SEBP4566-10
October 2009

RUTHZIL TRATOR COMERCIAL DE PEÇAS LTDA 11 97083-6812 ROLANDO

Parts Manual

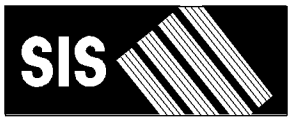

See "General Information" for New Parts Manual Features.

262C Skid Steer Loader

MST1-Up (Machine)
CJS1-Up (Engine)
CYM1-Up (Engine)

Powered By 3044C Engine, C3.4 Engine
This Parts Manual is also available on Compact Disc (CD-ROM) - Caterpillar Form No. SERP4566.

Product and Dealer Information

Note: For product identification plate locations, see the section “Product Identification Information” in the Operation and Maintenance Manual.

Delivery Date: _____

Product Information

Model: _____

Product Identification Number: _____

Engine Serial Number: _____

Transmission Serial Number: _____

Generator Serial Number: _____

Attachment Serial Numbers: _____

Attachment Information: _____

Customer Equipment Number: _____

Dealer Equipment Number: _____

Dealer Information

Name: _____ Branch: _____

Address: _____

_____

_____

	Dealer Contact	Phone Number	Hours
Sales:	_____	_____	_____
Parts:	_____	_____	_____
Service:	_____	_____	_____

MEMORANDA

TABLE OF CONTENTS

Name	Page
GENERAL INFORMATION	A4
REPAIR ALTERNATIVES	A7
SUPPLEMENTAL COOLANT ADDITIVES	A8
MAINTENANCE PARTS	A9
INDEX	A12
MACHINE ARRANGEMENT	1
CHASSIS AR	1
COMMON AR	1
CONTROL AR-MACHINE	2
CONVERSION AR-MACHINE	3
MACHINE AR-SPECIAL	4
ENGINE ARRANGEMENT	7
ENGINE AR	7
ENGINE AR-PRIMARY	9
INSTALLATION AR-ENGINE	13
BASIC ENGINE	15
ACCESSORY GP-ENGINE	15
BEARING GP-MAIN	16
CAMSHAFT GP	17
CONNECTING ROD GP	19
COVER GP-VALVE MECHANISM	20
CRANKSHAFT GP	22
CYLINDER BLOCK GP	24
CYLINDER HEAD GP	32
DRAIN GP-ENGINE OIL	35
FLYWHEEL GP	37
GEAR GP-FRONT	39
GUARD GP-BELT	41
HOUSING GP-FLYWHEEL	42
HOUSING GP-FRONT	44
LIFTING GP-ENGINE	50
MOUNTING GP-ENGINE	52
PAN GP-OIL	53
PISTON GP	62
PLUG GP-ENGINE	64
PULLEY GP-CRANKSHAFT	66
PULLEY GP-WATER PUMP	68
V-BELT GP	69
VALVE MECHANISM GP	70
LUBRICATION SYSTEM	71
BREATHER GP	71
FILTER GP-ENGINE OIL	75
LINES GP-ENGINE OIL	78
PUMP GP-ENGINE OIL	79
VALVE GP-ENGINE OIL RELIEF	80
COOLING SYSTEM	81
COOLER GP-ENGINE OIL	81
DRAIN GP-COOLANT	84
HOUSING & REGULATOR GP	86
LINES GP-WATER	87
MOUNTING GP-RAD & OIL COOLER	89
PUMP GP-WATER	93
RADIATOR & HYD OIL COOLER GP	96
AIR INLET AND EXHAUST SYSTEM	98
AIR CLEANER GP	98
GUARD GP-DEBRIS	101
KIT-DEBRIS GUARD	102
LINES GP-AIR	104
MANIFOLD GP-EXHAUST	109
MANIFOLD GP-INLET	110
MUFFLER & MOUNTING GP	112
TURBOCHARGER GP	114
FUEL SYSTEM	118
CONTROL GP-GOVERNOR	118
LINES GP-FUEL	121
LINES GP-FUEL INJECTION	125
LINES GP-FUEL PRM & FILTER	131
PUMP GP-FUEL INJECTION	133
TANK & MTG GP-FUEL	140
TANK GP-FUEL	142
ELECTRICAL AND STARTING SYSTEM	143
ALTERNATOR GP-CHARGING	143
BATTERY & WIRING GP	149
CONTROL GP-MACHINE	151
COVER GP-FUSE PANEL	152
GLOW PLUG GP	153
HEATER GP-JACKET WATER	154
KIT-CONTROL MOUNTING	156
KIT-SECURITY	157
KIT-WIRING	161
KIT-WORK TOOL WIRING	162
LAMP GP-FLOOD	163
LAMP GP-HEAD & SIGNAL	164
LAMP GP-WARNING BEACON	166
LIGHTING GP-FLOOD	168
LIGHTING GP-ROADING	169
LIGHTING GP-STOP & TAIL	173
LIGHTING GP-WARNING BEACON	174
MAST GP	175
RELAY GP	176
SENSOR GP-POSITION	177
SENSOR GP-SPEED	179
SENSOR GP-TEMP & PRESS	180
SERVICE GP-MACHINE	181
STARTING MOTOR GP-ELECTRIC	182
SWITCH GP-PRESSURE	185
WIRING GP-AIR CONDITIONER	186

TABLE OF CONTENTS

Name	Page
WIRING GP-CAB	188
WIRING GP-ENGINE	192
WIRING GP-GRADE CONTROL	200
WIRING GP-MACHINE	201
WIRING GP-QUICK COUPLER	204
WIRING GP-WORK TOOL	205
POWER TRAIN	207
AXLE GP	207
DRIVE GP-TANDEM	209
FILTER & LINES GP-HYDRAULIC	212
FILTER GP-OIL	214
LINES GP-HYDROSTATIC	215
LINES GP-PARKING BRAKE	221
MANIFOLD & LINES GP-CONTROL	222
MANIFOLD GP-RETURN	226
MOTOR & MTG GP-HYDROSTATIC	230
MOTOR GP-PISTON	233
MOUNTING GP-PUMP	241
POWER TRAIN AR	242
PUMP & MTG GP-HYDROSTATIC	243
PUMP GP-PISTON	245
TIRE & RIM GP	250
WHEEL & TIRE AR	256
WHEEL & TIRE GP	259
FRAME AND BODY	261
CONVERSION AR-ROADING	261
CONVERSION GP-ROADING	263
COUNTERWEIGHT GP	266
DOOR AS-ACCESS	267
ENCLOSURE GP-ENGINE	268
FRAME & MTG GP-MACHINE	269
FRAME GP-MACHINE	271
GUIDE GP-LINES	272
KIT-COUNTERWEIGHT	273
KIT-ENGINE ENCLOSURE	275
KIT-MACHINE ENCLOSURE SEAL	276
KIT-ROADING CONVERSION	278
LIFTING GP-MACHINE	286
MIRROR & MTG GP-REAR VIEW	289
MOUNTING GP-REGISTRATION	290
MOUNTING GP-ROADING LIGHTS	292
SUPPRESSION GP-SOUND	294
HYDRAULIC SYSTEM	298
ACCUMULATOR GP-HYDRAULIC	298
ACCUMULATOR GP-RIDE CONTROL	299
CYLINDER & MTG GP-ANGLE BLADE	301
CYLINDER GP-BUCKET	303
CYLINDER GP-GRAPPLE	305
CYLINDER GP-HYDRAULIC	308
CYLINDER GP-LIFT ARM	313
FITTING GP-HYDRAULIC	314
HYDRAULIC AR	318
KIT-QUICK COUPLER CONVERSION	321
KIT-RIDE CONTROL	324
KIT-WORK TOOL POSITIONER	327
LINES GP-BUCKET	329
LINES GP-CONNECTING	351
LINES GP-COUPLER	355
LINES GP-GRAPPLE	361
LINES GP-HYDRAULIC	367
LINES GP-HYDRAULIC FAN	373
LINES GP-HYDRAULIC OIL COOLER	381
LINES GP-LIFT CYLINDER	383
LINES GP-LOWERING CONTROL	384
LINES GP-PUMP	386
LINES GP-TILT CYLINDER	402
LINES GP-WORK TOOL	404
MANF & SOLENOID MTG GP-ACCUM	410
MANIFOLD & LINES GP-ACCUM	412
MANIFOLD & MTG GP-CONTROL	414
MANIFOLD & SOLENOID GP-CONTROL	417
MANIFOLD GP-CONTROL	418
MANIFOLD GP-RIDE CONTROL	423
MOTOR & MTG GP-HYDRAULIC FAN	425
MOUNTING GP-CYLINDER	426
PUMP & MTG GP-GEAR	430
PUMP & MTG GP-WORK TOOL	431
PUMP GP-PISTON	433
PUMP GP-PISTON & GEAR	435
TANK & MTG GP-HYDRAULIC	436
TANK GP-HYDRAULIC	437
VALVE & MTG GP-CONTROL	439
VALVE GP-CHECK	440
VALVE GP-CONTROL	441
VALVE GP-MANUAL	447
VALVE GP-RELIEF	448
VALVE GP-SHUTTLE	449
VALVE GP-SOLENOID	450
IMPLEMENTS	452
PIN & LINK GP-LIFT ARM	452
WORK TOOLS	454
ARM GP-MATERIAL HANDLING	454
BLADE AR	455
BLADE AS-ANGLING	460
BLADE GP-ANGLING	462
BLADE GP-MULTIPURPOSE BUCKET	466
BUCKET AR-DIRT	488
BUCKET AR-GENERAL PURPOSE	489
BUCKET AR-GRAPPLE	491
BUCKET AR-LIGHT MATERIAL	498
BUCKET AR-MULTIPURPOSE	499
BUCKET AR-UTILITY	508
BUCKET AS-DIRT	509
BUCKET AS-GENERAL PURPOSE	524

TABLE OF CONTENTS

Name	Page
BUCKET AS-GRAPPLE	534
BUCKET AS-LIGHT MATERIAL	542
BUCKET AS-UTILITY	550
BUCKET GP-DIRT	557
BUCKET GP-GENERAL PURPOSE	561
BUCKET GP-GRAPPLE	562
BUCKET GP-MULTIPURPOSE	569
BUCKET GP-UTILITY	581
CARRIAGE & FORK AR	584
CARRIAGE GP-FORK	585
CLAM AS-MULTIPURPOSE BUCKET	587
CONVERSION GP-WORK TOOL	592
COUPLER AR-QUICK	593
COUPLER GP-QUICK	594
COVER GP-LINES	596
CYLINDER & LINK GP-COUPLER	597
EDGE GP-BIT & CUTTING	599
EDGE GP-CUTTING	599
FORK AR-GRAPPLE	607
FORK GP-GRAPPLE	608
FORK GP-PALLET	611
FORK GP-UTILITY	613
FRAME GP-BLADE	619
FRAME GP-FORK	620
GRAPPLE & CYLINDER GP-UTILITY	622
GRAPPLE GP-UTILITY	624
HANDLE & PIN GP-COUPLER	625
KIT-ROADING PLATE & MOUNTING	627
KIT-WATER TANK & MOUNTING	629
LINK GP-COUPLER	631
LOCK GP-QUICK COUPLER	633
PLATE GP-ROADING	636
SPRING GP-BLADE	638
STEP GP-MATERIAL HANDLING ARM	639
STOP GP-BUCKET	640
STRAINER GP-WATER	641
TANK GP-WATER	642
TOOTH GP-UNI	643
OPERATOR STATION	644
ACCESSORY GP-CAB	644
ACCUMULATOR GP-REFRIGERANT	645
AIR CONDITIONER & MOUNTING GP	647
AIR CONDITIONER AR	648
AIR CONDITIONER GP	649
ARMREST & MOUNTING GP	653
BASE AS-JOYSTICK	654
CAB AR-ENCLOSED ROPS	656
CABLE GP-CONTROL	657
COMPRESSOR & MTG GP-REFRIG	659
CONDENSER & MTG GP-REFRIGERANT	660
CONTROL & WIRING GP-AIR & TEMP	662
CONTROL GP-AIR & TEMPERATURE	665
CONTROL GP-ELECTROHYDRAULIC	666
CONTROL GP-HANDLE	671
CONTROL GP-JOYSTICK	672
COVER GP-CAB	677
COVER GP-CONSOLE	678
COVER GP-INSTRUMENT PANEL	679
DOOR & MTG GP-CAB	680
DOOR GP-CAB	688
DUCT & FILTER GP-CAB AIR	708
GUARD GP-ROPS/FOPS	710
HANDLE GP	711
HEATER & MTG GP-CAB	712
HEATER AR-CAB	713
HEATER GP-CAB	714
INSTALLATION GP-RADIO	718
KIT-AIR COND & HEATER INSTL	722
KIT-AIR CONDITIONER BREATHER	725
KIT-AIR CONDITIONER INSTL	726
KIT-CAB DOOR & MOUNTING	728
KIT-CAB HEATER & MOUNTING	737
KIT-CAB WINDOW	738
KIT-CONTROL PATTERN CHANGE	739
KIT-INSTRUMENT PANEL	741
LEVER GP-GOVERNOR	743
LINER GP-CAB	744
LINES GP-AIR CONDITIONER	751
LINES GP-HEATER	753
LITERATURE GP	754
MIRROR GP-REAR VIEW	755
MODULE GP-DISPLAY	757
MOTOR GP-WINDOW WIPER	758
MOUNTING GP-ARMREST	759
MOUNTING GP-ROPS	761
OPTION AR-CAB	764
PANEL GP-INSTRUMENT	765
PEDAL GP-GOVERNOR	770
RADIO GP	773
SEAT & ARMREST GP	786
SEAT & MOUNTING GP	789
SEAT AR	792
SEAT AR-SUSPENSION	792
SEAT BELT GP	793
SEAT GP	795
SEAT GP-SUSPENSION	798
SPRING GP-GAS	801
SUSPENSION GP-SEAT	803
VISOR GP-CAB	807
WINDOW GP-CAB	809
SERVICE EQUIPMENT AND SUPPLIES	813
BRACKET GP-MOUNTING	813
FILM GP	814
KIT-MUFFLER	817
PLATE & FILM GP	818
PART NUMBER INDEX	B1

GENERAL INFORMATION

1. MACHINE IDENTIFICATION

Caterpillar machines are identified by Product Identification Numbers (PIN). Some components included in a machine may be identified by Serial Numbers (S/N). Typical components that will be serialized include engines, transmissions, bulldozers, and rippers. The machine and engine are further identified by arrangement numbers and in some cases modification numbers. These numbers are shown on the product identification plate(s) and on the master plate in the operator's compartment.

Caterpillar dealers need all of these numbers to determine accurate parts identification.

SIS *New Feature*

Effective First Quarter 2001 the Caterpillar Product Identification Number (PIN) changed from 8 to 17 characters. In an effort to provide uniform equipment identification, Caterpillar and other construction equipment manufacturers are moving to comply with the latest version of the product identification numbering standard. Non-road machine PINs are defined by ISO 10261. The new PIN format will apply to all Caterpillar machines and generator sets. The PIN plates and frame marking will display the 17 character PIN. The new format will look like the following:

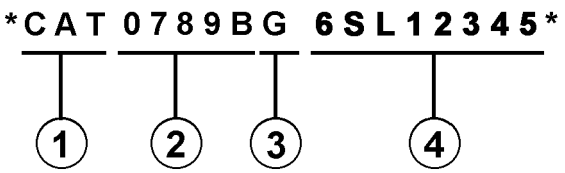

Where:

1. Caterpillar's World Manufacturing Code (characters 1-3)

2. Machine Descriptor (characters 4-8)

3. Check Character (character 9)

4. Machine Indicator Section (MIS) or Product Sequence Number (characters 10-17). These were previously referred to as the Serial Number.

Machines and generator sets produced before First Quarter 2001 will maintain their 8 character PIN format.

Components such as engines, transmissions, axles, etc. and work tools will continue to use an 8 character Serial Number (S/N).

2. ORDERING PARTS

⚠ WARNING

When replacement parts are required for this product Caterpillar recommends using Caterpillar replacement parts or parts with equivalent specifications including, but not limited to, physical dimensions, type, strength and material.

Failure to heed this warning can lead to premature failures, product damage, personal injury or death.

Quality Caterpillar replacement parts are available from Caterpillar dealers throughout the world. Their parts inventories are up to date and include all parts normally required to protect your investment in Caterpillar machines. Dealers may offer repair kits or remanufactured parts to allow selection of the most effective repair alternative for a particular situation. When ordering parts, your order should specify the quantity, part number, part name, and the serial number/product identification number of the machine for which the parts are needed.

3. PARTS MANUAL ORGANIZATION

Product information in this manual is presented as "information elements" that represent all of the components for the specific model. Engine Arrangement and Seat Group are examples of information elements. The information elements are organized alphabetically by part name and secondarily by part number within each major section of the manual.

4. TABLE OF CONTENTS

A table of contents (TOC) is found at the beginning of the manual. The TOC lists each section of the manual with a complete list of all information elements organized as they appear in the manual. Page numbers are provided for quick reference to detailed parts identification illustrations and serviceable consist lists.

5. MAINTENANCE PARTS INDEX

The Maintenance Parts Index, located near the beginning of the manual, references most frequently used maintenance part numbers, providing description, quantity, usage and page number. This information is organized alphabetically by part description.

6. INDEX

The index located near the front of the manual is an alphabetical listing of all information elements included in the manual. Page numbers are provided for quick reference to detailed parts identification illustrations and serviceable consist lists.

7. PART NUMBER INDEX

A numerical index listing all part numbers and the corresponding page number(s) appears at the back of the manual.

8. CAPTIONS

Captions located at the beginning of each information element identify the part number and part name along with additional descriptive information. PIN and S/N information found in each caption should be used to select correct information for a specific machine. Field replacement options, identification of optional attachment components, and where used ("part of") information is also provided.

The first line of a caption is shown in larger type font to indicate the beginning of an information element. Captions for additional pages that may be required to illustrate an information element will be shown in standard type font and will include the term *(contd.)* .

9. NON-SERVICED PARTS

In some instances it is necessary to display non-serviced parts that are a link to a lower level serviceable consist lists. These non-serviced part numbers are shown in *italic* type indicating that they are not available.

10. PARTS LIST REFERENCE NUMBERS

Numbers shown in the Ref No column correspond to numbers used in the associated graphic(s). An alphabetic suffix may be added to a reference number to identify lower level consist items. Numbers shown in the Graphic Ref column refer to the graphic number identifier displayed in the lower left corner of each illustration. The Graphic Ref number may be used in combination with the item Ref No to determine the correct part number. There may be intentional omission of a Ref No in a consist list as information is updated to reflect the latest serviceable part numbers.

11. INDENTED PART NAMES

When a part name is indented in a parts list, it is part of (included in) the group or assembly under which it is indented.

12. ILLUSTRATION REFERENCE LETTERS

When necessary, illustrations contain reference letters (A, B, C etc.) that are intended to track lines and harnesses from one point to another. They are also used to show where to reconnect illustrations that have been separated.

13. ABBREVIATIONS AND SYMBOLS

O.D. – Outside Diameter
I.D. – Inside Diameter
A – Not Part Of This Group
B – Use As Required
C – Change From Previous Type
D – Order By The Meter
E – Order By The Centimeter
F – Not Shown
G – Order By The Inch
I – Refer To Hydraulic Information System
M – Metric Part
R – Remfg Part May Be Available
Y – Separate Illustration
Z – Not Serviced Separately

SIS *New Feature*

14. DESCRIPTION OF TYPE CHANGES

Type - A type is defined as any configuration change that requires an additional Information Element for an Arrangement, Group, or Assembly. If serial number breaks for types are not available, a type # (Type 1, Type 2, etc.) will be displayed in the caption. These "type" changes are identified with a "C" note (change from previous type) in the Parts List. Only the "types" that apply to this Parts Manual will be included. Additional types may exist causing "C" notes to appear on an Information Element when no other types are shown.

15.<END>

This symbol indicates the end of an information element.

NOTE:

Continuing improvement and advancement of product design may cause changes to your machine which may not be included in this publication. Whenever a question arises regarding your Caterpillar product or this publication, please consult your Caterpillar dealer for the latest available information.

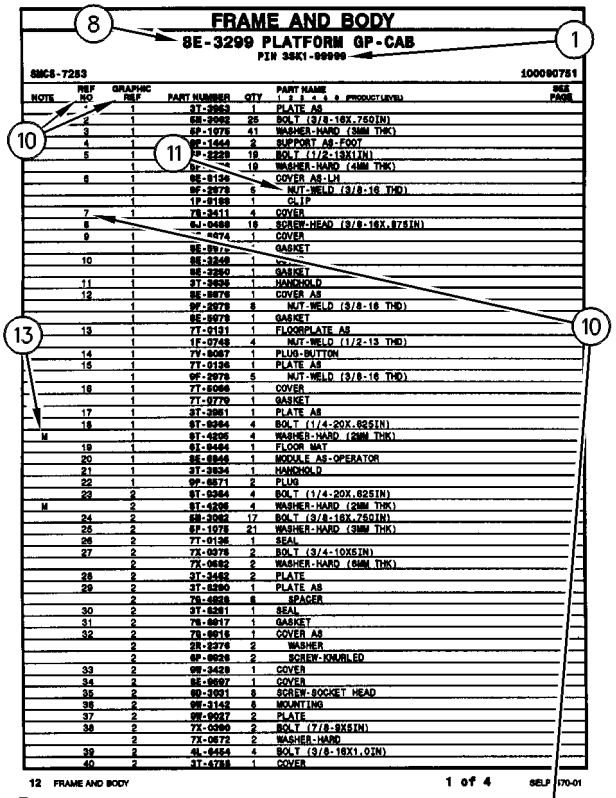
FRAME AND BODY
8E-3299 PLATFORM GP-CAB
PIN 3SK1-99999
SMCS-7283
100090751
1
8
10
11
13
10
12 FRAME AND BODY
1 of 4
SELP4570-01

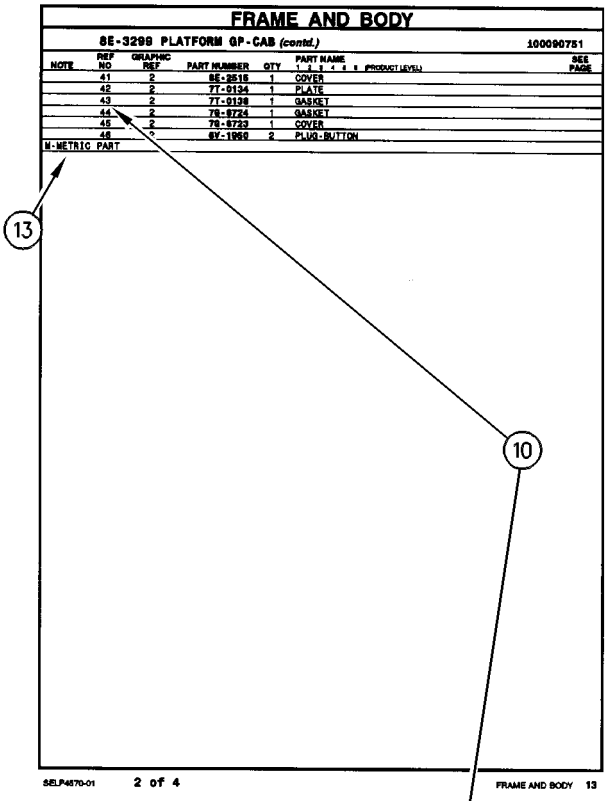
FRAME AND BODY
8E-3299 PLATFORM GP-CAB (contd.)
100090751
13
10
M-METRIC PART
SELP4570-01
2 of 4
FRAME AND BODY 13

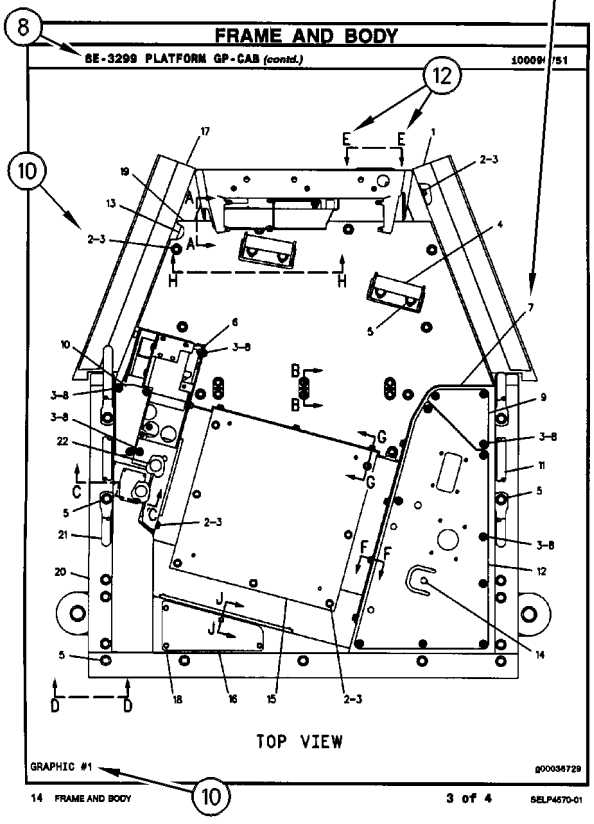
FRAME AND BODY
8E-3299 PLATFORM GP-CAB (contd.)
100090751
8
12
10
TOP VIEW
GRAPHIC #1
g00036729
10
14 FRAME AND BODY
3 of 4
SELP4570-01

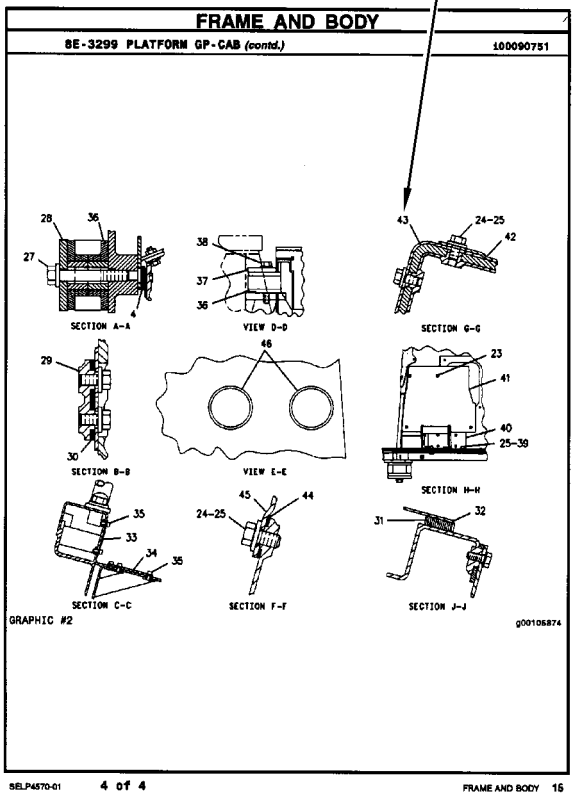
FRAME AND BODY
8E-3299 PLATFORM GP-CAB (contd.)
100090751
SECTION A-A
VIEW D-D
SECTION G-G
SECTION B-B
VIEW E-E
SECTION H-H
SECTION C-C
SECTION F-F
SECTION J-J
GRAPHIC #2
g00105874
SELP4570-01
4 of 4
FRAME AND BODY 15

REPAIR ALTERNATIVES

REMANUFACTURED COMPONENTS

As an option when making repairs consider Caterpillar Remanufactured Components. Components that are available through the Caterpillar Remanufactured Program are identified three ways in the parts book:

- with the letter R in the note field of the parts list
- with an R* at the beginning of the first line of the caption
- with an *R at the end of the first line of the caption

Typical components included in the Remanufacturing Program include:

ALTERNATORS
CONNECTING RODS
CRANKSHAFTS - UNDERSIZE
CRANKSHAFTS - UPGRADE TO NEW
CYLINDER HEADS
ELECTRONIC CONTROL MODULES (ECM)
ELECTRONIC SENSORS
FUEL INJECTORS
FUEL NOZZLES
FUEL PUMPS
GOVERNORS
OIL PUMPS
PISTONS
SHORT BLOCKS
STARTERS
TURBOCHARGERS - COMPLETE
TURBOCHARGER CARTRIDGES
WATER PUMPS

Caterpillar Remanufactured engines for many engine arrangements are also available.

SUPPLEMENTAL COOLANT ADDITIVES

CUSTOMER BENEFITS:

Protects against cavitation, foam, erosion, corrosion, and scale buildup in cooling systems.

- Provides measured coolant conditioner.

DESCRIPTION:

Additives deplete from the coolant with normal operation. For this reason, Supplemental Coolant Additives (SCA) must be added to all heavy duty coolants at regular intervals. In addition, when not using a fully formulated, pre-charged antifreeze, like Caterpillar's DEAC, an initial charge of SCA must be added to the cooling system. The amount of SCA added to the system is dependent on the capacity of the system.

The SCA for initial fill is provided as a liquid. SCA's for maintenance intervals are available in liquid form and as a spin-on element. (No Spin-on available for 3600 Family of Engines)

NOTE:

The amount of SCA added at initial fill is not the same as the amount added at maintenance intervals.

The coolant additive elements can be used with any ethylene or propylene glycol type antifreeze which meets ASTM D4985 or ASTM D5345 Specifications.

NOTE:

For use with standard heavy duty coolant only, not for use with Extended Life Coolant.

PARTS NEEDED:

Cooling System Capacity		Liquid SCA at Initial Fill	Liquid SCA at Maintenance*	Spin-on SCA Maintenance Element*
Liters	Gallons			
22-30	(6-8)	3P-2044 (1)	6V-3542 (1)	111-2370 (1)
30-38	(8-10)	3P-2044 (1) 6V-3542 (1)	111-2372 (1)	111-2369 (1)
38-49	(10-13)	3P-2044 (1) 8T-1589 (1)	111-2372 (1)	111-2369 (1)
49-64	(13-17)	3P-2044 (2)	8T-1589 (1)	9N-3368 (1)
64-83	(17-22)	3P-2044 (2) 8T-1589 (1)	111-2372 (1) 6V-3542 (1)	111-2371 (1)
83-114	(22-30)	3P-2044 (3) 8T-1589 (1)	3P-2044 (1)	9N-3718 (1)
114-163	(30-43)	3P-2044 (5)	3P-2044 (1) 6V-3542 (1)	111-2371 (2)
163-242	(43-64)	3P-2044 (8)	3P-2044 (2)	9N-3718 (2)

** Normal maintenance period is 250 hrs. See your Operation and Maintenance Manual for complete coolant maintenance instructions.*

( ) Indicates quantity required.

MAINTENANCE PARTS

DESCRIPTION	PART NUMBER	QTY	WHERE USED	PAGE
BASIC ENGINE				
CAP-FILLER (ENGINE OIL)	233-5498	1	HOUSING GP-FRONT	44
CAP-OIL FILLER (ENGINE)	310-8798	1	COVER GP-VALVE MECHANISM	20
		1	COVER GP-VALVE MECHANISM	21
GASKET (VALVE COVER)	233-5483	1	COVER GP-VALVE MECHANISM	20
GASKET (VALVE MECHANISM)	233-5483	1	COVER GP-VALVE MECHANISM	21
GAUGE-OIL LEVEL (DIPSTICK) (ENGINE)	335-5768	1	PAN GP-OIL	60
PLUG (DRAIN, ENGINE OIL)	135-8432	1	PAN GP-OIL	55
		1	PAN GP-OIL	57
		1	PAN GP-OIL	59
		1	PAN GP-OIL	60
PLUG-DRAIN (ENGINE OIL PAN)	5I-7833	1	PAN GP-OIL	53
V-BELT (WATER PUMP)	235-4972	1	V-BELT GP	69
COOLING SYSTEM				
CAP AS-RADIATOR	036-1865	1	RADIATOR & HYD OIL COOLER GP	96
CAP-VENTED (COOLANT RECOVERY)	169-6715	1	LINES GP-WATER	88
GASKET (WATER TEMPERATURE REGULATOR)	235-4959	1	HOUSING & REGULATOR GP	86
		1	LINES GP-WATER	87
REGULATOR AS-WATER TEMPERATURE (THERMOSTAT)	235-4960	1	HOUSING & REGULATOR GP	86
		1	LINES GP-WATER	87

MAINTENANCE PARTS

DESCRIPTION	PART NUMBER	QTY	WHERE USED	PAGE
ELECTRICAL AND STARTING SYSTEM				
BATTERY (12-VOLT, MAINTENANCE FREE)	230-6368	1	BATTERY & WIRING GP	149
BELT-DRIVE	9X-8139	1	LAMP GP-WARNING BEACON	166
BELT-DRIVE (WARNING BEACON)	9X-8139	1	LAMP GP-WARNING BEACON	167
FLASHER AS (12-VOLT) (STOP LIGHT)	242-9000	1	LIGHTING GP-ROADING	169
		1	LIGHTING GP-ROADING	171
FUSE (10-AMPERE)	113-8490	7	WIRING GP-CAB	188
FUSE (100-AMPERE)	235-1845	1	BATTERY & WIRING GP	149
FUSE (15-AMPERE)	113-8491	10	WIRING GP-CAB	188
FUSE (20-AMPERE)	113-8492	3	WIRING GP-CAB	188
	267-2680	2	COVER GP-FUSE PANEL	152
		1	RELAY GP	176
		2	WIRING GP-CAB	189
FUSE (60-AMPERE)	267-2701	1	RELAY GP	176
FUSE AS (MAIN POWER)	258-4136	1	WIRING GP-CAB	189
FUSE AS (ROADING)	258-4134	1	LIGHTING GP-ROADING	169
		1	LIGHTING GP-ROADING	171
GLOW PLUG	107-3659	4	GLOW PLUG GP	153
KEY AS-ELECTRONIC (SECURITY)	206-5162	2	KIT-SECURITY	157
		2	KIT-SECURITY	159
LAMP (12-VOLT)	9W-2471	1	LIGHTING GP-STOP & TAIL	173
LAMP (12-VOLT, 21-WATT) (AMBER)	226-4560	1	LAMP GP-HEAD & SIGNAL	164
		1	LAMP GP-HEAD & SIGNAL	165
LAMP (12-VOLT, 21-WATT) (ROADING LIGHTS)	9W-3326	1	LIGHTING GP-ROADING	169
		1	LIGHTING GP-ROADING	171
LAMP (12-VOLT, 5-WATT) (CLEAR)	226-4561	1	LAMP GP-HEAD & SIGNAL	164
		1	LAMP GP-HEAD & SIGNAL	165
LAMP (12-VOLT, 5-WATT) (MINIATURE)	084-4348	1	LIGHTING GP-ROADING	169
		1	LIGHTING GP-ROADING	171
LAMP (12-VOLT, 55-WATT) (FLOODLIGHT)	9W-0607	1	LAMP GP-FLOOD	163
		1	WIRING GP-MACHINE	202
LAMP (12-VOLT, 55-WATT) (WARNING BEACON)	9X-8118	1	LAMP GP-WARNING BEACON	166
		1	LAMP GP-WARNING BEACON	167
LAMP-HEAD (12-VOLT, 60/55-WATT)	9W-3324	1	LAMP GP-HEAD & SIGNAL	164
		1	LAMP GP-HEAD & SIGNAL	165
FRAME AND BODY				
FLASHER AS (12-VOLT) (STOP LIGHT)	242-9000	1	KIT-ROADING CONVERSION	278
FUSE AS (ROADING)	258-4134	1	KIT-ROADING CONVERSION	278
LAMP (12-VOLT, 10-WATT)	195-9712	1	KIT-ROADING CONVERSION	278
		1	KIT-ROADING CONVERSION	281
		1	KIT-ROADING CONVERSION	283
		1	MOUNTING GP-REGISTRATION	290
LAMP (12-VOLT, 21-WATT)	9W-3326	1	KIT-ROADING CONVERSION	278
LAMP (12-VOLT, 5-WATT)	084-4348	1	KIT-ROADING CONVERSION	278
PLUG-MAGNETIC (DRIVE CHAIN CASE)	3S-9182	4	FRAME & MTG GP-MACHINE	269

MAINTENANCE PARTS

DESCRIPTION	PART NUMBER	QTY	WHERE USED	PAGE
FUEL SYSTEM				
CAP-FUEL	304-3885	1	TANK GP-FUEL	142
FILTER AS-WATER SEP & FUEL	233-9856	1	LINES GP-FUEL	121
		1	LINES GP-FUEL PRM & FILTER	131
PLUG-O-RING	9S-4185	1	TANK GP-FUEL	142
HYDRAULIC SYSTEM				
BREATHER (HYDRAULIC TANK)	258-2829	1	TANK GP-HYDRAULIC	437
CAP AS-FILLER (HYDRAULIC TANK)	142-8937	1	TANK GP-HYDRAULIC	437
PLUG-O-RING	9S-4185	1	LINES GP-HYDRAULIC OIL COOLER	381
SCREEN (HYDRAULIC)	195-6768	1	MANIFOLD & LINES GP-ACCUM	412
STRAINER AS (HYDRAULIC TANK)	258-2804	1	TANK GP-HYDRAULIC	438
LUBRICATION SYSTEM				
BREATHER (CRANKCASE)	287-6020	1	BREATHER GP	71
FILTER-ENGINE OIL	1R-0734	1	FILTER GP-ENGINE OIL	75
		1	FILTER GP-ENGINE OIL	76
FILTER-ENGINE OIL (ENGINE)	1R-0734	1	FILTER GP-ENGINE OIL	77
OPERATOR STATION				
BLADE AS-WIPER (400-MM) (CAB DOOR)	322-9633	1	DOOR GP-CAB	691
		1	DOOR GP-CAB	698
		1	DOOR GP-CAB	705
	8Y-4615	1	DOOR GP-CAB	688
		1	DOOR GP-CAB	694
		1	DOOR GP-CAB	702
CAP-VENTED (WASHER)	258-3296	1	DOOR & MTG GP-CAB	680
		1	DOOR & MTG GP-CAB	683
		1	DOOR & MTG GP-CAB	685
		1	KIT-CAB DOOR & MOUNTING	728
		1	KIT-CAB DOOR & MOUNTING	731
		1	KIT-CAB DOOR & MOUNTING	734
FILTER ELEMENT-CAB AIR (FRESH)	265-6619	1	DUCT & FILTER GP-CAB AIR	708
		1	KIT-AIR COND & HEATER INSTL	723
		1	KIT-CAB HEATER & MOUNTING	737
FILTER ELEMENT-CAB AIR (RECIRCULATION)	265-6618	1	DUCT & FILTER GP-CAB AIR	708
		1	KIT-AIR COND & HEATER INSTL	723
		1	KIT-CAB HEATER & MOUNTING	737
LAMP (12-VOLT) (MINIATURE)	210-8754	1	PANEL GP-INSTRUMENT	765
V-BELT (AIR CONDITIONER)	258-3539	1	KIT-AIR COND & HEATER INSTL	724
		1	KIT-AIR CONDITIONER INSTL	727
V-BELT (COMPRESSOR)	258-3539	1	COMPRESSOR & MTG GP-REFRIG	659
POWER TRAIN				
FILTER-OIL (ADVANCED EFFICIENCY) (HYDRAULIC)	1G-8878	1	FILTER GP-OIL	214
WORK TOOLS				
CAP AS (WATER TANK)	192-2606	1	TANK GP-WATER	642
FUSE (10-AMPERE)	3K-8782	1	CONVERSION GP-WORK TOOL	592
SCREEN (WATER TANK)	119-1414	1	STRAINER GP-WATER	641
STRAINER (WATER TANK FILL)	7R-0476	1	KIT-WATER TANK & MOUNTING	629

INDEX

Name	Page
A	
ACCESSORY GP-CAB	644
ACCESSORY GP-ENGINE	15
ACCUMULATOR GP-HYDRAULIC–CHARGED	298
ACCUMULATOR GP-HYDRAULIC–UNCHARGED	298
ACCUMULATOR GP-REFRIGERANT–WITH DESICCANT	645
	646
ACCUMULATOR GP-RIDE CONTROL–CHARGED	299
ACCUMULATOR GP-RIDE CONTROL–UNCHARGED	300
AIR CLEANER GP	98
	99
	100
AIR CONDITIONER & MOUNTING GP	647
AIR CONDITIONER AR	648
AIR CONDITIONER GP	649
	651
ALTERNATOR GP-CHARGING	143
	145
	146
	147
	148
ARM GP-MATERIAL HANDLING	454
ARM GP-WINDOW WIPER (CAB DOOR)	689
	691
	695
	699
ARM GP-WINDOW WIPER (WET)	702
	705
ARMREST & MOUNTING GP	653
AXLE GP–STANDARD	207
	208
B	
BASE AS-JOYSTICK–LH	655
BASE AS-JOYSTICK–RH	654
BATTERY & WIRING GP	149
BATTERY (12-VOLT, MAINTENANCE FREE)	149
BEARING GP-MAIN	16
BELT-DRIVE	166
BELT-DRIVE (WARNING BEACON)	167
BLADE AR–ANGLING	455
	456
	458
BLADE AS-ANGLING	460
	461
BLADE AS-WIPER (400-MM) (CAB DOOR)	688
	691
	694
	698
	702
	705
BLADE GP-ANGLING	462
	463
	464
	465
BLADE GP-MULTIPURPOSE BUCKET	466
	467
	468
	469
	470
	471
	472
	473
	474
	475
	476
	477
	478
	479
	480
	481
	482
	483
	484
	485
	486
	487
BRACKET GP-MOUNTING–BELT GUARD	813
BREATHER (CRANKCASE)	71
BREATHER (HYDRAULIC TANK)	437
BREATHER GP	71
	73
BUCKET AR-DIRT	488
	489
BUCKET AR-GENERAL PURPOSE	489
	490
	491
BUCKET AR-GRAPPLE	491
	492
	493
	494
	495
	496
	497
BUCKET AR-GRAPPLE–INDUSTRIAL	492
BUCKET AR-LIGHT MATERIAL	498
BUCKET AR-MULTIPURPOSE	499
	500
	501
	502
	503
	504
	505

INDEX

Name	Page
	506
	507
	508
BUCKET AR-UTILITY	508
BUCKET AS-DIRT	509
	510
	511
	512
	513
	514
	515
	516
	517
	518
	519
	520
	521
	522
	523
BUCKET AS-GENERAL PURPOSE	524
	525
	526
	527
	528
	529
	530
	531
	533
BUCKET AS-GENERAL PURPOSE–HIGH CAPACITY	532
BUCKET AS-GRAPPLE	534
	535
	536
	537
	538
	539
	540
	541
BUCKET AS-LIGHT MATERIAL	542
	543
	544
	545
	546
	547
	548
	549
BUCKET AS-UTILITY	550
	551
	552
	553
	554
	555
	556
BUCKET GP-DIRT	557
	558
	559
	560
BUCKET GP-GENERAL PURPOSE	561
BUCKET GP-GRAPPLE	562
	563
	564
	565
	567
	568
BUCKET GP-GRAPPLE–INDUSTRIAL	566
BUCKET GP-MULTIPURPOSE	569
	570
	571
	572
	573
	574
	575
	576
	577
	578
	579
	580
BUCKET GP-UTILITY	581
	582
	583

C

Name	Page
CAB AR-ENCLOSED ROPS	656
CABLE GP-CONTROL	657
CABLE GP-CONTROL–MANUAL LOWERING	658
CAMSHAFT GP	17
	18
CANOPY GP-OPEN ROPS	3
	4
	261
	262
CAP AS (WATER TANK)	642
CAP AS-FILLER (HYDRAULIC TANK)	437
CAP AS-RADIATOR	96
CAP-FILLER (ENGINE OIL)	44
CAP-FUEL	142
CAP-OIL FILLER (ENGINE)	20
	21
CAP-VENTED (COOLANT RECOVERY)	88
CAP-VENTED (WASHER)	680
	683
	685
	728
	731
	734
CARRIAGE & FORK AR	584
CARRIAGE GP-FORK	585
	586
CHASSIS AR	1

INDEX

Name	Page
CLAM AS-MULTIPURPOSE BUCKET	587, 588, 589, 590, 591
COMMON AR	1, 2
COMPRESSOR & MTG GP-REFRIG	659
COMPRESSOR GP-REFRIGERANT	722, 726
COMPRESSOR GP-REFRIGERANT (AIR CONDITIONER)	659
CONDENSER & MTG GP-REFRIGERANT	660, 661
CONNECTING ROD GP	19
CONTROL & WIRING GP-AIR & TEMP	662, 664
CONTROL AR-MACHINE– AUX PROPORTIONAL FLOW	2
CONTROL AR-MACHINE– ON, OFF AUXILIARY CONTROL	2
CONTROL GP-AIR & TEMPERATURE	665
CONTROL GP-AIR CONDITIONER	722, 751
CONTROL GP-AIR CONDITIONER (COMPRESSOR)	726
CONTROL GP-ELECTROHYDRAULIC–LH	666
CONTROL GP-ELECTROHYDRAULIC– LH, HIGH FLOW	667
CONTROL GP-ELECTROHYDRAULIC–RH	668, 669
CONTROL GP-ELECTROHYDRAULIC– RH, HIGH FLOW	670
CONTROL GP-GOVERNOR	118, 120
CONTROL GP-HANDLE	674, 676
CONTROL GP-HANDLE (RH)	672, 673
CONTROL GP-HANDLE–LH	671
CONTROL GP-JOYSTICK–LH	676
CONTROL GP-JOYSTICK–LH, HIGH FLOW	675
CONTROL GP-JOYSTICK–RH	672, 674
CONTROL GP-JOYSTICK–RH, HIGH FLOW	673
CONTROL GP-MACHINE	151
CONTROL GP-UNPROGRAMMED (MACHINE)	181
CONVERSION AR-MACHINE	4
CONVERSION AR-MACHINE– OUTSIDE NACD	3
CONVERSION AR-ROADING–GERMANY	261
CONVERSION AR-ROADING–ITALY	262
CONVERSION AR-ROADING–NACD	261
CONVERSION GP-ROADING–GERMANY	263
CONVERSION GP-ROADING–ITALY	264, 265
CONVERSION GP-WORK TOOL– KIT, HIGH FLOW	592
COOLER GP-ENGINE OIL	81, 82, 83
COUNTERWEIGHT GP	266
COUPLER AR-QUICK	593
COUPLER GP-QUICK	594, 595
COVER GP-CAB	677
COVER GP-CONSOLE–RH, LH	678
COVER GP-FUSE PANEL	152
COVER GP-INSTRUMENT PANEL	679
COVER GP-LINES	596
COVER GP-VALVE MECHANISM	20, 21
CRANKSHAFT GP	22, 23
CYLINDER & LINK GP-COUPLER–LH	597
CYLINDER & LINK GP-COUPLER–RH	598
CYLINDER & MTG GP-ANGLE BLADE	301, 302
CYLINDER BLOCK GP	24, 26, 28, 30
CYLINDER GP-BUCKET	303, 304
CYLINDER GP-GRAPPLE	305, 306
CYLINDER GP-GRAPPLE–INDUSTRIAL	307
CYLINDER GP-HYDRAULIC	312
CYLINDER GP-HYDRAULIC–ANGLE BLADE	309, 310, 311
CYLINDER GP-HYDRAULIC–COUPLER	308
CYLINDER GP-LIFT (LH)	313
CYLINDER GP-LIFT ARM–VERTICAL LIFT	313
CYLINDER GP-TILT (LH)	313
CYLINDER GP-TILT (RH)	313
CYLINDER HEAD GP	32, 33, 34

D

Name	Page
DOOR & MTG GP-CAB– WITH CAB TILT GAS SPRING	680, 683, 685
DOOR AS-ACCESS–VENTED	267
DOOR GP-CAB	702, 705

INDEX

Name	Page
DOOR GP-CAB–GLASS	688, 691
DOOR GP-CAB–POLYCARBONATE	694, 698
DRAIN GP-COOLANT	84, 85
DRAIN GP-ENGINE OIL	35, 36
DRIVE GP-TANDEM	209, 210, 211
DUCT & FILTER GP-CAB AIR	708
E	
EDGE GP-BIT & CUTTING	599
EDGE GP-CUTTING	498, 599, 600, 601, 602, 603, 604, 605, 606
ENCLOSURE GP-ENGINE	268
ENGINE AR	7, 8
ENGINE AR-PRIMARY	9, 11, 12
F	
FAN GP-BLOWER	96
FASTENER GP-FRONT COVER	46, 48
FILM (POWER DISTRIBUTION)	189
FILM (REFLECTIVE)	628, 636, 637
FILM GP–2-SPEED	816
FILM GP–262C	814
FILM GP–HIGH FLOW XPS	815
FILM-CERTIFICATION (OPS, READ OMM)	710
FILM-FUSE PANEL	152
FILM-IDENTIFICATION (HIGH FLOW XPS)	815
FILM-IDENTIFICATION (IGNITION SWITCH)	157, 159
FILM-IDENTIFICATION (POWER RECEPTACLE, 12-VOLT)	820, 823, 826, 829
FILM-IDENTIFICATION (TWO SPEED)	816
FILM-INFORMATION (READ OMM)	820, 823, 826, 829
FILM-INFORMATION (TIE-DOWN LOCATION)	454
FILM-INSTRUCTION (ALTERNATE EXIT)	811
FILM-INSTRUCTION (CONTROL PATTERN, LH)	739, 740
FILM-INSTRUCTION (CONTROL PATTERN, RH)	739, 740
FILM-INSTRUCTION (DO NOT SPRAY, READ OMM)	649, 651, 714, 716
FILM-INSTRUCTION (EGRESS SYSTEM, READ OMM)	689, 692, 695, 699, 703, 706
FILM-INSTRUCTION (KEY START SWITCH)	765
FILM-INSTRUCTION (MACHINE SECURITY, CONSOLE)	157, 159
FILM-INSTRUCTION (MACHINE SECURITY, READ OMM)	159
FILM-INSTRUCTION (NO STEP)	321, 355, 358, 818
FILM-INSTRUCTION (OPERATOR CONSOLE)	820, 823, 826, 829
FILM-INSTRUCTION (OPERATOR CONTROL)	820, 823, 826, 829
FILM-INSTRUCTION (SERVICE CHART, READ OMM)	275, 820, 826, 829
FILM-INSTRUCTION (SERVICE CHART, READ OMM) (SERVICE CHART)	823
FILM-NOTICE	281
FILM-NOTICE (ALTERNATE EXIT, READ OMM)	680

INDEX

Name	Page
	683
	685
	728
	731
	734
FILM-NOTICE (STEERING)	263
	282
FILM-PANEL (BLOWER, TEMPERATURE CONTROL)	665
FILM-SPEED	826
	829
FILM-SPEED (THROTTLE)	820
	823
FILM-STRIPE (REFLECTIVE, RED, WHITE)	628
	636
	637
FILM-WARNING (CRUSH HAZARD, FASTEN SEAT BELT)	820
	823
FILM-WARNING (CRUSH HAZARD, READ OMM)	826
FILM-WARNING (CRUSH HAZARD, STAY BACK)	427
	570
	580
	587
	588
	589
	590
	818
	820
	823
	826
	829
FILM-WARNING (CRUSH HAZARD, STAY BACK, U.S.)	818
FILM-WARNING (GROUND)	820
	823
	826
	829
FILM-WARNING (HIGH PRESSURE, READ OMM)	299
	300
FILM-WARNING (HIGH PRESSURE, READ OMM, INTL)	826
	829
FILM-WARNING (HIGH PRESSURE, READ OMM, U.S.)	820
	823
FILM-WARNING (IMPALED POINT)	566
	609
	610
	614
	615
	616
	617
	618
	620
	621
FILM-WARNING (JUMP START, READ OMM)	826
	829
FILM-WARNING (JUMP START, READ OMM) (JUMP START)	820
	823
FILM-WARNING (NO ACCESS)	826
FILM-WARNING (NO CLEARANCE, STAY BACK)	462
	463
FILM-WARNING (ROPS, FOPS, READ OMM)	820
	823
	826
	829
FILTER & LINES GP-HYDRAULIC	212
FILTER AS-WATER SEP & FUEL	121
	131
FILTER ELEMENT AS-AIR (PRIMARY)	98
FILTER ELEMENT AS-AIR (SECONDARY)	98
FILTER ELEMENT-CAB AIR (FRESH)	708
	723
	737
FILTER ELEMENT-CAB AIR (RECIRCULATION)	708
	723
	737
FILTER GP-ENGINE OIL	75
	76
	77
FILTER GP-OIL–HYDRAULIC	214
FILTER-ENGINE OIL	75
	76
FILTER-ENGINE OIL (ENGINE)	77
FILTER-OIL (ADVANCED EFFICIENCY) (HYDRAULIC)	214
FITTING GP (PUMP CASE DRAIN)	228
	388
	399
FITTING GP (RETURN MANIFOLD)	386
	388
	390
	393
	396
	399
FITTING GP-HYDRAULIC	386
	388
	390
	393
	396
	399
FITTING GP-HYDRAULIC (MANUAL)	593
FITTING GP-HYDRAULIC–1-SPEED	317

INDEX

Name	Page
FITTING GP-HYDRAULIC–MANUAL	316
FITTING GP-HYDRAULIC–QUICK DISCONNECT, FEMALE, HIGH FLOW	315
FITTING GP-HYDRAULIC–QUICK DISCONNECT, MALE, HIGH FLOW	314
FLASHER AS (12-VOLT) (STOP LIGHT)	169
	171
	278
FLOOR MAT	744
	747
FLYWHEEL GP	37
	38
FORK AR-GRAPPLE–INDUSTRIAL	607
FORK AR-GRAPPLE–UTILITY	607
FORK GP-GRAPPLE	610
FORK GP-GRAPPLE–INDUSTRIAL	608
	609
FORK GP-PALLET	611
FORK GP-PALLET–KIT	611
	612
FORK GP-UTILITY	613
	614
	615
	616
	617
	618
FRAME & MTG GP-MACHINE	269
FRAME GP-BLADE	464
	465
	619
FRAME GP-FORK–INDUSTRIAL	620
	621
FRAME GP-MACHINE	271
FUSE (10-AMPERE)	188
	592
FUSE (100-AMPERE)	149
FUSE (15-AMPERE)	188
FUSE (20-AMPERE)	152
	176
	188
	189
FUSE (60-AMPERE)	176
FUSE AS (MAIN POWER)	189
FUSE AS (ROADING)	169
	171
	278

G

Name	Page
GASKET (VALVE COVER)	20
GASKET (VALVE MECHANISM)	21
GASKET (WATER TEMPERATURE REGULATOR)	86
	87
GAUGE GP-OIL LEVEL (DIPSTICK) (ENGINE)	55
	57
	59
GAUGE GP-SIGHT (HYDRAULIC TANK)	438
GAUGE-OIL (DIPSTICK, ENGINE)	53
GAUGE-OIL LEVEL (DIPSTICK) (ENGINE)	60
GAUGE-SIGHT (COOLANT LEVEL)	96
GEAR GP-FRONT	39
	40
GLOW PLUG	153
GLOW PLUG GP	153
GRAPPLE & CYLINDER GP-UTILITY	622
	623
GRAPPLE GP-UTILITY	624
GUARD GP-BELT	41
GUARD GP-DEBRIS (TURBOCHARGER, EXHAUST MANIFOLD)	319
	320
GUARD GP-DEBRIS–TURBOCHARGER, EXHAUST MANIFOLD	101
GUARD GP-ROPS/FOPS–KIT	710
GUIDE GP-LINES	272

H

Name	Page
HANDLE & PIN GP-COUPLER–LH	626
HANDLE & PIN GP-COUPLER–RH	625
HANDLE GP	658
	711
HARNESS AS-CAB	188
	680
	683
	685
	728
	731
	734
HARNESS AS-CAB (DOOR, FRONT)	688
	691
	694
	698
	702
	705
HARNESS AS-CHASSIS	201
HARNESS AS-CONTROL	161
	662
HARNESS AS-CONTROL (ACCUGRADE)	200
HARNESS AS-CONTROL (AIR CONDITIONER, HEATER)	664
HARNESS AS-CONTROL (SECURITY)	157
	159
HARNESS AS-ENGINE	192
	195
HARNESS AS-HEATER	714
HARNESS AS-HEATER & AIR COND	186
	649
	722

INDEX

Name	Page
	737
HARNESS AS-LIGHTING (FRONT, REAR)	169
	278
	284
HARNESS AS-MOTOR	651
	716
HARNESS AS-OPERATOR CONTROLS	189
HARNESS AS-PANEL	765
HARNESS AS-RADIO	718
	720
	774
	776
	780
	781
	784
HARNESS AS-REAR (DOOR)	201
HARNESS AS-REAR LIGHTING	292
HARNESS AS-REAR LIGHTING (STOP, TAIL, TURN)	279
	281
	283
	290
HARNESS AS-RIDE CONTROL	324
	370
HARNESS AS-SWITCH	795
	798
HARNESS AS-VALVE	404
HARNESS AS-WIRING	803
HARNESS AS-WORK TOOL	162
	204
	205
	321
	592
	629
HARNESS AS-WORK TOOL (CONNECTING)	456
	458
HEATER & MTG GP-CAB	712
HEATER AR-CAB	713
HEATER GP-CAB	714
	716
HEATER GP-JACKET WATER	154
	155
HOUSING & REGULATOR GP	86
HOUSING GP-FLYWHEEL	42
	43
HOUSING GP-FRONT	44
	46
	48
HYDRAULIC AR	318
	320
HYDRAULIC AR–HIGH FLOW	319
	320
HYDRAULIC AR–STANDARD FLOW	318
	319
HYDRAULIC AR–WORK TOOL POSITIONER	319

I

Name	Page
INDICATOR	99
INSTALLATION AR-ENGINE	13
	14
INSTALLATION GP-RADIO	718
INSTALLATION GP-RADIO–KIT	720

K

Name	Page
KEY AS-ELECTRONIC (SECURITY)	157
	159
KIT-AIR COND & HEATER INSTL	722
KIT-AIR CONDITIONER BREATHER	725
KIT-AIR CONDITIONER INSTL–CONVERSION	726
KIT-CAB DOOR & MOUNTING	731
KIT-CAB DOOR & MOUNTING–GLASS	728
KIT-CAB DOOR & MOUNTING–POLYCARBONATE	734
KIT-CAB HEATER & MOUNTING	737
KIT-CAB WINDOW–SIDE	738
KIT-CONTROL MOUNTING–PRODUCT LINK	156
KIT-CONTROL PATTERN CHANGE–DEDICATED	740
KIT-CONTROL PATTERN CHANGE–SELECTABLE	739
KIT-COUNTERWEIGHT	273
	274
KIT-DEBRIS GUARD–TURBOCHARGER, EXHAUST MANIFOLD	102
	103
KIT-ENGINE ENCLOSURE–VENTED	275
KIT-INSTRUMENT PANEL–INCLUDES CREEPER CONTROL, RH	741
	742
KIT-MACHINE ENCLOSURE SEAL–DEBRIS BARRIER	276
KIT-MUFFLER	817
KIT-QUICK COUPLER CONVERSION–HYDRAULIC	321
KIT-RIDE CONTROL	324
KIT-ROADING CONVERSION–FRONT	284
KIT-ROADING CONVERSION–GERMANY	281
	282
KIT-ROADING CONVERSION–ITALY	281
	283
KIT-ROADING CONVERSION–LIGHTS, MIRRORS	278
KIT-ROADING PLATE & MOUNTING–BUCKET	627
	628
KIT-SECURITY	157
	159
KIT-WATER TANK & MOUNTING	629

INDEX

Name	Page
KIT-WIRING–ACCUGRADE	161
KIT-WORK TOOL POSITIONER–SELF-LEVELING HYDRAULICS	327
KIT-WORK TOOL WIRING	162
L	
LAMP (12-VOLT)	173
LAMP (12-VOLT) (MINIATURE)	765
LAMP (12-VOLT, 10-WATT)	278
	281
	283
	290
LAMP (12-VOLT, 21-WATT)	278
LAMP (12-VOLT, 21-WATT) (AMBER)	164
	165
LAMP (12-VOLT, 21-WATT) (ROADING LIGHTS)	169
	171
LAMP (12-VOLT, 5-WATT)	278
LAMP (12-VOLT, 5-WATT) (CLEAR)	164
	165
LAMP (12-VOLT, 5-WATT) (MINIATURE)	169
	171
LAMP (12-VOLT, 55-WATT) (FLOODLIGHT)	163
	202
LAMP (12-VOLT, 55-WATT) (WARNING BEACON)	166
	167
LAMP GP-DOME (12-VOLT)	765
LAMP GP-FLOOD	163
LAMP GP-FLOOD (12-VOLT)	202
LAMP GP-HEAD & SIGNAL–LH–HIGH, LOW BEAM	165
LAMP GP-HEAD & SIGNAL–RH–HIGH, LOW BEAM	164
LAMP GP-REGISTRATION PLATE	278
	281
	283
	290
LAMP GP-SIGNAL (STOP, TAIL, TURN)	169
	171
	278
LAMP GP-STOP & TAIL	173
LAMP GP-WARNING BEACON–AMBER	167
LAMP GP-WARNING BEACON–AMBER, MAGNETIC MOUNT, ROTATING	166
LAMP-HEAD (12-VOLT, 60/55-WATT)	164
	165
LEVER GP-GOVERNOR	743
LIFTING GP-ENGINE	50
	51
LIFTING GP-MACHINE–FOUR POINT	286
LIFTING GP-MACHINE–KIT, FOUR POINT	288
LIFTING GP-MACHINE–KIT, SINGLE POINT	287
LIGHTING GP-FLOOD–WORK LIGHTS, FRONT	168
LIGHTING GP-ROADING–HEAD, SIGNAL, STOP, TAIL	169
LIGHTING GP-ROADING–REAR	171
LIGHTING GP-STOP & TAIL	173
LIGHTING GP-WARNING BEACON–AMBER, MAGNETIC MOUNT, ROTATING	174
LINER GP-CAB	744
	747
	750
LINES GP-AIR	104
	105
	106
	107
	108
LINES GP-AIR CONDITIONER	751
LINES GP-BUCKET	329
	331
	333
LINES GP-BUCKET–INDUSTRIAL	335
LINES GP-BUCKET–MULTIPURPOSE	337
	339
	341
	343
	349
LINES GP-BUCKET–UTILITY	345
	347
LINES GP-CONNECTING	351
	353
LINES GP-COUPLER	355
	358
LINES GP-ENGINE OIL	78
LINES GP-FUEL	121
	123
LINES GP-FUEL INJECTION	125
	127
	129
LINES GP-FUEL PRM & FILTER	131
LINES GP-GRAPPLE	361
	363
	365
LINES GP-HEATER	753
LINES GP-HYDRAULIC	367
LINES GP-HYDRAULIC FAN	377
	379
LINES GP-HYDRAULIC FAN–RADIATOR	373
	375
LINES GP-HYDRAULIC OIL COOLER	381
LINES GP-HYDRAULIC–RIDE CONTROL, WORK TOOL POSITIONER	370
LINES GP-HYDRAULIC–WORK TOOL POSITIONER	368
LINES GP-HYDROSTATIC	215
	217

INDEX

Name	Page
	219
LINES GP-LIFT CYLINDER	383
LINES GP-LOWERING CONTROL–MANUAL	384
LINES GP-PARKING BRAKE	221
LINES GP-PUMP	386
	388
LINES GP-PUMP–HIGH FLOW	390
	393
	396
	399
LINES GP-TILT CYLINDER	402
LINES GP-WATER	87
LINES GP-WATER–RADIATOR	88
LINES GP-WORK TOOL	408
LINES GP-WORK TOOL–HIGH FLOW XPS	404
LINK GP-COUPLER	631
	632
LITERATURE GP	1
	2
	754
LOCK GP (ENGINE COVER)	268
LOCK GP-QUICK COUPLER–LH	635
LOCK GP-QUICK COUPLER–MECHANICAL	633
LOCK GP-QUICK COUPLER–RH	634

M

MACHINE AR-SPECIAL	5
	6
MACHINE AR-SPECIAL–EXTREME SERVICE POWER TRAIN	5
	6
MACHINE AR-SPECIAL–RIDE CONTROL, WORK TOOL POSITIONER, 2-SPEED	5
MACHINE AR-SPECIAL–WORK TOOL POSITIONER, 2-SPEED	4
MANF & SOLENOID MTG GP-ACCUM–PILOT SHUTOFF	410
MANF & SOLENOID MTG GP-ACCUM–RIDE CONTROL	411
MANIFOLD & LINES GP-ACCUM	412
MANIFOLD & LINES GP-CONTROL–MOTOR, 2-SPEED	222
	224
MANIFOLD & MTG GP-CONTROL–ANGLING BLADE	414
MANIFOLD & MTG GP-CONTROL–MOTOR, 2-SPEED	415
MANIFOLD & MTG GP-CONTROL–WORK TOOL POSITIONER	416
MANIFOLD & SOLENOID GP-CONTROL–WORK TOOL POSITIONER	417
MANIFOLD GP-CONTROL–ANGLING BLADE	418
MANIFOLD GP-CONTROL–MOTOR, 2-SPEED	421
MANIFOLD GP-CONTROL–PILOT SHUTOFF	420
MANIFOLD GP-CONTROL–QUICK COUPLER	422
MANIFOLD GP-EXHAUST	109
MANIFOLD GP-INLET	110
	111
MANIFOLD GP-RETURN	226
	228
MANIFOLD GP-RIDE CONTROL	423
MANIFOLD GP-RIDE CONTROL–ACCUMULATOR	424
MAST GP–ACCUGRADE LASER	175
MIRROR & MTG GP-REAR VIEW–WITH ROADING LIGHT MOUNT	289
MIRROR GP-REAR VIEW	278
	284
	289
	755
	756
MODULE GP-DISPLAY	741
	757
	769
MODULE GP-DISPLAY (MACHINE)	757
MODULE GP-DISPLAY (PARKING BRAKE)	766
MODULE GP-INTERFACE (KEY)	151
	157
MOTOR & MTG GP-HYDRAULIC FAN	425
MOTOR & MTG GP-HYDROSTATIC	230
	231
	232
MOTOR GP-GEAR (FAN, DEMAND)	425
MOTOR GP-PISTON	233
	239
MOTOR GP-PISTON–2-SPEED, LH	235
MOTOR GP-PISTON–2-SPEED, RH	237
MOTOR GP-WINDOW WIPER	758
MOTOR GP-WINDOW WIPER (CAB DOOR)	688
	694
	702
MOUNTING GP-ARMREST–LH	759
MOUNTING GP-ARMREST–RH	760
MOUNTING GP-CYLINDER	426
MOUNTING GP-CYLINDER–GRAPPLE BUCKET	429
MOUNTING GP-CYLINDER–INDUSTRIAL	427
MOUNTING GP-CYLINDER–UTILITY	428
MOUNTING GP-ENGINE	52
MOUNTING GP-PUMP	241
MOUNTING GP-RAD & OIL COOLER	89
	91
MOUNTING GP-REGISTRATION–ITALIAN	290
MOUNTING GP-ROADING LIGHTS–KIT, GERMANY, ITALY	292
MOUNTING GP-ROPS–INCLUDES STEP	761
MUFFLER & MOUNTING GP	112

INDEX

Name	Page
	113
O	
OPTION AR-CAB	764
ORIFICE AS-AIR CONDITIONER	649
	651
P	
PAN GP-OIL	53
	55
	57
	59
	60
PANEL GP-INSTRUMENT	765
PANEL GP-INSTRUMENT–RH	769
PEDAL GP-GOVERNOR	770
	771
	772
PIN & LINK GP-LIFT ARM–WITH SUPPORT	452
PISTON GP	62
	63
PLATE & FILM GP	818
	820
	823
	826
	829
	832
	834
PLATE GP-ROADING–LH	636
PLATE GP-ROADING–RH	637
PLATE-IDENTIFICATION (ENGLISH, GERMAN, SPANISH)	263
PLUG (DRAIN, ENGINE OIL)	55
	57
	59
	60
PLUG GP-ENGINE	64
	65
PLUG-DRAIN (ENGINE OIL PAN)	53
PLUG-MAGNETIC (DRIVE CHAIN CASE)	269
PLUG-O-RING	142
	381
POSITIONER GP-FORK	611
POWER TRAIN AR	242
POWER TRAIN AR–2-SPEED	242
POWER TRAIN AR– EXTREME SERVICE POWER TRAIN	242
PULLEY GP-CRANKSHAFT	66
	67
PULLEY GP-WATER PUMP	68
PUMP & MTG GP-GEAR	430
PUMP & MTG GP-HYDROSTATIC	243
	244
PUMP & MTG GP-WORK TOOL	431
PUMP & MTG GP-WORK TOOL–HIGH FLOW	432
PUMP GP-DIAPHRAGM	629
PUMP GP-ENGINE OIL	79
PUMP GP-FUEL INJECTION	133
	135
	137
	138
PUMP GP-FUEL PRM & PRIM FILTER (WATER SEPARATOR)	121
	131
PUMP GP-GEAR	430
	431
	435
PUMP GP-GEAR (WORK TOOL HYDRAULIC)	432
PUMP GP-PISTON & GEAR	435
PUMP GP-PISTON–HIGH FLOW	433
PUMP GP-PISTON–HYDROSTATIC	245
	248
PUMP GP-WATER	93
	94
	95
R	
RADIATOR & HYD OIL COOLER GP	96
RADIO GP–AM, FM	783
RADIO GP–AM/FM	784
RADIO GP–AM/FM CASSETTE	776
RADIO GP–AM/FM/WB	773
	774
RADIO GP–AM/FM/WB/CD PLAYER	775
	777
	780
	781
	782
RADIO GP–AM/FM/WB/SIRIUS/ CD PLAYER	779
RADIO GP–AM/FM/WB/XM/ CD PLAYER	778
RECEIVER GP-LASER (LR410)	175
RECOVERY GP-COOLANT	88
REGULATOR AS-ALTERNATOR	143
REGULATOR AS-WATER TEMPERATURE (THERMOSTAT)	86
	87
RELAY AS (12-VOLT)	188
	205
	324
	327
	368
	370
	660
RELAY AS (12-VOLT) (AIR CONDITIONER)	723
	726
RELAY AS (12-VOLT) (COLD START)	192
	195

INDEX

Name	Page
RELAY AS (12-VOLT) (STOP LIGHT)	169, 171, 278
RELAY AS (12-VOLT) (WORK TOOL)	162
RELAY GP–MAIN POWER	176
ROCKER ARM GP	70
ROTATING GP-PUMP	248
S	
SCREEN (HYDRAULIC)	412
SCREEN (WATER TANK)	641
SEAT & ARMREST GP	786
SEAT & ARMREST GP–STATIC	788
SEAT & ARMREST GP–SUSPENSION	787
SEAT & MOUNTING GP	791
SEAT & MOUNTING GP–STATIC	789
SEAT & MOUNTING GP–SUSPENSION	790
SEAT AR–STATIC	792
SEAT AR-SUSPENSION–AIR	792
SEAT AR-SUSPENSION–MECHANICAL	792
SEAT BELT GP–RETRACTABLE	793, 794
SEAT GP	795
SEAT GP–CLOTH, SUSPENSION	796
SEAT GP–STATIC	795
SEAT GP–VINYL	797
SEAT GP-SUSPENSION–AIR	800
SEAT GP-SUSPENSION–MECHANICAL	798
SENDER AS-FUEL LEVEL	140
SENSOR GP-POSITION	178
SENSOR GP-POSITION (ROTARY)	771
SENSOR GP-POSITION–ROTARY	177
SENSOR GP-SPEED	179
SENSOR GP-SPEED (ENGINE)	192, 195
SENSOR GP-SPEED (MOTOR)	230, 231, 232
SENSOR GP-TEMP & PRESS–ENGINE	180
SENSOR GP-TEMPERATURE (ENGINE COOLANT)	192, 195
SENSOR GP-TEMPERATURE (HYDRAULIC OIL)	437
SERVICE GP-MACHINE	181
SERVICE GP-MONITOR	757
SOFTWARE GP-MACHINE	181
SOFTWARE GP-MONITOR	757
SOLENOID (FUEL PUMP)	135, 138
SOLENOID AS	418
SOLENOID AS (FUEL SHUTOFF)	133, 137
SPRING AS-GAS (RH)	89, 91
SPRING GP-BLADE	638
SPRING GP-GAS–INCLUDES LIFT HANDLE	801
SPRING-GAS	680, 685, 731
SPRING-GAS (CAB)	683, 728, 734
SPRING-GAS (DOOR)	683, 728, 731, 734
SPRING-GAS (LH)	89, 91
SPRING-GAS (LOCKING)	801
SPRING-GAS (NON-LOCKING)	801
STARTING MOTOR GP-ELECTRIC	182, 184
STEP GP-MATERIAL HANDLING ARM	639
STOP GP-BUCKET	622, 623
STOP GP-BUCKET–UTILITY	640
STRAINER (WATER TANK FILL)	629
STRAINER AS (HYDRAULIC TANK)	438
STRAINER GP-WATER	641
SUN VISOR	807, 808
SUPPRESSION GP-SOUND–ENGINE	296
SUPPRESSION GP-SOUND–MACHINE	294, 297
SUSPENSION GP-SEAT–AIR	803
SUSPENSION GP-SEAT–MECHANICAL	805
SWITCH AS (BLOWER FAN SPEED)	665
SWITCH AS (SEAT)	795, 797
SWITCH AS (SEAT) (OPERATOR SWITCHES)	796
SWITCH AS (STARTING MOTOR)(12-VOLT)	182
SWITCH AS (TEMPERATURE CONTROL)	665
SWITCH AS-LIMIT	653, 694
SWITCH AS-LIMIT (DOOR)	688, 691, 698
SWITCH AS-LIMIT (WIPER)	702, 705
SWITCH AS-PRESSURE (HYDRAULIC OIL)	214
SWITCH AS-PRESSURE (REFRIGERANT COMPR, HIGH SIDE)	723, 726, 751
SWITCH AS-PRESSURE (REFRIGERANT COMPR, LOW SIDE)	751
SWITCH AS-PRESSURE (REFRIGERANT, LOW SIDE)	723

INDEX

Name	Page
	726
SWITCH AS-ROCKER (AIR CONDITIONER)	647
	723
	726
SWITCH AS-ROCKER (CONTROL PATTERN CHANGE)	739
SWITCH AS-ROCKER (CREEPER CONTROL)	741
	742
	769
SWITCH AS-ROCKER (DIVERTER VALVE, 4TH FUNCTION)	766
SWITCH AS-ROCKER (FRONT WIPER, WASHER)	692
SWITCH AS-ROCKER (FRONT WIPER/WASHER)	695
	699
SWITCH AS-ROCKER (HAZARD WARNING LIGHTS)	169
	171
	279
SWITCH AS-ROCKER (HYD LOCKOUT, INTERLOCK OVRD)	766
SWITCH AS-ROCKER (HYDRAULIC QUICK COUPLER)	204
	321
SWITCH AS-ROCKER (MOTOR, 2-SPEED, AUXILIARY)	222
	224
SWITCH AS-ROCKER (PARKING BRAKE)	765
SWITCH AS-ROCKER (RIDE CONTROL)	324
	370
SWITCH AS-ROCKER (ROADING LIGHTS)	169
	278
	284
SWITCH AS-ROCKER (TURN SIGNAL)	169
	171
	279
SWITCH AS-ROCKER (WARNING BEACON)	174
	264
	265
	283
SWITCH AS-ROCKER (WIPER)	689
	703
	706
SWITCH AS-ROCKER (WORK LIGHTS, FRONT)	766
SWITCH AS-ROCKER (WORK LIGHTS, REAR)	766
SWITCH AS-ROCKER (WORK TOOL POSITIONER)	327
	368
	370
SWITCH AS-ROCKER (WORK TOOL)	162
	205
SWITCH AS-START (KEY) (IGNITION)	765
SWITCH AS-TOGGLE (IDLE SPEED)	592
SWITCH GP-PRESSURE	185
SWITCH-OIL PRESS (ENGINE)	180
	185
SWITCH-TEMPERATURE (AIR CONDITIONER)	649
	651
SWITCH-TEMPERATURE (ENGINE COOLANT)	180

T

Name	Page
TANK & MTG GP-FUEL	140
TANK & MTG GP-HYDRAULIC	436
TANK GP-FUEL	142
TANK GP-HYDRAULIC	437
	438
TANK GP-WATER	642
TINE GP	568
TIRE & RIM GP–HEAVY-DUTY, LH	250
TIRE & RIM GP–HEAVY-DUTY, RH	250
	251
TIRE & RIM GP–LH	251
	252
	253
	254
	255
	256
TIRE & RIM GP–RH	251
	252
	253
	254
	255
	256
TOOTH GP-UNI	643
TURBOCHARGER GP	114
	116

V

Name	Page
V-BELT (AIR CONDITIONER)	724
	727
V-BELT (COMPRESSOR)	659
V-BELT (WATER PUMP)	69
V-BELT GP	69
VALVE & MTG GP-CONTROL	439
VALVE AS-RELIEF (REFRIGERANT COMPRESSOR)	659
	722
	726
VALVE GP-CHECK	370
	418
VALVE GP-CHECK (PILOT OIL)	420
VALVE GP-CHECK (RIDE CONTROL)	324

INDEX

Name	Page
VALVE GP-CHECK–PILOT OIL	440
VALVE GP-CONTROL	441
	442
	444
VALVE GP-CONTROL (QUICK COUPLER)	423
VALVE GP-ENGINE OIL RELIEF	80
VALVE GP-FLUSHING	233
	235
	237
	239
VALVE GP-MANUAL–LOWERING CONTROL	447
VALVE GP-PUMP CONTROL	245
	248
	433
VALVE GP-RELIEF	418
VALVE GP-RELIEF (AUXILIARY)	444
VALVE GP-RELIEF (CHARGE)	245
	248
VALVE GP-RELIEF (CROSSOVER)	245
	248
VALVE GP-RELIEF (LIFT)	444
VALVE GP-RELIEF (LIFT, TILT)	442
VALVE GP-RELIEF (TILT)	444
VALVE GP-RELIEF (TILT, AUXILIARY)	442
VALVE GP-RELIEF–MAIN	448
VALVE GP-SHUTTLE–HIGH FLOW	449
VALVE GP-SOLENOID (12-VOLT)	444
VALVE GP-SOLENOID (ANGLE)	418
VALVE GP-SOLENOID (FAN)	425
VALVE GP-SOLENOID (MAIN)	444
VALVE GP-SOLENOID (MOTOR, 2-SPEED)	421
VALVE GP-SOLENOID (PILOT SHUTOFF)	420
VALVE GP-SOLENOID (QUICK COUPLER)	422
VALVE GP-SOLENOID (TILT)	418
VALVE GP-SOLENOID–12-VOLT	450
	451
VALVE GP-SPEED CONTROL (2-SPEED)	235
	237
VALVE MECHANISM GP	70
VISOR GP-CAB	807
VISOR GP-CAB–LH	808

W

Name	Page
WHEEL & TIRE AR	258
	259
WHEEL & TIRE AR–HEAVY DUTY	256
	257
	258
WHEEL & TIRE AR–LOW SIDE WALL	257
WHEEL & TIRE AR–SOLID	256
	259
WHEEL & TIRE GP	259
	260
WINDOW GP-CAB	811
WINDOW GP-CAB–SIDE	812
WINDOW GP-CAB–SIDE, LH	809
WINDOW GP-CAB–SIDE, RH	810
WIRING GP-AIR CONDITIONER	186
	713
WIRING GP-CAB	188
WIRING GP-ENGINE	192
	195
WIRING GP-ENGINE–BATTERY	198
WIRING GP-GRADE CONTROL	200
WIRING GP-MACHINE	201
WIRING GP-QUICK COUPLER	204
WIRING GP-WORK TOOL	205

MACHINE ARRANGEMENT

258-2510 CHASSIS AR

S/N: MST1-1859

PART OF 258-3262 COMMON AR

SMCS-7000 **i02721370**

NOTE	PART NUMBER	QTY	PART NAME 1 2 3 4 5 6 (PRODUCT LEVEL)	SEE PAGE
Y	*258-3736*	1	AXLE GP	208
Y	*258-4121*	1	BATTERY & WIRING GP	149
Y	*280-6340*	1	CONTROL GP-GOVERNOR	118
Y	*258-2559*	1	CYLINDER GP-LIFT ARM (VERTICAL LIFT)	313
Y	*258-2594*	1	ENCLOSURE GP-ENGINE	268
Y	*258-2775*	1	FRAME & MTG GP-MACHINE	269
Y	*150-8621*	1	GUIDE GP-LINES	272
Y	*258-2444*	1	LINES GP-FUEL PRM & FILTER	131
Y	*258-2799*	1	PIN & LINK GP-LIFT ARM (WITH SUPPORT)	452
Y	*258-2439*	1	TANK & MTG GP-FUEL	140
Y	*258-4107*	1	WIRING GP-MACHINE	201

Y-SEPARATE ILLUSTRATION

<END>

295-7292 CHASSIS AR

S/N: MST1860-UP

PART OF 295-7262 COMMON AR

SMCS-7000 **i02908896**

NOTE	PART NUMBER	QTY	PART NAME 1 2 3 4 5 6 (PRODUCT LEVEL)	SEE PAGE
Y	*258-3736*	1	AXLE GP	208
Y	*258-4121*	1	BATTERY & WIRING GP	149
Y	*295-7463*	1	CONTROL GP-GOVERNOR	120
Y	*258-2559*	1	CYLINDER GP-LIFT ARM (VERTICAL LIFT)	313
Y	*258-2594*	1	ENCLOSURE GP-ENGINE	268
Y	*258-2775*	1	FRAME & MTG GP-MACHINE	269
Y	*150-8621*	1	GUIDE GP-LINES	272
Y	*295-7029*	1	LINES GP-FUEL	121
Y	*258-2799*	1	PIN & LINK GP-LIFT ARM (WITH SUPPORT)	452
Y	*258-2439*	1	TANK & MTG GP-FUEL	140
Y	*258-4107*	1	WIRING GP-MACHINE	201

Y-SEPARATE ILLUSTRATION

<END>

258-3262 COMMON AR

S/N: MST1-1859

SMCS-7000 **i02627292**

NOTE	PART NUMBER	QTY	PART NAME 1 2 3 4 5 6 (PRODUCT LEVEL)	SEE PAGE
Y	*258-4000*	1	CAB AR-ENCLOSED ROPS	656
Y	*258-2510*	1	CHASSIS AR	1
Y	*258-3192*	1	FILM GP (262C)	814
Y	*258-2601*	1	HYDRAULIC AR	318
Y	*258-2445*	1	INSTALLATION AR-ENGINE	13
Y	*6V-1970*	1	LITERATURE GP	754

Y-SEPARATE ILLUSTRATION

<END>

MACHINE ARRANGEMENT

295-7262 COMMON AR

S/N: MST1860-UP

SMCS-7000 **i02835441**

NOTE	PART NUMBER	QTY	PART NAME 1 2 3 4 5 6 (PRODUCT LEVEL)	SEE PAGE
Y	*258-4000*	1	CAB AR-ENCLOSED ROPS	656
Y	*295-7292*	1	CHASSIS AR	1
Y	*258-3192*	1	FILM GP (262C)	814
Y	*258-2601*	1	HYDRAULIC AR	318
Y	*295-7118*	1	INSTALLATION AR-ENGINE	14
Y	*6V-1970*	1	LITERATURE GP	754

Y-SEPARATE ILLUSTRATION

<END>

342-5009 CONTROL AR-MACHINE—ON, OFF AUXILIARY CONTROL

S/N: MST1-UP

AN ATTACHMENT

SMCS-4062, 4284, 4351, 5059, 5705 **i03633336**

NOTE	PART NUMBER	QTY	PART NAME 1 2 3 4 5 6 (PRODUCT LEVEL)	SEE PAGE
Y	*258-3403*	1	CONTROL GP-ELECTROHYDRAULIC (LH)	666
Y	*258-3405*	1	CONTROL GP-ELECTROHYDRAULIC (RH)	668

Y-SEPARATE ILLUSTRATION

<END>

342-5010 CONTROL AR-MACHINE—AUX PROPORTIONAL FLOW

S/N: MST1-UP

AN ATTACHMENT

SMCS-4062, 4284, 4351, 5059, 5705 **i03633340**

NOTE	PART NUMBER	QTY	PART NAME 1 2 3 4 5 6 (PRODUCT LEVEL)	SEE PAGE
Y	*258-3403*	1	CONTROL GP-ELECTROHYDRAULIC (LH)	666
Y	*258-3406*	1	CONTROL GP-ELECTROHYDRAULIC (RH)	669

Y-SEPARATE ILLUSTRATION

<END>

342-5011 CONTROL AR-MACHINE—AUX PROPORTIONAL FLOW

S/N: MST1-UP

AN ATTACHMENT

SMCS-4062, 4284, 4351, 5059, 5705 **i03646964**

NOTE	PART NUMBER	QTY	PART NAME 1 2 3 4 5 6 (PRODUCT LEVEL)	SEE PAGE
Y	*258-3404*	1	CONTROL GP-ELECTROHYDRAULIC (LH) (HIGH FLOW)	667
Y	*258-3406*	1	CONTROL GP-ELECTROHYDRAULIC (RH)	669
Y	*258-4125*	1	WIRING GP-WORK TOOL	205

Y-SEPARATE ILLUSTRATION

<END>

MACHINE ARRANGEMENT

258-3803 CONVERSION AR-MACHINE—OUTSIDE NACD

S/N: MST1-UP

AN ATTACHMENT

SMCS-7000 **i03690299**

NOTE	PART NUMBER	QTY	PART NAME 1 2 3 4 5 6 (PRODUCT LEVEL)	SEE PAGE
Y	*258-4385*	1	LIFTING GP-MACHINE (FOUR POINT)	286
Y	*258-4169*	1	LIGHTING GP-STOP & TAIL	173
Y	*305-8034*	1	MIRROR GP-REAR VIEW	756
Y	*258-2579*	1	MOTOR & MTG GP-HYDRAULIC FAN	425
Y	*280-8347*	1	MUFFLER & MOUNTING GP	113
Y	*280-8330*	1	SUPPRESSION GP-SOUND (ENGINE)	296
			S/N: MST1-1859	
Y	*258-3496*	1	SUPPRESSION GP-SOUND (MACHINE)	294
Y	*294-4560*	1	SUPPRESSION GP-SOUND (MACHINE)	297
	258-4222	1	CANOPY GP-OPEN ROPS	
	258-4012	1	WINDOW-PLASTIC (TOP)	

Y-SEPARATE ILLUSTRATION

<END>

MACHINE ARRANGEMENT

315-6354 CONVERSION AR-MACHINE

S/N: MST1-UP

AN ATTACHMENT

SMCS-7000 **i03690353**

NOTE	PART NUMBER	QTY	PART NAME 1 2 3 4 5 6 (PRODUCT LEVEL)	SEE PAGE
Y	**177-9152**	1	KIT-ROADING PLATE & MOUNTING (BUCKET)	627
			—OR—	
Y	**319-9480**	1	KIT-ROADING PLATE & MOUNTING (BUCKET)	628
Y	*258-4385*	1	LIFTING GP-MACHINE (FOUR POINT)	286
Y	*258-4130*	1	LIGHTING GP-ROADING (HEAD, SIGNAL, STOP, TAIL)	169
			S/N: MST1-2635	
Y	*333-4957*	1	LIGHTING GP-ROADING	171
			S/N: MST2636-UP	
Y	*175-4238*	1	LOCK GP-QUICK COUPLER (MECHANICAL)	633
			S/N: MST1-2635	
Y	*305-8034*	1	MIRROR GP-REAR VIEW	756
Y	*258-3872*	1	MIRROR & MTG GP-REAR VIEW (WITH ROADING LIGHT MOUNT)	289
			S/N: MST1-2635	
Y	*258-2579*	1	MOTOR & MTG GP-HYDRAULIC FAN	425
Y	*280-8347*	1	MUFFLER & MOUNTING GP	113
Y	*280-8330*	1	SUPPRESSION GP-SOUND (ENGINE)	296
			S/N: MST1-1859	
Y	*258-3496*	1	SUPPRESSION GP-SOUND (MACHINE)	294
Y	*294-4560*	1	SUPPRESSION GP-SOUND (MACHINE)	297
	258-4222	1	CANOPY GP-OPEN ROPS	
	258-4200	1	CANOPY AS	
	258-4389	4	MOUNT	
	289-0849	1	BLOCK AS	
			S/N: MST1-2635	
	258-3849	1	PLATE-IDENTIFICATION (ENGLISH, GERMAN, SPANISH)	
			S/N: MST1-2635	

Y-SEPARATE ILLUSTRATION

<END>

258-3683 MACHINE AR-SPECIAL—WORK TOOL POSITIONER, 2-SPEED

S/N: MST1-UP

AN ATTACHMENT

SMCS-7000 **i02650305**

NOTE	PART NUMBER	QTY	PART NAME 1 2 3 4 5 6 (PRODUCT LEVEL)	SEE PAGE
Y	*258-4009*	1	COVER GP-INSTRUMENT PANEL	679
Y	*258-3358*	1	HYDRAULIC AR	319
Y	*258-3400*	1	POWER TRAIN AR	242
Y	*258-2406*	1	PUMP & MTG GP-HYDROSTATIC	243

Y-SEPARATE ILLUSTRATION

<END>

MACHINE ARRANGEMENT

258-3748 MACHINE AR-SPECIAL

S/N: MST1-UP

AN ATTACHMENT

SMCS-7000 **i02650313**

NOTE	PART NUMBER	QTY	PART NAME 1 2 3 4 5 6 (PRODUCT LEVEL)	SEE PAGE
Y	*258-4009*	1	COVER GP-INSTRUMENT PANEL	679
Y	*258-2426*	1	HYDRAULIC AR	318
Y	*258-3200*	1	POWER TRAIN AR	242
Y	*258-2406*	1	PUMP & MTG GP-HYDROSTATIC	243

Y-SEPARATE ILLUSTRATION

<END>

258-3751 MACHINE AR-SPECIAL

S/N: MST1-UP

AN ATTACHMENT

SMCS-7000 **i02650306**

NOTE	PART NUMBER	QTY	PART NAME 1 2 3 4 5 6 (PRODUCT LEVEL)	SEE PAGE
Y	*258-4009*	1	COVER GP-INSTRUMENT PANEL	679
Y	*258-3358*	1	HYDRAULIC AR	319
Y	*258-3200*	1	POWER TRAIN AR	242
Y	*258-2406*	1	PUMP & MTG GP-HYDROSTATIC	243

Y-SEPARATE ILLUSTRATION

<END>

258-3754 MACHINE AR-SPECIAL–
RIDE CONTROL, WORK TOOL POSITIONER, 2-SPEED

S/N: MST1-UP

AN ATTACHMENT

SMCS-7000 **i02693298**

NOTE	PART NUMBER	QTY	PART NAME 1 2 3 4 5 6 (PRODUCT LEVEL)	SEE PAGE
Y	*258-3358*	1	HYDRAULIC AR	319
Y	*258-4163*	1	PANEL GP-INSTRUMENT (RH)	769
Y	*258-3400*	1	POWER TRAIN AR	242
Y	*258-2406*	1	PUMP & MTG GP-HYDROSTATIC	243

Y-SEPARATE ILLUSTRATION

<END>

300-7629 MACHINE AR-SPECIAL–
EXTREME SERVICE POWER TRAIN

S/N: MST1-UP

AN ATTACHMENT

SMCS-7000 **i02782132**

NOTE	PART NUMBER	QTY	PART NAME 1 2 3 4 5 6 (PRODUCT LEVEL)	SEE PAGE
Y	*258-4009*	1	COVER GP-INSTRUMENT PANEL	679
Y	*258-2426*	1	HYDRAULIC AR	318
Y	*300-7637*	1	POWER TRAIN AR	242
Y	*300-7640*	1	PUMP & MTG GP-HYDROSTATIC	244

Y-SEPARATE ILLUSTRATION

<END>

MACHINE ARRANGEMENT

300-7635 MACHINE AR-SPECIAL–
EXTREME SERVICE POWER TRAIN
S/N: MST1-UP
AN ATTACHMENT

SMCS-7000 **i02782152**

NOTE	PART NUMBER	QTY	PART NAME 1 2 3 4 5 6 (PRODUCT LEVEL)	SEE PAGE
Y	*258-3358*	1	HYDRAULIC AR (WORK TOOL POSITIONER)	319
Y	*258-4163*	1	PANEL GP-INSTRUMENT (RH)	769
Y	*300-7637*	1	POWER TRAIN AR	242
Y	*300-7640*	1	PUMP & MTG GP-HYDROSTATIC	244

Y-SEPARATE ILLUSTRATION

<END>

304-6741 MACHINE AR-SPECIAL
S/N: MST1-UP
AN ATTACHMENT

SMCS-7000 **i02836927**

NOTE	PART NUMBER	QTY	PART NAME 1 2 3 4 5 6 (PRODUCT LEVEL)	SEE PAGE
Y	*304-6744*	1	HYDRAULIC AR	320
Y	*258-4163*	1	PANEL GP-INSTRUMENT (RH)	769
Y	*258-3400*	1	POWER TRAIN AR	242
Y	*258-2406*	1	PUMP & MTG GP-HYDROSTATIC	243

Y-SEPARATE ILLUSTRATION

<END>

ENGINE ARRANGEMENT

258-2518 ENGINE AR

S/N: MST1-UP

AN ATTACHMENT

SMCS-1000 **i02629810**

NOTE	PART NUMBER	QTY	PART NAME 1 2 3 4 5 6 (PRODUCT LEVEL)	SEE PAGE
Y	**262-7289**	1	ENGINE AR-PRIMARY	9

Y-SEPARATE ILLUSTRATION

ENGINE ARRANGEMENT

295-7114 ENGINE AR

S/N: MST1425-UP

AN ATTACHMENT

SMCS-1000 **i03345641**

NOTE	PART NUMBER	QTY	PART NAME 1 2 3 4 5 6 (PRODUCT LEVEL)	SEE PAGE
Y	**287-8074**	1	ENGINE AR-PRIMARY	11
			S/N: MST1425-2539	
Y	**319-6806**	1	ENGINE AR-PRIMARY	12
			S/N: MST2540-UP	

Y-SEPARATE ILLUSTRATION

ENGINE ARRANGEMENT

262-7289 ENGINE AR-PRIMARY

S/N: CJS1-UP
62 BRAKE KW (83 BHP) AT 2500 RPM
PART OF 258-2518 ENGINE AR
AN ATTACHMENT

SMCS-1000 **i03402367**

NOTE	PART NUMBER	QTY	PART NAME 1 2 3 4 5 6 (PRODUCT LEVEL)	SEE PAGE
Y	*287-6361*	1	ALTERNATOR GP-CHARGING	145
			S/N: CJS1-60343	
Y	*315-8353*	1	ALTERNATOR GP-CHARGING	147
			S/N: CJS60344-UP	
Y	*287-6138*	1	V-BELT GP (WATER PUMP)	69
Y	*292-4041*	1	BEARING GP-MAIN	16
Y	*287-6016*	1	BREATHER GP	71
			S/N: CJS1-60343	
Y	*317-5070*	1	LINES GP-AIR (CRANKCASE BREATHER)	108
			S/N: CJS60344-UP	
Y	*233-5473*	1	CAMSHAFT GP	17
Y	*287-4033*	1	CONNECTING ROD GP	19
Y	*235-5896*	1	COOLER GP-ENGINE OIL	81
			S/N: CJS1-60343	
Y	*314-9900*	1	COOLER GP-ENGINE OIL	82
			S/N: CJS60344-UP	
Y	*233-5480*	1	COVER GP-VALVE MECHANISM	20
			S/N: CJS1-60343	
Y	*315-7762*	1	COVER GP-VALVE MECHANISM	21
			S/N: CJS60344-UP	
Y	*287-2416*	1	CYLINDER BLOCK GP	24
			S/N: CJS1-60343	
Y	*317-5094*	1	CYLINDER BLOCK GP	28
			S/N: CJS60344-UP	
Y	*287-4649*	1	CRANKSHAFT GP	22
Y	*233-5500*	1	CYLINDER HEAD GP	32
Y	*292-4040*	1	DRAIN GP-COOLANT	84
Y	*235-5897*	1	FILTER GP-ENGINE OIL	75
			S/N: CJS1-60343	
Y	*317-5076*	1	FILTER GP-ENGINE OIL	77
			S/N: CJS60344-UP	
Y	*287-5377*	1	LINES GP-ENGINE OIL	78
Y	*235-5890*	1	FLYWHEEL GP	37
Y	*287-4830*	1	GEAR GP-FRONT	39
Y	*235-5904*	1	GLOW PLUG GP	153
Y	*287-3357*	1	HOUSING GP-FLYWHEEL	42
			S/N: CJS1-60343	
Y	*315-7764*	1	HOUSING GP-FLYWHEEL	43
			S/N: CJS60344-UP	
Y	*287-3074*	1	HOUSING GP-FRONT	44
			S/N: CJS1-60343	
Y	*316-9040*	1	HOUSING GP-FRONT	48
			S/N: CJS60344-UP	
Y	*287-1844*	1	LIFTING GP-ENGINE	50
			S/N: CJS1-60343	
Y	*315-7761*	1	LIFTING GP-ENGINE	51
			S/N: CJS60344-UP	
Y	*247-6317*	1	LINES GP-AIR	104
Y	*235-5901*	1	LINES GP-FUEL INJECTION	125
			S/N: CJS1-60343	
Y	*317-5057*	1	LINES GP-FUEL INJECTION	129
			S/N: CJS60344-UP	
Y	*235-5900*	1	LINES GP-WATER (TEMPERATURE REGULATOR)	87
			S/N: CJS1-60343	

ENGINE ARRANGEMENT

262-7289 ENGINE AR-PRIMARY *(contd.)* i03402367

NOTE	PART NUMBER	QTY	PART NAME 1 2 3 4 5 6 (PRODUCT LEVEL)	SEE PAGE
Y	*315-8355*	1	HOUSING & REGULATOR GP	86
			S/N: CJS60344-UP	
Y	*287-5323*	1	MANIFOLD GP-EXHAUST	109
Y	*287-4832*	1	MANIFOLD GP-INLET	110
Y	*287-3921*	1	PAN GP-OIL (ENGINE)	53
			S/N: CJS1-60343	
Y	*317-5082*	1	PAN GP-OIL (ENGINE)	59
			S/N: CJS60344-UP	
Y	*235-5889*	1	PISTON GP	62
Y	*287-2922*	1	PLUG GP-ENGINE	64
Y	*287-2983*	1	PLUG GP-ENGINE	65
Y	*287-4749*	1	PULLEY GP-CRANKSHAFT	66
			S/N: CJS1-60343	
Y	*301-3396*	1	PULLEY GP-CRANKSHAFT	67
			S/N: CJS60344-UP	
Y	*287-6114*	1	PULLEY GP-WATER PUMP	68
Y	*235-5895*	1	PUMP GP-ENGINE OIL	79
Y	*235-5902*	1	PUMP GP-FUEL INJECTION	133
			S/N: CJS1-60343	
Y	*317-5045*	1	PUMP GP-FUEL INJECTION	137
			S/N: CJS60344-UP	
Y	*287-6056*	1	PUMP GP-WATER	93
Y	*238-8277*	1	SENSOR GP-TEMP & PRESS (ENGINE COOLANT, ENGINE OIL)	180
			S/N: CJS1-60343	
Y	*300-1071*	1	SWITCH GP-PRESSURE (ENGINE OIL)	185
			S/N: CJS60344-UP	
Y	*287-6181*	1	STARTING MOTOR GP-ELECTRIC	184
Y	*235-5894*	1	TURBOCHARGER GP	114
Y	*287-5665*	1	VALVE GP-ENGINE OIL RELIEF	80
Y	*235-5880*	1	VALVE MECHANISM GP	70
			AVAILABLE GASKET KIT(S):	
	341-3561	1	KIT-GASKET	

Y-SEPARATE ILLUSTRATION

ENGINE ARRANGEMENT

287-8074 ENGINE AR-PRIMARY

S/N: CYM1-UP
62 BRAKE KW (83 BHP) AT 2500 RPM
PART OF 295-7114 ENGINE AR
AN ATTACHMENT

SMCS-1000 **i03065456**

NOTE	PART NUMBER	QTY	PART NAME 1 2 3 4 5 6 (PRODUCT LEVEL)	SEE PAGE
Y	*315-8353*	1	ALTERNATOR GP-CHARGING	147
Y	*292-4041*	1	BEARING GP-MAIN	16
Y	*315-7769*	1	LINES GP-AIR	106
Y	*314-9835*	1	CAMSHAFT GP	18
Y	*287-4033*	1	CONNECTING ROD GP	19
Y	*314-9900*	1	COOLER GP-ENGINE OIL	82
Y	*315-7762*	1	COVER GP-VALVE MECHANISM	21
Y	*314-9860*	1	CRANKSHAFT GP	23
Y	*315-8330*	1	CYLINDER BLOCK GP	26
Y	*315-7760*	1	CYLINDER HEAD GP	34
Y	*315-7763*	1	DRAIN GP-COOLANT	85
Y	*314-9901*	1	FILTER GP-ENGINE OIL	76
Y	*314-9861*	1	FLYWHEEL GP	38
Y	*315-7766*	1	GEAR GP-FRONT	40
Y	*235-5904*	1	GLOW PLUG GP	153
Y	*315-8355*	1	HOUSING & REGULATOR GP	86
Y	*315-7764*	1	HOUSING GP-FLYWHEEL	43
Y	*315-8336*	1	HOUSING GP-FRONT	46
Y	*315-7761*	1	LIFTING GP-ENGINE	51
Y	*247-6317*	1	LINES GP-AIR	104
Y	*287-5377*	1	LINES GP-ENGINE OIL	78
Y	*314-9909*	1	LINES GP-FUEL INJECTION	127
Y	*287-5323*	1	MANIFOLD GP-EXHAUST	109
Y	*287-4832*	1	MANIFOLD GP-INLET	110
Y	*315-7765*	1	PAN GP-OIL	55
Y	*314-9855*	1	PISTON GP	63
Y	*287-2922*	1	PLUG GP-ENGINE	64
Y	*287-2983*	1	PLUG GP-ENGINE	65
Y	*301-3396*	1	PULLEY GP-CRANKSHAFT	67
Y	*287-6114*	1	PULLEY GP-WATER PUMP	68
Y	*235-5895*	1	PUMP GP-ENGINE OIL	79
Y	*314-9911*	1	PUMP GP-FUEL INJECTION	135
Y	*315-7770*	1	PUMP GP-WATER	94
Y	*287-6181*	1	STARTING MOTOR GP-ELECTRIC	184
Y	*300-1071*	1	SWITCH GP-PRESSURE (ENGINE OIL)	185
Y	*315-7768*	1	TURBOCHARGER GP	116
Y	*287-6138*	1	V-BELT GP	69
Y	*287-5665*	1	VALVE GP-ENGINE OIL RELIEF	80
Y	*235-5880*	1	VALVE MECHANISM GP	70
			AVAILABLE REPAIR KIT(S):	
	239-6773	1	KIT-GASKET	

Y-SEPARATE ILLUSTRATION

ENGINE ARRANGEMENT

319-6806 ENGINE AR-PRIMARY

S/N: CYM1-UP; CJS1-UP
62 BRAKE KW (83 BHP) AT 2500 RPM
PART OF 295-7114 ENGINE AR
AN ATTACHMENT

SMCS-1000 **i03298180**

NOTE	PART NUMBER	QTY	PART NAME 1 2 3 4 5 6 (PRODUCT LEVEL)	SEE PAGE
Y	*323-2009*	1	ACCESSORY GP-ENGINE	15
Y	*315-8353*	1	ALTERNATOR GP-CHARGING	147
Y	*292-4041*	1	BEARING GP-MAIN	16
Y	*315-7769*	1	LINES GP-AIR	106
Y	*314-9835*	1	CAMSHAFT GP	18
Y	*287-4033*	1	CONNECTING ROD GP	19
Y	*314-9900*	1	COOLER GP-ENGINE OIL	82
Y	*315-7762*	1	COVER GP-VALVE MECHANISM	21
Y	*314-9860*	1	CRANKSHAFT GP	23
Y	*315-8330*	1	CYLINDER BLOCK GP	26
Y	*315-7760*	1	CYLINDER HEAD GP	34
Y	*315-7763*	1	DRAIN GP-COOLANT	85
Y	*314-9901*	1	FILTER GP-ENGINE OIL	76
Y	*314-9861*	1	FLYWHEEL GP	38
Y	*315-7766*	1	GEAR GP-FRONT	40
Y	*235-5904*	1	GLOW PLUG GP	153
Y	*315-8355*	1	HOUSING & REGULATOR GP	86
Y	*315-7764*	1	HOUSING GP-FLYWHEEL	43
Y	*315-8336*	1	HOUSING GP-FRONT	46
Y	*315-7761*	1	LIFTING GP-ENGINE	51
Y	*316-0471*	1	LINES GP-AIR	107
Y	*287-5377*	1	LINES GP-ENGINE OIL	78
Y	*335-5751*	1	LINES GP-FUEL	123
Y	*287-5323*	1	MANIFOLD GP-EXHAUST	109
Y	*335-5750*	1	MANIFOLD GP-INLET	111
Y	*335-5772*	1	PAN GP-OIL	60
Y	*314-9855*	1	PISTON GP	63
Y	*287-2922*	1	PLUG GP-ENGINE	64
Y	*287-2983*	1	PLUG GP-ENGINE	65
Y	*301-3396*	1	PULLEY GP-CRANKSHAFT	67
Y	*287-6114*	1	PULLEY GP-WATER PUMP	68
Y	*235-5895*	1	PUMP GP-ENGINE OIL	79
Y	*335-5752*	1	PUMP GP-FUEL INJECTION	138
Y	*315-7770*	1	PUMP GP-WATER	94
Y	*287-6181*	1	STARTING MOTOR GP-ELECTRIC	184
Y	*300-1071*	1	SWITCH GP-PRESSURE (ENGINE OIL)	185
Y	*315-7768*	1	TURBOCHARGER GP	116
Y	*287-6138*	1	V-BELT GP (WATER PUMP)	69
Y	*287-5665*	1	VALVE GP-ENGINE OIL RELIEF	80
Y	*235-5880*	1	VALVE MECHANISM GP	70

Y-SEPARATE ILLUSTRATION

ENGINE ARRANGEMENT

258-2445 INSTALLATION AR-ENGINE

S/N: MST1-1859

PART OF 258-3262 COMMON AR

SMCS-1000 **i02663657**

NOTE	PART NUMBER	QTY	PART NAME 1 2 3 4 5 6 (PRODUCT LEVEL)	SEE PAGE
Y	*280-8294*	1	AIR CLEANER GP	100
Y	*258-2452*	1	DRAIN GP-ENGINE OIL	35
Y	*258-2469*	1	GUARD GP-BELT	41
Y	*258-2465*	1	LINES GP-AIR	105
Y	*258-3552*	1	LINES GP-WATER (RADIATOR)	88
Y	*258-2447*	1	MOUNTING GP-ENGINE	52
Y	*258-3318*	1	MOUNTING GP-PUMP	241
Y	*258-3542*	1	MOUNTING GP-RAD & OIL COOLER	89
Y	*258-3459*	1	RADIATOR & HYD OIL COOLER GP	96
Y	*258-4115*	1	WIRING GP-ENGINE	192
Y	*258-4192*	1	WIRING GP-ENGINE (BATTERY)	198

Y-SEPARATE ILLUSTRATION

ENGINE ARRANGEMENT

295-7118 INSTALLATION AR-ENGINE

S/N: MST1860-UP

PART OF 295-7262 COMMON AR

SMCS-1000 **i02835478**

NOTE	PART NUMBER	QTY	PART NAME 1 2 3 4 5 6 (PRODUCT LEVEL)	SEE PAGE
Y	*280-8294*	1	AIR CLEANER GP	100
Y	*258-2452*	1	DRAIN GP-ENGINE OIL	35
Y	*258-2469*	1	GUARD GP-BELT	41
Y	*258-2465*	1	LINES GP-AIR	105
Y	*258-3552*	1	LINES GP-WATER (RADIATOR)	88
Y	*258-2447*	1	MOUNTING GP-ENGINE	52
Y	*258-3318*	1	MOUNTING GP-PUMP	241
Y	*258-3542*	1	MOUNTING GP-RAD & OIL COOLER	89
Y	*258-3459*	1	RADIATOR & HYD OIL COOLER GP	96
Y	*258-4115*	1	WIRING GP-ENGINE	192
Y	*258-4192*	1	WIRING GP-ENGINE (BATTERY)	198

Y-SEPARATE ILLUSTRATION

323-2009 ACCESSORY GP-ENGINE

S/N: CYM1-UP

PART OF 319-6806 ENGINE AR-PRIMARY

AN ATTACHMENT

SMCS-1207, 1358, 1405, 1802 **i03637509**

NOTE	PART NUMBER	QTY	PART NAME 1 2 3 4 5 6 (PRODUCT LEVEL)	SEE PAGE
			AVAILABLE REPAIR KIT(S):	
	341-3561	1	KIT-GASKET	
			KIT HAS ALL SEALING GASKET FOR WHOLE ENGINE EXCEPT FOR FRONT AND REAR SEALS.	

<END>

292-4041 BEARING GP-MAIN

S/N: CYM1-UP; CJS1-UP
PART OF 262-7289, 287-8074, 319-6806 ENGINE AR-PRIMARY
AN ATTACHMENT

SMCS-1203 **i03552784**

NOTE	REF NO	GRAPHIC REF	PART NUMBER	QTY	PART NAME 1 2 3 4 5 6 (PRODUCT LEVEL)	SEE PAGE
	1	1	**103-9288**	1	PLATE-THRUST (STANDARD)	
AB		1	**103-9289**	1	PLATE-THRUST (0.15-MM OS)	
AB		1	**103-9290**	1	PLATE-THRUST (0.35-MM OS)	
	2	1	**233-5486**	1	BEARING-MAIN (STANDARD)	
AB		1	**294-4890**	1	KIT-BEARING (0.25-MM US)	
AB		1	**294-4891**	1	KIT-BEARING (0.50-MM US)	
AB		1	**294-4892**	1	KIT-BEARING (0.75-MM US)	

A-NOT PART OF THIS GROUP
B-USE AS REQUIRED

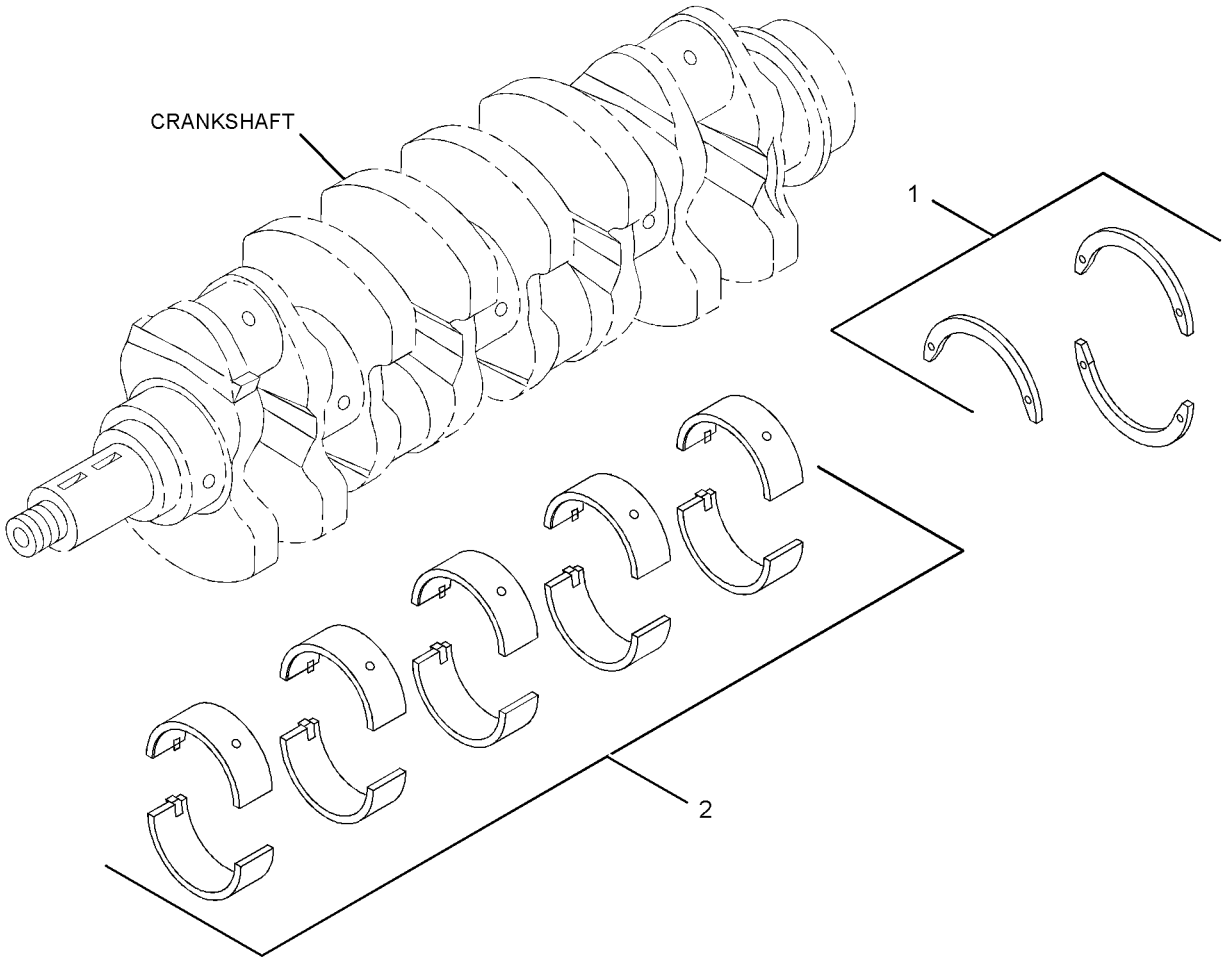

GRAPHIC #1 **<END>** g01379195

BASIC ENGINE

233-5473 CAMSHAFT GP

S/N: CJS1-UP

PART OF 262-7289 ENGINE AR-PRIMARY

AN ATTACHMENT

SMCS-1210, 1211, 1212 **i03199957**

NOTE	REF NO	GRAPHIC REF	PART NUMBER	QTY	PART NAME 1 2 3 4 5 6 (PRODUCT LEVEL)	SEE PAGE
M	1	1	**6V-5215**	2	BOLT (M8X1.25X16-MM)	
	2	1	**9M-1974**	2	WASHER-HARD (8.8X16X2-MM THK)	
	3	1	**094-4628**	1	KEY	
	4	1	**103-9272**	8	TAPPET	
	5	1	**233-5479**	1	CAMSHAFT	
	6	1	**233-5485**	1	PLATE-THRUST	
	7	1	**103-9273**	8	PUSHROD	

M-METRIC PART

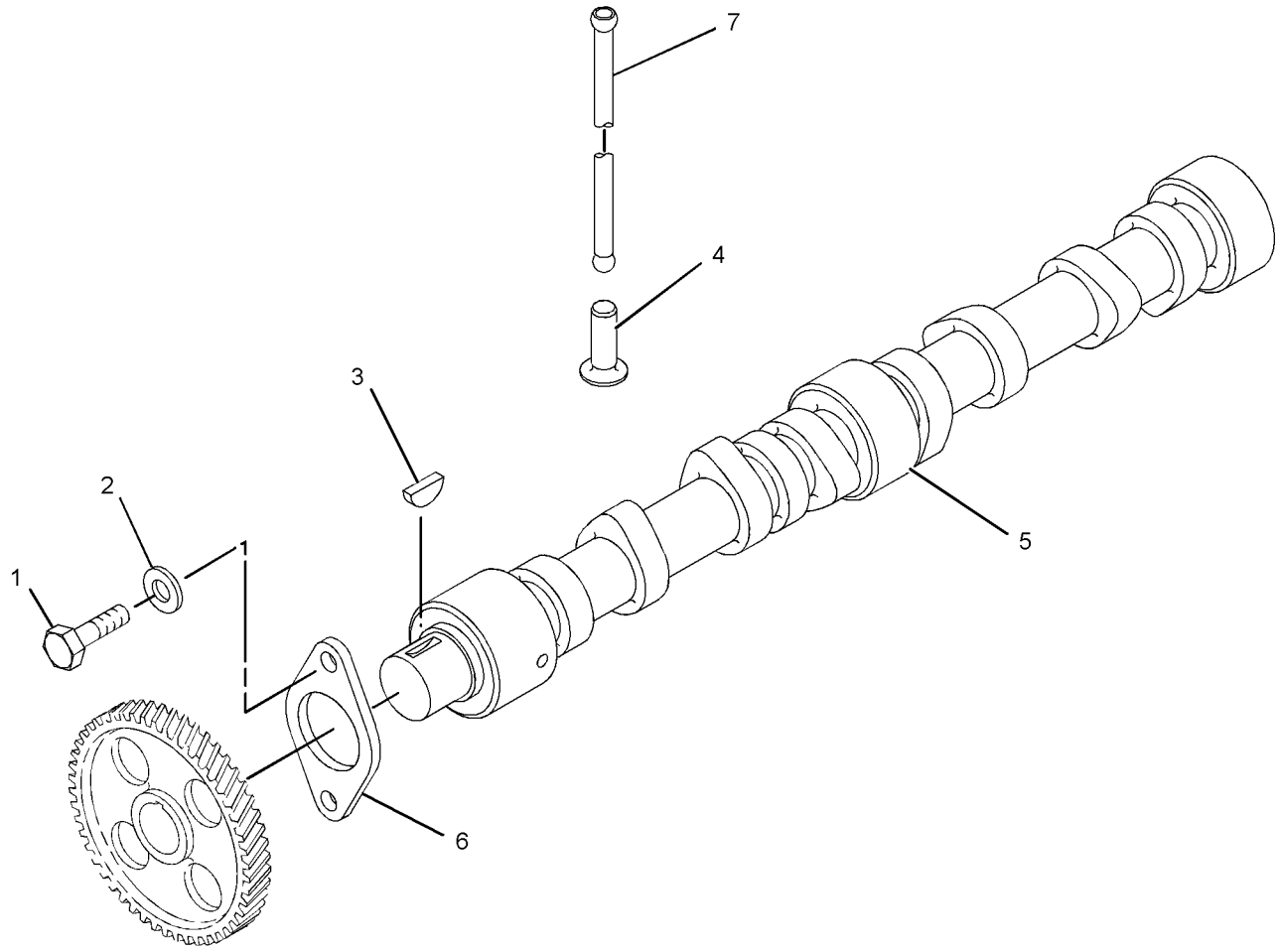

GRAPHIC #1 **<END>** g01654693

BASIC ENGINE

314-9835 CAMSHAFT GP

S/N: CYM1-UP

PART OF 287-8074, 319-6806 ENGINE AR-PRIMARY

AN ATTACHMENT

SMCS-1210, 1211, 1212 **i03246372**

NOTE	REF NO	GRAPHIC REF	PART NUMBER	QTY	PART NAME 1 2 3 4 5 6 (PRODUCT LEVEL)	SEE PAGE
	1	1	**3B-4505**	2	LOCKWASHER	
M	2	1	**8T-4200**	2	BOLT (M8X1.25X16-MM)	
	3	1	**094-4628**	1	KEY	
	4	1	**233-5485**	1	PLATE-THRUST	
	5	1	**314-9925**	1	CAMSHAFT	
	6	1	**103-9273**	8	PUSHROD	
	7	1	**103-9272**	8	TAPPET	

M-METRIC PART

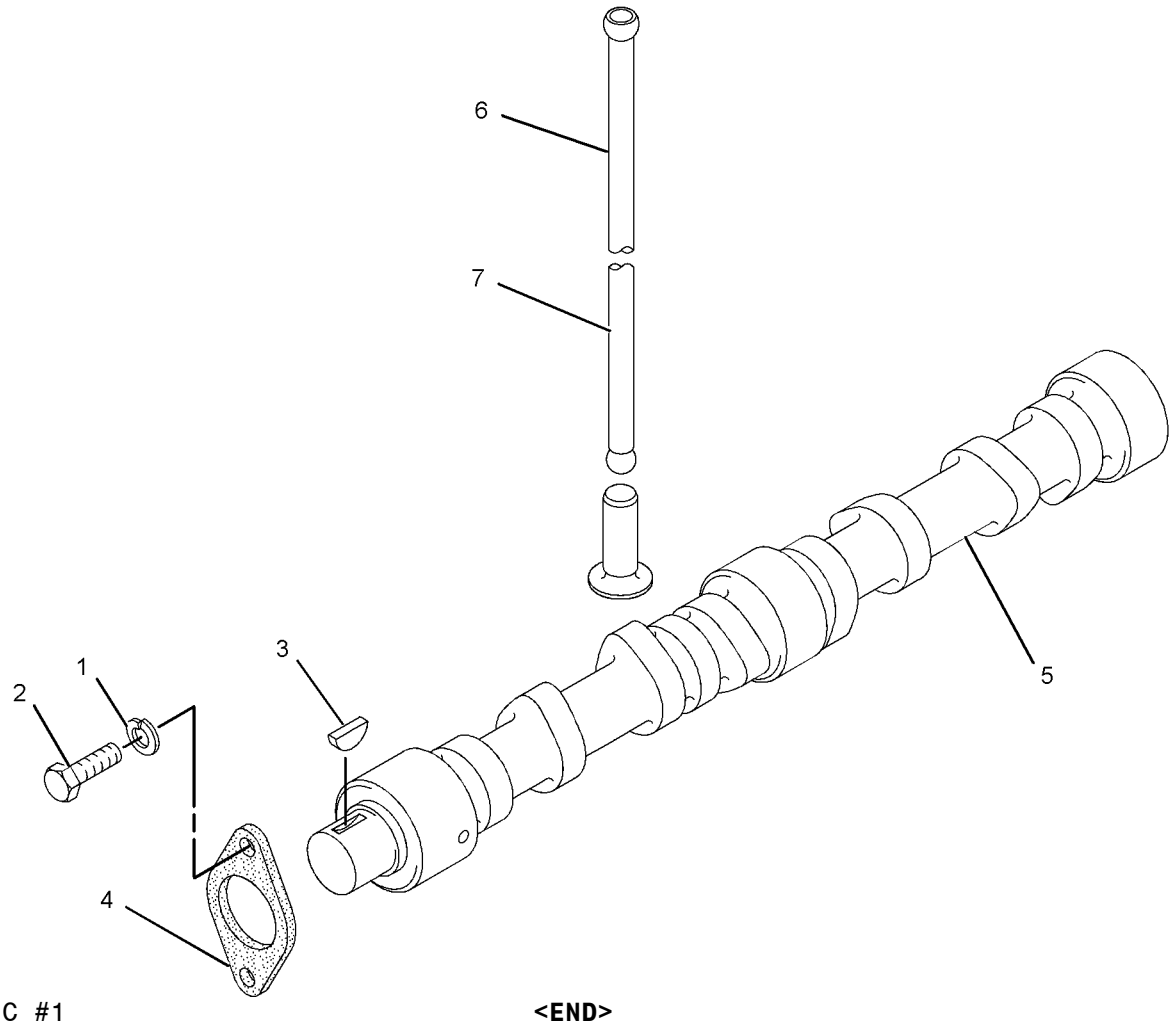

GRAPHIC #1 **<END>** g01396194

287-4033 CONNECTING ROD GP

S/N: CYM1-UP; CJS1-UP
PART OF 262-7289, 287-8074, 319-6806 ENGINE AR-PRIMARY
AN ATTACHMENT

SMCS-1218 **i02735544**

NOTE	REF NO	GRAPHIC REF	PART NUMBER	QTY	PART NAME 1 2 3 4 5 6 (PRODUCT LEVEL)	SEE PAGE
	1	1	**103-9680**	4	ROD AS-CONNECTING	
					(EACH INCLUDES)	
	1A	1	**128-2955**	2	BOLT-CONNECTING ROD	
	1B	1	**128-2956**	2	NUT	
	1C	1	**128-2958**	1	BUSHING	
	2	1	**238-8282**	1	BEARING (STANDARD)	
AB		1	**238-8283**		BEARING (0.25-MM US)	
AB		1	**238-8284**		BEARING (0.5-MM US)	
AB		1	**238-8285**		BEARING (0.75-MM US)	

A-NOT PART OF THIS GROUP
B-USE AS REQUIRED

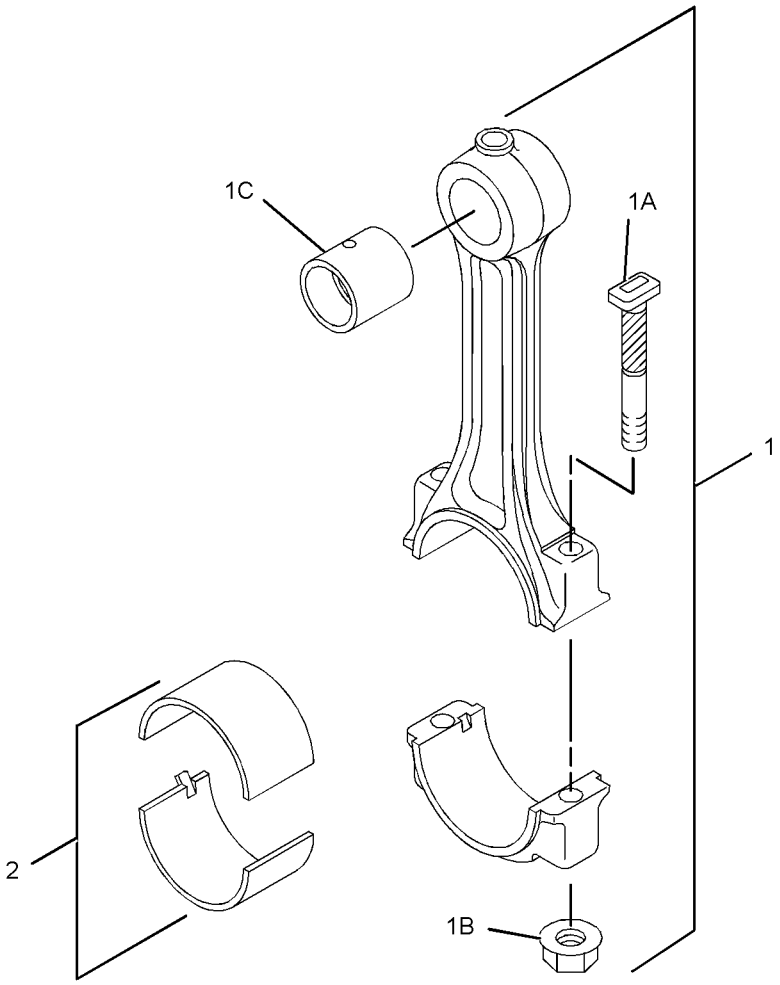

GRAPHIC #1 **<END>** g01380324

BASIC ENGINE

233-5480 COVER GP-VALVE MECHANISM

S/N: CJS1-60343
PART OF 262-7289 ENGINE AR-PRIMARY
AN ATTACHMENT

SMCS-1107 **i03649085**

NOTE	REF NO	GRAPHIC REF	PART NUMBER	QTY	PART NAME 1 2 3 4 5 6 (PRODUCT LEVEL)	SEE PAGE
M	1	1	**8T-4197**	5	BOLT (M8X1.25X40-MM)	
	2	1	**9M-1974**	5	WASHER-HARD (8.8X16X2-MM THK)	
	3	1	**310-8798**	1	CAP-OIL FILLER (ENGINE)	
	4	1	**233-5483**	1	GASKET (VALVE COVER)	
	5	1	**348-7675**	1	COVER AS	

M-METRIC PART

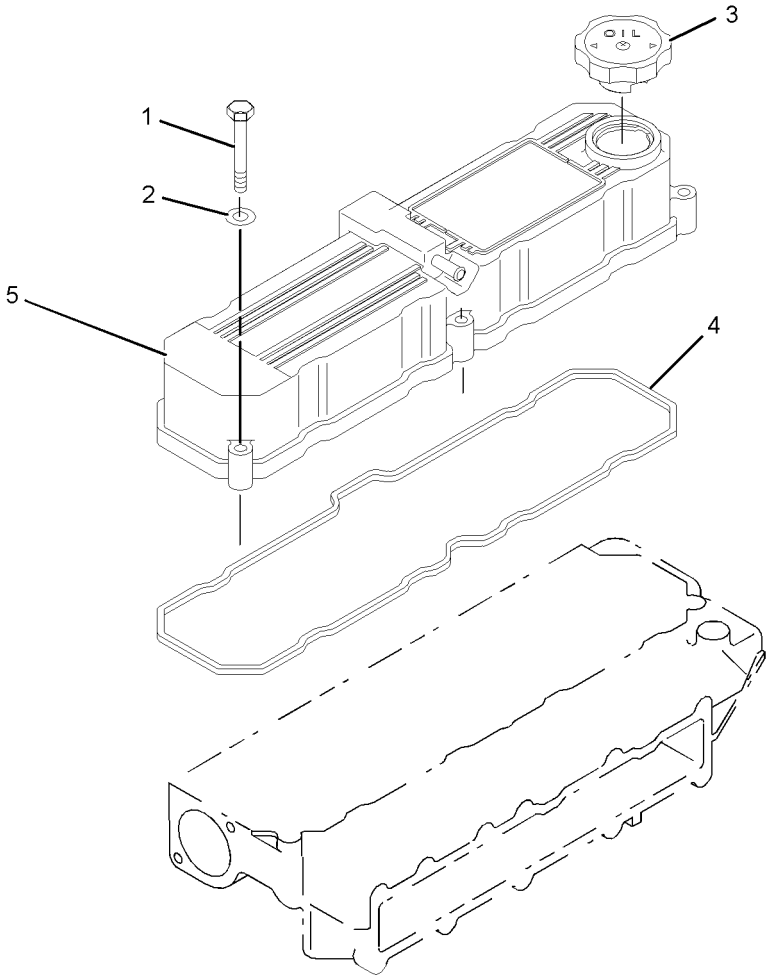

GRAPHIC #1 **<END>** g01011546

315-7762 COVER GP-VALVE MECHANISM

S/N: CYM1-UP; CJS60344-UP

PART OF 262-7289, 287-8074, 319-6806 ENGINE AR-PRIMARY

AN ATTACHMENT

SMCS-1107 **i03649086**

NOTE	REF NO	GRAPHIC REF	PART NUMBER	QTY	PART NAME 1 2 3 4 5 6 (PRODUCT LEVEL)	SEE PAGE
	1	1	**3B-4505**	5	LOCKWASHER	
M	2	1	**099-3649**	5	BOLT (M8X1.25X40-MM)	
	3	1	**233-5483**	1	GASKET (VALVE MECHANISM)	
	4	1	**348-7676**	1	COVER-VALVE MECHANISM	
	5	1	**310-8798**	1	CAP-OIL FILLER (ENGINE)	

M-METRIC PART

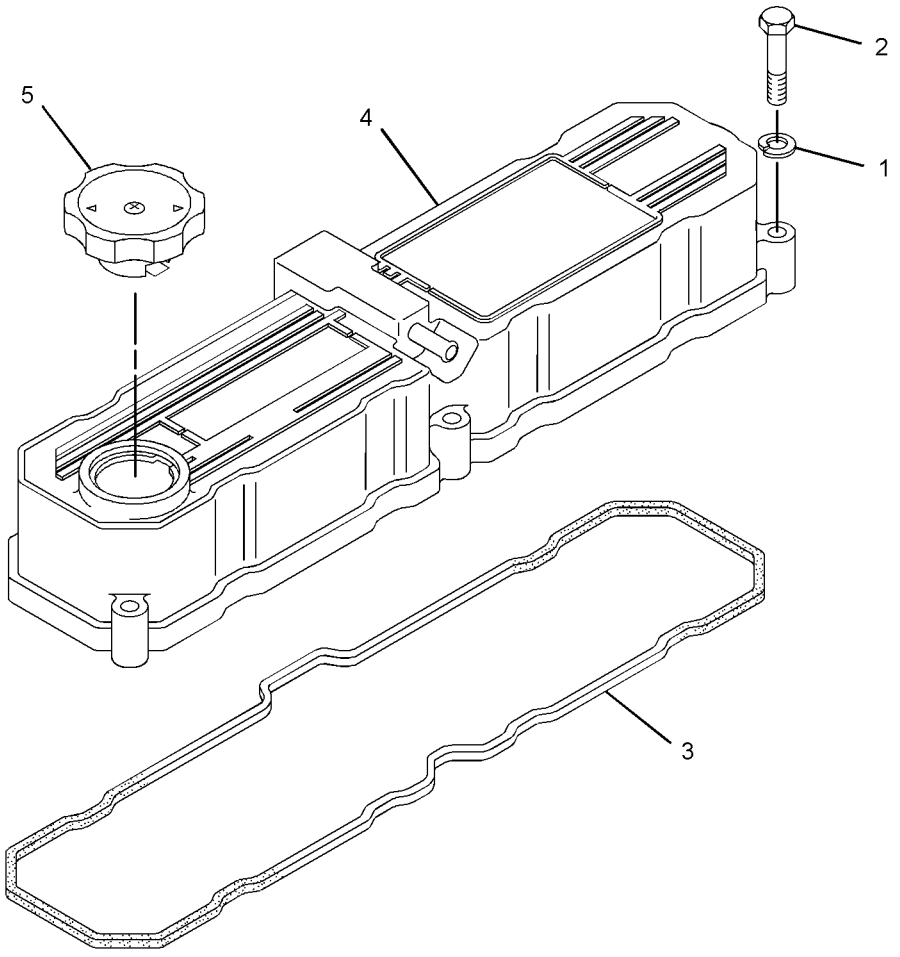

GRAPHIC #1 **<END>** g01400933

BASIC ENGINE

287-4649 CRANKSHAFT GP

S/N: CJS1-UP
PART OF 262-7289 ENGINE AR-PRIMARY
AN ATTACHMENT

SMCS-1202 **i02735545**

NOTE	REF NO	GRAPHIC REF	PART NUMBER	QTY	PART NAME 1 2 3 4 5 6 (PRODUCT LEVEL)	SEE PAGE
	1	1	**234-4794**	1	CRANKSHAFT AS	
	1A	1	**085-9513**	2	PIN	
	1B	1	**094-4628**	2	KEY	
	1C	1	**130-7596**	1	NUT	

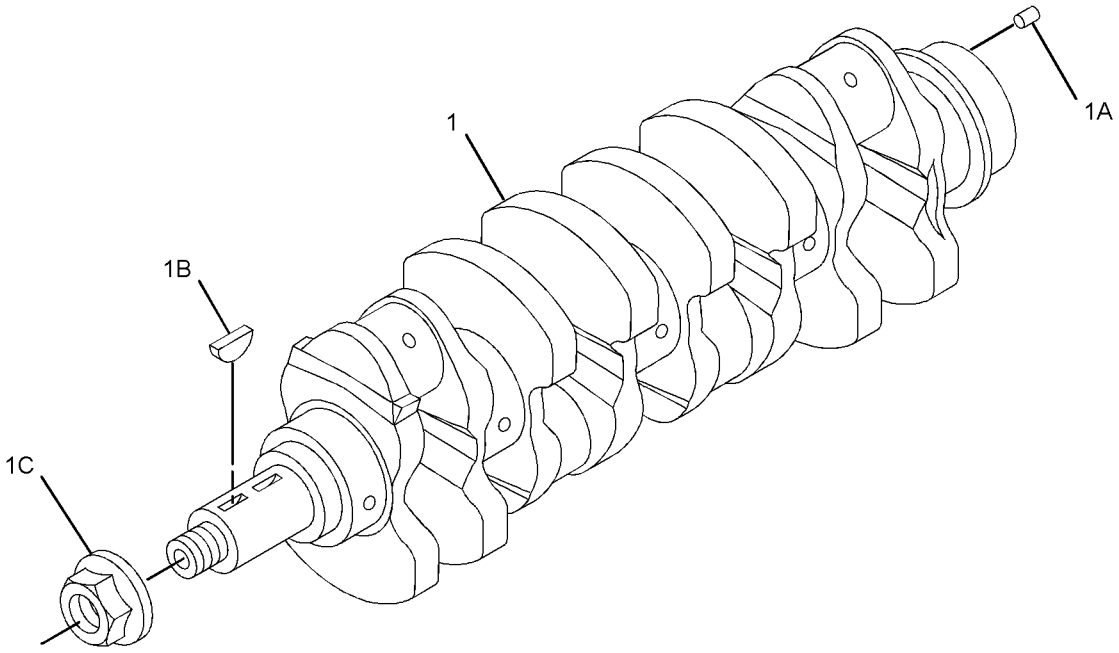

GRAPHIC #1 **<END>** g01380298

314-9860 CRANKSHAFT GP

S/N: CYM1-UP
PART OF 287-8074, 319-6806 ENGINE AR-PRIMARY
AN ATTACHMENT

SMCS-1202 **i02822912**

NOTE	REF NO	GRAPHIC REF	PART NUMBER	QTY	PART NAME 1 2 3 4 5 6 (PRODUCT LEVEL)	SEE PAGE
	1	1	**085-9513**	2	PIN	
	2	1	**094-4628**	2	KEY	
	3	1	**130-7596**	1	NUT	
	4	1	**294-7922**	1	CRANKSHAFT	

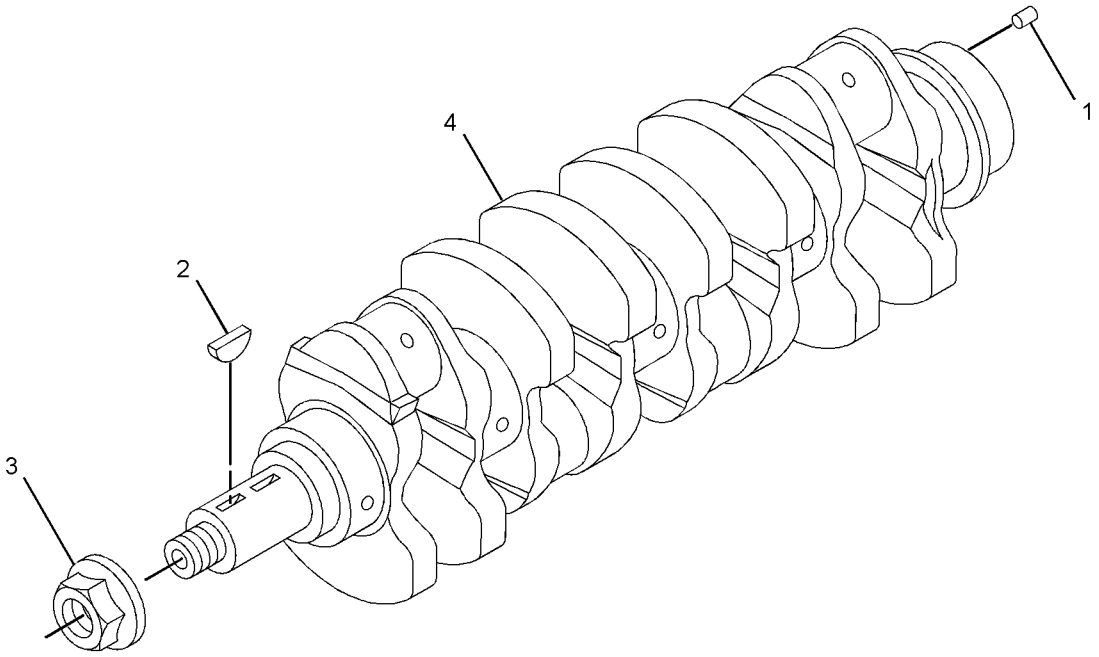

GRAPHIC #1 **<END>** g01392963

BASIC ENGINE

287-2416 CYLINDER BLOCK GP

S/N: CJS1-60343
PART OF 262-7289 ENGINE AR-PRIMARY
AN ATTACHMENT

SMCS-1201 **i02854033**

NOTE	REF NO	GRAPHIC REF	PART NUMBER	QTY	PART NAME 1 2 3 4 5 6 (PRODUCT LEVEL)	SEE PAGE
	1	1	**5I-7525**	1	PLUG	
	2	1	**096-3741**	4	CAP	
	3	1	**099-4420**	2	PIN	
	4	1	**103-9062**	1	BUSHING	
	5	1	**103-9275**	2	DOWEL	
	6	1	**103-9703**	1	SHAFT-IDLER	
	7	1	**183-5916**	6	PIN-SPRING	
	8	1	**104-1218**	2	DOWEL	
	9	1	**233-5457**	4	ORIFICE-JET (OIL PISTON COOLING)	
	10	1	**239-8504**	1	CYLINDER BLOCK GP	
	10A	1	**3P-1896**	10	PLUG-CUP	
	10B	1	**103-9276**	10	BOLT	
	11	1	**310-2682**	2	PLUG	
	12	1	**103-9279**	2	SEAL-SIDE	

287-2416 **CYLINDER BLOCK GP** *(contd.)* **i02854033**

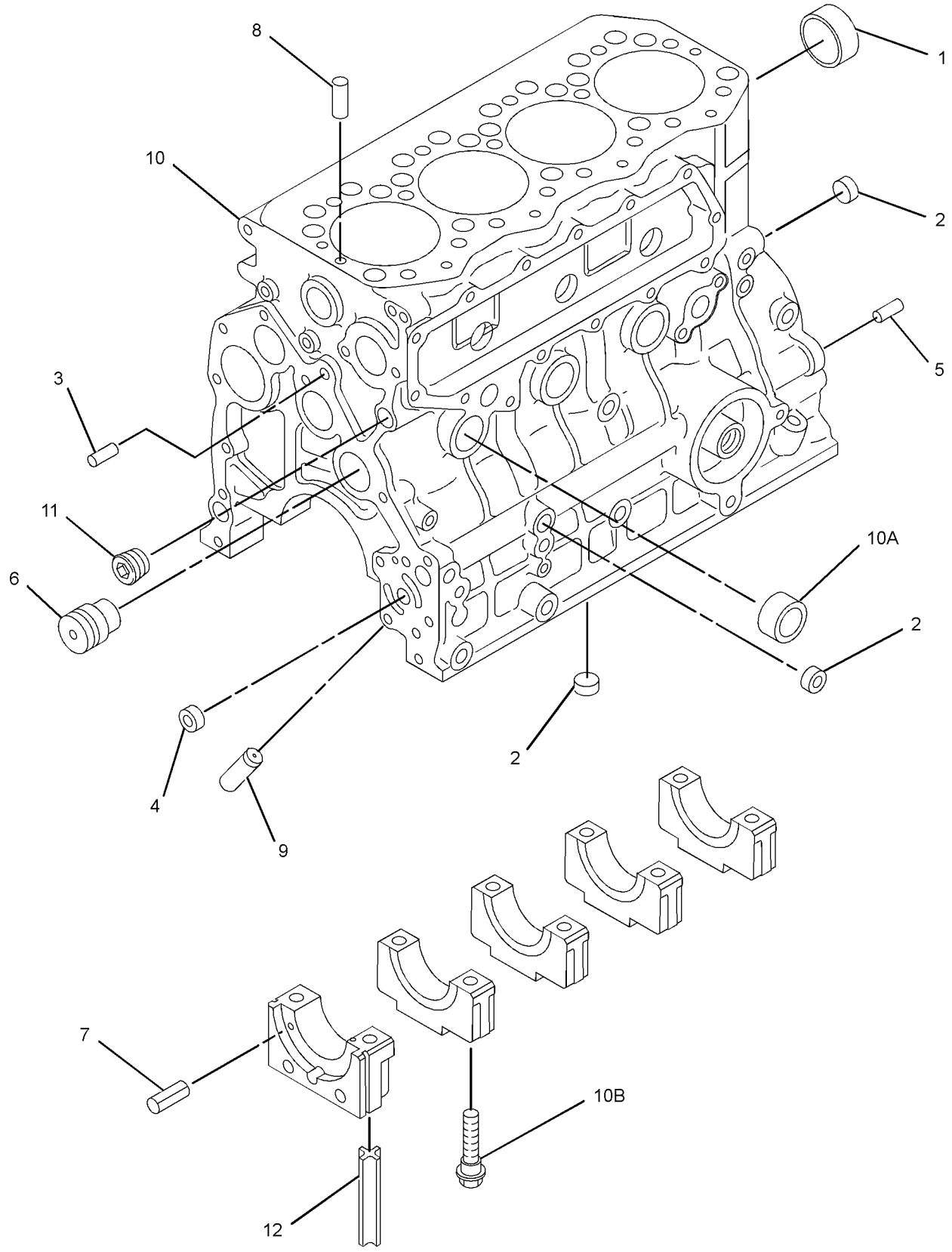

GRAPHIC #1 **<END>** g01443371

BASIC ENGINE

315-8330 CYLINDER BLOCK GP

S/N: CYM1-UP

PART OF 287-8074, 319-6806 ENGINE AR-PRIMARY

AN ATTACHMENT

SMCS-1201 **i03105543**

NOTE	REF NO	GRAPHIC REF	PART NUMBER	QTY	PART NAME 1 2 3 4 5 6 (PRODUCT LEVEL)	SEE PAGE
	1	1	**5I-7525**	1	PLUG	
	2	1	**096-3741**	5	CAP	
	3	1	**099-4420**	2	PIN	
	4	1	**103-9703**	1	SHAFT-IDLER	
	5	1	**233-5457**	4	ORIFICE-JET (OIL PISTON COOLING)	
	6	1	**183-5916**	1	PIN-SPRING	
	7	1	**199-2139**	2	PIN	
	8	1	**233-5488**	2	PIN	
	9	1	**310-2682**	2	PLUG	
	10	1	**330-7720**	1	CYLINDER BLOCK GP	
	10A	1	**103-9276**	10	BOLT	
	10B	1	**096-3741**	5	CAP	
	10C	1	**3P-1896**	10	PLUG-CUP	
	11	1	**314-9938**	1	BUSHING	
	12	1	**103-9279**	2	SEAL-SIDE	

315-8330 **CYLINDER BLOCK GP** *(contd.)* **i03105543**

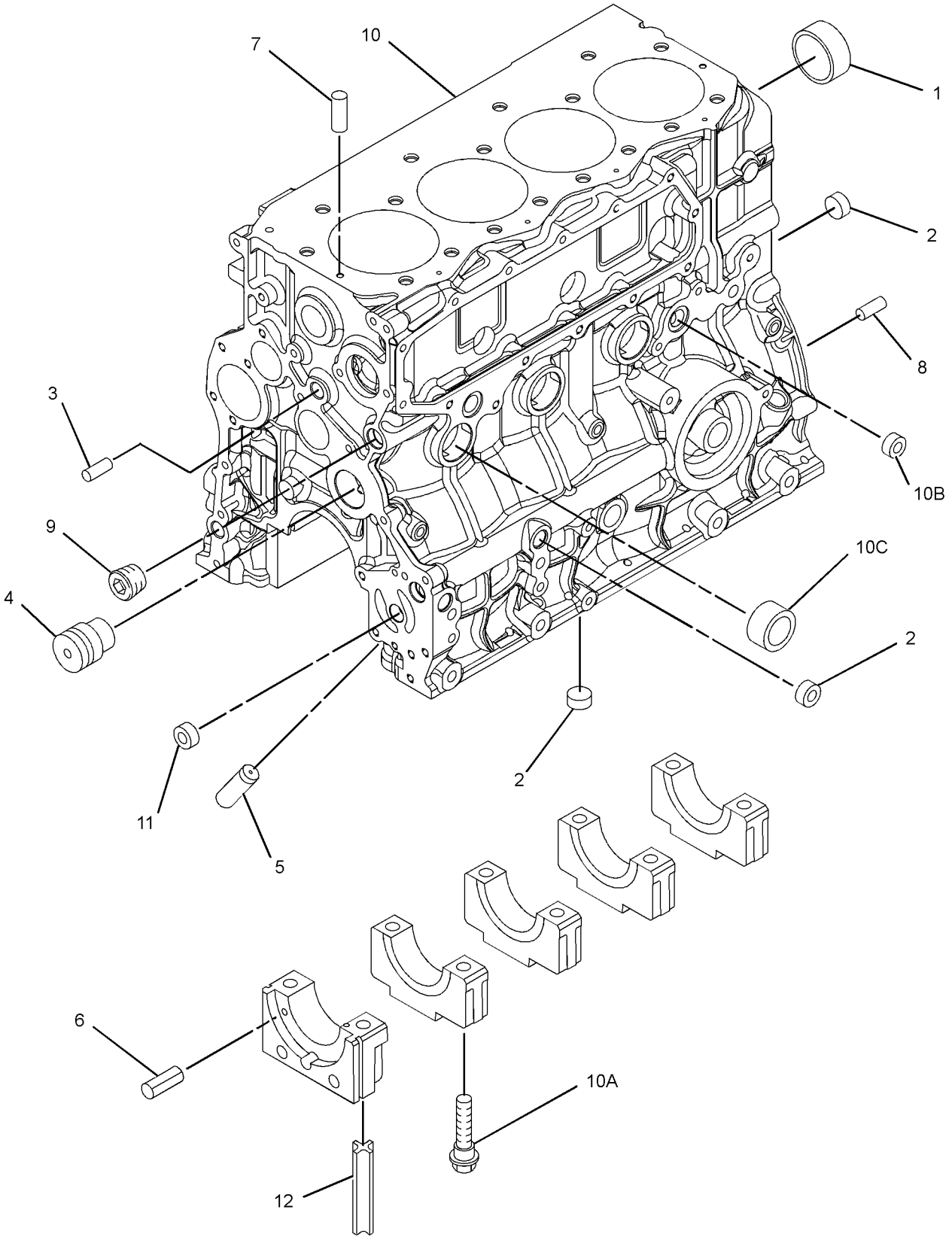

GRAPHIC #1 **<END>** g01624421

BASIC ENGINE

317-5094 CYLINDER BLOCK GP

S/N: CJS60344-61783
PART OF 262-7289 ENGINE AR-PRIMARY
AN ATTACHMENT

SMCS-1201 **i02864977**

NOTE	REF NO	GRAPHIC REF	PART NUMBER	QTY	PART NAME 1 2 3 4 5 6 (PRODUCT LEVEL)	SEE PAGE
	1	1	**5I-7525**	1	PLUG	
	2	1	**099-4420**	2	PIN	
	3	1	**103-9062**	1	BUSHING	
	4	1	**103-9279**	2	SEAL-SIDE	
	5	1	**103-9703**	1	SHAFT-IDLER	
	6	1	**183-5916**	6	PIN-SPRING	
	7	1	**104-1218**	2	DOWEL	
	8	1	**233-5457**	4	ORIFICE-JET (OIL PISTON COOLING)	
	9	1	**233-5488**	2	PIN	
	10	1	**289-8271**	4	CAP	
	11	1	**310-2682**	2	PLUG	
	12	1	**317-5010**	1	CYLINDER BLOCK GP	
	12A	1	**3P-1896**	5	PLUG-CUP	
	12B	1	**103-9276**	10	BOLT	

317-5094 **CYLINDER BLOCK GP** *(contd.)* **i02864977**

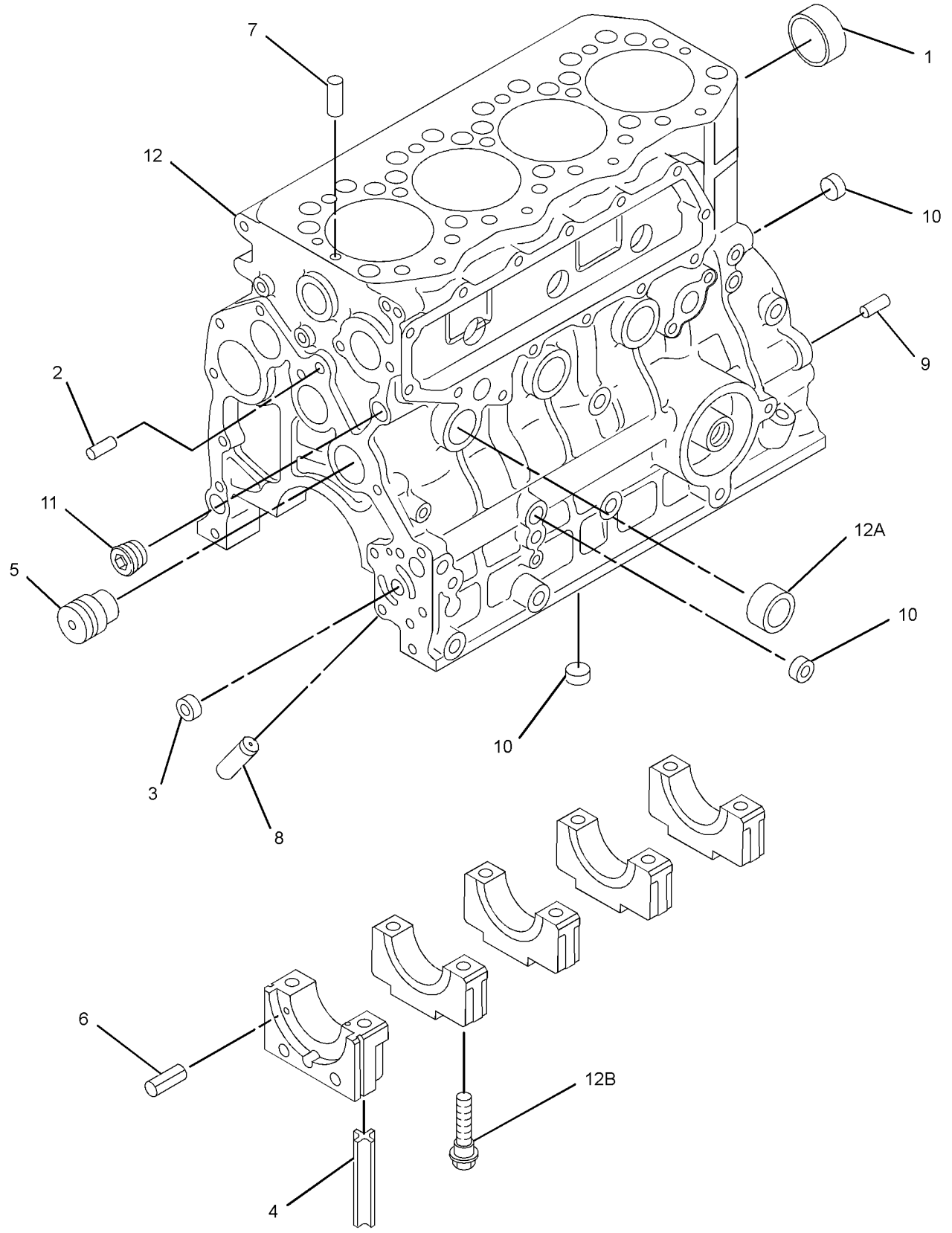

GRAPHIC #1 **<END>** g01407228

BASIC ENGINE

317-5094 CYLINDER BLOCK GP

S/N: CJS61784-UP
PART OF 262-7289 ENGINE AR-PRIMARY
AN ATTACHMENT

SMCS-1201 **i03465055**

NOTE	REF NO	GRAPHIC REF	PART NUMBER	QTY	PART NAME 1 2 3 4 5 6 (PRODUCT LEVEL)	SEE PAGE
	1	1	**5I-7525**	1	PLUG	
	2	1	**099-4420**	2	PIN	
	3	1	**103-9062**	1	BUSHING	
	4	1	**103-9279**	2	SEAL-SIDE	
	5	1	**103-9703**	1	SHAFT-IDLER	
	6	1	**183-5916**	6	PIN-SPRING	
	7	1	**104-1218**	2	DOWEL	
	8	1	**233-5457**	4	ORIFICE-JET (OIL PISTON COOLING)	
	9	1	**233-5488**	2	PIN	
	10	1	**289-8271**	4	CAP	
	11	1	**310-2682**	2	PLUG	
C	12	1	**327-7701**	1	CRANKCASE AS	

C-CHANGE FROM PREVIOUS TYPE

317-5094 **CYLINDER BLOCK GP** *(contd.)* **i03465055**

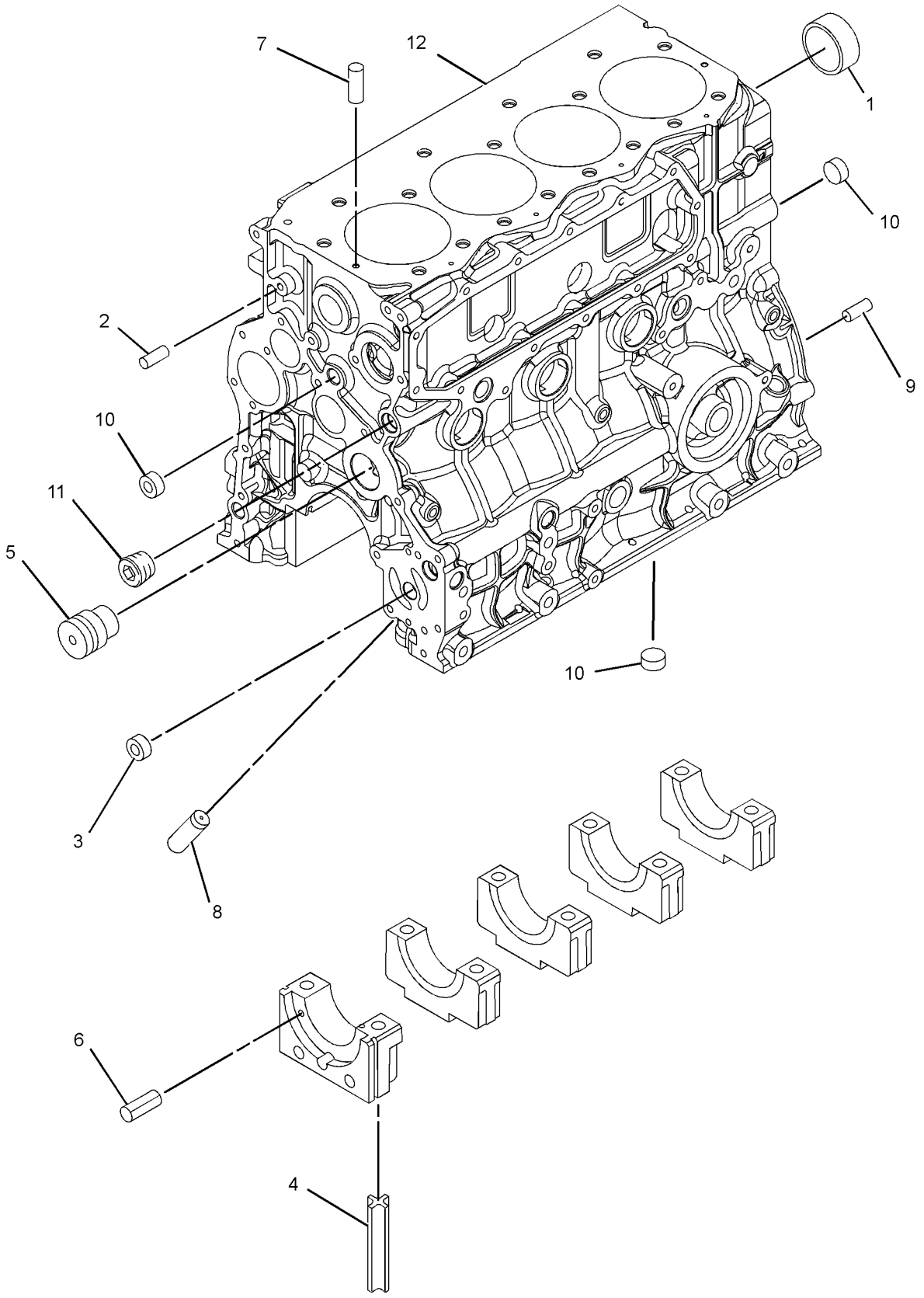

GRAPHIC #1 **<END>** g01857736

233-5500 CYLINDER HEAD GP

S/N: CJS1-16657
PART OF 262-7289 ENGINE AR-PRIMARY
AN ATTACHMENT

SMCS-1100, 1101, 1103, 1104, 1105, 1108, 1109, 1115, 1117, 1121, 1124, 1125

i02843018

NOTE	REF NO	GRAPHIC REF	PART NUMBER	QTY	PART NAME 1 2 3 4 5 6 (PRODUCT LEVEL)	SEE PAGE
	1	1	**233-5454**	17	BOLT (M12X1.75X115-MM)	
	2	1	**299-4645**	1	GASKET-HEAD	
	3	1	**233-5465**	1	HEAD AS	
	3A	1	**212-8475**	7	CAP	
	3B	1	**257-8736**	12	CAP-SEALING	
	3C	1	**233-5453**	1	CYLINDER HEAD	
	3D	1	**233-5462**	4	INSERT-INLET	
	3E	1	**233-5463**	4	INSERT-EXHAUST	
	3F	1	**233-5464**	8	GUIDE	

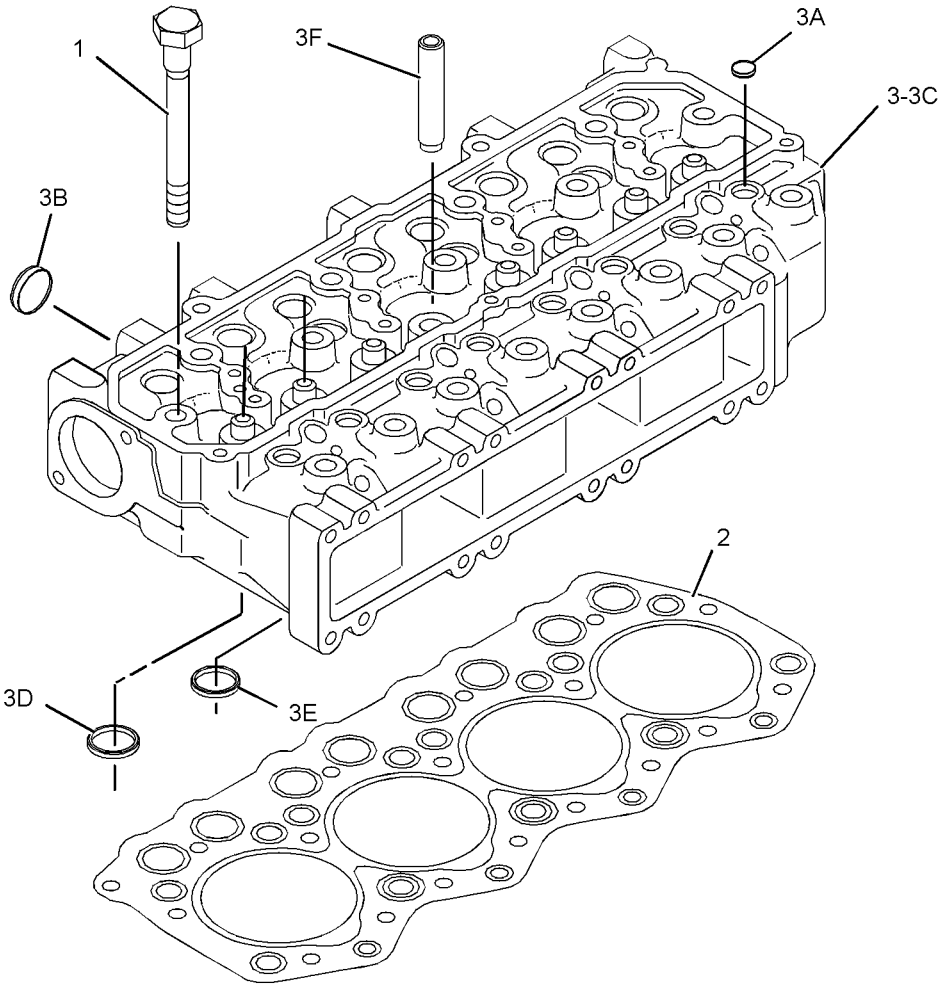

GRAPHIC #1

<END>

g01330815

233-5500 CYLINDER HEAD GP

S/N: CJS16658-UP
PART OF 262-7289 ENGINE AR-PRIMARY
AN ATTACHMENT

SMCS-1100, 1101, 1103, 1104, 1105, 1108, 1109, 1115, 1117, 1121, 1124, 1125

i03536270

NOTE	REF NO	GRAPHIC REF	PART NUMBER	QTY	PART NAME 1 2 3 4 5 6 (PRODUCT LEVEL)	SEE PAGE
	1	1	**103-9246**	17	BOLT-CYLINDER HEAD	
	2	1	**299-4645**	1	GASKET-HEAD	
C	3	1	**319-7263**	1	CYLINDER HEAD AS	
	4	1	**319-7262**	1	STUD	
	5	1	**103-9252**	4	SEAT-VALVE (INLET)	
	6	1	**103-9253**	4	SEAT-VALVE (EXHAUST)	
	7	1	**103-9247**	8	GUIDE-VALVE	

C-CHANGE FROM PREVIOUS TYPE

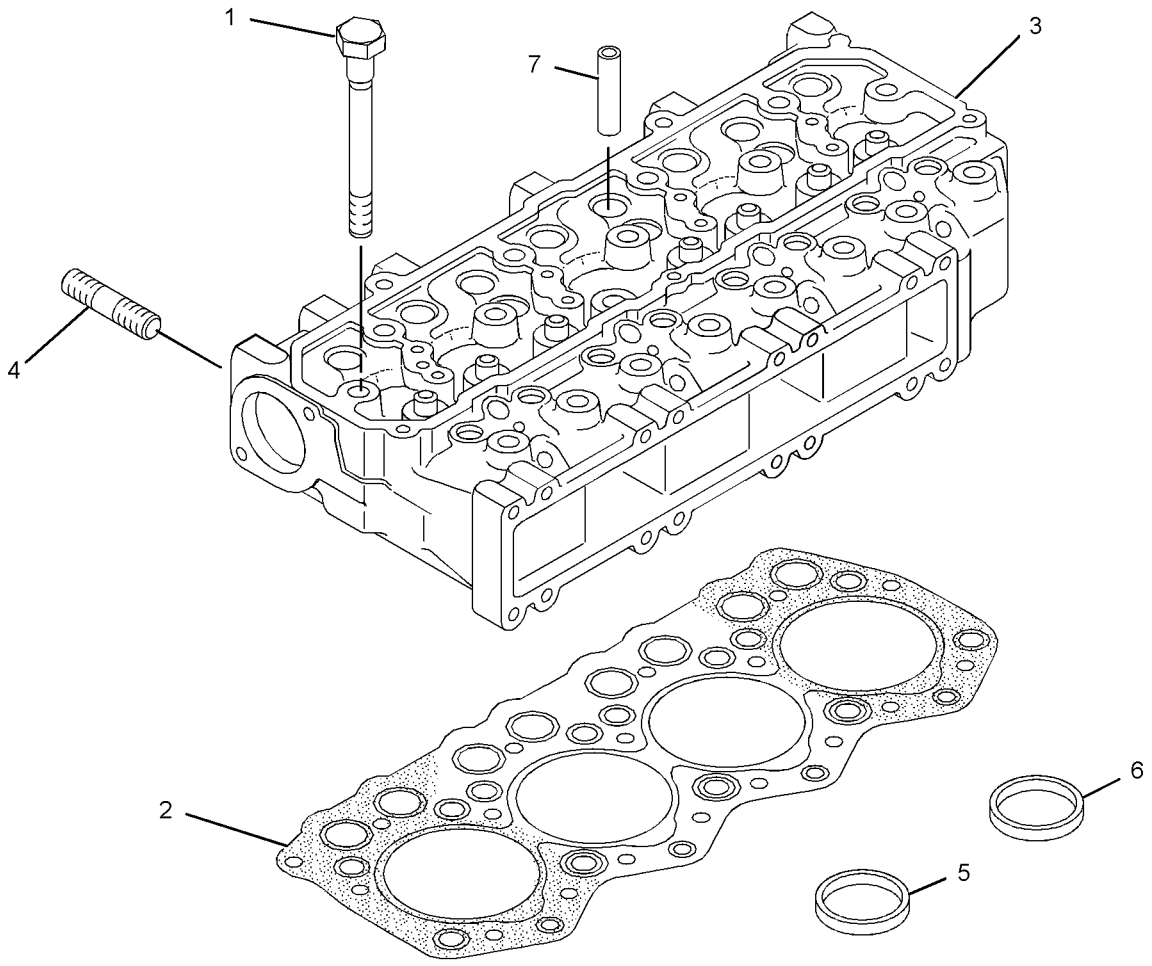

GRAPHIC #1 **<END>** g01869753

315-7760 CYLINDER HEAD GP

S/N: CYM1-UP
PART OF 287-8074, 319-6806 ENGINE AR-PRIMARY
AN ATTACHMENT

SMCS-1100, 1101, 1103, 1104, 1105, 1108, 1109, 1115, 1117, 1121, 1124, 1125

i03046103

NOTE	REF NO	GRAPHIC REF	PART NUMBER	QTY	PART NAME 1 2 3 4 5 6 (PRODUCT LEVEL)	SEE PAGE
	1	1	**103-9246**	17	BOLT-CYLINDER HEAD	
	2	1	**299-4645**	1	GASKET-HEAD	
	3	1	**319-7262**	1	STUD	
	4	1	**319-7264**	1	CYLINDER HEAD AS	

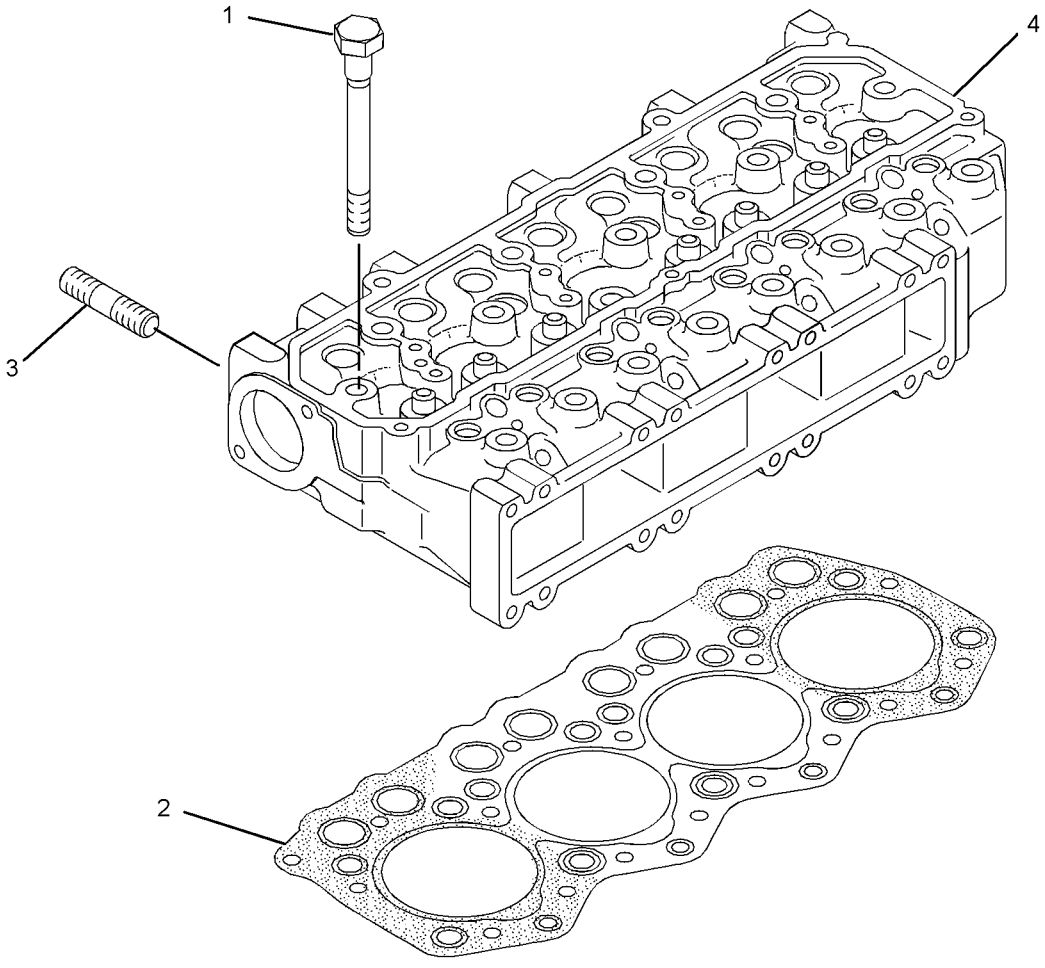

GRAPHIC #1

<END>

g01447760

258-2452 DRAIN GP-ENGINE OIL

S/N: MST1-UP

PART OF 258-2445, 295-7118 INSTALLATION AR-ENGINE

SMCS-1302 **i03552826**

NOTE	REF NO	GRAPHIC REF	PART NUMBER	QTY	PART NAME 1 2 3 4 5 6 (PRODUCT LEVEL)	SEE PAGE
	1	1	**1P-4278**	1	CLAMP-HOSE	
	2	1	**8C-3445**	1	CAP-DUST	
	3	1	**8C-3446**	1	VALVE-FLUID SAMPLING (ENGINE OIL)	
	4	1	**110-2570**	1	CAP (ENGINE OIL)	
	5	1	**218-0919**	1	ADAPTER	
	6	1	**8L-2779**	1	SEAL-O-RING	
E	7	1	**5P-1442**		HOSE (68-CM)	

E-ORDER BY THE CENTIMETER

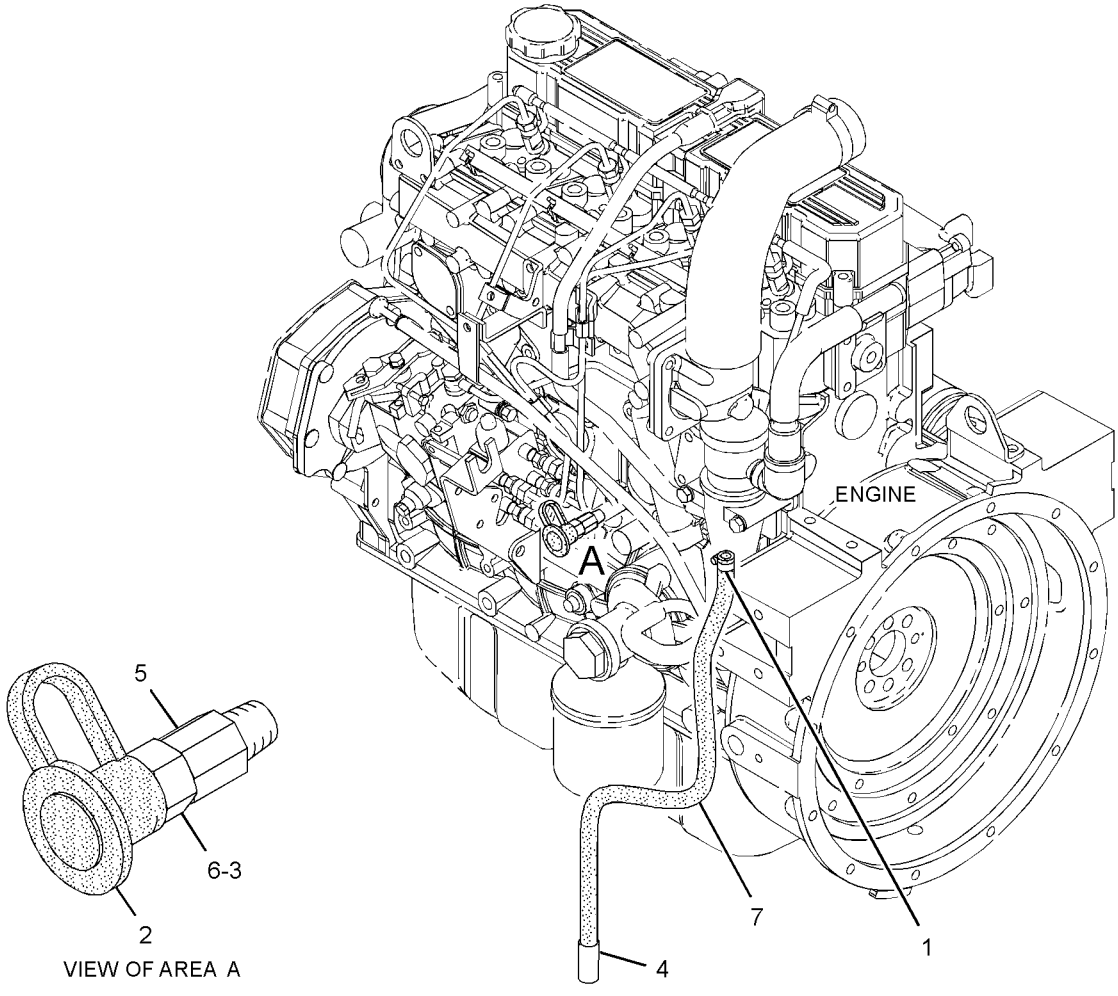

GRAPHIC #1 **<END>** g01319979

BASIC ENGINE

258-2452 DRAIN GP-ENGINE OIL

S/N: MST1860-UP

PART OF 295-7118 INSTALLATION AR-ENGINE

SMCS-1302 **i03690261**

NOTE	REF NO	GRAPHIC REF	PART NUMBER	QTY	PART NAME 1 2 3 4 5 6 (PRODUCT LEVEL)	SEE PAGE
	1	1	**1P-4278**	1	CLAMP-HOSE	
	2	1	**110-2570**	1	CAP (ENGINE OIL)	
E	3	1	**5P-1442**		HOSE (68-CM)	
E-ORDER BY THE CENTIMETER						

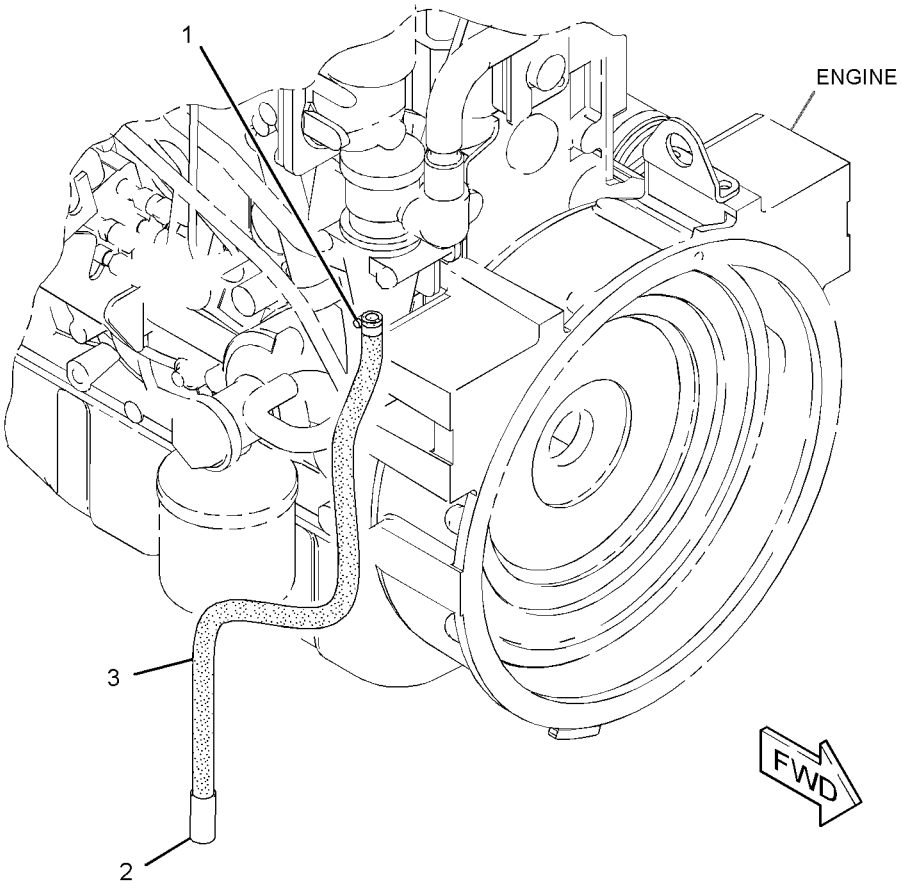

GRAPHIC #1 **<END>** g01960378

235-5890 FLYWHEEL GP

S/N: CJS1-UP
PART OF 262-7289 ENGINE AR-PRIMARY
AN ATTACHMENT

SMCS-1156, 1158 **i02613784**

NOTE	REF NO	GRAPHIC REF	PART NUMBER	QTY	PART NAME 1 2 3 4 5 6 (PRODUCT LEVEL)	SEE PAGE
	1	1	**234-4791**	1	FLYWHEEL AS	
M	1A	1	**226-3693**	4	BOLT (M12X1.25X30-MM)	
	1B	1	**032-8139**	1	GEAR-STARTER (112-TEETH)	

M-METRIC PART

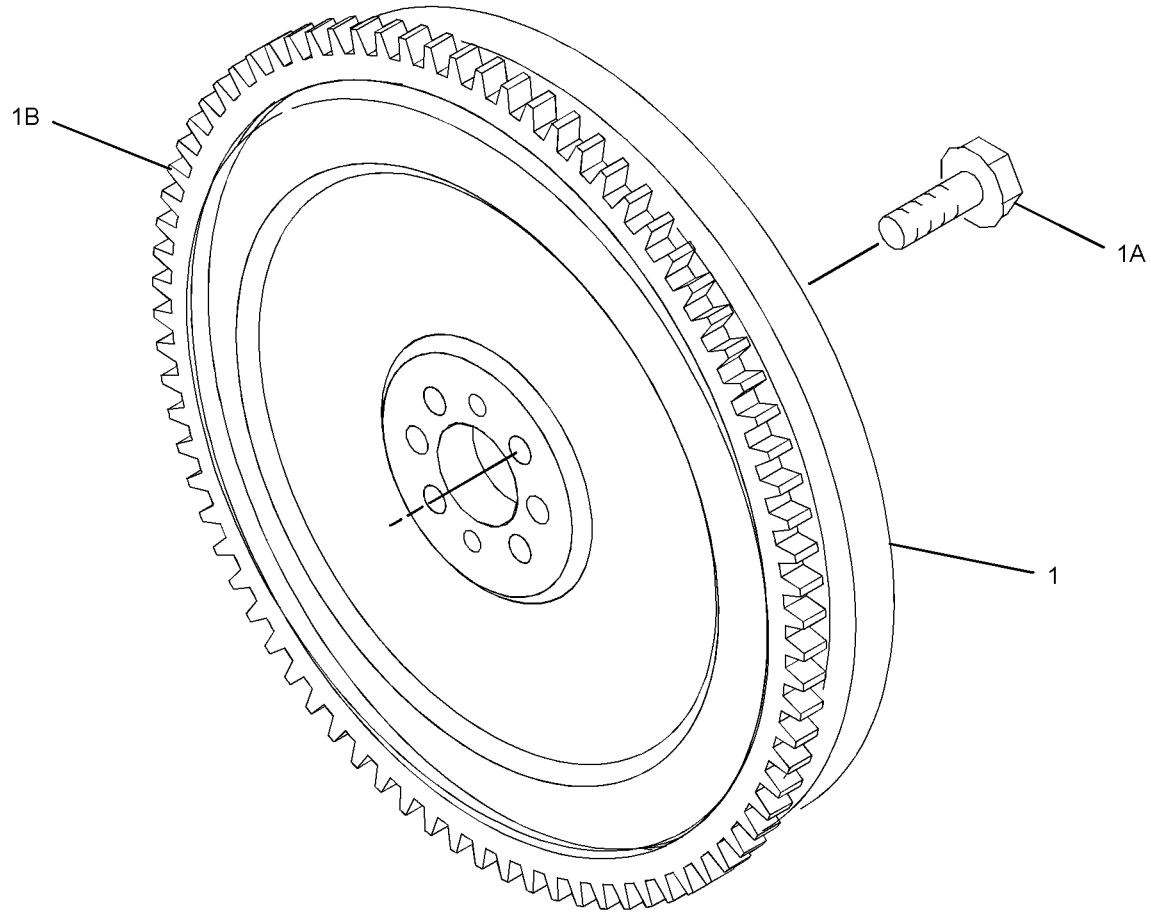

GRAPHIC #1 **<END>** g01310290

314-9861 FLYWHEEL GP

S/N: CYM1-UP
PART OF 287-8074, 319-6806 ENGINE AR-PRIMARY
AN ATTACHMENT

SMCS-1156, 1158 **i02824838**

NOTE	REF NO	GRAPHIC REF	PART NUMBER	QTY	PART NAME 1 2 3 4 5 6 (PRODUCT LEVEL)	SEE PAGE
M	1	1	**226-3693**	6	BOLT (M12X1.25X30-MM)	
	2	1	**234-4791**	1	FLYWHEEL AS	
	2A	1	**032-8139**	1	GEAR-STARTER (112-TEETH)	

M-METRIC PART

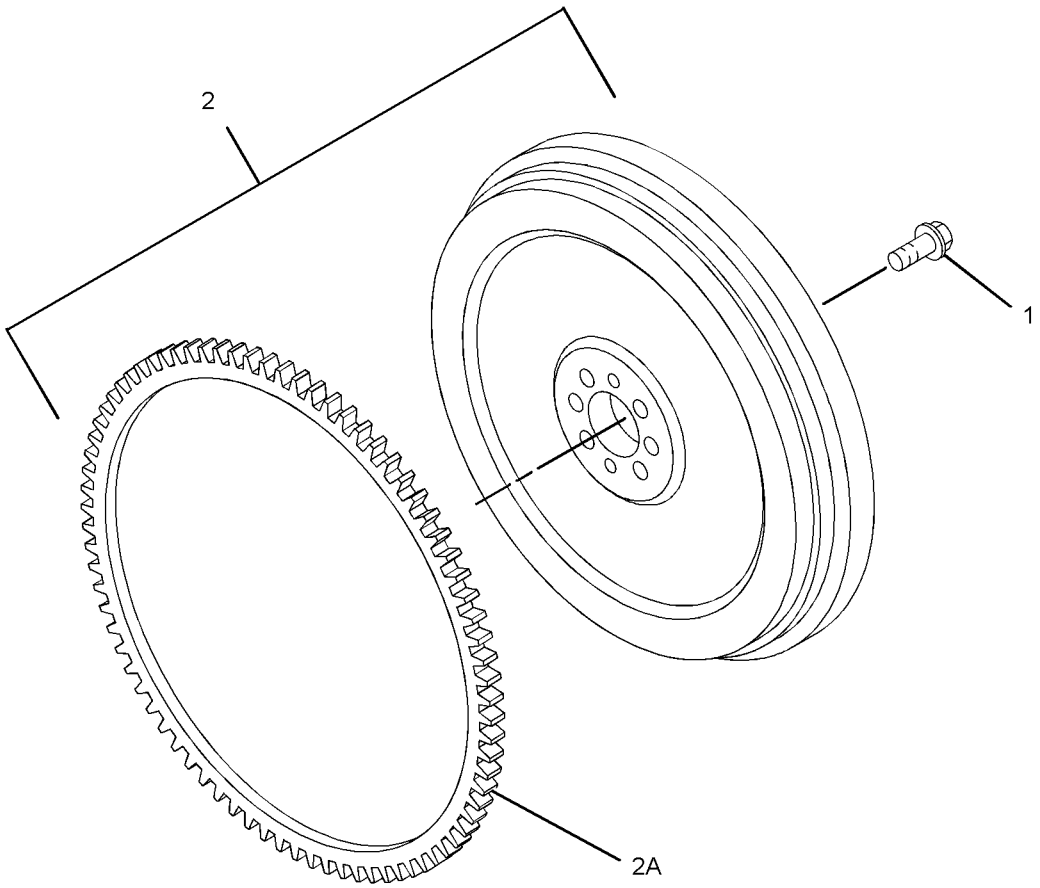

GRAPHIC #1 **<END>** g01394554

287-4830 GEAR GP-FRONT

S/N: CJS1-UP
PART OF 262-7289 ENGINE AR-PRIMARY
AN ATTACHMENT

SMCS-1206, 1212, 1234, 1288, 1313 **i02568578**

NOTE	REF NO	GRAPHIC REF	PART NUMBER	QTY	PART NAME 1 2 3 4 5 6 (PRODUCT LEVEL)	SEE PAGE
M	1	1	**5I-4936**	1	BOLT (M10X1.25X20-MM)	
	2	1	**222-8202**	1	PLATE	
	3	1	**8T-4121**	1	WASHER-HARD (11X21X2.5-MM THK)	
	4	1	**117-2827**	1	GEAR (46-TEETH)	
	5	1	**117-2829**	1	GEAR (23-TEETH)	
	6	1	**117-3283**	1	GEAR AS-IDLER (49-TEETH)	
	7	1	**117-3285**	1	GEAR-PUMP (OIL, 31-TEETH)	
	8	1	**239-4292**	1	GEAR	

M-METRIC PART

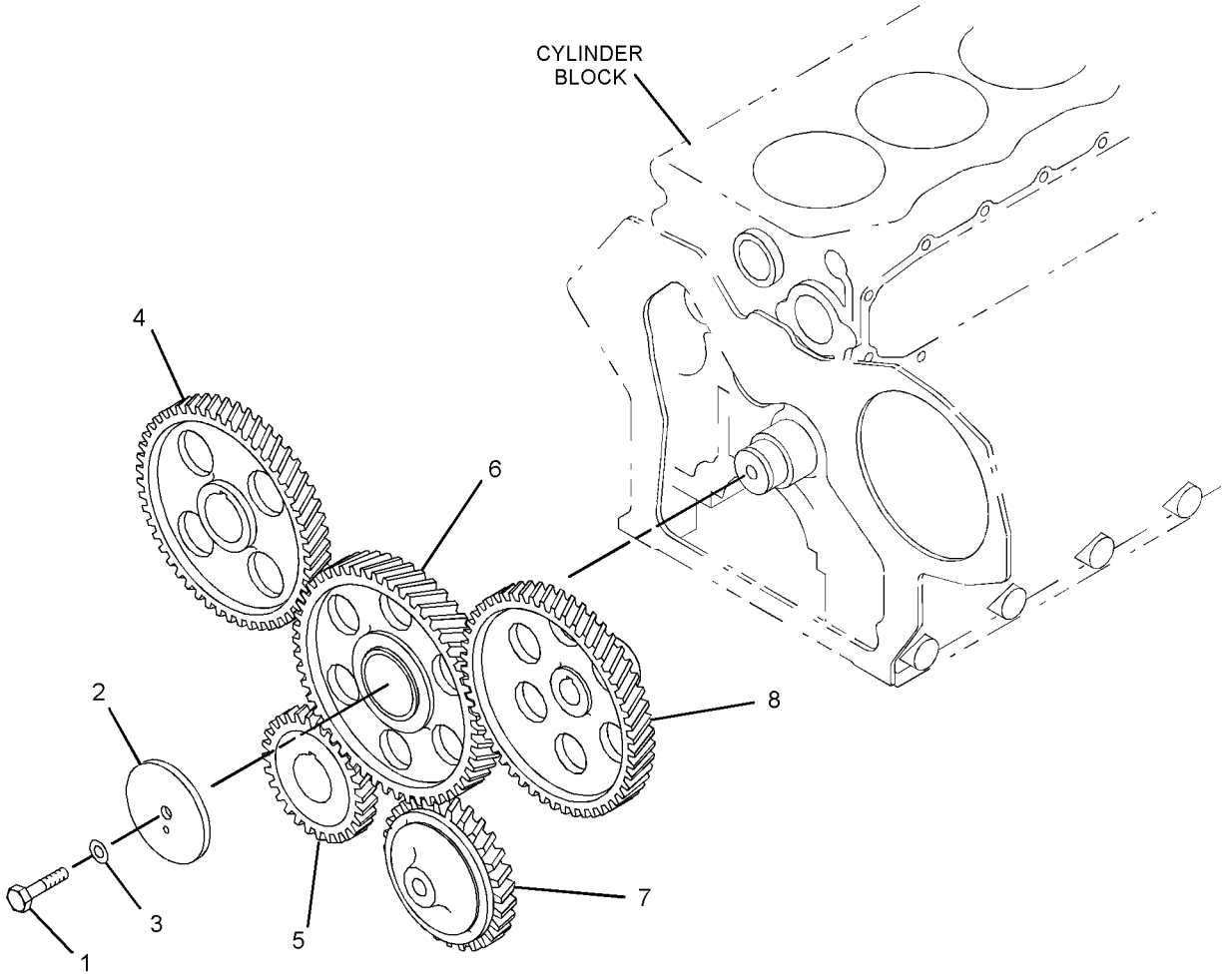

GRAPHIC #1 **<END>** g01322038

BASIC ENGINE

315-7766 GEAR GP-FRONT

S/N: CYM1-UP

PART OF 287-8074, 319-6806 ENGINE AR-PRIMARY

AN ATTACHMENT

SMCS-1206, 1212, 1234, 1288, 1313 **i03469908**

NOTE	REF NO	GRAPHIC REF	PART NUMBER	QTY	PART NAME 1 2 3 4 5 6 (PRODUCT LEVEL)	SEE PAGE
M	1	1	**5I-4936**	1	BOLT (M10X1.25X20-MM)	
	2	1	**5I-7543**	1	PLATE	
	3	1	**8T-4121**	1	WASHER-HARD (11X21X2.5-MM THK)	
	4	1	**117-2827**	1	GEAR (46-TEETH)	
	5	1	**117-2829**	1	GEAR (23-TEETH)	
	6	1	**117-3285**	1	GEAR-PUMP (OIL, 31-TEETH)	
	7	1	**239-4292**	1	GEAR	
	8	1	**322-3150**	1	GEAR-IDLER	

M-METRIC PART

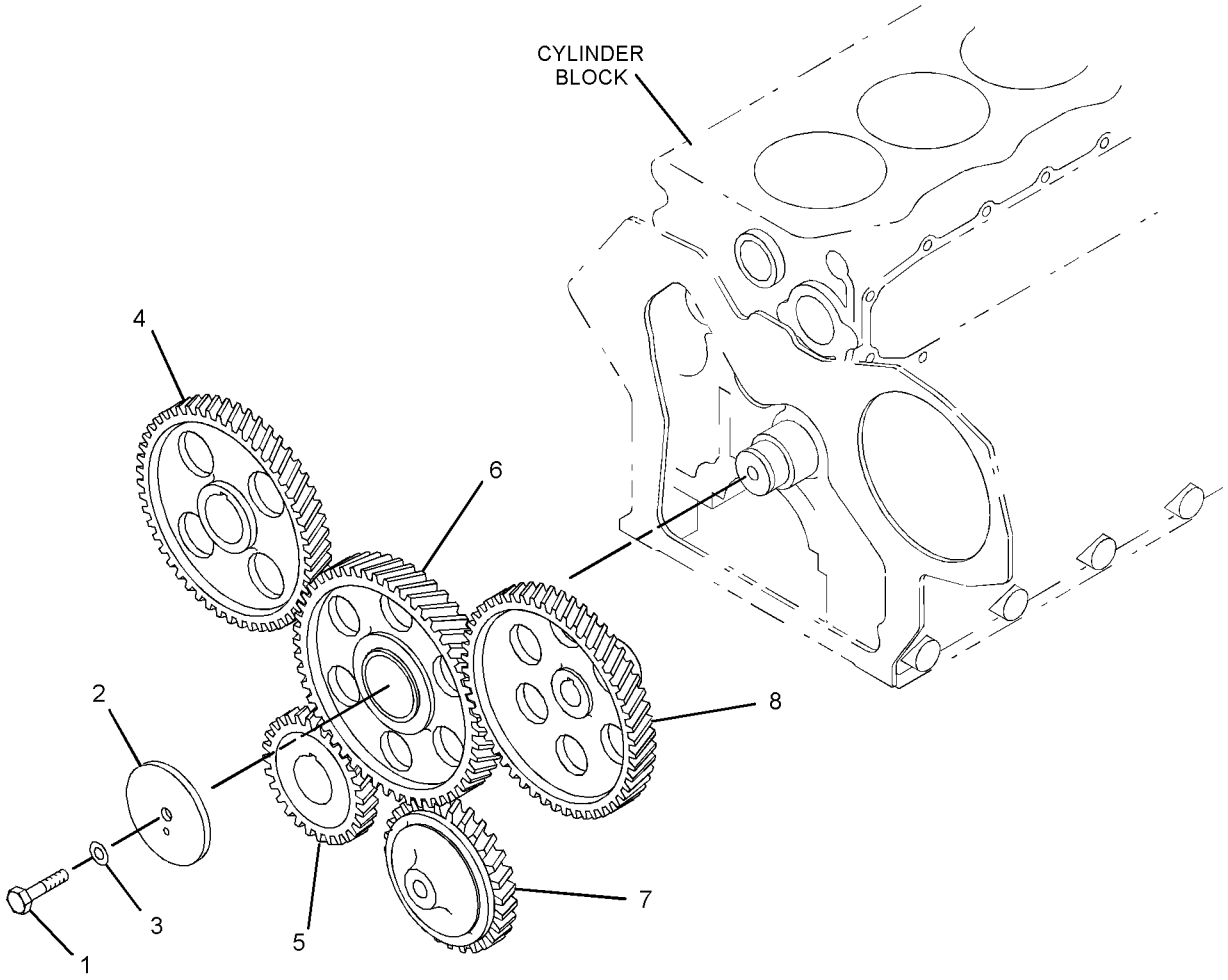

GRAPHIC #1 **<END>** g01322038

258-2469 GUARD GP-BELT

S/N: MST1-UP

PART OF 258-2445, 295-7118 INSTALLATION AR-ENGINE

SMCS-7174 **i03646974**

NOTE	REF NO	GRAPHIC REF	PART NUMBER	QTY	PART NAME 1 2 3 4 5 6 (PRODUCT LEVEL)	SEE PAGE
	1	1	**258-2443**	1	GUARD-BELT	
	2	1	**258-2590**	1	BRACKET AS	
	3	1	**280-8307**	1	BRACKET AS	
	4	1	**280-8314**	1	BRACKET AS	
	5	1	**280-8335**	2	SPACER (6.5X12X4.5-MM THK)	
	6	1	**280-8361**	1	PLATE	
	7	1	**101-2867**	4	WASHER-HARD (7.2X25X2-MM THK)	
M	8	1	**134-7722**	2	BOLT-LOCKING (M8X1.25X16-MM)	
	9	1	**270-9442**	4	SCREW-TRUSS HEAD (M6X1X20-MM)	
	10	1	**5P-4116**	6	WASHER-HARD (8.8X20.5X2-MM THK)	
M	11	1	**6V-7357**	2	BOLT (M6X1X25-MM)	
M	12	1	**8T-5093**	4	BOLT-LOCKING (M8X1.25X25-MM)	

M-METRIC PART

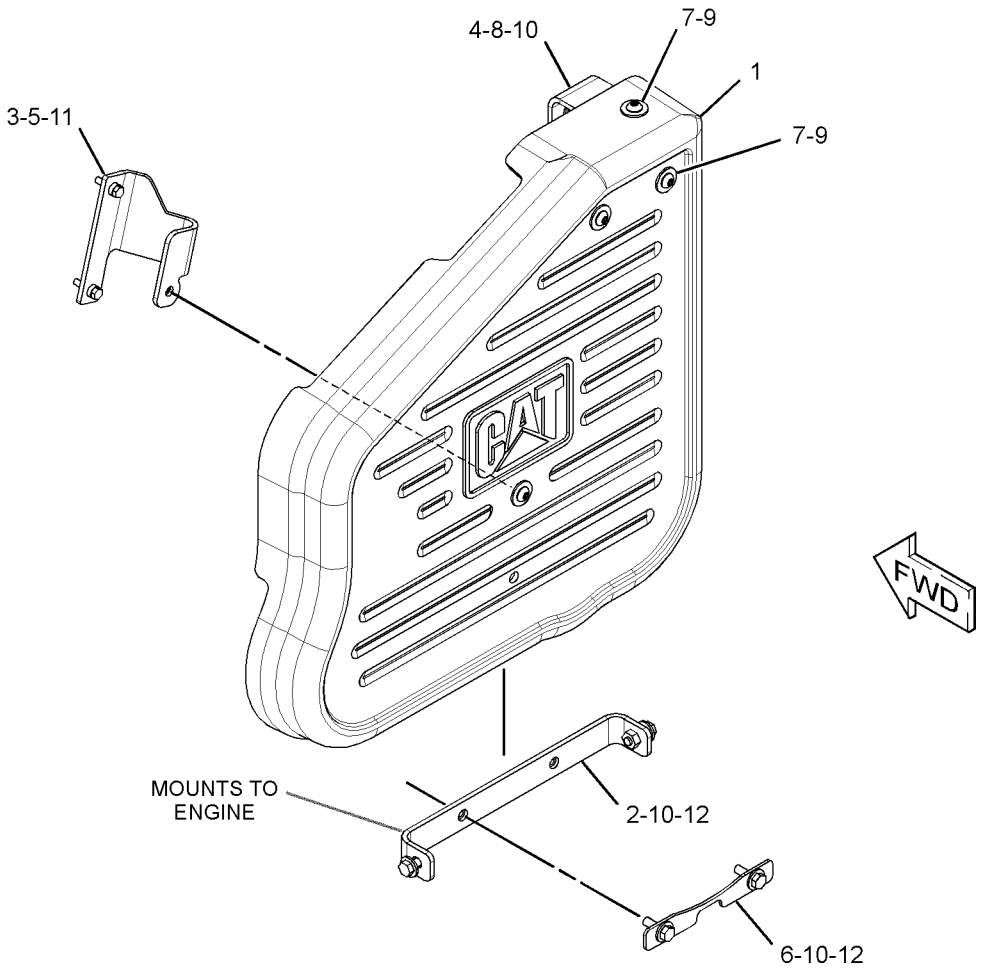

GRAPHIC #1 **<END>** g01457077

BASIC ENGINE

287-3357 HOUSING GP-FLYWHEEL

S/N: CJS1-60343
PART OF 262-7289 ENGINE AR-PRIMARY
AN ATTACHMENT

SMCS-1157 **i02877118**

NOTE	REF NO	GRAPHIC REF	PART NUMBER	QTY	PART NAME 1 2 3 4 5 6 (PRODUCT LEVEL)	SEE PAGE
	1	1	**096-4415**	2	LOCKWASHER	
	2	1	**103-9280**	1	GASKET-REAR	
	3	1	**117-5015**	1	SEAL AS-OIL	
M	4	1	**185-8182**	2	BOLT (M10X1.5X20-MM)	
	5	1	**199-2354**	10	BOLT (M10X1.25X25-MM)	
	6	1	**212-8499**	3	STUD	
M	7	1	**212-8510**	3	NUT (M10X1.25 THD)	
M	8	1	**9X-8912**	2	BOLT (M10X1.25X30-MM)	
	9	1	**233-5482**	1	EYE	
	10	1	**315-7703**	1	HOUSING-FLYWHEEL	
	11	1	**5I-7628**	1	GASKET	
	12	1	**5I-8056**	1	PLUG	

M-METRIC PART

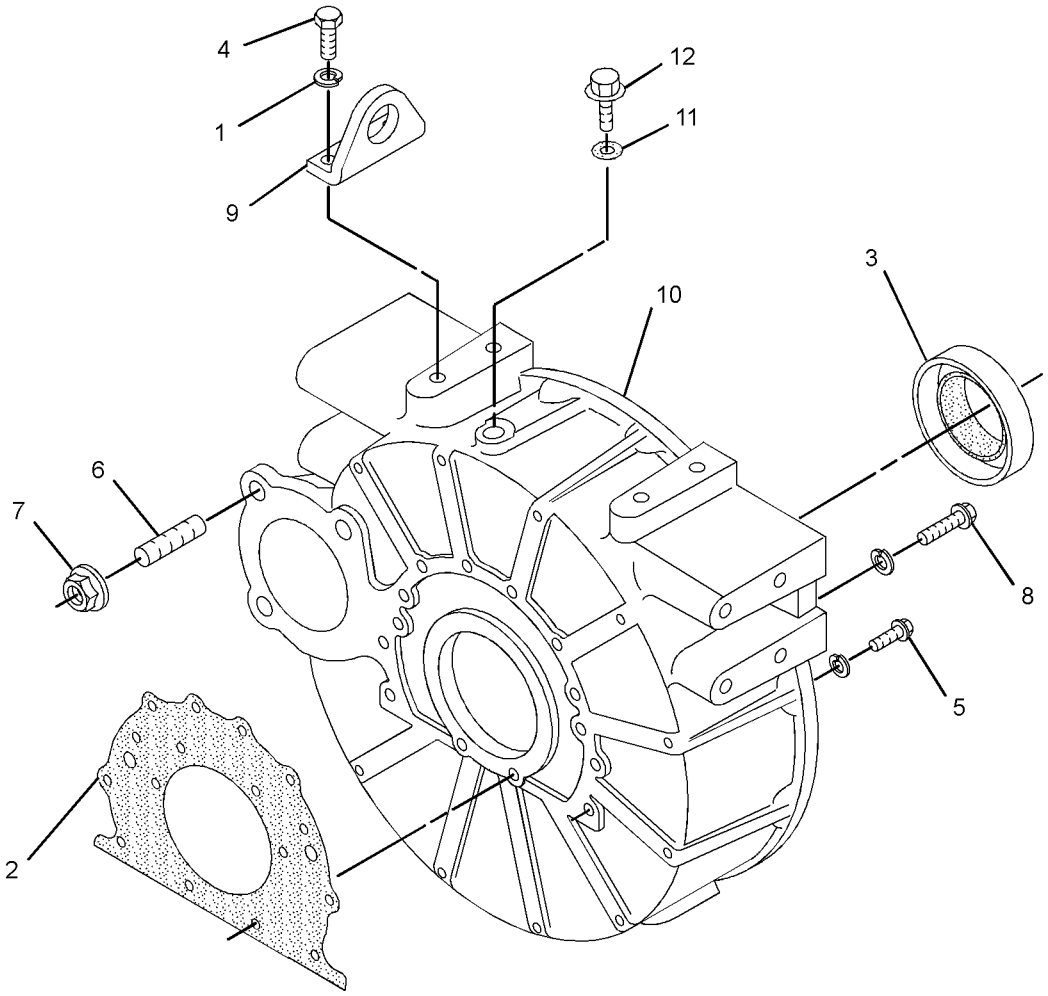

GRAPHIC #1 **<END>** g01442694

315-7764 HOUSING GP-FLYWHEEL

S/N: CYM1-UP; CJS60344-UP

PART OF 262-7289, 287-8074, 319-6806 ENGINE AR-PRIMARY

AN ATTACHMENT

SMCS-1157 **i02825004**

NOTE	REF NO	GRAPHIC REF	PART NUMBER	QTY	PART NAME 1 2 3 4 5 6 (PRODUCT LEVEL)	SEE PAGE
	1	1	**5I-7628**	1	GASKET	
	2	1	**5I-8056**	1	PLUG	
M	3	1	**8T-4137**	2	BOLT (M10X1.5X20-MM)	
M	4	1	**8T-4195**	2	BOLT (M10X1.5X30-MM)	
	5	1	**8T-4896**	14	WASHER-HARD (10.2X18.5X2.5-MM THK)	
	6	1	**103-9280**	1	GASKET-REAR	
	7	1	**117-5015**	1	SEAL AS-OIL	
M	8	1	**140-5217**	10	BOLT (M10X1.25X25-MM)	
	9	1	**212-8499**	3	STUD	
M	10	1	**212-8510**	3	NUT (M10X1.25 THD)	
	11	1	**233-5482**	1	EYE	
	12	1	**315-7703**	1	HOUSING-FLYWHEEL	

M-METRIC PART

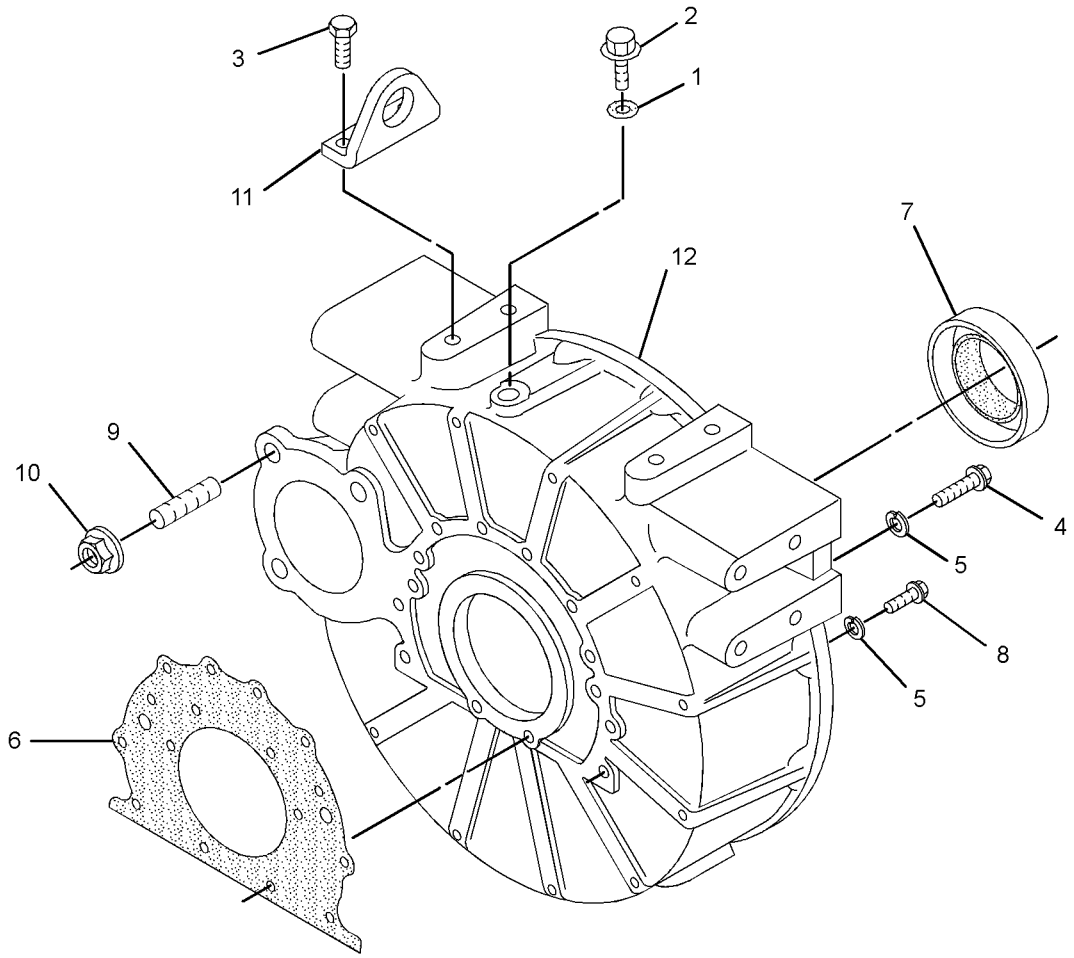

GRAPHIC #1 **<END>** g01433304

BASIC ENGINE

287-3074 HOUSING GP-FRONT

S/N: CJS1-60343

PART OF 262-7289 ENGINE AR-PRIMARY

AN ATTACHMENT

SMCS-1151, 1160, 1162, 1166, 3108 **i02674007**

NOTE	REF NO	GRAPHIC REF	PART NUMBER	QTY	PART NAME 1 2 3 4 5 6 (PRODUCT LEVEL)	SEE PAGE
	1	1	**9M-1974**	23	WASHER-HARD (8.8X16X2-MM THK)	
M	2	1	**8T-7329**	13	BOLT (M8X1.25X55-MM)	
	3	1	**096-9529**	1	SEAL-O-RING	
	4	1	**103-9277**	1	GASKET-FRONT PLATE	
	5	1	**117-3447**	1	GASKET	
	6	1	**117-3448**	1	PLATE	
M	7	1	**6V-5215**	5	BOLT (M8X1.25X16-MM)	
	10	1	**233-5497**	1	COVER-GEAR	
	11	1	**233-5498**	1	CAP-FILLER (ENGINE OIL)	
	13	1	**238-8279**	1	HOUSING-FRONT	
	14	1	**239-8429**	1	SEAL-CRANKSHAFT	
	15	1	**285-9066**	5	BOLT (M8X1.25X65-MM)	

M-METRIC PART

287-3074 **HOUSING GP-FRONT** *(contd.)* **i02674007**

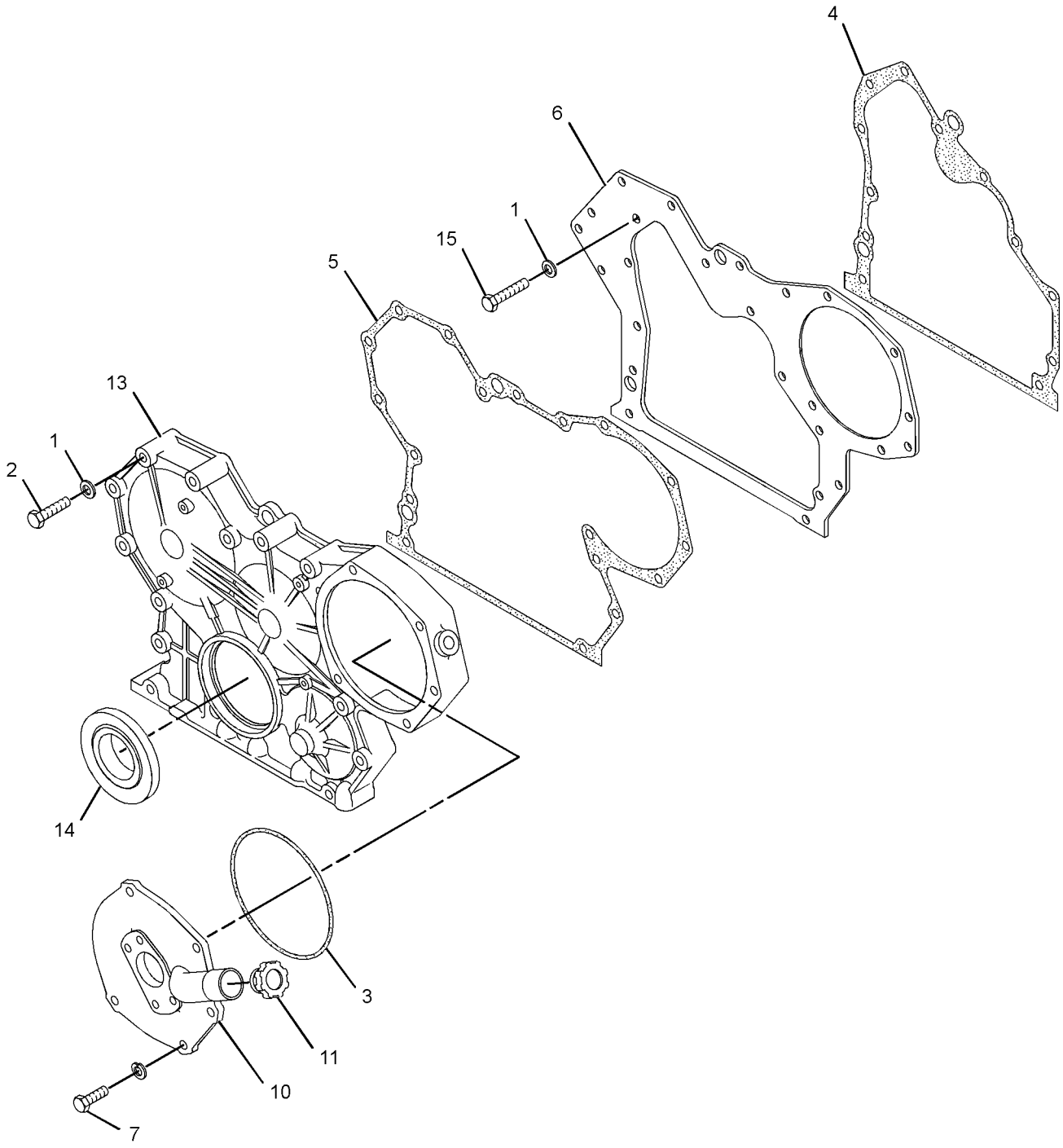

GRAPHIC #1 **<END>** g01351136

BASIC ENGINE

315-8336 HOUSING GP-FRONT

S/N: CYM1-UP

PART OF 287-8074, 319-6806 ENGINE AR-PRIMARY

AN ATTACHMENT

SMCS-1151, 1160, 1162, 1166, 3108 **i03245870**

NOTE	REF NO	GRAPHIC REF	PART NUMBER	QTY	PART NAME 1 2 3 4 5 6 (PRODUCT LEVEL)	SEE PAGE
	1	1	**3B-4505**	5	LOCKWASHER	
M	2	1	**6V-7357**	2	BOLT (M6X1X25-MM)	
M	3	1	**8T-4200**	5	BOLT (M8X1.25X16-MM)	
	4	1	**8T-4224**	15	WASHER-HARD (8.8X16X2-MM THK)	
M	5	1	**8T-7329**	11	BOLT (M8X1.25X55-MM)	
	6	1	**9X-8256**	6	WASHER (6.6X12X2-MM THK)	
	7	1	**096-2500**	2	LOCKWASHER	
	8	1	**096-9529**	1	SEAL-O-RING	
	9	1	**199-2212**	4	BOLT (M6X1X18-MM)	
	11	1	**246-1259**	1	COVER-INSULATION	
	12	1	**246-1260**	1	COVER-INSULATION	
	13	1	**285-9066**	4	BOLT (M8X1.25X65-MM)	
	14	1	**314-9947**	1	GASKET	
	15	1	**314-9948**	1	FASTENER GP-FRONT COVER	
	17	1	**315-4667**	1	GASKET	
	18	1	**315-4668**	1	PLATE	
	19	1	**315-4686**	1	HOUSING-FRONT	
	20	1	**315-4687**	1	COVER	
	21	1	**239-8429**	1	SEAL-CRANKSHAFT	

M-METRIC PART

315-8336 **HOUSING GP-FRONT** *(contd.)* **i03245870**

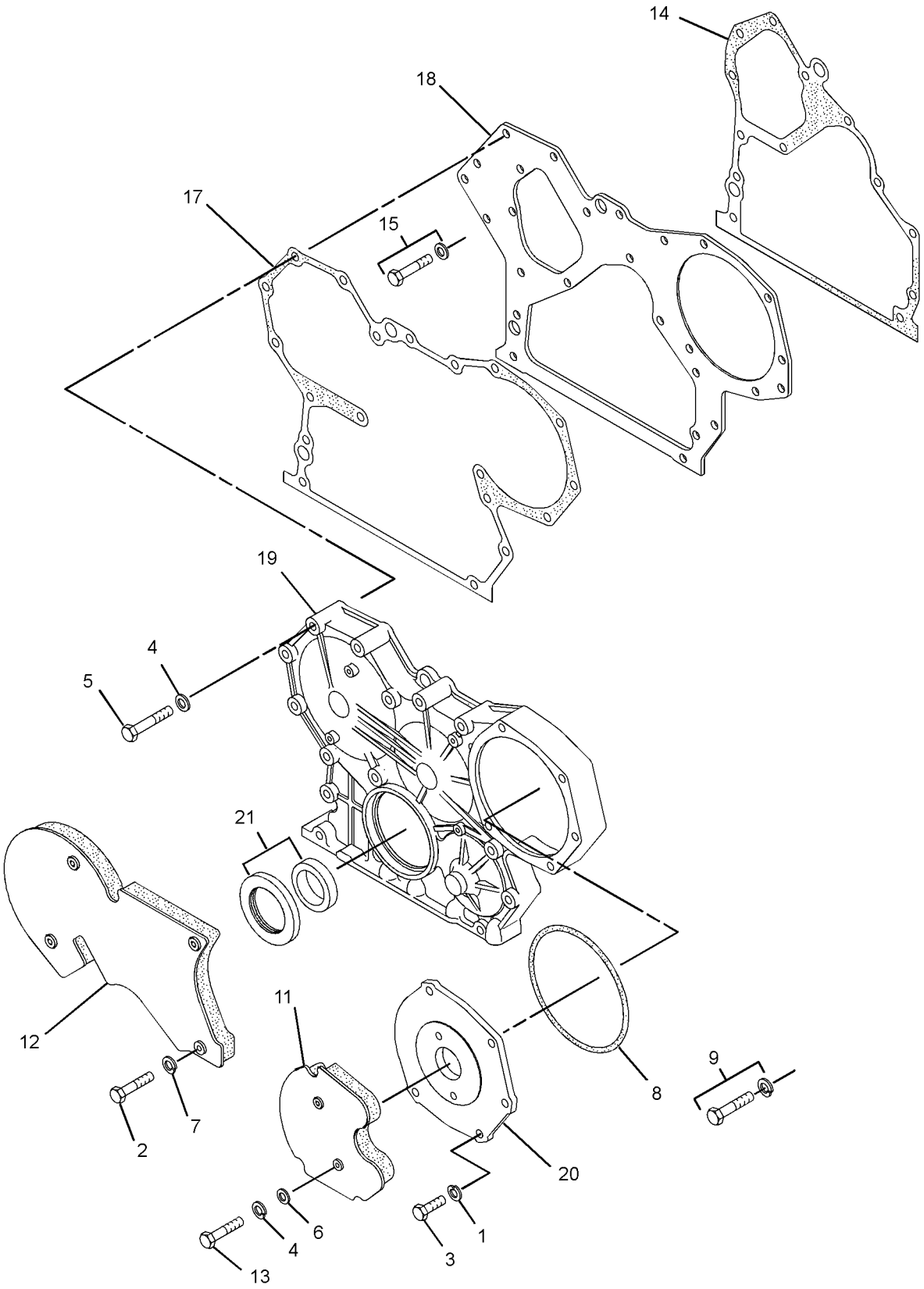

GRAPHIC #1 **<END>** g01658277

BASIC ENGINE

316-9040 HOUSING GP-FRONT

S/N: CJS60344-UP

PART OF 262-7289 ENGINE AR-PRIMARY

AN ATTACHMENT

SMCS-1151, 1160, 1162, 1166, 3108 **i02902182**

NOTE	REF NO	GRAPHIC REF	PART NUMBER	QTY	PART NAME 1 2 3 4 5 6 (PRODUCT LEVEL)	SEE PAGE
	1	1	**3B-4505**	5	LOCKWASHER	
M	2	1	**8T-4200**	5	BOLT (M8X1.25X16-MM)	
	3	1	**8T-4224**	13	WASHER-HARD (8.8X16X2-MM THK)	
M	4	1	**8T-7329**	13	BOLT (M8X1.25X55-MM)	
	5	1	**096-9529**	1	SEAL-O-RING	
	6	1	**103-9277**	1	GASKET-FRONT PLATE	
	7	1	**117-3447**	1	GASKET	
	8	1	**117-3448**	1	PLATE	
	9	1	**238-8279**	1	HOUSING-FRONT	
	10	1	**239-8429**	2	SEAL-CRANKSHAFT	
	11	1	**246-1258**	1	COVER-GEAR	
	12	1	**314-9948**	5	FASTENER GP-FRONT COVER	

M-METRIC PART

316-9040 **HOUSING GP-FRONT** *(contd.)* **i02902182**

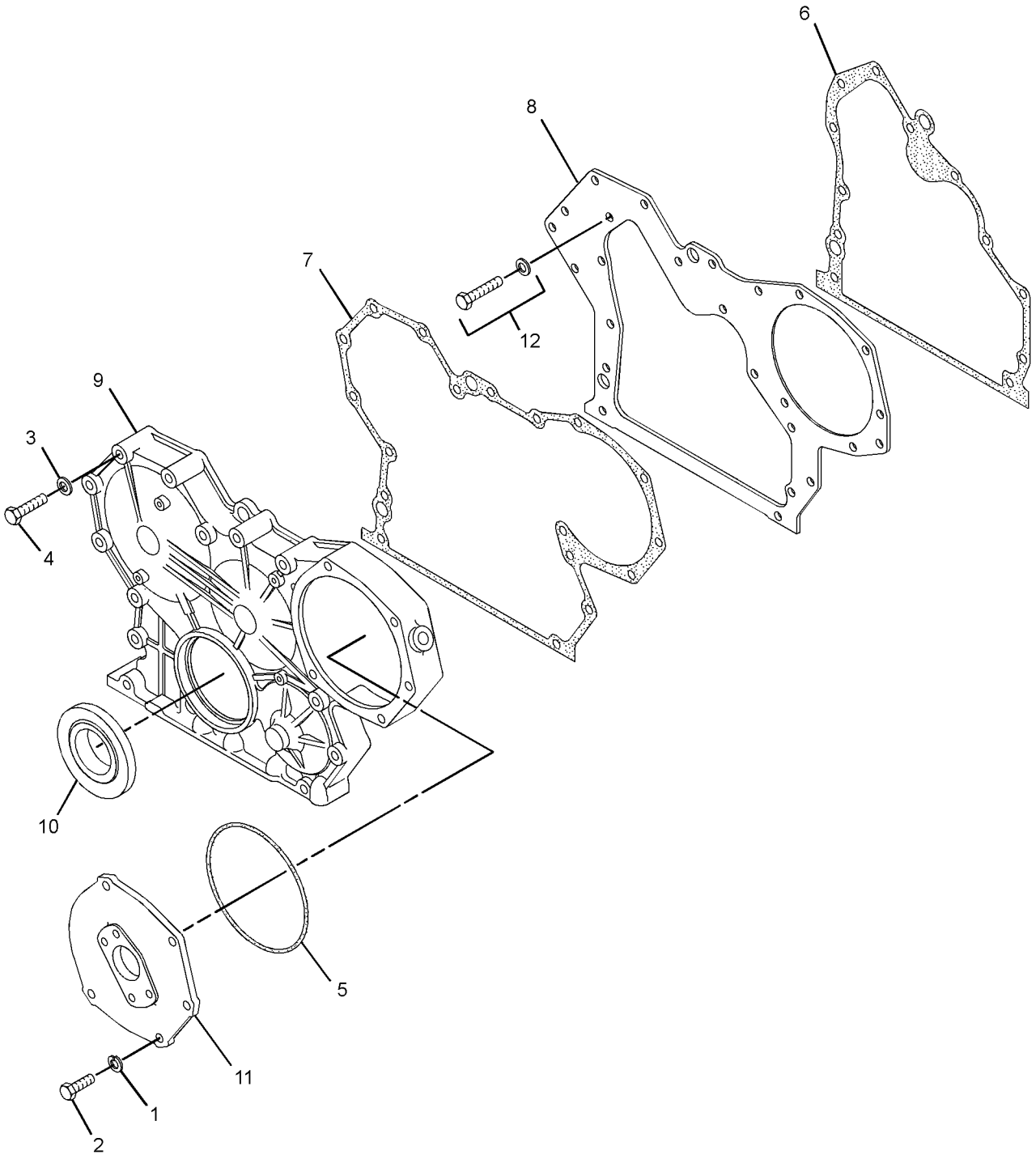

GRAPHIC #1 **<END>** g01401110

BASIC ENGINE

287-1844 LIFTING GP-ENGINE

S/N: CJS1-60343
PART OF 262-7289 ENGINE AR-PRIMARY
AN ATTACHMENT

SMCS-1122 **i02816278**

NOTE	REF NO	GRAPHIC REF	PART NUMBER	QTY	PART NAME 1 2 3 4 5 6 (PRODUCT LEVEL)	SEE PAGE
	1	1	**233-5466**	1	EYE	
	2	1	**233-5468**	1	GASKET	
	3	1	**234-4810**	1	COVER-CYLINDER HEAD	
M	4	1	**199-2205**	4	BOLT AS	
	5	1	**3B-4505**	4	LOCKWASHER	

M-METRIC PART

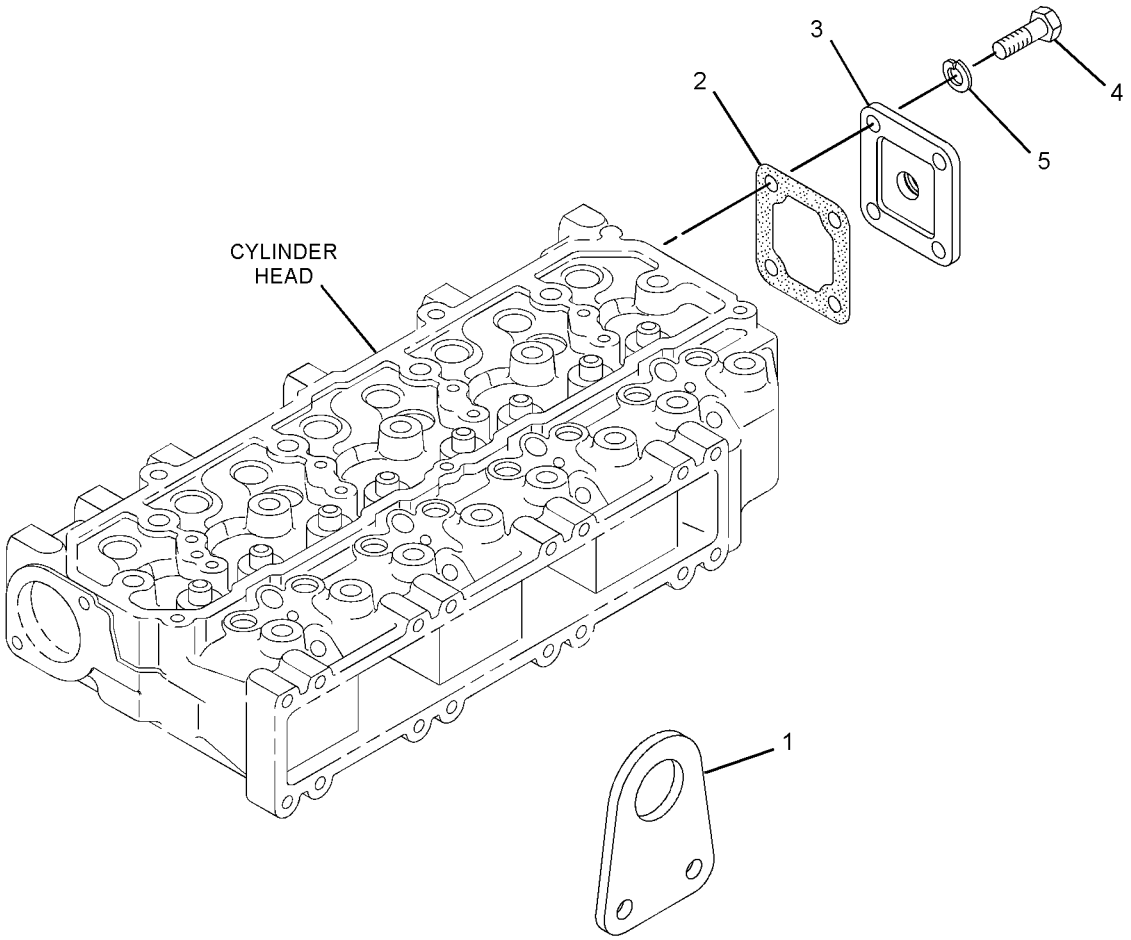

GRAPHIC #1 **<END>** g01352020

315-7761 LIFTING GP-ENGINE

S/N: CYM1-UP; CJS60344-UP
PART OF 262-7289, 287-8074, 319-6806 ENGINE AR-PRIMARY
AN ATTACHMENT

SMCS-1122 **i02864974**

NOTE	REF NO	GRAPHIC REF	PART NUMBER	QTY	PART NAME 1 2 3 4 5 6 (PRODUCT LEVEL)	SEE PAGE
	1	1	**3B-4505**	4	LOCKWASHER	
M	2	1	**8T-4200**	4	BOLT (M8X1.25X16-MM)	
	3	1	**233-5466**	1	EYE	
	4	1	**233-5468**	1	GASKET	
	5	1	**315-7704**	1	COVER	

M-METRIC PART

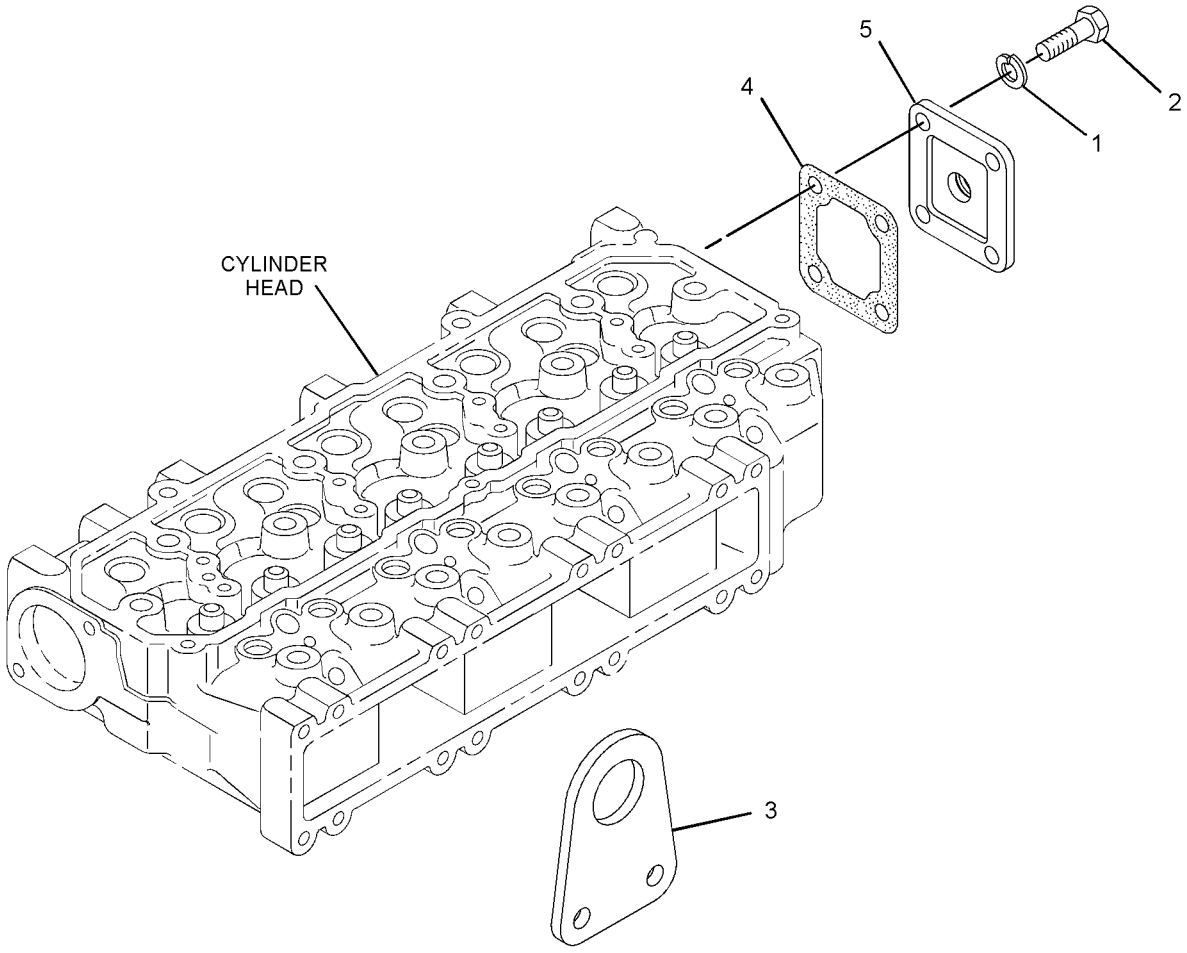

GRAPHIC #1 **<END>** g01430113

BASIC ENGINE

258-2447 MOUNTING GP-ENGINE

S/N: MST1-UP

PART OF 258-2445, 295-7118 INSTALLATION AR-ENGINE

SMCS-1152, 1153, 1154 **i03635708**

NOTE	REF NO	GRAPHIC REF	PART NUMBER	QTY	PART NAME 1 2 3 4 5 6 (PRODUCT LEVEL)	SEE PAGE
	1	1	**280-8308**	4	WASHER	
	2	1	**118-2990**	2	MOUNT AS	
	3	1	**230-3621**	1	MOUNT AS	
		1	**149-3488**	2	MOUNT-ENGINE	
		1	**241-6397**	1	SLEEVE	
	4	1	**258-2448**	1	BRACKET AS	
	5	1	**258-2449**	2	BRACKET AS	
	6	1	**258-3447**	2	BOLT AS	
M	7	1	**129-3180**	1	LOCKNUT (M12X1.75-THD)	
	8	1	**165-7095**	4	WASHER (16.5X71.5X3-MM THK)	
	9	1	**5P-1076**	2	WASHER-HARD (13.5X30X4-MM THK)	
	10	1	**8T-4122**	2	WASHER-HARD (17X32X3.5-MM THK)	
M	11	1	**8T-4132**	2	NUT (M16X2-THD)	
M	12	1	**8T-4176**	1	BOLT (M12X1.75X90-MM)	
M	13	1	**8T-4192**	16	BOLT (M12X1.75X25-MM)	
	14	1	**8T-4223**	16	WASHER-HARD (13.5X25.5X3-MM THK)	
	15	1	**280-8299**	2	ROD	

M-METRIC PART

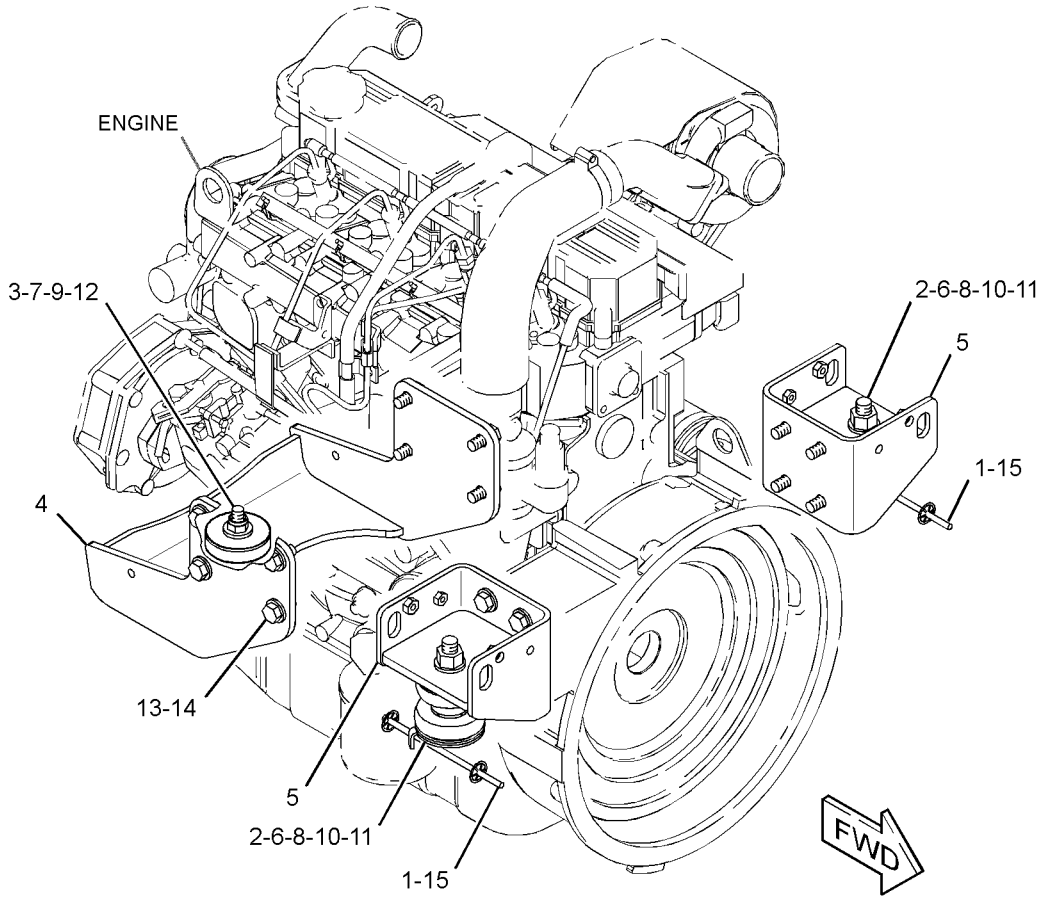

GRAPHIC #1 **<END>** g01341126

287-3921 PAN GP-OIL

S/N: CJS1-60343
PART OF 262-7289 ENGINE AR-PRIMARY
AN ATTACHMENT

SMCS-1302 **i03463441**

NOTE	REF NO	GRAPHIC REF	PART NUMBER	QTY	PART NAME 1 2 3 4 5 6 (PRODUCT LEVEL)	SEE PAGE
	1	1	**5I-4993**	2	SEAL	
M	2	1	**195-8403**	1	BOLT AS	
	3	1	**3B-4505**	25	LOCKWASHER	
	4	1	**234-4812**	1	GUIDE	
	5	1	**234-4813**	1	STAY	
	6	1	**323-6266**	1	GAUGE-OIL (DIPSTICK, ENGINE)	
	7	1	**235-4957**	1	GUIDE	
	8	1	**287-3922**	1	PAN AS-OIL	
	8A	1	**5I-7833**	1	PLUG-DRAIN (ENGINE OIL PAN)	
	8B	1	**234-4811**	1	WASHER	
M	9	1	**8T-4200**	25	BOLT (M8X1.25X16-MM)	
BF			**165-2601**		SEALANT-SILICONE	

B-USE AS REQUIRED
F-NOT SHOWN
M-METRIC PART

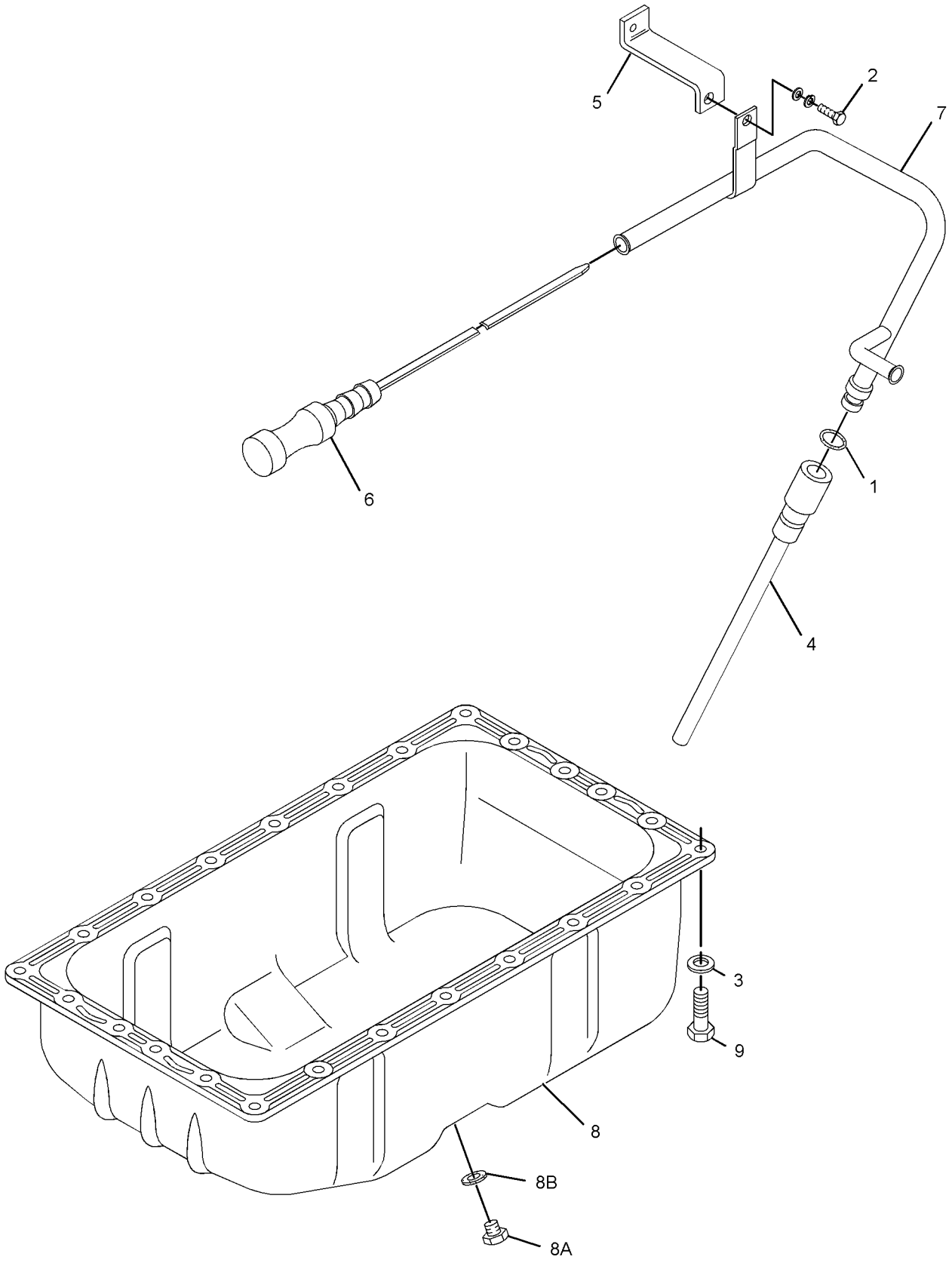

GRAPHIC #1 **<END>** g01377905

BASIC ENGINE

315-7765 PAN GP-OIL

S/N: CYM1-UP
PART OF 287-8074 ENGINE AR-PRIMARY
AN ATTACHMENT
TYPE 1

SMCS-1302 **i02939180**

NOTE	REF NO	GRAPHIC REF	PART NUMBER	QTY	PART NAME 1 2 3 4 5 6 (PRODUCT LEVEL)	SEE PAGE
	1	1	**3B-4505**	25	LOCKWASHER	
	2	1	**5I-4993**	2	SEAL	
M	3	1	**8T-4200**	25	BOLT (M8X1.25X16-MM)	
	4	1	**165-2601**	1	SEALANT-SILICONE	
M	5	1	**195-8403**	1	BOLT AS	
	6	1	**234-4812**	1	GUIDE	
	7	1	**300-9449**	1	PAN AS-OIL	
	7A	1	**096-8482**	1	GASKET	
	7B	1	**135-8432**	1	PLUG (DRAIN, ENGINE OIL)	
	8	1	**309-8909**	1	GAUGE GP-OIL LEVEL (DIPSTICK) (ENGINE)	
	9	1	**315-2354**	1	STAY	
	10	1	**315-2356**	1	GUIDE	

M-METRIC PART

315-7765 **PAN GP-OIL** *(contd.)* **i02939180**

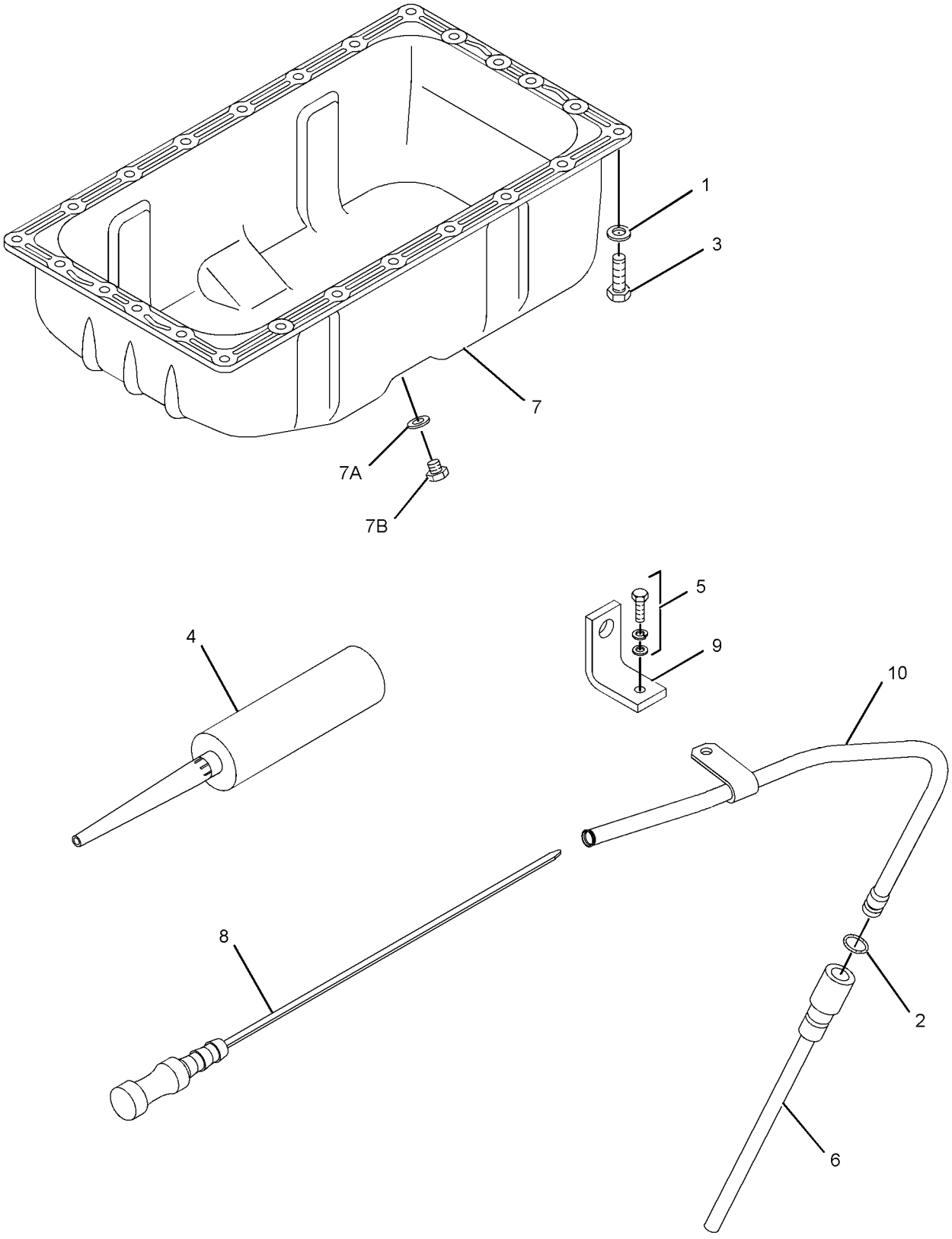

GRAPHIC #1 **<END>** g01446213

315-7765 PAN GP-OIL

S/N: CYM1-UP
PART OF 287-8074 ENGINE AR-PRIMARY
AN ATTACHMENT
TYPE 2

SMCS-1302 **i03198483**

NOTE	REF NO	GRAPHIC REF	PART NUMBER	QTY	PART NAME 1 2 3 4 5 6 (PRODUCT LEVEL)	SEE PAGE
	1	1	**3B-4505**	25	LOCKWASHER	
	2	1	**5I-4993**	2	SEAL	
M	3	1	**8T-4200**	25	BOLT (M8X1.25X16-MM)	
	4	1	**165-2601**	1	SEALANT-SILICONE	
M	5	1	**195-8403**	1	BOLT AS	
	6	1	**234-4812**	1	GUIDE	
	7	1	**300-9449**	1	PAN AS-OIL	
	7A	1	**096-8482**	1	GASKET	
	7B	1	**135-8432**	1	PLUG (DRAIN, ENGINE OIL)	
	8	1	**309-8909**	1	GAUGE GP-OIL LEVEL (DIPSTICK) (ENGINE)	
C	9	1	**325-5905**	1	BRACKET	
	10	1	**315-2356**	1	GUIDE	

C-CHANGE FROM PREVIOUS TYPE
M-METRIC PART

315-7765 **PAN GP-OIL** *(contd.)* **i03198483**

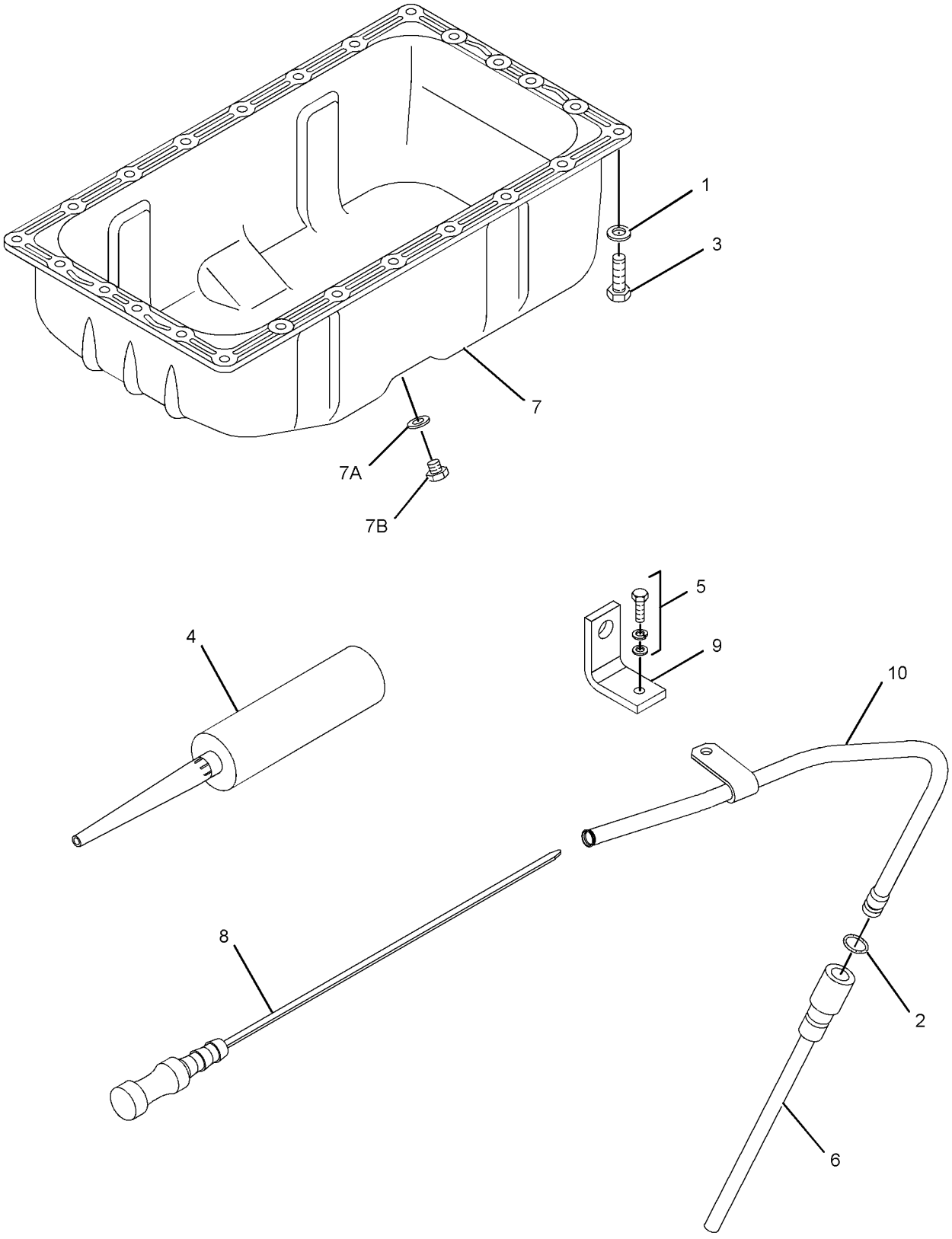

GRAPHIC #1 **<END>** g01852093

317-5082 PAN GP-OIL

S/N: CJS60344-UP
PART OF 262-7289 ENGINE AR-PRIMARY
AN ATTACHMENT

SMCS-1302 **i03296280**

NOTE	PART NUMBER	QTY	PART NAME 1 2 3 4 5 6 (PRODUCT LEVEL)	SEE PAGE
M	**8T-4200**	25	BOLT (M8X1.25X16-MM)	
M	**195-8403**	1	BOLT AS	
	309-8909	1	GAUGE GP-OIL LEVEL (DIPSTICK) (ENGINE)	
	3B-4505	25	LOCKWASHER	
	300-9449	1	PAN AS-OIL	
	096-8482	1	GASKET	
	135-8432	1	PLUG (DRAIN, ENGINE OIL)	
	5I-4993	2	SEAL	
B	**165-2601**	1	SEALANT-SILICONE	
	234-4813	1	STAY	
	309-8907	1	TUBE	
	309-8908	1	TUBE AS-OIL LEVEL	

B-USE AS REQUIRED
M-METRIC PART

<END>

BASIC ENGINE

335-5772 PAN GP-OIL

S/N: CYM1-UP
PART OF 319-6806 ENGINE AR-PRIMARY
AN ATTACHMENT

SMCS-1302 **i03254949**

NOTE	REF NO	GRAPHIC REF	PART NUMBER	QTY	PART NAME 1 2 3 4 5 6 (PRODUCT LEVEL)	SEE PAGE
	1	1	**3B-4505**	25	LOCKWASHER	
	2	1	**5I-4993**	2	SEAL	
M	3	1	**8T-4200**	25	BOLT (M8X1.25X16-MM)	
	4	1	**165-2601**	1	SEALANT-SILICONE	
M	5	1	**195-8403**	1	BOLT AS	
	6	1	**300-9449**	1	PAN AS-OIL	
	6A	1	**096-8482**	1	GASKET	
	6B	1	**135-8432**	1	PLUG (DRAIN, ENGINE OIL)	
	7	1	**325-5905**	1	BRACKET	
	8	1	**335-5768**	1	GAUGE-OIL LEVEL (DIPSTICK) (ENGINE)	
	9	1	**335-5769**	1	TUBE-OIL GAUGE	

M-METRIC PART

335-5772 **PAN GP-OIL** *(contd.)* **i03254949**

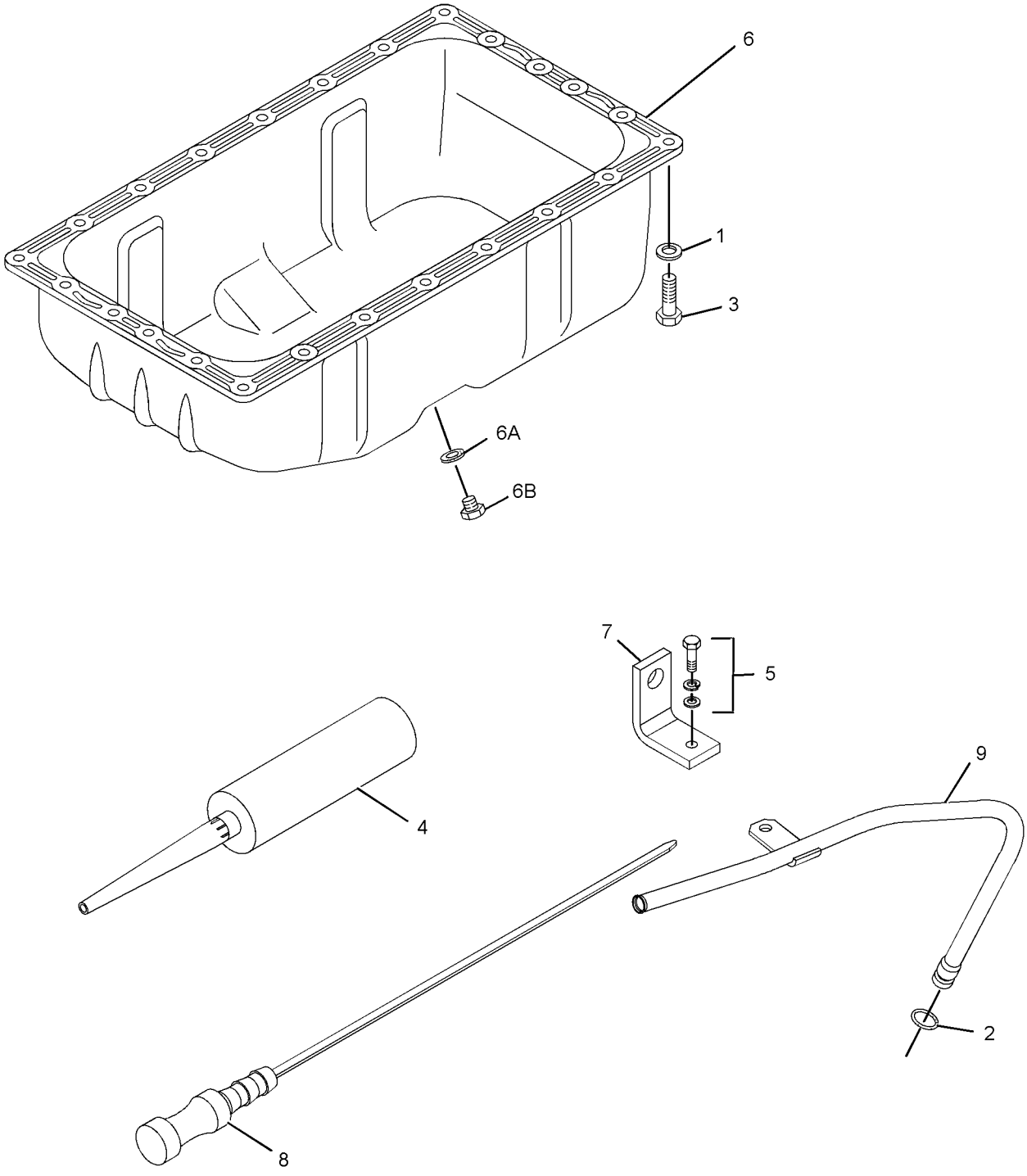

GRAPHIC #1 **<END>** g01665656

235-5889 PISTON GP

S/N: CJS1-UP
PART OF 262-7289 ENGINE AR-PRIMARY
AN ATTACHMENT

SMCS-1214, 1215 **i02887927**

NOTE	REF NO	GRAPHIC REF	PART NUMBER	QTY	PART NAME 1 2 3 4 5 6 (PRODUCT LEVEL)	SEE PAGE
	1	1	**257-8738**	8	RING-SNAP	
	2	1	**234-4815**	4	PIN-PISTON	
R	3	1	**234-4814**	4	PISTON (STANDARD)	
ABR		1	**234-4816**		PISTON (0.50-MM OS)	
ABR		1	**234-4817**		PISTON (0.25-MM OS)	
	4	1	**226-8204**	4	SET-PISTON RING (STANDARD)	
AB		1	**238-8280**		RING GP-PISTON (0.25MM OS)	
AB		1	**238-8281**		RING GP-PISTON (0.50MM OS)	

A-NOT PART OF THIS GROUP
B-USE AS REQUIRED
R-REMFG PART MAY BE AVAILABLE

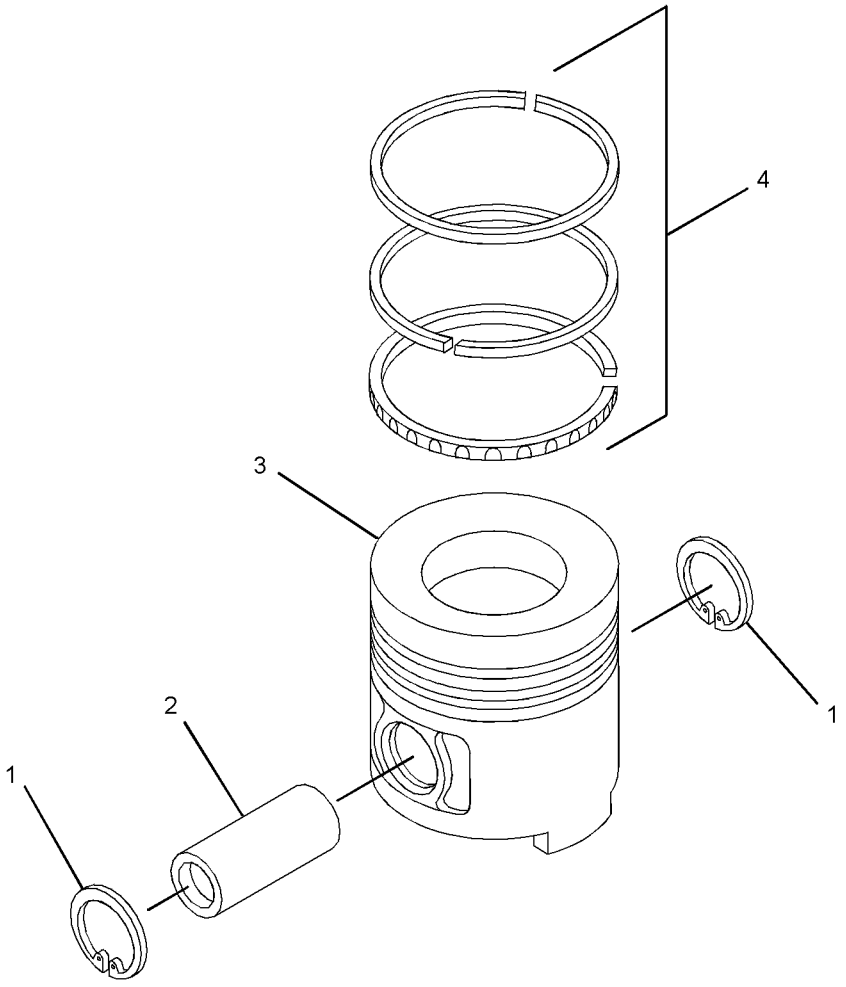

GRAPHIC #1 **<END>** g01348295

314-9855 PISTON GP

S/N: CYM1-UP
PART OF 287-8074, 319-6806 ENGINE AR-PRIMARY
AN ATTACHMENT

SMCS-1214, 1215 **i02879781**

NOTE	REF NO	GRAPHIC REF	PART NUMBER	QTY	PART NAME 1 2 3 4 5 6 (PRODUCT LEVEL)	SEE PAGE
	1	1	**257-8738**	8	RING-SNAP	
	2	1	**234-4815**	4	PIN-PISTON	
	3	1	**314-9959**	4	PISTON (STANDARD)	
AB		1	**314-9952**		PISTON (0.25-MM OS)	
AB		1	**314-9961**		PISTON (0.5-MM OS)	
	4	1	**314-9962**	4	RING-PISTON (STANDARD)	
AB		1	**314-9964**		RING-PISTON (0.25-MM OS)	
AB		1	**314-9963**		RING-PISTON (0.5-MM OS)	

A-NOT PART OF THIS GROUP
B-USE AS REQUIRED

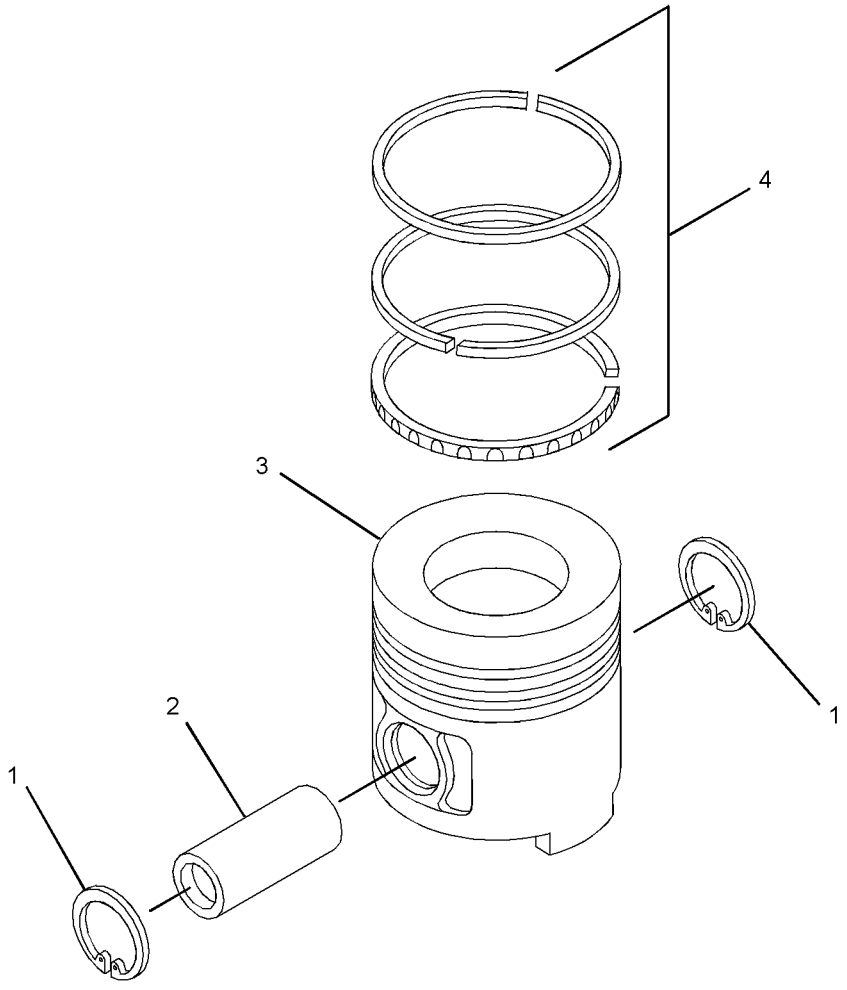

GRAPHIC #1 **<END>** g01348295

287-2922 PLUG GP-ENGINE

S/N: CYM1-UP; CJS1-UP
PART OF 262-7289, 287-8074, 319-6806 ENGINE AR-PRIMARY
AN ATTACHMENT

SMCS-1000 **i02568378**

NOTE	REF NO	GRAPHIC REF	PART NUMBER	QTY	PART NAME 1 2 3 4 5 6 (PRODUCT LEVEL)	SEE PAGE
	1	1	**5I-7505**	6	PLUG	

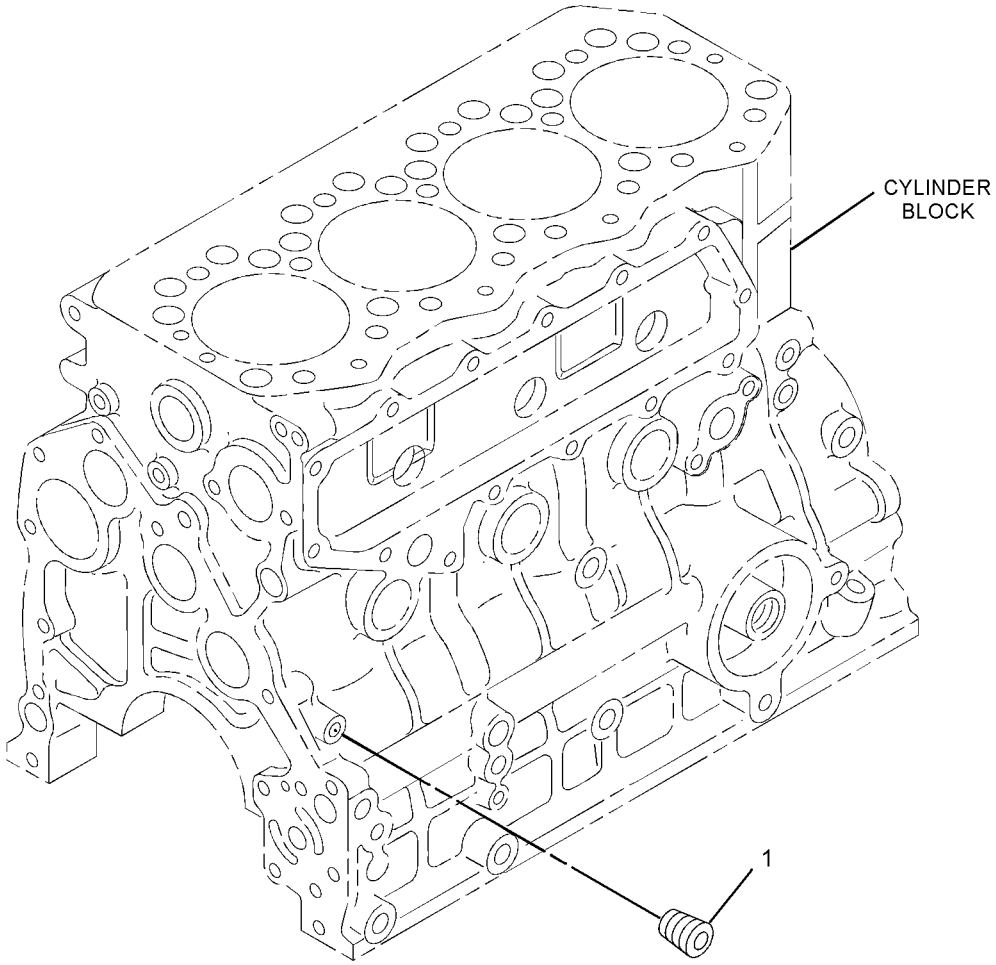

GRAPHIC #1 **<END>** g01325237

287-2983 PLUG GP-ENGINE

S/N: CYM1-UP; CJS1-UP
PART OF 262-7289, 287-8074, 319-6806 ENGINE AR-PRIMARY
AN ATTACHMENT

SMCS-1000 **i02616574**

NOTE	REF NO	GRAPHIC REF	PART NUMBER	QTY	PART NAME 1 2 3 4 5 6 (PRODUCT LEVEL)	SEE PAGE
	1	1	**195-8211**	1	PLUG	

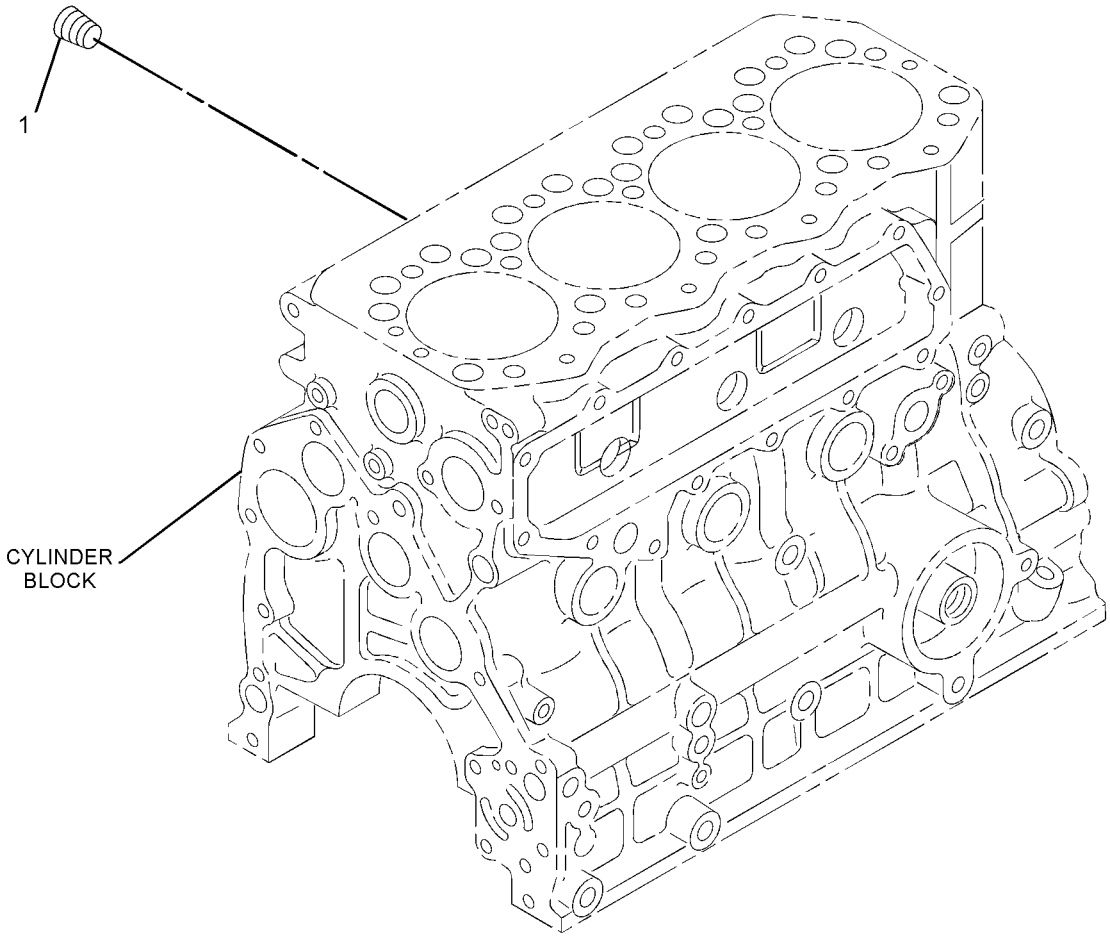

GRAPHIC #1 **<END>** g01325240

287-4749 PULLEY GP-CRANKSHAFT

S/N: CJS1-60343
PART OF 262-7289 ENGINE AR-PRIMARY
AN ATTACHMENT

SMCS-1205 **i02568579**

NOTE	REF NO	GRAPHIC REF	PART NUMBER	QTY	PART NAME 1 2 3 4 5 6 (PRODUCT LEVEL)	SEE PAGE
	1	1	**287-4748**	1	PULLEY-CRANKSHAFT	

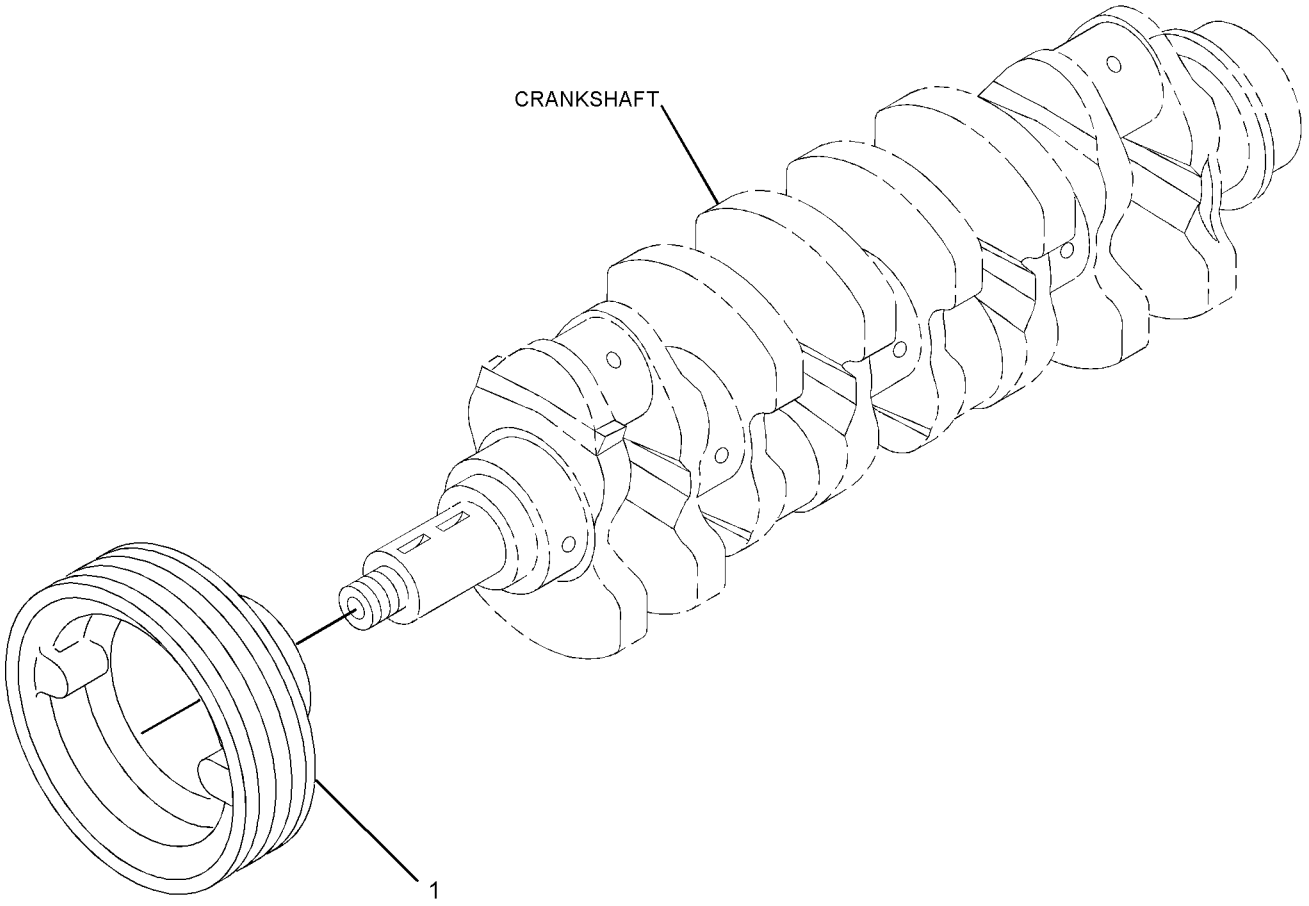

GRAPHIC #1 **<END>** g01321554

301-3396 PULLEY GP-CRANKSHAFT

S/N: CYM1-UP; CJS60344-UP
PART OF 262-7289, 287-8074, 319-6806 ENGINE AR-PRIMARY
AN ATTACHMENT

SMCS-1205 **i02864961**

NOTE	REF NO	GRAPHIC REF	PART NUMBER	QTY	PART NAME 1 2 3 4 5 6 (PRODUCT LEVEL)	SEE PAGE
	1	1	**301-3397**	1	PULLEY-CRANKSHAFT (2-GROOVE)	

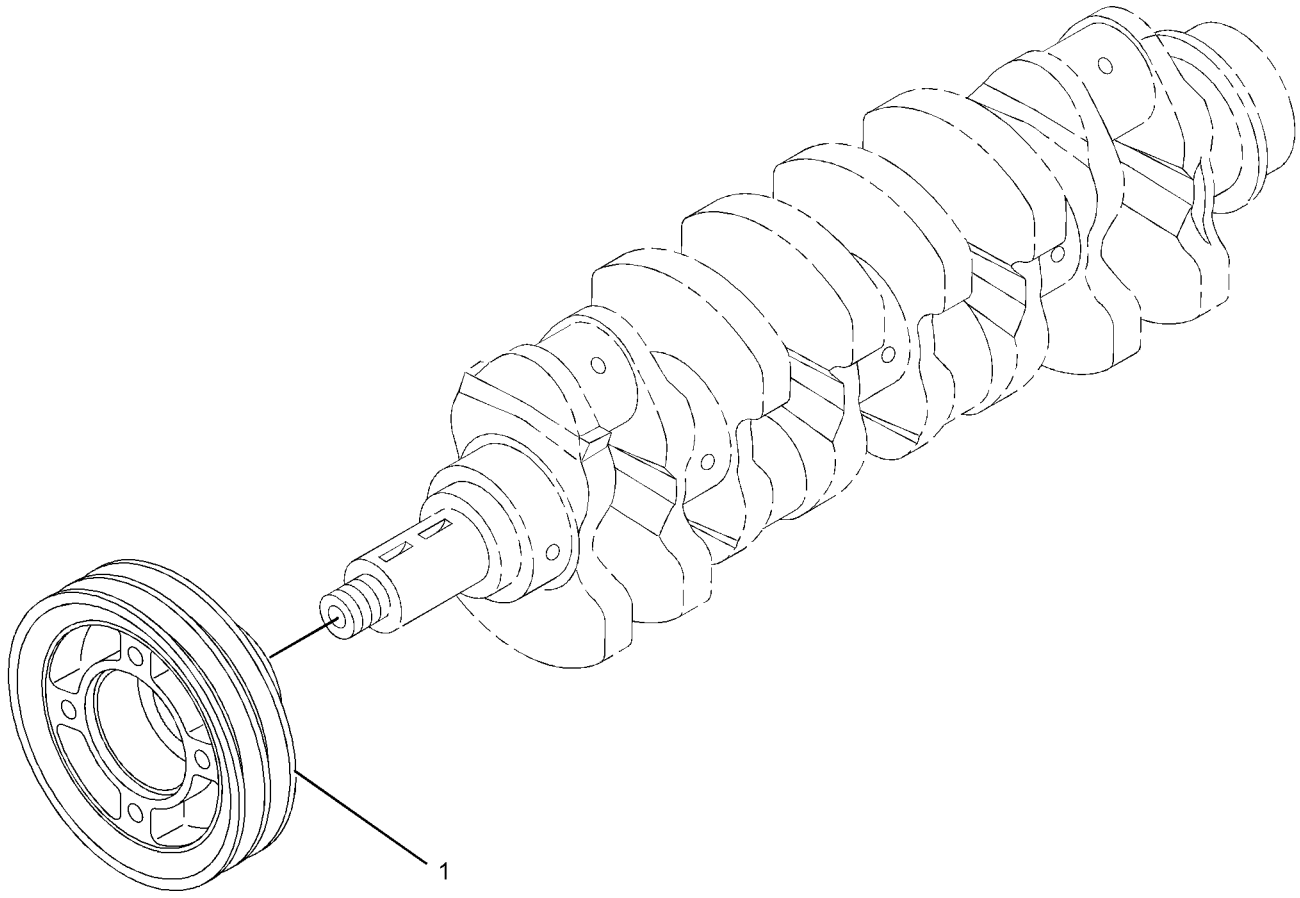

GRAPHIC #1 **<END>** g01351097

287-6114 PULLEY GP-WATER PUMP

S/N: CYM1-UP; CJS1-UP
PART OF 262-7289, 287-8074, 319-6806 ENGINE AR-PRIMARY
AN ATTACHMENT

SMCS-1384 **i03552847**

NOTE	REF NO	GRAPHIC REF	PART NUMBER	QTY	PART NAME 1 2 3 4 5 6 (PRODUCT LEVEL)	SEE PAGE
M	1	1	**8T-0642**	4	BOLT (M8X1.25X14-MM)	
	2	1	**9M-1974**	4	WASHER-HARD (8.8X16X2-MM THK)	
	3	1	**234-4807**	1	PULLEY (1-GROOVE)	

M-METRIC PART

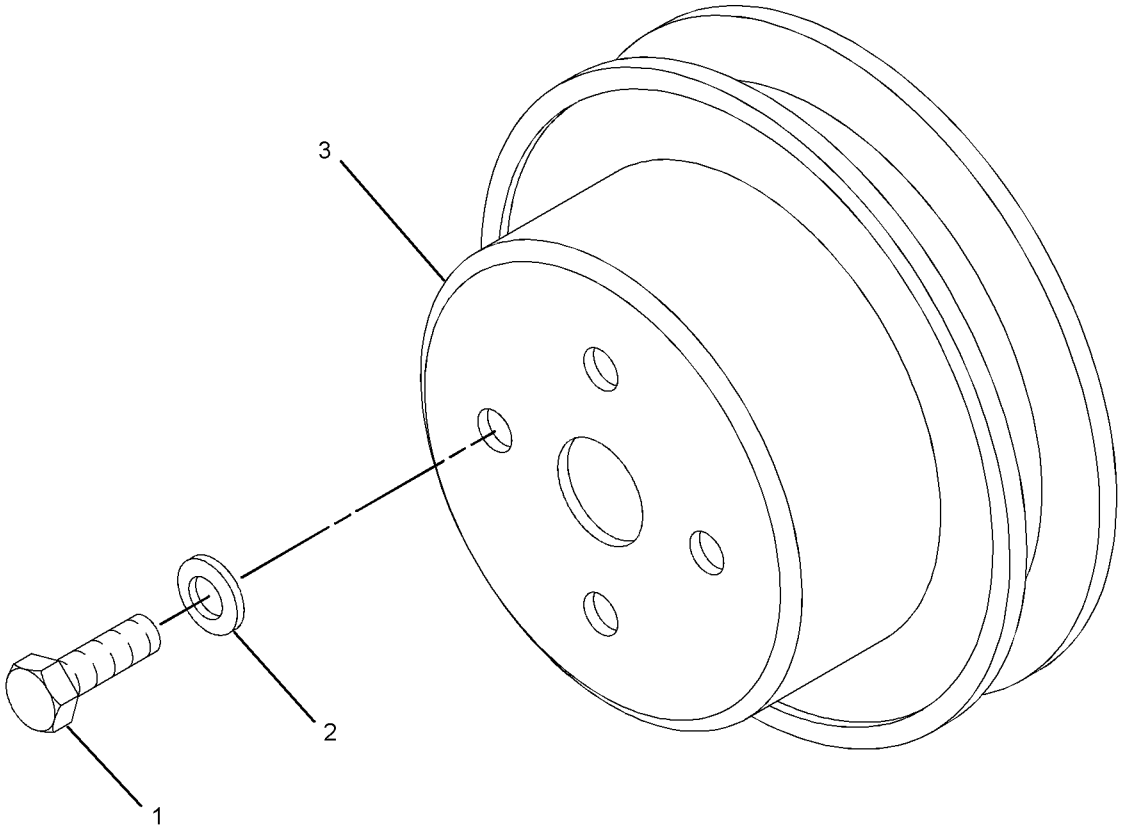

GRAPHIC #1 **<END>** g01326766

287-6138 V-BELT GP

S/N: CYM1-UP; CJS1-UP
WATER PUMP
PART OF 262-7289, 287-8074, 319-6806 ENGINE AR-PRIMARY
AN ATTACHMENT

SMCS-1357 **i02760620**

NOTE	REF NO	GRAPHIC REF	PART NUMBER	QTY	PART NAME 1 2 3 4 5 6 (PRODUCT LEVEL)	SEE PAGE
	1	1	**235-4972**	1	V-BELT (WATER PUMP)	

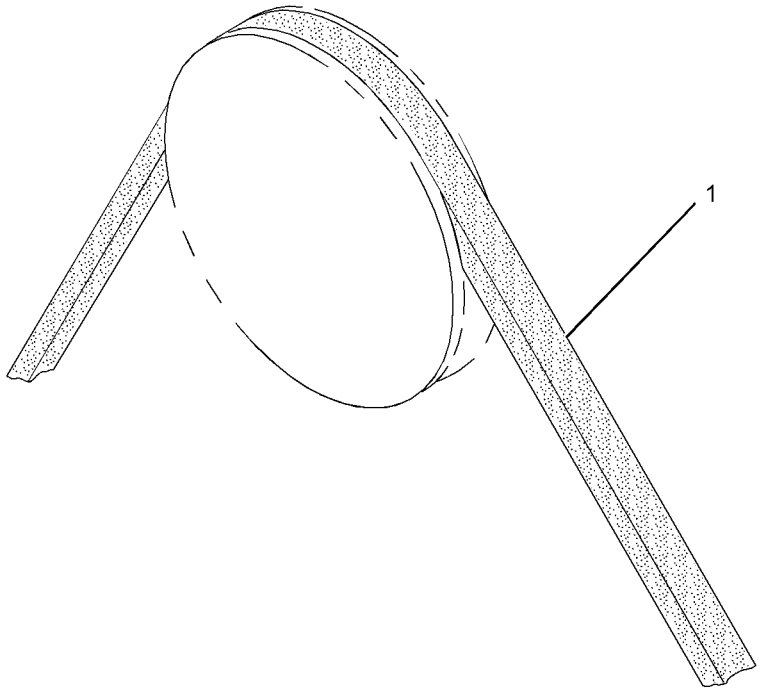

GRAPHIC #1 **<END>** g01321905

235-5880 VALVE MECHANISM GP

S/N: CYM1-UP; CJS1-UP

PART OF 262-7289, 287-8074, 319-6806 ENGINE AR-PRIMARY

AN ATTACHMENT

SMCS-1102, 1112, 1121, 1123, 1208, 1209 **i02628721**

NOTE	REF NO	GRAPHIC REF	PART NUMBER	QTY	PART NAME 1 2 3 4 5 6 (PRODUCT LEVEL)	SEE PAGE
	1	1	**5I-7625**	8	RETAINER	
	2	1	**5I-7630**	8	CAP	
	3	1	**5I-7719**	16	RETAINER	
M	4	1	**6V-3940**	4	BOLT (M8X1.25X25-MM)	
	5	1	**9M-1974**	4	WASHER-HARD (8.8X16X2-MM THK)	
	6	1	**233-5469**	4	VALVE-INLET	
	7	1	**233-5470**	4	VALVE-EXHAUST	
	8	1	**233-5471**	8	SPRING-VALVE	
	10	1	**233-5501**	1	ROCKER ARM GP	
		1	**233-5476**	1	SHAFT AS	
	10A	1	**095-2005**	1	CAP	
	10B	1	**195-8324**	2	RING-SNAP	
	10C	1	**221-5245**	8	ROCKER AS	
	10D	1	**221-5250**	3	SPRING	
	10E	1	**233-5477**	4	BRACKET	
	10F	1	**233-5478**	4	BOLT	

M-METRIC PART

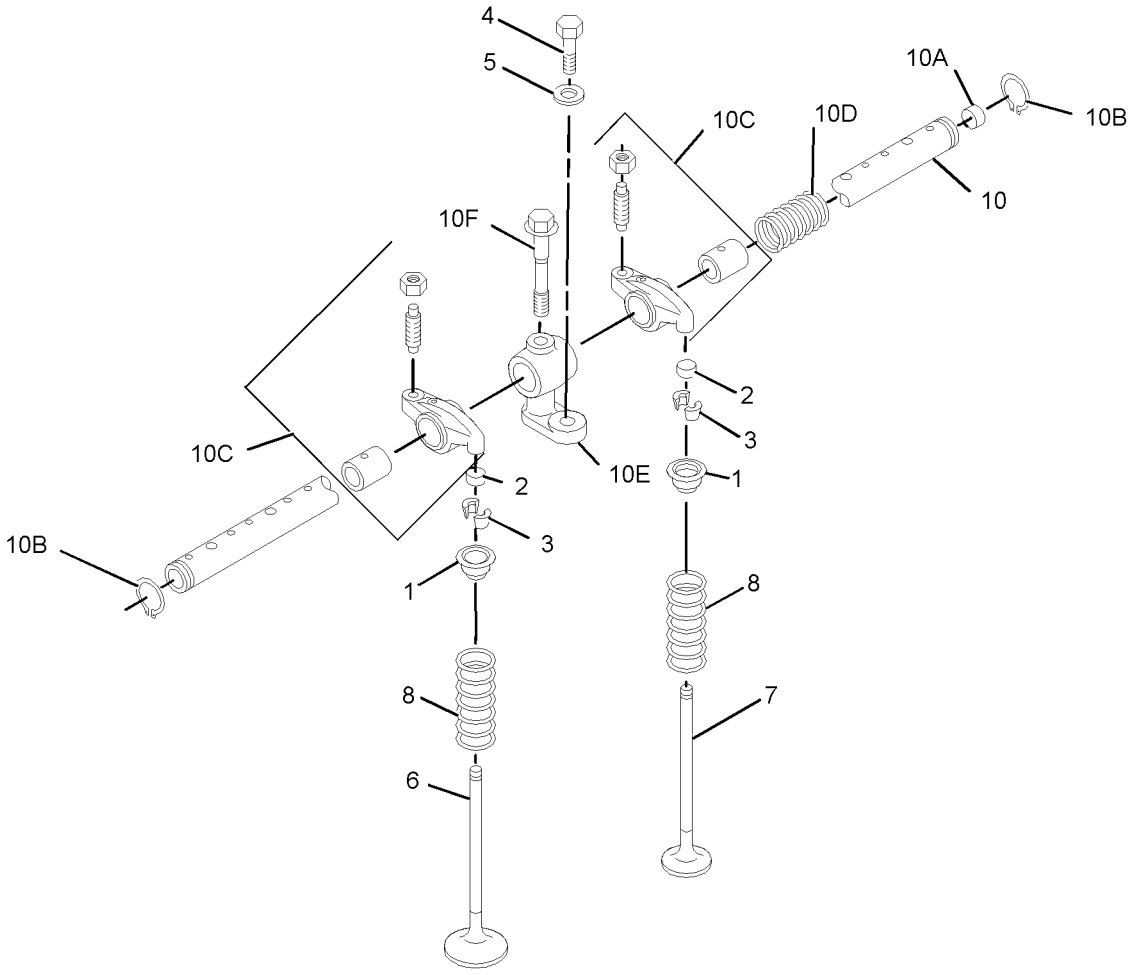

GRAPHIC #1 **<END>** g01348046

287-6016 BREATHER GP

S/N: CJS1-UP
CRANKCASE
PART OF 262-7289 ENGINE AR-PRIMARY
AN ATTACHMENT

SMCS-1317 **i03637507**

NOTE	REF NO	GRAPHIC REF	PART NUMBER	QTY	PART NAME 1 2 3 4 5 6 (PRODUCT LEVEL)	SEE PAGE
	1	1	**5I-8063**	1	CLIP	
	2	1	**115-0468**	2	CLIP	
	3	1	**151-5328**	1	CLAMP	
M	4	1	**195-8222**	2	BOLT AS	
	5	1	**195-8356**	2	BOLT AS	
M	6	1	**195-8449**	2	BOLT AS	
M	6A	1	**8T-3647**	1	BOLT (M8X1.25X80-MM)	
	6B	1	**3B-4505**	1	LOCKWASHER	
	6C	1	**8T-4224**	1	WASHER-HARD (8.8X16X2-MM THK)	
M	7	1	**199-2205**	1	BOLT AS	
M	7A	1	**8T-4200**	1	BOLT (M8X1.25X16-MM)	
	7B	1	**3B-4505**	1	LOCKWASHER	
	8	1	**234-4837**	1	CLIP-HOSE	
	9	1	**234-4838**	1	CLIP	
	10	1	**234-4839**	1	PIPE	
	11	1	**235-4931**	1	HOSE	
	12	1	**235-4937**	1	HOSE	
	13	1	**235-4942**	1	PLATE	
	14	1	**235-4951**	1	ADAPTER	
	15	1	**257-8389**	2	CLIP	
	16	1	**257-8739**	1	CLAMP-HOSE	
	17	1	**287-6015**	1	HOSE	
	18	1	**287-6017**	1	CLAMP-HOSE	
	19	1	**287-6020**	1	BREATHER (CRANKCASE)	
	20	1	**287-6021**	1	HOSE	
	21	1	**287-6022**	1	TUBE-BREATHER	

M-METRIC PART

287-6016 **BREATHER GP** *(contd.)* **i03637507**

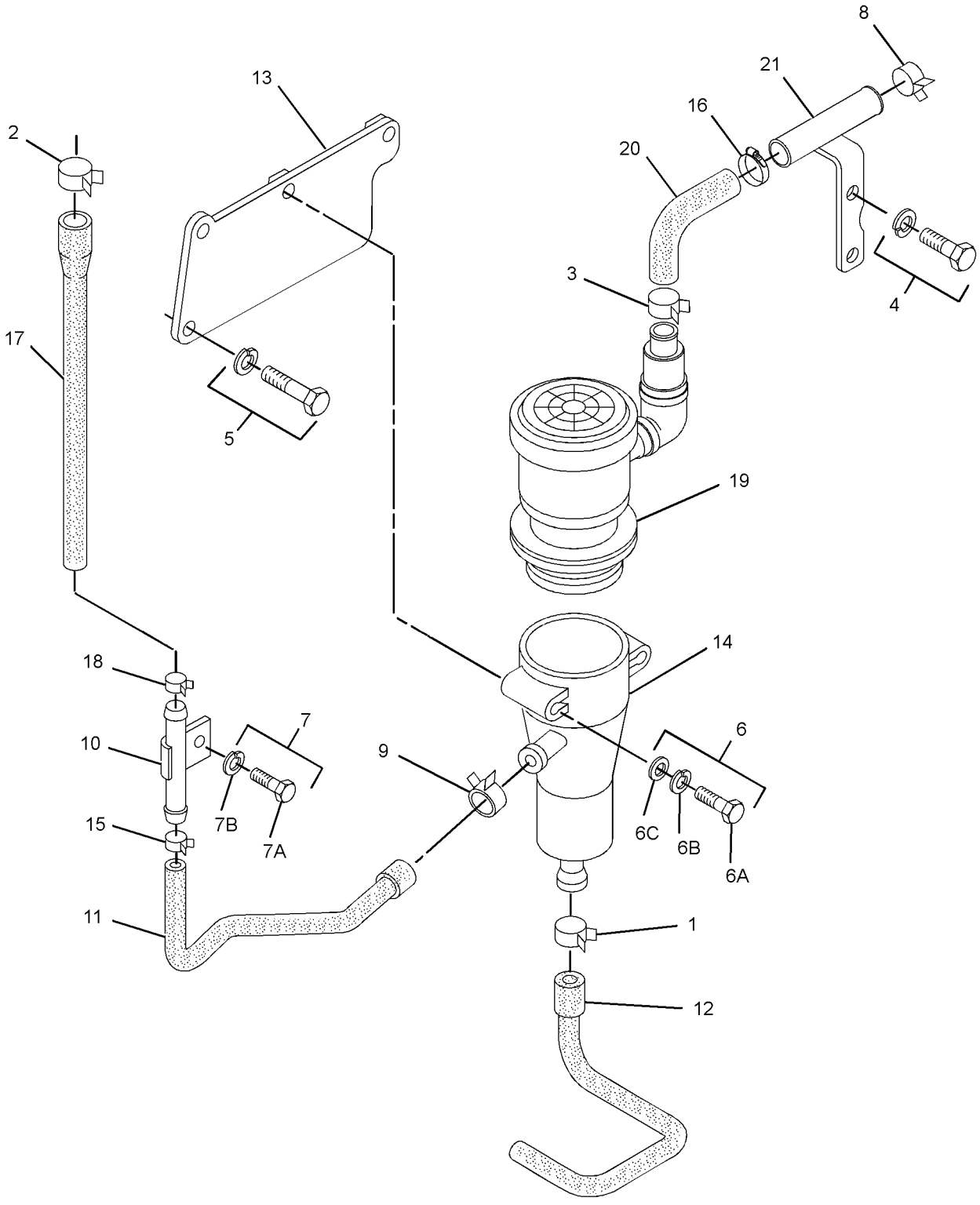

GRAPHIC #1 **<END>** g01355209

287-6016 BREATHER GP

S/N: CJS1-60343
CRANKCASE
PART OF 262-7289 ENGINE AR-PRIMARY
AN ATTACHMENT

SMCS-1317 **i03546181**

NOTE	REF NO	GRAPHIC REF	PART NUMBER	QTY	PART NAME 1 2 3 4 5 6 (PRODUCT LEVEL)	SEE PAGE
	1	1	**151-5328**	2	CLAMP	
	8	1	**234-4837**	1	CLIP-HOSE	
	9	1	**234-4838**	3	CLIP	
	10	1	**234-4839**	1	PIPE	
	11	1	**235-4931**	1	HOSE	
	12	1	**235-4937**	1	HOSE	
	13	1	**235-4942**	1	PLATE	
	14	1	**235-4951**	1	ADAPTER	
	15	1	**257-8389**	1	CLIP	
	17	1	**287-6015**	1	HOSE	
	20	1	**287-6021**	1	HOSE	
	22	1	**3B-4505**	3	LOCKWASHER	
M	23	1	**6V-2317**	2	BOLT (M8X1.25X30-MM)	
M	24	1	**6V-5221**	2	BOLT (M8X1.25X80-MM)	
M	25	1	**8T-4200**	2	BOLT (M8X1.25X16-MM)	
	26	1	**9M-1974**	2	WASHER-HARD (8.8X16X2-MM THK)	
	27	1	**318-8033**	1	TUBE-BREATHER	
	28	1	**263-3452**	1	ELBOW	
	29	1	**239-4261**	1	HOSE-BREATHER	

M-METRIC PART

287-6016 **BREATHER GP** *(contd.)* **i03546181**

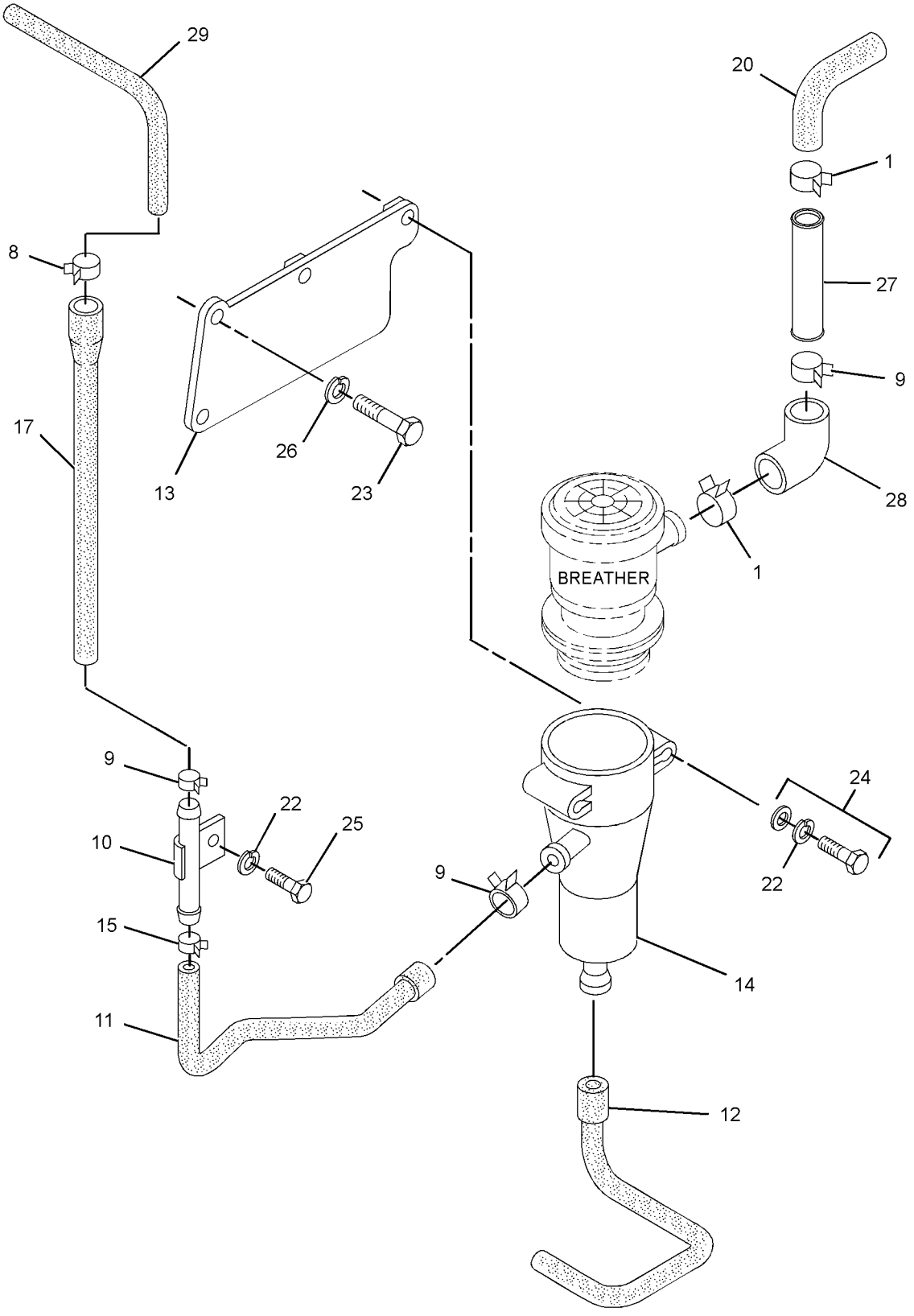

GRAPHIC #1 **<END>** g01942994

235-5897 FILTER GP-ENGINE OIL

S/N: CJS1-60343
PART OF 262-7289 ENGINE AR-PRIMARY
AN ATTACHMENT

SMCS-1308 **i02524392**

NOTE	REF NO	GRAPHIC REF	PART NUMBER	QTY	PART NAME 1 2 3 4 5 6 (PRODUCT LEVEL)	SEE PAGE
	1	1	**1R-0734**	1	FILTER-ENGINE OIL	
M	2	1	**6V-3940**	1	BOLT (M8X1.25X25-MM)	
	3	1	**9M-1974**	1	WASHER-HARD (8.8X16X2-MM THK)	
	4	1	**095-1537**	1	SEAL-O-RING	
	5	1	**095-1671**	1	SEAL-O-RING	
	6	1	**234-4827**	1	BOLT	
	7	1	**235-4955**	1	BRACKET AS	
	7A	1	**234-4826**	1	UNION	

M-METRIC PART

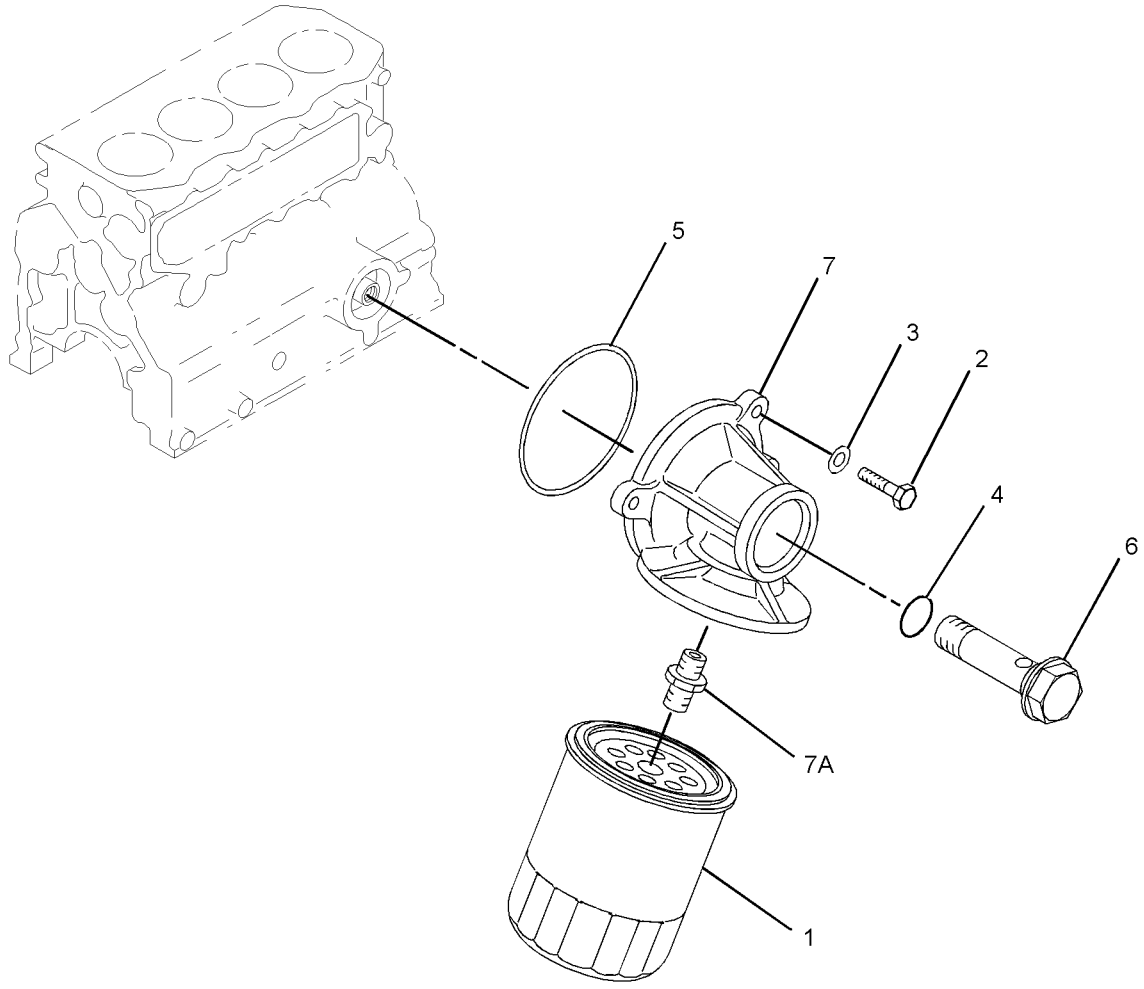

GRAPHIC #1 **<END>** g01347957

314-9901 FILTER GP-ENGINE OIL

S/N: CYM1-UP
PART OF 287-8074, 319-6806 ENGINE AR-PRIMARY
AN ATTACHMENT

SMCS-1308 **i02895566**

NOTE	REF NO	GRAPHIC REF	PART NUMBER	QTY	PART NAME 1 2 3 4 5 6 (PRODUCT LEVEL)	SEE PAGE
M	1	1	**6V-3940**	1	BOLT (M8X1.25X25-MM)	
	2	1	**9M-1974**	1	WASHER-HARD (8.8X16X2-MM THK)	
	3	1	**095-1537**	1	SEAL-O-RING	
	4	1	**095-1671**	1	SEAL-O-RING	
	5	1	**234-4827**	1	BOLT	
	6	1	**235-4955**	1	BRACKET AS	
	6A	1	**234-4826**	1	UNION	
	7	1	**253-0244**	1	BUSHING-THREADED	
	8	1	**1R-0734**	1	FILTER-ENGINE OIL	

M-METRIC PART

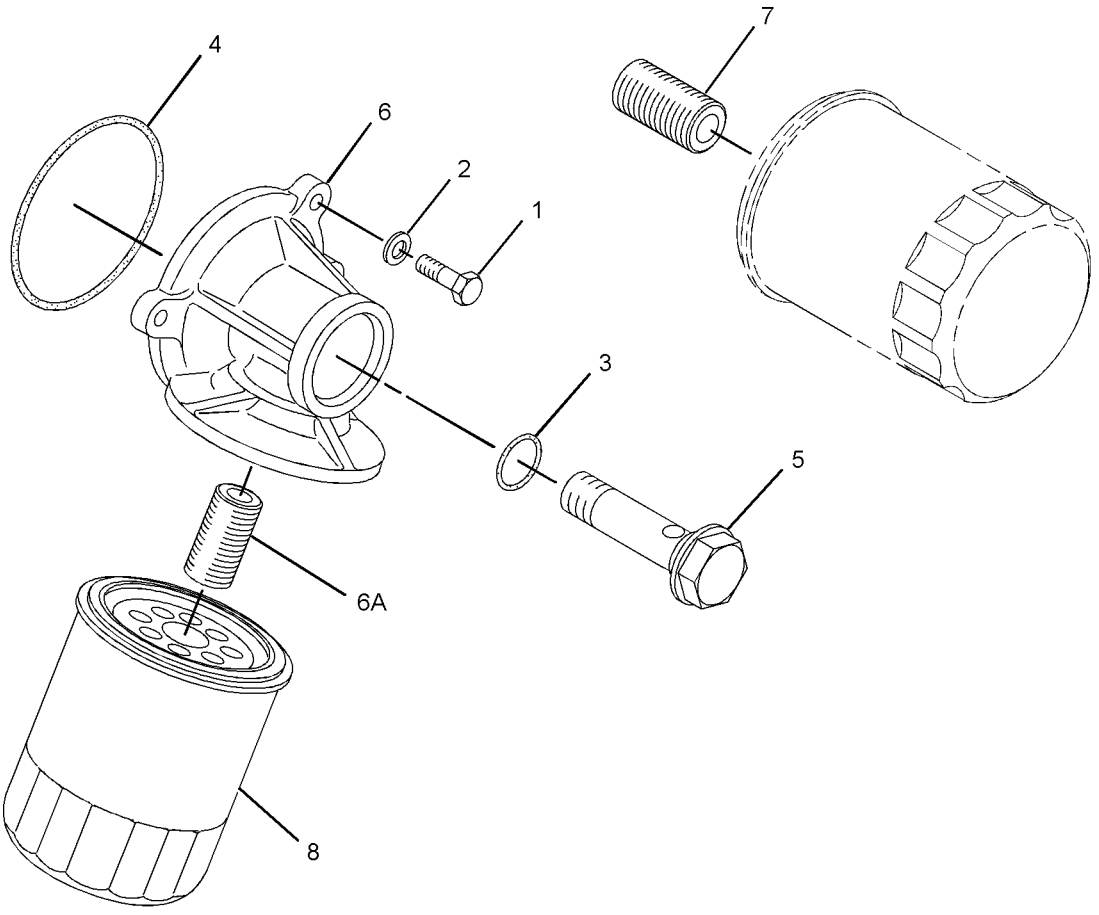

GRAPHIC #1 **<END>** g01392106

317-5076 FILTER GP-ENGINE OIL

S/N: CJS60344-UP
PART OF 262-7289 ENGINE AR-PRIMARY
AN ATTACHMENT

SMCS-1308 **i03464000**

NOTE	REF NO	GRAPHIC REF	PART NUMBER	QTY	PART NAME 1 2 3 4 5 6 (PRODUCT LEVEL)	SEE PAGE
M	1	1	**6V-3940**	1	BOLT (M8X1.25X25-MM)	
	2	1	**9M-1974**	1	WASHER-HARD (8.8X16X2-MM THK)	
	3	1	**095-1537**	1	SEAL-O-RING	
	4	1	**095-1671**	1	SEAL-O-RING	
	5	1	**234-4827**	1	BOLT	
	6	1	**235-4955**	1	BRACKET AS	
	6A	1	**234-4826**	1	UNION	
	7	1	**1R-0734**	1	FILTER-ENGINE OIL (ENGINE)	

M-METRIC PART

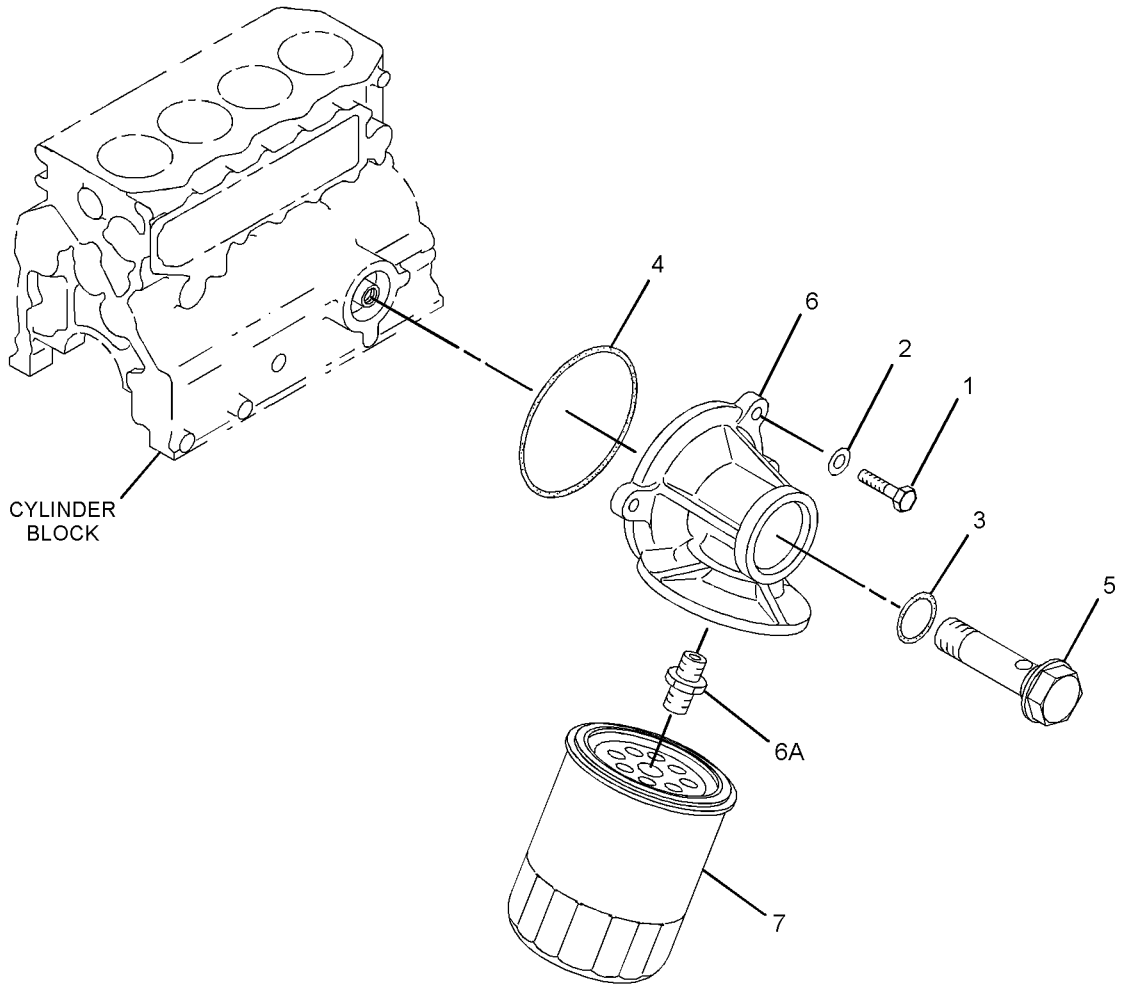

GRAPHIC #1 **<END>** g01429454

LUBRICATION SYSTEM

287-5377 LINES GP-ENGINE OIL

S/N: CYM1-UP; CJS1-UP

PART OF 262-7289, 287-8074, 319-6806 ENGINE AR-PRIMARY

AN ATTACHMENT

SMCS-1307 **i02555558**

NOTE	REF NO	GRAPHIC REF	PART NUMBER	QTY	PART NAME 1 2 3 4 5 6 (PRODUCT LEVEL)	SEE PAGE
M	1	1	**6V-5215**	3	BOLT (M8X1.25X16-MM)	
	2	1	**9M-1974**	3	WASHER-HARD (8.8X16X2-MM THK)	
	3	1	**233-5494**	1	STRAINER AS-OIL (ENGINE)	
	4	1	**239-8513**	1	SEAL-O-RING	

M-METRIC PART

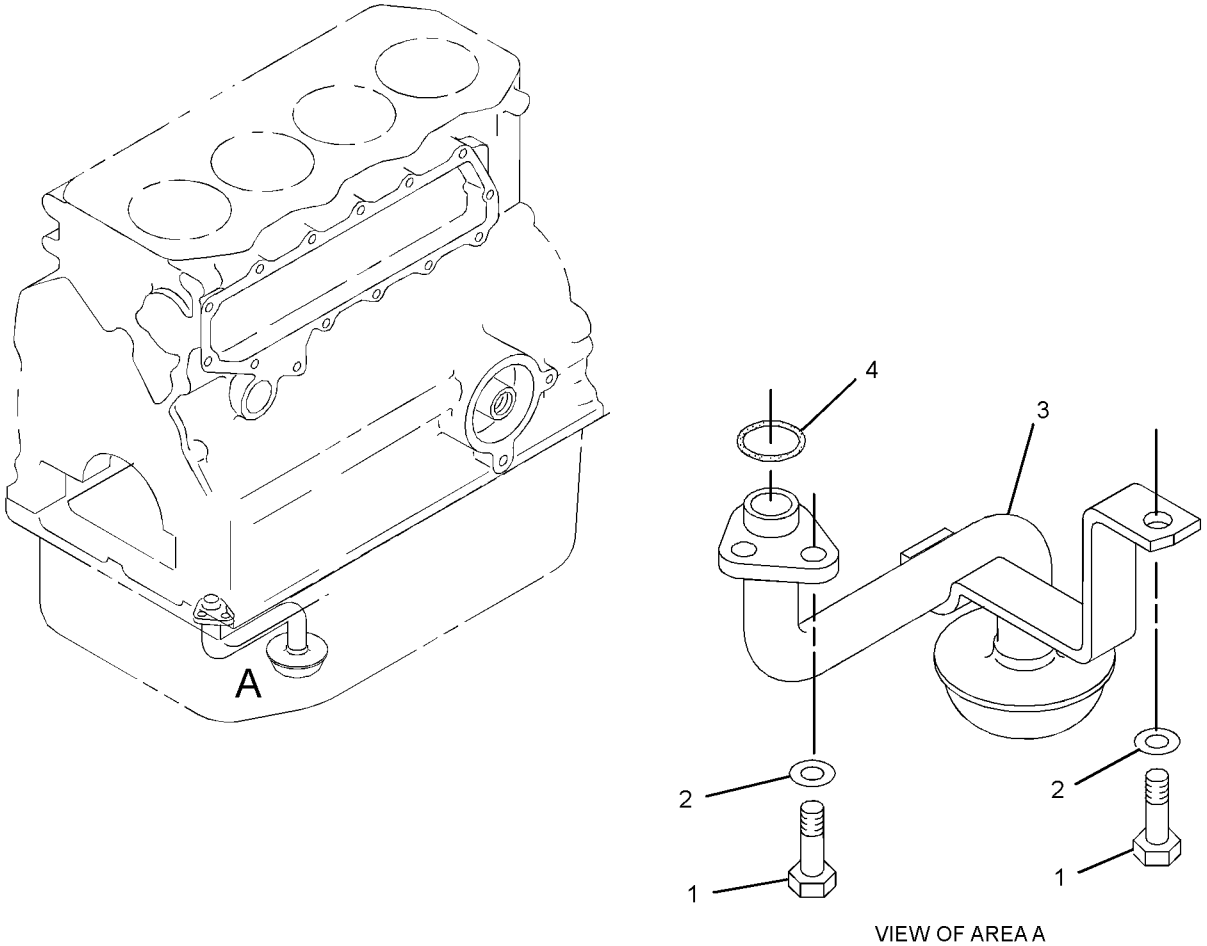

VIEW OF AREA A

GRAPHIC #1 **<END>** g01342337

235-5895 PUMP GP-ENGINE OIL

S/N: CYM1-UP; CJS1-UP
PART OF 262-7289, 287-8074, 319-6806 ENGINE AR-PRIMARY
AN ATTACHMENT

SMCS-1304, 1315 **i02524390**

NOTE	REF NO	GRAPHIC REF	PART NUMBER	QTY	PART NAME 1 2 3 4 5 6 (PRODUCT LEVEL)	SEE PAGE
M	1	1	**6V-5217**	4	BOLT (M8X1.25X20-MM)	
	2	1	**9M-1974**	4	WASHER-HARD (8.8X16X2-MM THK)	
	3	1	**113-1141**	1	PUMP AS-OIL	
	4	1	**101-6544**	1	NUT	
	5	1	**6V-5839**	1	WASHER (11X21X2.5-MM THK)	
	6	1	**103-9083**	1	SEAL-O-RING	

M-METRIC PART

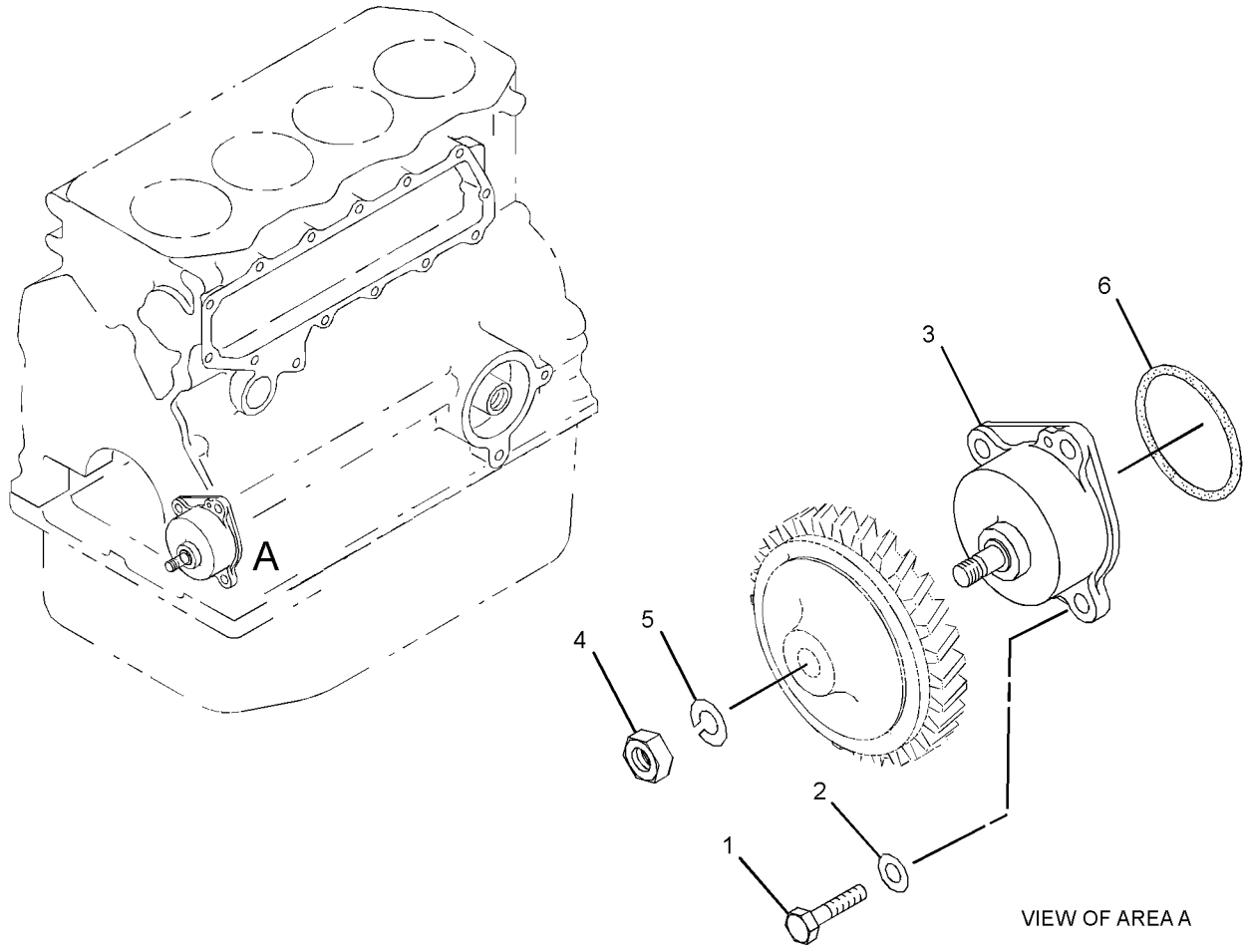

GRAPHIC #1 **<END>** g01348493

287-5665 VALVE GP-ENGINE OIL RELIEF

S/N: CYM1-UP; CJS1-UP

PART OF 262-7289, 287-8074, 319-6806 ENGINE AR-PRIMARY

AN ATTACHMENT

SMCS-1315 **i02961094**

NOTE	REF NO	GRAPHIC REF	PART NUMBER	QTY	PART NAME 1 2 3 4 5 6 (PRODUCT LEVEL)	SEE PAGE
	1	1	**294-1767**	1	VALVE (ENGINE OIL PRESSURE)	
	2	1	**103-9725**	1	VALVE AS (RELIEF) (ENGINE)	
	3	1	**233-5496**	1	GASKET	
	4	1	**234-4796**	1	GASKET	

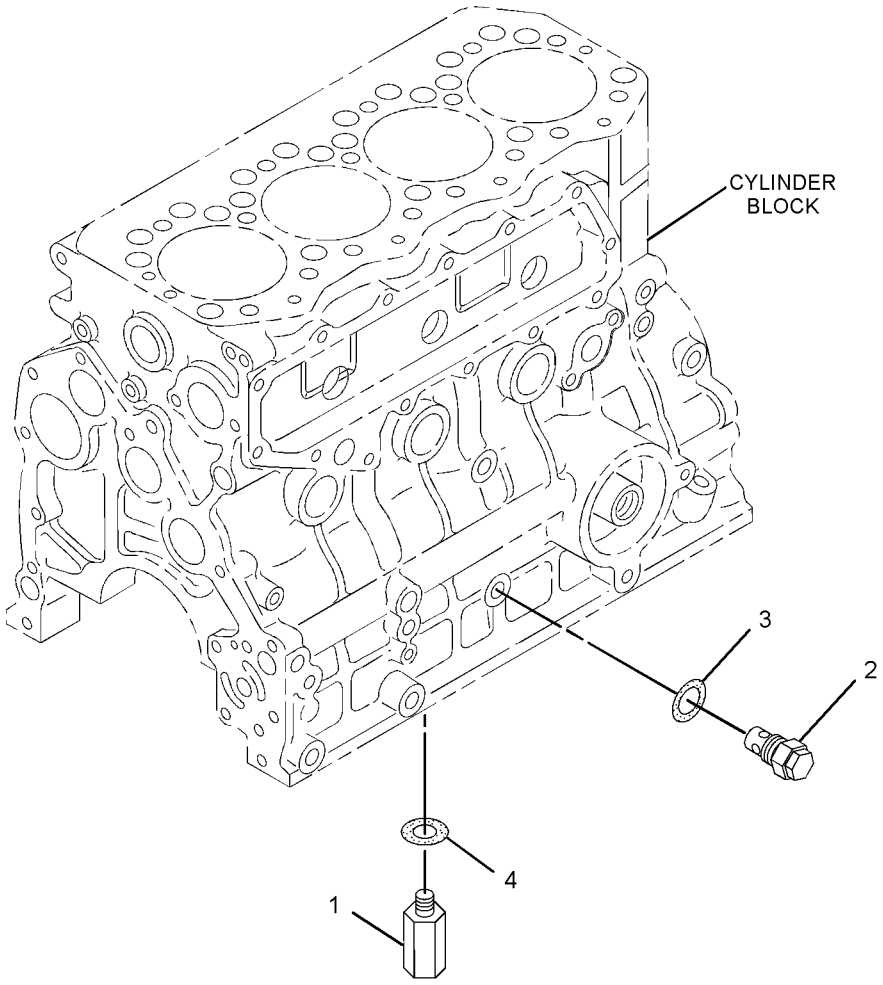

GRAPHIC #1 **<END>** g01323255

235-5896 COOLER GP-ENGINE OIL

S/N: CJS1-60343
PART OF 262-7289 ENGINE AR-PRIMARY
AN ATTACHMENT

SMCS-1378 **i02656178**

NOTE	REF NO	GRAPHIC REF	PART NUMBER	QTY	PART NAME 1 2 3 4 5 6 (PRODUCT LEVEL)	SEE PAGE
	1	1	**4I-9404**	2	SEAL-O-RING	
M	2	1	**6V-2317**	1	BOLT (M8X1.25X30-MM)	
M	3	1	**195-8222**	11	BOLT AS	
	4	1	**9M-1974**	12	WASHER-HARD (8.8X16X2-MM THK)	
	5	1	**095-1513**	4	SEAL-O-RING	
	6	1	**234-4800**	1	GASKET	
	7	1	**234-4798**	1	STUD	
	8	1	**244-7127**	5	NUT-FLANGE (M8X1.25-THD)	
	9	1	**234-4797**	1	GASKET	
	10	1	**234-4801**	1	COVER	
	11	1	**234-4802**	1	COVER AS	
	11A	1	**096-3321**	2	PLUG	
	12	1	**234-4803**	1	COOLER AS	
	13	1	**239-8513**	2	SEAL-O-RING	
F			**3B-4505**	11	LOCKWASHER	
F			**301-3274**	1	HOUSING-OIL COOLER	

F-NOT SHOWN
M-METRIC PART

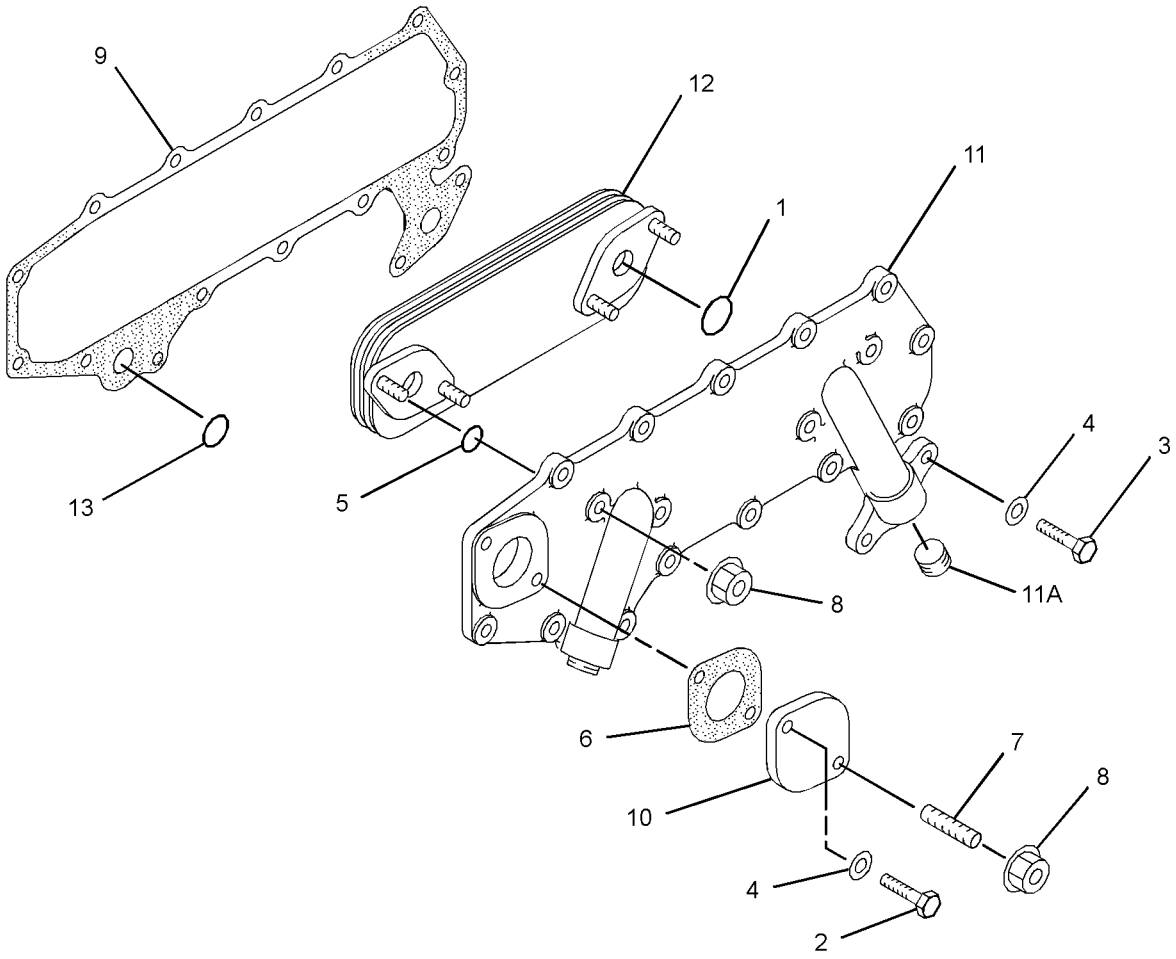

GRAPHIC #1 **<END>** g01354876

COOLING SYSTEM

314-9900 COOLER GP-ENGINE OIL

S/N: CYM1-4609; CJS60344-UP
PART OF 262-7289, 287-8074, 319-6806 ENGINE AR-PRIMARY
AN ATTACHMENT

SMCS-1378 **i02801846**

NOTE	REF NO	GRAPHIC REF	PART NUMBER	QTY	PART NAME 1 2 3 4 5 6 (PRODUCT LEVEL)	SEE PAGE
	1	1	**3B-4505**	13	LOCKWASHER	
	2	1	**4I-9404**	2	SEAL-O-RING	
M	3	1	**6V-2317**	1	BOLT (M8X1.25X30-MM)	
	4	1	**9M-1974**	1	WASHER-HARD (8.8X16X2-MM THK)	
	5	1	**095-1513**	4	SEAL-O-RING	
	6	1	**199-2235**	13	BOLT (M8X1.25X22-MM)	
	7	1	**234-4797**	1	GASKET	
	8	1	**234-4798**	1	STUD	
	9	1	**234-4800**	1	GASKET	
	10	1	**234-4801**	1	COVER	
	11	1	**234-4802**	1	COVER AS	
	11A	1	**096-3321**	2	PLUG	
	12	1	**234-4803**	1	COOLER AS	
	13	1	**244-7127**	5	NUT-FLANGE (M8X1.25-THD)	

M-METRIC PART

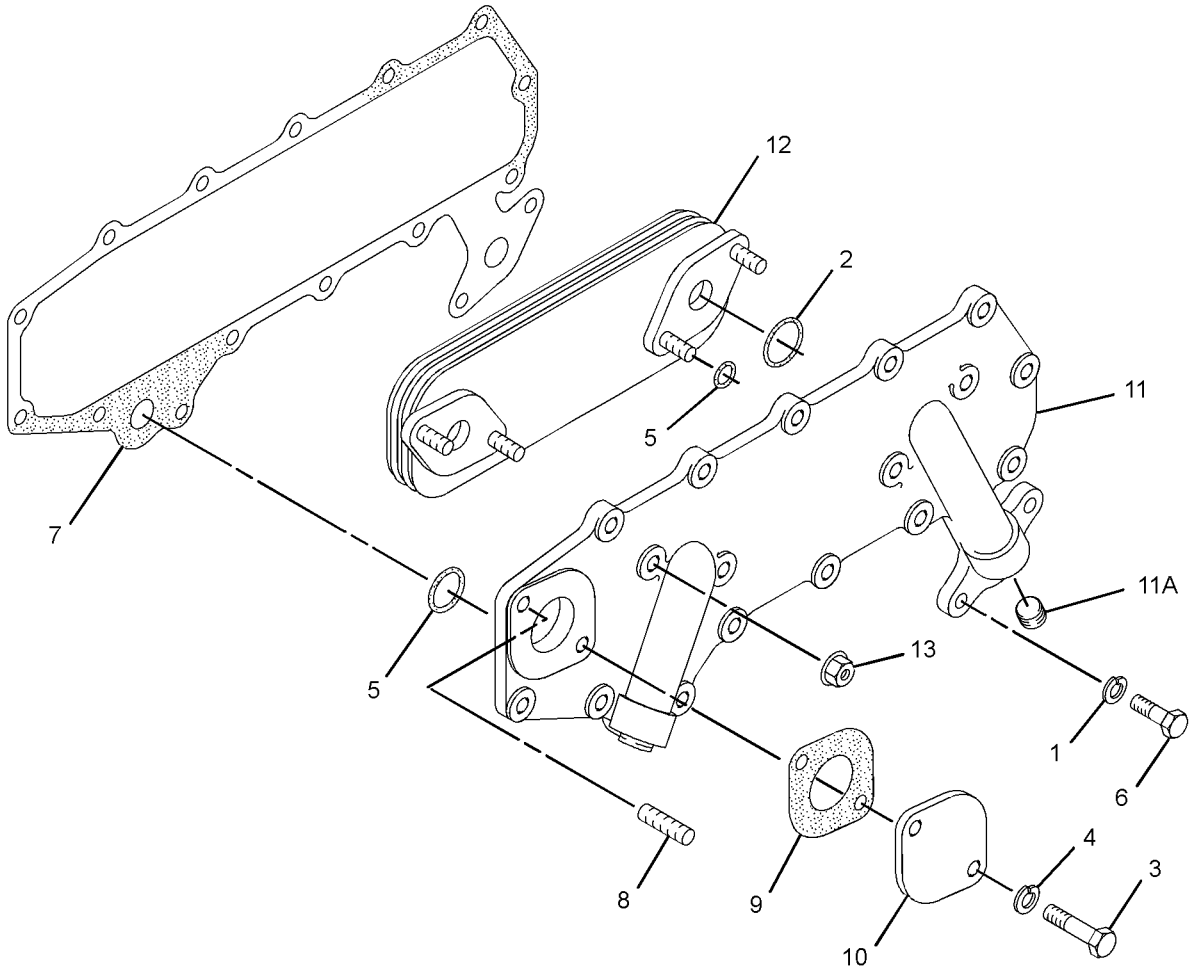

GRAPHIC #1 **<END>** g01392888

314-9900 COOLER GP-ENGINE OIL

S/N: CYM4610-UP; CJS1-UP
PART OF 262-7289, 319-6806 ENGINE AR-PRIMARY
AN ATTACHMENT

SMCS-1378 **i03470024**

NOTE	REF NO	GRAPHIC REF	PART NUMBER	QTY	PART NAME 1 2 3 4 5 6 (PRODUCT LEVEL)	SEE PAGE
	1	1	**3B-4505**	13	LOCKWASHER	
	2	1	**4I-9404**	2	SEAL-O-RING	
M	3	1	**6V-2317**	1	BOLT (M8X1.25X30-MM)	
	4	1	**9M-1974**	1	WASHER-HARD (8.8X16X2-MM THK)	
	5	1	**095-1513**	4	SEAL-O-RING	
C	6	1	**336-9857**	13	BOLT	
C	7	1	**336-9856**	1	GASKET	
	8	1	**234-4798**	1	STUD	
	9	1	**234-4800**	1	GASKET	
	10	1	**234-4801**	1	COVER	
	11	1	**234-4802**	1	COVER AS	
	11A	1	**096-3321**	2	PLUG	
	12	1	**234-4803**	1	COOLER AS	
	13	1	**244-7127**	5	NUT-FLANGE (M8X1.25-THD)	

C-CHANGE FROM PREVIOUS TYPE
M-METRIC PART

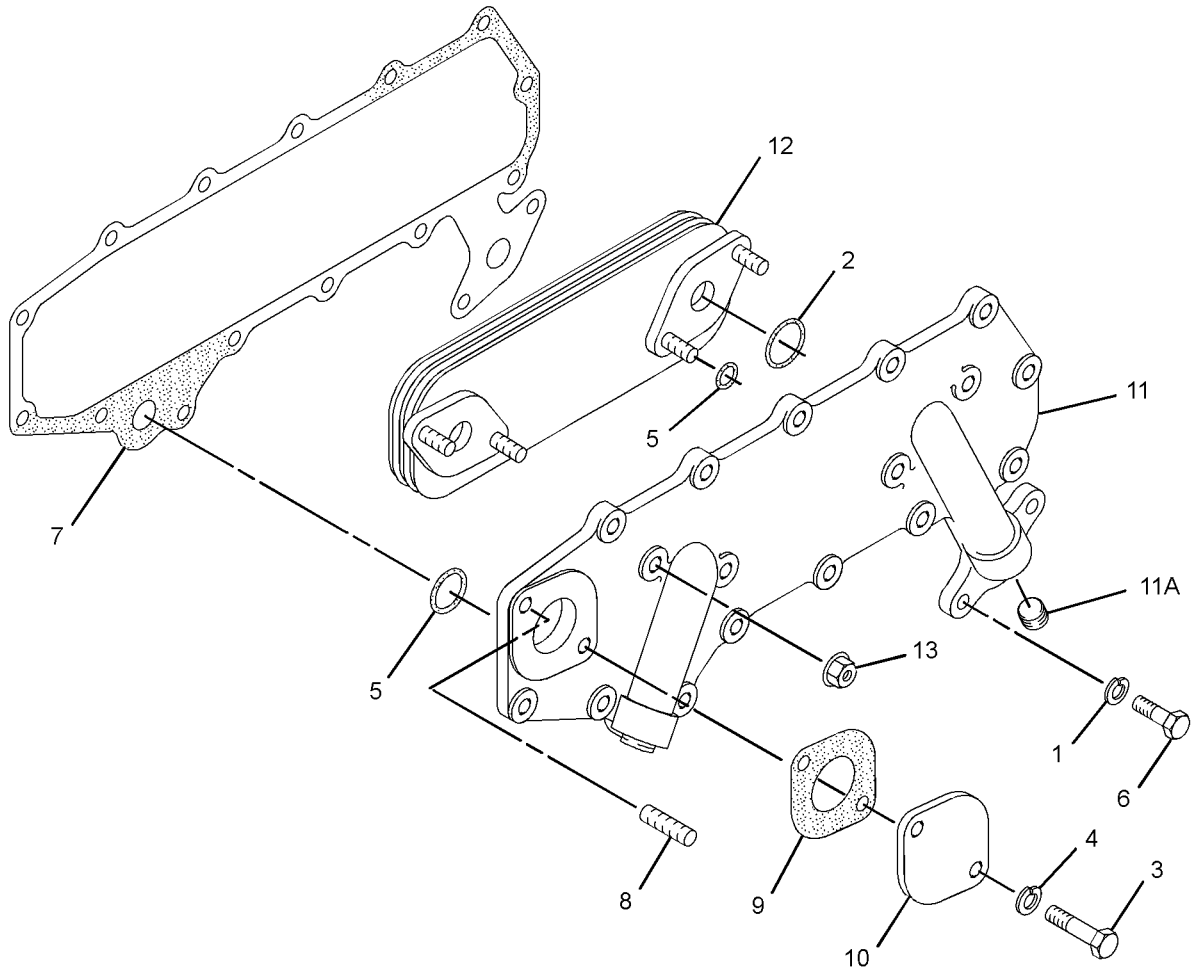

GRAPHIC #1 **<END>** g01392888

COOLING SYSTEM

292-4040 DRAIN GP-COOLANT

S/N: CJS1-UP
PART OF 262-7289 ENGINE AR-PRIMARY
AN ATTACHMENT

SMCS-1380, 1395 **i03552850**

NOTE	REF NO	GRAPHIC REF	PART NUMBER	QTY	PART NAME 1 2 3 4 5 6 (PRODUCT LEVEL)	SEE PAGE
	1	1	**238-8278**	1	VALVE AS-DRAIN (WATER)	

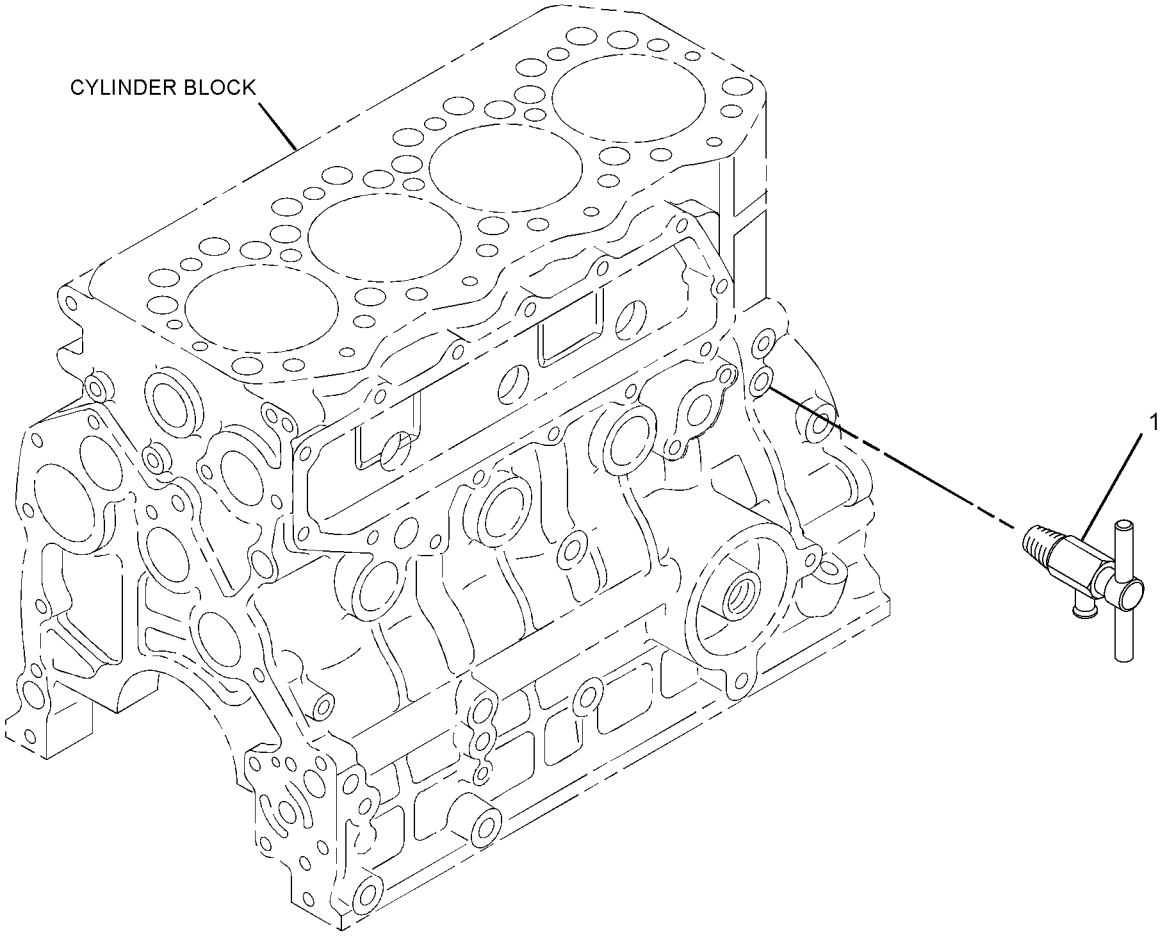

GRAPHIC #1 **<END>** g01354785

315-7763 DRAIN GP-COOLANT

S/N: CYM1-UP

PART OF 287-8074, 319-6806 ENGINE AR-PRIMARY

AN ATTACHMENT

SMCS-1380, 1395 **i03090327**

NOTE	REF NO	GRAPHIC REF	PART NUMBER	QTY	PART NAME 1 2 3 4 5 6 (PRODUCT LEVEL)	SEE PAGE
	1	1	**238-8278**	1	VALVE AS-DRAIN	
	2	1	**326-4033**	1	ADAPTER	

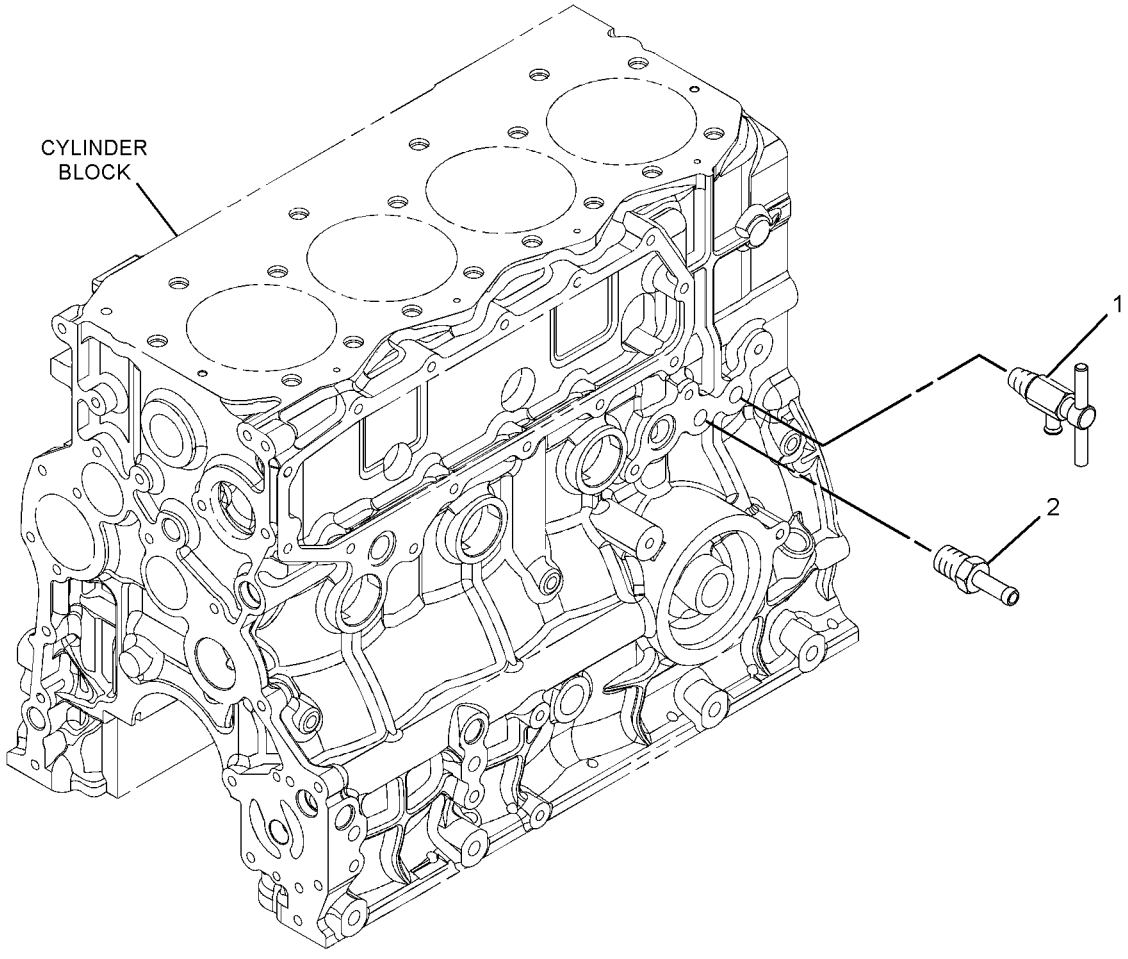

GRAPHIC #1 **<END>** g01412554

COOLING SYSTEM

315-8355 HOUSING & REGULATOR GP

S/N: CYM1-UP; CJS60344-UP
PART OF 262-7289, 287-8074, 319-6806 ENGINE AR-PRIMARY
AN ATTACHMENT

SMCS-1355, 1393 **i03672028**

NOTE	REF NO	GRAPHIC REF	PART NUMBER	QTY	PART NAME 1 2 3 4 5 6 (PRODUCT LEVEL)	SEE PAGE
	1	1	**294-7915**	1	HOUSING AS	
	2	1	**235-4960**	1	REGULATOR AS-WATER TEMPERATURE (THERMOSTAT)	
	3	1	**235-4959**	1	GASKET (WATER TEMPERATURE REGULATOR)	
	4	1	**234-4831**	1	COVER	
	5	1	**096-8475**	2	BOLT (25-MM LG)	
	6	1	**303-6257**	1	GASKET	
	7	1	**257-8739**	2	CLAMP-HOSE	
	8	1	**246-8315**	1	HOSE-BYPASS	
M	9	1	**6V-5221**	1	BOLT (M8X1.25X80-MM)	
M	10	1	**8T-0276**	1	BOLT (M8X1.25X45-MM)	
	11	1	**5I-8056**	1	PLUG	
	12	1	**5I-7628**	1	GASKET	
	13	1	**234-4809**	1	WASHER-SPECIAL	
	14	1	**315-7700**	1	PLUG	
	15	1	**9M-1974**	2	WASHER-HARD (8.8X16X2-MM THK)	

M-METRIC PART

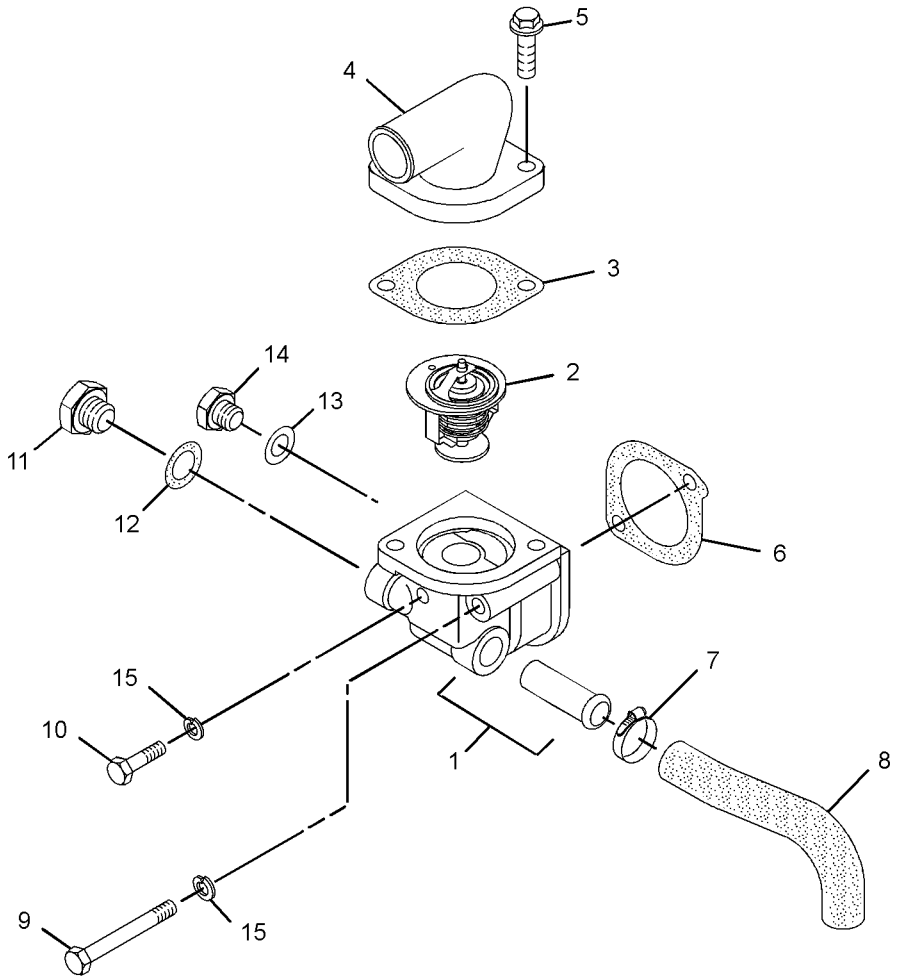

GRAPHIC #1 **<END>** g01943155

COOLING SYSTEM

235-5900 LINES GP-WATER

S/N: CJS1-60343
PART OF 262-7289 ENGINE AR-PRIMARY
AN ATTACHMENT

SMCS-1355, 1380, 1393 **i02643608**

NOTE	REF NO	GRAPHIC REF	PART NUMBER	QTY	PART NAME 1 2 3 4 5 6 (PRODUCT LEVEL)	SEE PAGE
	1	1	**5I-7628**	2	GASKET	
	2	1	**5I-8056**	2	PLUG (DRAIN)	
	3	1	**096-8475**	2	BOLT (25-MM LG)	
M	4	1	**6V-5221**	1	BOLT (M8X1.25X80-MM)	
M	5	1	**8T-0276**	1	BOLT (M8X1.25X45-MM)	
	6	1	**9M-1974**	4	WASHER-HARD (8.8X16X2-MM THK)	
	7	1	**5I-7728**	1	GASKET	
	8	1	**246-8315**	1	HOSE-BYPASS	
	9	1	**257-8739**	2	CLAMP-HOSE (HOSE)	
	10	1	**234-4831**	1	COVER	
	11	1	**235-4959**	1	GASKET (WATER TEMPERATURE REGULATOR)	
	12	1	**235-4960**	1	REGULATOR AS-WATER TEMPERATURE (THERMOSTAT)	
	13	1	**246-8314**	1	HOUSING	

M-METRIC PART

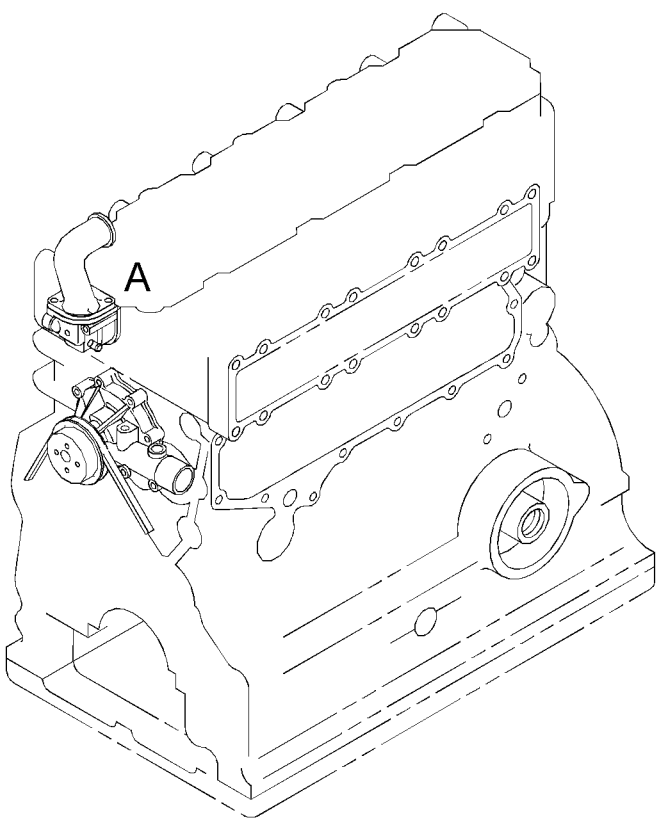

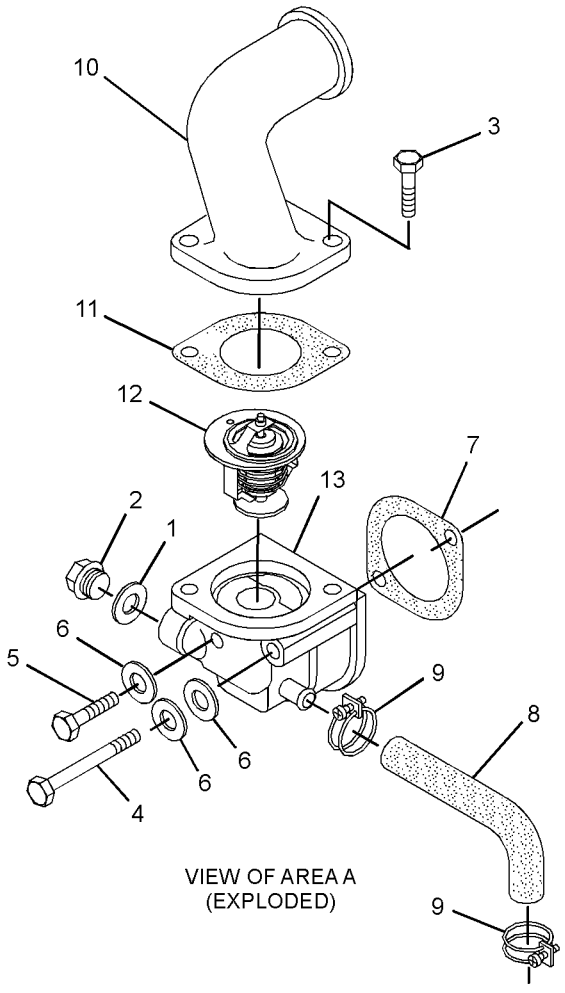

VIEW OF AREA A
(EXPLODED)

GRAPHIC #1 **<END>** g01345074

258-3552 LINES GP-WATER–RADIATOR

S/N: MST1-UP

PART OF 258-2445, 295-7118 INSTALLATION AR-ENGINE

SMCS-1355, 1380, 1393 **i02752365**

NOTE	REF NO	GRAPHIC REF	PART NUMBER	QTY	PART NAME 1 2 3 4 5 6 (PRODUCT LEVEL)	SEE PAGE
	1	1	**1P-4278**	2	CLAMP-HOSE	
	2	1	**7K-1181**	2	STRAP-CABLE	
	3	1	**222-1178**	4	CLAMP	
	4	1	**258-2547**	1	HOSE	
	5	1	**258-3546**	1	HOSE	
	6	1	**258-3549**	1	BRACKET AS	
	7	1	**285-5794**	1	RECOVERY GP-COOLANT	
		1	**169-6715**	1	CAP-VENTED (COOLANT RECOVERY)	
	8	1	**266-3316**	3	BOLT-FLANGE HEAD (M10X1.5X25-MM)	
	9	1	**4K-8864**	3	CLIP	
	10	1	**5P-7470**	2	CLIP (SLOT)	
	11	1	**5P-7471**	2	CLIP (TAB)	
	12	1	**5P-7703**	2	GROMMET	
	13	1	**8T-4121**	1	WASHER-HARD (11X21X2.5-MM THK)	
M	14	1	**8T-4196**	1	BOLT (M10X1.5X35-MM)	
	15	1	**8T-4224**	4	WASHER-HARD (8.8X16X2-MM THK)	
M	16	1	**8T-5091**	4	BOLT (M8X1.25X20-MM)	
E	17	1	**5P-1420**		HOSE (222-CM)	
	18	1	**7X-1443**	4	PROTECTOR	

E-ORDER BY THE CENTIMETER
M-METRIC PART

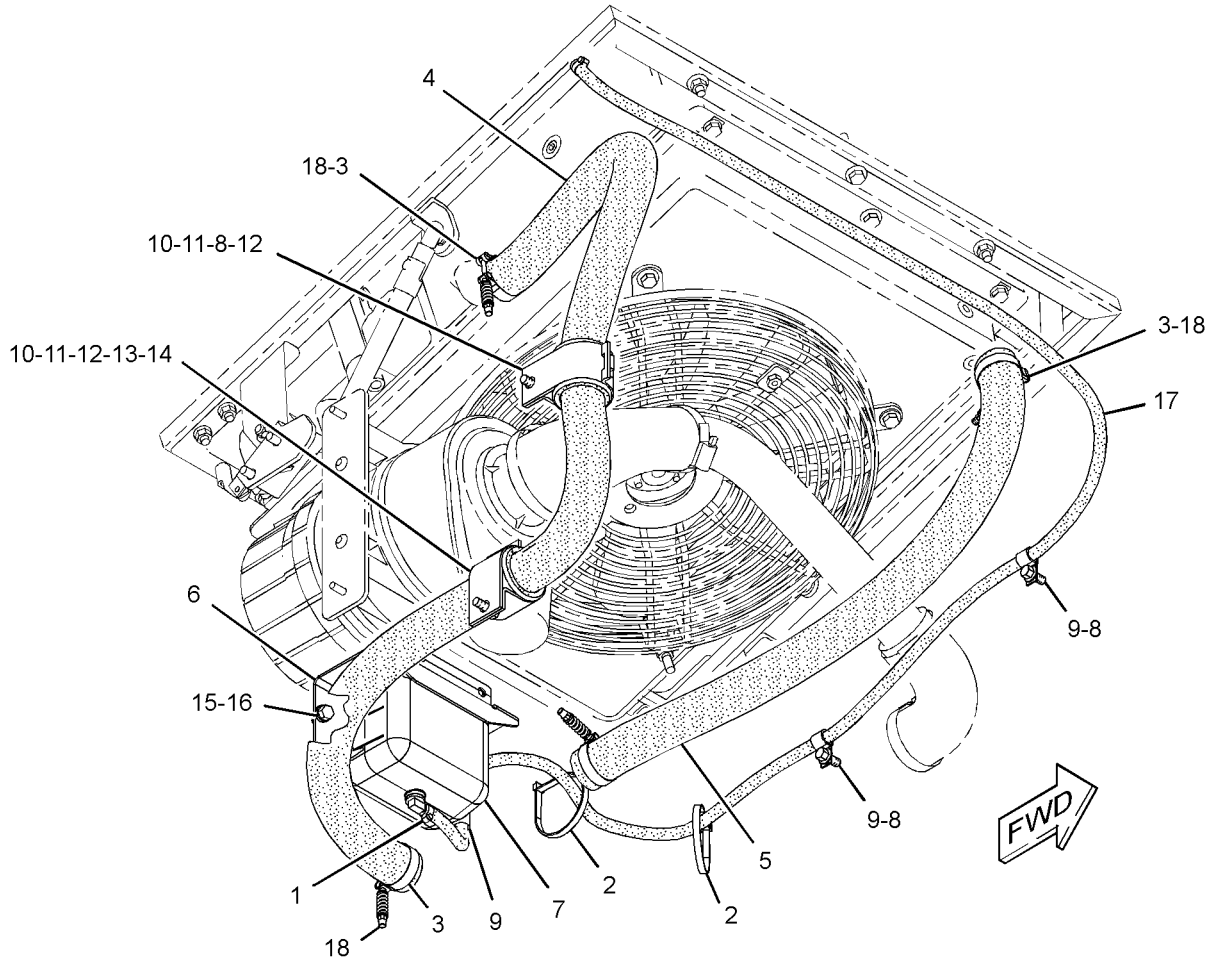

GRAPHIC #1 **<END>** g01387418

258-3542 MOUNTING GP-RAD & OIL COOLER

S/N: MST1-UP

PART OF 258-2445, 295-7118 INSTALLATION AR-ENGINE

SMCS-1353, 1374 **i03636348**

NOTE	REF NO	GRAPHIC REF	PART NUMBER	QTY	PART NAME 1 2 3 4 5 6 (PRODUCT LEVEL)	SEE PAGE
	1	1	**258-3543**	1	SUPPORT AS (BOTTOM)	
	2	1	**258-3544**	1	SUPPORT AS (TOP)	
	3	1	**258-3545**	1	GRILL AS-RADIATOR	
	4	1	**258-3551**	1	BRACKET AS	
	5	1	**258-3555**	1	SPRING AS-GAS (RH)	
	6	1	**258-3562**	1	SPRING-GAS (LH)	
	7	1	**142-8832**	1	PIN AS	
	8	1	**178-2255**	2	PIN	
	9	1	**208-6176**	4	STUD-BALL	
	10	1	**223-4275**	1	LATCH AS	
	11	1	**266-3316**	2	BOLT-FLANGE HEAD (M10X1.5X25-MM)	
	12	1	**2K-4973**	1	LOCKNUT (3/8-16-THD)	
M	13	1	**5C-7261**	1	NUT (M8X1.25-THD)	
	14	1	**5P-0372**	2	LOCK PIN	
	15	1	**5V-8309**	1	STRIKER AS	
	16	1	**7X-7729**	1	WASHER (11X25X3-MM THK)	
	17	1	**8T-0318**	1	SHIM (0.8-MM THK)	
	18	1	**8T-4121**	8	WASHER-HARD (11X21X2.5-MM THK)	
M	19	1	**8T-4133**	4	NUT (M10X1.5-THD)	
	20	1	**8T-4159**	1	BUMPER	
M	21	1	**8T-4181**	3	BOLT (M6X1X20-MM)	
	22	1	**8T-4205**	3	WASHER-HARD (7.2X14.5X2-MM THK)	
M	23	1	**8T-6466**	4	BOLT (M10X1.5X60-MM)	
D	24	1	**5P-8309**		SEAL (0.15-M)	
D	24A	1	**5P-8309**		SEAL (0.34-M)	
D	24B	1	**5P-8309**		SEAL (0.68-M EACH)	
D	24C	1	**5P-8309**		SEAL (0.56-M)	

D-ORDER BY THE METER
M-METRIC PART

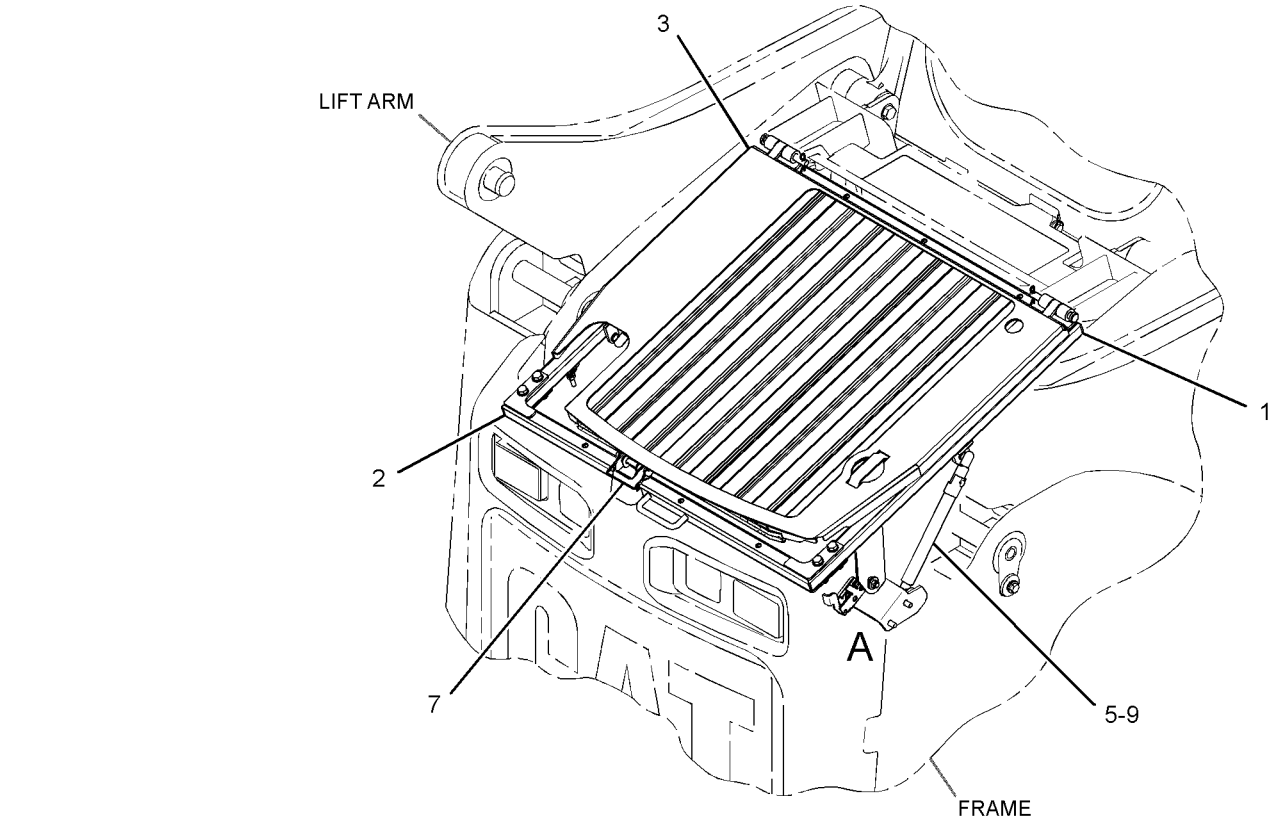

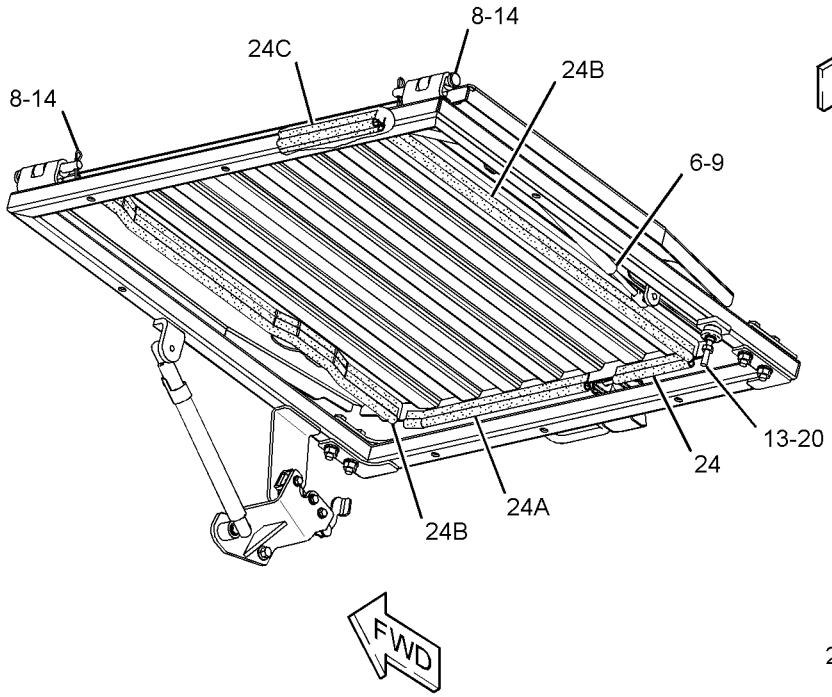

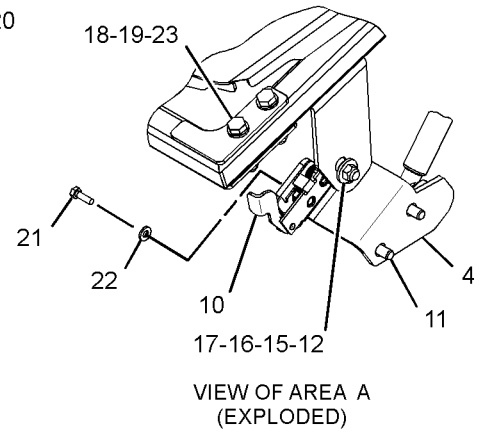

VIEW OF AREA A
(EXPLODED)

GRAPHIC #1 **<END>** g01951577

258-3542 MOUNTING GP-RAD & OIL COOLER

S/N: MST1860-UP

PART OF 295-7118 INSTALLATION AR-ENGINE

SMCS-1353, 1374 **i03636349**

NOTE	REF NO	GRAPHIC REF	PART NUMBER	QTY	PART NAME 1 2 3 4 5 6 (PRODUCT LEVEL)	SEE PAGE
	1	1	**258-3543**	1	SUPPORT AS (BOTTOM)	
	2	1	**258-3544**	1	SUPPORT AS (TOP)	
	3	1	**258-3545**	1	GRILL AS-RADIATOR	
	4	1	**258-3551**	1	BRACKET AS	
	5	1	**258-3555**	1	SPRING AS-GAS (RH)	
	6	1	**258-3562**	1	SPRING-GAS (LH)	
	7	1	**142-8832**	1	PIN AS	
	8	1	**178-2255**	2	PIN	
	9	1	**208-6176**	4	STUD-BALL	
	10	1	**223-4275**	1	LATCH AS	
	11	1	**266-3316**	2	BOLT-FLANGE HEAD (M10X1.5X25-MM)	
	12	1	**2K-4973**	1	LOCKNUT (3/8-16-THD)	
M	13	1	**5C-7261**	1	NUT (M8X1.25-THD)	
	14	1	**5P-0372**	2	LOCK PIN	
C	15	1	**280-8328**	1	STRIKER AS	
	16	1	**7X-7729**	1	WASHER (11X25X3-MM THK)	
	18	1	**8T-4121**	8	WASHER-HARD (11X21X2.5-MM THK)	
M	19	1	**8T-4133**	4	NUT (M10X1.5-THD)	
	20	1	**8T-4159**	1	BUMPER	
M	21	1	**8T-4181**	3	BOLT (M6X1X20-MM)	
	22	1	**8T-4205**	3	WASHER-HARD (7.2X14.5X2-MM THK)	
M	23	1	**8T-6466**	4	BOLT (M10X1.5X60-MM)	
D	24	1	**5P-8309**		SEAL (0.15-M)	
D	24A	1	**5P-8309**		SEAL (0.34-M)	
D	24B	1	**5P-8309**		SEAL (0.68-M EACH)	
D	24C	1	**5P-8309**		SEAL (0.56-M)	

C-CHANGE FROM PREVIOUS TYPE
D-ORDER BY THE METER
M-METRIC PART

258-3542 **MOUNTING GP-RAD & OIL COOLER** *(contd.)* **i03636349**

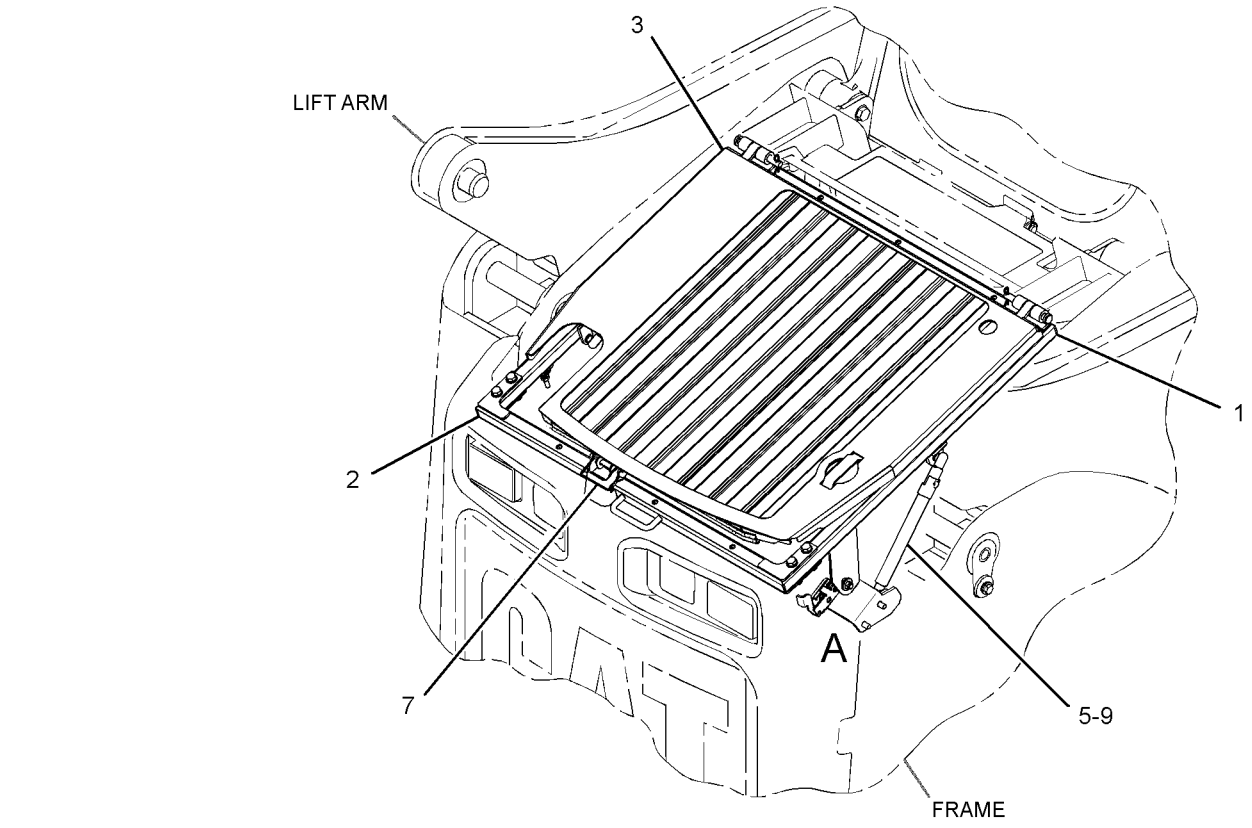

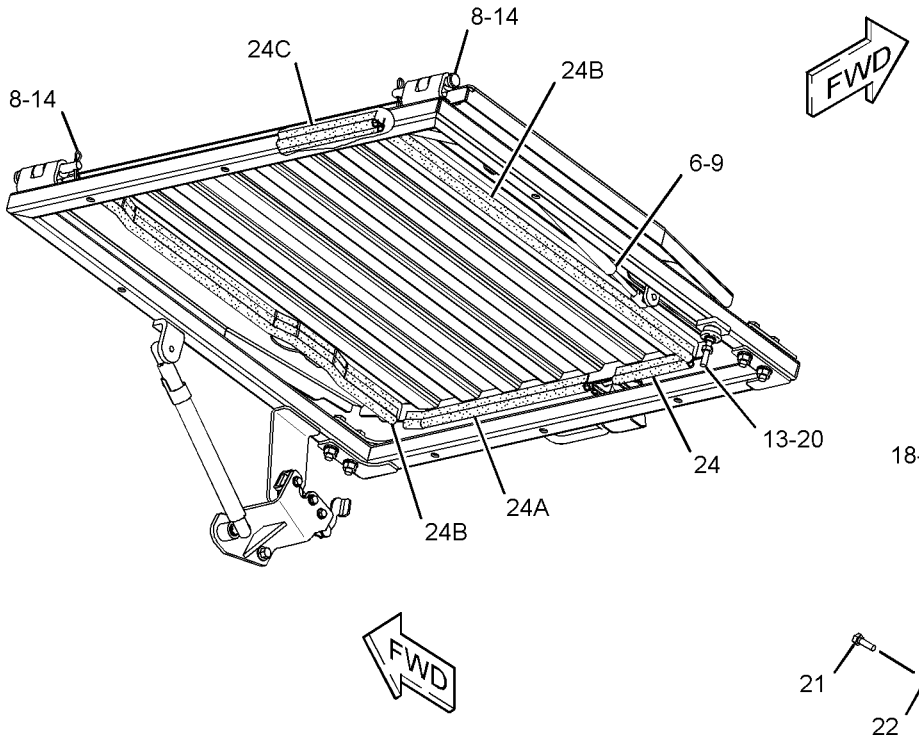

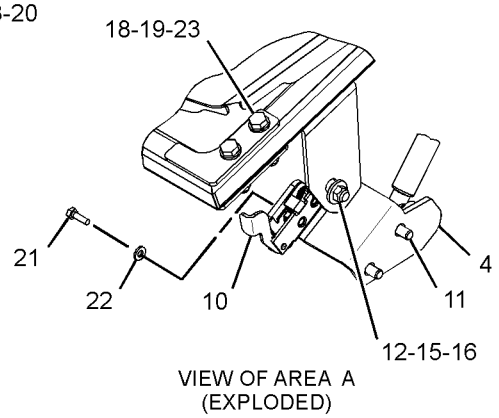

VIEW OF AREA A
(EXPLODED)

GRAPHIC #1 **<END>** g01951582

287-6056 PUMP GP-WATER

S/N: CJS1-UP
PART OF 262-7289 ENGINE AR-PRIMARY
AN ATTACHMENT

SMCS-1355, 1361 **i03355624**

NOTE	REF NO	GRAPHIC REF	PART NUMBER	QTY	PART NAME 1 2 3 4 5 6 (PRODUCT LEVEL)	SEE PAGE
	1	1	**8T-4224**	5	WASHER-HARD (8.8X16X2-MM THK)	
	2	1	**285-9066**	1	BOLT (M8X1.25X65-MM)	
Y	3	1	**335-9117**	1	PUMP GP-WATER	95
	4	1	**335-9125**	1	GASKET	
M	5	1	**7X-0818**	4	BOLT (M8X1.25X45-MM)	

M-METRIC PART
Y-SEPARATE ILLUSTRATION

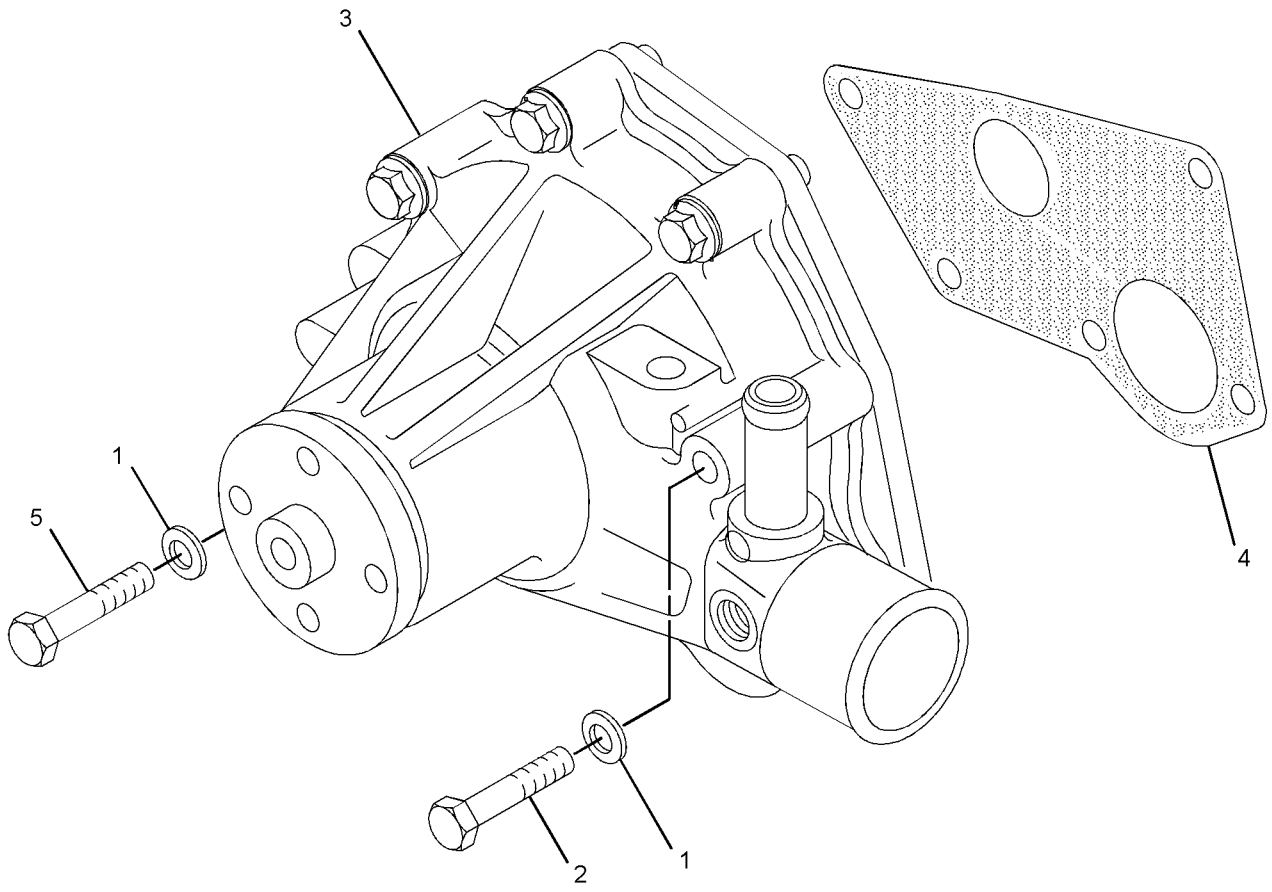

GRAPHIC #1 **<END>** g01757413

COOLING SYSTEM

315-7770 PUMP GP-WATER

S/N: CYM1-UP
PART OF 287-8074, 319-6806 ENGINE AR-PRIMARY
AN ATTACHMENT

SMCS-1355, 1361 **i03355285**

NOTE	REF NO	GRAPHIC REF	PART NUMBER	QTY	PART NAME 1 2 3 4 5 6 (PRODUCT LEVEL)	SEE PAGE
M	1	1	**7X-0818**	4	BOLT (M8X1.25X45-MM)	
	3	1	**8T-4224**	5	WASHER-HARD (8.8X16X2-MM THK)	
Y	4	1	**335-9117**	1	PUMP GP-WATER	95
	5	1	**335-9125**	1	GASKET (WATER PUMP)	
	6	1	**285-9066**	1	BOLT (M8X1.25X65-MM)	
	8	1	**315-4689**	1	ADAPTER	

M-METRIC PART
Y-SEPARATE ILLUSTRATION

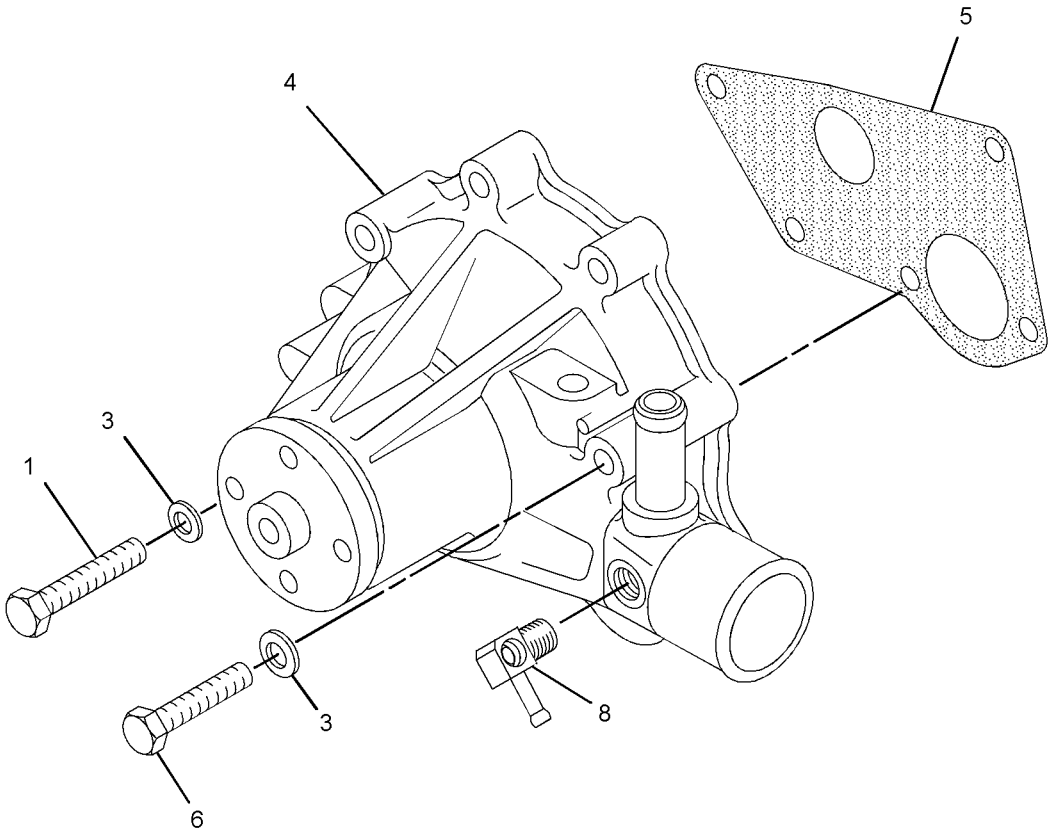

GRAPHIC #1 **<END>** g01802853

335-9117 PUMP GP-WATER

S/N: CYM1-UP; CJS1-UP
PART OF 287-6056, 315-7770 PUMP GP-WATER
AN ATTACHMENT

SMCS-1355, 1361 **i03562121**

NOTE	REF NO	GRAPHIC REF	PART NUMBER	QTY	PART NAME 1 2 3 4 5 6 (PRODUCT LEVEL)	SEE PAGE
M	1	1	**6V-3940**	2	BOLT (M8X1.25X25-MM)	
M	2	1	**7X-2537**	1	BOLT (M8X1.25X35-MM)	
	3	1	**9M-1974**	2	WASHER-HARD (8.8X16X2-MM THK)	
	4	1	**103-9747**	1	COVER-PUMP	
	5	1	**195-8460**	1	PLUG	
	6	1	**335-9124**	1	GASKET	

M-METRIC PART

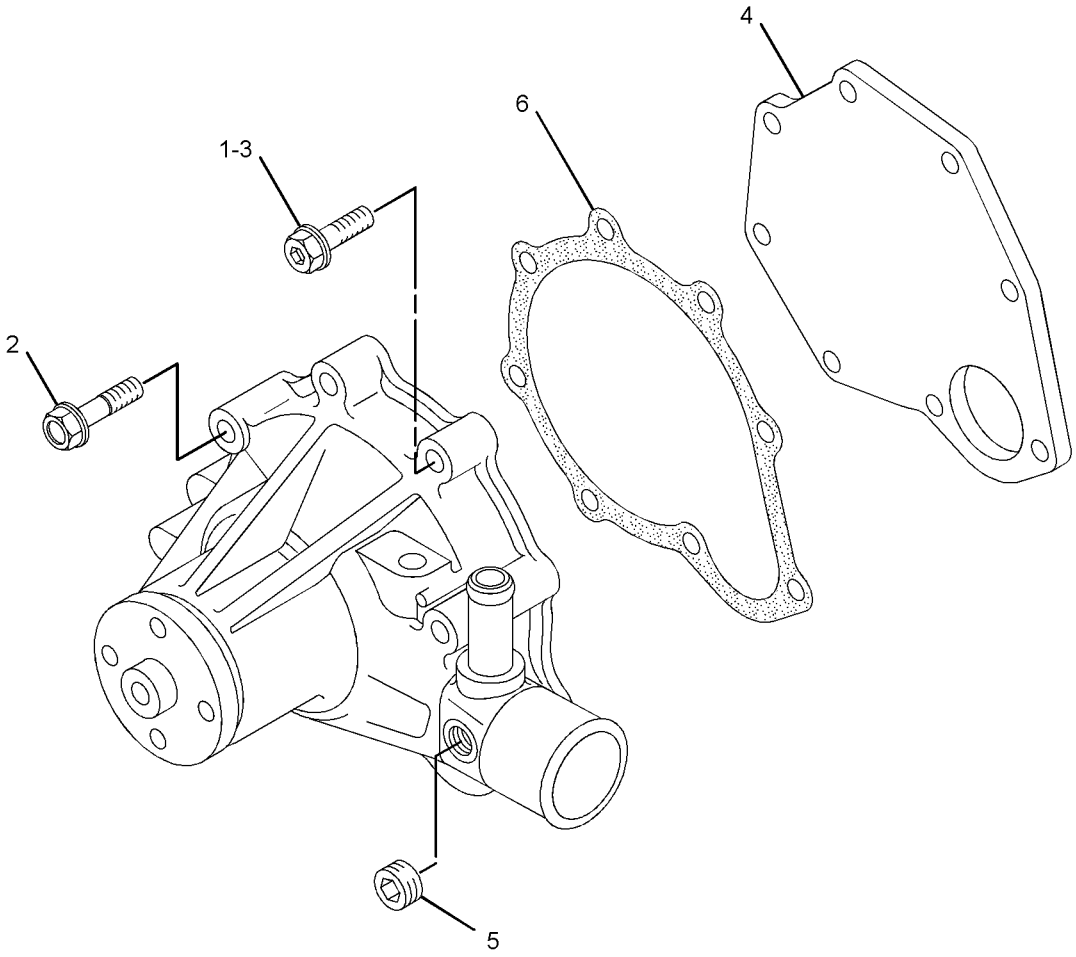

GRAPHIC #1 **<END>** g01757556

COOLING SYSTEM

258-3459 RADIATOR & HYD OIL COOLER GP

S/N: MST1-UP

PART OF 258-2445, 295-7118 INSTALLATION AR-ENGINE

SMCS-1351, 1356, 1386 **i03477120**

NOTE	REF NO	GRAPHIC REF	PART NUMBER	QTY	PART NAME 1 2 3 4 5 6 (PRODUCT LEVEL)	SEE PAGE
	1	1	**036-1865**	1	CAP AS-RADIATOR	
	2	1	**069-4080**	1	FITTING	
	3	1	**122-7052**	1	SPACER (10.5X20X28-MM THK)	
	4	1	**207-6154**	1	GAUGE-SIGHT (COOLANT LEVEL)	
	5	1	*217-3572*	1	FAN GP-BLOWER	
		1	**8T-4224**	4	WASHER-HARD (8.8X16X2-MM THK)	
M		1	**8T-4908**	4	BOLT (M8X1.25X25-MM)	
		1	**203-4827**	1	FAN AS	
		1	**229-8796**	1	ADAPTER	
	6	1	**258-3457**	1	RADIATOR & HYD OIL COOLER AS	
	7	1	**258-3458**	1	SHROUD AS	
	8	1	**258-3537**	1	GUARD AS-FAN	
	9	1	**258-3548**	1	CAP AS	
	10	1	**234-9525**	1	STUD (M10X1.5-THD)	
	11	1	**4K-8864**	2	CLIP	
	12	1	**7M-7410**	1	PLUG-PIPE	
	13	1	**7X-7729**	25	WASHER (11X25X3-MM THK)	
	14	1	**8T-4121**	2	WASHER-HARD (11X21X2.5-MM THK)	
M	15	1	**8T-4133**	12	NUT (M10X1.5-THD)	
M	16	1	**8T-4196**	9	BOLT (M10X1.5X35-MM)	
M	17	1	**8T-5005**	1	BOLT (M10X1.5X70-MM)	
M	18	1	**8T-6466**	5	BOLT (M10X1.5X60-MM)	

M-METRIC PART

258-3459 **RADIATOR & HYD OIL COOLER GP** *(contd.)* **i03477120**

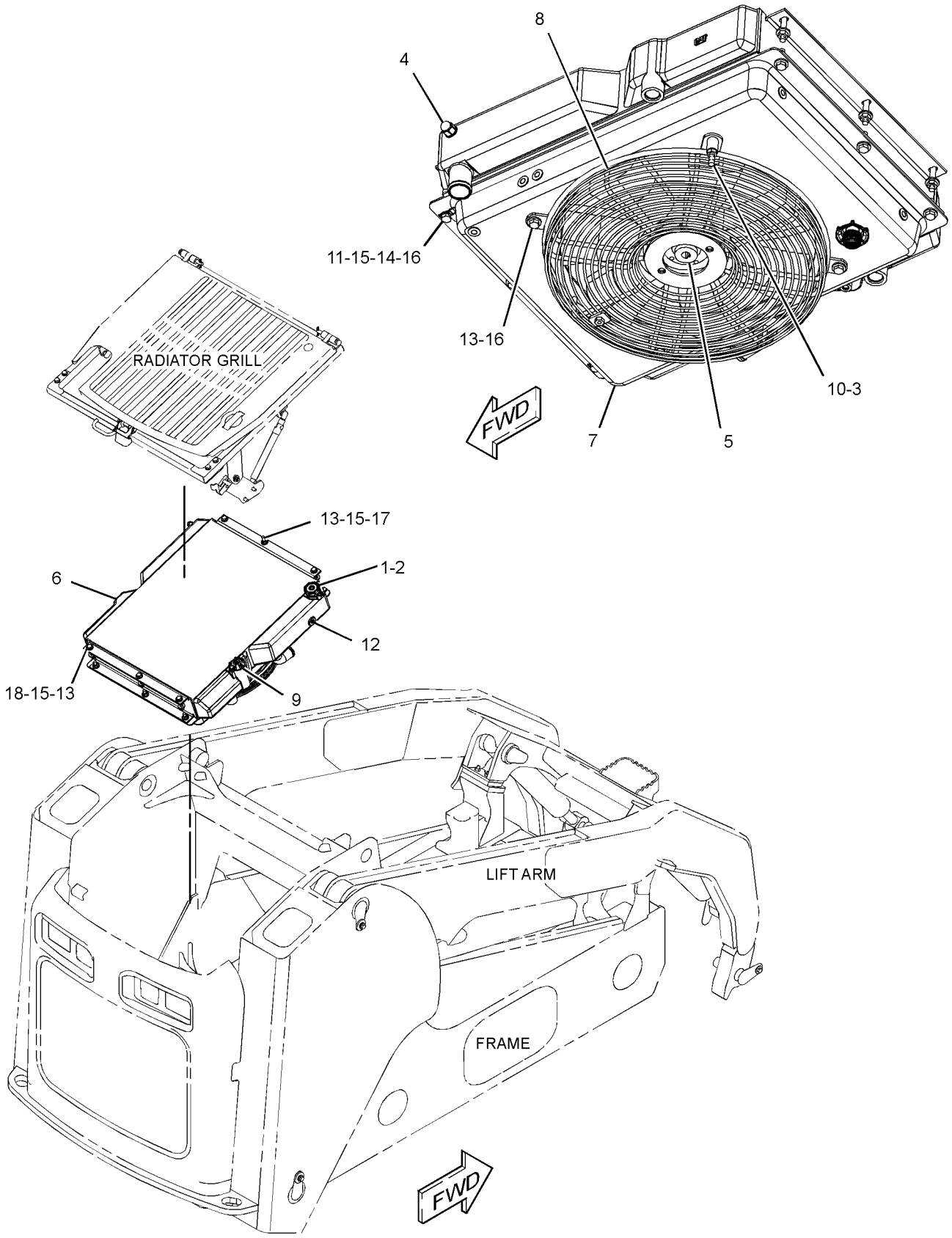

GRAPHIC #1 **<END>** g01891273

AIR INLET AND EXHAUST SYSTEM

258-3320 AIR CLEANER GP

S/N: MST1-UP

PART OF 258-3453 AIR CLEANER GP

SMCS-1051, 1054 **i03552762**

NOTE	REF NO	GRAPHIC REF	PART NUMBER	QTY	PART NAME 1 2 3 4 5 6 (PRODUCT LEVEL)	SEE PAGE
	1	1	**112-9717**	1	VALVE-DUST (AIR CLEANER)	
	2	1	**280-8298**	1	CLAMP	
	3	1	**280-8302**	1	COVER AS	
F			**110-6326**	1	FILTER ELEMENT AS-AIR (PRIMARY)	
F			**110-6331**	1	FILTER ELEMENT AS-AIR (SECONDARY)	

F-NOT SHOWN

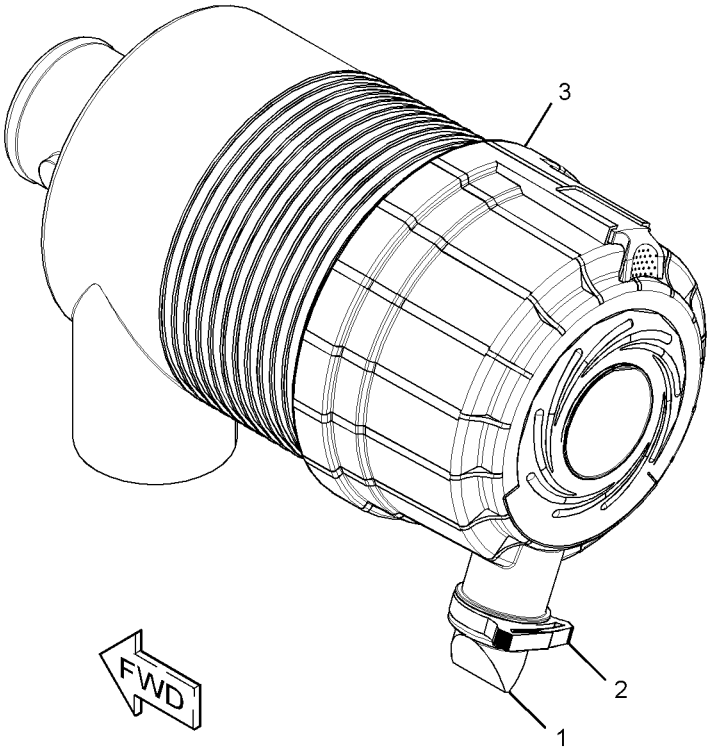

GRAPHIC #1 **<END>** g01352945

AIR INLET AND EXHAUST SYSTEM

258-3453 AIR CLEANER GP

S/N: MST1-UP

PART OF 280-8294 AIR CLEANER GP

SMCS-1051, 1054 **i02807696**

NOTE	REF NO	GRAPHIC REF	PART NUMBER	QTY	PART NAME 1 2 3 4 5 6 (PRODUCT LEVEL)	SEE PAGE
	1	1	**152-4898**	1	BAND-MOUNTING	
	2	1	**237-7325**	1	INDICATOR	
Y	3	1	**258-3320**	1	AIR CLEANER GP	98

Y-SEPARATE ILLUSTRATION

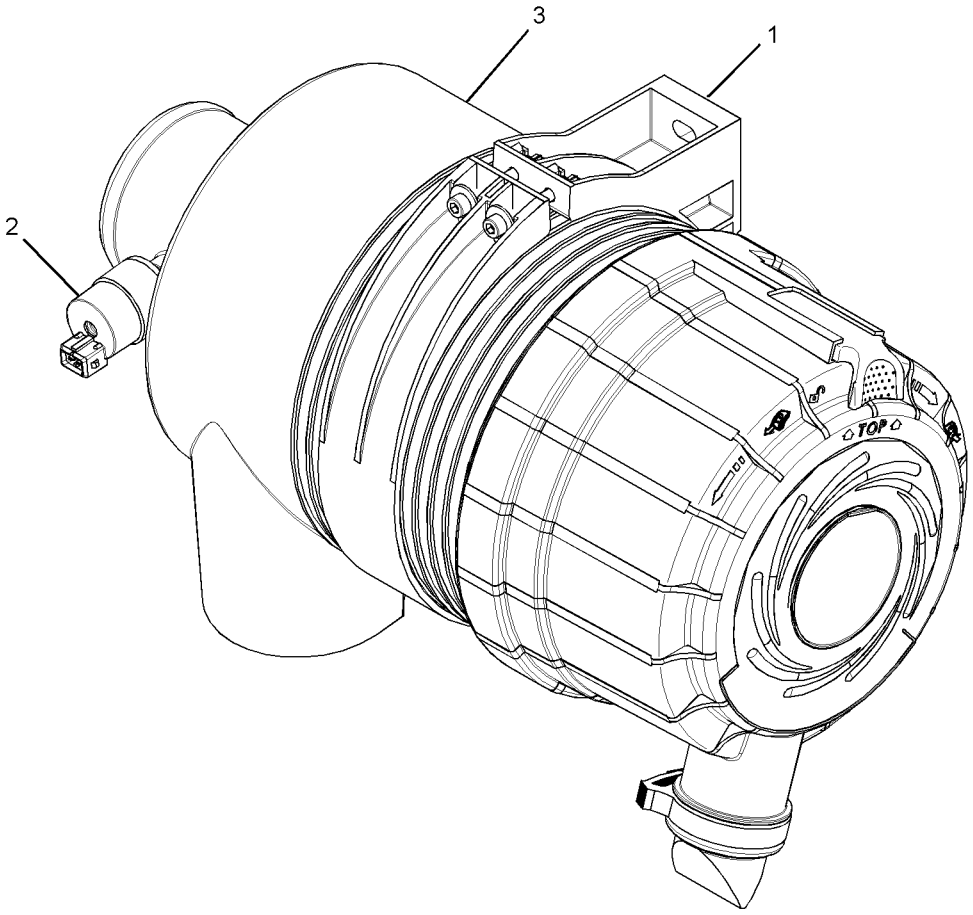

GRAPHIC #1 **<END>** g01413091

AIR INLET AND EXHAUST SYSTEM

280-8294 AIR CLEANER GP

S/N: MST1-UP

PART OF 258-2445, 295-7118 INSTALLATION AR-ENGINE

SMCS-1051, 1054 **i02663655**

NOTE	REF NO	GRAPHIC REF	PART NUMBER	QTY	PART NAME 1 2 3 4 5 6 (PRODUCT LEVEL)	SEE PAGE
	1	1	**131-6143**	1	CLAMP-HOSE	
	2	1	**258-2511**	1	PLATE	
Y	3	1	*258-3453*	1	AIR CLEANER GP	99
	4	1	**280-8286**	1	COVER	
	5	1	**280-8293**	1	DUCT	
M	6	1	**127-2170**	2	SCREW-TRUSS HEAD (M8X1.25X20-MM)	
M	7	1	**266-3315**	2	BOLT-FLANGE HEAD (M8X1.25X25.5-MM)	
	8	1	**8T-4224**	2	WASHER-HARD (8.8X16X2-MM THK)	
	9	1	**9R-9901**	4	FASTENER (CLIP)	

M-METRIC PART
Y-SEPARATE ILLUSTRATION

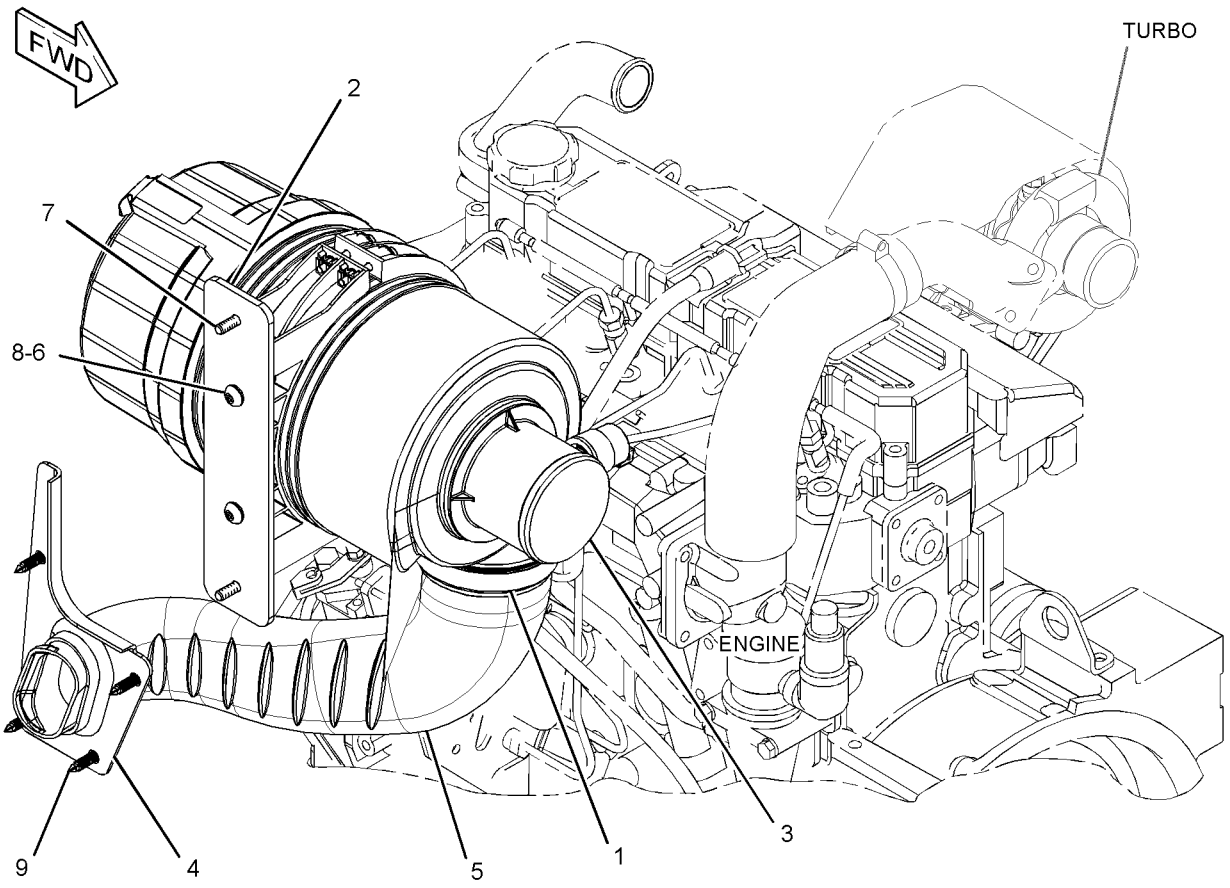

GRAPHIC #1 **<END>** g01340060

280-8393 GUARD GP-DEBRIS—TURBOCHARGER, EXHAUST MANIFOLD

S/N: MST1-UP
PART OF 258-3183, 258-3734 HYDRAULIC AR
AN ATTACHMENT

SMCS-1052, 1059 **i03019204**

NOTE	REF NO	GRAPHIC REF	PART NUMBER	QTY	PART NAME 1 2 3 4 5 6 (PRODUCT LEVEL)	SEE PAGE
	1	1	**280-8355**	1	GUARD AS-EXHAUST (TURBOCHARGER)	
	2	1	**280-8391**	1	GUARD-EXHAUST (MANIFOLD)	
M	3	1	**8T-4189**	2	BOLT (M8X1.25X20-MM)	
	4	1	**8T-4224**	4	WASHER-HARD (8.8X16X2-MM THK)	

M-METRIC PART

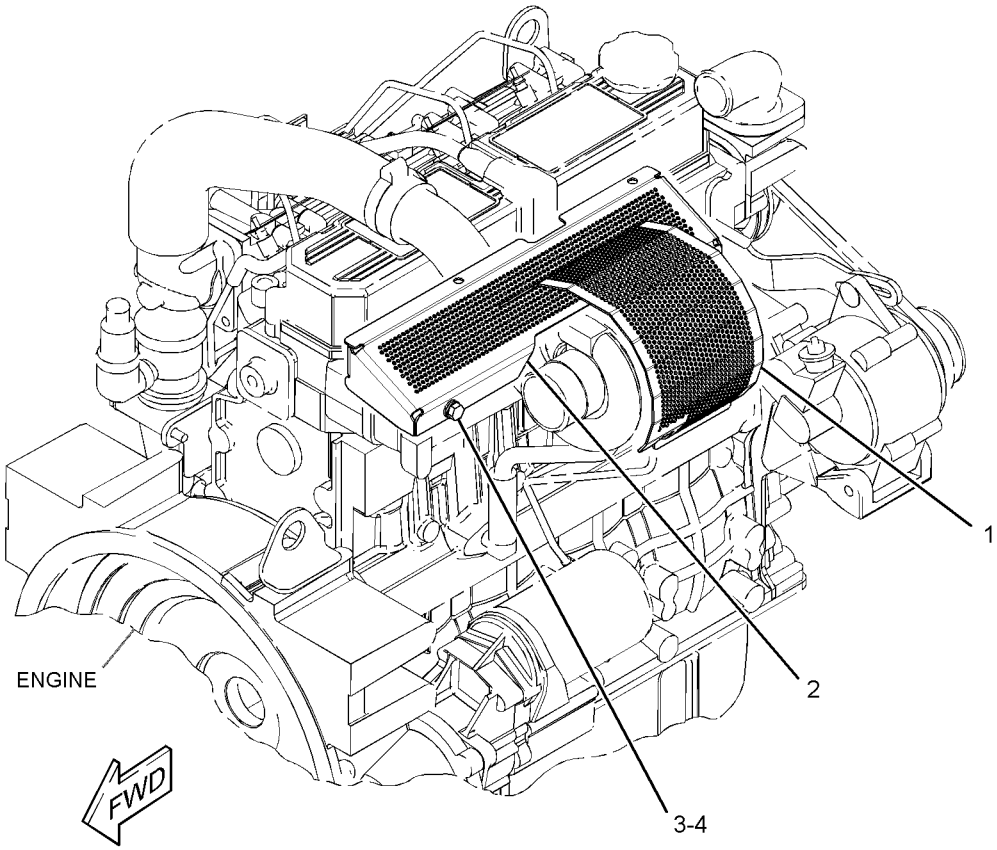

GRAPHIC #1 **<END>** g01528728

AIR INLET AND EXHAUST SYSTEM

272-3062 KIT-DEBRIS GUARD–
TURBOCHARGER, EXHAUST MANIFOLD
S/N: MST1-UP
AN ATTACHMENT

SMCS-1052, 1059 **i02921012**

NOTE	REF NO	GRAPHIC REF	PART NUMBER	QTY	PART NAME 1 2 3 4 5 6 (PRODUCT LEVEL)	SEE PAGE
	1	1	**272-3052**	1	GUARD-EXHAUST (MANIFOLD)	
	2	1	**280-8355**	1	GUARD AS-EXHAUST (TURBOCHARGER)	

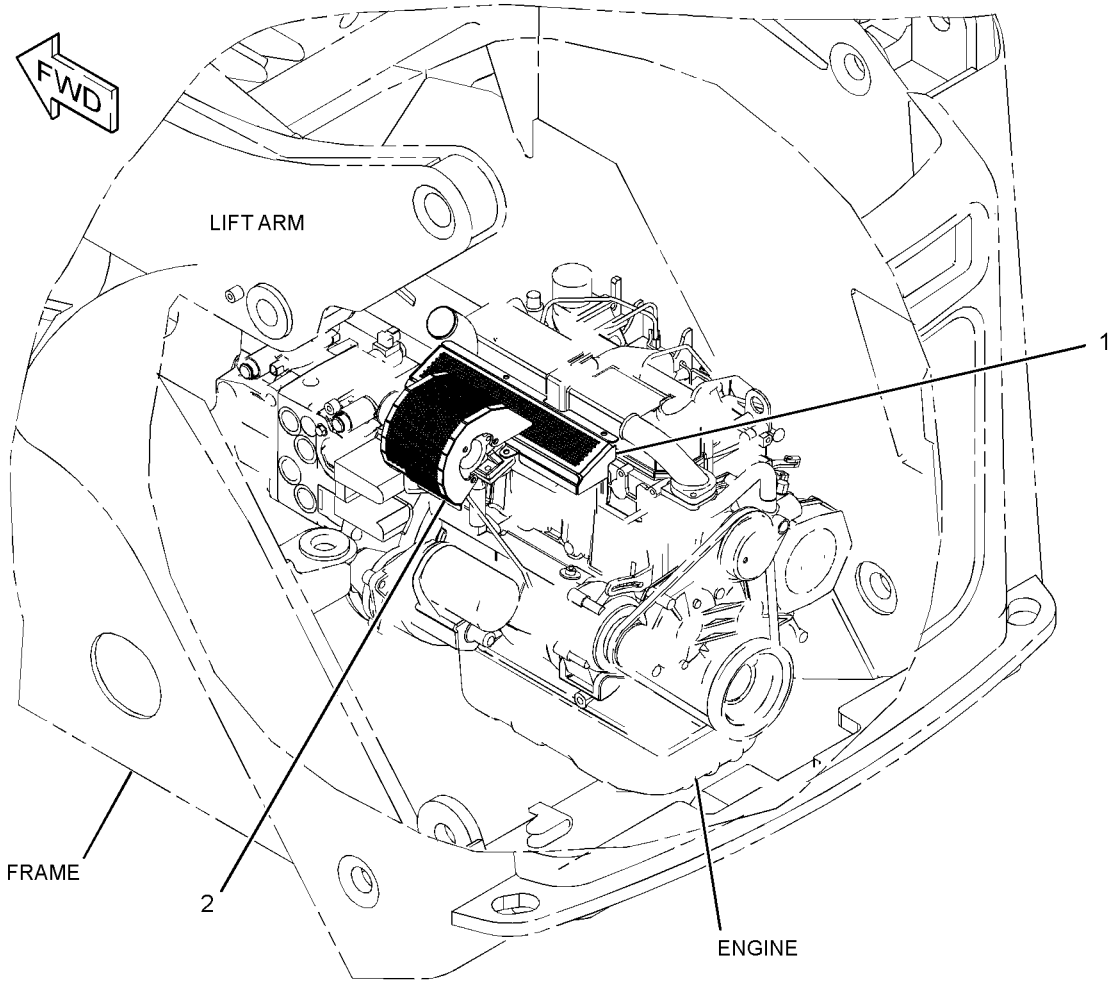

GRAPHIC #1 **<END>** g01452325

280-8392 KIT-DEBRIS GUARD–
TURBOCHARGER, EXHAUST MANIFOLD
S/N: MST1-UP
AN ATTACHMENT

SMCS-1052, 1059 **i03079704**

NOTE	REF NO	GRAPHIC REF	PART NUMBER	QTY	PART NAME 1 2 3 4 5 6 (PRODUCT LEVEL)	SEE PAGE
	1	1	**280-8355**	1	GUARD AS-EXHAUST (TURBOCHARGER)	
	2	1	**280-8391**	1	GUARD-EXHAUST (MANIFOLD)	
M	3	1	**8T-4189**	2	BOLT (M8X1.25X20-MM)	
	4	1	**8T-4224**	4	WASHER-HARD (8.8X16X2-MM THK)	

M-METRIC PART

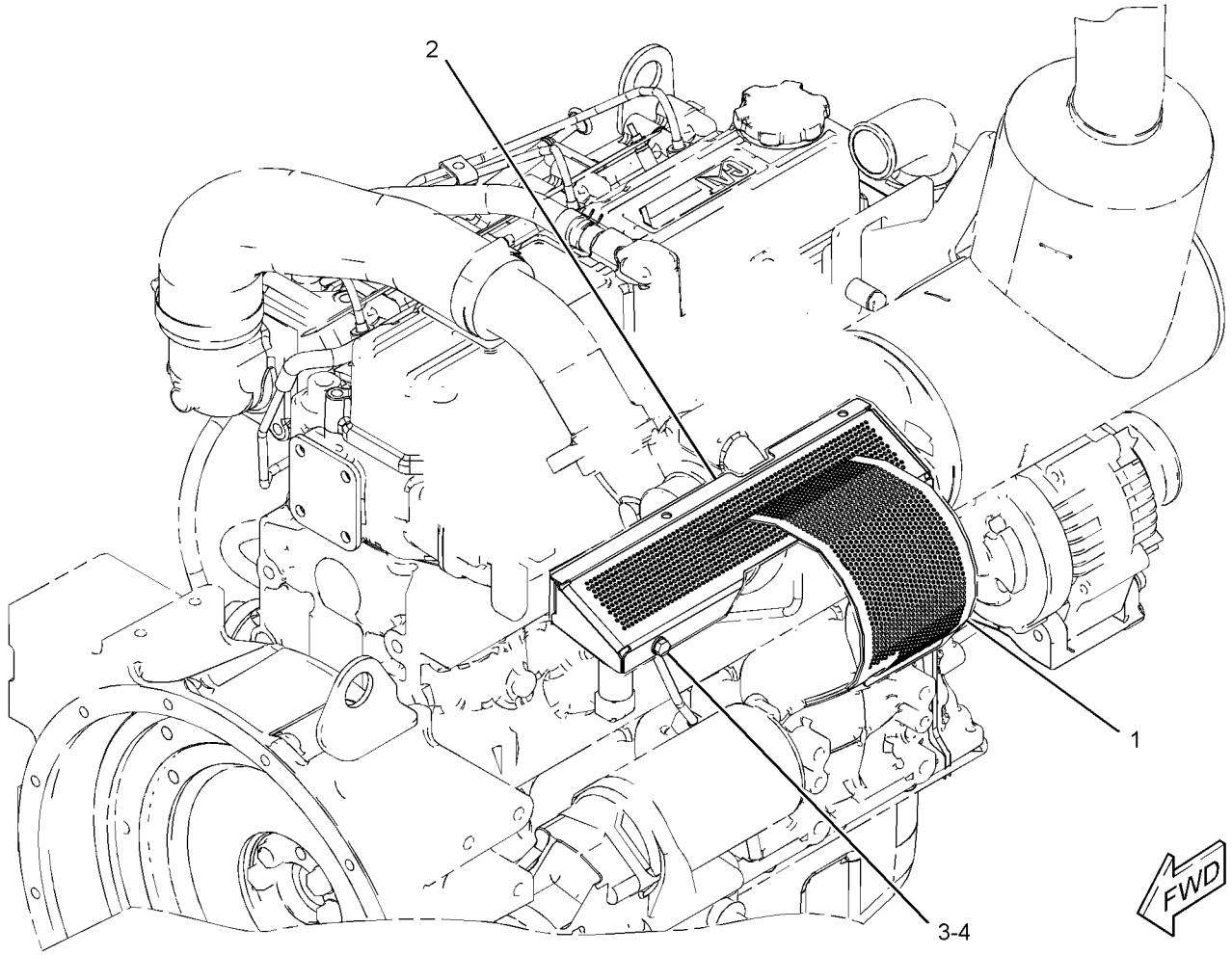

GRAPHIC #1 **<END>** g01863814

AIR INLET AND EXHAUST SYSTEM

247-6317 LINES GP-AIR

S/N: CYM1-UP; CJS1-UP
PART OF 262-7289, 287-8074 ENGINE AR-PRIMARY
AN ATTACHMENT

SMCS-1071 **i02712952**

NOTE	REF NO	GRAPHIC REF	PART NUMBER	QTY	PART NAME 1 2 3 4 5 6 (PRODUCT LEVEL)	SEE PAGE
M	1	1	**6V-3940**	4	BOLT (M8X1.25X25-MM)	
	2	1	**9M-1974**	4	WASHER-HARD (8.8X16X2-MM THK)	
	3	1	**5I-7678**	1	GASKET	
	4	1	**5I-8021**	1	ELBOW AS	
		1	**5I-8023**	1	PLUG	

M-METRIC PART

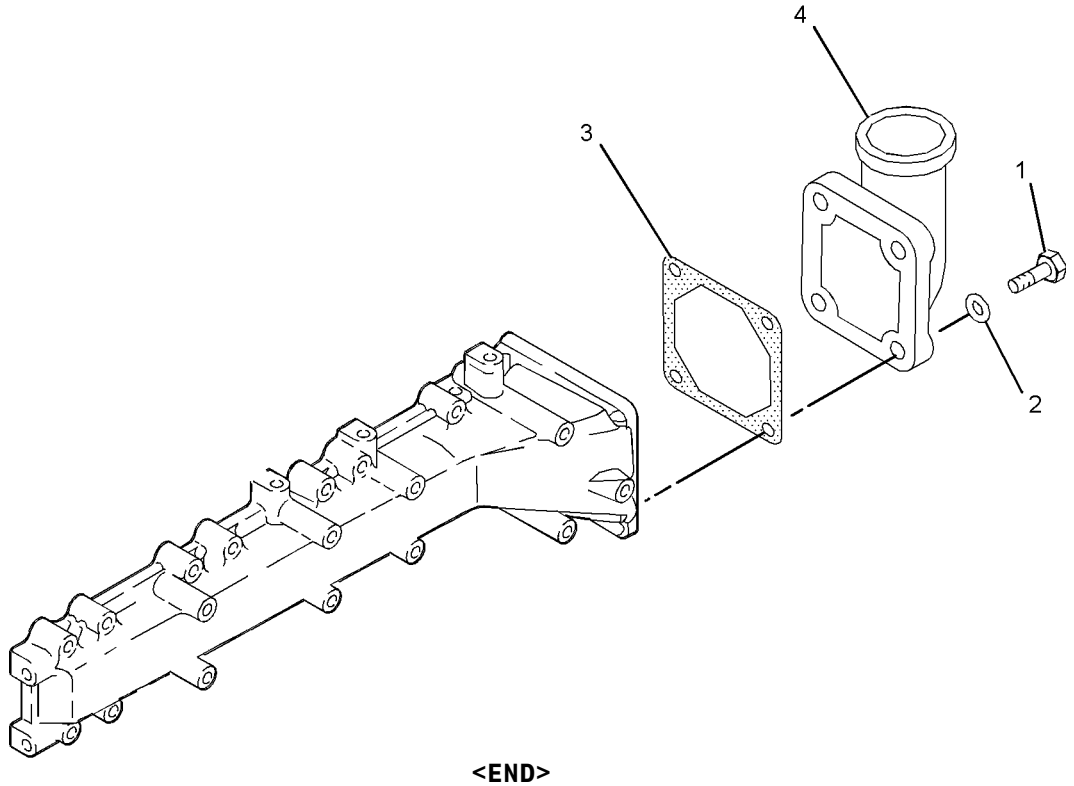

GRAPHIC #1 **<END>** g01048173

258-2465 LINES GP-AIR

S/N: MST1-UP

PART OF 258-2445, 295-7118 INSTALLATION AR-ENGINE

SMCS-1071 **i02627291**

NOTE	REF NO	GRAPHIC REF	PART NUMBER	QTY	PART NAME 1 2 3 4 5 6 (PRODUCT LEVEL)	SEE PAGE
	1	1	**5P-4868**	1	CLAMP - HOSE	
	2	1	**258-2464**	1	HOSE AS	
	3	1	**8T-6726**	1	CLAMP - HOSE	

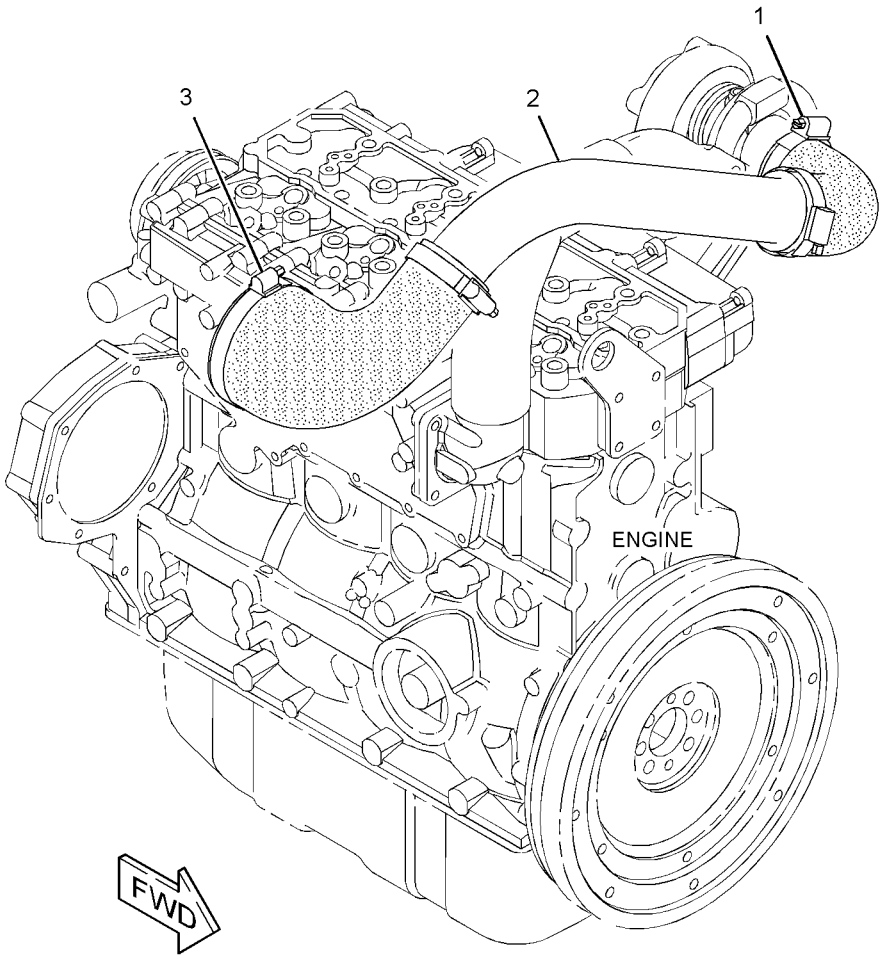

GRAPHIC #1 **<END>** g01321081

AIR INLET AND EXHAUST SYSTEM

315-7769 LINES GP-AIR

S/N: CYM1-UP

PART OF 287-8074, 319-6806 ENGINE AR-PRIMARY

AN ATTACHMENT

SMCS-1071 **i03529260**

NOTE	REF NO	GRAPHIC REF	PART NUMBER	QTY	PART NAME 1 2 3 4 5 6 (PRODUCT LEVEL)	SEE PAGE
	1	1	**330-7621**	1	HOSE-BREATHER	
	2	1	**330-7622**	2	CLIP	
M	3	1	**5C-9553**	2	BOLT (M6X1X16-MM)	
	4	1	**9X-8256**	2	WASHER (6.6X12X2-MM THK)	
	5	1	**315-8697**	1	CLIP HOSE	
	6	1	**253-5512**	1	CLIP	
	7	1	**315-7701**	2	SCREW	
	8	1	**315-8698**	2	RETAINER-WASHER	
	9	1	**315-7702**	1	CLIP HOSE	
	10	1	**330-7620**	1	BRACKET-SUPPORT	
	11	1	**096-2500**	2	LOCKWASHER	

M-METRIC PART

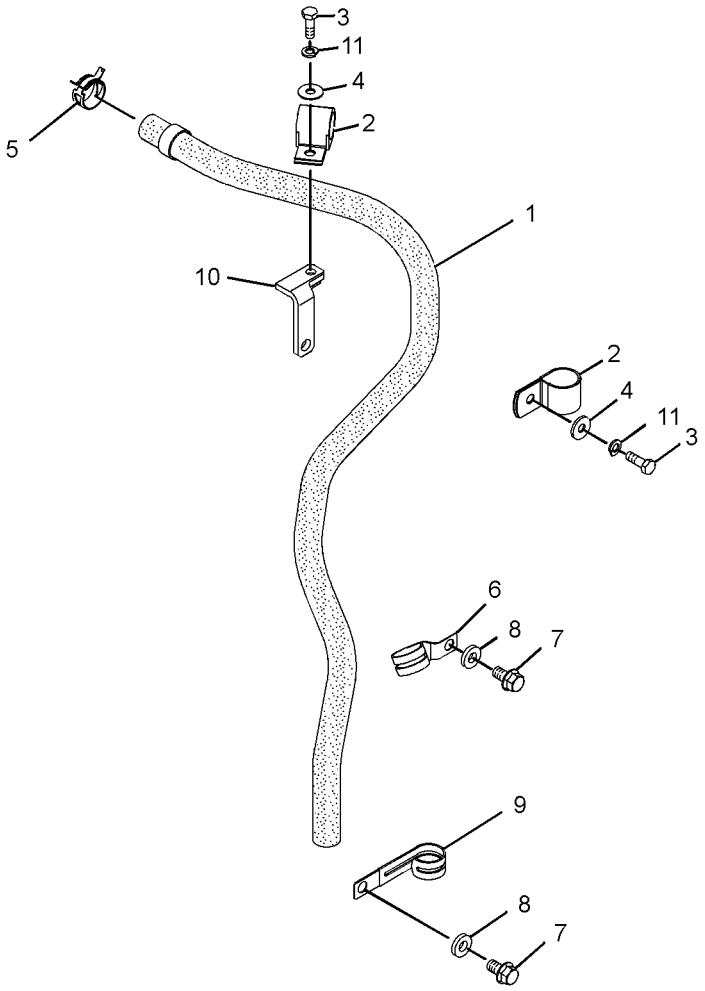

GRAPHIC #1 **<END>** g01802753

AIR INLET AND EXHAUST SYSTEM

316-0471 LINES GP-AIR

S/N: CYM1-UP

PART OF 319-6806 ENGINE AR-PRIMARY

AN ATTACHMENT

SMCS-1071 **i02975082**

NOTE	REF NO	GRAPHIC REF	PART NUMBER	QTY	PART NAME 1 2 3 4 5 6 (PRODUCT LEVEL)	SEE PAGE
	1	1	**5I-7678**	1	GASKET	
M	2	1	**195-8222**	4	BOLT AS	
	3	1	**315-2340**	1	ELBOW	
	4	1	**315-2341**	1	FITTING	
	5	1	**315-2342**	1	HOSE	
	6	1	**315-2343**	1	CLIP	
	7	1	**270-6282**	2	CLIP	

M-METRIC PART

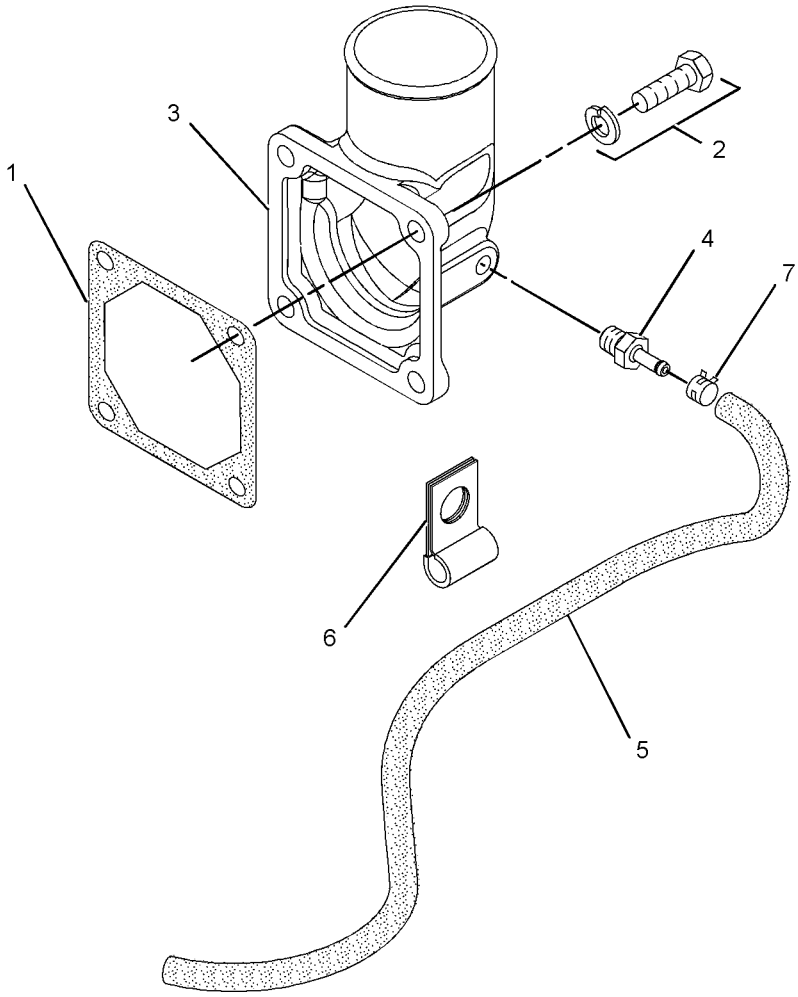

GRAPHIC #1 **<END>** g01448145

AIR INLET AND EXHAUST SYSTEM

317-5070 LINES GP-AIR

S/N: CJS60344-UP
PART OF 262-7289 ENGINE AR-PRIMARY
AN ATTACHMENT

SMCS-1071 **i02864898**

NOTE	REF NO	GRAPHIC REF	PART NUMBER	QTY	PART NAME 1 2 3 4 5 6 (PRODUCT LEVEL)	SEE PAGE
	1	1	**234-4837**	1	CLIP-HOSE	
	2	1	**253-5512**	1	CLIP	
	3	1	**315-7701**	3	SCREW	
	4	1	**315-7702**	1	CLIP HOSE	
	5	1	**315-8698**	3	RETAINER-WASHER	
	6	1	**317-5007**	1	HOSE	
	7	1	**317-5008**	1	CLIP	

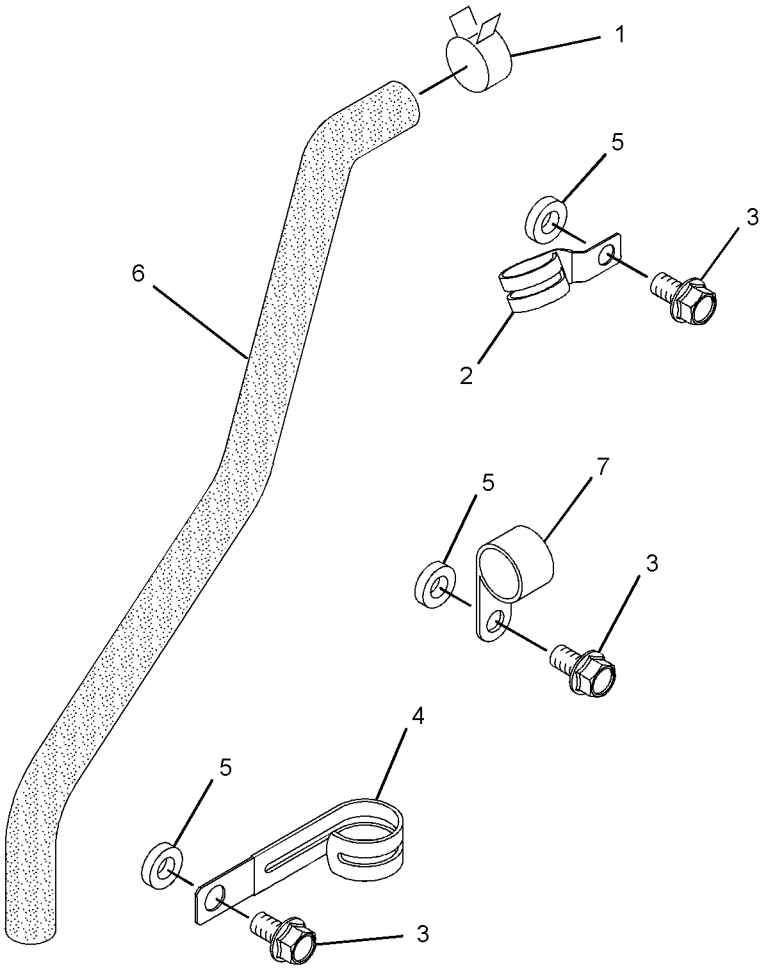

GRAPHIC #1 **<END>** g01429572

AIR INLET AND EXHAUST SYSTEM

287-5323 MANIFOLD GP-EXHAUST

S/N: CYM1-UP; CJS1-UP

PART OF 262-7289, 287-8074, 319-6806 ENGINE AR-PRIMARY

AN ATTACHMENT

SMCS-1059 **i03041710**

NOTE	REF NO	GRAPHIC REF	PART NUMBER	QTY	PART NAME 1 2 3 4 5 6 (PRODUCT LEVEL)	SEE PAGE
	1	1	**5I-7931**	4	STUD	
	2	1	**195-8260**	8	NUT (M8X1.25-THD)	
	3	1	**233-5460**	8	BOLT	
	4	1	**328-5192**	1	MANIFOLD-EXHAUST	
	5	1	**234-4824**	1	GASKET-MANIFOLD	

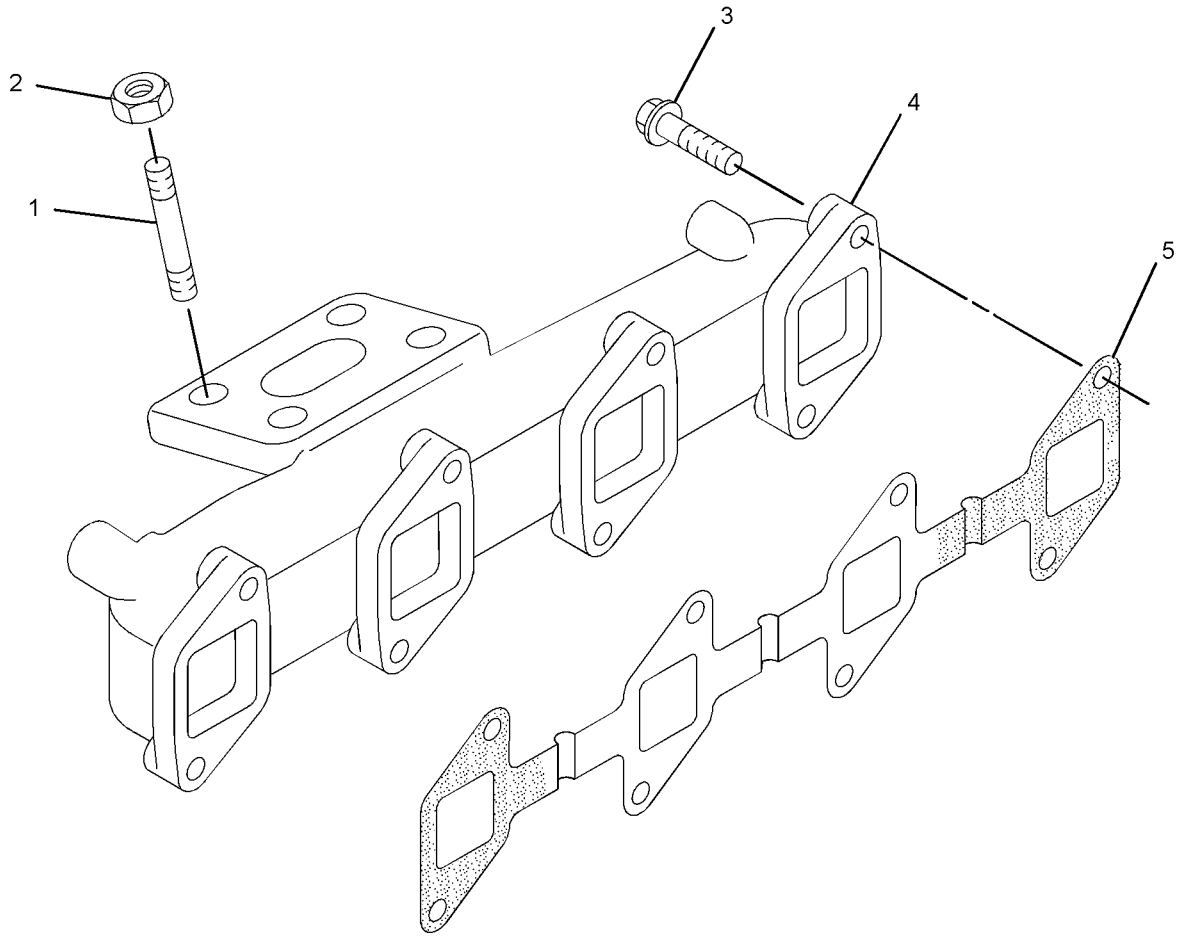

GRAPHIC #1 **<END>** g01327717

AIR INLET AND EXHAUST SYSTEM

287-4832 MANIFOLD GP-INLET

S/N: CYM1-UP; CJS1-UP
PART OF 262-7289, 287-8074 ENGINE AR-PRIMARY
AN ATTACHMENT

SMCS-1058 **i02568577**

NOTE	REF NO	GRAPHIC REF	PART NUMBER	QTY	PART NAME 1 2 3 4 5 6 (PRODUCT LEVEL)	SEE PAGE
	1	1	**234-4805**	1	MANIFOLD-INLET	
	2	1	**234-4806**	1	GASKET (INLET MANIFOLD)	
M	3	1	**099-3649**	12	BOLT (M8X1.25X40-MM)	
M	4	1	**8T-4177**	2	BOLT (M8X1.25X90-MM)	
	5	1	**3B-4505**	14	LOCKWASHER	
M	6	1	**7X-0818**	2	BOLT (M8X1.25X45-MM)	
	7	1	**8T-4224**	2	WASHER-HARD (8.8X16X2-MM THK)	

M-METRIC PART

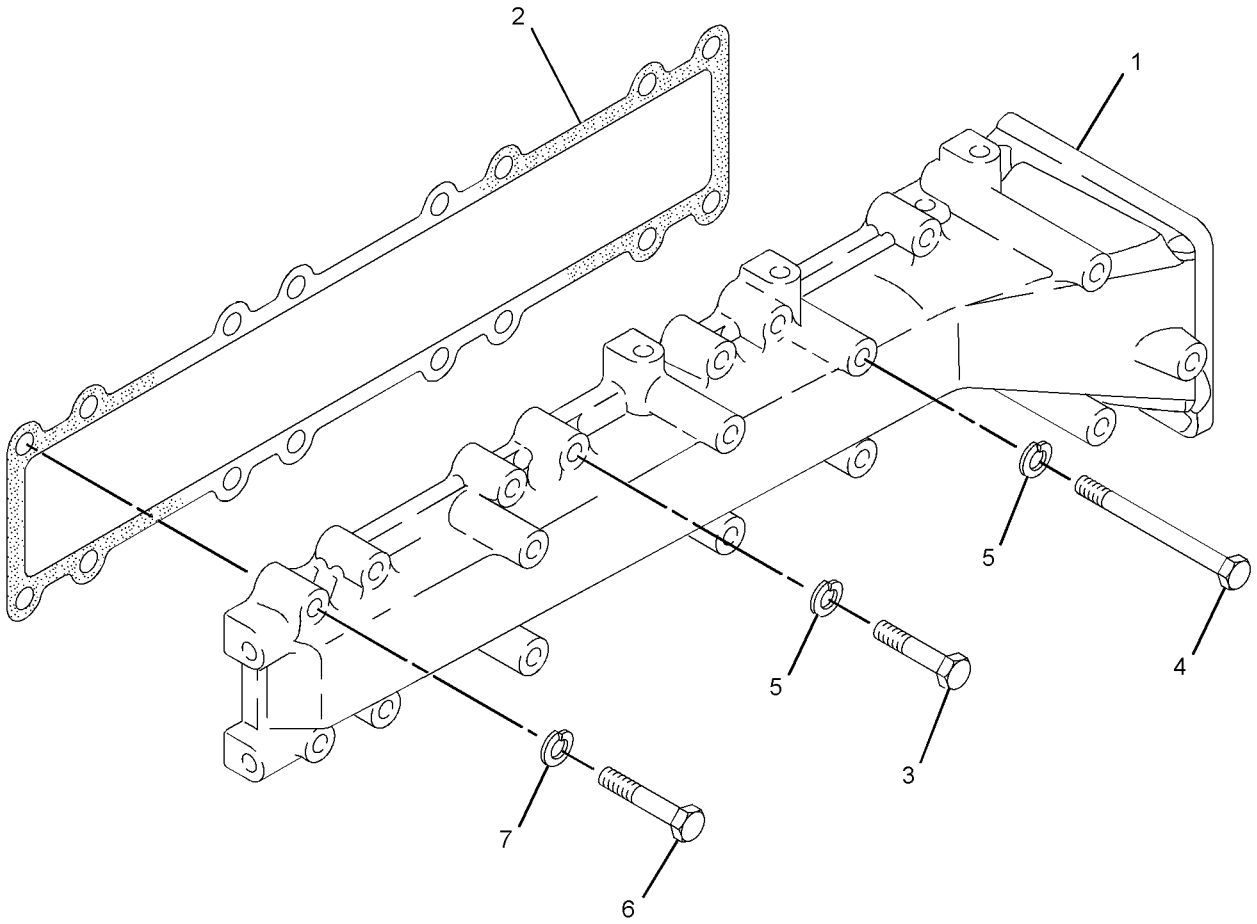

GRAPHIC #1 **<END>** g01327572

AIR INLET AND EXHAUST SYSTEM

335-5750 MANIFOLD GP-INLET

S/N: CYM1-UP

PART OF 319-6806 ENGINE AR-PRIMARY

AN ATTACHMENT

SMCS-1058 **i03254952**

NOTE	REF NO	GRAPHIC REF	PART NUMBER	QTY	PART NAME 1 2 3 4 5 6 (PRODUCT LEVEL)	SEE PAGE
	1	1	**3B-4505**	13	LOCKWASHER	
M	2	1	**7X-0818**	3	BOLT (M8X1.25X45-MM)	
M	3	1	**8T-4177**	2	BOLT (M8X1.25X90-MM)	
	4	1	**8T-4224**	3	WASHER-HARD (8.8X16X2-MM THK)	
M	5	1	**099-3649**	11	BOLT (M8X1.25X40-MM)	
	6	1	**234-4805**	1	MANIFOLD-INLET	
	7	1	**234-4806**	1	GASKET	

M-METRIC PART

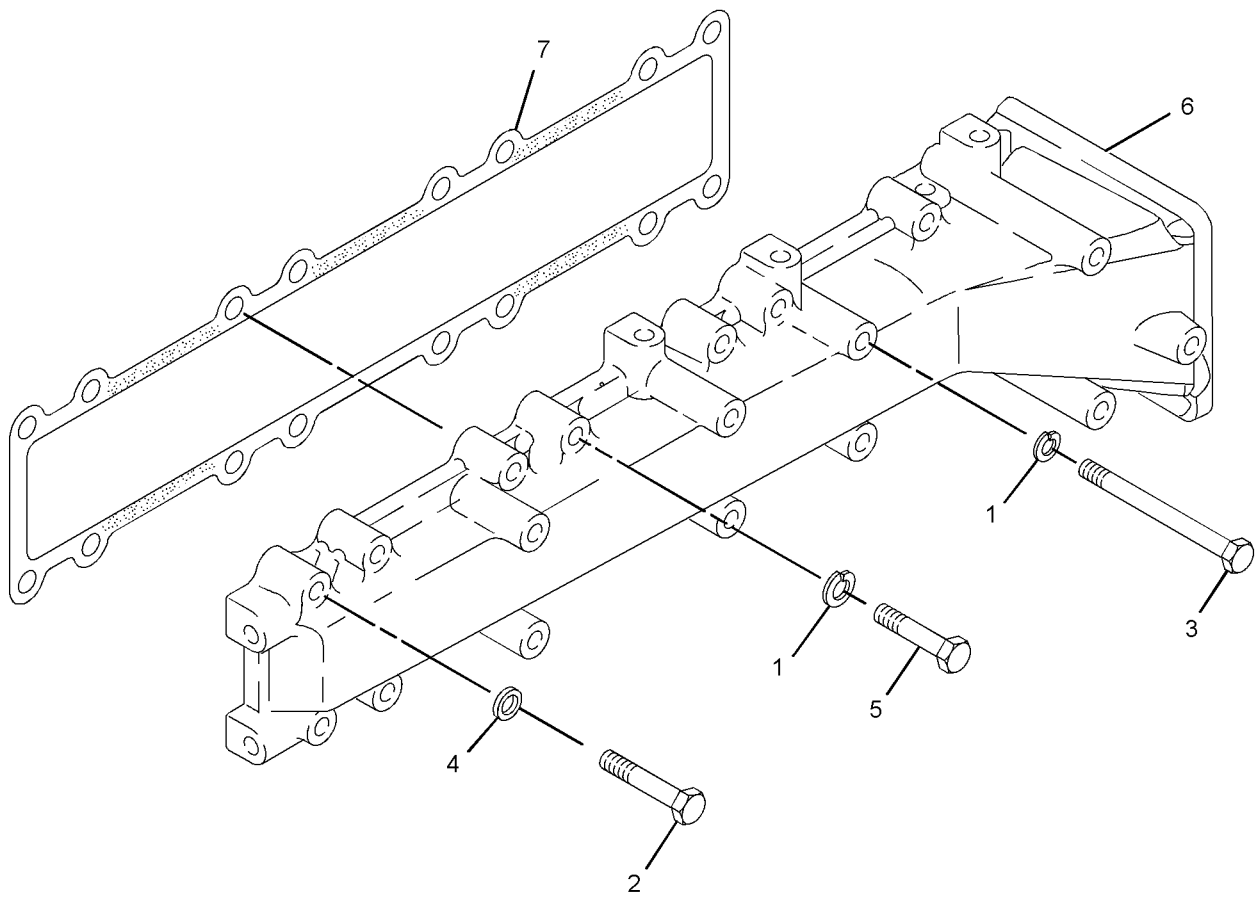

GRAPHIC #1 **<END>** g01664575

AIR INLET AND EXHAUST SYSTEM

258-2462 MUFFLER & MOUNTING GP

S/N: MST1-UP
PART OF 258-3800 CONVERSION AR-ROADING
AN ATTACHMENT

SMCS-1062 **i02930638**

NOTE	REF NO	GRAPHIC REF	PART NUMBER	QTY	PART NAME 1 2 3 4 5 6 (PRODUCT LEVEL)	SEE PAGE
	1	1	**5I-8111**	1	GASKET	
	2	1	**198-4776**	3	WASHER-HARD (8.8X20X8-MM THK)	
	3	1	**258-2419**	1	MUFFLER AS	
	4	1	**280-8240**	1	PLATE	
	5	1	**232-3121**	1	NUT (M10X1.25-THD)	
	6	1	**280-8341**	2	SPACER (8.7X15.8X21.1-MM THK)	
M	7	1	**8T-7547**	3	BOLT (M8X1.25X30-MM)	
	8	1	**280-8377**	1	SPACER (11.1X19.1X25-MM THK)	
M	9	1	**305-5385**	2	BOLT (M8X1.25X50-MM)	

M-METRIC PART

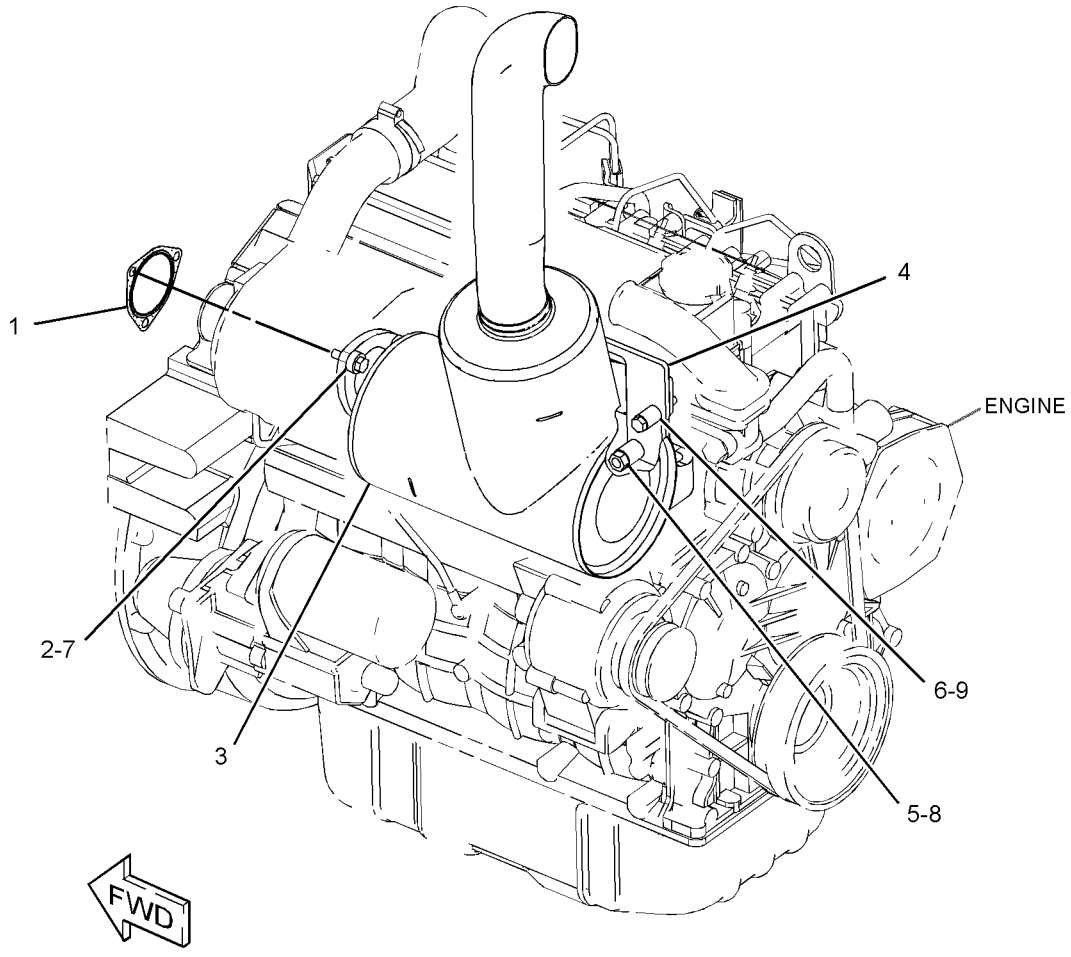

GRAPHIC #1 **<END>** g01457027

280-8347 MUFFLER & MOUNTING GP

S/N: MST1-UP
PART OF 258-3803, 315-6354 CONVERSION AR-MACHINE, 258-3802, 258-3804 CONVERSION AR-ROADING
AN ATTACHMENT

SMCS-1062 **i02948043**

NOTE	REF NO	GRAPHIC REF	PART NUMBER	QTY	PART NAME 1 2 3 4 5 6 (PRODUCT LEVEL)	SEE PAGE
	1	1	**5I-8111**	1	GASKET	
	2	1	**198-4776**	3	WASHER-HARD (8.8X20X8-MM THK)	
	3	1	**272-3050**	1	MUFFLER AS	
	4	1	**280-8240**	1	PLATE	
	5	1	**280-8341**	2	SPACER (8.7X15.8X21.1-MM THK)	
	6	1	**280-8377**	1	SPACER (11.1X19.1X25-MM THK)	
	7	1	**232-3121**	1	NUT (M10X1.25-THD)	
M	8	1	**305-5385**	2	BOLT (M8X1.25X50-MM)	
M	9	1	**8T-7547**	3	BOLT (M8X1.25X30-MM)	

M-METRIC PART

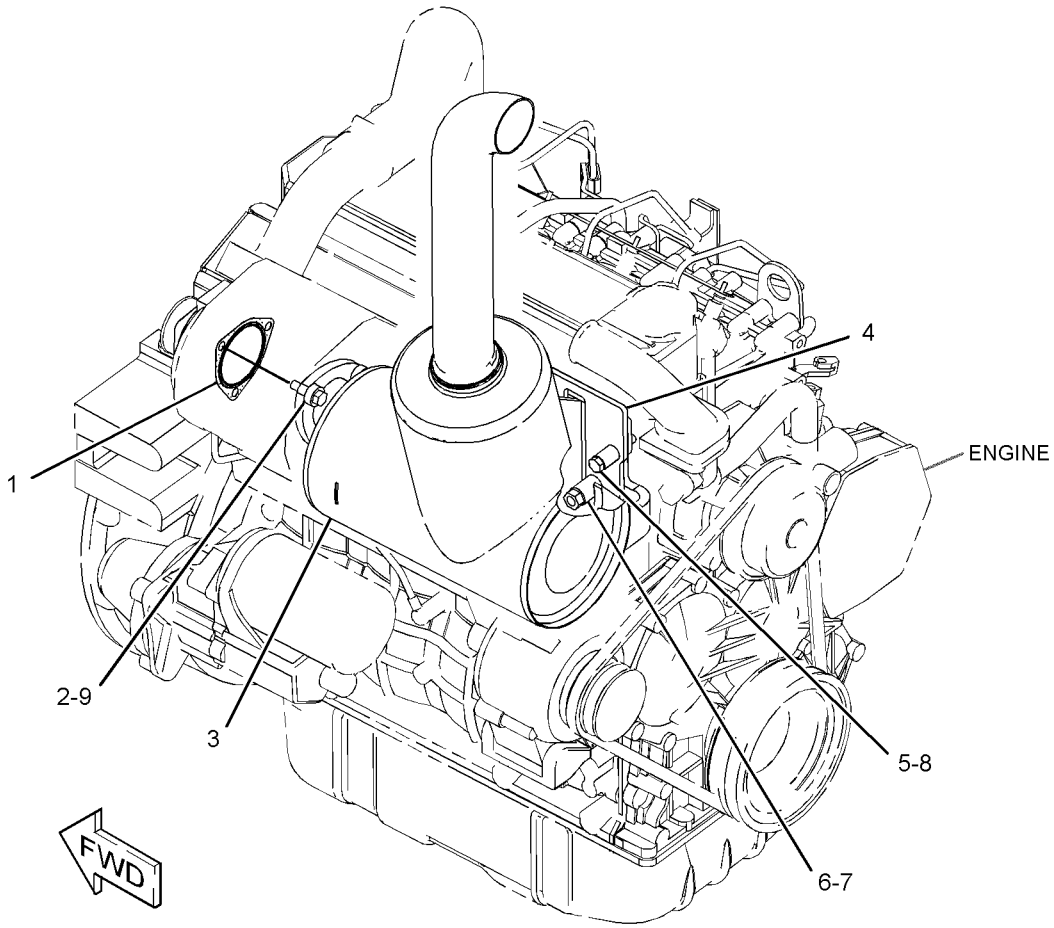

GRAPHIC #1 **<END>** g01556973

AIR INLET AND EXHAUST SYSTEM

235-5894 TURBOCHARGER GP

S/N: CJS1-UP
PART OF 262-7289 ENGINE AR-PRIMARY
AN ATTACHMENT

SMCS-1052, 1053 **i03672062**

NOTE	REF NO	GRAPHIC REF	PART NUMBER	QTY	PART NAME 1 2 3 4 5 6 (PRODUCT LEVEL)	SEE PAGE
	1	1	**5I-7933**	1	GASKET	
	2	1	**5I-5077**	2	CLAMP	
	3	1	**5I-7623**	1	BOLT (M10X1.25X20-MM)	
	4	1	**235-4964**	1	TURBOCHARGER GP	
	5	1	**5I-7689**	1	GASKET	
	6	1	**5I-8109**	1	HOSE	
	7	1	**5I-8110**	1	ELBOW	
M	8	1	**6V-7357**	1	BOLT (M6X1X25-MM)	
	9	1	**096-2500**	3	LOCKWASHER	
	10	1	**191-3206**	4	GASKET	
M	11	1	**6V-2317**	2	BOLT (M8X1.25X30-MM)	
	12	1	**9M-1974**	2	WASHER-HARD (8.8X16X2-MM THK)	
	13	1	**5P-0597**	1	CLAMP-HOSE	
	14	1	**5P-4868**	1	CLAMP-HOSE	
	15	1	**234-4818**	1	GASKET	
	16	1	**234-4819**	1	HOSE	
	17	1	**234-4820**	1	PIPE	
	18	1	**234-4821**	1	PIPE	
	19	1	**234-4822**	2	CLAMP	
	20	1	**296-4812**	1	BOLT	
	21	1	**235-4967**	1	CONNECTOR	
	22	1	**235-4968**	1	PIPE	
M	23	1	**5C-2890**	1	NUT (M6X1-THD)	
M	24	1	**5C-9553**	2	BOLT (M6X1X16-MM)	

M-METRIC PART

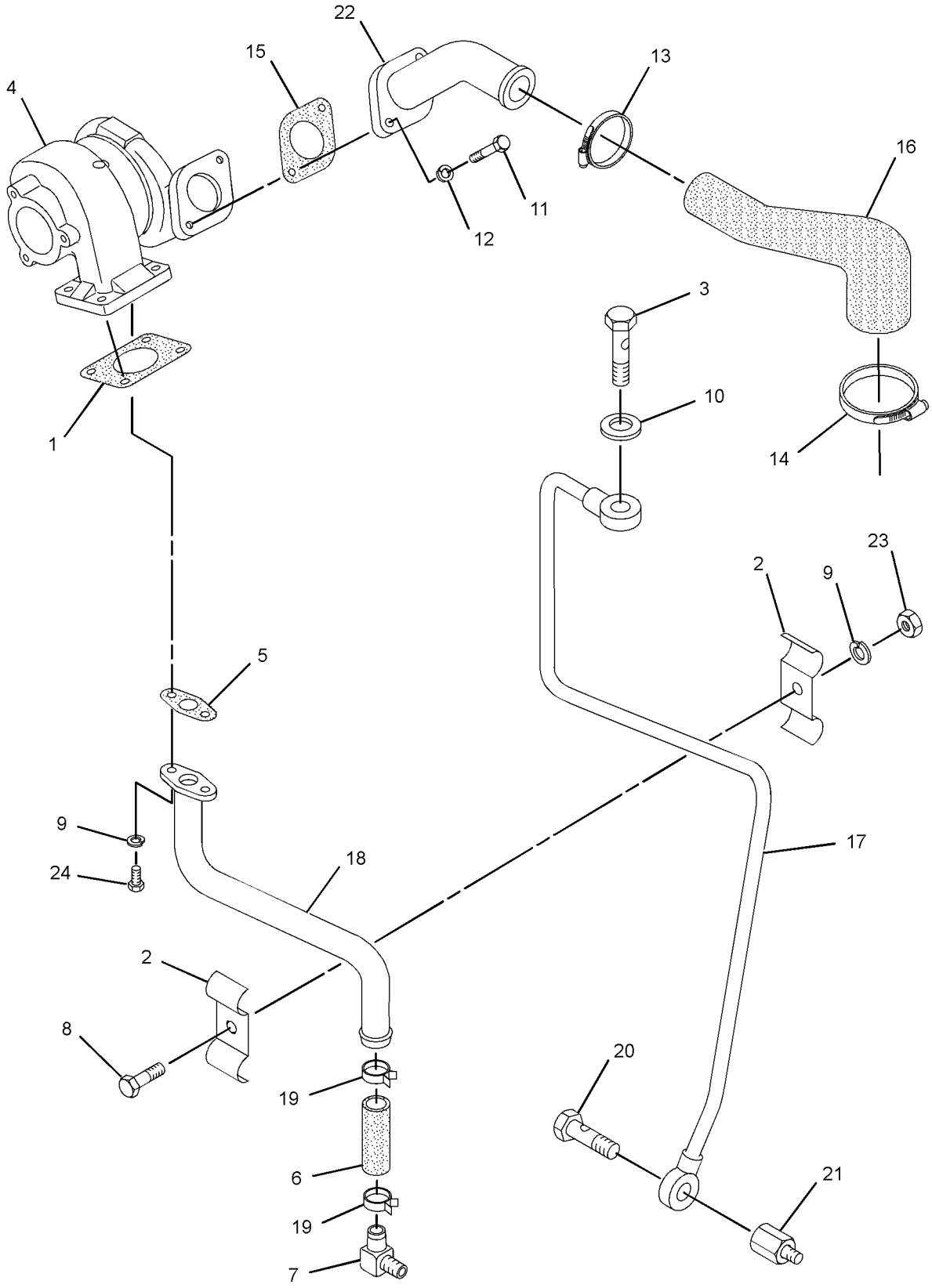

GRAPHIC #1 **<END>** g01345914

AIR INLET AND EXHAUST SYSTEM

315-7768 TURBOCHARGER GP

S/N: CYM1-UP

PART OF 287-8074, 319-6806 ENGINE AR-PRIMARY

AN ATTACHMENT

SMCS-1052, 1053 **i03671415**

NOTE	REF NO	GRAPHIC REF	PART NUMBER	QTY	PART NAME 1 2 3 4 5 6 (PRODUCT LEVEL)	SEE PAGE
M	1	1	**5C-2890**	1	NUT (M6X1-THD)	
M	2	1	**5C-9553**	2	BOLT (M6X1X16-MM)	
	3	1	**5I-5077**	2	CLAMP	
	4	1	**5I-7623**	1	BOLT (M10X1.25X20-MM)	
	5	1	**5I-7689**	1	GASKET	
	6	1	**5I-7933**	1	GASKET	
	7	1	**5I-8109**	1	HOSE	
	8	1	**5I-8110**	1	ELBOW	
M	9	1	**6V-2317**	2	BOLT (M8X1.25X30-MM)	
M	10	1	**6V-7357**	1	BOLT (M6X1X25-MM)	
	11	1	**9M-1974**	2	WASHER-HARD (8.8X16X2-MM THK)	
	12	1	**096-2500**	3	LOCKWASHER	
	13	1	**191-3206**	4	GASKET	
	14	1	**5P-0597**	1	CLAMP-HOSE	
	15	1	**5P-4868**	1	CLAMP-HOSE	
	16	1	**234-4818**	1	GASKET	
	17	1	**234-4820**	1	PIPE	
	18	1	**234-4821**	1	PIPE	
	19	1	**234-4822**	2	CLAMP	
	20	1	**296-4812**	1	BOLT	
	21	1	**235-4967**	1	CONNECTOR	
	22	1	**235-4968**	1	PIPE	
	23	1	**314-9972**	1	TURBOCHARGER AS	
	24	1	**314-9974**	1	HOSE-AIR	

M-METRIC PART

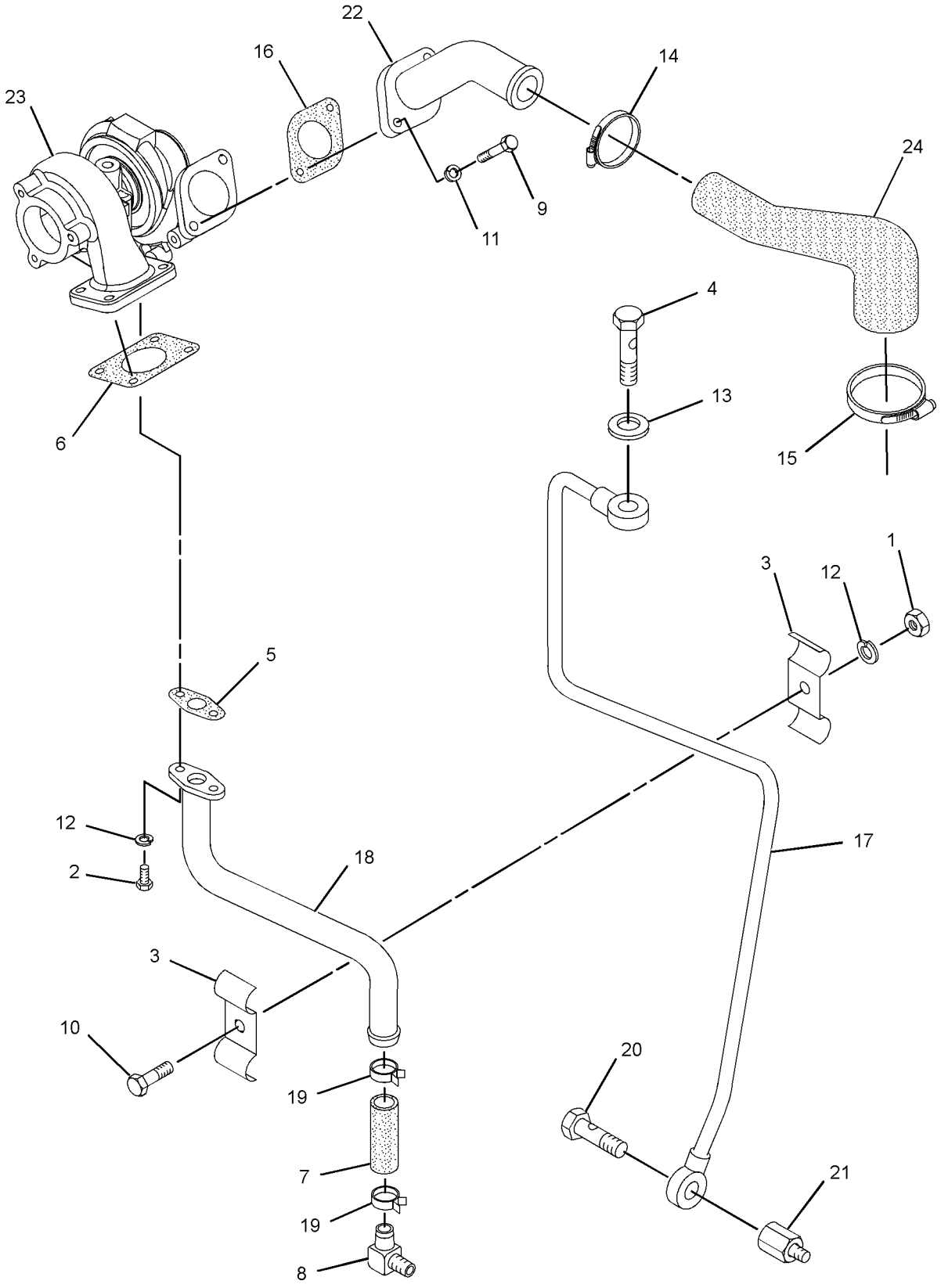

GRAPHIC #1 **<END>** g01445155

FUEL SYSTEM

280-6340 CONTROL GP-GOVERNOR

S/N: MST1-1859

PART OF 258-2510 CHASSIS AR

SMCS-1265, 1276 **i02792818**

NOTE	REF NO	GRAPHIC REF	PART NUMBER	QTY	PART NAME 1 2 3 4 5 6 (PRODUCT LEVEL)	SEE PAGE
	1	1	**3S-2093**	2	STRAP-CABLE	
	2	1	**4P-7581**	1	CLIP	
	3	1	**8T-3984**	1	KNOB	
	4	1	**258-3727**	1	SCREW-TRUSS HEAD (NO 12X17.46-MM)	
	5	1	**258-4041**	1	BRACKET AS	
Y	6	1	**258-4045**	1	LEVER GP-GOVERNOR	743
	7	1	**258-4048**	1	BRACKET-STOP	
	8	1	**258-4372**	1	CLIP	
Y	9	1	*280-6342*	1	PEDAL GP-GOVERNOR	772
	10	1	**134-3987**	1	CLIP	
	11	1	**237-7296**	4	SCREW-FLAT HEAD (M6X1X35-MM)	
	12	1	**195-0936**	3	INSERT-THREADED (M6X1-THD)	
	13	1	**8T-4205**	3	WASHER-HARD (7.2X14.5X2-MM THK)	
	14	1	**5P-4116**	2	WASHER-HARD (8.8X20.5X2-MM THK)	
M	15	1	**8T-4138**	3	BOLT (M6X1X20-MM)	
M	16	1	**3E-8020**	2	SCREW-TRUSS HEAD (M6X1X25-MM)	
	17	1	**9X-2038**	2	WASHER (7X19X2-MM THK)	
	18	1	**258-4242**	1	PIN-CLEVIS	
	19	1	**258-4243**	1	LINK	
	20	1	**258-4244**	1	CLIP-SPRING	

M-METRIC PART
Y-SEPARATE ILLUSTRATION

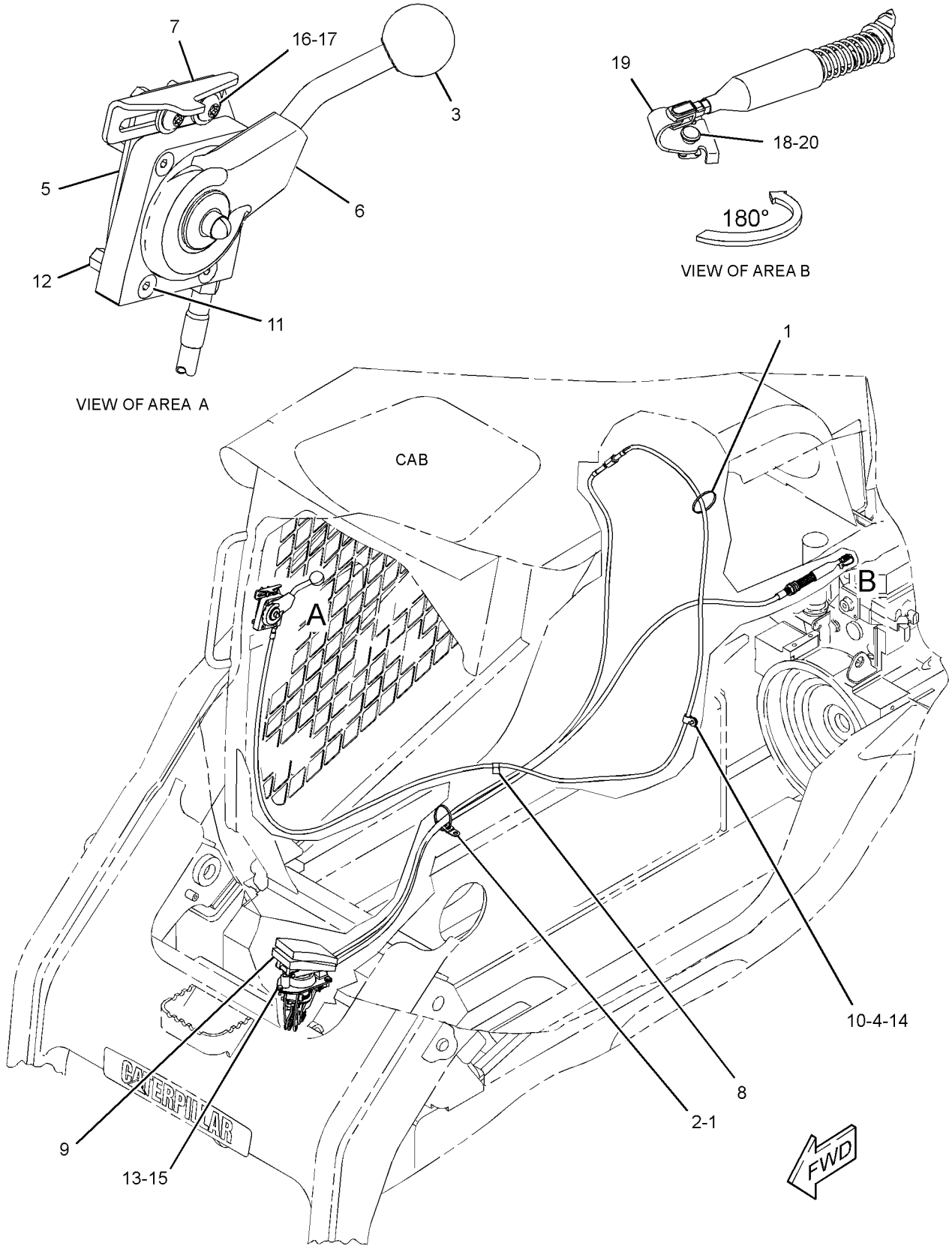

GRAPHIC #1 **<END>** g01413055

FUEL SYSTEM

295-7463 CONTROL GP-GOVERNOR

S/N: MST1860-UP

PART OF 295-7292 CHASSIS AR

SMCS-1265, 1276 **i03646976**

NOTE	REF NO	GRAPHIC REF	PART NUMBER	QTY	PART NAME 1 2 3 4 5 6 (PRODUCT LEVEL)	SEE PAGE
	1	1	**4P-7581**	1	CLIP	
	2	1	**8T-3984**	1	KNOB	
	3	1	**9X-2038**	2	WASHER (7X19X2-MM THK)	
	4	1	**237-7296**	4	SCREW-FLAT HEAD (M6X1X35-MM)	
	5	1	**258-3727**	1	SCREW-TRUSS HEAD (NO 12X17.46-MM)	
	6	1	**258-4041**	1	BRACKET AS	
Y	7	1	**258-4045**	1	LEVER GP-GOVERNOR	743
	8	1	**258-4048**	1	BRACKET-STOP	
	9	1	**258-4372**	1	CLIP	
Y	10	1	*280-6342*	1	PEDAL GP-GOVERNOR	772
	11	1	**134-3987**	1	CLIP	
	12	1	**195-0936**	3	INSERT-THREADED (M6X1-THD)	
M	13	1	**3E-8020**	2	SCREW-TRUSS HEAD (M6X1X25-MM)	
	14	1	**3S-2093**	2	STRAP-CABLE	
	15	1	**5P-4116**	2	WASHER-HARD (8.8X20.5X2-MM THK)	
M	16	1	**8T-4138**	3	BOLT (M6X1X20-MM)	
	17	1	**8T-4205**	3	WASHER-HARD (7.2X14.5X2-MM THK)	

M-METRIC PART
Y-SEPARATE ILLUSTRATION

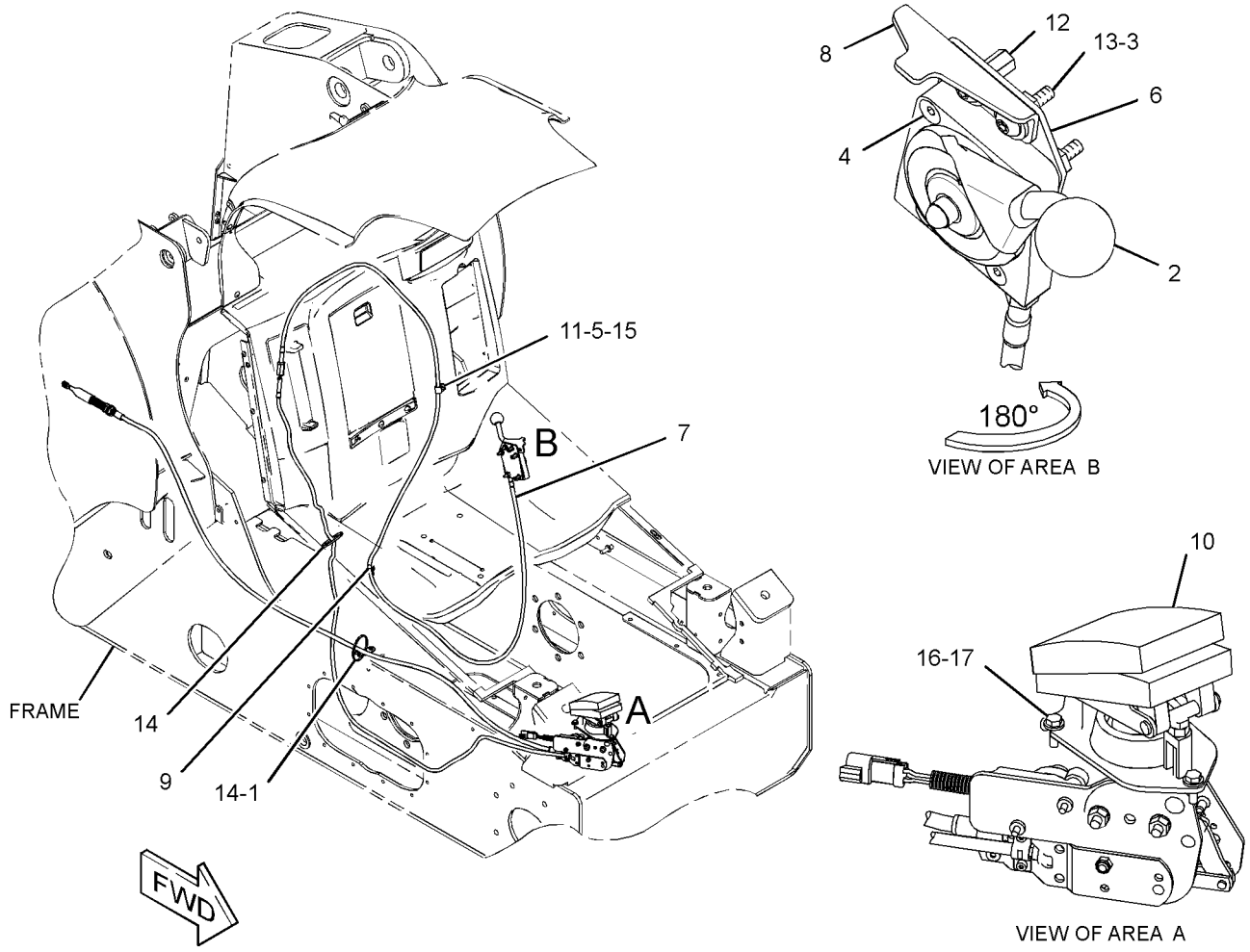

GRAPHIC #1 **<END>** g01454060

FUEL SYSTEM

295-7029 LINES GP-FUEL

S/N: MST1860-UP

PART OF 295-7292 CHASSIS AR

SMCS-1274 **i03468620**

NOTE	REF NO	GRAPHIC REF	PART NUMBER	QTY	PART NAME 1 2 3 4 5 6 (PRODUCT LEVEL)	SEE PAGE
	1	1	**1P-4278**	8	CLAMP-HOSE	
	2	1	**3S-2093**	4	STRAP-CABLE	
	3	1	**5P-4961**	2	CLAMP-HOSE	
	4	1	**069-4080**	1	FITTING	
	5	1	**206-2423**	2	SADDLE	
	6	1	**246-2622**	2	ELBOW	
	7	1	**258-3442**	1	PUMP GP-FUEL PRM & PRIM FILTER (WATER SEPARATOR)	
J		1	**112-9401**	1	BOWL AS-WATER COLLECTION	
		1	**118-8118**	1	RING-RETAINING	
		1	**228-9132**	1	FITTING	
		1	**233-9856**	1	FILTER AS-WATER SEP & FUEL	
	8	1	**258-3530**	1	TUBE AS	
	9	1	**258-3532**	1	BRACKET AS	
E	10	1	**295-7072**		HOSE (203-CM)	
E	11	1	**295-7125**		HOSE (122-CM)	
	12	1	**195-8372**	1	CLIP	
M	13	1	**266-3315**	3	BOLT-FLANGE HEAD (M8X1.25X25.5-MM)	
	14	1	**4D-6466**	5	CLIP	
	15	1	**4K-8864**	2	CLIP	
M	16	1	**5C-9553**	3	BOLT (M6X1X16-MM)	
	17	1	**5K-8451**	1	CLIP	
	18	1	**7H-7055**	2	CLIP	
	19	1	**8T-4121**	4	WASHER-HARD (11X21X2.5-MM THK)	
M	20	1	**8T-4136**	2	BOLT (M10X1.5X25-MM)	
M	21	1	**8T-4196**	2	BOLT (M10X1.5X35-MM)	
	22	1	**8T-4205**	3	WASHER-HARD (7.2X14.5X2-MM THK)	
	23	1	**8T-4224**	4	WASHER-HARD (8.8X16X2-MM THK)	
M	24	1	**8T-4908**	4	BOLT (M8X1.25X25-MM)	
	25	1	**9M-8406**	4	CLIP	
E	26	1	**5P-1420**		HOSE (62-CM)	
E	26A	1	**5P-1420**		HOSE (32-CM)	
E	27	1	**5P-1442**		HOSE (145-CM)	
E	28	1	**8C-3681**		HOSE (28-CM)	
					AVAILABLE REPAIR KIT(S):	
J			**128-8614**	1	KIT-SEAL (WATER SEPARATOR)	
					(INCLUDES SEALS)	

E-ORDER BY THE CENTIMETER
J-KIT MARKED J SERVICES PART MARKED J
M-METRIC PART

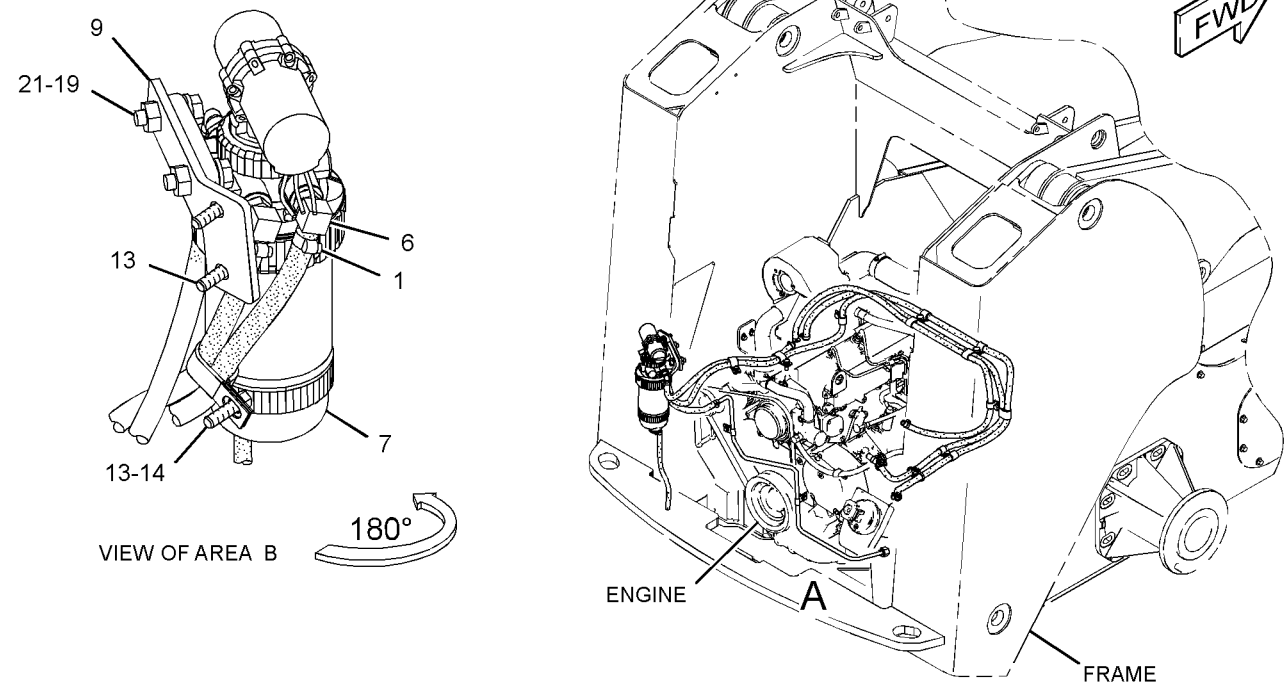

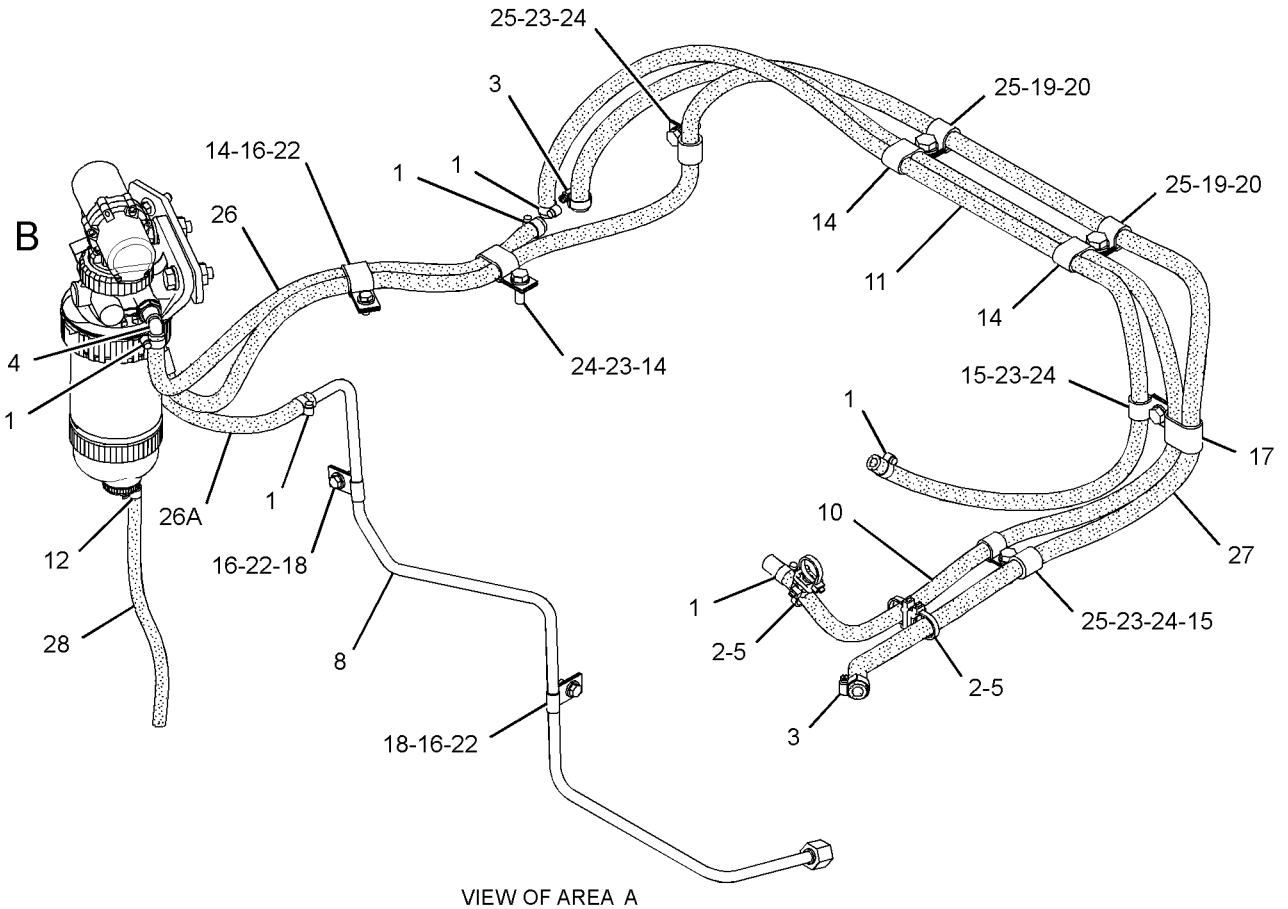

GRAPHIC #1 **<END>** g01825683

FUEL SYSTEM

335-5751 LINES GP-FUEL

S/N: CYM1-UP
PART OF 319-6806 ENGINE AR-PRIMARY
AN ATTACHMENT

SMCS-1274 **i03569007**

NOTE	REF NO	GRAPHIC REF	PART NUMBER	QTY	PART NAME 1 2 3 4 5 6 (PRODUCT LEVEL)	SEE PAGE
	1	1	**3B-4505**	2	LOCKWASHER	
M	2	1	**6V-2317**	4	BOLT (M8X1.25X30-MM)	
M	3	1	**8T-4200**	2	BOLT (M8X1.25X16-MM)	
	4	1	**9M-1974**	4	WASHER-HARD (8.8X16X2-MM THK)	
	5	1	**094-7235**	1	CAP	
	6	1	**113-0363**	4	SUPPORT	
	7	1	**122-8948**	6	CLAMP	
	8	1	**122-8949**	2	CLAMP	
M	9	1	**195-8364**	4	BOLT AS	
	10	1	**196-8356**	9	CLIP	
	11	1	**314-9980**	1	TUBE (CYL NO. 1)	
	12	1	**314-9981**	1	TUBE (CYL NO. 2)	
	13	1	**314-9982**	1	TUBE (CYL NO. 3)	
	14	1	**314-9983**	1	TUBE (CYL NO. 4)	
	15	1	**314-9984**	4	WASHER	
	16	1	**314-9985**	4	INJECTOR AS	
					(EACH INCLUDES)	
	16A	1	**314-9986**	1	NOZZLE AS-FUEL INJECTION	
	17	1	**314-9987**	1	TUBE	
	18	1	**314-9988**	1	BRACKET	
	19	1	**113-0364**	4	HOSE	

M-METRIC PART

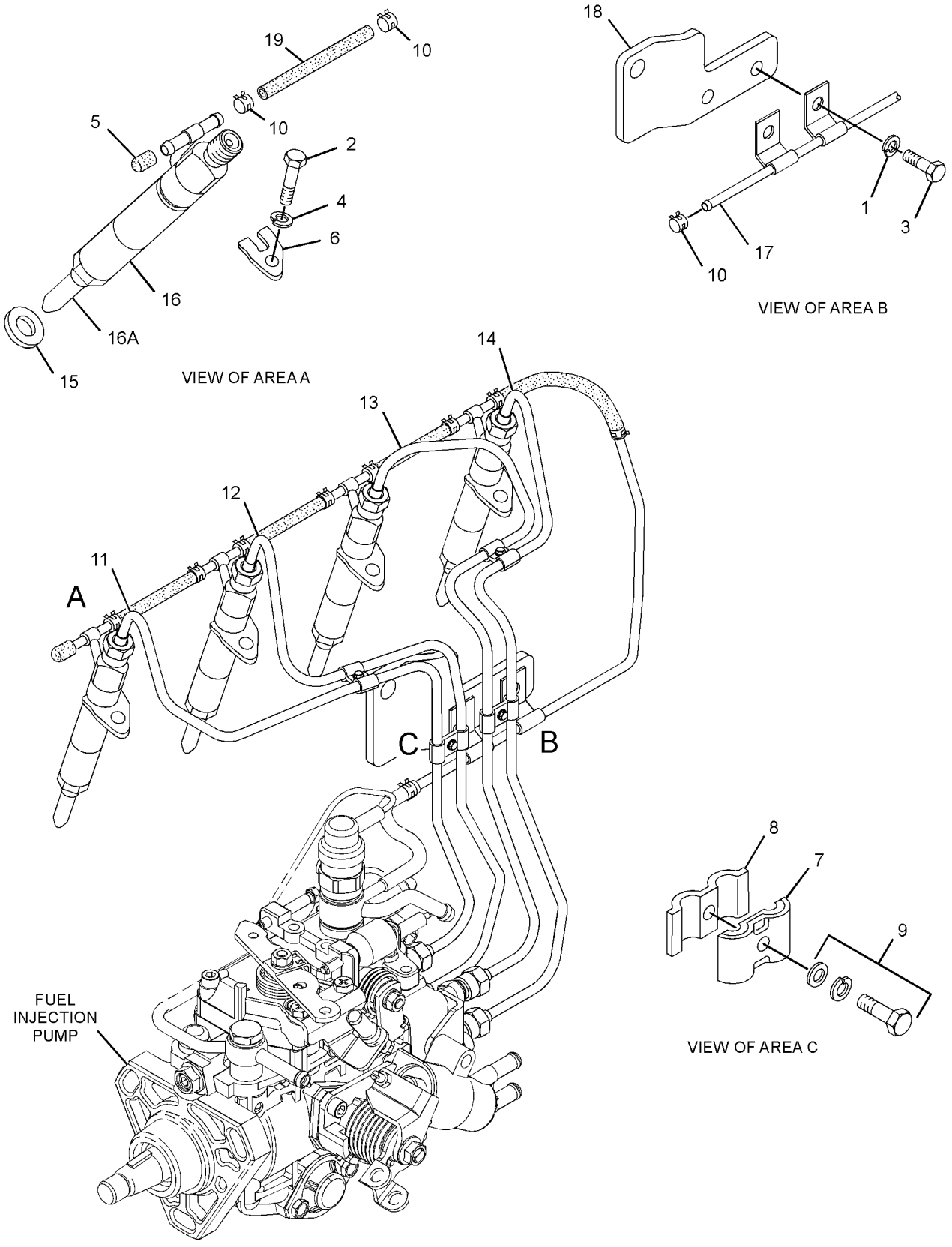

GRAPHIC #1 **<END>** g01948492

FUEL SYSTEM

235-5901 LINES GP-FUEL INJECTION

S/N: CJS1-60343
PART OF 262-7289 ENGINE AR-PRIMARY
AN ATTACHMENT

SMCS-1252, 1254 **i02942222**

NOTE	REF NO	GRAPHIC REF	PART NUMBER	QTY	PART NAME 1 2 3 4 5 6 (PRODUCT LEVEL)	SEE PAGE
	1	1	**113-0363**	4	SUPPORT	
	2	1	**5P-0537**	5	WASHER-HARD (7.2X14.5X2-MM THK)	
M	3	1	**6V-2317**	4	BOLT (M8X1.25X30-MM)	
M	4	1	**8T-4908**	2	BOLT (M8X1.25X25-MM)	
M	5	1	**6V-5215**	3	BOLT (M8X1.25X16-MM)	
	7	1	**9M-1974**	9	WASHER-HARD (8.8X16X2-MM THK)	
	8	1	**113-0364**	4	HOSE	
	9	1	**122-8948**	7	CLAMP	
	10	1	**122-8949**	3	CLAMP	
	11	1	**195-8355**	4	GASKET	
	13	1	**094-7235**	1	CAP	
	14	1	**234-4809**	2	WASHER-SPECIAL	
	15	1	**239-0687**	1	TUBE	
	16	1	**239-0719**	1	TUBE AS-FUEL INJECTION (CYL. NO. 1)	
	17	1	**239-0720**	1	TUBE AS-FUEL INJECTION (CYL. NO. 2)	
	18	1	**239-0721**	1	TUBE AS-FUEL INJECTION (CYL. NO.3)	
	19	1	**239-0722**	1	TUBE AS-FUEL INJECTION (CYL. NO.4)	
	20	1	**239-0728**	1	STAY	
	21	1	**239-0729**	1	SUPPORT	
	22	1	*239-0734*	4	NOZZLE AS	
					(EACH INCLUDES)	
R		1	**300-2952**	1	NOZZLE	
B		1	**096-8994**		SHIM (0.7-MM THK)	
B		1	**099-7519**		SHIM (0.75-MM THK)	
B		1	**099-7520**		SHIM (0.8-MM THK)	
B		1	**099-7521**		SHIM (0.85-MM THK)	
B		1	**096-8995**		SHIM (0.9-MM THK)	
B		1	**096-8996**		SHIM (0.98-MM THK)	
B		1	**099-7522**		SHIM (1.03-MM THK)	
B		1	**099-7523**		SHIM (1.08-MM THK)	
B		1	**099-7524**		SHIM (1.13-MM THK)	
B		1	**102-7341**		SHIM (1.15-MM THK)	
B		1	**099-7525**		SHIM (1.18-MM THK)	
B		1	**102-7342**		SHIM (1.20-MM THK)	
B		1	**096-8997**		SHIM (1.23-MM THK)	
B		1	**104-8039**		SHIM (1.25-MM THK)	
B		1	**102-7343**		SHIM (1.30-MM THK)	
B		1	**102-7344**		SHIM (1.35-MM THK)	
B		1	**102-7345**		SHIM (1.40-MM THK)	
B		1	**102-7346**		SHIM (1.45-MM THK)	
B		1	**102-7347**		SHIM (1.50-MM THK)	
B		1	**102-7348**		SHIM (1.55-MM THK)	
B		1	**102-7349**		SHIM (1.60-MM THK)	
B		1	**102-7350**		SHIM (1.65-MM THK)	
B		1	**102-7351**		SHIM (1.70-MM THK)	
B		1	**096-8990**		SHIM (1.80-MM THK)	
	23	1	**294-5520**	1	STAY	
M	24	1	**195-8364**	5	BOLT AS	
	25	1	**196-8356**	8	CLIP	

B-USE AS REQUIRED
M-METRIC PART
R-REMFG PART MAY BE AVAILABLE

235-5901 **LINES GP-FUEL INJECTION** *(contd.)* **i02942222**

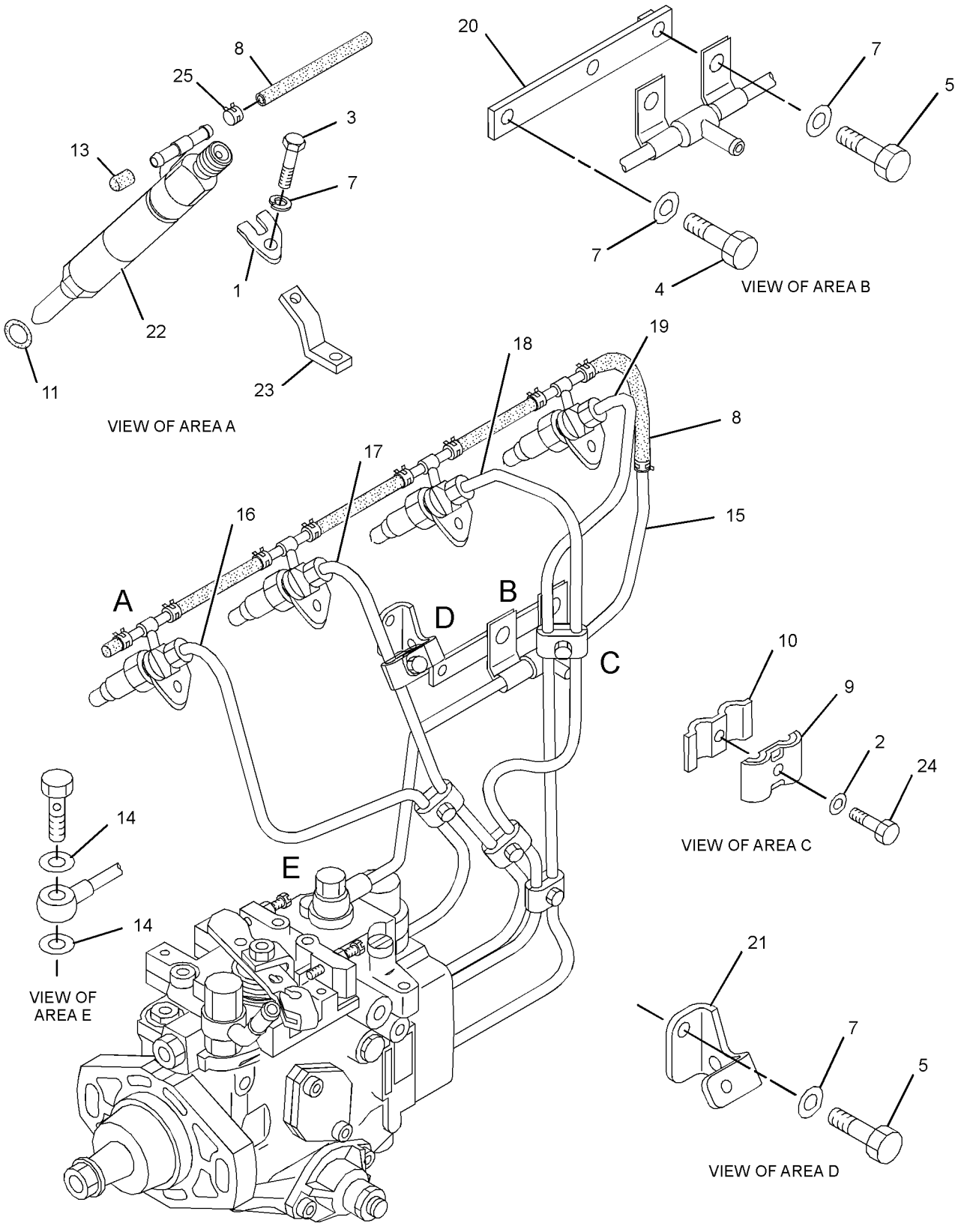

GRAPHIC #1 **<END>** g01461768

314-9909 LINES GP-FUEL INJECTION

S/N: CYM1-UP
PART OF 287-8074 ENGINE AR-PRIMARY
AN ATTACHMENT

SMCS-1252, 1254 **i02991875**

NOTE	REF NO	GRAPHIC REF	PART NUMBER	QTY	PART NAME 1 2 3 4 5 6 (PRODUCT LEVEL)	SEE PAGE
	1	1	**3B-4505**	2	LOCKWASHER	
M	2	1	**6V-2317**	4	BOLT (M8X1.25X30-MM)	
M	3	1	**8T-4200**	2	BOLT (M8X1.25X16-MM)	
	4	1	**9M-1974**	4	WASHER-HARD (8.8X16X2-MM THK)	
	5	1	**094-7235**	1	CAP	
	6	1	**113-0363**	4	SUPPORT	
	7	1	**113-0364**	4	HOSE	
	8	1	**122-8948**	6	CLAMP	
	9	1	**122-8949**	2	CLAMP	
M	10	1	**195-8364**	4	BOLT AS	
	11	1	**196-8356**	8	CLIP	
	12	1	**314-9980**	1	TUBE (CYL NO. 1)	
	13	1	**314-9981**	1	TUBE (CYL NO. 2)	
	14	1	**314-9982**	1	TUBE (CYL NO. 3)	
	15	1	**314-9983**	1	TUBE (CYL NO. 4)	
	16	1	**314-9984**	4	WASHER	
	17	1	**314-9985**	4	INJECTOR AS	
					(EACH INCLUDES)	
		1	**314-9986**	1	NOZZLE AS-FUEL INJECTION	
	18	1	**314-9987**	1	TUBE	
	19	1	**314-9988**	1	BRACKET	
	20	1	**314-9989**	1	HOSE	

M-METRIC PART

314-9909 **LINES GP-FUEL INJECTION** *(contd.)* **i02991875**

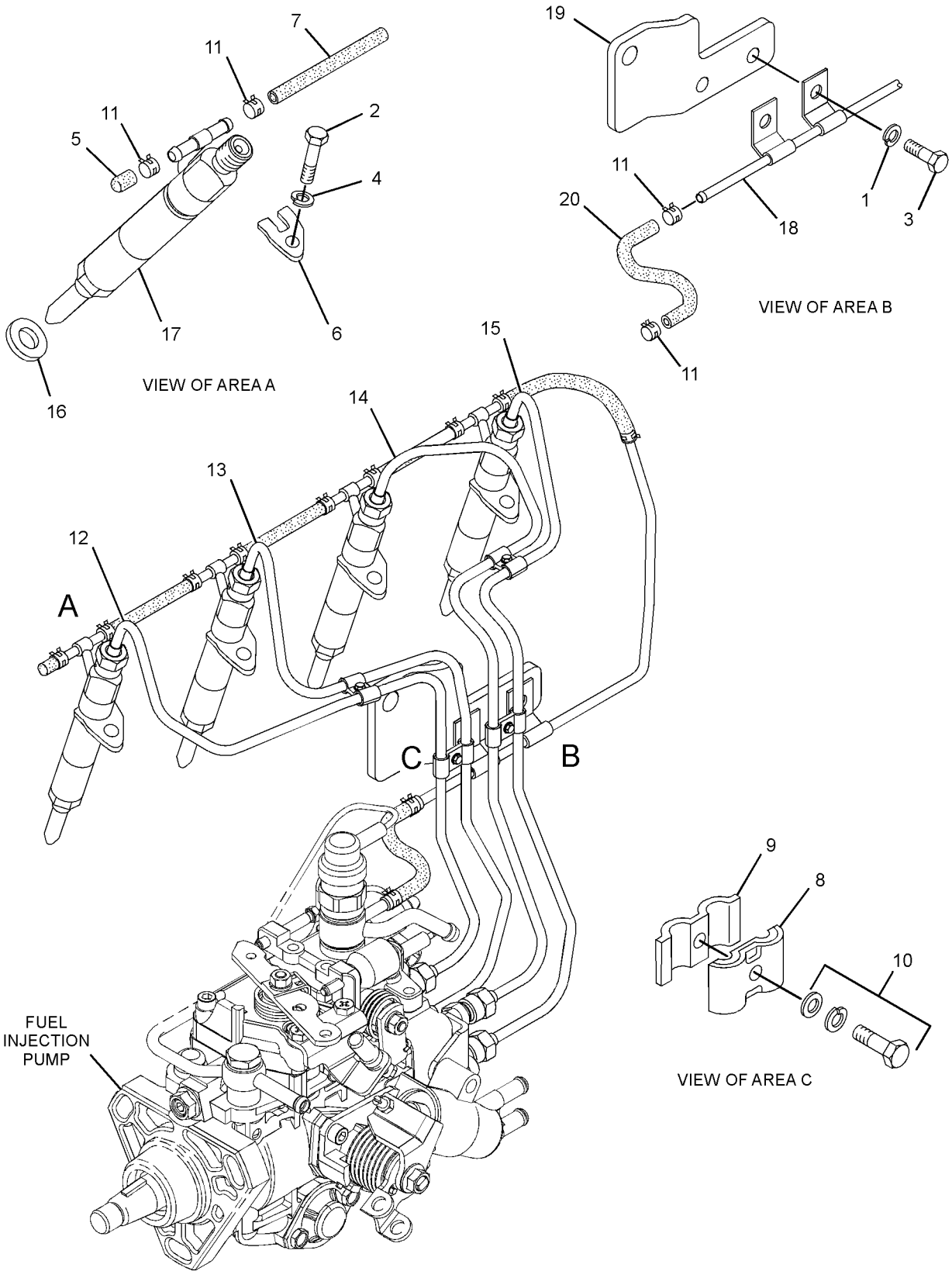

GRAPHIC #1 **<END>** g01395214

317-5057 LINES GP-FUEL INJECTION

S/N: CJS60344-UP

PART OF 262-7289 ENGINE AR-PRIMARY

AN ATTACHMENT

SMCS-1252, 1254 **i03464001**

NOTE	REF NO	GRAPHIC REF	PART NUMBER	QTY	PART NAME 1 2 3 4 5 6 (PRODUCT LEVEL)	SEE PAGE
	1	1	**3B-4505**	3	LOCKWASHER	
M	2	1	**6V-2317**	4	BOLT (M8X1.25X30-MM)	
M	3	1	**8T-4200**	3	BOLT (M8X1.25X16-MM)	
M	4	1	**8T-4908**	2	BOLT (M8X1.25X25-MM)	
	5	1	**9M-1974**	6	WASHER-HARD (8.8X16X2-MM THK)	
	6	1	**094-7235**	1	CAP	
	7	1	**113-0363**	4	SUPPORT	
	8	1	**113-0364**	4	HOSE	
	9	1	**122-8948**	7	CLAMP	
	10	1	**122-8949**	3	CLAMP	
	11	1	**195-8355**	4	GASKET	
M	12	1	**195-8364**	5	BOLT AS	
	13	1	**196-8356**	8	CLIP	
	14	1	**227-1028**	4	NOZZLE AS	
	15	1	**234-4809**	2	WASHER-SPECIAL	
	16	1	**239-0687**	1	TUBE	
	17	1	**239-0719**	1	TUBE AS-FUEL INJECTION (NO. 1)	
	18	1	**239-0720**	1	TUBE AS-FUEL INJECTION (NO. 2)	
	19	1	**239-0721**	1	TUBE AS-FUEL INJECTION (NO. 3)	
	20	1	**239-0722**	1	TUBE AS-FUEL INJECTION (NO. 4)	
	21	1	**239-0728**	1	STAY	
	22	1	**239-0729**	1	SUPPORT	
	23	1	**294-5520**	1	STAY	

M-METRIC PART

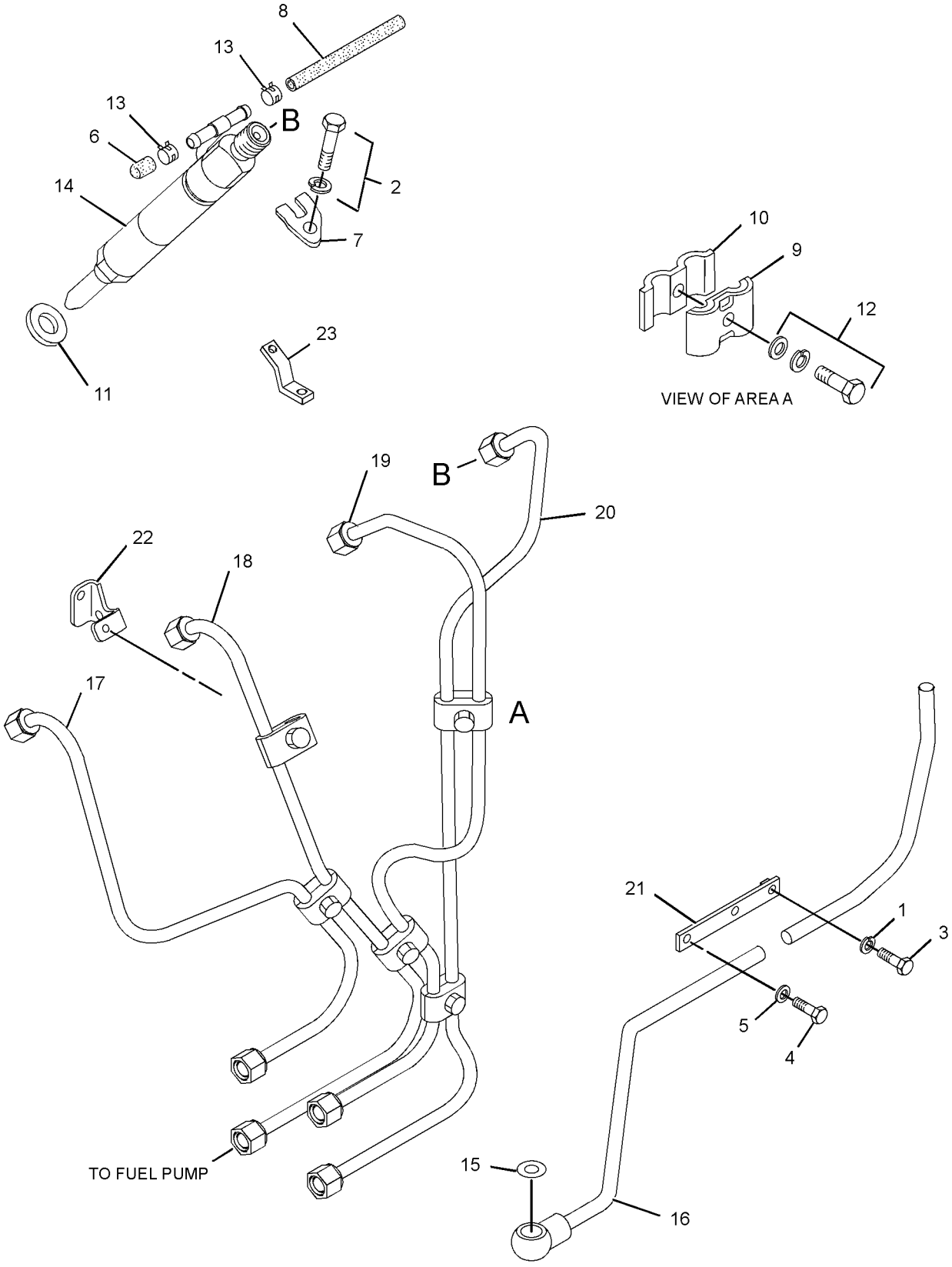

GRAPHIC #1 **<END>** g01874282

FUEL SYSTEM

258-2444 LINES GP-FUEL PRM & FILTER

S/N: MST1-1859

PART OF 258-2510 CHASSIS AR

SMCS-1258, 1263, 1274 **i02760084**

NOTE	REF NO	GRAPHIC REF	PART NUMBER	QTY	PART NAME 1 2 3 4 5 6 (PRODUCT LEVEL)	SEE PAGE
	1	1	**1P-4278**	8	CLAMP-HOSE	
	2	1	**5P-4961**	2	CLAMP-HOSE	
	3	1	**069-4080**	1	FITTING	
	4	1	**246-2622**	2	ELBOW	
	5	1	**258-3442**	1	PUMP GP-FUEL PRM & PRIM FILTER (WATER SEPARATOR)	
J		1	**112-9401**	1	BOWL AS-WATER COLLECTION	
		1	**118-8118**	1	RING-RETAINING	
		1	**228-9132**	1	FITTING	
		1	**233-9856**	1	FILTER AS-WATER SEP & FUEL	
	6	1	**258-3530**	1	TUBE AS	
	7	1	**258-3532**	1	BRACKET AS	
	8	1	**258-3662**	1	HOSE	
	9	1	**195-8372**	1	CLIP	
M	10	1	**266-3315**	3	BOLT-FLANGE HEAD (M8X1.25X25.5-MM)	
	11	1	**4D-6466**	5	CLIP	
	12	1	**4K-8864**	2	CLIP	
M	13	1	**5C-9553**	3	BOLT (M6X1X16-MM)	
	14	1	**7H-7055**	2	CLIP	
	15	1	**8T-4121**	4	WASHER-HARD (11X21X2.5-MM THK)	
M	16	1	**8T-4136**	2	BOLT (M10X1.5X25-MM)	
M	17	1	**8T-4196**	2	BOLT (M10X1.5X35-MM)	
	18	1	**8T-4205**	3	WASHER-HARD (7.2X14.5X2-MM THK)	
	19	1	**8T-4224**	4	WASHER-HARD (8.8X16X2-MM THK)	
M	20	1	**8T-4908**	4	BOLT (M8X1.25X25-MM)	
	21	1	**9M-8406**	5	CLIP	
E	23	1	**5P-1442**		HOSE (144-CM)	
E	24	1	**8C-3681**		HOSE (28-CM)	
					AVAILABLE REPAIR KIT(S):	
J			**128-8614**	1	KIT-SEAL (WATER SEPARATOR)	
					(INCLUDES SEALS)	

E-ORDER BY THE CENTIMETER
J-KIT MARKED J AVAILABLE FOR PART MARKED J
M-METRIC PART

258-2444 **LINES GP-FUEL PRM & FILTER** *(contd.)* **i02760084**

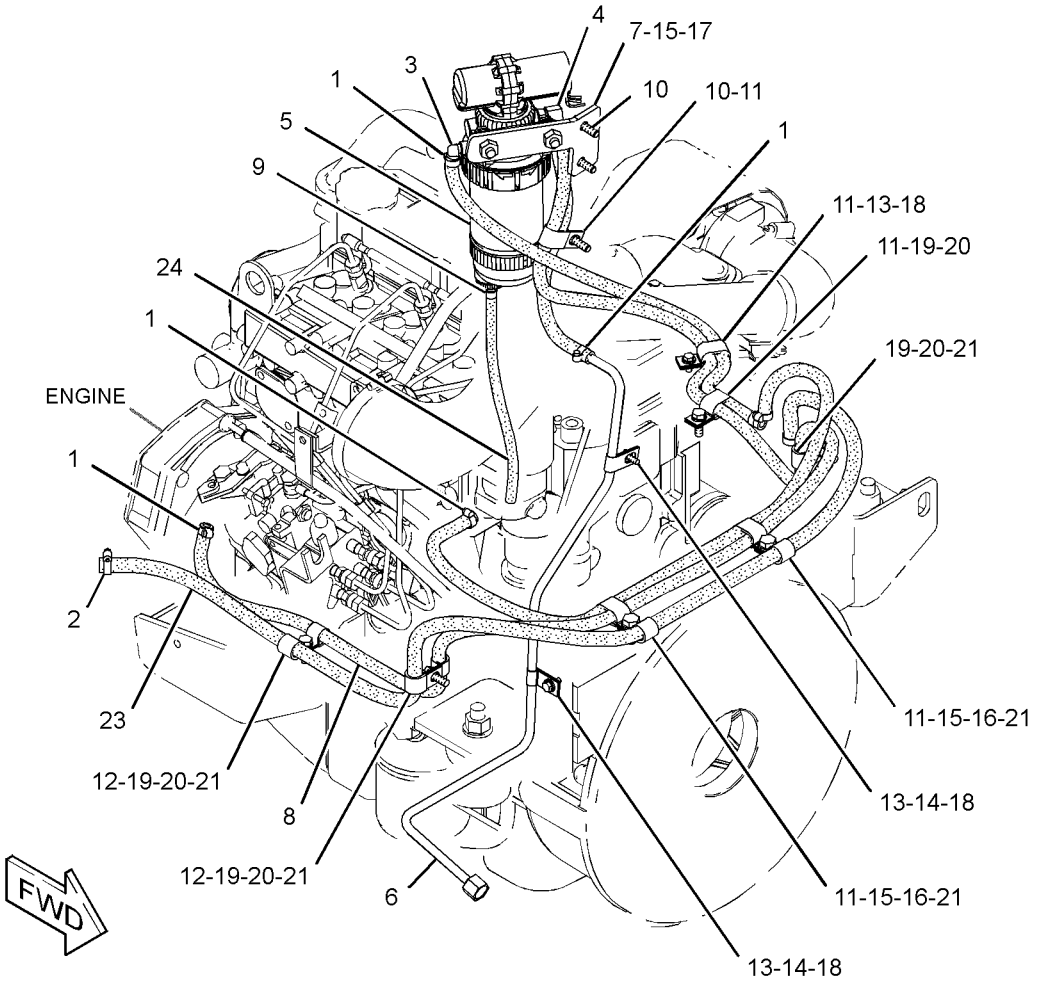

GRAPHIC #1 **<END>** g01345122

235-5902 PUMP GP-FUEL INJECTION

S/N: CJS1-60343
PART OF 262-7289 ENGINE AR-PRIMARY
AN ATTACHMENT

SMCS-1251, 1290, 5479 **i02945654**

NOTE	REF NO	GRAPHIC REF	PART NUMBER	QTY	PART NAME 1 2 3 4 5 6 (PRODUCT LEVEL)	SEE PAGE
C	1	1	**300-3988**	1	SEAL-O-RING	
C	2	1	**244-7127**	1	NUT-FLANGE (M8X1.25-THD)	
M	3	1	**6V-5217**	3	BOLT (M8X1.25X20-MM)	
	4	1	**9M-1974**	5	WASHER-HARD (8.8X16X2-MM THK)	
C	5	1	**300-3867**	1	WASHER	
C	6	1	**199-2354**	1	BOLT (M10X1.25X25-MM)	
M		1	**140-5217**	1	BOLT (M10X1.25X25-MM)	
	6A	1	**7X-0796**	1	LOCKWASHER	
M	7	1	**212-8510**	1	NUT (M10X1.25-THD)	
	9	1	**306-2165**	1	FLANGE-PUMP	
	10	1	**234-4836**	1	BRACKET	
C	11	1	**234-4835**	1	STUD	
C	12	1	**246-8307**	1	BRACKET-INJECTION PUMP	
	13	1	**235-4970**	1	BOLT	
R	14	1	**246-8310**	1	PUMP AS-FUEL INJECTION	
	14A	1	**237-5396**	1	SOLENOID AS (FUEL SHUTOFF)	
	15	1	**294-5060**	1	SEAL-O-RING	

C-CHANGE FROM PREVIOUS TYPE
M-METRIC PART
R-REMFG PART MAY BE AVAILABLE

235-5902 **PUMP GP-FUEL INJECTION** *(contd.)* **i02945654**

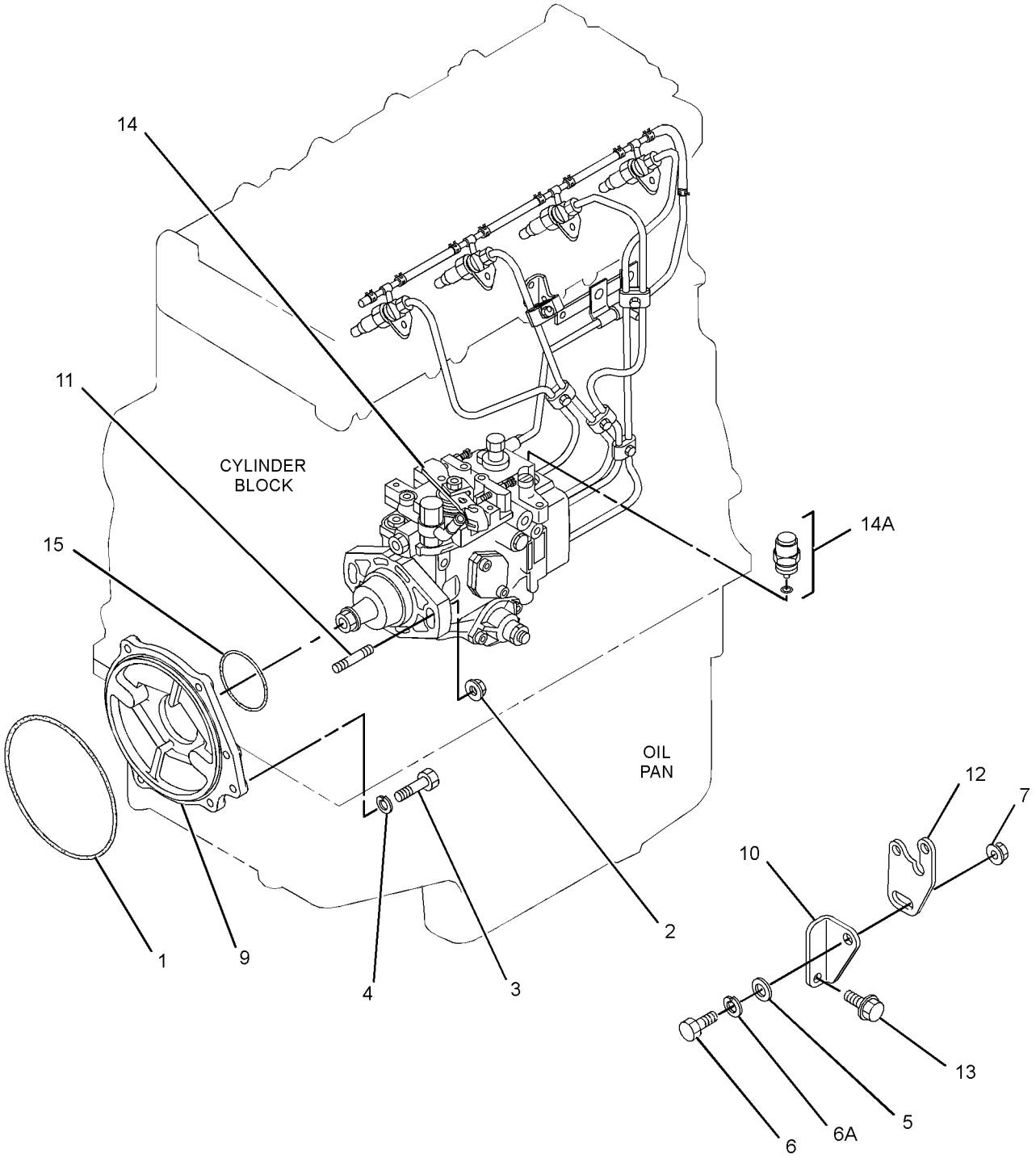

GRAPHIC #1 **<END>** g01365566

314-9911 PUMP GP-FUEL INJECTION

S/N: CYM1-UP
PART OF 287-8074 ENGINE AR-PRIMARY
AN ATTACHMENT

SMCS-1251, 1290, 5479 **i03506495**

NOTE	REF NO	GRAPHIC REF	PART NUMBER	QTY	PART NAME 1 2 3 4 5 6 (PRODUCT LEVEL)	SEE PAGE
M	1	1	**6V-5217**	1	BOLT (M8X1.25X20-MM)	
	2	1	**8T-4121**	2	WASHER-HARD (11X21X2.5-MM THK)	
M	3	1	**8T-4137**	1	BOLT (M10X1.5X20-MM)	
	4	1	**8T-4896**	2	WASHER-HARD (10.2X18.5X2.5-MM THK)	
	5	1	**9M-1974**	1	WASHER-HARD (8.8X16X2-MM THK)	
	6	1	**9X-8256**	1	WASHER (6.6X12X2-MM THK)	
M	7	1	**140-5217**	1	BOLT (M10X1.25X25-MM)	
	8	1	**199-2333**	1	BOLT	
M	9	1	**212-8510**	1	NUT (M10X1.25-THD)	
	10	1	**225-5249**	1	RETAINER	
	11	1	**234-4835**	3	STUD	
	12	1	**241-6010**	1	BOLT	
	13	1	**244-7127**	3	NUT-FLANGE (M8X1.25-THD)	
	14	1	**294-5060**	1	SEAL-O-RING	
	15	1	**300-3867**	1	WASHER	
	16	1	**300-3988**	1	SEAL-O-RING	
	17	1	**336-9191**	1	PUMP GP-FUEL INJECTION	
	17A	1	**300-3573**	1	SOLENOID (FUEL PUMP)	
	18	1	**314-9991**	1	FLANGE	
	19	1	**314-9992**	1	BRACKET	
	20	1	**315-8326**	1	BRACKET	
	21	1	**314-9994**	1	PIPE	
	22	1	**314-9995**	1	HOSE	
	23	1	**314-9996**	1	HOSE	
	24	1	**314-9997**	1	HOSE	
	25	1	**314-9998**	1	BOLT AS	
	26	1	**314-9999**	1	NUT	
	27	1	**315-0000**	1	CLIP	
	28	1	**199-2256**	1	CLIP	

M-METRIC PART

314-9911 **PUMP GP-FUEL INJECTION** *(contd.)* **i03506495**

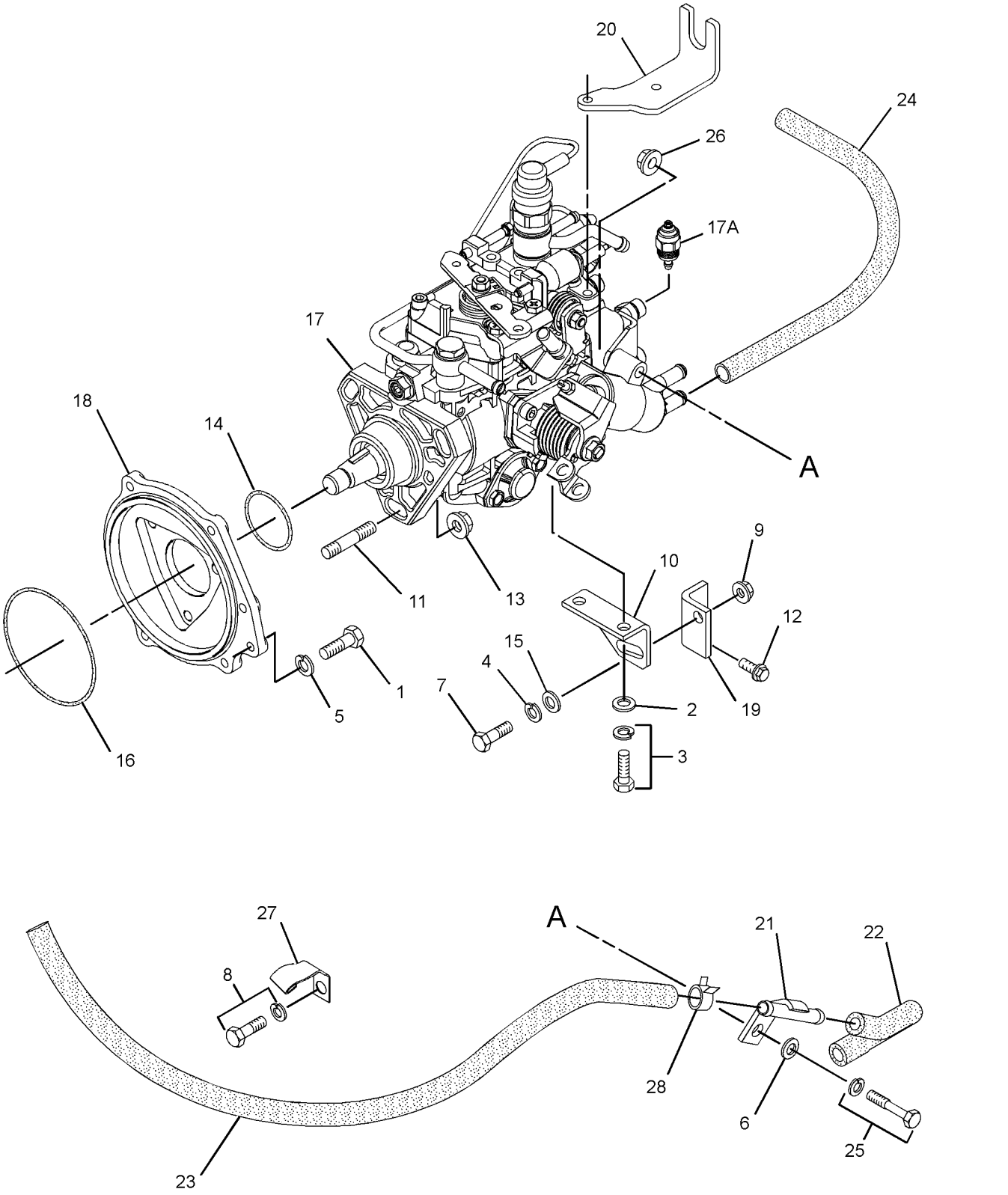

GRAPHIC #1 **<END>** g01957723

317-5045 PUMP GP-FUEL INJECTION

S/N: CJS60344-UP
PART OF 262-7289 ENGINE AR-PRIMARY
AN ATTACHMENT

SMCS-1251, 1290, 5479 **i02996908**

NOTE	REF NO	GRAPHIC REF	PART NUMBER	QTY	PART NAME 1 2 3 4 5 6 (PRODUCT LEVEL)	SEE PAGE
M	1	1	**5C-9553**	1	BOLT (M6X1X16-MM)	
M	2	1	**6V-5217**	3	BOLT (M8X1.25X20-MM)	
	3	1	**8T-4896**	1	WASHER-HARD (10.2X18.5X2.5-MM THK)	
	4	1	**9M-1974**	3	WASHER-HARD (8.8X16X2-MM THK)	
	5	1	**096-2500**	1	LOCKWASHER	
M	6	1	**140-5217**	1	BOLT (M10X1.25X25-MM)	
M	7	1	**212-8510**	1	NUT (M10X1.25-THD)	
	8	1	**306-2165**	1	FLANGE-PUMP	
	9	1	**234-4835**	1	STUD	
	10	1	**234-4836**	1	BRACKET	
	11	1	**235-4969**	1	BRACKET	
	12	1	**235-4970**	1	BOLT	
	13	1	**244-7127**	1	NUT-FLANGE (M8X1.25-THD)	
	14	1	**294-5060**	1	SEAL-O-RING	
	15	1	**300-3867**	1	WASHER	
	16	1	**300-3988**	1	SEAL-O-RING	
	17	1	**315-8698**	1	RETAINER-WASHER	
	18	1	**317-4996**	1	PUMP GP-FUEL INJECTION	
	18A	1	**237-5396**	1	SOLENOID AS (FUEL SHUTOFF)	

M-METRIC PART

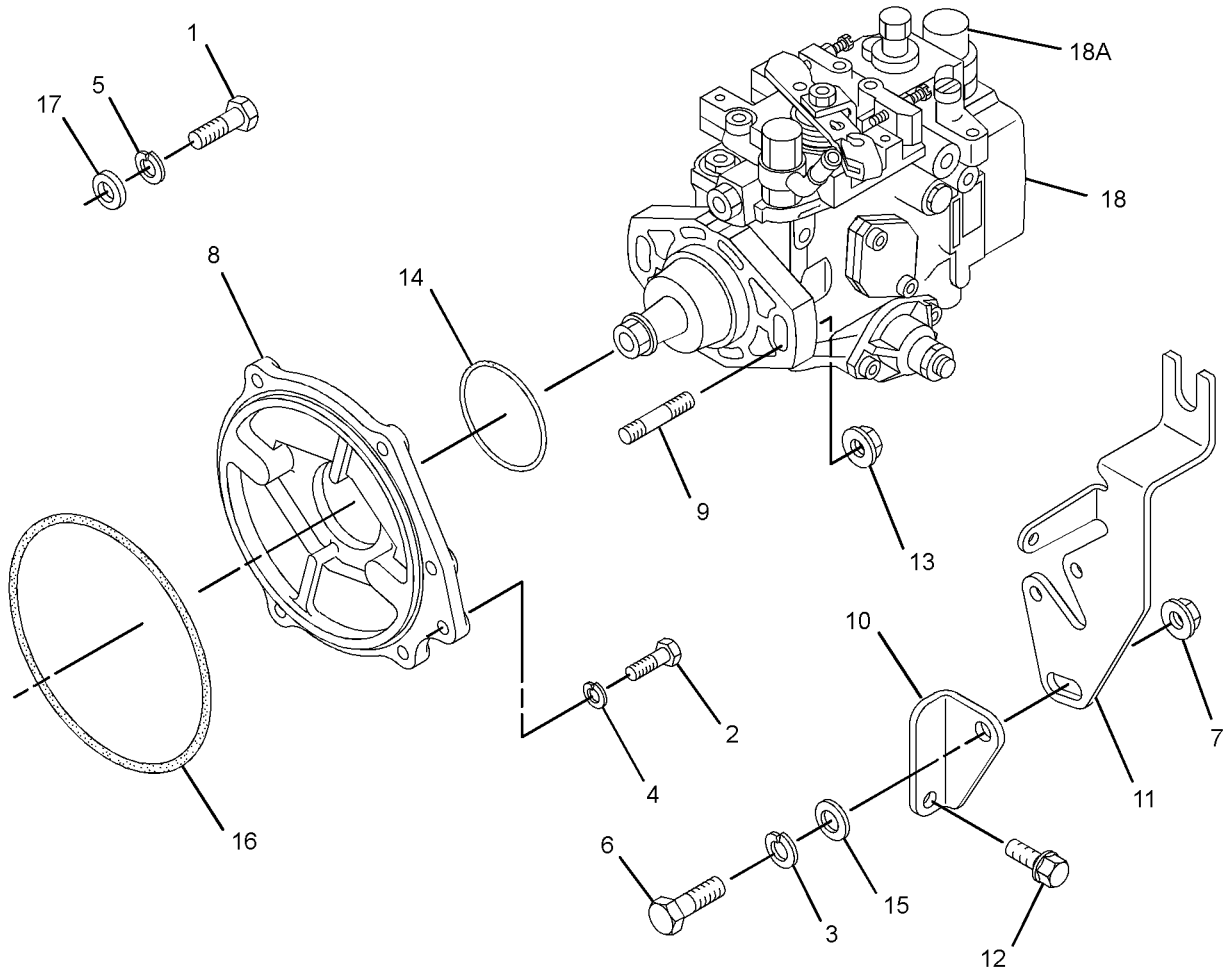

GRAPHIC #1 **<END>** g01433519

FUEL SYSTEM

335-5752 PUMP GP-FUEL INJECTION

S/N: CYM1-UP
PART OF 319-6806 ENGINE AR-PRIMARY
AN ATTACHMENT

SMCS-1251, 1290, 5479 **i03296260**

NOTE	REF NO	GRAPHIC REF	PART NUMBER	QTY	PART NAME 1 2 3 4 5 6 (PRODUCT LEVEL)	SEE PAGE
M	1	1	**6V-5217**	1	BOLT (M8X1.25X20-MM)	
	2	1	**7X-0796**	2	LOCKWASHER	
	3	1	**8T-4121**	2	WASHER-HARD (11X21X2.5-MM THK)	
M	4	1	**8T-4137**	2	BOLT (M10X1.5X20-MM)	
	5	1	**8T-4896**	1	WASHER-HARD (10.2X18.5X2.5-MM THK)	
	6	1	**9M-1974**	1	WASHER-HARD (8.8X16X2-MM THK)	
	7	1	**9X-8256**	1	WASHER (6.6X12X2-MM THK)	
M	8	1	**140-5217**	1	BOLT (M10X1.25X25-MM)	
	9	1	**199-2256**	1	CLIP	
	10	1	**199-2333**	2	BOLT	
M	11	1	**212-8510**	1	NUT (M10X1.25-THD)	
	12	1	**225-5249**	1	RETAINER	
	13	1	**234-4835**	3	STUD	
	14	1	**241-6010**	1	BOLT	
	15	1	**244-7127**	3	NUT-FLANGE (M8X1.25-THD)	
	16	1	**294-5060**	1	SEAL-O-RING	
	17	1	**300-3867**	1	WASHER	
	18	1	**300-3988**	1	SEAL-O-RING	
	19	1	**314-9991**	1	FLANGE	
	20	1	**314-9992**	1	BRACKET	
	21	1	**314-9994**	1	PIPE	
	22	1	**314-9995**	1	HOSE	
	23	1	**314-9996**	1	HOSE	
	24	1	**314-9997**	1	HOSE	
	25	1	**314-9998**	1	BOLT AS	
	26	1	**314-9999**	2	NUT	
	27	1	**315-0000**	1	CLIP	
	28	1	**315-8326**	1	BRACKET	
	29	1	**335-5734**	1	PUMP-FUEL INJECTION	
	29A	1	**335-5735**	1	SOLENOID (FUEL PUMP)	

M-METRIC PART

335-5752 **PUMP GP-FUEL INJECTION** *(contd.)* **i03296260**

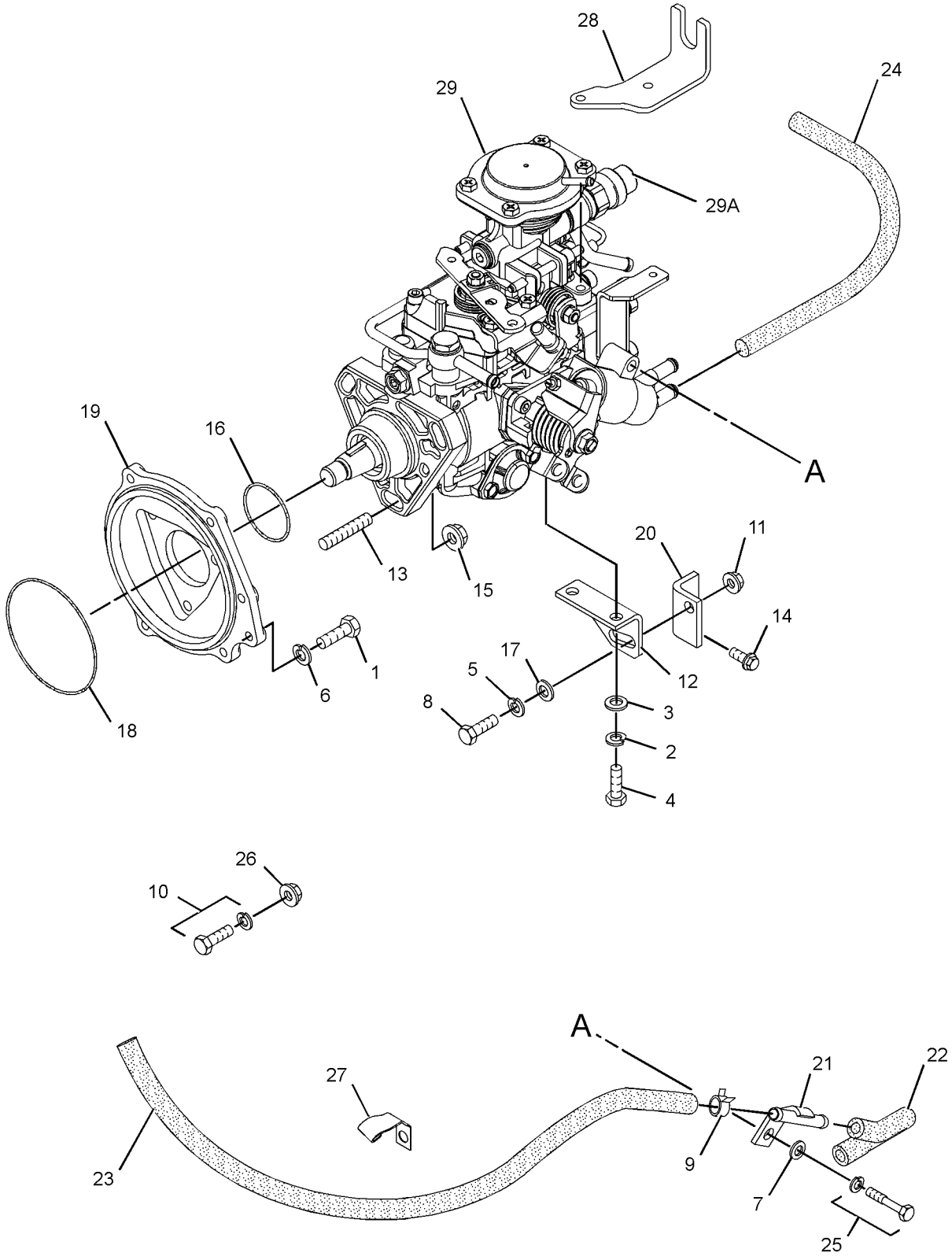

GRAPHIC #1 **<END>** g01619492

FUEL SYSTEM

258-2439 TANK & MTG GP-FUEL

S/N: MST1-UP

PART OF 258-2510, 295-7292 CHASSIS AR

SMCS-1273 **i03571121**

NOTE	REF NO	GRAPHIC REF	PART NUMBER	QTY	PART NAME 1 2 3 4 5 6 (PRODUCT LEVEL)	SEE PAGE
	1	1	**9R-7240**	1	GASKET (FUEL TANK)	
Y	2	1	*258-2440*	1	TANK GP-FUEL	142
	3	1	**258-2948**	2	BRACKET AS	
	4	1	**258-2995**	1	INSULATION (BOTTOM)	
M	5	1	**266-3315**	4	BOLT-FLANGE HEAD (M8X1.25X25.5-MM)	
	6	1	**304-8351**	2	INSULATION	
	7	1	**304-8352**	2	INSULATION	
	8	1	**271-2912**	1	SENDER AS-FUEL LEVEL	
		1	**102-8802**	1	KIT-RECEPTACLE (2-PIN)	
					(INCLUDES RECEPTACLE AS & WEDGE)	
		1	**186-3735**	2	PIN-CONNECTOR (16-GA TO 18-GA)	
M	9	1	**7X-7920**	5	BOLT (M5X0.8X14-MM)	
	10	1	**6V-7699**	5	WASHER-HARD (5.5X13X1.6-MM THK)	

M-METRIC PART
Y-SEPARATE ILLUSTRATION

258-2439 **TANK & MTG GP-FUEL** *(contd.)* **i03571121**

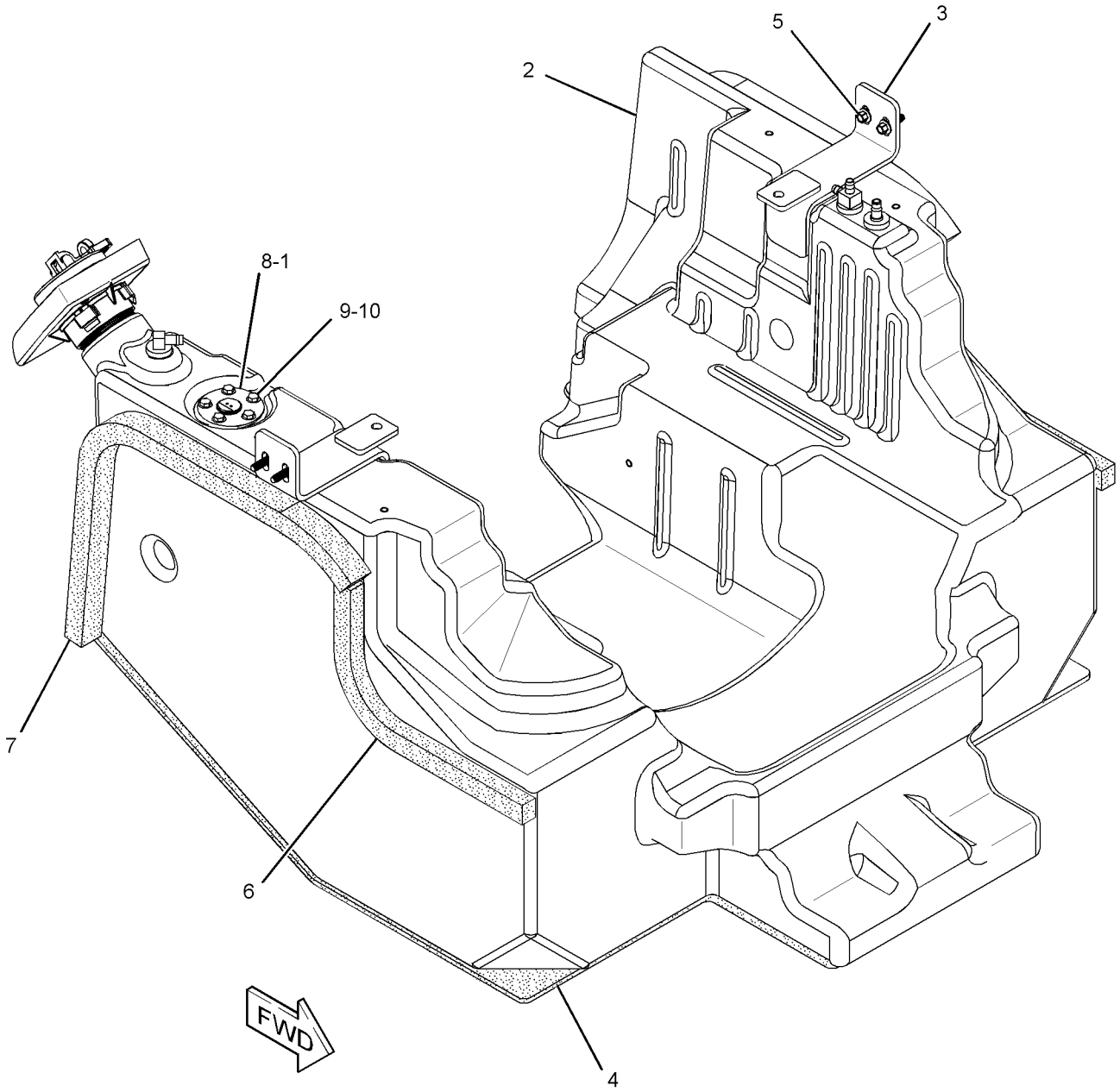

GRAPHIC #1 **<END>** g01344088

FUEL SYSTEM

258-2440 TANK GP-FUEL

S/N: MST1-UP
110-L
PART OF 258-2439 TANK & MTG GP-FUEL

SMCS-1273 **i03024180**

NOTE	REF NO	GRAPHIC REF	PART NUMBER	QTY	PART NAME 1 2 3 4 5 6 (PRODUCT LEVEL)	SEE PAGE
	1	1	**6W-5698**	3	GROMMET	
	2	1	**304-3885**	1	CAP-FUEL	
	3	1	**142-8928**	1	ELBOW	
	4	1	**230-3737**	1	FITTING	
	5	1	**322-0352**	1	TANK AS-FUEL	
	6	1	**258-2732**	1	GUARD AS	
		1	**7F-8268**	1	SEAL-O-RING	
		1	**004-1964**	1	SEAL-O-RING	
	7	1	**258-2983**	1	TUBE AS	
	8	1	**258-2988**	1	TUBE AS	
	9	1	**3K-0360**	1	SEAL-O-RING	
	10	1	**9S-4185**	1	PLUG-O-RING	

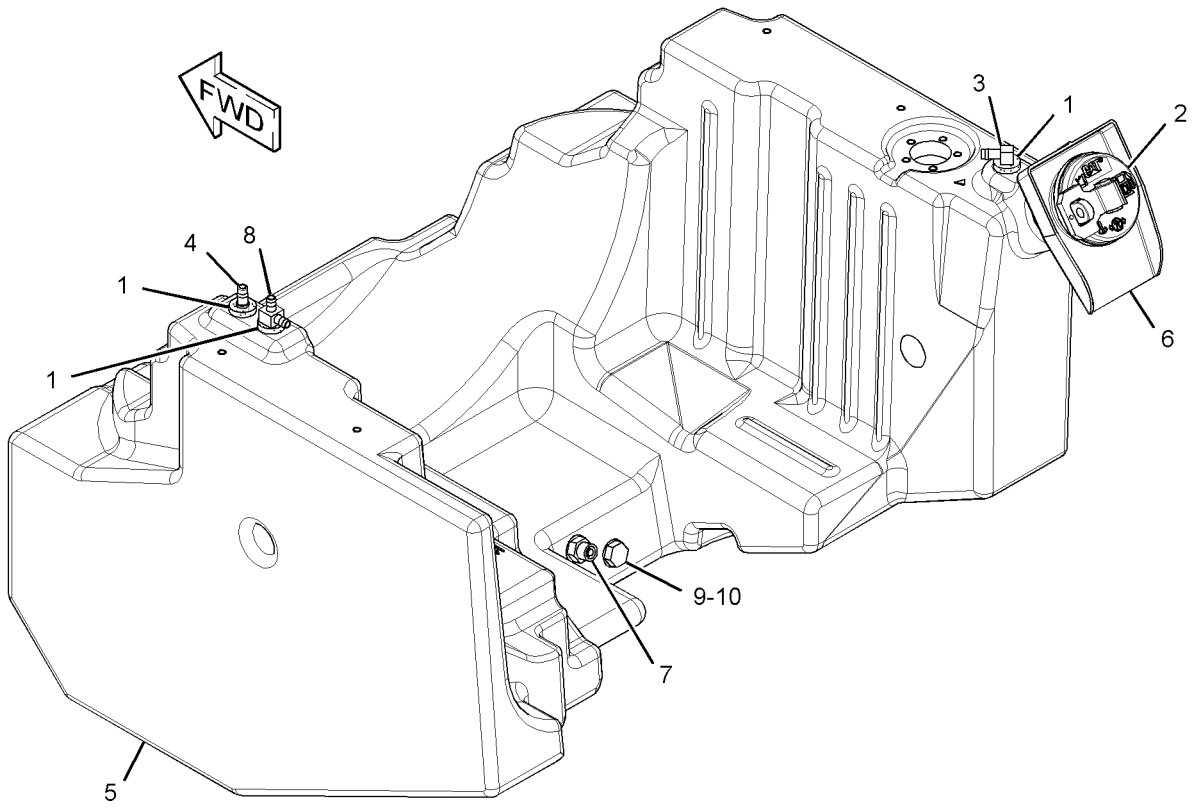

GRAPHIC #1 **<END>** g01329630

105-2814 ALTERNATOR GP-CHARGING*R

S/N: CYM1-UP; CJS1-UP
12 VOLT, 90 AMPERE
PART OF 287-6361, 315-8353 ALTERNATOR GP-CHARGING
AN ATTACHMENT

SMCS-1405 **i03552882**

NOTE	REF NO	GRAPHIC REF	PART NUMBER	QTY	PART NAME 1 2 3 4 5 6 (PRODUCT LEVEL)	SEE PAGE
	1	1	**113-4458**	1	PULLEY-ALTERNATOR (2-GROOVE)	
	2	1	**113-4459**	1	FRAME AS-ALTERNATOR	
	3	1	**113-4460**	1	ROTOR AS-ALTERNATOR	
	4	1	**113-4461**	1	FRAME AS-ALTERNATOR	
	5	1	**113-4462**	1	REGULATOR AS-ALTERNATOR	
	6	1	**113-4463**	1	RECTIFIER AS-ALTERNATOR	
	7	1	**113-4464**	1	COVER-ALTERNATOR	
	8	1	**113-4469**	4	BUSHING-ALTERNATOR	
	9	1	**113-4470**	1	BUSHING-ALTERNATOR	
M	10	1	**5C-2890**	1	NUT (M6X1-THD)	
	11	1	**8T-4205**	1	WASHER-HARD (7.2X14.5X2-MM THK)	
	12	1	**1H-3244**	1	LOCKWASHER	
					AVAILABLE REPAIR KIT(S):	
			113-4465	1	KIT-ALTERNATOR BEARING	
					(INCLUDES COVERS, BEARINGS & WASHERS)	
			113-4466	1	KIT-REPAIR (ALTERNATOR BRUSHES)	
					(INCLUDES HOLDER ASSEMBLY & SEALS)	
			113-4467	1	KIT-ALTERNATOR TERMINAL	
					(INCLUDES SCREWS, PLATE & NUTS)	
			113-4468	1	KIT-ALTERNATOR HARDWARE	
					(INCLUDES SCREWS)	

M-METRIC PART

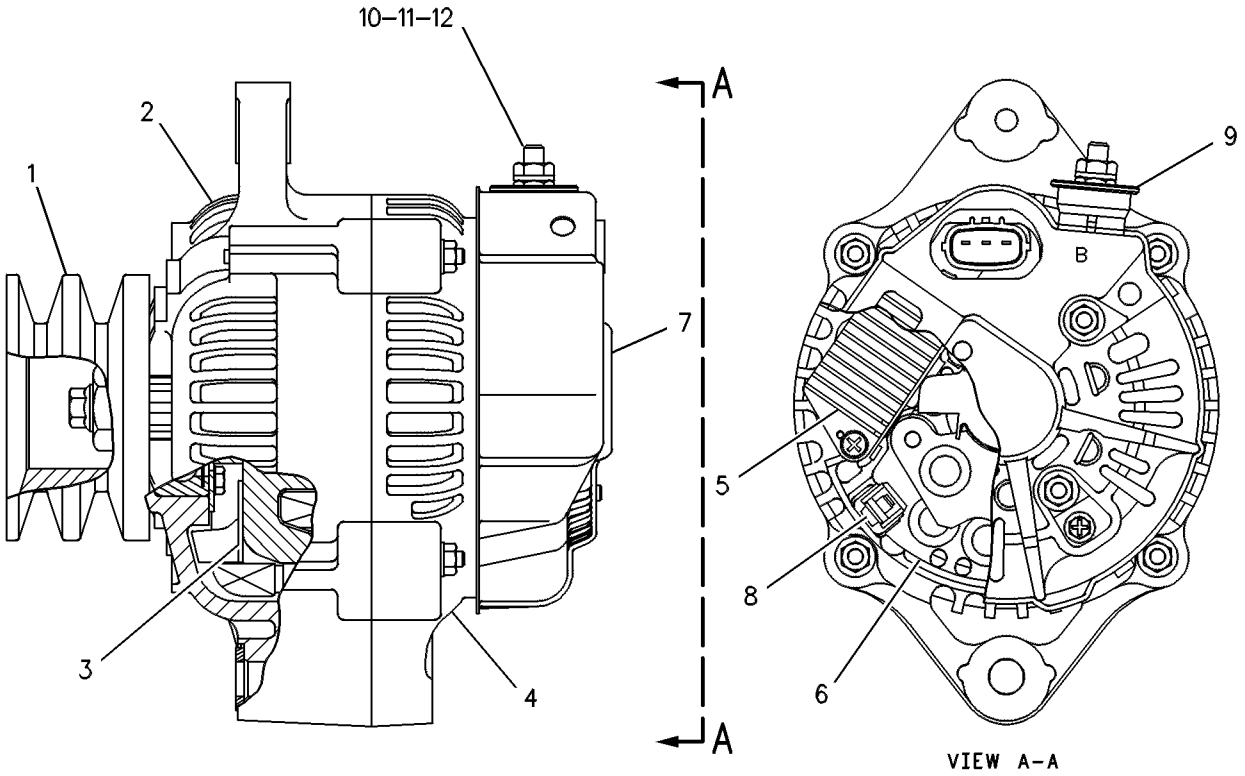

GRAPHIC #1 **<END>** g00128916

287-6361 ALTERNATOR GP-CHARGING

S/N: CJS1-31382
PART OF 262-7289 ENGINE AR-PRIMARY
AN ATTACHMENT

SMCS-1405 **i02735547**

NOTE	REF NO	GRAPHIC REF	PART NUMBER	QTY	PART NAME 1 2 3 4 5 6 (PRODUCT LEVEL)	SEE PAGE
M	1	1	**6V-5217**	1	BOLT (M8X1.25X20-MM)	
	2	1	**8T-4896**	1	WASHER-HARD (10.2X18.5X2.5-MM THK)	
	3	1	**9M-1974**	1	WASHER-HARD (8.8X16X2-MM THK)	
	4	1	**235-4962**	1	PLATE	
	5	1	**235-4973**	1	BOLT (M10X1.5X90-MM)	
	6	1	**239-0771**	1	BRACKET	
YR	7	1	**105-2814**	1	ALTERNATOR GP-CHARGING	143
M	8	1	**8T-4189**	2	BOLT (M8X1.25X20-MM)	
	9	1	**3B-4505**	2	LOCKWASHER	

M-METRIC PART
R-REMFG PART MAY BE AVAILABLE
Y-SEPARATE ILLUSTRATION

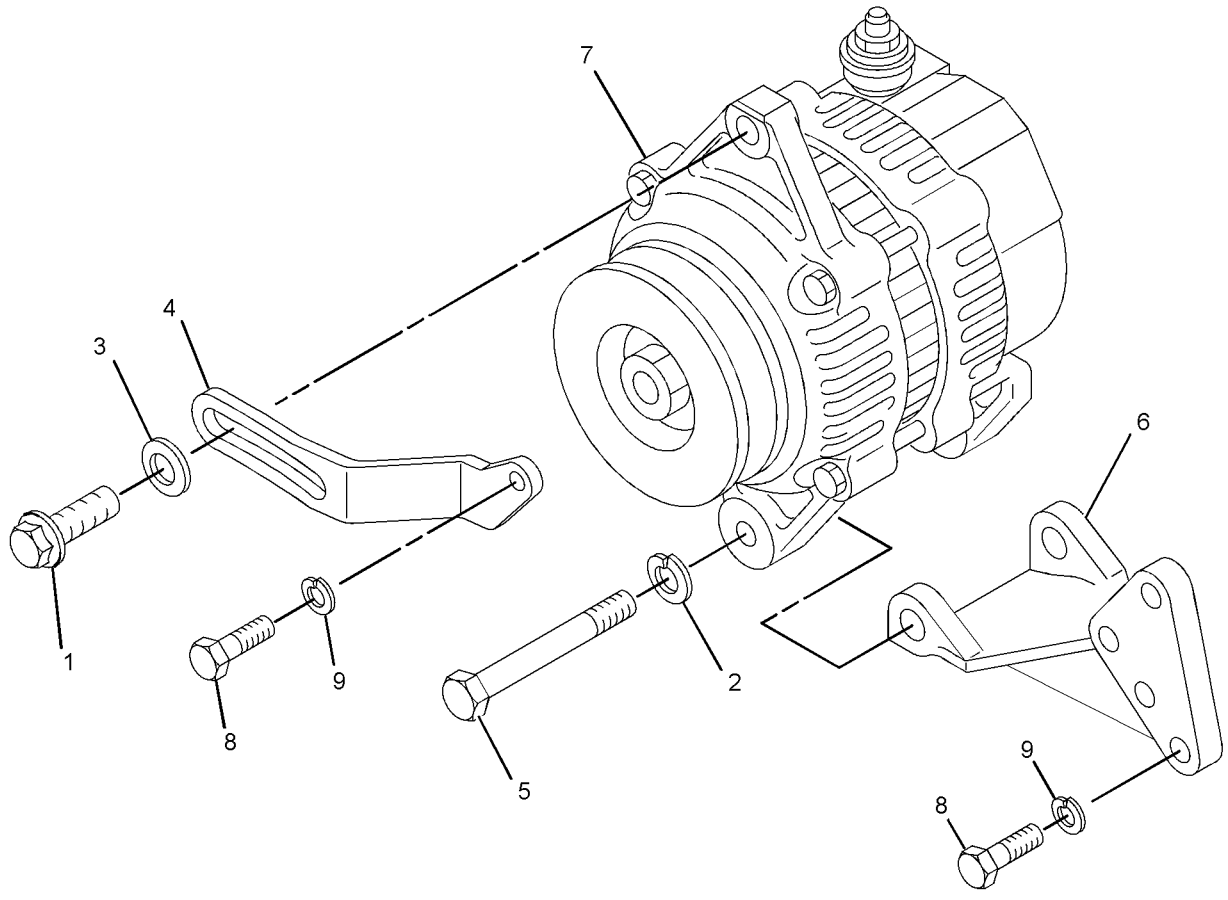

GRAPHIC #1 **<END>** g01377214

287-6361 ALTERNATOR GP-CHARGING

S/N: CJS31383-60343
PART OF 262-7289 ENGINE AR-PRIMARY
AN ATTACHMENT

SMCS-1405 **i02814901**

NOTE	REF NO	GRAPHIC REF	PART NUMBER	QTY	PART NAME 1 2 3 4 5 6 (PRODUCT LEVEL)	SEE PAGE
M	1	1	**6V-5217**	1	BOLT (M8X1.25X20-MM)	
	2	1	**8T-4896**	1	WASHER-HARD (10.2X18.5X2.5-MM THK)	
	3	1	**9M-1974**	1	WASHER-HARD (8.8X16X2-MM THK)	
	4	1	**235-4962**	1	PLATE	
	5	1	**235-4973**	1	BOLT (M10X1.5X90-MM)	
C	6	1	**294-7916**	1	BRACKET	
YR	7	1	**105-2814**	1	ALTERNATOR GP-CHARGING	143
M	8	1	**8T-4189**	2	BOLT (M8X1.25X20-MM)	
	9	1	**3B-4505**	2	LOCKWASHER	

C-CHANGE FROM PREVIOUS TYPE
M-METRIC PART
R-REMFG PART MAY BE AVAILABLE
Y-SEPARATE ILLUSTRATION

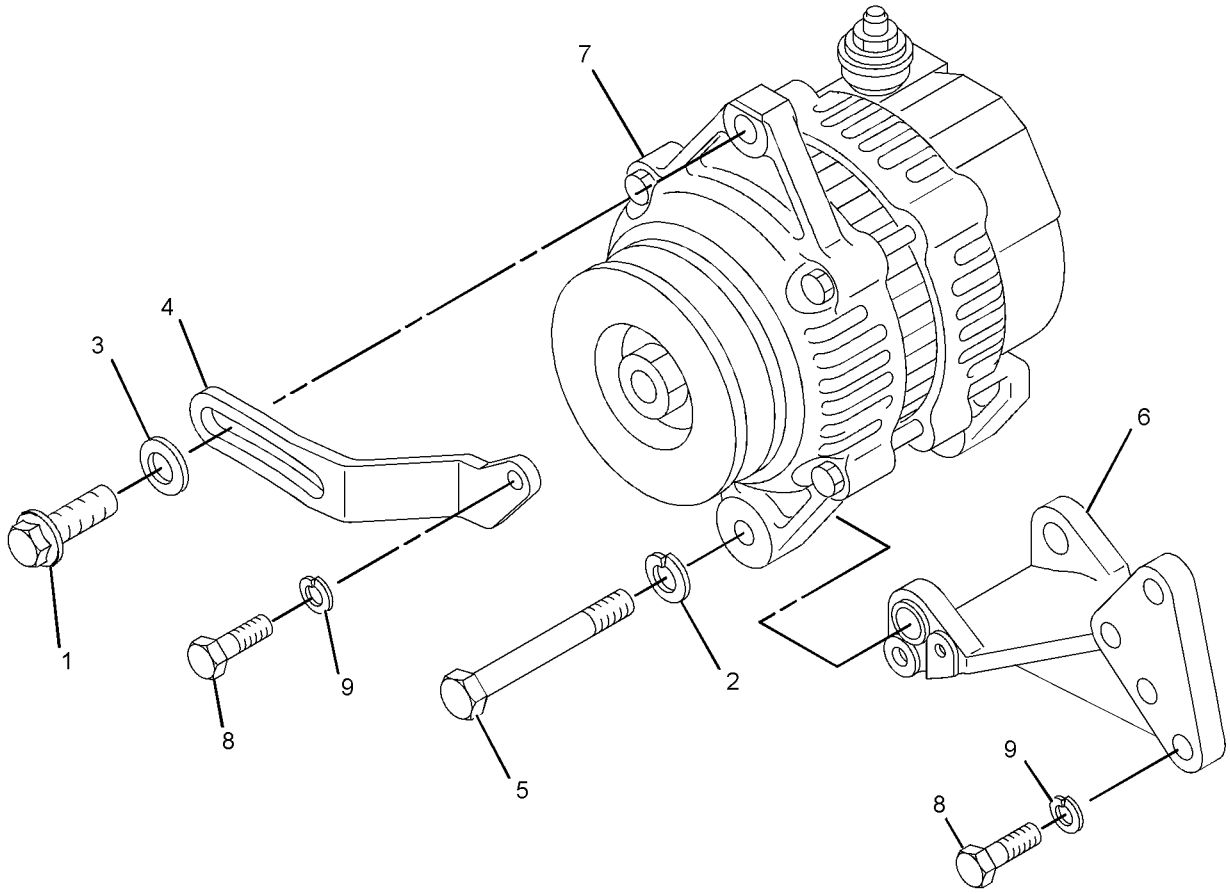

GRAPHIC #1 **<END>** g01414335

315-8353 ALTERNATOR GP-CHARGING

S/N: CYM1-UP; CJS60344-63198
PART OF 262-7289, 287-8074 ENGINE AR-PRIMARY
AN ATTACHMENT

SMCS-1405 **i02822892**

NOTE	REF NO	GRAPHIC REF	PART NUMBER	QTY	PART NAME 1 2 3 4 5 6 (PRODUCT LEVEL)	SEE PAGE
	1	1	**3B-4505**	2	LOCKWASHER	
M	2	1	**6V-5217**	1	BOLT (M8X1.25X20-MM)	
M	3	1	**8T-4189**	2	BOLT (M8X1.25X20-MM)	
	4	1	**8T-4896**	1	WASHER-HARD (10.2X18.5X2.5-MM THK)	
	5	1	**9M-1974**	1	WASHER-HARD (8.8X16X2-MM THK)	
	6	1	**235-4962**	1	PLATE	
	7	1	**235-4973**	1	BOLT (M10X1.5X90-MM)	
	8	1	*239-0772*	1	ALTERNATOR GP-CHARGING	
	9	1	**294-7916**	1	BRACKET	

M-METRIC PART

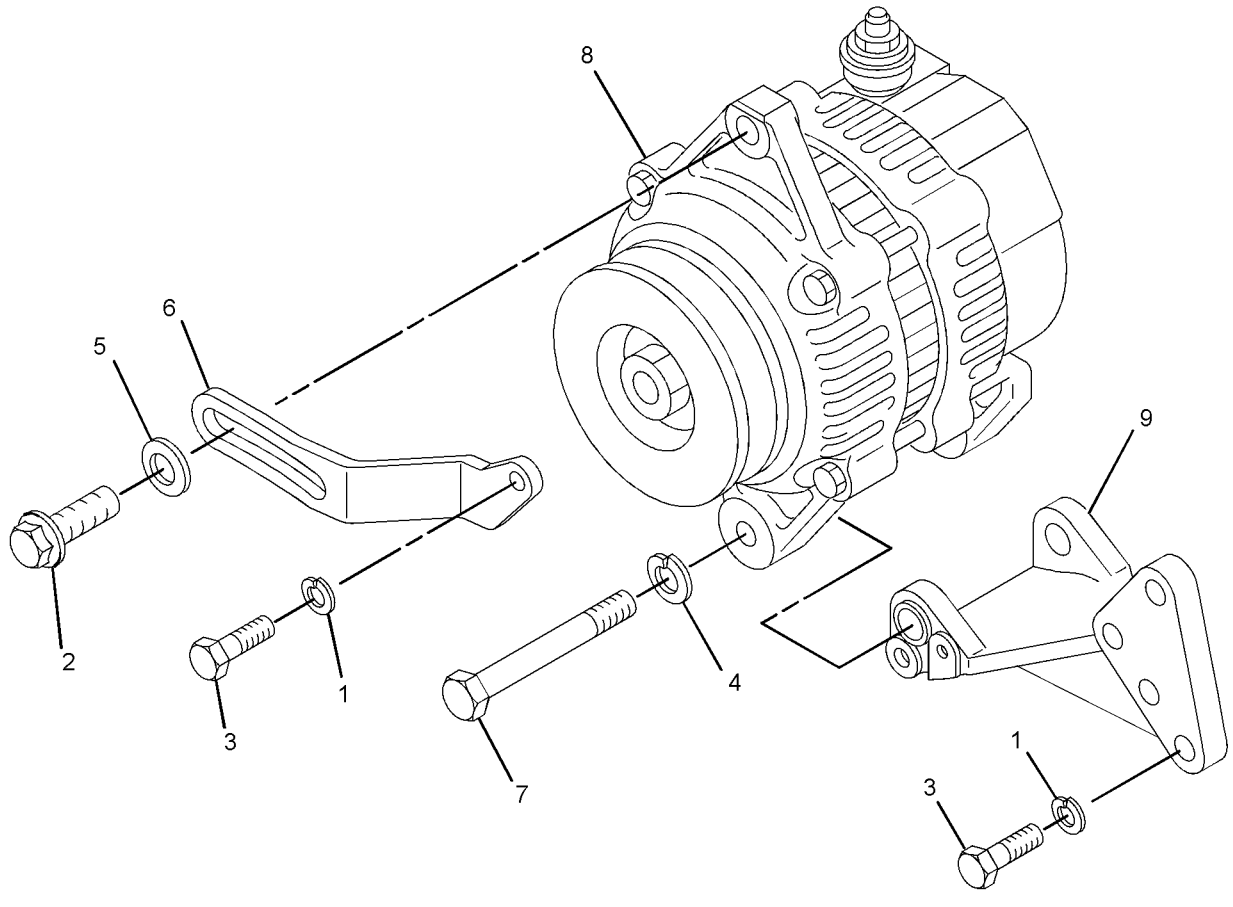

GRAPHIC #1 **<END>** g01433294

315-8353 ALTERNATOR GP-CHARGING

S/N: CYM1-UP; CJS63199-UP
PART OF 262-7289, 287-8074, 319-6806 ENGINE AR-PRIMARY
AN ATTACHMENT

SMCS-1405 **i03077440**

NOTE	REF NO	GRAPHIC REF	PART NUMBER	QTY	PART NAME 1 2 3 4 5 6 (PRODUCT LEVEL)	SEE PAGE
	1	1	**294-7916**	1	BRACKET	
M	2	1	**6V-5217**	1	BOLT (M8X1.25X20-MM)	
C	3	1	**241-6010**	3	BOLT	
	4	1	**8T-4896**	1	WASHER-HARD (10.2X18.5X2.5-MM THK)	
	5	1	**9M-1974**	1	WASHER-HARD (8.8X16X2-MM THK)	
	6	1	**235-4962**	1	PLATE	
	7	1	**235-4973**	1	BOLT (M10X1.5X90-MM)	
YR	8	1	**105-2814**	1	ALTERNATOR GP-CHARGING	143

C-CHANGE FROM PREVIOUS TYPE
M-METRIC PART
R-REMFG PART MAY BE AVAILABLE
Y-SEPARATE ILLUSTRATION

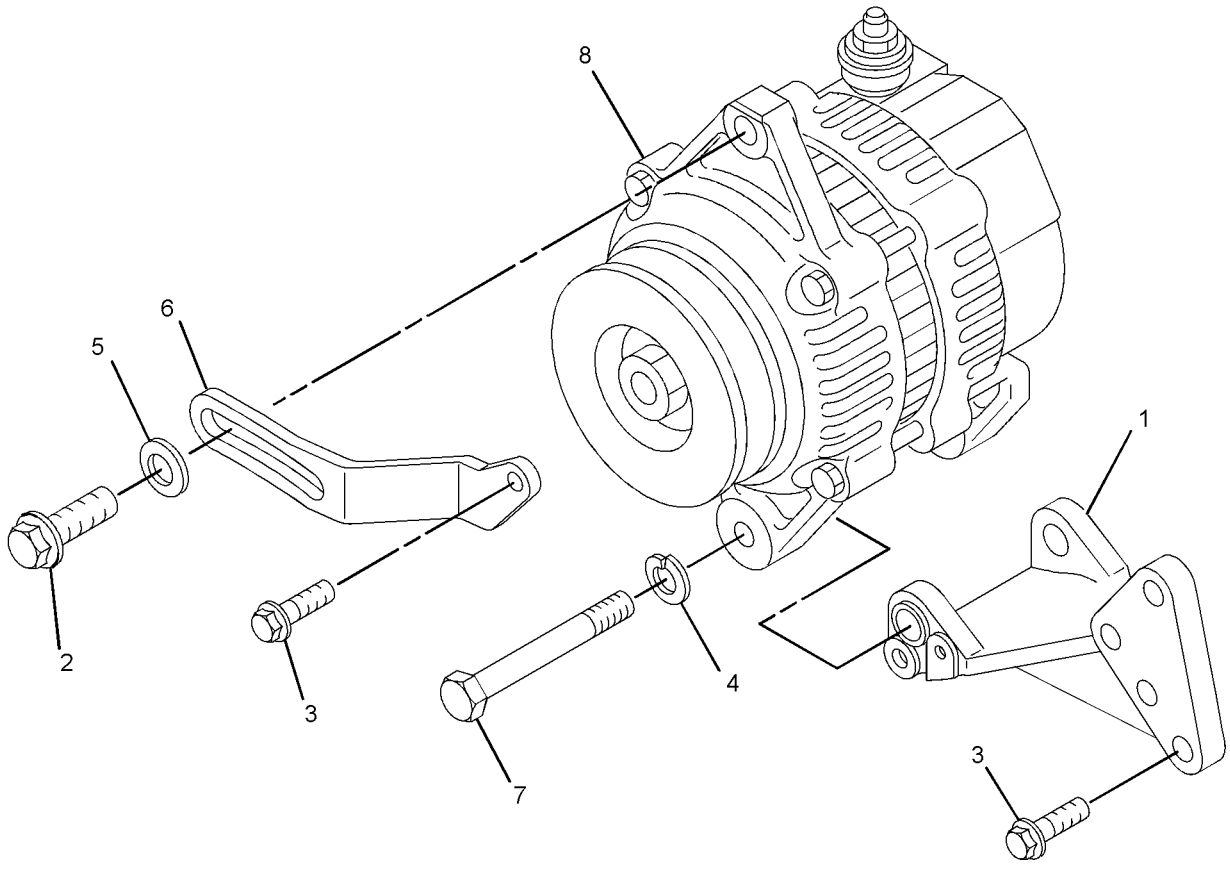

GRAPHIC #1 **<END>** g01567413

ELECTRICAL AND STARTING SYSTEM

258-4121 BATTERY & WIRING GP

S/N: MST1-UP

PART OF 258-2510, 295-7292 CHASSIS AR

SMCS-1401, 1402 **i03179041**

NOTE	REF NO	GRAPHIC REF	PART NUMBER	QTY	PART NAME 1 2 3 4 5 6 (PRODUCT LEVEL)	SEE PAGE
	1	1	**114-4516**	1	BLOCK	
	2	1	**230-6368**	1	BATTERY (12-VOLT, MAINTENANCE FREE)	
	3	1	**235-1845**	1	FUSE (100-AMPERE)	
	4	1	**247-6440**	1	HOLD-DOWN AS	
	5	1	**258-2849**	1	PLATE AS	
	6	1	**258-4118**	1	CABLE AS-BATTERY (POSITIVE)	
E		1	**8Y-8081**		TUBE-CONVOLUTED (132-CM)	
E		1	**210-8958**		TUBE-HEAT SHRINK (24-MM DIA) (10-CM)	
B		1	**1P-0810**		TAPE-ELECTRICAL	
		1	**1S-7252**	1	TERMINAL-CABLE (00-GA, 3/8-IN SCREW)	
E		1	**5P-0761**		CABLE (00-GA, RED) (132-CM)	
		1	**8N-0869**	2	COVER-TERMINAL (RED)	
		1	**030-1705**	1	RING-TERMINAL (00-GA, 5/16-IN SCREW)	
	7	1	**258-4120**	1	WIRE AS	
	8	1	**258-4123**	1	PLATE AS	
	9	1	**267-2744**	1	HOLDER AS-FUSE	
		1	**267-2746**	1	COVER AS	
M		1	**5C-7261**	2	NUT (M8X1.25-THD)	
		1	**7X-0608**	2	WASHER-HARD (10.2X16X2-MM THK)	
		1	**9F-5644**	2	LOCKWASHER	
	10	1	**266-3314**	3	BOLT-FLANGE HEAD (M6X1X20.5-MM)	
M	11	1	**266-3315**	2	BOLT-FLANGE HEAD (M8X1.25X25.5-MM)	
M	12	1	**5C-2890**	2	NUT (M6X1-THD)	
M	13	1	**5C-7261**	1	NUT (M8X1.25-THD)	
M	14	1	**6V-5698**	2	SCREW-BUTTON HEAD (M4X0.7X10-MM)	
M	15	1	**6V-7357**	2	BOLT (M6X1X25-MM)	
	16	1	**7X-0608**	1	WASHER-HARD (10.2X16X2-MM THK)	
	17	1	**6V-8801**	2	NUT (3/8-16-THD)	
	18	1	**8T-4205**	5	WASHER-HARD (7.2X14.5X2-MM THK)	
	19	1	**8T-4224**	2	WASHER-HARD (8.8X16X2-MM THK)	
M	20	1	**8T-4908**	1	BOLT (M8X1.25X25-MM)	
	21	1	**9F-5644**	1	LOCKWASHER	
	22	1	**3S-8665**	2	CLIP	
M	23	1	**8T-4138**	2	BOLT (M6X1X20-MM)	

B-USE AS REQUIRED
E-ORDER BY THE CENTIMETER
M-METRIC PART

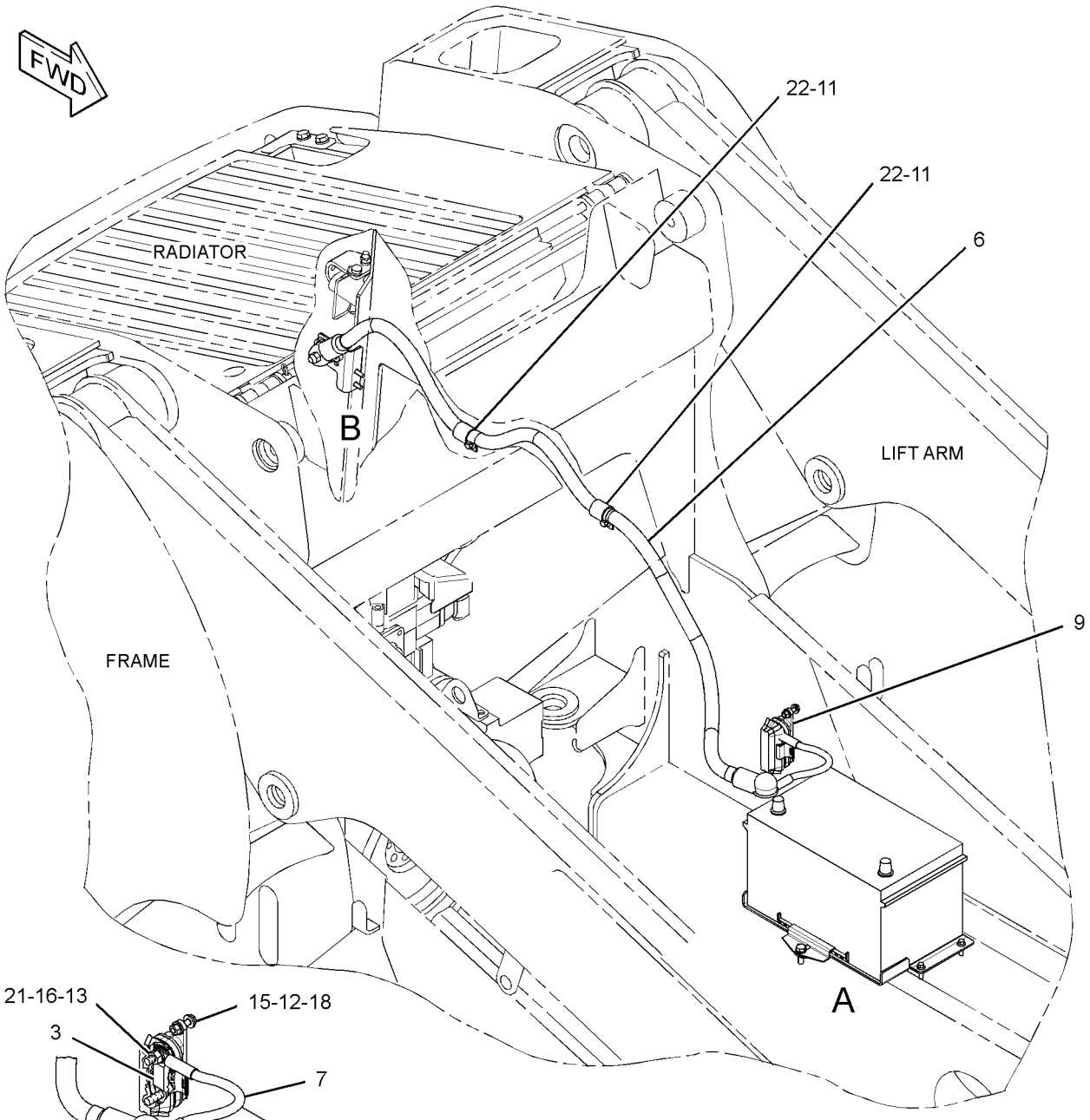

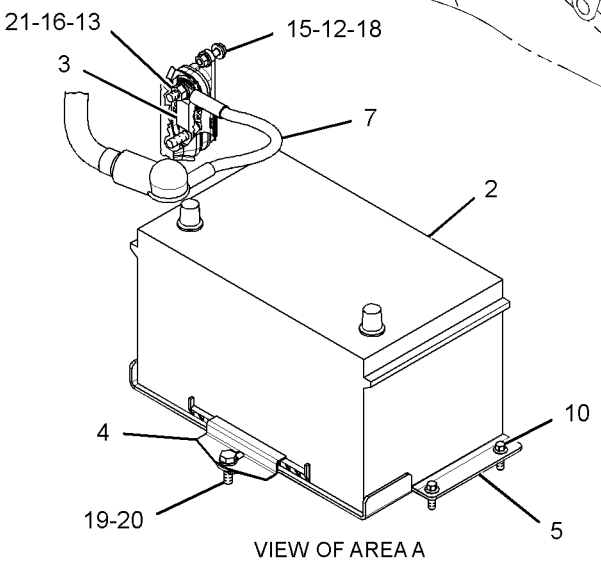

VIEW OF AREA A

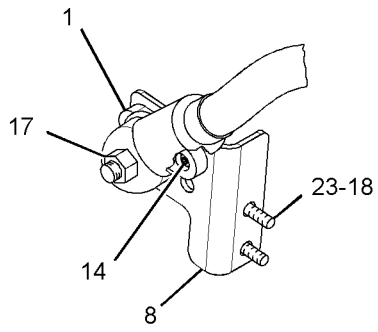

VIEW OF AREA B

GRAPHIC #1 **<END>** g01669835

310-5289 CONTROL GP-MACHINE

S/N: MST1-UP

PART OF 258-4185 KIT-SECURITY

AN ATTACHMENT

SMCS-7600, 7610 **i03546822**

NOTE	PART NUMBER	QTY	PART NAME 1 2 3 4 5 6 (PRODUCT LEVEL)	SEE PAGE
	310-4772	1	MODULE GP-INTERFACE (KEY)	
	6V-6715	1	SCREW-PAN HEAD (4-20X0.25-IN)	
	8C-3095	1	SEAL-O-RING	

<END>

258-4144 COVER GP-FUSE PANEL

S/N: MST1-UP

PART OF 258-4000 CAB AR-ENCLOSED ROPS

SMCS-1417 **i02712956**

NOTE	REF NO	GRAPHIC REF	PART NUMBER	QTY	PART NAME 1 2 3 4 5 6 (PRODUCT LEVEL)	SEE PAGE
	1	1	**8R-9654**	1	LANYARD	
	2	1	**116-7471**	1	PULLER-MINIFUSE	
	3	1	**258-3727**	2	SCREW-TRUSS HEAD (NO 12X17.46-MM)	
	4	1	**258-4137**	1	FILM-FUSE PANEL	
	5	1	**267-2680**	2	FUSE (20-AMPERE)	
	6	1	**8T-4205**	3	WASHER-HARD (7.2X14.5X2-MM THK)	

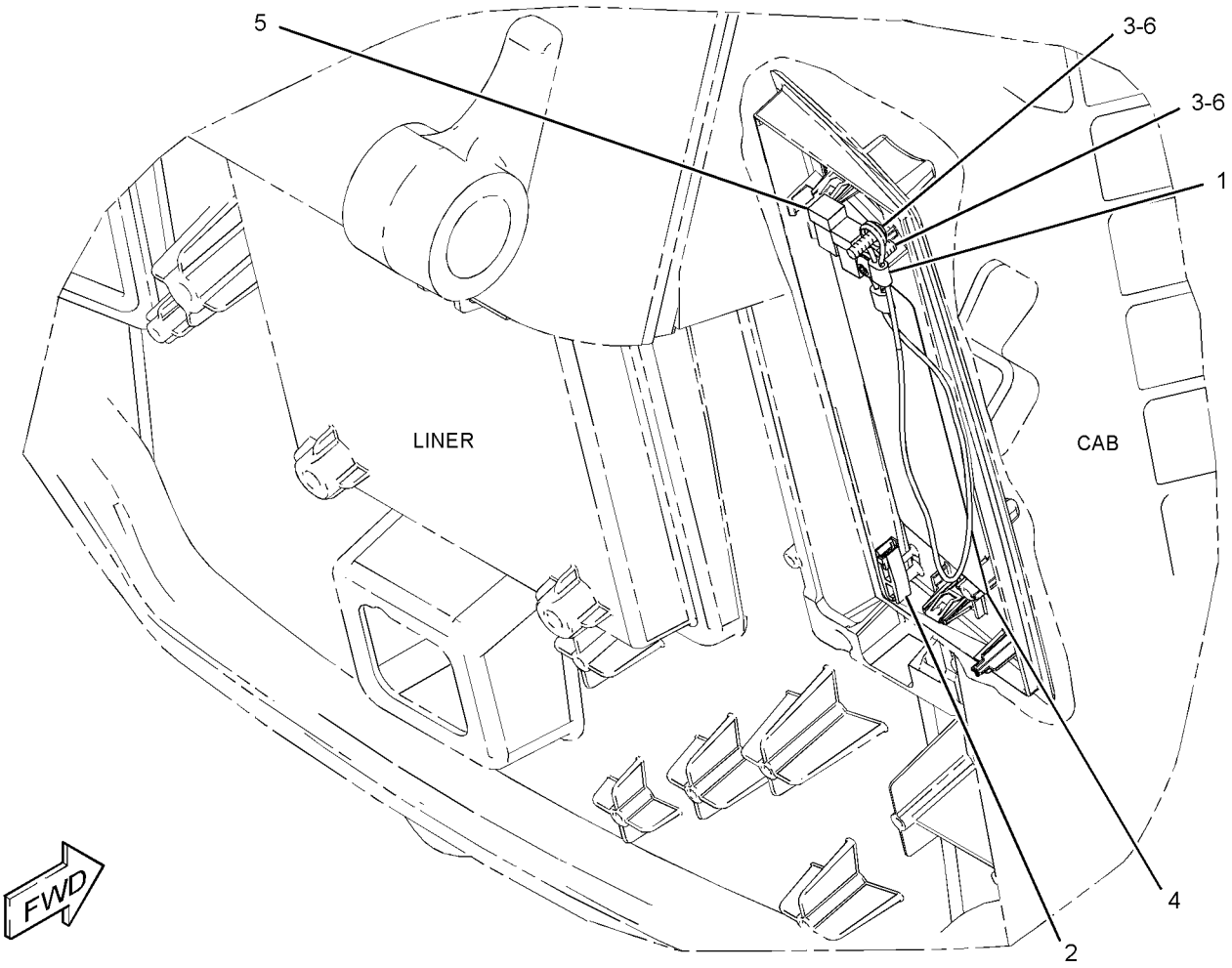

GRAPHIC #1 **<END>** g01339564

235-5904 GLOW PLUG GP

S/N: CYM1-UP; CJS1-UP
PART OF 262-7289, 287-8074, 319-6806 ENGINE AR-PRIMARY
AN ATTACHMENT

SMCS-1412 **i02162785**

NOTE	REF NO	GRAPHIC REF	PART NUMBER	QTY	PART NAME 1 2 3 4 5 6 (PRODUCT LEVEL)	SEE PAGE
	1	1	**107-3659**	4	GLOW PLUG	
	2	1	**257-8390**	1	PLATE-CONNECTION	

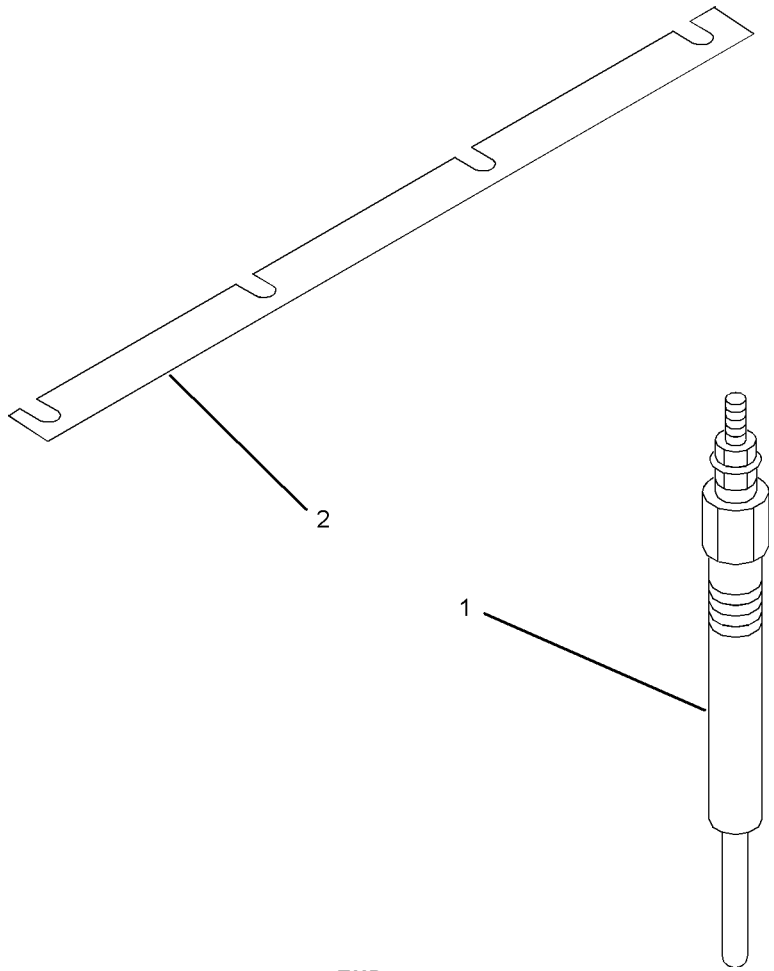

GRAPHIC #1 **<END>** g01011629

218-0942 HEATER GP-JACKET WATER

S/N: MST1-UP
120-VOLT, 530-WATT
AN ATTACHMENT

SMCS-1383 **i02762194**

NOTE	REF NO	GRAPHIC REF	PART NUMBER	QTY	PART NAME 1 2 3 4 5 6 (PRODUCT LEVEL)	SEE PAGE
	1	1	**9X-6772**	2	STRAP-CABLE	
	2	1	*225-5642*	1	HEATER GP-JACKET WATER	
	2A	1	**7X-6312**	1	CORD AS-HEATER ELEMENT (120-VOLT, 15-AMPERE)	
	2B	1	**225-5541**	1	ELEMENT AS-JACKET WATER HEATER (120-VOLT, 530-WATT)	
	2C	1	**232-4703**	1	GASKET	

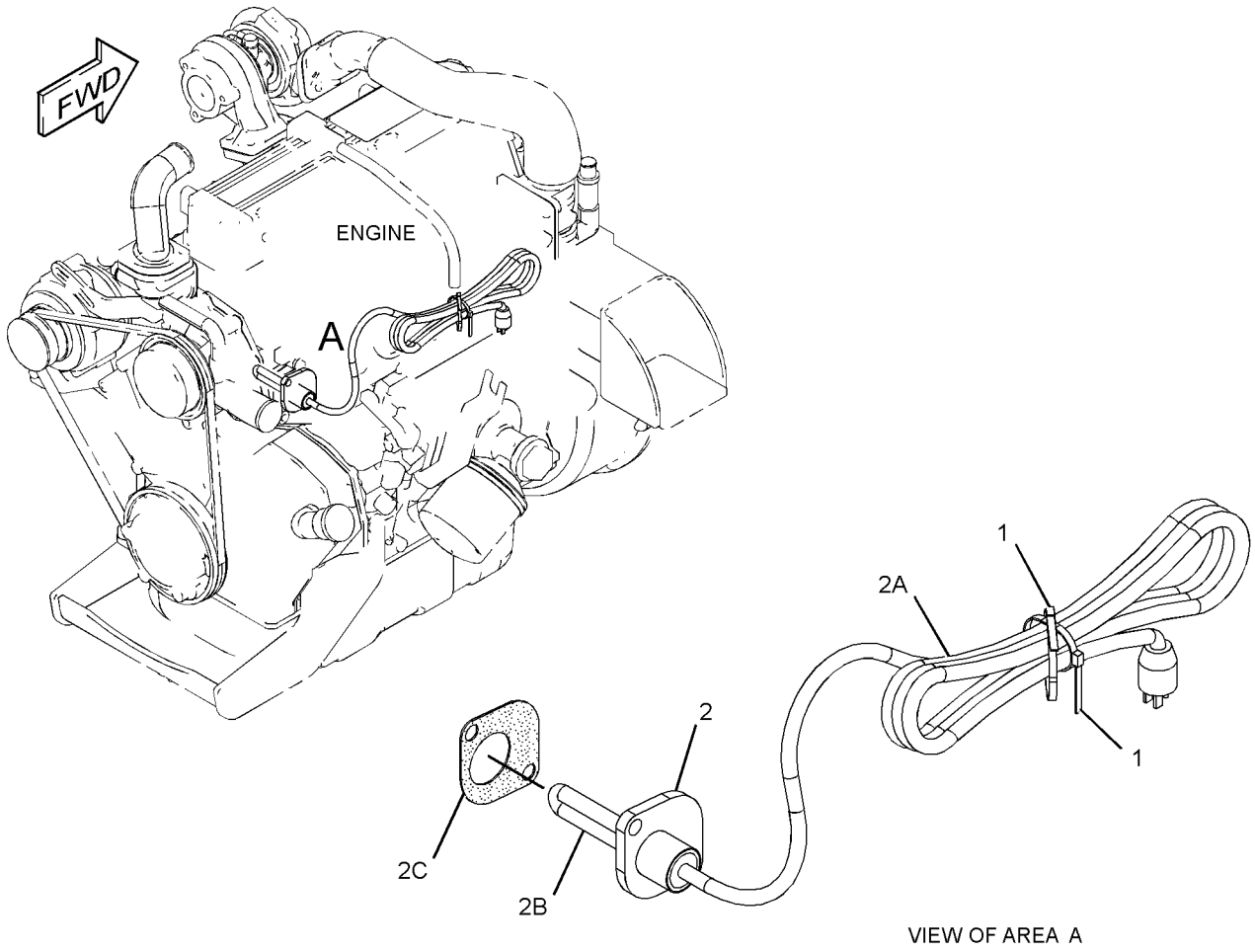

VIEW OF AREA A

GRAPHIC #1 **<END>** g01335541

218-0943 HEATER GP-JACKET WATER

S/N: MST1-UP
240-VOLT, 530-WATT
AN ATTACHMENT

SMCS-1383 **i02762195**

NOTE	REF NO	GRAPHIC REF	PART NUMBER	QTY	PART NAME 1 2 3 4 5 6 (PRODUCT LEVEL)	SEE PAGE
	1	1	**9X-6772**	2	STRAP-CABLE	
	2	1	*225-5644*	1	HEATER GP-JACKET WATER	
	2A	1	**217-5912**	1	CORD AS	
	2B	1	**225-5535**	1	ELEMENT AS-JACKET WATER HEATER (240-VOLT, 530-WATT)	
	2C	1	**232-4703**	1	GASKET	

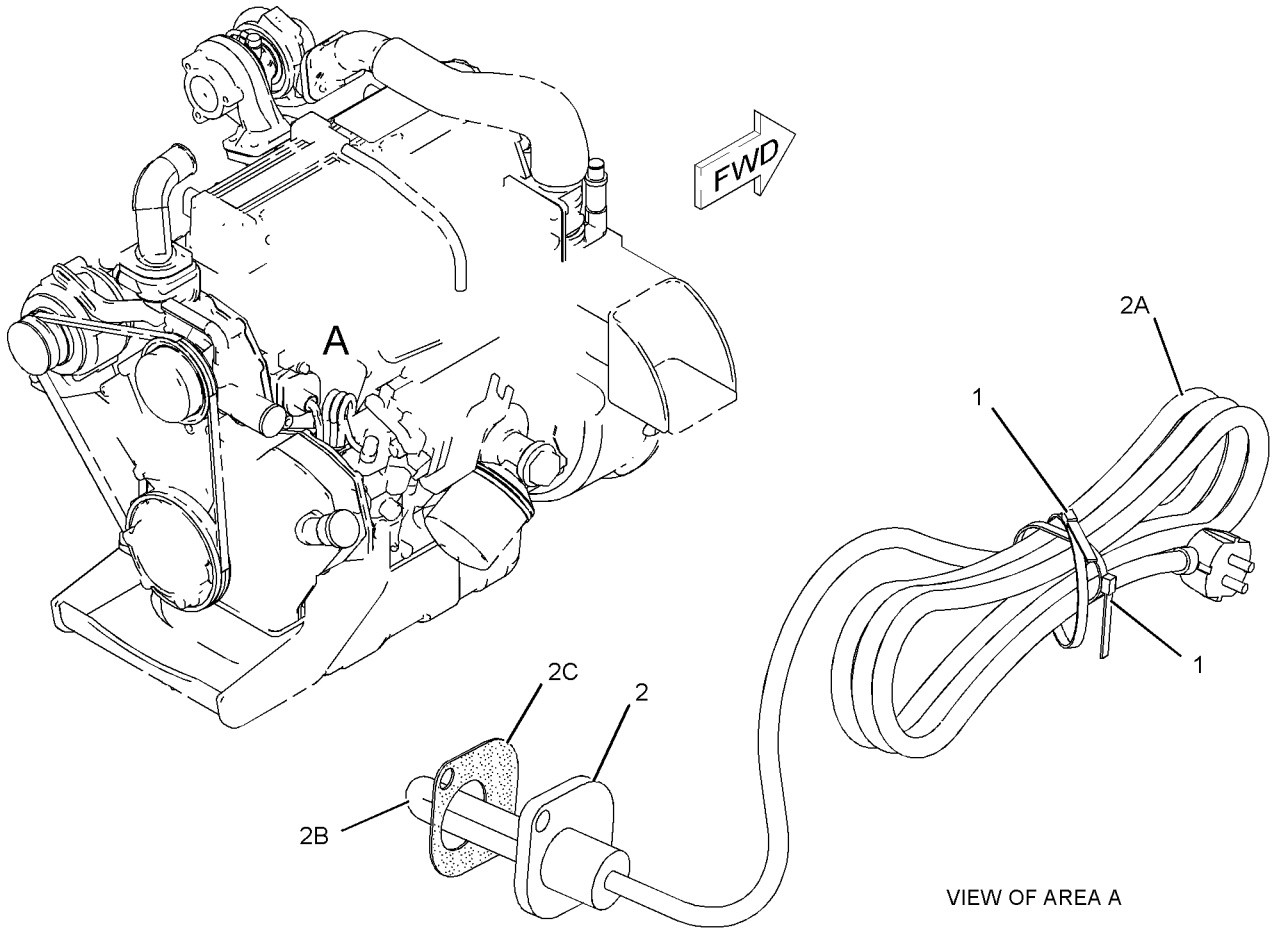

GRAPHIC #1 **<END>** g01108040

258-4145 KIT-CONTROL MOUNTING—PRODUCT LINK

S/N: MST1-UP

AN ATTACHMENT

SMCS-7606 **i02637900**

NOTE	REF NO	GRAPHIC REF	PART NUMBER	QTY	PART NAME 1 2 3 4 5 6 (PRODUCT LEVEL)	SEE PAGE
	1	1	**157-2528**	4	SPACER (7X16X20-MM THK)	
	2	1	**258-3727**	9	SCREW-TRUSS HEAD (NO 12X17.46-MM)	
	3	1	**258-4148**	1	PLATE AS	
	4	1	**258-4149**	1	PLATE AS	
M	5	1	**8C-8451**	4	BOLT (M6X1X40-MM)	

M-METRIC PART

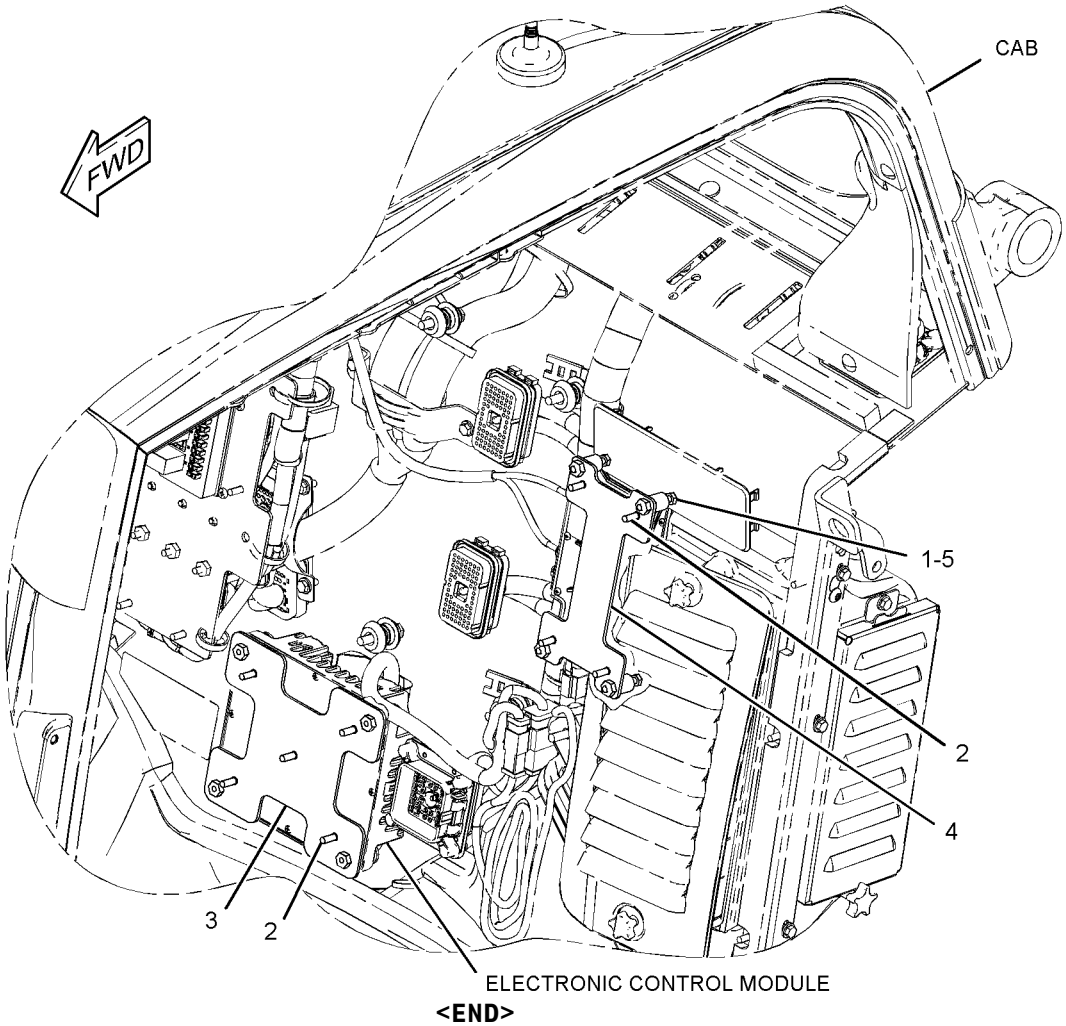

GRAPHIC #1 **<END>** g01328380

258-4185 KIT-SECURITY

S/N: MST1-UP
AN ATTACHMENT
TYPE 1

SMCS-7631 **i03635698**

NOTE	REF NO	GRAPHIC REF	PART NUMBER	QTY	PART NAME 1 2 3 4 5 6 (PRODUCT LEVEL)	SEE PAGE
	1	1	**102-8802**	1	KIT-RECEPTACLE (2-PIN)	
					(INCLUDES RECEPTACLE AS & WEDGE)	
B	2	1	**107-2417**		TAPE (FOAM)	
	3	1	**205-0826**	1	FILM-INSTRUCTION (MACHINE SECURITY, CONSOLE)	
	4	1	**206-5162**	2	KEY AS-ELECTRONIC (SECURITY)	
	5	1	*206-5206*	1	COIL AS	
		1	**198-5389**	1	FILM-IDENTIFICATION (IGNITION SWITCH)	
		1	**205-8257**	1	COIL AS (EXCITER)	
	6	1	**213-6065**	1	HARNESS AS-CONTROL (SECURITY)	
		1	**9X-3401**	4	PIN-CONNECTOR (16-GA TO 18-GA)	
					—OR—	
		1	**126-1767**	4	PIN-CONNECTOR (14-GA)	
		1	**8T-8737**	2	PLUG-SEAL	
		1	**180-9340**	8	SOCKET-CONNECTOR (14-GA TO 18-GA)	
		1	**102-8804**	1	KIT-RECEPTACLE (4-PIN)	
					(INCLUDES RECEPTACLE AS & WEDGE)	
		1	**8L-8413**	10	STRAP-CABLE	
		1	**155-2265**	1	KIT-CONNECTING PLUG (8-PIN)	
		1	**155-2270**	1	KIT-CONNECTING PLUG (2-PIN)	
					(EACH PLUG KIT INCLUDES PLUG AS, WEDGE & INTERFACE SEAL)	
	7	1	**218-0404**	1	MODULE GP-INTERFACE (KEY)	
		1	*216-2517*	1	MODULE GP-INTERFACE (KEY)	
		1	**6V-6715**	1	SCREW-PAN HEAD (4-20X0.25-IN)	
		1	**8C-3095**	1	SEAL-O-RING	
	8	1	**219-6314**	2	KEY RING (IDENTIFICATION)	
	9	1	**8Y-5947**	3	FASTENER	

B-USE AS REQUIRED

258-4185 KIT-SECURITY *(contd.)* **i03635698**

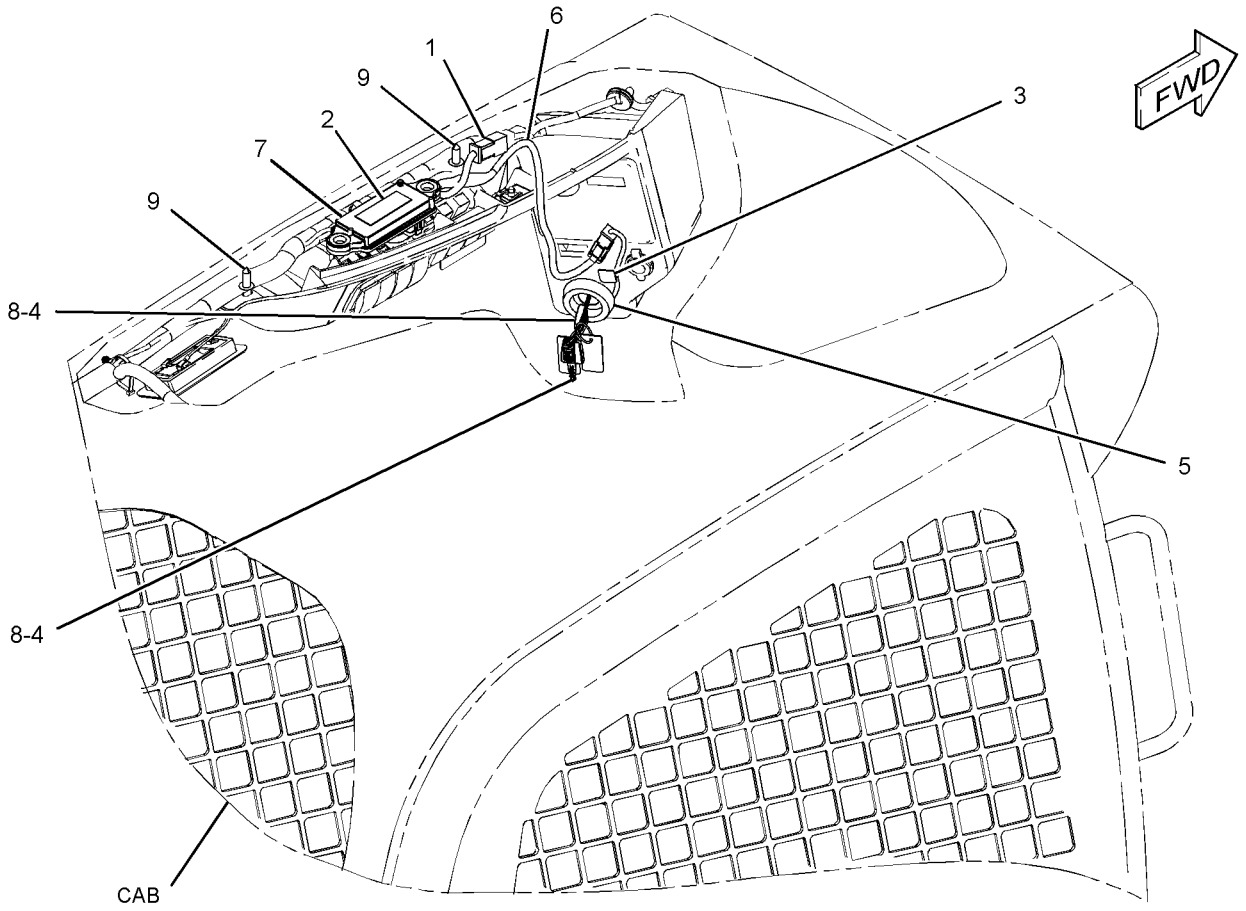

GRAPHIC #1 **<END>** g01328327

258-4185 KIT-SECURITY

S/N: MST1-UP
AN ATTACHMENT
TYPE 2

SMCS-7631 **i03646977**

NOTE	REF NO	GRAPHIC REF	PART NUMBER	QTY	PART NAME 1 2 3 4 5 6 (PRODUCT LEVEL)	SEE PAGE
	1	1	**102-8802**	1	KIT-RECEPTACLE (2-PIN)	
					(INCLUDES RECEPTACLE AS & WEDGE)	
B	2	1	**107-2417**		TAPE (FOAM)	
	3	1	**205-0826**	1	FILM-INSTRUCTION (MACHINE SECURITY, CONSOLE)	
	4	1	**206-5162**	2	KEY AS-ELECTRONIC (SECURITY)	
C	5	1	**205-8257**	1	COIL AS (EXCITER)	
D		1	**5P-5677**		WIRE (18-GA, BLACK) (0.4-M)	
		1	**186-3735**	2	PIN-CONNECTOR (16-GA TO 18-GA)	
		1	**207-5271**	1	WASHER (27X60.5X0.36-MM THK)	
	6	1	**213-6065**	1	HARNESS AS-CONTROL (SECURITY)	
		1	**9X-3401**	4	PIN-CONNECTOR (16-GA TO 18-GA)	
					—OR—	
		1	**126-1767**	4	PIN-CONNECTOR (14-GA)	
		1	**155-2270**	1	KIT-CONNECTING PLUG (2-PIN)	
		1	**155-2265**	1	KIT-CONNECTING PLUG (8-PIN)	
					(EACH PLUG KIT INCLUDES PLUG AS, WEDGE & INTERFACE SEAL)	
		1	**8T-8737**	2	PLUG-SEAL	
		1	**102-8804**	1	KIT-RECEPTACLE (4-PIN)	
					(INCLUDES RECEPTACLE AS & WEDGE)	
		1	**180-9340**	8	SOCKET-CONNECTOR (14-GA TO 18-GA)	
		1	**8L-8413**	10	STRAP-CABLE	
Y	7	1	**310-5289**	1	CONTROL GP-MACHINE	151
	8	1	**219-6314**	2	KEY RING (IDENTIFICATION)	
	9	1	**8Y-5947**	3	FASTENER	
C	10	1	**198-5389**	1	FILM-IDENTIFICATION (IGNITION SWITCH)	
	11	1	**225-5927**	1	FILM-INSTRUCTION (MACHINE SECURITY, READ OMM)	
					(ON LH SIDE OF FOPS ON DOOR FRAME 100-MM BELOW LH PANEL)	

B-USE AS REQUIRED
C-CHANGE FROM PREVIOUS TYPE
D-ORDER BY THE METER
Y-SEPARATE ILLUSTRATION

258-4185 KIT-SECURITY *(contd.)* **i03646977**

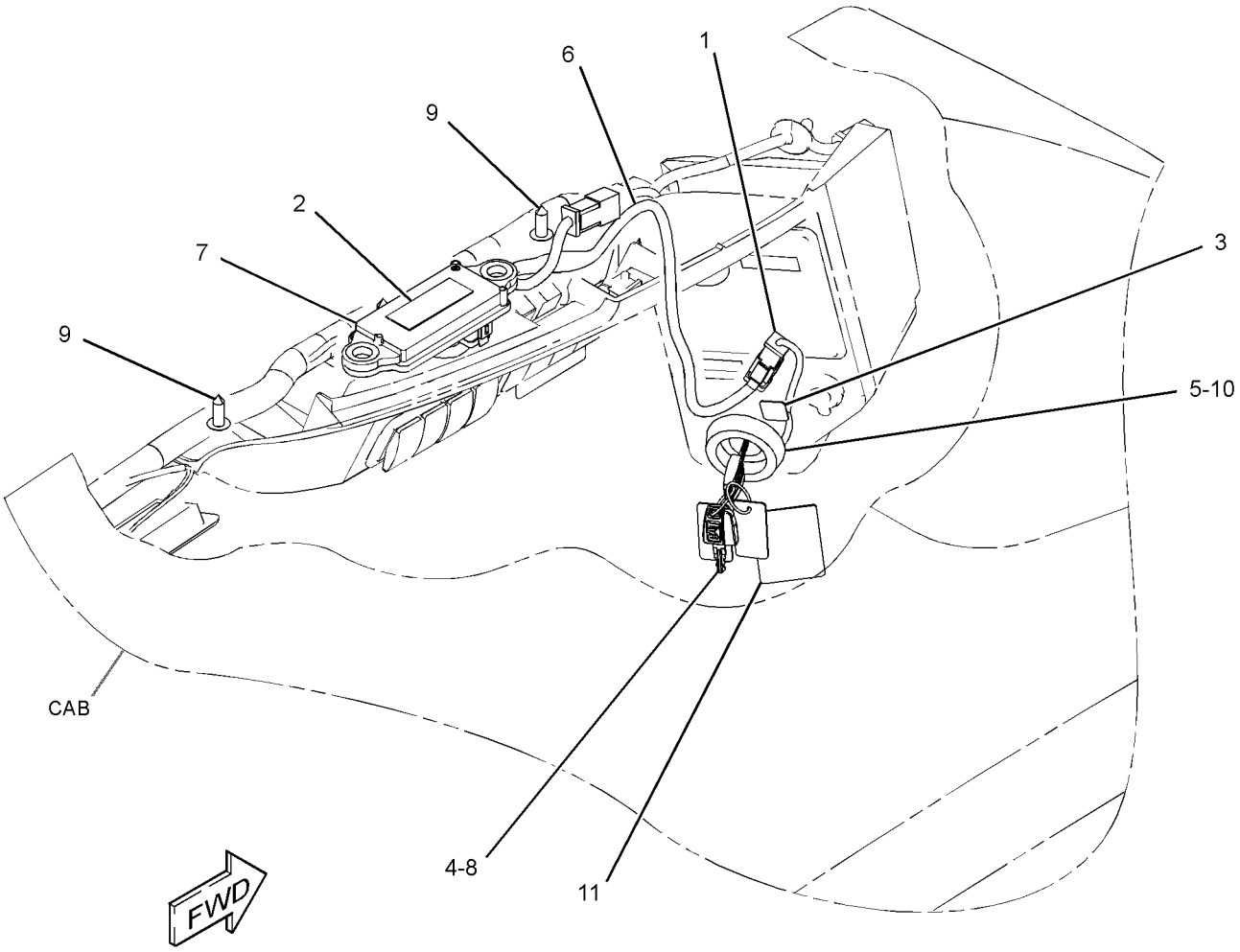

GRAPHIC #1 **<END>** g01787034

328-2366 KIT-WIRING–ACCUGRADE

S/N: MST1-UP
AN ATTACHMENT

SMCS-1408, 7324 **i03720825**

NOTE	REF NO	GRAPHIC REF	PART NUMBER	QTY	PART NAME 1 2 3 4 5 6 (PRODUCT LEVEL)	SEE PAGE
	1	1	**7K-1181**	9	STRAP-CABLE	
	2	1	**328-2367**	1	HARNESS AS-CONTROL	
		1	**155-2271**		KIT-CONNECTING PLUG (4-PIN)	
					(INCLUDES PLUG AS, WEDGE & INTERFACE SEAL)	
		1	**186-3736**	2	SOCKET-CONNECTOR (16-GA TO 18-GA)	
		1	**9X-3402**	2	SOCKET-CONNECTOR (16-GA TO 18-GA)	
		1	**180-9340**	2	SOCKET-CONNECTOR (14-GA TO 18-GA)	
		1	**2L-8077**	1	TERMINAL (14-GA TO 16-GA, 1/4-IN SCREW)	
		1	**2L-8078**	1	TERMINAL-RING (14-GA TO 16-GA, 5/16-IN SCREW)	

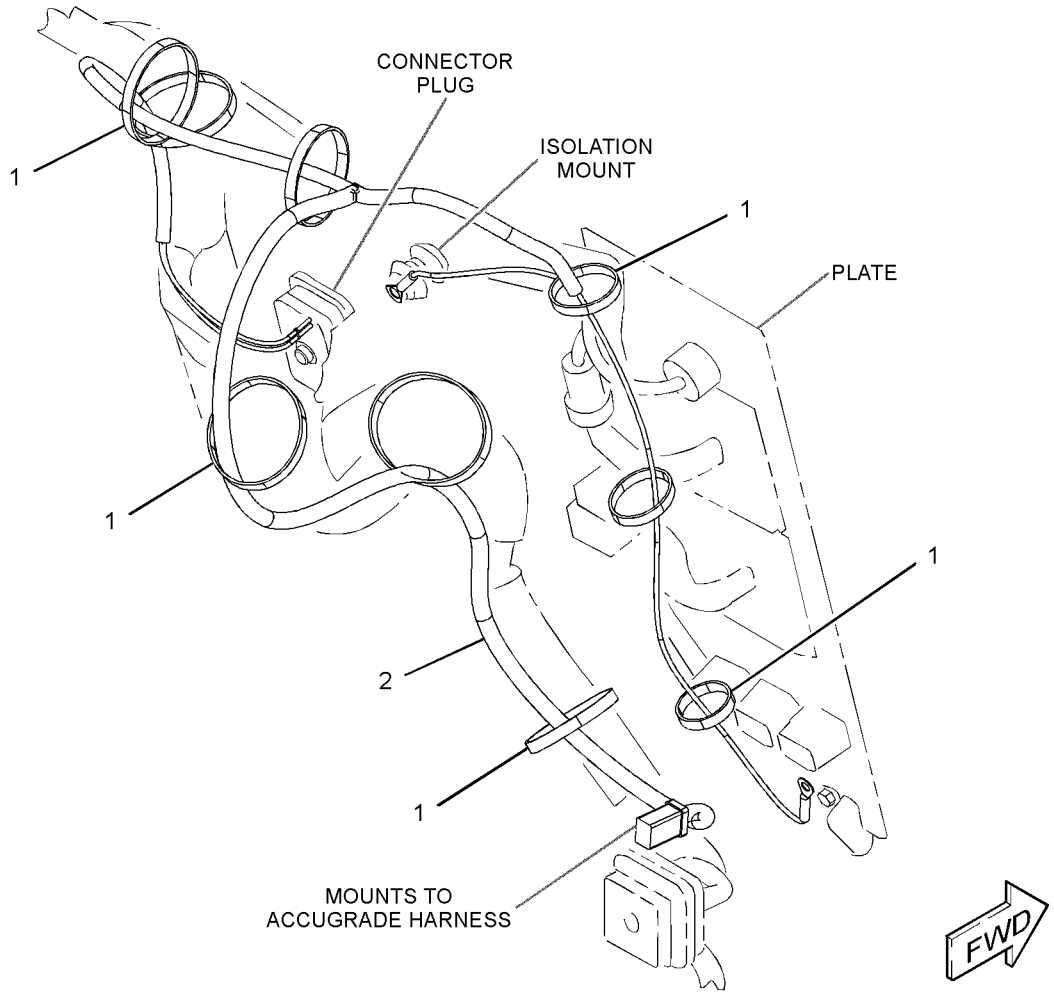

GRAPHIC #1 **<END>** g02009919

258-4127 KIT-WORK TOOL WIRING

S/N: MST1-UP
CANNOT BE USED WITH FACTORY EQUIPPED HIGH FLOW MACHINES
AN ATTACHMENT

SMCS-1408 **i03637885**

NOTE	REF NO	GRAPHIC REF	PART NUMBER	QTY	PART NAME 1 2 3 4 5 6 (PRODUCT LEVEL)	SEE PAGE
	1	1	**7K-1181**	3	STRAP-CABLE	
	2	1	**146-9439**	3	RELAY AS (12-VOLT) (WORK TOOL)	
	3	1	**159-9495**	1	NUT (1-1/2-18-THD)	
	4	1	**159-9496**	1	LOCKWASHER	
	5	1	**178-3620**	5	STRAP-DUAL CLAMP	
	6	1	**258-4126**	1	HARNESS AS-WORK TOOL	
E		1	**307-2338**		SLEEVE (12-CM)	
		1	**9W-0852**	8	PIN-CONNECTOR (14-GA)	
		1	**102-8806**	1	KIT-RECEPTACLE (8-PIN)	
					(INCLUDES RECEPTACLE AS & WEDGE)	
		1	**8L-8413**	1	STRAP-CABLE	
		1	**156-1458**	1	COVER	
		1	**156-1460**	1	RECEPTACLE (8-PIN)	
	7	1	**263-5418**	1	SWITCH AS-ROCKER (WORK TOOL)	
		1	**111-7899**	1	GASKET	
Y	8	1	**272-1790**	1	CONTROL GP-HANDLE (LH)	671
	9	1	**3S-2093**	8	STRAP-CABLE	
	10	1	**1S-9593**	2	STRAP-CABLE	

E-ORDER BY THE CENTIMETER
Y-SEPARATE ILLUSTRATION

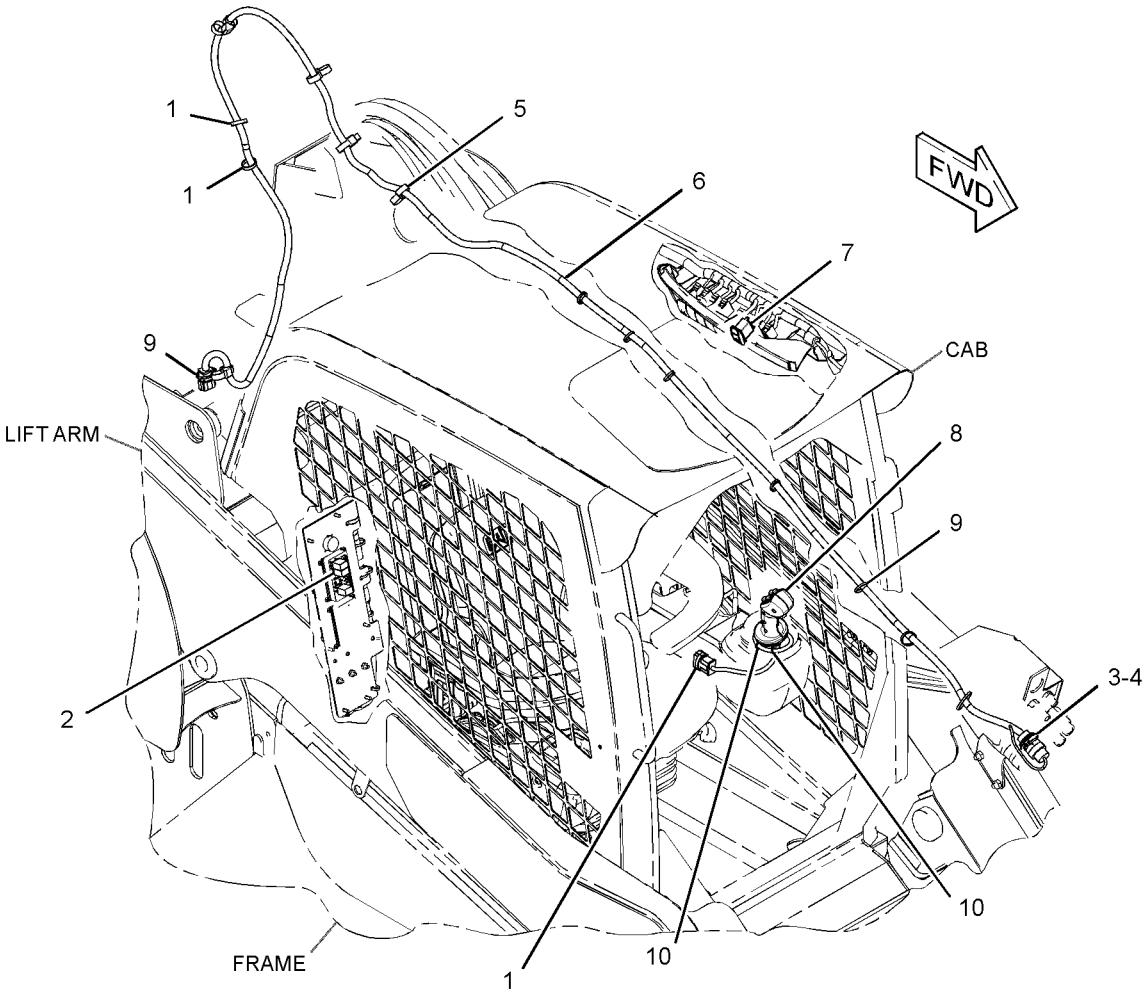

GRAPHIC #1 **<END>** g01359399

234-4328 LAMP GP-FLOOD

S/N: MST1-UP
12-VOLT
PART OF 258-4164 LIGHTING GP-FLOOD

SMCS-1434 **i03686763**

NOTE	REF NO	GRAPHIC REF	PART NUMBER	QTY	PART NAME 1 2 3 4 5 6 (PRODUCT LEVEL)	SEE PAGE
	1	1	**9W-0607**	1	LAMP (12-VOLT, 55-WATT) (FLOODLIGHT)	
M	2	1	**8T-0389**	1	LOCKNUT (M10X1.5-THD)	
	3	1	**9X-4244**	2	SCREW-SPECIAL (M4X1.79X25-MM)	
	4	1	**202-6614**	1	LENS AS (FLOODLIGHT)	
	5	1	**234-7730**	1	BODY AS (FLOODLIGHT)	
	6	1	**164-7556**	1	BRACKET (LAMP RETAINING)	
	7	1	**234-7731**	1	BRACKET AS	
	8	1	**8T-4121**	1	WASHER-HARD (11X21X2.5-MM THK)	

M-METRIC PART

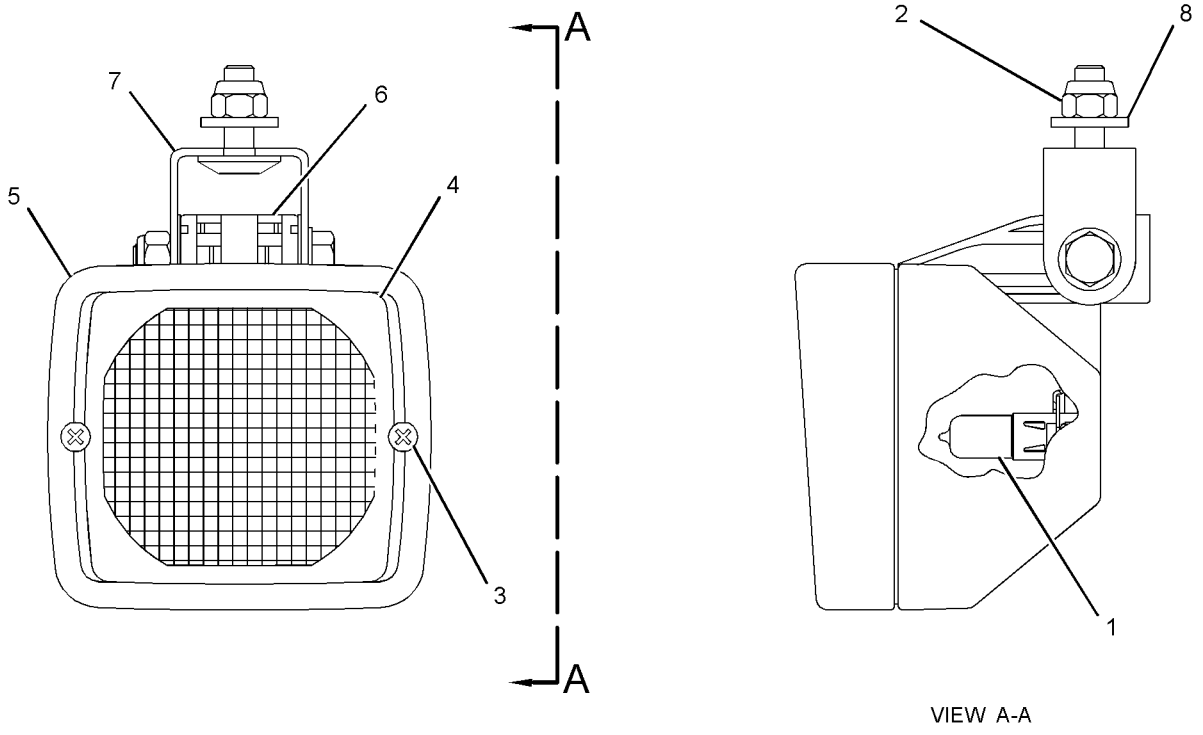

GRAPHIC #1 **<END>** g01283627

195-0189 LAMP GP-HEAD & SIGNAL–RH–HIGH, LOW BEAM

S/N: MST1-UP
12-VOLT
PART OF 258-3884, 333-7436 KIT-ROADING CONVERSION, 258-4130 LIGHTING GP-ROADING
AN ATTACHMENT

SMCS-1429, 1430 **i03646988**

NOTE	REF NO	GRAPHIC REF	PART NUMBER	QTY	PART NAME 1 2 3 4 5 6 (PRODUCT LEVEL)	SEE PAGE
	1	1	**228-6053**	1	BODY AS	
	2	1	**228-6054**	1	BEZEL	
	3	1	**228-6051**	1	LENS AS (HEADLIGHT)	
	4	1	**228-6052**	1	LENS AS (TURN SIGNAL)	
	5	1	**228-6056**	6	SCREW (4-32X1.26-IN)	
	6	1	**9W-3324**	1	LAMP-HEAD (12-VOLT, 60/55-WATT)	
	7	1	**226-4560**	1	LAMP (12-VOLT, 21-WATT) (AMBER)	
	8	1	**226-4561**	1	LAMP (12-VOLT, 5-WATT) (CLEAR)	
M	9	1	**8T-0389**	1	LOCKNUT (M10X1.5-THD)	
	10	1	**100-3253**	1	SPACER	
	11	1	**100-3254**	1	SPACER	
	12	1	**100-3255**	1	WASHER (SPHERICAL)	
	13	1	**102-8805**	1	KIT-RECEPTACLE (6-PIN)	
					(INCLUDES RECEPTACLE AS & WEDGE)	
	14	1	**186-3735**	5	PIN-CONNECTOR (16-GA TO 18-GA)	
	15	1	**8T-8737**	1	PLUG-SEAL	

M-METRIC PART

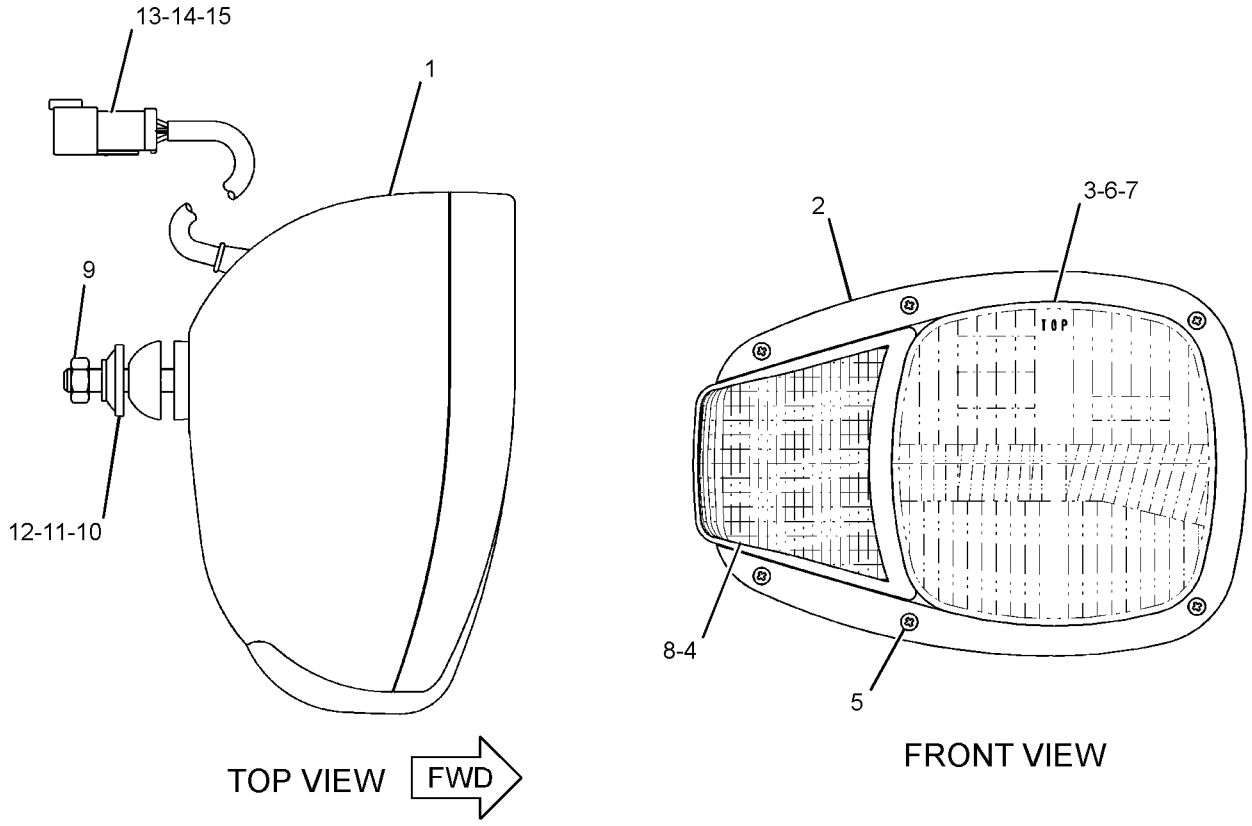

GRAPHIC #1 **<END>** g01313421

195-0190 LAMP GP-HEAD & SIGNAL–LH–HIGH, LOW BEAM

S/N: MST1-UP
12-VOLT
PART OF 258-3884, 333-7436 KIT-ROADING CONVERSION, 258-4130 LIGHTING GP-ROADING
AN ATTACHMENT

SMCS-1429, 1430 **i03646994**

NOTE	REF NO	GRAPHIC REF	PART NUMBER	QTY	PART NAME 1 2 3 4 5 6 (PRODUCT LEVEL)	SEE PAGE
	1	1	**228-6053**	1	BODY AS	
	2	1	**228-6054**	1	BEZEL	
	3	1	**228-6051**	1	LENS AS (HEADLIGHT)	
	4	1	**228-6052**	1	LENS AS (TURN SIGNAL)	
	5	1	**228-6056**	6	SCREW (4-32X1.26-IN)	
	6	1	**9W-3324**	1	LAMP-HEAD (12-VOLT, 60/55-WATT)	
	7	1	**226-4560**	1	LAMP (12-VOLT, 21-WATT) (AMBER)	
	8	1	**226-4561**	1	LAMP (12-VOLT, 5-WATT) (CLEAR)	
M	9	1	**8T-0389**	1	LOCKNUT (M10X1.5-THD)	
	10	1	**100-3253**	1	SPACER	
	11	1	**100-3254**	1	SPACER	
	12	1	**100-3255**	1	WASHER (SPHERICAL)	
	13	1	**102-8805**	1	KIT-RECEPTACLE (6-PIN)	
					(INCLUDES RECEPTACLE AS & WEDGE)	
	14	1	**186-3735**	5	PIN-CONNECTOR (16-GA TO 18-GA)	
	15	1	**8T-8737**	1	PLUG-SEAL	

M-METRIC PART

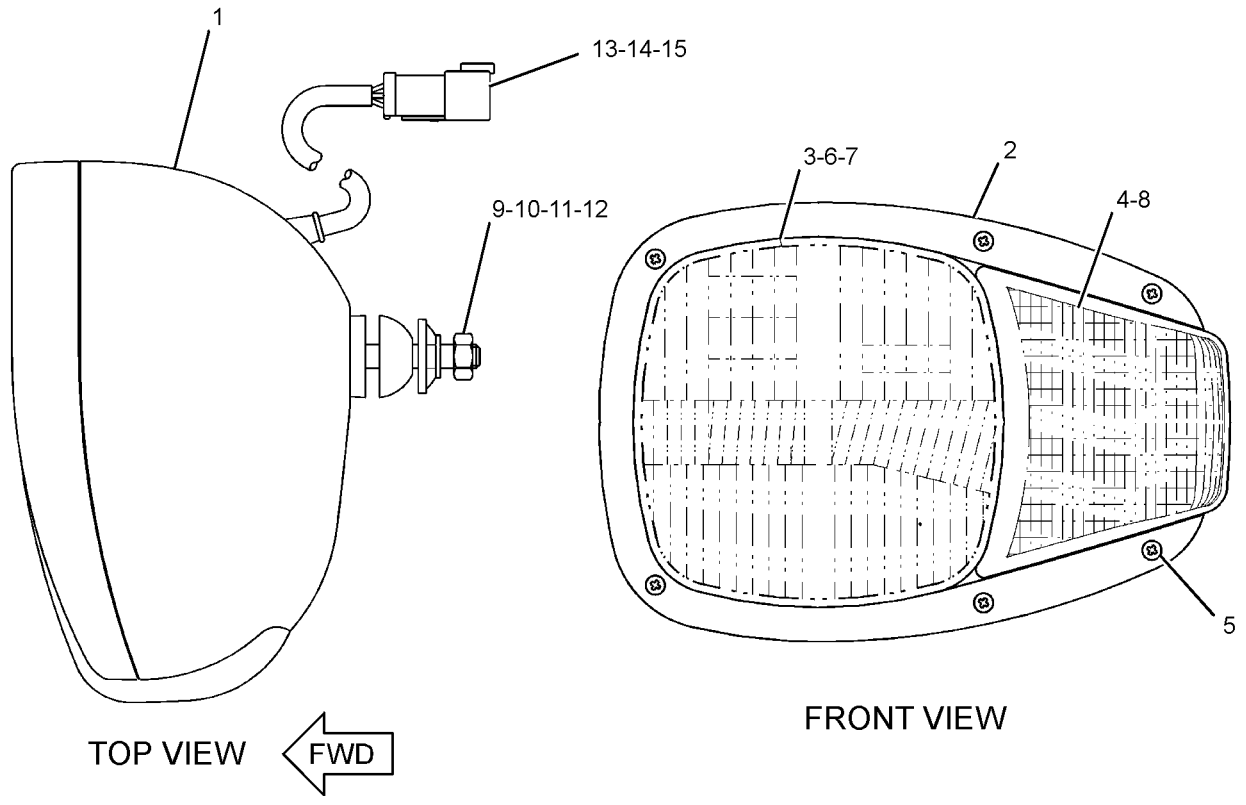

GRAPHIC #1 **<END>** g01313362

128-6985 LAMP GP-WARNING BEACON–

AMBER, MAGNETIC MOUNT, ROTATING
S/N: MST1-UP
12-VOLT
PART OF 258-3841 CONVERSION GP-ROADING, 315-7816, 333-7435 KIT-ROADING CONVERSION, 258-4184 LIGHTING GP-WARNING BEACON
AN ATTACHMENT

SMCS-1431 **i03648844**

NOTE	REF NO	GRAPHIC REF	PART NUMBER	QTY	PART NAME 1 2 3 4 5 6 (PRODUCT LEVEL)	SEE PAGE
	1	1	**9X-8121**	1	LENS (AMBER, WARNING BEACON)	
	2	1	**9X-8118**	1	LAMP (12-VOLT, 55-WATT) (WARNING BEACON)	
	3	1	**9X-8139**	1	BELT-DRIVE	
	4	1	**9R-7958**	1	CORD AS	
		1	**9R-7942**	1	PLUG AS	

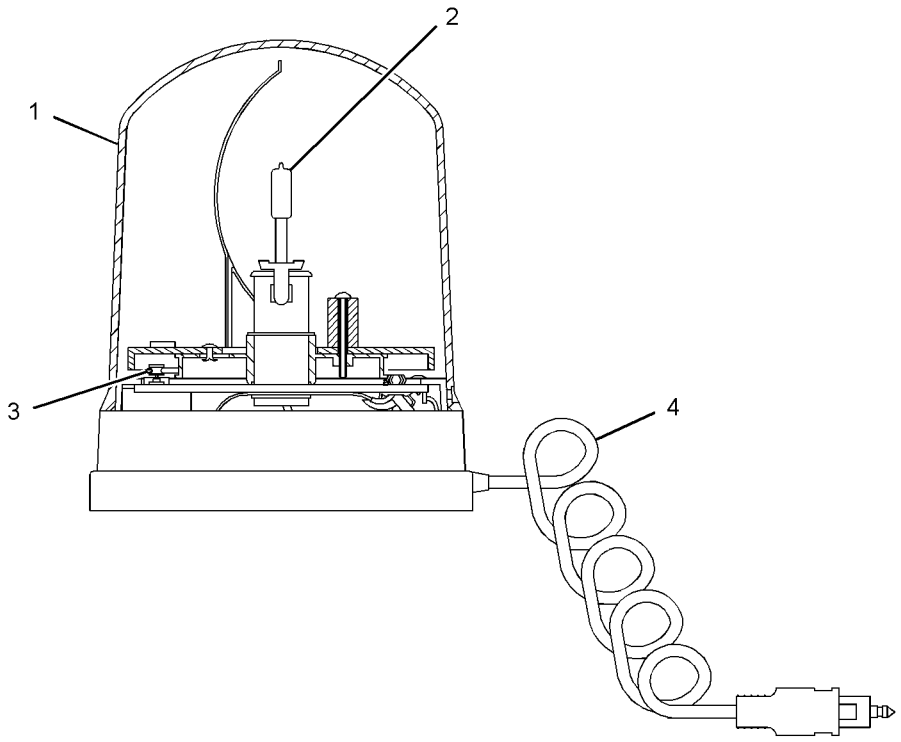

GRAPHIC #1 **<END>** g01567653

309-1325 LAMP GP-WARNING BEACON–AMBER

S/N: MST1-UP
12-VOLT
PART OF 258-3841 CONVERSION GP-ROADING, 333-7435 KIT-ROADING CONVERSION AN ATTACHMENT

SMCS-1431 **i03686768**

NOTE	REF NO	GRAPHIC REF	PART NUMBER	QTY	PART NAME 1 2 3 4 5 6 (PRODUCT LEVEL)	SEE PAGE
	1	1	**272-9800**	1	LENS (AMBER) (WARNING BEACON)	
	2	1	**9X-8118**	1	LAMP (12-VOLT, 55-WATT) (WARNING BEACON)	
	3	1	**9X-8139**	1	BELT-DRIVE (WARNING BEACON)	
	4	1	**9R-7958**	1	CORD AS	
	4A	1	**9R-7942**	1	PLUG AS	

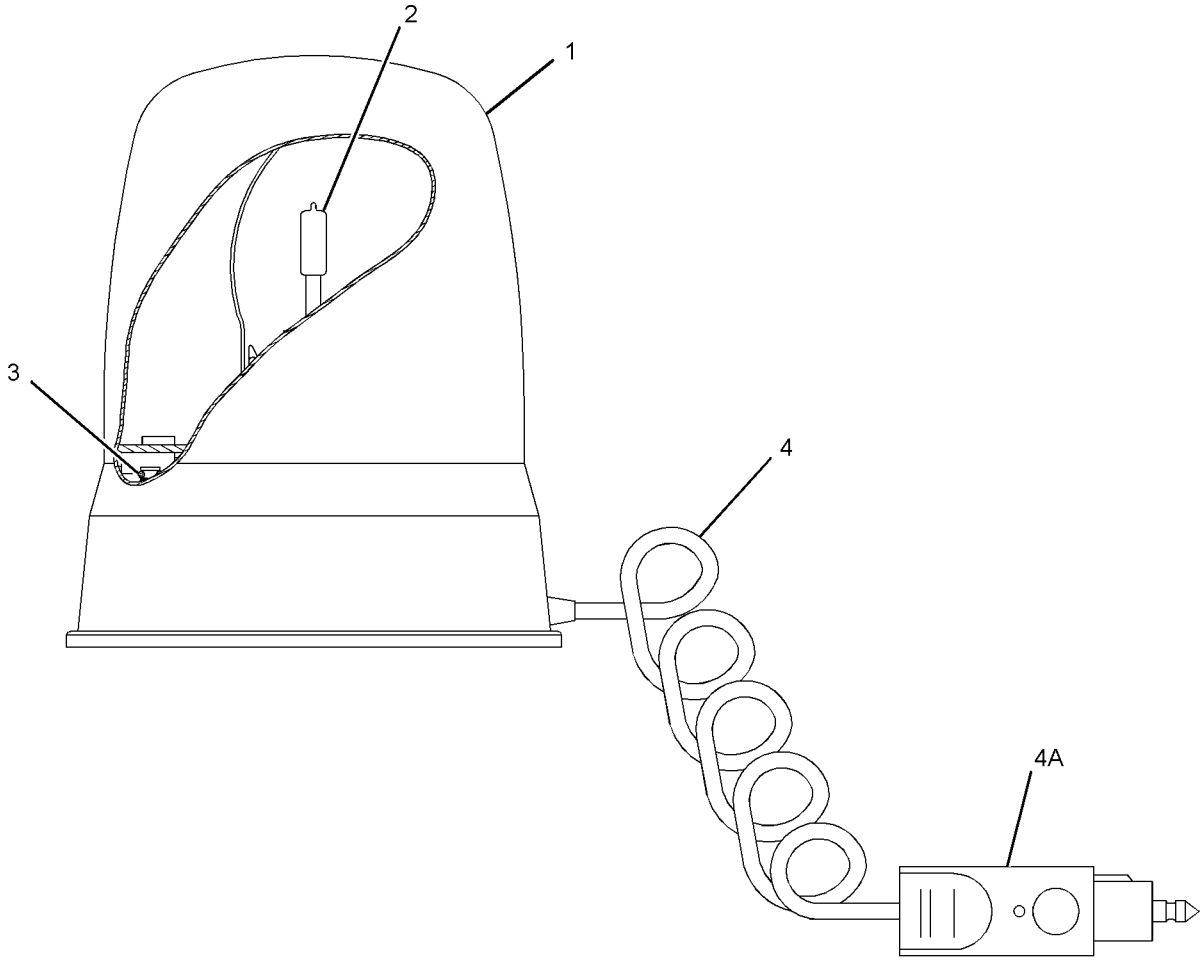

GRAPHIC #1 **<END>** g01382357

258-4164 LIGHTING GP-FLOOD—WORK LIGHTS, FRONT

S/N: MST1-UP
12-VOLT
PART OF 258-4000 CAB AR-ENCLOSED ROPS

SMCS-1434 **i02760100**

NOTE	REF NO	GRAPHIC REF	PART NUMBER	QTY	PART NAME 1 2 3 4 5 6 (PRODUCT LEVEL)	SEE PAGE
Y	1	1	**234-4328**	2	LAMP GP-FLOOD (12-VOLT) (FRONT)	163
	2	1	**8T-4121**	4	WASHER-HARD (11X21X2.5-MM THK)	

Y-SEPARATE ILLUSTRATION

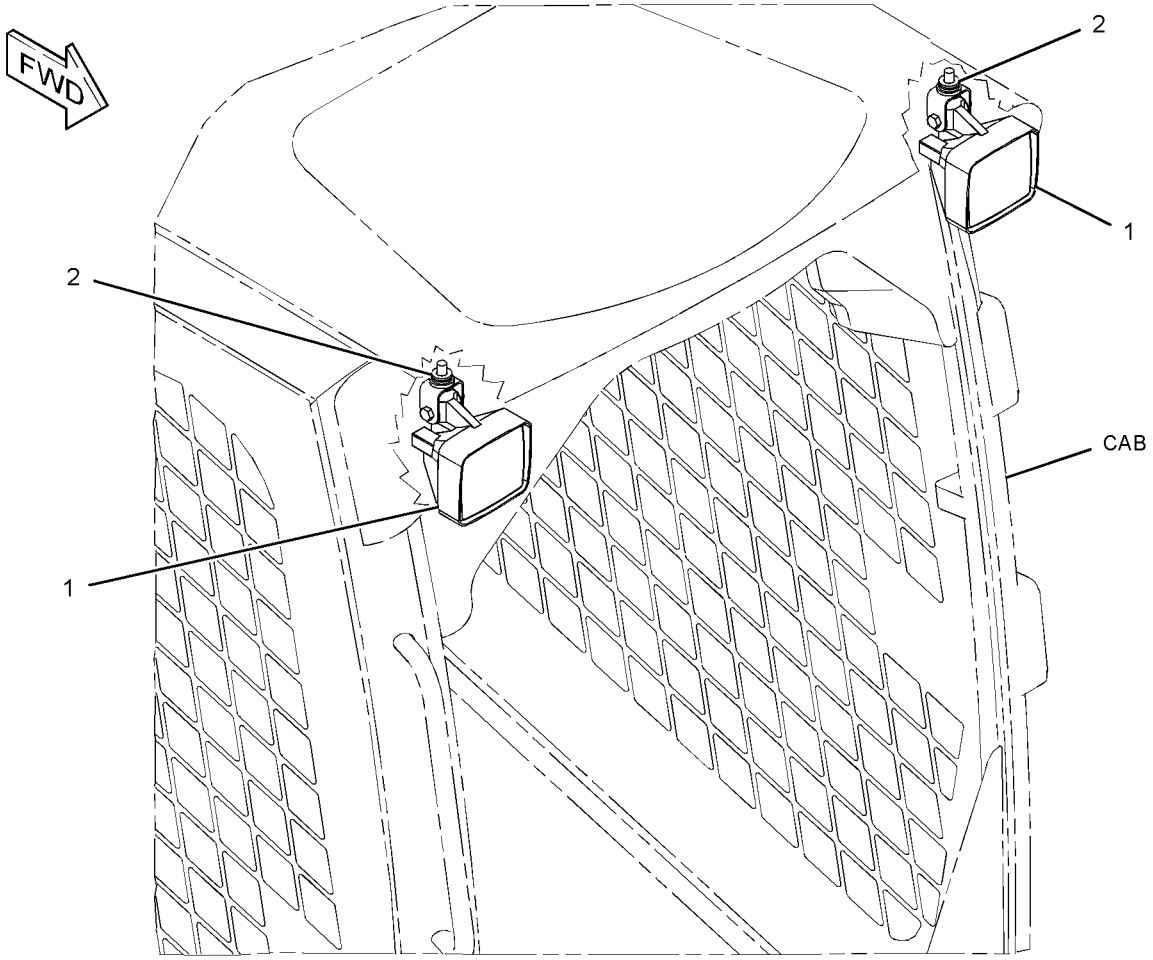

GRAPHIC #1 **<END>** g01316670

258-4130 LIGHTING GP-ROADING—HEAD, SIGNAL, STOP, TAIL

S/N: MST1-UP

PART OF 315-6354 CONVERSION AR-MACHINE, 258-3802, 258-3804 CONVERSION AR-ROADING

AN ATTACHMENT

SMCS-1429 **i03643540**

NOTE	REF NO	GRAPHIC REF	PART NUMBER	QTY	PART NAME 1 2 3 4 5 6 (PRODUCT LEVEL)	SEE PAGE
	1	1	**7K-1181**	5	STRAP-CABLE	
	2	1	**9R-1499**	2	REFLECTOR	
	3	1	**146-9439**	1	RELAY AS (12-VOLT) (STOP LIGHT)	
	4	1	**178-3620**	6	STRAP-DUAL CLAMP	
Y	5	1	**195-0189**	1	LAMP GP-HEAD & SIGNAL (RH) (HIGH, LOW BEAM)	164
Y	6	1	**195-0190**	1	LAMP GP-HEAD & SIGNAL (LH) (HIGH, LOW BEAM)	165
	7	1	**242-9000**	1	FLASHER AS (12-VOLT) (STOP LIGHT)	
	8	1	**258-4131**	1	HARNESS AS-LIGHTING (FRONT, REAR)	
E		1	**125-7875**		TUBE-HEAT SHRINK (7.44-MM DIA) (15-CM)	
		1	**155-2255**	1	KIT-CONNECTING PLUG (12-PIN)	
		1	**155-2271**	2	KIT-CONNECTING PLUG (4-PIN)	
		1	**155-2274**	2	KIT-CONNECTING PLUG (6-PIN)	
					(EACH PLUG KIT INCLUDES PLUG AS, WEDGE & INTERFACE SEAL)	
		1	**180-9339**	1	PIN-CONNECTOR (14-GA TO 18-GA)	
		1	**180-9340**	1	SOCKET-CONNECTOR (14-GA TO 18-GA)	
		1	**102-8804**	2	KIT-RECEPTACLE (4-PIN)	
		1	**102-8801**	1	KIT-RECEPTACLE (12-PIN)	
					(EACH RECEPTACLE KIT INCLUDES RECEPTACLE AS & WEDGE)	
		1	**3S-2093**	3	STRAP-CABLE	
		1	**8T-8737**	17	PLUG-SEAL	
		1	**186-3735**	2	PIN-CONNECTOR (16-GA TO 18-GA)	
		1	**186-3736**	18	SOCKET-CONNECTOR (16-GA TO 18-GA)	
		1	**9W-0852**	7	PIN-CONNECTOR (14-GA)	
		1	**9W-0844**	6	SOCKET-CONNECTOR (14-GA)	
E		1	**119-3662**		TUBE-HEAT SHRINK (10.85-MM DIA) (7-CM)	
E		1	**125-7874**		TUBE-HEAT SHRINK (5.72-MM DIA) (15-CM)	
	9	1	**258-4134**	1	FUSE AS (ROADING)	
	10	1	**263-5421**	1	SWITCH AS-ROCKER (ROADING LIGHTS)	
		1	**111-7899**	1	GASKET	
	11	1	**263-5422**	1	SWITCH AS-ROCKER (TURN SIGNAL)	
		1	**111-7899**	1	GASKET	
	12	1	**265-9543**	1	SWITCH AS-ROCKER (HAZARD WARNING LIGHTS)	
		1	**111-7899**	1	GASKET	
	13	1	**172-6490**	2	LAMP GP-SIGNAL (STOP, TAIL, TURN)	
					(EACH INCLUDES)	
		1	**9W-3326**	1	LAMP (12-VOLT, 21-WATT) (ROADING LIGHTS)	
		1	**084-4348**	1	LAMP (12-VOLT, 5-WATT) (MINIATURE)	
		1	**267-2809**	1	LENS (STOP, TAIL, TURN)	
		1	**186-3735**	4	PIN-CONNECTOR (16-GA TO 18-GA)	
		1	**102-8804**	1	KIT-RECEPTACLE (4-PIN)	
					(INCLUDES RECEPTACLE AS & WEDGE)	
	14	1	**3S-2093**	21	STRAP-CABLE	

E-ORDER BY THE CENTIMETER
Y-SEPARATE ILLUSTRATION

258-4130 **LIGHTING GP-ROADING** *(contd.)* **i03643540**

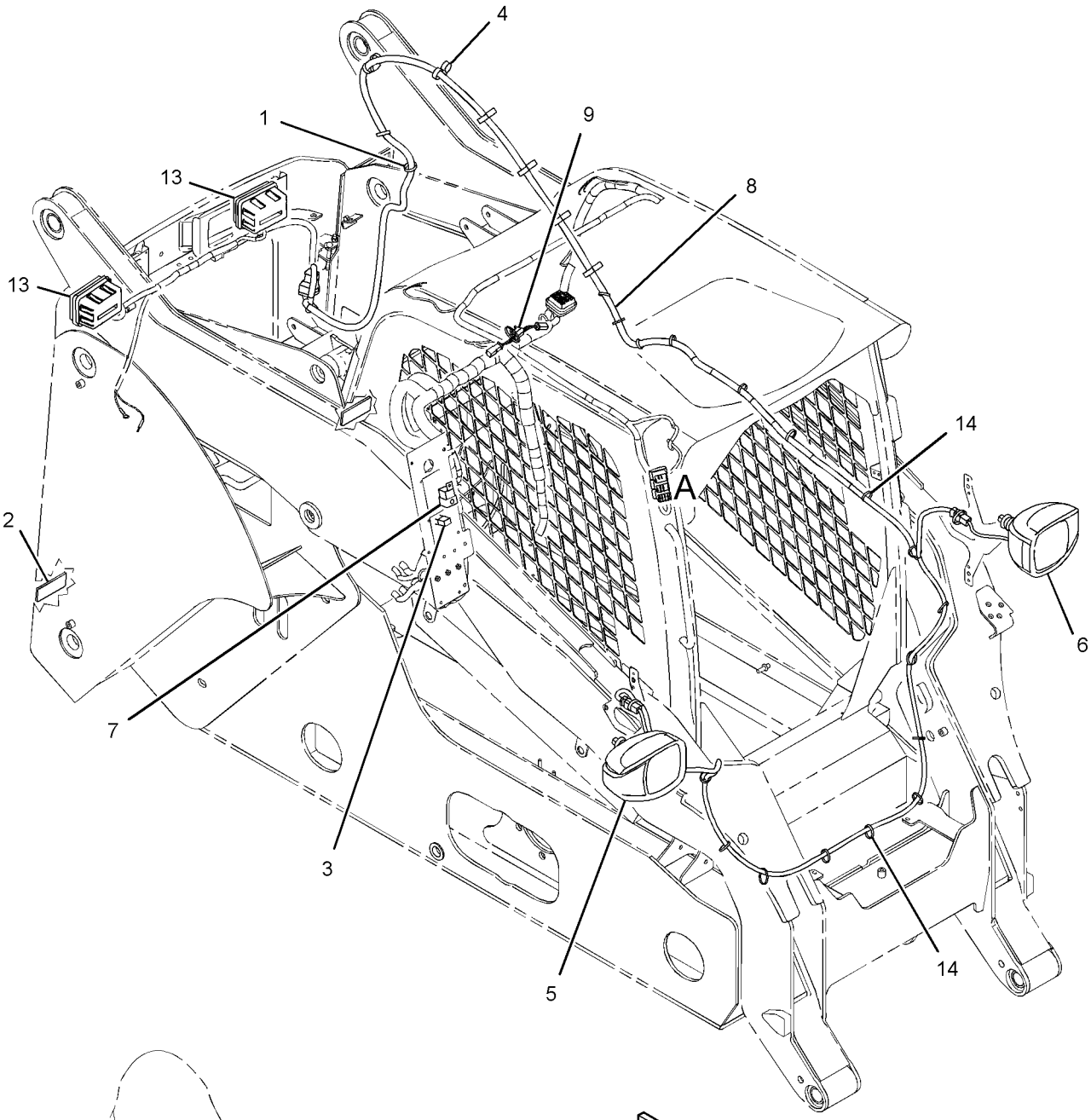

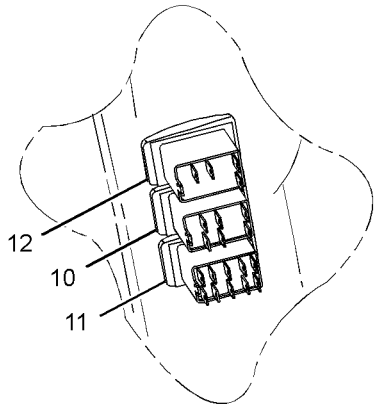

VIEW OF AREA A

GRAPHIC #1 **<END>** g01310738

333-4957 LIGHTING GP-ROADING–REAR

S/N: MST2636-UP
PART OF 315-6354 CONVERSION AR-MACHINE
AN ATTACHMENT

SMCS-1429 **i03505284**

NOTE	REF NO	GRAPHIC REF	PART NUMBER	QTY	PART NAME 1 2 3 4 5 6 (PRODUCT LEVEL)	SEE PAGE
	1	1	**9R-1499**	2	REFLECTOR	
	2	1	**146-9439**	1	RELAY AS (12-VOLT) (STOP LIGHT)	
	3	1	**172-6490**	2	LAMP GP-SIGNAL (STOP, TAIL, TURN)	
					(EACH INCLUDES)	
		1	**9W-3326**	1	LAMP (12-VOLT, 21-WATT) (ROADING LIGHTS)	
		1	**084-4348**	1	LAMP (12-VOLT, 5-WATT) (MINIATURE)	
		1	**102-8804**	1	KIT-RECEPTACLE (4-PIN)	
					(INCLUDES RECEPTACLE AS & WEDGE)	
		1	**186-3735**	4	PIN-CONNECTOR (16-GA TO 18-GA)	
		1	**267-2809**	1	LENS (STOP, TAIL, TURN)	
	4	1	**242-9000**	1	FLASHER AS (12-VOLT) (STOP LIGHT)	
	5	1	**258-4134**	1	FUSE AS (ROADING)	
	6	1	**263-5422**	1	SWITCH AS-ROCKER (TURN SIGNAL)	
		1	**111-7899**	1	GASKET	
	7	1	**265-9543**	1	SWITCH AS-ROCKER (HAZARD WARNING LIGHTS)	
		1	**111-7899**	1	GASKET	
	8	1	**3S-2093**	1	STRAP-CABLE	

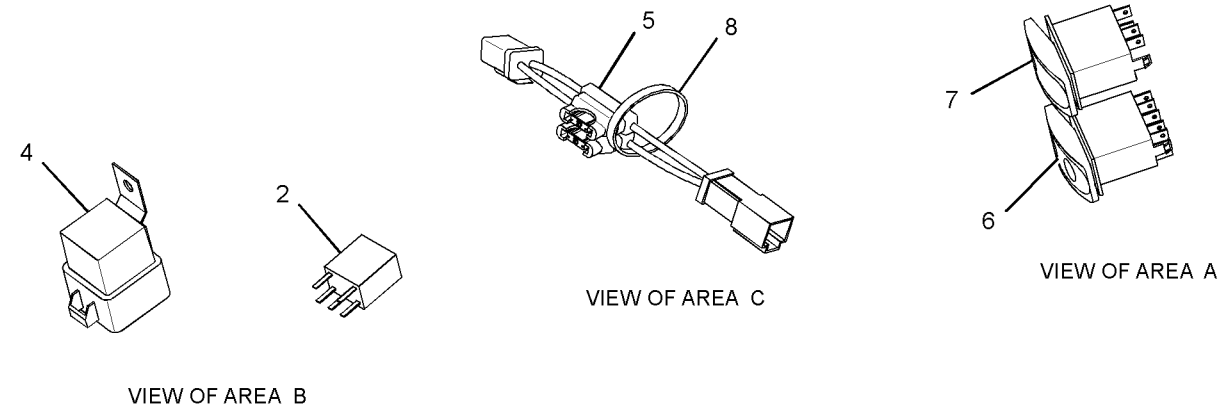

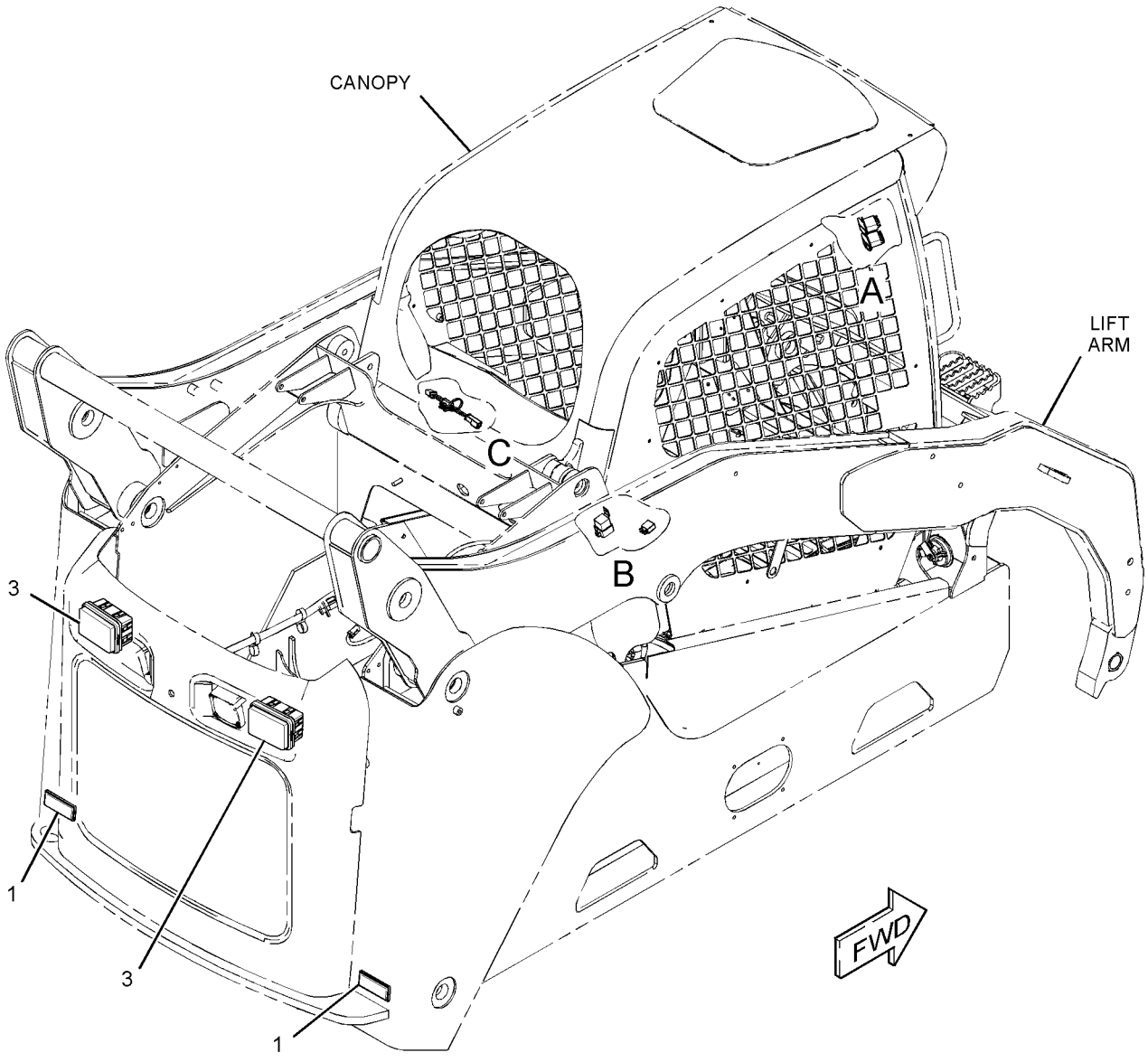

GRAPHIC #1 **<END>** g01824820

258-4169 LIGHTING GP-STOP & TAIL

S/N: MST1-UP

PART OF 258-3803 CONVERSION AR-MACHINE, 258-3800 CONVERSION AR-ROADING AN ATTACHMENT

SMCS-1432 **i03507880**

NOTE	REF NO	GRAPHIC REF	PART NUMBER	QTY	PART NAME 1 2 3 4 5 6 (PRODUCT LEVEL)	SEE PAGE
	1	1	**9R-1499**	2	REFLECTOR	
	2	1	**258-0930**	2	LAMP GP-STOP & TAIL	
		1	**8T-8737**	2	PLUG-SEAL	
		1	**9W-2471**	1	LAMP (12-VOLT)	
		1	**102-8804**	1	KIT-RECEPTACLE (4-PIN)	
					(INCLUDES RECEPTACLE AS & WEDGE)	
		1	**165-4895**	1	LENS	
		1	**186-3735**	2	PIN-CONNECTOR (16-GA TO 18-GA)	

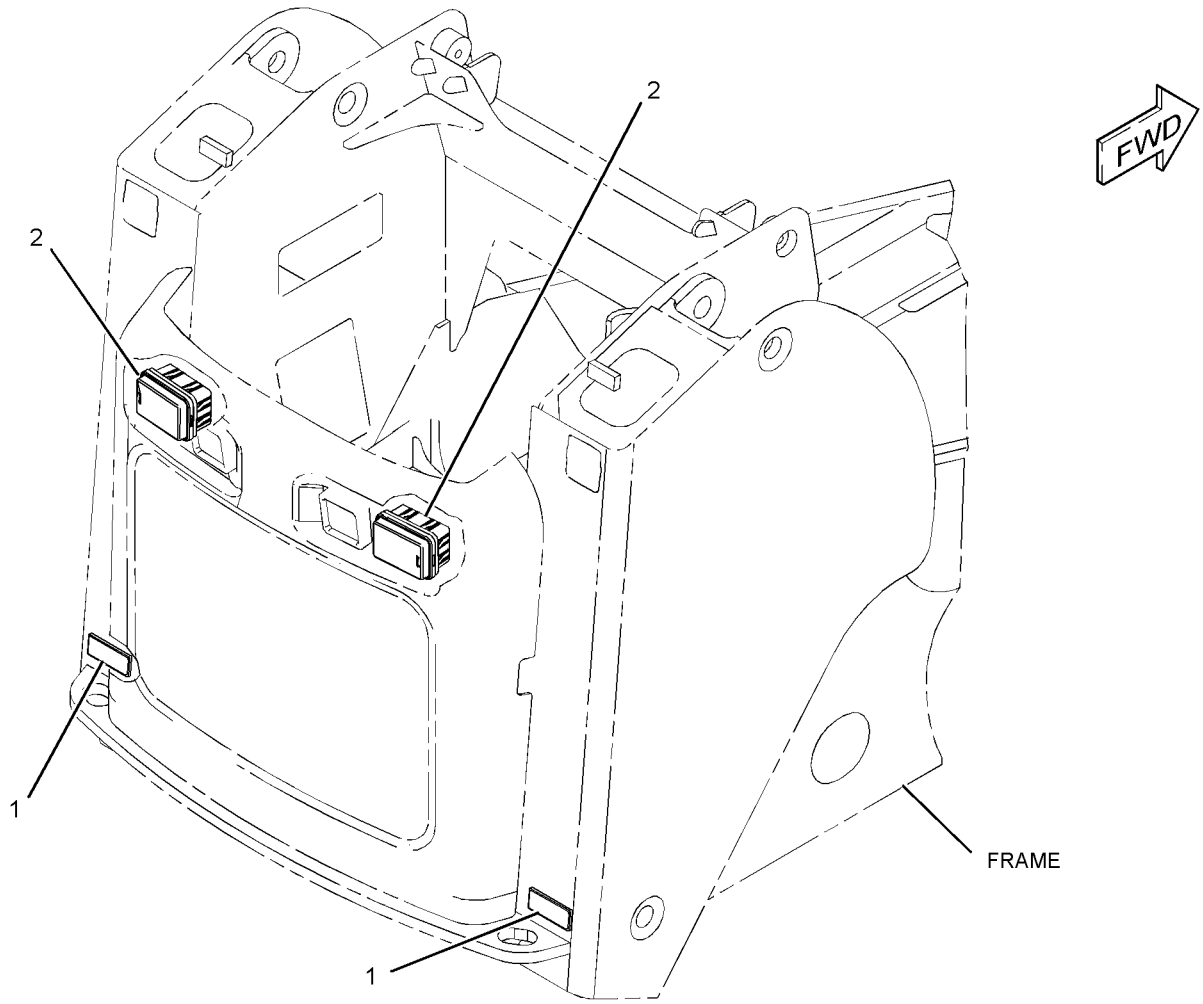

GRAPHIC #1 **<END>** g01325047

258-4184 LIGHTING GP-WARNING BEACON–
AMBER, MAGNETIC MOUNT, ROTATING
S/N: MST1-UP
AN ATTACHMENT

SMCS-1431 **i03505260**

NOTE	REF NO	GRAPHIC REF	PART NUMBER	QTY	PART NAME 1 2 3 4 5 6 (PRODUCT LEVEL)	SEE PAGE
Y	1	1	**128-6985**	1	LAMP GP-WARNING BEACON (12-VOLT, AMBER)	166
	2	1	**263-5423**	1	SWITCH AS-ROCKER (WARNING BEACON)	
		1	**111-7899**	1	GASKET	

Y-SEPARATE ILLUSTRATION

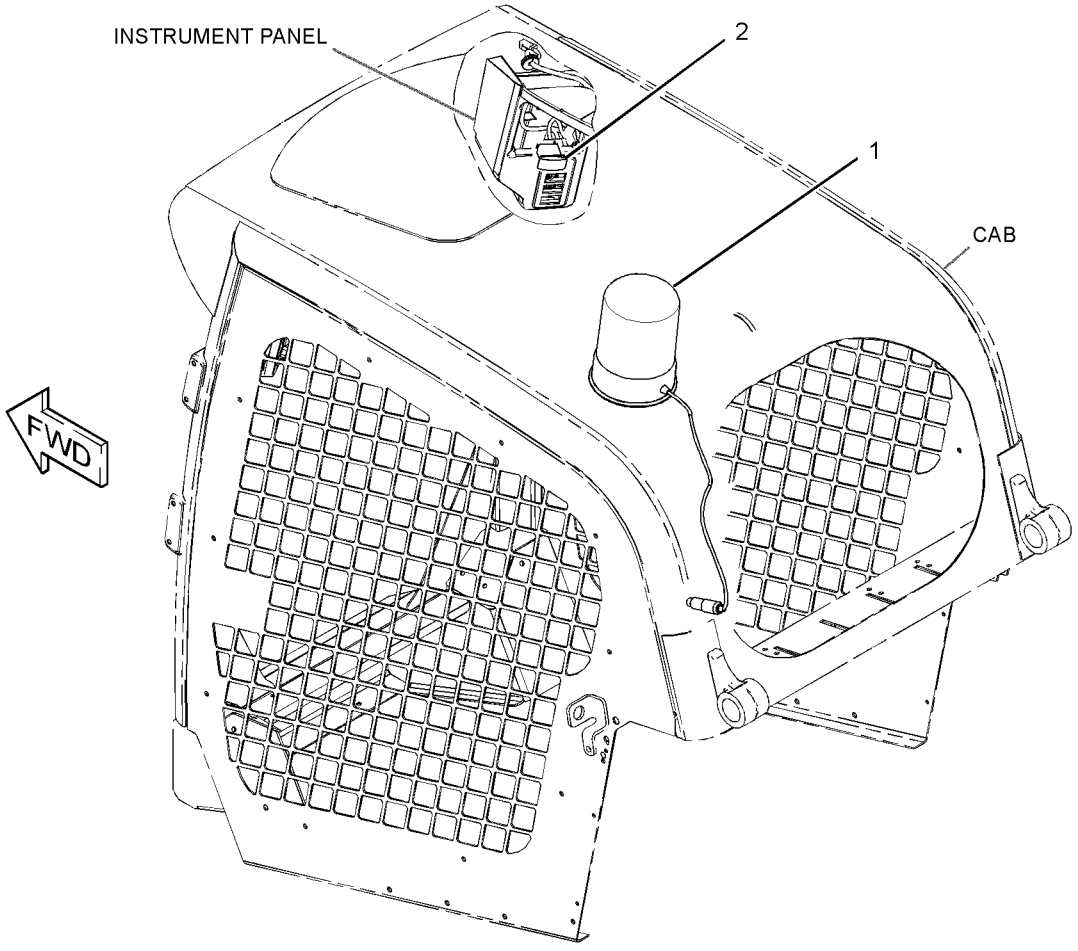

GRAPHIC #1 **<END>** g01311626

292-1271 MAST GP–ACCUGRADE LASER

S/N: MST1-UP

FOR USE WITH BOX BLADE, 258-4111–PAGE 741, 264-8861 MODULE GP-DISPLAY, 328-2367 HARNESS AS-CONTROL, 258-4111–PAGE 741

FIELD INSTALLATION

SMCS-7220, 79NS **i03503861**

NOTE	PART NUMBER	QTY	PART NAME 1 2 3 4 5 6 (PRODUCT LEVEL)	SEE PAGE
Y	**336-0913**	1	WIRING GP-GRADE CONTROL	200
	336-0914	1	RECEIVER GP-LASER (LR410)	
	248-1497	1	CABLE-COILED	
	253-8329	1	RECEIVER GP-LASER (LR410)	
	257-1729	1	CASE-CARRYING	
Y-SEPARATE ILLUSTRATION				

<END>

258-4135 RELAY GP–MAIN POWER

S/N: MST1-UP

PART OF 258-4100 WIRING GP-CAB

SMCS-1422, 4493 **i02645967**

NOTE	REF NO	GRAPHIC REF	PART NUMBER	QTY	PART NAME 1 2 3 4 5 6 (PRODUCT LEVEL)	SEE PAGE
M	1	1	**5C-2890**	2	NUT (M6X1-THD)	
	2	1	**8T-4205**	2	WASHER-HARD (7.2X14.5X2-MM THK)	
	3	1	**1H-3244**	2	LOCKWASHER	
M	4	1	**5C-7261**	1	NUT (M8X1.25-THD)	
	5	1	**8T-4224**	1	WASHER-HARD (8.8X16X2-MM THK)	
	6	1	**267-5213**	1	COVER	
	7	1	**267-5211**	1	SEAL	
	8	1	**267-2680**	1	FUSE (20-AMPERE)	
	9	1	**267-2701**	1	FUSE (60-AMPERE)	

M-METRIC PART

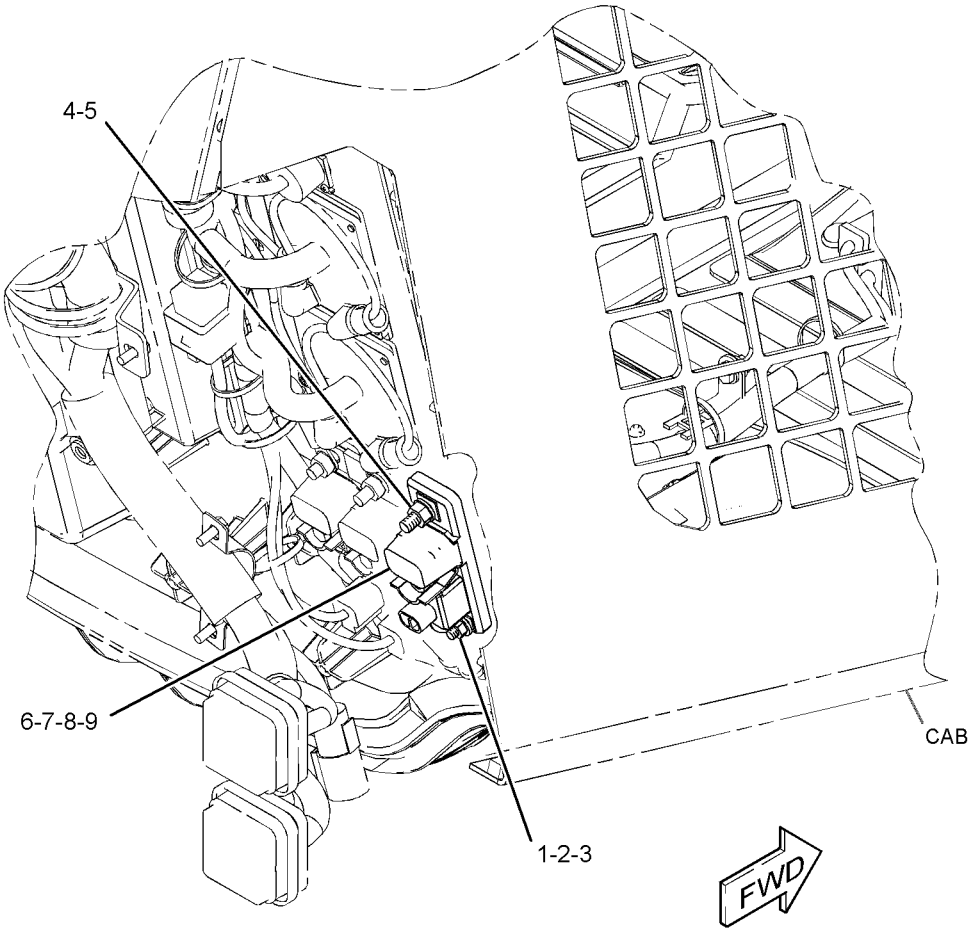

GRAPHIC #1 **<END>** g01328212

160-2443 SENSOR GP-POSITION–ROTARY

S/N: MST1-UP

PART OF 258-4043 PEDAL GP-GOVERNOR

FIELD REPLACEMENT ORDER 266-1467–PAGE 178

SMCS-1913 **i03543383**

NOTE	REF NO	GRAPHIC REF	PART NUMBER	QTY	PART NAME 1 2 3 4 5 6 (PRODUCT LEVEL)	SEE PAGE
	1	1	**102-8803**	1	KIT-RECEPTACLE (3-PIN)	
					(INCLUDES RECEPTACLE AS & WEDGE)	
	2	1	**186-3735**	3	PIN-CONNECTOR (16-GA TO 18-GA)	

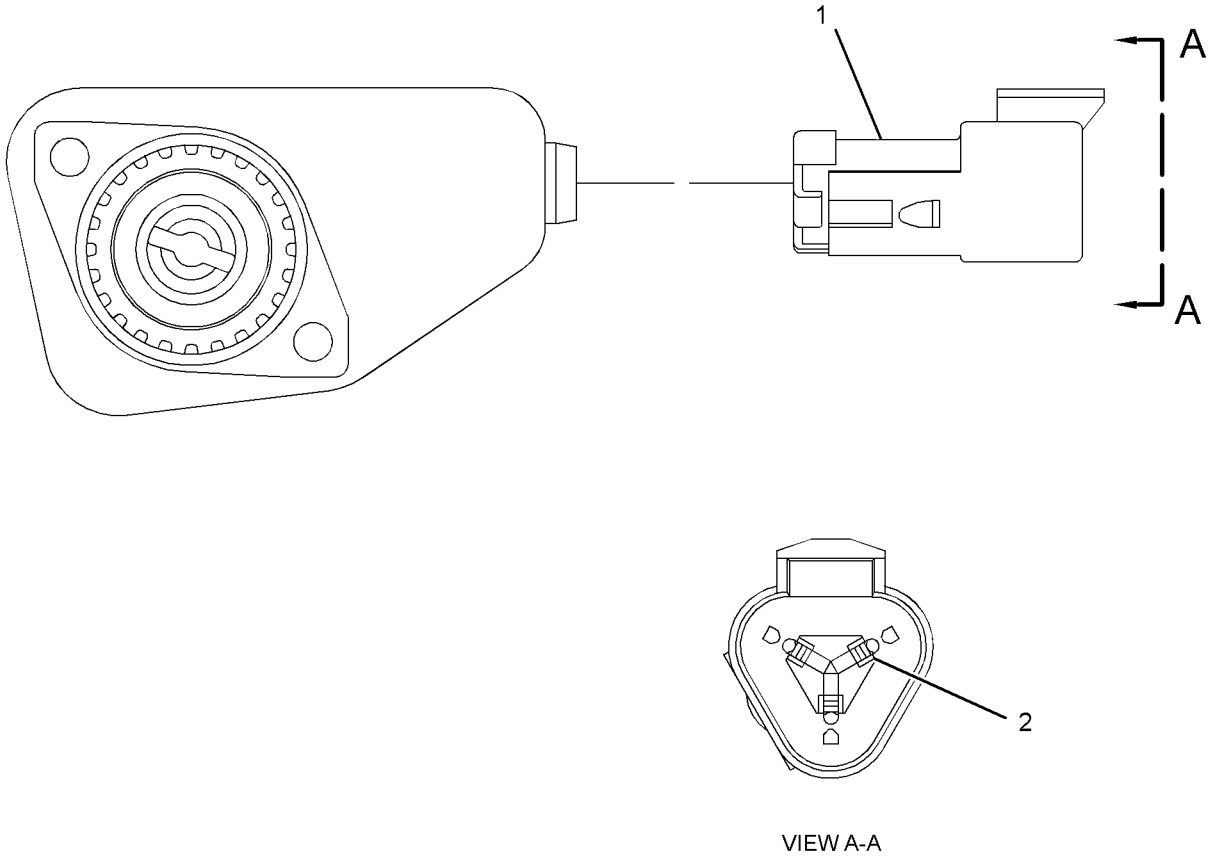

VIEW A-A

GRAPHIC #1 **<END>** g01871473

266-1467 SENSOR GP-POSITION

S/N: MST1-UP
PART OF 258-4043 PEDAL GP-GOVERNOR
FIELD REPLACEMENT FOR 160-2443—PAGE 177

SMCS-1913 **i03371123**

NOTE	REF NO	GRAPHIC REF	PART NUMBER	QTY	PART NAME 1 2 3 4 5 6 (PRODUCT LEVEL)	SEE PAGE
	1	1	**9X-3401**	3	PIN-CONNECTOR (16-GA TO 18-GA)	
					—OR—	
		1	**126-1767**	3	PIN-CONNECTOR (14-GA)	
	2	1	**102-8803**	1	KIT-RECEPTACLE (3-PIN)	
					(INCLUDES RECEPTACLE AS & WEDGE)	

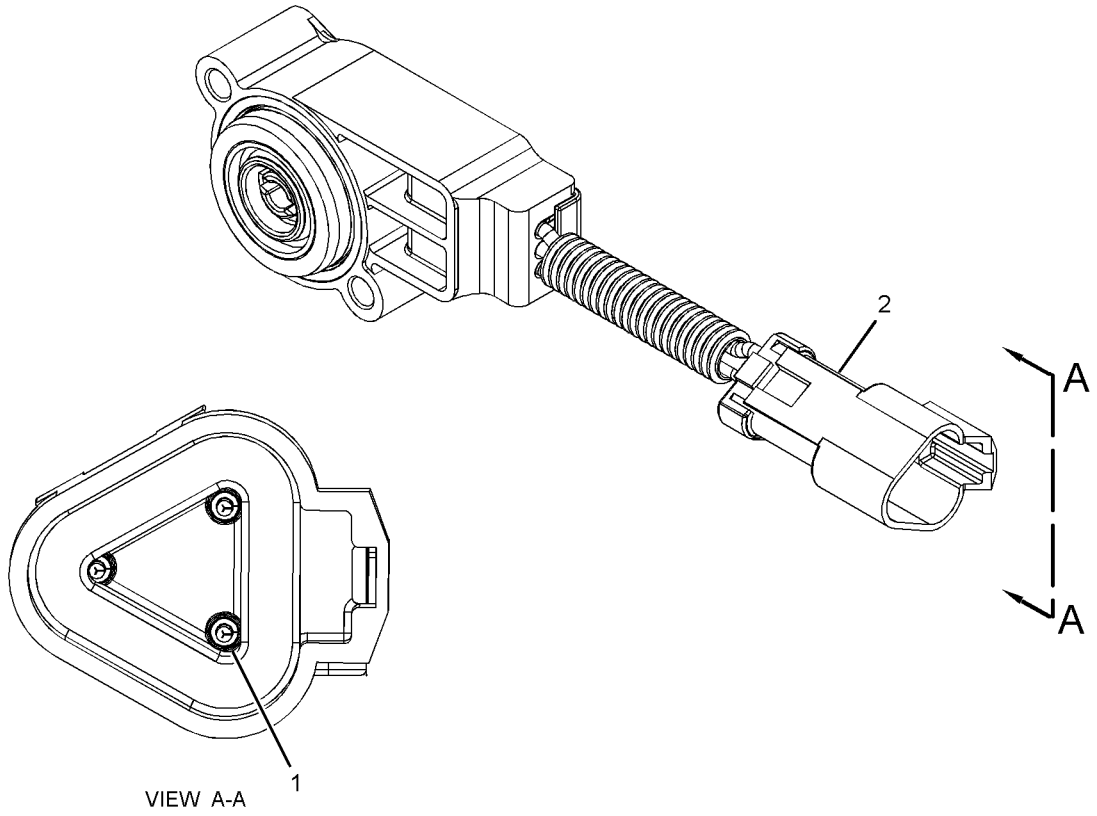

GRAPHIC #1 **<END>** g01740694

262-3764 SENSOR GP-SPEED

S/N: MST1-UP

PART OF 258-2408, 258-2409, 258-2416 MOTOR & MTG GP-HYDROSTATIC

AN ATTACHMENT

SMCS-4803 **i02635720**

NOTE	REF NO	GRAPHIC REF	PART NUMBER	QTY	PART NAME 1 2 3 4 5 6 (PRODUCT LEVEL)	SEE PAGE
	1	1	**102-8804**	1	KIT-RECEPTACLE (4-PIN)	
					(INCLUDES RECEPTACLE AS & WEDGE)	
	2	1	**9X-3401**	4	PIN-CONNECTOR (16-GA TO 18-GA)	
E	3	1	**9X-1813**		SLEEVE (28-CM)	
	4	1	**9X-7408**	1	SEAL-O-RING	
B	5	1	**171-5349**	1	STRAP-MARKER	

B-USE AS REQUIRED
E-ORDER BY THE CENTIMETER

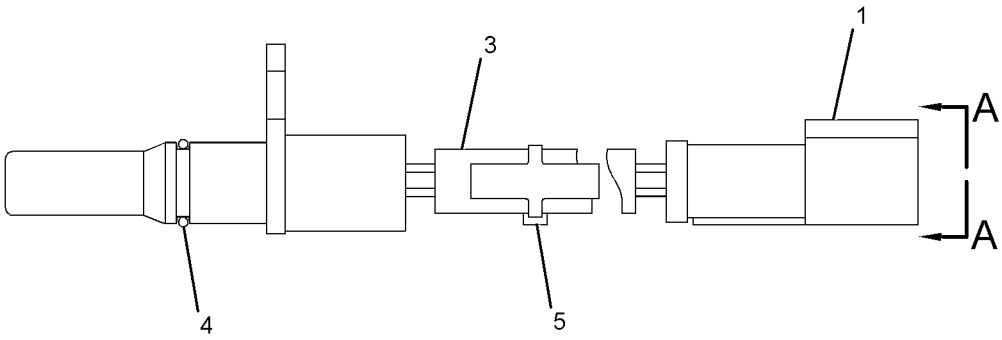

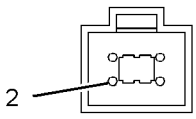

VIEW A-A

GRAPHIC #1 **<END>** g01326248

238-8277 SENSOR GP-TEMP & PRESS–ENGINE

S/N: CJS1-60343
PART OF 262-7289 ENGINE AR-PRIMARY
AN ATTACHMENT

SMCS-1906, 1924 **i03637586**

NOTE	REF NO	GRAPHIC REF	PART NUMBER	QTY	PART NAME 1 2 3 4 5 6 (PRODUCT LEVEL)	SEE PAGE
	1	1	**327-0752**	1	SWITCH-OIL PRESS (ENGINE)	
	2	1	**238-8274**	1	SWITCH-TEMPERATURE (ENGINE COOLANT)	

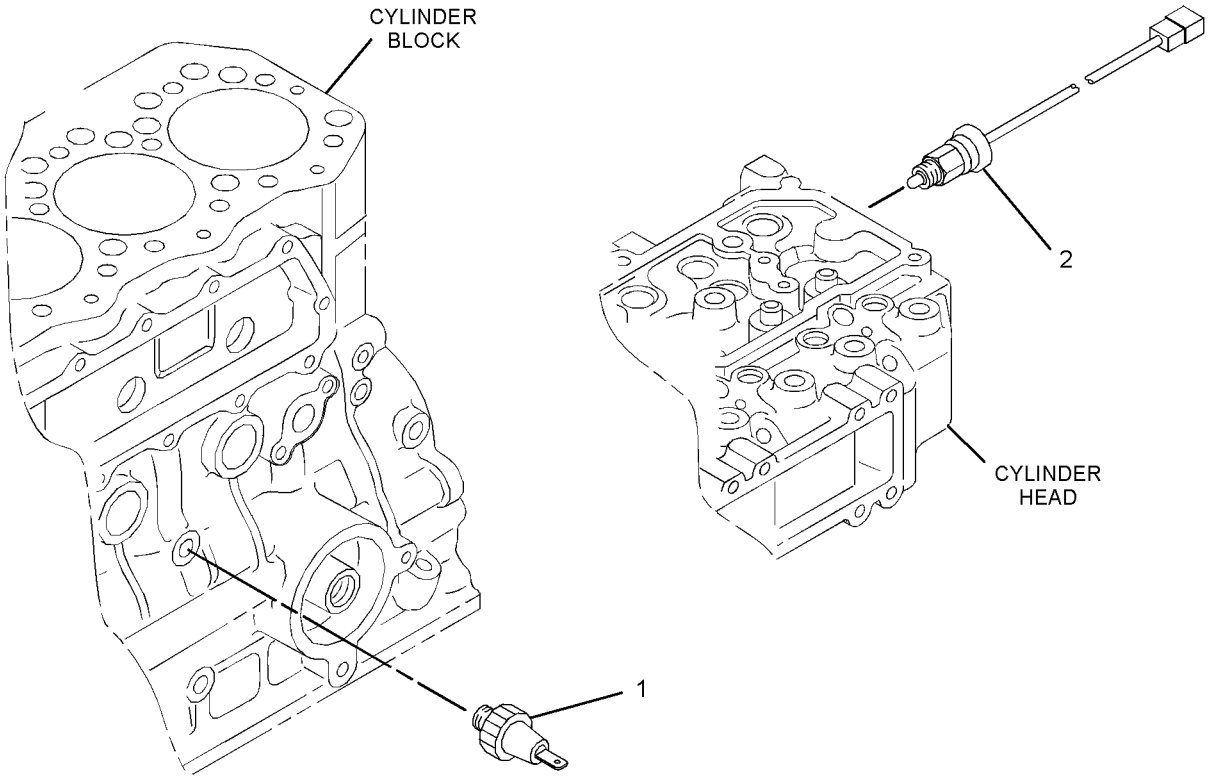

GRAPHIC #1 **<END>** g01341914

258-4103 SERVICE GP-MACHINE

S/N: MST1-UP

PART OF 258-4100 WIRING GP-CAB

SMCS-7610, 7631 **i03580901**

NOTE	PART NUMBER	QTY	PART NAME 1 2 3 4 5 6 (PRODUCT LEVEL)	SEE PAGE
	346-1575	1	SOFTWARE GP-MACHINE	
			-OR-	
R	**304-5687**	1	CONTROL GP-UNPROGRAMMED (MACHINE)	
			-OR-	
	346-1576	1	SERVICE GP-MACHINE	
			(OPTIONAL SERVICE REPLACEMENT)(INCLUDES CONTROL GP & SOFTWARE)	

R-REMFG PART MAY BE AVAILABLE

<END>

ELECTRICAL AND STARTING SYSTEM

143-0539 STARTING MOTOR GP-ELECTRIC*R

S/N: CYM1-UP; CJS1-UP
12-VOLT
PART OF 287-6181 STARTING MOTOR GP-ELECTRIC
AN ATTACHMENT

SMCS-1453 **i02712964**

NOTE	REF NO	GRAPHIC REF	PART NUMBER	QTY	PART NAME 1 2 3 4 5 6 (PRODUCT LEVEL)	SEE PAGE
	1	1	**8C-9778**	1	PLUNGER AS	
	2	1	**8C-9783**	1	GASKET	
	3	1	**2P-8104**	1	BEARING	
	4	1	**7T-6092**	1	HOLDER AS-BRUSH	
M	5	1	**8T-4133**	2	NUT (M10X1.5-THD)	
	6	1	**7T-6088**	1	BEARING AS	
	7	1	**7T-6087**	1	WASHER (15.2X40X0.5-MM THK)	
	8	1	**7T-6093**	1	CLUTCH AS	
	9	1	**8J-4455**	1	BALL	
	10	1	**7T-6090**	1	SPRING	
	11	1	**8T-4121**	2	WASHER-HARD (11X21X2.5-MM THK)	
	12	1	**3E-5153**	1	COVER-STARTING MOTOR	
M	13	1	**9X-2036**	1	SCREW-PAN HEAD	
	14	1	**8F-1434**	1	LOCKWASHER	
	15	1	**100-4113**	1	SWITCH AS (STARTING MOTOR)(12-VOLT)	
	16	1	**100-4119**	1	ARMATURE AS	
	17	1	**100-4118**	1	CASE AS-STARTING MOTOR	
	18	1	**100-4115**	1	HOUSING-STARTING MOTOR	
	19	1	**143-1344**	1	FRAME-STARTER	
	20	1	**100-3685**	1	CAP	
	21	1	**3E-5154**	1	BUSHING-STARTING MOTOR	
					AVAILABLE REPAIR KIT(S):	
			7T-6099	1	KIT-GEAR (STARTING MOTOR)	
					(INCLUDES RETAINER, PINION & ROLLERS)	
			146-6729	1	KIT-HARDWARE (STARTING MOTOR)	
					(INCLUDES BOLTS, SCREWS, SCREW ASSEMBLIES & PLATE)	
			100-4112	1	KIT-CONTACT (STARTING MOTOR)	
					(INCLUDES NUT, WASHERS, SEAL, BUSHINGS, PLATE & BOLT)	

M-METRIC PART

143-0539 **STARTING MOTOR GP-ELECTRIC** *(contd.)* **i02712964**

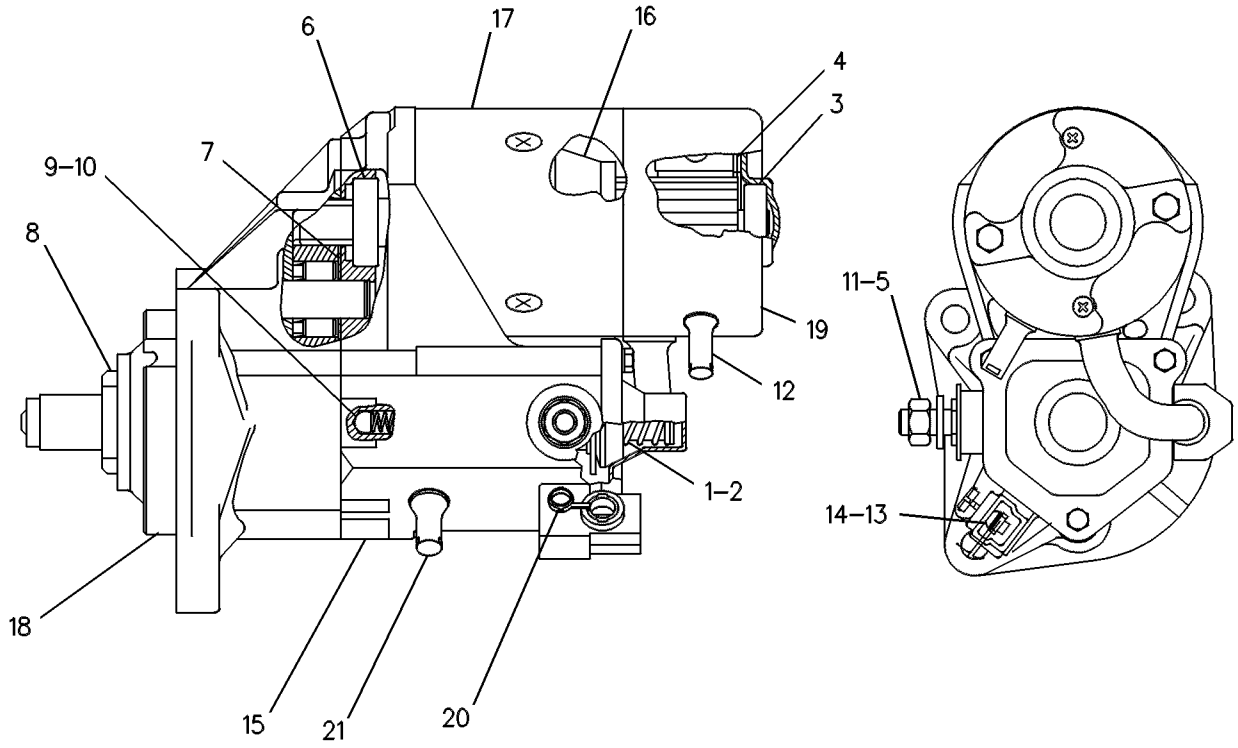

GRAPHIC #1 **<END>** g00131126

287-6181 STARTING MOTOR GP-ELECTRIC

S/N: CYM1-UP; CJS1-UP
12-VOLT
PART OF 262-7289, 287-8074, 319-6806 ENGINE AR-PRIMARY
AN ATTACHMENT

SMCS-1453 **i02568571**

NOTE	REF NO	GRAPHIC REF	PART NUMBER	QTY	PART NAME 1 2 3 4 5 6 (PRODUCT LEVEL)	SEE PAGE
YR	1	1	**143-0539**	1	STARTING MOTOR GP-ELECTRIC	182

R-REMFG PART MAY BE AVAILABLE
Y-SEPARATE ILLUSTRATION

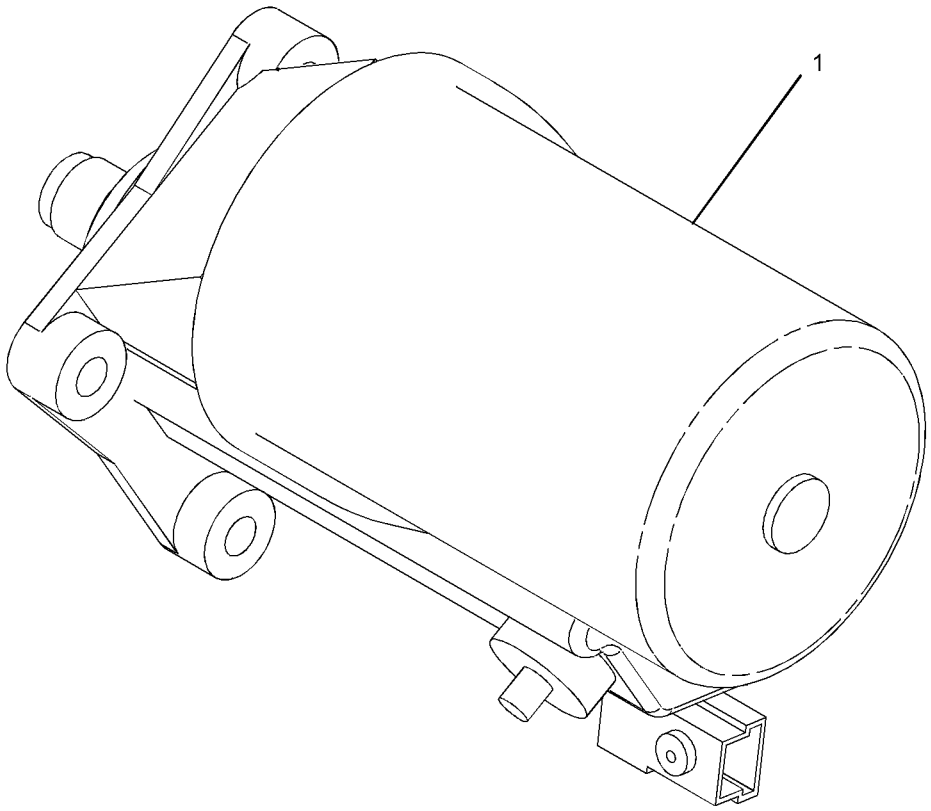

GRAPHIC #1 **<END>** g01345353

300-1071 SWITCH GP-PRESSURE

S/N: CYM1-UP; CJS60344-UP

PART OF 262-7289, 287-8074, 319-6806 ENGINE AR-PRIMARY

AN ATTACHMENT

SMCS-1435, 7400 **i02974920**

NOTE	REF NO	GRAPHIC REF	PART NUMBER	QTY	PART NAME 1 2 3 4 5 6 (PRODUCT LEVEL)	SEE PAGE
	1	1	**327-0752**	1	SWITCH-OIL PRESS (ENGINE)	

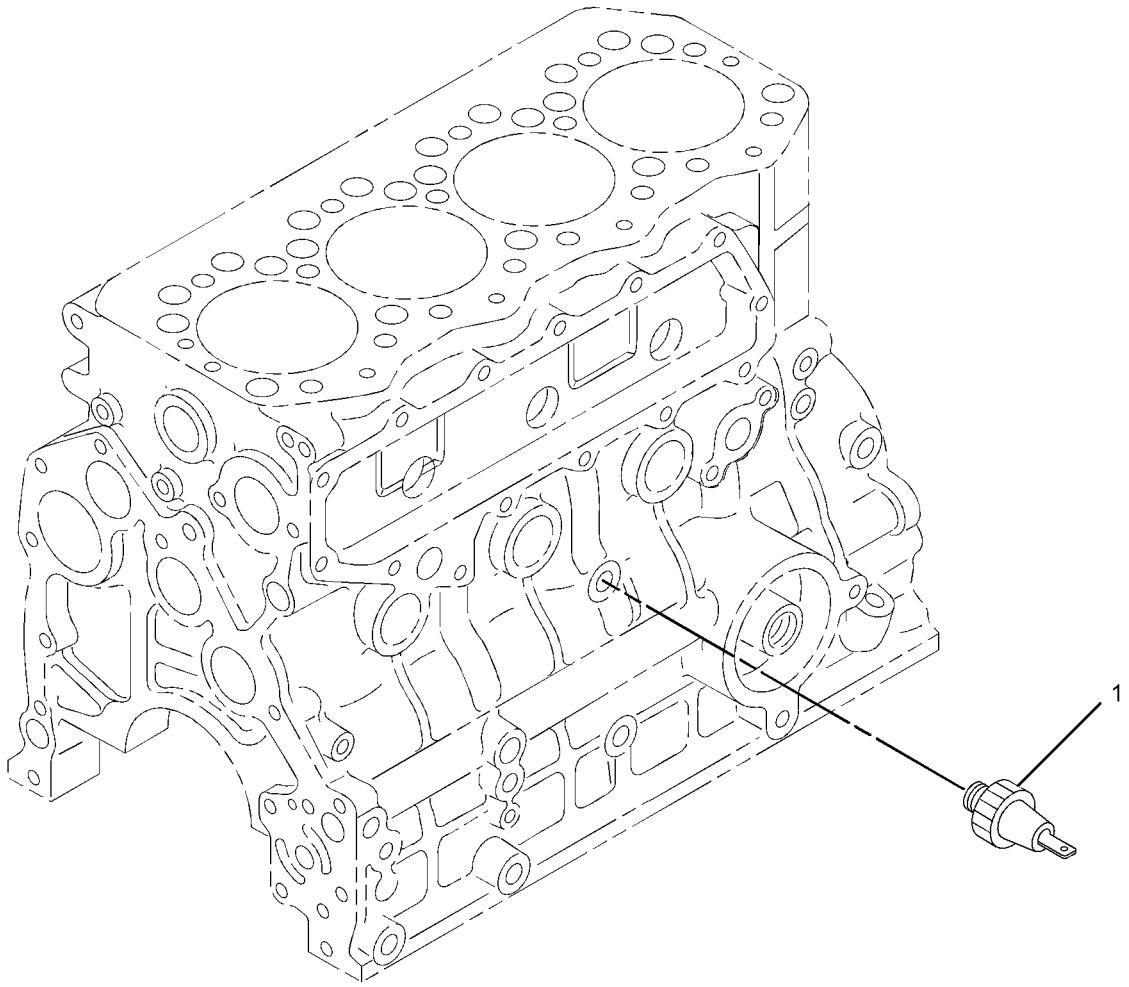

GRAPHIC #1 **<END>** g01345516

258-4146 WIRING GP-AIR CONDITIONER

S/N: MST1-UP

PART OF 258-4260 AIR CONDITIONER AR, 258-4250 HEATER AR-CAB AN ATTACHMENT

SMCS-1408, 7320 **i03571139**

NOTE	REF NO	GRAPHIC REF	PART NUMBER	QTY	PART NAME 1 2 3 4 5 6 (PRODUCT LEVEL)	SEE PAGE
	1	1	**206-2423**	3	SADDLE	
	2	1	**258-4147**	1	HARNESS AS-HEATER & AIR COND	
E		1	**119-3662**		TUBE-HEAT SHRINK (10.85-MM DIA) (7-CM)	
E		1	**125-7874**		TUBE-HEAT SHRINK (5.72-MM DIA) (20-CM)	
		1	**155-2255**	1	KIT-CONNECTING PLUG (12-PIN)	
		1	**155-2270**	3	KIT-CONNECTING PLUG (2-PIN)	
		1	**155-2265**	1	KIT-CONNECTING PLUG (8-PIN)	
					(EACH PLUG KIT INCLUDES PLUG AS, WEDGE & INTERFACE SEAL)	
		1	**102-8804**	1	KIT-RECEPTACLE (4-PIN)	
		1	**102-8805**	1	KIT-RECEPTACLE (6-PIN) (1)	
					(EACH RECEPTACLE KIT INCLUDES RECEPTACLE AS & WEDGE)	
		1	**8L-8413**	5	STRAP-CABLE	
		1	**8T-8737**	6	PLUG-SEAL	
		1	**9X-1054**	1	PLUG AS-CONNECTOR (4-PIN)	
		1	**100-6674**	2	SEAL-CONNECTOR	
		1	**186-3735**	5	PIN-CONNECTOR (16-GA TO 18-GA)	
		1	**186-3736**	5	SOCKET-CONNECTOR (16-GA TO 18-GA)	
		1	**9W-0852**	4	PIN-CONNECTOR (14-GA)	
		1	**9W-0844**	16	SOCKET-CONNECTOR (14-GA)	
	3	1	**3S-2093**	18	STRAP-CABLE	

E-ORDER BY THE CENTIMETER

258-4146 **WIRING GP-AIR CONDITIONER** *(contd.)* **i03571139**

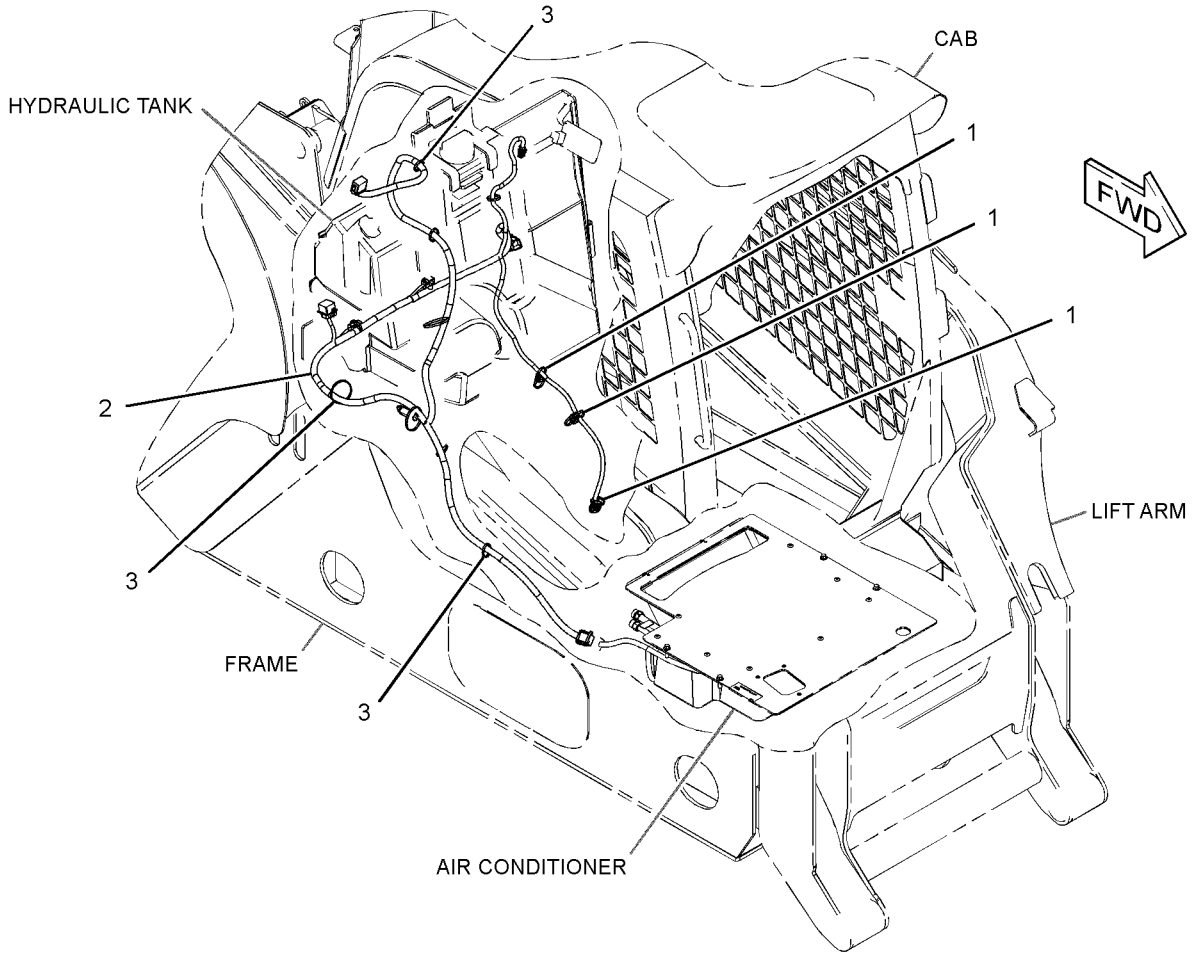

GRAPHIC #1 **<END>** g01320889

ELECTRICAL AND STARTING SYSTEM

258-4100 WIRING GP-CAB

S/N: MST1-UP

PART OF 258-4000 CAB AR-ENCLOSED ROPS

SMCS-1408, 7301 **i03624509**

NOTE	REF NO	GRAPHIC REF	PART NUMBER	QTY	PART NAME 1 2 3 4 5 6 (PRODUCT LEVEL)	SEE PAGE
	1	1	**6I-1418**	4	SPACER (8.2X12.7X28.7-MM THK)	
	2	1	**7G-1060**	1	STRAP AS-GROUND	
	3	1	**7K-1181**	14	STRAP-CABLE	
	4	1	**8T-9655**	8	MOUNT-ISOLATION	
	5	1	**100-5805**	1	CAP-RECEPTACLE (3-PIN)	
	6	1	**126-1774**	2	COVER-CONNECTOR (ENDBALL-CONNECTOR)	
	7	1	**146-9439**	3	RELAY AS (12-VOLT)	
	8	1	**246-9371**	1	COVER-RELAY	
	9	1	**258-3727**	8	SCREW-TRUSS HEAD (12X0.68-IN)	
	10	1	**258-4102**	1	HARNESS AS-CAB	
		1	**2L-8069**	2	TERMINAL-RING (2-GA TO 10-GA, 3/8-IN SCREW)	
		1	**2L-8078**	1	TERMINAL-RING (14-GA TO 16-GA, 5/16-IN SCREW)	
		1	**5P-3454**	1	TERMINAL-RING (4-GA, 5/16-IN SCREW)	
		1	**2L-8067**	7	TERMINAL-RING (10-GA TO 12-GA, 1/4-IN SCREW)	
		1	**2L-8077**	1	TERMINAL (14-GA TO 16-GA, 1/4-IN SCREW)	
D		1	**141-8061**		TAPE (2-M)	
		1	**147-1445**	1	PLUG AS-CONNECTOR (70-PIN)	
		1	**147-1446**	1	PLUG AS-CONNECTOR (70-PIN)	
					(EACH PLUG AS INCLUDES)	
		1	**159-9322**	1	SEAL-O-RING	
		1	**169-0705**	21	SEAL	
		1	**126-1766**	89	SOCKET-CONNECTOR (14-GA TO 18-GA)	
		1	**127-5484**	1	RECEPTACLE AS-CONNECTOR (1-PIN)	
		1	**128-4123**	19	SEAL	
		1	**128-5016**	25	SEAL-CABLE	
		1	**134-2540**	1	RESISTOR AS-CONNECTION (3-PIN)	
		1	**9W-0844**	19	SOCKET-CONNECTOR (14-GA)	
		1	**186-3736**	28	SOCKET-CONNECTOR (16-GA TO 18-GA)	
E		1	**119-3662**		TUBE-HEAT SHRINK (10.85-MM DIA) (33-CM)	
E		1	**125-7874**		TUBE-HEAT SHRINK (5.72-MM DIA) (50-CM)	
E		1	**125-7875**		TUBE-HEAT SHRINK (7.44-MM DIA) (30-CM)	
E		1	**125-7876**		TUBE-HEAT SHRINK (17.78-MM DIA) (6-CM)	
		1	**8T-8732**	1	RECEPTACLE (3-PIN)	
		1	**8T-8737**	88	PLUG-SEAL	
		1	**8T-8799**	6	BOOT	
		1	**9W-1951**	1	RECEPTACLE-CONNECTOR (9-PIN)	
		1	**113-8490**	7	FUSE (10-AMPERE)	
		1	**113-8491**	10	FUSE (15-AMPERE)	
		1	**113-8492**	3	FUSE (20-AMPERE)	
		1	**102-8802**	1	KIT-RECEPTACLE (2-PIN)	
					(INCLUDES RECEPTACLE AS & WEDGE)	
		1	**155-2255**	1	KIT-CONNECTING PLUG (12-PIN)	
		1	**155-2270**	1	KIT-CONNECTING PLUG (2-PIN)	
		1	**155-2265**	1	KIT-CONNECTING PLUG (8-PIN)	
		1	**174-0503**	1	KIT-CONNECTING PLUG (3-PIN)	
		1	**155-2260**	1	KIT-CONNECTING PLUG (3-PIN)	
					(EACH PLUG KIT INCLUDES PLUG AS, WEDGE & INTERFACE SEAL)	
		1	**7R-2750**	7	SEAL-CONNECTOR	
		1	**7R-2751**	25	PLUG-CONNECTOR	
		1	**8L-8413**	47	STRAP-CABLE	
		1	**8N-1548**	1	PIN-CONNECTOR (4-GA)	
		1	**9W-0852**	2	PIN-CONNECTOR (14-GA)	
		1	**186-3735**	2	PIN-CONNECTOR (16-GA TO 18-GA)	

258-4100 **WIRING GP-CAB** *(contd.)* **i03624509**

NOTE	REF NO	GRAPHIC REF	PART NUMBER	QTY	PART NAME 1 2 3 4 5 6 (PRODUCT LEVEL)	SEE PAGE
Y	11	1	*258-4103*	1	SERVICE GP-MACHINE	181
Y	12	1	**258-4135**	2	RELAY GP (MAIN POWER)	176
	13	1	**258-4136**	1	FUSE AS (MAIN POWER)	
		1	**267-2680**	2	FUSE (20-AMPERE)	
		1	**267-5211**	1	SEAL (DUAL FUSE HOLDER)	
		1	**267-5213**	1	COVER	
	14	1	**258-4138**	1	FILM (POWER DISTRIBUTION)	
	15	1	**258-4143**	1	BAR-BUS	
	16	1	**258-4150**	1	PLATE AS	
	17	1	**258-4154**	1	BRACKET	
	18	1	**258-4155**	1	BRACKET	
	19	1	**258-4160**	1	HARNESS AS-OPERATOR CONTROLS	
		1	**186-3735**	2	PIN-CONNECTOR (16-GA TO 18-GA)	
		1	**9X-3401**	4	PIN-CONNECTOR (16-GA TO 18-GA)	
					—OR—	
		1	**126-1767**	4	PIN-CONNECTOR (14-GA)	
		1	**275-0600**	18	PIN-CONNECTOR	
		1	**9W-0852**	4	PIN-CONNECTOR (14-GA)	
		1	**9W-0844**	10	SOCKET-CONNECTOR (14-GA)	
		1	**180-9340**	19	SOCKET-CONNECTOR (14-GA TO 18-GA)	
		1	**186-3736**	11	SOCKET-CONNECTOR (16-GA TO 18-GA)	
E		1	**119-3662**		TUBE-HEAT SHRINK (10.85-MM DIA) (7-CM)	
E		1	**125-7874**		TUBE-HEAT SHRINK (5.72-MM DIA) (10-CM)	
E		1	**135-5009**		TUBE-HEAT SHRINK (32-MM DIA) (10-CM)	
		1	**169-0705**	6	SEAL	
E		1	**201-3304**		CONDUIT (131-CM)	
E		1	**211-5358**		CONDUIT-FLEXIBLE (19-CM)	
		1	**271-5604**	18	PIN	
		1	**102-8805**	1	KIT-RECEPTACLE (6-PIN)	
					(INCLUDES RECEPTACLE AS & WEDGE)	
		1	**155-2255**	2	KIT-CONNECTING PLUG (12-PIN)	
		1	**155-2271**	1	KIT-CONNECTING PLUG (4-PIN)	
		1	**155-2274**	3	KIT-CONNECTING PLUG (6-PIN)	
		1	**155-2260**	1	KIT-CONNECTING PLUG (3-PIN)	
					(EACH PLUG KIT INCLUDES PLUG AS, WEDGE & INTERFACE SEAL)	
		1	**8L-8413**	14	STRAP-CABLE	
		1	**8T-8737**	26	PLUG-SEAL	
	20	1	**258-4178**	1	FLANGE-MOUNTING	
	21	1	**258-4196**	2	WIRE AS	
	22	1	**156-6175**	2	CLIP	
	23	1	**102-8806**	1	KIT-RECEPTACLE (8-PIN)	
	24	1	**102-8801**	1	KIT-RECEPTACLE (12-PIN)	
					(EACH RECEPTACLE KIT INCLUDES RECEPTACLE AS & WEDGE)	
	25	1	**3S-2093**	29	STRAP-CABLE	
	26	1	**4P-7581**	2	CLIP	
	27	1	**4P-8134**	2	CLIP	
M	28	1	**5C-2890**	12	NUT (M6X1-THD)	
M	29	1	**5C-7261**	4	NUT (M8X1.25-THD)	
M	30	1	**5C-9553**	4	BOLT (M6X1X16-MM)	
	31	1	**5P-4115**	2	WASHER-HARD (7.2X19X2-MM THK)	
	32	1	**5P-7162**	8	SCREW-MACHINE (10-32X0.5-IN)	
	33	1	**6V-5834**	4	SCREW-HEAD (10-14X0.75-IN)	
M	34	1	**7X-0818**	4	BOLT (M8X1.25X45-MM)	
M	35	1	**7X-2534**	3	BOLT (M6X1X50-MM)	
	36	1	**8C-8558**	2	SCREW-LOCK (4-40X0.25-IN)	
	37	1	**8T-0328**	4	WASHER-HARD (5.5X10X1-MM THK)	
	38	1	**8T-4205**	18	WASHER-HARD (7.2X14.5X2-MM THK)	
	39	1	**8T-4224**	6	WASHER-HARD (8.8X16X2-MM THK)	

258-4100 **WIRING GP-CAB** ***(contd.)*** **i03624509**

NOTE	REF NO	GRAPHIC REF	PART NUMBER	QTY	PART NAME 1 2 3 4 5 6 (PRODUCT LEVEL)	SEE PAGE
	40	1	**8T-8737**	20	PLUG-SEAL	
M	41	1	**8T-4970**	2	BOLT (M6X1X14-MM)	
D	42	1	**5P-9909**		SEAL (0.2-M)	

D-ORDER BY THE METER
E-ORDER BY THE CENTIMETER
M-METRIC PART
Y-SEPARATE ILLUSTRATION

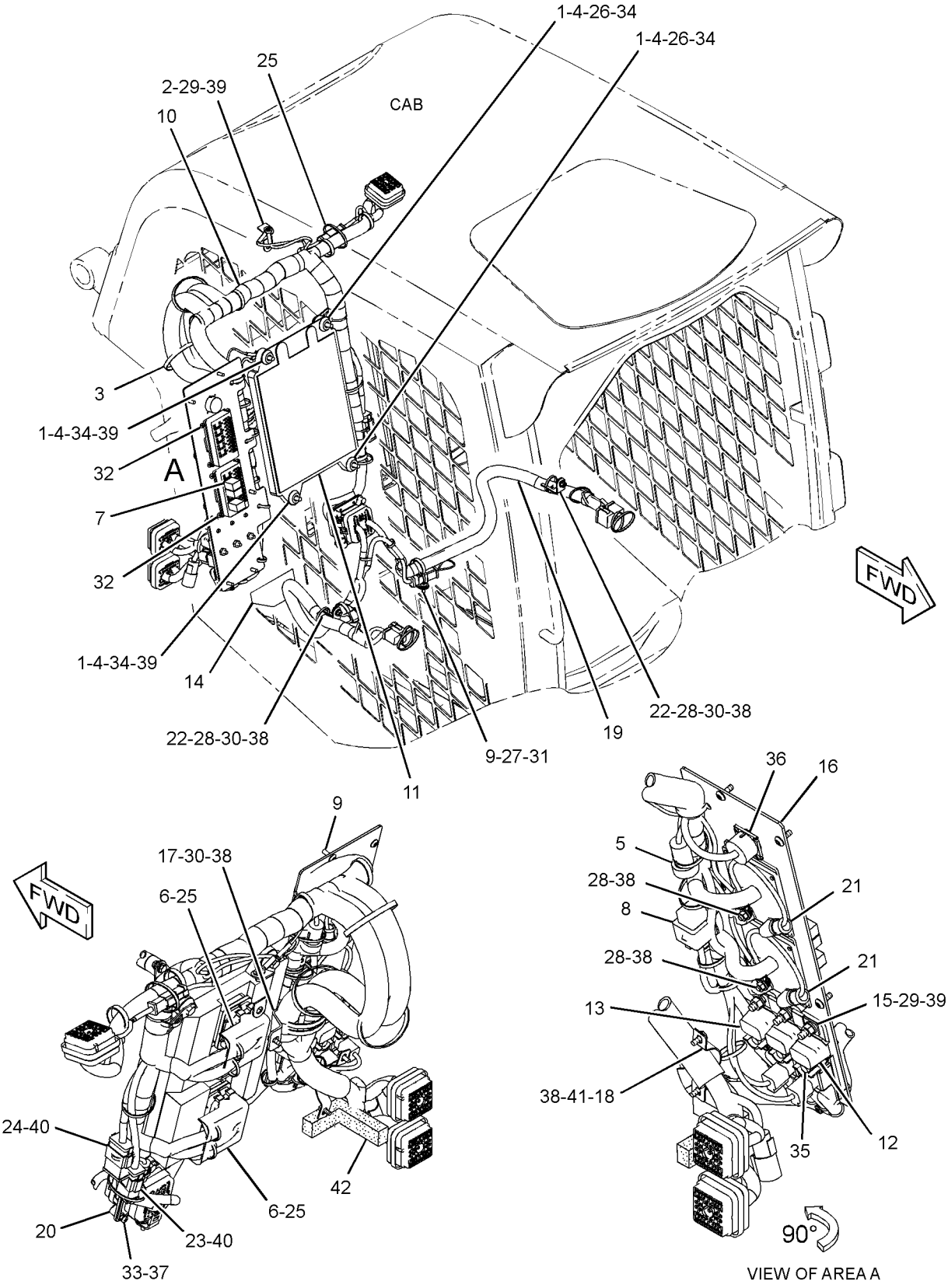

GRAPHIC #1 **<END>** g01413112

ELECTRICAL AND STARTING SYSTEM

258-4115 WIRING GP-ENGINE

S/N: MST1-2569

PART OF 258-2445, 295-7118 INSTALLATION AR-ENGINE

SMCS-1000, 1408, 1420 **i03624510**

NOTE	REF NO	GRAPHIC REF	PART NUMBER	QTY	PART NAME 1 2 3 4 5 6 (PRODUCT LEVEL)	SEE PAGE
	1	1	**191-8303**	1	SENSOR GP-SPEED (ENGINE)	
		1	**137-6645**	1	PAD	
	2	1	**238-0112**	1	SENSOR GP-TEMPERATURE (ENGINE COOLANT)	
	3	1	**258-4116**	1	HARNESS AS-ENGINE	
		1	**230-4011**	1	PLUG AS-CONNECTOR (2-PIN)	
		1	**264-7029**	1	SEAL-CONNECTOR	
		1	**271-5604**	17	PIN	
		1	**126-1766**	2	SOCKET-CONNECTOR (14-GA TO 18-GA)	
		1	**155-2270**	8	KIT-CONNECTING PLUG (2-PIN)	
		1	**155-2271**	2	KIT-CONNECTING PLUG (4-PIN)	
					(EACH PLUG KIT INCLUDES PLUG AS, WEDGE & INTERFACE SEAL)	
D		1	**1P-0810**		TAPE-ELECTRICAL (1-M)	
		1	**169-0705**	7	SEAL	
		1	**176-1477**	1	PLUG AS (2-PIN)	
		1	**176-1522**	2	SEAL	
		1	**180-9339**	7	PIN-CONNECTOR (14-GA TO 18-GA)	
		1	**180-9340**	10	SOCKET-CONNECTOR (14-GA TO 18-GA)	
E		1	**211-5358**		CONDUIT-FLEXIBLE (161-CM)	
		1	**8T-8737**	12	PLUG-SEAL	
		1	**8T-8799**	1	BOOT	
		1	**9X-1054**	2	PLUG AS-CONNECTOR (4-PIN)	
		1	**107-3136**	4	PLUG-SEAL	
		1	**186-3735**	4	PIN-CONNECTOR (16-GA TO 18-GA)	
		1	**186-3736**	14	SOCKET-CONNECTOR (16-GA TO 18-GA)	
		1	**9W-0852**	1	PIN-CONNECTOR (14-GA)	
		1	**2L-8069**	1	TERMINAL-RING (2-GA TO 10-GA, 3/8-IN SCREW)	
		1	**107-3135**	2	TERMINAL	
		1	**9X-1055**	4	TERMINAL-RECEPTACLE	
		1	**9X-1056**	1	TERMINAL-RECEPTACLE (14-GA TO 16-GA)	
		1	**100-5041**	3	TERMINAL-RECEPTACLE (18-GA TO 20-GA)	
		1	**030-1712**	1	TERMINAL-RING (2-GA, 1/4-IN SCREW)	
		1	**9G-4336**	1	TERMINAL-RING (4-GA)	
		1	**2L-8065**	1	TERMINAL-RING (10-GA TO 12-GA, NO. 8 SCREW)	
		1	**5P-4571**	1	TERMINAL-BLADE (14-GA TO 16-GA)	
		1	**5P-1478**	1	TERMINAL-FORK (10-GA TO 12-GA, NO. 10 SCREW)	
E		1	**119-3662**		TUBE-HEAT SHRINK (10.85-MM DIA) (13-CM)	
E		1	**125-7874**		TUBE-HEAT SHRINK (5.72-MM DIA) (10-CM)	
E		1	**125-7875**		TUBE-HEAT SHRINK (7.44-MM DIA) (5-CM)	
	4	1	**115-1615**	2	RELAY AS (12-VOLT) (COLD START)	
	5	1	**117-1385**	1	SEAL-O-RING	
	6	1	**132-5789**	1	CLIP	
B	7	1	**102-8802**	2	KIT-RECEPTACLE (2-PIN)	
					(EACH RECEPTACLE KIT INCLUDES RECEPTACLE AS & WEDGE)	
	8	1	**3S-2093**	9	STRAP-CABLE	
	9	1	**4P-7428**	1	CLIP	
	10	1	**4P-7429**	1	CLIP	
	11	1	**4P-7581**	3	CLIP	
	12	1	**4P-8134**	3	CLIP	
M	13	1	**6V-7357**	2	BOLT (M6X1X25-MM)	
	14	1	**6V-9028**	1	SEAL-O-RING	
M	15	1	**7X-2548**	1	BOLT (M12X1.75X16-MM)	
M	16	1	**8T-4200**	2	BOLT (M8X1.25X16-MM)	
	17	1	**8T-4205**	1	WASHER-HARD (7.2X14.5X2-MM THK)	

258-4115 **WIRING GP-ENGINE** *(contd.)* **i03624510**

NOTE	REF NO	GRAPHIC REF	PART NUMBER	QTY	PART NAME 1 2 3 4 5 6 (PRODUCT LEVEL)	SEE PAGE
	18	1	**8T-4224**	1	WASHER-HARD (8.8X16X2-MM THK)	
B	19	1	**8T-8737**	4	PLUG-SEAL	
	20	1	**7K-1181**	3	STRAP-CABLE	
	21	1	**5P-4116**	1	WASHER-HARD (8.8X20.5X2-MM THK)	
	24	1	**206-1345**	1	STRAP-CABLE	

B-USE AS REQUIRED
D-ORDER BY THE METER
E-ORDER BY THE CENTIMETER
M-METRIC PART

258-4115 **WIRING GP-ENGINE** *(contd.)* **i03624510**

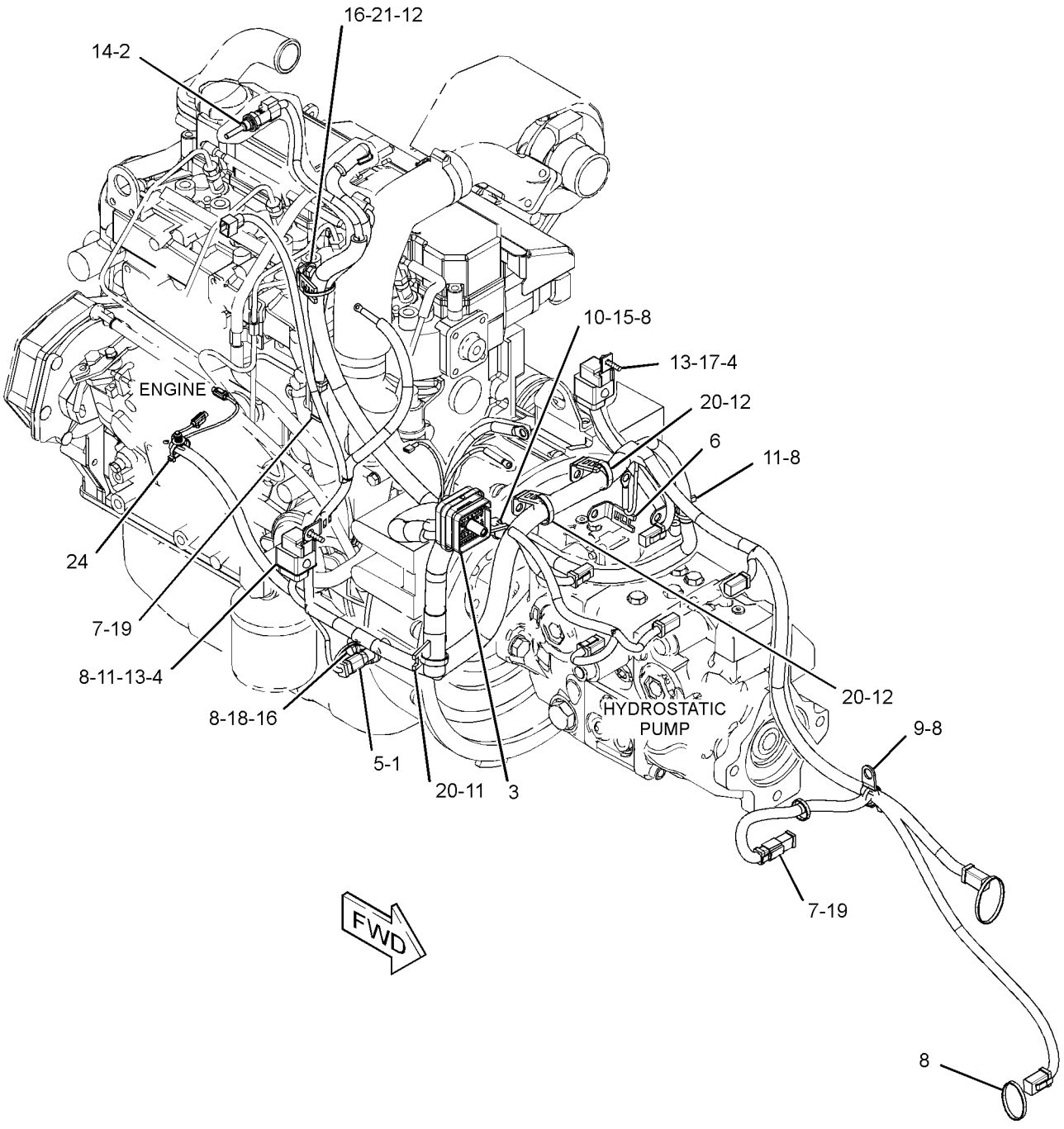

GRAPHIC #1 **<END>** g01519087

258-4115 WIRING GP-ENGINE

S/N: MST2570-UP

PART OF 295-7118 INSTALLATION AR-ENGINE

SMCS-1000, 1408, 1420 **i03624511**

NOTE	REF NO	GRAPHIC REF	PART NUMBER	QTY	PART NAME 1 2 3 4 5 6 (PRODUCT LEVEL)	SEE PAGE
	1	1	**191-8303**	1	SENSOR GP-SPEED (ENGINE)	
		1	**137-6645**	1	PAD	
	2	1	**238-0112**	1	SENSOR GP-TEMPERATURE (ENGINE COOLANT)	
	3	1	**258-4116**	1	HARNESS AS-ENGINE	
		1	**230-4011**	1	PLUG AS-CONNECTOR (2-PIN)	
		1	**264-7029**	1	SEAL-CONNECTOR	
		1	**271-5604**	17	PIN	
		1	**126-1766**	2	SOCKET-CONNECTOR (14-GA TO 18-GA)	
		1	**155-2270**	8	KIT-CONNECTING PLUG (2-PIN)	
		1	**155-2271**	2	KIT-CONNECTING PLUG (4-PIN)	
					(EACH PLUG KIT INCLUDES PLUG AS, WEDGE & INTERFACE SEAL)	
D		1	**1P-0810**		TAPE-ELECTRICAL (1-M)	
		1	**169-0705**	7	SEAL	
		1	**176-1477**	1	PLUG AS (2-PIN)	
		1	**176-1522**	2	SEAL	
		1	**180-9339**	7	PIN-CONNECTOR (14-GA TO 18-GA)	
		1	**180-9340**	10	SOCKET-CONNECTOR (14-GA TO 18-GA)	
E		1	**211-5358**		CONDUIT-FLEXIBLE (161-CM)	
		1	**8T-8737**	12	PLUG-SEAL	
		1	**8T-8799**	1	BOOT	
		1	**9X-1054**	2	PLUG AS-CONNECTOR (4-PIN)	
		1	**107-3136**	4	PLUG-SEAL	
		1	**186-3735**	4	PIN-CONNECTOR (16-GA TO 18-GA)	
		1	**186-3736**	14	SOCKET-CONNECTOR (16-GA TO 18-GA)	
		1	**9W-0852**	1	PIN-CONNECTOR (14-GA)	
		1	**2L-8069**	1	TERMINAL-RING (2-GA TO 10-GA, 3/8-IN SCREW)	
		1	**107-3135**	2	TERMINAL	
		1	**9X-1055**	4	TERMINAL-RECEPTACLE	
		1	**9X-1056**	1	TERMINAL-RECEPTACLE (14-GA TO 16-GA)	
		1	**100-5041**	3	TERMINAL-RECEPTACLE (18-GA TO 20-GA)	
		1	**030-1712**	1	TERMINAL-RING (2-GA, 1/4-IN SCREW)	
		1	**9G-4336**	1	TERMINAL-RING (4-GA)	
		1	**2L-8065**	1	TERMINAL-RING (10-GA TO 12-GA, NO. 8 SCREW)	
		1	**5P-4571**	1	TERMINAL-BLADE (14-GA TO 16-GA)	
		1	**5P-1478**	1	TERMINAL-FORK (10-GA TO 12-GA, NO. 10 SCREW)	
E		1	**119-3662**		TUBE-HEAT SHRINK (10.85-MM DIA) (13-CM)	
E		1	**125-7874**		TUBE-HEAT SHRINK (5.72-MM DIA) (10-CM)	
E		1	**125-7875**		TUBE-HEAT SHRINK (7.44-MM DIA) (5-CM)	
	4	1	**115-1615**	2	RELAY AS (12-VOLT) (COLD START)	
	5	1	**117-1385**	1	SEAL-O-RING	
C	6	1	**132-5789**	4	CLIP	
B	7	1	**102-8802**	2	KIT-RECEPTACLE (2-PIN)	
					(EACH INCLUDES RECEPTACLE AS & WEDGE)	
	8	1	**3S-2093**	9	STRAP-CABLE	
	9	1	**4P-7428**	1	CLIP	
	10	1	**4P-7429**	1	CLIP	
C	11	1	**4P-7581**	2	CLIP	
M	13	1	**6V-7357**	2	BOLT (M6X1X25-MM)	
	14	1	**6V-9028**	1	SEAL-O-RING	
M	15	1	**7X-2548**	1	BOLT (M12X1.75X16-MM)	
M	16	1	**8T-4200**	2	BOLT (M8X1.25X16-MM)	
	17	1	**8T-4205**	1	WASHER-HARD (7.2X14.5X2-MM THK)	
	18	1	**8T-4224**	1	WASHER-HARD (8.8X16X2-MM THK)	
B	19	1	**8T-8737**	4	PLUG-SEAL	

258-4115 **WIRING GP-ENGINE** *(contd.)* **i03624511**

NOTE	REF NO	GRAPHIC REF	PART NUMBER	QTY	PART NAME 1 2 3 4 5 6 (PRODUCT LEVEL)	SEE PAGE
C	20	1	**7K-1181**	2	STRAP-CABLE	
	21	1	**5P-4116**	1	WASHER-HARD (8.8X20.5X2-MM THK)	
	24	1	**206-1345**	1	STRAP-CABLE	

B-USE AS REQUIRED
C-CHANGE FROM PREVIOUS TYPE
D-ORDER BY THE METER
E-ORDER BY THE CENTIMETER
M-METRIC PART

258-4115 **WIRING GP-ENGINE** *(contd.)* **i03624511**

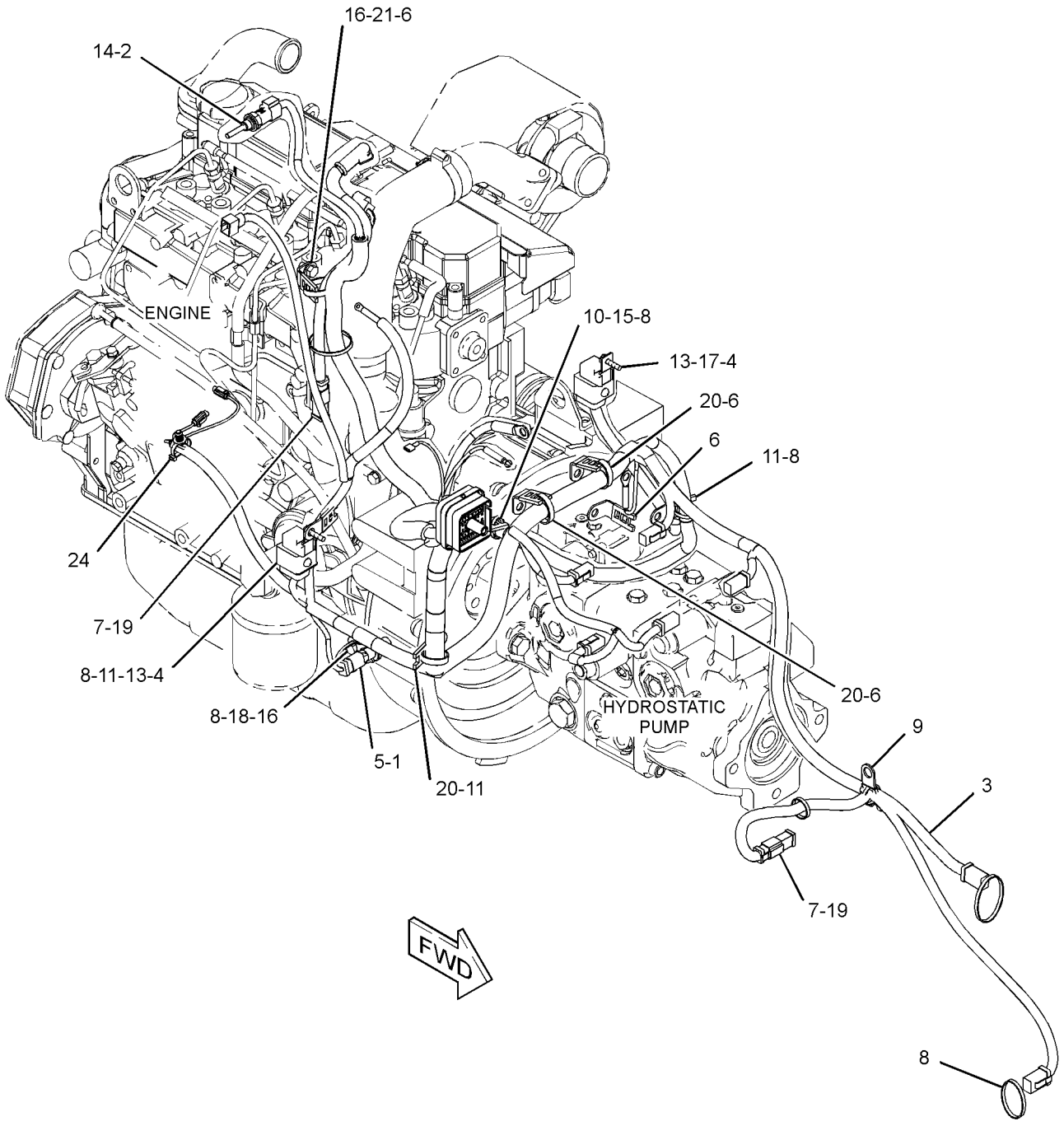

GRAPHIC #1 **<END>** g01840433

258-4192 WIRING GP-ENGINE–BATTERY

S/N: MST1-UP

PART OF 258-2445, 295-7118 INSTALLATION AR-ENGINE

SMCS-1000, 1408, 1420 **i03624512**

NOTE	REF NO	GRAPHIC REF	PART NUMBER	QTY	PART NAME 1 2 3 4 5 6 (PRODUCT LEVEL)	SEE PAGE
	1	1	**7K-1181**	5	STRAP-CABLE	
	2	1	**178-3620**	5	STRAP-DUAL CLAMP	
	3	1	**200-6345**	2	MOUNT (DUAL SWIVEL)	
	4	1	**258-4188**	1	CABLE AS-BATTERY (NEGATIVE)	
		1	**3S-2093**	1	STRAP-CABLE	
B		1	**1P-0810**		TAPE-ELECTRICAL	
		1	**9X-3410**	1	COVER-TERMINAL	
		1	**9X-6763**	1	TERMINAL AS (NEGATIVE)	
E		1	**159-8050**		CABLE (00-GA, BLACK) (141-CM)	
	5	1	**258-4189**	1	CABLE AS-BATTERY (POSITIVE)	
		1	*247-1337*	1	TERMINAL AS-BATTERY	
		1	**1M-6119**	1	BOLT (5/16-18X1.375-IN)	
		1	**1M-6120**	2	NUT (5/16-18-THD)	
		1	**283-3436**	1	COVER-TERMINAL	
B		1	**1P-0810**		TAPE-ELECTRICAL	
		1	**1S-7252**	1	TERMINAL-CABLE (00-GA, 3/8-IN BOLT)	
		1	**8N-0869**	1	COVER-TERMINAL (RED)	
E		1	**159-8049**		CABLE (00-GA, RED) (87-CM)	
	6	1	**8X-5489**	1	SLEEVE	
	7	1	**8T-4121**	1	WASHER-HARD (11X21X2.5-MM THK)	
M	8	1	**8T-4133**	1	NUT (M10X1.5-THD)	

B-USE AS REQUIRED
E-ORDER BY THE CENTIMETER
M-METRIC PART

258-4192 **WIRING GP-ENGINE** *(contd.)* **i03624512**

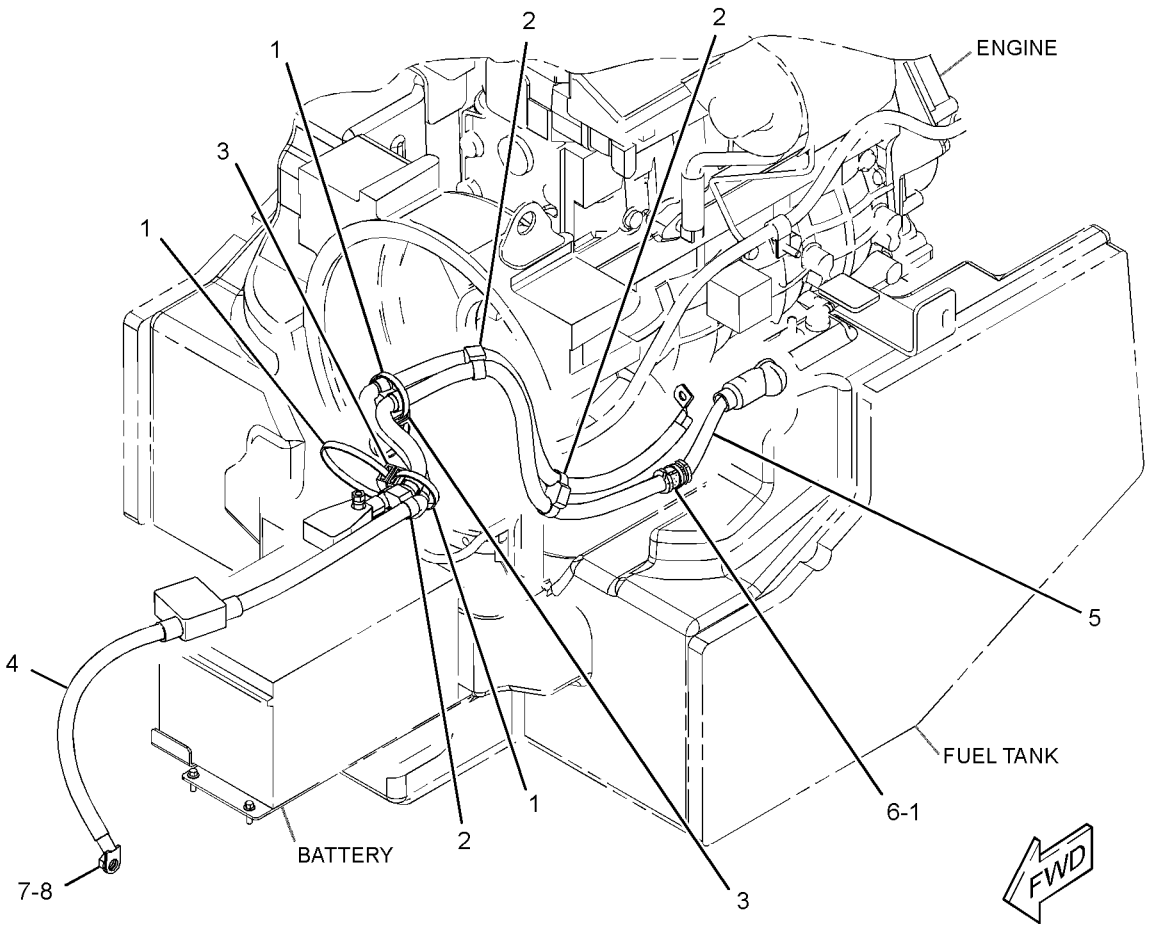

GRAPHIC #1 **<END>** g01624778

336-0913 WIRING GP-GRADE CONTROL

S/N: MST1-UP

PART OF 292-1271 MAST GP

SMCS-1408, 7220 **i03624513**

NOTE	PART NUMBER	QTY	PART NAME 1 2 3 4 5 6 (PRODUCT LEVEL)	SEE PAGE
	292-4554	1	HARNESS AS-CONTROL (ACCUGRADE)	
	155-2260	1	KIT-CONNECTING PLUG (3-PIN)	
			(INCLUDES PLUG AS, WEDGE & INTERFACE SEAL)	
	228-3323	1	CLIP-SPRING	
	102-8804	1	KIT-RECEPTACLE (4-PIN)	
			(INCLUDES RECPTACLE AS & WEDGE)	
	8T-8737	1	PLUG-SEAL	
E	**125-7874**		TUBE-HEAT SHRINK (5.72-MM DIA) (10-CM)	
	126-1766	2	SOCKET-CONNECTOR (14-GA TO 18-GA)	
	9X-3401	4	PIN-CONNECTOR (16-GA TO 18-GA)	
			—OR—	
	126-1767	4	PIN-CONNECTOR (14-GA)	
M	**8T-4908**	2	BOLT (M8X1.25X25-MM)	
	7R-3029	1	CAP-DUST	
	4P-7581	4	CLIP	
	130-5300	1	CLIP	
	134-2540	1	RESISTOR AS-CONNECTION (3-PIN)	
M	**5C-7261**	2	NUT (M8X1.25-THD)	
	132-8487	1	NUT-RING	
	292-4553	1	PLATE	
	6D-3033	4	SCREW-SOCKET HEAD (4-40X0.5-IN)	
	7K-1181	11	STRAP-CABLE	
	177-2215	15	STRAP-DUAL CLAMP	
	8T-4224	4	WASHER-HARD (8.8X16X2-MM THK)	

E-ORDER BY THE CENTIMETER
M-METRIC PART

<END>

258-4107 WIRING GP-MACHINE

S/N: MST1-UP

PART OF 258-2510, 295-7292 CHASSIS AR

SMCS-1408 **i03624541**

NOTE	REF NO	GRAPHIC REF	PART NUMBER	QTY	PART NAME 1 2 3 4 5 6 (PRODUCT LEVEL)	SEE PAGE
	1	1	**7K-1181**	2	STRAP-CABLE	
	2	1	**106-8704**	1	SUPPRESSOR AS-ARC	
	3	1	**300-9546**	1	ALARM AS (BACKUP)	
B	4	1	**161-3357**	1	SPACER (12X20X10-MM THK)	
	5	1	**164-9425**	1	HORN AS (24-VOLT, LOW TONE)	
	6	1	**178-3620**	12	STRAP-DUAL CLAMP	
	7	1	**206-1345**	1	STRAP-CABLE	
	8	1	**258-4106**	1	HARNESS AS-REAR (DOOR)	
		1	**2L-8069**	1	TERMINAL-RING (2-GA TO 10-GA, 3/8-IN SCREW)	
		1	**2L-8076**	1	TERMINAL-RING (14-GA TO 16-GA, NO. 10 SCREW)	
		1	**186-3735**	2	PIN-CONNECTOR (16-GA TO 18-GA)	
		1	**9W-0852**	6	PIN-CONNECTOR (14-GA)	
		1	**180-9339**	1	PIN-CONNECTOR (14-GA TO 18-GA)	
		1	**155-2270**	3	KIT-CONNECTING PLUG (2-PIN)	
					(INCLUDES PLUG AS, WEDGE & INTERFACE SEAL)	
		1	**155-2271**	2	KIT-CONNECTING PLUG (4-PIN)	
					(INCLUDES PLUG AS, WEDGE & INTERFACE SEAL)	
		1	**8T-8737**	3	PLUG-SEAL	
		1	**102-8801**	1	KIT-RECEPTACLE (12-PIN)	
					(INCLUDES RECEPTACLE AS & WEDGE)	
		1	**186-3736**	8	SOCKET-CONNECTOR (16-GA TO 18-GA)	
		1	**9W-0844**	6	SOCKET-CONNECTOR (14-GA)	
		1	**8L-8413**	4	STRAP-CABLE	
E		1	**119-3662**		TUBE-HEAT SHRINK (10.85-MM DIA) (7-CM)	
E		1	**125-7874**		TUBE-HEAT SHRINK (5.72-MM DIA) (5-CM)	
E		1	**125-7875**		TUBE-HEAT SHRINK (7.44-MM DIA) (5-CM)	
	9	1	**258-4108**	1	HARNESS AS-CHASSIS	
		1	**8N-1549**	1	SOCKET-CONNECTOR (4-GA)	
		1	**186-3736**	40	SOCKET-CONNECTOR (16-GA TO 18-GA)	
		1	**9W-0844**	21	SOCKET-CONNECTOR (14-GA)	
		1	**180-9340**	1	SOCKET-CONNECTOR (14-GA TO 18-GA)	
		1	**9G-4336**	1	TERMINAL-RING (4-GA)	
		1	**2L-8079**	2	TERMINAL-RING (14-GA TO 16-GA, 3/8-IN SCREW)	
E		1	**211-5358**		CONDUIT-FLEXIBLE (202-CM)	
E		1	**283-4198**		CONDUIT (65-CM)	
		1	**186-3735**	8	PIN-CONNECTOR (16-GA TO 18-GA)	
		1	**9W-0852**	4	PIN-CONNECTOR (14-GA)	
		1	**271-5604**	19	PIN	
		1	**127-5483**	1	PLUG AS-CONNECTOR (1-PIN)	
		1	**155-2255**	1	KIT-CONNECTING PLUG (12-PIN)	
		1	**155-2265**	1	KIT-CONNECTING PLUG (8-PIN)	
		1	**155-2260**	2	KIT-CONNECTING PLUG (3-PIN)	
		1	**155-2270**	14	KIT-CONNECTING PLUG (2-PIN)	
		1	**155-2271**	1	KIT-CONNECTING PLUG (4-PIN)	
		1	**155-2274**	2	KIT-CONNECTING PLUG (6-PIN)	
					(EACH PLUG KIT INCLUDES PLUG AS, WEDGE & INTERFACE SEAL)	
		1	**8T-8737**	6	PLUG-SEAL	
		1	**169-0705**	5	SEAL	
E		1	**119-3662**		TUBE-HEAT SHRINK (10.85-MM DIA) (13-CM)	
E		1	**125-7874**		TUBE-HEAT SHRINK (5.72-MM DIA) (20-CM)	
E		1	**125-7875**		TUBE-HEAT SHRINK (7.44-MM DIA) (5-CM)	
	10	1	**258-4179**	1	RAIL-MOUNTING	

258-4107 **WIRING GP-MACHINE** ***(contd.)*** **i03624541**

NOTE	REF NO	GRAPHIC REF	PART NUMBER	QTY	PART NAME 1 2 3 4 5 6 (PRODUCT LEVEL)	SEE PAGE
	11	1	**268-4071**	2	LAMP GP-FLOOD (12-VOLT)	
					(EACH INCLUDES)	
		1	**9W-0607**	1	LAMP (12-VOLT, 55-WATT) (FLOODLIGHT)	
		1	**102-8802**	1	KIT-RECEPTACLE (2-PIN)	
					(INCLUDES RECEPTACLE AS & WEDGE)	
		1	**186-3735**	2	PIN-CONNECTOR (16-GA TO 18-GA)	
	12	1	**132-5789**	1	CLIP	
	13	1	**156-6175**	1	CLIP	
	14	1	**266-3314**	1	BOLT-FLANGE HEAD (M6X1X20.5-MM)	
B	15	1	**102-8802**	1	KIT-RECEPTACLE (2-PIN)	
B	16	1	**102-8803**	1	KIT-RECEPTACLE (3-PIN)	
B	17	1	**102-8804**	1	KIT-RECEPTACLE (4-PIN)	
B	18	1	**102-8805**	2	KIT-RECEPTACLE (6-PIN)	
B	19	1	**102-8806**	1	KIT-RECEPTACLE (8-PIN)	
					(EACH RECEPTACLE KIT INCLUDES RECEPTACLE AS & WEDGE)	
	20	1	**3S-2093**	24	STRAP-CABLE	
	21	1	**4P-7581**	3	CLIP	
	22	1	**4P-8134**	1	CLIP	
M	23	1	**5C-7261**	1	NUT (M8X1.25-THD)	
M	24	1	**8T-4138**	2	BOLT (M6X1X20-MM)	
M	25	1	**7X-2533**	2	BOLT (M6X1X35-MM)	
	26	1	**8T-4121**	2	WASHER-HARD (11X21X2.5-MM THK)	
M	27	1	**8T-4133**	2	NUT (M10X1.5-THD)	
M	28	1	**8T-4137**	2	BOLT (M10X1.5X20-MM)	
M	29	1	**8T-4196**	1	BOLT (M10X1.5X35-MM)	
	30	1	**8T-4205**	2	WASHER-HARD (7.2X14.5X2-MM THK)	
	31	1	**8T-4224**	1	WASHER-HARD (8.8X16X2-MM THK)	
B	32	1	**8T-8737**	29	PLUG-SEAL	
	33	1	**310-0657**	1	PLATE	
	34	1	**5P-4115**	2	WASHER-HARD (7.2X19X2-MM THK)	

B-USE AS REQUIRED
E-ORDER BY THE CENTIMETER
M-METRIC PART

258-4107 **WIRING GP-MACHINE** *(contd.)* **i03624541**

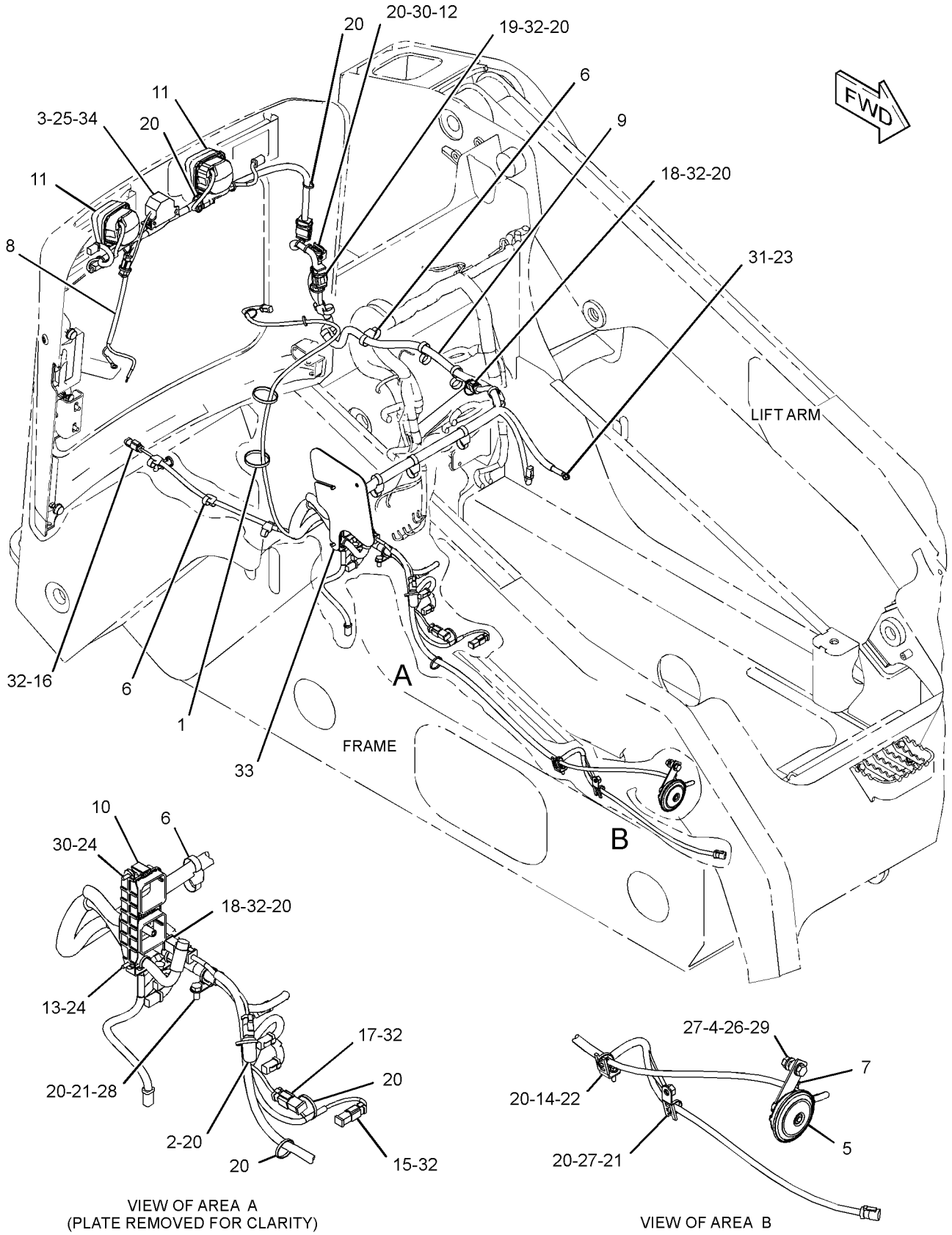

VIEW OF AREA A
(PLATE REMOVED FOR CLARITY)

VIEW OF AREA B

GRAPHIC #1 **<END>** g01454591

258-4190 WIRING GP-QUICK COUPLER

S/N: MST1-UP
PART OF 258-3691 COUPLER AR-QUICK
AN ATTACHMENT

SMCS-1408, 6129 **i03571155**

NOTE	REF NO	GRAPHIC REF	PART NUMBER	QTY	PART NAME 1 2 3 4 5 6 (PRODUCT LEVEL)	SEE PAGE
B	1	1	**7K-1181**	1	STRAP-CABLE	
	2	1	**178-3620**	6	STRAP-DUAL CLAMP	
	3	1	**258-4191**	1	HARNESS AS-WORK TOOL	
		1	**155-2270**	2	KIT-CONNECTING PLUG (2-PIN)	
					(EACH PLUG KIT INCLUDES PLUG AS, WEDGE & INTERFACE SEAL)	
		1	**102-8803**	1	KIT-RECEPTACLE (3-PIN)	
					(INCLUDES RECEPTACLE AS & WEDGE)	
		1	**8L-8413**	3	STRAP-CABLE	
		1	**186-3735**	3	PIN-CONNECTOR (16-GA TO 18-GA)	
		1	**186-3736**	4	SOCKET-CONNECTOR (16-GA TO 18-GA)	
E		1	**125-7874**		TUBE-HEAT SHRINK (5.72-MM DIA) (5-CM)	
	4	1	**265-9513**	1	SWITCH AS-ROCKER (HYDRAULIC QUICK COUPLER)	
		1	**111-7899**	1	GASKET	
B	5	1	**3S-2093**	13	STRAP-CABLE	

B-USE AS REQUIRED
E-ORDER BY THE CENTIMETER

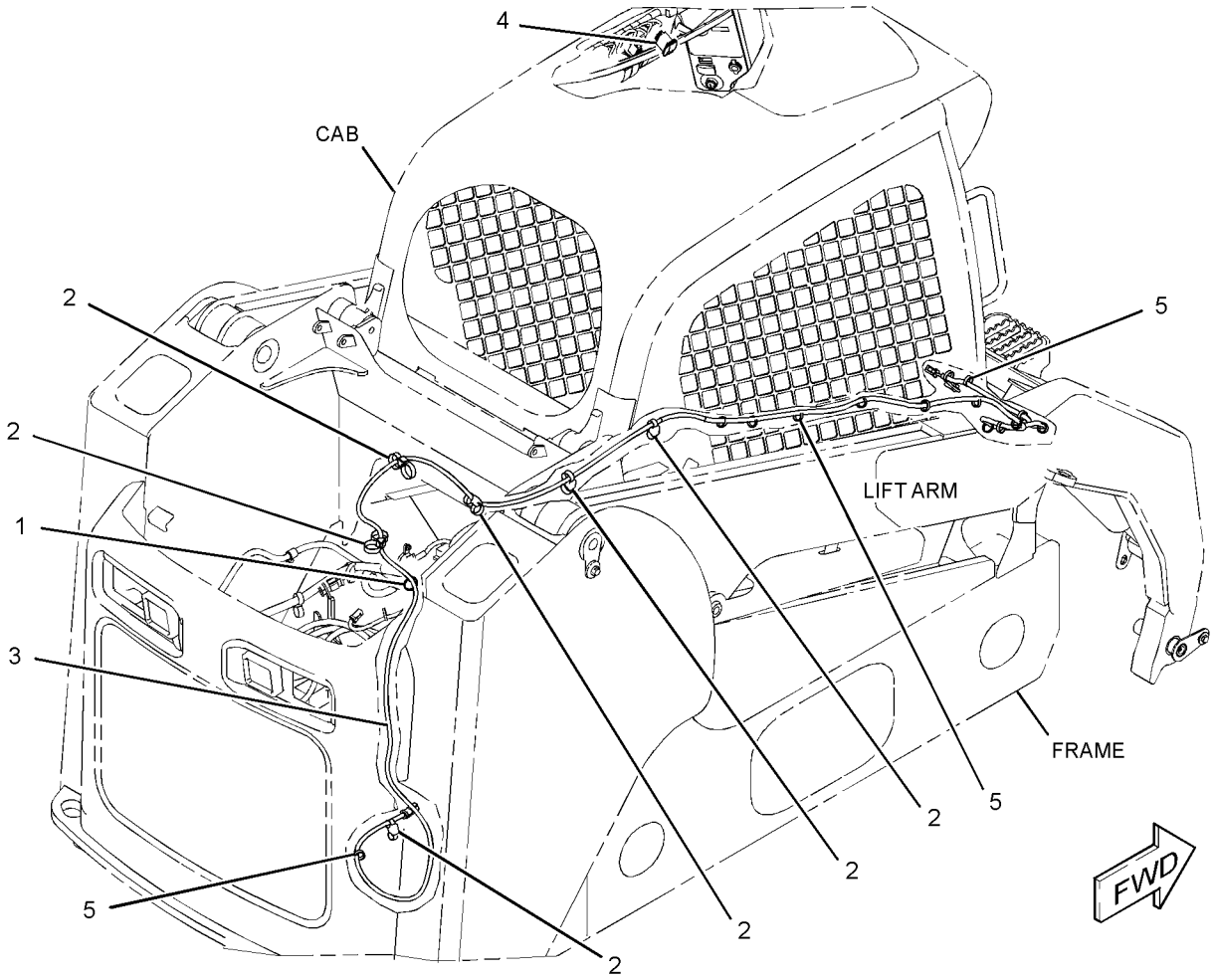

GRAPHIC #1 **<END>** g01329239

258-4125 WIRING GP-WORK TOOL

S/N: MST1-UP

PART OF 342-5011 CONTROL AR-MACHINE, 258-3183, 258-3734 HYDRAULIC AR AN ATTACHMENT

SMCS-1408 **i03571158**

NOTE	REF NO	GRAPHIC REF	PART NUMBER	QTY	PART NAME 1 2 3 4 5 6 (PRODUCT LEVEL)	SEE PAGE
	1	1	**7K-1181**	2	STRAP-CABLE	
	2	1	**146-9439**	5	RELAY AS (12-VOLT)	
	3	1	**159-9495**	1	NUT (1-1/2-18-THD)	
	4	1	**159-9496**	1	LOCKWASHER	
	5	1	**178-3620**	6	STRAP-DUAL CLAMP	
	6	1	**258-4126**	1	HARNESS AS-WORK TOOL	
		1	**156-1458**	1	COVER	
		1	**9W-0852**	1	PIN-CONNECTOR (14-GA)	
		1	**102-8806**	1	KIT-RECEPTACLE (8-PIN)	
					(INCLUDES RECEPTACLE AS & WEDGE)	
		1	**156-1460**	1	RECEPTACLE (8-PIN)	
E		1	**307-2338**		SLEEVE (12-CM)	
		1	**8L-8413**	1	STRAP-CABLE	
	7	1	**263-5418**	1	SWITCH AS-ROCKER (WORK TOOL)	
		1	**111-7899**	1	GASKET	
	8	1	**3S-2093**	8	STRAP-CABLE	

E-ORDER BY THE CENTIMETER

258-4125 **WIRING GP-WORK TOOL** *(contd.)* **i03571158**

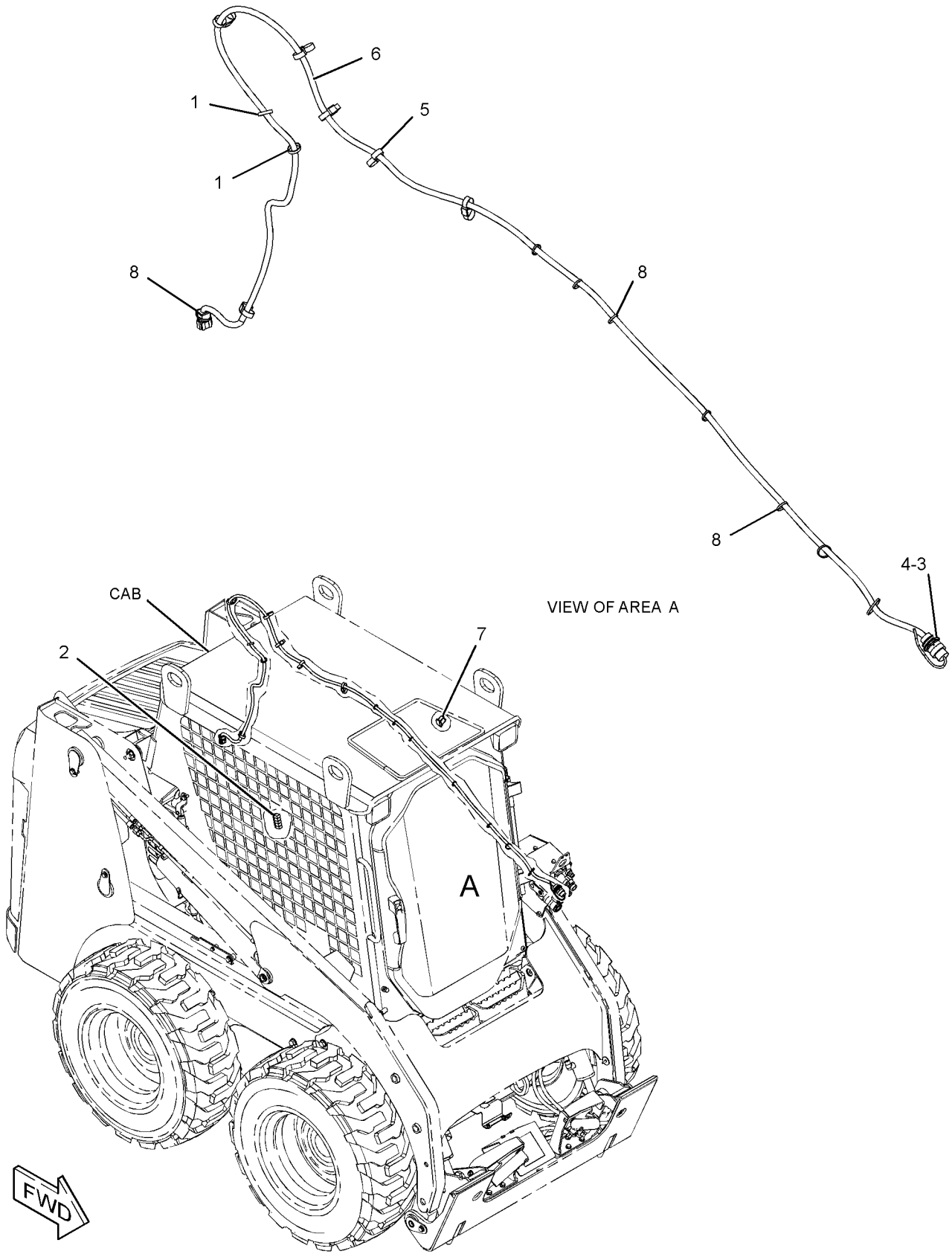

GRAPHIC #1 **<END>** g01310145

POWER TRAIN

258-2857 AXLE GP–STANDARD

S/N: MST1-UP

PART OF 258-3736 AXLE GP

SMCS-3278 **i02628507**

NOTE	REF NO	GRAPHIC REF	PART NUMBER	QTY	PART NAME 1 2 3 4 5 6 (PRODUCT LEVEL)	SEE PAGE
	1	1	**142-9023**	1	HOUSING-AXLE	
	2	1	**142-9029**	1	SPACER (57.16X69.85X27.54-MM THK)	
	3	1	**155-5652**	1	SEAL-LIP TYPE	
	4	1	**155-9010**	1	CONE-BEARING	
	5	1	**155-9432**	1	CONE-BEARING	
	6	1	**155-9433**	2	CUP-BEARING	
	7	1	**159-5772**	8	STUD	
	8	1	**169-1679**	1	SEAL-LIP TYPE	
	9	1	**258-2954**	1	SPINDLE (WHEEL)	

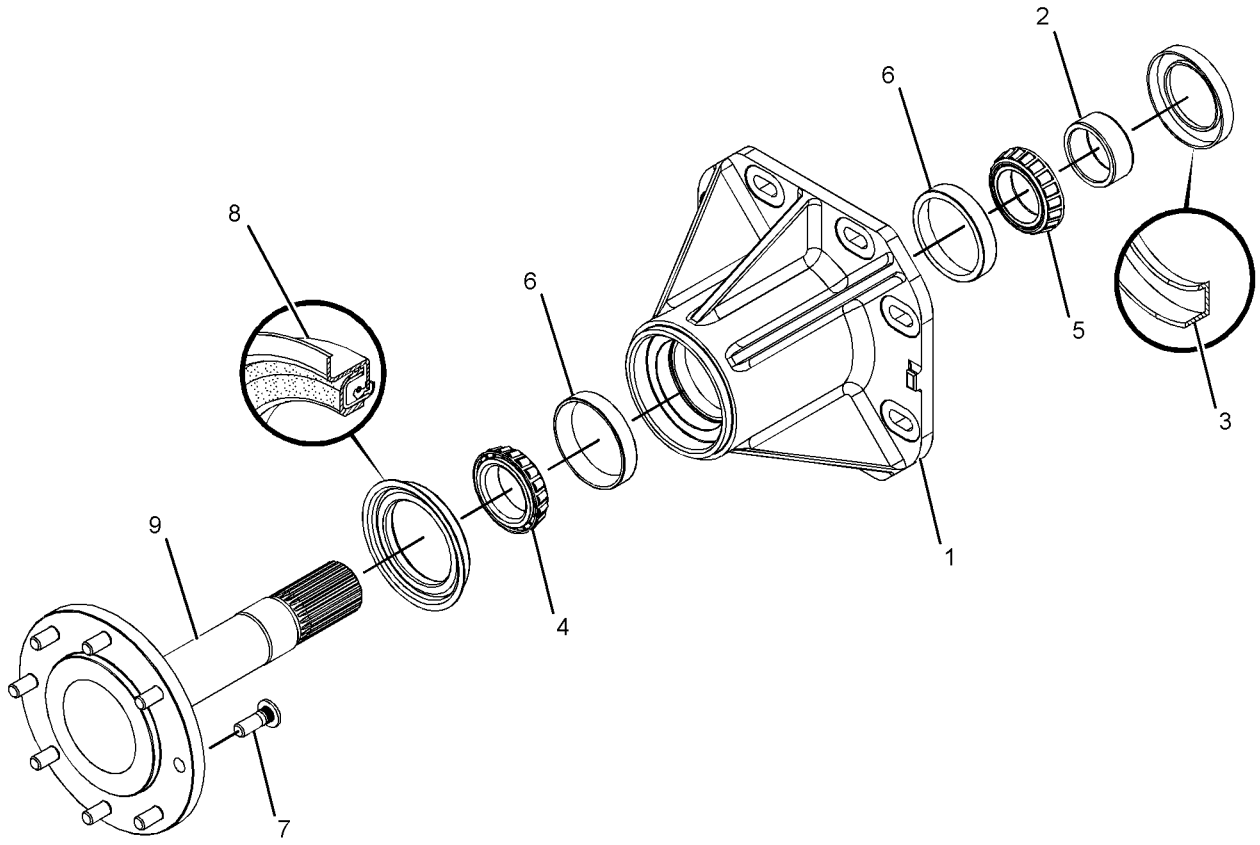

GRAPHIC #1 **<END>** g01321899

258-3736 AXLE GP–STANDARD

S/N: MST1-UP

PART OF 258-2510, 295-7292 CHASSIS AR

SMCS-3278 **i02628508**

NOTE	REF NO	GRAPHIC REF	PART NUMBER	QTY	PART NAME 1 2 3 4 5 6 (PRODUCT LEVEL)	SEE PAGE
Y	1	1	*258-2857*	4	AXLE GP	207

Y-SEPARATE ILLUSTRATION

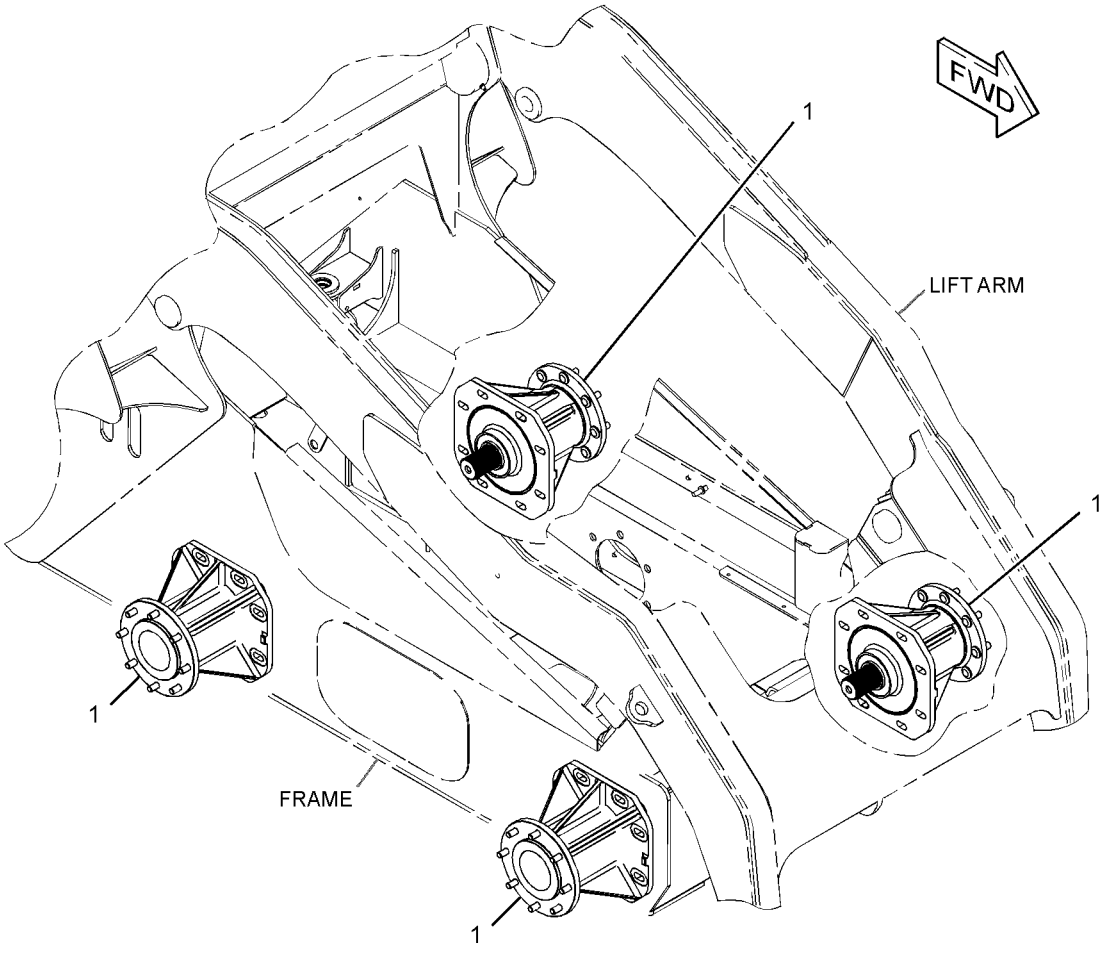

GRAPHIC #1 **<END>** g01321923

258-2860 DRIVE GP-TANDEM

S/N: MST1-UP
PART OF 258-3200 POWER TRAIN AR
AN ATTACHMENT

SMCS-4062 **i02659358**

NOTE	REF NO	GRAPHIC REF	PART NUMBER	QTY	PART NAME 1 2 3 4 5 6 (PRODUCT LEVEL)	SEE PAGE
	1	1	**5P-3092**	4	SEAL-O-RING	
	2	1	**142-9033**	2	RETAINER	
	3	1	**152-1157**	32	WASHER (15.5X32X8-MM THK)	
	4	1	**191-9762**	4	CHAIN AS	
	5	1	**200-0999**	32	STUD (9/16-18-THD)	
	6	1	**258-2855**	4	SPROCKET	
	7	1	**258-2858**	2	SPACER (63.9X75X13.13-MM THK)	
	8	1	**258-2864**	2	SPROCKET-MOTOR	
M	9	1	**100-3866**	4	BOLT-SELF-LOCKING (M16X2X40-MM)	
	10	1	**142-9036**	32	NUT (9/16-18-THD)	
	11	1	**7X-0610**	4	WASHER-HARD (20X75X6-MM THK)	
M	12	1	**8C-8992**	2	BOLT-LOCKING (M12X1.75X30-MM)	
	13	1	**8T-4122**	4	WASHER-HARD (17X32X3.5-MM THK)	

M-METRIC PART

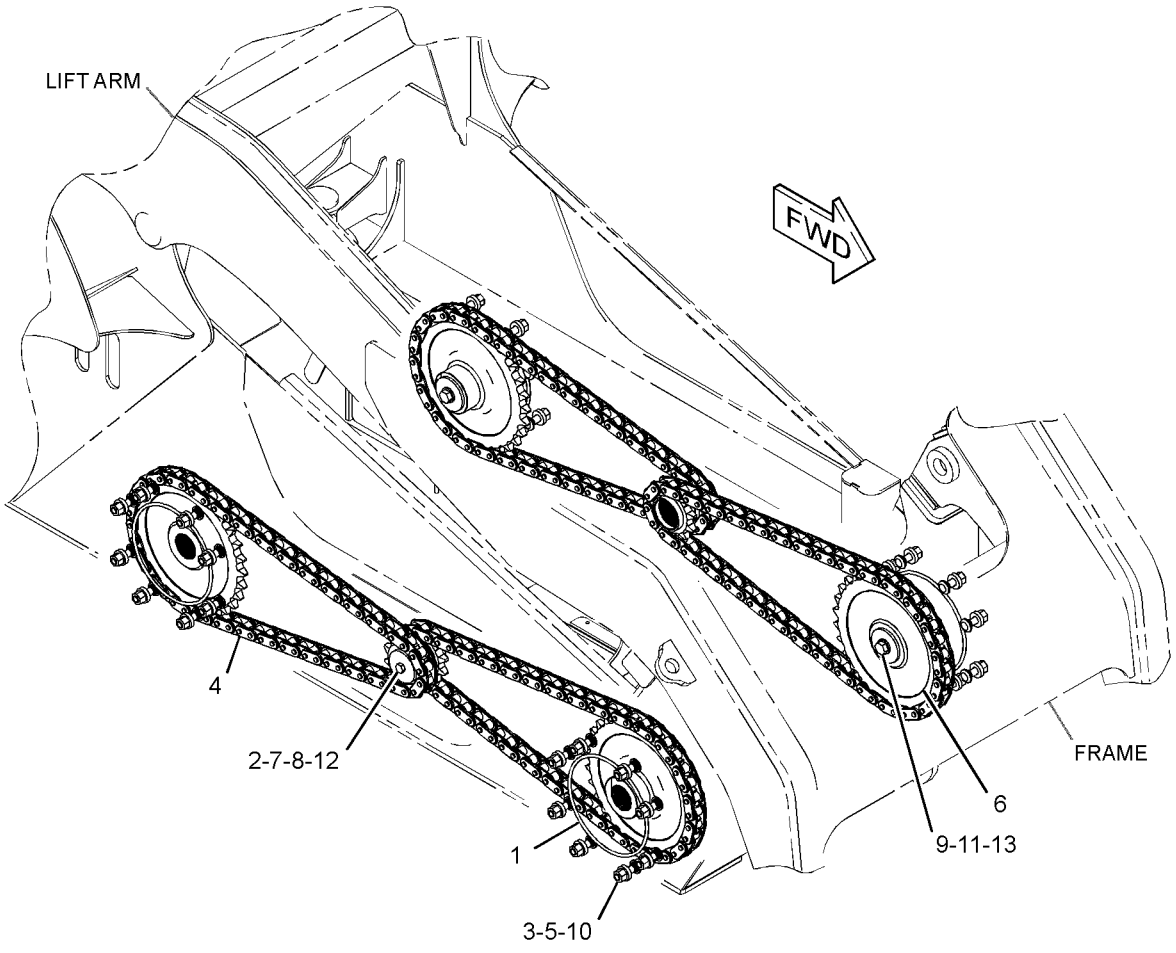

GRAPHIC #1 **<END>** g01325924

258-2862 DRIVE GP-TANDEM

S/N: MST1-UP
PART OF 258-3400 POWER TRAIN AR
AN ATTACHMENT

SMCS-4062 **i02636748**

NOTE	REF NO	GRAPHIC REF	PART NUMBER	QTY	PART NAME 1 2 3 4 5 6 (PRODUCT LEVEL)	SEE PAGE
	1	1	**5P-3092**	4	SEAL-O-RING	
	2	1	**142-9033**	2	RETAINER	
	3	1	**152-1157**	32	WASHER (15.5X32X8-MM THK)	
	4	1	**191-9762**	4	CHAIN AS	
	5	1	**200-0999**	32	STUD	
	6	1	**258-2854**	4	SPROCKET (AXLE)	
	7	1	**258-2858**	2	SPACER (63.9X75X13.13-MM THK)	
	8	1	**258-2865**	4	SPROCKET-MOTOR	
M	9	1	**100-3866**	4	BOLT-SELF-LOCKING (M16X2X40-MM)	
	10	1	**142-9036**	32	NUT (9/16-18-THD)	
	11	1	**7X-0610**	4	WASHER-HARD (20X75X6-MM THK)	
M	12	1	**8C-8992**	2	BOLT-LOCKING (M12X1.75X30-MM)	
	13	1	**8T-4122**	4	WASHER-HARD (17X32X3.5-MM THK)	

M-METRIC PART

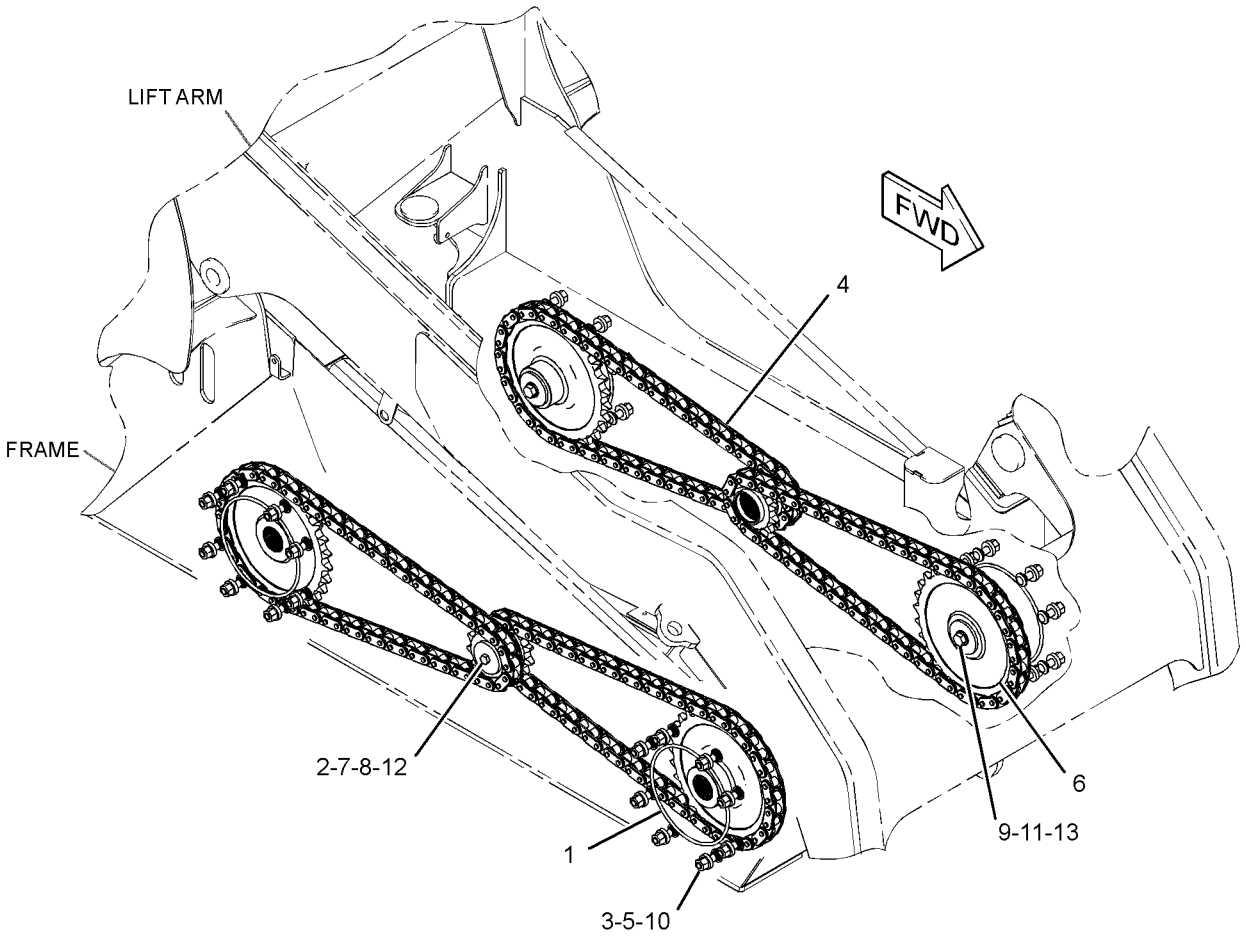

GRAPHIC #1 **<END>** g01326192

300-7627 DRIVE GP-TANDEM

S/N: MST1-UP
PART OF 300-7637 POWER TRAIN AR
AN ATTACHMENT

SMCS-4062 **i02782171**

NOTE	REF NO	GRAPHIC REF	PART NUMBER	QTY	PART NAME 1 2 3 4 5 6 (PRODUCT LEVEL)	SEE PAGE
	1	1	**5P-3092**	4	SEAL-O-RING	
	2	1	**152-1157**	32	WASHER (15.5X32X8-MM THK)	
	3	1	**200-0999**	32	STUD	
	4	1	**258-2852**	4	SPROCKET-AXLE DRIVE (23-TEETH)	
	5	1	**258-2856**	4	CHAIN AS	
	6	1	**258-2952**	4	SPROCKET-DRIVE (11-TEETH)	
	7	1	**258-2955**	2	RETAINER	
	8	1	**258-2958**	2	SPACER (69X90X13.13-MM THK)	
M	9	1	**100-3866**	4	BOLT-SELF-LOCKING (M16X2X40-MM)	
	10	1	**142-9036**	32	NUT (9/16-18-THD)	
	11	1	**7X-0610**	4	WASHER-HARD (20X75X6-MM THK)	
M	12	1	**8C-8992**	2	BOLT-LOCKING (M12X1.75X30-MM)	
	13	1	**8T-4122**	4	WASHER-HARD (17X32X3.5-MM THK)	

M-METRIC PART

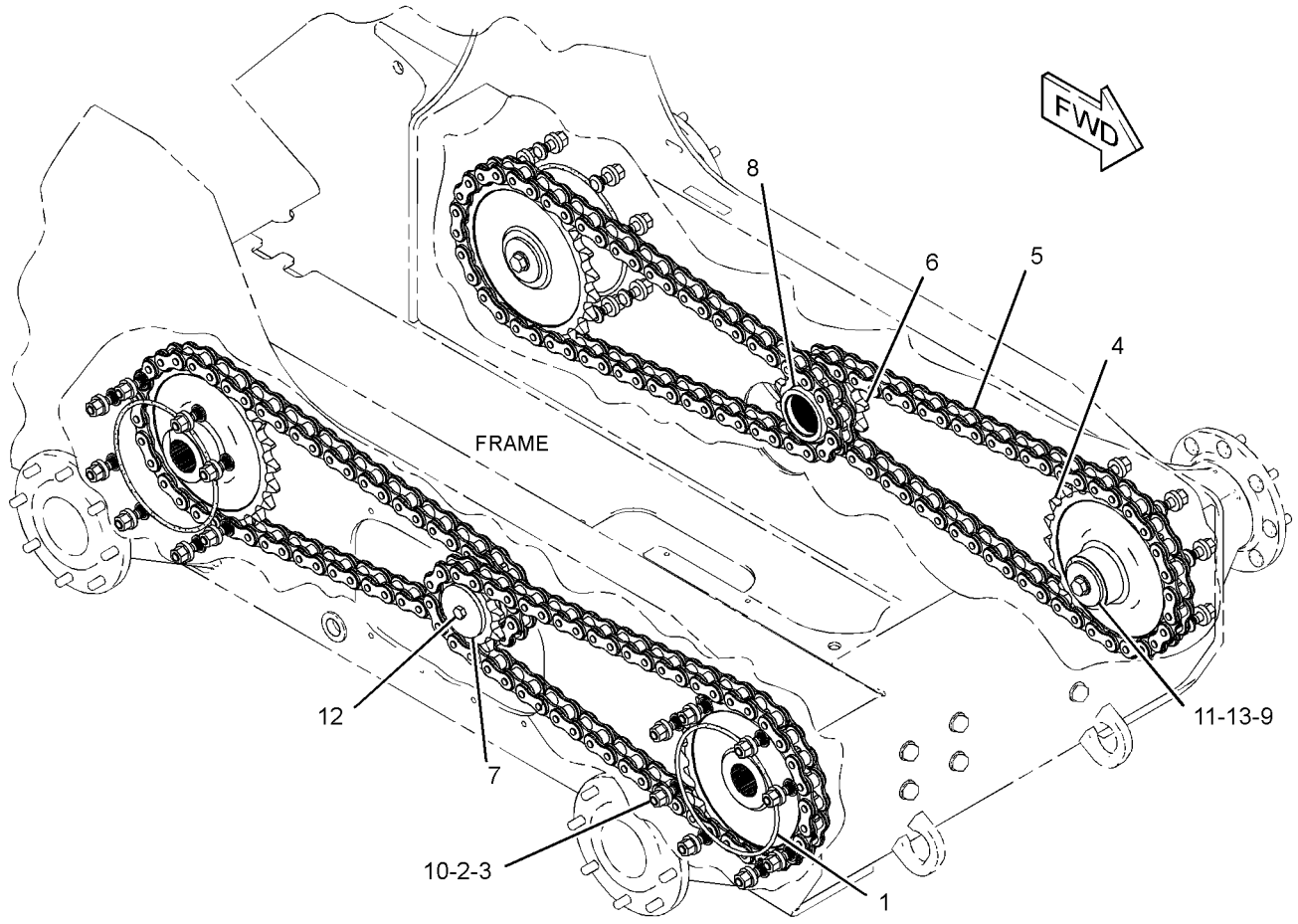

GRAPHIC #1 **<END>** g01416117

258-2581 FILTER & LINES GP-HYDRAULIC

S/N: MST1-UP

PART OF 258-2601 HYDRAULIC AR

SMCS-5057, 5068 **i03508080**

NOTE	REF NO	GRAPHIC REF	PART NUMBER	QTY	PART NAME 1 2 3 4 5 6 (PRODUCT LEVEL)	SEE PAGE
	1	1	*197-8940*	1	CONNECTOR AS	
		1	**2M-9780**	1	SEAL-O-RING	
		1	**7J-9108**	1	SEAL-O-RING	
		1	**8T-1576**	1	CONNECTOR	
Y	2	1	**223-9974**	1	FILTER GP-OIL (HYDRAULIC)	214
	3	1	**258-3979**	1	HOSE AS	
	4	1	*148-8382*	2	ELBOW AS	
					(EACH INCLUDES)	
		1	**3D-2824**	1	SEAL-O-RING	
		1	**7J-9108**	1	SEAL-O-RING	
		1	**8T-0404**	1	ELBOW	
	5	1	**266-3316**	1	BOLT-FLANGE HEAD (M10X1.5X25-MM)	
	6	1	**2M-6102**	1	PIPE	
	7	1	**3E-4321**	7	CLIP	
	8	1	**6V-1889**	1	CLIP	
	9	1	**8T-4121**	7	WASHER-HARD (11X21X2.5-MM THK)	
M	10	1	**8T-4137**	4	BOLT (M10X1.5X20-MM)	
M	11	1	**8T-4185**	1	BOLT (M10X1.5X50-MM)	
M	12	1	**8T-4189**	2	BOLT (M8X1.25X20-MM)	
	13	1	**8T-4224**	2	WASHER-HARD (8.8X16X2-MM THK)	
M	14	1	**8T-4196**	2	BOLT (M10X1.5X35-MM)	
	15	1	**178-3620**	1	STRAP-DUAL CLAMP	

M-METRIC PART
Y-SEPARATE ILLUSTRATION

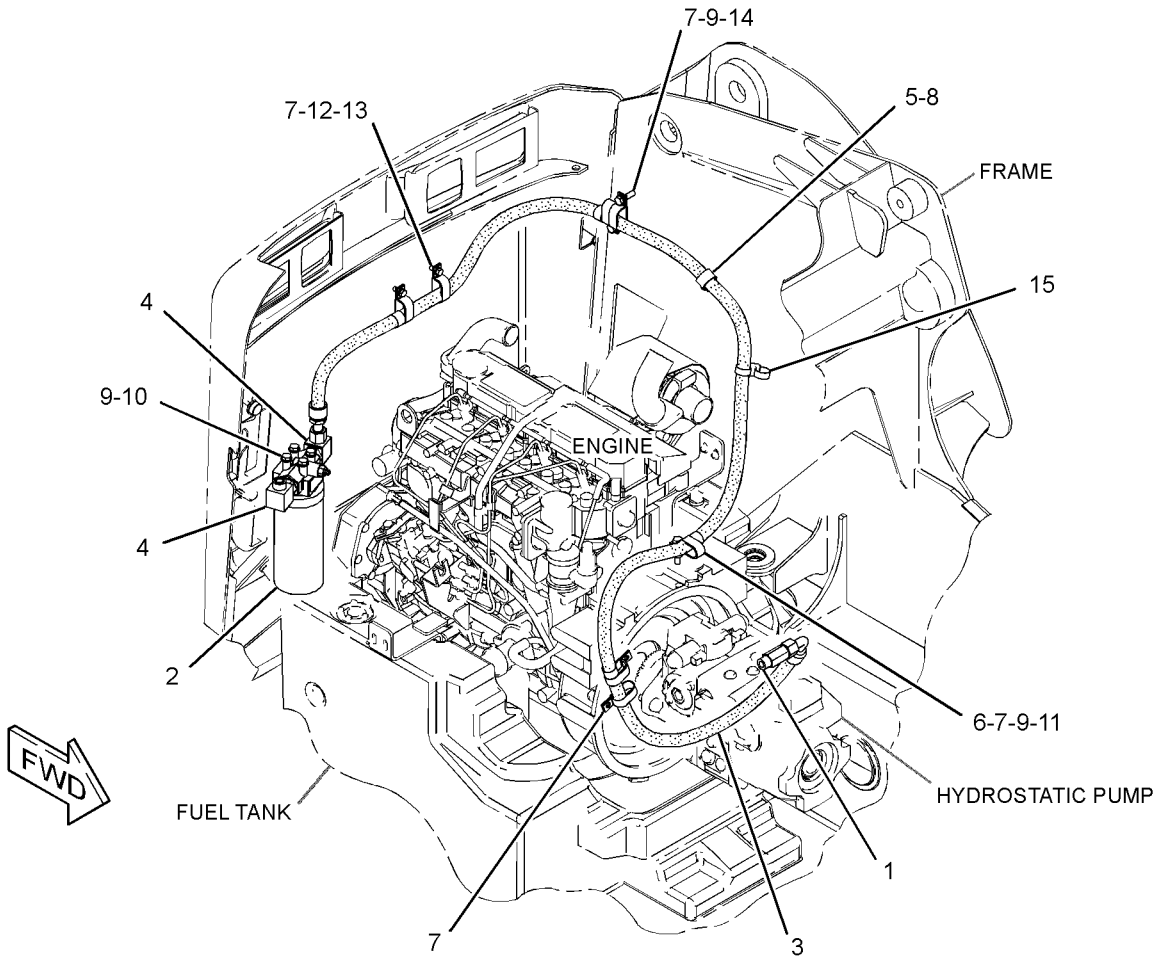

GRAPHIC #1 **<END>** g01337656

223-9974 FILTER GP-OIL–HYDRAULIC

S/N: MST1-UP

PART OF 258-2581 FILTER & LINES GP-HYDRAULIC

SMCS-5068 **i02469830**

NOTE	REF NO	GRAPHIC REF	PART NUMBER	QTY	PART NAME 1 2 3 4 5 6 (PRODUCT LEVEL)	SEE PAGE
	1	1	**3J-1907**	1	SEAL-O-RING	
	2	1	**134-0404**	1	SWITCH AS-PRESSURE (HYDRAULIC OIL)	
	3	1	**1G-8878**	1	FILTER-OIL (ADVANCED EFFICIENCY) (HYDRAULIC)	

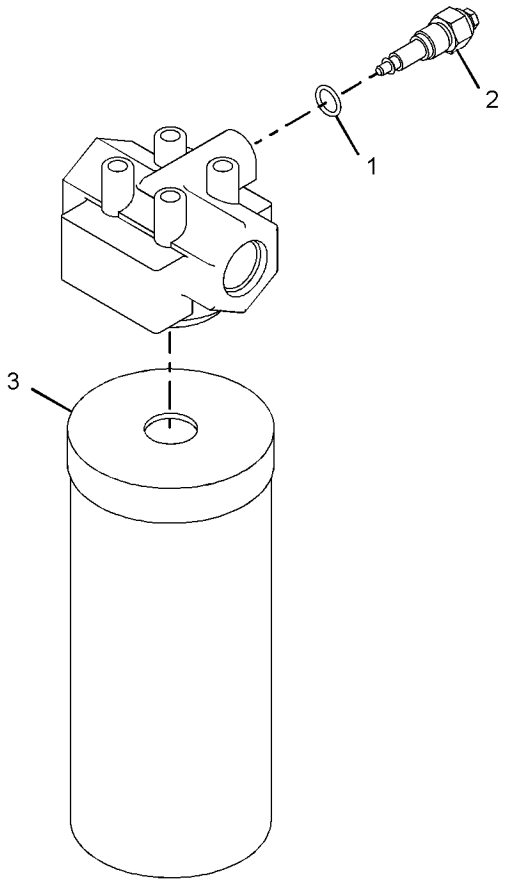

GRAPHIC #1 **<END>** g01035150

258-2430 LINES GP-HYDROSTATIC

S/N: MST1-UP
PART OF 258-3200, 300-7637 POWER TRAIN AR
AN ATTACHMENT

SMCS-3154 **i03595543**

NOTE	REF NO	GRAPHIC REF	PART NUMBER	QTY	PART NAME 1 2 3 4 5 6 (PRODUCT LEVEL)	SEE PAGE
	1	1	**6V-0852**	2	CAP-DUST	
	2	1	*153-6237*	2	ELBOW AS	
					(EACH INCLUDES)	
		1	**3D-2824**	1	SEAL-O-RING	
		1	**6V-9004**	1	ELBOW	
		1	**6V-9746**	1	SEAL-O-RING	
	3	1	*164-5567*	2	COUPLER AS-QUICK DISCONNECT	
					(EACH INCLUDES)	
		1	**214-7568**	1	SEAL-O-RING	
		1	**6V-3965**	1	FITTING (QUICK DISCONNECT)	
I	4	1	**258-3250**	2	HOSE AS	
I	5	1	**258-3252**	2	HOSE AS	
I	6	1	**258-3254**	1	HOSE AS	
I	7	1	**258-3257**	1	HOSE AS	
	8	1	*296-5750*	1	CONNECTOR AS	
		1	**6V-9746**	1	SEAL-O-RING	
		1	**7M-8485**	1	SEAL-O-RING	
		1	**109-5821**	1	CONNECTOR	
	9	1	*148-8339*	3	CONNECTOR AS	
					(EACH INCLUDES)	
		1	**6V-8716**	1	CONNECTOR	
		1	**6V-9746**	1	SEAL-O-RING	
		1	**7M-8485**	1	SEAL-O-RING	
	10	1	*148-8358*	1	ELBOW AS	
		1	**2M-9780**	1	SEAL-O-RING	
		1	**6V-8398**	1	SEAL-O-RING	
		1	**6V-8624**	1	ELBOW	
	11	1	*164-5557*	1	CONNECTOR AS	
		1	**2M-9780**	1	SEAL-O-RING	
		1	**5I-4370**	1	CONNECTOR	
		1	**6V-8398**	1	SEAL-O-RING	
	12	1	*164-5606*	2	CONNECTOR AS	
					(EACH INCLUDES)	
		1	**3D-2824**	1	SEAL-O-RING	
		1	**6V-9746**	1	SEAL-O-RING	
		1	**8T-0078**	1	CONNECTOR	
M	13	1	**266-3315**	1	BOLT-FLANGE HEAD (M8X1.25X25.5-MM)	
	14	1	**3S-8665**	1	CLIP	
M	15	1	**5C-7261**	1	NUT (M8X1.25-THD)	
	16	1	**5P-4116**	1	WASHER-HARD (8.8X20.5X2-MM THK)	

I-REFER TO HYDRAULIC INFORMATION SYSTEM
M-METRIC PART

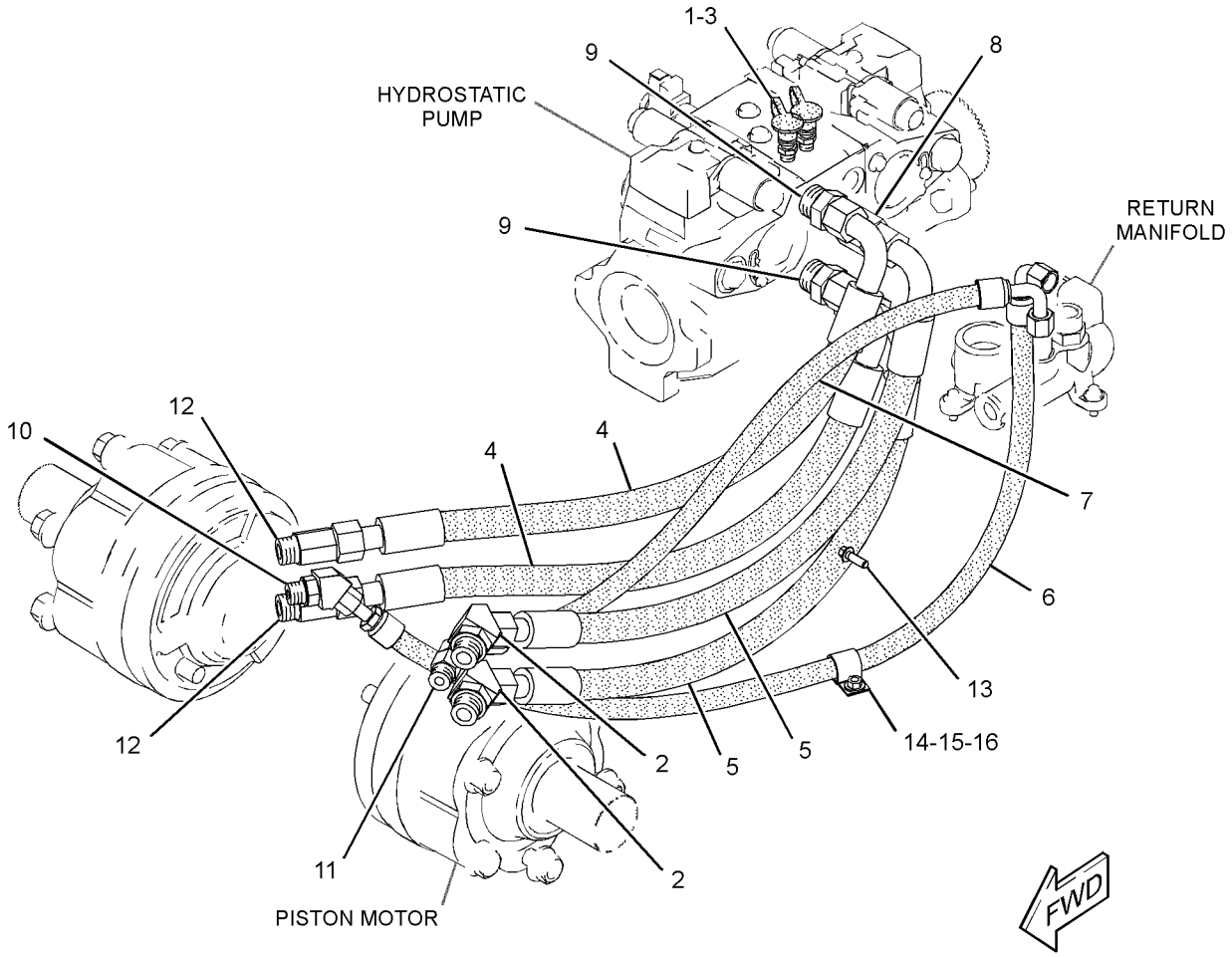

GRAPHIC #1 **<END>** g01932053

258-2431 LINES GP-HYDROSTATIC

S/N: MST1-2969
PART OF 258-3400 POWER TRAIN AR
AN ATTACHMENT

SMCS-3154 **i02693331**

NOTE	REF NO	GRAPHIC REF	PART NUMBER	QTY	PART NAME 1 2 3 4 5 6 (PRODUCT LEVEL)	SEE PAGE
	1	1	**6V-0852**	4	CAP-DUST	
	2	1	*164-5567*	4	COUPLER AS-QUICK DISCONNECT	
					(EACH INCLUDES)	
		1	**3J-1907**	1	SEAL-O-RING	
		1	**6V-3965**	1	FITTING (QUICK DISCONNECT)	
I	3	1	**258-3251**	1	HOSE AS	
I	4	1	**258-3255**	1	HOSE AS	
I	5	1	**258-3258**	1	HOSE AS	
I	6	1	**258-3259**	1	HOSE AS	
I	7	1	**258-3972**	1	HOSE AS	
	8	1	*296-5750*	1	CONNECTOR AS	
		1	**6V-9746**	1	SEAL-O-RING	
		1	**7M-8485**	1	SEAL-O-RING	
		1	**109-5821**	1	CONNECTOR	
	9	1	*148-8327*	3	CONNECTOR AS	
					(EACH INCLUDES)	
		1	**3D-2824**	1	SEAL-O-RING	
		1	**6V-8637**	1	CONNECTOR	
		1	**6V-9746**	1	SEAL-O-RING	
	10	1	*148-8339*	3	CONNECTOR AS	
					(EACH INCLUDES)	
		1	**6V-8716**	1	CONNECTOR	
		1	**6V-9746**	1	SEAL-O-RING	
		1	**7M-8485**	1	SEAL-O-RING	
	11	1	*148-8345*	2	CONNECTOR AS	
					(EACH INCLUDES)	
		1	**2M-9780**	1	SEAL-O-RING	
		1	**6V-8398**	1	SEAL-O-RING	
		1	**6V-8638**	1	CONNECTOR	
M	12	1	**266-3315**	1	BOLT-FLANGE HEAD (M8X1.25X25.5-MM)	
	13	1	**3S-8665**	3	CLIP	
M	14	1	**5C-7261**	2	NUT (M8X1.25-THD)	
	15	1	**5P-4116**	2	WASHER-HARD (8.8X20.5X2-MM THK)	
I	16	1	**305-0201**	1	HOSE AS	
	17	1	*164-5606*	1	CONNECTOR AS	
		1	**3D-2824**	1	SEAL-O-RING	
		1	**6V-9746**	1	SEAL-O-RING	
		1	**8T-0078**	1	CONNECTOR	
	18	1	**8T-4121**	1	WASHER-HARD (11X21X2.5-MM THK)	

I-REFER TO HYDRAULIC INFORMATION SYSTEM
M-METRIC PART

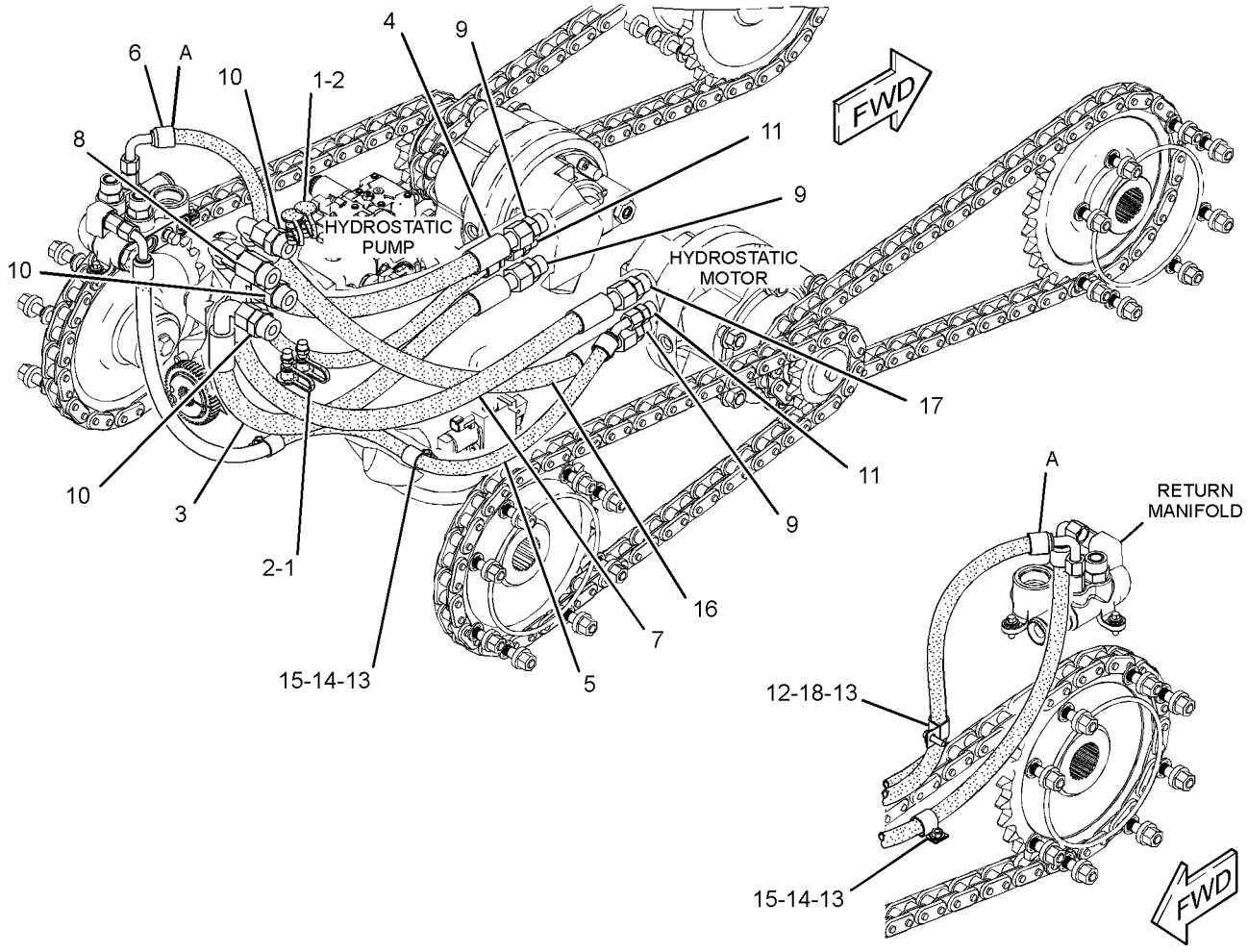

GRAPHIC #1 **<END>** g01351477

258-2431 LINES GP-HYDROSTATIC

S/N: MST2970-UP
PART OF 258-3400 POWER TRAIN AR
AN ATTACHMENT

SMCS-3154 **i03652106**

NOTE	REF NO	GRAPHIC REF	PART NUMBER	QTY	PART NAME 1 2 3 4 5 6 (PRODUCT LEVEL)	SEE PAGE
C	1	1	**6V-0852**	2	CAP-DUST	
I	2	1	**258-3258**	1	HOSE AS	
I	3	1	**258-3259**	1	HOSE AS	
CI	4	1	**328-8813**	1	HOSE AS	
CI	5	1	**328-8814**	1	HOSE AS	
CI	6	1	**328-8815**	1	HOSE AS	
CI	7	1	**328-8816**	1	HOSE AS	
C	8	1	*148-8327*	2	CONNECTOR AS	
					(EACH INCLUDES)	
		1	**3D-2824**	1	SEAL-O-RING	
		1	**6V-8637**	1	CONNECTOR	
		1	**6V-9746**	1	SEAL-O-RING	
C	9	1	*148-8339*	4	CONNECTOR AS	
					(EACH INCLUDES)	
		1	**6V-8716**	1	CONNECTOR	
		1	**6V-9746**	1	SEAL-O-RING	
		1	**7M-8485**	1	SEAL-O-RING	
	10	1	*148-8345*	2	CONNECTOR AS	
					(EACH INCLUDES)	
		1	**2M-9780**	1	SEAL-O-RING	
		1	**6V-8398**	1	SEAL-O-RING	
		1	**6V-8638**	1	CONNECTOR	
C	11	1	*153-6237*	2	ELBOW AS	
					(EACH INCLUDES)	
		1	**3D-2824**	1	SEAL-O-RING	
		1	**6V-9004**	1	ELBOW	
		1	**6V-9746**	1	SEAL-O-RING	
C	12	1	*164-5567*	2	COUPLER AS-QUICK DISCONNECT	
					(EACH INCLUDES)	
		1	**214-7568**	1	SEAL-O-RING	
		1	**6V-3965**	1	FITTING (QUICK DISCONNECT)	
M	13	1	**266-3315**	1	BOLT-FLANGE HEAD (M8X1.25X25.5-MM)	
	14	1	**3S-8665**	3	CLIP	
M	15	1	**5C-7261**	2	NUT (M8X1.25-THD)	
	16	1	**5P-4116**	2	WASHER-HARD (8.8X20.5X2-MM THK)	
	17	1	**8T-4121**	1	WASHER-HARD (11X21X2.5-MM THK)	

C-CHANGE FROM PREVIOUS TYPE
I-REFER TO HYDRAULIC INFORMATION SYSTEM
M-METRIC PART

258-2431 **LINES GP-HYDROSTATIC** *(contd.)* **i03652106**

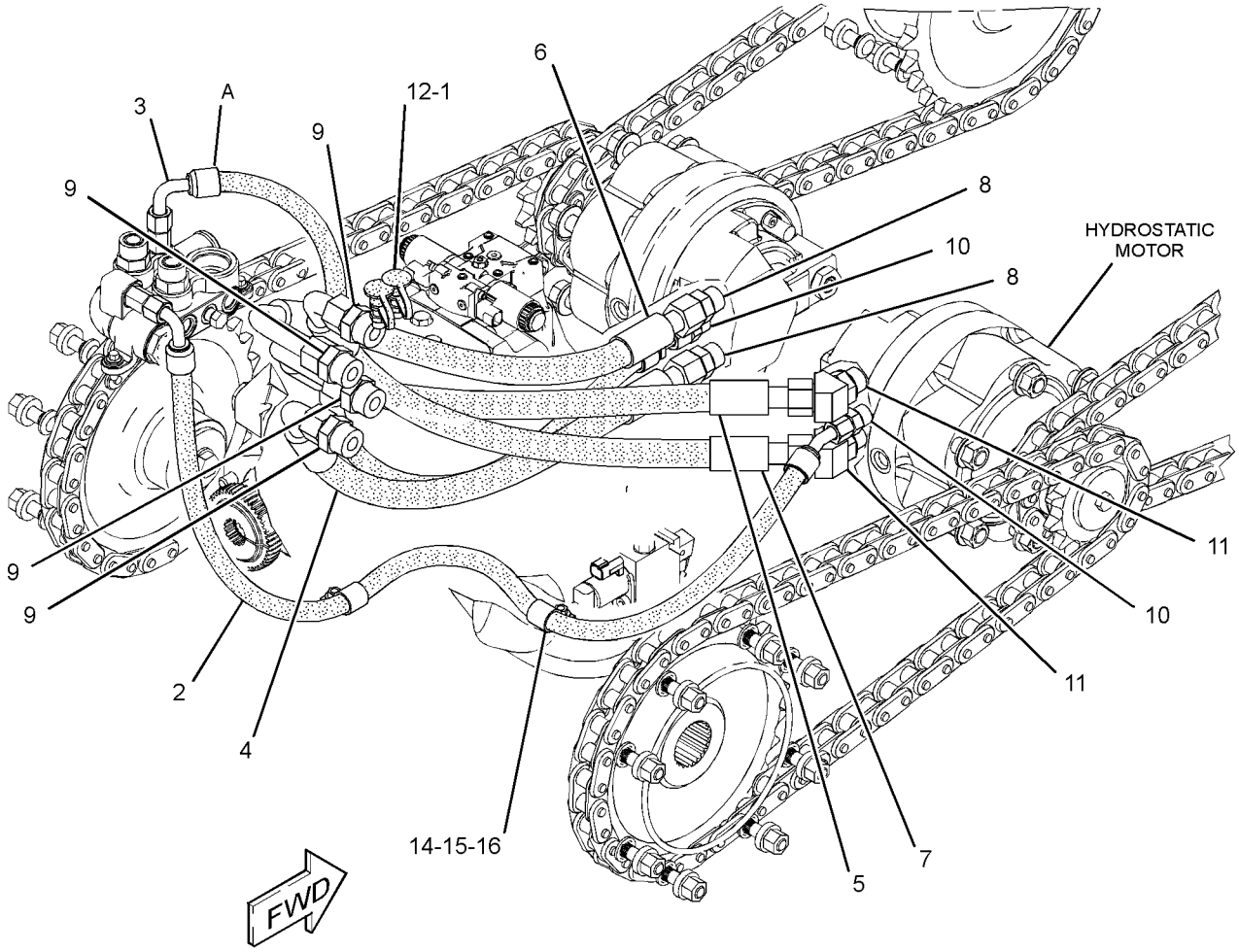

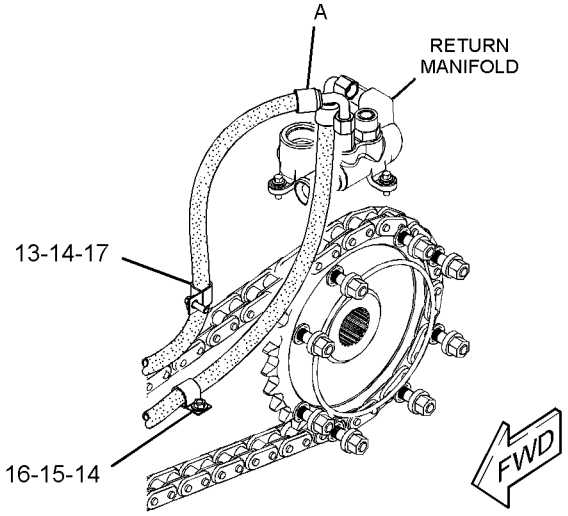

GRAPHIC #1 **<END>** g01962729

258-2607 LINES GP-PARKING BRAKE

S/N: MST1-UP

PART OF 258-2601 HYDRAULIC AR

SMCS-4284 **i02674948**

NOTE	REF NO	GRAPHIC REF	PART NUMBER	QTY	PART NAME 1 2 3 4 5 6 (PRODUCT LEVEL)	SEE PAGE
	1	1	**097-0832**	2	SPACER (13.5X22X14-MM THK)	
I	2	1	**258-2608**	1	HOSE AS	
I	3	1	**258-2609**	2	HOSE AS	
	4	1	**258-3931**	1	TUBE AS	
	5	1	*148-8340*	2	CONNECTOR AS	
					(EACH INCLUDES)	
		1	**3K-0360**	1	SEAL-O-RING	
		1	**6V-8398**	1	SEAL-O-RING	
		1	**6V-8639**	1	CONNECTOR	
	6	1	*172-9287*	1	CONNECTOR AS	
		1	**3J-1907**	1	SEAL-O-RING	
		1	**6V-8397**	1	SEAL-O-RING	
		1	**7E-9898**	1	CONNECTOR	
	7	1	**1F-7567**	2	CLIP (LOOP)	
M	8	1	**5C-7261**	2	NUT (M8X1.25-THD)	
	9	1	**5P-4116**	2	WASHER-HARD (8.8X20.5X2-MM THK)	
	10	1	**6V-8397**	3	SEAL-O-RING	
	11	1	**204-2281**	2	STRAP-TIE	
	12	1	**200-6345**	1	MOUNT (DUAL SWIVEL)	

I-REFER TO HYDRAULIC INFORMATION SYSTEM
M-METRIC PART

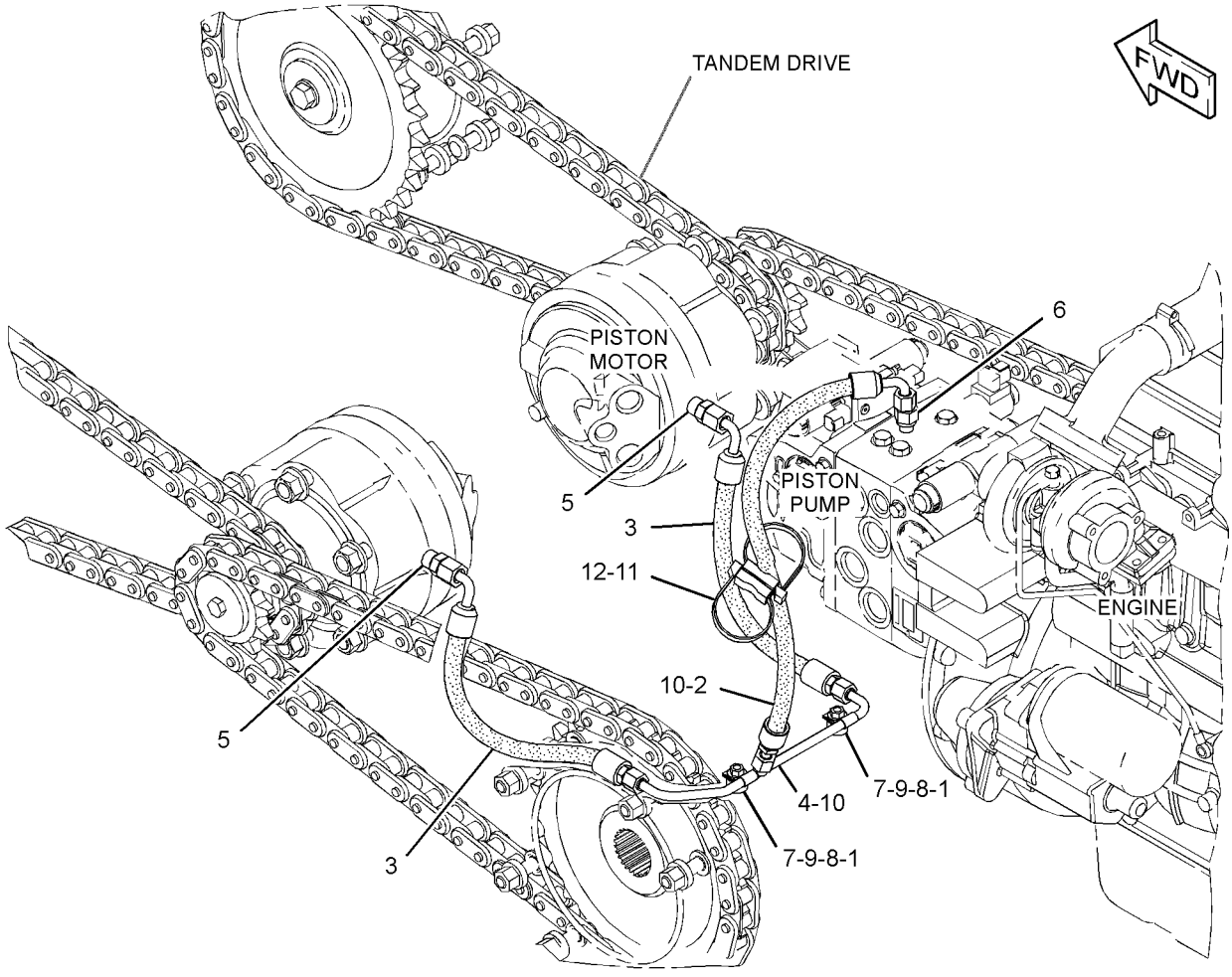

GRAPHIC #1 **<END>** g01344996

258-3151 MANIFOLD & LINES GP-CONTROL—MOTOR, 2-SPEED

S/N: MST1-UP
PART OF 258-3400 POWER TRAIN AR
AN ATTACHMENT
TYPE 1

SMCS-5057, 5264, 5479 **i03635735**

NOTE	REF NO	GRAPHIC REF	PART NUMBER	QTY	PART NAME 1 2 3 4 5 6 (PRODUCT LEVEL)	SEE PAGE
I	1	1	**234-9661**	1	HOSE AS	
	2	1	**258-3157**	1	TUBE AS	
Y	3	1	*258-3463*	1	MANIFOLD & MTG GP-CONTROL (MOTOR, 2-SPEED)	415
	4	1	**263-5419**	1	SWITCH AS-ROCKER (MOTOR, 2-SPEED, AUXILIARY)	
		1	**111-7899**	1	GASKET	
	5	1	*148-8336*	1	CONNECTOR AS	
		1	**3J-1907**	1	SEAL-O-RING	
		1	**6V-8397**	1	SEAL-O-RING	
		1	**6V-8636**	1	CONNECTOR	
	6	1	*148-8378*	2	ELBOW AS	
					(EACH INCLUDES)	
		1	**3J-1907**	1	SEAL-O-RING	
		1	**6V-8397**	1	SEAL-O-RING	
		1	**6V-8724**	1	ELBOW	
	7	1	*148-8433*	1	TEE AS	
		1	**6V-8397**	2	SEAL-O-RING	
		1	**6V-9836**	1	TEE-SWIVEL	
	8	1	*148-8439*	1	TEE AS	
		1	**3J-1907**	1	SEAL-O-RING	
		1	**6V-8397**	2	SEAL-O-RING	
		1	**6V-8774**	1	TEE	
I	9	1	**196-3940**	1	HOSE AS	
I	10	1	**7I-5418**	1	HOSE AS	
	11	1	*148-8318*	2	CONNECTOR AS	
					(EACH INCLUDES)	
		1	**3K-0360**	1	SEAL-O-RING	
		1	**6V-8397**	1	SEAL-O-RING	
		1	**6V-8634**	1	CONNECTOR	

I-REFER TO HYDRAULIC INFORMATION SYSTEM
Y-SEPARATE ILLUSTRATION

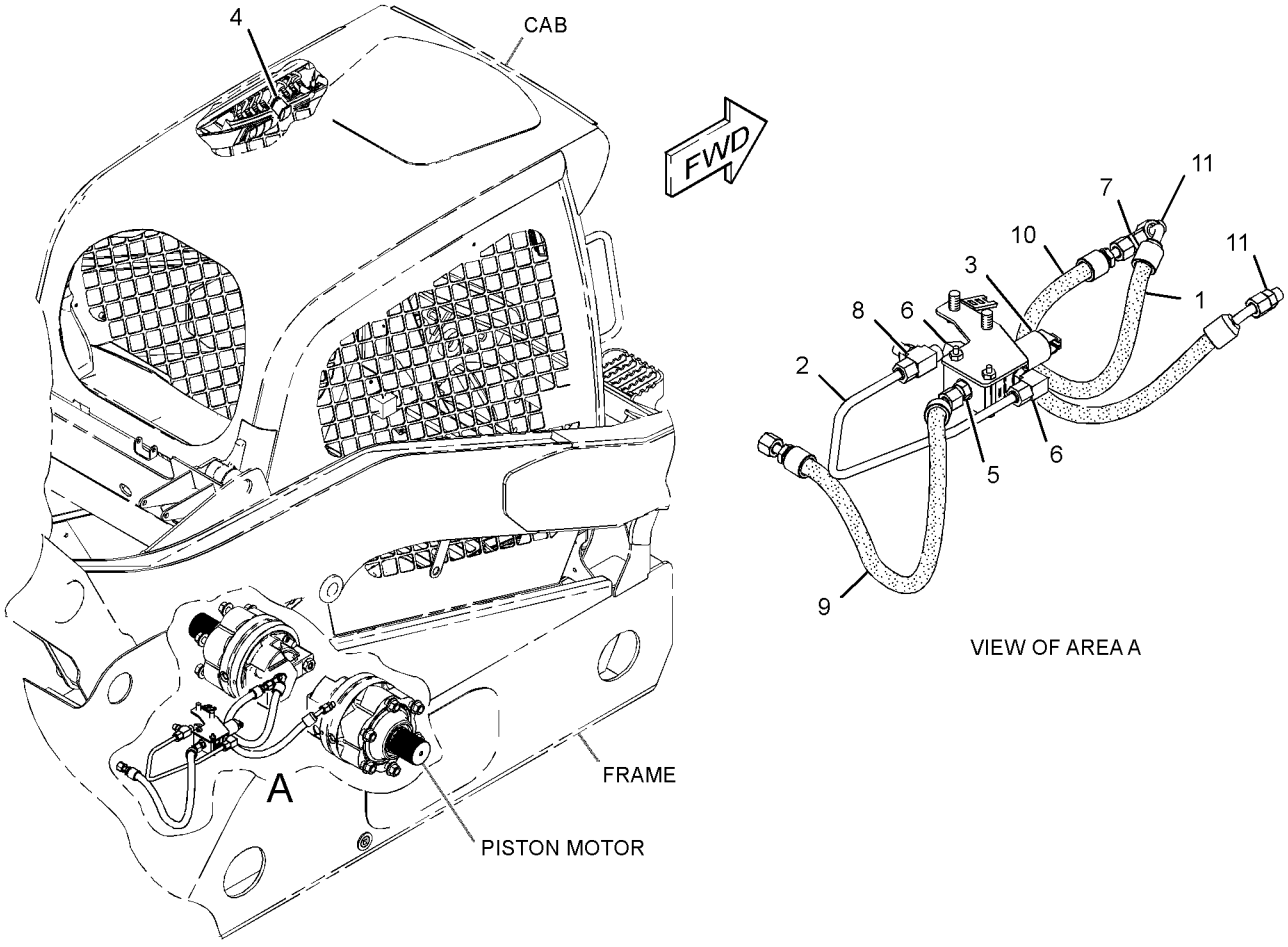

GRAPHIC #1 **<END>** g01340854

258-3151 MANIFOLD & LINES GP-CONTROL—MOTOR, 2-SPEED

S/N: MST1-UP
PART OF 258-3400 POWER TRAIN AR
AN ATTACHMENT
TYPE 2

SMCS-5057, 5264, 5479 **i03632767**

NOTE	REF NO	GRAPHIC REF	PART NUMBER	QTY	PART NAME 1 2 3 4 5 6 (PRODUCT LEVEL)	SEE PAGE
CI	1	1	**328-8818**	1	HOSE AS	
	2	1	**258-3157**	1	TUBE AS	
Y	3	1	*258-3463*	1	MANIFOLD & MTG GP-CONTROL (MOTOR, 2-SPEED)	415
	4	1	**263-5419**	1	SWITCH AS-ROCKER (MOTOR, 2-SPEED, AUXILIARY)	
		1	**111-7899**	1	GASKET	
	5	1	*148-8336*	1	CONNECTOR AS	
		1	**3J-1907**	1	SEAL-O-RING	
		1	**6V-8397**	1	SEAL-O-RING	
		1	**6V-8636**	1	CONNECTOR	
C	6	1	*148-8378*	1	ELBOW AS	
		1	**3J-1907**	1	SEAL-O-RING	
		1	**6V-8397**	1	SEAL-O-RING	
		1	**6V-8724**	1	ELBOW	
C	7	1	*148-8435*	1	TEE AS	
		1	**3J-1907**	1	SEAL-O-RING	
		1	**6V-8397**	2	SEAL-O-RING	
		1	**6V-8781**	1	TEE-FACE SEAL	
	8	1	*148-8439*	1	TEE AS	
		1	**3J-1907**	1	SEAL-O-RING	
		1	**6V-8397**	2	SEAL-O-RING	
		1	**6V-8774**	1	TEE	
I	9	1	**196-3940**	1	HOSE AS	
C	10	1	**328-8817**	1	HOSE AS	
	11	1	*148-8318*	2	CONNECTOR AS	
					(EACH INCLUDES)	
		1	**3K-0360**	1	SEAL-O-RING	
		1	**6V-8397**	1	SEAL-O-RING	
		1	**6V-8634**	1	CONNECTOR	

C-CHANGE FROM PREVIOUS TYPE
I-REFER TO HYDRAULIC INFORMATION SYSTEM
Y-SEPARATE ILLUSTRATION

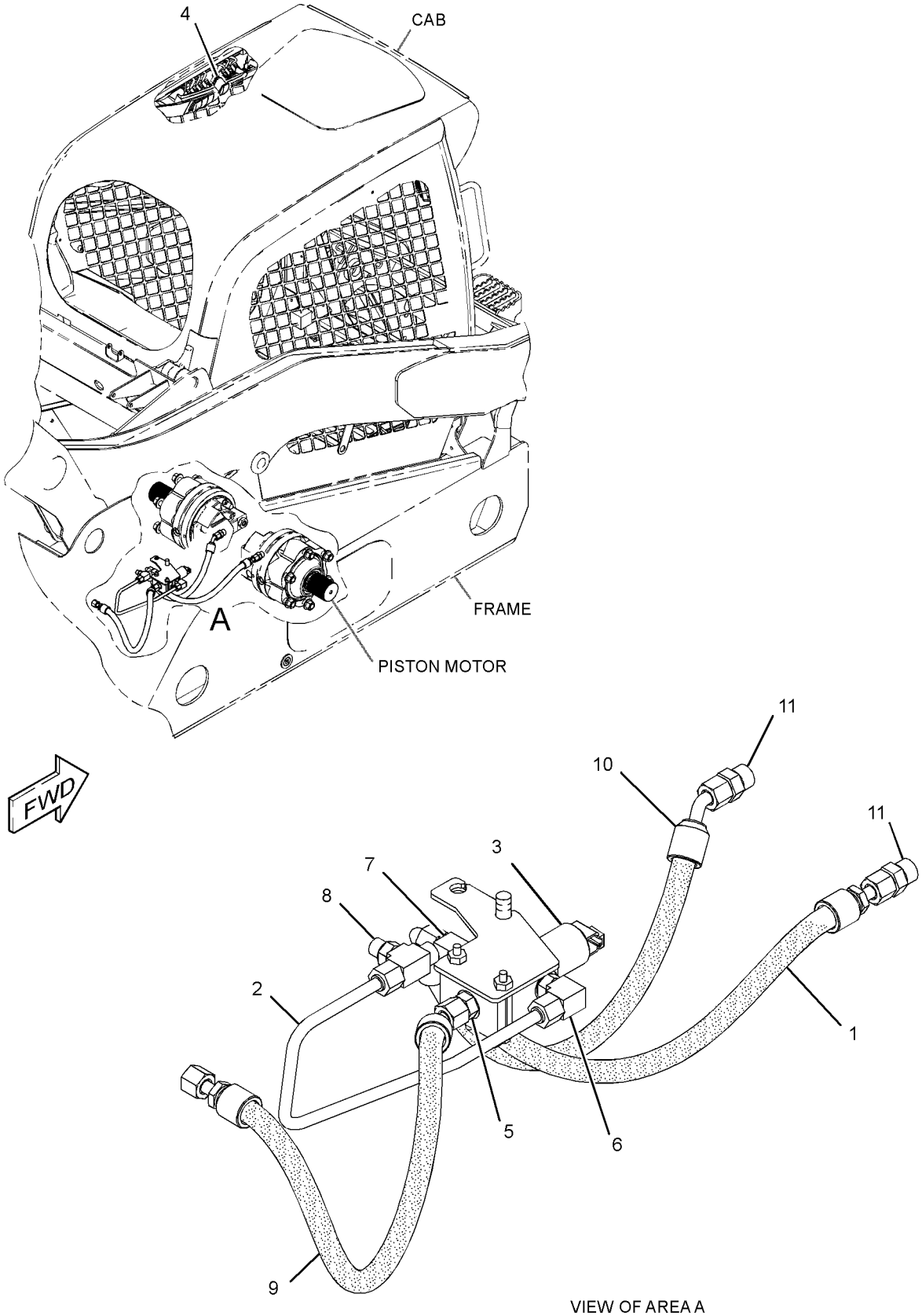

VIEW OF AREA A

GRAPHIC #1 **<END>** g01954112

258-2589 MANIFOLD GP-RETURN

S/N: MST1-UP
PART OF 258-2601 HYDRAULIC AR
TYPE 1

SMCS-5264 **i03624540**

NOTE	REF NO	GRAPHIC REF	PART NUMBER	QTY	PART NAME 1 2 3 4 5 6 (PRODUCT LEVEL)	SEE PAGE
	1	1	**105-4593**	1	POPPET	
	2	1	*148-8407*	1	PLUG AS	
		1	**3J-1907**	1	SEAL-O-RING	
		1	**9S-4191**	1	PLUG-O-RING	
	3	1	**212-6603**	1	PLUG AS	
		1	**6V-8978**	1	SEAL-O-RING	
	4	1	**212-6604**	1	SPRING	
	5	1	**305-4185**	1	BLOCK	
I	6	1	**258-3660**	1	HOSE AS	
	7	1	*148-8327*	2	CONNECTOR AS	
					(EACH INCLUDES)	
		1	**3D-2824**	1	SEAL-O-RING	
		1	**6V-8637**	1	CONNECTOR	
		1	**6V-9746**	1	SEAL-O-RING	
	8	1	*150-3072*	1	PLUG AS	
		1	**6V-8398**	1	SEAL-O-RING	
		1	**6V-9509**	1	PLUG (13/16-16-THD)	
	9	1	*164-5608*	2	CONNECTOR AS	
					(EACH INCLUDES)	
		1	**3K-0360**	1	SEAL-O-RING	
		1	**6V-8398**	1	SEAL-O-RING	
		1	**8T-1687**	1	CONNECTOR	
M	10	1	**266-3315**	3	BOLT-FLANGE HEAD (M8X1.25X25.5-MM)	
M	11	1	**5C-7261**	1	NUT (M8X1.25-THD)	
	12	1	**5P-4116**	4	WASHER-HARD (8.8X20.5X2-MM THK)	
	13	1	**6D-4246**	1	CLIP	
	14	1	*148-8362*	1	ELBOW AS	
		1	**3D-2824**	1	SEAL-O-RING	
		1	**5K-9090**	1	SEAL-O-RING	
		1	**8T-6684**	1	ELBOW	

I-REFER TO HYDRAULIC INFORMATION SYSTEM
M-METRIC PART

258-2589 **MANIFOLD GP-RETURN** *(contd.)* **i03624540**

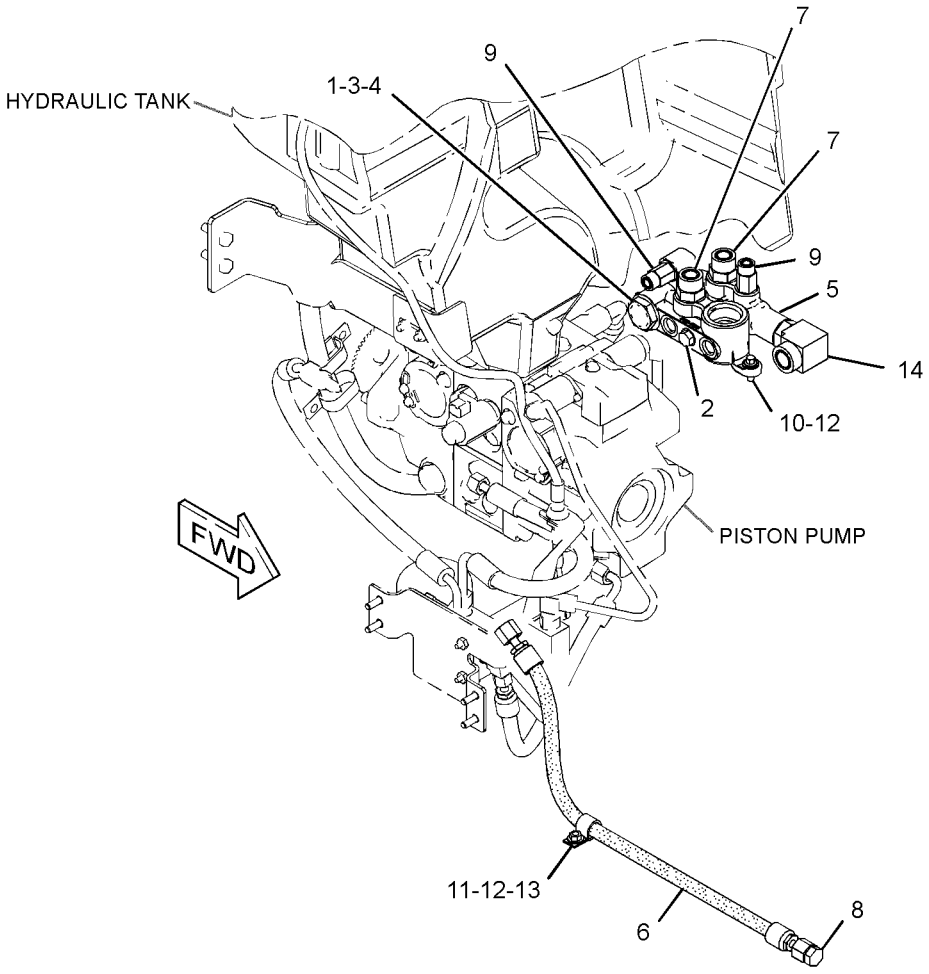

GRAPHIC #1 **<END>** g01352597

258-2589 MANIFOLD GP-RETURN

S/N: MST1-UP
PART OF 258-2601 HYDRAULIC AR
TYPE 2

SMCS-5264 **i03632803**

NOTE	REF NO	GRAPHIC REF	PART NUMBER	QTY	PART NAME 1 2 3 4 5 6 (PRODUCT LEVEL)	SEE PAGE
	1	1	**105-4593**	1	POPPET	
	2	1	*148-8407*	1	PLUG AS	
		1	**3J-1907**	1	SEAL-O-RING	
		1	**9S-4191**	1	PLUG-O-RING	
	3	1	**212-6603**	1	PLUG AS	
		1	**6V-8978**	1	SEAL-O-RING	
	4	1	**212-6604**	1	SPRING	
	5	1	**305-4185**	1	BLOCK	
I	6	1	**258-3660**	1	HOSE AS	
	7	1	*148-8327*	2	CONNECTOR AS	
					(EACH INCLUDES)	
		1	**3D-2824**	1	SEAL-O-RING	
		1	**6V-8637**	1	CONNECTOR	
		1	**6V-9746**	1	SEAL-O-RING	
	8	1	*150-3072*	1	PLUG AS	
		1	**6V-8398**	1	SEAL-O-RING	
		1	**6V-9509**	1	PLUG (13/16-16-THD)	
	9	1	*164-5608*	2	CONNECTOR AS	
					(EACH INCLUDES)	
		1	**3K-0360**	1	SEAL-O-RING	
		1	**6V-8398**	1	SEAL-O-RING	
		1	**8T-1687**	1	CONNECTOR	
M	10	1	**266-3315**	3	BOLT-FLANGE HEAD (M8X1.25X25.5-MM)	
M	11	1	**5C-7261**	1	NUT (M8X1.25-THD)	
	12	1	**5P-4116**	4	WASHER-HARD (8.8X20.5X2-MM THK)	
	13	1	**6D-4246**	1	CLIP	
C	14	1	**9U-6998**	1	FITTING GP (PUMP CASE DRAIN)	
		1	**3D-2824**	1	SEAL-O-RING	

C-CHANGE FROM PREVIOUS TYPE
I-REFER TO HYDRAULIC INFORMATION SYSTEM
M-METRIC PART

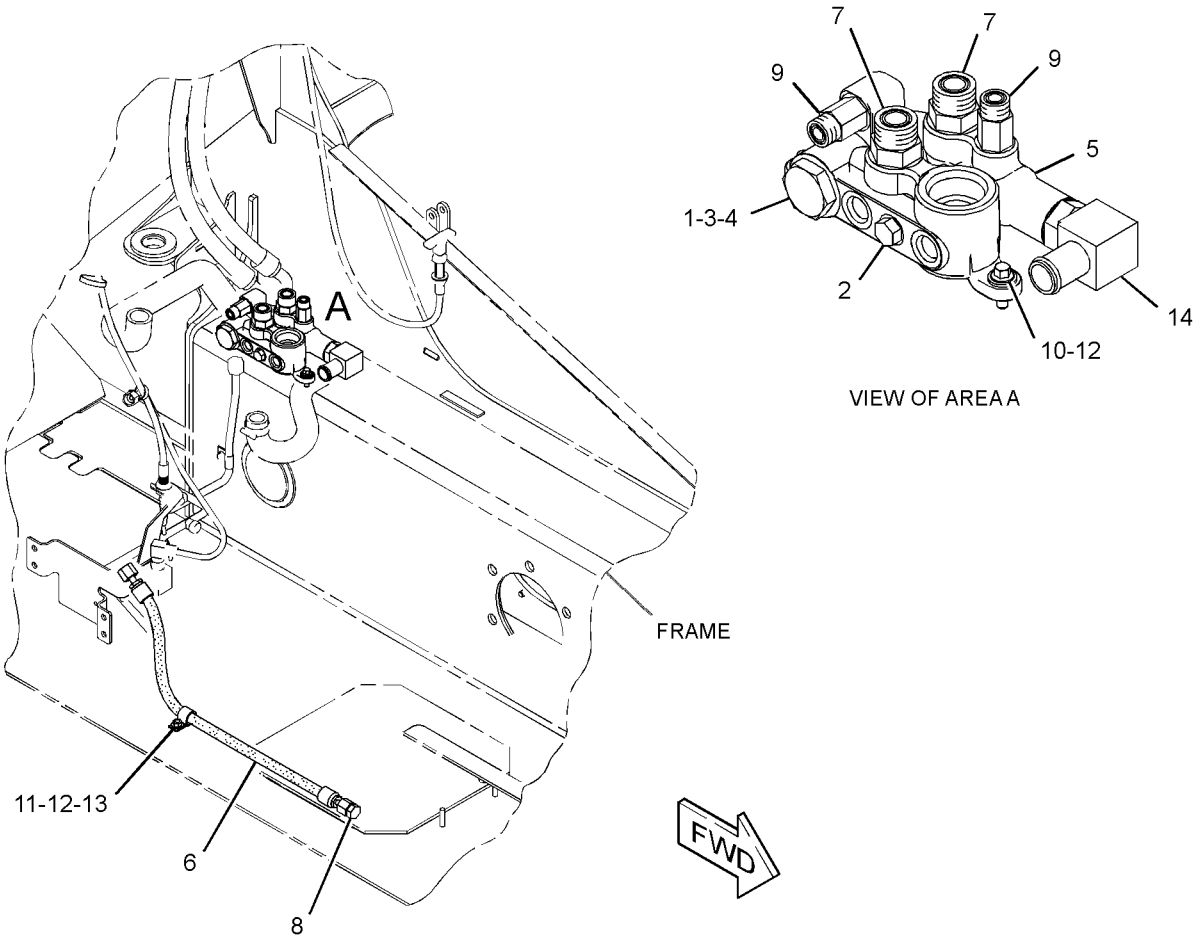

GRAPHIC #1 **<END>** g01950941

258-2408 MOTOR & MTG GP-HYDROSTATIC

S/N: MST1-UP
PART OF 258-3200 POWER TRAIN AR
AN ATTACHMENT

SMCS-5058 **i02715578**

NOTE	REF NO	GRAPHIC REF	PART NUMBER	QTY	PART NAME 1 2 3 4 5 6 (PRODUCT LEVEL)	SEE PAGE
Y	1	1	**258-2442**	2	MOTOR GP-PISTON	233
Y	2	1	*262-3764*	2	SENSOR GP-SPEED (MOTOR)	179
M	3	1	**282-2613**	12	NUT-FLANGE (M18X1.5-THD)	
M	4	1	**170-6705**	2	BOLT-SOCKET HEAD (M8X1.25X12-MM)	
	5	1	**6F-4718**	2	SEAL-O-RING	

M-METRIC PART
Y-SEPARATE ILLUSTRATION

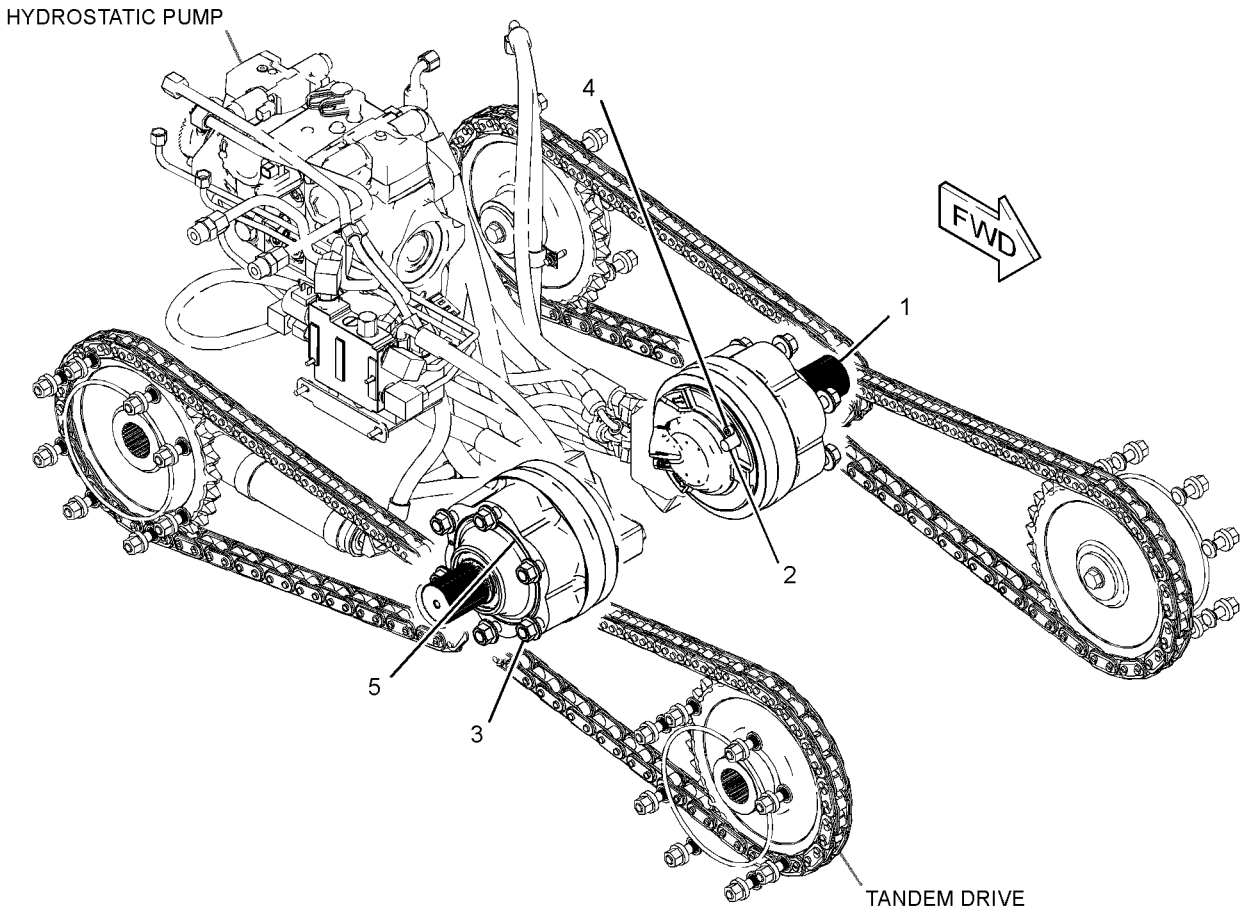

GRAPHIC #1 **<END>** g01326148

258-2409 MOTOR & MTG GP-HYDROSTATIC

S/N: MST1-UP
PART OF 258-3400 POWER TRAIN AR
AN ATTACHMENT

SMCS-5058 **i03635701**

NOTE	REF NO	GRAPHIC REF	PART NUMBER	QTY	PART NAME 1 2 3 4 5 6 (PRODUCT LEVEL)	SEE PAGE
Y	1	1	**258-2520**	1	MOTOR GP-PISTON (2-SPEED, LH)	235
Y	2	1	**258-2521**	1	MOTOR GP-PISTON (2-SPEED, RH)	237
Y	3	1	*262-3764*	2	SENSOR GP-SPEED (MOTOR)	179
M	4	1	**282-2613**	12	NUT-FLANGE (M18X1.5-THD)	
M	5	1	**170-6705**	2	BOLT-SOCKET HEAD (M8X1.25X12-MM)	
	6	1	**6F-4718**	2	SEAL-O-RING	

M-METRIC PART
Y-SEPARATE ILLUSTRATION

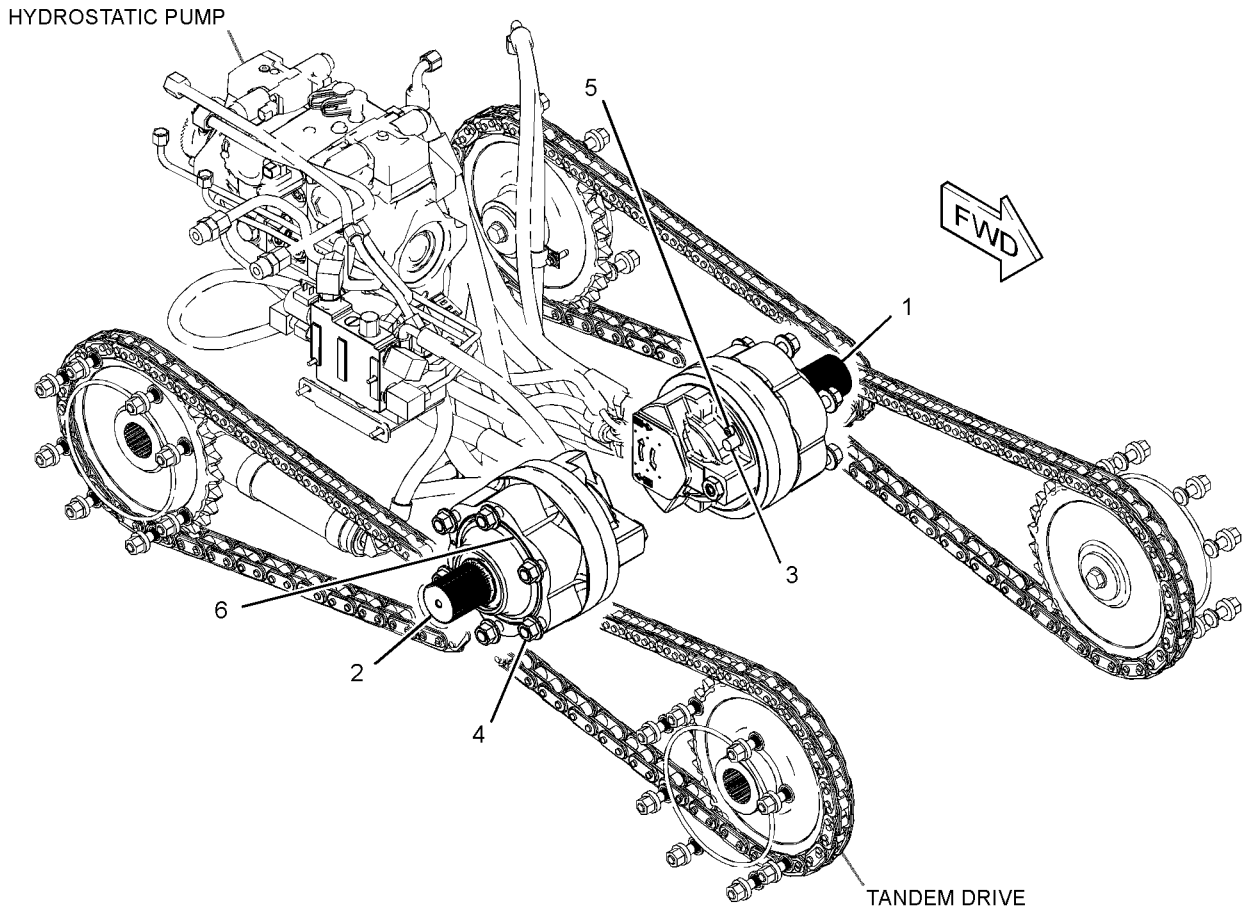

GRAPHIC #1 **<END>** g01326160

258-2416 MOTOR & MTG GP-HYDROSTATIC

S/N: MST1-UP
PART OF 300-7637 POWER TRAIN AR
AN ATTACHMENT

SMCS-5058 **i03635704**

NOTE	REF NO	GRAPHIC REF	PART NUMBER	QTY	PART NAME 1 2 3 4 5 6 (PRODUCT LEVEL)	SEE PAGE
Y	1	1	**258-2605**	2	MOTOR GP-PISTON	239
Y	2	1	*262-3764*	2	SENSOR GP-SPEED (MOTOR)	179
M	3	1	**282-2613**	12	NUT-FLANGE (M18X1.5-THD)	
M	4	1	**170-6705**	2	BOLT-SOCKET HEAD (M8X1.25X12-MM)	
	5	1	**6F-4718**	2	SEAL-O-RING	

M-METRIC PART
Y-SEPARATE ILLUSTRATION

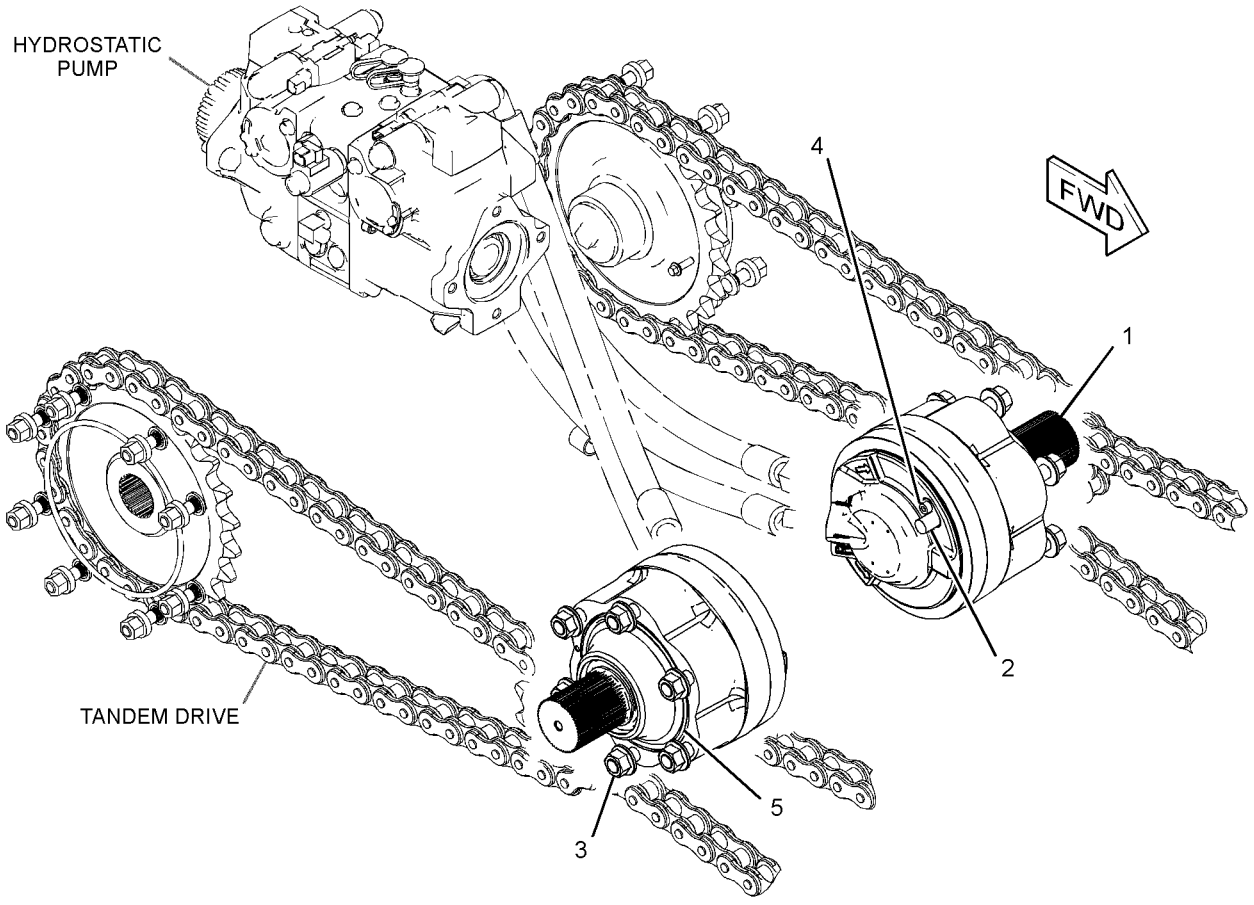

GRAPHIC #1 **<END>** g01327510

258-2442 MOTOR GP-PISTON

S/N: MST1-UP

PART OF 258-2408 MOTOR & MTG GP-HYDROSTATIC

AN ATTACHMENT

SMCS-4351, 5058 **i03690260**

NOTE	REF NO	GRAPHIC REF	PART NUMBER	QTY	PART NAME 1 2 3 4 5 6 (PRODUCT LEVEL)	SEE PAGE
	1	1	**280-7843**	1	VALVE GP-FLUSHING	
	2	1	**280-7837**	1	KIT-VALVE (DISTRIBUTION)	
					(INCLUDES VALVE BODY, PIN, RINGS & SPRINGS)	
	3	1	**280-7838**	1	KIT-BEARING (PISTON MOTOR)	
					(INCLUDES SEALS, TAPERED ROLLER BEARINGS, WASHERS & RINGS)	
	4	1	**280-7839**	6	STUD	
	5	1	**280-7840**	1	KIT-BRAKE (PISTON MOTOR)	
					(INCLUDES STEEL BRAKE PISTON, SEALS & SPRINGS)	
	6	1	**280-7841**	1	SHAFT-DRIVE	
					PARTS SHOWN IN GRAPHIC(S) WITHOUT A REFERENCE NUMBER ARE NOT SERVICED SEPARATELY	

258-2442 MOTOR GP-PISTON *(contd.)* **i03690260**

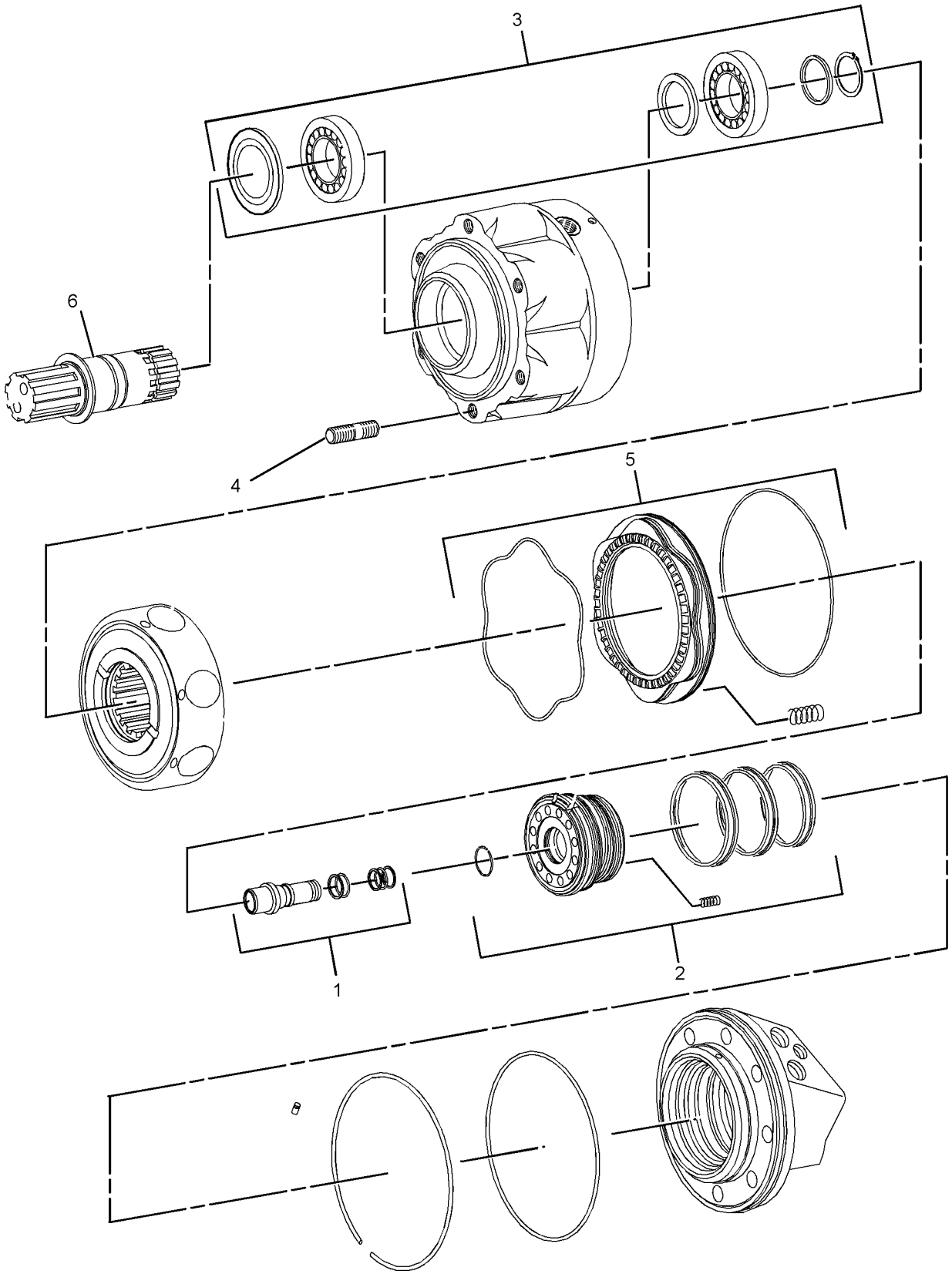

GRAPHIC #1 **<END>** g01327439

258-2520 MOTOR GP-PISTON—2-SPEED, LH

S/N: MST1-UP

PART OF 258-2409 MOTOR & MTG GP-HYDROSTATIC

AN ATTACHMENT

SMCS-4351, 5058 **i02636745**

NOTE	REF NO	GRAPHIC REF	PART NUMBER	QTY	PART NAME 1 2 3 4 5 6 (PRODUCT LEVEL)	SEE PAGE
	1	1	**280-7846**	1	VALVE GP-SPEED CONTROL (2-SPEED)	
	2	1	**280-7850**	1	KIT-VALVE (DISTRIBUTION)	
					(INCLUDES DISTRIBUTION VALVE BODY, PIN, RINGS, SPRINGS & SEAL)	
	3	1	**280-7838**	1	KIT-BEARING (PISTON MOTOR)	
					(INCLUDES SEALS, TAPERED ROLLER BEARINGS, WASHER & RING)	
	4	1	**280-7839**	6	STUD	
	5	1	**280-7840**	1	KIT-BRAKE (PISTON MOTOR)	
					(INCLUDES STEEL BRAKE PISTON, SEALS & SPRINGS)	
	6	1	**280-7841**	1	SHAFT-DRIVE	
	7	1	**280-7848**	1	VALVE GP-FLUSHING	
					PARTS SHOWN IN GRAPHIC(S) WITHOUT A REFERENCE NUMBER ARE NOT SERVICED SEPARATELY	
					AVAILABLE REPAIR KIT(S):	
			280-7849	1	KIT-VALVE (PISTON MOTOR)	
					(INCLUDES RINGS, SEALS & PINS)	

258-2520 MOTOR GP-PISTON *(contd.)* **i02636745**

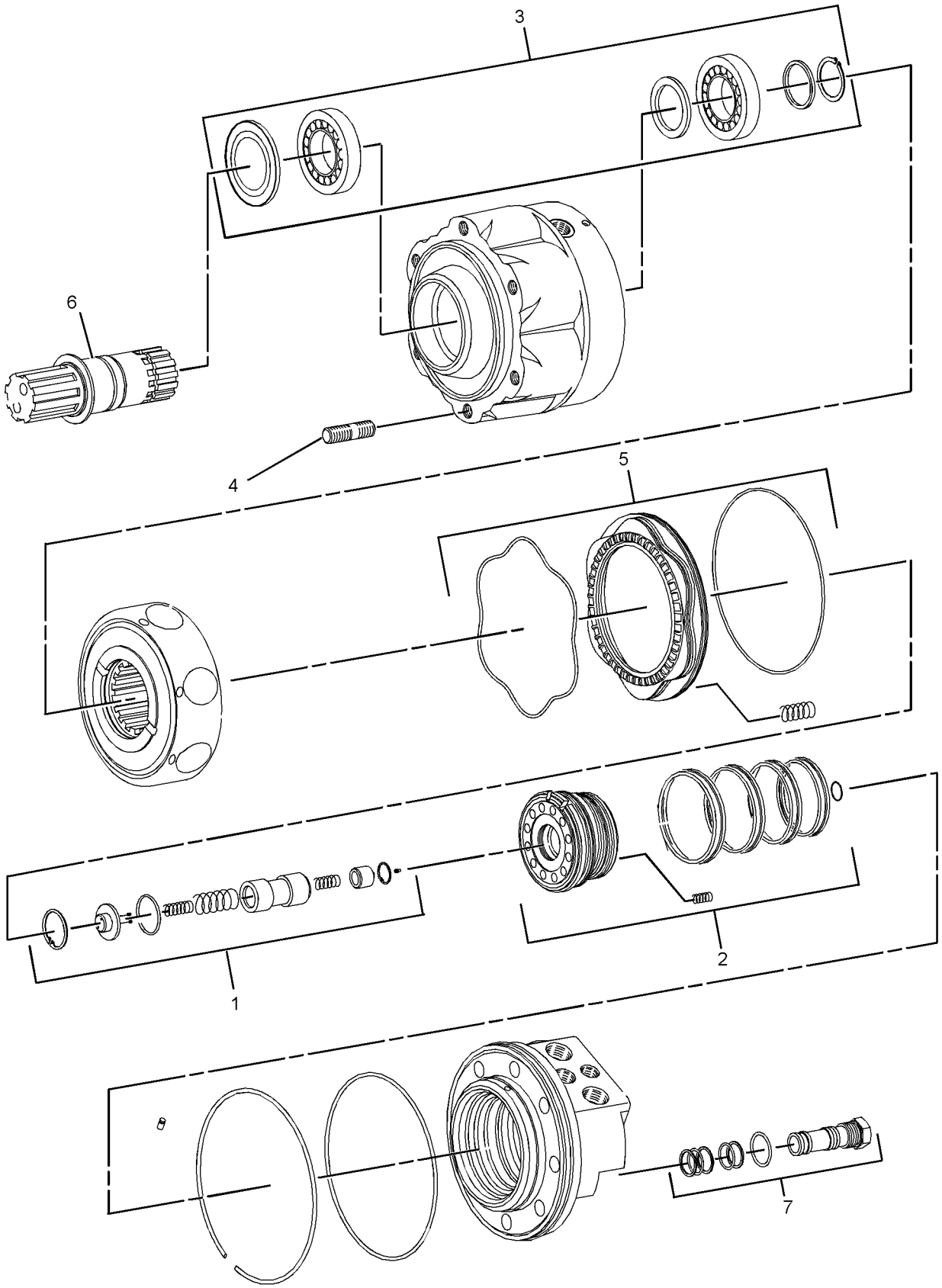

GRAPHIC #1 **<END>** g01327254

258-2521 MOTOR GP-PISTON—2-SPEED, RH

S/N: MST1-UP

PART OF 258-2409 MOTOR & MTG GP-HYDROSTATIC

AN ATTACHMENT

SMCS-4351, 5058 **i03690281**

NOTE	REF NO	GRAPHIC REF	PART NUMBER	QTY	PART NAME 1 2 3 4 5 6 (PRODUCT LEVEL)	SEE PAGE
	1	1	**280-7846**	1	VALVE GP-SPEED CONTROL (2-SPEED)	
	2	1	**280-7850**	1	KIT-VALVE (DISTRIBUTION)	
					(INCLUDES VALVE BODY, PIN, RINGS, SPRINGS & SEAL)	
	3	1	**280-7838**	1	KIT-BEARING (PISTON MOTOR)	
					(INCLUDES SEALS, TAPERED ROLLER BEARINGS, WASHER & RING)	
	4	1	**280-7839**	6	STUD	
	5	1	**280-7840**	1	KIT-BRAKE (PISTON MOTOR)	
					(INCLUDES STEEL BRAKE PISTON, SEALS & SPRINGS)	
	6	1	**280-7841**	1	SHAFT-DRIVE	
	7	1	**280-7848**	1	VALVE GP-FLUSHING	
					PARTS SHOWN IN GRAPHIC(S) WITHOUT A REFERENCE NUMBER ARE NOT SERVICED SEPARATELY	
					AVAILABLE REPAIR KIT(S):	
			280-7849	1	KIT-VALVE (PISTON MOTOR)	
					(INCLUDES RINGS, SEALS & PINS)	

258-2521 **MOTOR GP-PISTON** *(contd.)* **i03690281**

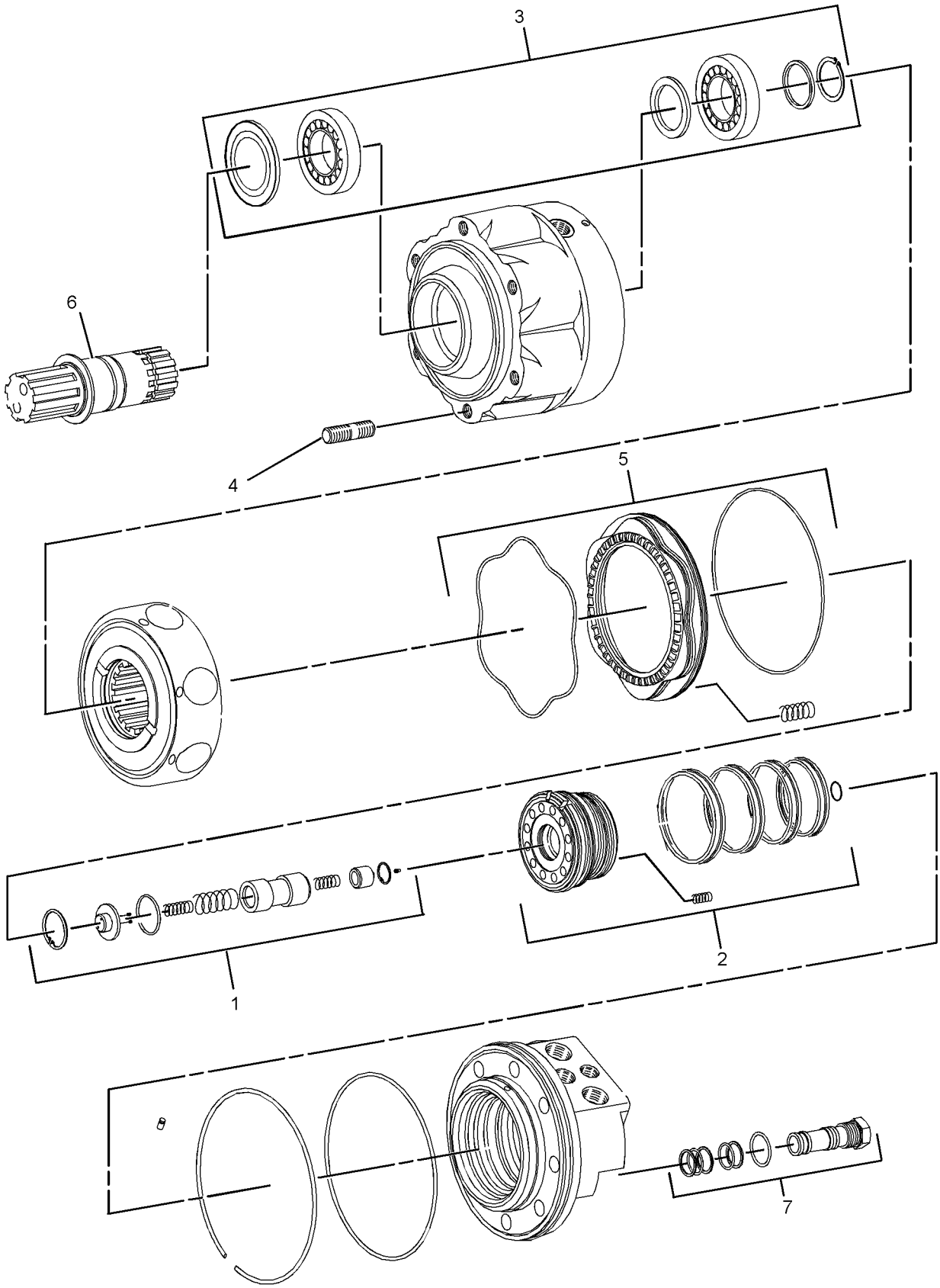

GRAPHIC #1 **<END>** g01327254

258-2605 MOTOR GP-PISTON

S/N: MST1-UP

PART OF 258-2416 MOTOR & MTG GP-HYDROSTATIC

AN ATTACHMENT

SMCS-4351, 5058 **i03690288**

NOTE	REF NO	GRAPHIC REF	PART NUMBER	QTY	PART NAME 1 2 3 4 5 6 (PRODUCT LEVEL)	SEE PAGE
	1	1	**280-7843**	1	VALVE GP-FLUSHING	
	2	1	**280-7837**	1	KIT-VALVE (DISTRIBUTION)	
					(INCLUDES VALVE BODY, PIN, RINGS & SPRINGS)	
	3	1	**280-7838**	1	KIT-BEARING (PISTON MOTOR)	
					(INCLUDES SEALS, TAPERED ROLLER BEARINGS, WASHER & RING)	
	4	1	**280-7839**	6	STUD	
	5	1	**280-7840**	1	KIT-BRAKE (PISTON MOTOR)	
					(INCLUDES STEEL BRAKE PISTON, SEALS & SPRINGS)	
	6	1	**280-7844**	1	SHAFT-DRIVE	
					PARTS SHOWN IN GRAPHIC(S) WITHOUT A REFERENCE NUMBER ARE NOT SERVICED SEPARATELY	

258-2605 MOTOR GP-PISTON *(contd.)* **i03690288**

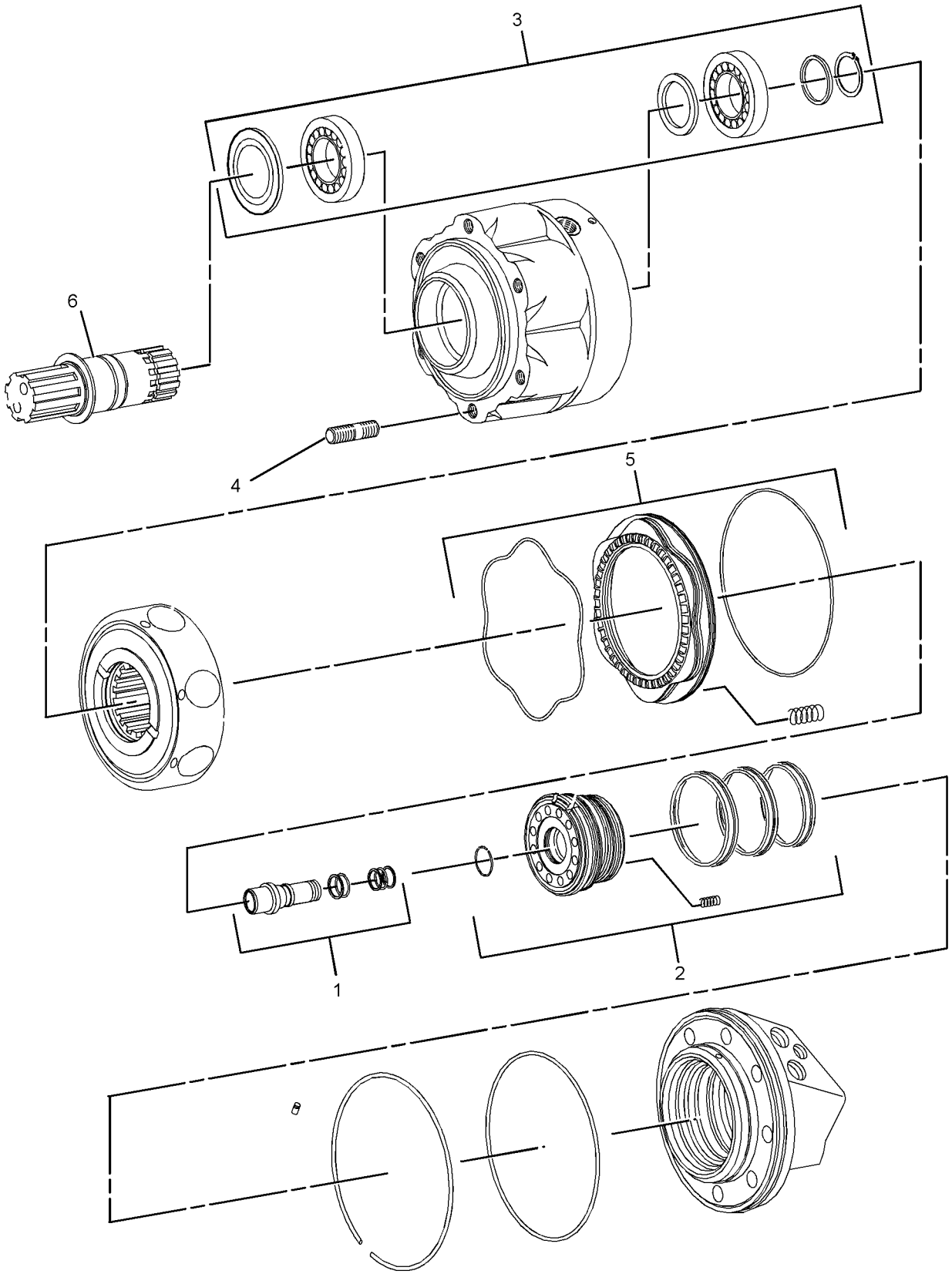

GRAPHIC #1 **<END>** g01327439

258-3318 MOUNTING GP-PUMP

S/N: MST1-UP

PART OF 258-2445, 295-7118 INSTALLATION AR-ENGINE

SMCS-3203, 5062, 5070 **i02606322**

NOTE	REF NO	GRAPHIC REF	PART NUMBER	QTY	PART NAME 1 2 3 4 5 6 (PRODUCT LEVEL)	SEE PAGE
	1	1	**226-7635**	1	FLANGE	
	2	1	**258-3319**	1	PLATE-ADAPTER	
	3	1	**8T-4121**	12	WASHER-HARD (11X21X2.5-MM THK)	
M	4	1	**8T-4195**	8	BOLT (M10X1.5X30-MM)	
M	5	1	**8T-4196**	12	BOLT (M10X1.5X35-MM)	

M-METRIC PART

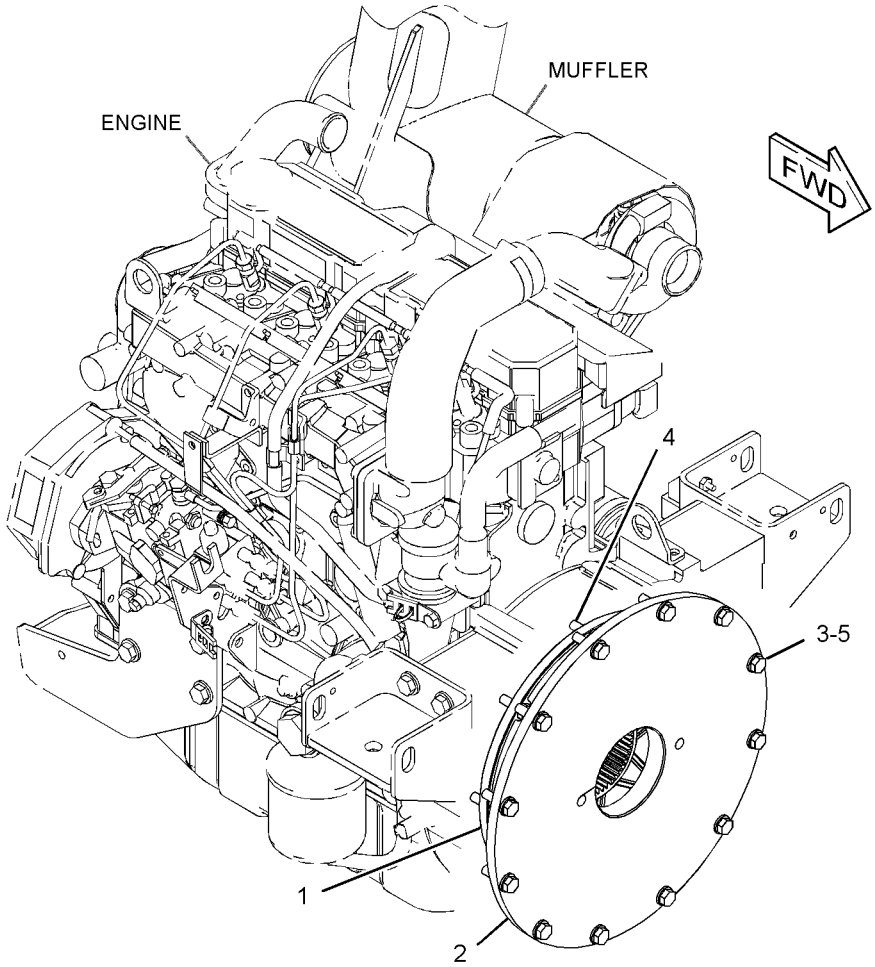

GRAPHIC #1 **<END>** g01320472

POWER TRAIN

258-3200 POWER TRAIN AR

S/N: MST1-UP
PART OF 258-3748, 258-3751 MACHINE AR-SPECIAL
AN ATTACHMENT

SMCS-3203, 4062, 5058, 5070 **i03635739**

NOTE	PART NUMBER	QTY	PART NAME 1 2 3 4 5 6 (PRODUCT LEVEL)	SEE PAGE
Y	*258-2860*	1	DRIVE GP-TANDEM	209
Y	*292-2439*	1	FITTING GP-HYDRAULIC (1-SPEED)	317
Y	*258-2430*	1	LINES GP-HYDROSTATIC	215
Y	*258-2408*	1	MOTOR & MTG GP-HYDROSTATIC	230

Y-SEPARATE ILLUSTRATION

<END>

258-3400 POWER TRAIN AR—2-SPEED

S/N: MST1-UP
PART OF 258-3683, 258-3754, 304-6741 MACHINE AR-SPECIAL
AN ATTACHMENT

SMCS-3203, 4062, 5058, 5070 **i02636753**

NOTE	PART NUMBER	QTY	PART NAME 1 2 3 4 5 6 (PRODUCT LEVEL)	SEE PAGE
Y	*258-2862*	1	DRIVE GP-TANDEM	210
Y	*289-0848*	1	FILM GP (2-SPEED)	816
Y	*258-2431*	1	LINES GP-HYDROSTATIC	217
Y	*258-3151*	1	MANIFOLD & LINES GP-CONTROL (MOTOR, 2-SPEED)	222
Y	*258-2409*	1	MOTOR & MTG GP-HYDROSTATIC	231

Y-SEPARATE ILLUSTRATION

<END>

300-7637 POWER TRAIN AR—EXTREME SERVICE POWER TRAIN

S/N: MST1-UP
PART OF 300-7629, 300-7635 MACHINE AR-SPECIAL
AN ATTACHMENT

SMCS-3203, 4062, 5058, 5070 **i02782155**

NOTE	PART NUMBER	QTY	PART NAME 1 2 3 4 5 6 (PRODUCT LEVEL)	SEE PAGE
Y	*300-7627*	1	DRIVE GP-TANDEM	211
Y	*292-2439*	1	FITTING GP-HYDRAULIC (1-SPEED)	317
Y	*258-2430*	1	LINES GP-HYDROSTATIC	215
Y	*258-2416*	1	MOTOR & MTG GP-HYDROSTATIC	232

Y-SEPARATE ILLUSTRATION

<END>

258-2406 PUMP & MTG GP-HYDROSTATIC

S/N: MST1-UP

PART OF 258-3683, 258-3748, 258-3751, 258-3754, 304-6741 MACHINE AR-SPECIAL AN ATTACHMENT

SMCS-3203, 5070 **i02715577**

NOTE	REF NO	GRAPHIC REF	PART NUMBER	QTY	PART NAME 1 2 3 4 5 6 (PRODUCT LEVEL)	SEE PAGE
	1	1	**165-0142**	2	WASHER-HARD (14.8X27X3-MM THK)	
M	2	1	**167-4339**	2	BOLT (M14X2X40-MM)	
	3	1	**252-9197**	1	BOLT-SOCKET HEAD (M12X1.75X35-MM)	
Y	4	1	**258-2404**	1	PUMP GP-PISTON (HYDROSTATIC)	245
	5	1	**263-4996**	1	HUB AS-COUPLING	
		1	**096-0194**	1	RING-RETAINING	

M-METRIC PART
Y-SEPARATE ILLUSTRATION

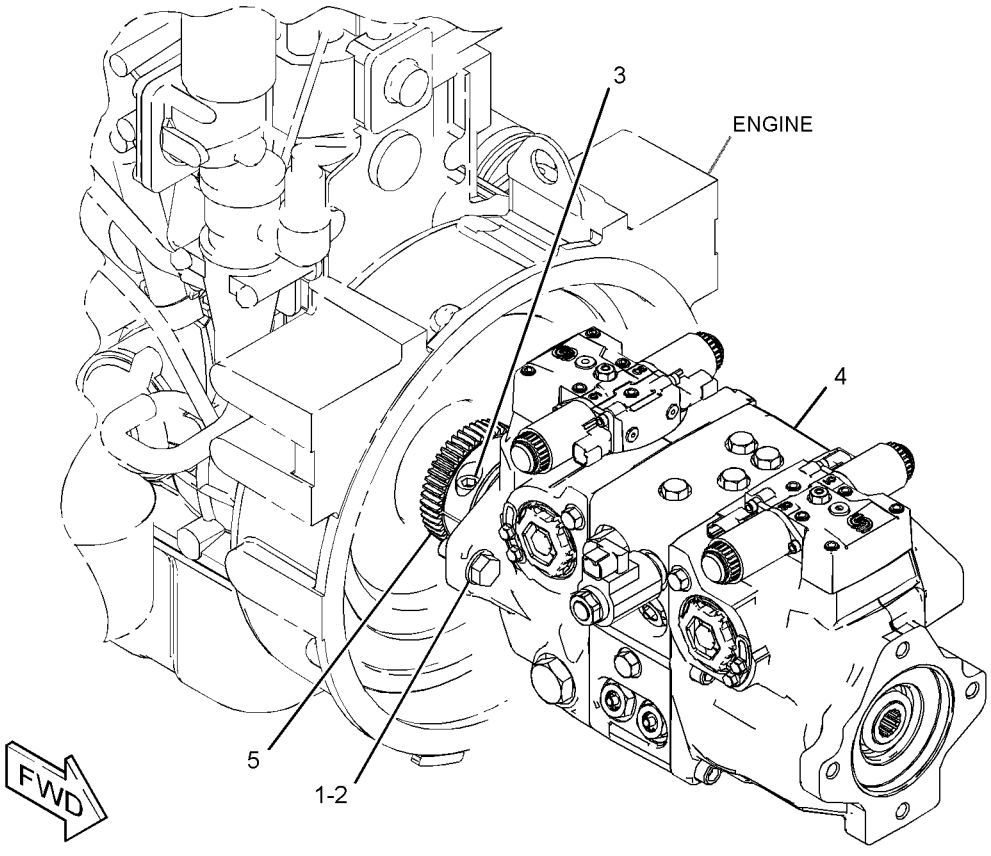

GRAPHIC #1 **<END>** g01333116

300-7640 PUMP & MTG GP-HYDROSTATIC

S/N: MST1-UP
PART OF 300-7629, 300-7635 MACHINE AR-SPECIAL
AN ATTACHMENT

SMCS-3203, 5070 **i02782157**

NOTE	REF NO	GRAPHIC REF	PART NUMBER	QTY	PART NAME 1 2 3 4 5 6 (PRODUCT LEVEL)	SEE PAGE
	1	1	**165-0142**	2	WASHER-HARD (14.8X27X3-MM THK)	
M	2	1	**167-4339**	2	BOLT (M14X2X40-MM)	
	3	1	**252-9197**	1	BOLT-SOCKET HEAD (M12X1.75X35-MM)	
	4	1	**263-4996**	1	HUB AS-COUPLING	
		1	**096-0194**	1	RING-RETAINING	
Y	5	1	**289-6362**	1	PUMP GP-PISTON (HYDROSTATIC)	248

M-METRIC PART
Y-SEPARATE ILLUSTRATION

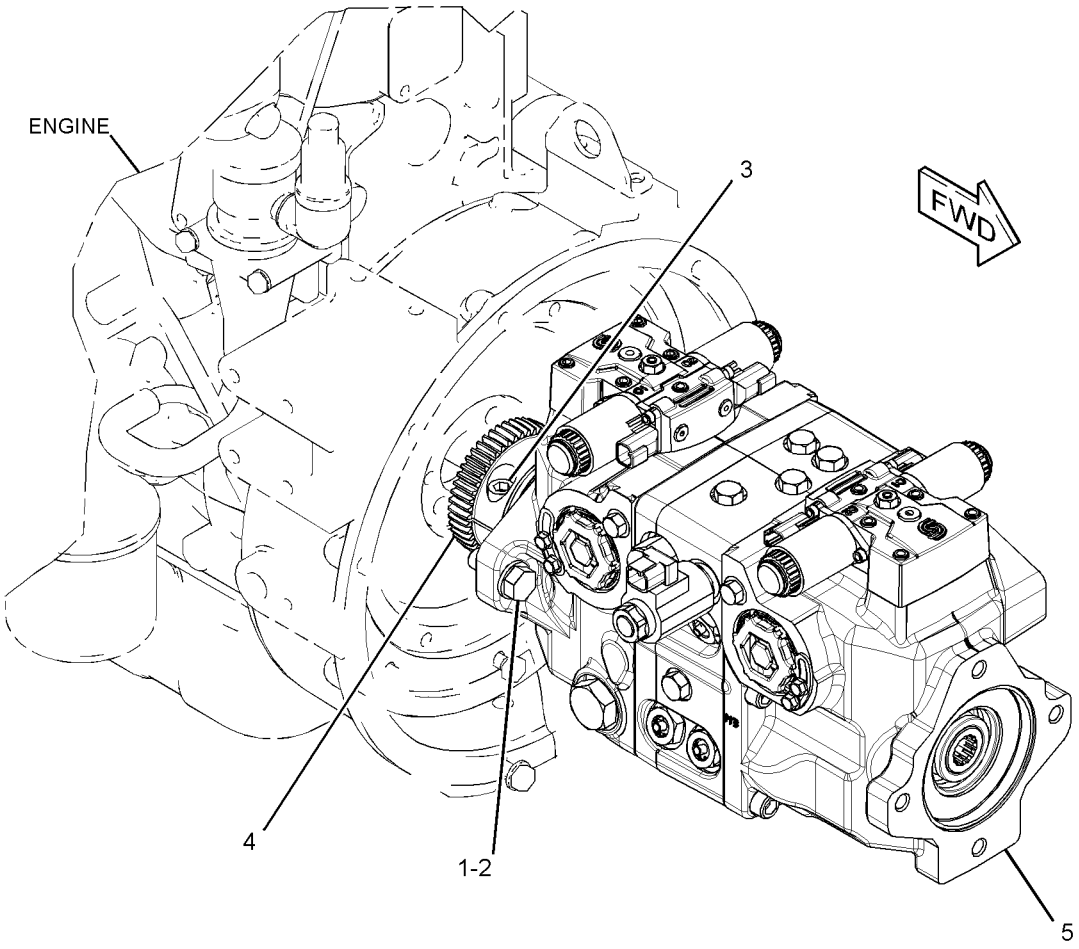

GRAPHIC #1 **<END>** g01417799

258-2404 PUMP GP-PISTON–HYDROSTATIC*R

S/N: MST1-UP

PART OF 258-2406 PUMP & MTG GP-HYDROSTATIC

AN ATTACHMENT

SMCS-3203, 5070, 5117, 5455, 5479 **i03635696**

NOTE	REF NO	GRAPHIC REF	PART NUMBER	QTY	PART NAME 1 2 3 4 5 6 (PRODUCT LEVEL)	SEE PAGE
	1	1,2	**278-8737**	2	VALVE GP-PUMP CONTROL	
	2	1,2	**278-8740**	2	SWASHPLATE	
	3	1	**278-8748**	1	SHAFT-DRIVE (INPUT)	
L	4	1,2	**280-7860**	2	BLOCK-SLIDER	
L	5	1,2	**278-8751**	4	SPRING	
	6	1	**278-8746**	1	VALVE GP-RELIEF (CHARGE)	
	7	1	**278-8743**	1	VALVE GP-SOLENOID (PARKING BRAKE)	
	8	1	**278-8745**	4	VALVE GP-RELIEF (CROSSOVER)	
	9	1	**278-8750**	1	PLATE (CCW)	
	10	1	**278-8749**	1	PLATE (CW)	
	11	2	**278-8747**	1	SHAFT-DRIVE	
	12	1,2	**9S-8002**	4	PLUG-O-RING	
	13	1	**9S-8004**	1	PLUG	
	14	2	**9S-8008**	2	PLUG-O-RING	
	15	1,2	**278-8741**	2	KIT-BEARING (PISTON PUMP)	
					(EACH INCLUDES SWASHPLATES)	
	16	1,2	**278-8735**	2	KIT-CYLINDER BLOCK	
M	17	1	**8C-3413**	6	BOLT-SOCKET HEAD (M12X1.75X120-MM)	
					PARTS SHOWN IN GRAPHIC(S) WITHOUT A REFERENCE NUMBER ARE NOT SERVICED SEPARATELY	
					AVAILABLE REPAIR KIT(S):	
			278-8736	1	KIT-SEAL (PISTON PUMP)	
					(INCLUDES O-RINGS,RING-PISTON SEAL,RING BACKUPS,RING-RETAINING,PIN-DOWEL,PIN-SLOTTED,GASKET-CONTROLLER,	
					GASKET-BODY/HEAD,SHAFT SEAL & RETAINER)	
L			**278-8738**	2	KIT-PISTON	
			278-8742	1	KIT-BEARING (PISTON PUMP)	
					(INCLUDES COUPLING,SLEEVE BEARING,RETAINING RING & SHAFT BEARING)	
			278-8744	4	KIT-SOLENOID	

L-KIT MARKED L SERVICES PARTS MARKED L
M-METRIC PART

258-2404 PUMP GP-PISTON *(contd.)* **i03635696**

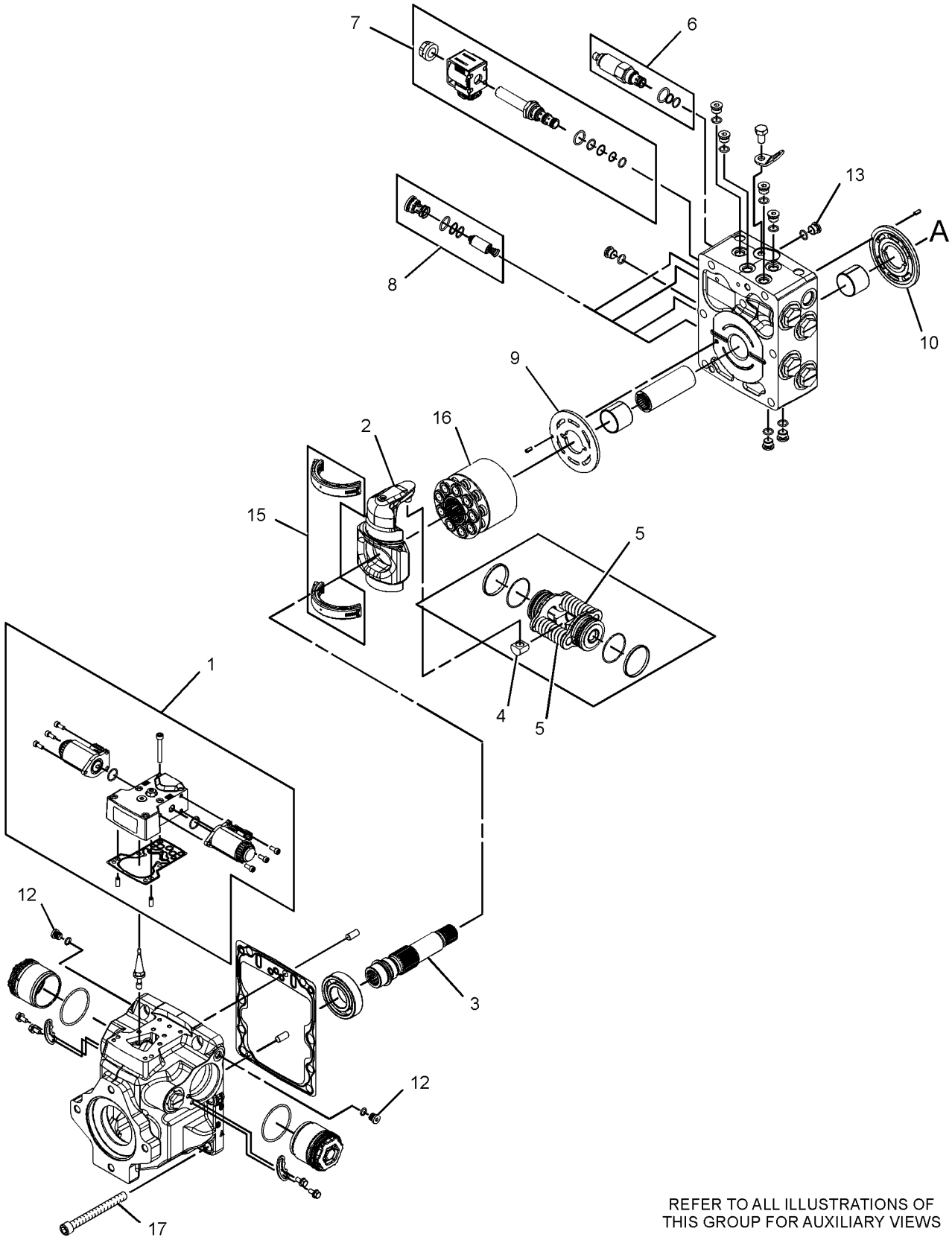

REFER TO ALL ILLUSTRATIONS OF
THIS GROUP FOR AUXILIARY VIEWS

GRAPHIC #1

g01332812

258-2404 PUMP GP-PISTON *(contd.)* **i03635696**

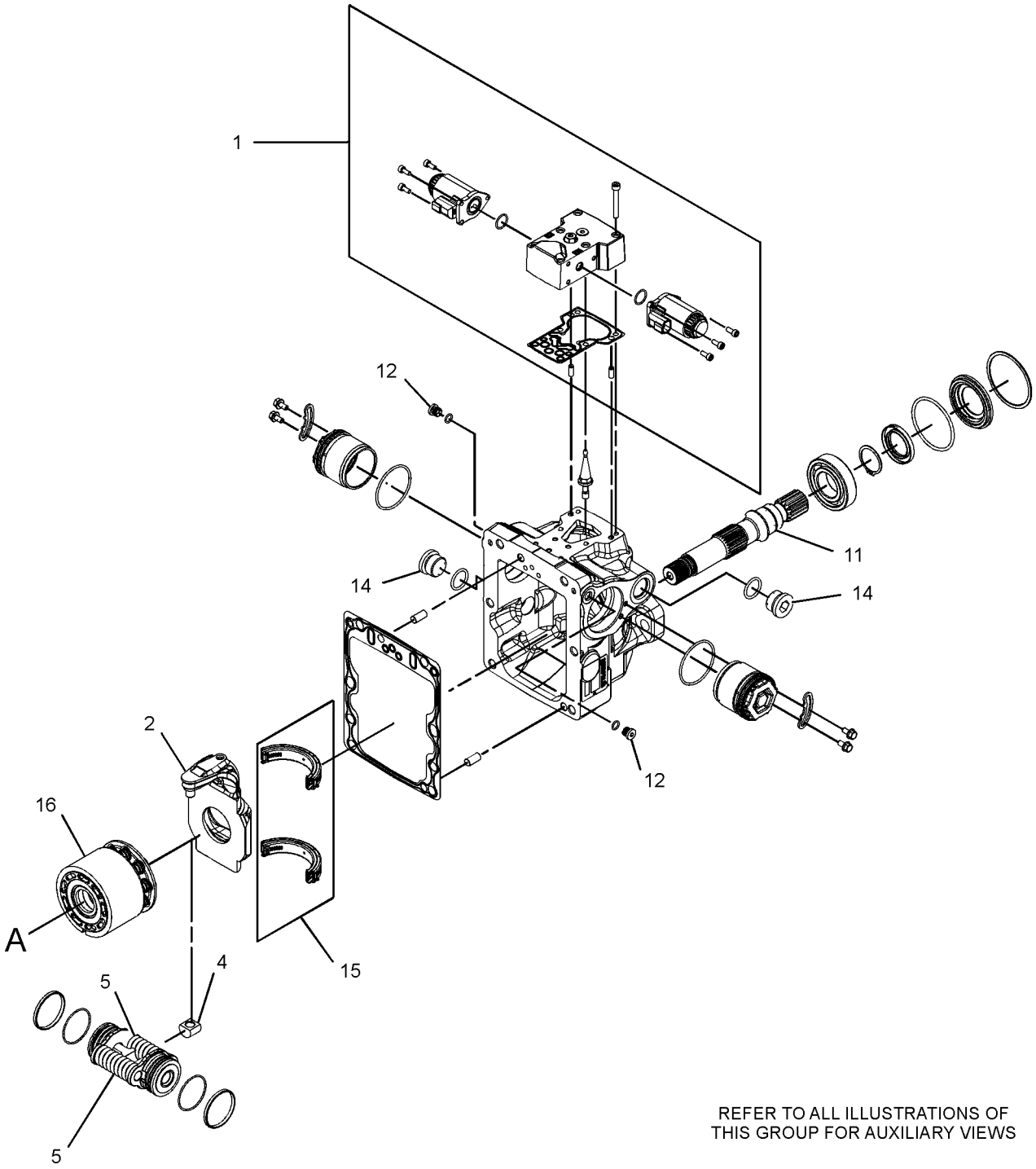

REFER TO ALL ILLUSTRATIONS OF
THIS GROUP FOR AUXILIARY VIEWS

GRAPHIC #2 **<END>** g01332841

289-6362 PUMP GP-PISTON—HYDROSTATIC

S/N: MST1-UP

PART OF 300-7640 PUMP & MTG GP-HYDROSTATIC

AN ATTACHMENT

SMCS-3203, 5070, 5117, 5455, 5479 **i03690348**

NOTE	REF NO	GRAPHIC REF	PART NUMBER	QTY	PART NAME 1 2 3 4 5 6 (PRODUCT LEVEL)	SEE PAGE
	1	1	**278-8737**	2	VALVE GP-PUMP CONTROL	
	2	1	**278-8740**	2	SWASHPLATE	
	3	1	**278-8748**	1	SHAFT-DRIVE (INPUT)	
J	4	1	**280-7860**	2	BLOCK-SLIDER	
J	5	1	**278-8751**	4	SPRING	
	6	1	**278-8746**	1	VALVE GP-RELIEF (CHARGE)	
	7	1	**278-8743**	1	VALVE GP-SOLENOID (PARKING BRAKE)	
	8	1	**289-6377**	4	VALVE GP-RELIEF (CROSSOVER)	
	9	1	**278-8750**	1	PLATE (CCW)	
	10	1	**278-8749**	1	PLATE (CW)	
	11	1	**278-8747**	1	SHAFT-DRIVE (INPUT)	
	12	1	**9S-8002**	4	PLUG-O-RING	
	13	1	**9S-8004**	1	PLUG	
	14	1	**9S-8008**	2	PLUG-O-RING	
	15	1	**278-8741**	2	KIT-BEARING (PISTON PUMP)	
					(EACH INCLUDES SWASHPLATES)	
	16	1	**278-8739**	2	ROTATING GP-PUMP	
M	17	1	**8C-3413**	6	BOLT-SOCKET HEAD (M12X1.75X120-MM)	
					PARTS SHOWN IN GRAPHIC(S) WITHOUT A REFERENCE NUMBER ARE NOT SERVICED SEPARATELY	
					AVAILABLE REPAIR KIT(S):	
J			**278-8738**	2	KIT-PISTON	
			278-8736	1	KIT-SEAL (PISTON PUMP)	
					(INCLUDES O-RINGS,RING-PISTON SEAL,RING BACKUPS,RING-RETAINING,PIN-DOWEL,PIN-SLOTTED,GASKET-CONTROLLER,	
					GASKET-BODY/HEAD,SHAFT SEAL & RETAINER)	
			278-8742	1	KIT-BEARING (PISTON PUMP)	
					(INCLUDES COUPLING,SLEEVE BEARING,RETAINING RING & SHAFT BEARING)	
			278-8744	2	KIT-SOLENOID	

J-KIT MARKED J SERVICES PARTS MARKED J
M-METRIC PART

289-6362 PUMP GP-PISTON *(contd.)* **i03690348**

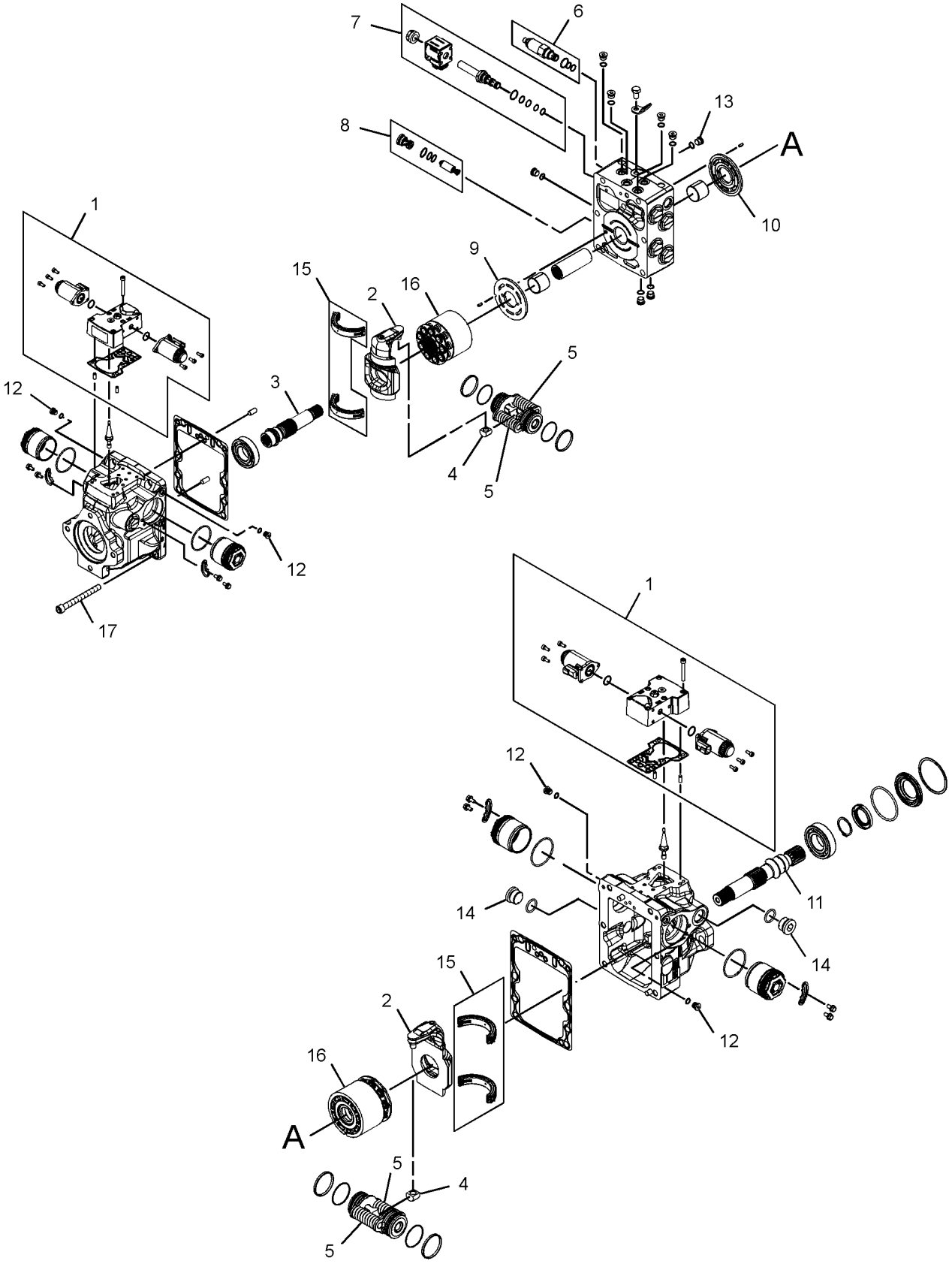

GRAPHIC #1 **<END>** g01442516

165-4901 TIRE & RIM GP—HEAVY-DUTY, LH

S/N: MST1-UP
(12X16.5). DIRECTIONAL TIRE
PART OF 165-4898 WHEEL & TIRE AR
AN ATTACHMENT

SMCS-4202 **i02474449**

NOTE	PART NUMBER	QTY	PART NAME 1 2 3 4 5 6 (PRODUCT LEVEL)	SEE PAGE
	150-8599	1	VALVE AS-TIRE	
	142-8731	1	WHEEL AS	
	165-4909	1	TIRE (12-16.5)	

<END>

165-4902 TIRE & RIM GP—HEAVY-DUTY, RH

S/N: MST1-UP
(12X16.5). DIRECTIONAL TIRE
PART OF 165-4898 WHEEL & TIRE AR
AN ATTACHMENT

SMCS-4202 **i02474458**

NOTE	PART NUMBER	QTY	PART NAME 1 2 3 4 5 6 (PRODUCT LEVEL)	SEE PAGE
	150-8599	1	VALVE AS-TIRE	
	142-8731	1	WHEEL AS	
	165-4909	1	TIRE (12-16.5)	

<END>

165-4906 TIRE & RIM GP—HEAVY-DUTY, LH

S/N: MST1-UP
(12X16.5). DIRECTIONAL TIRE
PART OF 165-4903 WHEEL & TIRE AR
AN ATTACHMENT

SMCS-4202 **i02571051**

NOTE	PART NUMBER	QTY	PART NAME 1 2 3 4 5 6 (PRODUCT LEVEL)	SEE PAGE
	150-8599	1	VALVE AS-TIRE	
	142-8759	1	WHEEL AS	
	165-4909	1	TIRE (12-16.5)	

<END>

165-4907 TIRE & RIM GP—HEAVY-DUTY, RH

S/N: MST1-UP
(12X16.5). DIRECTIONAL TIRE
PART OF 165-4903 WHEEL & TIRE AR
AN ATTACHMENT

SMCS-4202 **i02571052**

NOTE	PART NUMBER	QTY	PART NAME 1 2 3 4 5 6 (PRODUCT LEVEL)	SEE PAGE
	150-8599	1	VALVE AS-TIRE	
	142-8759	1	WHEEL AS	
	165-4909	1	TIRE (12-16.5)	

<END>

185-8674 TIRE & RIM GP—LH

S/N: MST1-UP
(305X546). DIRECTIONAL TIRE
PART OF 185-8662 WHEEL & TIRE AR
AN ATTACHMENT

SMCS-4202 **i02571069**

NOTE	PART NUMBER	QTY	PART NAME 1 2 3 4 5 6 (PRODUCT LEVEL)	SEE PAGE
	150-8599	1	VALVE AS-TIRE	
	185-9936	1	WHEEL AS	
	185-9935	1	TIRE (305-546)	

<END>

185-8675 TIRE & RIM GP—RH

S/N: MST1-UP
(305X546). DIRECTIONAL TIRE
PART OF 185-8662 WHEEL & TIRE AR
AN ATTACHMENT

SMCS-4202 **i02571070**

NOTE	PART NUMBER	QTY	PART NAME 1 2 3 4 5 6 (PRODUCT LEVEL)	SEE PAGE
	150-8599	1	VALVE AS-TIRE	
	185-9936	1	WHEEL AS	
	185-9935	1	TIRE (305-546)	

<END>

185-8676 TIRE & RIM GP–LH

S/N: MST1-UP
(305X546). DIRECTIONAL TIRE
PART OF 185-8663 WHEEL & TIRE AR
AN ATTACHMENT

SMCS-4202 **i02474467**

NOTE	PART NUMBER	QTY	PART NAME 1 2 3 4 5 6 (PRODUCT LEVEL)	SEE PAGE
	150-8599	1	VALVE AS-TIRE	
	185-9937	1	WHEEL AS	
	185-9935	1	TIRE (305-546)	

<END>

185-8677 TIRE & RIM GP–RH

S/N: MST1-UP
(305X546). DIRECTIONAL TIRE
PART OF 185-8663 WHEEL & TIRE AR
AN ATTACHMENT

SMCS-4202 **i02474504**

NOTE	PART NUMBER	QTY	PART NAME 1 2 3 4 5 6 (PRODUCT LEVEL)	SEE PAGE
	150-8599	1	VALVE AS-TIRE	
	185-9937	1	WHEEL AS	
	185-9935	1	TIRE (305-546)	

<END>

185-9928 TIRE & RIM GP–LH

S/N: MST1-UP
(12X16.5). DIRECTIONAL TIRE
PART OF 185-8666 WHEEL & TIRE AR
AN ATTACHMENT

SMCS-4202 **i02571082**

NOTE	PART NUMBER	QTY	PART NAME 1 2 3 4 5 6 (PRODUCT LEVEL)	SEE PAGE
	150-8599	1	VALVE AS-TIRE	
	142-8759	1	WHEEL AS	
	185-9933	1	TIRE (12-16.5)	

<END>

185-9929 TIRE & RIM GP–RH

S/N: MST1-UP
(12X16.5). DIRECTIONAL TIRE
PART OF 185-8666 WHEEL & TIRE AR
AN ATTACHMENT

SMCS-4202 **i02571083**

NOTE	PART NUMBER	QTY	PART NAME 1 2 3 4 5 6 (PRODUCT LEVEL)	SEE PAGE
	150-8599	1	VALVE AS-TIRE	
	142-8759	1	WHEEL AS	
	185-9933	1	TIRE (12-16.5)	

<END>

185-9930 TIRE & RIM GP–LH

S/N: MST1-UP
(12X16.5). DIRECTIONAL TIRE
PART OF 185-8667 WHEEL & TIRE AR
AN ATTACHMENT

SMCS-4202 **i02362232**

NOTE	PART NUMBER	QTY	PART NAME 1 2 3 4 5 6 (PRODUCT LEVEL)	SEE PAGE
	150-8599	1	VALVE AS-TIRE	
	142-8731	1	WHEEL AS	
	185-9933	1	TIRE (12-16.5)	

<END>

185-9931 TIRE & RIM GP–RH

S/N: MST1-UP
(12X16.5). DIRECTIONAL TIRE
PART OF 185-8667 WHEEL & TIRE AR
AN ATTACHMENT

SMCS-4202 **i02362236**

NOTE	PART NUMBER	QTY	PART NAME 1 2 3 4 5 6 (PRODUCT LEVEL)	SEE PAGE
	150-8599	1	VALVE AS-TIRE	
	142-8731	1	WHEEL AS	
	185-9933	1	TIRE (12-16.5)	

<END>

188-0124 TIRE & RIM GP–LH

S/N: MST1-UP
(12X16.5). DIRECTIONAL TIRE
PART OF 187-3239 WHEEL & TIRE AR
AN ATTACHMENT

SMCS-4202 **i02474523**

NOTE	PART NUMBER	QTY	PART NAME 1 2 3 4 5 6 (PRODUCT LEVEL)	SEE PAGE
	142-8731	1	WHEEL AS	
	150-8599	1	VALVE AS-TIRE	
	185-9933	1	TIRE (12-16.5)	

<END>

188-0125 TIRE & RIM GP–RH

S/N: MST1-UP
(12X16.5). DIRECTIONAL TIRE
PART OF 187-3239 WHEEL & TIRE AR
AN ATTACHMENT

SMCS-4202 **i02474537**

NOTE	PART NUMBER	QTY	PART NAME 1 2 3 4 5 6 (PRODUCT LEVEL)	SEE PAGE
	142-8731	1	WHEEL AS	
	150-8599	1	VALVE AS-TIRE	
	185-9933	1	TIRE (12-16.5)	

<END>

199-5438 TIRE & RIM GP–LH

S/N: MST1-UP
(12X16.5). DIRECTIONAL TIRE
PART OF 178-2256 WHEEL & TIRE AR
AN ATTACHMENT

SMCS-4202 **i02362244**

NOTE	PART NUMBER	QTY	PART NAME 1 2 3 4 5 6 (PRODUCT LEVEL)	SEE PAGE
	150-8599	1	VALVE AS-TIRE	
	178-2270	1	WHEEL AS	
	199-5440	1	TIRE (33/15.5-16.5)	

<END>

199-5439 TIRE & RIM GP–RH

S/N: MST1-UP
(12X16.5). DIRECTIONAL TIRE
PART OF 178-2256 WHEEL & TIRE AR
AN ATTACHMENT

SMCS-4202 **i02362243**

NOTE	PART NUMBER	QTY	PART NAME 1 2 3 4 5 6 (PRODUCT LEVEL)	SEE PAGE
	150-8599	1	VALVE AS-TIRE	
	178-2270	1	WHEEL AS	
	199-5440	1	TIRE (33/15.5-16.5)	

<END>

265-2898 TIRE & RIM GP–LH

S/N: MST1-UP
(12X16.5)
PART OF 252-0346 WHEEL & TIRE AR
AN ATTACHMENT

SMCS-4202 **i02361217**

NOTE	PART NUMBER	QTY	PART NAME 1 2 3 4 5 6 (PRODUCT LEVEL)	SEE PAGE
	150-8599	1	VALVE AS-TIRE	
	142-8731	1	WHEEL AS	
	222-3963	1	TIRE (12-16.5)	

<END>

265-2899 TIRE & RIM GP–RH

S/N: MST1-UP
(12X16.5)
PART OF 252-0346 WHEEL & TIRE AR
AN ATTACHMENT

SMCS-4202 **i02361220**

NOTE	PART NUMBER	QTY	PART NAME 1 2 3 4 5 6 (PRODUCT LEVEL)	SEE PAGE
	150-8599	1	VALVE AS-TIRE	
	142-8731	1	WHEEL AS	
	222-3963	1	TIRE (12-16.5)	

<END>

265-2900 TIRE & RIM GP–LH

S/N: MST1-UP
(12X16.5)
PART OF 252-0347 WHEEL & TIRE AR
AN ATTACHMENT

SMCS-4202 **i02279760**

NOTE	PART NUMBER	QTY	PART NAME 1 2 3 4 5 6 (PRODUCT LEVEL)	SEE PAGE
	150-8599	1	VALVE AS-TIRE	
	142-8759	1	WHEEL AS	
	222-3963	1	TIRE (12-16.5)	

<END>

265-2901 TIRE & RIM GP–RH

S/N: MST1-UP
(12X16.5)
PART OF 252-0347 WHEEL & TIRE AR
AN ATTACHMENT

SMCS-4202 **i02279766**

NOTE	PART NUMBER	QTY	PART NAME 1 2 3 4 5 6 (PRODUCT LEVEL)	SEE PAGE
	150-8599	1	VALVE AS-TIRE	
	142-8759	1	WHEEL AS	
	222-3963	1	TIRE (12-16.5)	

<END>

159-5761 WHEEL & TIRE AR–SOLID

S/N: MST1-UP
AN ATTACHMENT

SMCS-4200, 4201, 4203 **i02361156**

NOTE	PART NUMBER	QTY	PART NAME 1 2 3 4 5 6 (PRODUCT LEVEL)	SEE PAGE
	142-7493	32	NUT-LUG (9/16-18-THD)	
	187-3230	4	TIRE-SOLID (33X6X8)	

<END>

165-4898 WHEEL & TIRE AR–HEAVY DUTY

S/N: MST1-UP
AN ATTACHMENT

SMCS-4200, 4201, 4203 **i02361187**

NOTE	PART NUMBER	QTY	PART NAME 1 2 3 4 5 6 (PRODUCT LEVEL)	SEE PAGE
Y	*165-4901*	2	TIRE & RIM GP (LH)	250
Y	*165-4902*	2	TIRE & RIM GP (RH)	250
	142-7493	32	NUT-LUG (9/16-18-2B THD)	

Y-SEPARATE ILLUSTRATION

<END>

165-4903 WHEEL & TIRE AR—HEAVY DUTY

S/N: MST1-UP
AN ATTACHMENT

SMCS-4200, 4201, 4203 **i02571050**

NOTE	PART NUMBER	QTY	PART NAME 1 2 3 4 5 6 (PRODUCT LEVEL)	SEE PAGE
Y	*165-4906*	2	TIRE & RIM GP (LH)	250
Y	*165-4907*	2	TIRE & RIM GP (RH)	251
	142-7493	32	NUT-LUG (9/16-18-2B-THD)	

Y-SEPARATE ILLUSTRATION

<END>

178-2256 WHEEL & TIRE AR—HEAVY DUTY

S/N: MST1-UP
AN ATTACHMENT

SMCS-4200, 4201, 4203 **i02361189**

NOTE	PART NUMBER	QTY	PART NAME 1 2 3 4 5 6 (PRODUCT LEVEL)	SEE PAGE
Y	*199-5438*	2	TIRE & RIM GP (LH)	254
Y	*199-5439*	2	TIRE & RIM GP (RH)	255
	142-7493	32	NUT-LUG (9/16-18-2B THD)	

Y-SEPARATE ILLUSTRATION

<END>

185-8662 WHEEL & TIRE AR—LOW SIDE WALL

S/N: MST1-UP
AN ATTACHMENT

SMCS-4200, 4201, 4203 **i02571068**

NOTE	PART NUMBER	QTY	PART NAME 1 2 3 4 5 6 (PRODUCT LEVEL)	SEE PAGE
Y	*185-8674*	2	TIRE & RIM GP (LH)	251
Y	*185-8675*	2	TIRE & RIM GP (RH)	251
	142-7493	32	NUT-LUG (9/16-18-2B-THD)	

Y-SEPARATE ILLUSTRATION

<END>

185-8663 WHEEL & TIRE AR—LOW SIDE WALL

S/N: MST1-UP
AN ATTACHMENT

SMCS-4200, 4201, 4203 **i02361197**

NOTE	PART NUMBER	QTY	PART NAME 1 2 3 4 5 6 (PRODUCT LEVEL)	SEE PAGE
Y	*185-8676*	2	TIRE & RIM GP (LH)	252
Y	*185-8677*	2	TIRE & RIM GP (RH)	252
	142-7493	32	NUT-LUG (9/16-18-2B THD)	

Y-SEPARATE ILLUSTRATION

<END>

POWER TRAIN

185-8666 WHEEL & TIRE AR—HEAVY DUTY

S/N: MST1-UP

AN ATTACHMENT

SMCS-4200, 4201, 4203 **i02571081**

NOTE	PART NUMBER	QTY	PART NAME 1 2 3 4 5 6 (PRODUCT LEVEL)	SEE PAGE
Y	*185-9928*	2	TIRE & RIM GP (LH)	252
Y	*185-9929*	2	TIRE & RIM GP (RH)	253
	142-7493	32	NUT-LUG (9/16-18-2B-THD)	

Y-SEPARATE ILLUSTRATION

<END>

185-8667 WHEEL & TIRE AR—HEAVY DUTY

S/N: MST1-UP

AN ATTACHMENT

SMCS-4200, 4201, 4203 **i02361203**

NOTE	PART NUMBER	QTY	PART NAME 1 2 3 4 5 6 (PRODUCT LEVEL)	SEE PAGE
Y	*185-9930*	2	TIRE & RIM GP (LH)	253
Y	*185-9931*	2	TIRE & RIM GP (RH)	253
	142-7493	32	NUT-LUG (9/16-18-2B THD)	

Y-SEPARATE ILLUSTRATION

<END>

187-3239 WHEEL & TIRE AR

S/N: MST1-UP

AN ATTACHMENT

SMCS-4200, 4201, 4203 **i02361206**

NOTE	PART NUMBER	QTY	PART NAME 1 2 3 4 5 6 (PRODUCT LEVEL)	SEE PAGE
Y	*188-0124*	2	TIRE & RIM GP (LH)	254
Y	*188-0125*	2	TIRE & RIM GP (RH)	254
	142-7493	32	NUT-LUG (9/16-18-2B THD)	

Y-SEPARATE ILLUSTRATION

<END>

252-0346 WHEEL & TIRE AR

S/N: MST1-UP

AN ATTACHMENT

SMCS-4200, 4201, 4203 **i02279611**

NOTE	PART NUMBER	QTY	PART NAME 1 2 3 4 5 6 (PRODUCT LEVEL)	SEE PAGE
Y	**265-2899**	2	TIRE & RIM GP (RH)	255
Y	**265-2898**	2	TIRE & RIM GP (LH)	255
	142-7493	32	NUT-LUG (9/16-18-2B THD)	

Y-SEPARATE ILLUSTRATION

<END>

252-0347 WHEEL & TIRE AR

S/N: MST1-UP
AN ATTACHMENT

SMCS-4200, 4201, 4203 **i02279615**

NOTE	PART NUMBER	QTY	PART NAME 1 2 3 4 5 6 (PRODUCT LEVEL)	SEE PAGE
Y	**265-2900**	2	TIRE & RIM GP (LH)	256
Y	**265-2901**	2	TIRE & RIM GP (RH)	256
	142-7493	32	NUT-LUG (9/16-18-2B THD)	

Y-SEPARATE ILLUSTRATION

<END>

252-0366 WHEEL & TIRE AR—SOLID

S/N: MST1-UP
33X6X11
AN ATTACHMENT

SMCS-4200, 4201, 4203 **i02233317**

NOTE	PART NUMBER	QTY	PART NAME 1 2 3 4 5 6 (PRODUCT LEVEL)	SEE PAGE
	142-7493	32	NUT-LUG (9/16-18-2B THD)	
	226-3734	2	TIRE-SOLID (33X6X11) (LH)	
	226-3735	2	TIRE-SOLID (33X6X11) (RH)	

<END>

252-0377 WHEEL & TIRE AR—SOLID

S/N: MST1-UP
33X6X11
AN ATTACHMENT

SMCS-4200, 4201, 4203 **i02233313**

NOTE	PART NUMBER	QTY	PART NAME 1 2 3 4 5 6 (PRODUCT LEVEL)	SEE PAGE
	142-7493	32	NUT-LUG (9/16-18-2B THD)	
	226-3734	2	TIRE-SOLID (33X6X11) (RH)	
	226-3735	2	TIRE-SOLID (33X6X11) (LH)	

<END>

259-9892 WHEEL & TIRE GP

S/N: MST1-UP
AN ATTACHMENT

SMCS-4200, 4201, 4202, 4203, 4208, 4209 **i02797678**

NOTE	PART NUMBER	QTY	PART NAME 1 2 3 4 5 6 (PRODUCT LEVEL)	SEE PAGE
	226-3734	2	TIRE-SOLID (33X6X11)	
	226-3735	2	TIRE-SOLID (33X6X11)	

<END>

317-0691 WHEEL & TIRE GP

S/N: MST1-UP

FIELD INSTALLATION

SMCS-4200, 4201, 4202, 4203, 4208, 4209 **i02839893**

NOTE	REF NO	GRAPHIC REF	PART NUMBER	QTY	PART NAME 1 2 3 4 5 6 (PRODUCT LEVEL)	SEE PAGE
	1	1	**311-4928**	4	TIRE (33X6X10)	

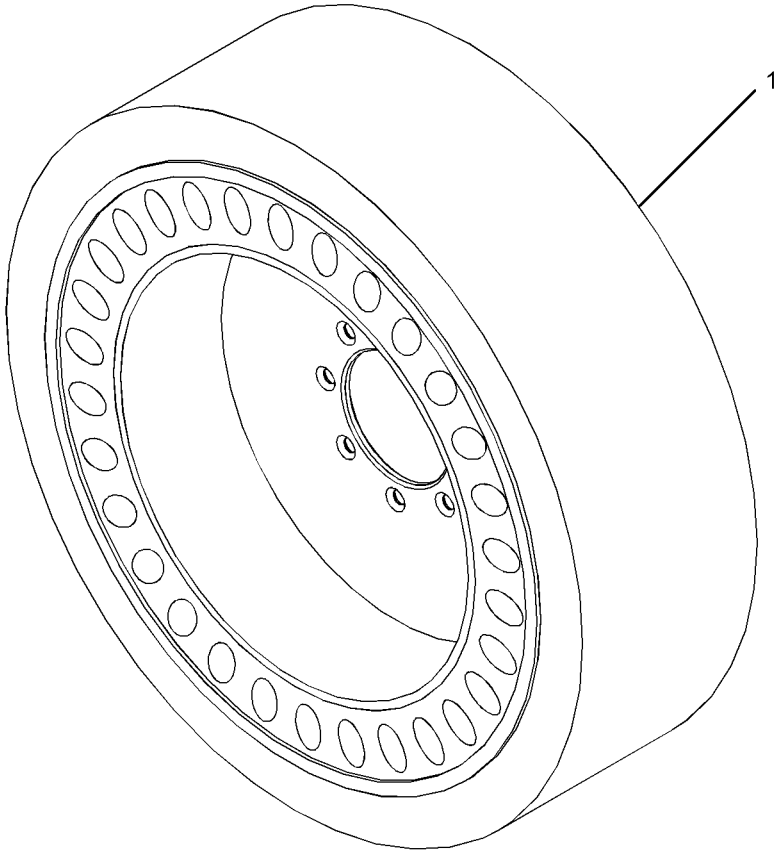

GRAPHIC #1 **<END>** g01417448

258-3800 CONVERSION AR-ROADING—NACD

S/N: MST1-UP
AN ATTACHMENT

SMCS-7000 **i03343862**

NOTE	PART NUMBER	QTY	PART NAME 1 2 3 4 5 6 (PRODUCT LEVEL)	SEE PAGE
Y	*280-8329*	1	BRACKET GP-MOUNTING (BELT GUARD)	813
			S/N: MST1-1859	
Y	*258-4169*	1	LIGHTING GP-STOP & TAIL	173
Y	*258-4230*	1	MIRROR GP-REAR VIEW	755
Y	*258-2579*	1	MOTOR & MTG GP-HYDRAULIC FAN	425
Y	*258-2462*	1	MUFFLER & MOUNTING GP	112
	258-4200	1	CANOPY AS	
	258-4012	1	WINDOW-PLASTIC (TOP)	

Y-SEPARATE ILLUSTRATION

<END>

258-3802 CONVERSION AR-ROADING—GERMANY

S/N: MST1-UP
AN ATTACHMENT

SMCS-7000 **i03342340**

NOTE	PART NUMBER	QTY	PART NAME 1 2 3 4 5 6 (PRODUCT LEVEL)	SEE PAGE
Y	*258-3840*	1	CONVERSION GP-ROADING (GERMANY)	263
Y	**177-9152**	1	KIT-ROADING PLATE & MOUNTING (BUCKET)	627
			—OR—	
Y	**319-9480**	1	KIT-ROADING PLATE & MOUNTING (BUCKET)	628
Y	*258-4385*	1	LIFTING GP-MACHINE (FOUR POINT)	286
Y	*258-4130*	1	LIGHTING GP-ROADING (HEAD, SIGNAL, STOP, TAIL)	169
Y	*175-4238*	1	LOCK GP-QUICK COUPLER (MECHANICAL)	633
Y	*305-8034*	1	MIRROR GP-REAR VIEW	756
Y	*258-3872*	1	MIRROR & MTG GP-REAR VIEW (WITH ROADING LIGHT MOUNT)	289
Y	*258-2579*	1	MOTOR & MTG GP-HYDRAULIC FAN	425
Y	*280-8347*	1	MUFFLER & MOUNTING GP	113
Y	*280-8330*	1	SUPPRESSION GP-SOUND (ENGINE)	296
			S/N: MST1-1859	
Y	*258-3496*	1	SUPPRESSION GP-SOUND (MACHINE)	294
Y	*294-4560*	1	SUPPRESSION GP-SOUND (MACHINE)	297
Y	*258-3497*	1	VISOR GP-CAB	807
	258-4222	1	CANOPY GP-OPEN ROPS	
	258-4012	1	WINDOW-PLASTIC (TOP)	

Y-SEPARATE ILLUSTRATION

<END>

FRAME AND BODY

258-3804 CONVERSION AR-ROADING—ITALY

S/N: MST1-UP

AN ATTACHMENT

SMCS-7000 **i03342382**

NOTE	PART NUMBER	QTY	PART NAME 1 2 3 4 5 6 (PRODUCT LEVEL)	SEE PAGE
Y	*258-3841*	1	CONVERSION GP-ROADING (ITALY)	264
Y	**177-9152**	1	KIT-ROADING PLATE & MOUNTING (BUCKET)	627
			—OR—	
Y	**319-9480**	1	KIT-ROADING PLATE & MOUNTING (BUCKET)	628
Y	*258-4385*	1	LIFTING GP-MACHINE (FOUR POINT)	286
Y	*258-4130*	1	LIGHTING GP-ROADING (HEAD, SIGNAL, STOP, TAIL)	169
Y	*175-4238*	1	LOCK GP-QUICK COUPLER (MECHANICAL)	633
Y	*305-8034*	1	MIRROR GP-REAR VIEW	756
Y	*258-3872*	1	MIRROR & MTG GP-REAR VIEW (WITH ROADING LIGHT MOUNT)	289
Y	*258-2579*	1	MOTOR & MTG GP-HYDRAULIC FAN	425
Y	*258-3848*	1	MOUNTING GP-REGISTRATION (ITALIAN)	290
Y	*280-8347*	1	MUFFLER & MOUNTING GP	113
Y	*258-3496*	1	SUPPRESSION GP-SOUND (MACHINE)	294
Y	*280-8330*	1	SUPPRESSION GP-SOUND (ENGINE)	296
			S/N: MST1-1859	
Y	*294-4560*	1	SUPPRESSION GP-SOUND (MACHINE)	297
	258-4222	1	CANOPY GP-OPEN ROPS	
	258-4012	1	WINDOW-PLASTIC (TOP)	

Y-SEPARATE ILLUSTRATION

<END>

258-3840 CONVERSION GP-ROADING–GERMANY

S/N: MST1-UP

PART OF 258-3802 CONVERSION AR-ROADING

AN ATTACHMENT

SMCS-7000 **i02948040**

NOTE	REF NO	GRAPHIC REF	PART NUMBER	QTY	PART NAME 1 2 3 4 5 6 (PRODUCT LEVEL)	SEE PAGE
	1	1	**258-3833**	1	FILM-NOTICE (STEERING)	
	2	1	**173-3016**	1	CHOCK	
	3	1	**258-3844**	1	BRACKET AS (REGISTRATION PLATE)	
	4	1	**258-3849**	1	PLATE-IDENTIFICATION (ENGLISH, GERMAN, SPANISH)	
	5	1	**289-0849**	1	BLOCK AS	
M	6	1	**8T-4138**	1	BOLT (M6X1X20-MM)	
	7	1	**8T-4205**	1	WASHER-HARD (7.2X14.5X2-MM THK)	

M-METRIC PART

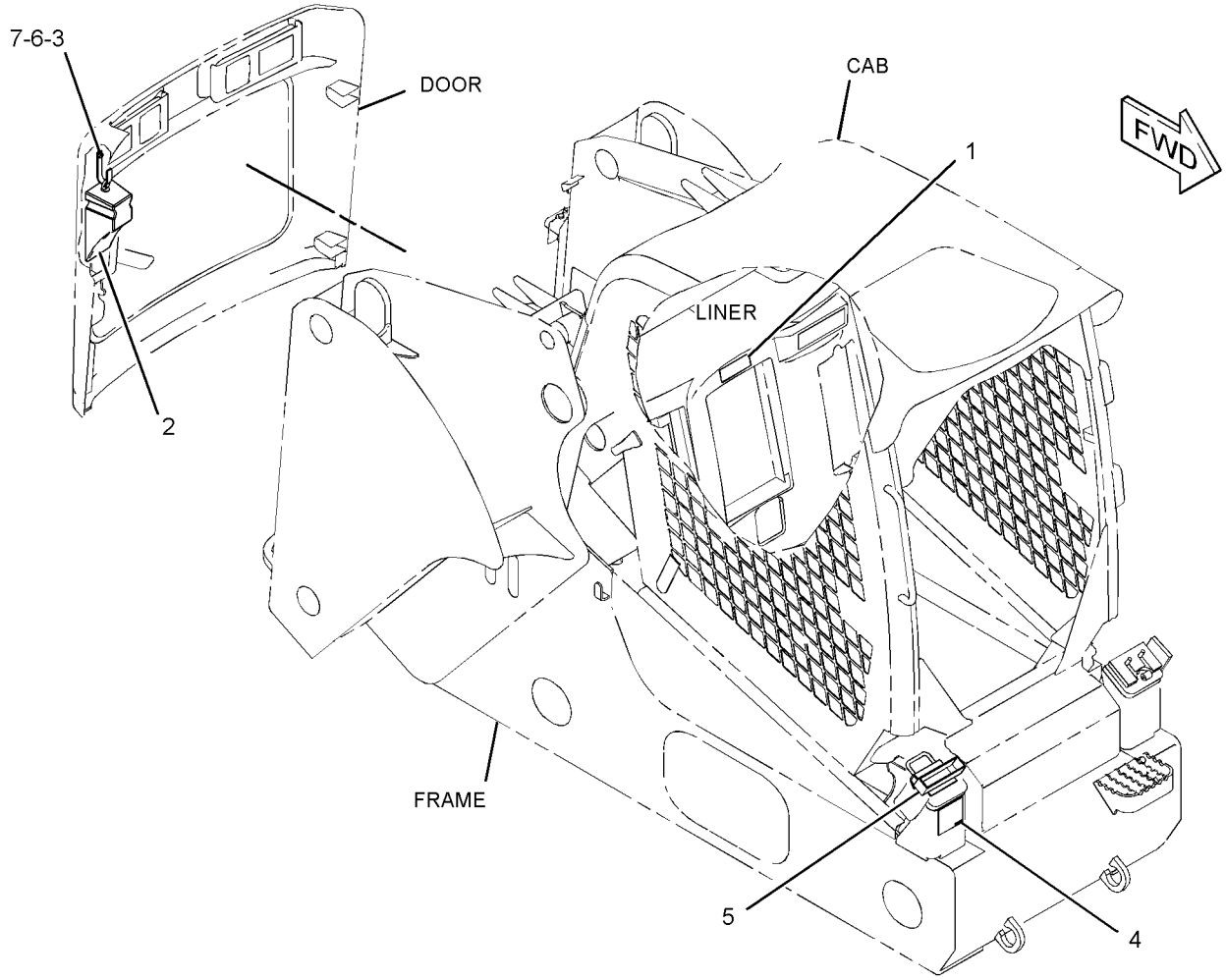

GRAPHIC #1 **<END>** g01559633

258-3841 CONVERSION GP-ROADING–ITALY

S/N: MST1-UP
PART OF 258-3804 CONVERSION AR-ROADING
AN ATTACHMENT
TYPE 1

SMCS-7000 **i03571174**

NOTE	REF NO	GRAPHIC REF	PART NUMBER	QTY	PART NAME 1 2 3 4 5 6 (PRODUCT LEVEL)	SEE PAGE
Y	1	1	**128-6985**	1	LAMP GP-WARNING BEACON (12-VOLT, AMBER)	166
	2	1	**186-2360**	4	COVER AS	
					(EACH INCLUDES)	
		1	**129-1854**	10	FASTENER-LOOP	
		1	**129-1855**	10	FASTENER-HOOK	
	3	1	**258-3849**	1	PLATE-IDENTIFICATION (ENGLISH, GERMAN, SPANISH)	
	4	1	**289-0849**	1	BLOCK AS	
	5	1	**263-5423**	1	SWITCH AS-ROCKER (WARNING BEACON)	
		1	**111-7899**	1	GASKET	

Y-SEPARATE ILLUSTRATION

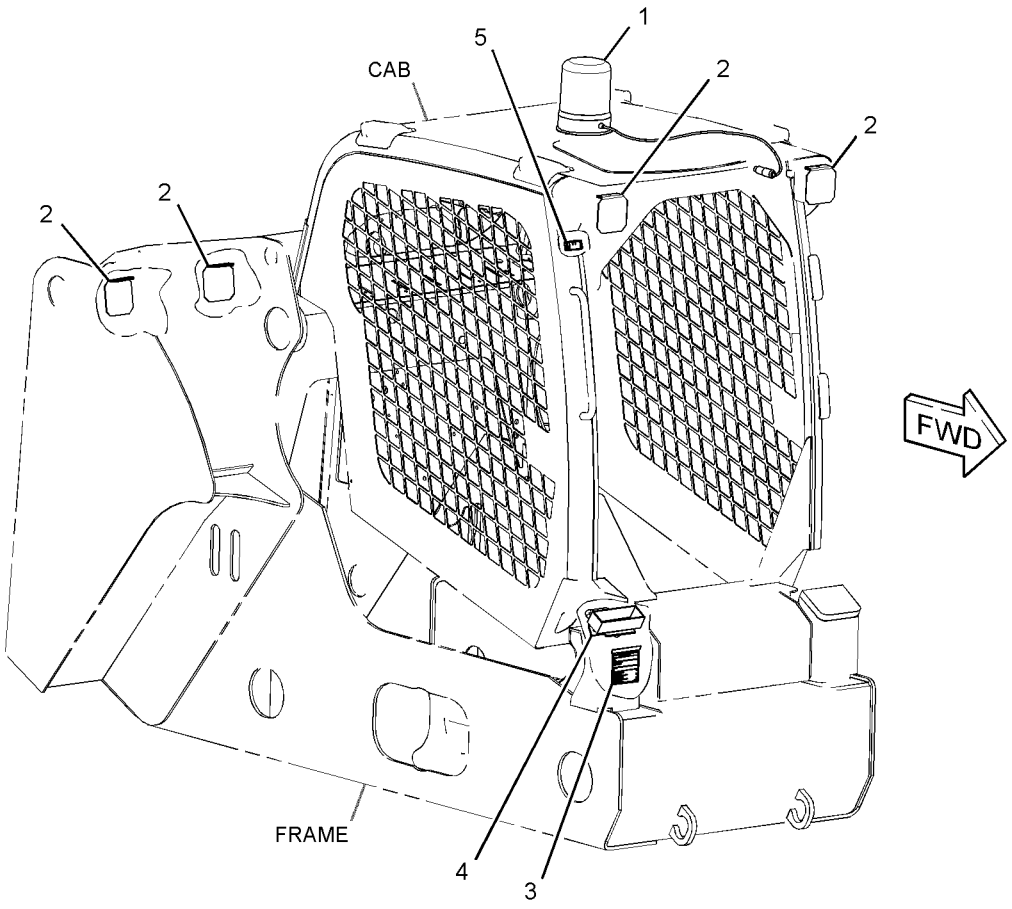

GRAPHIC #1 **<END>** g01727793

258-3841 CONVERSION GP-ROADING–ITALY

S/N: MST1-UP
PART OF 258-3804 CONVERSION AR-ROADING
AN ATTACHMENT
TYPE 2

SMCS-7000 **i03722420**

NOTE	REF NO	GRAPHIC REF	PART NUMBER	QTY	PART NAME 1 2 3 4 5 6 (PRODUCT LEVEL)	SEE PAGE
CY	1	1	**309-1325**	1	LAMP GP-WARNING BEACON (12-VOLT, AMBER)	167
	2	1	**186-2360**	4	COVER AS	
					(EACH INCLUDES)	
E		1	**129-1854**		FASTENER-LOOP (10-CM)	
E		1	**129-1855**		FASTENER-HOOK (10-CM)	
	3	1	**258-3849**	1	PLATE-IDENTIFICATION (ENGLISH, GERMAN, SPANISH)	
	4	1	**289-0849**	1	BLOCK AS	
	5	1	**263-5423**	1	SWITCH AS-ROCKER (WARNING BEACON)	
		1	**111-7899**	1	GASKET	

C-CHANGE FROM PREVIOUS TYPE
E-ORDER BY THE CENTIMETER
Y-SEPARATE ILLUSTRATION

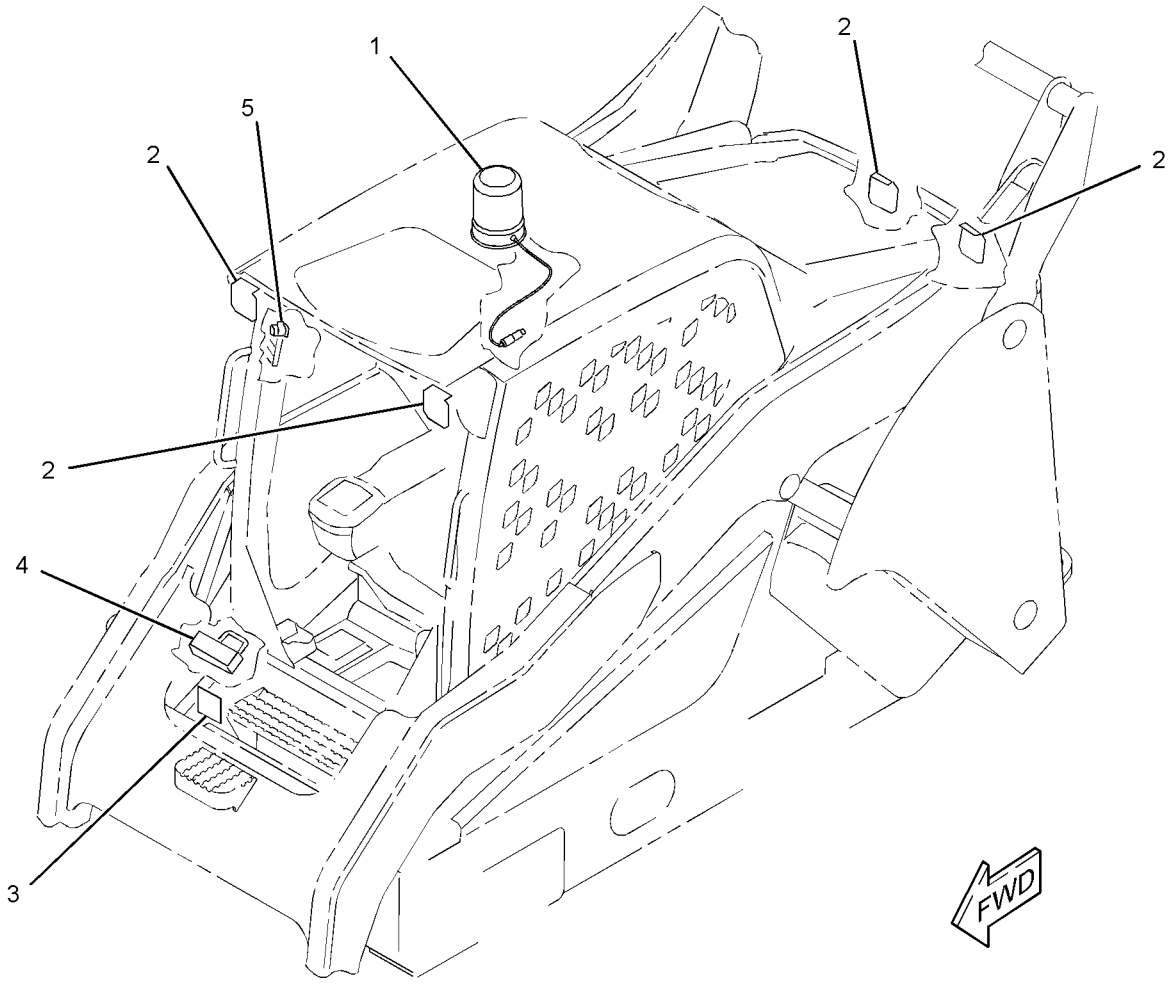

GRAPHIC #1 **<END>** g02010499

258-2591 COUNTERWEIGHT GP

S/N: MST1-UP

AN ATTACHMENT

SMCS-7056 **i02894421**

NOTE	REF NO	GRAPHIC REF	PART NUMBER	QTY	PART NAME 1 2 3 4 5 6 (PRODUCT LEVEL)	SEE PAGE
	1	1	**313-9141**	4	COUNTERWEIGHT	
	2	1	**8T-4223**	4	WASHER-HARD (13.5X25.5X3-MM THK)	
M	3	1	**7X-2549**	4	BOLT (M12X1.75X100-MM)	

M-METRIC PART

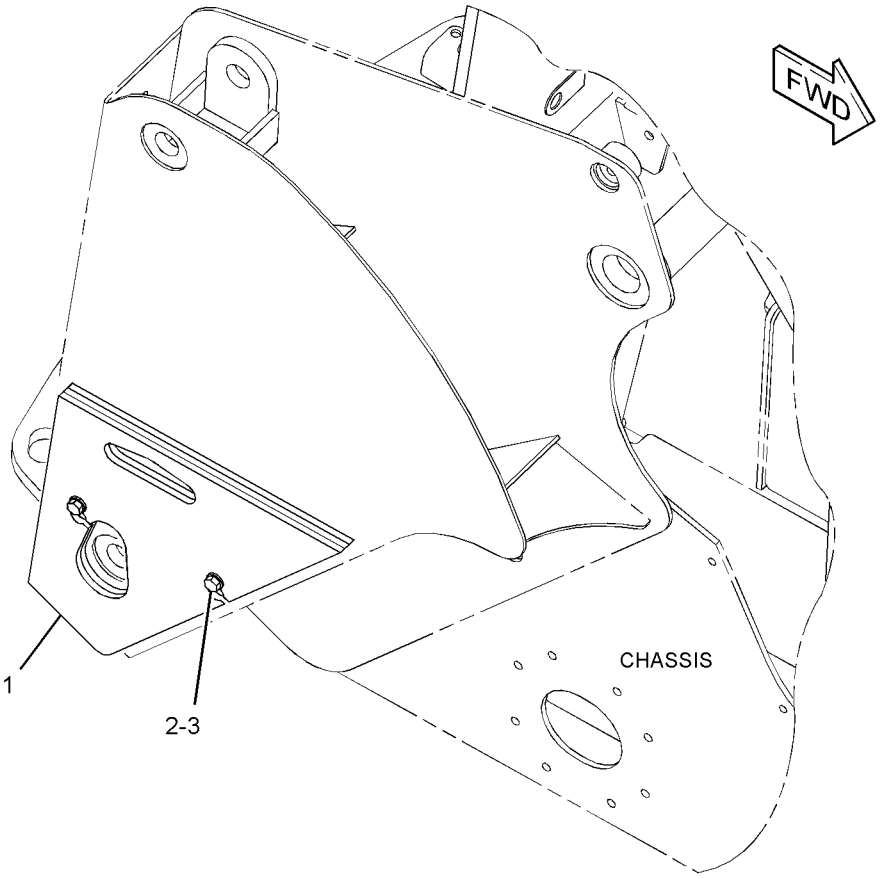

GRAPHIC #1 **<END>** g01330983

322-1644 DOOR AS-ACCESS–VENTED

S/N: MST1860-UP

PART OF 312-1024 KIT-ENGINE ENCLOSURE

AN ATTACHMENT

SMCS-7263, 7273 **i02920859**

NOTE	REF NO	GRAPHIC REF	PART NUMBER	QTY	PART NAME 1 2 3 4 5 6 (PRODUCT LEVEL)	SEE PAGE
	1	1	**7T-1099**	1	LINK	
	2	1	**317-6894**	1	GRILL	
					PARTS SHOWN IN GRAPHIC(S) WITHOUT A REFERENCE NUMBER ARE NOT SERVICED SEPARATELY	

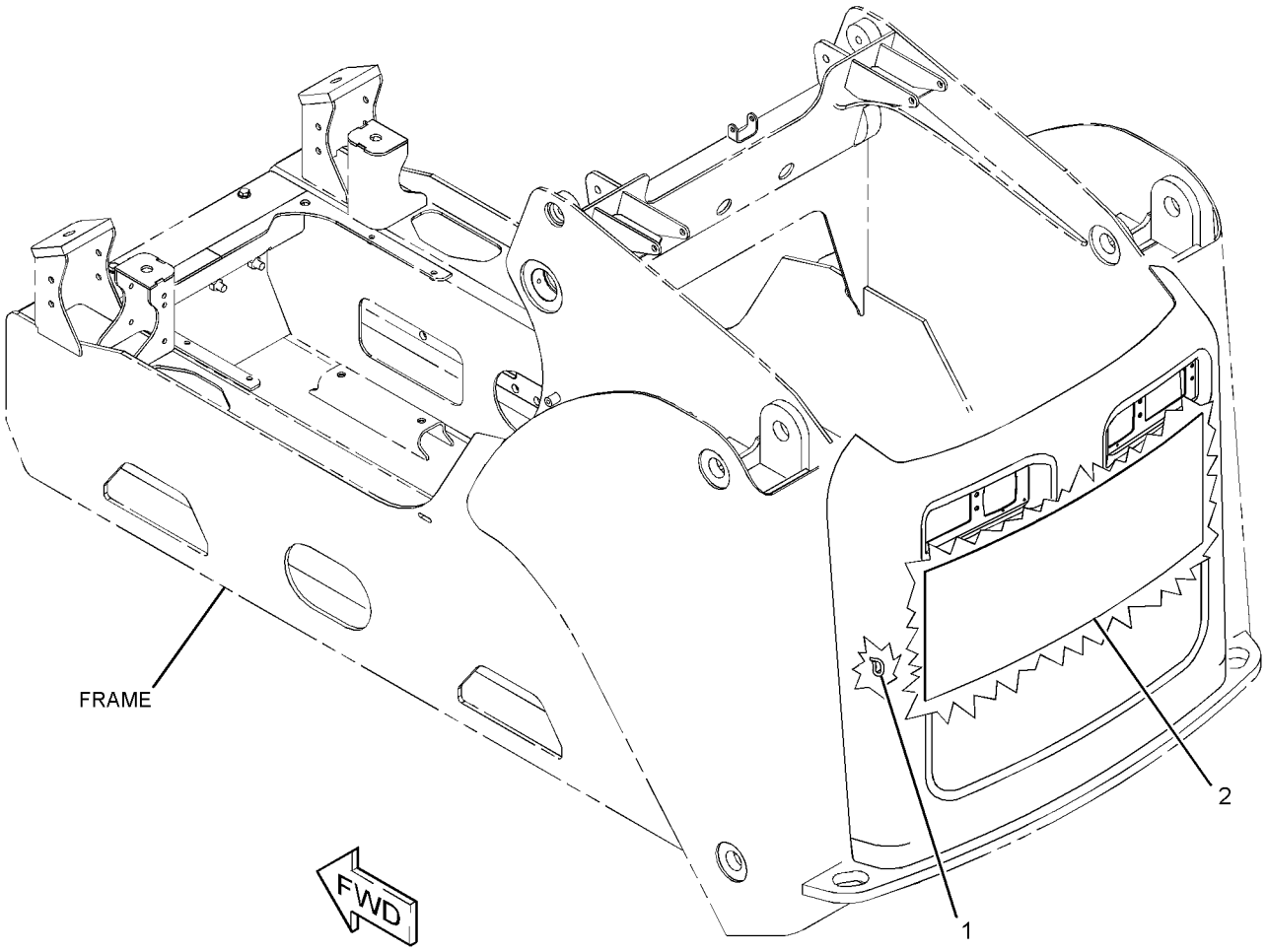

GRAPHIC #1 **<END>** g01454524

FRAME AND BODY

258-2594 ENCLOSURE GP-ENGINE

S/N: MST1-UP

PART OF 258-2510, 295-7292 CHASSIS AR

SMCS-7263, 7273 **i02928684**

NOTE	REF NO	GRAPHIC REF	PART NUMBER	QTY	PART NAME 1 2 3 4 5 6 (PRODUCT LEVEL)	SEE PAGE
	1	1	**309-4920**	1	STRIKER AS	
	2	1	**159-8405**	2	BOLT-SHOULDER	
	3	1	**223-4240**	1	LATCH AS	
	4	1	*224-3875*	1	LOCK GP (ENGINE COVER)	
		1	**226-0291**	1	LOCK AS	
		1	**233-4872**	1	CAM	
	5	1	**258-2606**	1	DOOR AS-ACCESS	
	6	1	**142-8832**	1	PIN AS	
	7	1	**2K-4973**	2	LOCKNUT (3/8-16-THD)	
M	8	1	**5C-7261**	2	NUT (M8X1.25-THD)	
	9	1	**7X-7729**	2	WASHER (11X25X3-MM THK)	
M	10	1	**8T-4137**	2	BOLT (M10X1.5X20-MM)	
	11	1	**308-6767**	2	BUMPER AS	
M	12	1	**8T-4181**	4	BOLT (M6X1X20-MM)	
	13	1	**8T-4205**	4	WASHER-HARD (7.2X14.5X2-MM THK)	

M-METRIC PART

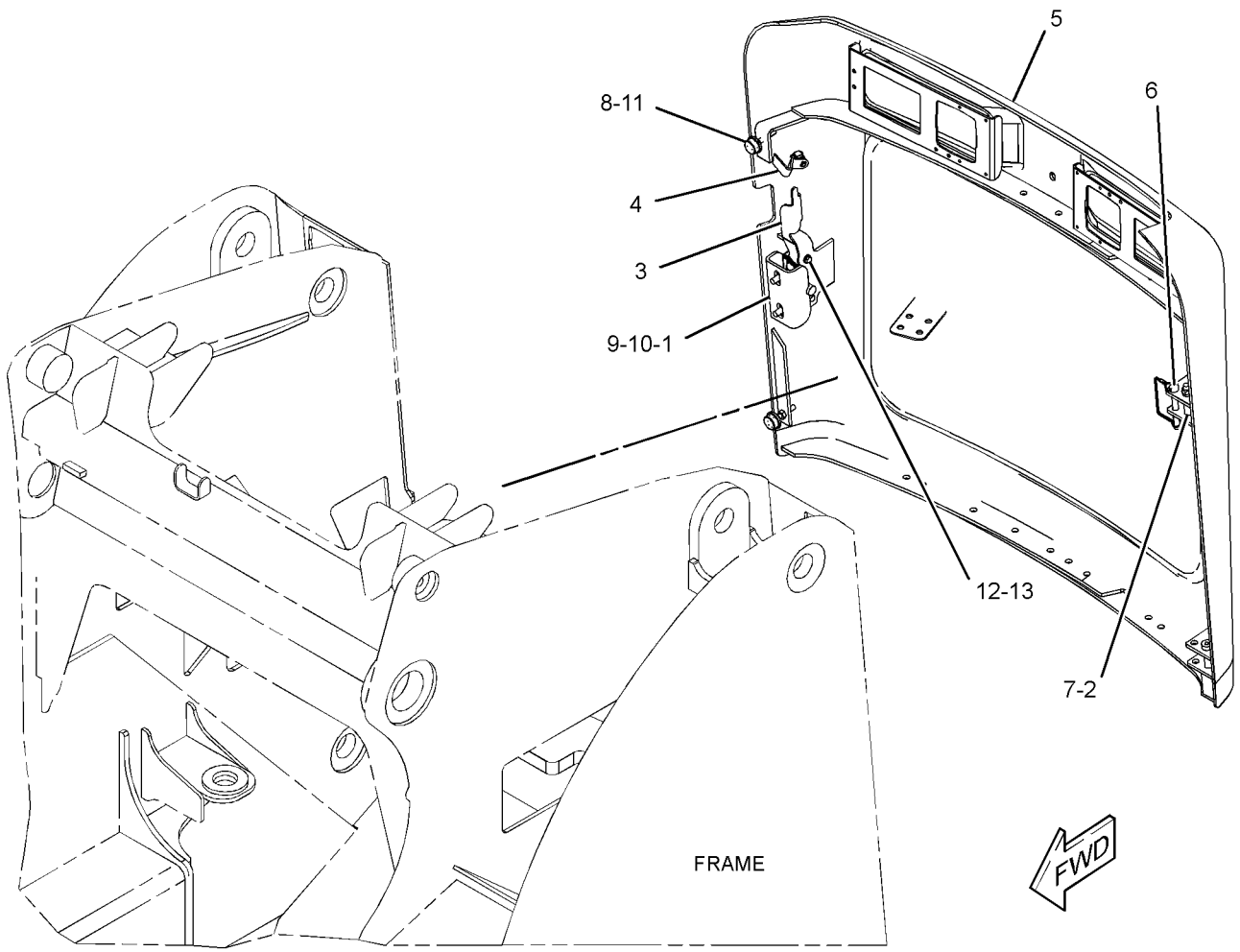

GRAPHIC #1 **<END>** g01317331

258-2775 FRAME & MTG GP-MACHINE

S/N: MST1-UP

PART OF 258-2510, 295-7292 CHASSIS AR

SMCS-6119, 7050, 7481 **i02675004**

NOTE	REF NO	GRAPHIC REF	PART NUMBER	QTY	PART NAME 1 2 3 4 5 6 (PRODUCT LEVEL)	SEE PAGE
	1	1	**3B-8686**	2	FITTING-GREASE	
	2	1	**3S-9182**	4	PLUG-MAGNETIC (DRIVE CHAIN CASE)	
	3	1	**4D-4431**	2	BEARING-ALIGNING	
Y	4	1	*258-2774*	1	FRAME GP-MACHINE	271
	5	1	**258-2978**	1	PLATE AS	
	6	1	**258-3184**	2	COVER	
	7	1	**258-3186**	1	PLATE AS	
	8	1	**258-3312**	1	PLATE	
	9	1	**258-3399**	1	PLATE	
	10	1	**261-6101**	4	COVER	
	11	1	**287-4218**	2	PLATE	
	12	1	**287-4219**	1	STEP AS	
	13	1	**266-3316**	31	BOLT-FLANGE HEAD (M10X1.5X25-MM)	
	14	1	**7X-7729**	4	WASHER (11X25X3-MM THK)	
	15	1	**8T-4121**	4	WASHER-HARD (11X21X2.5-MM THK)	
M	16	1	**8T-4196**	8	BOLT (M10X1.5X35-MM)	
	17	1	**8T-4224**	6	WASHER-HARD (8.8X16X2-MM THK)	
M	18	1	**8T-4908**	6	BOLT (M8X1.25X25-MM)	
	19	1	**287-4287**	2	PLATE	
B	20	1	**287-4220**	6	SHIM	
	21	1	**9R-5616**	1	PLUG	

B-USE AS REQUIRED
M-METRIC PART
Y-SEPARATE ILLUSTRATION

258-2775 **FRAME & MTG GP-MACHINE** *(contd.)* **i02675004**

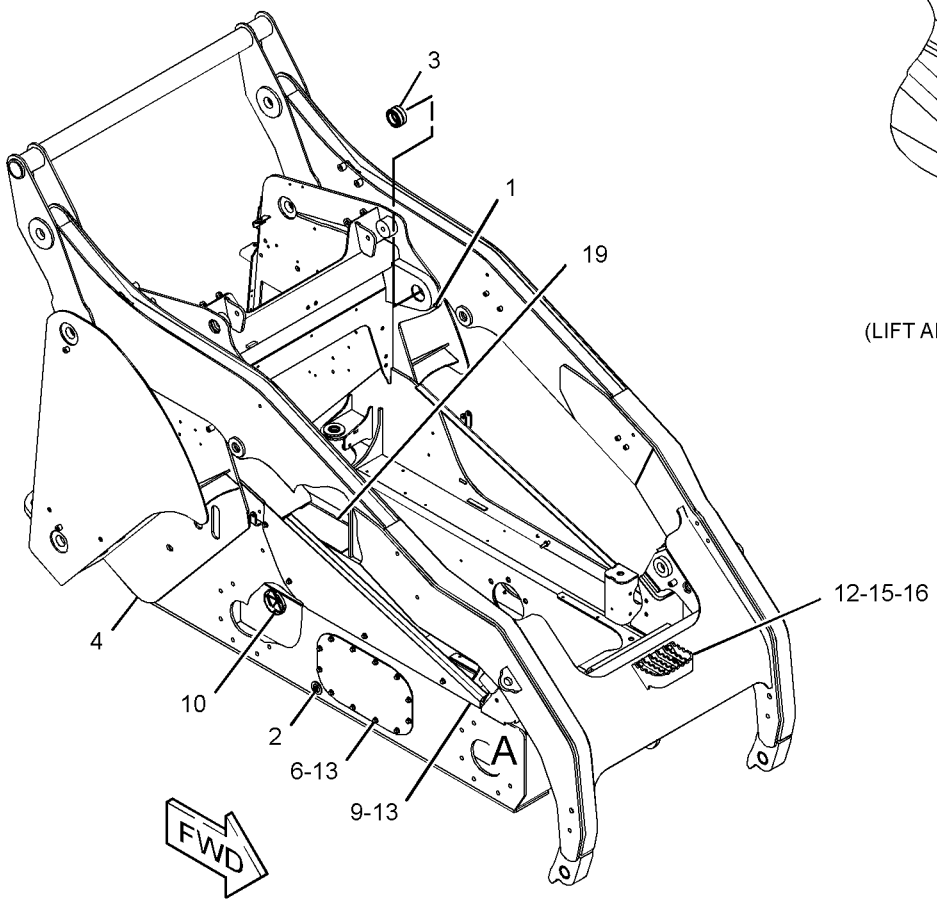

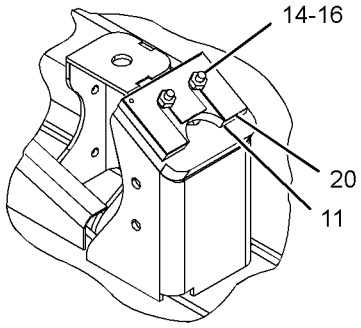

VIEW OF AREA A
(LIFT ARM REMOVED FOR CLARITY)

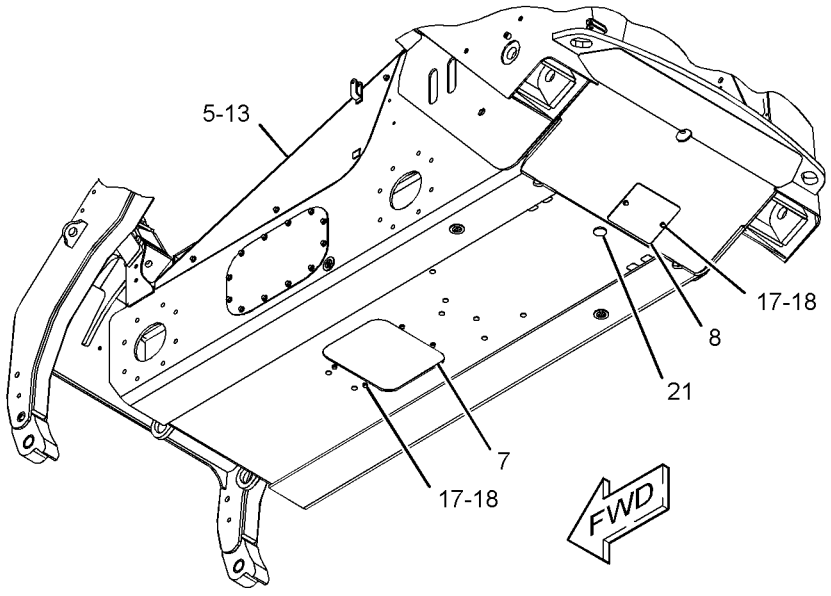

GRAPHIC #1 **<END>** g01345223

258-2774 FRAME GP-MACHINE

S/N: MST1-UP

PART OF 258-2775 FRAME & MTG GP-MACHINE

SMCS-6119, 7050 **i03690290**

NOTE	PART NUMBER	QTY	PART NAME 1 2 3 4 5 6 (PRODUCT LEVEL)	SEE PAGE
	287-4298	1	ARM AS-LIFT	
	6K-4148	4	BEARING-SLEEVE	
	250-1257	4	BEARING-SLEEVE	
	258-2773	1	FRAME AS	
	258-2794	1	LINK AS	
	4K-4709	4	BEARING-SLEEVE	

<END>

FRAME AND BODY

150-8621 GUIDE GP-LINES

S/N: MST1-UP

PART OF 258-2510, 295-7292 CHASSIS AR

SMCS-5057 **i02059885**

NOTE	REF NO	GRAPHIC REF	PART NUMBER	QTY	PART NAME 1 2 3 4 5 6 (PRODUCT LEVEL)	SEE PAGE
	1	1	**227-4315**	1	PLATE AS	
	2	1	**247-4877**	1	BOLT (M8X1.25X12-MM)	
M	3	1	**6V-9189**	1	LOCKNUT (M8X1.25-THD)	
	4	1	**7X-0603**	2	WASHER-HARD (9.9X35X2.5-MM THK)	
M	5	1	**7X-2539**	1	BOLT (M8X1.25X110-MM)	
	6	1	**8T-4224**	1	WASHER-HARD (8.8X16X2-MM THK)	

M-METRIC PART

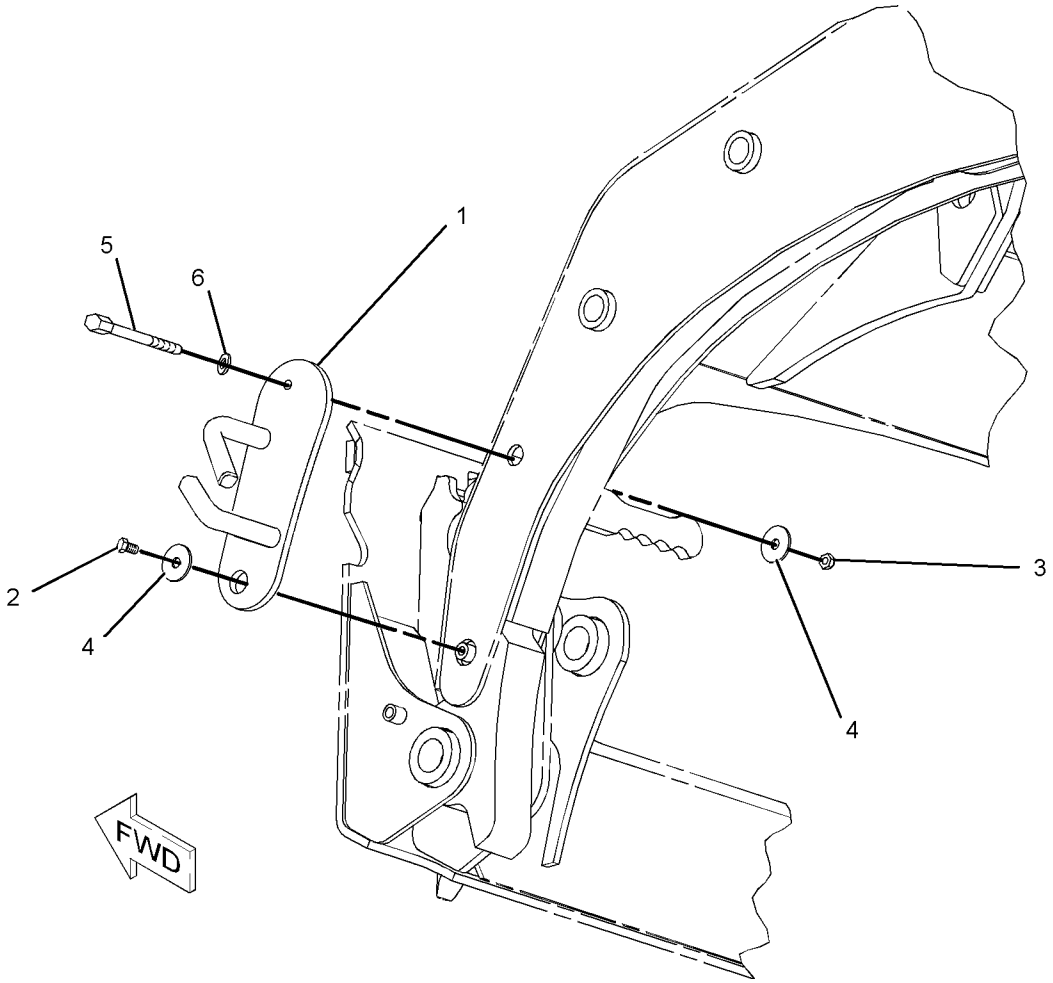

GRAPHIC #1 **<END>** g01056803

287-4160 KIT-COUNTERWEIGHT

S/N: MST1-UP
AN ATTACHMENT

SMCS-7056 **i02867022**

NOTE	REF NO	GRAPHIC REF	PART NUMBER	QTY	PART NAME 1 2 3 4 5 6 (PRODUCT LEVEL)	SEE PAGE
	1	1	**313-9141**	2	COUNTERWEIGHT	
	2	1	**8T-4223**	4	WASHER-HARD (13.5X25.5X3-MM THK)	
M	3	1	**8T-4910**	4	BOLT (M12X1.75X60-MM)	
M	4	1	**7X-2549**	4	BOLT (M12X1.75X100-MM)	

M-METRIC PART

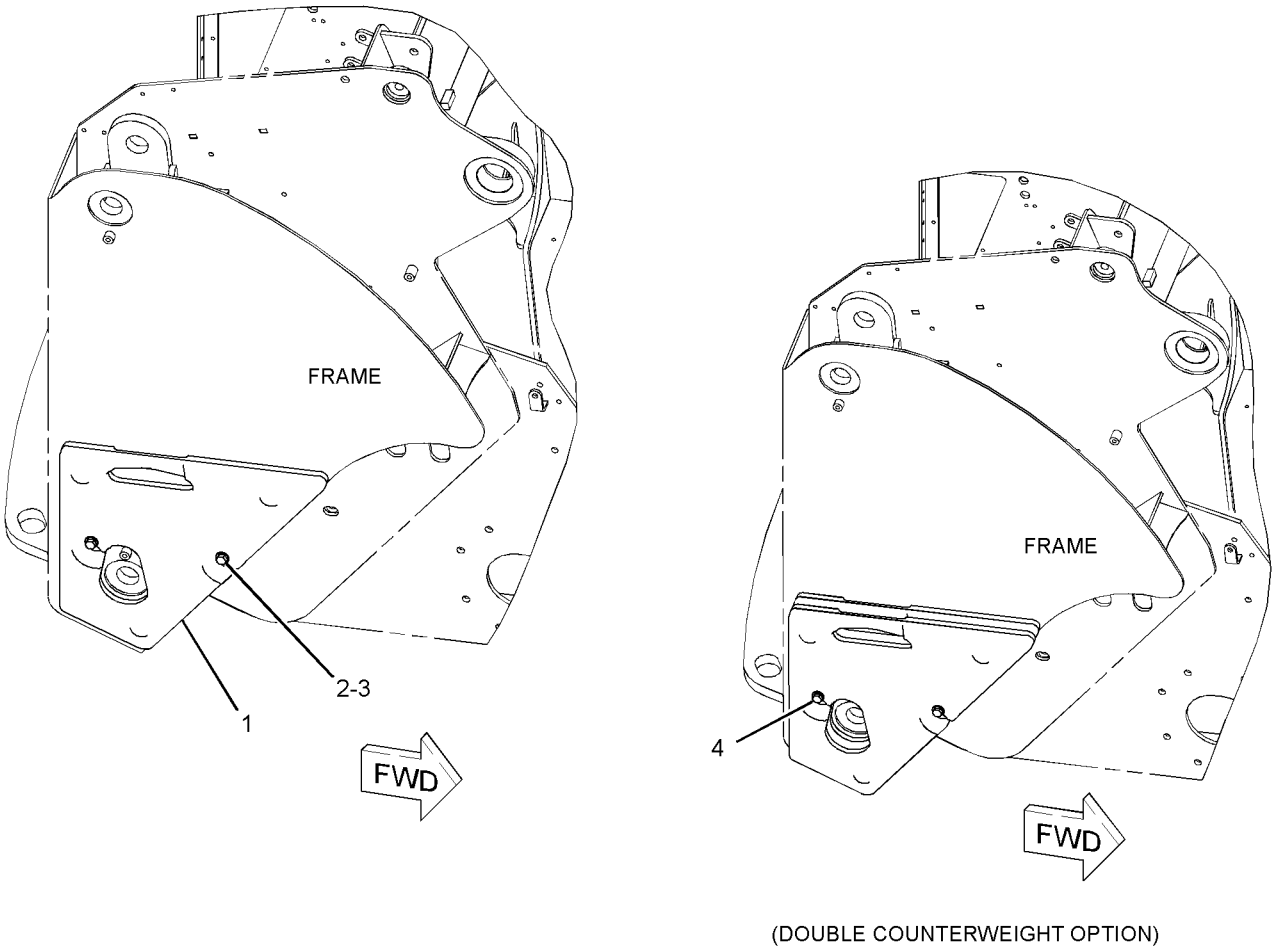

(DOUBLE COUNTERWEIGHT OPTION)

GRAPHIC #1 **<END>** g01453942

FRAME AND BODY

287-4161 KIT-COUNTERWEIGHT

S/N: MST1-UP

AN ATTACHMENT

SMCS-7056 **i02675253**

NOTE	REF NO	GRAPHIC REF	PART NUMBER	QTY	PART NAME 1 2 3 4 5 6 (PRODUCT LEVEL)	SEE PAGE
	1	1	**258-2592**	8	PLATE	
	2	1	**8T-4223**	4	WASHER-HARD (13.5X25.5X3-MM THK)	
M	3	1	**8T-6868**	4	BOLT (M12X1.75X80-MM)	

M-METRIC PART

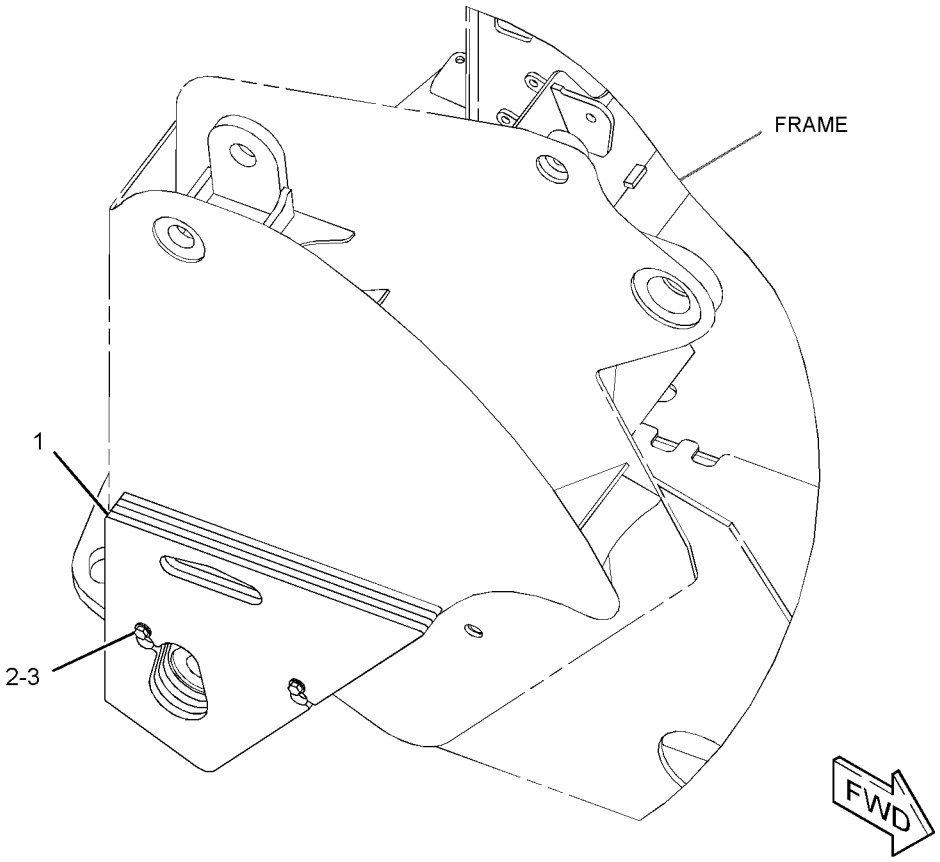

GRAPHIC #1 **<END>** g01344895

312-1024 KIT-ENGINE ENCLOSURE–VENTED

S/N: MST1860-UP
AN ATTACHMENT

SMCS-7263 **i03333560**

NOTE	REF NO	GRAPHIC REF	PART NUMBER	QTY	PART NAME 1 2 3 4 5 6 (PRODUCT LEVEL)	SEE PAGE
	1	1	**285-2167**	1	FILM-INSTRUCTION (SERVICE CHART, READ OMM)	
					-OR-	
		1	**285-2168**	1	FILM-INSTRUCTION (SERVICE CHART, READ OMM)	
					-OR-	
		1	**285-2169**	1	FILM-INSTRUCTION (SERVICE CHART, READ OMM)	
					-OR-	
		1	**285-2170**	1	FILM-INSTRUCTION (SERVICE CHART, READ OMM)	
Y	2	1	*322-1644*	1	DOOR AS-ACCESS (VENTED)	267
	3	1	**2K-4973**	2	LOCKNUT (3/8-16-THD)	
	4	1	**330-4060**	1	STRIKER AS	

Y-SEPARATE ILLUSTRATION

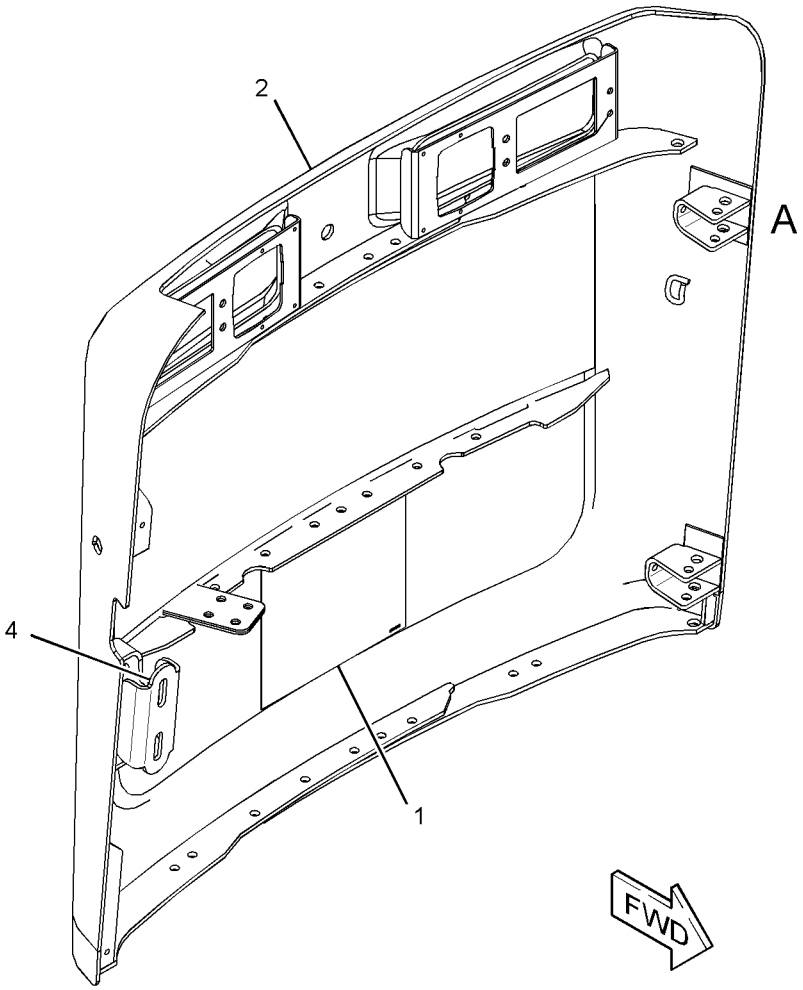

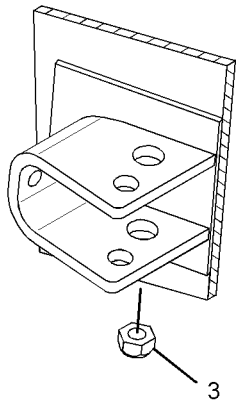

VIEW OF AREA A

GRAPHIC #1 **<END>** g01869522

311-8705 KIT-MACHINE ENCLOSURE SEAL–DEBRIS BARRIER

S/N: MST1-UP

AN ATTACHMENT

SMCS-7276 **i02872189**

NOTE	REF NO	GRAPHIC REF	PART NUMBER	QTY	PART NAME 1 2 3 4 5 6 (PRODUCT LEVEL)	SEE PAGE
	1	1	**176-4079**	1	INSULATION	
	2	1	**261-6379**	1	INSULATION	
	3	1	**294-0082**	1	INSULATION	
	4	1	**294-0083**	1	INSULATION	
	5	1	**294-0084**	1	INSULATION	
	6	1	**308-7534**	1	COVER AS	
	7	1	**308-7535**	1	COVER AS	
	8	1	**308-7536**	1	COVER AS	
	9	1	**308-7540**	1	BRACKET AS	
	10	1	**309-1936**	2	GUARD AS-BRUSH	
	11	1	**309-2477**	1	HOOD AS	
	12	1	**311-0258**	1	COVER AS	
	13	1	**311-0259**	1	COVER AS	
	14	1	**311-6565**	2	BRACKET AS	
					(EACH INCLUDES)	
M		1	**3E-6908**	2	STUD-WELD (M8X1.25X20-MM)	
M		1	**6V-9632**	2	NUT-WELD (M6X1-THD)	
	15	1	**312-2613**	2	COVER AS	
	16	1	**312-8308**	1	COVER AS	
	17	1	**5P-4116**	4	WASHER-HARD (8.8X20.5X2-MM THK)	
M	18	1	**6V-7357**	4	BOLT (M6X1X25-MM)	
M	19	1	**6V-7743**	4	LOCKNUT (M6X1-THD)	
M	20	1	**6V-9189**	4	LOCKNUT (M8X1.25-THD)	
M	21	1	**8T-4138**	4	BOLT (M6X1X20-MM)	
	22	1	**8T-4205**	8	WASHER-HARD (7.2X14.5X2-MM THK)	
E	23	1	**125-3518**		SEAL (25-CM EACH)	
D	24	1	**5P-7483**		SEAL (0.7-M)	
D	24A	1	**5P-7483**		SEAL (0.9-M EACH)	
	25	1	**310-9334**		SEAL (54-CM EACH)	
	26	1	**310-9335**		SEAL (84-CM EACH)	
	27	1	**310-9332**		SEAL (93-CM EACH)	

D-ORDER BY THE METER
E-ORDER BY THE CENTIMETER
M-METRIC PART

311-8705 KIT-MACHINE ENCLOSURE SEAL *(contd.)* i02872189

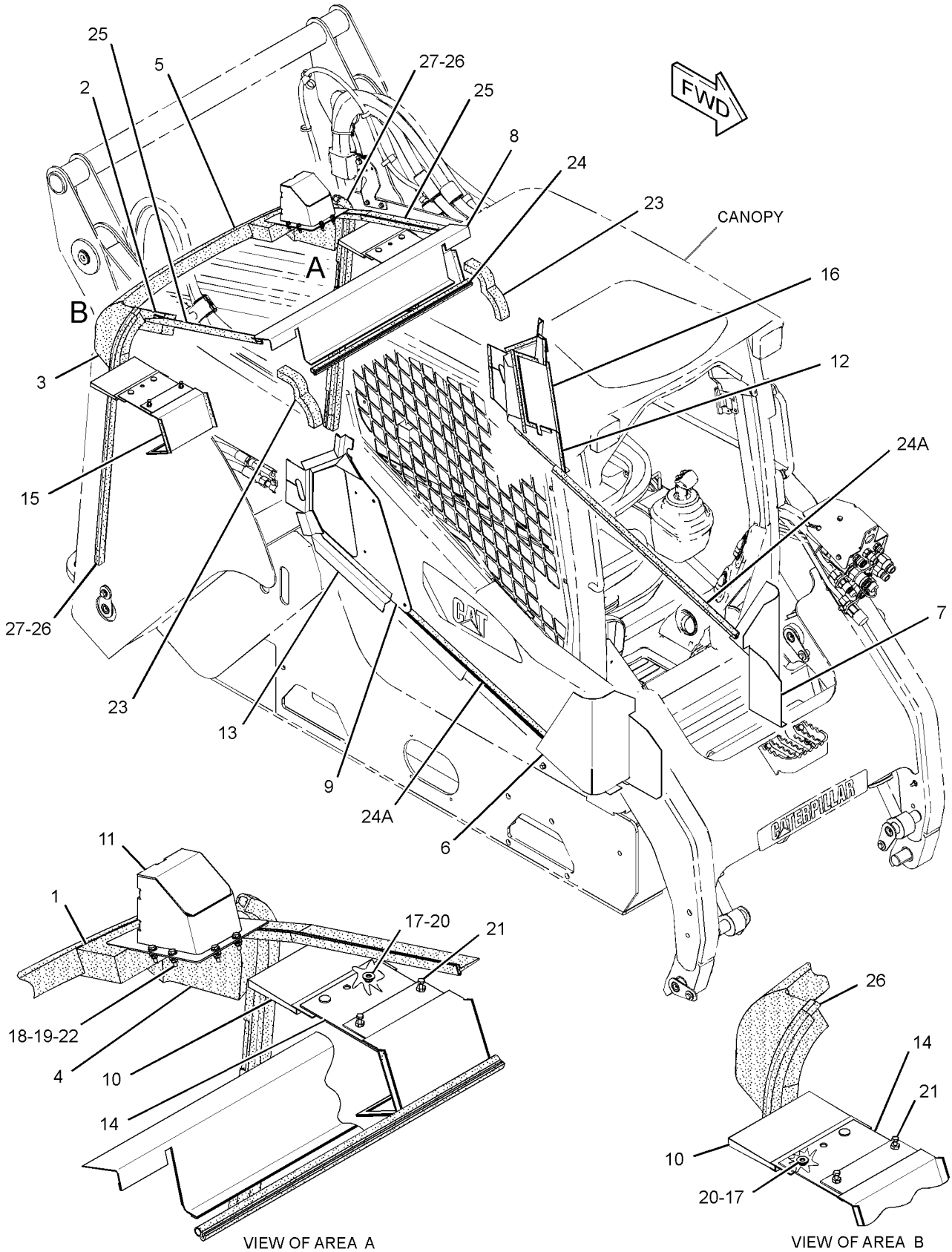

GRAPHIC #1 **<END>** g01431246

FRAME AND BODY

258-3884 KIT-ROADING CONVERSION—LIGHTS, MIRRORS

S/N: MST1860-UP

AN ATTACHMENT

SMCS-1408, 1429, 1430, 1432, 7000, 7319 **i03635692**

NOTE	REF NO	GRAPHIC REF	PART NUMBER	QTY	PART NAME 1 2 3 4 5 6 (PRODUCT LEVEL)	SEE PAGE
	1	1	**7K-1181**	5	STRAP-CABLE	
	2	1	**7X-0579**	1	WASHER-HARD (8.8X25.5X2-MM THK)	
	3	1	**9R-1499**	2	REFLECTOR	
	4	1	**132-5166**	2	MIRROR GP-REAR VIEW	
					(EACH INCLUDES)	
		1	**148-2371**	1	CLAMP (TOP)	
		1	**148-2372**	1	CLAMP (BOTTOM)	
	5	1	**146-9439**	1	RELAY AS (12-VOLT) (STOP LIGHT)	
	6	1	**172-6490**	2	LAMP GP-SIGNAL (STOP, TAIL, TURN)	
					(EACH INCLUDES)	
		1	**9W-3326**	1	LAMP (12-VOLT, 21-WATT)	
		1	**084-4348**	1	LAMP (12-VOLT, 5-WATT)	
		1	**102-8804**	1	KIT-RECEPTACLE (4-PIN)	
					(INCLUDES RECEPTACLE AS & WEDGE)	
		1	**186-3735**	4	PIN-CONNECTOR (16-GA TO 18-GA)	
		1	**267-2809**	1	LENS	
	7	1	**175-4236**	1	PLATE	
	8	1	**175-4239**	2	BRACKET AS	
	9	1	**178-3620**	6	STRAP-DUAL CLAMP	
	10	1	**190-8962**	1	LAMP GP-REGISTRATION PLATE	
		1	**195-9712**	1	LAMP (12-VOLT, 10-WATT)	
Y	11	1	**195-0189**	1	LAMP GP-HEAD & SIGNAL (RH) (HIGH, LOW BEAM)	164
Y	12	1	**195-0190**	1	LAMP GP-HEAD & SIGNAL (LH) (HIGH, LOW BEAM)	165
	13	1	**242-9000**	1	FLASHER AS (12-VOLT) (STOP LIGHT)	
	14	1	**252-0413**	1	BRACKET AS (REGISTRATION PLATE)	
	15	1	**258-3873**	2	BRACKET	
	16	1	**258-4131**	1	HARNESS AS-LIGHTING (FRONT, REAR)	
		1	**186-3735**	2	PIN-CONNECTOR (16-GA TO 18-GA)	
		1	**9W-0852**	7	PIN-CONNECTOR (14-GA)	
		1	**155-2255**	1	KIT-CONNECTING PLUG (12-PIN)	
		1	**155-2271**	2	KIT-CONNECTING PLUG (4-PIN)	
		1	**155-2274**	2	KIT-CONNECTING PLUG (6-PIN)	
					(EACH PLUG KIT INCLUDES PLUG AS, WEDGE & INTERFACE SEAL)	
		1	**8T-8737**	17	PLUG-SEAL	
		1	**102-8804**	2	KIT-RECEPTACLE (4-PIN)	
		1	**102-8801**	1	KIT-RECEPTACLE (12-PIN)	
					(EACH RECEPTACLE KIT INCLUDES RECEPTACLE AS & WEDGE)	
		1	**3S-2093**	3	STRAP-CABLE	
		1	**186-3736**	18	SOCKET-CONNECTOR (16-GA TO 18-GA)	
		1	**9W-0844**	6	SOCKET-CONNECTOR (14-GA)	
E		1	**119-3662**		TUBE-HEAT SHRINK (10.85-MM DIA) (7-CM)	
E		1	**125-7874**		TUBE-HEAT SHRINK (5.72-MM DIA) (15-CM)	
E		1	**125-7875**		TUBE-HEAT SHRINK (7.44-MM DIA) (15-CM)	
		1	**180-9339**	1	PIN-CONNECTOR (14-GA TO 18-GA)	
		1	**180-9340**	1	SOCKET-CONNECTOR (14-GA TO 18-GA)	
	17	1	**258-4134**	1	FUSE AS (ROADING)	
		1	**102-8802**	1	KIT-RECEPTACLE (2-PIN)	
					(INCLUDES RECEPTACLE AS & WEDGE)	
		1	**9W-0852**	2	PIN-CONNECTOR (14-GA)	
		1	**9W-0844**	2	SOCKET-CONNECTOR (14-GA)	
		1	**155-2270**	1	KIT-CONNECTING PLUG (2-PIN)	
					(INCLUDES PLUG AS, WEDGE & INTERFACE SEAL)	
	18	1	**263-5421**	1	SWITCH AS-ROCKER (ROADING LIGHTS)	

258-3884 KIT-ROADING CONVERSION *(contd.)* i03635692

NOTE	REF NO	GRAPHIC REF	PART NUMBER	QTY	PART NAME 1 2 3 4 5 6 (PRODUCT LEVEL)	SEE PAGE
	19	1	**263-5422**	1	SWITCH AS-ROCKER (TURN SIGNAL)	
	20	1	**265-9543**	1	SWITCH AS-ROCKER (HAZARD WARNING LIGHTS)	
					(EACH SWITCH AS INCLUDES)	
		1	**111-7899**	1	GASKET	
	21	1	**293-9044**	1	HARNESS AS-REAR LIGHTING (STOP, TAIL, TURN)	
		1	**102-8804**	1	KIT-RECEPTACLE (4-PIN)	
					(INCLUDES RECEPTACLE AS & WEDGE)	
		1	**186-3735**	4	PIN-CONNECTOR (16-GA TO 18-GA)	
		1	**186-3736**	4	SOCKET-CONNECTOR (16-GA TO 18-GA)	
E		1	**125-7874**		TUBE-HEAT SHRINK (5.72-MM DIA) (10-CM)	
		1	**5P-4571**	2	TERMINAL-BLADE (14-GA TO 16-GA)	
		1	**155-2271**	1	KIT-CONNECTING PLUG (4-PIN)	
					(INCLUDES PLUG AS, WEDGE & INTERFACE SEAL)	
	22	1	**3S-2093**	21	STRAP-CABLE	
	23	1	**4B-4863**	2	WASHER (4.7X11X1.2-MM THK)	
M	24	1	**5C-8312**	2	NUT (M4X0.7-THD)	
M	25	1	**5C-9553**	4	BOLT (M6X1X16-MM)	
M	26	1	**6V-9672**	2	SCREW-MACHINE (M4X0.7X16-MM)	
	27	1	**8T-4121**	4	WASHER-HARD (11X21X2.5-MM THK)	
M	28	1	**8T-4138**	2	BOLT (M6X1X20-MM)	
M	29	1	**8T-4189**	1	BOLT (M8X1.25X20-MM)	
M	30	1	**8T-4196**	4	BOLT (M10X1.5X35-MM)	
	31	1	**8T-4205**	6	WASHER-HARD (7.2X14.5X2-MM THK)	

E-ORDER BY THE CENTIMETER
M-METRIC PART
Y-SEPARATE ILLUSTRATION

258-3884 KIT-ROADING CONVERSION *(contd.)* i03635692

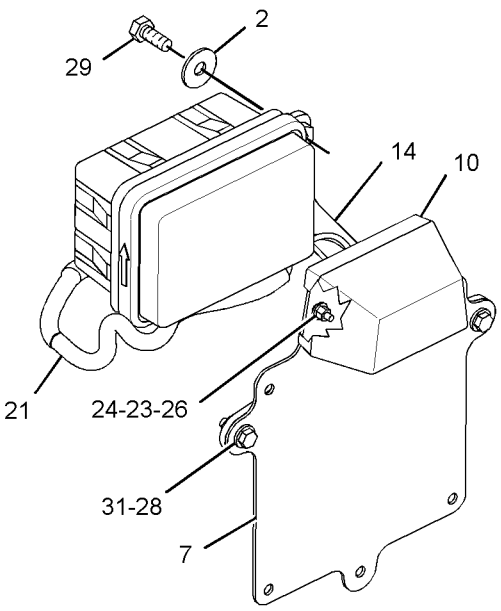

VIEW OF AREA E
(EXPLODED)

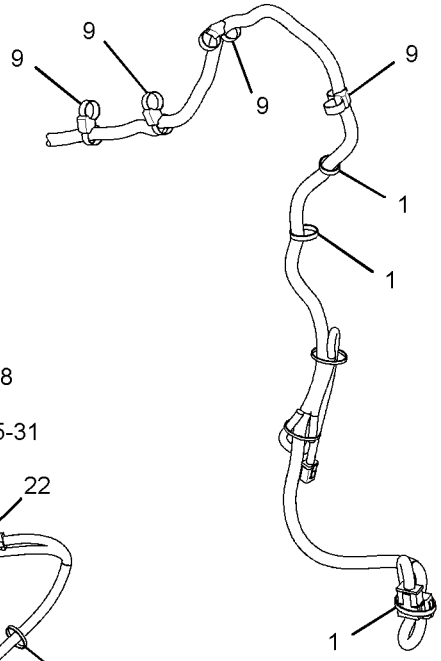

VIEW OF AREA F

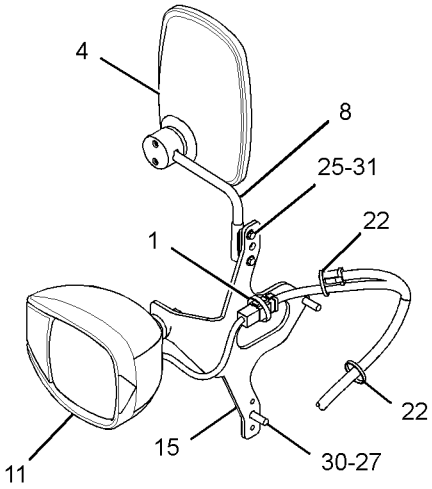

VIEW OF AREA B

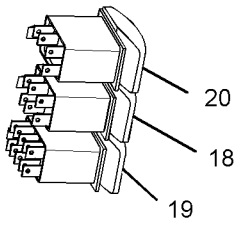

VIEW OF AREA A

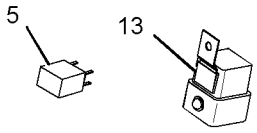

VIEW OF AREA C

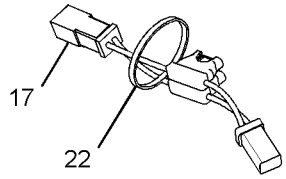

VIEW OF AREA D

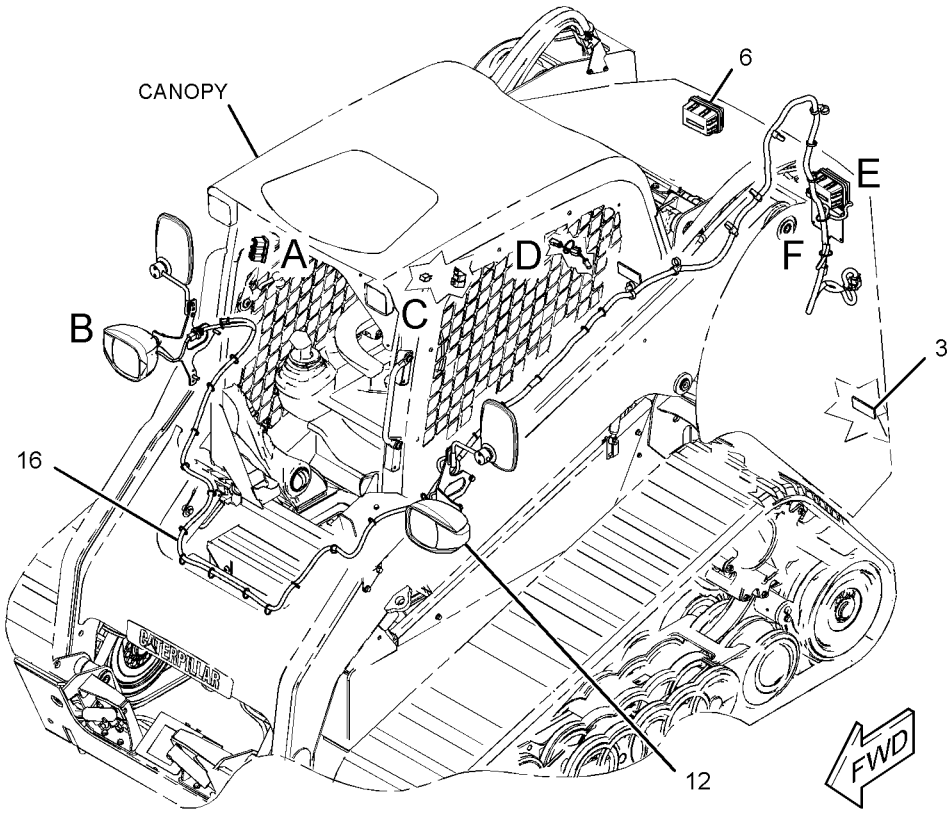

GRAPHIC #1

<END>

g01444576

315-7815 KIT-ROADING CONVERSION—GERMANY

S/N: MST1-UP
AN ATTACHMENT

SMCS-1408, 1429, 1430, 1432, 7000, 7319 **i02942930**

NOTE	PART NUMBER	QTY	PART NAME 1 2 3 4 5 6 (PRODUCT LEVEL)	SEE PAGE
Y	**258-4233**	1	VISOR GP-CAB (LH)	808
M	**8T-4138**	1	BOLT (M6X1X20-MM)	
	258-3844	1	BRACKET AS (REGISTRATION PLATE)	
	173-3016	1	CHOCK	
	258-3833	1	FILM-NOTICE	
	172-8591	4	NUT-SPRING	
	270-9442	4	SCREW-TRUSS HEAD (M6X1X20-MM)	
	8T-4205	1	WASHER-HARD (7.2X14.5X2-MM THK)	

M-METRIC PART
Y-SEPARATE ILLUSTRATION

<END>

315-7816 KIT-ROADING CONVERSION—ITALY

S/N: MST1-UP
AN ATTACHMENT

SMCS-1408, 1429, 1430, 1432, 7000, 7319 **i03638354**

NOTE	PART NUMBER	QTY	PART NAME 1 2 3 4 5 6 (PRODUCT LEVEL)	SEE PAGE
Y	*128-6985*	1	LAMP GP-WARNING BEACON (12-VOLT, AMBER)	166
	190-8962	1	LAMP GP-REGISTRATION PLATE	
	195-9712	1	LAMP (12-VOLT, 10-WATT)	
	252-0413	1	BRACKET AS (REGISTRATION PLATE)	
	186-2360	4	COVER AS	
			(EACH INCLUDES)	
E	**129-1854**		FASTENER-LOOP (10-CM)	
E	**129-1855**		FASTENER-HOOK (10-CME)	
	293-9044	1	HARNESS AS-REAR LIGHTING (STOP, TAIL, TURN)	
	186-3735	4	PIN-CONNECTOR (16-GA TO 18-GA)	
	155-2271	1	KIT-CONNECTING PLUG (4-PIN)	
			(INCLUDES PLUG AS, WEDGE & INTERFACE SEAL)	
	102-8804	1	KIT-RECEPTACLE (4-PIN)	
			(INCLUDES RECEPTACLE AS & WEDGE)	
	186-3736	4	SOCKET-CONNECTOR (16-GA TO 18-GA)	
	5P-4571	2	TERMINAL-BLADE (14-GA TO 16-GA)	
E	**125-7874**		TUBE-HEAT SHRINK (5.72-MM DIA) (10-CM)	
M	**8T-4138**	2	BOLT (M6X1X20-MM)	
M	**8T-4189**	1	BOLT (M8X1.25X20-MM)	
M	**5C-8312**	2	NUT (M4X0.7-THD)	
	175-4236	1	PLATE	
M	**6V-9672**	2	SCREW-MACHINE (M4X0.7X16-MM)	
	4B-4863	2	WASHER (4.7X11X1.2-MM THK)	
	7X-0579	1	WASHER-HARD (8.8X25.5X2-MM THK)	
	8T-4205	1	WASHER-HARD (7.2X14.5X2-MM THK)	

E-ORDER BY THE CENTIMETER
M-METRIC PART
Y-SEPARATE ILLUSTRATION

<END>

FRAME AND BODY

333-7434 KIT-ROADING CONVERSION—GERMANY

S/N: MST1-UP

AN ATTACHMENT

SMCS-1408, 1429, 1430, 1432, 7000, 7319 **i03381062**

NOTE	PART NUMBER	QTY	PART NAME 1 2 3 4 5 6 (PRODUCT LEVEL)	SEE PAGE
Y	**258-4233**	1	VISOR GP-CAB (LH)	808
	289-0849	1	BLOCK AS	
	258-3844	1	BRACKET AS (REGISTRATION PLATE)	
M	**8T-4138**	1	BOLT (M6X1X20-MM)	
	173-3016	1	CHOCK	
	258-3833	1	FILM-NOTICE (STEERING)	
	172-8591	4	NUT-SPRING	
	178-2247	1	PIN	
	9R-5301	1	PIN-COTTER	
	270-9442	4	SCREW-TRUSS HEAD (M6X1X20-MM)	
	9X-8257	1	WASHER (17.5X30X3.5-MM THK)	
	8T-4205	1	WASHER-HARD (7.2X14.5X2-MM THK)	

M-METRIC PART
Y-SEPARATE ILLUSTRATION

<END>

FRAME AND BODY

333-7435 KIT-ROADING CONVERSION—ITALY

S/N: MST1-UP

AN ATTACHMENT

SMCS-1408, 1429, 1430, 1432, 7000, 7319 **i03724443**

NOTE	PART NUMBER	QTY	PART NAME 1 2 3 4 5 6 (PRODUCT LEVEL)	SEE PAGE
Y	*128-6985*	1	LAMP GP-WARNING BEACON (12-VOLT, AMBER)	166
			—OR—	
Y	**309-1325**	1	LAMP GP-WARNING BEACON (12-VOLT, AMBER)	167
	190-8962	1	LAMP GP-REGISTRATION PLATE	
	195-9712	1	LAMP (12-VOLT, 10-WATT)	
	289-0849	1	BLOCK AS	
	252-0413	1	BRACKET AS (REGISTRATION PLATE)	
	186-2360	4	COVER AS	
			(EACH INCLUDES)	
E	**129-1854**		FASTENER-LOOP (10-CM)	
E	**129-1855**		FASTENER-HOOK (10-CM)	
	293-9044	1	HARNESS AS-REAR LIGHTING (STOP, TAIL, TURN)	
	102-8804	1	KIT-RECEPTACLE (4-PIN)	
			(INCLUDES RECEPTACLE AS & WEDGE)	
	186-3735	4	PIN-CONNECTOR (16-GA TO 18-GA)	
	186-3736	4	SOCKET-CONNECTOR (16-GA TO 18-GA)	
E	**125-7874**		TUBE-HEAT SHRINK (5.72-MM DIA) (10-CM)	
	5P-4571	2	TERMINAL-BLADE (14-GA TO 16-GA)	
	155-2271	1	KIT-CONNECTING PLUG (4-PIN)	
			(INCLUDES PLUG AS, WEDGE & INTERFACE SEAL)	
	263-5423	1	SWITCH AS-ROCKER (WARNING BEACON)	
	111-7899	1	GASKET	
M	**8T-4138**	2	BOLT (M6X1X20-MM)	
M	**8T-4189**	1	BOLT (M8X1.25X20-MM)	
M	**5C-8312**	2	NUT (M4X0.7-THD)	
	178-2247	1	PIN	
	9R-5301	1	PIN-COTTER	
	175-4236	1	PLATE	
	258-3849	1	PLATE-IDENTIFICATION (ENGLISH, GERMAN, SPANISH)	
M	**6V-9672**	2	SCREW-MACHINE (M4X0.7X16-MM)	
	4B-4863	2	WASHER (4.7X11X1.2-MM THK)	
	9X-8257	1	WASHER (17.5X30X3.5-MM THK)	
	7X-0579	1	WASHER-HARD (8.8X25.5X2-MM THK)	
	8T-4205	2	WASHER-HARD (7.2X14.5X2-MM THK)	

E-ORDER BY THE CENTIMETER
M-METRIC PART
Y-SEPARATE ILLUSTRATION

<END>

FRAME AND BODY

333-7436 KIT-ROADING CONVERSION—FRONT

S/N: MST1-UP

AN ATTACHMENT

SMCS-1408, 1429, 1430, 1432, 7000, 7319 **i03643541**

NOTE	REF NO	GRAPHIC REF	PART NUMBER	QTY	PART NAME 1 2 3 4 5 6 (PRODUCT LEVEL)	SEE PAGE
	1	1	**7K-1181**	5	STRAP-CABLE	
	2	1	**132-5166**	2	MIRROR GP-REAR VIEW	
		1	**148-2371**	1	CLAMP (TOP)	
		1	**148-2372**	1	CLAMP (BOTTOM)	
	3	1	**175-4239**	2	BRACKET AS	
	4	1	**178-3620**	6	STRAP-DUAL CLAMP	
Y	5	1	**195-0189**	1	LAMP GP-HEAD & SIGNAL (RH) (HIGH, LOW BEAM)	164
Y	6	1	**195-0190**	1	LAMP GP-HEAD & SIGNAL (LH) (HIGH, LOW BEAM)	165
	7	1	**258-3873**	2	BRACKET	
	8	1	**258-4131**	1	HARNESS AS-LIGHTING (FRONT, REAR)	
E		1	**125-7875**		TUBE-HEAT SHRINK (7.44-MM DIA) (15-CM)	
		1	**155-2255**	1	KIT-CONNECTING PLUG (12-PIN)	
		1	**155-2271**	2	KIT-CONNECTING PLUG (4-PIN)	
		1	**155-2274**	2	KIT-CONNECTING PLUG (6-PIN)	
					(EACH PLUG KIT INCLUDES PLUG AS, WEDGE & INTERFACE SEAL)	
		1	**180-9339**	1	PIN-CONNECTOR (14-GA TO 18-GA)	
		1	**180-9340**	1	SOCKET-CONNECTOR (14-GA TO 18-GA)	
		1	**102-8804**	2	KIT-RECEPTACLE (4-PIN)	
		1	**102-8801**	1	KIT-RECEPTACLE (12-PIN)	
					(EACH RECEPTACLE KIT INCLUDES RECEPTACLE AS & WEDGE)	
		1	**3S-2093**	3	STRAP-CABLE	
		1	**8T-8737**	17	PLUG-SEAL	
		1	**186-3735**	2	PIN-CONNECTOR (16-GA TO 18-GA)	
		1	**186-3736**	18	SOCKET-CONNECTOR (16-GA TO 18-GA)	
		1	**9W-0852**	7	PIN-CONNECTOR (14-GA)	
		1	**9W-0844**	6	SOCKET-CONNECTOR (14-GA)	
E		1	**119-3662**		TUBE-HEAT SHRINK (10.85-MM DIA) (7-CM)	
E		1	**125-7874**		TUBE-HEAT SHRINK (5.72-MM DIA) (15-CM)	
	9	1	**263-5421**	1	SWITCH AS-ROCKER (ROADING LIGHTS)	
		1	**111-7899**	1	GASKET	
	10	1	**3S-2093**	20	STRAP-CABLE	
M	11	1	**5C-9553**	4	BOLT (M6X1X16-MM)	
	12	1	**8T-4121**	4	WASHER-HARD (11X21X2.5-MM THK)	
M	13	1	**8T-4196**	4	BOLT (M10X1.5X35-MM)	
	14	1	**8T-4205**	4	WASHER-HARD (7.2X14.5X2-MM THK)	

E-ORDER BY THE CENTIMETER
M-METRIC PART
Y-SEPARATE ILLUSTRATION

333-7436 KIT-ROADING CONVERSION *(contd.)* **i03643541**

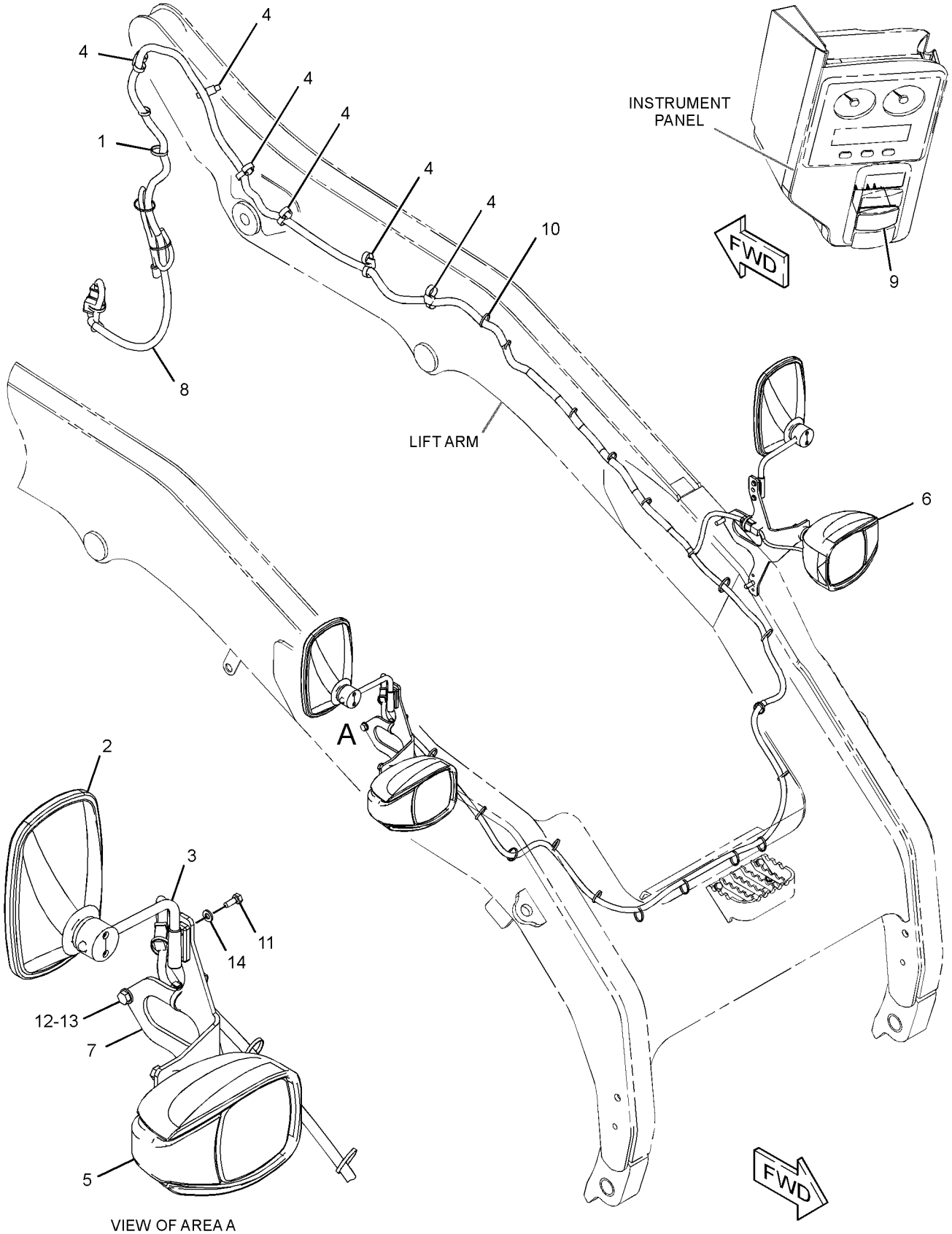

GRAPHIC #1 **<END>** g01818361

258-4385 LIFTING GP-MACHINE—FOUR POINT

S/N: MST1-UP
PART OF 258-3803, 315-6354 CONVERSION AR-MACHINE, 258-3802, 258-3804 CONVERSION AR-ROADING
CANNOT BE USED WITH 258-4390—PAGE 287
AN ATTACHMENT

SMCS-1122, 6459, 7000 **i02664269**

NOTE	REF NO	GRAPHIC REF	PART NUMBER	QTY	PART NAME 1 2 3 4 5 6 (PRODUCT LEVEL)	SEE PAGE
	1	1	**7E-2700**	4	FILM-SYMBOL (LIFT EYE LOCATION)	
	2	1	**258-4391**	4	PLATE-LIFT	
M	3	1	**7X-2562**	8	BOLT (M20X2.5X45-MM)	
	4	1	**154-1580**	8	WASHER-HARD (22X38X6-MM THK)	

M-METRIC PART

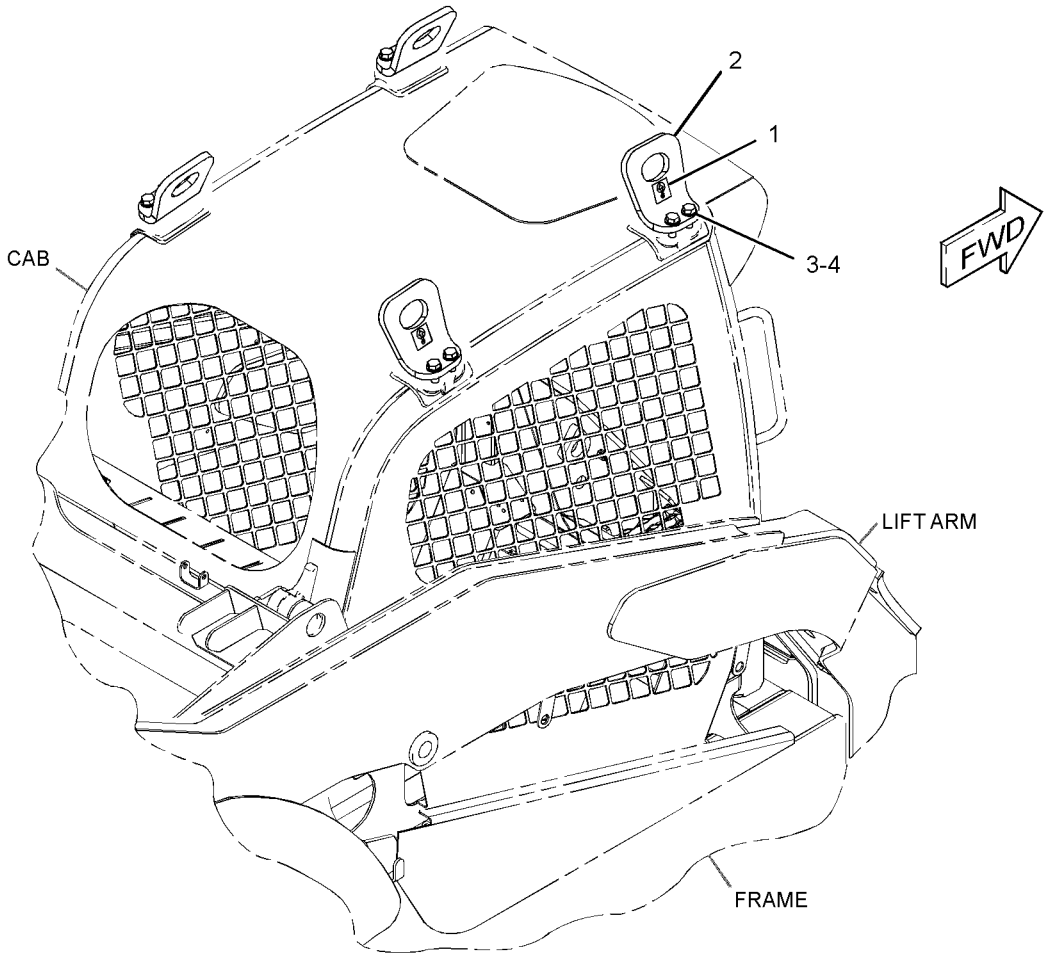

GRAPHIC #1 **<END>** g01322822

258-4390 LIFTING GP-MACHINE–KIT, SINGLE POINT

S/N: MST1-UP

CANNOT BE USED WITH 258-4410–PAGE 288

AN ATTACHMENT

SMCS-1122, 6459, 7000 **i02939460**

NOTE	REF NO	GRAPHIC REF	PART NUMBER	QTY	PART NAME 1 2 3 4 5 6 (PRODUCT LEVEL)	SEE PAGE
	1	1	**7E-2700**	2	FILM-SYMBOL (LIFT EYE LOCATION)	
	2	1	**258-4389**	4	MOUNT	
	3	1	**258-4392**	1	BRACKET AS-LIFT	
	4	1	**154-1580**	8	WASHER-HARD (22X38X6-MM THK)	
M	5	1	**7X-2562**	8	BOLT (M20X2.5X45-MM)	

M-METRIC PART

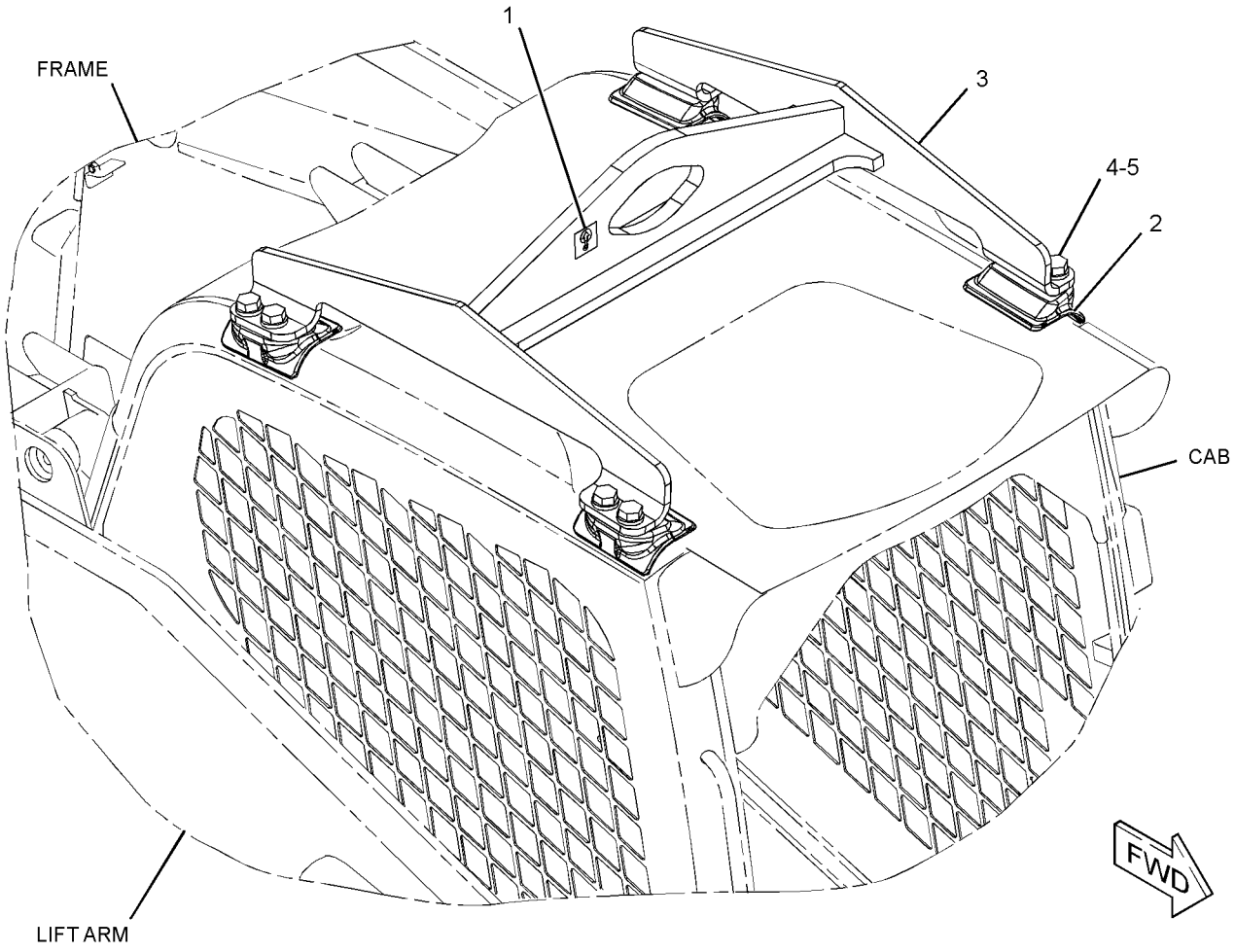

GRAPHIC #1 **<END>** g01339251

258-4410 LIFTING GP-MACHINE–KIT, FOUR POINT

S/N: MST1-UP

CANNOT BE USED WITH 258-4390–PAGE 287, 258-4400–PAGE 710

AN ATTACHMENT

SMCS-1122, 6459, 7000 **i02939461**

NOTE	REF NO	GRAPHIC REF	PART NUMBER	QTY	PART NAME 1 2 3 4 5 6 (PRODUCT LEVEL)	SEE PAGE
	1	1	**7E-2700**	4	FILM-SYMBOL (LIFT EYE LOCATION)	
	2	1	**258-4389**	4	MOUNT	
	3	1	**258-4391**	4	PLATE-LIFT	
	4	1	**154-1580**	8	WASHER-HARD (22X38X6-MM THK)	
M	5	1	**7X-2562**	8	BOLT (M20X2.5X45-MM)	

M-METRIC PART

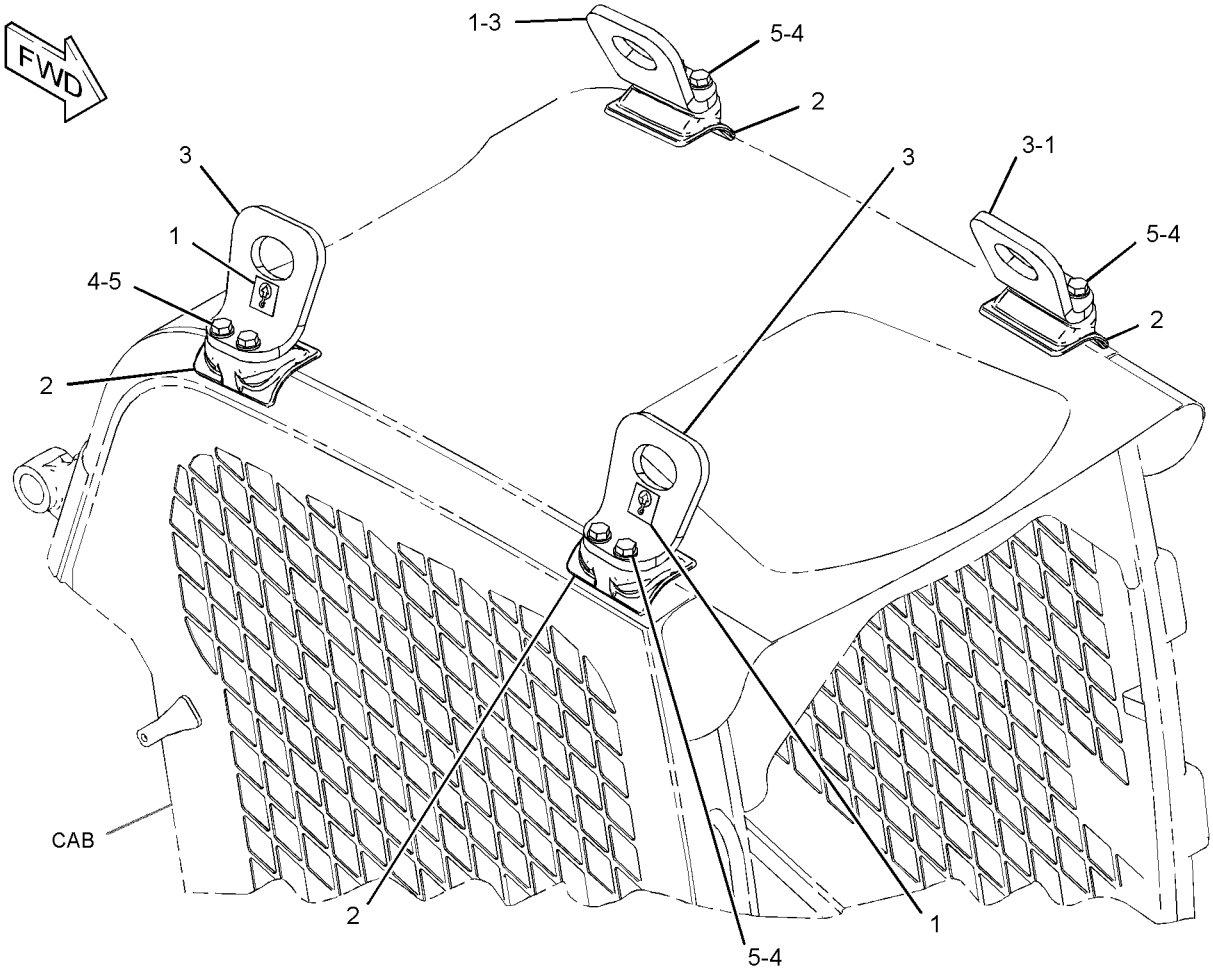

GRAPHIC #1 **<END>** g01344723

258-3872 MIRROR & MTG GP-REAR VIEW–
WITH ROADING LIGHT MOUNT
S/N: MST1-UP
PART OF 315-6354 CONVERSION AR-MACHINE, 258-3802, 258-3804 CONVERSION AR-ROADING AN ATTACHMENT

SMCS-7319 **i03505322**

NOTE	REF NO	GRAPHIC REF	PART NUMBER	QTY	PART NAME 1 2 3 4 5 6 (PRODUCT LEVEL)	SEE PAGE
	1	1	**132-5166**	2	MIRROR GP-REAR VIEW	
					(EACH INCLUDES)	
		1	**148-2371**	1	CLAMP (TOP)	
		1	**148-2372**	1	CLAMP (BOTTOM)	
	2	1	**175-4239**	2	BRACKET AS	
	3	1	**258-3873**	2	BRACKET	
M	4	1	**5C-9553**	4	BOLT (M6X1X16-MM)	
	5	1	**8T-4121**	4	WASHER-HARD (11X21X2.5-MM THK)	
M	6	1	**8T-4196**	4	BOLT (M10X1.5X35-MM)	
	7	1	**8T-4205**	4	WASHER-HARD (7.2X14.5X2-MM THK)	

M-METRIC PART

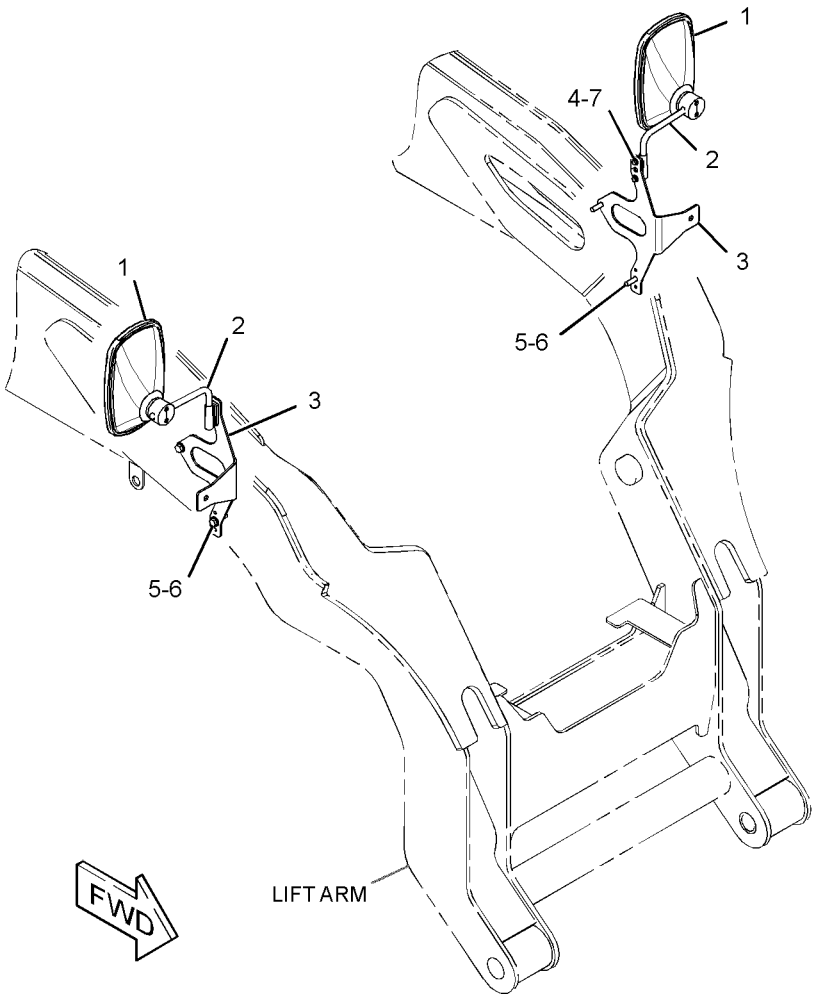

GRAPHIC #1 **<END>** g01313245

258-3848 MOUNTING GP-REGISTRATION—ITALIAN

S/N: MST1-UP
PART OF 258-3804 CONVERSION AR-ROADING
AN ATTACHMENT

SMCS-1408, 1429, 7050 **i03624553**

NOTE	REF NO	GRAPHIC REF	PART NUMBER	QTY	PART NAME 1 2 3 4 5 6 (PRODUCT LEVEL)	SEE PAGE
	1	1	**175-4236**	1	PLATE	
	2	1	**190-8962**	1	LAMP GP-REGISTRATION PLATE	
		1	**195-9712**	1	LAMP (12-VOLT, 10-WATT)	
	3	1	**252-0413**	1	BRACKET AS (REGISTRATION PLATE)	
	4	1	**4B-4863**	2	WASHER (4.7X11X1.2-MM THK)	
M	5	1	**5C-8312**	2	NUT (M4X0.7-THD)	
	6	1	**7X-0579**	1	WASHER-HARD (8.8X25.5X2-MM THK)	
M	7	1	**6V-9672**	2	SCREW-MACHINE (M4X0.7X16-MM)	
M	8	1	**8T-4138**	2	BOLT (M6X1X20-MM)	
M	9	1	**8T-4189**	1	BOLT (M8X1.25X20-MM)	
	10	1	**8T-4205**	2	WASHER-HARD (7.2X14.5X2-MM THK)	
	11	1	**293-9044**	1	HARNESS AS-REAR LIGHTING (STOP, TAIL, TURN)	
		1	**102-8804**	1	KIT-RECEPTACLE (4-PIN)	
					(INCLUDES RECEPTACLE AS & WEDGE)	
		1	**186-3735**	4	PIN-CONNECTOR (16-GA TO 18-GA)	
		1	**186-3736**	4	SOCKET-CONNECTOR (16-GA TO 18-GA)	
E		1	**125-7874**		TUBE-HEAT SHRINK (5.72-MM DIA) (10-CM)	
		1	**5P-4571**	2	TERMINAL-BLADE (14-GA TO 16-GA)	
		1	**155-2271**	1	KIT-CONNECTING PLUG (4-PIN)	
					(INCLUDES PLUG AS, WEDGE & INTERFACE SEAL)	

E-ORDER BY THE CENTIMETER
M-METRIC PART

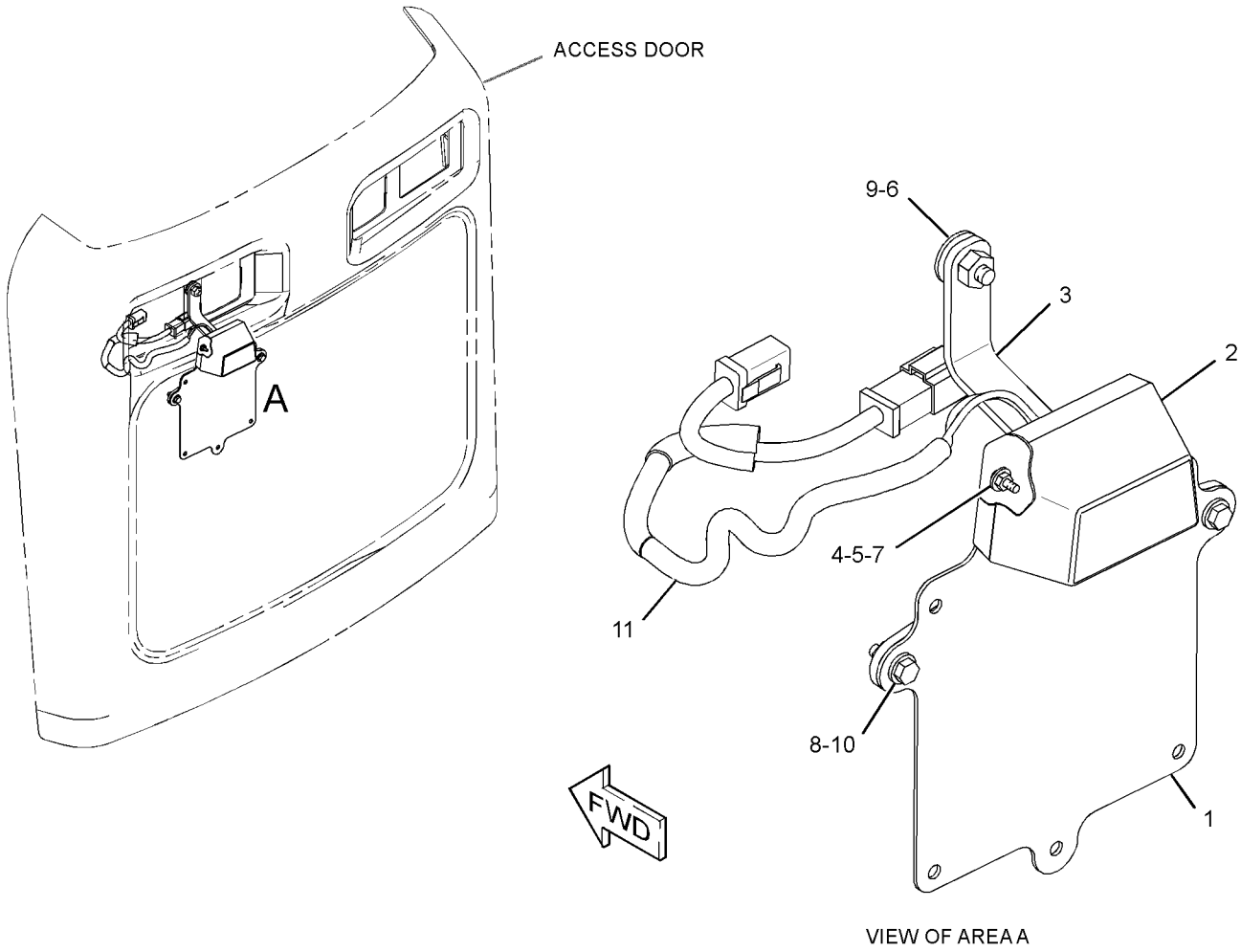

GRAPHIC #1

<END>

g01557353

307-6237 MOUNTING GP-ROADING LIGHTS–
KIT, GERMANY, ITALY
S/N: MST1860-UP
AN ATTACHMENT

SMCS-1429 **i03571193**

NOTE	REF NO	GRAPHIC REF	PART NUMBER	QTY	PART NAME 1 2 3 4 5 6 (PRODUCT LEVEL)	SEE PAGE
	1	1	**9R-1499**	2	REFLECTOR	
	2	1	**178-3620**	5	STRAP-DUAL CLAMP	
	3	1	**310-3990**	2	PLATE AS	
M		1	**8T-3597**	2	NUT-WELD (M12X1.75-THD)	
	4	1	**310-4062**	2	BRACKET AS	
	5	1	**312-8932**	2	PLATE	
	6	1	**315-9794**	1	HARNESS AS-REAR LIGHTING	
		1	**186-3735**	4	PIN-CONNECTOR (16-GA TO 18-GA)	
		1	**155-2271**	1	KIT-CONNECTING PLUG (4-PIN)	
					(INCLUDES PLUG AS, WEDGE & TNERFACE SEAL)	
		1	**102-8804**	1	KIT-RECEPTACLE (4-PIN)	
					(INCLUDES RECEPTACLE AS & WEDGE)	
		1	**186-3736**	4	SOCKET-CONNECTOR (16-GA TO 18-GA)	
	7	1	**3S-2093**	3	STRAP-CABLE	
M	8	1	**5C-7261**	2	NUT (M8X1.25-THD)	
	9	1	**5P-1076**	4	WASHER-HARD (13.5X30X4-MM THK)	
M	10	1	**8T-4183**	4	BOLT (M12X1.75X40-MM)	
M	11	1	**8T-4189**	2	BOLT (M8X1.25X20-MM)	
	12	1	**8T-4224**	4	WASHER-HARD (8.8X16X2-MM THK)	
	13	1	**9G-4191**	2	GROMMET	

M-METRIC PART

307-6237 MOUNTING GP-ROADING LIGHTS *(contd.)* i03571193

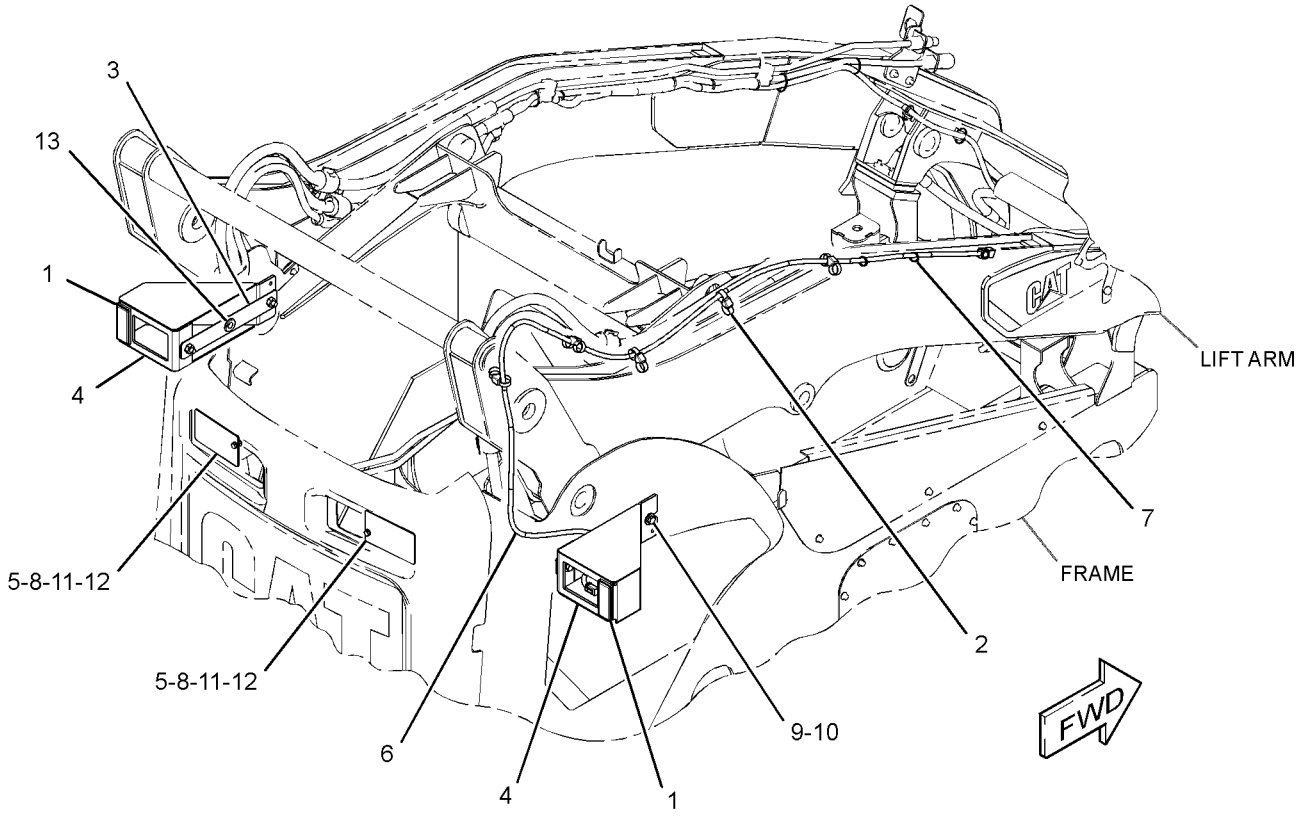

GRAPHIC #1 **<END>** g01444372

FRAME AND BODY

258-3496 SUPPRESSION GP-SOUND—MACHINE

S/N: MST1-UP

PART OF 258-3803, 315-6354 CONVERSION AR-MACHINE, 258-3802, 258-3804 CONVERSION AR-ROADING

AN ATTACHMENT

SMCS-1801, 7076 **i02645971**

NOTE	REF NO	GRAPHIC REF	PART NUMBER	QTY	PART NAME 1 2 3 4 5 6 (PRODUCT LEVEL)	SEE PAGE
	1	1	**176-4079**	1	INSULATION	
	3	1	**261-6378**	1	INSULATION	
	4	1	**261-6379**	1	INSULATION	
	5	1	**294-0075**	1	INSULATION	
	6	1	**294-0076**	1	INSULATION	
	7	1	**294-0077**	1	INSULATION	
	8	1	**294-0078**	1	INSULATION	
	9	1	**294-0079**	1	INSULATION	
	10	1	**294-0081**	1	INSULATION	
	11	1	**294-0082**	1	INSULATION	
	12	1	**294-0083**	1	INSULATION	
	13	1	**294-0084**	1	INSULATION	
	14	1	**294-0085**	1	INSULATION	
	15	1	**294-0086**	1	INSULATION	
	18	1	**294-0090**	1	INSULATION	
	19	1	**294-4558**	1	INSULATION	
	20	1	**294-4559**	1	INSULATION	
	21	1	**295-0035**	1	INSULATION	

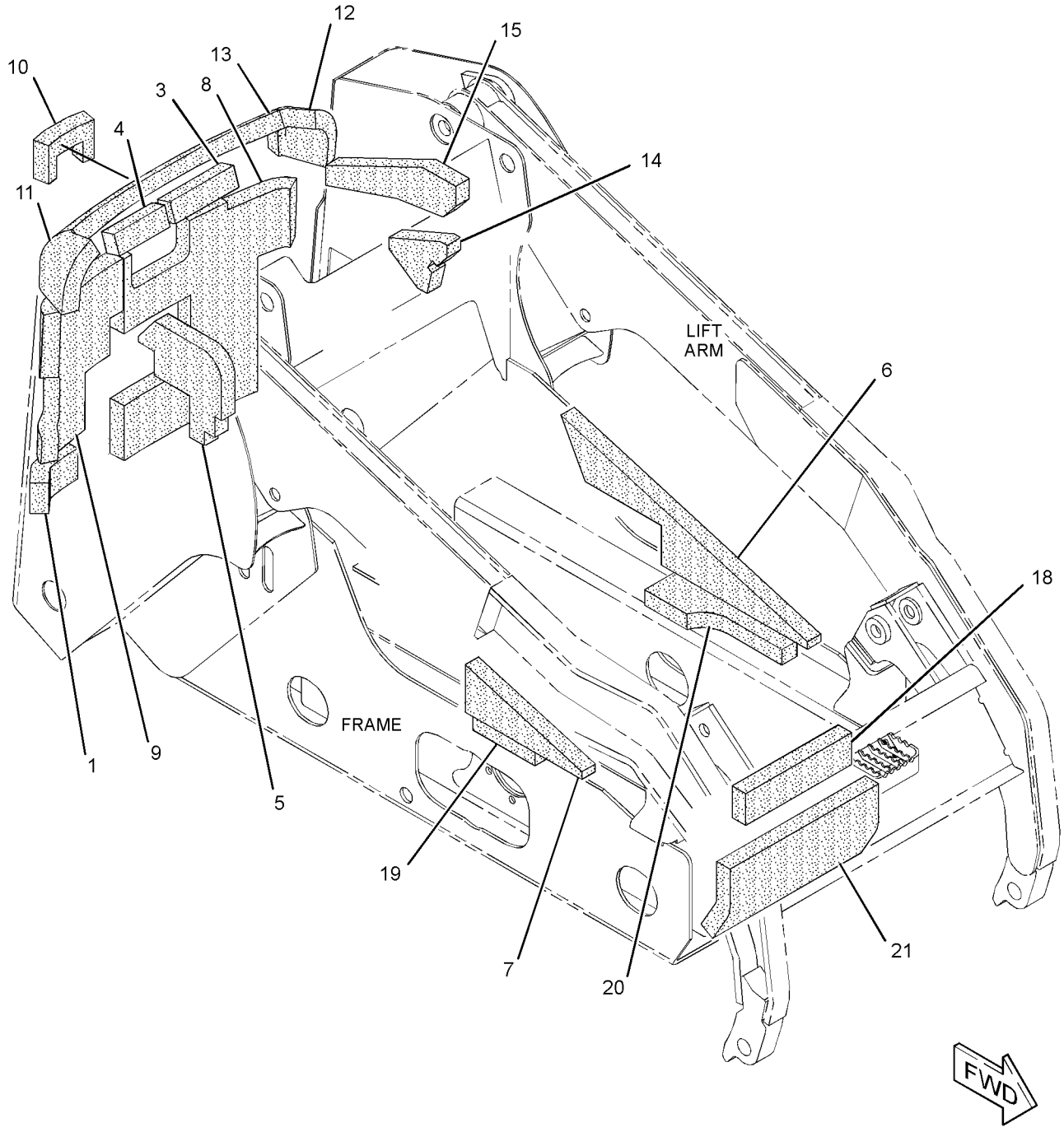

GRAPHIC #1 **<END>** g01329402

280-8330 SUPPRESSION GP-SOUND–ENGINE

S/N: MST1-1859
PART OF 258-3803, 315-6354 CONVERSION AR-MACHINE, 258-3802, 258-3804 CONVERSION AR-ROADING
AN ATTACHMENT

SMCS-1801, 7076 **i02885847**

NOTE	REF NO	GRAPHIC REF	PART NUMBER	QTY	PART NAME 1 2 3 4 5 6 (PRODUCT LEVEL)	SEE PAGE
	1	1	**246-1259**	1	COVER-INSULATION (LH)	
	2	1	**246-1260**	1	COVER-INSULATION (RH)	
	3	1	**280-8307**	1	BRACKET AS	
B	4	1	**280-8335**	4	SPACER	
	5	1	**101-2867**	1	WASHER-HARD (7.2X25X2-MM THK)	
	6	1	**270-9442**	1	SCREW-TRUSS HEAD (M6X1X20-MM)	
M	7	1	**6V-7357**	4	BOLT (M6X1X25-MM)	
M	8	1	**5C-9553**	2	BOLT (M6X1X16-MM)	
	9	1	**9X-2026**	2	WASHER (6.5X17X1-MM THK)	

B-USE AS REQUIRED
M-METRIC PART

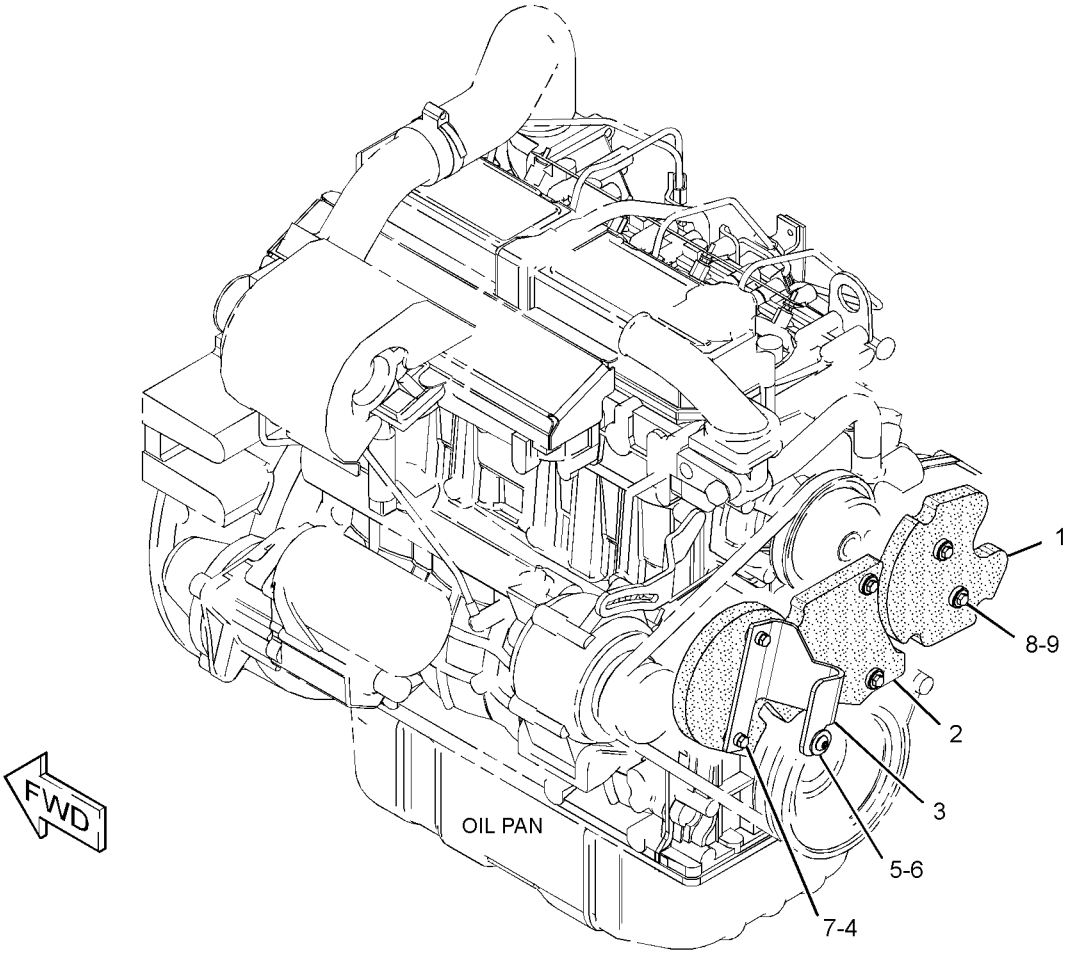

GRAPHIC #1 **<END>** g01372934

294-4560 SUPPRESSION GP-SOUND–MACHINE

S/N: MST1-UP
PART OF 258-3803, 315-6354 CONVERSION AR-MACHINE, 258-3802, 258-3804 CONVERSION AR-ROADING
AN ATTACHMENT

SMCS-1801, 7076 **i02645129**

NOTE	REF NO	GRAPHIC REF	PART NUMBER	QTY	PART NAME 1 2 3 4 5 6 (PRODUCT LEVEL)	SEE PAGE
	1	1	**176-4079**	2	INSULATION	
	2	1	**294-4555**	1	INSULATION	
	3	1	**294-4556**	1	INSULATION	

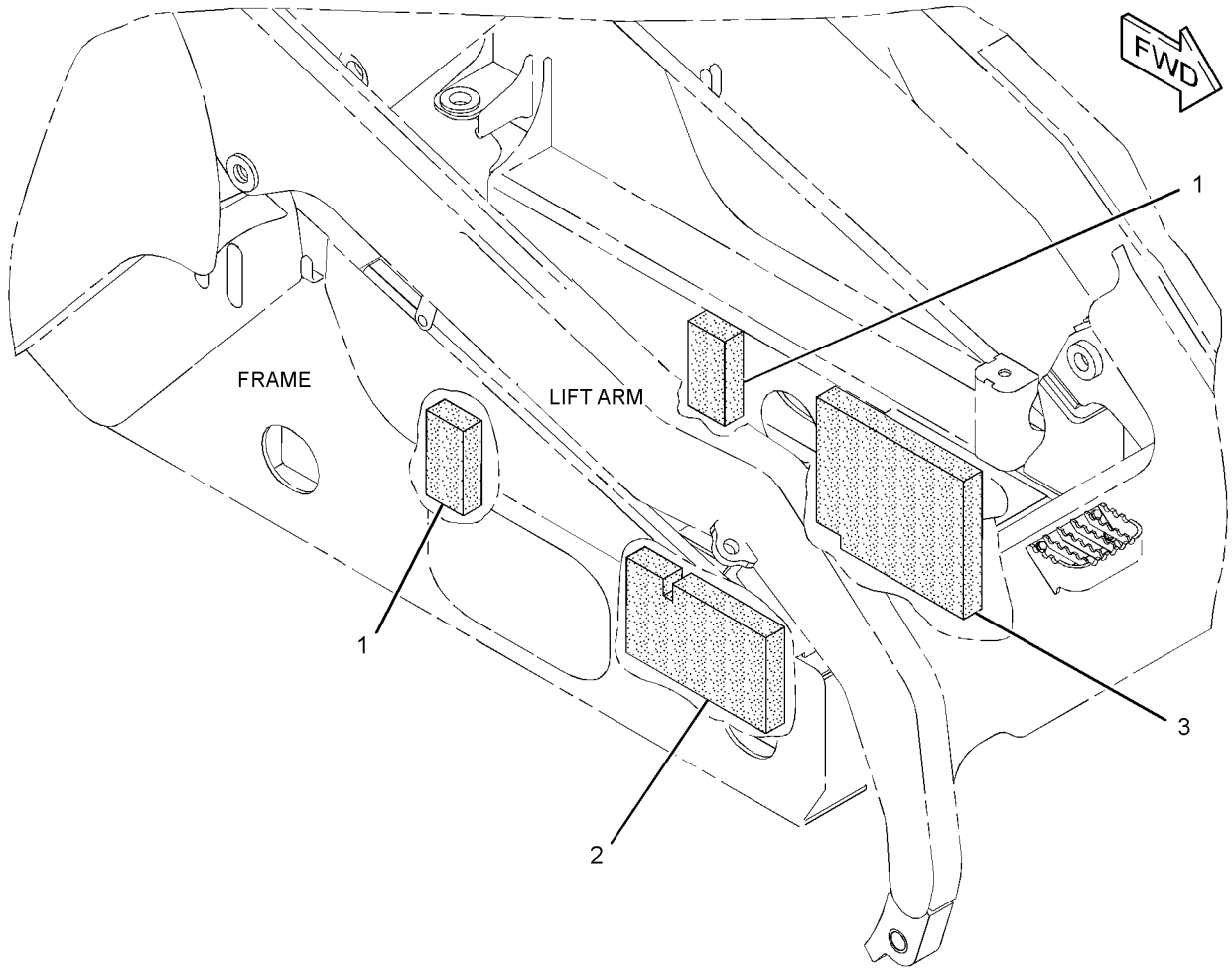

GRAPHIC #1 **<END>** g01332926

149-0686 ACCUMULATOR GP-HYDRAULIC—CHARGED

S/N: MST1-UP

PART OF 258-3462 MANF & SOLENOID MTG GP-ACCUM

FIELD REPLACEMENT ORDER 227-8807—PAGE 298

SMCS-5077 **i02036049**

NOTE	PART NUMBER	QTY	PART NAME 1 2 3 4 5 6 (PRODUCT LEVEL)	SEE PAGE
			(NO SERVICED PARTS)	

<END>

227-8807 ACCUMULATOR GP-HYDRAULIC—UNCHARGED

S/N: MST1-UP

FIELD REPLACEMENT FOR 149-0686—PAGE 298

SMCS-5077 **i02036588**

NOTE	PART NUMBER	QTY	PART NAME 1 2 3 4 5 6 (PRODUCT LEVEL)	SEE PAGE
			(NO SERVICED PARTS)	

<END>

307-6504 ACCUMULATOR GP-RIDE CONTROL–CHARGED

S/N: MST1-UP
PART OF 304-6747 MANF & SOLENOID MTG GP-ACCUM
FIELD REPLACEMENT ORDER 307-6505–PAGE 300
AN ATTACHMENT

SMCS-5077 **i02837009**

NOTE	REF NO	GRAPHIC REF	PART NUMBER	QTY	PART NAME 1 2 3 4 5 6 (PRODUCT LEVEL)	SEE PAGE
	1	1	**224-5132**	1	CAP (GAS VALVE)	
	2	1	**224-5152**	1	VALVE-GAS	
	3	1	**3J-7354**	1	SEAL-O-RING	
	4	1	**1J-9671**	1	SEAL-O-RING	
	5	1	**241-0037**	1	FILM-WARNING (HIGH PRESSURE, READ OMM)	

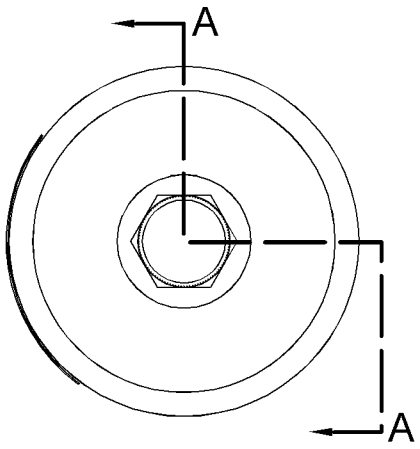

REAR VIEW

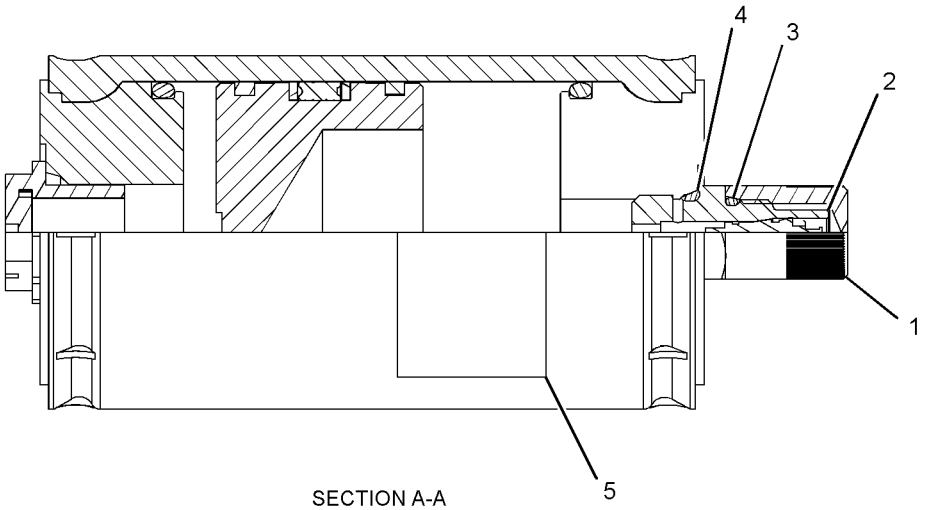

SECTION A-A

GRAPHIC #1 **<END>** g01420240

307-6505 ACCUMULATOR GP-RIDE CONTROL–UNCHARGED

S/N: MST1-UP

PART OF 304-6750 KIT-RIDE CONTROL, 304-6747 MANF & SOLENOID MTG GP-ACCUM

FIELD REPLACEMENT FOR 307-6504–PAGE 299

AN ATTACHMENT

SMCS-5077 **i02837010**

NOTE	REF NO	GRAPHIC REF	PART NUMBER	QTY	PART NAME 1 2 3 4 5 6 (PRODUCT LEVEL)	SEE PAGE
	1	1	**224-5132**	1	CAP (GAS VALVE)	
	2	1	**224-5152**	1	VALVE-GAS	
	3	1	**3J-7354**	1	SEAL-O-RING	
	4	1	**1J-9671**	1	SEAL-O-RING	
	6	1	**241-0037**	1	FILM-WARNING (HIGH PRESSURE, READ OMM)	

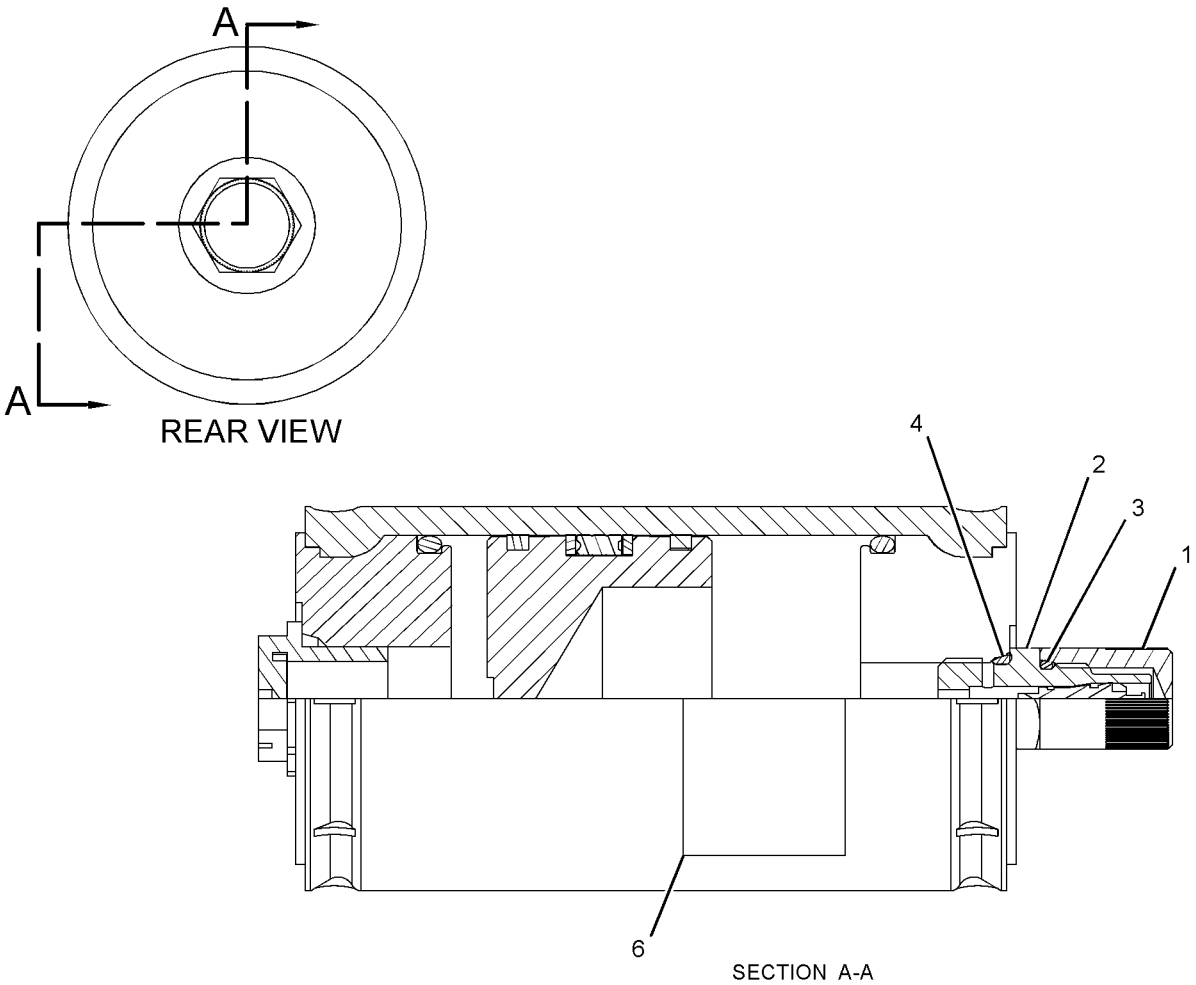

GRAPHIC #1 **<END>** g01420257

230-5406 CYLINDER & MTG GP-ANGLE BLADE

S/N: MST1-UP
PART OF 177-1989, 177-1990 BLADE AR
AN ATTACHMENT

SMCS-6701 **i01860855**

NOTE	REF NO	GRAPHIC REF	PART NUMBER	QTY	PART NAME 1 2 3 4 5 6 (PRODUCT LEVEL)	SEE PAGE
	1	1	**064-3843**	1	RING-SNAP	
	2	1	**210-0855**	1	PIN AS	
	3	1	**213-3943**	1	BUSHING	
Y	4	1	**225-9521**	1	CYLINDER GP-HYDRAULIC (ANGLE BLADE)	309
	5	1	**3B-8489**	1	FITTING-GREASE	
	6	1	**7X-7729**	1	WASHER (11X25X3-MM THK)	
M	7	1	**8T-4137**	1	BOLT (M10X1.5X20-MM)	

M-METRIC PART
Y-SEPARATE ILLUSTRATION

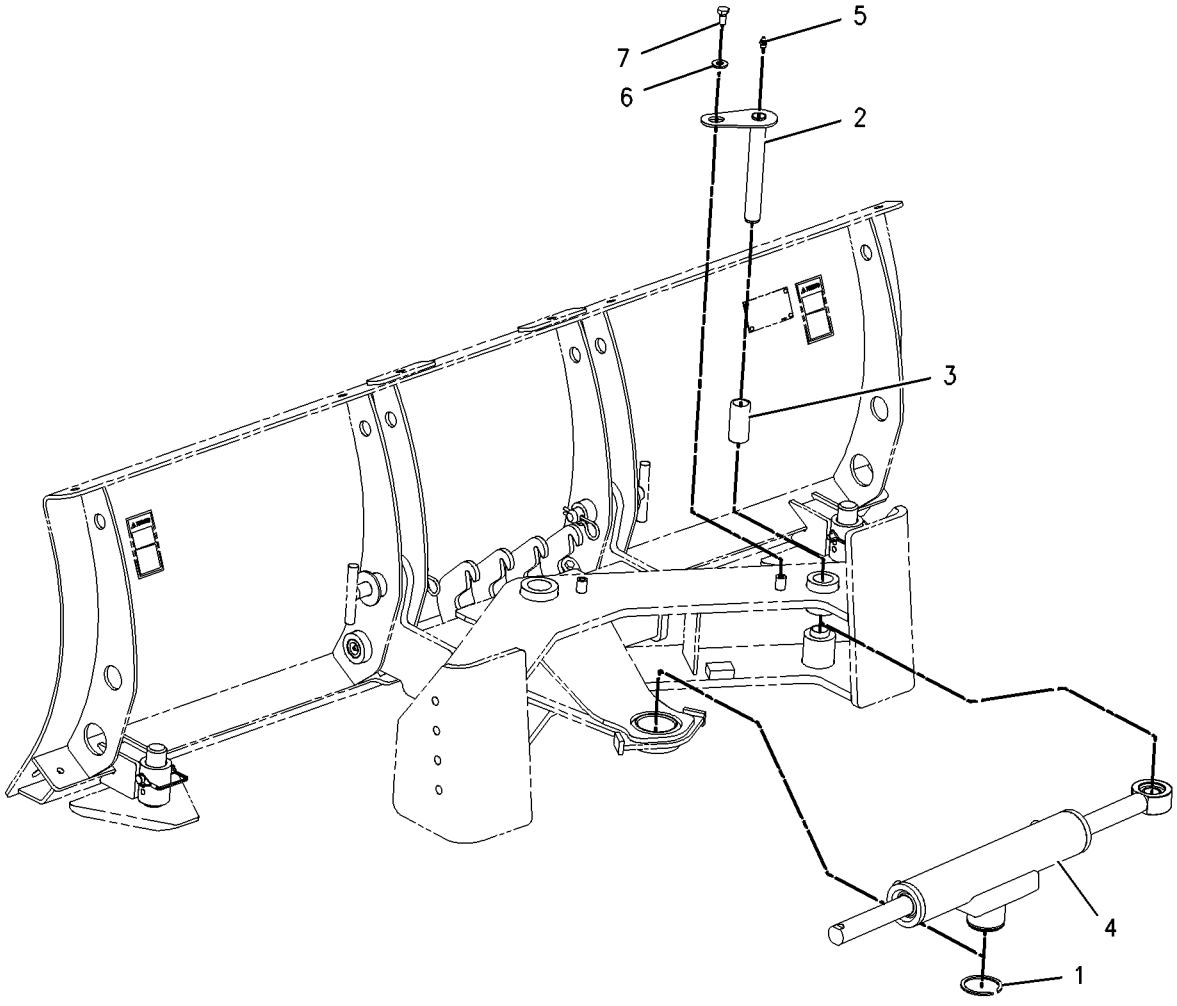

GRAPHIC #1 **<END>** g00978845

HYDRAULIC SYSTEM

231-5274 CYLINDER & MTG GP-ANGLE BLADE

S/N: MST1-UP
PART OF 231-5275, 231-5277 BLADE AR
AN ATTACHMENT

SMCS-6701 **i03590820**

NOTE	REF NO	GRAPHIC REF	PART NUMBER	QTY	PART NAME 1 2 3 4 5 6 (PRODUCT LEVEL)	SEE PAGE
CY	1	1	**274-9930**	2	CYLINDER GP-HYDRAULIC (LOWER RADIATOR)	310
CY	2	1	**274-9931**	1	CYLINDER GP-HYDRAULIC (UPPER)	311
	3	1	**231-5266**	6	PIN AS	
	4	1	**238-0999**	12	SPACER (25.4X28.4X13-MM THK)	
M	5	1	**8T-4200**	6	BOLT (M8X1.25X16-MM)	
	6	1	**6V-8397**	6	SEAL-O-RING	
	7	1	**8T-4224**	6	WASHER-HARD (8.8X16X2-MM THK)	
	8	1	**244-1370**	6	SPACER (8.2X13X6-MM THK)	

C-CHANGE FROM PREVIOUS TYPE
M-METRIC PART
Y-SEPARATE ILLUSTRATION

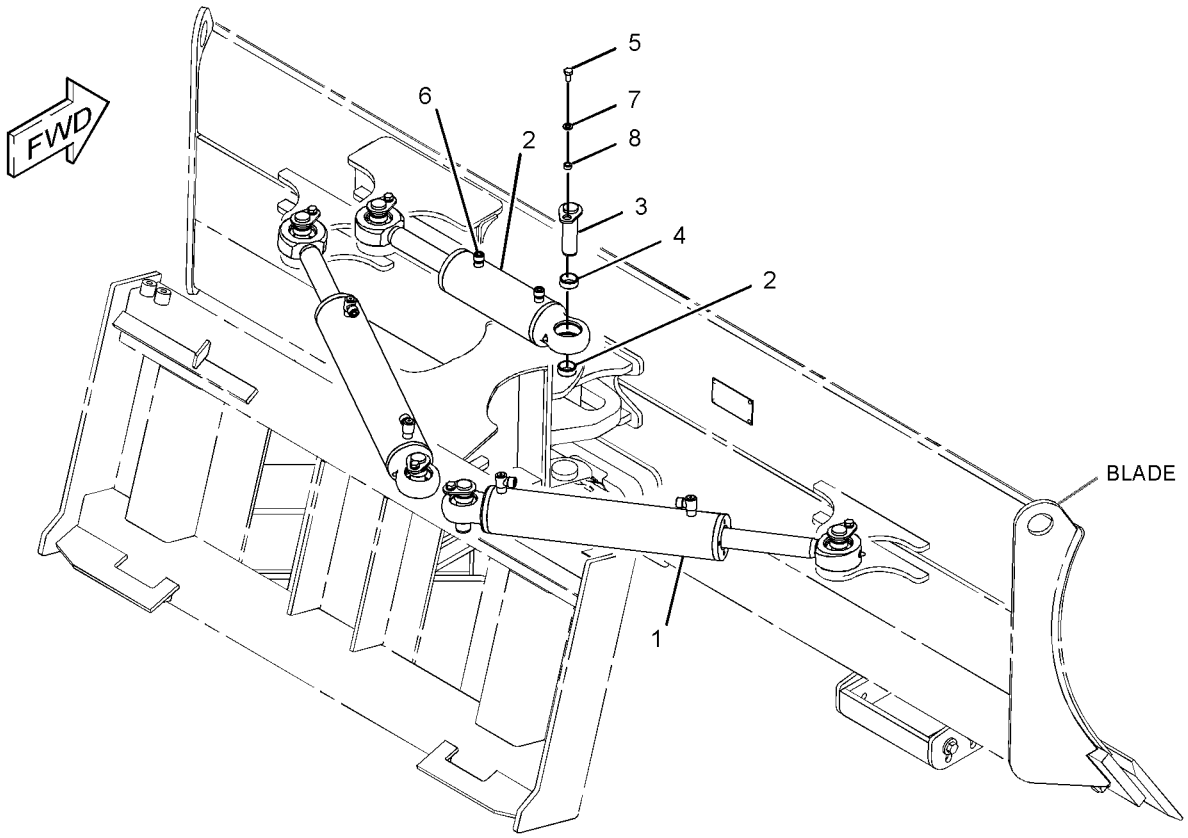

GRAPHIC #1 **<END>** g01270108

154-5018 CYLINDER GP-BUCKET

S/N: MST1-UP
60-MM (2.4-IN) BORE X 200-MM (7.9-IN) STROKE
PART OF 279-5382, 279-5390, 279-5398, 279-5403, 293-0139 BUCKET
AR-MULTIPURPOSE
AN ATTACHMENT

SMCS-5498 **i03624556**

NOTE	REF NO	GRAPHIC REF	PART NUMBER	QTY	PART NAME 1 2 3 4 5 6 (PRODUCT LEVEL)	SEE PAGE
	1	1	**3B-8489**	1	FITTING-GREASE	
					AVAILABLE REPAIR KIT(S):	
			164-3213	1	KIT-SEAL	
					(INCLUDES O-RINGS, SEALS, BACK RINGS, PISTON GUIDE RING, SET SCREW & WIPER RING)	

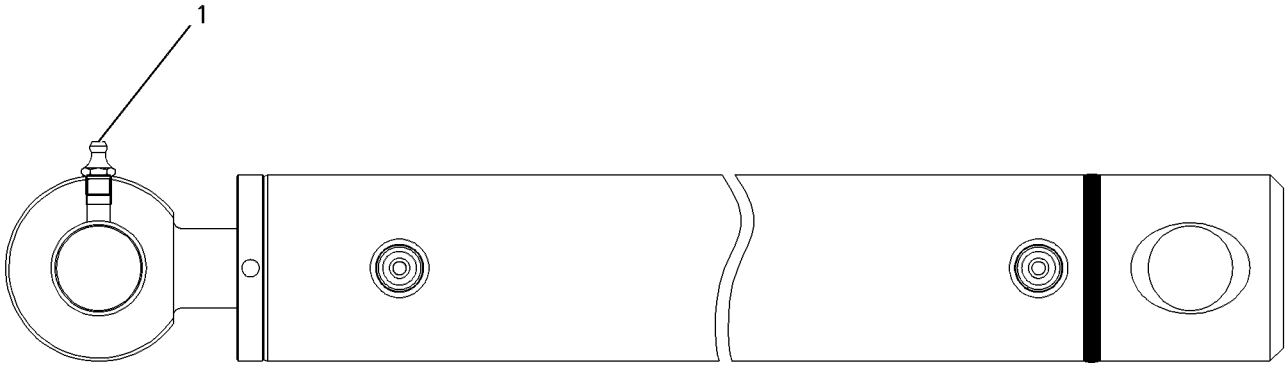

GRAPHIC #1 **<END>** g00564347

HYDRAULIC SYSTEM

293-6264 CYLINDER GP-BUCKET

S/N: MST1-UP
50-MM (2-IN) BORE X 225-MM (8.9-IN) STROKE
PART OF 286-9300, 286-9301 BUCKET AR-GRAPPLE
AN ATTACHMENT

SMCS-5498 **i03590825**

NOTE	REF NO	GRAPHIC REF	PART NUMBER	QTY	PART NAME 1 2 3 4 5 6 (PRODUCT LEVEL)	SEE PAGE
	1	1	**6B-6682**	1	NUT-FULL (3/4-16-THD)	
	2	1	**3B-8489**	1	FITTING-GREASE	
	3	1	**7J-0204**	2	SEAL-O-RING	
	4	1	**9S-8007**	2	PLUG	
					AVAILABLE REPAIR KIT(S):	
			262-0941	1	KIT-SEAL (BUCKET CYLINDER)	
					(INCLUDES PISTON SEAL, PISTON WEAR RING, ROD-O-RING, GLAND-O-RING, GLAND BACKUP RING, GLAND DUST RING, WIPER SEAL & ROD SEAL)	

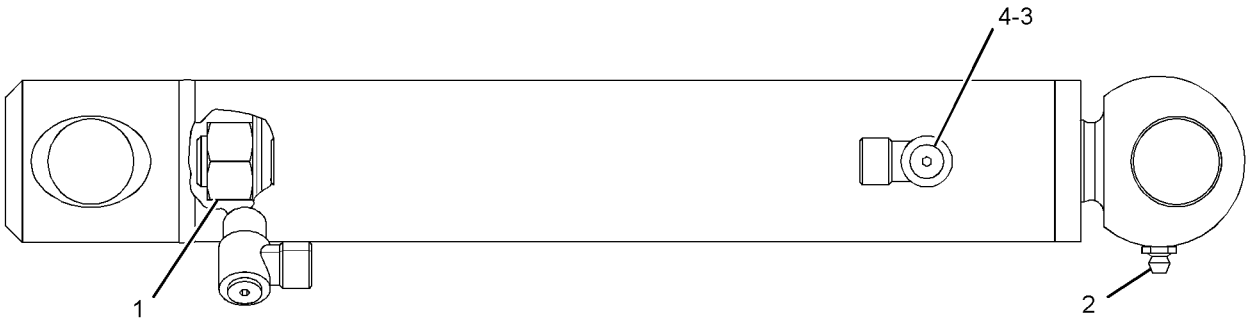

GRAPHIC #1 **<END>** g01373044

164-9295 CYLINDER GP-GRAPPLE

S/N: MST1-UP
40-MM (1.6-IN) BORE X 200-MM (7.9-IN) STROKE
PART OF 285-6116 GRAPPLE & CYLINDER GP-UTILITY
AN ATTACHMENT

SMCS-5457 **i03347409**

NOTE	REF NO	GRAPHIC REF	PART NUMBER	QTY	PART NAME 1 2 3 4 5 6 (PRODUCT LEVEL)	SEE PAGE
	1	1	**3B-8489**	1	FITTING-GREASE	
					AVAILABLE REPAIR KIT(S):	
			172-5285	1	KIT-SEAL	
					(INCLUDES WIPER RING, PISTON GUIDE RING, PISTON SEAL & O-RINGS)	

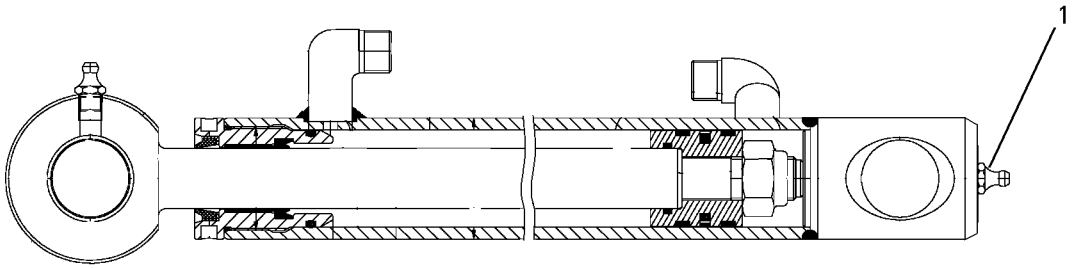

GRAPHIC #1 **<END>** g00604934

HYDRAULIC SYSTEM

255-0943 CYLINDER GP-GRAPPLE

S/N: MST1-UP
40-MM (1.6-IN) BORE X 200-MM (7.9-IN) STROKE
PART OF 285-6116 GRAPPLE & CYLINDER GP-UTILITY
AN ATTACHMENT

SMCS-5457 **i02888528**

NOTE	REF NO	GRAPHIC REF	PART NUMBER	QTY	PART NAME 1 2 3 4 5 6 (PRODUCT LEVEL)	SEE PAGE
	1	1	**254-9097**	1	BEARING-SLEEVE	
	2	1	**3B-8489**	2	FITTING-GREASE	
	3	1	**7J-0204**	2	SEAL-O-RING	
	4	1	**9S-8007**	2	PLUG	
	5	1	**2K-4821**	1	LOCKNUT (5/8-18-THD)	
					AVAILABLE REPAIR KIT(S):	
			286-3591	1	KIT-SEAL	
					(INCLUDES SEALS, SEAL-O-RINGS & RING BACK-UPS)	

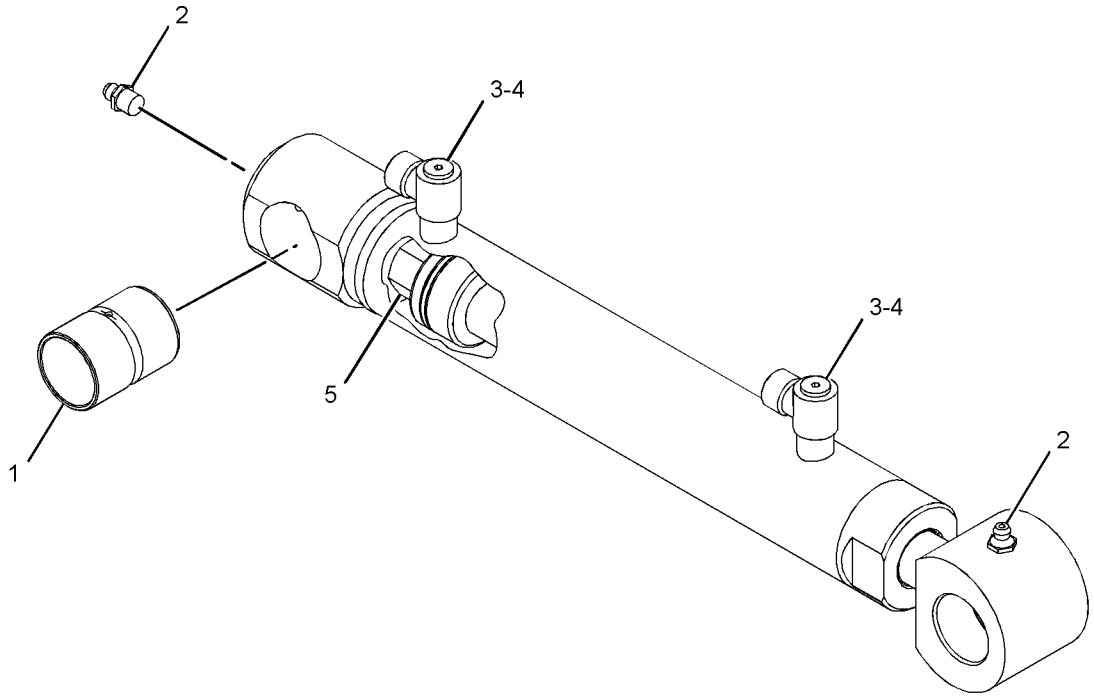

GRAPHIC #1 **<END>** g01439380

278-1975 CYLINDER GP-GRAPPLE–INDUSTRIAL

S/N: MST1-UP

60-MM (2.4-IN) BORE X 200-MM (7.9-IN) STROKE

PART OF 157-7223, 157-7224, 157-7225, 217-6229 BUCKET AR-GRAPPLE, 279-5350, 279-5360 FORK AR-GRAPPLE

AN ATTACHMENT

SMCS-5457 **i03590846**

NOTE	REF NO	GRAPHIC REF	PART NUMBER	QTY	PART NAME 1 2 3 4 5 6 (PRODUCT LEVEL)	SEE PAGE
	1	1	**7D-8508**	1	NUT-FULL (7/8-14-THD)	
	2	1	**254-9097**	1	BEARING-SLEEVE	
	3	1	**255-0942**	1	BEARING-SLEEVE	
	4	1	**3B-8489**	1	FITTING-GREASE	
	5	1	**7J-0204**	2	SEAL-O-RING	
	6	1	**9S-8007**	2	PLUG	
					AVAILABLE REPAIR KIT(S):	
			278-1970	1	KIT-SEAL (HYDRAULIC CYLINDER)	
					(INCLUDES SEAL-O-RINGS, WEAR RINGS, BACKUP RING, SEAL-U CUP & SEAL)	

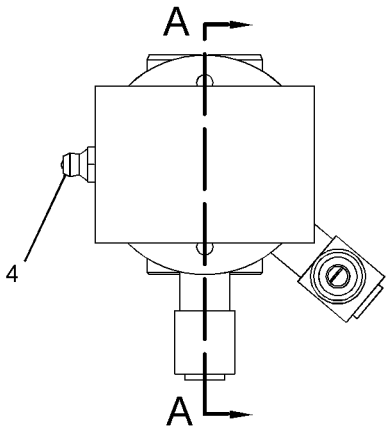

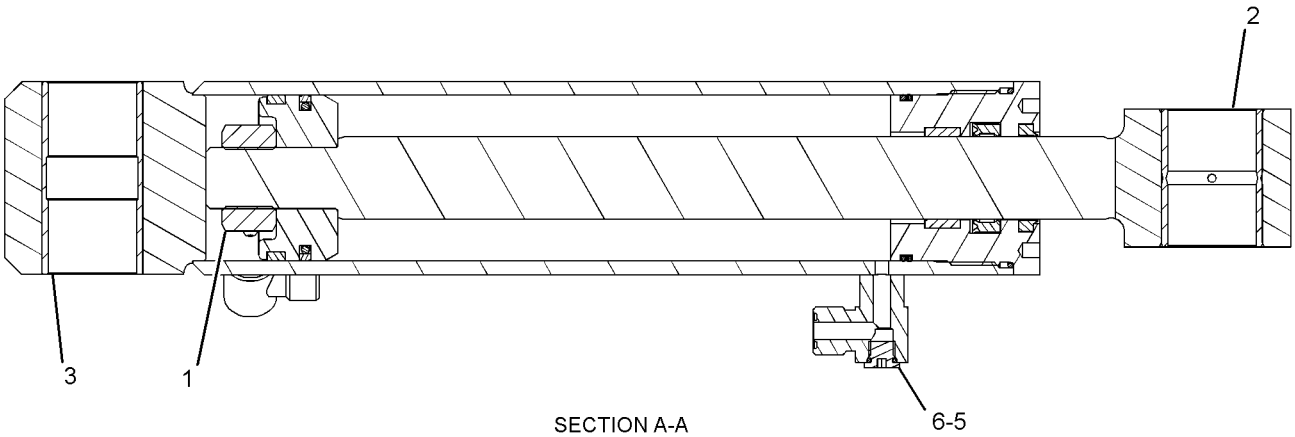

SECTION A-A

GRAPHIC #1 **<END>** g01280909

HYDRAULIC SYSTEM

192-2640 CYLINDER GP-HYDRAULIC–COUPLER

S/N: MST1-UP
35-MM (1.4-IN) BORE X 103.5-MM (4.1-IN) STROKE
PART OF 215-3962, 215-3963 CYLINDER & LINK GP-COUPLER, 258-3911 KIT-QUICK COUPLER CONVERSION
AN ATTACHMENT

SMCS-5362, 7562 **i03435422**

NOTE	REF NO	GRAPHIC REF	PART NUMBER	QTY	PART NAME 1 2 3 4 5 6 (PRODUCT LEVEL)	SEE PAGE
					(NO SERVICED PARTS)	

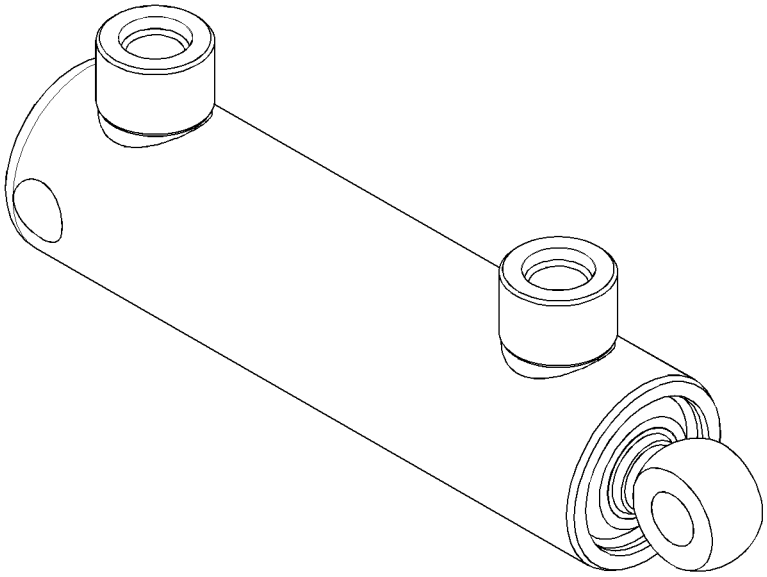

GRAPHIC #1 **<END>** g01787137

225-9521 CYLINDER GP-HYDRAULIC–ANGLE BLADE

S/N: MST1-UP
63-MM (2.5-IN) BORE X 300-MM (11.8-IN) STROKE
PART OF 230-5406 CYLINDER & MTG GP-ANGLE BLADE
AN ATTACHMENT

SMCS-5362, 7562 **i03590837**

NOTE	REF NO	GRAPHIC REF	PART NUMBER	QTY	PART NAME 1 2 3 4 5 6 (PRODUCT LEVEL)	SEE PAGE
	1	1	**214-5555**	1	ROD END AS	
					AVAILABLE REPAIR KIT(S):	
			177-1958	1	KIT-SEAL	
					(INCLUDES O-RINGS, SEALS, BACK RINGS, PISTON GUIDE RING, ROD GUIDE RING & WIPER RINGS)	

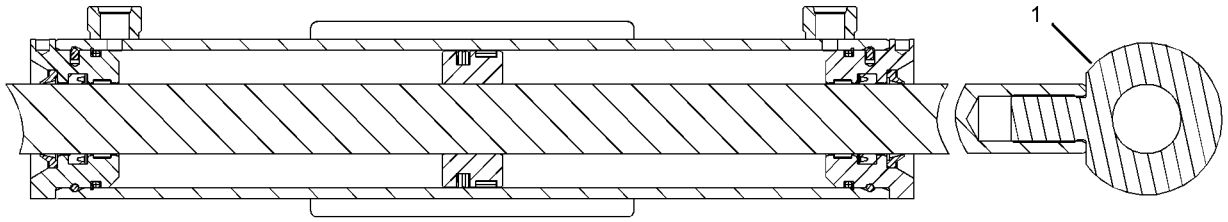

GRAPHIC #1 **<END>** g01282929

274-9930 CYLINDER GP-HYDRAULIC—ANGLE BLADE

S/N: MST1-UP
70-MM (2.8-IN) BORE X 314-MM (12.4-IN) STROKE
PART OF 231-5274 CYLINDER & MTG GP-ANGLE BLADE
AN ATTACHMENT

SMCS-5362, 7562 **i03590840**

NOTE	REF NO	GRAPHIC REF	PART NUMBER	QTY	PART NAME 1 2 3 4 5 6 (PRODUCT LEVEL)	SEE PAGE
	1	1	**7D-8508**	1	NUT-FULL (7/8-14-THD)	
	2	1	**8Q-6027**	2	BEARING-SPHERICAL	
	3	1	**027-1287**	2	FITTING-GREASE	
	4	1	**278-4524**	1	ROD AS	
	5	1	**278-4875**	2	RING-RETAINING	
	6	1	**7J-0204**	2	SEAL-O-RING	
	7	1	**9S-8007**	2	PLUG	
					AVAILABLE REPAIR KIT(S):	
			266-6140	1	KIT-SEAL (SWING CYLINDER)	
					(INCLUDES SEAL-O-RINGS, WEAR RINGS, BACKUP RING, SEAL-U CUP, SEAL & SETSCREW)	

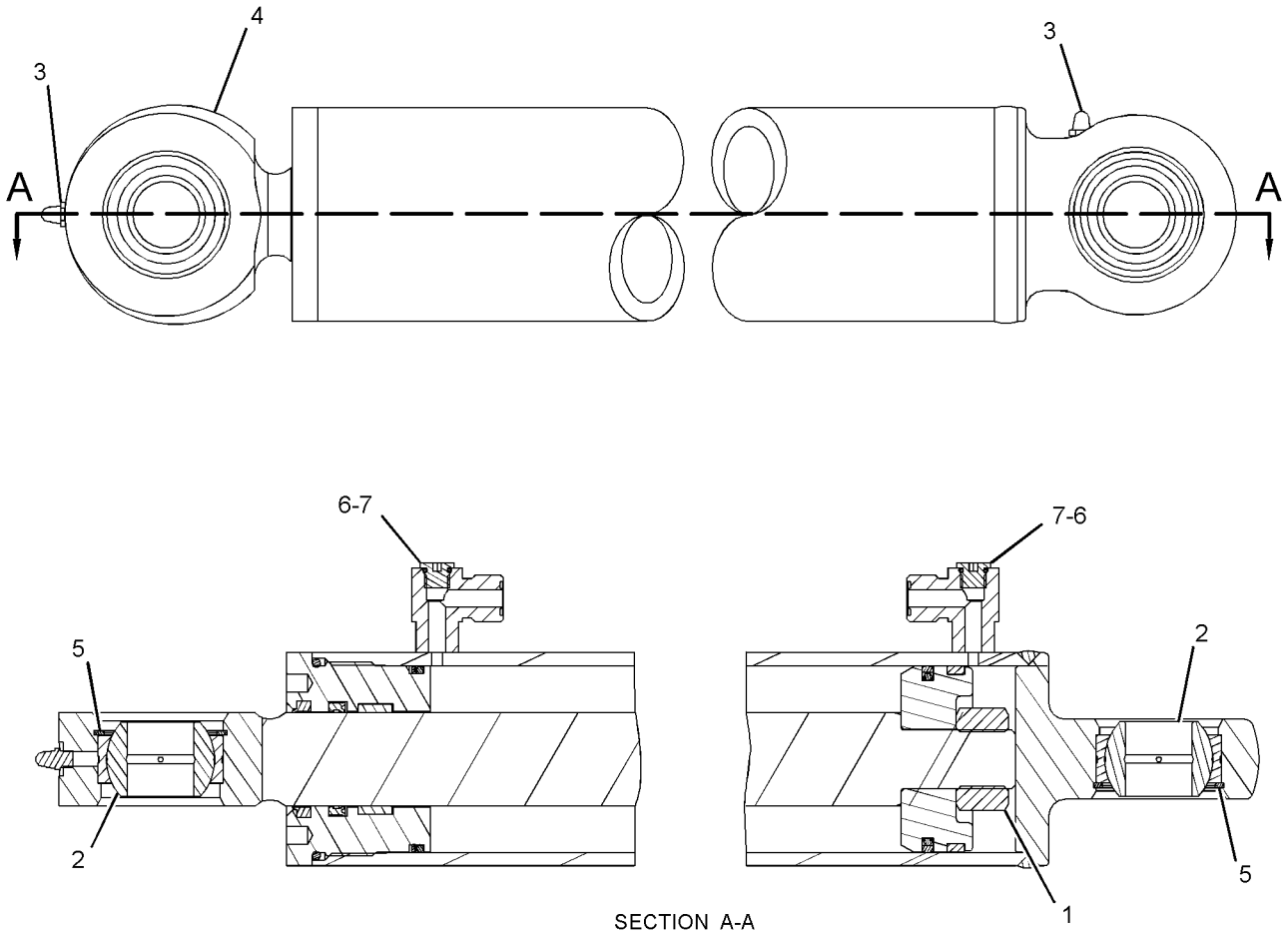

SECTION A-A

GRAPHIC #1 **<END>** g01305293

274-9931 CYLINDER GP-HYDRAULIC–ANGLE BLADE

S/N: MST1-UP
70-MM (2.8-IN) BORE X 120-MM (4.7-IN) STROKE
PART OF 231-5274 CYLINDER & MTG GP-ANGLE BLADE
AN ATTACHMENT

SMCS-5362, 7562 **i03690346**

NOTE	REF NO	GRAPHIC REF	PART NUMBER	QTY	PART NAME 1 2 3 4 5 6 (PRODUCT LEVEL)	SEE PAGE
	1	1	**7D-8508**	1	NUT-FULL (7/8-14-THD)	
	2	1	**8Q-6027**	2	BEARING-SPHERICAL	
	3	1	**027-1287**	2	FITTING-GREASE	
	4	1	**278-4525**	1	ROD AS	
	5	1	**278-4875**	2	RING-RETAINING	
					AVAILABLE REPAIR KIT(S):	
			266-6140	1	KIT-SEAL (SWING CYLINDER)	
					(INCLUDES SEAL-O-RINGS, WEAR RINGS, BACKUP RING, SEAL-U CUP, SEAL & SETSCREW)	

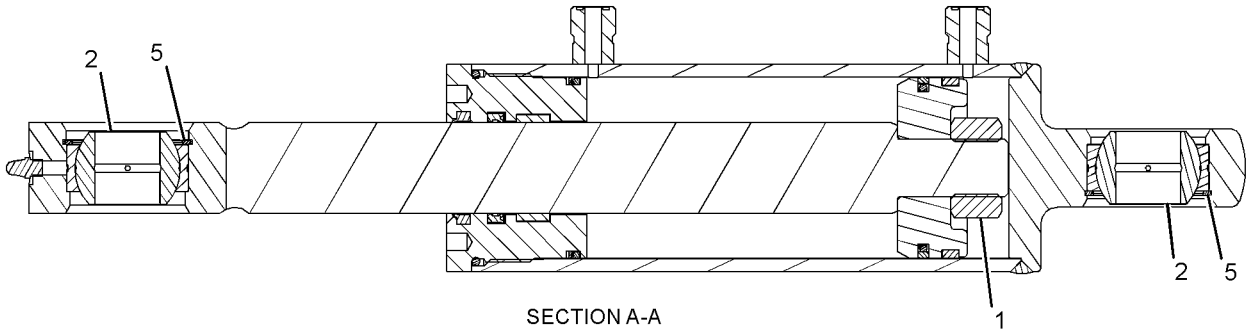

SECTION A-A

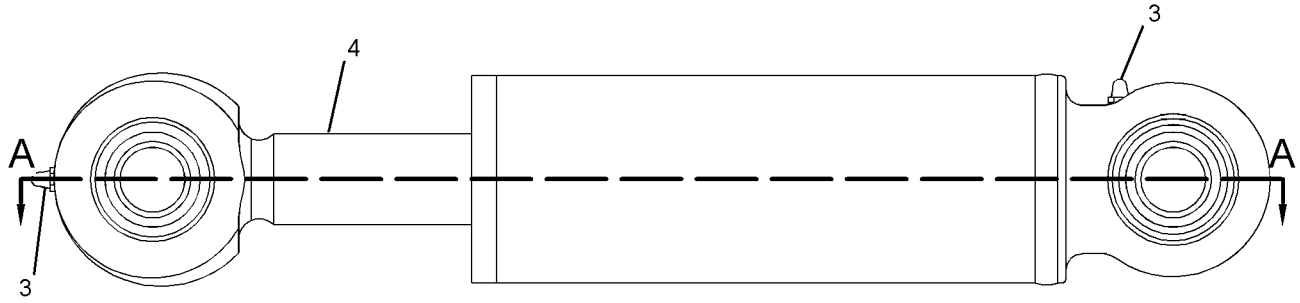

GRAPHIC #1 **<END>** g01270194

278-1969 CYLINDER GP-HYDRAULIC

S/N: MST1-UP
60-MM (2.4-IN) BORE X 200-MM (7.9-IN) STROKE
PART OF 154-5004, 154-5010, 279-5382, 279-5390, 279-5398, 279-5403, 293-0139, 325-7036, 325-7046, 325-7056, 325-7066, 325-7076 BUCKET
AR-MULTIPURPOSE
AN ATTACHMENT

SMCS-5362, 7562 **i03590845**

NOTE	REF NO	GRAPHIC REF	PART NUMBER	QTY	PART NAME 1 2 3 4 5 6 (PRODUCT LEVEL)	SEE PAGE
	1	1	**7D-8508**	1	NUT-FULL (7/8-14-THD)	
	2	1	**254-9097**	1	BEARING-SLEEVE	
	3	1	**3B-8489**	1	FITTING-GREASE	
					AVAILABLE REPAIR KIT(S):	
			278-1970	1	KIT-SEAL (HYDRAULIC CYLINDER)	
					(INCLUDES SEAL-O-RINGS, WEAR RINGS, BACKUP RING, SEAL-U CUP & SEAL)	

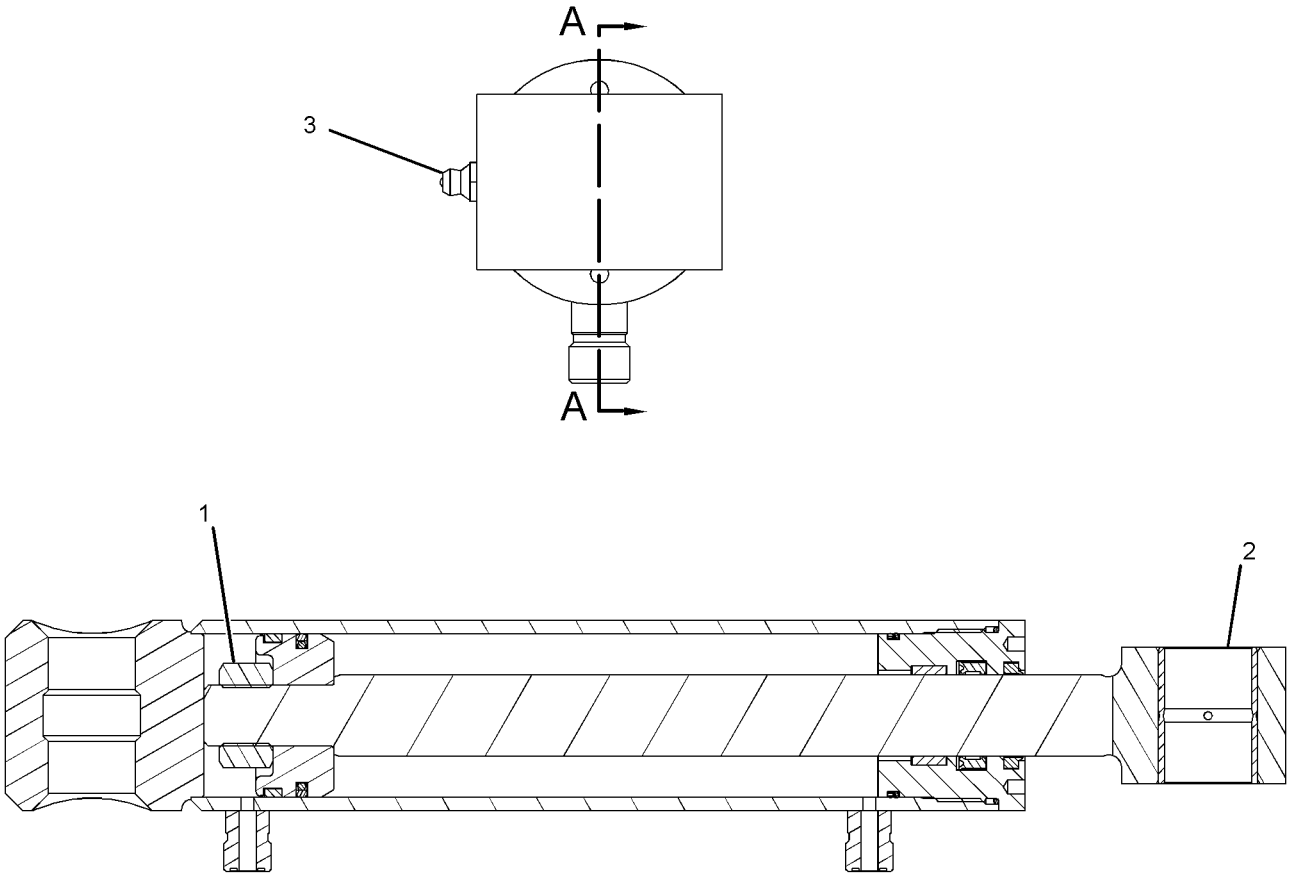

SECTION A-A

GRAPHIC #1 **<END>** g01281180

258-2559 CYLINDER GP-LIFT ARM–VERTICAL LIFT

S/N: MST1-UP

PART OF 258-2510, 295-7292 CHASSIS AR

SMCS-5102, 5104 **i03690286**

NOTE	REF NO	GRAPHIC REF	PART NUMBER	QTY	PART NAME 1 2 3 4 5 6 (PRODUCT LEVEL)	SEE PAGE
J	1	1	**258-2514**	1	CYLINDER GP-TILT (RH)	
J	2	1	**258-2515**	1	CYLINDER GP-TILT (LH)	
H	3	1	**258-2516**	2	CYLINDER GP-LIFT (LH)	
					AVAILABLE REPAIR KIT(S):	
J			**258-3621**	2	KIT-SEAL (TILT)	
					(EACH INCLUDES SEALS, RINGS & SCREWS)	
H			**218-6824**	2	KIT-SEAL (LIFT)	
					(EACH INCLUDES RINGS, SEALS & PISTON WEAR BAND)	

H-KIT MARKED H SERVICES PART(S) MARKED H
J-KIT MARKED J SERVICES PART(S) MARKED J

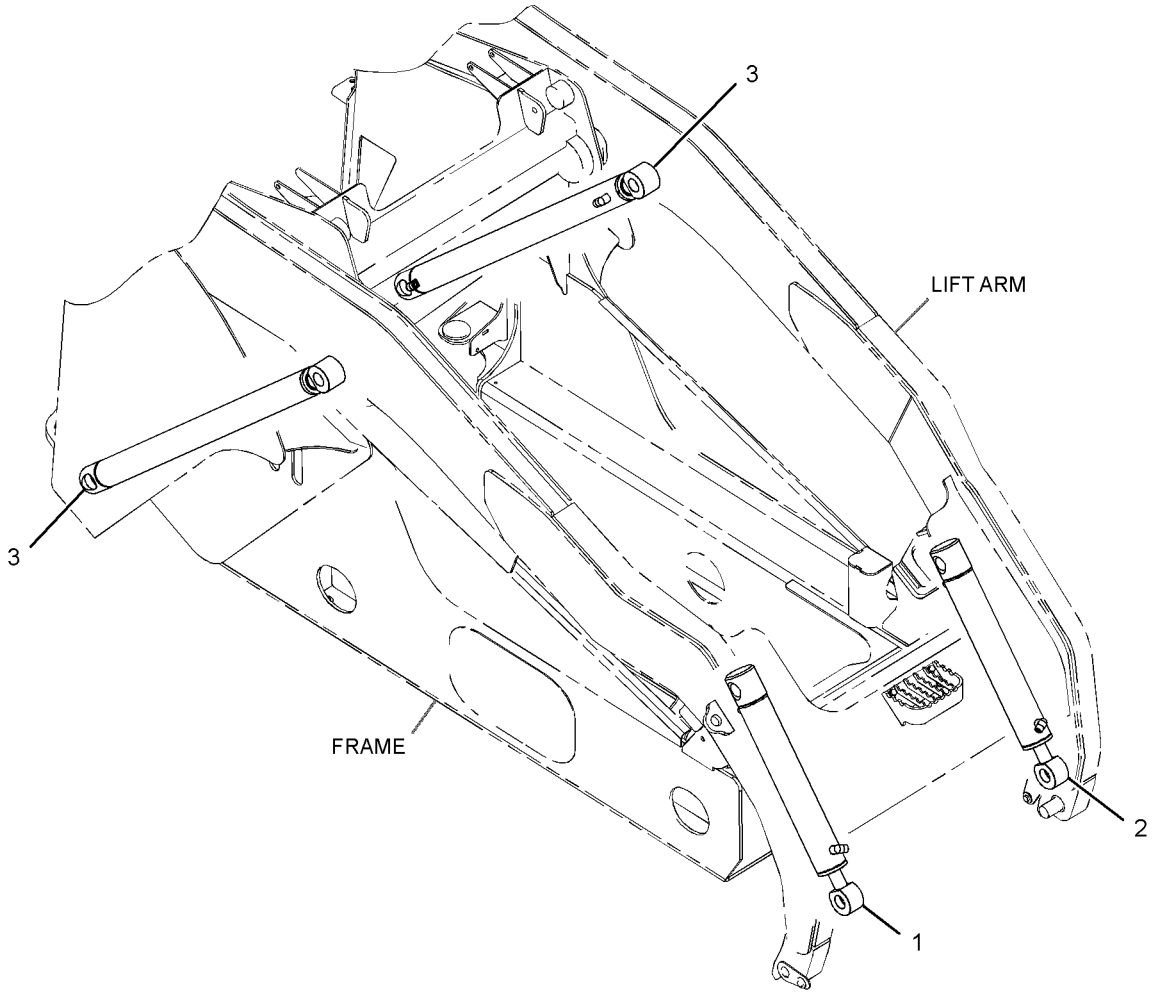

GRAPHIC #1 **<END>** g01328688

218-5840 FITTING GP-HYDRAULIC–
QUICK DISCONNECT, MALE, HIGH FLOW
S/N: MST1-UP
PART OF 258-3350 LINES GP-WORK TOOL
AN ATTACHMENT

SMCS-5057 **i03587746**

NOTE	REF NO	GRAPHIC REF	PART NUMBER	QTY	PART NAME 1 2 3 4 5 6 (PRODUCT LEVEL)	SEE PAGE
	1	1	**218-5843**	1	FITTING AS (QUICK DISCONNECT, MALE)	
		1	**3K-0360**	1	SEAL-O-RING	
	2	1	**218-5844**	1	FITTING AS (QUICK DISCONNECT, MALE)	
		1	**2M-9780**	1	SEAL-O-RING	
	3	1	**2M-9780**	1	SEAL-O-RING	
	4	1	**6V-8640**	1	CONNECTOR	
	5	1	**6V-9746**	1	SEAL-O-RING	

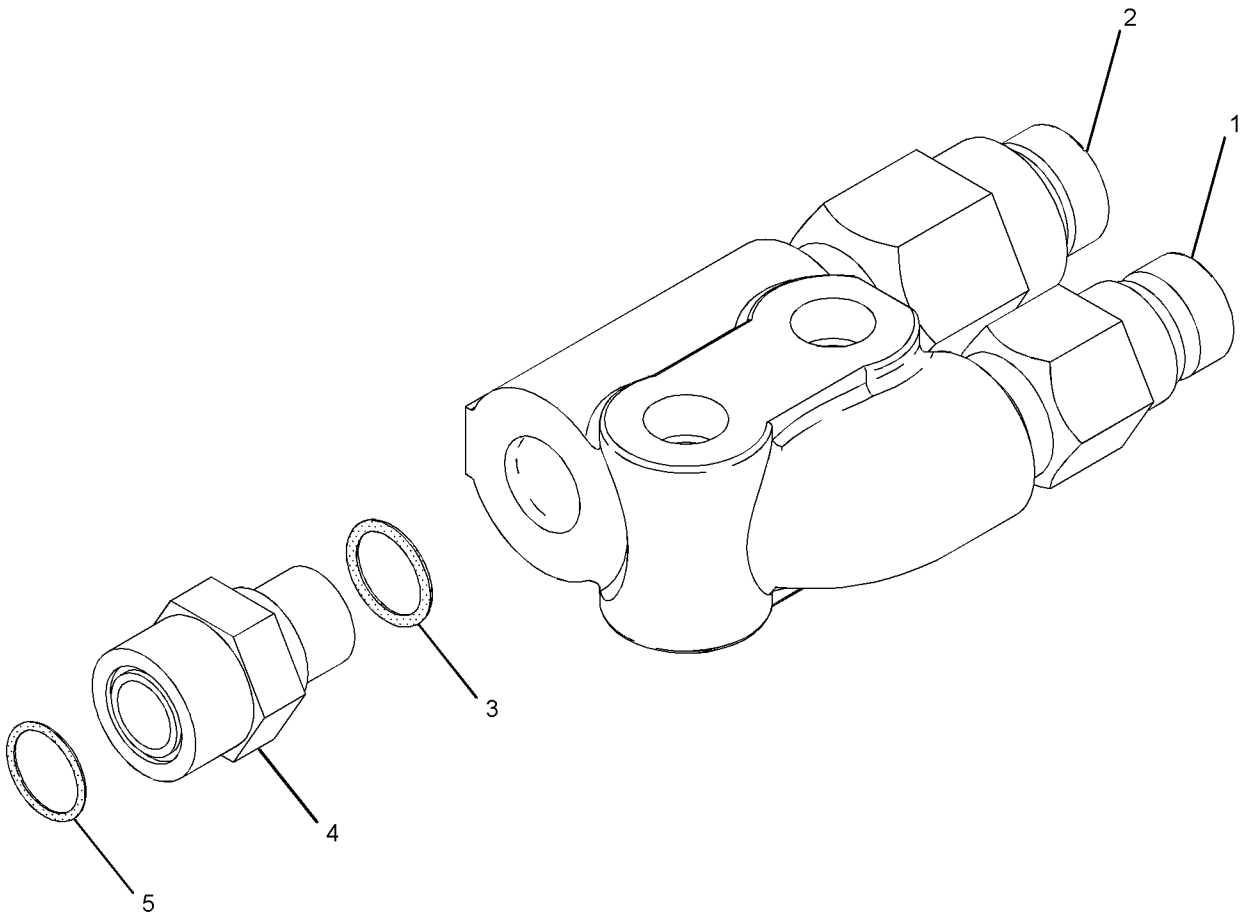

GRAPHIC #1 **<END>** g01026062

218-5841 FITTING GP-HYDRAULIC–
QUICK DISCONNECT, FEMALE, HIGH FLOW
S/N: MST1-UP
PART OF 258-3350 LINES GP-WORK TOOL
AN ATTACHMENT

SMCS-5057 **i03587747**

NOTE	REF NO	GRAPHIC REF	PART NUMBER	QTY	PART NAME 1 2 3 4 5 6 (PRODUCT LEVEL)	SEE PAGE
	1	1	**218-5845**	1	FITTING AS (QUICK DISCONNECT, FEMALE)	
		1	**3K-0360**	1	SEAL-O-RING	
	2	1	**218-5846**	1	FITTING AS (QUICK DISCONNECT, FEMALE)	
		1	**2M-9780**	1	SEAL-O-RING	
	3	1	**2M-9780**	1	SEAL-O-RING	
	4	1	**6V-8640**	1	CONNECTOR	
	5	1	**6V-9746**	1	SEAL-O-RING	

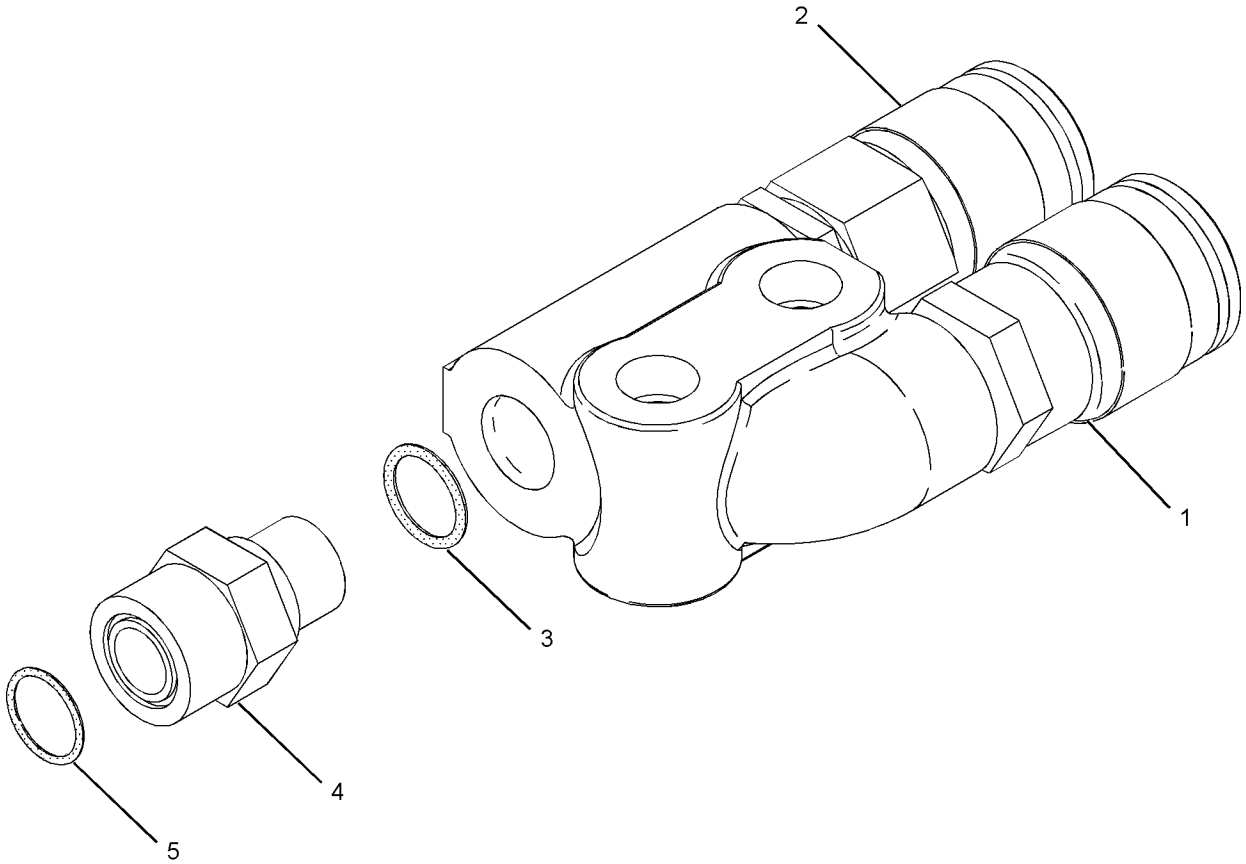

GRAPHIC #1 **<END>** g01084158

285-2190 FITTING GP-HYDRAULIC–MANUAL

S/N: MST1-UP
PART OF 258-2790 COUPLER AR-QUICK
AN ATTACHMENT

SMCS-5057 **i02859004**

NOTE	REF NO	GRAPHIC REF	PART NUMBER	QTY	PART NAME 1 2 3 4 5 6 (PRODUCT LEVEL)	SEE PAGE
	1	1	**304-6752**	1	TEE	
	2	1	**2M-9780**	1	SEAL-O-RING	
	3	1	**4J-5477**	1	SEAL-O-RING	
	4	1	**6V-8397**	1	SEAL-O-RING	
	5	1	**6V-9828**	1	CAP AS	
	6	1	**6V-9829**	1	CAP AS	
	7	1	**7J-9108**	1	SEAL-O-RING	

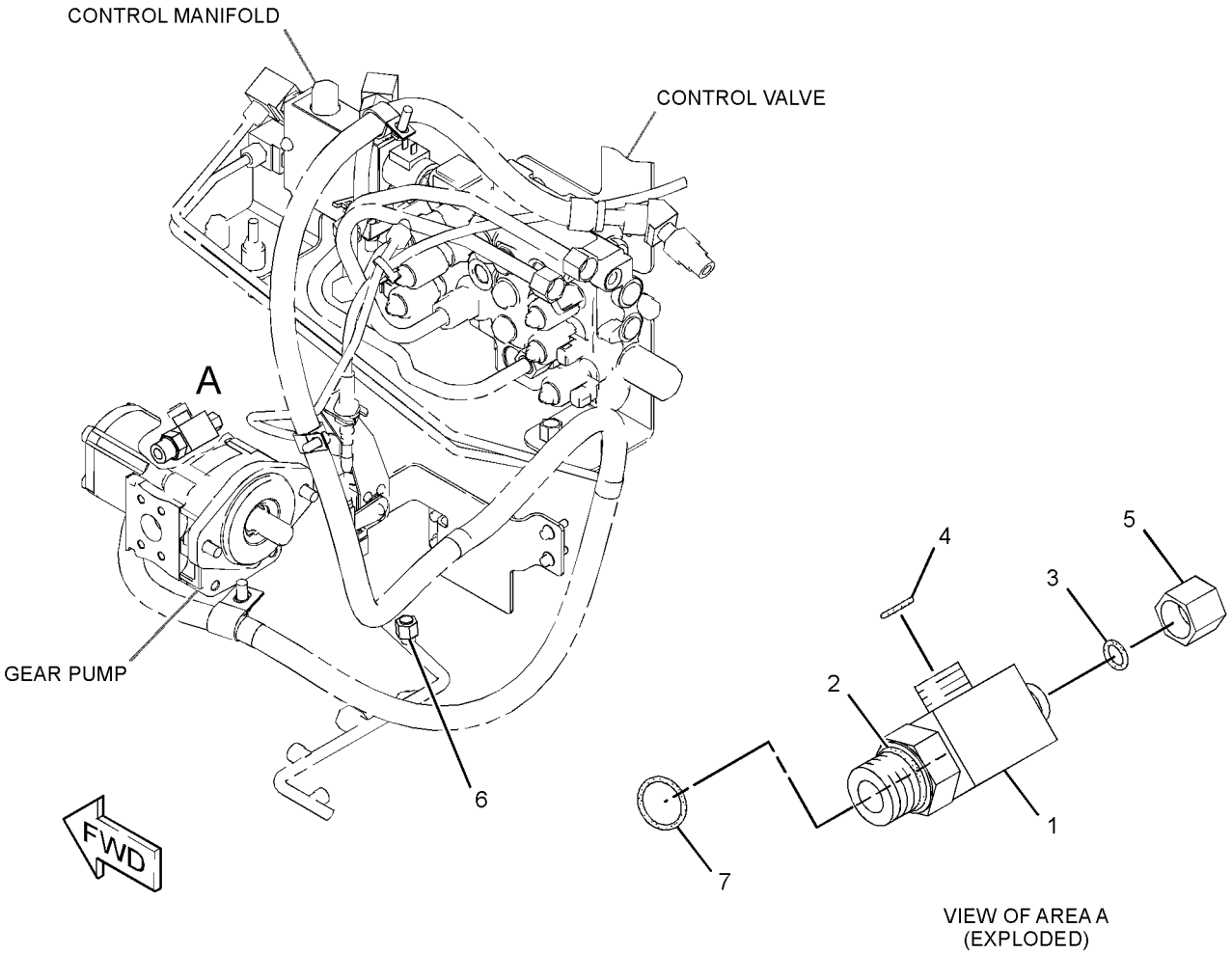

VIEW OF AREA A
(EXPLODED)

GRAPHIC #1 **<END>** g01433212

292-2439 FITTING GP-HYDRAULIC–1-SPEED

S/N: MST1-UP
PART OF 258-3200, 300-7637 POWER TRAIN AR
AN ATTACHMENT

SMCS-5057 **i03018455**

NOTE	REF NO	GRAPHIC REF	PART NUMBER	QTY	PART NAME 1 2 3 4 5 6 (PRODUCT LEVEL)	SEE PAGE
	1	1	*148-8378*	1	ELBOW AS	
		1	**3J-1907**	1	SEAL-O-RING	
		1	**6V-8397**	1	SEAL-O-RING	
		1	**6V-8724**	1	ELBOW	
	2	1	**6V-9829**	1	CAP AS (AUX HYD FUNCTION)	
	3	1	**227-7474**	1	SPACER (13X20X7-MM THK)	

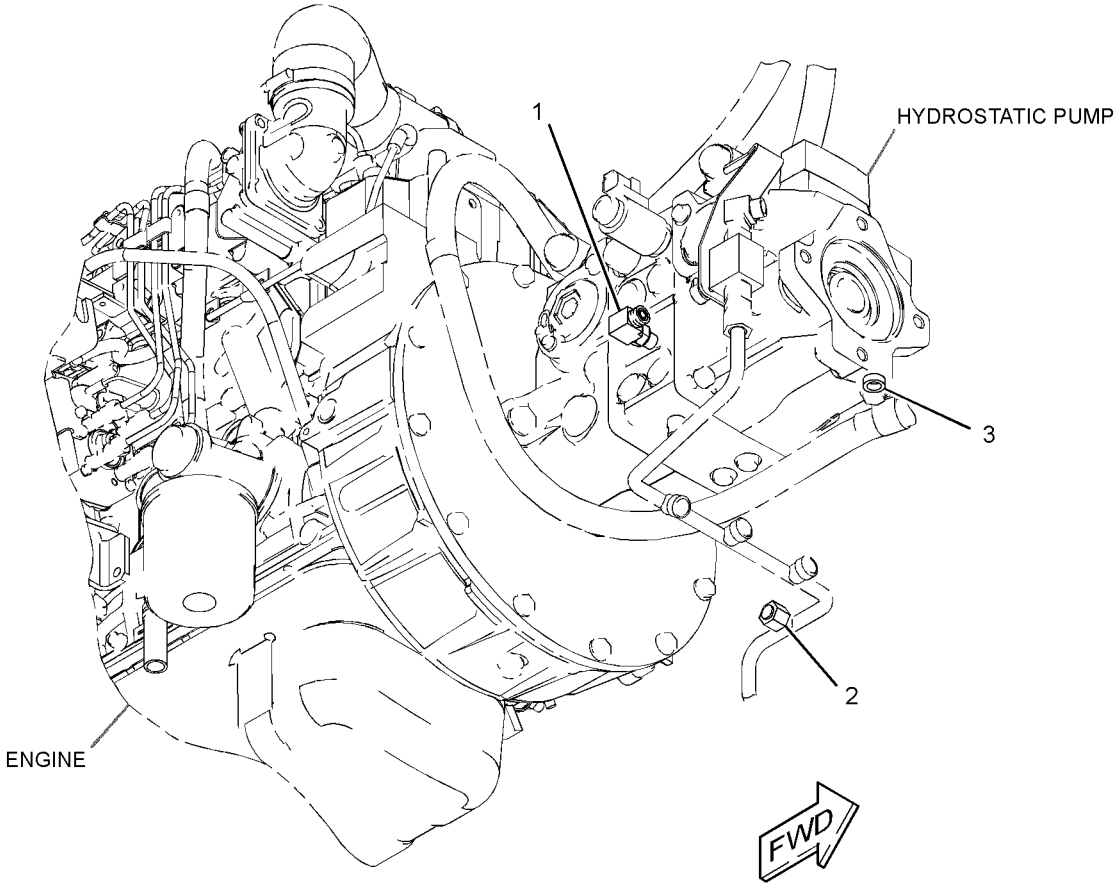

GRAPHIC #1 **<END>** g01533254

HYDRAULIC SYSTEM

258-2426 HYDRAULIC AR

S/N: MST1-UP
PART OF 258-3748, 300-7629 MACHINE AR-SPECIAL
AN ATTACHMENT

SMCS-5050 **i02636295**

NOTE	PART NUMBER	QTY	PART NAME 1 2 3 4 5 6 (PRODUCT LEVEL)	SEE PAGE
Y	*258-2876*	1	LINES GP-HYDRAULIC	367
Y-SEPARATE ILLUSTRATION				

<END>

258-2601 HYDRAULIC AR

S/N: MST1-UP
PART OF 258-3262, 295-7262 COMMON AR

SMCS-5050 **i02706178**

NOTE	PART NUMBER	QTY	PART NAME 1 2 3 4 5 6 (PRODUCT LEVEL)	SEE PAGE
Y	*258-2581*	1	FILTER & LINES GP-HYDRAULIC	212
Y	*258-2780*	1	LINES GP-HYDRAULIC OIL COOLER	381
Y	*258-3595*	1	LINES GP-LIFT CYLINDER	383
Y	*258-3393*	1	LINES GP-LOWERING CONTROL (MANUAL)	384
Y	*258-2607*	1	LINES GP-PARKING BRAKE	221
Y	*258-3593*	1	LINES GP-TILT CYLINDER	402
Y	*258-3394*	1	MANIFOLD & LINES GP-ACCUM	412
Y	*258-2589*	1	MANIFOLD GP-RETURN	226
Y	*258-2434*	1	TANK & MTG GP-HYDRAULIC	436
Y-SEPARATE ILLUSTRATION				

<END>

258-3181 HYDRAULIC AR—STANDARD FLOW

S/N: MST1-UP
AN ATTACHMENT

SMCS-5050 **i03632774**

NOTE	PART NUMBER	QTY	PART NAME 1 2 3 4 5 6 (PRODUCT LEVEL)	SEE PAGE
Y	*258-2582*	1	LINES GP-HYDRAULIC FAN (RADIATOR)	373
Y	*258-3237*	1	LINES GP-PUMP	386
Y	*258-3594*	1	LINES GP-WORK TOOL	408
Y	*258-2556*	1	PUMP & MTG GP-WORK TOOL	431
Y	*258-2504*	1	VALVE GP-CONTROL	441
Y-SEPARATE ILLUSTRATION				

<END>

HYDRAULIC SYSTEM

258-3183 HYDRAULIC AR—HIGH FLOW

S/N: MST1-UP

AN ATTACHMENT

SMCS-5050 **i03690292**

NOTE	PART NUMBER	QTY	PART NAME 1 2 3 4 5 6 (PRODUCT LEVEL)	SEE PAGE
Y	*258-3404*	1	CONTROL GP-ELECTROHYDRAULIC (LH) (HIGH FLOW)	667
Y	*258-3407*	1	CONTROL GP-ELECTROHYDRAULIC (RH) (HIGH FLOW)	670
Y	*258-3230*	1	FILM GP (HIGH FLOW XPS)	815
Y	*280-8393*	1	GUARD GP-DEBRIS (TURBOCHARGER, EXHAUST MANIFOLD)	101
Y	*258-2786*	1	LINES GP-HYDRAULIC FAN (HIGH FLOW)	377
Y	*258-3238*	1	LINES GP-PUMP (HIGH FLOW)	390
Y	*258-3350*	1	LINES GP-WORK TOOL (HIGH FLOW XPS)	404
Y	*258-2557*	1	PUMP & MTG GP-WORK TOOL (HIGH FLOW)	432
Y	*258-2505*	1	VALVE & MTG GP-CONTROL	439
Y	*258-4125*	1	WIRING GP-WORK TOOL	205

Y-SEPARATE ILLUSTRATION

<END>

258-3358 HYDRAULIC AR—WORK TOOL POSITIONER

S/N: MST1-UP

PART OF 258-3683, 258-3751, 258-3754, 300-7635 MACHINE AR-SPECIAL

AN ATTACHMENT

SMCS-5050 **i02711907**

NOTE	PART NUMBER	QTY	PART NAME 1 2 3 4 5 6 (PRODUCT LEVEL)	SEE PAGE
Y	*258-2878*	1	LINES GP-HYDRAULIC (WORK TOOL POSITIONER)	368
Y	*258-3469*	1	MANIFOLD & MTG GP-CONTROL (WORK TOOL POSITIONER)	416

Y-SEPARATE ILLUSTRATION

<END>

258-3731 HYDRAULIC AR—STANDARD FLOW

S/N: MST1-UP

AN ATTACHMENT

SMCS-5050 **i03632776**

NOTE	PART NUMBER	QTY	PART NAME 1 2 3 4 5 6 (PRODUCT LEVEL)	SEE PAGE
Y	*258-2582*	1	LINES GP-HYDRAULIC FAN (RADIATOR)	373
Y	*258-3237*	1	LINES GP-PUMP	386
Y	*258-3594*	1	LINES GP-WORK TOOL	408
Y	*258-3402*	1	PUMP & MTG GP-GEAR	430
Y	*258-2504*	1	VALVE GP-CONTROL	441

Y-SEPARATE ILLUSTRATION

<END>

HYDRAULIC SYSTEM

258-3734 HYDRAULIC AR—HIGH FLOW

S/N: MST1-UP
AN ATTACHMENT

SMCS-5050 **i03690296**

NOTE	PART NUMBER	QTY	PART NAME 1 2 3 4 5 6 (PRODUCT LEVEL)	SEE PAGE
Y	*258-3404*	1	CONTROL GP-ELECTROHYDRAULIC (LH) (HIGH FLOW)	667
Y	*258-3407*	1	CONTROL GP-ELECTROHYDRAULIC (RH) (HIGH FLOW)	670
Y	*258-3230*	1	FILM GP (HIGH FLOW XPS)	815
Y	*280-8393*	1	GUARD GP-DEBRIS (TURBOCHARGER, EXHAUST MANIFOLD)	101
Y	*258-2786*	1	LINES GP-HYDRAULIC FAN (HIGH FLOW)	377
Y	*258-3238*	1	LINES GP-PUMP (HIGH FLOW)	390
Y	*258-3350*	1	LINES GP-WORK TOOL (HIGH FLOW XPS)	404
Y	*258-3401*	1	PUMP GP-PISTON & GEAR	435
Y	*258-2505*	1	VALVE & MTG GP-CONTROL	439
Y	*258-4125*	1	WIRING GP-WORK TOOL	205

Y-SEPARATE ILLUSTRATION

<END>

304-6744 HYDRAULIC AR

S/N: MST1-UP
PART OF 304-6741 MACHINE AR-SPECIAL
AN ATTACHMENT

SMCS-5050 **i02836949**

NOTE	PART NUMBER	QTY	PART NAME 1 2 3 4 5 6 (PRODUCT LEVEL)	SEE PAGE
Y	*304-6745*	1	LINES GP-HYDRAULIC	370
Y	*304-6747*	1	MANF & SOLENOID MTG GP-ACCUM (RIDE CONTROL)	411
Y	*258-3469*	1	MANIFOLD & MTG GP-CONTROL (WORK TOOL POSITIONER)	416

Y-SEPARATE ILLUSTRATION

<END>

HYDRAULIC SYSTEM

258-3911 KIT-QUICK COUPLER CONVERSION—HYDRAULIC

S/N: MST1-UP

AN ATTACHMENT

SMCS-5057, 5133, 5479, 6129 **i03690300**

NOTE	REF NO	GRAPHIC REF	PART NUMBER	QTY	PART NAME 1 2 3 4 5 6 (PRODUCT LEVEL)	SEE PAGE
	1	1	**7K-1181**	17	STRAP-CABLE	
	2	1	**124-2456**	1	FILM-INSTRUCTION (NO STEP)	
	3	1	**178-3620**	6	STRAP-DUAL CLAMP	
	4	1	**311-9240**	2	PLATE	
	5	1	**319-2137**	2	BRACKET	
Y	6	1	**192-2640**	2	CYLINDER GP-HYDRAULIC (COUPLER)	308
	7	1	**303-8768**	4	PIN-SPRING	
	8	1	**207-9737**	1	BRACKET AS	
I	9	1	**207-9756**	4	HOSE AS	
	10	1	**207-9785**	2	PIN	
	11	1	**212-6690**	1	GUARD	
	12	1	**218-6332**	1	BRACKET AS	
	13	1	**218-6333**	1	BRACKET AS	
	14	1	**192-2645**	2	SPRING	
I	15	1	**258-2841**	2	HOSE AS	
	16	1	**258-4191**	1	HARNESS AS-WORK TOOL	
		1	**186-3735**	3	PIN-CONNECTOR (16-GA TO 18-GA)	
		1	**155-2270**	2	KIT-CONNECTING PLUG (2-PIN)	
					(EACH INCLUDES PLUG AS, WEDGE & INTERFACE SEAL)	
		1	**102-8803**	1	KIT-RECEPTACLE (3-PIN)	
					(INCLUDES RECEPTACLE AS & WEDGE)	
		1	**186-3736**	4	SOCKET-CONNECTOR (16-GA TO 18-GA)	
		1	**8L-8413**	3	STRAP-CABLE	
E		1	**125-7874**		TUBE-HEAT SHRINK (5.72-MM DIA) (5-CM)	
	17	1	**265-9513**	1	SWITCH AS-ROCKER (HYDRAULIC QUICK COUPLER)	
		1	**111-7899**	1	GASKET	
	18	1	**285-2193**	1	TUBE AS	
	19	1	**285-2194**	1	TUBE AS	
Y	20	1	**291-0010**	1	MANIFOLD GP-CONTROL (QUICK COUPLER)	422
	21	1	**302-0389**	1	BRACKET AS	
	22	1	**124-2113**	1	COUPLING-PERMANENT	
	23	1	**124-2140**	1	COUPLING-PERMANENT	
	24	1	**132-7551**	1	SPACER (11X19X6-MM THK)	
	25	1	*148-8325*	4	CONNECTOR AS	
					(EACH INCLUDES)	
		1	**3J-1907**	1	SEAL-O-RING	
		1	**4J-5477**	1	SEAL-O-RING	
		1	**6V-8641**	1	CONNECTOR	
	26	1	*148-8336*	2	CONNECTOR AS	
					(EACH INCLUDES)	
		1	**3J-1907**	1	SEAL-O-RING	
		1	**6V-8397**	1	SEAL-O-RING	
		1	**6V-8636**	1	CONNECTOR	
	27	1	*148-8378*	2	ELBOW AS	
					(EACH INCLUDES)	
		1	**3J-1907**	1	SEAL-O-RING	
		1	**6V-8397**	1	SEAL-O-RING	
		1	**6V-8724**	1	ELBOW	
	28	1	*150-4034*	2	TEE AS	
					(EACH INCLUDES)	
		1	**6V-8397**	3	SEAL-O-RING	
		1	**8T-0379**	1	TEE-BULKHEAD	
	29	1	**164-4225**	2	CLIP	
	30	1	*212-1336*	1	TEE AS	
		1	**2M-9780**	1	SEAL-O-RING	

258-3911 **KIT-QUICK COUPLER CONVERSION** *(contd.)* **i03690300**

NOTE	REF NO	GRAPHIC REF	PART NUMBER	QTY	PART NAME 1 2 3 4 5 6 (PRODUCT LEVEL)	SEE PAGE
		1	**6V-8783**	1	TEE-FACE SEAL	
		1	**7J-9108**	2	SEAL-O-RING	
	31	1	*215-3191*	1	REDUCER AS	
		1	**4J-5477**	1	SEAL-O-RING	
		1	**6V-8937**	1	REDUCER-O-RING	
	32	1	**242-9532**	2	COUPLING AS-PERMANENT	
M	33	1	**266-3315**	2	BOLT-FLANGE HEAD (M8X1.25X25.5-MM)	
	34	1	**3B-4628**	2	PIN-COTTER	
	35	1	**3S-2093**	2	STRAP-CABLE	
	36	1	**4D-6466**	3	CLIP	
	37	1	**5P-0372**	2	LOCK PIN	
	38	1	**5P-4116**	2	WASHER-HARD (8.8X20.5X2-MM THK)	
	39	1	**6V-8397**	2	SEAL-O-RING	
	40	1	**6V-9168**	2	NUT (11/16-16-THD)	
	41	1	**7B-1597**	2	CLIP	
	42	1	**7G-2950**	1	CLIP (SLOT)	
	43	1	**7G-2951**	1	CLIP (TAB)	
	44	1	**7H-7055**	2	CLIP	
	45	1	**7X-7729**	3	WASHER (11X25X3-MM THK)	
	46	1	**8L-5188**	2	PIN	
	47	1	**8T-4121**	11	WASHER-HARD (11X21X2.5-MM THK)	
M	48	1	**315-5493**	4	WASHER-HARD (22.5X35X4.5-MM THK)	
M	49	1	**8T-4133**	4	NUT (M10X1.5-THD)	
M	50	1	**8T-4136**	3	BOLT (M10X1.5X25-MM)	
M	51	1	**8T-4137**	2	BOLT (M10X1.5X20-MM)	
M	52	1	**8T-4189**	2	BOLT (M8X1.25X20-MM)	
M	53	1	**8T-4191**	1	BOLT (M10X1.5X16-MM)	
M	54	1	**8T-4196**	4	BOLT (M10X1.5X35-MM)	
M	55	1	**8T-4200**	2	BOLT (M8X1.25X16-MM)	
	56	1	**8T-4224**	4	WASHER-HARD (8.8X16X2-MM THK)	
M	57	1	**8T-6870**	2	BOLT (M8X1.25X70-MM)	
	58	1	**9M-8406**	2	CLIP	
	59	1	**9S-1350**	2	CLIP	
	60	1	**9T-7303**	4	SPACER (16X28X1.5-MM THK)	
	61	1	**9X-6581**	1	NUT-O-RING SEAL (1-14-THD)	
BE	62	1	**213-8708**		HOSE-HYDRAULIC (321-CM)	
					(FOR MODELS 262C & 287C)	
BE		1	**213-8708**		HOSE-HYDRAULIC (339-CM)	
					(FOR MODELS 272C & 297C)	
BE	62A	1	**213-8708**		HOSE-HYDRAULIC (357-CM)	
					(FOR MODELS 262C & 287C)	
BE		1	**213-8708**		HOSE-HYDRAULIC (383-CM)	
					(FOR MODELS 272C & 297C)	
	63	1	**303-8767**	2	PIN-SPRING	
	64	1	**310-6660**	2	PIN-SPRING	

B-USE AS REQUIRED
E-ORDER BY THE CENTIMETER
I-REFER TO HYDRAULIC INFORMATION SYSTEM
M-METRIC PART
Y-SEPARATE ILLUSTRATION

258-3911 **KIT-QUICK COUPLER CONVERSION** *(contd.)* **i03690300**

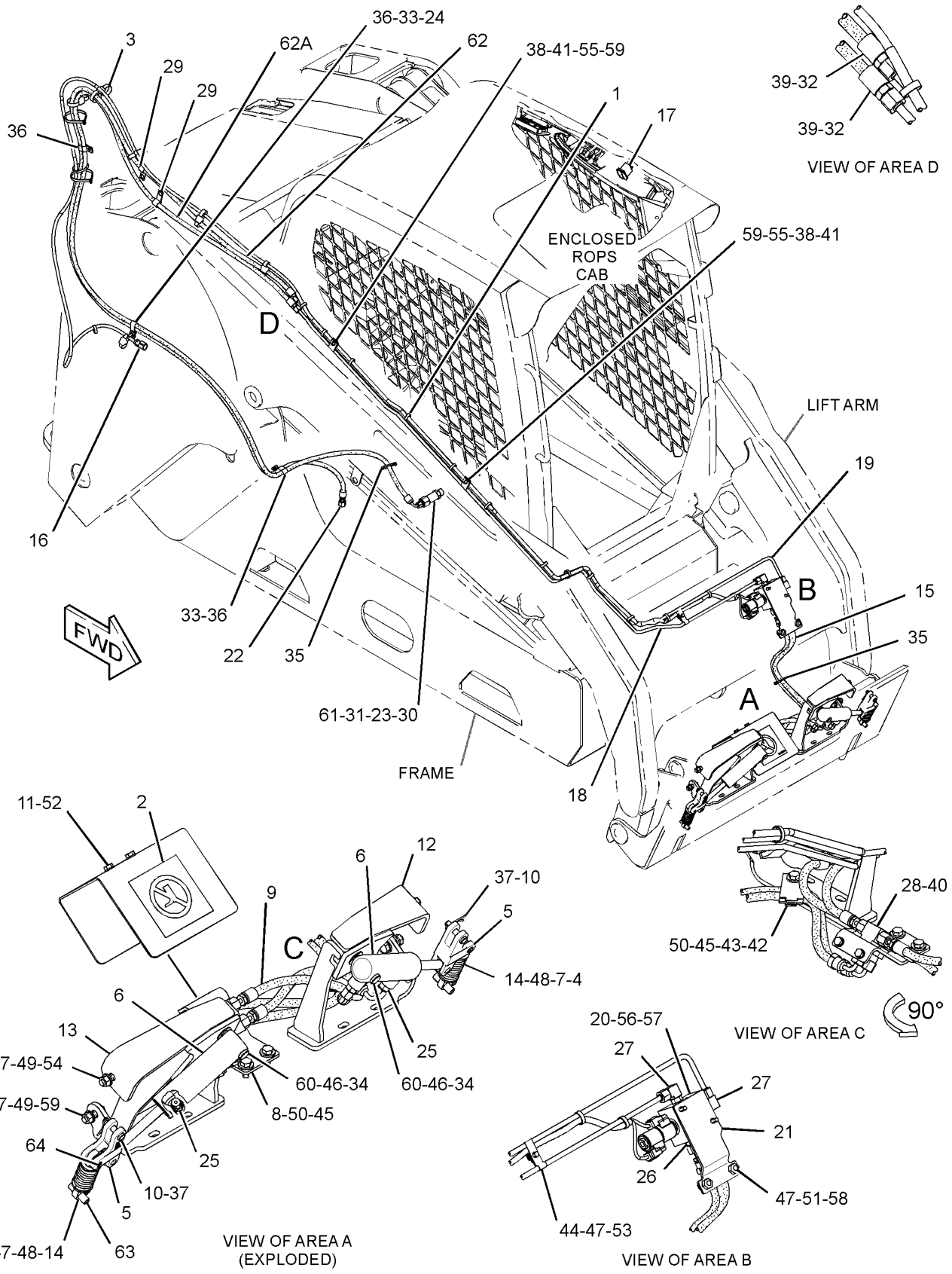

GRAPHIC #1 **<END>** g01504214

HYDRAULIC SYSTEM

304-6750 KIT-RIDE CONTROL

S/N: MST1-UP

AN ATTACHMENT

SMCS-5004 **i03690352**

NOTE	REF NO	GRAPHIC REF	PART NUMBER	QTY	PART NAME 1 2 3 4 5 6 (PRODUCT LEVEL)	SEE PAGE
	1	1	**9W-4216**	2	SPACER (9X18X7-MM THK)	
	2	1	**146-9439**	1	RELAY AS (12-VOLT)	
	3	1	**178-3620**	3	STRAP-DUAL CLAMP	
	4	1	**258-2886**	1	TUBE AS	
	5	1	**258-2887**	1	TUBE AS	
	6	1	**258-2888**	1	TUBE AS	
	7	1	**258-2890**	1	BRACKET AS	
I	8	1	**258-2891**	1	HOSE AS	
	9	1	**265-9526**	1	SWITCH AS-ROCKER (RIDE CONTROL)	
		1	**111-7899**	1	GASKET	
	10	1	**304-6748**	1	PLATE AS	
	11	1	**304-6749**	1	TEE	
I	12	1	**304-6751**	1	HOSE AS	
	13	1	**304-6752**	1	TEE	
I	14	1	**304-6753**	1	HOSE AS	
	15	1	**304-6756**	1	VALVE GP-CHECK (RIDE CONTROL)	
		1	**3K-0360**	1	SEAL-O-RING	
		1	**6V-8398**	1	SEAL-O-RING	
Y	16	1	**307-2275**	1	MANIFOLD GP-RIDE CONTROL	423
Y	17	1	**307-2276**	1	MANIFOLD GP-RIDE CONTROL (ACCUMULATOR)	424
Y	18	1	**307-6505**	1	ACCUMULATOR GP-RIDE CONTROL (UNCHARGED)	300
	19	1	**308-6423**	1	HARNESS AS-RIDE CONTROL	
		1	**186-3735**	2	PIN-CONNECTOR (16-GA TO 18-GA)	
		1	**155-2270**	3	KIT-CONNECTING PLUG (2-PIN)	
					(EACH KIT INCLUDES PLUG AS, WEDGE & INTERFACE SEAL)	
		1	**102-8802**	1	KIT-RECEPTACLE (2-PIN)	
					(INCLUDES RECEPTACLE AS & WEDGE)	
		1	**186-3736**	6	SOCKET-CONNECTOR (16-GA TO 18-GA)	
E		1	**125-7874**		TUBE-HEAT SHRINK (5.72-MM DIA) (10-CM)	
	20	1	**104-3173**	2	CLIP	
	21	1	*148-8318*	1	CONNECTOR AS	
		1	**3K-0360**	1	SEAL-O-RING	
		1	**6V-8397**	1	SEAL-O-RING	
		1	**6V-8634**	1	CONNECTOR	
	22	1	*148-8354*	1	ELBOW AS	
		1	**3K-0360**	1	SEAL-O-RING	
		1	**6V-8398**	1	SEAL-O-RING	
		1	**6V-9002**	1	ELBOW	
	23	1	*148-8364*	2	ELBOW AS	
					(EACH INCLUDES)	
		1	**3K-0360**	1	SEAL-O-RING	
		1	**6V-8398**	1	SEAL-O-RING	
		1	**6V-8625**	1	ELBOW	
	24	1	**2M-9780**	1	SEAL-O-RING	
	25	1	**3K-0360**	2	SEAL-O-RING	
	26	1	**4J-5477**	1	SEAL-O-RING	
	27	1	**4P-7581**	1	CLIP	
M	28	1	**5C-7261**	3	NUT (M8X1.25-THD)	
	29	1	**5P-4116**	3	WASHER-HARD (8.8X20.5X2-MM THK)	
	30	1	**6V-8397**	1	SEAL-O-RING	
	31	1	**6V-8398**	1	SEAL-O-RING	
	32	1	**6V-9828**	1	CAP AS	
	33	1	**7J-9108**	1	SEAL-O-RING	
M	34	1	**7X-2534**	2	BOLT (M6X1X50-MM)	
M	35	1	**7X-7888**	2	BOLT (M6X1X90-MM)	

304-6750 KIT-RIDE CONTROL *(contd.)* i03690352

NOTE	REF NO	GRAPHIC REF	PART NUMBER	QTY	PART NAME 1 2 3 4 5 6 (PRODUCT LEVEL)	SEE PAGE
	36	1	**8T-4205**	4	WASHER-HARD (7.2X14.5X2-MM THK)	
	37	1	**8T-4224**	2	WASHER-HARD (8.8X16X2-MM THK)	
M	38	1	**8T-4908**	2	BOLT (M8X1.25X25-MM)	

E-ORDER BY THE CENTIMETER
I-REFER TO HYDRAULIC INFORMATION SYSTEM
M-METRIC PART
Y-SEPARATE ILLUSTRATION

304-6750 KIT-RIDE CONTROL *(contd.)* i03690352

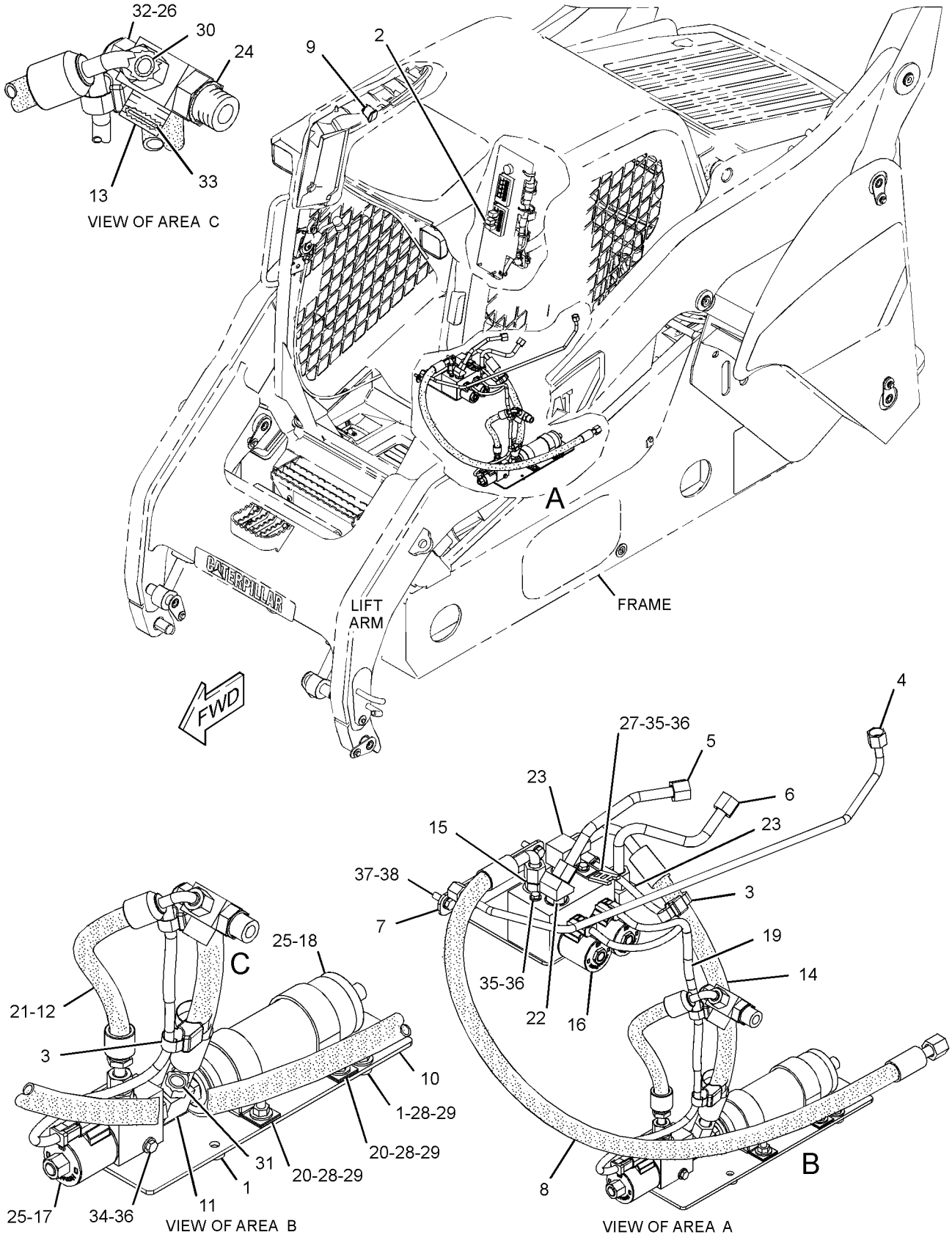

GRAPHIC #1 **<END>** g01431242

294-5580 KIT-WORK TOOL POSITIONER–
SELF-LEVELING HYDRAULICS
S/N: MST1-UP
AN ATTACHMENT

SMCS-5112, 5264, 5479 **i03690349**

NOTE	REF NO	GRAPHIC REF	PART NUMBER	QTY	PART NAME 1 2 3 4 5 6 (PRODUCT LEVEL)	SEE PAGE
	1	1	**146-9439**	1	RELAY AS (12-VOLT)	
					(NOT FOR USE WITH RIDE CONTROL)	
Y	2	1	**258-2802**	1	MANIFOLD & SOLENOID GP-CONTROL (WORK TOOL POSITIONER)	417
	3	1	**318-0008**	1	TUBE AS	
	4	1	**258-2884**	1	TUBE AS	
	5	1	**258-2885**	1	TUBE AS	
	6	1	**258-2886**	1	TUBE AS	
	7	1	**263-5417**	1	SWITCH AS-ROCKER (WORK TOOL POSITIONER)	
		1	**111-7899**	1	GASKET	
	8	1	*148-8315*	1	CONNECTOR AS	
		1	**2M-9780**	1	SEAL-O-RING	
		1	**6V-8642**	1	CONNECTOR	
		1	**7J-9108**	1	SEAL-O-RING	
	9	1	*148-8388*	1	ELBOW AS	
		1	**2M-9780**	1	SEAL-O-RING	
		1	**6V-8629**	1	ELBOW	
		1	**6V-9746**	1	SEAL-O-RING	
	10	1	*148-8393*	1	ELBOW AS	
		1	**6V-9852**	1	ELBOW	
		1	**7J-9108**	1	SEAL-O-RING	
	11	1	*205-3692*	2	ELBOW AS	
					(EACH INCLUDES)	
		1	**2M-9780**	1	SEAL-O-RING	
		1	**6V-8397**	1	SEAL-O-RING	
		1	**9X-2134**	1	ELBOW	
	12	1	**4P-8134**	1	CLIP	
	13	1	**6V-8398**	1	SEAL-O-RING	
	14	1	**6V-9830**	1	CAP AS	
M	15	1	**7X-2535**	2	BOLT (M6X1X60-MM)	
	16	1	**8T-4205**	1	WASHER-HARD (7.2X14.5X2-MM THK)	
	17	1	**7K-1181**	1	STRAP-CABLE	
	18	1	*148-8327*	1	CONNECTOR AS	
		1	**3D-2824**	1	SEAL-O-RING	
		1	**6V-8637**	1	CONNECTOR	
		1	**6V-9746**	1	SEAL-O-RING	

M-METRIC PART
Y-SEPARATE ILLUSTRATION

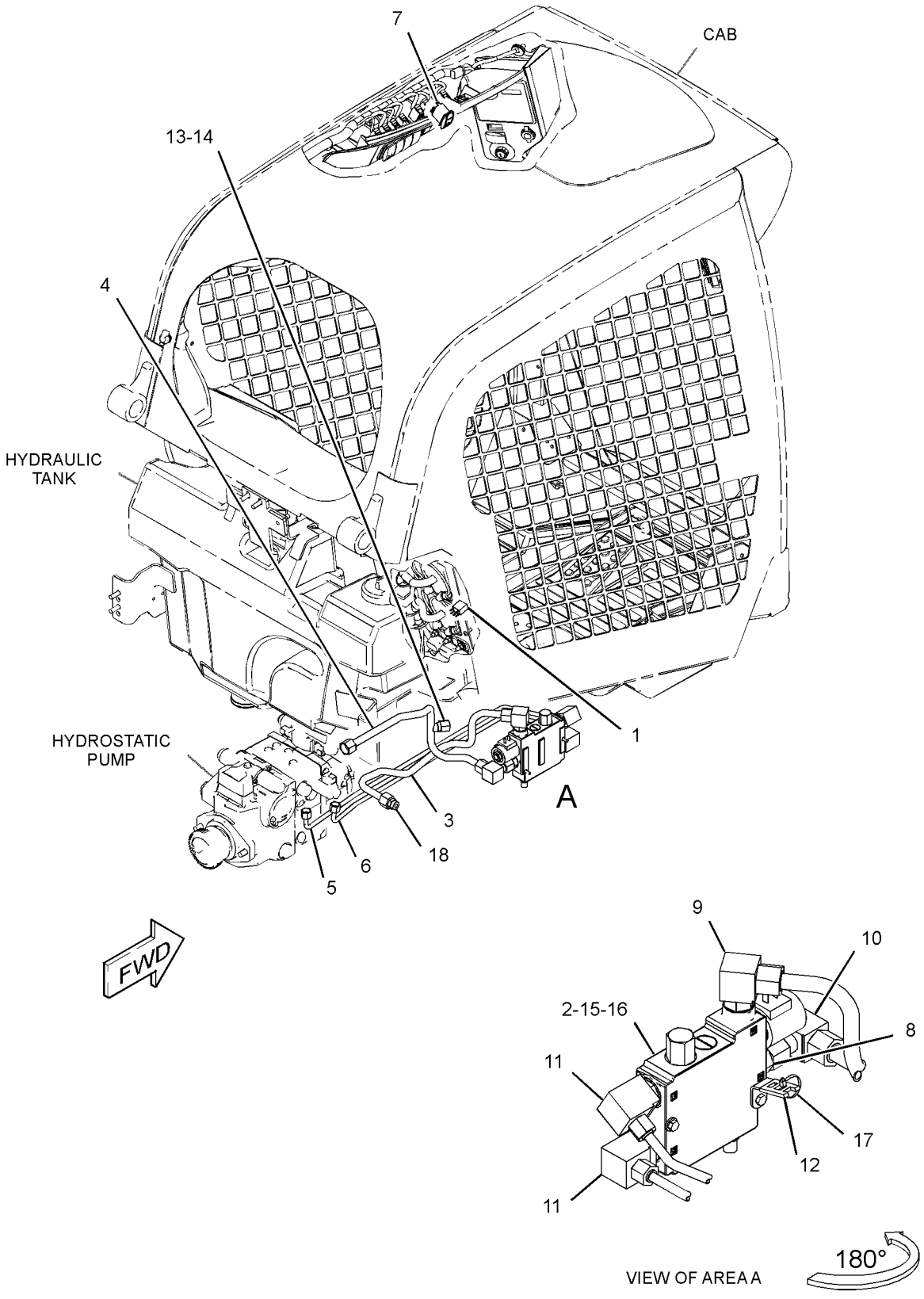

GRAPHIC #1 **<END>** g01441906

HYDRAULIC SYSTEM

154-5019 LINES GP-BUCKET

S/N: MST1-UP
PART OF 154-5004 BUCKET AR-MULTIPURPOSE
AN ATTACHMENT
TYPE 1

SMCS-5057 **i03635688**

NOTE	REF NO	GRAPHIC REF	PART NUMBER	QTY	PART NAME 1 2 3 4 5 6 (PRODUCT LEVEL)	SEE PAGE
	1	1	**153-2994**	1	COUPLER AS-QUICK DISCONNECT (FEMALE)	
I	2	1	**154-5020**	2	HOSE AS	
I	3	1	**154-5021**	1	HOSE AS	
I	4	1	**154-5022**	1	HOSE AS	
I	5	1	**154-5024**	1	HOSE AS	
I	6	1	**154-5025**	1	HOSE AS	
	7	1	**163-1386**	1	TEE-UNION	
	8	1	**185-7887**	1	COUPLER AS-QUICK DISCONNECT (MALE)	
	9	1	*148-8319*	2	CONNECTOR AS	
					(EACH INCLUDES)	
		1	**2M-9780**	1	SEAL-O-RING	
		1	**6V-8397**	1	SEAL-O-RING	
		1	**6V-8715**	1	CONNECTOR	
	10	1	*150-3056*	1	TEE AS	
		1	**6V-8397**	3	SEAL-O-RING	
		1	**6V-8788**	1	TEE	
	11	1	**1S-0994**	1	CLIP	
	12	1	**6D-4247**	3	CLIP	
	13	1	**6V-8397**	7	SEAL-O-RING	
CM	14	1	**8T-4189**	4	BOLT (M8X1.25X20-MM)	
C	15	1	**8T-4224**	4	WASHER-HARD (8.8X16X2-MM THK)	
B	16	1	**9X-6273**	2	WASHER (32.5X50X0.8-MM THK)	
B	17	1	**9X-6274**	2	WASHER (32.5X50X1.6-MM THK)	

B-USE AS REQUIRED
C-CHANGE FROM PREVIOUS TYPE
I-REFER TO HYDRAULIC INFORMATION SYSTEM
M-METRIC PART

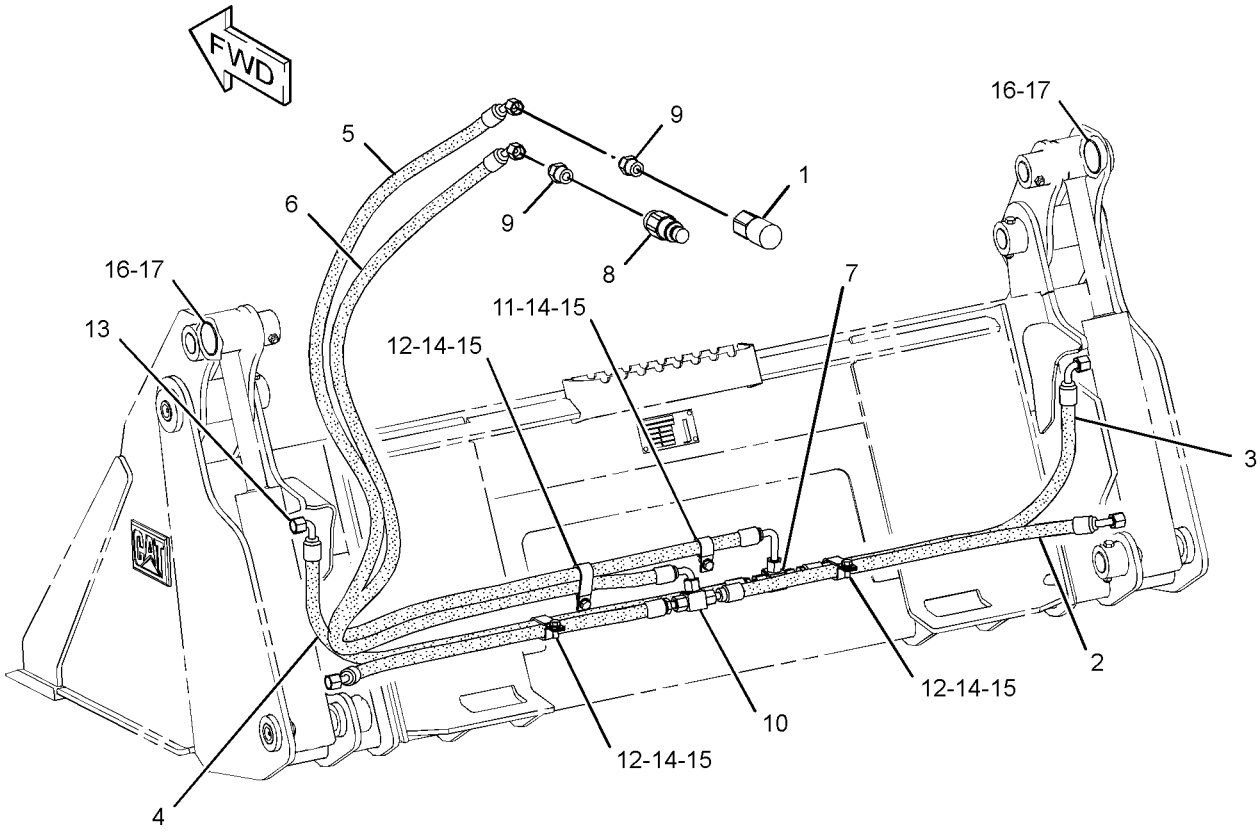

GRAPHIC #1 **<END>** g01283080

HYDRAULIC SYSTEM

154-5019 LINES GP-BUCKET

S/N: MST1-UP
PART OF 154-5004 BUCKET AR-MULTIPURPOSE
AN ATTACHMENT
TYPE 2

SMCS-5057 **i03635690**

NOTE	REF NO	GRAPHIC REF	PART NUMBER	QTY	PART NAME 1 2 3 4 5 6 (PRODUCT LEVEL)	SEE PAGE
	1	1	**153-2994**	1	COUPLER AS-QUICK DISCONNECT (FEMALE)	
	2	1	**185-7887**	1	COUPLER AS-QUICK DISCONNECT (MALE)	
I	3	1	**154-5020**	2	HOSE AS	
I	4	1	**154-5021**	1	HOSE AS	
I	5	1	**154-5022**	1	HOSE AS	
I	6	1	**154-5024**	1	HOSE AS	
I	7	1	**154-5025**	1	HOSE AS	
	8	1	**163-1386**	1	TEE-UNION	
	9	1	*148-8319*	2	CONNECTOR AS	
					(EACH INCLUDES)	
		1	**2M-9780**	1	SEAL-O-RING	
		1	**6V-8397**	1	SEAL-O-RING	
		1	**6V-8715**	1	CONNECTOR	
	10	1	*150-3056*	1	TEE AS	
		1	**6V-8397**	3	SEAL-O-RING	
		1	**6V-8788**	1	TEE	
	11	1	**1S-0994**	1	CLIP	
M	12	1	**5C-7261**	4	NUT (M8X1.25-THD)	
	13	1	**6D-4247**	3	CLIP	
	14	1	**6V-8397**	7	SEAL-O-RING	
	15	1	**9X-6273**	2	WASHER (32.5X50X0.8-MM THK)	
	16	1	**9X-6274**	2	WASHER (32.5X50X1.6-MM THK)	

I-REFER TO HYDRAULIC INFORMATION SYSTEM
M-METRIC PART

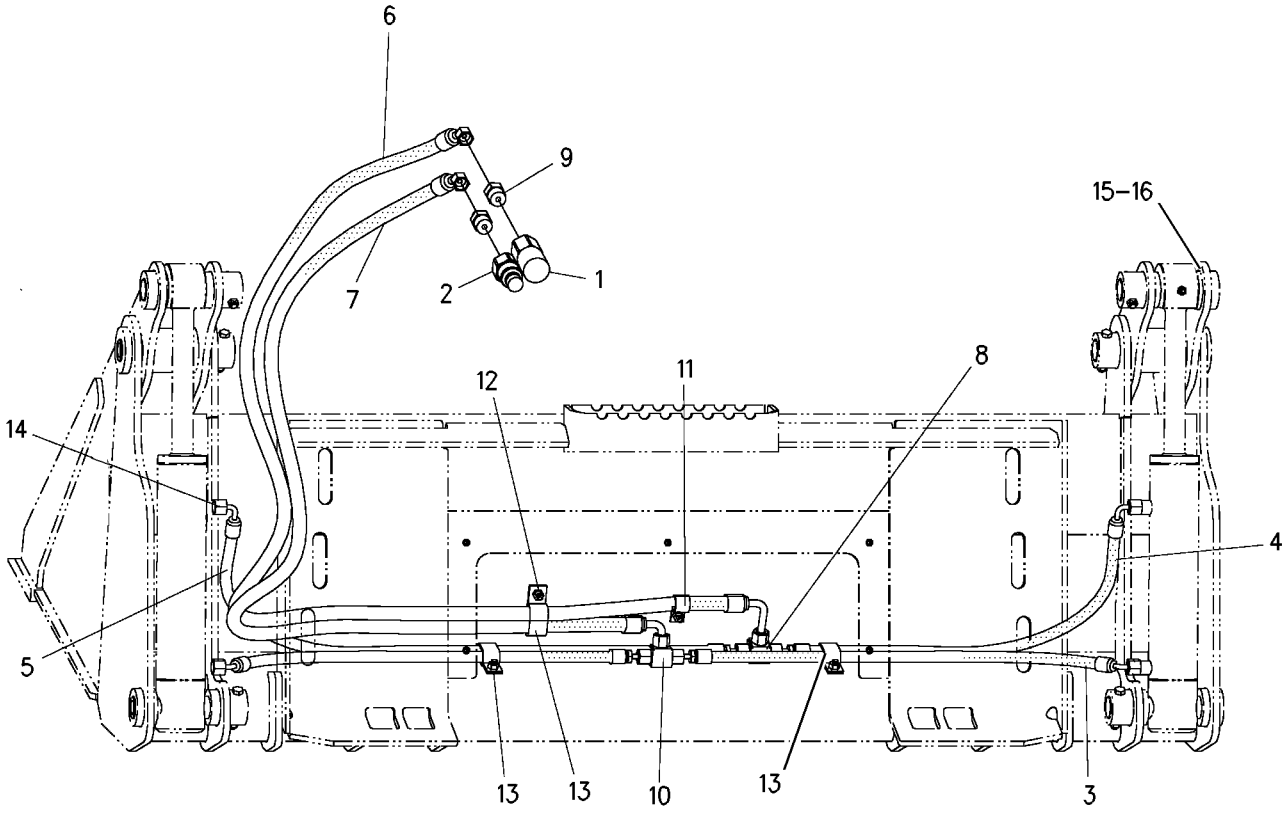

GRAPHIC #1 **<END>** g00922568

HYDRAULIC SYSTEM

154-5052 LINES GP-BUCKET

S/N: MST1-UP

PART OF 154-5010 BUCKET AR-MULTIPURPOSE

AN ATTACHMENT

SMCS-5057 **i03635695**

NOTE	REF NO	GRAPHIC REF	PART NUMBER	QTY	PART NAME 1 2 3 4 5 6 (PRODUCT LEVEL)	SEE PAGE
	1	1	**153-2994**	1	COUPLER AS-QUICK DISCONNECT (FEMALE)	
I	2	1	**154-5024**	1	HOSE AS	
I	3	1	**154-5025**	1	HOSE AS	
I	4	1	**159-4535**	1	HOSE AS	
I	5	1	**159-4536**	2	HOSE AS	
I	6	1	**159-4537**	1	HOSE AS	
	7	1	**163-1386**	1	TEE-UNION	
	8	1	**185-7887**	1	COUPLER AS-QUICK DISCONNECT (MALE)	
	9	1	*148-8319*	2	CONNECTOR AS	
					(EACH INCLUDES)	
		1	**2M-9780**	1	SEAL-O-RING	
		1	**6V-8397**	1	SEAL-O-RING	
		1	**6V-8715**	1	CONNECTOR	
	10	1	*150-3056*	1	TEE AS	
		1	**6V-8397**	3	SEAL-O-RING	
		1	**6V-8788**	1	TEE	
	11	1	**1S-0994**	1	CLIP	
	12	1	**6D-4247**	3	CLIP	
	13	1	**6V-8397**	7	SEAL-O-RING	
CM	14	1	**8T-4189**	4	BOLT (M8X1.25X20-MM)	
C	15	1	**8T-4224**	4	WASHER-HARD (8.8X16X2-MM THK)	
B	16	1	**9X-6273**	2	WASHER (32.5X50X0.8-MM THK)	
B	17	1	**9X-6274**	2	WASHER (32.5X50X1.6-MM THK)	

B-USE AS REQUIRED
C-CHANGE FROM PREVIOUS TYPE
I-REFER TO HYDRAULIC INFORMATION SYSTEM
M-METRIC PART

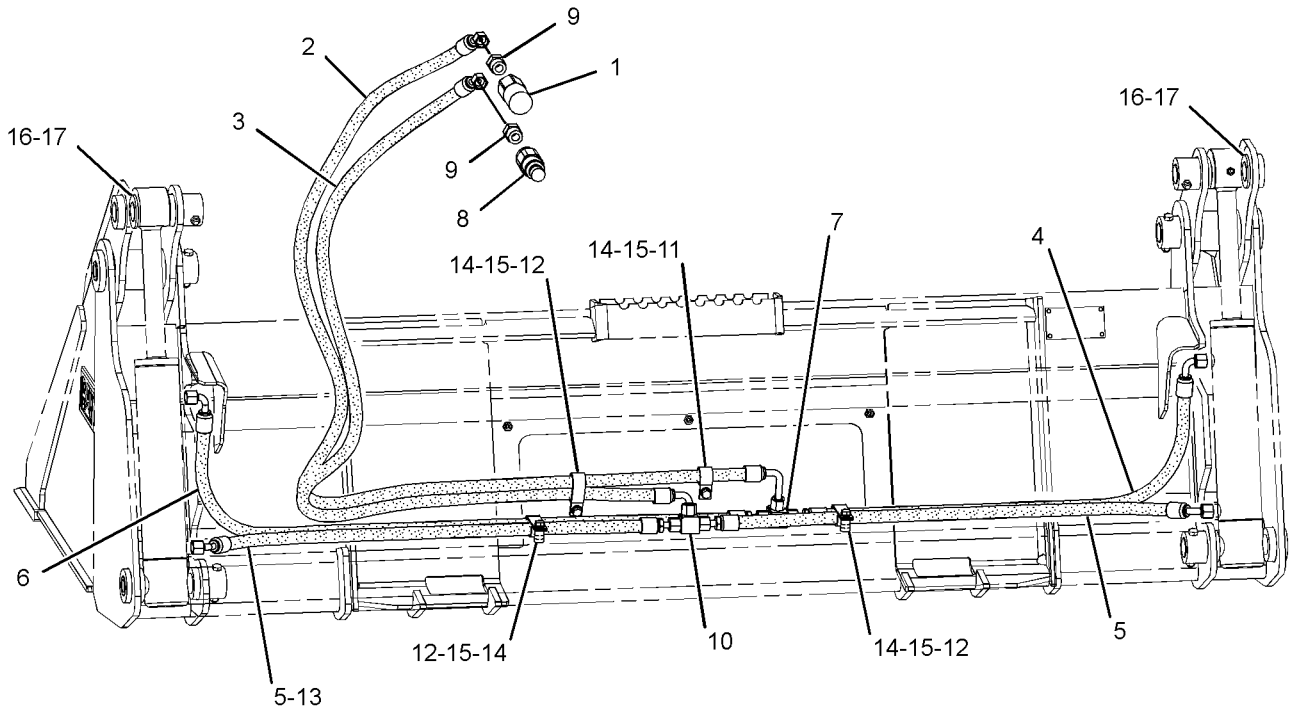

REAR VIEW
(UPPER LEFT)

GRAPHIC #1 **<END>** g01283201

HYDRAULIC SYSTEM

279-5412 LINES GP-BUCKET—INDUSTRIAL

S/N: MST1-UP

PART OF 279-5350, 279-5360 FORK AR-GRAPPLE

AN ATTACHMENT

SMCS-5057 **i02616554**

NOTE	REF NO	GRAPHIC REF	PART NUMBER	QTY	PART NAME 1 2 3 4 5 6 (PRODUCT LEVEL)	SEE PAGE
	1	1	**3E-7404**	2	CLAMP-HOSE	
I	2	1	**294-5503**	1	HOSE AS	
	3	1	**153-2994**	1	COUPLER AS-QUICK DISCONNECT (FEMALE)	
	4	1	**153-2995**	1	FITTING AS (QUICK DISCONNECT, MALE)	
	5	1	**161-0185**	1	TUBE AS	
	6	1	**161-0186**	1	TUBE AS	
	7	1	**161-0188**	2	TUBE AS	
I	8	1	**161-0189**	2	HOSE AS	
I	9	1	**161-0190**	2	HOSE AS	
	10	1	**163-1385**	1	ELBOW	
I	11	1	**294-5502**	1	HOSE AS	
	12	1	*148-8319*	2	CONNECTOR AS	
					(EACH INCLUDES)	
		1	**2M-9780**	1	SEAL-O-RING	
		1	**6V-8397**	1	SEAL-O-RING	
		1	**6V-8715**	1	CONNECTOR	
	13	1	**2V-3216**	6	CLIP	
	14	1	**6V-8397**	13	SEAL-O-RING	
	15	1	**7S-3916**	2	CLIP (TAB)	
	16	1	**7S-3919**	2	CLIP (SLOT)	
	17	1	**8T-4121**	2	WASHER-HARD (11X21X2.5-MM THK)	
M	18	1	**8T-4136**	2	BOLT (M10X1.5X25-MM)	
M	19	1	**8T-4171**	4	BOLT (M6X1X12-MM)	
	20	1	**9R-2004**	2	BLOCK	

I-REFER TO HYDRAULIC INFORMATION SYSTEM
M-METRIC PART

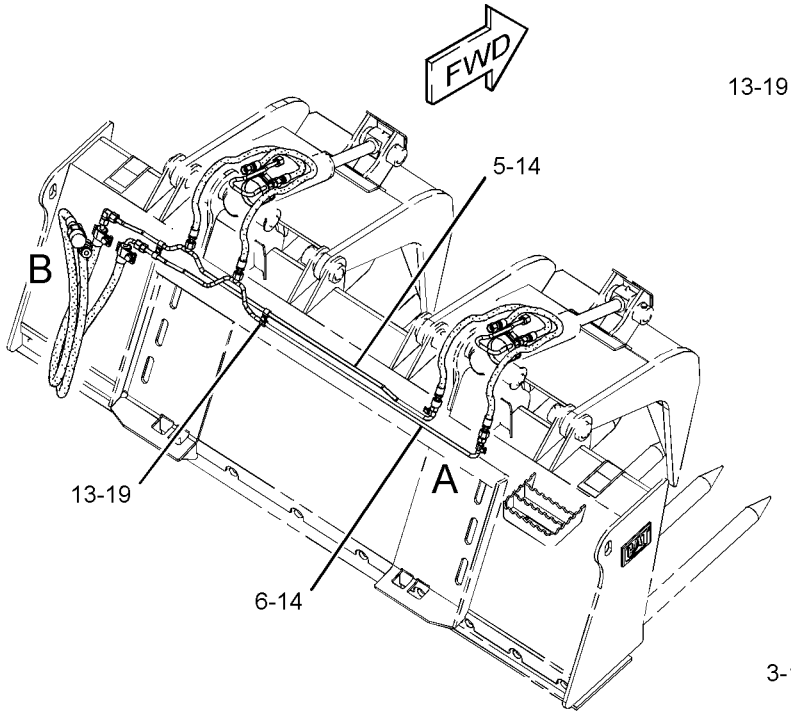

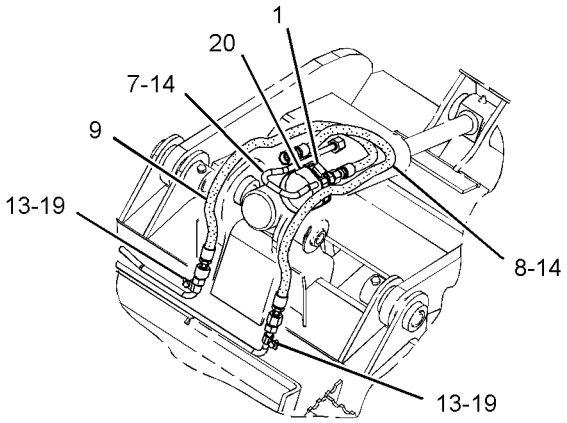

VIEW OF AREA A

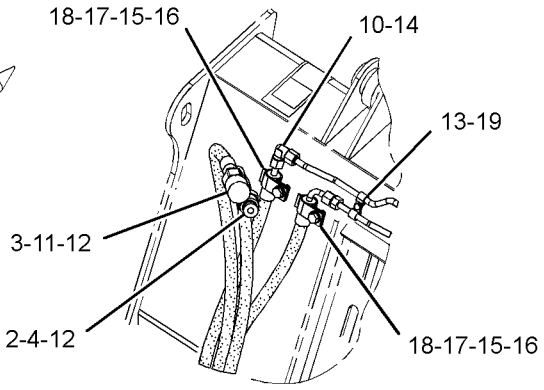

VIEW OF AREA B

GRAPHIC #1 **<END>** g01280859

279-5413 LINES GP-BUCKET—MULTIPURPOSE

S/N: MST1-UP

PART OF 279-5382, 325-7036 BUCKET AR-MULTIPURPOSE AN ATTACHMENT

SMCS-5057 **i03641721**

NOTE	REF NO	GRAPHIC REF	PART NUMBER	QTY	PART NAME 1 2 3 4 5 6 (PRODUCT LEVEL)	SEE PAGE
	1	1	**153-2994**	1	COUPLER AS-QUICK DISCONNECT (FEMALE)	
I	2	1	**154-5020**	2	HOSE AS	
I	3	1	**154-5021**	1	HOSE AS	
I	4	1	**154-5022**	1	HOSE AS	
	5	1	**163-1386**	1	TEE-UNION	
	6	1	**185-7887**	1	COUPLER AS-QUICK DISCONNECT (MALE)	
I	7	1	**279-5417**	1	HOSE AS	
I	8	1	**279-5418**	1	HOSE AS	
	9	1	*148-8319*	2	CONNECTOR AS	
					(EACH INCLUDES)	
		1	**2M-9780**	1	SEAL-O-RING	
		1	**6V-8397**	1	SEAL-O-RING	
		1	**6V-8715**	1	CONNECTOR	
	10	1	*150-3056*	1	TEE AS	
		1	**6V-8397**	3	SEAL-O-RING	
		1	**6V-8788**	1	TEE	
	11	1	**1S-0994**	1	CLIP	
	12	1	**6D-4247**	3	CLIP	
	13	1	**6V-8397**	7	SEAL-O-RING	
M	14	1	**8T-4189**	4	BOLT (M8X1.25X20-MM)	
	15	1	**8T-4224**	4	WASHER-HARD (8.8X16X2-MM THK)	
B	16	1	**9X-6273**	2	WASHER (32.5X50X0.8-MM THK)	
B	17	1	**9X-6274**	2	WASHER (32.5X50X1.6-MM THK)	

B-USE AS REQUIRED
I-REFER TO HYDRAULIC INFORMATION SYSTEM
M-METRIC PART

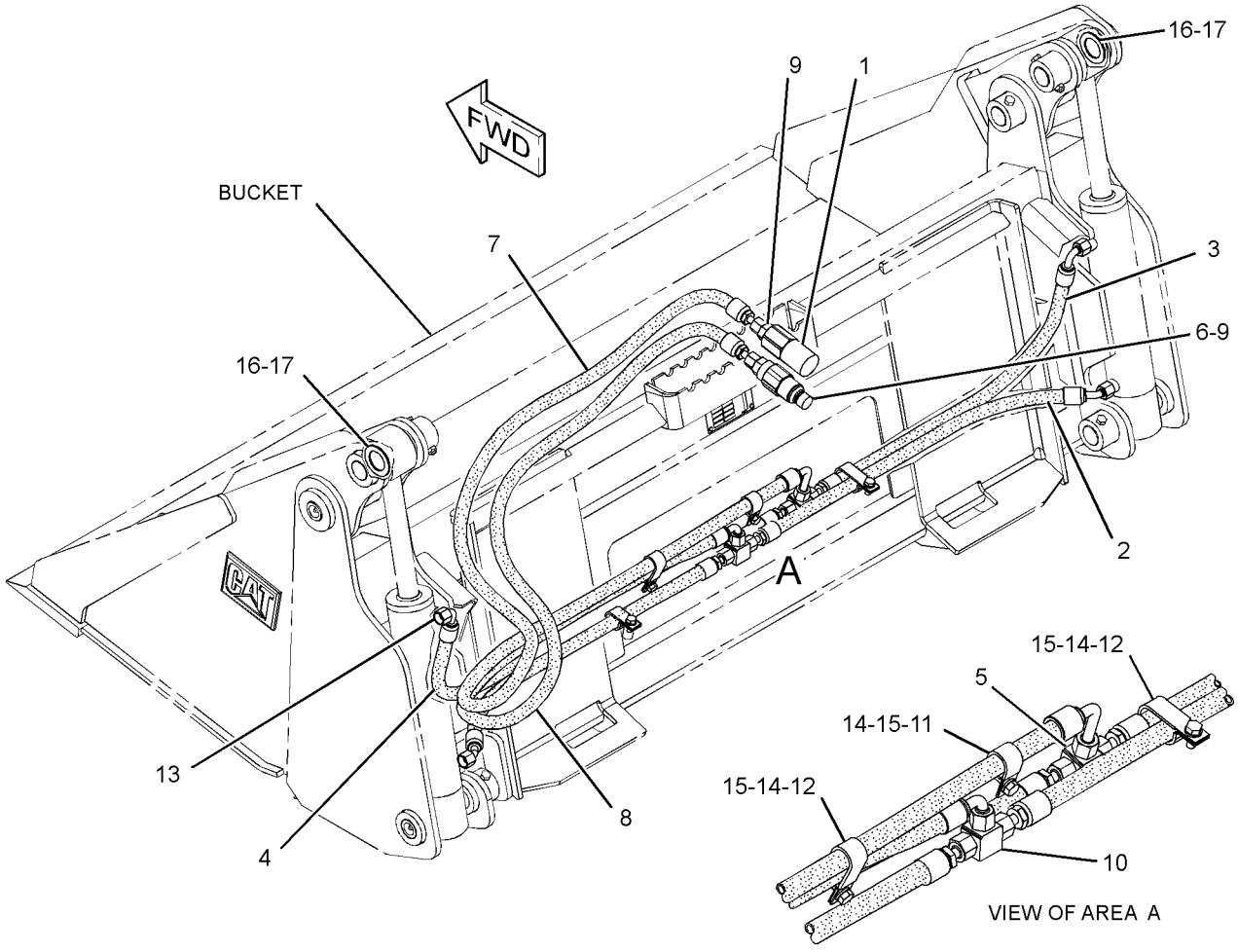

GRAPHIC #1 **<END>** g01278435

279-5414 LINES GP-BUCKET—MULTIPURPOSE

S/N: MST1-UP

PART OF 279-5390, 325-7046 BUCKET AR-MULTIPURPOSE AN ATTACHMENT

SMCS-5057 **i02664837**

NOTE	REF NO	GRAPHIC REF	PART NUMBER	QTY	PART NAME 1 2 3 4 5 6 (PRODUCT LEVEL)	SEE PAGE
	1	1	**153-2994**	1	COUPLER AS-QUICK DISCONNECT (FEMALE)	
I	2	1	**156-5508**	1	HOSE AS	
I	3	1	**156-5509**	2	HOSE AS	
I	4	1	**156-5510**	1	HOSE AS	
	5	1	**163-1386**	1	TEE-UNION	
	6	1	**185-7887**	1	COUPLER AS-QUICK DISCONNECT (MALE)	
I	7	1	**279-5417**	1	HOSE AS	
I	8	1	**279-5418**	1	HOSE AS	
	9	1	*148-8319*	2	CONNECTOR AS	
					(EACH INCLUDES)	
		1	**2M-9780**	1	SEAL-O-RING	
		1	**6V-8397**	1	SEAL-O-RING	
		1	**6V-8715**	1	CONNECTOR	
	10	1	*150-3056*	1	TEE AS	
		1	**6V-8397**	3	SEAL-O-RING	
		1	**6V-8788**	1	TEE	
	11	1	**1S-0994**	1	CLIP	
	12	1	**6D-4247**	3	CLIP	
	13	1	**6V-8397**	7	SEAL-O-RING	
M	14	1	**8T-4189**	4	BOLT (M8X1.25X20-MM)	
	15	1	**8T-4224**	4	WASHER-HARD (8.8X16X2-MM THK)	
B	16	1	**9X-6273**	2	WASHER (32.5X50X0.8-MM THK)	
B	17	1	**9X-6274**	2	WASHER (32.5X50X1.6-MM THK)	

B-USE AS REQUIRED
I-REFER TO HYDRAULIC INFORMATION SYSTEM
M-METRIC PART

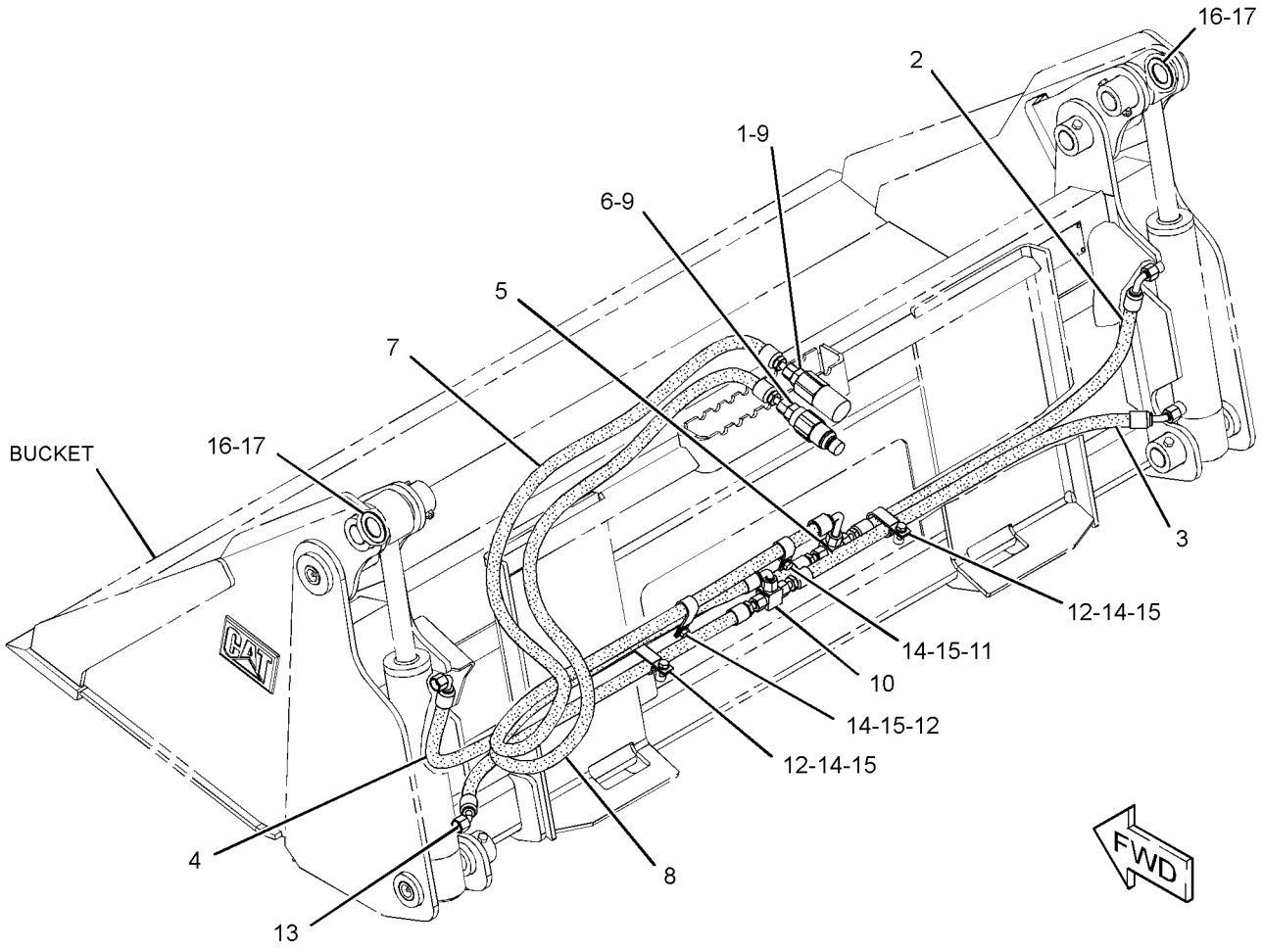

GRAPHIC #1 **<END>** g01339126

279-5415 LINES GP-BUCKET—MULTIPURPOSE

S/N: MST1-UP

PART OF 279-5398, 325-7056 BUCKET AR-MULTIPURPOSE

AN ATTACHMENT

SMCS-5057 **i02552160**

NOTE	REF NO	GRAPHIC REF	PART NUMBER	QTY	PART NAME 1 2 3 4 5 6 (PRODUCT LEVEL)	SEE PAGE
	1	1	**153-2994**	1	COUPLER AS-QUICK DISCONNECT (FEMALE)	
I	2	1	**159-4535**	1	HOSE AS	
I	3	1	**159-4536**	2	HOSE AS	
I	4	1	**159-4537**	1	HOSE AS	
	5	1	**163-1386**	1	TEE-UNION	
	6	1	**185-7887**	1	COUPLER AS-QUICK DISCONNECT (MALE)	
I	7	1	**279-5417**	1	HOSE AS	
I	8	1	**279-5418**	1	HOSE AS	
	9	1	*148-8319*	2	CONNECTOR AS	
					(EACH INCLUDES)	
		1	**2M-9780**	1	SEAL-O-RING	
		1	**6V-8397**	1	SEAL-O-RING	
		1	**6V-8715**	1	CONNECTOR	
	10	1	*150-3056*	1	TEE AS	
		1	**6V-8397**	3	SEAL-O-RING	
		1	**6V-8788**	1	TEE	
	11	1	**1S-0994**	1	CLIP	
	12	1	**6D-4247**	3	CLIP	
	13	1	**6V-8397**	7	SEAL-O-RING	
M	14	1	**8T-4189**	4	BOLT (M8X1.25X20-MM)	
	15	1	**8T-4224**	4	WASHER-HARD (8.8X16X2-MM THK)	
B	16	1	**9X-6273**	2	WASHER (32.5X50X0.8-MM THK)	
B	17	1	**9X-6274**	2	WASHER (32.5X50X1.6-MM THK)	

B-USE AS REQUIRED
I-REFER TO HYDRAULIC INFORMATION SYSTEM
M-METRIC PART

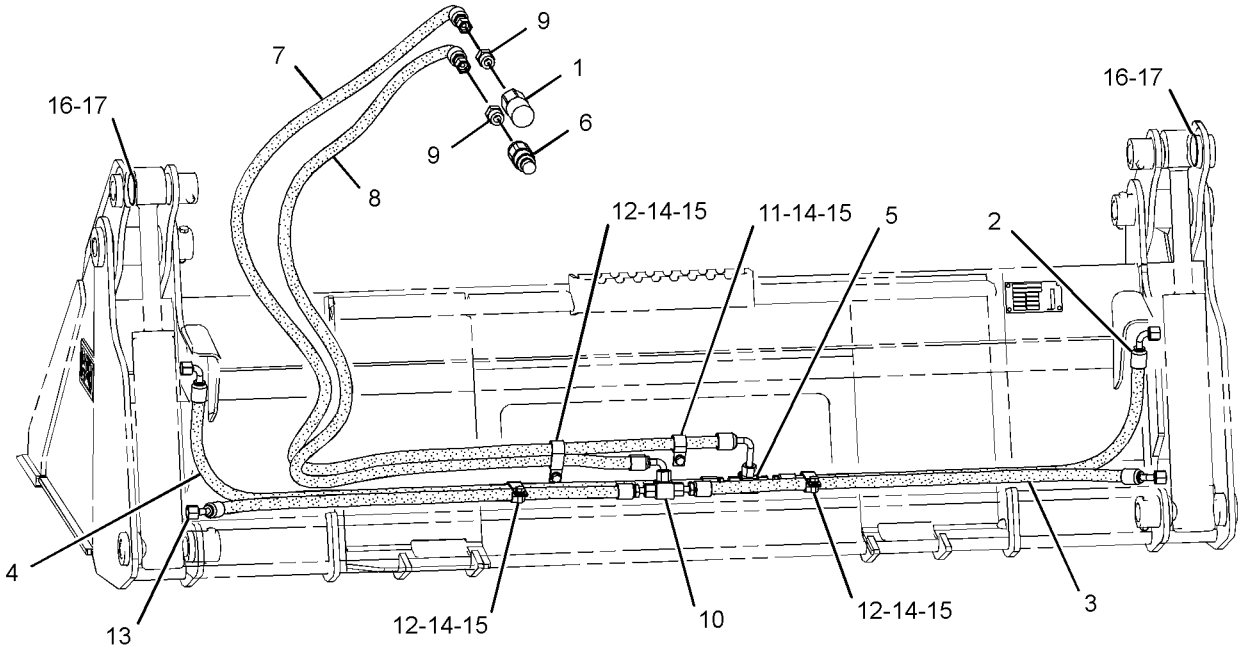

REAR VIEW
(UPPER LEFT)

GRAPHIC #1 **<END>** g01280163

279-5416 LINES GP-BUCKET—MULTIPURPOSE

S/N: MST1-UP

PART OF 279-5403, 325-7066 BUCKET AR-MULTIPURPOSE AN ATTACHMENT

SMCS-5057 **i02552257**

NOTE	REF NO	GRAPHIC REF	PART NUMBER	QTY	PART NAME 1 2 3 4 5 6 (PRODUCT LEVEL)	SEE PAGE
	1	1	**153-2994**	1	COUPLER AS-QUICK DISCONNECT (FEMALE)	
	2	1	**163-1386**	1	TEE-UNION	
	3	1	**185-7887**	1	COUPLER AS-QUICK DISCONNECT (MALE)	
I	4	1	**199-8309**	1	HOSE AS	
I	5	1	**199-8310**	2	HOSE AS	
I	6	1	**199-8311**	1	HOSE AS	
I	7	1	**279-5417**	1	HOSE AS	
I	8	1	**279-5418**	1	HOSE AS	
	9	1	*148-8319*	2	CONNECTOR AS	
					(EACH INCLUDES)	
		1	**2M-9780**	1	SEAL-O-RING	
		1	**6V-8397**	1	SEAL-O-RING	
		1	**6V-8715**	1	CONNECTOR	
	10	1	*150-3056*	1	TEE AS	
		1	**6V-8397**	3	SEAL-O-RING	
		1	**6V-8788**	1	TEE	
	11	1	**1S-0994**	1	CLIP	
	12	1	**6D-4247**	3	CLIP	
	13	1	**6V-8397**	7	SEAL-O-RING	
M	14	1	**8T-4189**	4	BOLT (M8X1.25X20-MM)	
	15	1	**8T-4224**	4	WASHER-HARD (8.8X16X2-MM THK)	
B	16	1	**9X-6273**	2	WASHER (32.5X50X0.8-MM THK)	
B	17	1	**9X-6274**	2	WASHER (32.5X50X1.6-MM THK)	

B-USE AS REQUIRED
I-REFER TO HYDRAULIC INFORMATION SYSTEM
M-METRIC PART

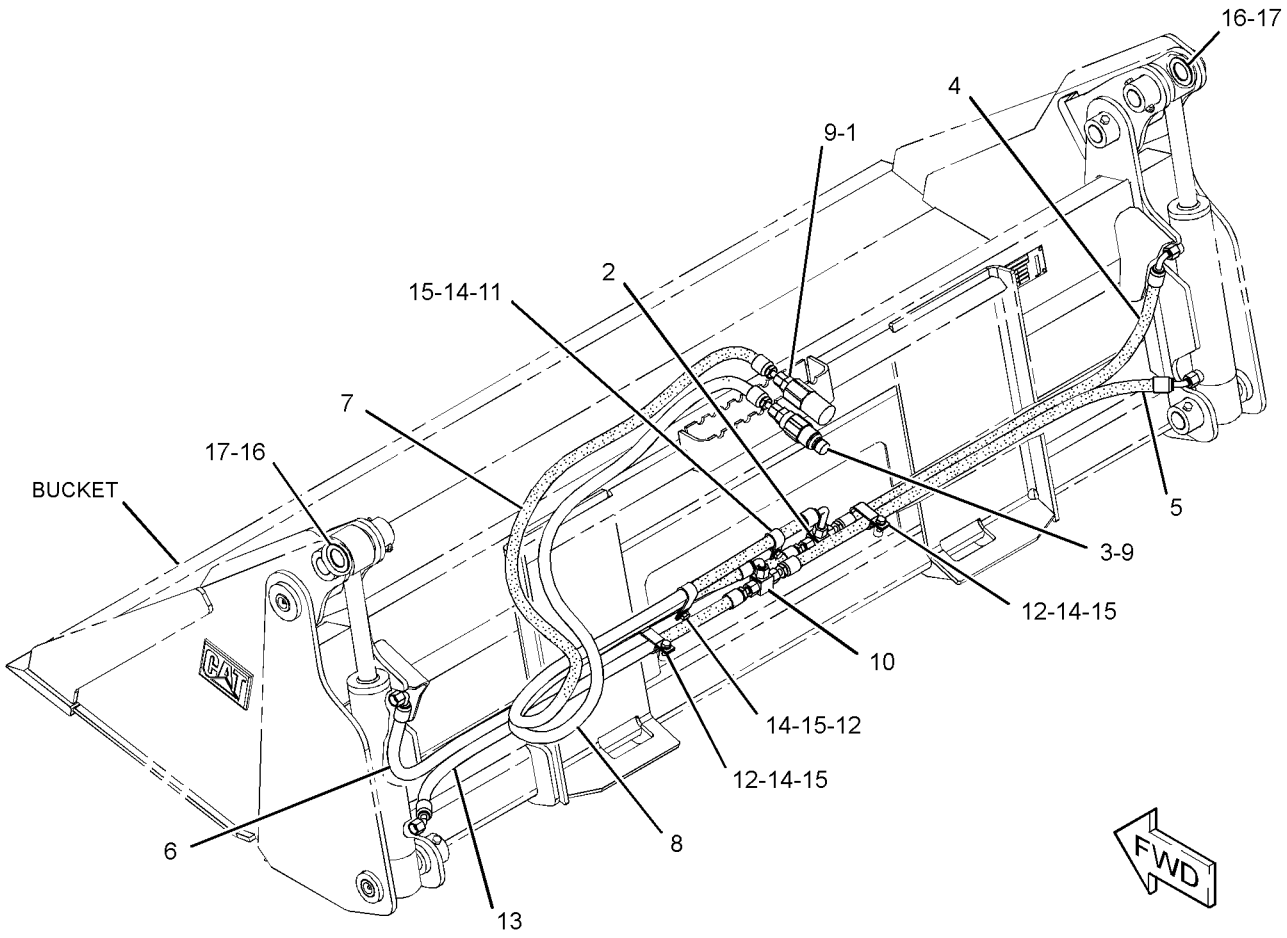

GRAPHIC #1 **<END>** g01278627

HYDRAULIC SYSTEM

285-6113 LINES GP-BUCKET—UTILITY

S/N: MST1-UP
PART OF 285-6116 GRAPPLE & CYLINDER GP-UTILITY
AN ATTACHMENT
TYPE 1

SMCS-5057 **i02645962**

NOTE	REF NO	GRAPHIC REF	PART NUMBER	QTY	PART NAME 1 2 3 4 5 6 (PRODUCT LEVEL)	SEE PAGE
	1	1	**2J-6540**	1	CLAMP-HOSE	
	2	1	**153-2994**	1	COUPLER AS-QUICK DISCONNECT (FEMALE)	
	3	1	**153-2995**	1	FITTING AS (QUICK DISCONNECT, MALE)	
	4	1	**174-2388**	1	TUBE AS	
	5	1	**174-2389**	1	TUBE AS	
I	6	1	**174-2393**	2	HOSE AS	
	7	1	**174-3097**	1	TUBE AS	
	8	1	*183-4085*	1	ELBOW AS	
		1	**6V-8397**	2	SEAL-O-RING	
		1	**183-4084**	1	ELBOW	
I	9	1	**294-5504**	1	HOSE AS	
I	10	1	**294-5505**	1	HOSE AS	
	11	1	*148-8319*	2	CONNECTOR AS	
					(EACH INCLUDES)	
		1	**2M-9780**	1	SEAL-O-RING	
		1	**6V-8397**	1	SEAL-O-RING	
		1	**6V-8715**	1	CONNECTOR	
	12	1	**6V-8397**	6	SEAL-O-RING	
	13	1	**7S-3912**	2	CLIP (TAB)	
	14	1	**7S-3913**	2	CLIP (SLOT)	
	15	1	**8T-1893**	2	CLIP (SLOT)	
	16	1	**8T-1894**	2	CLIP (TAB)	
	17	1	**8T-4121**	6	WASHER-HARD (11X21X2.5-MM THK)	
M	18	1	**8T-4137**	4	BOLT (M10X1.5X20-MM)	
	19	1	**9R-2004**	1	BLOCK	

I-REFER TO HYDRAULIC INFORMATION SYSTEM
M-METRIC PART

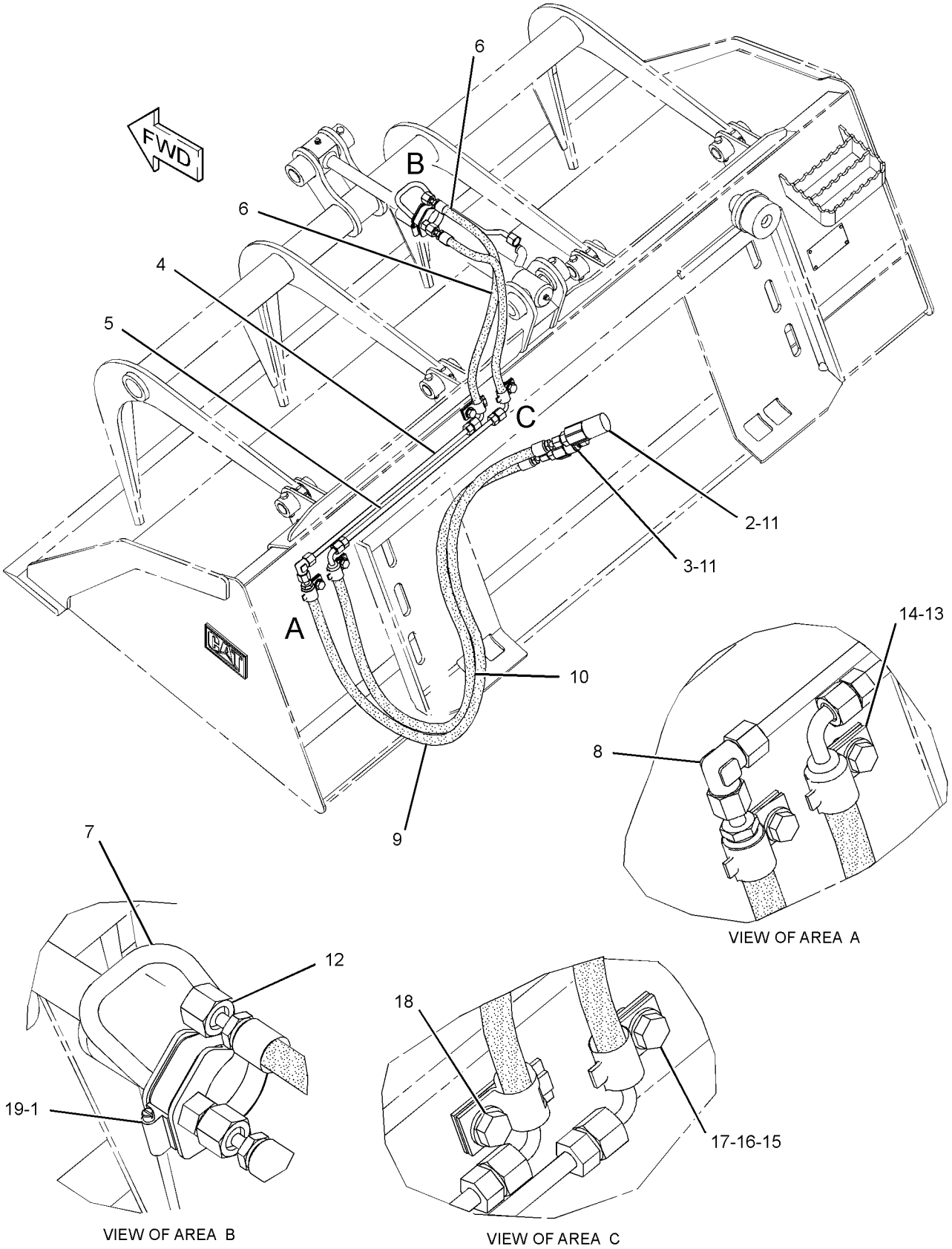

GRAPHIC #1 **<END>** g01279537

HYDRAULIC SYSTEM

285-6113 LINES GP-BUCKET—UTILITY

S/N: MST1-UP
PART OF 285-6116 GRAPPLE & CYLINDER GP-UTILITY
AN ATTACHMENT
TYPE 2

SMCS-5057 **i02890974**

NOTE	REF NO	GRAPHIC REF	PART NUMBER	QTY	PART NAME 1 2 3 4 5 6 (PRODUCT LEVEL)	SEE PAGE
	1	1	**153-2994**	1	COUPLER AS-QUICK DISCONNECT (FEMALE)	
	2	1	**153-2995**	1	FITTING AS (QUICK DISCONNECT, MALE)	
	3	1	**174-2388**	1	TUBE AS	
	4	1	**174-2389**	1	TUBE AS	
CI	5	1	**174-2393**	1	HOSE AS	
	6	1	*183-4085*	1	ELBOW AS	
		1	**6V-8397**	2	SEAL-O-RING	
		1	**183-4084**	1	ELBOW	
I	7	1	**294-5504**	1	HOSE AS	
I	8	1	**294-5505**	1	HOSE AS	
CI	9	1	**307-3808**	1	HOSE AS	
	10	1	*148-8319*	2	CONNECTOR AS	
					(EACH INCLUDES)	
		1	**2M-9780**	1	SEAL-O-RING	
		1	**6V-8397**	1	SEAL-O-RING	
		1	**6V-8715**	1	CONNECTOR	
C	11	1	**6V-8397**	5	SEAL-O-RING	
	12	1	**7S-3912**	2	CLIP (TAB)	
	13	1	**7S-3913**	2	CLIP (SLOT)	
	14	1	**8T-1893**	2	CLIP (SLOT)	
	15	1	**8T-1894**	2	CLIP (TAB)	
	16	1	**8T-4121**	6	WASHER-HARD (11X21X2.5-MM THK)	
M	17	1	**8T-4137**	4	BOLT (M10X1.5X20-MM)	

C-CHANGE FROM PREVIOUS TYPE
I-REFER TO HYDRAULIC INFORMATION SYSTEM
M-METRIC PART

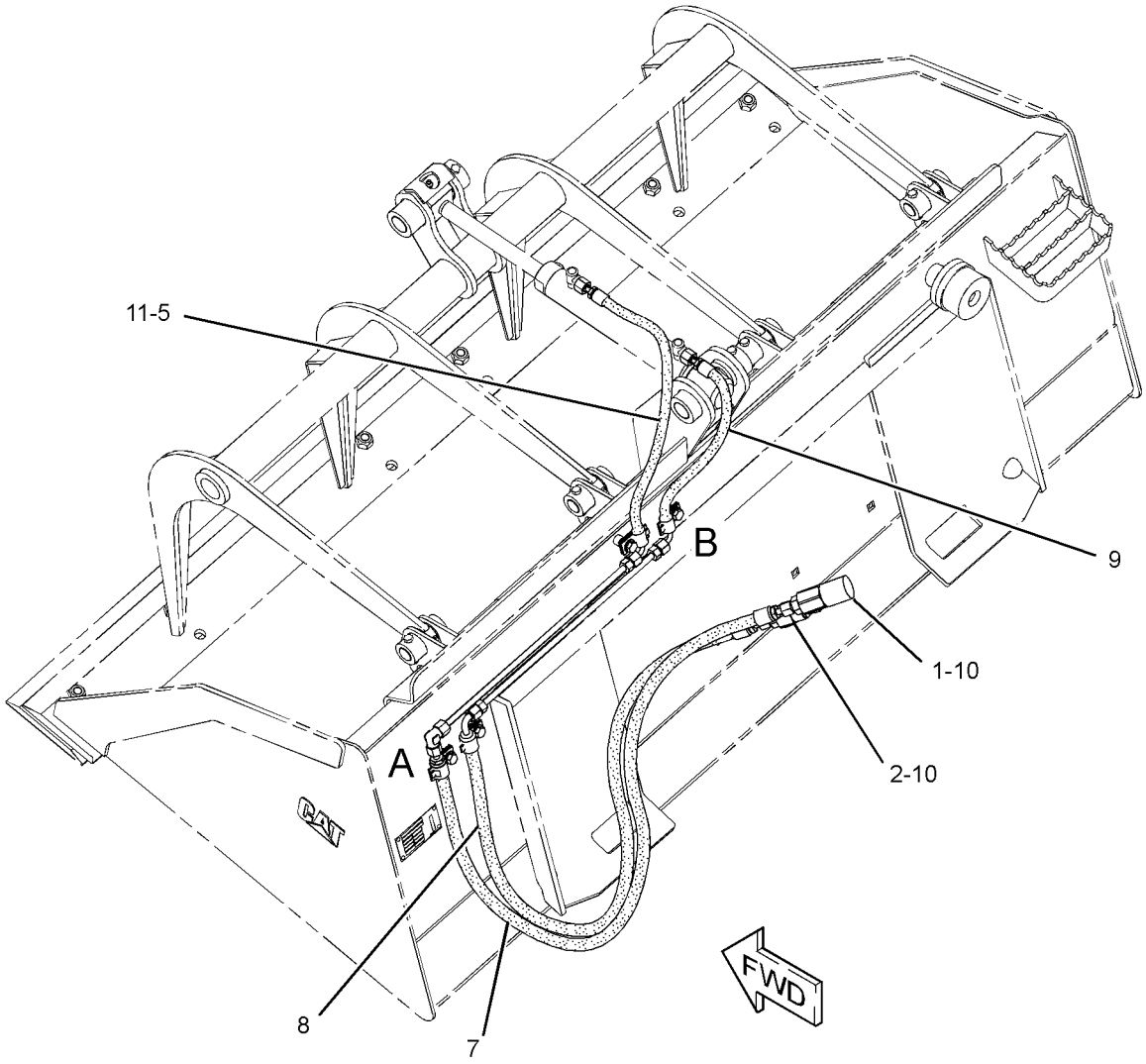

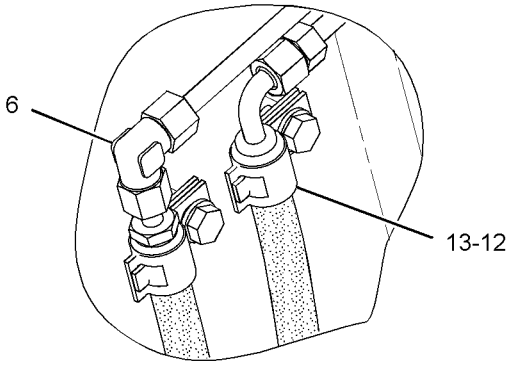

VIEW OF AREA A

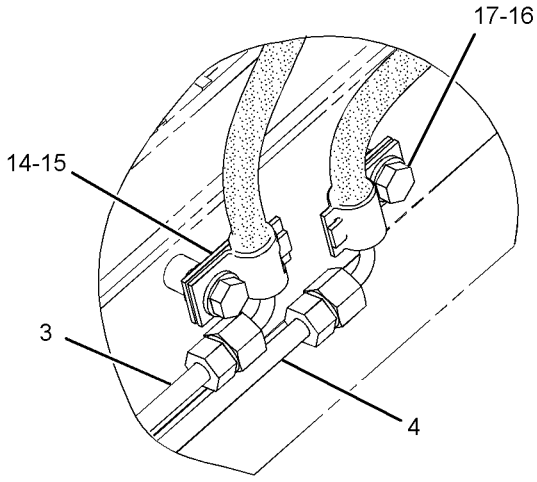

VIEW OF AREA B

GRAPHIC #1 **<END>** g01439824

293-0140 LINES GP-BUCKET—MULTIPURPOSE

S/N: MST1-UP

PART OF 293-0139, 325-7076 BUCKET AR-MULTIPURPOSE AN ATTACHMENT

SMCS-5057 **i02636472**

NOTE	REF NO	GRAPHIC REF	PART NUMBER	QTY	PART NAME 1 2 3 4 5 6 (PRODUCT LEVEL)	SEE PAGE
	1	1	**153-2994**	1	COUPLER AS-QUICK DISCONNECT (FEMALE)	
	2	1	**163-1386**	1	TEE-UNION	
	3	1	**185-7887**	1	COUPLER AS-QUICK DISCONNECT (MALE)	
I	4	1	**199-8309**	1	HOSE AS	
I	5	1	**199-8311**	1	HOSE AS	
I	6	1	**279-5417**	1	HOSE AS	
I	7	1	**279-5418**	1	HOSE AS	
I	8	1	**293-0152**	2	HOSE AS	
	9	1	*148-8319*	2	CONNECTOR AS	
					(EACH INCLUDES)	
		1	**2M-9780**	1	SEAL-O-RING	
		1	**6V-8397**	1	SEAL-O-RING	
		1	**6V-8715**	1	CONNECTOR	
	10	1	*150-3056*	1	TEE AS	
		1	**6V-8397**	3	SEAL-O-RING	
		1	**6V-8788**	1	TEE	
	11	1	**1S-0994**	1	CLIP	
	12	1	**6D-4247**	3	CLIP	
	13	1	**6V-8397**	7	SEAL-O-RING	
M	14	1	**8T-4189**	4	BOLT (M8X1.25X20-MM)	
	15	1	**8T-4224**	4	WASHER-HARD (8.8X16X2-MM THK)	
B	16	1	**9X-6273**	2	WASHER (32.5X50X0.8-MM THK)	
B	17	1	**9X-6274**	2	WASHER (32.5X50X1.6-MM THK)	

B-USE AS REQUIRED
I-REFER TO HYDRAULIC INFORMATION SYSTEM
M-METRIC PART

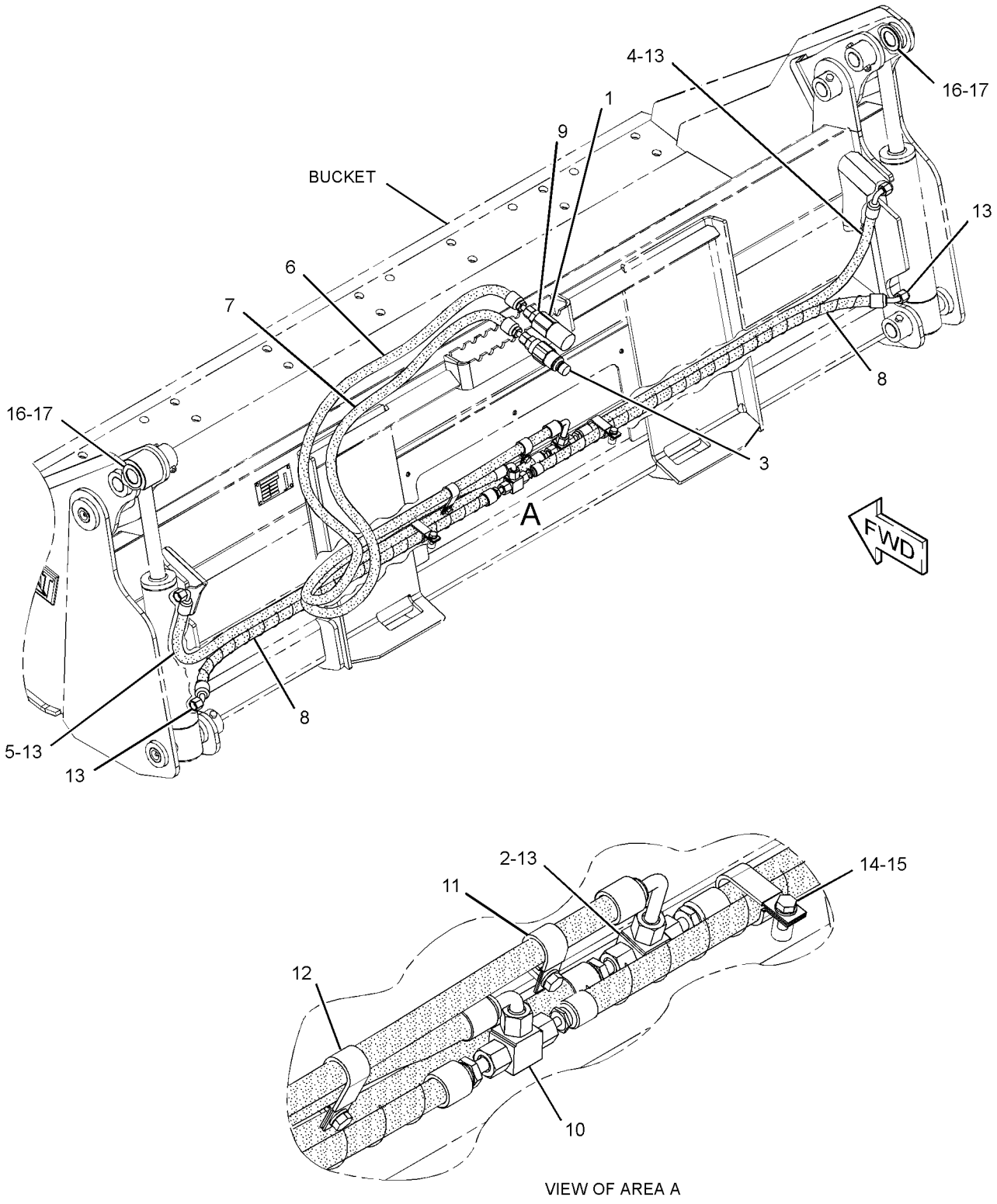

VIEW OF AREA A

GRAPHIC #1 **<END>** g01327736

HYDRAULIC SYSTEM

177-1986 LINES GP-CONNECTING

S/N: MST1-UP

PART OF 177-1989, 177-1990 BLADE AR

AN ATTACHMENT

SMCS-5057 **i01928980**

NOTE	REF NO	GRAPHIC REF	PART NUMBER	QTY	PART NAME 1 2 3 4 5 6 (PRODUCT LEVEL)	SEE PAGE
	1	1	**153-2994**	1	COUPLER AS-QUICK DISCONNECT (FEMALE)	
	2	1	**153-2995**	1	FITTING AS (QUICK DISCONNECT, MALE)	
	3	1	**163-1385**	2	ELBOW	
I	4	1	**177-1910**	2	HOSE AS	
I	5	1	**177-1911**	1	HOSE AS	
I	6	1	**177-1912**	1	HOSE AS	
	7	1	*148-8319*	2	CONNECTOR AS	
					(EACH INCLUDES)	
		1	**2M-9780**	1	SEAL-O-RING	
		1	**6V-8397**	1	SEAL-O-RING	
		1	**6V-8715**	1	CONNECTOR	
	8	1	**148-8378**	2	ELBOW AS	
					(EACH INCLUDES)	
		1	**3J-1907**	1	SEAL-O-RING	
		1	**6V-8397**	1	SEAL-O-RING	
		1	**6V-8724**	1	ELBOW	
	9	1	**6V-8397**	4	SEAL-O-RING	
	10	1	**8T-4121**	4	WASHER-HARD (11X21X2.5-MM THK)	
M	11	1	**8T-4133**	2	NUT (M10X1.5-THD)	
M	12	1	**8T-4185**	1	BOLT (M10X1.5X50-MM)	
M	13	1	**8T-4195**	1	BOLT (M10X1.5X30-MM)	
	14	1	**8T-8192**	2	CLIP (SLOT)	
	15	1	**8T-8193**	2	CLIP (TAB)	

I-REFER TO HYDRAULIC INFORMATION SYSTEM
M-METRIC PART

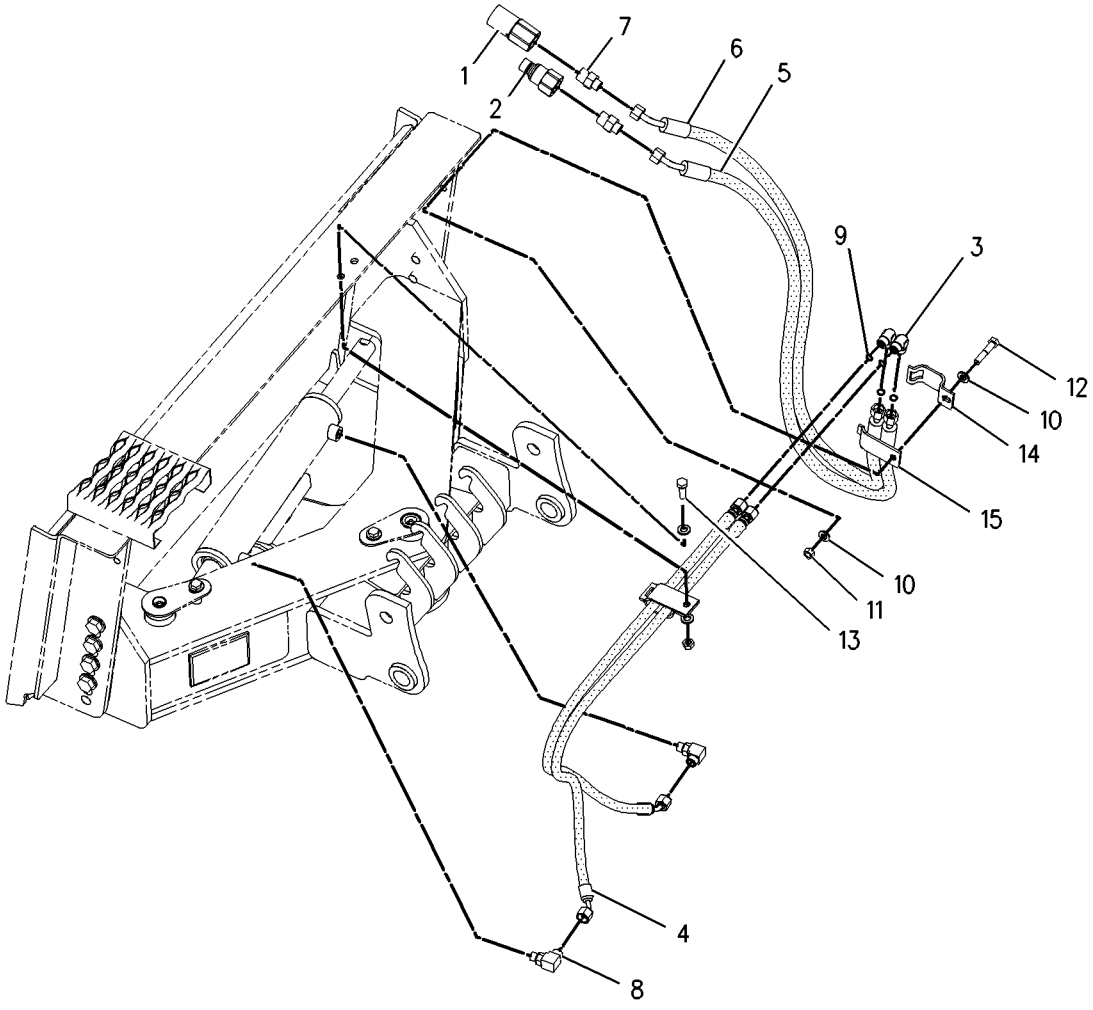

GRAPHIC #1 **<END>** g00978933

HYDRAULIC SYSTEM

231-5273 LINES GP-CONNECTING

S/N: MST1-UP

PART OF 231-5275, 231-5277 BLADE AR

AN ATTACHMENT

SMCS-5057 **i01964116**

NOTE	REF NO	GRAPHIC REF	PART NUMBER	QTY	PART NAME 1 2 3 4 5 6 (PRODUCT LEVEL)	SEE PAGE
	1	1	**153-2994**	1	COUPLER AS-QUICK DISCONNECT (FEMALE)	
	2	1	**153-2995**	1	FITTING AS (QUICK DISCONNECT, MALE)	
I	3	1	**231-0124**	2	HOSE AS	
I	4	1	**231-0125**	1	HOSE AS	
I	5	1	**231-0126**	2	HOSE AS	
I	6	1	**231-0127**	2	HOSE AS	
I	7	1	**238-1003**	1	HOSE AS	
	8	1	*148-8315*	2	CONNECTOR AS	
					(EACH INCLUDES)	
		1	**2M-9780**	1	SEAL-O-RING	
		1	**6V-8642**	1	CONNECTOR	
		1	**7J-9108**	1	SEAL-O-RING	
	9	1	*148-8336*	6	CONNECTOR AS	
					(EACH INCLUDES)	
		1	**3J-1907**	1	SEAL-O-RING	
		1	**6V-8397**	1	SEAL-O-RING	
		1	**6V-8636**	1	CONNECTOR	
	10	1	*148-8342*	2	CONNECTOR AS	
					(EACH INCLUDES)	
		1	**3K-0360**	1	SEAL-O-RING	
		1	**6V-8632**	1	CONNECTOR	
		1	**7J-9108**	1	SEAL-O-RING	
	11	1	**5P-1076**	2	WASHER-HARD (13.5X30X4-MM THK)	
	12	1	**7G-5984**	1	CLIP (TAB)	
	13	1	**7G-5985**	1	CLIP (SLOT)	
	14	1	**7G-5986**	1	GROMMET	
M	15	1	**8T-4139**	2	BOLT (M12X1.75X30-MM)	

I-REFER TO HYDRAULIC INFORMATION SYSTEM
M-METRIC PART

231-5273 **LINES GP-CONNECTING** *(contd.)* **i01964116**

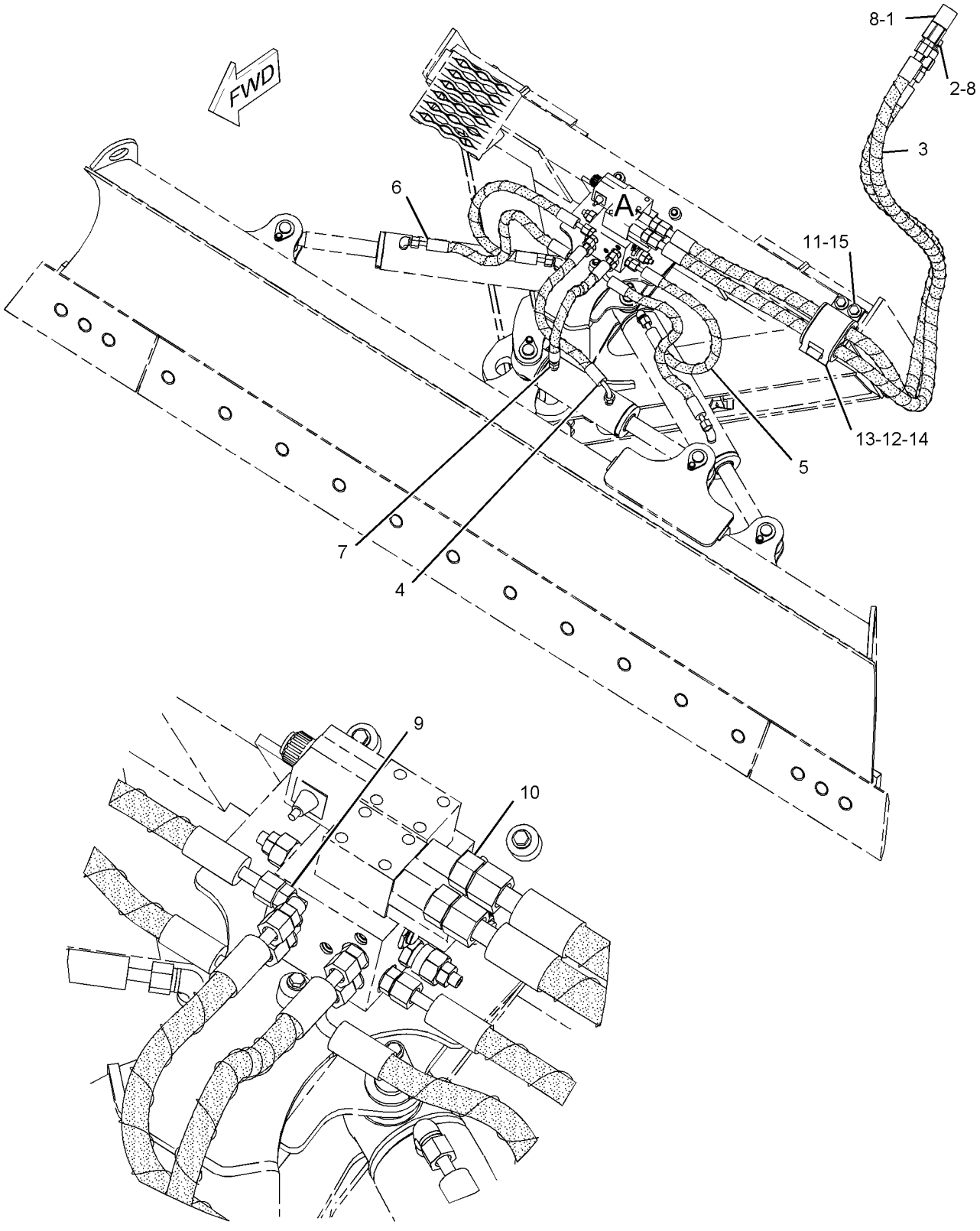

VIEW OF AREA A

GRAPHIC #1 **<END>** g01041993

HYDRAULIC SYSTEM

258-2425 LINES GP-COUPLER

S/N: MST1-UP
PART OF 258-3691 COUPLER AR-QUICK
AN ATTACHMENT
TYPE 1

SMCS-5057, 6129 **i02760139**

NOTE	REF NO	GRAPHIC REF	PART NUMBER	QTY	PART NAME 1 2 3 4 5 6 (PRODUCT LEVEL)	SEE PAGE
	1	1	**7K-1181**	2	STRAP-CABLE	
	2	1	**124-2456**	1	FILM-INSTRUCTION (NO STEP)	
	3	1	**207-9737**	1	BRACKET AS	
I	4	1	**207-9756**	4	HOSE AS	
	5	1	**212-6690**	1	GUARD	
I	6	1	**258-2841**	2	HOSE AS	
I	7	1	**258-3917**	1	HOSE AS	
I	8	1	**258-3918**	1	HOSE AS	
	9	1	**285-2193**	1	TUBE AS	
	10	1	**285-2194**	1	TUBE AS	
Y	11	1	**291-0010**	1	MANIFOLD GP-CONTROL (QUICK COUPLER)	422
	12	1	**132-7551**	1	SPACER (11X19X6-MM THK)	
	13	1	*148-8325*	4	CONNECTOR AS	
					(EACH INCLUDES)	
		1	**3J-1907**	1	SEAL-O-RING	
		1	**4J-5477**	1	SEAL-O-RING	
		1	**6V-8641**	1	CONNECTOR	
	14	1	*148-8336*	2	CONNECTOR AS	
					(EACH INCLUDES)	
		1	**3J-1907**	1	SEAL-O-RING	
		1	**6V-8397**	1	SEAL-O-RING	
		1	**6V-8636**	1	CONNECTOR	
	15	1	*148-8378*	2	ELBOW AS	
					(EACH INCLUDES)	
		1	**3J-1907**	1	SEAL-O-RING	
		1	**6V-8397**	1	SEAL-O-RING	
		1	**6V-8724**	1	ELBOW	
	16	1	*150-4034*	2	TEE AS	
					(EACH INCLUDES)	
		1	**6V-8397**	3	SEAL-O-RING	
		1	**8T-0379**	1	TEE-BULKHEAD	
	17	1	**164-4225**	2	CLIP	
	18	1	*212-1336*	1	TEE AS	
		1	**2M-9780**	1	SEAL-O-RING	
		1	**6V-8783**	1	TEE-FACE SEAL	
		1	**7J-9108**	2	SEAL-O-RING	
	19	1	*215-3191*	1	REDUCER AS	
		1	**4J-5477**	1	SEAL-O-RING	
		1	**6V-8937**	1	REDUCER-O-RING	
M	20	1	**266-3315**	2	BOLT-FLANGE HEAD (M8X1.25X25.5-MM)	
	21	1	**3S-2093**	2	STRAP-CABLE	
	22	1	**4D-6466**	3	CLIP	
	23	1	**5P-4116**	2	WASHER-HARD (8.8X20.5X2-MM THK)	
	24	1	**6V-8397**	2	SEAL-O-RING	
	25	1	**6V-9168**	2	NUT (11/16-16-THD)	
	26	1	**7B-1597**	2	CLIP (LOOP)	
	27	1	**7G-2950**	1	CLIP (SLOT)	
	28	1	**7G-2951**	1	CLIP (TAB)	
	29	1	**7H-7055**	2	CLIP	
	30	1	**7X-7729**	3	WASHER (11X25X3-MM THK)	
	31	1	**8T-4121**	3	WASHER-HARD (11X21X2.5-MM THK)	
M	32	1	**8T-4136**	3	BOLT (M10X1.5X25-MM)	
M	33	1	**8T-4189**	2	BOLT (M8X1.25X20-MM)	
M	34	1	**8T-4137**	3	BOLT (M10X1.5X20-MM)	

258-2425 **LINES GP-COUPLER** *(contd.)* **i02760139**

NOTE	REF NO	GRAPHIC REF	PART NUMBER	QTY	PART NAME 1 2 3 4 5 6 (PRODUCT LEVEL)	SEE PAGE
M	35	1	**8T-4200**	2	BOLT (M8X1.25X16-MM)	
	36	1	**8T-4224**	4	WASHER-HARD (8.8X16X2-MM THK)	
M	37	1	**8T-6870**	2	BOLT (M8X1.25X70-MM)	
	38	1	**9M-8406**	2	CLIP	
	39	1	**9S-1350**	2	CLIP	
	40	1	**9X-6581**	1	NUT-O-RING SEAL (1-14-THD)	
	41	1	**302-0389**	1	BRACKET AS	

I-REFER TO HYDRAULIC INFORMATION SYSTEM
M-METRIC PART
Y-SEPARATE ILLUSTRATION

258-2425 **LINES GP-COUPLER** *(contd.)* **i02760139**

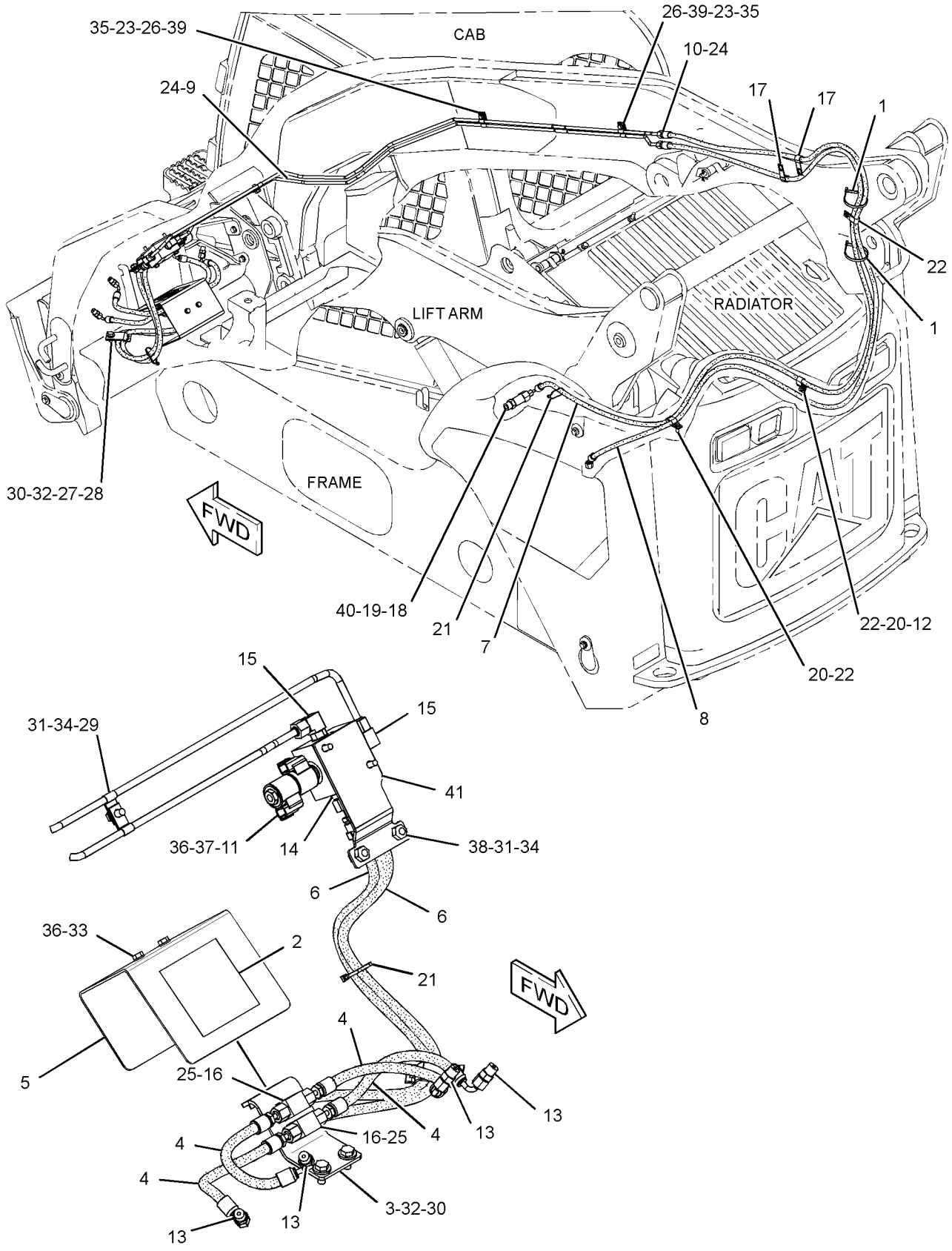

GRAPHIC #1 **<END>** g01341236

HYDRAULIC SYSTEM

258-2425 LINES GP-COUPLER

S/N: MST1-UP
PART OF 258-3691 COUPLER AR-QUICK
AN ATTACHMENT
TYPE 2

SMCS-5057, 6129 **i02877739**

NOTE	REF NO	GRAPHIC REF	PART NUMBER	QTY	PART NAME 1 2 3 4 5 6 (PRODUCT LEVEL)	SEE PAGE
	1	1	**7K-1181**	2	STRAP-CABLE	
	2	1	**124-2456**	1	FILM-INSTRUCTION (NO STEP)	
	3	1	**207-9737**	1	BRACKET AS	
I	4	1	**207-9756**	4	HOSE AS	
	5	1	**212-6690**	1	GUARD	
I	6	1	**258-2841**	2	HOSE AS	
I	7	1	**258-3917**	1	HOSE AS	
I	8	1	**258-3918**	1	HOSE AS	
	9	1	**285-2193**	1	TUBE AS	
	10	1	**285-2194**	1	TUBE AS	
Y	11	1	**291-0010**	1	MANIFOLD GP-CONTROL (QUICK COUPLER)	422
	12	1	**132-7551**	1	SPACER (11X19X6-MM THK)	
	13	1	*148-8325*	4	CONNECTOR AS	
					(EACH INCLUDES)	
		1	**3J-1907**	1	SEAL-O-RING	
		1	**4J-5477**	1	SEAL-O-RING	
		1	**6V-8641**	1	CONNECTOR	
	14	1	*148-8336*	2	CONNECTOR AS	
					(EACH INCLUDES)	
		1	**3J-1907**	1	SEAL-O-RING	
		1	**6V-8397**	1	SEAL-O-RING	
		1	**6V-8636**	1	CONNECTOR	
	15	1	*148-8378*	2	ELBOW AS	
					(EACH INCLUDES)	
		1	**3J-1907**	1	SEAL-O-RING	
		1	**6V-8397**	1	SEAL-O-RING	
		1	**6V-8724**	1	ELBOW	
	16	1	*150-4034*	2	TEE AS	
					(EACH INCLUDES)	
		1	**6V-8397**	3	SEAL-O-RING	
		1	**8T-0379**	1	TEE-BULKHEAD	
	17	1	**164-4225**	2	CLIP	
C	18	1	**304-6752**	1	TEE	
C	19	1	**7J-9108**	1	SEAL-O-RING	
M	20	1	**266-3315**	2	BOLT-FLANGE HEAD (M8X1.25X25.5-MM)	
	21	1	**3S-2093**	2	STRAP-CABLE	
	22	1	**4D-6466**	3	CLIP	
	23	1	**5P-4116**	2	WASHER-HARD (8.8X20.5X2-MM THK)	
C	24	1	**6V-8397**	3	SEAL-O-RING	
	25	1	**6V-9168**	2	NUT (11/16-16-THD)	
	26	1	**7B-1597**	2	CLIP (LOOP)	
	27	1	**7G-2950**	1	CLIP (SLOT)	
	28	1	**7G-2951**	1	CLIP (TAB)	
	29	1	**7H-7055**	2	CLIP	
	30	1	**7X-7729**	3	WASHER (11X25X3-MM THK)	
	31	1	**8T-4121**	3	WASHER-HARD (11X21X2.5-MM THK)	
M	32	1	**8T-4136**	3	BOLT (M10X1.5X25-MM)	
M	33	1	**8T-4189**	2	BOLT (M8X1.25X20-MM)	
M	34	1	**8T-4137**	3	BOLT (M10X1.5X20-MM)	
M	35	1	**8T-4200**	2	BOLT (M8X1.25X16-MM)	
	36	1	**8T-4224**	4	WASHER-HARD (8.8X16X2-MM THK)	
M	37	1	**8T-6870**	2	BOLT (M8X1.25X70-MM)	
	38	1	**9M-8406**	2	CLIP	
	39	1	**9S-1350**	2	CLIP	

258-2425 LINES GP-COUPLER *(contd.)* i02877739

NOTE	REF NO	GRAPHIC REF	PART NUMBER	QTY	PART NAME 1 2 3 4 5 6 (PRODUCT LEVEL)	SEE PAGE
C	40	1	**4J-5477**	1	SEAL-O-RING	
	41	1	**302-0389**	1	BRACKET AS	
C	42	1	**2M-9780**	1	SEAL-O-RING	

C-CHANGE FROM PREVIOUS TYPE
I-REFER TO HYDRAULIC INFORMATION SYSTEM
M-METRIC PART
Y-SEPARATE ILLUSTRATION

258-2425 **LINES GP-COUPLER** *(contd.)* **i02877739**

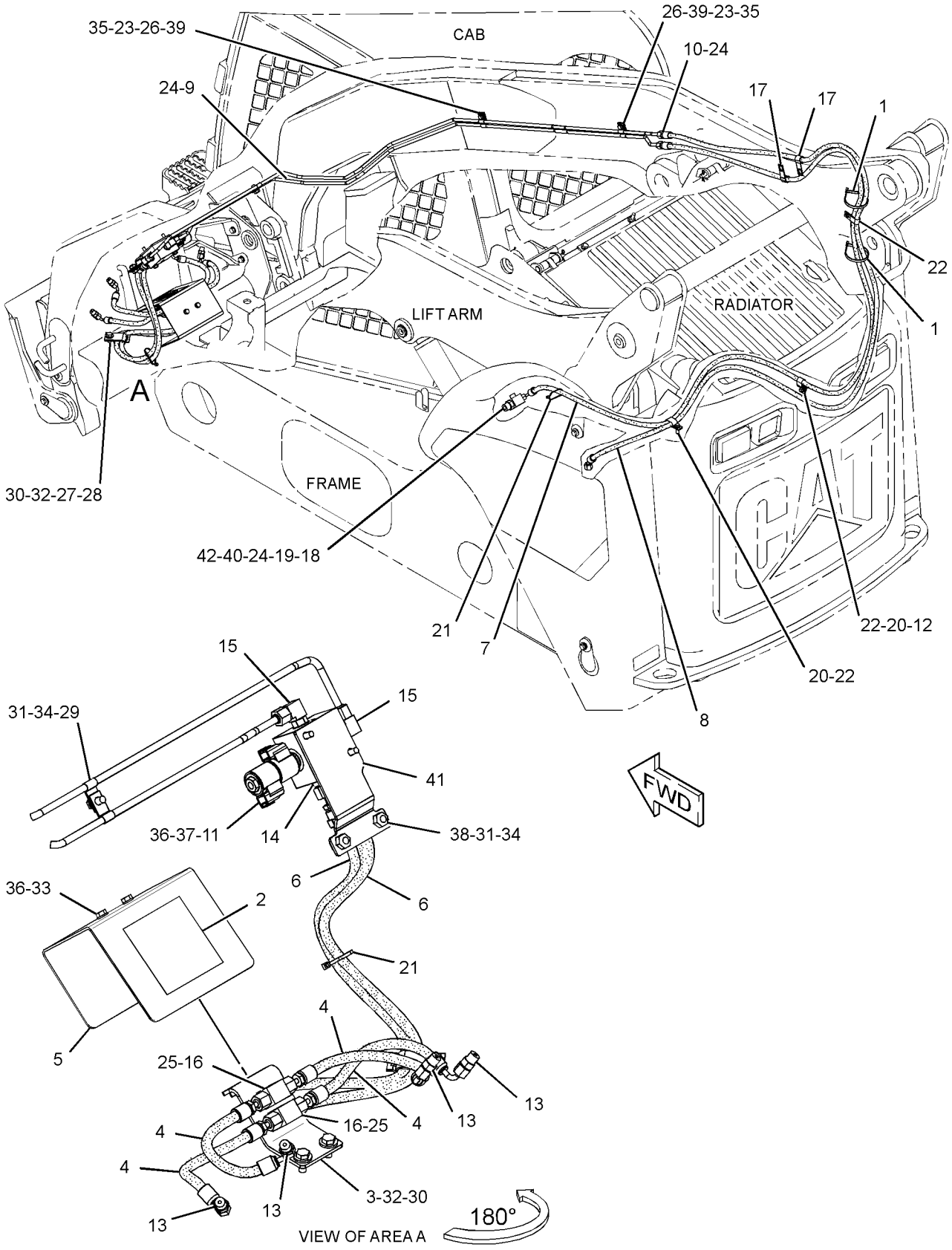

GRAPHIC #1 **<END>** g01448966

HYDRAULIC SYSTEM

161-0187 LINES GP-GRAPPLE

S/N: MST1-UP

PART OF 157-7223, 157-7224, 157-7225, 217-6229 BUCKET AR-GRAPPLE

AN ATTACHMENT

SMCS-5057, 5555 **i01928983**

NOTE	REF NO	GRAPHIC REF	PART NUMBER	QTY	PART NAME 1 2 3 4 5 6 (PRODUCT LEVEL)	SEE PAGE
	1	1	**3E-7404**	2	CLAMP-HOSE	
	2	1	**153-2994**	1	COUPLER AS-QUICK DISCONNECT (FEMALE)	
	3	1	**153-2995**	1	FITTING AS (QUICK DISCONNECT, MALE)	
	4	1	**161-0185**	1	TUBE AS	
	5	1	**161-0186**	1	TUBE AS	
	6	1	**161-0188**	2	TUBE AS	
I	7	1	**161-0189**	2	HOSE AS	
I	8	1	**161-0190**	2	HOSE AS	
	9	1	**163-1385**	1	ELBOW	
I	10	1	**163-9320**	1	HOSE AS	
I	11	1	**166-9312**	1	HOSE AS	
	12	1	*148-8319*	2	CONNECTOR AS	
					(EACH INCLUDES)	
		1	**2M-9780**	1	SEAL-O-RING	
		1	**6V-8397**	1	SEAL-O-RING	
		1	**6V-8715**	1	CONNECTOR	
	13	1	**2V-3216**	6	CLIP	
	14	1	**6V-8397**	13	SEAL-O-RING	
	15	1	**7S-3916**	2	CLIP (TAB)	
	16	1	**7S-3919**	2	CLIP (SLOT)	
	17	1	**8T-4121**	2	WASHER-HARD (11X21X2.5-MM THK)	
M	18	1	**8T-4136**	2	BOLT (M10X1.5X25-MM)	
M	19	1	**8T-4171**	4	BOLT (M6X1X12-MM)	
	20	1	**9R-2004**	2	BLOCK	

I-REFER TO HYDRAULIC INFORMATION SYSTEM
M-METRIC PART

161-0187 **LINES GP-GRAPPLE** *(contd.)* **i01928983**

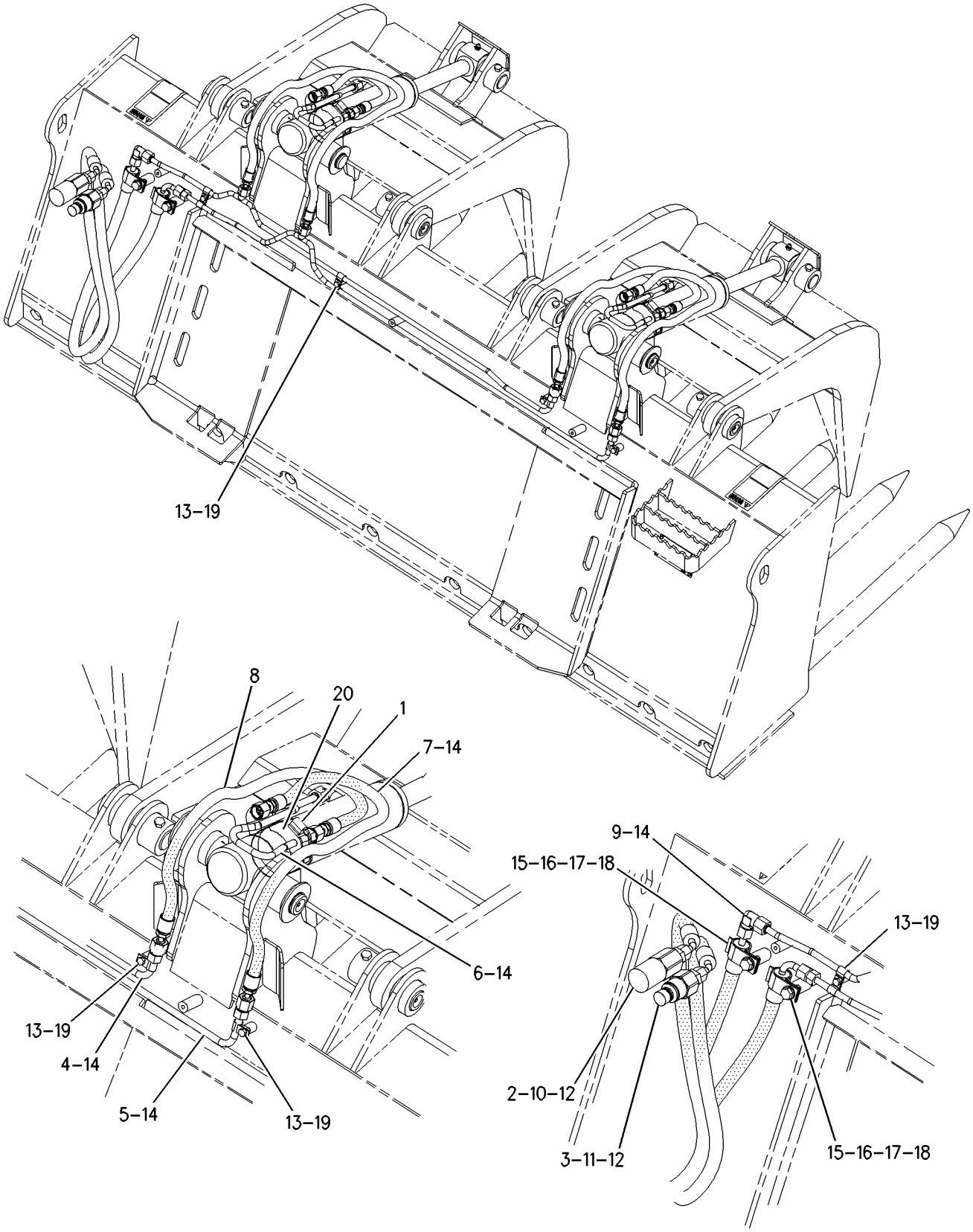

GRAPHIC #1 **<END>** g00733464

HYDRAULIC SYSTEM

286-9250 LINES GP-GRAPPLE

S/N: MST1-UP
2134-MM (84-IN)
PART OF 286-9301 BUCKET AR-GRAPPLE
AN ATTACHMENT

SMCS-5057, 5555 **i02941543**

NOTE	REF NO	GRAPHIC REF	PART NUMBER	QTY	PART NAME 1 2 3 4 5 6 (PRODUCT LEVEL)	SEE PAGE
	1	1	**2H-7829**	10	CLIP	
	2	1	**9S-4200**	2	CLIP	
	3	1	**153-2994**	1	COUPLER AS-QUICK DISCONNECT (FEMALE)	
I	4	1	**161-0189**	2	HOSE AS	
	5	1	**163-1385**	1	ELBOW	
I	6	1	**177-1911**	2	HOSE AS	
	7	1	**185-7887**	1	COUPLER AS-QUICK DISCONNECT (MALE)	
I	8	1	**286-9263**	2	HOSE AS	
	9	1	**286-9265**	1	TUBE AS	
	10	1	**286-9266**	1	TUBE AS	
	11	1	**286-9267**	1	TUBE AS	
	12	1	**286-9268**	1	TUBE AS	
	13	1	**286-9271**	1	GUARD	
	14	1	*148-8319*	2	CONNECTOR AS	
					(EACH INCLUDES)	
		1	**2M-9780**	1	SEAL-O-RING	
		1	**6V-8397**	1	SEAL-O-RING	
		1	**6V-8715**	1	CONNECTOR	
	15	1	**8T-4224**	6	WASHER-HARD (8.8X16X2-MM THK)	
	16	1	**6V-8397**	13	SEAL-O-RING	
	17	1	**7S-3916**	2	CLIP (TAB)	
	18	1	**7S-3919**	2	CLIP (SLOT)	
	19	1	**7X-7729**	5	WASHER (11X25X3-MM THK)	
M	20	1	**8T-4195**	5	BOLT (M10X1.5X30-MM)	
M	21	1	**8T-4200**	6	BOLT (M8X1.25X16-MM)	
	22	1	**5P-5148**	2	STRAP-TIE	

I-REFER TO HYDRAULIC INFORMATION SYSTEM
M-METRIC PART

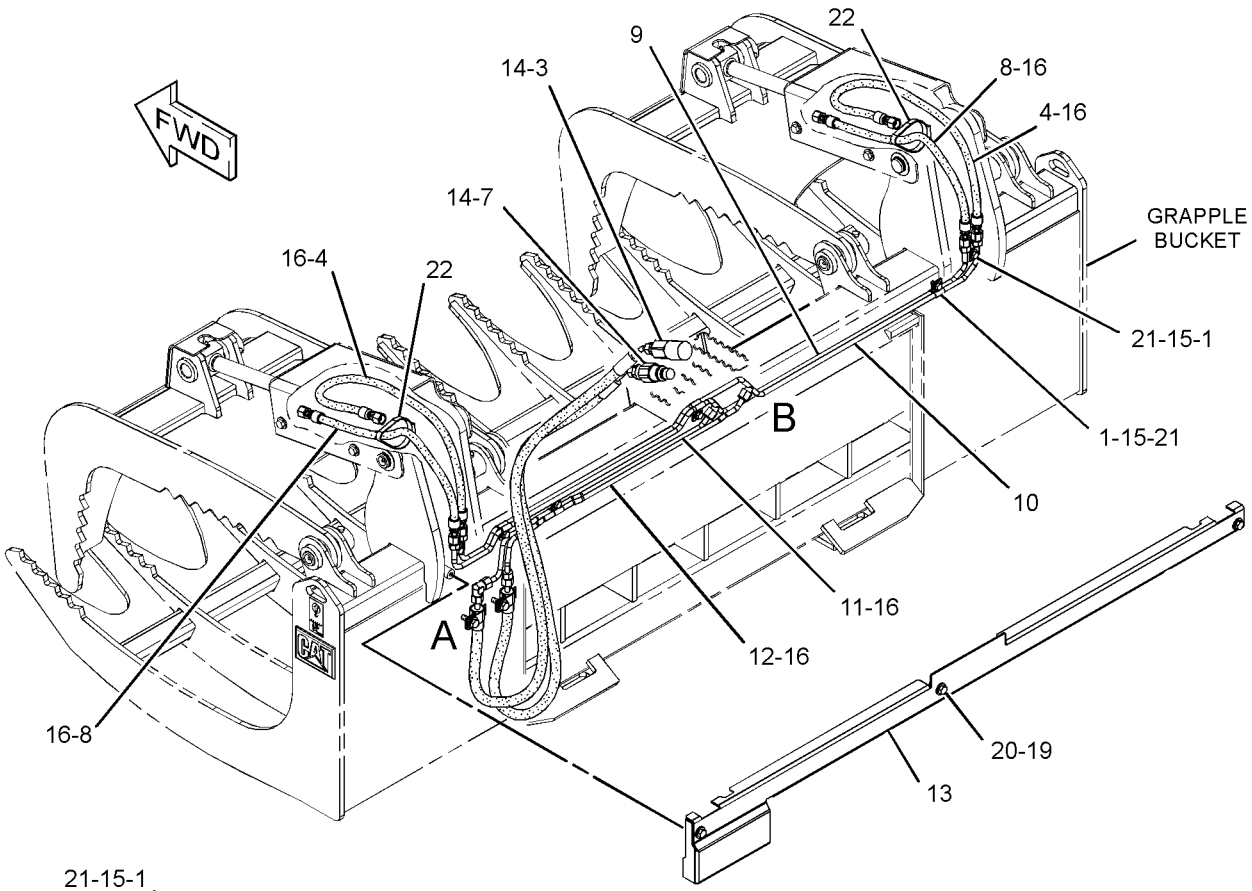

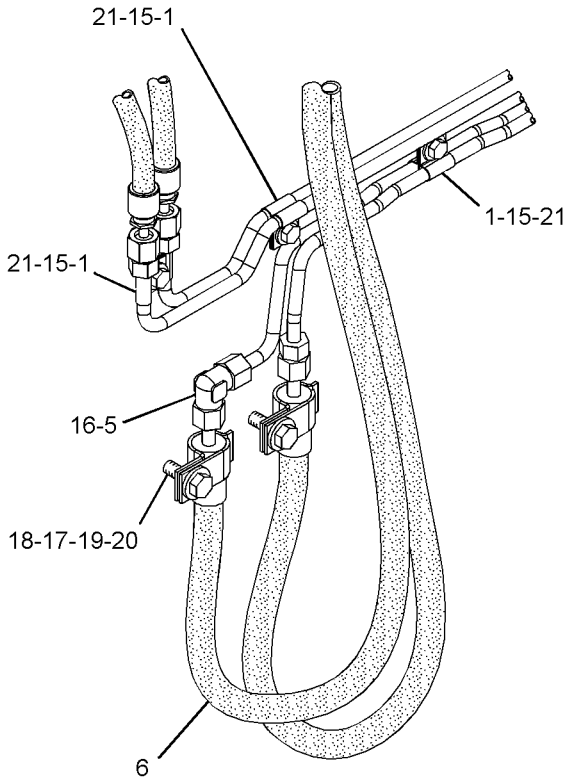

VIEW OF AREA A

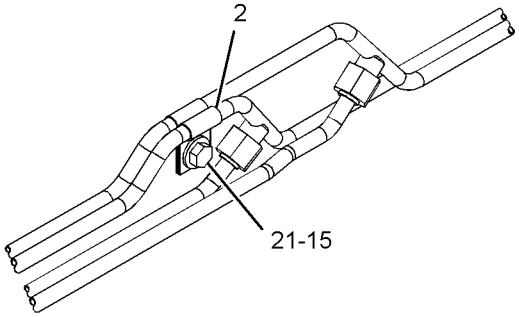

VIEW OF AREA B

GRAPHIC #1 **<END>** g01514424

HYDRAULIC SYSTEM

286-9279 LINES GP-GRAPPLE

S/N: MST1-UP
1829-MM (72-IN)
PART OF 286-9300 BUCKET AR-GRAPPLE
AN ATTACHMENT

SMCS-5057, 5555 **i02914649**

NOTE	REF NO	GRAPHIC REF	PART NUMBER	QTY	PART NAME 1 2 3 4 5 6 (PRODUCT LEVEL)	SEE PAGE
	1	1	**2H-7829**	10	CLIP	
	2	1	**9S-4200**	2	CLIP	
	3	1	**153-2994**	1	COUPLER AS-QUICK DISCONNECT (FEMALE)	
I	4	1	**161-0189**	2	HOSE AS	
	5	1	**163-1385**	1	ELBOW	
I	6	1	**177-1911**	2	HOSE AS	
	7	1	**185-7887**	1	COUPLER AS-QUICK DISCONNECT (MALE)	
	8	1	**286-9249**	1	GUARD	
I	9	1	**286-9263**	2	HOSE AS	
	10	1	**286-9267**	1	TUBE AS	
	11	1	**286-9268**	1	TUBE AS	
	12	1	**286-9280**	1	TUBE AS	
	13	1	**286-9281**	1	TUBE AS	
	14	1	*148-8319*	2	CONNECTOR AS	
					(EACH INCLUDES)	
		1	**2M-9780**	1	SEAL-O-RING	
		1	**6V-8397**	1	SEAL-O-RING	
		1	**6V-8715**	1	CONNECTOR	
	15	1	**8T-4224**	6	WASHER-HARD (8.8X16X2-MM THK)	
	16	1	**6V-8397**	13	SEAL-O-RING	
	17	1	**7S-3916**	2	CLIP (TAB)	
	18	1	**7S-3919**	2	CLIP (SLOT)	
	19	1	**7X-7729**	5	WASHER (11X25X3-MM THK)	
M	20	1	**8T-4195**	5	BOLT (M10X1.5X30-MM)	
M	21	1	**8T-4200**	6	BOLT (M8X1.25X16-MM)	
	22	1	**5P-5148**	2	STRAP-TIE	

I-REFER TO HYDRAULIC INFORMATION SYSTEM
M-METRIC PART

286-9279 **LINES GP-GRAPPLE** *(contd.)* **i02914649**

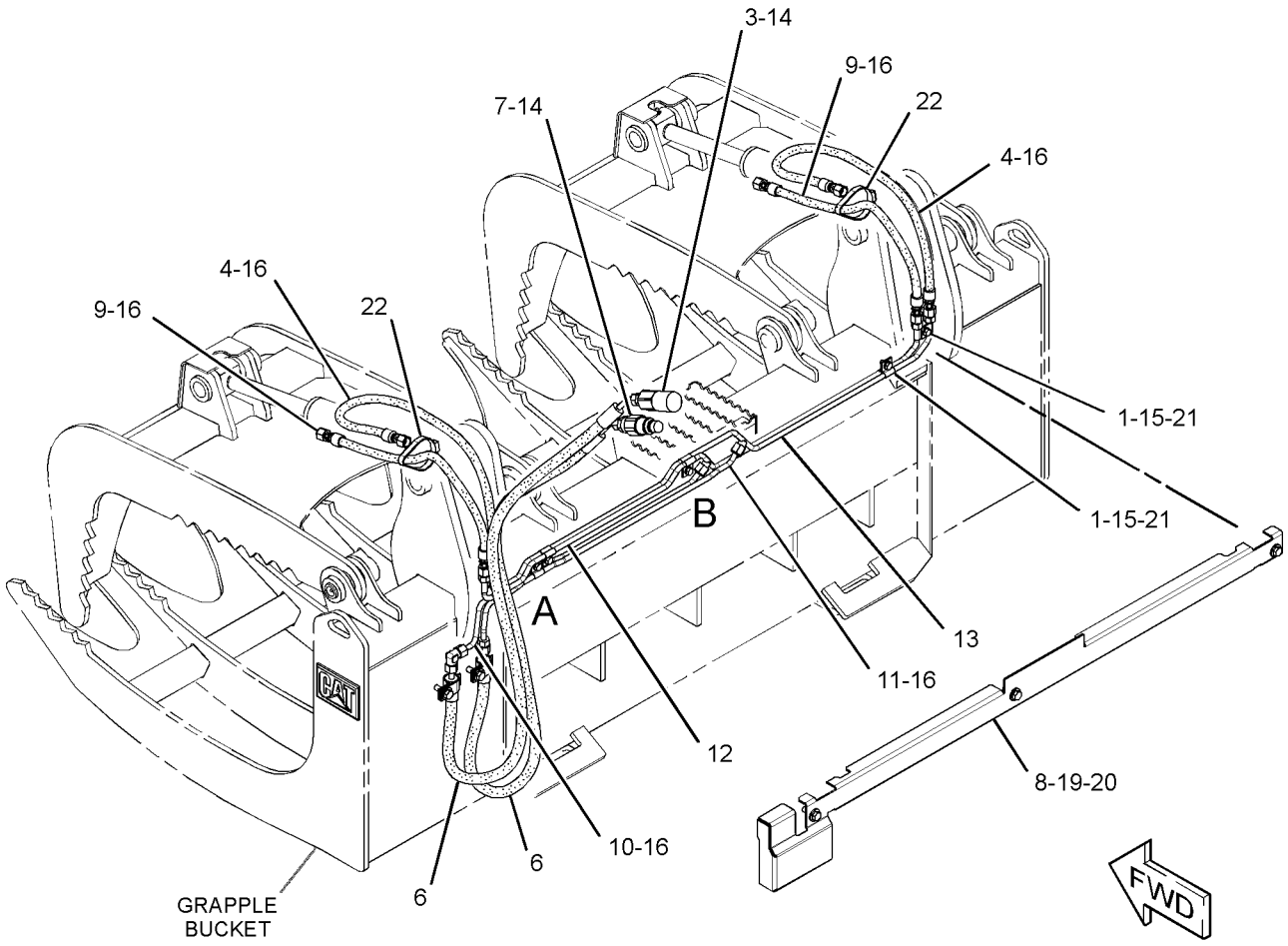

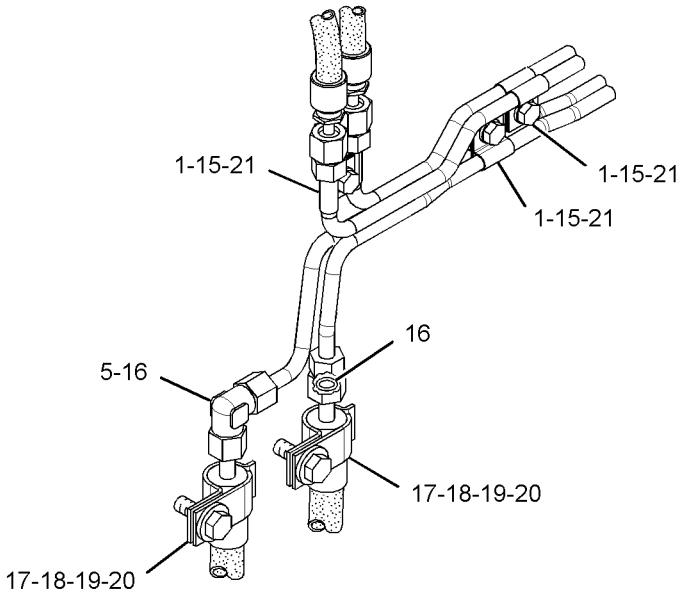

VIEW OF AREA A
(HOSES REMOVED FOR CLARITY)

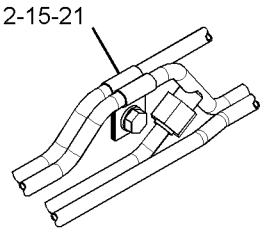

VIEW OF AREA B

GRAPHIC #1 **<END>** g01453768

HYDRAULIC SYSTEM

258-2876 LINES GP-HYDRAULIC

S/N: MST1-UP
PART OF 258-2426 HYDRAULIC AR
AN ATTACHMENT

SMCS-5057 **i02793528**

NOTE	REF NO	GRAPHIC REF	PART NUMBER	QTY	PART NAME 1 2 3 4 5 6 (PRODUCT LEVEL)	SEE PAGE
	1	1	**258-2880**	1	TUBE AS	
	2	1	**258-2881**	1	TUBE AS	
	3	1	*148-8341*	2	CONNECTOR AS	
					(EACH INCLUDES)	
		1	**3D-2824**	1	SEAL-O-RING	
		1	**6V-8713**	1	CONNECTOR	
		1	**7J-9108**	1	SEAL-O-RING	
	4	1	**6V-8397**	1	SEAL-O-RING	
	5	1	**6V-8398**	2	SEAL-O-RING	
	6	1	**6V-9829**	3	CAP AS	
	7	1	**6V-9830**	3	CAP AS	

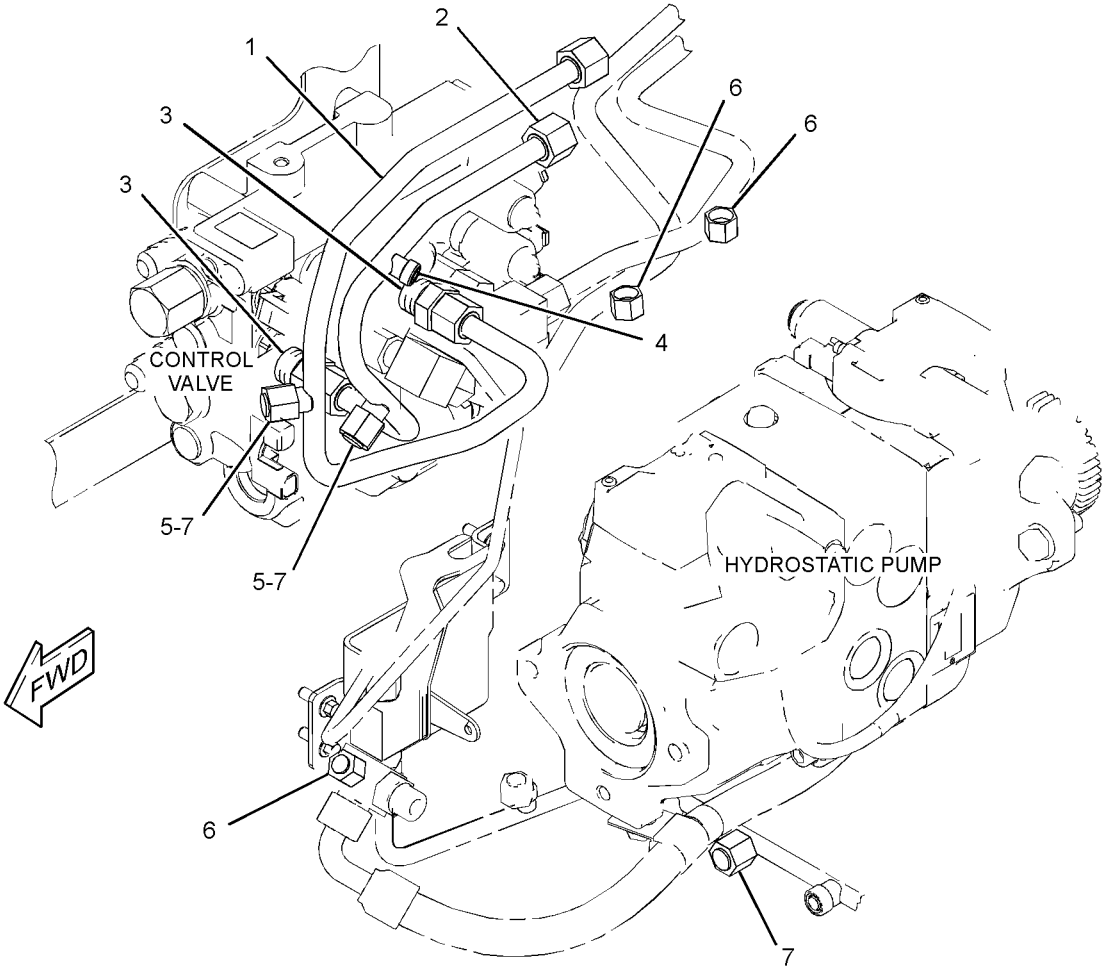

GRAPHIC #1 **<END>** g01417465

HYDRAULIC SYSTEM

258-2878 LINES GP-HYDRAULIC—WORK TOOL POSITIONER

S/N: MST1-UP
PART OF 258-3358 HYDRAULIC AR
AN ATTACHMENT

SMCS-5057 **i03571200**

NOTE	REF NO	GRAPHIC REF	PART NUMBER	QTY	PART NAME 1 2 3 4 5 6 (PRODUCT LEVEL)	SEE PAGE
	1	1	**146-9439**	1	RELAY AS (12-VOLT)	
	2	1	**258-2881**	1	TUBE AS	
	3	1	**318-0008**	1	TUBE AS	
	4	1	**258-2884**	1	TUBE AS	
	5	1	**258-2885**	1	TUBE AS	
	6	1	**258-2886**	1	TUBE AS	
	7	1	**263-5417**	1	SWITCH AS-ROCKER (WORK TOOL POSITIONER)	
		1	**111-7899**	1	GASKET	
	8	1	*148-8315*	1	CONNECTOR AS	
		1	**2M-9780**	1	SEAL-O-RING	
		1	**6V-8642**	1	CONNECTOR	
		1	**7J-9108**	1	SEAL-O-RING	
	9	1	*148-8341*	1	CONNECTOR AS	
		1	**3D-2824**	1	SEAL-O-RING	
		1	**6V-8713**	1	CONNECTOR	
		1	**7J-9108**	1	SEAL-O-RING	
	10	1	*148-8388*	1	ELBOW AS	
		1	**2M-9780**	1	SEAL-O-RING	
		1	**6V-8629**	1	ELBOW	
		1	**6V-9746**	1	SEAL-O-RING	
	11	1	*148-8393*	1	ELBOW AS	
		1	**6V-9852**	1	ELBOW	
		1	**7J-9108**	1	SEAL-O-RING	
	12	1	*205-3692*	2	ELBOW AS	
					(EACH INCLUDES)	
		1	**2M-9780**	1	SEAL-O-RING	
		1	**6V-8397**	1	SEAL-O-RING	
		1	**9X-2134**	1	ELBOW	
	13	1	**6V-8397**	1	SEAL-O-RING	
	14	1	**6V-8398**	2	SEAL-O-RING	
	15	1	**6V-9830**	3	CAP AS	
	16	1	**6V-9829**	1	CAP AS	
	17	1	*148-8327*	1	CONNECTOR AS	
		1	**3D-2824**	1	SEAL-O-RING	
		1	**6V-8637**	1	CONNECTOR	
		1	**6V-9746**	1	SEAL-O-RING	

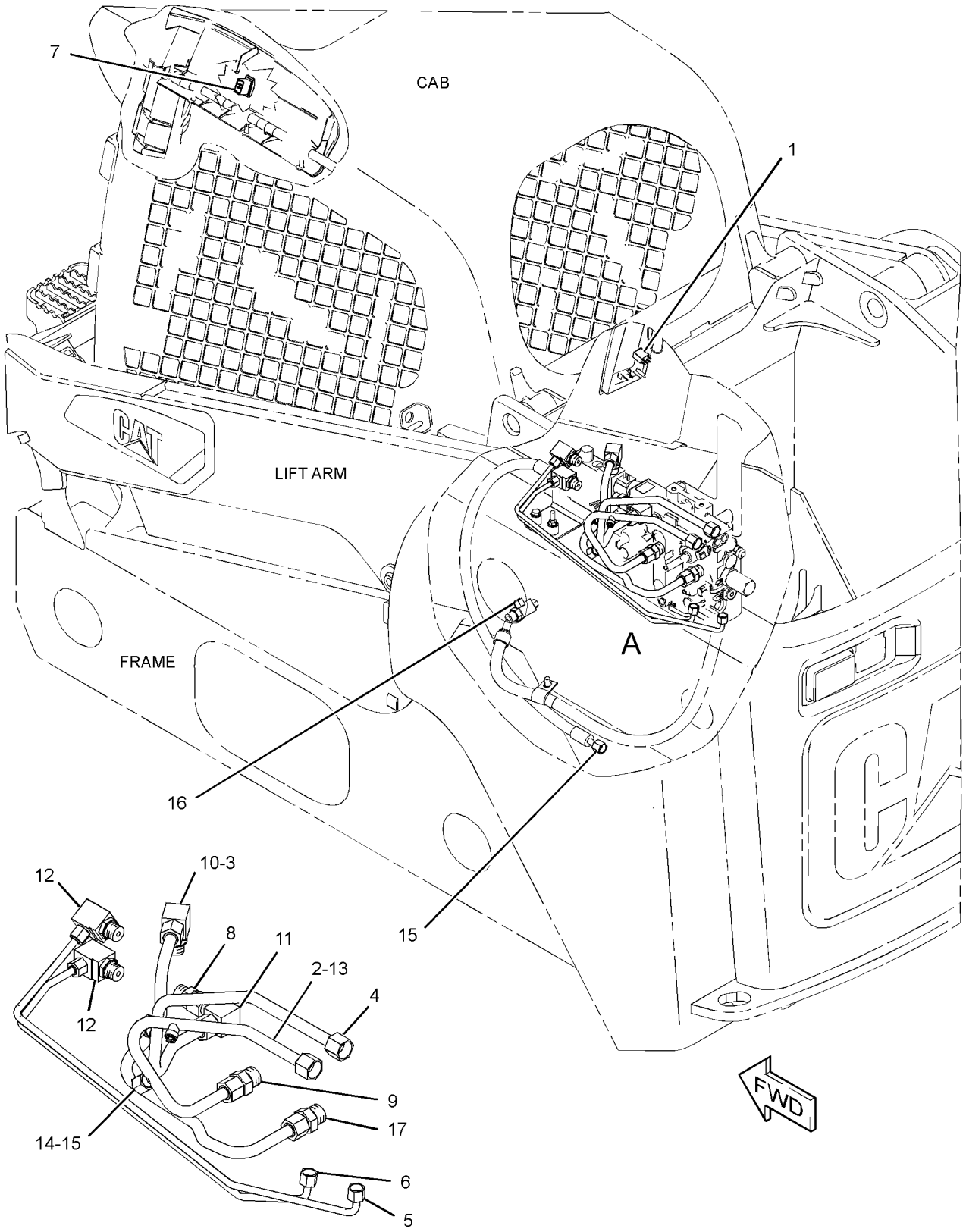

VIEW OF AREA A

GRAPHIC #1 **<END>** g01440645

HYDRAULIC SYSTEM

304-6745 LINES GP-HYDRAULIC–
RIDE CONTROL, WORK TOOL POSITIONER
S/N: MST1-UP
PART OF 304-6744 HYDRAULIC AR
AN ATTACHMENT

SMCS-5057 **i03624562**

NOTE	REF NO	GRAPHIC REF	PART NUMBER	QTY	PART NAME 1 2 3 4 5 6 (PRODUCT LEVEL)	SEE PAGE
	1	1	**146-9439**	1	RELAY AS (12-VOLT)	
	2	1	**178-3620**	3	STRAP-DUAL CLAMP	
	3	1	**258-2881**	1	TUBE AS	
	4	1	**318-0008**	1	TUBE AS	
	5	1	**258-2884**	1	TUBE AS	
	6	1	**258-2885**	1	TUBE AS	
	7	1	**258-2886**	1	TUBE AS	
	8	1	**258-2887**	1	TUBE AS	
	9	1	**258-2888**	1	TUBE AS	
I	10	1	**258-2891**	1	HOSE AS	
	11	1	**263-5417**	1	SWITCH AS-ROCKER (WORK TOOL POSITIONER)	
		1	**111-7899**	1	GASKET	
	12	1	**265-9526**	1	SWITCH AS-ROCKER (RIDE CONTROL)	
		1	**111-7899**	1	GASKET	
I	13	1	**304-6751**	1	HOSE AS	
I	14	1	**304-6753**	1	HOSE AS	
	15	1	**304-6756**	1	VALVE GP-CHECK	
		1	**3K-0360**	1	SEAL-O-RING	
		1	**6V-8398**	1	SEAL-O-RING	
	16	1	**308-6423**	1	HARNESS AS-RIDE CONTROL	
		1	**102-8802**	1	KIT-RECEPTACLE (2-PIN)	
					(INCLUDES RECEPTACLE AS & WEDGE)	
		1	**186-3735**	2	PIN-CONNECTOR (16-GA TO 18-GA)	
		1	**186-3736**	6	SOCKET-CONNECTOR (16-GA TO 18-GA)	
E		1	**125-7874**		TUBE-HEAT SHRINK (5.72-MM DIA) (10-CM)	
		1	**155-2270**	3	KIT-CONNECTING PLUG (2-PIN)	
					(EACH PLUG KIT INCLUDES PLUG AS, WEDGE & INTERFACE SEAL)	
	17	1	*148-8315*	1	CONNECTOR AS	
		1	**2M-9780**	1	SEAL-O-RING	
		1	**6V-8642**	1	CONNECTOR	
		1	**7J-9108**	1	SEAL-O-RING	
	18	1	*148-8318*	1	CONNECTOR AS	
		1	**3K-0360**	1	SEAL-O-RING	
		1	**6V-8397**	1	SEAL-O-RING	
		1	**6V-8634**	1	CONNECTOR	
	19	1	*148-8341*	1	CONNECTOR AS	
		1	**3D-2824**	1	SEAL-O-RING	
		1	**6V-8713**	1	CONNECTOR	
		1	**7J-9108**	1	SEAL-O-RING	
	20	1	*148-8354*	1	ELBOW AS	
		1	**3K-0360**	1	SEAL-O-RING	
		1	**6V-8398**	1	SEAL-O-RING	
		1	**6V-9002**	1	ELBOW	
	21	1	*148-8364*	2	ELBOW AS	
					(EACH INCLUDES)	
		1	**3K-0360**	1	SEAL-O-RING	
		1	**6V-8398**	1	SEAL-O-RING	
		1	**6V-8625**	1	ELBOW	
	22	1	*148-8388*	1	ELBOW AS	
		1	**2M-9780**	1	SEAL-O-RING	
		1	**6V-8629**	1	ELBOW	
		1	**6V-9746**	1	SEAL-O-RING	
	23	1	*148-8393*	1	ELBOW AS	

304-6745 **LINES GP-HYDRAULIC** *(contd.)* **i03624562**

NOTE	REF NO	GRAPHIC REF	PART NUMBER	QTY	PART NAME 1 2 3 4 5 6 (PRODUCT LEVEL)	SEE PAGE
		1	**6V-9852**	1	ELBOW	
		1	**7J-9108**	1	SEAL-O-RING	
	24	1	*205-3692*	2	ELBOW AS	
					(EACH INCLUDES)	
		1	**2M-9780**	1	SEAL-O-RING	
		1	**6V-8397**	1	SEAL-O-RING	
		1	**9X-2134**	1	ELBOW	
	25	1	**4P-7581**	1	CLIP	
	26	1	**6V-8397**	1	SEAL-O-RING	
	27	1	**6V-8398**	2	SEAL-O-RING	
	28	1	**148-8327**	1	CONNECTOR AS	
		1	**3D-2824**	1	SEAL-O-RING	
		1	**6V-8637**	1	CONNECTOR	
		1	**6V-9746**	1	SEAL-O-RING	
	29	1	**7K-1181**	1	STRAP-CABLE	
	30	1	*148-8336*	1	CONNECTOR AS	
		1	**3J-1907**	1	SEAL-O-RING	
		1	**6V-8397**	1	SEAL-O-RING	
		1	**6V-8636**	1	CONNECTOR	
	31	1	*153-6248*	1	ADAPTER AS	
		1	**6V-8397**	1	SEAL-O-RING	
		1	**8T-6663**	1	ADAPTER-PORT	
I	32	1	**321-5709**	1	HOSE AS	

E-ORDER BY THE CENTIMETER
I-REFER TO HYDRAULIC INFORMATION SYSTEM

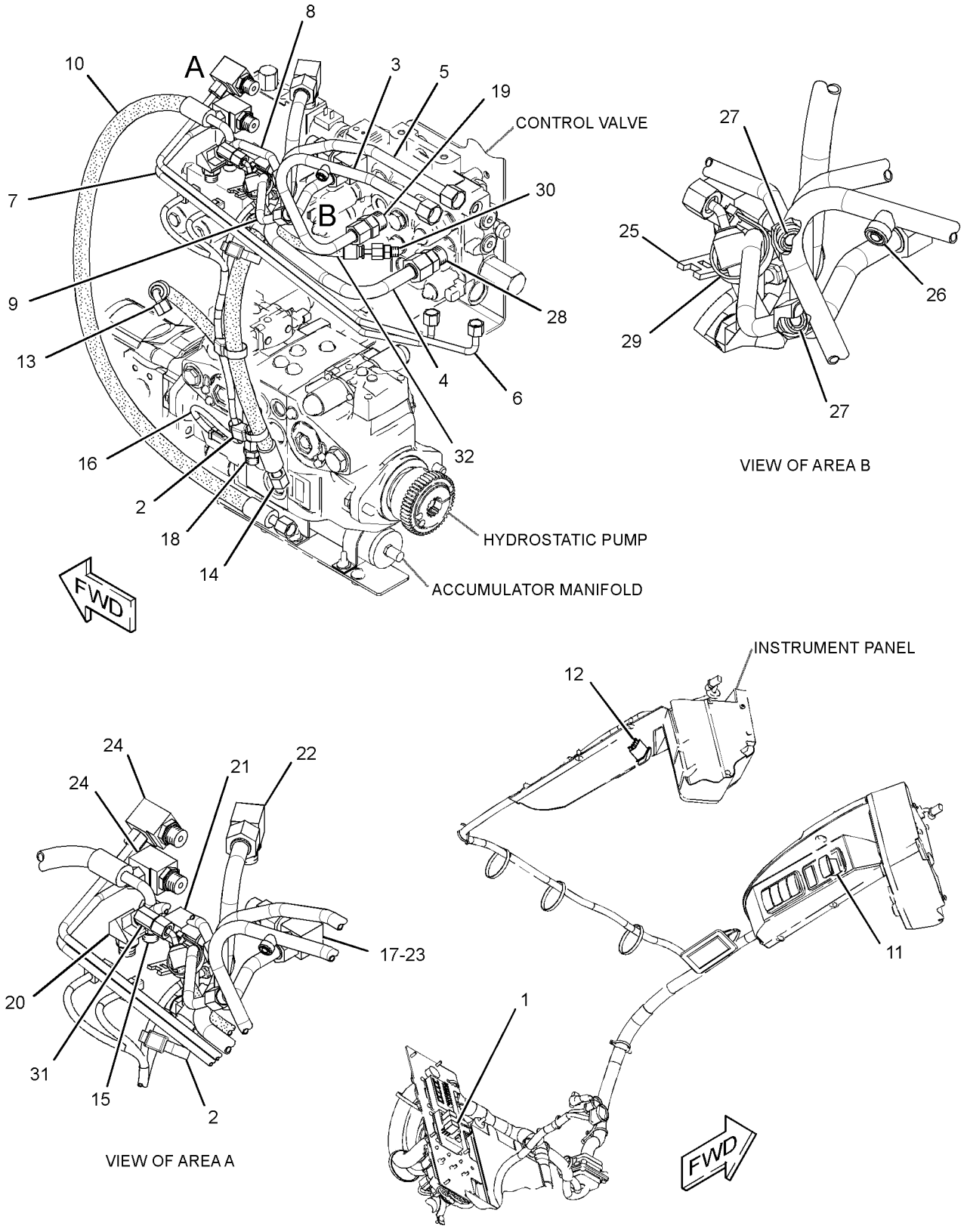

GRAPHIC #1 **<END>** g01771173

HYDRAULIC SYSTEM

258-2582 LINES GP-HYDRAULIC FAN–RADIATOR

S/N: MST1-2078

PART OF 258-3181, 258-3731 HYDRAULIC AR

AN ATTACHMENT

SMCS-5057 **i02659388**

NOTE	REF NO	GRAPHIC REF	PART NUMBER	QTY	PART NAME 1 2 3 4 5 6 (PRODUCT LEVEL)	SEE PAGE
I	1	1	**115-8161**	1	HOSE AS	
	2	1	**229-5466**	1	FITTING AS	
		1	**3J-7354**	1	SEAL-O-RING	
		1	**229-5465**	1	FITTING	
	3	1	**258-2585**	1	HOSE AS	
I	4	1	**258-2784**	1	HOSE AS	
	5	1	*148-8315*	2	CONNECTOR AS	
					(EACH INCLUDES)	
		1	**2M-9780**	1	SEAL-O-RING	
		1	**6V-8642**	1	CONNECTOR	
		1	**7J-9108**	1	SEAL-O-RING	
	6	1	*148-8316*	2	CONNECTOR AS	
					(EACH INCLUDES)	
		1	**3J-7354**	1	SEAL-O-RING	
		1	**4J-5477**	1	SEAL-O-RING	
		1	**6V-8647**	1	CONNECTOR	
	7	1	*153-6256*	1	ELBOW AS	
		1	**8C-7563**	1	ELBOW	
		1	**7J-9108**	1	SEAL-O-RING	
	8	1	**266-3316**	2	BOLT-FLANGE HEAD (M10X1.5X25-MM)	
	9	1	**3S-8665**	1	CLIP	
	10	1	**4K-8864**	2	CLIP	
	11	1	**5P-4116**	1	WASHER-HARD (8.8X20.5X2-MM THK)	
	12	1	**6V-1889**	4	CLIP	
	13	1	**8C-3451**	1	CAP-DUST	
	14	1	**8J-8197**	1	CLIP	
	15	1	**8T-4121**	3	WASHER-HARD (11X21X2.5-MM THK)	
M	16	1	**8T-4133**	1	NUT (M10X1.5-THD)	
M	17	1	**8T-4196**	2	BOLT (M10X1.5X35-MM)	
M	18	1	**8T-4189**	1	BOLT (M8X1.25X20-MM)	
M	19	1	**8T-4192**	1	BOLT (M12X1.75X25-MM)	
	20	1	**8T-4223**	1	WASHER-HARD (13.5X25.5X3-MM THK)	

I-REFER TO HYDRAULIC INFORMATION SYSTEM
M-METRIC PART

258-2582 **LINES GP-HYDRAULIC FAN** *(contd.)* **i02659388**

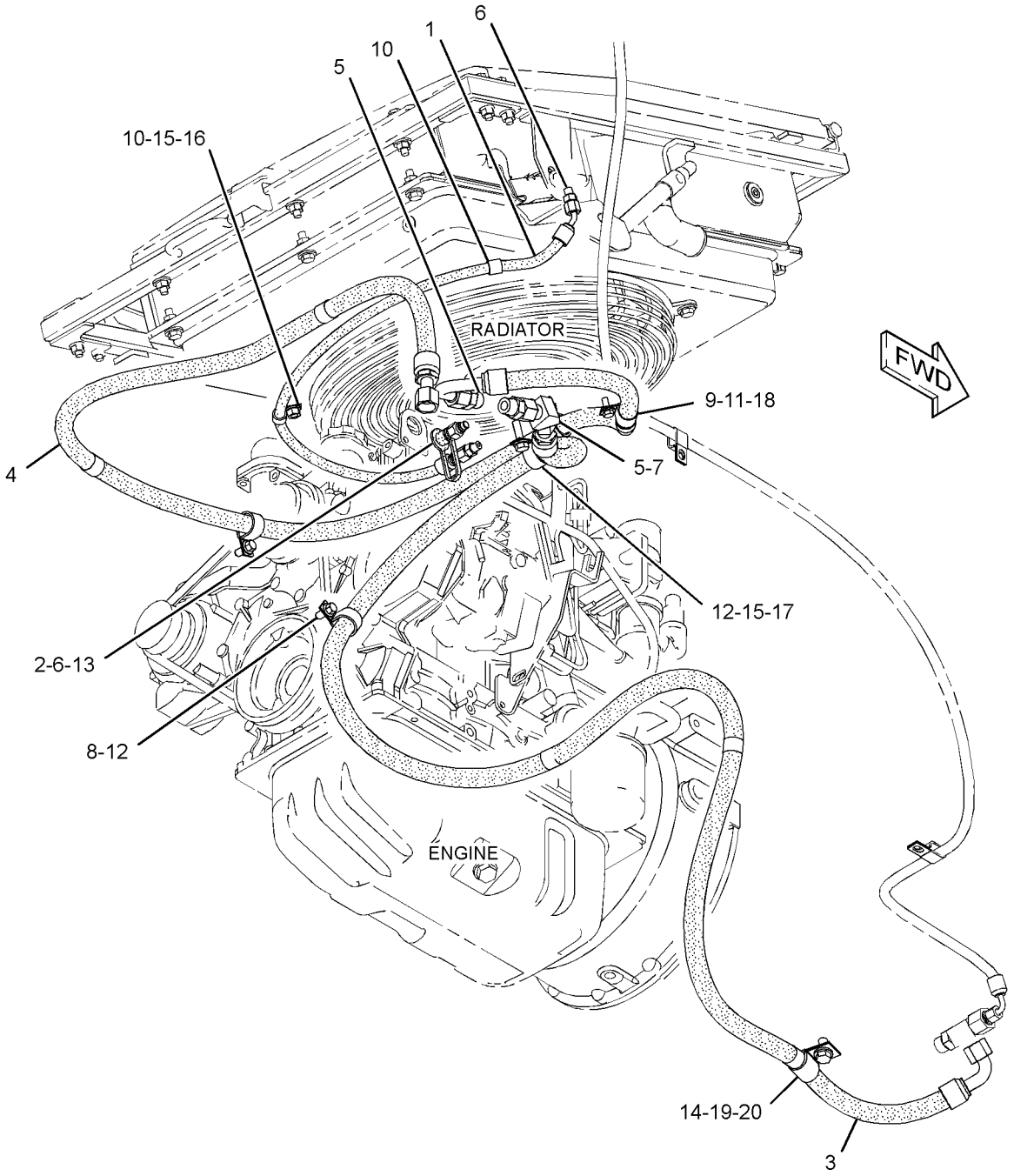

GRAPHIC #1 **<END>** g01337527

HYDRAULIC SYSTEM

258-2582 LINES GP-HYDRAULIC FAN–RADIATOR

S/N: MST2079-UP
PART OF 258-3181, 258-3731 HYDRAULIC AR
AN ATTACHMENT

SMCS-5057 **i03630975**

NOTE	REF NO	GRAPHIC REF	PART NUMBER	QTY	PART NAME 1 2 3 4 5 6 (PRODUCT LEVEL)	SEE PAGE
I	1	1	**115-8161**	1	HOSE AS	
	2	1	*164-5590*	1	VALVE AS-FLUID SAMPLING	
		1	**3J-7354**	1	SEAL-O-RING	
		1	**8C-3446**	1	VALVE-FLUID SAMPLING	
	3	1	**258-2585**	1	HOSE AS	
I	4	1	**258-2784**	1	HOSE AS	
	5	1	*148-8315*	2	CONNECTOR AS	
					(EACH INCLUDES)	
		1	**2M-9780**	1	SEAL-O-RING	
		1	**6V-8642**	1	CONNECTOR	
		1	**7J-9108**	1	SEAL-O-RING	
	6	1	*148-8316*	2	CONNECTOR AS	
					(EACH INCLUDES)	
		1	**3J-7354**	1	SEAL-O-RING	
		1	**4J-5477**	1	SEAL-O-RING	
		1	**6V-8647**	1	CONNECTOR	
	7	1	*153-6256*	1	ELBOW AS	
		1	**8C-7563**	1	ELBOW	
		1	**7J-9108**	1	SEAL-O-RING	
	8	1	**266-3316**	2	BOLT-FLANGE HEAD (M10X1.5X25-MM)	
	9	1	**3S-8665**	1	CLIP	
	10	1	**4K-8864**	2	CLIP	
	11	1	**5P-4116**	1	WASHER-HARD (8.8X20.5X2-MM THK)	
	12	1	**6V-1889**	4	CLIP	
	13	1	**8C-3451**	1	CAP-DUST (HYDRAULIC OIL)	
C	14	1	**6D-4636**	1	CLIP	
	15	1	**8T-4121**	3	WASHER-HARD (11X21X2.5-MM THK)	
M	16	1	**8T-4133**	1	NUT (M10X1.5-THD)	
M	17	1	**8T-4196**	2	BOLT (M10X1.5X35-MM)	
M	18	1	**8T-4189**	1	BOLT (M8X1.25X20-MM)	
CM	19	1	**8T-4139**	1	BOLT (M12X1.75X30-MM)	
	20	1	**8T-4223**	1	WASHER-HARD (13.5X25.5X3-MM THK)	

C-CHANGE FROM PREVIOUS TYPE
I-REFER TO HYDRAULIC INFORMATION SYSTEM
M-METRIC PART

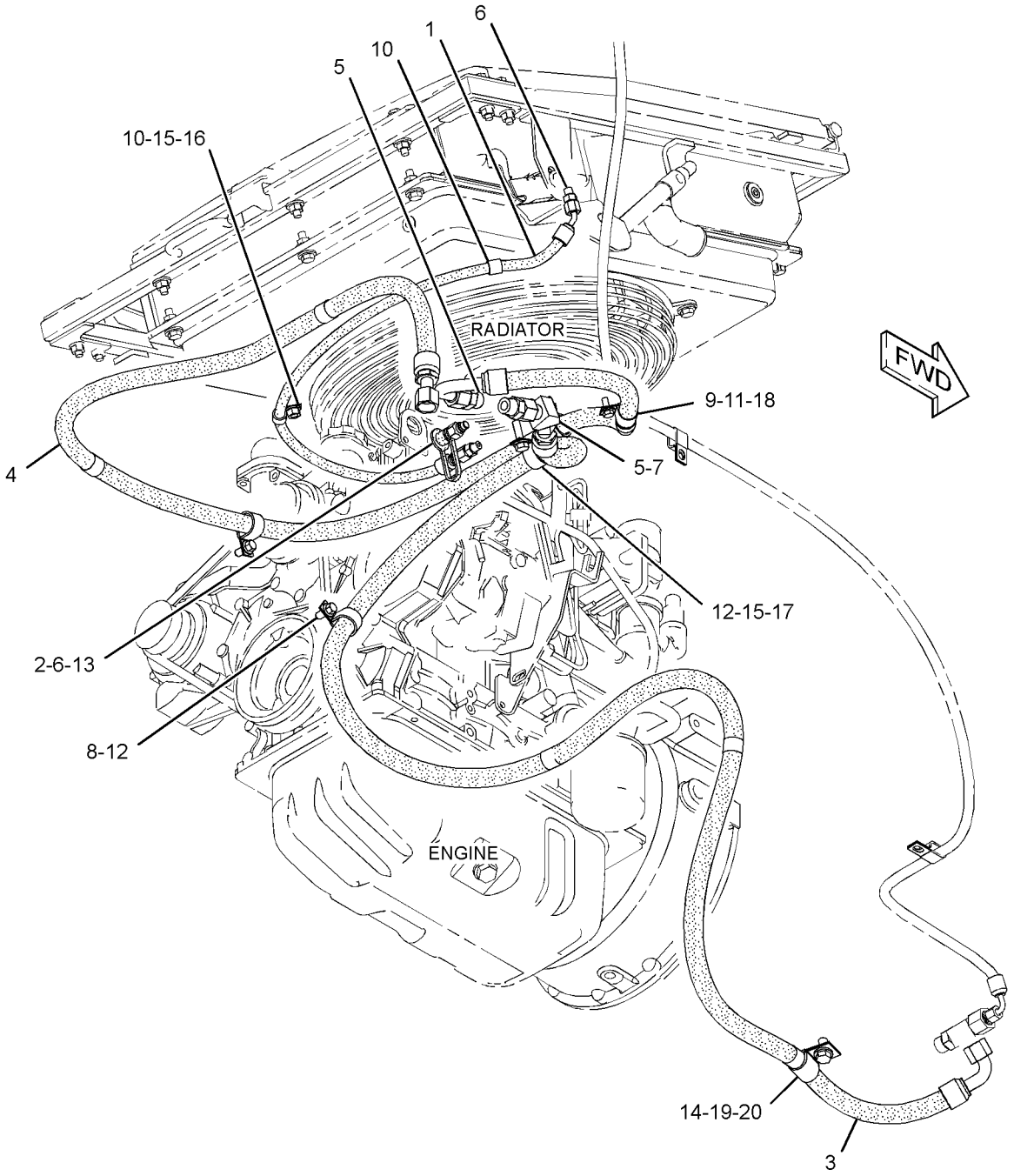

GRAPHIC #1 **<END>** g01337527

HYDRAULIC SYSTEM

258-2786 LINES GP-HYDRAULIC FAN

S/N: MST1-2078
PART OF 258-3183, 258-3734 HYDRAULIC AR
AN ATTACHMENT

SMCS-5057 **i02659369**

NOTE	REF NO	GRAPHIC REF	PART NUMBER	QTY	PART NAME 1 2 3 4 5 6 (PRODUCT LEVEL)	SEE PAGE
I	1	1	**115-8161**	1	HOSE AS	
	2	1	**229-5466**	1	FITTING AS	
		1	**3J-7354**	2	SEAL-O-RING	
		1	**229-5465**	2	FITTING	
I	3	1	**258-2689**	1	HOSE AS	
I	4	1	**258-2784**	1	HOSE AS	
	5	1	*148-8315*	2	CONNECTOR AS	
					(EACH INCLUDES)	
		1	**2M-9780**	1	SEAL-O-RING	
		1	**6V-8642**	1	CONNECTOR	
		1	**7J-9108**	1	SEAL-O-RING	
	6	1	*148-8316*	2	CONNECTOR AS	
					(EACH INCLUDES)	
		1	**3J-7354**	1	SEAL-O-RING	
		1	**4J-5477**	1	SEAL-O-RING	
		1	**6V-8647**	1	CONNECTOR	
	7	1	*153-6256*	1	ELBOW AS	
		1	**7J-9108**	1	SEAL-O-RING	
		1	**8C-7563**	1	ELBOW	
	8	1	**266-3316**	2	BOLT-FLANGE HEAD (M10X1.5X25-MM)	
	9	1	**3S-8665**	1	CLIP	
	10	1	**4K-8864**	2	CLIP	
	11	1	**5P-4116**	1	WASHER-HARD (8.8X20.5X2-MM THK)	
	12	1	**6V-1889**	4	CLIP	
	13	1	**8C-3451**	1	CAP-DUST	
	14	1	**8J-8197**	1	CLIP	
	15	1	**8T-4121**	3	WASHER-HARD (11X21X2.5-MM THK)	
M	16	1	**8T-4133**	1	NUT (M10X1.5-THD)	
M	17	1	**8T-4196**	2	BOLT (M10X1.5X35-MM)	
M	18	1	**8T-4189**	1	BOLT (M8X1.25X20-MM)	
M	19	1	**8T-4192**	1	BOLT (M12X1.75X25-MM)	
	20	1	**8T-4223**	1	WASHER-HARD (13.5X25.5X3-MM THK)	

I-REFER TO HYDRAULIC INFORMATION SYSTEM
M-METRIC PART

258-2786 **LINES GP-HYDRAULIC FAN** *(contd.)* **i02659369**

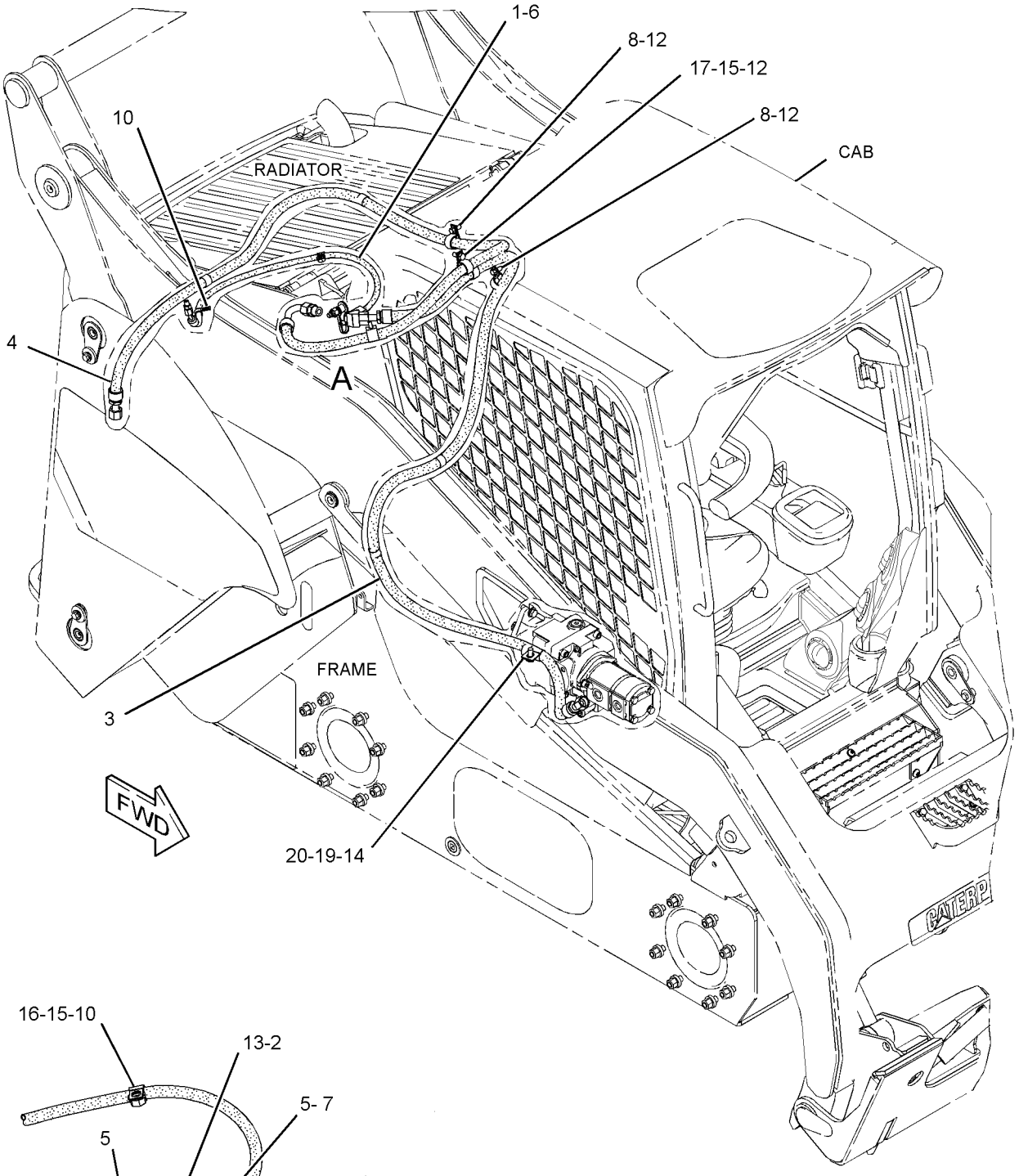

VIEW OF AREA A

GRAPHIC #1 **<END>** g01336901

HYDRAULIC SYSTEM

258-2786 LINES GP-HYDRAULIC FAN

S/N: MST2079-UP
PART OF 258-3183, 258-3734 HYDRAULIC AR
AN ATTACHMENT

SMCS-5057 **i03630974**

NOTE	REF NO	GRAPHIC REF	PART NUMBER	QTY	PART NAME 1 2 3 4 5 6 (PRODUCT LEVEL)	SEE PAGE
I	1	1	**115-8161**	1	HOSE AS	
	2	1	*164-5590*	1	VALVE AS-FLUID SAMPLING	
		1	**3J-7354**	1	SEAL-O-RING	
		1	**8C-3446**	1	VALVE-FLUID SAMPLING	
I	3	1	**258-2689**	1	HOSE AS	
I	4	1	**258-2784**	1	HOSE AS	
	5	1	*148-8315*	2	CONNECTOR AS	
					(EACH INCLUDES)	
		1	**2M-9780**	1	SEAL-O-RING	
		1	**6V-8642**	1	CONNECTOR	
		1	**7J-9108**	1	SEAL-O-RING	
	6	1	*148-8316*	2	CONNECTOR AS	
					(EACH INCLUDES)	
		1	**3J-7354**	1	SEAL-O-RING	
		1	**4J-5477**	1	SEAL-O-RING	
		1	**6V-8647**	1	CONNECTOR	
	7	1	*153-6256*	1	ELBOW AS	
		1	**7J-9108**	1	SEAL-O-RING	
		1	**8C-7563**	1	ELBOW	
	8	1	**266-3316**	2	BOLT-FLANGE HEAD (M10X1.5X25-MM)	
	9	1	**3S-8665**	1	CLIP	
	10	1	**4K-8864**	2	CLIP	
	11	1	**5P-4116**	1	WASHER-HARD (8.8X20.5X2-MM THK)	
	12	1	**6V-1889**	4	CLIP	
	13	1	**8C-3451**	1	CAP-DUST (HYDRAULIC OIL)	
C	14	1	**6D-4636**	1	CLIP	
	15	1	**8T-4121**	3	WASHER-HARD (11X21X2.5-MM THK)	
M	16	1	**8T-4133**	1	NUT (M10X1.5-THD)	
M	17	1	**8T-4196**	2	BOLT (M10X1.5X35-MM)	
M	18	1	**8T-4189**	1	BOLT (M8X1.25X20-MM)	
CM	19	1	**8T-4139**	1	BOLT (M12X1.75X30-MM)	
	20	1	**8T-4223**	1	WASHER-HARD (13.5X25.5X3-MM THK)	

C-CHANGE FROM PREVIOUS TYPE
I-REFER TO HYDRAULIC INFORMATION SYSTEM
M-METRIC PART

258-2786 **LINES GP-HYDRAULIC FAN** *(contd.)* **i03630974**

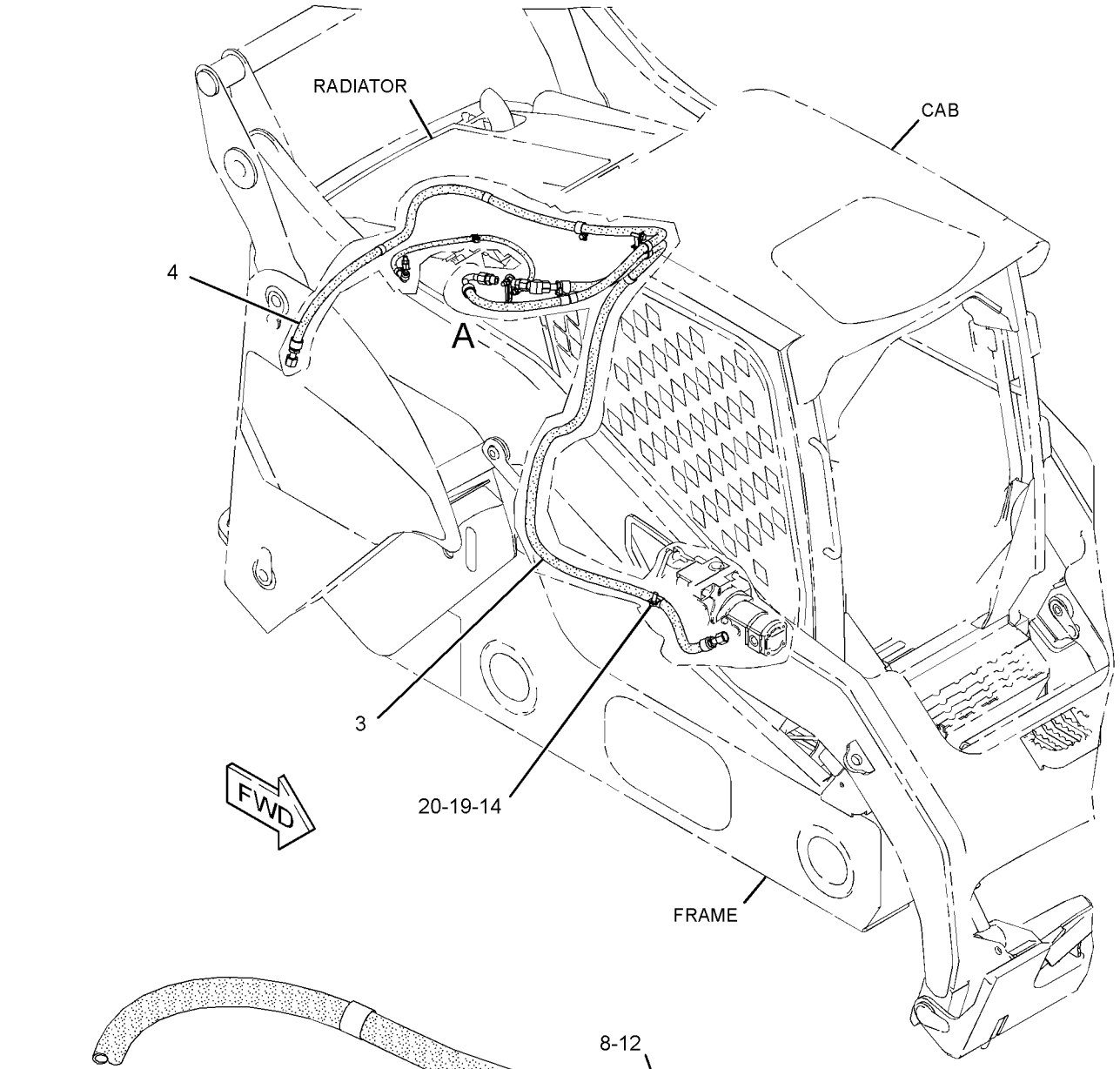

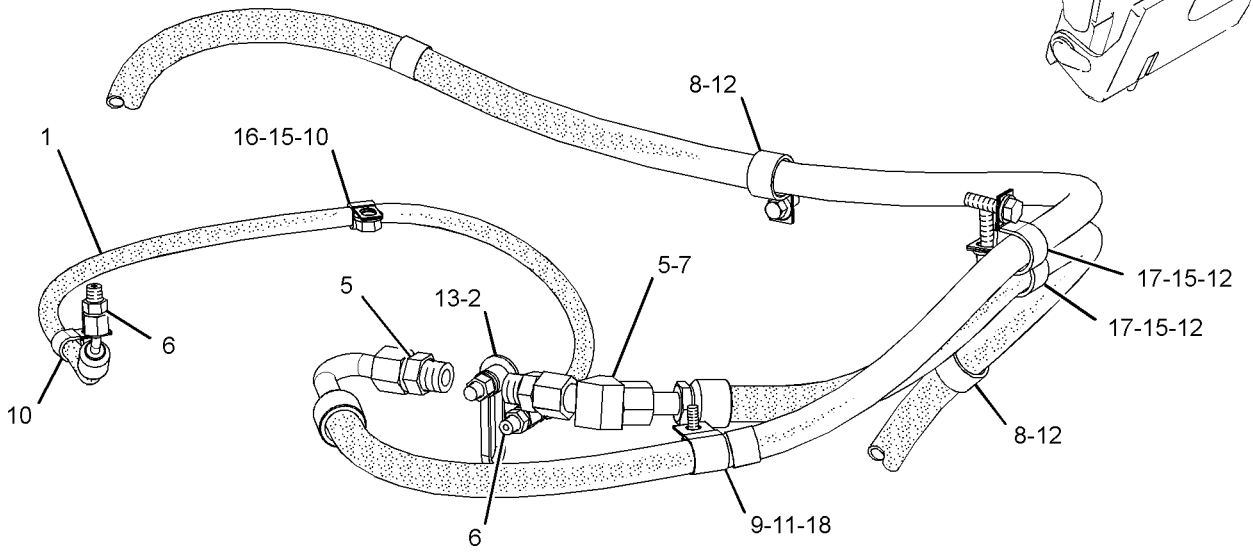

VIEW OF AREA A

GRAPHIC #1 **<END>** g01948500

258-2780 LINES GP-HYDRAULIC OIL COOLER

S/N: MST1-UP

PART OF 258-2601 HYDRAULIC AR

SMCS-5057 **i03647021**

NOTE	REF NO	GRAPHIC REF	PART NUMBER	QTY	PART NAME 1 2 3 4 5 6 (PRODUCT LEVEL)	SEE PAGE
	1	1	**6R-3320**	2	COVER	
	2	1	**258-2781**	1	TUBE AS	
I	3	1	**258-2782**	2	HOSE AS	
	4	1	**258-3620**	1	BRACKET AS	
	5	1	**258-3845**	1	BRACKET AS	
	6	1	**258-3850**	4	CLAMP-HALF	
	7	1	*148-8347*	1	ELBOW AS	
		1	**3D-2824**	1	SEAL-O-RING	
		1	**6V-9007**	1	ELBOW	
		1	**6V-9746**	1	SEAL-O-RING	
	8	1	*148-8411*	1	PLUG AS	
		1	**3K-0360**	1	SEAL-O-RING	
		1	**9S-4185**	1	PLUG-O-RING	
	9	1	*171-6725*	1	ELBOW AS	
		1	**3D-2824**	1	SEAL-O-RING	
		1	**8T-6451**	1	ELBOW	
	10	1	**266-3316**	2	BOLT-FLANGE HEAD (M10X1.5X25-MM)	
	11	1	**5K-9660**	2	CLIP	
	12	1	**6V-9746**	2	SEAL-O-RING	
	13	1	**8T-4121**	5	WASHER-HARD (11X21X2.5-MM THK)	
M	14	1	**8T-4136**	4	BOLT (M10X1.5X25-MM)	
M	15	1	**8T-6466**	1	BOLT (M10X1.5X60-MM)	
M	16	1	**303-8205**	2	BOLT (M8X1.25X60-MM)	

I-REFER TO HYDRAULIC INFORMATION SYSTEM
M-METRIC PART

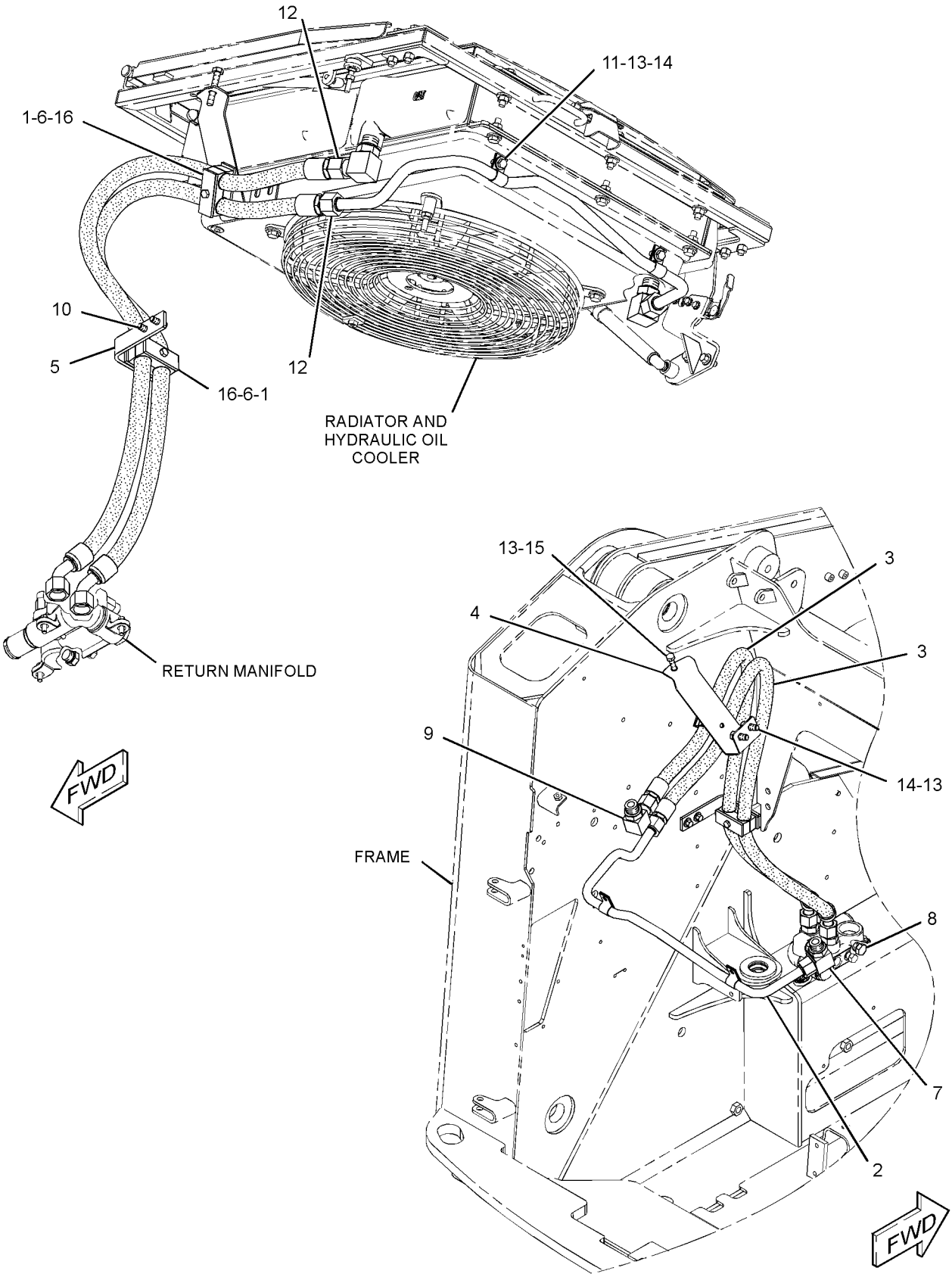

GRAPHIC #1 **<END>** g01329836

HYDRAULIC SYSTEM

258-3595 LINES GP-LIFT CYLINDER

S/N: MST1-UP

PART OF 258-2601 HYDRAULIC AR

SMCS-5057, 5102 **i02659390**

NOTE	REF NO	GRAPHIC REF	PART NUMBER	QTY	PART NAME 1 2 3 4 5 6 (PRODUCT LEVEL)	SEE PAGE
	1	1	**6V-3582**	2	CLAMP-HOSE	
	2	1	**9R-1005**	2	CLIP (SLOT)	
	3	1	**9R-7802**	2	CLIP (SLOT)	
	4	1	**9R-7803**	2	CLIP (TAB)	
	5	1	**142-8997**	2	BLOCK	
I	6	1	**258-2939**	4	HOSE AS	
	7	1	**258-2964**	1	TUBE AS	
	8	1	**258-2965**	1	TUBE AS	
	9	1	**258-3525**	1	TUBE AS	
	10	1	**258-3526**	1	TUBE AS	
	11	1	**6V-8398**	6	SEAL-O-RING	
	12	1	**7J-9108**	6	SEAL-O-RING	
	13	1	**8T-4121**	2	WASHER-HARD (11X21X2.5-MM THK)	
M	14	1	**8T-4136**	2	BOLT (M10X1.5X25-MM)	
	15	1	**7K-1181**	1	STRAP-CABLE	

I-REFER TO HYDRAULIC INFORMATION SYSTEM
M-METRIC PART

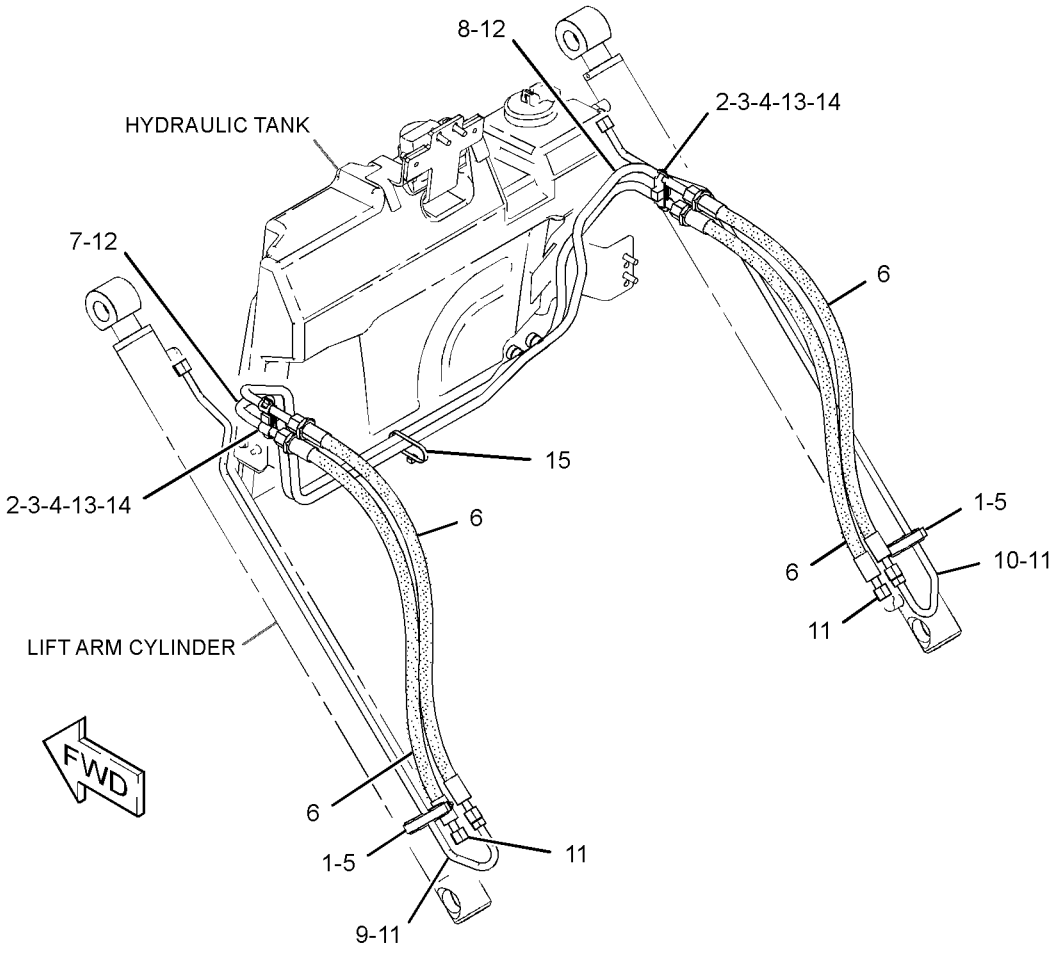

GRAPHIC #1 **<END>** g01337519

HYDRAULIC SYSTEM

258-3393 LINES GP-LOWERING CONTROL—MANUAL

S/N: MST1-UP

PART OF 258-2601 HYDRAULIC AR

SMCS-5057, 5147, 5154 **i02879514**

NOTE	REF NO	GRAPHIC REF	PART NUMBER	QTY	PART NAME 1 2 3 4 5 6 (PRODUCT LEVEL)	SEE PAGE
	1	1	**7K-1181**	2	STRAP-CABLE (LOWERING CONTROL)	
Y	2	1	**112-1817**	1	VALVE GP-MANUAL (LOWERING CONTROL)	447
	3	1	**178-3620**	1	STRAP-DUAL CLAMP	
	5	1	**258-3501**	1	BRACKET AS	
	6	1	**258-3507**	1	TUBE AS	
	8	1	**269-9404**	1	BRACKET	
	9	1	**270-0216**	1	BRACKET	
	10	1	**289-0843**	1	TUBE AS	
	11	1	*148-8378*	1	ELBOW AS	
		1	**3J-1907**	1	SEAL-O-RING	
		1	**6V-8397**	1	SEAL-O-RING	
		1	**6V-8724**	1	ELBOW	
	12	1	*150-4043*	1	CONNECTOR AS	
		1	**3J-1907**	1	SEAL-O-RING	
		1	**6V-8398**	1	SEAL-O-RING	
		1	**6V-9873**	1	CONNECTOR	
M	13	1	**266-3315**	5	BOLT-FLANGE HEAD (M8X1.25X25.5-MM)	
	14	1	**4B-0418**	1	CLIP	
	15	1	**4B-4274**	1	WASHER (5.5X13X1.2-MM THK)	
	17	1	**6V-8397**	2	SEAL-O-RING	
	18	1	**6V-8398**	3	SEAL-O-RING	
M	19	1	**6V-9673**	1	SCREW-MACHINE (M5X0.8X12-MM)	
	20	1	**8M-4791**	2	WASHER-HARD (13.5X27X3-MM THK)	
M	21	1	**8T-0337**	4	SCREW-MACHINE (M4X0.7X12-MM)	
	22	1	**9X-1481**	1	WASHER (13X25.4X1.6-MM THK)	
Y	23	1	**298-7198**	1	CABLE GP-CONTROL (MANUAL LOWERING)	658

M-METRIC PART
Y-SEPARATE ILLUSTRATION

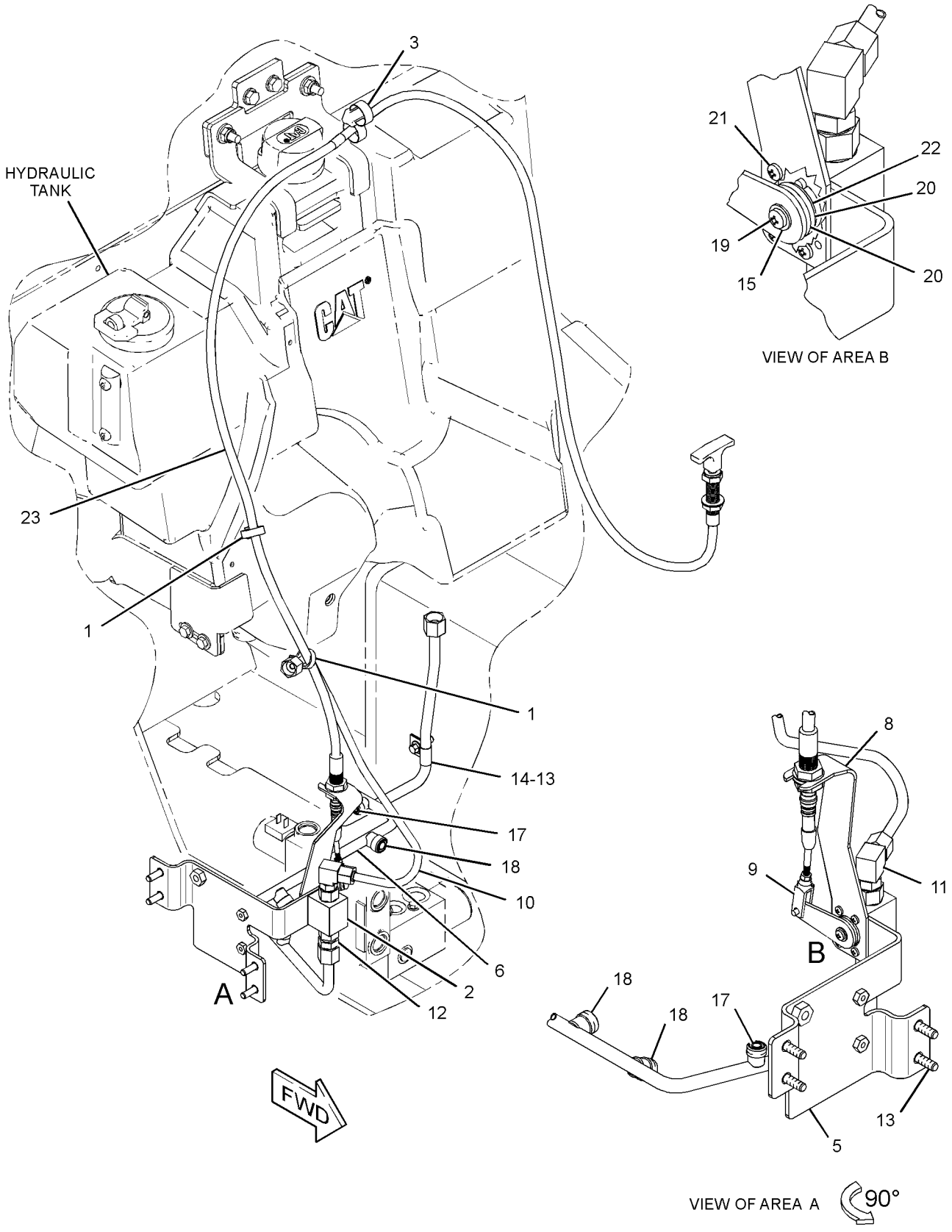

GRAPHIC #1 **<END>** g01454033

HYDRAULIC SYSTEM

258-3237 LINES GP-PUMP

S/N: MST1-UP
PART OF 258-3181, 258-3731 HYDRAULIC AR
AN ATTACHMENT
TYPE 1

SMCS-5057 **i03635745**

NOTE	REF NO	GRAPHIC REF	PART NUMBER	QTY	PART NAME 1 2 3 4 5 6 (PRODUCT LEVEL)	SEE PAGE
	1	1	**2S-3440**	1	CLAMP-HOSE	
	2	1	**3J-1907**	1	SEAL-O-RING	
	3	1	**5P-2230**	4	CLAMP-HOSE	
	4	1	**5P-4868**	1	CLAMP-HOSE	
	5	1	**6V-0852**	3	CAP-DUST (FUEL QUICK DISCONNECT)	
	6	1	**9U-6994**	1	FITTING GP (RETURN MANIFOLD)	
		1	**5P-4362**	1	CONNECTOR	
		1	**7M-8485**	1	SEAL-O-RING	
	7	1	*148-8362*	1	ELBOW AS	
		1	**3D-2824**	1	SEAL-O-RING	
		1	**5K-9090**	1	SEAL-O-RING	
		1	**8T-6684**	1	ELBOW	
	8	1	**9U-7000**	1	FITTING GP-HYDRAULIC	
		1	**2S-4078**	1	SEAL-O-RING	
		1	**5P-7506**	1	ELBOW	
	9	1	**9S-4191**	1	PLUG-O-RING	
	10	1	*241-6215*	1	ELBOW AS	
		1	**3J-1907**	1	SEAL-O-RING	
		1	**6V-8076**	1	ELBOW	
	11	1	**193-8308**	1	ADAPTER	
	12	1	**258-3870**	1	HOSE	
I	13	1	**258-3871**	1	HOSE AS	
	14	1	**258-3874**	1	HOSE	
	15	1	**258-3882**	1	HOSE	
	16	1	**305-2893**	1	HOSE AS	
	17	1	**292-2440**	1	FITTING GP-HYDRAULIC	
		1	**6V-9746**	1	SEAL-O-RING	
	18	1	*150-4049*	1	ELBOW AS	
		1	**6V-9746**	1	SEAL-O-RING	
		1	**7M-8485**	1	SEAL-O-RING	
		1	**8T-4149**	1	ELBOW	
	19	1	*164-5567*	2	COUPLER AS-QUICK DISCONNECT (EACH INCLUDES)	
		1	**214-7568**	1	SEAL-O-RING	
		1	**6V-3965**	1	FITTING (QUICK DISCONNECT)	
	20	1	**1P-4578**	2	FLANGE-HALF	
	21	1	**4J-0522**	1	SEAL-O-RING	
	22	1	**4J-5267**	1	SEAL-O-RING	
	23	1	**8C-3205**	2	FLANGE-HALF	
	24	1	**8T-4121**	8	WASHER-HARD (11X21X2.5-MM THK)	
M	25	1	**8T-4196**	8	BOLT (M10X1.5X35-MM)	
	26	1	**110-6349**	1	FITTING AS (QUICK DISCONNECT)	
	27	1	*297-7942*	1	ELBOW AS	
		1	**3J-7354**	1	SEAL-O-RING	
		1	**297-7941**	1	ELBOW	

I-REFER TO HYDRAULIC INFORMATION SYSTEM
M-METRIC PART

258-3237 **LINES GP-PUMP** *(contd.)* **i03635745**

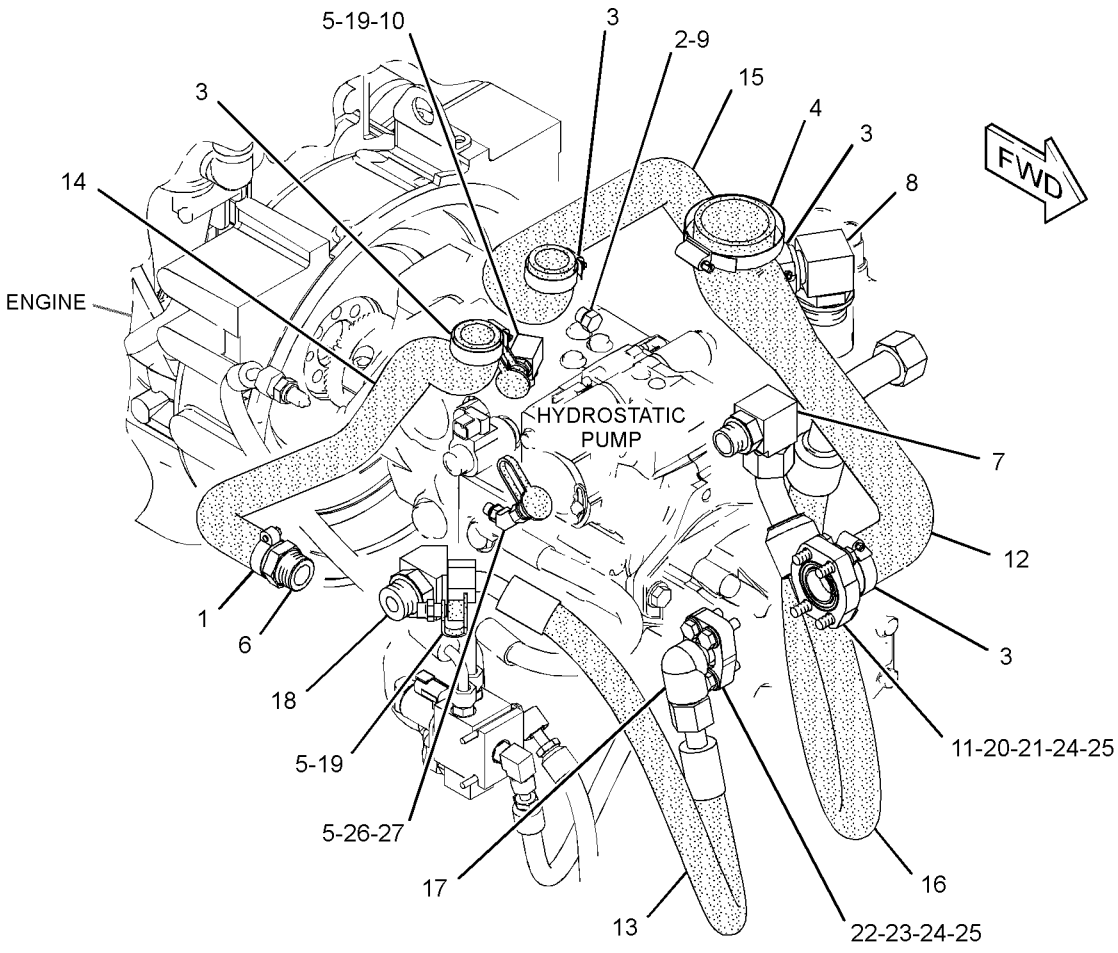

GRAPHIC #1 **<END>** g01454520

HYDRAULIC SYSTEM

258-3237 LINES GP-PUMP

S/N: MST1-UP
PART OF 258-3181, 258-3731 HYDRAULIC AR
AN ATTACHMENT
TYPE 2

SMCS-5057 **i03682321**

NOTE	REF NO	GRAPHIC REF	PART NUMBER	QTY	PART NAME 1 2 3 4 5 6 (PRODUCT LEVEL)	SEE PAGE
	1	1	**2S-3440**	1	CLAMP-HOSE	
	2	1	**3J-1907**	1	SEAL-O-RING	
	3	1	**5P-2230**	4	CLAMP-HOSE	
	4	1	**5P-4868**	1	CLAMP-HOSE	
	5	1	**6V-0852**	2	CAP-DUST	
	6	1	**9U-6994**	1	FITTING GP (RETURN MANIFOLD)	
		1	**5P-4362**	1	CONNECTOR	
		1	**7M-8485**	1	SEAL-O-RING	
C	7	1	**9U-6998**	1	FITTING GP (PUMP CASE DRAIN)	
		1	**3D-2824**	1	SEAL-O-RING	
	8	1	**9U-7000**	1	FITTING GP-HYDRAULIC	
		1	**2S-4078**	1	SEAL-O-RING	
		1	**5P-7506**	1	ELBOW	
	9	1	**9S-4191**	1	PLUG-O-RING	
	10	1	*241-6215*	1	ELBOW AS	
		1	**3J-1907**	1	SEAL-O-RING	
		1	**6V-8076**	1	ELBOW	
	11	1	**193-8308**	1	ADAPTER	
	12	1	**258-3870**	1	HOSE	
I	13	1	**258-3871**	1	HOSE AS	
	14	1	**258-3874**	1	HOSE	
	15	1	**258-3882**	1	HOSE	
C	16	1	**328-2044**	1	HOSE	
	17	1	**292-2440**	1	FITTING GP-HYDRAULIC	
		1	**6V-9746**	1	SEAL-O-RING	
	18	1	*150-4049*	1	ELBOW AS	
		1	**6V-9746**	1	SEAL-O-RING	
		1	**7M-8485**	1	SEAL-O-RING	
		1	**8T-4149**	1	ELBOW	
	19	1	*164-5567*	2	COUPLER AS-QUICK DISCONNECT (EACH INCLUDES)	
		1	**214-7568**	1	SEAL-O-RING	
		1	**6V-3965**	1	FITTING (QUICK DISCONNECT)	
	20	1	**1P-4578**	2	FLANGE-HALF	
	21	1	**4J-0522**	1	SEAL-O-RING	
	22	1	**4J-5267**	1	SEAL-O-RING	
	23	1	**8C-3205**	2	FLANGE-HALF	
	24	1	**8T-4121**	8	WASHER-HARD (11X21X2.5-MM THK)	
M	25	1	**8T-4196**	8	BOLT (M10X1.5X35-MM)	
C	28	1	**280-8911**	2	CLAMP-BAND	

C-CHANGE FROM PREVIOUS TYPE
I-REFER TO HYDRAULIC INFORMATION SYSTEM
M-METRIC PART

258-3237 **LINES GP-PUMP** *(contd.)* **i03682321**

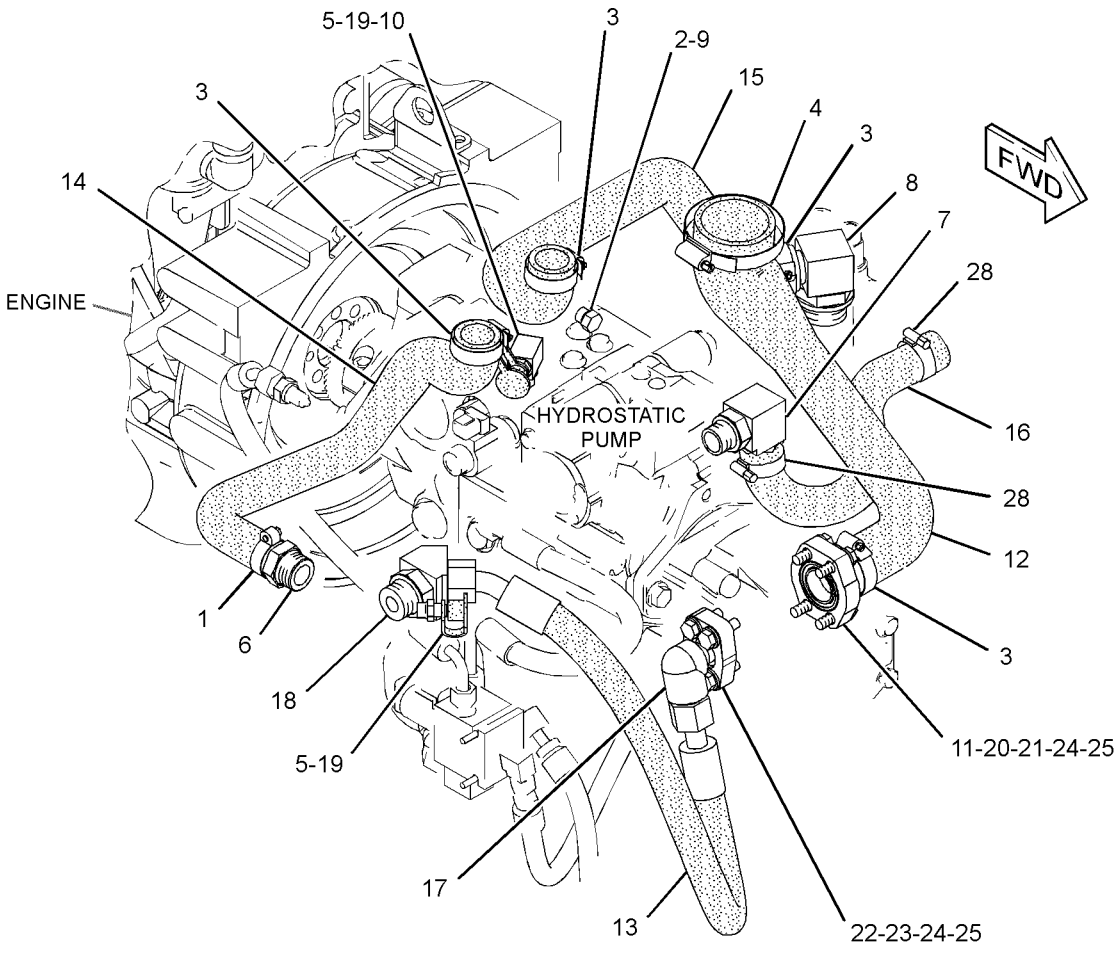

GRAPHIC #1 **<END>** g02003895

HYDRAULIC SYSTEM

258-3238 LINES GP-PUMP—HIGH FLOW

S/N: MST1-199
PART OF 258-3183, 258-3734 HYDRAULIC AR
AN ATTACHMENT

SMCS-5057 **i03647024**

NOTE	REF NO	GRAPHIC REF	PART NUMBER	QTY	PART NAME 1 2 3 4 5 6 (PRODUCT LEVEL)	SEE PAGE
	1	1	**2S-3440**	1	CLAMP-HOSE	
	2	1	**5P-0597**	1	CLAMP-HOSE	
	3	1	**5P-2230**	3	CLAMP-HOSE	
	4	1	**5P-4868**	1	CLAMP-HOSE	
	5	1	**6V-0852**	4	CAP-DUST	
	6	1	**9U-6994**	1	FITTING GP (RETURN MANIFOLD)	
		1	**5P-4362**	1	CONNECTOR	
		1	**7M-8485**	1	SEAL-O-RING	
	7	1	*148-8362*	1	ELBOW AS	
		1	**3D-2824**	1	SEAL-O-RING	
		1	**5K-9090**	1	SEAL-O-RING	
		1	**8T-6684**	1	ELBOW	
	8	1	**9U-7000**	1	FITTING GP-HYDRAULIC	
		1	**2S-4078**	1	SEAL-O-RING	
		1	**5P-7506**	1	ELBOW	
	9	1	**161-3357**	2	SPACER (12X20X10-MM THK)	
	10	1	**110-6349**	2	FITTING AS (QUICK DISCONNECT) (MALE)	
	11	1	**204-2281**	1	STRAP-TIE	
Y	12	1	**211-3014**	1	VALVE GP-SHUTTLE (HIGH FLOW)	449
	13	1	**258-3880**	1	HOSE	
I	14	1	**258-3881**	1	HOSE AS	
	15	1	**258-3882**	1	HOSE	
I	16	1	**258-3883**	1	HOSE AS	
	17	1	**258-3889**	1	HOSE	
	18	1	**304-5080**	1	TUBE AS	
	19	1	**258-3899**	1	ADAPTER AS	
I	20	1	**258-3967**	1	HOSE AS	
	21	1	**305-2893**	1	HOSE AS	
	22	1	*148-8361*	1	ELBOW AS	
		1	**3J-7354**	1	SEAL-O-RING	
		1	**6V-8397**	1	SEAL-O-RING	
		1	**6V-9200**	1	ELBOW	
	23	1	*297-7942*	1	ELBOW AS	
		1	**3J-7354**	1	SEAL-O-RING	
		1	**297-7941**	1	ELBOW	
	24	1	**303-5020**	1	ELBOW	
	25	1	*148-8368*	2	ELBOW AS	
					(EACH INCLUDES)	
		1	**3J-1907**	1	SEAL-O-RING	
		1	**4J-5477**	1	SEAL-O-RING	
		1	**6V-8627**	1	ELBOW	
	26	1	*164-5567*	2	COUPLER AS-QUICK DISCONNECT	
					(EACH INCLUDES)	
		1	**214-7568**	1	SEAL-O-RING	
		1	**6V-3965**	1	FITTING (QUICK DISCONNECT)	
	27	1	**286-4867**	1	HOSE AS	
	28	1	**1P-3703**	1	SEAL-RECTANGULAR	
	29	1	**1P-4582**	2	FLANGE-HALF	
	30	1	**4J-0527**	1	SEAL-O-RING	
M	31	1	**5C-7261**	2	NUT (M8X1.25-THD)	
	32	1	**5K-9090**	3	SEAL-O-RING	
	33	1	**5P-4116**	2	WASHER-HARD (8.8X20.5X2-MM THK)	
	34	1	**6V-0400**	2	FLANGE-HALF	
	35	1	**6V-7359**	3	GROMMET	
	36	1	**7M-8485**	1	SEAL-O-RING	

258-3238 **LINES GP-PUMP** *(contd.)* **i03647024**

NOTE	REF NO	GRAPHIC REF	PART NUMBER	QTY	PART NAME 1 2 3 4 5 6 (PRODUCT LEVEL)	SEE PAGE
	37	1	**5P-7464**	2	CLIP (SLOT)	
	38	1	**5P-7465**	2	CLIP (TAB)	
M	39	1	**8T-4184**	8	BOLT (M12X1.75X45-MM)	
	40	1	**8T-4223**	8	WASHER-HARD (13.5X25.5X3-MM THK)	
	41	1	*241-6215*	1	ELBOW AS	
		1	**3J-1907**	1	SEAL-O-RING	
		1	**6V-8076**	1	ELBOW	

I-REFER TO HYDRAULIC INFORMATION SYSTEM
M-METRIC PART
Y-SEPARATE ILLUSTRATION

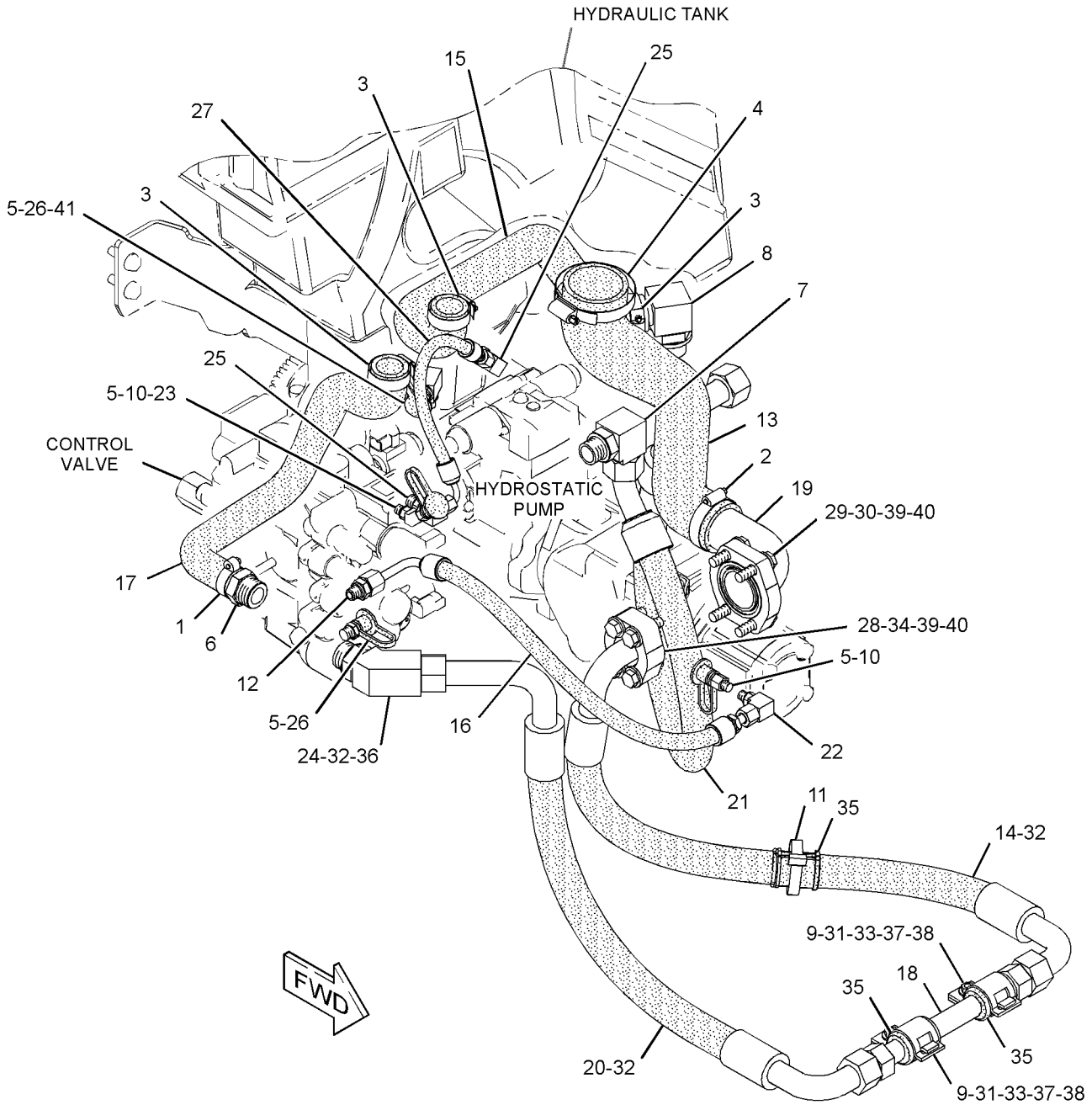

GRAPHIC #1 **<END>** g01352748

HYDRAULIC SYSTEM

258-3238 LINES GP-PUMP—HIGH FLOW

S/N: MST200-UP
PART OF 258-3183, 258-3734 HYDRAULIC AR
AN ATTACHMENT
TYPE 1

SMCS-5057 **i03648324**

NOTE	REF NO	GRAPHIC REF	PART NUMBER	QTY	PART NAME 1 2 3 4 5 6 (PRODUCT LEVEL)	SEE PAGE
	1	1	**2S-3440**	1	CLAMP-HOSE	
	2	1	**5P-0597**	1	CLAMP-HOSE	
	3	1	**5P-2230**	3	CLAMP-HOSE	
	4	1	**5P-4868**	1	CLAMP-HOSE	
	5	1	**6V-0852**	4	CAP-DUST	
	6	1	**9U-6994**	1	FITTING GP (RETURN MANIFOLD)	
		1	**5P-4362**	1	CONNECTOR	
		1	**7M-8485**	1	SEAL-O-RING	
	7	1	*148-8362*	1	ELBOW AS	
		1	**3D-2824**	1	SEAL-O-RING	
		1	**5K-9090**	1	SEAL-O-RING	
		1	**8T-6684**	1	ELBOW	
	8	1	**9U-7000**	1	FITTING GP-HYDRAULIC	
		1	**2S-4078**	1	SEAL-O-RING	
		1	**5P-7506**	1	ELBOW	
	9	1	**161-3357**	2	SPACER (12X20X10-MM THK)	
	10	1	**110-6349**	2	FITTING AS (QUICK DISCONNECT) (MALE)	
	11	1	**204-2281**	1	STRAP-TIE	
Y	12	1	**211-3014**	1	VALVE GP-SHUTTLE (HIGH FLOW)	449
	13	1	**258-3880**	1	HOSE	
I	14	1	**258-3881**	1	HOSE AS	
	15	1	**258-3882**	1	HOSE	
I	16	1	**258-3883**	1	HOSE AS	
	17	1	**258-3889**	1	HOSE	
	18	1	**304-5080**	1	TUBE AS	
	19	1	**258-3899**	1	ADAPTER AS	
I	20	1	**258-3967**	1	HOSE AS	
	21	1	**305-2893**	1	HOSE AS	
	22	1	*148-8361*	1	ELBOW AS	
		1	**3J-7354**	1	SEAL-O-RING	
		1	**6V-8397**	1	SEAL-O-RING	
		1	**6V-9200**	1	ELBOW	
	23	1	*297-7942*	1	ELBOW AS	
		1	**3J-7354**	1	SEAL-O-RING	
		1	**297-7941**	1	ELBOW	
	24	1	**303-5020**	1	ELBOW	
C	25	1	*148-8368*	1	ELBOW AS	
		1	**3J-1907**	1	SEAL-O-RING	
		1	**4J-5477**	1	SEAL-O-RING	
		1	**6V-8627**	1	ELBOW	
	26	1	*164-5567*	2	COUPLER AS-QUICK DISCONNECT	
					(EACH INCLUDES)	
		1	**214-7568**	1	SEAL-O-RING	
		1	**6V-3965**	1	FITTING (QUICK DISCONNECT)	
	27	1	**286-4867**	1	HOSE AS	
	28	1	**1P-3703**	1	SEAL-RECTANGULAR	
	29	1	**1P-4582**	2	FLANGE-HALF	
	30	1	**4J-0527**	1	SEAL-O-RING	
M	31	1	**5C-7261**	2	NUT (M8X1.25-THD)	
	32	1	**5K-9090**	3	SEAL-O-RING	
	33	1	**5P-4116**	2	WASHER-HARD (8.8X20.5X2-MM THK)	
	34	1	**6V-0400**	2	FLANGE-HALF	
	35	1	**6V-7359**	3	GROMMET	
	36	1	**7M-8485**	1	SEAL-O-RING	

258-3238 **LINES GP-PUMP** *(contd.)* **i03648324**

NOTE	REF NO	GRAPHIC REF	PART NUMBER	QTY	PART NAME 1 2 3 4 5 6 (PRODUCT LEVEL)	SEE PAGE
	37	1	**5P-7464**	2	CLIP (SLOT)	
	38	1	**5P-7465**	2	CLIP (TAB)	
M	39	1	**8T-4184**	8	BOLT (M12X1.75X45-MM)	
	40	1	**8T-4223**	8	WASHER-HARD (13.5X25.5X3-MM THK)	
	41	1	*241-6215*	1	ELBOW AS	
		1	**3J-1907**	1	SEAL-O-RING	
		1	**6V-8076**	1	ELBOW	
C	42	1	**314-2403**	1	VALVE-CHECK	
		1	**3J-1907**	1	SEAL-O-RING	
		1	**6V-8397**	1	SEAL-O-RING	

C-CHANGE FROM PREVIOUS TYPE
I-REFER TO HYDRAULIC INFORMATION SYSTEM
M-METRIC PART
Y-SEPARATE ILLUSTRATION

258-3238 **LINES GP-PUMP** *(contd.)* **i03648324**

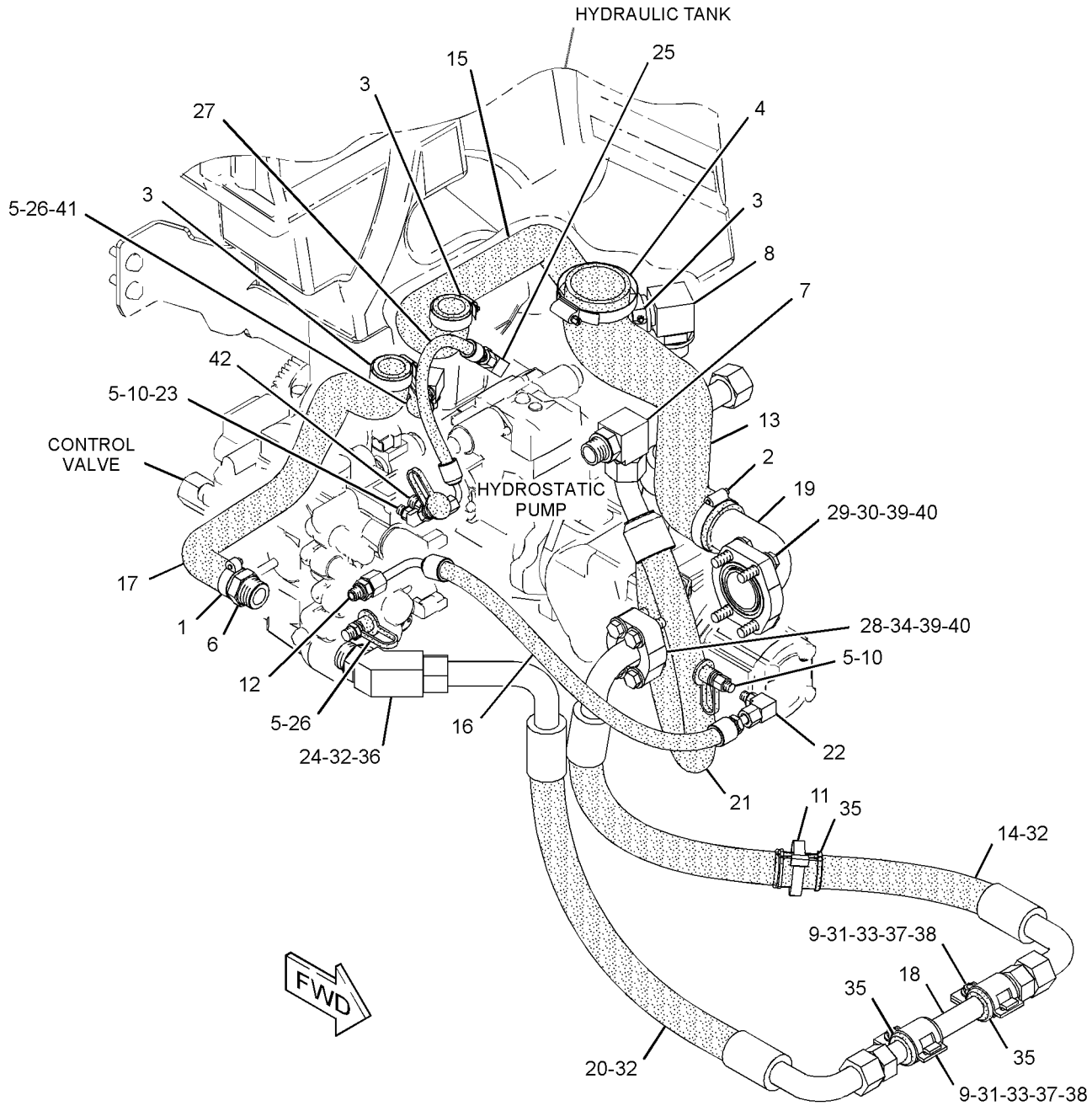

GRAPHIC #1 **<END>** g01453974

HYDRAULIC SYSTEM

258-3238 LINES GP-PUMP—HIGH FLOW

S/N: MST200-UP
PART OF 258-3183, 258-3734 HYDRAULIC AR
AN ATTACHMENT
TYPE 2

SMCS-5057 **i03648333**

NOTE	REF NO	GRAPHIC REF	PART NUMBER	QTY	PART NAME 1 2 3 4 5 6 (PRODUCT LEVEL)	SEE PAGE
	1	1	**2S-3440**	1	CLAMP-HOSE	
	2	1	**5P-0597**	1	CLAMP-HOSE	
	3	1	**5P-2230**	3	CLAMP-HOSE	
	4	1	**5P-4868**	1	CLAMP-HOSE	
	5	1	**6V-0852**	4	CAP-DUST	
	6	1	**9U-6994**	1	FITTING GP (RETURN MANIFOLD)	
		1	**5P-4362**	1	CONNECTOR	
		1	**7M-8485**	1	SEAL-O-RING	
	7	1	*148-8362*	1	ELBOW AS	
		1	**3D-2824**	1	SEAL-O-RING	
		1	**5K-9090**	1	SEAL-O-RING	
		1	**8T-6684**	1	ELBOW	
	8	1	**9U-7000**	1	FITTING GP-HYDRAULIC	
		1	**2S-4078**	1	SEAL-O-RING	
		1	**5P-7506**	1	ELBOW	
	9	1	**161-3357**	2	SPACER (12X20X10-MM THK)	
	10	1	**110-6349**	2	FITTING AS (QUICK DISCONNECT) (MALE)	
	11	1	**204-2281**	1	STRAP-TIE	
Y	12	1	**211-3014**	1	VALVE GP-SHUTTLE (HIGH FLOW)	449
	13	1	**258-3880**	1	HOSE	
CI	14	1	**261-6168**	1	HOSE AS	
	15	1	**258-3882**	1	HOSE	
CI	16	1	**319-5901**	1	HOSE AS	
	17	1	**258-3889**	1	HOSE	
	18	1	**304-5080**	1	TUBE AS	
	19	1	**258-3899**	1	ADAPTER AS	
I	20	1	**258-3967**	1	HOSE AS	
	21	1	**305-2893**	1	HOSE AS	
	22	1	*148-8361*	1	ELBOW AS	
		1	**3J-7354**	1	SEAL-O-RING	
		1	**6V-8397**	1	SEAL-O-RING	
		1	**6V-9200**	1	ELBOW	
	23	1	*297-7942*	1	ELBOW AS	
		1	**3J-7354**	1	SEAL-O-RING	
		1	**297-7941**	1	ELBOW	
	24	1	**303-5020**	1	ELBOW	
	25	1	*148-8368*	1	ELBOW AS	
		1	**3J-1907**	1	SEAL-O-RING	
		1	**4J-5477**	1	SEAL-O-RING	
		1	**6V-8627**	1	ELBOW	
	26	1	*164-5567*	2	COUPLER AS-QUICK DISCONNECT	
					(EACH INCLUDES)	
		1	**214-7568**	1	SEAL-O-RING	
		1	**6V-3965**	1	FITTING (QUICK DISCONNECT)	
	27	1	**286-4867**	1	HOSE AS	
	28	1	**1P-3703**	1	SEAL-RECTANGULAR	
	29	1	**1P-4582**	2	FLANGE-HALF	
	30	1	**4J-0527**	1	SEAL-O-RING	
M	31	1	**5C-7261**	2	NUT (M8X1.25-THD)	
	32	1	**5K-9090**	3	SEAL-O-RING	
	33	1	**5P-4116**	2	WASHER-HARD (8.8X20.5X2-MM THK)	
	34	1	**6V-0400**	2	FLANGE-HALF	
	35	1	**6V-7359**	3	GROMMET	
	36	1	**7M-8485**	1	SEAL-O-RING	

258-3238 **LINES GP-PUMP** *(contd.)* **i03648333**

NOTE	REF NO	GRAPHIC REF	PART NUMBER	QTY	PART NAME 1 2 3 4 5 6 (PRODUCT LEVEL)	SEE PAGE
	37	1	**5P-7464**	2	CLIP (SLOT)	
	38	1	**5P-7465**	2	CLIP (TAB)	
M	39	1	**8T-4184**	8	BOLT (M12X1.75X45-MM)	
	40	1	**8T-4223**	8	WASHER-HARD (13.5X25.5X3-MM THK)	
	41	1	*241-6215*	1	ELBOW AS	
		1	**3J-1907**	1	SEAL-O-RING	
		1	**6V-8076**	1	ELBOW	
	42	1	**314-2403**	1	VALVE-CHECK	
		1	**3J-1907**	1	SEAL-O-RING	
		1	**6V-8397**	1	SEAL-O-RING	
C	43	1	*148-8352*	1	ELBOW AS	
		1	**5K-9090**	1	SEAL-O-RING	
		1	**6V-9854**	1	ELBOW	
C	44	1	*165-4931*	1	ELBOW AS	
		1	**3J-1907**	1	SEAL-O-RING	
		1	**6V-8077**	1	ELBOW	

C-CHANGE FROM PREVIOUS TYPE
I-REFER TO HYDRAULIC INFORMATION SYSTEM
M-METRIC PART
Y-SEPARATE ILLUSTRATION

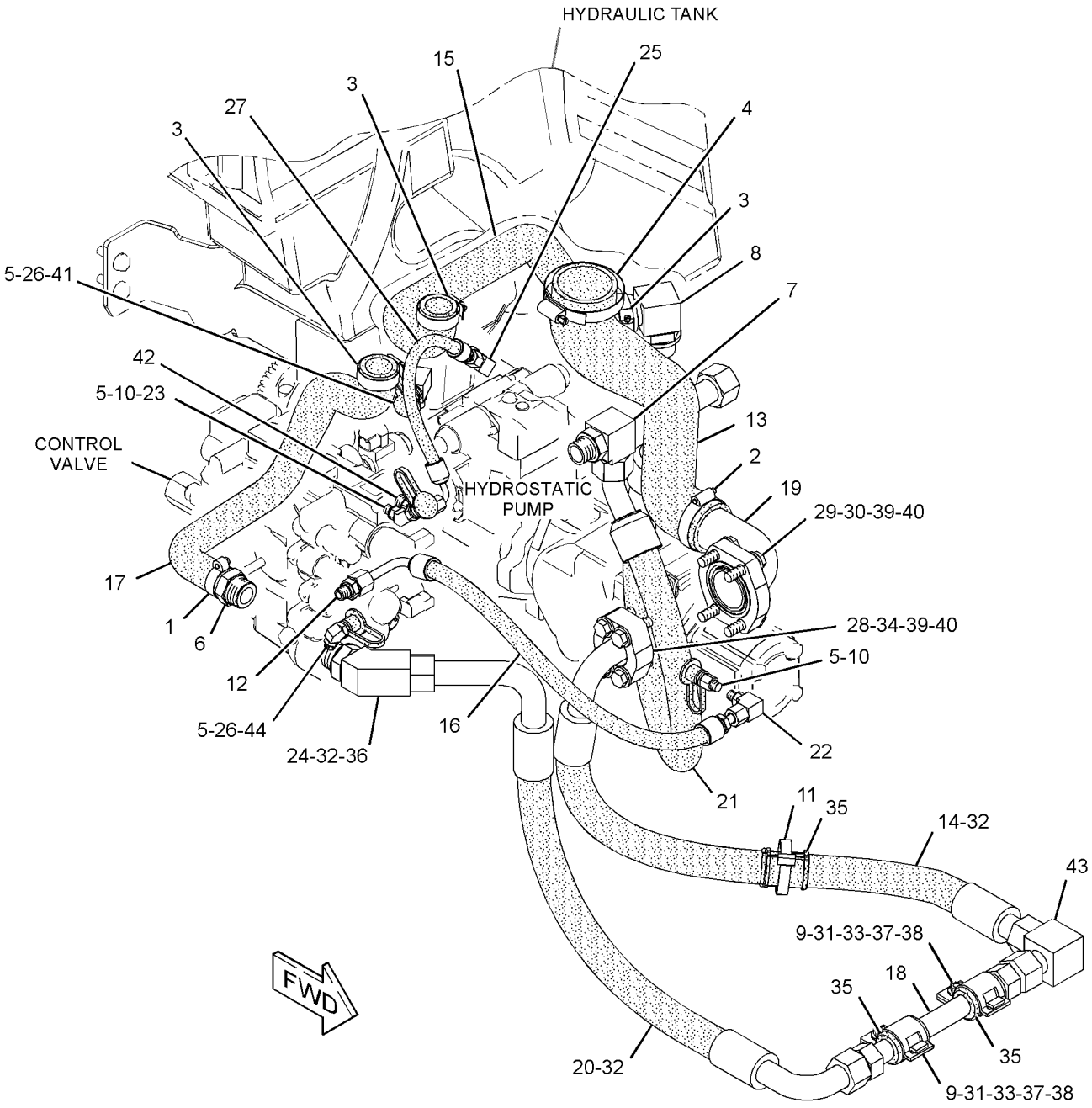

GRAPHIC #1 **<END>** g01453975

HYDRAULIC SYSTEM

258-3238 LINES GP-PUMP—HIGH FLOW

S/N: MST200-UP
PART OF 258-3183, 258-3734 HYDRAULIC AR
AN ATTACHMENT
TYPE 3

SMCS-5057 **i03682322**

NOTE	REF NO	GRAPHIC REF	PART NUMBER	QTY	PART NAME 1 2 3 4 5 6 (PRODUCT LEVEL)	SEE PAGE
	1	1	**2S-3440**	1	CLAMP-HOSE	
	2	1	**5P-0597**	1	CLAMP-HOSE	
	3	1	**5P-2230**	3	CLAMP-HOSE	
	4	1	**5P-4868**	1	CLAMP-HOSE	
	5	1	**6V-0852**	3	CAP-DUST	
	6	1	**9U-6994**	1	FITTING GP (RETURN MANIFOLD)	
		1	**5P-4362**	1	CONNECTOR	
		1	**7M-8485**	1	SEAL-O-RING	
C	7	1	**9U-6998**	1	FITTING GP (PUMP CASE DRAIN)	
		1	**3D-2824**	1	SEAL-O-RING	
	8	1	**9U-7000**	1	FITTING GP-HYDRAULIC	
		1	**2S-4078**	1	SEAL-O-RING	
		1	**5P-7506**	1	ELBOW	
	9	1	**161-3357**	2	SPACER (12X20X10-MM THK)	
	10	1	**110-6349**	1	FITTING AS (QUICK DISCONNECT)	
	11	1	**204-2281**	1	STRAP-TIE	
Y	12	1	**211-3014**	1	VALVE GP-SHUTTLE (HIGH FLOW)	449
	13	1	**258-3880**	1	HOSE	
I	14	1	**261-6168**	1	HOSE AS	
	15	1	**258-3882**	1	HOSE	
I	16	1	**319-5901**	1	HOSE AS	
	17	1	**258-3889**	1	HOSE	
	18	1	**304-5080**	1	TUBE AS	
	19	1	**258-3899**	1	ADAPTER AS	
I	20	1	**258-3967**	1	HOSE AS	
C	21	1	**328-2044**	1	HOSE	
	22	1	*148-8361*	1	ELBOW AS	
		1	**3J-7354**	1	SEAL-O-RING	
		1	**6V-8397**	1	SEAL-O-RING	
		1	**6V-9200**	1	ELBOW	
	24	1	**303-5020**	1	ELBOW	
	25	1	*148-8368*	1	ELBOW AS	
		1	**3J-1907**	1	SEAL-O-RING	
		1	**4J-5477**	1	SEAL-O-RING	
		1	**6V-8627**	1	ELBOW	
	26	1	*164-5567*	2	COUPLER AS-QUICK DISCONNECT	
					(EACH INCLUDES)	
		1	**214-7568**	1	SEAL-O-RING	
		1	**6V-3965**	1	FITTING (QUICK DISCONNECT)	
	27	1	**286-4867**	1	HOSE AS	
	28	1	**1P-3703**	1	SEAL-RECTANGULAR	
	29	1	**1P-4582**	2	FLANGE-HALF	
	30	1	**4J-0527**	1	SEAL-O-RING	
M	31	1	**5C-7261**	2	NUT (M8X1.25-THD)	
	32	1	**5K-9090**	3	SEAL-O-RING	
	33	1	**5P-4116**	2	WASHER-HARD (8.8X20.5X2-MM THK)	
	34	1	**6V-0400**	2	FLANGE-HALF	
	35	1	**6V-7359**	3	GROMMET	
	36	1	**7M-8485**	1	SEAL-O-RING	
	37	1	**5P-7464**	2	CLIP (SLOT)	
	38	1	**5P-7465**	2	CLIP (TAB)	
M	39	1	**8T-4184**	8	BOLT (M12X1.75X45-MM)	
	40	1	**8T-4223**	8	WASHER-HARD (13.5X25.5X3-MM THK)	
	41	1	*241-6215*	1	ELBOW AS	

258-3238 **LINES GP-PUMP** ***(contd.)*** **i03682322**

NOTE	REF NO	GRAPHIC REF	PART NUMBER	QTY	PART NAME 1 2 3 4 5 6 (PRODUCT LEVEL)	SEE PAGE
		1	**3J-1907**	1	SEAL-O-RING	
		1	**6V-8076**	1	ELBOW	
	42	1	**314-2403**	1	VALVE-CHECK	
		1	**3J-1907**	1	SEAL-O-RING	
		1	**6V-8397**	1	SEAL-O-RING	
	43	1	*148-8352*	1	ELBOW AS	
		1	**5K-9090**	1	SEAL-O-RING	
		1	**6V-9854**	1	ELBOW	
	44	1	*165-4931*	1	ELBOW AS	
		1	**3J-1907**	1	SEAL-O-RING	
		1	**6V-8077**	1	ELBOW	
C	45	1	**280-8911**	2	CLAMP-BAND	

C-CHANGE FROM PREVIOUS TYPE
I-REFER TO HYDRAULIC INFORMATION SYSTEM
M-METRIC PART
Y-SEPARATE ILLUSTRATION

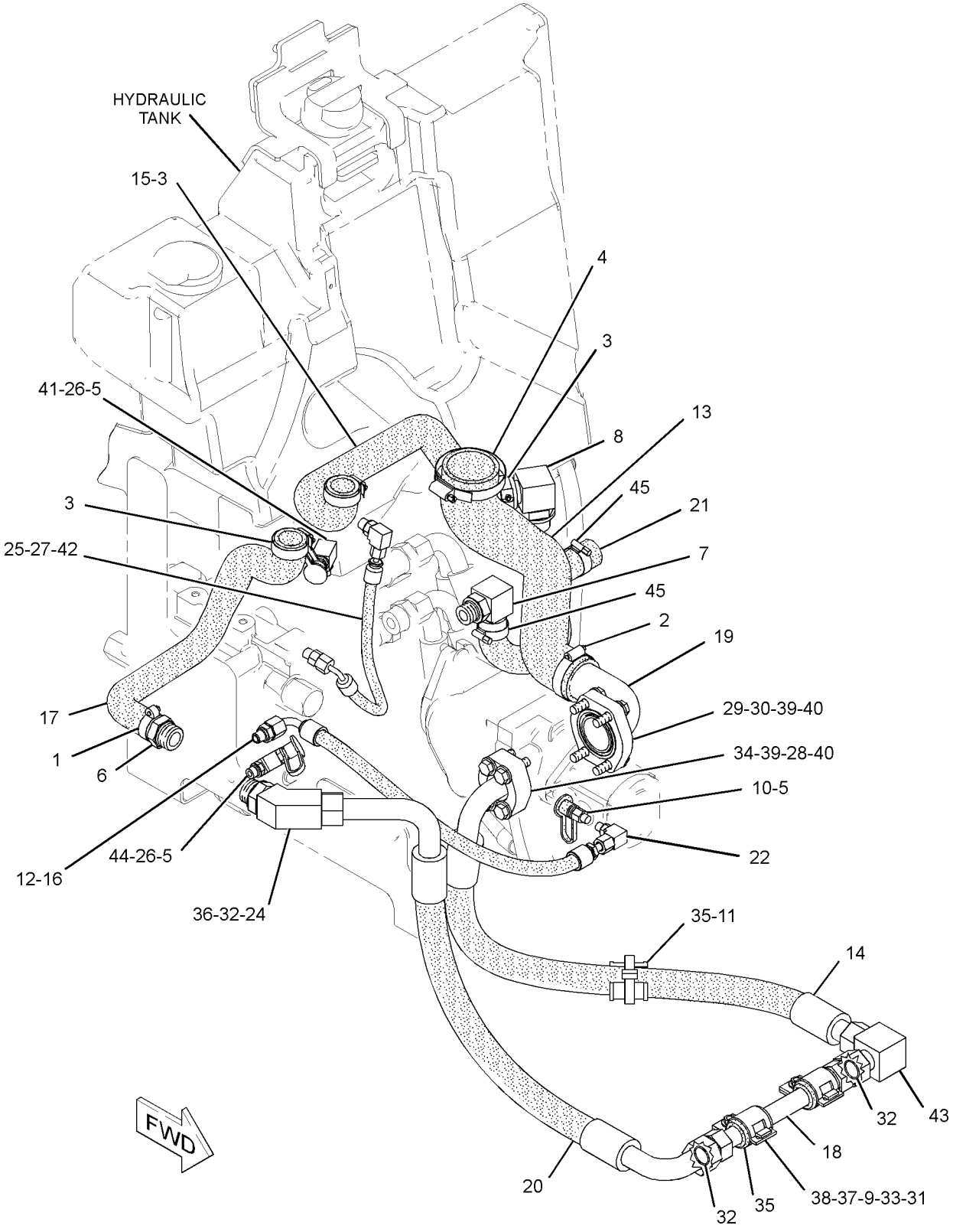

GRAPHIC #1 **<END>** g02005056

HYDRAULIC SYSTEM

258-3593 LINES GP-TILT CYLINDER

S/N: MST1-UP

PART OF 258-2601 HYDRAULIC AR

SMCS-5057, 5104 **i02741362**

NOTE	REF NO	GRAPHIC REF	PART NUMBER	QTY	PART NAME 1 2 3 4 5 6 (PRODUCT LEVEL)	SEE PAGE
	1	1	**102-8703**	3	PLATE-COVER	
	2	1	**195-6750**	6	CLAMP-DOUBLE	
	3	1	*197-8940*	2	CONNECTOR AS	
					(EACH INCLUDES)	
		1	**2M-9780**	1	SEAL-O-RING	
		1	**7J-9108**	1	SEAL-O-RING	
		1	**8T-1576**	1	CONNECTOR	
	4	1	**258-2932**	1	TUBE AS	
	5	1	**258-2933**	1	TUBE AS	
	6	1	**258-2935**	1	TUBE AS	
	7	1	**258-2936**	1	TUBE AS	
I	8	1	**258-3657**	2	HOSE AS	
	9	1	**258-3659**	1	BRACKET	
	10	1	**258-3958**	4	HOSE AS	
M	11	1	**303-8205**	3	BOLT (M8X1.25X60-MM)	
	12	1	**309-8968**	2	PLATE	
	13	1	**068-8358**	2	CLAMP	
	14	1	*148-8393*	2	ELBOW AS	
					(EACH INCLUDES)	
		1	**6V-9852**	1	ELBOW	
		1	**7J-9108**	1	SEAL-O-RING	
M	15	1	**266-3315**	2	BOLT-FLANGE HEAD (M8X1.25X25.5-MM)	
	16	1	**5P-7466**	2	CLIP (SLOT)	
	17	1	**5P-7467**	2	CLIP (TAB)	
	18	1	**5P-8112**	2	GROMMET	
	19	1	**6B-2882**	2	SPACER (0.406X0.75X0.312-IN THK)	
	20	1	**6V-8397**	2	SEAL-O-RING	
	21	1	**6V-8398**	8	SEAL-O-RING	
	22	1	**7G-3832**	1	GROMMET	
	23	1	**7G-3833**	1	CLIP (TAB)	
	24	1	**7G-3834**	1	CLIP (SLOT)	
	25	1	**7J-9108**	4	SEAL-O-RING	
	26	1	**8T-4121**	4	WASHER-HARD (11X21X2.5-MM THK)	
M	27	1	**8T-4133**	2	NUT (M10X1.5-THD)	
M	28	1	**8T-4139**	2	BOLT (M12X1.75X30-MM)	
M	29	1	**8T-4186**	4	BOLT (M10X1.5X40-MM)	
	30	1	**8T-4223**	2	WASHER-HARD (13.5X25.5X3-MM THK)	

I-REFER TO HYDRAULIC INFORMATION SYSTEM
M-METRIC PART

258-3593 **LINES GP-TILT CYLINDER** *(contd.)* **i02741362**

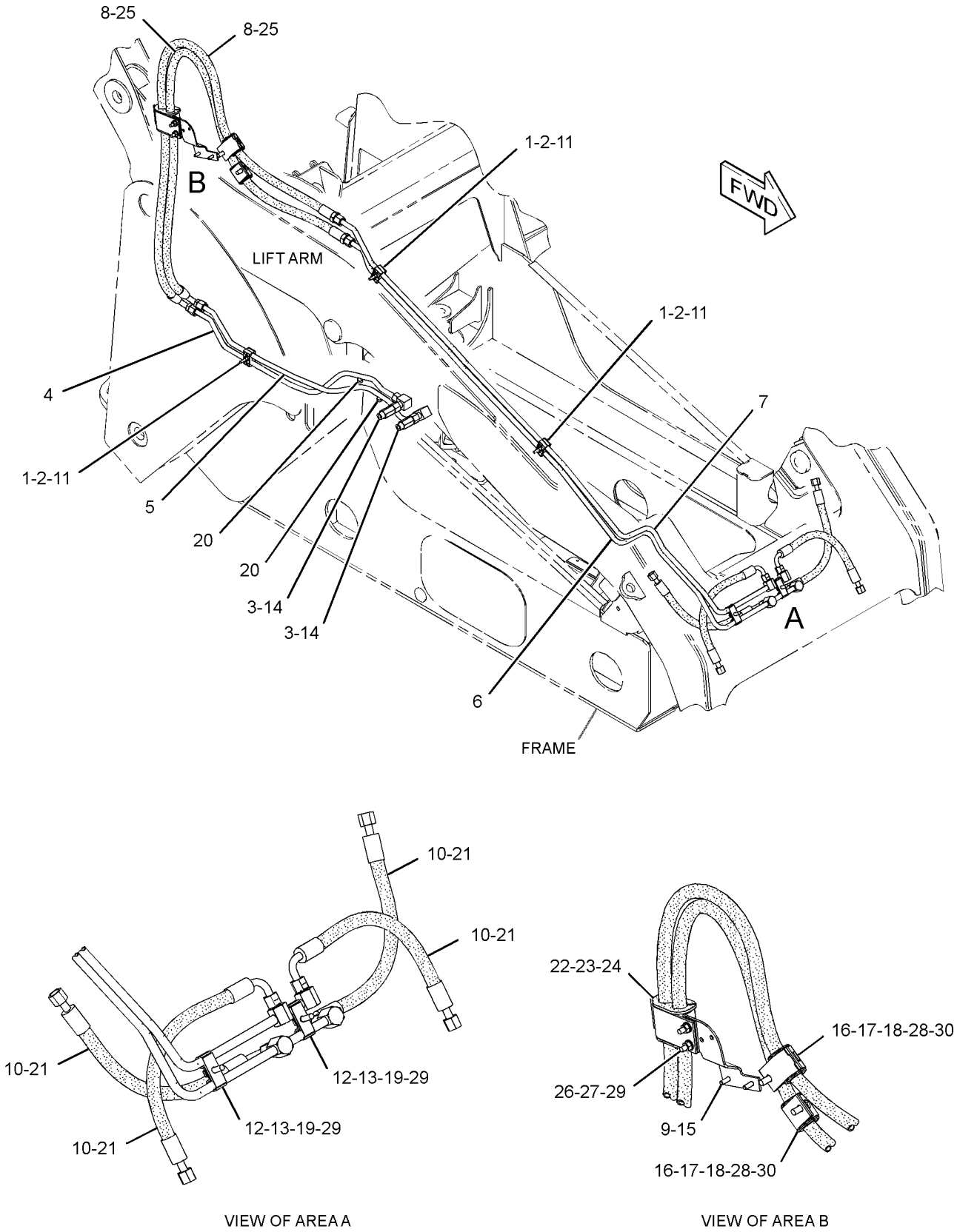

GRAPHIC #1 **<END>** g01374634

HYDRAULIC SYSTEM

258-3350 LINES GP-WORK TOOL—HIGH FLOW XPS

S/N: MST1-UP

PART OF 258-3183, 258-3734 HYDRAULIC AR

AN ATTACHMENT

SMCS-5057 **i03693259**

NOTE	REF NO	GRAPHIC REF	PART NUMBER	QTY	PART NAME 1 2 3 4 5 6 (PRODUCT LEVEL)	SEE PAGE
	1	1,2	**4V-0611**	6	CLAMP	
	2	1,2	**4V-0612**	3	PLATE	
	3	2	**7K-1181**	2	STRAP-CABLE	
Y	4	1	**218-5840**	1	FITTING GP-HYDRAULIC (QUICK DISCONNECT, MALE) (HIGH FLOW)	314
Y	5	1	**218-5841**	1	FITTING GP-HYDRAULIC (QUICK DISCONNECT, FEMALE) (HIGH FLOW)	315
	6	1	**229-5468**	1	FITTING AS (QUICK DISCONNECT, MALE)	
	7	1	**229-5471**	1	FITTING AS (QUICK DISCONNECT, FEMALE)	
	8	1	**229-5473**	1	FITTING AS (QUICK DISCONNECT, MALE)	
	9	2	**258-2571**	1	PLATE AS	
I	10	1	**258-2894**	1	HOSE AS	
	11	2	**258-3161**	1	PLATE	
	12	2	**258-3162**	2	BLOCK	
	13	2	**258-3164**	2	PLATE	
	14	2	**258-3330**	1	TUBE AS	
	15	2	**258-3331**	1	TUBE AS	
	16	2	**258-3332**	1	TUBE AS	
	17	1	**258-3344**	1	COVER	
	18	1	**258-3345**	1	TUBE AS	
	19	1	**258-3346**	1	TUBE AS	
	20	1	**258-3347**	1	TUBE AS	
	21	2	**258-3351**	1	TUBE AS	
	22	2	**258-3352**	1	TUBE AS	
	23	1	**258-3355**	1	TUBE AS	
	24	1	**258-3356**	1	TUBE AS	
	25	2	**331-7171**	1	HARNESS AS-VALVE	
		1	**9X-3401**	5	PIN-CONNECTOR (16-GA TO 18-GA)	
					—OR—	
		1	**126-1767**	5	PIN-CONNECTOR (14-GA)	
		1	**155-2270**	3	KIT-CONNECTING PLUG (2-PIN)	
					(EACH KIT INCLUDES PLUG AS, WEGDE & INTERFACE SEAL)	
		1	**8T-8737**	1	PLUG-SEAL	
		1	**102-8805**	1	KIT-RECEPTACLE (6-PIN)	
					(INCLUDES RECEPTACLE AS & WEDGE)	
		1	**180-9340**	6	SOCKET-CONNECTOR (14-GA TO 18-GA)	
		1	**8L-8413**	1	STRAP-CABLE	
E		1	**125-7874**		TUBE-HEAT SHRINK (5.72-MM DIA) (5-CM)	
I	26	1	**285-2189**	2	HOSE AS	
I	27	1	**285-2192**	2	HOSE AS	
	28	1	**286-4863**	1	BRACKET AS	
	31	2	**132-7551**	1	SPACER (11X19X6-MM THK)	
	32	2	*148-8344*	2	CONNECTOR AS	
					(EACH INCLUDES)	
		2	**3D-2824**	1	SEAL-O-RING	
		2	**6V-9162**	1	CONNECTOR	
		2	**6V-9746**	1	SEAL-O-RING	
	33	2	*148-8392*	2	ELBOW AS	
					(EACH INCLUDES)	
		2	**6V-9746**	1	SEAL-O-RING	
		2	**6V-9853**	1	ELBOW	
	34	2	*148-8436*	1	TEE AS	
		2	**3K-0360**	1	SEAL-O-RING	
		2	**6V-8398**	2	SEAL-O-RING	

258-3350 **LINES GP-WORK TOOL** *(contd.)* **i03693259**

NOTE	REF NO	GRAPHIC REF	PART NUMBER	QTY	PART NAME 1 2 3 4 5 6 (PRODUCT LEVEL)	SEE PAGE
		2	**6V-8775**	1	TEE-FACE SEAL	
	35	2	*164-5605*	2	CONNECTOR AS	
					(EACH INCLUDES)	
		2	**3K-0360**	1	SEAL-O-RING	
		2	**6V-8397**	1	SEAL-O-RING	
		2	**8T-0076**	1	CONNECTOR	
M	36	2	**266-3315**	4	BOLT-FLANGE HEAD (M8X1.25X25.5-MM)	
	37	1	**1B-3057**	2	CLIP	
	40	2	**5K-8451**	2	CLIP	
	41	1	**5P-4116**	7	WASHER-HARD (8.8X20.5X2-MM THK)	
	42	2	**5P-7466**	2	CLIP (SLOT)	
	43	2	**5P-7467**	2	CLIP (TAB)	
	44	2	**5P-8112**	2	GROMMET	
	45	1	**6D-4244**	1	CLIP	
M	46	1,2	**8T-4136**	2	BOLT (M10X1.5X25-MM)	
	47	1,2	**6V-8397**	4	SEAL-O-RING	
	48	1	**6V-8398**	2	SEAL-O-RING	
	49	1,2	**6V-9746**	4	SEAL-O-RING	
	50	1	**7B-1597**	2	CLIP	
	51	2	**7G-3832**	1	GROMMET	
	52	2	**7G-3833**	1	CLIP (TAB)	
	53	2	**7G-3834**	1	CLIP (SLOT)	
M	54	1	**7X-2543**	2	BOLT (M10X1.5X120-MM)	
	55	2	**8D-9671**	1	CLIP	
M	56	1	**8T-0341**	4	BOLT-SOCKET HEAD (M10X1.5X60-MM)	
	57	1,2	**8T-4121**	9	WASHER-HARD (11X21X2.5-MM THK)	
M	58	1,2	**8T-4133**	4	NUT (M10X1.5-THD)	
M	59	1	**8T-4137**	1	BOLT (M10X1.5X20-MM)	
M	60	1	**8T-4189**	1	BOLT (M8X1.25X20-MM)	
M	61	2	**8T-4192**	2	BOLT (M12X1.75X25-MM)	
M	62	2	**8T-4186**	2	BOLT (M10X1.5X40-MM)	
M	63	1	**8T-4200**	4	BOLT (M8X1.25X16-MM)	
	64	2	**8T-4223**	4	WASHER-HARD (13.5X25.5X3-MM THK)	
M	65	1	**8T-4139**	2	BOLT (M12X1.75X30-MM)	
	66	1	**7X-7729**	2	WASHER (11X25X3-MM THK)	
M	67	1,2	**303-8205**	3	BOLT (M8X1.25X60-MM)	
	68	1	**9S-1350**	2	CLIP	

E-ORDER BY THE CENTIMETER
I-REFER TO HYDRAULIC INFORMATION SYSTEM
M-METRIC PART
Y-SEPARATE ILLUSTRATION

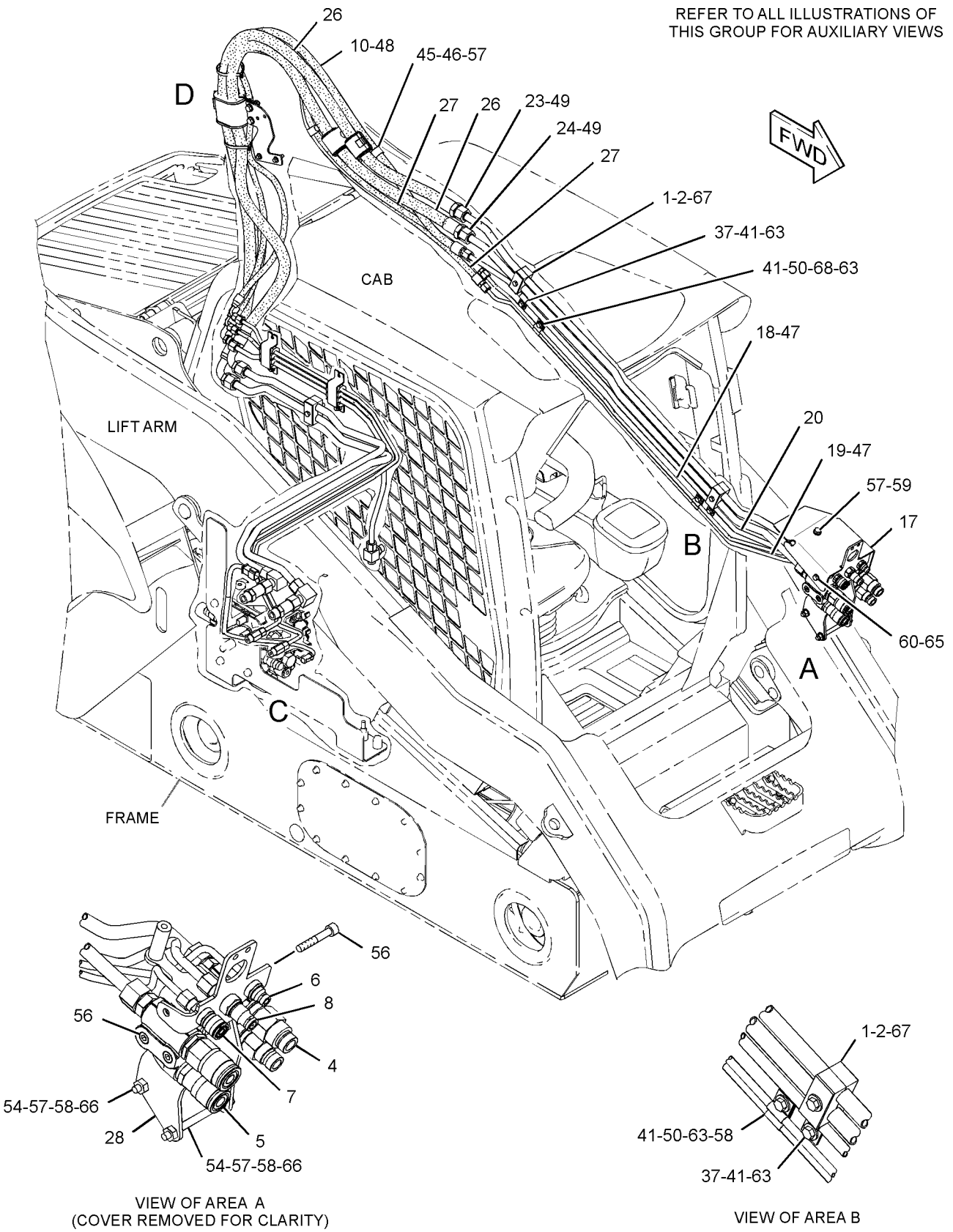

GRAPHIC #1

g01452415

258-3350 **LINES GP-WORK TOOL** *(contd.)* **i03693259**

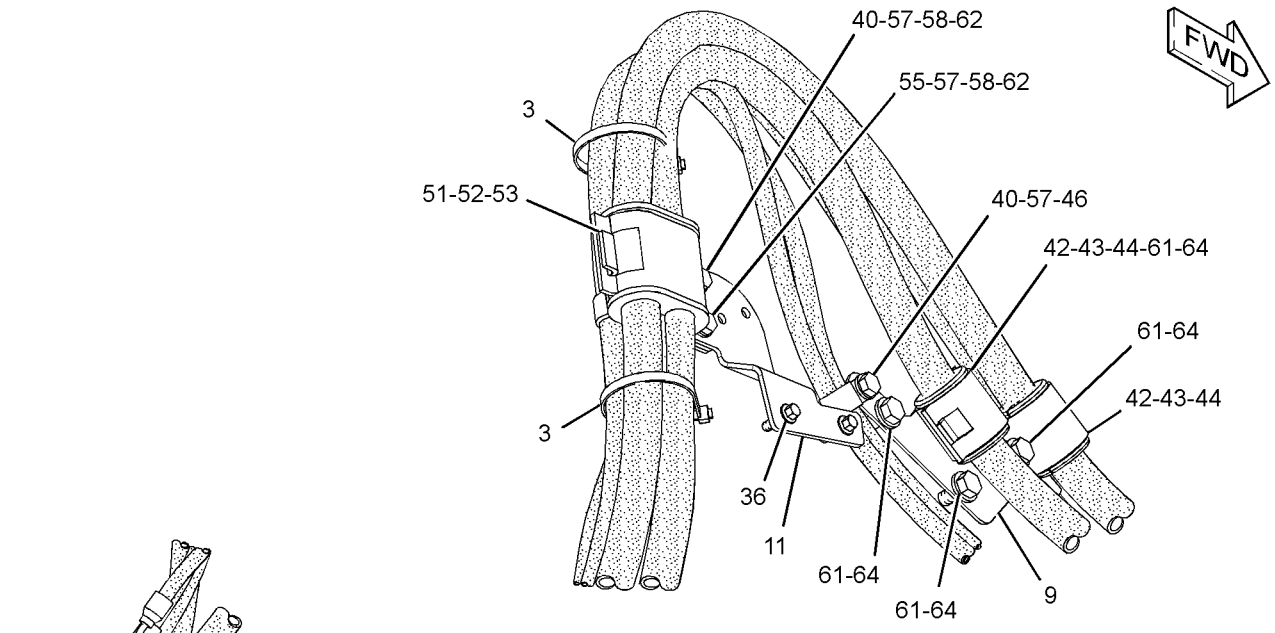

VIEW OF AREA D

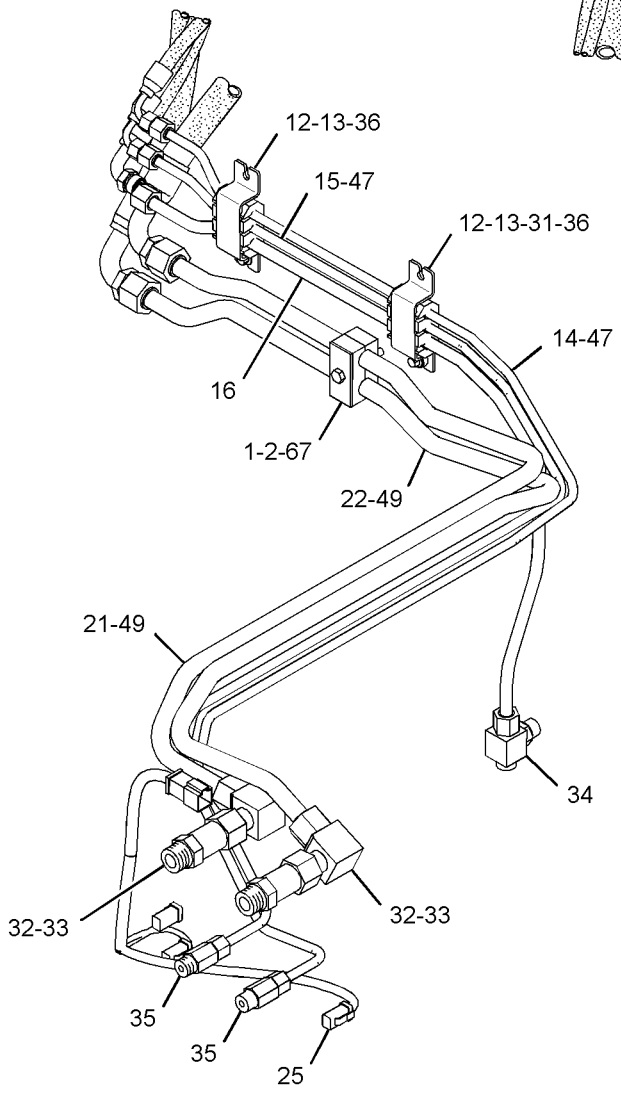

VIEW OF AREA C

GRAPHIC #2 **<END>** g01452416

HYDRAULIC SYSTEM

258-3594 LINES GP-WORK TOOL

S/N: MST1-UP
PART OF 258-3181, 258-3731 HYDRAULIC AR
AN ATTACHMENT

SMCS-5057 **i02636757**

NOTE	REF NO	GRAPHIC REF	PART NUMBER	QTY	PART NAME 1 2 3 4 5 6 (PRODUCT LEVEL)	SEE PAGE
	1	1	**102-8703**	3	PLATE-COVER	
	2	1	**193-8334**	1	FITTING AS (QUICK DISCONNECT, MALE)	
	3	1	**193-8335**	1	FITTING AS (QUICK DISCONNECT, FEMALE)	
	4	1	**195-6750**	6	CLAMP-DOUBLE	
M	5	1	**303-8205**	3	BOLT (M8X1.25X60-MM)	
	6	1	**258-2927**	1	TUBE AS	
	7	1	**258-2928**	1	TUBE AS	
	8	1	**258-3161**	1	PLATE	
	9	1	**258-3247**	1	BRACKET AS	
	10	1	**258-3590**	1	TUBE AS	
	11	1	**258-3591**	1	TUBE AS	
I	12	1	**258-3657**	2	HOSE AS	
	13	1	*260-9214*	2	CONNECTOR AS	
					(EACH INCLUDES)	
		1	**3D-2824**	1	SEAL-O-RING	
		1	**7J-9108**	1	SEAL-O-RING	
		1	**260-9213**	1	CONNECTOR	
	16	1	*148-8364*	1	ELBOW AS	
		1	**3K-0360**	1	SEAL-O-RING	
		1	**6V-8398**	1	SEAL-O-RING	
		1	**6V-8625**	1	ELBOW	
	17	1	*148-8393*	2	ELBOW AS	
					(EACH INCLUDES)	
		1	**6V-9852**	1	ELBOW	
		1	**7J-9108**	1	SEAL-O-RING	
M	18	1	**266-3315**	2	BOLT-FLANGE HEAD (M8X1.25X25.5-MM)	
	19	1	**5P-7466**	2	CLIP (SLOT)	
	20	1	**5P-7467**	2	CLIP (TAB)	
	21	1	**5P-8112**	2	GROMMET	
	23	1	**7G-3832**	1	GROMMET	
	24	1	**7G-3833**	1	CLIP (TAB)	
	25	1	**7G-3834**	1	CLIP (SLOT)	
	26	1	**7J-9108**	6	SEAL-O-RING	
	27	1	**8T-4121**	6	WASHER-HARD (11X21X2.5-MM THK)	
M	28	1	**8T-4133**	2	NUT (M10X1.5-THD)	
M	29	1	**8T-4139**	2	BOLT (M12X1.75X30-MM)	
M	30	1	**8T-4186**	2	BOLT (M10X1.5X40-MM)	
	31	1	**8T-4223**	2	WASHER-HARD (13.5X25.5X3-MM THK)	
M	32	1	**8T-6685**	2	BOLT (M10X1.5X110-MM)	
	33	1	**6V-9170**	2	NUT-BULKHEAD (1-14-THD)	

I-REFER TO HYDRAULIC INFORMATION SYSTEM
M-METRIC PART

258-3594 **LINES GP-WORK TOOL** *(contd.)* **i02636757**

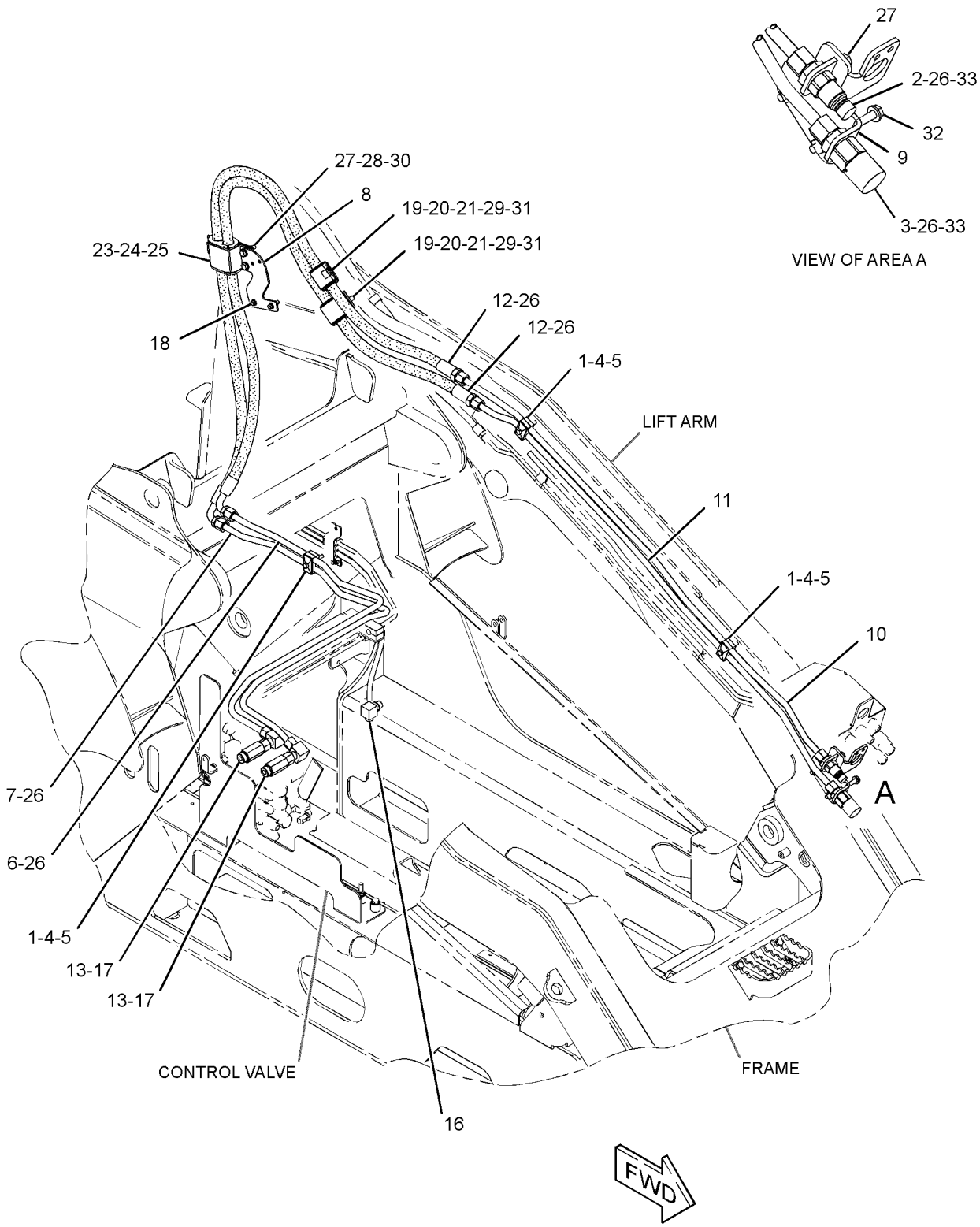

GRAPHIC #1 **<END>** g01329044

258-3462 MANF & SOLENOID MTG GP-ACCUM–PILOT SHUTOFF

S/N: MST1-UP

PART OF 258-3394 MANIFOLD & LINES GP-ACCUM

SMCS-5077, 5264, 5479 **i03571201**

NOTE	REF NO	GRAPHIC REF	PART NUMBER	QTY	PART NAME 1 2 3 4 5 6 (PRODUCT LEVEL)	SEE PAGE
Y	1	1	*149-0686*	1	ACCUMULATOR GP-HYDRAULIC (CHARGED)	298
	2	1	*194-7632*	1	ELBOW AS	
		1	**3K-0360**	1	SEAL-O-RING	
		1	**194-7631**	1	ELBOW	
Y	3	1	**274-8563**	1	MANIFOLD GP-CONTROL (PILOT SHUTOFF)	420
	4	1	*194-2903*	1	ELBOW AS	
		1	**3K-0360**	1	SEAL-O-RING	
		1	**8T-0119**	1	ELBOW	
	5	1	**3K-0360**	1	SEAL-O-RING	
M	6	1	**8T-3844**	2	BOLT (M6X1X70-MM)	
	7	1	**8T-4205**	2	WASHER-HARD (7.2X14.5X2-MM THK)	

M-METRIC PART
Y-SEPARATE ILLUSTRATION

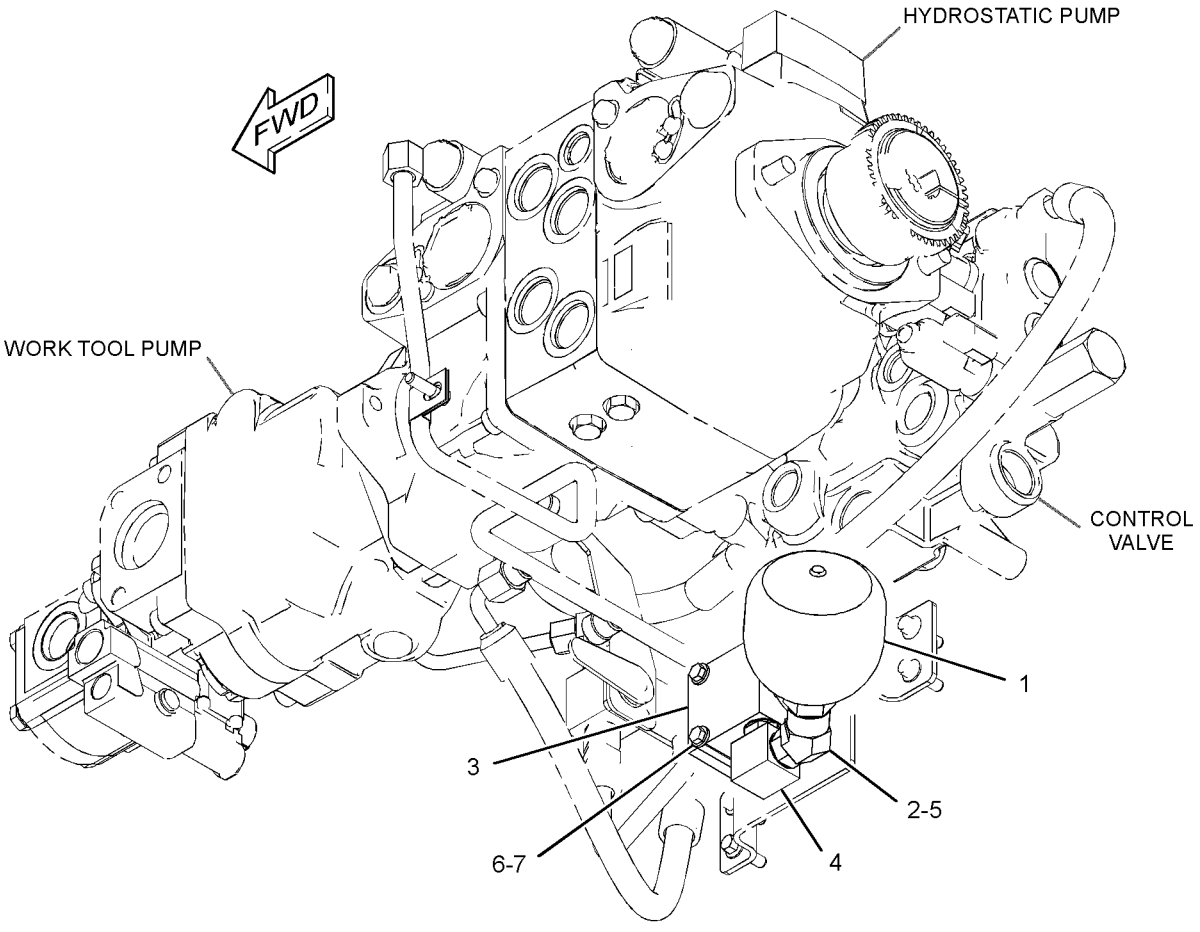

GRAPHIC #1 **<END>** g01329523

304-6747 MANF & SOLENOID MTG GP-ACCUM–RIDE CONTROL

S/N: MST1-UP
PART OF 304-6744 HYDRAULIC AR
AN ATTACHMENT

SMCS-5077, 5264, 5479 **i02836960**

NOTE	REF NO	GRAPHIC REF	PART NUMBER	QTY	PART NAME 1 2 3 4 5 6 (PRODUCT LEVEL)	SEE PAGE
	1	1	**9W-4216**	2	SPACER (9X18X7-MM THK)	
	2	1	**258-2890**	1	BRACKET AS	
	3	1	**304-6748**	1	PLATE AS	
	4	1	**304-6749**	1	TEE	
Y	5	1	**307-2275**	1	MANIFOLD GP-RIDE CONTROL	423
Y	6	1	**307-2276**	1	MANIFOLD GP-RIDE CONTROL (ACCUMULATOR)	424
Y	7	1	**307-6504**	1	ACCUMULATOR GP-RIDE CONTROL (CHARGED)	299
	8	1	**104-3173**	2	CLIP	
	9	1	**3K-0360**	2	SEAL-O-RING	
M	10	1	**5C-7261**	3	NUT (M8X1.25-THD)	
	11	1	**5P-4116**	3	WASHER-HARD (8.8X20.5X2-MM THK)	
	12	1	**6V-8398**	1	SEAL-O-RING	
M	13	1	**7X-2534**	2	BOLT (M6X1X50-MM)	
M	14	1	**7X-7888**	2	BOLT (M6X1X90-MM)	
	15	1	**8T-4205**	4	WASHER-HARD (7.2X14.5X2-MM THK)	
	16	1	**8T-4224**	2	WASHER-HARD (8.8X16X2-MM THK)	
M	17	1	**8T-4908**	2	BOLT (M8X1.25X25-MM)	

M-METRIC PART
Y-SEPARATE ILLUSTRATION

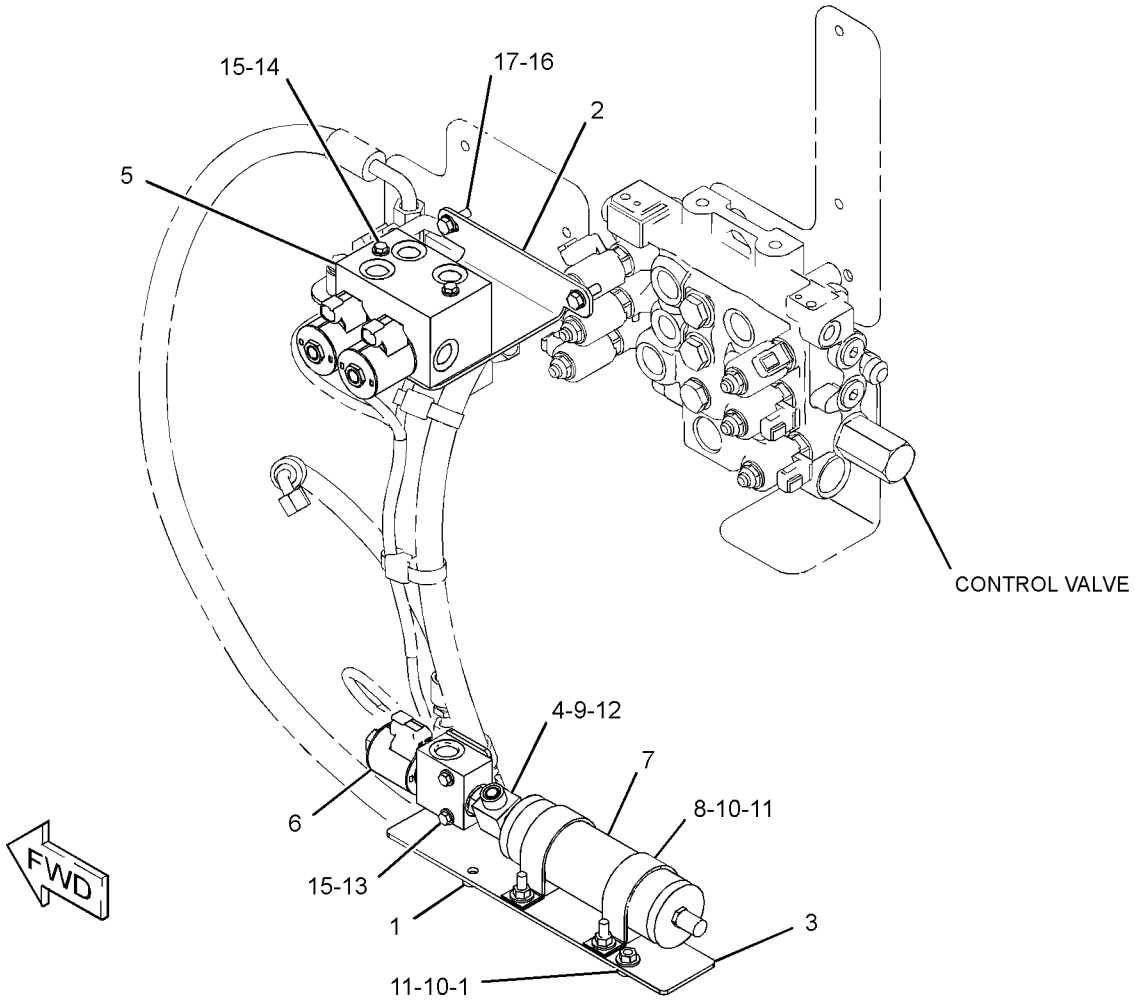

GRAPHIC #1 **<END>** g01420171

HYDRAULIC SYSTEM

258-3394 MANIFOLD & LINES GP-ACCUM

S/N: MST1-UP

PART OF 258-2601 HYDRAULIC AR

SMCS-5057, 5077, 5264 **i02721372**

NOTE	REF NO	GRAPHIC REF	PART NUMBER	QTY	PART NAME 1 2 3 4 5 6 (PRODUCT LEVEL)	SEE PAGE
	1	1	**7K-1181**	2	STRAP-CABLE	
	2	1	**195-6768**	1	SCREEN (HYDRAULIC)	
	3	1	**195-6769**	1	WASHER (6.99X12.7X5.46-MM THK)	
	4	1	**200-6345**	1	MOUNT (DUAL SWIVEL)	
I	5	1	**258-3279**	1	HOSE AS	
I	6	1	**258-3292**	1	HOSE AS	
Y	7	1	*258-3462*	1	MANF & SOLENOID MTG GP-ACCUM (PILOT SHUTOFF)	410
I	8	1	**289-0841**	1	HOSE AS	
	9	1	*148-8336*	1	CONNECTOR AS	
		1	**3J-1907**	1	SEAL-O-RING	
		1	**6V-8397**	1	SEAL-O-RING	
		1	**6V-8636**	1	CONNECTOR	
	10	1	*148-8378*	1	ELBOW AS	
		1	**3J-1907**	1	SEAL-O-RING	
		1	**6V-8397**	1	SEAL-O-RING	
		1	**6V-8724**	1	ELBOW	
	11	1	*150-4043*	1	CONNECTOR AS	
		1	**3J-1907**	1	SEAL-O-RING	
		1	**6V-8398**	1	SEAL-O-RING	
		1	**6V-9873**	1	CONNECTOR	

I-REFER TO HYDRAULIC INFORMATION SYSTEM
Y-SEPARATE ILLUSTRATION

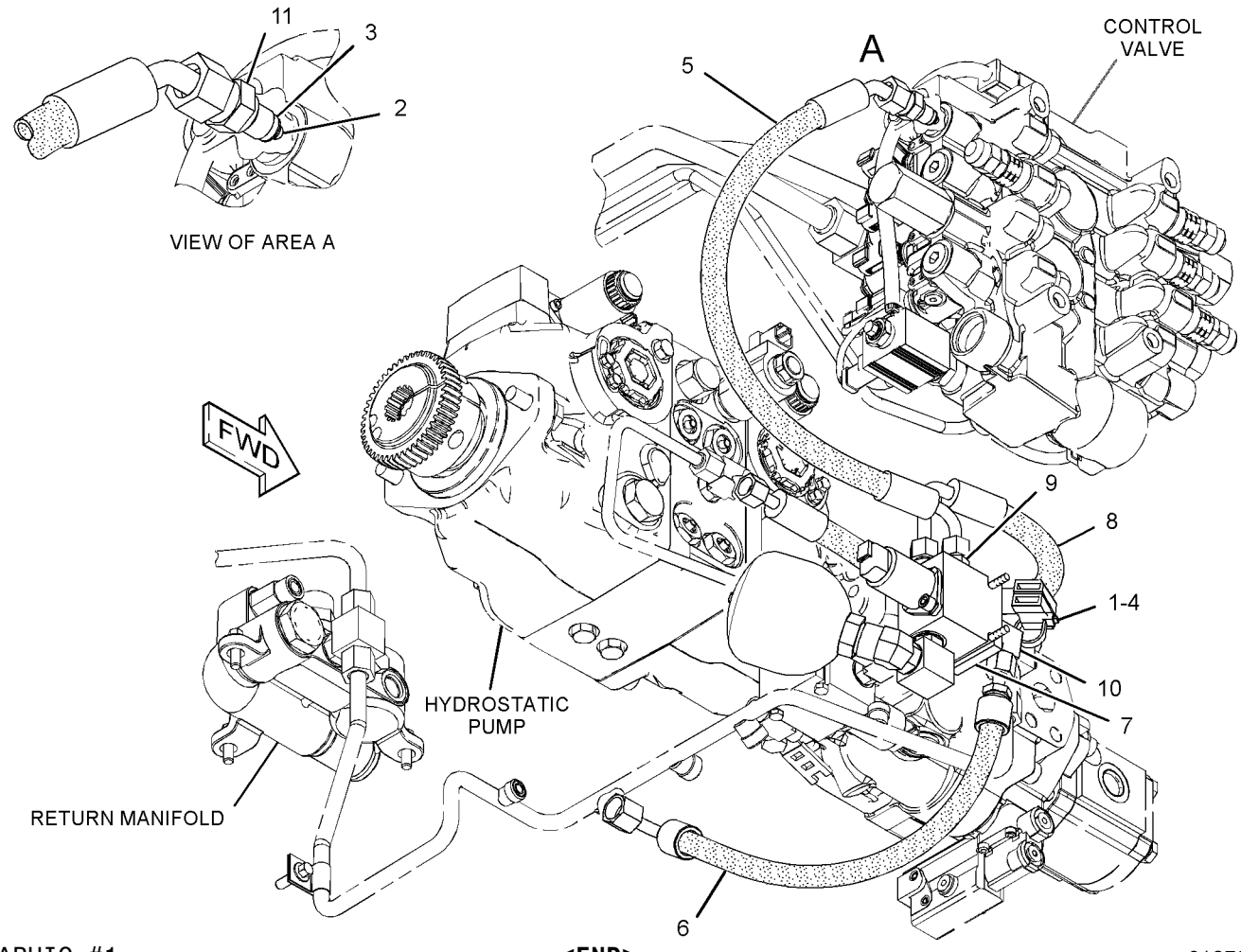

GRAPHIC #1 **<END>** g01373077

231-5278 MANIFOLD & MTG GP-CONTROL—ANGLING BLADE

S/N: MST1-UP
PART OF 231-5275, 231-5277 BLADE AR
AN ATTACHMENT

SMCS-5264 **i02337085**

NOTE	REF NO	GRAPHIC REF	PART NUMBER	QTY	PART NAME 1 2 3 4 5 6 (PRODUCT LEVEL)	SEE PAGE
Y	1	1	**258-9011**	1	MANIFOLD GP-CONTROL (ANGLING BLADE)	418
	2	1	**231-5279**	1	COVER	
	3	1	**5P-4116**	3	WASHER-HARD (8.8X20.5X2-MM THK)	
M	4	1	**8T-4189**	2	BOLT (M8X1.25X20-MM)	
M	5	1	**8T-4200**	3	BOLT (M8X1.25X16-MM)	
	6	1	**8T-4224**	2	WASHER-HARD (8.8X16X2-MM THK)	

M-METRIC PART
Y-SEPARATE ILLUSTRATION

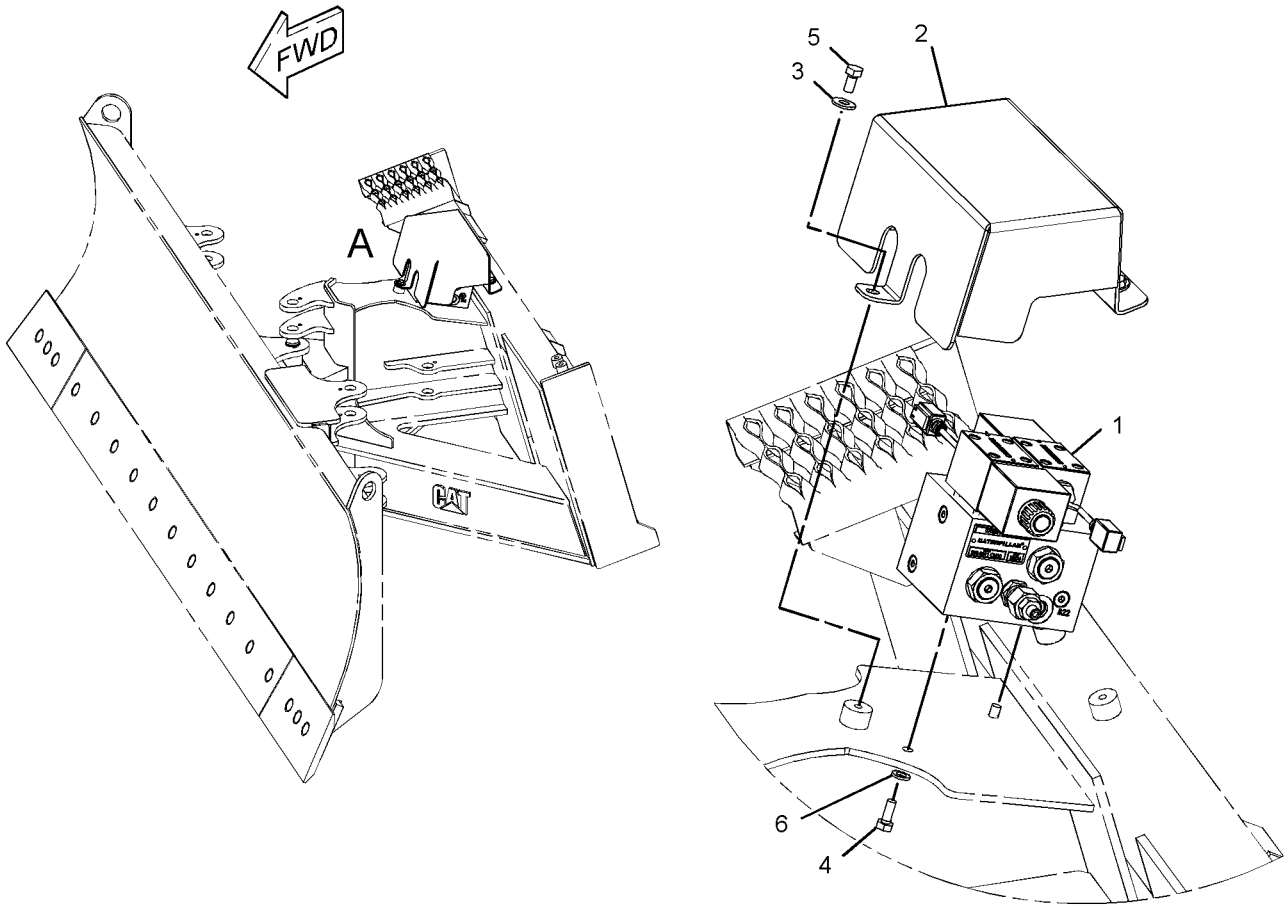

VIEW OF AREA A

GRAPHIC #1 **<END>** g01167422

258-3463 MANIFOLD & MTG GP-CONTROL—MOTOR, 2-SPEED

S/N: MST1-UP

PART OF 258-3151 MANIFOLD & LINES GP-CONTROL

AN ATTACHMENT

SMCS-5264 **i03648345**

NOTE	REF NO	GRAPHIC REF	PART NUMBER	QTY	PART NAME 1 2 3 4 5 6 (PRODUCT LEVEL)	SEE PAGE
	1	1	**258-3160**	1	BRACKET AS	
Y	2	1	**274-8564**	1	MANIFOLD GP-CONTROL (MOTOR, 2-SPEED)	421
	3	1	**4P-7429**	1	CLIP	
M	4	1	**7X-2535**	2	BOLT (M6X1X60-MM)	
	5	1	**8T-4223**	2	WASHER-HARD (13.5X25.5X3-MM THK)	
M	6	1	**8T-4192**	1	BOLT (M12X1.75X25-MM)	
	7	1	**8T-4205**	2	WASHER-HARD (7.2X14.5X2-MM THK)	

M-METRIC PART
Y-SEPARATE ILLUSTRATION

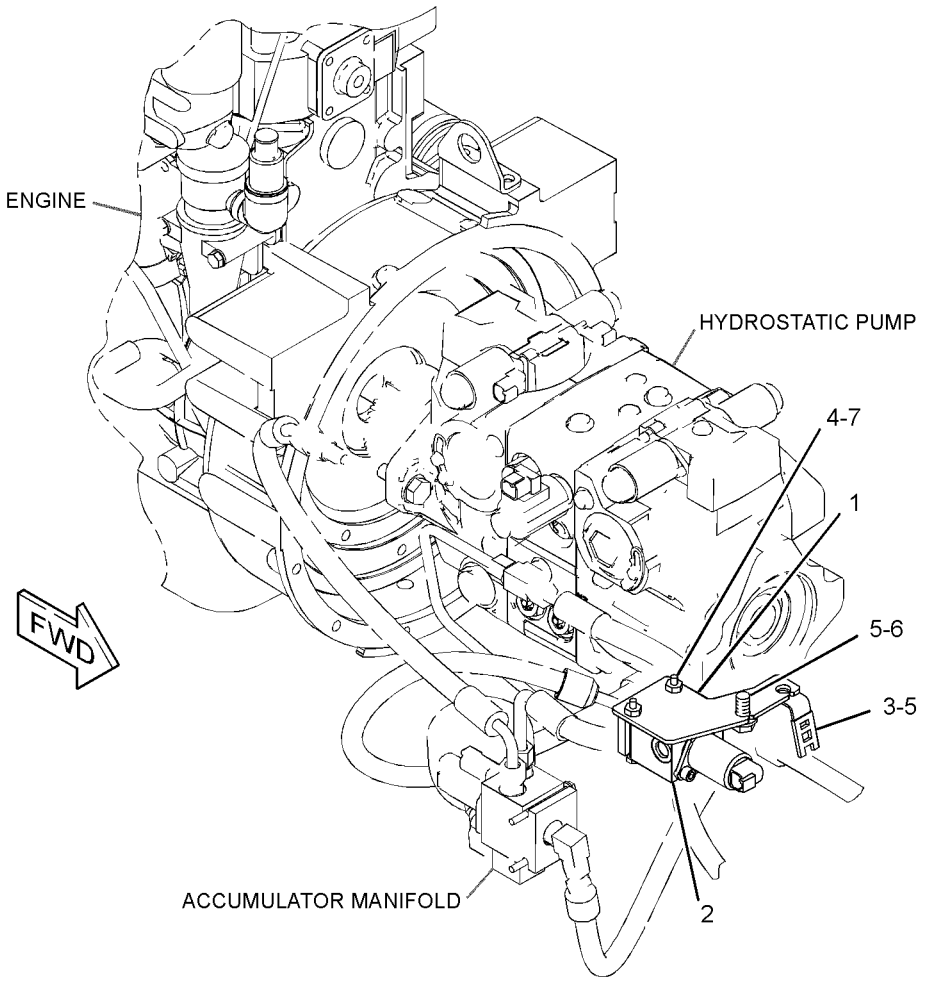

GRAPHIC #1 **<END>** g01526673

258-3469 MANIFOLD & MTG GP-CONTROL–
WORK TOOL POSITIONER
S/N: MST1-UP
PART OF 258-3358, 304-6744 HYDRAULIC AR
AN ATTACHMENT

SMCS-5264 **i02667630**

NOTE	REF NO	GRAPHIC REF	PART NUMBER	QTY	PART NAME 1 2 3 4 5 6 (PRODUCT LEVEL)	SEE PAGE
Y	1	1	**258-2802**	1	MANIFOLD & SOLENOID GP-CONTROL (WORK TOOL POSITIONER)	417
	2	1	**4P-8134**	1	CLIP	
M	3	1	**7X-2535**	2	BOLT (M6X1X60-MM)	
	4	1	**8T-4205**	1	WASHER-HARD (7.2X14.5X2-MM THK)	

M-METRIC PART
Y-SEPARATE ILLUSTRATION

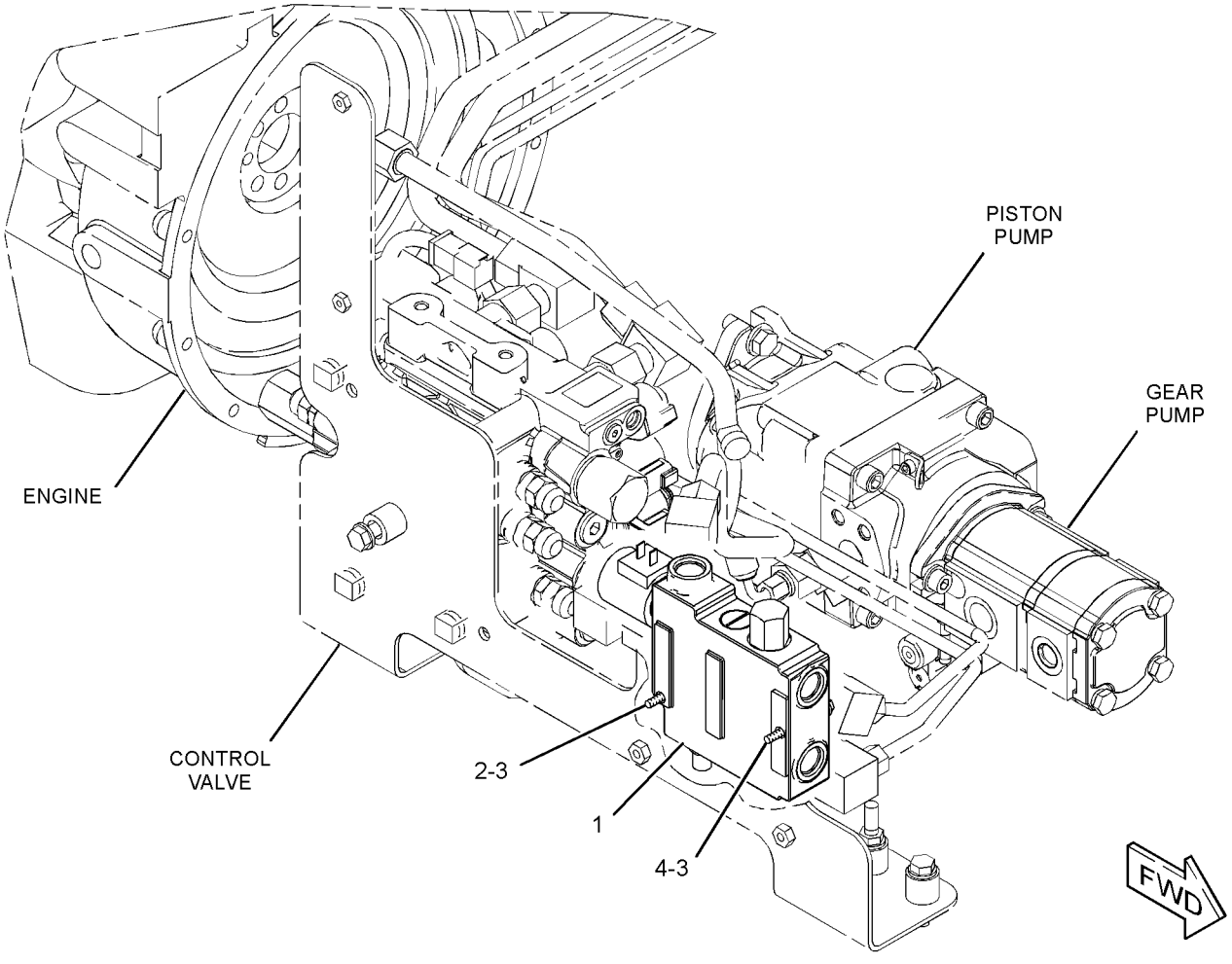

GRAPHIC #1 **<END>** g01322786

258-2802 MANIFOLD & SOLENOID GP-CONTROL–

WORK TOOL POSITIONER

S/N: MST1-UP

PART OF 294-5580 KIT-WORK TOOL POSITIONER, 258-3469 MANIFOLD & MTG GP-CONTROL

AN ATTACHMENT

SMCS-5264, 5479 **i02667628**

NOTE	REF NO	GRAPHIC REF	PART NUMBER	QTY	PART NAME 1 2 3 4 5 6 (PRODUCT LEVEL)	SEE PAGE
	1	1	**102-8804**	1	KIT-RECEPTACLE (4-PIN)	
					(INCLUDES RECEPTACLE AS & WEDGE)	
	2	1	**3E-3377**	1	WEDGE-RECEPTACLE LOCK (4-PIN)	
	3	1	**186-3735**	2	PIN-CONNECTOR (16-GA TO 18-GA)	
	4	1	**9G-3695**	2	PLUG-SEAL	
	5	1	**218-6858**	1	CARTRIDGE AS-VALVE	
	6	1	**218-6857**	1	COIL AS	
					AVAILABLE REPAIR KIT(S):	
			218-6856	1	KIT-SEAL (DIVERTER VALVE)	
					(INCLUDES O-RINGS, COVER & BACK-UP WASHER)	
			155-1279	1	KIT-SEAL (DIVERTER VALVE)	
					(INCLUDES SEAL-O-RINGS & RING-BACKUP)	

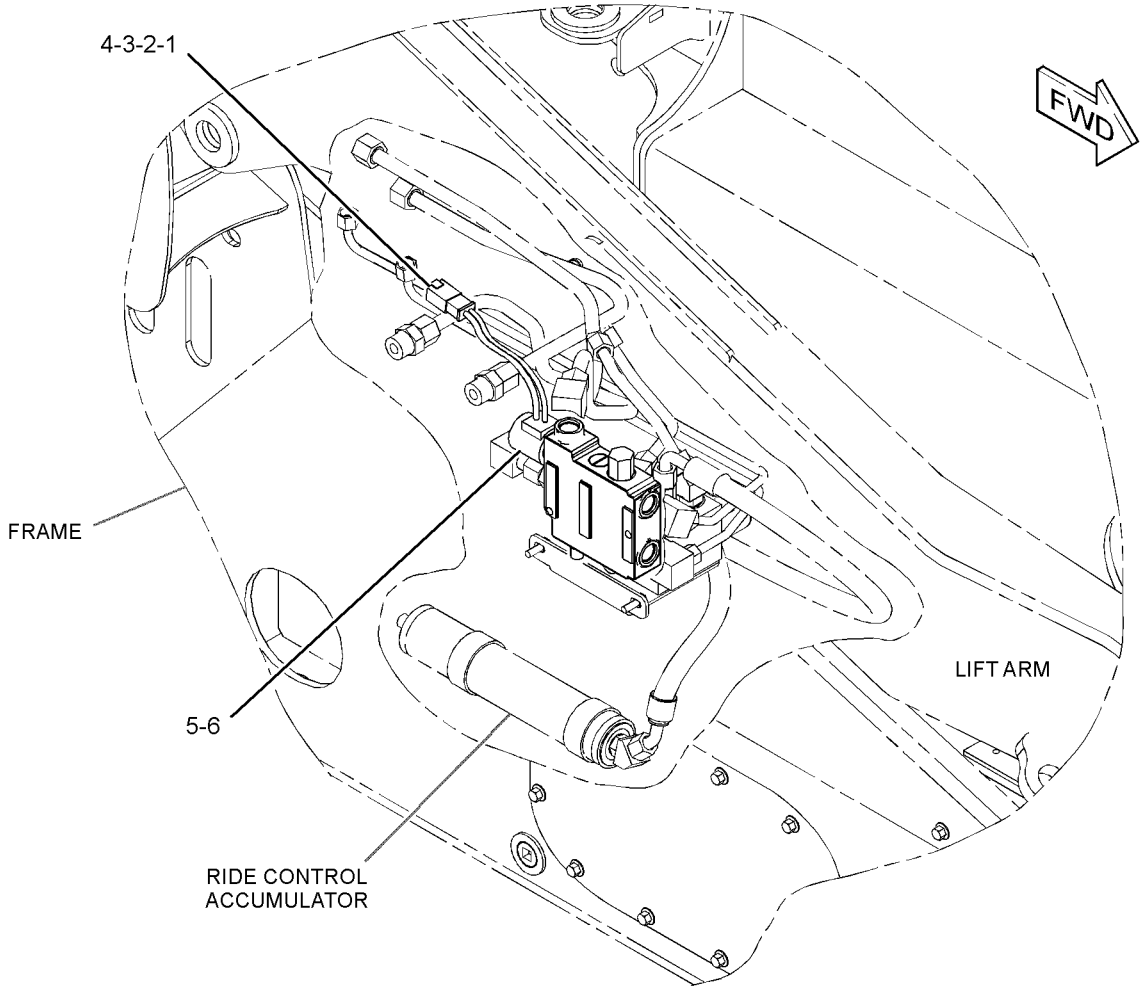

GRAPHIC #1 **<END>** g01341164

HYDRAULIC SYSTEM

258-9011 MANIFOLD GP-CONTROL—ANGLING BLADE

S/N: MST1-UP

PART OF 231-5278 MANIFOLD & MTG GP-CONTROL

AN ATTACHMENT

SMCS-5117, 5264, 5479 **i03690344**

NOTE	REF NO	GRAPHIC REF	PART NUMBER	QTY	PART NAME 1 2 3 4 5 6 (PRODUCT LEVEL)	SEE PAGE
M	1	1	**9X-6615**	8	BOLT (M5X0.8X30-MM)	
	2	1	**243-5601**	7	PLUG	
	3	1	**244-1363**	1	VALVE GP-SOLENOID (ANGLE)	
		1	**215-3273**	1	CARTRIDGE AS-VALVE	
		1	**6V-8399**	1	SEAL-O-RING	
		1	**215-3274**	1	SEAL & RETAINER AS	
		1	**217-3875**	1	SEAL-O-RING	
		1	**212-4114**	1	SEAL-O-RING	
		1	**215-3275**	1	KIT-SEAL	
		1	**227-7025**	1	SOLENOID AS	
	4	1	**244-1364**	1	VALVE GP-SOLENOID (TILT)	
		1	**215-3273**	1	CARTRIDGE AS-VALVE	
		1	**6V-8399**	1	SEAL-O-RING	
		1	**215-3274**	1	SEAL & RETAINER AS	
		1	**217-3875**	1	SEAL-O-RING	
		1	**212-4114**	1	SEAL-O-RING	
		1	**215-3275**	1	KIT-SEAL	
		1	**227-7025**	1	SOLENOID AS	
	5	1	**244-1365**	2	VALVE GP-RELIEF	
					(EACH INCLUDES)	
		1	**192-7508**	1	SEAL-O-RING	
	6	1	**266-8903**	4	VALVE GP-CHECK	
					(EACH INCLUDES)	
		1	**2M-9780**	1	SEAL-O-RING	
		1	**7J-9108**	1	SEAL-O-RING	
	7	1	**180-7451**	8	WASHER-HARD (5.3X8.8X2-MM THK)	

M-METRIC PART

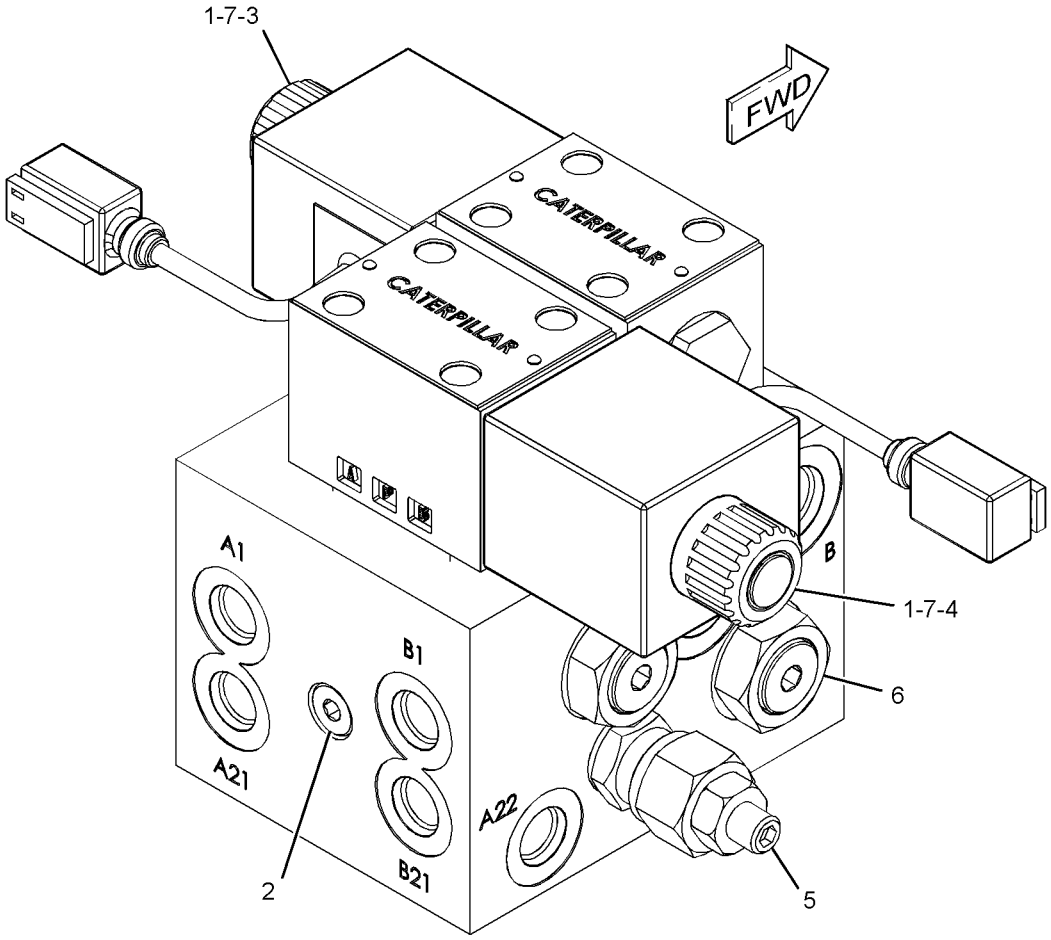

GRAPHIC #1 **<END>** g01178679

HYDRAULIC SYSTEM

274-8563 MANIFOLD GP-CONTROL–PILOT SHUTOFF

S/N: MST1-UP

PART OF 258-3462 MANF & SOLENOID MTG GP-ACCUM

SMCS-5117, 5264, 5479 **i03648362**

NOTE	REF NO	GRAPHIC REF	PART NUMBER	QTY	PART NAME 1 2 3 4 5 6 (PRODUCT LEVEL)	SEE PAGE
	1	1	**245-1181**	1	FLANGE	
J	2	1	**252-4734**	1	VALVE GP-SOLENOID (PILOT SHUTOFF)	
		1	**245-1181**	1	FLANGE	
Y	3	1	**6E-4701**	1	VALVE GP-CHECK (PILOT OIL)	440
M	4	1	**8T-1158**	1	BOLT-SOCKET HEAD (M8X1.25X20-MM)	
					AVAILABLE REPAIR KIT(S):	
J			**245-1912**	1	KIT-SEAL (SOLENOID VALVE)	
					(INCLUDES SEAL-O-RINGS)	

J-(KIT MARKED J SERVICES PARTS MARKED J)
M-METRIC PART
Y-SEPARATE ILLUSTRATION

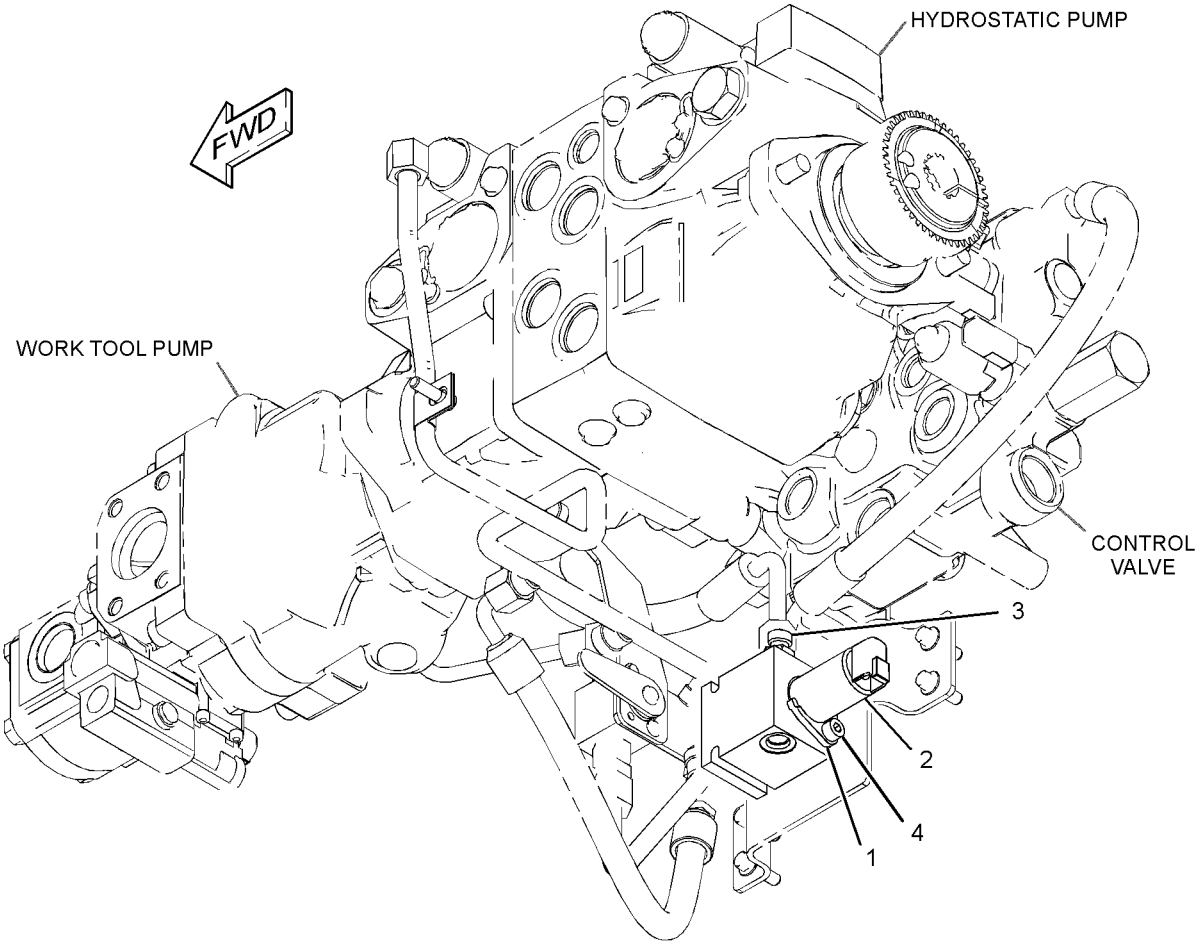

GRAPHIC #1 **<END>** g01341170

274-8564 MANIFOLD GP-CONTROL–MOTOR, 2-SPEED

S/N: MST1-UP
PART OF 258-3463 MANIFOLD & MTG GP-CONTROL
AN ATTACHMENT

SMCS-5117, 5264, 5479 **i03635743**

NOTE	REF NO	GRAPHIC REF	PART NUMBER	QTY	PART NAME 1 2 3 4 5 6 (PRODUCT LEVEL)	SEE PAGE
	1	1	**245-1181**	1	FLANGE	
J	2	1	**252-4734**	1	VALVE GP-SOLENOID (MOTOR, 2-SPEED)	
		1	**245-1181**	1	FLANGE	
M	3	1	**8T-1158**	1	BOLT-SOCKET HEAD (M8X1.25X20-MM)	
					AVAILABLE REPAIR KIT(S):	
J			**245-1912**	1	KIT-SEAL (SOLENOID VALVE)	
					(INCLUDES SEAL-O-RINGS)	

J-KIT MARKED J SERVICES PARTS MARKED J
M-METRIC PART

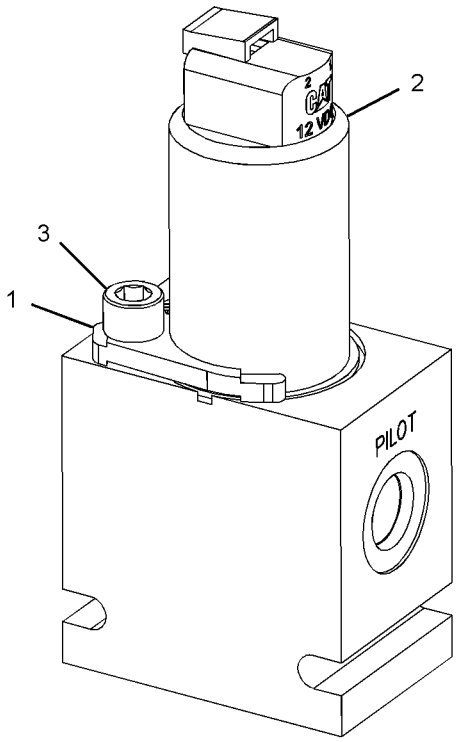

GRAPHIC #1 **<END>** g01322427

291-0010 MANIFOLD GP-CONTROL–QUICK COUPLER

S/N: MST1-UP

PART OF 258-3911 KIT-QUICK COUPLER CONVERSION, 258-2425 LINES GP-COUPLER AN ATTACHMENT

SMCS-5117, 5264, 5479 **i02939462**

NOTE	REF NO	GRAPHIC REF	PART NUMBER	QTY	PART NAME 1 2 3 4 5 6 (PRODUCT LEVEL)	SEE PAGE
J	1	1	**274-8044**	1	VALVE GP-SOLENOID (QUICK COUPLER)	
		1	**274-8034**	2	COIL AS (12-VOLT)	
					AVAILABLE REPAIR KIT(S):	
J			**106-3108**	1	KIT-SEAL (QUICK COUPLER VALVE)	

J-KIT MARKED J SERVICES PART MARKED J

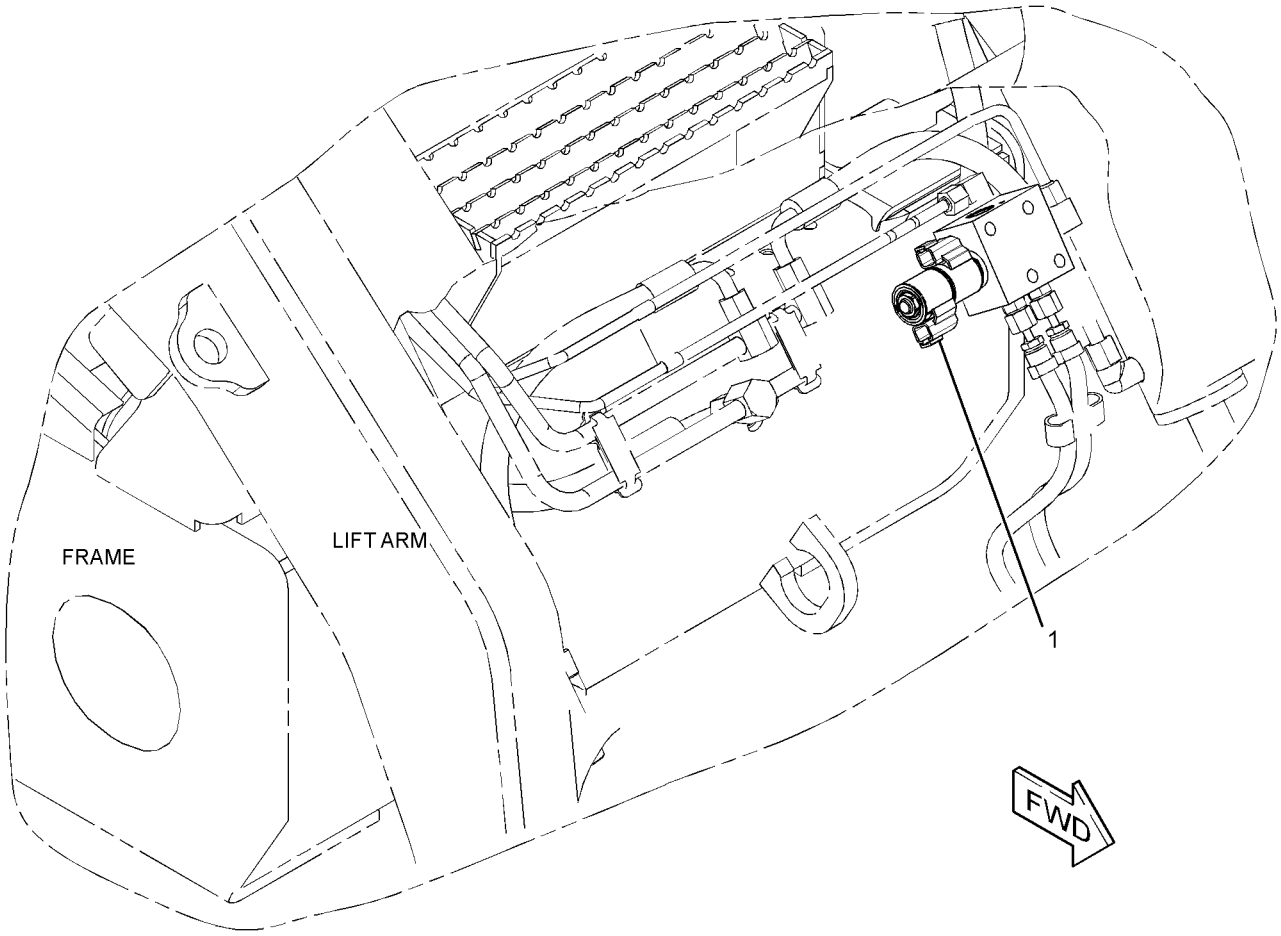

GRAPHIC #1 **<END>** g01372907

307-2275 MANIFOLD GP-RIDE CONTROL

S/N: MST1-UP

PART OF 304-6750 KIT-RIDE CONTROL, 304-6747 MANF & SOLENOID MTG GP-ACCUM

AN ATTACHMENT

SMCS-5264 **i02836992**

NOTE	REF NO	GRAPHIC REF	PART NUMBER	QTY	PART NAME 1 2 3 4 5 6 (PRODUCT LEVEL)	SEE PAGE
	1	1	**274-8035**	2	COIL AS	
	2	1	**303-2206**	2	VALVE GP-CONTROL (QUICK COUPLER)	
	3	1	**141-0888**	2	KIT-SEAL	
					(EACH INCLUDES SEAL-O-RINGS & BACK-UP RING)	

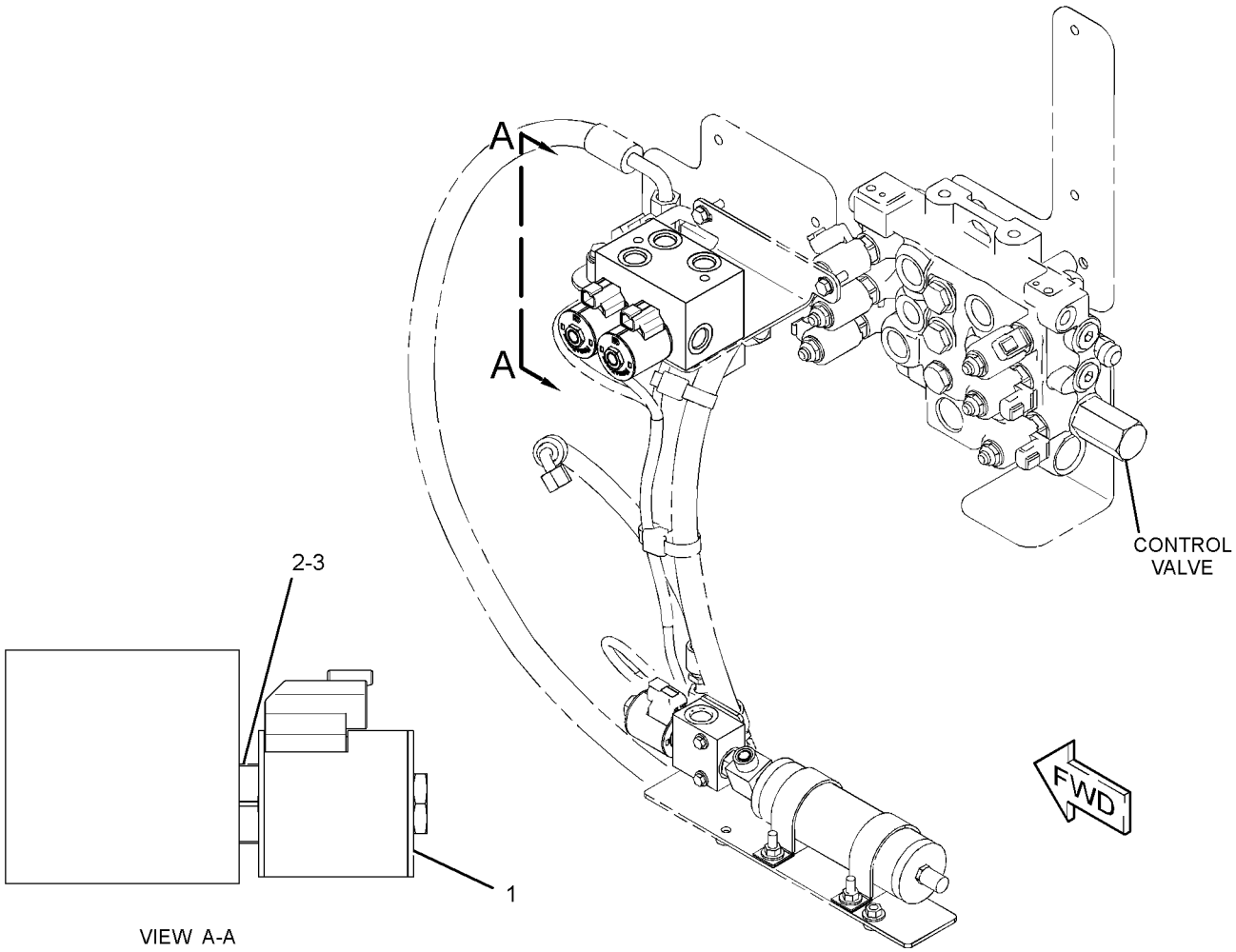

GRAPHIC #1 **<END>** g01420203

307-2276 MANIFOLD GP-RIDE CONTROL–ACCUMULATOR

S/N: MST1-UP

PART OF 304-6750 KIT-RIDE CONTROL, 304-6747 MANF & SOLENOID MTG GP-ACCUM

AN ATTACHMENT

SMCS-5264 **i02837001**

NOTE	REF NO	GRAPHIC REF	PART NUMBER	QTY	PART NAME 1 2 3 4 5 6 (PRODUCT LEVEL)	SEE PAGE
	1	1	**274-8035**	1	COIL AS	
	2	1	**307-2277**	1	VALVE GP-CONTROL	
	3	1	**141-0888**	1	KIT-SEAL	
					(INCLUDES SEAL-O-RINGS & A BACK-UP SEAL)	

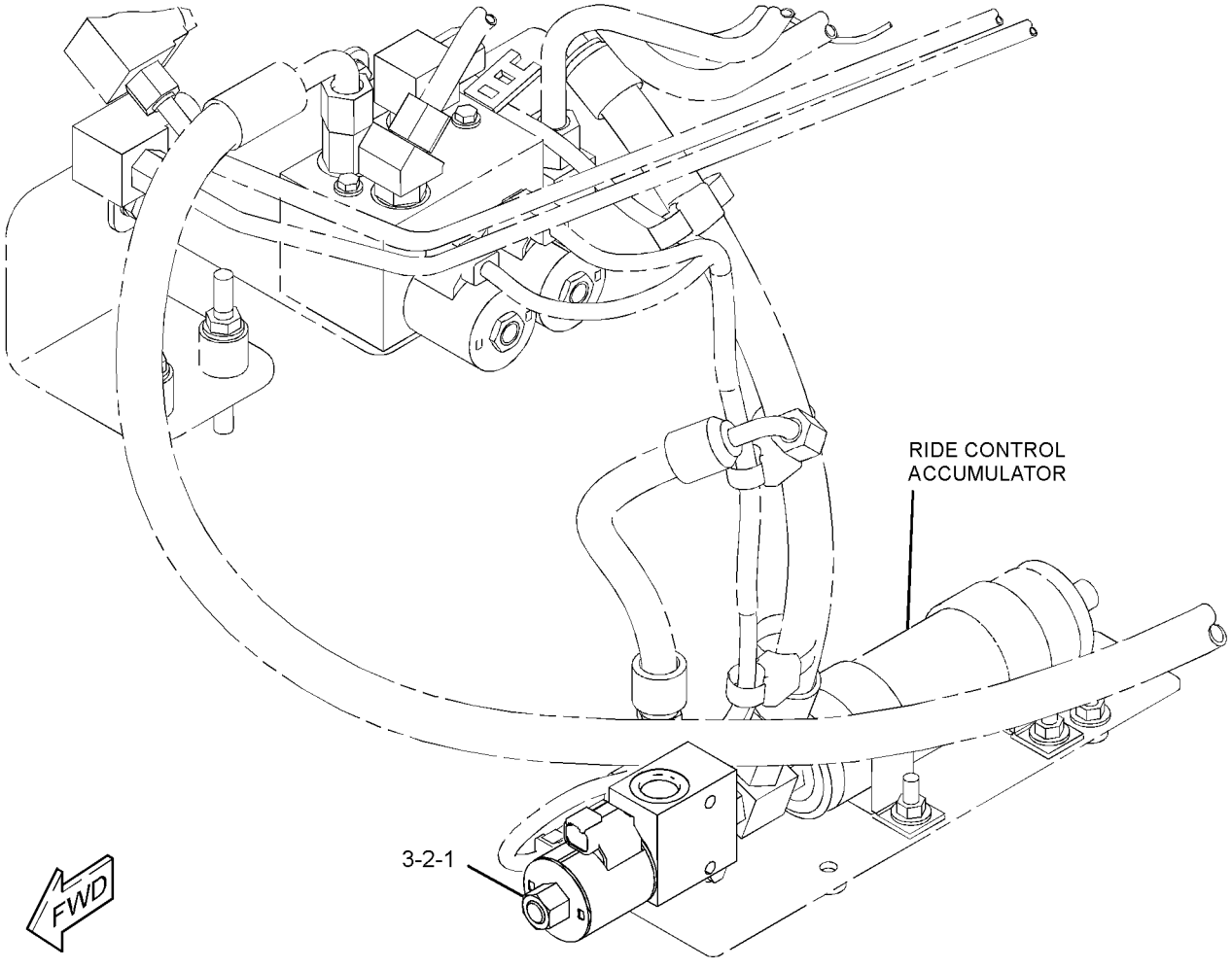

GRAPHIC #1 **<END>** g01420190

258-2579 MOTOR & MTG GP-HYDRAULIC FAN

S/N: MST1-UP

PART OF 258-3803, 315-6354 CONVERSION AR-MACHINE, 258-3800, 258-3802, 258-3804 CONVERSION AR-ROADING

AN ATTACHMENT

SMCS-1386 **i03635732**

NOTE	REF NO	GRAPHIC REF	PART NUMBER	QTY	PART NAME 1 2 3 4 5 6 (PRODUCT LEVEL)	SEE PAGE
J	1	1	**258-2577**	1	MOTOR GP-GEAR (FAN, DEMAND)	
M		1	**8T-0271**	2	BOLT-SOCKET HEAD (M10X1.5X35-MM)	
M		1	**9T-4884**	2	BOLT (M10X1.5X30-MM)	
	2	1	**277-8862**	1	VALVE GP-SOLENOID (FAN)	
		1	**238-4628**	1	COIL AS (12-VOLT)	
	3	1	**8T-4121**	2	WASHER-HARD (11X21X2.5-MM THK)	
	4	1	**8T-4224**	1	WASHER-HARD (8.8X16X2-MM THK)	
M	5	1	**8T-7547**	1	BOLT (M8X1.25X30-MM)	
M	6	1	**9X-6032**	2	BOLT-SOCKET HEAD (M10X1.5X30-MM)	
					AVAILABLE REPAIR KIT(S):	
J			**278-8716**	1	KIT-SEAL	
					(INCLUDES E-SEALS, SEAL-O-RINGS, SHAFT SEAL, SNAP RING & BACK UP SEALS)	

J-KIT MARKED J SERVICES PARTS MARKED J
M-METRIC PART

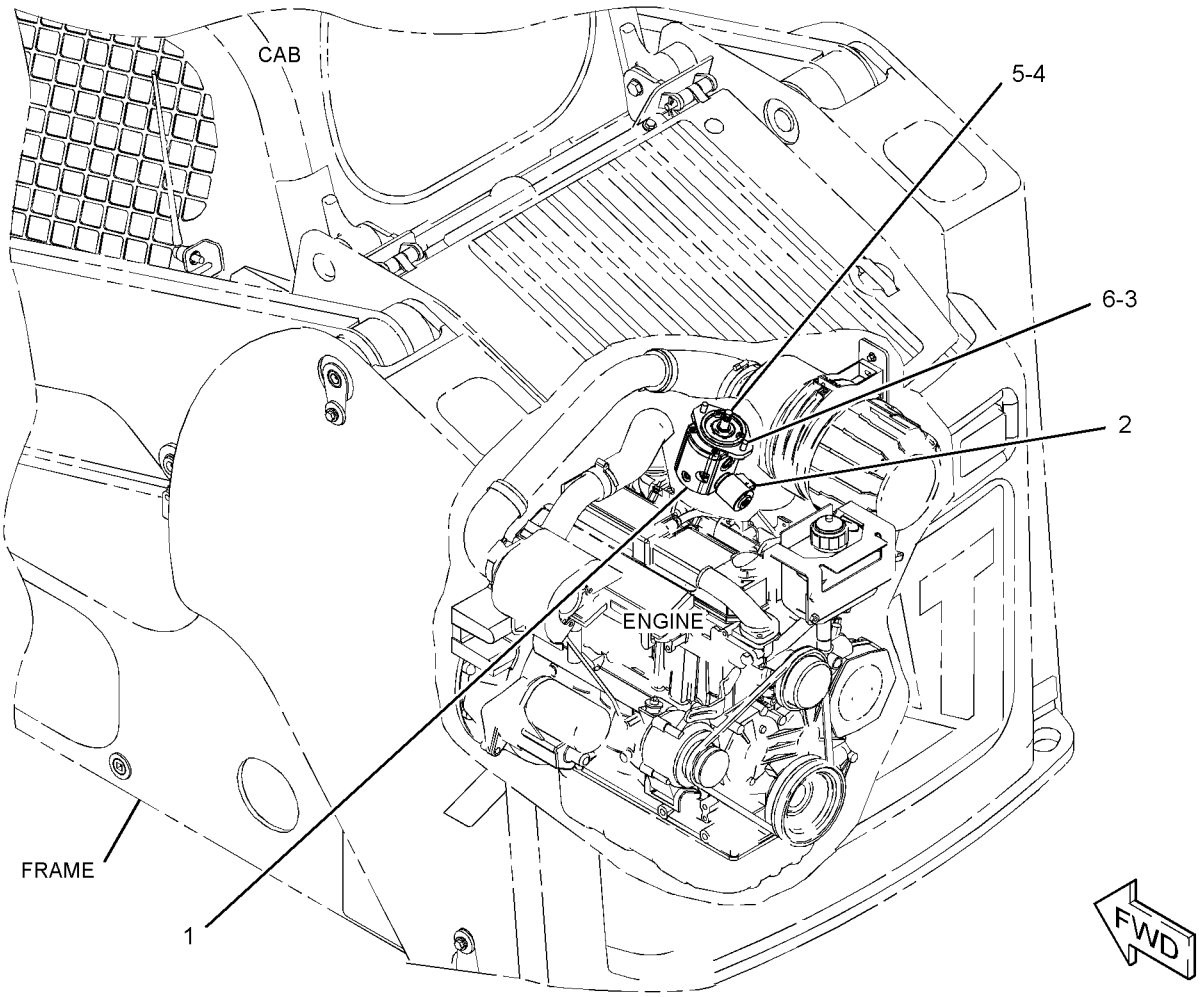

GRAPHIC #1 **<END>** g01315096

HYDRAULIC SYSTEM

154-5011 MOUNTING GP-CYLINDER

S/N: MST1-UP
PART OF 154-5004, 154-5010, 279-5382, 279-5390, 279-5398, 279-5403, 293-0139, 325-7036, 325-7046, 325-7056, 325-7066, 325-7076 BUCKET
AR-MULTIPURPOSE
AN ATTACHMENT

SMCS-5498 **i01066088**

NOTE	REF NO	GRAPHIC REF	PART NUMBER	QTY	PART NAME 1 2 3 4 5 6 (PRODUCT LEVEL)	SEE PAGE
	1	1	**154-5012**	2	PIN	
	2	1	**154-5013**	2	PIN	
	3	1	**3B-8489**	2	FITTING-GREASE	
M	4	1	**6V-9189**	4	LOCKNUT (M8X1.25-THD)	
M	5	1	**8T-6869**	4	BOLT (M8X1.25X60-MM)	

M-METRIC PART

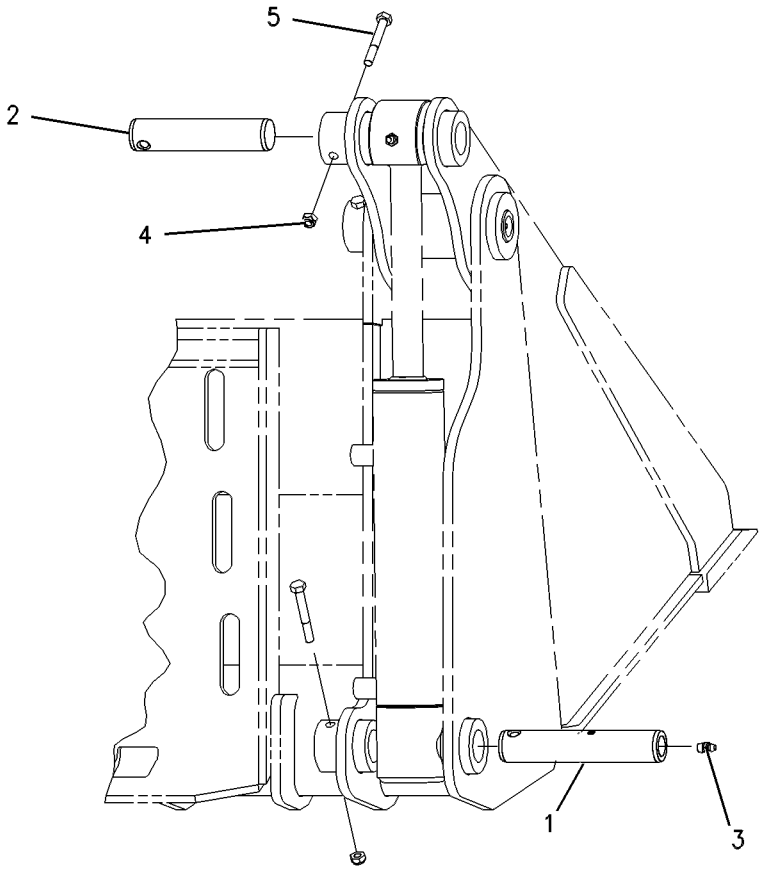

GRAPHIC #1 **<END>** g00560356

156-0891 MOUNTING GP-CYLINDER—INDUSTRIAL

S/N: MST1-UP

PART OF 157-7223, 157-7224, 157-7225, 217-6229 BUCKET AR-GRAPPLE, 279-5350, 279-5360 FORK AR-GRAPPLE

AN ATTACHMENT

SMCS-5498 **i02578037**

NOTE	REF NO	GRAPHIC REF	PART NUMBER	QTY	PART NAME 1 2 3 4 5 6 (PRODUCT LEVEL)	SEE PAGE
	1	1	**255-8058**	2	PLATE	
	2	1	**156-0913**	1	PLATE	
	3	1	**157-0941**	2	PIN	
	4	1	**157-0942**	2	PIN	
	5	1	**159-8035**	2	FILM-WARNING (CRUSH HAZARD, STAY BACK)	
	6	1	**3B-8489**	2	FITTING-GREASE	
	7	1	**4M-5285**	4	RING-RETAINING (EXTERNAL)	
M	8	1	**6V-9189**	2	LOCKNUT (M8X1.25-THD)	
M	9	1	**8T-4138**	3	BOLT (M6X1X20-MM)	
M	10	1	**8T-6869**	2	BOLT (M8X1.25X60-MM)	
	11	1	**9X-2026**	3	WASHER (6.5X17X1-MM THK)	
	12	1	**9X-6274**	4	WASHER (32.5X50X1.6-MM THK)	

M-METRIC PART

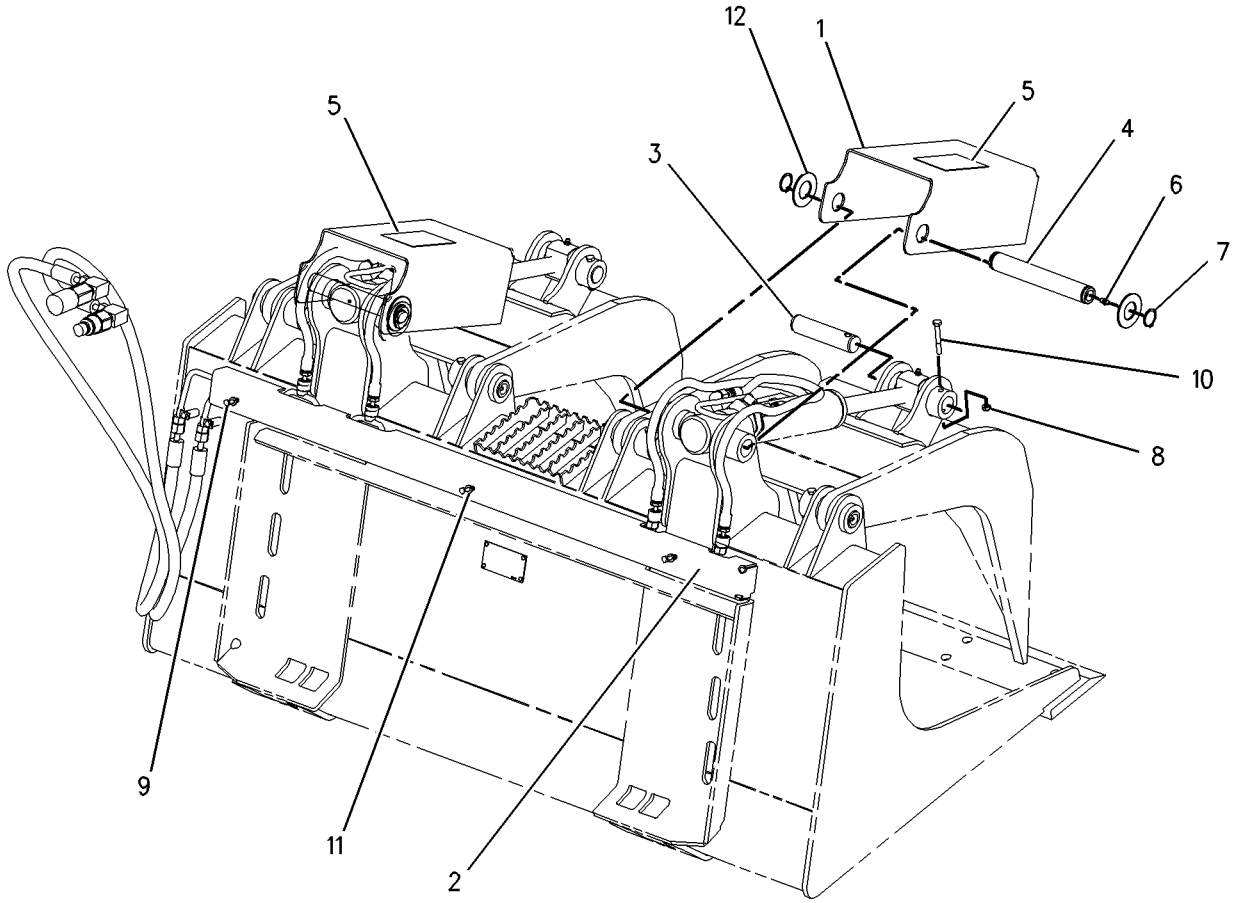

GRAPHIC #1 **<END>** g00777681

HYDRAULIC SYSTEM

165-8731 MOUNTING GP-CYLINDER–UTILITY

S/N: MST1-UP
PART OF 285-6116 GRAPPLE & CYLINDER GP-UTILITY
AN ATTACHMENT

SMCS-5498 **i02017132**

NOTE	REF NO	GRAPHIC REF	PART NUMBER	QTY	PART NAME 1 2 3 4 5 6 (PRODUCT LEVEL)	SEE PAGE
	1	1	**154-5013**	2	PIN	
M	2	1	**6V-9189**	2	LOCKNUT (M8X1.25-THD)	
M	3	1	**8T-6869**	2	BOLT (M8X1.25X60-MM)	

M-METRIC PART

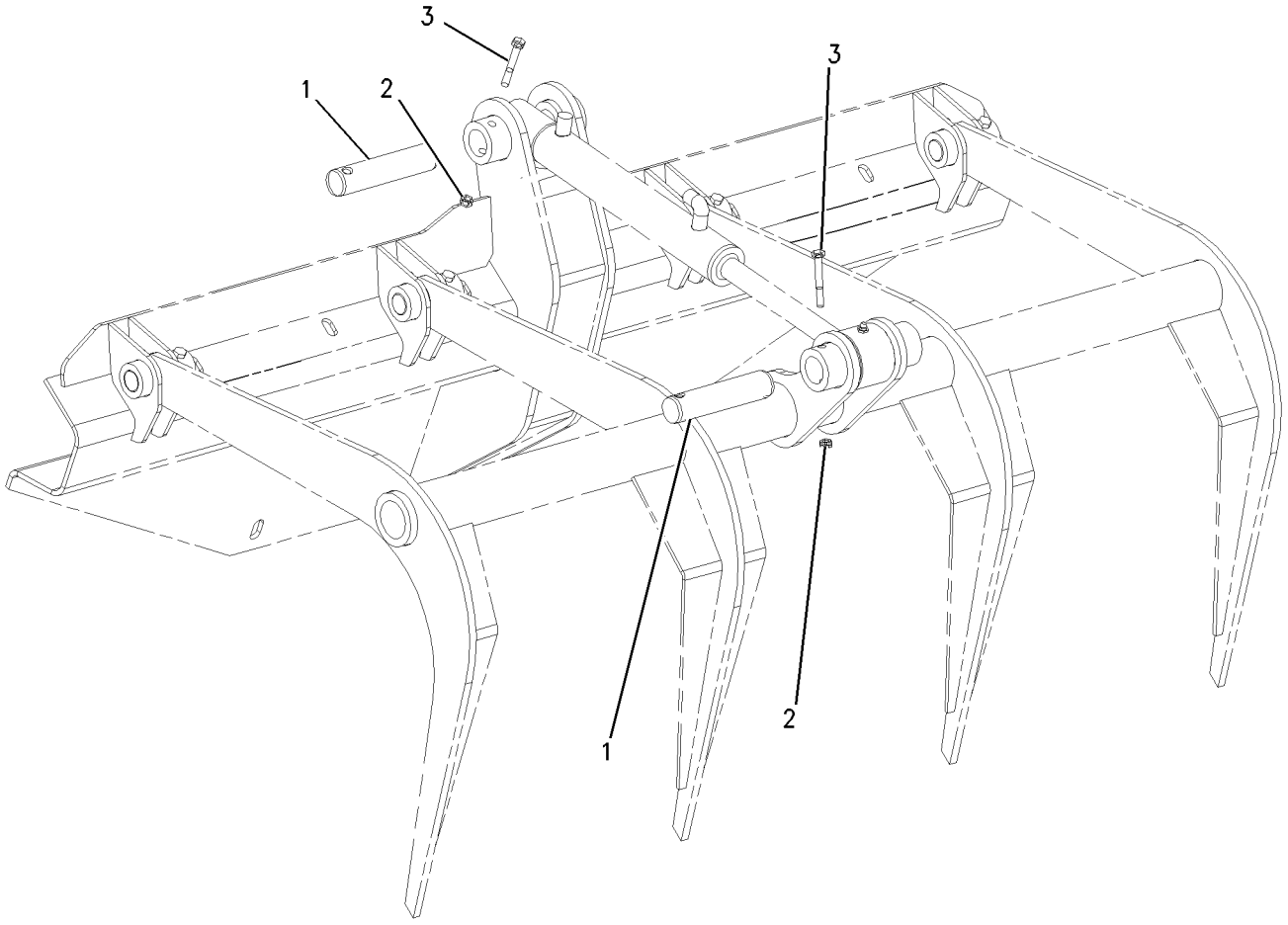

GRAPHIC #1 **<END>** g00652937

286-9248 MOUNTING GP-CYLINDER—GRAPPLE BUCKET

S/N: MST1-UP

PART OF 286-9300, 286-9301 BUCKET AR-GRAPPLE

AN ATTACHMENT

SMCS-5498 **i02723716**

NOTE	REF NO	GRAPHIC REF	PART NUMBER	QTY	PART NAME 1 2 3 4 5 6 (PRODUCT LEVEL)	SEE PAGE
	1	1	**157-0941**	2	PIN	
	2	1	**157-0942**	2	PIN	
	3	1	**286-9273**	2	PLATE	
	4	1	**286-9289**	2	PLATE AS	
	5	1	**3B-8489**	2	FITTING-GREASE	
	6	1	**4M-5285**	4	RING-RETAINING (EXTERNAL)	
M	7	1	**6V-9189**	2	LOCKNUT (M8X1.25-THD)	
	8	1	**7X-7729**	8	WASHER (11X25X3-MM THK)	
M	9	1	**8T-4195**	8	BOLT (M10X1.5X30-MM)	
M	10	1	**8T-6869**	2	BOLT (M8X1.25X60-MM)	
	11	1	**9X-6274**	4	WASHER (32.5X50X1.6-MM THK)	

M-METRIC PART

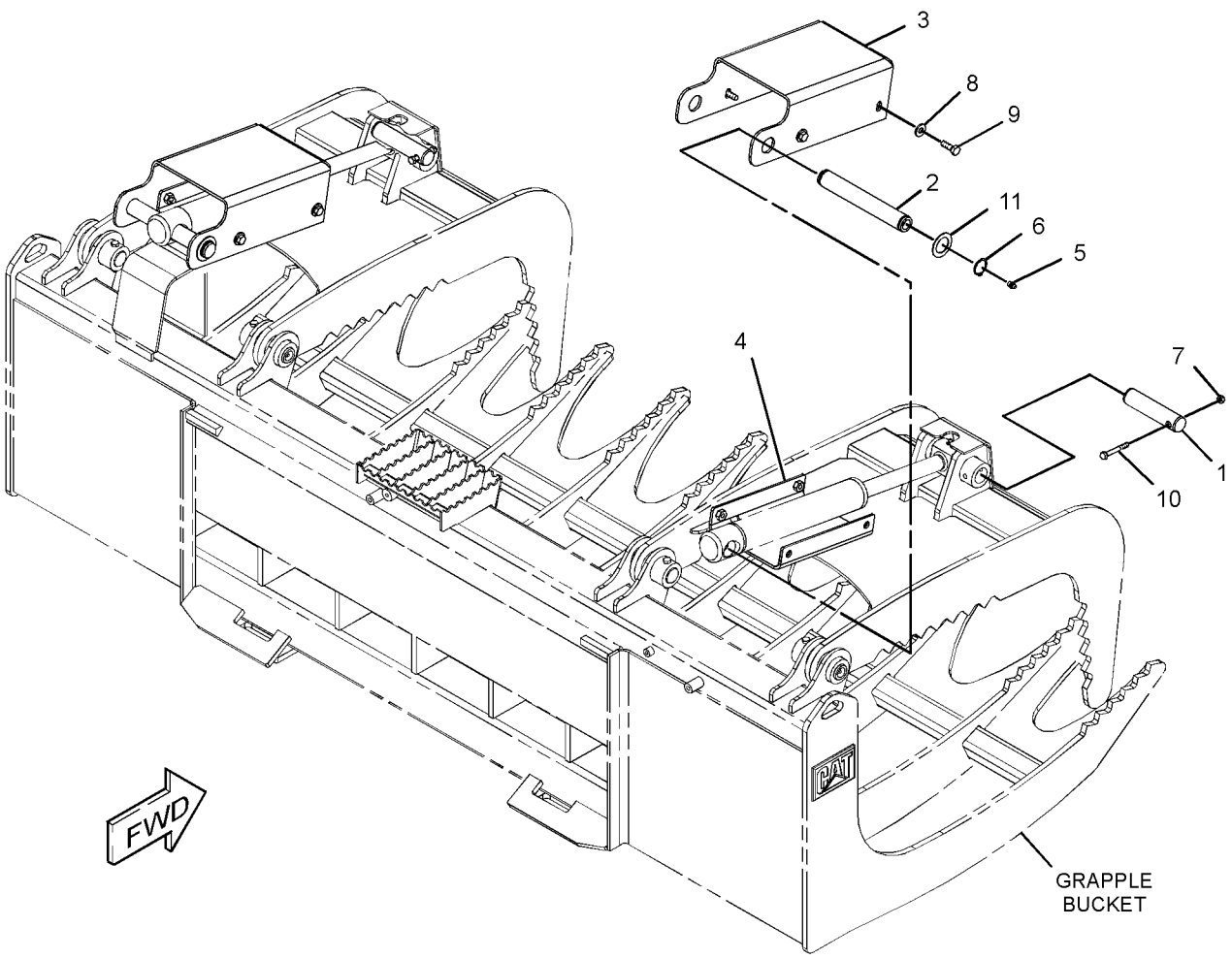

GRAPHIC #1 **<END>** g01372951

HYDRAULIC SYSTEM

258-3402 PUMP & MTG GP-GEAR

S/N: MST1-UP
PART OF 258-3731 HYDRAULIC AR
AN ATTACHMENT

SMCS-5073 **i03507900**

NOTE	REF NO	GRAPHIC REF	PART NUMBER	QTY	PART NAME 1 2 3 4 5 6 (PRODUCT LEVEL)	SEE PAGE
J	1	1	**258-3260**	1	PUMP GP-GEAR	
		1	**313-5646**	4	BOLT	
		1	**271-2360**	4	WASHER-HARD (15X22X2.5-MM THK)	
M		1	**297-8107**	4	BOLT (M10X1.5X105-MM)	
		1	**8T-5095**	4	WASHER-PLATED (11X16X2-MM THK)	
	2	1	**8T-4223**	2	WASHER-HARD (13.5X25.5X3-MM THK)	
M	3	1	**8T-4956**	2	BOLT (M12X1.75X35-MM)	
	4	1	**8T-5049**	1	SEAL-O-RING	
					AVAILABLE REPAIR KIT(S):	
J			**278-8714**	1	KIT-SEAL (GEAR PUMP)	
					(INCLUDES SNAP RING & SEALS)	

J-KITS MARKED J AVAILABLE FOR PART MARKED J
M-METRIC PART

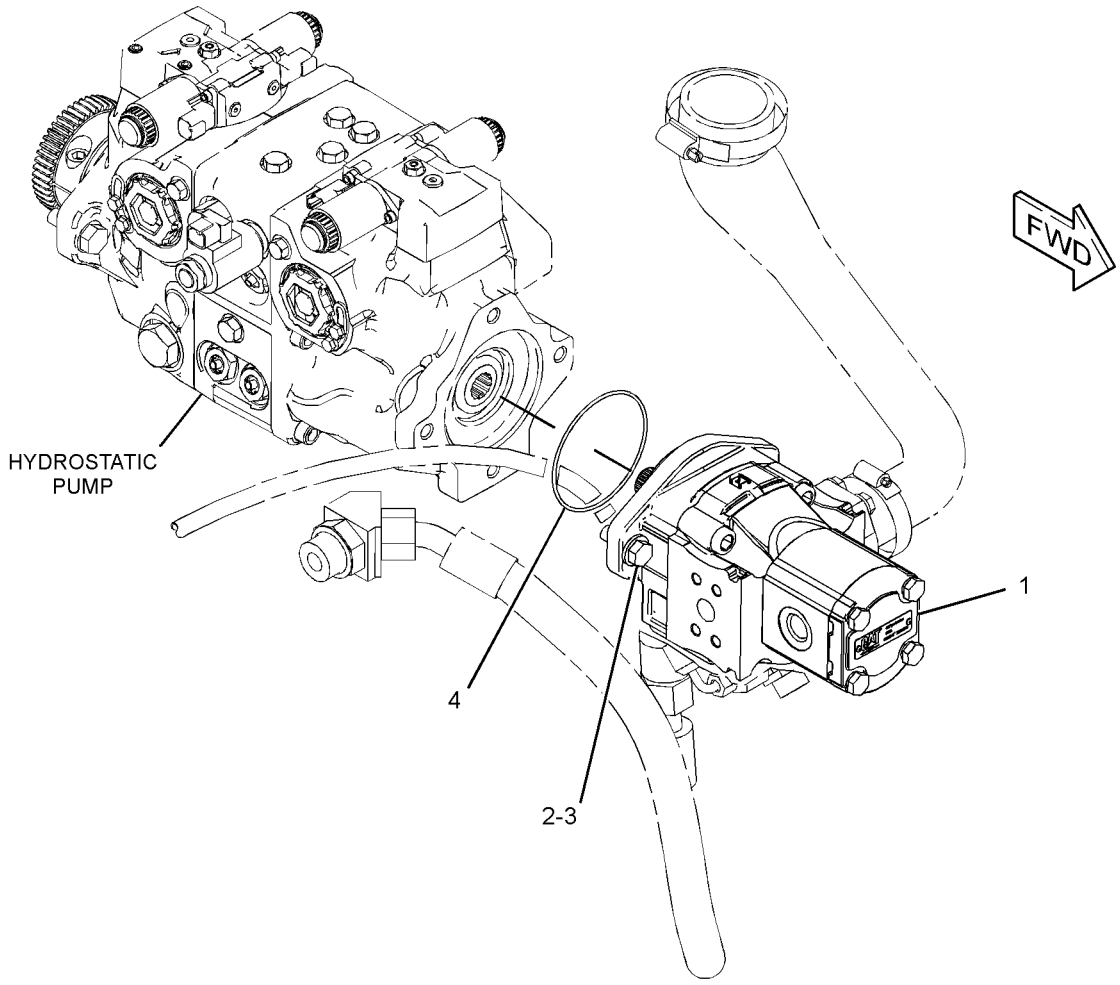

GRAPHIC #1 **<END>** g01326166

258-2556 PUMP & MTG GP-WORK TOOL

S/N: MST1-UP
PART OF 258-3181 HYDRAULIC AR
AN ATTACHMENT

SMCS-6700 **i03635718**

NOTE	REF NO	GRAPHIC REF	PART NUMBER	QTY	PART NAME 1 2 3 4 5 6 (PRODUCT LEVEL)	SEE PAGE
J	1	1	**258-2553**	1	PUMP GP-GEAR	
		1	**313-5646**	4	BOLT	
M		1	**297-8107**	4	BOLT (M10X1.5X105-MM)	
		1	**271-2360**	4	WASHER-HARD (15X22X2.5-MM THK)	
		1	**8T-5095**	4	WASHER-PLATED (11X16X2-MM THK)	
	2	1	**8T-4223**	2	WASHER-HARD (13.5X25.5X3-MM THK)	
M	3	1	**8T-4956**	2	BOLT (M12X1.75X35-MM)	
	4	1	**8T-5049**	1	SEAL-O-RING	
					AVAILABLE REPAIR KIT(S):	
J			**278-8714**	1	KIT-SEAL (GEAR PUMP)	
					(INCLUDES E-SEALS, SEAL-O-RINGS, SHAFT SEAL, SNAP RING & BACK UP SEALS)	

J-KIT MARKED J SERVICES PART MARKED J
M-METRIC PART

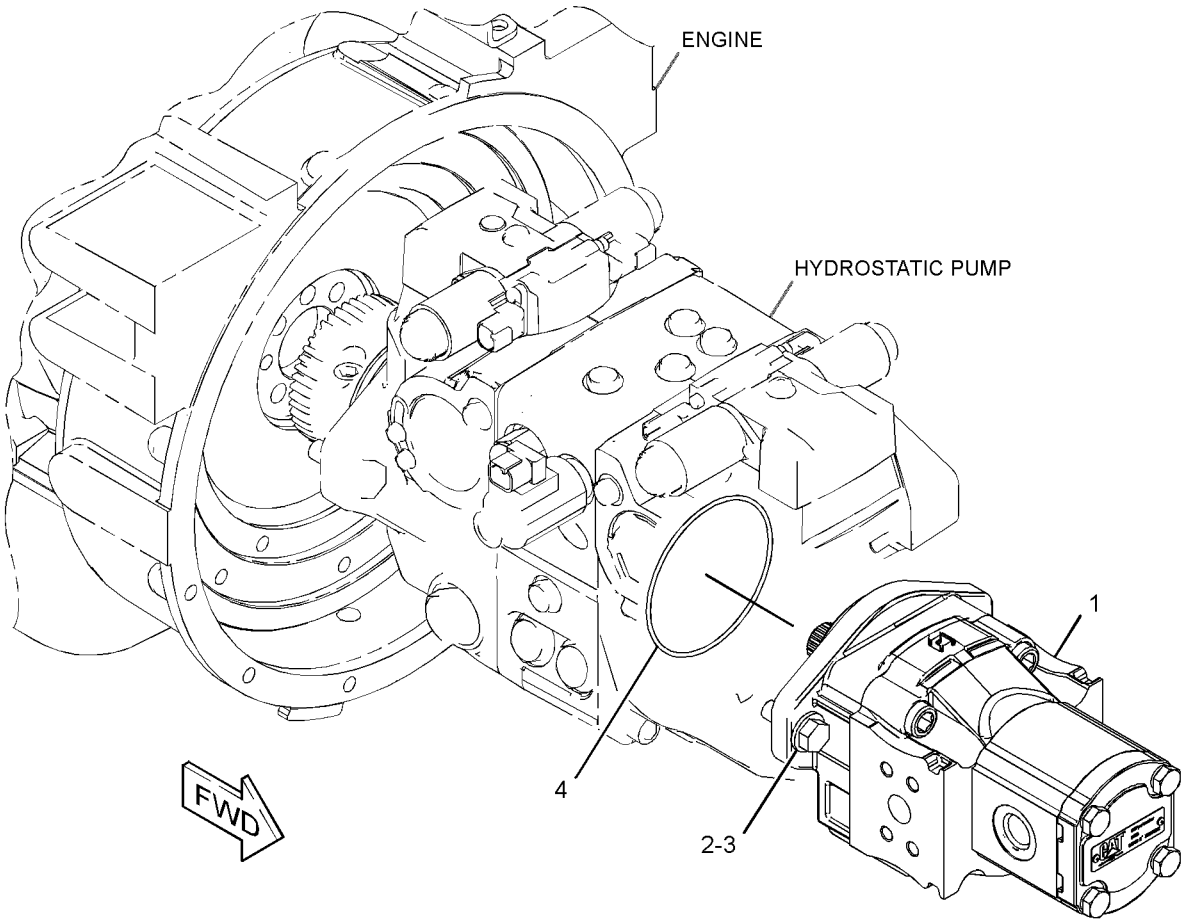

GRAPHIC #1 **<END>** g01328229

HYDRAULIC SYSTEM

258-2557 PUMP & MTG GP-WORK TOOL—HIGH FLOW

S/N: MST1-UP
PART OF 258-3183 HYDRAULIC AR
AN ATTACHMENT

SMCS-6700 **i03690284**

NOTE	REF NO	GRAPHIC REF	PART NUMBER	QTY	PART NAME 1 2 3 4 5 6 (PRODUCT LEVEL)	SEE PAGE
YR	1	1	**258-2554**	1	PUMP GP-PISTON (HIGH FLOW)	433
	2	1	**258-2555**	1	PUMP GP-GEAR (WORK TOOL HYDRAULIC)	
		1	**8T-5095**	4	WASHER-PLATED (11X16X2-MM THK)	
M		1	**8T-6685**	4	BOLT (M10X1.5X110-MM)	
M	3	1	**101-7404**	2	BOLT-SOCKET HEAD (M10X1.5X30-MM)	
	4	1	**5P-3863**	1	SEAL-O-RING	
	5	1	**8T-4121**	2	WASHER-HARD (11X21X2.5-MM THK)	
	6	1	**8T-4223**	2	WASHER-HARD (13.5X25.5X3-MM THK)	
M	7	1	**8T-4956**	2	BOLT (M12X1.75X35-MM)	
	8	1	**8T-5049**	1	SEAL-O-RING	
					AVAILABLE REPAIR KIT(S):	
			278-8715	1	KIT-SEAL (GEAR PUMP)	
					(INCLUDES SEALS & BACK UP RINGS)	

M-METRIC PART
R-REMFG PART MAY BE AVAILABLE
Y-SEPARATE ILLUSTRATION

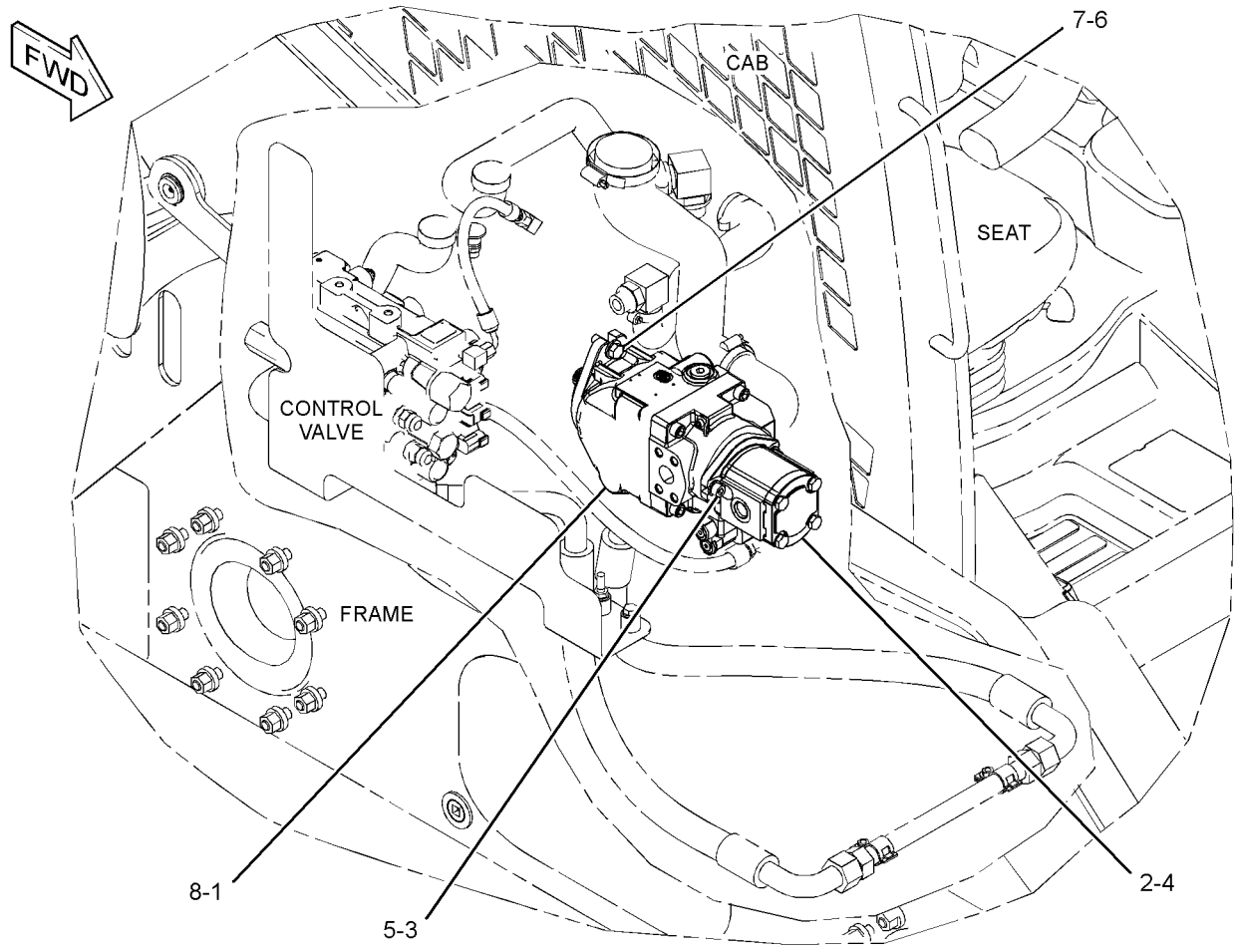

GRAPHIC #1 **<END>** g01314720

258-2554 PUMP GP-PISTON–HIGH FLOW

S/N: MST1-UP

PART OF 258-2557 PUMP & MTG GP-WORK TOOL, 258-3401 PUMP GP-PISTON & GEAR AN ATTACHMENT

SMCS-5070 **i02943060**

NOTE	REF NO	GRAPHIC REF	PART NUMBER	QTY	PART NAME 1 2 3 4 5 6 (PRODUCT LEVEL)	SEE PAGE
	1	1	**232-3587**	1	KIT-BEARING (PISTON PUMP)	
	2	1	**232-3586**	1	KIT-BEARING (PISTON PUMP)	
					(EACH BEARING KIT INCLUDES TAPERED ROLLER BEARING)	
	3	1	**260-3146**	1	SWASHPLATE	
	4	1	**260-3149**	1	KIT-CYLINDER (PISTON PUMP)	
					(INCLUDES PISTON AS, SLIPPER RETAINER, GUIDE, PINS, CYLINDER BLOCK, SPRING SEATS, SPRING & RING)	
	5	1	**260-3147**	1	PLATE	
	6	1	**260-3145**	1	KIT-SWASHPLATE (PISTON PUMP)	
					(KIT INCLUDES PINS & BEARINGS)	
	7	1	**278-8718**	1	VALVE GP-PUMP CONTROL	
		1	**3J-7354**	4	SEAL-O-RING	
		1	**6J-2245**	1	SEAL-O-RING	
		1	**234-4173**	4	SEAL-O-RING	
		1	**307-3049**	1	PLUG-ADJUSTMENT	
	8	1	**278-8719**	1	SHAFT-DRIVE	
	9	1	**6J-7855**	1	RING-LOCK	
	10	1	**9S-8006**	2	PLUG-O-RING	
M	11	1	**113-2004**	4	BOLT-SOCKET HEAD (M12X1.75X45-MM)	
	12	1	**278-8722**	1	ADAPTER	
J	13	1	**307-3049**	1	PLUG-ADJUSTMENT	
J	14	1	**2M-9780**	2	SEAL-O-RING	
					AVAILABLE REPAIR KIT(S):	
J			**307-3043**	1	KIT-SEAL (PISTON PUMP)	
					(KIT INCLUDES O-RINGS SEALS, LIP SEAL, SEAL RINGS, PLUG-SPECIAL & PISTON RINGS)	

J-KIT MARKED J SERVICES PARTS MARKED J
M-METRIC PART

258-2554 PUMP GP-PISTON *(contd.)* **i02943060**

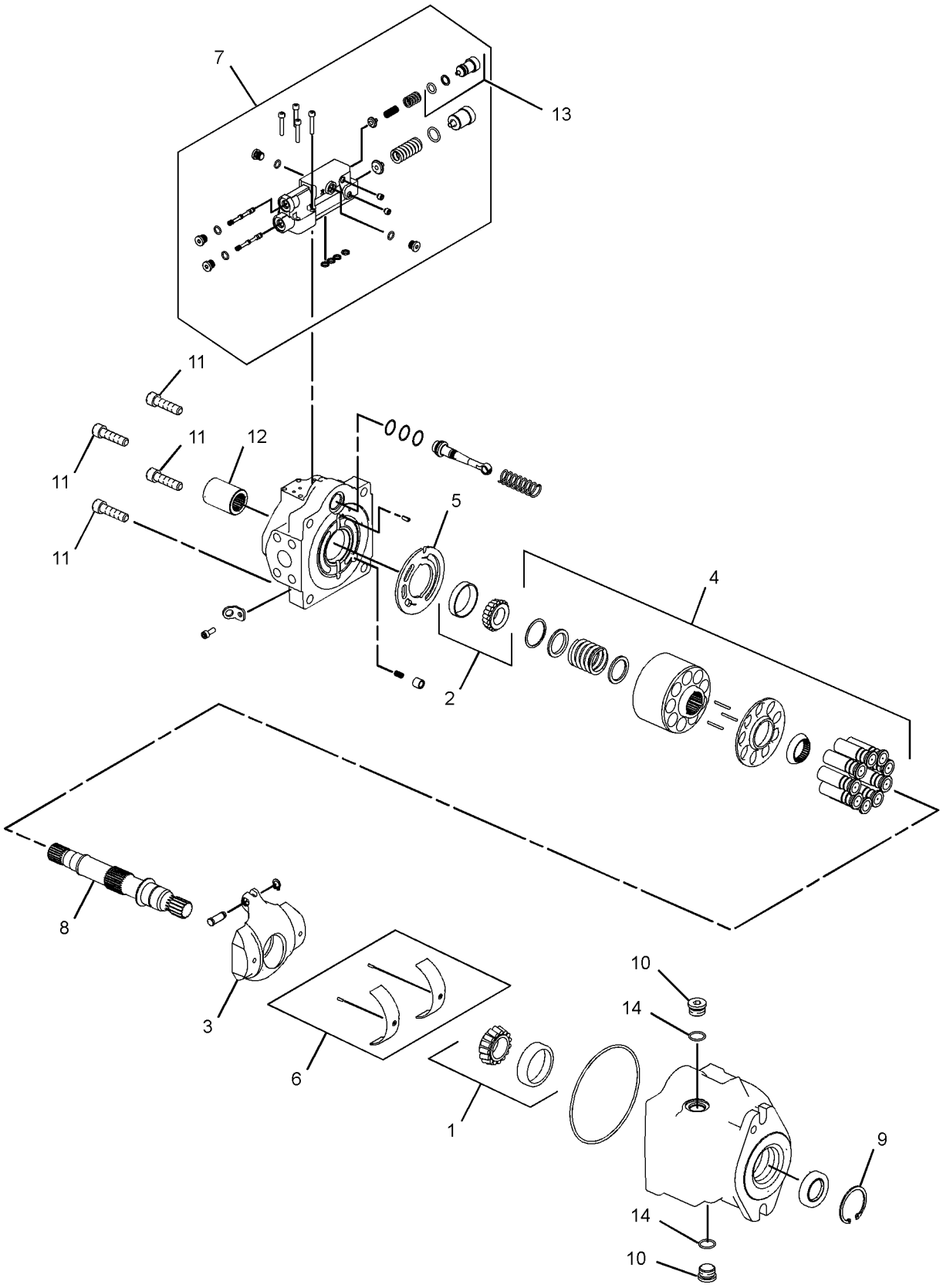

GRAPHIC #1 **<END>** g01459550

258-3401 PUMP GP-PISTON & GEAR

S/N: MST1-UP
PART OF 258-3734 HYDRAULIC AR
AN ATTACHMENT

SMCS-3203, 5070, 5073 **i03635741**

NOTE	REF NO	GRAPHIC REF	PART NUMBER	QTY	PART NAME 1 2 3 4 5 6 (PRODUCT LEVEL)	SEE PAGE
YR	1	1	**258-2554**	1	PUMP GP-PISTON (HIGH FLOW)	433
J	2	1	**258-3261**	1	PUMP GP-GEAR	
		1	**8T-5095**	4	WASHER-PLATED (11X16X2-MM THK)	
M		1	**8T-6685**	4	BOLT (M10X1.5X110-MM)	
M	3	1	**101-7404**	2	BOLT-SOCKET HEAD (M10X1.5X30-MM)	
	4	1	**5P-3863**	1	SEAL-O-RING	
	5	1	**8T-4121**	2	WASHER-HARD (11X21X2.5-MM THK)	
	6	1	**8T-4223**	2	WASHER-HARD (13.5X25.5X3-MM THK)	
M	7	1	**8T-4956**	2	BOLT (M12X1.75X35-MM)	
	8	1	**8T-5049**	1	SEAL-O-RING	
					AVAILABLE REPAIR KIT(S):	
J			**278-8715**	1	KIT-SEAL (GEAR PUMP)	
					(INCLUDES SEALS & RINGS)	

J-KIT MARKED J SERVICES PARTS MARKED J
M-METRIC PART
R-REMFG PART MAY BE AVAILABLE
Y-SEPARATE ILLUSTRATION

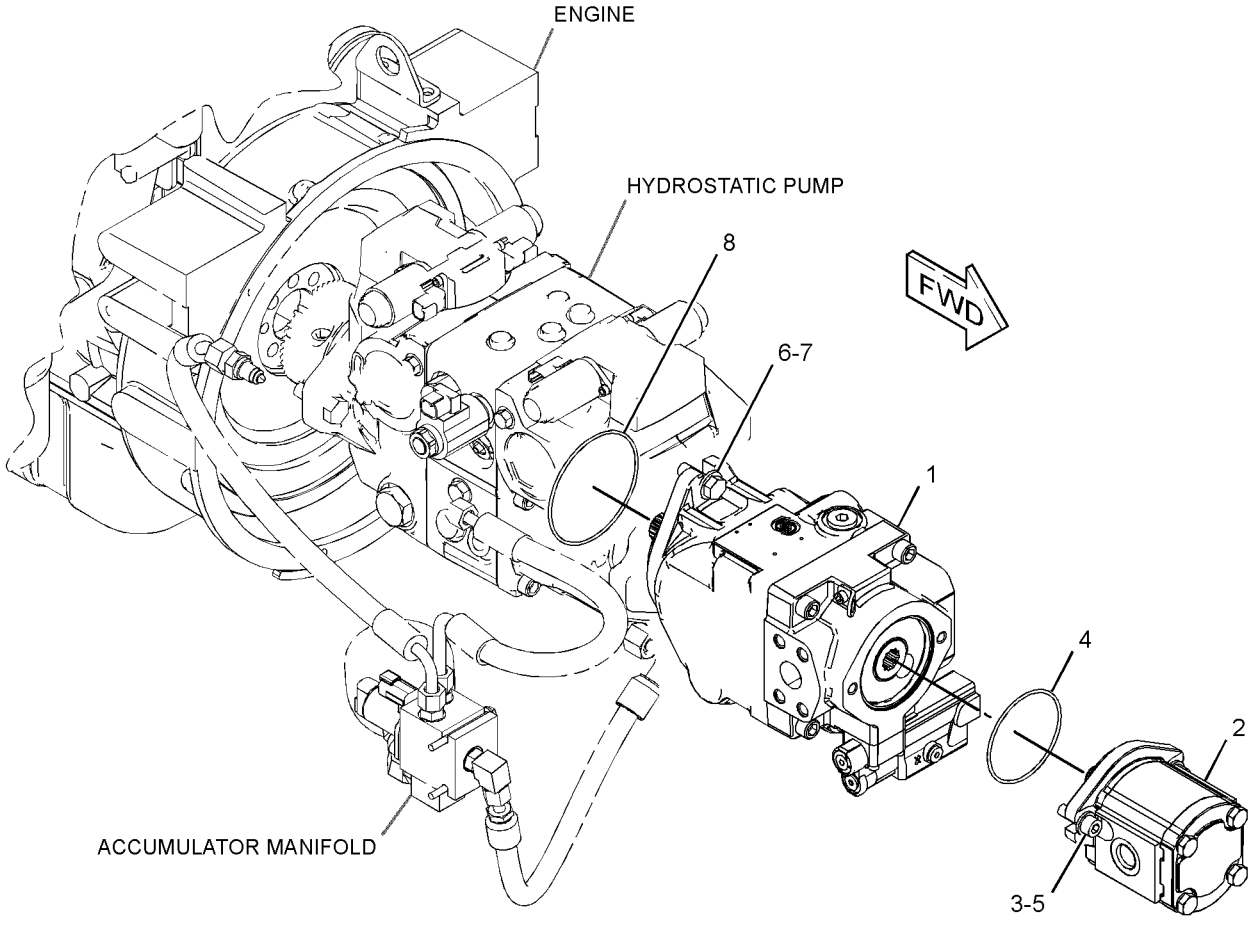

GRAPHIC #1 **<END>** g01327061

258-2434 TANK & MTG GP-HYDRAULIC

S/N: MST1-UP

PART OF 258-2601 HYDRAULIC AR

SMCS-5056 **i02723735**

NOTE	REF NO	GRAPHIC REF	PART NUMBER	QTY	PART NAME 1 2 3 4 5 6 (PRODUCT LEVEL)	SEE PAGE
Y	1	1	*258-2435*	1	TANK GP-HYDRAULIC	437
	2	1	**258-2947**	1	BRACKET	
	3	1	**258-2949**	1	BRACKET AS	
	4	1	**258-2981**	1	BRACKET AS	
	5	1	**258-2982**	1	BRACKET	
	6	1	**258-2991**	1	BRACKET AS	
	7	1	**258-2992**	1	BRACKET	
	8	1	**5P-4116**	4	WASHER-HARD (8.8X20.5X2-MM THK)	
	9	1	**7X-7729**	2	WASHER (11X25X3-MM THK)	
	10	1	**8T-4121**	6	WASHER-HARD (11X21X2.5-MM THK)	
M	11	1	**8T-0389**	2	LOCKNUT (M10X1.15-THD)	
M	12	1	**8T-4196**	6	BOLT (M10X1.5X35-MM)	
M	13	1	**8T-4908**	4	BOLT (M8X1.25X25-MM)	

M-METRIC PART
Y-SEPARATE ILLUSTRATION

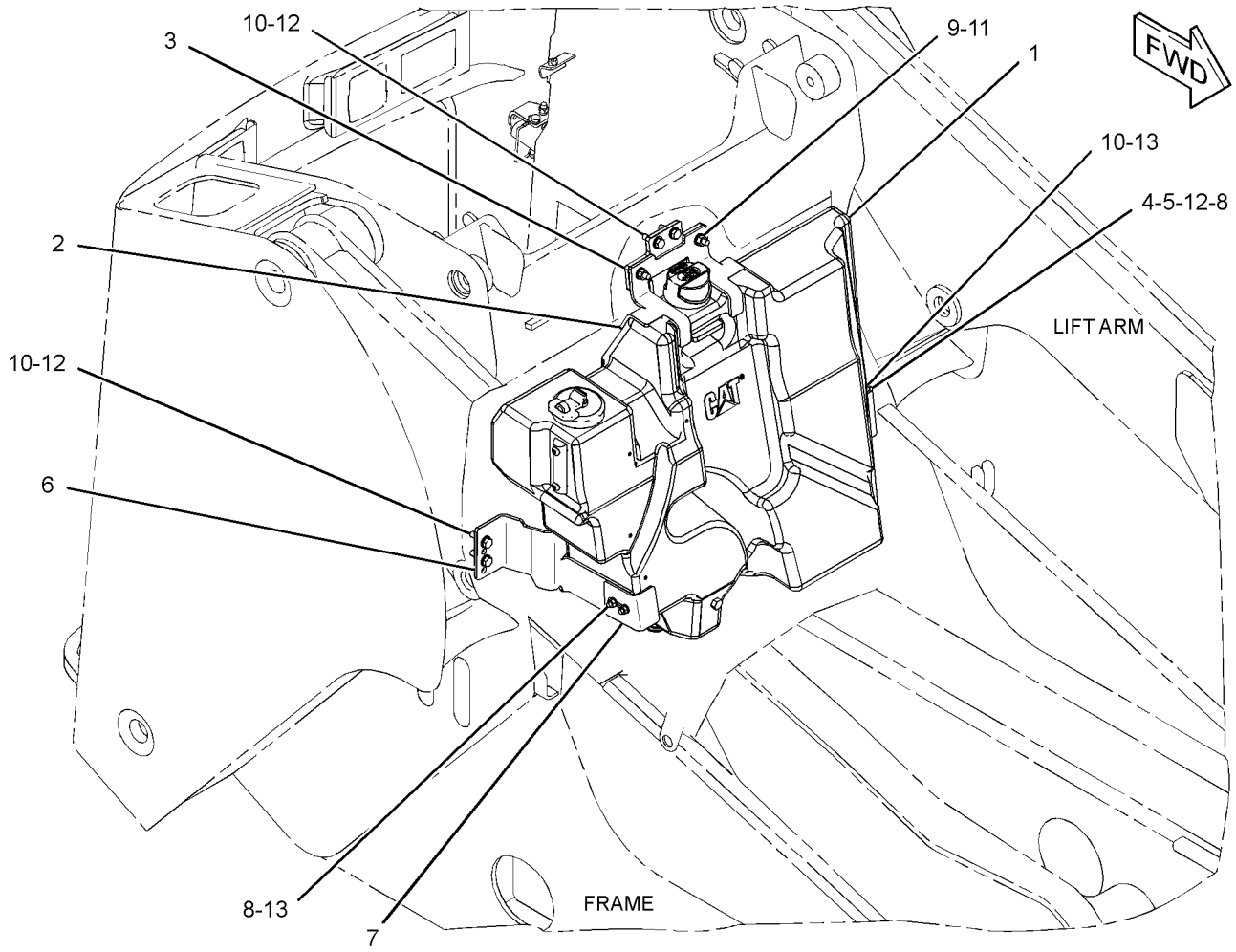

GRAPHIC #1 **<END>** g01340814

258-2435 TANK GP-HYDRAULIC

S/N: MST1-UP

PART OF 258-2434 TANK & MTG GP-HYDRAULIC

SMCS-5056 **i02655613**

NOTE	REF NO	GRAPHIC REF	PART NUMBER	QTY	PART NAME 1 2 3 4 5 6 (PRODUCT LEVEL)	SEE PAGE
	1	1	**142-8937**	1	CAP AS-FILLER (HYDRAULIC TANK)	
Y	2	1	**258-2806**	1	TANK GP-HYDRAULIC	438
	3	1	**258-2829**	1	BREATHER (HYDRAULIC TANK)	
	4	1	**264-4297**	1	SENSOR GP-TEMPERATURE (HYDRAULIC OIL)	
		1	**137-6645**	1	PAD	
	5	1	**3K-0360**	1	SEAL-O-RING	

Y-SEPARATE ILLUSTRATION

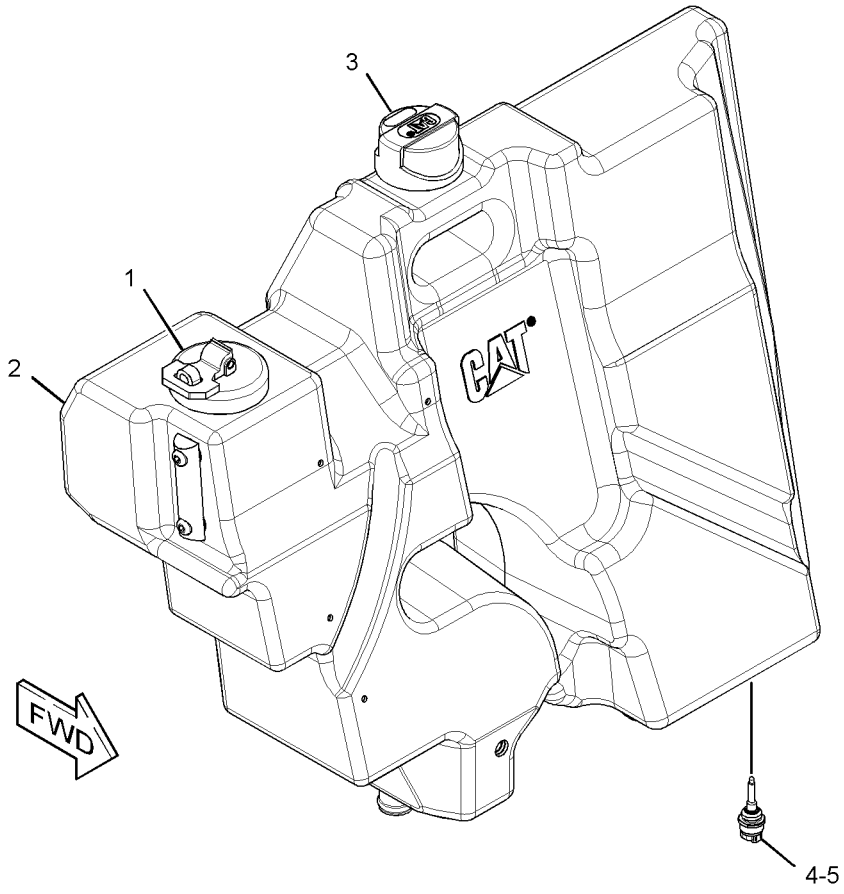

GRAPHIC #1 **<END>** g01335539

HYDRAULIC SYSTEM

258-2806 TANK GP-HYDRAULIC

S/N: MST1-UP

PART OF 258-2435 TANK GP-HYDRAULIC

SMCS-5056 **i02712995**

NOTE	REF NO	GRAPHIC REF	PART NUMBER	QTY	PART NAME 1 2 3 4 5 6 (PRODUCT LEVEL)	SEE PAGE
	1	1	**258-2804**	1	STRAINER AS (HYDRAULIC TANK)	
	2	1	**267-8390**	1	GAUGE GP-SIGHT (HYDRAULIC TANK)	
		1	**7W-3983**	2	RING-RETAINING	
		1	**8F-3469**	2	SEAL-O-RING	
					PARTS SHOWN IN GRAPHIC(S) WITHOUT A REFERENCE NUMBER ARE NOT SERVICED SEPARATELY	

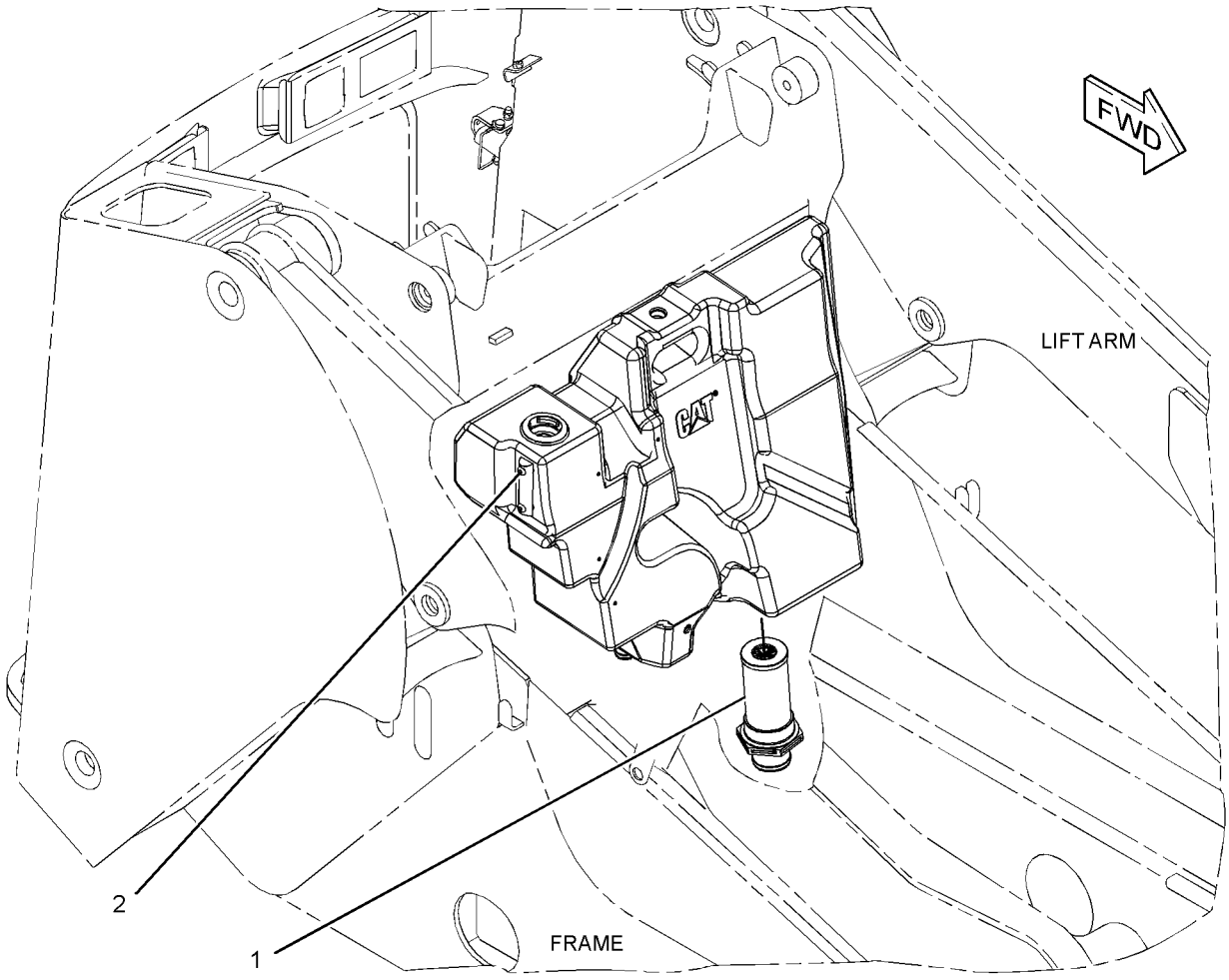

GRAPHIC #1 **<END>** g01330021

258-2505 VALVE & MTG GP-CONTROL

S/N: MST1-UP

PART OF 258-3183, 258-3734 HYDRAULIC AR

AN ATTACHMENT

SMCS-5051 **i02659380**

NOTE	REF NO	GRAPHIC REF	PART NUMBER	QTY	PART NAME 1 2 3 4 5 6 (PRODUCT LEVEL)	SEE PAGE
Y	1	1	**258-2509**	1	VALVE GP-CONTROL	444
	2	1	**258-2569**	1	BRACKET AS	
	3	1	**8T-4121**	3	WASHER-HARD (11X21X2.5-MM THK)	
M	4	1	**8T-4136**	3	BOLT (M10X1.5X25-MM)	
M	5	1	**8T-4185**	2	BOLT (M10X1.5X50-MM)	
	6	1	**8T-7934**	3	WASHER-HARD (11X21X5-MM THK)	
	7	1	**112-9252**	2	SPACER (13X25X22.14-MM THK)	
	8	1	**234-9525**	1	STUD (BOLT)	

M-METRIC PART
Y-SEPARATE ILLUSTRATION

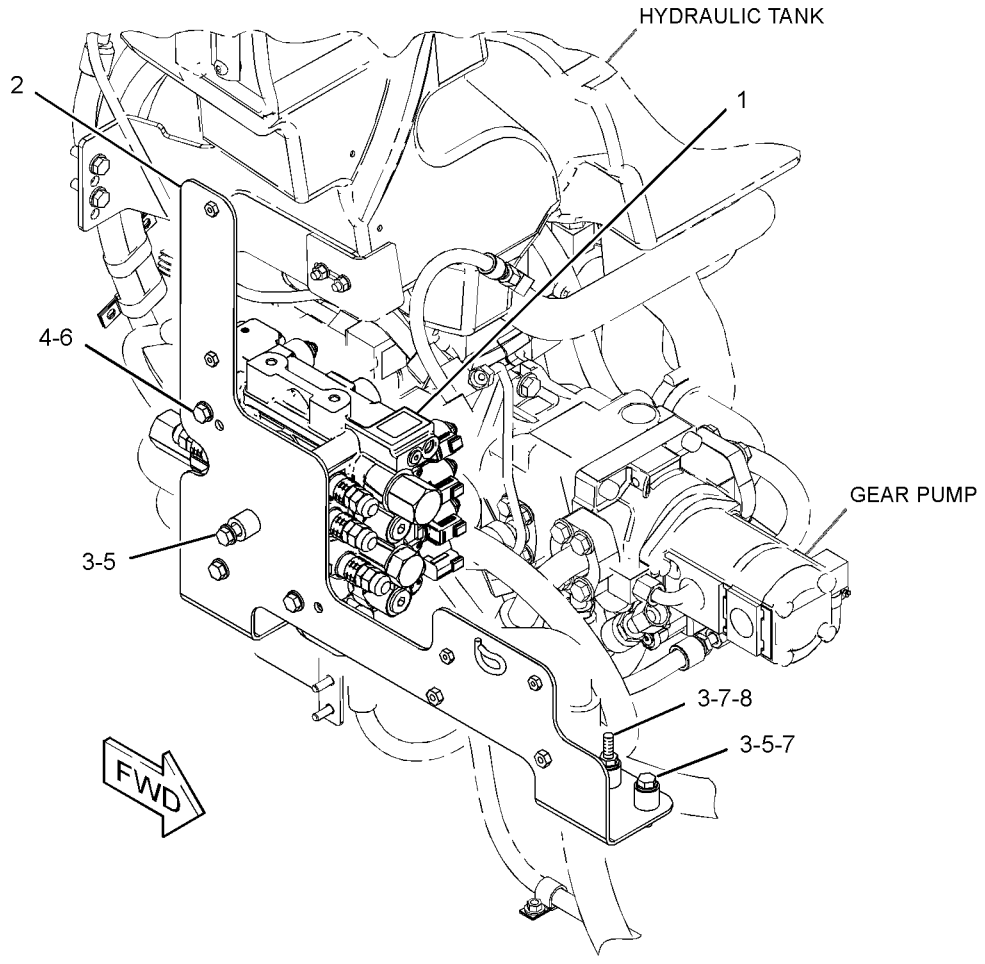

GRAPHIC #1 **<END>** g01337624

6E-4701 VALVE GP-CHECK–PILOT OIL

S/N: MST1-UP

PART OF 274-8563 MANIFOLD GP-CONTROL

SMCS-5067 **i03619401**

NOTE	REF NO	GRAPHIC REF	PART NUMBER	QTY	PART NAME 1 2 3 4 5 6 (PRODUCT LEVEL)	SEE PAGE
	1	1	**3J-1907**	1	SEAL-O-RING	
	2	1	**6V-8397**	1	SEAL-O-RING	

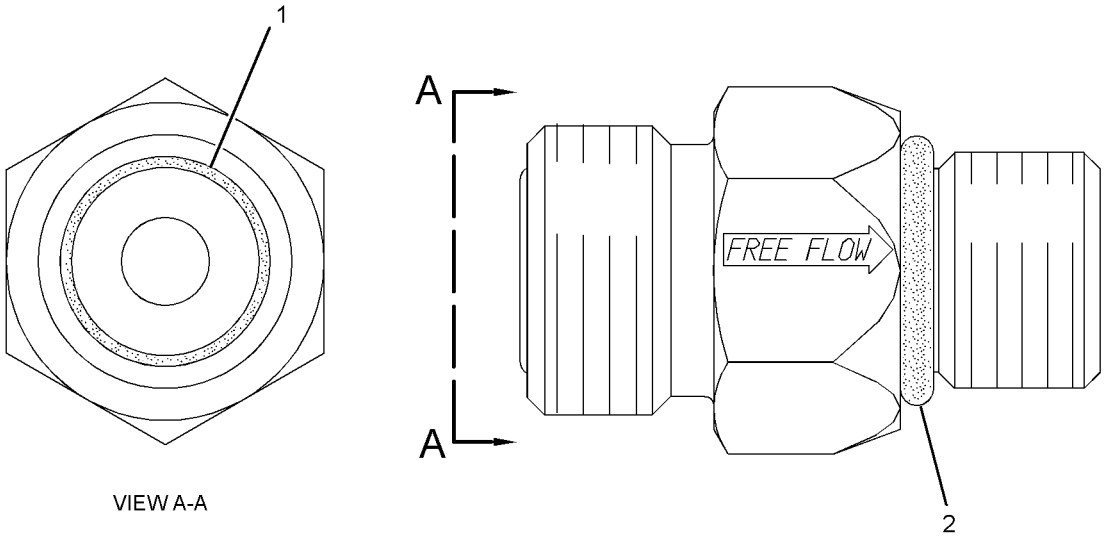

VIEW A-A

GRAPHIC #1 **<END>** g01944653

258-2504 VALVE GP-CONTROL

S/N: MST1-UP
PART OF 258-3181, 258-3731 HYDRAULIC AR
AN ATTACHMENT

SMCS-5051 **i02659387**

NOTE	REF NO	GRAPHIC REF	PART NUMBER	QTY	PART NAME 1 2 3 4 5 6 (PRODUCT LEVEL)	SEE PAGE
	1	1	**112-9252**	2	SPACER (13X25X22.14-MM THK)	
Y	2	1	**258-2508**	1	VALVE GP-CONTROL	442
	3	1	**258-2569**	1	BRACKET AS	
	4	1	**234-9525**	1	STUD (BOLT)	
	5	1	**8T-4121**	3	WASHER-HARD (11X21X2.5-MM THK)	
M	6	1	**8T-4136**	3	BOLT (M10X1.5X25-MM)	
M	7	1	**8T-4185**	2	BOLT (M10X1.5X50-MM)	
	8	1	**8T-7934**	3	WASHER-HARD (11X21X5-MM THK)	

M-METRIC PART
Y-SEPARATE ILLUSTRATION

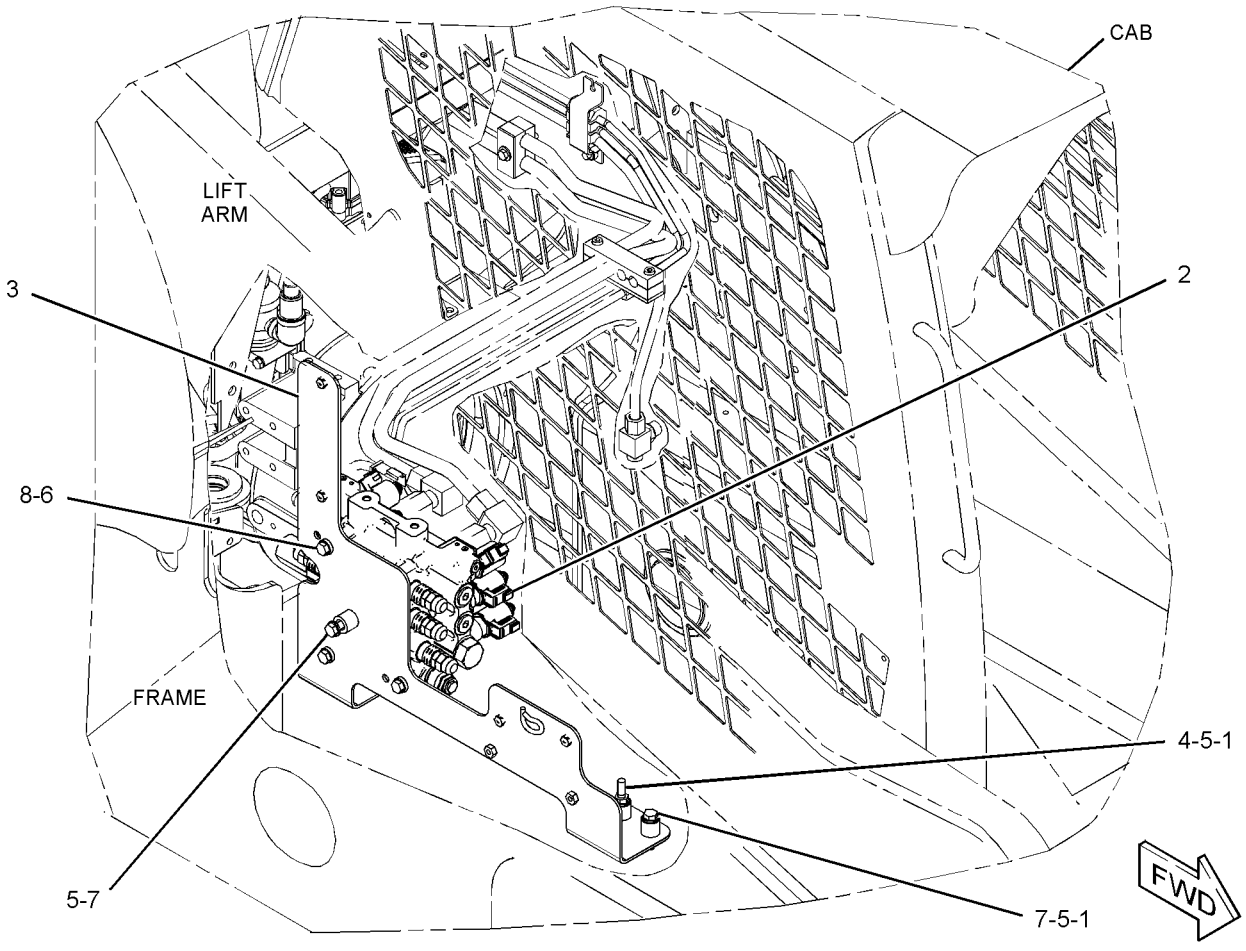

GRAPHIC #1 **<END>** g01338102

HYDRAULIC SYSTEM

258-2508 VALVE GP-CONTROL

S/N: MST1-UP
PART OF 258-2504 VALVE GP-CONTROL
AN ATTACHMENT

SMCS-5051 **i02760146**

NOTE	REF NO	GRAPHIC REF	PART NUMBER	QTY	PART NAME 1 2 3 4 5 6 (PRODUCT LEVEL)	SEE PAGE
Y	1	1	**295-1799**	1	VALVE GP-RELIEF (MAIN)	448
	2	1	**216-6160**	2	VALVE GP-RELIEF (TILT, AUXILIARY)	
	3	1	**216-6161**	2	VALVE GP-RELIEF (LIFT, TILT)	
Y	4	1	**185-4254**	6	VALVE GP-SOLENOID (12-VOLT)	450
	5	1	**4J-7533**	1	SEAL-O-RING	
	6	1	**204-1485**	6	WASHER (0.47X0.75X0.02-MM THK)	
	7	1	**204-1482**	1	SPRING	
	8	1	**204-1488**	1	SPRING	
	9	1	**204-1489**	4	SPRING	
	10	1	**204-1486**	1	WASHER (0.32X0.74X0.02-MM THK)	
	11	1	**127-6316**	1	BOLT-SHOULDER	
	12	1	**204-1476**	4	PLUG	
	13	1	**4K-1388**	2	SEAL-O-RING	
	14	1	**204-1471**	1	CAP	
	15	1	**204-1481**	1	CAP	
	16	1	**144-4531**	3	VALVE-CHECK	
	17	1	**003-3082**	3	SPRING	
	18	1	**2M-9780**	7	SEAL-O-RING	
	19	1	**144-4532**	3	PLUG	
	20	1	**216-6156**	1	VALVE-CHECK	
	21	1	**216-6157**	1	SPRING	
	22	1	**3J-1907**	1	SEAL-O-RING	
	23	1	**216-6159**	1	PLUG	
	24	1	**9S-8002**	1	PLUG-O-RING	
	25	1	**3J-7354**	1	SEAL-O-RING	

Y-SEPARATE ILLUSTRATION

258-2508 VALVE GP-CONTROL *(contd.)* **i02760146**

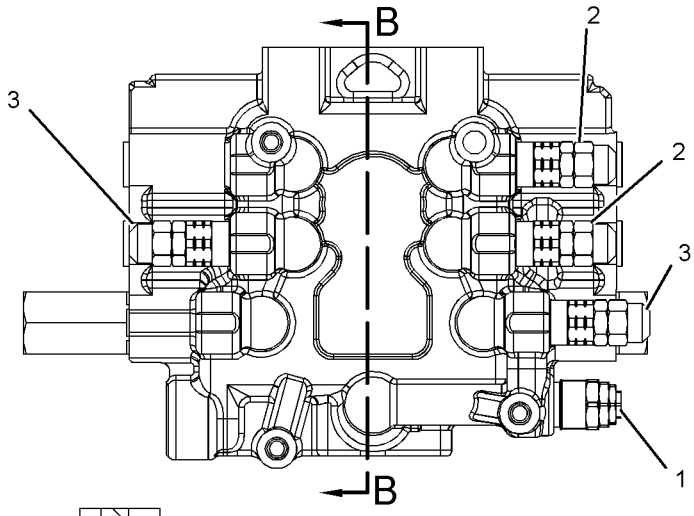

VIEW A-A

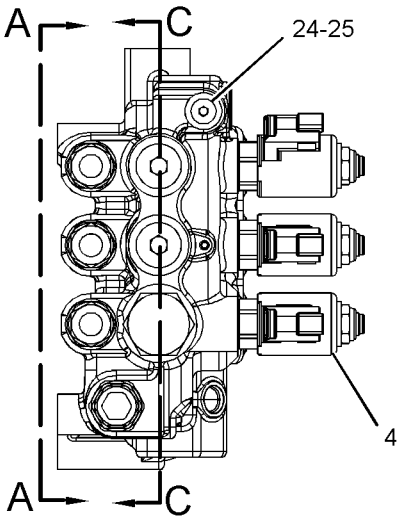

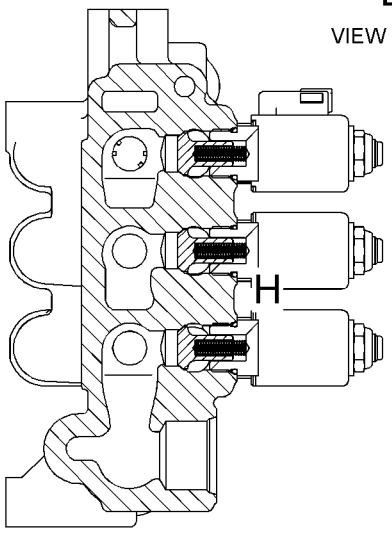

SECTION B-B

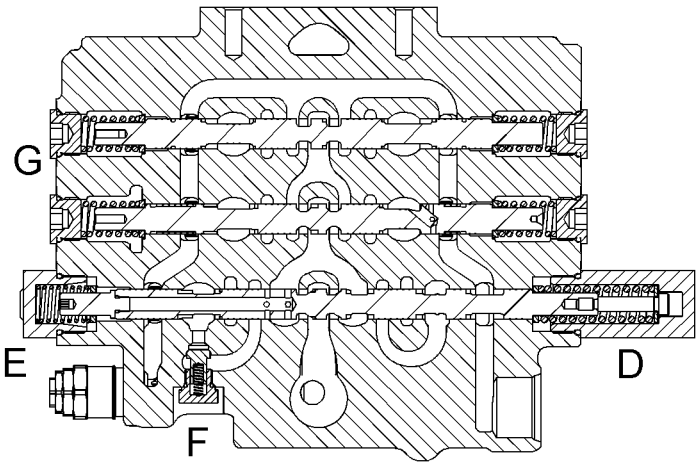

SECTION C-C

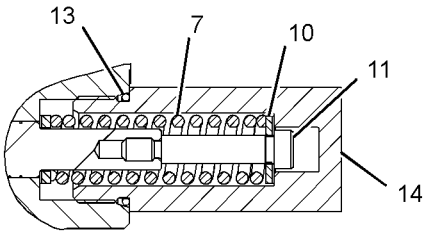

VIEW OF AREA D

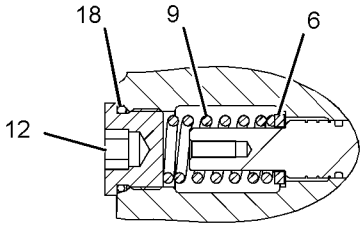

VIEW OF AREA G

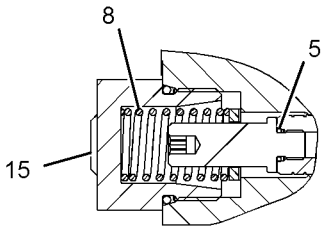

VIEW OF AREA E

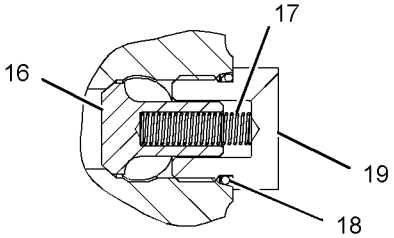

VIEW OF AREA H

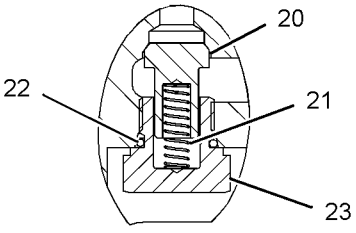

VIEW OF AREA F

GRAPHIC #1 **<END>** g01319607

HYDRAULIC SYSTEM

258-2509 VALVE GP-CONTROL

S/N: MST1-UP

PART OF 258-2505 VALVE & MTG GP-CONTROL

AN ATTACHMENT

SMCS-5051 **i02760148**

NOTE	REF NO	GRAPHIC REF	PART NUMBER	QTY	PART NAME 1 2 3 4 5 6 (PRODUCT LEVEL)	SEE PAGE
Y	1	1	**185-4254**	6	VALVE GP-SOLENOID (12-VOLT)	450
Y	2	1	**195-9700**	2	VALVE GP-SOLENOID (12-VOLT)	451
	3	1	**204-1471**	1	CAP	
	4	2	**204-1476**	9	PLUG	
	5	1	**204-1481**	1	CAP	
	6	1	**216-6160**	1	VALVE GP-RELIEF (TILT)	
	7	1	**9X-7744**	1	SEAL-O-RING	
	8	1	**289-0850**	1	VALVE GP-RELIEF (AUXILIARY)	
	9	1	**295-0046**	1	VALVE GP-SOLENOID (MAIN)	
		1	**287-8753**	1	SCREEN	
		1	**301-4213**	1	SPACER	
	10	1	**231-7156**	1	CAP-VALVE	
	11	2	**9S-8002**	4	PLUG-O-RING	
	12	1	**231-7165**	1	PLUG-VALVE	
	13	2	**231-7297**	7	SPRING	
	14	2	**280-5164**	3	SPOOL (ISOLATOR)	
	15	2	**231-7299**	3	SPOOL (COMP PT)	
	16	2	**287-8752**	1	SPOOL (COMP)	
	17	2	**287-8753**	1	SCREEN	
M	18	1	**8T-1158**	2	BOLT-SOCKET HEAD (M8X1.25X20-MM)	
	19	2	**3J-7354**	4	SEAL-O-RING	
	20	1	**204-1472**	2	SEAL-O-RING	
	21	1	**216-6161**	1	VALVE GP-RELIEF (TILT)	
	22	1	**216-6161**	1	VALVE GP-RELIEF (LIFT)	

M-METRIC PART
Y-SEPARATE ILLUSTRATION

258-2509 VALVE GP-CONTROL *(contd.)* **i02760148**

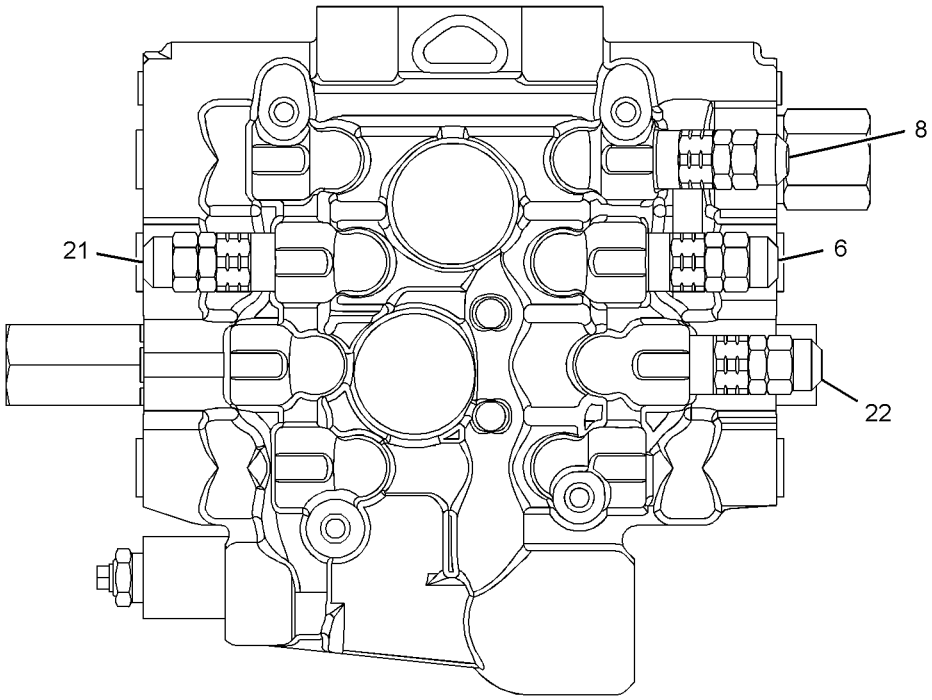

RIGHT SIDE VIEW

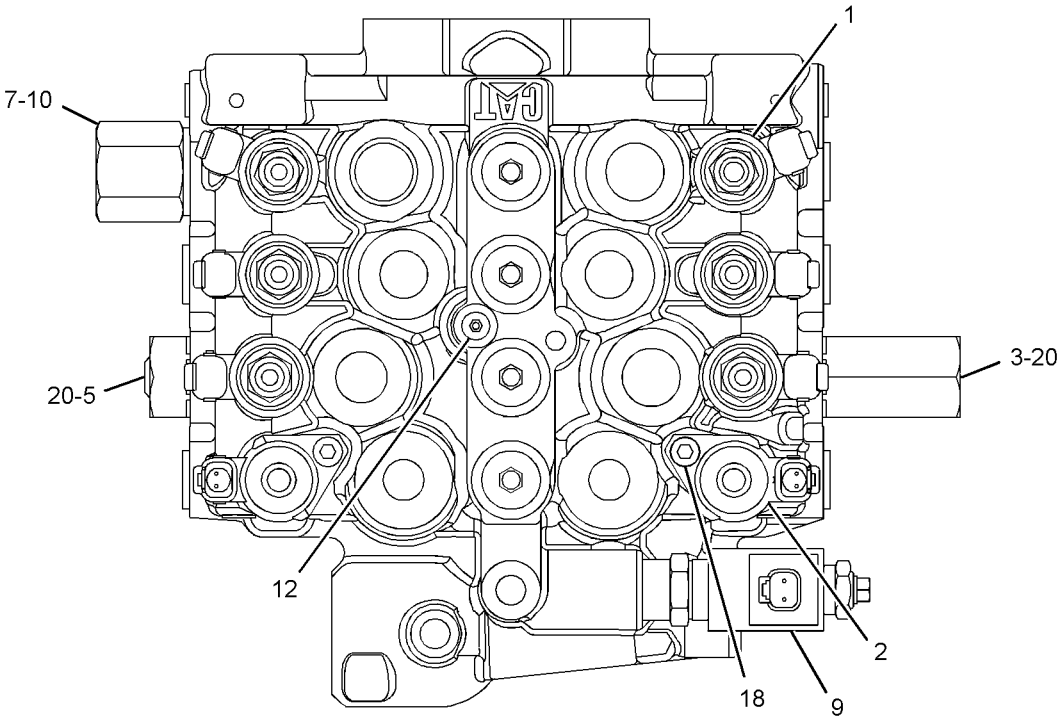

LEFT SIDE VIEW

GRAPHIC #1 g01310889

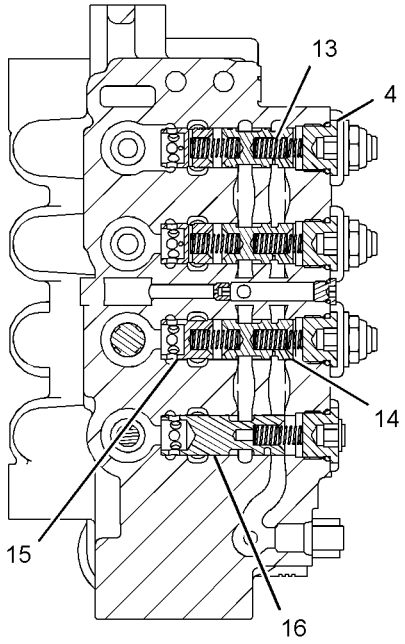

SECTION B-B

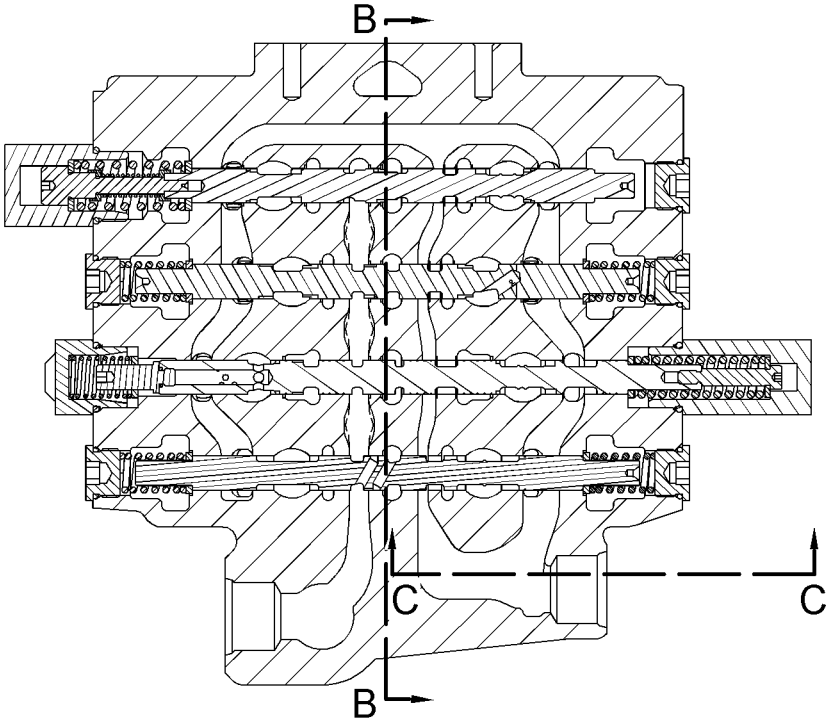

SECTION A-A

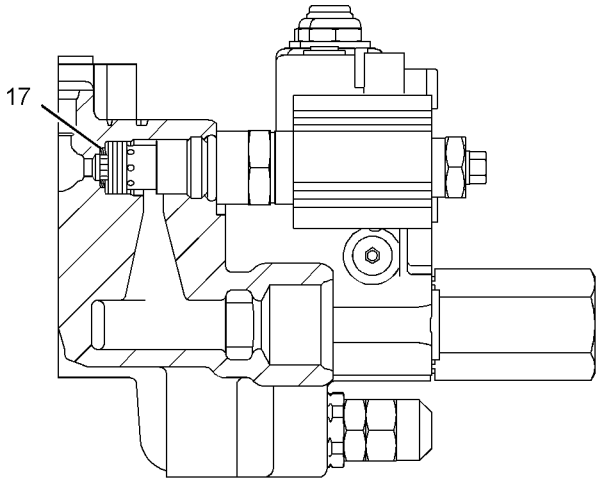

SECTION C-C

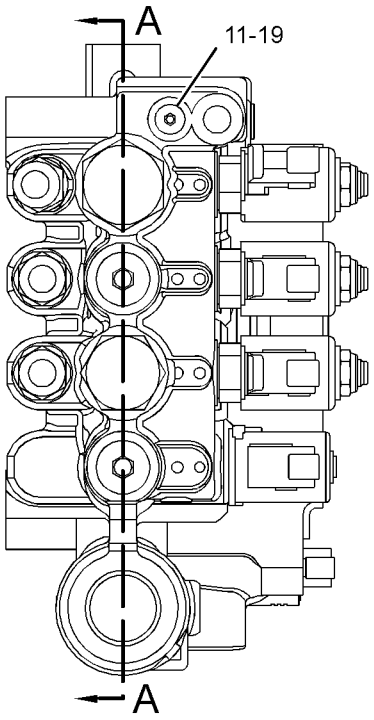

FRONT VIEW

GRAPHIC #2 **<END>** g01312818

112-1817 VALVE GP-MANUAL–LOWERING CONTROL

S/N: MST1-UP

PART OF 258-3393 LINES GP-LOWERING CONTROL

SMCS-5147 **i02903081**

NOTE	PART NUMBER	QTY	PART NAME 1 2 3 4 5 6 (PRODUCT LEVEL)	SEE PAGE
J	*202-0671*	1	VALVE GP-MANUAL (COUPLER PIN, LIFT ARM LWR CONT)	
			–OR–	
J	*202-0673*	1	VALVE GP-MANUAL (COUPLER PIN, LIFT ARM LWR CONT)	
			–OR–	
J	*202-0674*	1	VALVE GP-MANUAL (COUPLER PIN, LIFT ARM LWR CONT)	
			AVAILABLE REPAIR KIT(S):	
J	**112-9861**	1	KIT-SEAL (DEAD ENGINE LOWERING)	
			(INCLUDES SEALS, CONNECTORS & THRUST RING)	

J-KIT MARKED J SERVICES PARTS MARKED J

<END>

HYDRAULIC SYSTEM

295-1799 VALVE GP-RELIEF–MAIN

S/N: MST1-UP
PART OF 258-2508 VALVE GP-CONTROL
AN ATTACHMENT

SMCS-5069, 5117 **i02605603**

NOTE	REF NO	GRAPHIC REF	PART NUMBER	QTY	PART NAME 1 2 3 4 5 6 (PRODUCT LEVEL)	SEE PAGE
	1	1	**130-1676**	1	SEAL-O-RING	

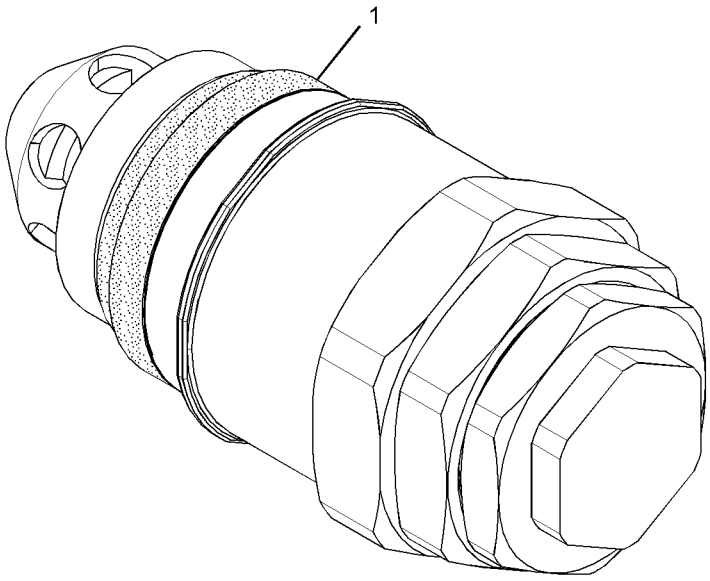

GRAPHIC #1 **<END>** g01304645

211-3014 VALVE GP-SHUTTLE–HIGH FLOW

S/N: MST1-UP
PART OF 258-3238 LINES GP-PUMP
AN ATTACHMENT

SMCS-5079 **i02772037**

NOTE	REF NO	GRAPHIC REF	PART NUMBER	QTY	PART NAME 1 2 3 4 5 6 (PRODUCT LEVEL)	SEE PAGE
	1	1	**123-5798**	1	SEAT	
	2	1	**123-5799**	1	SEAT	
	3	1	**131-0749**	1	CONNECTOR	
	4	1	**211-3646**	1	VALVE-SHUTTLE	
	5	1	**3J-1907**	1	SEAL-O-RING	
	6	1	**6V-8398**	1	SEAL-O-RING	

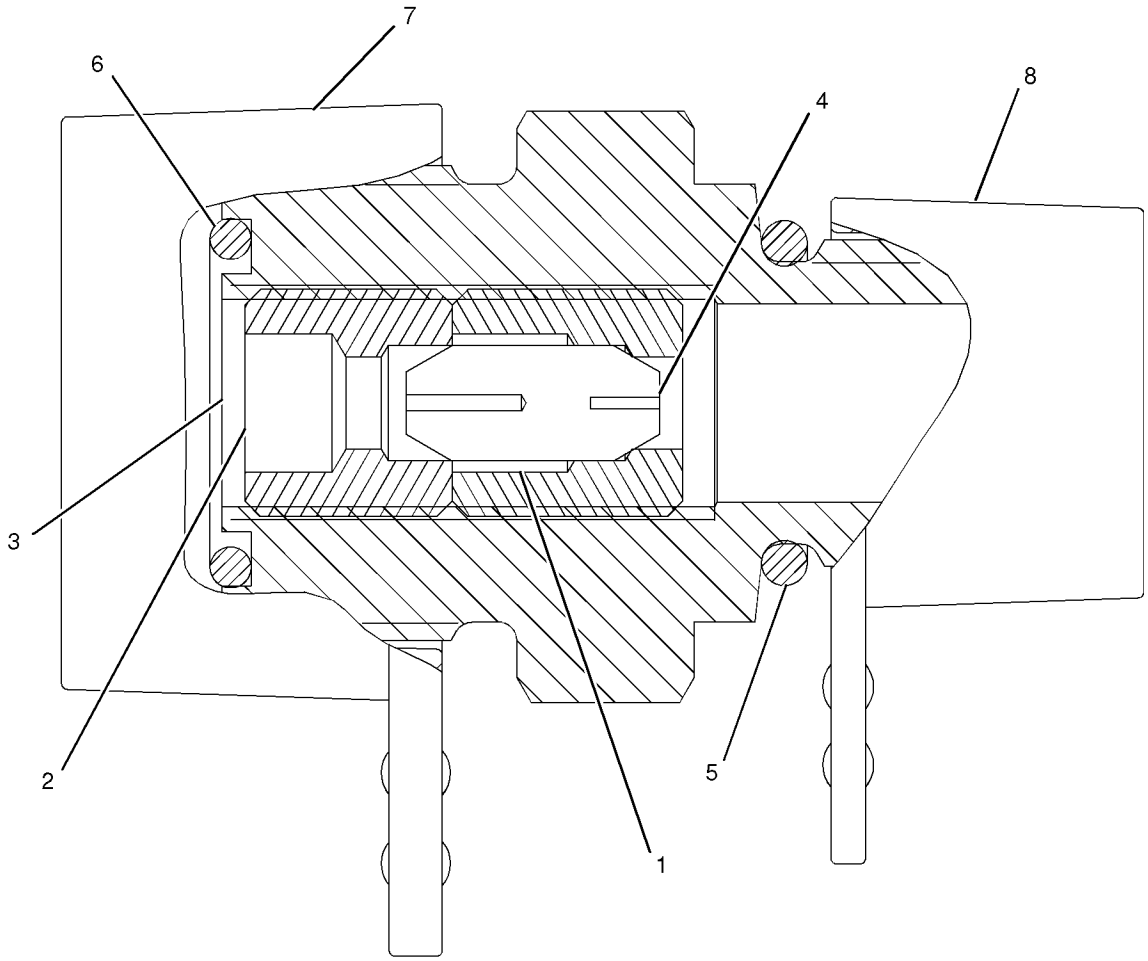

GRAPHIC #1 **<END>** g01041755

HYDRAULIC SYSTEM

185-4254 VALVE GP-SOLENOID–12-VOLT

S/N: MST1-UP
PART OF 258-2508, 258-2509 VALVE GP-CONTROL
AN ATTACHMENT

SMCS-5479 **i03437588**

NOTE	REF NO	GRAPHIC REF	PART NUMBER	QTY	PART NAME 1 2 3 4 5 6 (PRODUCT LEVEL)	SEE PAGE
	1	1	**226-9629**	1	COIL AS-SOLENOID (12-VOLT)	
	2	1	**164-2108**	1	WASHER (13.03X25.4X2.38-MM THK)	
	3	1	**218-2373**	1	NUT (1/2-28-THD)	

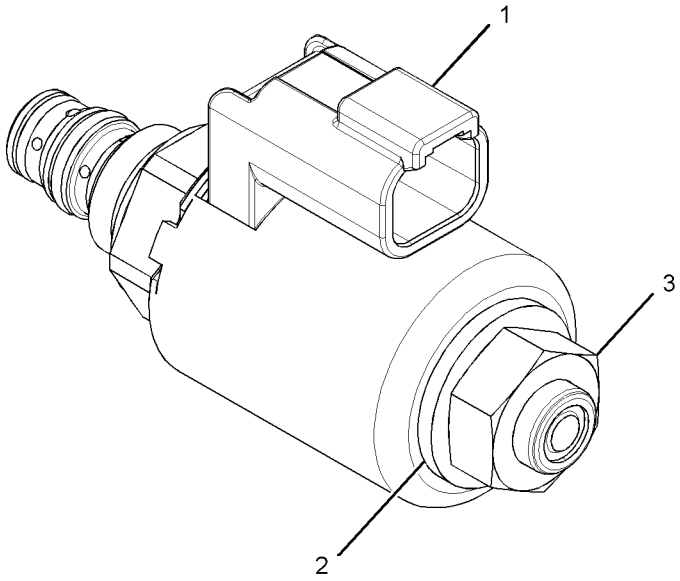

GRAPHIC #1 **<END>** g01794642

195-9700 VALVE GP-SOLENOID–12-VOLT

S/N: MST1-UP
PART OF 258-2509 VALVE GP-CONTROL
AN ATTACHMENT

SMCS-5479 **i03690247**

NOTE	REF NO	GRAPHIC REF	PART NUMBER	QTY	PART NAME 1 2 3 4 5 6 (PRODUCT LEVEL)	SEE PAGE
	1	1	**212-0061**	1	FLANGE	
					AVAILABLE REPAIR KIT(S):	
			200-2371	1	KIT-SEAL (SOLENOID VALVE)	
					(INCLUDES SEALS)	

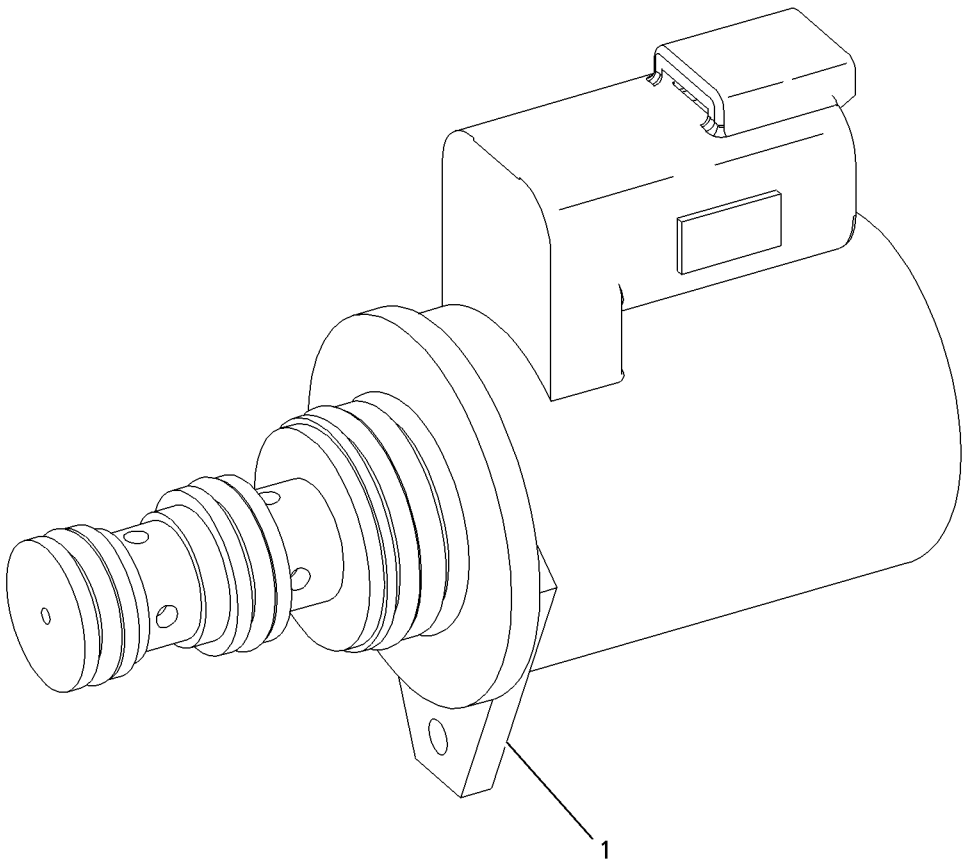

GRAPHIC #1 **<END>** g00947284

258-2799 PIN & LINK GP-LIFT ARM—WITH SUPPORT

S/N: MST1-UP

PART OF 258-2510, 295-7292 CHASSIS AR

SMCS-6119, 7507 **i03103531**

NOTE	REF NO	GRAPHIC REF	PART NUMBER	QTY	PART NAME 1 2 3 4 5 6 (PRODUCT LEVEL)	SEE PAGE
	1	1	**111-4337**	12	WASHER (46X70X1-MM THK)	
	2	1	**142-9091**	2	PIN AS	
	3	1	**142-9094**	1	PIN	
	4	1	**190-7992**	2	SPACER (44.7X54.7X13.1-MM THK)	
	5	1	**191-9738**	2	WASHER (13.8X70X5-MM THK)	
	6	1	**191-9739**	2	BOLT-SOCKET HEAD (M10X1.5X40-MM)	
	7	1	**238-7685**	2	LINK AS	
					(EACH INCLUDES)	
		1	**2G-8624**	2	BEARING-SLEEVE	
	8	1	**258-2679**	2	PIN AS	
	9	1	**258-2916**	2	PIN AS	
	10	1	**258-2919**	2	PIN	
	11	1	**258-2920**	4	PIN AS	
	12	1	**258-2922**	2	PIN AS	
	13	1	**258-3451**	1	PIN	
	14	1	**258-3452**	1	SUPPORT (LIFT ARM BRACE)	
	15	1	**285-2185**	1	PIN AS	
	16	1	**1H-8134**	4	RING-RETAINING (EXTERNAL)	
	17	1	**3B-8488**	2	FITTING-GREASE	
	18	1	**3B-8489**	10	FITTING-GREASE	
	19	1	**3K-4897**	2	PIN-SPRING	
	20	1	**4S-5875**	2	RING-RETAINING	
	21	1	**5B-0651**	4	FITTING-STRAIGHT	
	22	1	**5H-9743**	1	GROMMET	
	23	1	**6N-8863**	8	WASHER (10.2X32X2.5-MM THK)	
	24	1	**6V-7700**	4	RING-RETAINING	
	25	1	**7X-7729**	4	WASHER (11X25X3-MM THK)	
M	26	1	**8T-4191**	12	BOLT (M10X1.5X16-MM)	
	27	1	**8T-5439**	4	WASHER-HARD (21.5X45X6-MM THK)	
	28	1	**308-6542**	2	SPACER	

M-METRIC PART

258-2799 **PIN & LINK GP-LIFT ARM** *(contd.)* **i03103531**

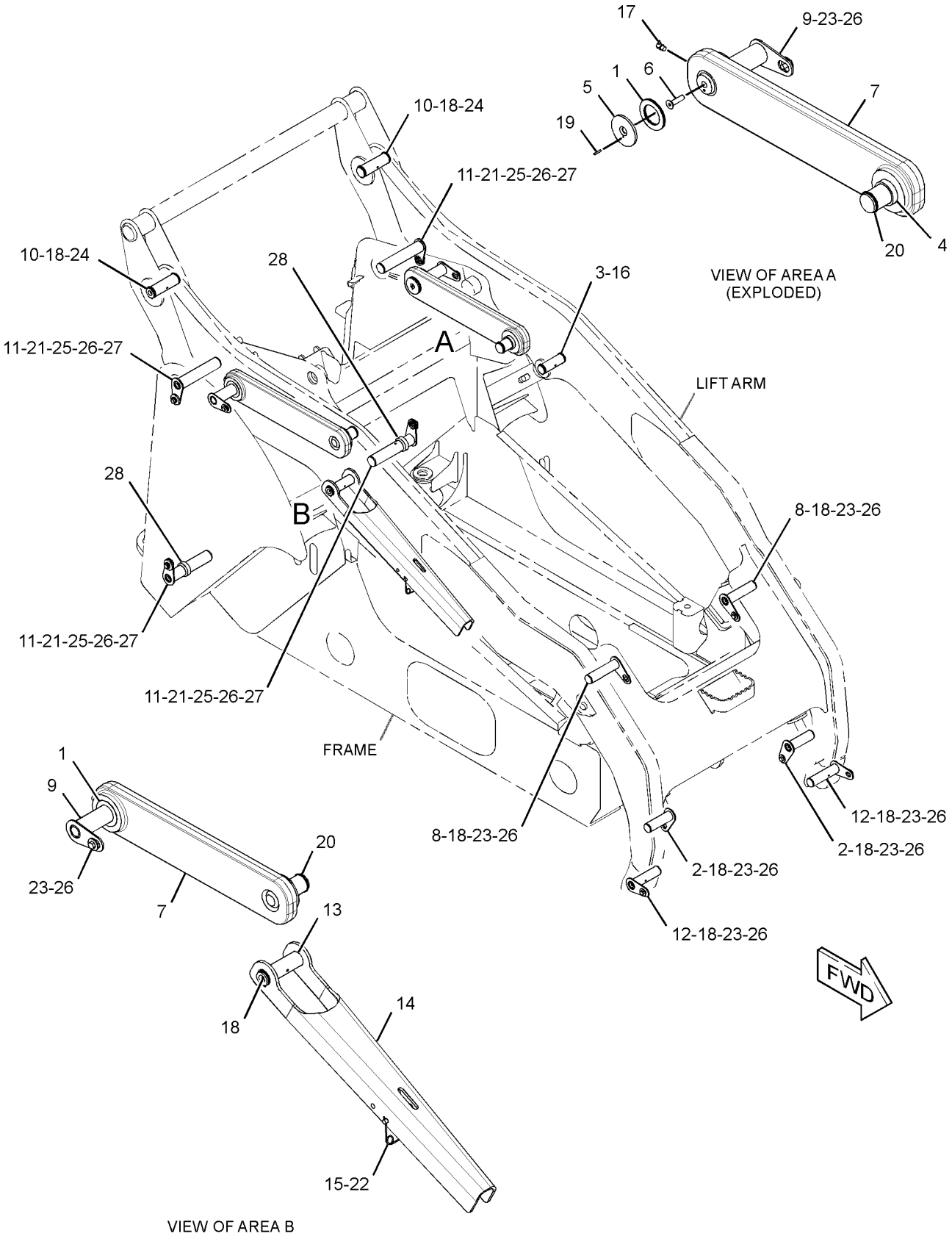

GRAPHIC #1 **<END>** g01557193

WORK TOOLS

216-8756 ARM GP-MATERIAL HANDLING

S/N: MST1-UP

AN ATTACHMENT

SMCS-6542 **i02342557**

NOTE	REF NO	GRAPHIC REF	PART NUMBER	QTY	PART NAME 1 2 3 4 5 6 (PRODUCT LEVEL)	SEE PAGE
	1	1	**9V-2714**	1	HOOK	
	2	1	**9V-2715**	1	SHACKLE AS	
	3	1	**156-5762**	2	FILM-INFORMATION (TIE-DOWN LOCATION)	
Y	4	1	*188-7733*	1	STEP GP-MATERIAL HANDLING ARM	639
	5	1	**216-8850**	1	ARM AS	
M	6	1	**7X-2475**	1	BOLT (M16X2X130-MM)	
	7	1	**8T-4122**	1	WASHER-HARD (17X32X3.5-MM THK)	
M	8	1	**8T-1757**	1	NUT (M16X2-THD)	

M-METRIC PART
Y-SEPARATE ILLUSTRATION

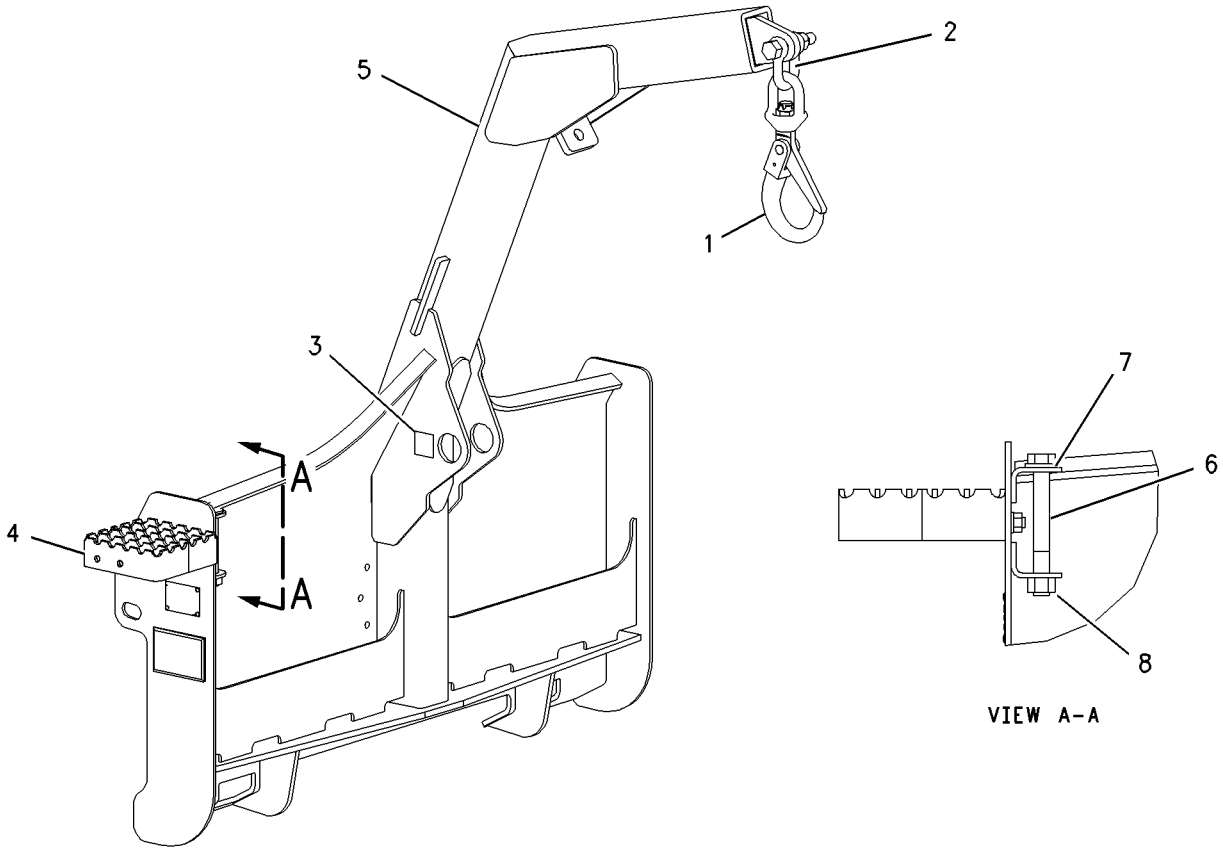

GRAPHIC #1 **<END>** g00934159

177-1989 BLADE AR–ANGLING

S/N: MST1-UP
1829-MM (72-IN)
AN ATTACHMENT

SMCS-6060, 6701 **i01860746**

NOTE	PART NUMBER	QTY	PART NAME 1 2 3 4 5 6 (PRODUCT LEVEL)	SEE PAGE
Y	*177-1981*	1	BLADE GP-ANGLING	462
Y	*230-5406*	1	CYLINDER & MTG GP-ANGLE BLADE	301
Y	*135-9386*	1	EDGE GP-CUTTING	602
Y	*230-5670*	1	FRAME GP-BLADE	619
Y	*177-1986*	1	LINES GP-CONNECTING	351
Y	*177-1983*	1	SPRING GP-BLADE	638

Y-SEPARATE ILLUSTRATION

<END>

177-1990 BLADE AR–ANGLING

S/N: MST1-UP
2134-MM (84-IN)
AN ATTACHMENT

SMCS-6060, 6701 **i01861063**

NOTE	PART NUMBER	QTY	PART NAME 1 2 3 4 5 6 (PRODUCT LEVEL)	SEE PAGE
Y	*177-1982*	1	BLADE GP-ANGLING	463
Y	*230-5406*	1	CYLINDER & MTG GP-ANGLE BLADE	301
Y	*149-5741*	1	EDGE GP-CUTTING	604
Y	*230-5670*	1	FRAME GP-BLADE	619
Y	*177-1986*	1	LINES GP-CONNECTING	351
Y	*177-1983*	1	SPRING GP-BLADE	638

Y-SEPARATE ILLUSTRATION

<END>

WORK TOOLS

231-5275 BLADE AR—ANGLING

S/N: MST1-UP
2337-MM (92-IN)
AN ATTACHMENT

SMCS-6060, 6701 **i03646972**

NOTE	REF NO	GRAPHIC REF	PART NUMBER	QTY	PART NAME 1 2 3 4 5 6 (PRODUCT LEVEL)	SEE PAGE
	1	1	**7K-1181**	3	STRAP-CABLE	
Y	2	1	*222-7724*	1	BLADE GP-ANGLING	464
	3	1	**225-8015**	1	HARNESS AS-WORK TOOL (CONNECTING)	
		1	**213-0139**	6	PIN	
		1	**172-3998**	1	PLUG AS	
		1	**155-2270**	8	KIT-CONNECTING PLUG (2-PIN)	
					(INCLUDES PLUG AS, WEDGE & INTERFACE SEAL)	
		1	**9W-0844**	9	SOCKET-CONNECTOR (14-GA)	
		1	**180-9340**	7	SOCKET-CONNECTOR (14-GA TO 18-GA)	
		1	**8L-8413**	10	STRAP-CABLE	
		1	**189-3158**	2	SUPPRESSOR-ARC	
E		1	**119-3662**		TUBE-HEAT SHRINK (10.85-MM DIA) (13-CM)	
E		1	**125-7874**		TUBE-HEAT SHRINK (5.72-MM DIA) (5-CM)	
E		1	**125-7875**		TUBE-HEAT SHRINK (7.44-MM DIA) (10-CM)	
Y	4	1	*231-5273*	1	LINES GP-CONNECTING	353
Y	5	1	*231-5274*	1	CYLINDER & MTG GP-ANGLE BLADE	302
Y	6	1	*231-5278*	1	MANIFOLD & MTG GP-CONTROL (ANGLING BLADE)	414
Y	7	1	*247-0678*	1	PLATE & FILM GP	818

E-ORDER BY THE CENTIMETER
Y-SEPARATE ILLUSTRATION

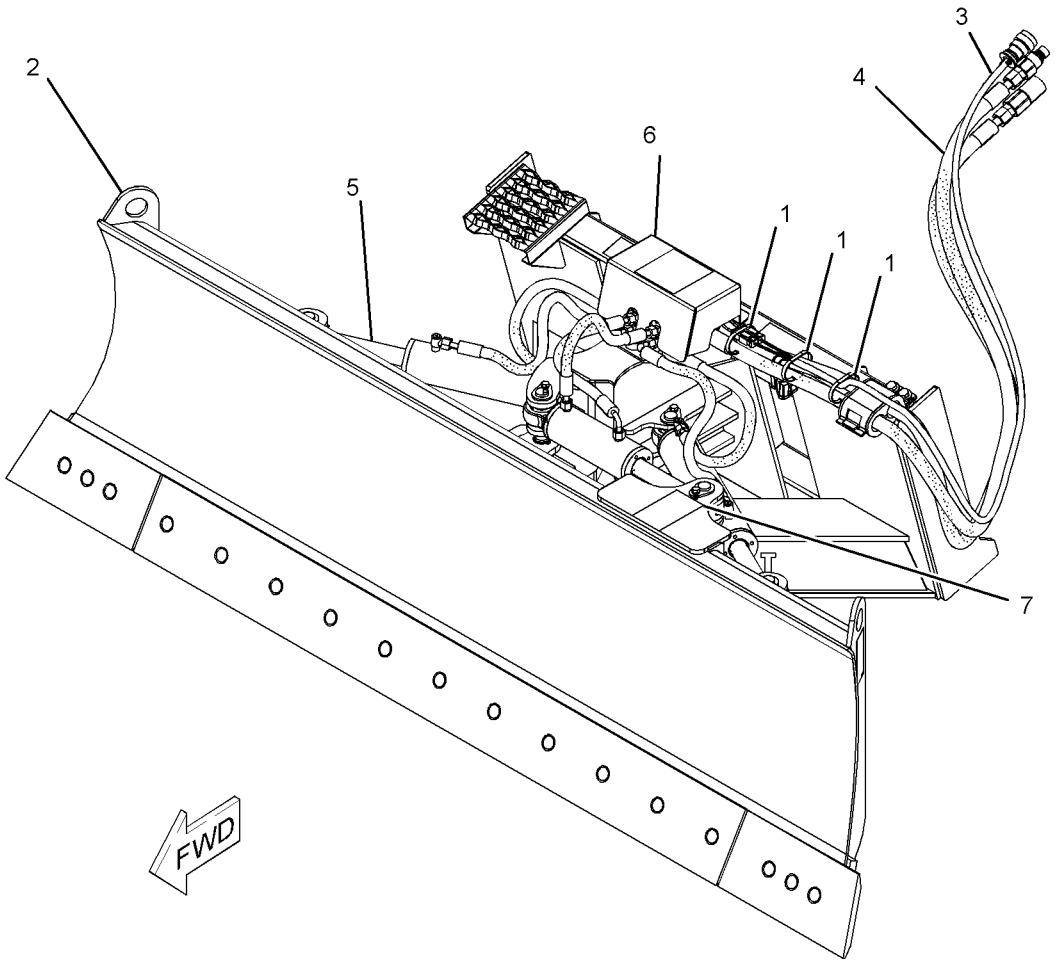

GRAPHIC #1 **<END>** g01381201

WORK TOOLS

231-5277 BLADE AR—ANGLING

S/N: MST1-UP
2007-MM (79-IN)
AN ATTACHMENT

SMCS-6060, 6701 **i03571243**

NOTE	REF NO	GRAPHIC REF	PART NUMBER	QTY	PART NAME 1 2 3 4 5 6 (PRODUCT LEVEL)	SEE PAGE
	1	1	**7K-1181**	3	STRAP-CABLE	
	2	1	**225-8015**	1	HARNESS AS-WORK TOOL (CONNECTING)	
		1	**213-0139**	6	PIN	
		1	**172-3998**	1	PLUG AS	
		1	**155-2270**	8	KIT-CONNECTING PLUG (2-PIN)	
					(EACH INCLUDES PLUG AS, WEDGE & INTERFACE SEAL)	
		1	**9W-0844**	9	SOCKET-CONNECTOR (14-GA)	
		1	**180-9340**	7	SOCKET-CONNECTOR (14-GA TO 18-GA)	
		1	**8L-8413**	10	STRAP-CABLE	
		1	**189-3158**	2	SUPPRESSOR-ARC	
E		1	**119-3662**		TUBE-HEAT SHRINK (10.85-MM DIA) (13-CM)	
E		1	**125-7874**		TUBE-HEAT SHRINK (5.72-MM DIA) (5-CM)	
E		1	**125-7875**		TUBE-HEAT SHRINK (7.44-MM DIA) (15-CM)	
Y	3	1	*231-5273*	1	LINES GP-CONNECTING	353
Y	4	1	*231-5274*	1	CYLINDER & MTG GP-ANGLE BLADE	302
Y	5	1	*231-5276*	1	BLADE GP-ANGLING	465
Y	6	1	*231-5278*	1	MANIFOLD & MTG GP-CONTROL (ANGLING BLADE)	414
Y	7	1	*247-0678*	1	PLATE & FILM GP	818

E-ORDER BY THE CENTIMETER
Y-SEPARATE ILLUSTRATION

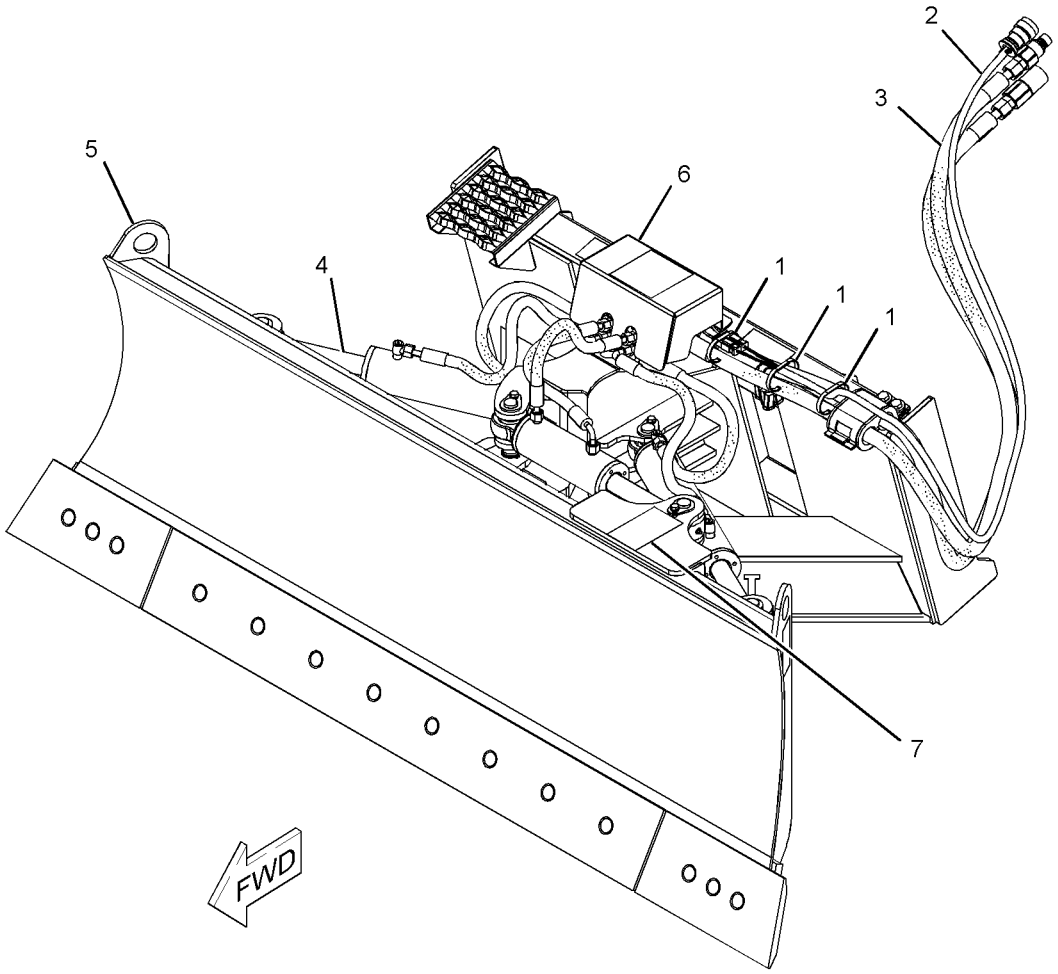

GRAPHIC #1 **<END>** g01381202

222-7412 BLADE AS-ANGLING

S/N: MST1-UP
2337-MM (92-IN)
PART OF 222-7724 BLADE GP-ANGLING
AN ATTACHMENT

SMCS-6052, 6060 **i03646971**

NOTE	REF NO	GRAPHIC REF	PART NUMBER	QTY	PART NAME 1 2 3 4 5 6 (PRODUCT LEVEL)	SEE PAGE
	1	1	**222-7421**	1	TRUNNION AS	
	2	1	**222-7479**	1	PLATE AS	
	3	1	**222-7728**	1	PLATE AS	

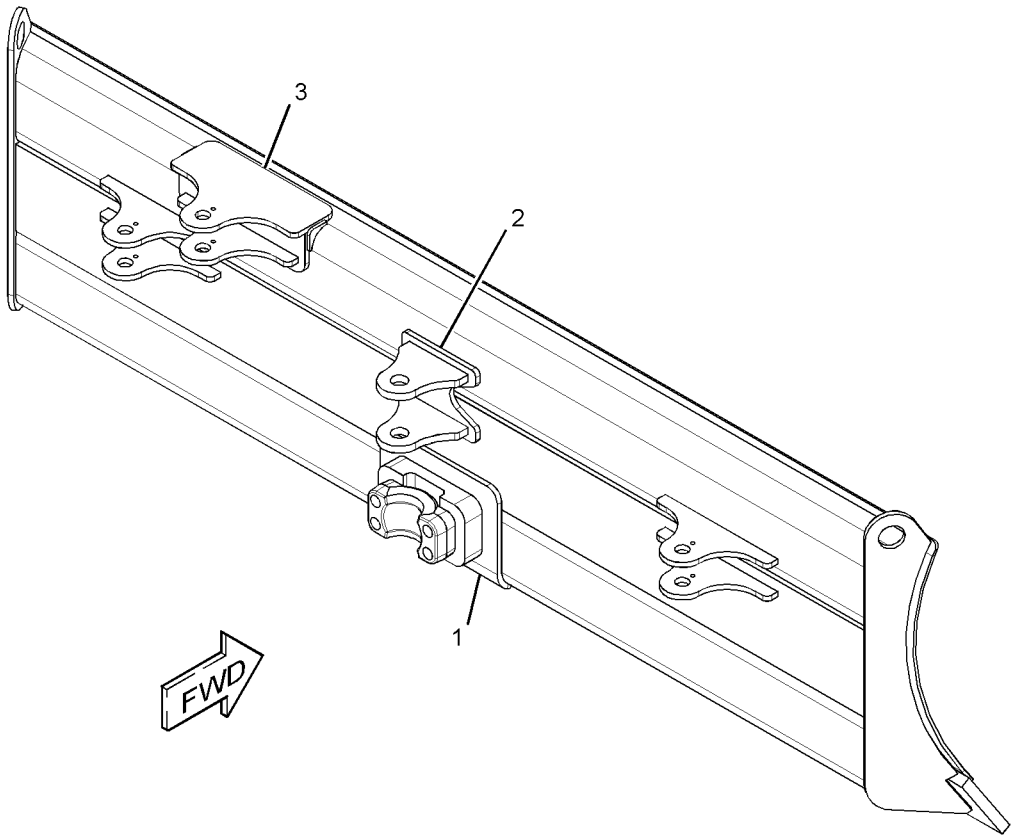

GRAPHIC #1 **<END>** g01960536

230-4596 BLADE AS-ANGLING

S/N: MST1-UP
2007-MM (79-IN)
PART OF 231-5276 BLADE GP-ANGLING
AN ATTACHMENT

SMCS-6052, 6060 **i03646970**

NOTE	REF NO	GRAPHIC REF	PART NUMBER	QTY	PART NAME 1 2 3 4 5 6 (PRODUCT LEVEL)	SEE PAGE
	1	1	**222-7421**	1	TRUNNION AS	
	2	1	**222-7479**	1	PLATE AS	
	3	1	**222-7728**	1	PLATE AS	

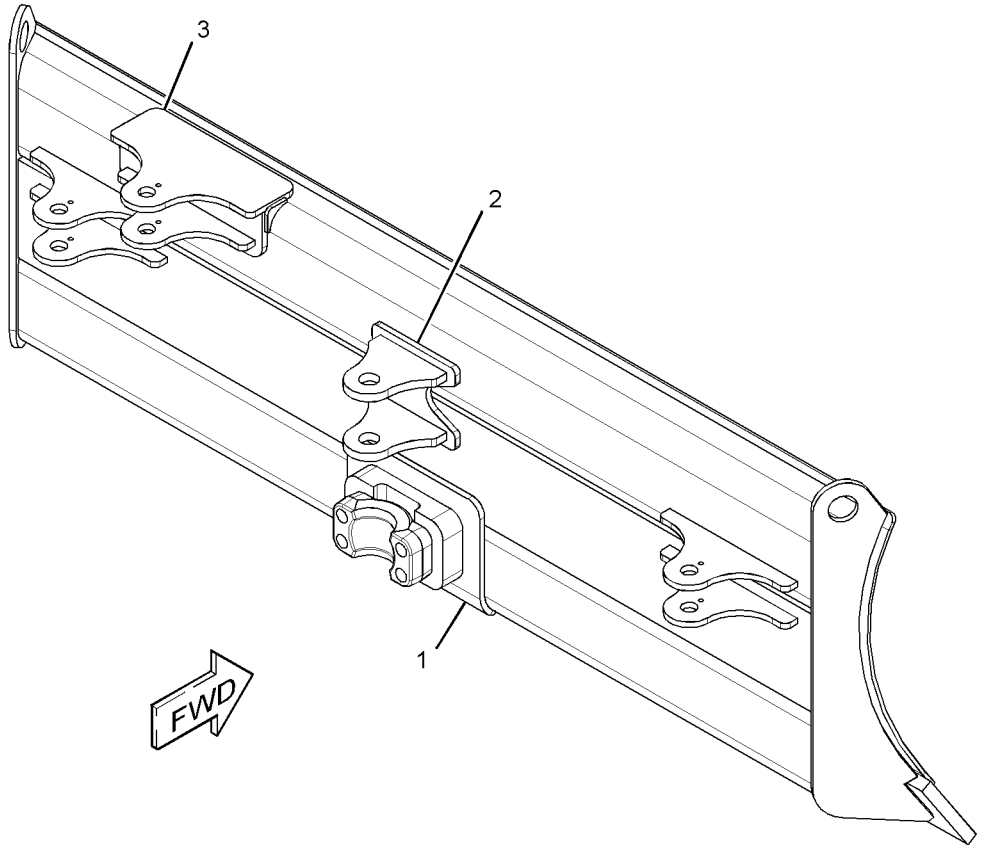

GRAPHIC #1 **<END>** g01960542

WORK TOOLS

177-1981 BLADE GP-ANGLING

S/N: MST1-UP
72-IN (1829-MM)
PART OF 177-1989 BLADE AR
AN ATTACHMENT

SMCS-6060, 6701 **i03654021**

NOTE	REF NO	GRAPHIC REF	PART NUMBER	QTY	PART NAME 1 2 3 4 5 6 (PRODUCT LEVEL)	SEE PAGE
	1	1	**157-0940**	2	PIN	
	2	1	**166-0319**	2	PIN AS	
	3	1	**9R-2959**	2	CLIP	
	4	1	**177-1921**	2	PIN AS	
	5	1	**177-1972**	2	SKID AS	
	6	1	**177-1987**	1	BLADE AS	
		1	**154-2704**	1	PLATE-INSTRUCTION (BUCKET SPECIFICATIONS)	
		1	**168-8389**	4	TACK-FASTENER	
		1	**169-4868**	2	FILM-WARNING (NO CLEARANCE, STAY BACK)	
	7	1	**3B-8489**	2	FITTING-GREASE	
M	8	1	**6V-9189**	2	LOCKNUT (M8X1.25-THD)	
M	9	1	**8T-6869**	2	BOLT (M8X1.25X60-MM)	

M-METRIC PART

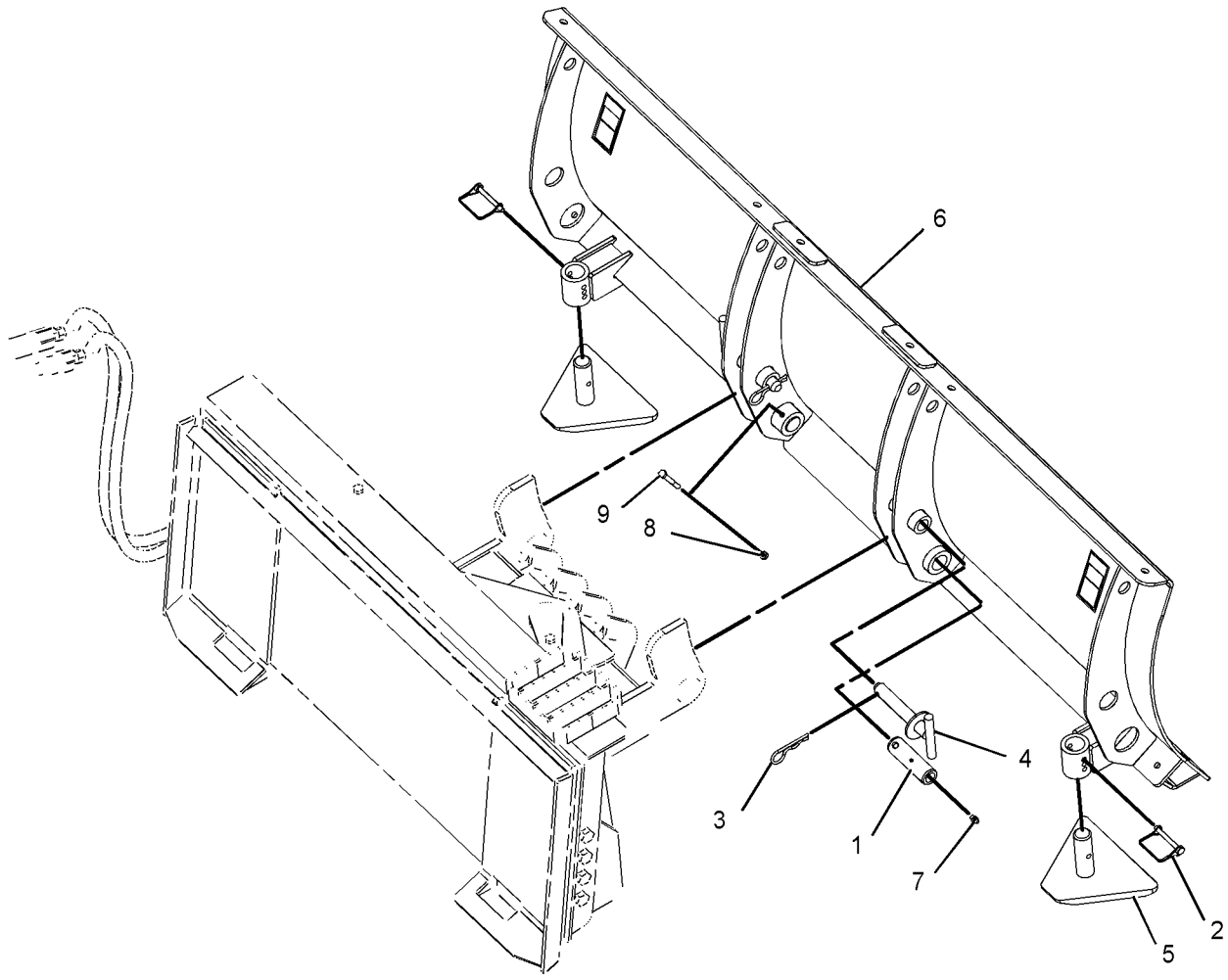

GRAPHIC #1 **<END>** g01960538

177-1982 BLADE GP-ANGLING

S/N: MST1-UP
84-IN (2134-MM)
PART OF 177-1990 BLADE AR
AN ATTACHMENT

SMCS-6060, 6701 **i03654022**

NOTE	REF NO	GRAPHIC REF	PART NUMBER	QTY	PART NAME 1 2 3 4 5 6 (PRODUCT LEVEL)	SEE PAGE
	1	1	**157-0940**	2	PIN	
	2	1	**166-0319**	2	PIN AS	
	3	1	**9R-2959**	2	CLIP	
	4	1	**177-1921**	2	PIN AS	
	5	1	**177-1972**	2	SKID AS	
	6	1	**177-1988**	1	BLADE AS	
		1	**154-2704**	1	PLATE-INSTRUCTION (BUCKET SPECIFICATIONS)	
		1	**168-8389**	4	TACK-FASTENER	
		1	**169-4868**	2	FILM-WARNING (NO CLEARANCE, STAY BACK)	
	7	1	**3B-8489**	2	FITTING-GREASE	
M	8	1	**6V-9189**	2	LOCKNUT (M8X1.25-THD)	
M	9	1	**8T-6869**	2	BOLT (M8X1.25X60-MM)	

M-METRIC PART

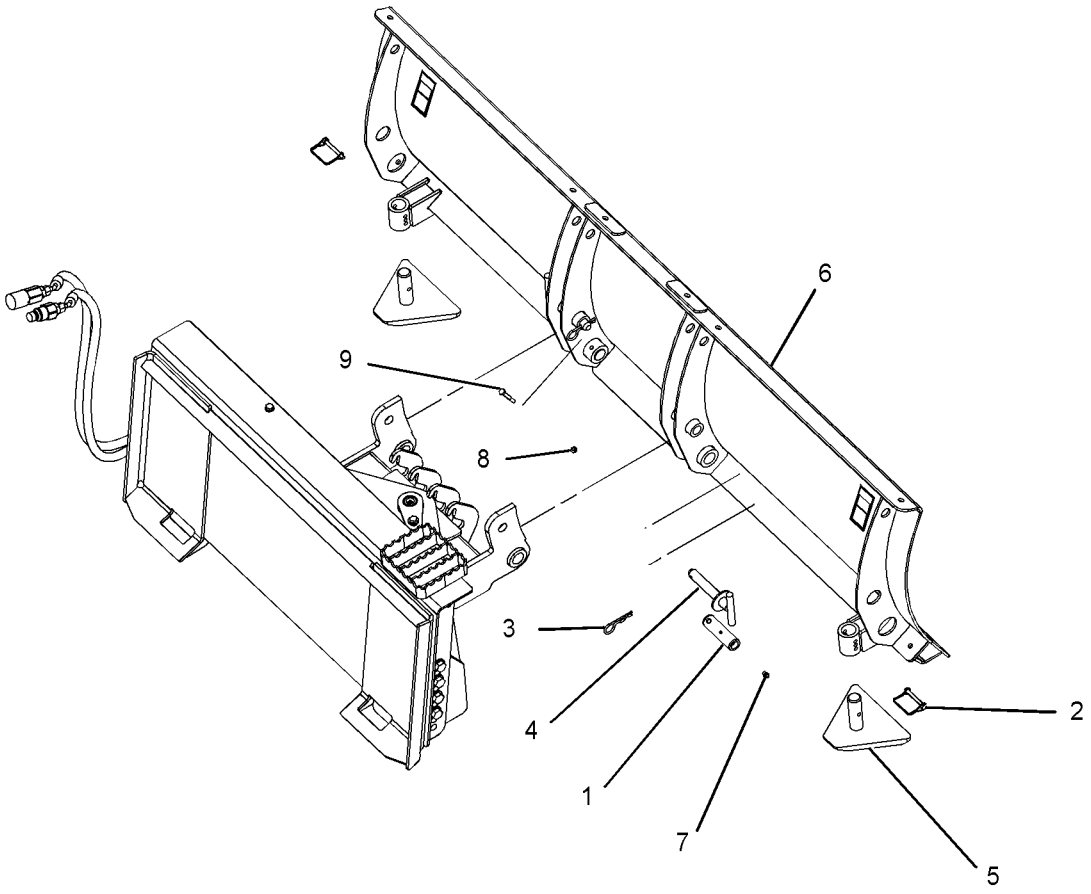

GRAPHIC #1 **<END>** g01960539

WORK TOOLS

222-7724 BLADE GP-ANGLING

S/N: MST1-UP
PART OF 231-5275 BLADE AR
AN ATTACHMENT

SMCS-6060, 6701 **i03646980**

NOTE	REF NO	GRAPHIC REF	PART NUMBER	QTY	PART NAME 1 2 3 4 5 6 (PRODUCT LEVEL)	SEE PAGE
B	1	1	**8E-5702**	22	SHIM (0.8-MM THK)	
	2	1	**255-6540**	1	PLATE-INSTRUCTION (BUCKET SPECIFICATIONS)	
	3	1	**168-8389**	4	TACK-FASTENER	
Y	4	1	**222-7412**	1	BLADE AS-ANGLING	460
	5	1	**222-7725**	1	FRAME GP-BLADE	
	6	1	**231-5271**	1	PIN	
	7	1	**238-1004**	2	MOUNT AS	
	8	1	**238-1005**	2	SKID AS	
	9	1	**244-1367**	1	BUSHING	
Y	10	1	*222-7546*	1	EDGE GP-BIT & CUTTING	599
	11	1	**5P-1076**	8	WASHER-HARD (13.5X30X4-MM THK)	
	12	1	**6V-7644**	2	RING-RETAINING	
M	13	1	**8C-8478**	4	BOLT (M20X2.5X140-MM)	
	14	1	**8J-2880**	1	CAP-BEARING	
	15	1	**8T-4123**	4	WASHER (22X35X3.5-MM THK)	
M	16	1	**8T-4139**	8	BOLT (M12X1.75X30-MM)	

B-USE AS REQUIRED
M-METRIC PART
Y-SEPARATE ILLUSTRATION

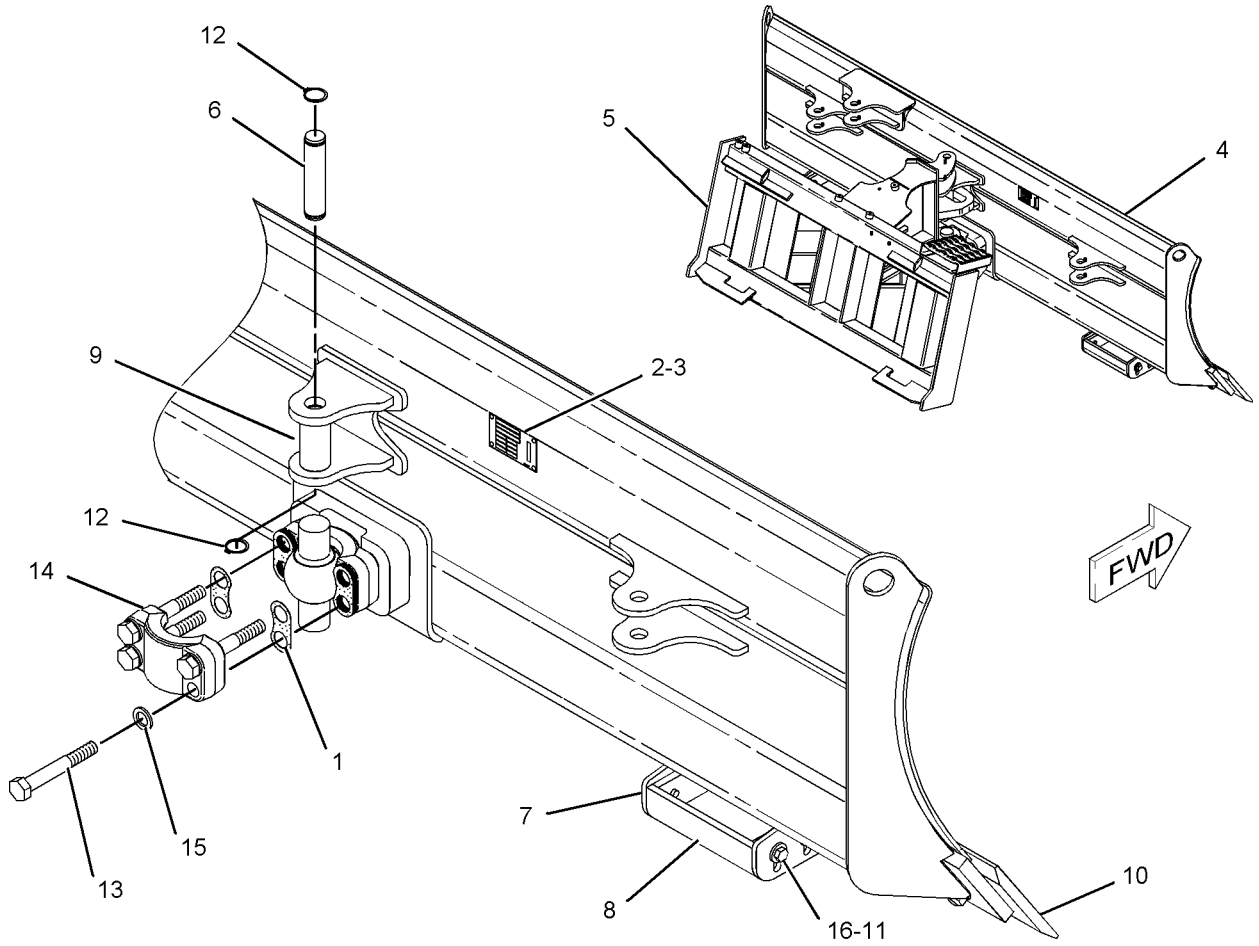

GRAPHIC #1 **<END>** g01021080

231-5276 BLADE GP-ANGLING

S/N: MST1-UP
PART OF 231-5277 BLADE AR
AN ATTACHMENT

SMCS-6060, 6701 **i03646979**

NOTE	REF NO	GRAPHIC REF	PART NUMBER	QTY	PART NAME 1 2 3 4 5 6 (PRODUCT LEVEL)	SEE PAGE
B	1	1	**8E-5702**	22	SHIM (0.8-MM THK)	
	2	1	**255-6540**	1	PLATE-INSTRUCTION (BUCKET SPECIFICATIONS)	
	3	1	**168-8389**	4	TACK-FASTENER	
	4	1	**222-7725**	1	FRAME GP-BLADE	
Y	5	1	**230-4596**	1	BLADE AS-ANGLING	461
	6	1	**231-5271**	1	PIN	
	7	1	**238-1004**	2	MOUNT AS	
	8	1	**238-1005**	2	SKID AS	
	9	1	**244-1367**	1	BUSHING	
Y	10	1	*222-7545*	1	EDGE GP-BIT & CUTTING	599
	11	1	**5P-1076**	8	WASHER-HARD (13.5X30X4-MM THK)	
	12	1	**6V-7644**	2	RING-RETAINING	
M	13	1	**8C-8478**	4	BOLT (M20X2.5X140-MM)	
	14	1	**8J-2880**	1	CAP-BEARING	
	15	1	**8T-4123**	4	WASHER (22X35X3.5-MM THK)	
M	16	1	**8T-4139**	8	BOLT (M12X1.75X30-MM)	

B-USE AS REQUIRED
M-METRIC PART
Y-SEPARATE ILLUSTRATION

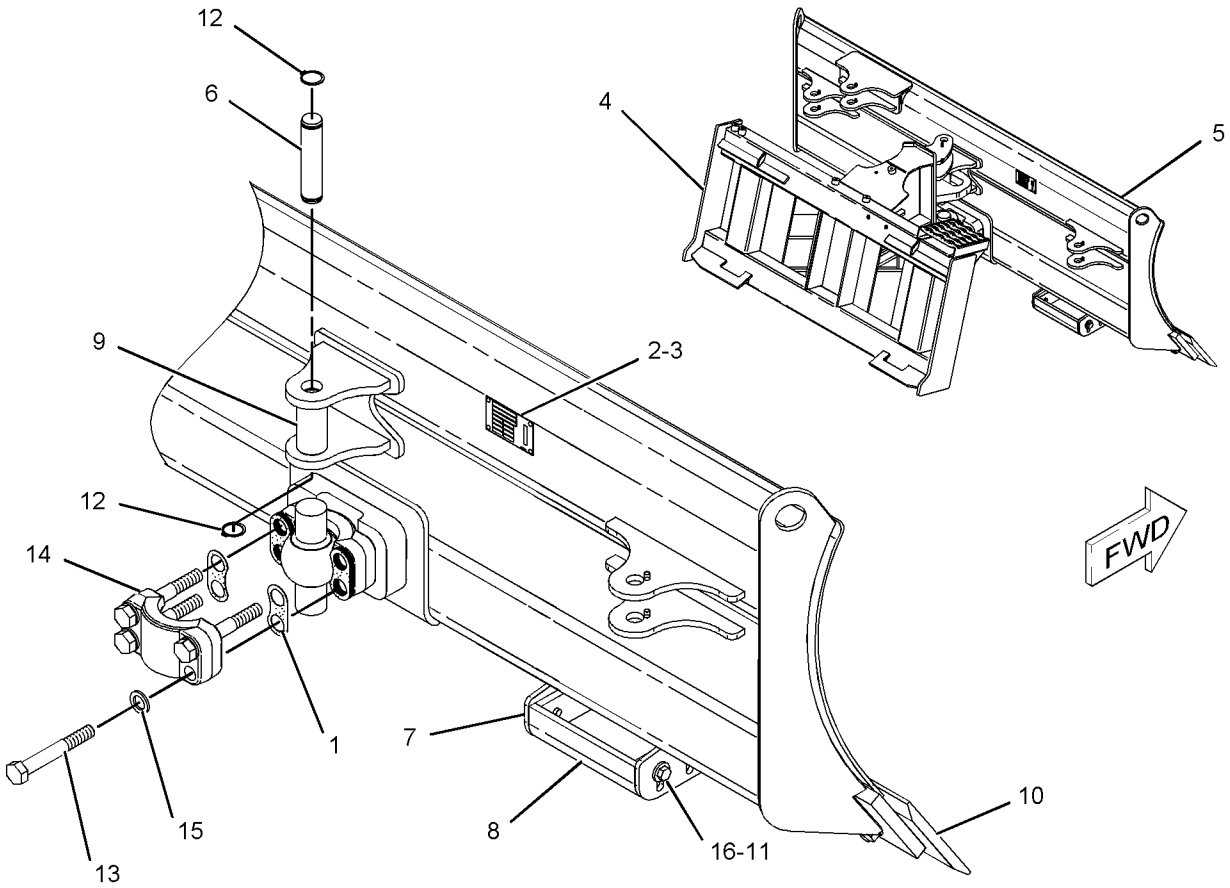

GRAPHIC #1 **<END>** g01020723

154-5080 BLADE GP-MULTIPURPOSE BUCKET

S/N: MST1-UP
1829-MM (72-IN)
PART OF 159-5347 BLADE GP-MULTIPURPOSE BUCKET
AN ATTACHMENT

SMCS-6060, 6104 **i03641795**

NOTE	REF NO	GRAPHIC REF	PART NUMBER	QTY	PART NAME 1 2 3 4 5 6 (PRODUCT LEVEL)	SEE PAGE
	1	1	**154-5077**	1	EDGE	

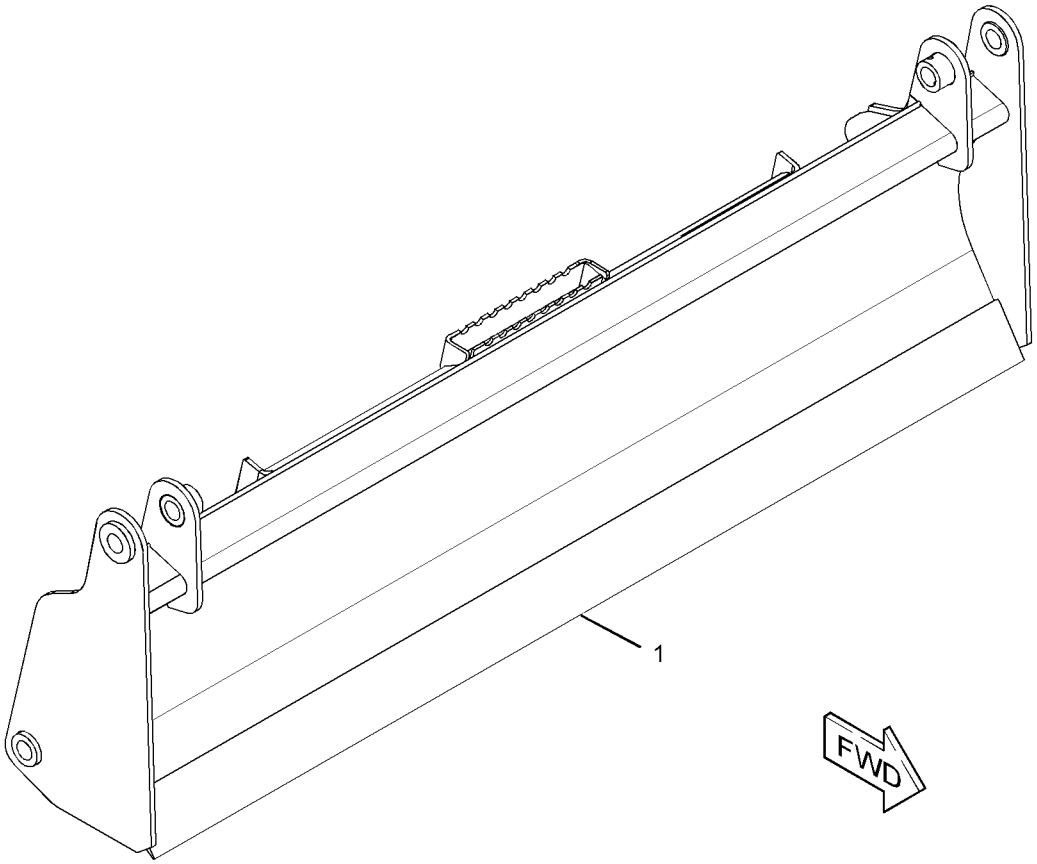

GRAPHIC #1 **<END>** g01953741

159-5345 BLADE GP-MULTIPURPOSE BUCKET

S/N: MST1-UP
1524-MM (60-IN)
PART OF 154-5005 BUCKET GP-MULTIPURPOSE
AN ATTACHMENT

SMCS-6060, 6104 **i03641755**

NOTE	REF NO	GRAPHIC REF	PART NUMBER	QTY	PART NAME 1 2 3 4 5 6 (PRODUCT LEVEL)	SEE PAGE
Y	1	1	**279-5385**	1	BLADE GP-MULTIPURPOSE BUCKET (60-IN)	470
	2	1	**154-2704**	1	PLATE-INSTRUCTION (BUCKET SPECIFICATIONS)	
	3	1	**168-8389**	4	TACK-FASTENER	

Y-SEPARATE ILLUSTRATION

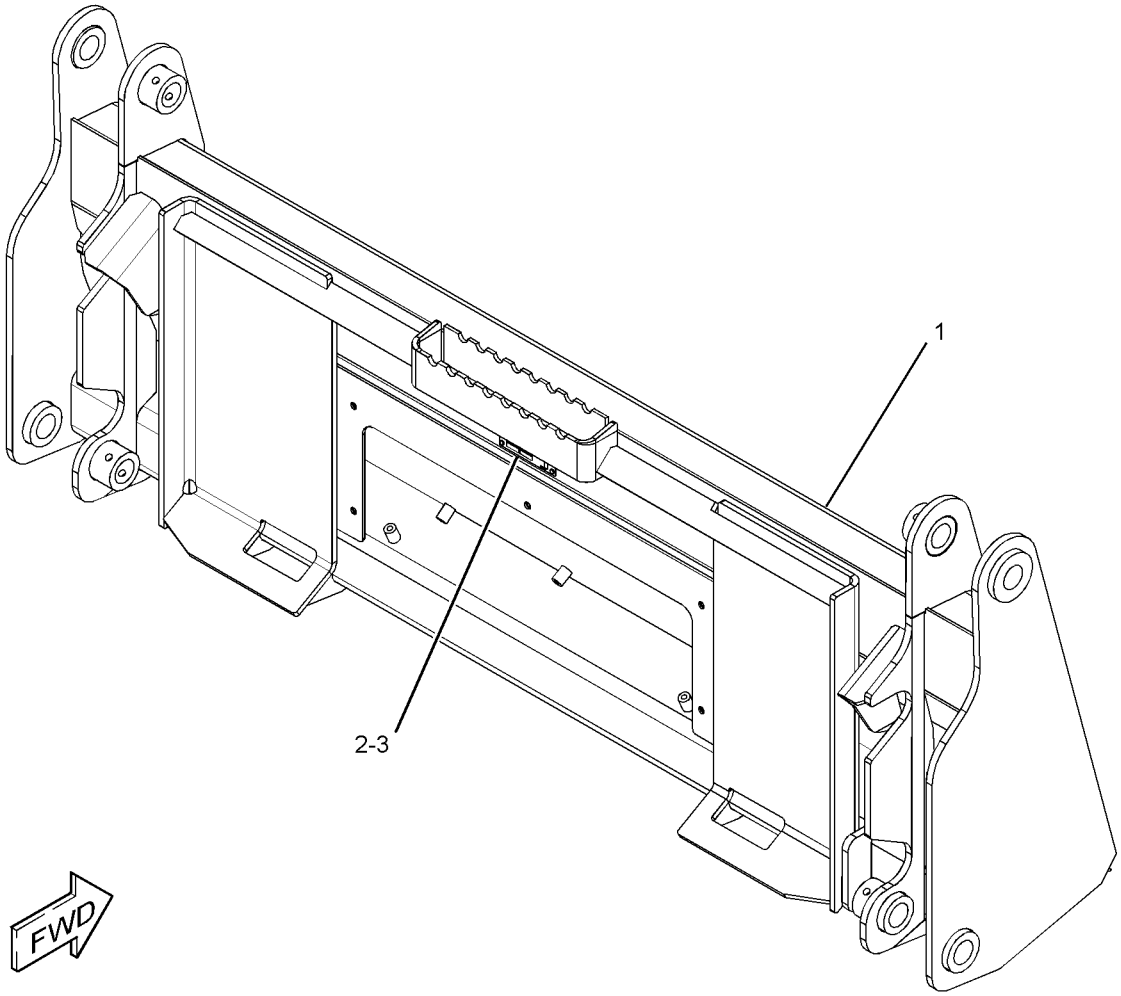

GRAPHIC #1 **<END>** g01945292

WORK TOOLS

159-5347 BLADE GP-MULTIPURPOSE BUCKET

S/N: MST1-UP
1829-MM (72-IN)
PART OF 154-5009 BUCKET GP-MULTIPURPOSE
AN ATTACHMENT

SMCS-6060, 6104 **i03641796**

NOTE	REF NO	GRAPHIC REF	PART NUMBER	QTY	PART NAME 1 2 3 4 5 6 (PRODUCT LEVEL)	SEE PAGE
	1	1	**154-2704**	1	PLATE-INSTRUCTION (BUCKET SPECIFICATIONS)	
Y	2	1	*154-5080*	1	BLADE GP-MULTIPURPOSE BUCKET (72-IN)	466
	3	1	**168-8389**	4	TACK-FASTENER	

Y-SEPARATE ILLUSTRATION

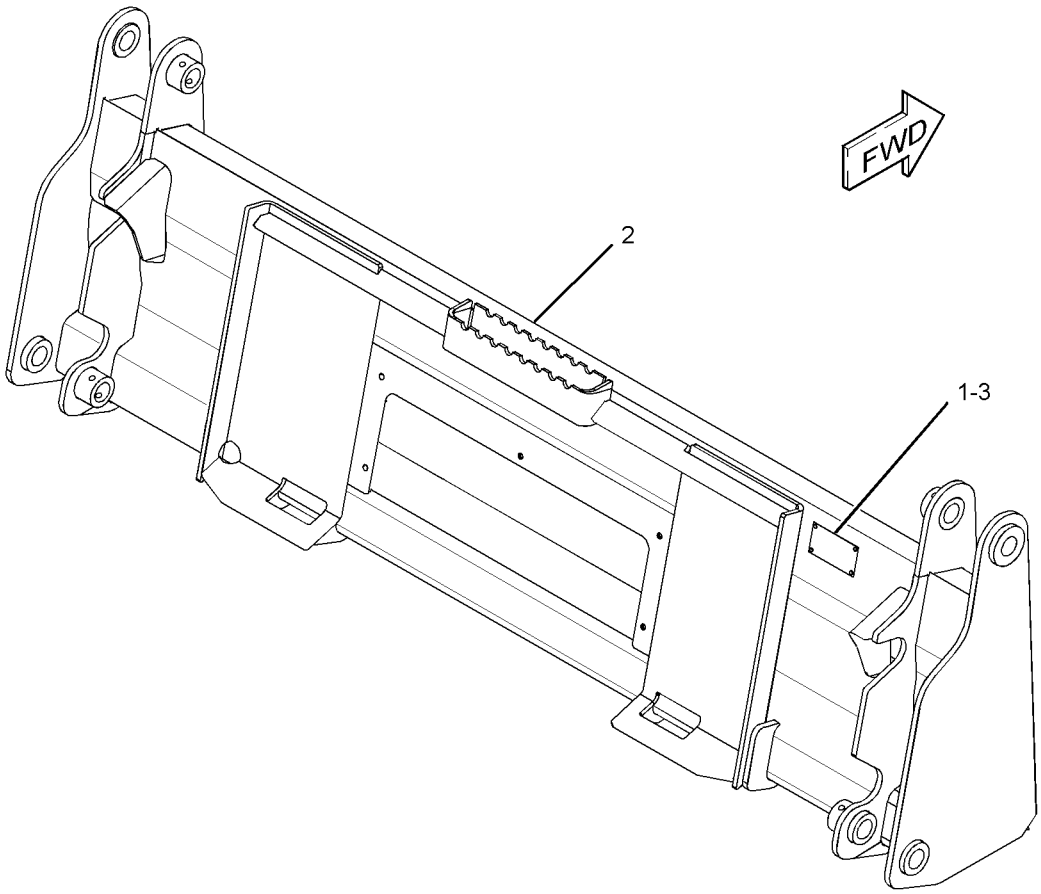

GRAPHIC #1 **<END>** g01953756

279-5384 BLADE GP-MULTIPURPOSE BUCKET

S/N: MST1-UP

PART OF 279-5383 BUCKET GP-MULTIPURPOSE

AN ATTACHMENT

SMCS-6060, 6104 **i03641756**

NOTE	REF NO	GRAPHIC REF	PART NUMBER	QTY	PART NAME 1 2 3 4 5 6 (PRODUCT LEVEL)	SEE PAGE
	1	1	**154-2704**	1	PLATE-INSTRUCTION (BUCKET SPECIFICATIONS)	
	2	1	**168-8389**	4	TACK-FASTENER	
Y	3	1	**279-5385**	1	BLADE GP-MULTIPURPOSE BUCKET (60-IN)	470

Y-SEPARATE ILLUSTRATION

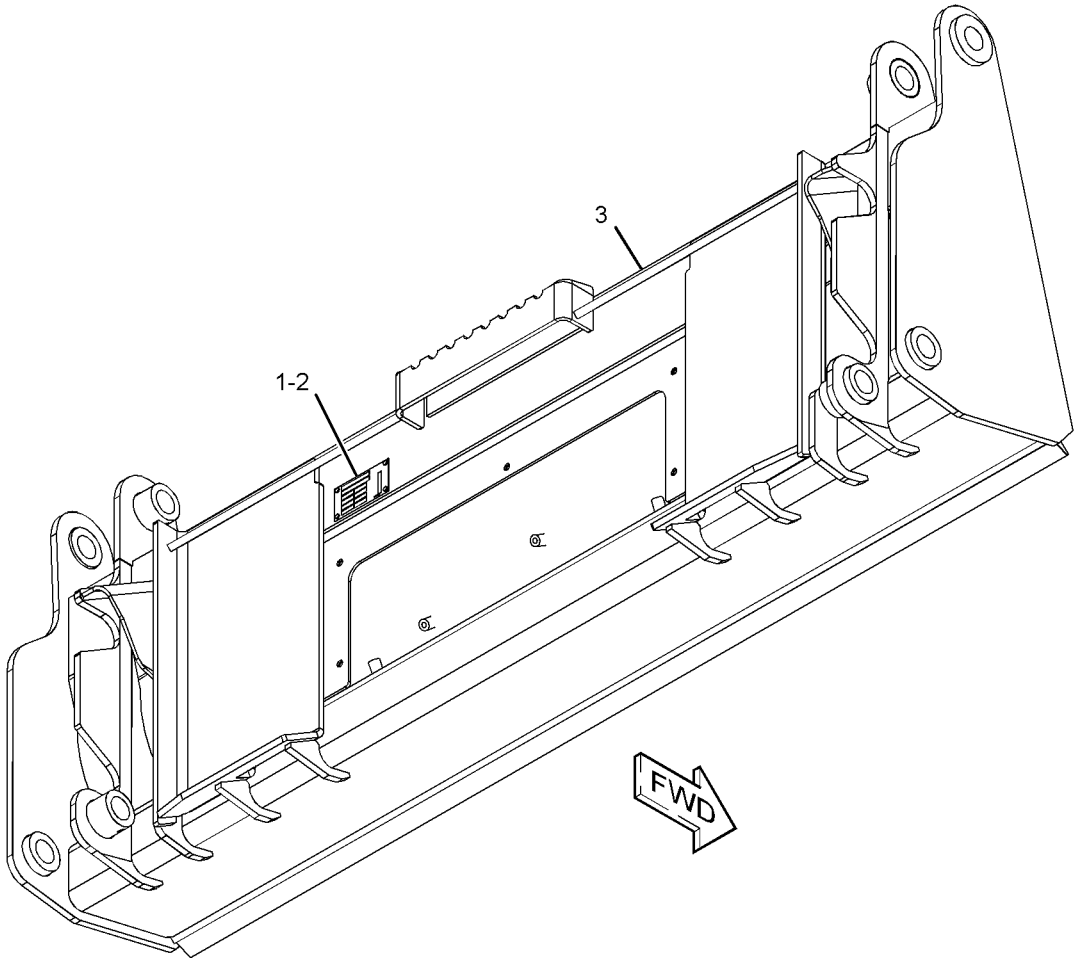

GRAPHIC #1 **<END>** g01278496

279-5385 BLADE GP-MULTIPURPOSE BUCKET

S/N: MST1-UP
1524-MM (60-IN)
PART OF 159-5345, 279-5384 BLADE GP-MULTIPURPOSE BUCKET
AN ATTACHMENT

SMCS-6060, 6104 **i03638431**

NOTE	REF NO	GRAPHIC REF	PART NUMBER	QTY	PART NAME 1 2 3 4 5 6 (PRODUCT LEVEL)	SEE PAGE
	1	1	**154-5037**	1	EDGE	

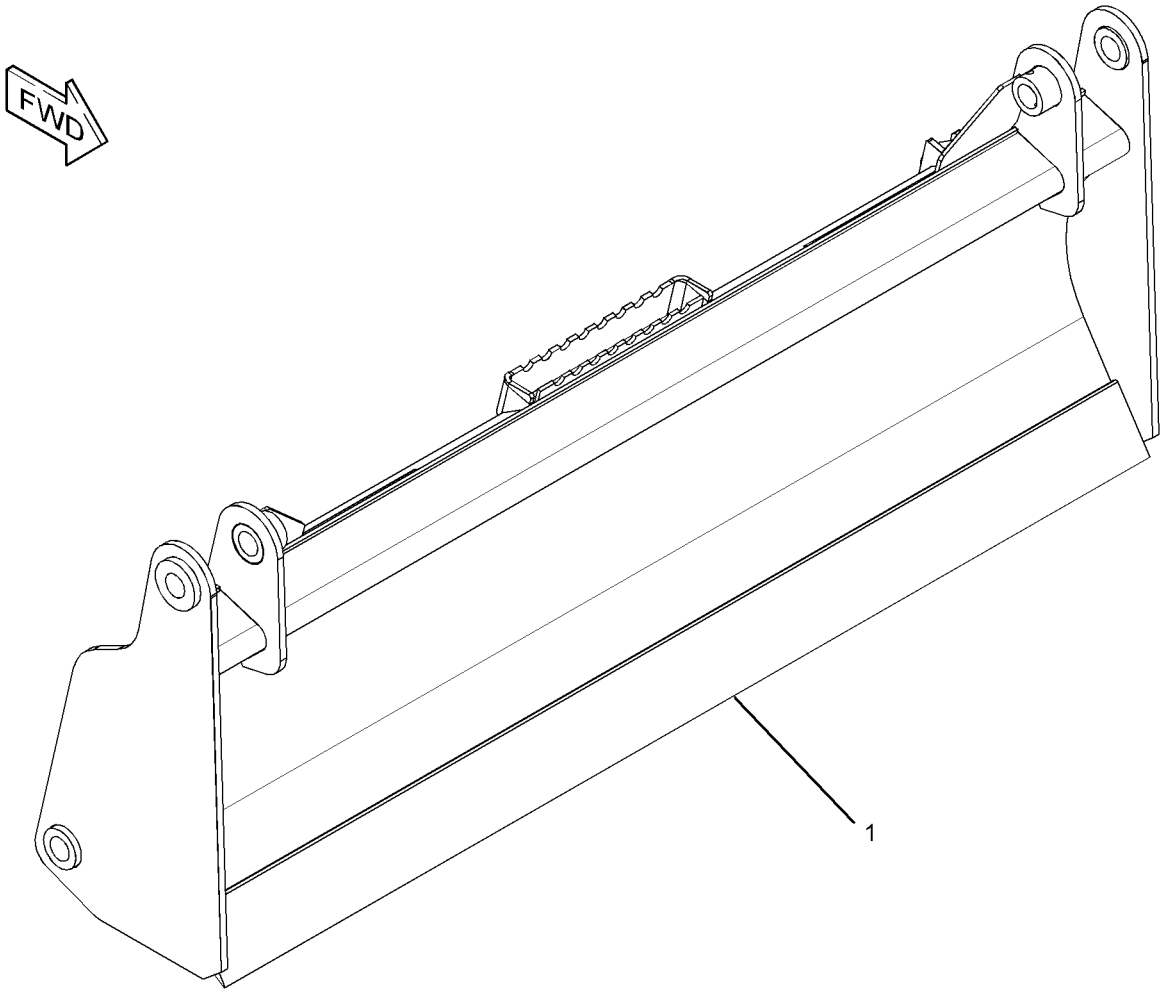

GRAPHIC #1 **<END>** g01953861

WORK TOOLS

279-5387 BLADE GP-MULTIPURPOSE BUCKET

S/N: MST1-UP
1676-MM (66-IN)
PART OF 279-5388 BLADE GP-MULTIPURPOSE BUCKET
AN ATTACHMENT

SMCS-6060, 6104 **i03646985**

NOTE	REF NO	GRAPHIC REF	PART NUMBER	QTY	PART NAME 1 2 3 4 5 6 (PRODUCT LEVEL)	SEE PAGE
	1	1	**154-5059**	1	EDGE	

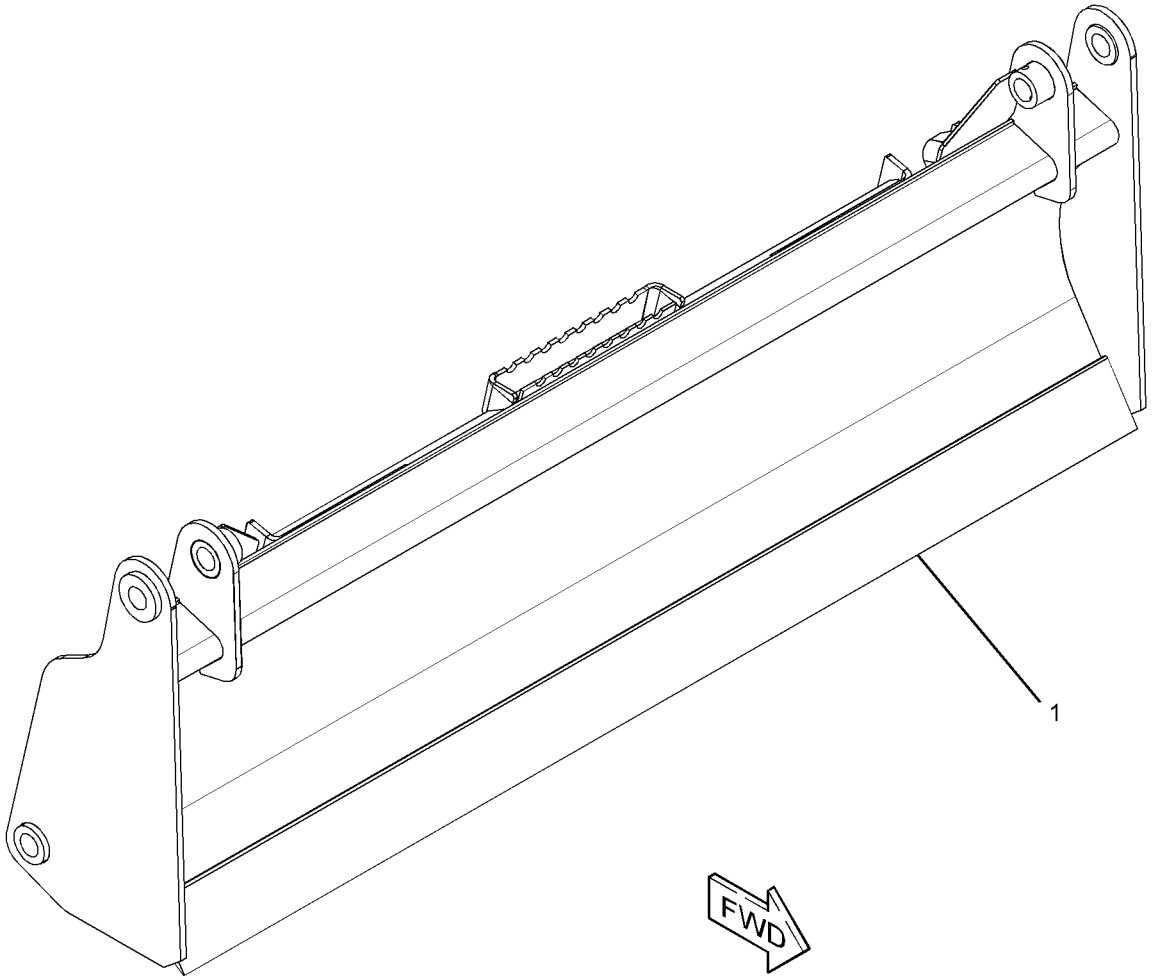

GRAPHIC #1 **<END>** g01960204

279-5388 BLADE GP-MULTIPURPOSE BUCKET

S/N: MST1-UP

PART OF 279-5389 BUCKET GP-MULTIPURPOSE

AN ATTACHMENT

SMCS-6060, 6104 **i03646978**

NOTE	REF NO	GRAPHIC REF	PART NUMBER	QTY	PART NAME 1 2 3 4 5 6 (PRODUCT LEVEL)	SEE PAGE
	1	1	**154-2704**	1	PLATE-INSTRUCTION (BUCKET SPECIFICATIONS)	
	2	1	**168-8389**	4	TACK-FASTENER	
Y	3	1	**279-5387**	1	BLADE GP-MULTIPURPOSE BUCKET (66-IN)	471

Y-SEPARATE ILLUSTRATION

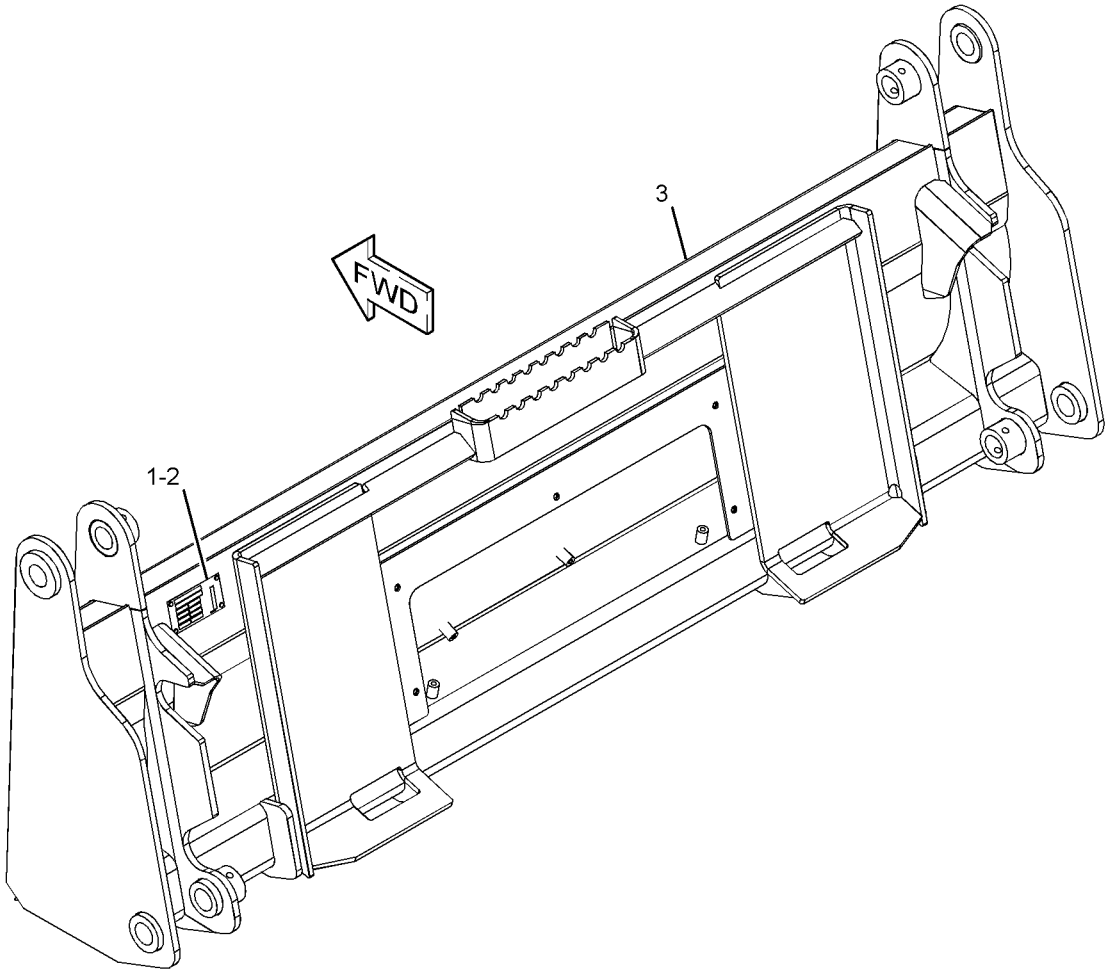

GRAPHIC #1 **<END>** g01279242

WORK TOOLS

279-5395 BLADE GP-MULTIPURPOSE BUCKET

S/N: MST1-UP
1829-MM (72-IN)
PART OF 279-5396 BLADE GP-MULTIPURPOSE BUCKET
AN ATTACHMENT

SMCS-6060, 6104 **i03646984**

NOTE	REF NO	GRAPHIC REF	PART NUMBER	QTY	PART NAME 1 2 3 4 5 6 (PRODUCT LEVEL)	SEE PAGE
	1	1	**154-5077**	1	EDGE	

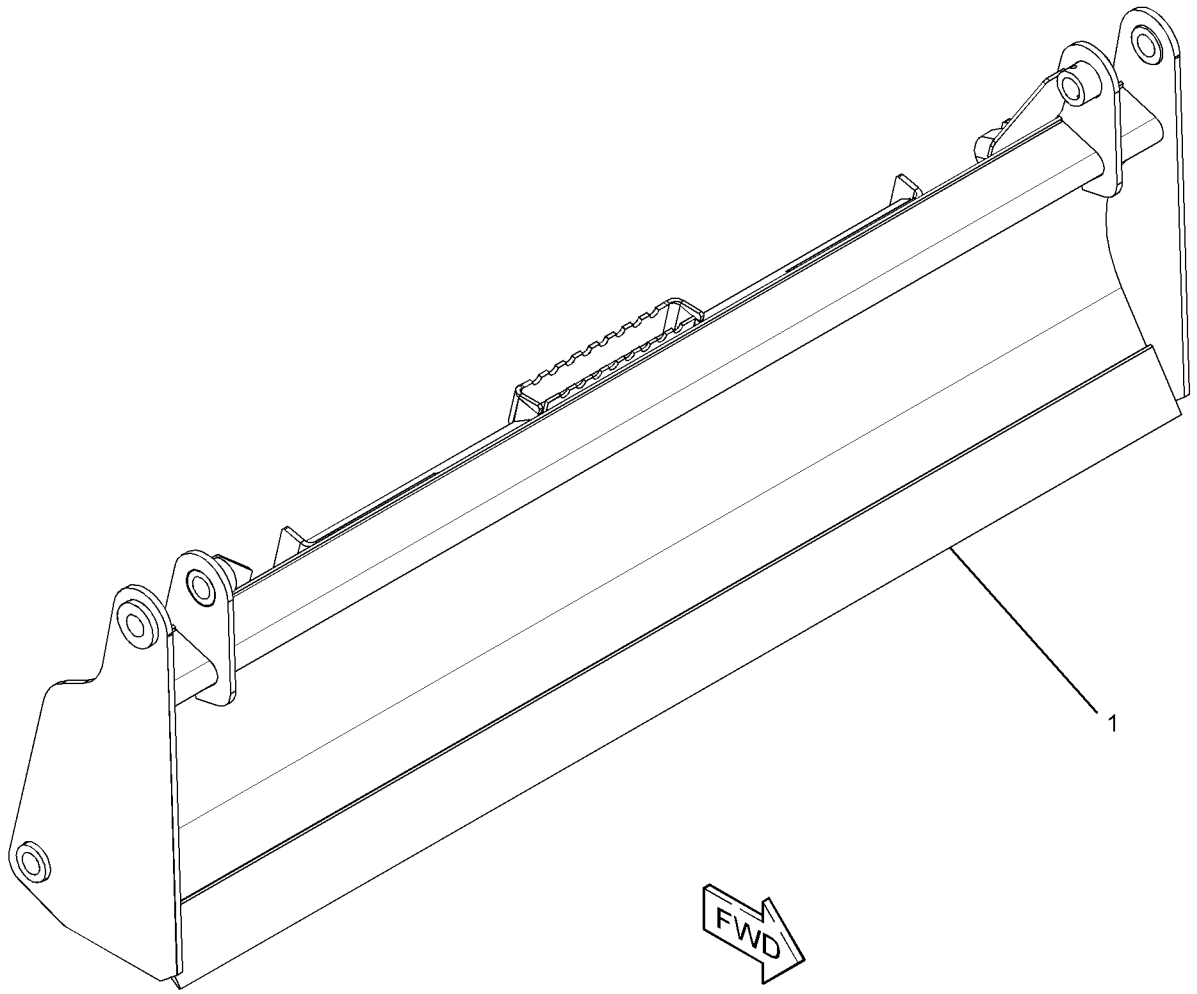

GRAPHIC #1 **<END>** g01960206

WORK TOOLS

279-5396 BLADE GP-MULTIPURPOSE BUCKET

S/N: MST1-UP

PART OF 279-5397 BUCKET GP-MULTIPURPOSE

AN ATTACHMENT

SMCS-6060, 6104 **i03646991**

NOTE	REF NO	GRAPHIC REF	PART NUMBER	QTY	PART NAME 1 2 3 4 5 6 (PRODUCT LEVEL)	SEE PAGE
	1	1	**154-2704**	1	PLATE-INSTRUCTION (BUCKET SPECIFICATIONS)	
	2	1	**168-8389**	4	TACK-FASTENER	
Y	3	1	**279-5395**	1	BLADE GP-MULTIPURPOSE BUCKET (72-IN)	473

Y-SEPARATE ILLUSTRATION

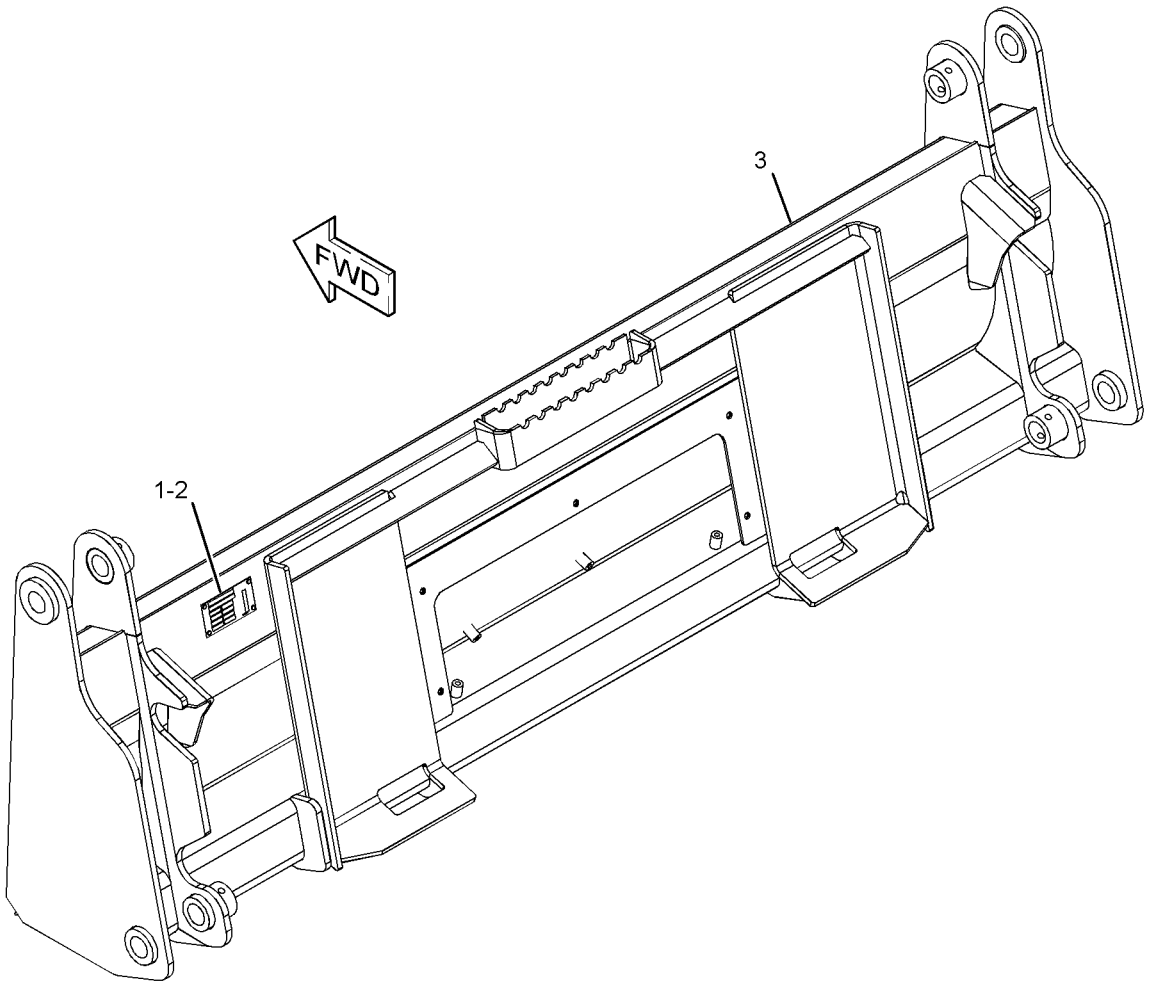

GRAPHIC #1 **<END>** g01279973

279-5405 BLADE GP-MULTIPURPOSE BUCKET

S/N: MST1-UP
PART OF 279-5404 BUCKET GP-MULTIPURPOSE
AN ATTACHMENT

SMCS-6060, 6104 **i03641757**

NOTE	REF NO	GRAPHIC REF	PART NUMBER	QTY	PART NAME 1 2 3 4 5 6 (PRODUCT LEVEL)	SEE PAGE
	1	1	**154-2704**	1	PLATE-INSTRUCTION (BUCKET SPECIFICATIONS)	
	2	1	**168-8389**	4	TACK-FASTENER	
Y	3	1	**279-5406**	1	BLADE GP-MULTIPURPOSE BUCKET (78-IN)	476

Y-SEPARATE ILLUSTRATION

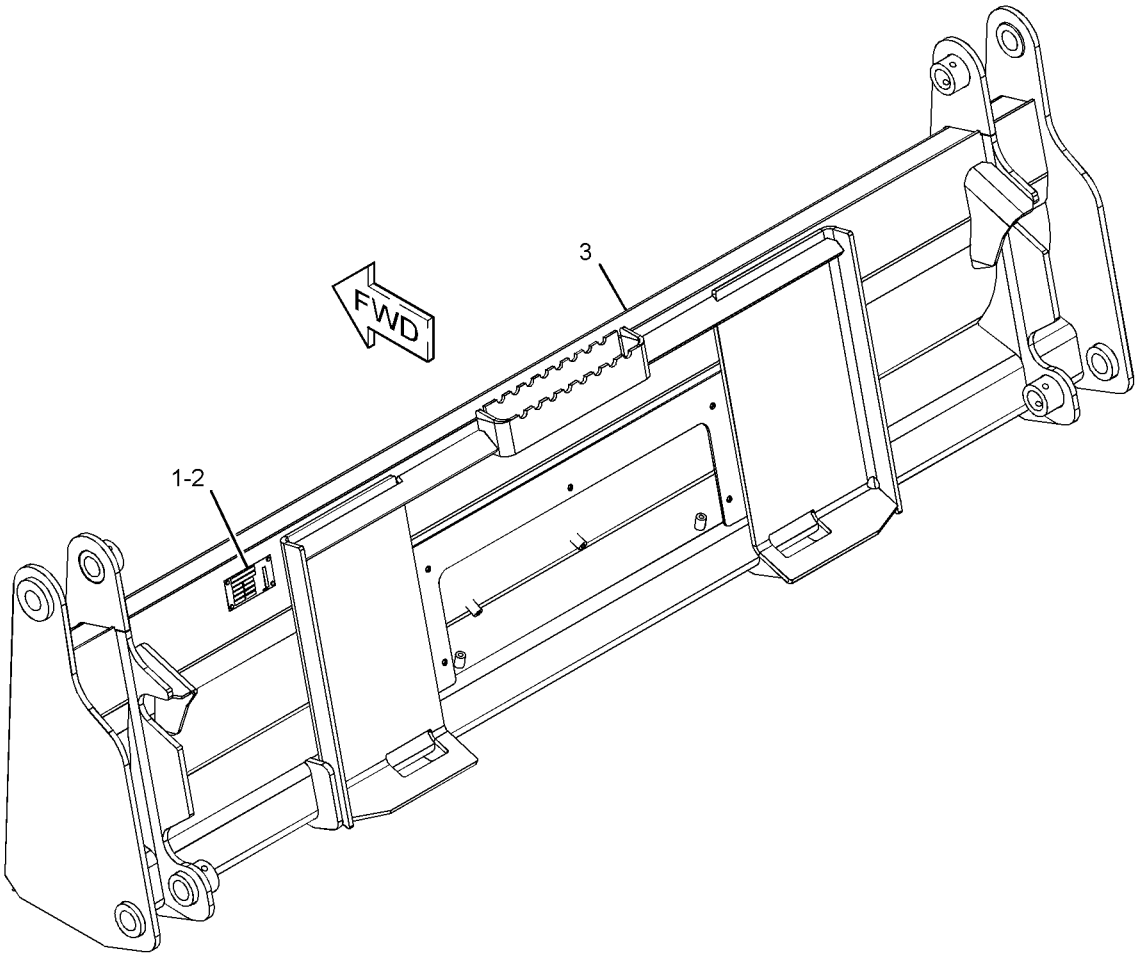

GRAPHIC #1 **<END>** g01278518

279-5406 BLADE GP-MULTIPURPOSE BUCKET

S/N: MST1-UP
1981-MM (78-IN)
PART OF 279-5405 BLADE GP-MULTIPURPOSE BUCKET
AN ATTACHMENT

SMCS-6060, 6104 **i03638465**

NOTE	REF NO	GRAPHIC REF	PART NUMBER	QTY	PART NAME 1 2 3 4 5 6 (PRODUCT LEVEL)	SEE PAGE
	1	1	**199-8316**	1	EDGE	

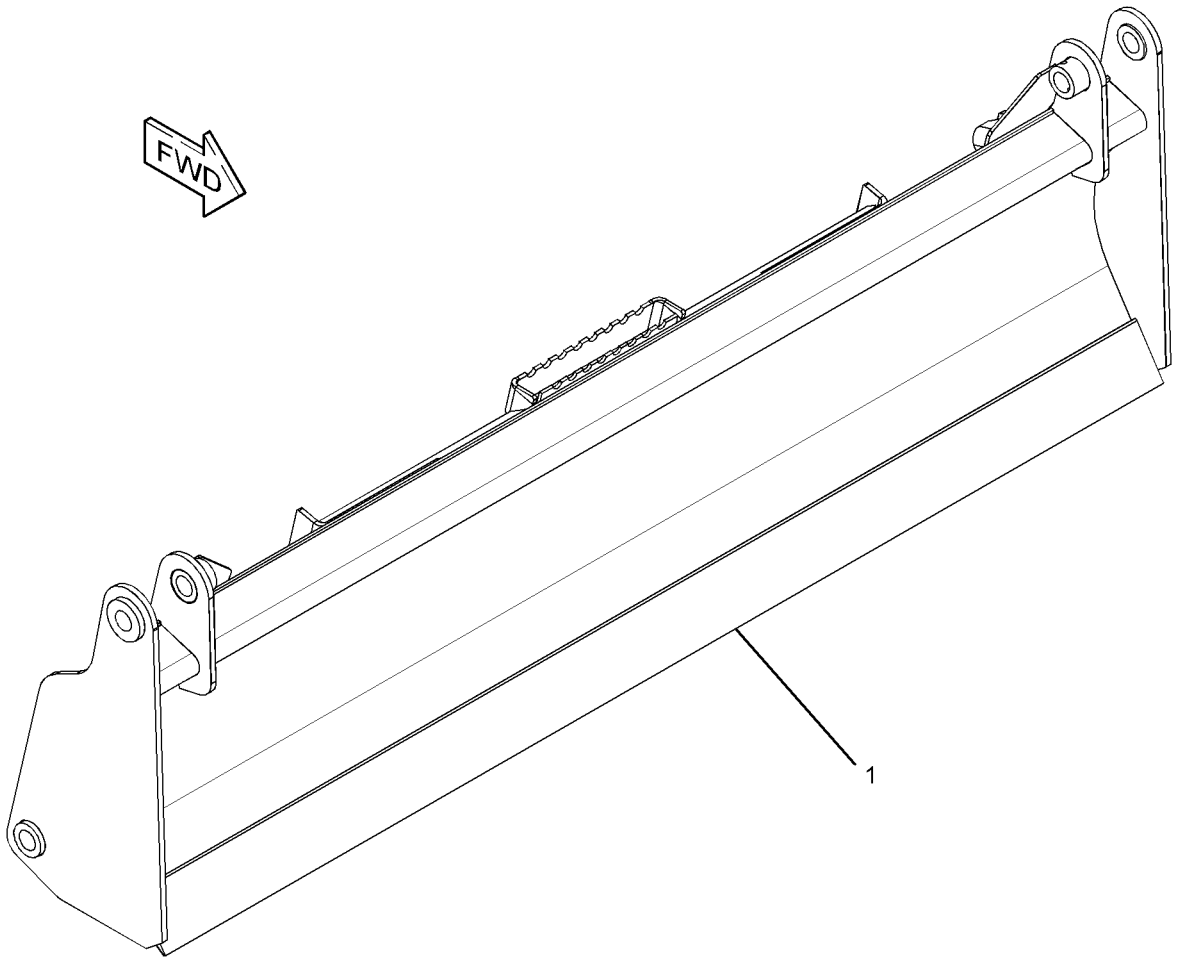

GRAPHIC #1 **<END>** g01954566

293-0142 BLADE GP-MULTIPURPOSE BUCKET

S/N: MST1-UP
2134-MM (84-IN)
PART OF 293-0141 BUCKET GP-MULTIPURPOSE
AN ATTACHMENT

SMCS-6060, 6104 **i02636486**

NOTE	REF NO	GRAPHIC REF	PART NUMBER	QTY	PART NAME 1 2 3 4 5 6 (PRODUCT LEVEL)	SEE PAGE
	1	1	**154-2704**	1	PLATE-INSTRUCTION (BUCKET SPECIFICATIONS)	
	2	1	**168-8389**	4	TACK-FASTENER	
	3	1	**293-0143**	1	BLADE AS	

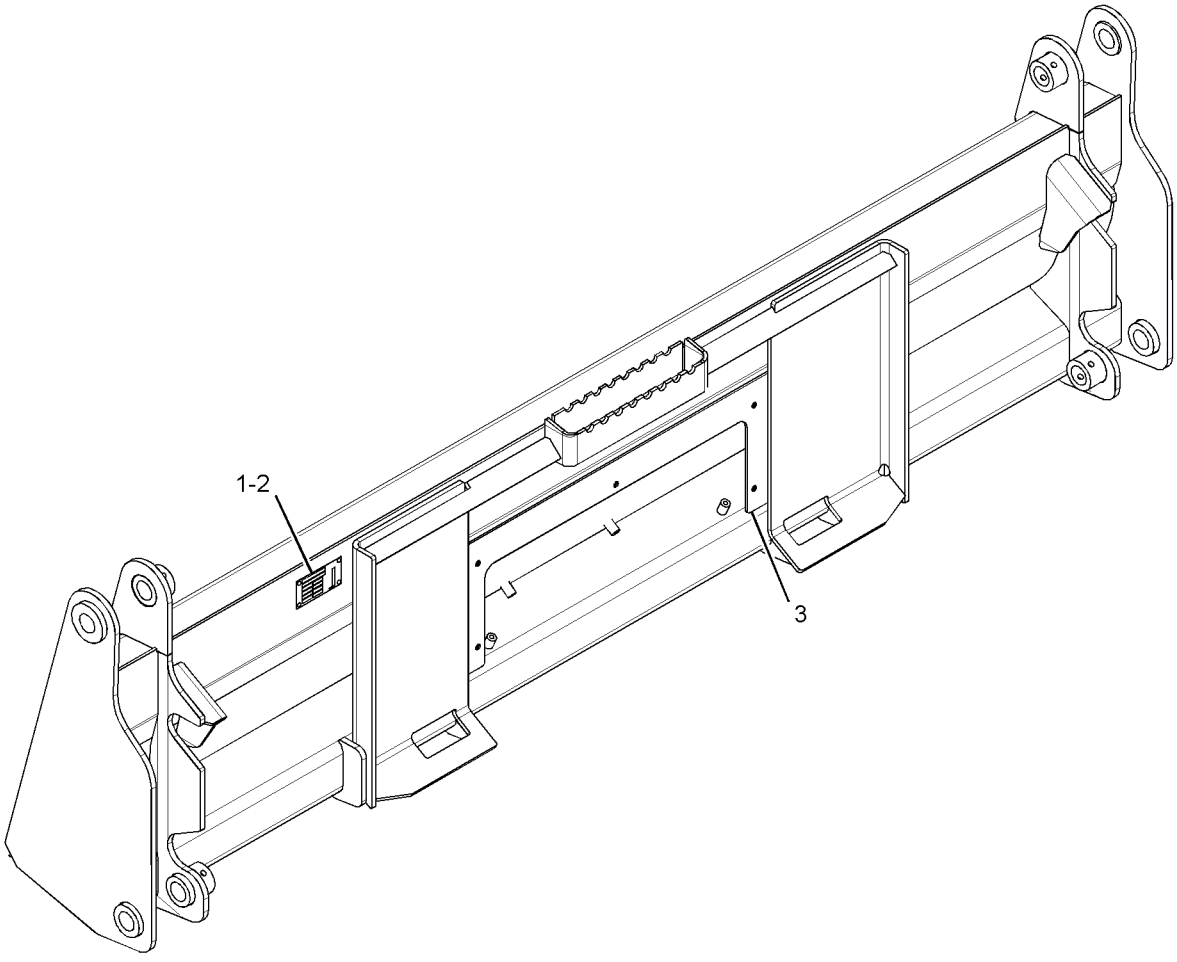

GRAPHIC #1 **<END>** g01327412

325-7038 BLADE GP-MULTIPURPOSE BUCKET

S/N: MST1-UP

PART OF 325-7037 BUCKET GP-MULTIPURPOSE

AN ATTACHMENT

SMCS-6060, 6104 **i03641711**

NOTE	REF NO	GRAPHIC REF	PART NUMBER	QTY	PART NAME 1 2 3 4 5 6 (PRODUCT LEVEL)	SEE PAGE
	1	1	**154-2704**	1	PLATE-INSTRUCTION (BUCKET SPECIFICATIONS)	
	2	1	**168-8389**	4	TACK-FASTENER	
Y	3	1	**325-7039**	1	BLADE GP-MULTIPURPOSE BUCKET (60-IN)	479

Y-SEPARATE ILLUSTRATION

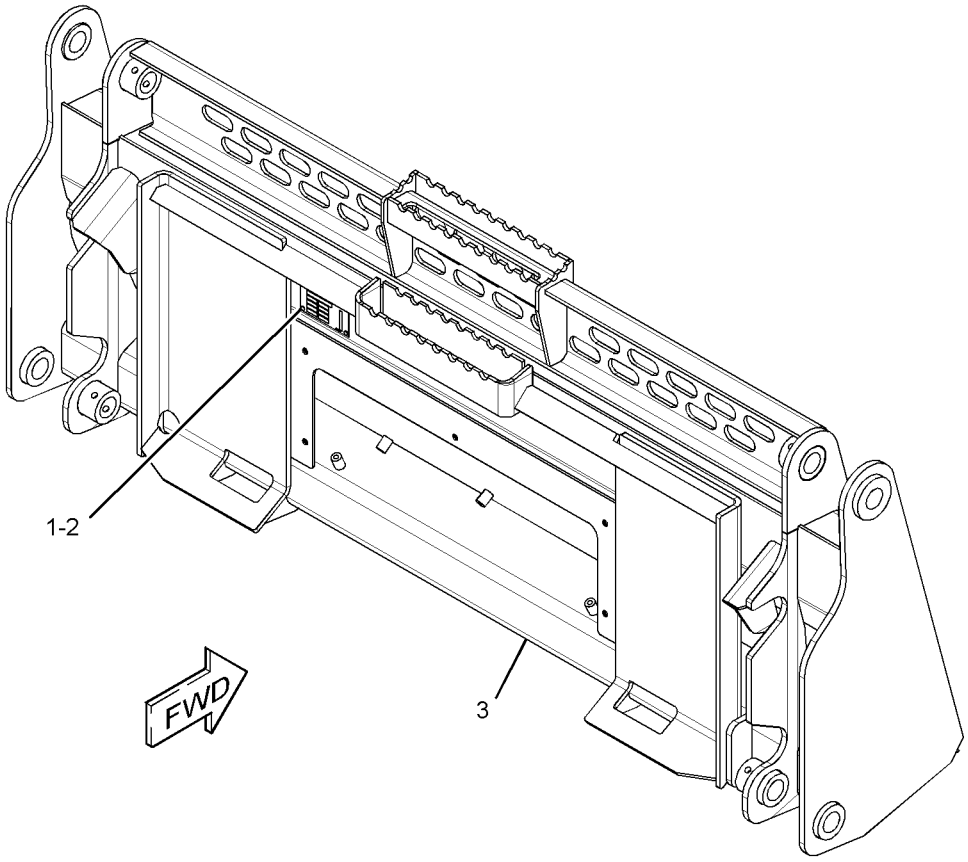

GRAPHIC #1 **<END>** g01529146

325-7039 BLADE GP-MULTIPURPOSE BUCKET

S/N: MST1-UP
1524-MM (60-IN)
PART OF 325-7038 BLADE GP-MULTIPURPOSE BUCKET
AN ATTACHMENT

SMCS-6060, 6104 **i03635069**

NOTE	REF NO	GRAPHIC REF	PART NUMBER	QTY	PART NAME 1 2 3 4 5 6 (PRODUCT LEVEL)	SEE PAGE
	1	1	**154-5037**	1	EDGE	
	2	1	**325-7034**	1	GUARD AS (60-IN)	

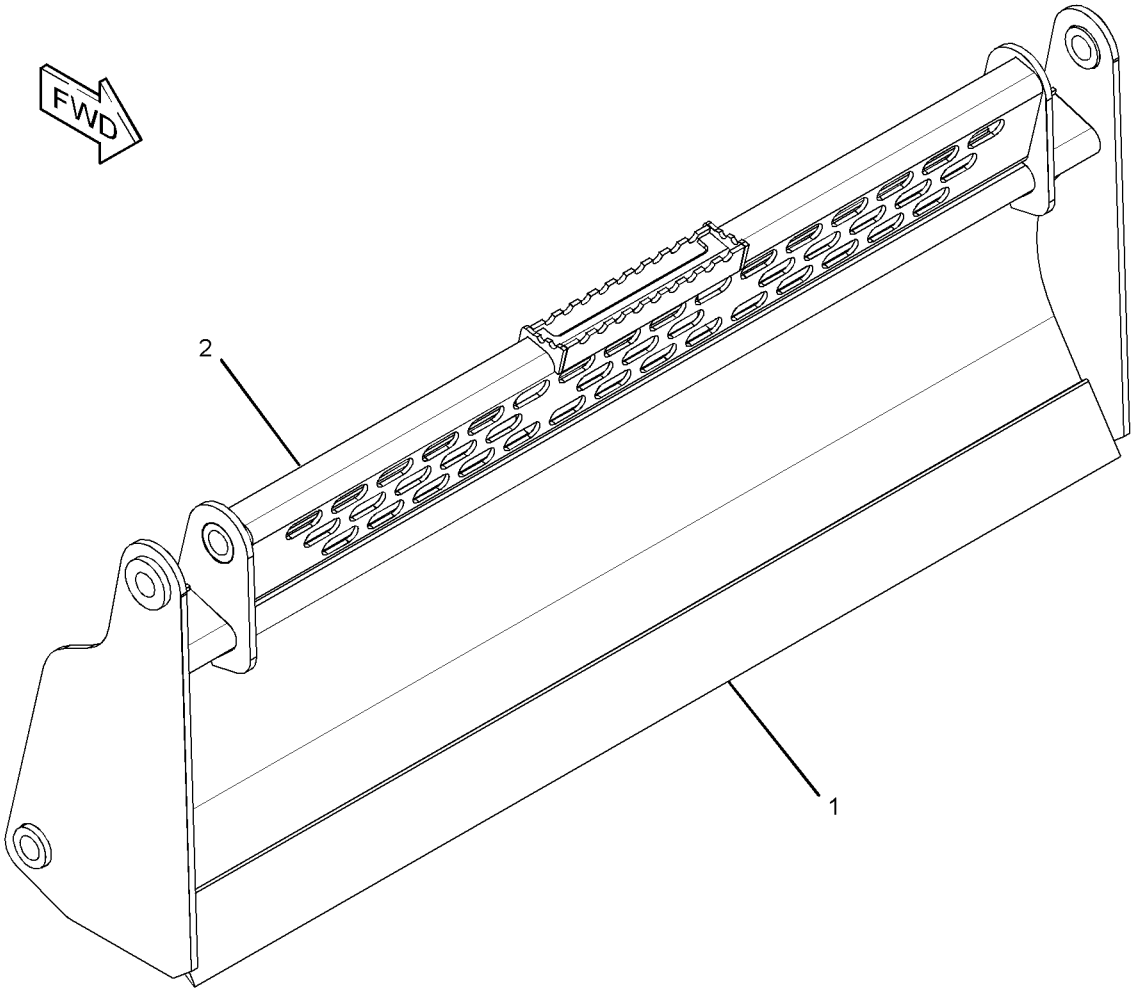

GRAPHIC #1 **<END>** g01953488

WORK TOOLS

325-7048 BLADE GP-MULTIPURPOSE BUCKET

S/N: MST1-UP

PART OF 325-7047 BUCKET GP-MULTIPURPOSE

AN ATTACHMENT

SMCS-6060, 6104 **i03641712**

NOTE	REF NO	GRAPHIC REF	PART NUMBER	QTY	PART NAME 1 2 3 4 5 6 (PRODUCT LEVEL)	SEE PAGE
	1	1	**154-2704**	1	PLATE-INSTRUCTION (BUCKET SPECIFICATIONS)	
	2	1	**168-8389**	4	TACK-FASTENER	
Y	3	1	**325-7049**	1	BLADE GP-MULTIPURPOSE BUCKET (66-IN)	481

Y-SEPARATE ILLUSTRATION

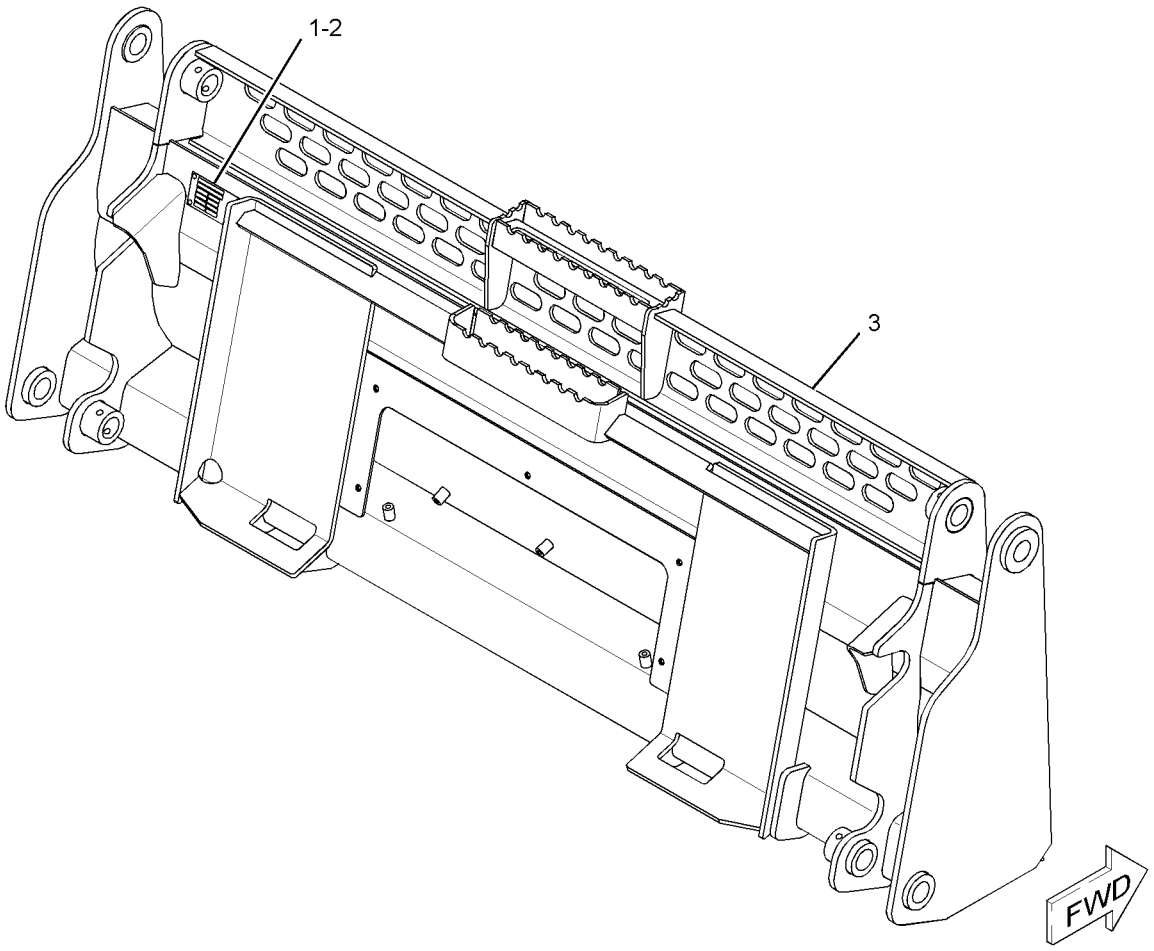

GRAPHIC #1 **<END>** g01943656

WORK TOOLS

325-7049 BLADE GP-MULTIPURPOSE BUCKET

S/N: MST1-UP
1676-MM (66-IN)
PART OF 325-7048 BLADE GP-MULTIPURPOSE BUCKET
AN ATTACHMENT

SMCS-6060, 6104 **i03635073**

NOTE	REF NO	GRAPHIC REF	PART NUMBER	QTY	PART NAME 1 2 3 4 5 6 (PRODUCT LEVEL)	SEE PAGE
	1	1	**154-5059**	1	EDGE	
	2	1	**325-7044**	1	GUARD AS (66-IN)	

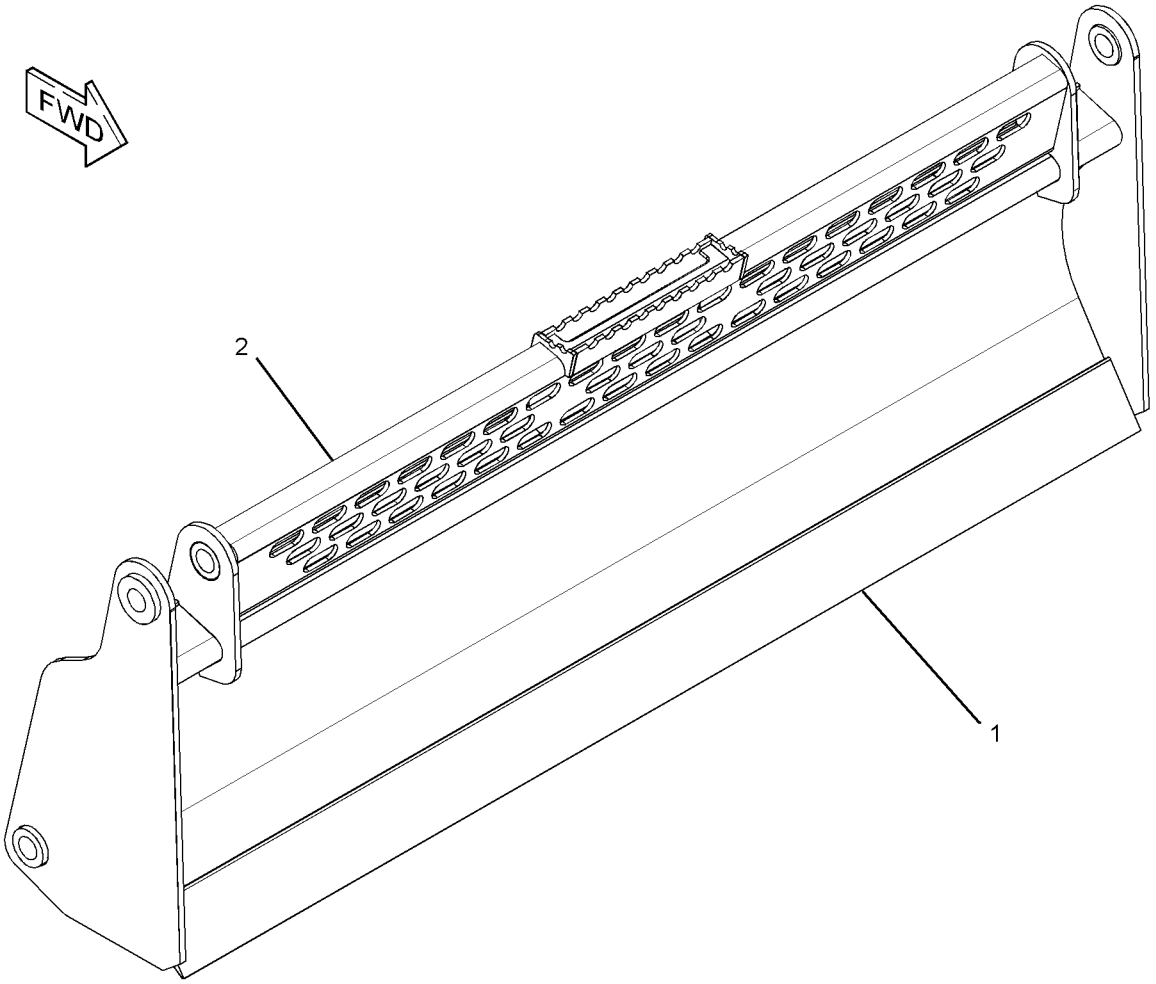

GRAPHIC #1 **<END>** g01953513

325-7058 BLADE GP-MULTIPURPOSE BUCKET

S/N: MST1-UP

PART OF 325-7057 BUCKET GP-MULTIPURPOSE

AN ATTACHMENT

SMCS-6060, 6104 **i03641713**

NOTE	REF NO	GRAPHIC REF	PART NUMBER	QTY	PART NAME 1 2 3 4 5 6 (PRODUCT LEVEL)	SEE PAGE
	1	1	**154-2704**	1	PLATE-INSTRUCTION (BUCKET SPECIFICATIONS)	
	2	1	**168-8389**	4	TACK-FASTENER	
Y	3	1	**325-7059**	1	BLADE GP-MULTIPURPOSE BUCKET (72-IN)	483

Y-SEPARATE ILLUSTRATION

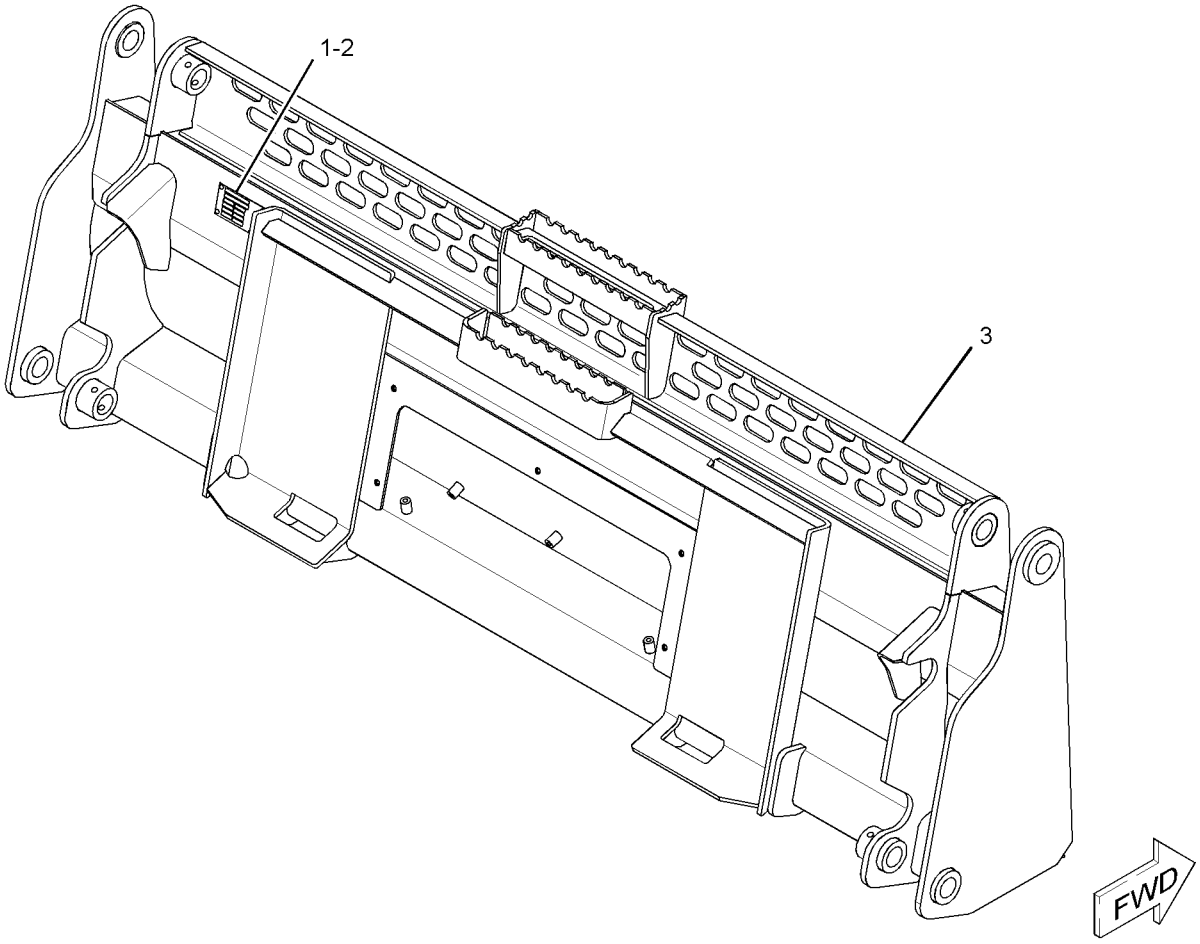

GRAPHIC #1 **<END>** g01943659

325-7059 BLADE GP-MULTIPURPOSE BUCKET

S/N: MST1-UP
1829-MM (72-IN)
PART OF 325-7058 BLADE GP-MULTIPURPOSE BUCKET
AN ATTACHMENT

SMCS-6060, 6104 **i03635074**

NOTE	REF NO	GRAPHIC REF	PART NUMBER	QTY	PART NAME 1 2 3 4 5 6 (PRODUCT LEVEL)	SEE PAGE
	1	1	**154-5077**	1	EDGE	
	2	1	**325-7054**	1	GUARD AS (72-IN)	

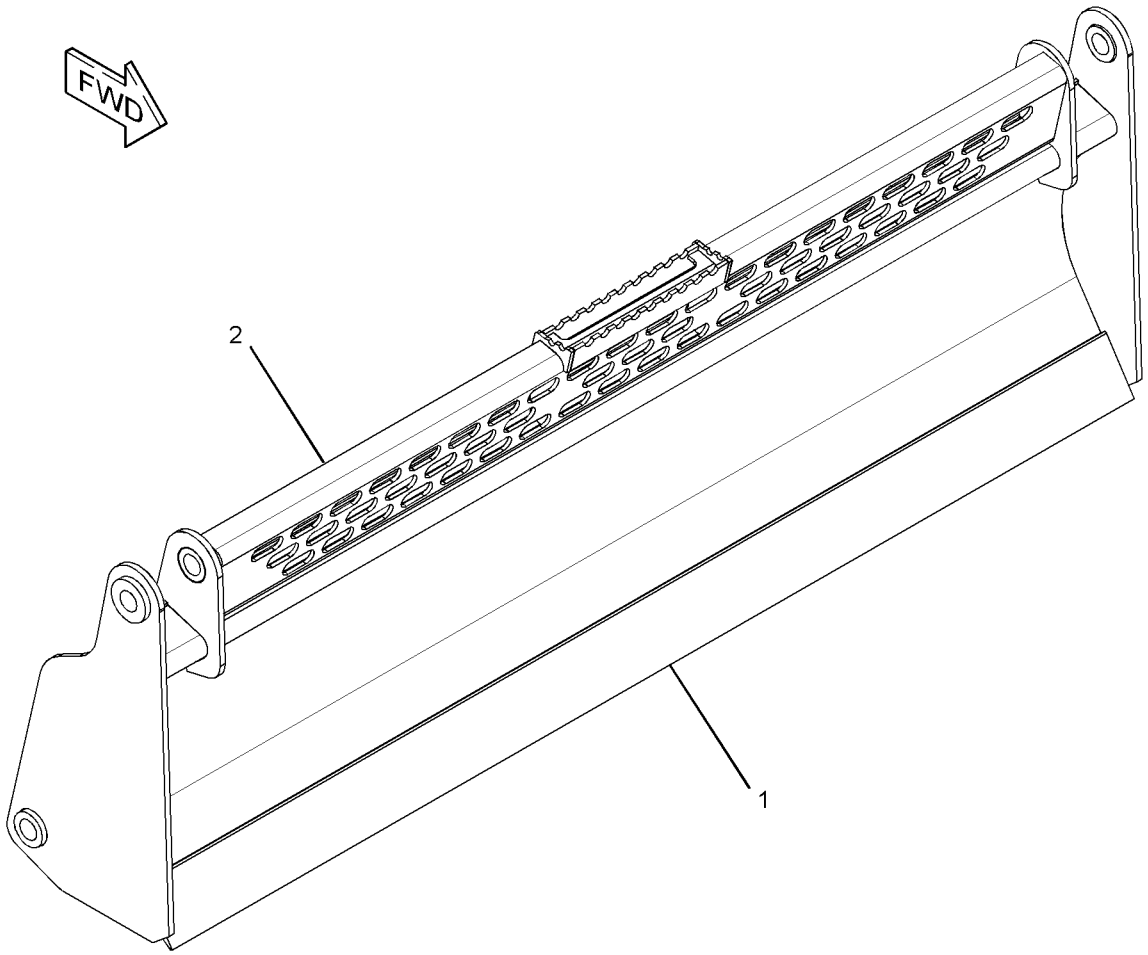

GRAPHIC #1 **<END>** g01953461

325-7068 BLADE GP-MULTIPURPOSE BUCKET

S/N: MST1-UP
PART OF 325-7067 BUCKET GP-MULTIPURPOSE
AN ATTACHMENT

SMCS-6060, 6104 **i03641709**

NOTE	REF NO	GRAPHIC REF	PART NUMBER	QTY	PART NAME 1 2 3 4 5 6 (PRODUCT LEVEL)	SEE PAGE
	1	1	**154-2704**	1	PLATE-INSTRUCTION (BUCKET SPECIFICATIONS)	
	2	1	**168-8389**	4	TACK-FASTENER	
Y	3	1	**325-7069**	1	BLADE GP-MULTIPURPOSE BUCKET (78-IN)	485

Y-SEPARATE ILLUSTRATION

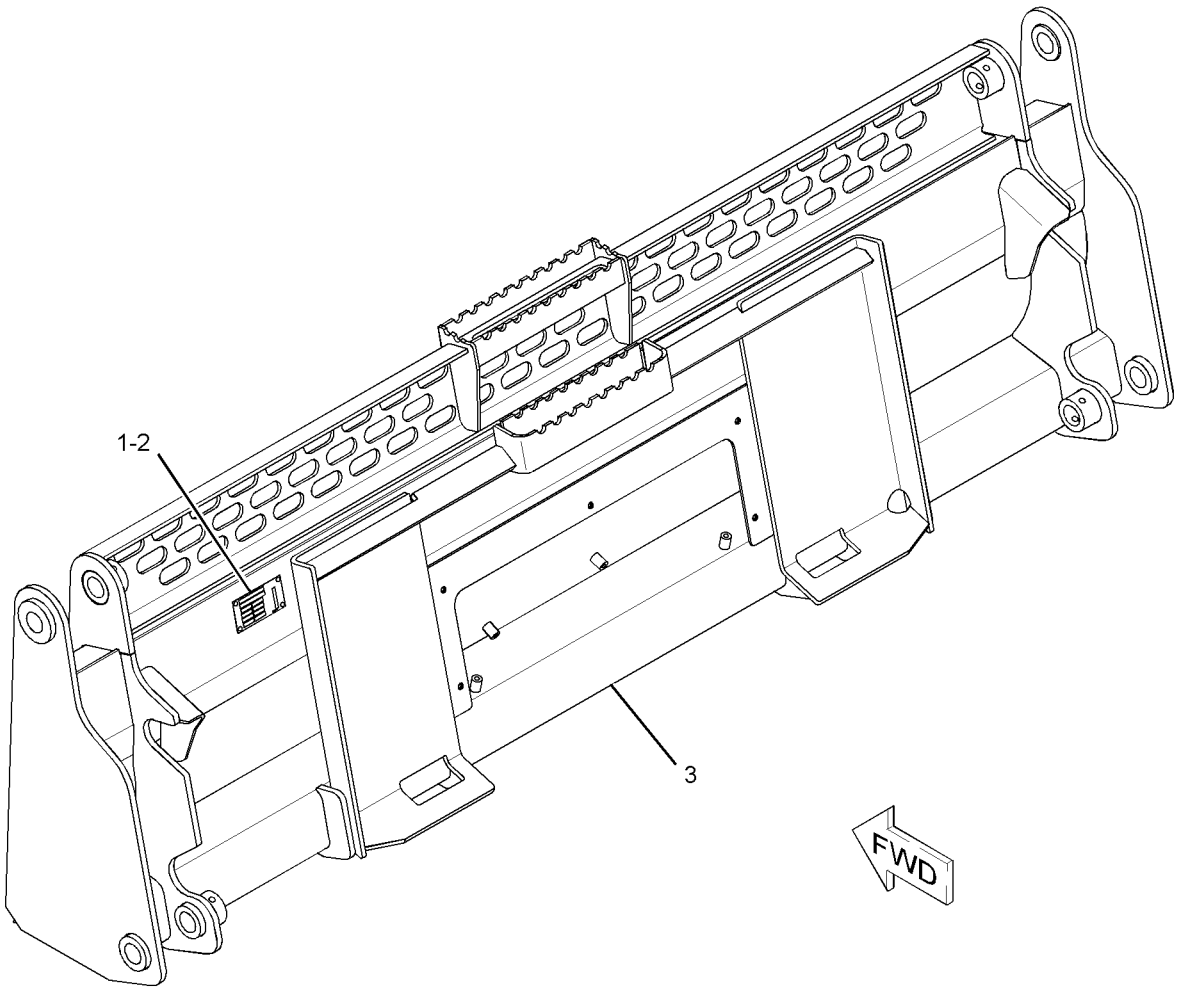

GRAPHIC #1 **<END>** g01943849

WORK TOOLS

325-7069 BLADE GP-MULTIPURPOSE BUCKET

S/N: MST1-UP
1981-MM (78-IN)
PART OF 325-7068 BLADE GP-MULTIPURPOSE BUCKET
AN ATTACHMENT

SMCS-6060, 6104 **i03635083**

NOTE	REF NO	GRAPHIC REF	PART NUMBER	QTY	PART NAME 1 2 3 4 5 6 (PRODUCT LEVEL)	SEE PAGE
	1	1	**199-8316**	1	EDGE	
	2	1	**325-7064**	1	GUARD AS (78-IN)	

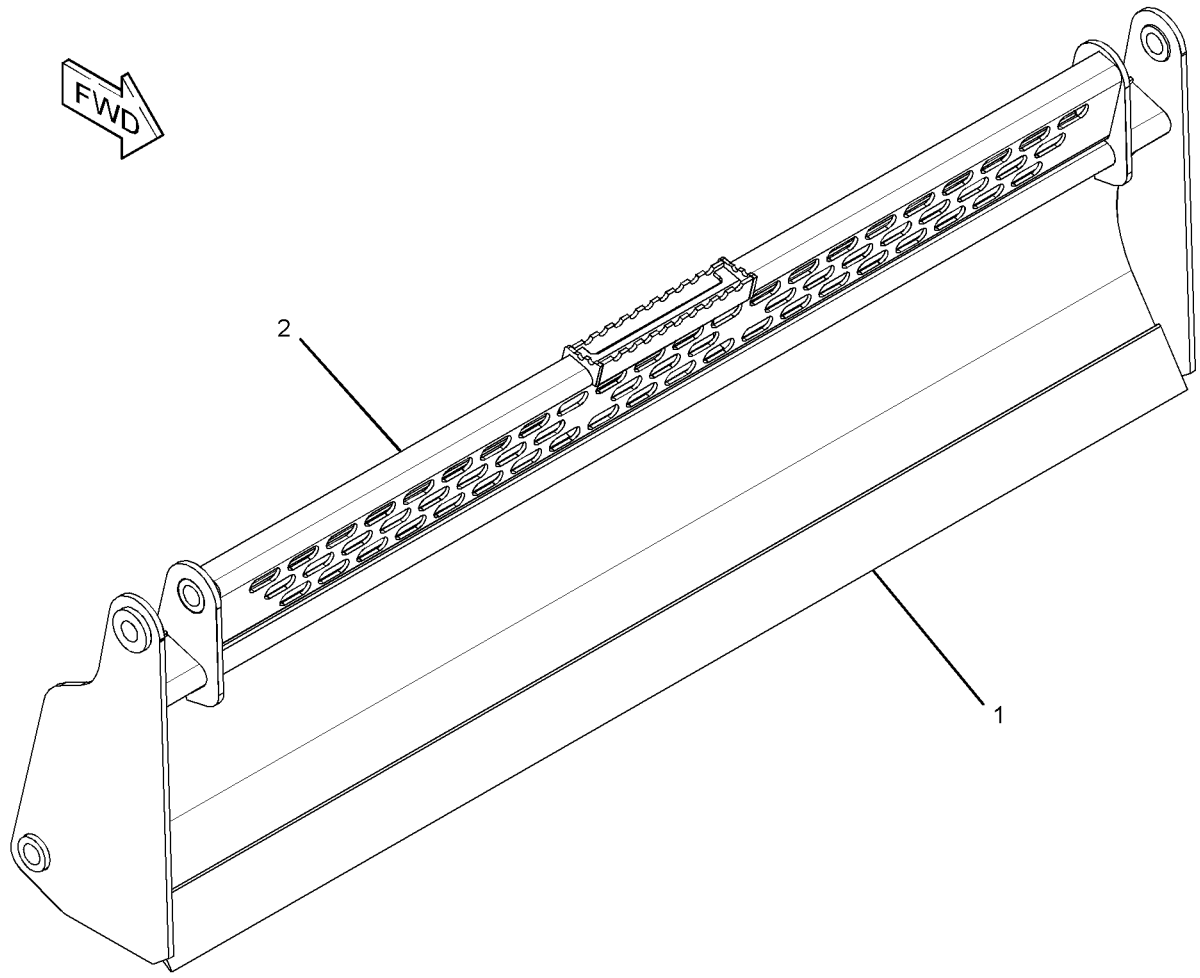

GRAPHIC #1 **<END>** g01953472

325-7078 BLADE GP-MULTIPURPOSE BUCKET

S/N: MST1-UP
PART OF 325-7077 BUCKET GP-MULTIPURPOSE
AN ATTACHMENT

SMCS-6060, 6104 **i03641714**

NOTE	REF NO	GRAPHIC REF	PART NUMBER	QTY	PART NAME 1 2 3 4 5 6 (PRODUCT LEVEL)	SEE PAGE
	1	1	**154-2704**	1	PLATE-INSTRUCTION (BUCKET SPECIFICATIONS)	
	2	1	**168-8389**	4	TACK-FASTENER	
Y	3	1	**325-7079**	1	BLADE GP-MULTIPURPOSE BUCKET (84-IN)	487

Y-SEPARATE ILLUSTRATION

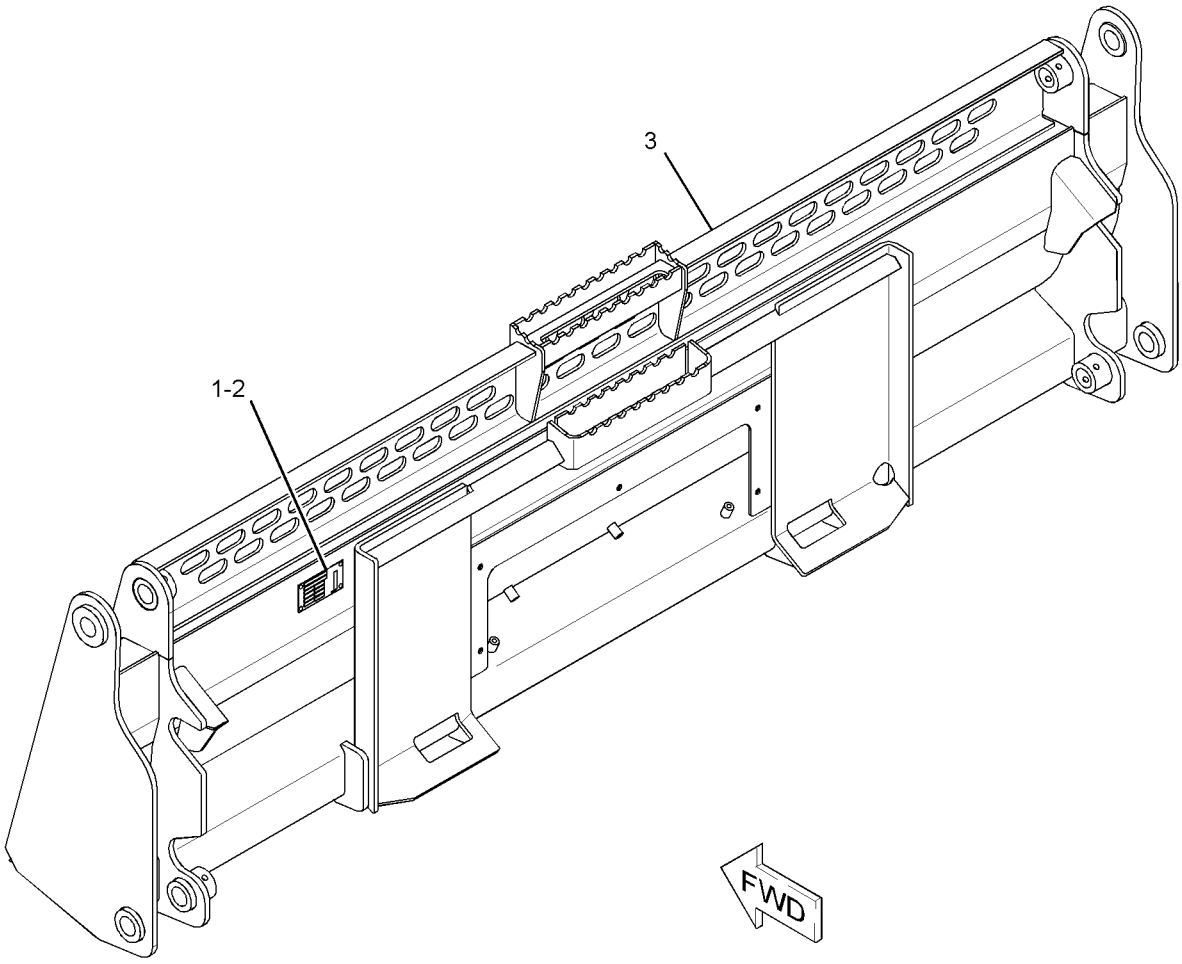

GRAPHIC #1 **<END>** g01943897

WORK TOOLS

325-7079 BLADE GP-MULTIPURPOSE BUCKET

S/N: MST1-UP
2134-MM (84-IN)
PART OF 325-7078 BLADE GP-MULTIPURPOSE BUCKET
AN ATTACHMENT

SMCS-6060, 6104 **i03638915**

NOTE	REF NO	GRAPHIC REF	PART NUMBER	QTY	PART NAME 1 2 3 4 5 6 (PRODUCT LEVEL)	SEE PAGE
	1	1	**293-0144**	1	EDGE	
	2	1	**325-7074**	1	GUARD AS (84-IN)	

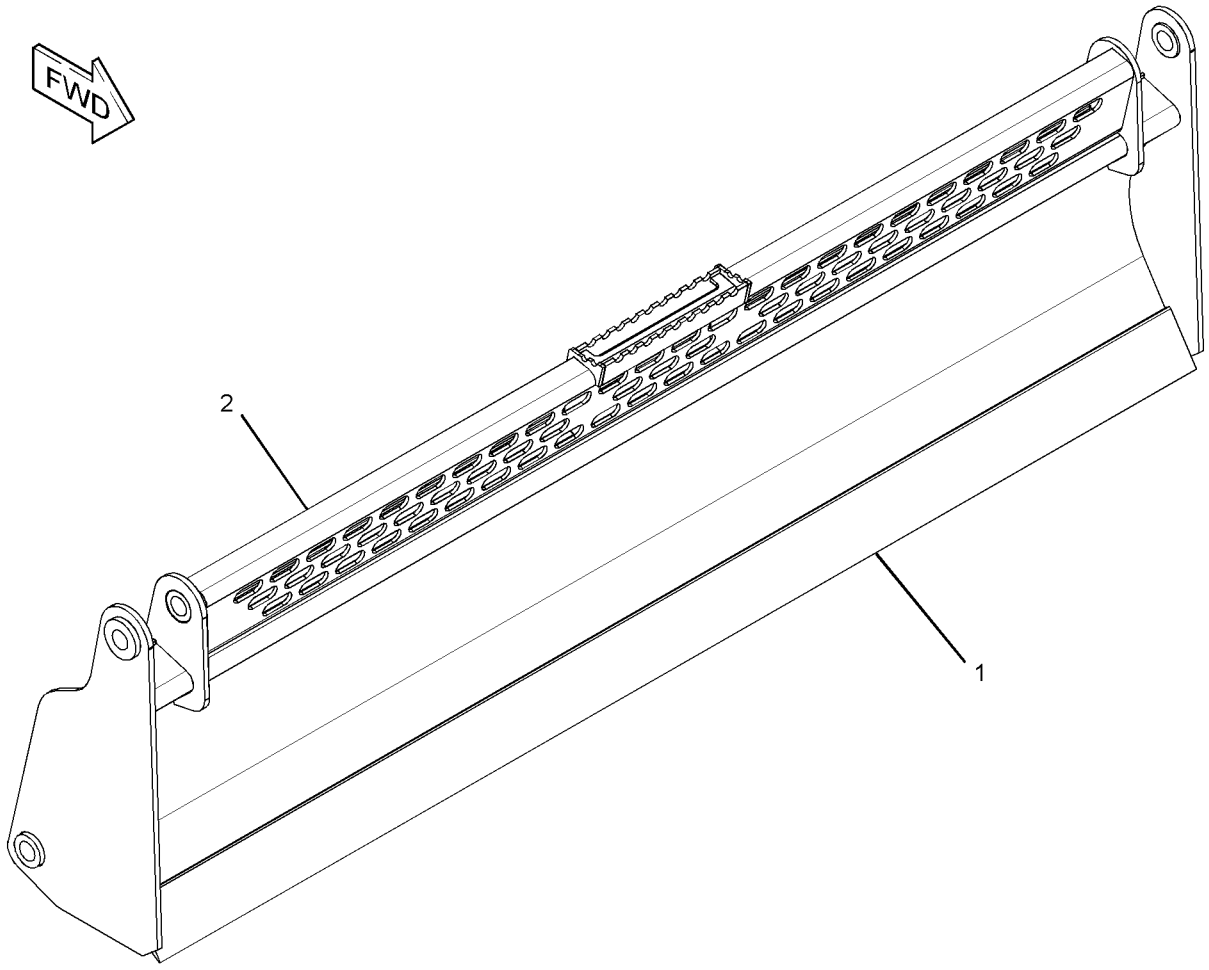

GRAPHIC #1 **<END>** g01954100

WORK TOOLS

268-4083 BUCKET AR-DIRT

S/N: MST1-UP
FIELD REPLACEMENT FOR 268-4084—PAGE 560
AN ATTACHMENT

SMCS-6001 **i02539980**

NOTE	PART NUMBER	QTY	PART NAME 1 2 3 4 5 6 (PRODUCT LEVEL)	SEE PAGE
Y	**268-4084**	1	BUCKET GP-DIRT	560
Y	*135-9387*	1	EDGE GP-CUTTING	603
Y-SEPARATE ILLUSTRATION				

<END>

279-5435 BUCKET AR-DIRT

S/N: MST1-UP
AN ATTACHMENT

SMCS-6001 **i02552331**

NOTE	PART NUMBER	QTY	PART NAME 1 2 3 4 5 6 (PRODUCT LEVEL)	SEE PAGE
Y	**279-5434**	1	BUCKET AS-DIRT	517
Y	*135-9383*	1	EDGE GP-CUTTING	599
Y-SEPARATE ILLUSTRATION				

<END>

279-5438 BUCKET AR-DIRT

S/N: MST1-UP
AN ATTACHMENT

SMCS-6001 **i02571312**

NOTE	PART NUMBER	QTY	PART NAME 1 2 3 4 5 6 (PRODUCT LEVEL)	SEE PAGE
Y	**279-5437**	1	BUCKET AS-DIRT	519
Y	*135-9384*	1	EDGE GP-CUTTING	600
Y-SEPARATE ILLUSTRATION				

<END>

279-5441 BUCKET AR-DIRT

S/N: MST1-UP
AN ATTACHMENT

SMCS-6001 **i02571314**

NOTE	PART NUMBER	QTY	PART NAME 1 2 3 4 5 6 (PRODUCT LEVEL)	SEE PAGE
Y	**279-5440**	1	BUCKET AS-DIRT	521
Y	*135-9385*	1	EDGE GP-CUTTING	601
Y-SEPARATE ILLUSTRATION				

<END>

WORK TOOLS

285-6090 BUCKET AR-DIRT

S/N: MST1-UP

AN ATTACHMENT

SMCS-6001 **i02552446**

NOTE	PART NUMBER	QTY	PART NAME 1 2 3 4 5 6 (PRODUCT LEVEL)	SEE PAGE
Y	**285-6089**	1	BUCKET AS-DIRT	523
Y	*135-9386*	1	EDGE GP-CUTTING (DIRT)	602

Y-SEPARATE ILLUSTRATION

<END>

279-5365 BUCKET AR-GENERAL PURPOSE

S/N: MST1-UP

AN ATTACHMENT

SMCS-6101 **i02550406**

NOTE	PART NUMBER	QTY	PART NAME 1 2 3 4 5 6 (PRODUCT LEVEL)	SEE PAGE
Y	**279-5364**	1	BUCKET AS-GENERAL PURPOSE	525
Y	*135-9384*	1	EDGE GP-CUTTING	600

Y-SEPARATE ILLUSTRATION

<END>

279-5366 BUCKET AR-GENERAL PURPOSE

S/N: MST1-UP

AN ATTACHMENT

SMCS-6101 **i02550436**

NOTE	PART NUMBER	QTY	PART NAME 1 2 3 4 5 6 (PRODUCT LEVEL)	SEE PAGE
Y	**279-5364**	1	BUCKET AS-GENERAL PURPOSE	525
Y	*141-4999*	8	TOOTH GP-UNI	643

Y-SEPARATE ILLUSTRATION

<END>

279-5369 BUCKET AR-GENERAL PURPOSE

S/N: MST1-UP

AN ATTACHMENT

SMCS-6101 **i02551081**

NOTE	PART NUMBER	QTY	PART NAME 1 2 3 4 5 6 (PRODUCT LEVEL)	SEE PAGE
Y	**279-5368**	1	BUCKET AS-GENERAL PURPOSE	527
Y	*135-9385*	1	EDGE GP-CUTTING	601

Y-SEPARATE ILLUSTRATION

<END>

WORK TOOLS

279-5370 BUCKET AR-GENERAL PURPOSE

S/N: MST1-UP
AN ATTACHMENT

SMCS-6101 **i02551084**

NOTE	PART NUMBER	QTY	PART NAME 1 2 3 4 5 6 (PRODUCT LEVEL)	SEE PAGE
Y	**279-5368**	1	BUCKET AS-GENERAL PURPOSE	527
Y	*141-4999*	8	TOOTH GP-UNI	643
Y-SEPARATE ILLUSTRATION				

<END>

279-5373 BUCKET AR-GENERAL PURPOSE

S/N: MST1-UP
AN ATTACHMENT

SMCS-6101 **i02552012**

NOTE	PART NUMBER	QTY	PART NAME 1 2 3 4 5 6 (PRODUCT LEVEL)	SEE PAGE
Y	**279-5372**	1	BUCKET AS-GENERAL PURPOSE	529
Y	*135-9386*	1	EDGE GP-CUTTING	602
Y-SEPARATE ILLUSTRATION				

<END>

279-5374 BUCKET AR-GENERAL PURPOSE

S/N: MST1-UP
AN ATTACHMENT

SMCS-6101 **i02552011**

NOTE	PART NUMBER	QTY	PART NAME 1 2 3 4 5 6 (PRODUCT LEVEL)	SEE PAGE
Y	**279-5372**	1	BUCKET AS-GENERAL PURPOSE	529
Y	*141-4999*	8	TOOTH GP-UNI	643
Y-SEPARATE ILLUSTRATION				

<END>

279-5377 BUCKET AR-GENERAL PURPOSE

S/N: MST1-UP
AN ATTACHMENT

SMCS-6101 **i02552020**

NOTE	PART NUMBER	QTY	PART NAME 1 2 3 4 5 6 (PRODUCT LEVEL)	SEE PAGE
Y	**279-5376**	1	BUCKET AS-GENERAL PURPOSE	531
Y	*135-9387*	1	EDGE GP-CUTTING	603
Y-SEPARATE ILLUSTRATION				

<END>

WORK TOOLS

279-5378 BUCKET AR-GENERAL PURPOSE

S/N: MST1-UP

AN ATTACHMENT

SMCS-6101 **i02552018**

NOTE	PART NUMBER	QTY	PART NAME 1 2 3 4 5 6 (PRODUCT LEVEL)	SEE PAGE
Y	**279-5376**	1	BUCKET AS-GENERAL PURPOSE	531
Y	*141-4999*	9	TOOTH GP-UNI	643
Y-SEPARATE ILLUSTRATION				

<END>

296-8192 BUCKET AR-GENERAL PURPOSE

S/N: MST1-UP

AN ATTACHMENT

SMCS-6101 **i02636478**

NOTE	PART NUMBER	QTY	PART NAME 1 2 3 4 5 6 (PRODUCT LEVEL)	SEE PAGE
Y	**292-9270**	1	BUCKET AS-GENERAL PURPOSE	532
Y	*195-7124*	1	EDGE GP-CUTTING	605
Y-SEPARATE ILLUSTRATION				

<END>

157-7223 BUCKET AR-GRAPPLE

S/N: MST1-UP

PART OF 157-7226 BUCKET AR-GRAPPLE

AN ATTACHMENT

SMCS-6704 **i03636369**

NOTE	PART NUMBER	QTY	PART NAME 1 2 3 4 5 6 (PRODUCT LEVEL)	SEE PAGE
Y	*156-0884*	1	BUCKET GP-GRAPPLE (INDUSTRIAL)	562
Y	**278-1975**	2	CYLINDER GP-GRAPPLE (INDUSTRIAL)	307
Y	*161-0187*	1	LINES GP-GRAPPLE (INDUSTRIAL)	361
Y	*156-0891*	1	MOUNTING GP-CYLINDER (INDUSTRIAL)	427
Y-SEPARATE ILLUSTRATION				

<END>

157-7224 BUCKET AR-GRAPPLE

S/N: MST1-UP

PART OF 157-7227 BUCKET AR-GRAPPLE

AN ATTACHMENT

SMCS-6704 **i03636379**

NOTE	PART NUMBER	QTY	PART NAME 1 2 3 4 5 6 (PRODUCT LEVEL)	SEE PAGE
Y	*156-0885*	1	BUCKET GP-GRAPPLE (INDUSTRIAL)	563
Y	*156-0891*	1	MOUNTING GP-CYLINDER (INDUSTRIAL)	427
Y	**278-1975**	2	CYLINDER GP-GRAPPLE (INDUSTRIAL)	307
Y	*161-0187*	1	LINES GP-GRAPPLE (INDUSTRIAL)	361
Y-SEPARATE ILLUSTRATION				

<END>

WORK TOOLS

157-7225 BUCKET AR-GRAPPLE—INDUSTRIAL

S/N: MST1-UP
PART OF 158-6095 BUCKET AR-GRAPPLE
AN ATTACHMENT

SMCS-6704 **i03636381**

NOTE	PART NUMBER	QTY	PART NAME 1 2 3 4 5 6 (PRODUCT LEVEL)	SEE PAGE
Y	*156-0886*	1	BUCKET GP-GRAPPLE (INDUSTRIAL)	564
Y	**278-1975**	2	CYLINDER GP-GRAPPLE (INDUSTRIAL)	307
Y	*161-0187*	1	LINES GP-GRAPPLE (INDUSTRIAL)	361
Y	*156-0891*	1	MOUNTING GP-CYLINDER (INDUSTRIAL)	427

Y-SEPARATE ILLUSTRATION

<END>

157-7226 BUCKET AR-GRAPPLE

S/N: MST1-UP
AN ATTACHMENT

SMCS-6704 **i01788957**

NOTE	PART NUMBER	QTY	PART NAME 1 2 3 4 5 6 (PRODUCT LEVEL)	SEE PAGE
Y	**157-7223**	1	BUCKET AR-GRAPPLE	491
Y	*135-9384*	1	EDGE GP-CUTTING	600

Y-SEPARATE ILLUSTRATION

<END>

157-7227 BUCKET AR-GRAPPLE

S/N: MST1-UP
AN ATTACHMENT

SMCS-6704 **i01788965**

NOTE	PART NUMBER	QTY	PART NAME 1 2 3 4 5 6 (PRODUCT LEVEL)	SEE PAGE
Y	**157-7224**	1	BUCKET AR-GRAPPLE	491
Y	*135-9385*	1	EDGE GP-CUTTING	601

Y-SEPARATE ILLUSTRATION

<END>

158-6095 BUCKET AR-GRAPPLE

S/N: MST1-UP
AN ATTACHMENT

SMCS-6704 **i01060288**

NOTE	PART NUMBER	QTY	PART NAME 1 2 3 4 5 6 (PRODUCT LEVEL)	SEE PAGE
Y	**157-7225**	1	BUCKET AR-GRAPPLE	492
Y	*135-9386*	1	EDGE GP-CUTTING	602

Y-SEPARATE ILLUSTRATION

<END>

WORK TOOLS

217-6229 BUCKET AR-GRAPPLE

S/N: MST1-UP

PART OF 217-6230 BUCKET AR-GRAPPLE

AN ATTACHMENT

SMCS-6704 **i03636392**

NOTE	REF NO	GRAPHIC REF	PART NUMBER	QTY	PART NAME 1 2 3 4 5 6 (PRODUCT LEVEL)	SEE PAGE
Y	1	1	*156-0891*	1	MOUNTING GP-CYLINDER (INDUSTRIAL)	427
Y	2	1	*161-0187*	1	LINES GP-GRAPPLE (INDUSTRIAL)	361
Y	3	1	*217-6228*	1	BUCKET GP-GRAPPLE (INDUSTRIAL)	565
CY	4	1	**278-1975**	2	CYLINDER GP-GRAPPLE (INDUSTRIAL)	307

C-CHANGE FROM PREVIOUS TYPE
Y-SEPARATE ILLUSTRATION

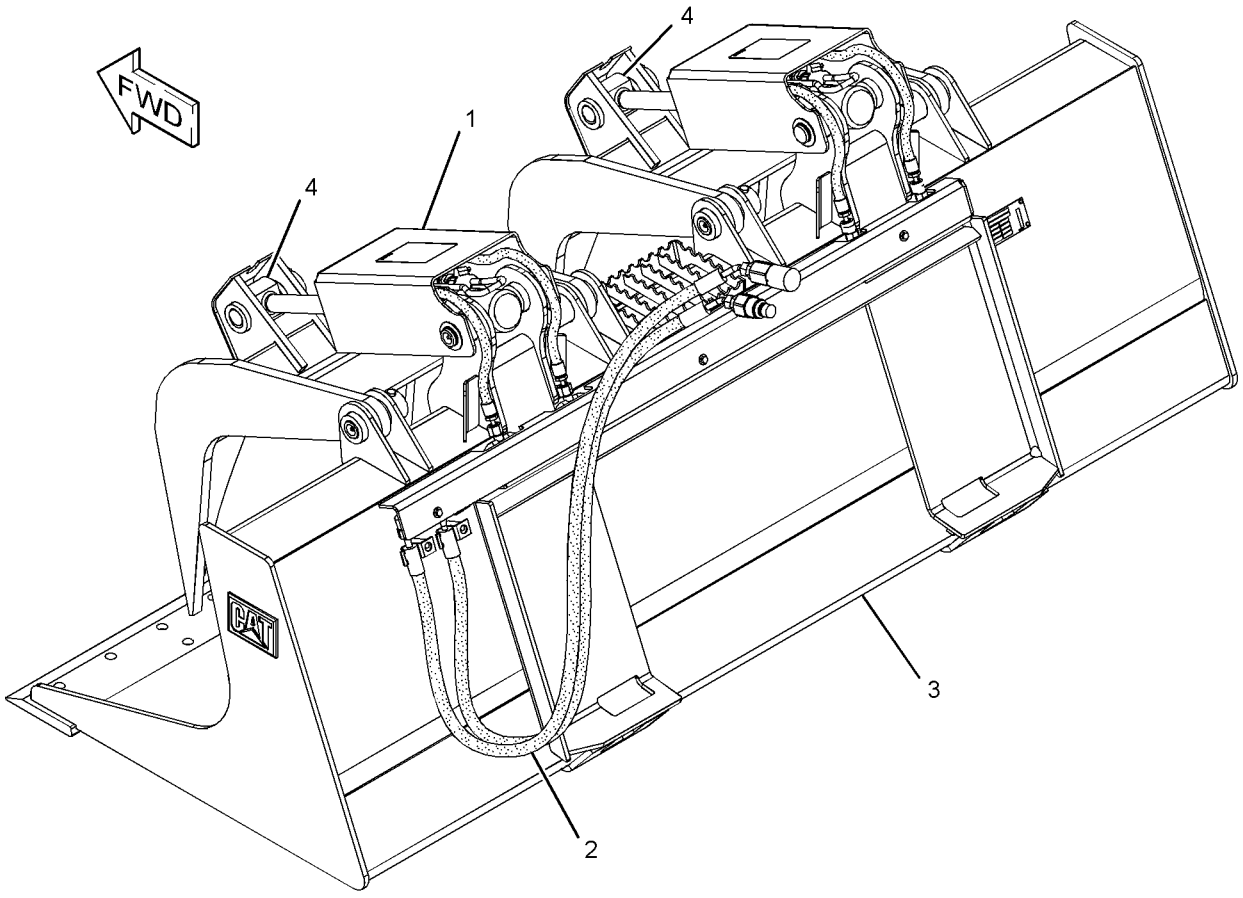

GRAPHIC #1 **<END>** g01281607

WORK TOOLS

217-6230 BUCKET AR-GRAPPLE

S/N: MST1-UP

AN ATTACHMENT

SMCS-6704 **i01877714**

NOTE	PART NUMBER	QTY	PART NAME 1 2 3 4 5 6 (PRODUCT LEVEL)	SEE PAGE
Y	**217-6229**	1	BUCKET AR-GRAPPLE (INDUSTRIAL)	493
Y	*135-9387*	1	EDGE GP-CUTTING	603

Y-SEPARATE ILLUSTRATION

<END>

285-6093 BUCKET AR-GRAPPLE

S/N: MST1-UP

AN ATTACHMENT

SMCS-6704 **i02552451**

NOTE	PART NUMBER	QTY	PART NAME 1 2 3 4 5 6 (PRODUCT LEVEL)	SEE PAGE
Y	**285-6099**	1	BUCKET GP-UTILITY (66-IN)	582
Y	*285-6116*	1	GRAPPLE & CYLINDER GP-UTILITY	622

Y-SEPARATE ILLUSTRATION

<END>

285-6104 BUCKET AR-GRAPPLE

S/N: MST1-UP

AN ATTACHMENT

SMCS-6704 **i02552487**

NOTE	PART NUMBER	QTY	PART NAME 1 2 3 4 5 6 (PRODUCT LEVEL)	SEE PAGE
Y	**285-6102**	1	BUCKET GP-UTILITY (72-IN)	583
Y	*285-6116*	1	GRAPPLE & CYLINDER GP-UTILITY	622

Y-SEPARATE ILLUSTRATION

<END>

285-6111 BUCKET AR-GRAPPLE

S/N: MST1-UP

AN ATTACHMENT

SMCS-6704 **i02552741**

NOTE	PART NUMBER	QTY	PART NAME 1 2 3 4 5 6 (PRODUCT LEVEL)	SEE PAGE
Y	**285-6100**	1	BUCKET AR-UTILITY	508
Y	*285-6116*	1	GRAPPLE & CYLINDER GP-UTILITY	622

Y-SEPARATE ILLUSTRATION

<END>

WORK TOOLS

285-6112 BUCKET AR-GRAPPLE

S/N: MST1-UP

AN ATTACHMENT

SMCS-6704 **i02552759**

NOTE	PART NUMBER	QTY	PART NAME 1 2 3 4 5 6 (PRODUCT LEVEL)	SEE PAGE
Y	**285-6101**	1	BUCKET AR-UTILITY	508
Y	*285-6116*	1	GRAPPLE & CYLINDER GP-UTILITY	622

Y-SEPARATE ILLUSTRATION

<END>

WORK TOOLS

286-9300 BUCKET AR-GRAPPLE

S/N: MST1-UP

AN ATTACHMENT

SMCS-6704 **i03646993**

NOTE	REF NO	GRAPHIC REF	PART NUMBER	QTY	PART NAME 1 2 3 4 5 6 (PRODUCT LEVEL)	SEE PAGE
Y	1	1	*286-9248*	1	MOUNTING GP-CYLINDER (GRAPPLE BUCKET)	429
Y	2	1	*286-9251*	1	PLATE & FILM GP	832
Y	3	1	*286-9278*	1	BUCKET GP-GRAPPLE (1829-MM (72-IN) WIDE)	568
Y	4	1	*286-9279*	1	LINES GP-GRAPPLE	365
Y	5	1	**293-6264**	2	CYLINDER GP-BUCKET	304

Y-SEPARATE ILLUSTRATION

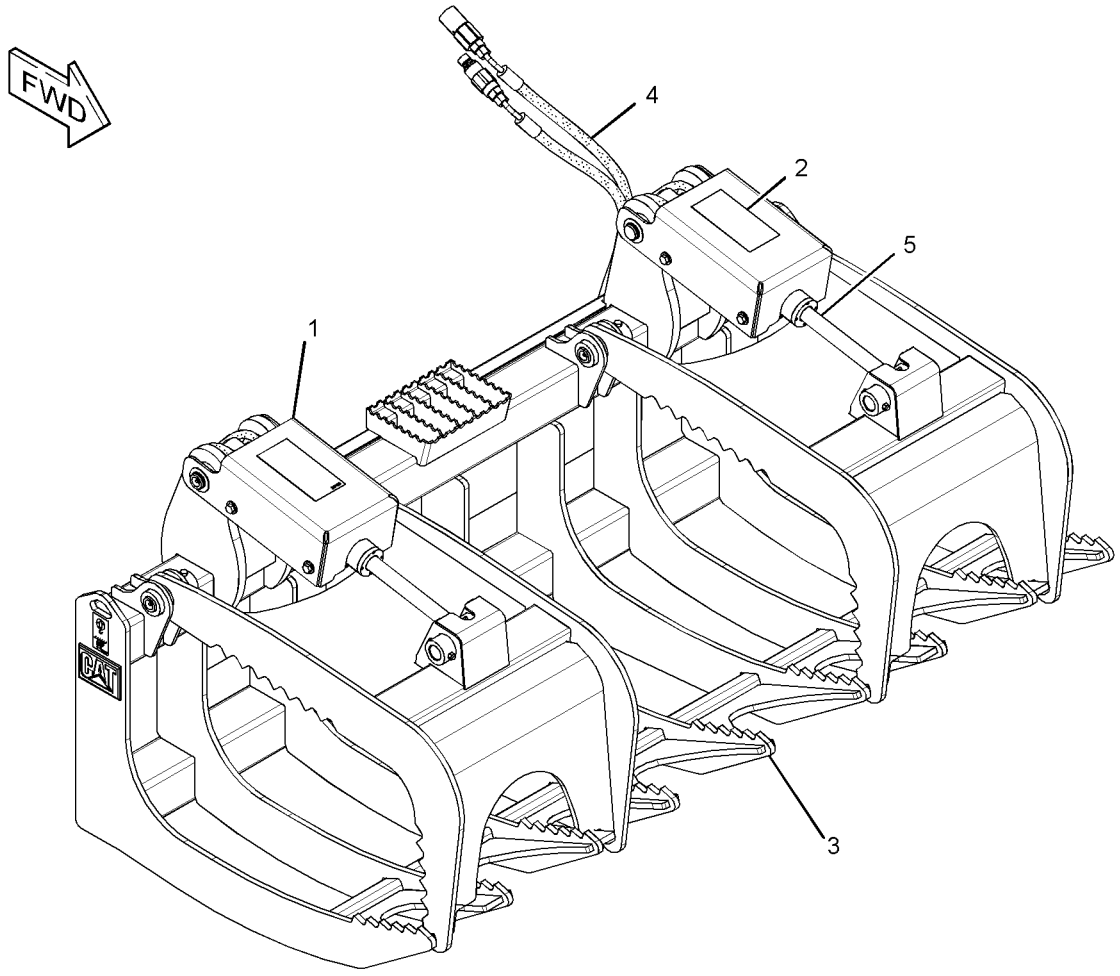

GRAPHIC #1 **<END>** g01372572

WORK TOOLS

286-9301 BUCKET AR-GRAPPLE

S/N: MST1-UP

AN ATTACHMENT

SMCS-6704 **i02723700**

NOTE	REF NO	GRAPHIC REF	PART NUMBER	QTY	PART NAME 1 2 3 4 5 6 (PRODUCT LEVEL)	SEE PAGE
Y	1	1	*286-9244*	1	BUCKET GP-GRAPPLE	567
Y	2	1	*286-9248*	1	MOUNTING GP-CYLINDER (GRAPPLE BUCKET)	429
Y	3	1	*286-9250*	1	LINES GP-GRAPPLE	363
Y	4	1	*286-9251*	1	PLATE & FILM GP	832
Y	5	1	**293-6264**	2	CYLINDER GP-BUCKET	304

Y-SEPARATE ILLUSTRATION

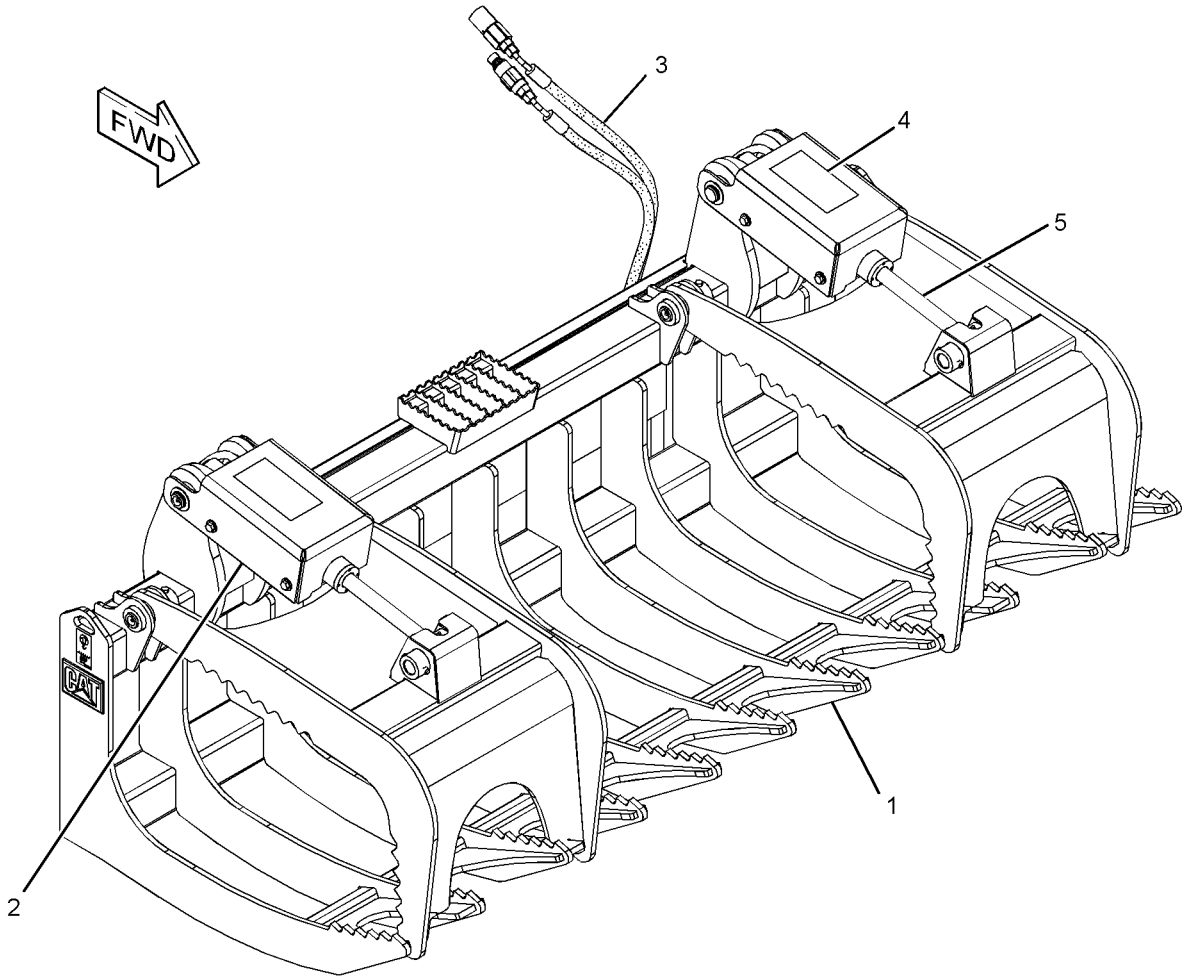

GRAPHIC #1 **<END>** g01372972

WORK TOOLS

279-5420 BUCKET AR-LIGHT MATERIAL

S/N: MST1-UP
AN ATTACHMENT

SMCS-6103 **i02552302**

NOTE	PART NUMBER	QTY	PART NAME 1 2 3 4 5 6 (PRODUCT LEVEL)	SEE PAGE
Y	**279-5421**	1	BUCKET AS-LIGHT MATERIAL	542
Y	*135-9386*	1	EDGE GP-CUTTING	602
Y-SEPARATE ILLUSTRATION				

<END>

279-5425 BUCKET AR-LIGHT MATERIAL

S/N: MST1-UP
AN ATTACHMENT

SMCS-6103 **i02552308**

NOTE	PART NUMBER	QTY	PART NAME 1 2 3 4 5 6 (PRODUCT LEVEL)	SEE PAGE
Y	**279-5424**	1	BUCKET AS-LIGHT MATERIAL	545
Y	*135-9387*	1	EDGE GP-CUTTING	603
Y-SEPARATE ILLUSTRATION				

<END>

279-5430 BUCKET AR-LIGHT MATERIAL

S/N: MST1-UP
AN ATTACHMENT

SMCS-6103 **i02552313**

NOTE	PART NUMBER	QTY	PART NAME 1 2 3 4 5 6 (PRODUCT LEVEL)	SEE PAGE
Y	**279-5429**	1	BUCKET AS-LIGHT MATERIAL	547
Y	*195-7124*	1	EDGE GP-CUTTING	605
Y-SEPARATE ILLUSTRATION				

<END>

296-7597 BUCKET AR-LIGHT MATERIAL

S/N: MST1-UP
AN ATTACHMENT

SMCS-6103 **i03624568**

NOTE	PART NUMBER	QTY	PART NAME 1 2 3 4 5 6 (PRODUCT LEVEL)	SEE PAGE
Y	*292-9223*	1	BUCKET AS-LIGHT MATERIAL	548
Y	*296-7680*	1	EDGE GP-CUTTING	606
Y-SEPARATE ILLUSTRATION				

<END>

WORK TOOLS

154-5004 BUCKET AR-MULTIPURPOSE

S/N: MST1-UP
PART OF 154-5046 BUCKET AR-MULTIPURPOSE
AN ATTACHMENT

SMCS-6104 **i03646995**

NOTE	PART NUMBER	QTY	PART NAME 1 2 3 4 5 6 (PRODUCT LEVEL)	SEE PAGE
Y	**154-5005**	1	BUCKET GP-MULTIPURPOSE	569
Y	*162-5236*	1	COVER GP-LINES	596
Y	**154-5018**	2	CYLINDER GP-BUCKET	303
			—OR—	
Y	**278-1969**	2	CYLINDER GP-HYDRAULIC	312
Y	*154-5019*	1	LINES GP-BUCKET (MULTIPURPOSE)	329
Y	*154-5011*	1	MOUNTING GP-CYLINDER	426
Y-SEPARATE ILLUSTRATION				

<END>

154-5010 BUCKET AR-MULTIPURPOSE

S/N: MST1-UP
AN ATTACHMENT

SMCS-6104 **i03646997**

NOTE	PART NUMBER	QTY	PART NAME 1 2 3 4 5 6 (PRODUCT LEVEL)	SEE PAGE
Y	**154-5009**	1	BUCKET GP-MULTIPURPOSE	570
Y	*162-5236*	1	COVER GP-LINES	596
Y	**154-5018**	2	CYLINDER GP-BUCKET	303
			—OR—	
Y	**278-1969**	2	CYLINDER GP-HYDRAULIC	312
Y	*154-5052*	1	LINES GP-BUCKET (MULTIPURPOSE)	333
Y	*154-5011*	1	MOUNTING GP-CYLINDER	426
Y-SEPARATE ILLUSTRATION				

<END>

154-5046 BUCKET AR-MULTIPURPOSE

S/N: MST1-UP
AN ATTACHMENT

SMCS-6104 **i01218112**

NOTE	PART NUMBER	QTY	PART NAME 1 2 3 4 5 6 (PRODUCT LEVEL)	SEE PAGE
Y	**154-5004**	1	BUCKET AR-MULTIPURPOSE	499
Y	*141-4999*	8	TOOTH GP-UNI	643
Y-SEPARATE ILLUSTRATION				

<END>

WORK TOOLS

279-5380 BUCKET AR-MULTIPURPOSE

S/N: MST1-UP

AN ATTACHMENT

SMCS-6104 **i02552027**

NOTE	PART NUMBER	QTY	PART NAME 1 2 3 4 5 6 (PRODUCT LEVEL)	SEE PAGE
Y	**279-5382**	1	BUCKET AR-MULTIPURPOSE	500
Y	*141-4999*	8	TOOTH GP-UNI	643
Y-SEPARATE ILLUSTRATION				

<END>

279-5381 BUCKET AR-MULTIPURPOSE

S/N: MST1-UP

AN ATTACHMENT

SMCS-6104 **i02552030**

NOTE	PART NUMBER	QTY	PART NAME 1 2 3 4 5 6 (PRODUCT LEVEL)	SEE PAGE
Y	**279-5382**	1	BUCKET AR-MULTIPURPOSE	500
Y	*135-9384*	1	EDGE GP-CUTTING	600
Y-SEPARATE ILLUSTRATION				

<END>

279-5382 BUCKET AR-MULTIPURPOSE

S/N: MST1-UP

PART OF 279-5380, 279-5381 BUCKET AR-MULTIPURPOSE

AN ATTACHMENT

SMCS-6104 **i03646999**

NOTE	PART NUMBER	QTY	PART NAME 1 2 3 4 5 6 (PRODUCT LEVEL)	SEE PAGE
Y	**279-5383**	1	BUCKET GP-MULTIPURPOSE (60-IN)	571
Y	*162-5236*	1	COVER GP-LINES	596
Y	**154-5018**	2	CYLINDER GP-BUCKET	303
			—OR—	
Y	**278-1969**	2	CYLINDER GP-HYDRAULIC	312
Y	*279-5413*	1	LINES GP-BUCKET	337
Y	*154-5011*	1	MOUNTING GP-CYLINDER	426
Y-SEPARATE ILLUSTRATION				

<END>

WORK TOOLS

279-5390 BUCKET AR-MULTIPURPOSE

S/N: MST1-UP

PART OF 279-5391, 279-5392 BUCKET AR-MULTIPURPOSE AN ATTACHMENT

SMCS-6104 **i03647000**

NOTE	PART NUMBER	QTY	PART NAME 1 2 3 4 5 6 (PRODUCT LEVEL)	SEE PAGE
Y	**279-5389**	1	BUCKET GP-MULTIPURPOSE	572
Y	*162-5236*	1	COVER GP-LINES	596
Y	**154-5018**	2	CYLINDER GP-BUCKET	303
			—OR—	
Y	**278-1969**	2	CYLINDER GP-HYDRAULIC	312
Y	*279-5414*	1	LINES GP-BUCKET	339
Y	*154-5011*	1	MOUNTING GP-CYLINDER	426

Y-SEPARATE ILLUSTRATION

<END>

279-5391 BUCKET AR-MULTIPURPOSE

S/N: MST1-UP

AN ATTACHMENT

SMCS-6104 **i02552078**

NOTE	PART NUMBER	QTY	PART NAME 1 2 3 4 5 6 (PRODUCT LEVEL)	SEE PAGE
Y	**279-5390**	1	BUCKET AR-MULTIPURPOSE	501
Y	*135-9385*	1	EDGE GP-CUTTING	601

Y-SEPARATE ILLUSTRATION

<END>

279-5392 BUCKET AR-MULTIPURPOSE

S/N: MST1-UP

AN ATTACHMENT

SMCS-6104 **i02552071**

NOTE	PART NUMBER	QTY	PART NAME 1 2 3 4 5 6 (PRODUCT LEVEL)	SEE PAGE
Y	**279-5390**	1	BUCKET AR-MULTIPURPOSE	501
Y	*141-4999*	8	TOOTH GP-UNI	643

Y-SEPARATE ILLUSTRATION

<END>

WORK TOOLS

279-5398 BUCKET AR-MULTIPURPOSE

S/N: MST1-UP
PART OF 279-5399, 279-5400 BUCKET AR-MULTIPURPOSE
AN ATTACHMENT

SMCS-6104 **i03647001**

NOTE	PART NUMBER	QTY	PART NAME 1 2 3 4 5 6 (PRODUCT LEVEL)	SEE PAGE
Y	**279-5397**	1	BUCKET GP-MULTIPURPOSE	573
Y	*162-5236*	1	COVER GP-LINES	596
Y	**154-5018**	2	CYLINDER GP-BUCKET	303
			—OR—	
Y	**278-1969**	2	CYLINDER GP-HYDRAULIC	312
Y	*279-5415*	1	LINES GP-BUCKET	341
Y	*154-5011*	1	MOUNTING GP-CYLINDER	426
Y-SEPARATE ILLUSTRATION				

<END>

279-5399 BUCKET AR-MULTIPURPOSE

S/N: MST1-UP
AN ATTACHMENT

SMCS-6104 **i02552131**

NOTE	PART NUMBER	QTY	PART NAME 1 2 3 4 5 6 (PRODUCT LEVEL)	SEE PAGE
Y	**279-5398**	1	BUCKET AR-MULTIPURPOSE	502
Y	*135-9386*	1	EDGE GP-CUTTING	602
Y-SEPARATE ILLUSTRATION				

<END>

279-5400 BUCKET AR-MULTIPURPOSE

S/N: MST1-UP
AN ATTACHMENT

SMCS-6104 **i02552121**

NOTE	PART NUMBER	QTY	PART NAME 1 2 3 4 5 6 (PRODUCT LEVEL)	SEE PAGE
Y	**279-5398**	1	BUCKET AR-MULTIPURPOSE	502
Y	*141-4999*	8	TOOTH GP-UNI	643
Y-SEPARATE ILLUSTRATION				

<END>

279-5401 BUCKET AR-MULTIPURPOSE

S/N: MST1-UP
AN ATTACHMENT

SMCS-6104 **i02552198**

NOTE	PART NUMBER	QTY	PART NAME 1 2 3 4 5 6 (PRODUCT LEVEL)	SEE PAGE
Y	**279-5403**	1	BUCKET AR-MULTIPURPOSE	503
Y	*141-4999*	9	TOOTH GP-UNI	643
Y-SEPARATE ILLUSTRATION				

<END>

WORK TOOLS

279-5402 BUCKET AR-MULTIPURPOSE

S/N: MST1-UP

AN ATTACHMENT

SMCS-6104 **i02552200**

NOTE	PART NUMBER	QTY	PART NAME 1 2 3 4 5 6 (PRODUCT LEVEL)	SEE PAGE
Y	**279-5403**	1	BUCKET AR-MULTIPURPOSE	503
Y	*135-9387*	1	EDGE GP-CUTTING	603
Y-SEPARATE ILLUSTRATION				

<END>

279-5403 BUCKET AR-MULTIPURPOSE

S/N: MST1-UP

PART OF 279-5401, 279-5402 BUCKET AR-MULTIPURPOSE

AN ATTACHMENT

SMCS-6104 **i03647004**

NOTE	PART NUMBER	QTY	PART NAME 1 2 3 4 5 6 (PRODUCT LEVEL)	SEE PAGE
Y	**279-5404**	1	BUCKET GP-MULTIPURPOSE (78-IN)	574
Y	*162-5236*	1	COVER GP-LINES	596
Y	**154-5018**	2	CYLINDER GP-BUCKET	303
			—OR—	
Y	**278-1969**	2	CYLINDER GP-HYDRAULIC	312
Y	*279-5416*	1	LINES GP-BUCKET	343
Y	*154-5011*	1	MOUNTING GP-CYLINDER	426
Y-SEPARATE ILLUSTRATION				

<END>

293-0139 BUCKET AR-MULTIPURPOSE

S/N: MST1-UP

PART OF 296-8055, 296-8057 BUCKET AR-MULTIPURPOSE

AN ATTACHMENT

SMCS-6104 **i02796780**

NOTE	PART NUMBER	QTY	PART NAME 1 2 3 4 5 6 (PRODUCT LEVEL)	SEE PAGE
Y	*293-0141*	1	BUCKET GP-MULTIPURPOSE	575
Y	*162-5236*	1	COVER GP-LINES	596
Y	*154-5018*	2	CYLINDER GP-BUCKET	303
			—OR—	
Y	**278-1969**	2	CYLINDER GP-HYDRAULIC	312
Y	*293-0140*	1	LINES GP-BUCKET	349
Y	*154-5011*	1	MOUNTING GP-CYLINDER	426
Y-SEPARATE ILLUSTRATION				

<END>

WORK TOOLS

296-8055 BUCKET AR-MULTIPURPOSE

S/N: MST1-UP

AN ATTACHMENT

SMCS-6104 **i03647005**

NOTE	PART NUMBER	QTY	PART NAME 1 2 3 4 5 6 (PRODUCT LEVEL)	SEE PAGE
Y	**293-0139**	1	BUCKET AR-MULTIPURPOSE	503
Y	*141-4999*	9	TOOTH GP-UNI	643
Y-SEPARATE ILLUSTRATION				

<END>

296-8057 BUCKET AR-MULTIPURPOSE

S/N: MST1-UP

AN ATTACHMENT

SMCS-6104 **i03647006**

NOTE	PART NUMBER	QTY	PART NAME 1 2 3 4 5 6 (PRODUCT LEVEL)	SEE PAGE
Y	**293-0139**	1	BUCKET AR-MULTIPURPOSE	503
Y	*195-7124*	1	EDGE GP-CUTTING	605
Y-SEPARATE ILLUSTRATION				

<END>

325-7035 BUCKET AR-MULTIPURPOSE

S/N: MST1-UP

AN ATTACHMENT

SMCS-6104 **i03021270**

NOTE	PART NUMBER	QTY	PART NAME 1 2 3 4 5 6 (PRODUCT LEVEL)	SEE PAGE
Y	*325-7036*	1	BUCKET AR-MULTIPURPOSE	504
Y	*141-4999*	8	TOOTH GP-UNI	643
Y-SEPARATE ILLUSTRATION				

<END>

325-7036 BUCKET AR-MULTIPURPOSE

S/N: MST1-UP

PART OF 325-7035, 325-7040 BUCKET AR-MULTIPURPOSE

AN ATTACHMENT

SMCS-6104 **i03021273**

NOTE	PART NUMBER	QTY	PART NAME 1 2 3 4 5 6 (PRODUCT LEVEL)	SEE PAGE
Y	*325-7037*	1	BUCKET GP-MULTIPURPOSE	576
Y	*162-5236*	1	COVER GP-LINES	596
Y	**278-1969**	2	CYLINDER GP-HYDRAULIC	312
Y	*279-5413*	1	LINES GP-BUCKET	337
Y	*154-5011*	1	MOUNTING GP-CYLINDER	426
Y-SEPARATE ILLUSTRATION				

<END>

WORK TOOLS

325-7040 BUCKET AR-MULTIPURPOSE

S/N: MST1-UP
AN ATTACHMENT

SMCS-6104 **i03021373**

NOTE	PART NUMBER	QTY	PART NAME 1 2 3 4 5 6 (PRODUCT LEVEL)	SEE PAGE
Y	*325-7036*	1	BUCKET AR-MULTIPURPOSE	504
Y	*135-9384*	1	EDGE GP-CUTTING	600
Y-SEPARATE ILLUSTRATION				

<END>

325-7045 BUCKET AR-MULTIPURPOSE

S/N: MST1-UP
AN ATTACHMENT

SMCS-6104 **i03021504**

NOTE	PART NUMBER	QTY	PART NAME 1 2 3 4 5 6 (PRODUCT LEVEL)	SEE PAGE
Y	*325-7046*	1	BUCKET AR-MULTIPURPOSE	505
Y	*141-4999*	8	TOOTH GP-UNI	643
Y-SEPARATE ILLUSTRATION				

<END>

325-7046 BUCKET AR-MULTIPURPOSE

S/N: MST1-UP
PART OF 325-7045, 325-7050 BUCKET AR-MULTIPURPOSE
AN ATTACHMENT

SMCS-6104 **i03021636**

NOTE	PART NUMBER	QTY	PART NAME 1 2 3 4 5 6 (PRODUCT LEVEL)	SEE PAGE
Y	*325-7047*	1	BUCKET GP-MULTIPURPOSE	577
Y	*162-5236*	1	COVER GP-LINES	596
Y	**278-1969**	2	CYLINDER GP-HYDRAULIC	312
Y	*279-5414*	1	LINES GP-BUCKET	339
Y	*154-5011*	1	MOUNTING GP-CYLINDER	426
Y-SEPARATE ILLUSTRATION				

<END>

325-7050 BUCKET AR-MULTIPURPOSE

S/N: MST1-UP
AN ATTACHMENT

SMCS-6104 **i03022239**

NOTE	PART NUMBER	QTY	PART NAME 1 2 3 4 5 6 (PRODUCT LEVEL)	SEE PAGE
Y	*325-7046*	1	BUCKET AR-MULTIPURPOSE	505
Y	*135-9385*	1	EDGE GP-CUTTING	601
Y-SEPARATE ILLUSTRATION				

<END>

WORK TOOLS

325-7055 BUCKET AR-MULTIPURPOSE

S/N: MST1-UP

AN ATTACHMENT

SMCS-6104 **i03022391**

NOTE	PART NUMBER	QTY	PART NAME 1 2 3 4 5 6 (PRODUCT LEVEL)	SEE PAGE
Y	*325-7056*	1	BUCKET AR-MULTIPURPOSE	506
Y	*141-4999*	8	TOOTH GP-UNI	643

Y-SEPARATE ILLUSTRATION

<END>

325-7056 BUCKET AR-MULTIPURPOSE

S/N: MST1-UP

PART OF 325-7055, 325-7060 BUCKET AR-MULTIPURPOSE

AN ATTACHMENT

SMCS-6104 **i03022408**

NOTE	PART NUMBER	QTY	PART NAME 1 2 3 4 5 6 (PRODUCT LEVEL)	SEE PAGE
Y	*325-7057*	1	BUCKET GP-MULTIPURPOSE	578
Y	*162-5236*	1	COVER GP-LINES	596
Y	**278-1969**	2	CYLINDER GP-HYDRAULIC	312
Y	*279-5415*	1	LINES GP-BUCKET	341
Y	*154-5011*	1	MOUNTING GP-CYLINDER	426

Y-SEPARATE ILLUSTRATION

<END>

325-7060 BUCKET AR-MULTIPURPOSE

S/N: MST1-UP

AN ATTACHMENT

SMCS-6104 **i03022550**

NOTE	PART NUMBER	QTY	PART NAME 1 2 3 4 5 6 (PRODUCT LEVEL)	SEE PAGE
Y	*325-7056*	1	BUCKET AR-MULTIPURPOSE	506
Y	*135-9386*	1	EDGE GP-CUTTING	602

Y-SEPARATE ILLUSTRATION

<END>

325-7065 BUCKET AR-MULTIPURPOSE

S/N: MST1-UP

AN ATTACHMENT

SMCS-6104 **i03022572**

NOTE	PART NUMBER	QTY	PART NAME 1 2 3 4 5 6 (PRODUCT LEVEL)	SEE PAGE
Y	*325-7066*	1	BUCKET AR-MULTIPURPOSE	507
Y	*141-4999*	9	TOOTH GP-UNI	643

Y-SEPARATE ILLUSTRATION

<END>

325-7066 BUCKET AR-MULTIPURPOSE

S/N: MST1-UP
PART OF 325-7065, 325-7070 BUCKET AR-MULTIPURPOSE
AN ATTACHMENT

SMCS-6104 **i03022580**

NOTE	PART NUMBER	QTY	PART NAME 1 2 3 4 5 6 (PRODUCT LEVEL)	SEE PAGE
Y	*325-7067*	1	BUCKET GP-MULTIPURPOSE	579
Y	*162-5236*	1	COVER GP-LINES	596
Y	**278-1969**	2	CYLINDER GP-HYDRAULIC	312
Y	*279-5416*	1	LINES GP-BUCKET	343
Y	*154-5011*	1	MOUNTING GP-CYLINDER	426
Y-SEPARATE ILLUSTRATION				

<END>

325-7070 BUCKET AR-MULTIPURPOSE

S/N: MST1-UP
AN ATTACHMENT

SMCS-6104 **i03022802**

NOTE	PART NUMBER	QTY	PART NAME 1 2 3 4 5 6 (PRODUCT LEVEL)	SEE PAGE
Y	*325-7066*	1	BUCKET AR-MULTIPURPOSE	507
Y	*135-9387*	1	EDGE GP-CUTTING	603
Y-SEPARATE ILLUSTRATION				

<END>

325-7075 BUCKET AR-MULTIPURPOSE

S/N: MST1-UP
AN ATTACHMENT

SMCS-6104 **i03012162**

NOTE	PART NUMBER	QTY	PART NAME 1 2 3 4 5 6 (PRODUCT LEVEL)	SEE PAGE
Y	*325-7076*	1	BUCKET AR-MULTIPURPOSE	507
Y	*141-4999*	9	TOOTH GP-UNI	643
Y-SEPARATE ILLUSTRATION				

<END>

325-7076 BUCKET AR-MULTIPURPOSE

S/N: MST1-UP
PART OF 325-7075, 325-7080 BUCKET AR-MULTIPURPOSE
AN ATTACHMENT

SMCS-6104 **i03012205**

NOTE	PART NUMBER	QTY	PART NAME 1 2 3 4 5 6 (PRODUCT LEVEL)	SEE PAGE
Y	*325-7077*	1	BUCKET GP-MULTIPURPOSE	580
Y	*162-5236*	1	COVER GP-LINES	596
Y	**278-1969**	2	CYLINDER GP-HYDRAULIC	312
Y	*293-0140*	1	LINES GP-BUCKET	349
Y	*154-5011*	1	MOUNTING GP-CYLINDER	426
Y-SEPARATE ILLUSTRATION				

<END>

WORK TOOLS

325-7080 BUCKET AR-MULTIPURPOSE

S/N: MST1-UP

AN ATTACHMENT

SMCS-6104 **i03013192**

NOTE	PART NUMBER	QTY	PART NAME 1 2 3 4 5 6 (PRODUCT LEVEL)	SEE PAGE
Y	*325-7076*	1	BUCKET AR-MULTIPURPOSE	507
Y	*195-7124*	1	EDGE GP-CUTTING	605
Y-SEPARATE ILLUSTRATION				

<END>

285-6095 BUCKET AR-UTILITY

S/N: MST1-UP

AN ATTACHMENT

i02552467

NOTE	PART NUMBER	QTY	PART NAME 1 2 3 4 5 6 (PRODUCT LEVEL)	SEE PAGE
Y	**285-6096**	1	BUCKET GP-UTILITY (60-IN)	581
Y	*135-9384*	1	EDGE GP-CUTTING	600
Y-SEPARATE ILLUSTRATION				

<END>

285-6100 BUCKET AR-UTILITY

S/N: MST1-UP

PART OF 285-6111 BUCKET AR-GRAPPLE

AN ATTACHMENT

i02552478

NOTE	PART NUMBER	QTY	PART NAME 1 2 3 4 5 6 (PRODUCT LEVEL)	SEE PAGE
Y	**285-6099**	1	BUCKET GP-UTILITY (66-IN)	582
Y	*135-9385*	1	EDGE GP-CUTTING	601
Y-SEPARATE ILLUSTRATION				

<END>

285-6101 BUCKET AR-UTILITY

S/N: MST1-UP

PART OF 285-6112 BUCKET AR-GRAPPLE

AN ATTACHMENT

i02552482

NOTE	PART NUMBER	QTY	PART NAME 1 2 3 4 5 6 (PRODUCT LEVEL)	SEE PAGE
Y	**285-6102**	1	BUCKET GP-UTILITY (72-IN)	583
Y	*135-9386*	1	EDGE GP-CUTTING	602
Y-SEPARATE ILLUSTRATION				

<END>

WORK TOOLS

141-6704 BUCKET AS-DIRT

S/N: MST1-UP
1676-MM (66-IN)
PART OF 165-6157 BUCKET AS-DIRT
AN ATTACHMENT

SMCS-6001 **i03638866**

NOTE	REF NO	GRAPHIC REF	PART NUMBER	QTY	PART NAME 1 2 3 4 5 6 (PRODUCT LEVEL)	SEE PAGE
	1	1	**149-5436**	1	EDGE	

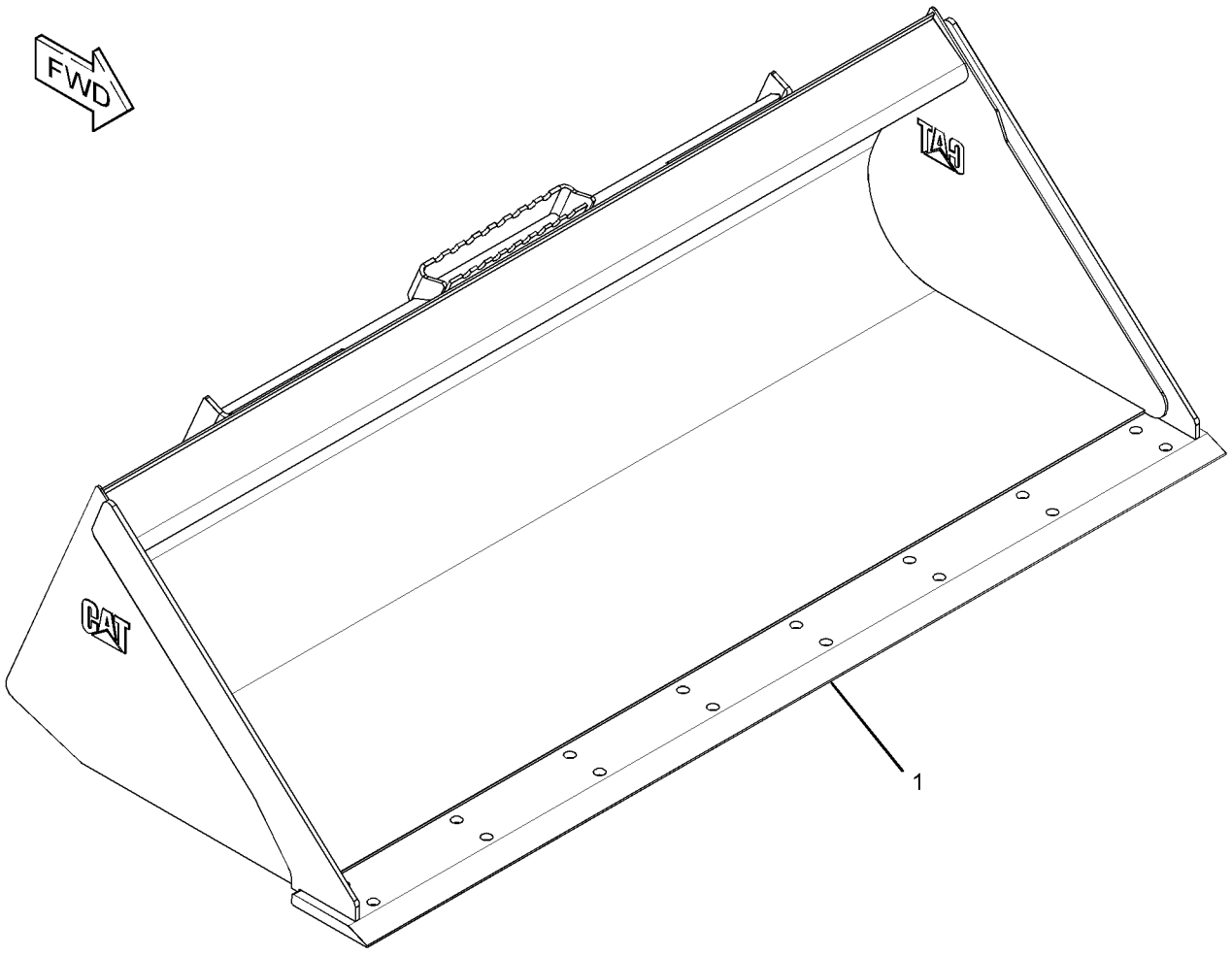

GRAPHIC #1 **<END>** g01953854

WORK TOOLS

152-0227 BUCKET AS-DIRT

S/N: MST1-UP
1524-MM (60-IN)
PART OF 165-6156 BUCKET AS-DIRT
AN ATTACHMENT

SMCS-6001 **i03638850**

NOTE	REF NO	GRAPHIC REF	PART NUMBER	QTY	PART NAME 1 2 3 4 5 6 (PRODUCT LEVEL)	SEE PAGE
	1	1	**149-5435**	1	EDGE	

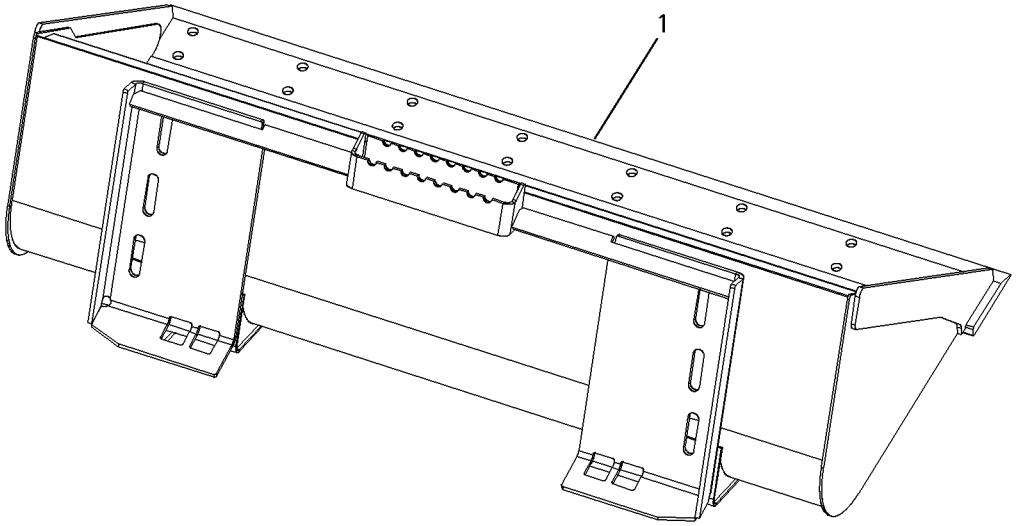

GRAPHIC #1 **<END>** g00651083

165-6156 BUCKET AS-DIRT

S/N: MST1-UP
1524-MM (60-IN), 0.34CU M (0.44 CU YD)
PART OF 152-0231 BUCKET GP-DIRT
AN ATTACHMENT

SMCS-6001 **i03638322**

NOTE	REF NO	GRAPHIC REF	PART NUMBER	QTY	PART NAME 1 2 3 4 5 6 (PRODUCT LEVEL)	SEE PAGE
Y	1	1	*152-0227*	1	BUCKET AS-DIRT (60-IN)	510
	2	1	**154-2704**	1	PLATE-INSTRUCTION (BUCKET SPECIFICATIONS)	
	3	1	**168-8389**	4	TACK-FASTENER	

Y-SEPARATE ILLUSTRATION

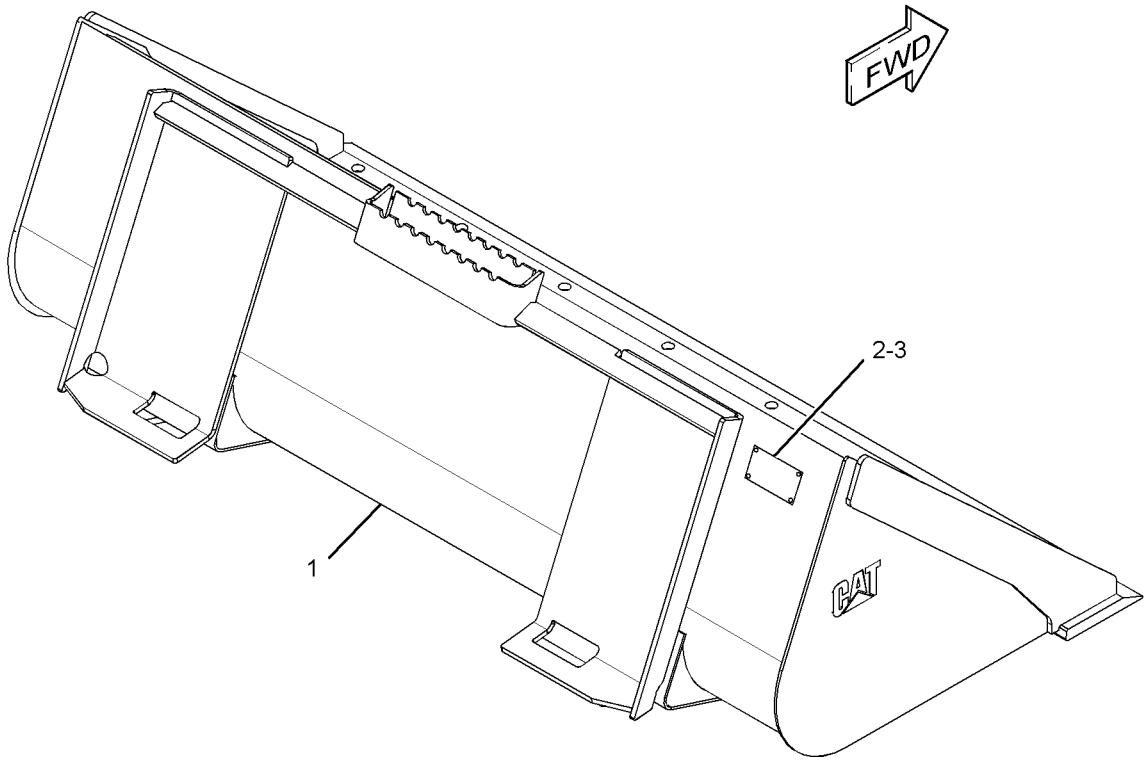

GRAPHIC #1 **<END>** g01954030

WORK TOOLS

165-6157 BUCKET AS-DIRT

S/N: MST1-UP
0.37CU M (0.48 CU YD), 1677-MM (66-IN)
PART OF 152-0232 BUCKET GP-DIRT
AN ATTACHMENT

SMCS-6001 **i03638323**

NOTE	REF NO	GRAPHIC REF	PART NUMBER	QTY	PART NAME 1 2 3 4 5 6 (PRODUCT LEVEL)	SEE PAGE
Y	1	1	*141-6704*	1	BUCKET AS-DIRT	509
	2	1	**154-2704**	1	PLATE-INSTRUCTION (BUCKET SPECIFICATIONS)	
	3	1	**168-8389**	4	TACK-FASTENER	

Y-SEPARATE ILLUSTRATION

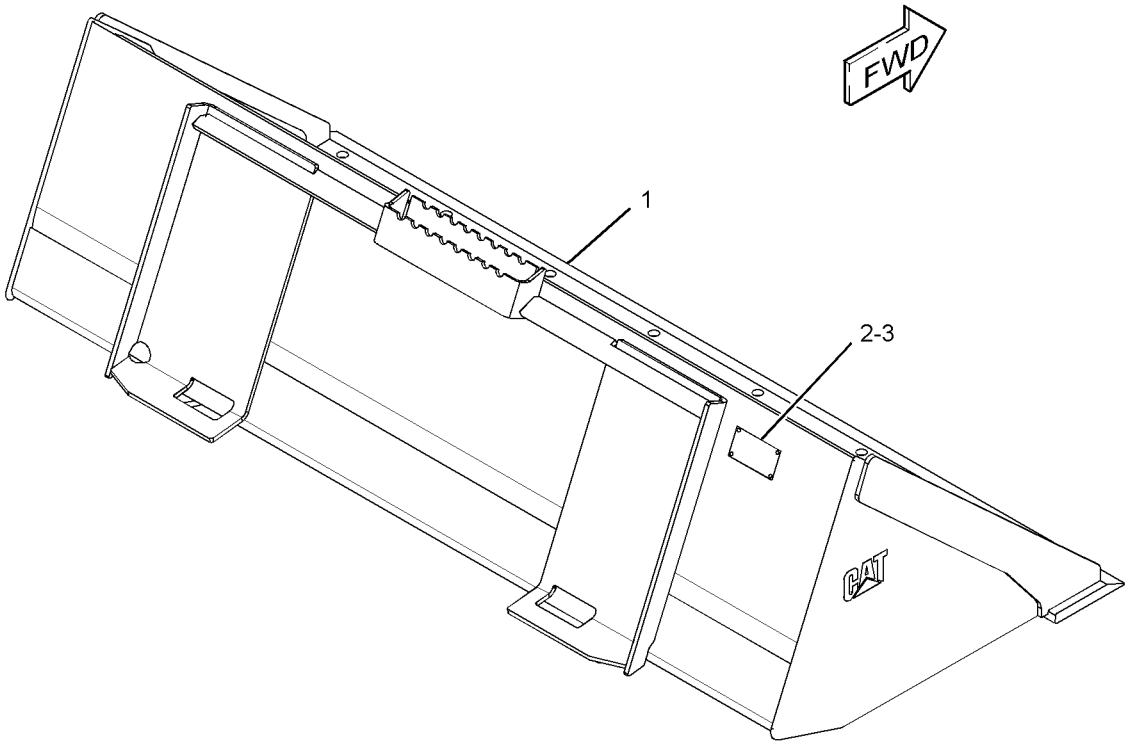

GRAPHIC #1 **<END>** g01953993

WORK TOOLS

188-2716 BUCKET AS-DIRT

S/N: MST1-UP
1829-MM (72-IN)
PART OF 188-3526 BUCKET AS-DIRT
AN ATTACHMENT

SMCS-6001 **i03638903**

NOTE	REF NO	GRAPHIC REF	PART NUMBER	QTY	PART NAME 1 2 3 4 5 6 (PRODUCT LEVEL)	SEE PAGE
	1	1	**149-5437**	1	EDGE	

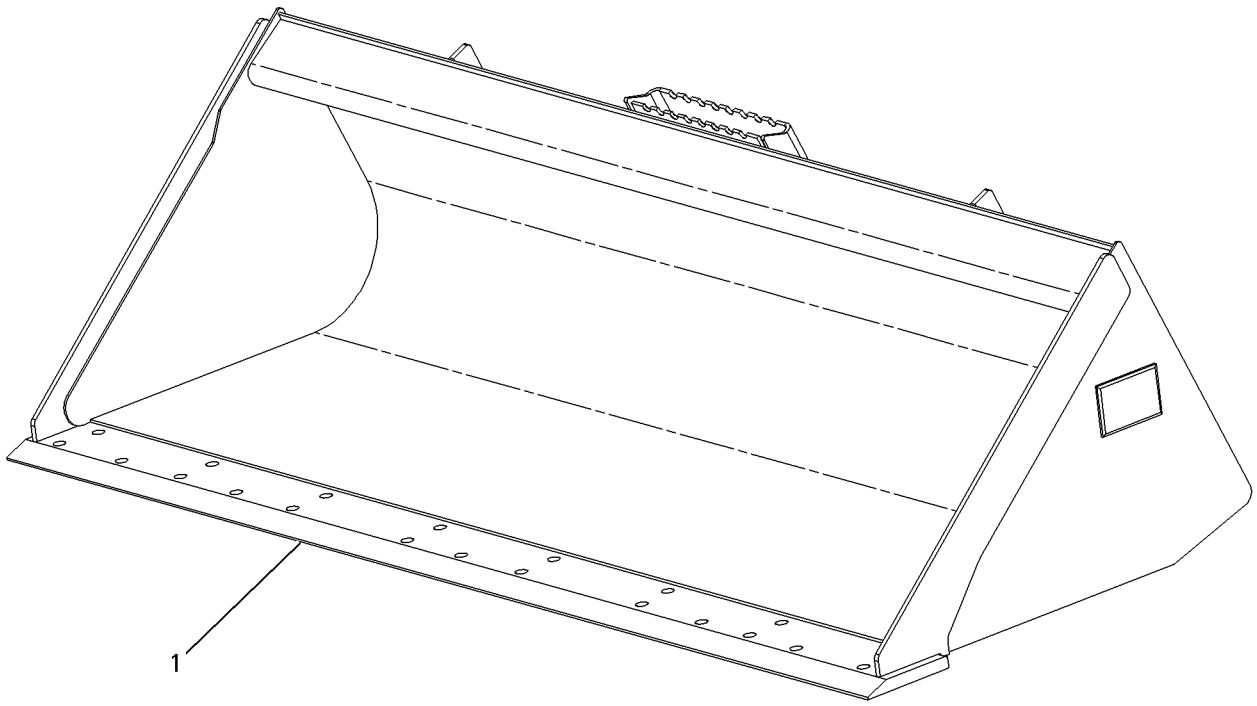

GRAPHIC #1 **<END>** g00723342

WORK TOOLS

188-3526 BUCKET AS-DIRT

S/N: MST1-UP
PART OF 188-2719 BUCKET GP-DIRT
AN ATTACHMENT

SMCS-6001 **i03648351**

NOTE	REF NO	GRAPHIC REF	PART NUMBER	QTY	PART NAME 1 2 3 4 5 6 (PRODUCT LEVEL)	SEE PAGE
	1	1	**154-2704**	1	PLATE-INSTRUCTION (BUCKET SPECIFICATIONS)	
	2	1	**168-8389**	4	TACK-FASTENER	
Y	3	1	*188-2716*	1	BUCKET AS-DIRT (72-IN)	513

Y-SEPARATE ILLUSTRATION

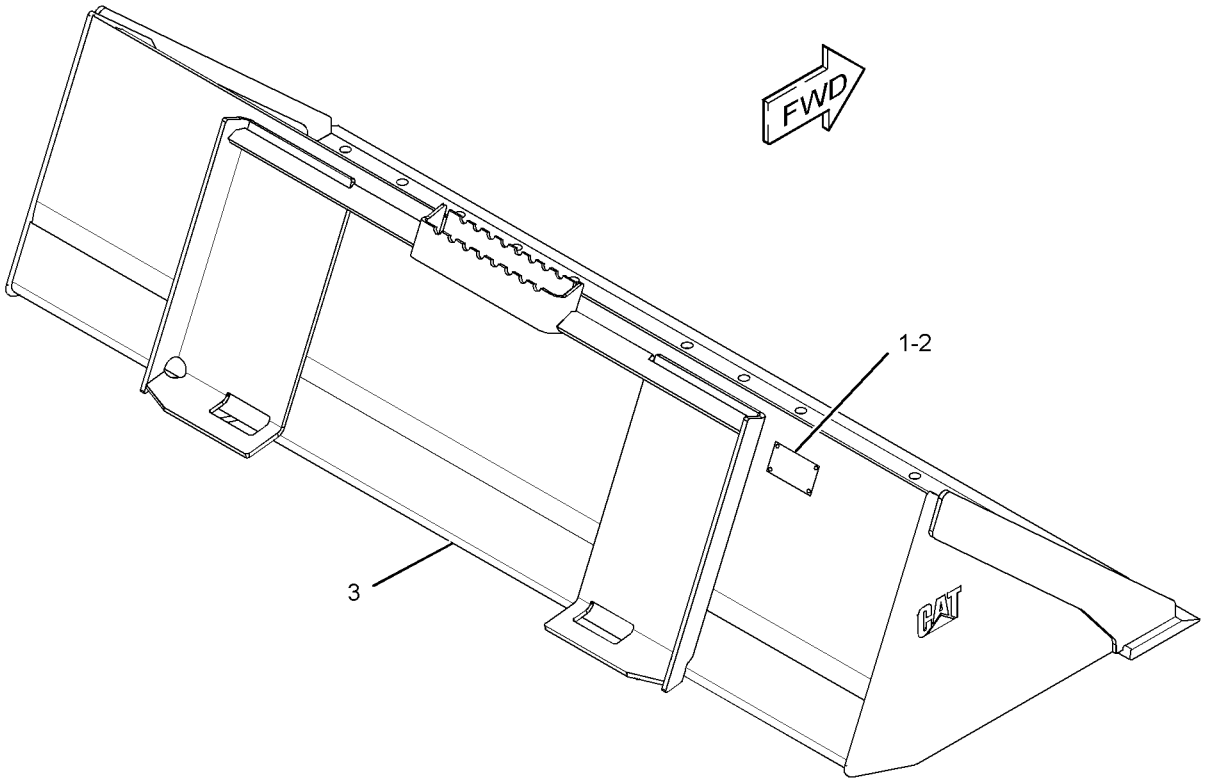

GRAPHIC #1 **<END>** g01954110

WORK TOOLS

268-4089 BUCKET AS-DIRT

S/N: MST1-UP
1981-MM (78-IN)
PART OF 268-4084 BUCKET GP-DIRT
AN ATTACHMENT

SMCS-6001 **i03647015**

NOTE	REF NO	GRAPHIC REF	PART NUMBER	QTY	PART NAME 1 2 3 4 5 6 (PRODUCT LEVEL)	SEE PAGE
	1	1	**199-7722**	1	EDGE	

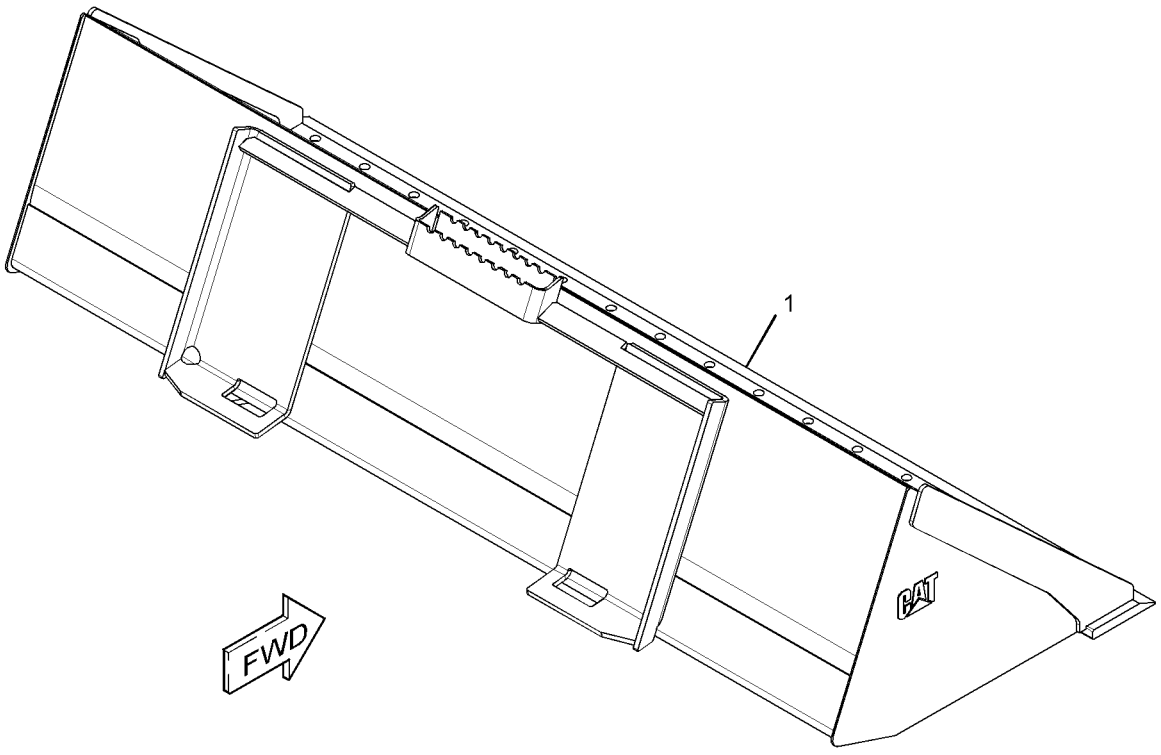

GRAPHIC #1 **<END>** g01958544

279-5433 BUCKET AS-DIRT

S/N: MST1-UP
1372-MM (54-IN)
PART OF 279-5434 BUCKET AS-DIRT
AN ATTACHMENT

SMCS-6001 **i03635729**

NOTE	REF NO	GRAPHIC REF	PART NUMBER	QTY	PART NAME 1 2 3 4 5 6 (PRODUCT LEVEL)	SEE PAGE
	1	1	**149-5434**	1	EDGE	

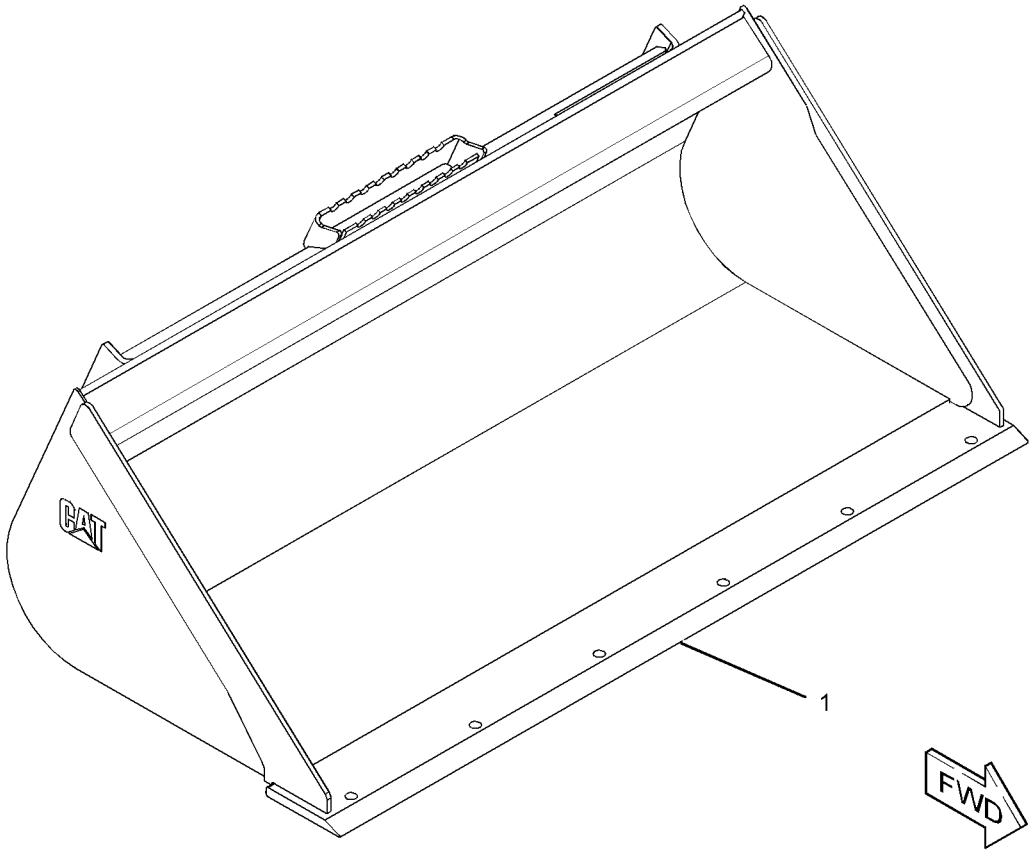

GRAPHIC #1 **<END>** g01953755

279-5434 BUCKET AS-DIRT

S/N: MST1-UP
PART OF 279-5435 BUCKET AR-DIRT
AN ATTACHMENT

SMCS-6001 **i03636082**

NOTE	REF NO	GRAPHIC REF	PART NUMBER	QTY	PART NAME 1 2 3 4 5 6 (PRODUCT LEVEL)	SEE PAGE
	1	1	**154-2704**	1	PLATE-INSTRUCTION (BUCKET SPECIFICATIONS)	
	2	1	**168-8389**	4	TACK-FASTENER	
Y	3	1	*279-5433*	1	BUCKET AS-DIRT	516

Y-SEPARATE ILLUSTRATION

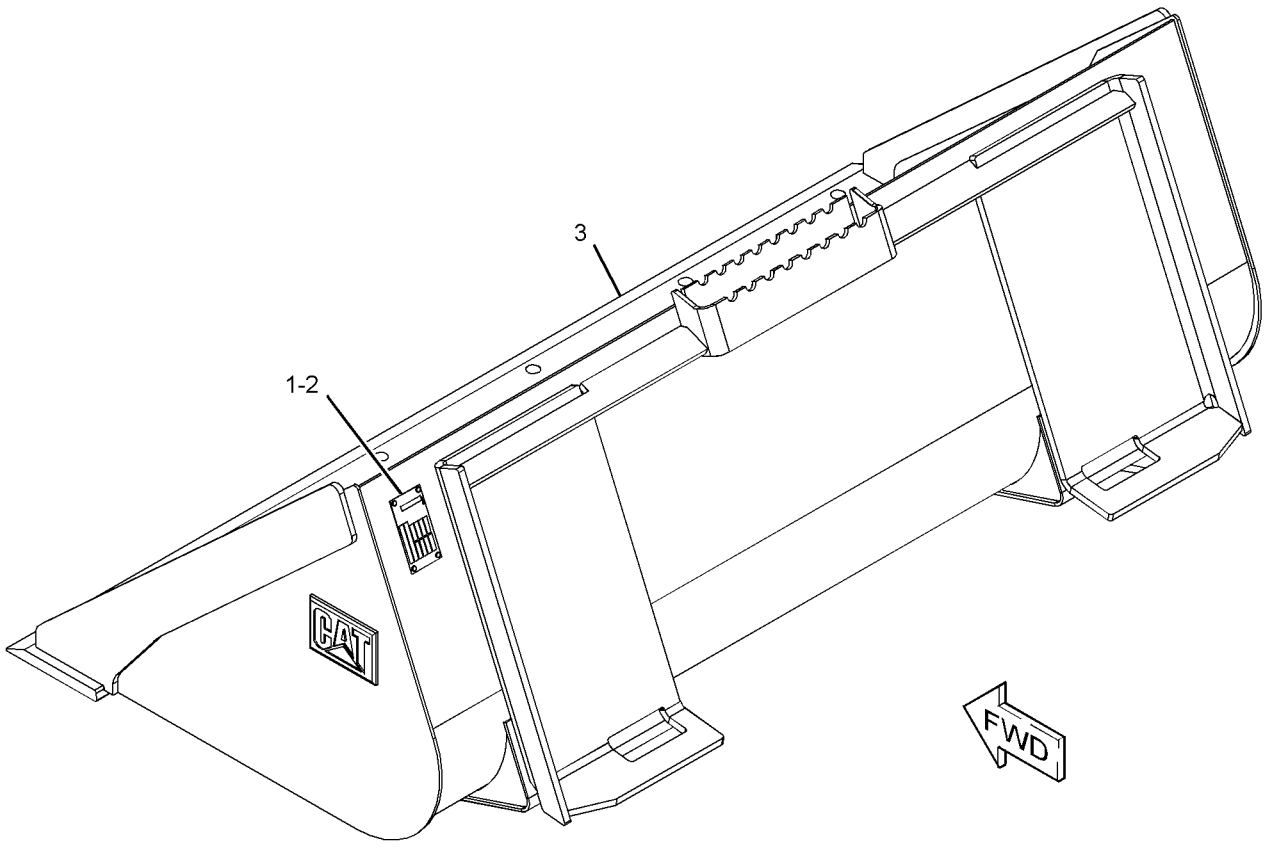

GRAPHIC #1 **<END>** g01951568

WORK TOOLS

279-5436 BUCKET AS-DIRT

S/N: MST1-UP
1524-MM (60-IN)
PART OF 279-5437 BUCKET AS-DIRT
AN ATTACHMENT

SMCS-6001 **i03635731**

NOTE	REF NO	GRAPHIC REF	PART NUMBER	QTY	PART NAME 1 2 3 4 5 6 (PRODUCT LEVEL)	SEE PAGE
	1	1	**149-5435**	1	EDGE	

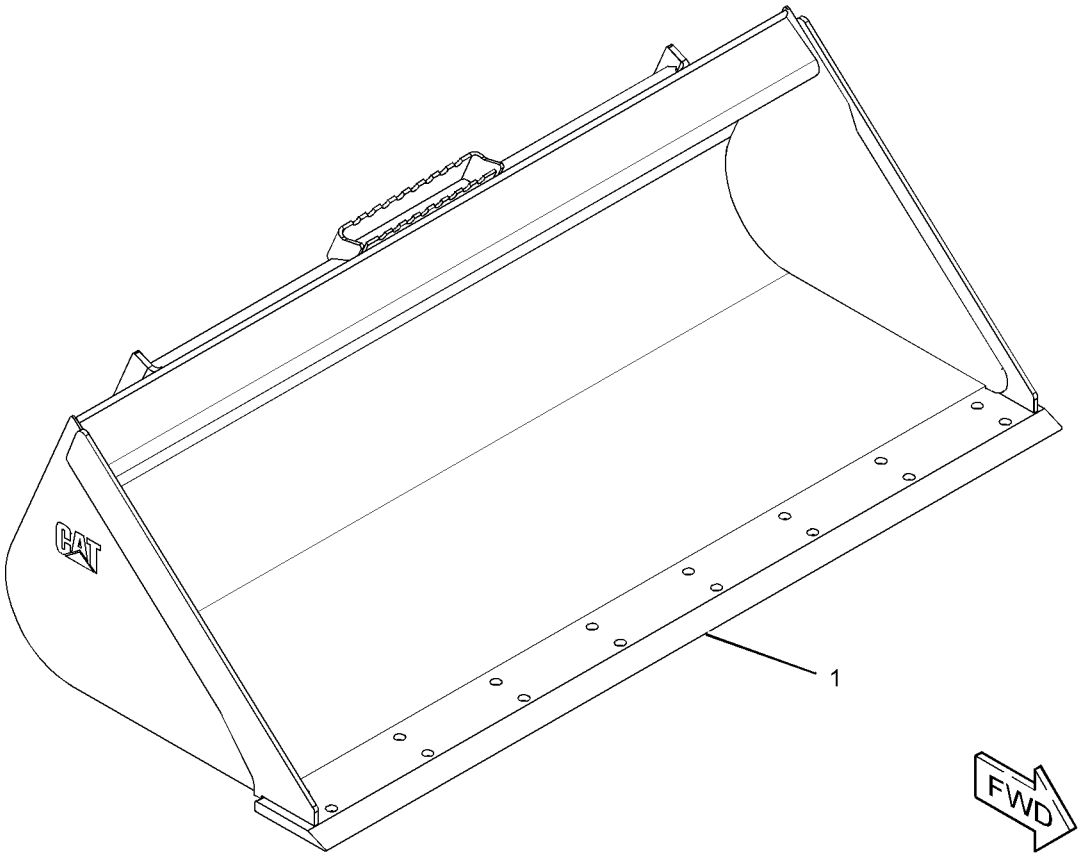

GRAPHIC #1 **<END>** g01953749

WORK TOOLS

279-5437 BUCKET AS-DIRT

S/N: MST1-UP
PART OF 279-5438 BUCKET AR-DIRT
AN ATTACHMENT

SMCS-6001 **i03648372**

NOTE	REF NO	GRAPHIC REF	PART NUMBER	QTY	PART NAME 1 2 3 4 5 6 (PRODUCT LEVEL)	SEE PAGE
	1	1	**154-2704**	1	PLATE-INSTRUCTION (BUCKET SPECIFICATIONS)	
	2	1	**168-8389**	4	TACK-FASTENER	
Y	3	1	*279-5436*	1	BUCKET AS-DIRT (60-IN)	518

Y-SEPARATE ILLUSTRATION

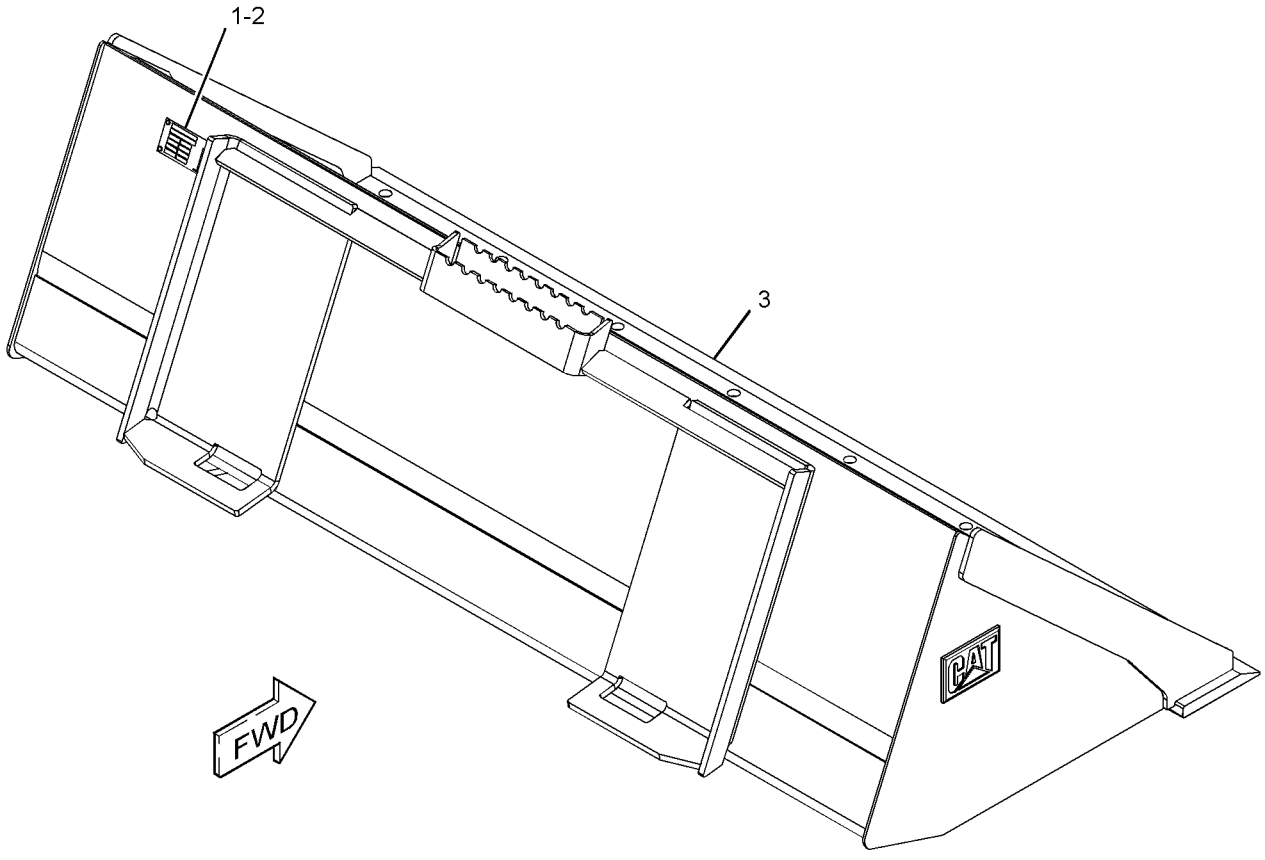

GRAPHIC #1 **<END>** g01951590

WORK TOOLS

279-5439 BUCKET AS-DIRT

S/N: MST1-UP
1676-MM (66-IN)
PART OF 279-5440 BUCKET AS-DIRT
AN ATTACHMENT

SMCS-6001 **i03635763**

NOTE	REF NO	GRAPHIC REF	PART NUMBER	QTY	PART NAME 1 2 3 4 5 6 (PRODUCT LEVEL)	SEE PAGE
	1	1	**149-5436**	1	EDGE	

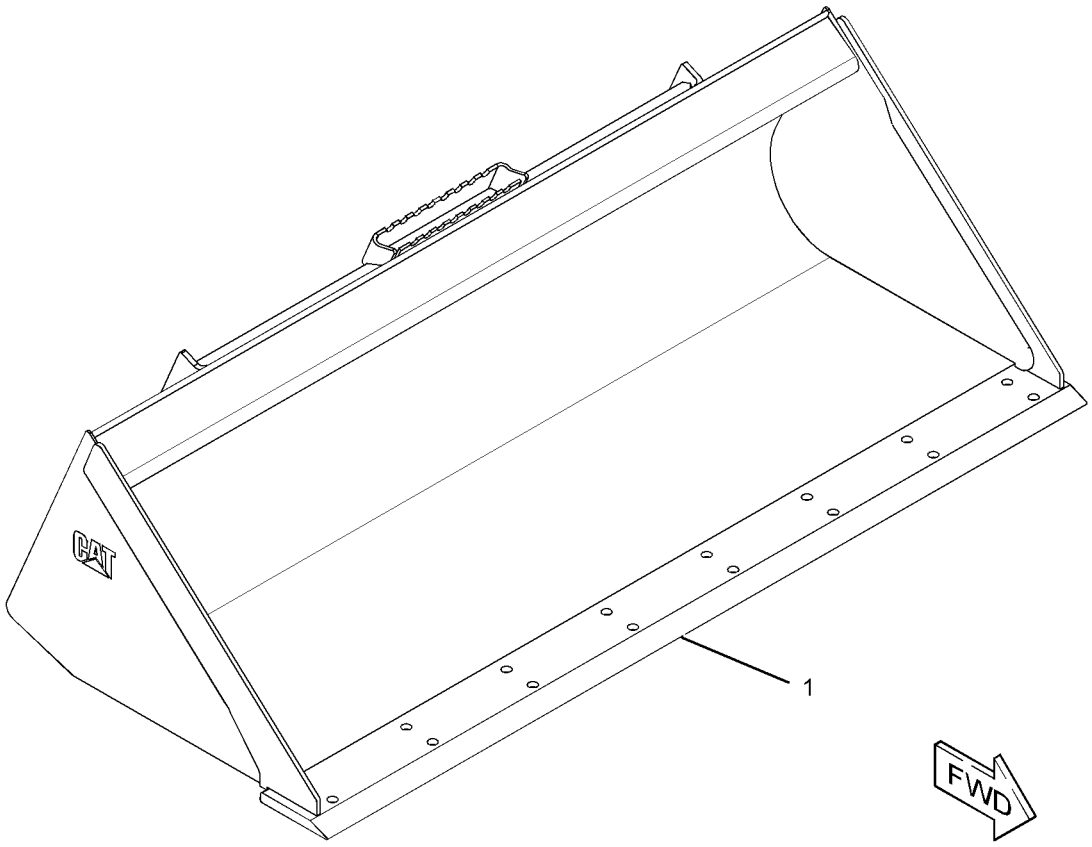

GRAPHIC #1 **<END>** g01953842

WORK TOOLS

279-5440 BUCKET AS-DIRT

S/N: MST1-UP
PART OF 279-5441 BUCKET AR-DIRT
AN ATTACHMENT

SMCS-6001 **i03648373**

NOTE	REF NO	GRAPHIC REF	PART NUMBER	QTY	PART NAME 1 2 3 4 5 6 (PRODUCT LEVEL)	SEE PAGE
	1	1	**154-2704**	1	PLATE-INSTRUCTION (BUCKET SPECIFICATIONS)	
	2	1	**168-8389**	4	TACK-FASTENER	
Y	3	1	*279-5439*	1	BUCKET AS-DIRT (66-IN)	520

Y-SEPARATE ILLUSTRATION

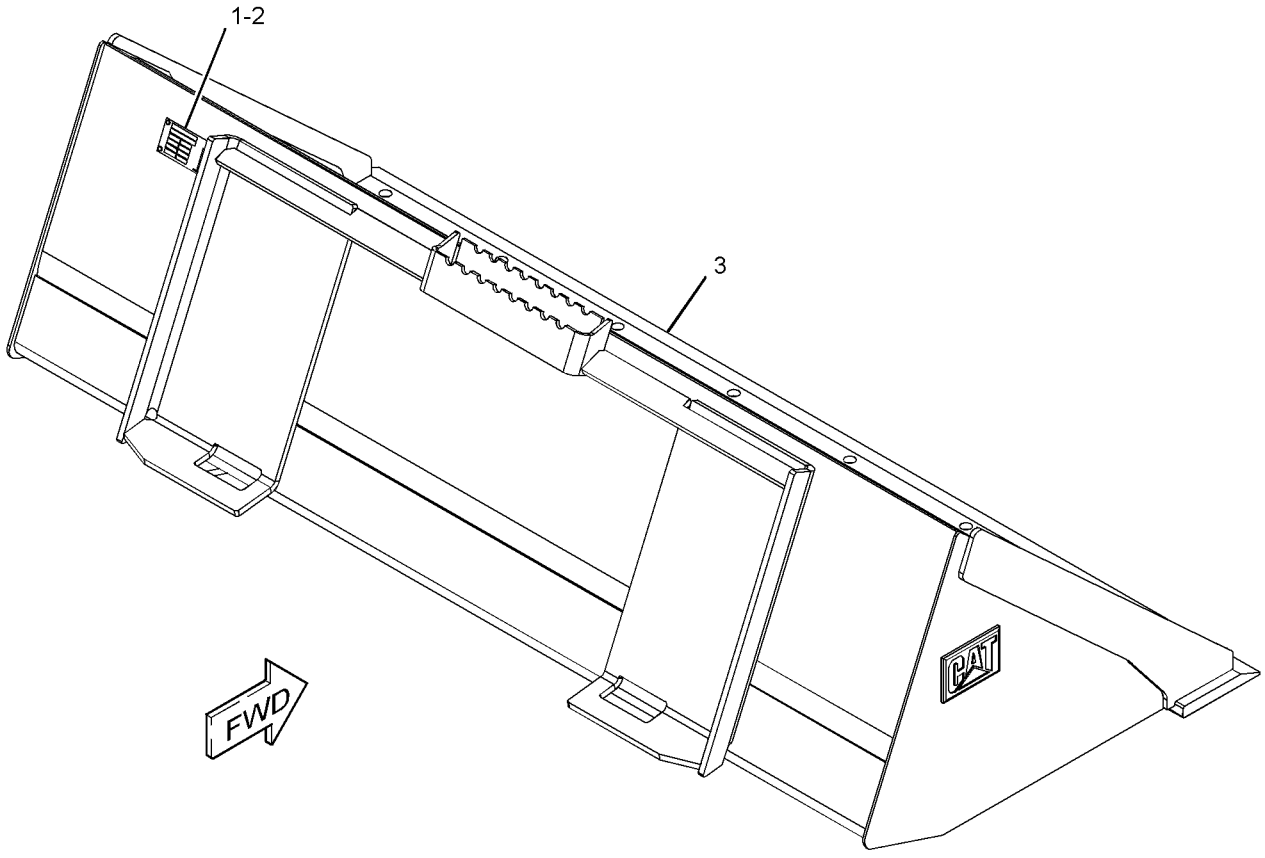

GRAPHIC #1 **<END>** g01951588

WORK TOOLS

285-6088 BUCKET AS-DIRT

S/N: MST1-UP
1829-MM (72-IN)
PART OF 285-6089 BUCKET AS-DIRT
AN ATTACHMENT

SMCS-6001 **i03635778**

NOTE	REF NO	GRAPHIC REF	PART NUMBER	QTY	PART NAME 1 2 3 4 5 6 (PRODUCT LEVEL)	SEE PAGE
	1	1	**149-5437**	1	EDGE	

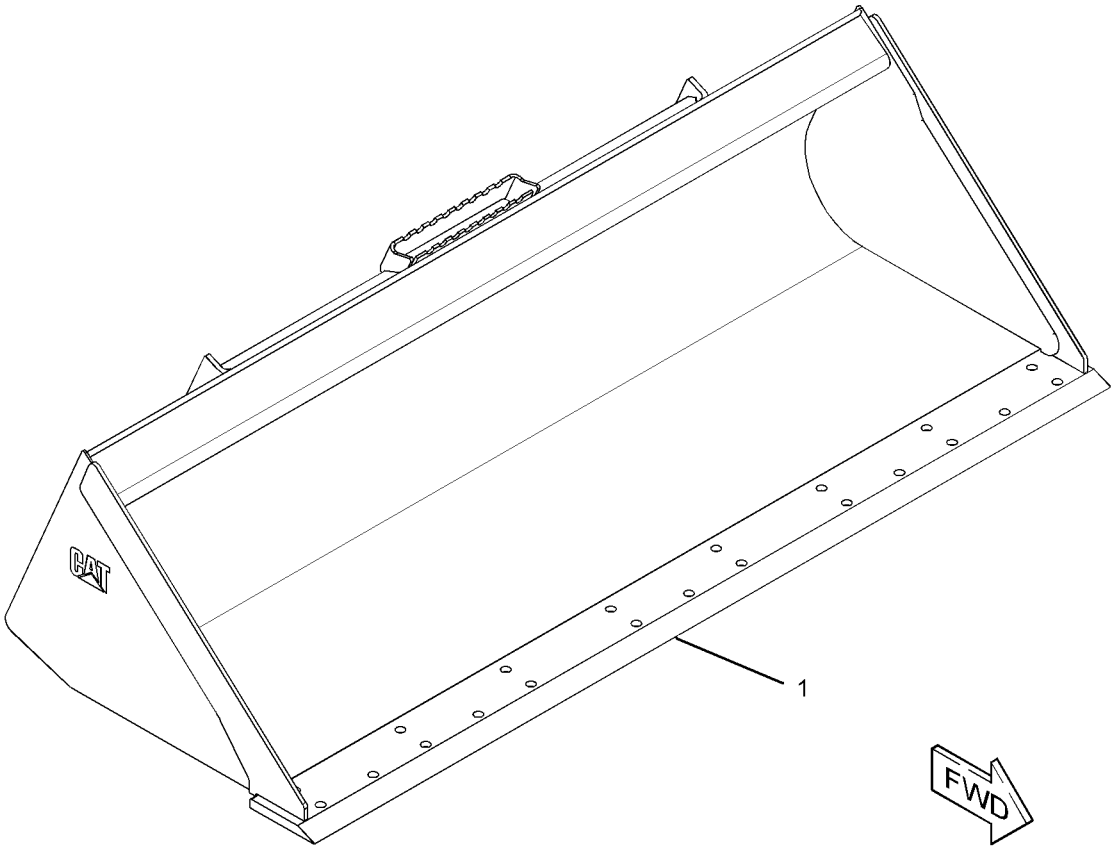

GRAPHIC #1 **<END>** g01953863

WORK TOOLS

285-6089 BUCKET AS-DIRT

S/N: MST1-UP
PART OF 285-6090 BUCKET AR-DIRT
AN ATTACHMENT

SMCS-6001 **i03648374**

NOTE	REF NO	GRAPHIC REF	PART NUMBER	QTY	PART NAME 1 2 3 4 5 6 (PRODUCT LEVEL)	SEE PAGE
	1	1	**154-2704**	1	PLATE-INSTRUCTION (BUCKET SPECIFICATIONS)	
	2	1	**168-8389**	4	TACK-FASTENER	
Y	3	1	*285-6088*	1	BUCKET AS-DIRT (72-IN)	522

Y-SEPARATE ILLUSTRATION

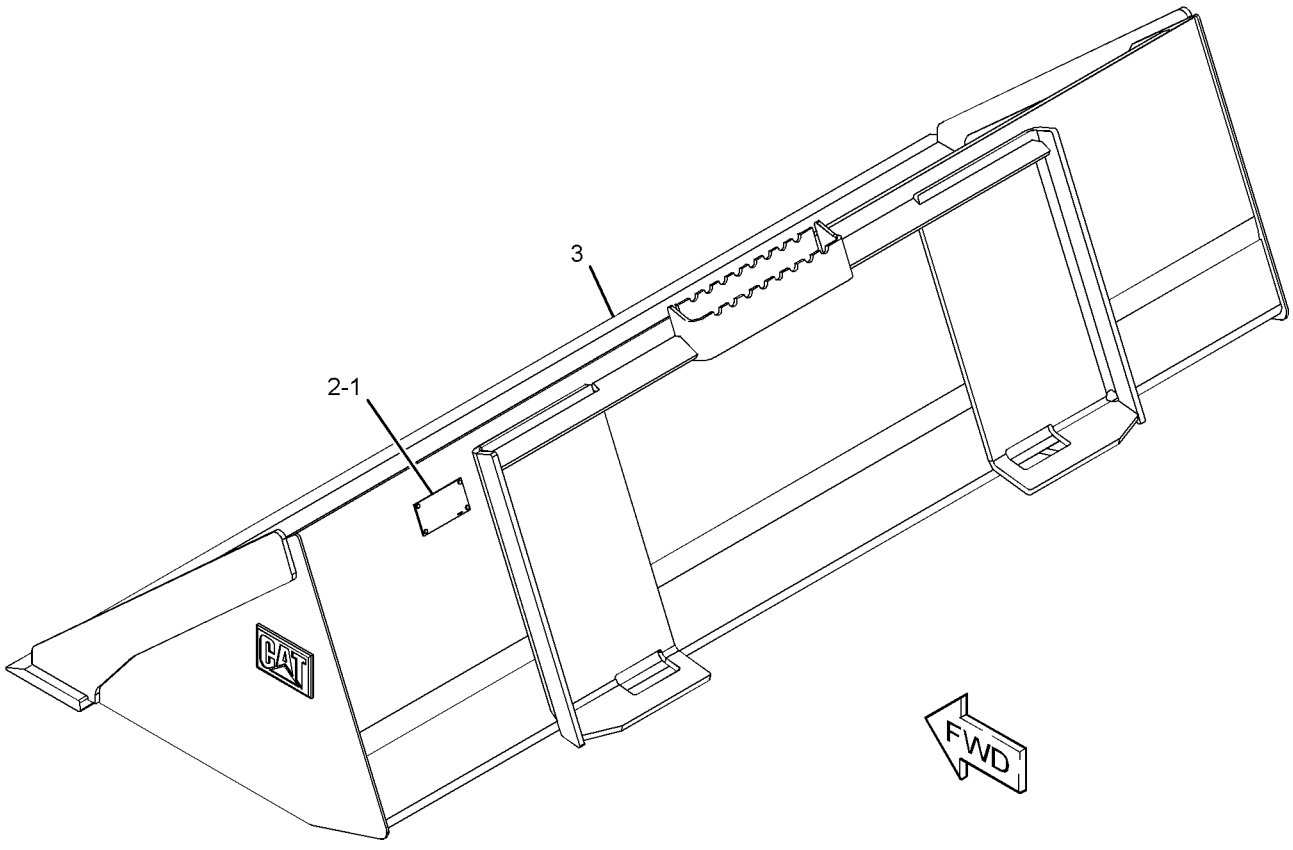

GRAPHIC #1 **<END>** g01951563

279-5363 BUCKET AS-GENERAL PURPOSE

S/N: MST1-UP
1524-MM (60-IN)
PART OF 279-5364 BUCKET AS-GENERAL PURPOSE
AN ATTACHMENT

SMCS-6101 **i03635782**

NOTE	REF NO	GRAPHIC REF	PART NUMBER	QTY	PART NAME 1 2 3 4 5 6 (PRODUCT LEVEL)	SEE PAGE
	1	1	**149-5435**	1	EDGE	

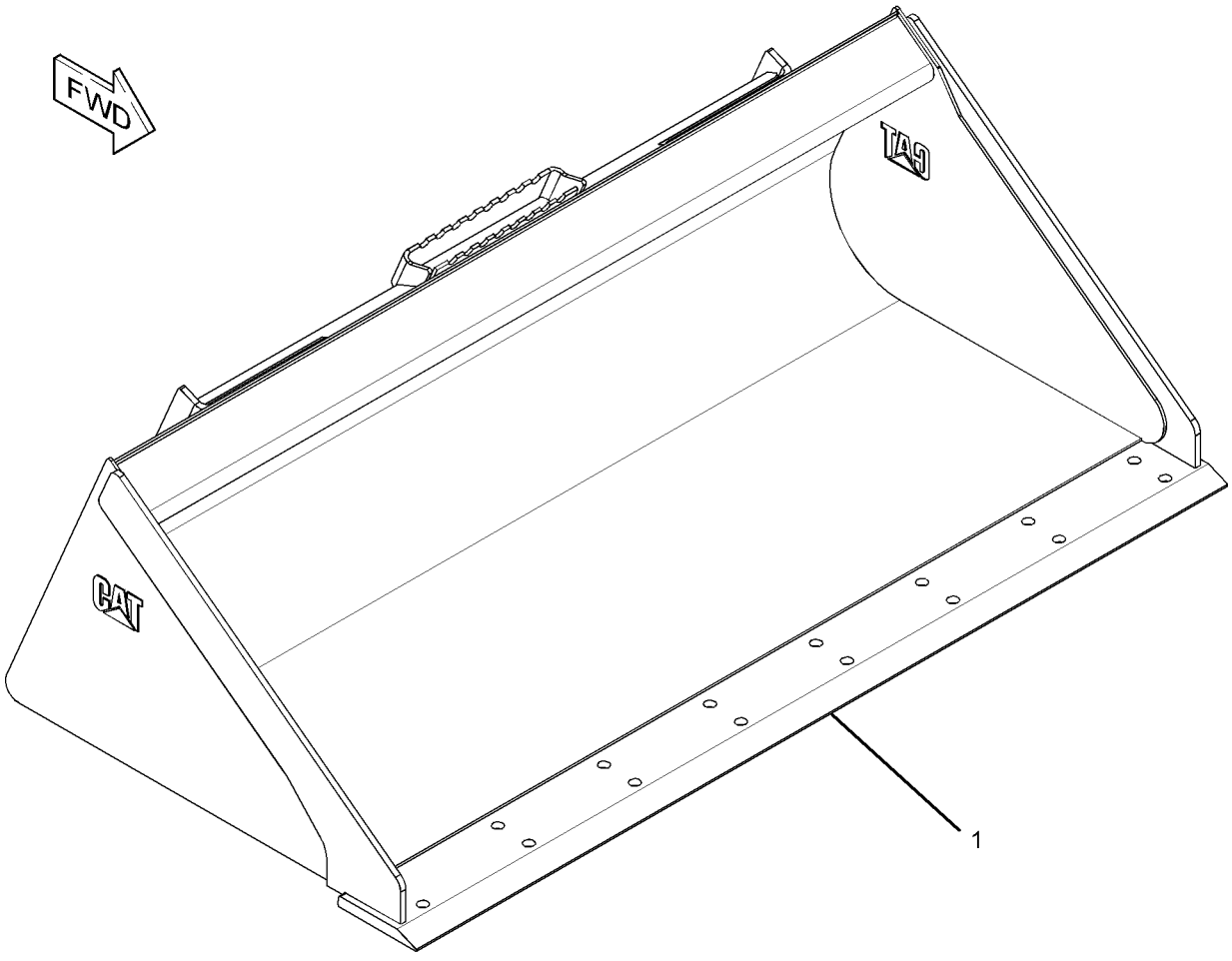

GRAPHIC #1 **<END>** g01951959

279-5364 BUCKET AS-GENERAL PURPOSE

S/N: MST1-UP

PART OF 279-5365, 279-5366 BUCKET AR-GENERAL PURPOSE

AN ATTACHMENT

SMCS-6101 **i03648359**

NOTE	REF NO	GRAPHIC REF	PART NUMBER	QTY	PART NAME 1 2 3 4 5 6 (PRODUCT LEVEL)	SEE PAGE
	1	1	**154-2704**	1	PLATE-INSTRUCTION (BUCKET SPECIFICATIONS)	
	2	1	**168-8389**	4	TACK-FASTENER	
Y	3	1	*279-5363*	1	BUCKET AS-GENERAL PURPOSE (60-IN)	524

Y-SEPARATE ILLUSTRATION

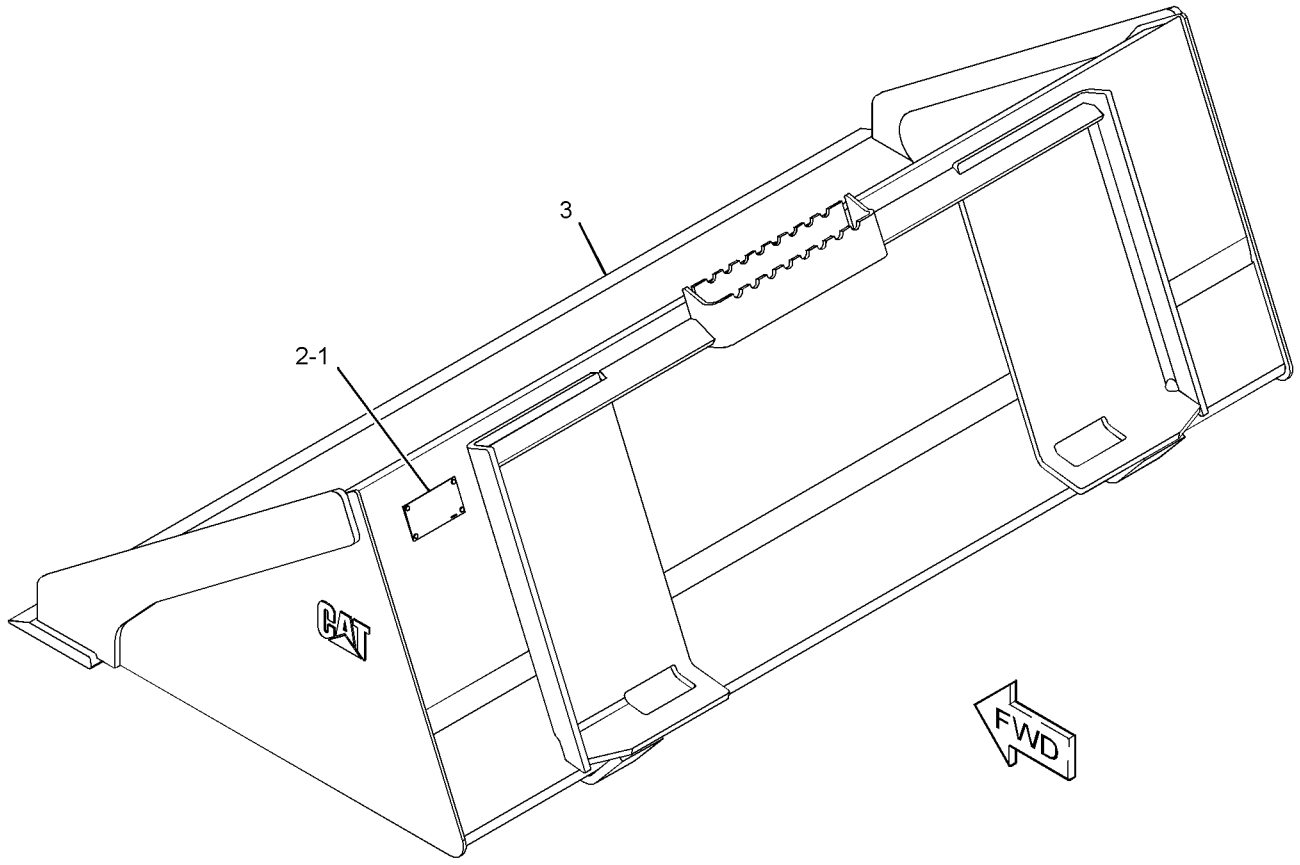

GRAPHIC #1 **<END>** g01951595

279-5367 BUCKET AS-GENERAL PURPOSE

S/N: MST1-UP
1676-MM (66-IN)
PART OF 279-5368 BUCKET AS-GENERAL PURPOSE
AN ATTACHMENT

SMCS-6101 **i03635793**

NOTE	REF NO	GRAPHIC REF	PART NUMBER	QTY	PART NAME 1 2 3 4 5 6 (PRODUCT LEVEL)	SEE PAGE
	1	1	**149-5436**	1	EDGE	

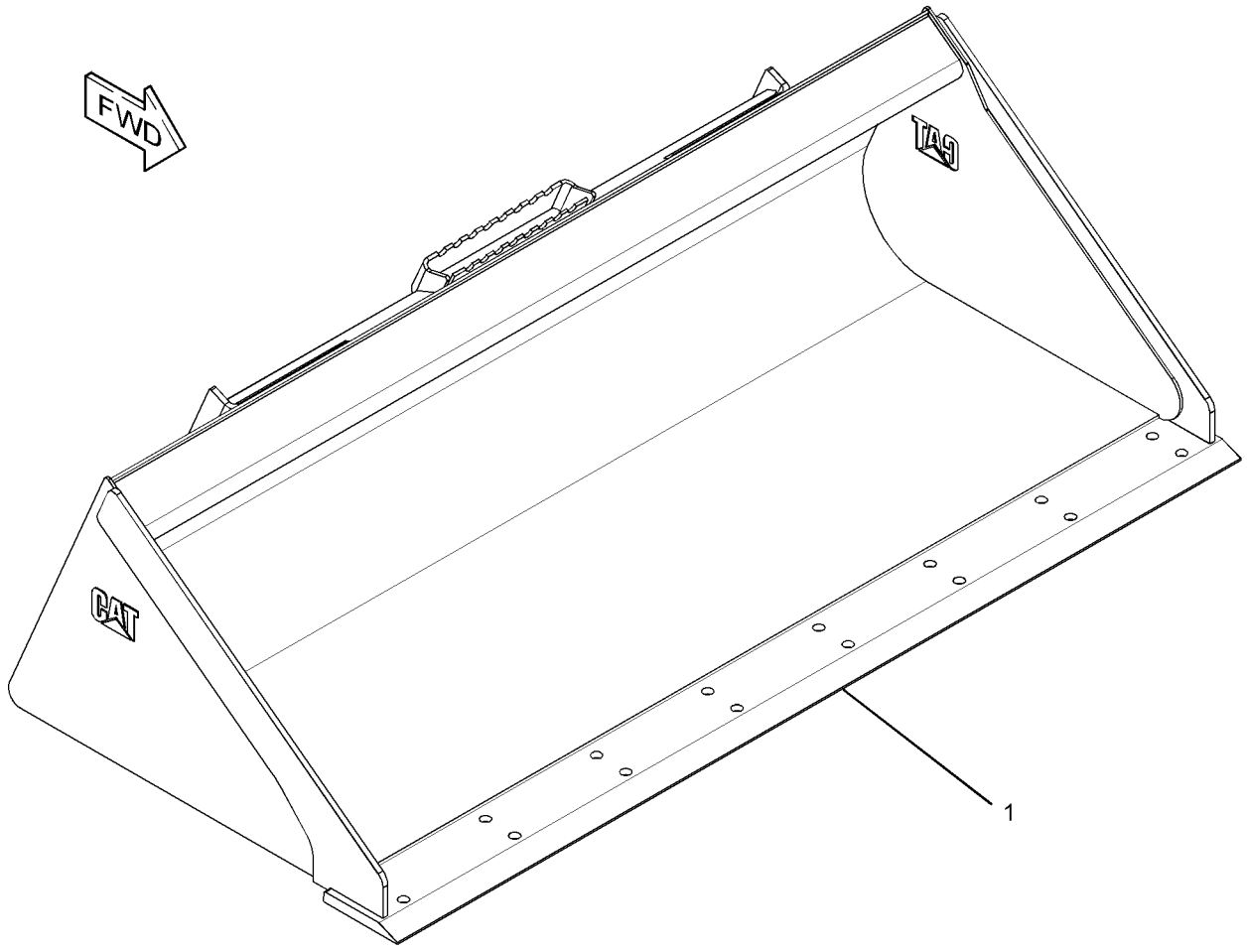

GRAPHIC #1 **<END>** g01951953

279-5368 BUCKET AS-GENERAL PURPOSE

S/N: MST1-UP

PART OF 279-5369, 279-5370 BUCKET AR-GENERAL PURPOSE

AN ATTACHMENT

SMCS-6101 **i03648360**

NOTE	REF NO	GRAPHIC REF	PART NUMBER	QTY	PART NAME 1 2 3 4 5 6 (PRODUCT LEVEL)	SEE PAGE
	1	1	**154-2704**	1	PLATE-INSTRUCTION (BUCKET SPECIFICATIONS)	
	2	1	**168-8389**	4	TACK-FASTENER	
Y	3	1	*279-5367*	1	BUCKET AS-GENERAL PURPOSE (66-IN)	526

Y-SEPARATE ILLUSTRATION

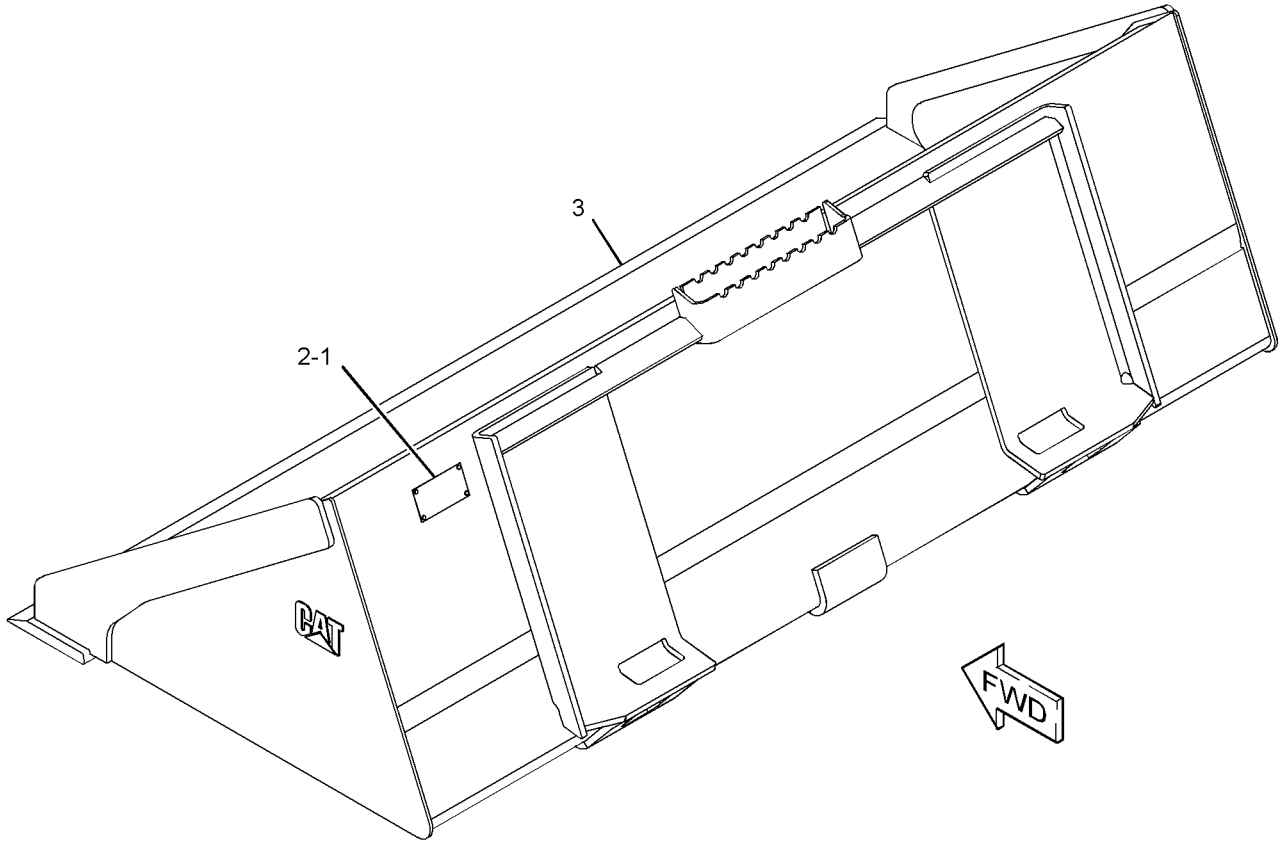

GRAPHIC #1 **<END>** g01951562

279-5371 BUCKET AS-GENERAL PURPOSE

S/N: MST1-UP
1829-MM (72-IN)
PART OF 279-5372 BUCKET AS-GENERAL PURPOSE
AN ATTACHMENT

SMCS-6101 **i03635988**

NOTE	REF NO	GRAPHIC REF	PART NUMBER	QTY	PART NAME 1 2 3 4 5 6 (PRODUCT LEVEL)	SEE PAGE
	1	1	**149-5437**	1	EDGE	

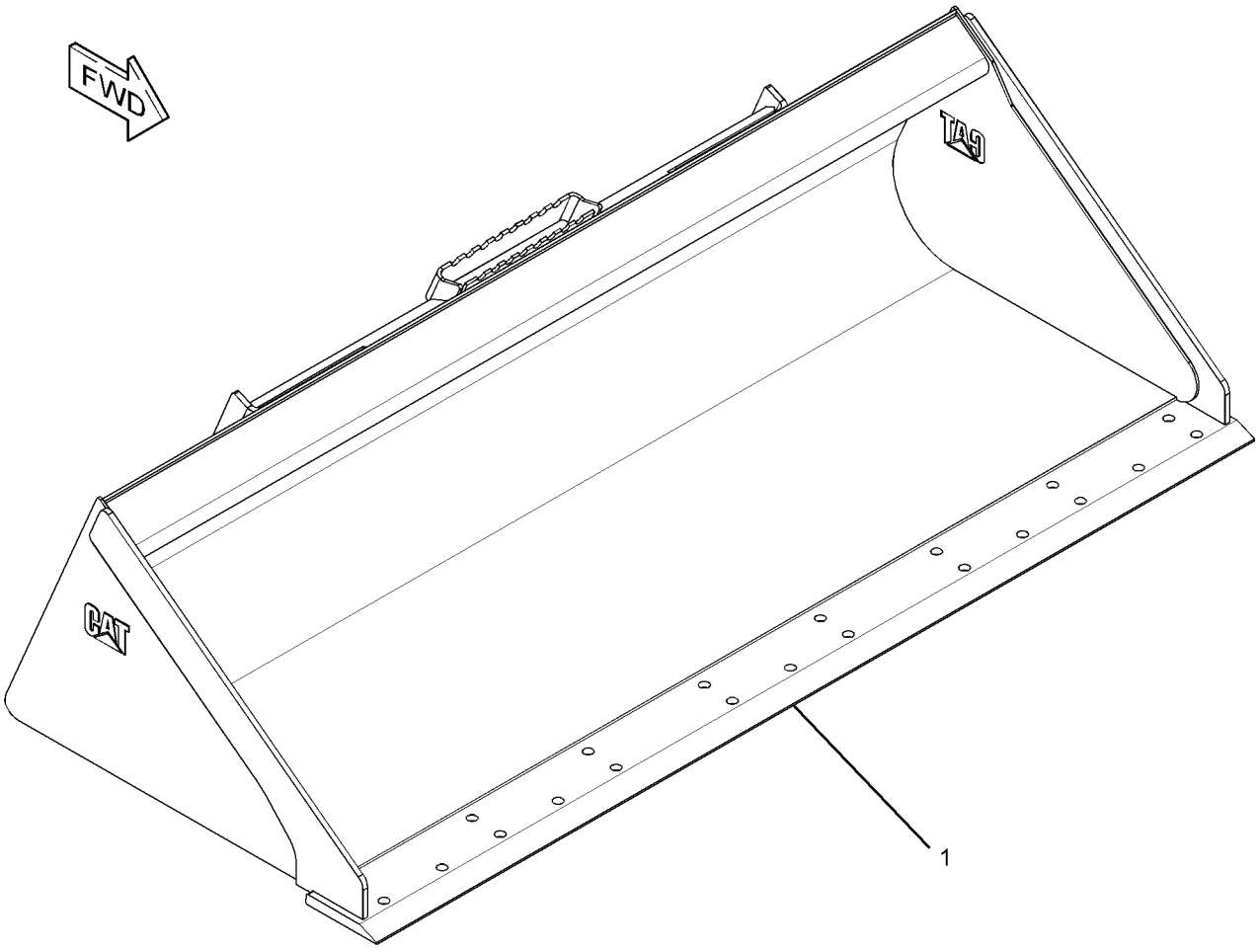

GRAPHIC #1 **<END>** g01952024

279-5372 BUCKET AS-GENERAL PURPOSE

S/N: MST1-UP

PART OF 279-5373, 279-5374 BUCKET AR-GENERAL PURPOSE AN ATTACHMENT

SMCS-6101 **i03648361**

NOTE	REF NO	GRAPHIC REF	PART NUMBER	QTY	PART NAME 1 2 3 4 5 6 (PRODUCT LEVEL)	SEE PAGE
	1	1	**154-2704**	1	PLATE-INSTRUCTION (BUCKET SPECIFICATIONS)	
	2	1	**168-8389**	4	TACK-FASTENER	
Y	3	1	*279-5371*	1	BUCKET AS-GENERAL PURPOSE (72-IN)	528

Y-SEPARATE ILLUSTRATION

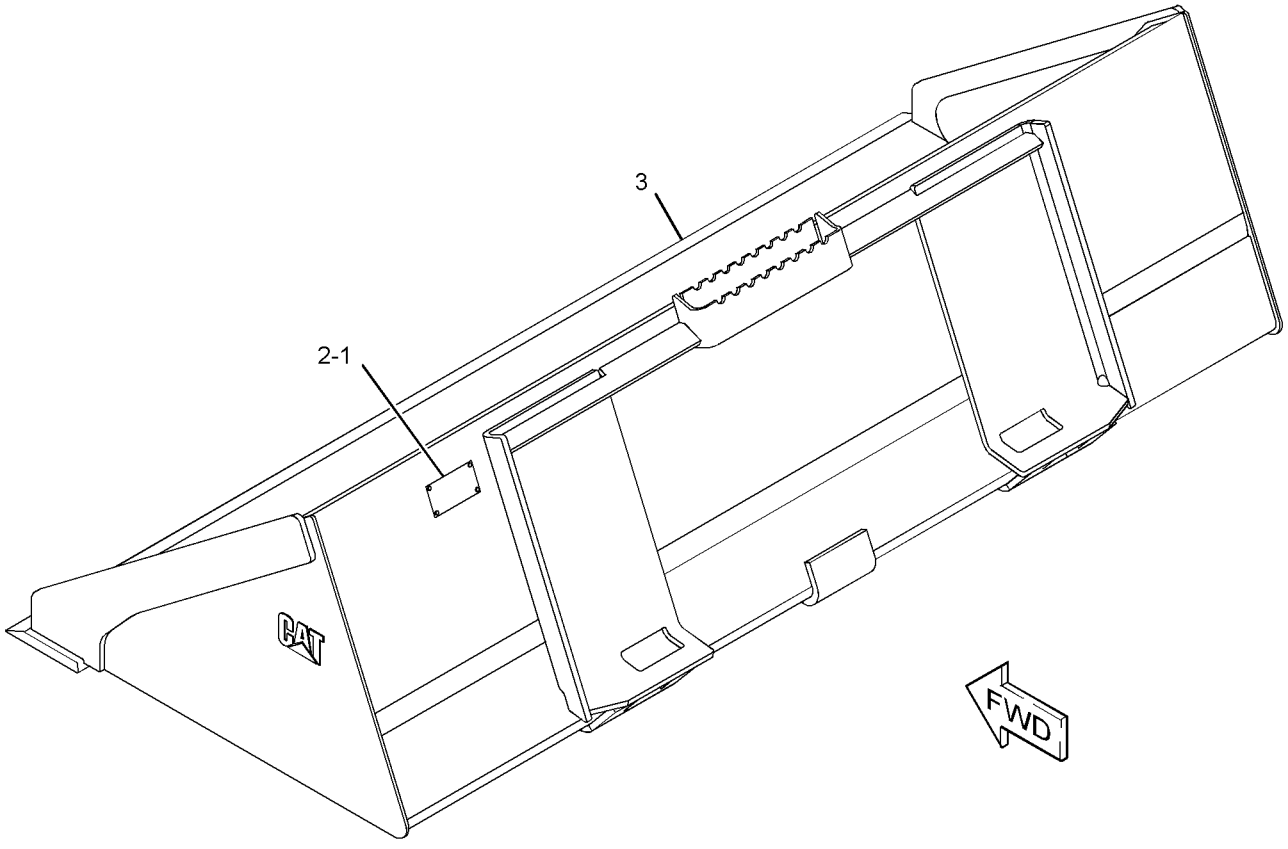

GRAPHIC #1 **<END>** g01951593

WORK TOOLS

279-5375 BUCKET AS-GENERAL PURPOSE

S/N: MST1-UP
1981-MM (78-IN)
PART OF 279-5376 BUCKET AS-GENERAL PURPOSE
AN ATTACHMENT

SMCS-6101 **i03636000**

NOTE	REF NO	GRAPHIC REF	PART NUMBER	QTY	PART NAME 1 2 3 4 5 6 (PRODUCT LEVEL)	SEE PAGE
	1	1	**199-7722**	1	EDGE	

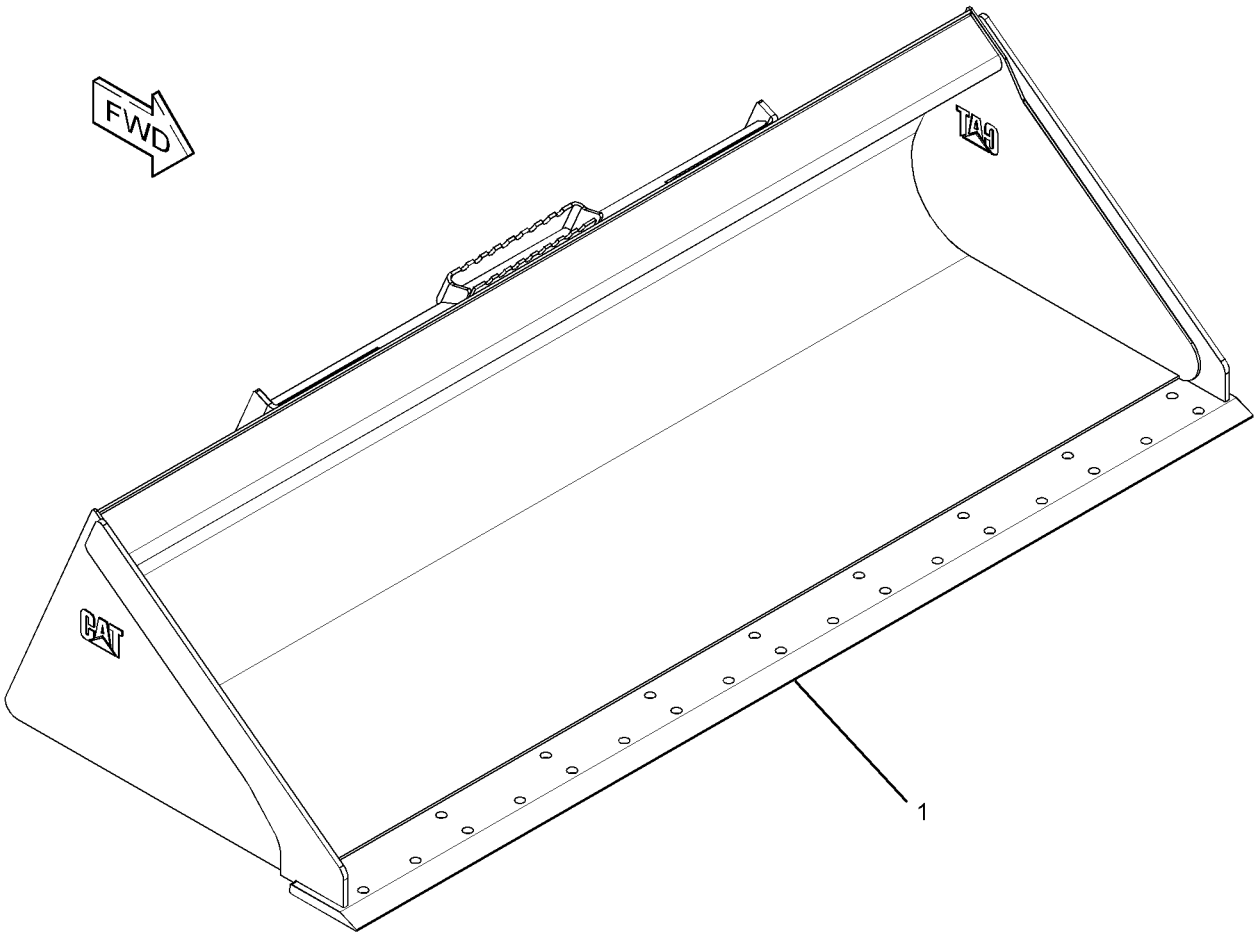

GRAPHIC #1 **<END>** g01952022

WORK TOOLS

279-5376 BUCKET AS-GENERAL PURPOSE

S/N: MST1-UP

PART OF 279-5377, 279-5378 BUCKET AR-GENERAL PURPOSE

AN ATTACHMENT

SMCS-6101 **i03648369**

NOTE	REF NO	GRAPHIC REF	PART NUMBER	QTY	PART NAME 1 2 3 4 5 6 (PRODUCT LEVEL)	SEE PAGE
	1	1	**154-2704**	1	PLATE-INSTRUCTION (BUCKET SPECIFICATIONS)	
	2	1	**168-8389**	4	TACK-FASTENER	
Y	3	1	*279-5375*	1	BUCKET AS-GENERAL PURPOSE (78-IN)	530

Y-SEPARATE ILLUSTRATION

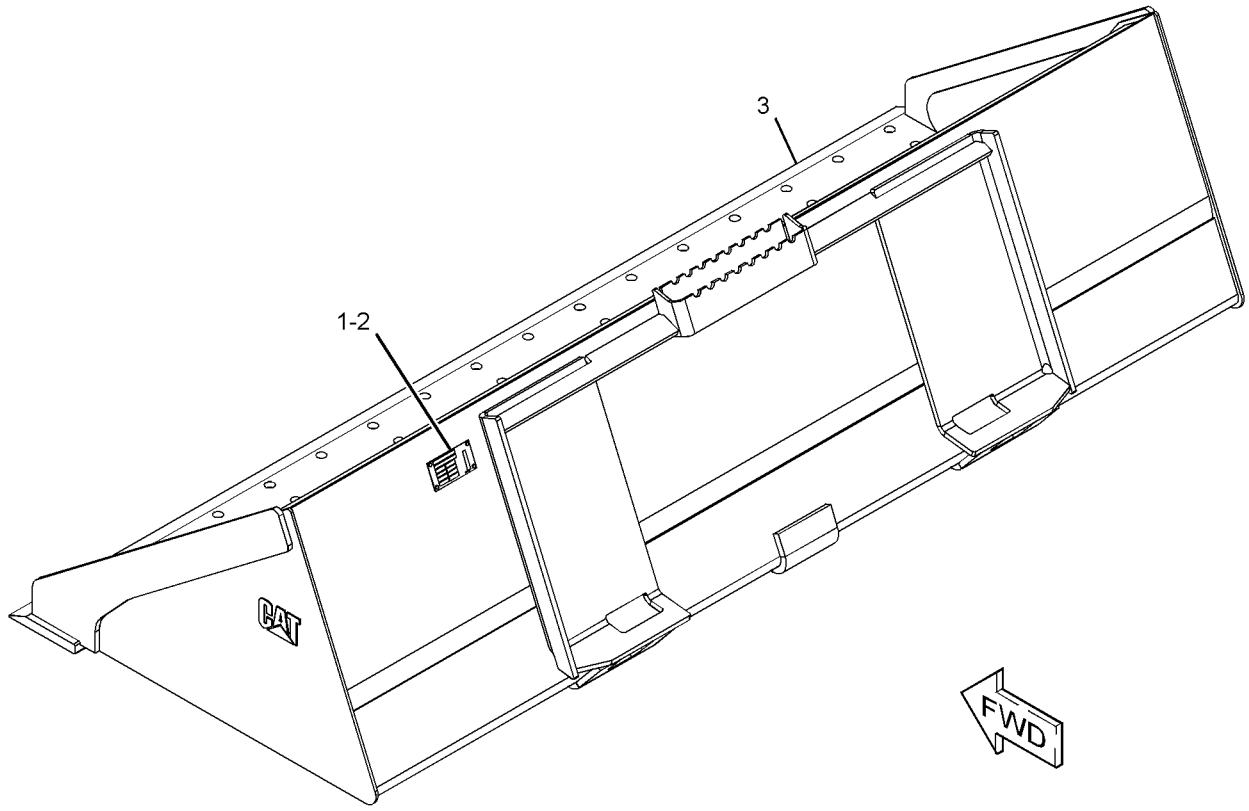

GRAPHIC #1 **<END>** g01951591

WORK TOOLS

292-9270 BUCKET AS-GENERAL PURPOSE—HIGH CAPACITY

S/N: MST1-UP

PART OF 296-8192 BUCKET AR-GENERAL PURPOSE, 296-8191 BUCKET GP-GENERAL PURPOSE

AN ATTACHMENT

SMCS-6101 **i03648482**

NOTE	REF NO	GRAPHIC REF	PART NUMBER	QTY	PART NAME 1 2 3 4 5 6 (PRODUCT LEVEL)	SEE PAGE
	1	1	**154-2704**	1	PLATE-INSTRUCTION (BUCKET SPECIFICATIONS)	
	2	1	**168-8389**	4	TACK-FASTENER	
Y	3	1	*292-9271*	1	BUCKET AS-GENERAL PURPOSE (84-IN)	533

Y-SEPARATE ILLUSTRATION

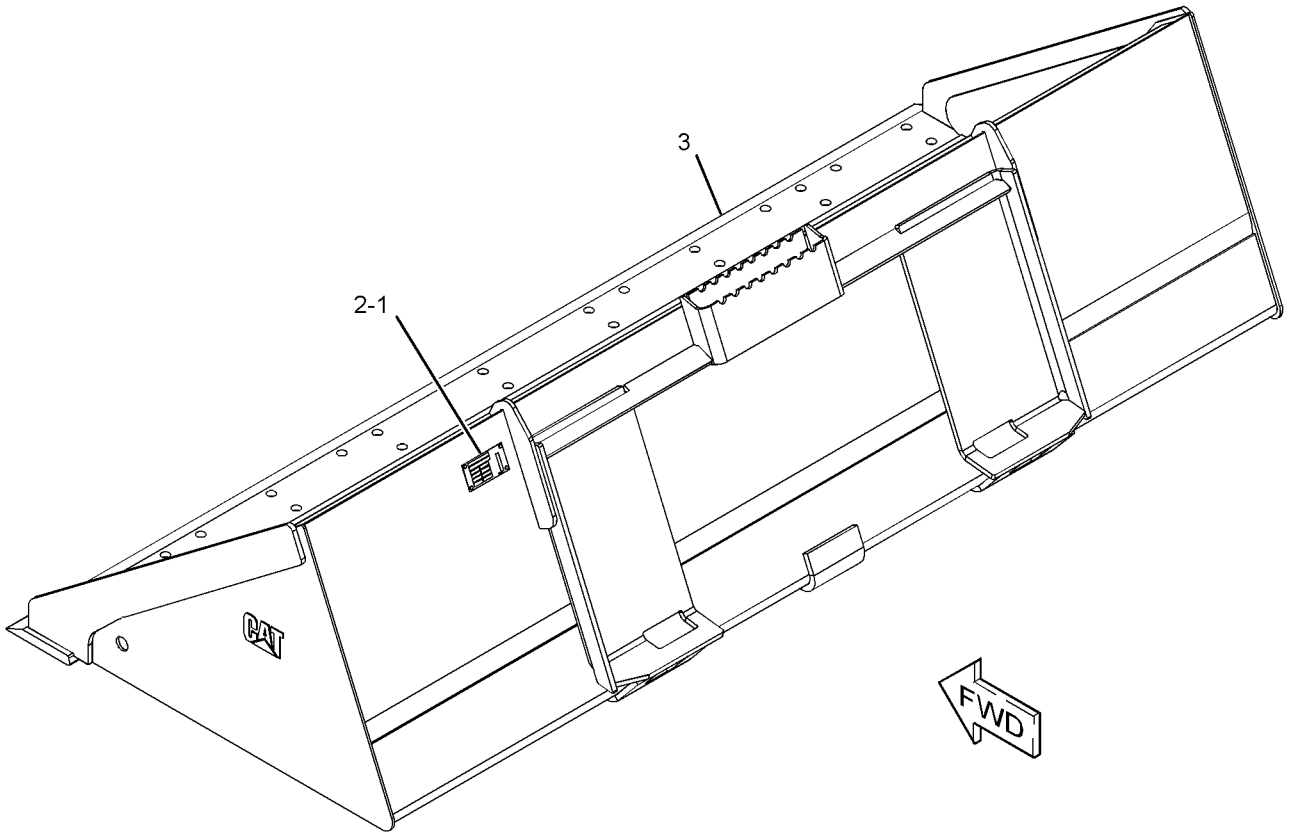

GRAPHIC #1 **<END>** g01951560

292-9271 BUCKET AS-GENERAL PURPOSE

S/N: MST1-UP
2134-MM (84-IN)
PART OF 292-9270 BUCKET AS-GENERAL PURPOSE
AN ATTACHMENT

SMCS-6101 **i03636009**

NOTE	REF NO	GRAPHIC REF	PART NUMBER	QTY	PART NAME 1 2 3 4 5 6 (PRODUCT LEVEL)	SEE PAGE
	1	1	**229-3432**	1	EDGE	

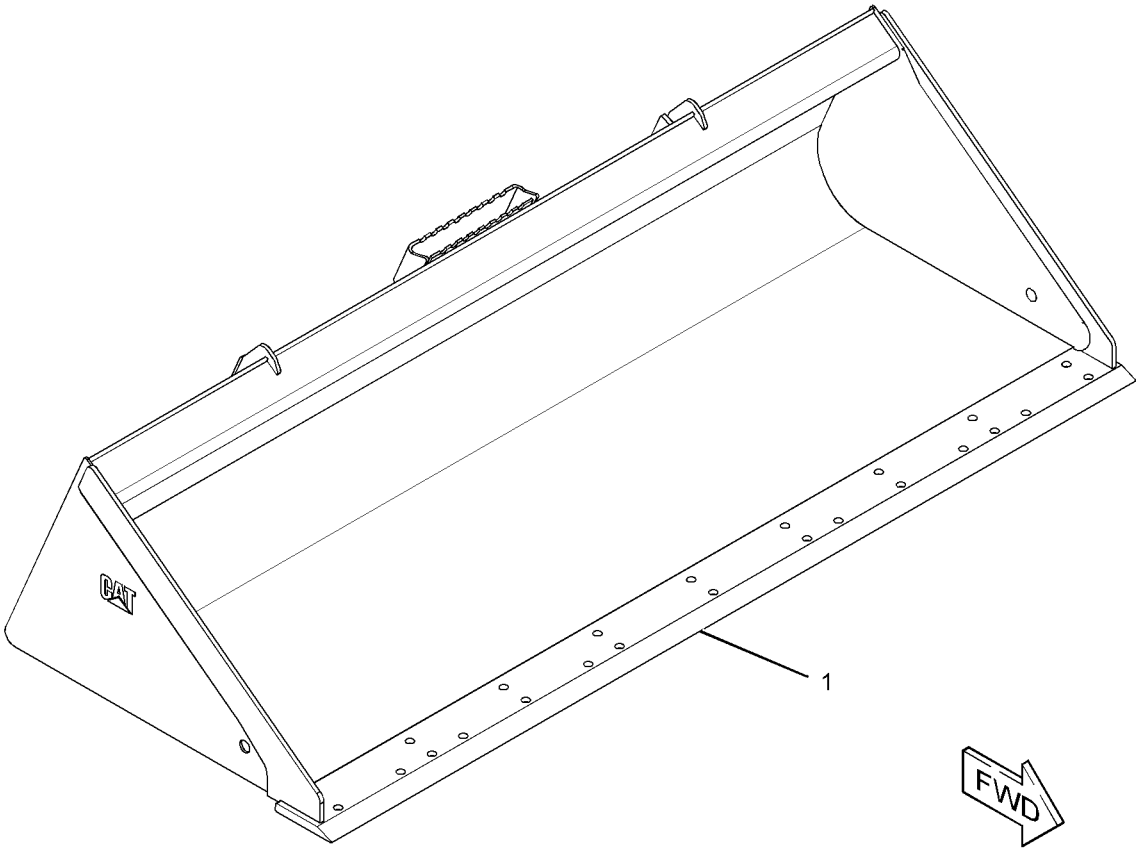

GRAPHIC #1 **<END>** g01953877

156-0887 BUCKET AS-GRAPPLE

S/N: MST1-UP
1524-MM (60-IN)
PART OF 169-8941 BUCKET AS-GRAPPLE
AN ATTACHMENT

SMCS-6704 **i03613140**

NOTE	REF NO	GRAPHIC REF	PART NUMBER	QTY	PART NAME 1 2 3 4 5 6 (PRODUCT LEVEL)	SEE PAGE
	1	1	**149-5435**	1	EDGE	
	2	1	**161-4130**	2	PLATE-IDENTIFICATION (CAT)	
M	3	1	**8Y-4489**	2	BOSS (M10X1.5-THD)	

M-METRIC PART

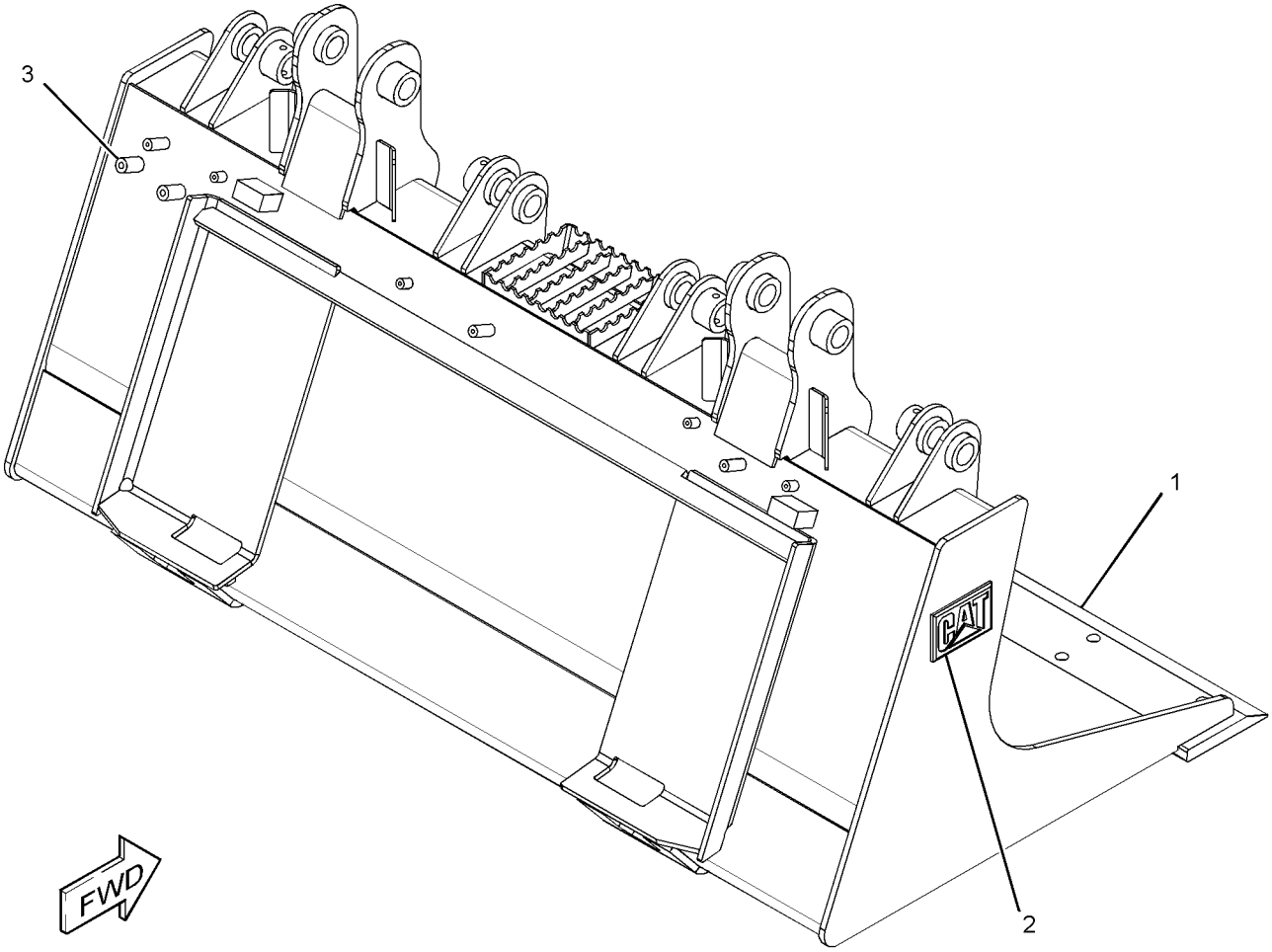

GRAPHIC #1 **<END>** g01944452

WORK TOOLS

156-0888 BUCKET AS-GRAPPLE

S/N: MST1-UP
1676-MM (66-IN)
PART OF 169-8942 BUCKET AS-GRAPPLE
AN ATTACHMENT

SMCS-6704 **i03613141**

NOTE	REF NO	GRAPHIC REF	PART NUMBER	QTY	PART NAME 1 2 3 4 5 6 (PRODUCT LEVEL)	SEE PAGE
	1	1	**149-5436**	1	EDGE	
	2	1	**161-4130**	2	PLATE-IDENTIFICATION (CAT)	
M	3	1	**8Y-4489**	2	BOSS (M10X1.5-THD)	

M-METRIC PART

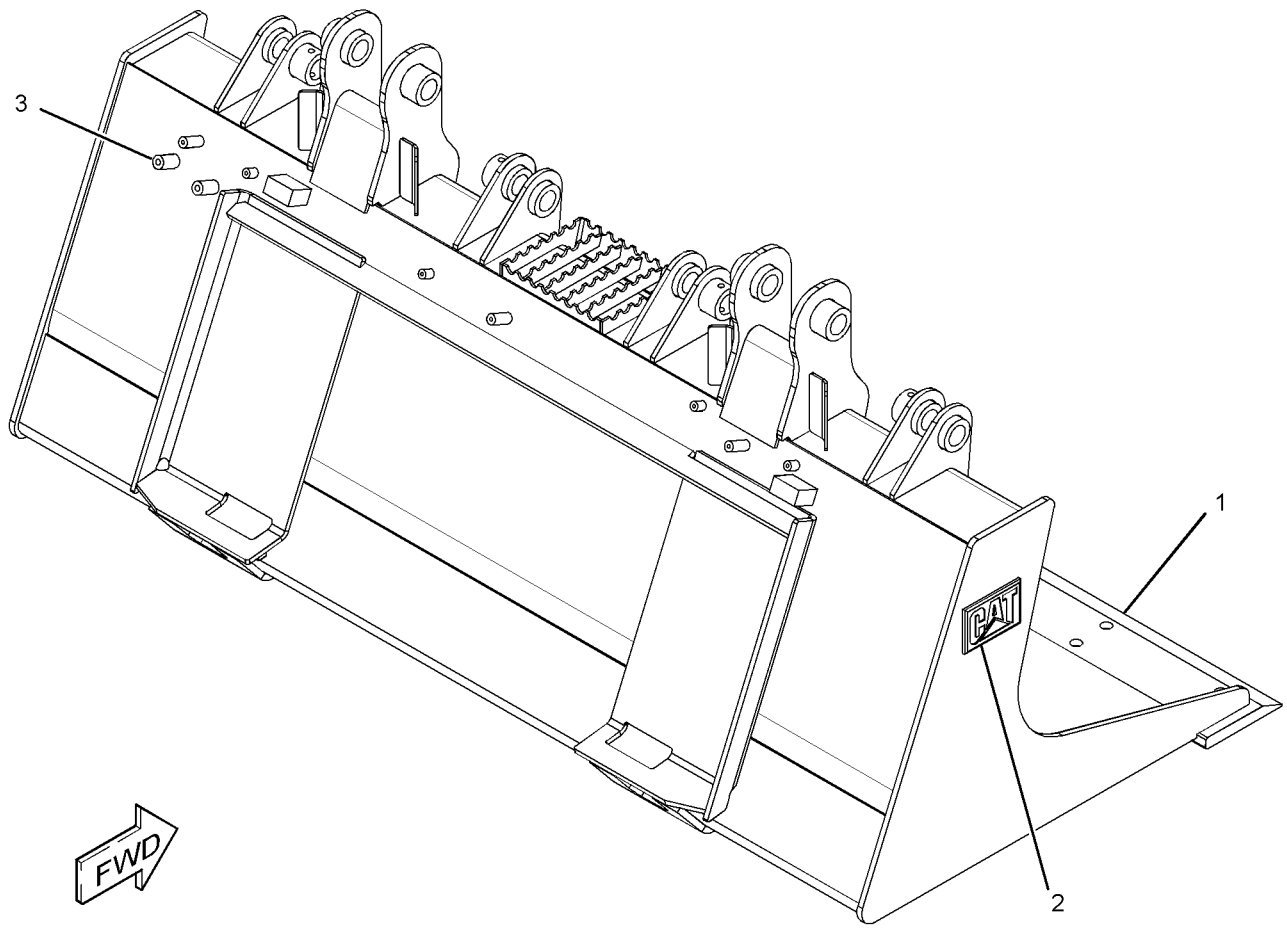

GRAPHIC #1 **<END>** g01944438

WORK TOOLS

156-0889 BUCKET AS-GRAPPLE

S/N: MST1-UP
1829-MM (72-IN)
PART OF 169-8943 BUCKET AS-GRAPPLE
AN ATTACHMENT

SMCS-6704 **i03613143**

NOTE	REF NO	GRAPHIC REF	PART NUMBER	QTY	PART NAME 1 2 3 4 5 6 (PRODUCT LEVEL)	SEE PAGE
	1	1	**149-5437**	1	EDGE	
	2	1	**161-4130**	2	PLATE-IDENTIFICATION (CAT)	
M	3	1	**8Y-4489**	2	BOSS (M10X1.5-THD)	

M-METRIC PART

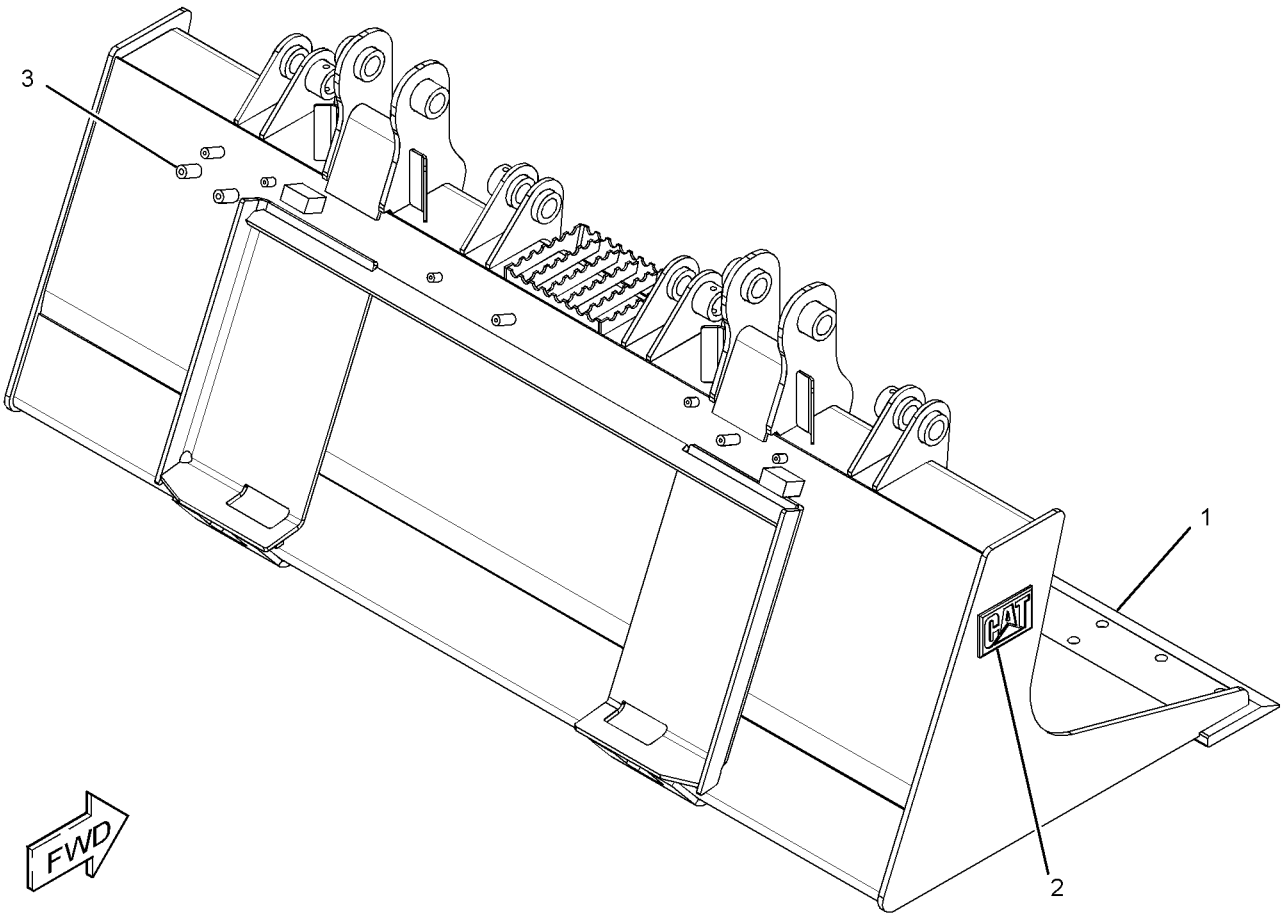

GRAPHIC #1 **<END>** g01944443

WORK TOOLS

169-8941 BUCKET AS-GRAPPLE

S/N: MST1-UP

PART OF 156-0884 BUCKET GP-GRAPPLE

AN ATTACHMENT

SMCS-6704 **i03648339**

NOTE	REF NO	GRAPHIC REF	PART NUMBER	QTY	PART NAME 1 2 3 4 5 6 (PRODUCT LEVEL)	SEE PAGE
	1	1	**154-2704**	1	PLATE-INSTRUCTION (BUCKET SPECIFICATIONS)	
Y	2	1	**156-0887**	1	BUCKET AS-GRAPPLE (60-IN) (INDUSTRIAL)	534
	3	1	**168-8389**	4	TACK-FASTENER	

Y-SEPARATE ILLUSTRATION

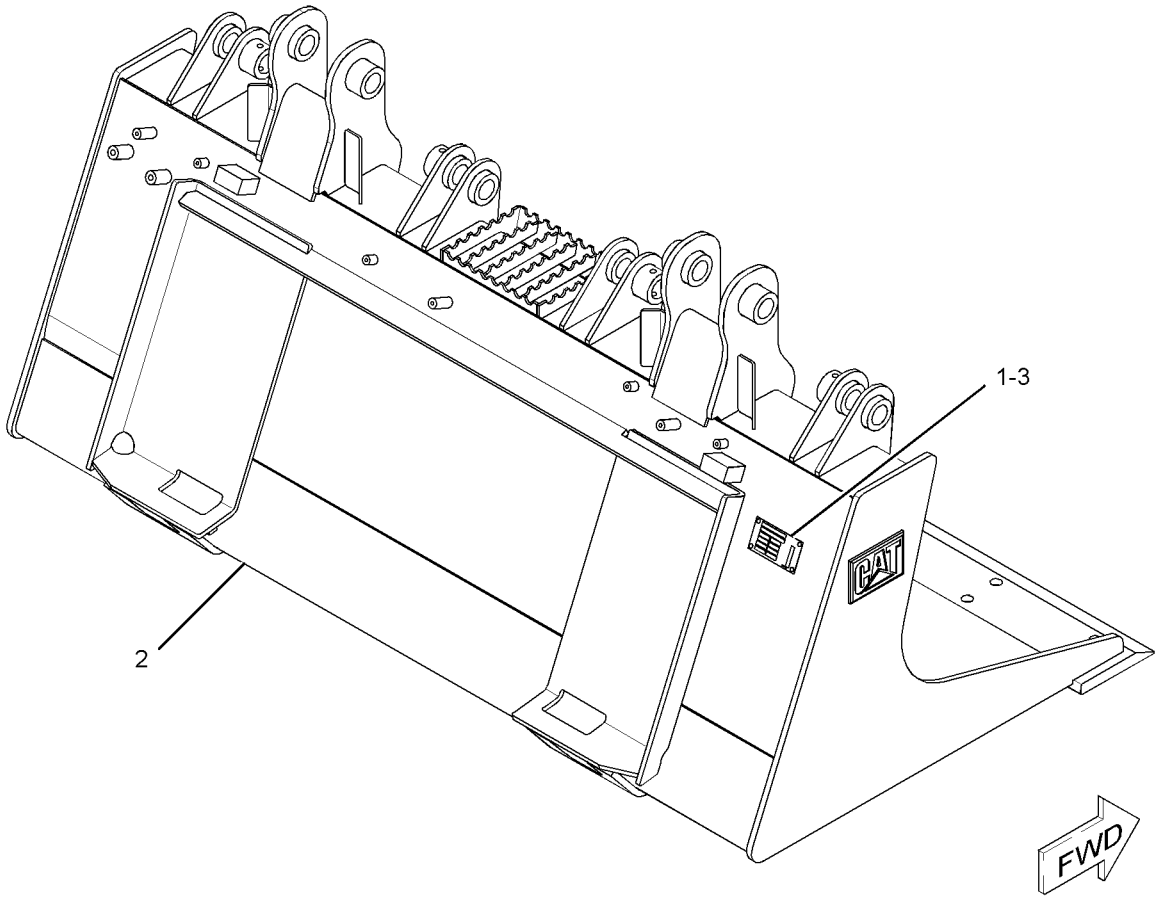

GRAPHIC #1 **<END>** g01941813

WORK TOOLS

169-8942 BUCKET AS-GRAPPLE

S/N: MST1-UP
PART OF 156-0885 BUCKET GP-GRAPPLE
AN ATTACHMENT

SMCS-6704 **i03648348**

NOTE	REF NO	GRAPHIC REF	PART NUMBER	QTY	PART NAME 1 2 3 4 5 6 (PRODUCT LEVEL)	SEE PAGE
	1	1	**154-2704**	1	PLATE-INSTRUCTION (BUCKET SPECIFICATIONS)	
Y	2	1	**156-0888**	1	BUCKET AS-GRAPPLE (INDUSTRIAL) (66-IN)	535
	3	1	**168-8389**	4	TACK-FASTENER	

Y-SEPARATE ILLUSTRATION

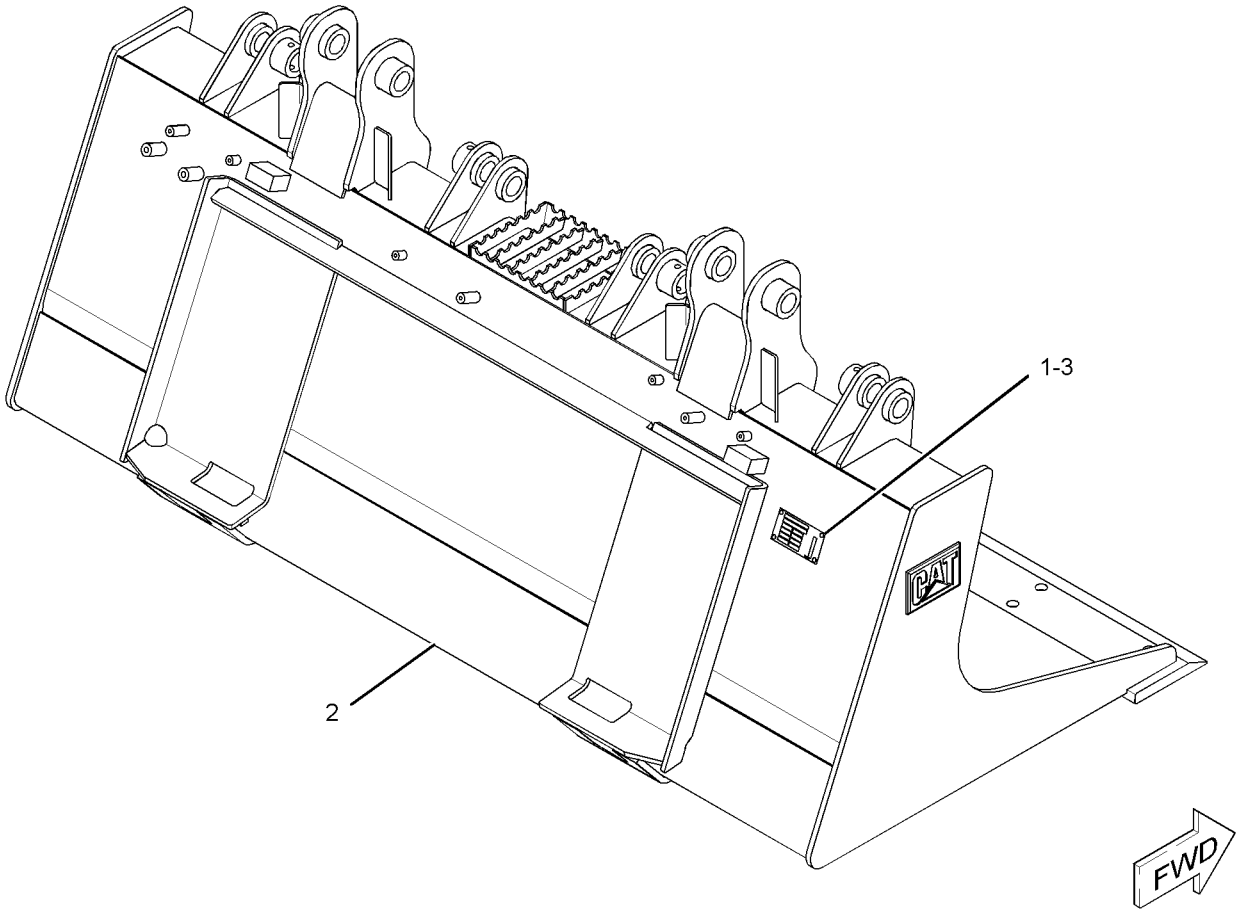

GRAPHIC #1 **<END>** g01941854

169-8943 BUCKET AS-GRAPPLE

S/N: MST1-UP

PART OF 156-0886 BUCKET GP-GRAPPLE

AN ATTACHMENT

SMCS-6704 **i03648346**

NOTE	REF NO	GRAPHIC REF	PART NUMBER	QTY	PART NAME 1 2 3 4 5 6 (PRODUCT LEVEL)	SEE PAGE
	1	1	**154-2704**	1	PLATE-INSTRUCTION (BUCKET SPECIFICATIONS)	
Y	2	1	**156-0889**	1	BUCKET AS-GRAPPLE (INDUSTRIAL) (72-IN)	536
	3	1	**168-8389**	4	TACK-FASTENER	

Y-SEPARATE ILLUSTRATION

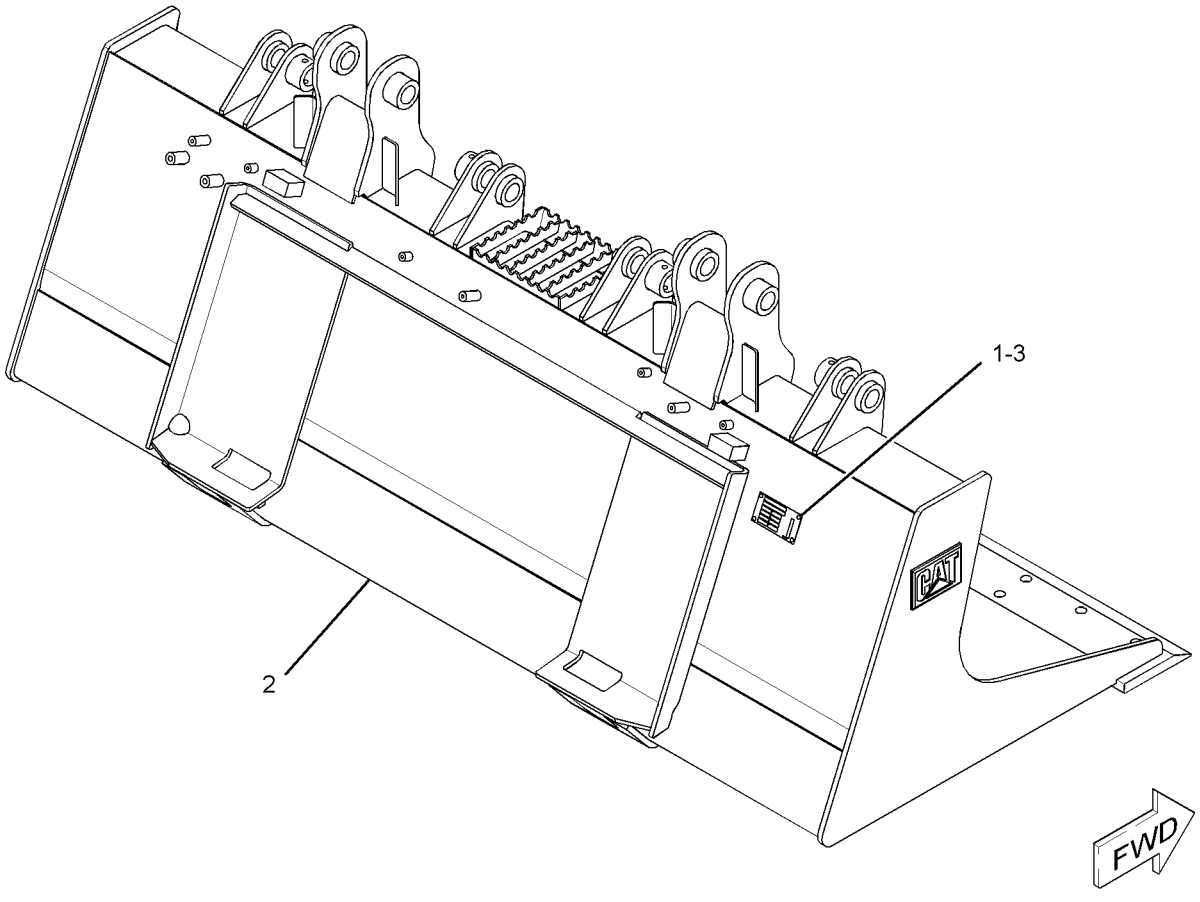

GRAPHIC #1 **<END>** g01941893

WORK TOOLS

217-6226 BUCKET AS-GRAPPLE

S/N: MST1-UP
1981-MM (78-IN)
PART OF 217-6227 BUCKET AS-GRAPPLE
AN ATTACHMENT

SMCS-6704 **i03638332**

NOTE	REF NO	GRAPHIC REF	PART NUMBER	QTY	PART NAME 1 2 3 4 5 6 (PRODUCT LEVEL)	SEE PAGE
	1	1	**199-7722**	1	EDGE	
	2	1	**161-4130**	2	PLATE-IDENTIFICATION (CAT)	

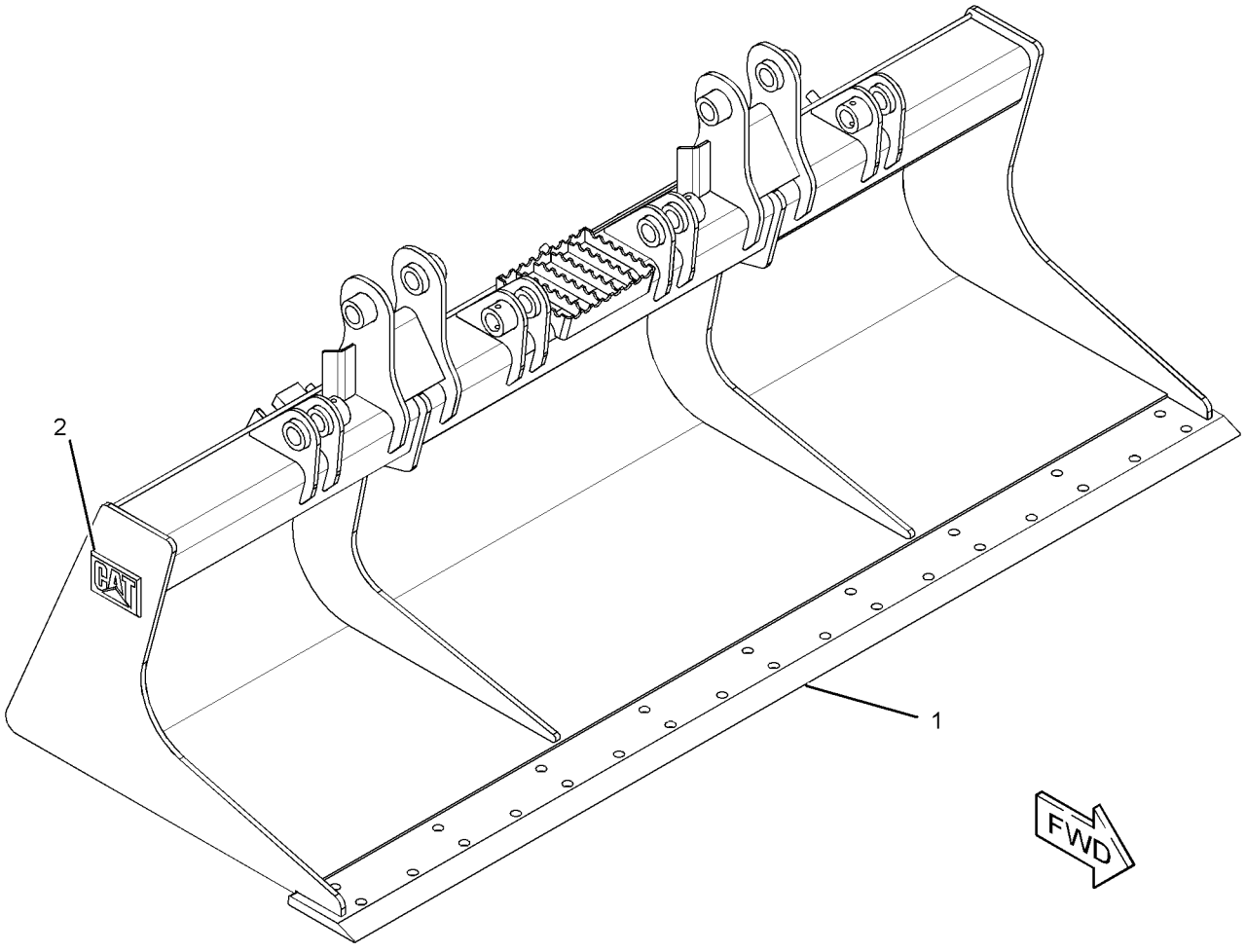

GRAPHIC #1 **<END>** g01953746

217-6227 BUCKET AS-GRAPPLE

S/N: MST1-UP
PART OF 217-6228 BUCKET GP-GRAPPLE
AN ATTACHMENT

SMCS-6704 **i03648353**

NOTE	REF NO	GRAPHIC REF	PART NUMBER	QTY	PART NAME 1 2 3 4 5 6 (PRODUCT LEVEL)	SEE PAGE
	1	1	**154-2704**	1	PLATE-INSTRUCTION (BUCKET SPECIFICATIONS)	
	2	1	**168-8389**	4	TACK-FASTENER	
Y	3	1	*217-6226*	1	BUCKET AS-GRAPPLE (INDUSTRIAL) (78-IN)	540

Y-SEPARATE ILLUSTRATION

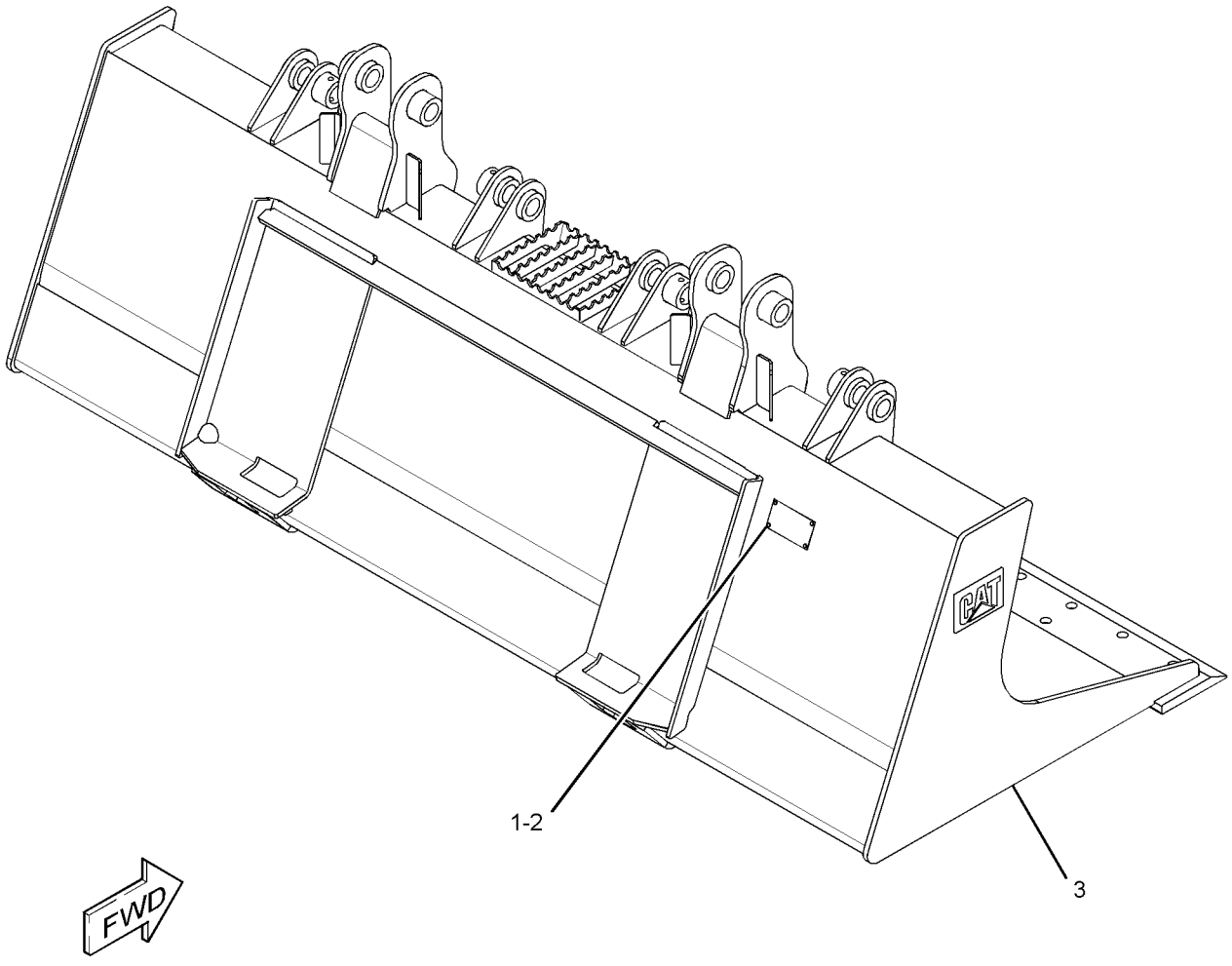

GRAPHIC #1 **<END>** g01945431

279-5421 BUCKET AS-LIGHT MATERIAL

S/N: MST1-UP
PART OF 279-5420 BUCKET AR-LIGHT MATERIAL
AN ATTACHMENT

SMCS-6103 **i03636045**

NOTE	REF NO	GRAPHIC REF	PART NUMBER	QTY	PART NAME 1 2 3 4 5 6 (PRODUCT LEVEL)	SEE PAGE
	1	1	**154-2704**	1	PLATE-INSTRUCTION (BUCKET SPECIFICATIONS)	
	2	1	**168-8389**	4	TACK-FASTENER	
Y	3	1	*279-5422*	1	BUCKET AS-LIGHT MATERIAL (72-IN)	543

Y-SEPARATE ILLUSTRATION

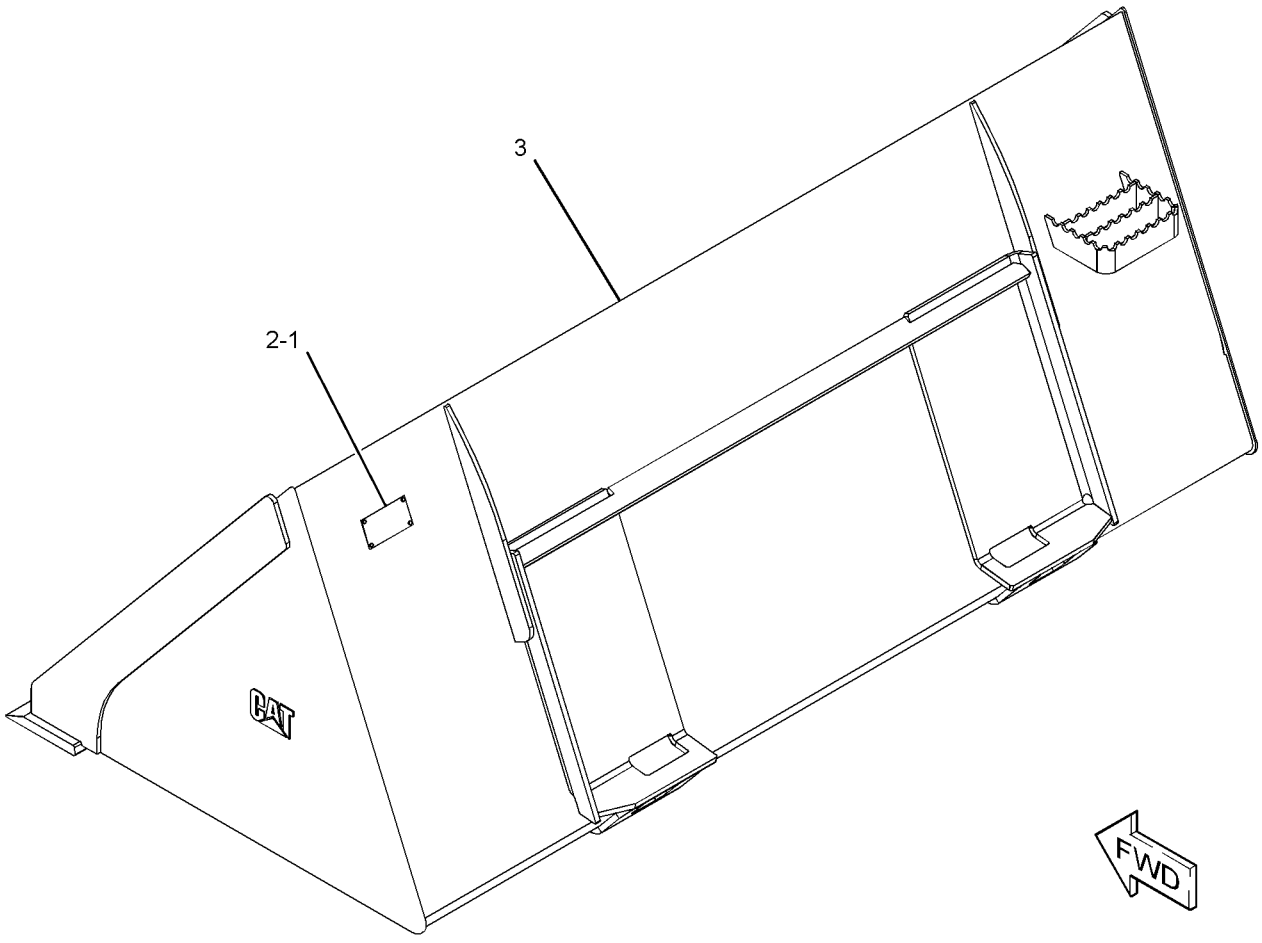

GRAPHIC #1 **<END>** g01951970

WORK TOOLS

279-5422 BUCKET AS-LIGHT MATERIAL

S/N: MST1-UP
1829-MM (72-IN)
PART OF 279-5421 BUCKET AS-LIGHT MATERIAL
AN ATTACHMENT

SMCS-6103 **i03636387**

NOTE	REF NO	GRAPHIC REF	PART NUMBER	QTY	PART NAME 1 2 3 4 5 6 (PRODUCT LEVEL)	SEE PAGE
	1	1	**149-5437**	1	EDGE	

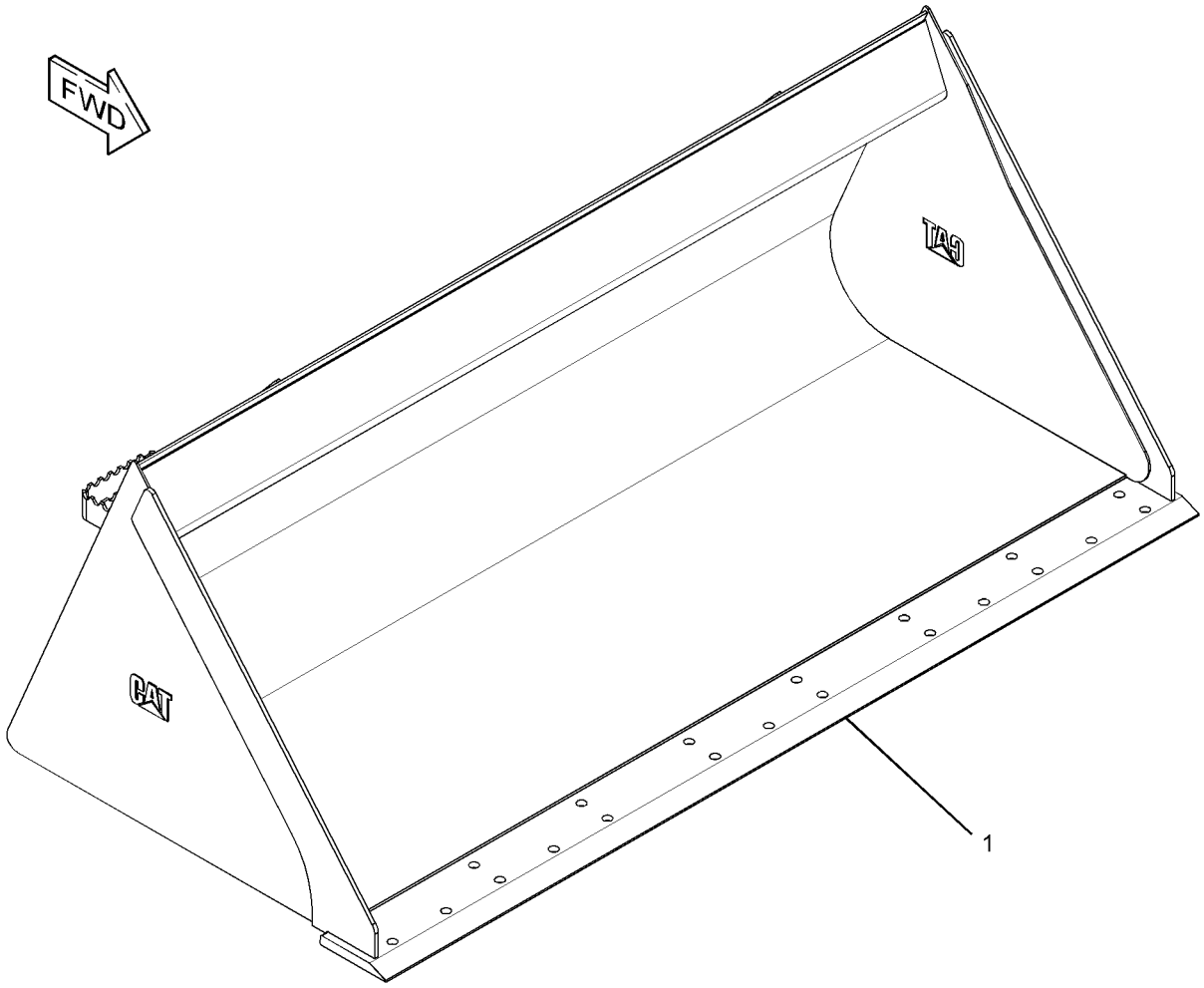

GRAPHIC #1 **<END>** g01952030

279-5423 BUCKET AS-LIGHT MATERIAL

S/N: MST1-UP
1981-MM (78-IN)
PART OF 279-5424 BUCKET AS-LIGHT MATERIAL
AN ATTACHMENT

SMCS-6103 **i03636382**

NOTE	REF NO	GRAPHIC REF	PART NUMBER	QTY	PART NAME 1 2 3 4 5 6 (PRODUCT LEVEL)	SEE PAGE
	1	1	**199-7722**	1	EDGE	

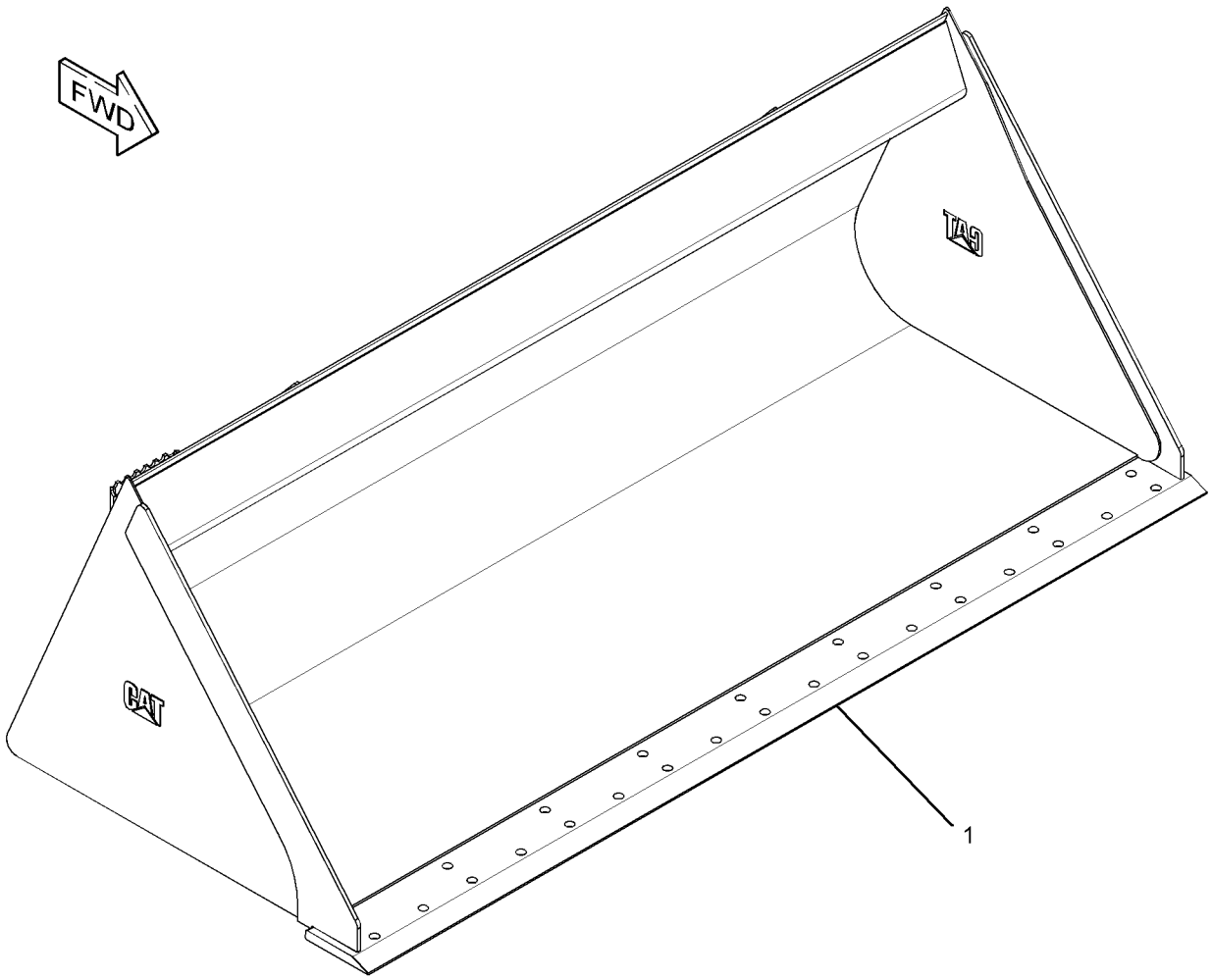

GRAPHIC #1 **<END>** g01952052

279-5424 BUCKET AS-LIGHT MATERIAL

S/N: MST1-UP

PART OF 279-5425 BUCKET AR-LIGHT MATERIAL

AN ATTACHMENT

SMCS-6103 **i03648370**

NOTE	REF NO	GRAPHIC REF	PART NUMBER	QTY	PART NAME 1 2 3 4 5 6 (PRODUCT LEVEL)	SEE PAGE
	1	1	**154-2704**	1	PLATE-INSTRUCTION (BUCKET SPECIFICATIONS)	
	2	1	**168-8389**	4	TACK-FASTENER	
Y	3	1	*279-5423*	1	BUCKET AS-LIGHT MATERIAL (78-IN)	544

Y-SEPARATE ILLUSTRATION

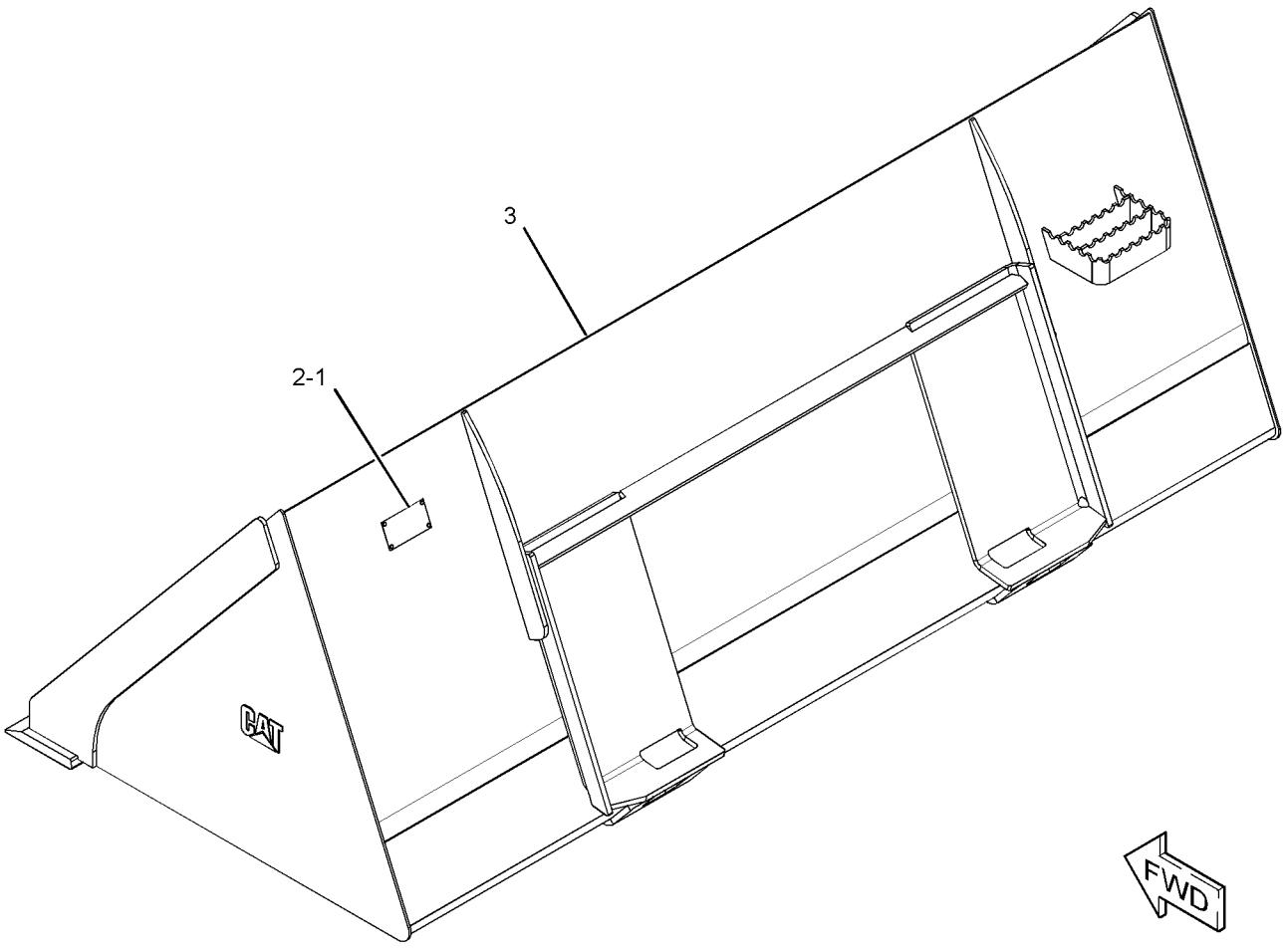

GRAPHIC #1 **<END>** g01951977

279-5428 BUCKET AS-LIGHT MATERIAL

S/N: MST1-UP
2134-MM (84-IN)
PART OF 279-5429 BUCKET AS-LIGHT MATERIAL
AN ATTACHMENT

SMCS-6103 **i03636386**

NOTE	REF NO	GRAPHIC REF	PART NUMBER	QTY	PART NAME 1 2 3 4 5 6 (PRODUCT LEVEL)	SEE PAGE
	1	1	**220-4982**	1	EDGE	

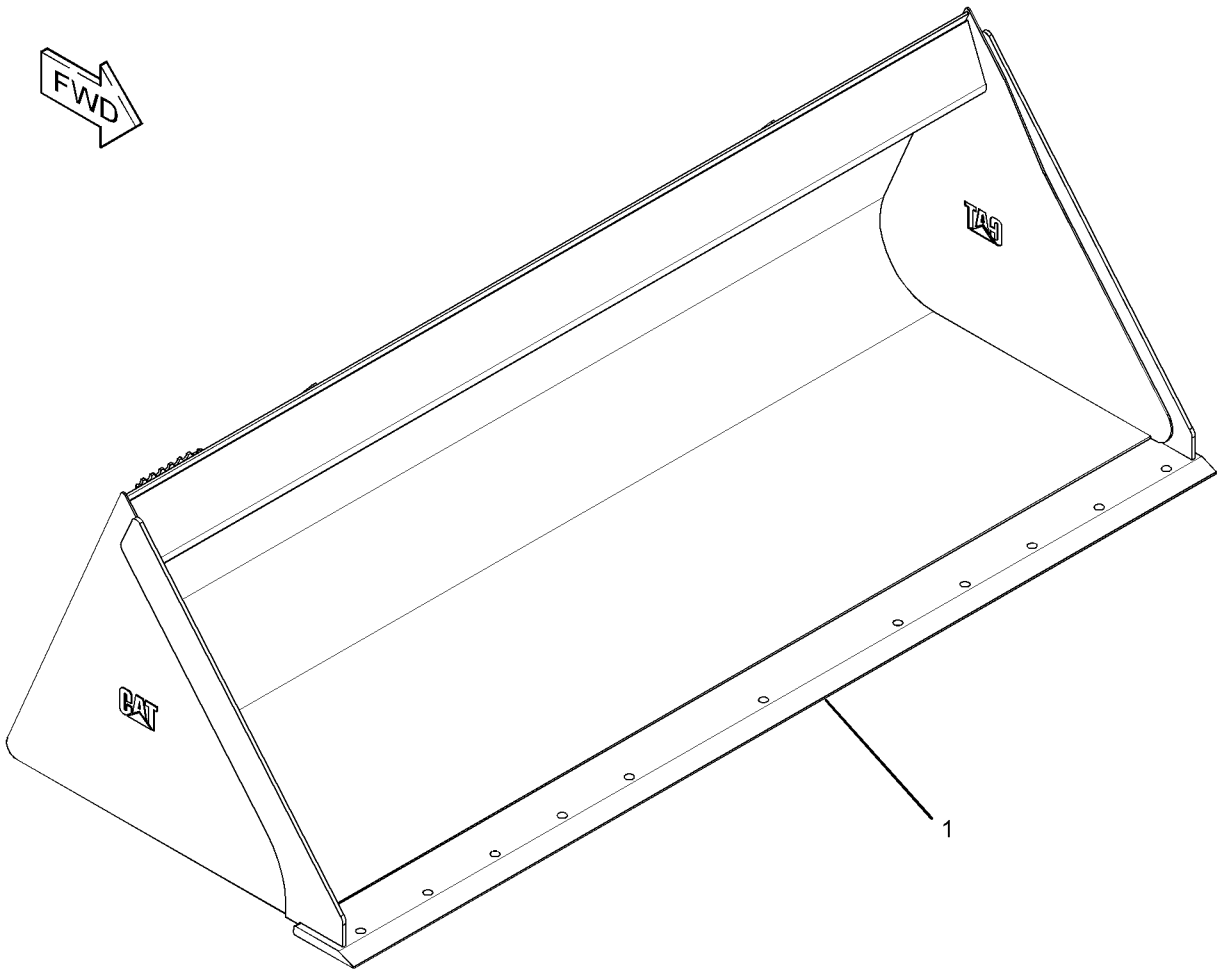

GRAPHIC #1 **<END>** g01952037

279-5429 BUCKET AS-LIGHT MATERIAL

S/N: MST1-UP

PART OF 279-5430 BUCKET AR-LIGHT MATERIAL

AN ATTACHMENT

SMCS-6103 **i03648371**

NOTE	REF NO	GRAPHIC REF	PART NUMBER	QTY	PART NAME 1 2 3 4 5 6 (PRODUCT LEVEL)	SEE PAGE
	1	1	**154-2704**	1	PLATE-INSTRUCTION (BUCKET SPECIFICATIONS)	
	2	1	**168-8389**	4	TACK-FASTENER	
Y	3	1	*279-5428*	1	BUCKET AS-LIGHT MATERIAL (84-IN)	546

Y-SEPARATE ILLUSTRATION

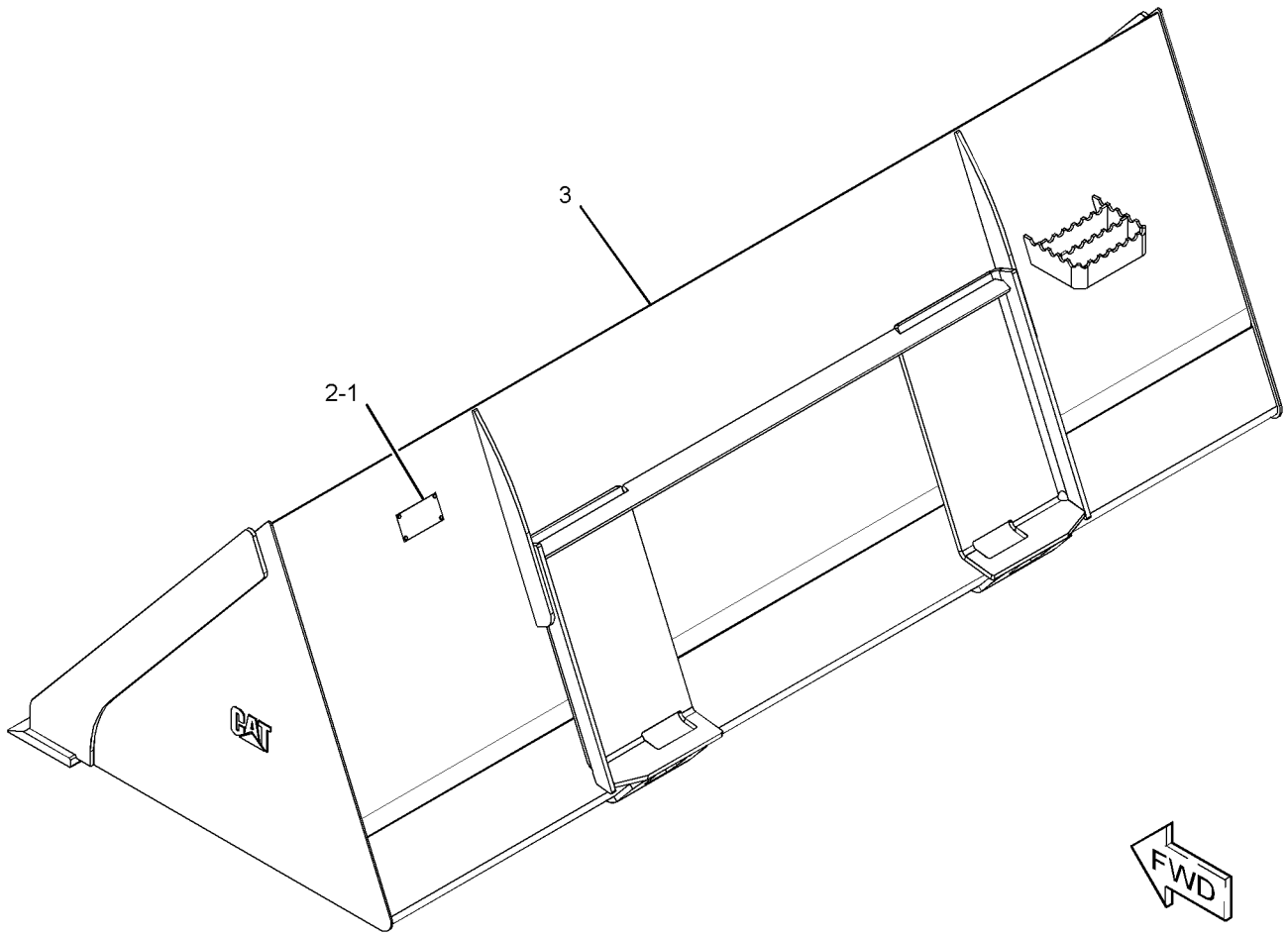

GRAPHIC #1 **<END>** g01951973

292-9223 BUCKET AS-LIGHT MATERIAL

S/N: MST1-UP
PART OF 296-7597 BUCKET AR-LIGHT MATERIAL
AN ATTACHMENT

SMCS-6103 **i03648378**

NOTE	REF NO	GRAPHIC REF	PART NUMBER	QTY	PART NAME 1 2 3 4 5 6 (PRODUCT LEVEL)	SEE PAGE
	1	1	**154-2704**	1	PLATE-INSTRUCTION (BUCKET SPECIFICATIONS)	
	2	1	**168-8389**	4	TACK-FASTENER	
Y	3	1	*292-9224*	1	BUCKET AS-LIGHT MATERIAL (96-IN)	549

Y-SEPARATE ILLUSTRATION

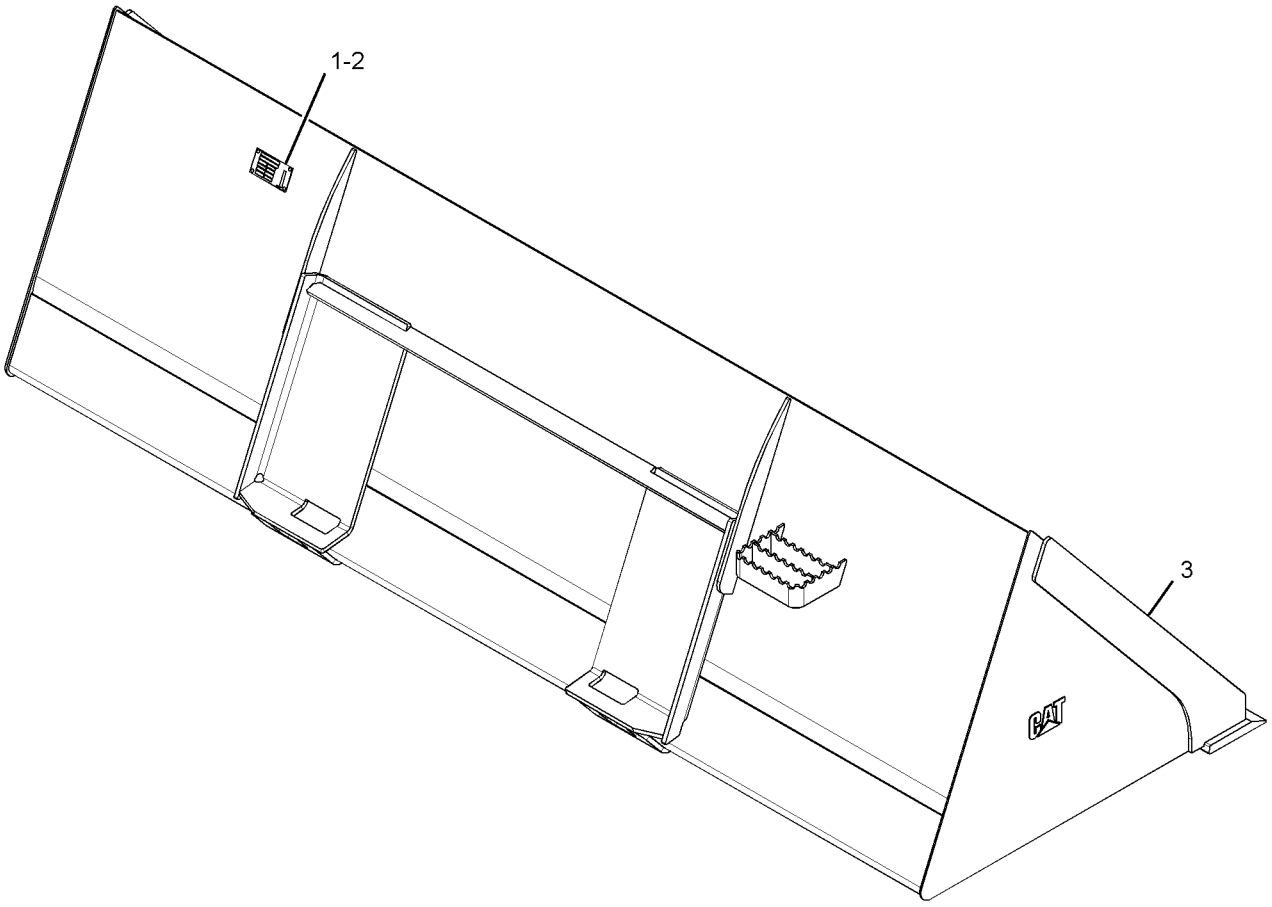

GRAPHIC #1 **<END>** g01322797

292-9224 BUCKET AS-LIGHT MATERIAL

S/N: MST1-UP
2438-MM (96-IN)
PART OF 292-9223 BUCKET AS-LIGHT MATERIAL
AN ATTACHMENT

SMCS-6103 **i03611760**

NOTE	REF NO	GRAPHIC REF	PART NUMBER	QTY	PART NAME 1 2 3 4 5 6 (PRODUCT LEVEL)	SEE PAGE
	1	1	**292-9257**	1	EDGE	

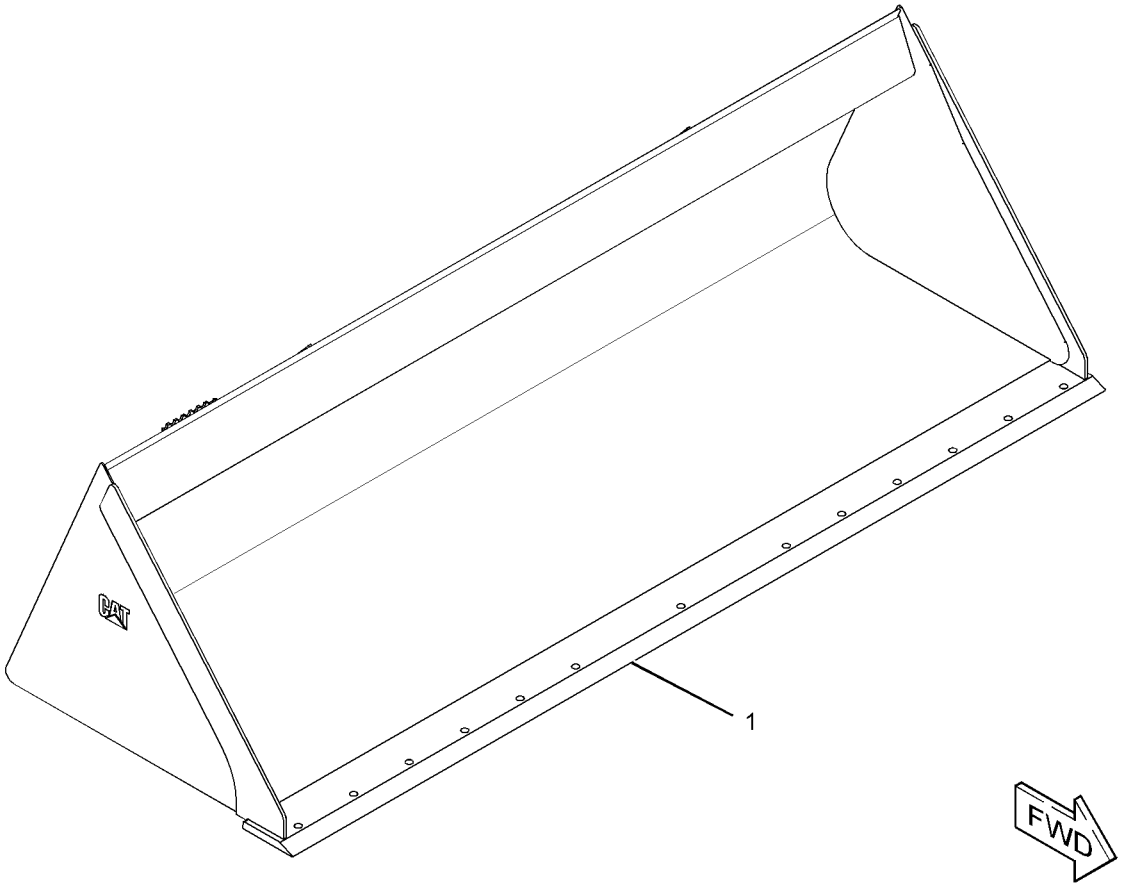

GRAPHIC #1 **<END>** g01938633

WORK TOOLS

165-8746 BUCKET AS-UTILITY

S/N: MST1-UP

AN ATTACHMENT

SMCS-6101 **i03647008**

NOTE	REF NO	GRAPHIC REF	PART NUMBER	QTY	PART NAME 1 2 3 4 5 6 (PRODUCT LEVEL)	SEE PAGE
	1	1	**154-2704**	1	PLATE-INSTRUCTION (BUCKET SPECIFICATIONS)	
Y	2	1	*165-8832*	1	BUCKET AS-UTILITY	551
	3	1	**168-8389**	4	TACK-FASTENER	

Y-SEPARATE ILLUSTRATION

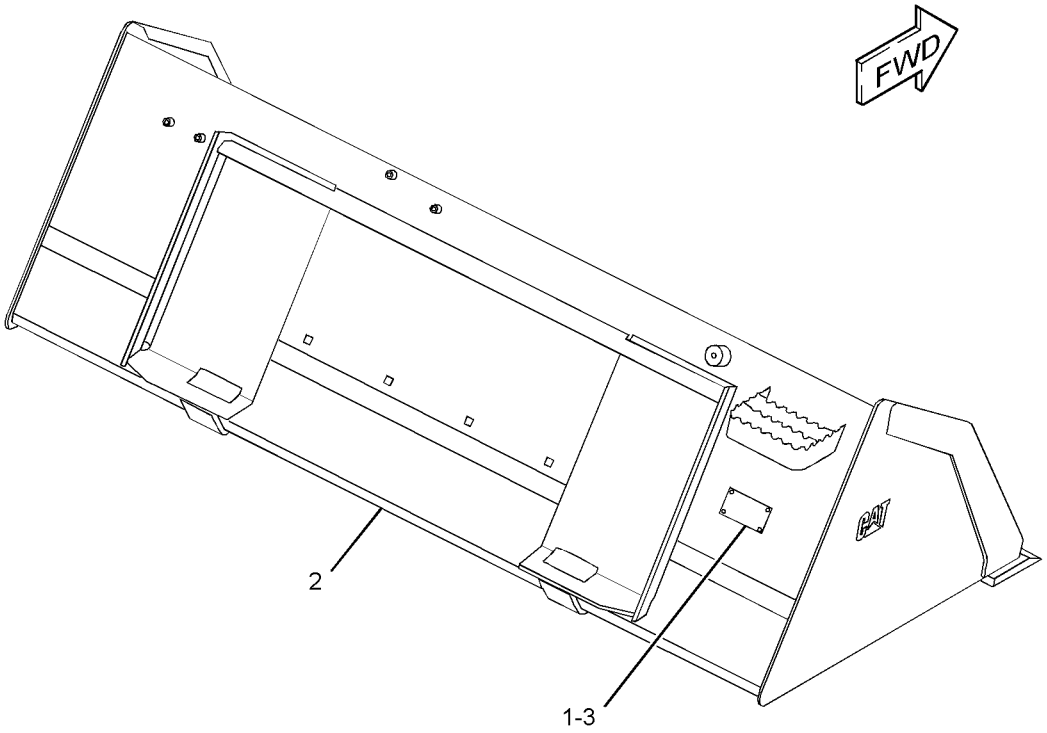

GRAPHIC #1 **<END>** g01957398

WORK TOOLS

165-8832 BUCKET AS-UTILITY

S/N: MST1-UP
1676-MM (66-IN)
PART OF 165-8746 BUCKET AS-UTILITY
AN ATTACHMENT

SMCS-6101 **i03647010**

NOTE	REF NO	GRAPHIC REF	PART NUMBER	QTY	PART NAME 1 2 3 4 5 6 (PRODUCT LEVEL)	SEE PAGE
	1	1	**149-5436**	1	EDGE	
	2	1	**161-4130**	2	PLATE-IDENTIFICATION (CAT)	
M	3	1	**111-0483**	4	BOSS (M10X1.5-THD)	

M-METRIC PART

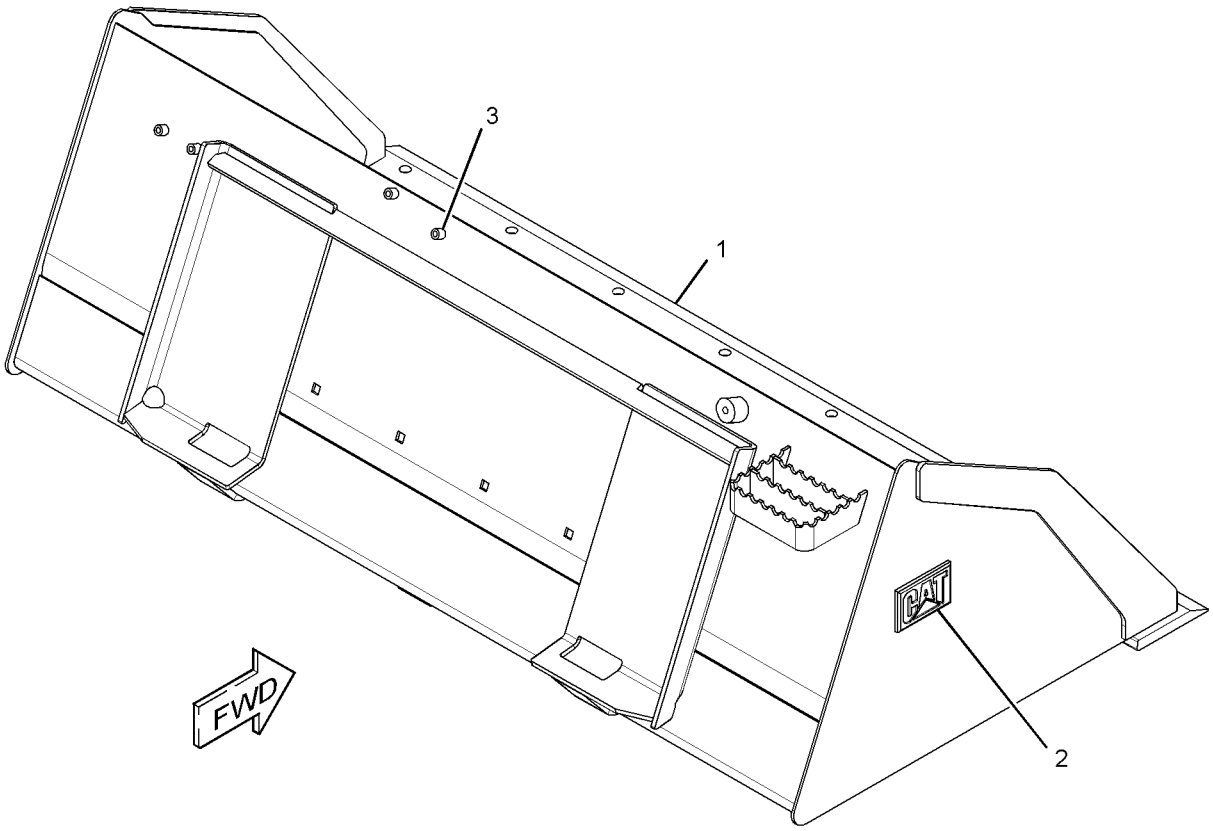

GRAPHIC #1 **<END>** g01958462

WORK TOOLS

165-8835 BUCKET AS-UTILITY

S/N: MST1-UP
1524-MM (60-IN) WIDE X 0.42-CU M (0.55-CU YD)
AN ATTACHMENT

SMCS-6101 **i03638325**

NOTE	REF NO	GRAPHIC REF	PART NUMBER	QTY	PART NAME 1 2 3 4 5 6 (PRODUCT LEVEL)	SEE PAGE
	1	1	**154-2704**	1	PLATE-INSTRUCTION (BUCKET SPECIFICATIONS)	
Y	2	1	*165-8837*	1	BUCKET AS-UTILITY	553
	3	1	**168-8389**	4	TACK-FASTENER	

Y-SEPARATE ILLUSTRATION

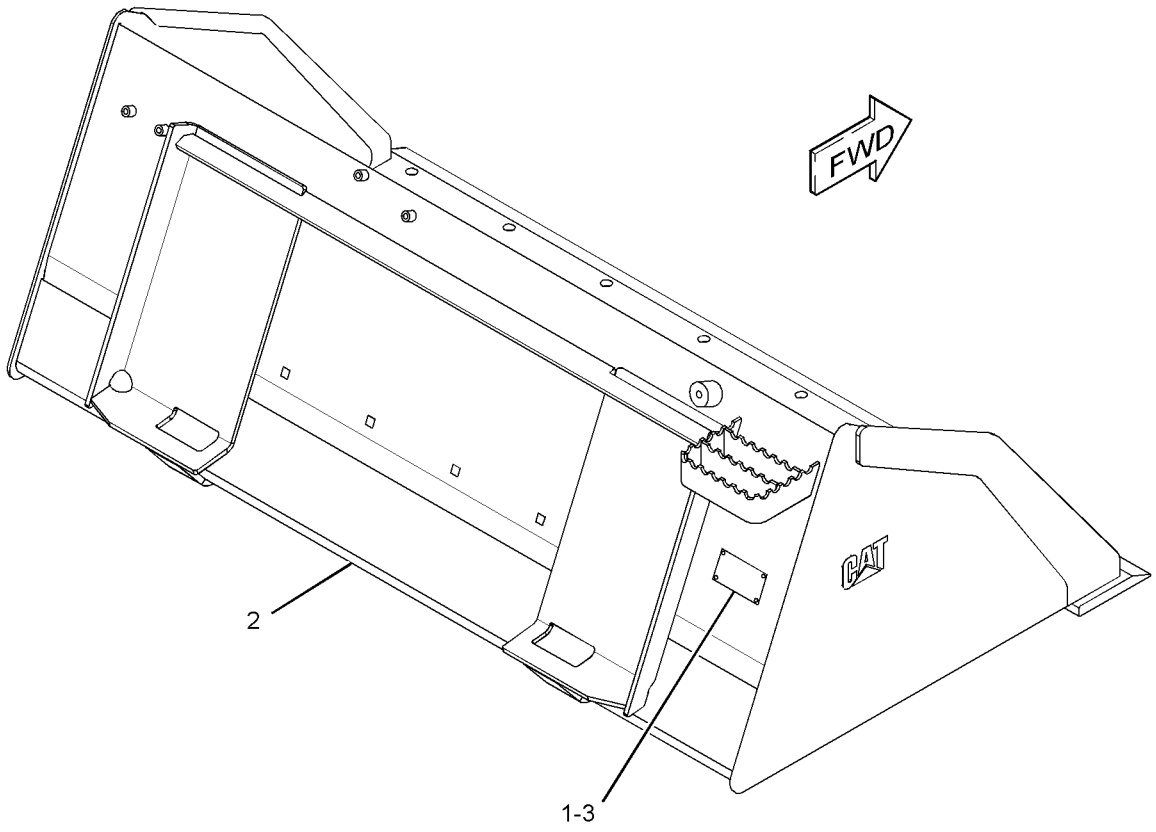

GRAPHIC #1 **<END>** g01954101

WORK TOOLS

165-8837 BUCKET AS-UTILITY

S/N: MST1-UP
1524-MM (60-IN)
PART OF 165-8835 BUCKET AS-UTILITY
AN ATTACHMENT

SMCS-6101 **i03638851**

NOTE	REF NO	GRAPHIC REF	PART NUMBER	QTY	PART NAME 1 2 3 4 5 6 (PRODUCT LEVEL)	SEE PAGE
	1	1	**149-5435**	1	EDGE	

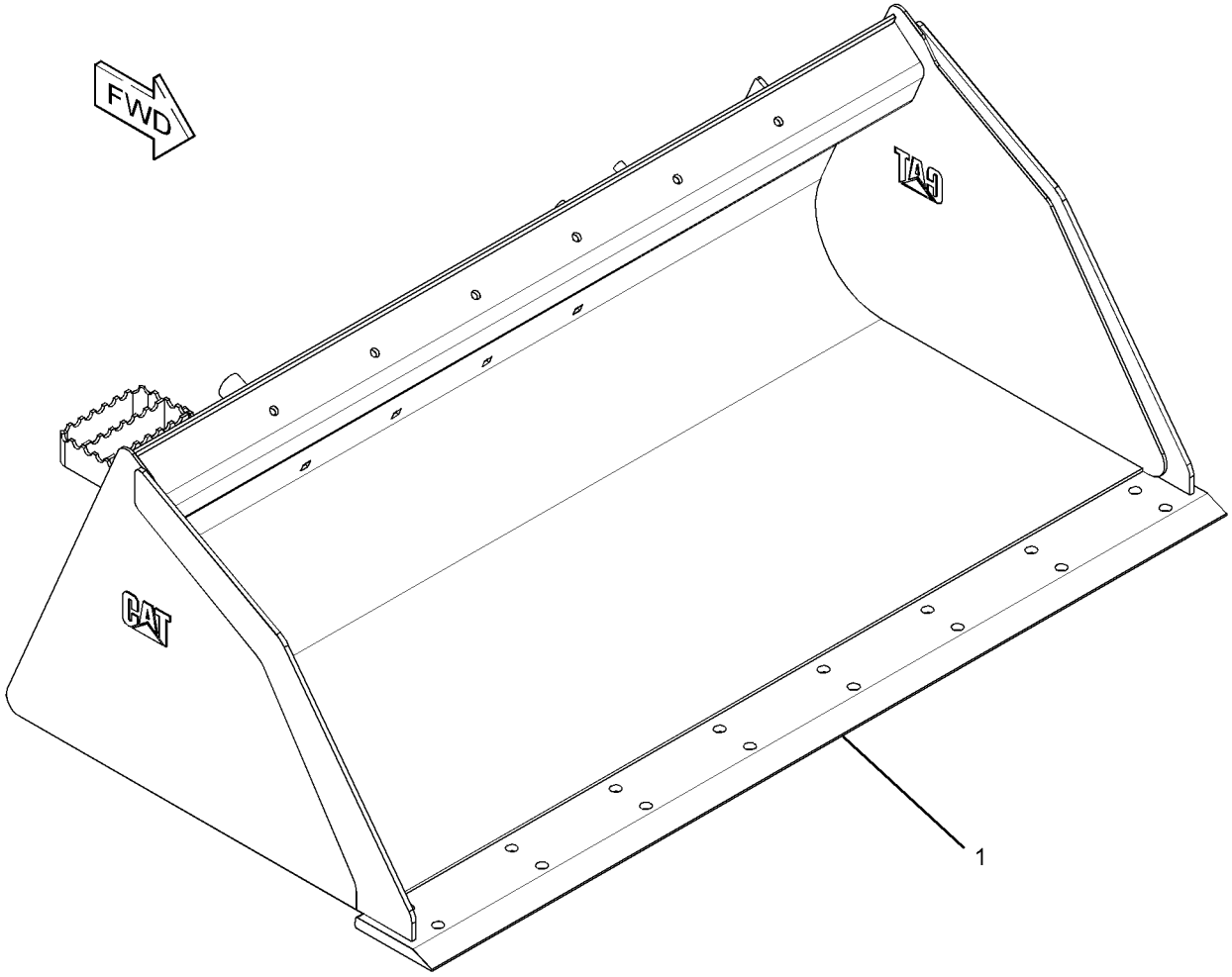

GRAPHIC #1 **<END>** g01953674

285-6097 BUCKET AS-UTILITY

S/N: MST1-UP
1524-MM (60-IN)
PART OF 285-6096 BUCKET GP-UTILITY
AN ATTACHMENT

SMCS-6101 **i03638905**

NOTE	REF NO	GRAPHIC REF	PART NUMBER	QTY	PART NAME 1 2 3 4 5 6 (PRODUCT LEVEL)	SEE PAGE
	1	1	**149-5435**	1	EDGE	

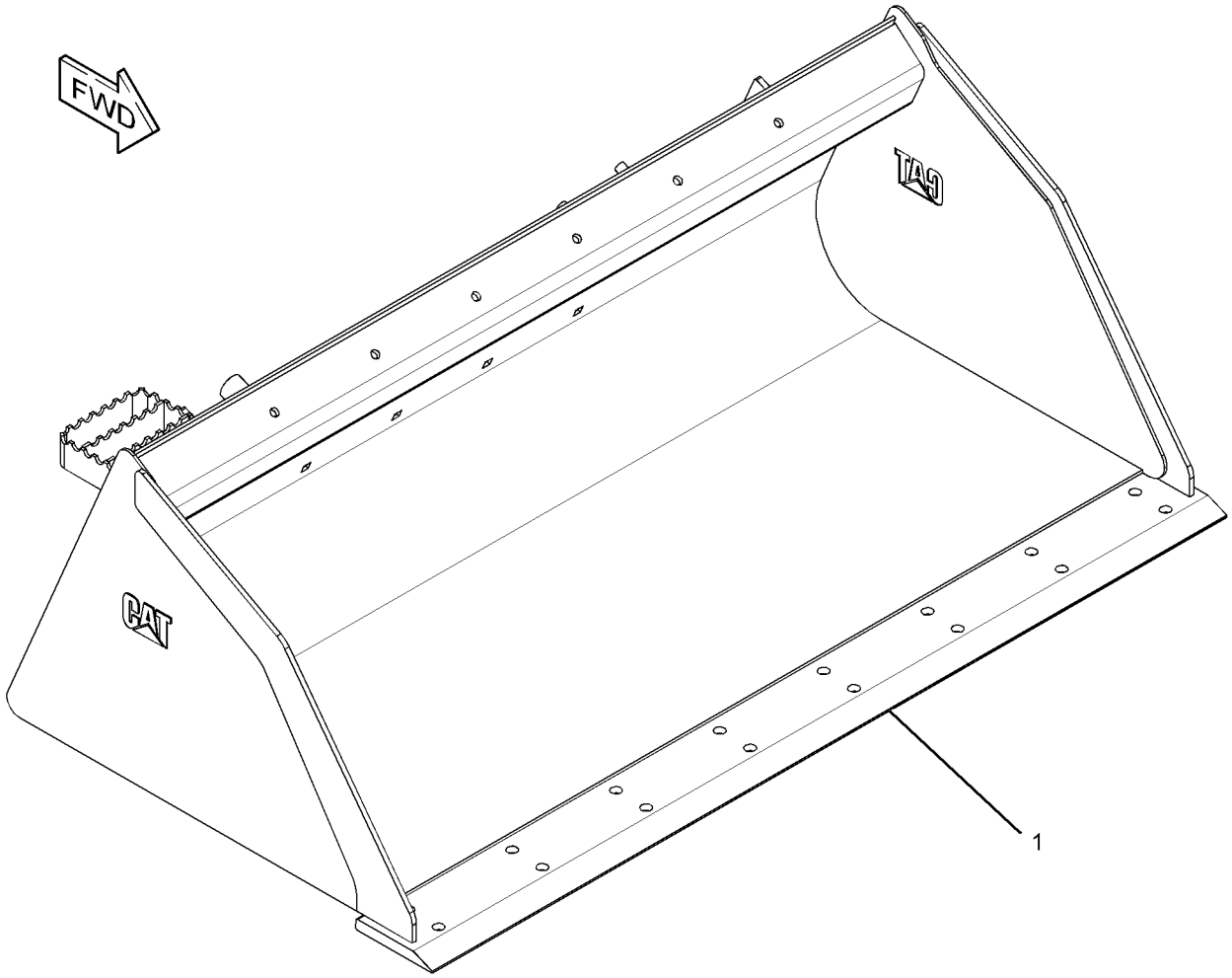

GRAPHIC #1 **<END>** g01953699

WORK TOOLS

285-6098 BUCKET AS-UTILITY

S/N: MST1-UP
1676-MM (66-IN)
PART OF 285-6099 BUCKET GP-UTILITY
AN ATTACHMENT

SMCS-6101 **i03638906**

NOTE	REF NO	GRAPHIC REF	PART NUMBER	QTY	PART NAME 1 2 3 4 5 6 (PRODUCT LEVEL)	SEE PAGE
	1	1	**149-5436**	1	EDGE	

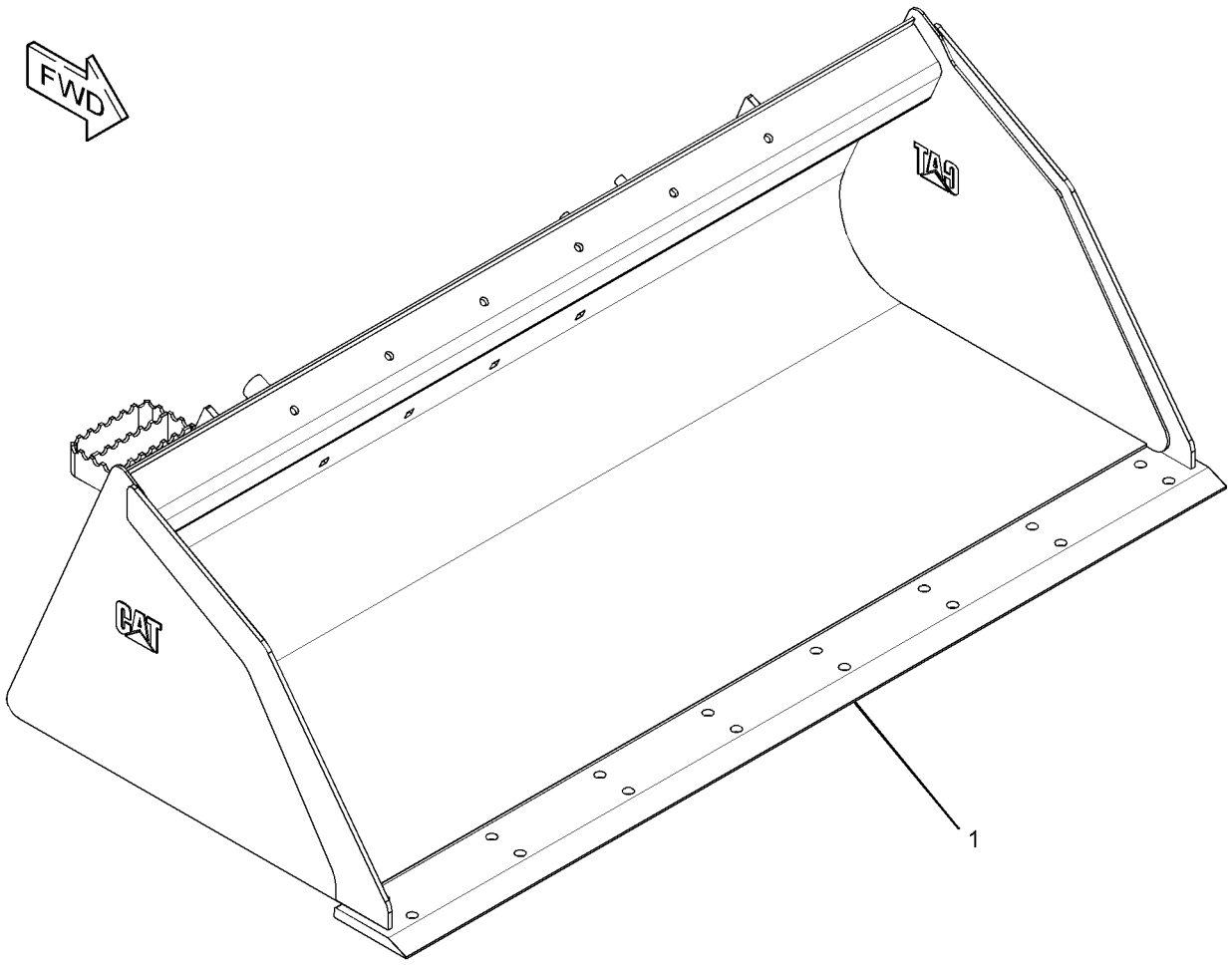

GRAPHIC #1 **<END>** g01953732

WORK TOOLS

285-6103 BUCKET AS-UTILITY

S/N: MST1-UP
1829-MM (72-IN)
PART OF 285-6102 BUCKET GP-UTILITY
AN ATTACHMENT

SMCS-6101 **i03638909**

NOTE	REF NO	GRAPHIC REF	PART NUMBER	QTY	PART NAME 1 2 3 4 5 6 (PRODUCT LEVEL)	SEE PAGE
	1	1	**149-5437**	1	EDGE	

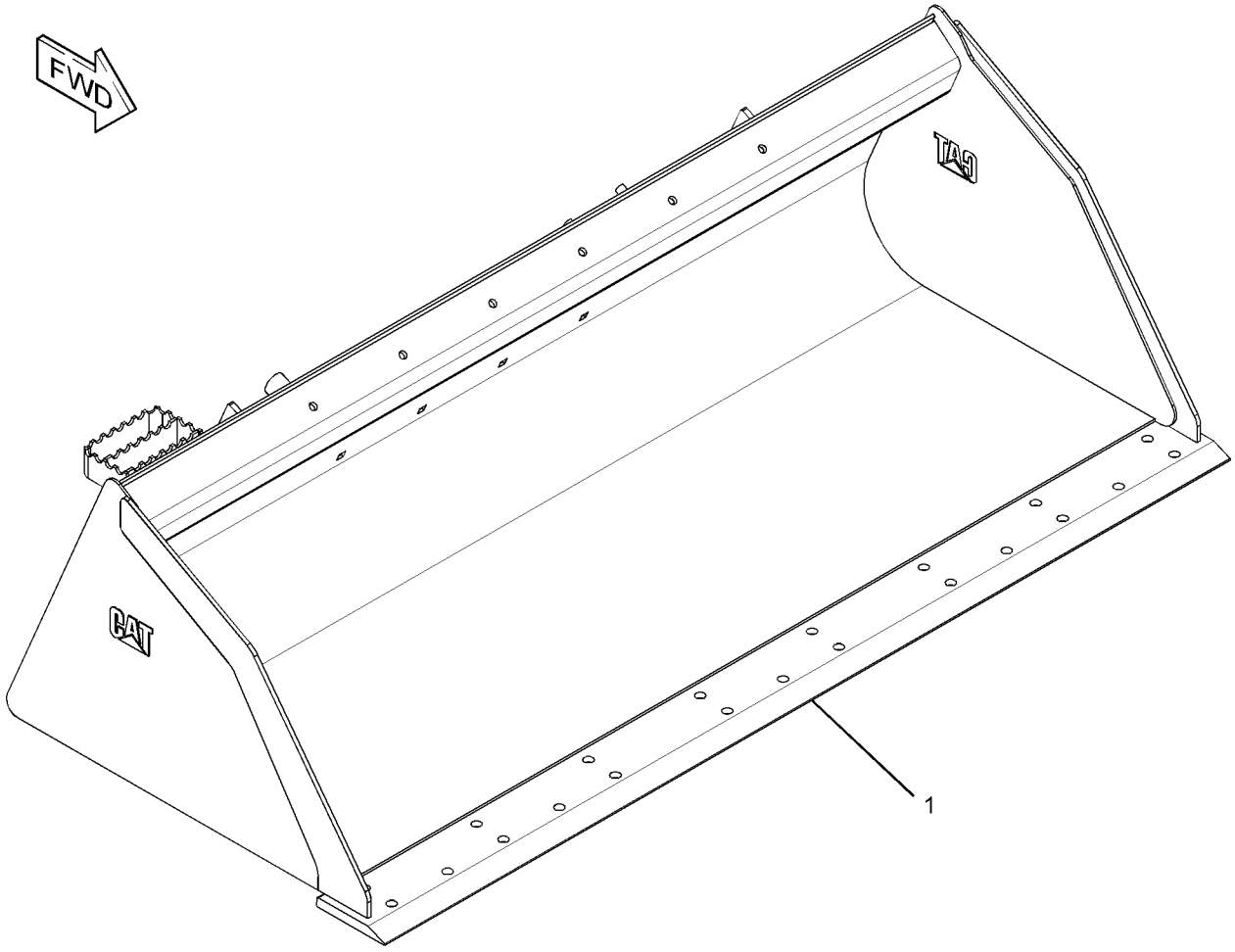

GRAPHIC #1 **<END>** g01953843

WORK TOOLS

152-0231 BUCKET GP-DIRT

S/N: MST1-UP

FIELD REPLACEMENT FOR 165-6156 BUCKET AS-DIRT

AN ATTACHMENT

SMCS-6001 **i02962462**

NOTE	REF NO	GRAPHIC REF	PART NUMBER	QTY	PART NAME 1 2 3 4 5 6 (PRODUCT LEVEL)	SEE PAGE
Y	1	1	**165-6156**	1	BUCKET AS-DIRT	511
Y	2	1	*135-9384*	1	EDGE GP-CUTTING	600

Y-SEPARATE ILLUSTRATION

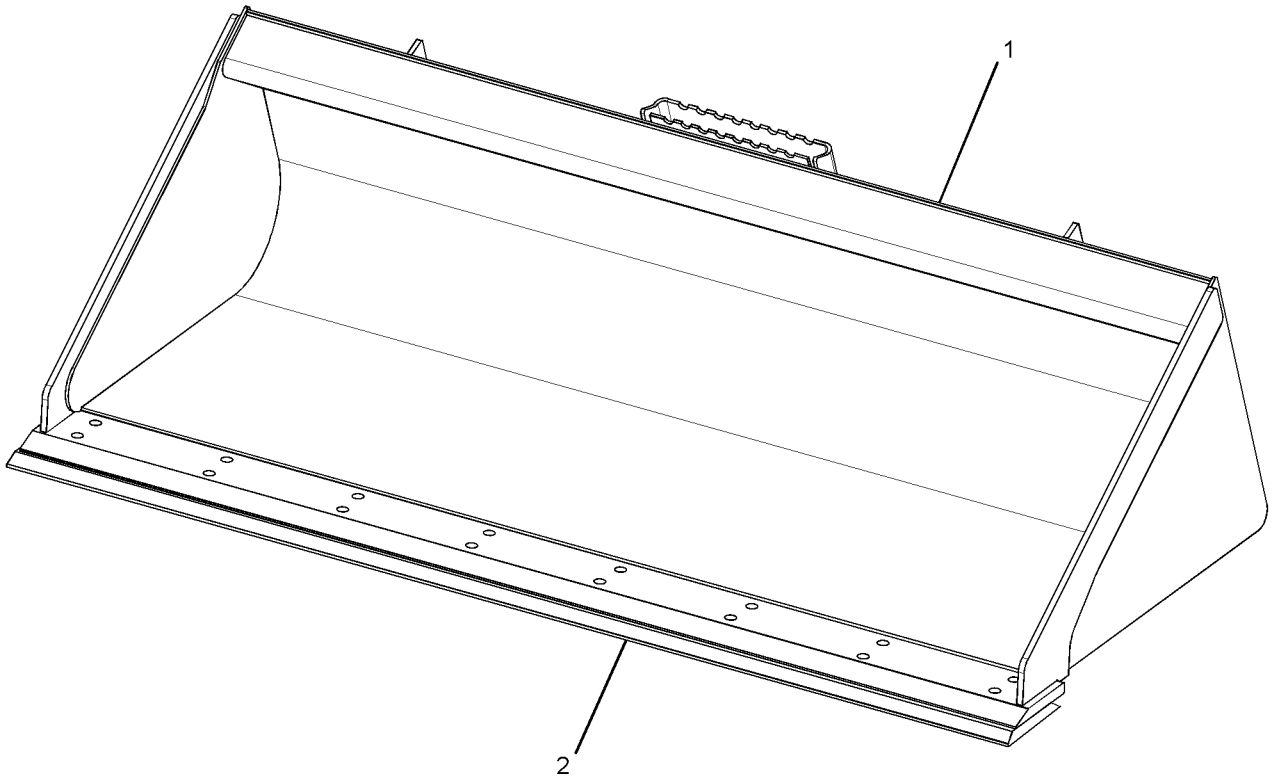

GRAPHIC #1 **<END>** g01481192

WORK TOOLS

152-0232 BUCKET GP-DIRT

S/N: MST1-UP
FIELD REPLACEMENT FOR 165-6157 BUCKET AS-DIRT
AN ATTACHMENT

SMCS-6001 **i02961159**

NOTE	REF NO	GRAPHIC REF	PART NUMBER	QTY	PART NAME 1 2 3 4 5 6 (PRODUCT LEVEL)	SEE PAGE
Y	1	1	**165-6157**	1	BUCKET AS-DIRT	512
Y	2	1	*135-9385*	1	EDGE GP-CUTTING	601

Y-SEPARATE ILLUSTRATION

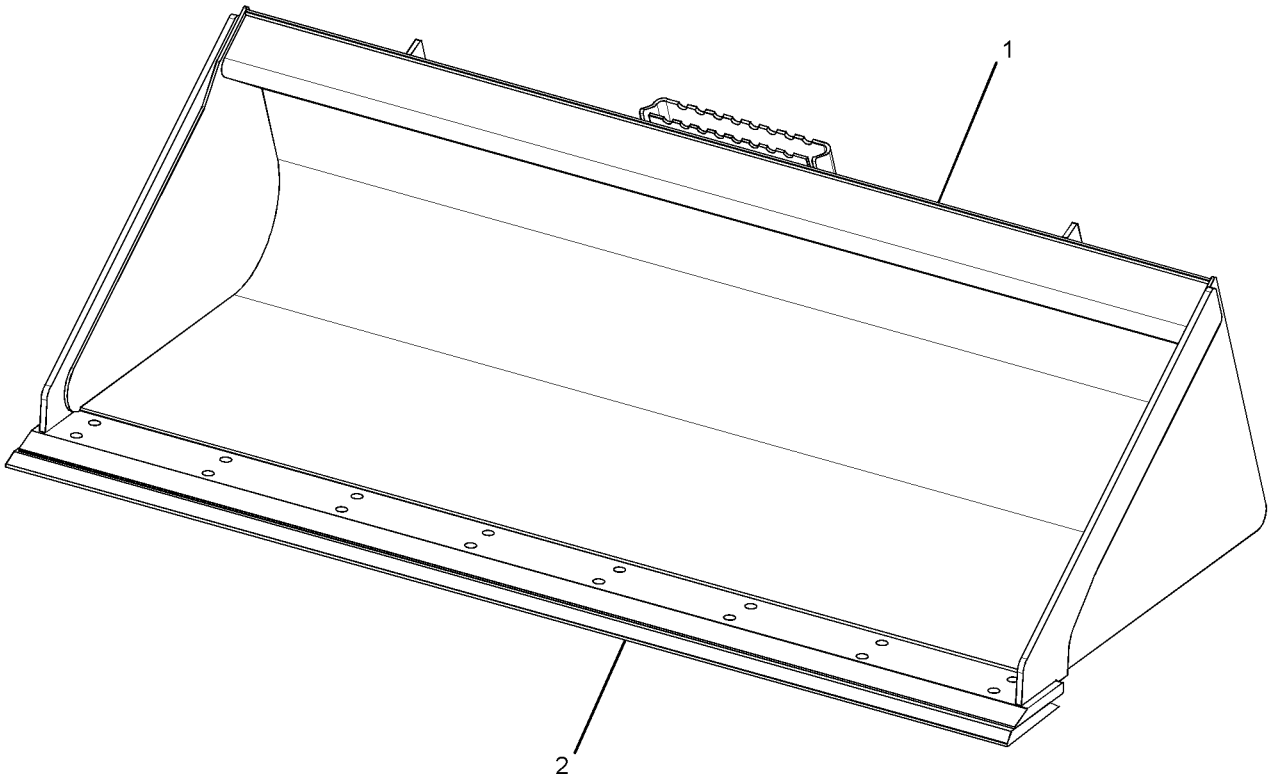

GRAPHIC #1 **<END>** g01481192

WORK TOOLS

188-2719 BUCKET GP-DIRT

S/N: MST1-UP

FIELD REPLACEMENT FOR 188-3526 BUCKET AS-DIRT

AN ATTACHMENT

SMCS-6001 **i02757699**

NOTE	PART NUMBER	QTY	PART NAME 1 2 3 4 5 6 (PRODUCT LEVEL)	SEE PAGE
Y	*188-3526*	1	BUCKET AS-DIRT	514
Y	*135-9386*	1	EDGE GP-CUTTING	602

Y-SEPARATE ILLUSTRATION

<END>

268-4084 BUCKET GP-DIRT

S/N: MST1-UP
PART OF 268-4083 BUCKET AR-DIRT
FIELD REPLACEMENT ORDER 268-4083—PAGE 488
AN ATTACHMENT

SMCS-6001 **i03647009**

NOTE	REF NO	GRAPHIC REF	PART NUMBER	QTY	PART NAME 1 2 3 4 5 6 (PRODUCT LEVEL)	SEE PAGE
	1	1	**154-2704**	1	PLATE-INSTRUCTION (BUCKET SPECIFICATIONS)	
	2	1	**168-8389**	4	TACK-FASTENER	
Y	3	1	*268-4089*	1	BUCKET AS-DIRT	515

Y-SEPARATE ILLUSTRATION

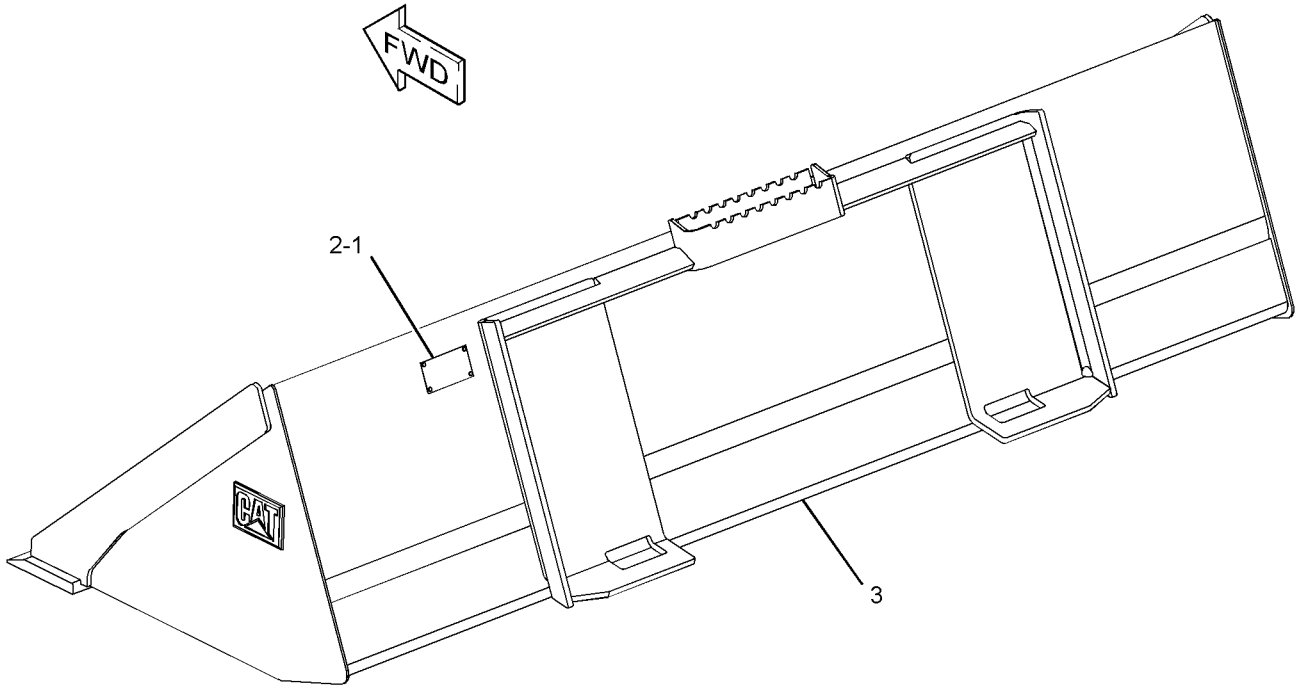

GRAPHIC #1 **<END>** g01957399

WORK TOOLS

296-8191 BUCKET GP-GENERAL PURPOSE

S/N: MST1-UP

AN ATTACHMENT

SMCS-6101 **i02636477**

NOTE	PART NUMBER	QTY	PART NAME 1 2 3 4 5 6 (PRODUCT LEVEL)	SEE PAGE
Y	**292-9270**	1	BUCKET AS-GENERAL PURPOSE	532
Y	*141-4999*	9	TOOTH GP-UNI	643

Y-SEPARATE ILLUSTRATION

<END>

WORK TOOLS

156-0884 BUCKET GP-GRAPPLE

S/N: MST1-UP
PART OF 157-7223 BUCKET AR-GRAPPLE
AN ATTACHMENT

SMCS-6704 **i03648335**

NOTE	REF NO	GRAPHIC REF	PART NUMBER	QTY	PART NAME 1 2 3 4 5 6 (PRODUCT LEVEL)	SEE PAGE
	1	1	**157-0940**	4	PIN	
Y	2	1	**169-8941**	1	BUCKET AS-GRAPPLE (60-IN) (INDUSTRIAL)	537
	3	1	**222-7467**	2	FORK AS	
					(EACH INCLUDES)	
		1	**158-5648**	2	BEARING-SLEEVE	
	4	1	**3B-8489**	4	FITTING-GREASE	
M	5	1	**6V-9189**	4	LOCKNUT (M8X1.25-THD)	
M	6	1	**8T-6869**	4	BOLT (M8X1.25X60-MM)	

M-METRIC PART
Y-SEPARATE ILLUSTRATION

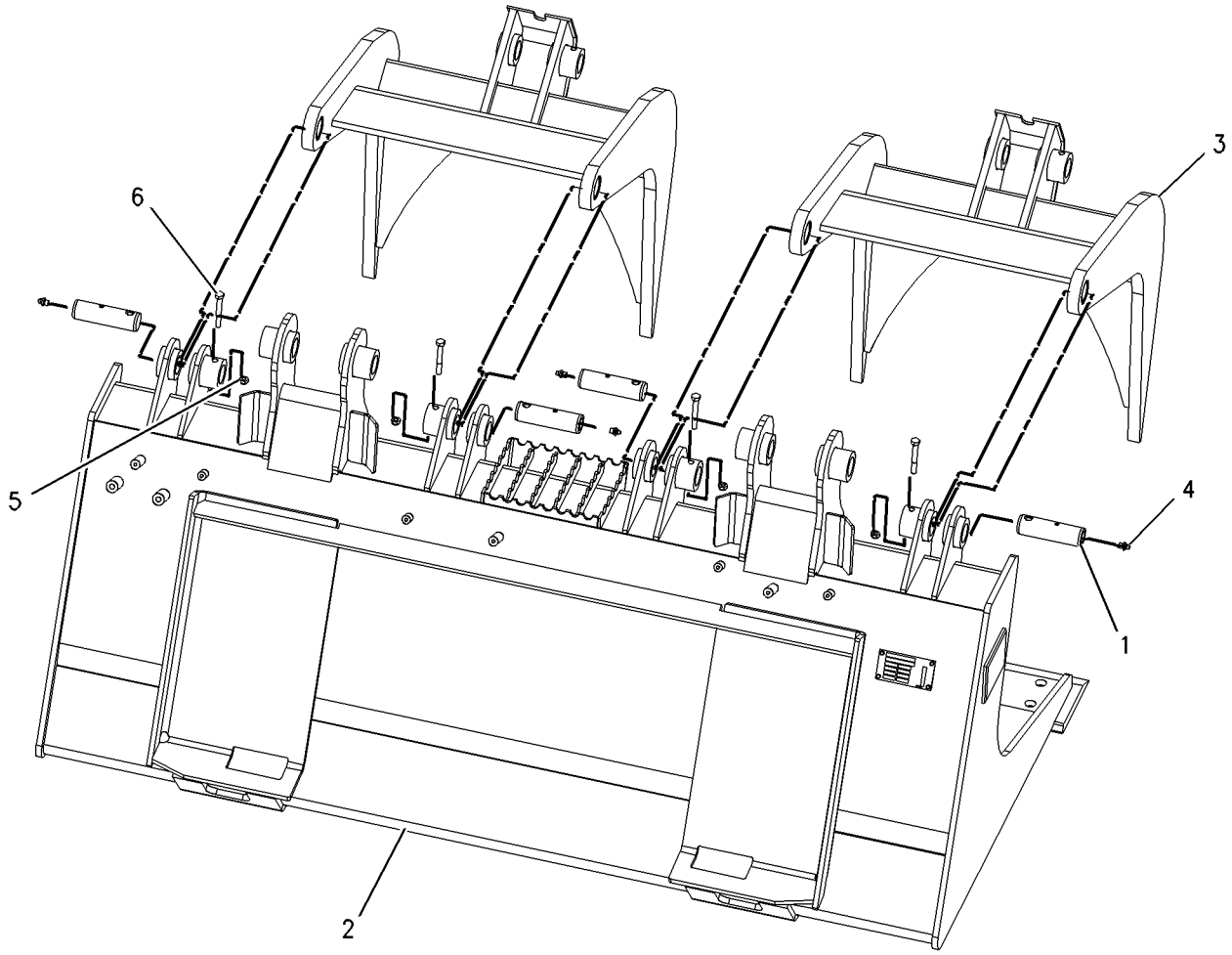

GRAPHIC #1 **<END>** g00978796

WORK TOOLS

156-0885 BUCKET GP-GRAPPLE

S/N: MST1-UP
PART OF 157-7224 BUCKET AR-GRAPPLE
AN ATTACHMENT

SMCS-6704 **i03648337**

NOTE	REF NO	GRAPHIC REF	PART NUMBER	QTY	PART NAME 1 2 3 4 5 6 (PRODUCT LEVEL)	SEE PAGE
	1	1	**157-0940**	4	PIN	
Y	2	1	**169-8942**	1	BUCKET AS-GRAPPLE (66-IN) (INDUSTRIAL)	538
	3	1	**222-7467**	2	FORK AS	
					(EACH INCLUDES)	
		1	**158-5648**	2	BEARING-SLEEVE	
	4	1	**3B-8489**	4	FITTING-GREASE	
M	5	1	**6V-9189**	4	LOCKNUT (M8X1.25-THD)	
M	6	1	**8T-6869**	4	BOLT (M8X1.25X60-MM)	

M-METRIC PART
Y-SEPARATE ILLUSTRATION

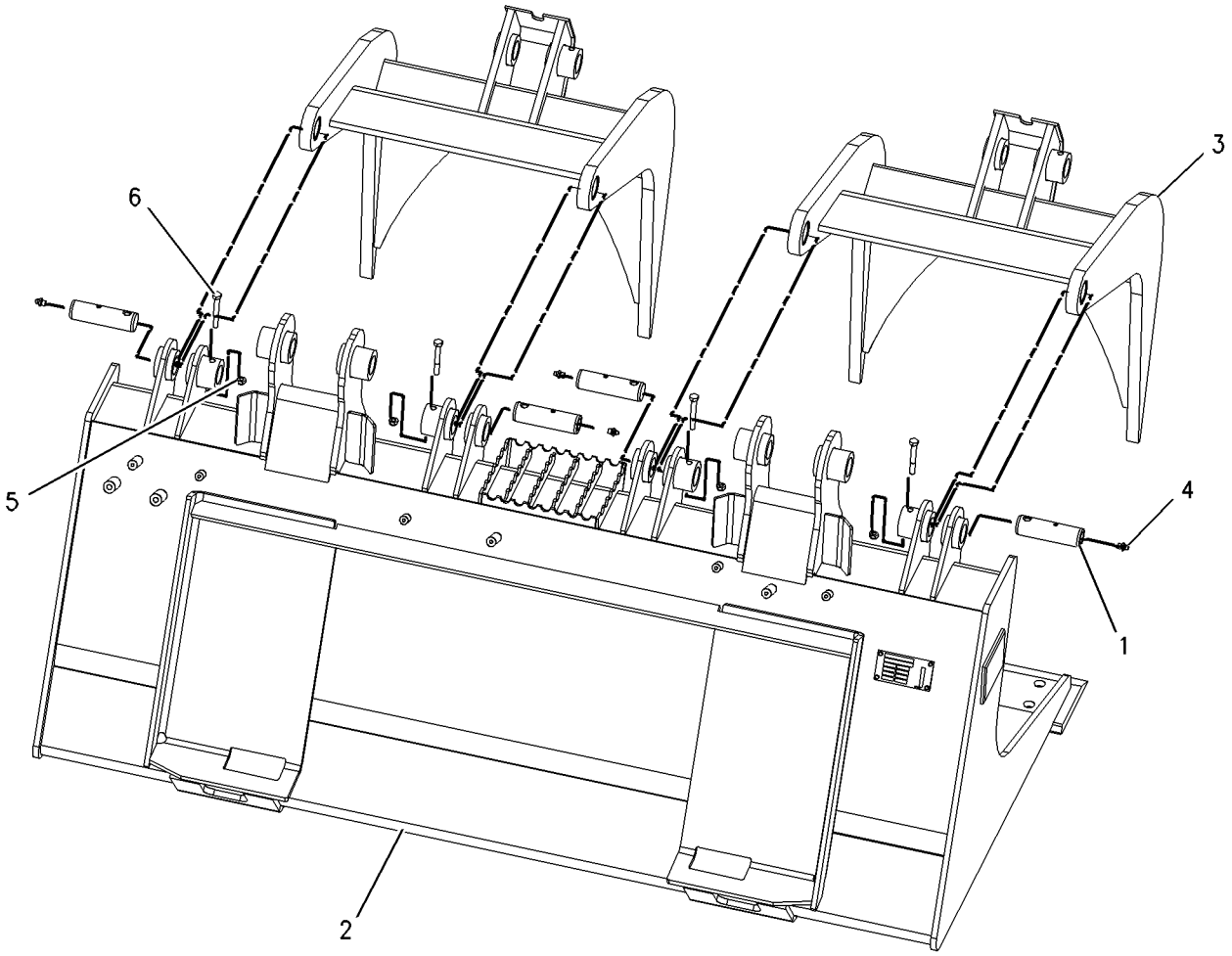

GRAPHIC #1 **<END>** g00978796

WORK TOOLS

156-0886 BUCKET GP-GRAPPLE

S/N: MST1-UP
PART OF 157-7225 BUCKET AR-GRAPPLE
AN ATTACHMENT

SMCS-6704 **i03648343**

NOTE	REF NO	GRAPHIC REF	PART NUMBER	QTY	PART NAME 1 2 3 4 5 6 (PRODUCT LEVEL)	SEE PAGE
	1	1	**157-0940**	4	PIN	
Y	2	1	**169-8943**	1	BUCKET AS-GRAPPLE (INDUSTRIAL) (72-IN)	539
	3	1	**222-7467**	2	FORK AS	
					(EACH INCLUDES)	
		1	**158-5648**	2	BEARING-SLEEVE	
	4	1	**3B-8489**	4	FITTING-GREASE	
M	5	1	**6V-9189**	4	LOCKNUT (M8X1.25-THD)	
M	6	1	**8T-6869**	4	BOLT (M8X1.25X60-MM)	

M-METRIC PART
Y-SEPARATE ILLUSTRATION

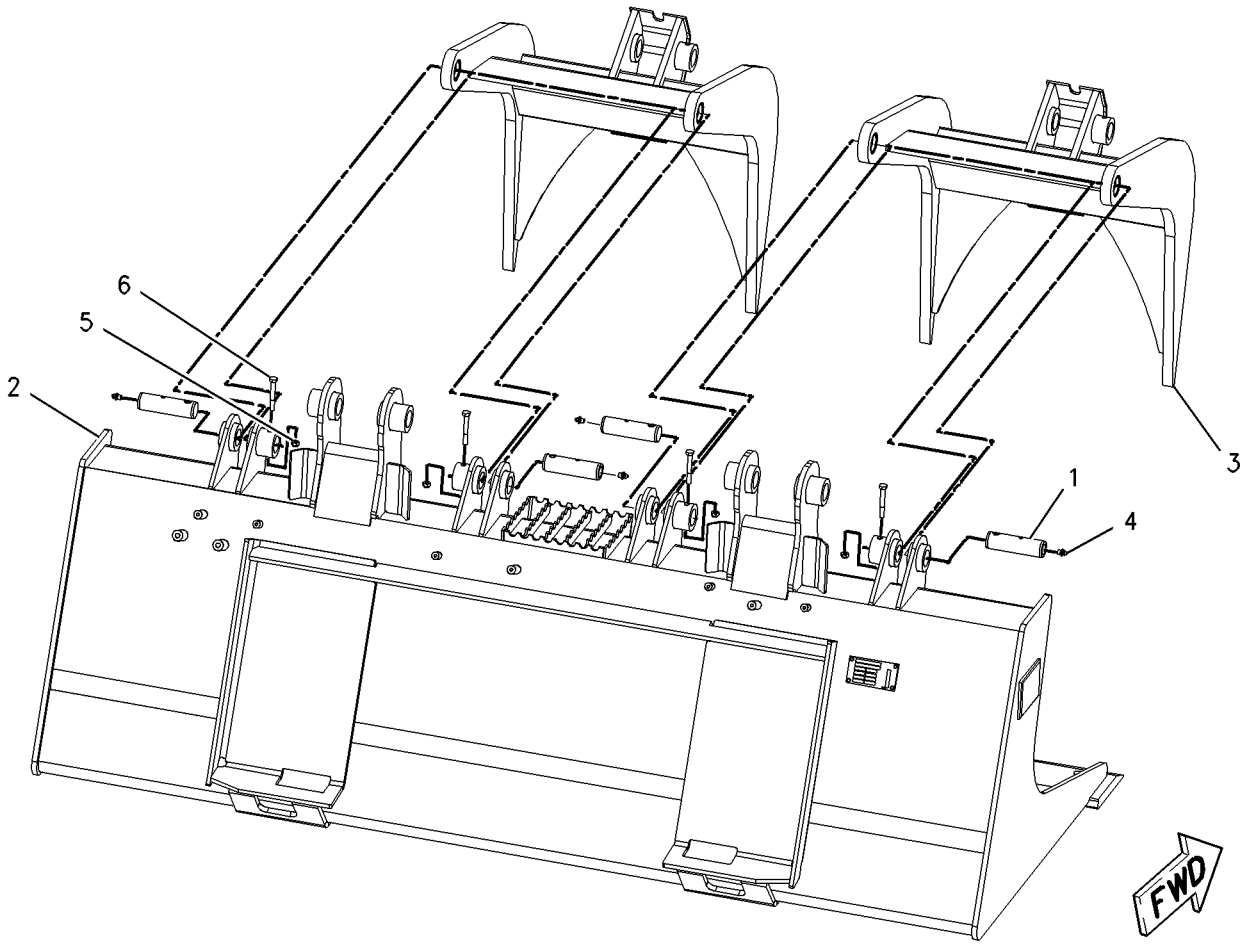

GRAPHIC #1 **<END>** g00993692

WORK TOOLS

217-6228 BUCKET GP-GRAPPLE

S/N: MST1-UP
PART OF 217-6229 BUCKET AR-GRAPPLE
AN ATTACHMENT

SMCS-6704 **i03648354**

NOTE	REF NO	GRAPHIC REF	PART NUMBER	QTY	PART NAME 1 2 3 4 5 6 (PRODUCT LEVEL)	SEE PAGE
	1	1	**157-0940**	4	PIN	
Y	2	1	**217-6227**	1	BUCKET AS-GRAPPLE (INDUSTRIAL) (78-IN)	541
	3	1	**222-7467**	2	FORK AS	
					(EACH INCLUDES)	
		1	**158-5648**	2	BEARING-SLEEVE	
	4	1	**3B-8489**	4	FITTING-GREASE	
M	5	1	**6V-9189**	4	LOCKNUT (M8X1.25-THD)	
M	6	1	**8T-6869**	4	BOLT (M8X1.25X60-MM)	

M-METRIC PART
Y-SEPARATE ILLUSTRATION

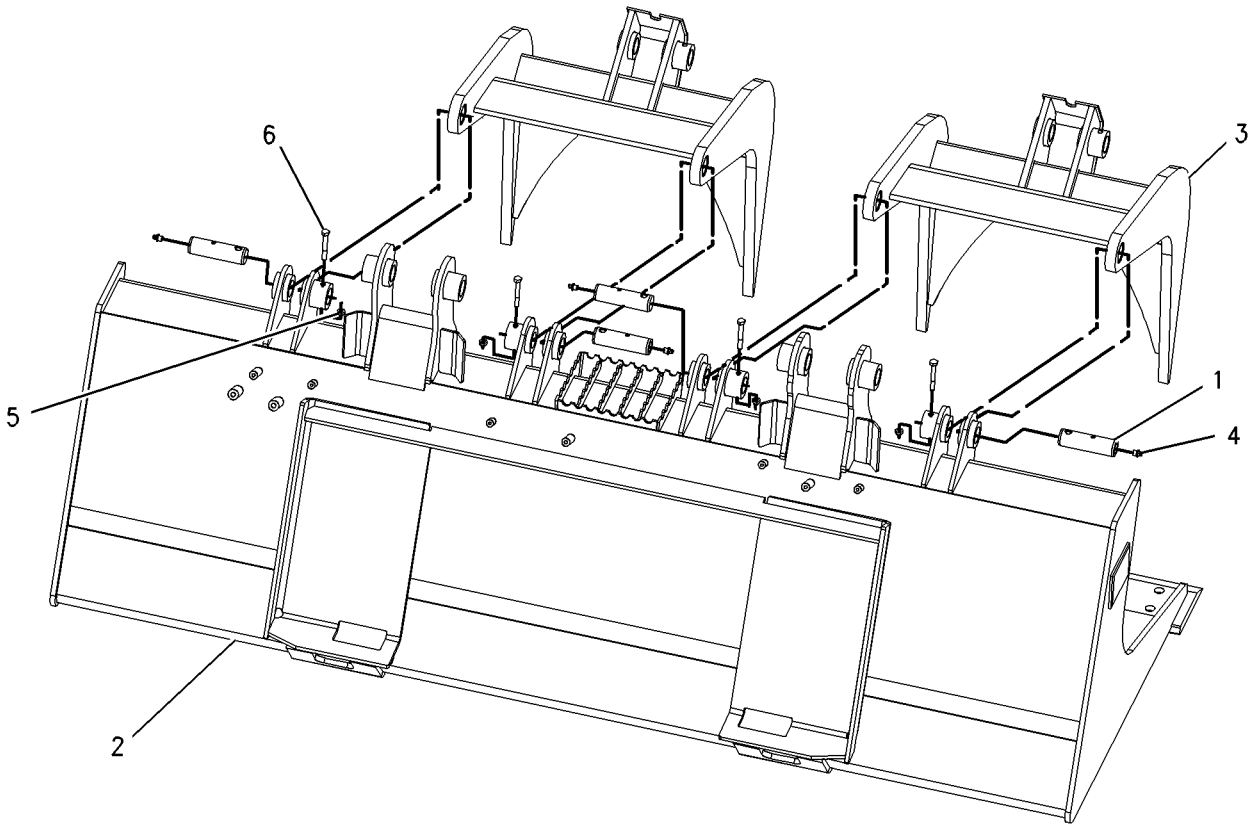

GRAPHIC #1 **<END>** g00992181

279-5359 BUCKET GP-GRAPPLE–INDUSTRIAL

S/N: MST1-UP
1829-MM (72-IN)
PART OF 279-5360 FORK AR-GRAPPLE
AN ATTACHMENT

SMCS-6704 **i03690347**

NOTE	REF NO	GRAPHIC REF	PART NUMBER	QTY	PART NAME 1 2 3 4 5 6 (PRODUCT LEVEL)	SEE PAGE
	1	1	**157-0940**	4	PIN	
	2	1	**164-9989**	2	FILM-WARNING (IMPALED POINT)	
	3	1	**222-7467**	2	FORK AS	
					(EACH INCLUDES)	
		1	**158-5648**	2	BEARING-SLEEVE	
Y	4	1	*279-5358*	1	FRAME GP-FORK (72-IN, INDUSTRIAL)	621
	5	1	**3B-8489**	4	FITTING-GREASE	
M	6	1	**6V-9189**	4	LOCKNUT (M8X1.25-THD)	
M	7	1	**8T-6869**	4	BOLT (M8X1.25X60-MM)	

M-METRIC PART
Y-SEPARATE ILLUSTRATION

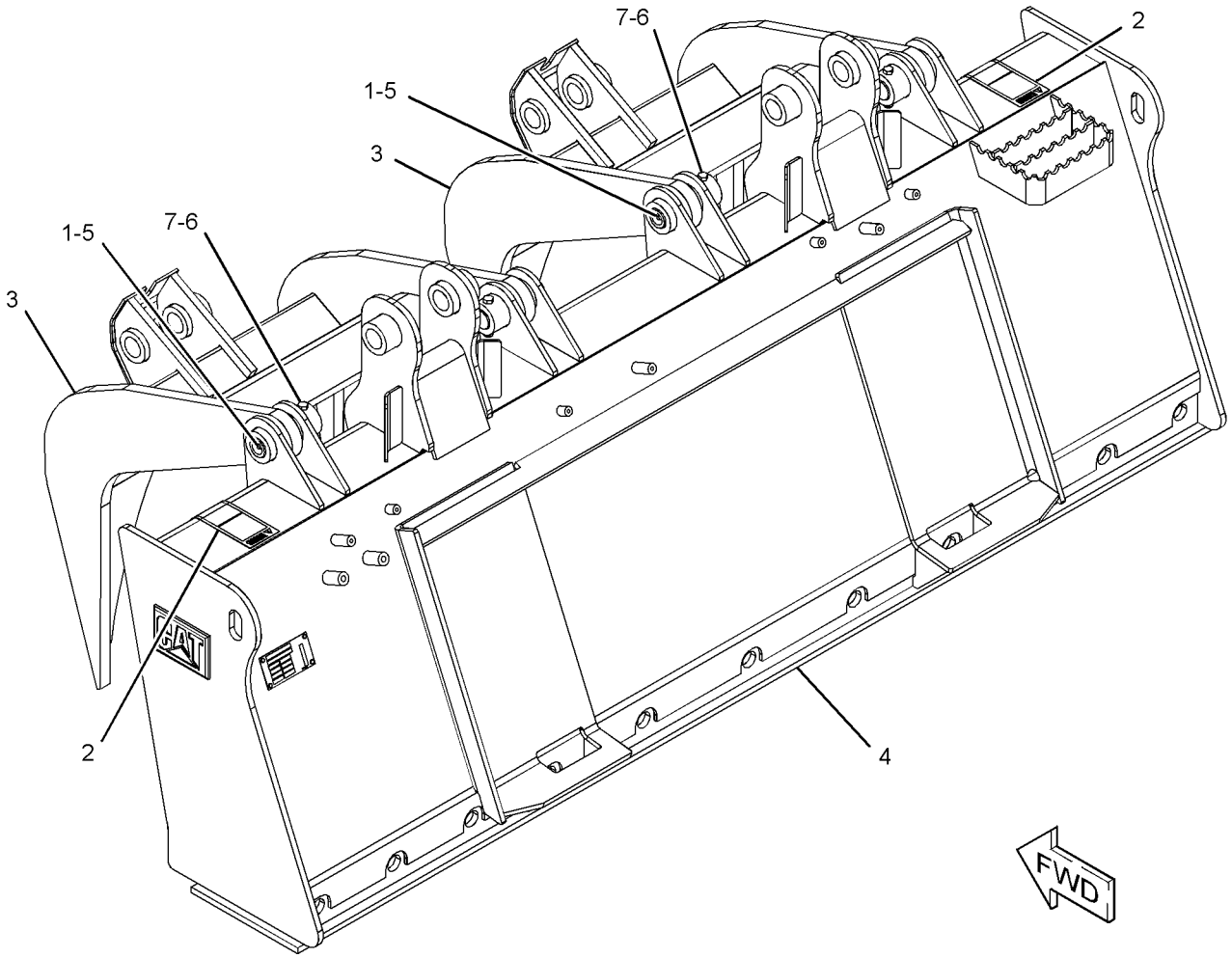

GRAPHIC #1 **<END>** g01280924

286-9244 BUCKET GP-GRAPPLE

S/N: MST1-UP

PART OF 286-9301 BUCKET AR-GRAPPLE

AN ATTACHMENT

SMCS-6704 **i02723701**

NOTE	REF NO	GRAPHIC REF	PART NUMBER	QTY	PART NAME 1 2 3 4 5 6 (PRODUCT LEVEL)	SEE PAGE
	1	1	**157-0940**	4	PIN	
	2	1	**286-9229**	1	TINE GP	
	3	1	**286-9243**	2	FORK AS	
					(EACH INCLUDES)	
		1	**158-5648**	2	BEARING-SLEEVE	
	4	1	**3B-8489**	4	FITTING-GREASE	
M	5	1	**6V-9189**	4	LOCKNUT (M8X1.25-THD)	
M	6	1	**8T-6869**	4	BOLT (M8X1.25X60-MM)	

M-METRIC PART

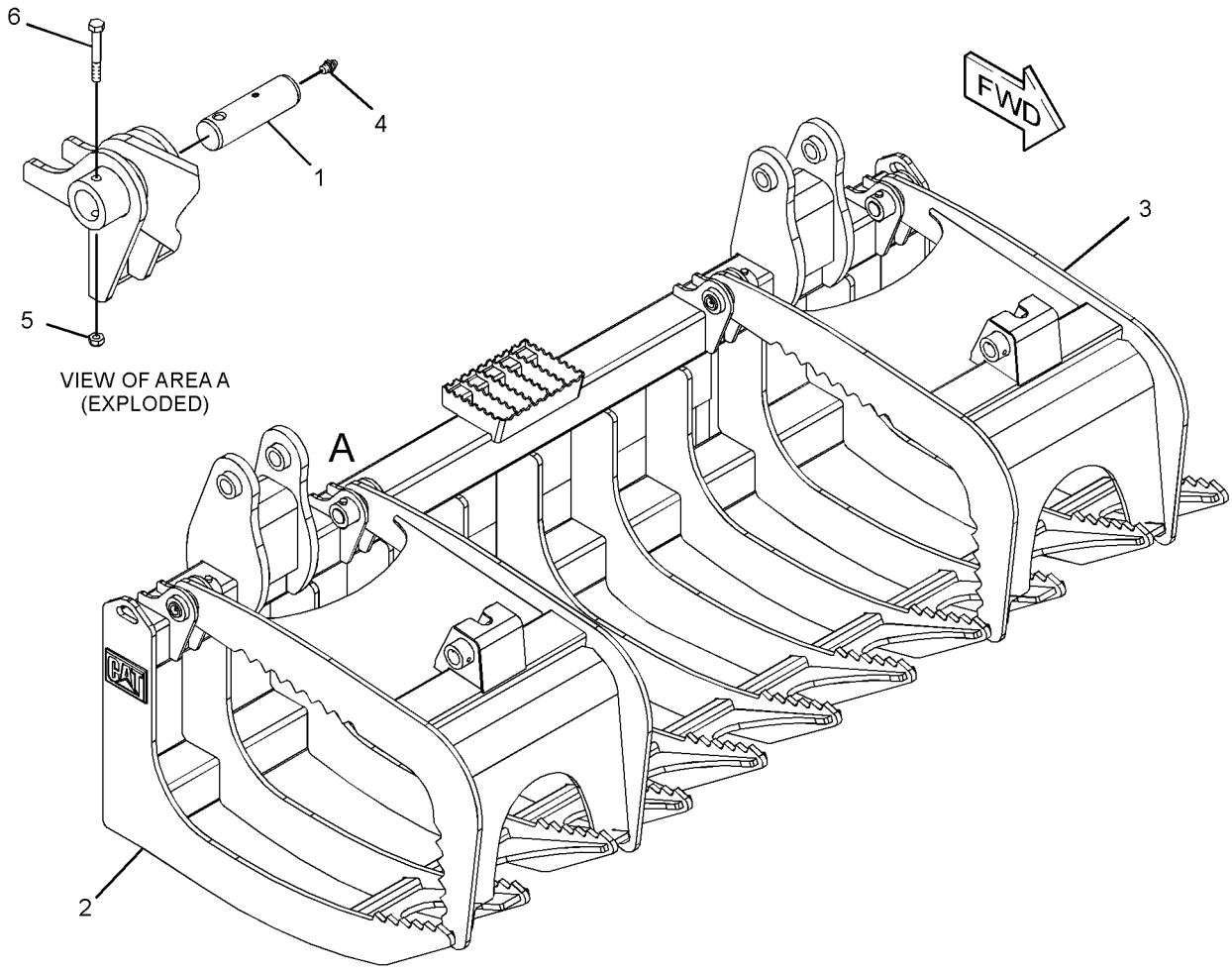

GRAPHIC #1 **<END>** g01372924

286-9278 BUCKET GP-GRAPPLE

S/N: MST1-UP
1829-MM (72-IN)
PART OF 286-9300 BUCKET AR-GRAPPLE
AN ATTACHMENT

SMCS-6704 **i03635722**

NOTE	REF NO	GRAPHIC REF	PART NUMBER	QTY	PART NAME 1 2 3 4 5 6 (PRODUCT LEVEL)	SEE PAGE
	1	1	**157-0940**	4	PIN	
	2	1	**286-9243**	2	FORK AS	
					(EACH INCLUDES)	
		1	**158-5648**	2	BEARING-SLEEVE	
	3	1	**286-9274**	1	TINE GP	
	4	1	**3B-8489**	4	FITTING-GREASE	
M	5	1	**6V-9189**	4	LOCKNUT (M8X1.25-THD)	
M	6	1	**8T-6869**	4	BOLT (M8X1.25X60-MM)	

M-METRIC PART

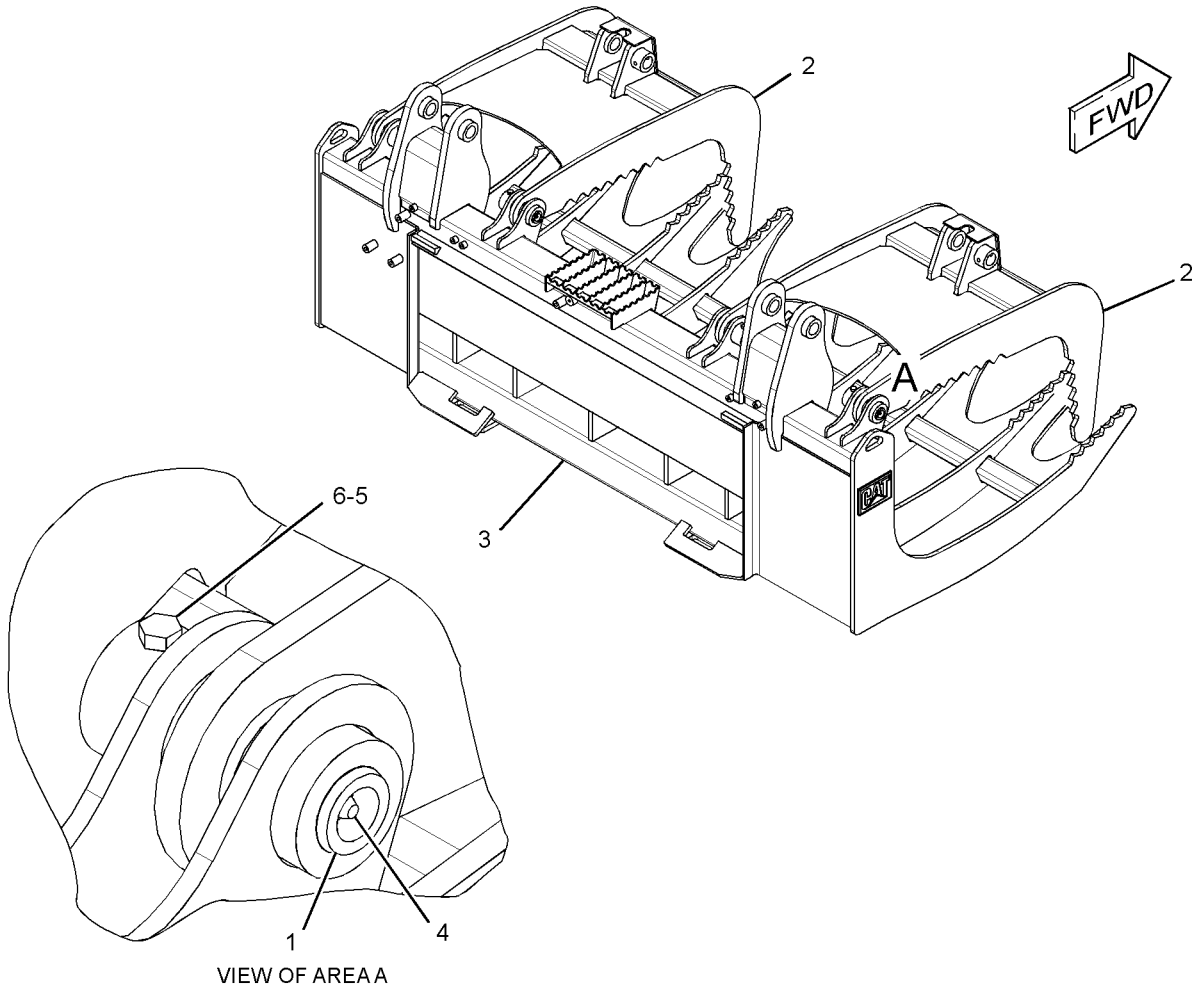

VIEW OF AREA A

GRAPHIC #1 **<END>** g01372568

154-5005 BUCKET GP-MULTIPURPOSE

S/N: MST1-UP
152.40-CM (60-IN) WIDE X 0.30-CU M (0.39-CU YD)
PART OF 154-5004 BUCKET AR-MULTIPURPOSE
AN ATTACHMENT

SMCS-6104 **i03622340**

NOTE	REF NO	GRAPHIC REF	PART NUMBER	QTY	PART NAME 1 2 3 4 5 6 (PRODUCT LEVEL)	SEE PAGE
Y	1	1	**149-4232**	1	CLAM AS-MULTIPURPOSE BUCKET	587
	2	1	**154-5012**	2	PIN	
Y	3	1	**159-5345**	1	BLADE GP-MULTIPURPOSE BUCKET	467
M	4	1	**8T-6869**	2	BOLT (M8X1.25X60-MM)	
	5	1	**3B-8489**	2	FITTING-GREASE	
M	6	1	**6V-9189**	2	LOCKNUT (M8X1.25-THD)	

M-METRIC PART
Y-SEPARATE ILLUSTRATION

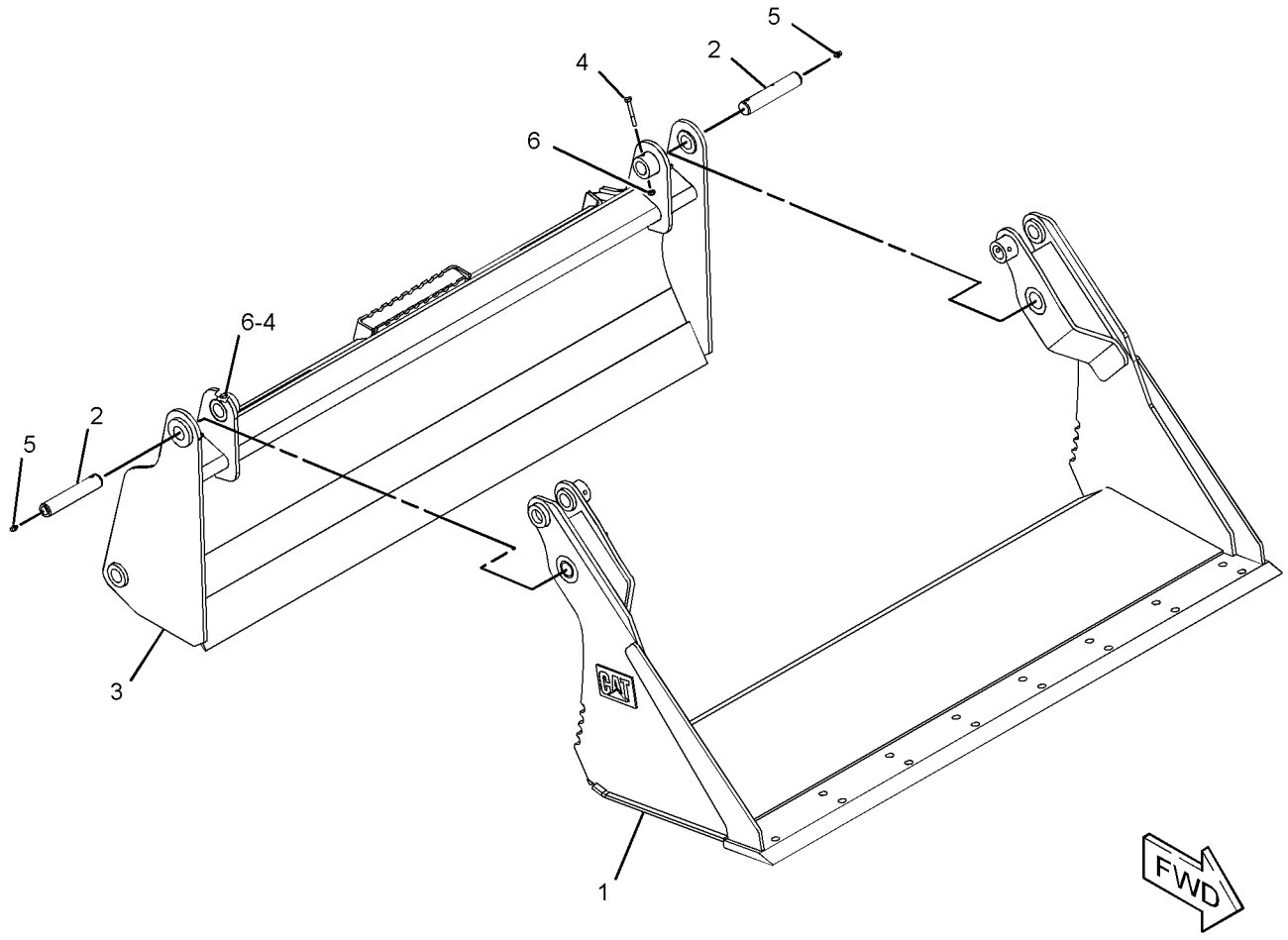

GRAPHIC #1 **<END>** g01945754

WORK TOOLS

154-5009 BUCKET GP-MULTIPURPOSE

S/N: MST1-UP
1829-MM (72-IN)
PART OF 154-5010 BUCKET AR-MULTIPURPOSE
AN ATTACHMENT

SMCS-6104 **i03690245**

NOTE	REF NO	GRAPHIC REF	PART NUMBER	QTY	PART NAME 1 2 3 4 5 6 (PRODUCT LEVEL)	SEE PAGE
	1	1	**154-5012**	2	PIN	
Y	2	1	**154-5070**	1	CLAM AS-MULTIPURPOSE BUCKET	589
Y	3	1	**159-5347**	1	BLADE GP-MULTIPURPOSE BUCKET (72-IN)	468
M	4	1	**8T-6869**	2	BOLT (M8X1.25X60-MM)	
	5	1	**3B-8489**	2	FITTING-GREASE	
M	6	1	**6V-9189**	2	LOCKNUT (M8X1.25-THD)	
	7	1	**159-8038**	2	FILM-WARNING (CRUSH HAZARD, STAY BACK)	

M-METRIC PART
Y-SEPARATE ILLUSTRATION

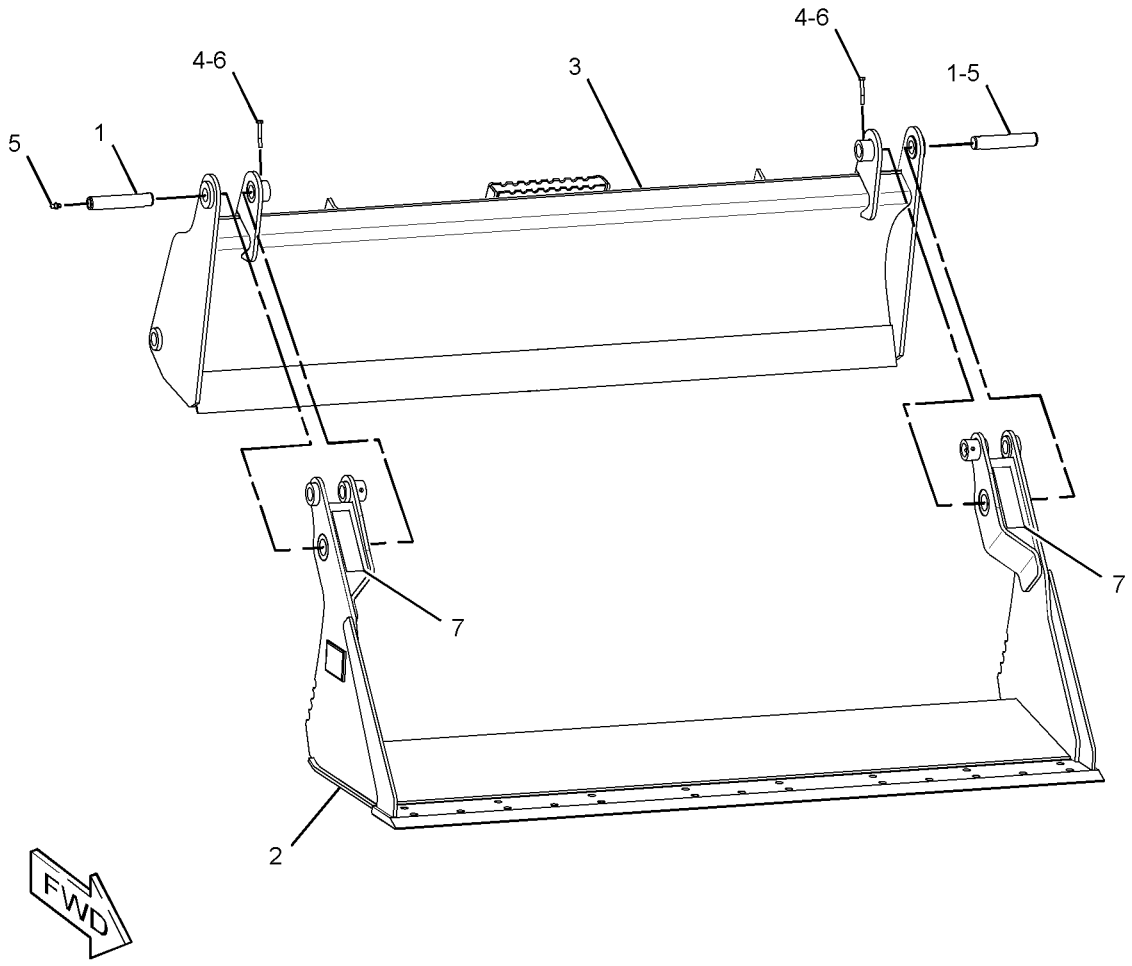

GRAPHIC #1 **<END>** g01953374

WORK TOOLS

279-5383 BUCKET GP-MULTIPURPOSE

S/N: MST1-UP
1524-MM (60-IN)
PART OF 279-5382 BUCKET AR-MULTIPURPOSE
AN ATTACHMENT

SMCS-6104 **i03622341**

NOTE	REF NO	GRAPHIC REF	PART NUMBER	QTY	PART NAME 1 2 3 4 5 6 (PRODUCT LEVEL)	SEE PAGE
Y	1	1	**149-4232**	1	CLAM AS-MULTIPURPOSE BUCKET	587
	2	1	**154-5012**	2	PIN	
M	3	1	**8T-6869**	2	BOLT (M8X1.25X60-MM)	
Y	4	1	*279-5384*	1	BLADE GP-MULTIPURPOSE BUCKET (60-IN)	469
	5	1	**3B-8489**	2	FITTING-GREASE	
M	6	1	**6V-9189**	2	LOCKNUT (M8X1.25-THD)	

M-METRIC PART
Y-SEPARATE ILLUSTRATION

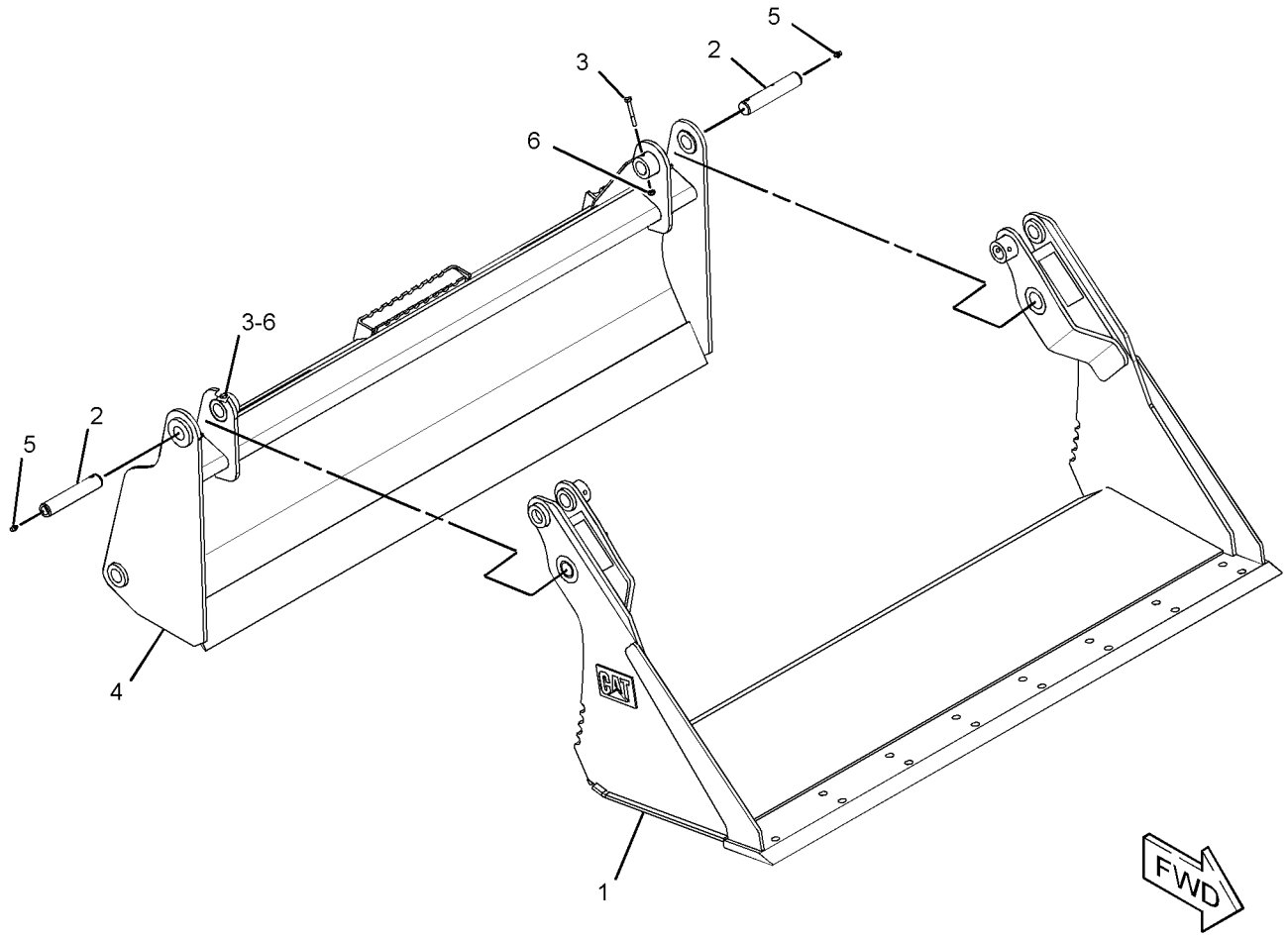

GRAPHIC #1 **<END>** g01945368

279-5389 BUCKET GP-MULTIPURPOSE

S/N: MST1-UP
1676-MM (66-IN)
PART OF 279-5390 BUCKET AR-MULTIPURPOSE
AN ATTACHMENT

SMCS-6104 **i03635045**

NOTE	REF NO	GRAPHIC REF	PART NUMBER	QTY	PART NAME 1 2 3 4 5 6 (PRODUCT LEVEL)	SEE PAGE
	1	1	**154-5012**	2	PIN	
Y	2	1	**154-5053**	1	CLAM AS-MULTIPURPOSE BUCKET	588
Y	3	1	*279-5388*	1	BLADE GP-MULTIPURPOSE BUCKET (66-IN)	472
	4	1	**3B-8489**	2	FITTING-GREASE	
M	5	1	**6V-9189**	2	LOCKNUT (M8X1.25-THD)	
M	6	1	**8T-6869**	2	BOLT (M8X1.25X60-MM)	

M-METRIC PART
Y-SEPARATE ILLUSTRATION

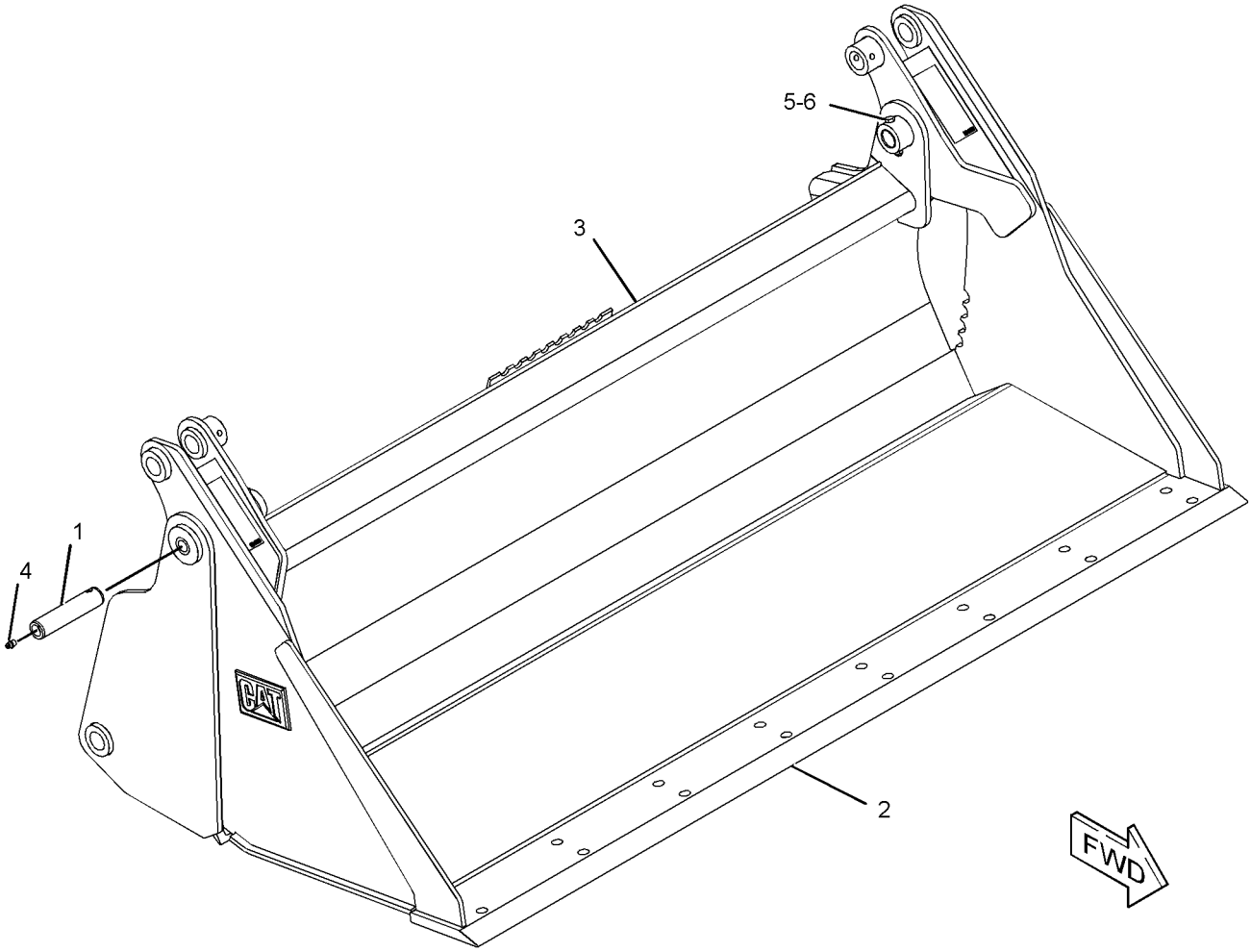

GRAPHIC #1 **<END>** g01952471

279-5397 BUCKET GP-MULTIPURPOSE

S/N: MST1-UP
1829-MM (72-IN)
PART OF 279-5398 BUCKET AR-MULTIPURPOSE
AN ATTACHMENT

SMCS-6104 **i03635046**

NOTE	REF NO	GRAPHIC REF	PART NUMBER	QTY	PART NAME 1 2 3 4 5 6 (PRODUCT LEVEL)	SEE PAGE
	1	1	**154-5012**	2	PIN	
Y	2	1	**154-5070**	1	CLAM AS-MULTIPURPOSE BUCKET	589
M	3	1	**8T-6869**	2	BOLT (M8X1.25X60-MM)	
Y	4	1	*279-5396*	1	BLADE GP-MULTIPURPOSE BUCKET (72-IN)	474
	5	1	**3B-8489**	2	FITTING-GREASE	
M	6	1	**6V-9189**	2	LOCKNUT (M8X1.25-THD)	

M-METRIC PART
Y-SEPARATE ILLUSTRATION

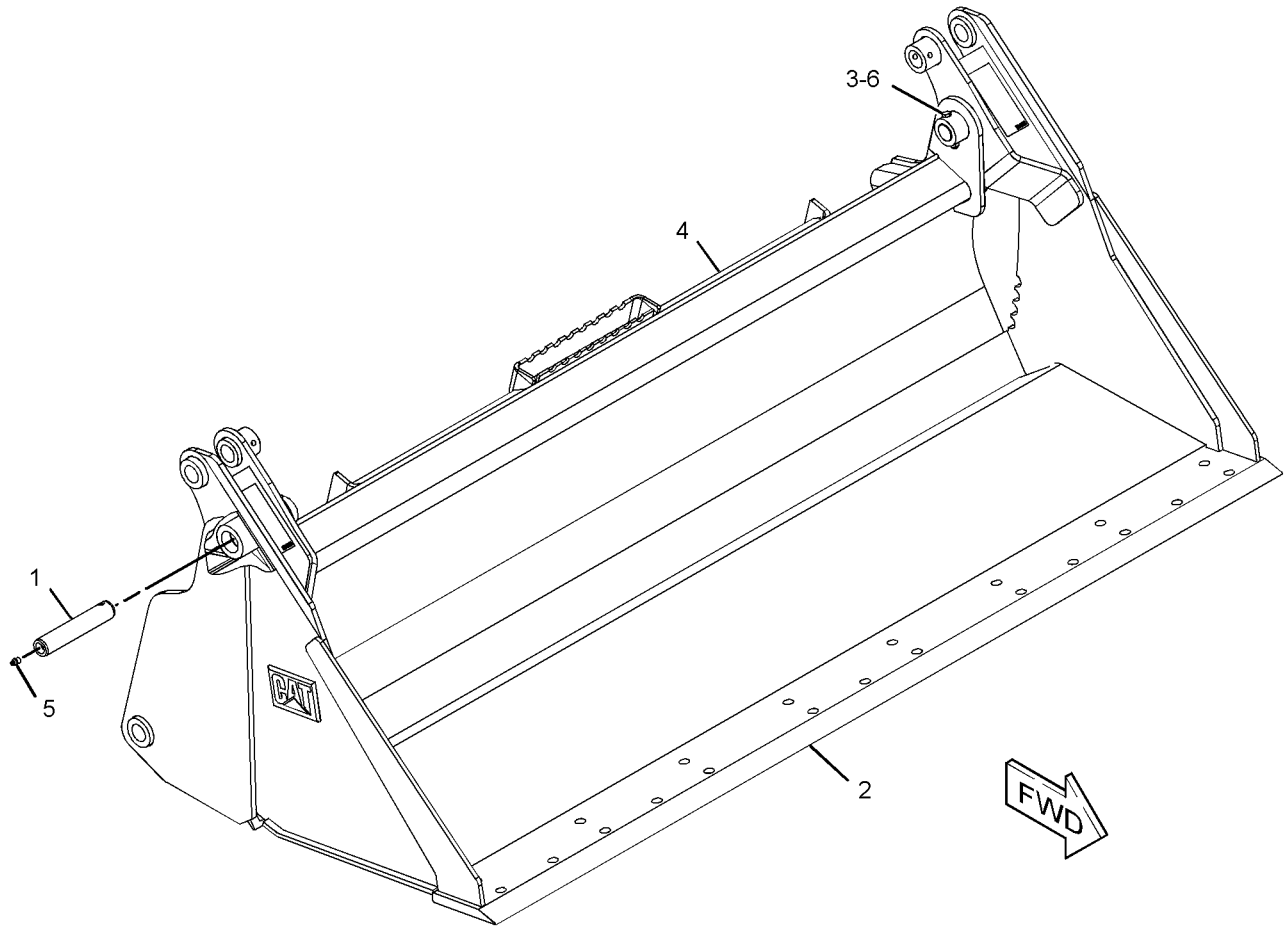

GRAPHIC #1 **<END>** g01952445

279-5404 BUCKET GP-MULTIPURPOSE

S/N: MST1-UP
1981-MM (78-IN)
PART OF 279-5403 BUCKET AR-MULTIPURPOSE
AN ATTACHMENT

SMCS-6104 **i03635047**

NOTE	REF NO	GRAPHIC REF	PART NUMBER	QTY	PART NAME 1 2 3 4 5 6 (PRODUCT LEVEL)	SEE PAGE
	1	1	**154-5012**	2	PIN	
M	2	1	**8T-6869**	2	BOLT (M8X1.25X60-MM)	
Y	3	1	**199-8308**	1	CLAM AS-MULTIPURPOSE BUCKET	590
Y	4	1	*279-5405*	1	BLADE GP-MULTIPURPOSE BUCKET (78-IN)	475
	5	1	**3B-8489**	2	FITTING-GREASE	
M	6	1	**6V-9189**	2	LOCKNUT (M8X1.25-THD)	

M-METRIC PART
Y-SEPARATE ILLUSTRATION

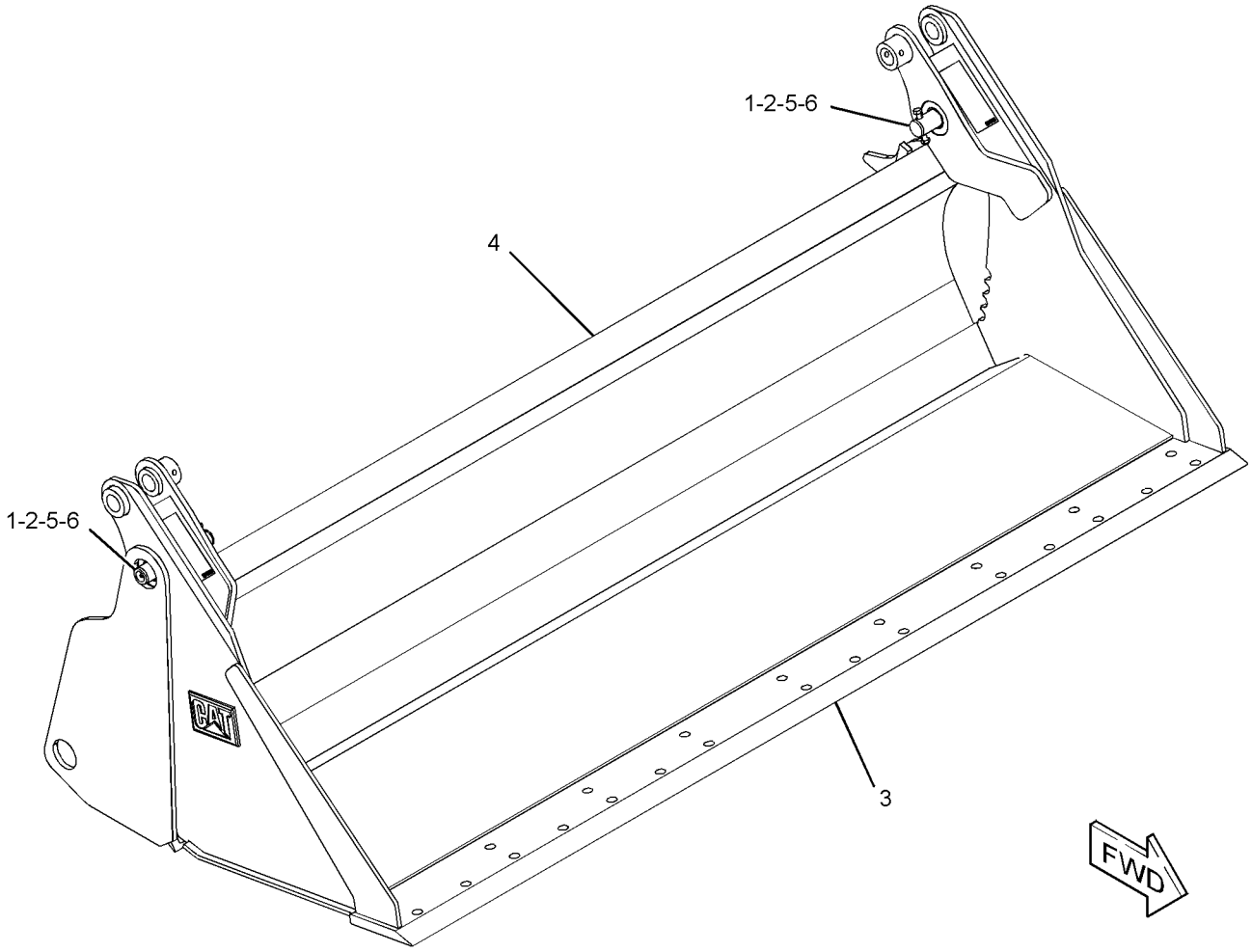

GRAPHIC #1 **<END>** g01920456

293-0141 BUCKET GP-MULTIPURPOSE

S/N: MST1-UP
2134-MM (84-IN)
PART OF 293-0139 BUCKET AR-MULTIPURPOSE
AN ATTACHMENT

SMCS-6104 **i03647948**

NOTE	REF NO	GRAPHIC REF	PART NUMBER	QTY	PART NAME 1 2 3 4 5 6 (PRODUCT LEVEL)	SEE PAGE
	1	1	**154-5012**	2	PIN	
Y	2	1	*293-0142*	1	BLADE GP-MULTIPURPOSE BUCKET (84-IN)	477
Y	3	1	**293-0148**	1	CLAM AS-MULTIPURPOSE BUCKET	591
	4	1	**3B-8489**	2	FITTING-GREASE	
M	5	1	**6V-9189**	2	LOCKNUT (M8X1.25-THD)	
M	6	1	**8T-6869**	2	BOLT (M8X1.25X60-MM)	

M-METRIC PART
Y-SEPARATE ILLUSTRATION

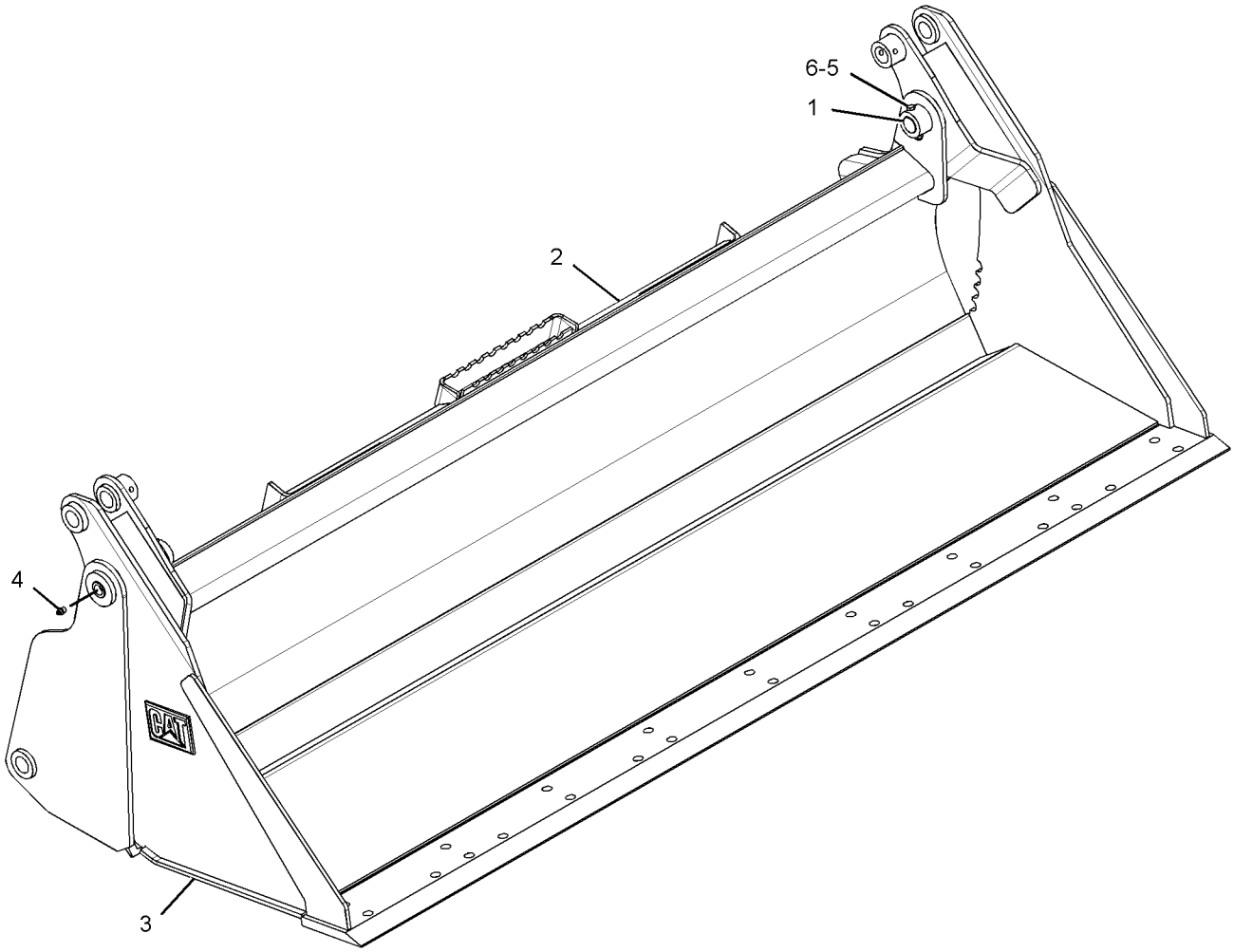

GRAPHIC #1 **<END>** g01327400

325-7037 BUCKET GP-MULTIPURPOSE

S/N: MST1-UP
1524-MM (60-IN)
PART OF 325-7036 BUCKET AR-MULTIPURPOSE
AN ATTACHMENT

SMCS-6104 **i03622342**

NOTE	REF NO	GRAPHIC REF	PART NUMBER	QTY	PART NAME 1 2 3 4 5 6 (PRODUCT LEVEL)	SEE PAGE
Y	1	1	**149-4232**	1	CLAM AS-MULTIPURPOSE BUCKET	587
	2	1	**154-5012**	2	PIN	
M	3	1	**8T-6869**	2	BOLT (M8X1.25X60-MM)	
Y	4	1	*325-7038*	1	BLADE GP-MULTIPURPOSE BUCKET (1552-MM)	478
	5	1	**3B-8489**	2	FITTING-GREASE	
M	6	1	**6V-9189**	2	LOCKNUT (M8X1.25-THD)	

M-METRIC PART
Y-SEPARATE ILLUSTRATION

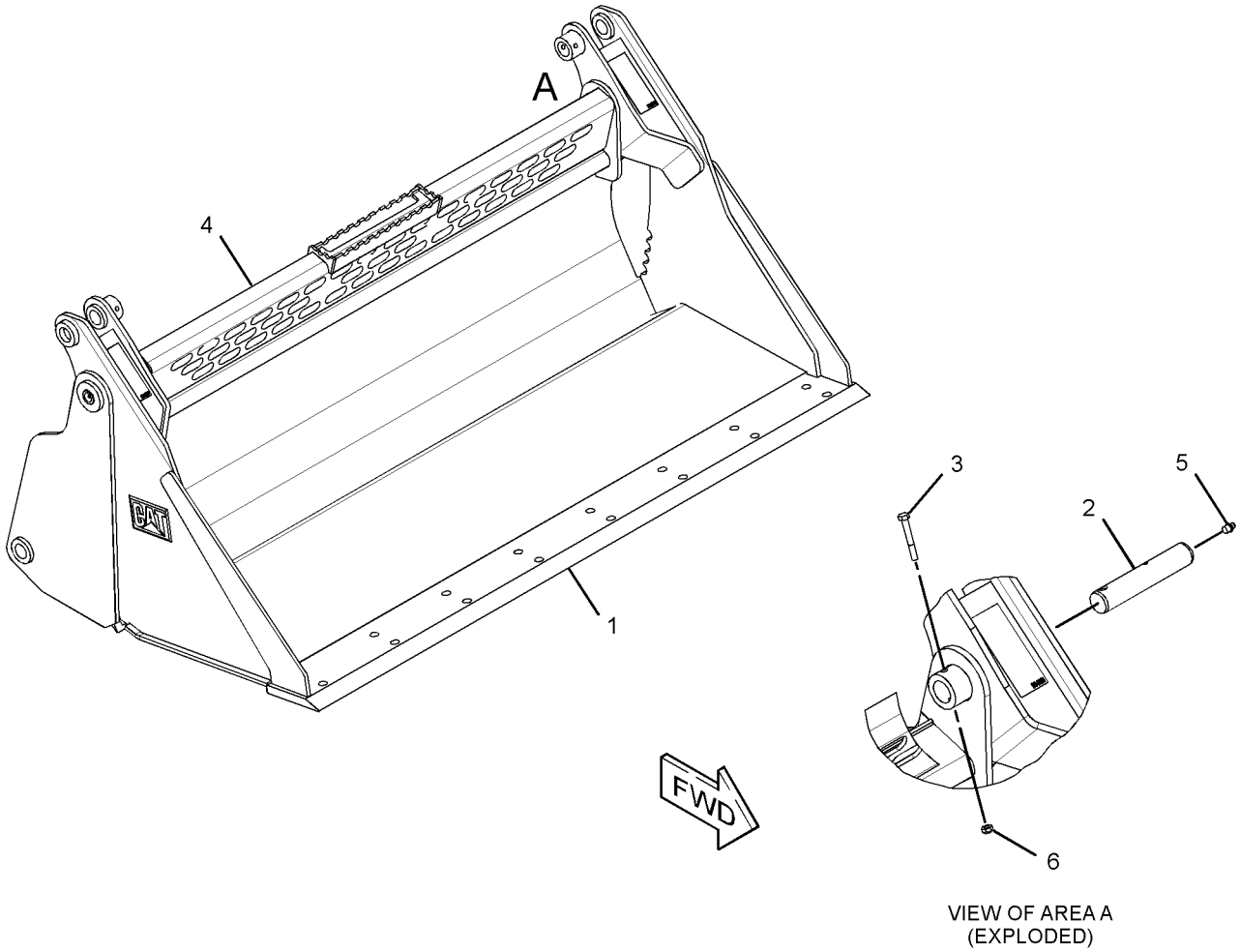

VIEW OF AREA A
(EXPLODED)

GRAPHIC #1 **<END>** g01920493

325-7047 BUCKET GP-MULTIPURPOSE

S/N: MST1-UP
1676-MM (66-IN)
PART OF 325-7046 BUCKET AR-MULTIPURPOSE
AN ATTACHMENT

SMCS-6104 **i03647949**

NOTE	REF NO	GRAPHIC REF	PART NUMBER	QTY	PART NAME 1 2 3 4 5 6 (PRODUCT LEVEL)	SEE PAGE
	1	1	**154-5012**	2	PIN	
Y	2	1	**154-5053**	1	CLAM AS-MULTIPURPOSE BUCKET	588
Y	3	1	*325-7048*	1	BLADE GP-MULTIPURPOSE BUCKET (66-IN)	480
	4	1	**3B-8489**	2	FITTING-GREASE	
M	5	1	**6V-9189**	2	LOCKNUT (M8X1.25-THD)	
M	6	1	**8T-6869**	2	BOLT (M8X1.25X60-MM)	

M-METRIC PART
Y-SEPARATE ILLUSTRATION

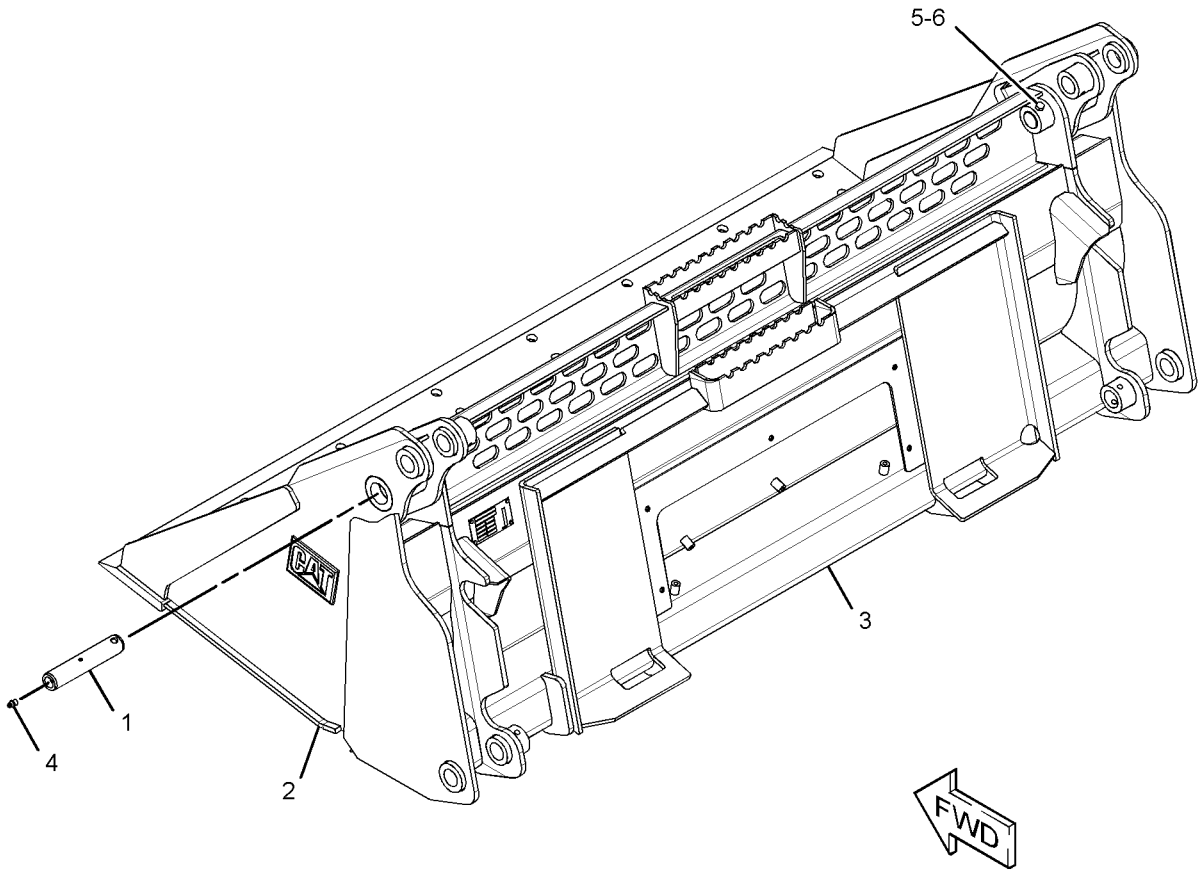

GRAPHIC #1 **<END>** g01943396

325-7057 BUCKET GP-MULTIPURPOSE

S/N: MST1-UP
1829-MM (72-IN)
PART OF 325-7056 BUCKET AR-MULTIPURPOSE
AN ATTACHMENT

SMCS-6104 **i03647950**

NOTE	REF NO	GRAPHIC REF	PART NUMBER	QTY	PART NAME 1 2 3 4 5 6 (PRODUCT LEVEL)	SEE PAGE
	1	1	**154-5012**	2	PIN	
Y	2	1	**154-5070**	1	CLAM AS-MULTIPURPOSE BUCKET	589
Y	3	1	*325-7058*	1	BLADE GP-MULTIPURPOSE BUCKET (72-IN)	482
	4	1	**3B-8489**	2	FITTING-GREASE	
M	5	1	**6V-9189**	2	LOCKNUT (M8X1.25-THD)	
M	6	1	**8T-6869**	2	BOLT (M8X1.25X60-MM)	

M-METRIC PART
Y-SEPARATE ILLUSTRATION

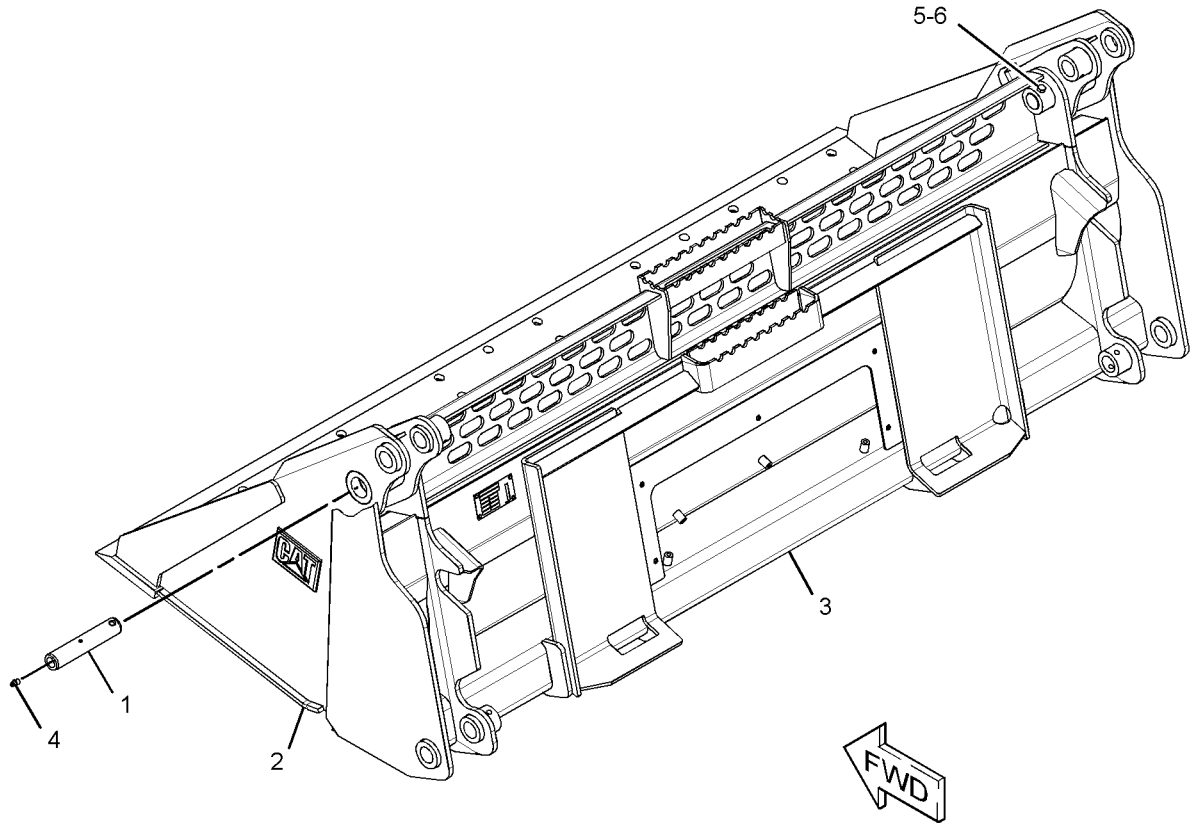

GRAPHIC #1 **<END>** g01943398

WORK TOOLS

325-7067 BUCKET GP-MULTIPURPOSE

S/N: MST1-UP
1981-MM (78-IN)
PART OF 325-7066 BUCKET AR-MULTIPURPOSE
AN ATTACHMENT

SMCS-6104 **i03647951**

NOTE	REF NO	GRAPHIC REF	PART NUMBER	QTY	PART NAME 1 2 3 4 5 6 (PRODUCT LEVEL)	SEE PAGE
	1	1	**154-5012**	2	PIN	
M	2	1	**8T-6869**	2	BOLT (M8X1.25X60-MM)	
Y	3	1	**199-8308**	1	CLAM AS-MULTIPURPOSE BUCKET	590
Y	4	1	*325-7068*	1	BLADE GP-MULTIPURPOSE BUCKET (78-IN)	484
	5	1	**3B-8489**	2	FITTING-GREASE	
M	6	1	**6V-9189**	2	LOCKNUT (M8X1.25-THD)	

M-METRIC PART
Y-SEPARATE ILLUSTRATION

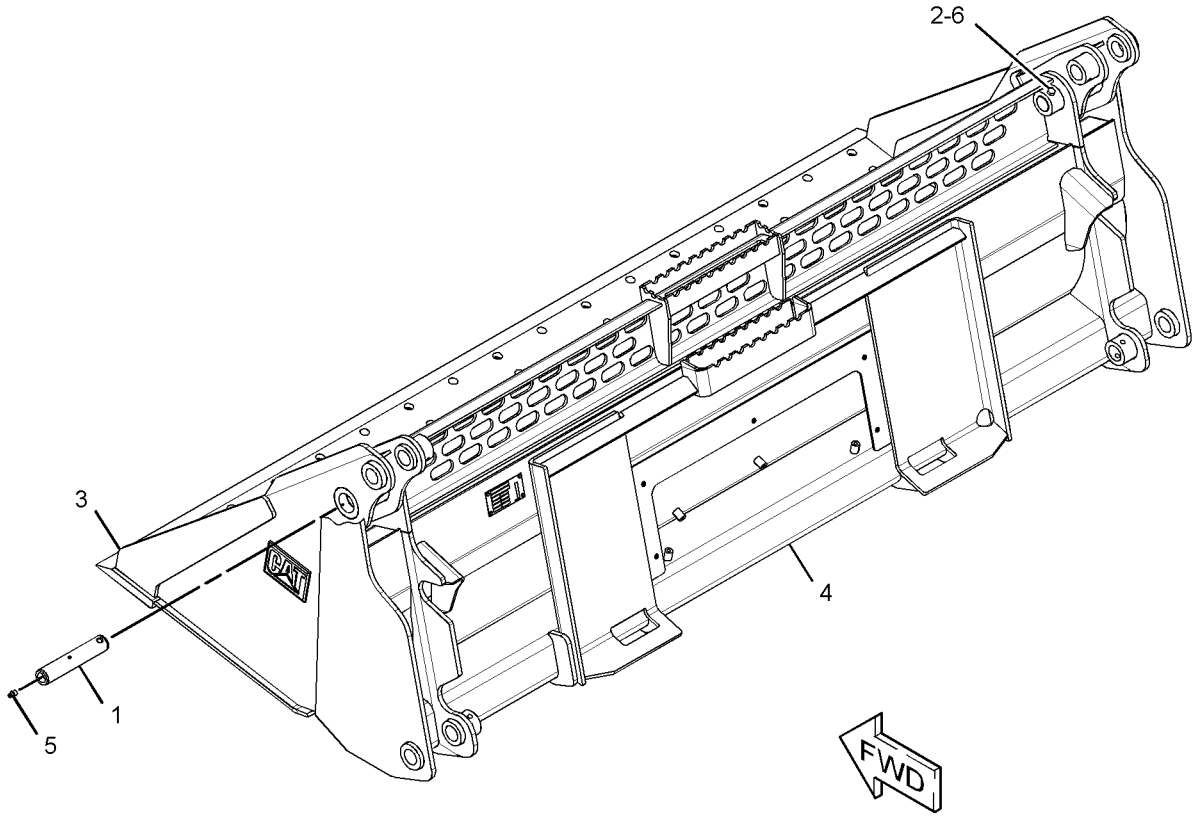

GRAPHIC #1 **<END>** g01943400

WORK TOOLS

325-7077 BUCKET GP-MULTIPURPOSE

S/N: MST1-UP
2134-MM (84-IN)
PART OF 325-7076 BUCKET AR-MULTIPURPOSE
AN ATTACHMENT

SMCS-6104 **i03647952**

NOTE	REF NO	GRAPHIC REF	PART NUMBER	QTY	PART NAME 1 2 3 4 5 6 (PRODUCT LEVEL)	SEE PAGE
	1	1	**154-5012**	2	PIN	
	2	1	**159-8038**	2	FILM-WARNING (CRUSH HAZARD, STAY BACK)	
Y	3	1	**293-0148**	1	CLAM AS-MULTIPURPOSE BUCKET	591
Y	4	1	*325-7078*	1	BLADE GP-MULTIPURPOSE BUCKET (84-IN)	486
	5	1	**3B-8489**	2	FITTING-GREASE	
M	6	1	**6V-9189**	2	LOCKNUT (M8X1.25-THD)	
M	7	1	**8T-6869**	2	BOLT (M8X1.25X60-MM)	

M-METRIC PART
Y-SEPARATE ILLUSTRATION

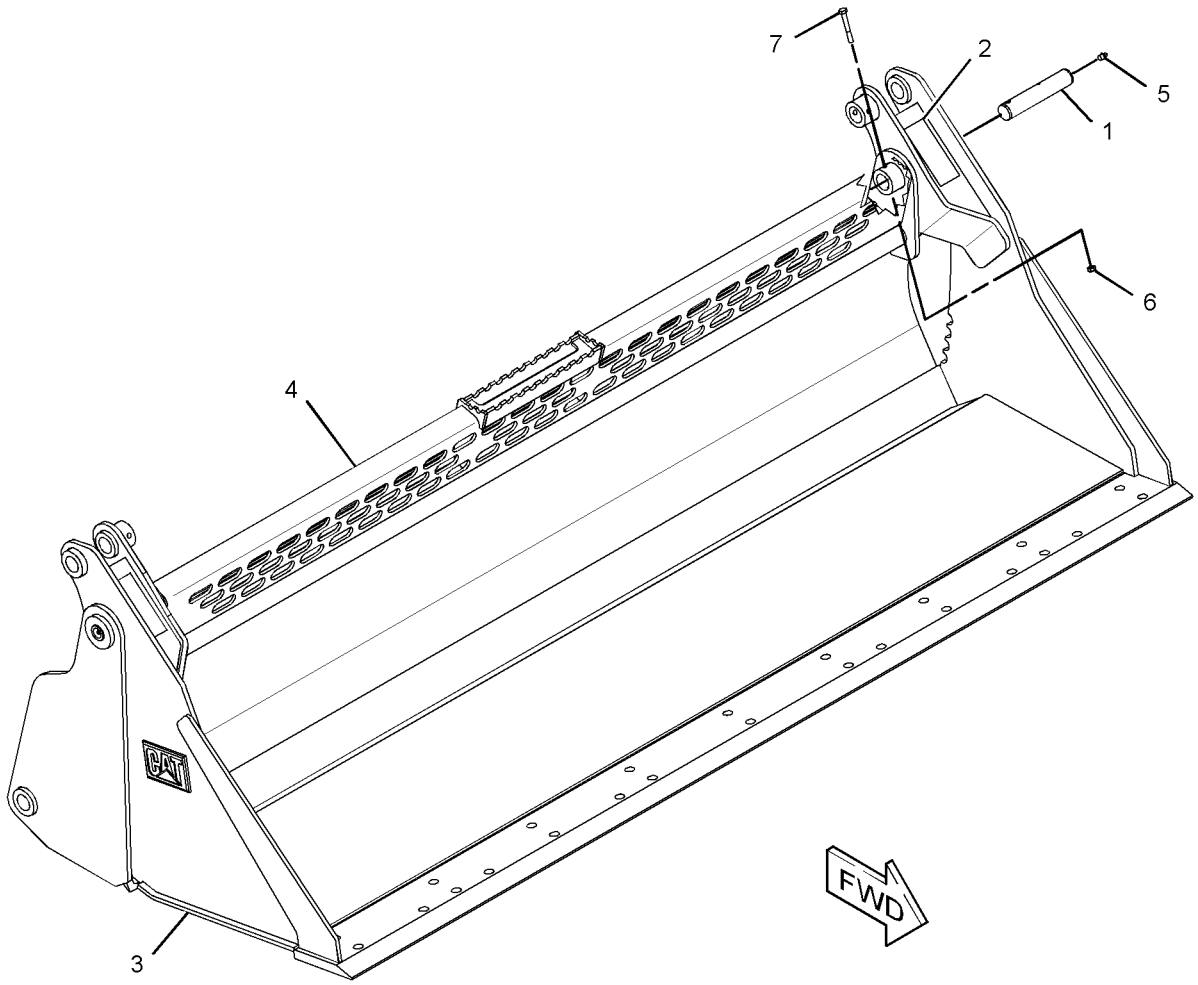

GRAPHIC #1 **<END>** g01532821

285-6096 BUCKET GP-UTILITY

S/N: MST1-UP
1524-MM (60-IN)
PART OF 285-6095 BUCKET AR-UTILITY
AN ATTACHMENT

SMCS-6101 **i03647012**

NOTE	REF NO	GRAPHIC REF	PART NUMBER	QTY	PART NAME 1 2 3 4 5 6 (PRODUCT LEVEL)	SEE PAGE
	1	1	**154-2704**	1	PLATE-INSTRUCTION (BUCKET SPECIFICATIONS)	
	2	1	**168-8389**	4	TACK-FASTENER	
Y	3	1	**285-6097**	1	BUCKET AS-UTILITY	554

Y-SEPARATE ILLUSTRATION

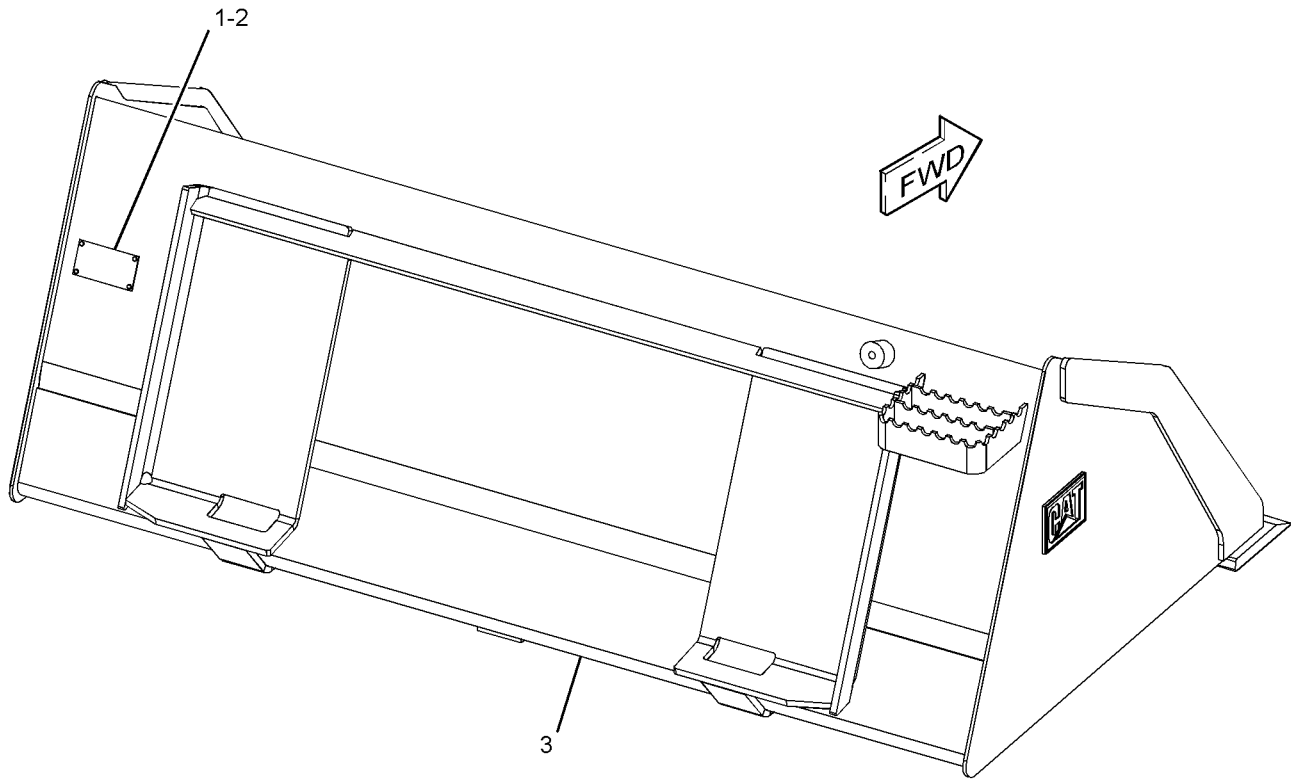

GRAPHIC #1 **<END>** g01957401

WORK TOOLS

285-6099 BUCKET GP-UTILITY

S/N: MST1-UP

PART OF 285-6093 BUCKET AR-GRAPPLE, 285-6100 BUCKET AR-UTILITY

AN ATTACHMENT

SMCS-6101 **i03648375**

NOTE	REF NO	GRAPHIC REF	PART NUMBER	QTY	PART NAME 1 2 3 4 5 6 (PRODUCT LEVEL)	SEE PAGE
	1	1	**154-2704**	1	PLATE-INSTRUCTION (BUCKET SPECIFICATIONS)	
	2	1	**168-8389**	4	TACK-FASTENER	
Y	3	1	*285-6098*	1	BUCKET AS-UTILITY (66-IN)	555

Y-SEPARATE ILLUSTRATION

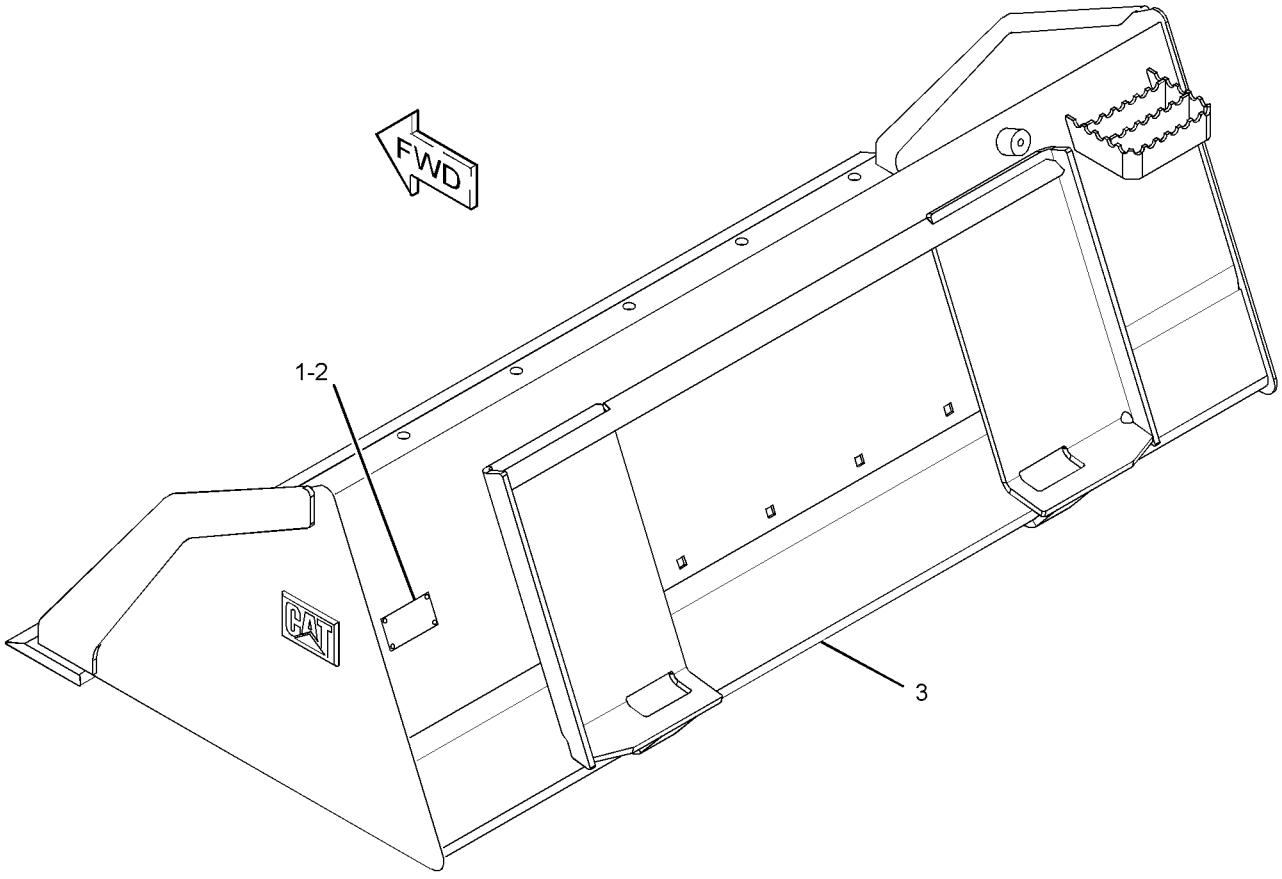

GRAPHIC #1 **<END>** g01954053

WORK TOOLS

285-6102 BUCKET GP-UTILITY

S/N: MST1-UP

PART OF 285-6104 BUCKET AR-GRAPPLE, 285-6101 BUCKET AR-UTILITY

AN ATTACHMENT

SMCS-6101 **i03648376**

NOTE	REF NO	GRAPHIC REF	PART NUMBER	QTY	PART NAME 1 2 3 4 5 6 (PRODUCT LEVEL)	SEE PAGE
	1	1	**154-2704**	1	PLATE-INSTRUCTION (BUCKET SPECIFICATIONS)	
	2	1	**168-8389**	4	TACK-FASTENER	
Y	3	1	*285-6103*	1	BUCKET AS-UTILITY (72-IN)	556

Y-SEPARATE ILLUSTRATION

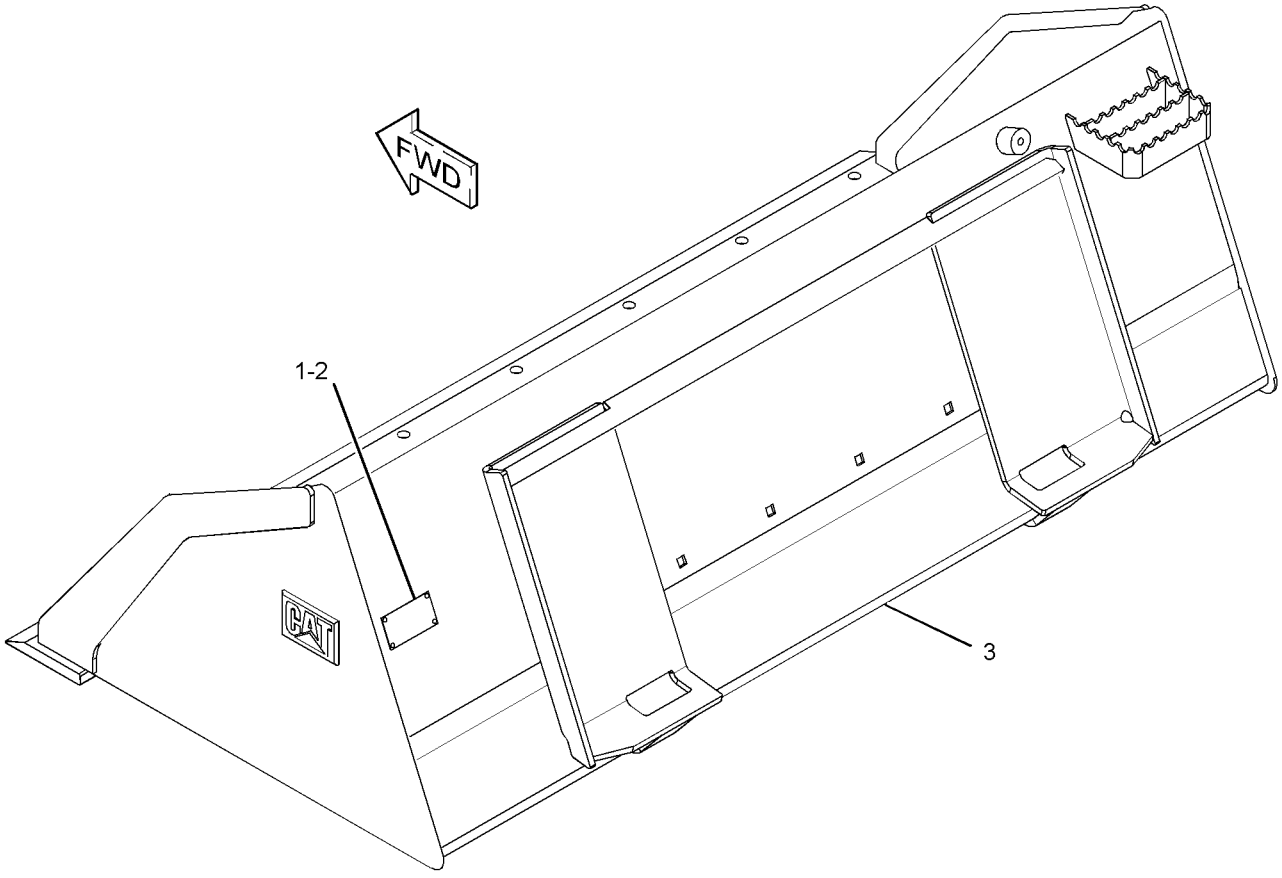

GRAPHIC #1 **<END>** g01954037

293-9427 CARRIAGE & FORK AR

S/N: MST1-UP
AN ATTACHMENT

SMCS-6136, 6402 **i02628876**

NOTE	PART NUMBER	QTY	PART NAME 1 2 3 4 5 6 (PRODUCT LEVEL)	SEE PAGE
Y	**261-6681**	1	CARRIAGE GP-FORK	585
Y	**195-6943**	2	FORK GP-PALLET (36-IN)	611

Y-SEPARATE ILLUSTRATION

<END>

293-9428 CARRIAGE & FORK AR

S/N: MST1-UP
AN ATTACHMENT

SMCS-6136, 6402 **i02628877**

NOTE	PART NUMBER	QTY	PART NAME 1 2 3 4 5 6 (PRODUCT LEVEL)	SEE PAGE
Y	**261-6681**	1	CARRIAGE GP-FORK	585
Y	**195-6942**	2	FORK GP-PALLET (42-IN)	611

Y-SEPARATE ILLUSTRATION

<END>

293-9429 CARRIAGE & FORK AR

S/N: MST1-UP
AN ATTACHMENT

SMCS-6136, 6402 **i02628878**

NOTE	PART NUMBER	QTY	PART NAME 1 2 3 4 5 6 (PRODUCT LEVEL)	SEE PAGE
Y	**261-6681**	1	CARRIAGE GP-FORK	585
Y	**195-8545**	2	FORK GP-PALLET (48-IN)	611

Y-SEPARATE ILLUSTRATION

<END>

WORK TOOLS

261-6681 CARRIAGE GP-FORK

S/N: MST1-UP

PART OF 293-9427, 293-9428, 293-9429 CARRIAGE & FORK AR, 293-9426 CARRIAGE GP-FORK

AN ATTACHMENT

SMCS-6402 **i03647961**

NOTE	REF NO	GRAPHIC REF	PART NUMBER	QTY	PART NAME 1 2 3 4 5 6 (PRODUCT LEVEL)	SEE PAGE
	1	1	**157-4835**	1	PLATE-INSTRUCTION	
	2	1	**168-8389**	4	TACK-FASTENER	
	3	1	**252-8595**	1	STEP AS	
	4	1	**8T-4121**	2	WASHER-HARD (11X21X2.5-MM THK)	
M	5	1	**8T-4133**	2	NUT (M10X1.5-THD)	
M	6	1	**8T-4136**	2	BOLT (M10X1.5X25-MM)	

M-METRIC PART

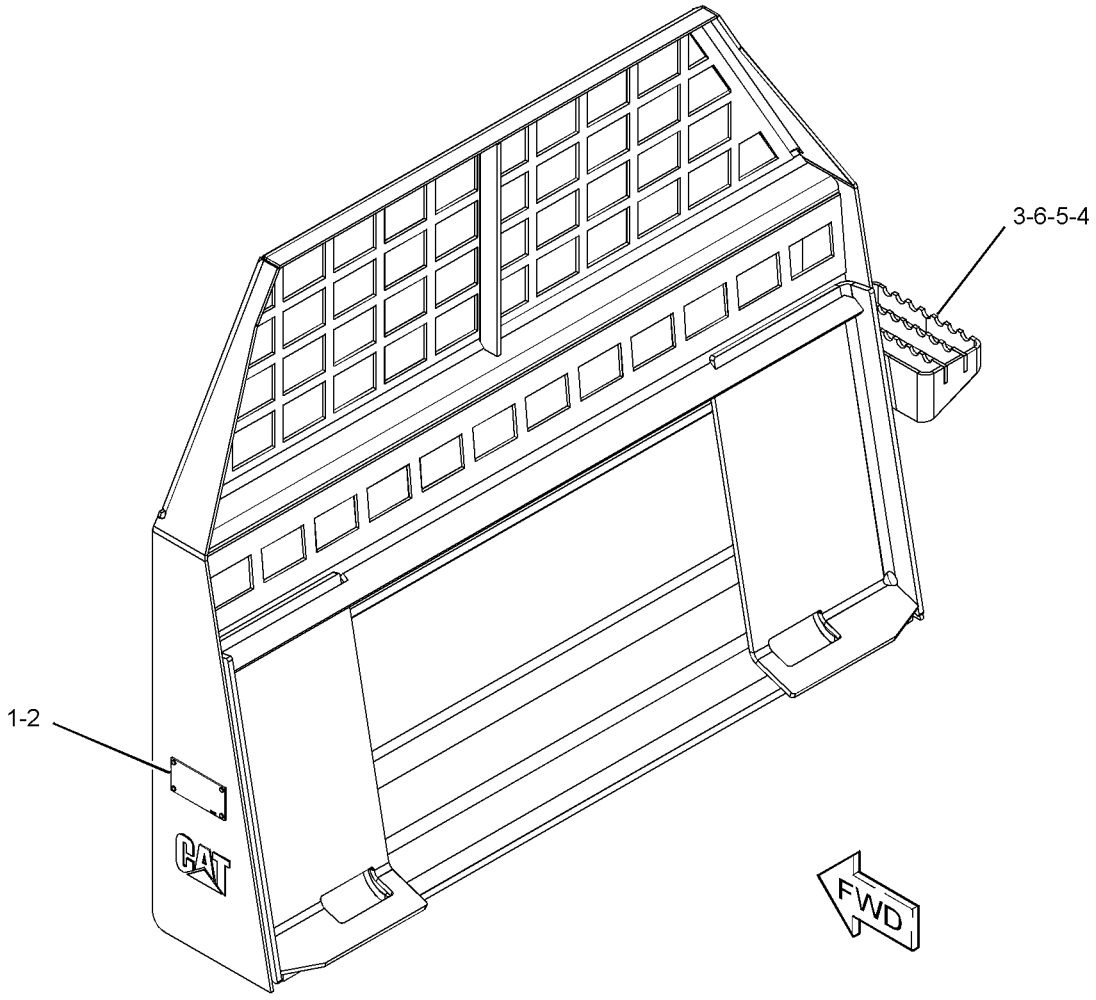

GRAPHIC #1 **<END>** g01282475

WORK TOOLS

293-9426 CARRIAGE GP-FORK

S/N: MST1-UP

AN ATTACHMENT

SMCS-6402 **i02628875**

NOTE	PART NUMBER	QTY	PART NAME 1 2 3 4 5 6 (PRODUCT LEVEL)	SEE PAGE
Y	**261-6681**	6	CARRIAGE GP-FORK	585

Y-SEPARATE ILLUSTRATION

<END>

149-4232 CLAM AS-MULTIPURPOSE BUCKET

S/N: MST1-UP
1524-MM (60-IN)
PART OF 154-5005, 279-5383, 325-7037 BUCKET GP-MULTIPURPOSE
AN ATTACHMENT

SMCS-6104 **i03622320**

NOTE	REF NO	GRAPHIC REF	PART NUMBER	QTY	PART NAME 1 2 3 4 5 6 (PRODUCT LEVEL)	SEE PAGE
	1	1	**142-8805**	4	BEARING-SLEEVE	
	2	1	**161-4130**	2	PLATE-IDENTIFICATION (CAT)	
	3	1	**149-5435**	1	EDGE	
	4	1	**159-8038**	2	FILM-WARNING (CRUSH HAZARD, STAY BACK)	

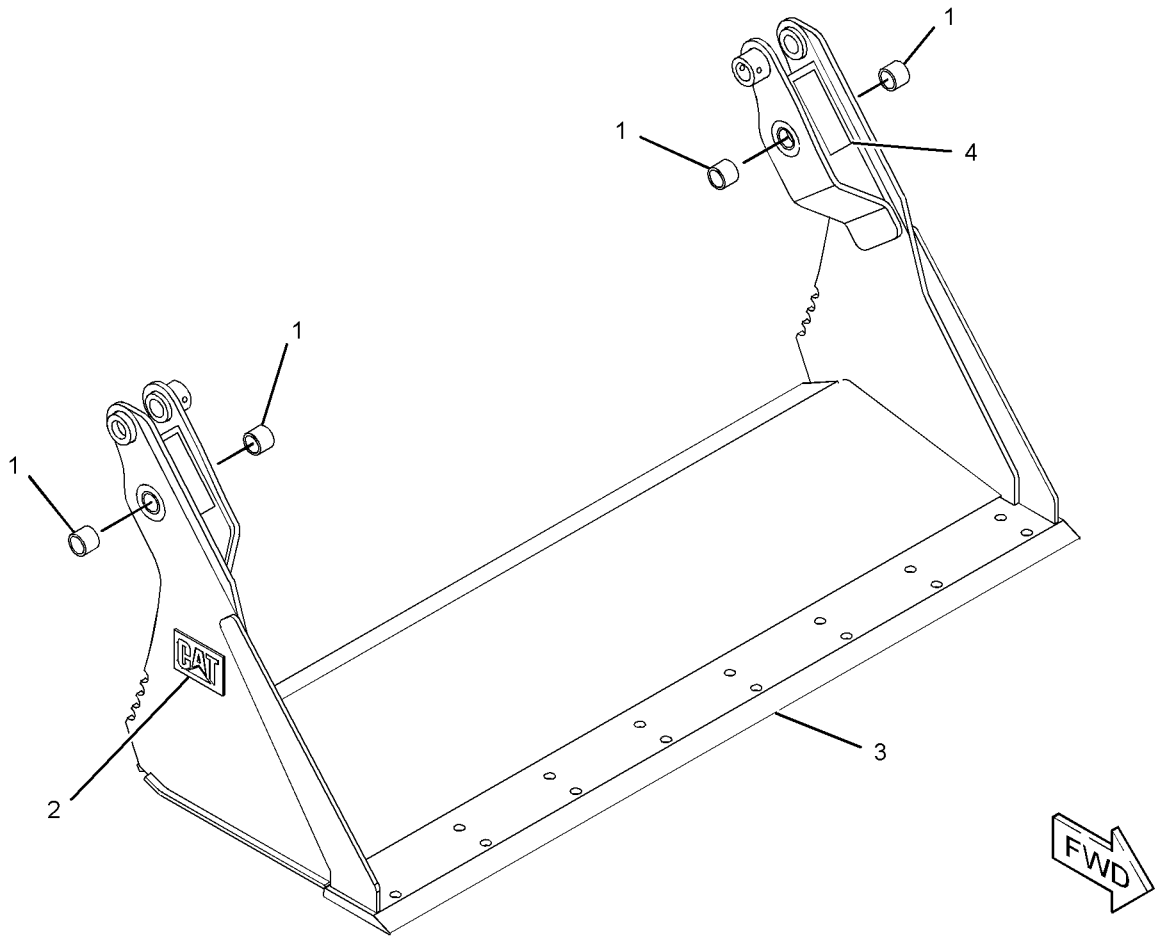

GRAPHIC #1 **<END>** g01945759

WORK TOOLS

154-5053 CLAM AS-MULTIPURPOSE BUCKET

S/N: MST1-UP
1676-MM (66-IN)
PART OF 279-5389, 325-7047 BUCKET GP-MULTIPURPOSE
AN ATTACHMENT

SMCS-6104 **i03621236**

NOTE	REF NO	GRAPHIC REF	PART NUMBER	QTY	PART NAME 1 2 3 4 5 6 (PRODUCT LEVEL)	SEE PAGE
	1	1	**142-8805**	4	BEARING-SLEEVE	
	2	1	**161-4130**	2	PLATE-IDENTIFICATION (CAT)	
	3	1	**149-5436**	1	EDGE	
	4	1	**159-8038**	2	FILM-WARNING (CRUSH HAZARD, STAY BACK)	

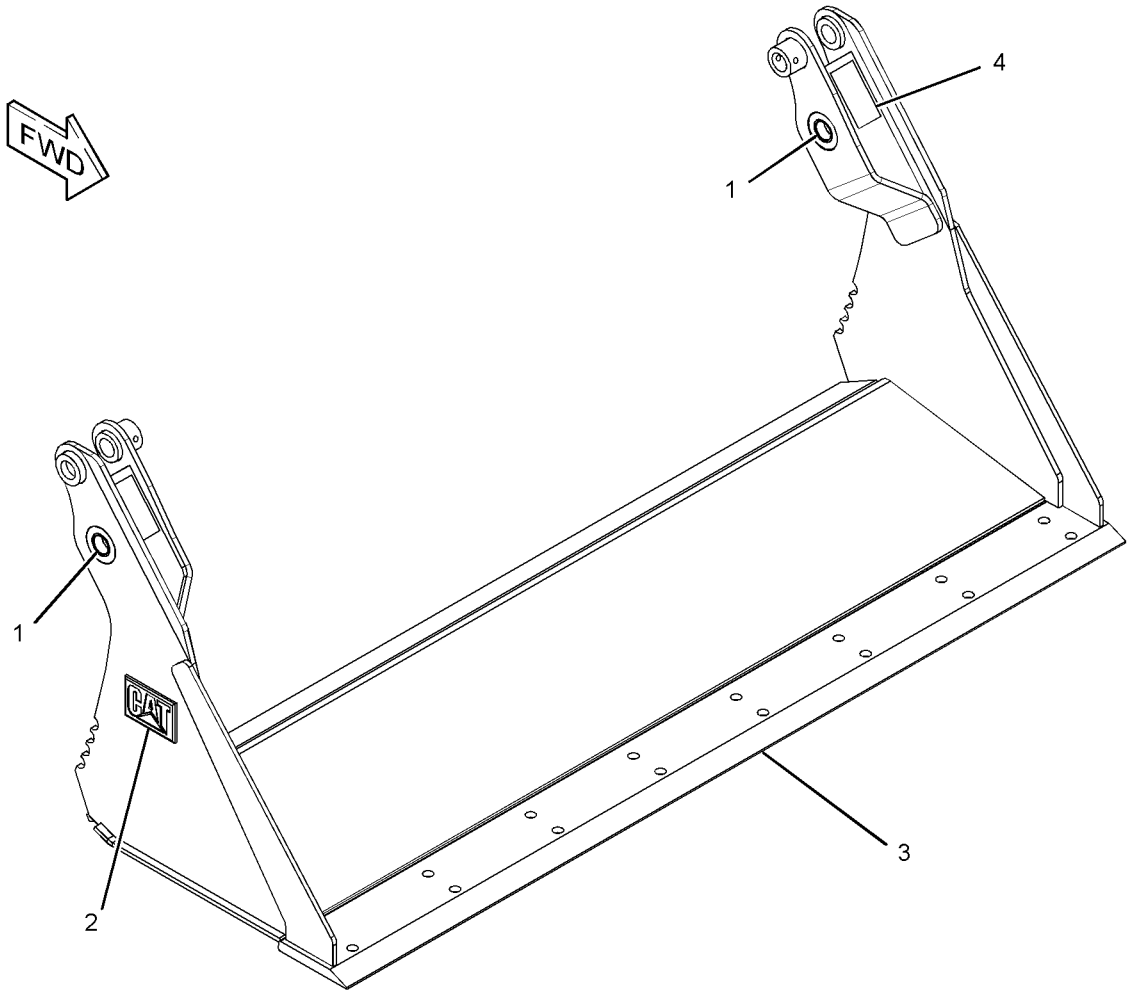

GRAPHIC #1 **<END>** g01945550

154-5070 CLAM AS-MULTIPURPOSE BUCKET

S/N: MST1-UP
1829-MM (72-IN)
PART OF 154-5009, 279-5397, 325-7057 BUCKET GP-MULTIPURPOSE
AN ATTACHMENT

SMCS-6104 **i03621205**

NOTE	REF NO	GRAPHIC REF	PART NUMBER	QTY	PART NAME 1 2 3 4 5 6 (PRODUCT LEVEL)	SEE PAGE
	1	1	**142-8805**	4	BEARING-SLEEVE	
	2	1	**161-4130**	2	PLATE-IDENTIFICATION (CAT)	
	3	1	**149-5437**	1	EDGE	
	4	1	**159-8038**	2	FILM-WARNING (CRUSH HAZARD, STAY BACK)	

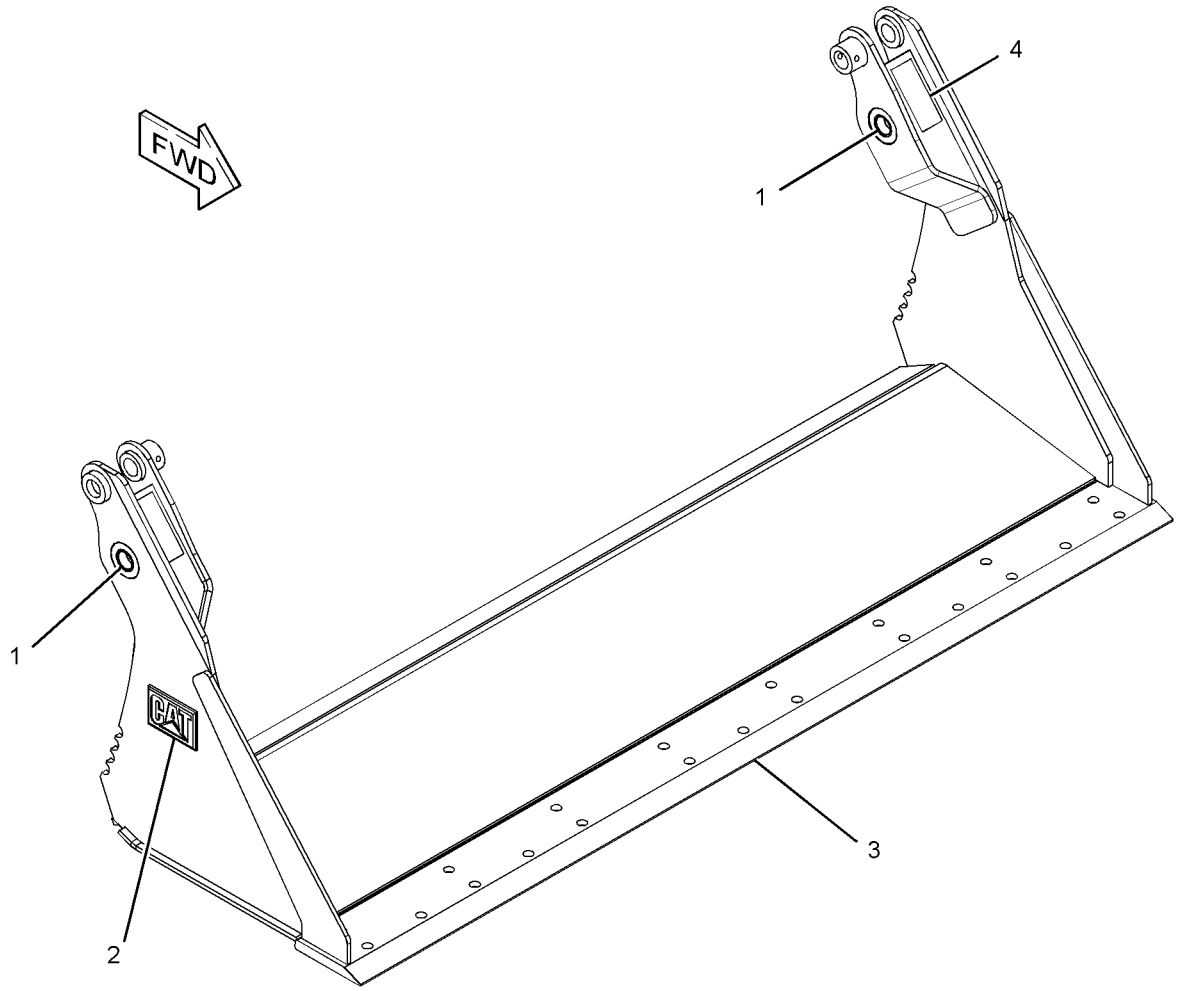

GRAPHIC #1 **<END>** g01945555

WORK TOOLS

199-8308 CLAM AS-MULTIPURPOSE BUCKET

S/N: MST1-UP
1981-MM (78-IN)
PART OF 279-5404, 325-7067 BUCKET GP-MULTIPURPOSE
AN ATTACHMENT

SMCS-6104 **i03621225**

NOTE	REF NO	GRAPHIC REF	PART NUMBER	QTY	PART NAME 1 2 3 4 5 6 (PRODUCT LEVEL)	SEE PAGE
	1	1	**142-8805**	4	BEARING-SLEEVE	
	2	1	**161-4130**	2	PLATE-IDENTIFICATION (CAT)	
	3	1	**199-7722**	1	EDGE	
	4	1	**199-8317**	1	EDGE	
	5	1	**159-8038**	2	FILM-WARNING (CRUSH HAZARD, STAY BACK)	

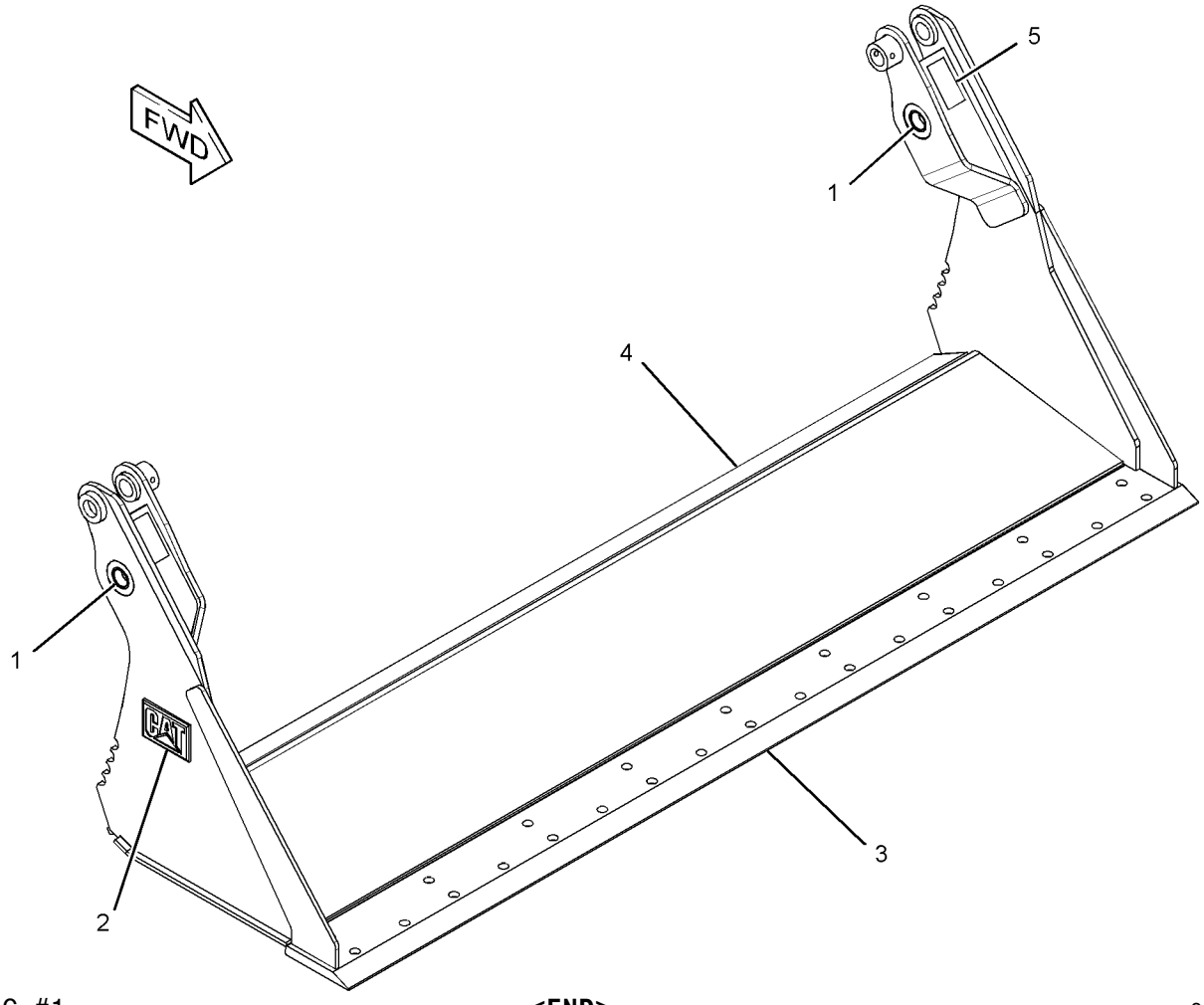

GRAPHIC #1 **<END>** g01945620

293-0148 CLAM AS-MULTIPURPOSE BUCKET

S/N: MST1-UP
2134-MM (84-IN)
PART OF 293-0141, 325-7077 BUCKET GP-MULTIPURPOSE
AN ATTACHMENT

SMCS-6104 **i03621201**

NOTE	REF NO	GRAPHIC REF	PART NUMBER	QTY	PART NAME 1 2 3 4 5 6 (PRODUCT LEVEL)	SEE PAGE
	1	1	**142-8805**	4	BEARING-SLEEVE	
	2	1	**161-4130**	2	PLATE-IDENTIFICATION (CAT)	
	3	1	**229-3432**	1	EDGE	

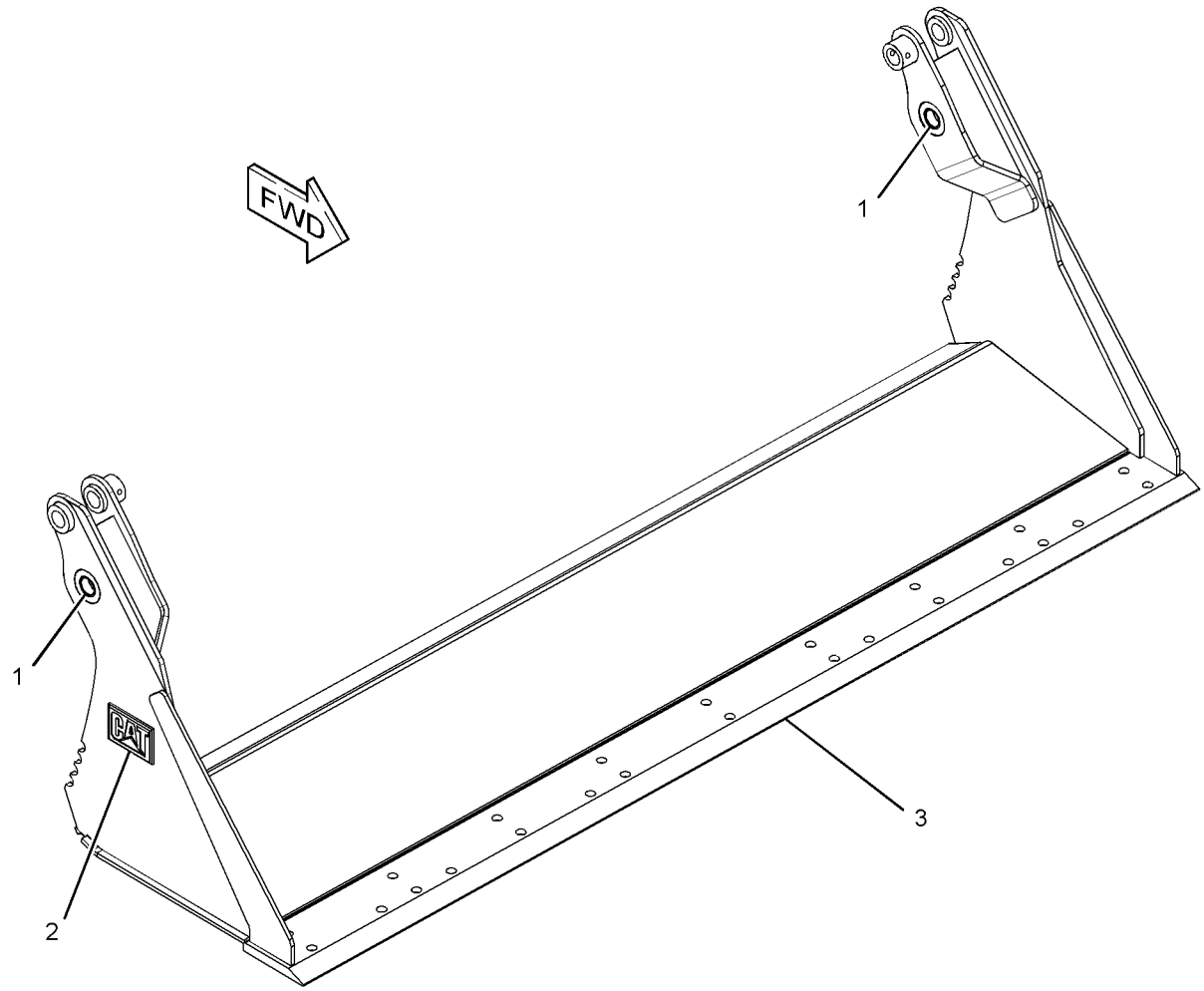

GRAPHIC #1 **<END>** g01945653

296-0582 CONVERSION GP-WORK TOOL—KIT, HIGH FLOW

S/N: MST1-UP

AN ATTACHMENT

SMCS-1408, 4283, 5057, 7553 **i03568248**

NOTE	REF NO	GRAPHIC REF	PART NUMBER	QTY	PART NAME 1 2 3 4 5 6 (PRODUCT LEVEL)	SEE PAGE
	1	1	**258-4198**	1	HARNESS AS-WORK TOOL	
		1	**8T-8737**	5	PLUG-SEAL	
		1	**9W-0844**	2	SOCKET-CONNECTOR (14-GA)	
		1	**155-2260**	1	KIT-CONNECTING PLUG (3-PIN)	
					(INCLUDES PLUG AS, WEDGE & INTERFACE SEAL)	
		1	**156-1460**	1	RECEPTACLE (8-PIN)	
		1	**179-5434**	1	PLUG AS	
		1	**3K-8782**	1	FUSE (10-AMPERE)	
		1	**180-9340**	1	SOCKET-CONNECTOR (14-GA TO 18-GA)	
	2	1	**259-1107**	1	SWITCH AS-TOGGLE (IDLE SPEED)	
		1	**102-8803**	1	KIT-RECEPTACLE (3-PIN)	
					(INCLUDES RECEPTACLE AS & WEDGE)	
		1	**186-3735**	3	PIN-CONNECTOR (16-GA TO 18-GA)	
	3	1	**296-0583**	1	BRACKET	
	4	1	**296-0584**	1	MAGNET	
	5	1	**096-6166**	4	WASHER-HARD (4.5X9X1-MM THK)	
M	6	1	**6V-9671**	2	SCREW-MACHINE (M3X0.5X12-MM)	
M	7	1	**8T-2658**	2	LOCKNUT (M3X0.5-THD)	

M-METRIC PART

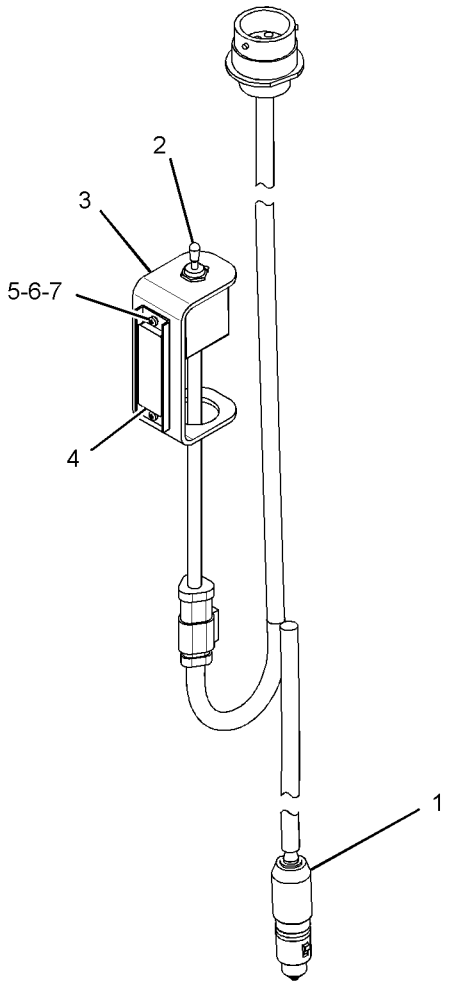

GRAPHIC #1 **<END>** g01894540

258-2790 COUPLER AR-QUICK

S/N: MST1-UP

AN ATTACHMENT

SMCS-6129 **i02860885**

NOTE	PART NUMBER	QTY	PART NAME 1 2 3 4 5 6 (PRODUCT LEVEL)	SEE PAGE
Y	*258-2500*	1	COUPLER GP-QUICK	594
Y	*285-2190*	1	FITTING GP-HYDRAULIC (MANUAL)	316

Y-SEPARATE ILLUSTRATION

<END>

258-3691 COUPLER AR-QUICK

S/N: MST1-UP

AN ATTACHMENT

SMCS-6129 **i02625580**

NOTE	PART NUMBER	QTY	PART NAME 1 2 3 4 5 6 (PRODUCT LEVEL)	SEE PAGE
Y	*258-2501*	1	COUPLER GP-QUICK	595
Y	*258-2425*	1	LINES GP-COUPLER	355
Y	*258-4190*	1	WIRING GP-QUICK COUPLER	204

Y-SEPARATE ILLUSTRATION

<END>

258-2500 COUPLER GP-QUICK

S/N: MST1-UP
PART OF 258-2790 COUPLER AR-QUICK
AN ATTACHMENT

SMCS-6129 **i02711953**

NOTE	REF NO	GRAPHIC REF	PART NUMBER	QTY	PART NAME 1 2 3 4 5 6 (PRODUCT LEVEL)	SEE PAGE
	1	1	**159-5797**	2	SPRING	
Y	2	1	*258-2537*	1	LOCK GP-QUICK COUPLER (LH)	635
Y	3	1	*258-2535*	1	LOCK GP-QUICK COUPLER (RH)	634
	4	1	**287-4300**	1	COUPLER AS	
	5	1	**131-5879**	2	WASHER (11X32X3-MM THK)	
	6	1	**132-7551**	2	SPACER (11X19X6-MM THK)	
	7	1	**5B-0651**	2	FITTING-STRAIGHT	
M	8	1	**6V-7744**	2	LOCKNUT (M10X1.5-THD)	
M	9	1	**7X-2621**	2	BOLT (M10X1.5X12-MM)	
	10	1	**7X-7729**	4	WASHER (11X25X3-MM THK)	
	11	1	**8T-4121**	6	WASHER-HARD (11X21X2.5-MM THK)	
M	12	1	**8T-4172**	2	BOLT (M10X1.5X80-MM)	
M	13	1	**8T-4196**	4	BOLT (M10X1.5X35-MM)	

M-METRIC PART
Y-SEPARATE ILLUSTRATION

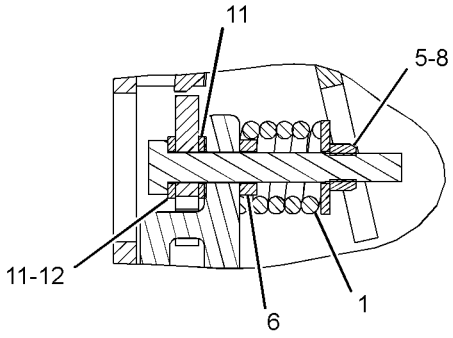

SECTION A-A

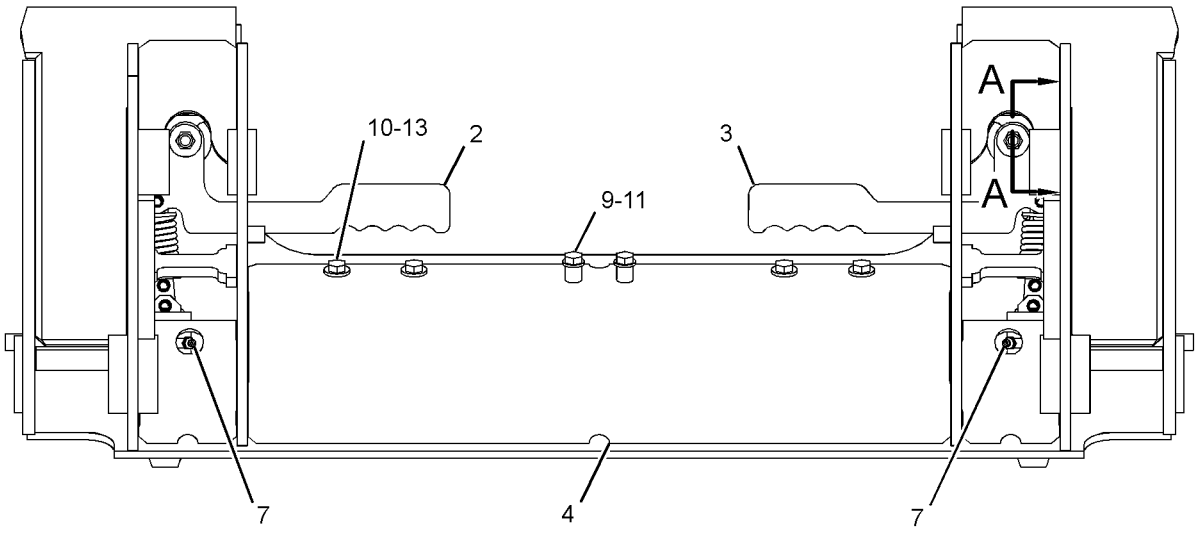

FRONT VIEW

GRAPHIC #1 **<END>** g01320262

258-2501 COUPLER GP-QUICK

S/N: MST1-UP
PART OF 258-3691 COUPLER AR-QUICK
AN ATTACHMENT

SMCS-6129 **i02625579**

NOTE	REF NO	GRAPHIC REF	PART NUMBER	QTY	PART NAME 1 2 3 4 5 6 (PRODUCT LEVEL)	SEE PAGE
	1	1	**207-9785**	2	PIN	
Y	2	1	*215-3962*	1	CYLINDER & LINK GP-COUPLER (LH)	597
Y	3	1	*215-3963*	1	CYLINDER & LINK GP-COUPLER (RH)	598
	4	1	**218-6332**	1	BRACKET AS	
	5	1	**218-6333**	1	BRACKET AS	
	6	1	**287-4300**	1	COUPLER AS	
	7	1	**3B-4628**	2	PIN-COTTER	
	8	1	**5B-0651**	2	FITTING-STRAIGHT	
	9	1	**5P-0372**	2	LOCK PIN	
	10	1	**8L-5188**	2	PIN	
	11	1	**8T-4121**	12	WASHER-HARD (11X21X2.5-MM THK)	
M	12	1	**8T-4133**	4	NUT (M10X1.5-THD)	
M	13	1	**8T-4196**	8	BOLT (M10X1.5X35-MM)	
	14	1	**9T-7303**	4	SPACER (16X28X1.5-MM THK)	

M-METRIC PART
Y-SEPARATE ILLUSTRATION

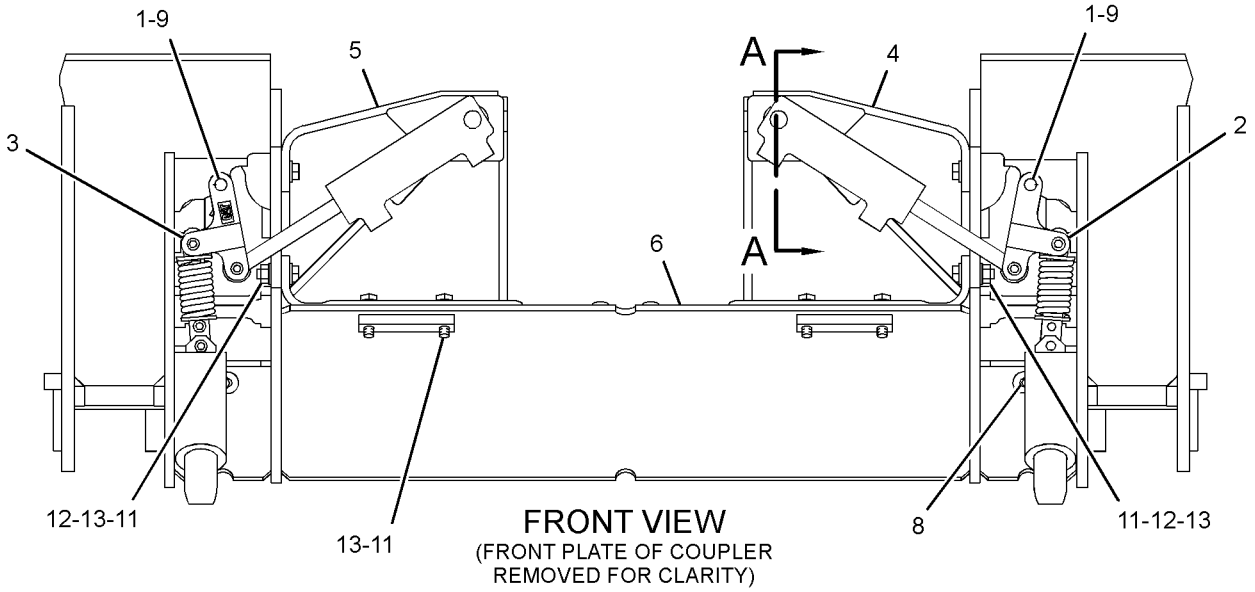

FRONT VIEW
(FRONT PLATE OF COUPLER REMOVED FOR CLARITY)

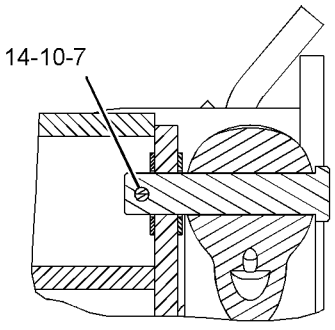

SECTION A-A

GRAPHIC #1

<END>

g01322741

162-5236 COVER GP-LINES

S/N: MST1-UP
PART OF 154-5004, 154-5010, 279-5382, 279-5390, 279-5398, 279-5403, 293-0139, 325-7036, 325-7046, 325-7056, 325-7066, 325-7076 BUCKET
AR-MULTIPURPOSE
AN ATTACHMENT

i01227894

NOTE	REF NO	GRAPHIC REF	PART NUMBER	QTY	PART NAME 1 2 3 4 5 6 (PRODUCT LEVEL)	SEE PAGE
	1	1	**161-4128**	1	PLATE	
M	2	1	**5C-9553**	5	BOLT (M6X1.0X16MM)	
	3	1	**9X-2026**	5	WASHER (1MM THK)	

M-METRIC PART

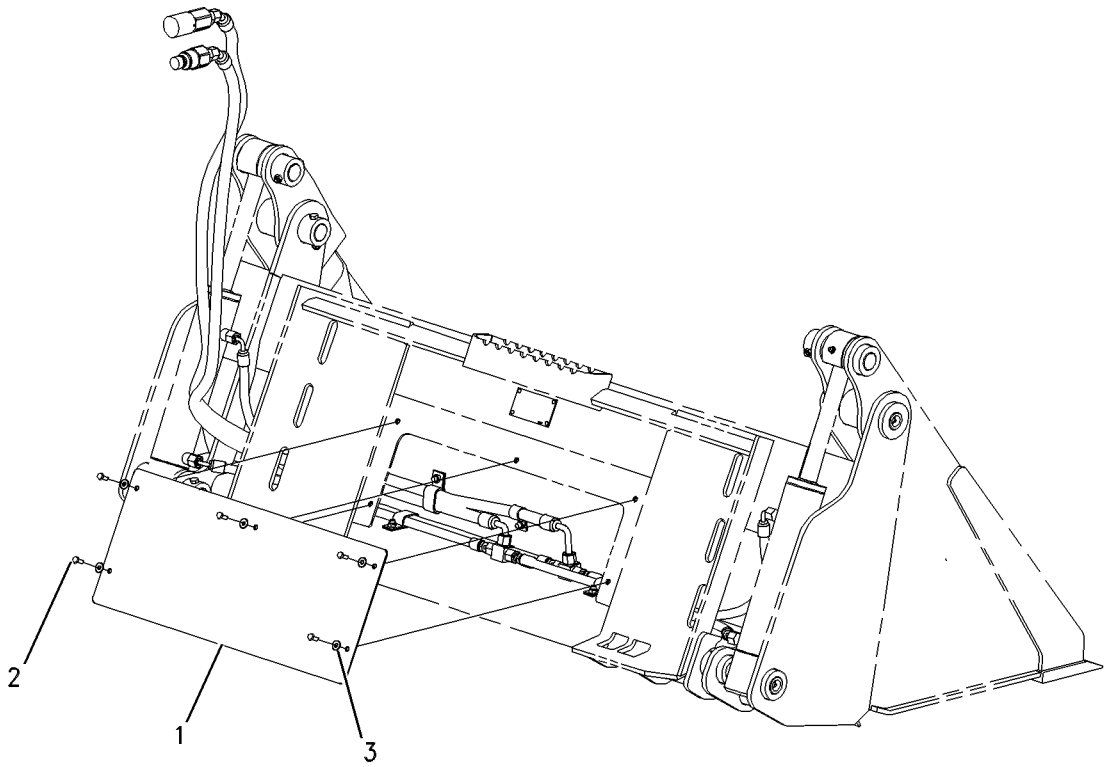

GRAPHIC #1 **<END>** g00560360

215-3962 CYLINDER & LINK GP-COUPLER—LH

S/N: MST1-UP
PART OF 258-2501 COUPLER GP-QUICK
AN ATTACHMENT

SMCS-5133, 6129 **i02960140**

NOTE	REF NO	GRAPHIC REF	PART NUMBER	QTY	PART NAME 1 2 3 4 5 6 (PRODUCT LEVEL)	SEE PAGE
	1	1	**303-8767**	1	PIN-SPRING	
Y	2	1	**192-2640**	1	CYLINDER GP-HYDRAULIC (COUPLER)	308
	3	1	**192-2642**	1	PIN	
	4	1	**303-8768**	1	PIN-SPRING	
Y	5	1	*215-3957*	1	LINK GP-COUPLER	631

Y-SEPARATE ILLUSTRATION

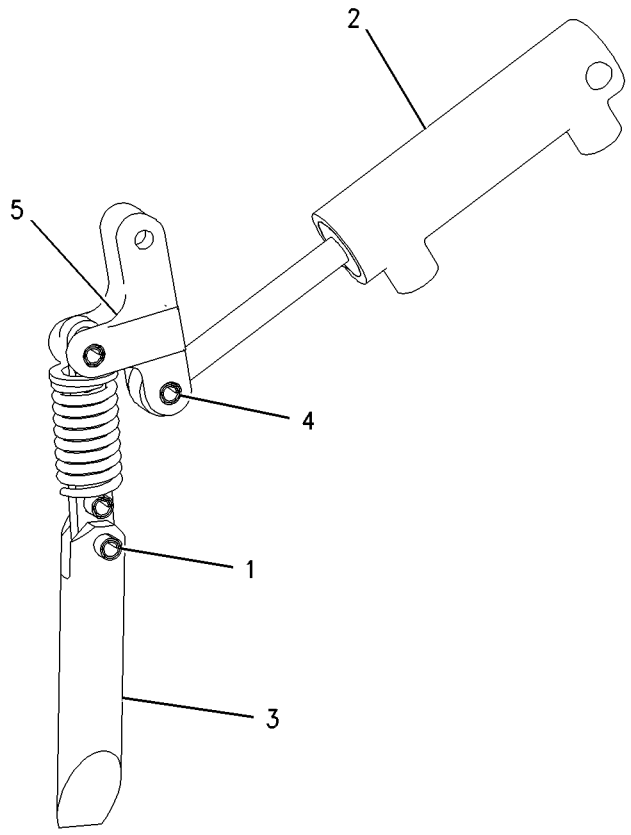

GRAPHIC #1 **<END>** g00871294

215-3963 CYLINDER & LINK GP-COUPLER–RH

S/N: MST1-UP
PART OF 258-2501 COUPLER GP-QUICK
AN ATTACHMENT

SMCS-5133, 6129 **i02960142**

NOTE	REF NO	GRAPHIC REF	PART NUMBER	QTY	PART NAME 1 2 3 4 5 6 (PRODUCT LEVEL)	SEE PAGE
	1	1	**303-8767**	1	PIN-SPRING	
Y	2	1	**192-2640**	1	CYLINDER GP-HYDRAULIC (COUPLER)	308
	3	1	**192-2642**	1	PIN	
	4	1	**303-8768**	1	PIN-SPRING	
Y	5	1	*215-3957*	1	LINK GP-COUPLER	631

Y-SEPARATE ILLUSTRATION

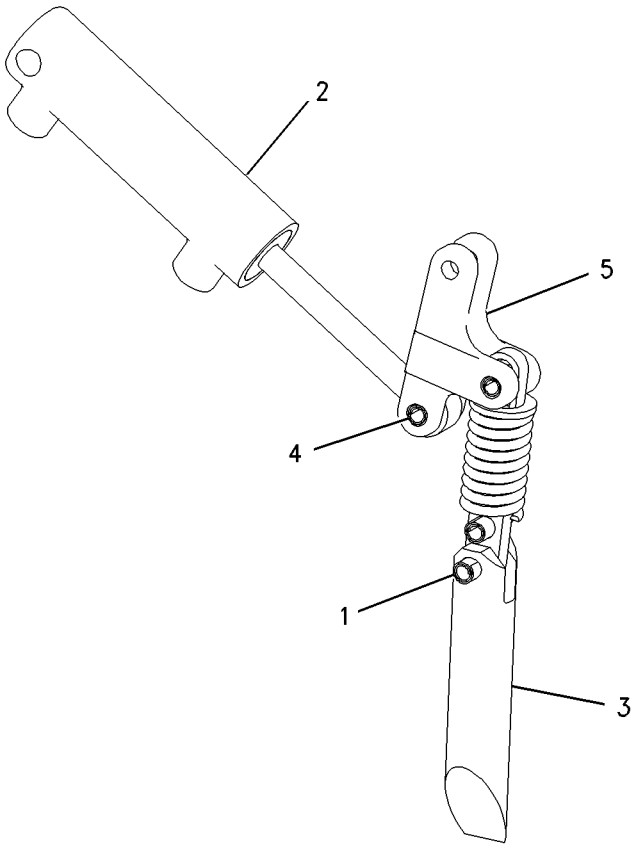

GRAPHIC #1 **<END>** g00871299

WORK TOOLS

222-7545 EDGE GP-BIT & CUTTING

S/N: MST1-UP
PART OF 231-5276 BLADE GP-ANGLING
AN ATTACHMENT

SMCS-6801, 6804 **i03647018**

NOTE	PART NUMBER	QTY	PART NAME 1 2 3 4 5 6 (PRODUCT LEVEL)	SEE PAGE
	6Y-5839	1	BIT-END (RH)	
	6Y-5840	1	BIT-END (LH)	
	3F-5108	10	BOLT-PLOW (5/8-11X2.25-IN)	
	4F-3658	4	BOLT-PLOW (5/8-11X3-IN)	
	142-4914	1	EDGE-CUTTING	
	4K-0367	14	NUT-FULL (5/8-11-THD)	
	5P-8247	14	WASHER-HARD (17X32X3.5-MM THK)	

<END>

222-7546 EDGE GP-BIT & CUTTING

S/N: MST1-UP
PART OF 222-7724 BLADE GP-ANGLING
AN ATTACHMENT

SMCS-6801, 6804 **i03647019**

NOTE	PART NUMBER	QTY	PART NAME 1 2 3 4 5 6 (PRODUCT LEVEL)	SEE PAGE
	6Y-5839	1	BIT-END (RH)	
	6Y-5840	1	BIT-END (LH)	
	3F-5108	13	BOLT-PLOW (5/8-11X2.25-IN)	
	4F-3658	4	BOLT-PLOW (5/8-11X3-IN)	
	143-3088	1	EDGE-CUTTING	
	4K-0367	17	NUT-FULL (5/8-11-THD)	
	5P-8247	17	WASHER-HARD (17X32X3.5-MM THK)	

<END>

135-9383 EDGE GP-CUTTING

S/N: MST1-UP
PART OF 279-5435 BUCKET AR-DIRT
FOR USE WITH 137.20-CM (54-IN) BUCKET
AN ATTACHMENT

SMCS-6801 **i02571125**

NOTE	PART NUMBER	QTY	PART NAME 1 2 3 4 5 6 (PRODUCT LEVEL)	SEE PAGE
	135-9393	1	EDGE-CUTTING	
M	**8T-4778**	6	LOCKNUT (M16X2-THD)	
M	**159-2953**	6	SCREW-FLAT HEAD (M16X2-THD)	

M-METRIC PART

<END>

WORK TOOLS

135-9384 EDGE GP-CUTTING

S/N: MST1-UP
PART OF 279-5438 BUCKET AR-DIRT, 279-5365 BUCKET AR-GENERAL PURPOSE, 157-7226 BUCKET AR-GRAPPLE, 279-5381, 325-7040 BUCKET AR-MULTIPURPOSE, 285-6095 BUCKET AR-UTILITY, 152-0231 BUCKET GP-DIRT
FOR USE WITH 152.40-CM (60-IN) BUCKET
AN ATTACHMENT

SMCS-6801 **i01372033**

NOTE	REF NO	GRAPHIC REF	PART NUMBER	QTY	PART NAME 1 2 3 4 5 6 (PRODUCT LEVEL)	SEE PAGE
	1	1	**135-9394**	1	EDGE-CUTTING	
M	2	1	**8T-4778**	8	LOCKNUT (M16X2.00 THD)	
M	3	1	**159-2953**	8	SCREW-FLAT HEAD (M16X2.00 THD)	

M-METRIC PART

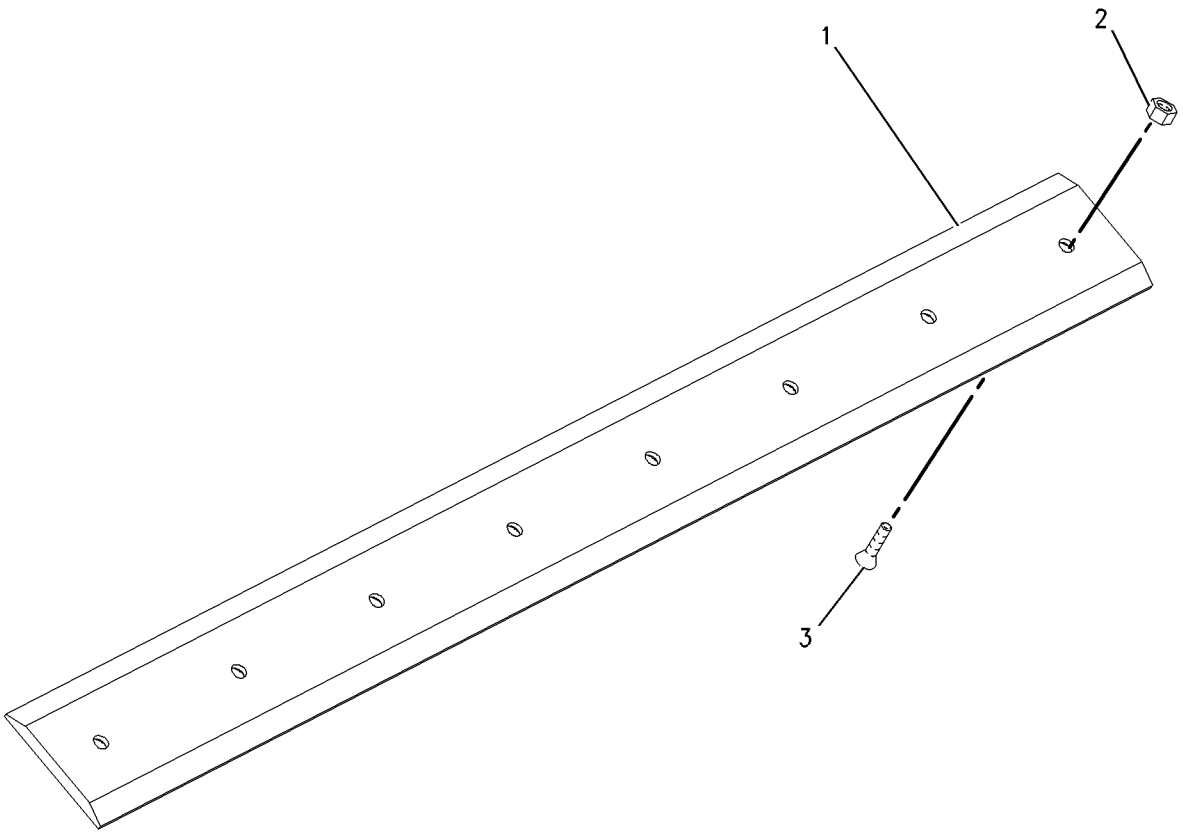

GRAPHIC #1 **<END>** g00724087

WORK TOOLS

135-9385 EDGE GP-CUTTING

S/N: MST1-UP
PART OF 279-5441 BUCKET AR-DIRT, 279-5369 BUCKET AR-GENERAL PURPOSE, 157-7227 BUCKET AR-GRAPPLE, 279-5391, 325-7050 BUCKET AR-MULTIPURPOSE, 285-6100 BUCKET AR-UTILITY, 152-0232 BUCKET GP-DIRT
FOR USE WITH 167.64-CM (66-IN) BUCKET
AN ATTACHMENT

SMCS-6801 **i01228508**

NOTE	REF NO	GRAPHIC REF	PART NUMBER	QTY	PART NAME 1 2 3 4 5 6 (PRODUCT LEVEL)	SEE PAGE
	1	1	**135-9395**	1	EDGE-CUTTING	
M	2	1	**8T-4778**	8	LOCKNUT (M16X2.00 THD)	
M	3	1	**159-2953**	8	SCREW-FLAT HEAD (M16X2.00 THD)	

M-METRIC PART

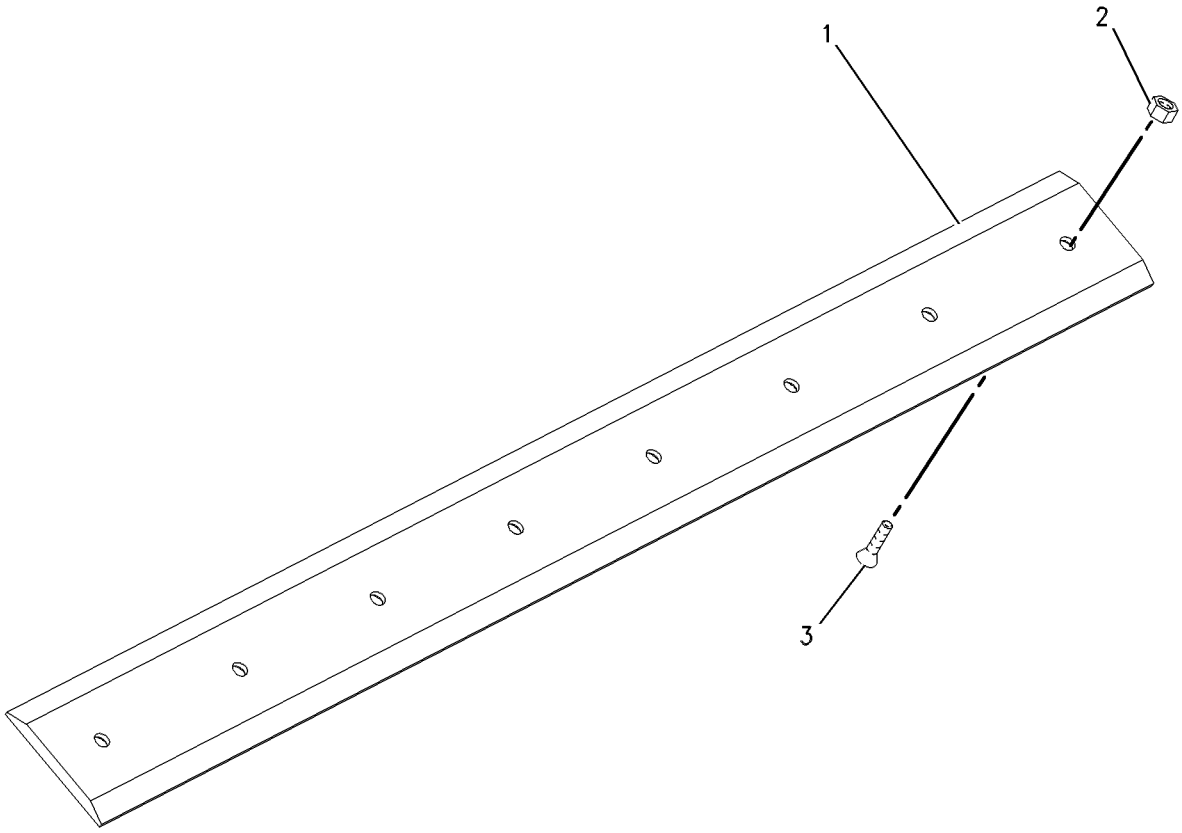

GRAPHIC #1 **<END>** g00657004

WORK TOOLS

135-9386 EDGE GP-CUTTING

S/N: MST1-UP

PART OF 177-1989 BLADE AR, 285-6090 BUCKET AR-DIRT, 279-5373 BUCKET AR-GENERAL PURPOSE, 158-6095 BUCKET AR-GRAPPLE, 279-5420 BUCKET AR-LIGHT MATERIAL, 279-5399, 325-7060 BUCKET AR-MULTIPURPOSE, 285-6101 BUCKET AR-UTILITY, 188-2719 BUCKET GP-DIRT

FOR USE WITH 182.88-CM (72-IN) BUCKET

AN ATTACHMENT

SMCS-6801 **i01372498**

NOTE	REF NO	GRAPHIC REF	PART NUMBER	QTY	PART NAME 1 2 3 4 5 6 (PRODUCT LEVEL)	SEE PAGE
	1	1	**135-9396**	1	EDGE-CUTTING	
M	2	1	**8T-4778**	11	LOCKNUT (M16X2.00 THD)	
M	3	1	**159-2953**	11	SCREW-FLAT HEAD (M16X2.00 THD)	

M-METRIC PART

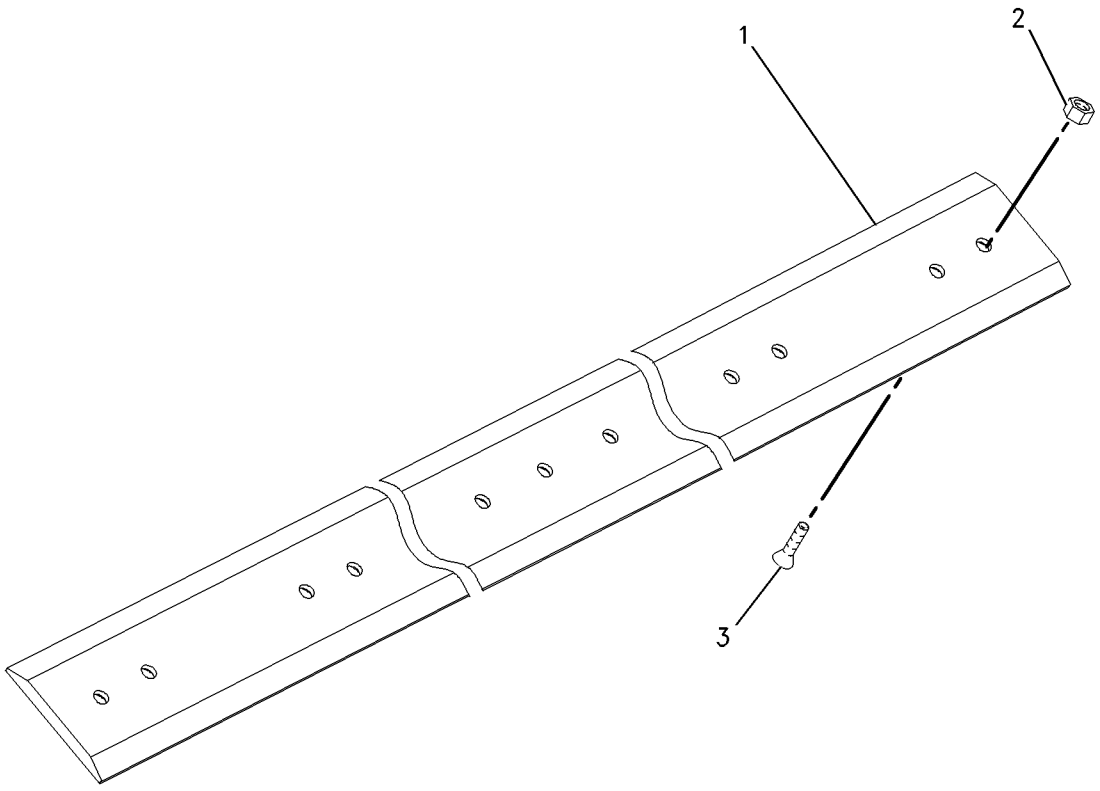

GRAPHIC #1 **<END>** g00724435

135-9387 EDGE GP-CUTTING

S/N: MST1-UP
PART OF 268-4083 BUCKET AR-DIRT, 279-5377 BUCKET AR-GENERAL PURPOSE, 217-6230 BUCKET AR-GRAPPLE, 279-5425 BUCKET AR-LIGHT MATERIAL, 279-5402, 325-7070 BUCKET AR-MULTIPURPOSE
FOR USE WITH 198.12-CM (78-IN) BUCKET
AN ATTACHMENT

SMCS-6801 **i01755490**

NOTE	REF NO	GRAPHIC REF	PART NUMBER	QTY	PART NAME 1 2 3 4 5 6 (PRODUCT LEVEL)	SEE PAGE
	1	1	**135-9397**	1	EDGE-CUTTING	
M	2	1	**8T-4778**	11	LOCKNUT (M16X2 THD)	
M	3	1	**159-2953**	11	SCREW-FLAT HEAD (M16X2.00 THD)	

M-METRIC PART

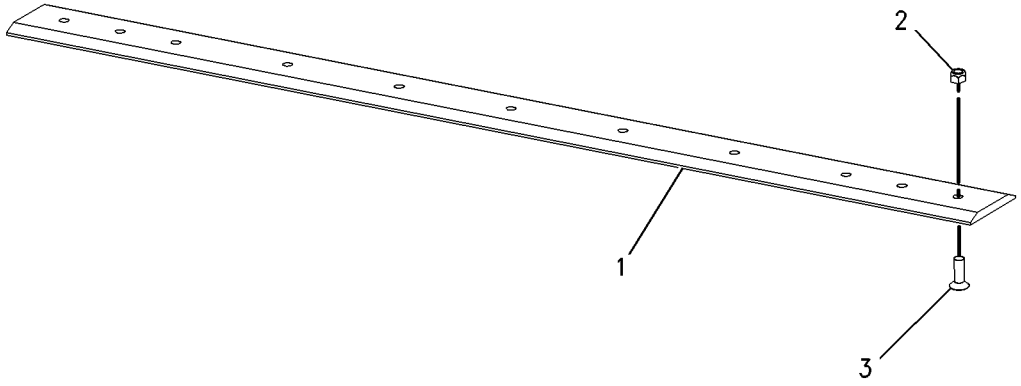

GRAPHIC #1 **<END>** g00898154

WORK TOOLS

149-5741 EDGE GP-CUTTING

S/N: MST1-UP
PART OF 177-1990 BLADE AR
FOR USE WITH 218.9-CM (85-IN) BUCKET
AN ATTACHMENT

SMCS-6801 **i01832720**

NOTE	REF NO	GRAPHIC REF	PART NUMBER	QTY	PART NAME 1 2 3 4 5 6 (PRODUCT LEVEL)	SEE PAGE
	1	1	**195-5124**	1	EDGE-CUTTING	
M	2	1	**8T-4778**	7	LOCKNUT (M16X2 THD)	
M	3	1	**159-2953**	7	SCREW-FLAT HEAD (M16X2.00 THD)	

M-METRIC PART

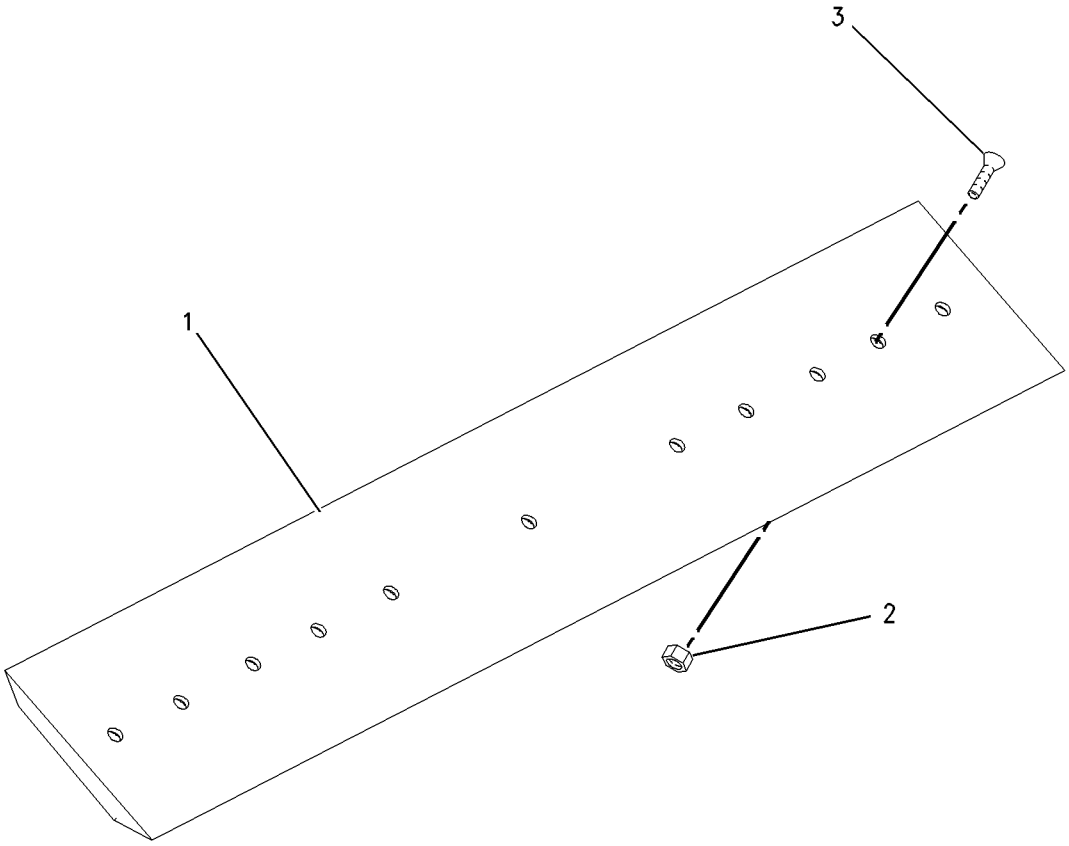

GRAPHIC #1 **<END>** g00936281

WORK TOOLS

195-7124 EDGE GP-CUTTING

S/N: MST1-UP
PART OF 296-8192 BUCKET AR-GENERAL PURPOSE, 279-5430 BUCKET AR-LIGHT MATERIAL, 296-8057, 325-7080 BUCKET AR-MULTIPURPOSE
FOR USE WITH 213.36CM (84 IN) BUCKET
AN ATTACHMENT

SMCS-6801 **i01859534**

NOTE	PART NUMBER	QTY	PART NAME 1 2 3 4 5 6 (PRODUCT LEVEL)	SEE PAGE
	195-5124	1	EDGE-CUTTING	
M	**8T-4778**	11	LOCKNUT (M16X2 THD)	
M	**159-2953**	11	SCREW-FLAT HEAD (M16X2.00 THD)	

M-METRIC PART

<END>

WORK TOOLS

296-7680 EDGE GP-CUTTING

S/N: MST1-UP
PART OF 296-7597 BUCKET AR-LIGHT MATERIAL
AN ATTACHMENT

SMCS-6801 **i03508403**

NOTE	REF NO	GRAPHIC REF	PART NUMBER	QTY	PART NAME 1 2 3 4 5 6 (PRODUCT LEVEL)	SEE PAGE
	1	1	**296-7602**	1	EDGE-CUTTING	
M	2	1	**159-2953**	13	SCREW-FLAT HEAD (M16X2-THD)	
M	3	1	**8T-4778**	13	LOCKNUT (M16X2-THD)	

M-METRIC PART

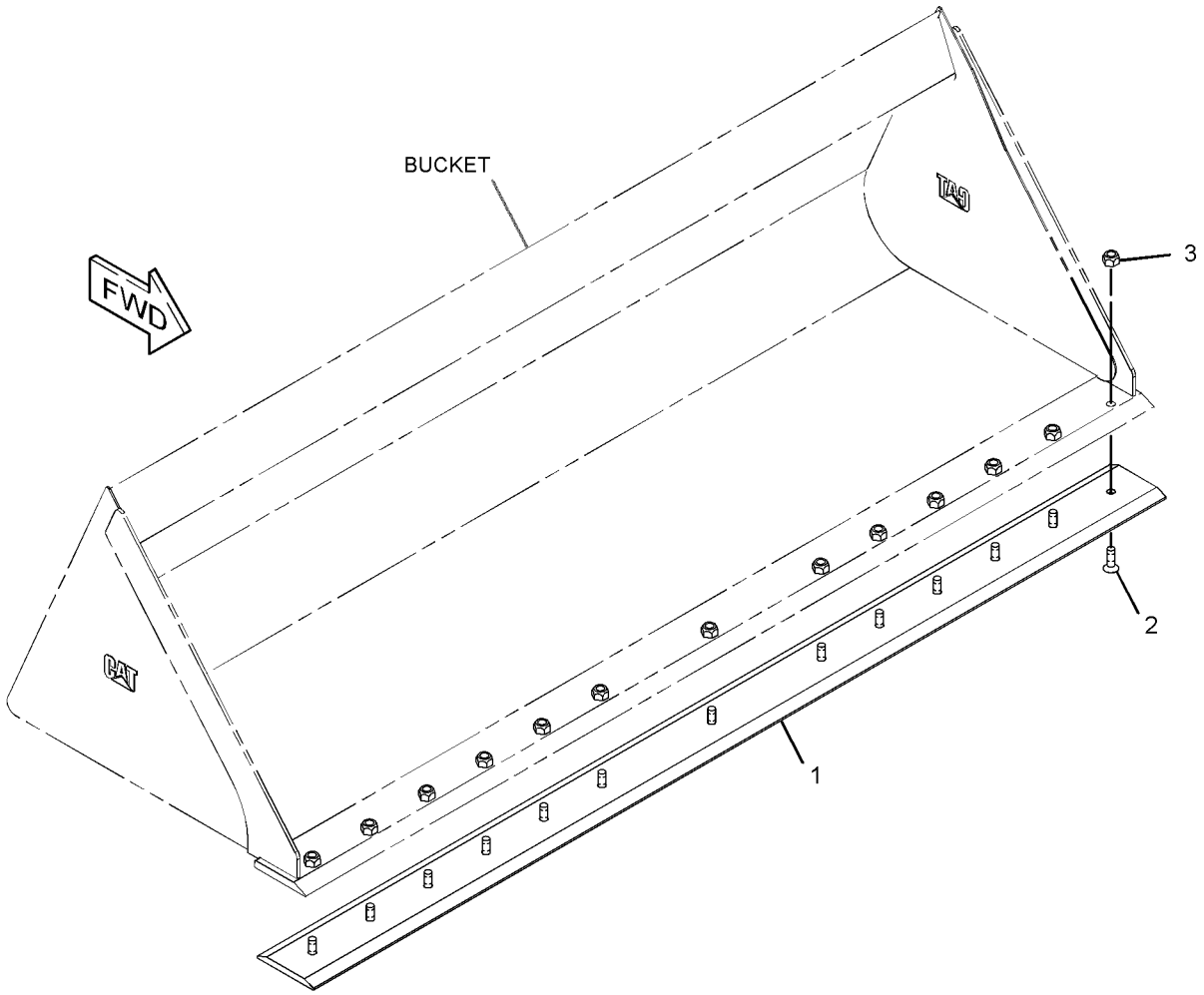

GRAPHIC #1 **<END>** g01845076

279-5350 FORK AR-GRAPPLE–INDUSTRIAL

S/N: MST1-UP
1676-MM (66-IN)
AN ATTACHMENT

SMCS-6705 **i02715580**

NOTE	PART NUMBER	QTY	PART NAME 1 2 3 4 5 6 (PRODUCT LEVEL)	SEE PAGE
Y	**278-1975**	2	CYLINDER GP-GRAPPLE (INDUSTRIAL)	307
Y	*164-9614*	9	FORK GP-GRAPPLE (INDUSTRIAL)	608
Y	*279-5351*	1	FORK GP-GRAPPLE (66-IN, INDUSTRIAL)	609
Y	*279-5412*	1	LINES GP-BUCKET (INDUSTRIAL)	335
Y	*156-0891*	1	MOUNTING GP-CYLINDER (INDUSTRIAL)	427

Y-SEPARATE ILLUSTRATION

<END>

279-5360 FORK AR-GRAPPLE–INDUSTRIAL

S/N: MST1-UP
1829-MM (72-IN)
AN ATTACHMENT

SMCS-6705 **i02715593**

NOTE	PART NUMBER	QTY	PART NAME 1 2 3 4 5 6 (PRODUCT LEVEL)	SEE PAGE
Y	**278-1975**	2	CYLINDER GP-GRAPPLE (INDUSTRIAL)	307
Y	*164-9614*	2	FORK GP-GRAPPLE (INDUSTRIAL)	608
Y	*279-5359*	1	BUCKET GP-GRAPPLE (72-IN, INDUSTRIAL)	566
Y	*279-5412*	1	LINES GP-BUCKET (INDUSTRIAL)	335
Y	*156-0891*	1	MOUNTING GP-CYLINDER (INDUSTRIAL)	427

Y-SEPARATE ILLUSTRATION

<END>

285-6114 FORK AR-GRAPPLE–UTILITY

S/N: MST1-UP
1676-MM (66-IN)
AN ATTACHMENT

SMCS-6705 **i02552497**

NOTE	PART NUMBER	QTY	PART NAME 1 2 3 4 5 6 (PRODUCT LEVEL)	SEE PAGE
Y	**285-6105**	1	FORK GP-UTILITY (66-IN)	618
Y	*285-6116*	1	GRAPPLE & CYLINDER GP-UTILITY	622

Y-SEPARATE ILLUSTRATION

<END>

285-6115 FORK AR-GRAPPLE–UTILITY

S/N: MST1-UP
1829-MM(72-IN)
AN ATTACHMENT

SMCS-6705 **i02552699**

NOTE	PART NUMBER	QTY	PART NAME 1 2 3 4 5 6 (PRODUCT LEVEL)	SEE PAGE
Y	**285-6110**	1	FORK GP-GRAPPLE	610
Y	*285-6116*	1	GRAPPLE & CYLINDER GP-UTILITY	622

Y-SEPARATE ILLUSTRATION

<END>

WORK TOOLS

164-9614 FORK GP-GRAPPLE–INDUSTRIAL

S/N: MST1-UP

PART OF 279-5350, 279-5360 FORK AR-GRAPPLE

AN ATTACHMENT

SMCS-6705 **i01075196**

NOTE	REF NO	GRAPHIC REF	PART NUMBER	QTY	PART NAME 1 2 3 4 5 6 (PRODUCT LEVEL)	SEE PAGE
	1	1	**3E-4370**	1	PIN-SPRING	
	2	1	**162-8154**	1	TINE	

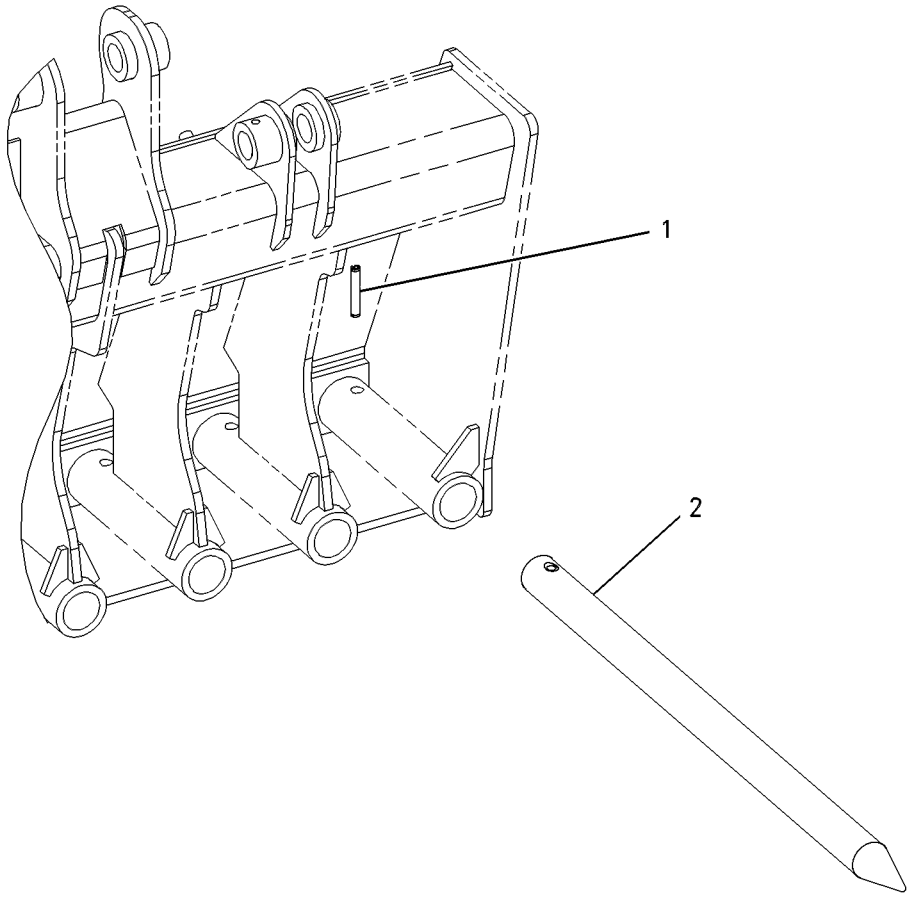

GRAPHIC #1 **<END>** g00559648

279-5351 FORK GP-GRAPPLE–INDUSTRIAL

S/N: MST1-UP
1676-MM (66-IN)
PART OF 279-5350 FORK AR-GRAPPLE
AN ATTACHMENT

SMCS-6705 **i03647022**

NOTE	REF NO	GRAPHIC REF	PART NUMBER	QTY	PART NAME 1 2 3 4 5 6 (PRODUCT LEVEL)	SEE PAGE
	1	1	**157-0940**	4	PIN	
	2	1	**164-9989**	2	FILM-WARNING (IMPALED POINT)	
	3	1	**222-7467**	2	FORK AS	
					(EACH INCLUDES)	
		1	**158-5648**	2	BEARING-SLEEVE	
Y	4	1	**279-5352**	1	FRAME GP-FORK (66-IN, INDUSTRIAL)	620
	5	1	**3B-8489**	4	FITTING-GREASE	
M	6	1	**6V-9189**	4	LOCKNUT (M8X1.25-THD)	
M	7	1	**8T-6869**	4	BOLT (M8X1.25X60-MM)	

M-METRIC PART
Y-SEPARATE ILLUSTRATION

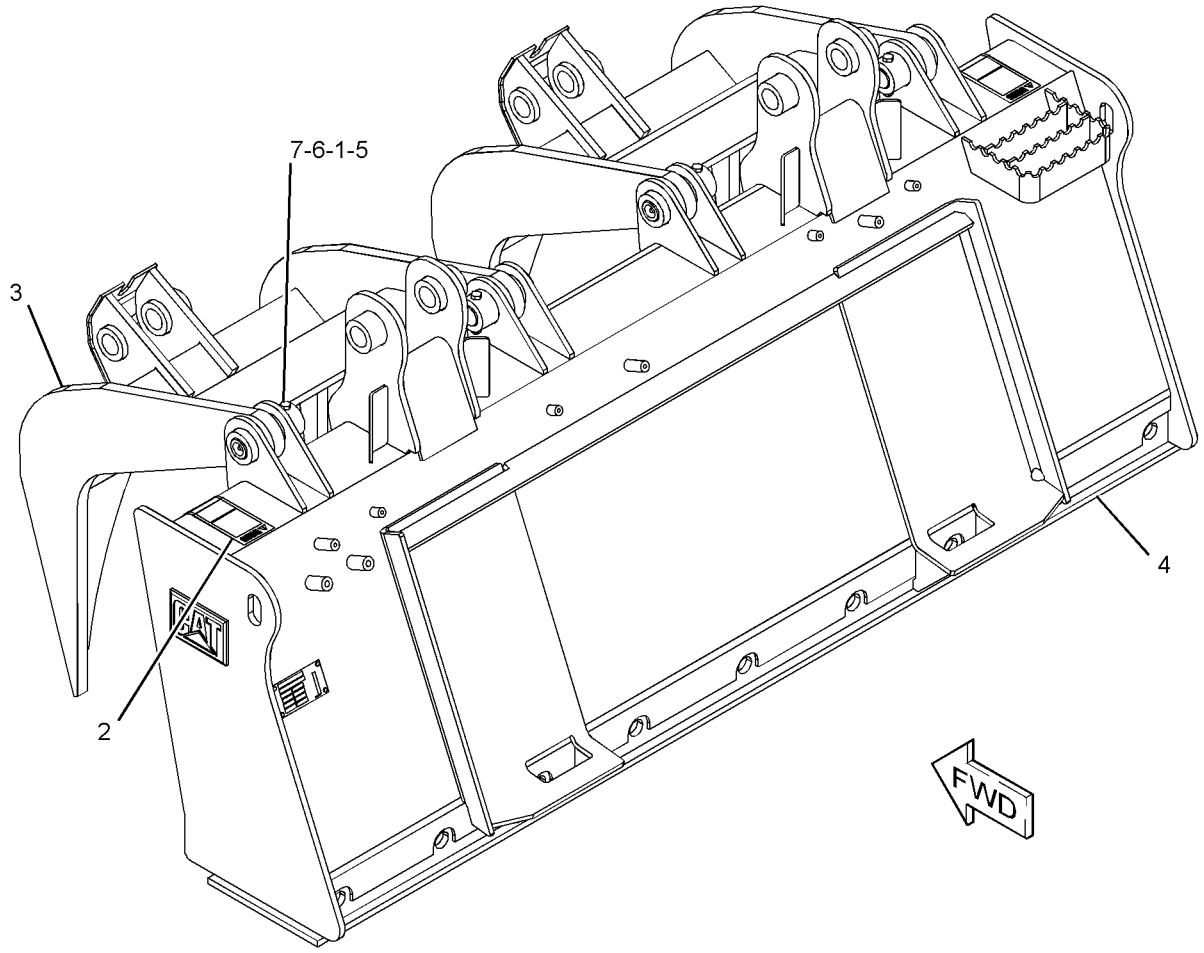

GRAPHIC #1 **<END>** g01279797

WORK TOOLS

285-6110 FORK GP-GRAPPLE

S/N: MST1-UP
1829-MM (72-IN)
PART OF 285-6115 FORK AR-GRAPPLE
AN ATTACHMENT

SMCS-6705 **i03647956**

NOTE	REF NO	GRAPHIC REF	PART NUMBER	QTY	PART NAME 1 2 3 4 5 6 (PRODUCT LEVEL)	SEE PAGE
	1	1	**164-9989**	2	FILM-WARNING (IMPALED POINT)	
Y	2	1	*165-8732*	9	FORK GP-UTILITY (1676-MM (66-IN) WIDE)	613

Y-SEPARATE ILLUSTRATION

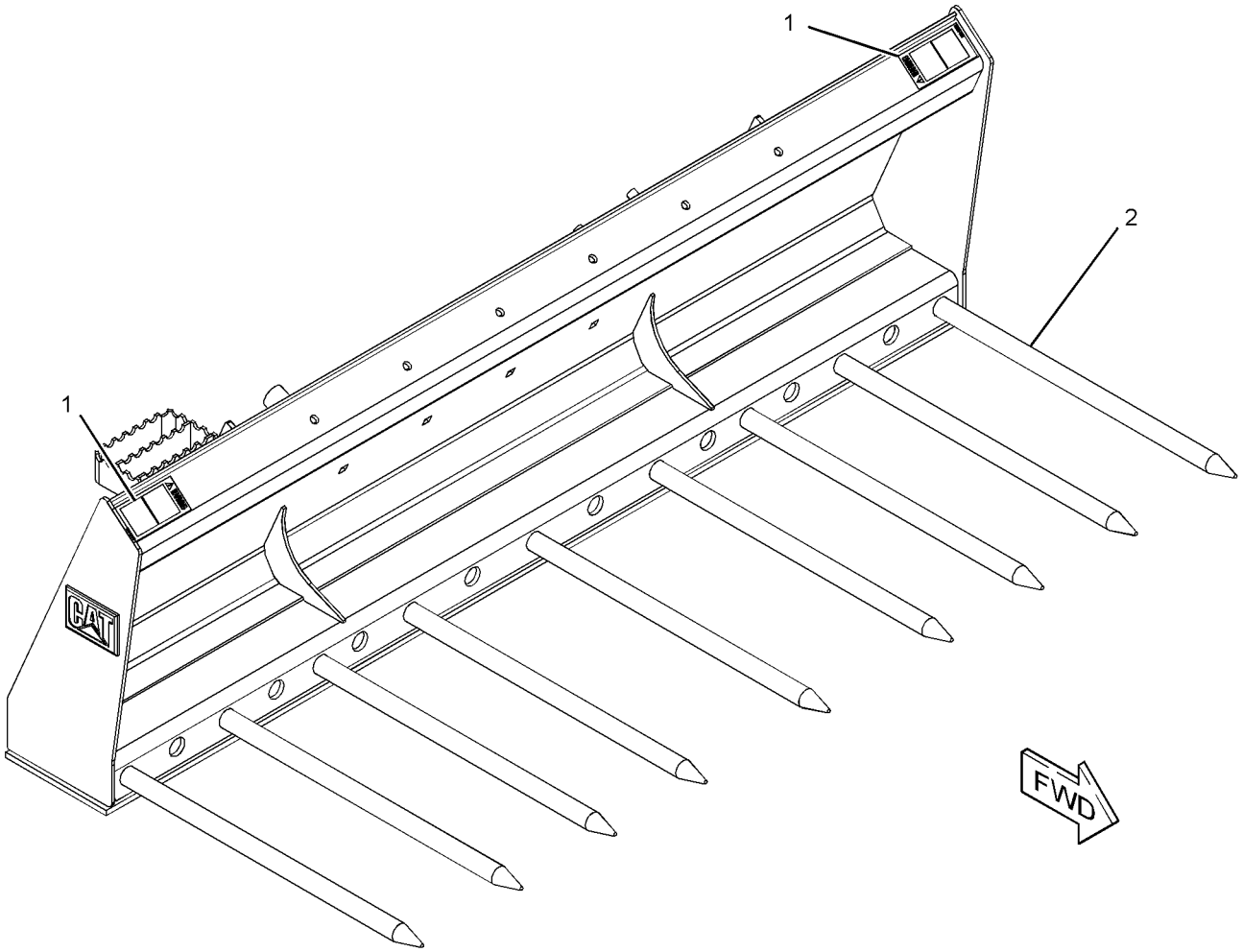

GRAPHIC #1 **<END>** g01381750

WORK TOOLS

195-6942 FORK GP-PALLET

S/N: MST1-UP
1067-MM (42-IN)
PART OF 293-9428 CARRIAGE & FORK AR
AN ATTACHMENT

SMCS-6136 **i02569271**

NOTE	PART NUMBER	QTY	PART NAME 1 2 3 4 5 6 (PRODUCT LEVEL)	SEE PAGE
	221-3429	1	POSITIONER GP-FORK	

<END>

195-6943 FORK GP-PALLET

S/N: MST1-UP
914-MM (36-IN)
PART OF 293-9427 CARRIAGE & FORK AR
AN ATTACHMENT

SMCS-6136 **i02569272**

NOTE	PART NUMBER	QTY	PART NAME 1 2 3 4 5 6 (PRODUCT LEVEL)	SEE PAGE
	221-3429	1	POSITIONER GP-FORK	

<END>

195-8545 FORK GP-PALLET

S/N: MST1-UP
1219-MM (48-IN)
PART OF 293-9429 CARRIAGE & FORK AR
AN ATTACHMENT

SMCS-6136 **i02569274**

NOTE	PART NUMBER	QTY	PART NAME 1 2 3 4 5 6 (PRODUCT LEVEL)	SEE PAGE
	221-3429	1	POSITIONER GP-FORK	

<END>

243-0001 FORK GP-PALLET—KIT

S/N: MST1-UP
914-MM (36-IN)
AN ATTACHMENT

SMCS-6136 **i01964024**

NOTE	PART NUMBER	QTY	PART NAME 1 2 3 4 5 6 (PRODUCT LEVEL)	SEE PAGE
	195-6943	12	FORK GP-PALLET (36-IN)	
			(EACH INCLUDES)	
	221-3429	1	POSITIONER GP-FORK	

<END>

WORK TOOLS

243-0002 FORK GP-PALLET–KIT

S/N: MST1-UP
1067-MM (42-IN)
AN ATTACHMENT

SMCS-6136 **i01964030**

NOTE	PART NUMBER	QTY	PART NAME 1 2 3 4 5 6 (PRODUCT LEVEL)	SEE PAGE
	195-6942	12	FORK GP-PALLET (42 IN)	
			(EACH INCLUDES)	
	221-3429	1	POSITIONER GP-FORK	

<END>

243-0003 FORK GP-PALLET–KIT

S/N: MST1-UP
1219-MM (48-IN)
AN ATTACHMENT

SMCS-6136 **i01964031**

NOTE	PART NUMBER	QTY	PART NAME 1 2 3 4 5 6 (PRODUCT LEVEL)	SEE PAGE
	195-8545	12	FORK GP-PALLET (48 IN)	
			(EACH INCLUDES)	
	221-3429	1	POSITIONER GP-FORK	

<END>

165-8732 FORK GP-UTILITY

S/N: MST1-UP
1676-MM (66-IN)
PART OF 285-6110 FORK GP-GRAPPLE, 165-8736, 165-8737, 285-6105 FORK GP-UTILITY
AN ATTACHMENT

SMCS-6458 **i01204324**

NOTE	REF NO	GRAPHIC REF	PART NUMBER	QTY	PART NAME 1 2 3 4 5 6 (PRODUCT LEVEL)	SEE PAGE
	1	1	**9R-2959**	1	CLIP	
	2	1	**166-4041**	1	TINE	

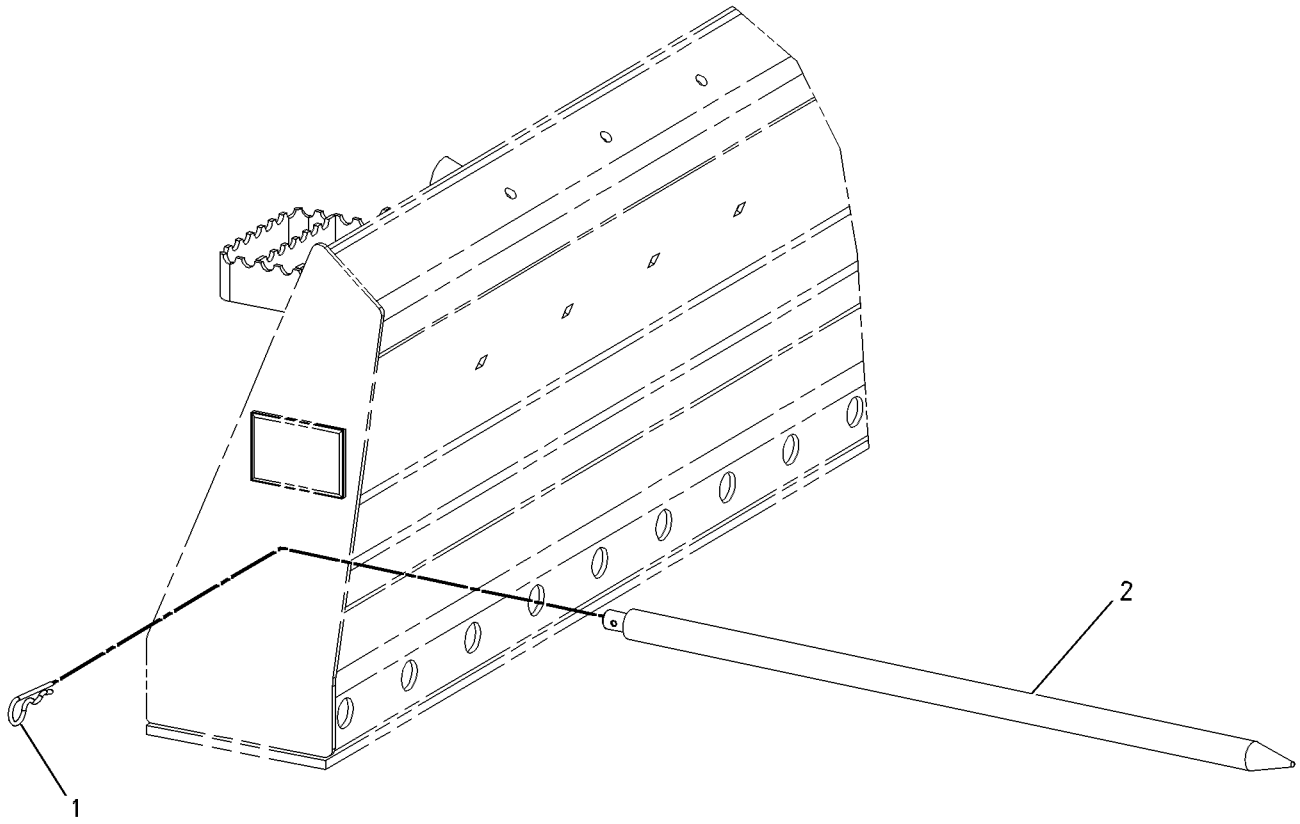

GRAPHIC #1 **<END>** g00639778

WORK TOOLS

165-8736 FORK GP-UTILITY

S/N: MST1-UP

AN ATTACHMENT

SMCS-6458 **i03019728**

NOTE	REF NO	GRAPHIC REF	PART NUMBER	QTY	PART NAME 1 2 3 4 5 6 (PRODUCT LEVEL)	SEE PAGE
	1	1	**164-9989**	2	FILM-WARNING (IMPALED POINT)	
Y	2	1	*165-8732*	7	FORK GP-UTILITY (1676-MM (66-IN) WIDE)	613
Y	3	1	*165-8738*	1	FORK GP-UTILITY	616

Y-SEPARATE ILLUSTRATION

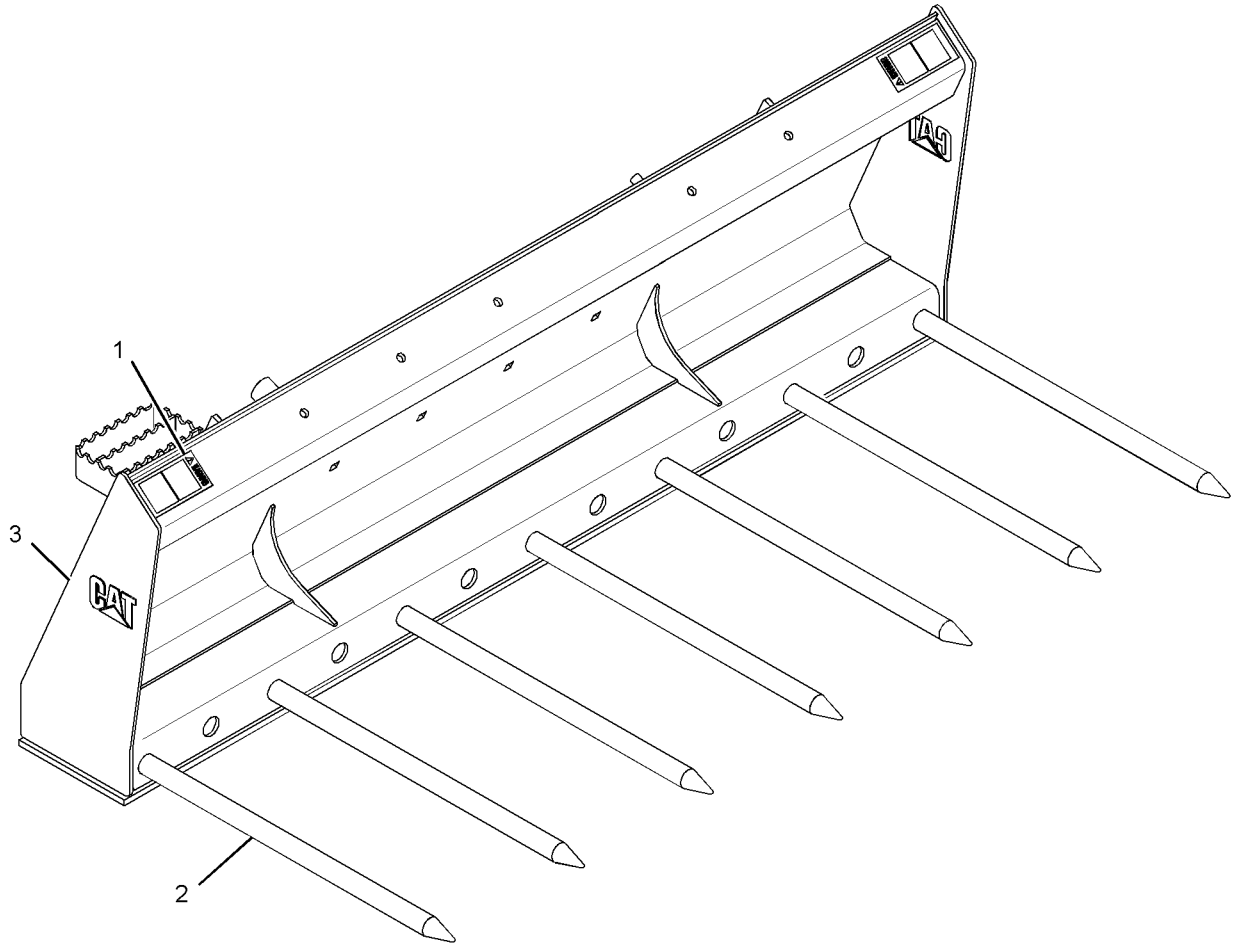

GRAPHIC #1 **<END>** g01527067

WORK TOOLS

165-8737 FORK GP-UTILITY

S/N: MST1-UP

AN ATTACHMENT

SMCS-6458 **i03019730**

NOTE	REF NO	GRAPHIC REF	PART NUMBER	QTY	PART NAME 1 2 3 4 5 6 (PRODUCT LEVEL)	SEE PAGE
	1	1	**164-9989**	2	FILM-WARNING (IMPALED POINT)	
Y	2	1	*165-8732*	9	FORK GP-UTILITY (1676-MM (66-IN) WIDE)	613
Y	3	1	*165-8739*	1	FORK GP-UTILITY	617

Y-SEPARATE ILLUSTRATION

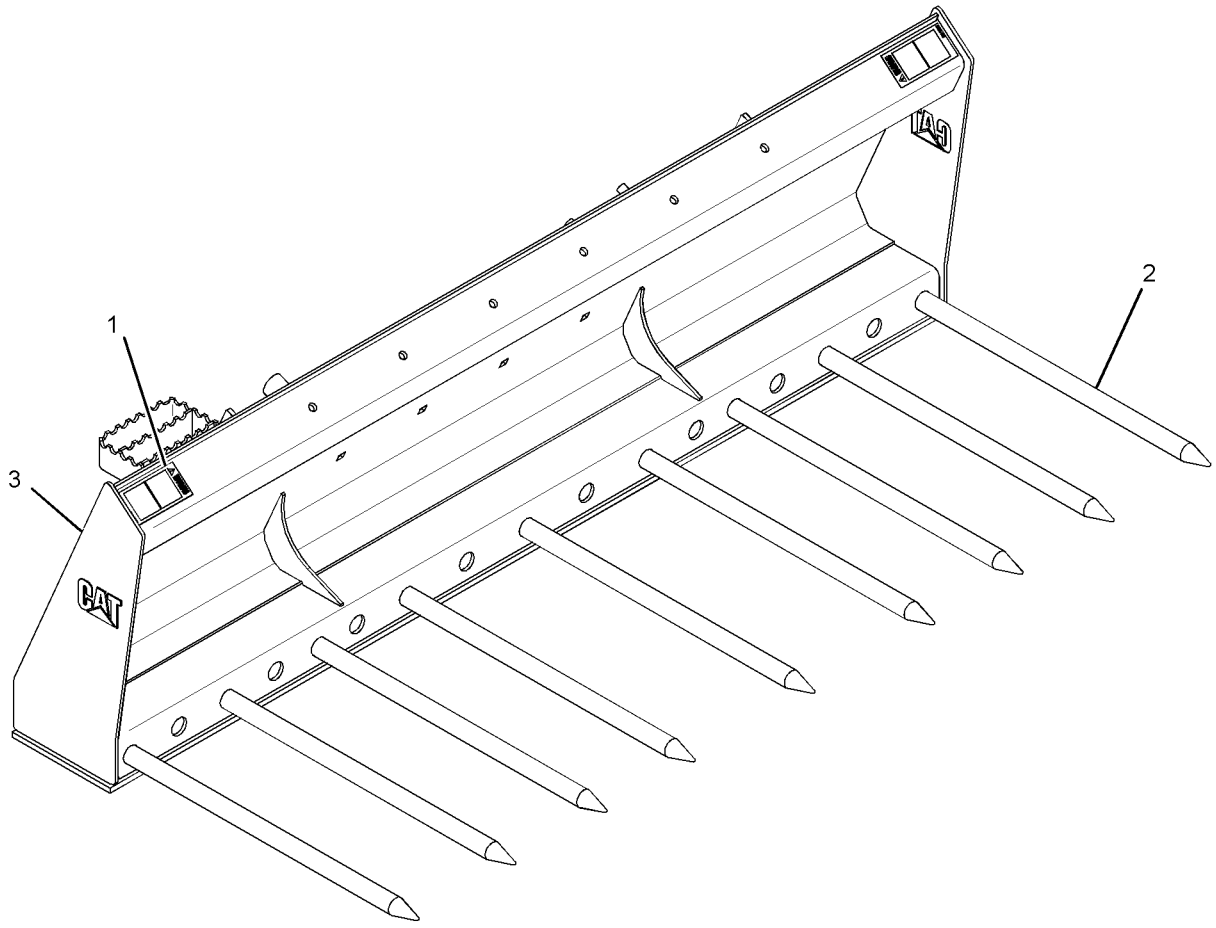

GRAPHIC #1 **<END>** g01527025

WORK TOOLS

165-8738 FORK GP-UTILITY

S/N: MST1-UP
167.64CM (66 IN)
PART OF 165-8736 FORK GP-UTILITY
AN ATTACHMENT

SMCS-6458 **i03647970**

NOTE	REF NO	GRAPHIC REF	PART NUMBER	QTY	PART NAME 1 2 3 4 5 6 (PRODUCT LEVEL)	SEE PAGE
	1	1	**165-8744**	1	FORK AS (UTILITY)	
	2	1	**154-2704**	1	PLATE-INSTRUCTION (BUCKET SPECIFICATIONS)	
	3	1	**168-8389**	4	TACK-FASTENER	
F			**164-9989**	2	FILM-WARNING (IMPALED POINT)	

F-NOT SHOWN

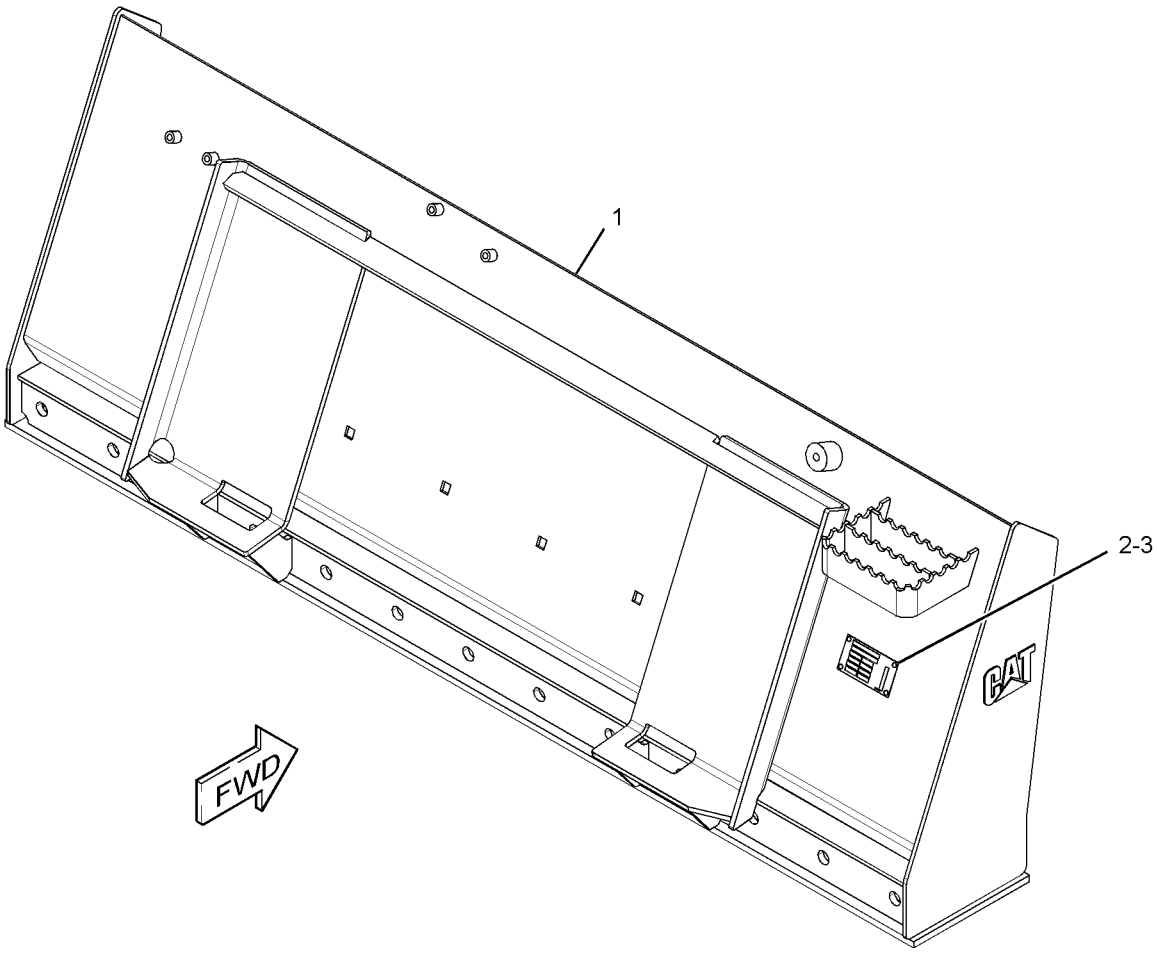

GRAPHIC #1 **<END>** g01958446

WORK TOOLS

165-8739 FORK GP-UTILITY

S/N: MST1-UP
182.88CM (72 IN)
PART OF 165-8737 FORK GP-UTILITY
AN ATTACHMENT

SMCS-6458 **i03647974**

NOTE	REF NO	GRAPHIC REF	PART NUMBER	QTY	PART NAME 1 2 3 4 5 6 (PRODUCT LEVEL)	SEE PAGE
	1	1	**165-8745**	1	FORK AS (UTILITY)	
	2	1	**154-2704**	1	PLATE-INSTRUCTION (BUCKET SPECIFICATIONS)	
	3	1	**168-8389**	4	TACK-FASTENER	
F			**164-9989**	2	FILM-WARNING (IMPALED POINT)	

F-NOT SHOWN

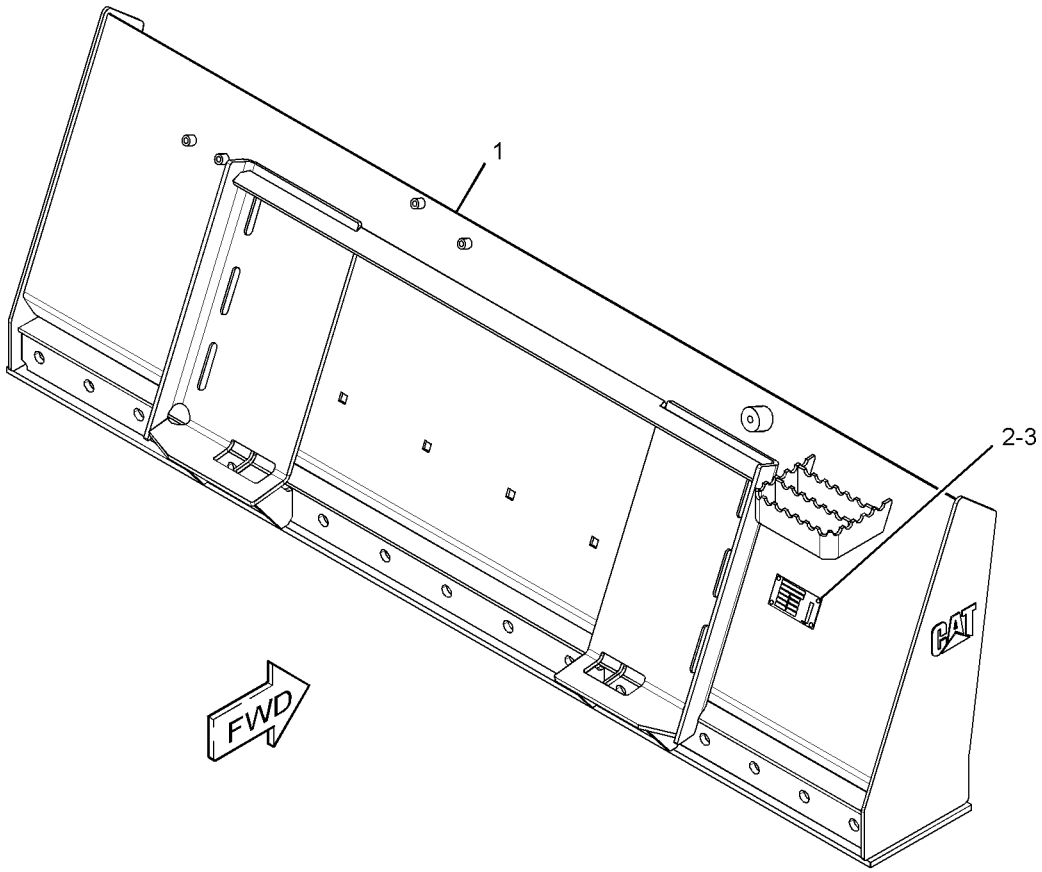

GRAPHIC #1 **<END>** g01958534

WORK TOOLS

285-6105 FORK GP-UTILITY

S/N: MST1-UP
1676-MM (66-IN)
PART OF 285-6114 FORK AR-GRAPPLE
AN ATTACHMENT

SMCS-6458 **i03647960**

NOTE	REF NO	GRAPHIC REF	PART NUMBER	QTY	PART NAME 1 2 3 4 5 6 (PRODUCT LEVEL)	SEE PAGE
	1	1	**164-9989**	2	FILM-WARNING (IMPALED POINT)	
Y	2	1	*165-8732*	7	FORK GP-UTILITY (1676-MM (66-IN) WIDE)	613

Y-SEPARATE ILLUSTRATION

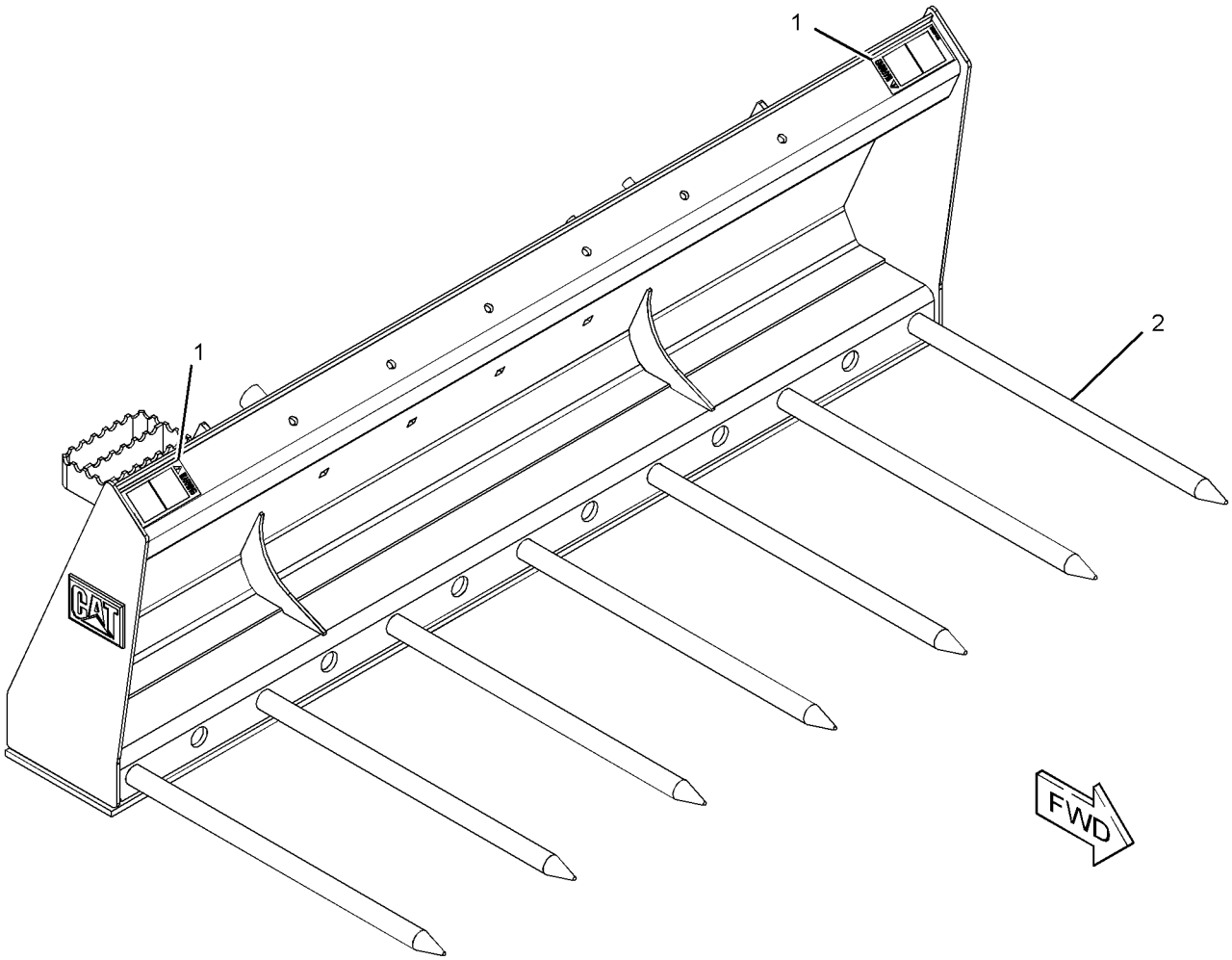

GRAPHIC #1 **<END>** g01280417

WORK TOOLS

230-5670 FRAME GP-BLADE

S/N: MST1-UP
PART OF 177-1989, 177-1990 BLADE AR
AN ATTACHMENT

SMCS-6060 **i03637977**

NOTE	REF NO	GRAPHIC REF	PART NUMBER	QTY	PART NAME 1 2 3 4 5 6 (PRODUCT LEVEL)	SEE PAGE
	1	1	**177-1914**	1	PIN AS	
B	2	1	**177-1955**	1	SHIM (1-MM THK)	
B	3	1	**177-1956**	1	SHIM (2-MM THK)	
B	4	1	**177-1957**	1	SHIM (3-MM THK)	
	5	1	**177-1971**	1	FRAME AS	
	6	1	**177-1975**	1	FRAME AS	
	7	1	**230-5407**	1	FRAME AS	
	8	1	**3B-8489**	1	FITTING-GREASE	
	9	1	**5B-0935**	1	FITTING-GREASE	
M	10	1	**7X-2553**	8	BOLT (M16X2X40-MM)	
	11	1	**7X-7729**	1	WASHER (11X25X3-MM THK)	
	12	1	**8T-4122**	8	WASHER-HARD (17X32X3.5-MM THK)	
M	13	1	**8T-4137**	1	BOLT (M10X1.5X20-MM)	

B-USE AS REQUIRED
M-METRIC PART

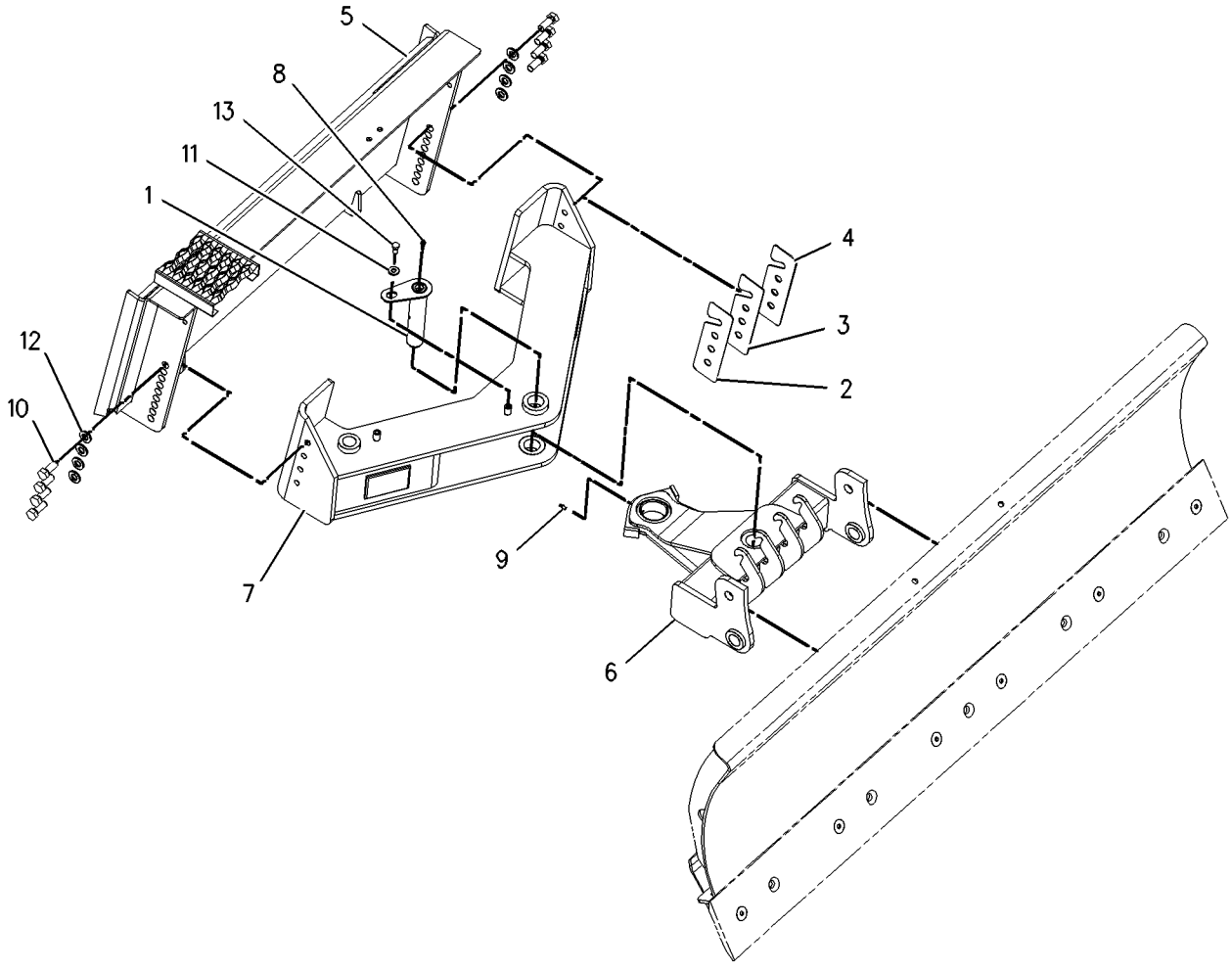

GRAPHIC #1 **<END>** g00978893

WORK TOOLS

279-5352 FRAME GP-FORK–INDUSTRIAL

S/N: MST1-UP
1676-MM (66-IN)
PART OF 279-5351 FORK GP-GRAPPLE
AN ATTACHMENT

SMCS-6705 **i03647980**

NOTE	REF NO	GRAPHIC REF	PART NUMBER	QTY	PART NAME 1 2 3 4 5 6 (PRODUCT LEVEL)	SEE PAGE
	1	1	**154-2704**	1	PLATE-INSTRUCTION (BUCKET SPECIFICATIONS)	
	2	1	**168-8389**	4	TACK-FASTENER	
	3	1	**279-5353**	1	FORK AS	
F			**164-9989**	2	FILM-WARNING (IMPALED POINT)	

F-NOT SHOWN

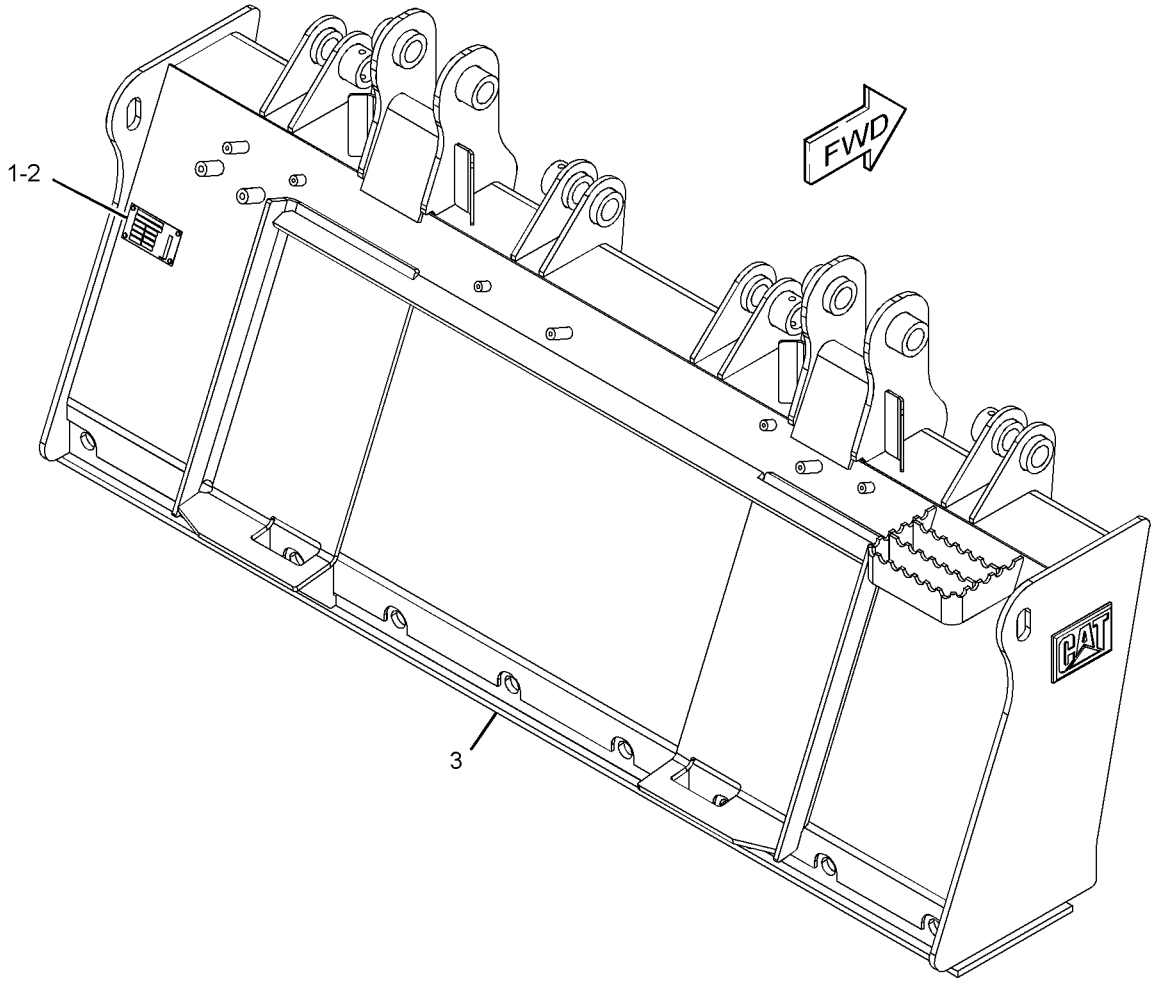

GRAPHIC #1 **<END>** g01280687

279-5358 FRAME GP-FORK–INDUSTRIAL

S/N: MST1-UP
1829-MM (72-IN)
PART OF 279-5359 BUCKET GP-GRAPPLE
AN ATTACHMENT

SMCS-6705 **i03647984**

NOTE	REF NO	GRAPHIC REF	PART NUMBER	QTY	PART NAME 1 2 3 4 5 6 (PRODUCT LEVEL)	SEE PAGE
	1	1	**154-2704**	1	PLATE-INSTRUCTION (BUCKET SPECIFICATIONS)	
	2	1	**168-8389**	4	TACK-FASTENER	
	3	1	**279-5357**	1	FORK AS	
F			**164-9989**	2	FILM-WARNING (IMPALED POINT)	

F-NOT SHOWN

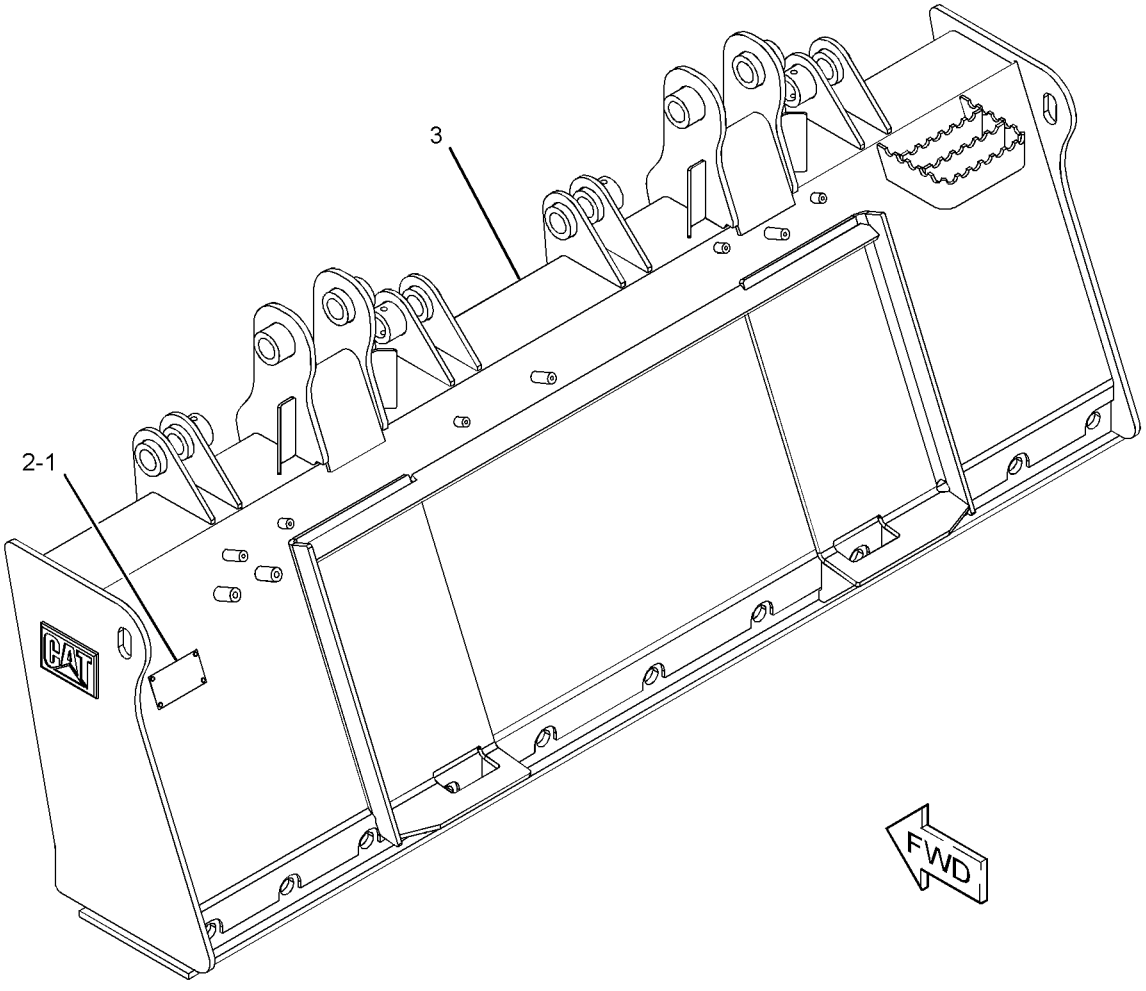

GRAPHIC #1 **<END>** g01279388

WORK TOOLS

285-6116 GRAPPLE & CYLINDER GP-UTILITY

S/N: MST1-UP
PART OF 285-6093, 285-6104, 285-6111, 285-6112 BUCKET AR-GRAPPLE, 285-6114, 285-6115 FORK AR-GRAPPLE
AN ATTACHMENT
TYPE 1

SMCS-5057, 5555, 6307 **i02711972**

NOTE	REF NO	GRAPHIC REF	PART NUMBER	QTY	PART NAME 1 2 3 4 5 6 (PRODUCT LEVEL)	SEE PAGE
Y	1	1	**164-9295**	1	CYLINDER GP-GRAPPLE	305
Y	2	1	*165-8731*	1	MOUNTING GP-CYLINDER (UTILITY)	428
Y	3	1	*165-8740*	1	GRAPPLE GP-UTILITY	624
M	4	1	**170-5836**	4	BOLT (M12X1.75X35-MM)	
Y	5	1	*173-7407*	1	STOP GP-BUCKET	640
	6	1	**239-5029**	1	GUARD	
Y	7	1	*285-6113*	1	LINES GP-BUCKET	345
	8	1	**5P-1076**	4	WASHER-HARD (13.5X30X4-MM THK)	
M	9	1	**8T-4139**	6	BOLT (M12X1.75X30-MM)	
	10	1	**8T-4223**	6	WASHER-HARD (13.5X25.5X3-MM THK)	
M	11	1	**8T-4244**	10	NUT (M12X1.75-THD)	

M-METRIC PART
Y-SEPARATE ILLUSTRATION

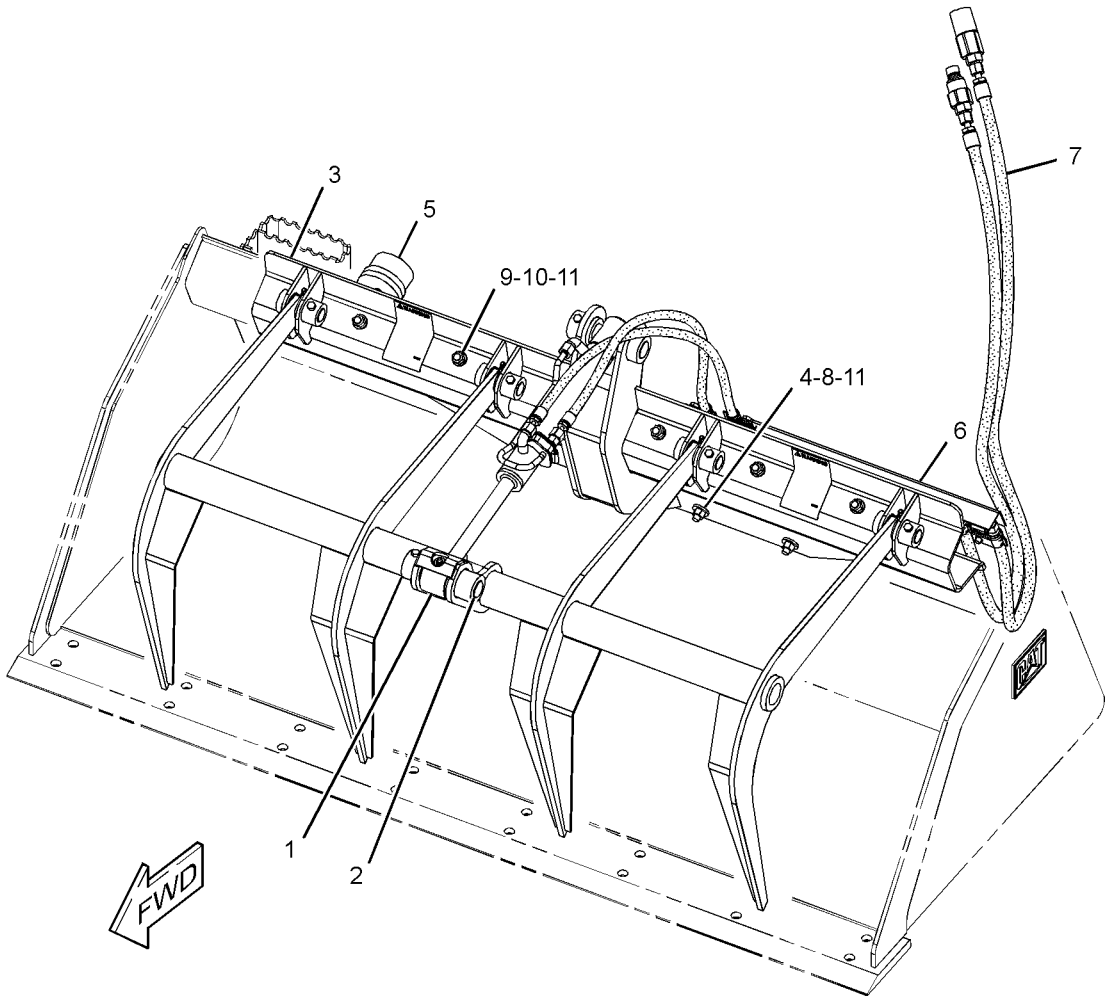

GRAPHIC #1 **<END>** g01278678

285-6116 GRAPPLE & CYLINDER GP-UTILITY

S/N: MST1-UP

PART OF 285-6093, 285-6104, 285-6111, 285-6112 BUCKET AR-GRAPPLE, 285-6114, 285-6115 FORK AR-GRAPPLE

AN ATTACHMENT

TYPE 2

SMCS-5057, 5555, 6307 **i02941009**

NOTE	REF NO	GRAPHIC REF	PART NUMBER	QTY	PART NAME 1 2 3 4 5 6 (PRODUCT LEVEL)	SEE PAGE
CY	1	1	**255-0943**	1	CYLINDER GP-GRAPPLE	306
Y	2	1	*165-8731*	1	MOUNTING GP-CYLINDER (UTILITY)	428
Y	3	1	*165-8740*	1	GRAPPLE GP-UTILITY	624
M	4	1	**170-5836**	4	BOLT (M12X1.75X35-MM)	
Y	5	1	*173-7407*	1	STOP GP-BUCKET	640
	6	1	**239-5029**	1	GUARD	
Y	7	1	*285-6113*	1	LINES GP-BUCKET	345
	8	1	**5P-1076**	4	WASHER-HARD (13.5X30X4-MM THK)	
M	9	1	**8T-4139**	6	BOLT (M12X1.75X30-MM)	
	10	1	**8T-4223**	6	WASHER-HARD (13.5X25.5X3-MM THK)	
M	11	1	**8T-4244**	10	NUT (M12X1.75-THD)	

C-CHANGE FROM PREVIOUS TYPE
M-METRIC PART
Y-SEPARATE ILLUSTRATION

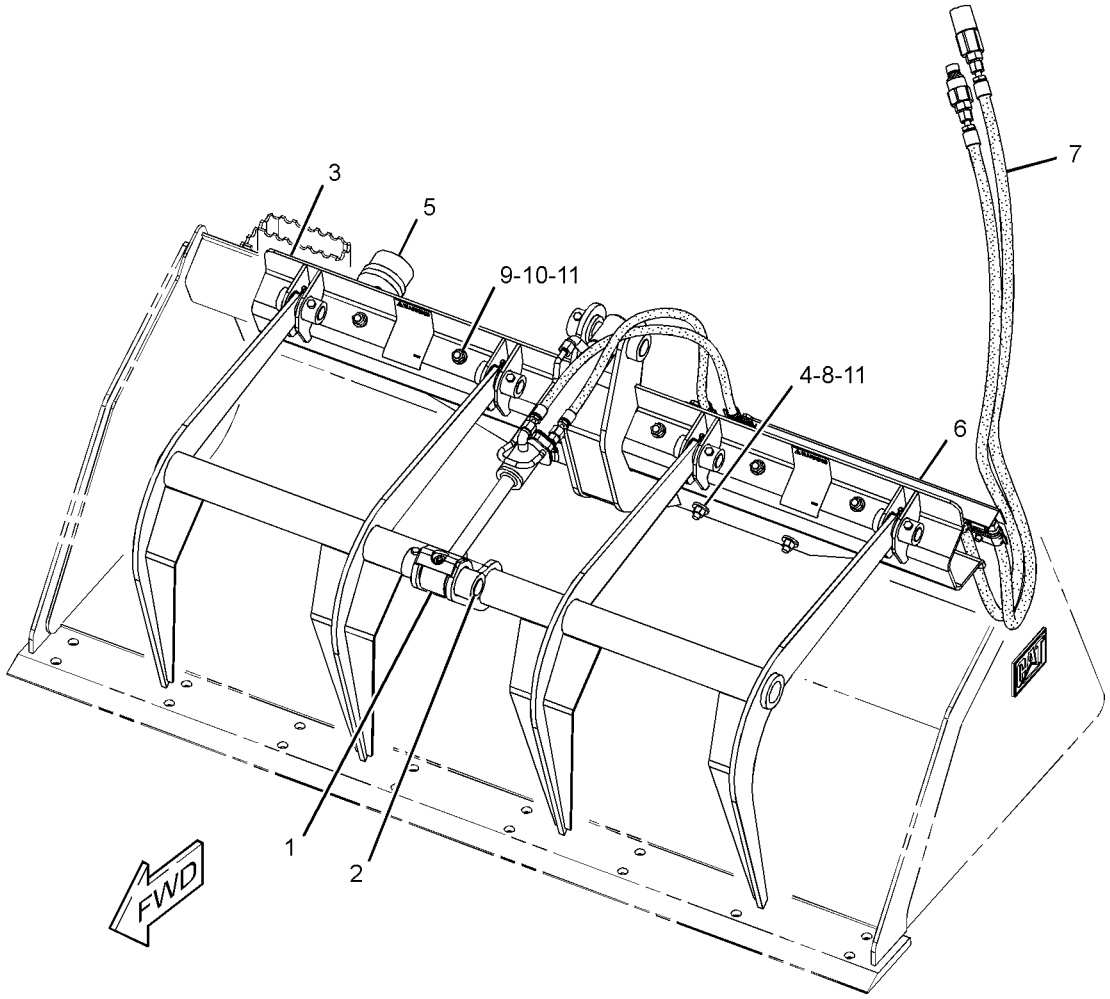

GRAPHIC #1 **<END>** g01278678

WORK TOOLS

165-8740 GRAPPLE GP-UTILITY

S/N: MST1-UP
PART OF 285-6116 GRAPPLE & CYLINDER GP-UTILITY
AN ATTACHMENT

SMCS-6307 **i02772047**

NOTE	REF NO	GRAPHIC REF	PART NUMBER	QTY	PART NAME 1 2 3 4 5 6 (PRODUCT LEVEL)	SEE PAGE
	1	1	**3B-8488**	4	FITTING-GREASE	
	2	1	**159-5411**	4	PIN	
	3	1	**165-8743**	1	ARM AS	
	4	1	**169-3569**	1	BRACKET AS	
		1	**159-8035**	2	FILM-WARNING (CRUSH HAZARD, STAY BACK)	
M	5	1	**6V-9189**	4	LOCKNUT (M8X1.25-THD)	
M	6	1	**8T-6912**	4	BOLT (M8X1.25X50-MM)	

M-METRIC PART

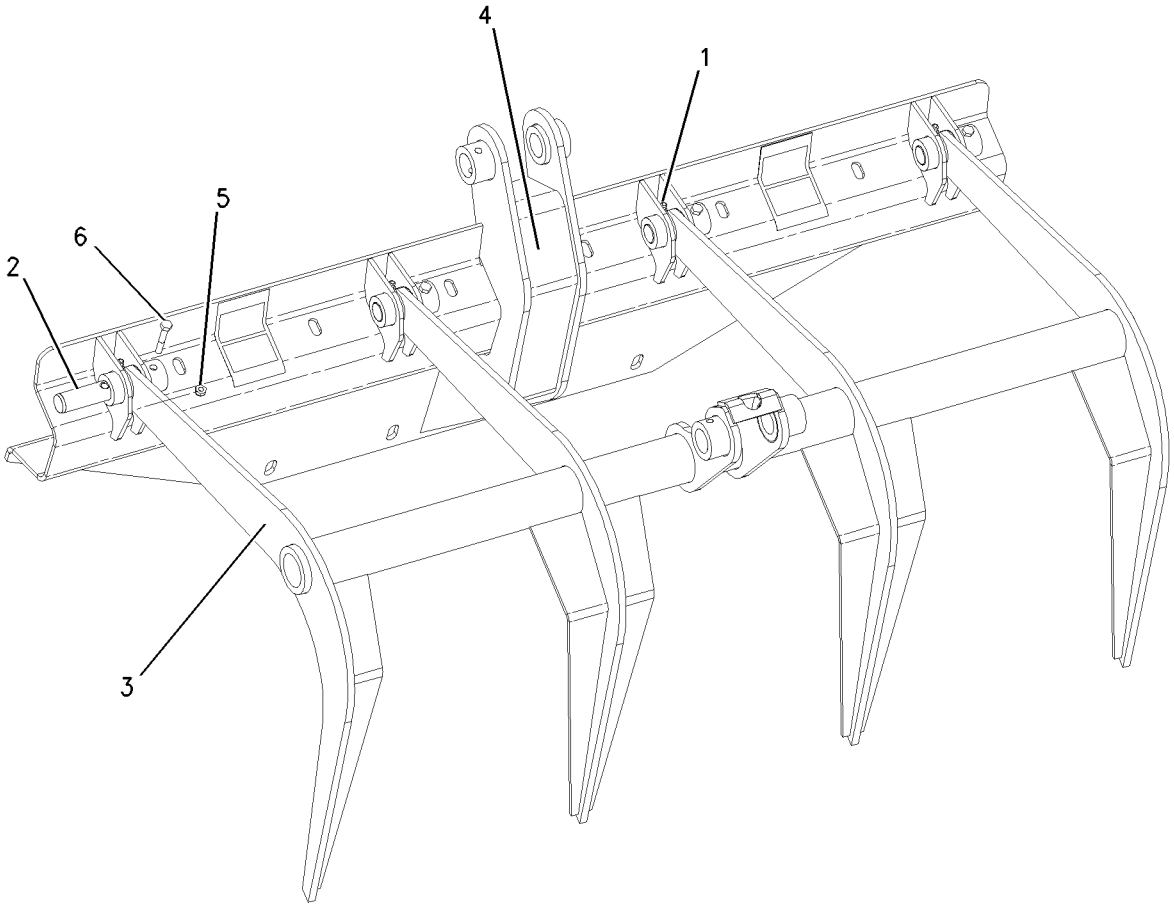

GRAPHIC #1 **<END>** g00777325

258-2536 HANDLE & PIN GP-COUPLER–RH

S/N: MST1-UP
PART OF 258-2535 LOCK GP-QUICK COUPLER
AN ATTACHMENT

SMCS-6129 **i02960198**

NOTE	REF NO	GRAPHIC REF	PART NUMBER	QTY	PART NAME 1 2 3 4 5 6 (PRODUCT LEVEL)	SEE PAGE
	1	1	**192-2637**	1	PLATE	
	2	1	**195-6754**	2	PIN-SPRING	
	3	1	**192-2645**	1	SPRING	
	4	1	**258-2534**	1	HANDLE-RH	
M	5	1	**315-5493**	2	WASHER-HARD (22.5X35X4.5-MM THK)	

M-METRIC PART

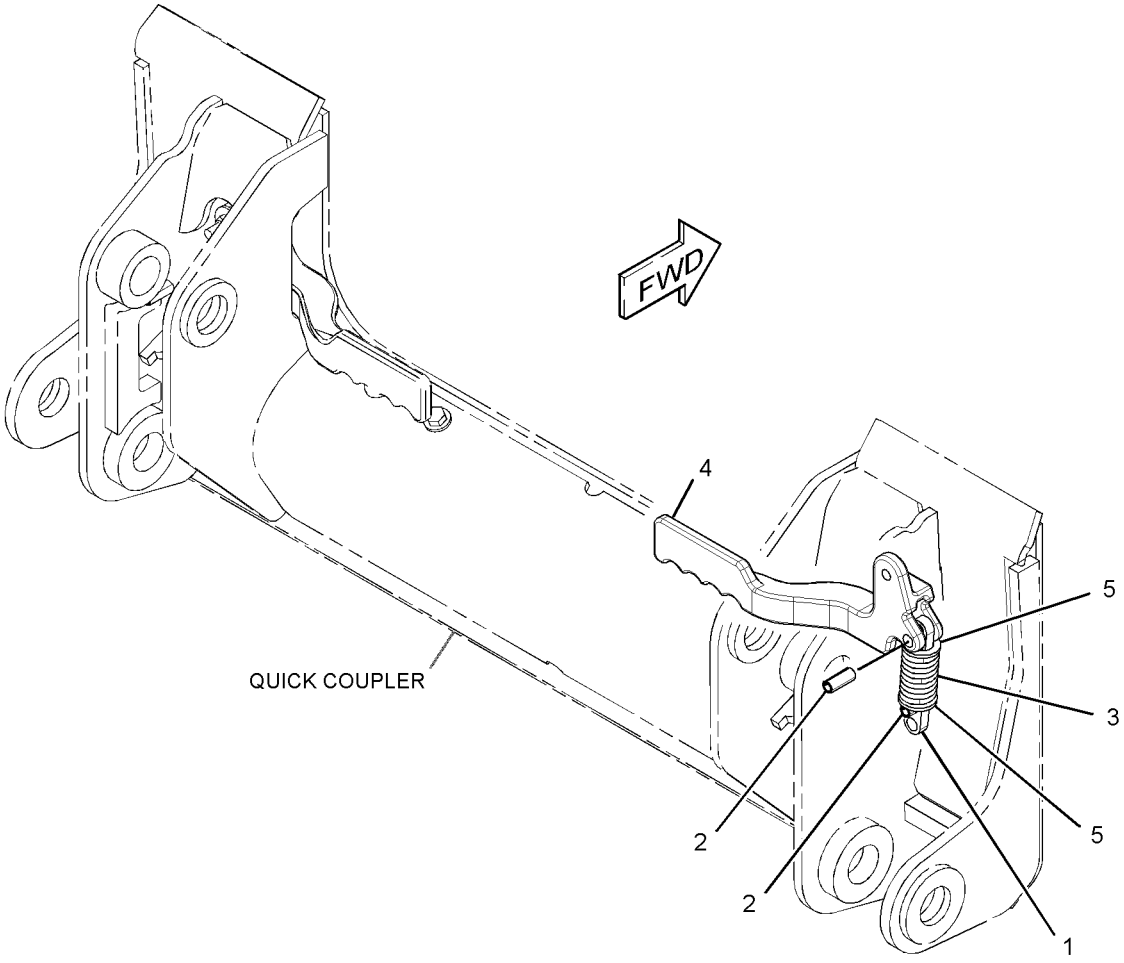

GRAPHIC #1 **<END>** g01335572

WORK TOOLS

258-2538 HANDLE & PIN GP-COUPLER–LH

S/N: MST1-UP
PART OF 258-2537 LOCK GP-QUICK COUPLER
AN ATTACHMENT

SMCS-6129 **i02960209**

NOTE	REF NO	GRAPHIC REF	PART NUMBER	QTY	PART NAME 1 2 3 4 5 6 (PRODUCT LEVEL)	SEE PAGE
	1	1	**192-2637**	1	PLATE	
	2	1	**195-6754**	2	PIN-SPRING	
	3	1	**192-2645**	1	SPRING	
	4	1	**258-2533**	1	HANDLE-LH	
M	5	1	**315-5493**	2	WASHER-HARD (22.5X35X4.5-MM THK)	

M-METRIC PART

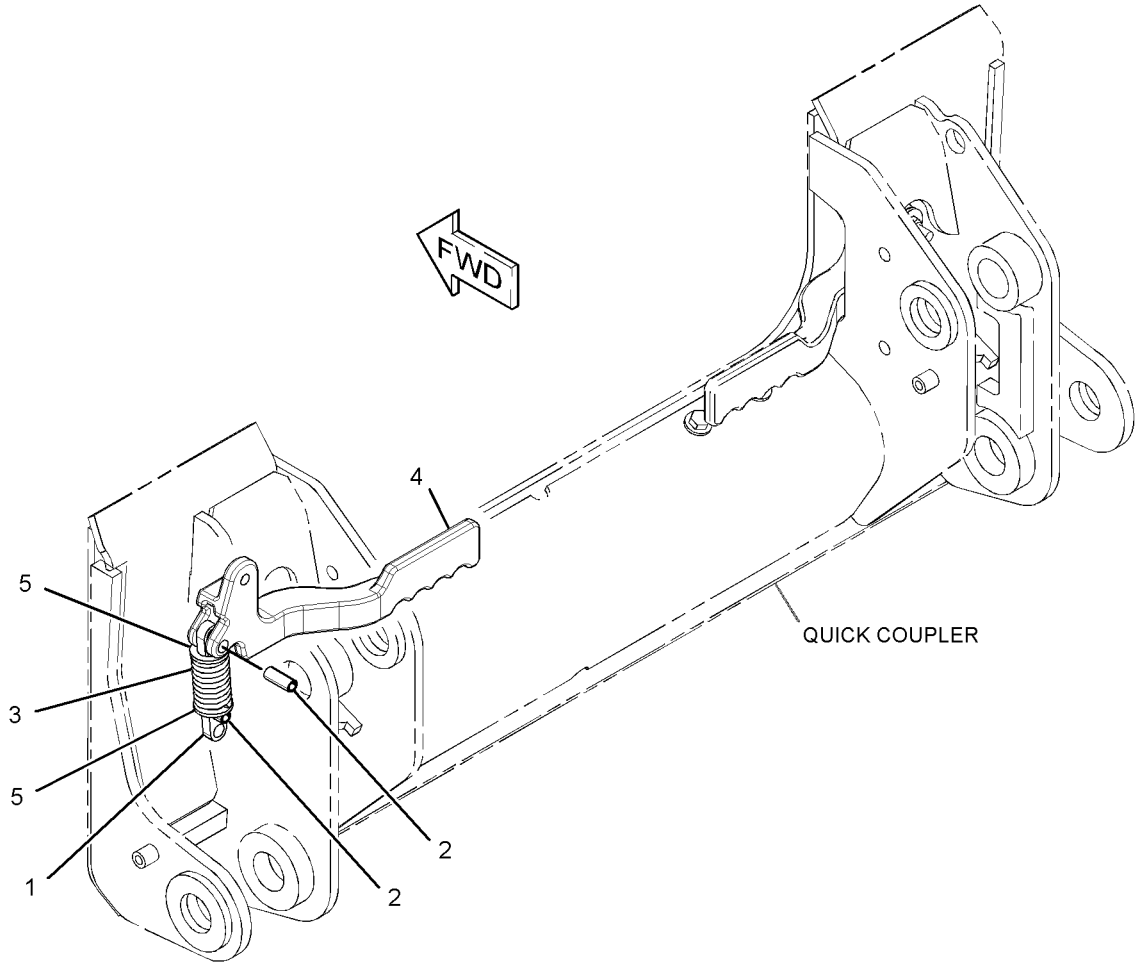

GRAPHIC #1 **<END>** g01335567

177-9152 KIT-ROADING PLATE & MOUNTING–BUCKET

S/N: MST1-UP
PART OF 315-6354 CONVERSION AR-MACHINE, 258-3802, 258-3804 CONVERSION AR-ROADING
AN ATTACHMENT

SMCS-7405, 7557 **i01905397**

NOTE	REF NO	GRAPHIC REF	PART NUMBER	QTY	PART NAME 1 2 3 4 5 6 (PRODUCT LEVEL)	SEE PAGE
	1	1	**177-9153**	2	PLATE	
Y	2	1	*184-6097*	1	PLATE GP-ROADING (LH)	636
Y	3	1	*184-6098*	1	PLATE GP-ROADING (RH)	637
	4	1	**039-8557**	2	WASHER (13X26X6-MM THK)	
M	5	1	**6V-8949**	4	NUT (M10X1.5-6H THD)	
	6	1	**8T-4121**	8	WASHER-HARD (11X21X2.5-MM THK)	
M	7	1	**8T-4137**	2	BOLT (M10X1.5X20-MM)	
M	8	1	**8T-4186**	2	BOLT (M10X1.5X40-MM)	

M-METRIC PART
Y-SEPARATE ILLUSTRATION

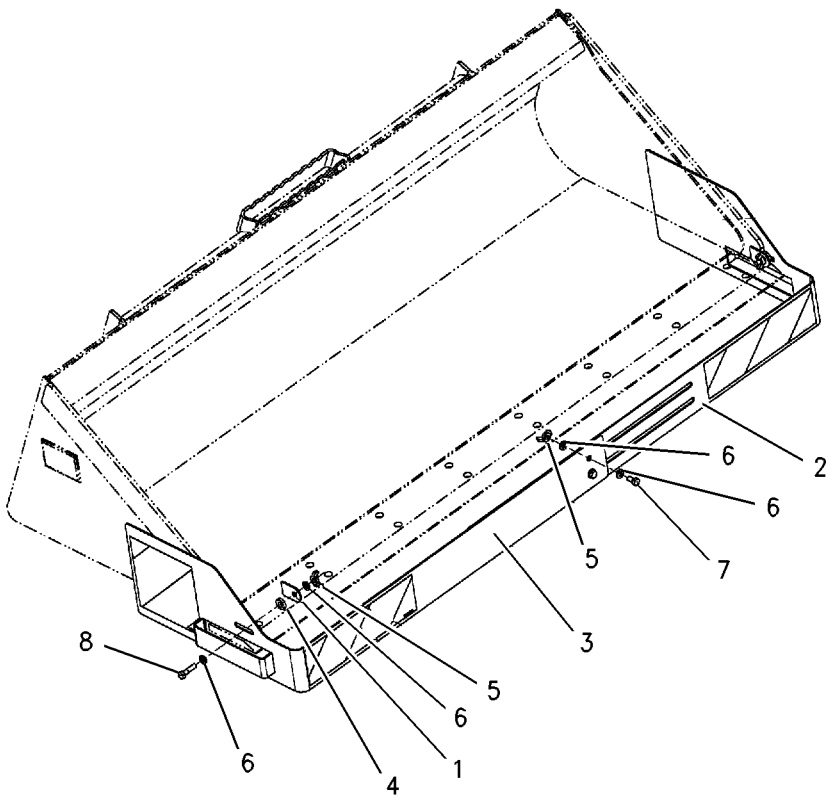

GRAPHIC #1 **<END>** g00778934

319-9480 KIT-ROADING PLATE & MOUNTING—BUCKET

S/N: MST1-UP

PART OF 315-6354 CONVERSION AR-MACHINE, 258-3802, 258-3804 CONVERSION AR-ROADING

AN ATTACHMENT

SMCS-7405, 7557 **i03648540**

NOTE	PART NUMBER	QTY	PART NAME 1 2 3 4 5 6 (PRODUCT LEVEL)	SEE PAGE
	319-9481	1	PLATE AS (LH)	
	177-7414	1	FILM-STRIPE (REFLECTIVE, RED, WHITE)	
	177-7415	1	FILM (REFLECTIVE)	
	319-9483	1	PLATE AS	
	319-9482	1	PLATE AS (RH)	
	177-7414	1	FILM-STRIPE (REFLECTIVE, RED, WHITE)	
	177-7415	1	FILM (REFLECTIVE)	
	319-9484	1	PLATE AS	
	319-9490	2	STRAP AS	
M	**8T-4136**	8	BOLT (M10X1.5X25-MM)	
M	**8T-4186**	2	BOLT (M10X1.5X40-MM)	
M	**6V-8949**	8	NUT (M10X1.5-THD)	
	319-9489	2	PLATE	
	039-8557	4	WASHER (13X26X6-MM THK)	
	8T-4121	16	WASHER-HARD (11X21X2.5-MM THK)	

M-METRIC PART

<END>

WORK TOOLS

258-3645 KIT-WATER TANK & MOUNTING

S/N: MST1-UP

AN ATTACHMENT

SMCS-5613 **i03636358**

NOTE	REF NO	GRAPHIC REF	PART NUMBER	QTY	PART NAME 1 2 3 4 5 6 (PRODUCT LEVEL)	SEE PAGE
	1	1	**3B-7255**	1	BUSHING-REDUCING	
	2	1	**3S-2093**	4	STRAP-CABLE	
	3	1	**7X-0495**	1	ADAPTER	
	4	1	**8T-0737**	1	VALVE-SHUTOFF	
Y	5	1	**116-2001**	1	STRAINER GP-WATER	641
	6	1	**124-1916**	1	COUPLING-PERMANENT	
	7	1	**124-1917**	1	COUPLING-PERMANENT	
	8	1	**165-4894**	1	HARNESS AS-WORK TOOL	
		1	**126-1767**	8	PIN-CONNECTOR (14-GA)	
		1	**9X-3402**	10	SOCKET-CONNECTOR (16-GA TO 18-GA)	
		1	**102-8806**	1	KIT-RECEPTACLE (8-PIN)	
					(INCLUDES RECEPTACLE AS & WEDGE)	
E		1	**119-3662**		TUBE-HEAT SHRINK (10.85-MM DIA) (13-CM)	
		1	**155-2265**	1	KIT-CONNECTING PLUG (8-PIN)	
		1	**155-2270**	1	KIT-CONNECTING PLUG (2-PIN)	
					(EACH PLUG KIT INCLUDES PLUG AS, WEDGE & INTERFACE SEAL)	
Y	9	1	**166-2551**	1	TANK GP-WATER	642
I	10	1	**166-2552**	1	HOSE AS	
	11	1	**166-2557**	1	PLATE	
	12	1	**166-2558**	1	COUPLING	
	13	1	**166-2559**	2	BRACKET	
	14	1	**218-5847**	1	PLATE	
	15	1	**233-5719**	1	PUMP GP-DIAPHRAGM	
	16	1	**258-3644**	1	BRACKET AS	
	17	1	**7R-0476**	1	STRAINER (WATER TANK FILL)	
B	18	1	**292-5476**	1	BRACKET	
	19	1	**003-2143**	1	ELBOW	
	20	1	**067-2551**	4	CLIP	
B	21	1	**101-9759**	1	SPACER (9X20X39.2-MM THK)	
M	22	1	**111-4627**	4	SCREW-MACHINE (M6X1X30-MM)	
	23	1	**119-3859**	6	SCREW-PAN HEAD (10-16X0.75-IN)	
M	24	1	**129-3178**	4	LOCKNUT (M6X1-THD)	
	25	1	**1L-2279**	1	ELBOW	
BM	26	1	**5C-7261**	5	NUT (M8X1.25-THD)	
B	27	1	**5P-4116**	6	WASHER-HARD (8.8X20.5X2-MM THK)	
	28	1	**5P-8246**	2	WASHER-HARD (15.5X29X3-MM THK)	
	29	1	**8T-4122**	4	WASHER-HARD (17X32X3.5-MM THK)	
	30	1	**154-1580**	1	WASHER-HARD (22X38X6-MM THK)	
	31	1	**8T-4205**	4	WASHER-HARD (7.2X14.5X2-MM THK)	
	32	1	**8T-4224**	4	WASHER-HARD (8.8X16X2-MM THK)	
M	33	1	**8T-4779**	4	BOLT (M16X2X35-MM)	
M	34	1	**8T-4908**	4	BOLT (M8X1.25X25-MM)	
BM	35	1	**8T-6870**	1	BOLT (M8X1.25X70-MM)	
M	36	1	**7X-2561**	8	BOLT (M20X2.5X35-MM)	
E	37	1	**167-0608**		SEAL (86-CM)	
BE	38	1	**122-6869**		HOSE-HYDRAULIC (410-CM)	
BE	38A	1	**122-6869**		HOSE-HYDRAULIC (383-CM)	
BE	38B	1	**122-6869**		HOSE-HYDRAULIC (369-CM)	
	39	1	**258-4389**	4	MOUNT	
	40	1	**178-3620**	2	STRAP-DUAL CLAMP	

B-USE AS REQUIRED
E-ORDER BY THE CENTIMETER
I-REFER TO HYDRAULIC INFORMATION SYSTEM
M-METRIC PART
Y-SEPARATE ILLUSTRATION

258-3645 KIT-WATER TANK & MOUNTING *(contd.)* i03636358

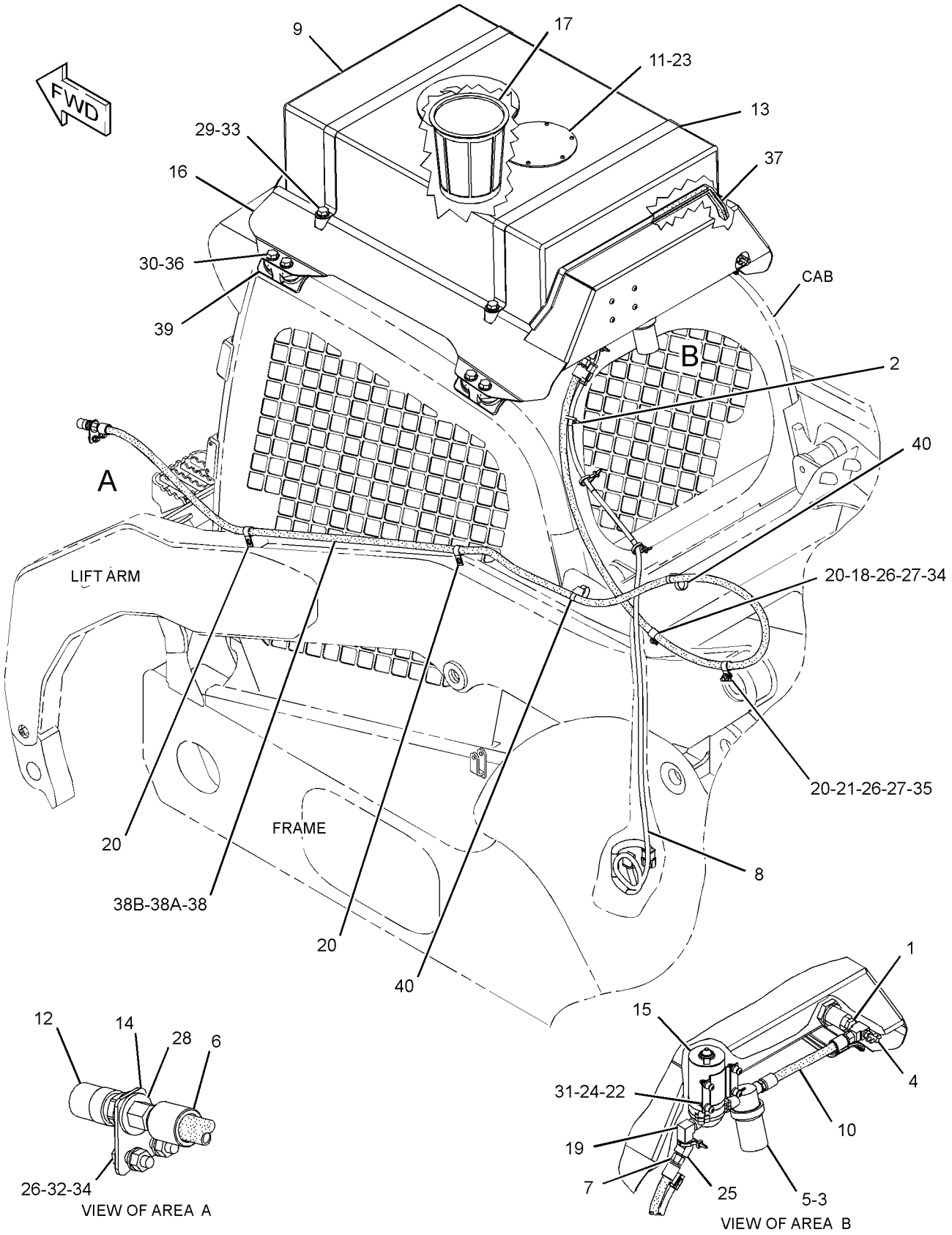

GRAPHIC #1 **<END>** g01359396

215-3957 LINK GP-COUPLER

S/N: MST1-1930

PART OF 215-3962, 215-3963 CYLINDER & LINK GP-COUPLER

AN ATTACHMENT

SMCS-6129 **i02232650**

NOTE	REF NO	GRAPHIC REF	PART NUMBER	QTY	PART NAME 1 2 3 4 5 6 (PRODUCT LEVEL)	SEE PAGE
	1	1	**192-2637**	1	PLATE	
	2	1	**192-2638**	1	BRACKET	
C	3	1	**238-7693**	1	SPRING	
	4	1	**195-6754**	2	PIN-SPRING	
C	5	1	**8T-4123**	2	WASHER (22X35X3.5-MM THK)	

C-CHANGE FROM PREVIOUS TYPE

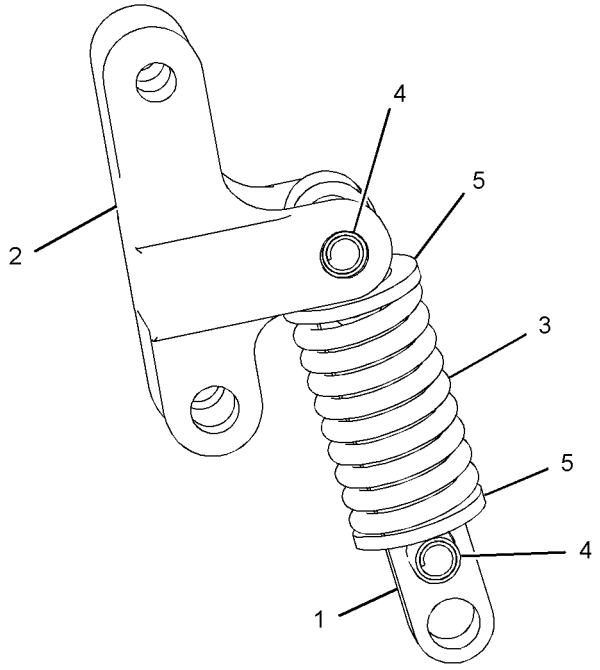

GRAPHIC #1 **<END>** g01130555

WORK TOOLS

215-3957 LINK GP-COUPLER

S/N: MST1931-UP

PART OF 215-3962, 215-3963 CYLINDER & LINK GP-COUPLER

AN ATTACHMENT

SMCS-6129 **i02999956**

NOTE	REF NO	GRAPHIC REF	PART NUMBER	QTY	PART NAME 1 2 3 4 5 6 (PRODUCT LEVEL)	SEE PAGE
C	1	1	**192-2645**	1	SPRING	
C	2	1	**303-8768**	1	PIN-SPRING	
C	3	1	**310-6660**	1	PIN-SPRING	
C	4	1	**311-9240**	1	PLATE	
CM	5	1	**315-5493**	2	WASHER-HARD (22.5X35X4.5-MM THK)	
C	6	1	**319-2137**	1	BRACKET	

C-CHANGE FROM PREVIOUS TYPE
M-METRIC PART

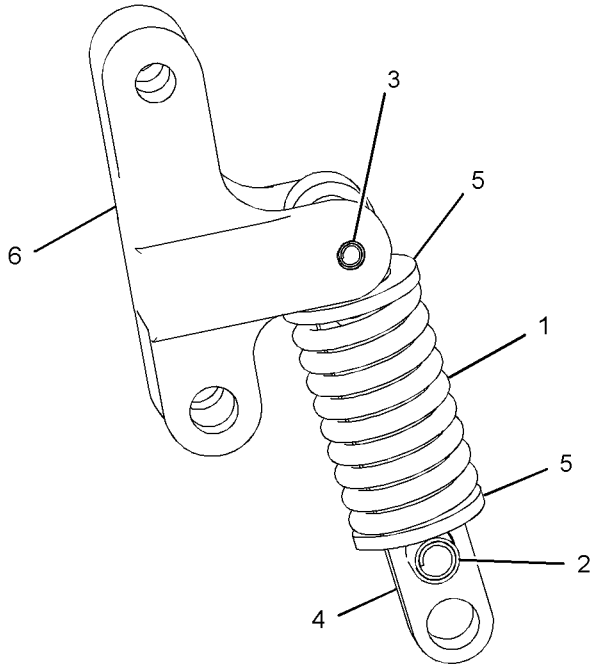

GRAPHIC #1 **<END>** g01523779

175-4238 LOCK GP-QUICK COUPLER—MECHANICAL

S/N: MST1-UP
PART OF 315-6354 CONVERSION AR-MACHINE, 258-3802, 258-3804 CONVERSION AR-ROADING
AN ATTACHMENT

SMCS-6129 **i01408856**

NOTE	REF NO	GRAPHIC REF	PART NUMBER	QTY	PART NAME 1 2 3 4 5 6 (PRODUCT LEVEL)	SEE PAGE
	1	1	**9R-5301**	1	PIN-COTTER	
	2	1	**178-2247**	1	PIN	
	3	1	**9X-8257**	1	WASHER (17.5X30X3.5-MM THK)	

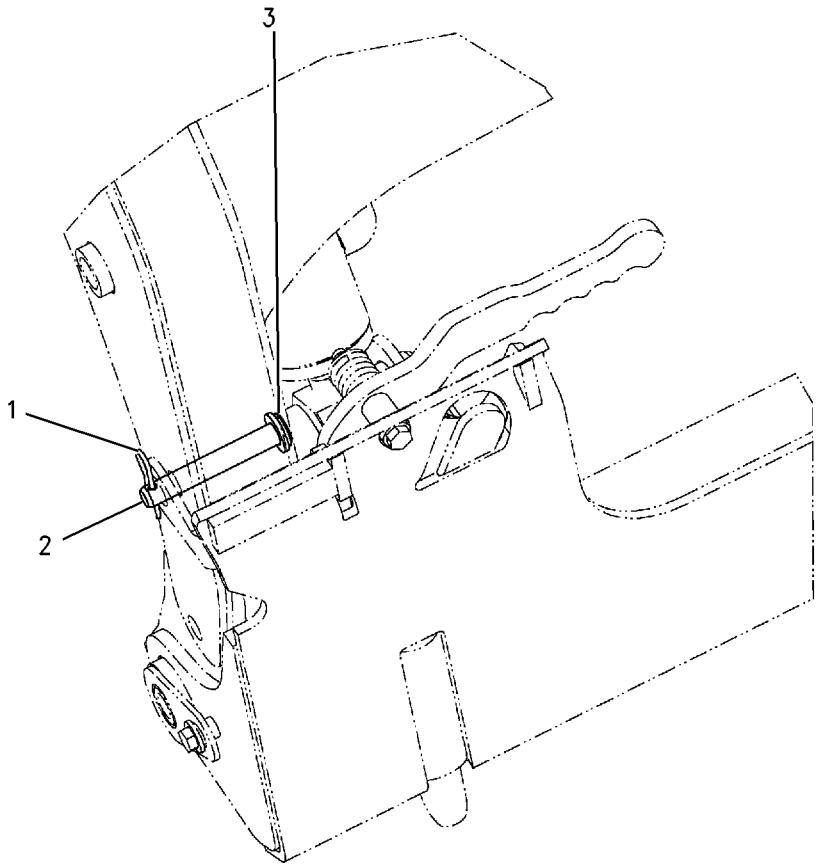

GRAPHIC #1 **<END>** g00741828

258-2535 LOCK GP-QUICK COUPLER—RH

S/N: MST1-UP
PART OF 258-2500 COUPLER GP-QUICK
AN ATTACHMENT

SMCS-6129 **i02655596**

NOTE	REF NO	GRAPHIC REF	PART NUMBER	QTY	PART NAME 1 2 3 4 5 6 (PRODUCT LEVEL)	SEE PAGE
	1	1	**166-2560**	1	PIN-SPRING	
	2	1	**192-2642**	1	PIN	
Y	3	1	*258-2536*	1	HANDLE & PIN GP-COUPLER (RH)	625

Y-SEPARATE ILLUSTRATION

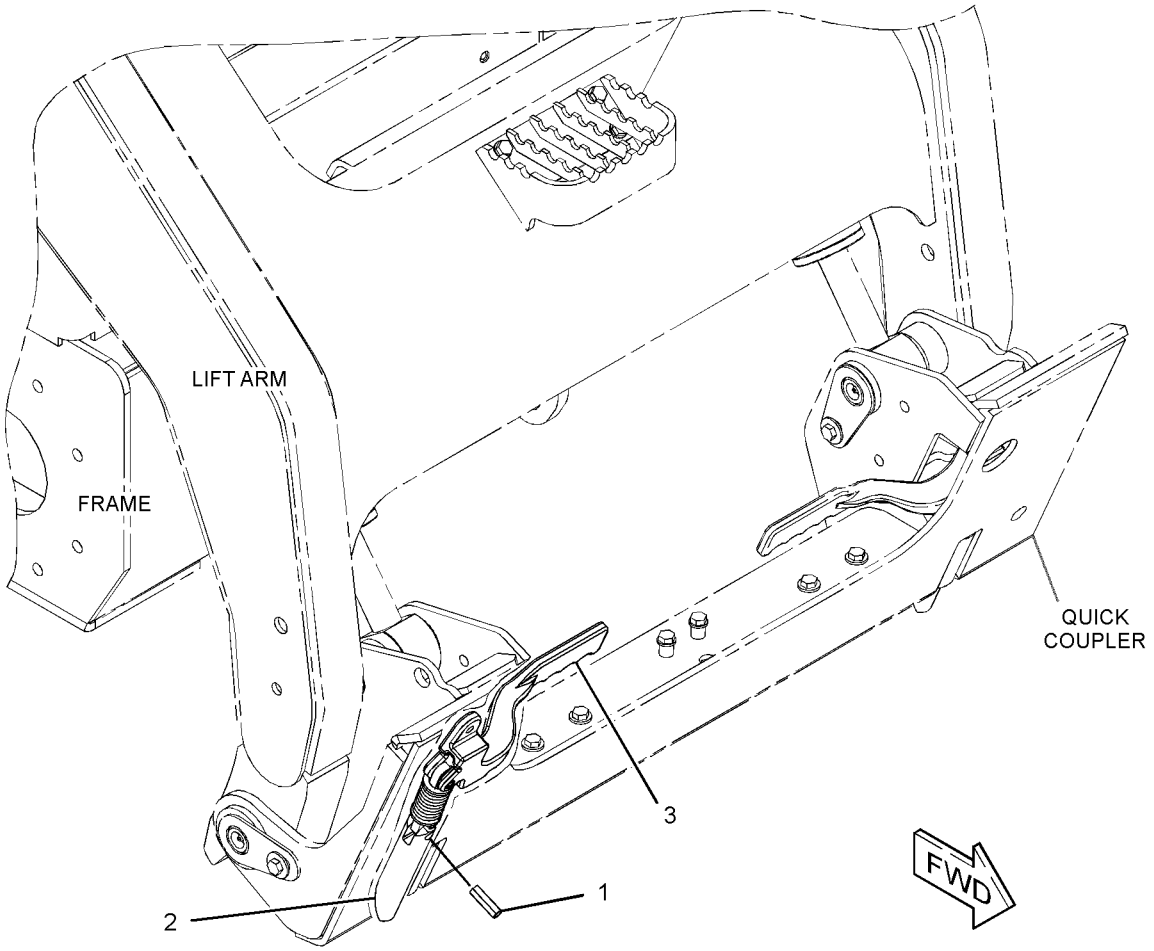

GRAPHIC #1 **<END>** g01335585

258-2537 LOCK GP-QUICK COUPLER–LH

S/N: MST1-UP
PART OF 258-2500 COUPLER GP-QUICK
AN ATTACHMENT

SMCS-6129 **i02655597**

NOTE	REF NO	GRAPHIC REF	PART NUMBER	QTY	PART NAME 1 2 3 4 5 6 (PRODUCT LEVEL)	SEE PAGE
	1	1	**166-2560**	1	PIN-SPRING	
	2	1	**192-2642**	1	PIN	
Y	3	1	*258-2538*	1	HANDLE & PIN GP-COUPLER (LH)	626

Y-SEPARATE ILLUSTRATION

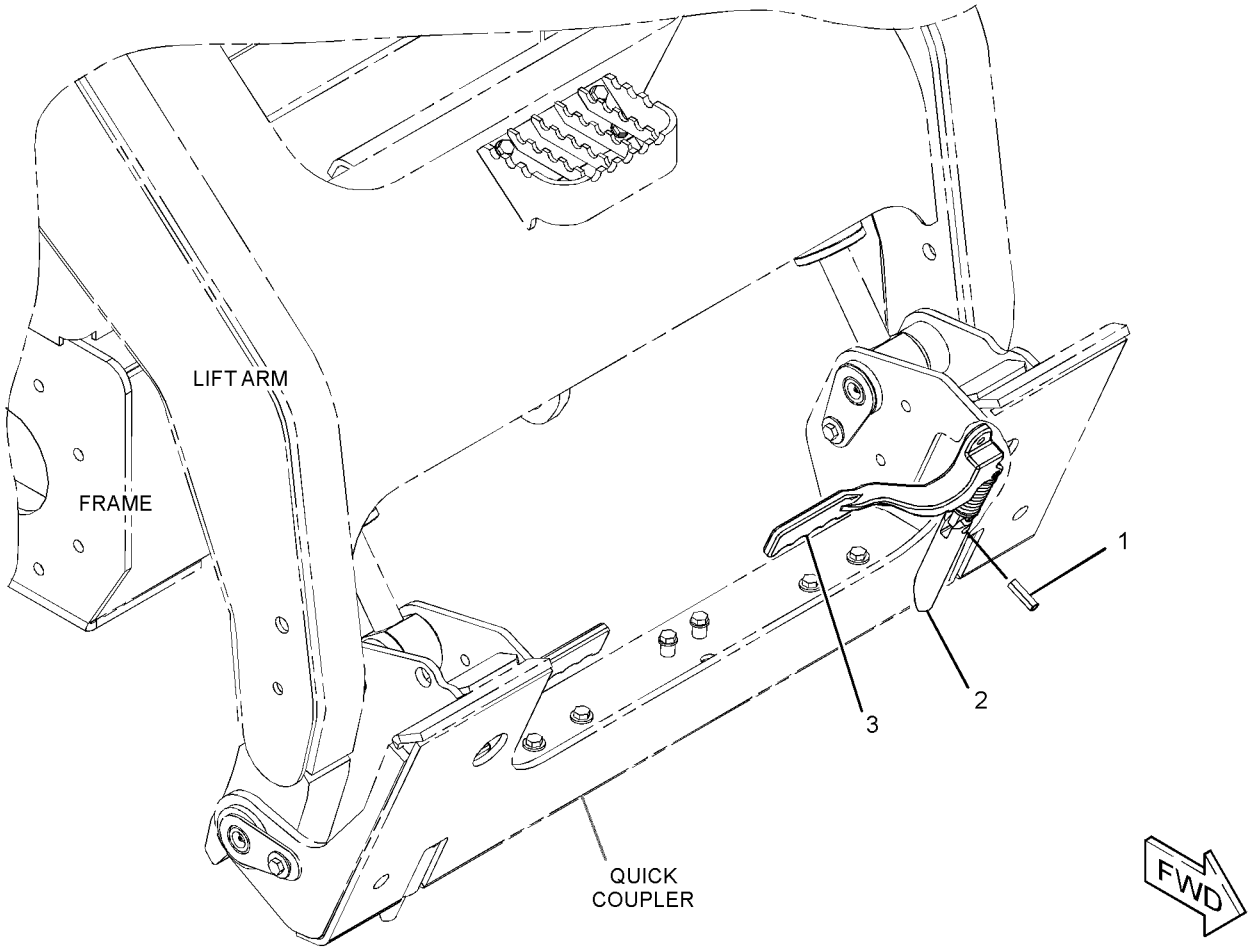

GRAPHIC #1 **<END>** g01335566

WORK TOOLS

184-6097 PLATE GP-ROADING—LH

S/N: MST1-UP
PART OF 177-9152 KIT-ROADING PLATE & MOUNTING
AN ATTACHMENT

SMCS-7405, 7557 **i02939455**

NOTE	REF NO	GRAPHIC REF	PART NUMBER	QTY	PART NAME 1 2 3 4 5 6 (PRODUCT LEVEL)	SEE PAGE
	1	1	**177-7414**	1	FILM-STRIPE (REFLECTIVE, RED, WHITE)	
	2	1	**177-7415**	1	FILM (REFLECTIVE)	
	3	1	**177-9150**	1	PLATE AS (LH)	

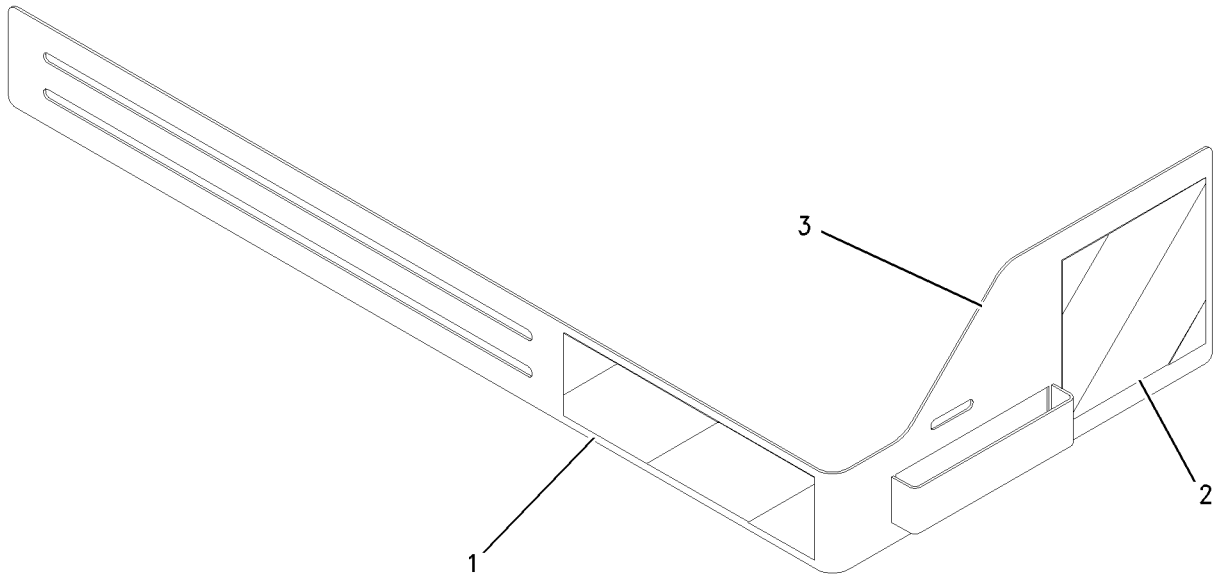

GRAPHIC #1 **<END>** g00995785

184-6098 PLATE GP-ROADING–RH

S/N: MST1-UP
PART OF 177-9152 KIT-ROADING PLATE & MOUNTING
AN ATTACHMENT

SMCS-7405, 7557 **i02939456**

NOTE	REF NO	GRAPHIC REF	PART NUMBER	QTY	PART NAME 1 2 3 4 5 6 (PRODUCT LEVEL)	SEE PAGE
	1	1	**177-7414**	1	FILM-STRIPE (REFLECTIVE, RED, WHITE)	
	2	1	**177-7415**	1	FILM (REFLECTIVE)	
	3	1	**177-9151**	1	PLATE AS (RH)	

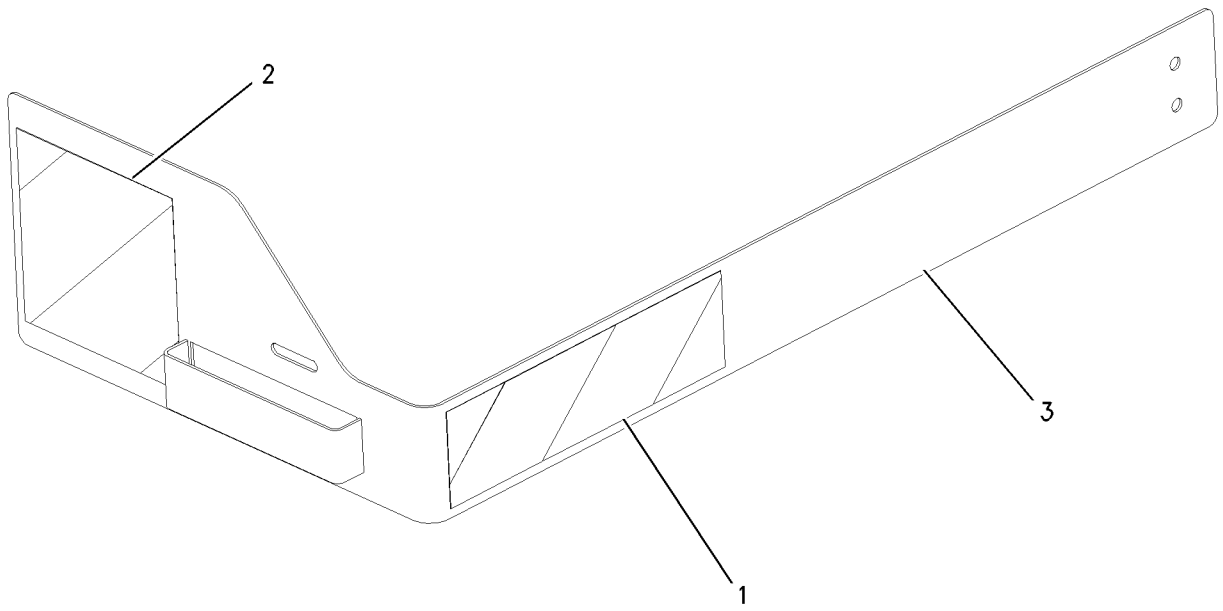

GRAPHIC #1 **<END>** g00995786

WORK TOOLS

177-1983 SPRING GP-BLADE

S/N: MST1-UP
PART OF 177-1989, 177-1990 BLADE AR
AN ATTACHMENT

SMCS-6060 **i01497986**

NOTE	REF NO	GRAPHIC REF	PART NUMBER	QTY	PART NAME 1 2 3 4 5 6 (PRODUCT LEVEL)	SEE PAGE
	1	1	**177-1941**	4	SPRING	
	2	1	**177-1973**	1	PLATE AS	
M	3	1	**8T-4194**	2	BOLT (M12X1.75X50-MM)	
	4	1	**8T-4223**	4	WASHER-HARD (13.5X25.5X3-MM THK)	
M	5	1	**8T-4244**	2	NUT (M12X1.75-THD)	

M-METRIC PART

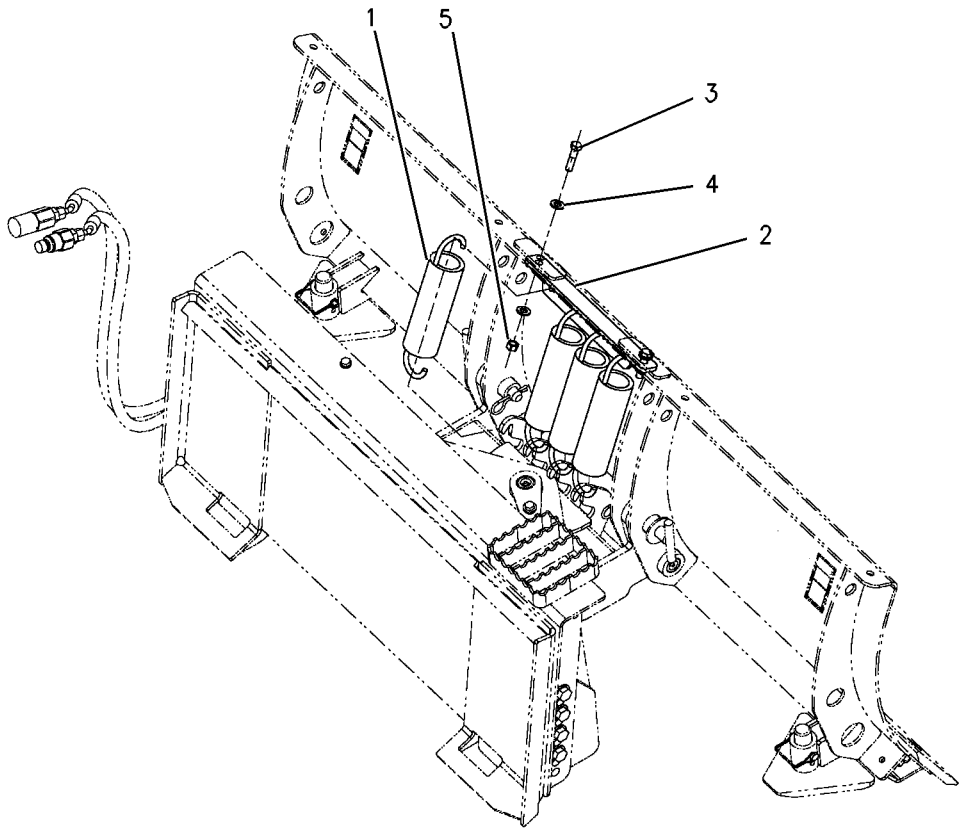

GRAPHIC #1 **<END>** g00777337

188-7733 STEP GP-MATERIAL HANDLING ARM

S/N: MST1-UP

PART OF 216-8756 ARM GP-MATERIAL HANDLING

AN ATTACHMENT

SMCS-6542 **i01498007**

NOTE	REF NO	GRAPHIC REF	PART NUMBER	QTY	PART NAME 1 2 3 4 5 6 (PRODUCT LEVEL)	SEE PAGE
	1	1	**186-5186**	1	STEP AS	
	2	1	**8T-4121**	2	WASHER-HARD (11X21X2.5-MM THK)	
M	3	1	**8T-4133**	2	NUT (M10X1.5-THD)	
M	4	1	**8T-4136**	2	BOLT (M10X1.5X25-MM)	

M-METRIC PART

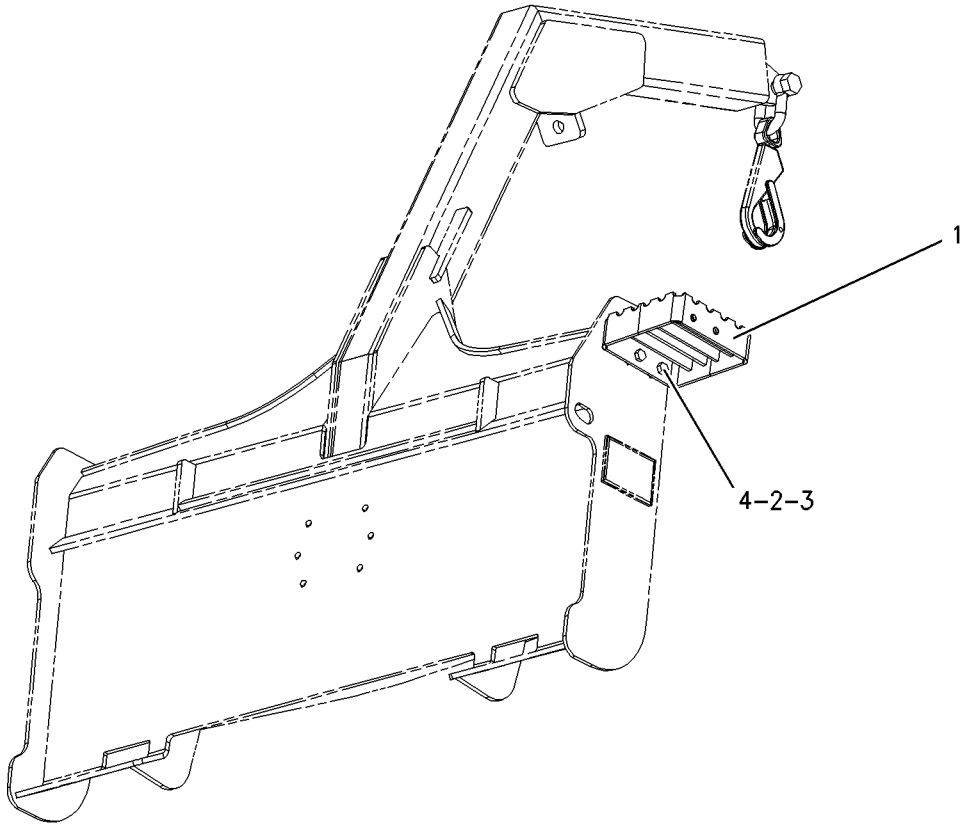

GRAPHIC #1 **<END>** g00777345

173-7407 STOP GP-BUCKET–UTILITY

S/N: MST1-UP
PART OF 285-6116 GRAPPLE & CYLINDER GP-UTILITY
AN ATTACHMENT

SMCS-6001, 6307 **i01218895**

NOTE	REF NO	GRAPHIC REF	PART NUMBER	QTY	PART NAME 1 2 3 4 5 6 (PRODUCT LEVEL)	SEE PAGE
	1	1	**8Y-7386**	1	SPACER (12.5X17.1X16.5-MM THK)	
	2	1	**2S-6408**	2	WASHER-RETAINING (0.531X3.25X0.438-IN THK)	
	3	1	**8T-4223**	1	WASHER-HARD (13.5X25.5X3-MM THK)	
M	4	1	**8T-4910**	1	BOLT (M12X1.75X60-MM)	
	5	1	**8Y-7385**	1	STOP	

M-METRIC PART

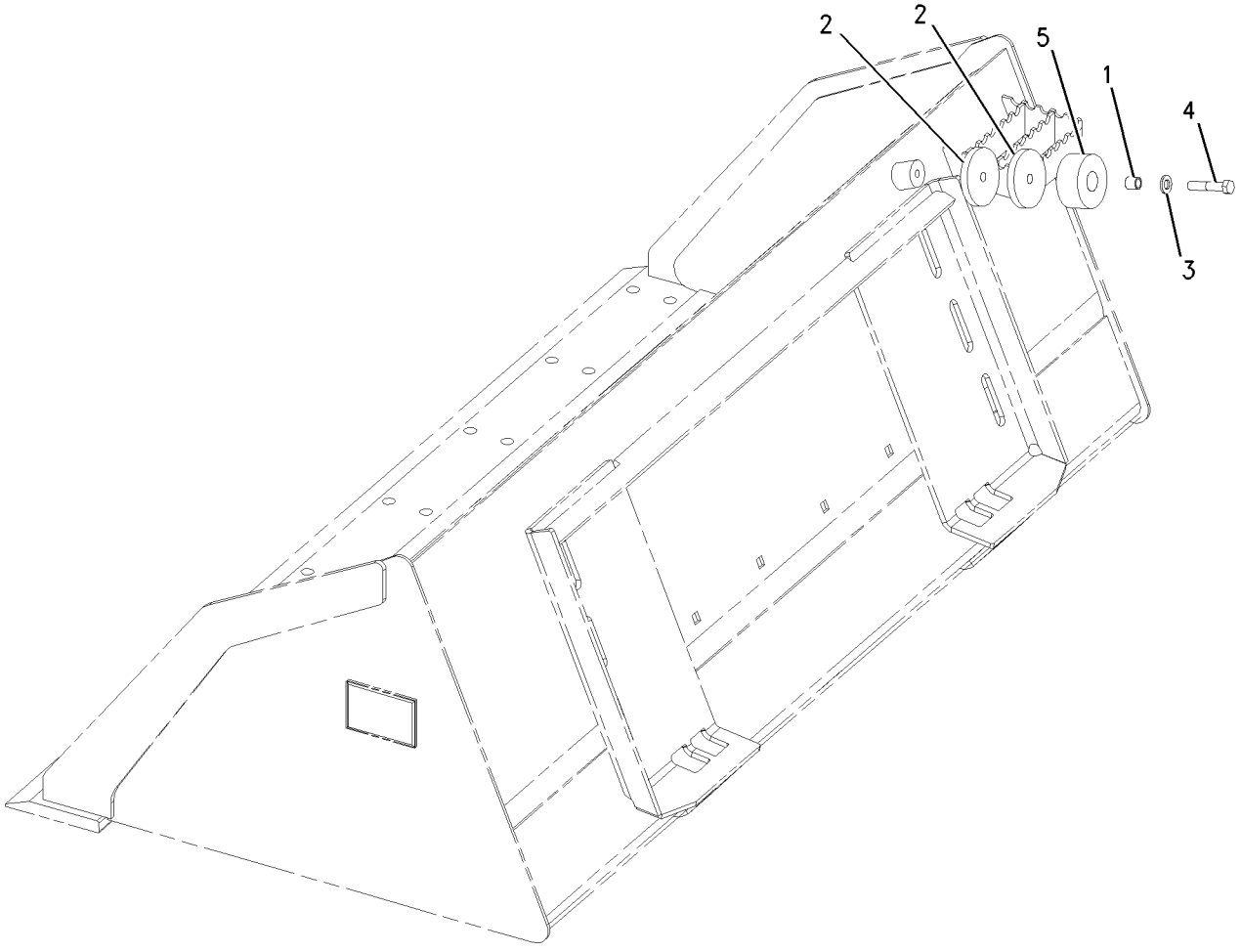

GRAPHIC #1 **<END>** g00651574

116-2001 STRAINER GP-WATER

S/N: MST1-UP

PART OF 258-3645 KIT-WATER TANK & MOUNTING

AN ATTACHMENT

SMCS-5612 **i02571404**

NOTE	REF NO	GRAPHIC REF	PART NUMBER	QTY	PART NAME 1 2 3 4 5 6 (PRODUCT LEVEL)	SEE PAGE
	1	1	**119-1415**	1	GASKET	
	2	1	**119-1414**	1	SCREEN (WATER TANK)	

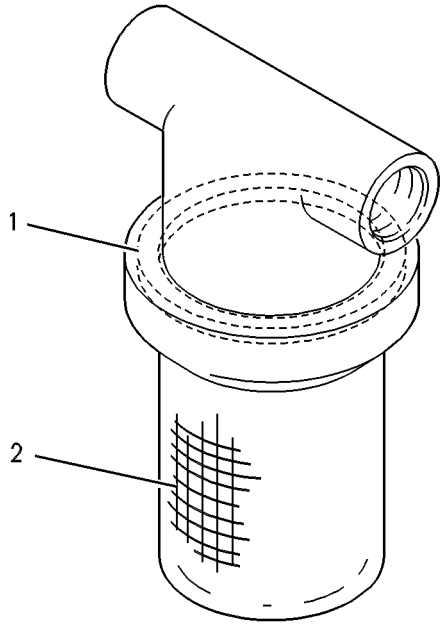

GRAPHIC #1 **<END>** g00293866

WORK TOOLS

166-2551 TANK GP-WATER

S/N: MST1-UP
PART OF 258-3645 KIT-WATER TANK & MOUNTING
AN ATTACHMENT

SMCS-5613 **i02571400**

NOTE	REF NO	GRAPHIC REF	PART NUMBER	QTY	PART NAME 1 2 3 4 5 6 (PRODUCT LEVEL)	SEE PAGE
	1	1	**192-2606**	1	CAP AS (WATER TANK)	
	2	1	**192-2607**	1	FITTING-DRAIN	

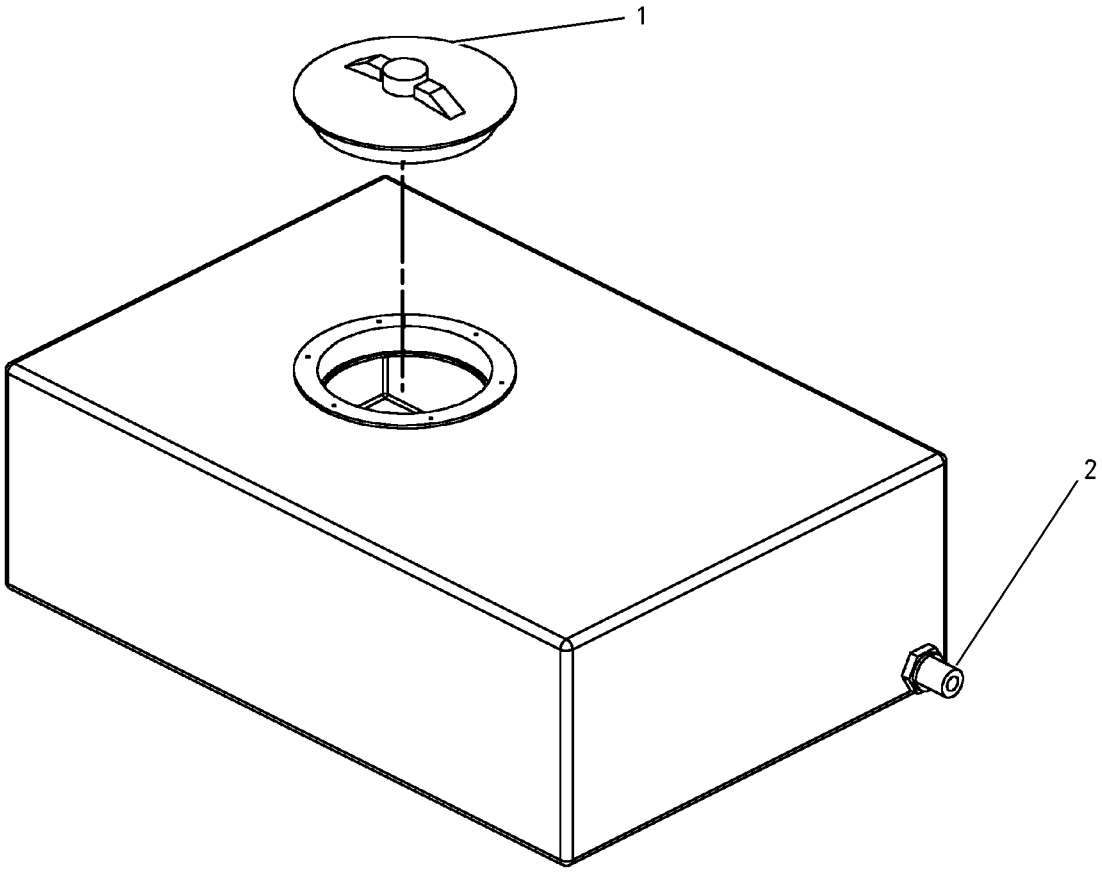

GRAPHIC #1 **<END>** g00742953

WORK TOOLS

141-4999 TOOTH GP-UNI

S/N: MST1-UP

PART OF 279-5366, 279-5370, 279-5374, 279-5378 BUCKET AR-GENERAL PURPOSE, 154-5046, 279-5380, 279-5392, 279-5400, 279-5401, 296-8055, 325-7035, 325-7045, 325-7055, 325-7065, 325-7075 BUCKET AR-MULTIPURPOSE, 296-8191 BUCKET GP-GENERAL PURPOSE

AN ATTACHMENT

SMCS-6822 **i02163942**

NOTE	REF NO	GRAPHIC REF	PART NUMBER	QTY	PART NAME 1 2 3 4 5 6 (PRODUCT LEVEL)	SEE PAGE
	1	1	**132-4720**	1	TOOTH-UNI-SINGLE STRAP	
	2	1	**246-4349**	2	SCREW-FLAT HEAD (M16X2-THD)	
M	3	1	**8T-4778**	2	LOCKNUT (M16X2-THD)	

M-METRIC PART

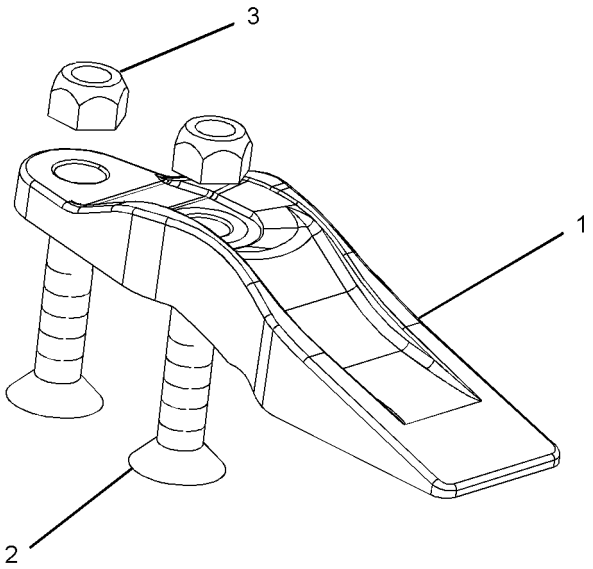

GRAPHIC #1 **<END>** g01097424

OPERATOR STATION

258-4229 ACCESSORY GP-CAB

S/N: MST1-UP

PART OF 258-3680, 258-3742 CAB AR-ENCLOSED ROPS, 258-3740 OPTION AR-CAB

AN ATTACHMENT

SMCS-7301, 731C **i02629783**

NOTE	REF NO	GRAPHIC REF	PART NUMBER	QTY	PART NAME 1 2 3 4 5 6 (PRODUCT LEVEL)	SEE PAGE
	1	1	**258-3727**	4	SCREW-TRUSS HEAD (NO 12X17.46-MM)	
	2	1	**258-4098**	1	HOLDER-CUP	
	3	1	**258-4099**	1	TRAY (CHANGE)	

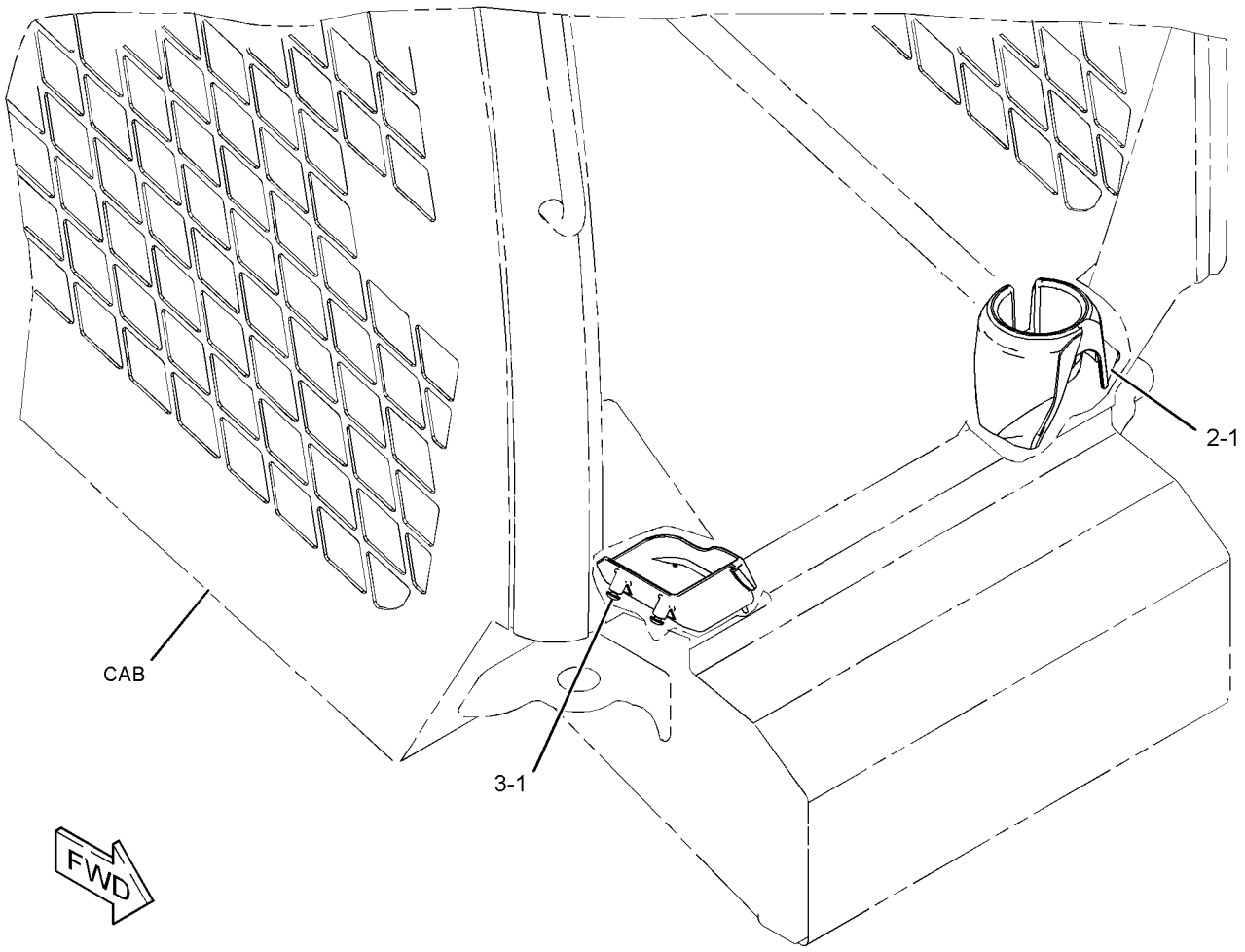

GRAPHIC #1 **<END>** g01322422

OPERATOR STATION

176-3900 ACCUMULATOR GP-REFRIGERANT—WITH DESICCANT

S/N: MST1-UP

FIELD REPLACEMENT FOR 186-6190—PAGE 646

SMCS-7320 **i02195254**

NOTE	REF NO	GRAPHIC REF	PART NUMBER	QTY	PART NAME 1 2 3 4 5 6 (PRODUCT LEVEL)	SEE PAGE
					(NO SERVICED PARTS)	

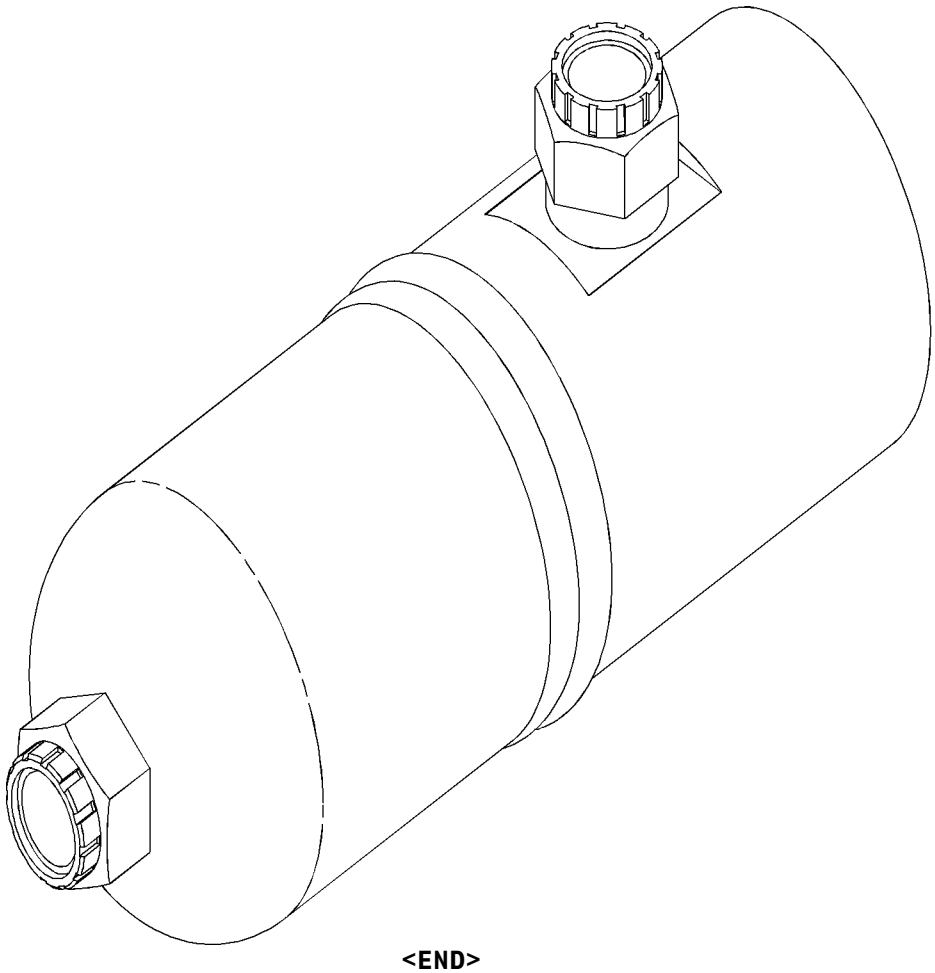

GRAPHIC #1 **<END>** g01035076

OPERATOR STATION

186-6190 ACCUMULATOR GP-REFRIGERANT—WITH DESICCANT

S/N: MST1-UP

PART OF 258-2474 KIT-AIR COND & HEATER INSTL, 258-2475 KIT-AIR CONDITIONER INSTL, 258-4265 LINES GP-AIR CONDITIONER

FIELD REPLACEMENT ORDER 176-3900—PAGE 645

AN ATTACHMENT

SMCS-7320 **i02306357**

NOTE	REF NO	GRAPHIC REF	PART NUMBER	QTY	PART NAME 1 2 3 4 5 6 (PRODUCT LEVEL)	SEE PAGE
					(NO SERVICED PARTS)	

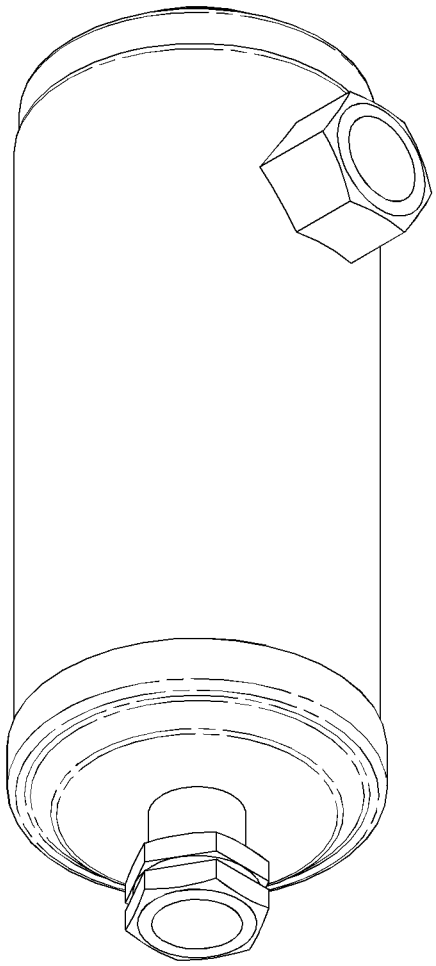

GRAPHIC #1 **<END>** g01155244

OPERATOR STATION

258-4261 AIR CONDITIONER & MOUNTING GP

S/N: MST1-UP

PART OF 258-4260 AIR CONDITIONER AR

AN ATTACHMENT

SMCS-7320 **i03624612**

NOTE	REF NO	GRAPHIC REF	PART NUMBER	QTY	PART NAME 1 2 3 4 5 6 (PRODUCT LEVEL)	SEE PAGE
	1	1	**206-1345**	2	STRAP-CABLE	
	2	1	**258-3792**	1	SEAL	
	3	1	**258-3794**	1	INSULATION	
Y	4	1	*258-4290*	1	AIR CONDITIONER GP	649
	5	1	**258-4408**	1	INSULATION	
	6	1	**266-0299**	1	SWITCH AS-ROCKER (AIR CONDITIONER)	
		1	**111-7899**	1	GASKET	
Y	7	1	*266-2430*	1	CONTROL & WIRING GP-AIR & TEMP	662
M	8	1	**266-3315**	4	BOLT-FLANGE HEAD (M8X1.25X25.5-MM)	
	9	1	**266-3314**	2	BOLT-FLANGE HEAD (M6X1X20.5-MM)	

M-METRIC PART
Y-SEPARATE ILLUSTRATION

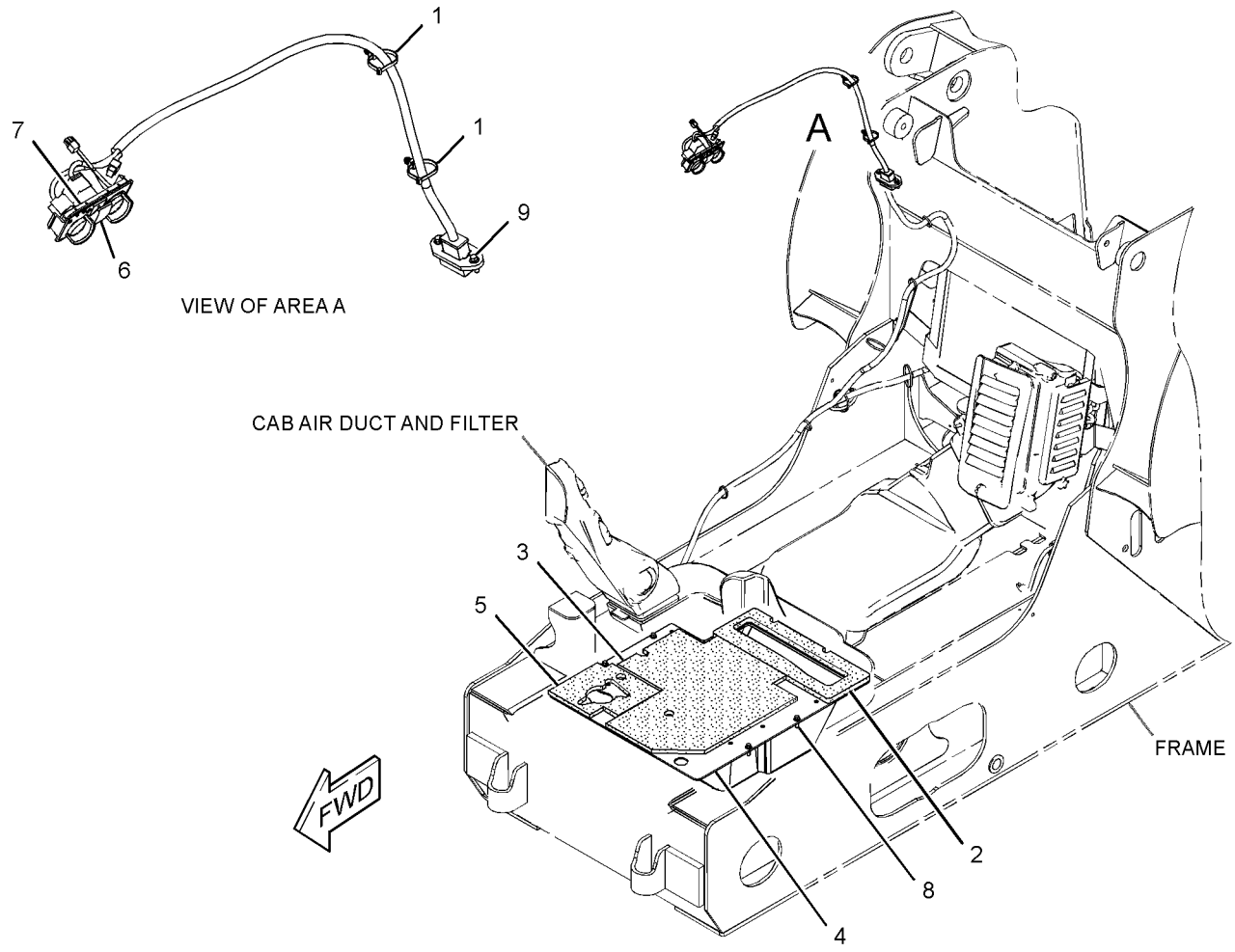

GRAPHIC #1 **<END>** g01311283

OPERATOR STATION

258-4260 AIR CONDITIONER AR

S/N: MST1-UP

PART OF 258-3680 CAB AR-ENCLOSED ROPS

AN ATTACHMENT

SMCS-7320 **i03505640**

NOTE	PART NUMBER	QTY	PART NAME 1 2 3 4 5 6 (PRODUCT LEVEL)	SEE PAGE
Y	*258-4261*	1	AIR CONDITIONER & MOUNTING GP	647
Y	*258-2468*	1	COMPRESSOR & MTG GP-REFRIG	659
Y	*258-4280*	1	CONDENSER & MTG GP-REFRIGERANT	660
Y	*258-4252*	1	DUCT & FILTER GP-CAB AIR	708
Y	*258-4265*	1	LINES GP-AIR CONDITIONER	751
Y	*258-4255*	1	LINES GP-HEATER	753
Y	*258-4146*	1	WIRING GP-AIR CONDITIONER	186

Y-SEPARATE ILLUSTRATION

<END>

OPERATOR STATION

258-4290 AIR CONDITIONER GP

S/N: MST1-2890

PART OF 258-4261 AIR CONDITIONER & MOUNTING GP, 258-2474 KIT-AIR COND & HEATER INSTL, 258-2475 KIT-AIR CONDITIONER INSTL AN ATTACHMENT

SMCS-7320, 7342 **i03635697**

NOTE	REF NO	GRAPHIC REF	PART NUMBER	QTY	PART NAME 1 2 3 4 5 6 (PRODUCT LEVEL)	SEE PAGE
	1	1	**119-9631**	1	SWITCH-TEMPERATURE (AIR CONDITIONER)	
	2	1	**295-5440**	1	MOTOR (BLOWER)	
	3	1	**232-1384**	1	ORIFICE AS-AIR CONDITIONER	
	4	1	**258-4273**	1	CASE AS	
	5	1	**258-4274**	1	GASKET	
	6	1	**258-4286**	1	TUBE	
	7	1	**258-4298**	1	PLATE AS	
	8	1	**266-2432**	1	VALVE AS-WATER	
	9	1	**266-2433**	1	COIL AS-EVAPORATOR	
	10	1	**266-2434**	1	COIL AS-HEATER	
	11	1	**266-2435**	1	HARNESS AS-HEATER & AIR COND	
		1	**7T-6739**	1	HOUSING-PLUG	
		1	**8T-8729**	3	PIN-CONNECTOR (16-GA TO 18-GA)	
		1	**9W-0852**	5	PIN-CONNECTOR (14-GA)	
		1	**102-8806**	1	KIT-RECEPTACLE (8-PIN) (INCLUDES RECEPTACLE AS & WEDGE)	
		1	**100-6674**	3	SEAL-CONNECTOR	
		1	**9G-9314**	3	TERMINAL-BLADE (14-GA TO 16-GA)	
		1	**5P-4571**	1	TERMINAL-BLADE (14-GA TO 16-GA)	
		1	**6S-4350**	2	TERMINAL-BLADE (14-GA TO 16-GA)	
E		1	**8Y-8081**		TUBE-CONVOLUTED (50-CM)	
E		1	**119-3662**		TUBE-HEAT SHRINK (10.85-MM DIA) (7-CM)	
	12	1	**283-2458**	2	NUT-SPEED	
	13	1	**6V-6717**	4	SCREW-WASHER HEAD (8-32X9.52-MM)	
M	14	1	**9X-2045**	9	SCREW-TRUSS HEAD (M6X1X20-MM)	
D	15	1	**5P-5637**		SEAL (0.17-M EACH)	
	16	1	**294-0091**	1	FILM-INSTRUCTION (DO NOT SPRAY, READ OMM)	

D-ORDER BY THE METER
E-ORDER BY THE CENTIMETER
M-METRIC PART

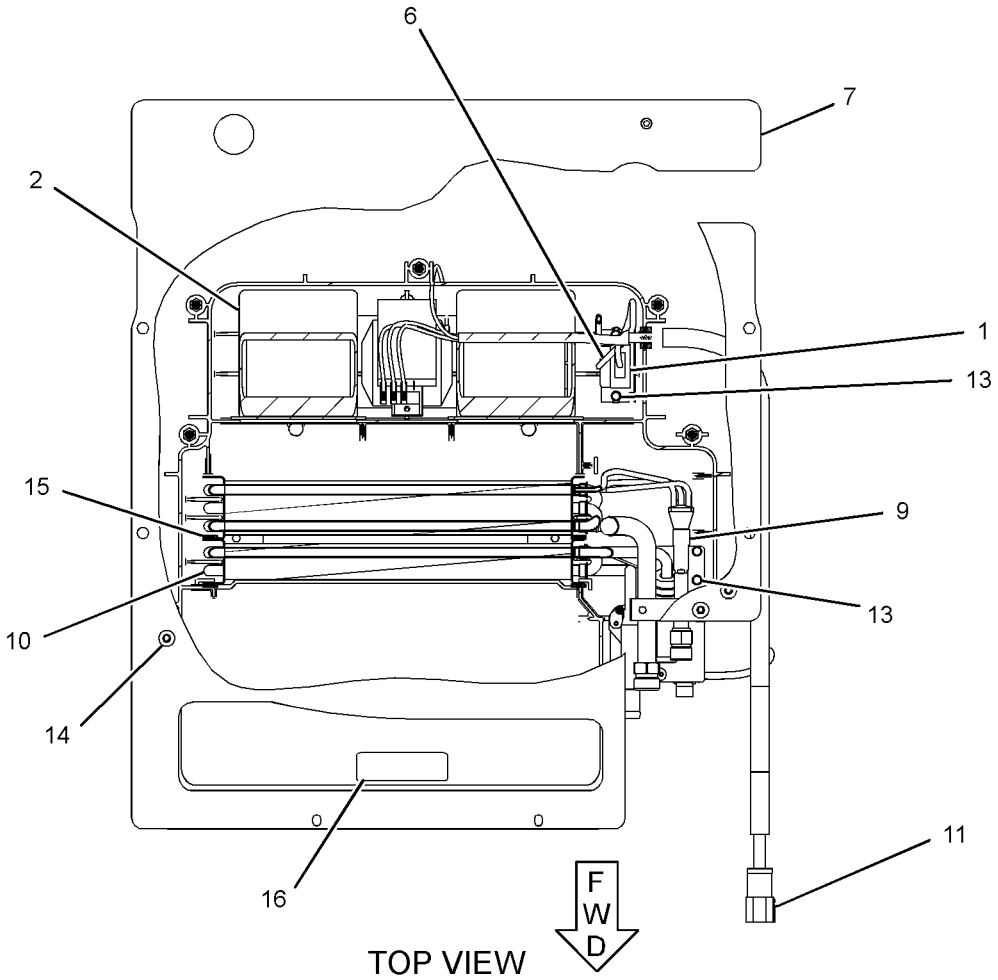

TOP VIEW

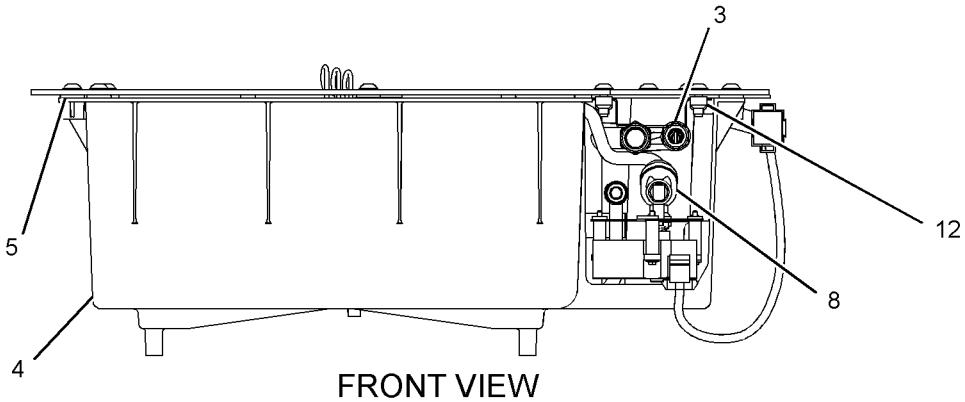

FRONT VIEW

GRAPHIC #1

<END>

g01339586

OPERATOR STATION

258-4290 AIR CONDITIONER GP

S/N: MST2891-UP

PART OF 258-4261 AIR CONDITIONER & MOUNTING GP, 258-2474 KIT-AIR COND & HEATER INSTL, 258-2475 KIT-AIR CONDITIONER INSTL

AN ATTACHMENT

SMCS-7320, 7342 **i03615660**

NOTE	REF NO	GRAPHIC REF	PART NUMBER	QTY	PART NAME 1 2 3 4 5 6 (PRODUCT LEVEL)	SEE PAGE
	1	1	**119-9631**	1	SWITCH-TEMPERATURE (AIR CONDITIONER)	
	2	1	**295-5440**	1	MOTOR (BLOWER)	
	3	1	**232-1384**	1	ORIFICE AS-AIR CONDITIONER	
	4	1	**258-4273**	1	CASE AS	
	5	1	**258-4274**	1	GASKET	
	6	1	**258-4286**	1	TUBE	
	7	1	**258-4298**	1	PLATE AS	
C	8	1	**328-3317**	1	VALVE AS-WATER	
	9	1	**266-2433**	1	COIL AS-EVAPORATOR	
	10	1	**266-2434**	1	COIL AS-HEATER	
C	11	1	**328-2369**	1	HARNESS AS-MOTOR	
		1	**7T-6739**	1	HOUSING-PLUG	
		1	**186-3735**	3	PIN-CONNECTOR (16-GA TO 18-GA)	
		1	**9W-0852**	5	PIN-CONNECTOR (14-GA)	
		1	**155-2271**	1	KIT-CONNECTING PLUG (4-PIN)	
					(INCLUDES PLUG AS, WEDGE & INTERFACE SEAL)	
		1	**8T-8737**	1	PLUG-SEAL	
		1	**102-8806**	1	KIT-RECEPTACLE (8-PIN)	
					(INCLUDES RECEPTACLE AS & WEDGE)	
		1	**186-3736**	1	SOCKET-CONNECTOR (16-GA TO 18-GA)	
		1	**9W-0844**	2	SOCKET-CONNECTOR (14-GA)	
		1	**3S-2093**	8	STRAP-CABLE	
		1	**9G-9314**	3	TERMINAL-BLADE (14-GA TO 16-GA)	
		1	**5P-4571**	1	TERMINAL-BLADE (14-GA TO 16-GA)	
		1	**6S-4350**	2	TERMINAL-BLADE (14-GA TO 16-GA)	
E		1	**8Y-8081**		TUBE-CONVOLUTED (50-CM)	
E		1	**125-7874**		TUBE-HEAT SHRINK (5.72-MM DIA) (5-CM)	
	12	1	**283-2458**	2	NUT-SPEED	
	13	1	**6V-6717**	4	SCREW-WASHER HEAD (8-32X9.52-MM)	
M	14	1	**9X-2045**	9	SCREW-TRUSS HEAD (M6X1X20-MM)	
D	15	1	**5P-5637**		SEAL (0.2-M EACH)	
	16	1	**294-0091**	1	FILM-INSTRUCTION (DO NOT SPRAY, READ OMM)	

C-CHANGE FROM PREVIOUS TYPE
D-ORDER BY THE METER
E-ORDER BY THE CENTIMETER
M-METRIC PART

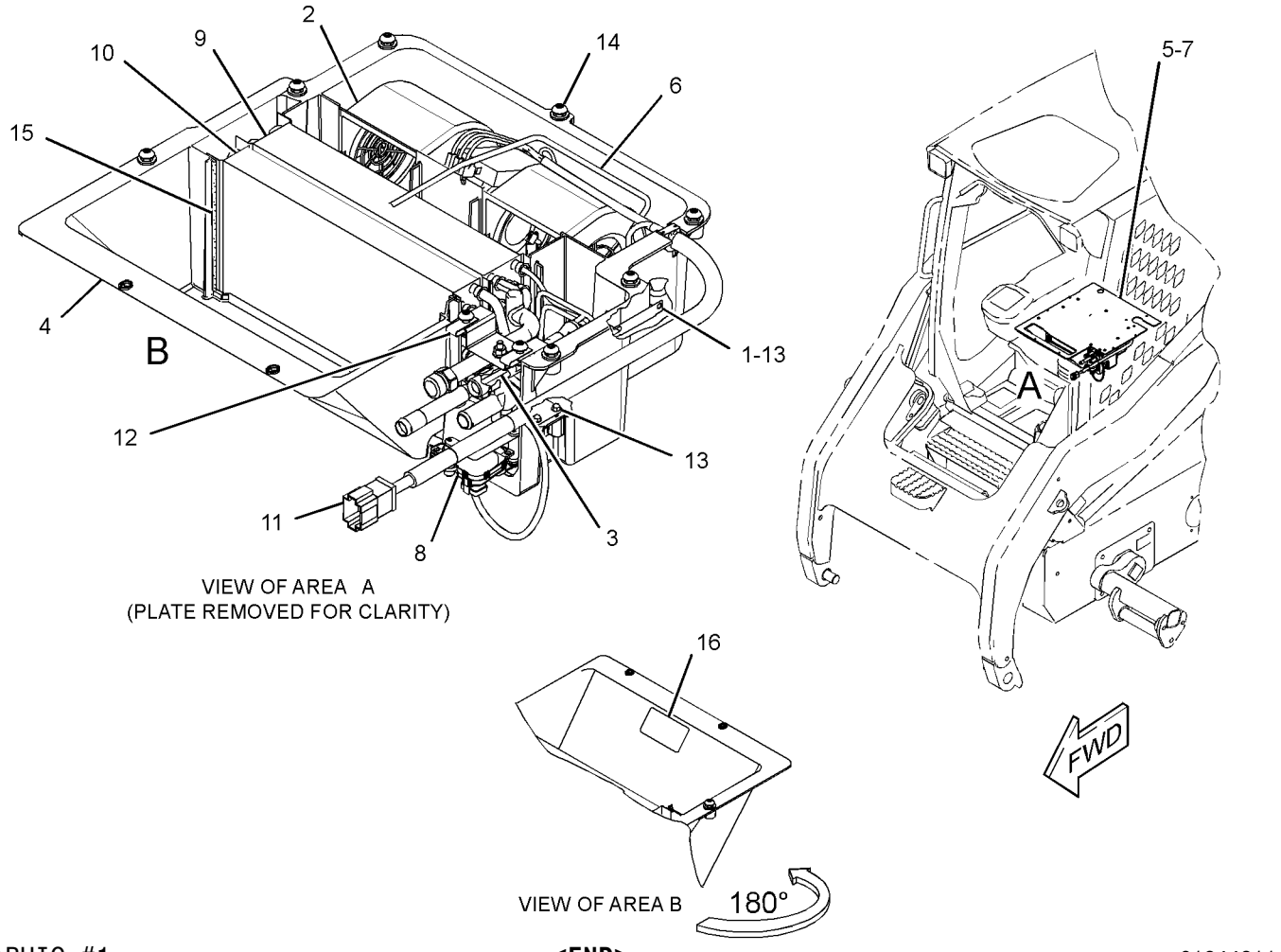

GRAPHIC #1

<END>

g01944811

OPERATOR STATION

258-4311 ARMREST & MOUNTING GP

S/N: MST1-UP

PART OF 258-4401, 258-4402, 258-4403 SEAT & ARMREST GP

AN ATTACHMENT

SMCS-7307 **i03505662**

NOTE	REF NO	GRAPHIC REF	PART NUMBER	QTY	PART NAME 1 2 3 4 5 6 (PRODUCT LEVEL)	SEE PAGE
	1	1	**229-8757**	1	SWITCH AS-LIMIT	
		1	**102-8803**	1	KIT-RECEPTACLE (3-PIN)	
					(INCLUDES RECEPTACLE AS & WEDGE)	
		1	**186-3735**	3	PIN-CONNECTOR (16-GA TO 18-GA)	
	2	1	**258-4318**	1	ARMREST AS (LH)	
	3	1	**258-4319**	1	ARMREST AS (RH)	
	4	1	**7X-7729**	6	WASHER (11X25X3-MM THK)	
	5	1	**258-4422**	2	WASHER-SPRING	
Y	6	1	*295-3171*	1	MOUNTING GP-ARMREST (LH)	759
Y	7	1	*295-3172*	1	MOUNTING GP-ARMREST (RH)	760
	8	1	**3S-2093**	1	STRAP-CABLE	
M	9	1	**8T-6685**	2	BOLT (M10X1.5X110-MM)	

M-METRIC PART
Y-SEPARATE ILLUSTRATION

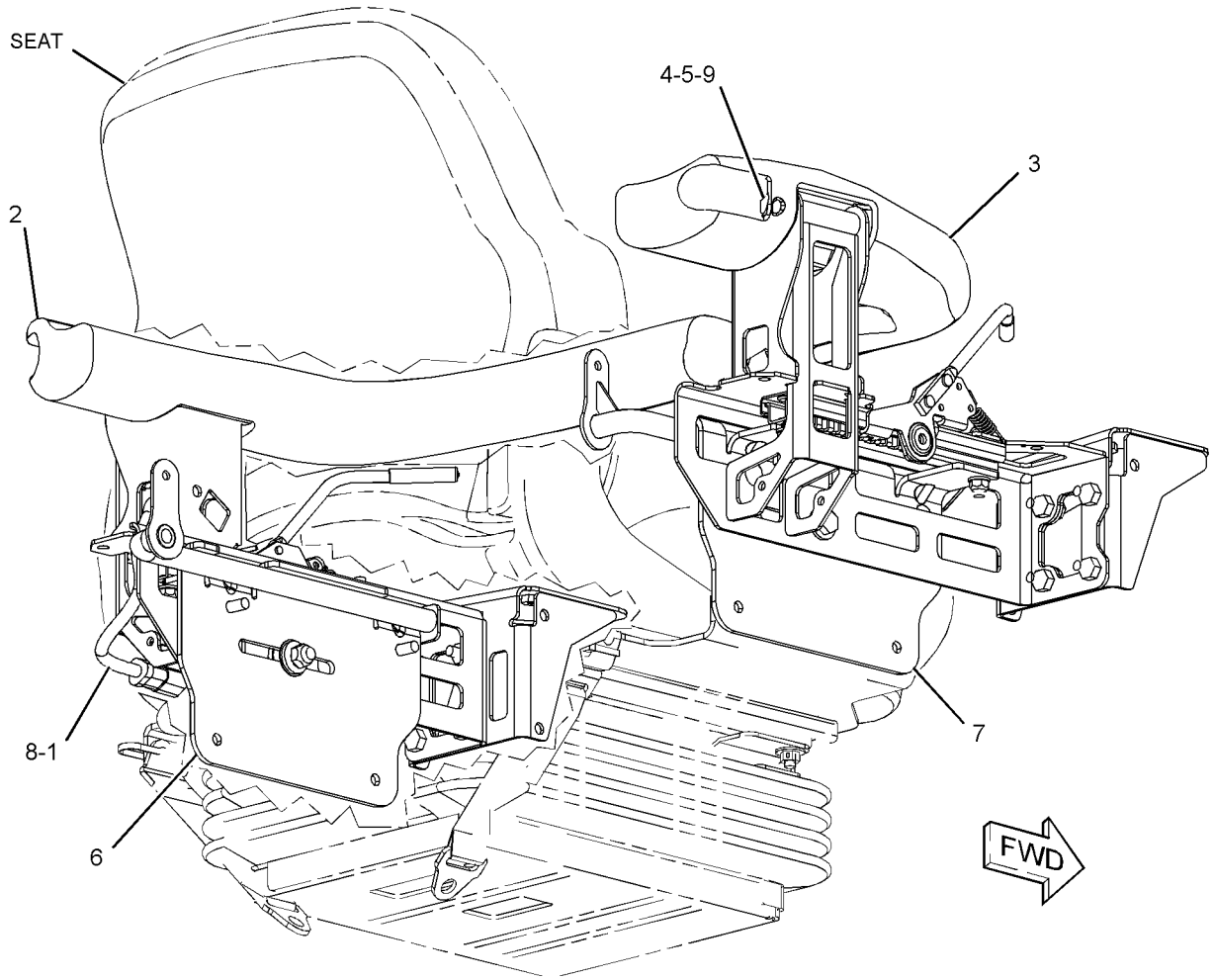

GRAPHIC #1 **<END>** g01312099

OPERATOR STATION

269-0257 BASE AS-JOYSTICK–RH

S/N: MST1-UP

PART OF 269-0262, 269-0263, 269-0264 CONTROL GP-JOYSTICK

AN ATTACHMENT

SMCS-5705 **i02645126**

NOTE	REF NO	GRAPHIC REF	PART NUMBER	QTY	PART NAME 1 2 3 4 5 6 (PRODUCT LEVEL)	SEE PAGE
	1	1	**102-8805**	1	KIT-RECEPTACLE (6-PIN)	
					(INCLUDES RECEPTACLE AS & WEDGE)	
	2	1	**186-3735**	6	PIN-CONNECTOR (16-GA TO 18-GA)	

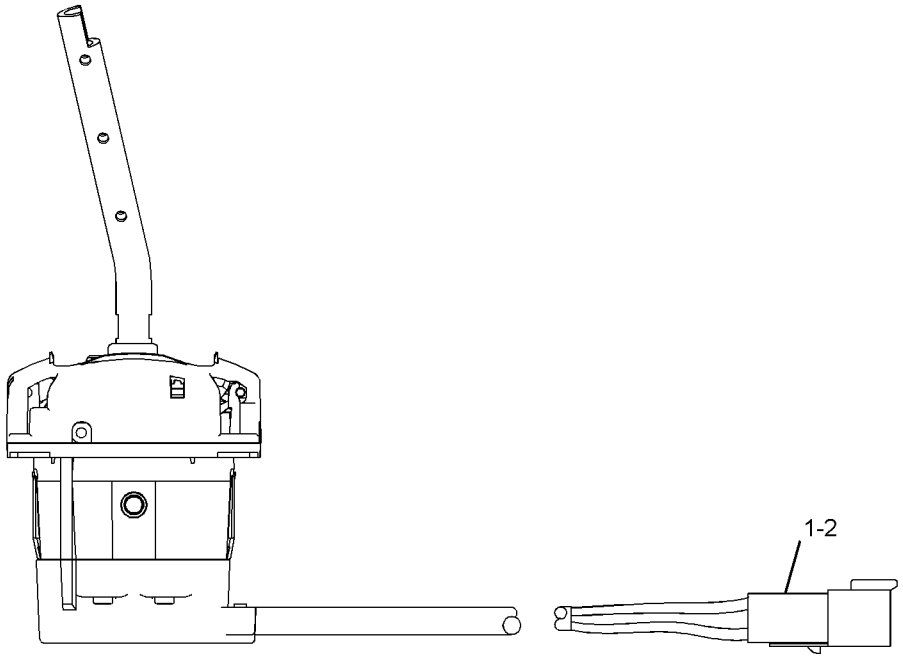

LEFT SIDE VIEW

GRAPHIC #1 **<END>** g01330001

OPERATOR STATION

269-0258 BASE AS-JOYSTICK–LH

S/N: MST1-UP

PART OF 269-0265, 269-0266 CONTROL GP-JOYSTICK

AN ATTACHMENT

SMCS-5705 **i02645128**

NOTE	REF NO	GRAPHIC REF	PART NUMBER	QTY	PART NAME 1 2 3 4 5 6 (PRODUCT LEVEL)	SEE PAGE
	1	1	**102-8805**	1	KIT-RECEPTACLE (6-PIN)	
					(INCLUDES RECEPTACLE AS & WEDGE)	
	2	1	**186-3735**	6	PIN-CONNECTOR (16-GA TO 18-GA)	

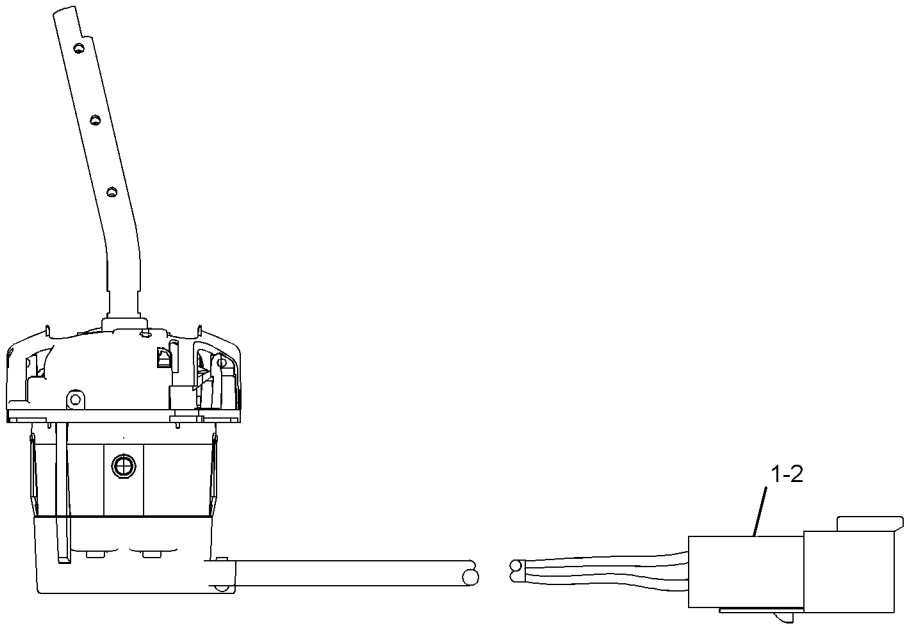

LEFT SIDE VIEW

GRAPHIC #1 **<END>** g01330013

OPERATOR STATION

258-3680 CAB AR-ENCLOSED ROPS

S/N: MST1-UP

AN ATTACHMENT

SMCS-7301 **i02664231**

NOTE	PART NUMBER	QTY	PART NAME 1 2 3 4 5 6 (PRODUCT LEVEL)	SEE PAGE
Y	*258-4229*	1	ACCESSORY GP-CAB	644
Y	*258-4260*	1	AIR CONDITIONER AR	648
Y	*258-4066*	1	INSTALLATION GP-RADIO	718
Y	*258-4090*	1	WINDOW GP-CAB (SIDE)	812

Y-SEPARATE ILLUSTRATION

<END>

258-3742 CAB AR-ENCLOSED ROPS

S/N: MST1-UP

AN ATTACHMENT

SMCS-7301 **i02664492**

NOTE	PART NUMBER	QTY	PART NAME 1 2 3 4 5 6 (PRODUCT LEVEL)	SEE PAGE
Y	*258-4229*	1	ACCESSORY GP-CAB	644
Y	*258-4250*	1	HEATER AR-CAB	713
Y	*258-4066*	1	INSTALLATION GP-RADIO	718
Y	*258-4090*	1	WINDOW GP-CAB (SIDE)	812

Y-SEPARATE ILLUSTRATION

<END>

258-4000 CAB AR-ENCLOSED ROPS

S/N: MST1-UP

PART OF 258-3262, 295-7262 COMMON AR

SMCS-7301 **i03343843**

NOTE	PART NUMBER	QTY	PART NAME 1 2 3 4 5 6 (PRODUCT LEVEL)	SEE PAGE
Y	*258-4144*	1	COVER GP-FUSE PANEL	152
Y	*258-4164*	1	LIGHTING GP-FLOOD (WORK LIGHTS, FRONT)	168
Y	*258-4020*	1	LINER GP-CAB	744
Y	*258-4220*	1	MOUNTING GP-ROPS (INCLUDES STEP)	761
Y	*258-4162*	1	PANEL GP-INSTRUMENT	765
Y	*258-4010*	1	WINDOW GP-CAB	811
Y	*258-4100*	1	WIRING GP-CAB	188

Y-SEPARATE ILLUSTRATION

<END>

OPERATOR STATION

276-0074 CABLE GP-CONTROL

S/N: MST1-UP

PART OF 298-7198 CABLE GP-CONTROL

SMCS-5154 **i03620341**

NOTE	REF NO	GRAPHIC REF	PART NUMBER	QTY	PART NAME 1 2 3 4 5 6 (PRODUCT LEVEL)	SEE PAGE
	1	1	**8T-4744**	1	PIN AS-SPRING	
	2	1	**8T-4742**	1	END-YOKE ROD	

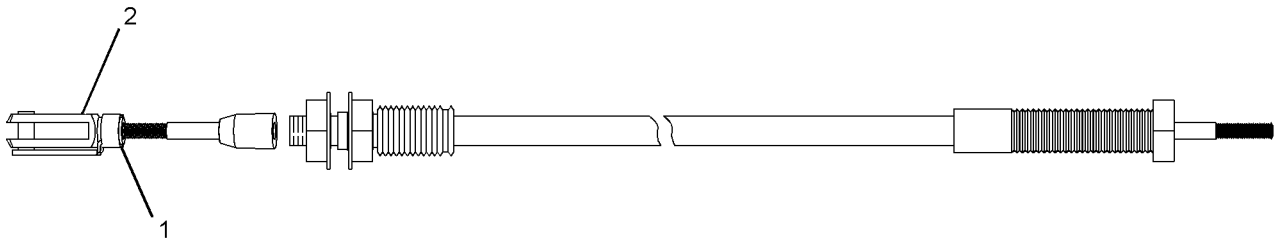

GRAPHIC #1 **<END>** g01943691

OPERATOR STATION

298-7198 CABLE GP-CONTROL—MANUAL LOWERING

S/N: MST1-UP

PART OF 258-3393 LINES GP-LOWERING CONTROL

SMCS-5154 **i03620642**

NOTE	PART NUMBER	QTY	PART NAME 1 2 3 4 5 6 (PRODUCT LEVEL)	SEE PAGE
Y	**276-0074**	1	CABLE GP-CONTROL	657
Y	**298-7197**	1	HANDLE GP	711

Y-SEPARATE ILLUSTRATION

<END>

OPERATOR STATION

258-2468 COMPRESSOR & MTG GP-REFRIG

S/N: MST1-UP
PART OF 258-4260 AIR CONDITIONER AR
AN ATTACHMENT

SMCS-1802 **i03656648**

NOTE	REF NO	GRAPHIC REF	PART NUMBER	QTY	PART NAME 1 2 3 4 5 6 (PRODUCT LEVEL)	SEE PAGE
	1	1	**258-2466**	1	BRACKET	
	2	1	**280-8395**	1	BRACKET	
	3	1	**258-3539**	1	V-BELT (COMPRESSOR)	
	4	1	**276-9875**	1	COMPRESSOR GP-REFRIGERANT (AIR CONDITIONER)	
		1	**102-8802**	1	KIT-RECEPTACLE (2-PIN)	
					(INCLUDES RECEPTACLE AS & WEDGE)	
		1	**229-4896**	2	SEAL-O-RING	
		1	**229-7356**	1	VALVE AS-RELIEF (REFRIGERANT COMPRESSOR)	
		1	**9X-7378**	1	SEAL-O-RING	
	5	1	**113-0693**	1	LOCKWASHER	
	6	1	**8T-4121**	8	WASHER-HARD (11X21X2.5-MM THK)	
M	7	1	**8T-4133**	3	NUT (M10X1.5-THD)	
M	8	1	**8T-4196**	3	BOLT (M10X1.5X35-MM)	
	9	1	**8T-4223**	3	WASHER-HARD (13.5X25.5X3-MM THK)	
M	10	1	**8T-4183**	3	BOLT (M12X1.75X40-MM)	
M	11	1	**8T-6685**	1	BOLT (M10X1.5X110-MM)	
	12	1	**4P-7429**	1	CLIP	
	13	1	**7K-1181**	1	STRAP-CABLE	

M-METRIC PART

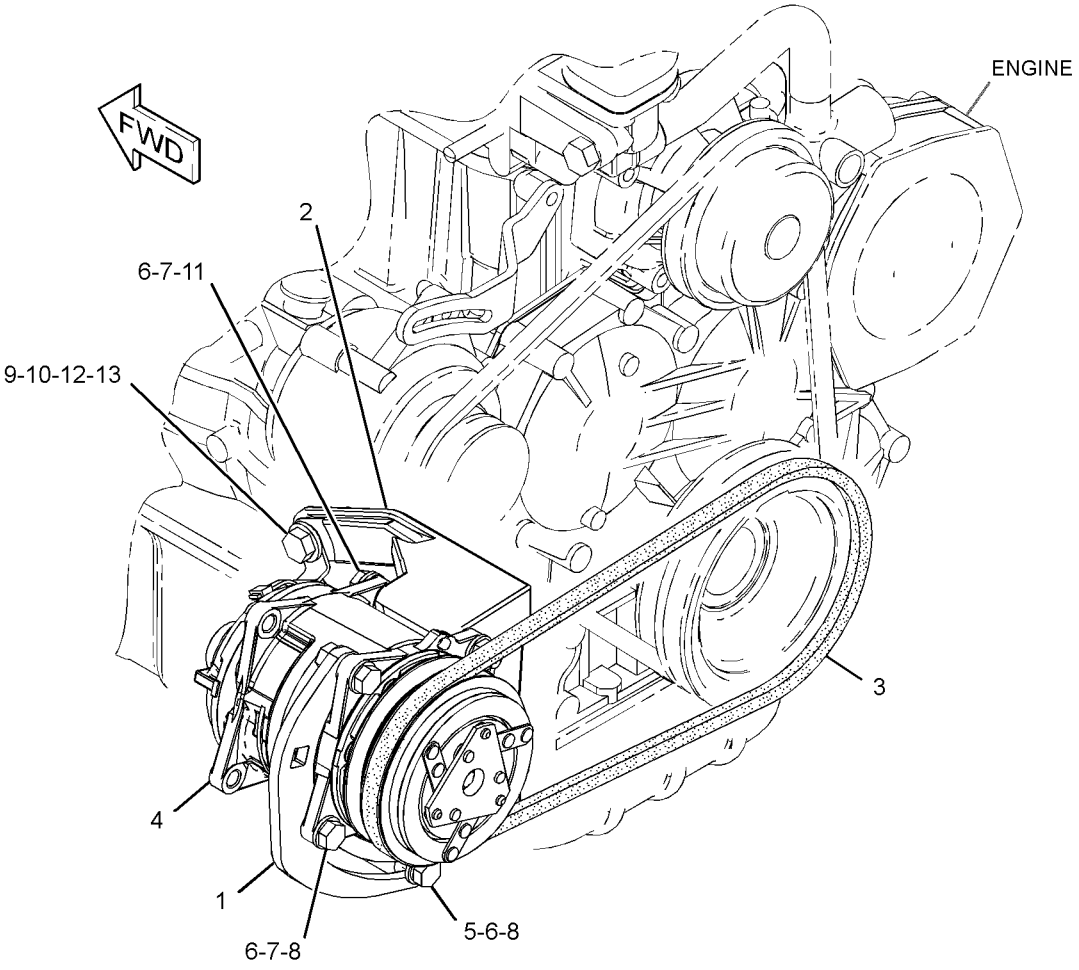

GRAPHIC #1 **<END>** g01964995

OPERATOR STATION

258-4280 CONDENSER & MTG GP-REFRIGERANT

S/N: MST1-UP
PART OF 258-4260 AIR CONDITIONER AR
AN ATTACHMENT

SMCS-1805 **i03690340**

NOTE	REF NO	GRAPHIC REF	PART NUMBER	QTY	PART NAME 1 2 3 4 5 6 (PRODUCT LEVEL)	SEE PAGE
	1	1	**115-1615**	1	RELAY AS (12-VOLT)	
	2	1	**258-4284**	1	BRACKET AS (UPPER LH)	
	3	1	**258-4380**	1	BRACKET AS (LOWER LH)	
	4	1	**258-4386**	1	BRACKET AS (RH)	
Y	6	1	*266-2425*	1	CONDENSER & MTG GP-REFRIGERANT	661
	7	1	**4K-8864**	2	CLIP	
M	8	1	**5C-9553**	10	BOLT (M6X1X16-MM)	
	9	1	**6D-4246**	1	CLIP	
	10	1	**8T-4121**	2	WASHER-HARD (11X21X2.5-MM THK)	
M	11	1	**8T-4136**	2	BOLT (M10X1.5X25-MM)	
	12	1	**8T-4205**	10	WASHER-HARD (7.2X14.5X2-MM THK)	

M-METRIC PART
Y-SEPARATE ILLUSTRATION

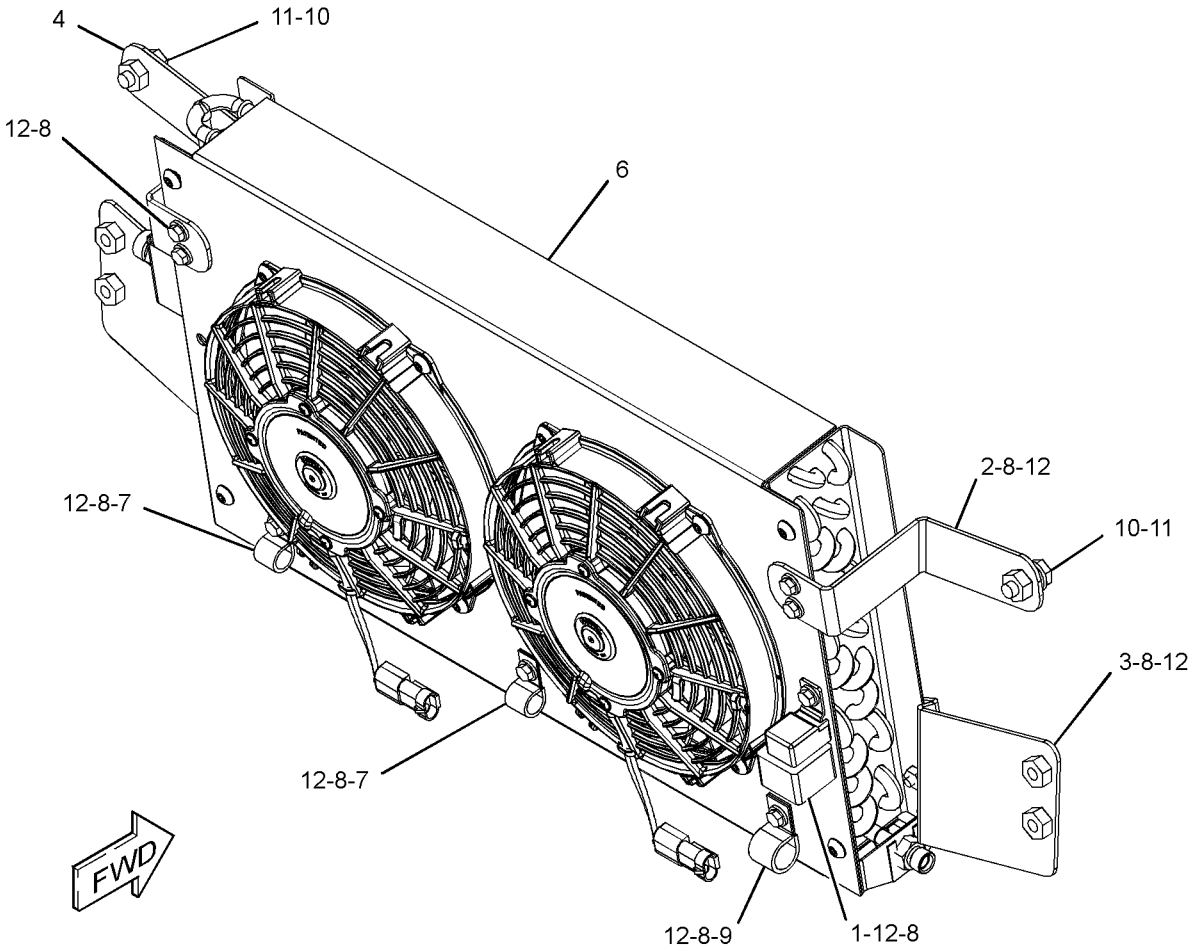

GRAPHIC #1 **<END>** g01339547

OPERATOR STATION

266-2425 CONDENSER & MTG GP-REFRIGERANT

S/N: MST1-UP

PART OF 258-4280 CONDENSER & MTG GP-REFRIGERANT, 258-2474 KIT-AIR COND & HEATER INSTL, 258-2475 KIT-AIR CONDITIONER INSTL

AN ATTACHMENT

SMCS-1805 **i02614216**

NOTE	REF NO	GRAPHIC REF	PART NUMBER	QTY	PART NAME 1 2 3 4 5 6 (PRODUCT LEVEL)	SEE PAGE
	1	1	**266-2429**	1	SHROUD AS	
	2	1	**284-6041**	1	COIL AS	
	3	1	**287-7062**	2	FAN AS (REFRIGERANT)	
M	4	1	**5C-9553**	4	BOLT (M6X1X16-MM)	
M	5	1	**8T-4181**	8	BOLT (M6X1X20-MM)	
	6	1	**9X-8256**	12	WASHER (6.6X12X2-MM THK)	

M-METRIC PART

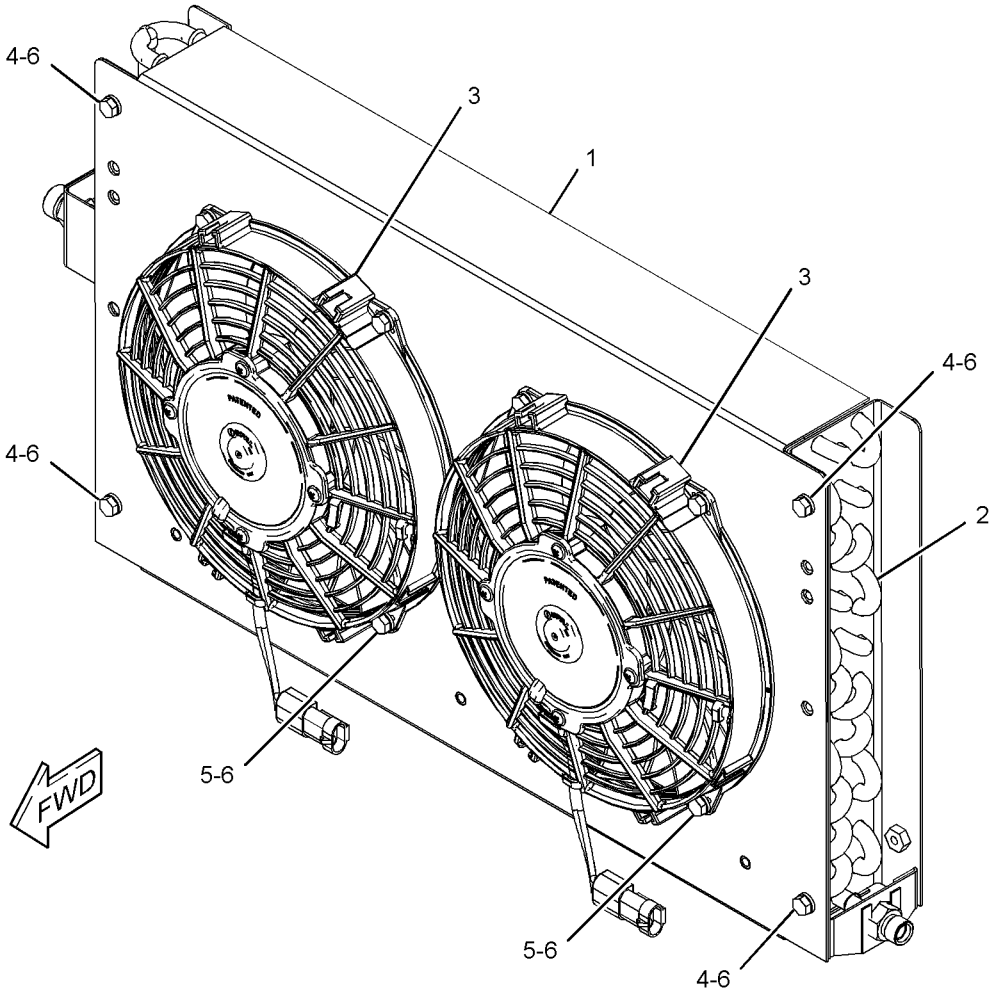

GRAPHIC #1 **<END>** g01311051

OPERATOR STATION

266-2430 CONTROL & WIRING GP-AIR & TEMP

S/N: MST1-2913

PART OF 258-4261 AIR CONDITIONER & MOUNTING GP, 258-4251 HEATER & MTG GP-CAB, 258-2474 KIT-AIR COND & HEATER INSTL, 280-6077 KIT-CAB HEATER & MOUNTING

AN ATTACHMENT

SMCS-1408, 7451 **i03624800**

NOTE	REF NO	GRAPHIC REF	PART NUMBER	QTY	PART NAME 1 2 3 4 5 6 (PRODUCT LEVEL)	SEE PAGE
	1	1	**289-8537**	1	HARNESS AS-CONTROL	
		1	**128-7721**	1	CONNECTOR	
		1	**142-9117**	1	CONNECTOR	
		1	**186-3735**	2	PIN-CONNECTOR (16-GA TO 18-GA)	
		1	**9W-0852**	5	PIN-CONNECTOR (14-GA)	
		1	**155-2270**	1	KIT-CONNECTING PLUG (2-PIN)	
					(INCLUDES PLUG AS, WEDGE & INTERFACE SEAL)	
		1	**8T-8737**	5	PLUG-SEAL	
		1	**103-8133**	1	KIT-RECEPTACLE (12-PIN)	
					(INCLUDES RECEPTACLE AS & WEDGE)	
		1	**9W-0844**	2	SOCKET-CONNECTOR (14-GA)	
		1	**8L-8413**	17	STRAP-CABLE	
		1	**128-2016**	1	TERMINAL	
		1	**128-7714**	5	TERMINAL	
E		1	**125-7874**		TUBE-HEAT SHRINK (5.72-MM DIA) (10-CM)	
Y	2	1	**258-4299**	1	CONTROL GP-AIR & TEMPERATURE	665
	3	1	**239-9368**	1	RESISTOR AS	
	4	1	**3S-2093**	1	STRAP-CABLE	

E-ORDER BY THE CENTIMETER
Y-SEPARATE ILLUSTRATION

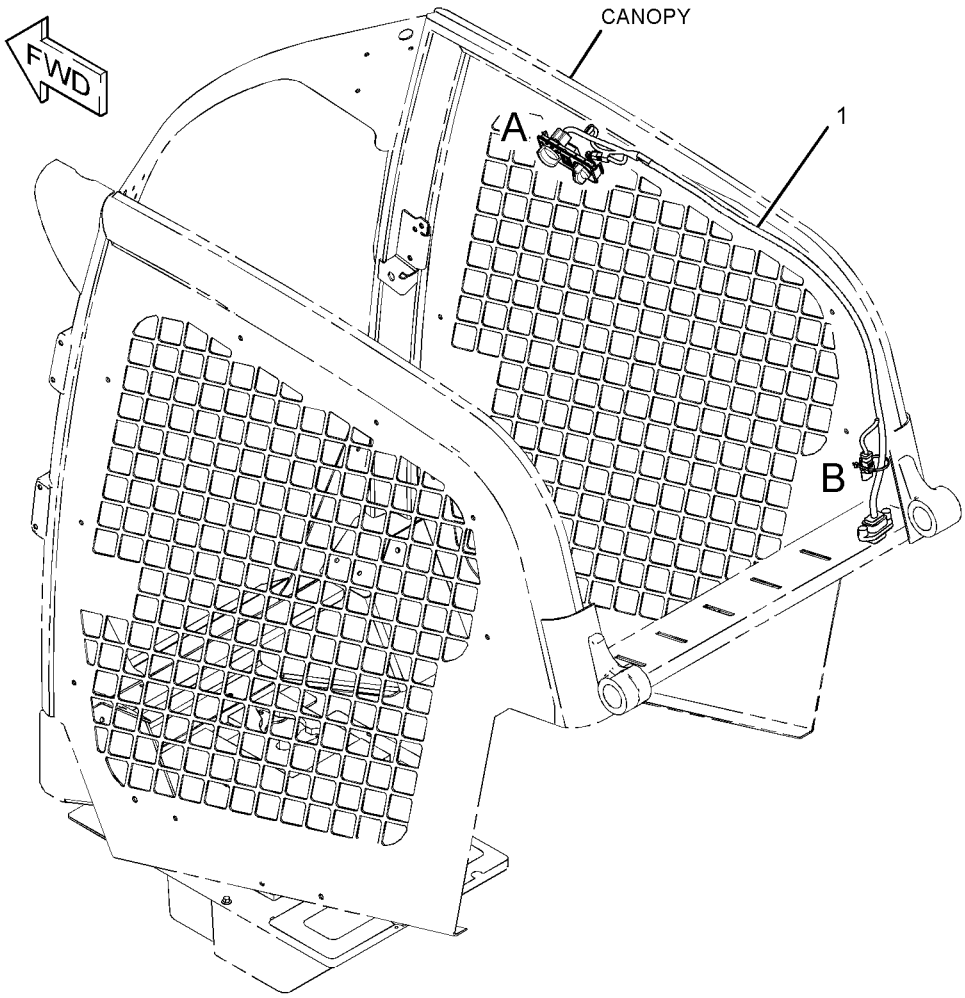

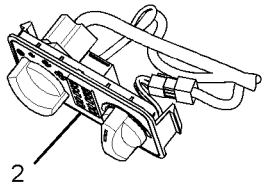

VIEW OF AREA A

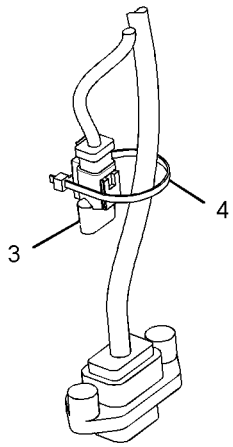

VIEW OF AREA B

GRAPHIC #1 **<END>** g01413078

OPERATOR STATION

266-2430 CONTROL & WIRING GP-AIR & TEMP

S/N: MST2914-UP

PART OF 258-4261 AIR CONDITIONER & MOUNTING GP, 258-4251 HEATER & MTG GP-CAB, 258-2474 KIT-AIR COND & HEATER INSTL, 280-6077 KIT-CAB HEATER & MOUNTING

AN ATTACHMENT

SMCS-1408, 7451 **i03712642**

NOTE	REF NO	GRAPHIC REF	PART NUMBER	QTY	PART NAME 1 2 3 4 5 6 (PRODUCT LEVEL)	SEE PAGE
C	1	1	**328-2368**	1	HARNESS AS-CONTROL (AIR CONDITIONER, HEATER)	
		1	**128-7721**	1	CONNECTOR	
		1	**228-5856**	1	CONNECTOR	
		1	**186-3735**	2	PIN-CONNECTOR (16-GA TO 18-GA)	
		1	**9W-0852**	5	PIN-CONNECTOR (14-GA)	
		1	**8T-8737**	5	PLUG-SEAL	
		1	**103-8133**	1	KIT-RECEPTACLE (12-PIN)	
					(INCLUDES RECEPTACLE AS & WEDGE)	
		1	**8L-8413**	17	STRAP-CABLE	
		1	**091-2436**	2	TERMINAL-BLADE (18-GA TO 22-GA)	
		1	**104-1995**	2	TERMINAL-BLADE (14-GA TO 18-GA)	
		1	**128-7714**	5	TERMINAL	
E		1	**125-7874**		TUBE-HEAT SHRINK (5.72-MM DIA) (15-CM)	
Y	2	1	**258-4299**	1	CONTROL GP-AIR & TEMPERATURE	665

C-CHANGE FROM PREVIOUS TYPE
E-ORDER BY THE CENTIMETER
Y-SEPARATE ILLUSTRATION

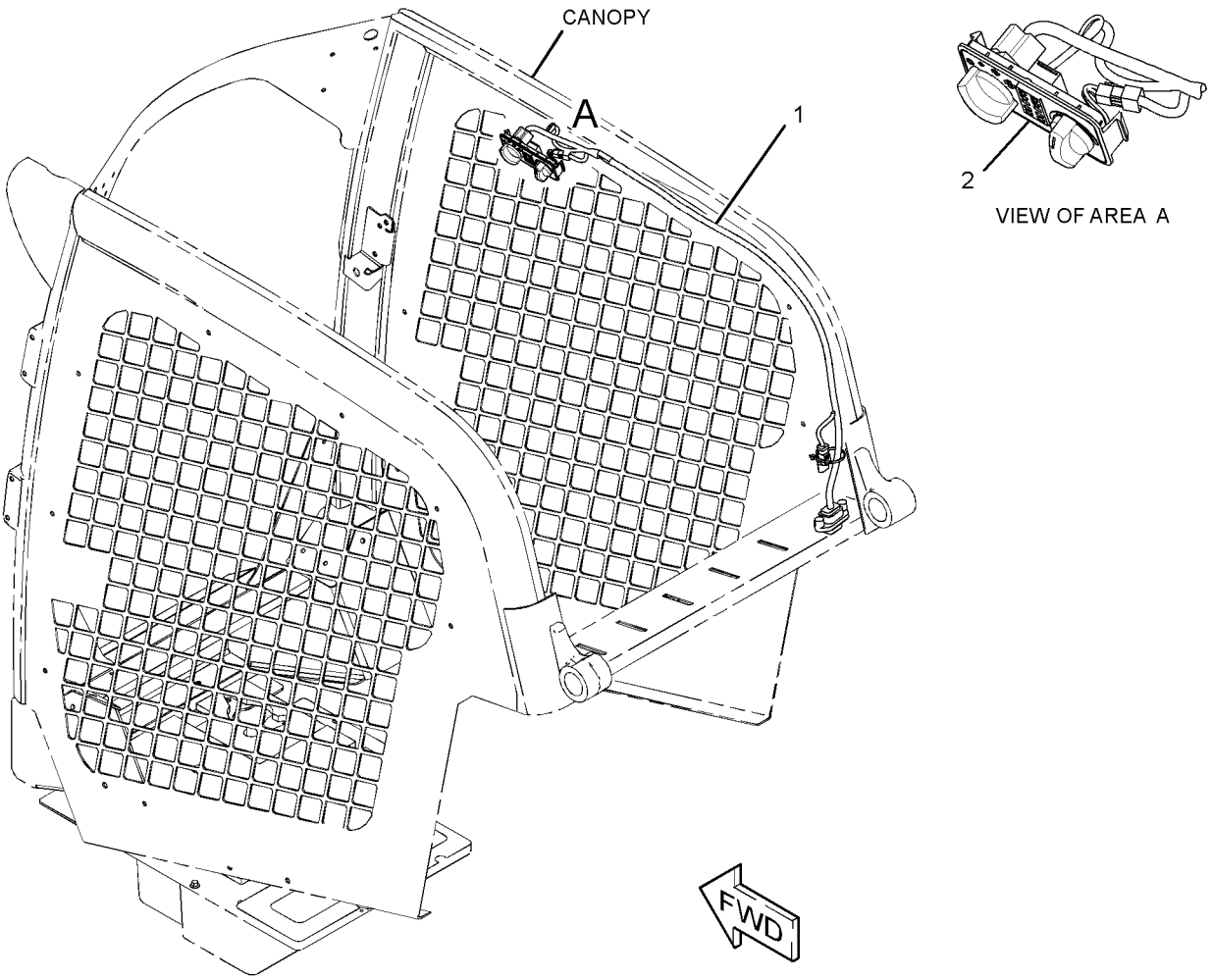

GRAPHIC #1 **<END>** g02004274

OPERATOR STATION

258-4299 CONTROL GP-AIR & TEMPERATURE

S/N: MST1-UP

PART OF 266-2430 CONTROL & WIRING GP-AIR & TEMP

AN ATTACHMENT

SMCS-7451 **i03604422**

NOTE	REF NO	GRAPHIC REF	PART NUMBER	QTY	PART NAME 1 2 3 4 5 6 (PRODUCT LEVEL)	SEE PAGE
	1	1	**6V-8369**	1	NUT (7/16-28-THD)	
	2	1	**340-8931**	2	KNOB AS	
	3	1	**258-4271**	1	SWITCH AS (TEMPERATURE CONTROL)	
	4	1	**258-4272**	1	SWITCH AS (BLOWER FAN SPEED)	
	5	1	**258-4288**	1	KNOB	
	6	1	**258-4289**	1	STOP	
	7	1	**258-4292**	1	FILM-PANEL (BLOWER, TEMPERATURE CONTROL)	
	8	1	**266-2431**	1	PANEL	
	9	1	**7X-0848**	1	NUT-BULKHEAD (3/8-32-THD)	
	10	1	**9F-5644**	1	LOCKWASHER	

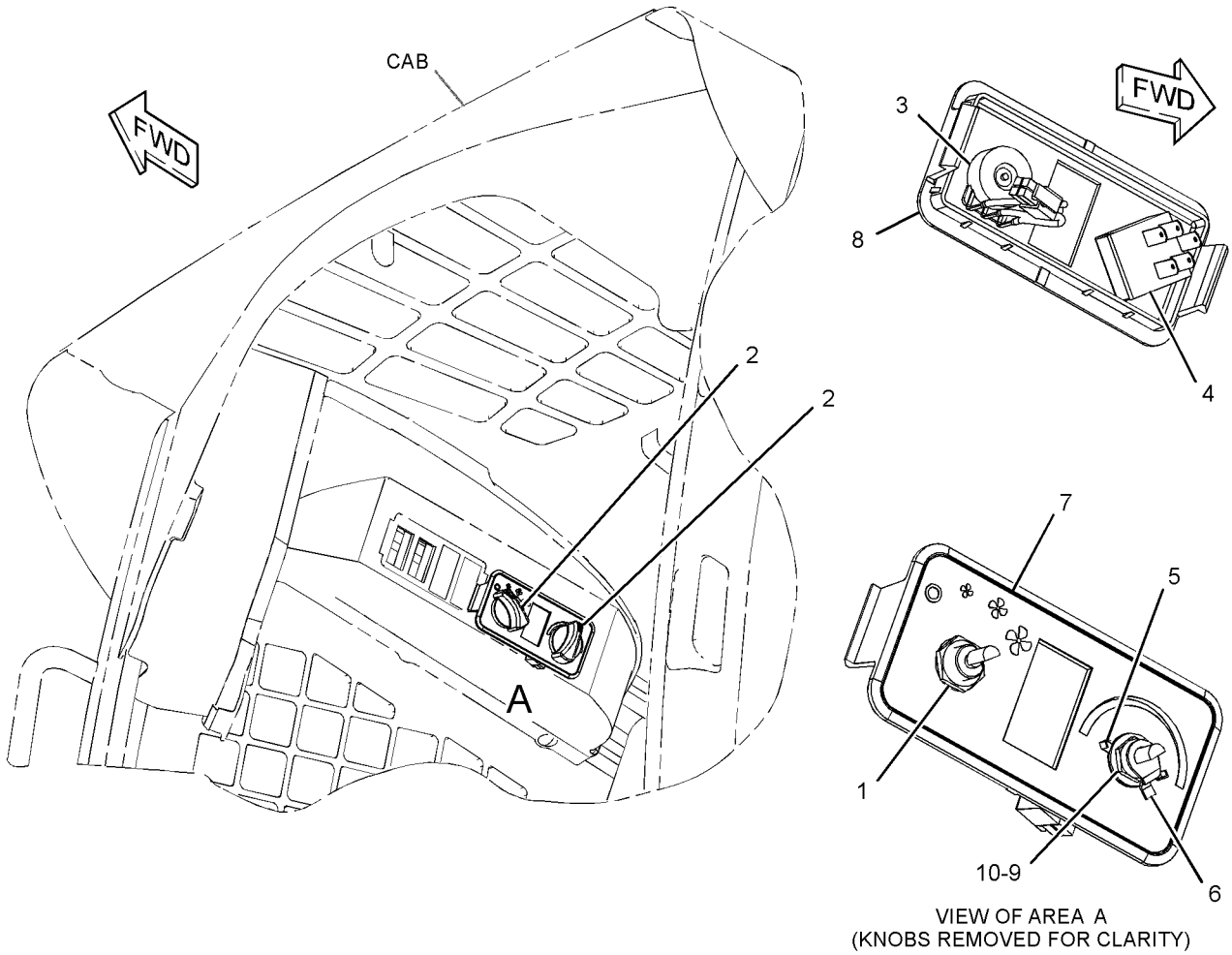

VIEW OF AREA A
(KNOBS REMOVED FOR CLARITY)

GRAPHIC #1 **<END>** g01339840

OPERATOR STATION

258-3403 CONTROL GP-ELECTROHYDRAULIC—LH

S/N: MST1-UP

PART OF 342-5009, 342-5010 CONTROL AR-MACHINE

AN ATTACHMENT

SMCS-5702, 5705 **i02711960**

NOTE	REF NO	GRAPHIC REF	PART NUMBER	QTY	PART NAME 1 2 3 4 5 6 (PRODUCT LEVEL)	SEE PAGE
M	1	1	**9X-2546**	4	BOLT (M6X1X20-MM)	
Y	2	1	**269-0266**	1	CONTROL GP-JOYSTICK (LH)	676
	3	1	**3S-2093**	2	STRAP-CABLE	

M-METRIC PART
Y-SEPARATE ILLUSTRATION

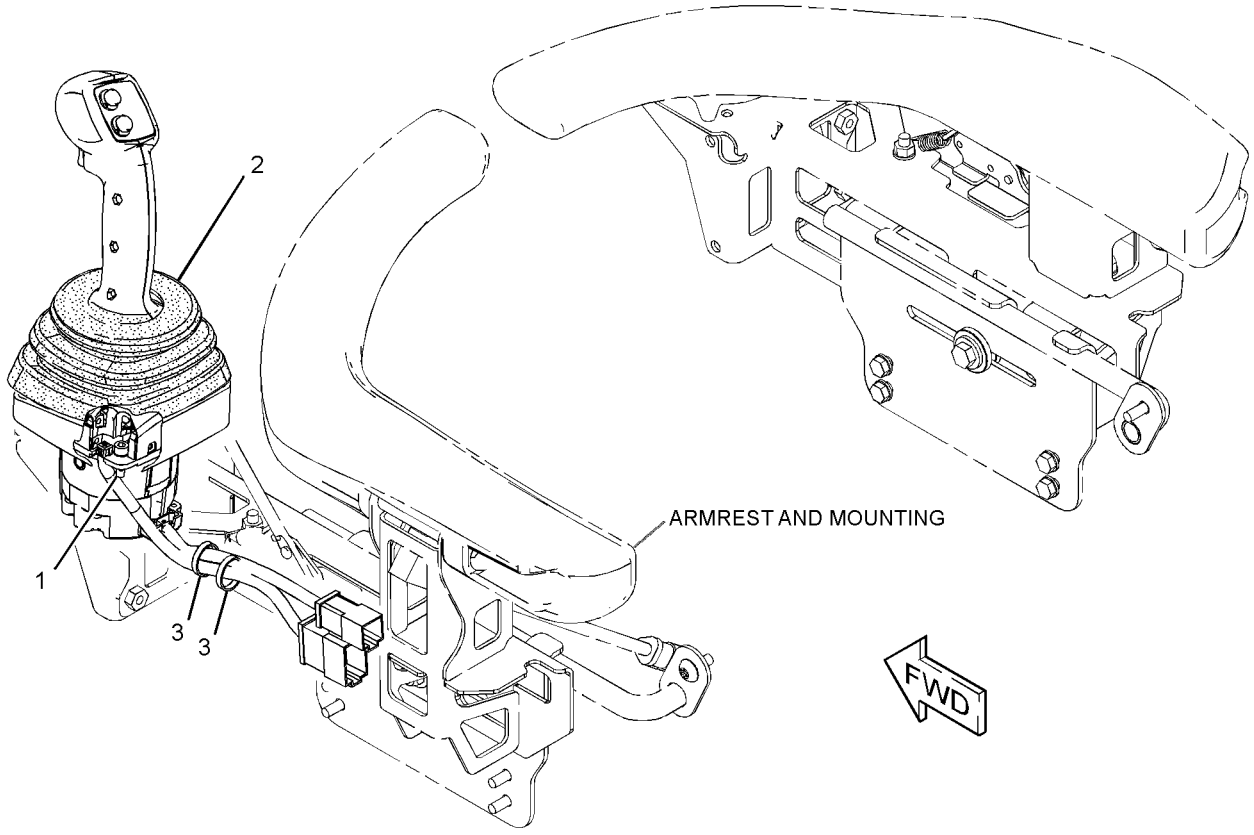

GRAPHIC #1 **<END>** g01337550

258-3404 CONTROL GP-ELECTROHYDRAULIC—LH, HIGH FLOW

S/N: MST1-UP

PART OF 342-5011 CONTROL AR-MACHINE, 258-3183, 258-3734 HYDRAULIC AR AN ATTACHMENT

SMCS-5702, 5705 **i02711961**

NOTE	REF NO	GRAPHIC REF	PART NUMBER	QTY	PART NAME 1 2 3 4 5 6 (PRODUCT LEVEL)	SEE PAGE
M	1	1	**9X-2546**	4	BOLT (M6X1X20-MM)	
Y	2	1	**269-0265**	1	CONTROL GP-JOYSTICK (LH, HIGH FLOW)	675
	3	1	**3S-2093**	2	STRAP-CABLE	

M-METRIC PART
Y-SEPARATE ILLUSTRATION

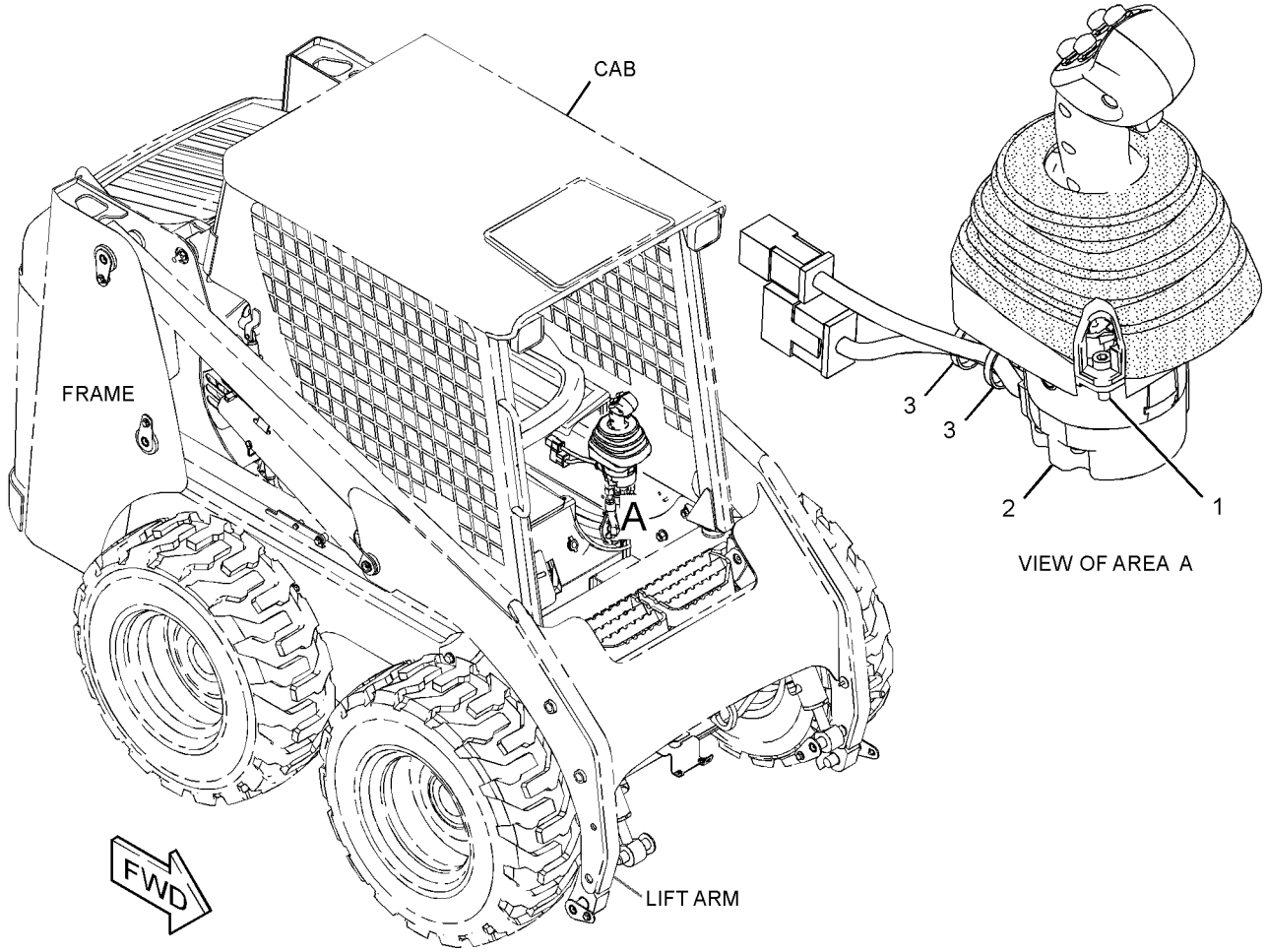

GRAPHIC #1 **<END>** g01336967

OPERATOR STATION

258-3405 CONTROL GP-ELECTROHYDRAULIC—RH

S/N: MST1-UP

PART OF 342-5009 CONTROL AR-MACHINE

FOR USE WITH 258-3181—PAGE 318, 258-3731—PAGE 319. CANNOT BE USED WITH 258-3406—PAGE 669, 258-3183—PAGE 319, 258-3734—PAGE 320 AN ATTACHMENT

SMCS-5702, 5705 **i02659395**

NOTE	REF NO	GRAPHIC REF	PART NUMBER	QTY	PART NAME 1 2 3 4 5 6 (PRODUCT LEVEL)	SEE PAGE
M	1	1	**9X-2546**	4	BOLT (M6X1X20-MM)	
Y	2	1	**269-0264**	1	CONTROL GP-JOYSTICK (RH)	674
	3	1	**3S-2093**	2	STRAP-CABLE	

M-METRIC PART
Y-SEPARATE ILLUSTRATION

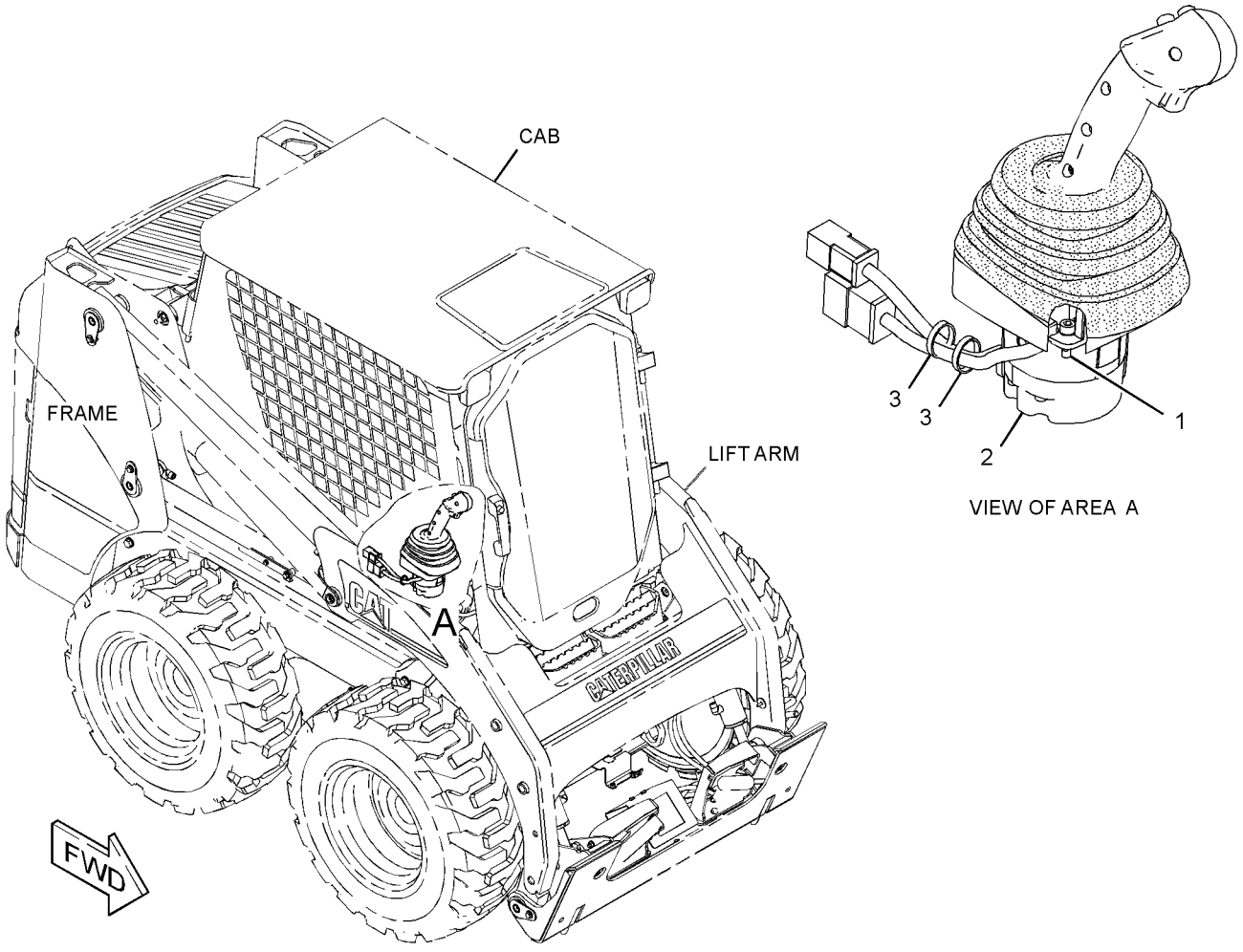

GRAPHIC #1 **<END>** g01337551

OPERATOR STATION

258-3406 CONTROL GP-ELECTROHYDRAULIC—RH

S/N: MST1-UP

PART OF 342-5010, 342-5011 CONTROL AR-MACHINE

FOR USE WITH 258-3181—PAGE 318, 258-3731—PAGE 319. CANNOT BE USED WITH 258-3405—PAGE 668, 258-3183—PAGE 319, 258-3734—PAGE 320 AN ATTACHMENT

SMCS-5702, 5705 **i02659382**

NOTE	REF NO	GRAPHIC REF	PART NUMBER	QTY	PART NAME 1 2 3 4 5 6 (PRODUCT LEVEL)	SEE PAGE
M	1	1	**9X-2546**	4	BOLT (M6X1X20-MM)	
Y	2	1	**269-0262**	1	CONTROL GP-JOYSTICK (RH)	672
	3	1	**3S-2093**	2	STRAP-CABLE	

M-METRIC PART
Y-SEPARATE ILLUSTRATION

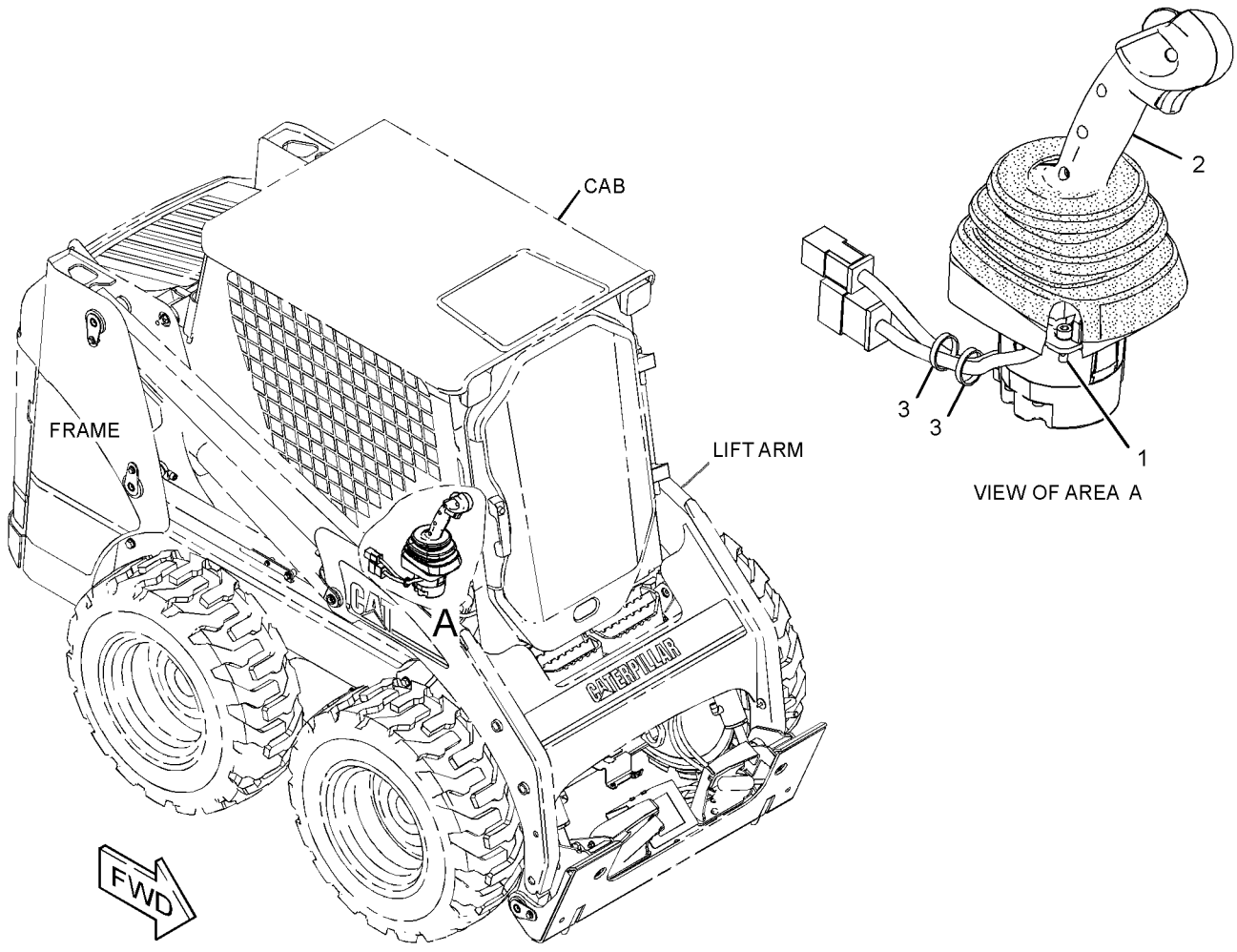

GRAPHIC #1 **<END>** g01337510

OPERATOR STATION

258-3407 CONTROL GP-ELECTROHYDRAULIC—RH, HIGH FLOW

S/N: MST1-UP

PART OF 258-3183, 258-3734 HYDRAULIC AR

AN ATTACHMENT

SMCS-5702, 5705 **i02659383**

NOTE	REF NO	GRAPHIC REF	PART NUMBER	QTY	PART NAME 1 2 3 4 5 6 (PRODUCT LEVEL)	SEE PAGE
M	1	1	**9X-2546**	4	BOLT (M6X1X20-MM)	
Y	2	1	**269-0263**	1	CONTROL GP-JOYSTICK (RH, HIGH FLOW)	673
	3	1	**3S-2093**	2	STRAP-CABLE	

M-METRIC PART
Y-SEPARATE ILLUSTRATION

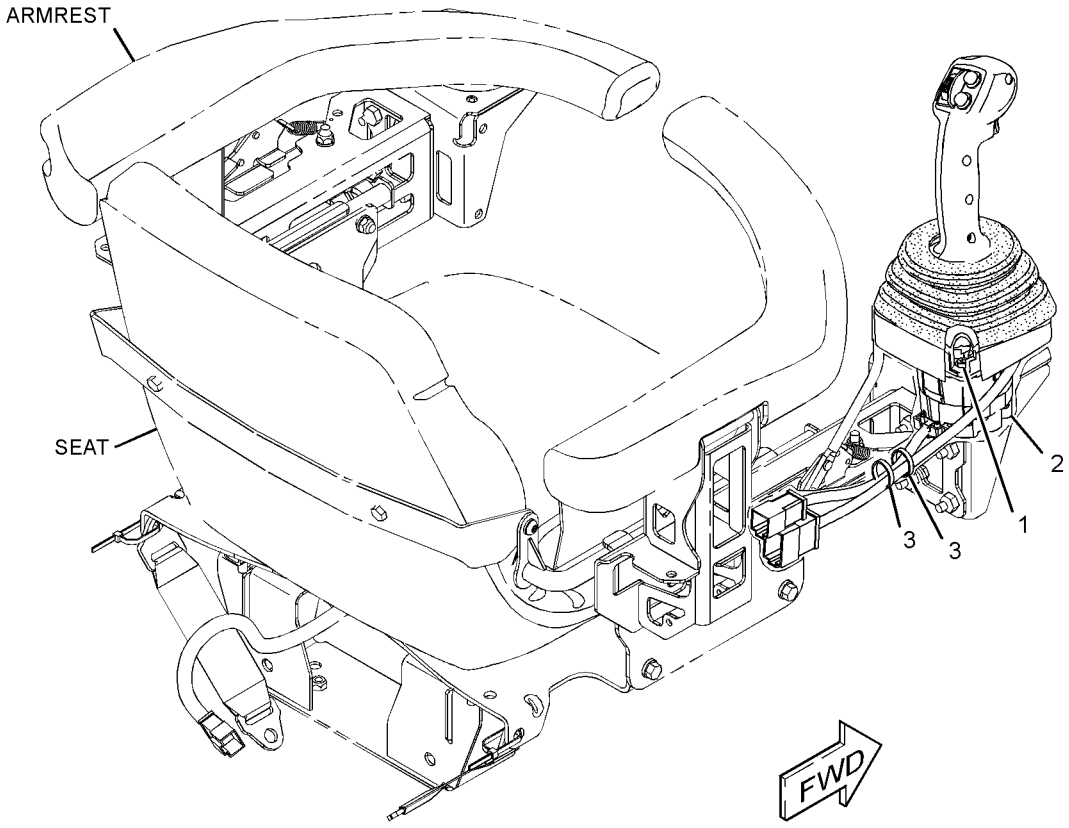

GRAPHIC #1 **<END>** g01336965

OPERATOR STATION

272-1790 CONTROL GP-HANDLE–LH

S/N: MST1-UP

PART OF 269-0265 CONTROL GP-JOYSTICK, 258-4127 KIT-WORK TOOL WIRING AN ATTACHMENT

SMCS-5705 **i02629793**

NOTE	REF NO	GRAPHIC REF	PART NUMBER	QTY	PART NAME 1 2 3 4 5 6 (PRODUCT LEVEL)	SEE PAGE
	1	1	**174-3091**	1	KIT-RECEPTACLE (12-PIN)	
					(INCLUDES RECEPTACLE AS & WEDGE)	
	2	1	**186-3735**	9	PIN-CONNECTOR (16-GA TO 18-GA)	
	3	1	**8T-8737**	3	PLUG-SEAL	
	4	1	**276-4878**	1	GROMMET	

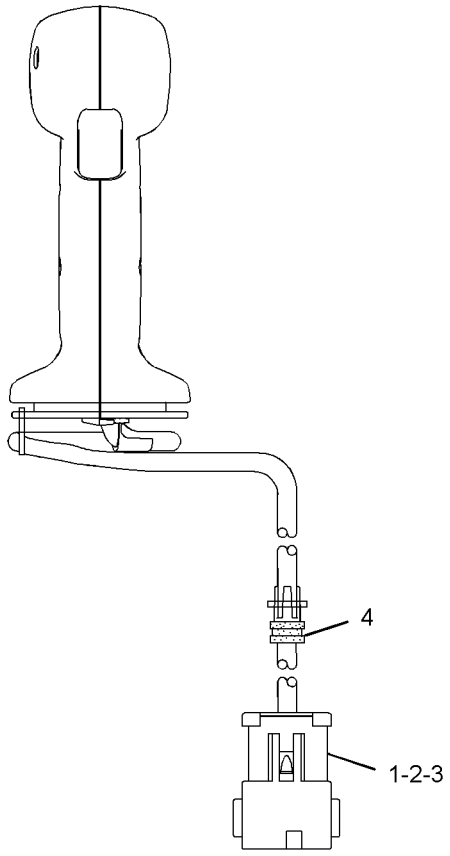

FRONT VIEW

GRAPHIC #1 **<END>** g01322784

OPERATOR STATION

269-0262 CONTROL GP-JOYSTICK–RH

S/N: MST1-UP
PART OF 258-3406 CONTROL GP-ELECTROHYDRAULIC
AN ATTACHMENT

SMCS-5705 **i03296096**

NOTE	REF NO	GRAPHIC REF	PART NUMBER	QTY	PART NAME 1 2 3 4 5 6 (PRODUCT LEVEL)	SEE PAGE
	1	1	**254-3437**	1	BOOT	
Y	2	1	**269-0257**	1	BASE AS-JOYSTICK (RH)	654
	3	1	**273-9103**	1	CONTROL GP-HANDLE (RH)	
	3A	1	**8T-8737**	5	PLUG-SEAL	
	3B	1	**174-3091**	1	KIT-RECEPTACLE (12-PIN)	
					(INCLUDES RECEPTACLE AS & WEDGE)	
	3C	1	**186-3735**	7	PIN-CONNECTOR (16-GA TO 18-GA)	
		1	**276-4878**	1	GROMMET	
M	4	1	**213-7489**	3	SCREW (M4X25-MM)	
M	5	1	**178-9983**	3	LOCKNUT (M4X0.7-THD)	

M-METRIC PART
Y-SEPARATE ILLUSTRATION

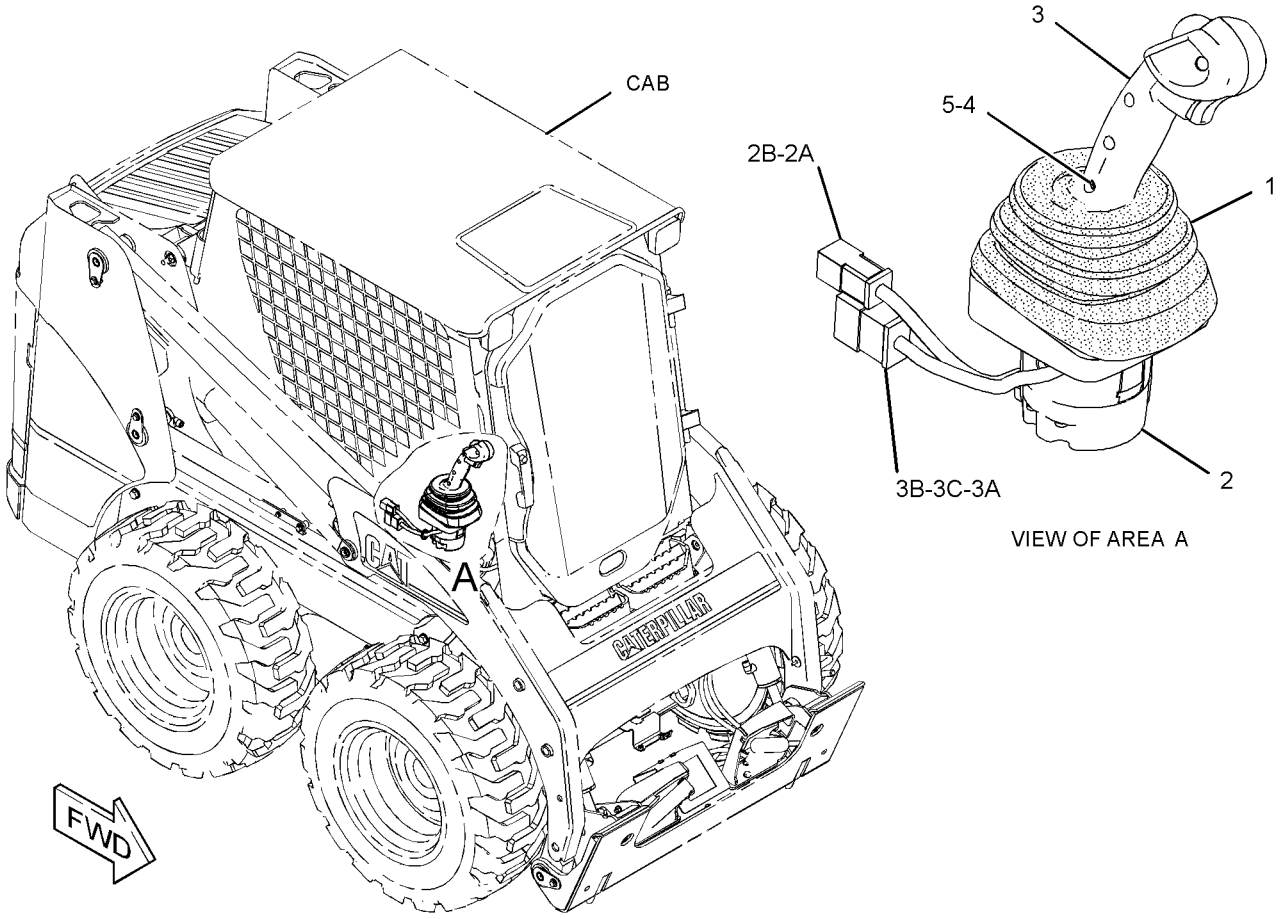

GRAPHIC #1 **<END>** g01309748

OPERATOR STATION

269-0263 CONTROL GP-JOYSTICK–RH, HIGH FLOW

S/N: MST1-UP

PART OF 258-3407 CONTROL GP-ELECTROHYDRAULIC

AN ATTACHMENT

SMCS-5705 **i03638372**

NOTE	REF NO	GRAPHIC REF	PART NUMBER	QTY	PART NAME 1 2 3 4 5 6 (PRODUCT LEVEL)	SEE PAGE
	1	1	**254-3437**	1	BOOT	
Y	2	1	**269-0257**	1	BASE AS-JOYSTICK (RH)	654
	3	1	**273-9104**	1	CONTROL GP-HANDLE (RH)	
		1	**8T-8737**	1	PLUG-SEAL	
		1	**174-3091**	1	KIT-RECEPTACLE (12-PIN)	
					(INCLUDES RECEPTACLE AS & WEDGE)	
		1	**186-3735**	11	PIN-CONNECTOR (16-GA TO 18-GA)	
		1	**276-4878**	1	GROMMET	
M	4	1	**213-7489**	3	SCREW (M4X0.7X25-MM)	
M	5	1	**178-9983**	3	LOCKNUT (M4X0.7-THD)	
	6	1	**174-3091**	1	KIT-RECEPTACLE (12-PIN)	
	7	1	**102-8805**	1	KIT-RECEPTACLE (6-PIN)	
					(EACH RECEPTACLE KIT INCLUDES RECEPTACLE AS & WEDGE)	
	8	1	**186-3735**	17	PIN-CONNECTOR (16-GA TO 18-GA)	
	9	1	**8T-8737**	1	PLUG-SEAL	

M-METRIC PART
Y-SEPARATE ILLUSTRATION

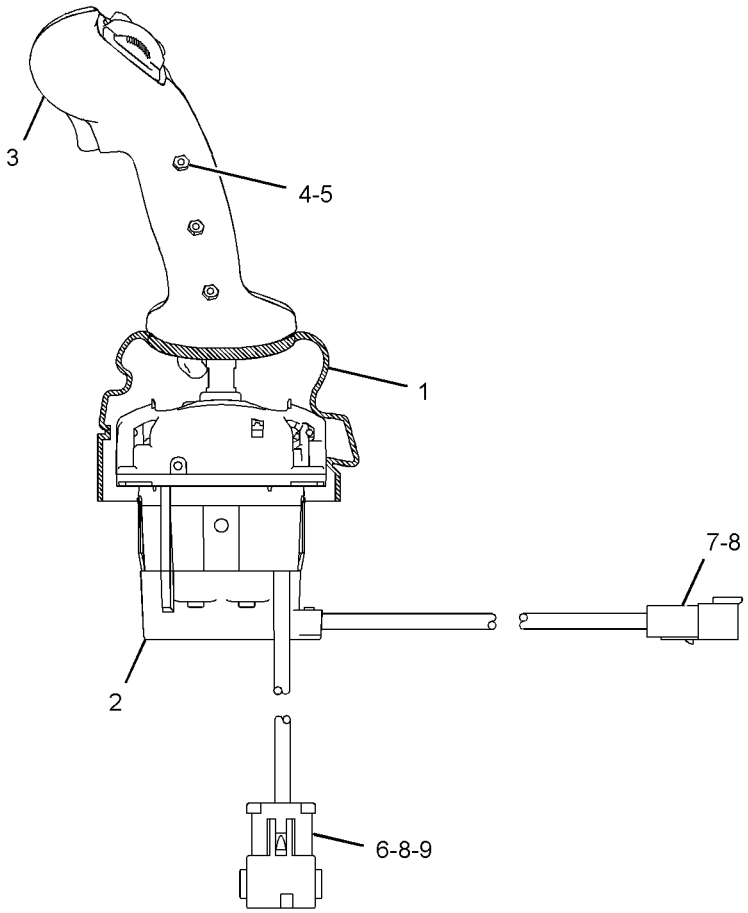

LEFT SIDE VIEW

GRAPHIC #1 **<END>** g01317881

OPERATOR STATION

269-0264 CONTROL GP-JOYSTICK–RH

S/N: MST1-UP
PART OF 258-3405 CONTROL GP-ELECTROHYDRAULIC
AN ATTACHMENT

SMCS-5705 **i03647023**

NOTE	REF NO	GRAPHIC REF	PART NUMBER	QTY	PART NAME 1 2 3 4 5 6 (PRODUCT LEVEL)	SEE PAGE
	1	1	**254-3437**	1	BOOT	
Y	2	1	**269-0257**	1	BASE AS-JOYSTICK (RH)	654
	3	1	**269-0259**	1	CONTROL GP-HANDLE	
	3A	1	**8T-8737**	6	PLUG-SEAL	
	3B	1	**186-3735**	6	PIN-CONNECTOR (16-GA TO 18-GA)	
	3C	1	**174-3091**	1	KIT-RECEPTACLE (12-PIN)	
					(INCLUDES RECEPTACLE AS & WEDGE)	
		1	**276-4878**	1	GROMMET	
M	4	1	**213-7489**	3	SCREW (M4X0.7X25-MM)	
M	5	1	**178-9983**	3	LOCKNUT (M4X0.7-THD)	

M-METRIC PART
Y-SEPARATE ILLUSTRATION

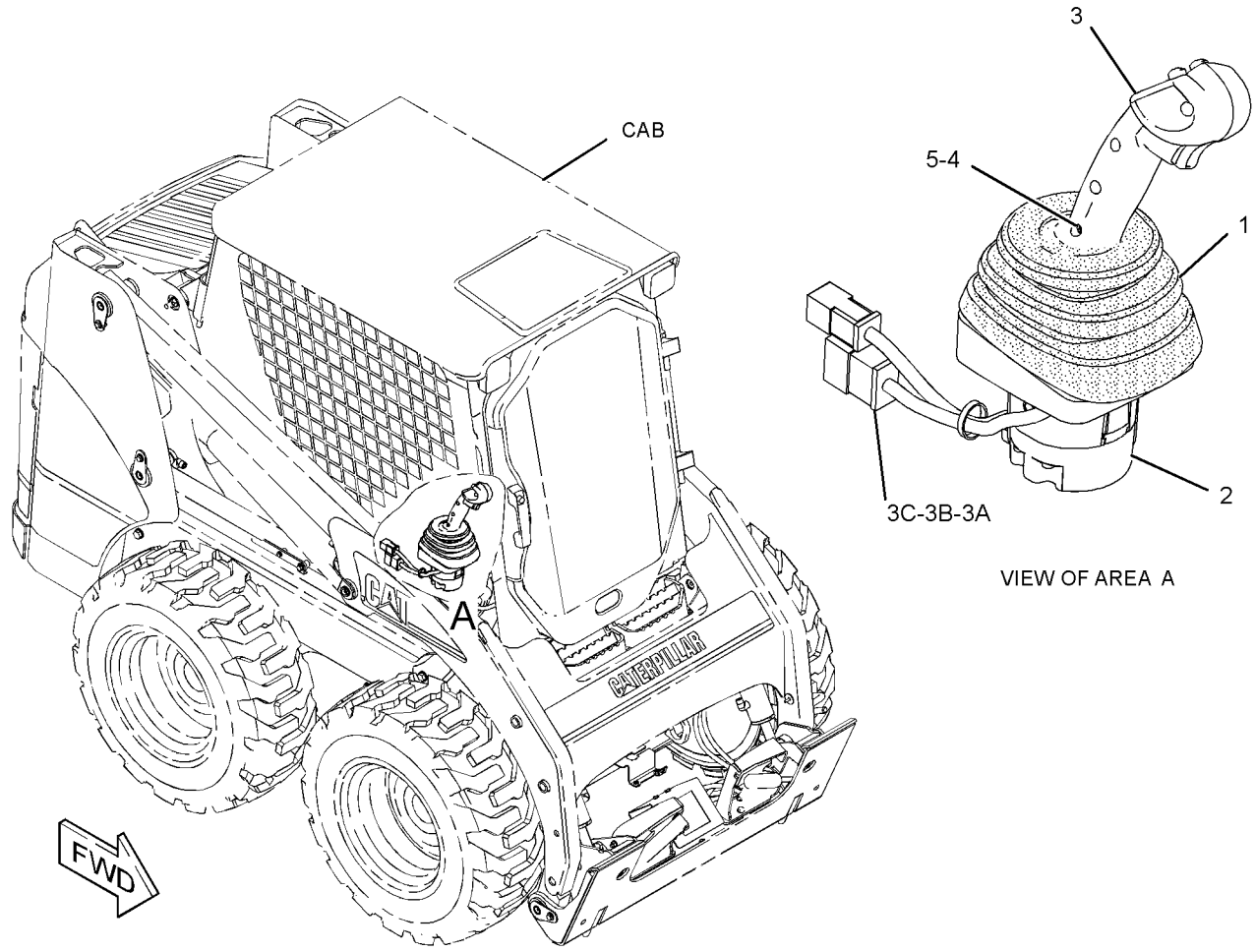

GRAPHIC #1 **<END>** g01957400

OPERATOR STATION

269-0265 CONTROL GP-JOYSTICK–LH, HIGH FLOW

S/N: MST1-UP

PART OF 258-3404 CONTROL GP-ELECTROHYDRAULIC

AN ATTACHMENT

SMCS-5705 **i03638925**

NOTE	REF NO	GRAPHIC REF	PART NUMBER	QTY	PART NAME 1 2 3 4 5 6 (PRODUCT LEVEL)	SEE PAGE
	1	1	**254-3437**	1	BOOT	
Y	2	1	**269-0258**	1	BASE AS-JOYSTICK (LH)	655
Y	3	1	**272-1790**	1	CONTROL GP-HANDLE (LH)	671
M	4	1	**213-7489**	3	SCREW (M4X0.7X25-MM)	
M	5	1	**178-9983**	3	LOCKNUT (M4X0.7-THD)	

M-METRIC PART
Y-SEPARATE ILLUSTRATION

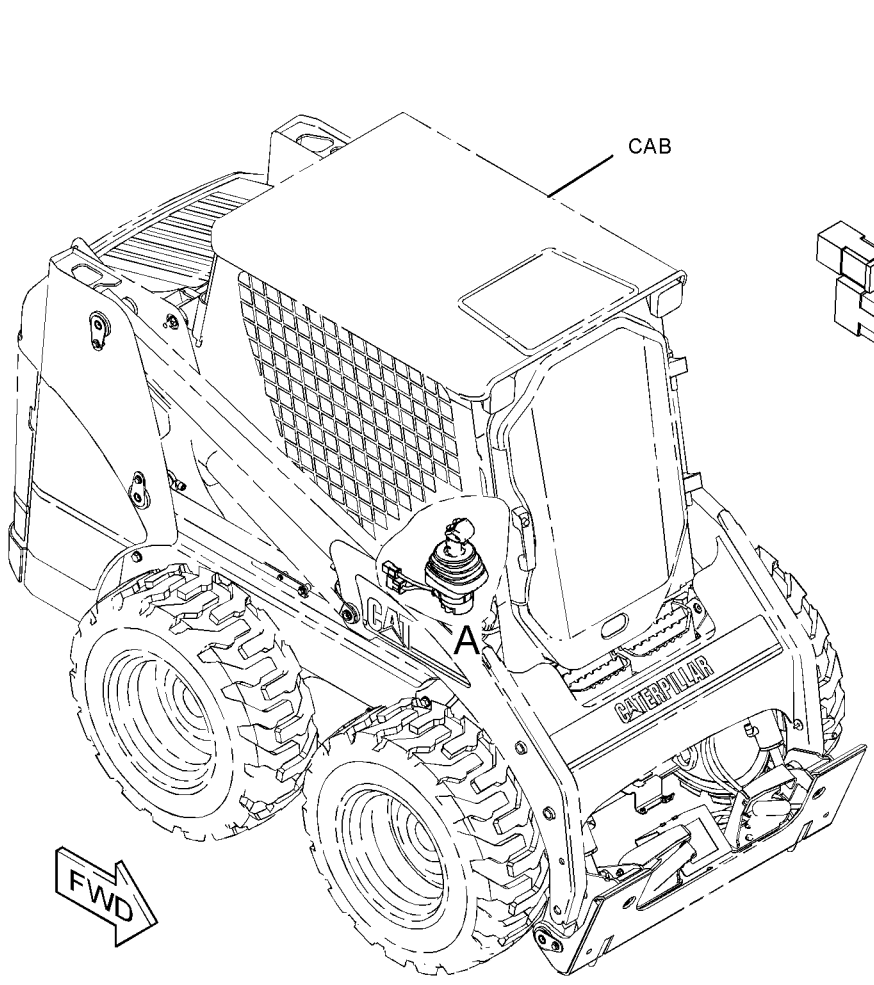

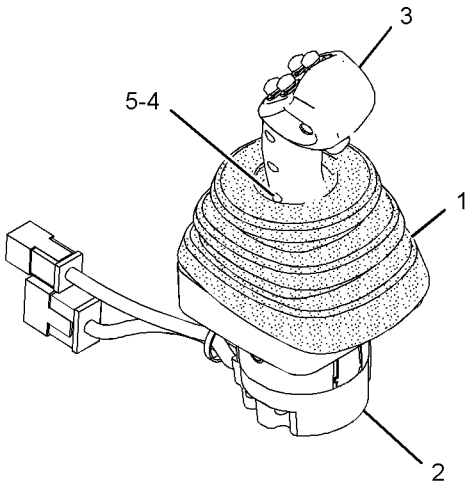

VIEW OF AREA A

GRAPHIC #1 **<END>** g01954298

OPERATOR STATION

269-0266 CONTROL GP-JOYSTICK–LH

S/N: MST1-UP
PART OF 258-3403 CONTROL GP-ELECTROHYDRAULIC
AN ATTACHMENT

SMCS-5705 **i03638926**

NOTE	REF NO	GRAPHIC REF	PART NUMBER	QTY	PART NAME 1 2 3 4 5 6 (PRODUCT LEVEL)	SEE PAGE
Y	1	1	**269-0258**	1	BASE AS-JOYSTICK (LH)	655
	2	1	**269-0259**	1	CONTROL GP-HANDLE	
	2A	1	**8T-8737**	6	PLUG-SEAL	
	2B	1	**174-3091**	1	KIT-RECEPTACLE (12-PIN)	
					(INCLUDES RECEPTACLE AS & WEDGE)	
	2C	1	**186-3735**	6	PIN-CONNECTOR (16-GA TO 18-GA)	
		1	**276-4878**	1	GROMMET	
	3	1	**254-3437**	1	BOOT	
M	4	1	**213-7489**	3	SCREW (M4X0.7X25-MM)	
M	5	1	**178-9983**	3	LOCKNUT (M4X0.7-THD)	

M-METRIC PART
Y-SEPARATE ILLUSTRATION

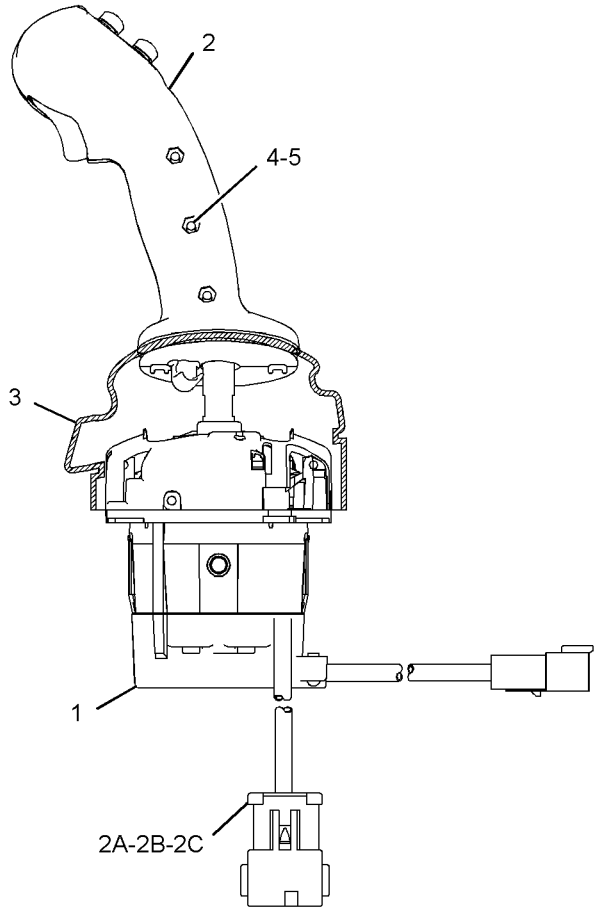

LEFT SIDE VIEW

GRAPHIC #1 **<END>** g01955073

258-4245 COVER GP-CAB

S/N: MST1-UP

PART OF 258-3738, 258-3740 OPTION AR-CAB

AN ATTACHMENT

SMCS-7301 **i02613965**

NOTE	REF NO	GRAPHIC REF	PART NUMBER	QTY	PART NAME 1 2 3 4 5 6 (PRODUCT LEVEL)	SEE PAGE
	1	1	**258-3727**	2	SCREW-TRUSS HEAD (NO 12X17.46-MM)	
	2	1	**258-3728**	1	PLATE	
	3	1	**258-3794**	1	INSULATION	
	4	1	**258-4027**	1	COVER	
	5	1	**258-4028**	2	COVER-DUCT	
	6	1	**258-4034**	1	COVER-SWITCH	
	7	1	**258-4225**	1	FLOORPLATE AS	
	8	1	**258-4408**	1	INSULATION	
	9	1	**266-3314**	2	BOLT-FLANGE HEAD (M6X1X20.5-MM)	
M	10	1	**266-3315**	8	BOLT-FLANGE HEAD (M8X1.25X25.5-MM)	
	11	1	**5P-4116**	2	WASHER-HARD (8.8X20.5X2-MM THK)	
	12	1	**8T-4121**	4	WASHER-HARD (11X21X2.5-MM THK)	
M	13	1	**8T-4133**	4	NUT (M10X1.5-THD)	

M-METRIC PART

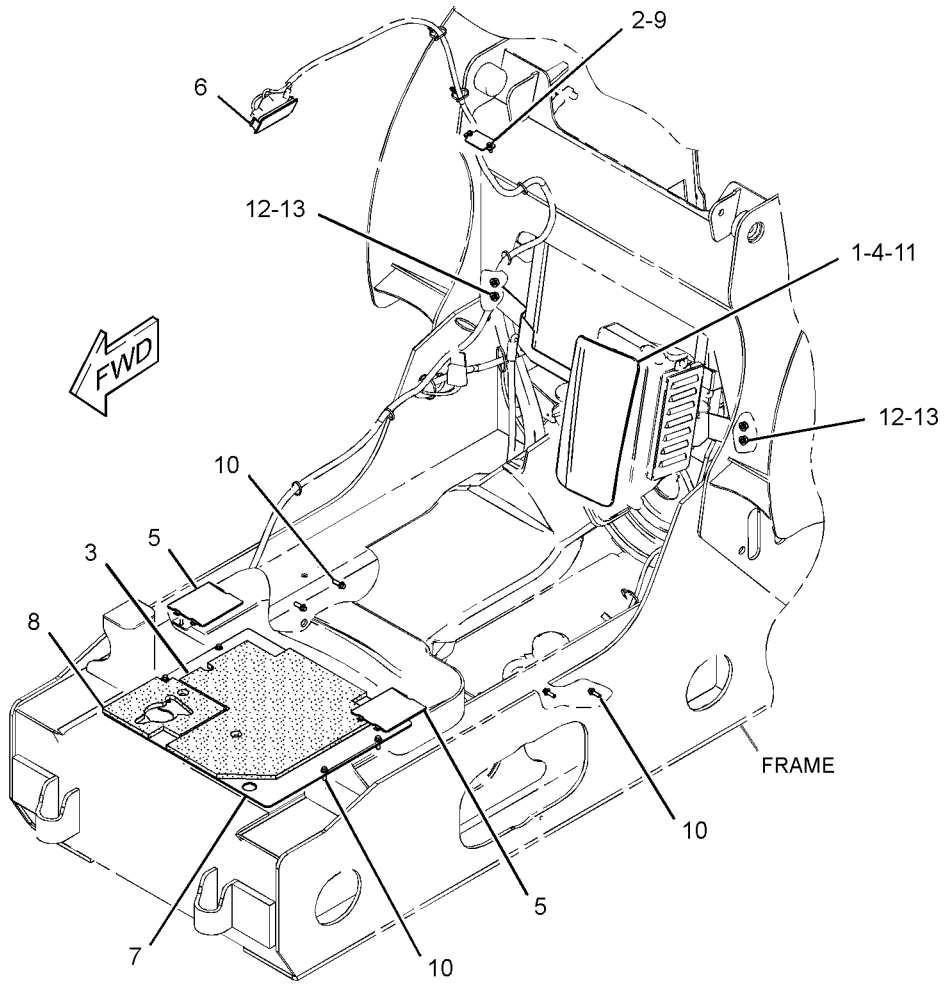

GRAPHIC #1 **<END>** g01313308

OPERATOR STATION

258-4314 COVER GP-CONSOLE–RH, LH

S/N: MST1-UP

PART OF 258-4310 SEAT AR, 258-4320, 258-4330 SEAT AR-SUSPENSION

AN ATTACHMENT

SMCS-5258 **i02711965**

NOTE	REF NO	GRAPHIC REF	PART NUMBER	QTY	PART NAME 1 2 3 4 5 6 (PRODUCT LEVEL)	SEE PAGE
	1	1	**139-6039**	10	NUT (U-TYPE RETAINER)	
	2	1	**258-3727**	6	SCREW-TRUSS HEAD (NO 12X17.46-MM)	
	3	1	**258-4312**	1	COVER (INNER, LH)	
	4	1	**258-4313**	1	COVER (OUTER, LH)	
	5	1	**258-4315**	1	COVER (INNER, RH)	
	6	1	**258-4316**	1	COVER (OUTER, RH)	
M	7	1	**215-6406**	10	SCREW-TRUSS HEAD (M6X1X16-MM)	

M-METRIC PART

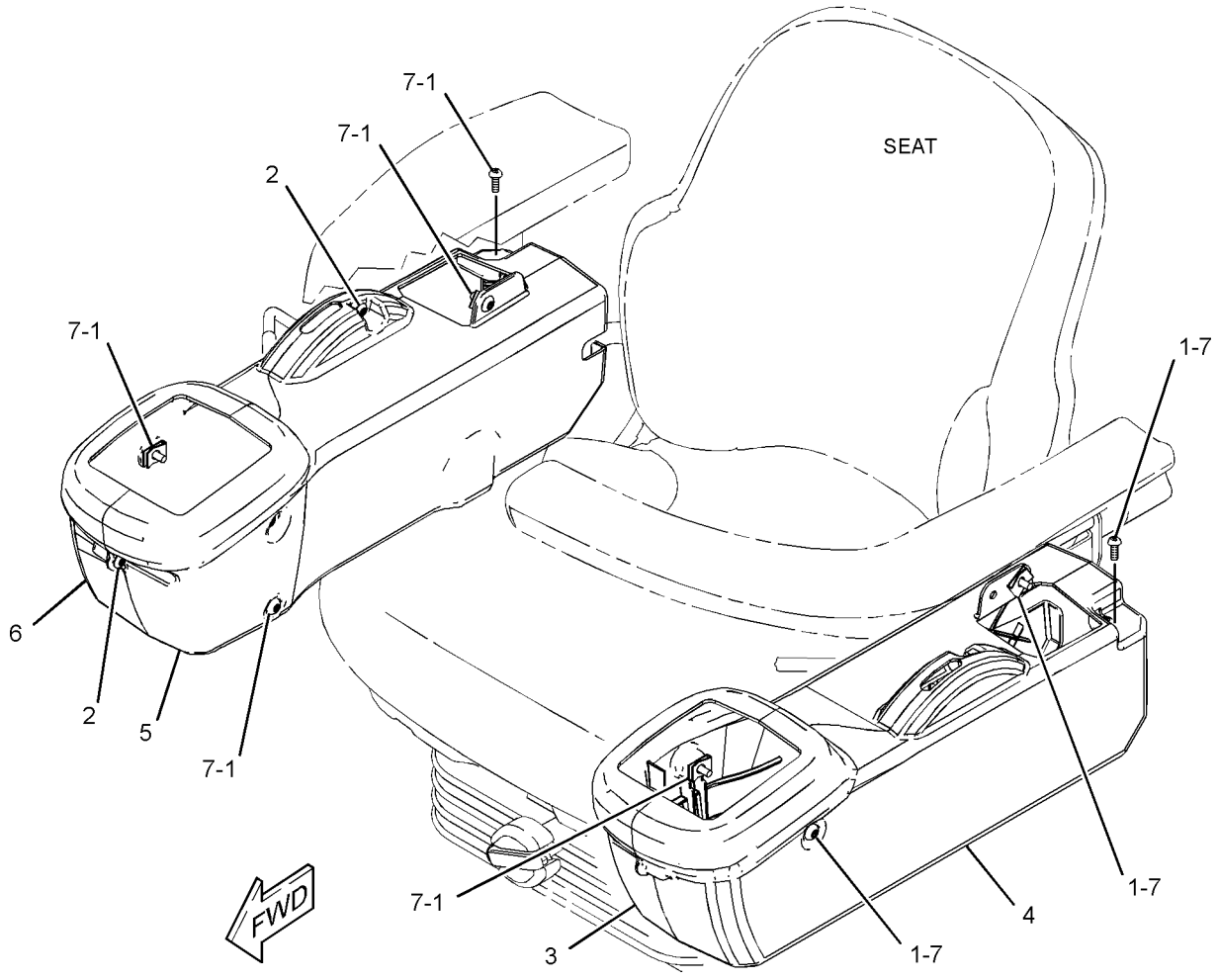

GRAPHIC #1 **<END>** g01312002

OPERATOR STATION

258-4009 COVER GP-INSTRUMENT PANEL

S/N: MST1-UP

PART OF 258-3683, 258-3748, 258-3751, 300-7629 MACHINE AR-SPECIAL

AN ATTACHMENT

SMCS-1408, 7451, 7478 **i02630066**

NOTE	REF NO	GRAPHIC REF	PART NUMBER	QTY	PART NAME 1 2 3 4 5 6 (PRODUCT LEVEL)	SEE PAGE
	1	1	**109-2356**	6	PLUG	
	2	1	**258-4033**	1	COVER (CLUSTER)	

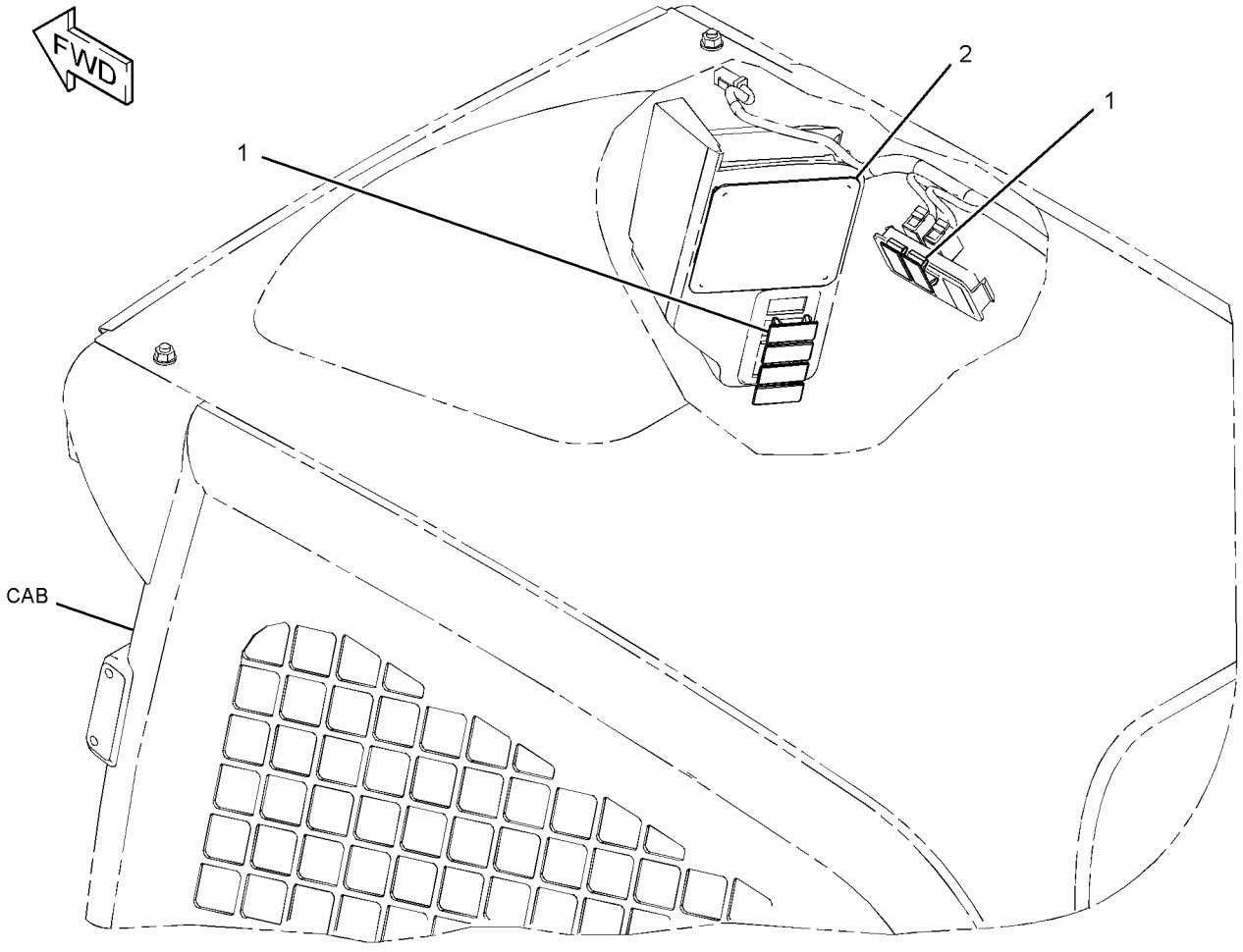

GRAPHIC #1 **<END>** g01321985

OPERATOR STATION

258-4070 DOOR & MTG GP-CAB—WITH CAB TILT GAS SPRING

S/N: MST1-UP

CANNOT BE USED WITH 258-4080—PAGE 683, 258-3738—PAGE 764, 258-3740—PAGE 764 AN ATTACHMENT

SMCS-7308 **i03635694**

NOTE	REF NO	GRAPHIC REF	PART NUMBER	QTY	PART NAME 1 2 3 4 5 6 (PRODUCT LEVEL)	SEE PAGE
M	1	1	**5C-2890**	1	NUT (M6X1-THD)	
M	2	1	**215-6406**	1	SCREW-TRUSS HEAD (M6X1X16-MM)	
	3	1	**5T-9400**	1	SPACER (12X25X8.5-MM THK)	
	4	1	**7C-8246**	2	SPACER (10.5X20X24-MM THK)	
	5	1	**8T-2444**	2	STUD-BALL	
	6	1	**095-1325**	1	PIN-CLEVIS	
	7	1	**139-6039**	1	NUT (U-TYPE RETAINER)	
	8	1	**153-2682**	2	SPRING-GAS	
	9	1	**198-1725**	4	WASHER-HARD (8.8X25.5X2-M THK)	
	10	1	**206-1345**	4	STRAP-CABLE	
	11	1	**258-3281**	1	BRACKET AS	
	12	1	**258-3725**	1	HINGE	
	13	1	**258-3726**	2	PIN	
	14	1	**258-3761**	1	SPRING-GAS	
	15	1	**258-3764**	1	STRIKER AS	
	16	1	**258-4078**	1	TANK AS-WINDOW WASHER	
		1	**6T-1375**	1	PUMP AS-WASHER	
		1	**8E-8293**	1	GROMMET	
		1	**258-3296**	1	CAP-VENTED (WASHER)	
Y	17	1	*258-4086*	1	DOOR GP-CAB (GLASS)	688
	18	1	**258-4141**	2	CLIP	
	19	1	**258-4157**	1	HARNESS AS-CAB	
		1	**091-2436**	2	TERMINAL-BLADE (18-GA TO 22-GA)	
		1	**123-7615**	1	CONNECTOR	
		1	**9X-3401**	2	PIN-CONNECTOR (16-GA TO 18-GA)	
					—OR—	
		1	**126-1767**	2	PIN-CONNECTOR (14-GA)	
		1	**186-3735**	1	PIN-CONNECTOR (16-GA TO 18-GA)	
		1	**9W-0852**	2	PIN-CONNECTOR (14-GA)	
		1	**155-2274**	1	KIT-CONNECTING PLUG (6-PIN)	
					(INCLUDES PLUG AS, WEDGE & INTERFACE SEAL)	
		1	**8T-8737**	1	PLUG-SEAL	
		1	**102-8805**	1	KIT-RECEPTACLE (6-PIN)	
					(INCLUDES RECPTACLE AS & WEDGE)	
		1	**180-9340**	2	SOCKET-CONNECTOR (14-GA TO 18-GA)	
E		1	**211-5358**		CONDUIT-FLEXIBLE (63-CM)	
		1	**186-3736**	2	SOCKET-CONNECTOR (16-GA TO 18-GA)	
		1	**9W-0844**	2	SOCKET-CONNECTOR (14-GA)	
E		1	**125-7874**		TUBE-HEAT SHRINK (5.72-MM DIA) (5-CM)	
	20	1	**258-4356**	1	BRACKET AS	
	21	1	**284-7932**	1	FILM-NOTICE (ALTERNATE EXIT, READ OMM)	
M	22	1	**127-2170**	4	SCREW-TRUSS HEAD (M8X1.25X20-MM)	
	23	1	**5P-0372**	4	LOCK PIN	
	24	1	**6L-3966**	3	PIN (0.374-IN OD)	
	25	1	**8S-7803**	2	RING-RETAINING	
	26	1	**8T-4223**	1	WASHER-HARD (13.5X25.5X3-MM THK)	
	27	1	**8T-4224**	2	WASHER-HARD (8.8X16X2-MM THK)	
M	28	1	**8T-4244**	1	NUT (M12X1.75-THD)	
M	29	1	**9X-2044**	3	SCREW-TRUSS HEAD (M6X1X16-MM)	
E	30	1	**144-0195**		HOSE (90-CM)	
B	31	1	**198-1725**	2	WASHER-HARD (8.8X25.5X2-M THK)	
D	32	1	**8T-6936**		SEAL (0.05-M EACH)	

B-USE AS REQUIRED
D-ORDER BY THE METER
E-ORDER BY THE CENTIMETER
M-METRIC PART
Y-SEPARATE ILLUSTRATION

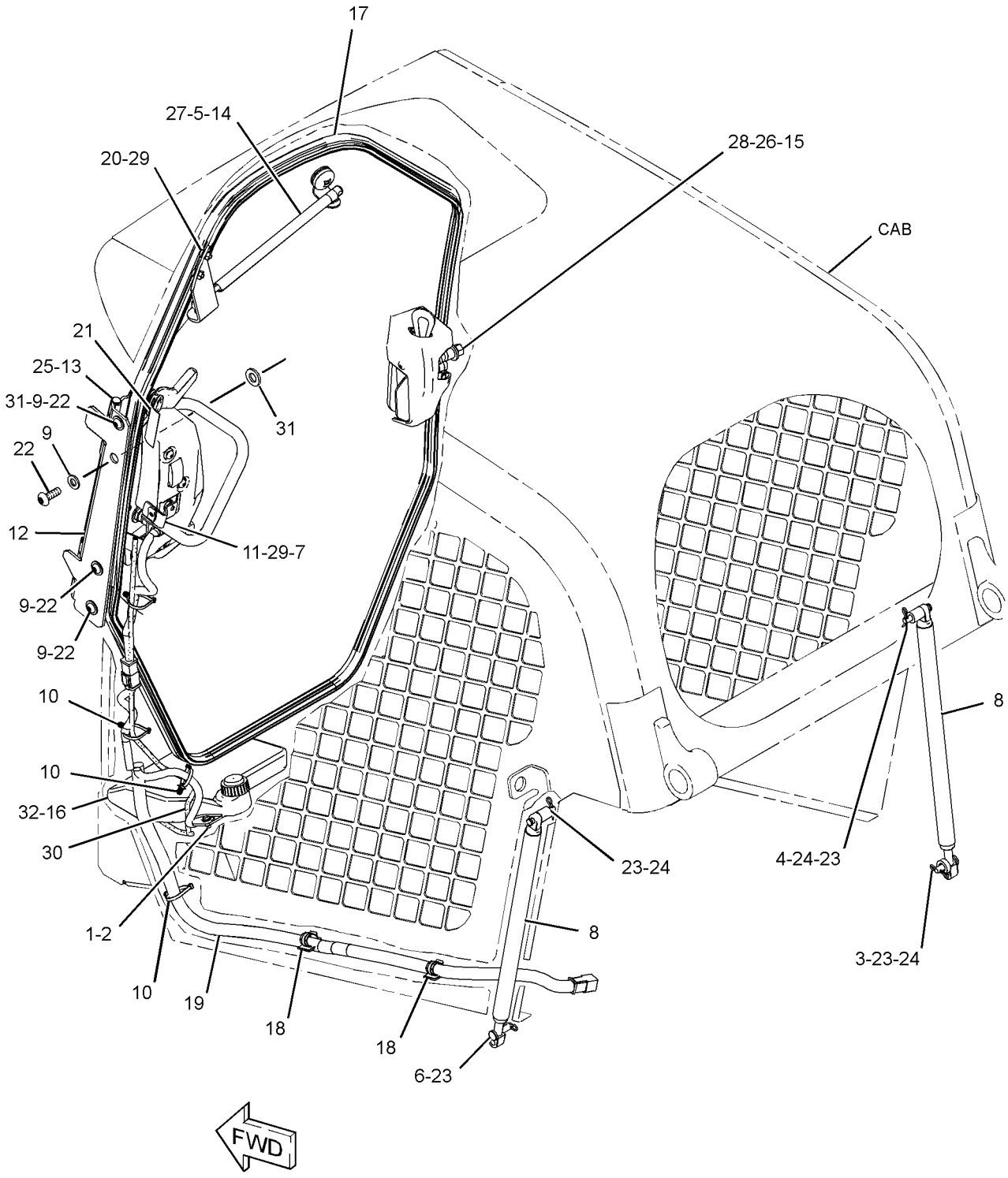

GRAPHIC #1 **<END>** g01441682

OPERATOR STATION

258-4080 DOOR & MTG GP-CAB—WITH CAB TILT GAS SPRING

S/N: MST1-UP

CANNOT BE USED WITH 258-4070—PAGE 680, 258-3738—PAGE 764, 258-3740—PAGE 764 AN ATTACHMENT

SMCS-7308 **i03624790**

NOTE	REF NO	GRAPHIC REF	PART NUMBER	QTY	PART NAME 1 2 3 4 5 6 (PRODUCT LEVEL)	SEE PAGE
M	1	1	**5C-2890**	1	NUT (M6X1-THD)	
	2	1	**5T-9400**	1	SPACER (12X25X8.5-MM THK)	
	3	1	**7C-8246**	2	SPACER (10.5X20X24-MM THK)	
	4	1	**8T-2444**	2	STUD-BALL	
	5	1	**095-1325**	1	PIN-CLEVIS	
	6	1	**139-6039**	1	NUT (U-TYPE RETAINER)	
	7	1	**153-2682**	2	SPRING-GAS (CAB)	
	8	1	**198-1725**	4	WASHER-HARD (8.8X25.5X2-M THK)	
	9	1	**206-1345**	4	STRAP-CABLE	
	10	1	**258-3281**	1	BRACKET AS	
	11	1	**258-3725**	1	HINGE	
	12	1	**258-3726**	2	PIN	
	13	1	**258-3761**	1	SPRING-GAS (DOOR)	
	14	1	**258-3764**	1	STRIKER AS	
	15	1	**258-4078**	1	TANK AS-WINDOW WASHER	
		1	**6T-1375**	1	PUMP AS-WASHER	
		1	**8E-8293**	1	GROMMET	
		1	**258-3296**	1	CAP-VENTED (WASHER)	
Y	16	1	*258-4087*	1	DOOR GP-CAB (POLYCARBONATE)	694
	17	1	**258-4141**	2	CLIP	
	18	1	**258-4157**	1	HARNESS AS-CAB	
		1	**102-8805**	1	KIT-RECEPTACLE (6-PIN) (INCLUDES RECEPTACLE AS & WEDGE)	
		1	**8T-8737**	1	PLUG-SEAL	
		1	**091-2436**	2	TERMINAL-BLADE	
		1	**186-3735**	1	PIN-CONNECTOR (16-GA TO 18-GA)	
		1	**186-3736**	2	SOCKET-CONNECTOR (16-GA TO 18-GA)	
		1	**9W-0852**	2	PIN-CONNECTOR (14-GA)	
		1	**9W-0844**	2	SOCKET-CONNECTOR (14-GA)	
		1	**123-7615**	1	CONNECTOR	
E		1	**125-7874**		TUBE-HEAT SHRINK (5.72-MM DIA) (5-CM)	
		1	**155-2274**	1	KIT-CONNECTING PLUG (6-PIN) (INCLUDES PLUG AS, WEDGE & INTERFACE SEAL)	
		1	**180-9339**	2	PIN-CONNECTOR (14-GA TO 18-GA)	
		1	**180-9340**	2	SOCKET-CONNECTOR (14-GA TO 18-GA)	
E		1	**211-5358**		CONDUIT-FLEXIBLE (63-CM)	
	19	1	**258-4356**	1	BRACKET AS	
	20	1	**284-7932**	1	FILM-NOTICE (ALTERNATE EXIT, READ OMM)	
M	21	1	**127-2170**	4	SCREW-TRUSS HEAD (M8X1.25X20-MM)	
M	22	1	**215-6406**	1	SCREW-TRUSS HEAD (M6X1X16-MM)	
	23	1	**5P-0372**	4	LOCK PIN	
	24	1	**6L-3966**	3	PIN (0.374-IN OD)	
	25	1	**8S-7803**	2	RING-RETAINING	
	26	1	**8T-4224**	2	WASHER-HARD (8.8X16X2-MM THK)	
M	27	1	**8T-4244**	1	NUT (M12X1.75-THD)	
M	28	1	**9X-2044**	3	SCREW-TRUSS HEAD (M6X1X16-MM)	
E	29	1	**144-0195**		HOSE (90-CM)	
B	30	1	**198-1725**	2	WASHER-HARD (8.8X25.5X2-M THK)	
	31	1	**8T-4223**	1	WASHER-HARD (13.5X25.5X3-MM THK)	
D	32	1	**8T-6936**		SEAL (0.1-M)	

B-USE AS REQUIRED
D-ORDER BY THE METER
E-ORDER BY THE CENTIMETER
M-METRIC PART
Y-SEPARATE ILLUSTRATION

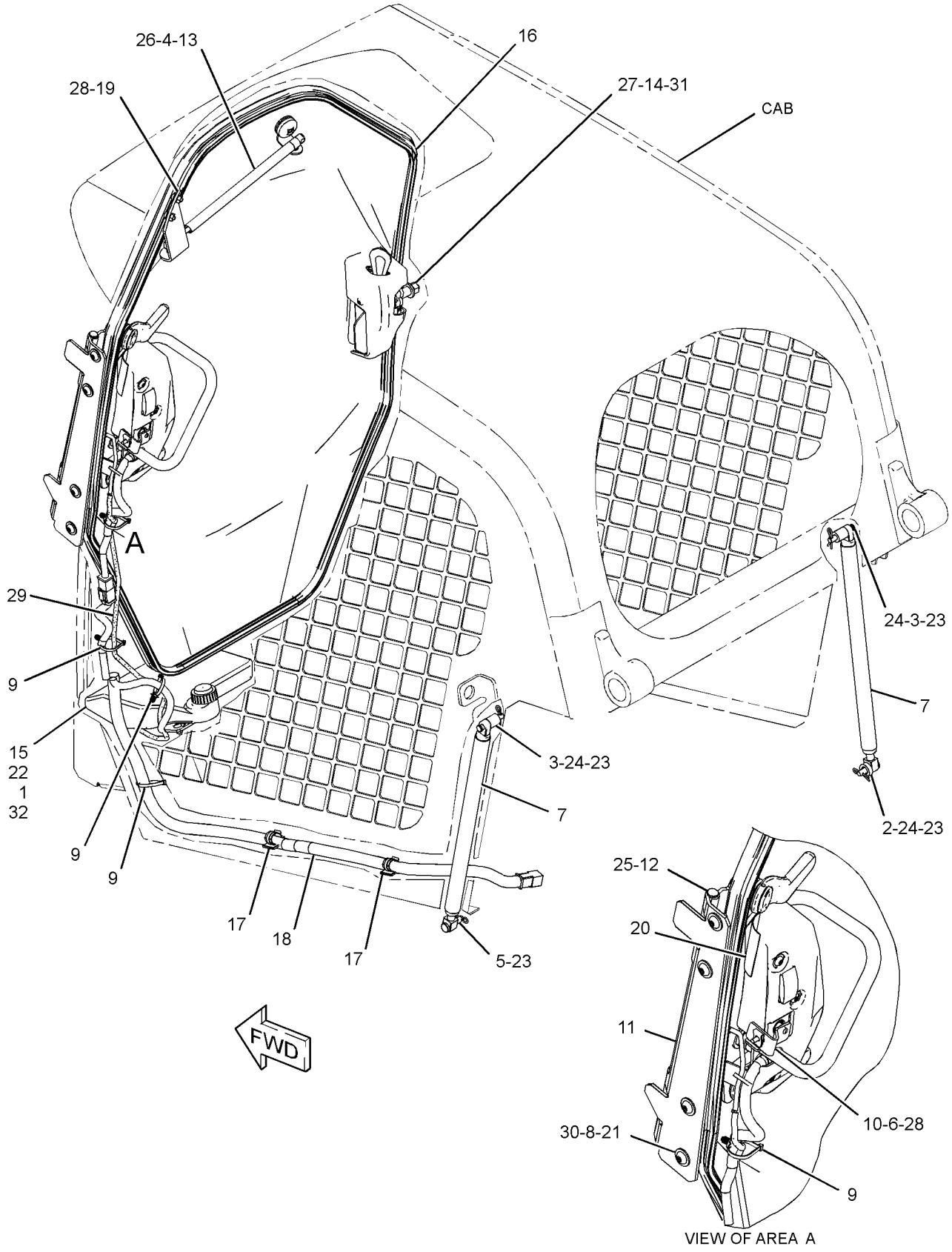

GRAPHIC #1 **<END>** g01440596

OPERATOR STATION

258-4440 DOOR & MTG GP-CAB—WITH CAB TILT GAS SPRING

S/N: MST1860-UP

CANNOT BE USED WITH 258-4070—PAGE 680, 258-4080—PAGE 683, 258-3738—PAGE 764, 258-3740—PAGE 764

AN ATTACHMENT

SMCS-7308 **i03635713**

NOTE	REF NO	GRAPHIC REF	PART NUMBER	QTY	PART NAME 1 2 3 4 5 6 (PRODUCT LEVEL)	SEE PAGE
	1	1	**5T-9400**	1	SPACER (12X25X8.5-MM THK)	
	2	1	**7C-8246**	2	SPACER (10.5X20X24-MM THK)	
	3	1	**8T-2444**	2	STUD-BALL	
	4	1	**139-6039**	1	NUT (U-TYPE RETAINER)	
	5	1	**153-2682**	2	SPRING-GAS	
	6	1	**206-1345**	4	STRAP-CABLE	
	7	1	**258-3281**	1	BRACKET AS	
	8	1	**258-3725**	1	HINGE	
	9	1	**258-3726**	2	PIN	
	10	1	**258-3761**	1	SPRING-GAS	
	11	1	**258-3764**	1	STRIKER AS	
	12	1	**258-4078**	1	TANK AS-WINDOW WASHER	
		1	**6T-1375**	1	PUMP AS-WASHER	
		1	**8E-8293**	1	GROMMET	
		1	**258-3296**	1	CAP-VENTED (WASHER)	
	13	1	**258-4141**	2	CLIP	
	14	1	**258-4157**	1	HARNESS AS-CAB	
		1	**091-2436**	2	TERMINAL-BLADE (18-GA TO 22-GA)	
		1	**123-7615**	1	CONNECTOR	
		1	**9X-3401**	2	PIN-CONNECTOR (16-GA TO 18-GA)	
					—OR—	
		1	**126-1767**	2	PIN-CONNECTOR (14-GA)	
		1	**186-3735**	1	PIN-CONNECTOR (16-GA TO 18-GA)	
		1	**9W-0852**	2	PIN-CONNECTOR (14-GA)	
		1	**155-2274**	1	KIT-CONNECTING PLUG (6-PIN)	
					(INCLUDES PLUG AS, WEDGE & INTERFACE SEAL)	
		1	**8T-8737**	1	PLUG-SEAL	
		1	**102-8805**	1	KIT-RECEPTACLE (6-PIN)	
					(INCLUDES RECPTACLE AS & WEDGE)	
		1	**180-9340**	2	SOCKET-CONNECTOR (14-GA TO 18-GA)	
E		1	**211-5358**		CONDUIT-FLEXIBLE (63-CM)	
		1	**186-3736**	2	SOCKET-CONNECTOR (16-GA TO 18-GA)	
		1	**9W-0844**	2	SOCKET-CONNECTOR (14-GA)	
E		1	**125-7874**		TUBE-HEAT SHRINK (5.72-MM DIA) (5-CM)	
	15	1	**258-4356**	1	BRACKET AS	
Y	16	1	*258-4442*	1	DOOR GP-CAB	702
	17	1	**284-7932**	1	FILM-NOTICE (ALTERNATE EXIT, READ OMM)	
	18	1	**095-1325**	1	PIN-CLEVIS	
M	19	1	**127-2170**	4	SCREW-TRUSS HEAD (M8X1.25X20-MM)	
	20	1	**198-1725**	4	WASHER-HARD (8.8X25.5X2-M THK)	
M	21	1	**215-6406**	1	SCREW-TRUSS HEAD (M6X1X16-MM)	
M	22	1	**5C-2890**	1	NUT (M6X1-THD)	
	23	1	**5P-0372**	4	LOCK PIN	
	24	1	**6L-3966**	3	PIN (0.374-IN OD)	
	25	1	**8S-7803**	2	RING-RETAINING	
	26	1	**8T-4223**	1	WASHER-HARD (13.5X25.5X3-MM THK)	
M	27	1	**8T-4244**	1	NUT (M12X1.75-THD)	
	28	1	**8T-4224**	2	WASHER-HARD (8.8X16X2-MM THK)	
M	29	1	**9X-2044**	3	SCREW-TRUSS HEAD (M6X1X16-MM)	
B	30	1	**198-1725**	2	WASHER-HARD (8.8X25.5X2-M THK)	
E	31	1	**144-0195**		HOSE (90-CM)	

B-USE AS REQUIRED
E-ORDER BY THE CENTIMETER
M-METRIC PART
Y-SEPARATE ILLUSTRATION

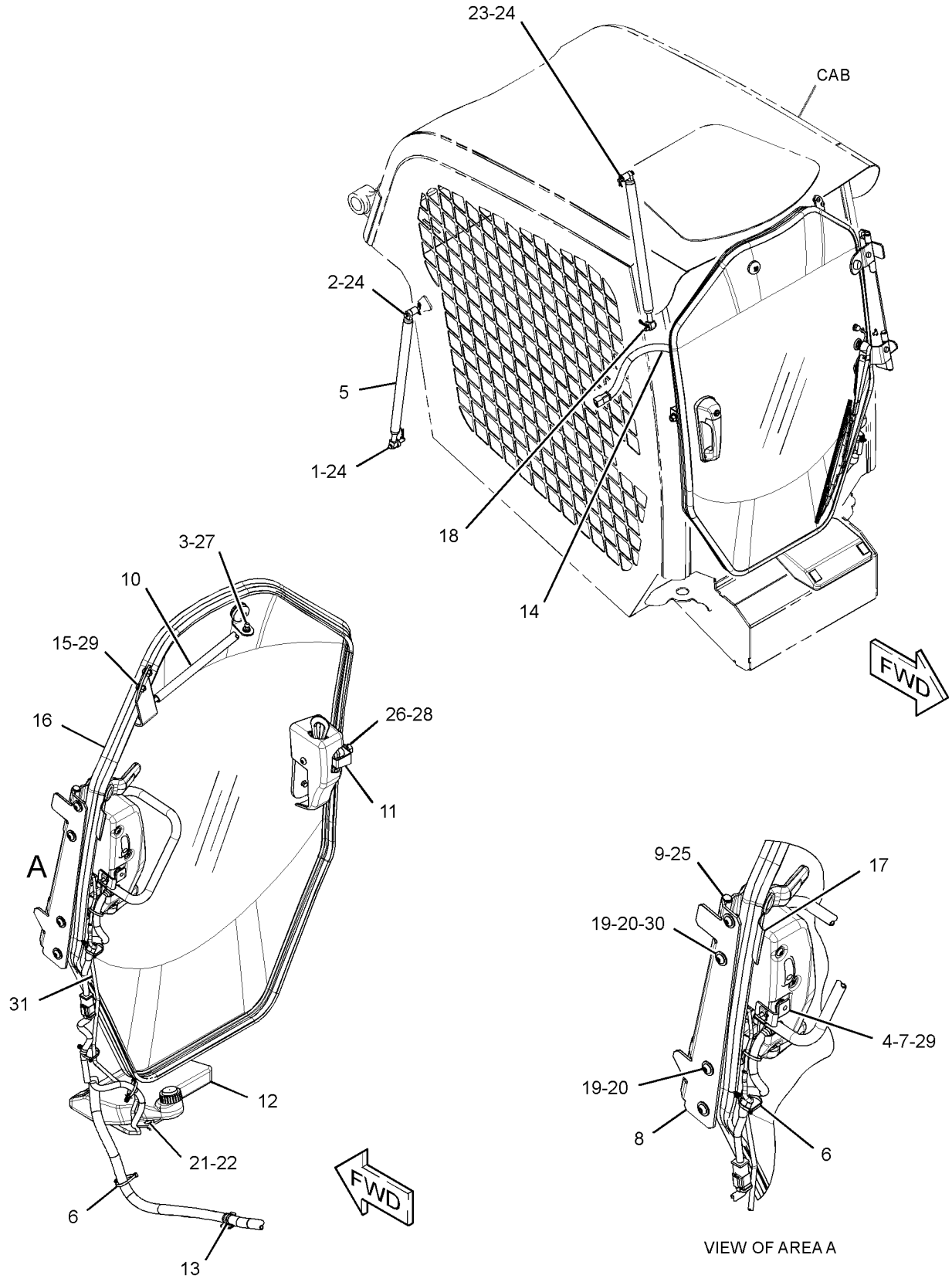

GRAPHIC #1 **<END>** g01455108

OPERATOR STATION

258-4086 DOOR GP-CAB—GLASS

S/N: MST1-2711

PART OF 258-4070 DOOR & MTG GP-CAB, 258-2473 KIT-CAB DOOR & MOUNTING

AN ATTACHMENT

SMCS-7308 **i03624791**

NOTE	REF NO	GRAPHIC REF	PART NUMBER	QTY	PART NAME 1 2 3 4 5 6 (PRODUCT LEVEL)	SEE PAGE
M	1	1	**5C-2890**	2	NUT (M6X1-THD)	
	2	1	**8G-1151**	1	CONNECTOR	
	3	1	**8Y-4615**	1	BLADE AS-WIPER (400-MM) (CAB DOOR)	
	4	1	**129-8542**	2	RETAINER	
	5	1	**129-8545**	2	WASHER (13X40X3-MM THK)	
M	6	1	**136-4192**	1	BOLT (M6X1X35-MM)	
B	7	1	**154-5423**	1	SPACER (6.6X12.7X17-MM THK)	
	8	1	**206-1345**	2	STRAP-CABLE	
M	9	1	**215-6406**	6	SCREW-TRUSS HEAD (M6X1X16-MM)	
	10	1	**229-8757**	1	SWITCH AS-LIMIT (DOOR)	
		1	**102-8803**	1	KIT-RECEPTACLE (3-PIN)	
					(INCLUDES RECEPTACLE AS & WEDGE)	
		1	**186-3735**	3	PIN-CONNECTOR (16-GA TO 18-GA)	
J	11	1	**252-1862**	1	HANDLE AS (PULL)	
B	12	1	**253-1817**	1	SPACER (6.5X14.5X12-MM THK)	
	13	1	**258-3280**	1	LATCH AS (INNER)	
	14	1	**258-3288**	1	HANDLE AS (LOWER)	
	15	1	**258-3289**	2	LATCH AS (OUTER)	
	16	1	**258-3290**	1	GASKET	
	17	1	**258-3294**	1	HANDLE AS (UPPER)	
	18	1	**258-3298**	1	GROMMET	
	19	1	**258-3697**	1	WASHER-NYLON (7X20X2-MM THK)	
	20	1	**258-3762**	2	GROMMET	
	21	1	**258-4013**	1	BRACKET AS	
	22	1	**258-4014**	1	HINGE	
	23	1	**258-4016**	1	COVER (WIPER)	
	24	1	**258-4071**	1	GLASS (DOOR)	
	25	1	**258-4073**	1	HINGE	
	26	1	**258-4075**	4	GASKET	
	27	1	**258-4076**	1	HANDLE AS	
	28	1	**258-4082**	1	GASKET	
	29	1	**258-4083**	1	COVER-LATCH	
	30	1	**258-4084**	1	BRACKET	
	31	1	**258-4085**	2	BUSHING	
	32	1	**258-4156**	1	HARNESS AS-CAB (DOOR, FRONT)	
		1	**102-8805**	1	KIT-RECEPTACLE (6-PIN)	
					(INCLUDES RECEPTACLE AS & WEDGE)	
		1	**8L-8413**	5	STRAP-CABLE	
		1	**091-2436**	4	TERMINAL-BLADE (18-GA TO 22-GA)	
		1	**104-1995**	3	TERMINAL-BLADE (14-GA TO 18-GA)	
		1	**186-3735**	2	PIN-CONNECTOR (16-GA TO 18-GA)	
		1	**9W-0852**	2	PIN-CONNECTOR (14-GA)	
		1	**9W-0844**	4	SOCKET-CONNECTOR (14-GA)	
E		1	**125-7874**		TUBE-HEAT SHRINK (5.72-MM DIA) (10-CM)	
		1	**155-2260**	1	KIT-CONNECTING PLUG (3-PIN)	
		1	**155-2271**	1	KIT-CONNECTING PLUG (4-PIN)	
		1	**155-2260**	1	KIT-CONNECTING PLUG (3-PIN)	
					(EACH PLUG KIT INCLUDES PLUG AS, WEDGE & INTERFACE SEAL)	
		1	**180-9339**	2	PIN-CONNECTOR (14-GA TO 18-GA)	
		1	**180-9340**	3	SOCKET-CONNECTOR (14-GA TO 18-GA)	
		1	**228-5856**	1	CONNECTOR	
	33	1	**264-4407**	1	MOTOR GP-WINDOW WIPER (CAB DOOR)	
		1	**102-8804**	1	KIT-RECEPTACLE (4-PIN)	
					(INCLUDES RECEPTACLE AS & WEDGE)	

258-4086 **DOOR GP-CAB** *(contd.)* **i03624791**

NOTE	REF NO	GRAPHIC REF	PART NUMBER	QTY	PART NAME 1 2 3 4 5 6 (PRODUCT LEVEL)	SEE PAGE
		1	**3F-9556**	1	LOCKWASHER	
M		1	**5C-7261**	1	NUT (M8X1.25-THD)	
		1	**186-3735**	4	PIN-CONNECTOR (16-GA TO 18-GA)	
		1	**263-3823**	1	CAP-WIPER	
	34	1	**264-4408**	1	ARM GP-WINDOW WIPER (CAB DOOR)	
		1	**305-9194**	1	NOZZLE AS-WASHER	
E		1	**194-5171**		HOSE (50-CM)	
	35	1	**281-6390**	1	SWITCH AS-ROCKER (WIPER)	
		1	**111-7899**	1	GASKET	
	36	1	**292-6936**	1	BOLT (M6X1X70-MM)	
	37	1	**115-3069**	1	CLIP AS-CONNECTOR (3-PIN)	
	38	1	**3S-2093**	2	STRAP-CABLE	
M	39	1	**6V-7357**	4	BOLT (M6X1X25-MM)	
M	40	1	**8C-3798**	3	BOLT-LOCKING (M6X1X30-MM)	
	41	1	**8T-4205**	1	WASHER-HARD (7.2X14.5X2-MM THK)	
M	42	1	**9X-2044**	1	SCREW-TRUSS HEAD (M6X1X16-MM)	
E	43	1	**258-4430**		SEAL (329-CM)	
M	44	1	**129-3178**	1	LOCKNUT (M6X1-THD)	
	45	1	**319-0710**	2	FILM-INSTRUCTION (EGRESS SYSTEM, READ OMM)	

B-USE AS REQUIRED
E-ORDER BY THE CENTIMETER
J-REQUIRES CORPORATE KEY
M-METRIC PART

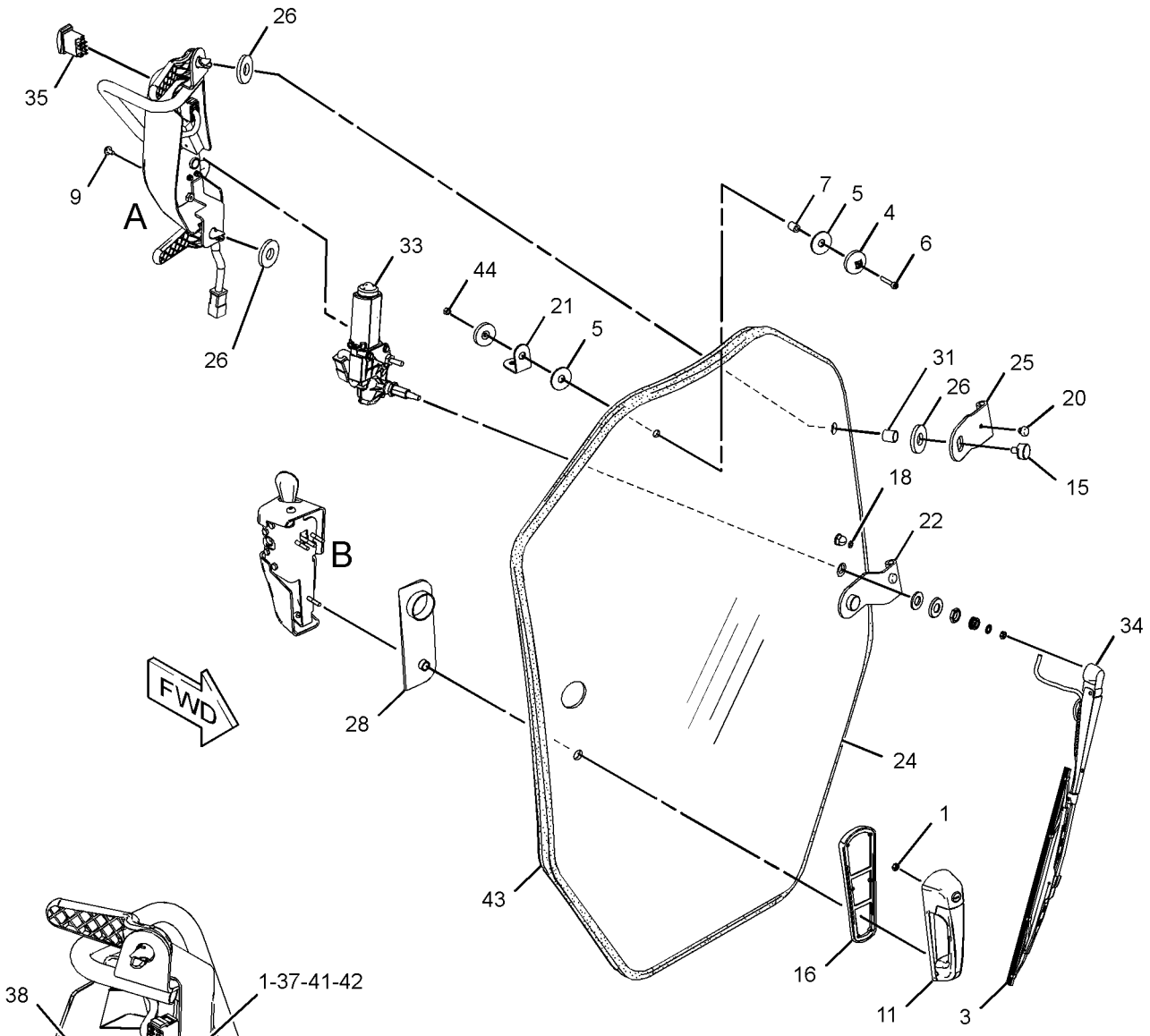

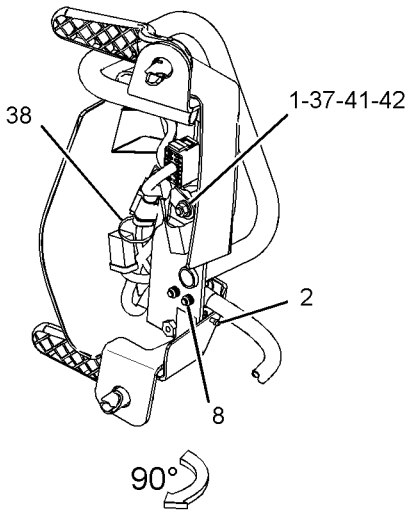

VIEW OF AREA A

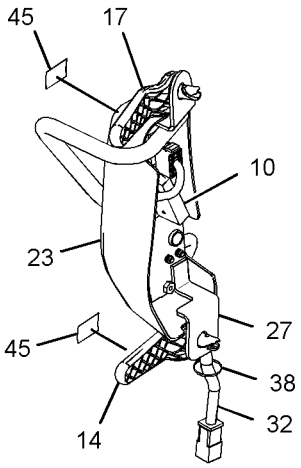

VIEW OF AREA A

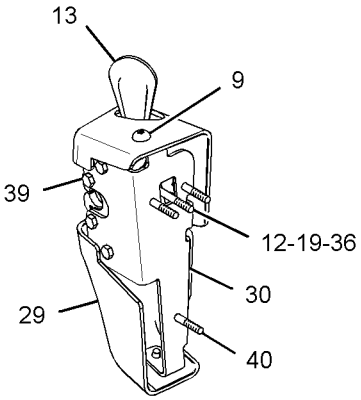

VIEW OF AREA B

GRAPHIC #1

<END>

g01457058

OPERATOR STATION

258-4086 DOOR GP-CAB—GLASS

S/N: MST2712-UP

PART OF 258-4070 DOOR & MTG GP-CAB, 258-2473 KIT-CAB DOOR & MOUNTING

AN ATTACHMENT

SMCS-7308 **i03585729**

NOTE	REF NO	GRAPHIC REF	PART NUMBER	QTY	PART NAME 1 2 3 4 5 6 (PRODUCT LEVEL)	SEE PAGE
M	1	1	**5C-2890**	2	NUT (M6X1-THD)	
	2	1	**8G-1151**	1	CONNECTOR	
C	3	1	**322-9633**	1	BLADE AS-WIPER (400-MM) (CAB DOOR)	
	4	1	**129-8542**	2	RETAINER	
	5	1	**129-8545**	2	WASHER (13X40X3-MM THK)	
M	6	1	**136-4192**	1	BOLT (M6X1X35-MM)	
	7	1	**154-5423**	1	SPACER (6.6X12.7X17-MM THK)	
	8	1	**206-1345**	2	STRAP-CABLE	
M	9	1	**215-6406**	6	SCREW-TRUSS HEAD (M6X1X16-MM)	
	10	1	**229-8757**	1	SWITCH AS-LIMIT (DOOR)	
		1	**102-8803**	1	KIT-RECEPTACLE (3-PIN)	
					(INCLUDES RECEPTACLE AS & WEDGE)	
		1	**186-3735**	3	PIN-CONNECTOR (16-GA TO 18-GA)	
J	11	1	**252-1862**	1	HANDLE AS (PULL)	
	12	1	**253-1817**	1	SPACER (6.5X14.5X12-MM THK)	
	13	1	**258-3280**	1	LATCH AS (INNER)	
	14	1	**258-3288**	1	HANDLE AS (LOWER)	
	15	1	**258-3289**	2	LATCH AS (OUTER)	
	16	1	**258-3290**	1	GASKET	
	17	1	**258-3294**	1	HANDLE AS (UPPER)	
	18	1	**258-3298**	1	GROMMET	
	19	1	**258-3697**	1	WASHER-NYLON (7X20X2-MM THK)	
	20	1	**331-8050**	2	BUMPER	
	21	1	**258-4013**	1	BRACKET AS	
	22	1	**258-4014**	1	HINGE (LOWER)	
	23	1	**258-4016**	1	COVER (WIPER)	
	24	1	**258-4071**	1	GLASS (DOOR)	
	25	1	**258-4073**	1	HINGE (UPPER)	
	26	1	**258-4075**	4	GASKET	
	27	1	**258-4076**	1	HANDLE AS	
	28	1	**258-4082**	1	GASKET	
	29	1	**258-4083**	1	COVER-LATCH	
	30	1	**258-4084**	1	BRACKET	
	31	1	**258-4085**	2	BUSHING	
	32	1	**258-4156**	1	HARNESS AS-CAB (DOOR, FRONT)	
		1	**228-5856**	1	CONNECTOR	
		1	**186-3735**	2	PIN-CONNECTOR (16-GA TO 18-GA)	
		1	**9W-0852**	2	PIN-CONNECTOR (14-GA)	
		1	**9X-3401**	2	PIN-CONNECTOR (16-GA TO 18-GA)	
					-OR-	
		1	**126-1767**	2	PIN-CONNECTOR (14-GA)	
		1	**155-2271**	1	KIT-CONNECTING PLUG (4-PIN)	
		1	**155-2260**	1	KIT-CONNECTING PLUG (3-PIN)	
					(EACH PLUG KIT INCLUDES PLUG AS, WEDGE & INTERFACE SEAL)	
		1	**102-8805**	1	KIT-RECEPTACLE (6-PIN)	
					(INCLUDES RECEPTACLE AS & WEDGE)	
		1	**180-9340**	3	SOCKET-CONNECTOR (14-GA TO 18-GA)	
		1	**9W-0844**	4	SOCKET-CONNECTOR (14-GA)	
		1	**8L-8413**	5	STRAP-CABLE	
		1	**091-2436**	4	TERMINAL-BLADE (18-GA TO 22-GA)	
		1	**104-1995**	3	TERMINAL-BLADE (14-GA TO 18-GA)	
E		1	**125-7875**		TUBE-HEAT SHRINK (7.44-MM DIA) (10-CM)	
CY	33	1	**330-5011**	1	MOTOR GP-WINDOW WIPER (CAB DOOR)	758
	34	1	**264-4408**	1	ARM GP-WINDOW WIPER (CAB DOOR)	

258-4086 **DOOR GP-CAB** *(contd.)* **i03585729**

NOTE	REF NO	GRAPHIC REF	PART NUMBER	QTY	PART NAME 1 2 3 4 5 6 (PRODUCT LEVEL)	SEE PAGE
		1	**305-9194**	1	NOZZLE AS-WASHER	
E		1	**194-5171**		HOSE (50-CM)	
	35	1	**281-6390**	1	SWITCH AS-ROCKER (FRONT WIPER, WASHER)	
		1	**111-7899**	1	GASKET	
	36	1	**292-6936**	1	BOLT (M6X1X70-MM)	
	37	1	**115-3069**	1	CLIP AS-CONNECTOR (3-PIN)	
	38	1	**3S-2093**	2	STRAP-CABLE	
M	39	1	**6V-7357**	4	BOLT (M6X1X25-MM)	
M	40	1	**8C-3798**	3	BOLT-LOCKING (M6X1X30-MM)	
	41	1	**8T-4205**	1	WASHER-HARD (7.2X14.5X2-MM THK)	
M	42	1	**9X-2044**	1	SCREW-TRUSS HEAD (M6X1X16-MM)	
E	43	1	**258-4430**		SEAL (329-CM)	
M	44	1	**129-3178**	1	LOCKNUT (M6X1-THD)	
	45	1	**319-0710**	2	FILM-INSTRUCTION (EGRESS SYSTEM, READ OMM)	
	46	1	**8S-3193**	2	NUT-PUSH ON	

C-CHANGE FROM PREVIOUS TYPE
E-ORDER BY THE CENTIMETER
J-REQUIRES CORPORATE KEY
M-METRIC PART
Y-SEPARATE ILLUSTRATION

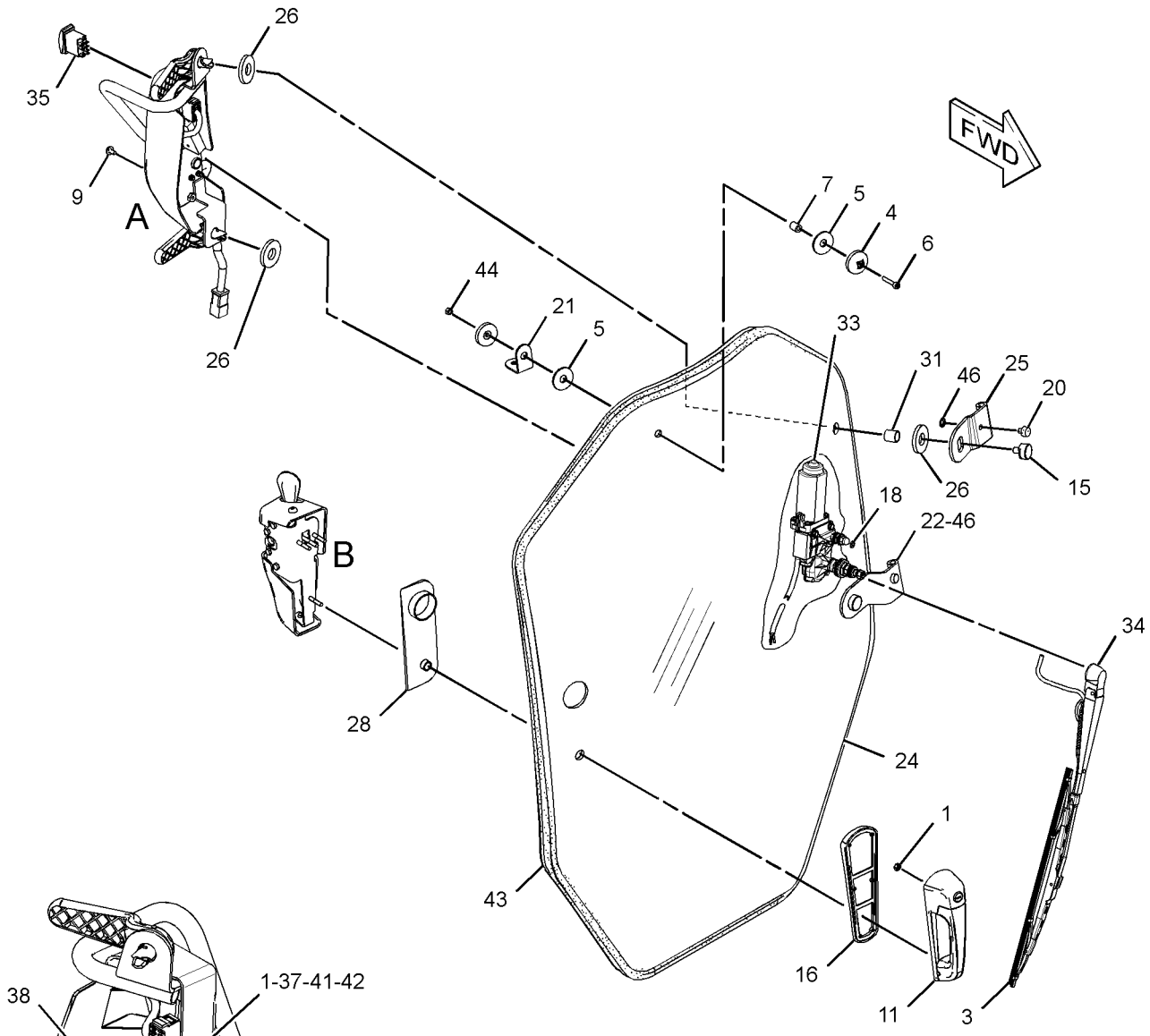

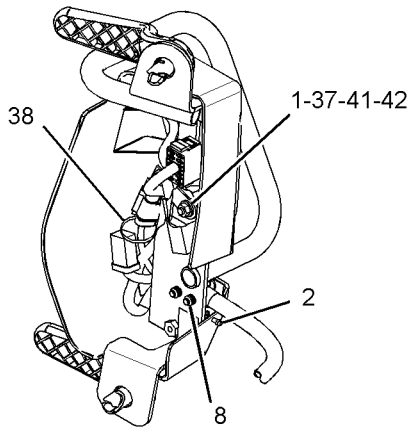

VIEW OF AREA A 90°

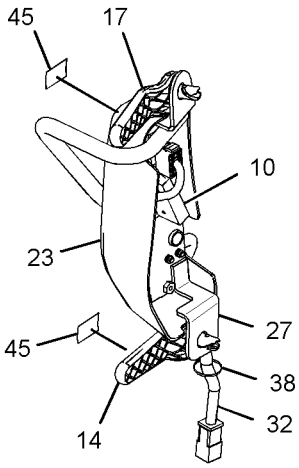

VIEW OF AREA A

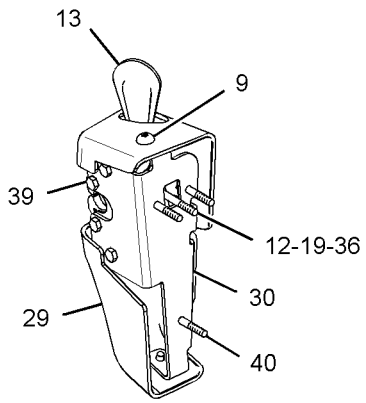

VIEW OF AREA B

GRAPHIC #1

<END>

g01942813

OPERATOR STATION

258-4087 DOOR GP-CAB—POLYCARBONATE

S/N: MST1-UP

PART OF 258-4080 DOOR & MTG GP-CAB, 280-6084 KIT-CAB DOOR & MOUNTING

AN ATTACHMENT

TYPE 1

SMCS-7308 **i03624792**

NOTE	REF NO	GRAPHIC REF	PART NUMBER	QTY	PART NAME 1 2 3 4 5 6 (PRODUCT LEVEL)	SEE PAGE
M	1	1,2	**5C-2890**	2	NUT (M6X1-THD)	
	2	2	**8G-1151**	1	CONNECTOR	
	3	2	**8Y-4615**	1	BLADE AS-WIPER (400-MM) (CAB DOOR)	
	4	1	**129-8542**	2	RETAINER	
	5	1	**129-8545**	2	WASHER (13X40X3-MM THK)	
M	6	1	**136-4192**	1	BOLT (M6X1X35-MM)	
B	7	1	**154-5423**	1	SPACER (6.6X12.7X17-MM THK)	
	8	2	**206-1345**	2	STRAP-CABLE	
M	9	1,2	**215-6406**	6	SCREW-TRUSS HEAD (M6X1X16-MM)	
	10	2	**229-8757**	1	SWITCH AS-LIMIT	
		2	**186-3735**	3	PIN-CONNECTOR (16-GA TO 18-GA)	
		2	**102-8803**	1	KIT-RECEPTACLE (3-PIN)	
					(INCLUDES RECEPTACLE AS & WEDGE)	
J	11	1	**252-1862**	1	HANDLE AS (PULL)	
B	12	1	**253-1817**	1	SPACER (6.5X14.5X12-MM THK)	
	13	1	**258-3280**	1	LATCH AS (INNER)	
	14	2	**258-3288**	1	HANDLE AS (LOWER)	
	15	2	**258-3289**	2	LATCH AS (OUTER)	
	16	1	**258-3290**	1	GASKET	
	17	2	**258-3294**	1	HANDLE AS (UPPER)	
	18	2	**258-3298**	1	GROMMET	
	19	1	**258-3697**	1	WASHER-NYLON (7X20X2-MM THK)	
	20	2	**258-3762**	2	GROMMET	
	21	1	**258-4013**	1	BRACKET AS	
	22	2	**258-4014**	1	HINGE (LOWER)	
	23	2	**258-4016**	1	COVER (WIPER)	
	24	2	**258-4073**	1	HINGE (UPPER)	
	25	2	**258-4075**	4	GASKET	
	26	2	**258-4076**	1	HANDLE AS	
	27	1	**258-4081**	1	WINDOW	
	28	1	**258-4082**	1	GASKET	
	29	1	**258-4083**	1	COVER-LATCH	
	30	1	**258-4084**	1	BRACKET	
	31	2	**258-4085**	2	BUSHING	
	32	2	**258-4156**	1	HARNESS AS-CAB (DOOR, FRONT)	
		1	**102-8805**	1	KIT-RECEPTACLE (6-PIN)	
					(INCLUDES RECEPTACLE AS & WEDGE)	
		1	**8L-8413**	5	STRAP-CABLE	
		1	**091-2436**	4	TERMINAL-BLADE (18-GA TO 22-GA)	
		1	**104-1995**	3	TERMINAL-BLADE (14-GA TO 18-GA)	
		1	**186-3735**	2	PIN-CONNECTOR (16-GA TO 18-GA)	
		1	**9W-0852**	2	PIN-CONNECTOR (14-GA)	
		1	**9W-0844**	4	SOCKET-CONNECTOR (14-GA)	
E		1	**125-7875**		TUBE-HEAT SHRINK (7.44-MM DIA) (10-CM)	
		1	**155-2260**	1	KIT-CONNECTING PLUG (3-PIN)	
		1	**155-2271**	1	KIT-CONNECTING PLUG (4-PIN)	
		1	**155-2260**	1	KIT-CONNECTING PLUG (3-PIN)	
					(EACH PLUG KIT INCLUDES PLUG AS , WEDGE & INTERFACE SEAL)	
		1	**180-9339**	2	PIN-CONNECTOR (14-GA TO 18-GA)	
		1	**180-9340**	3	SOCKET-CONNECTOR (14-GA TO 18-GA)	
		1	**228-5856**	1	CONNECTOR	
	33	2	**264-4407**	1	MOTOR GP-WINDOW WIPER (CAB DOOR)	
		2	**3F-9556**	1	LOCKWASHER	

258-4087 **DOOR GP-CAB** *(contd.)* **i03624792**

NOTE	REF NO	GRAPHIC REF	PART NUMBER	QTY	PART NAME 1 2 3 4 5 6 (PRODUCT LEVEL)	SEE PAGE
M		2	**5C-7261**	1	NUT (M8X1.25-THD)	
		2	**102-8804**	1	KIT-RECEPTACLE (4-PIN)	
					(INCLUDES RECEPTACLE AS & WEDGE)	
		2	**186-3735**	4	PIN-CONNECTOR (16-GA TO 18-GA)	
		2	**263-3823**	1	CAP-WIPER	
	34	2	**264-4408**	1	ARM GP-WINDOW WIPER (CAB DOOR)	
		2	**305-9194**	1	NOZZLE AS-WASHER	
E		2	**194-5171**		HOSE (50-CM)	
	35	2	**281-6390**	1	SWITCH AS-ROCKER (FRONT WIPER/WASHER)	
		2	**111-7899**	1	GASKET	
	36	1	**292-6936**	1	BOLT (M6X1X70-MM)	
	37	2	**115-3069**	1	CLIP AS-CONNECTOR (3-PIN)	
	38	2	**3S-2093**	2	STRAP-CABLE	
M	39	1	**6V-7357**	4	BOLT (M6X1X25-MM)	
M	40	1	**8C-3798**	3	BOLT-LOCKING (M6X1X30-MM)	
	41	2	**8T-4205**	1	WASHER-HARD (7.2X14.5X2-MM THK)	
M	42	2	**9X-2044**	1	SCREW-TRUSS HEAD (M6X1X16-MM)	
E	43	1	**258-4430**		SEAL (331-CM)	
M	44	1	**129-3178**	1	LOCKNUT (M6X1-THD)	
	45	2	**319-0710**	2	FILM-INSTRUCTION (EGRESS SYSTEM, READ OMM)	

B-USE AS REQUIRED
E-ORDER BY THE CENTIMETER
J-REQUIRES CORPORATE KEY
M-METRIC PART

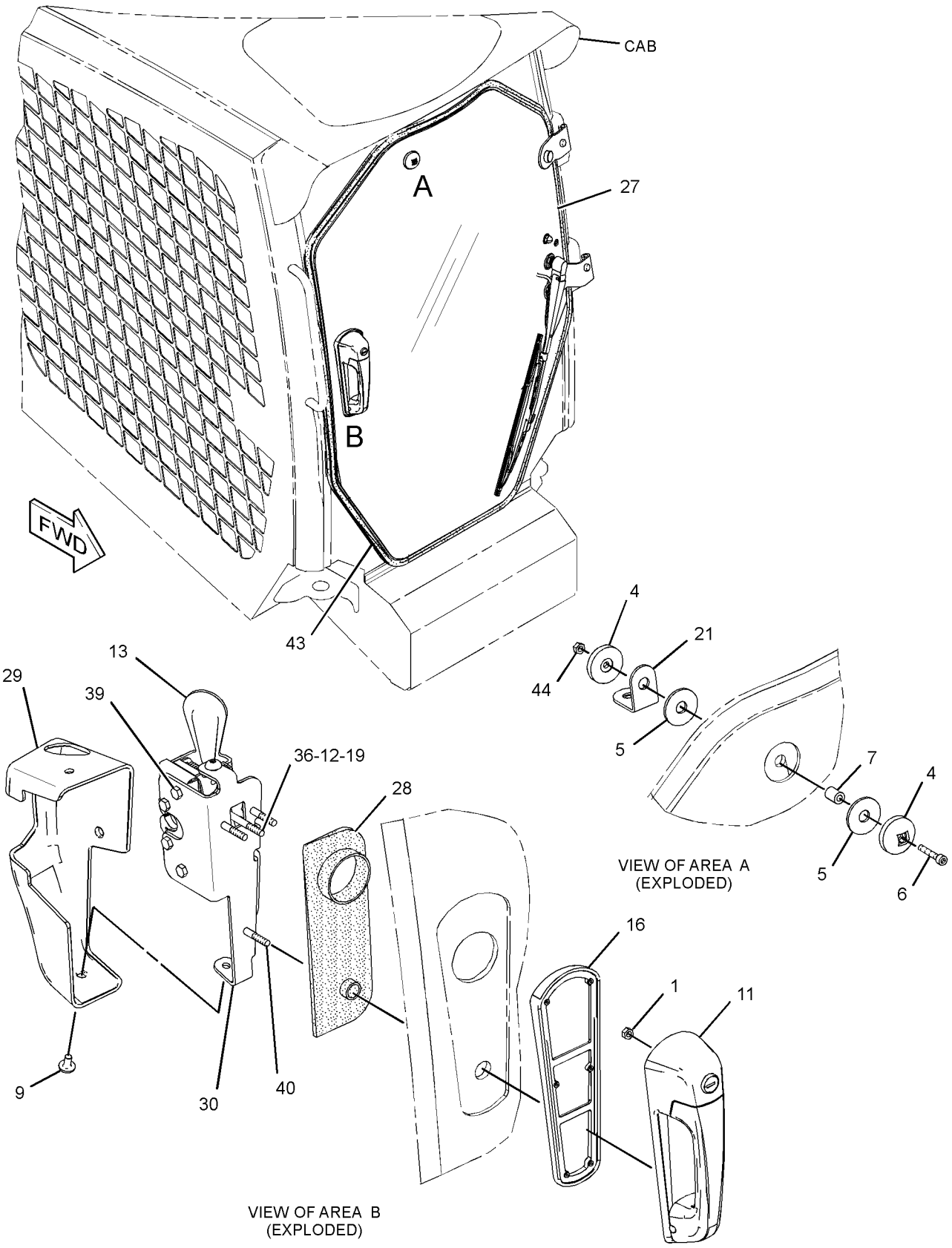

GRAPHIC #1

g01457062

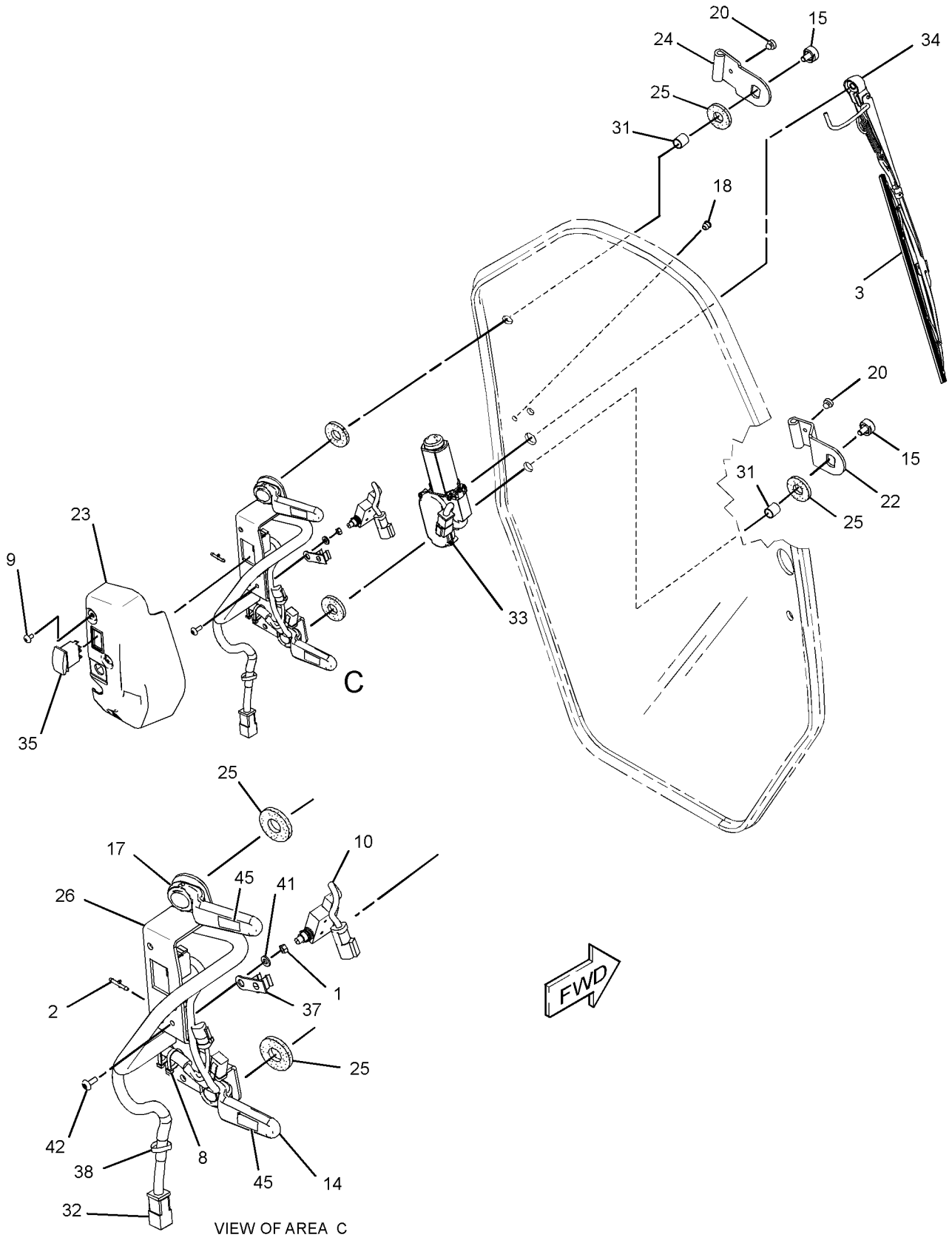

GRAPHIC #2 **<END>** g01441397

OPERATOR STATION

258-4087 DOOR GP-CAB—POLYCARBONATE

S/N: MST1-UP

PART OF 258-4080 DOOR & MTG GP-CAB, 280-6084 KIT-CAB DOOR & MOUNTING

AN ATTACHMENT

TYPE 2

SMCS-7308 **i03585732**

NOTE	REF NO	GRAPHIC REF	PART NUMBER	QTY	PART NAME 1 2 3 4 5 6 (PRODUCT LEVEL)	SEE PAGE
M	1	1,2	**5C-2890**	2	NUT (M6X1-THD)	
	2	2	**8G-1151**	1	CONNECTOR	
C	3	2	**322-9633**	1	BLADE AS-WIPER (400-MM) (CAB DOOR)	
	4	1	**129-8542**	2	RETAINER	
	5	1	**129-8545**	2	WASHER (13X40X3-MM THK)	
M	6	1	**136-4192**	1	BOLT (M6X1X35-MM)	
	7	1	**154-5423**	1	SPACER (6.6X12.7X17-MM THK)	
	8	2	**206-1345**	2	STRAP-CABLE	
M	9	1,2	**215-6406**	6	SCREW-TRUSS HEAD (M6X1X16-MM)	
	10	2	**229-8757**	1	SWITCH AS-LIMIT (DOOR)	
		2	**186-3735**	3	PIN-CONNECTOR (16-GA TO 18-GA)	
		2	**102-8803**	1	KIT-RECEPTACLE (3-PIN)	
					(INCLUDES RECEPTACLE AS & WEDGE)	
J	11	1	**252-1862**	1	HANDLE AS (PULL)	
	12	1	**253-1817**	1	SPACER (6.5X14.5X12-MM THK)	
	13	1	**258-3280**	1	LATCH AS (INNER)	
	14	2	**258-3288**	1	HANDLE AS (LOWER)	
	15	2	**258-3289**	2	LATCH AS (OUTER)	
	16	1	**258-3290**	1	GASKET	
	17	2	**258-3294**	1	HANDLE AS (UPPER)	
	18	2	**258-3298**	1	GROMMET	
	19	1	**258-3697**	1	WASHER-NYLON (7X20X2-MM THK)	
	20	2	**331-8050**	2	BUMPER	
	21	1	**258-4013**	1	BRACKET AS	
	22	2	**258-4014**	1	HINGE (LOWER)	
	23	2	**258-4016**	1	COVER (WIPER)	
	24	2	**258-4073**	1	HINGE (UPPER)	
	25	2	**258-4075**	4	GASKET	
	26	2	**258-4076**	1	HANDLE AS	
	27	1	**258-4081**	1	WINDOW	
	28	1	**258-4082**	1	GASKET	
	29	1	**258-4083**	1	COVER-LATCH	
	30	1	**258-4084**	1	BRACKET	
	31	2	**258-4085**	2	BUSHING	
	32	2	**258-4156**	1	HARNESS AS-CAB (DOOR, FRONT)	
		2	**228-5856**	1	CONNECTOR	
		2	**186-3735**	2	PIN-CONNECTOR (16-GA TO 18-GA)	
		2	**9W-0852**	2	PIN-CONNECTOR (14-GA)	
		2	**9X-3401**	2	PIN-CONNECTOR (16-GA TO 18-GA)	
					-OR-	
		2	**126-1767**	2	PIN-CONNECTOR (14-GA)	
		2	**155-2271**	1	KIT-CONNECTING PLUG (4-PIN)	
		2	**155-2260**	1	KIT-CONNECTING PLUG (3-PIN)	
					(EACH PLUG KIT INCLUDES PLUG AS, WEDGE & INTERFACE SEAL)	
		2	**102-8805**	1	KIT-RECEPTACLE (6-PIN)	
					(INCLUDES RECEPTACLE AS & WEDGE)	
		2	**180-9340**	3	SOCKET-CONNECTOR (14-GA TO 18-GA)	
		2	**9W-0844**	4	SOCKET-CONNECTOR (14-GA)	
		2	**8L-8413**	5	STRAP-CABLE	
		2	**091-2436**	4	TERMINAL-BLADE (18-GA TO 22-GA)	
		2	**104-1995**	3	TERMINAL-BLADE (14-GA TO 18-GA)	
E		2	**125-7875**		TUBE-HEAT SHRINK (7.44-MM DIA) (10-CM)	
CY	33	2	**330-5011**	1	MOTOR GP-WINDOW WIPER (CAB DOOR)	758

258-4087 **DOOR GP-CAB** *(contd.)* **i03585732**

NOTE	REF NO	GRAPHIC REF	PART NUMBER	QTY	PART NAME 1 2 3 4 5 6 (PRODUCT LEVEL)	SEE PAGE
	34	2	**264-4408**	1	ARM GP-WINDOW WIPER (CAB DOOR)	
		2	**305-9194**	1	NOZZLE AS-WASHER	
E		2	**194-5171**		HOSE (50-CM)	
	35	2	**281-6390**	1	SWITCH AS-ROCKER (FRONT WIPER/WASHER)	
		2	**111-7899**	1	GASKET	
	36	1	**292-6936**	1	BOLT (M6X1X70-MM)	
	37	2	**115-3069**	1	CLIP AS-CONNECTOR (3-PIN)	
	38	2	**3S-2093**	2	STRAP-CABLE	
M	39	1	**6V-7357**	4	BOLT (M6X1X25-MM)	
M	40	1	**8C-3798**	3	BOLT-LOCKING (M6X1X30-MM)	
	41	2	**8T-4205**	1	WASHER-HARD (7.2X14.5X2-MM THK)	
M	42	2	**9X-2044**	1	SCREW-TRUSS HEAD (M6X1X16-MM)	
E	43	1	**258-4430**		SEAL (331-CM)	
M	44	1	**129-3178**	1	LOCKNUT (M6X1-THD)	
	45	2	**319-0710**	2	FILM-INSTRUCTION (EGRESS SYSTEM, READ OMM)	
	46	2	**8S-3193**	2	NUT-PUSH ON	

C-CHANGE FROM PREVIOUS TYPE
E-ORDER BY THE CENTIMETER
J-REQUIRES CORPORATE KEY
M-METRIC PART
Y-SEPARATE ILLUSTRATION

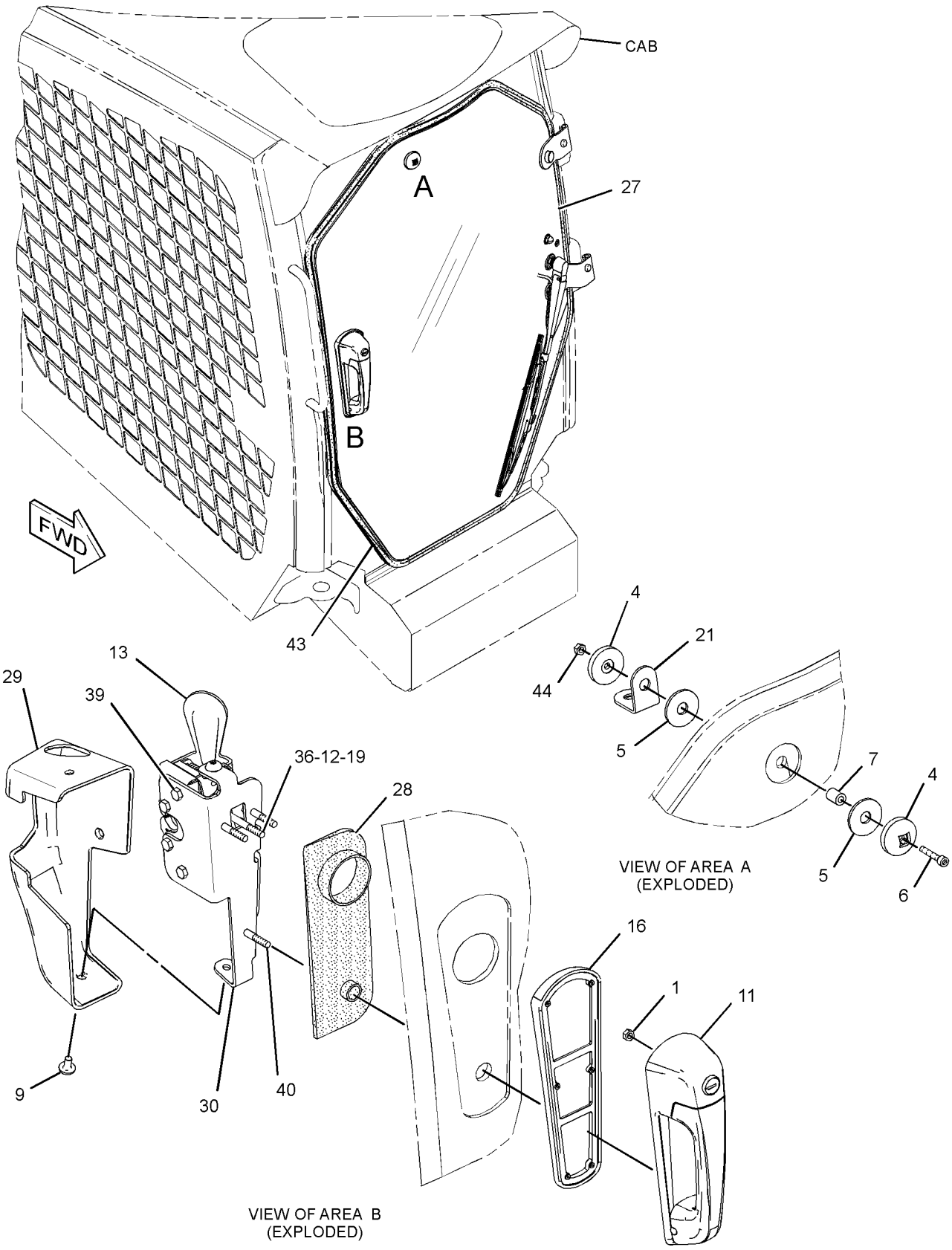

GRAPHIC #1

g01457062

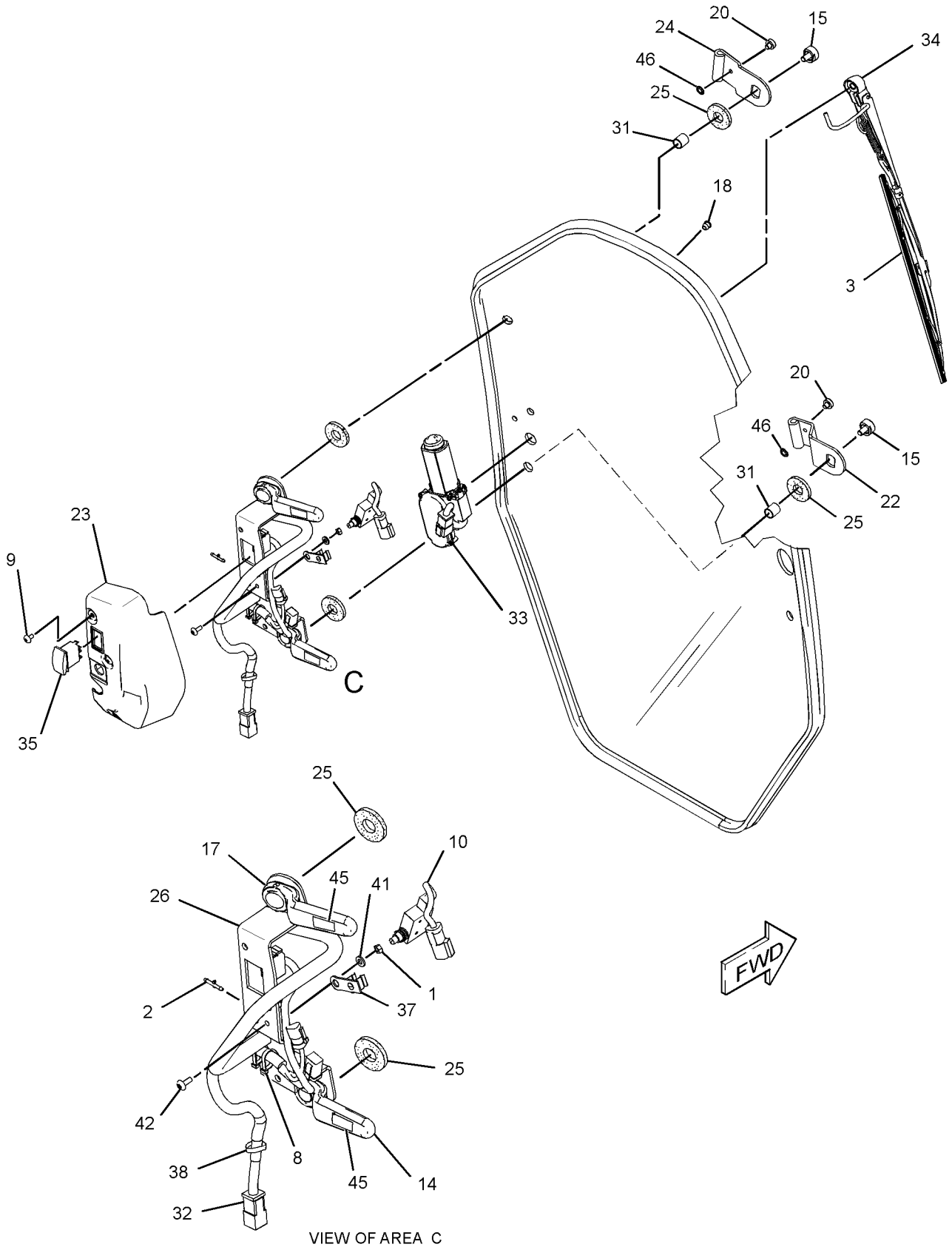

GRAPHIC #2 **<END>** g01942834

OPERATOR STATION

258-4442 DOOR GP-CAB

S/N: MST1-UP

PART OF 258-4440 DOOR & MTG GP-CAB, 258-4443 KIT-CAB DOOR & MOUNTING

AN ATTACHMENT

SMCS-7308 **i03543583**

NOTE	REF NO	GRAPHIC REF	PART NUMBER	QTY	PART NAME 1 2 3 4 5 6 (PRODUCT LEVEL)	SEE PAGE
	1	1	**8G-1151**	1	CONNECTOR	
	2	1	**8Y-4615**	1	BLADE AS-WIPER (400-MM) (CAB DOOR)	
	3	1	**129-8542**	2	RETAINER (GLASS MOUNT)	
	4	1	**129-8545**	2	WASHER (13X40X3-MM THK)	
M	5	1	**136-4192**	1	BOLT (M6X1X35-MM)	
	6	1	**154-5423**	1	SPACER (6.6X12.7X17-MM THK)	
	7	1	**206-1345**	2	STRAP-CABLE	
	8	1	**229-8757**	1	SWITCH AS-LIMIT (WIPER)	
		1	**102-8803**	1	KIT-RECEPTACLE (3-PIN)	
					(INCLUDES RECEPTACLE AS & WEDGE)	
		1	**186-3735**	3	PIN-CONNECTOR (16-GA TO 18-GA)	
J	9	1	**252-1862**	1	HANDLE AS (PULL)	
	10	1	**253-1817**	1	SPACER (6.5X14.5X12-MM THK)	
	11	1	**258-3280**	1	LATCH AS (INNER)	
	12	1	**258-3288**	1	HANDLE AS (LOWER)	
	13	1	**258-3289**	2	LATCH AS (OUTER)	
	14	1	**258-3290**	1	GASKET	
	15	1	**258-3294**	1	HANDLE AS (UPPER)	
	16	1	**258-3298**	1	GROMMET	
	17	1	**258-3697**	1	WASHER-NYLON (7X20X2-MM THK)	
	18	1	**258-3762**	2	GROMMET	
	19	1	**258-4013**	1	BRACKET AS	
	20	1	**258-4014**	1	HINGE	
	21	1	**258-4016**	1	COVER (WIPER)	
	22	1	**258-4073**	1	HINGE (UPPER)	
	23	1	**258-4075**	4	GASKET	
	24	1	**258-4076**	1	HANDLE AS	
	25	1	**258-4082**	1	GASKET	
	26	1	**258-4083**	1	COVER-LATCH	
	27	1	**258-4084**	1	BRACKET	
	28	1	**258-4085**	2	BUSHING	
	29	1	**258-4156**	1	HARNESS AS-CAB (DOOR, FRONT)	
		1	**228-5856**	1	CONNECTOR	
E		1	**125-7875**		TUBE-HEAT SHRINK (7.44-MM DIA) (10-CM)	
		1	**9W-0852**	2	PIN-CONNECTOR (14-GA)	
		1	**9W-0844**	4	SOCKET-CONNECTOR (14-GA)	
		1	**180-9339**	2	PIN-CONNECTOR (14-GA TO 18-GA)	
		1	**8L-8413**	5	STRAP-CABLE	
		1	**186-3735**	2	PIN-CONNECTOR (16-GA TO 18-GA)	
		1	**155-2271**	1	KIT-CONNECTING PLUG (4-PIN)	
		1	**155-2260**	1	KIT-CONNECTING PLUG (3-PIN)	
					(EACH PLUG KIT INCLUDES PLUG AS, WEDGE & INTERFACE SEAL)	
		1	**180-9340**	3	SOCKET-CONNECTOR (14-GA TO 18-GA)	
		1	**102-8805**	1	KIT-RECEPTACLE (6-PIN)	
					(INCLUDES RECEPTACLE AS & WEDGE)	
	30	1	**258-4441**	1	GLASS (CLEAR)	
	31	1	**264-4407**	1	MOTOR GP-WINDOW WIPER (CAB DOOR)	
		1	**3F-9556**	1	LOCKWASHER	
M		1	**5C-7261**	1	NUT (M8X1.25-THD)	
		1	**102-8804**	1	KIT-RECEPTACLE (4-PIN)	
					(INCLUDES RECEPTACLE AS & WEDGE)	
		1	**186-3735**	4	PIN-CONNECTOR (16-GA TO 18-GA)	
		1	**263-3823**	1	CAP-WIPER	
	32	1	**264-4408**	1	ARM GP-WINDOW WIPER (WET)	

258-4442 **DOOR GP-CAB** *(contd.)* **i03543583**

NOTE	REF NO	GRAPHIC REF	PART NUMBER	QTY	PART NAME 1 2 3 4 5 6 (PRODUCT LEVEL)	SEE PAGE
		1	**305-9194**	1	NOZZLE AS-WASHER	
E		1	**194-5171**		HOSE (50-CM)	
	33	1	**281-6390**	1	SWITCH AS-ROCKER (WIPER)	
		1	**111-7899**	1	GASKET	
	34	1	**292-6936**	1	BOLT (M6X1X70-MM)	
	35	1	**319-0710**	2	FILM-INSTRUCTION (EGRESS SYSTEM, READ OMM)	
	36	1	**115-3069**	1	CLIP AS-CONNECTOR (3-PIN)	
		1	**8C-3334**	1	RIVET-TUBULAR	
M	37	1	**129-3178**	1	LOCKNUT (M6X1-THD)	
M	38	1	**215-6406**	6	SCREW-TRUSS HEAD (M6X1X16-MM)	
	39	1	**3S-2093**	2	STRAP-CABLE	
M	40	1	**5C-2890**	2	NUT (M6X1-THD)	
M	41	1	**6V-7357**	4	BOLT (M6X1X25-MM)	
M	42	1	**8C-3798**	3	BOLT-LOCKING (M6X1X30-MM)	
	43	1	**8T-4205**	1	WASHER-HARD (7.2X14.5X2-MM THK)	
M	44	1	**9X-2044**	1	SCREW-TRUSS HEAD (M6X1X16-MM)	
E	45	1	**258-4430**		SEAL (329-CM)	

E-ORDER BY THE CENTIMETER
J-REQUIRES CORPORATE KEY
M-METRIC PART

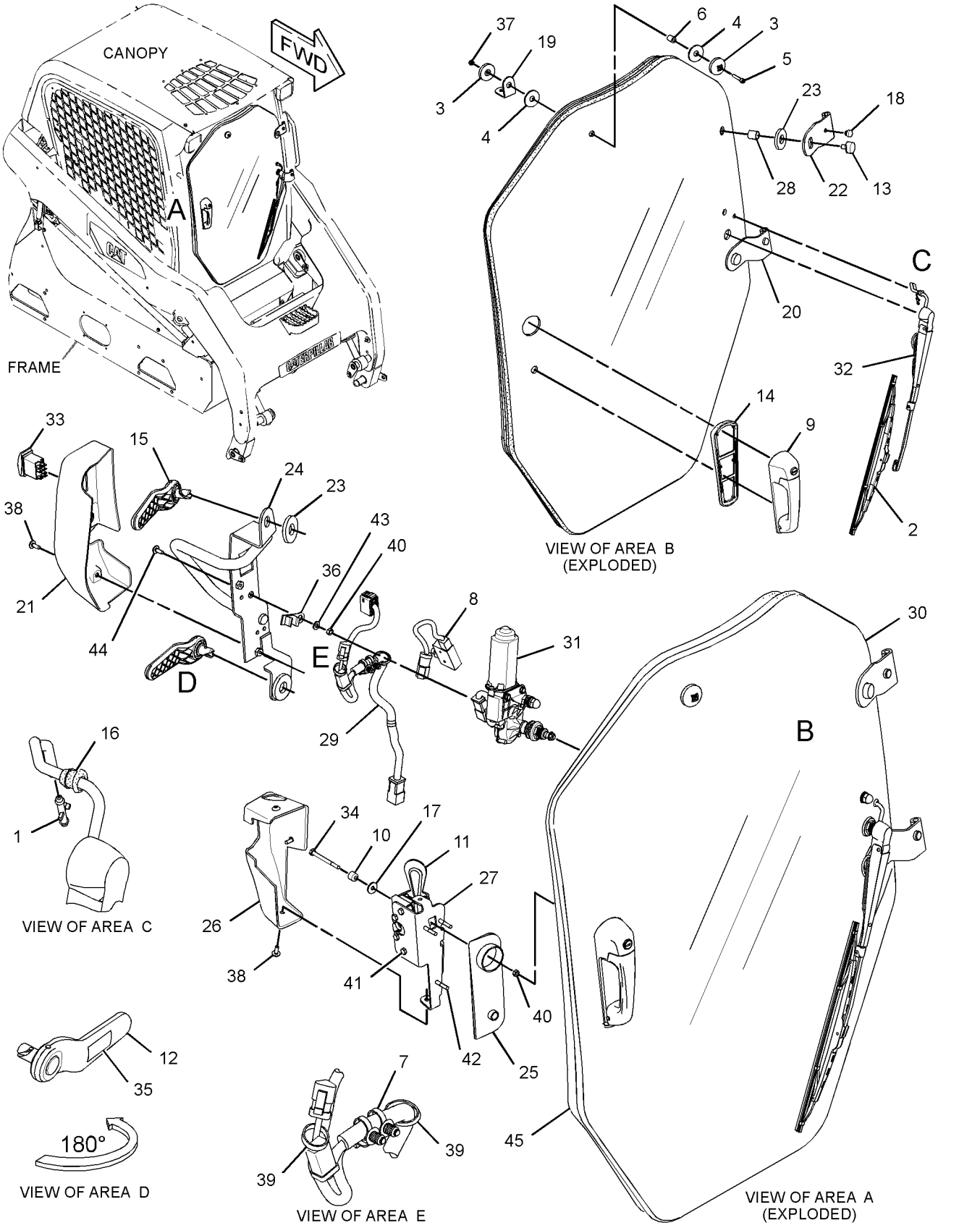

GRAPHIC #1 **<END>** g01456748

OPERATOR STATION

258-4442 DOOR GP-CAB

S/N: MST1860-UP

PART OF 258-4440 DOOR & MTG GP-CAB

AN ATTACHMENT

SMCS-7308 **i03585760**

NOTE	REF NO	GRAPHIC REF	PART NUMBER	QTY	PART NAME 1 2 3 4 5 6 (PRODUCT LEVEL)	SEE PAGE
	1	1	**8G-1151**	1	CONNECTOR	
C	2	1	**322-9633**	1	BLADE AS-WIPER (400-MM) (CAB DOOR)	
	3	1	**129-8542**	2	RETAINER (MOUNT)	
	4	1	**129-8545**	2	WASHER (13X40X3-MM THK)	
M	5	1	**136-4192**	1	BOLT (M6X1X35-MM)	
	6	1	**154-5423**	1	SPACER (6.6X12.7X17-MM THK)	
	7	1	**206-1345**	2	STRAP-CABLE	
	8	1	**229-8757**	1	SWITCH AS-LIMIT (WIPER)	
		1	**102-8803**	1	KIT-RECEPTACLE (3-PIN)	
					(INCLUDES RECEPTACLE AS & WEDGE)	
		1	**186-3735**	3	PIN-CONNECTOR (16-GA TO 18-GA)	
J	9	1	**252-1862**	1	HANDLE AS (PULL)	
	10	1	**253-1817**	1	SPACER (6.5X14.5X12-MM THK)	
	11	1	**258-3280**	1	LATCH AS (INNER)	
	12	1	**258-3288**	1	HANDLE AS (LOWER)	
	13	1	**258-3289**	2	LATCH AS (OUTER)	
	14	1	**258-3290**	1	GASKET	
	15	1	**258-3294**	1	HANDLE AS (UPPER)	
	16	1	**258-3298**	1	GROMMET	
	17	1	**258-3697**	1	WASHER-NYLON (7X20X2-MM THK)	
	18	1	**331-8050**	2	BUMPER	
	19	1	**258-4013**	1	BRACKET AS	
	20	1	**258-4014**	1	HINGE	
	21	1	**258-4016**	1	COVER (WIPER)	
	22	1	**258-4073**	1	HINGE (UPPER)	
	23	1	**258-4075**	4	GASKET	
	24	1	**258-4076**	1	HANDLE AS	
	25	1	**258-4082**	1	GASKET	
	26	1	**258-4083**	1	COVER-LATCH	
	27	1	**258-4084**	1	BRACKET	
	28	1	**258-4085**	2	BUSHING	
	29	1	**258-4156**	1	HARNESS AS-CAB (DOOR, FRONT)	
		1	**228-5856**	1	CONNECTOR	
		1	**186-3735**	2	PIN-CONNECTOR (16-GA TO 18-GA)	
		1	**9W-0852**	2	PIN-CONNECTOR (14-GA)	
		1	**9X-3401**	2	PIN-CONNECTOR (16-GA TO 18-GA)	
					-OR-	
		1	**126-1767**	2	PIN-CONNECTOR (14-GA)	
		1	**155-2271**	1	KIT-CONNECTING PLUG (4-PIN)	
		1	**155-2260**	1	KIT-CONNECTING PLUG (3-PIN)	
					(EACH PLUG KIT INCLUDES PLUG AS, WEDGE & INTERFACE SEAL)	
		1	**102-8805**	1	KIT-RECEPTACLE (6-PIN)	
					(INCLUDES RECEPTACLE AS & WEDGE)	
		1	**180-9340**	3	SOCKET-CONNECTOR (14-GA TO 18-GA)	
		1	**9W-0844**	4	SOCKET-CONNECTOR (14-GA)	
		1	**8L-8413**	5	STRAP-CABLE	
		1	**091-2436**	4	TERMINAL-BLADE (18-GA TO 22-GA)	
		1	**104-1995**	3	TERMINAL-BLADE (14-GA TO 18-GA)	
E		1	**125-7875**		TUBE-HEAT SHRINK (7.44-MM DIA) (10-CM)	
	30	1	**258-4441**	1	GLASS (CLEAR)	
CY	31	1	**330-5011**	1	MOTOR GP-WINDOW WIPER (CAB DOOR)	758
	32	1	**264-4408**	1	ARM GP-WINDOW WIPER (WET)	
		1	**305-9194**	1	NOZZLE AS-WASHER	
E		1	**194-5171**		HOSE (50-CM)	

258-4442 **DOOR GP-CAB** *(contd.)* **i03585760**

NOTE	REF NO	GRAPHIC REF	PART NUMBER	QTY	PART NAME 1 2 3 4 5 6 (PRODUCT LEVEL)	SEE PAGE
	33	1	**281-6390**	1	SWITCH AS-ROCKER (WIPER)	
		1	**111-7899**	1	GASKET	
	34	1	**292-6936**	1	BOLT (M6X1X70-MM)	
	35	1	**319-0710**	2	FILM-INSTRUCTION (EGRESS SYSTEM, READ OMM)	
	36	1	**115-3069**	1	CLIP AS-CONNECTOR (3-PIN)	
		1	**8C-3334**	1	RIVET-TUBULAR	
M	37	1	**129-3178**	1	LOCKNUT (M6X1-THD)	
M	38	1	**215-6406**	6	SCREW-TRUSS HEAD (M6X1X16-MM)	
	39	1	**3S-2093**	2	STRAP-CABLE	
M	40	1	**5C-2890**	2	NUT (M6X1-THD)	
M	41	1	**6V-7357**	4	BOLT (M6X1X25-MM)	
M	42	1	**8C-3798**	3	BOLT-LOCKING (M6X1X30-MM)	
	43	1	**8T-4205**	1	WASHER-HARD (7.2X14.5X2-MM THK)	
M	44	1	**9X-2044**	1	SCREW-TRUSS HEAD (M6X1X16-MM)	
E	45	1	**258-4430**		SEAL (329-CM)	
	46	1	**8S-3193**	2	NUT-PUSH ON	

C-CHANGE FROM PREVIOUS TYPE
E-ORDER BY THE CENTIMETER
J-REQUIRES CORPORATE KEY
M-METRIC PART
Y-SEPARATE ILLUSTRATION

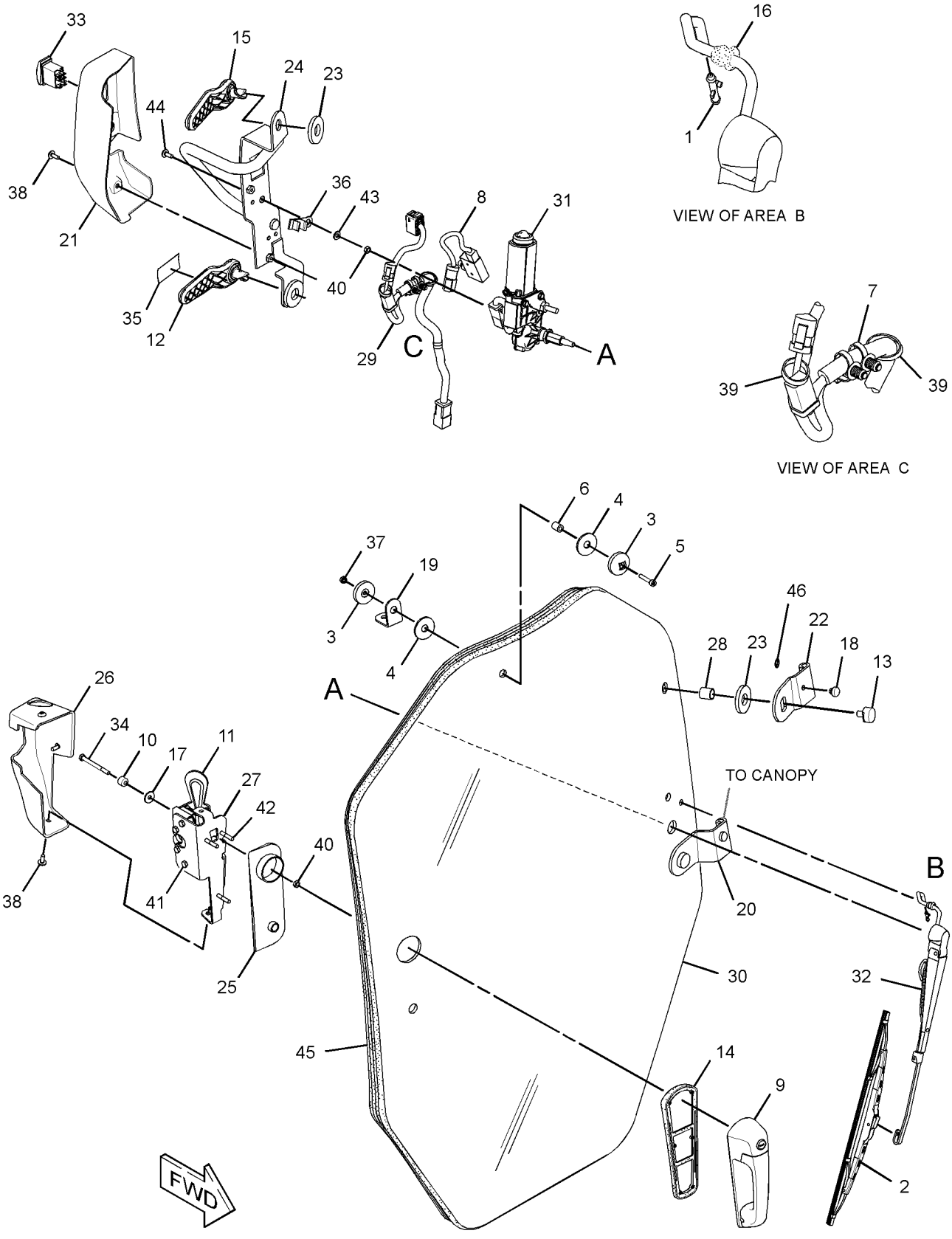

GRAPHIC #1 **<END>** g01941294

OPERATOR STATION

258-4252 DUCT & FILTER GP-CAB AIR

S/N: MST1-UP

PART OF 258-4260 AIR CONDITIONER AR, 258-4250 HEATER AR-CAB

AN ATTACHMENT

SMCS-7342, 734D **i03543625**

NOTE	REF NO	GRAPHIC REF	PART NUMBER	QTY	PART NAME 1 2 3 4 5 6 (PRODUCT LEVEL)	SEE PAGE
	1	1	**8Y-5947**	2	FASTENER	
	2	1	**146-6371**	6	LOUVER AS	
	3	1	**206-9185**	1	BOLT (M8X1.25X35-MM)	
	4	1	**258-3727**	7	SCREW-TRUSS HEAD (NO 12X17.46-MM)	
	5	1	**258-3793**	1	SEAL	
	6	1	**258-3795**	4	SEAL	
	7	1	**258-3796**	1	SEAL	
	8	1	**258-4248**	1	COVER-LOUVER	
	9	1	**258-4249**	1	DUCT-INLET	
	10	1	**258-4253**	1	DUCT AS (INTERIOR)	
	11	1	**258-4257**	1	DUCT AS (INLET)	
	12	1	**258-4258**	1	DUCT AS (PLENUM)	
	13	1	**258-4263**	1	PLATE	
	14	1	**258-4264**	1	COVER-FILTER	
	15	1	**258-4378**	2	KNOB AS	
	16	1	**258-4379**	1	KNOB AS	
	17	1	**258-4384**	1	SCREEN	
	18	1	**265-6618**	1	FILTER ELEMENT-CAB AIR (RECIRCULATION)	
	19	1	**265-6619**	1	FILTER ELEMENT-CAB AIR (FRESH)	
M	20	1	**163-3955**	2	BOLT (M6X1X35-MM)	
M	21	1	**215-6406**	3	SCREW-TRUSS HEAD (M6X1X16-MM)	
	22	1	**258-4254**	1	DUCT AS (INTERIOR)	
	23	1	**258-4259**	1	DUCT AS-OUTLET	
	24	1	**5P-4116**	1	WASHER-HARD (8.8X20.5X2-MM THK)	
	25	1	**6V-6689**	2	SCREW-SELF-TAPPING (10-16X.625-IN)	
M	26	1	**6V-7357**	4	BOLT (M6X1X25-MM)	
	27	1	**7X-2031**	3	RETAINER	
	28	1	**8T-4205**	8	WASHER-HARD (7.2X14.5X2-MM THK)	
D	29	1	**6V-9335**		SEAL (0.33-M EACH)	
D	29A	1	**6V-9335**		SEAL (0.14-M EACH)	
	30	1	**312-0131**	4	SCREW-MACHINE (M6X1X30-MM)	

D-ORDER BY THE METER
M-METRIC PART

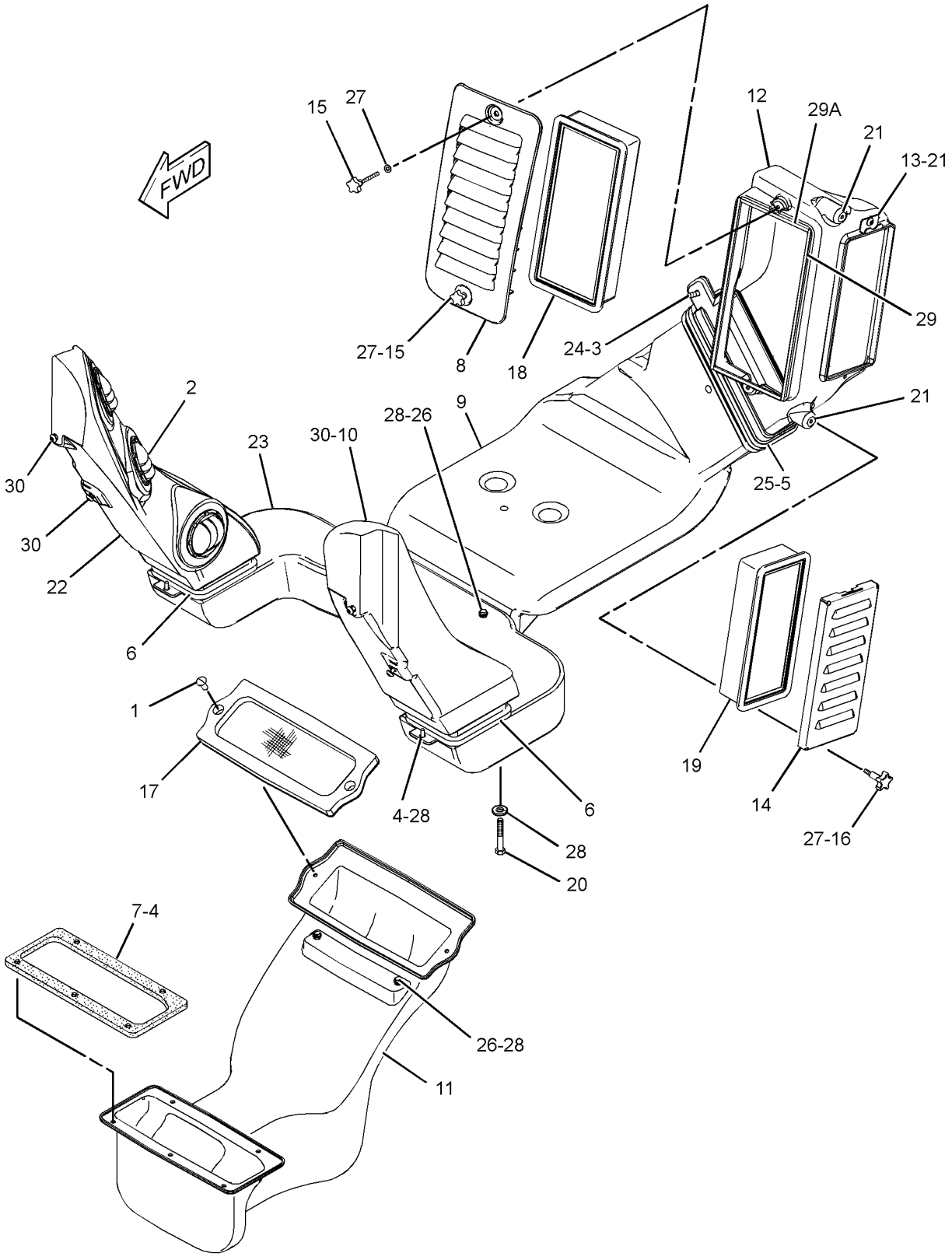

GRAPHIC #1 **<END>** g01413021

OPERATOR STATION

258-4400 GUARD GP-ROPS/FOPS–KIT

S/N: MST1-UP

CANNOT BE USED WITH 258-4410–PAGE 288

AN ATTACHMENT

SMCS-7323 **i02939444**

NOTE	REF NO	GRAPHIC REF	PART NUMBER	QTY	PART NAME 1 2 3 4 5 6 (PRODUCT LEVEL)	SEE PAGE
	1	1	**258-4389**	4	MOUNT	
	2	1	**258-4398**	1	FILM-CERTIFICATION (OPS, READ OMM)	
	3	1	**258-4405**	1	PLATE AS	
	4	1	**154-1580**	8	WASHER-HARD (22X38X6-MM THK)	
M	5	1	**8T-5460**	8	BOLT (M20X2.5X40-MM)	

M-METRIC PART

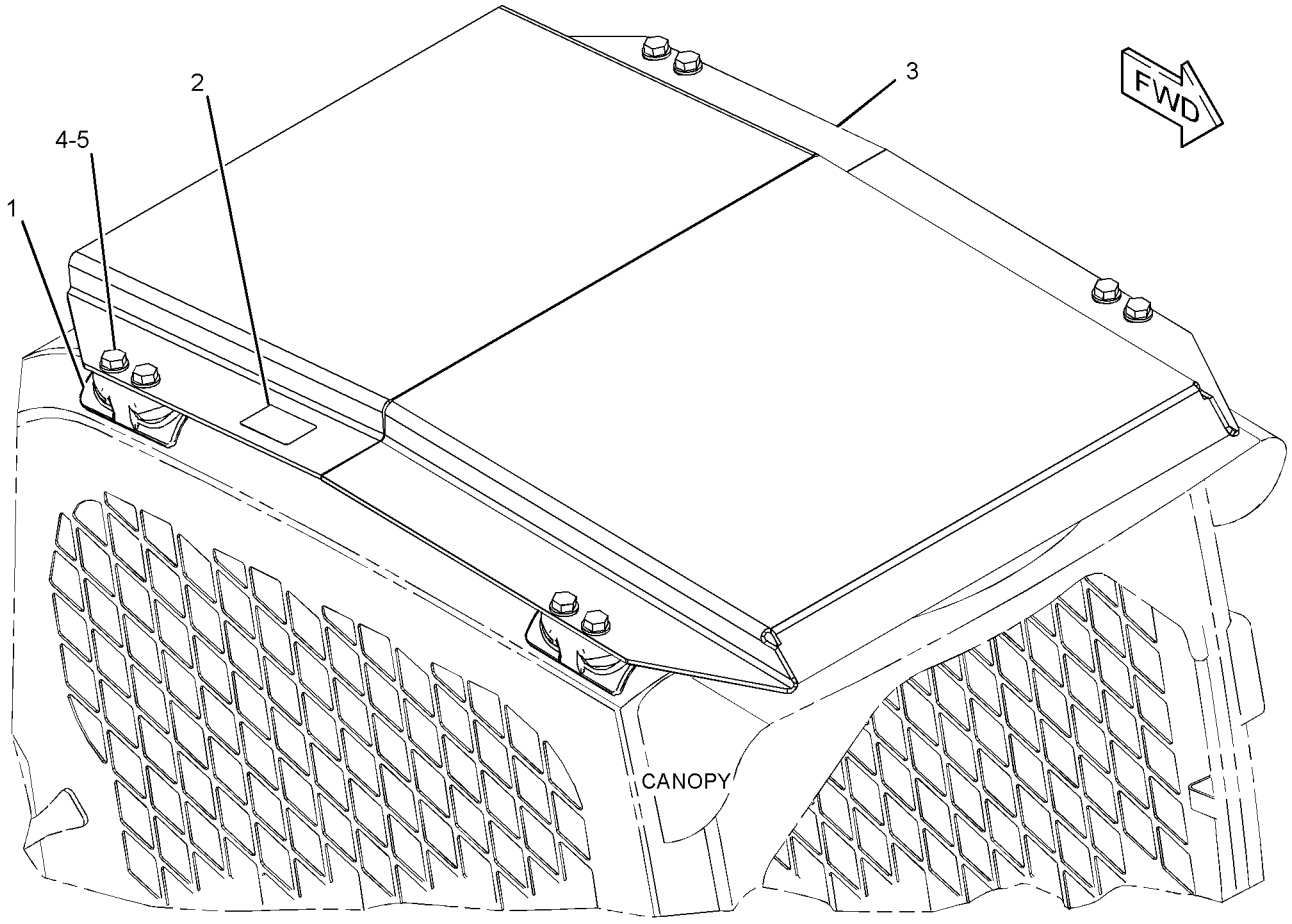

GRAPHIC #1 **<END>** g01339107

OPERATOR STATION

298-7197 HANDLE GP

S/N: MST1-UP

PART OF 298-7198 CABLE GP-CONTROL

SMCS-5800 **i03619742**

NOTE	REF NO	GRAPHIC REF	PART NUMBER	QTY	PART NAME 1 2 3 4 5 6 (PRODUCT LEVEL)	SEE PAGE
	1	1	**284-3914**	1	HANDLE	
	2	1	**292-2437**	1	NUT	
	3	1	**292-2438**	1	SEAL	
					PARTS SHOWN IN GRAPHIC(S) WITHOUT A REFERENCE NUMBER ARE NOT SERVICED SEPARATELY	

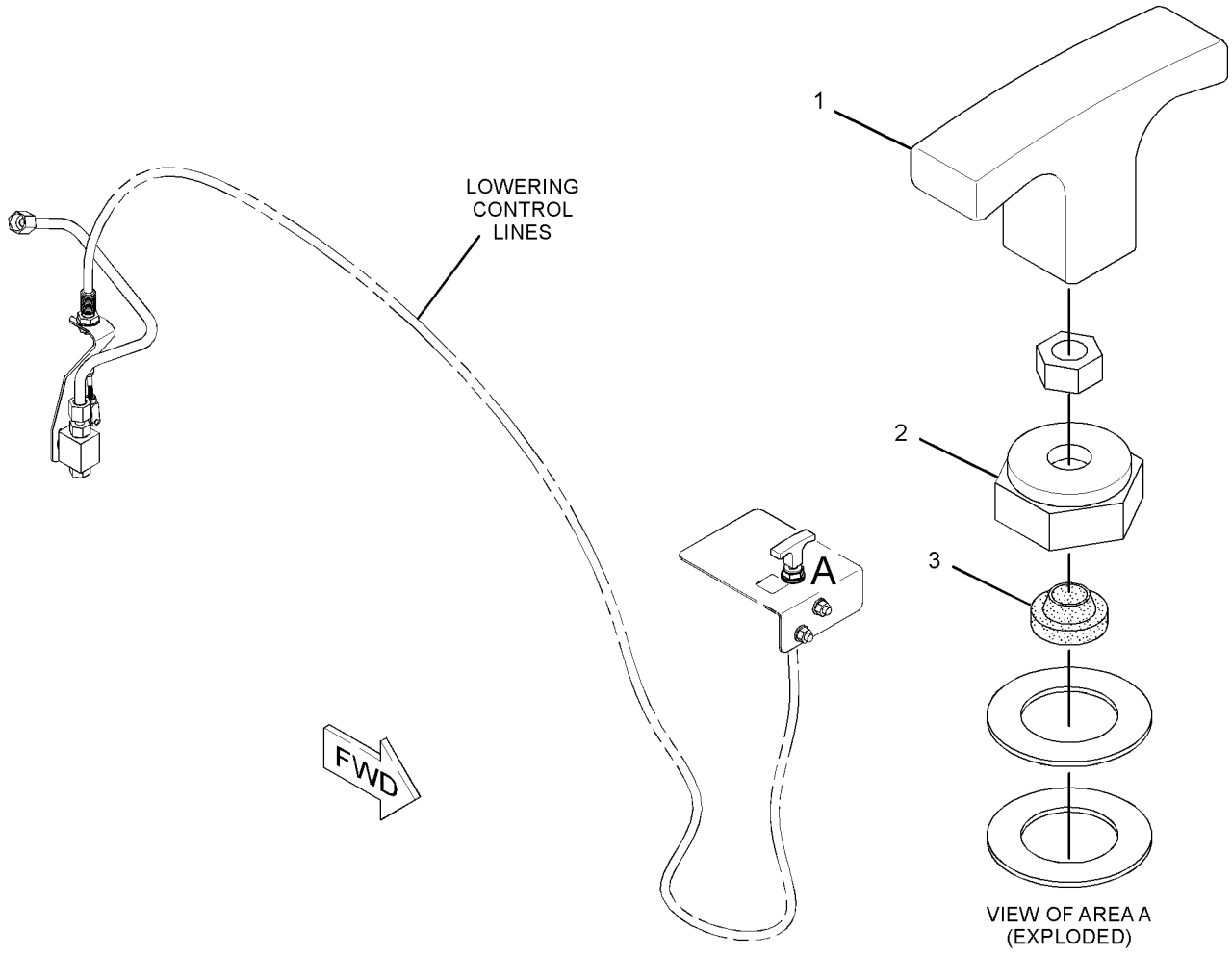

GRAPHIC #1 **<END>** g01943789

OPERATOR STATION

258-4251 HEATER & MTG GP-CAB

S/N: MST1-UP
PART OF 258-4250 HEATER AR-CAB
AN ATTACHMENT

SMCS-7304 **i02628667**

NOTE	REF NO	GRAPHIC REF	PART NUMBER	QTY	PART NAME 1 2 3 4 5 6 (PRODUCT LEVEL)	SEE PAGE
	1	1	**8T-8737**	10	PLUG-SEAL	
	2	1	**109-2356**	1	PLUG	
	3	1	**206-1345**	2	STRAP-CABLE	
	4	1	**246-9371**	1	COVER-RELAY	
	5	1	**258-3792**	1	SEAL	
	6	1	**258-3794**	1	INSULATION	
Y	7	1	*258-4270*	1	HEATER GP-CAB	714
	8	1	**258-4408**	1	INSULATION	
Y	9	1	*266-2430*	1	CONTROL & WIRING GP-AIR & TEMP	662
	10	1	**155-2271**	1	KIT-CONNECTING PLUG (4-PIN)	
					(INCLUDES PLUG AS, WEDGE & INTERFACE SEAL)	
	11	1	**266-3314**	2	BOLT-FLANGE HEAD (M6X1X20.5-MM)	
M	12	1	**266-3315**	7	BOLT-FLANGE HEAD (M8X1.25X25.5-MM)	
	13	1	**102-8802**	3	KIT-RECEPTACLE (2-PIN)	
					(EACH INCLUDES RECEPTACLE AS & WEDGE)	

M-METRIC PART
Y-SEPARATE ILLUSTRATION

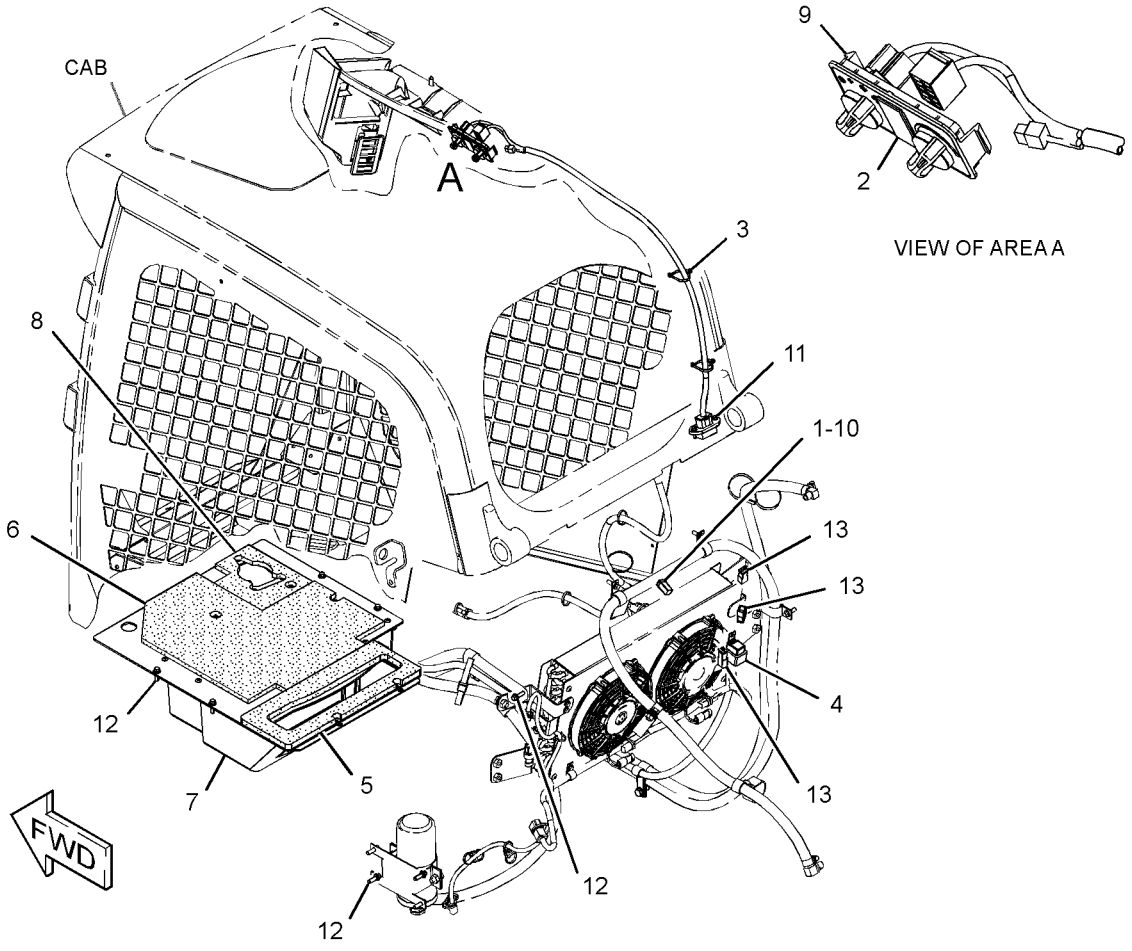

GRAPHIC #1 **<END>** g01325906

OPERATOR STATION

258-4250 HEATER AR-CAB

S/N: MST1-UP

PART OF 258-3742 CAB AR-ENCLOSED ROPS

AN ATTACHMENT

SMCS-7304 **i02629844**

NOTE	REF NO	GRAPHIC REF	PART NUMBER	QTY	PART NAME 1 2 3 4 5 6 (PRODUCT LEVEL)	SEE PAGE
Y	1	1	*258-4146*	1	WIRING GP-AIR CONDITIONER	186
Y	2	1	*258-4251*	1	HEATER & MTG GP-CAB	712
Y	3	1	*258-4252*	1	DUCT & FILTER GP-CAB AIR	708
Y	4	1	*258-4255*	1	LINES GP-HEATER	753
	5	1	**8T-4121**	4	WASHER-HARD (11X21X2.5-MM THK)	
M	6	1	**8T-4133**	4	NUT (M10X1.5-THD)	

M-METRIC PART
Y-SEPARATE ILLUSTRATION

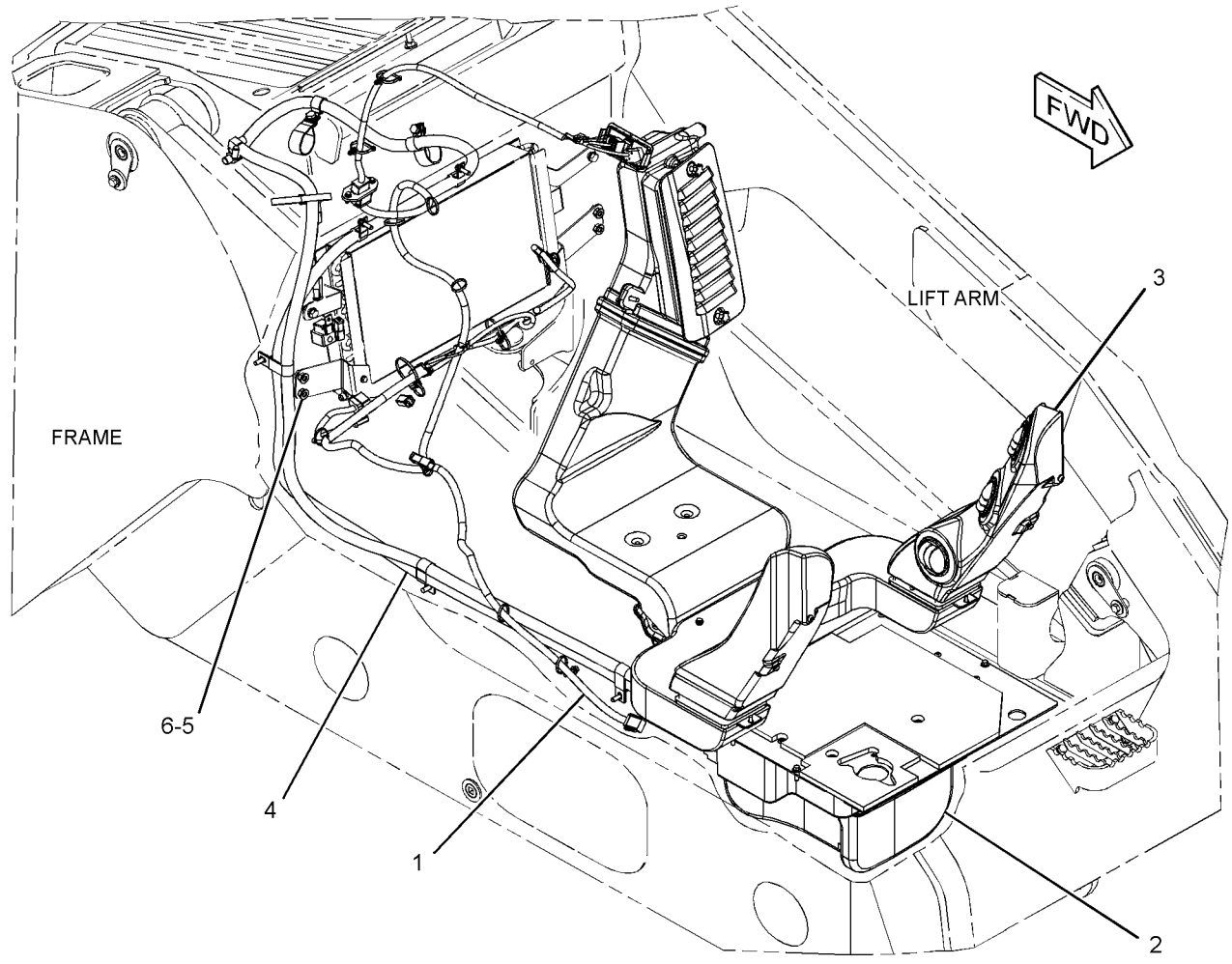

GRAPHIC #1 **<END>** g01323037

OPERATOR STATION

258-4270 HEATER GP-CAB

S/N: MST1-2905

PART OF 258-4251 HEATER & MTG GP-CAB, 280-6077 KIT-CAB HEATER & MOUNTING AN ATTACHMENT

SMCS-7304, 7342 **i03624801**

NOTE	REF NO	GRAPHIC REF	PART NUMBER	QTY	PART NAME 1 2 3 4 5 6 (PRODUCT LEVEL)	SEE PAGE
	1	1	**295-5440**	1	MOTOR (BLOWER)	
	2	1	**258-4273**	1	CASE AS	
	3	1	**258-4274**	1	GASKET	
	4	1	**258-4287**	1	BAFFLE	
	5	1	**258-4295**	1	CLIP	
	6	1	**258-4298**	1	PLATE AS	
	7	1	**266-2432**	1	VALVE AS-WATER	
	8	1	**266-2434**	1	COIL AS-HEATER	
	9	1	**266-2436**	1	HARNESS AS-HEATER	
		1	**9G-9314**	3	TERMINAL-BLADE (14-GA TO 16-GA)	
		1	**5P-4571**	1	TERMINAL-BLADE (14-GA TO 16-GA)	
		1	**100-6674**	3	SEAL-CONNECTOR	
E		1	**119-3662**		TUBE-HEAT SHRINK (10.85-MM DIA) (7-CM)	
		1	**102-8806**	1	KIT-RECEPTACLE (8-PIN)	
					(INCLUDES RECEPTACLE AS & WEDGE)	
		1	**186-3735**	1	PIN-CONNECTOR (16-GA TO 18-GA)	
		1	**8T-8737**	2	PLUG-SEAL	
E		1	**8Y-8081**		TUBE-CONVOLUTED (50-CM)	
		1	**9W-0852**	5	PIN-CONNECTOR (14-GA)	
	10	1	**6V-6717**	2	SCREW-WASHER HEAD (8-32X9.52-MM)	
M	11	1	**9X-2045**	7	SCREW-TRUSS HEAD (M6X1X20-MM)	
D	12	1	**5P-5637**		SEAL (0.17-M EACH)	
	13	1	**294-0091**	1	FILM-INSTRUCTION (DO NOT SPRAY, READ OMM)	

D-ORDER BY THE METER
E-ORDER BY THE CENTIMETER
M-METRIC PART

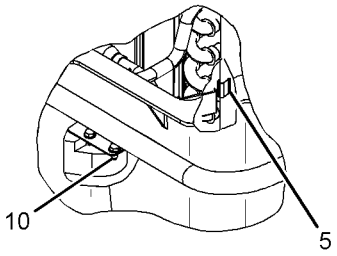

VIEW OF AREA B

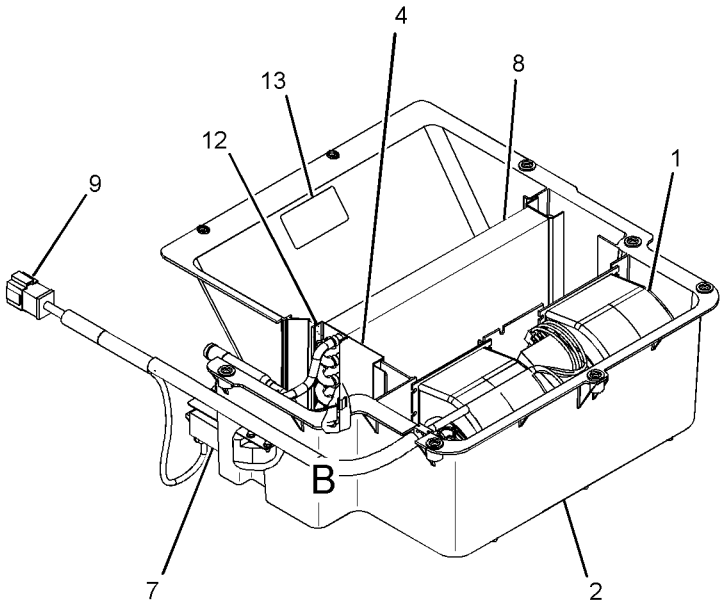

VIEW OF AREA A

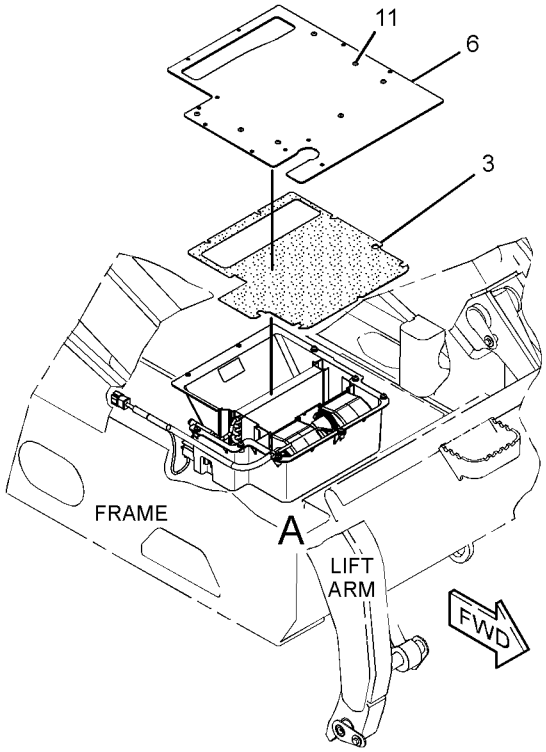

GRAPHIC #1 **<END>** g01339603

OPERATOR STATION

258-4270 HEATER GP-CAB

S/N: MST2906-UP

PART OF 258-4251 HEATER & MTG GP-CAB, 280-6077 KIT-CAB HEATER & MOUNTING AN ATTACHMENT

SMCS-7304, 7342 **i03599059**

NOTE	REF NO	GRAPHIC REF	PART NUMBER	QTY	PART NAME 1 2 3 4 5 6 (PRODUCT LEVEL)	SEE PAGE
	1	1	**295-5440**	1	MOTOR (BLOWER)	
	2	1	**258-4273**	1	CASE AS	
	3	1	**258-4274**	1	GASKET	
	4	1	**258-4287**	1	BAFFLE	
	5	1	**258-4295**	1	CLIP	
	6	1	**258-4298**	1	PLATE AS	
C	7	1	**328-3317**	1	VALVE AS-WATER	
	8	1	**266-2434**	1	COIL AS-HEATER	
C	9	1	**328-2370**	1	HARNESS AS-MOTOR	
		1	**186-3735**	1	PIN-CONNECTOR (16-GA TO 18-GA)	
		1	**9W-0852**	5	PIN-CONNECTOR (14-GA)	
		1	**155-2271**	1	KIT-CONNECTING PLUG (4-PIN)	
					(INCLUDES PLUG AS, WEDGE & INTERFACE SEAL)	
		1	**8T-8737**	3	PLUG-SEAL	
		1	**102-8806**	1	KIT-RECEPTACLE (8-PIN)	
					(INCLUDES RECEPTACLE S & WEDGE)	
		1	**186-3736**	1	SOCKET-CONNECTOR (16-GA TO 18-GA)	
		1	**9W-0844**	2	SOCKET-CONNECTOR (14-GA)	
		1	**3S-2093**	6	STRAP-CABLE	
		1	**9G-9314**	3	TERMINAL-BLADE (14-GA TO 16-GA)	
		1	**5P-4571**	1	TERMINAL-BLADE (14-GA TO 16-GA)	
E		1	**8Y-8081**		TUBE-CONVOLUTED (50-CM)	
E		1	**125-7874**		TUBE-HEAT SHRINK (5.72-MM DIA) (5-CM)	
	10	1	**6V-6717**	2	SCREW-WASHER HEAD (8-32X9.52-MM)	
M	11	1	**9X-2045**	7	SCREW-TRUSS HEAD (M6X1X20-MM)	
D	12	1	**5P-5637**		SEAL (0.17-M EACH)	
	13	1	**294-0091**	1	FILM-INSTRUCTION (DO NOT SPRAY, READ OMM)	

C-CHANGE FROM PREVIOUS TYPE
D-ORDER BY THE METER
E-ORDER BY THE CENTIMETER
M-METRIC PART

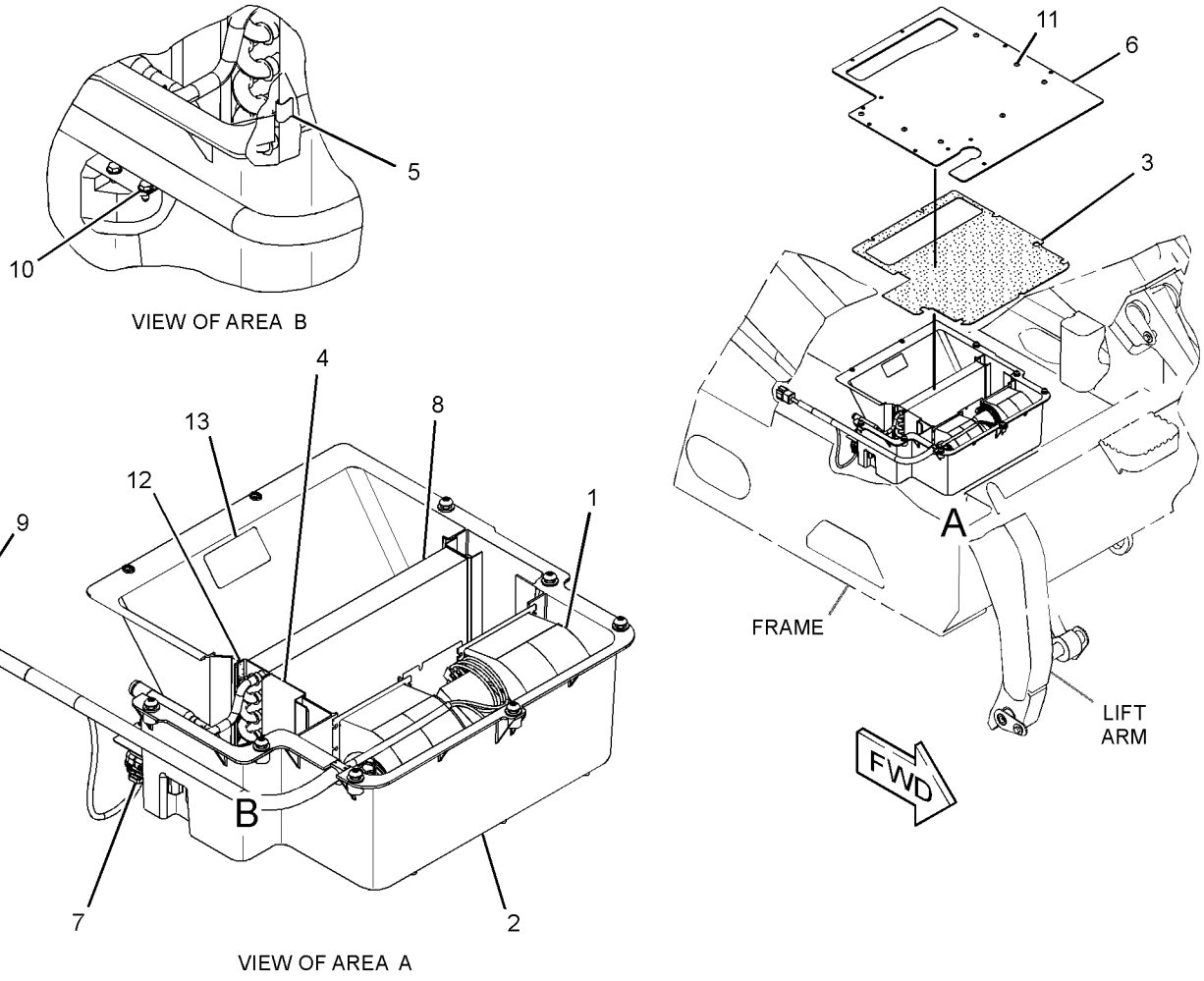

GRAPHIC #1 **<END>** g01937214

OPERATOR STATION

258-4066 INSTALLATION GP-RADIO

S/N: MST1-UP

PART OF 258-3680, 258-3742 CAB AR-ENCLOSED ROPS, 258-3740 OPTION AR-CAB AN ATTACHMENT

SMCS-1408, 7338 **i03572293**

NOTE	REF NO	GRAPHIC REF	PART NUMBER	QTY	PART NAME 1 2 3 4 5 6 (PRODUCT LEVEL)	SEE PAGE
	1	1	**8E-1118**	1	ANTENNA AS	
	2	1	**8Y-5947**	1	FASTENER	
	3	1	**9U-8746**	1	CABLE AS-COAXIAL	
	4	1	**168-8772**	2	SPEAKER AS-RADIO	
	5	1	**200-5728**	1	HARNESS AS-RADIO	
		1	**160-3518**	1	KIT-RECEPTACLE (8-PIN)	
					(INCLUDES RECEPTACLE AS & WEDGE)	
		1	**8T-8737**	1	PLUG-SEAL	
		1	**172-8037**	1	CONNECTOR (RADIO)	
		1	**186-3735**	7	PIN-CONNECTOR (16-GA TO 18-GA)	
	6	1	**8T-4224**	4	WASHER-HARD (8.8X16X2-MM THK)	
	7	1	**258-4039**	1	SPACER	
M	8	1	**5C-7261**	1	NUT (M8X1.25-THD)	
	9	1	**258-4067**	1	COVER (RADIO)	
	10	1	**258-4074**	1	BRACKET	
	11	1	**258-4367**	2	BRACKET	
	12	1	**5P-4116**	1	WASHER-HARD (8.8X20.5X2-MM THK)	
	13	1	**195-0936**	4	INSERT-THREADED (M6X1-THD)	
M	14	1	**6V-7357**	4	BOLT (M6X1X25-MM)	
M	15	1	**8T-4142**	8	BOLT-FLANGE HEAD (M5X0.8X12-MM)	

M-METRIC PART

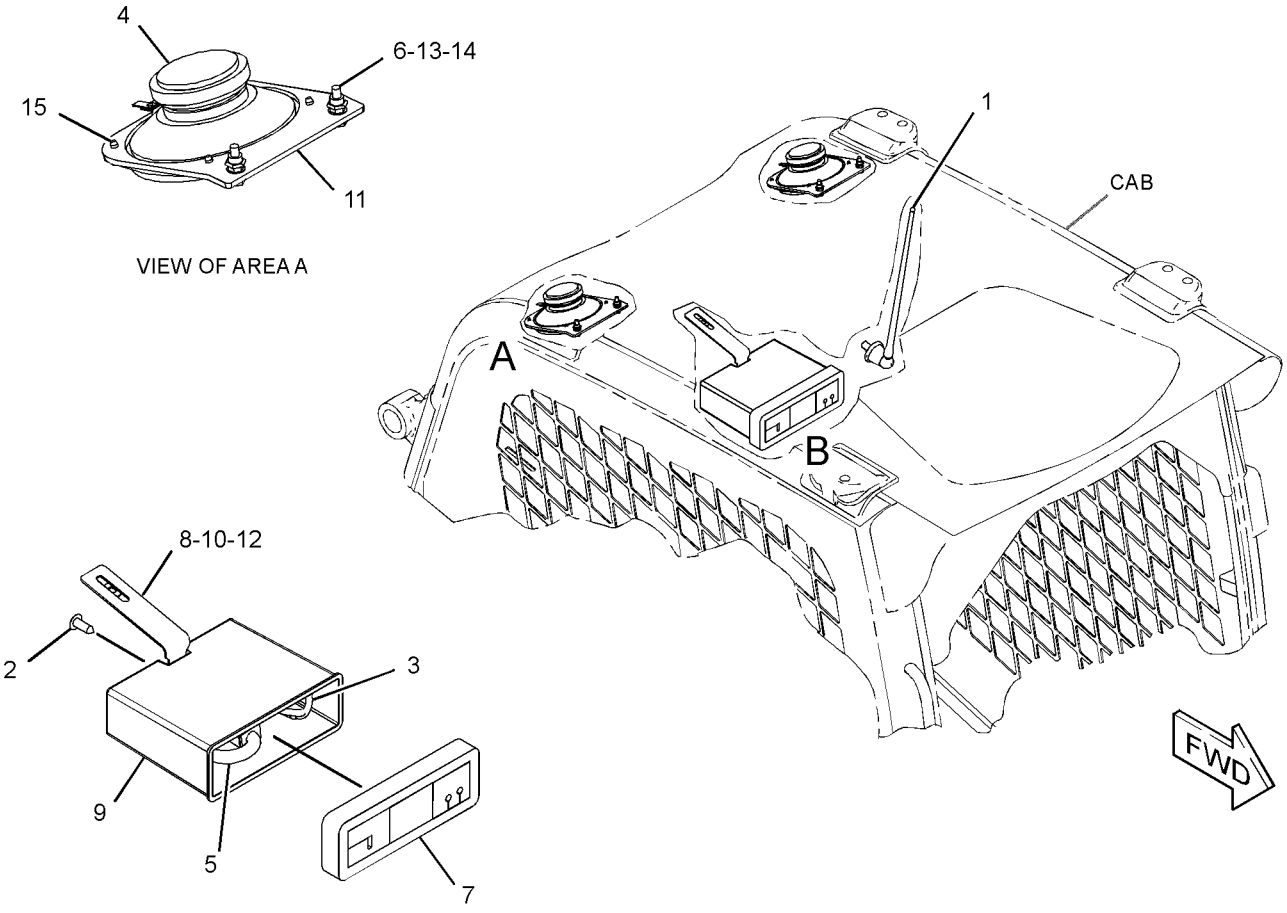

GRAPHIC #1 **<END>** g01459585

OPERATOR STATION

337-3991 INSTALLATION GP-RADIO–KIT

S/N: MST1-UP

AN ATTACHMENT

SMCS-1408, 7338 **i03685064**

NOTE	REF NO	GRAPHIC REF	PART NUMBER	QTY	PART NAME 1 2 3 4 5 6 (PRODUCT LEVEL)	SEE PAGE
	1	1	**8E-1118**	1	ANTENNA AS	
	2	1	**8Y-5947**	6	FASTENER	
	3	1	**9U-8746**	1	CABLE AS-COAXIAL	
	4	1	**168-8772**	2	SPEAKER AS-RADIO	
	5	1	**200-5728**	1	HARNESS AS-RADIO	
		1	**172-8037**	1	CONNECTOR (RADIO)	
		1	**186-3735**	7	PIN-CONNECTOR (16-GA TO 18-GA)	
		1	**8T-8737**	1	PLUG-SEAL	
		1	**160-3518**	1	KIT-RECEPTACLE (8-PIN)	
					(INCLUDES RECEPTACLE AS & WEDGE)	
		1	**172-8039**	11	TERMINAL (RADIO)	
	6	1	**258-4039**	1	SPACER	
	7	1	**258-4067**	1	COVER	
	8	1	**258-4074**	1	BRACKET	
	9	1	**258-4367**	2	BRACKET	
	10	1	**195-0936**	4	INSERT-THREADED (M6X1-THD)	
M	11	1	**5C-7261**	1	NUT (M8X1.25-THD)	
	12	1	**5P-4116**	1	WASHER-HARD (8.8X20.5X2-MM THK)	
M	13	1	**6V-7357**	4	BOLT (M6X1X25-MM)	
M	14	1	**8T-4142**	8	BOLT-FLANGE HEAD (M5X0.8X12-MM)	
	15	1	**8T-4224**	4	WASHER-HARD (8.8X16X2-MM THK)	

M-METRIC PART

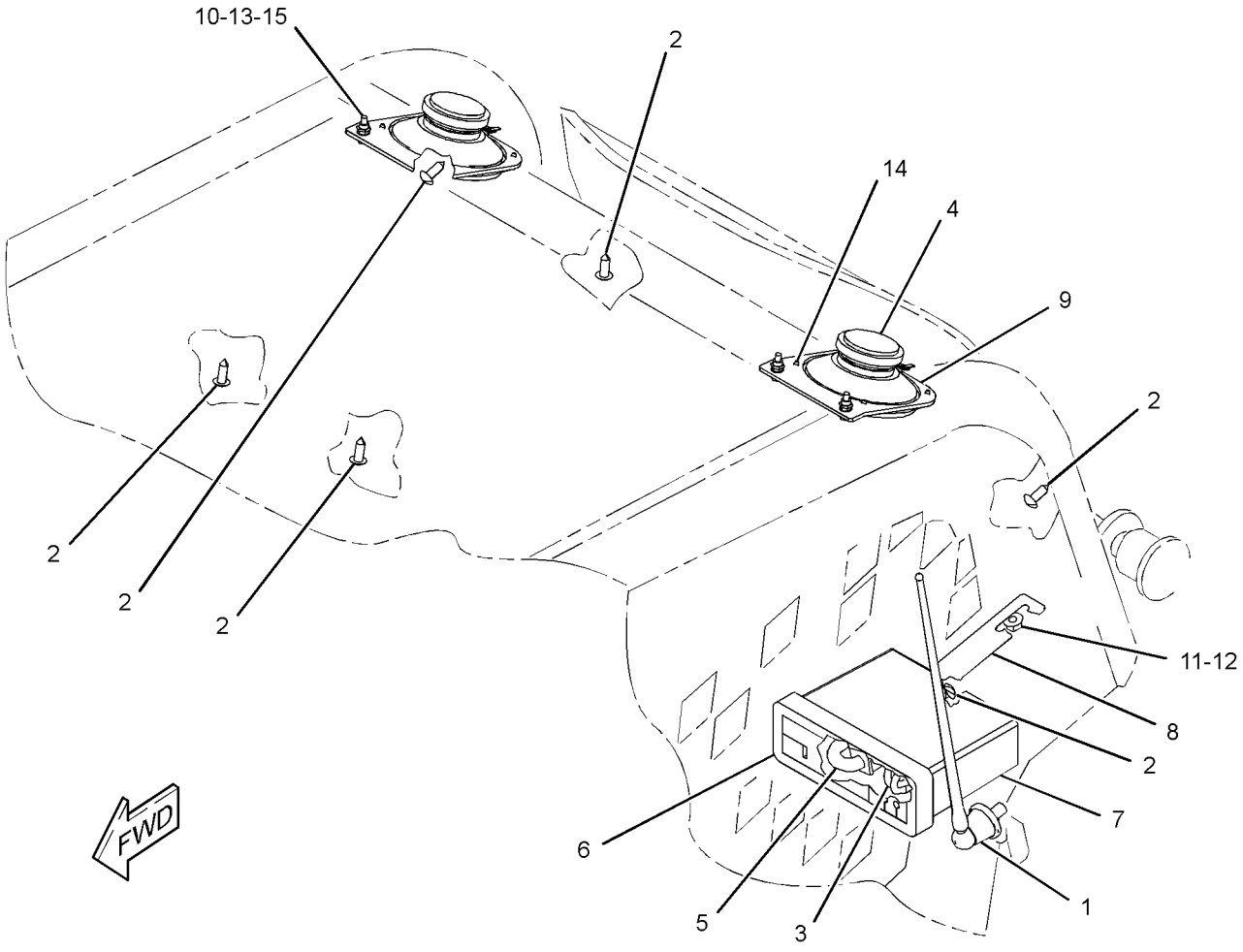

GRAPHIC #1 **<END>** g02001495

OPERATOR STATION

258-2474 KIT-AIR COND & HEATER INSTL

S/N: MST1-UP

AN ATTACHMENT

SMCS-1405, 1802, 1805, 1808, 7174, 7304, 7320, 734D **i03656647**

NOTE	PART NUMBER	QTY	PART NAME 1 2 3 4 5 6 (PRODUCT LEVEL)	SEE PAGE
Y	*186-6190*	1	ACCUMULATOR GP-REFRIGERANT (WITH DESICCANT)	646
Y	*258-4290*	1	AIR CONDITIONER GP	649
Y	*266-2425*	1	CONDENSER & MTG GP-REFRIGERANT	661
Y	*266-2430*	1	CONTROL & WIRING GP-AIR & TEMP	662
	276-9875	1	COMPRESSOR GP-REFRIGERANT	
	102-8802	1	KIT-RECEPTACLE (2-PIN)	
			(INCLUDES RECEPTACLE AS & WEDGE)	
	229-4896	2	SEAL-O-RING	
	229-7356	1	VALVE AS-RELIEF (REFRIGERANT COMPRESSOR)	
	9X-7378	1	SEAL-O-RING	
	212-2204	1	CONTROL GP-AIR CONDITIONER	
	155-2271	1	KIT-CONNECTING PLUG (4-PIN)	
			(INCLUDES PLUG AS, WEDGE & INTERFACE SEAL)	
	186-3736	4	SOCKET-CONNECTOR (16-GA TO 18-GA)	
	258-4284	1	BRACKET AS	
	258-4380	1	BRACKET AS	
	258-4386	1	BRACKET AS	
	258-4388	1	BRACKET AS	
	258-4253	1	DUCT AS (INTERIOR)	
	258-4254	1	DUCT AS (INTERIOR)	
	258-4257	1	DUCT AS (INLET)	
	258-4258	1	DUCT AS (PLENUM)	
	258-4259	1	DUCT AS-OUTLET	
	258-4147	1	HARNESS AS-HEATER & AIR COND	
	186-3735	5	PIN-CONNECTOR (16-GA TO 18-GA)	
	9W-0852	4	PIN-CONNECTOR (14-GA)	
	155-2255	1	KIT-CONNECTING PLUG (12-PIN)	
	155-2270	3	KIT-CONNECTING PLUG (2-PIN)	
	155-2265	1	KIT-CONNECTING PLUG (8-PIN)	
			(EACH PLUG KIT INCLUDES PLUG AS, WEDGE & INTERFACE SEAL)	
	9X-1054	1	PLUG AS-CONNECTOR (4-PIN)	
	8T-8737	6	PLUG-SEAL	
	102-8804	1	KIT-RECEPTACLE (4-PIN)	
	102-8805	1	KIT-RECEPTACLE (6-PIN)	
			(EACH RECEPTACLE KIT INCLUDES RECEPTACLE AS & WEDGE)	
	100-6674	2	SEAL-CONNECTOR	
	186-3736	5	SOCKET-CONNECTOR (16-GA TO 18-GA)	
	9W-0844	16	SOCKET-CONNECTOR (14-GA)	
	124-5640	2	TERMINAL-SOCKET	
	8L-8413	5	STRAP-CABLE	
	9X-1056	2	TERMINAL-RECEPTACLE (14-GA TO 16-GA)	
	100-5041	2	TERMINAL-RECEPTACLE (18-GA TO 20-GA)	
E	**119-3662**		TUBE-HEAT SHRINK (10.85-MM DIA) (7-CM)	
E	**125-7874**		TUBE-HEAT SHRINK (5.72-MM DIA) (20-CM)	
	258-4262	1	HOSE AS	
	258-4304	1	HOSE AS	
I	**258-4308**	1	HOSE AS	
I	**258-4309**	1	HOSE AS	
	258-4378	2	KNOB AS	
	258-4379	1	KNOB AS	
	146-6371	6	LOUVER AS	

258-2474 KIT-AIR COND & HEATER INSTL *(contd.)* i03656647

NOTE	PART NUMBER	QTY	PART NAME 1 2 3 4 5 6 (PRODUCT LEVEL)	SEE PAGE
	149-6371	1	SWITCH AS-PRESSURE (REFRIGERANT, LOW SIDE)	
	102-8802	1	KIT-RECEPTACLE (2-PIN)	
			(INCLUDES RECEPTACLE AS & WEDGE)	
	186-3735	2	PIN-CONNECTOR (16-GA TO 18-GA)	
	236-6923	1	SWITCH AS-PRESSURE (REFRIGERANT COMPR, HIGH SIDE)	
	266-0299	1	SWITCH AS-ROCKER (AIR CONDITIONER)	
	111-7899	1	GASKET	
M	**5C-9553**	10	BOLT (M6X1X16-MM)	
M	**6V-7357**	4	BOLT (M6X1X25-MM)	
M	**8T-4136**	6	BOLT (M10X1.5X25-MM)	
M	**8T-4196**	3	BOLT (M10X1.5X35-MM)	
M	**8T-6685**	1	BOLT (M10X1.5X110-MM)	
	206-9185	1	BOLT (M8X1.25X35-MM)	
M	**163-3955**	2	BOLT (M6X1X35-MM)	
M	**8T-4183**	3	BOLT (M12X1.75X40-MM)	
M	**266-3315**	6	BOLT-FLANGE HEAD (M8X1.25X25.5-MM)	
	266-3314	2	BOLT-FLANGE HEAD (M6X1X20.5-MM)	
	258-2466	1	BRACKET	
	280-8395	1	BRACKET	
	8T-0154	4	CLAMP-HOSE	
	4K-8864	2	CLIP	
	6D-1641	3	CLIP	
	6D-4246	1	CLIP	
	9X-8250	2	CLIP	
	4P-7429	1	CLIP	
	101-8296	2	CLIP	
	258-4264	1	COVER-FILTER	
	258-4248	1	COVER-LOUVER	
	258-4249	1	DUCT-INLET	
	004-6810	1	ELBOW	
	218-6645	1	ELBOW	
	8Y-5947	2	FASTENER	
	265-6618	1	FILTER ELEMENT-CAB AIR (RECIRCULATION)	
	265-6619	1	FILTER ELEMENT-CAB AIR (FRESH)	
E	**136-1953**		HOSE (530-CM)	
	258-3794	1	INSULATION	
	258-4408	1	INSULATION	
	113-0693	1	LOCKWASHER	
	204-8000	1	MOUNT (TIE WRAP)	
M	**8T-4133**	3	NUT (M10X1.5-THD)	
	258-4263	1	PLATE	
	315-5381	1	PLATE-INSTRUCTION (AIR CONDITIONER, READ OMM)	
	115-1615	1	RELAY AS (12-VOLT) (AIR CONDITIONER)	
	7X-2031	3	RETAINER	
	206-2423	3	SADDLE	
	258-4384	1	SCREEN	
	312-0131	4	SCREW-MACHINE (M6X1X30-MM)	
	6V-6689	2	SCREW-SELF-TAPPING (10-16X.625-IN)	
M	**215-6406**	3	SCREW-TRUSS HEAD (M6X1X16-MM)	
	258-3727	7	SCREW-TRUSS HEAD (NO 12X17.46-MM)	
D	**5P-5924**		SEAL (0.3-M)	
D	**6V-9335**		SEAL (1-M)	
	258-3792	1	SEAL	
	258-3793	1	SEAL	
	258-3795	4	SEAL	
	258-3796	1	SEAL	
	9X-7378	2	SEAL-O-RING	
	9X-7380	1	SEAL-O-RING	

258-2474 KIT-AIR COND & HEATER INSTL *(contd.)* i03656647

NOTE	PART NUMBER	QTY	PART NAME 1 2 3 4 5 6 (PRODUCT LEVEL)	SEE PAGE
	9X-7381	2	SEAL-O-RING	
	9X-7382	1	SEAL-O-RING	
	9X-7383	2	SEAL-O-RING	
	3S-2093	20	STRAP-CABLE	
	206-1345	2	STRAP-CABLE	
	7K-1181	1	STRAP-CABLE	
	178-3620	7	STRAP-DUAL CLAMP	
	105-9411	1	SUPPORT	
	258-3539	1	V-BELT (AIR CONDITIONER)	
	5P-4116	1	WASHER-HARD (8.8X20.5X2-MM THK)	
	8T-4121	14	WASHER-HARD (11X21X2.5-MM THK)	
	8T-4205	18	WASHER-HARD (7.2X14.5X2-MM THK)	
	8T-4223	3	WASHER-HARD (13.5X25.5X3-MM THK)	

D-ORDER BY THE METER
E-ORDER BY THE CENTIMETER
I-REFER TO HYDRAULIC INFORMATION SYSTEM
M-METRIC PART
Y-SEPARATE ILLUSTRATION

<END>

OPERATOR STATION

305-8044 KIT-AIR CONDITIONER BREATHER

S/N: MST1-UP
AN ATTACHMENT

SMCS-7320 **i03670357**

NOTE	REF NO	GRAPHIC REF	PART NUMBER	QTY	PART NAME 1 2 3 4 5 6 (PRODUCT LEVEL)	SEE PAGE
	1	1	**172-8591**	3	NUT-SPRING	
	2	1	**258-4379**	1	KNOB AS	
	3	1	**280-8377**	3	SPACER (11.1X19.1X25-MM THK)	
	4	1	**305-8046**	1	COVER AS	
	5	1	**305-8047**	1	HOSE	
	6	1	**305-8048**	1	TUBE AS	
	7	1	**348-3485**	1	VALVE-DUST (AIR CLEANER)	
M	8	1	**121-9870**	3	SCREW-MACHINE (M6X1X40-MM)	
	9	1	**7X-2031**	1	RETAINER	

M-METRIC PART

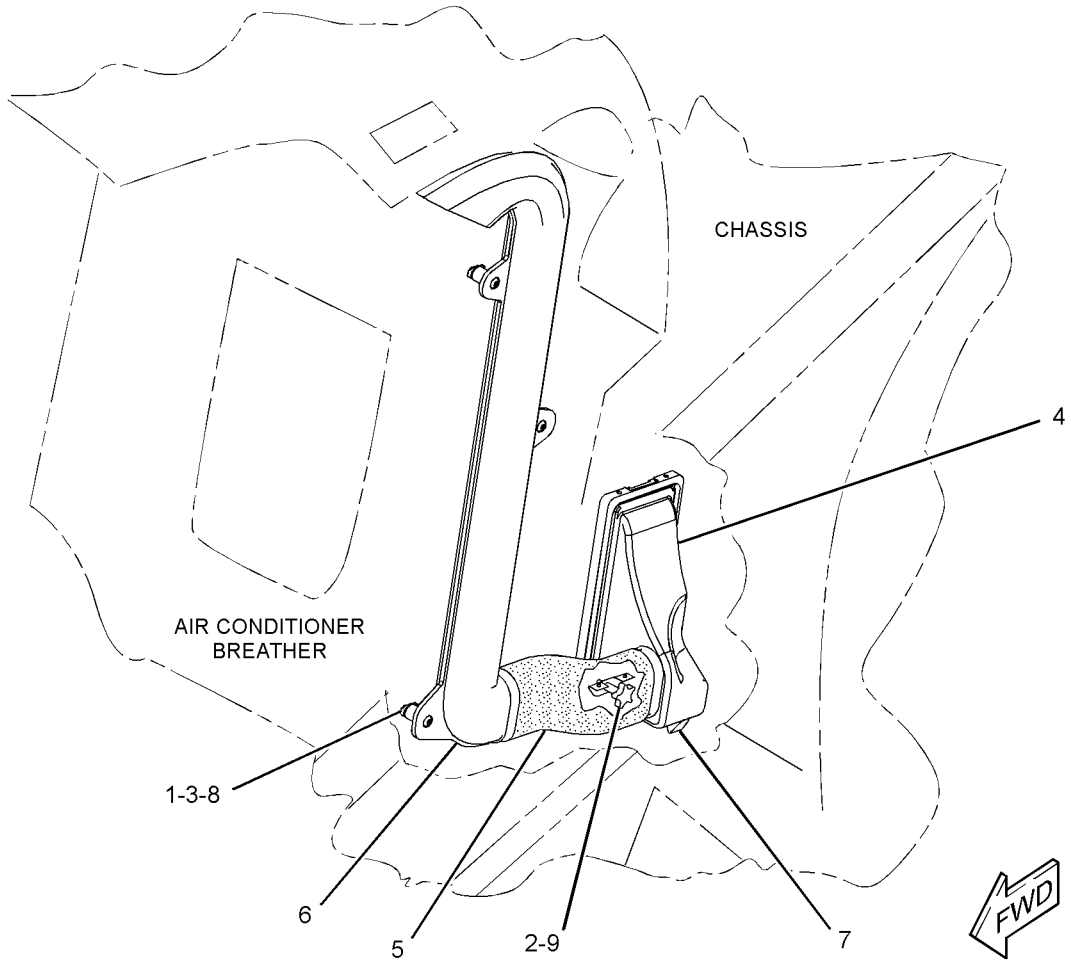

GRAPHIC #1 **<END>** g01993794

OPERATOR STATION

258-2475 KIT-AIR CONDITIONER INSTL–CONVERSION

S/N: MST1-UP

AN ATTACHMENT

SMCS-1405, 1802, 1805, 1808, 7174, 7320, 734D **i03656646**

NOTE	PART NUMBER	QTY	PART NAME 1 2 3 4 5 6 (PRODUCT LEVEL)	SEE PAGE
Y	*186-6190*	1	ACCUMULATOR GP-REFRIGERANT (WITH DESICCANT)	646
Y	*258-4290*	1	AIR CONDITIONER GP	649
Y	*266-2425*	1	CONDENSER & MTG GP-REFRIGERANT	661
	276-9875	1	COMPRESSOR GP-REFRIGERANT	
	102-8802	1	KIT-RECEPTACLE (2-PIN)	
			(INCLUDES RECEPTACLE AS & WEDGE)	
	229-4896	2	SEAL-O-RING	
	229-7356	1	VALVE AS-RELIEF (REFRIGERANT COMPRESSOR)	
	9X-7378	1	SEAL-O-RING	
	212-2204	1	CONTROL GP-AIR CONDITIONER (COMPRESSOR)	
	155-2271	1	KIT-CONNECTING PLUG (4-PIN)	
			(INCLUDES PLUG AS, WEDGE & INTERFACE SEAL)	
	186-3736	4	SOCKET-CONNECTOR (16-GA TO 18-GA)	
	258-4284	1	BRACKET AS	
	258-4380	1	BRACKET AS	
	258-4386	1	BRACKET AS	
	258-4388	1	BRACKET AS	
	258-4262	1	HOSE AS	
	258-4304	1	HOSE AS	
I	**258-4308**	1	HOSE AS	
I	**258-4309**	1	HOSE AS	
	115-1615	1	RELAY AS (12-VOLT) (AIR CONDITIONER)	
	149-6371	1	SWITCH AS-PRESSURE (REFRIGERANT, LOW SIDE)	
	102-8802	1	KIT-RECEPTACLE (2-PIN)	
			(INCLUDES RECEPTACLE AS & WEDGE)	
	8T-8729	2	PIN-CONNECTOR (16-GA TO 18-GA)	
	236-6923	1	SWITCH AS-PRESSURE (REFRIGERANT COMPR, HIGH SIDE)	
	266-0299	1	SWITCH AS-ROCKER (AIR CONDITIONER)	
	111-7899	1	GASKET	
M	**5C-9553**	10	BOLT (M6X1X16-MM)	
M	**8T-4136**	5	BOLT (M10X1.5X25-MM)	
M	**8T-4196**	3	BOLT (M10X1.5X35-MM)	
M	**8T-4183**	3	BOLT (M12X1.75X40-MM)	
M	**8T-6685**	1	BOLT (M10X1.5X110-MM)	
M	**266-3315**	3	BOLT-FLANGE HEAD (M8X1.25X25.5-MM)	
	258-2466	1	BRACKET	
	280-8395	1	BRACKET	
	4K-8864	2	CLIP	
	6D-4246	1	CLIP	
	101-8296	2	CLIP	
	4P-7429	1	CLIP	
	258-3794	1	INSULATION	
	258-4408	1	INSULATION	
	113-0693	1	LOCKWASHER	
	204-8000	1	MOUNT (TIE WRAP)	
M	**8T-4133**	3	NUT (M10X1.5-THD)	
	315-5381	1	PLATE-INSTRUCTION (AIR CONDITIONER, READ OMM)	
D	**5P-5924**		SEAL (0.3-M)	
	258-3792	1	SEAL	
	9X-7378	2	SEAL-O-RING	
	9X-7380	1	SEAL-O-RING	

258-2475 KIT-AIR CONDITIONER INSTL *(contd.)* i03656646

NOTE	PART NUMBER	QTY	PART NAME 1 2 3 4 5 6 (PRODUCT LEVEL)	SEE PAGE
	9X-7381	2	SEAL-O-RING	
	9X-7382	1	SEAL-O-RING	
	9X-7383	2	SEAL-O-RING	
	7K-1181	1	STRAP-CABLE	
	3S-2093	2	STRAP-CABLE	
	178-3620	4	STRAP-DUAL CLAMP	
	105-9411	1	SUPPORT	
	258-3539	1	V-BELT (AIR CONDITIONER)	
	8T-4121	13	WASHER-HARD (11X21X2.5-MM THK)	
	8T-4205	10	WASHER-HARD (7.2X14.5X2-MM THK)	
	8T-4223	3	WASHER-HARD (13.5X25.5X3-MM THK)	

D-ORDER BY THE METER
I-REFER TO HYDRAULIC INFORMATION SYSTEM
M-METRIC PART
Y-SEPARATE ILLUSTRATION

<END>

OPERATOR STATION

258-2473 KIT-CAB DOOR & MOUNTING—GLASS

S/N: MST1-UP

AN ATTACHMENT

SMCS-7308 **i03572301**

NOTE	REF NO	GRAPHIC REF	PART NUMBER	QTY	PART NAME 1 2 3 4 5 6 (PRODUCT LEVEL)	SEE PAGE
	1	1	**7C-8246**	1	SPACER (10.5X20X24-MM THK)	
	2	2	**8T-2444**	2	STUD-BALL	
	3	2	**139-6039**	1	NUT (U-TYPE RETAINER)	
	4	1	**153-2682**	1	SPRING-GAS (CAB)	
	5	2	**206-1345**	4	STRAP-CABLE	
	6	2	**258-3281**	1	BRACKET AS	
	7	2	**258-3725**	1	HINGE	
	8	2	**258-3726**	2	PIN	
	9	2	**258-3761**	1	SPRING-GAS (DOOR)	
	10	1	**258-3764**	1	STRIKER AS	
	11	1	**258-4078**	1	TANK AS-WINDOW WASHER	
		1	**6T-1375**	1	PUMP AS-WASHER	
		1	**8E-8293**	1	GROMMET	
		1	**258-3296**	1	CAP-VENTED (WASHER)	
Y	12	2	*258-4086*	1	DOOR GP-CAB (GLASS)	688
	13	2	**258-4141**	2	CLIP	
	14	2	**258-4157**	1	HARNESS AS-CAB	
		1	**180-9340**	2	SOCKET-CONNECTOR (14-GA TO 18-GA)	
		1	**102-8805**	1	KIT-RECEPTACLE (6-PIN)	
					(INCLUDES RECEPTACLE AS & WEDGE)	
		1	**8T-8737**	1	PLUG-SEAL	
		1	**186-3735**	1	PIN-CONNECTOR (16-GA TO 18-GA)	
		1	**186-3736**	2	SOCKET-CONNECTOR (16-GA TO 18-GA)	
		1	**9W-0852**	2	PIN-CONNECTOR (14-GA)	
		1	**9W-0844**	2	SOCKET-CONNECTOR (14-GA)	
		1	**123-7615**	1	CONNECTOR	
E		1	**125-7874**		TUBE-HEAT SHRINK (5.72-MM DIA) (5-CM)	
		1	**155-2274**	1	KIT-CONNECTING PLUG (6-PIN)	
					(INCLUDES PLUG AS, WEDGE & INTERFACE SEAL)	
		1	**180-9339**	2	PIN-CONNECTOR (14-GA TO 18-GA)	
	15	2	**258-4356**	1	BRACKET AS	
	16	2	**284-7932**	1	FILM-NOTICE (ALTERNATE EXIT, READ OMM)	
	17	1	**095-1325**	1	PIN-CLEVIS	
M	18	2	**127-2170**	4	SCREW-TRUSS HEAD (M8X1.25X20-MM)	
	19	2	**198-1725**	4	WASHER-HARD (8.8X25.5X2-M THK)	
M	20	1	**215-6406**	1	SCREW-TRUSS HEAD (M6X1X16-MM)	
M	21	1	**5C-2890**	1	NUT (M6X1-THD)	
	22	1	**5P-0372**	2	LOCK PIN	
	23	1	**6L-3966**	1	PIN (0.374-IN OD)	
	24	2	**8S-7803**	2	RING-RETAINING	
	25	1	**8T-4223**	1	WASHER-HARD (13.5X25.5X3-MM THK)	
	26	2	**8T-4224**	2	WASHER-HARD (8.8X16X2-MM THK)	
M	27	1	**8T-4244**	1	NUT (M12X1.75-THD)	
M	28	2	**9X-2044**	3	SCREW-TRUSS HEAD (M6X1X16-MM)	
B	29	2	**198-1725**	2	WASHER-HARD (8.8X25.5X2-M THK)	
E	30	2	**144-0195**		HOSE (90-CM)	
D	31	1	**8T-6936**		SEAL (0.1-M)	

B-USE AS REQUIRED
D-ORDER BY THE METER
E-ORDER BY THE CENTIMETER
M-METRIC PART
Y-SEPARATE ILLUSTRATION

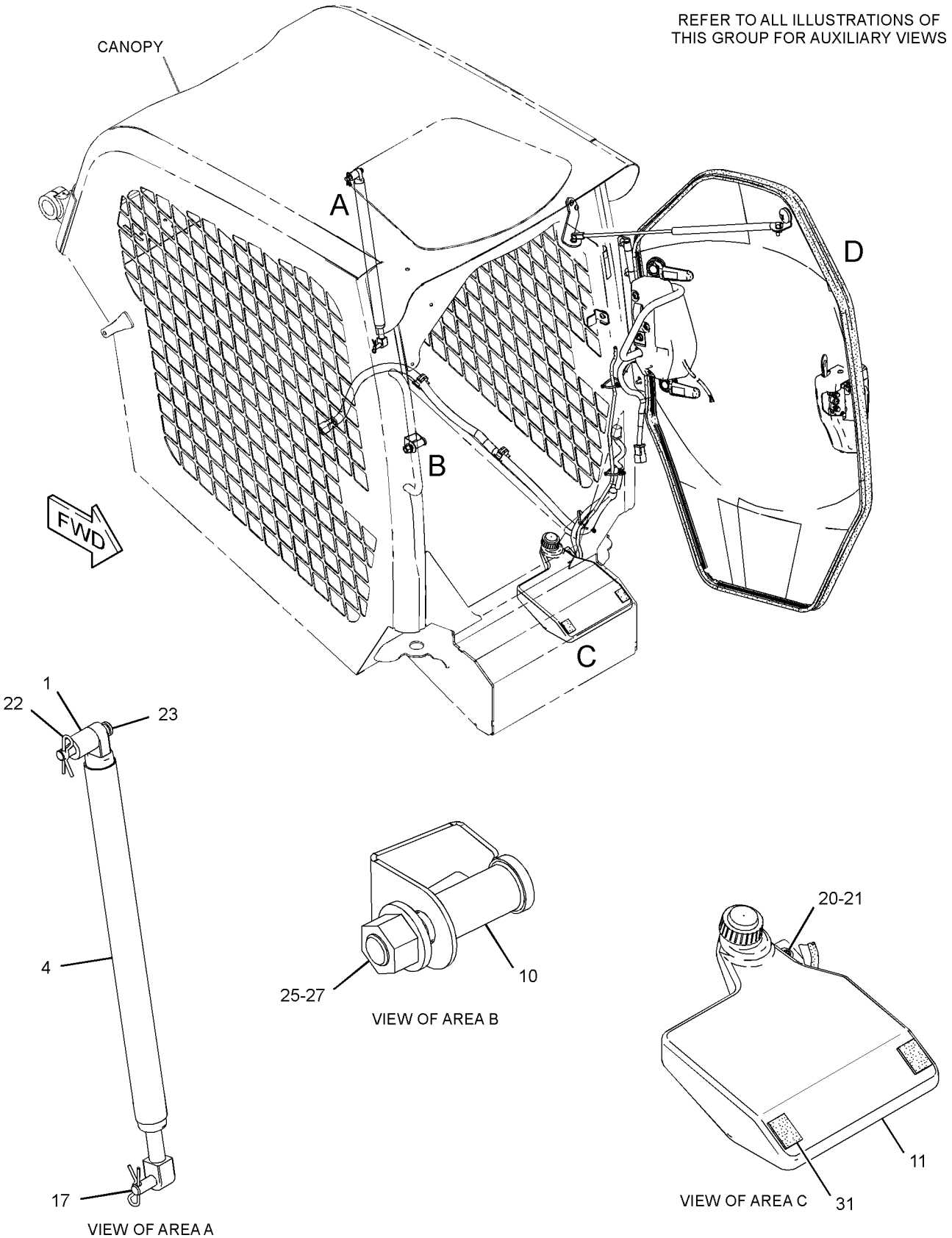

GRAPHIC #1

g01831455

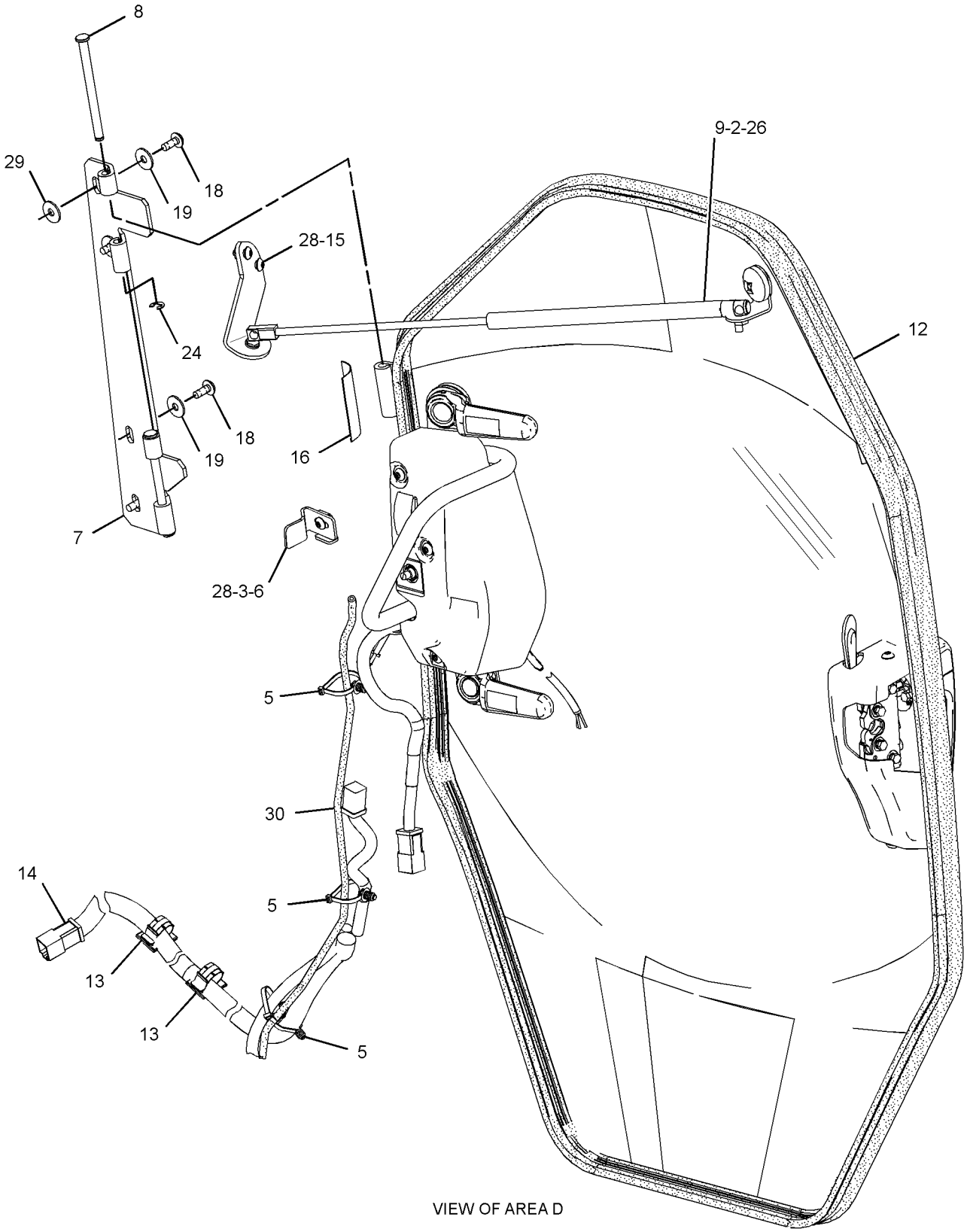

VIEW OF AREA D

GRAPHIC #2 **<END>** g01831459

OPERATOR STATION

258-4443 KIT-CAB DOOR & MOUNTING

S/N: MST1-UP

CANNOT BE USED WITH 258-2473—PAGE 728, 280-6084—PAGE 734, 258-3738—PAGE 764, 258-3740—PAGE 764

AN ATTACHMENT

SMCS-7308 **i03572315**

NOTE	REF NO	GRAPHIC REF	PART NUMBER	QTY	PART NAME 1 2 3 4 5 6 (PRODUCT LEVEL)	SEE PAGE
M	1	2	**5C-2890**	1	NUT (M6X1-THD)	
B	2	1	**7C-8246**	1	SPACER (10.5X20X24-MM THK)	
	3	1	**8T-2444**	2	STUD-BALL	
	4	1	**095-1325**	1	PIN-CLEVIS	
	5	2	**139-6039**	1	NUT (U-TYPE RETAINER)	
	6	1	**153-2682**	1	SPRING-GAS	
	7	1,2	**206-1345**	4	STRAP-CABLE	
	8	2	**258-3281**	1	BRACKET AS	
	9	2	**258-3725**	1	HINGE	
	10	2	**258-3726**	2	PIN	
	11	1	**258-3761**	1	SPRING-GAS (DOOR)	
	12	1	**258-3764**	1	STRIKER AS	
	13	2	**258-4078**	1	TANK AS-WINDOW WASHER	
		2	**6T-1375**	1	PUMP AS-WASHER	
		2	**8E-8293**	1	GROMMET	
		2	**258-3296**	1	CAP-VENTED (WASHER)	
	14	1	**258-4141**	2	CLIP	
	15	1	**258-4157**	1	HARNESS AS-CAB	
		1	**180-9340**	2	SOCKET-CONNECTOR (14-GA TO 18-GA)	
E		1	**211-5358**		CONDUIT-FLEXIBLE (63-CM)	
		1	**102-8805**	1	KIT-RECEPTACLE (6-PIN) (INCLUDES RECPTACLE AS & WEDGE)	
		1	**8T-8737**	1	PLUG-SEAL	
		1	**186-3735**	1	PIN-CONNECTOR (16-GA TO 18-GA)	
		1	**186-3736**	2	SOCKET-CONNECTOR (16-GA TO 18-GA)	
		1	**9W-0852**	2	PIN-CONNECTOR (14-GA)	
		1	**9W-0844**	2	SOCKET-CONNECTOR (14-GA)	
		1	**123-7615**	1	CONNECTOR	
E		1	**125-7874**		TUBE-HEAT SHRINK (5.72-MM DIA) (5-CM)	
		1	**155-2274**	1	KIT-CONNECTING PLUG (6-PIN) (INCLUDES PLUG AS, WEDGE & INTERFACE SEAL)	
		1	**180-9339**	2	PIN-CONNECTOR (14-GA TO 18-GA)	
	16	1	**258-4356**	1	BRACKET AS	
Y	17	1	*258-4442*	1	DOOR GP-CAB	702
	18	2	**284-7932**	1	FILM-NOTICE (ALTERNATE EXIT, READ OMM)	
M	19	2	**127-2170**	4	SCREW-TRUSS HEAD (M8X1.25X20-MM)	
B	20	2	**198-1725**	6	WASHER-HARD (8.8X25.5X2-M THK)	
M	21	2	**215-6406**	1	SCREW-TRUSS HEAD (M6X1X16-MM)	
	22	1	**5P-0372**	2	LOCK PIN	
	23	1	**6L-3966**	1	PIN (0.374-IN OD) (LOCK)	
	24	2	**8S-7803**	2	RING-RETAINING	
	25	1	**8T-4223**	1	WASHER-HARD (13.5X25.5X3-MM THK)	
	26	1	**8T-4224**	2	WASHER-HARD (8.8X16X2-MM THK)	
M	27	1	**8T-4244**	1	NUT (M12X1.75-THD)	
M	28	1,2	**9X-2044**	3	SCREW-TRUSS HEAD (M6X1X16-MM)	
E	30	1	**144-0195**		HOSE (90-CM)	
D	31	2	**8T-6936**		SEAL (1-M EACH)	

B-USE AS REQUIRED
D-ORDER BY THE METER
E-ORDER BY THE CENTIMETER
M-METRIC PART
Y-SEPARATE ILLUSTRATION

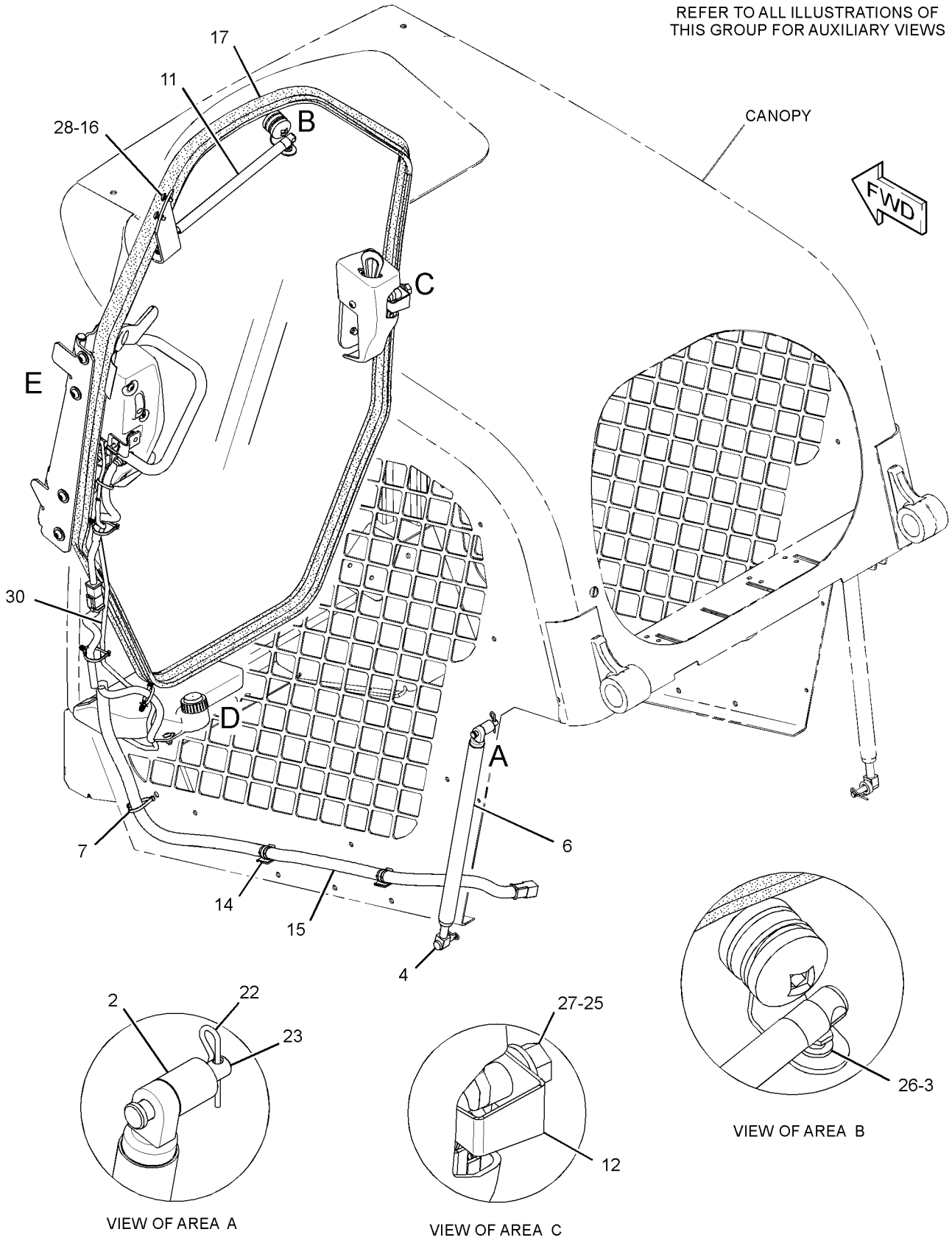

GRAPHIC #1

g01436984

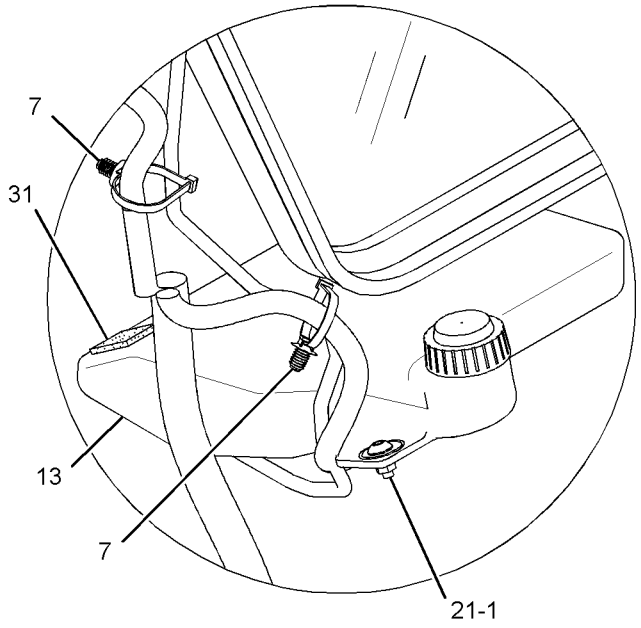

VIEW OF AREA D

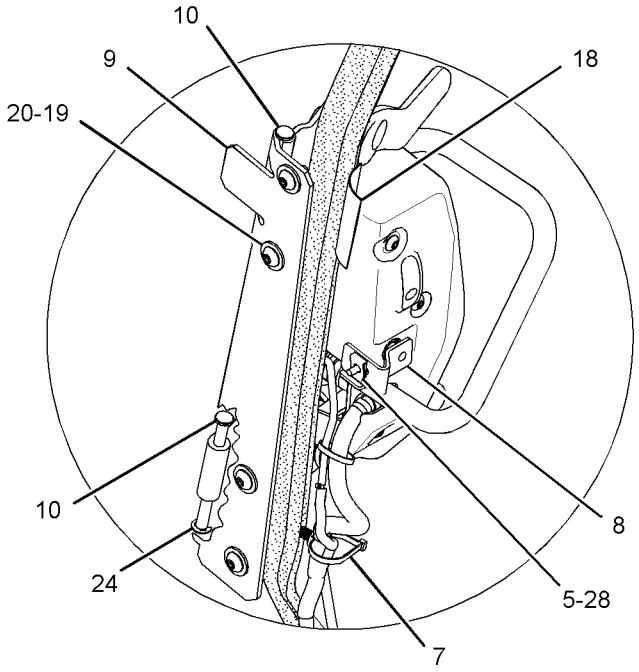

VIEW OF AREA E

GRAPHIC #2 **<END>** g01436985

OPERATOR STATION

280-6084 KIT-CAB DOOR & MOUNTING—POLYCARBONATE

S/N: MST1-UP

AN ATTACHMENT

SMCS-7308 **i03572319**

NOTE	REF NO	GRAPHIC REF	PART NUMBER	QTY	PART NAME 1 2 3 4 5 6 (PRODUCT LEVEL)	SEE PAGE
	1	1	**7C-8246**	1	SPACER (10.5X20X24-MM THK)	
	2	2	**8T-2444**	2	STUD-BALL	
	3	2	**139-6039**	1	NUT (U-TYPE RETAINER)	
	4	1	**153-2682**	1	SPRING-GAS (CAB)	
	5	2	**206-1345**	4	STRAP-CABLE	
	6	2	**258-3281**	1	BRACKET AS	
	7	2	**258-3725**	1	HINGE	
	8	2	**258-3726**	2	PIN	
	9	2	**258-3761**	1	SPRING-GAS (DOOR)	
	10	1	**258-3764**	1	STRIKER AS	
	11	1	**258-4078**	1	TANK AS-WINDOW WASHER	
		1	**6T-1375**	1	PUMP AS-WASHER	
		1	**8E-8293**	1	GROMMET	
		1	**258-3296**	1	CAP-VENTED (WASHER)	
Y	12	2	*258-4087*	1	DOOR GP-CAB (POLYCARBONATE)	694
	13	2	**258-4141**	2	CLIP	
	14	2	**258-4157**	1	HARNESS AS-CAB	
		1	**180-9340**	2	SOCKET-CONNECTOR (14-GA TO 18-GA)	
E		1	**211-5358**		CONDUIT-FLEXIBLE (63-CM)	
		1	**102-8805**	1	KIT-RECEPTACLE (6-PIN)	
					(INCLUDES RECEPTACLE AS & WEDGE)	
		1	**8T-8737**	1	PLUG-SEAL	
		1	**186-3735**	1	PIN-CONNECTOR (16-GA TO 18-GA)	
		1	**186-3736**	2	SOCKET-CONNECTOR (16-GA TO 18-GA)	
		1	**9W-0852**	2	PIN-CONNECTOR (14-GA)	
		1	**9W-0844**	2	SOCKET-CONNECTOR (14-GA)	
		1	**123-7615**	1	CONNECTOR	
E		1	**125-7874**		TUBE-HEAT SHRINK (5.72-MM DIA) (5-CM)	
		1	**155-2274**	1	KIT-CONNECTING PLUG (6-PIN)	
					(INCLUDES PLUG AS, WEDGE & INTERFACE SEAL)	
		1	**180-9339**	2	PIN-CONNECTOR (14-GA TO 18-GA)	
	15	2	**258-4356**	1	BRACKET AS	
	16	2	**284-7932**	1	FILM-NOTICE (ALTERNATE EXIT, READ OMM)	
	17	1	**095-1325**	1	PIN-CLEVIS	
M	18	2	**127-2170**	4	SCREW-TRUSS HEAD (M8X1.25X20-MM)	
	19	2	**198-1725**	4	WASHER-HARD (8.8X25.5X2-M THK)	
M	20	1	**215-6406**	1	SCREW-TRUSS HEAD (M6X1X16-MM)	
M	21	1	**5C-2890**	1	NUT (M6X1-THD)	
	22	1	**5P-0372**	2	LOCK PIN	
	23	1	**6L-3966**	1	PIN (0.374-IN OD)	
	24	2	**8S-7803**	2	RING-RETAINING	
	25	1	**8T-4223**	1	WASHER-HARD (13.5X25.5X3-MM THK)	
	26	2	**8T-4224**	2	WASHER-HARD (8.8X16X2-MM THK)	
M	27	1	**8T-4244**	1	NUT (M12X1.75-THD)	
M	28	2	**9X-2044**	3	SCREW-TRUSS HEAD (M6X1X16-MM)	
B	29	2	**198-1725**	2	WASHER-HARD (8.8X25.5X2-M THK)	
E	30	2	**144-0195**		HOSE (90-CM)	
D	31	1	**8T-6936**		SEAL (0.1-M)	

B-USE AS REQUIRED
D-ORDER BY THE METER
E-ORDER BY THE CENTIMETER
M-METRIC PART
Y-SEPARATE ILLUSTRATION

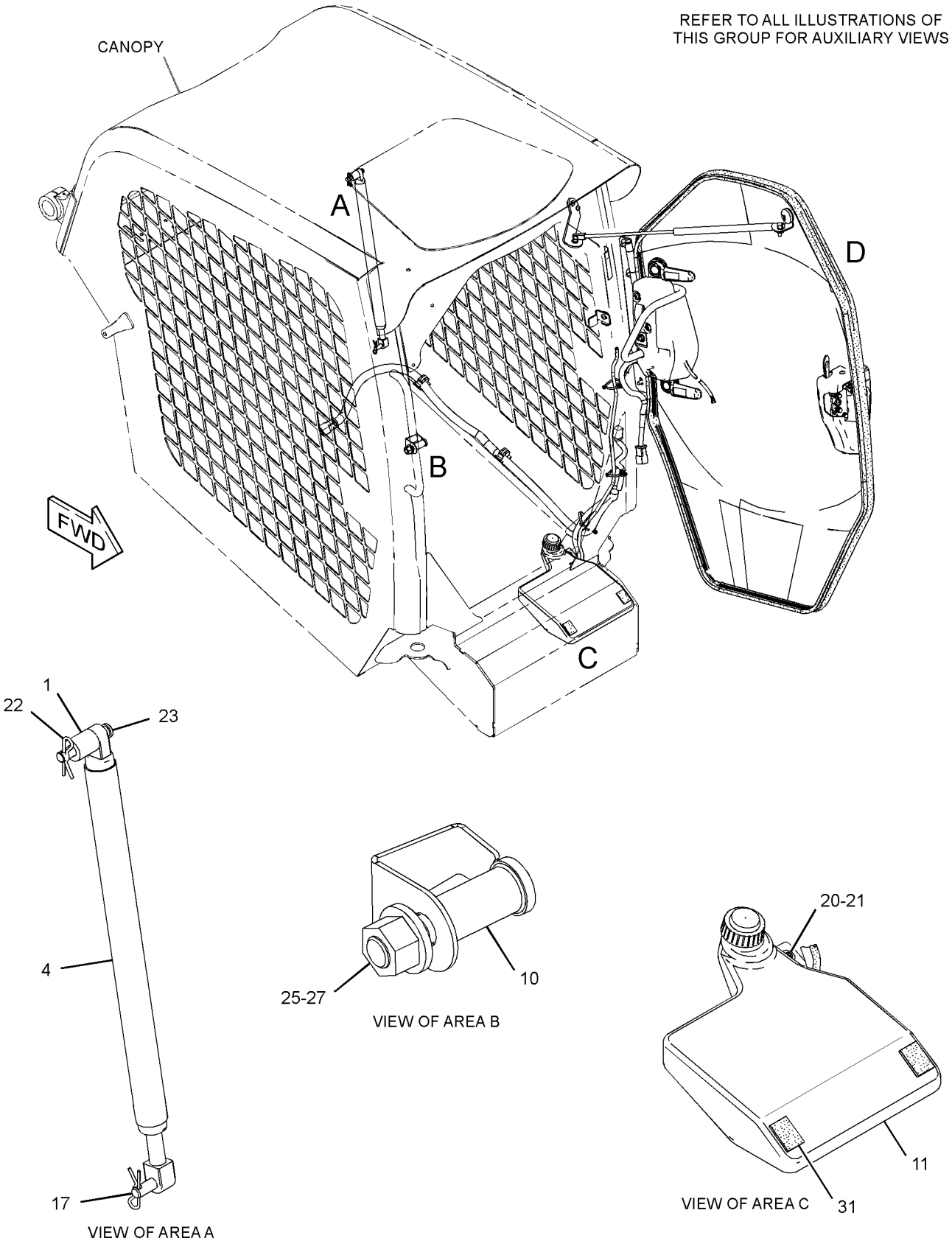

GRAPHIC #1

g01831455

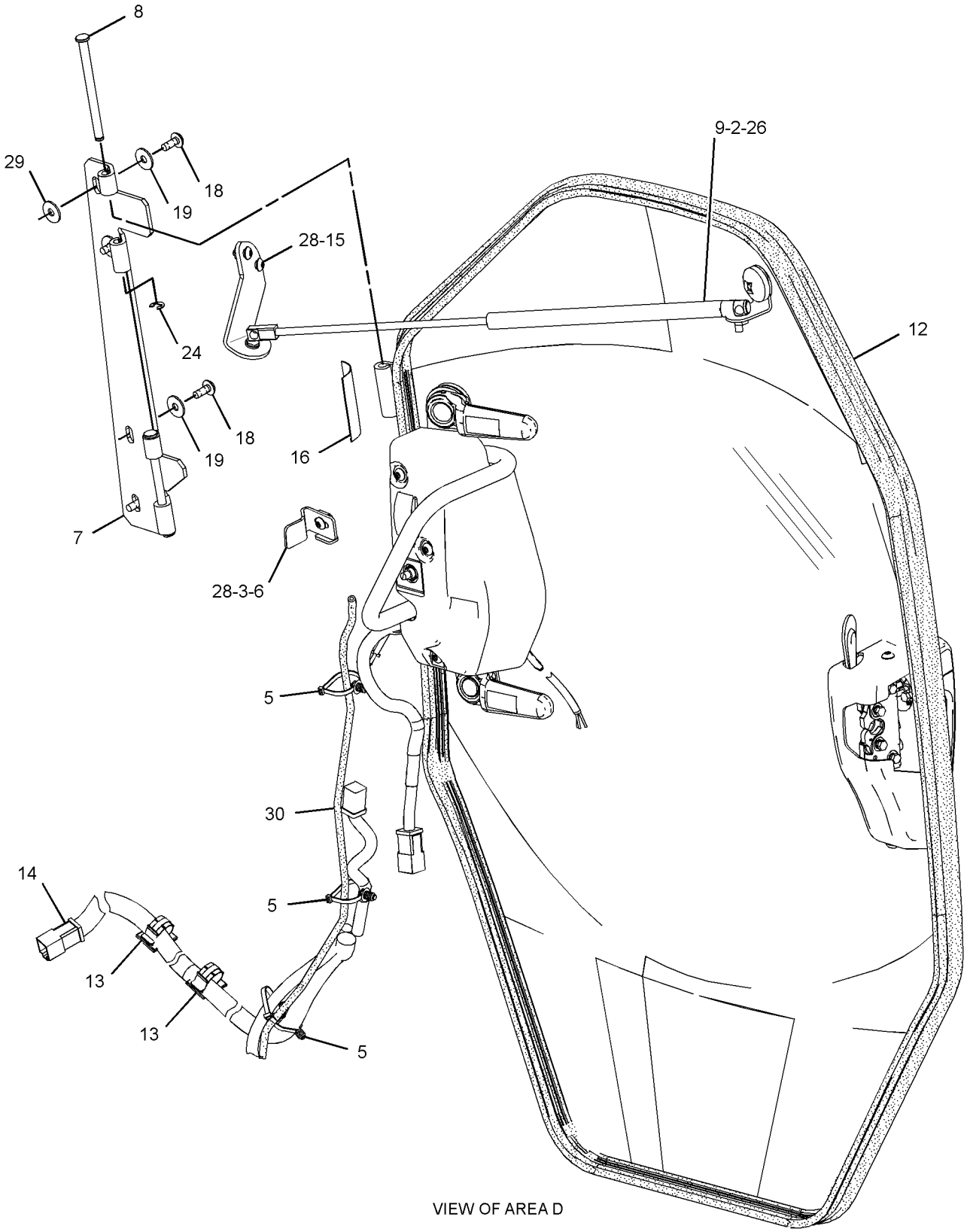

VIEW OF AREA D

GRAPHIC #2 **<END>** g01831459

OPERATOR STATION

280-6077 KIT-CAB HEATER & MOUNTING

S/N: MST1-UP

AN ATTACHMENT

SMCS-7304 **i03624798**

NOTE	PART NUMBER	QTY	PART NAME 1 2 3 4 5 6 (PRODUCT LEVEL)	SEE PAGE
Y	*266-2430*	1	CONTROL & WIRING GP-AIR & TEMP	662
Y	*258-4270*	1	HEATER GP-CAB	714
	258-4253	1	DUCT AS (INTERIOR)	
	258-4254	1	DUCT AS (INTERIOR)	
	258-4257	1	DUCT AS (INLET)	
	258-4258	1	DUCT AS (PLENUM)	
	258-4259	1	DUCT AS-OUTLET	
	258-4147	1	HARNESS AS-HEATER & AIR COND	
	186-3735	5	PIN-CONNECTOR (16-GA TO 18-GA)	
	9W-0852	4	PIN-CONNECTOR (14-GA)	
	9X-1054	1	PLUG AS-CONNECTOR (4-PIN)	
	155-2255	1	KIT-CONNECTING PLUG (12-PIN)	
	155-2265	1	KIT-CONNECTING PLUG (8-PIN)	
	155-2270	3	KIT-CONNECTING PLUG (2-PIN)	
			(EACH PLUG KIT INCLUDES PLUG AS, WEDGE & INTERFACE SEAL)	
	8T-8737	6	PLUG-SEAL	
	102-8804	1	KIT-RECEPTACLE (4-PIN)	
	102-8805	1	KIT-RECEPTACLE (6-PIN)	
			(EACH RECEPTACLE KIT INCLUDES RECEPTACLE AS & WEDGE)	
	100-6674	2	SEAL-CONNECTOR	
	186-3736	5	SOCKET-CONNECTOR (16-GA TO 18-GA)	
	9W-0844	16	SOCKET-CONNECTOR (14-GA)	
	124-5640	2	TERMINAL-SOCKET	
	8L-8413	5	STRAP-CABLE	
	9X-1056	2	TERMINAL-RECEPTACLE (14-GA TO 16-GA)	
	100-5041	2	TERMINAL-RECEPTACLE (18-GA TO 20-GA)	
E	**119-3662**		TUBE-HEAT SHRINK (10.85-MM DIA) (7-CM)	
E	**125-7874**		TUBE-HEAT SHRINK (5.72-MM DIA) (20-CM)	
	258-4378	2	KNOB AS	
	258-4379	1	KNOB AS	
	146-6371	6	LOUVER AS	
M	**6V-7357**	4	BOLT (M6X1X25-MM)	
M	**8T-4136**	1	BOLT (M10X1.5X25-MM)	
M	**163-3955**	2	BOLT (M6X1X35-MM)	
	206-9185	1	BOLT (M8X1.25X35-MM)	
	266-3314	2	BOLT-FLANGE HEAD (M6X1X20.5-MM)	
M	**266-3315**	11	BOLT-FLANGE HEAD (M8X1.25X25.5-MM)	
	8T-0154	4	CLAMP-HOSE	
	6D-1641	3	CLIP (LOOP)	
	9X-8250	4	CLIP	
	258-4264	1	COVER-FILTER	
	258-4248	1	COVER-LOUVER	
	246-9371	1	COVER-RELAY	
	258-4249	1	DUCT-INLET	
	004-6810	1	ELBOW	
	218-6645	1	ELBOW	
	8Y-5947	2	FASTENER	
	265-6618	1	FILTER ELEMENT-CAB AIR (RECIRCULATION)	
	265-6619	1	FILTER ELEMENT-CAB AIR (FRESH)	
E	**136-1953**		HOSE (530-CM)	
	258-3794	1	INSULATION	
	258-4408	1	INSULATION	

280-6077 KIT-CAB HEATER & MOUNTING *(contd.)* i03624798

NOTE	PART NUMBER	QTY	PART NAME 1 2 3 4 5 6 (PRODUCT LEVEL)	SEE PAGE
	155-2271	1	KIT-CONNECTING PLUG (4-PIN)	
			(INCLUDES PLUG AS, WEDGE & INTERFACE SEAL)	
	102-8802	3	KIT-RECEPTACLE (2-PIN)	
			(EACH INCLUDES RECEPTACLE AS & WEDGE)	
	258-4263	1	PLATE	
	109-2356	1	PLUG	
	8T-8737	10	PLUG-SEAL	
	7X-2031	3	RETAINER	
	206-2423	3	SADDLE	
	258-4384	1	SCREEN	
	6V-6689	2	SCREW-SELF-TAPPING (10-16X.625-IN)	
M	**215-6406**	3	SCREW-TRUSS HEAD (M6X1X16-MM)	
	258-3727	7	SCREW-TRUSS HEAD (NO 12X17.46-MM)	
	312-0131	4	SCREW-MACHINE (M6X1X30-MM)	
D	**6V-9335**		SEAL (1-M)	
	258-3792	1	SEAL	
	258-3793	1	SEAL	
	258-3795	2	SEAL	
	258-3796	1	SEAL	
	178-3620	3	STRAP-DUAL CLAMP	
	3S-2093	18	STRAP-CABLE	
	206-1345	2	STRAP-CABLE	
	5P-4116	1	WASHER-HARD (8.8X20.5X2-MM THK)	
	8T-4121	1	WASHER-HARD (11X21X2.5-MM THK)	
	8T-4205	8	WASHER-HARD (7.2X14.5X2-MM THK)	

D-ORDER BY THE METER
E-ORDER BY THE CENTIMETER
M-METRIC PART
Y-SEPARATE ILLUSTRATION

<END>

258-2472 KIT-CAB WINDOW—SIDE

S/N: MST1-UP
AN ATTACHMENT

SMCS-7310 **i02645952**

NOTE	PART NUMBER	QTY	PART NAME 1 2 3 4 5 6 (PRODUCT LEVEL)	SEE PAGE
Y	*258-3285*	1	WINDOW GP-CAB (SIDE, LH)	809
Y	*258-3286*	1	WINDOW GP-CAB (SIDE, RH)	810
	270-9442	18	SCREW-TRUSS HEAD (M6X1X20-MM)	

Y-SEPARATE ILLUSTRATION

<END>

258-4110 KIT-CONTROL PATTERN CHANGE–SELECTABLE

S/N: MST1-UP

FIELD INSTALLATION

SMCS-5705, 7557, 7620 **i03572324**

NOTE	REF NO	GRAPHIC REF	PART NUMBER	QTY	PART NAME 1 2 3 4 5 6 (PRODUCT LEVEL)	SEE PAGE
	1	1	**265-8033**	1	SWITCH AS-ROCKER (CONTROL PATTERN CHANGE)	
		1	**111-7899**	1	GASKET	
	2	1	**285-2181**	1	FILM-INSTRUCTION (CONTROL PATTERN, RH)	
	3	1	**285-2182**	1	FILM-INSTRUCTION (CONTROL PATTERN, LH)	

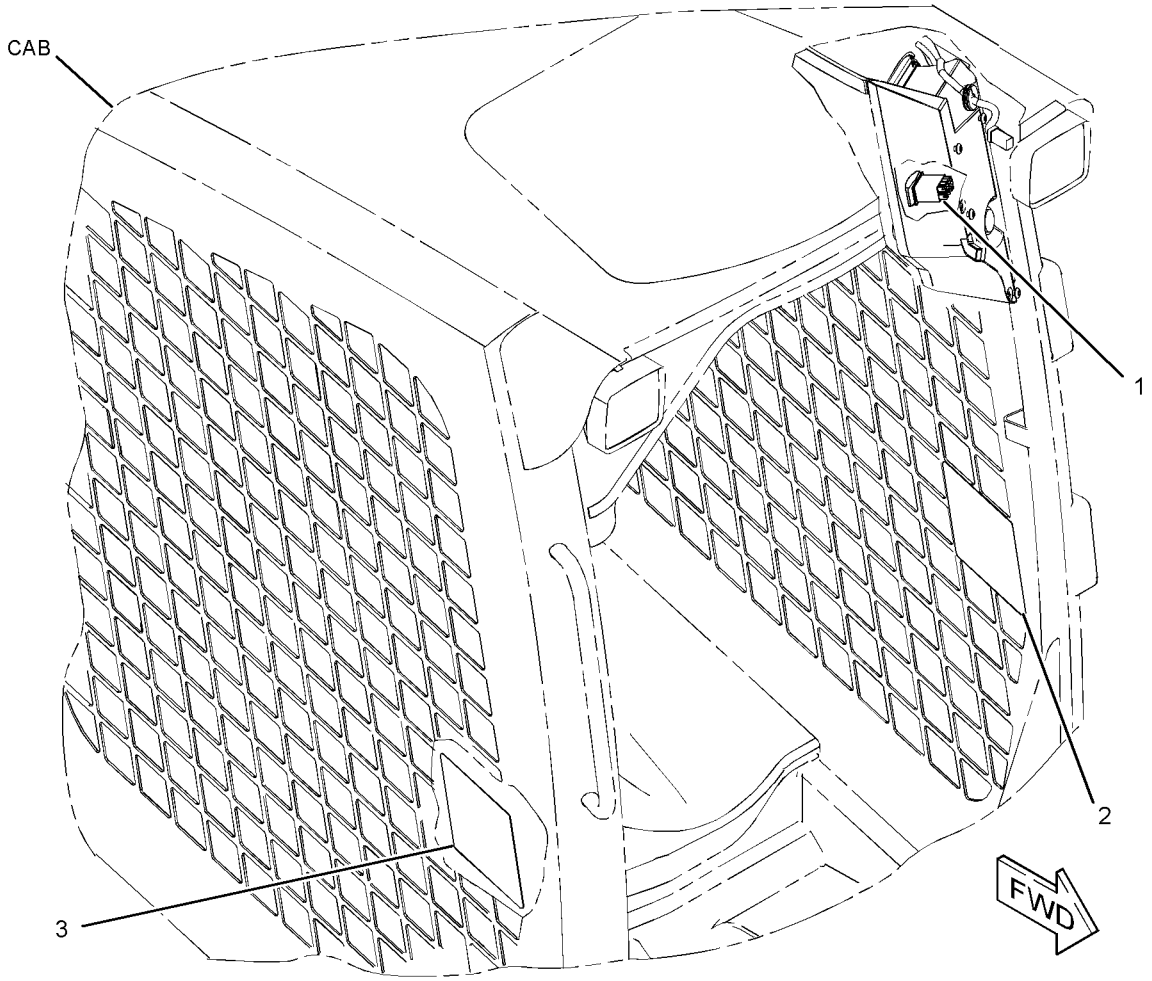

GRAPHIC #1 **<END>** g01328348

OPERATOR STATION

292-7927 KIT-CONTROL PATTERN CHANGE–DEDICATED

S/N: MST1-UP

AN ATTACHMENT

SMCS-5705, 7557, 7620 **i02910287**

NOTE	REF NO	GRAPHIC REF	PART NUMBER	QTY	PART NAME 1 2 3 4 5 6 (PRODUCT LEVEL)	SEE PAGE
	1	1	**285-2181**	1	FILM-INSTRUCTION (CONTROL PATTERN, RH)	
	2	1	**285-2182**	1	FILM-INSTRUCTION (CONTROL PATTERN, LH)	

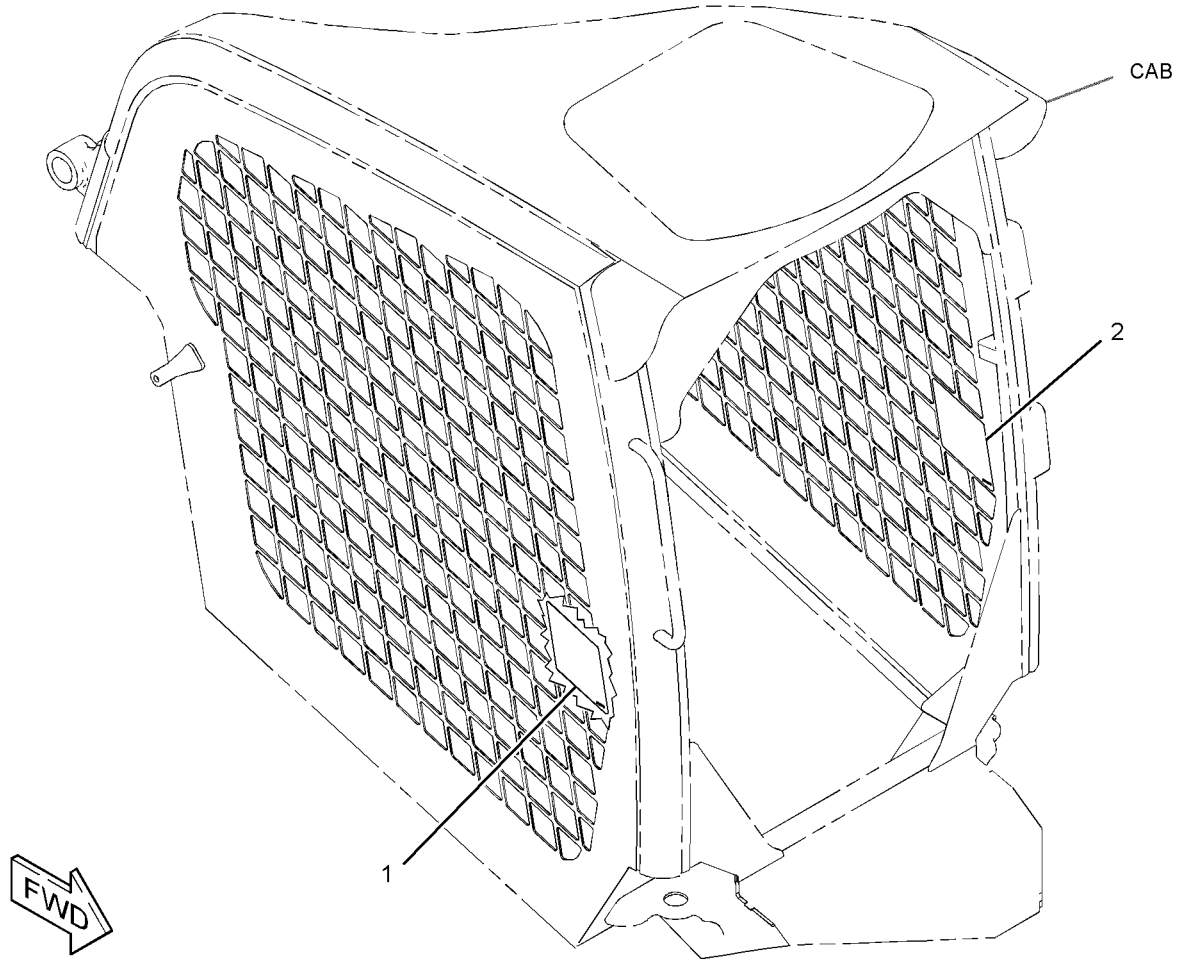

GRAPHIC #1 **<END>** g01349478

258-4111 KIT-INSTRUMENT PANEL–
INCLUDES CREEPER CONTROL, RH
S/N: MST1-UP
CANNOT BE USED WITH MACHINE EQUIPPED WITH THE RH INSTRUMENT CLUSTER AN ATTACHMENT
TYPE 1

SMCS-1435, 7450, 7490 **i03572329**

NOTE	REF NO	GRAPHIC REF	PART NUMBER	QTY	PART NAME 1 2 3 4 5 6 (PRODUCT LEVEL)	SEE PAGE
	1	1	**263-5420**	1	SWITCH AS-ROCKER (CREEPER CONTROL)	
		1	**111-7899**	1	GASKET	
	2	1	**264-8861**	1	MODULE GP-DISPLAY	
M	3	1	**135-7242**	4	SCREW-SELF-TAPPING (M5X2.3X18.8-MM)	
	4	1	**9X-8256**	4	WASHER (6.6X12X2-MM THK)	

M-METRIC PART

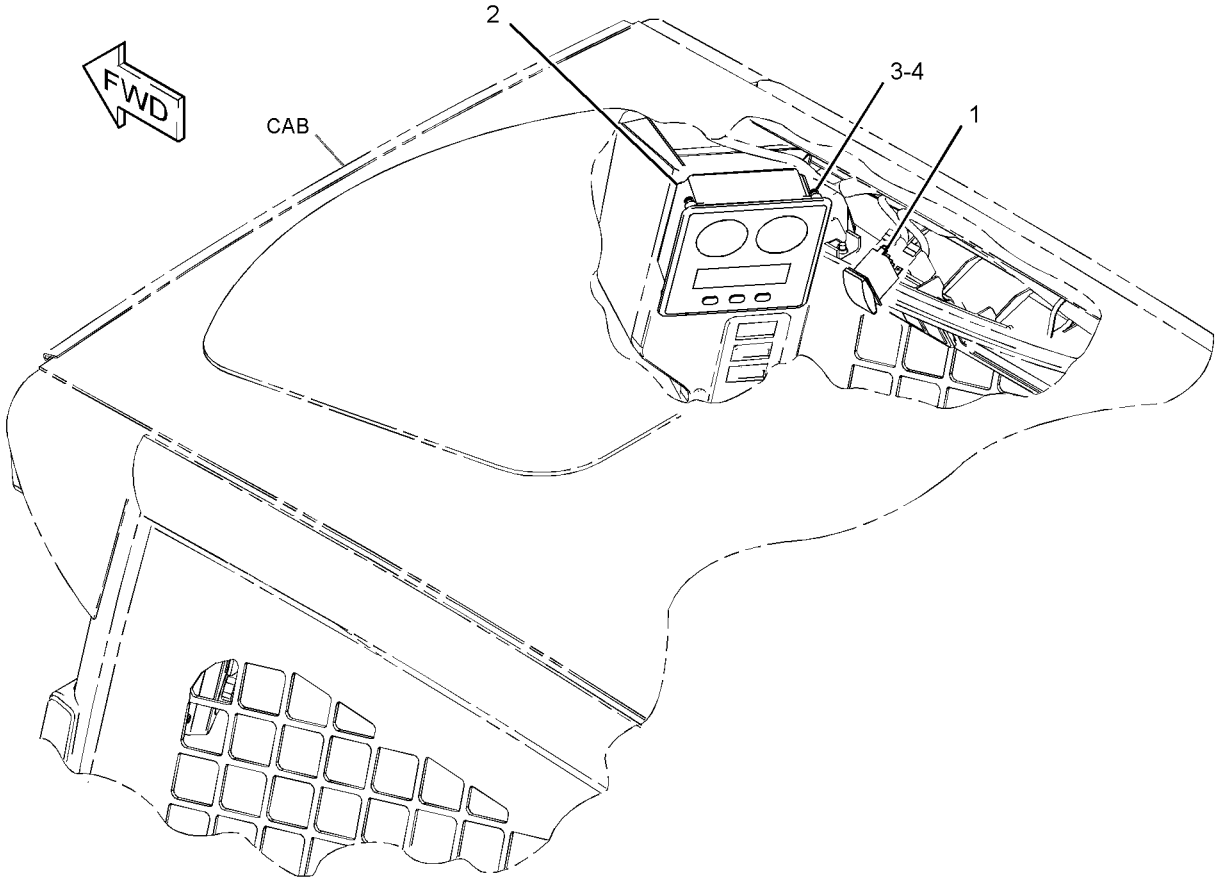

GRAPHIC #1 **<END>** g01328352

OPERATOR STATION

258-4111 KIT-INSTRUMENT PANEL–

INCLUDES CREEPER CONTROL, RH

S/N: MST1-UP

CANNOT BE USED WITH MACHINE EQUIPPED WITH THE RH INSTRUMENT CLUSTER AN ATTACHMENT

TYPE 2

SMCS-1435, 7450, 7490 **i03726321**

NOTE	REF NO	GRAPHIC REF	PART NUMBER	QTY	PART NAME 1 2 3 4 5 6 (PRODUCT LEVEL)	SEE PAGE
	1	1	**263-5420**	1	SWITCH AS-ROCKER (CREEPER CONTROL)	
		1	**111-7899**	1	GASKET	
CY	2	1	*347-4187*	1	MODULE GP-DISPLAY	757
M	3	1	**135-7242**	4	SCREW-SELF-TAPPING (M5X2.3X18.8-MM)	
	4	1	**9X-8256**	4	WASHER (6.6X12X2-MM THK)	

C-CHANGE FROM PREVIOUS TYPE
M-METRIC PART
Y-SEPARATE ILLUSTRATION

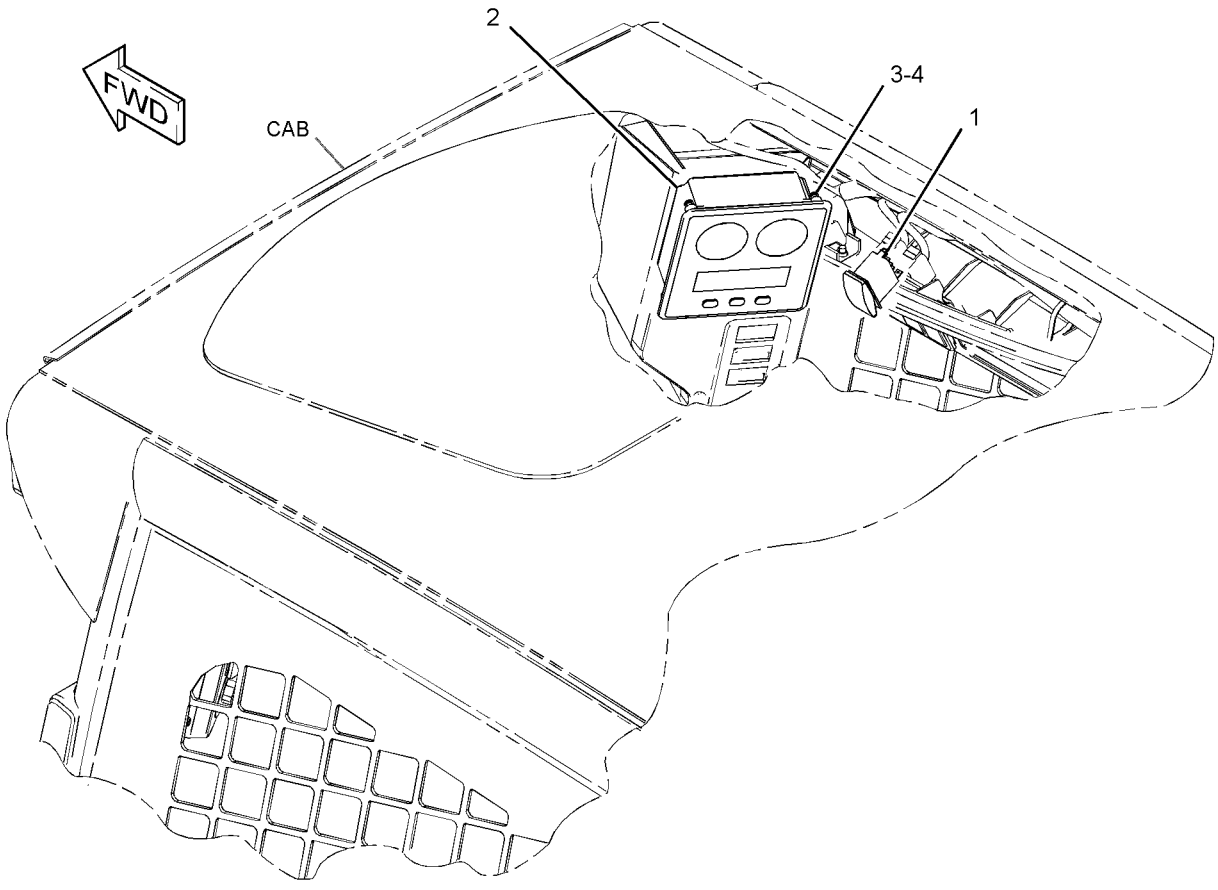

GRAPHIC #1 **<END>** g01328352

258-4045 LEVER GP-GOVERNOR

S/N: MST1-UP

PART OF 280-6340, 295-7463 CONTROL GP-GOVERNOR

SMCS-1265, 1276 **i02625324**

NOTE	REF NO	GRAPHIC REF	PART NUMBER	QTY	PART NAME 1 2 3 4 5 6 (PRODUCT LEVEL)	SEE PAGE
	1	1	**258-4046**	1	LEVER GP-GOVERNOR	
M		1	**8T-4971**	1	BOLT (M6X1X30-MM)	
M		1	**129-3178**	1	LOCKNUT (M6X1-THD)	
	2	1	**258-4047**	1	CABLE AS	
M		1	**8T-4133**	1	NUT (M10X1.5-THD)	
		1	**280-6341**	1	NUT (M10X1.5-MM THD)	

M-METRIC PART

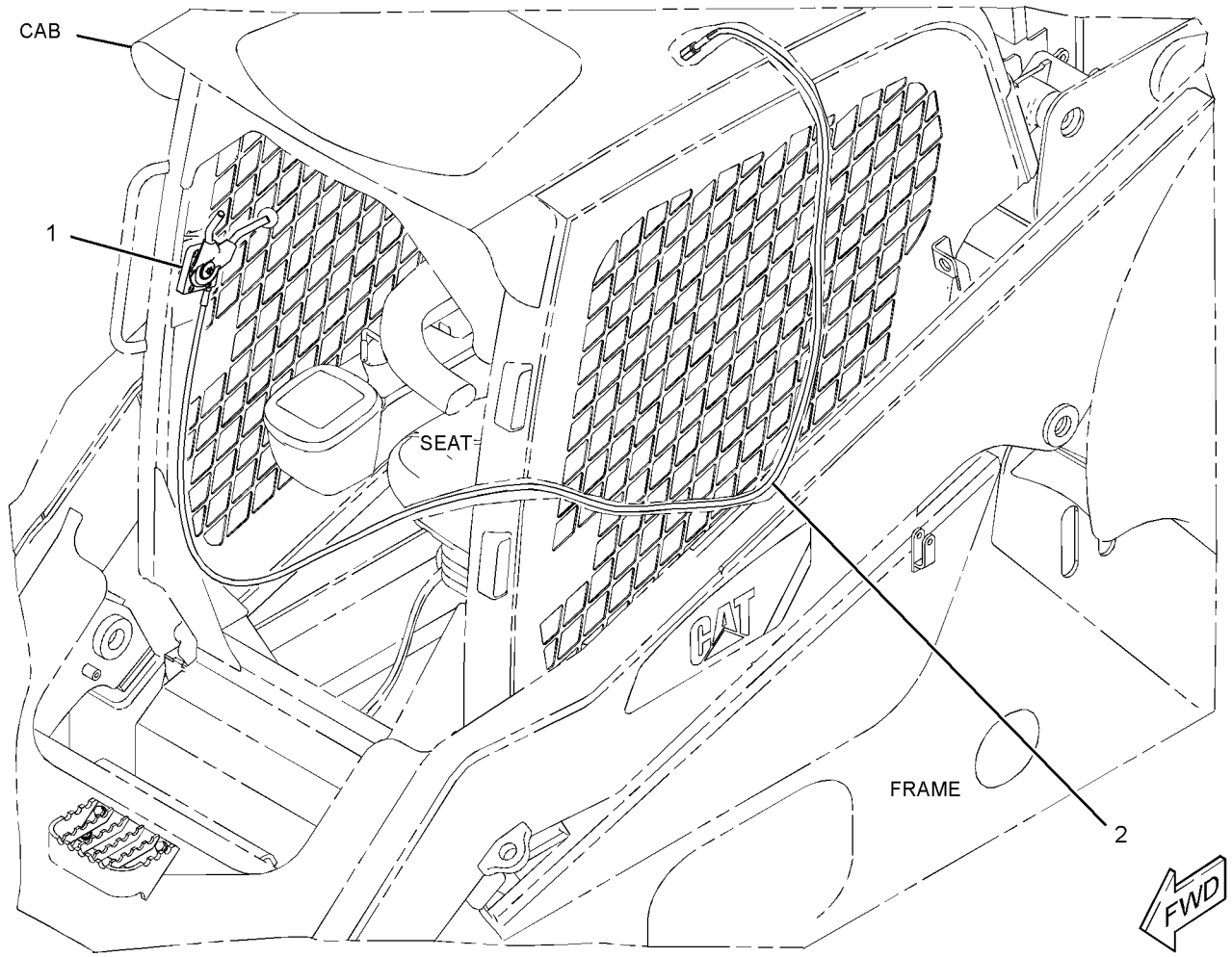

GRAPHIC #1 **<END>** g01316881

OPERATOR STATION

258-4020 LINER GP-CAB

S/N: MST1-2924

PART OF 258-4000 CAB AR-ENCLOSED ROPS

SMCS-7268, 7329 **i03636002**

NOTE	REF NO	GRAPHIC REF	PART NUMBER	QTY	PART NAME 1 2 3 4 5 6 (PRODUCT LEVEL)	SEE PAGE
	1	2	**8Y-5947**	7	FASTENER	
	2	1	**258-3727**	5	SCREW-TRUSS HEAD (NO 12X17.46-MM)	
	3	1	**258-3785**	2	SEAL	
	4	1	**258-3786**	1	SEAL	
	5	1	**258-3787**	1	SEAL	
	6	1	**258-3788**	1	SEAL	
	7	1	**258-3790**	1	SEAL	
	8	2	**258-4021**	1	HEADLINER	
	9	2	**258-4024**	1	LINER (FLOOR)	
Y	10	2	*258-4433*	1	LINER GP-CAB	750
	11	2	**258-4029**	1	SUPPORT AS-SEAT	
	12	2	**258-4065**	1	FLOOR MAT	
	13	1	**5P-7957**	1	LANYARD	
	16	1	**280-6068**	1	COVER (LH)	
	17	2	**280-6069**	1	COVER (RH)	
	18	1	**280-6071**	5	CLIP	
	19	2	**274-7409**	6	SCREW-TRUSS HEAD (M8X1.25X45-MM)	
M	20	2	**5C-2890**	6	NUT (M6X1-THD)	
	21	2	**5P-4116**	2	WASHER-HARD (8.8X20.5X2-MM THK)	
M	22	2	**6V-9189**	6	LOCKNUT (M8X1.25-THD)	
	23	2	**8T-4205**	6	WASHER-HARD (7.2X14.5X2-MM THK)	
	24	2	**8T-4224**	6	WASHER-HARD (8.8X16X2-MM THK)	
M	25	2	**9X-2045**	6	SCREW-TRUSS HEAD (M6X1X20-MM)	
M	26	2	**111-4627**	2	SCREW-MACHINE (M6X1X30-MM)	
E	27	1	**134-2827**		SEAL (89-CM)	
	28	1	**5P-7958**	1	SLEEVE-CABLE SPLICE	
E	29	1	**177-4122**		SEAL (48-CM)	
D	30	1	**5P-5927**		SEAL (0.86-M EACH)	
D	31	1	**5P-5755**		SEAL (0.13-M EACH)	
D	32	1	**5P-7483**		SEAL (0.53-M)	
D	34	1	**8T-6936**		SEAL (0.04-M EACH)	
D	35	2	**8T-5372**		SEAL (0.33-M EACH)	
D	35A	2	**8T-5372**		SEAL (0.09-M EACH)	
D	35B	1	**8T-5372**		SEAL (0.36-M EACH)	
D	35C	1	**8T-5372**		SEAL (0.1-M EACH)	
E	41	1	**9X-2092**		TRIM-EDGE (70-CM EACH)	

D-ORDER BY THE METER
E-ORDER BY THE CENTIMETER
M-METRIC PART
Y-SEPARATE ILLUSTRATION

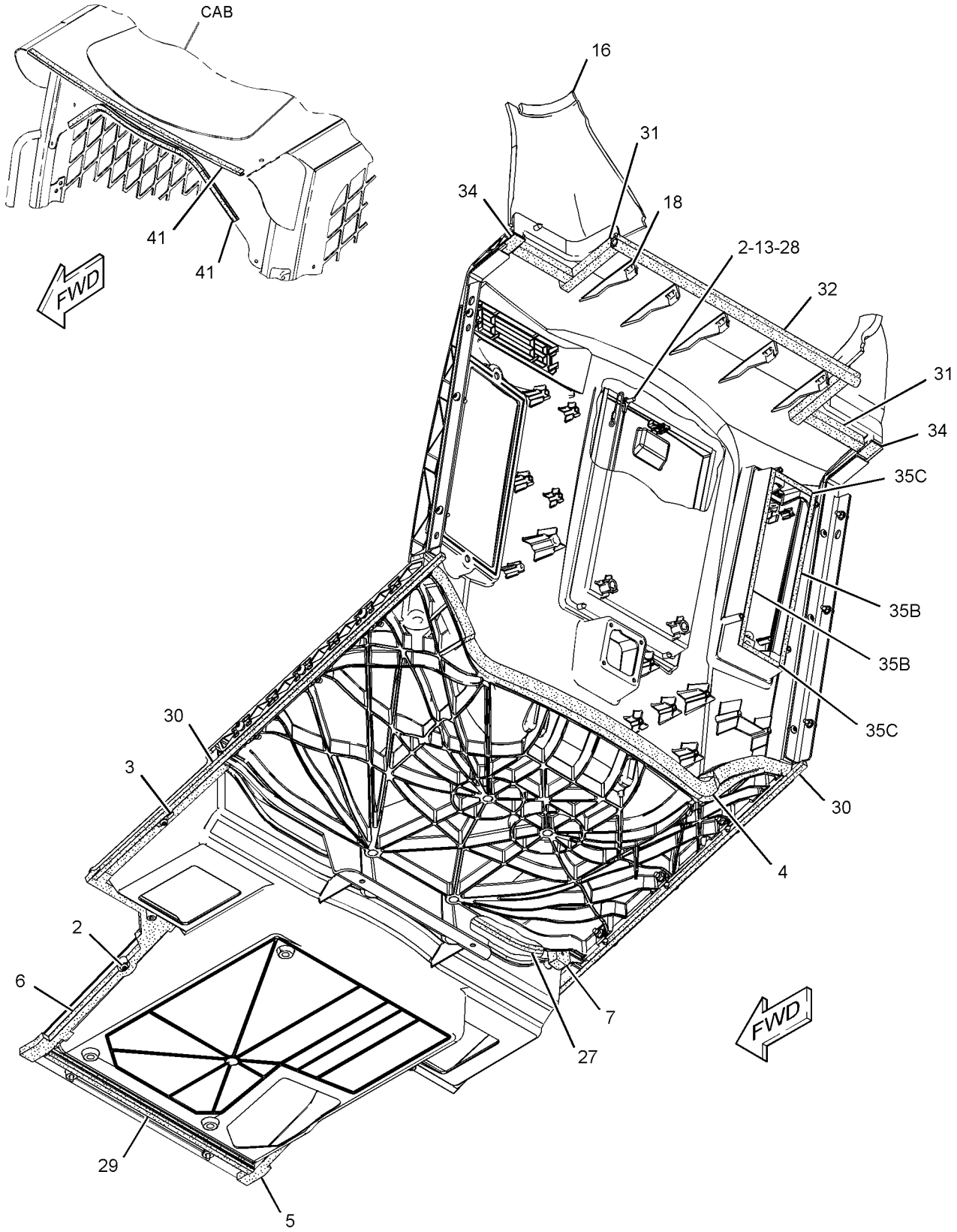

GRAPHIC #1 g01951541

258-4020 **LINER GP-CAB** *(contd.)* **i03636002**

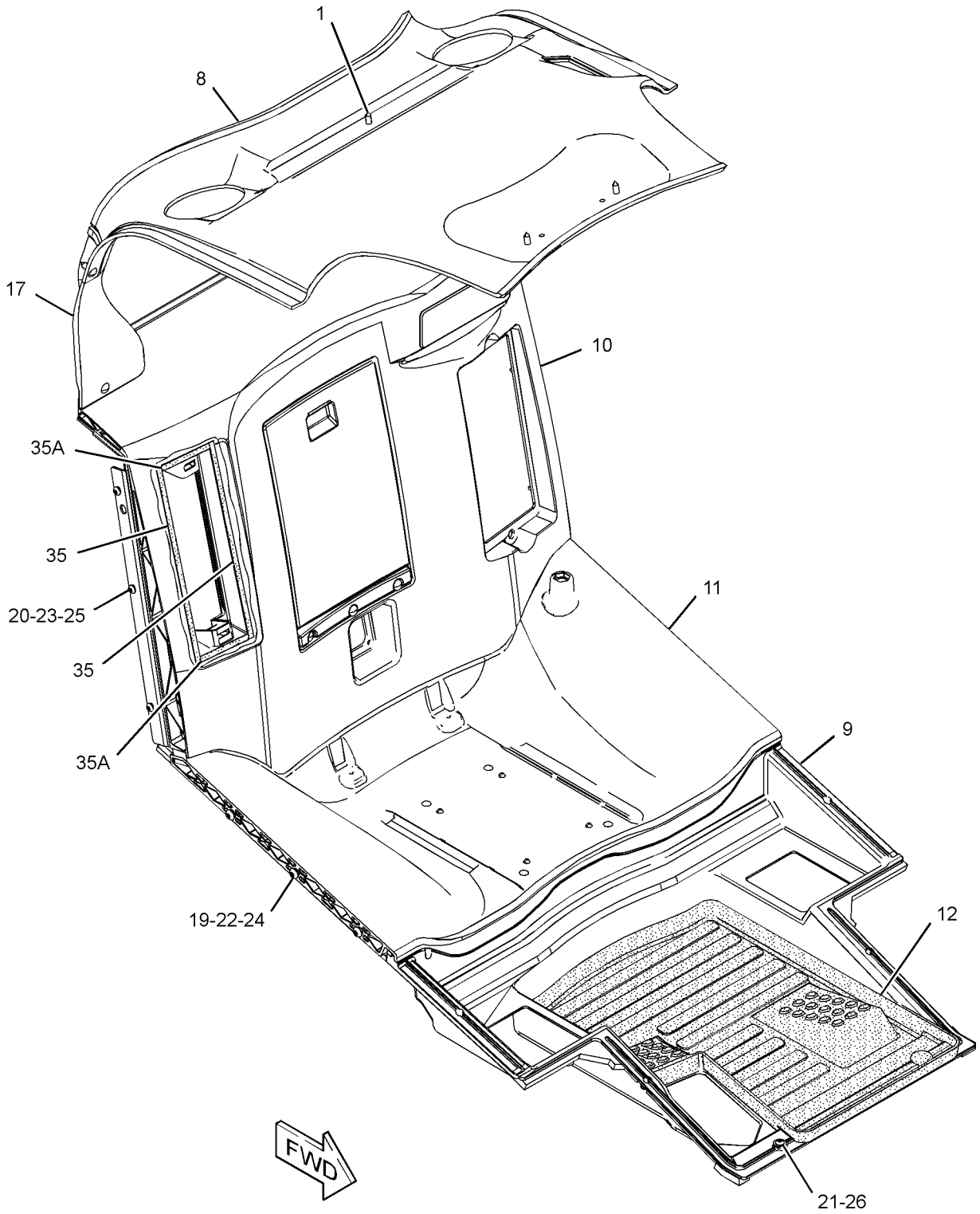

GRAPHIC #2 **<END>** g01951542

OPERATOR STATION

258-4020 LINER GP-CAB

S/N: MST2925-UP

PART OF 258-4000 CAB AR-ENCLOSED ROPS

SMCS-7268, 7329 **i03652903**

NOTE	REF NO	GRAPHIC REF	PART NUMBER	QTY	PART NAME 1 2 3 4 5 6 (PRODUCT LEVEL)	SEE PAGE
	1	2	**8Y-5947**	7	FASTENER	
	2	1	**258-3727**	5	SCREW-TRUSS HEAD (NO 12X17.46-MM)	
	3	1	**258-3785**	2	SEAL	
	4	1	**258-3786**	1	SEAL	
	5	1	**258-3787**	1	SEAL	
	6	1	**258-3788**	1	SEAL	
	7	1	**258-3790**	1	SEAL	
	8	2	**258-4021**	1	HEADLINER	
	9	2	**258-4024**	1	LINER (FLOOR)	
Y	10	2	*258-4433*	1	LINER GP-CAB	750
	11	2	**258-4029**	1	SUPPORT AS-SEAT	
	12	2	**258-4065**	1	FLOOR MAT	
	13	1	**5P-7957**	1	LANYARD	
	16	1	**280-6068**	1	COVER (LH)	
	17	2	**280-6069**	1	COVER (RH)	
	18	1	**280-6071**	5	CLIP	
	19	2	**274-7409**	6	SCREW-TRUSS HEAD (M8X1.25X45-MM)	
M	20	2	**5C-2890**	6	NUT (M6X1-THD)	
	21	2	**5P-4116**	2	WASHER-HARD (8.8X20.5X2-MM THK)	
M	22	2	**6V-9189**	6	LOCKNUT (M8X1.25-THD)	
	23	2	**8T-4205**	6	WASHER-HARD (7.2X14.5X2-MM THK)	
	24	2	**8T-4224**	6	WASHER-HARD (8.8X16X2-MM THK)	
M	25	2	**9X-2045**	6	SCREW-TRUSS HEAD (M6X1X20-MM)	
M	26	2	**111-4627**	2	SCREW-MACHINE (M6X1X30-MM)	
E	27	1	**134-2827**		SEAL (89-CM)	
	28	1	**5P-7958**	1	SLEEVE-CABLE SPLICE	
E	29	1	**177-4122**		SEAL (48-CM)	
D	30	1	**5P-5927**		SEAL (0.9-M EACH)	
CD	35	2	**8T-5372**		SEAL (0.33-M EACH)	
CD	35A	2	**8T-5372**		SEAL (0.09-M EACH)	
CD	35B	1	**8T-5372**		SEAL (0.4-M EACH)	
CD	35C	1	**8T-5372**		SEAL (0.1-M EACH)	
E	41	1	**9X-2092**		TRIM-EDGE (70-CM EACH)	

C-CHANGE FROM PREVIOUS TYPE
D-ORDER BY THE METER
E-ORDER BY THE CENTIMETER
M-METRIC PART
Y-SEPARATE ILLUSTRATION

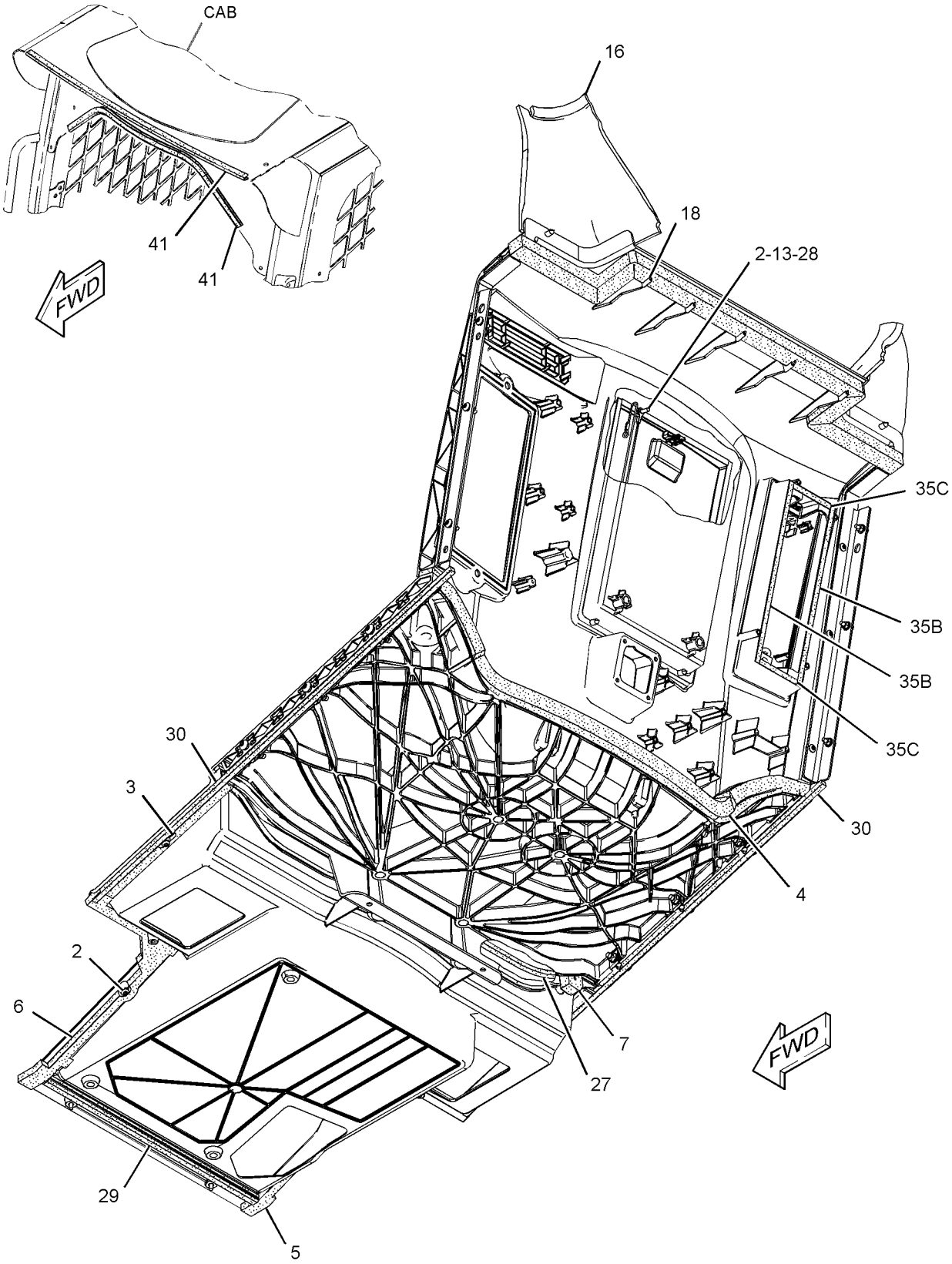

GRAPHIC #1

g01960405

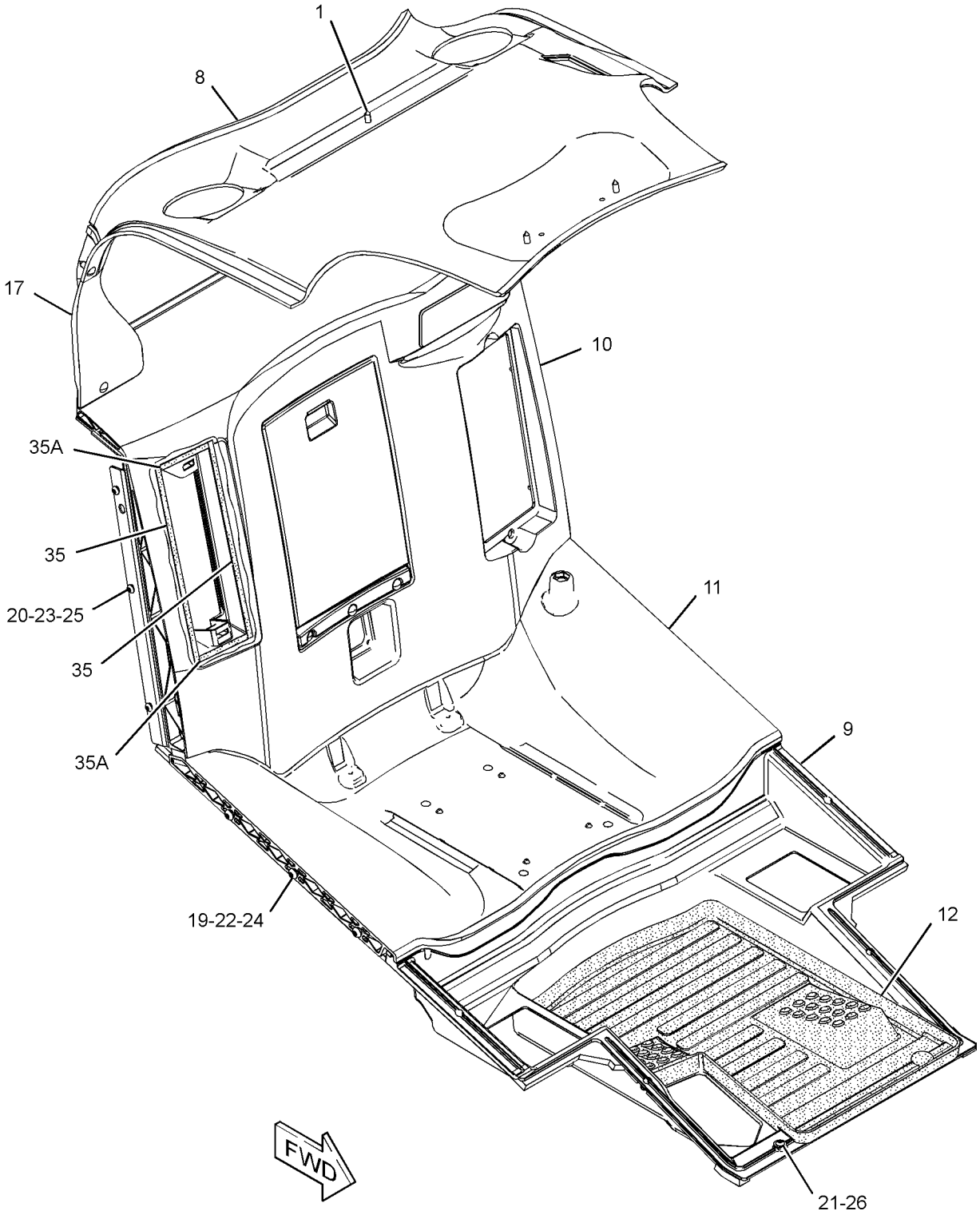

GRAPHIC #2 **<END>** g01960397

OPERATOR STATION

258-4433 LINER GP-CAB

S/N: MST1-UP

PART OF 258-4020 LINER GP-CAB

SMCS-7268, 7329 **i03690343**

NOTE	REF NO	GRAPHIC REF	PART NUMBER	QTY	PART NAME 1 2 3 4 5 6 (PRODUCT LEVEL)	SEE PAGE
	1	1	**8Y-5947**	3	FASTENER	
	2	1	**258-3727**	6	SCREW-TRUSS HEAD (12X0.68-IN)	
	3	1	**258-4025**	1	LINER AS	
	4	1	**258-4026**	1	COVER AS	
	5	1	**258-4068**	1	COVER	
	6	1	**258-4236**	1	COVER AS	
	7	1	**258-4358**	1	PLATE	
	8	1	**258-4359**	1	PLATE	
E	9	1	**8C-7524**		SEAL (60.5-CM EACH)	
D	10	1	**8T-5372**		SEAL (0.25-M)	
D	10A	1	**8T-5372**		SEAL (0.4-M EACH)	

D-ORDER BY THE METER
E-ORDER BY THE CENTIMETER

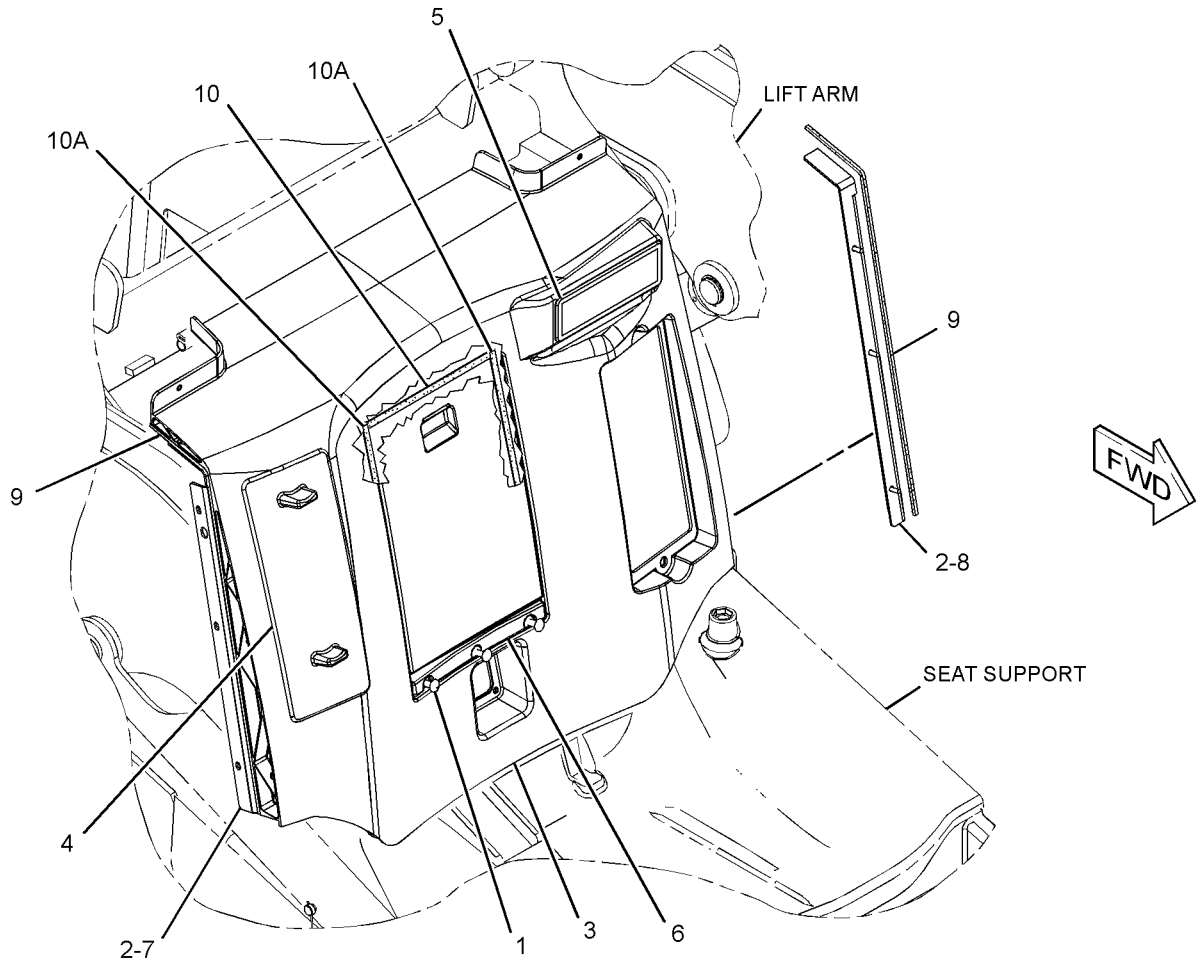

GRAPHIC #1 **<END>** g01951619

OPERATOR STATION

258-4265 LINES GP-AIR CONDITIONER

S/N: MST1-UP

PART OF 258-4260 AIR CONDITIONER AR

AN ATTACHMENT

SMCS-1808, 7320 **i03647027**

NOTE	REF NO	GRAPHIC REF	PART NUMBER	QTY	PART NAME 1 2 3 4 5 6 (PRODUCT LEVEL)	SEE PAGE
	1	1	**3S-2093**	2	STRAP-CABLE	
	2	1	**9X-7378**	2	SEAL-O-RING	
	3	1	**101-8296**	2	CLIP	
	4	1	**105-9411**	1	SUPPORT	
	5	1	**149-6371**	1	SWITCH AS-PRESSURE (REFRIGERANT COMPR, LOW SIDE)	
		1	**102-8802**	1	KIT-RECEPTACLE (2-PIN)	
					(INCLUDES RECEPTACLE AS & WEDGE)	
		1	**8T-8729**	2	PIN-CONNECTOR (16-GA TO 18-GA)	
	6	1	**178-3620**	4	STRAP-DUAL CLAMP	
	7	1	**212-2204**	1	CONTROL GP-AIR CONDITIONER	
		1	**155-2271**	1	KIT-CONNECTING PLUG (4-PIN)	
					(INCLUDES PLUG AS, WEDGE & INTERFACE SEAL)	
		1	**186-3736**	4	SOCKET-CONNECTOR (16-GA TO 18-GA)	
	8	1	**236-6923**	1	SWITCH AS-PRESSURE (REFRIGERANT COMPR, HIGH SIDE)	
	9	1	**258-4262**	1	HOSE AS	
	10	1	**258-4304**	1	HOSE AS	
I	11	1	**258-4308**	1	HOSE AS	
I	12	1	**258-4309**	1	HOSE AS	
	13	1	**258-4388**	1	BRACKET AS	
Y	14	1	*186-6190*	1	ACCUMULATOR GP-REFRIGERANT (WITH DESICCANT)	646
	15	1	**315-5381**	1	PLATE-INSTRUCTION (AIR CONDITIONER, READ OMM)	
M	16	1	**266-3315**	3	BOLT-FLANGE HEAD (M8X1.25X25.5-MM)	
	18	1	**8T-4121**	3	WASHER-HARD (11X21X2.5-MM THK)	
M	19	1	**8T-4136**	3	BOLT (M10X1.5X25-MM)	
	21	1	**9X-7380**	1	SEAL-O-RING	
	22	1	**9X-7381**	2	SEAL-O-RING	
	23	1	**9X-7382**	1	SEAL-O-RING	
	24	1	**9X-7383**	2	SEAL-O-RING	
	25	1	**132-5789**	1	CLIP	
D	26	1	**5P-5924**		SEAL (0.15-M EACH)	
	27	1	**7K-1181**	1	STRAP-CABLE	

D-ORDER BY THE METER
I-REFER TO HYDRAULIC INFORMATION SYSTEM
M-METRIC PART
Y-SEPARATE ILLUSTRATION

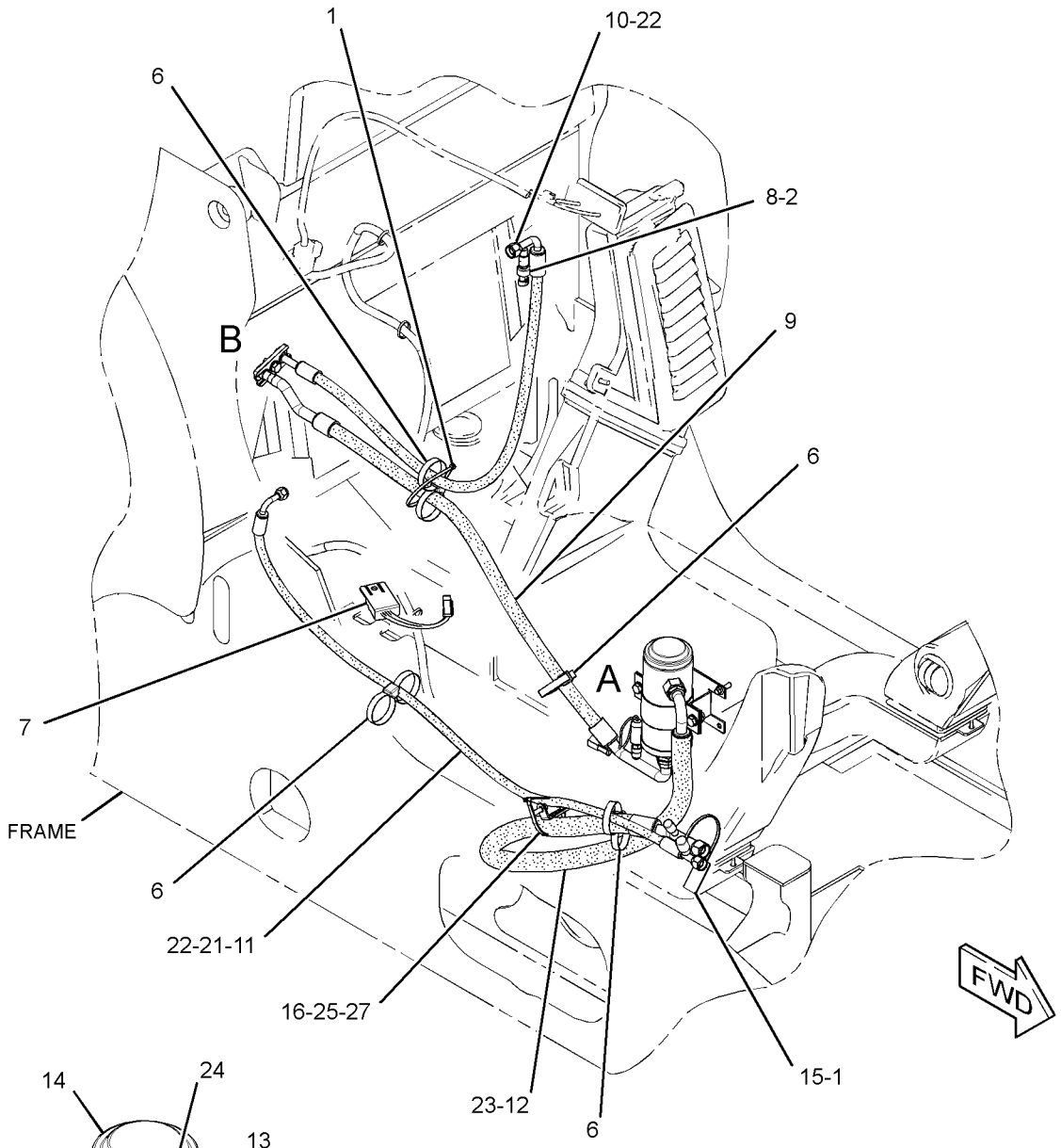

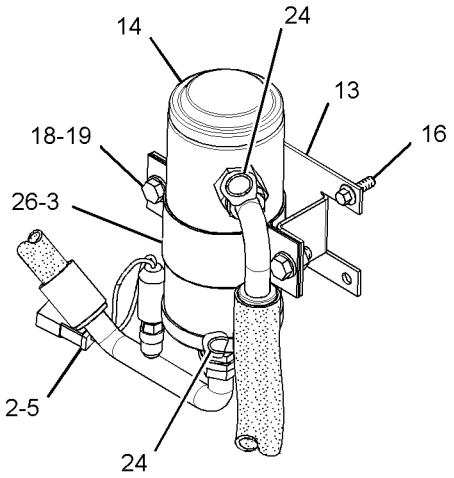

VIEW OF AREA A

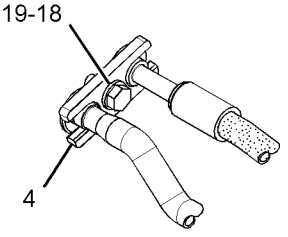

VIEW OF AREA B

GRAPHIC #1 **<END>** g01669953

OPERATOR STATION

258-4255 LINES GP-HEATER

S/N: MST1-UP

PART OF 258-4260 AIR CONDITIONER AR, 258-4250 HEATER AR-CAB AN ATTACHMENT

SMCS-1812, 7304 **i03647954**

NOTE	REF NO	GRAPHIC REF	PART NUMBER	QTY	PART NAME 1 2 3 4 5 6 (PRODUCT LEVEL)	SEE PAGE
	1	1	**8T-0154**	4	CLAMP-HOSE	
	2	1	**004-6810**	1	ELBOW	
	3	1	**178-3620**	3	STRAP-DUAL CLAMP	
	4	1	**218-6645**	1	ELBOW	
M	5	1	**266-3315**	4	BOLT-FLANGE HEAD (M8X1.25X25.5-MM)	
	6	1	**6D-1641**	3	CLIP	
	7	1	**8T-4121**	1	WASHER-HARD (11X21X2.5-MM THK)	
M	8	1	**8T-4136**	1	BOLT (M10X1.5X25-MM)	
	9	1	**9X-8250**	2	CLIP	
E	10	1	**136-1953**		HOSE (315-CM)	
E	10A	1	**136-1953**		HOSE (215-CM)	

E-ORDER BY THE CENTIMETER
M-METRIC PART

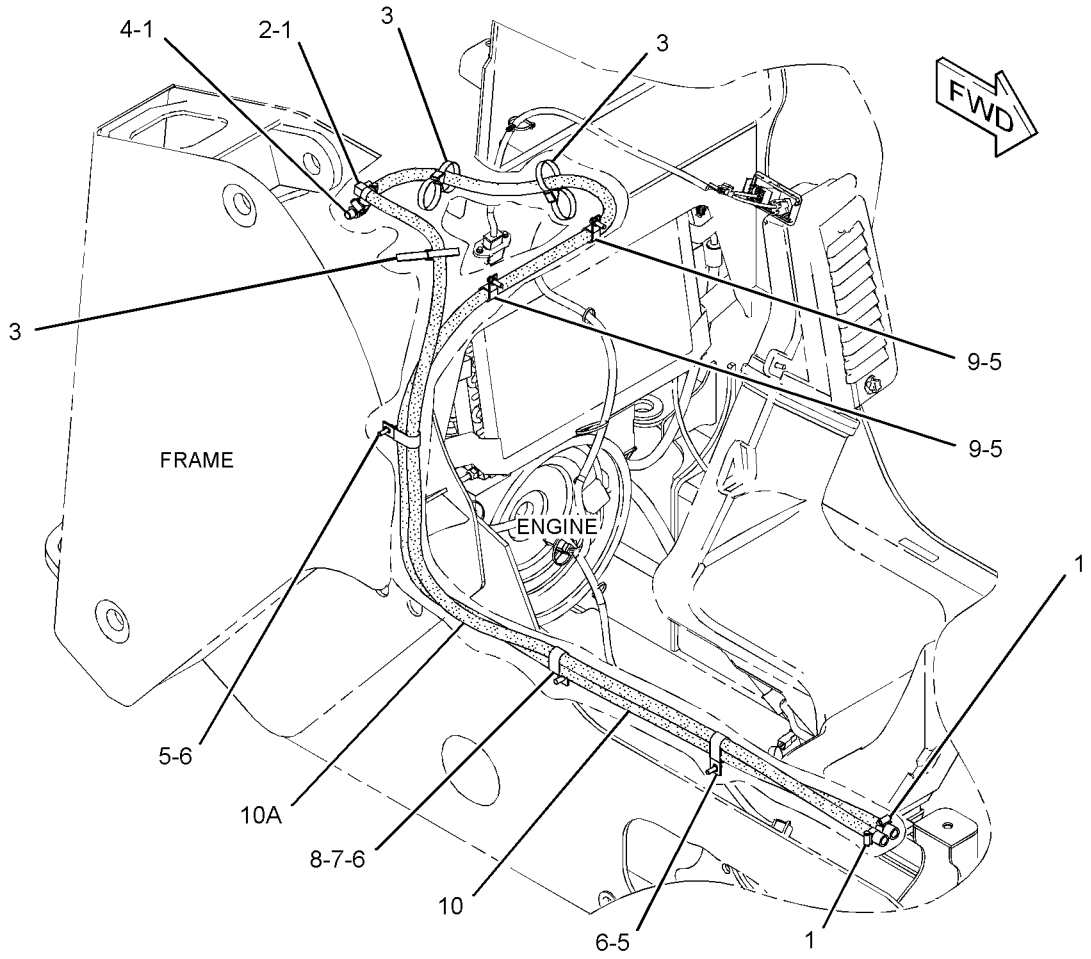

GRAPHIC #1 **<END>** g01442537

OPERATOR STATION

6V-1970 LITERATURE GP

S/N: MST1-UP

PART OF 258-3262, 295-7262 COMMON AR

SMCS-0374, 0375, 7300 **i02831417**

NOTE	PART NUMBER	QTY	PART NAME 1 2 3 4 5 6 (PRODUCT LEVEL)	SEE PAGE
	5P-8500	2	KEY (LITERATURE COMPARTMENT)	
	5P-7958	1	SLEEVE-CABLE SPLICE	

<END>

258-4230 MIRROR GP-REAR VIEW

S/N: MST1860-UP
PART OF 258-3800 CONVERSION AR-ROADING
AN ATTACHMENT

SMCS-7319 **i03505726**

NOTE	REF NO	GRAPHIC REF	PART NUMBER	QTY	PART NAME 1 2 3 4 5 6 (PRODUCT LEVEL)	SEE PAGE
	1	1	**280-6070**	1	MIRROR AS (REAR VIEW)	
	2	1	**3B-4505**	1	LOCKWASHER	
M	3	1	**5C-7261**	1	NUT (M8X1.25-THD)	
	4	1	**8T-4224**	1	WASHER-HARD (8.8X16X2-MM THK)	

M-METRIC PART

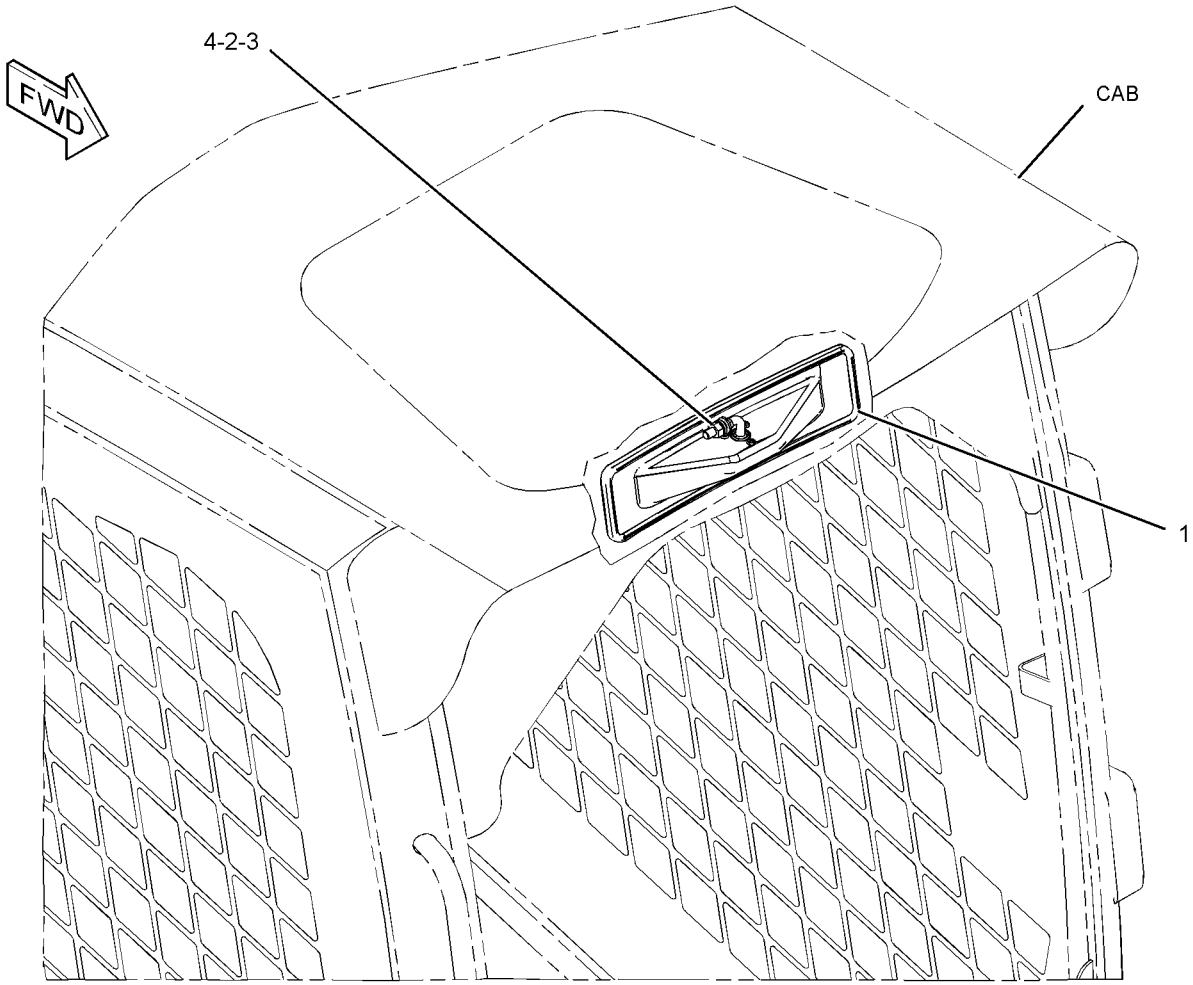

GRAPHIC #1 **<END>** g01316638

OPERATOR STATION

305-8034 MIRROR GP-REAR VIEW

S/N: MST1-UP
PART OF 258-3803, 315-6354 CONVERSION AR-MACHINE, 258-3802, 258-3804 CONVERSION AR-ROADING
AN ATTACHMENT

SMCS-7319 **i03344042**

NOTE	REF NO	GRAPHIC REF	PART NUMBER	QTY	PART NAME 1 2 3 4 5 6 (PRODUCT LEVEL)	SEE PAGE
	1	1	**218-6384**	1	MIRROR AS	
	2	1	**3B-4505**	1	LOCKWASHER	
M	3	1	**5C-7261**	2	NUT (M8X1.25-THD)	
	4	1	**8T-4224**	2	WASHER-HARD (8.8X16X2-MM THK)	

M-METRIC PART

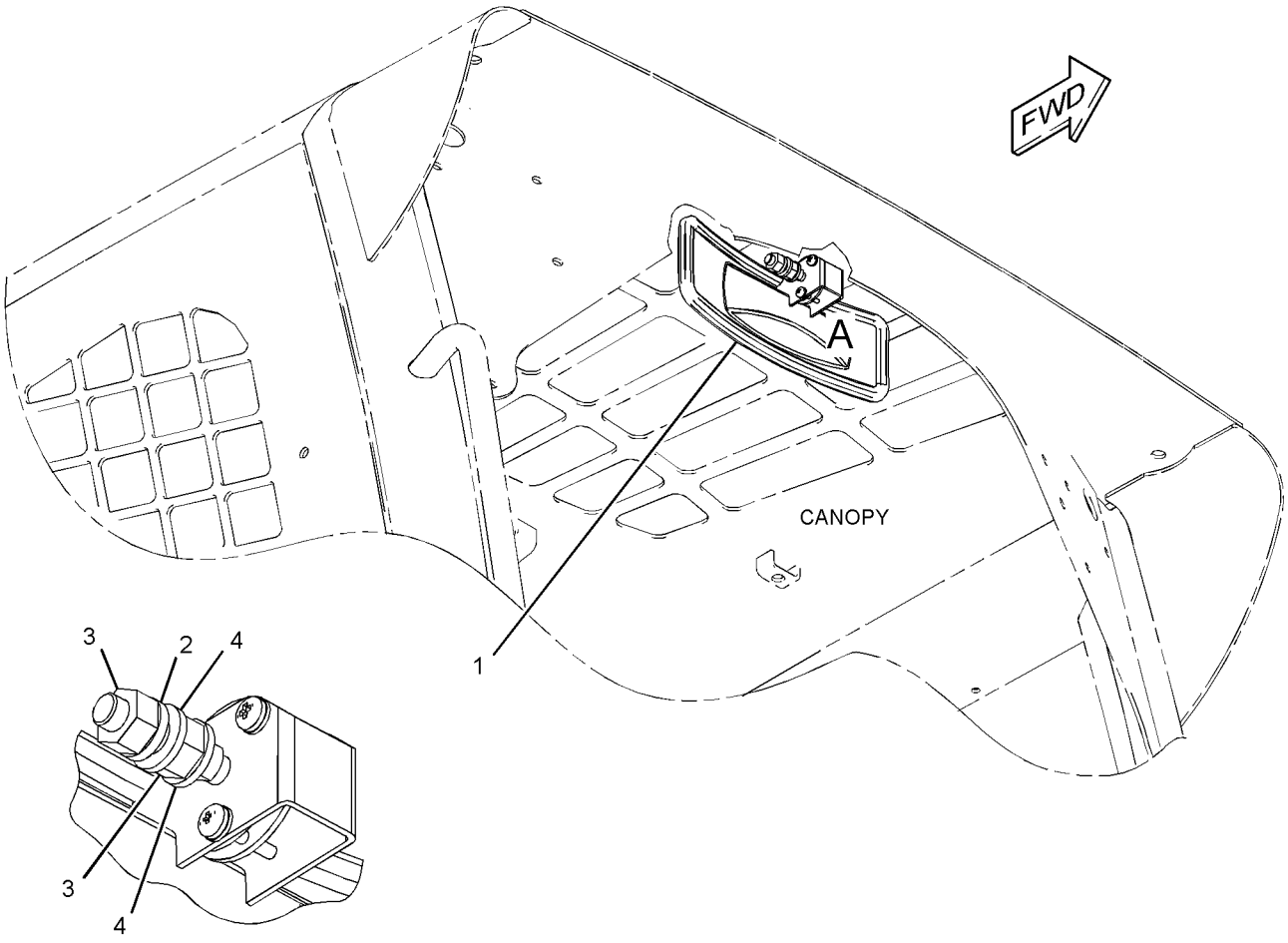

VIEW OF AREA A

GRAPHIC #1 **<END>** g01839142

OPERATOR STATION

347-4187 MODULE GP-DISPLAY

S/N: MST1-UP

PART OF 258-4111 KIT-INSTRUMENT PANEL

AN ATTACHMENT

SMCS-7450, 7490 **i03726324**

NOTE	PART NUMBER	QTY	PART NAME 1 2 3 4 5 6 (PRODUCT LEVEL)	SEE PAGE
	352-1758	1	SOFTWARE GP-MONITOR	
			-OR-	
	346-6336	1	MODULE GP-DISPLAY (MACHINE)	
			-OR-	
	352-1759	1	SERVICE GP-MONITOR	
			(OPTIONAL SERVICE REPLACEMENT)(INCLUDES CONTROL GP & SOFTWARE)	

<END>

OPERATOR STATION

330-5011 MOTOR GP-WINDOW WIPER

S/N: MST1-UP

PART OF 258-4086, 258-4087, 258-4442 DOOR GP-CAB

AN ATTACHMENT

SMCS-7305 **i03261560**

NOTE	REF NO	GRAPHIC REF	PART NUMBER	QTY	PART NAME 1 2 3 4 5 6 (PRODUCT LEVEL)	SEE PAGE
	1	1	**102-8804**	1	KIT-RECEPTACLE (4-PIN)	
					(INCLUDES RECEPTACLE AS & WEDGE)	
	2	1	**263-3823**	1	CAP-WIPER	
	3	1	**3F-9556**	1	LOCKWASHER	
M	4	1	**5C-7261**	1	NUT (M8X1.25-THD)	
	5	1	**186-3735**	4	PIN-CONNECTOR (16-GA TO 18-GA)	

M-METRIC PART

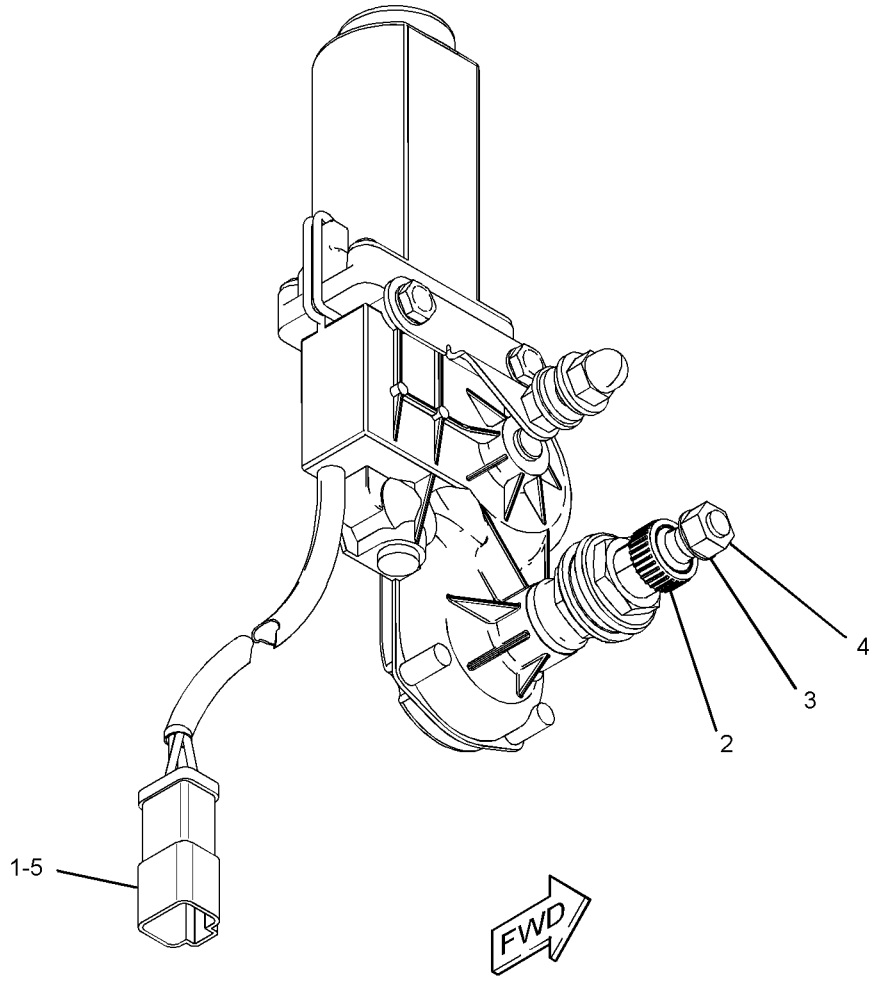

GRAPHIC #1 **<END>** g01668495

OPERATOR STATION

295-3171 MOUNTING GP-ARMREST–LH

S/N: MST1-UP

PART OF 258-4311 ARMREST & MOUNTING GP

AN ATTACHMENT

SMCS-7307 **i02755507**

NOTE	REF NO	GRAPHIC REF	PART NUMBER	QTY	PART NAME 1 2 3 4 5 6 (PRODUCT LEVEL)	SEE PAGE
	1	1	**258-4321**	1	BRACKET AS-MOUNTING (FRONT)	
	2	1	**258-4323**	1	BRACKET AS-MOUNTING (REAR)	
	3	1	**258-4325**	1	SLIDE AS (LH)	
	4	1	**258-4328**	1	SUPPORT AS	
	5	1	**258-4431**	2	BLOCK	
	6	1	**216-7352**	2	SCREW-TRUSS HEAD (M8X1.25X30-MM)	
M	7	1	**6V-9189**	4	LOCKNUT (M8X1.25-THD)	
	8	1	**7X-0613**	2	WASHER-HARD (8.8X25.5X5-MM THK)	
	9	1	**8T-4224**	8	WASHER-HARD (8.8X16X2-MM THK)	
M	10	1	**8T-4908**	4	BOLT (M8X1.25X25-MM)	
M	11	1	**131-3540**	2	LOCKNUT (M8X1.25-THD)	

M-METRIC PART

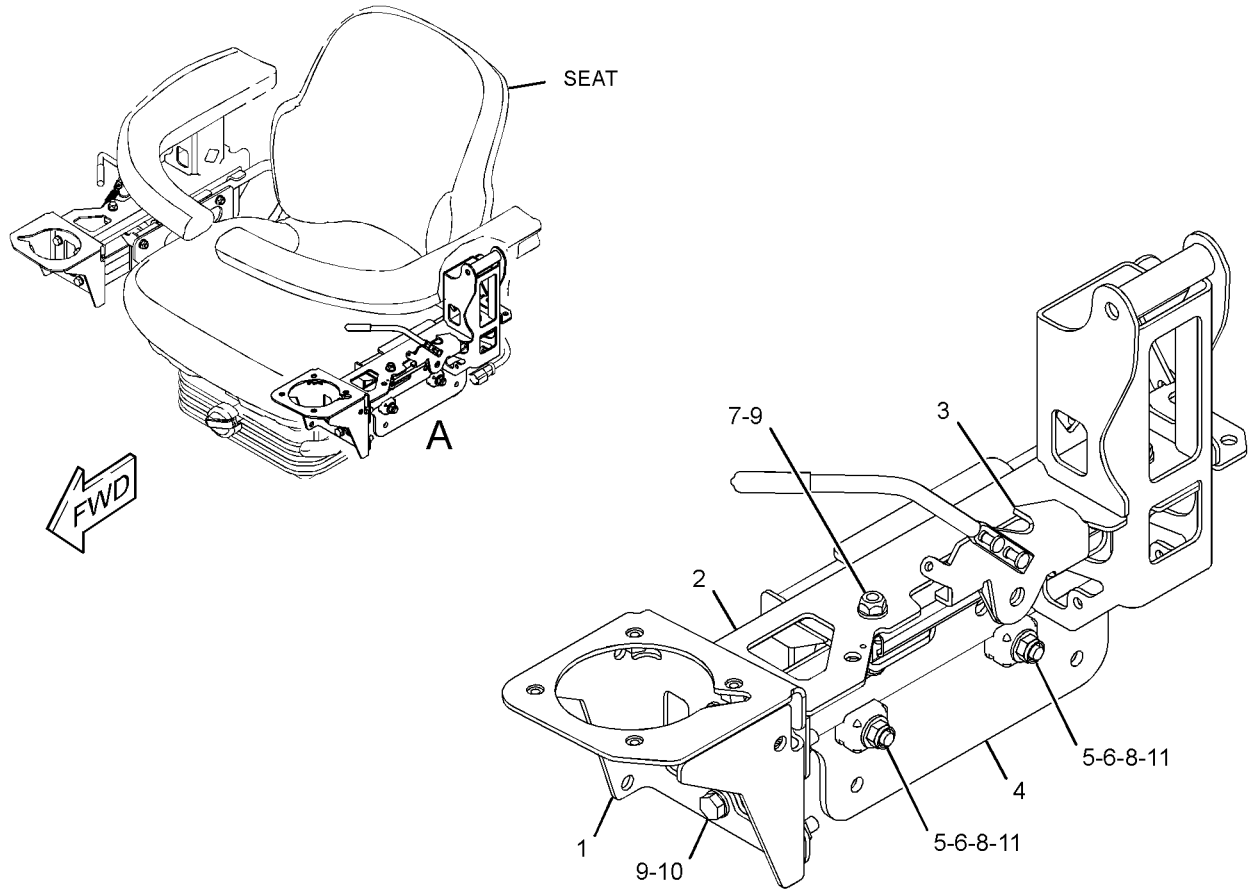

VIEW OF AREA A

GRAPHIC #1 **<END>** g01345430

OPERATOR STATION

295-3172 MOUNTING GP-ARMREST–RH

S/N: MST1-UP
PART OF 258-4311 ARMREST & MOUNTING GP
AN ATTACHMENT

SMCS-7307 **i02755508**

NOTE	REF NO	GRAPHIC REF	PART NUMBER	QTY	PART NAME 1 2 3 4 5 6 (PRODUCT LEVEL)	SEE PAGE
	1	1	**258-4322**	1	BRACKET AS-MOUNTING (FRONT)	
	2	1	**258-4324**	1	BRACKET AS-MOUNTING (REAR)	
	3	1	**258-4326**	1	SLIDE AS (LH)	
	4	1	**258-4329**	1	SUPPORT AS	
	5	1	**258-4431**	2	BLOCK	
M	6	1	**131-3540**	2	LOCKNUT (M8X1.25-THD)	
	7	1	**216-7352**	2	SCREW-TRUSS HEAD (M8X1.25X30-MM)	
M	8	1	**6V-9189**	4	LOCKNUT (M8X1.25-THD)	
	9	1	**7X-0613**	2	WASHER-HARD (8.8X25.5X5-MM THK)	
	10	1	**8T-4224**	8	WASHER-HARD (8.8X16X2-MM THK)	
M	11	1	**8T-4908**	4	BOLT (M8X1.25X25-MM)	

M-METRIC PART

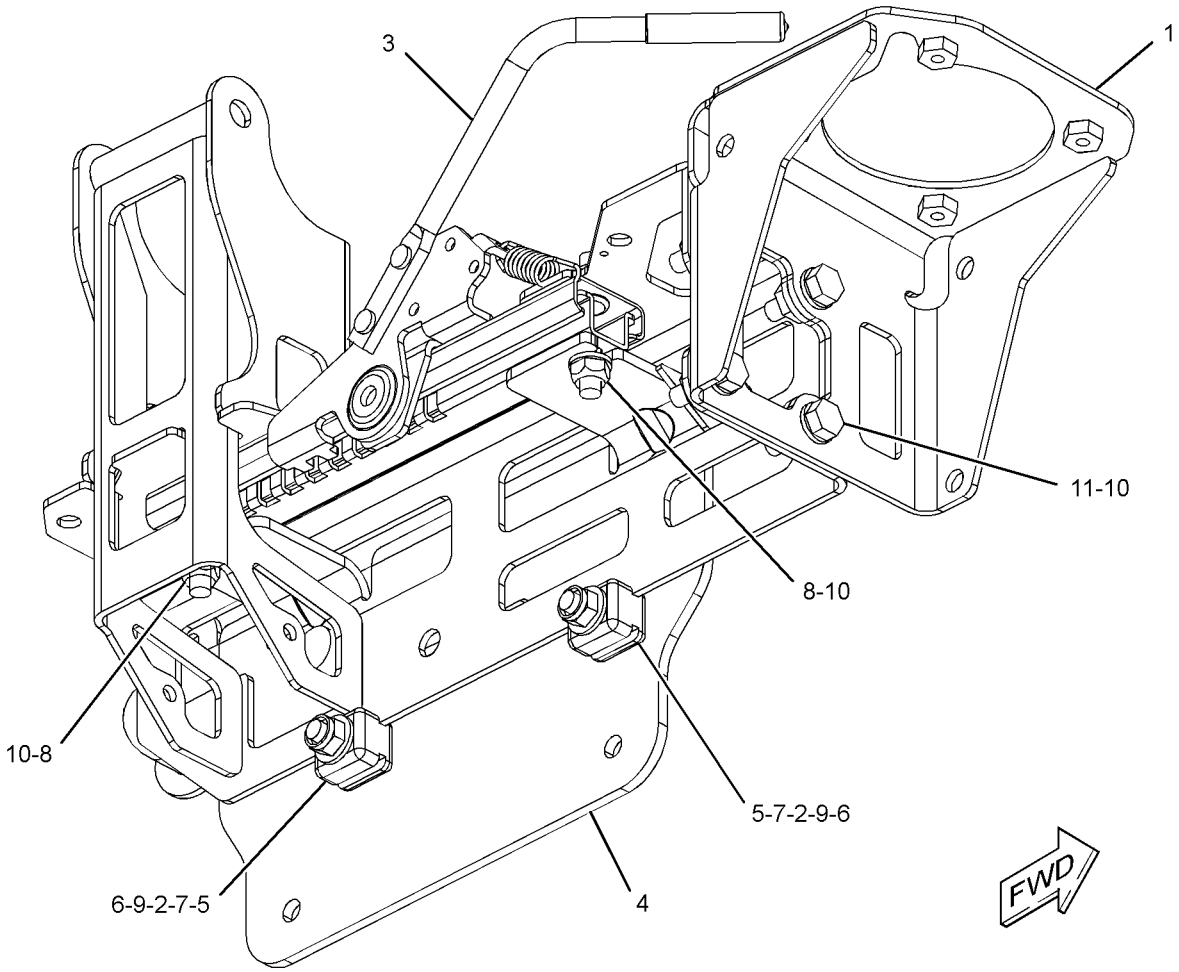

GRAPHIC #1 **<END>** g01346210

OPERATOR STATION

258-4220 MOUNTING GP-ROPS—INCLUDES STEP

S/N: MST1-UP

PART OF 258-4000 CAB AR-ENCLOSED ROPS

SMCS-7266, 7325 **i02752473**

NOTE	REF NO	GRAPHIC REF	PART NUMBER	QTY	PART NAME 1 2 3 4 5 6 (PRODUCT LEVEL)	SEE PAGE
	1	1	**5P-7958**	2	SLEEVE-CABLE SPLICE	
	2	1	**5T-9400**	1	SPACER (12X25X8.5-MM THK)	
	4	2	**305-4339**	2	MOUNT AS	
	5	1	**305-4335**	2	MOUNT	
	6	2	**258-4221**	2	SPACER	
	7	1	**258-4224**	1	SPRING	
	8	1	**258-4227**	1	BRACKET AS	
	9	1	**258-4387**	1	KNOB	
	10	1	**258-4396**	1	PIN	
	11	1	**258-4397**	1	LANYARD	
	12	2	**258-4416**	1	STEP AS	
	13	2	**090-8865**	2	SPACER (17X40X3-MM THK)	
	14	2	**165-7095**	4	WASHER (16.5X71.5X3-MM THK)	
M	15	2	**195-0937**	1	INSERT-THREADED (M8X1.25-THD)	
	16	2	**3E-4352**	1	WASHER-HARD (8.8X20.5X2.5-MM THK)	
	17	1	**5P-0372**	1	LOCK PIN	
	18	2	**6V-5839**	4	WASHER (11X21X2.5-MM THK)	
M	19	1	**7X-2557**	2	BOLT (M16X2X140-MM)	
M	20	2	**7X-2556**	2	BOLT (M16X2X100-MM)	
M	21	2	**7Y-9099**	1	SCREW-TRUSS HEAD (M8X1.25X25-MM)	
	22	1	**8T-4122**	4	WASHER-HARD (17X32X3.5-MM THK)	
M	23	1,2	**8T-4778**	4	LOCKNUT (M16X2-THD)	
M	24	2	**9X-2040**	4	SCREW-TRUSS HEAD (M10X1.5X25-MM)	
	26	1	**305-4337**	4	PAD	

PARTS SHOWN IN GRAPHIC(S) WITHOUT A REFERENCE NUMBER ARE NOT SERVICED SEPARATELY

M-METRIC PART

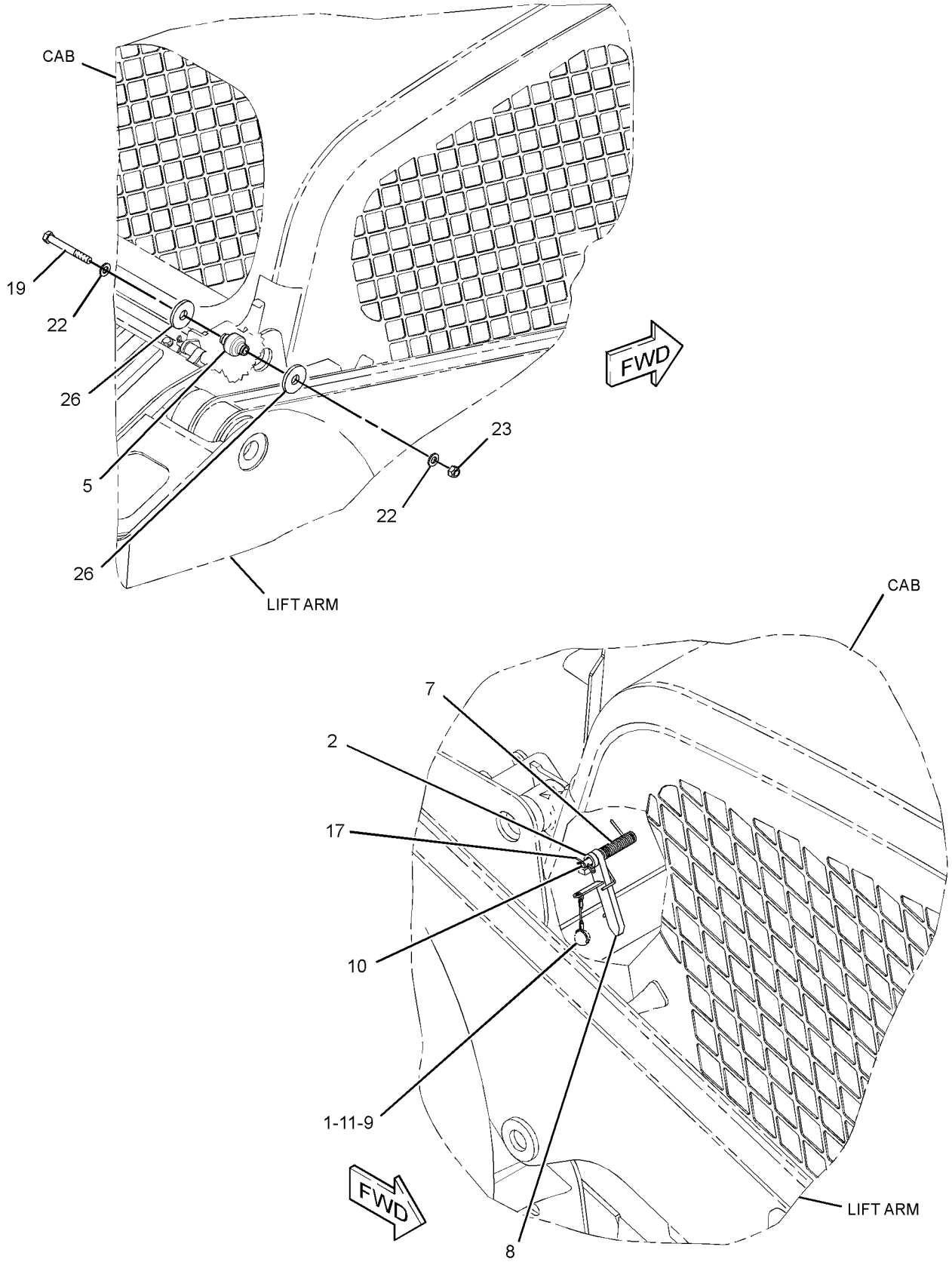

GRAPHIC #1

g01384955

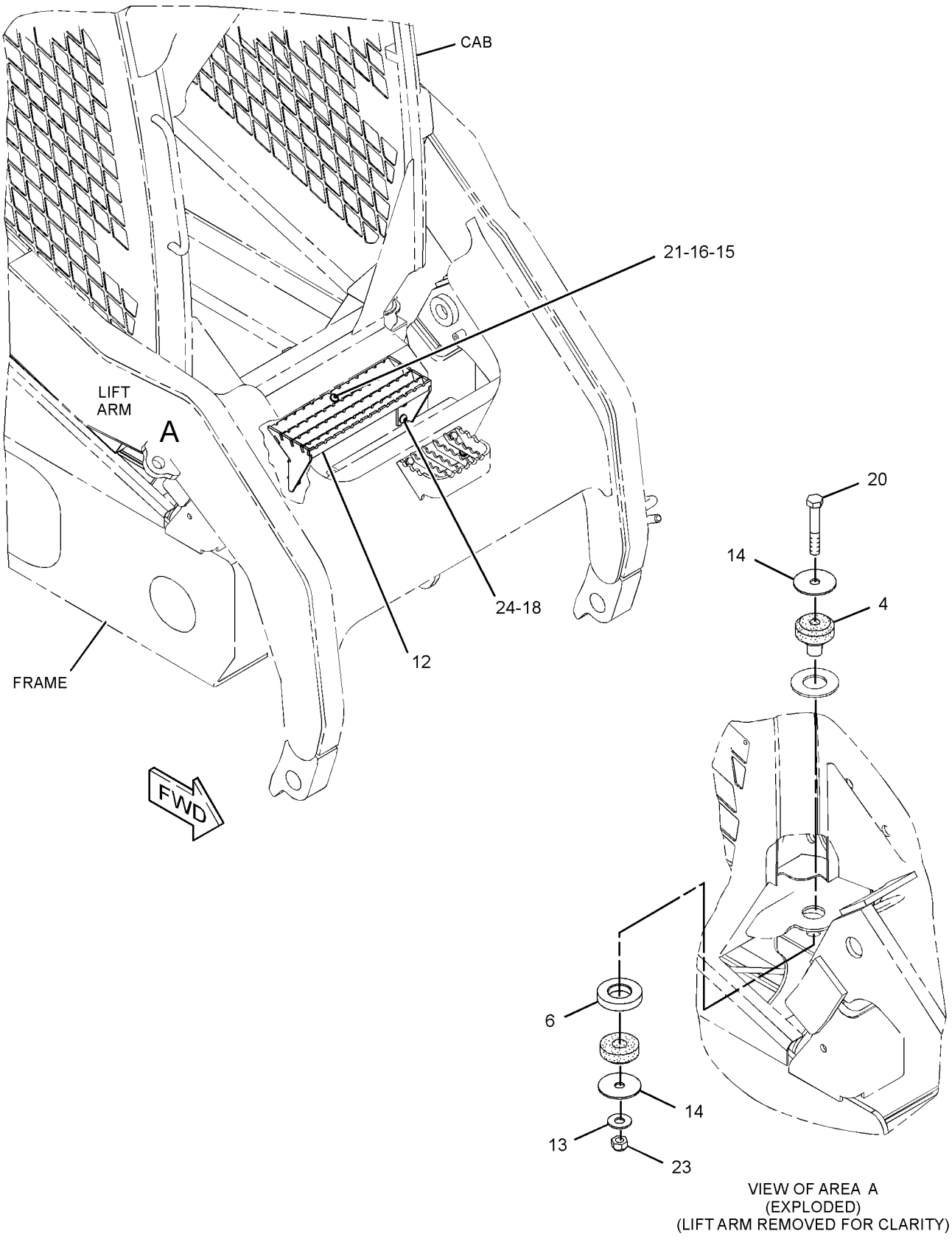

VIEW OF AREA A
(EXPLODED)
(LIFT ARM REMOVED FOR CLARITY)

GRAPHIC #2 **<END>** g01345079

OPERATOR STATION

258-3738 OPTION AR-CAB

S/N: MST1-UP

AN ATTACHMENT

SMCS-7301 **i02613958**

NOTE	PART NUMBER	QTY	PART NAME 1 2 3 4 5 6 (PRODUCT LEVEL)	SEE PAGE
Y	*258-4245*	1	COVER GP-CAB	677
Y	*258-4310*	1	SEAT AR (STATIC)	792
Y	*258-4017*	1	SPRING GP-GAS (INCLUDES LIFT HANDLE)	801

Y-SEPARATE ILLUSTRATION

<END>

258-3740 OPTION AR-CAB

S/N: MST1-UP

AN ATTACHMENT

SMCS-7301 **i03708305**

NOTE	PART NUMBER	QTY	PART NAME 1 2 3 4 5 6 (PRODUCT LEVEL)	SEE PAGE
Y	*258-4229*	1	ACCESSORY GP-CAB	644
Y	*258-4245*	1	COVER GP-CAB	677
Y	*258-4066*	1	INSTALLATION GP-RADIO	718
Y	*258-4320*	1	SEAT AR-SUSPENSION (MECHANICAL)	792
Y	*258-4017*	1	SPRING GP-GAS (INCLUDES LIFT HANDLE)	801

Y-SEPARATE ILLUSTRATION

<END>

OPERATOR STATION

258-4162 PANEL GP-INSTRUMENT

S/N: MST1-UP

PART OF 258-4000 CAB AR-ENCLOSED ROPS

SMCS-7451 **i03624793**

NOTE	REF NO	GRAPHIC REF	PART NUMBER	QTY	PART NAME 1 2 3 4 5 6 (PRODUCT LEVEL)	SEE PAGE
	1	1	**7K-1181**	3	STRAP-CABLE	
	2	1	**8Y-5947**	6	FASTENER	
	3	1	**9R-7941**	1	SOCKET AS	
		1	**9R-7980**	1	COVER	
	4	1	**084-4277**	1	LAMP GP-DOME (12-VOLT)	
		1	**210-8754**	1	LAMP (12-VOLT) (MINIATURE)	
B	5	1,2	**109-2356**	6	PLUG	
	6	1	**139-6039**	2	NUT (U-TYPE RETAINER)	
	7	2	**110-7887**	1	SWITCH AS-START (KEY) (IGNITION)	
		2	**7T-6799**	1	NUT-MOUNTING (1-32-THD)	
		2	**186-3735**	4	PIN-CONNECTOR (16-GA TO 18-GA)	
		2	**102-8804**	1	KIT-RECEPTACLE (4-PIN)	
					(INCLUDES RECEPTACLE AS & WEDGE)	
	8	1,2	**165-0312**	2	WIRE AS	
	9	2	**178-7539**	1	RECEPTACLE AS (POWER SUPPLY)	
	10	1	**206-1345**	6	STRAP-CABLE	
	11	2	**218-0651**	1	FILM-INSTRUCTION (KEY START SWITCH)	
	12	1	**232-1792**	1	HORN	
	13	1	**258-3727**	8	SCREW-TRUSS HEAD (NO 12X17.46-MM)	
	14	2	**258-4001**	1	PANEL (LH)	
	15	2	**258-4002**	1	COVER (FRONT, LH)	
	16	1	**258-4003**	1	COVER (REAR, LH)	
	17	2	**258-4004**	1	PANEL (RH)	
	18	2	**258-4005**	1	COVER (FRONT, RH)	
	19	1	**258-4006**	1	COVER (REAR, RH)	
	20	1,2	**258-4007**	4	COVER-SWITCH	
	21	1	**258-4101**	1	HARNESS AS-PANEL	
		1	**8L-8413**	84	STRAP-CABLE	
		1	**8T-8737**	12	PLUG-SEAL	
		1	**091-2436**	74	TERMINAL-BLADE (18-GA TO 22-GA)	
		1	**104-1995**	19	TERMINAL-BLADE (14-GA TO 18-GA)	
		1	**186-3736**	4	SOCKET-CONNECTOR (16-GA TO 18-GA)	
		1	**9W-0852**	5	PIN-CONNECTOR (14-GA)	
		1	**9W-0844**	2	SOCKET-CONNECTOR (14-GA)	
E		1	**119-3662**		TUBE-HEAT SHRINK (10.85-MM DIA) (26-CM)	
		1	**123-7615**	1	CONNECTOR	
E		1	**125-7874**		TUBE-HEAT SHRINK (5.72-MM DIA) (60-CM)	
E		1	**125-7875**		TUBE-HEAT SHRINK (7.44-MM DIA) (25-CM)	
		1	**9X-3402**	13	SOCKET-CONNECTOR (16-GA TO 18-GA)	
		1	**5P-4571**	4	TERMINAL-BLADE (14-GA TO 16-GA)	
		1	**097-7234**	4	TERMINAL	
		1	**7N-7221**	2	TERMINAL-BLADE (18-GA TO 22-GA)	
		1	**155-2270**	2	KIT-CONNECTING PLUG (2-PIN)	
		1	**155-2271**	2	KIT-CONNECTING PLUG (4-PIN)	
					(EACH PLUG KIT INCLUDES PLUG AS, WEDGE & INTERFACE SEAL)	
		1	**169-0705**	3	SEAL	
		1	**180-9339**	7	PIN-CONNECTOR (14-GA TO 18-GA)	
		1	**180-9340**	5	SOCKET-CONNECTOR (14-GA TO 18-GA)	
		1	**228-5856**	8	CONNECTOR	
		1	**230-4009**	2	PLUG AS-CONNECTOR (12-PIN)	
					(EACH INCLUDES)	
		1	**264-7034**	1	SEAL-CONNECTOR	
	22	1	**258-4178**	1	FLANGE-MOUNTING	
	23	2	**263-5414**	1	SWITCH AS-ROCKER (PARKING BRAKE)	

258-4162 **PANEL GP-INSTRUMENT** *(contd.)* **i03624793**

NOTE	REF NO	GRAPHIC REF	PART NUMBER	QTY	PART NAME 1 2 3 4 5 6 (PRODUCT LEVEL)	SEE PAGE
	24	1	**263-5415**	1	SWITCH AS-ROCKER (HYD LOCKOUT, INTERLOCK OVRD)	
	25	1	**263-5416**	1	SWITCH AS-ROCKER (DIVERTER VALVE, 4TH FUNCTION)	
					(EACH SWITCH AS-ROCKER INCLUDES)	
		1	**111-7899**	1	GASKET	
	26	2	**264-8860**	1	MODULE GP-DISPLAY (PARKING BRAKE)	
	27	1	**265-9424**	1	SWITCH AS-ROCKER (WORK LIGHTS, FRONT)	
	28	1	**265-9425**	1	SWITCH AS-ROCKER (WORK LIGHTS, REAR)	
					(EACH SWITCH AS-ROCKER INCLUDES)	
		1	**111-7899**	1	GASKET	
	29	1	**103-2006**	12	SCREW-PAN HEAD (6-19X0.37-IN)	
M	30	1	**135-7242**	4	SCREW-SELF-TAPPING (M5X2.3X18.8-MM)	
	31	1	**2V-8260**	2	GROMMET	
	32	1	**6V-5834**	4	SCREW-HEAD (10-14X0.75-IN)	
M	33	1	**9X-2044**	2	SCREW-TRUSS HEAD (M6X1X16-MM)	
	34	1	**9X-8256**	8	WASHER (6.6X12X2-MM THK)	
B	35	2	**258-4141**	1	CLIP	

B-USE AS REQUIRED
E-ORDER BY THE CENTIMETER
M-METRIC PART

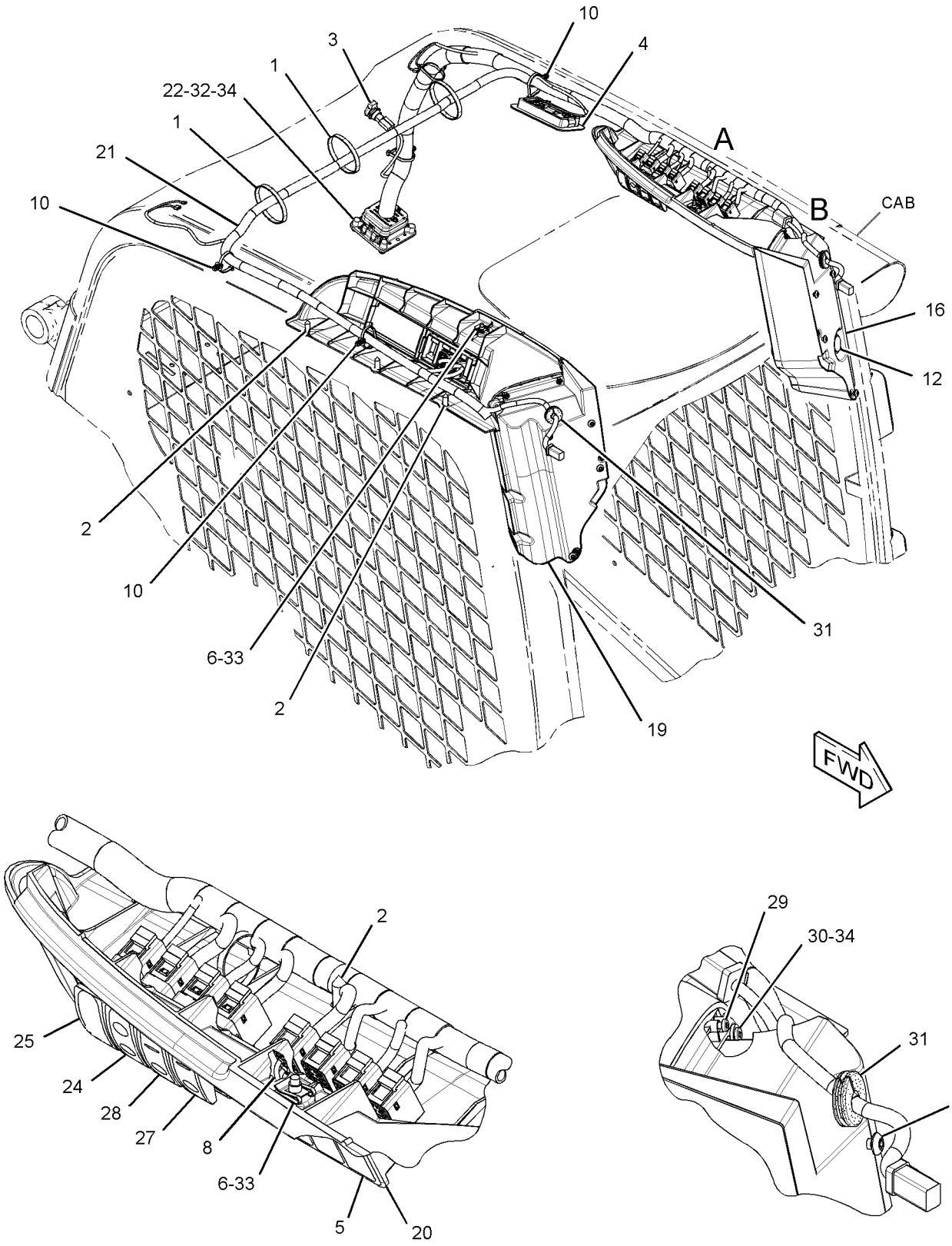

VIEW OF AREA A

VIEW OF AREA B

GRAPHIC #1

g01453999

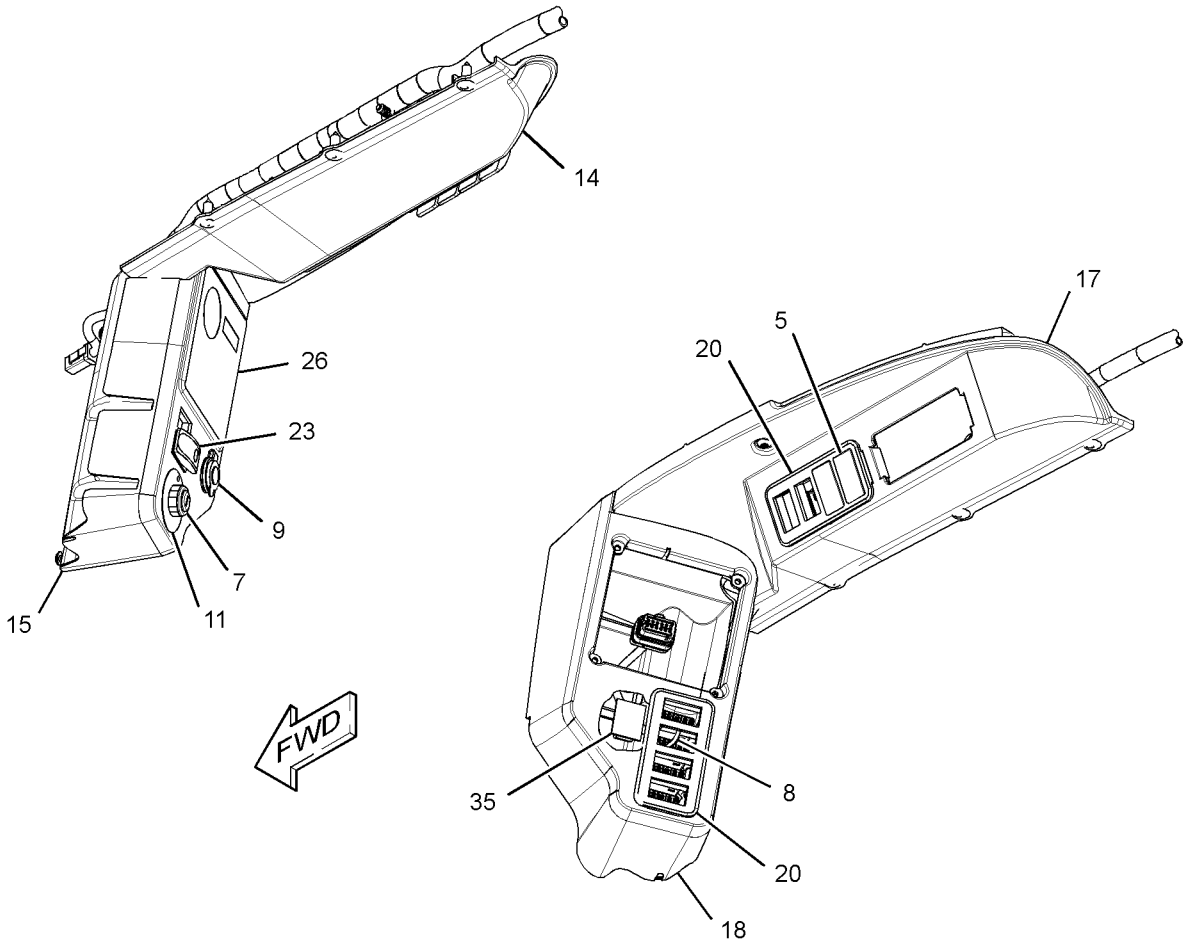

GRAPHIC #2 **<END>** g01454007

OPERATOR STATION

258-4163 PANEL GP-INSTRUMENT–RH

S/N: MST1-UP

PART OF 258-3754, 300-7635, 304-6741 MACHINE AR-SPECIAL

AN ATTACHMENT

SMCS-7451 **i03572356**

NOTE	REF NO	GRAPHIC REF	PART NUMBER	QTY	PART NAME 1 2 3 4 5 6 (PRODUCT LEVEL)	SEE PAGE
	1	1	**263-5420**	1	SWITCH AS-ROCKER (CREEPER CONTROL)	
		1	**111-7899**	1	GASKET	
	2	1	**264-8861**	1	MODULE GP-DISPLAY	
M	3	1	**135-7242**	4	SCREW-SELF-TAPPING (M5X2.3X18.8-MM)	
	4	1	**9X-8256**	4	WASHER (6.6X12X2-MM THK)	

M-METRIC PART

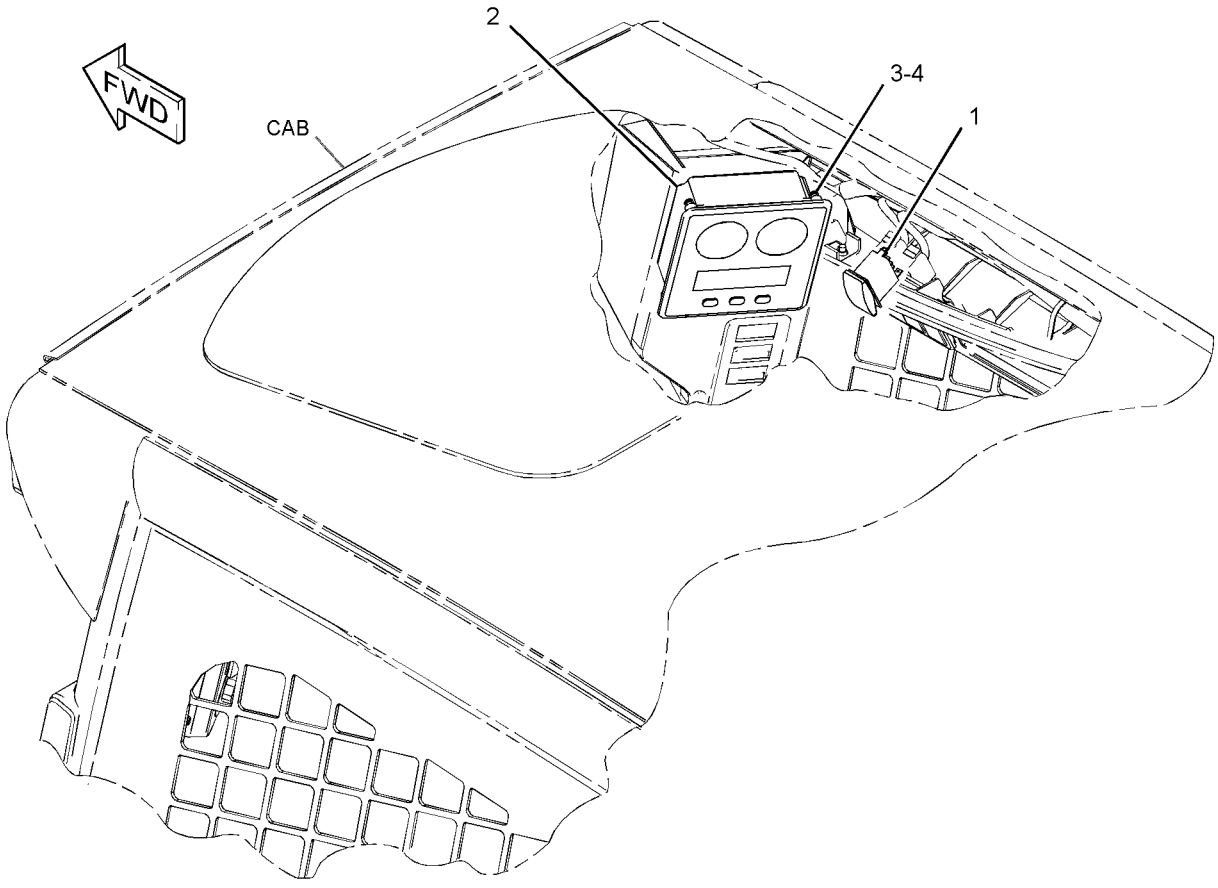

GRAPHIC #1 **<END>** g01327575

OPERATOR STATION

258-4043 PEDAL GP-GOVERNOR

S/N: MST1-UP

PART OF 280-6342 PEDAL GP-GOVERNOR

TYPE 1

SMCS-1265, 1276 **i02664234**

NOTE	REF NO	GRAPHIC REF	PART NUMBER	QTY	PART NAME 1 2 3 4 5 6 (PRODUCT LEVEL)	SEE PAGE
	1	1	**8T-0328**	2	WASHER-HARD (5.5X10X1-MM THK)	
M	2	1	**8T-0352**	2	BOLT (M5X0.8X45-MM)	
	3	1	**8T-6904**	2	PIN-CLEVIS	
M	4	1	**095-0641**	4	BOLT-SOCKET HEAD (M4X0.7X10-MM)	
Y	5	1	**160-2443**	1	SENSOR GP-POSITION (ROTARY)	177
M	6	1	**129-3178**	1	LOCKNUT (M6X1-THD)	
	7	1	**3F-9556**	2	LOCKWASHER	
M	8	1	**5C-7261**	1	NUT (M8X1.25-THD)	
M	9	1	**5C-9553**	1	BOLT (M6X1X16-MM)	
	10	1	**6V-8186**	2	NUT-FULL (5/16-24-THD)	
M	11	1	**8T-4197**	1	BOLT (M8X1.25X40-MM)	
	12	1	**8T-4205**	1	WASHER-HARD (7.2X14.5X2-MM THK)	
	13	1	**8T-6902**	3	CLIP	
					AVAILABLE REPAIR KIT(S):	
			164-1154	1	KIT-SERVICE (PEDAL)	
					(INCLUDES CABLE CLAMPS & SCREWS)	

M-METRIC PART
Y-SEPARATE ILLUSTRATION

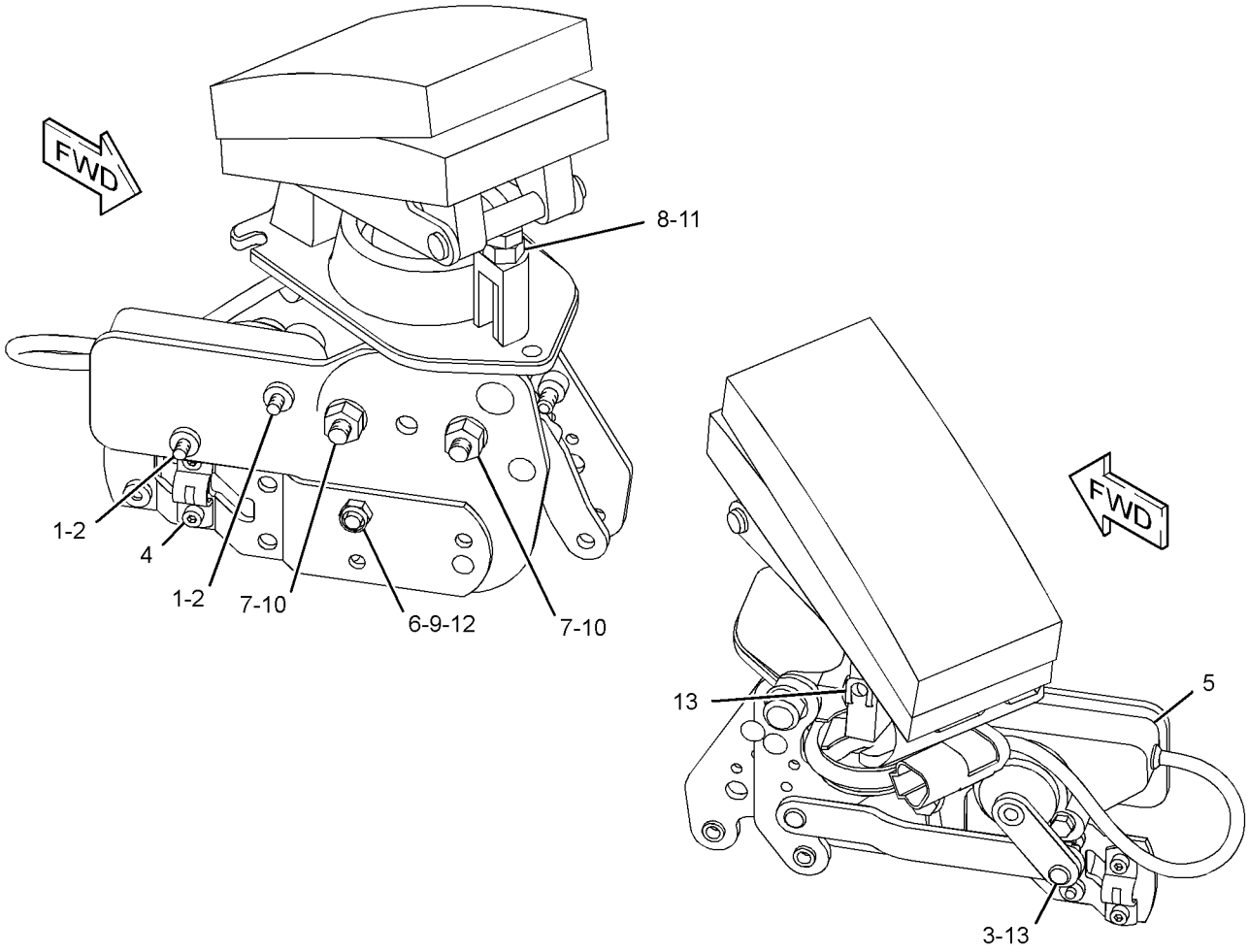

GRAPHIC #1 **<END>** g01339285

OPERATOR STATION

258-4043 PEDAL GP-GOVERNOR

S/N: MST1-UP

PART OF 280-6342 PEDAL GP-GOVERNOR

TYPE 2

SMCS-1265, 1276 **i03001258**

NOTE	REF NO	GRAPHIC REF	PART NUMBER	QTY	PART NAME 1 2 3 4 5 6 (PRODUCT LEVEL)	SEE PAGE
	1	1	**8T-0328**	2	WASHER-HARD (5.5X10X1-MM THK)	
M	2	1	**8T-0352**	2	BOLT (M5X0.8X45-MM)	
	3	1	**8T-6904**	2	PIN-CLEVIS	
M	4	1	**095-0641**	4	BOLT-SOCKET HEAD (M4X0.7X10-MM)	
CY	5	1	**266-1467**	1	SENSOR GP-POSITION (ROTARY)	178
M	6	1	**129-3178**	1	LOCKNUT (M6X1-THD)	
	7	1	**3F-9556**	2	LOCKWASHER	
M	8	1	**5C-7261**	1	NUT (M8X1.25-THD)	
M	9	1	**5C-9553**	1	BOLT (M6X1X16-MM)	
	10	1	**6V-8186**	2	NUT-FULL (5/16-24-THD)	
M	11	1	**8T-4197**	1	BOLT (M8X1.25X40-MM)	
	12	1	**8T-4205**	1	WASHER-HARD (7.2X14.5X2-MM THK)	
	13	1	**8T-6902**	3	CLIP	
					AVAILABLE REPAIR KIT(S):	
			164-1154	1	KIT-SERVICE (PEDAL)	
					(INCLUDES CABLE CLAMPS & SCREWS)	

C-CHANGE FROM PREVIOUS TYPE
M-METRIC PART
Y-SEPARATE ILLUSTRATION

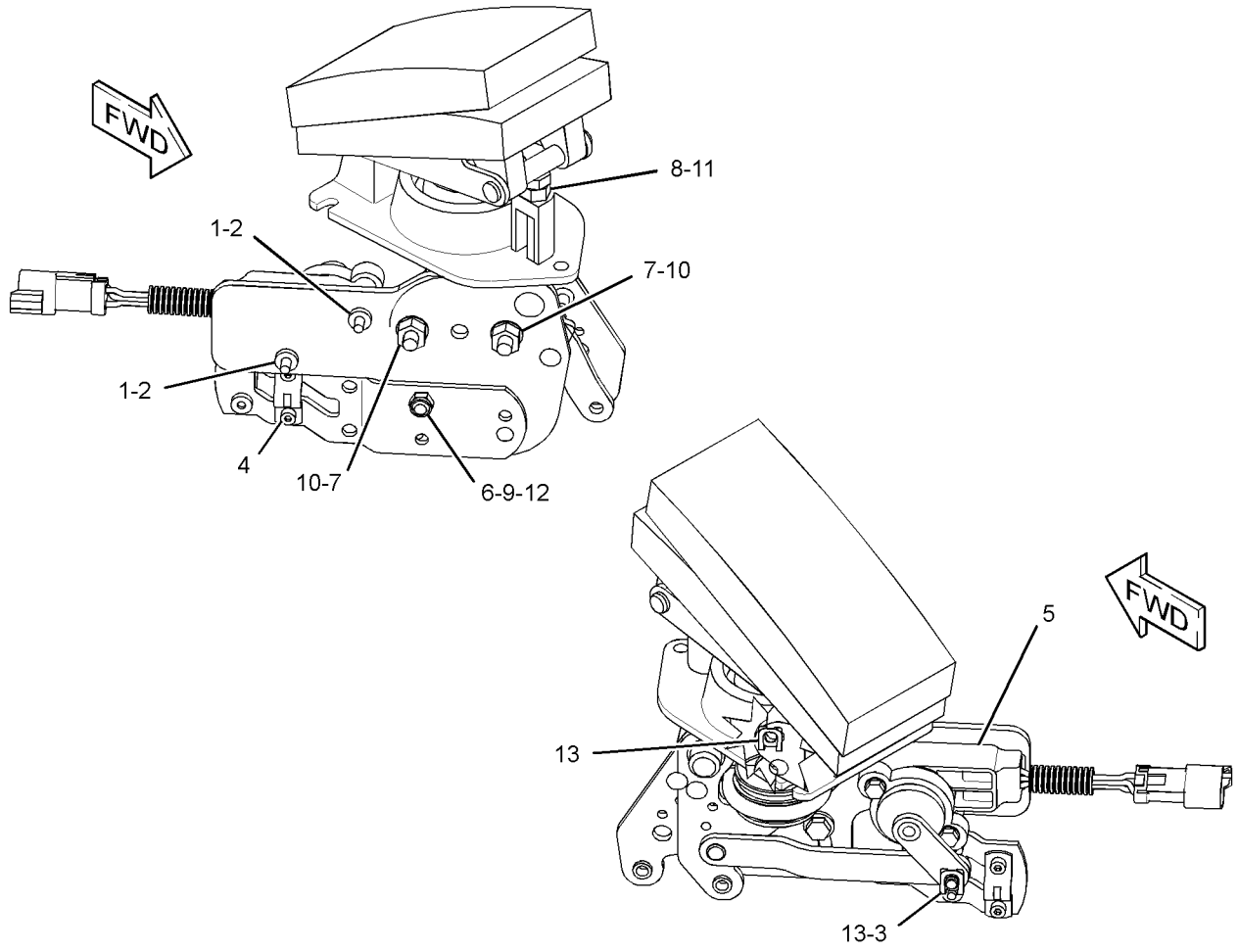

GRAPHIC #1 **<END>** g01567793

OPERATOR STATION

280-6342 PEDAL GP-GOVERNOR

S/N: MST1-UP

PART OF 280-6340, 295-7463 CONTROL GP-GOVERNOR

SMCS-1265, 1276 **i02625322**

NOTE	REF NO	GRAPHIC REF	PART NUMBER	QTY	PART NAME 1 2 3 4 5 6 (PRODUCT LEVEL)	SEE PAGE
Y	1	1	**258-4043**	1	PEDAL GP-GOVERNOR	770
	2	1	**258-4373**	1	CABLE AS (HAND CONTROL)	
M		1	**5C-2890**	1	NUT (M6X1-THD)	
		1	**8T-4742**	1	END-YOKE ROD	
		1	**8T-4744**	1	PIN AS-SPRING	
	3	1	**280-6344**	1	CABLE AS (LOW IDLE)	
M		1	**5C-2890**	1	NUT (M6X1-THD)	
		1	**8T-4742**	1	END-YOKE ROD	
		1	**8T-4744**	1	PIN AS-SPRING	
		1	**8T-6902**	1	CLIP	
		1	**8T-6904**	1	PIN-CLEVIS	

M-METRIC PART
Y-SEPARATE ILLUSTRATION

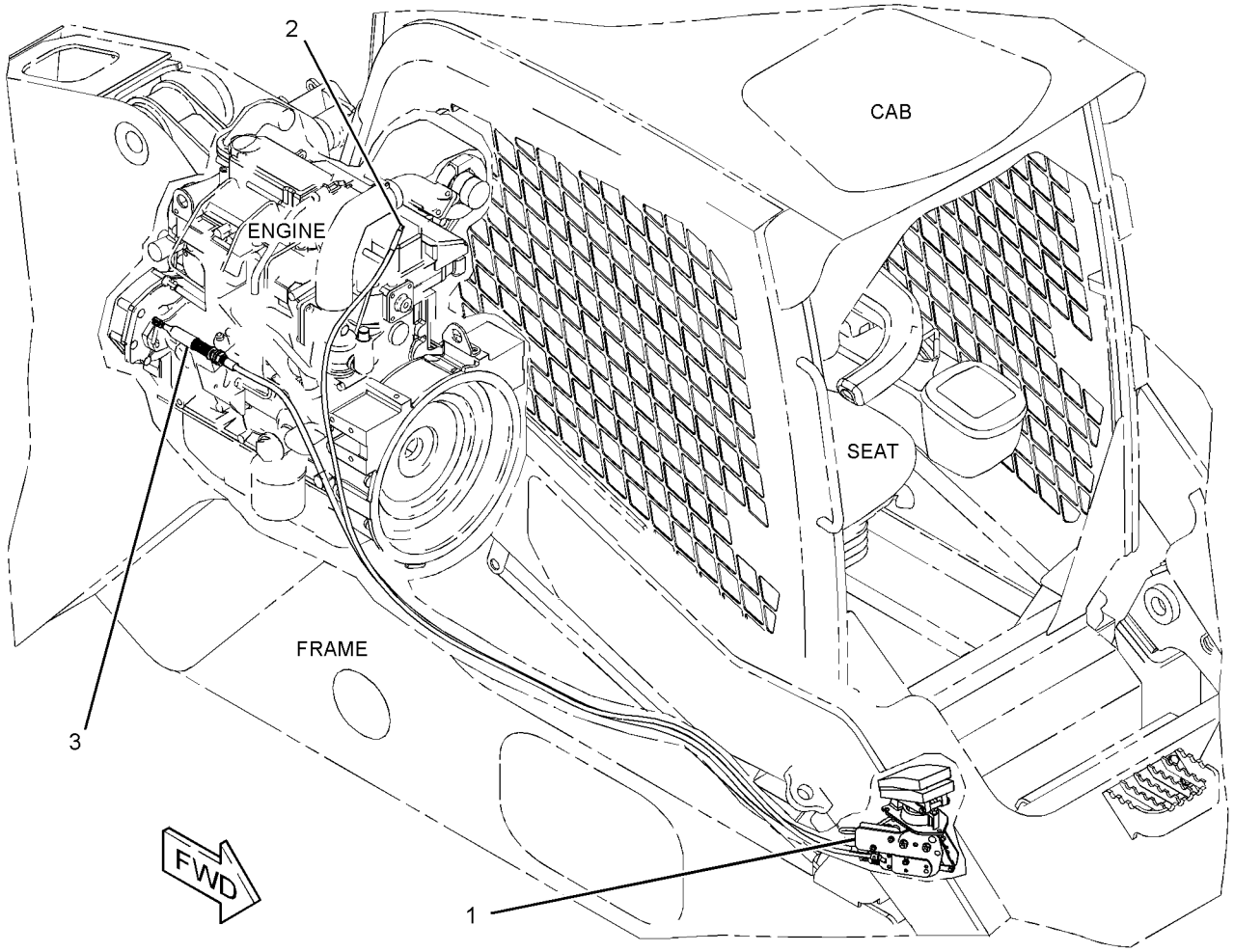

GRAPHIC #1 **<END>** g01316917

OPERATOR STATION

200-5729 RADIO GP–AM/FM/WB

S/N: MST1-UP

FIELD REPLACEMENT ORDER 331-5292–PAGE 783

AN ATTACHMENT

SMCS-7338, 733C **i03503821**

NOTE	REF NO	GRAPHIC REF	PART NUMBER	QTY	PART NAME 1 2 3 4 5 6 (PRODUCT LEVEL)	SEE PAGE
	1	1	**192-7054**	1	SLEEVE	

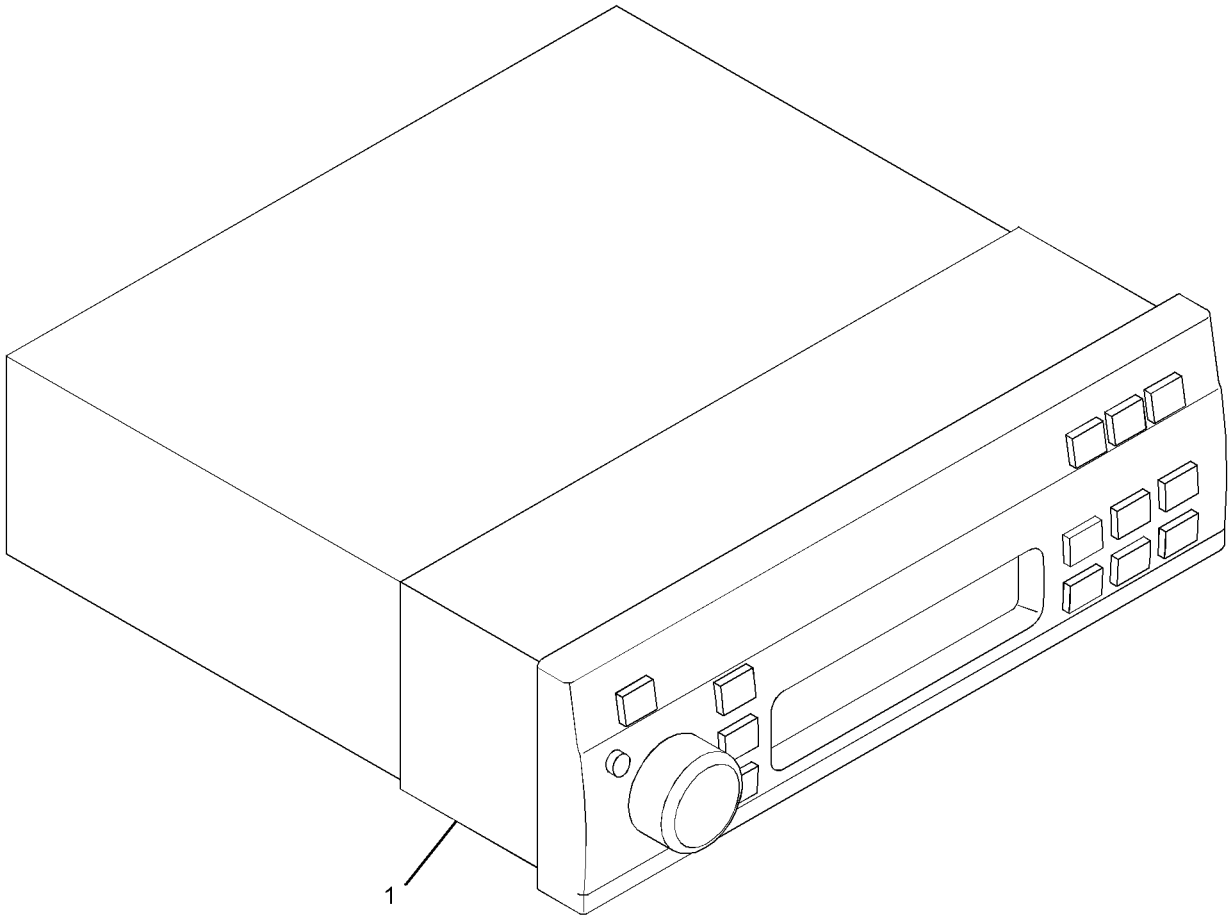

GRAPHIC #1 **<END>** g01846295

OPERATOR STATION

233-3123 RADIO GP–AM/FM/WB

S/N: MST1-UP

AN ATTACHMENT

SMCS-7338, 733C **i03572366**

NOTE	REF NO	GRAPHIC REF	PART NUMBER	QTY	PART NAME 1 2 3 4 5 6 (PRODUCT LEVEL)	SEE PAGE
	1	1	**136-5490**	1	BUSHING (RADIO MOUNT)	
	2	1	**200-5728**	1	HARNESS AS-RADIO	
		1	**172-8037**	1	CONNECTOR (RADIO)	
		1	**186-3735**	7	PIN-CONNECTOR (16-GA TO 18-GA)	
		1	**8T-8737**	1	PLUG-SEAL	
		1	**160-3518**	1	KIT-RECEPTACLE (8-PIN)	
					(INCLUDES RECEPTACLE AS & WEDGE)	
Y	3	1	**331-5292**	1	RADIO GP (AM/FM/WB)	783

Y-SEPARATE ILLUSTRATION

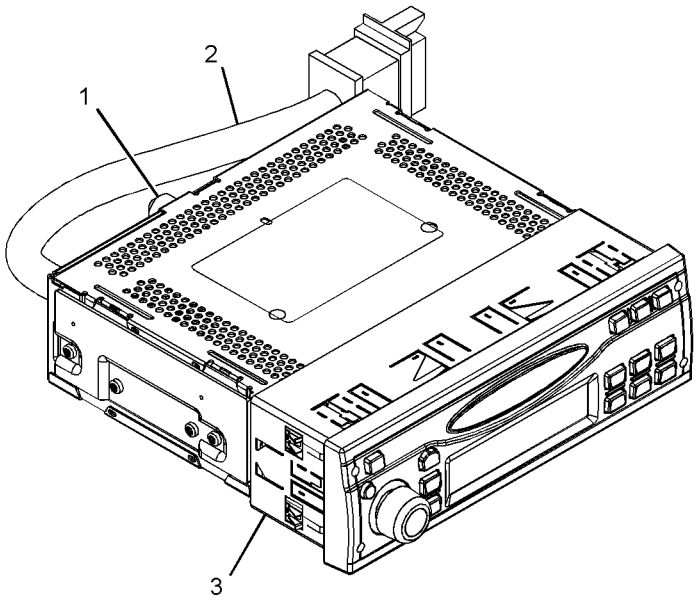

GRAPHIC #1 **<END>** g01813816

OPERATOR STATION

241-4936 RADIO GP–AM/FM/WB/CD PLAYER

S/N: MST1-UP

PART OF 288-1744 RADIO GP

AN ATTACHMENT

SMCS-7338, 733C **i03466483**

NOTE	REF NO	GRAPHIC REF	PART NUMBER	QTY	PART NAME 1 2 3 4 5 6 (PRODUCT LEVEL)	SEE PAGE
	1	1	**192-7054**	1	SLEEVE	

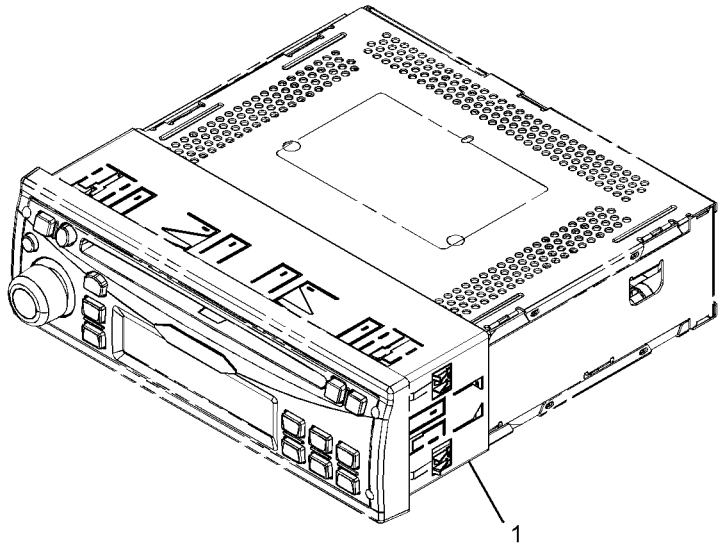

GRAPHIC #1 **<END>** g01813873

OPERATOR STATION

262-9163 RADIO GP—AM/FM CASSETTE

S/N: MST1-UP
12-VOLT
AN ATTACHMENT

SMCS-7338, 733C **i03572365**

NOTE	PART NUMBER	QTY	PART NAME 1 2 3 4 5 6 (PRODUCT LEVEL)	SEE PAGE
Y	**331-5291**	1	RADIO GP (AM/FM/WB/CD PLAYER)	782
	200-5728	1	HARNESS AS-RADIO	
	172-8037	1	CONNECTOR (RADIO)	
	186-3735	7	PIN-CONNECTOR (16-GA TO 18-GA)	
	8T-8737	1	PLUG-SEAL	
	160-3518	1	KIT-RECEPTACLE (8-PIN)	
			(INCLUDES RECEPTACLE AS & WEDGE)	
	137-8166	1	LEAD-ANTENNA	
	170-1817	1	SUPPORT-RADIO	
Y-SEPARATE ILLUSTRATION				

<END>

OPERATOR STATION

284-8953 RADIO GP–AM/FM/WB/CD PLAYER

S/N: MST1-UP

AN ATTACHMENT

SMCS-7338, 733C **i03426820**

NOTE	REF NO	GRAPHIC REF	PART NUMBER	QTY	PART NAME 1 2 3 4 5 6 (PRODUCT LEVEL)	SEE PAGE
	1	1	**192-7054**	1	SLEEVE	

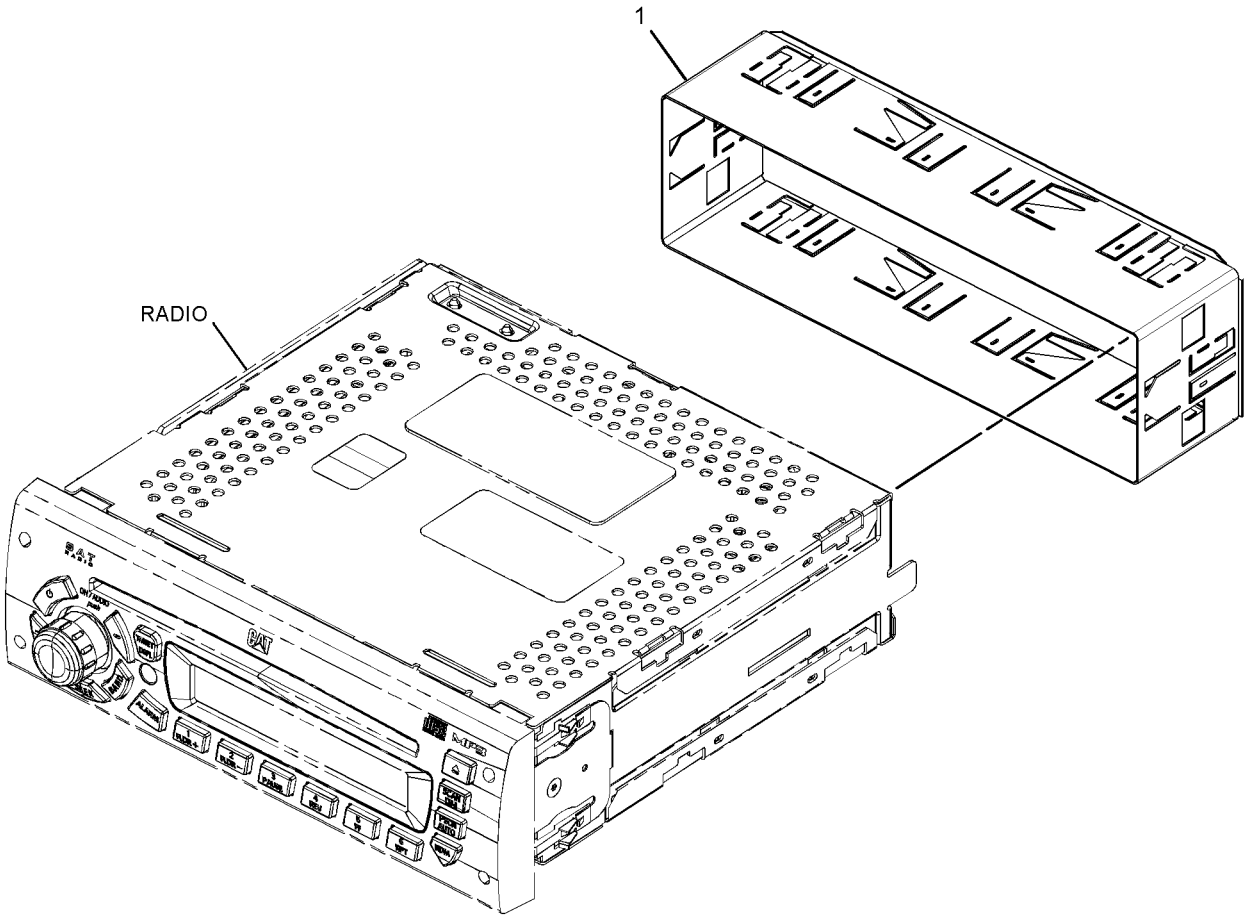

GRAPHIC #1 **<END>** g01821613

OPERATOR STATION

284-8954 RADIO GP–AM/FM/WB/XM/ CD PLAYER

S/N: MST1-UP

AN ATTACHMENT

SMCS-7338, 733C **i03466742**

NOTE	REF NO	GRAPHIC REF	PART NUMBER	QTY	PART NAME 1 2 3 4 5 6 (PRODUCT LEVEL)	SEE PAGE
	1	1	**192-7054**	1	SLEEVE	

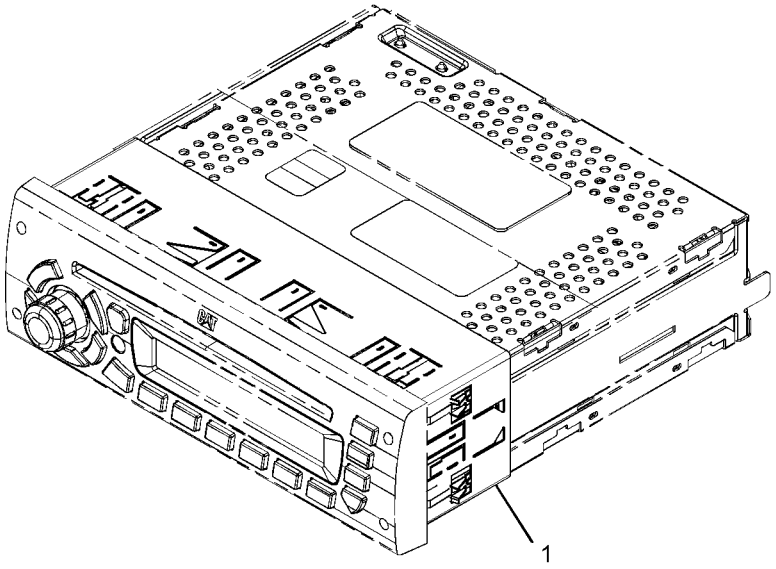

GRAPHIC #1 **<END>** g01813914

OPERATOR STATION

284-8955 RADIO GP–AM/FM/WB/SIRIUS/ CD PLAYER

S/N: MST1-UP

AN ATTACHMENT

SMCS-7338, 733C **i03466743**

NOTE	REF NO	GRAPHIC REF	PART NUMBER	QTY	PART NAME 1 2 3 4 5 6 (PRODUCT LEVEL)	SEE PAGE
	1	1	**192-7054**	1	SLEEVE	

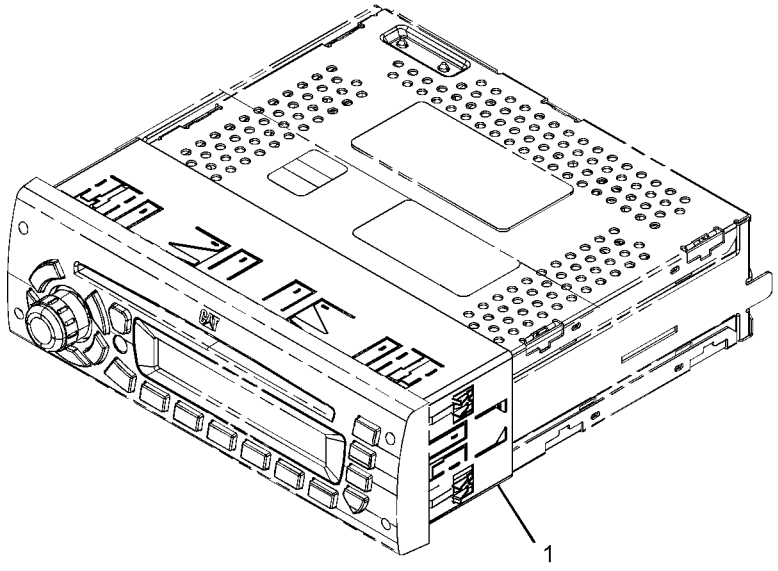

GRAPHIC #1 **<END>** g01813795

OPERATOR STATION

288-1744 RADIO GP–AM/FM/WB/CD PLAYER

S/N: MST1-UP
AN ATTACHMENT
TYPE 1

SMCS-7338, 733C **i03647955**

NOTE	REF NO	GRAPHIC REF	PART NUMBER	QTY	PART NAME 1 2 3 4 5 6 (PRODUCT LEVEL)	SEE PAGE
	1	1	**136-5490**	1	BUSHING (RADIO MOUNT)	
	2	1	**200-5728**	1	HARNESS AS-RADIO	
		1	**172-8037**	1	CONNECTOR (RADIO)	
		1	**186-3735**	7	PIN-CONNECTOR (16-GA TO 18-GA)	
		1	**8T-8737**	1	PLUG-SEAL	
		1	**160-3518**	1	KIT-RECEPTACLE (8-PIN)	
					(INCLUDES RECEPTACLE AS & WEDGE)	
		1	**172-8039**	11	TERMINAL (RADIO)	
Y	3	1	*241-4936*	1	RADIO GP (AM/FM/WB/CD PLAYER)	775

Y-SEPARATE ILLUSTRATION

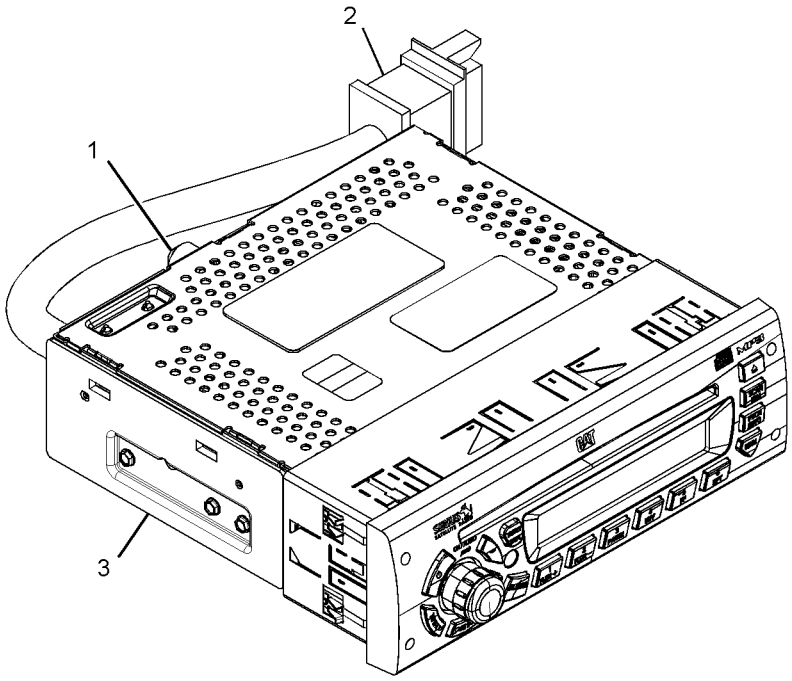

GRAPHIC #1 **<END>** g01958475

OPERATOR STATION

288-1744 RADIO GP–AM/FM/WB/CD PLAYER

S/N: MST1-UP
AN ATTACHMENT
TYPE 2

SMCS-7338, 733C **i03572364**

NOTE	REF NO	GRAPHIC REF	PART NUMBER	QTY	PART NAME 1 2 3 4 5 6 (PRODUCT LEVEL)	SEE PAGE
	1	1	**136-5490**	1	BUSHING (RADIO MOUNT)	
	2	1	**200-5728**	1	HARNESS AS-RADIO	
		1	**172-8037**	1	CONNECTOR (RADIO)	
		1	**186-3735**	7	PIN-CONNECTOR (16-GA TO 18-GA)	
		1	**8T-8737**	1	PLUG-SEAL	
		1	**160-3518**	1	KIT-RECEPTACLE (8-PIN)	
					(INCLUDES RECEPTACLE AS & WEDGE)	
CY	3	1	**331-5291**	1	RADIO GP (AM/FM/WB/CD PLAYER)	782

C-CHANGE FROM PREVIOUS TYPE
Y-SEPARATE ILLUSTRATION

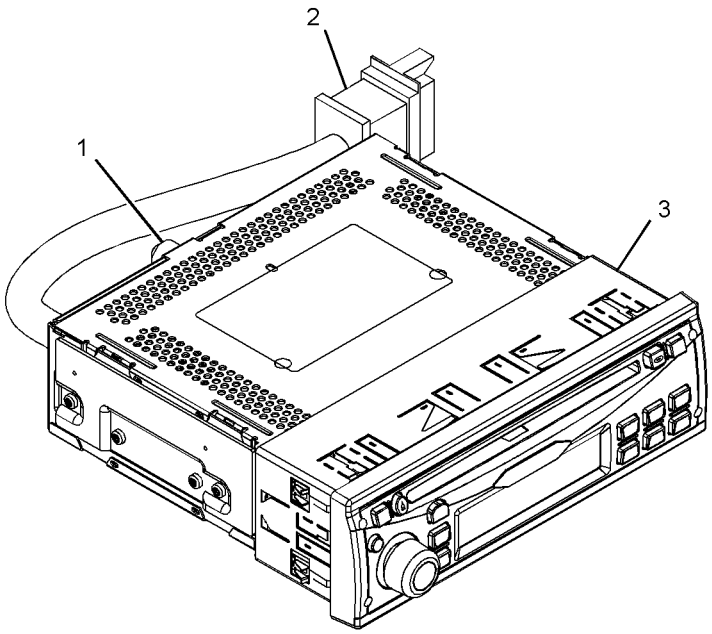

GRAPHIC #1 **<END>** g01812994

OPERATOR STATION

331-5291 RADIO GP–AM/FM/WB/CD PLAYER

S/N: MST1-UP

PART OF 262-9163, 288-1744, 337-3992 RADIO GP

FOR USE WITH INSTALLATION GP-RADIO

AN ATTACHMENT

SMCS-7338, 733C **i03466569**

NOTE	REF NO	GRAPHIC REF	PART NUMBER	QTY	PART NAME 1 2 3 4 5 6 (PRODUCT LEVEL)	SEE PAGE
	1	1	**192-7054**	1	SLEEVE	

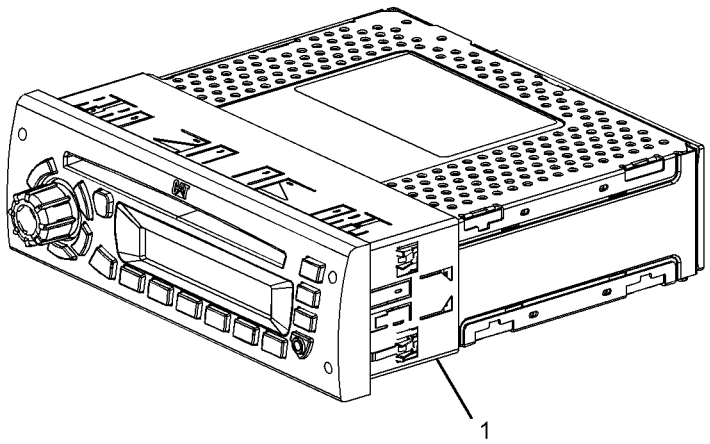

GRAPHIC #1 **<END>** g01813033

OPERATOR STATION

331-5292 RADIO GP–AM, FM

S/N: MST1-UP

PART OF 233-3123 RADIO GP

FIELD REPLACEMENT FOR 200-5729–PAGE 773. FOR USE WITH INSTALLATION GP-RADIO AN ATTACHMENT AND FIELD INSTALLATION

SMCS-7338, 733C **i03466464**

NOTE	REF NO	GRAPHIC REF	PART NUMBER	QTY	PART NAME 1 2 3 4 5 6 (PRODUCT LEVEL)	SEE PAGE
	1	1	**192-7054**	1	SLEEVE	

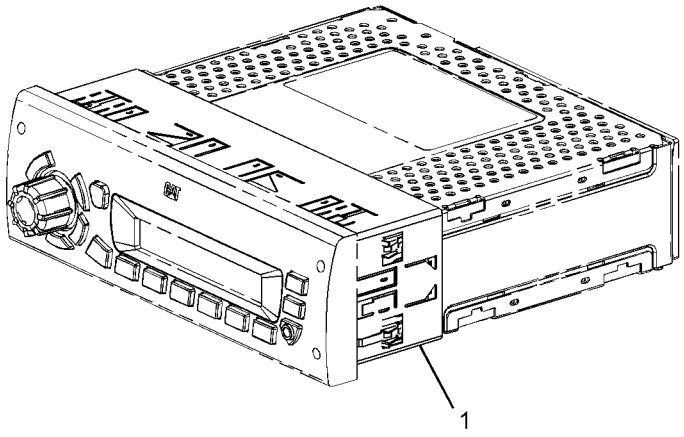

GRAPHIC #1 **<END>** g01813076

OPERATOR STATION

337-3992 RADIO GP–AM/FM

S/N: MST1-UP

AN ATTACHMENT

SMCS-7338, 733C **i03726307**

NOTE	REF NO	GRAPHIC REF	PART NUMBER	QTY	PART NAME 1 2 3 4 5 6 (PRODUCT LEVEL)	SEE PAGE
	1	1	**9X-2026**	1	WASHER (6.5X17X1-MM THK)	
	2	1	**8E-1118**	1	ANTENNA AS	
	3	1	**9U-8746**	1	CABLE AS-COAXIAL	
	4	1	**168-8772**	2	SPEAKER AS-RADIO	
	5	1	**200-5728**	1	HARNESS AS-RADIO	
		1	**172-8037**	1	CONNECTOR (RADIO)	
		1	**186-3735**	7	PIN-CONNECTOR (16-GA TO 18-GA)	
		1	**8T-8737**	1	PLUG-SEAL	
		1	**160-3518**	1	KIT-RECEPTACLE (8-PIN)	
					(INCLUDES RECEPTACLE AS & WEDGE)	
		1	**172-8039**	11	TERMINAL (RADIO)	
	6	1	**258-4039**	1	SPACER	
	7	1	**258-4074**	1	BRACKET	
	8	1	**258-4367**	2	BRACKET	
Y	9	1	**331-5291**	1	RADIO GP (AM/FM/WB/CD PLAYER)	782
	10	1	**340-9348**	1	COVER	
	11	1	**195-0936**	4	INSERT-THREADED (M6X1-THD)	
M	12	1	**5C-7261**	1	NUT (M8X1.25-THD)	
	13	1	**5P-4116**	1	WASHER-HARD (8.8X20.5X2-MM THK)	
M	14	1	**6V-7357**	4	BOLT (M6X1X25-MM)	
M	15	1	**8T-4142**	8	BOLT-FLANGE HEAD (M5X0.8X12-MM)	
	16	1	**8T-4224**	4	WASHER-HARD (8.8X16X2-MM THK)	

M-METRIC PART
Y-SEPARATE ILLUSTRATION

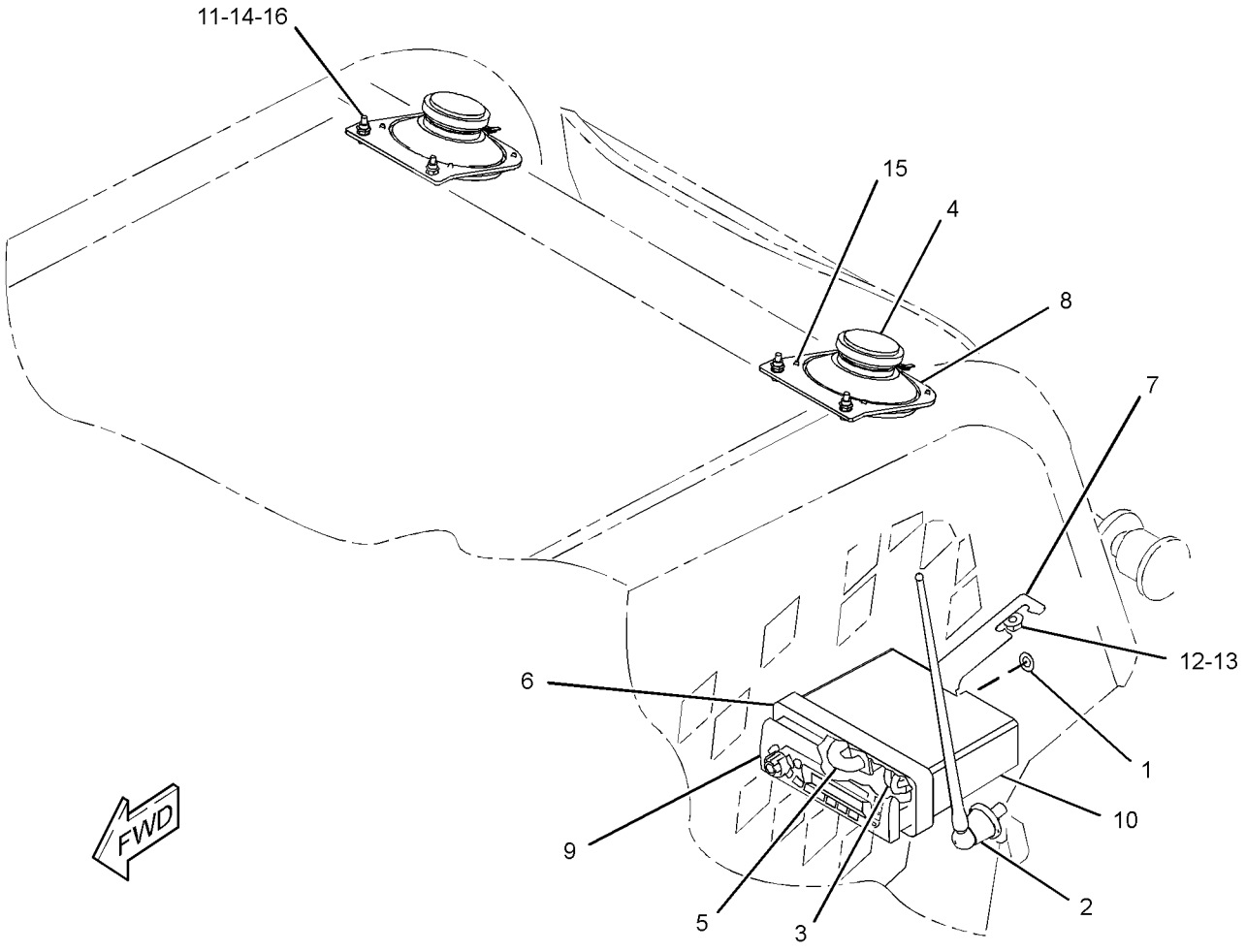

GRAPHIC #1 **<END>** g02001598

OPERATOR STATION

258-4401 SEAT & ARMREST GP

S/N: MST1-UP
PART OF 258-4052 SEAT & MOUNTING GP
AN ATTACHMENT

SMCS-7307, 7312 **i02839873**

NOTE	REF NO	GRAPHIC REF	PART NUMBER	QTY	PART NAME 1 2 3 4 5 6 (PRODUCT LEVEL)	SEE PAGE
Y	1	1	**258-4055**	1	SEAT GP-SUSPENSION (AIR)	800
Y	2	1	*258-4311*	1	ARMREST & MOUNTING GP	653
M	3	1	**6V-9189**	8	LOCKNUT (M8X1.25-THD)	
	4	1	**8T-4205**	2	WASHER-HARD (7.2X14.5X2-MM THK)	
	5	1	**8T-4224**	12	WASHER-HARD (8.8X16X2-MM THK)	
M	6	1	**8T-4908**	4	BOLT (M8X1.25X25-MM)	
M	7	1	**9X-2045**	2	SCREW-TRUSS HEAD (M6X1X20-MM)	

M-METRIC PART
Y-SEPARATE ILLUSTRATION

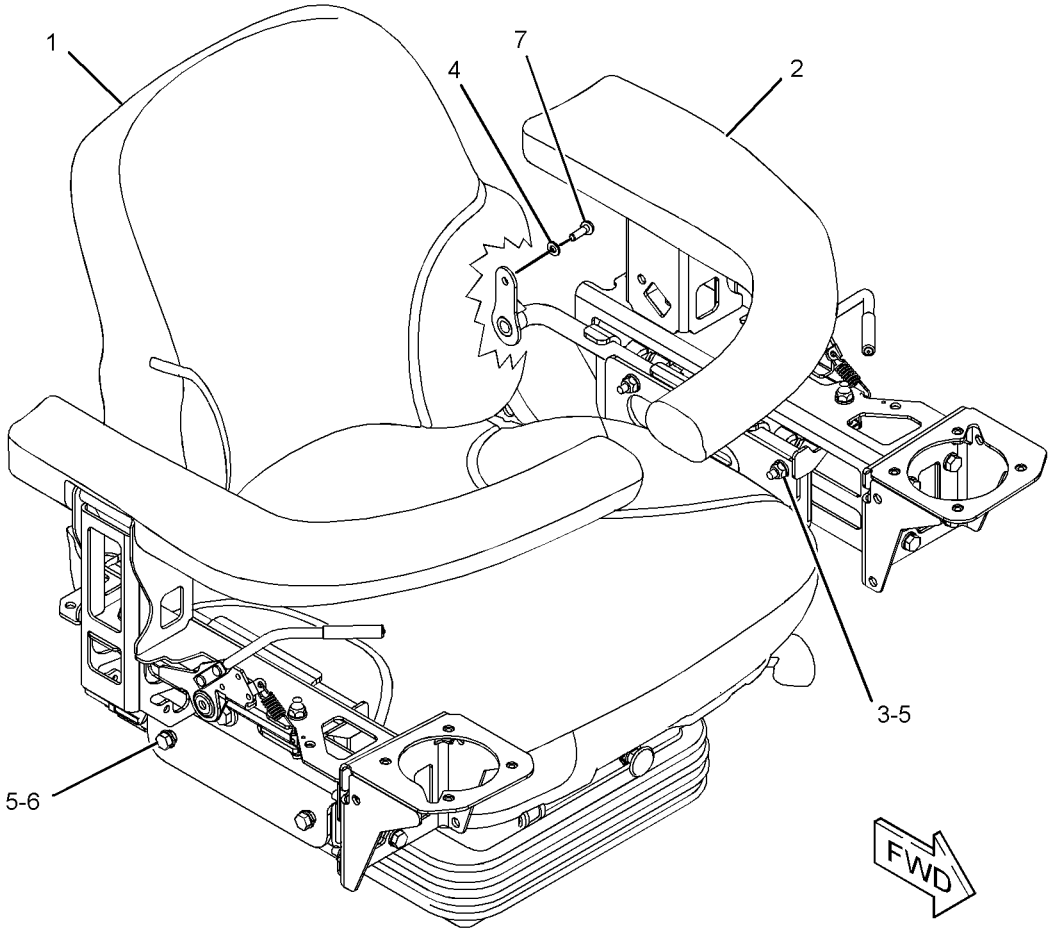

GRAPHIC #1 **<END>** g01344411

OPERATOR STATION

258-4402 SEAT & ARMREST GP–SUSPENSION

S/N: MST1-UP

PART OF 258-4051 SEAT & MOUNTING GP

AN ATTACHMENT

SMCS-7307, 7312 **i02674930**

NOTE	REF NO	GRAPHIC REF	PART NUMBER	QTY	PART NAME 1 2 3 4 5 6 (PRODUCT LEVEL)	SEE PAGE
Y	1	1	**258-4054**	1	SEAT GP-SUSPENSION (MECHANICAL)	798
Y	2	1	*258-4311*	1	ARMREST & MOUNTING GP	653
M	3	1	**6V-9189**	8	LOCKNUT (M8X1.25-THD)	
	4	1	**8T-4205**	2	WASHER-HARD (7.2X14.5X2-MM THK)	
	5	1	**8T-4224**	12	WASHER-HARD (8.8X16X2-MM THK)	
M	6	1	**8T-4908**	4	BOLT (M8X1.25X25-MM)	
M	7	1	**9X-2045**	2	SCREW-TRUSS HEAD (M6X1X20-MM)	

M-METRIC PART
Y-SEPARATE ILLUSTRATION

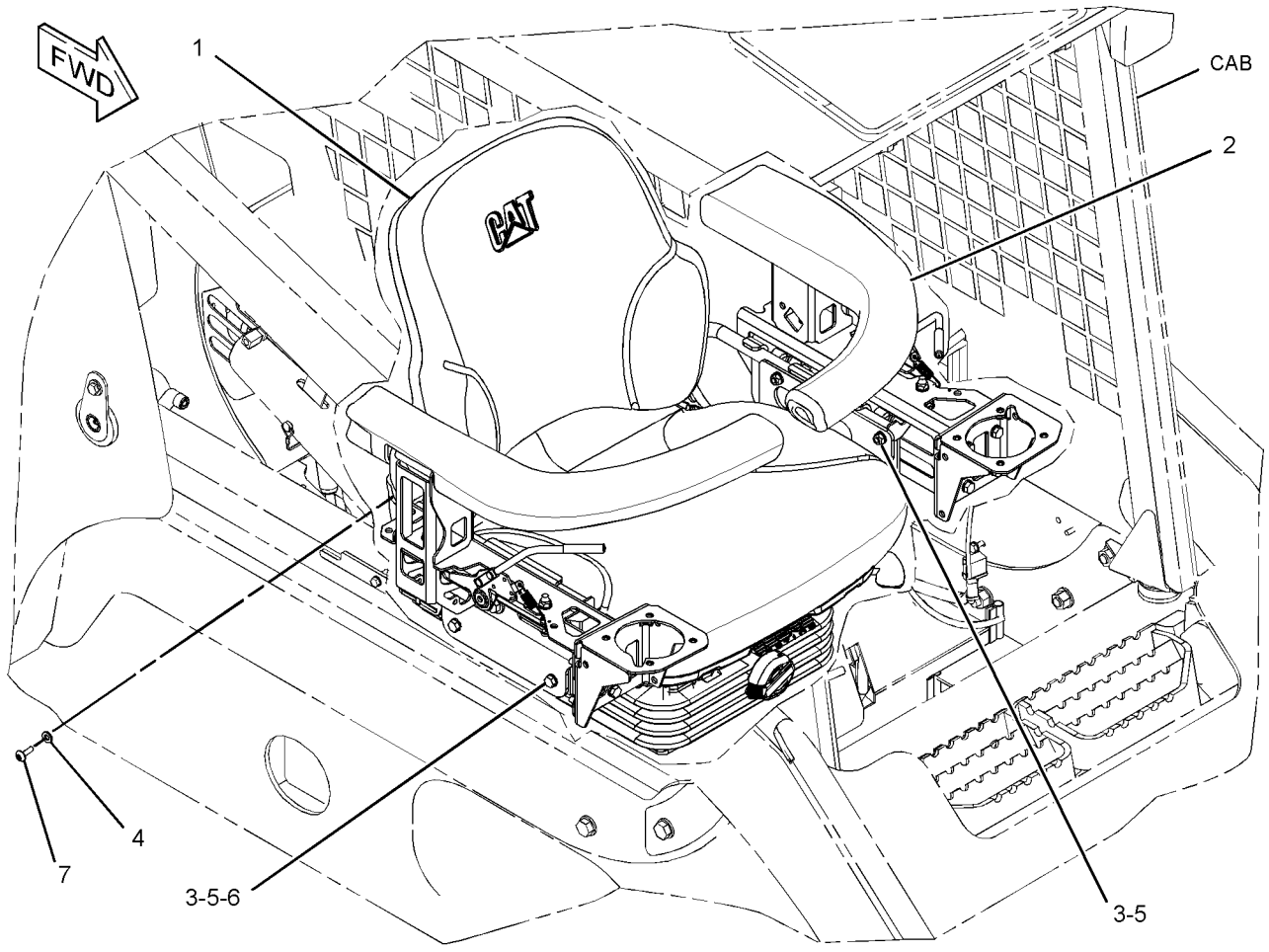

GRAPHIC #1 **<END>** g01344677

OPERATOR STATION

258-4403 SEAT & ARMREST GP–STATIC

S/N: MST1-UP
PART OF 258-4050 SEAT & MOUNTING GP
AN ATTACHMENT

SMCS-7307, 7312 **i03638373**

NOTE	REF NO	GRAPHIC REF	PART NUMBER	QTY	PART NAME 1 2 3 4 5 6 (PRODUCT LEVEL)	SEE PAGE
	1	1	**258-4049**	1	SUPPORT AS-SEAT	
Y	2	1	**258-4053**	1	SEAT GP (STATIC)	795
Y	3	1	*258-4311*	1	ARMREST & MOUNTING GP	653
M	4	1	**6V-9189**	12	LOCKNUT (M8X1.25-THD)	
	5	1	**8T-4205**	2	WASHER-HARD (7.2X14.5X2-MM THK)	
	6	1	**8T-4224**	16	WASHER-HARD (8.8X16X2-MM THK)	
M	7	1	**8T-4908**	4	BOLT (M8X1.25X25-MM)	
M	8	1	**9X-2045**	2	SCREW-TRUSS HEAD (M6X1X20-MM)	

M-METRIC PART
Y-SEPARATE ILLUSTRATION

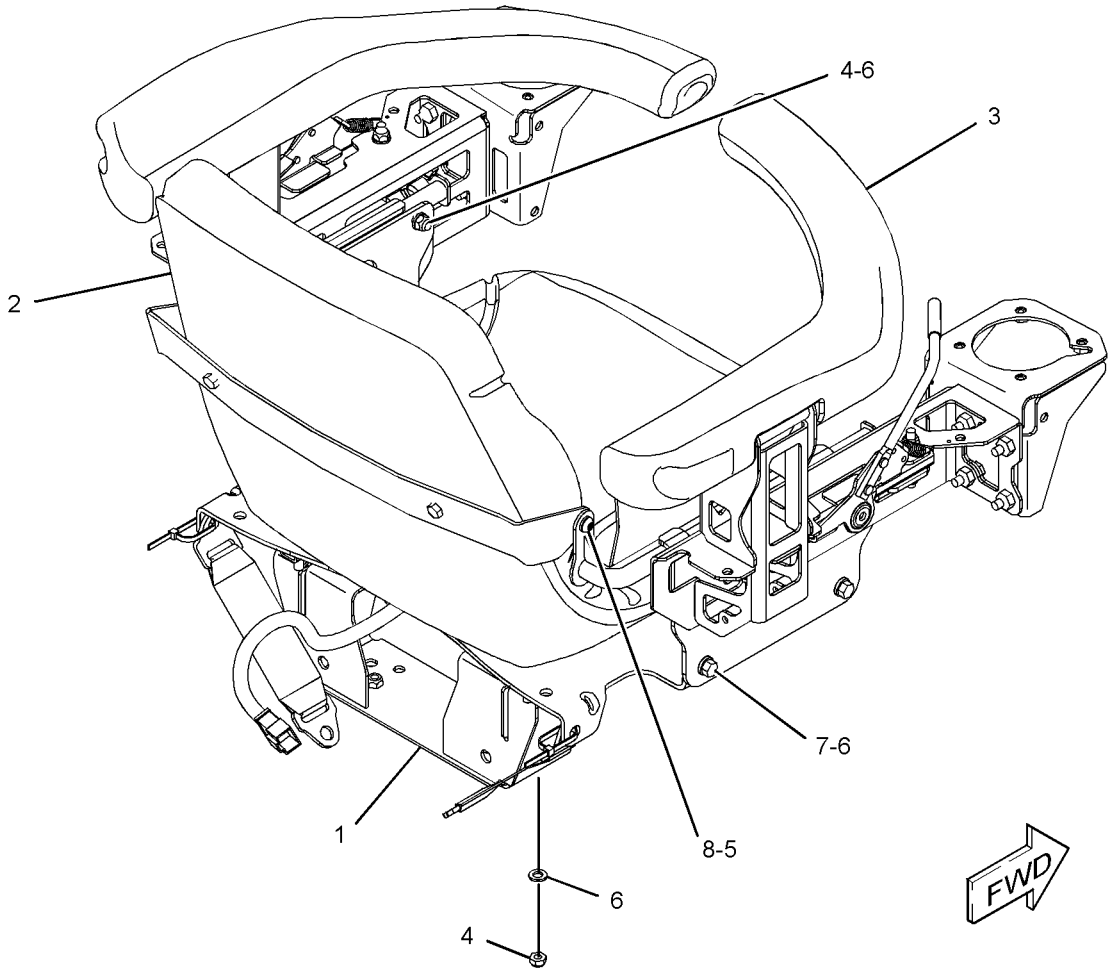

GRAPHIC #1 **<END>** g01311083

258-4050 SEAT & MOUNTING GP–STATIC

S/N: MST1-UP
PART OF 258-4310 SEAT AR
AN ATTACHMENT

SMCS-7312 **i02706180**

NOTE	REF NO	GRAPHIC REF	PART NUMBER	QTY	PART NAME 1 2 3 4 5 6 (PRODUCT LEVEL)	SEE PAGE
	1	1	**7X-0507**	2	WASHER-HARD (12X22.5X5-MM THK)	
Y	2	1	*258-4403*	1	SEAT & ARMREST GP (STATIC)	788
	3	1	**156-0283**	4	WASHER-HARD (8.4X35X2.5-MM THK)	
M	4	1	**7X-0818**	4	BOLT (M8X1.25X45-MM)	
	5	1	**8S-0934**	2	LOCKNUT-FLANGE (7/16-20-THD)	
	6	1	**8S-4723**	2	BOLT (7/16-20X1.5-IN)	
	7	1	**8T-4223**	2	WASHER-HARD (13.5X25.5X3-MM THK)	

M-METRIC PART
Y-SEPARATE ILLUSTRATION

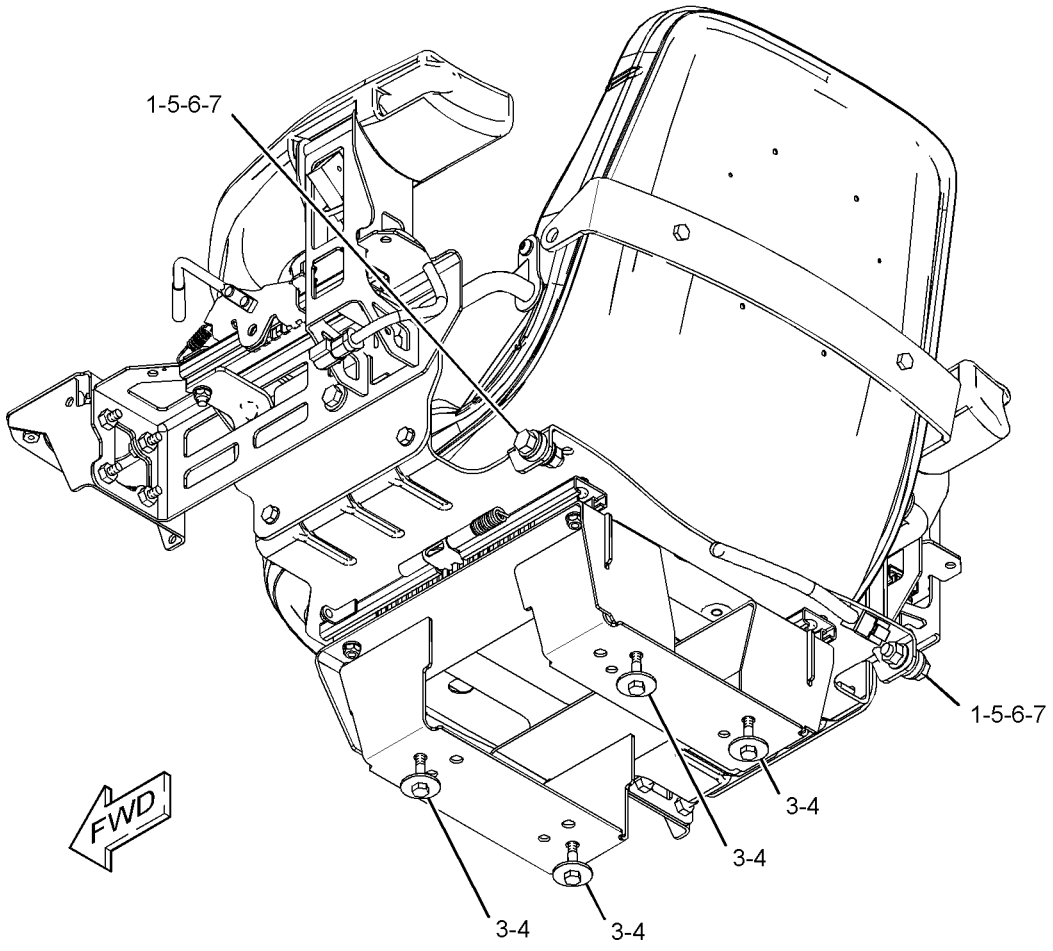

GRAPHIC #1 **<END>** g01310522

OPERATOR STATION

258-4051 SEAT & MOUNTING GP—SUSPENSION

S/N: MST1-UP
PART OF 258-4320 SEAT AR-SUSPENSION
AN ATTACHMENT

SMCS-7312 **i02706195**

NOTE	REF NO	GRAPHIC REF	PART NUMBER	QTY	PART NAME 1 2 3 4 5 6 (PRODUCT LEVEL)	SEE PAGE
	1	1	**7X-0507**	2	WASHER-HARD (12X22.5X5-MM THK)	
Y	2	1	*258-4402*	1	SEAT & ARMREST GP (SUSPENSION)	787
	3	1	**156-0283**	4	WASHER-HARD (8.4X35X2.5-MM THK)	
M	4	1	**7X-0818**	4	BOLT (M8X1.25X45-MM)	
	5	1	**8S-0934**	2	LOCKNUT-FLANGE (7/16-20-THD)	
	6	1	**8S-4723**	2	BOLT (7/16-20X1.5-IN)	
	7	1	**8T-4223**	2	WASHER-HARD (13.5X25.5X3-MM THK)	

M-METRIC PART
Y-SEPARATE ILLUSTRATION

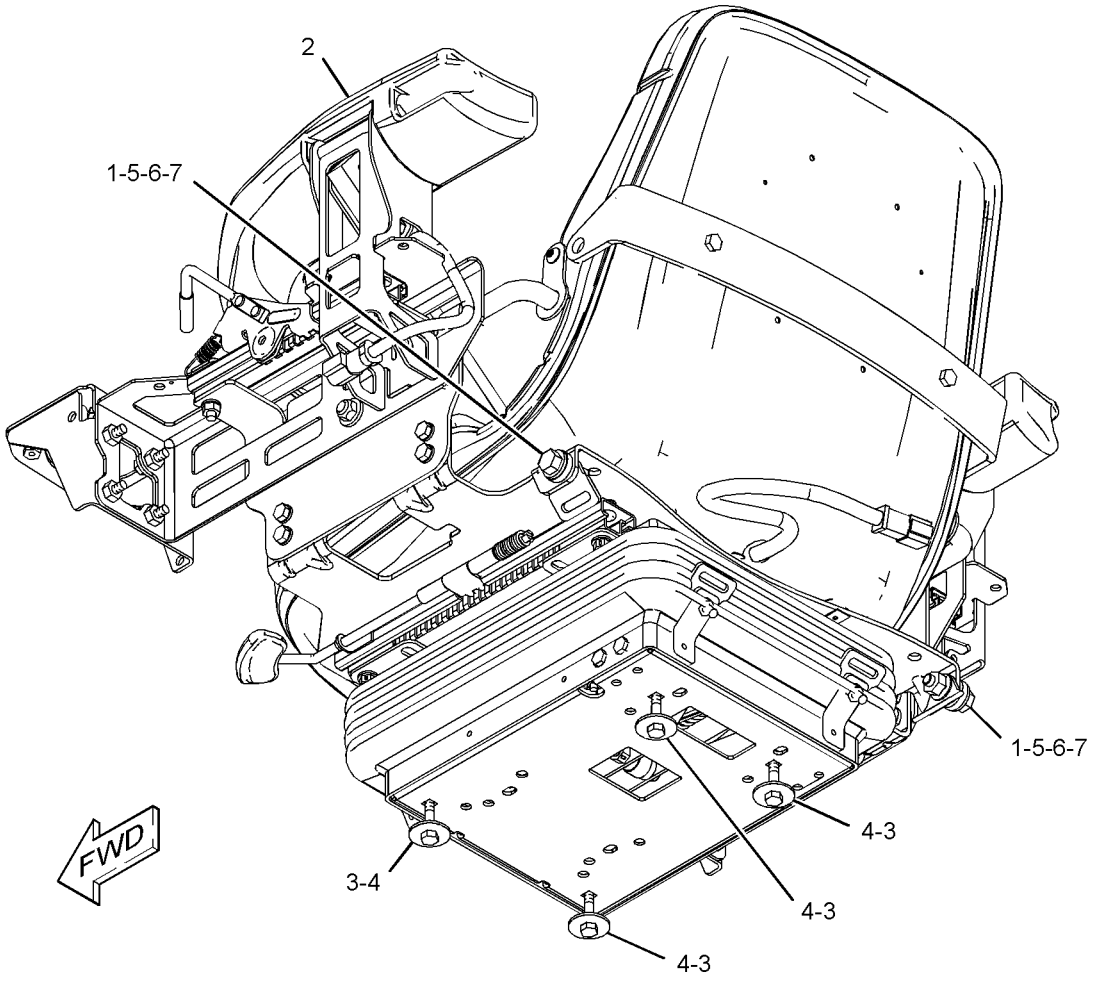

GRAPHIC #1 **<END>** g01310831

OPERATOR STATION

258-4052 SEAT & MOUNTING GP

S/N: MST1-UP

PART OF 258-4330 SEAT AR-SUSPENSION

AN ATTACHMENT

SMCS-7312 **i02706196**

NOTE	REF NO	GRAPHIC REF	PART NUMBER	QTY	PART NAME 1 2 3 4 5 6 (PRODUCT LEVEL)	SEE PAGE
	1	1	**7X-0507**	2	WASHER-HARD (12X22.5X5-MM THK)	
Y	2	1	*258-4401*	1	SEAT & ARMREST GP	786
	3	1	**156-0283**	4	WASHER-HARD (8.4X35X2.5-MM THK)	
M	4	1	**7X-0818**	4	BOLT (M8X1.25X45-MM)	
	5	1	**8S-0934**	2	LOCKNUT-FLANGE (7/16-20-THD)	
	6	1	**8S-4723**	2	BOLT (7/16-20X1.5-IN)	
	7	1	**8T-4223**	2	WASHER-HARD (13.5X25.5X3-MM THK)	

M-METRIC PART
Y-SEPARATE ILLUSTRATION

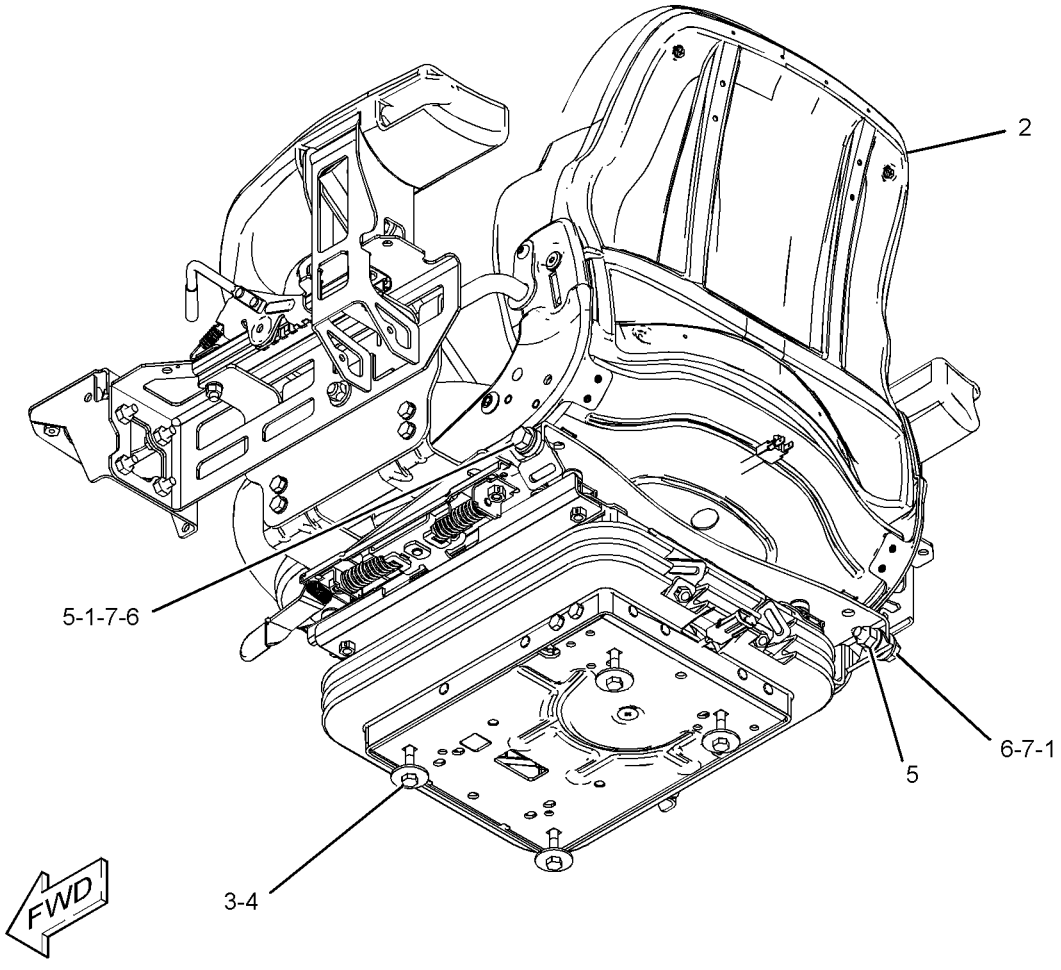

GRAPHIC #1 **<END>** g01319456

OPERATOR STATION

258-4310 SEAT AR—STATIC

S/N: MST1-UP
PART OF 258-3738 OPTION AR-CAB
AN ATTACHMENT

SMCS-7312 **i02613967**

NOTE	PART NUMBER	QTY	PART NAME 1 2 3 4 5 6 (PRODUCT LEVEL)	SEE PAGE
Y	*258-4314*	1	COVER GP-CONSOLE (RH, LH)	678
Y	*258-4050*	1	SEAT & MOUNTING GP (STATIC)	789

Y-SEPARATE ILLUSTRATION

<END>

258-4320 SEAT AR-SUSPENSION—MECHANICAL

S/N: MST1-UP
PART OF 258-3740 OPTION AR-CAB
CANNOT BE USED WITH 258-3738—PAGE 764, 258-3738—PAGE 764
AN ATTACHMENT

SMCS-7324 **i02614239**

NOTE	PART NUMBER	QTY	PART NAME 1 2 3 4 5 6 (PRODUCT LEVEL)	SEE PAGE
Y	*258-4314*	1	COVER GP-CONSOLE (RH, LH)	678
Y	*258-4051*	1	SEAT & MOUNTING GP (SUSPENSION)	790

Y-SEPARATE ILLUSTRATION

<END>

258-4330 SEAT AR-SUSPENSION—AIR

S/N: MST1-UP
CANNOT BE USED WITH 258-3738—PAGE 764
AN ATTACHMENT

SMCS-7324 **i02628656**

NOTE	PART NUMBER	QTY	PART NAME 1 2 3 4 5 6 (PRODUCT LEVEL)	SEE PAGE
Y	*258-4314*	1	COVER GP-CONSOLE (RH, LH)	678
Y	*258-4052*	1	SEAT & MOUNTING GP	791

Y-SEPARATE ILLUSTRATION

<END>

OPERATOR STATION

258-4095 SEAT BELT GP–RETRACTABLE

S/N: MST1-UP

AN ATTACHMENT

SMCS-7327 **i03505740**

NOTE	REF NO	GRAPHIC REF	PART NUMBER	QTY	PART NAME 1 2 3 4 5 6 (PRODUCT LEVEL)	SEE PAGE
F			**2D-6412**	2	WASHER (7/16X15/16X1/4-IN THK)	
F			**8S-0934**	2	LOCKNUT-FLANGE (7/16-20-THD)	
F			**8S-4723**	2	BOLT (7/16-20X1.5-IN)	
F			**8T-4223**	2	WASHER-HARD (13.5X25.5X3-MM THK)	

F-NOT SHOWN

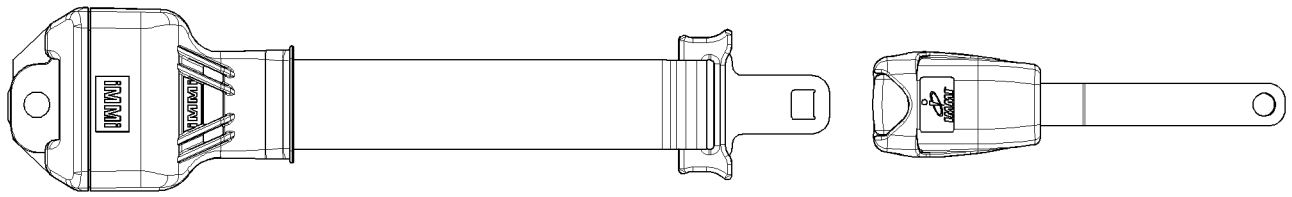

GRAPHIC #1 **<END>** g01345229

OPERATOR STATION

258-4096 SEAT BELT GP–RETRACTABLE

S/N: MST1-UP

AN ATTACHMENT

SMCS-7327 **i03505761**

NOTE	REF NO	GRAPHIC REF	PART NUMBER	QTY	PART NAME 1 2 3 4 5 6 (PRODUCT LEVEL)	SEE PAGE
F			**2D-6412**	2	WASHER (7/16X15/16X1/4-IN THK)	
F			**8S-0934**	2	LOCKNUT-FLANGE (7/16-20-THD)	
F			**8S-4723**	2	BOLT (7/16-20X1.5-IN)	
F			**8T-4223**	2	WASHER-HARD (13.5X25.5X3-MM THK)	

F-NOT SHOWN

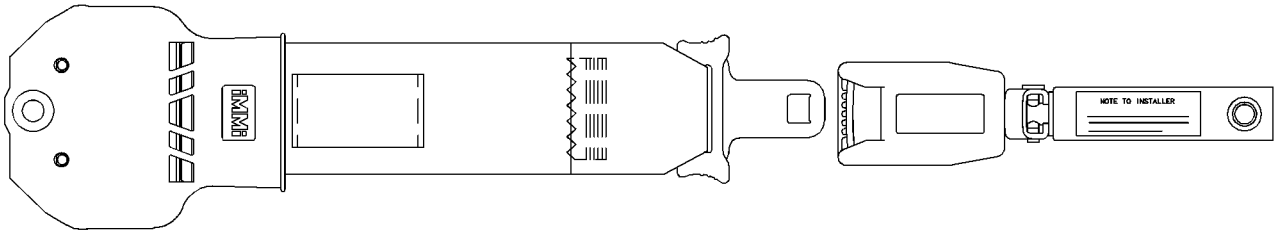

GRAPHIC #1 **<END>** g01196135

OPERATOR STATION

258-4053 SEAT GP–STATIC

S/N: MST1-UP
PART OF 258-4403 SEAT & ARMREST GP
AN ATTACHMENT

SMCS-7312, 7324 **i03690301**

NOTE	REF NO	GRAPHIC REF	PART NUMBER	QTY	PART NAME 1 2 3 4 5 6 (PRODUCT LEVEL)	SEE PAGE
	1	1	**8L-8413**	2	STRAP-CABLE	
	2	1	**225-2657**	2	BOLT (5/16-18-THD)	
	3	1	**273-5915**	1	PLATE	
	4	1	**275-5916**	1	SEAT GP	
		1	**293-2870**	1	SWITCH AS (SEAT)	
		1	**293-2871**	1	SWITCH AS (SEAT)	
	5	1	**293-2872**	1	HARNESS AS-SWITCH	
E		1	**211-5358**		CONDUIT-FLEXIBLE (55-CM)	
		1	**8T-8729**	2	PIN-CONNECTOR (16-GA TO 18-GA)	
		1	**8T-8737**	2	PLUG-SEAL	
		1	**102-8804**	1	KIT-RECEPTACLE (4-PIN)	
					(INCLUDES RECEPTACLE AS & WEDGE)	
	6	1	**305-7092**	1	SLIDE AS (LATCHING)	
	7	1	**305-7093**	1	SLIDE AS (SLAVE PISTON)	
	8	1	**307-2955**	2	TETHER	
	9	1	**308-6616**	1	PLATE AS	
	10	1	**4M-0061**	4	BOLT (5/16-18X0.75-IN)	
	11	1	**7X-0603**	4	WASHER-HARD (9.9X35X2.5-MM THK)	

E-ORDER BY THE CENTIMETER

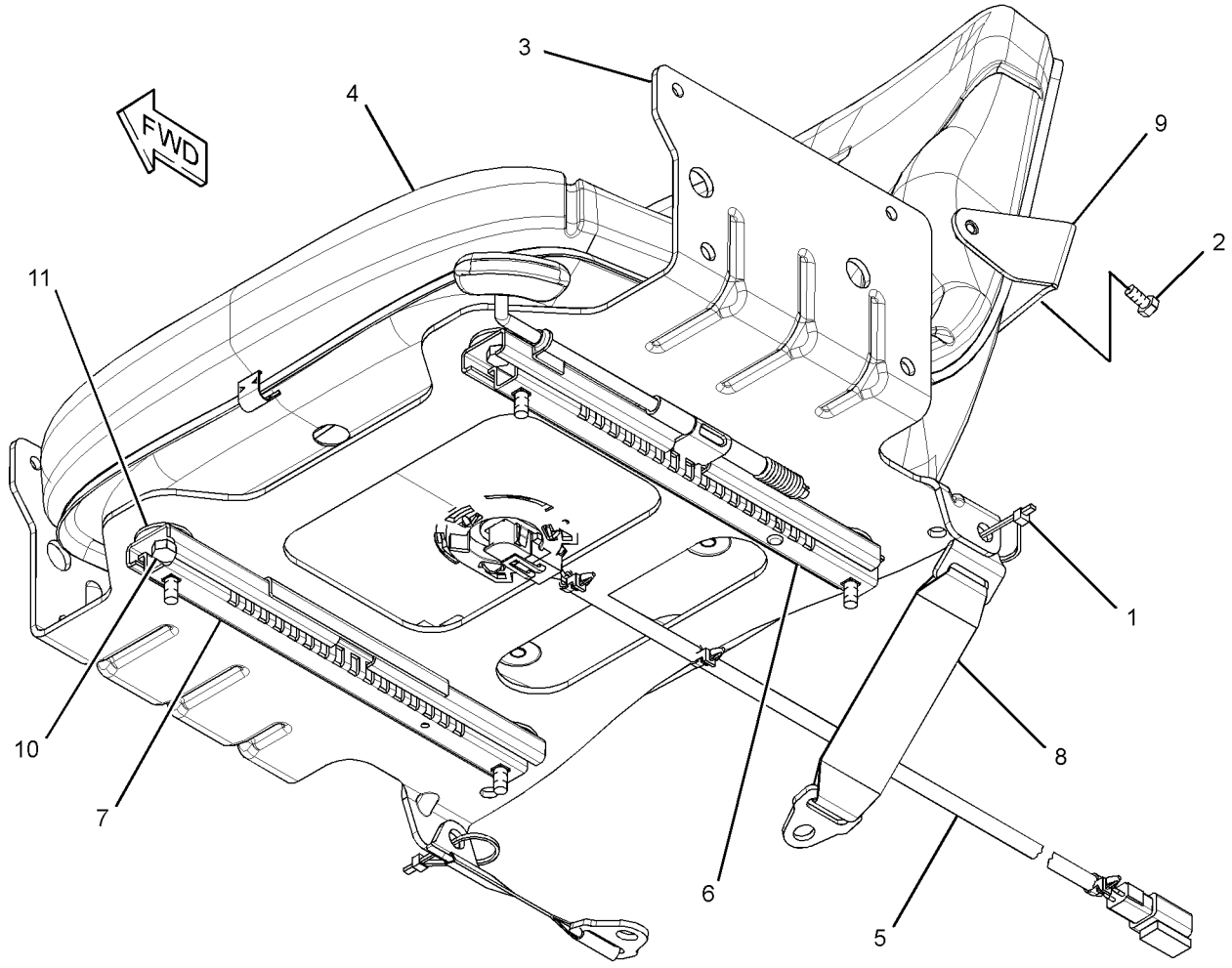

GRAPHIC #1 **<END>** g01574355

OPERATOR STATION

273-5913 SEAT GP–CLOTH, SUSPENSION

S/N: MST1-UP
PART OF 258-4055 SEAT GP-SUSPENSION
AN ATTACHMENT

SMCS-7312, 7324 **i02958617**

NOTE	REF NO	GRAPHIC REF	PART NUMBER	QTY	PART NAME 1 2 3 4 5 6 (PRODUCT LEVEL)	SEE PAGE
	1	1	**098-8968**	2	WASHER (5X16X1.2-MM THK)	
	2	1	**8T-4224**	2	WASHER-HARD (8.8X16X2-MM THK)	
	3	1	**305-7085**	1	PAN AS-SEAT (FIXED)	
	4	1	**305-7086**	1	CUSHION AS-BACKREST	
	5	1	**305-7087**	1	CUSHION AS-SEAT	
	6	1	**307-2952**	1	PAN AS-SEAT (OPERATOR CONTROL)	
		1	**293-2871**	1	SWITCH AS (SEAT) (OPERATOR SWITCHES)	
		1	**307-2953**	1	SPACER	
		1	**307-2954**	2	SPRING	
	7	1	**119-5026**	2	SCREW-PAN HEAD (10-16X0.63-IN)	
M	8	1	**131-3990**	2	BOLT-CARRIAGE (M8X1.25X30-MM)	
M	9	1	**6V-9189**	2	LOCKNUT (M8X1.25-THD)	
	10	1	**319-4168**	4	SCREW-PAN HEAD	

M-METRIC PART

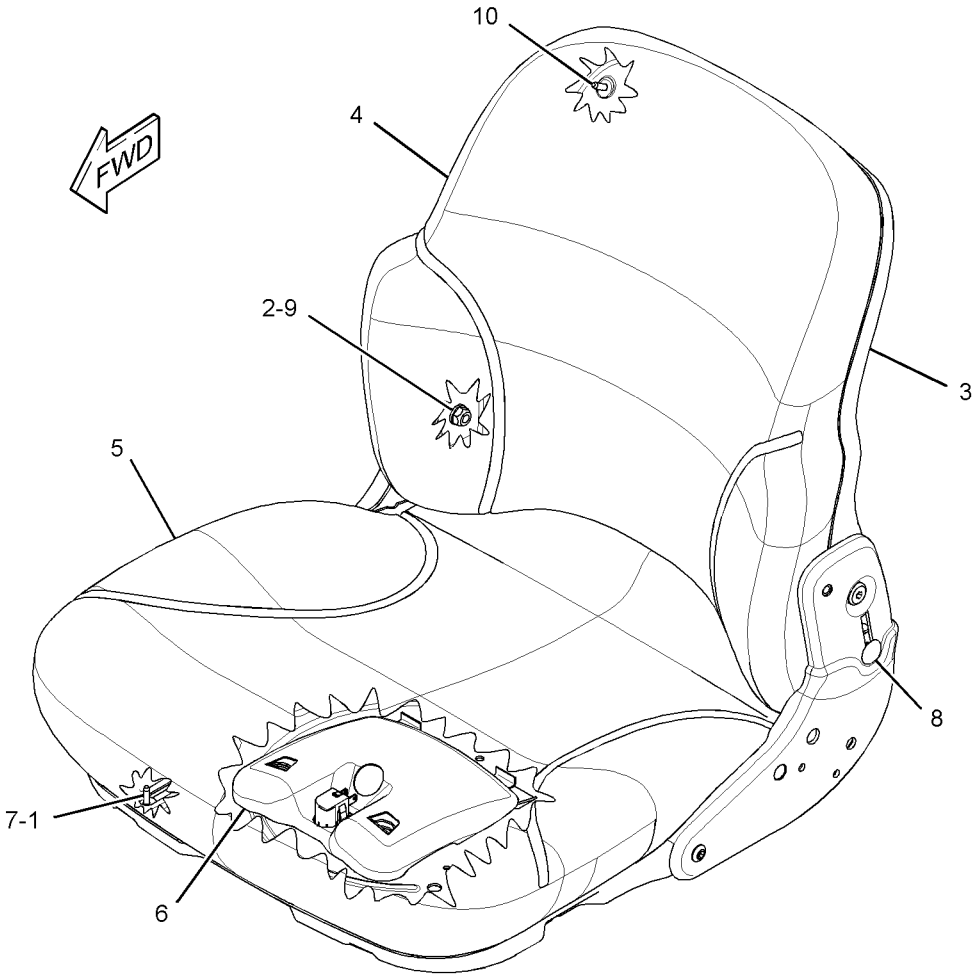

GRAPHIC #1 **<END>** g01556513

OPERATOR STATION

305-7096 SEAT GP–VINYL

S/N: MST1-UP
PART OF 258-4054 SEAT GP-SUSPENSION
AN ATTACHMENT

SMCS-7312, 7324 **i02958642**

NOTE	REF NO	GRAPHIC REF	PART NUMBER	QTY	PART NAME 1 2 3 4 5 6 (PRODUCT LEVEL)	SEE PAGE
	1	1	**098-8968**	2	WASHER (5X16X1.2-MM THK)	
	2	1	**8T-4224**	2	WASHER-HARD (8.8X16X2-MM THK)	
	3	1	**305-7085**	1	PAN AS-SEAT	
	4	1	**305-7088**	1	CUSHION AS-SEAT	
	5	1	**305-7089**	1	CUSHION AS-SEAT	
	6	1	**307-2952**	1	PAN AS-SEAT	
		1	**293-2871**	1	SWITCH AS (SEAT)	
		1	**307-2953**	1	SPACER	
		1	**307-2954**	2	SPRING	
	7	1	**119-5026**	2	SCREW-PAN HEAD (10-16X0.63-IN)	
M	8	1	**131-3990**	2	BOLT-CARRIAGE (M8X1.25X30-MM)	
M	9	1	**6V-9189**	2	LOCKNUT (M8X1.25-THD)	
	10	1	**319-4168**	4	SCREW-PAN HEAD	

M-METRIC PART

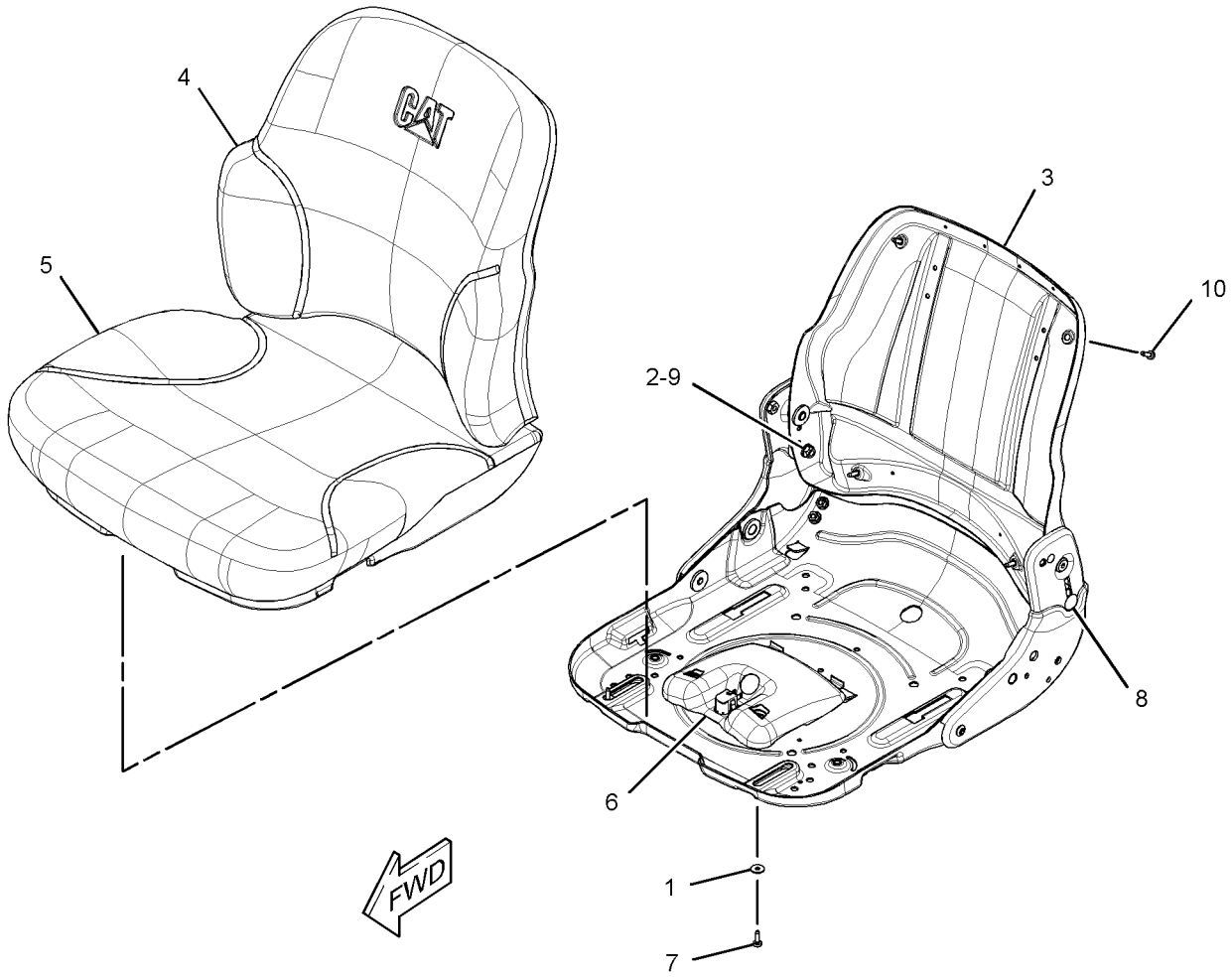

GRAPHIC #1 **<END>** g01508149

OPERATOR STATION

258-4054 SEAT GP-SUSPENSION—MECHANICAL

S/N: MST1-UP

PART OF 258-4402 SEAT & ARMREST GP

AN ATTACHMENT

SMCS-7312, 7321, 7324 **i03624789**

NOTE	REF NO	GRAPHIC REF	PART NUMBER	QTY	PART NAME 1 2 3 4 5 6 (PRODUCT LEVEL)	SEE PAGE
	1	1	**8L-8413**	2	STRAP-CABLE	
	2	1	**273-5915**	1	PLATE	
Y	3	1	**273-9611**	1	SUSPENSION GP-SEAT (MECHANICAL)	805
	4	1	**293-2872**	1	HARNESS AS-SWITCH	
		1	**102-8804**	1	KIT-RECEPTACLE (4-PIN)	
					(INCLUDES RECEPTACLE AS & WEDGE)	
		1	**186-3735**	2	PIN-CONNECTOR (16-GA TO 18-GA)	
		1	**8T-8737**	2	PLUG-SEAL	
E		1	**211-5358**		CONDUIT-FLEXIBLE (55-CM)	
	5	1	**305-7092**	1	SLIDE AS (LATCHING)	
	6	1	**305-7093**	1	SLIDE AS (SLAVE)	
Y	7	1	*305-7096*	1	SEAT GP	797
	8	1	**307-2955**	2	TETHER	
	9	1	**031-4155**	4	LOCKNUT (5/16-18-THD)	
	10	1	**1P-1210**	4	WASHER (0.391X0.812X0.067-IN THK)	
	11	1	**4M-0061**	4	BOLT (5/16-18X0.75-IN)	
M	12	1	**6V-7687**	2	LOCKNUT (M12X1.75-THD)	
M	13	1	**6V-9189**	4	LOCKNUT (M8X1.25-THD)	
	14	1	**7X-0603**	4	WASHER-HARD (9.9X35X2.5-MM THK)	
	15	1	**8M-4791**	2	WASHER-HARD (13.5X27X3-MM THK)	
M	16	1	**8T-4139**	2	BOLT (M12X1.75X30-MM)	

E-ORDER BY THE CENTIMETER
M-METRIC PART
Y-SEPARATE ILLUSTRATION

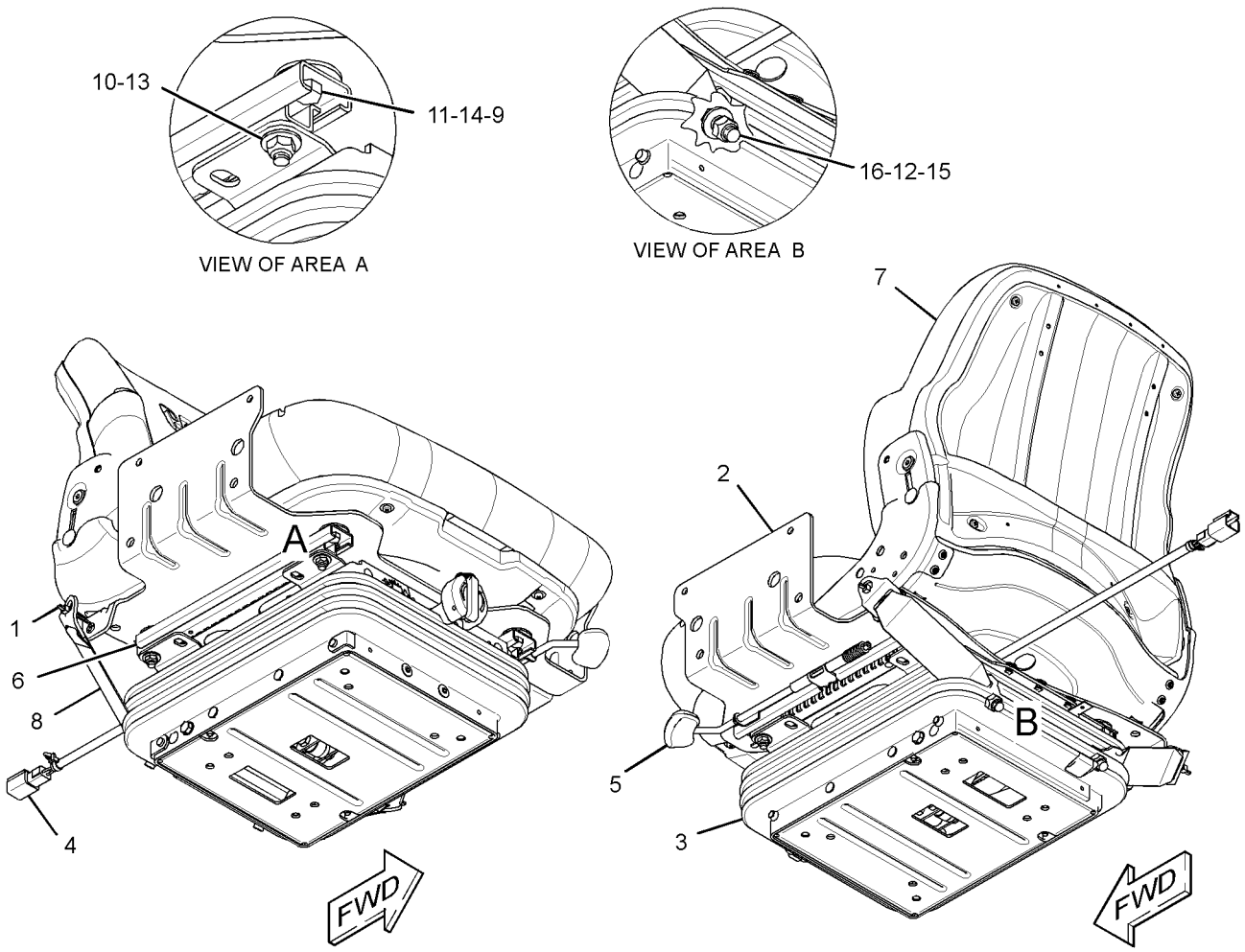

GRAPHIC #1 **<END>** g01420189

OPERATOR STATION

258-4055 SEAT GP-SUSPENSION–AIR

S/N: MST1-UP
PART OF 258-4401 SEAT & ARMREST GP
AN ATTACHMENT

SMCS-7312, 7321, 7324 **i02839869**

NOTE	REF NO	GRAPHIC REF	PART NUMBER	QTY	PART NAME 1 2 3 4 5 6 (PRODUCT LEVEL)	SEE PAGE
	1	1	**8L-8413**	2	STRAP-CABLE	
Y	2	1	*273-5913*	1	SEAT GP (CLOTH, SUSPENSION)	796
Y	3	1	**273-5914**	1	SUSPENSION GP-SEAT (AIR)	803
	4	1	**273-5915**	1	PLATE	
	5	1	**305-7092**	1	SLIDE AS (LATCHING)	
	6	1	**305-7093**	1	SLIDE AS (SLAVE)	
	7	1	**307-2955**	2	TETHER	
	8	1	**031-4155**	4	LOCKNUT (5/16-18-THD)	
	9	1	**1P-1210**	4	WASHER (0.391X0.812X0.067-IN THK)	
	10	1	**4M-0061**	4	BOLT (5/16-18X0.75-IN)	
M	11	1	**6V-7687**	2	LOCKNUT (M12X1.75-THD)	
M	12	1	**6V-9189**	4	LOCKNUT (M8X1.25-THD)	
	13	1	**7X-0603**	4	WASHER-HARD (9.9X35X2.5-MM THK)	
	14	1	**8M-4791**	2	WASHER-HARD (13.5X27X3-MM THK)	
M	15	1	**8T-4139**	2	BOLT (M12X1.75X30-MM)	

M-METRIC PART
Y-SEPARATE ILLUSTRATION

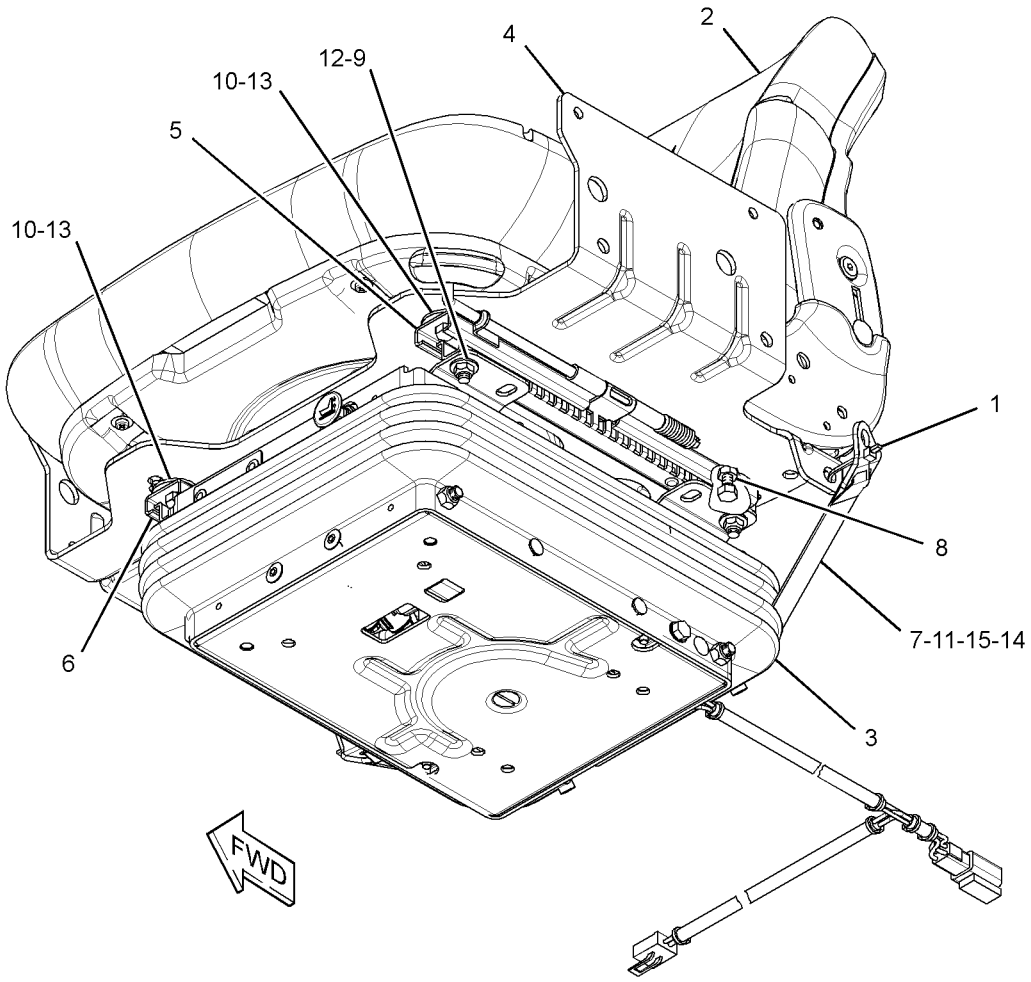

GRAPHIC #1 **<END>** g01421188

258-4017 SPRING GP-GAS—INCLUDES LIFT HANDLE

S/N: MST1-UP

PART OF 258-3738, 258-3740 OPTION AR-CAB

AN ATTACHMENT

SMCS-7301 **i02674943**

NOTE	REF NO	GRAPHIC REF	PART NUMBER	QTY	PART NAME 1 2 3 4 5 6 (PRODUCT LEVEL)	SEE PAGE
	1	1	**5T-9400**	1	SPACER (12X25X8.5-MM THK)	
	2	1	**7C-8246**	2	SPACER (10.5X20X24-MM THK)	
	3	1	**095-1325**	1	PIN-CLEVIS	
	4	1	**153-2682**	1	SPRING-GAS (NON-LOCKING)	
	5	1	**153-2683**	1	SPRING-GAS (LOCKING)	
	6	1	**258-4018**	1	HANDLE	
M	7	1	**127-2170**	2	SCREW-TRUSS HEAD (M8X1.25X20-MM)	
	8	1	**5P-0372**	4	LOCK PIN	
	9	1	**6L-3966**	3	PIN (0.374-IN OD)	
	10	1	**198-1725**	2	WASHER-HARD (8.8X25.5X2-M THK)	

M-METRIC PART

258-4017 **SPRING GP-GAS** *(contd.)* **i02674943**

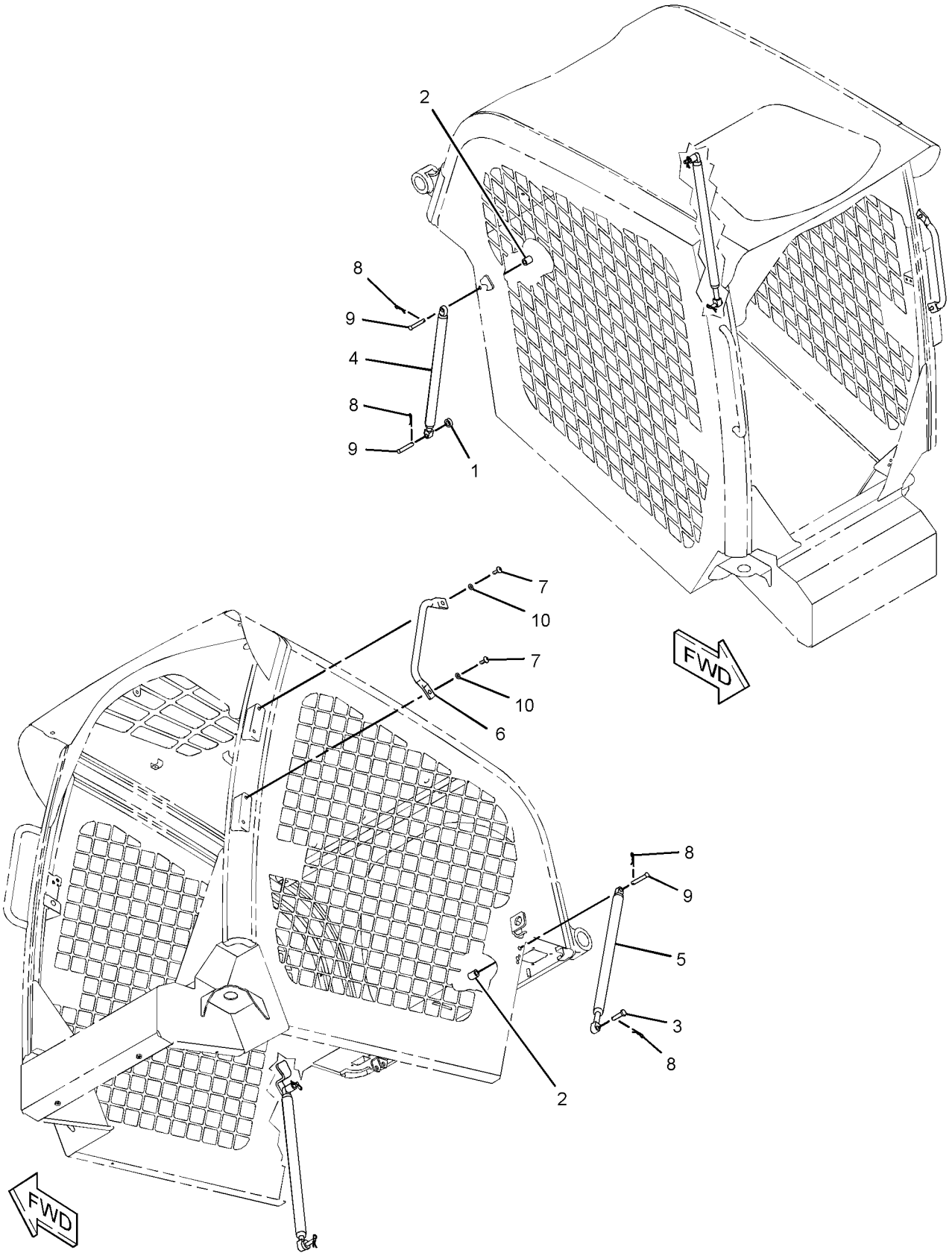

GRAPHIC #1 **<END>** g01309930

OPERATOR STATION

273-5914 SUSPENSION GP-SEAT—AIR

S/N: MST1-UP
PART OF 258-4055 SEAT GP-SUSPENSION
AN ATTACHMENT

SMCS-7312, 7324 **i03624796**

NOTE	REF NO	GRAPHIC REF	PART NUMBER	QTY	PART NAME 1 2 3 4 5 6 (PRODUCT LEVEL)	SEE PAGE
J	1	1	**2M-7819**	2	RING-RETAINING	
P	2	1	**3D-9369**	1	RING-RETAINING	
N	3	1	**4B-4278**	2	WASHER (10.2X20.5X1.6-MM THK)	
L	4	1	**4V-8577**	6	BEARING	
J	5	1	**8T-4224**	4	WASHER-HARD (8.8X16X2-MM THK)	
	6	1	**8T-9371**	1	BOLT (3/8-16X0.5-IN)	
	7	1	**144-4108**	15	FASTENER	
	8	1	**163-1135**	1	SPRING	
	9	1	**163-1146**	2	FASTENER	
	10	1	**166-6781**	2	FASTENER	
S	11	1	**186-5107**	2	SCREW-DRIVE (8-16X1.25-IN)	
S	12	1	**237-3943**	1	BRACKET	
	13	1	**293-2873**	1	HARNESS AS-WIRING	
		1	**5P-4571**	2	TERMINAL-BLADE (14-GA TO 16-GA)	
E		1	**211-5358**		CONDUIT-FLEXIBLE (95-CM)	
		1	**186-3735**	4	PIN-CONNECTOR (16-GA TO 18-GA)	
		1	**102-8804**	1	KIT-RECEPTACLE (4-PIN)	
					(INCLUDES RECEPTACLE AS & WEDGE)	
	14	1	**304-1021**	2	ROLLER	
	15	1	**304-1022**	2	BLOCK	
	16	1	**304-1023**	2	BUMPER	
	17	1	**304-1034**	2	BRACKET	
	18	1	**304-1035**	2	BUMPER	
	19	1	**304-1036**	1	BOOT	
	20	1	**305-4353**	2	SPACER (6.4X24X6-MM THK)	
	21	1	**031-4155**	2	LOCKNUT (5/16-18-THD)	
JM	22	1	**129-3178**	1	LOCKNUT (M6X1-THD)	
	23	1	**1B-2705**	2	BOLT-CARRIAGE (5/16-18X0.75-IN)	
	24	1	**108-4311**	1	SCREW-MACHINE (3/8-16X0.75-IN)	
LN	25	1	**2K-4973**	5	LOCKNUT (3/8-16-THD)	
M	26	1	**5C-2890**	2	NUT (M6X1-THD)	
	27	1	**6L-7155**	2	SCREW-MACHINE (1/4-20X0.5-IN)	
	28	1	**6V-7412**	2	SCREW-WASHER HEAD	
					PARTS SHOWN IN GRAPHIC(S) WITHOUT A REFERENCE NUMBER ARE NOT SERVICED SEPARATELY	
					AVAILABLE REPAIR KIT(S):	
J			**304-1052**	1	KIT-SHOCK ABSORBER	
					(ALSO INCLUDES BUSHINGS, SHOCK ABSORBER, BOLT & PIN)	
L			**304-1054**	1	KIT-SHAFT	
					(ALSO INCLUDES SHAFT AS)	
N			**304-1055**	1	KIT-TOGGLE BOLT	
					(ALSO INCLUDES BUSHINGS & BOLTS)	
P			**304-1056**	1	KIT-VALVE	
					(ALSO INCLUDES LOCKWASHER, NUT, VALVE, KNOB AS & FITTING)	
S			**304-1057**	1	KIT-COMPRESSOR	
					(ALSO INCLUDES COMPRESSOR AS & FITTINGS)	

E-ORDER BY THE CENTIMETER
J-KIT MARKED J SERIVES PARTS(S) MARKED J
L-KIT MARKED L SERVICES PART(S) MARKED L
M-METRIC PART
N-KIT MARKED N SERVICES PART(S) MARKED N
P-KIT MARKED P SERVICES PART(S) MARKED P
S-KIT MARKED S SERVICES PART(S) MARKED S

273-5914 SUSPENSION GP-SEAT *(contd.)* i03624796

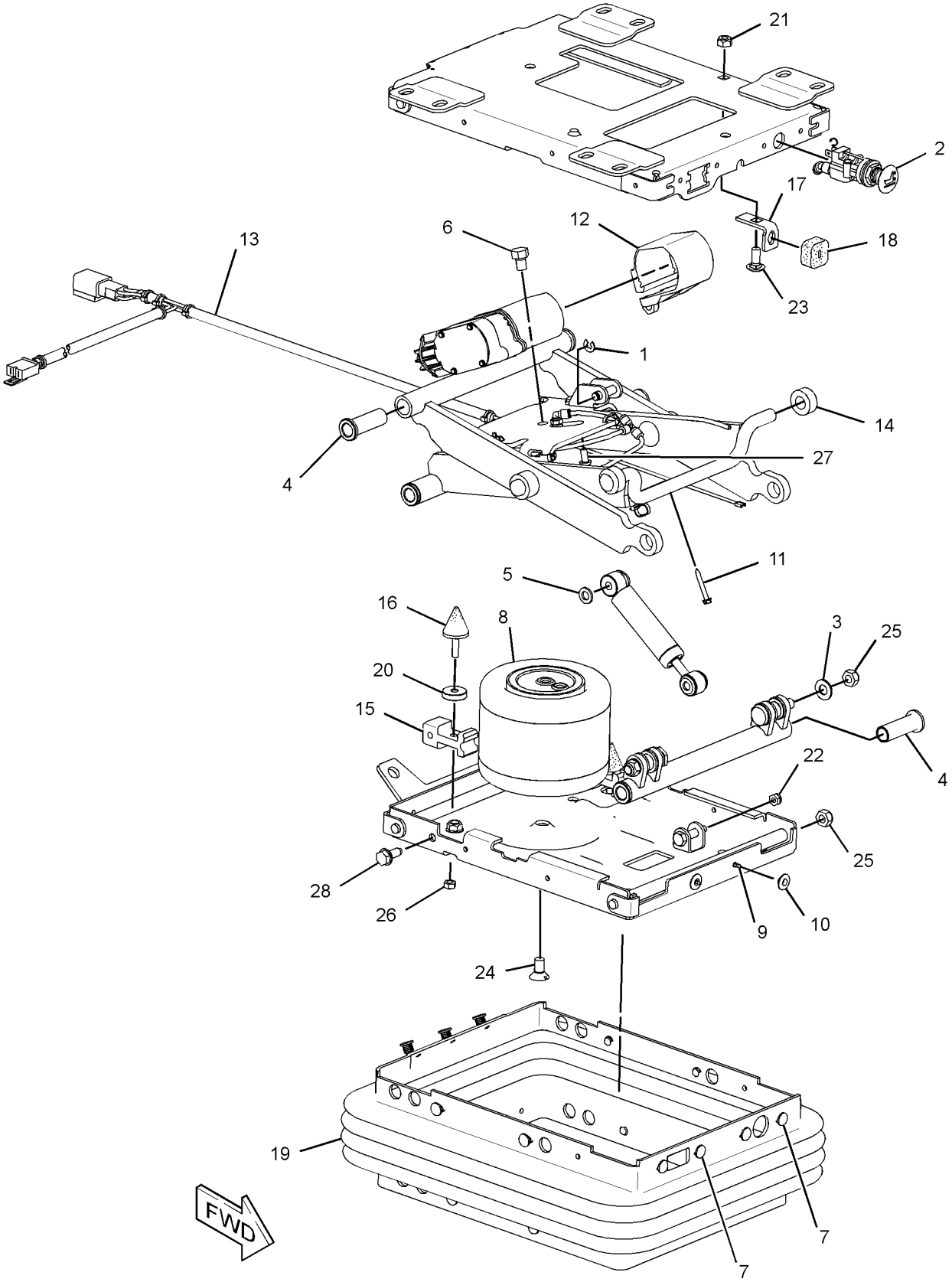

GRAPHIC #1 **<END>** g01559353

OPERATOR STATION

273-9611 SUSPENSION GP-SEAT—MECHANICAL

S/N: MST1-UP

PART OF 258-4054 SEAT GP-SUSPENSION

AN ATTACHMENT

SMCS-7312, 7324 **i02845460**

NOTE	REF NO	GRAPHIC REF	PART NUMBER	QTY	PART NAME 1 2 3 4 5 6 (PRODUCT LEVEL)	SEE PAGE
	1	1	**4B-4278**	2	WASHER (10.2X20.5X1.6-MM THK)	
	2	1	**4V-8577**	6	BEARING	
	3	1	**5V-1497**	3	RETAINER	
	4	1	**144-4108**	13	FASTENER	
	5	1	**163-1146**	2	FASTENER	
	6	1	**166-6781**	2	FASTENER	
	7	1	**195-7055**	1	WASHER-HARD (9.9X28.5X3.2-MM THK)	
	8	1	**304-1021**	2	ROLLER	
	9	1	**304-1022**	2	BLOCK	
	10	1	**304-1023**	2	BUMPER	
	11	1	**304-1034**	2	BRACKET	
	12	1	**304-1035**	2	BUMPER	
	13	1	**304-1038**	1	BOOT	
	14	1	**304-1043**	1	LINK	
	15	1	**305-4351**	2	BOLT	
	16	1	**305-4353**	2	SPACER	
	17	1	**031-4155**	2	LOCKNUT (5/16-18-THD)	
	18	1	**095-0878**	1	PIN-SPRING	
	19	1	**1B-2705**	2	BOLT-CARRIAGE (5/16-18X0.75-IN)	
	20	1	**2K-4973**	5	LOCKNUT (3/8-16-THD)	
	21	1	**3E-9860**	2	LOCKNUT (5/16-18-THD)	
M	22	1	**5C-2890**	2	NUT (M6X1-THD)	
	23	1	**6V-7412**	2	SCREW-WASHER HEAD	
					PARTS SHOWN IN GRAPHIC(S) WITHOUT A REFERENCE NUMBER ARE NOT SERVICED SEPARATELY	

M-METRIC PART

273-9611 SUSPENSION GP-SEAT *(contd.)* i02845460

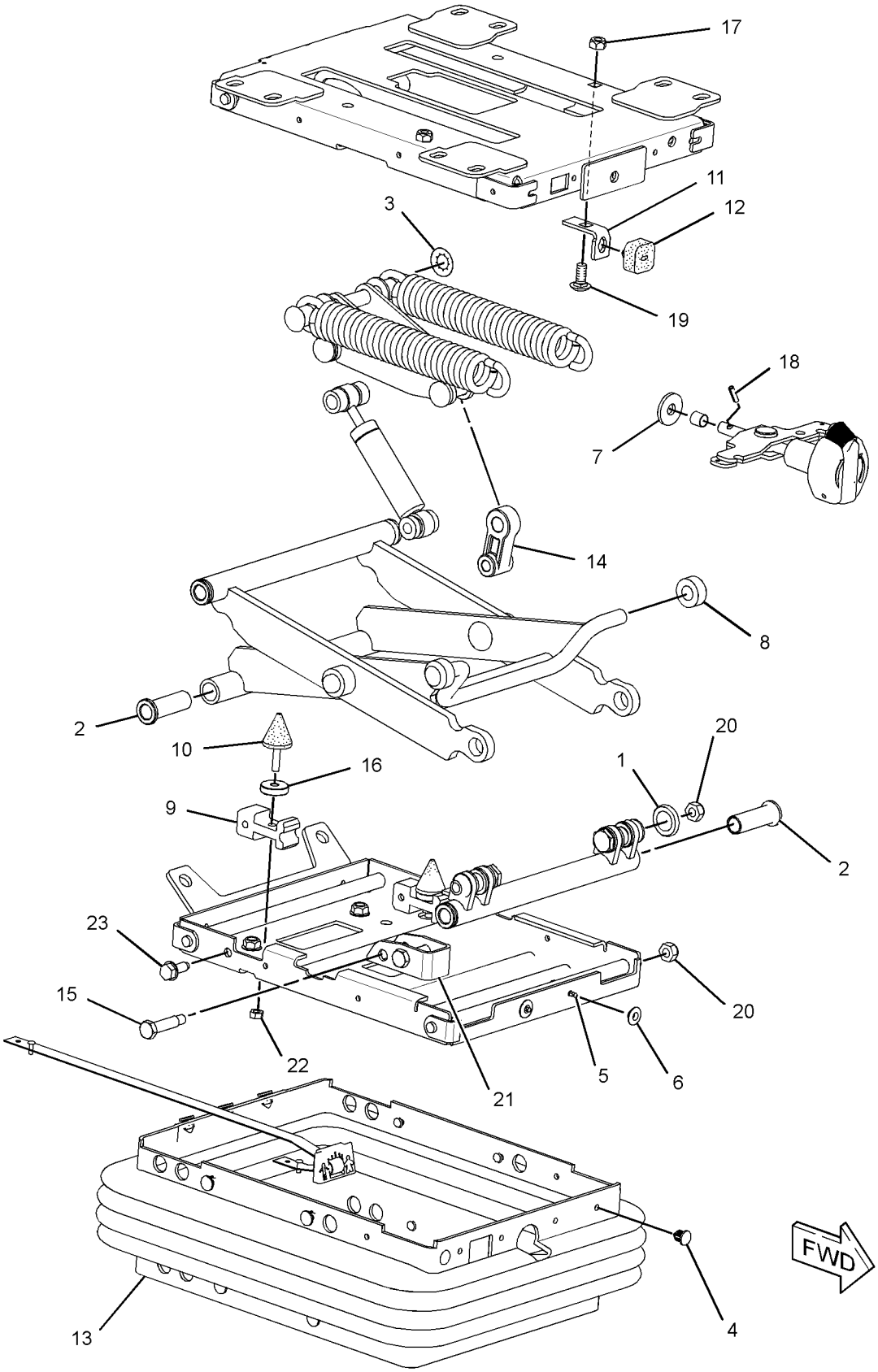

GRAPHIC #1 **<END>** g01420091

OPERATOR STATION

258-3497 VISOR GP-CAB

S/N: MST1-UP
PART OF 258-3802 CONVERSION AR-ROADING
AN ATTACHMENT

SMCS-7301 **i02715591**

NOTE	REF NO	GRAPHIC REF	PART NUMBER	QTY	PART NAME 1 2 3 4 5 6 (PRODUCT LEVEL)	SEE PAGE
	1	1	**172-8591**	4	NUT-SPRING	
Y	2	1	**258-4233**	1	VISOR GP-CAB (LH)	808
	3	1	**270-9442**	4	SCREW-TRUSS HEAD (M6X1X20-MM)	

Y-SEPARATE ILLUSTRATION

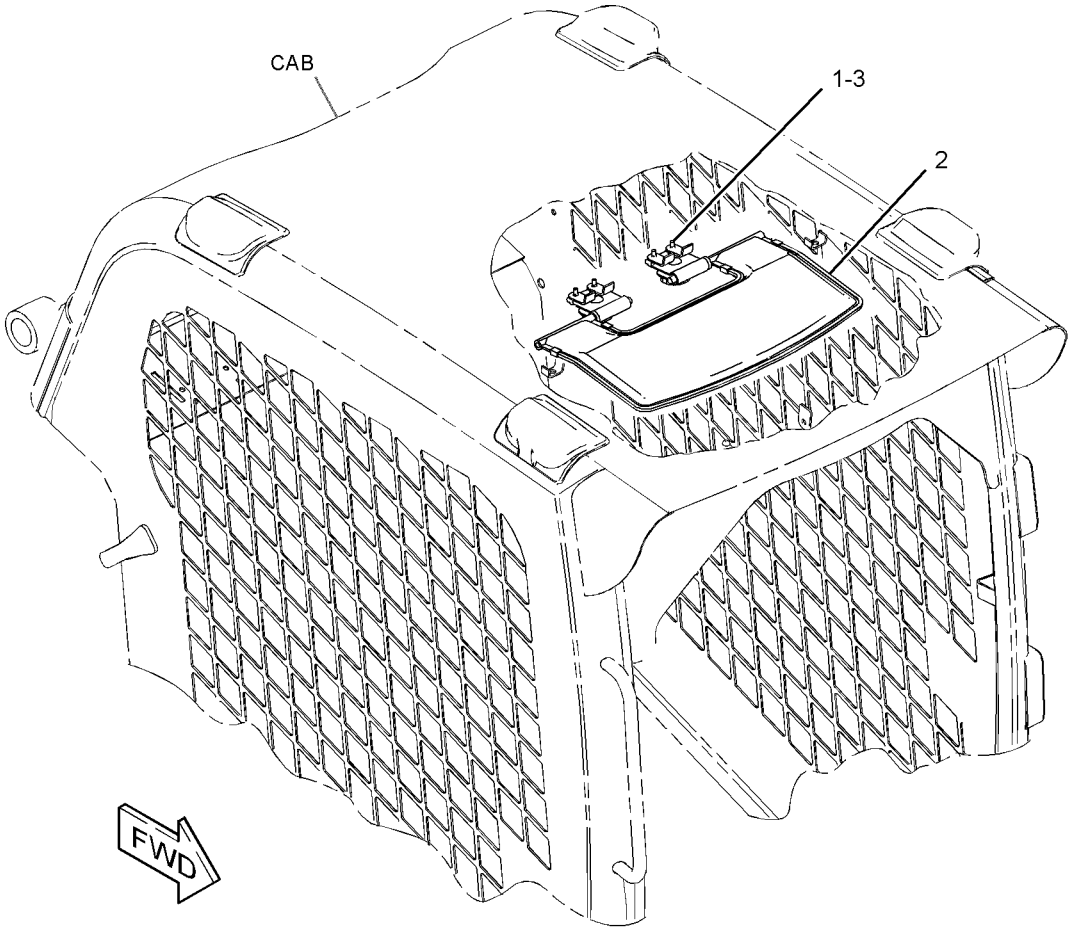

GRAPHIC #1 **<END>** g01336851

OPERATOR STATION

258-4233 VISOR GP-CAB—LH

S/N: MST1-UP

PART OF 315-7815, 333-7434 KIT-ROADING CONVERSION, 258-3497 VISOR GP-CAB AN ATTACHMENT

SMCS-7301 **i02664258**

NOTE	REF NO	GRAPHIC REF	PART NUMBER	QTY	PART NAME 1 2 3 4 5 6 (PRODUCT LEVEL)	SEE PAGE
	1	1	**5T-7869**	2	CLAMP	
	2	1	**5T-7870**	2	KNOB	
	3	1	**1D-4677**	2	BOLT-ROUND HEAD (3/8-16X1-IN)	

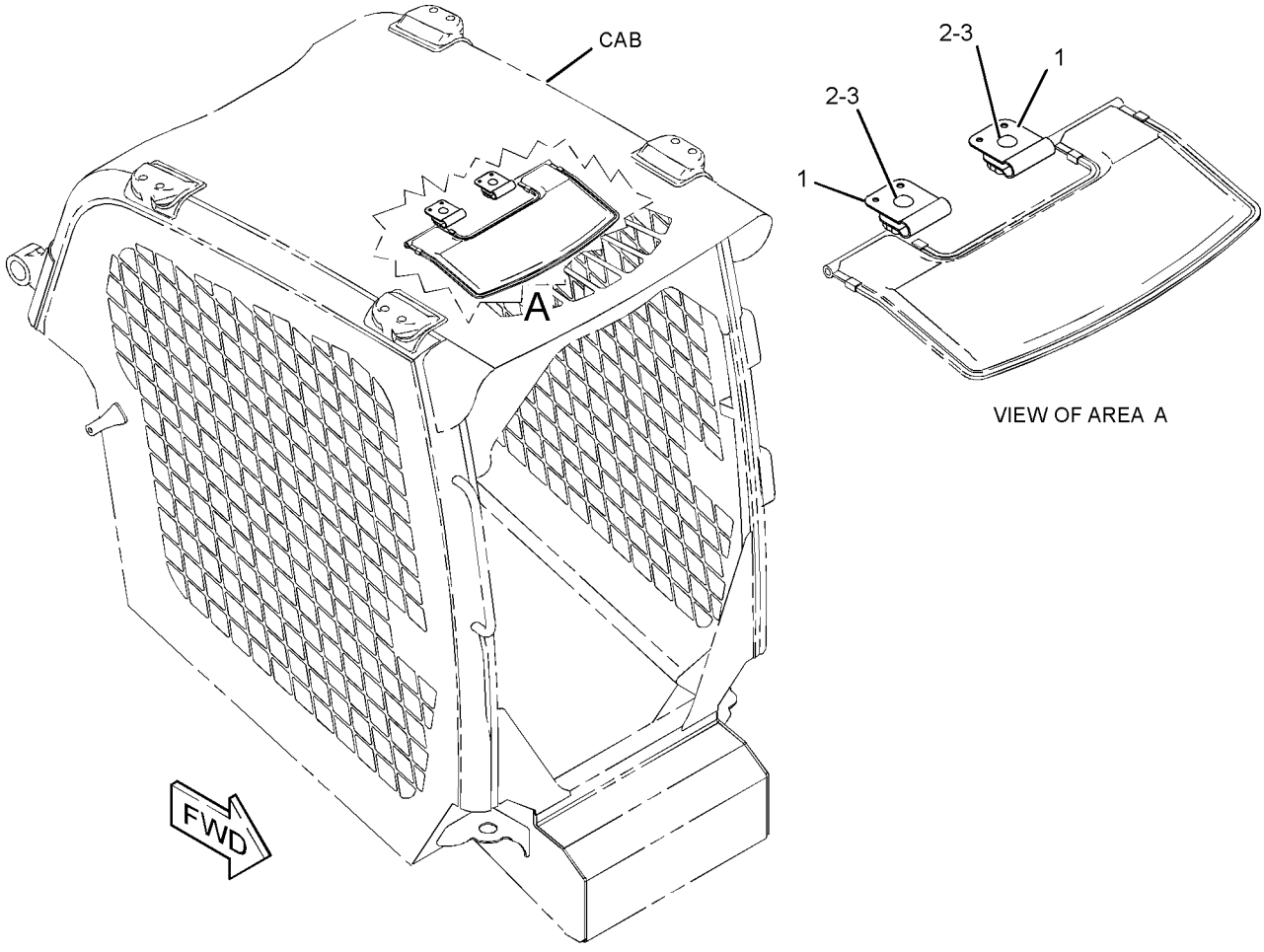

GRAPHIC #1 **<END>** g01339145

258-3285 WINDOW GP-CAB—SIDE, LH

S/N: MST1-UP

PART OF 258-2472 KIT-CAB WINDOW, 258-4090 WINDOW GP-CAB

AN ATTACHMENT

SMCS-7310 **i03631030**

NOTE	REF NO	GRAPHIC REF	PART NUMBER	QTY	PART NAME 1 2 3 4 5 6 (PRODUCT LEVEL)	SEE PAGE
	1	1	**258-3283**	1	WINDOW AS (LH FRONT SLIDING GLASS)	
	2	1	**258-3284**	1	WINDOW AS (LH REAR SLIDING GLASS)	
					(EACH WINDOW ASSEMBLY INCLUDES)	
		1	**258-3765**	1	LATCH AS	
	3	1	**258-4019**	1	FRAME AS (LH)	
		1	**258-3776**	1	CATCH AS (INNER)	
		1	**258-3781**	1	CATCH AS (OUTER)	
	4	1	**258-4091**	1	WINDOW AS-CAB (LH)	
		1	**258-4432**		PAD-RUBBER	
					AVAILABLE REPAIR KIT(S):	
			337-9101	1	KIT-SEAL (CAB WINDOW)	
					(INCLUDES SEALS & FOAM)	

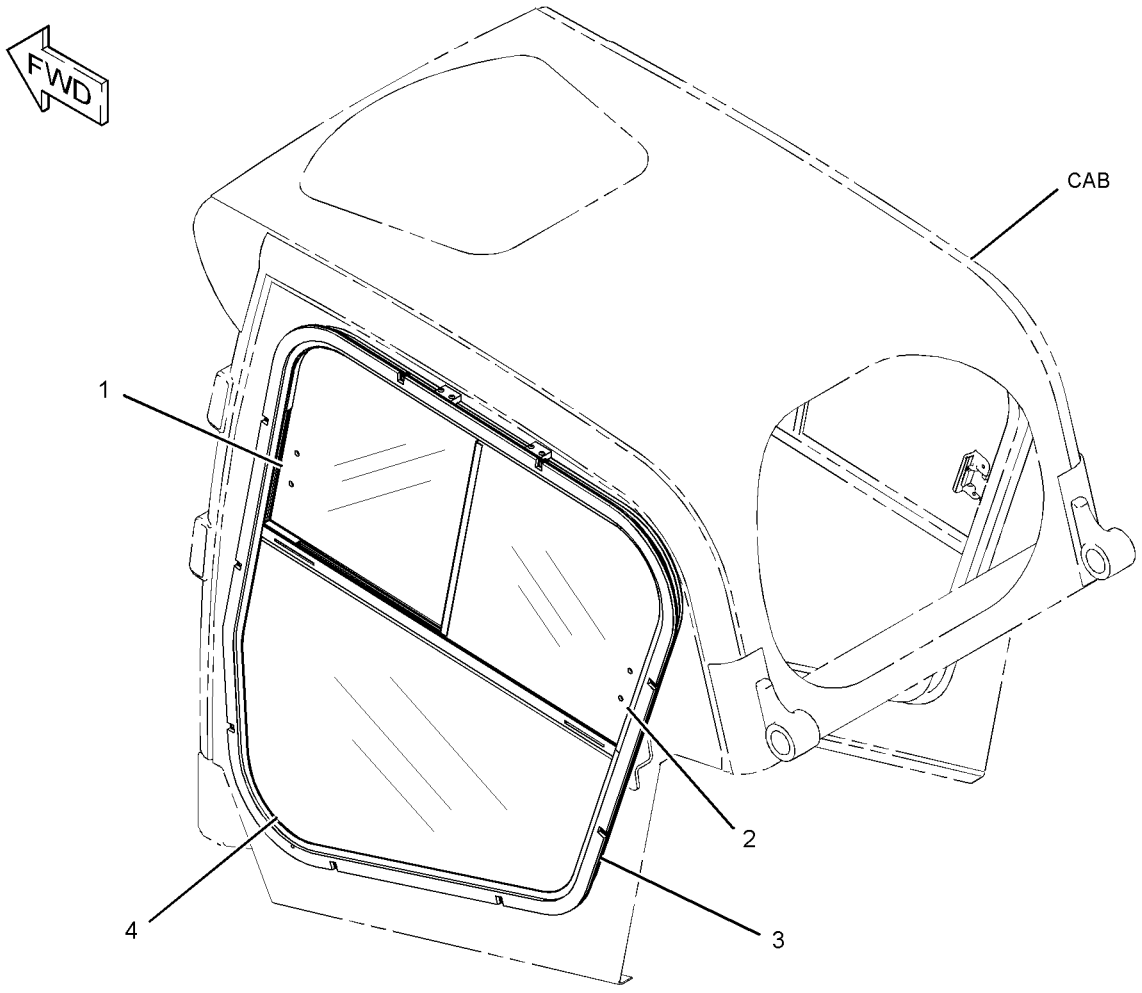

GRAPHIC #1

<END>

g01311244

OPERATOR STATION

258-3286 WINDOW GP-CAB—SIDE, RH

S/N: MST1-UP

PART OF 258-2472 KIT-CAB WINDOW, 258-4090 WINDOW GP-CAB

AN ATTACHMENT

SMCS-7310 **i03631031**

NOTE	REF NO	GRAPHIC REF	PART NUMBER	QTY	PART NAME 1 2 3 4 5 6 (PRODUCT LEVEL)	SEE PAGE
	1	1	**258-3282**	1	FRAME AS (RH)	
		1	**258-3776**	1	CATCH AS (INNER)	
		1	**258-3781**	1	CATCH AS (OUTER)	
	2	1	**258-4092**	1	WINDOW AS-CAB (RH REAR SLIDING GLASS)	
	3	1	**258-4093**	1	WINDOW AS-CAB (RH FRONT SLIDING GLASS)	
					(EACH WINDOW ASSEMBLY INCLUDES)	
		1	**258-3765**	1	LATCH AS	
	4	1	**258-4094**	1	WINDOW AS-CAB (RH)	
		1	**258-4432**		PAD-RUBBER	
					AVAILABLE REPAIR KIT(S):	
			337-9101	1	KIT-SEAL (CAB WINDOW)	
					(INCLUDES SEALS & FOAM)	

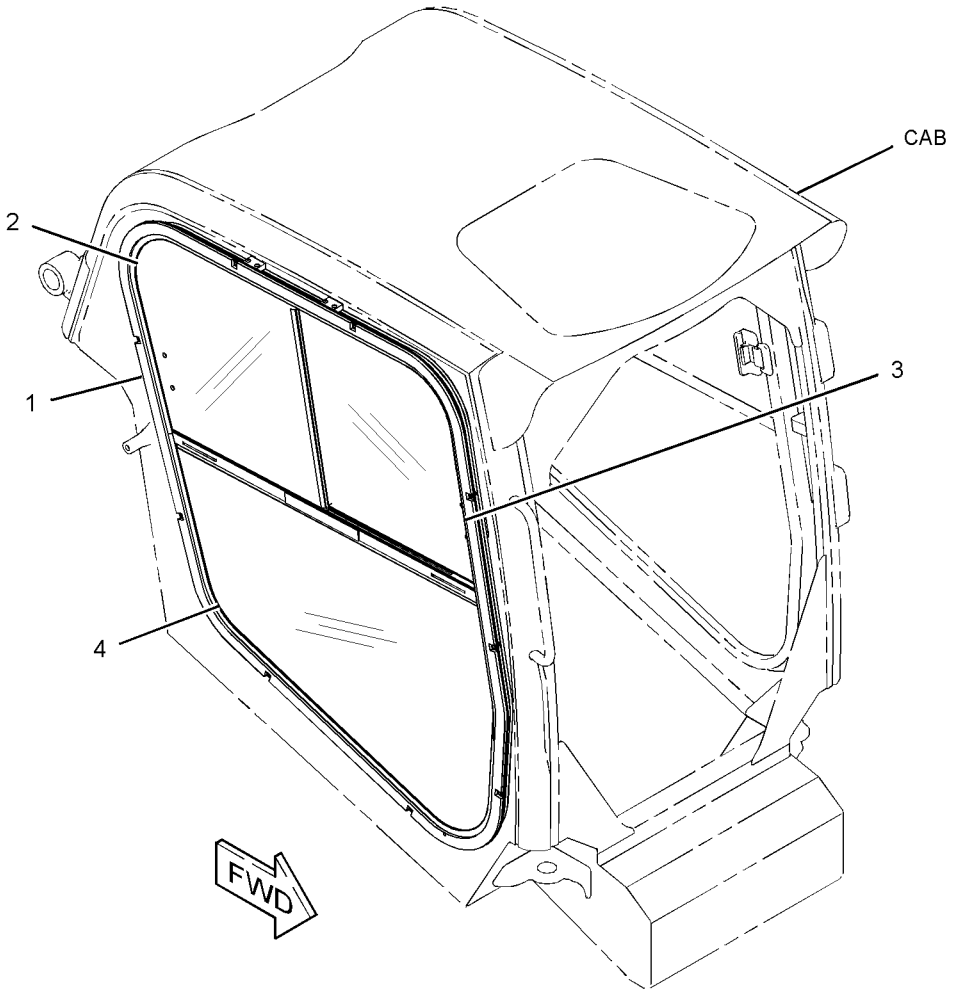

GRAPHIC #1 **<END>** g01311843

OPERATOR STATION

258-4010 WINDOW GP-CAB

S/N: MST1-UP

PART OF 258-4000 CAB AR-ENCLOSED ROPS

SMCS-7310 **i02764097**

NOTE	REF NO	GRAPHIC REF	PART NUMBER	QTY	PART NAME 1 2 3 4 5 6 (PRODUCT LEVEL)	SEE PAGE
	1	1	**5C-8310**	1	BRACKET-RING	
	2	1	**5C-8311**	1	RING	
	3	1	**258-4429**	1	FILM-INSTRUCTION (ALTERNATE EXIT)	
	4	1	**258-4011**	1	GLASS-REAR	
E	5	1	**108-0656**		SEAL (192-CM)	
E	6	1	**104-5957**		STRIP-LOCKING (186-CM)	

E-ORDER BY THE CENTIMETER

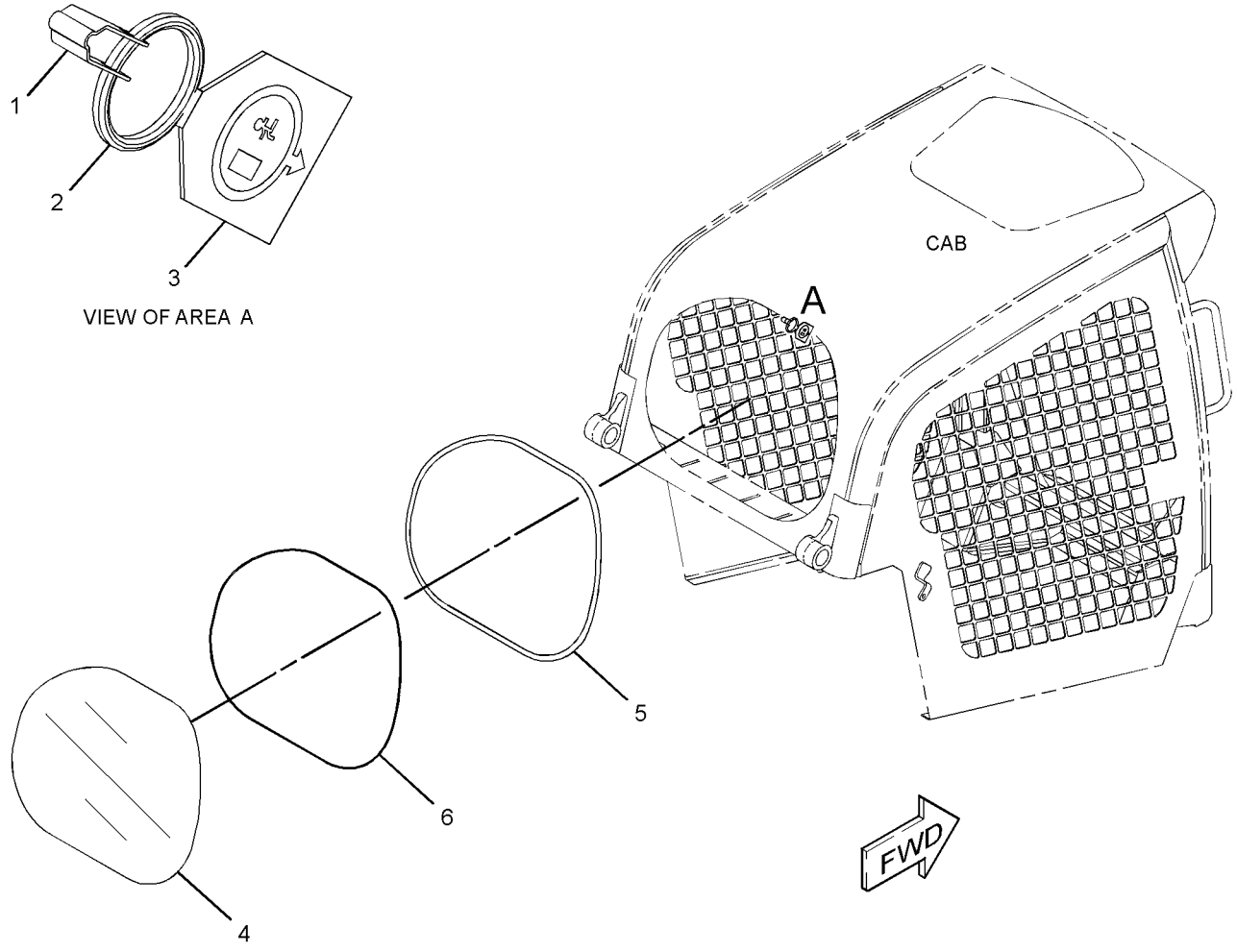

GRAPHIC #1 **<END>** g01317851

OPERATOR STATION

258-4090 WINDOW GP-CAB—SIDE

S/N: MST1-UP
PART OF 258-3680, 258-3742 CAB AR-ENCLOSED ROPS
AN ATTACHMENT

SMCS-7310 **i02664475**

NOTE	REF NO	GRAPHIC REF	PART NUMBER	QTY	PART NAME 1 2 3 4 5 6 (PRODUCT LEVEL)	SEE PAGE
Y	1	1	*258-3285*	1	WINDOW GP-CAB (SIDE, LH)	809
Y	2	1	*258-3286*	1	WINDOW GP-CAB (SIDE, RH)	810
	3	1	**270-9442**	18	SCREW-TRUSS HEAD (M6X1X20-MM)	

Y-SEPARATE ILLUSTRATION

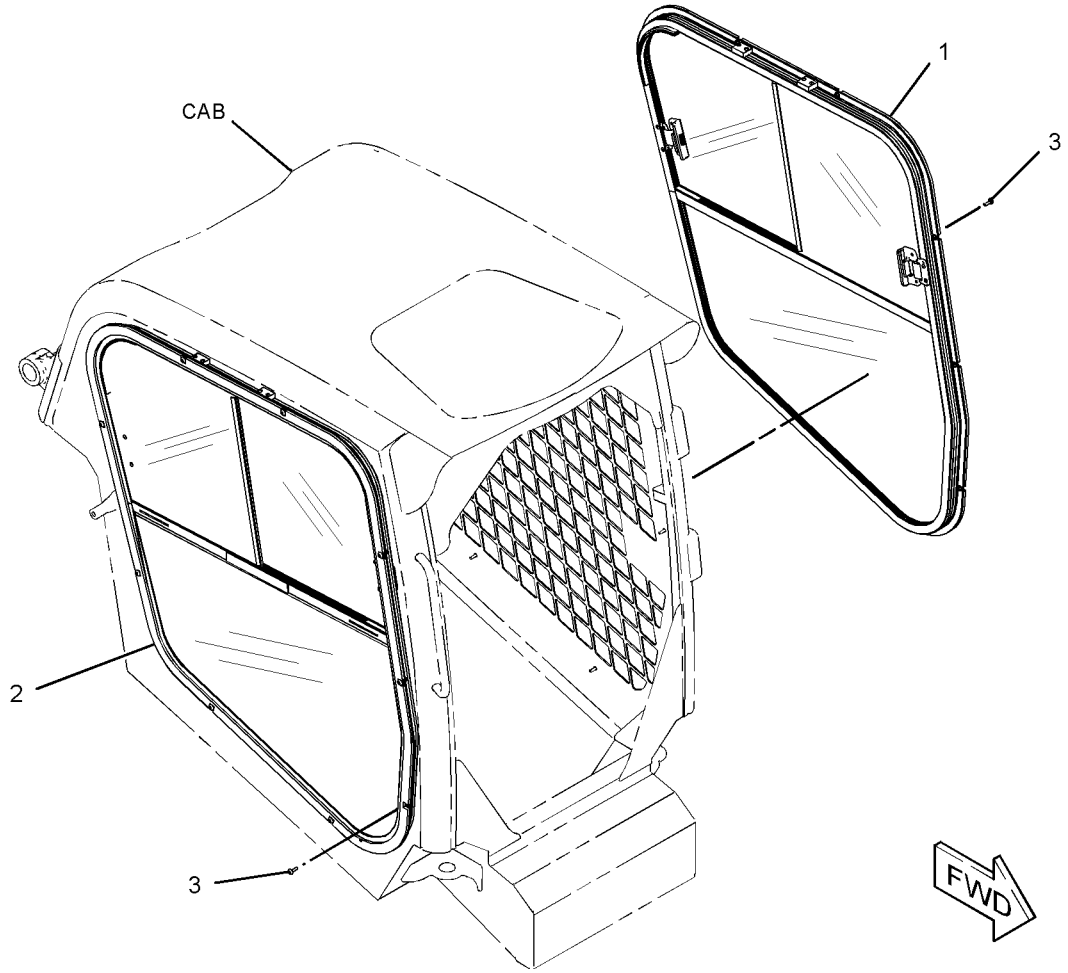

GRAPHIC #1 **<END>** g01311431

280-8329 BRACKET GP-MOUNTING—BELT GUARD

S/N: MST1-1859
PART OF 258-3800 CONVERSION AR-ROADING
AN ATTACHMENT

SMCS-0635, 4200, 7430 **i02717334**

NOTE	REF NO	GRAPHIC REF	PART NUMBER	QTY	PART NAME 1 2 3 4 5 6 (PRODUCT LEVEL)	SEE PAGE
	1	1	**280-8305**	1	BRACKET AS	
	2	1	**280-8335**	2	SPACER	
	3	1	**101-2867**	1	WASHER-HARD (7.2X25X2-MM THK)	
	4	1	**270-9442**	1	SCREW-TRUSS HEAD (M6X1X20-MM)	
M	5	1	**5C-9553**	2	BOLT (M6X1X16-MM)	

M-METRIC PART

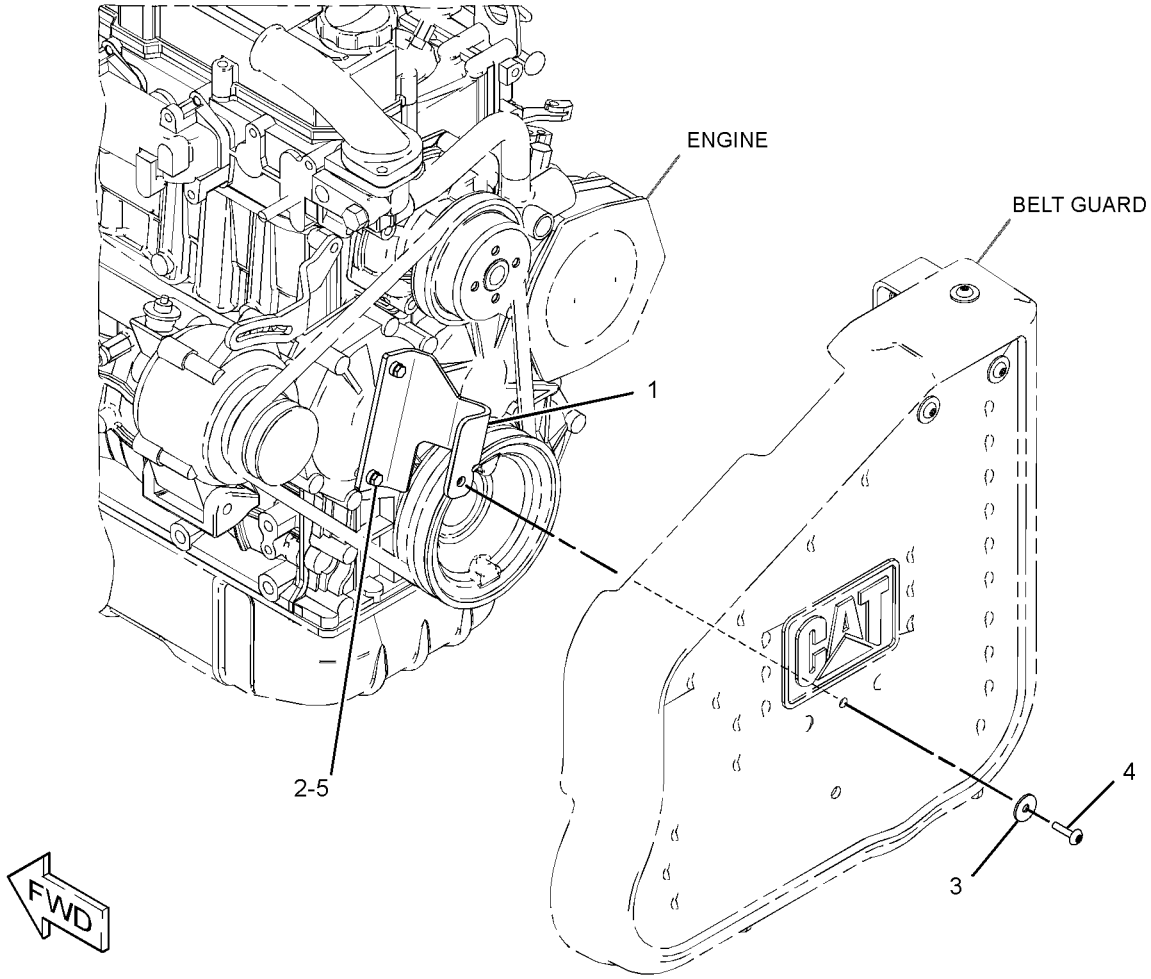

GRAPHIC #1 **<END>** g01345004

SERVICE EQUIPMENT AND SUPPLIES

258-3192 FILM GP–262C

S/N: MST1-UP

PART OF 258-3262, 295-7262 COMMON AR

SMCS-7557 **i02623283**

NOTE	REF NO	GRAPHIC REF	PART NUMBER	QTY	PART NAME 1 2 3 4 5 6 (PRODUCT LEVEL)	SEE PAGE
	1	1	**258-3413**	1	FILM-IDENTIFICATION (262C, LH)	
	2	1	**258-3414**	1	FILM-IDENTIFICATION (262C, RH)	
	3	1	**258-3423**	1	FILM-IDENTIFICATION (CATERPILLAR)	
	4	1	**258-3424**	1	FILM-IDENTIFICATION (CAT, LH)	
	5	1	**258-3425**	1	FILM-IDENTIFICATION (CAT, RH)	
	6	1	**258-3427**	1	FILM-IDENTIFICATION (CAT)	

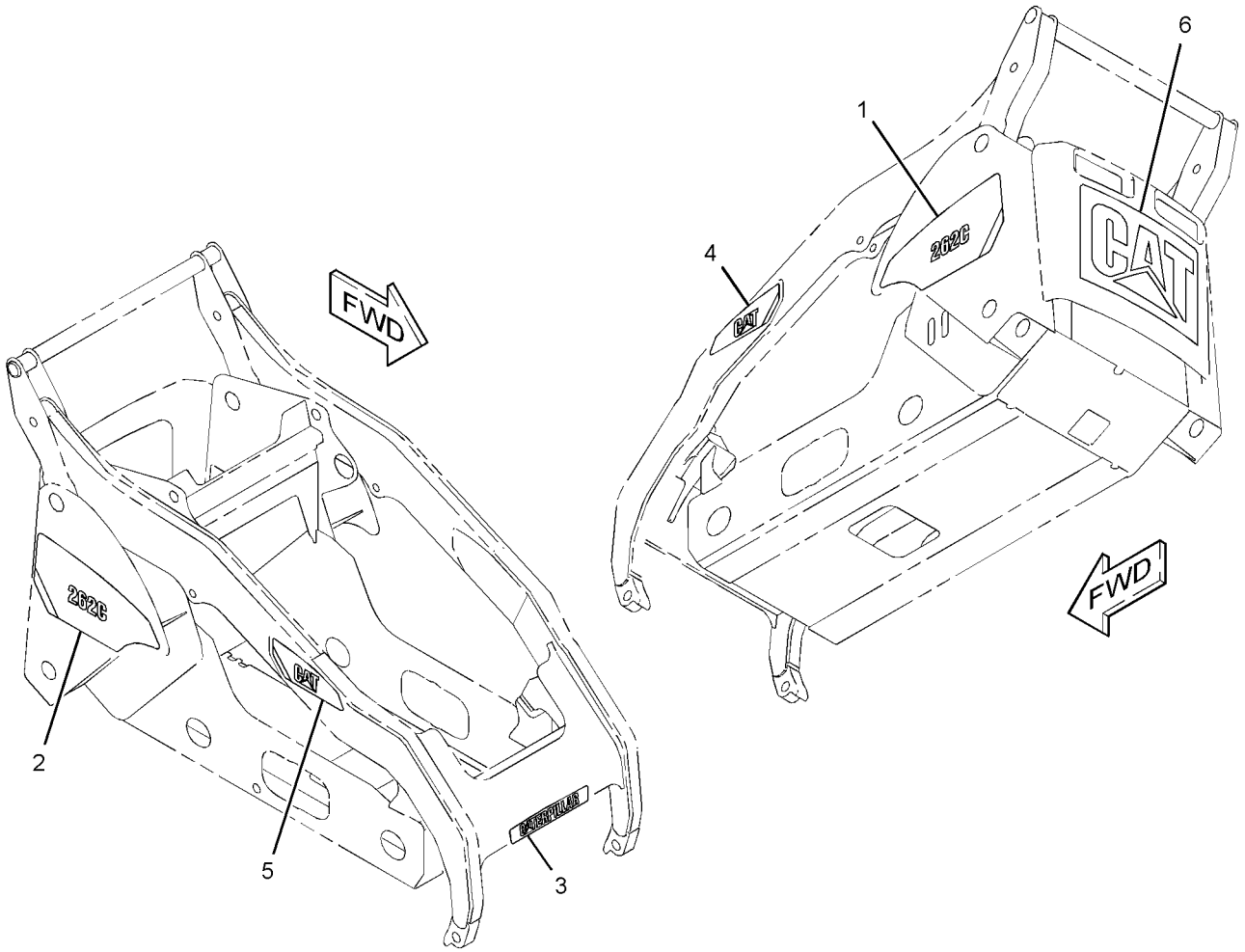

GRAPHIC #1 **<END>** g01322163

SERVICE EQUIPMENT AND SUPPLIES

258-3230 FILM GP—HIGH FLOW XPS

S/N: MST1-UP
PART OF 258-3183, 258-3734 HYDRAULIC AR
AN ATTACHMENT

SMCS-7557 **i02636007**

NOTE	REF NO	GRAPHIC REF	PART NUMBER	QTY	PART NAME 1 2 3 4 5 6 (PRODUCT LEVEL)	SEE PAGE
	1	1	**258-3231**	2	FILM-IDENTIFICATION (HIGH FLOW XPS)	

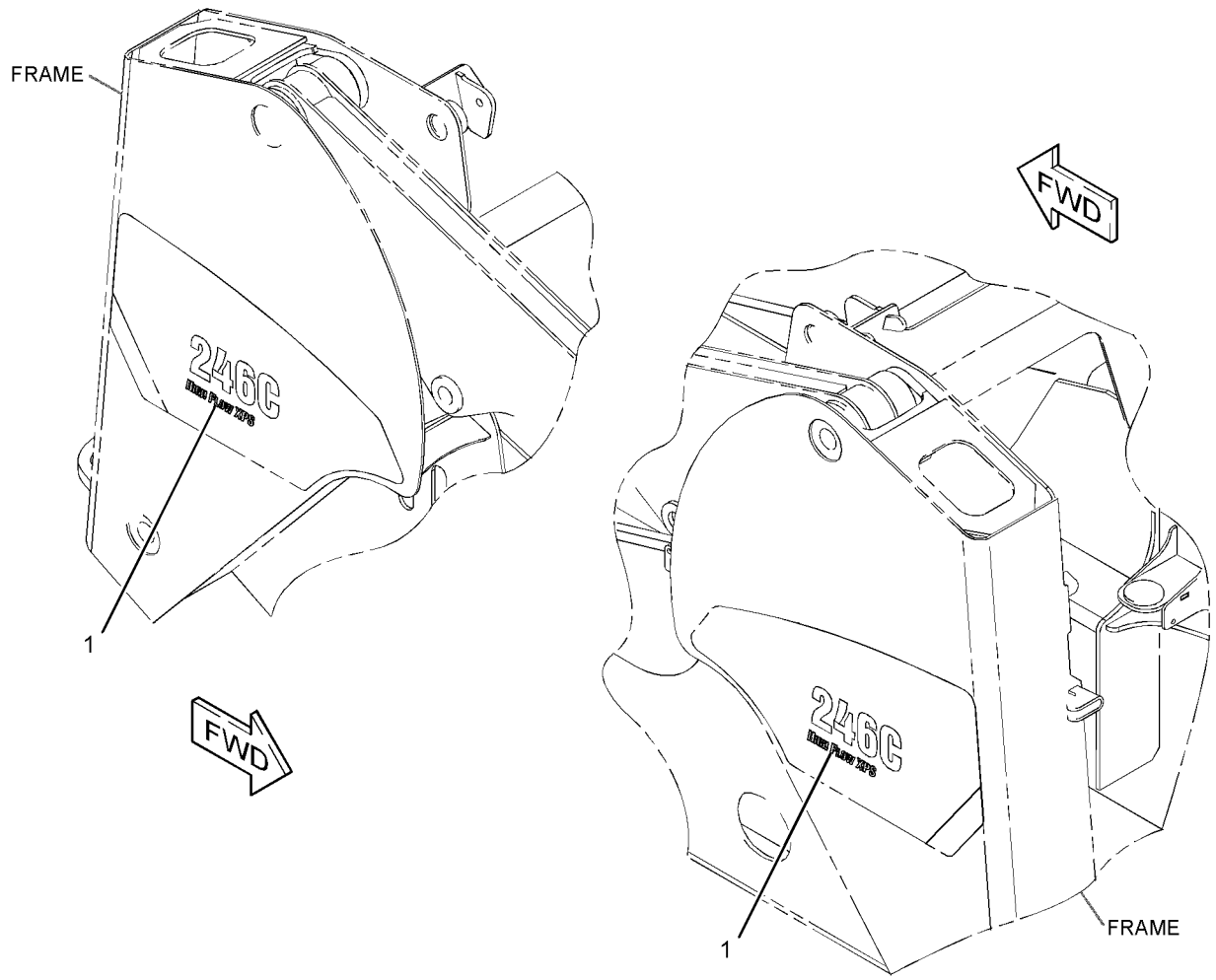

GRAPHIC #1 **<END>** g01326333

SERVICE EQUIPMENT AND SUPPLIES

289-0848 FILM GP–2-SPEED

S/N: MST1-UP
PART OF 258-3400 POWER TRAIN AR
AN ATTACHMENT

SMCS-7557 **i02635700**

NOTE	REF NO	GRAPHIC REF	PART NUMBER	QTY	PART NAME 1 2 3 4 5 6 (PRODUCT LEVEL)	SEE PAGE
	1	1	**290-2110**	2	FILM-IDENTIFICATION (TWO SPEED)	

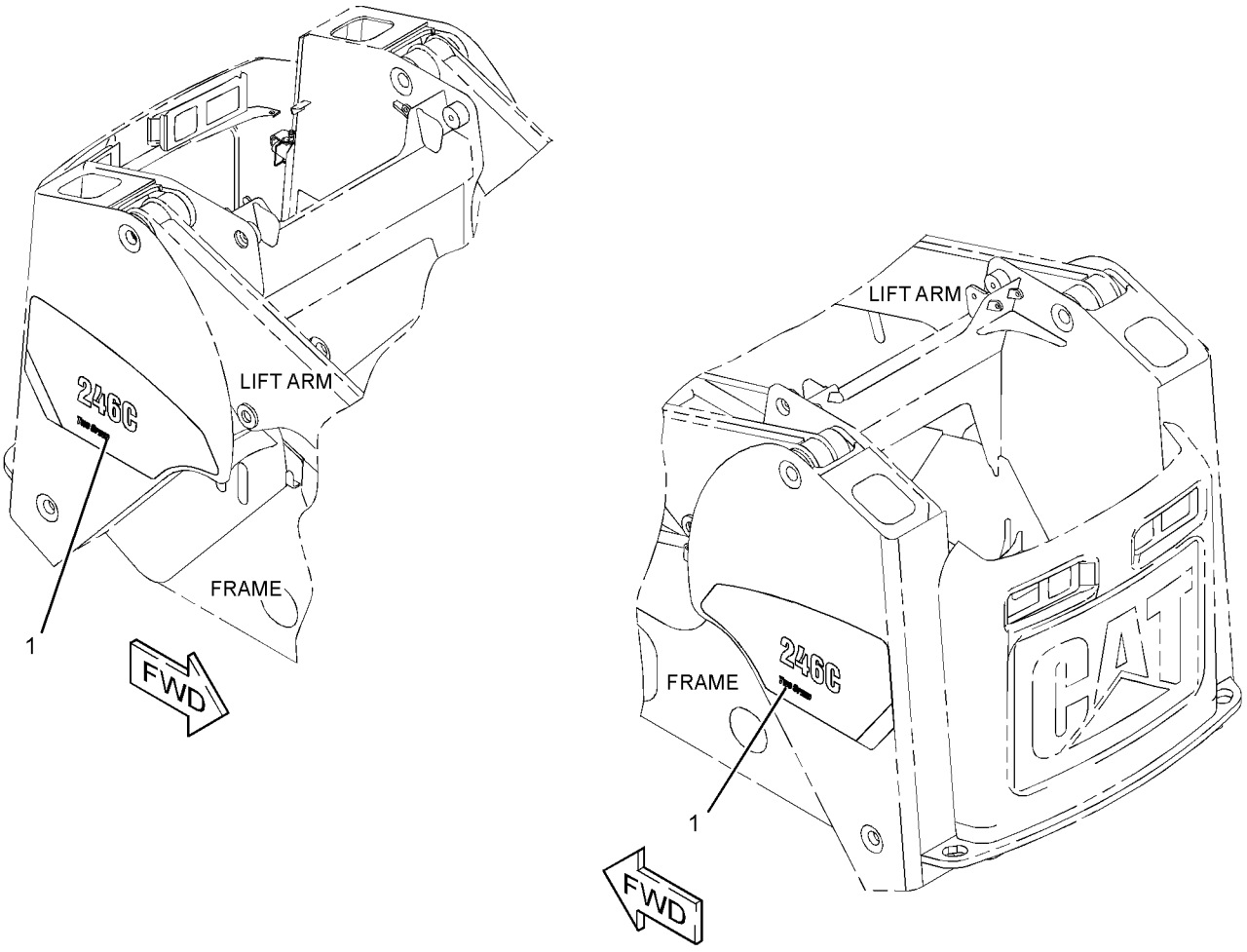

GRAPHIC #1 **<END>** g01327235

SERVICE EQUIPMENT AND SUPPLIES

348-6735 KIT-MUFFLER

S/N: MST1-UP

AN ATTACHMENT

SMCS-1062 **i03657443**

NOTE	REF NO	GRAPHIC REF	PART NUMBER	QTY	PART NAME 1 2 3 4 5 6 (PRODUCT LEVEL)	SEE PAGE
	1	1	**5I-8111**	1	GASKET	
	2	1	**180-3007**	1	CLAMP-HOSE	
	3	1	**247-9730**	1	VALVE AS-CHECK	
	4	1	**260-0634**	1	TUBE	
	5	1	**348-6738**	1	HOSE	
	6	1	**348-6741**	1	MUFFLER	
	7	1	**124-6259**	2	CLAMP-HOSE	
	8	1	**127-4471**	1	CLAMP-HOSE	

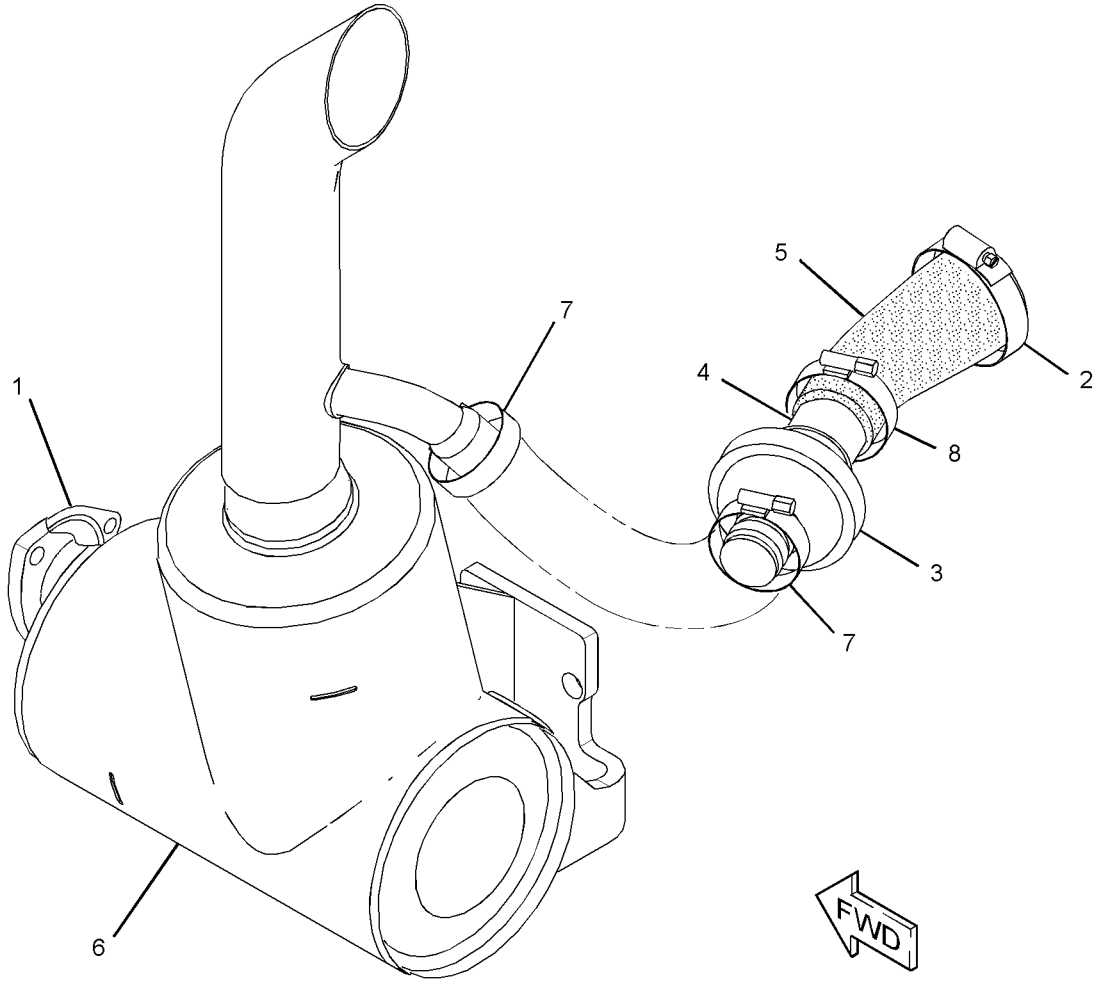

GRAPHIC #1 **<END>** g01962592

SERVICE EQUIPMENT AND SUPPLIES

247-0678 PLATE & FILM GP

S/N: MST1-UP
PART OF 231-5275, 231-5277 BLADE AR
AN ATTACHMENT

SMCS-7405, 7557 **i02469823**

NOTE	REF NO	GRAPHIC REF	PART NUMBER	QTY	PART NAME 1 2 3 4 5 6 (PRODUCT LEVEL)	SEE PAGE
	1	1	**7X-3229**	4	FILM-INSTRUCTION (LIFT EYE, TIE-DOWN LOCATION)	
	2	1	**226-1242**	2	FILM-WARNING (CRUSH HAZARD, STAY BACK, U.S.)	
	3	1	**228-3581**	1	FILM-WARNING (DO NOT OPERATE, READ OMM)	
	4	1	**159-8035**	1	FILM-WARNING (CRUSH HAZARD, STAY BACK)	
	5	1	**124-2456**	1	FILM-INSTRUCTION (NO STEP)	

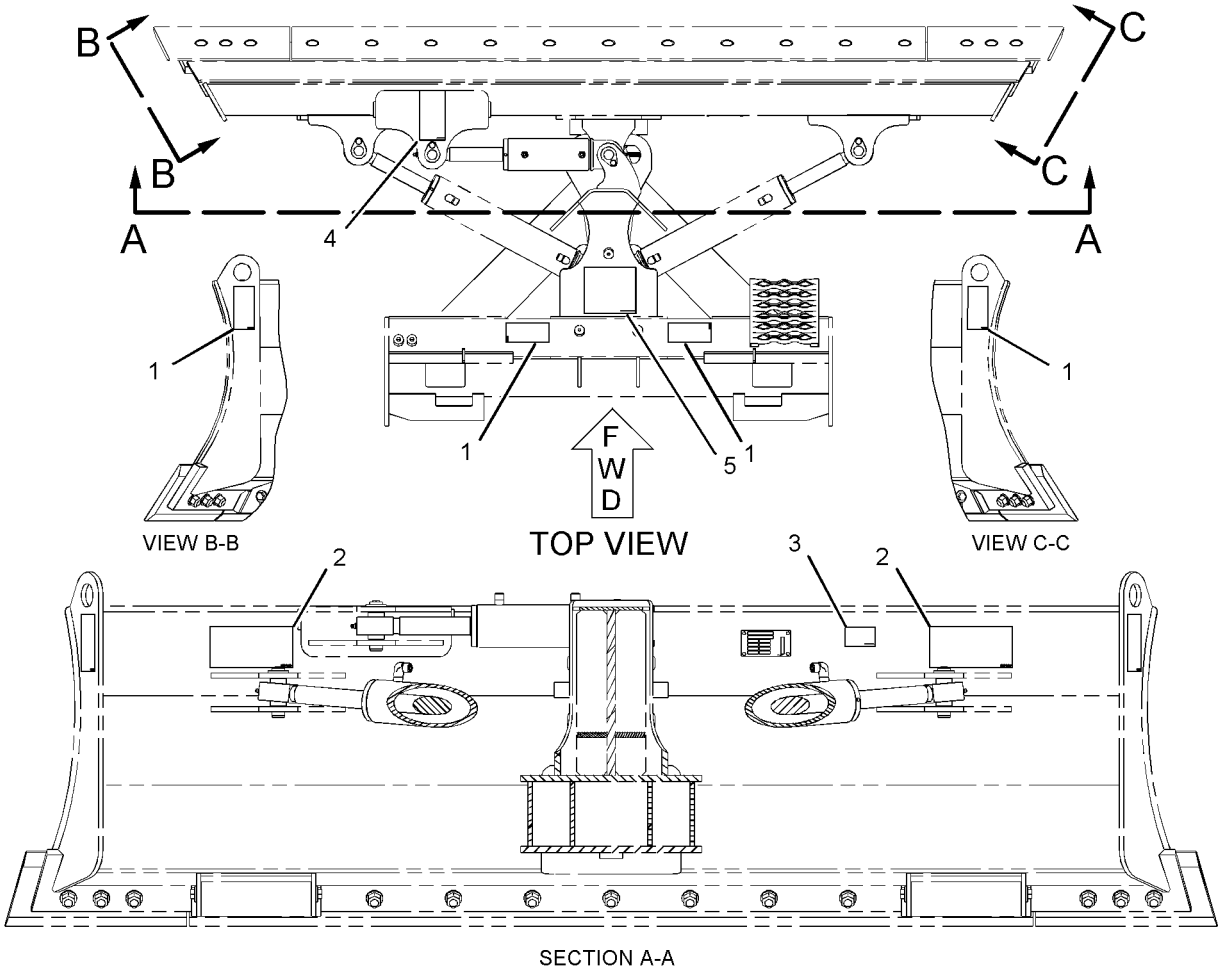

GRAPHIC #1 **<END>** g01120449

SERVICE EQUIPMENT AND SUPPLIES

258-3222 PLATE & FILM GP

S/N: MST1-1859
AN ATTACHMENT

SMCS-7405, 7557 **i02770319**

NOTE	REF NO	GRAPHIC REF	PART NUMBER	QTY	PART NAME 1 2 3 4 5 6 (PRODUCT LEVEL)	SEE PAGE
	1	2	**157-2853**	1	FILM-INFORMATION (READ OMM)	
	2	1	**169-2876**	1	FILM-IDENTIFICATION (POWER RECEPTACLE, 12-VOLT)	
	3	1	**219-0302**	1	FILM-WARNING (NO WELD, NO DRILL, READ OMM)	
	4	1	**224-7830**	1	FILM-WARNING (HIGH PRESSURE, READ OMM, U.S.)	
	5	1,2	**224-8645**	2	FILM-WARNING (CRUSH HAZARD, STAY BACK)	
	6	1	**224-8945**	1	FILM-WARNING (DO NOT USE ETHER, U.S)	
	7	1	**228-2615**	1	FILM-WARNING (UNIVERSAL, U.S.)	
	8	1	**233-0059**	1	FILM-WARNING (GROUND)	
	9	2	**234-6070**	1	FILM-WARNING (CRUSH HAZARD, CAB, READ OMM)	
	10	1	**234-6072**	1	FILM-WARNING (CRUSH HAZARD, READ OMM)	
	11	2	**234-6074**	1	FILM-WARNING (FALL/CRUSH HAZARD, NO ACCESS)	
	12	2	**234-6077**	1	FILM-WARNING (CRUSH HAZARD, READ OMM)	
	13	1	**302-4389**	1	FILM-WARNING (CRUSH HAZARD, FASTEN SEAT BELT)	
	14	1	**235-1365**	1	FILM-WARNING (HOT FLUID UNDER PRESSURE)	
	15	1	**239-6986**	1	PLATE-IDENTIFICATION (MACHINE)	
	16	1	**253-9499**	1	FILM-WARNING (JUMP START, READ OMM) (JUMP START)	
	17	1	**263-4836**	4	FILM-SYMBOL (TIE-DOWN)	
	18	2	**295-2567**	1	FILM-INSTRUCTION (BUCKET LOWER)	
	19	1	**285-2168**	1	FILM-INSTRUCTION (SERVICE CHART, READ OMM)	
	20	2	**285-2171**	1	FILM-WARNING (ROPS, FOPS, READ OMM)	
	21	2	**285-2172**	2	FILM-WARNING (CRUSH HAZARD, READ OMM)	
	22	1	**285-2176**	1	FILM-SPEED (THROTTLE)	
	23	2	**285-2177**	1	FILM-INSTRUCTION (OPERATOR CONSOLE)	
	24	2	**285-2178**	1	FILM-INSTRUCTION (OPERATOR CONTROL)	
	25	1	**308-1439**	1	FILM-WARNING (CRUSH HAZARD, FASTEN SEAT BELT)	
	26	2	**312-7747**	1	PLATE-WARNING (UNIVERSAL)	

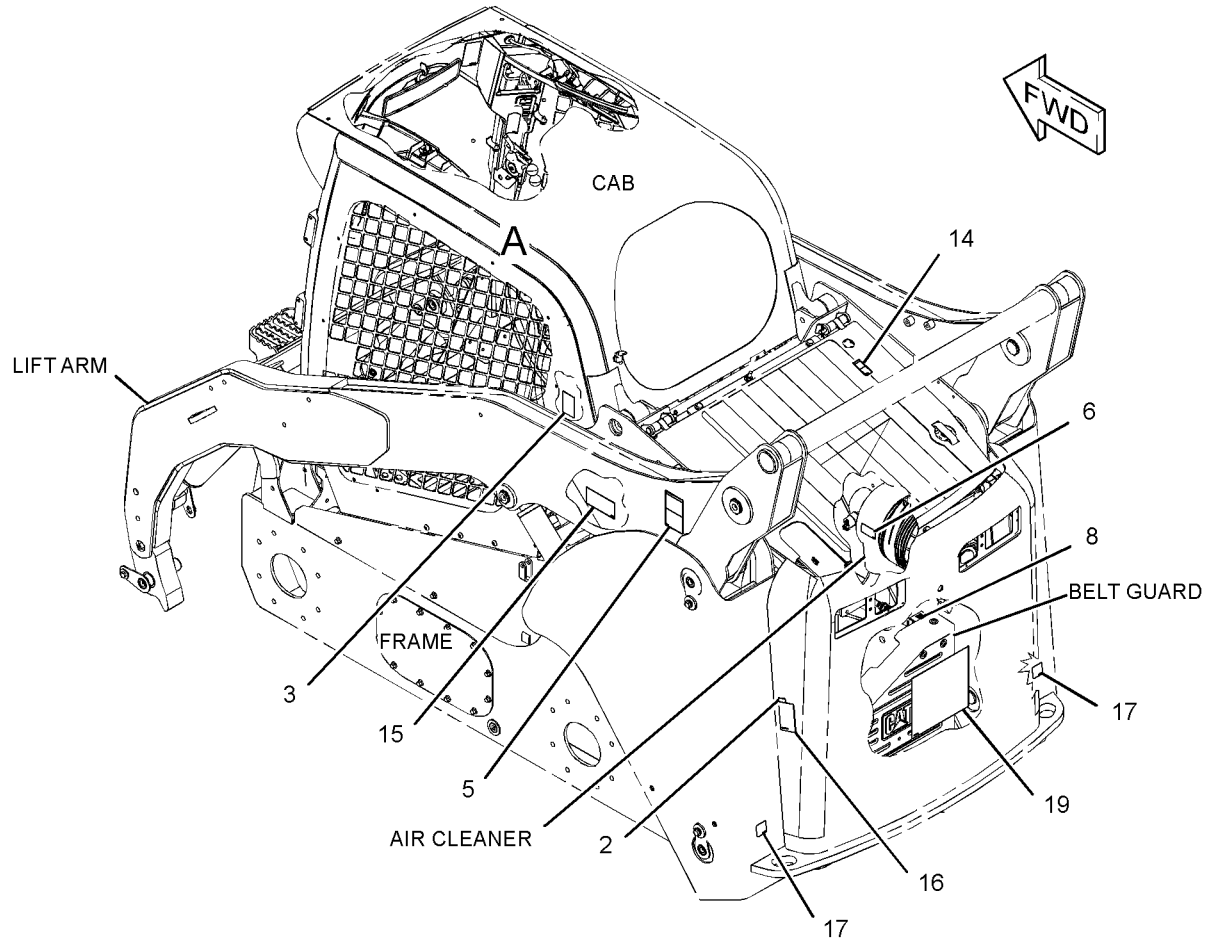

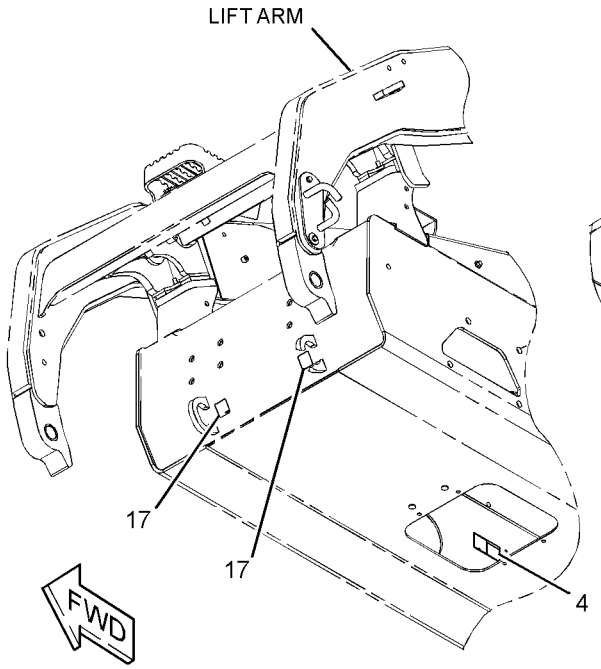

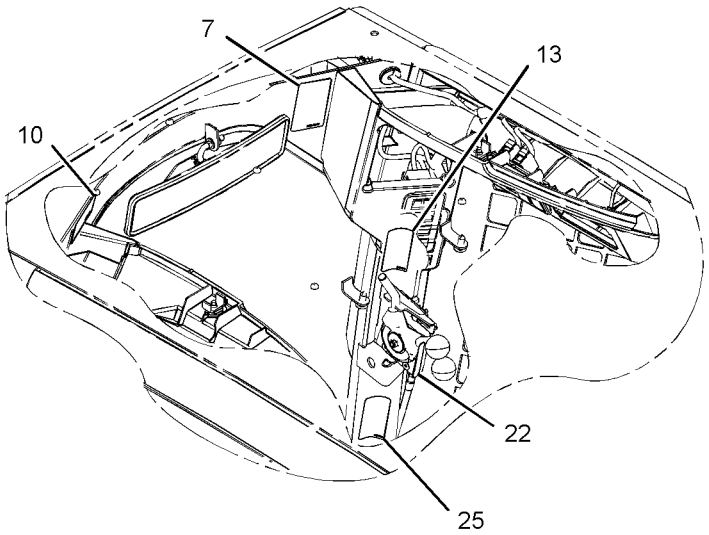

VIEW OF AREA A

GRAPHIC #1

g01359673

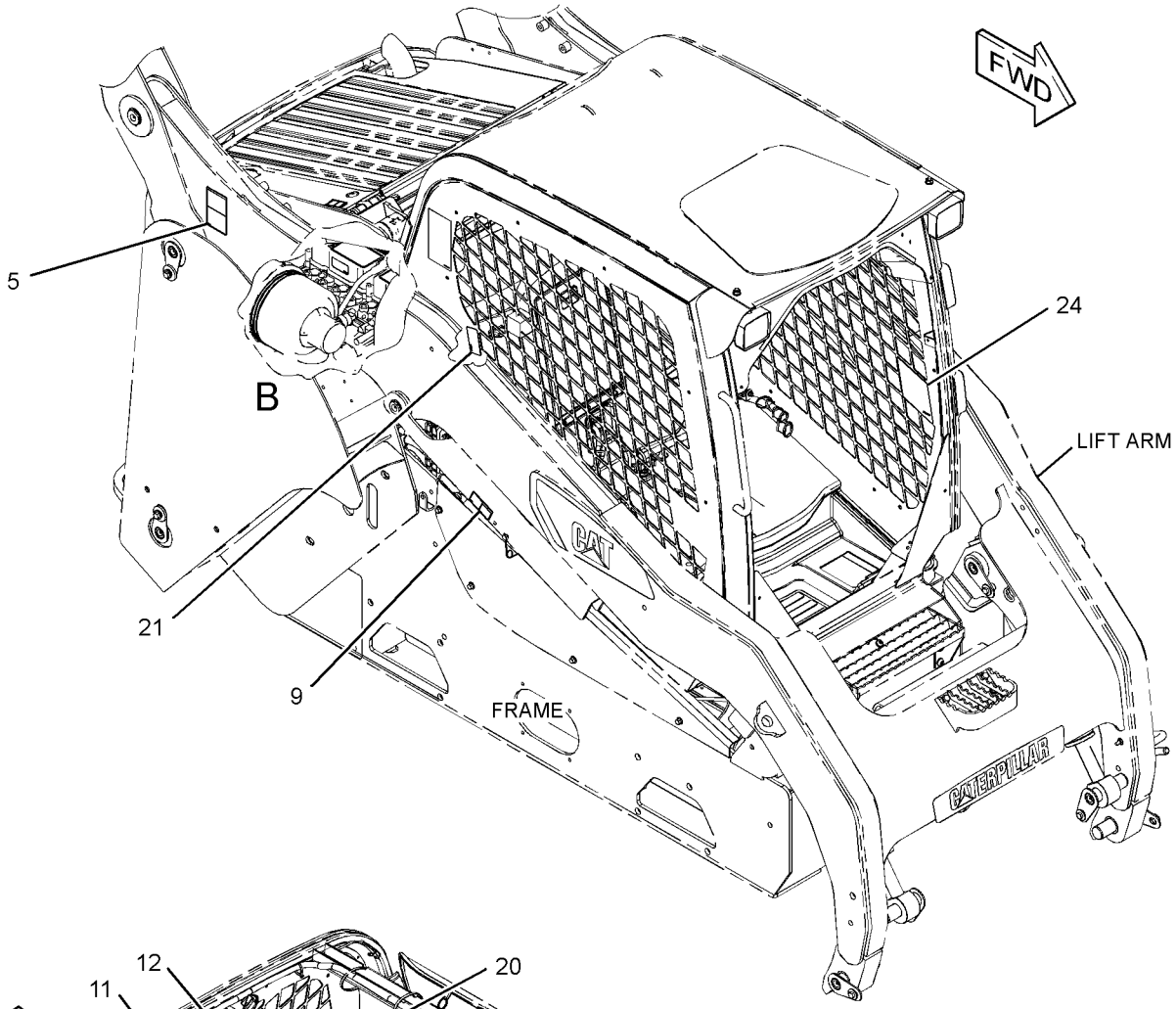

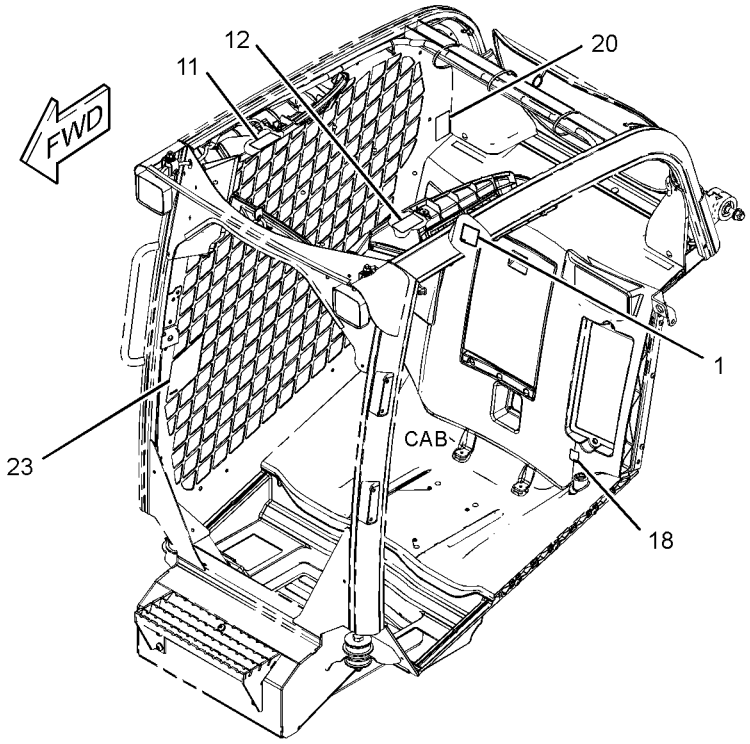

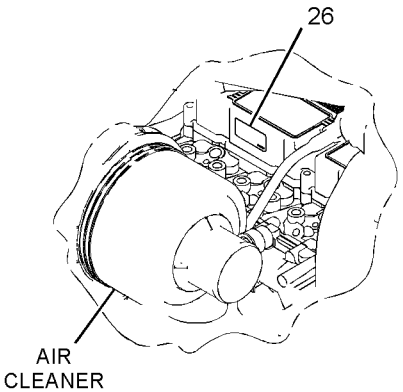

VIEW OF AREA B

GRAPHIC #2 **<END>** g01410536

SERVICE EQUIPMENT AND SUPPLIES

258-3222 PLATE & FILM GP

S/N: MST1860-UP
AN ATTACHMENT

SMCS-7405, 7557 **i02875525**

NOTE	REF NO	GRAPHIC REF	PART NUMBER	QTY	PART NAME 1 2 3 4 5 6 (PRODUCT LEVEL)	SEE PAGE
	1	2	**157-2853**	1	FILM-INFORMATION (READ OMM)	
	2	1	**169-2876**	1	FILM-IDENTIFICATION (POWER RECEPTACLE, 12-VOLT)	
	3	1	**219-0302**	1	FILM-WARNING (NO WELD, NO DRILL, READ OMM)	
	4	1	**224-7830**	1	FILM-WARNING (HIGH PRESSURE, READ OMM, U.S.)	
	5	1,2	**224-8645**	2	FILM-WARNING (CRUSH HAZARD, STAY BACK)	
	6	1	**224-8945**	1	FILM-WARNING (DO NOT USE ETHER, U.S)	
	7	1	**228-2615**	1	FILM-WARNING (UNIVERSAL, U.S.)	
	8	1	**233-0059**	1	FILM-WARNING (GROUND)	
C	9	2	**295-7317**	1	FILM-WARNING (CRUSH HAZARD, CAB, READ OMM)	
C	10	1	**295-7320**	1	FILM-WARNING (CRUSH HAZARD, READ OMM)	
C	11	2	**295-7318**	1	FILM-WARNING (FALL/CRUSH HAZARD, NO ACCESS)	
C	12	2	**295-7319**	1	FILM-WARNING (CRUSH HAZARD, READ OMM)	
	13	1	**302-4389**	1	FILM-WARNING (CRUSH HAZARD, FASTEN SEAT BELT)	
	14	1	**235-1365**	1	FILM-WARNING (HOT FLUID UNDER PRESSURE)	
	15	1	**239-6986**	1	PLATE-IDENTIFICATION (MACHINE)	
	16	1	**253-9499**	1	FILM-WARNING (JUMP START, READ OMM) (JUMP START)	
	17	1	**263-4836**	4	FILM-SYMBOL (TIE-DOWN)	
	18	2	**295-2567**	1	FILM-INSTRUCTION (BUCKET LOWER)	
	19	1	**285-2168**	1	FILM-INSTRUCTION (SERVICE CHART, READ OMM) (SERVICE CHART)	
	20	2	**285-2171**	1	FILM-WARNING (ROPS, FOPS, READ OMM)	
C	21	2	**295-7316**	2	FILM-WARNING (CAB SUPPORT) (CRUSH-CAB)	
	22	1	**285-2176**	1	FILM-SPEED (THROTTLE)	
	23	2	**285-2177**	1	FILM-INSTRUCTION (OPERATOR CONSOLE)	
	24	2	**285-2178**	1	FILM-INSTRUCTION (OPERATOR CONTROL)	
C	25	1	**295-7337**	1	FILM-WARNING (ARM CRUSHING HAZARD) (CRUSH EJECT)	
	26	2	**312-7747**	1	PLATE-WARNING (UNIVERSAL)	

C-CHANGE FROM PREVIOUS TYPE

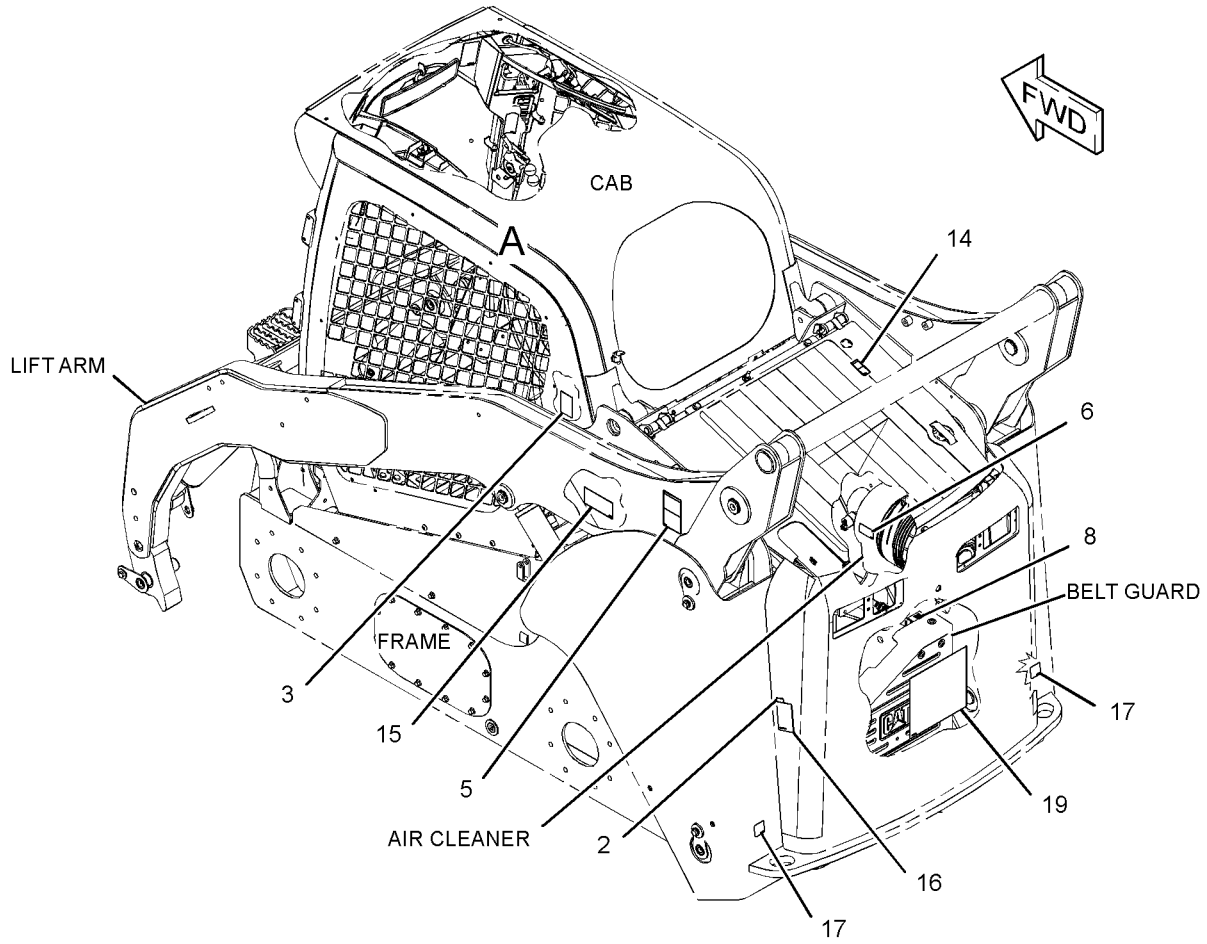

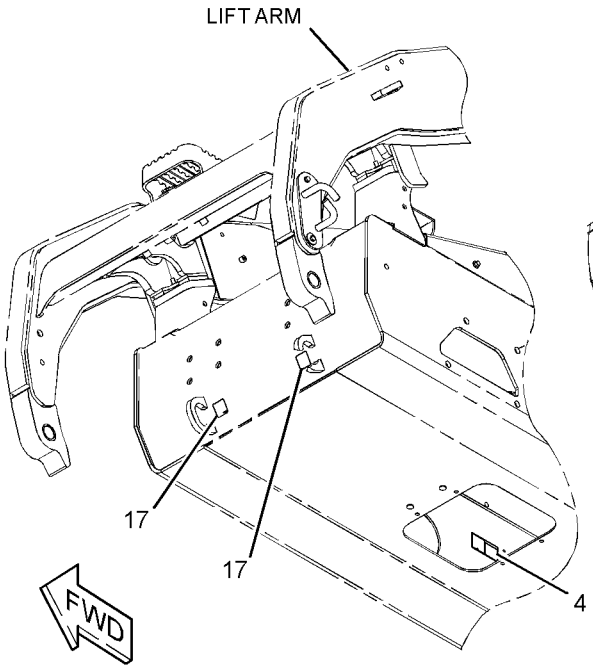

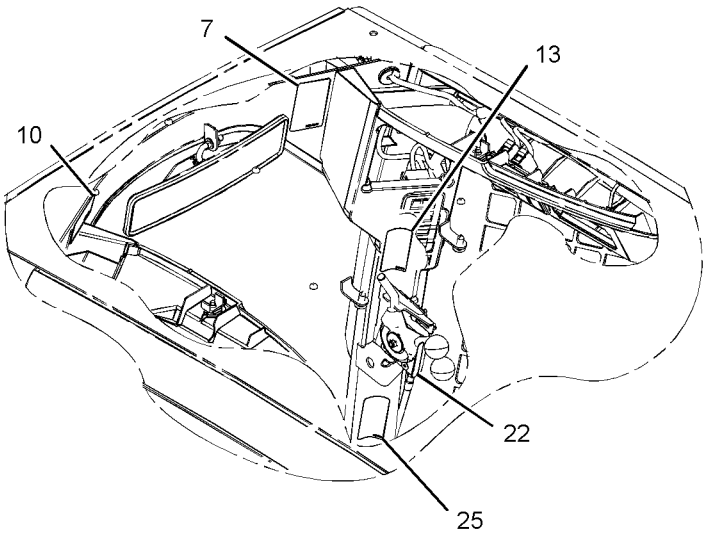

VIEW OF AREA A

GRAPHIC #1

g01359673

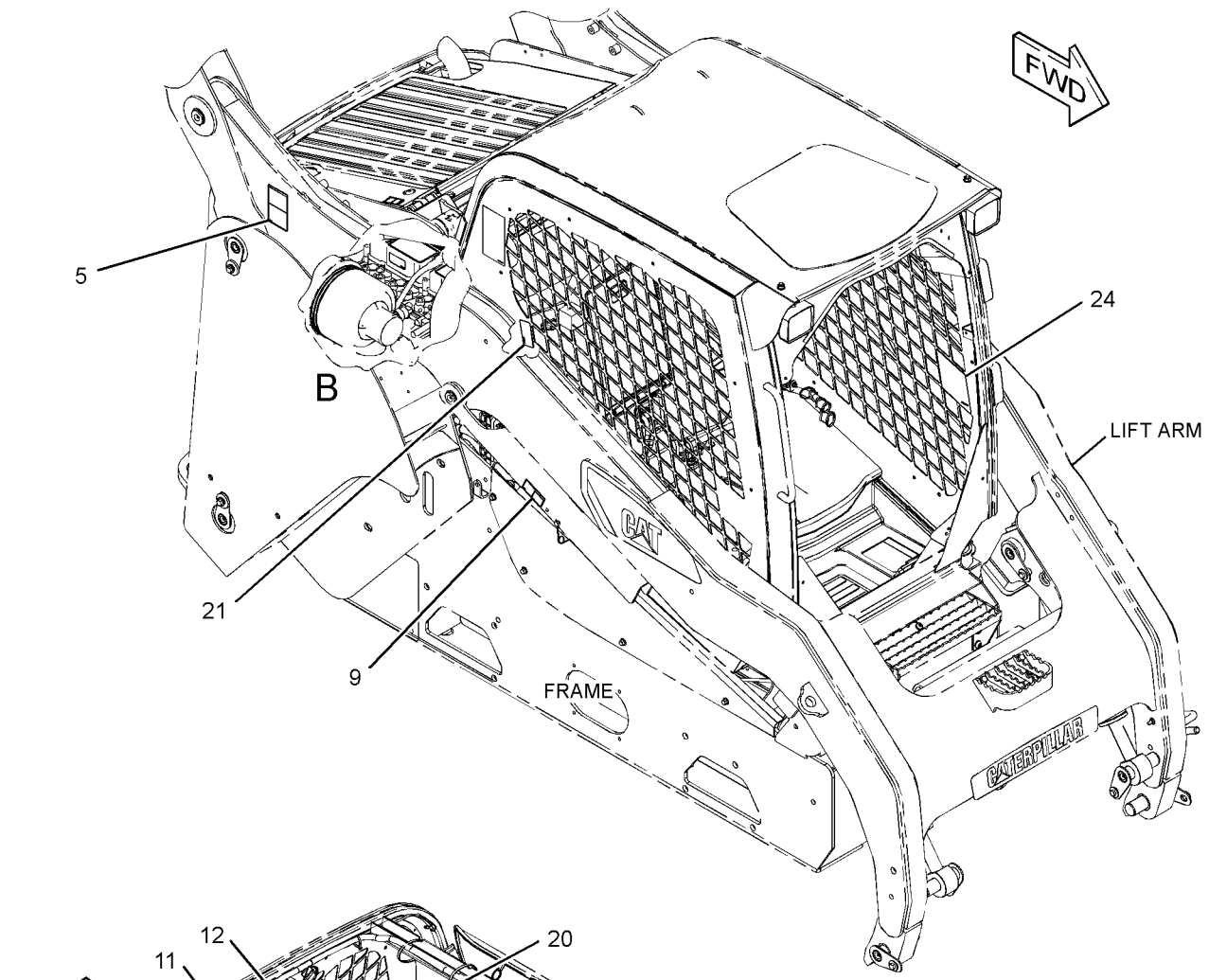

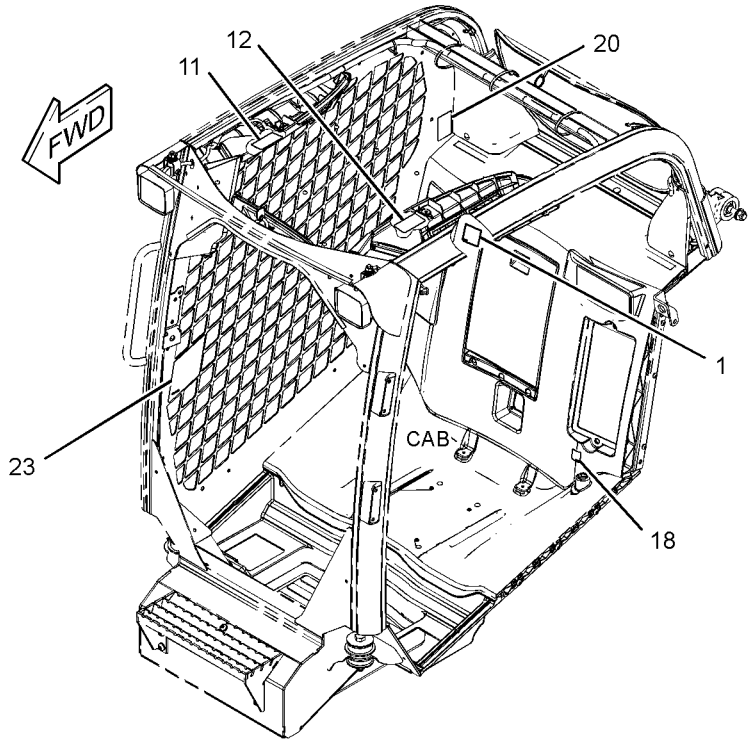

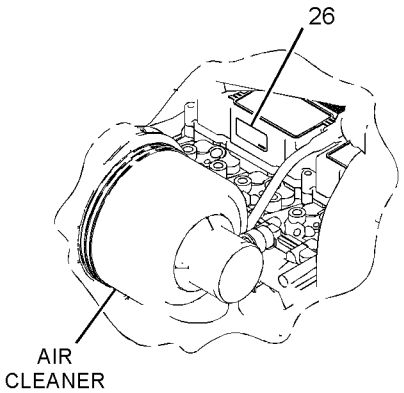

VIEW OF AREA B

GRAPHIC #2 **<END>** g01410536

SERVICE EQUIPMENT AND SUPPLIES

258-3226 PLATE & FILM GP

S/N: MST1-1859
AN ATTACHMENT

SMCS-7405, 7557 **i02770324**

NOTE	REF NO	GRAPHIC REF	PART NUMBER	QTY	PART NAME 1 2 3 4 5 6 (PRODUCT LEVEL)	SEE PAGE
	1	2	**157-2853**	1	FILM-INFORMATION (READ OMM)	
	2	2	**169-2876**	1	FILM-IDENTIFICATION (POWER RECEPTACLE, 12-VOLT)	
	3	1	**219-0302**	1	FILM-WARNING (NO WELD, NO DRILL, READ OMM)	
	4	1	**224-0672**	1	FILM-WARNING (HIGH PRESSURE, READ OMM, INTL)	
	5	1	**224-8646**	2	FILM-WARNING (CRUSH HAZARD, STAY BACK)	
	6	2	**224-8946**	1	FILM-WARNING (NO ETHER SPRAY/AIR INTK, INTL)	
	7	2	**228-2616**	1	FILM-WARNING (UNIVERSAL, READ OMM, INTL)	
	8	1	**233-0059**	1	FILM-WARNING (GROUND)	
	9	1	**234-6069**	1	FILM-WARNING (CRUSH HAZARD)	
	10	2	**234-6071**	1	FILM-WARNING (LIFT ARM BRACE)	
	11	2	**234-6076**	1	FILM-WARNING (NO ACCESS)	
	12	2	**234-6081**	1	FILM-WARNING (WORK TOOL)	
	14	2	**235-1368**	1	FILM-WARNING (RADIATOR)	
	15	1	**239-6986**	1	PLATE-IDENTIFICATION (MACHINE)	
	16	2	**253-7817**	1	FILM-WARNING (JUMP START, READ OMM)	
	17	1,2	**263-4836**	4	FILM-SYMBOL (TIE-DOWN)	
	19	2	**285-2168**	1	FILM-INSTRUCTION (SERVICE CHART, READ OMM)	
	20	1	**285-2171**	1	FILM-WARNING (ROPS, FOPS, READ OMM)	
	21	1	**285-2173**	1	FILM-WARNING (CRUSH HAZARD, READ OMM)	
	22	2	**285-2176**	1	FILM-SPEED	
	23	1	**285-2177**	1	FILM-INSTRUCTION (OPERATOR CONSOLE)	
	24	1	**285-2178**	1	FILM-INSTRUCTION (OPERATOR CONTROL)	
	25	2	**295-2567**	1	FILM-INSTRUCTION (BUCKET LOWER)	
	26	2	**302-4390**	1	FILM-WARNING (CRUSH HAZARD, FASTEN SEAT BELT)	
	27	2	**308-1440**	1	FILM-WARNING (CRUSH HAZARD, FASTEN SEAT BELT)	
	28	2	**312-7748**	1	PLATE-WARNING (UNIVERSAL, READ OMM)	

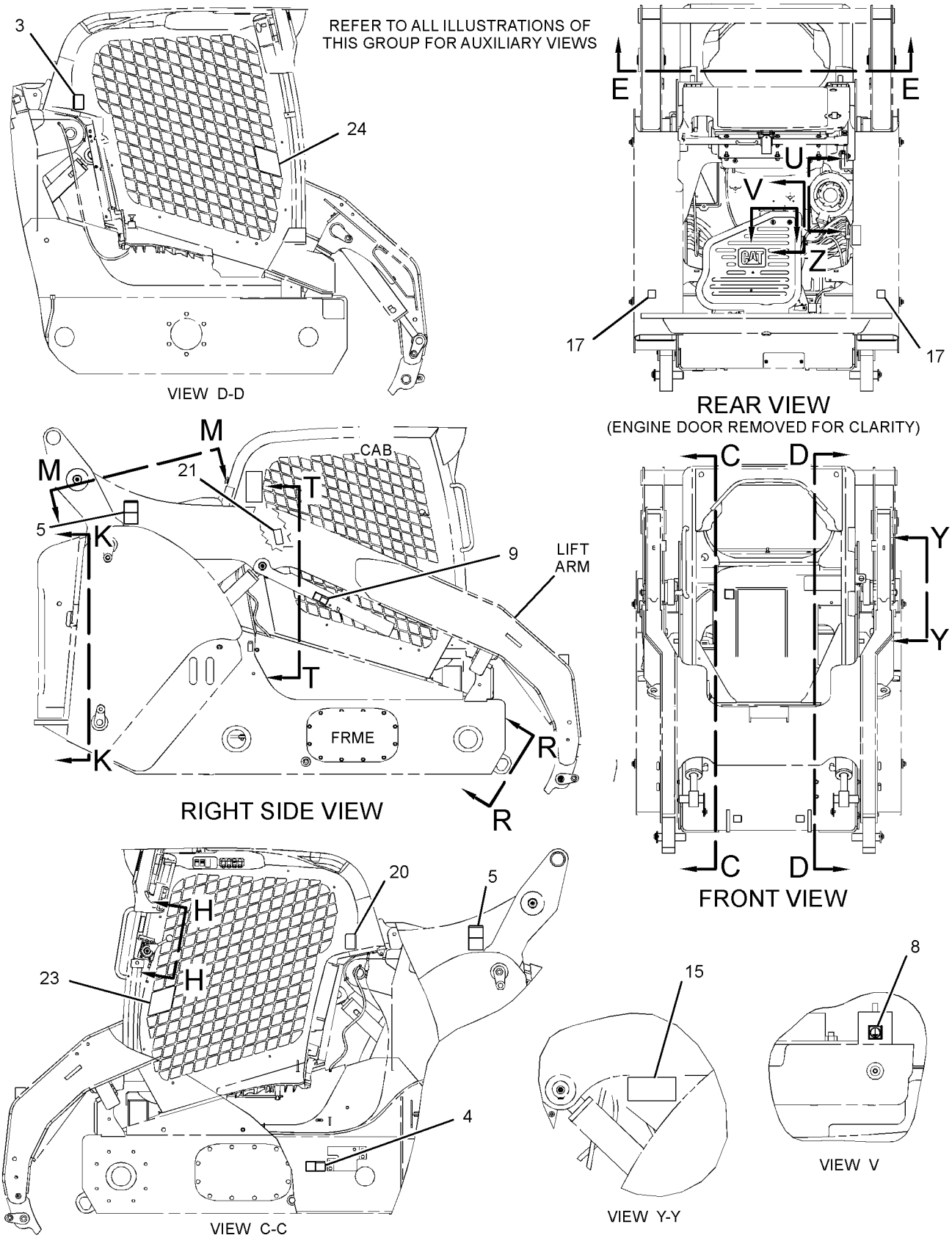

GRAPHIC #1 g01410915

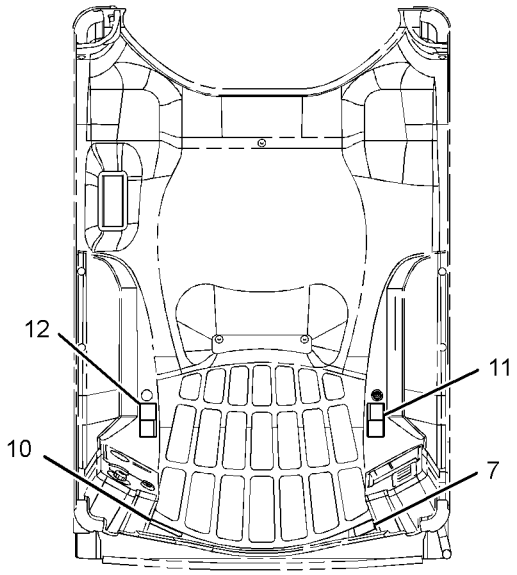

VIEW E-E

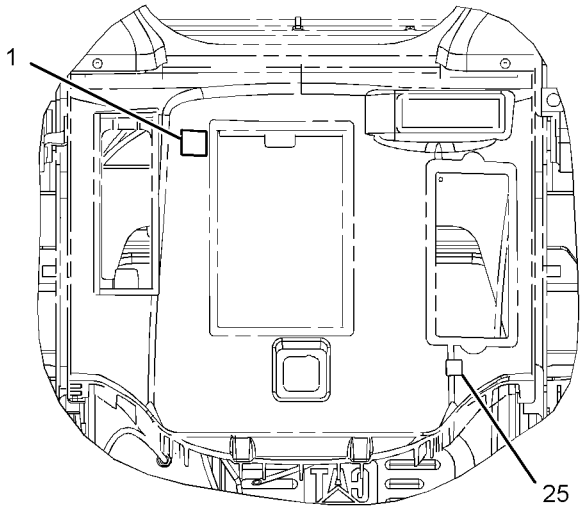

VIEW T-T

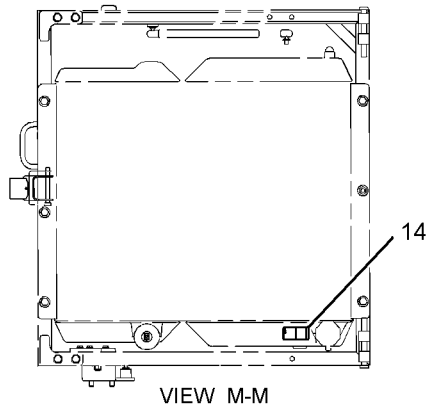

VIEW M-M

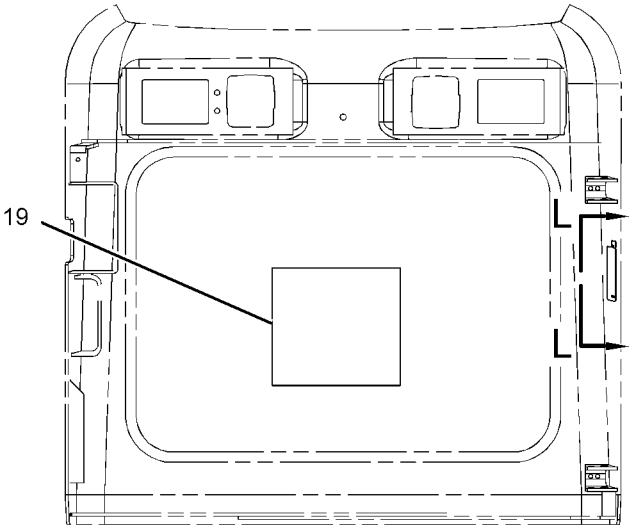

VIEW K-K

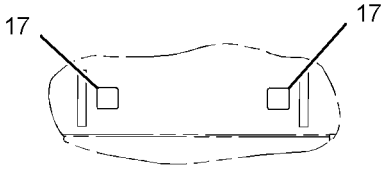

VIEW R-R

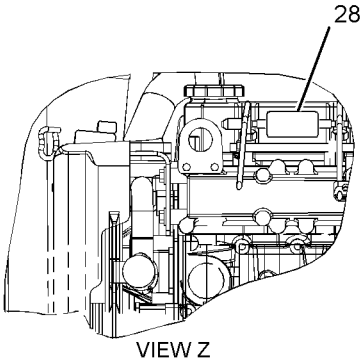

VIEW Z

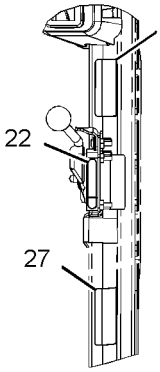

VIEW H-H

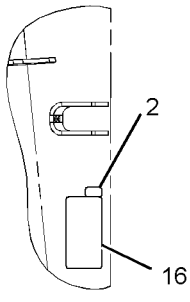

VIEW L-L

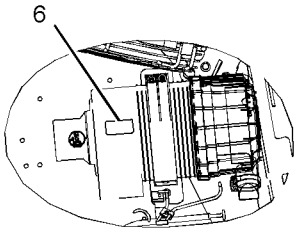

VIEW U

GRAPHIC #2 **<END>** g01410917

SERVICE EQUIPMENT AND SUPPLIES

258-3226 PLATE & FILM GP

S/N: MST1860-UP
AN ATTACHMENT

SMCS-7405, 7557 **i02875745**

NOTE	REF NO	GRAPHIC REF	PART NUMBER	QTY	PART NAME 1 2 3 4 5 6 (PRODUCT LEVEL)	SEE PAGE
	1	2	**157-2853**	1	FILM-INFORMATION (READ OMM)	
	2	2	**169-2876**	1	FILM-IDENTIFICATION (POWER RECEPTACLE, 12-VOLT)	
	3	1	**219-0302**	1	FILM-WARNING (NO WELD, NO DRILL, READ OMM)	
	4	1	**224-0672**	1	FILM-WARNING (HIGH PRESSURE, READ OMM, INTL)	
	5	1	**224-8646**	2	FILM-WARNING (CRUSH HAZARD, STAY BACK)	
	6	2	**224-8946**	1	FILM-WARNING (NO ETHER SPRAY/AIR INTK, INTL)	
	7	2	**228-2616**	1	FILM-WARNING (UNIVERSAL, READ OMM, INTL)	
	8	1	**233-0059**	1	FILM-WARNING (GROUND)	
C	9	1	**295-7330**	1	FILM-WARNING (CRUSH HAZARD, READ OMM)	
C	10	2	**295-7327**	1	FILM-WARNING (CRUSH HAZARD, READ OMM)	
C	11	2	**295-7328**	1	FILM-WARNING (FALL/CRUSH HAZARD, NO ACCESS)	
C	12	2	**295-7329**	1	FILM-WARNING (CRUSH HAZARD, READ OMM)	
	14	2	**235-1368**	1	FILM-WARNING (RADIATOR)	
	15	1	**239-6986**	1	PLATE-IDENTIFICATION (MACHINE)	
	16	2	**253-7817**	1	FILM-WARNING (JUMP START, READ OMM)	
	17	1,2	**263-4836**	4	FILM-SYMBOL (TIE-DOWN)	
	19	2	**285-2168**	1	FILM-INSTRUCTION (SERVICE CHART, READ OMM)	
	20	1	**285-2171**	1	FILM-WARNING (ROPS, FOPS, READ OMM)	
C	21	1	**295-7326**	1	FILM-WARNING (CRUSH HAZARD, CAB, READ OMM)	
	22	2	**285-2176**	1	FILM-SPEED	
	23	1	**285-2177**	1	FILM-INSTRUCTION (OPERATOR CONSOLE)	
	24	1	**285-2178**	1	FILM-INSTRUCTION (OPERATOR CONTROL)	
	25	2	**295-2567**	1	FILM-INSTRUCTION (BUCKET LOWER)	
	26	2	**302-4390**	1	FILM-WARNING (CRUSH HAZARD, FASTEN SEAT BELT)	
C	27	2	**295-7338**	1	FILM-WARNING (CRUSH HAZARD, FASTEN SEAT BELT)	
	28	2	**312-7748**	1	PLATE-WARNING (UNIVERSAL, READ OMM)	

C-CHANGE FROM PREVIOUS TYPE

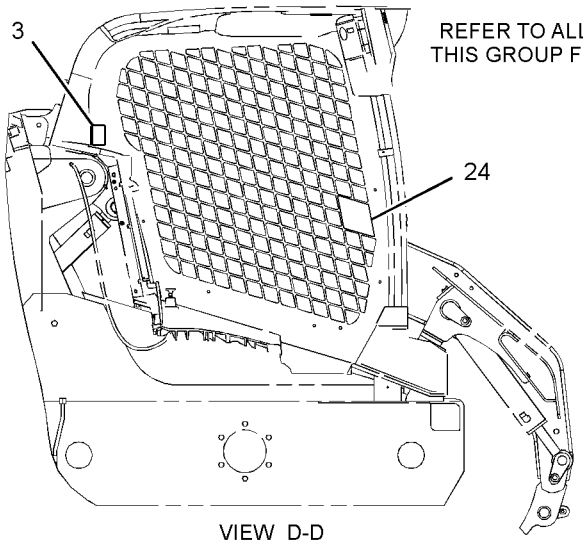

REFER TO ALL ILLUSTRATIONS OF THIS GROUP FOR AUXILIARY VIEWS

VIEW D-D

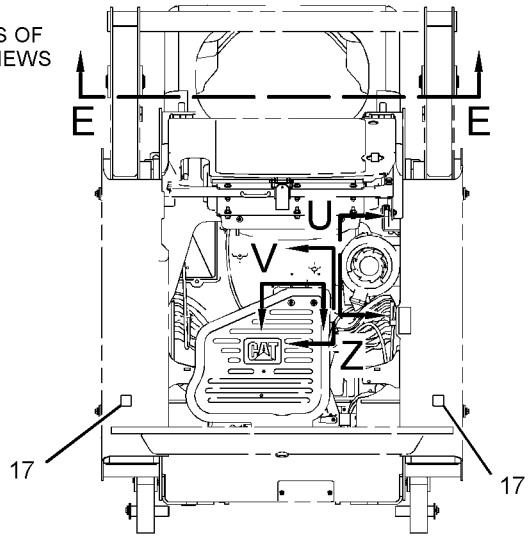

REAR VIEW
(ENGINE DOOR REMOVED FOR CLARITY)

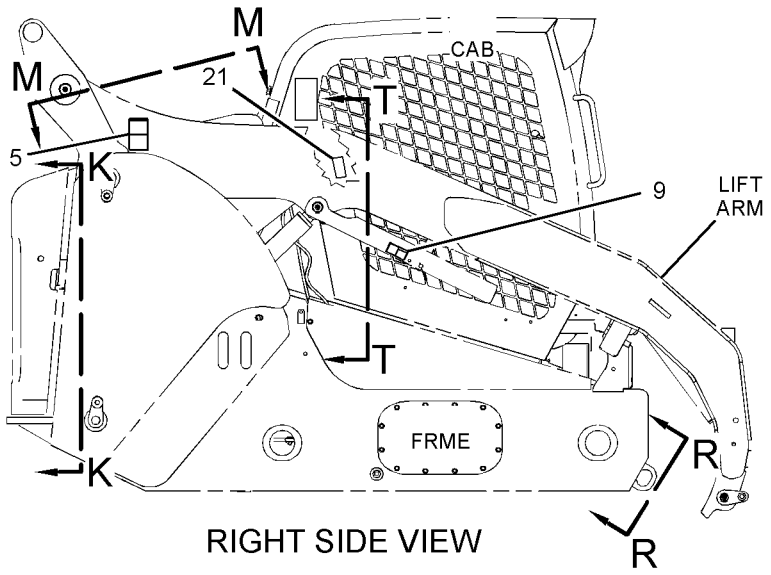

RIGHT SIDE VIEW

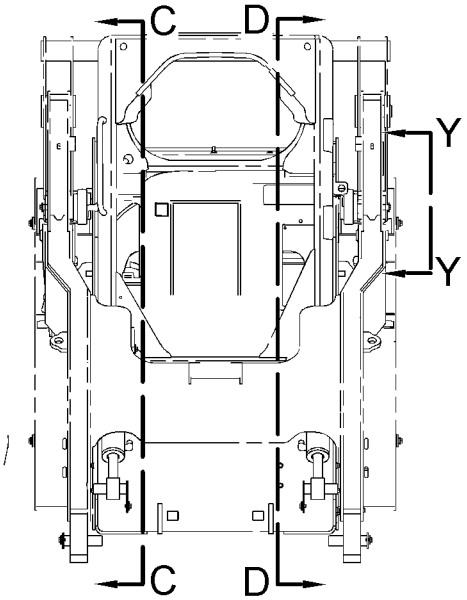

FRONT VIEW

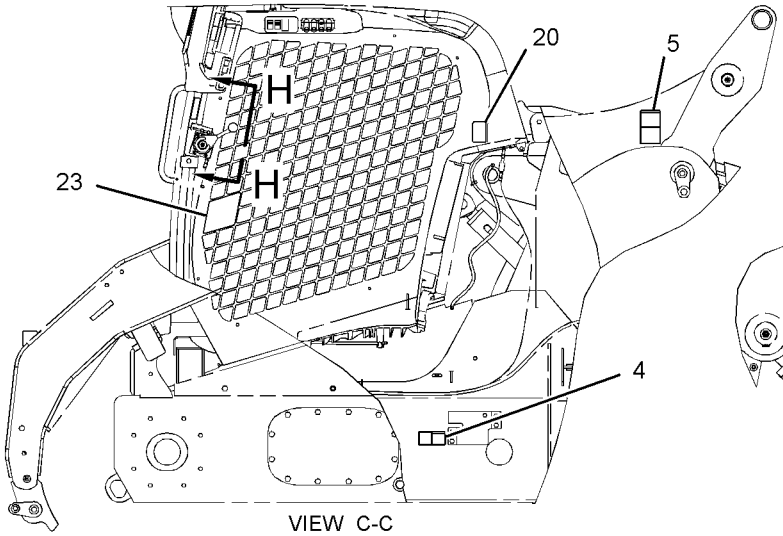

VIEW C-C

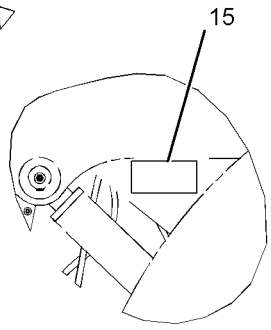

VIEW Y-Y

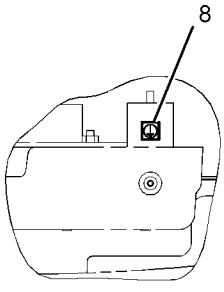

VIEW V

GRAPHIC #1

g01410915

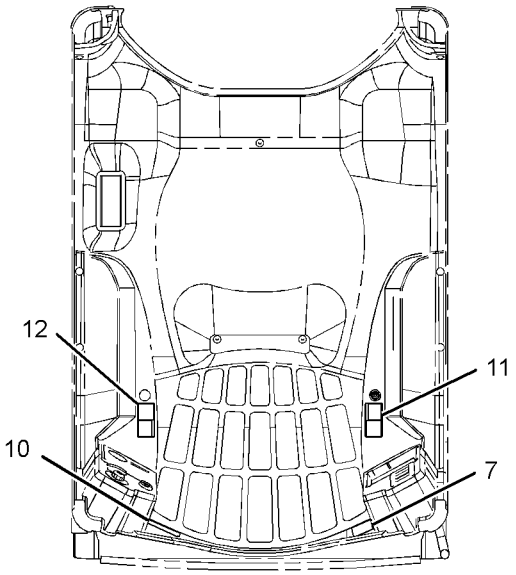

VIEW E-E

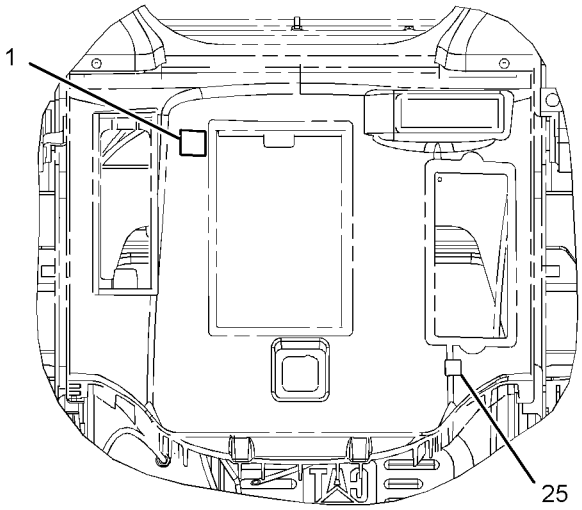

VIEW T-T

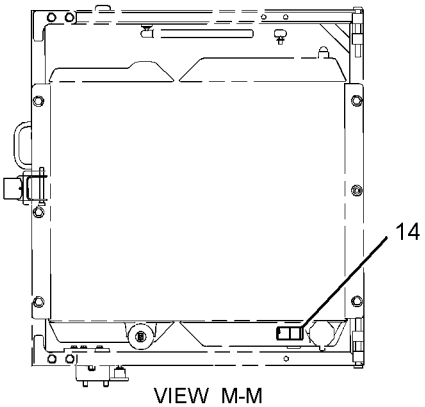

VIEW M-M

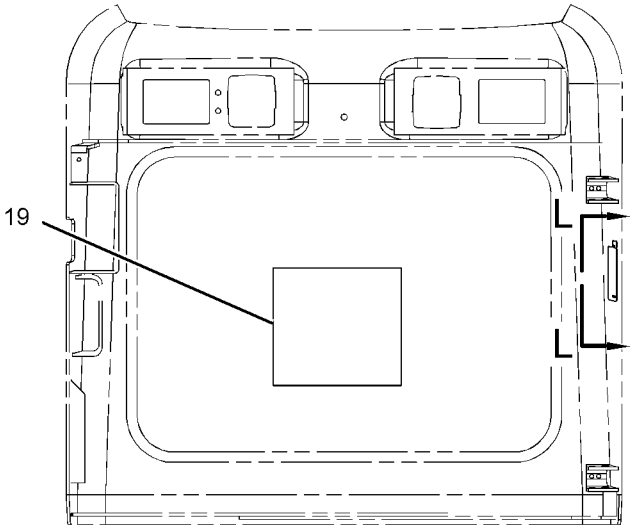

VIEW K-K

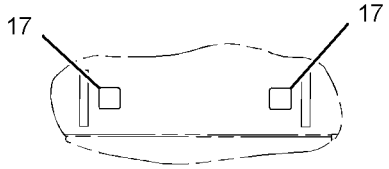

VIEW R-R

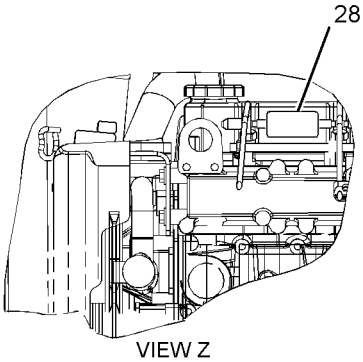

VIEW Z

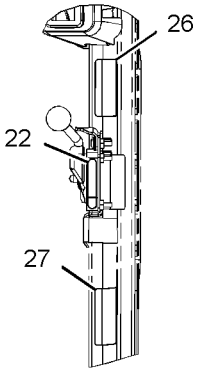

VIEW H-H

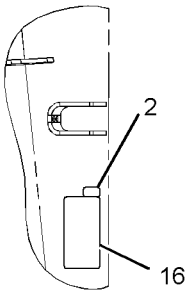

VIEW L-L

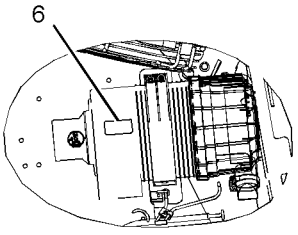

VIEW U

GRAPHIC #2 **<END>** g01410917

SERVICE EQUIPMENT AND SUPPLIES

286-9251 PLATE & FILM GP

S/N: MST1-UP

PART OF 286-9300, 286-9301 BUCKET AR-GRAPPLE

AN ATTACHMENT

SMCS-7405, 7557 **i02723719**

NOTE	REF NO	GRAPHIC REF	PART NUMBER	QTY	PART NAME 1 2 3 4 5 6 (PRODUCT LEVEL)	SEE PAGE
	1	1	**168-8389**	4	TACK-FASTENER	
	2	1	**228-3369**	1	FILM-WARNING (DO NOT OPERATE, READ OMM)	
	3	1	**247-6118**	2	FILM-WARNING (CRUSH HAZARD, STAY BACK)	
	4	1	**248-5245**	2	FILM-INFORMATION (LIFT EYE, TIE-DOWN LOCATION)	
	5	1	**255-6540**	1	PLATE-INSTRUCTION (BUCKET SPECIFICATIONS)	

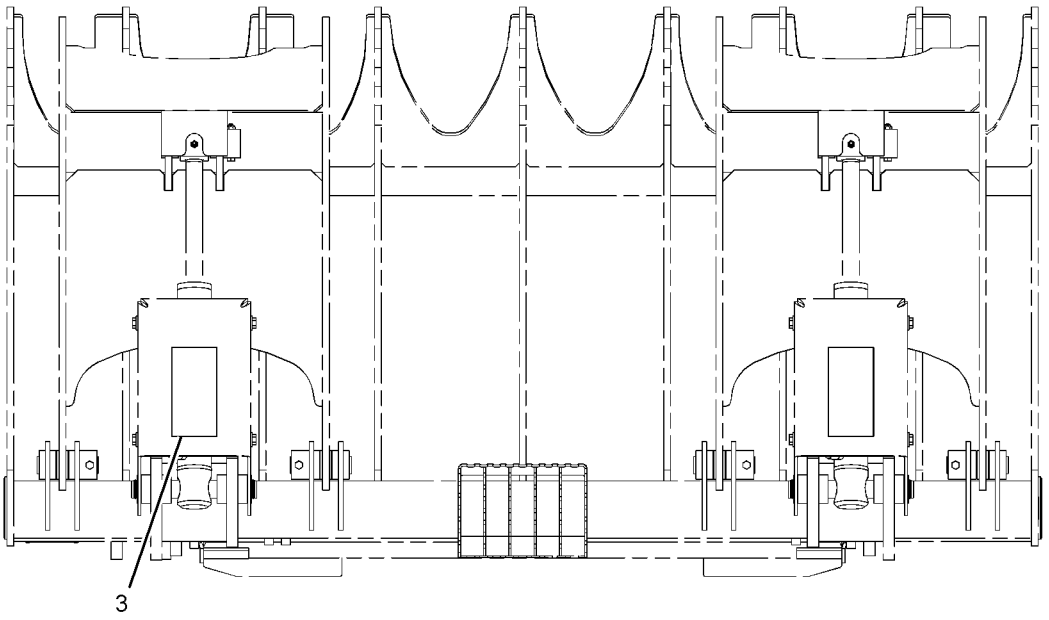

TOP VIEW

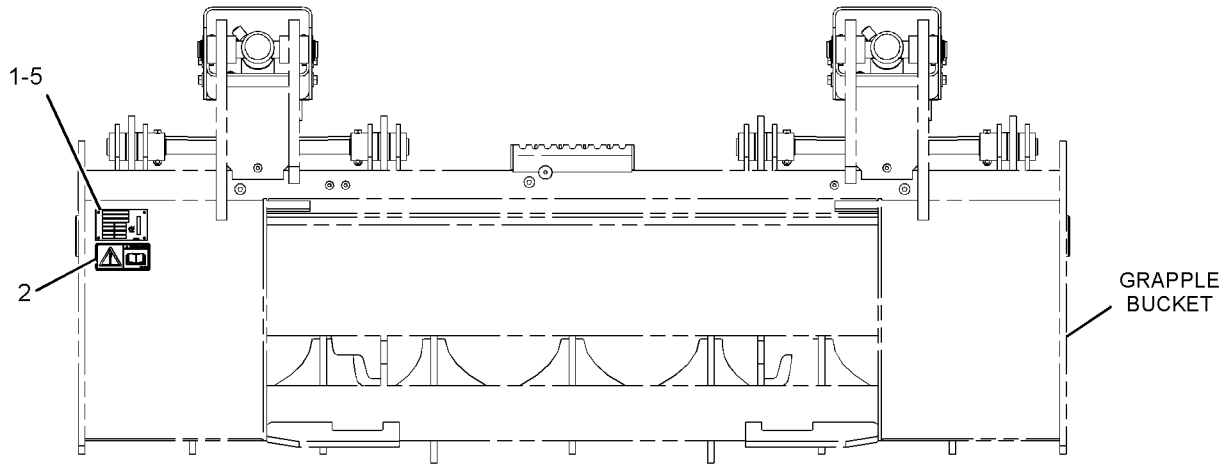

REAR VIEW

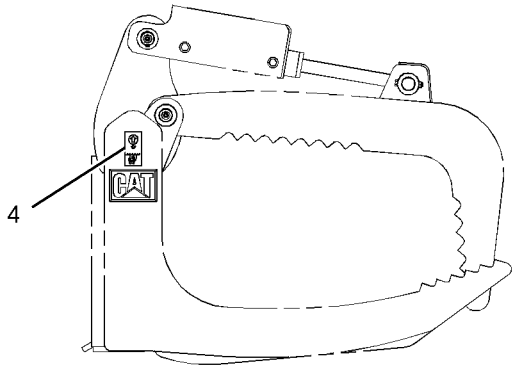

RIGHT SIDE VIEW

GRAPHIC #1 **<END>** g01373367

SERVICE EQUIPMENT AND SUPPLIES

304-5237 PLATE & FILM GP

S/N: MST1-UP

AN ATTACHMENT

SMCS-7405, 7557 **i03505801**

NOTE	REF NO	GRAPHIC REF	PART NUMBER	QTY	PART NAME 1 2 3 4 5 6 (PRODUCT LEVEL)	SEE PAGE
	1	1	**199-3410**	2	FILM-IDENTIFICATION (SYNTHETIC HYD OIL, READ OMM)	

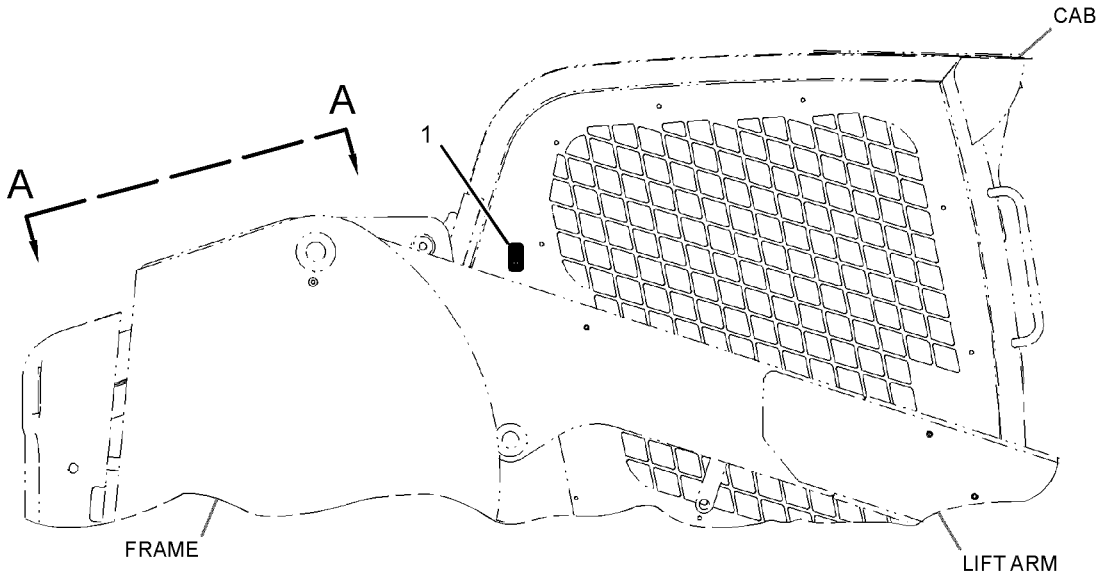

RIGHT SIDE VIEW

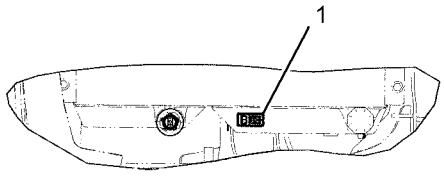

VIEW A-A

GRAPHIC #1 **<END>** g01346444

PART NUMBER INDEX

Part	Page
1	
1B-2705	803
	805
1B-3057	405
1D-4677	808
1F-7567	221
1G-8878	214
1H-3244	143
	176
1H-8134	452
1J-9671	299
	300
1L-2279	629
1M-6119	198
1M-6120	198
1P-0810	149
	192
	195
	198
1P-1210	798
	800
1P-3703	390
	393
	396
	399
1P-4278	35
	36
	88
	121
	131
1P-4578	386
	388
1P-4582	390
	393
	396
	399
1R-0734	75
	76
	77
1S-0994	329
	331
	333
	337
	339
	341
	343
	349
1S-7252	149
	198
1S-9593	162
2	
2D-6412	793
	794
2G-8624	452
2H-7829	363
	365
2J-6540	345
2K-4821	306
2K-4973	89
	91
	268
2L-8065	192
	195
2L-8067	188
2L-8069	188
	192
	195
	201
2L-8076	201
2L-8077	161
	188
2L-8078	161
	188
2L-8079	201
2M-6102	212
2M-7819	803
2M-9780	212
	215
	217
	219
	314
	315
	316
	321
	324
	327
	329
	331
	333
	335
	337
	339
	341
	343
	345
	347
	349
	351
	353
	355
	359
	361
	363
	365
	368
	370
	371
	373
	375
	377
	379
	402
	418
	433
	442
2P-8104	182
2S-3440	386
	388
	390
	393
	396
	399
2S-4078	386
	388
	390
	393
	396
	399
2S-6408	640
2V-3216	335
	361
2V-8260	766
3	
3B-4505	18
	21
	46
	48
	50
	51
	53
	55
	57
	59
	60
	71
	73
	81
	82
	83
	110
	111
	123
	127
	129
	145
	146
	147
	755
	756
3B-4628	322
	595
3B-7255	629
3B-8488	452
	624
3B-8489	301
	303
	304
	305
	306
	307
	312
	426
	427
	429
	452
	462
	463
	562
	563
	564
	565
	566
	567
	568
	569
3B-8686	269
3D-2824	212
	215
	217
	219
	226
	228
	327
	367
	368
	370
	371
	381
	386
	388
	390
	393
	396
	399
	404
	408
3D-9369	803
3E-3377	417
3E-4321	212
3E-4352	761
3E-4370	608
3E-5153	182
3E-5154	182
3E-6908	276
3E-7404	335
	361
3E-8020	118
	120
3E-9860	805
3F-5108	599
3F-9556	689
	694
	702
	758
	770
	771
3J-1907	214
	217
	221
	222
	224
	226
	228
	317
	321
	351
	353

► **PRIMARY REFERENCE**

PART NUMBER INDEX

Part	Page
	355
	358
	371
	384
	386
	388
	390
	391
	393
	394
	396
	397
	399
	400
	412
	440
	442
	449
3J-7354	299
	300
	373
	375
	377
	379
	386
	390
	393
	396
	399
	433
	442
	444
3K-0360	142
	221
	222
	224
	226
	228
	314
	315
	324
	353
	370
	381
	404
	405
	408
	410
	411
	437
3K-4897	452
3K-8782	592
3P-1896	24
	26
	28
3S-2093	118
	120
	121
	162
	169
	171
	186
	189
	192
	195
	198
	202
	204
	205
	278
	279
	284
	292
	322
	355
	358
	629
	651
	653
	662
	666
	667
	668
	669
	670
	689
	692
	695
	699
	703
	706
	716
	724
	727
	738
	751
3S-8665	149
	215
	217
	219
	373
	375
	377
	379
3S-9182	269

4

Part	Page
4B-0418	384
4B-4274	384
4B-4278	803
	805
4B-4863	279
	281
	283
	290
4D-4431	269
4D-6466	121
	131
	322
	355
	358
4F-3658	599
4I-9404	81
	82
	83
4J-0522	386
	388
4J-0527	390
	393
	396
	399
4J-5267	386
	388
4J-5477	316
	321
	322
	324
	355
	358
	359
	373
	375
	377
	379
	390
	393
	396
	399
4J-7533	442
4K-0367	599
4K-1388	442
4K-4709	271
4K-8864	88
	96
	121
	131
	373
	375
	377
	379
	660
	723
	726
4M-0061	795
	798
	800
4M-5285	427
	429
4P-7428	192
	195
4P-7429	192
	195
	415
	659
	723
	726
4P-7581	118
	120
	189
	192
	195
	200
	202
	324
	371
4P-8134	189
	192
	202
	327
	416
4S-5875	452
4V-0611	404
4V-0612	404
4V-8577	803
	805

5

Part	Page
5B-0651	452
	594
	595
5B-0935	619
5C-2890	114
	116
	143
	149
	176
	189
	680
	683
	685
	688
	691
	694
	698
	703
	706
	728
	731
	734
	744
	747
	772
	803
	805
5C-7261	89
	91
	149
	176
	189
	200
	202
	215
	217
	219
	221
	226
	228
	268
	292
	324
	331
	390
	393
	396
	399
	411
	629
	689
	695
	702
	718
	720
	755
	756
	758
	770

PART NUMBER INDEX

Part	Page	Part	Page	Part	Page	Part	Page
	771		43		211		386
	784		86	5P-3454	188		388
5C-8310	811		87	5P-3863	432		390
5C-8311	811	5I-8063	71		435		393
5C-8312	279	5I-8109	114	5P-4115	189		396
	281		116		202		399
	283	5I-8110	114	5P-4116	41	5P-4961	121
	290		116		118		131
5C-9553	106	5I-8111	112		120	5P-5148	363
	114		113		193		365
	116		817		196	5P-5637	649
	121	5K-8451	121		215		651
	131		405		217		714
	137	5K-9090	226		219		716
	189		386		221	5P-5677	159
	279		390		226	5P-5755	744
	284		393		228	5P-5924	723
	289		396		276		726
	296		397		322		751
	596		399		324	5P-5927	744
	660		400		355		747
	661	5K-9660	381		358	5P-7162	189
	723	5P-0372	89		373	5P-7464	391
	726		91		375		394
	770		322		377		397
	771		595		379		399
	813		680		390	5P-7465	391
5H-9743	452		683		393		394
5I-4370	215		685		396		397
5I-4936	39		728		399		399
	40		731		405	5P-7466	402
5I-4993	53		734		411		405
	55		761		414		408
	57		801		436	5P-7467	402
	59	5P-0537	125		629		405
	60	5P-0597	114		677		408
5I-5077	114		116		708	5P-7470	88
	116		390		718	5P-7471	88
5I-7505	64		393		720	5P-7483	276
5I-7525	24		396		724		744
	26		399		738	5P-7506	386
	28	5P-0761	149		744		388
	30	5P-1076	52		747		390
5I-7543	40		292		784		393
5I-7623	114		353	5P-4362	386		396
	116		464		388		399
5I-7625	70		465		390	5P-7703	88
5I-7628	42		622		393	5P-7957	744
	43		623		396		747
	86	5P-1420	88		399	5P-7958	744
	87		121	5P-4571	192		747
5I-7630	70	5P-1442	35		195		754
5I-7678	104		36		279		761
	107		121		281	5P-8112	402
5I-7689	114		131		283		405
	116	5P-1478	192		290		408
5I-7719	70		195		649	5P-8246	629
5I-7728	87	5P-2230	386		651	5P-8247	599
5I-7833	53		388		714	5P-8309	89
5I-7931	109		390		716		91
5I-7933	114		393		765	5P-8500	754
	116		396		803	5P-9909	190
5I-8021	104		399	5P-4868	105	5T-7869	808
5I-8023	104	5P-3092	209		114	5T-7870	808
5I-8056	42		210		116	5T-9400	680

► **PRIMARY REFERENCE**

PART NUMBER INDEX

Part	Page	Part	Page	Part	Page	Part	Page
	683		219	6V-6715	151		335
	685		386		157		337
	761		388	6V-6717	649		339
	801		390		651		341
5V-1497	805		393		714		343
5V-8309	89		396		716		345
			399	6V-7357	41		347
		6V-1889	212		46		349
6			373		114		351
			375		116		353
6B-2882	402		377		149		355
6B-6682	304		379		192		358
6D-1641	723	6V-1970	1		195		361
	737		2		276		363
	753		▶754		296		365
6D-3033	200	6V-2317	73		689		367
6D-4244	405		81		692		368
6D-4246	226		82		695		370
	228		83		699		371
	660		114		703		384
	723		116		706		390
	726		123		708		393
6D-4247	329		125		718		394
	331		127		720		396
	333		129		723		397
	337	6V-3582	383		737		399
	339	6V-3940	70		784		400
	341		75	6V-7359	390		402
	343		76		393		405
	349		77		396		412
6D-4636	375		95		399		440
	379		104	6V-7412	803	6V-8398	215
6E-4701	420	6V-3965	215		805		217
	▶440		217	6V-7644	464		219
6F-4718	230		219		465		221
	231		386	6V-7687	798		226
	232		388		800		228
6I-1418	188		390	6V-7699	140		324
6J-2245	433		393	6V-7700	452		327
6J-7855	433		396	6V-7743	276		367
6K-4148	271		399	6V-7744	594		368
6L-3966	680	6V-5215	17	6V-8076	386		370
	683		44		388		371
	685		78		391		383
	728		125		394		384
	731	6V-5217	79		397		402
	734		133		400		404
	801		135	6V-8077	397		405
6L-7155	803		137		400		408
6N-8863	452		138	6V-8186	770		411
6R-3320	381		145		771		412
6S-4350	649		146	6V-8369	665		449
	651		147	6V-8397	221	6V-8399	418
6T-1375	680		148		222	6V-8624	215
	683	6V-5221	73		224	6V-8625	324
	685		86		302		370
	728		87		316		408
	731	6V-5698	149		317	6V-8627	390
	734	6V-5834	189		321		393
6V-0400	390		766		322		396
	393	6V-5839	79		324		399
	396		761		327	6V-8629	327
	399	6V-6689	708		329		368
6V-0852	215		723		331		370
	217		738		333	6V-8632	353

▶ **PRIMARY REFERENCE**

PART NUMBER INDEX

Part	Page
6V-8634	222
	224
	324
	370
6V-8636	222
	224
	321
	353
	355
	358
	371
	412
6V-8637	217
	219
	226
	228
	327
	368
	371
6V-8638	217
	219
6V-8639	221
6V-8640	314
	315
6V-8641	321
	355
	358
6V-8642	327
	353
	368
	370
	373
	375
	377
	379
6V-8647	373
	375
	377
	379
6V-8713	367
	368
	370
6V-8715	329
	331
	333
	335
	337
	339
	341
	343
	345
	347
	349
	351
6V-8716	215
	217
	219
6V-8724	222
	224
	317
	321
	351
	355
	358
	384
	412
6V-8774	222
	224
6V-8775	405
6V-8781	224
6V-8783	322
	355
6V-8788	329
	331
	333
	337
	339
	341
	343
	349
6V-8801	149
6V-8937	322
	355
6V-8949	627
	628
6V-8978	226
	228
6V-9002	324
	370
6V-9004	215
	219
6V-9007	381
6V-9028	192
	195
6V-9162	404
6V-9168	322
	355
	358
6V-9170	408
6V-9189	272
	276
	426
	427
	428
	429
	462
	463
	562
	563
	564
	565
	566
	567
	568
	569
	570
	571
	572
	573
	574
	575
	576
	577
	578
	579
	580
	609
	624
	744
	747
	759
	760
	786
	787
	788
	796
	797
	798
	800
6V-9200	390
	393
	396
	399
6V-9335	708
	723
	738
6V-9509	226
	228
6V-9632	276
6V-9671	592
6V-9672	279
	281
	283
	290
6V-9673	384
6V-9746	215
	217
	219
	226
	228
	314
	315
	327
	368
	370
	371
	381
	386
	388
	404
	405
6V-9828	316
	324
6V-9829	316
	317
	367
	368
6V-9830	327
	367
	368
6V-9836	222
6V-9852	327
	368
	371
	402
	408
6V-9853	404
6V-9854	397
	400
6V-9873	384
	412
6W-5698	142
6Y-5839	599
6Y-5840	599
7B-1597	322
	355
	358
	405
7C-8246	680
	683
	685
	728
	731
	734
	801
7D-8508	307
	310
	311
	312
7E-2700	286
	287
	288
7E-9898	221
7F-8268	142
7G-1060	188
7G-2950	322
	355
	358
7G-2951	322
	355
	358
7G-3832	402
	405
	408
7G-3833	402
	405
	408
7G-3834	402
	405
	408
7G-5984	353
7G-5985	353
7G-5986	353
7H-7055	121
	131
	322
	355
	358
7I-5418	222
7J-0204	304
	306
	307
	310
7J-9108	212
	316
	322
	324
	327
	353
	355
	358
	367
	368

7

► **PRIMARY REFERENCE**

PART NUMBER INDEX

Part	Page
	370
	371
	373
	375
	377
	379
	383
	402
	408
	418
7K-1181	88
	161
	162
	169
	188
	193
	196
	198
	200
	201
	204
	205
	278
	284
	321
	327
	355
	358
	371
	383
	384
	404
	412
	456
	458
	659
	724
	727
	751
	765
7M-7410	96
7M-8485	215
	217
	219
	386
	388
	390
	393
	396
	399
7N-7221	765
7R-0476	629
7R-2750	188
7R-2751	188
7R-3029	200
7S-3912	345
	347
7S-3913	345
	347
7S-3916	335
	361
	363
	365
7S-3919	335
	361
7T-1099	267
7T-6087	182
7T-6088	182
7T-6090	182
7T-6092	182
7T-6093	182
7T-6099	182
7T-6739	649
	651
7T-6799	765
7W-3983	438
7X-0495	629
7X-0507	789
	790
	791
7X-0579	278
	281
	283
	290
7X-0603	272
	795
	798
	800
7X-0608	149
7X-0610	209
	210
	211
7X-0613	759
	760
7X-0796	133
	138
7X-0818	93
	94
	110
	111
	189
	789
	790
	791
7X-0848	665
7X-1443	88
7X-2031	708
	723
	725
	738
7X-2475	454
7X-2533	202
7X-2534	189
	324
	411
7X-2535	327
	415
	416
7X-2537	95
7X-2539	272
7X-2543	405
7X-2548	192
	195
7X-2549	266
	273
7X-2553	619
7X-2556	761
7X-2557	761
7X-2561	629
7X-2562	286
	287
	288
7X-2621	594
7X-3229	818
7X-6312	154
7X-7729	89
	91
	96
	268
	269
	301
	322
	355
	358
	363
	365
	405
	429
	436
	452
	594
	619
	653
7X-7888	324
	411
7X-7920	140
7Y-9099	761
8	
8C-3095	151
	157
8C-3205	386
	388
8C-3334	703
	706
8C-3413	245
	248
8C-3445	35
8C-3446	35
	375
	379
8C-3451	373
	375
	377
	379
8C-3681	121
	131
8C-3798	689
	692
	695
	699
	703
	706
8C-7524	750
8C-7563	373
	375
	377
	379
8C-8451	156
8C-8478	464
	465
8C-8558	189
8C-8992	209
	210
	211
8C-9778	182
8C-9783	182
8D-9671	405
8E-1118	718
	720
	784
8E-5702	464
	465
8E-8293	680
	683
	685
	728
	731
	734
8F-1434	182
8F-3469	438
8G-1151	688
	691
	694
	698
	702
	705
8J-2880	464
	465
8J-4455	182
8J-8197	373
	377
8L-2779	35
8L-5188	322
	595
8L-8413	157
	159
	162
	186
	188
	189
	201
	204
	205
	321
	404
	456
	458
	662
	664
	688
	691
	694
	698
	702
	705
	722
	737
	765
	795
	798
	800
8M-4791	384
	798
	800
8N-0869	149

PART NUMBER INDEX

Part	Page	Part	Page	Part	Page	Part	Page
	198	8T-2444	680		639		751
8N-1548	188		683		659		753
8N-1549	201		685		660	8T-4137	43
8Q-6027	310		728		677		135
	311		731		713		138
8R-9654	152		734		724		202
8S-0934	789	8T-2658	592		727		212
	790	8T-3597	292		738		268
	791	8T-3647	71		751		301
	793	8T-3844	410		753		322
	794	8T-3984	118	8T-4122	52		345
8S-3193	692		120		209		347
	699	8T-4121	39		210		355
	706		40		211		358
8S-4723	789		88		454		405
	790		89		619		619
	791		91		629		627
	793		96		761	8T-4138	118
	794		121	8T-4123	464		120
8S-7803	680		131		465		149
	683		135		631		202
	685		138	8T-4132	52		263
	728		163	8T-4133	89		276
	731		168		91		279
	734		182		96		281
8T-0076	405		198		182		282
8T-0078	215		202		198		283
	217		212		202		290
8T-0119	410		217		322		427
8T-0154	723		219		351	8T-4139	353
	737		241		373		375
	753		269		375		379
8T-0271	425		279		377		402
8T-0276	86		284		379		405
	87		289		402		408
8T-0318	89		322		405		464
8T-0328	189		335		408		465
	770		345		585		622
	771		347		595		623
8T-0337	384		351		639		798
8T-0341	405		355		659		800
8T-0352	770		358		677	8T-4142	718
	771		361		713		720
8T-0379	321		373		723		784
	355		375		726	8T-4149	386
	358		377		743		388
8T-0389	163		379	8T-4136	121	8T-4159	89
	164		381		131		91
	165		383		322	8T-4171	335
	436		386		335		361
8T-0404	212		388		355	8T-4172	594
8T-0642	68		402		358	8T-4176	52
8T-0737	629		405		361	8T-4177	110
8T-1158	420		408		381		111
	421		425		383	8T-4181	89
	444		432		405		91
8T-1576	212		435		439		268
	402		436		441		661
8T-1687	226		439		585	8T-4183	292
	228		441		628		659
8T-1757	454		585		639		723
8T-1893	345		594		660		726
	347		595		723	8T-4184	391
8T-1894	345		627		726		394
	347		628		737		397

► **PRIMARY REFERENCE**

PART NUMBER INDEX

Part	Page
	399
8T-4185	212
	351
	439
	441
8T-4186	402
	405
	408
	627
	628
8T-4189	101
	103
	145
	146
	147
	212
	279
	281
	283
	290
	292
	322
	329
	333
	337
	339
	341
	343
	349
	355
	358
	373
	375
	377
	379
	405
	414
8T-4191	322
	452
8T-4192	52
	373
	377
	405
	415
8T-4194	638
8T-4195	43
	241
	351
	363
	365
	429
8T-4196	88
	96
	121
	131
	202
	212
	241
	269
	279
	284
	289
	322
	373
	375
	377
	379
	386
	388
	436
	594
	595
	659
	723
	726
8T-4197	20
	770
	771
8T-4200	18
	46
	48
	51
	53
	55
	57
	59
	60
	71
	73
	123
	127
	129
	192
	195
	302
	322
	356
	358
	363
	365
	405
	414
8T-4205	89
	91
	118
	120
	121
	131
	143
	149
	152
	176
	189
	192
	195
	202
	263
	268
	276
	279
	281
	282
	283
	284
	289
	290
	325
	327
	410
	411
	415
	416
	629
	660
	689
	692
	695
	699
	703
	706
	708
	724
	727
	738
	744
	747
	770
	771
	786
	787
	788
8T-4223	52
	266
	273
	274
	373
	375
	377
	379
	391
	394
	397
	399
	402
	405
	408
	415
	430
	431
	432
	435
	622
	623
	638
	640
	659
	680
	683
	685
	724
	727
	728
	731
	734
	789
	790
	791
	793
	794
8T-4224	46
	48
	71
	88
	93
	94
	96
	100
	101
	103
	110
	111
	121
	131
	149
	176
	189
	193
	195
	200
	202
	212
	269
	272
	292
	302
	322
	325
	329
	333
	337
	339
	341
	343
	349
	356
	358
	363
	365
	411
	414
	425
	629
	680
	683
	685
	718
	720
	728
	731
	734
	744
	747
	755
	756
	759
	760
	784
	786
	787
	788
	796
	797
	803
8T-4244	622
	623
	638
	680
	683
	685
	728

PART NUMBER INDEX

Part	Page	Part	Page	Part	Page	Part	Page
	731	8T-5460	710		46		192
	734	8T-6451	381		48		195
8T-4742	657	8T-6466	89	8T-7547	112	8T-9371	803
	772		91		113	8T-9655	188
8T-4744	657		96		425	8X-5489	198
	772		381	8T-7934	439	8Y-4489	534
8T-4778	599	8T-6663	371		441		535
	600	8T-6684	226	8T-8192	351		536
	601		386	8T-8193	351	8Y-4615	688
	602		390	8T-8729	649		694
	603		393		726		702
	604		396		751	8Y-5947	157
	605	8T-6685	408		795		159
	606		432	8T-8732	188		708
	643		435	8T-8737	157		718
	761		653		159		720
8T-4779	629		659		164		723
8T-4896	43		723		165		737
	135		726		169		744
	137	8T-6726	105		173		747
	138	8T-6868	274		186		750
	145	8T-6869	426		188		765
	146		427		189	8Y-7385	640
	147		428		190	8Y-7386	640
	148		429		192	8Y-8081	149
8T-4908	96		462		193		649
	121		463		195		651
	125		562		200		714
	129		563		201		716
	131		564		202		
	149		565		278		
	200		566		284	**9**	
	269		567		404		
	325		568		592	9F-5644	149
	411		569		651		665
	436		570		662	9G-3695	417
	629		571		664	9G-4191	292
	759		572		671	9G-4336	192
	760		573		672		195
	786		574		673		201
	787		575		674	9G-9314	649
	788		576		676		651
8T-4910	273		577		680		714
	640		578		683		716
8T-4956	430		579		685	9M-1974	17
	431		580		712		20
	432		609		714		44
	435	8T-6870	322		716		68
8T-4970	190		356		718		70
8T-4971	743		358		720		73
8T-5005	96		629		722		75
8T-5049	430	8T-6902	770		728		76
	431		771		731		77
	432		772		734		78
	435	8T-6904	770		737		79
8T-5091	88		771		738		81
8T-5093	41		772		765		82
8T-5095	430	8T-6912	624		774		83
	431	8T-6936	680		776		86
	432		683		780		87
	435		728		781		95
8T-5372	744		731		784		104
	747		734		795		114
	750		744		798		116
8T-5439	452	8T-7329	44	8T-8799	188		123

► **PRIMARY REFERENCE**

PART NUMBER INDEX

Part	Page
	125
	127
	129
	133
	135
	137
	138
	145
	146
	147
	148
9M-8406	121
	131
	322
	356
	358
9R-1005	383
9R-1499	169
	171
	173
	278
	292
9R-2004	335
	345
	361
9R-2959	462
	463
	613
9R-5301	282
	283
	633
9R-5616	269
9R-7240	140
9R-7802	383
9R-7803	383
9R-7941	765
9R-7942	166
	167
9R-7958	166
	167
9R-7980	765
9R-9901	100
9S-1350	322
	356
	358
	405
9S-4185	142
	381
9S-4191	226
	228
	386
	388
9S-4200	363
	365
9S-8002	245
	248
	442
	444
9S-8004	245
	248
9S-8006	433
9S-8007	304
	306
	307
	310
9S-8008	245
	248
9T-4884	425
9T-7303	322
	595
9U-6994	386
	388
	390
	393
	396
	399
9U-6998	228
	388
	399
9U-7000	386
	388
	390
	393
	396
	399
9U-8746	718
	720
	784
9V-2714	454
9V-2715	454
9W-0607	163
	202
9W-0844	169
	186
	188
	189
	201
	278
	284
	456
	458
	592
	651
	662
	680
	683
	685
	688
	691
	694
	698
	702
	705
	714
	716
	722
	728
	731
	734
	737
	765
9W-0852	162
	169
	186
	188
	189
	192
	195
	201
	205
	278
	284
	649
	651
	662
	664
	680
	683
	685
	688
	691
	694
	698
	702
	705
	714
	716
	722
	728
	731
	734
	737
	765
9W-1951	188
9W-2471	173
9W-3324	164
	165
9W-3326	169
	171
	278
9W-4216	324
	411
9X-1054	186
	192
	195
	722
	737
9X-1055	192
	195
9X-1056	192
	195
	722
	737
9X-1481	384
9X-1813	179
9X-2026	296
	427
	596
	784
9X-2036	182
9X-2038	118
	120
9X-2040	761
9X-2044	680
	683
	685
	689
	692
	695
	699
	703
	706
	728
	731
	734
	766
9X-2045	649
	651
	714
	716
	744
	747
	786
	787
	788
9X-2092	744
	747
9X-2134	327
	368
	371
9X-2546	666
	667
	668
	669
	670
9X-3401	157
	159
	178
	179
	189
	200
	404
	680
	685
	691
	698
	705
9X-3402	161
	629
	765
9X-3410	198
9X-4244	163
9X-6032	425
9X-6273	329
	331
	333
	337
	339
	341
	343
	349
9X-6274	329
	331
	333
	337
	339
	341
	343
	349
	427
	429
9X-6581	322
	356
9X-6615	418
9X-6763	198
9X-6772	154
	155
9X-7378	659
	722
	723
	726

► **PRIMARY REFERENCE**

PART NUMBER INDEX

Part	Page
	751
9X-7380	723
	726
	751
9X-7381	724
	727
	751
9X-7382	724
	727
	751
9X-7383	724
	727
	751
9X-7408	179
9X-7744	444
9X-8118	166
	167
9X-8121	166
9X-8139	166
	167
9X-8250	723
	737
	753
9X-8256	46
	106
	135
	138
	661
	741
	742
	766
	769
9X-8257	282
	283
	633
9X-8912	42

0

Part	Page
003-2143	629
003-3082	442
004-1964	142
004-6810	723
	737
	753
027-1287	310
	311
030-1705	149
030-1712	192
	195
031-4155	798
	800
	803
	805
032-8139	37
	38
036-1865	96
039-8557	627
	628
064-3843	301
067-2551	629
068-8358	402
069-4080	96
	121
	131
084-4277	765
084-4348	169
	171
	278
085-9513	22
	23
090-8865	761
091-2436	664
	680
	683
	685
	688
	691
	694
	698
	705
	765
094-4628	17
	18
	22
	23
094-7235	123
	125
	127
	129
095-0641	770
	771
095-0878	805
095-1325	680
	683
	685
	728
	731
	734
	801
095-1513	81
	82
	83
095-1537	75
	76
	77
095-1671	75
	76
	77
095-2005	70
096-0194	243
	244
096-2500	46
	106
	114
	116
	137
096-3321	81
	82
	83
096-3741	24
	26
096-4415	42
096-6166	592
096-8475	86
	87
096-8482	55
	57
	59
	60
096-8990	125
096-8994	125
096-8995	125
096-8996	125
096-8997	125
096-9529	44
	46
	48
097-0832	221
097-7234	765
098-8968	796
	797
099-3649	21
	110
	111
099-4420	24
	26
	28
	30
099-7519	125
099-7520	125
099-7521	125
099-7522	125
099-7523	125
099-7524	125
099-7525	125

1

Part	Page
100-3253	164
	165
100-3254	164
	165
100-3255	164
	165
100-3685	182
100-3866	209
	210
	211
100-4112	182
100-4113	182
100-4115	182
100-4118	182
100-4119	182
100-5041	192
	195
	722
	737
100-5805	188
100-6674	186
	649
	714
	722
	737
101-2867	41
	296
	813
101-6544	79
101-7404	432
	435
101-8296	723
	726
	751
101-9759	629
102-7341	125
102-7342	125
102-7343	125
102-7344	125
102-7345	125
102-7346	125
102-7347	125
102-7348	125
102-7349	125
102-7350	125
102-7351	125
102-8703	402
	408
102-8801	169
	189
	201
	278
	284
102-8802	140
	157
	159
	188
	192
	195
	202
	278
	324
	370
	659
	712
	722
	723
	726
	738
	751
102-8803	177
	178
	202
	204
	321
	592
	653
	688
	691
	694
	698
	702
	705
102-8804	157
	159
	169
	171
	173
	179
	186
	200
	202
	278
	279
	281
	283
	284
	290
	292

► **PRIMARY REFERENCE**

PART NUMBER INDEX

Part	Page
	417
	688
	695
	702
	722
	737
	758
	765
	795
	798
	803
102-8805	164
	165
	186
	189
	202
	404
	654
	655
	673
	680
	683
	685
	688
	691
	694
	698
	702
	705
	722
	728
	731
	734
	737
102-8806	162
	189
	202
	205
	629
	649
	651
	714
	716
103-2006	766
103-8133	662
	664
103-9062	24
	28
	30
103-9083	79
103-9246	33
	34
103-9247	33
103-9252	33
103-9253	33
103-9272	17
	18
103-9273	17
	18
103-9275	24
103-9276	24
	26
	28
103-9277	44
	48
103-9279	24
	26
	28
	30
103-9280	42
	43
103-9288	16
103-9289	16
103-9290	16
103-9680	19
103-9703	24
	26
	28
	30
103-9725	80
103-9747	95
104-1218	24
	28
	30
104-1995	664
	688
	691
	694
	698
	705
	765
104-3173	324
	411
104-5957	811
104-8039	125
105-2814	▶143
	145
	146
	148
105-4593	226
	228
105-9411	724
	727
	751
106-3108	422
106-8704	201
107-2417	157
	159
107-3135	192
	195
107-3136	192
	195
107-3659	153
108-0656	811
108-4311	803
109-2356	679
	712
	738
	765
109-5821	215
	217
110-2570	35
	36
110-6326	98
110-6331	98
110-6349	386
	390
	393
	396
	399
110-7887	765
111-0483	551
111-4337	452
111-4627	629
	744
	747
111-7899	162
	169
	171
	174
	204
	205
	222
	224
	264
	265
	279
	283
	284
	321
	324
	327
	368
	370
	647
	689
	692
	695
	699
	703
	706
	723
	726
	739
	741
	742
	766
	769
112-1817	384
	▶447
112-9252	439
	441
112-9401	121
	131
112-9717	98
112-9861	447
113-0363	123
	125
	127
	129
113-0364	123
	125
	127
	129
113-0693	659
	723
	726
113-1141	79
113-2004	433
113-4458	143
113-4459	143
113-4460	143
113-4461	143
113-4462	143
113-4463	143
113-4464	143
113-4465	143
113-4466	143
113-4467	143
113-4468	143
113-4469	143
113-4470	143
113-8490	188
113-8491	188
113-8492	188
114-4516	149
115-0468	71
115-1615	192
	195
	660
	723
	726
115-3069	689
	692
	695
	699
	703
	706
115-8161	373
	375
	377
	379
116-2001	629
	▶641
116-7471	152
117-1385	192
	195
117-2827	39
	40
117-2829	39
	40
117-3283	39
117-3285	39
	40
117-3447	44
	48
117-3448	44
	48
117-5015	42
	43
118-2990	52
118-8118	121
	131
119-1414	641
119-1415	641
119-3662	169
	186
	188
	189
	192
	195
	201
	278
	284
	456
	458
	629
	649
	714
	722

▶ **PRIMARY REFERENCE**

PART NUMBER INDEX

Part	Page
	737
	765
119-3859	629
119-5026	796
	797
119-9631	649
	651
121-9870	725
122-6869	629
122-7052	96
122-8948	123
	125
	127
	129
122-8949	123
	125
	127
	129
123-5798	449
123-5799	449
123-7615	680
	683
	685
	728
	731
	734
	765
124-1916	629
124-1917	629
124-2113	321
124-2140	321
124-2456	321
	355
	358
	818
124-5640	722
	737
124-6259	817
125-3518	276
125-7874	169
	186
	188
	189
	192
	195
	200
	201
	204
	278
	279
	281
	283
	284
	290
	321
	324
	370
	404
	456
	458
	651
	662
	664
	680
	683
	685
	688
	716
	722
	728
	731
	734
	737
	765
125-7875	169
	188
	192
	195
	201
	278
	284
	456
	458
	691
	694
	698
	702
	705
	765
125-7876	188
126-1766	188
	192
	195
	200
126-1767	157
	159
	178
	189
	200
	404
	629
	680
	685
	691
	698
	705
126-1774	188
127-2170	100
	680
	683
	685
	728
	731
	734
	801
127-4471	817
127-5483	201
127-5484	188
127-6316	442
128-2016	662
128-2955	19
128-2956	19
128-2958	19
128-4123	188
128-5016	188
128-6985	▶166
	174
	264
	281
	283
128-7714	662
	664
128-7721	662
	664
128-8614	121
	131
129-1854	264
	265
	281
	283
129-1855	264
	265
	281
	283
129-3178	629
	689
	692
	695
	699
	703
	706
	743
	770
	771
	803
129-3180	52
129-8542	688
	691
	694
	698
	702
	705
129-8545	688
	691
	694
	698
	702
	705
130-1676	448
130-5300	200
130-7596	22
	23
131-0749	449
131-3540	759
	760
131-3990	796
	797
131-5879	594
131-6143	100
132-4720	643
132-5166	278
	284
	289
132-5789	192
	195
	202
	751
132-7551	321
	355
	358
	404
	594
132-8487	200
134-0404	214
134-2540	188
	200
134-2827	744
	747
134-3987	118
	120
134-7722	41
135-5009	189
135-7242	741
	742
	766
	769
135-8432	55
	57
	59
	60
135-9383	488
	▶599
135-9384	488
	489
	492
	500
	505
	508
	557
	▶600
135-9385	488
	489
	492
	501
	505
	508
	558
	▶601
135-9386	455
	489
	490
	492
	498
	502
	506
	508
	559
	▶602
135-9387	488
	490
	494
	498
	503
	507
	▶603
135-9393	599
135-9394	600
135-9395	601
135-9396	602
135-9397	603
136-1953	723
	737
	753
136-4192	688
	691
	694
	698
	702
	705
136-5490	774

▶ **PRIMARY REFERENCE**

PART NUMBER INDEX

Part	Page	Part	Page	Part	Page	Part	Page
	780		210		341		355
	781	142-9036	209		343		358
137-6645	192		210		345		384
	195		211		347		412
	437	142-9091	452		349	148-8382	212
137-8166	776	142-9094	452		351	148-8388	327
139-6039	678	142-9117	662		361		368
	680	143-0539	▶182		363		370
	683		184		365	148-8392	404
	685	143-1344	182	148-8325	321	148-8393	327
	728	143-3088	599		355		368
	731	144-0195	680		358		370
	734		683	148-8327	217		402
	765		685		219		408
140-5217	43		728		226	148-8407	226
	133		731		228		228
	135		734		327	148-8411	381
	137	144-4108	803		368	148-8433	222
	138		805		371	148-8435	224
141-0888	423	144-4531	442	148-8336	222	148-8436	404
	424	144-4532	442		224	148-8439	222
141-4999	489	146-6371	708		321		224
	490		722		353	149-0686	▶298
	491		737		355		410
	499	146-6729	182		358	149-3488	52
	500	146-9439	162		371	149-4232	569
	501		169		412		571
	502		171	148-8339	215		576
	504		188		217		▶587
	505		205		219	149-5434	516
	506		278	148-8340	221	149-5435	510
	507		324	148-8341	367		518
	561		327		368		524
	▶643		368		370		534
141-6704	▶509		370	148-8342	353		553
	512	147-1445	188	148-8344	404		554
141-8061	188	147-1446	188	148-8345	217		587
142-4914	599	148-2371	278		219	149-5436	509
142-7493	256		284	148-8347	381		520
	257		289	148-8352	397		526
	258	148-2372	278		400		535
	259		284	148-8354	324		551
142-8731	250		289		370		555
	253	148-8315	327	148-8358	215		588
	254		353	148-8361	390	149-5437	513
	255		368		393		522
142-8759	250		370		396		528
	251		373		399		536
	252		375	148-8362	226		543
	253		377		386		556
	256		379		390		589
142-8805	587	148-8316	373		393	149-5741	455
	588		375		396		▶604
	589		377	148-8364	324	149-6371	723
	590		379		370		726
	591	148-8318	222		408		751
142-8832	89		224	148-8368	390	150-3056	329
	91		324		393		331
	268		370		396		333
142-8928	142	148-8319	329		399		337
142-8937	437		331	148-8378	222		339
142-8997	383		333		224		341
142-9023	207		335		317		343
142-9029	207		337		321		349
142-9033	209		339		351	150-3072	226

▶ **PRIMARY REFERENCE**

PART NUMBER INDEX

Part	Page	Part	Page	Part	Page	Part	Page
	228		287		569		186
150-4034	321		288		570		188
	355		629		571		189
	358		710		572		201
150-4043	384	154-2704	462		573		278
	412		463		574		284
150-4049	386		467		575		722
	388		468		576		737
150-8599	250		469		577	155-2260	188
	251		472		578		189
	252		474		579		200
	253		475		580		201
	254		477	154-5013	426		592
	255		478		428		688
	256		480	154-5018	▶303		691
150-8621	1		482		499		694
	▶272		484		500		698
151-5328	71		486		501		702
	73		511		502		705
152-0227	▶510		512		503	155-2265	157
	511		514	154-5019	▶329		159
152-0231	▶557		517		▶331		186
152-0232	▶558		519		499		188
152-1157	209		521	154-5020	329		201
	210		523		331		629
	211		525		337		722
152-4898	99		527	154-5021	329		737
153-2682	680		529		331	155-2270	157
	683		531		337		159
	685		532	154-5022	329		186
	728		537		331		188
	731		538		337		192
	734		539	154-5024	329		195
	801		541		331		201
153-2683	801		542		333		204
153-2994	329		545	154-5025	329		278
	331		547		331		321
	333		548		333		324
	335		550	154-5037	470		370
	337		552		479		404
	339		560	154-5046	▶499		456
	341		581	154-5052	▶333		458
	343		582		499		629
	345		583	154-5053	572		662
	347		616		577		722
	349		617		▶588		737
	351		620	154-5059	471		765
	353		621		481	155-2271	161
	361	154-5004	▶499	154-5070	570		169
	363	154-5005	499		573		189
	365		▶569		578		192
153-2995	335	154-5009	499		▶589		195
	345		▶570	154-5077	466		201
	347	154-5010	▶499		473		278
	351	154-5011	▶426		483		279
	353		499	154-5080	▶466		281
	361		500		468		283
153-6237	215		501	154-5423	688		284
	219		502		691		290
153-6248	371		503		694		292
153-6256	373		504		698		651
	375		505		702		688
	377		506		705		691
	379		507	155-1279	417		694
154-1580	286	154-5012	426	155-2255	169		698

▶ **PRIMARY REFERENCE**

PART NUMBER INDEX

Part	Page	Part	Page	Part	Page	Part	Page
	702		609		205		339
	705	157-0941	427	160-2443	▶177		341
	712		429		770		343
	716	157-0942	427	160-3518	718		349
	722		429		720	163-3955	708
	726	157-2528	156		774		723
	738	157-2853	820		776		737
	751		823		780	163-9320	361
	765		826		781	164-1154	770
155-2274	169		829		784		771
	189	157-4835	585	161-0185	335	164-2108	450
	201	157-7223	▶491		361	164-3213	303
	278		492	161-0186	335	164-4225	321
	284	157-7224	▶491		361		355
	680		492	161-0187	▶361		358
	683	157-7225	492		491	164-5557	215
	685	157-7226	▶492		492	164-5567	215
	728	157-7227	▶492		493		217
	731	158-5648	562	161-0188	335		219
	734		563		361		386
155-5652	207		564	161-0189	335		388
155-9010	207		565		361		390
155-9432	207		566		363		393
155-9433	207		567		365		396
156-0283	789		568	161-0190	335		399
	790		609		361	164-5590	375
	791	158-6095	▶492	161-3357	201		379
156-0884	491	159-2953	599		390	164-5605	405
	▶562		600		393	164-5606	215
156-0885	491		601		396		217
	▶563		602		399	164-5608	226
156-0886	492		603	161-4128	596		228
	▶564		604	161-4130	534	164-7556	163
156-0887	▶534		605		535	164-9295	▶305
	537		606		536		622
156-0888	▶535	159-4535	333		540	164-9425	201
	538		341		551	164-9614	607
156-0889	▶536	159-4536	333		587		▶608
	539		341		588	164-9989	566
156-0891	▶427	159-4537	333		589		609
	491		341		590		610
	492	159-5345	▶467		591		614
	493		569	162-5236	499		615
	607	159-5347	▶468		500		616
156-0913	427		570		501		617
156-1458	162	159-5411	624		502		618
	205	159-5761	▶256		503		620
156-1460	162	159-5772	207		504		621
	205	159-5797	594		505	165-0142	243
	592	159-8035	427		506		244
156-5508	339		624		507	165-0312	765
156-5509	339		818		▶596	165-2601	53
156-5510	339	159-8038	570	162-8154	608		55
156-5762	454		580	163-1135	803		57
156-6175	189		587	163-1146	803		59
	202		588		805		60
157-0940	462		589	163-1385	335	165-4894	629
	463		590		351	165-4895	173
	562	159-8049	198		361	165-4898	▶256
	563	159-8050	198		363	165-4901	▶250
	564	159-8405	268		365		256
	565	159-9322	188	163-1386	329	165-4902	▶250
	566	159-9495	162		331		256
	567		205		333	165-4903	▶257
	568	159-9496	162		337	165-4906	▶250

▶ **PRIMARY REFERENCE**

PART NUMBER INDEX

Part	Page
	257
165-4907	▶251
	257
165-4909	250
	251
165-4931	397
	400
165-6156	▶511
	557
165-6157	▶512
	558
165-7095	52
	761
165-8731	▶428
	622
	623
165-8732	610
	▶613
	614
	615
	618
165-8736	▶614
165-8737	▶615
165-8738	614
	▶616
165-8739	615
	▶617
165-8740	622
	623
	▶624
165-8743	624
165-8744	616
165-8745	617
165-8746	▶550
165-8832	550
	▶551
165-8835	▶552
165-8837	552
	▶553
166-0319	462
	463
166-2551	629
	▶642
166-2552	629
166-2557	629
166-2558	629
166-2559	629
166-2560	634
	635
166-4041	613
166-6781	803
	805
166-9312	361
167-0608	629
167-4339	243
	244
168-8389	462
	463
	464
	465
	467
	468
	469
	472
	474
168-8772	718
	720
	784
169-0705	188
	189
	192
	195
	201
	765
169-1679	207
169-2876	820
	823
	826
	829
169-3569	624
169-4868	462
	463
169-6715	88
169-8941	▶537
	562
169-8942	▶538
	563
169-8943	▶539
	564
170-1817	776
170-5836	622
	623
170-6705	230
	231
	232
171-5349	179
171-6725	381
172-3998	456
	458
172-5285	305
172-6490	169
	171
	278
172-8037	718
	720
	774
	776
	780
	781
	784
172-8039	720
	780
	784
172-8591	281
	282
	725
	807
172-9287	221
173-3016	263
	281
	282
173-7407	622
	623
	▶640
174-0503	188
174-2388	345
	347
174-2389	345
	347
174-2393	345
	347
174-3091	671
	672
	673
	674
	676
174-3097	345
175-4236	278
	281
	283
	290
175-4238	4
	261
	262
	▶633
175-4239	278
	284
	289
176-1477	192
	195
176-1522	192
	195
176-3900	▶645
176-4079	276
	294
	297
177-1910	351
177-1911	351
	363
	365
177-1912	351
177-1914	619
177-1921	462
	463
177-1941	638
177-1955	619
177-1956	619
177-1957	619
177-1958	309
177-1971	619
177-1972	462
	463
177-1973	638
177-1975	619
177-1981	455
	▶462
177-1982	455
	▶463
177-1983	455
	▶638
177-1986	▶351
	455
177-1987	462
177-1988	463
177-1989	▶455
177-1990	▶455
177-2215	200
177-4122	744
	747
177-7414	628
	636
	637
177-7415	628
	636
	637
177-9150	636
177-9151	637
177-9152	4
	261
	262
	▶627
177-9153	627
178-2247	282
	283
	633
178-2255	89
	91
178-2256	▶257
178-2270	254
	255
178-3620	162
	169
	198
	201
	204
	205
	212
	278
	284
	292
	321

▶ **PRIMARY REFERENCE**

PART NUMBER INDEX

Part	Page
	324
	370
	384
	629
	724
	727
	738
	751
	753
178-7539	765
178-9983	672
	673
	674
	675
	676
179-5434	592
180-3007	817
180-7451	418
180-9339	169
	192
	195
	201
	278
	284
	683
	688
	694
	702
	728
	731
	734
	765
180-9340	157
	159
	161
	169
	189
	192
	195
	201
	278
	284
	404
	456
	458
	592
	680
	683
	685
	688
	691
	694
	698
	702
	705
	728
	731
	734
	765
183-4084	345
	347
183-4085	345
	347
183-5916	24
	26
	28
	30
184-6097	627
	▶636
184-6098	627
	▶637
185-4254	442
	444
	▶450
185-7887	329
	331
	333
	337
	339
	341
	343
	349
	363
	365
185-8182	42
185-8662	▶257
185-8663	▶257
185-8666	▶258
185-8667	▶258
185-8674	▶251
	257
185-8675	▶251
	257
185-8676	▶252
	257
185-8677	▶252
	257
185-9928	▶252
	258
185-9929	▶253
	258
185-9930	▶253
	258
185-9931	▶253
	258
185-9933	252
	253
	254
185-9935	251
	252
185-9936	251
185-9937	252
186-2360	264
	265
	281
	283
186-3735	140
	159
	164
	165
	169
	171
	173
	177
	186
	188
	189
	192
	195
	201
	202
	204
	278
	279
	281
	283
	284
	290
	292
	321
	324
	370
	417
	592
	651
	653
	654
	655
	662
	664
	671
	672
186-3736	673
	674
	676
	680
	683
	685
	688
	689
	691
	694
	695
	698
	702
	705
	714
	716
	718
	720
	722
	723
	728
	731
	734
	737
	758
	765
	774
	776
	780
	781
	784
	798
	803
186-5107	803
186-5186	639
186-6190	▶646
	722
	726
	751
187-3230	256
187-3239	▶258
188-0124	▶254
	258
188-0125	▶254
	258
188-2716	▶513
	514
188-2719	▶559
188-3526	▶514
	559
188-7733	454
	▶639
189-3158	456
	458
190-7992	452
190-8962	278
	281
	283
	290
191-3206	114
	116
191-8303	192
	195
191-9738	452
191-9739	452
191-9762	209
	210
192-2606	642
192-2607	642
192-2637	625
	626
	631
192-2638	631
192-2640	▶308
	321
	597

▶ **PRIMARY REFERENCE**

PART NUMBER INDEX

Part	Page
	598
192-2642	597
	598
	634
	635
192-2645	321
	625
	626
	632
192-7054	773
	775
	777
	778
	779
	782
	783
192-7508	418
193-8308	386
	388
193-8334	408
193-8335	408
194-2903	410
194-5171	689
	692
	695
	699
	703
	705
194-7631	410
194-7632	410
195-0189	▶164
	169
	278
	284
195-0190	▶165
	169
	278
	284
195-0936	118
	120
	718
	720
	784
195-0937	761
195-5124	604
	605
195-6750	402
	408
195-6754	625
	626
	631
195-6768	412
195-6769	412
195-6942	584
	▶611
	612
195-6943	584
	611
195-7055	805
195-7124	491
	498
	504
	508
	▶605
195-8211	65
195-8222	71
	81
	107
195-8260	109
195-8324	70
195-8355	125
	129
195-8356	71
195-8364	123
	125
	127
	129
195-8372	121
	131
195-8403	53
	55
	57
	59
	60
195-8449	71
195-8460	95
195-8545	584
	▶611
	612
195-9700	444
	▶451
195-9712	278
	281
	283
	290
196-3940	222
	224
196-8356	123
	125
	127
	129
197-8940	212
	402
198-1725	680
	683
	685
	728
	731
	734
	801
198-4776	112
	113
198-5389	157
	159
199-2139	26
199-2205	50
	71
199-2212	46
199-2235	82
199-2256	135
	138
199-2333	135
	138
199-2354	42
	133
199-3410	834
199-5438	▶254
	257
199-5439	▶255
	257
199-5440	254
	255
199-7722	515
	530
	540
	544
	590
199-8308	574
	579
	▶590
199-8309	343
	349
199-8310	343
199-8311	343
	349
199-8316	476
	485
199-8317	590
2	
200-0999	209
	210
	211
200-2371	451
200-5728	718
	720
	774
	776
	780
	781
	784
200-5729	▶773
200-6345	198
	221
	412
201-3304	189
202-0671	447
202-0673	447
202-0674	447
202-6614	163
203-4827	96
204-1471	442
	444
204-1472	444
204-1476	442
	444
204-1481	442
	444
204-1482	442
204-1485	442
204-1486	442
204-1488	442
204-1489	442
204-2281	221
	390
	393
	396
	399
204-8000	723
	726
205-0826	157
	159
205-3692	327
	368
	371
205-8257	157
	159
206-1345	193
	196
	201
	647
	680
	683
	685
	688
	691
	694
	698
	702
	705
	712
	724
	728
	731
	734
	738
	765
206-2423	121
	186
	723
	738
206-5162	157
	159
206-5206	157
206-9185	708
	723
	737
207-5271	159
207-6154	96
207-9737	321
	355
	358
207-9756	321
	355
	358
207-9785	321
	595
208-6176	89
	91
210-0855	301
210-8754	765
210-8958	149
211-3014	390
	393
	396
	399
	▶449
211-3646	449
211-5358	189
	192
	195
	201
	680
	683
	685
	731
	734
	795

▶ **PRIMARY REFERENCE**

PART NUMBER INDEX

Part	Page	Part	Page	Part	Page	Part	Page
	798		698		159		▶309
	803		703	220-4982	546	226-0291	268
212-0061	451		706	221-3429	611	226-1242	818
212-1336	321		708		612	226-3693	37
	355		723	221-5245	70		38
212-2204	722		728	221-5250	70	226-3734	259
	726		731	222-1178	88	226-3735	259
	751		734	222-3963	255	226-4560	164
212-4114	418		738		256		165
212-6603	226	216-2517	157	222-7412	▶460	226-4561	164
	228	216-6156	442		464		165
212-6604	226	216-6157	442	222-7421	460	226-7635	241
	228	216-6159	442		461	226-8204	62
212-6690	321	216-6160	442	222-7467	562	226-9629	450
	355		444		563	227-1028	129
	358	216-6161	442		564	227-4315	272
212-8475	32		444		565	227-7025	418
212-8499	42	216-7352	759		566	227-7474	317
	43		760		609	227-8807	▶298
212-8510	42	216-8756	▶454	222-7479	460	228-2615	820
	43	216-8850	454		461		823
	133	217-3572	96	222-7545	465	228-2616	826
	135	217-3875	418		▶599		829
	137	217-5912	155	222-7546	464	228-3323	200
	138	217-6226	▶540		▶599	228-3369	832
213-0139	456		541	222-7724	456	228-3581	818
	458	217-6227	▶541		▶464	228-5856	664
213-3943	301		565	222-7725	464		688
213-6065	157	217-6228	493		465		691
	159		▶565	222-7728	460		694
213-7489	672	217-6229	▶493		461		698
	673		494	222-8202	39		702
	674	217-6230	▶494	223-4240	268		705
	675	218-0404	157	223-4275	89		765
	676	218-0651	765		91	228-6051	164
213-8708	322	218-0919	35	223-9974	212		165
214-5555	309	218-0942	▶154		▶214	228-6052	164
214-7568	215	218-0943	▶155	224-0672	826		165
	219	218-2373	450		829	228-6053	164
	386	218-5840	▶314	224-3875	268		165
	388		404	224-5132	299	228-6054	164
	390	218-5841	▶315		300		165
	393		404	224-5152	299	228-6056	164
	396	218-5843	314		300		165
	399	218-5844	314	224-7830	820	228-9132	121
215-3191	322	218-5845	315		823		131
	355	218-5846	315	224-8645	820	229-3432	533
215-3273	418	218-5847	629		823		591
215-3274	418	218-6332	321	224-8646	826	229-4896	659
215-3275	418		595		829		722
215-3957	597	218-6333	321	224-8945	820		726
	598		595		823	229-5465	373
	▶631	218-6384	756	224-8946	826		377
	▶632	218-6645	723		829	229-5466	373
215-3962	595		737	225-2657	795		377
	▶597		753	225-5249	135	229-5468	404
215-3963	595	218-6824	313		138	229-5471	404
	▶598	218-6856	417	225-5535	155	229-5473	404
215-6406	678	218-6857	417	225-5541	154	229-7356	659
	680	218-6858	417	225-5642	154		722
	683	219-0302	820	225-5644	155		726
	685		823	225-5927	159	229-8757	653
	688		826	225-8015	456		688
	691		829		458		691
	694	219-6314	157	225-9521	301		694

▶ **PRIMARY REFERENCE**

PART NUMBER INDEX

Part	Page
	698
	702
	705
229-8796	96
230-3621	52
230-3737	142
230-4009	765
230-4011	192
	195
230-4596	▶461
	465
230-5406	▶301
	455
230-5407	619
230-5670	455
	▶619
230-6368	149
231-0124	353
231-0125	353
231-0126	353
231-0127	353
231-5266	302
231-5271	464
	465
231-5273	▶353
	456
	458
231-5274	▶302
	456
	458
231-5275	▶456
231-5276	458
	▶465
231-5277	▶458
231-5278	▶414
	456
	458
231-5279	414
231-7156	444
231-7165	444
231-7297	444
231-7299	444
232-1384	649
	651
232-1792	765
232-3121	112
	113
232-3586	433
232-3587	433
232-4703	154
	155
233-0059	820
	823
	826
	829
233-3123	▶774
233-4872	268
233-5453	32
233-5454	32
233-5457	24
	26
	28
	30
233-5460	109
233-5462	32
233-5463	32
233-5464	32
233-5465	32
233-5466	50
	51
233-5468	50
	51
233-5469	70
233-5470	70
233-5471	70
233-5473	9
	▶17
233-5476	70
233-5477	70
233-5478	70
233-5479	17
233-5480	9
	▶20
233-5482	42
	43
233-5483	20
	21
233-5485	17
	18
233-5486	16
233-5488	26
	28
	30
233-5494	78
233-5496	80
233-5497	44
233-5498	44
233-5500	9
	▶32
	▶33
233-5501	70
233-5719	629
233-9856	121
	131
234-4173	433
234-4328	▶163
	168
234-4791	37
	38
234-4794	22
234-4796	80
234-4797	81
	82
234-4798	81
	82
234-4800	81
	82
	83
234-4801	81
	82
	83
234-4802	81
	82
	83
234-4803	81
	82
	83
234-4805	110
	111
234-4806	110
	111
234-4807	68
234-4809	86
	125
	129
234-4810	50
234-4811	53
234-4812	53
	55
	57
234-4813	53
	59
234-4814	62
234-4815	62
	63
234-4816	62
234-4817	62
234-4818	114
	116
234-4819	114
234-4820	114
	116
234-4821	114
	116
234-4822	114
	116
234-4824	109
234-4826	75
	76
	77
234-4827	75
	76
	77
234-4831	86
	87
234-4835	133
	135
	137
	138
234-4836	133
	137
234-4837	71
	73
	108
234-4838	71
	73
234-4839	71
	73
234-6069	826
234-6070	820
234-6071	826
234-6072	820
234-6074	820
234-6076	826
234-6077	820
234-6081	826
234-7730	163
234-7731	163
234-9525	96
	439
	441
234-9661	222
235-1365	820
	823
235-1368	826
	829
235-1845	149
235-4931	71
	73
235-4937	71
	73
235-4942	71
	73
235-4951	71
	73
235-4955	75
	76
	77
235-4957	53
235-4959	86
	87
235-4960	86
	87
235-4962	145
	146
	147
	148
235-4964	114
235-4967	114
	116
235-4968	114
	116
235-4969	137
235-4970	133
	137
235-4972	69
235-4973	145
	146
	147
	148
235-5880	10
	11
	12
	▶70
235-5889	10
	▶62
235-5890	9
	▶37
235-5894	10
	▶114
235-5895	10
	11
	12
	▶79
235-5896	9
	▶81
235-5897	9
	▶75
235-5900	9
	▶87
235-5901	9
	▶125
235-5902	10
	▶133
235-5904	9
	11
	12
	▶153
236-6923	723

▶ **PRIMARY REFERENCE**

PART NUMBER INDEX

Part	Page	Part	Page	Part	Page	Part	Page
	726	239-9368	662	247-6440	149		▶245
	751	241-0037	299	247-9730	817	258-2406	4
237-3943	803		300	248-1497	175		5
237-5396	133	241-4936	▶775	248-5245	832		6
	137		780	250-1257	271		▶243
237-7296	118	241-6010	135	252-0346	▶258	258-2408	▶230
	120		138	252-0347	▶259		242
237-7325	99		148	252-0366	▶259	258-2409	▶231
238-0112	192	241-6215	386	252-0377	▶259		242
	195		388	252-0413	278	258-2416	▶232
238-0999	302		391		281		242
238-1003	353		394		283	258-2419	112
238-1004	464		397		290	258-2425	▶355
	465		399	252-1862	688		▶358
238-1005	464	241-6397	52		691		593
	465	242-9000	169		694	258-2426	5
238-4628	425		171		698		▶318
238-7685	452		278		702	258-2430	▶215
238-7693	631	242-9532	322		705		242
238-8274	180	243-0001	▶611	252-4734	420	258-2431	▶217
238-8277	10	243-0002	▶612		421		▶219
	▶180	243-0003	▶612	252-8595	585		242
238-8278	84	243-5601	418	252-9197	243	258-2434	318
	85	244-1363	418		244		▶436
238-8279	44	244-1364	418	253-0244	76	258-2435	436
	48	244-1365	418	253-1817	688		▶437
238-8280	62	244-1367	464		691	258-2439	1
238-8281	62		465		694		▶140
238-8282	19	244-1370	302		698	258-2440	140
238-8283	19	244-7127	81		702		▶142
238-8284	19		82		705	258-2442	230
238-8285	19		83	253-5512	106		▶233
239-0687	125		133		108	258-2443	41
	129		135	253-7817	826	258-2444	1
239-0719	125		137		829		▶131
	129		138	253-8329	175	258-2445	1
239-0720	125	245-1181	420	253-9499	820		▶13
	129		421		823	258-2447	13
239-0721	125	245-1912	420	254-3437	672		14
	129		421		673		▶52
239-0722	125	246-1258	48		674	258-2448	52
	129	246-1259	46		675	258-2449	52
239-0728	125		296		676	258-2452	13
	129	246-1260	46	254-9097	306		14
239-0729	125		296		307		▶35
	129	246-2622	121		312		▶36
239-0734	125		131	255-0942	307	258-2462	▶112
239-0771	145	246-4349	643	255-0943	▶306		261
239-0772	147	246-8307	133		623	258-2464	105
239-4261	73	246-8310	133	255-6540	464	258-2465	13
239-4292	39	246-8314	87		465		14
	40	246-8315	86		832		▶105
239-5029	622		87	255-8058	427	258-2466	659
	623	246-9371	188	257-1729	175		723
239-6773	11		712	257-8389	71		726
239-6986	820		737		73	258-2468	648
	823	247-0678	456	257-8390	153		▶659
	826		458	257-8736	32	258-2469	13
	829		▶818	257-8738	62		14
239-8429	44	247-1337	198		63		▶41
	46	247-4877	272	257-8739	71	258-2472	▶738
	48	247-6118	832		86	258-2473	▶728
239-8504	24	247-6317	9		87	258-2474	▶722
239-8513	78		11	258-0930	173	258-2475	▶726
	81		▶104	258-2404	243	258-2500	593

▶ **PRIMARY REFERENCE**

PART NUMBER INDEX

Part	Page	Part	Page	Part	Page	Part	Page
	▶594	258-2590	41	258-2876	318	258-3181	▶318
258-2501	593	258-2591	▶266		▶367	258-3183	▶319
	▶595	258-2592	274	258-2878	319	258-3184	269
258-2504	318	258-2594	1		▶368	258-3186	269
	319		▶268	258-2880	367	258-3192	1
	▶441	258-2601	1	258-2881	367		2
258-2505	319		2		368		▶814
	320		▶318		370	258-3200	5
	▶439	258-2605	232	258-2884	327		▶242
258-2508	441		▶239		368	258-3222	▶820
	▶442	258-2606	268		370		▶823
258-2509	439	258-2607	▶221	258-2885	327	258-3226	▶826
	▶444		318		368		▶829
258-2510	1	258-2608	221		370	258-3230	319
258-2511	100	258-2609	221	258-2886	324		320
258-2514	313	258-2679	452		327		▶815
258-2515	313	258-2689	377		368	258-3231	815
258-2516	313		379		370	258-3237	318
258-2518	▶7	258-2732	142	258-2887	324		319
258-2520	231	258-2773	271		370		▶386
	▶235	258-2774	269	258-2888	324		▶388
258-2521	231		▶271		370	258-3238	319
	▶237	258-2775	1	258-2890	324		320
258-2533	626		▶269		411		▶390
258-2534	625	258-2780	318	258-2891	324		▶393
258-2535	594		▶381		370		▶396
	▶634	258-2781	381	258-2894	404		▶399
258-2536	▶625	258-2782	381	258-2916	452	258-3247	408
	634	258-2784	373	258-2919	452	258-3250	215
258-2537	594		375	258-2920	452	258-3251	217
	▶635		377	258-2922	452	258-3252	215
258-2538	▶626		379	258-2927	408	258-3254	215
	635	258-2786	319	258-2928	408	258-3255	217
258-2547	88		320	258-2932	402	258-3257	215
258-2553	431		▶377	258-2933	402	258-3258	217
258-2554	432		▶379	258-2935	402		219
	▶433	258-2790	▶593	258-2936	402	258-3259	217
	435	258-2794	271	258-2939	383		219
258-2555	432	258-2799	1	258-2947	436	258-3260	430
258-2556	318		▶452	258-2948	140	258-3261	435
	▶431	258-2802	327	258-2949	436	258-3262	▶1
258-2557	319		416	258-2952	211	258-3279	412
	▶432		▶417	258-2954	207	258-3280	688
258-2559	1	258-2804	438	258-2955	211		691
	▶313	258-2806	437	258-2958	211		694
258-2569	439		▶438	258-2964	383		698
	441	258-2829	437	258-2965	383		702
258-2571	404	258-2841	321	258-2978	269		705
258-2577	425		355	258-2981	436	258-3281	680
258-2579	3		358	258-2982	436		683
	4	258-2849	149	258-2983	142		685
	261	258-2852	211	258-2988	142		728
	262	258-2854	210	258-2991	436		731
	▶425	258-2855	209	258-2992	436		734
258-2581	▶212	258-2856	211	258-2995	140	258-3282	810
	318	258-2857	▶207	258-3151	▶222	258-3283	809
258-2582	318		208		▶224	258-3284	809
	319	258-2858	209		242	258-3285	738
	▶373		210	258-3157	222		▶809
	▶375	258-2860	▶209		224		812
258-2585	373		242	258-3160	415	258-3286	738
	375	258-2862	▶210	258-3161	404		▶810
258-2589	▶226		242		408		812
	▶228	258-2864	209	258-3162	404	258-3288	688
	318	258-2865	210	258-3164	404		691

▶ **PRIMARY REFERENCE**

PART NUMBER INDEX

Part	Page
	694
	698
	702
	705
258-3289	688
	691
	694
	698
	702
	705
258-3290	688
	691
	694
	698
	702
	705
258-3292	412
258-3294	688
	691
	694
	698
	702
	705
258-3296	680
	683
	685
	728
	731
	734
258-3298	688
	691
	694
	698
	702
	705
258-3312	269
258-3318	13
	14
	▶241
258-3319	241
258-3320	▶98
	99
258-3330	404
258-3331	404
258-3332	404
258-3344	404
258-3345	404
258-3346	404
258-3347	404
258-3350	319
	320
	▶404
258-3351	404
258-3352	404
258-3355	404
258-3356	404
258-3358	4
	5
	6
	▶319
258-3393	318
	▶384
258-3394	318
	▶412
258-3399	269
258-3400	4
	5
	6
	▶242
258-3401	320
	▶435
258-3402	319
	▶430
258-3403	2
	▶666
258-3404	2
	319
	320
	▶667
258-3405	2
	▶668
258-3406	2
	▶669
258-3407	319
	320
	▶670
258-3413	814
258-3414	814
258-3423	814
258-3424	814
258-3425	814
258-3427	814
258-3442	121
	131
258-3447	52
258-3451	452
258-3452	452
258-3453	▶99
	100
258-3457	96
258-3458	96
258-3459	13
	14
	▶96
258-3462	▶410
	412
258-3463	222
	224
	▶415
258-3469	319
	320
	▶416
258-3496	3
	4
	261
	262
	▶294
258-3497	261
	▶807
258-3501	384
258-3507	384
258-3525	383
258-3526	383
258-3530	121
	131
258-3532	121
	131
258-3537	96
258-3539	659
	724
	727
258-3542	13
	14
	▶89
	▶91
258-3543	89
	91
258-3544	89
	91
258-3545	89
	91
258-3546	88
258-3548	96
258-3549	88
258-3551	89
	91
258-3552	13
	14
	▶88
258-3555	89
	91
258-3562	89
	91
258-3590	408
258-3591	408
258-3593	318
	▶402
258-3594	318
	319
	▶408
258-3595	318
	▶383
258-3620	381
258-3621	313
258-3644	629
258-3645	▶629
258-3657	402
	408
258-3659	402
258-3660	226
	228
258-3662	131
258-3680	▶656
258-3683	▶4
258-3691	▶593
258-3697	688
	691
	694
	698
	702
	705
258-3725	680
	683
	685
	728
	731
	734
258-3726	680
	683
	685
	728
	731
	734
258-3727	118
	120
	152
	156
	188
	644
	677
	678
	708
	723
	738
	744
	747
	750
	765
258-3728	677
258-3731	▶319
258-3734	▶320
258-3736	1
	▶208
258-3738	▶764
258-3740	▶764
258-3742	▶656
258-3748	▶5
258-3751	▶5
258-3754	▶5
258-3761	680
	683
	685
	728
	731
	734
258-3762	688
	694
	702
258-3764	680
	683
	685
	728
	731
	734
258-3765	809
	810
258-3776	809
	810
258-3781	809
	810
258-3785	744
	747
258-3786	744
	747
258-3787	744
	747
258-3788	744
	747
258-3790	744
	747
258-3792	647
	712
	723
	726
	738
258-3793	708
	723
	738
258-3794	647
	677

▶ **PRIMARY REFERENCE**

PART NUMBER INDEX

Part	Page
	712
	723
	726
	737
258-3795	708
	723
	738
258-3796	708
	723
	738
258-3800	▶261
258-3802	▶261
258-3803	▶3
258-3804	▶262
258-3833	263
	281
	282
258-3840	261
	▶263
258-3841	262
	▶264
	▶265
258-3844	263
	281
	282
258-3845	381
258-3848	262
	▶290
258-3849	4
	263
	264
	265
	283
258-3850	381
258-3870	386
	388
258-3871	386
	388
258-3872	4
	261
	262
	▶289
258-3873	278
	284
	289
258-3874	386
	388
258-3880	390
	393
	396
	399
258-3881	390
	393
258-3882	386
	388
	390
	393
	396
	399
258-3883	390
	393
258-3884	▶278
258-3889	390
	393
	396
258-3899	390
	393
	396
	399
258-3911	▶321
258-3917	355
	358
258-3918	355
	358
258-3931	221
258-3958	402
258-3967	390
	393
	396
	399
258-3972	217
258-3979	212
258-4000	1
	2
	▶656
258-4001	765
258-4002	765
258-4003	765
258-4004	765
258-4005	765
258-4006	765
258-4007	765
258-4009	4
	5
	▶679
258-4010	656
	▶811
258-4011	811
258-4012	3
	261
	262
258-4013	688
	691
	694
	698
	702
	705
258-4014	688
	691
	694
	698
	702
	705
258-4016	688
	691
	694
	698
	702
	705
258-4017	764
	▶801
258-4018	801
258-4019	809
258-4020	656
	▶744
	▶747
258-4021	744
	747
258-4024	744
	747
258-4025	750
258-4026	750
258-4027	677
258-4028	677
258-4029	744
	747
258-4033	679
258-4034	677
258-4039	718
	720
	784
258-4041	118
	120
258-4043	▶770
	▶771
	772
258-4045	118
	120
	▶743
258-4046	743
258-4047	743
258-4048	118
	120
258-4049	788
258-4050	▶789
	792
258-4051	▶790
	792
258-4052	▶791
	792
258-4053	788
	▶795
258-4054	787
	▶798
258-4055	786
	▶800
258-4065	744
	747
258-4066	656
	▶718
	764
258-4067	718
	720
258-4068	750
258-4070	▶680
258-4071	688
	691
258-4073	688
	691
	694
	698
	702
	705
258-4074	718
	720
	784
258-4075	688
	691
	694
	698
	702
	705
258-4076	688
	691
258-4078	680
	683
	685
	728
	731
	734
258-4080	▶683
258-4081	694
	698
258-4082	688
	691
	694
	698
	702
	705
258-4083	688
	691
	694
	698
	702
	705
258-4084	688
	691
	694
	698
	702
	705
258-4085	688
	691
	694
	698
	702
	705
258-4086	680
	▶688
	▶691
	728
258-4087	683
	▶694
	▶698
	734
258-4090	656
	▶812
258-4091	809
258-4092	810
258-4093	810
258-4094	810
258-4095	▶793
258-4096	▶794
258-4098	644
258-4099	644
258-4100	▶188
	656
258-4101	765
258-4102	188
258-4103	▶181
	189
258-4106	201
258-4107	1
	▶201
258-4108	201

▶ **PRIMARY REFERENCE**

PART NUMBER INDEX

Part	Page
258-4110	▶739
258-4111	▶741
	▶742
258-4115	13
	14
	▶192
	▶195
258-4116	192
	195
258-4118	149
258-4120	149
258-4121	1
	▶149
258-4123	149
258-4125	2
	▶205
	319
	320
258-4126	162
	205
258-4127	▶162
258-4130	4
	▶169
	261
	262
258-4131	169
	278
	284
258-4134	169
	171
	278
258-4135	▶176
	189
258-4136	189
258-4137	152
258-4138	189
258-4141	680
	683
	685
	728
	731
	734
	766
258-4143	189
258-4144	▶152
	656
258-4145	▶156
258-4146	▶186
	648
	713
258-4147	186
	722
	737
258-4148	156
258-4149	156
258-4150	189
258-4154	189
258-4155	189
258-4156	688
	691
	694
	698
	702
	705
258-4157	680
	683
	685
	728
	731
	734
	766
258-4160	189
258-4162	656
	▶765
258-4163	5
	6
	▶769
258-4164	▶168
	656
258-4169	3
	▶173
	261
258-4178	189
	765
258-4179	201
258-4184	▶174
258-4185	▶157
	▶159
258-4188	198
258-4189	198
258-4190	▶204
	593
258-4191	204
	321
258-4192	13
	14
	▶198
258-4196	189
258-4198	592
258-4200	4
	261
258-4220	656
	▶761
258-4221	761
258-4222	3
	4
	261
	262
258-4224	761
258-4225	677
258-4227	761
258-4229	▶644
	656
	764
258-4230	261
	▶755
258-4233	281
	282
	807
	▶808
258-4236	750
258-4242	118
258-4243	118
258-4244	118
258-4245	▶677
	764
258-4248	708
	723
	737
258-4249	708
	723
	737
258-4250	656
	▶713
258-4251	▶712
	713
258-4252	648
	▶708
	713
258-4253	708
	722
	737
258-4254	708
	722
	737
258-4255	648
	713
	▶753
258-4257	708
	722
	737
258-4258	708
	722
	737
258-4259	708
	722
	737
258-4260	▶648
	656
258-4261	▶647
	648
258-4262	722
	726
	751
258-4263	708
	723
	738
258-4264	708
	723
	737
258-4265	648
	▶751
258-4270	712
	▶714
	▶716
	737
258-4271	665
258-4272	665
258-4273	649
	651
	714
	716
258-4274	649
	651
	714
	716
258-4280	648
	▶660
258-4284	660
	722
	726
258-4286	649
	651
258-4287	714
	716
258-4288	665
258-4289	665
258-4290	647
	▶649
	▶651
	722
	726
258-4292	665
258-4295	714
	716
258-4298	649
	651
	714
	716
258-4299	662
	664
	▶665
258-4304	722
	726
	751
258-4308	722
	726
	751
258-4309	722
	726
	751
258-4310	764
	▶792
258-4311	▶653
	786
	787
	788
258-4312	678
258-4313	678
258-4314	▶678
	792
258-4315	678
258-4316	678
258-4318	653
258-4319	653
258-4320	764
	▶792
258-4321	759
258-4322	760
258-4323	759
258-4324	760
258-4325	759
258-4326	760
258-4328	759
258-4329	760
258-4330	▶792
258-4356	680
	683
	685
	728
	731
	734
258-4358	750
258-4359	750
258-4367	718
	720
	784
258-4372	118
	120
258-4373	772
258-4378	708

▶ **PRIMARY REFERENCE**

PART NUMBER INDEX

Part	Page	Part	Page	Part	Page	Part	Page
	722		747	263-5422	169		714
	737		▶750		171	266-2433	649
258-4379	708	258-4440	▶685		279		651
	722	258-4441	702	263-5423	174	266-2434	649
	725		705		264		651
	737	258-4442	685		265		714
258-4380	660		▶702		283		716
	722		▶705	264-4297	437	266-2435	649
	726		731	264-4407	688	266-2436	714
258-4384	708	258-4443	▶731		694	266-3314	149
	723	258-9011	414		702		202
	738		▶418	264-4408	689		647
258-4385	3	259-1107	592		691		677
	4	259-9892	▶259		695		712
	261	260-0634	817		699		723
	262	260-3145	433		702		737
	▶286	260-3146	433		705	266-3315	100
258-4386	660	260-3147	433	264-7029	192		121
	722	260-3149	433		195		131
	726	260-9213	408	264-7034	765		140
258-4387	761	260-9214	408	264-8860	766		149
258-4388	722	261-6101	269	264-8861	741		215
	726	261-6168	396		769		217
	751		399	265-2898	▶255		219
258-4389	4	261-6378	294		258		226
	287	261-6379	276	265-2899	▶255		228
	288		294		258		322
	629	261-6681	584	265-2900	▶256		355
	710		▶585		259		358
258-4390	▶287		586	265-2901	▶256		384
258-4391	286	262-0941	304		259		402
	288	262-3764	▶179	265-6618	708		405
258-4392	287		230		723		408
258-4396	761		231		737		647
258-4397	761		232	265-6619	708		677
258-4398	710	262-7289	7		723		712
258-4400	▶710		▶9		737		723
258-4401	▶786	262-9163	▶776	265-8033	739		726
	791	263-3452	73	265-9424	766		737
258-4402	▶787	263-3823	689	265-9425	766		751
	790		695	265-9513	204		753
258-4403	▶788		702		321	266-3316	88
	789		758	265-9526	324		89
258-4405	710	263-4836	820		370		91
258-4408	647		823	265-9543	169		212
	677		826		171		269
	712		829		279		373
	723	263-4996	243	266-0299	647		375
	726		244		723		377
	737	263-5414	765		726		379
258-4410	▶288	263-5415	766	266-1467	▶178		381
258-4416	761	263-5416	766		771	266-6140	310
258-4422	653	263-5417	327	266-2425	660		311
258-4429	811		368		▶661	266-8903	418
258-4430	689		370		722	267-2680	152
	692	263-5418	162		726		176
	695		205	266-2429	661		189
	699	263-5419	222	266-2430	647	267-2701	176
	703		224		▶662	267-2744	149
	706	263-5420	741		▶664	267-2746	149
258-4431	759		742		712	267-2809	169
	760		769		722		171
258-4432	809	263-5421	169		737		278
	810		278	266-2431	665	267-5211	176
258-4433	744		284	266-2432	649		189

▶ **PRIMARY REFERENCE**

PART NUMBER INDEX

Part	Page
267-5213	176
	189
267-8390	438
268-4071	202
268-4083	▶488
268-4084	488
	▶560
268-4089	▶515
	560
269-0257	▶654
	672
	673
	674
269-0258	▶655
	675
	676
269-0259	674
	676
269-0262	669
	▶672
269-0263	670
	▶673
269-0264	668
	▶674
269-0265	667
	▶675
269-0266	666
	▶676
269-9404	384
270-0216	384
270-6282	107
270-9442	41
	281
	282
	296
	738
	807
	812
	813
271-2360	430
	431
271-2912	140
271-5604	189
	192
	195
	201
272-1790	162
	▶671
	675
272-3050	113
272-3052	102
272-3062	▶102
272-9800	167
273-5913	▶796
	800
273-5914	800
	▶803
273-5915	795
	798
	800
273-9103	672
273-9104	673
273-9611	798
	▶805
274-7409	744
	747
274-8034	422
274-8035	423
	424
274-8044	422
274-8563	410
	▶420
274-8564	415
	▶421
274-9930	302
	▶310
274-9931	302
	▶311
275-0600	189
275-5916	795
276-0074	▶657
	658
276-4878	671
	672
	673
	674
	676
276-9875	659
	722
	726
277-8862	425
278-1969	▶312
	499
	500
	501
	502
	503
	504
	505
	506
	507
278-1970	307
	312
278-1975	▶307
	491
	492
	493
	607
278-4524	310
278-4525	311
278-4875	310
	311
278-8714	430
	431
278-8715	432
	435
278-8716	425
278-8718	433
278-8719	433
278-8722	433
278-8735	245
278-8736	245
	248
278-8737	245
	248
278-8738	245
	248
278-8739	248
278-8740	245
	248
278-8741	245
	248
278-8742	245
	248
278-8743	245
	248
278-8744	245
	248
278-8745	245
278-8746	245
	248
278-8747	245
	248
278-8748	245
	248
278-8749	245
	248
278-8750	245
	248
278-8751	245
	248
279-5350	▶607
279-5351	607
	▶609
279-5352	609
	▶620
279-5353	620
279-5357	621
279-5358	566
	▶621
279-5359	▶566
	607
279-5360	▶607
279-5363	▶524
	525
279-5364	489
	▶525
279-5365	▶489
279-5366	▶489
279-5367	▶526
	527
279-5368	489
	490
	▶527
279-5369	▶489
279-5370	▶490
279-5371	▶528
	529
279-5372	490
	▶529
279-5373	▶490
279-5374	▶490
279-5375	▶530
	531
279-5376	490
	491
	▶531
279-5377	▶490
279-5378	▶491
279-5380	▶500
279-5381	▶500
279-5382	▶500
279-5383	500
	▶571
279-5384	▶469
	571
279-5385	467
	469
	▶470
279-5387	▶471
	472
279-5388	▶472
	572
279-5389	501
	▶572
279-5390	501
279-5391	▶501
279-5392	▶501
279-5395	▶473
	474
279-5396	▶474
	573
279-5397	502
	▶573
279-5398	▶502
279-5399	▶502
279-5400	▶502
279-5401	▶502
279-5402	▶503
279-5403	502
	▶503
279-5404	503
	▶574
279-5405	▶475
	574
279-5406	475
	▶476
279-5412	▶335
	607
279-5413	▶337
	500
	504
279-5414	▶339
	501
	505
279-5415	▶341
	502
	506
279-5416	▶343
	503
	507
279-5417	337
	339
	341
	343
	349
279-5418	337
	339
	341
	343
	349
279-5420	▶498
279-5421	498
	▶542
279-5422	542
	▶543
279-5423	▶544
	545
279-5424	498
	▶545

▶ **PRIMARY REFERENCE**

PART NUMBER INDEX

Part	Page
279-5425	▶498
279-5428	▶546
	547
279-5429	498
	▶547
279-5430	▶498
279-5433	▶516
	517
279-5434	488
	▶517
279-5435	▶488
279-5436	▶518
	519
279-5437	488
	▶519
279-5438	▶488
279-5439	▶520
	521
279-5440	488
	▶521
279-5441	▶488
280-5164	444
280-6068	744
	747
280-6069	744
	747
280-6070	755
280-6071	744
	747
280-6077	▶737
280-6084	▶734
280-6340	1
	▶118
280-6341	743
280-6342	118
	120
	▶772
280-6344	772
280-7837	233
	239
280-7838	233
	235
	237
	239
280-7839	233
	235
	237
	239
280-7840	233
	235
	237
	239
280-7841	233
	235
	237
280-7843	233
	239
280-7844	239
280-7846	235
	237
280-7848	235
	237
280-7849	235
	237
280-7850	235
280-7860	245
	248
280-8240	112
	113
280-8286	100
280-8293	100
280-8294	13
	14
	▶100
280-8298	98
280-8299	52
280-8302	98
280-8305	813
280-8307	41
	296
280-8308	52
280-8314	41
280-8328	91
280-8329	261
	▶813
280-8330	3
	4
	261
	262
	▶296
280-8335	41
	296
	813
280-8341	112
	113
280-8347	3
	4
	▶113
	261
	262
280-8355	101
	102
	103
280-8361	41
280-8377	112
	113
	725
280-8391	101
	103
280-8392	▶103
280-8393	▶101
	319
	320
280-8395	659
	723
	726
280-8911	388
	400
281-6390	689
	692
	695
	699
	703
	706
282-2613	230
	231
	232
283-2458	649
	651
283-3436	198
283-4198	201
284-3914	711
284-6041	661
284-7932	680
	683
	685
	728
	731
	734
284-8953	▶777
284-8954	▶778
284-8955	▶779
285-2167	275
285-2168	275
	820
	823
	826
	829
285-2169	275
285-2170	275
285-2171	820
	823
	826
	829
285-2172	820
285-2173	826
285-2176	820
	823
	826
	829
285-2177	820
	823
	826
	829
285-2178	820
	823
	826
285-2181	739
	740
285-2182	739
	740
285-2185	452
285-2189	404
285-2190	▶316
	593
285-2192	404
285-2193	321
	355
	358
285-2194	321
	355
	358
285-5794	88
285-6088	▶522
	523
285-6089	489
	▶523
285-6090	▶489
285-6093	▶494
285-6095	▶508
285-6096	508
	▶581
285-6097	▶554
	581
285-6098	▶555
	582
285-6099	494
	508
	▶582
285-6100	494
	▶508
285-6101	495
	▶508
285-6102	494
	508
	▶583
285-6103	▶556
	583
285-6104	▶494
285-6105	607
	▶618
285-6110	607
	▶610
285-6111	▶494
285-6112	▶495
285-6113	▶345
	▶347
	622
	623
285-6114	▶607
285-6115	▶607
285-6116	494
	495
	607
	▶622
	▶623
285-9066	44
	46
	93
	94
286-3591	306
286-4863	404
286-4867	390
	393
	396
	399
286-9229	567
286-9243	567
	568
286-9244	497
	▶567
286-9248	▶429
	496
	497
286-9249	365
286-9250	▶363
	497
286-9251	496
	497
	▶832
286-9263	363
	365
286-9265	363
286-9266	363
286-9267	363
	365
286-9268	363
	365

▶ **PRIMARY REFERENCE**

PART NUMBER INDEX

Part	Page	Part	Page	Part	Page	Part	Page
286-9271	363		▶80		▶84		294
286-9273	429	287-6015	71	292-4041	9	294-0083	276
286-9274	568		73		11		294
286-9278	496	287-6016	9		12	294-0084	276
	▶568		▶71		▶16		294
286-9279	▶365		▶73	292-4553	200	294-0085	294
	496	287-6017	71	292-4554	200	294-0086	294
286-9280	365	287-6020	71	292-5476	629	294-0090	294
286-9281	365	287-6021	71	292-6936	689	294-0091	649
286-9289	429		73		692		651
286-9300	▶496	287-6022	71		695		714
286-9301	▶497	287-6056	10		699		716
287-1844	9		▶93		703	294-1767	80
	▶50	287-6114	10		706	294-4555	297
287-2416	9		11	292-7927	▶740	294-4556	297
	▶24		12	292-9223	498	294-4558	294
287-2922	10		▶68		▶548	294-4559	294
	11	287-6138	9	292-9224	548	294-4560	3
	12		11		▶549		4
	▶64		12	292-9257	549		261
287-2983	10		▶69	292-9270	491		262
	11	287-6181	10		▶532		▶297
	12		11		561	294-4890	16
	▶65		12	292-9271	532	294-4891	16
287-3074	9		▶184		▶533	294-4892	16
	▶44	287-6361	9	293-0139	▶503	294-5060	133
287-3357	9		▶145		504		135
	▶42		▶146	293-0140	▶349		137
287-3921	10	287-7062	661		503		138
	▶53	287-8074	8		507	294-5502	335
287-3922	53		▶11	293-0141	503	294-5503	335
287-4033	9	287-8752	444		▶575	294-5504	345
	11	287-8753	444	293-0142	▶477		347
	12	288-1744	▶780		575	294-5505	345
	▶19		▶781	293-0143	477		347
287-4160	▶273	289-0841	412	293-0144	487	294-5520	125
287-4161	▶274	289-0843	384	293-0148	575		129
287-4218	269	289-0848	242		580	294-5580	▶327
287-4219	269		▶816		▶591	294-7915	86
287-4220	269	289-0849	4	293-0152	349	294-7916	146
287-4287	269		263	293-2870	795		147
287-4298	271		264	293-2871	795		148
287-4300	594		265		796	294-7922	23
	595		282		797	295-0035	294
287-4649	9		283	293-2872	795	295-0046	444
	▶22	289-0850	444		798	295-1799	442
287-4748	66	289-6362	244	293-2873	803		▶448
287-4749	10		▶248	293-6264	▶304	295-2567	820
	▶66	289-6377	248		496		823
287-4830	9	289-8271	28		497		826
	▶39		30	293-9044	279		829
287-4832	10	289-8537	662		281	295-3171	653
	11	290-2110	816		283		▶759
	▶110	291-0010	321		290	295-3172	653
287-5323	10		355	293-9426	▶586		▶760
	11		358	293-9427	▶584	295-5440	649
	12		▶422	293-9428	▶584		651
	▶109	292-1271	▶175	293-9429	▶584		714
287-5377	9	292-2437	711	294-0075	294		716
	11	292-2438	711	294-0076	294	295-7029	1
	12	292-2439	242	294-0077	294		▶121
	▶78		▶317	294-0078	294	295-7072	121
287-5665	10	292-2440	386	294-0079	294	295-7114	▶8
	11		388	294-0081	294	295-7118	2
	12	292-4040	9	294-0082	276		▶14

▶ **PRIMARY REFERENCE**

PART NUMBER INDEX

Part	Page
295-7125	121
295-7262	▶2
295-7292	▶1
	2
295-7316	823
295-7317	823
295-7318	823
295-7319	823
295-7320	823
295-7326	829
295-7327	829
295-7328	829
295-7329	829
295-7330	829
295-7337	823
295-7338	829
295-7463	1
	▶120
296-0582	▶592
296-0583	592
296-0584	592
296-4812	114
	116
296-5750	215
	217
296-7597	▶498
296-7602	606
296-7680	498
	▶606
296-8055	▶504
296-8057	▶504
296-8191	▶561
296-8192	▶491
297-7941	386
	390
	393
	396
297-7942	386
	390
	393
	396
297-8107	430
	431
298-7197	658
	▶711
298-7198	384
	▶658
299-4645	32
	33
	34
300-1071	10
	11
	12
	▶185
300-2952	125
300-3573	135
300-3867	133
	135
	137
	138
300-3988	133
300-7627	▶211
	242
300-7629	▶5
300-7635	▶6
300-7637	5
	6
	▶242
300-7640	5
	6
	▶244
300-9449	55
	57
	59
300-9546	201
301-3274	81
301-3396	10
	11
	12
	▶67
301-3397	67
301-4213	444
302-0389	321
	356
	359
302-4389	820
	823
302-4390	826
	829
303-2206	423
303-5020	390
	393
	396
	399
303-6257	86
303-8205	381
	402
	405
	408
303-8767	322
	597
	598
303-8768	321
	597
	598
	632
304-1021	803
	805
304-1022	803
	805
304-1023	803
	805
304-1034	803
	805
304-1035	803
	805
304-1036	803
304-1038	805
304-1043	805
304-1052	803
304-1054	803
304-1055	803
304-1056	803
304-1057	803
304-3885	142
304-5080	390
	393
	396
	399
304-5237	▶834
304-5687	181
304-6741	▶6
304-6744	6
	▶320
304-6745	320
	▶370
304-6747	320
	▶411
304-6748	324
	411
304-6749	324
	411
304-6750	▶324
304-6751	324
	370
304-6752	316
	324
	358
304-6753	324
	370
304-6756	324
	370
304-8351	140
304-8352	140
305-0201	217
305-2893	386
	390
	393
	396
305-4185	226
	228
305-4335	761
305-4337	761
305-4339	761
305-4351	805
305-4353	803
	805
305-5385	112
	113
305-7085	796
	797
305-7086	796
305-7087	796
305-7088	797
305-7089	797
305-7092	795
	798
	800
305-7093	795
	798
	800
305-7096	▶797
	798
305-8034	3
	4
	261
	262
	▶756
305-8044	▶725
305-8046	725
305-8047	725
305-8048	725
305-9194	689
	692
	695
	699
	703
	705
306-2165	133
	137
307-2275	324
	411
	▶423
307-2276	324
	411
	▶424
307-2277	424
307-2338	162
	205
307-2952	796
	797
307-2953	796
	797
307-2954	796
	797
307-2955	795
	798
307-3043	433
307-3049	433
307-3808	347
307-6237	▶292
307-6504	▶299
	411
307-6505	▶300
	324
308-1439	820
308-1440	826
308-6423	324
	370
308-6542	452
308-6616	795
308-6767	268
308-7534	276
308-7535	276
308-7536	276
308-7540	276
309-1325	▶167
	265
	283
309-1936	276
309-2477	276
309-4920	268
309-8907	59
309-8908	59
309-8909	55
	57
	59
309-8968	402
310-0657	202
310-2682	24
	26

3

▶ PRIMARY REFERENCE

PART NUMBER INDEX

Part	Page
	28
	30
310-3990	292
310-4062	292
310-4772	151
310-5289	▶151
	159
310-6660	322
	632
310-8798	20
	21
310-9332	276
310-9334	276
310-9335	276
311-0258	276
311-0259	276
311-4928	260
311-6565	276
311-8705	▶276
311-9240	321
	632
312-0131	708
	723
	738
312-1024	▶275
312-2613	276
312-7747	820
	823
312-7748	826
	829
312-8308	276
312-8932	292
313-5646	430
	431
313-9141	266
	273
314-2403	394
	397
	400
314-9835	11
	12
	▶18
314-9855	11
	12
	▶63
314-9860	11
	12
	▶23
314-9861	11
	12
	▶38
314-9900	9
	11
	12
	▶82
	▶83
314-9901	11
	12
	▶76
314-9909	11
	▶127
314-9911	11
	▶135
314-9925	18
314-9938	26
314-9947	46
314-9948	46
	48
314-9952	63
314-9959	63
314-9961	63
314-9962	63
314-9963	63
314-9964	63
314-9972	116
314-9974	116
314-9980	123
	127
314-9981	123
	127
314-9982	123
	127
314-9983	123
	127
314-9984	123
	127
314-9985	123
	127
314-9986	123
	127
314-9987	123
	127
314-9988	123
	127
314-9989	127
314-9991	135
	138
314-9992	135
	138
314-9994	135
	138
314-9995	135
	138
314-9996	135
	138
314-9997	135
	138
314-9998	135
	138
314-9999	135
	138
315-0000	135
	138
315-2340	107
315-2341	107
315-2342	107
315-2343	107
315-2354	55
315-2356	55
	57
315-4667	46
315-4668	46
315-4686	46
315-4687	46
315-4689	94
315-5381	723
	726
	751
315-5493	322
	625
	626
	632
315-6354	▶4
315-7700	86
315-7701	106
	108
315-7702	106
	108
315-7703	42
	43
315-7704	51
315-7760	11
	12
	▶34
315-7761	9
	11
	12
	▶51
315-7762	9
	11
	12
	▶21
315-7763	11
	12
	▶85
315-7764	9
	11
	12
	▶43
315-7765	11
	▶55
	▶57
315-7766	11
	12
	▶40
315-7768	11
	12
	▶116
315-7769	11
	12
	▶106
315-7770	11
	12
	▶94
315-7815	▶281
315-7816	▶281
315-8326	135
	138
315-8330	11
	12
	▶26
315-8336	11
	12
	▶46
315-8353	9
	11
	12
	▶147
	▶148
315-8355	10
	11
	12
	▶86
315-8697	106
315-8698	106
	108
	137
315-9794	292
316-0471	12
	▶107
316-9040	9
	▶48
317-0691	▶260
317-4996	137
317-5007	108
317-5008	108
317-5010	28
317-5045	10
	▶137
317-5057	9
	▶129
317-5070	9
	▶108
317-5076	9
	▶77
317-5082	10
	▶59
317-5094	9
	▶28
	▶30
317-6894	267
318-0008	327
	368
	370
318-8033	73
319-0710	689
	692
	695
	699
	703
	706
319-2137	321
	632
319-4168	796
	797
319-5901	396
	399
319-6806	8
	▶12
319-7262	33
	34
319-7263	33
319-7264	34
319-9480	4
	261
	262
	▶628
319-9481	628
319-9482	628
319-9483	628
319-9484	628
319-9489	628
319-9490	628
321-5709	371
322-0352	142
322-1644	▶267
	275
322-3150	40
322-9633	691
	698

▶ **PRIMARY REFERENCE**

PART NUMBER INDEX

Part	Page
	705
323-2009	12
	▶15
323-6266	53
325-5905	57
	60
325-7034	479
325-7035	▶504
325-7036	▶504
	505
325-7037	504
	▶576
325-7038	▶478
	576
325-7039	478
	▶479
325-7040	▶505
325-7044	481
325-7045	▶505
325-7046	▶505
325-7047	505
	▶577
325-7048	▶480
	577
325-7049	480
	▶481
325-7050	▶505
325-7054	483
325-7055	▶506
325-7056	506
325-7057	506
	▶578
325-7058	▶482
	578
325-7059	482
	▶483
325-7060	▶506
325-7064	485
325-7065	▶506
325-7066	506
	507
325-7067	507
	▶579
325-7068	▶484
	579
325-7069	484
	▶485
325-7070	▶507
325-7074	487
325-7075	▶507
325-7076	▶507
	508
325-7077	507
	▶580
325-7078	▶486
	580
325-7079	486
	▶487
325-7080	▶508
326-4033	85
327-0752	180
	185
327-7701	30
328-2044	388
	399
328-2366	▶161
328-2367	161
328-2368	664
328-2369	651
328-2370	716
328-3317	651
	716
328-5192	109
328-8813	219
328-8814	219
328-8815	219
328-8816	219
328-8817	224
328-8818	224
330-4060	275
330-5011	691
	698
	705
	▶758
330-7620	106
330-7621	106
330-7622	106
330-7720	26
331-5291	776
	781
	▶782
	784
331-5292	774
	▶783
331-7171	404
331-8050	691
	698
	705
333-4957	4
	▶171
333-7434	▶282
333-7435	▶283
333-7436	▶284
335-5734	138
335-5735	138
335-5750	12
	▶111
335-5751	12
	▶123
335-5752	12
	▶138
335-5768	60
335-5769	60
335-5772	12
	▶60
335-9117	93
	94
	▶95
335-9124	95
335-9125	93
	94
336-0913	175
	▶200
336-0914	175
336-9191	135
336-9856	83
336-9857	83
337-3991	▶720
337-3992	▶784
337-9101	809
	810
340-8931	665
340-9348	784
341-3561	10
	15
342-5009	▶2
342-5010	▶2
342-5011	▶2
346-1575	181
346-1576	181
346-6336	757
347-4187	742
	▶757
348-3485	725
348-6735	▶817
348-6738	817
348-6741	817
348-7675	20
348-7676	21
352-1758	757
352-1759	757

▶ **PRIMARY REFERENCE**

MEMORANDA



© 2009 CATERPILLAR
ALL RIGHTS
RESERVED

CAT, CATERPILLAR, THEIR RESPECTIVE LOGOS, “CATERPILLAR YELLOW” AND THE POWER EDGE TRADE DRESS, AS WELL AS CORPORATE AND PRODUCT IDENTITY USED HEREIN, ARE TRADEMARKS OF CATERPILLAR AND MAY NOT BE USED WITHOUT PERMISSION.

PRINTED IN
U.S.A.