INTRODUCTION AND CUSTOMER INFORMATION

T190483A -UN-21MAY03

MAIO 2003

RUTHZIL TRATOR COMERCIAL DE PEÇAS LTDA 11 97083-6812 ROLANDO



LEFT-HAND SIDE VIEW OF JOHN DEERE 270C LC EXCAVATOR
(MANUFACTURED 2002-)

TO THE CUSTOMER

THE PART NUMBERS IN THIS PARTS CATALOG WERE CORRECT AT THE TIME YOUR CATALOG WAS PUBLISHED. IT IS OUR POLICY TO CONSTANTLY IMPROVE OUR MACHINES AND, THEREFORE, PART NUMBERS MAY CHANGE. WHEN ORDERING PARTS, VERIFY PART NUMBERS THROUGH YOUR DEALER.

(SPECIFICATIONS AND DESIGN SUBJECT TO CHANGE WITHOUT NOTICE.)

COPYRIGHT © 2005 DEERE & COMPANY Moline, Illinois All rights reserved

SERIAL NUMBER LOCATIONS

EACH 270C LC EXCAVATOR HAS SEVEN SERIAL NUMBER PLATES:

A PRODUCT IDENTIFICATION NUMBER PLATE, AN ENGINE SERIAL NUMBER PLATE, A HYDRAULIC PUMP SERIAL NUMBER PLATE, A LEFT-HAND PROPEL MOTOR SERIAL NUMBER PLATE, A RIGHT-HAND PROPEL MOTOR SERIAL NUMBER PLATE, A SWING MOTOR SERIAL NUMBER PLATE AND A CONTROL VALVE SERIAL NUMBER PLATE.

THE PRODUCT IDENTIFICATION PLATE IS LOCATED ON THE RIGHT-HAND SIDE FRAME NEAR THE FRONT SUPPORT.

THE ENGINE SERIAL NUMBER PLATE IS LOCATED ON THE RIGHT SIDE OF THE CYLINDER BLOCK NEAR THE FUEL PUMP.

THE HYDRAULIC PUMP SERIAL NUMBER PLATE IS LOCATED NEAR THE FRONT OF THE HYDRAULIC PUMP.

THE SWING MOTOR SERIAL NUMBER PLATE IS LOCATED ON THE TOP OF THE SWING MOTOR.

THE PROPEL MOTOR SERIAL NUMBER PLATE IS LOCATED ON THE REAR OF THE PROPEL MOTOR.

THE CONTROL VALVE SERIAL NUMBER PLATE IS LOCATED ON THE UPPER LEFT-HAND SIDE OF THE CONTROL VALVE.

LEFT SIDE, RIGHT SIDE, FRONT AND REAR OF THE EXCAVATOR ARE VIEWED BY FACING IN THE DIRECTION OF THE EXCAVATOR FORWARD TRAVEL.

IF PRODUCT IDENTIFICATION NUMBERS OR SERIAL NUMBERS ARE REQUIRED FOR WARRANTY CLAIMS OR CORRESPONDENSE PERTAINING TO THIS PRODUCT. IT IS EXTREMELY IMPORTANT THAT ALL CHARACTERS BE FURNISHED. THIS POINT CANNOT BE OVEREMPHASIZED.

PRODUCT IDENTIFICATION NUMBER

TP16492 -UN-01JAN94

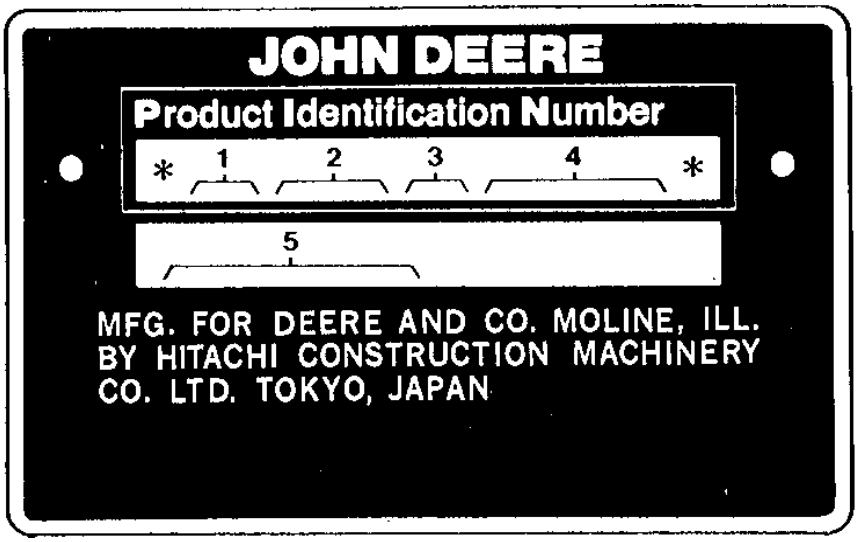

TP16492

1. DESIGNATES EXCAVATOR MANUFACTURER	FF - JOHN DEERE-HITACHI
2. DESIGNATES EXCAVATOR MODEL	270
3. DESIGNATES EXCAVATOR CONFIGURATION	C LC
4. DESIGNATES EXCAVATOR SERIAL NUMBER	000000
5. DESIGNATES UNIT TYPE	EXCAVATOR

ENGINE SERIAL NUMBER

TP49503 -UN-02NOV96

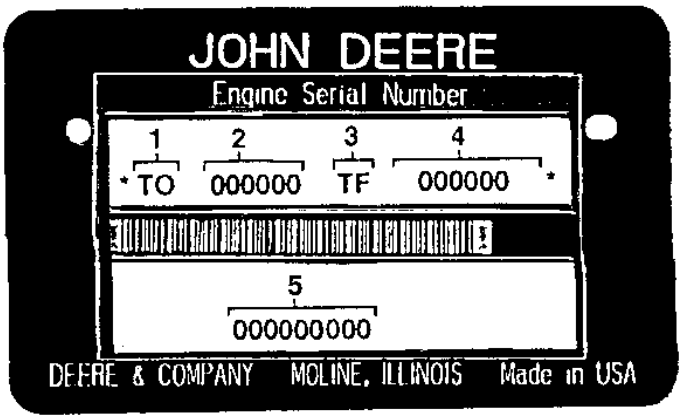

TP49503

1. DESIGNATES ENGINE MANUFACTURER T-JOHN DEERE DUBUQUE WORKS
2. DESIGNATES NUMBER OF CYLINDERS AND CUBIC INCH DISPLACEMENT. 6068 (6.8 LITER)
3. DESIGNATES FUEL TYPE OR SPECIAL CONDITION T-TURBOCHARGED DIESEL
4. DESIGNATES ENGINE SERIAL NUMBER 123456
5. DESIGNATES THE ENGINE APPLICATION AND FACTORY USER. PE6068HT055

SERIAL NUMBER LISTING INFORMATION

SERIAL NUMBER INFORMATION IS LISTED TO SHOW ON WHICH MACHINES EACH PART CAN BE USED; FOR EXAMPLE:

- THE PART CAN BE USED ON ALL MACHINES.
000000- THE PART CAN BE USED ON ALL MACHINES BEGINNING WITH THE SERIAL NUMBER LISTED.
-000000 THE PART CAN BE USED ON ALL MACHINES UP TO AND INCLUDING THE SERIAL NUMBER LISTED.
000000-000000 THE PART CAN BE USED ON ALL MACHINES BETWEEN AND INCLUDING THE SERIAL NUMBERS LISTED.

WHEN XXXXXX'S ARE LISTED IN PLACE OF A SERIAL NUMBER, A SERIAL NUMBER CHANGE WAS MADE BUT THE EXACT SERIAL NUMBER WAS NOT AVAILABLE WHEN THE CATALOG WAS PRODUCED.

DIRECTION ARROW

ARROWS ARE USED WITH ILLUSTRATIONS TO INDICATE THE FRONT OF THE UNIT. "RIGHT-HAND" AND "LEFT-HAND" SIDES ARE DETERMINED BY FACING IN THE DIRECTION OF MACHINE FORWARD TRAVEL.

BOX-ENCLOSED ILLUSTRATIONS

A KEY NUMBER, SHOWN IN THE PARTS LIST, IS ASSIGNED TO A BOX ENCLOSING ALL PARTS SOLD AS A SERVICE ASSEMBLY.

COMPLETE GOODS LISTINGS

COMPLETE GOODS ARE LISTED IN BOLD FACE TYPE. ORDER SEPARATELY. DO NOT INCLUDE ON REPLACEMENT PARTS ORDER.

SI UNITS OF MEASURE

METRIC DIMENSIONS ARE GIVEN, WHERE APPLICABLE, THROUGHOUT THIS PARTS CATALOG.

CHANGE INDICATOR LINE

CHANGES AFFECTING THE ORDERING OF PARTS ARE IDENTIFIED BY VERTICAL LINES MARKED IN THE LEFT-HAND MARGIN OF REVISED PARTS LISTING IMAGES. A LINE IS ALSO AT THE LEFT-HAND EDGE OF THE SAME PART NUMBER IN THE NUMERICAL INDEX TO SHOW THE LOCATION OF REVISED INFORMATION.

ALPHABETICAL INDEX

GRID		PAGE
	A	
1E9	ADAPTER, ENGINE COOLANT	0419 - 2
1B7	ADJUSTER	0130 - 12
1B9	ADJUSTER (REPLACEMENT)	0130 - 13A
2C17	ADJUSTER, SEAT	1821 - 2
1F24	AIR CLEANER	0520 - 2
1F24	AIR CLEANER FILTER ELEMENT	0520 - 2
1G1	AIR CLEANER HOSE	0520 - 4
1G1	AIR CLEANER PIPE	0520 - 4
1F24	AIR CLEANER RESTRICTION SENSOR	0520 - 2
1G3	AIR CLEANER SUPPORT	0520 - 6
2D1	AIR CONDITIONER	1830 - 2
2D3	AIR CONDITIONER AND HEATER BLOWER MOTOR	1830 - 3A
2D5	AIR CONDITIONER AND HEATER BLOWER MOTOR	1830 - 3C
2D3	AIR CONDITIONER AND HEATER COMPONENTS	1830 - 3A
2D5	AIR CONDITIONER AND HEATER COMPONENTS	1830 - 3C
2D3	AIR CONDITIONER AND HEATER ELECTRIC MOTOR	1830 - 3A
2D5	AIR CONDITIONER AND HEATER ELECTRIC MOTOR	1830 - 3C
2D3	AIR CONDITIONER AND HEATER RELAY	1830 - 3A
2D5	AIR CONDITIONER AND HEATER RELAY	1830 - 3C
2D3	AIR CONDITIONER AND HEATER SWITCH	1830 - 3A
2D5	AIR CONDITIONER AND HEATER SWITCH	1830 - 3C
2D3	AIR CONDITIONER AND HEATER TRANSISTOR	1830 - 3A
2D5	AIR CONDITIONER AND HEATER TRANSISTOR	1830 - 3C
2D3	AIR CONDITIONER CASE	1830 - 3A
2D5	AIR CONDITIONER CASE	1830 - 3C
2D9	AIR CONDITIONER COMPRESSOR	1830 - 8
2D7	AIR CONDITIONER COMPRESSOR BRACKET	1830 - 4
2D9	AIR CONDITIONER CONDENSER	1830 - 8
2D1	AIR CONDITIONER DUCT	1830 - 2
2D13	AIR CONDITIONER DUCT AND FILTER	1830 - 12
2D3	AIR CONDITIONER EVAPORATOR	1830 - 3A
2D5	AIR CONDITIONER EVAPORATOR	1830 - 3C
2D7	AIR CONDITIONER HOSES	1830 - 4
2D7	AIR CONDITIONER PULLEY	1830 - 4
2D7	AIR CONDITIONER REFRIGERANT HOSES	1830 - 4
2D9	AIR CONDITIONER SENSOR	1830 - 8
2D7	AIR CONDITIONER SYSTEM (ENGINE)	1830 - 4
2D1	AIR DUCT, AIR CONDITIONER	1830 - 2
1E3	AIR INTAKE GASKET	0414 - 2
1E3	AIR INTAKE SYSTEM	0414 - 2
1E3	AIR INTAKE TEMPERATURE SENSOR	0414 - 2
2F8	ALARM, MOTION	2004 - 4
2F8	ALARM, MOTION, WIRE HARNESS	2004 - 4
1H5	ALTERNATOR	1672 - 2
1H5	ALTERNATOR FAN	1672 - 2
1E20	ALTERNATOR MOUNTING BRACKET	0423 - 2
1E20	ALTERNATOR MOUNTING STRAP	0423 - 2
1H5	ALTERNATOR PULLEY	1672 - 2
2B8	ANTENNA, RADIO	1810 - 6
3F9	ANTI-DRIFT KIT, ARM	3360 - 22
3F11	ANTI-DRIFT KIT, BOOM	3360 - 24
3F9	ANTI-DRIFT VALVE (ARM)	3360 - 22
3F11	ANTI-DRIFT VALVE (BOOM)	3360 - 24
1G16	ANTI-SKID PADS LABELS, DECALS	1322 - 2
3F9	ARM ANTI-DRIFT KIT	3360 - 22
3F17	ARM AUXILIARY HOSE (FACTORY INSTALLED)	3360 - 30
3F17	ARM AUXILIARY LINE (FACTORY INSTALLED)	3360 - 30
3F17	ARM AUXILIARY PLUMBING VALVE (FACTORY INSTALLED)	3360 - 30
3L3	ARM CYLINDER	3365 - 6
3L5	ARM CYLINDER COMPONENTS, SUPER LONG FRONT	3365 - 7A
3K11	ARM CYLINDER HOSE TO BOOM OIL LINE, SUPER LONG FRONT	3363 - 51A
3K13	ARM CYLINDER HOSE TO BOOM OIL LINE, SUPER LONG FRONT	3363 - 51C
3L5	ARM CYLINDER SEAL KIT, SUPER LONG FRONT	3365 - 7A
3E1	ARM, LONG	3340 - 6
1D9	ARM, ROCKER	0402 - 6
3D24	ARM, SHORT	3340 - 4
3D22	ARM, STANDARD	3340 - 2
3E3	ARM, SUPER LONG FRONT	3340 - 8
2C17	ARMREST, SEAT	1821 - 2
3F17	AUXILIARY ARM PLUMBING (FACTORY INSTALLED)	3360 - 30
3F15	AUXILIARY BOOM PLUMBING (FACTORY INSTALLED)	3360 - 28
1E22	AUXILIARY CRANKSHAFT DRIVE PULLEY	0429 - 1
1D11	AUXILIARY DRIVE COVER	0404 - 1
3E21	AUXILIARY ELECTRIC FOOT SWITCH	3360 - 8
3F1	AUXILIARY ELECTRIC HAND CONTROLLER	3360 - 12
3D18	AUXILIARY FOOT PEDAL CONTROL	3315 - 12
3F19	AUXILIARY HYDRAULIC PLUMBING	3360 - 84
3F13	AUXILIARY MAIN HYDRAULIC PLUMBING (FACTORY INSTALLED)	3360 - 26
3F13	AUXILIARY RETURN HOSE (FACTORY INSTALLED)	3360 - 26
3F7	AUXILIARY SOLENOID AND FLOW CONTROL VALVE KIT (1-WAY)	3360 - 20
	B	
2C21	BASE, SEAT	1821 - 6
1H3	BATTERIES AND HARNESSES	1671 - 2
1H3	BATTERY	1671 - 2
1H3	BATTERY CABLE	1671 - 2
1D12	BEARING CAP, MAIN	0404 - 2
1D4	BEARING, CRANKSHAFT THRUST	0401 - 1
1D10	BEARING, C0NNECTING ROD	0403 - 2
1D4	BEARING, MAIN	0401 - 1
1I14	BEARING, SWING	1740 - 10
1F1	BELT IDLER TENSIONER	0429 - 4
2D7	BELT, DRIVE COMPRESSOR	1830 - 4
2C23	BELT, SEAT	1821 - 8
2C19	BELT, SEAT (3.00 INCH)	1821 - 4
1F3	BELT,FAN DRIVE	0429 - 6
1F21	BLADE, FAN	0510 - 10
1D12	BLOCK, CYLINDER	0404 - 2
1D14	BLOCK, ENGINE SHORT	0404 - 4
2D3	BLOWER MOTOR, HEATER AND AIR CONDITIONER	1830 - 3A
2D5	BLOWER MOTOR, HEATER AND AIR CONDITIONER	1830 - 3C
3E5	BOOM	3344 - 2
3F11	BOOM ANTI-DRIFT KIT	3360 - 24
3F15	BOOM AUXILIARY HOSE (FACTORY INSTALLED)	3360 - 28
3F15	BOOM AUXILIARY LINE (FACTORY INSTALLED)	3360 - 28
3I21	BOOM BOTTOM HYDRAULIC LINES	3363 - 20
3I23	BOOM BOTTOM PIPINGS,SUPER LONG FRONT	3363 - 21A
3I23	BOOM BOTTOM PLUMBING, SUPER LONG FRONT	3363 - 21A
3L1	BOOM CYLINDER, LEFT	3365 - 4
3K23	BOOM CYLINDER, RIGHT	3365 - 2
1I10	BOOM FOOT PIN	1740 - 6
3K9	BOOM HYDRAULIC LINES	3363 - 50

ALPHABETICAL INDEX - CONTINUED

GRID		PAGE
1H6	BOOM LIGHT	1674 - 2
1I1	BOOM LIGHT HARNESS	1674 - 18
3E11	BOOM LINK	3345 - 4
3K11	BOOM OIL LINE MOUNTING, SUPER LONG FRONT	3363 - 51A
3K13	BOOM OIL LINE MOUNTING, SUPER LONG FRONT	3363 - 51C
3K11	BOOM OIL LINE, SUPER LONG FRONT	3363 - 51A
3K13	BOOM OIL LINE, SUPER LONG FRONT	3363 - 51C
3E7	BOOM PINS AND BUSHINGS, SUPER LONG FRONT	3344 - 3A
3K11	BOOM PLUMBING, SUPER LONG FRONT	3363 - 51A
3K13	BOOM PLUMBING, SUPER LONG FRONT	3363 - 51C
3E7	BOOM, SUPER LONG FRONT	3344 - 3A
3D6	BOOT, CONTROL LEVER	3315 - 2
2E19	BOTTOM PROTECTION COVERS	1910 - 28
2D7	BRACKET, AIR CONDITIONER COMPRESSOR	1830 - 4
1E20	BRACKET, ALTERNATOR MOUNTING	0423 - 2
2C7	BRACKET, CAB FLOOR	1810 - 28
1G7	BRACKET, ENGINE SUPPORT	0540 - 2
1F1	BRACKET, FAN BELT TENSIONER	0429 - 4
1E11	BRACKET, FINAL FUEL FILTER	0420 - 2
1G5	BRACKET, MUFFLER	0530 - 2
3D12	BRACKET, PILOT SYSTEM CONTROL LEVER	3315 - 6
2C21	BRACKET, SEAT BASE	1821 - 6
2C23	BRACKET, SEAT BELT	1821 - 8
2B14	BRACKETS, CAB WINDSHIELD	1810 - 12
1C11	BRAKE VALVE COMPONENTS (S.N. 071232-)	0260 - 15A
1C9	BRAKE VALVE, PROPEL MOTOR (S.N. -071231)	0260 - 14
3L7	BUCKET CYLINDER	3365 - 8
3L9	BUCKET CYLINDER COMPONENTS, SUPER LONG FRONT	3365 - 10
3C9	BUCKET KIT, ROADBUILDER	3302 - 18
3E9	BUCKET LINK	3345 - 2
3D5	BUCKET PIN-UP DATA	3302 - 34
3C23	BUCKET TOOTH ASSEMBLY (24, 30 OR 36 INCH BUCKET)	3302 - 28
3D3	BUCKET TOOTH ASSEMBLY, SEVERE DUTY PLATE LIP BUCKET	3302 - 32
3D1	BUCKET TOOTH ASSEMBLY, SEVERE DUTY CAST LIP (36 OR 42 INCH BUCKET)	3302 - 30
3C21	BUCKET TOOTH ASSEMBLY, 400 SERIES, HEAVY DUTY HIGH CAPACITY BUCKET	3302 - 26
3C5	BUCKET-TO-ARM PIN BUSHING, ONE-INCH HEAD THICKNESS, LONG FRONT DITCHING	3302 - 14
3C7	BUCKET, DITCH CLEANING	3302 - 16
3C13	BUCKET, DITCH CLEANING, SUPER LONG FRONT	3302 - 19C
3C5	BUCKET, DITCHING, LONG FRONT	3302 - 14
3B11	BUCKET, GENERAL PURPOSE	3302 - 2
3B13	BUCKET, GENERAL PURPOSE	3302 - 3A
3B23	BUCKET, HEAVY DUTY	3302 - 10
3C1	BUCKET, HEAVY DUTY	3302 - 11A
3C3	BUCKET, HEAVY DUTY	3302 - 12
3B15	BUCKET, HEAVY DUTY HIGH CAPACITY	3302 - 4
3B17	BUCKET, HEAVY DUTY HIGH CAPACITY	3302 - 5A
3B19	BUCKET, SEVERE DUTY CAST LIP	3302 - 6
3B21	BUCKET, SEVERE DUTY PLATE LIP	3302 - 8
3C11	BUCKET, SUPER LONG FRONT, 30 INCH	3302 - 19A
3C17	BUCKET, TOOTH ASSEMBLY, GENERAL PURPOSE	3302 - 22
3C19	BUCKET, TOOTH ASSEMBLY, GENERAL PURPOSE	3302 - 23A
3C5	BUSHING, BUCKET-TO-ARM PIN, ONE-INCH HEAD THICKNESS, LONG FRONT DITCHING	3302 - 14
1D12	BUSHING, CAMSHAFT	0404 - 2
1D12	BUSHING, OIL PRESSURE REGULATING	0404 - 2
3E7	BUSHINGS, BOOM, SUPER LONG FRONT	3344 - 3A

C

GRID		PAGE
2B18	CAB COMPONENTS (TOP HATCH)	1810 - 16
2C11	CAB CONSOLE	1810 - 32
2C13	CAB CONSOLE COVER	1810 - 34
2B8	CAB DOME LIGHT	1810 - 6
2B12	CAB DOOR	1810 - 10
2B20	CAB DOOR HANDLE	1810 - 18
2B20	CAB DOOR HANDLE CATCH	1810 - 18
2B12	CAB DOOR LOCK	1810 - 10
2B12	CAB DOOR WEATHERSTRIP	1810 - 10
2B12	CAB DOOR WINDOW GLASS	1810 - 10
2C7	CAB FLOOR BRACKET	1810 - 28
2C7	CAB FLOOR COMPONENTS	1810 - 28
2C7	CAB FLOOR MAT	1810 - 28
2C9	CAB FLOOR PAN	1810 - 30
2C7	CAB FLOOR SUPPORT	1810 - 28
2B10	CAB HEADLINER	1810 - 8
2C3	CAB INSIDE LEFT COVER WITHOUT RADIO	1810 - 25A
2B24	CAB INSIDE R.H. SIDE COVER	1810 - 22
2C1	CAB INSIDE RIGHT COVER	1810 - 24
2B4	CAB MOUNT	1810 - 2
2B4	CAB MOUNT ISOLATOR	1810 - 2
2B16	CAB REAR WINDOW	1810 - 14
2B16	CAB REAR WINDOW GLASS	1810 - 14
2B16	CAB REAR WINDOW GLASS GUARD	1810 - 14
2B22	CAB SECONDARY EXIT KIT	1810 - 20
2B10	CAB WINDOW GLASS	1810 - 8
2B10	CAB WINDOW SEALS	1810 - 8
2B14	CAB WINDSHIELD	1810 - 12
2B14	CAB WINDSHIELD BRACKETS	1810 - 12
2B14	CAB WINDSHIELD WEATHER STRIP	1810 - 12
2B8	CAB WIPER ARMS	1810 - 6
2B8	CAB WIPER BLADES	1810 - 6
2B8	CAB WIPER MOTORS	1810 - 6
2B6	CAB, COMPLETE	1810 - 4
1H3	CABLE, BATTERY	1671 - 2
1H14	CABLE, MIC (S.N. 071174-)	1674 - 7C
1D5	CAMSHAFT	0402 - 2
1D5	CAMSHAFT GEAR	0402 - 2
1I12	CAP, COUNTERWEIGHT	1740 - 8
1F17	CAP, ENGINE COOLANT RECOVERY TANK	0510 - 2
1D6	CAP, ENGINE OIL FILL	0402 - 3
1G9	CAP, FUEL TANK	0560 - 2
3K21	CAP, HYD. OIL RESERVOIR	3364 - 2
1D12	CAP, MAIN BEARING	0404 - 2
2D3	CASE, AIR CONDITIONER	1830 - 3A
2D5	CASE, AIR CONDITIONER	1830 - 3C
3B19	CAST LIP BUCKET, SEVERE DUTY	3302 - 6
2B20	CATCH, CAB DOOR HANDLE	1810 - 18
1B20	CENTER JOINT COVER	0260 - 2
1B15	CHAIN, TRACK (SN -702000)	0130 - 18
1B17	CHAIN, TRACK (SN 702001-)	0130 - 19A
1B7	CHAIN, TRACK, ADJUSTER	0130 - 12
1B9	CHAIN, TRACK, ADJUSTER (REPLACEMENT)	0130 - 13A
1F24	CLEANER, AIR	0520 - 2
1G3	CLEANER, AIR, SUPPORT	0520 - 6
1F12	COLD WEATHER STARTING AID	0505 - 2
1F12	COLD WEATHER STARTING AID SWITCH	0505 - 2
2E3	COMPARTMENT INTERIOR PANEL	1910 - 8
2B6	COMPLETE CAB	1810 - 4
3D8	COMPONENTS, DIG AND SWING PILOT CONTROLLER (SN -071384)	3315 - 4
3D10	COMPONENTS, DIG AND SWING PILOT CONTROLLER (SN 071385-)	3315 - 5A

ALPHABETICAL INDEX - CONTINUED

GRID		PAGE
3D16	COMPONENTS, HYD/PILOT CONTROL VALVE	3315 - 10
2D7	COMPRESSOR DRIVE BELT	1830 - 4
2D9	COMPRESSOR, AIR CONDITIONER	1830 - 8
2D9	CONDENSER, AIR CONDITIONER	1830 - 8
1D10	CONNECTING ROD	0403 - 2
1D10	CONNECTING ROD BEARING	0403 - 2
2C13	CONSOLE COVER, CAB	1810 - 34
2C11	CONSOLE, CAB	1810 - 32
3D6	CONTROL LEVER	3315 - 2
3D6	CONTROL LEVER BOOT	3315 - 2
3D6	CONTROL LEVER GRIP	3315 - 2
3F3	CONTROL PATTERN SELECTOR KIT	3360 - 14
1H20	CONTROL UNIT, ENGINE	1674 - 12
3E13	CONTROL VALVE	3360 - 2
3G15	CONTROL VALVE	3362 - 6
3G17	CONTROL VALVE	3362 - 8
3G19	CONTROL VALVE	3362 - 10
3G21	CONTROL VALVE	3362 - 12
3G23	CONTROL VALVE	3362 - 14
3H1	CONTROL VALVE	3362 - 16
3D18	CONTROL VALVE FITTINGS TO PILOT SIGNAL MANIFOLD (FOOT CONTROL, PILOT SYSTEM)	3315 - 12
3D18	CONTROL VALVE HOSE TO PILOT SIGNAL MANIFOLD (FOOT CONTROL, PILOT SYSTEM)	3315 - 12
3E23	CONTROL VALVE HOSE TO PILOT SIGNAL MANIFOLD (PILOT SYSTEM)	3360 - 10
3I13	CONTROL VALVE HYDRAULIC LINES	3363 - 14
3I15	CONTROL VALVE HYDRAULIC LINES	3363 - 16
3I17	CONTROL VALVE HYDRAULIC LINES	3363 - 18
3K5	CONTROL VALVE LINES TO OIL FILTER	3363 - 46
3K7	CONTROL VALVE LINES TO OIL TANK	3363 - 48
3K1	CONTROL VALVE LINES TO OIL TANK (SERIAL NUMBER -XXXXXX)	3363 - 44
3K3	CONTROL VALVE LINES TO OIL TANK (SERIAL NUMBER XXXXXX-)	3363 - 45A
3K7	CONTROL VALVE LINES TO PILOT SHUTOFF VALVE	3363 - 48
3J13	CONTROL VALVE LINES TO PILOT SIGNAL MANIFOLD	3363 - 32
3J15	CONTROL VALVE LINES TO PILOT SIGNAL MANIFOLD	3363 - 34
3K1	CONTROL VALVE LINES TO SOLENOID VALVE (SERIAL NUMBER -XXXXXX)	3363 - 44
3K3	CONTROL VALVE LINES TO SOLENOID VALVE (SERIAL NUMBER XXXXXX-)	3363 - 45A
3I23	CONTROL VALVE PIPINGS TO MAIN PIPINGS, SUPER LONG FRONT (BOOM HOSES)	3363 - 21A
3J13	CONTROL VALVE PRESSURE SENSOR	3363 - 32
3J15	CONTROL VALVE PRESSURE SENSOR	3363 - 34
3H19	CONTROL VALVE SIDE, PILOT SIGNAL MANIFOLD (SERIAL NUMBER -071103)	3362 - 32
3H21	CONTROL VALVE SIDE, PILOT SIGNAL MANIFOLD (SERIAL NUMBER 071104-)	3362 - 33A
3E15	CONTROL VALVE SUPPORT	3360 - 4
3F7	CONTROL VALVE TO HYDRAULIC RESERVOIR HOSE (AUXILIARY SOLENOID/FLOW CONTROL)	3360 - 20
3I19	CONTROL VALVE TO OIL COOLER LINE	3363 - 19A
3K5	CONTROL VALVE TO OIL TANK LINES	3363 - 46
3F7	CONTROL VALVE TO SIGNAL MANIFOLD HOSE (AUXILIARY SOLENOID/FLOW CONTROL)	3360 - 20
3E17	CONTROL VALVE, SUPER LONG FRONT	3360 - 5A
2D1	CONTROLLER, AIR CONDITIONER	1830 - 2
2D1	CONTROLLER, HEATER	1830 - 2
1H12	CONTROLLER, MIC (S.N. 071174-)	1674 - 7A
3D8	CONTROLLER, PILOT (COMPONENTS) (DIG AND SWING) (SN -071384)	3315 - 4
3D10	CONTROLLER, PILOT (COMPONENTS) (DIG AND SWING)(SN 071385-)	3315 - 5A
1H10	CONTROLLER, VEHICLE	1674 - 6
1H18	CONVERTER (24-VOLT TO 12-VOLT)	1674 - 10
1F14	COOLANT HEATER	0505 - 4
1F14	COOLANT HEATER KIT, FUEL FIRED	0505 - 4
1G7	COOLANT TEMPERATURE SWITCH, ENGINE	0540 - 2
1F22	COOLER, FUEL	0510 - 12
1F22	COOLER, OIL	0510 - 12
2E21	COOLING PACKAGE AND HYDRAULIC PUMP COMPARTMENT DOORS (VENTED)	1910 - 30
2E21	COOLING PACKAGE COMPARTMENT DOOR (VENTED)	1910 - 30
2E21	COOLING PACKAGE COMPARTMENT DOOR LATCH (VENTED)	1910 - 30
1I12	COUNTERWEIGHT	1740 - 8
1I12	COUNTERWEIGHT CAP	1740 - 8
1I12	COUNTERWEIGHT ISOLATORS	1740 - 8
3I19	COUPLER, OIL COOLER LINE FROM CONTROL VALVETO OIL COOLER	3363 - 19A
3I19	COUPLER, OIL COOLER TO OIL COOLER LINE (LINE FROM CONTROL VALVE)	3363 - 19A
2D23	COVER	1910 - 4
2E1	COVER	1910 - 6
1D11	COVER, AUXILIARY DRIVE	0404 - 1
1H3	COVER, BATTERY	1671 - 2
2E9	COVER, BOTTOM	1910 - 14
2C3	COVER, CAB INSIDE LEFT WITHOUT RADIO	1810 - 25A
2C1	COVER, CAB INSIDE RIGHT	1810 - 24
2D15	COVER, CAB INTERIOR REAR	1830 - 14
2B24	COVER, CAB R.H. INSIDE	1810 - 22
1B20	COVER, CENTER JOINT	0260 - 2
2E15	COVER, ENGINE	1910 - 24
2E5	COVER, ENGINE COMPARTMENT	1910 - 10
1E7	COVER, ENGINE THERMOSTAT HOUSING	0418 - 2
1E15	COVER, FUEL TRANSFER PUMP	0421 - 2
1D16	COVER, OIL FILLER OPENING	0407 - 1
2E7	COVER, RIGHT SIDE	1910 - 12
1D6	COVER, ROCKER ARM	0402 - 3
1D7	COVER, TIMING GEAR COVER	0402 - 4
2E17	COVER, TOOL BOX	1910 - 26
1B3	COVER, TRACK BOTTOM	0130 - 8
1C3	COVER, TRAVEL MOTOR	0260 - 10
2E21	COVER, TROPICAL	1910 - 30
2C15	COVER, WINDOW	1810 - 36
2D21	COVERS	1910 - 2
2E19	COVERS, BOTTOM PROTECTION	1910 - 28
1D4	CRANKSHAFT	0401 - 1
1E22	CRANKSHAFT AUXILIARY DRIVE PULLEY	0429 - 1
1E23	CRANKSHAFT DAMPER	0429 - 2
1E24	CRANKSHAFT DAMPER PULLEY (WITH AIR CONDITIONING)	0429 - 3
1D4	CRANKSHAFT GEAR	0401 - 1
1E23	CRANKSHAFT PULLEY	0429 - 2
1D4	CRANKSHAFT SPEED SENSOR	0401 - 1
1D7	CRANKSHAFT SPEED SENSOR	0402 - 4
1D4	CRANKSHAFT THRUST BEARING	0401 - 1
2C17	CUSHION, SEAT	1821 - 2
3C7	CUTTING EDGE, DITCH CLEANING BUCKET	3302 - 16
3B11	CUTTING EDGE, GENERAL PURPOSE BUCKET	3302 - 2
3B13	CUTTING EDGE, GENERAL PURPOSE BUCKET	3302 - 3A
3B23	CUTTING EDGE, HEAVY DUTY BUCKET	3302 - 10
3C1	CUTTING EDGE, HEAVY DUTY BUCKET	3302 - 11A
3C3	CUTTING EDGE, HEAVY DUTY BUCKET	3302 - 12
3B15	CUTTING EDGE, HEAVY DUTY HIGH CAPACITY BUCKET	3302 - 4

ALPHABETICAL INDEX - CONTINUED

GRID		PAGE
3B17	CUTTING EDGE, HEAVY DUTY HIGH CAPACITY BUCKET	3302 - 5A
3B19	CUTTING EDGE, SEVERE DUTY CAST LIP BUCKET	3302 - 6
3B21	CUTTING EDGE, SEVERE DUTY PLATE LIP BUCKET	3302 - 8
3C15	CUTTING EDGES, ESCO	3302 - 20
1D12	CYLINDER BLOCK	0404 - 2
1D22	CYLINDER HEAD	0409 - 2
1D22	CYLINDER HEAD GASKET	0409 - 2
1F7	CYLINDER HEAD REMOVAL GASKET SET	0452 - 1
1D10	CYLINDER LINER	0403 - 2
1D10	CYLINDER LINER O-RING KIT	0403 - 2
3L3	CYLINDER, ARM	3365 - 6
3L5	CYLINDER, ARM, COMPONENTS, SUPER LONG FRONT	3365 - 7A
3L1	CYLINDER, BOOM, LEFT	3365 - 4
3K23	CYLINDER, BOOM, RIGHT	3365 - 2
3L7	CYLINDER, BUCKET	3365 - 8
3L9	CYLINDER, BUCKET, COMPONENTS, SUPER LONG FRONT	3365 - 10
3L9	CYLINDER, SUPER LONG FRONT BUCKET, COMPONENTS	3365 - 10

D

1E23	DAMPER, CRANKSHAFT	0429 - 2
1H20	DDU (DIAGNOSTIC DISPLAY UNIT)	1674 - 12
3E21	DECAL, AUXILIARY CONTROL	3360 - 8
3E19	DECAL, HYDRAULIC FILTER RESTRICTION INDICATOR	3360 - 6
2C13	DECAL, HYDRAULIC LOCKOUT	1810 - 34
2C13	DECAL, IGNITION SWITCH	1810 - 34
2F8	DECAL, MOTION ALARM	2004 - 4
1G16	DECALS, LABELS AND ANTI-SKID PADS	1322 - 2
1G18	DECALS, SUPER LONG FRONT	1322 - 4
3I3	DELIVERY HYDRAULIC LINES	3363 - 4
3G1	DEVICE, HYDRAULIC PUMP	3361 - 4
3L12	DEVICE, SWING	4360 - 2
1H20	DIAGNOSTIC DISPLAY UNIT	1674 - 12
1F14	DIESEL FIRED COOLANT HEATER KIT	0505 - 4
3D10	DIG AND SWING PILOT CONTROLLER COMPONENTS (SN 071385-)	3315 - 5A
3D8	DIG AND SWING PILOT CONTROLLER COMPONENTS(SN -071384)	3315 - 4
1H16	DIODES	1674 - 8
1D17	DIPSTICK, ENGINE OIL	0407 - 2
3C7	DITCH CLEANING BUCKET	3302 - 16
3C13	DITCH CLEANING BUCKET, SUPER LONG FRONT	3302 - 19C
3C5	DITCHING BUCKET, LONG FRONT	3302 - 14
2B8	DOME LIGHT WIRE HARNESS	1810 - 6
2B8	DOME LIGHT, CAB	1810 - 6
2D21	DOOR AND COVERS	1910 - 2
2E21	DOOR LATCH, COOLING PACKAGE AND HYDRAULIC PUMP COMPARTMENT (VENTED)	1910 - 30
2E21	DOOR LATCH, RADIATOR COMPARTMENT (VENTED)	1910 - 30
2E11	DOOR LOCK ASSEMBLY	1910 - 16
2B12	DOOR, CAB	1810 - 10
2E21	DOOR, COOLING PACKAGE COMPARTMENT (VENTED)	1910 - 30
2E21	DOOR, HYDRAULIC PUMP COMPARTMENT (VENTED)	1910 - 30
2E21	DOOR, RADIATOR COMPARTMENT (VENTED)	1910 - 30
3I9	DRAIN HYDRAULIC LINES	3363 - 10
1F22	DRAIN PLUG, RADIATOR	0510 - 12
1D12	DRAIN VALVE, BLOCK	0404 - 2
2D7	DRIVE BELT, AIR CONDITIONER COMPRESSOR	1830 - 4
3G9	DRIVE PUMP, MAIN HYDRAULIC PUMP	3361 - 12
1F1	DRIVE, FAN	0429 - 4
1E18	DRIVE, STARTER MOTOR CLUTCH (24V)(DENS0)	0422 - 2
1C1	DRIVE, TRACK	0260 - 8
3F1	DUAL CONTROL HANDLE WITH WIRING	3360 - 12
2D1	DUCT, AIR CONDITIONER	1830 - 2
2D13	DUCT, AIR CONDITIONER	1830 - 12
2D1	DUCT, HEATER	1830 - 2
2D15	DUCT, REAR TRAY	1830 - 14

E

3C7	EAR ASSEMBLY, DITCH CLEANING BUCKET	3302 - 16
3B11	EAR ASSEMBLY, GENERAL PURPOSE BUCKET	3302 - 2
3B13	EAR ASSEMBLY, GENERAL PURPOSE BUCKET	3302 - 3A
3B23	EAR ASSEMBLY, HEAVY DUTY BUCKET	3302 - 10
3C1	EAR ASSEMBLY, HEAVY DUTY BUCKET	3302 - 11A
3C3	EAR ASSEMBLY, HEAVY DUTY BUCKET	3302 - 12
3B15	EAR ASSEMBLY, HEAVY DUTY HIGH CAPACITY BUCKET	3302 - 4
3B17	EAR ASSEMBLY, HEAVY DUTY HIGH CAPACITY BUCKET	3302 - 5A
3B19	EAR ASSEMBLY, SEVERE DUTY CAST LIP BUCKET	3302 - 6
3B21	EAR ASSEMBLY, SEVERE DUTY PLATE LIP BUCKET	3302 - 8
1D21	ELBOW, VENTILAT0R HOSE	0408 - 1
1H10	ELECTRIC COMPONENTS (CAB)	1674 - 6
1H8	ELECTRIC PARTS	1674 - 4
1E13	ELEMENT, FINAL FUEL FILTER	0420 - 4
2D7	ENGINE BRACKET, AIR CONDITIONER COMPRESSOR	1830 - 4
2E5	ENGINE COMPARTMENT COVER	1910 - 10
1H20	ENGINE CONTROL UNIT	1674 - 12
1H20	ENGINE CONTROL UNIT GAUGE	1674 - 12
1H20	ENGINE CONTROL UNIT RELAY	1674 - 12
1H22	ENGINE CONTROL UNIT WIRING HARNESS	1674 - 14
1E9	ENGINE COOLANT ADAPTER	0419 - 2
1F17	ENGINE COOLANT RECOVERY TANK	0510 - 2
1F17	ENGINE COOLANT RECOVERY TANK CAP	0510 - 2
1F17	ENGINE COOLANT RECOVERY TANK SENSOR	0510 - 2
1E7	ENGINE COOLANT TEMPERATURE SENSOR	0418 - 2
1F16	ENGINE COOLANT, HEATER	0505 - 6
2E15	ENGINE COVER	1910 - 24
1F5	ENGINE FLYWHEEL	0433 - 2
1F6	ENGINE FLYWHEEL HOUSING	0433 - 3
1D11	ENGINE FRONT PLATE	0404 - 1
1F19	ENGINE HOSE TO RADIATOR	0510 - 8
1F8	ENGINE MAJOR OVERHAUL GASKET SET	0452 - 2
1G7	ENGINE MOUNTING BRACKET	0540 - 2
1E9	ENGINE OIL COOLER	0419 - 2
1D17	ENGINE OIL DIPSTICK	0407 - 2
1D17	ENGINE OIL DIPSTICK TUBE	0407 - 2
1D20	ENGINE OIL DRAIN VALVE	0407 - 5
1D6	ENGINE OIL FILL CAP	0402 - 3
1D19	ENGINE OIL FILTER ELEMENT	0407 - 4
1D19	ENGINE OIL FILTER HEADER	0407 - 4
1D20	ENGINE OIL PAN	0407 - 5
1D20	ENGINE OIL PAN GASKET	0407 - 5
1D12	ENGINE OIL PRESSURE SWITCH	0404 - 2
1D18	ENGINE OIL PUMP	0407 - 3
1D18	ENGINE OIL PUMP GEAR	0407 - 3
1D18	ENGINE OIL PUMP HOUSING	0407 - 3

ALPHABETICAL INDEX - CONTINUED

GRID		PAGE
1D18	ENGINE OIL PUMP INTAKE	0407 - 3
1F8	ENGINE OVERHAUL KIT	0452 - 2
1D22	ENGINE OVERHEAT SWITCH	0409 - 2
1D10	ENGINE PISTON	0403 - 2
1D14	ENGINE SHORT BLOCK	0404 - 4
1E7	ENGINE THERMOSTAT	0418 - 2
1E7	ENGINE THERMOSTAT HOUSING	0418 - 2
1E7	ENGINE THERMOSTAT HOUSING COVER	0418 - 2
1D21	ENGINE VENTILATOR HOSE	0408 - 1
1H24	ENGINE WIRING HARNESS	1674 - 16
3C15	ESCO BUCKET CUTTING EDGES	3302 - 20
1F12	ETHER START AID KIT	0505 - 2
1F12	ETHER START FLUID CYLINDER	0505 - 2
2D3	EVAPORATOR, AIR CONDITIONER	1830 - 3A
2D5	EVAPORATOR, AIR CONDITIONER	1830 - 3C
1D24	EXHAUST MANIFOLD	0410 - 2
1D24	EXHAUST MANIFOLD GASKET	0410 - 2
1G5	EXHAUST PIPE	0530 - 2
1D22	EXHAUST VALVE	0409 - 2

F

1F3	FAN BELT IDLER PULLEY	0429 - 6
1F21	FAN BLADE	0510 - 10
1F21	FAN BLADE SPACER	0510 - 10
1F1	FAN DRIVE	0429 - 4
1F3	FAN DRIVE BELT	0429 - 6
1F1	FAN DRIVE HOUSING	0429 - 4
1F1	FAN DRIVE HUB	0429 - 4
1F1	FAN DRIVE PULLEY	0429 - 4
1H5	FAN, ALTERNATOR	1672 - 2
1F24	FILTER ELEMENT, AIR CLEANER	0520 - 2
1E13	FILTER ELEMENT, PRIMARY FUEL	0420 - 4
3K21	FILTER ELEMENTS, HYD. OIL RESERVOIR	3364 - 2
3E19	FILTER RESTRICTION INDICATOR, HYDRAULIC (WITHOUT COUPLING)	3360 - 6
2D13	FILTER, AIR CONDITIONER	1830 - 12
1G9	FILTER, FUEL TANK	0560 - 2
3J3	FILTER, PILOT	3363 - 24
3J19	FILTER, PILOT SHUTOFF VALVE TO PROPEL PILOT CONTROLLER VALVE	3363 - 38
3J19	FILTER, PROPEL PILOT CONTROLLER VALVE TO PILOT SHUTOFF VALVE	3363 - 38
1G13	FILTER, WATER SEPARATOR	0560 - 6
1C1	FINAL DRIVE	0260 - 8
1E11	FINAL FUEL FILTER BRACKET	0420 - 2
1E13	FINAL FUEL FILTER ELEMENT	0420 - 4
1E11	FINAL FUEL FILTER FUEL LINES	0420 - 2
1E11	FINAL FUEL FILTER HEADER	0420 - 2
3F3	FITTINGS, CONTROL PATTERN SELECTOR KIT	3360 - 14
3D18	FITTINGS, FROM CONTROL VALVE TO PILOT SIGNAL MANIFOLD (FOOT CONTROL, PILOT)	3315 - 12
3D18	FITTINGS, FROM FOOT PEDAL CONTROL TO PILOT SHUTOFF VALVE (PILOT SYSTEM)	3315 - 12
3D18	FITTINGS, FROM FOOT PEDAL CONTROL TO PILOT SIGNAL MANIFOLD (PILOT SYSTEM)	3315 - 12
3D18	FITTINGS, FROM PILOT SHUTOFF VALVE TO FOOT PEDAL CONTROL (PILOT SYSTEM)	3315 - 12
3D18	FITTINGS, FROM PILOT SIGNAL MANIFOLD TO CONTROL VALVE (FOOT CONTROL,PILOT SYS)	3315 - 12
3D18	FITTINGS, FROM PILOT SIGNAL MANIFOLD TO FOOT PEDAL CONTROL (PILOT SYSTEM)	3315 - 12
1E16	FITTINGS, FUEL TRANSFER PUMP	0421 - 4
3F5	FITTINGS, MECHANICAL PATTERN CHANGER VALVE	3360 - 15A
1G9	FLOAT, FUEL TANK	0560 - 2
2C7	FLOOR MAT	1810 - 28
2C9	FLOOR PLATE, CAB	1810 - 30
3F7	FLOW REGULATOR TO SIGNAL MANIFOLD HOSE (AUXILIARY SOLENOID/FLOW CONTROL)	3360 - 20
1F6	FLYWHEEL HOUSING, ENGINE	0433 - 3
1F5	FLYWHEEL RING GEAR	0433 - 2
1F5	FLYWHEEL, ENGINE	0433 - 2
3D18	FOOT PEDAL CONTROL, HYDRAULIC (2-WAY) (AUXILIARY)	3315 - 12
3D14	FOOT PEDALS, PROPEL PILOT CONTROLLER	3315 - 8
3E21	FOOT SWITCH, AUXILIARY ELECTRIC	3360 - 8
1I6	FRAME	1740 - 2
1I10	FRAME, MAIN	1740 - 6
1I10	FRAME, MAIN, BOOM FOOT PIN	1740 - 6
1A22	FRAME, TRACK	0130 - 2
3K11	FRONT BOOM PLUMBING, SUPER LONG FRONT	3363 - 51A
3K13	FRONT BOOM PLUMBING, SUPER LONG FRONT	3363 - 51C
3K9	FRONT HYDRAULIC LINES	3363 - 50
1B5	FRONT IDLER	0130 - 10
2E21	FRONT PANEL, COOLING PACKAGE COMPARTMENT (VENTED)	1910 - 30
2E21	FRONT PANEL, HYDRAULIC PUMP COMPARTMENT (VENTED)	1910 - 30
1D11	FRONT PLATE, ENGINE	0404 - 1
1F22	FUEL COOLER	0510 - 12
1E13	FUEL FILTER SERVICE KIT	0420 - 4
1E11	FUEL FILTER, FINAL	0420 - 2
1F14	FUEL FIRED COOLANT HEATER KIT	0505 - 4
1G13	FUEL HOSE	0560 - 6
1E1	FUEL INJECTION LINE	0413 - 2
1D25	FUEL INJECTION NOZZLE	0413 - 1
1E1	FUEL INJECTION PUMP	0413 - 2
1E1	FUEL INJECTION PUMP SPEED SENSOR	0413 - 2
1E1	FUEL INJECTION SYSTEM	0413 - 2
1E11	FUEL LINES, FINAL FUEL FILTER	0420 - 2
1G9	FUEL TANK	0560 - 2
1G9	FUEL TANK CAP	0560 - 2
1G9	FUEL TANK FILTER	0560 - 2
1G9	FUEL TANK FUEL CAP KEY	0560 - 2
1G9	FUEL TANK FUEL LEVEL FLOAT	0560 - 2
1G11	FUEL TANK MOUNT HARDWARE	0560 - 4
1E16	FUEL TRANSFER PUMP	0421 - 4
1E15	FUEL TRANSFER PUMP COVER	0421 - 2
1E16	FUEL TRANSFER PUMP FITTINGS	0421 - 4
1E16	FUEL TRANSFER PUMP WIRING HARNESS	0421 - 4
1H10	FUSES	1674 - 6

G

1F7	GASKET SET, CYLINDER HEAD REMOVAL	0452 - 1
1F8	GASKET SET, ENGINE MAJOR OVERHAUL	0452 - 2
1F7	GASKET SET, IN CHASSIS OVERHAUL	0452 - 1
1E3	GASKET, AIR INTAKE	0414 - 2
1D22	GASKET, CYLINDER HEAD	0409 - 2
1D20	GASKET, ENGINE OIL PAN	0407 - 5
1D24	GASKET, EXHAUST MANIFOLD	0410 - 2
1D6	GASKET, ROCKER ARM COVER	0402 - 3
1D7	GASKET, TIMING GEAR COVER	0402 - 4
1H20	GAUGE, ENGINE CONTROL UNIT	1674 - 12
3K21	GAUGE, HYD. OIL RESERVOIR	3364 - 2
1C1	GEAR BOX AND HYDRAULIC MOTOR	0260 - 8
1C1	GEAR BOX, PROPEL	0260 - 8
1D5	GEAR, CAMSHAFT	0402 - 2
1D4	GEAR, CRANKSHAFT	0401 - 1
1D18	GEAR, ENGINE OIL PUMP	0407 - 3
1F5	GEAR, FLYWHEEL RING	0433 - 2

ALPHABETICAL INDEX - CONTINUED

GRID		PAGE
3B11	GENERAL PURPOSE BUCKET	3302 - 2
3B13	GENERAL PURPOSE BUCKET	3302 - 3A
2B16	GLASS, CAB REAR WINDOW	1810 - 14
2B10	GLASS, CAB WINDOW	1810 - 8
3D6	GRIP, CONTROL LEVER	3315 - 2
3D12	GRIP, PILOT SYSTEM CONTROL LEVER	3315 - 6
3D14	GRIP, PROPEL PILOT CONTROL LEVER	3315 - 8
2C15	GUARD KIT, VANDAL	1810 - 36
2B16	GUARD, CAB REAR WINDOW GLASS	1810 - 14
1A24	GUARD, TRACK	0130 - 4
2C15	GUARDS, WINDOW	1810 - 36

H

2B8	HAMMER, ESCAPE	1810 - 6
2B20	HANDLE, CAB DOOR	1810 - 18
3F1	HANDLE, PILOT DUAL CONTROL	3360 - 12
2B22	HANDLE, SECONDARY EXIT	1810 - 20
2E17	HANDRAIL	1910 - 26
1G11	HARDWARE, FUEL TANK MOUNT	0560 - 4
1I16	HARDWARE, SWING BEARING	1740 - 12
1H3	HARNESS, BATTERY	1671 - 2
1I1	HARNESS, BOOM LIGHT	1674 - 18
1H22	HARNESS, ENGINE CONTROL UNIT WIRING	1674 - 14
1H24	HARNESS, ENGINE WIRING	1674 - 16
1E16	HARNESS, FUEL TRANSFER PUMP WIRING	0421 - 4
1H8	HARNESS, MAIN	1674 - 4
3F1	HARNESS, SOLENOID VALVE DUAL CONTROL	3360 - 12
3E21	HARNESS, WIRE, FOOT SWITCH	3360 - 8
1H16	HARNESS, WIRE, MONITOR	1674 - 8
2F8	HARNESS, WIRE, MOTION ALARM	2004 - 4
1I3	HARNESS, WIRE, SUPER LONG FRONT	1674 - 20
1H6	HARNESS, WIRING, BOOM LIGHT	1674 - 2
2F6	HARNESS, WIRING, HORN	2004 - 2
2B18	HATCH, CAB TOP	1810 - 16
1D22	HEAD, CYLINDER	0409 - 2
1D19	HEADER, ENGINE OIL FILTER	0407 - 4
2B10	HEADLINER, CAB	1810 - 8
2D1	HEATER	1830 - 2
2D3	HEATER	1830 - 3A
2D5	HEATER	1830 - 3C
2D3	HEATER AND AIR CONDITIONER BLOWER MOTOR	1830 - 3A
2D5	HEATER AND AIR CONDITIONER BLOWER MOTOR	1830 - 3C
2D3	HEATER AND AIR CONDITIONER ELECTRIC MOTOR	1830 - 3A
2D5	HEATER AND AIR CONDITIONER ELECTRIC MOTOR	1830 - 3C
2D3	HEATER AND AIR CONDITIONER RELAY	1830 - 3A
2D5	HEATER AND AIR CONDITIONER RELAY	1830 - 3C
2D3	HEATER AND AIR CONDITIONER SWITCH	1830 - 3A
2D5	HEATER AND AIR CONDITIONER SWITCH	1830 - 3C
2D3	HEATER AND AIR CONDITIONER TRANSISTOR	1830 - 3A
2D5	HEATER AND AIR CONDITIONER TRANSISTOR	1830 - 3C
1E5	HEATER DRAIN VALVE	0417 - 2
2D1	HEATER DUCT	1830 - 2
2D11	HEATER HOSES	1830 - 10
1F14	HEATER KIT, FUEL FIRED COOLANT	0505 - 4
1E5	HEATER VALVE, DRAIN	0417 - 2
1F16	HEATER, ENGINE COOLANT	0505 - 6
3B23	HEAVY DUTY BUCKET	3302 - 10
3C1	HEAVY DUTY BUCKET	3302 - 11A
3C3	HEAVY DUTY BUCKET	3302 - 12
3B15	HEAVY DUTY BUCKET, HIGH CAPACITY	3302 - 4
3B17	HEAVY DUTY BUCKET, HIGH CAPACITY	3302 - 5A
3B15	HIGH CAPACITY BUCKET, HEAVY DUTY	3302 - 4
3B17	HIGH CAPACITY BUCKET, HEAVY DUTY	3302 - 5A

GRID		PAGE
2F6	HORN	2004 - 2
1G1	HOSE, AIR CLEANER	0520 - 4
3F17	HOSE, ARM AUXILIARY (FACTORY INSTALLED)	3360 - 30
3K11	HOSE, ARM CYLINDER TO BOOM OIL LINE, SUPER LONG FRONT	3363 - 51A
3K13	HOSE, ARM CYLINDER TO BOOM OIL LINE, SUPER LONG FRONT	3363 - 51C
3F13	HOSE, AUXILIARY RETURN (FACTORY INSTALLED)	3360 - 26
3F15	HOSE, BOOM AUXILIARY (FACTORY INSTALLED)	3360 - 28
3F21	HOSE, BOOM AUXILIARY LINE TO RETURN LINE (AUXILIARY HYDRAULIC OPTIONAL RETURN)	3360 - 85A
3F3	HOSE, CONTROL PATTERN SELECTOR KIT	3360 - 14
3I23	HOSE, CONTROL VALVE TO MAIN PIPINGS, SUPER LONG FRONT (BOOM HOSES)	3363 - 21A
3K5	HOSE, CONTROL VALVE TO OIL FILTER	3363 - 46
3K7	HOSE, CONTROL VALVE TO OIL TANK	3363 - 48
3K1	HOSE, CONTROL VALVE TO OIL TANK (SERIAL NUMBER -XXXXXX)	3363 - 44
3K3	HOSE, CONTROL VALVE TO OIL TANK (SERIAL NUMBER XXXXXX-)	3363 - 45A
3K7	HOSE, CONTROL VALVE TO PILOT SHUTOFF VALVE	3363 - 48
3J13	HOSE, CONTROL VALVE TO PILOT SIGNAL MANIFOLD	3363 - 32
3J15	HOSE, CONTROL VALVE TO PILOT SIGNAL MANIFOLD	3363 - 34
3E23	HOSE, CONTROL VALVE TO PILOT SIGNAL MANIFOLD (PILOT SYSTEM)	3360 - 10
3F7	HOSE, CONTROL VALVE TO RESERVOIR (AUX SOLENOID AND FLOW CONTROL)(1-WAY)	3360 - 20
3F7	HOSE, CONTROL VALVE TO SIGNAL MANIFOLD (AUXILIARY SOLENOID/FLOW CONTROL)	3360 - 20
3K1	HOSE, CONTROL VALVE TO SOLENOID VALVE (SERIAL NUMBER -XXXXXX)	3363 - 44
3K3	HOSE, CONTROL VALVE TO SOLENOID VALVE (SERIAL NUMBER XXXXXX-)	3363 - 45A
3K5	HOSE, CONTROPL VALVE TO OIL TANK	3363 - 46
1F19	HOSE, ENGINE TO RADIATOR	0510 - 8
1D21	HOSE, ENGINE VENTILATOR	0408 - 1
3F7	HOSE, FLOW REGULATOR TO SIGNAL MANIFOLD (AUXILIARY SOLENOID/FLOW CONTROL)	3360 - 20
3K11	HOSE, FROM BOOM OIL LINE TO ARM CYLINDER,SUPER LONG FRONT	3363 - 51A
3K13	HOSE, FROM BOOM OIL LINE TO ARM CYLINDER,SUPER LONG FRONT	3363 - 51C
3F13	HOSE, FROM CONTROL VALVE (FACTORY INSTALLED AUXILIARY PLUMBING)	3360 - 26
3D18	HOSE, FROM CONTROL VALVE TO PILOT SIGNAL MANIFOLD (FOOT CONTROL, PILOT SYSTEM)	3315 - 12
1G13	HOSE, FROM FILTER TO FUEL TANK	0560 - 6
1G13	HOSE, FROM FILTER TO TRANSFER PUMP	0560 - 6
1G13	HOSE, FROM FINAL FUEL FILTER TO FUEL COOLER	0560 - 6
3D18	HOSE, FROM FOOT PEDAL CONTROL TO PILOT SHUTOFF VALVE (PILOT SYSTEM)	3315 - 12
3D18	HOSE, FROM FOOT PEDAL CONTROL TO PILOT SIGNAL MANIFOLD (PILOT SYSTEM)	3315 - 12
1G13	HOSE, FROM FUEL COOLER TO FINAL FUEL FILTER	0560 - 6
1G13	HOSE, FROM FUEL COOLER TO TRANSFER PUMP	0560 - 6
1G13	HOSE, FROM FUEL TANK TO FILTER	0560 - 6
1G13	HOSE, FROM FUEL TANK TO INJECTION PUMP	0560 - 6
1G13	HOSE, FROM INJECTION PUMP TO FUEL TANK	0560 - 6

ALPHABETICAL INDEX - CONTINUED

GRID		PAGE
3E23	HOSE, FROM PILOT SHUT-OFF VALVE TO SOLENOID (PILOT SYSTEM)	3360 - 10
3D18	HOSE, FROM PILOT SHUTOFF VALVE TO FOOT PEDAL CONTROL (PILOT SYSTEM)	3315 - 12
3D18	HOSE, FROM PILOT SIGNAL MANIFOLD TO CONTROL VALVE (FOOT CONTROL, PILOTSYS)	3315 - 12
3D18	HOSE, FROM PILOT SIGNAL MANIFOLD TO FOOT PEDAL CONTROL (PILOT SYSTEM)	3315 - 12
3F3	HOSE, FROM PILOT SIGNAL MANIFOLD TO SOLENOID VALVE	3360 - 14
3E23	HOSE, FROM SOLENOID TO PILOT SHUT-OFF VALVE (PILOT SYSTEM)	3360 - 10
3F3	HOSE, FROM SOLENOID VALVE TO PILOT SIGNAL MANIFOLD	3360 - 14
1G13	HOSE, FROM TRANSFER PUMP TO FILTER	0560 - 6
1G13	HOSE, FROM TRANSFER PUMP TO FUEL COOLER	0560 - 6
1G13	HOSE, FUEL	0560 - 6
3J3	HOSE, HYDRAULIC PUMP TO OIL FILTER	3363 - 24
3J3	HOSE, HYDRAULIC PUMP TO SOLENOID VALVE	3363 - 24
3E23	HOSE, HYDRAULIC RESERVOIR TO SOLENOID (PILOT SYSTEM)	3360 - 10
3I23	HOSE, MAIN TO CONTROL VALVE, SUPER LONG FRONT (BOOM HOSES)	3363 - 21A
3K5	HOSE, OIL FILTER TO CONTROL VALVE	3363 - 46
3J3	HOSE, OIL FILTER TO HYDRAULIC PUMP	3363 - 24
3J5	HOSE, OIL FILTER TO HYDRAULIC PUMP	3363 - 26
3K5	HOSE, OIL TANK TO CONTROL VALVE	3363 - 46
3K1	HOSE, OIL TANK TO CONTROL VALVE (SERIAL NUMBER -XXXXXX)	3363 - 44
3K3	HOSE, OIL TANK TO CONTROL VALVE (SERIAL NUMBER XXXXXX-)	3363 - 45A
3J3	HOSE, OIL TANK TO SOLENOID VALVE	3363 - 24
3J19	HOSE, PILOT SHUTOFF VALVE TO PROPEL PILOT CONTROLLER VALVE	3363 - 38
3F7	HOSE, PILOT SIG. MAN. TO CONTROL VALVE (AUXILIARY SOLENOID/FLOW CONTROL)	3360 - 20
3F7	HOSE, PILOT SIG. MAN. TO SOLENOID VALVE (AUXILIARY SOLENOID/FLOW CONTROL)	3360 - 20
3J5	HOSE, PILOT SIGNAL MANIFOLD TO HYDRAULIC PUMP	3363 - 26
3J13	HOSE, PILOT SIGNAL MANIFOLD TO CONTROL VALVE	3363 - 32
3J15	HOSE, PILOT SIGNAL MANIFOLD TO CONTROL VALVE	3363 - 34
3E23	HOSE, PILOT SIGNAL MANIFOLD TO CONTROL VALVE (PILOT SYSTEM)	3360 - 10
3J17	HOSE, PILOT SIGNAL MANIFOLD TO PROPEL PILOT CONTROLLER VALVE	3363 - 36
3E23	HOSE, PILOT SIGNAL MANIFOLD TO SOLENOID (PILOT SYSTEM)	3360 - 10
3J19	HOSE, PROPEL PILOT CONTROLLER VALVE TO PILOT SHUTOFF VALVE	3363 - 38
3J17	HOSE, PROPEL PILOT CONTROLLER VALVE TO PILOT SIGNAL MANIFOLD	3363 - 36
3J5	HOSE, PUMP TO OIL FILTER	3363 - 26
3J5	HOSE, PUMP TO PILOT SIGNAL MANIFOLD	3363 - 26
1F22	HOSE, RADIATOR DRAIN	0510 - 12
1F19	HOSE, RADIATOR TO ENGINE	0510 - 8
3F7	HOSE, RESERVOIR TO CONTROL VALVE (AUX SOLENOID AND FLOW CONTROL)(1-WAY)	3360 - 20
3F7	HOSE, RESERVOIR TO SOLENOID VALVE (AUXILIARY SOLENOID/FLOW CONTROL)	3360 - 20
3F21	HOSE, RETURN LINE TO BOOM AUXILIARY LINE (AUXILIARY HYDRAULIC OPTIONAL RETURN)	3360 - 85A
3F21	HOSE, RETURN LINE TO SHUTOFF VALVE (AUXILIARY HYDRAULIC OPTIONAL RETURN)	3360 - 85A
3F7	HOSE, SHUT-OFF VALVE TO SOLENOID VALVE (AUXILIARY SOLENOID/FLOW CONTROL)	3360 - 20
3F21	HOSE, SHUTOFF VALVE TO RETURN LINE (AUXILIARY HYDRAULIC OPTIONAL RETURN)	3360 - 85A
3J11	HOSE, SHUTTLE VALVE TO SWING MOTOR	3363 - 30
3F7	HOSE, SIGNAL MANIFOLD TO FLOW REGULATOR (AUXILIARY SOLENOID/FLOW CONTROL)	3360 - 20
3E23	HOSE, SOLENOID TO HYDRAULIC RESERVOIR (PILOT SYSTEM)	3360 - 10
3E23	HOSE, SOLENOID TO PILOT SIGNAL MANIFOLD (PILOT SYSTEM)	3360 - 10
3K1	HOSE, SOLENOID VALVE TO CONTROL VALVE (SERIAL NUMBER -XXXXXX)	3363 - 44
3K3	HOSE, SOLENOID VALVE TO CONTROL VALVE (SERIAL NUMBER XXXXXX-)	3363 - 45A
3J3	HOSE, SOLENOID VALVE TO HYDRAULIC PUMP	3363 - 24
3J3	HOSE, SOLENOID VALVE TO OIL TANK	3363 - 24
3F7	HOSE, SOLENOID VALVE TO RESERVOIR (AUXILIARY SOLENOID/FLOW CONTROL)	3360 - 20
3F7	HOSE, SOLENOID VALVE TO SHUT-OFF VALVE (AUXILIARY SOLENOID/FLOW CONTROL)	3360 - 20
3F7	HOSE, SOLENOID VALVE TO SIGNAL MANIFOLD (AUXILIARY SOLENOID/FLOW CONTROL)	3360 - 20
3J11	HOSE, SWING MOTOR TO SHUTTLE VALVE	3363 - 30
2B8	HOSE, WINDSHIELD WASHER	1810 - 6
2D7	HOSES, AIR CONDITIONER	1830 - 4
2D11	HOSES, HEATER	1830 - 10
3F5	HOSES, MECHANICAL PATTERN CHANGER	3360 - 15A
3J21	HOSES, PILOT CONTROL VALVE, L.H., TO PILOT SIGNAL MANIFOLD	3363 - 40
3J23	HOSES, PILOT CONTROL VALVE, R.H., TO PILOT SIGNAL MANIFOLD	3363 - 42
3J21	HOSES, PILOT SIGNAL MANIFOLD TO PILOT CONTROL VALVE, L.H.	3363 - 40
3J23	HOSES, PILOT SIGNAL MANIFOLD TO PILOT CONTROL VALVE, R.H.	3363 - 42
3J7	HOSES, PILOT(CONTROL VALVE TO ROTARY AND SIGNAL MANIFOLD (SERIAL NO. -071103)	3363 - 28
3J9	HOSES, PILOT(CONTROL VALVE TO ROTARY AND SIGNAL MANIFOLD (SERIAL NO. 071104-)	3363 - 29A
3H13	HOUSING AND GASKETS, PILOT SIGNAL MANIFOLD	3362 - 26
1F6	HOUSING, ENGINE FLYWHEEL	0433 - 3
1D18	HOUSING, ENGINE OIL PUMP	0407 - 3
1E7	HOUSING, ENGINE THERMOSTAT	0418 - 2
1F1	HOUSING, FAN DRIVE	0429 - 4
3G3	HOUSING, MAIN HYD. PUMP	3361 - 6
1E6	HOUSING, WATER PUMP	0417 - 3
1F1	HUB, FAN DRIVE	0429 - 4
3E19	HYD. FILTER RESTRICTION INDICATOR SWITCH	3360 - 6
3K9	HYD. HOSES, BOOM	3363 - 50
3J1	HYD. HOSES, SIDE BRANCH	3363 - 22
3D20	HYD. HOSES, SINGLE PEDAL KIT	3315 - 14
3K9	HYD. OIL LINES, BOOM	3363 - 50
3K21	HYD. OIL RESERVOIR	3364 - 2
3K21	HYD. OIL RESERVOIR CAP	3364 - 2
3K21	HYD. OIL RESERVOIR FILTER ELEMENTS	3364 - 2
3K21	HYD. OIL RESERVOIR GAUGE	3364 - 2
3D16	HYD/PILOT CONTROL VALVE COMPONENTS	3315 - 10
3E19	HYDRAULIC FILTER RESTRICTION INDICATOR KIT (WITHOUT COUPLING)	3360 - 6
3D18	HYDRAULIC FOOT PEDAL CONTROL (2-WAY)	3315 - 12
3K9	HYDRAULIC LINES, BOOM	3363 - 50
3I21	HYDRAULIC LINES, BOOM BOTTOM	3363 - 20
3I13	HYDRAULIC LINES, CONTROL VALVE	3363 - 14
3I15	HYDRAULIC LINES, CONTROL VALVE	3363 - 16
3I3	HYDRAULIC LINES, DELIVERY	3363 - 4

ALPHABETICAL INDEX - CONTINUED

GRID		PAGE
3I9	HYDRAULIC LINES, DRAIN	3363 - 10
3K15	HYDRAULIC LINES, LUBRICATION	3363 - 52
3I11	HYDRAULIC LINES, MAIN (TO BOOM CYLINDERS)	3363 - 12
3K1	HYDRAULIC LINES, PILOT (CONTROL VALVE TO OIL TANK)(SERIAL NUMBER -XXXXXX)	3363 - 44
3K3	HYDRAULIC LINES, PILOT (CONTROL VALVE TO OIL TANK)(SERIAL NUMBER XXXXXX-)	3363 - 45A
3K5	HYDRAULIC LINES, PILOT (CONTROL VALVE TO OIL TANK)	3363 - 46
3J13	HYDRAULIC LINES, PILOT (CONTROL VALVE TO PILOT SIGNAL MANIFOLD)	3363 - 32
3J15	HYDRAULIC LINES, PILOT (CONTROL VALVE TO PILOT SIGNAL MANIFOLD)	3363 - 34
3K7	HYDRAULIC LINES, PILOT (CONTROL VALVE, OIL TANK, PILOT SHUTOFF VALVE)	3363 - 48
3J21	HYDRAULIC LINES, PILOT (PILOT SIGNAL MANIFOLD TO PILOT CONTROL VALVE, L.H.)	3363 - 40
3J23	HYDRAULIC LINES, PILOT (PILOT SIGNAL MANIFOLD TO PILOT CONTROL VALVE, R.H.)	3363 - 42
3J19	HYDRAULIC LINES, PILOT (PROPEL PILOT CONTROLLER VALVE TO SHUTOFF VALVE)	3363 - 38
3J21	HYDRAULIC LINES, PILOT CONTROL VALVE TO PILOT SIGNAL MANIFOLD	3363 - 40
3J23	HYDRAULIC LINES, PILOT CONTROL VALVE, R. H., TO PILOT SIGNAL MANIFOLD	3363 - 42
3J19	HYDRAULIC LINES, PILOT SHUTOFF VALVE TO PROPEL PILOT CONTROLLER VALVE	3363 - 38
3J15	HYDRAULIC LINES, PILOT SIGNAL MANIFOLD TO CONTROL VALVE	3363 - 34
3J17	HYDRAULIC LINES, PILOT SIGNAL MANIFOLD TO PROPEL PILOT CONTROLLER VALVE	3363 - 36
3J17	HYDRAULIC LINES, PROPEL PILOT CONTROLLER VALVE TO PILOT SIGNAL MANIFOLD	3363 - 36
3I7	HYDRAULIC LINES, RETURN (CONTROL VALVE TO RADIATOR)	3363 - 8
3I5	HYDRAULIC LINES, RETURN (TO OIL TANK)	3363 - 6
3J11	HYDRAULIC LINES, SHUTTLE VALVE TO SWING MOTOR	3363 - 30
3I1	HYDRAULIC LINES, SUCTION	3363 - 2
3J11	HYDRAULIC LINES, SWING MOTOR TO SHUTTLE VALVE	3363 - 30
1C17	HYDRAULIC LINES, TRAVEL	0263 - 2
2C13	HYDRAULIC LOCKOUT DECAL	1810 - 34
1C1	HYDRAULIC MOTOR AND GEAR BOX	0260 - 8
3J3	HYDRAULIC OIL FILTER	3363 - 24
3F23	HYDRAULIC PUMP	3361 - 2
2E21	HYDRAULIC PUMP COMPARTMENT DOOR (VENTED)	1910 - 30
2E21	HYDRAULIC PUMP COMPARTMENT DOOR LATCH (VENTED)	1910 - 30
3G1	HYDRAULIC PUMP DEVICE	3361 - 4
3J3	HYDRAULIC PUMP PIPINGS TO OIL FILTER	3363 - 24
3E23	HYDRAULIC RESERVOIR HOSE TO SOLENOID (PILOT SYSTEM)	3360 - 10
3F7	HYDRAULIC RESERVOIR TO CONTROL VALVE HOSE (AUXILIARY SOLENOID/FLOW CONTROL)	3360 - 20
3F7	HYDRAULIC RESERVOIR TO SOLENOID VALVE HOSE (AUXILIARY SOLENOID/FLOW CONTROL)	3360 - 20

I

1B7	IDLER PULLEY ADJUSTER, TRACK CHAIN	0130 - 12
1B9	IDLER PULLEY ADJUSTER, TRACK CHAIN (REPLACEMENT)	0130 - 13A
2D7	IDLER PULLEY, AIR CONDITIONER	1830 - 4
1B5	IDLER, FRONT	0130 - 10
2C13	IGNITION SWITCH DECAL	1810 - 34
1E6	IMPELLER, WATER PUMP	0417 - 3
1F7	IN CHASSIS OVERHAUL GASKET SET	0452 - 1
3E19	INDICATOR	3360 - 6
3E19	INDICATOR, HYDRAULIC FILTER (WITHOUT COUPLING)	3360 - 6
1E5	INLET, WATER PUMP	0417 - 2
1E3	INTAKE SYSTEM, AIR	0414 - 2
1D22	INTAKE VALVE	0409 - 2
1D18	INTAKE, ENGINE OIL PUMP	0407 - 3
2B4	ISOLATOR, CAB MOUNT	1810 - 2
1I12	ISOLATORS, COUNTERWEIGHT	1740 - 8

K

1H10	KEY	1674 - 6
1G9	KEY, FUEL TANK CAP	0560 - 2
1H10	KEY, SWITCH	1674 - 6
3F9	KIT, ANTI-DRIFT ARM	3360 - 22
3F11	KIT, ANTI-DRIFT BOOM	3360 - 24
3F3	KIT, CONTROL PATTERN SELECTOR	3360 - 14
1D10	KIT, CYLINDER LINER O-RING	0403 - 2
1F8	KIT, ENGINE OVERHAUL	0452 - 2
1E13	KIT, FUEL FILTER SERVICE	0420 - 4
1F14	KIT, FUEL FIRED COOLANT HEATER	0505 - 4
3E19	KIT, HYDRAULIC FILTER RESTRICTION INDICATOR (WITHOUT COUPLING)	3360 - 6
3G3	KIT, MAIN HYD. PUMP REPAIR	3361 - 6
3F5	KIT, MECHANICAL PATTERN CHANGER	3360 - 15A
1H14	KIT, MIC CUSTOMER (S.N. 071174-)	1674 - 7C
1G20	KIT, O-RING, METRIC	1369 - 2
1E13	KIT, PRIMARY FUEL FILTER SERVICE	0420 - 4
2F2	KIT, RADIO	2001 - 2
3C9	KIT, ROADBUILDER BUCKET	3302 - 18
3L5	KIT, SEAL, ARM CYLINDER, SUPER LONG FRONT	3365 - 7A
2C17	KIT, SEAT LUMBAR	1821 - 2
2C21	KIT, SEAT SLIDE TRACK	1821 - 6
3D20	KIT, SINGLE PEDAL CONTROL	3315 - 14
3F7	KIT, SOLENOID CONTROL AND FLOW CONTROL (1-WAY)	3360 - 20
3E7	KIT, SUPER LONG FRONT	3344 - 3A
3E17	KIT, SUPER LONG FRONT	3360 - 5A
3I23	KIT, SUPER LONG FRONT	3363 - 21A
3L5	KIT, SUPER LONG FRONT	3365 - 7A
3L16	KIT, SUPER LONG FRONT	4360 - 6
3E3	KIT, SUPER LONG FRONT (ARM)	3340 - 8
3K19	KIT, SUPER LONG FRONT (BOOM LUBRICATE LINES)	3363 - 56
3K11	KIT, SUPER LONG FRONT (BOOM PLUMBING)	3363 - 51A
3K13	KIT, SUPER LONG FRONT (BOOM PLUMBING)	3363 - 51C
3K17	KIT, SUPER LONG FRONT (LUBRICATE LINES)	3363 - 54
2C15	KIT, VANDAL PROTECTION	1810 - 36
1E6	KIT, WATER PUMP REPAIR	0417 - 3
2C15	KIT, WINDOW GUARDS	1810 - 36
2C19	KIT, 3.00 INCH SEAT BELT	1821 - 4
3E23	KIT,SOLENOID VALVE, 1WAY/2WAY, WITHOUT PRESSURE SWITCH	3360 - 10

L

3E21	LABEL, AUXILIARY CONTROL	3360 - 8

ALPHABETICAL INDEX - CONTINUED

GRID		PAGE
3E19	LABEL, HYDRAULIC FILTER RESTRICTION INDICATOR	3360 - 6
2C13	LABEL, HYDRAULIC LOCKOUT	1810 - 34
2F8	LABEL, MOTION ALARM	2004 - 4
3F3	LABEL, PILOT CONTROL LEVER	3360 - 14
2B22	LABEL, SECONDARY EXIT	1810 - 20
1G16	LABELS, DECALS AND ANTI-SKID PADS	1322 - 2
1G18	LABELS, SUPER LONG FRONT	1322 - 4
2E21	LATCH, COOLING PACKAGE COMPARTMENT DOOR (VENTED)	1910 - 30
2E21	LATCH, HYDRAULIC PUMP COMPARTMENT DOOR (VENTED)	1910 - 30
2E21	LATCH, RADIATOR COMPARTMENT DOOR (VENTED)	1910 - 30
3L1	LEFT BOOM CYLINDER	3365 - 4
3G7	LEFT HAND REGULATOR, HYDRAULIC PUMP	3361 - 10
2F4	LEFT REAR VIEW MIRROR	2002 - 2
3D6	LEVER, CONTROL	3315 - 2
3D12	LEVER, PILOT SYSTEM SHUTOFF	3315 - 6
3D14	LEVER, PROPEL PILOT CONTROLLER	3315 - 8
1H6	LIGHT, BOOM	1674 - 2
1H6	LIGHT, WORK	1674 - 2
2D15	LIGHTER, REAR TRAY	1830 - 14
3F17	LINE, ARM AUXILIARY (FACTORY INSTALLED)	3360 - 30
3F15	LINE, BOOM AUXILIARY (FACTORY INSTALLED)	3360 - 28
3K11	LINE, BOOM OIL, SUPER LONG FRONT	3363 - 51A
3K13	LINE, BOOM OIL, SUPER LONG FRONT	3363 - 51C
3I23	LINE, CONTROL VALVE TO MAIN PIPINGS, SUPER LONG FRONT (BOOM HOSES)	3363 - 21A
3I19	LINE, CONTROL VALVE TO OIL COOLER	3363 - 19A
1F19	LINE, ENGINE TO RADIATOR	0510 - 8
1E1	LINE, FUEL INJECTION	0413 - 2
3J3	LINE, HYDRAULIC PUMP TO OIL FILTER	3363 - 24
3J3	LINE, HYDRAULIC PUMP TO SOLENOID VALVE	3363 - 24
3K15	LINE, HYDRAULIC, LUBRICATION	3363 - 52
3I23	LINE, MAIN TO CONTROL VALVE, SUPER LONG FRONT (BOOM HOSES)	3363 - 21A
3I19	LINE, OIL COOLER TO CONTROL VALVE	3363 - 19A
3J3	LINE, OIL FILTER TO HYDRAULIC PUMP	3363 - 24
3J5	LINE, OIL FILTER TO HYDRAULIC PUMP	3363 - 26
3J3	LINE, OIL TANK TO SOLENOID VALVE	3363 - 24
3J5	LINE, PILOT SIGNAL MANIFOLD TO HYDRAULIC PUMP	3363 - 26
3J5	LINE, PUMP TO OIL FILTER	3363 - 26
3J5	LINE, PUMP TO PILOT SIGNAL MANIFOLD	3363 - 26
1F19	LINE, RADIATOR TO ENGINE	0510 - 8
3J3	LINE, SOLENOID VALVE TO HYDRAULIC PUMP	3363 - 24
3J3	LINE, SOLENOID VALVE TO OIL TANK	3363 - 24
1D10	LINER, CYLINDER	0403 - 2
3K5	LINES, CONTROL VALVE TO OIL FILTER	3363 - 46
3K5	LINES, CONTROL VALVE TO OIL TANK	3363 - 46
3K7	LINES, CONTROL VALVE TO OIL TANK	3363 - 48
3K1	LINES, CONTROL VALVE TO OIL TANK (SERIAL NUMBER -XXXXXX)	3363 - 44
3K3	LINES, CONTROL VALVE TO OIL TANK (SERIAL NUMBER XXXXXX-)	3363 - 45A
3K7	LINES, CONTROL VALVE TO PILOT SHUTOFF VALVE	3363 - 48
3J13	LINES, CONTROL VALVE TO PILOT SIGNAL MANIFOLD	3363 - 32
3J15	LINES, CONTROL VALVE TO PILOT SIGNAL MANIFOLD	3363 - 34
3K1	LINES, CONTROL VALVE TO SOLENOID VALVE (SERIAL NUMBER -XXXXXX)	3363 - 44
3K3	LINES, CONTROL VALVE TO SOLENOID VALVE (SERIAL NUMBER XXXXXX-)	3363 - 45A
3K9	LINES, HYDRAULIC, BOOM	3363 - 50
3K17	LINES, LUBRICATE, BOOM, SUPER LONG FRONT	3363 - 54
3K19	LINES, LUBRICATE, BOOM, SUPER LONG FRONT	3363 - 56
3K5	LINES, OIL FILTER TO CONTROL VALVE	3363 - 46
3K5	LINES, OIL TANK TO CONTROL VALVE	3363 - 46
3K1	LINES, OIL TANK TO CONTROL VALVE (SERIAL NUMBER -XXXXXX)	3363 - 44
3K3	LINES, OIL TANK TO CONTROL VALVE (SERIAL NUMBER XXXXXX-)	3363 - 45A
3J21	LINES, PILOT CONTROL VALVE, L.H., TO PILOT SIGNAL MANIFOLD	3363 - 40
3J23	LINES, PILOT CONTROL VALVE, R.H., TO PILOT SIGNAL MANIFOLD	3363 - 42
3J19	LINES, PILOT SHUTOFF VALVE TO PROPEL PILOT CONTROLLER VALVE	3363 - 38
3J13	LINES, PILOT SIGNAL MANIFOLD TO CONTROL VALVE	3363 - 32
3J15	LINES, PILOT SIGNAL MANIFOLD TO CONTROL VALVE	3363 - 34
3J21	LINES, PILOT SIGNAL MANIFOLD TO PILOT CONTROL VALVE, L.H.	3363 - 40
3J23	LINES, PILOT SIGNAL MANIFOLD TO PILOT CONTROL VALVE, R.H.	3363 - 42
3J17	LINES, PILOT SIGNAL MANIFOLD TO PROPEL PILOT CONTROLLER VALVE	3363 - 36
3J7	LINES, PILOT(CONTROL VALVE TO ROTARY AND SIGNAL MANIFOLD (SERIAL NO. -071103)	3363 - 28
3J9	LINES, PILOT(CONTROL VALVE TO ROTARY AND SIGNAL MANIFOLD (SERIAL NO. 071104-)	3363 - 29A
3J19	LINES, PROPEL PILOT CONTROLLER VALVE TO PILOT SHUTOFF VALVE	3363 - 38
3J17	LINES, PROPEL PILOT CONTROLLER VALVE TO PILOT SIGNAL MANIFOLD	3363 - 36
3J11	LINES, SHUTTLE VALVE TO SWING MOTOR	3363 - 30
3K1	LINES, SOLENOID VALVE TO CONTROL VALVE (SERIAL NUMBER -XXXXXX)	3363 - 44
3K3	LINES, SOLENOID VALVE TO CONTROL VALVE (SERIAL NUMBER XXXXXX-)	3363 - 45A
3J11	LINES, SWING MOTOR TO SHUTTLE VALVE	3363 - 30
1C17	LINES, TRAVEL HYDRAULIC	0263 - 2
3E11	LINK, BOOM	3345 - 4
3E9	LINK, BUCKET	3345 - 2
1B15	LINK, TRACK (SN -702000)	0130 - 18
1B17	LINK, TRACK (SN 702001-)	0130 - 19A
2E11	LOCK ASSEMBLY, DOOR	1910 - 16
3H3	LOCK VALVE	3362 - 18
2B12	LOCK, CAB DOOR	1810 - 10
2B18	LOCK, CAB TOP HATCH	1810 - 16
3E1	LONG ARM	3340 - 6
3C11	LONG FRONT BUCKET, SUPER, 30 INCH	3302 - 19A
3K13	LONG FRONT KIT, SUPER LONG (BOOM PLUMBING)	3363 - 51C
3E3	LONG FRONT, SUPER, ARM	3340 - 8
3C13	LONG FRONT, SUPER, DITCH CLEANING BUCKET	3302 - 19C
1I3	LONG FRONT, SUPER, WIRE HARNESS	1674 - 20
1B13	LOWER ROLLER	0130 - 16
3K17	LUBRICATE LINES, BOOM, SUPER LONG FRONT	3363 - 54
3K19	LUBRICATE LINES, BOOM, SUPER LONG FRONT	3363 - 56
3K15	LUBRICATION HYDRAULIC LINES	3363 - 52

M

1D4	MAIN BEARING	0401 - 1

ALPHABETICAL INDEX - CONTINUED

GRID		PAGE
1D12	MAIN BEARING CAP	0404 - 2
1I10	MAIN FRAME	1740 - 6
1I10	MAIN FRAME BOOM FOOT PIN	1740 - 6
1H8	MAIN HARNESS	1674 - 4
3G3	MAIN HYD. PUMP HOUSING	3361 - 6
3G3	MAIN HYD. PUMP REGULATOR	3361 - 6
3G3	MAIN HYD. PUMP REPAIR KIT	3361 - 6
3G3	MAIN HYD. PUMP SENSOR	3361 - 6
3I11	MAIN HYDRAULIC LINES (TO BOOM CYLINDERS)	3363 - 12
3F23	MAIN HYDRAULIC PUMP	3361 - 2
3I23	MAIN PIPINGS TO CONTROL VALVE, SUPER LONG FRONT (BOOM HOSES)	3363 - 21A
1D24	MANIFOLD, EXHAUST	0410 - 2
1B24	MANIFOLD, ROTARY	0260 - 6
2C7	MAT, CAB FLOOR	1810 - 28
3F5	MECHANICAL PATTERN CHANGER KIT	3360 - 15A
3F5	MECHANICAL PATTERN CHANGER VALVE	3360 - 15A
1G20	METRIC O-RING KIT	1369 - 2
1H14	MIC CABLE (S.N. 071174-)	1674 - 7C
1H12	MIC CONTROLLER (S.N. 071174-)	1674 - 7A
1H14	MIC CUSTOMER KIT (S.N. 071174-)	1674 - 7C
2F4	MIRROR, LEFT REAR VIEW	2002 - 2
2E17	MIRROR, RIGHT REAR VIEW	1910 - 26
2E17	MIRROR, TOOL BOX	1910 - 26
3F1	MODUAL RELAY FOR DUAL AUXILIARY CONTROL	3360 - 12
3B11	MOLDBOARD, GENERAL PURPOSE BUCKET	3302 - 2
3B13	MOLDBOARD, GENERAL PURPOSE BUCKET	3302 - 3A
3B23	MOLDBOARD, HEAVY DUTY BUCKET	3302 - 10
3C1	MOLDBOARD, HEAVY DUTY BUCKET	3302 - 11A
3C3	MOLDBOARD, HEAVY DUTY BUCKET	3302 - 12
3B15	MOLDBOARD, HEAVY DUTY HIGH CAPACITY BUCKET	3302 - 4
3B17	MOLDBOARD, HEAVY DUTY HIGH CAPACITY BUCKET	3302 - 5A
3B19	MOLDBOARD, SEVERE DUTY CAST LIP BUCKET	3302 - 6
3B21	MOLDBOARD, SEVERE DUTY PLATE LIP BUCKET	3302 - 8
1H16	MONITOR	1674 - 8
2F8	MOTION ALARM WIRE HARNESS	2004 - 4
1C5	MOTOR COMPONENTS, PROPEL (S.N. -071231)	0260 - 12
1C7	MOTOR COMPONENTS, PROPEL (SERIAL NUMBER 071232-)	0260 - 13A
1C19	MOTOR, OIL	0267 - 2
1C1	MOTOR, PROPEL	0260 - 8
1E18	MOTOR, STARTER (24V) (DENS0)	0422 - 2
3L18	MOTOR, SWING OIL (S.N. -XXXXXX)	4367 - 2
3L20	MOTOR, SWING OIL (S.N. XXXXXX-)	4367 - 4
2D7	MOUNT, AIR CONDITIONER COMPRESSOR	1830 - 4
2B4	MOUNT, CAB	1810 - 2
1E20	MOUNTING STRAP, ALTERNATOR	0423 - 2
1G5	MUFFLER	0530 - 2
1G5	MUFFLER BRACKET	0530 - 2

N

1D25	NOZZLE, FUEL INJECTION	0413 - 1

O

1G20	O-RING KIT, METRIC	1369 - 2
1F22	OIL COOLER	0510 - 12
3I19	OIL COOLER LINE COUPLER	3363 - 19A
1E9	OIL COOLER, ENGINE	0419 - 2
1D16	OIL FILLER OPENING COVER	0407 - 1
1D19	OIL FILTER ELEMENT, ENGINE	0407 - 4
3K5	OIL FILTER LINES TO CONTROL VALVE	3363 - 46
3J3	OIL FILTER PIPINGS TO HYDRAULIC PUMP	3363 - 24
3J5	OIL FILTER PIPINGS TO HYDRAULIC PUMP	3363 - 26
3J3	OIL FILTER, HYDRAULIC OIL	3363 - 24
1D20	OIL LEVEL SENSOR, ENGINE	0407 - 5
1E4	OIL LINE, TURBOCHARGER	0416 - 2
1C19	OIL MOTOR	0267 - 2
3L18	OIL MOTOR, SWING (S.N. -XXXXXX)	4367 - 2
3L20	OIL MOTOR, SWING (S.N. XXXXXX-)	4367 - 4
1D20	OIL PAN PLUG	0407 - 5
1D20	OIL PAN, ENGINE	0407 - 5
1D12	OIL PRESSURE REGULATING BUSHING	0404 - 2
1D12	OIL PRESSURE REGULATING SPRING	0404 - 2
1D12	OIL PRESSURE REGULATING VALVE	0404 - 2
3K1	OIL TANK LINES TO CONTROL VALVE (SERIAL NUMBER -XXXXXX)	3363 - 44
3K3	OIL TANK LINES TO CONTROL VALVE (SERIAL NUMBER XXXXXX-)	3363 - 45A
3J3	OIL TANK PIPINGS TO SOLENOID VALVE	3363 - 24
3K5	OIL TANK TO CONTROL VALVE LINES	3363 - 46
3E23	ONEWAY/2WAY SOLENOID VALVE KIT, WITHOUT PRESSURE SWITCH	3360 - 10

P

1D20	PAN, ENGINE OIL	0407 - 5
2E3	PANEL, COMPARTMENT INTERIOR	1910 - 8
2E21	PANEL, FRONT, COOLING PACKAGE COMPARTMENT (VENTED)	1910 - 30
2E21	PANEL,FRONT, HYDRAULIC PUMP COMPARTMENT (VENTED)	1910 - 30
3F5	PATTERN CHANGER VALVE, MECHANICAL	3360 - 15A
3F3	PATTERN SELECTOR CONTROL KIT	3360 - 14
3D18	PEDAL CONTROL, HYDRAULIC FOOT (2-WAY)	3315 - 12
3F3	PILOT CONTROL LEVER LABEL	3360 - 14
3H17	PILOT CONTROLLER SIDE, PILOT SIGNAL MANIFOLD	3362 - 30
3D8	PILOT CONTROLLER VALVE COMPONENTS (DIG AND SWING)(SN -071384)	3315 - 4
3D10	PILOT CONTROLLER VALVE COMPONENTS (DIG AND SWING)(SN 071385-)	3315 - 5A
3F1	PILOT DUAL CONTROL HANDLE	3360 - 12
3J3	PILOT FILTER	3363 - 24
3J7	PILOT HOSES,(CONTROL VALVE TO ROTARY AND SIGNAL MANIFOLD(SER. NO. -071103)	3363 - 28
3J9	PILOT HOSES,(CONTROL VALVE TO ROTARY AND SIGNAL MANIFOLD(SER. NO. 071104-)	3363 - 29A
3J13	PILOT HYDRAULIC LINES (CONTROL VALVE TO PILOT SIGNAL MANIFOLD)	3363 - 32
3K5	PILOT HYDRAULIC LINES (CONTROL VALVE TO OIL TANK)	3363 - 46
3K1	PILOT HYDRAULIC LINES (CONTROL VALVE TO OIL TANK)(SERIAL NUMBER -XXXXXX)	3363 - 44
3K3	PILOT HYDRAULIC LINES (CONTROL VALVE TO OIL TANK)(SERIAL NUMBER XXXXXX-)	3363 - 45A
3J15	PILOT HYDRAULIC LINES (CONTROL VALVE TO PILOT SIGNAL MANIFOLD)	3363 - 34
3K7	PILOT HYDRAULIC LINES (CONTROL VALVE, OIL TANK, PILOT SHUTOFF VALVE)	3363 - 48
3J21	PILOT HYDRAULIC LINES (PILOT SIGNAL MANIFOLD TO PILOT CONTROL VALVE, L.H.)	3363 - 40
3J23	PILOT HYDRAULIC LINES (PILOT SIGNAL MANIFOLD TO PILOT CONTROL VALVE, R.H.)	3363 - 42

ALPHABETICAL INDEX - CONTINUED

GRID		PAGE
3J17	PILOT HYDRAULIC LINES (PILOT SIGNAL MANIFOLD TO PROPEL PILOT CONTROLLER)	3363 - 36
3J19	PILOT HYDRAULIC LINES (PROPEL PILOT CONTROLLER VALVE TO SHUTOFF VALVE)	3363 - 38
3J11	PILOT HYDRAULIC LINES (SHUTTLE VALVE,	3363 - 30
3J3	PILOT PIPINGS (OIL TANK, SOLENOID VALVE, PUMP, FILTER)	3363 - 24
3J5	PILOT PIPINGS, AUTO ENGINE CONTROL (PUMP TO PILOT SIGNAL MANIFOLD)	3363 - 26
3E23	PILOT SHUT-OFF VALVE HOSE TO SOLENOID (PILOT SYSTEM)	3360 - 10
3D18	PILOT SHUTOFF VALVE FITTINGS TO FOOT PEDAL CONTROL (PILOT SYSTEM)	3315 - 12
3D18	PILOT SHUTOFF VALVE HOSE TO FOOT PEDAL CONTROL (PILOT SYSTEM)	3315 - 12
3F7	PILOT SIG. MAN. TO CONTROL VALVE HOSE (AUXILIARY SOLENOID/FLOW CONTROL)	3360 - 20
3F7	PILOT SIG. MAN. TO FLOW REGULATOR HOSE (AUXILIARY SOLENOID/FLOW CONTROL)	3360 - 20
3F7	PILOT SIG. MAN. TO SOLENOID VALVE HOSE (AUXILIARY SOLENOID/FLOW CONTROL)	3360 - 20
3H19	PILOT SIGNAL MANIFOLD (CONTROL VALVE SIDE) (SERIAL NUMBER -071103)	3362 - 32
3H21	PILOT SIGNAL MANIFOLD (CONTROL VALVE SIDE) (SERIAL NUMBER 071104-)	3362 - 33A
3H13	PILOT SIGNAL MANIFOLD (HOUSING AND GASKETS)	3362 - 26
3H17	PILOT SIGNAL MANIFOLD (PILOT CONTROLLER SIDE)	3362 - 30
3H15	PILOT SIGNAL MANIFOLD (VALVE SECTION)	3362 - 28
3D18	PILOT SIGNAL MANIFOLD FITTINGS TO FOOT PEDAL CONTROL (PILOT SYSTEM)	3315 - 12
3E23	PILOT SIGNAL MANIFOLD HOSE TO CONTROL VALVE (PILOT SYSTEM)	3360 - 10
3D18	PILOT SIGNAL MANIFOLD HOSE TO FOOT PEDAL CONTROL (PILOT SYSTEM)	3315 - 12
3E23	PILOT SIGNAL MANIFOLD HOSE TO SOLENOID (PILOT SYSTEM)	3360 - 10
3J13	PILOT SIGNAL MANIFOLD LINES TO CONTROL VALVE	3363 - 32
3J5	PILOT SIGNAL MANIFOLD PIPINGS TO HYDRAULIC TANK	3363 - 26
3J15	PILOT SIGNAL MANIFOLD TO CONTROL VALVE	3363 - 34
3H23	PILOT SIGNAL MANIFOLD VALVES	3362 - 34
3D12	PILOT SYSTEM CONTROL LEVER BRACKET	3315 - 6
3D12	PILOT SYSTEM CONTROL LEVER GRIP	3315 - 6
3D12	PILOT SYSTEM SHUTOFF LEVER	3315 - 6
3D6	PILOT VALVE	3315 - 2
3D5	PIN-UP DATA, BUCKET	3302 - 34
1I10	PIN, BOOM FOOT	1740 - 6
3E7	PINS, BOOM, SUPER LONG FRONT	3344 - 3A
1G1	PIPE, AIR CLEANER	0520 - 4
1G5	PIPE, EXHAUST	0530 - 2
2D1	PIPING, AIR CONDITIONER	1830 - 2
3F19	PIPING, AUXILIARY HYDRAULIC	3360 - 84
3I23	PIPING, BOOM BOTTOM, SUPER LONG FRONT	3363 - 21A
3I23	PIPING, CONTROL VALVE TO MAIN PIPINGS, SUPER LONG FRONT (BOOM HOSES)	3363 - 21A
3J3	PIPING, HYDRAULIC PUMP TO OIL FILTER	3363 - 24
3J3	PIPING, HYDRAULIC PUMP TO SOLENOID VALVE	3363 - 24
3I23	PIPING, MAIN TO CONTROL VALVE, SUPER LONG FRONT (BOOM HOSES)	3363 - 21A
3J3	PIPING, OIL FILTER TO HYDRAULIC PUMP	3363 - 24
3J5	PIPING, OIL FILTER TO HYDRAULIC PUMP	3363 - 26
3J3	PIPING, OIL TANK TO SOLENOID VALVE	3363 - 24
3J5	PIPING, PILOT SIGNAL MANIFOLD TO HYDRAULIC PUMP	3363 - 26
3J5	PIPING, PUMP TO OIL FILTER	3363 - 26
3J3	PIPING, SOLENOID VALVE TO HYDRAULIC PUMP	3363 - 24
3J3	PIPING, SOLENOID VALVE TO OIL TANK	3363 - 24
3J3	PIPINGS, PILOT (OIL TANK, SOLENOID	3363 - 24
3J5	PIPINGS, PILOT, AUTO ENGINE CONTROL	3363 - 26
1D10	PISTON RING	0403 - 2
1D10	PISTON, ENGINE	0403 - 2
3G13	PISTON, SERVO	3362 - 4
3B21	PLATE LIP BUCKET, SEVERE DUTY	3302 - 8
1D20	PLUG, OIL PAN	0407 - 5
1F22	PLUG, RADIATOR	0510 - 12
3F17	PLUMBING, AUXILIARY ARM (FACTORY INSTALLED)	3360 - 30
3F15	PLUMBING, AUXILIARY BOOM (FACTORY INSTALLED)	3360 - 28
3F19	PLUMBING, AUXILIARY HYDRAULIC	3360 - 84
3F13	PLUMBING, AUXILIARY MAIN HYDRAULIC (FACTORY INSTALLED)	3360 - 26
3I23	PLUMBING, BOOM BOTTOM, SUPER LONG FRONT	3363 - 21A
3K11	PLUMBING, BOOM, SUPER LONG FRONT	3363 - 51A
3K13	PLUMBING, BOOM, SUPER LONG FRONT	3363 - 51C
2D17	POWER SUPPLY, 12V	1830 - 16
3J13	PRESSURE SENSOR, CONTROL VALVE	3363 - 32
3J15	PRESSURE SENSOR, CONTROL VALVE	3363 - 34
1E13	PRIMARY FUEL FILTER ELEMENT	0420 - 4
1E13	PRIMARY FUEL FILTER SERVICE KIT	0420 - 4
1C1	PROPEL GEAR BOX	0260 - 8
1C13	PROPEL MOTOR BRAKE RELIEF VALVE (S.N. -071231)	0260 - 16
1C11	PROPEL MOTOR BRAKE VALVE COMPONENTS (S.N. 071232-)	0260 - 15A
1C9	PROPEL MOTOR BRAKE VALVE(S.N. -071231)	0260 - 14
1C5	PROPEL MOTOR COMPONENTS (S.N. -071231)	0260 - 12
1C7	PROPEL MOTOR COMPONENTS (SERIAL NUMBER 071232-)	0260 - 13A
1C15	PROPEL MOTOR CROSSOVER RELIEF VALVE COMPONENTS (S.N.071232-)	0260 - 17A
1C13	PROPEL MOTOR CROSSOVER RELIEF VALVE COMPONENTS(S.N. -071231)	0260 - 16
3D14	PROPEL PILOT CONTROL LEVER GRIP	3315 - 8
3D14	PROPEL PILOT CONTROLLER FOOT PEDALS	3315 - 8
3D14	PROPEL PILOT CONTROLLER LEVER	3315 - 8
3D14	PROPEL PILOT CONTROLLER PEDAL	3315 - 8
2D7	PULLEY, AIR CONDITIONER COMPRESSOR	1830 - 4
1H5	PULLEY, ALTERNATOR	1672 - 2
1E23	PULLEY, CRANKSHAFT	0429 - 2
1E22	PULLEY, CRANKSHAFT AUXILIARY DRIVE	0429 - 1
1E24	PULLEY, CRANKSHAFT DAMPER (WITH AIR CONDITIONING)	0429 - 3
1F3	PULLEY, FAN BELT IDLER	0429 - 6
1F1	PULLEY, FAN BELT TENSIONER	0429 - 4
1F1	PULLEY, FAN DRIVE	0429 - 4
1E5	PULLEY, WATER PUMP	0417 - 2
3G1	PUMP DEVICE	3361 - 4
3J5	PUMP PIPING TO OIL FILTER	3363 - 26
3J3	PUMP PIPINGS TO OIL FILTER	3363 - 24
3J5	PUMP PIPINGS TO PILOT SIGNAL MANIFOLD	3363 - 26
3J5	PUMP TO PILOT SIGNAL MANIFOLD)	3363 - 26
3G9	PUMP, DRIVE, MAIN HYDRAULIC PUMP	3361 - 12
1D18	PUMP, ENGINE OIL	0407 - 3
1E1	PUMP, FUEL INJECTION	0413 - 2
1E16	PUMP, FUEL TRANSFER	0421 - 4
3F23	PUMP, HYDRAULIC	3361 - 2
3J3	PUMP, PIPINGS TO SOLENOID VALVE	3363 - 24
1E6	PUMP, WATER	0417 - 3

ALPHABETICAL INDEX - CONTINUED

GRID		PAGE
2C5	PUMP, WINDOW WASHER RESERVOIR	1810 - 26
1D9	PUSH ROD	0402 - 6

R

1F22	RADIATOR	0510 - 12
2E21	RADIATOR COMPARTMENT DOOR (VENTED)	1910 - 30
2E21	RADIATOR DOOR, TROPICAL	1910 - 30
1F22	RADIATOR DRAIN HOSE	0510 - 12
1F19	RADIATOR SUPPORT	0510 - 8
2F2	RADIO	2001 - 2
2F2	RADIO KIT	2001 - 2
2B8	RADIO SPEAKER	1810 - 6
2B8	RADIO SPEAKER WIRE HARNESS	1810 - 6
2F2	RADIO WIRE HARNESS	2001 - 2
2D15	REAR TRAY	1830 - 14
2F4	REAR VIEW MIRROR, LEFT	2002 - 2
2E17	REAR VIEW MIRROR, RIGHT	1910 - 26
2B16	REAR WINDOW, CAB	1810 - 14
2D7	REFIGERANT HOSES, AIR CONDITIONER	1830 - 4
3G7	REGULATOR, L.H.	3361 - 10
3G3	REGULATOR, MAIN HYD. PUMP	3361 - 6
3G5	REGULATOR, R.H.	3361 - 8
1H20	RELAY, ENGINE CONTROL UNIT	1674 - 12
2D3	RELAY, HEATER AND AIR CONDITIONER	1830 - 3A
2D5	RELAY, HEATER AND AIR CONDITIONER	1830 - 3C
3F1	RELAY, MODUAL FOR DUAL AUXILIARY CONTROL	3360 - 12
3G11	RELIEF VALVE	3362 - 2
1C13	RELIEF VALVE, PROPEL MOTOR BRAKE (S.N. -071231)	0260 - 16
1C15	RELIEF VALVE, PROPEL MOTOR CROSSOVER COMPONENTS (S.N.071232-)	0260 - 17A
3K21	RESERVOIR, HYD. OIL	3364 - 2
2C5	RESERVOIR, WINDOW WASHER	1810 - 26
3I7	RETURN HYDRAULIC LINES (CONTROL VALVE TO RADIATOR)	3363 - 8
3I5	RETURN HYDRAULIC LINES (TO OIL TANK)	3363 - 6
3F21	RETURN LINE TO SHUTOFF VALVE HOSE (AUXILIARY HYDRAULIC OPTIONAL RETURN)	3360 - 85A
3L16	RETURN VALVE, SUPER LONG FRONT	4360 - 6
3K23	RIGHT BOOM CYLINDER	3365 - 2
3G5	RIGHT HAND REGULATOR, HYDRAULIC PUMP	3361 - 8
1F5	RING GEAR, FLYWHEEL	0433 - 2
1D10	RING, PISTON	0403 - 2
3C9	ROADBUILDER BUCKET KIT	3302 - 18
1D9	ROCKER ARM	0402 - 6
1D6	ROCKER ARM COVER	0402 - 3
1D6	ROCKER ARM COVER GASKET	0402 - 3
1D9	ROCKER ARM SHAFT	0402 - 6
1D10	ROD, CONNECTING	0403 - 2
1D9	ROD, PUSH	0402 - 6
1B13	ROLLER, LOWER	0130 - 16
1B11	ROLLER, UPPER	0130 - 14
1B24	ROTARY MANIFOLD	0260 - 6

S

3L5	SEAL KIT, ARM CYLINDER, SUPER LONG FRONT	3365 - 7A
1I18	SEAL, SWING BEARING	1740 - 14
2C17	SEAT	1821 - 2
2C17	SEAT ADJUSTER	1821 - 2
2C21	SEAT BASE	1821 - 6
2C21	SEAT BASE BRACKET	1821 - 6
2C23	SEAT BELT	1821 - 8
2C19	SEAT BELT (3.00 INCH)	1821 - 4
2C23	SEAT BELT BRACKET	1821 - 8
2C19	SEAT BELT KIT, (3.00 INCH)	1821 - 4
2C17	SEAT CUSHION	1821 - 2
2C17	SEAT LUMBAR KIT	1821 - 2
2C21	SEAT SLIDE TRACK KIT	1821 - 6
2C17	SEAT SUSPENSION	1821 - 2
2B22	SECONDARY EXIT HANDLE	1810 - 20
2B22	SECONDARY EXIT KIT, CAB	1810 - 20
2B22	SECONDARY EXIT LABEL	1810 - 20
3H5	SELECTOR VALVE	3362 - 20
1F17	SENDER, ENGINE COOLANT RECOVERY TANK	0510 - 2
1F24	SENSOR, AIR CLEANER RESTRICTION	0520 - 2
2D9	SENSOR, AIR CONDITIONER	1830 - 8
1E3	SENSOR, AIR INTAKE TEMPERATURE	0414 - 2
1G7	SENSOR, COOLANT, ENGINE	0540 - 2
1D4	SENSOR, CRANKSHAFT SPEED	0401 - 1
1D7	SENSOR, CRANKSHAFT SPEED	0402 - 4
1E7	SENSOR, ENGINE COOLANT TEMPERATURE	0418 - 2
1D20	SENSOR, ENGINE OIL LEVEL	0407 - 5
1E1	SENSOR, FUEL INJECTION PUMP SPEED	0413 - 2
3G3	SENSOR, MAIN HYD. PUMP	3361 - 6
3J15	SENSOR, PRESSURE CONTROL VALVE	3363 - 34
3J13	SENSOR, PRESSURE, CONTROL VALVE	3363 - 32
1G7	SENSOR, TEMPERATURE, ENGINE	0540 - 2
1G7	SENSOR, THERMOSTAT HOUSING TEMPERATURE	0540 - 2
3G13	SERVO PISTON	3362 - 4
3B19	SEVERE DUTY CAST LIP BUCKET	3302 - 6
3B21	SEVERE DUTY PLATE LIP BUCKET	3302 - 8
1D9	SHAFT, ROCKER ARM	0402 - 6
3C7	SHANK, DITCH CLEANING BUCKET	3302 - 16
3B23	SHANK, HEAVY DUTY BUCKET	3302 - 10
3C1	SHANK, HEAVY DUTY BUCKET	3302 - 11A
3C3	SHANK, HEAVY DUTY BUCKET	3302 - 12
3D1	SHANK, SEVERE DUTY CAST LIP BUCKET (36 OR 42 INCH BUCKET)	3302 - 30
3D3	SHANK, SEVERE DUTY PLATE LIP BUCKET	3302 - 32
3C17	SHANK, TOOTH, GENERAL PURPOSE BUCKET	3302 - 22
3C19	SHANK, TOOTH, GENERAL PURPOSE BUCKET	3302 - 23A
3C21	SHANK, 400 SERIES TOOTH, HEAVY DUTY HIGH CAPACITY BUCKET	3302 - 26
1B15	SHOE, TRACK (SN -702000)	0130 - 18
1B17	SHOE, TRACK (SN 702001-)	0130 - 19A
3D24	SHORT ARM	3340 - 4
1D14	SHORT BLOCK, ENGINE	0404 - 4
3F21	SHUT-OFF VALVE (AUXILIARY HYDRAULIC OPTIONAL RETURN)	3360 - 85A
3F7	SHUT-OFF VALVE TO SOLENOID VALVE HOSE (AUXILIARY SOLENOID/FLOW CONTROL)	3360 - 20
3F21	SHUTOFF VALVE TO RETURN LINE HOSE (AUXILIARY HYDRAULIC OPTIONAL RETURN)	3360 - 85A
3J1	SIDE BRANCH HYD. HOSES	3363 - 22
3B11	SIDE CUTTERS, GENERAL PURPOSE BUCKET	3302 - 2
3B13	SIDE CUTTERS, GENERAL PURPOSE BUCKET	3302 - 3A
3B23	SIDE CUTTERS, HEAVY DUTY BUCKET	3302 - 10
3C1	SIDE CUTTERS, HEAVY DUTY BUCKET	3302 - 11A
3C3	SIDE CUTTERS, HEAVY DUTY BUCKET	3302 - 12
3B15	SIDE CUTTERS, HEAVY DUTY HIGH CAPACITY BUCKET	3302 - 4
3B17	SIDE CUTTERS, HEAVY DUTY HIGH CAPACITY BUCKET	3302 - 5A
3B19	SIDE CUTTERS, SEVERE DUTY CAST LIP BUCKET	3302 - 6
3B21	SIDE CUTTERS, SEVERE DUTY PLATE LIP BUCKET	3302 - 8

ALPHABETICAL INDEX - CONTINUED

GRID		PAGE
3D20	SINGLE PEDAL CONTROL KIT	3315 - 14
3D20	SINGLE PEDAL CONTROL KIT HYD. HOSES	3315 - 14
3L16	SLOW RETURN VALVE, SUPER LONG FRONT	4360 - 6
3F7	SOLENOID CONTROL AND FLOW CONTROL KIT (1-WAY)	3360 - 20
3F7	SOLENOID CONTROL VALVE, AUXILIARY (1-WAY)	3360 - 20
3E23	SOLENOID HOSE TO HYDRAULIC RESERVOIR (PILOT SYSTEM)	3360 - 10
3E23	SOLENOID HOSE TO PILOT SHUT-OFF VALVE (PILOT SYSTEM)	3360 - 10
3E23	SOLENOID HOSE TO PILOT SIGNAL MANIFOLD (PILOT SYSTEM)	3360 - 10
3H11	SOLENOID VALVE	3362 - 24
3H7	SOLENOID VALVE (SERIAL NO. -071103)	3362 - 22
3H9	SOLENOID VALVE (SERIAL NO. 071104-)	3362 - 23A
3F1	SOLENOID VALVE DUAL CONTROL HARNESS	3360 - 12
3E23	SOLENOID VALVE KIT, 1WAY/2WAY, WITHOUT PRESSURE SWITCH	3360 - 10
3K1	SOLENOID VALVE LINES TO CONTRO VALVE (SERIAL NUMBER -XXXXXX)	3363 - 44
3K3	SOLENOID VALVE LINES TO CONTRO VALVE (SERIAL NUMBER XXXXXX-)	3363 - 45A
3J3	SOLENOID VALVE PIPINGS TO HYDRAULIC PUMP	3363 - 24
3J3	SOLENOID VALVE PIPINGS TO OIL TANK	3363 - 24
3F7	SOLENOID VALVE TO HYDRAULIC RESERVOIR HOSE (AUXILIARY SOLENOID/FLOW CONTROL)	3360 - 20
3F7	SOLENOID VALVE TO SHUT-OFF VALVE HOSE (AUXILIARY SOLENOID/FLOW CONTROL)	3360 - 20
3F7	SOLENOID VALVE TO SIGNAL MANIFOLD HOSE (AUXILIARY SOLENOID/FLOW CONTROL)	3360 - 20
3F3	SOLENOID VALVE, CONTROL PATTERN SELECTOR KIT	3360 - 14
1F21	SPACER, FAN BLADE	0510 - 10
2B8	SPEAKER, RADIO	1810 - 6
1B7	SPRING, TRACK CHAIN ADJUSTER	0130 - 12
1B9	SPRING, TRACK CHAIN ADJUSTER (REPLACEMENT)	0130 - 13A
1C1	SPROCKET, TRACK CHAIN	0260 - 8
3D22	STANDARD ARM	3340 - 2
1F12	START AID, ETHER	0505 - 2
1E18	STARTER MOTOR (24V) (DENSO)	0422 - 2
1E18	STARTER MOTOR CLUTCH DRIVE (24V) (DENSO)	0422 - 2
1E18	STARTER MOTOR SWITCH (24V) (DENSO)	0422 - 2
1F12	STARTING AID, COLD WEATHER	0505 - 2
1B1	STEP	0130 - 6
1E20	STRAP, ALTERNATOR MOUNTING	0423 - 2
3I1	SUCTION HYDRAULIC LINES	3363 - 2
3E3	SUPER LONG FRONT ARM	3340 - 8
3L5	SUPER LONG FRONT ARM CYLINDER COMPONENTS	3365 - 7A
3I23	SUPER LONG FRONT BOOM BOTTOM PIPINGS	3363 - 21A
3K17	SUPER LONG FRONT BOOM LUBRICATE LINES	3363 - 54
3K19	SUPER LONG FRONT BOOM LUBRICATE LINES	3363 - 56
3K11	SUPER LONG FRONT BOOM PLUMBING	3363 - 51A
3K13	SUPER LONG FRONT BOOM PLUMBING	3363 - 51C
3L9	SUPER LONG FRONT BUCKET CYLINDER COMPONENTS	3365 - 10
3C11	SUPER LONG FRONT BUCKET, 30 INCH	3302 - 19A
3E17	SUPER LONG FRONT CONTROL VALVE	3360 - 5A
3C13	SUPER LONG FRONT DITCH CLEANING BUCKET	3302 - 19C
3E7	SUPER LONG FRONT KIT	3344 - 3A
3L5	SUPER LONG FRONT KIT	3365 - 7A
3E3	SUPER LONG FRONT KIT (ARM)	3340 - 8
3K19	SUPER LONG FRONT KIT (BOOM LUBRICATE LINES)	3363 - 56
3K11	SUPER LONG FRONT KIT (BOOM PLUMBING)	3363 - 51A
3K17	SUPER LONG FRONT KIT (LUBRICATE LINES)	3363 - 54
1G18	SUPER LONG FRONT LABELS	1322 - 4
3L16	SUPER LONG FRONT SLOW RETURN VALVE	4360 - 6
1I3	SUPER LONG FRONT WIRE HARNESS	1674 - 20
2C7	SUPPORT, CAB FLOOR	1810 - 28
3E15	SUPPORT, CONTROL VALVE	3360 - 4
1I8	SUPPORT, SWING BEARING	1740 - 4
3L14	SUPPORT, SWING DEVICE	4360 - 4
1B22	SUPPORT, TRAVEL DEVICE	0260 - 4
2C17	SUSPENSION, SEAT	1821 - 2
1C7	SWASH PLATE (S.N. 071232-)	0260 - 13A
1I14	SWING BEARING	1740 - 10
1I16	SWING BEARING ATTACHMENTS	1740 - 12
1I18	SWING BEARING SEAL	1740 - 14
1I8	SWING BEARING SUPPORT	1740 - 4
3L12	SWING DEVICE	4360 - 2
3L14	SWING DEVICE SUPPORT	4360 - 4
3J11	SWING MOTOR)	3363 - 30
3L18	SWING OIL MOTOR (S.N. -XXXXXX)	4367 - 2
3L20	SWING OIL MOTOR (S.N. XXXXXX-)	4367 - 4
1G7	SWITCH, COOLANT, ENGINE	0540 - 2
1D12	SWITCH, ENGINE OIL PRESSURE	0404 - 2
1D22	SWITCH, ENGINE OVERHEAT	0409 - 2
3E21	SWITCH, FOOT, AUXILIARY ELECTRIC	3360 - 8
2D3	SWITCH, HEATER AND AIR CONDITIONER	1830 - 3A
2D5	SWITCH, HEATER AND AIR CONDITIONER	1830 - 3C
3E19	SWITCH, HYD. FILTER RESTRICTION	3360 - 6
1H10	SWITCH, KEY	1674 - 6
2F8	SWITCH, MOTION ALARM	2004 - 4
1E18	SWITCH, STARTER MOTOR (24V) (DENSO)	0422 - 2
1G7	SWITCH, TEMPERATURE, ENGINE	0540 - 2
1G7	SWITCH, THERMOSTAT HOUSING TEMPERATURE	0540 - 2
1F12	SWITCH,COLD WEATHER STARTING AID	0505 - 2
1E1	SYSTEM, FUEL INJECTION	0413 - 2

T

1F17	TANK, ENGINE COOLANT RECOVERY	0510 - 2
1G9	TANK, FUEL	0560 - 2
3C7	TEETH, DITCH CLEANING BUCKET	3302 - 16
3C15	TEETH, ESCO	3302 - 20
3C17	TEETH, GENERAL PURPOSE BUCKET	3302 - 22
3C19	TEETH, GENERAL PURPOSE BUCKET	3302 - 23A
3B23	TEETH, HEAVY DUTY BUCKET	3302 - 10
3C1	TEETH, HEAVY DUTY BUCKET	3302 - 11A
3C3	TEETH, HEAVY DUTY BUCKET	3302 - 12
3C23	TEETH, SEVERE DUTY CAST LIP BUCKET (24, 30 OR 36 INCH BUCKET)	3302 - 28
3D1	TEETH, SEVERE DUTY CAST LIP BUCKET (36 OR 42 INCH BUCKET)	3302 - 30
3D3	TEETH, SEVERE DUTY PLATE LIP BUCKET	3302 - 32
3C11	TEETH, SUPER LONG FRONT BUCKET, 30 INCH	3302 - 19A
3C21	TEETH, 400 SERIES, HEAVY DUTY HIGH CAPACITY BUCKET	3302 - 26
1G7	TEMPERATURE SWITCH, ENGINE	0540 - 2
1F1	TENSIONER, BELT IDLER	0429 - 4
1B7	TENSIONING DEVICE, TRACK CHAIN	0130 - 12
1B9	TENSIONING DEVICE, TRACK CHAIN (REPLACEMENT)	0130 - 13A
1G7	THERMOSTAT HOUSING TEMPERATURE SENSOR	0540 - 2
1E7	THERMOSTAT, ENGINE	0418 - 2
1D7	TIMING GEAR COVER	0402 - 4
1D7	TIMING GEAR COVER GASKET	0402 - 4

ALPHABETICAL INDEX - CONTINUED

GRID		PAGE
2E17	TOOL BOX COVER	1910 - 26
2E17	TOOL BOX COVER CYLINDER	1910 - 26
2E17	TOOLBOX	1910 - 26
3C17	TOOTH ASSEMBLY, GENERAL PURPOSE BUCKET	3302 - 22
3C19	TOOTH ASSEMBLY, GENERAL PURPOSE BUCKET	3302 - 23A
3C11	TOOTH, BUCKET, SUPER LONG FRONT, 30 INCH	3302 - 19A
3C7	TOOTH, DITCH CLEANING BUCKET	3302 - 16
3C15	TOOTH, ESCO	3302 - 20
3B23	TOOTH, HEAVY DUTY BUCKET	3302 - 10
3C1	TOOTH, HEAVY DUTY BUCKET	3302 - 11A
3C3	TOOTH, HEAVY DUTY BUCKET	3302 - 12
3C23	TOOTH, SEVERE DUTY CAST LIP BUCKET (24, 30 OR 36 INCH BUCKET)	3302 - 28
3D1	TOOTH, SEVERE DUTY CAST LIP BUCKET (36 OR 42 INCH BUCKET)	3302 - 30
3D3	TOOTH, SEVERE DUTY PLATE LIP BUCKET	3302 - 32
3C21	TOOTH, 400 SERIES, HEAVY DUTY HIGH CAPACITY BUCKET	3302 - 26
1B17	TRACK CHAIN (SN 702001-)	0130 - 19A
1C1	TRACK CHAIN SPROCKET	0260 - 8
1B15	TRACK CHAIN(SN -702000)	0130 - 18
1B7	TRACK CHAIN, ADJUSTER	0130 - 12
1B9	TRACK CHAIN, ADJUSTER (REPLACEMENT)	0130 - 13A
1C1	TRACK DRIVE	0260 - 8
1A22	TRACK FRAME	0130 - 2
1A24	TRACK GUARD	0130 - 4
1B15	TRACK LINK (SN -702000)	0130 - 18
1B17	TRACK LINK (SN 702001-)	0130 - 19A
1B17	TRACK SHOE (SN 702001-)	0130 - 19A
1B15	TRACK SHOE(SN -702000)	0130 - 18
1B3	TRACK, BOTTOM COVER	0130 - 8
2D3	TRANSISTOR, HEATER AND AIR CONDITIONER	1830 - 3A
2D5	TRANSISTOR, HEATER AND AIR CONDITIONER	1830 - 3C
1B22	TRAVEL DEVICE SUPPORT	0260 - 4
1C17	TRAVEL HYDRAULIC LINES	0263 - 2
2F8	TRAVEL MOTION ALARM	2004 - 4
1C3	TRAVEL MOTOR COVER	0260 - 10
2D15	TRAY, REAR	1830 - 14
2E21	TROPICAL COVER	1910 - 30
2E21	TROPICAL DOOR	1910 - 30
1D17	TUBE, ENGINE OIL DIPSTICK	0407 - 2
1E4	TURBOCHARGER	0416 - 2
1E4	TURBOCHARGER OIL LINE	0416 - 2

U

1B11	UPPER ROLLER	0130 - 14

V

2D7	V-BELT, AIR CONDITIONER	1830 - 4
3D10	VALVE COMPONENTS, PILOT CONTROLLER (DIG AND SWING) (SN 071385-)	3315 - 5A
3D8	VALVE COMPONENTS, PILOT CONTROLLER (DIG AND SWING)(SN -071384)	3315 - 4
3E23	VALVE KIT,SOLENOID, 1WAY/2WAY, WITHOUT PRESSURE SWITCH	3360 - 10
1C9	VALVE PROPEL MOTOR, BRAKE (S.N. -071231)	0260 - 14
3H15	VALVE SECTION, PILOT SIGNAL MANIFOLD	3362 - 28
3F9	VALVE, ANTI-DRIFT (ARM)	3360 - 22
3F11	VALVE, ANTI-DRIFT (BOOM)	3360 - 24
3F17	VALVE, ARM AUXILIARY PLUMBING (FACTORY INSTALLED)	3360 - 30
1C11	VALVE, BRAKE, COMPONENTS (S.N. 071232-)	0260 - 15A
3E13	VALVE, CONTROL	3360 - 2
3G15	VALVE, CONTROL	3362 - 6
3G17	VALVE, CONTROL	3362 - 8
3G19	VALVE, CONTROL	3362 - 10
3G21	VALVE, CONTROL	3362 - 12
3G23	VALVE, CONTROL	3362 - 14
3H1	VALVE, CONTROL	3362 - 16
3E17	VALVE, CONTROL, SUPER LONG FRONT	3360 - 5A
1D12	VALVE, ENGINE OIL BY-PASS	0404 - 2
1D20	VALVE, ENGINE OIL DRAIN	0407 - 5
1D22	VALVE, EXHAUST	0409 - 2
1D22	VALVE, INTAKE	0409 - 2
3H3	VALVE, LOCK	3362 - 18
3F5	VALVE, MECHANICAL PATTERN CHANGER	3360 - 15A
1D12	VALVE, OIL PRESSURE REGULATING	0404 - 2
3D6	VALVE, PILOT	3315 - 2
3J3	VALVE, PUMP FILTER)	3363 - 24
3G11	VALVE, RELIEF	3362 - 2
1C13	VALVE, RELIEF, PROPEL MOTOR BRAKE (S.N. -071231)	0260 - 16
1C15	VALVE, RELIEF, PROPEL MOTOR CROSSOVER COMPONENTS (S.N.071232-)	0260 - 17A
3H5	VALVE, SELECTOR	3362 - 20
3F21	VALVE, SHUT-OFF (AUXILIARY HYDRAULIC OPTIONAL RETURN)	3360 - 85A
3L16	VALVE, SLOW RETURN, SUPER LONG FRONT	4360 - 6
3H11	VALVE, SOLENOID	3362 - 24
3H7	VALVE, SOLENOID (SERIAL NO. -071103)	3362 - 22
3H9	VALVE, SOLENOID (SERIAL NO. 071104-)	3362 - 23A
3F3	VALVE, SOLENOID (CONTROL PATTERN SELECTOR KIT)	3360 - 14
3H23	VALVES, PILOT SIGNAL MANIFOLD	3362 - 34
2C15	VANDAL COVER KIT	1810 - 36
2C15	VANDAL GUARD KIT	1810 - 36
2C15	VANDAL PROTECTION	1810 - 36
1H10	VEHICLE CONTROLLER	1674 - 6
2E21	VENTED MACHINE DOORS	1910 - 30

W

1E6	WATER PUMP	0417 - 3
1E6	WATER PUMP HOUSING	0417 - 3
1E6	WATER PUMP IMPELLER	0417 - 3
1E5	WATER PUMP INLET	0417 - 2
1E5	WATER PUMP PULLEY	0417 - 2
1E6	WATER PUMP REPAIR KIT	0417 - 3
1G13	WATER SEPARATOR	0560 - 6
3C7	WEAR BAR, DITCH CLEANING BUCKET	3302 - 16
3B19	WEAR BAR, SEVERE DUTY CAST LIP BUCKET	3302 - 6
3B21	WEAR BAR, SEVERE DUTY PLATE LIP BUCKET	3302 - 8
3B11	WEAR BARS, GENERAL PURPOSE BUCKET	3302 - 2
3B13	WEAR BARS, GENERAL PURPOSE BUCKET	3302 - 3A
3B23	WEAR BARS, HEAVY DUTY BUCKET	3302 - 10
3C1	WEAR BARS, HEAVY DUTY BUCKET	3302 - 11A
3C3	WEAR BARS, HEAVY DUTY BUCKET	3302 - 12
3B15	WEAR BARS, HEAVY DUTY HIGH CAPACITY BUCKET	3302 - 4
3B17	WEAR BARS, HEAVY DUTY HIGH CAPACITY BUCKET	3302 - 5A
2E13	WEATHER STRIP	1910 - 22

ALPHABETICAL INDEX - CONTINUED

GRID		PAGE
2B14	WEATHER STRIP, CAB WINDSHIELD	1810 - 12
2B12	WEATHERSTRIP, CAB DOOR	1810 - 10
2B18	WEATHERSTRIP, CAB TOP HATCH	1810 - 16
2B12	WINDOW GLASS, CAB DOOR	1810 - 10
2C15	WINDOW GUARDS	1810 - 36
2B10	WINDOW SEALS, CAB	1810 - 8
2C5	WINDOW WASHER RESERVOIR	1810 - 26
2B8	WINDSHIELD WASHER HOSE	1810 - 6
2B8	WINDSHIELD WASHER NOZZLE	1810 - 6
2C5	WINDSHIELD WASHER RESERVOIR PUMP	1810 - 26
2B14	WINDSHIELD, CAB	1810 - 12
2B8	WIPER ARMS, CAB	1810 - 6
2B8	WIPER BLADES, CAB	1810 - 6
2B8	WIPER MOTORS, CAB	1810 - 6
2D1	WIRE HARNESS, AIR CONDITIONER	1830 - 2
1H6	WIRE HARNESS, BOOM LIGHT	1674 - 2
2D15	WIRE HARNESS, CIGAR LIGHTER	1830 - 14
2B8	WIRE HARNESS, DOME LIGHT	1810 - 6
3E21	WIRE HARNESS, FOOT SWITCH	3360 - 8
2F6	WIRE HARNESS, HORN	2004 - 2
1H16	WIRE HARNESS, MONITOR	1674 - 8
2F8	WIRE HARNESS, MOTION ALARM	2004 - 4
2F2	WIRE HARNESS, RADIO	2001 - 2
2B8	WIRE HARNESS, RADIO SPEAKER	1810 - 6
1I3	WIRE HARNESS, SUPER LONG FRONT	1674 - 20
1H10	WIRING HARNESS, CAB	1674 - 6
1H24	WIRING HARNESS, ENGINE	1674 - 16
1H22	WIRING HARNESS, ENGINE CONTROL UNIT	1674 - 14
1E16	WIRING HARNESS, FUEL TRANSFER PUMP	0421 - 4
1H6	WORK LIGHT	1674 - 2

Y

1B7	YOKE, TRACK CHAIN, ADJUSTER	0130 - 12
1B9	YOKE, TRACK CHAIN, ADJUSTER (REPLACEMENT)	0130 - 13A

TRACK FRAME

T147846 -UN-07JAN02

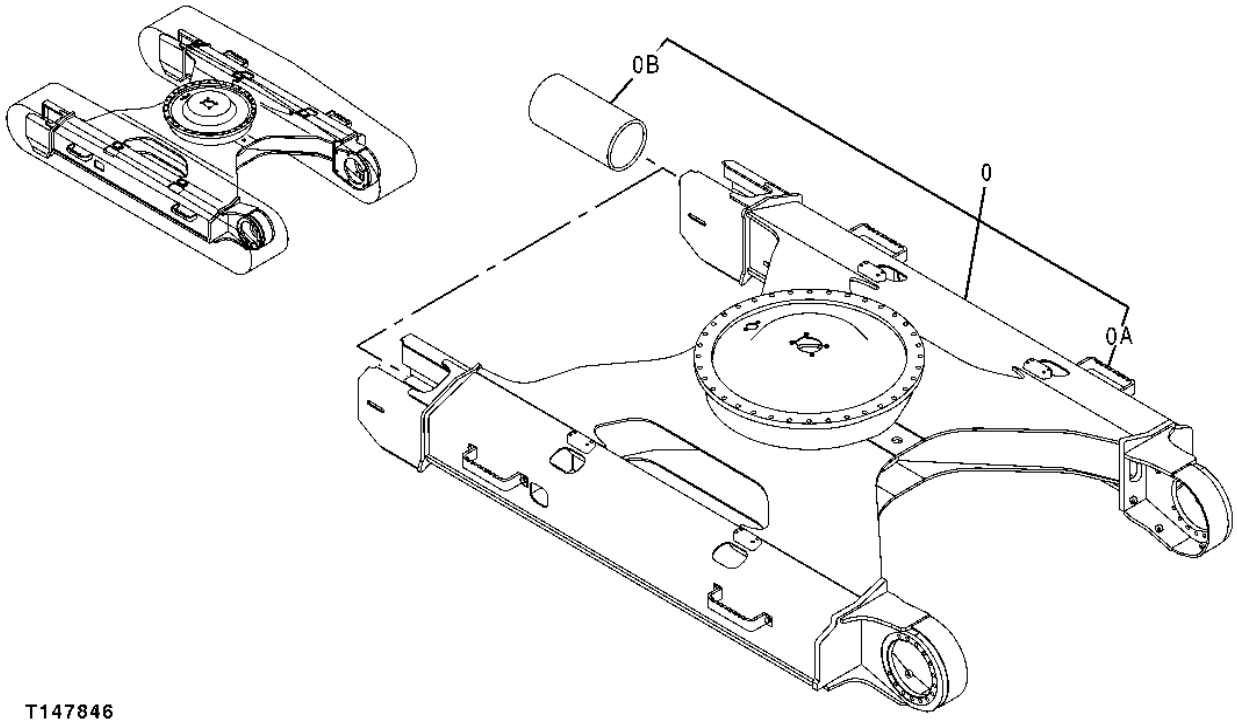

T147846

TRACK FRAME

KEY	PART NO.	PART NAME	QTY	SERIAL NO.	REMARKS
0	TH5007618	FRAME	1		
0A	4339137	BRACKET	4		(SUB FOR AT192124)
0B	4379845	PIPE	2		

TRACK GUARD

T147847 -UN-03DEC01

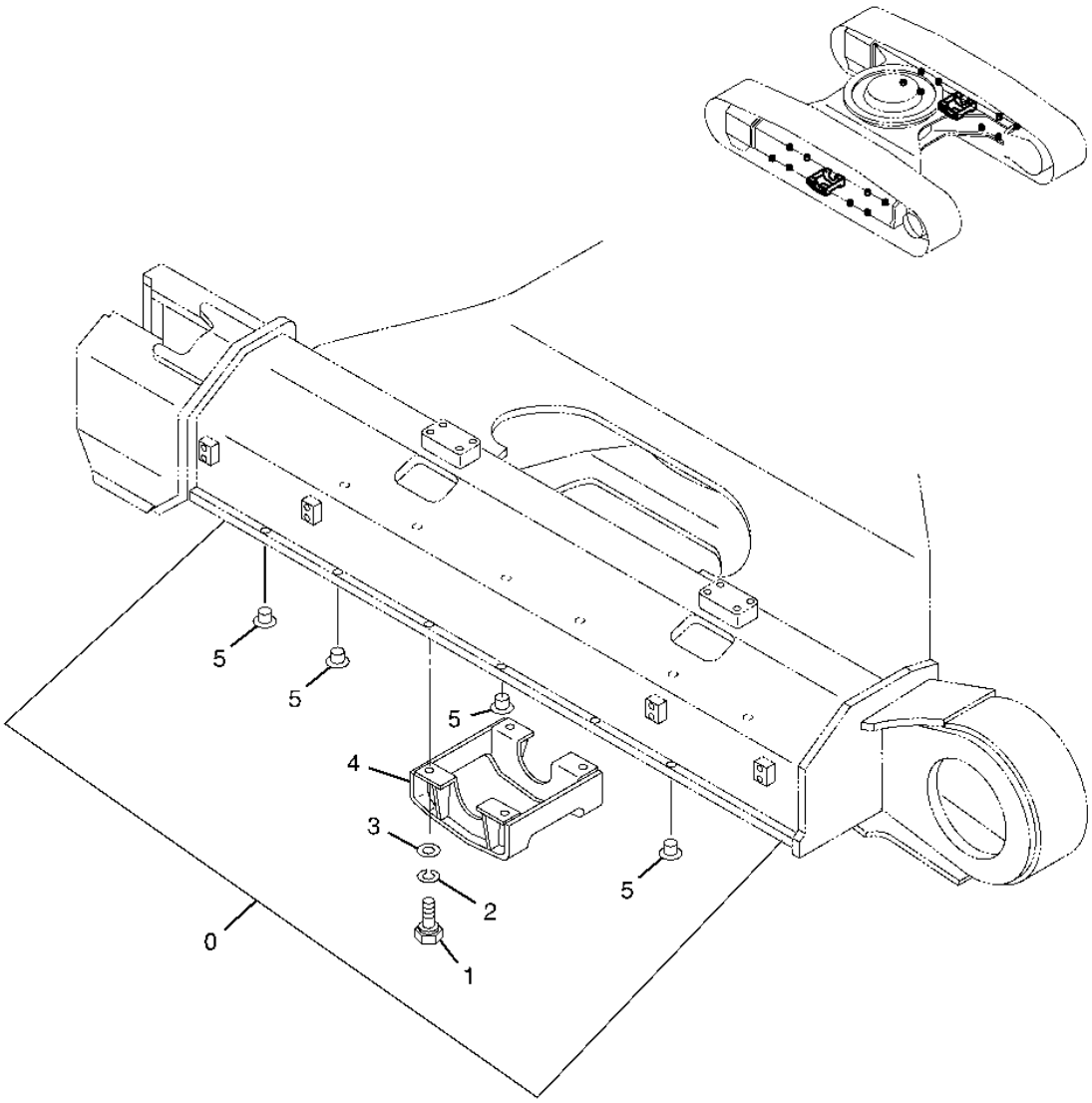

T147847

TRACK GUARD

KEY	PART NO.	PART NAME	QTY	SERIAL NO.	REMARKS
0	.....	FRAME	2		
1	19M7597	CAP SCREW	4		M20 X 50
2	12M7070	LOCK WASHER	4		20 MM
3	N231749	WASHER	4		
4	AT310427	BRACKET	1		(SUB FOR AT201128, 8049578)
5	99M7010	PLUG	8		

STEP

T147848 -UN-03DEC01

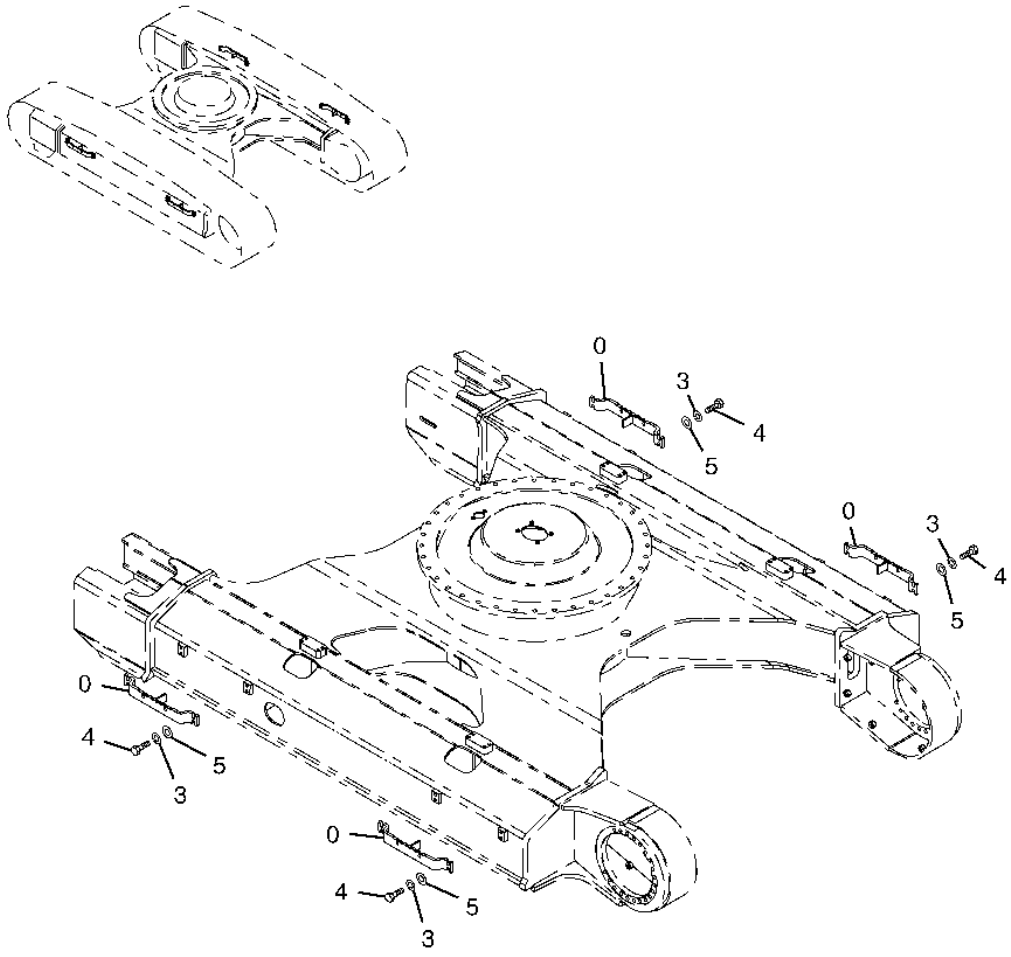

T147848

STEP

KEY	PART NO.	PART NAME	QTY	SERIAL NO.	REMARKS
0	9757149	STEP	4		
3	12H294	LOCK WASHER	16		5/8"
4	19M7489	CAP SCREW	16		M16 X 45
5	24M7338	WASHER	16		17 X 30 X 3 MM

TRACK BOTTOM COVER

T147849 -UN-03DEC01

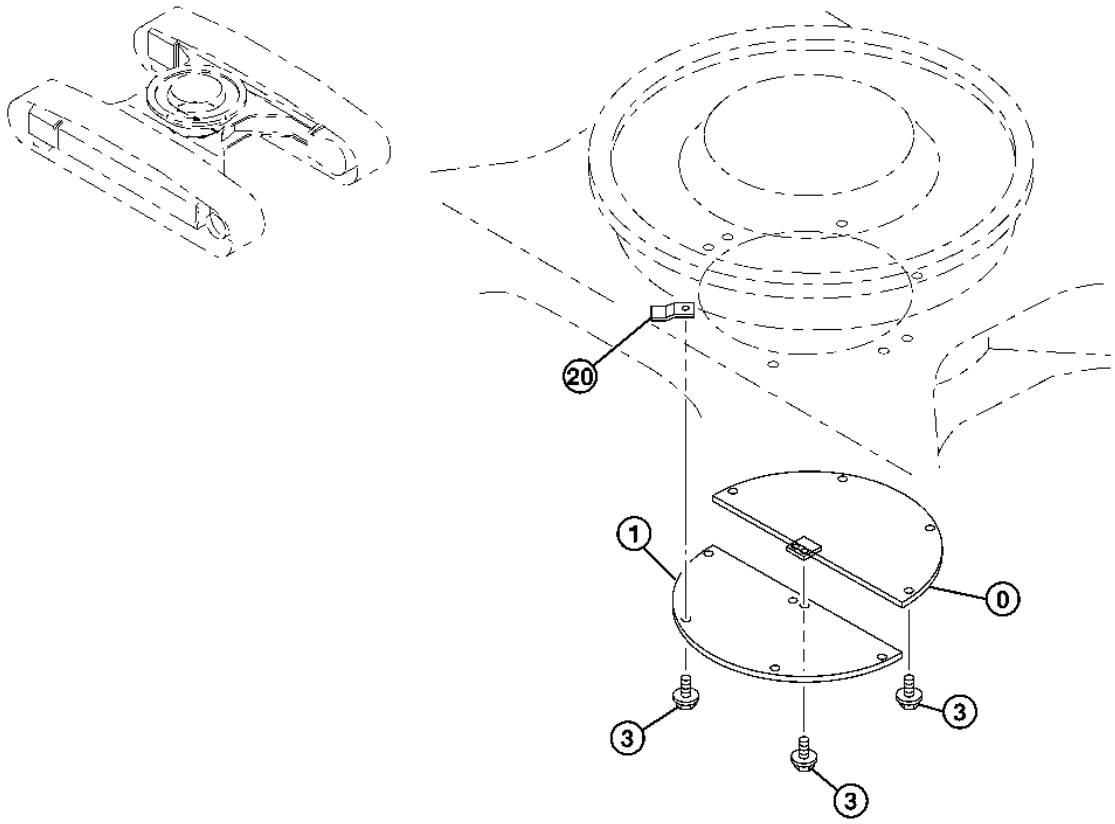

T147849

TRACK BOTTOM COVER

KEY	PART NO.	PART NAME	QTY	SERIAL NO.	REMARKS
0	9738383	COVER	1		(SUB FOR AT250448)
1	9738384	COVER	1		(SUB FOR AT250449)
3	19M8011	CAP SCREW	10		M12 X 30
	24M7047	WASHER	10		13 X 24 X 2.500 MM
20	.....	BRACKET	1		

FRONT IDLER

T153909 -UN-16APR02

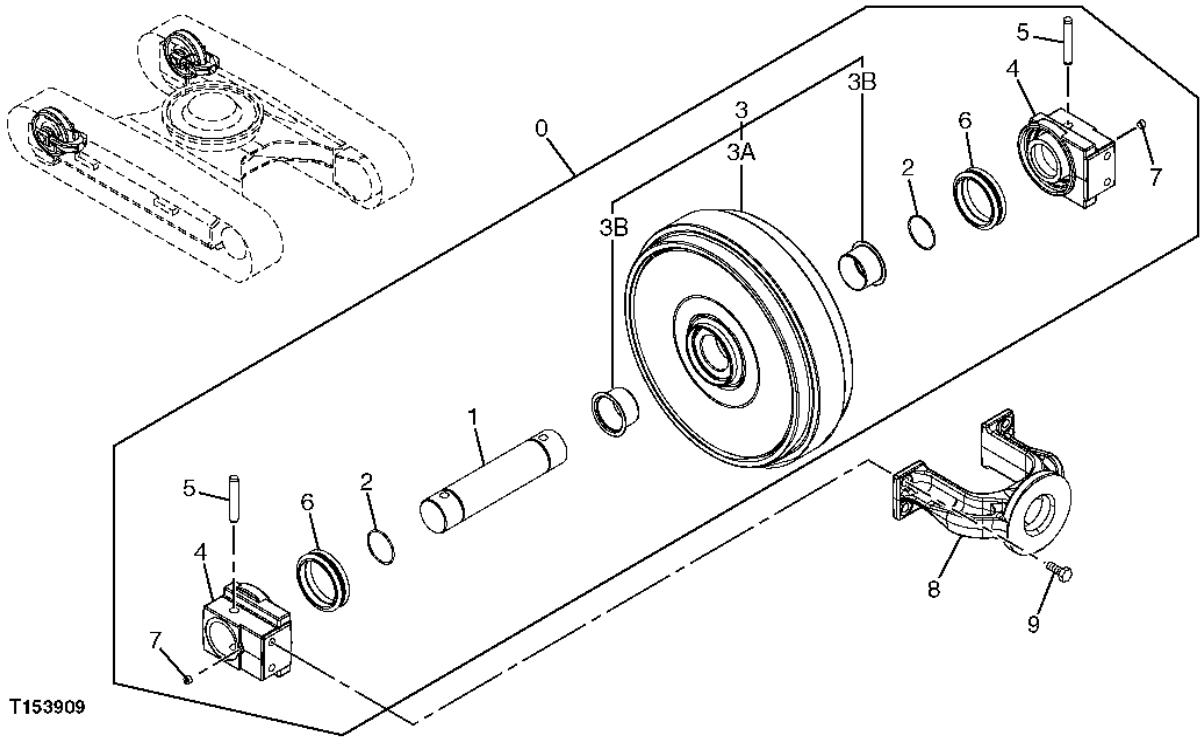

FRONT IDLER

KEY	PART NO.	PART NAME	QTY	SERIAL NO.	REMARKS
0	AT314422	TRACK IDLER	2		(INCLUDES T210839) (SUB FOR AT250450 OR 9154690)
1	T210832	SHAFT	1		(SUB FOR AT219619 OR 3077237)
2	T210833	O-RING	2		(SUB FOR CH11573)
3	T210834	ROLLER	1		(INCLUDES T210836) (SUB FOR AT250250 OR 9154691)
3A	.....	IDLER	1		(TH6016131 NOT AVAILABLE FOR SERVICE)
3B	T210836	BUSHING	2		(SUB FOR AT179610 OR 3075766)
4	T210831	BRACKET	2		(SUB FOR AT219584 OR 1023376)
5	4138084	PIN	2		(SUB FOR TH103124)
6	T210838	SEAL	2		(SUB FOR TH111283)
7	AT180007	FITTING PLUG	2		(SUB FOR 4478084)
8	T210839	YOKE	2		(SUB FOR AT219585 OR 1023479)
9	19M7488	CAP SCREW	8		M16 X 40

ADJUSTER (SN -702000)

T147853 -UN-07JAN02

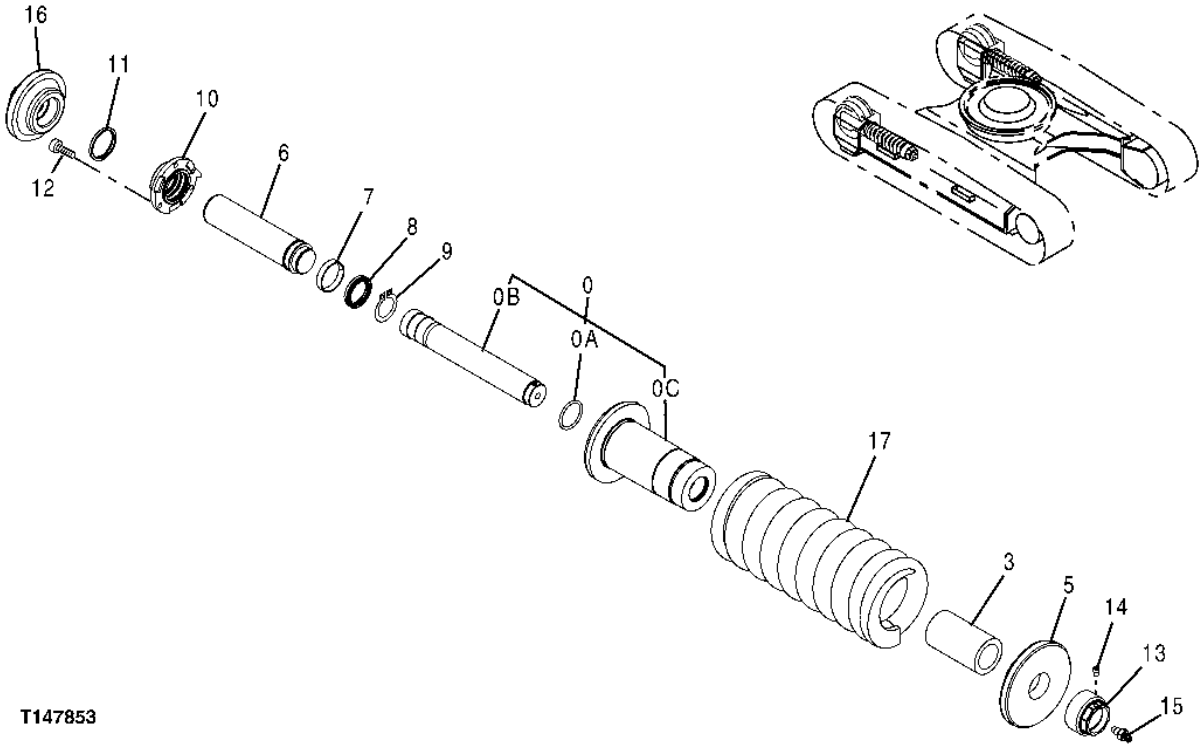

ADJUSTER (SN -702000)

KEY	PART NO.	PART NAME	QTY	SERIAL NO.	REMARKS
0	9159015	ADJUSTER	2		(COMPLETE TRACK ADJUSTER)
0A	FFSB112111	O-RING	1		(SUB FOR AT217955 OR 4619607)
0B	4619608	ROD	1		(SUB FOR AT219627)
0C	2040778	HYDRAULIC CYLINDER BARREL	1		(SUB FOR AT219599)
3	4619609	SPACER	1		(SUB FOR AT250037)
5	4619610	WASHER	1		(SUB FOR AT219629)
6	4619611	ROD	1		(SUB FOR AT219600)
7	TH111224	WEAR RING	1		
8	AT152109	SEAL	1		(SUB FOR TH103137 OR 4619612)
9	40M7065	SNAP RING	1		
10	3053246	FLANGE	1		(SUB FOR AT200975)
11	T139457	SEAL	1		(SUB FOR 4619613)
12	M341022	SCREW	4		(SUB FOR TH105695)
13	4619615	NUT	1		(SUB FOR AT217950)
14	4619604	PLUG	1		(SUB FOR AT154185)
15	AT280814	PACKAGE OF PARTS	1		(SUB FOR AT154223 OR 4619605)
16	4619614	HOLDER	1		(SUB FOR AT219630)
17	3098287	SPRING	1		(SUB FOR AT219628, 3078696)

ADJUSTER (SN 702001-)

T202997 -UN-10SEP04

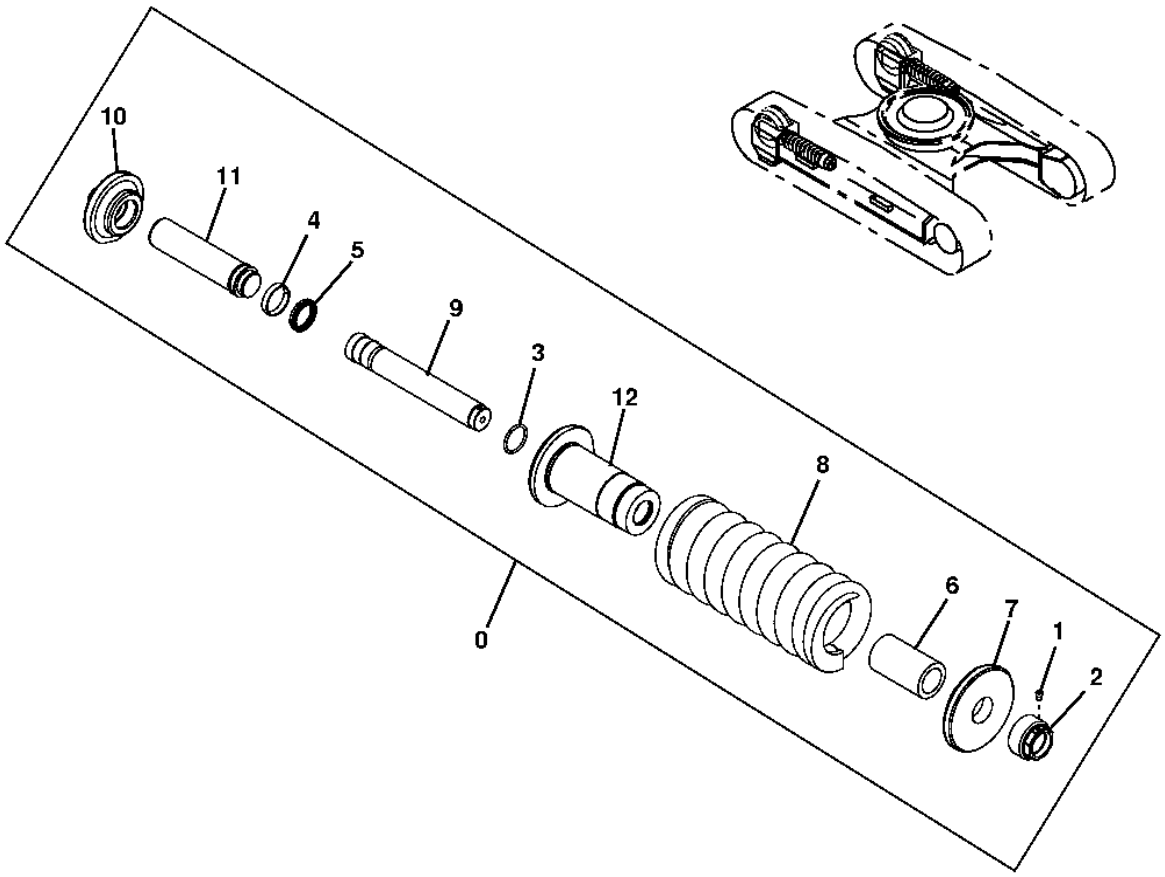

T202997

ADJUSTER (SN 702001-)

KEY	PART NO.	PART NAME	QTY	SERIAL NO.	REMARKS
0	AT315230	ADJUSTER	1		(COMPLETE ASSEMBLY)
1	AT180047	FITTING PLUG	1		
2	FFSB112112	NUT	1		
3	FFSB112111	O-RING	1		
4	T139457	SEAL	1		
5	AT152109	SEAL	1		
6	FFSB112108	SPACER	1		
7	FFSB112107	FLANGE	1		
8	T211395	COMPRESSION SPRING	1		
9	FFSB112105	ROD	1		
10	FFSB112104	HOLDER	1		
11	FFSB112103	PISTON	1		
12	FFSB112102	CYLINDER	4		

UPPER ROLLER

T147854 -UN-02JAN02

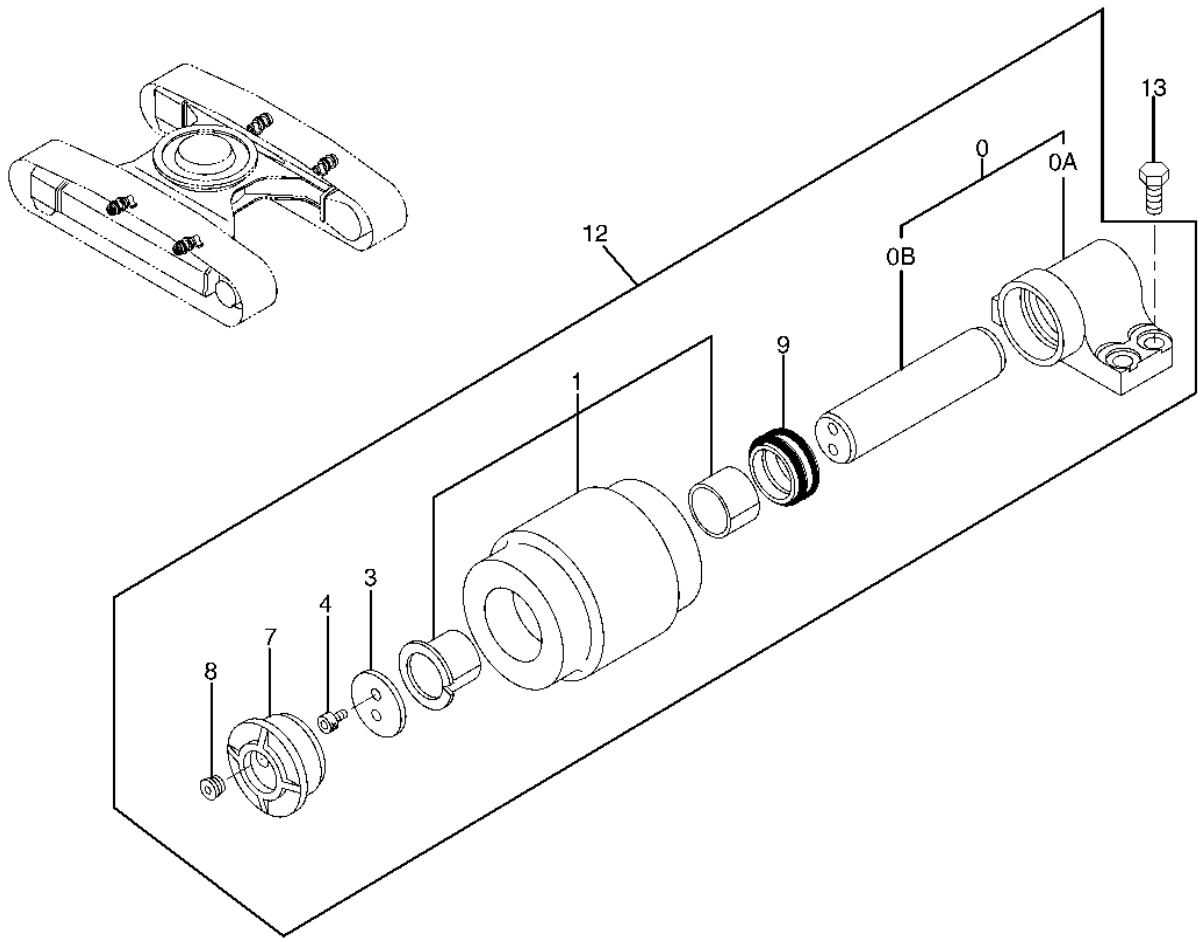

T147854

UPPER ROLLER

KEY	PART NO.	PART NAME	QTY	SERIAL NO.	REMARKS
0	9141304	SHAFT	1		
0A	.....	BRACKET	1		
0B	.....	SHAFT	1		
1	.....	ROLLER	1		(9191062 NO LONGER AVAILABLE)
	T210828	BUSHING	1		(ROLLER BUSHING) (ROLLER NOT INCLUDED)
3	T210827	THRUST WASHER	1		(SUB FOR AT131375 OR 4282842)
4	AT180006	SCREW	2		(SUB FOR AT131372 OR M351018)
7	.....	COVER	1		(SUB FOR AT213764) (3070078 NOT AVAILABLE FOR SERVICE)
8	AT180007	FITTING PLUG	1		(SUB FOR TH100434) (94-2011 NOT USED THIS APPLICATION)
9	AT180008	SEAL	1		(SUB FOR AT213828 OR 4317584)
12	AT314420	CARRIER ROLLER	4		(SUB FOR 9191054 OR 4S00520)
13	19M7488	CAP SCREW	4		M16 X 40

LOWER ROLLER

T197104 -UN-07JAN04

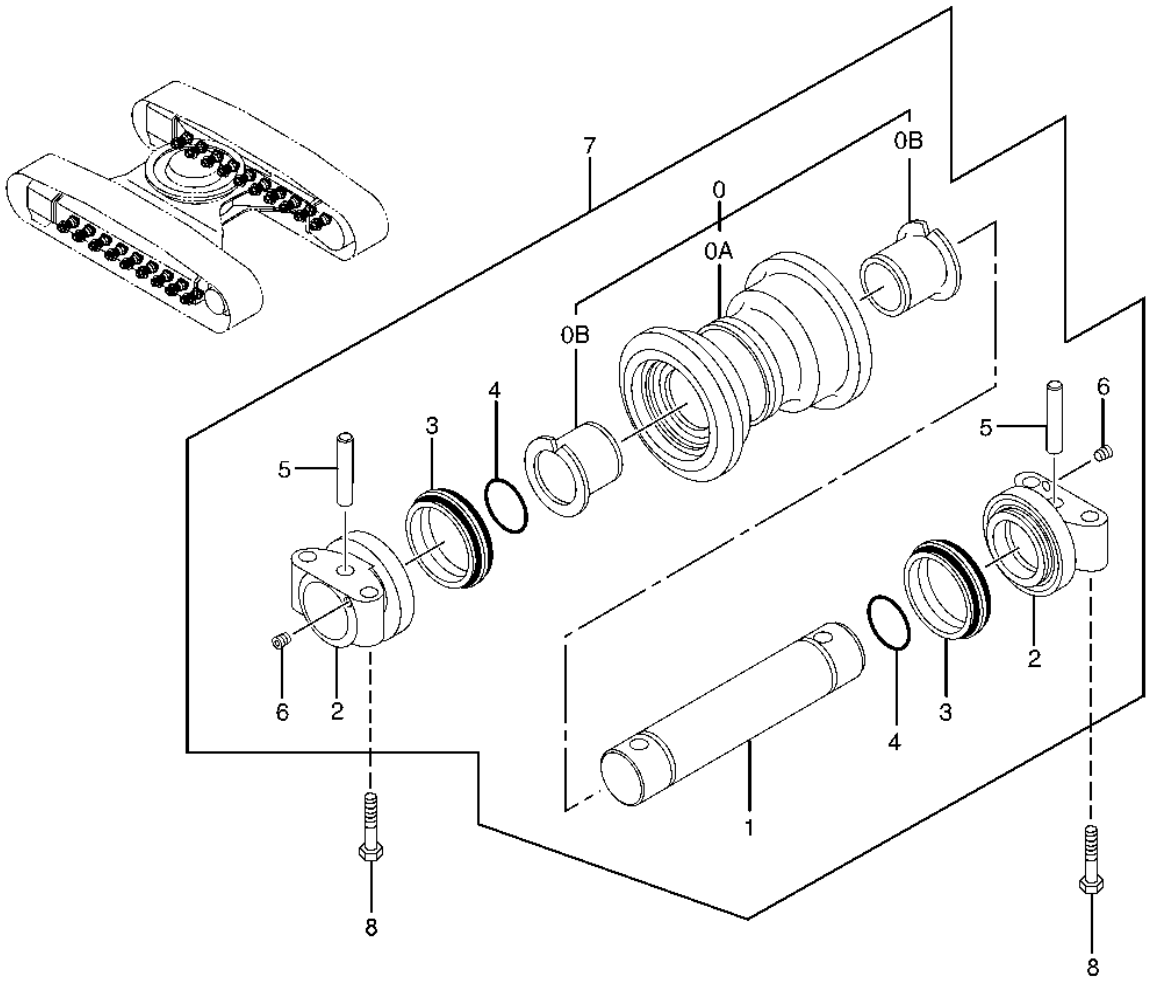

LOWER ROLLER

KEY	PART NO.	PART NAME	QTY	SERIAL NO.	REMARKS
0	9168173	ROLLER	18		(SUB FOR AT250257)
0A	.....	ROLLER	1		(7031044 NOT AVAILABLE FOR SERVICE)
0B	T210829	BUSHING	2		(SUB FOR AT184357 OR 3081250)
1	.....	SHAFT	1		(TH103157 NOT AVAILABLE FOR SERVICE)
2	.....	BRACKET	2		(TH111110 NOT AVAILABLE FOR SERVICE)
3	AT180017	SEAL	2		(SUB FOR TH100433)
4	AT180019	O-RING	2		(TH100433 NOT USED FOR THIS APPLICATION)
5	AT180007	FITTING PLUG	2		(SUB FOR TH103158 OR 4137684)
6	T210830	PIN	2		(SUB FOR 4478084)
7	AT314421	BOTTOM ROLLER	18		(SUB FOR AT250257 OR 9168173)
8	19M7963	CAP SCREW	64		

TRACK CHAIN AND SHOES (SN -702000)

T153910 -UN-16APR02

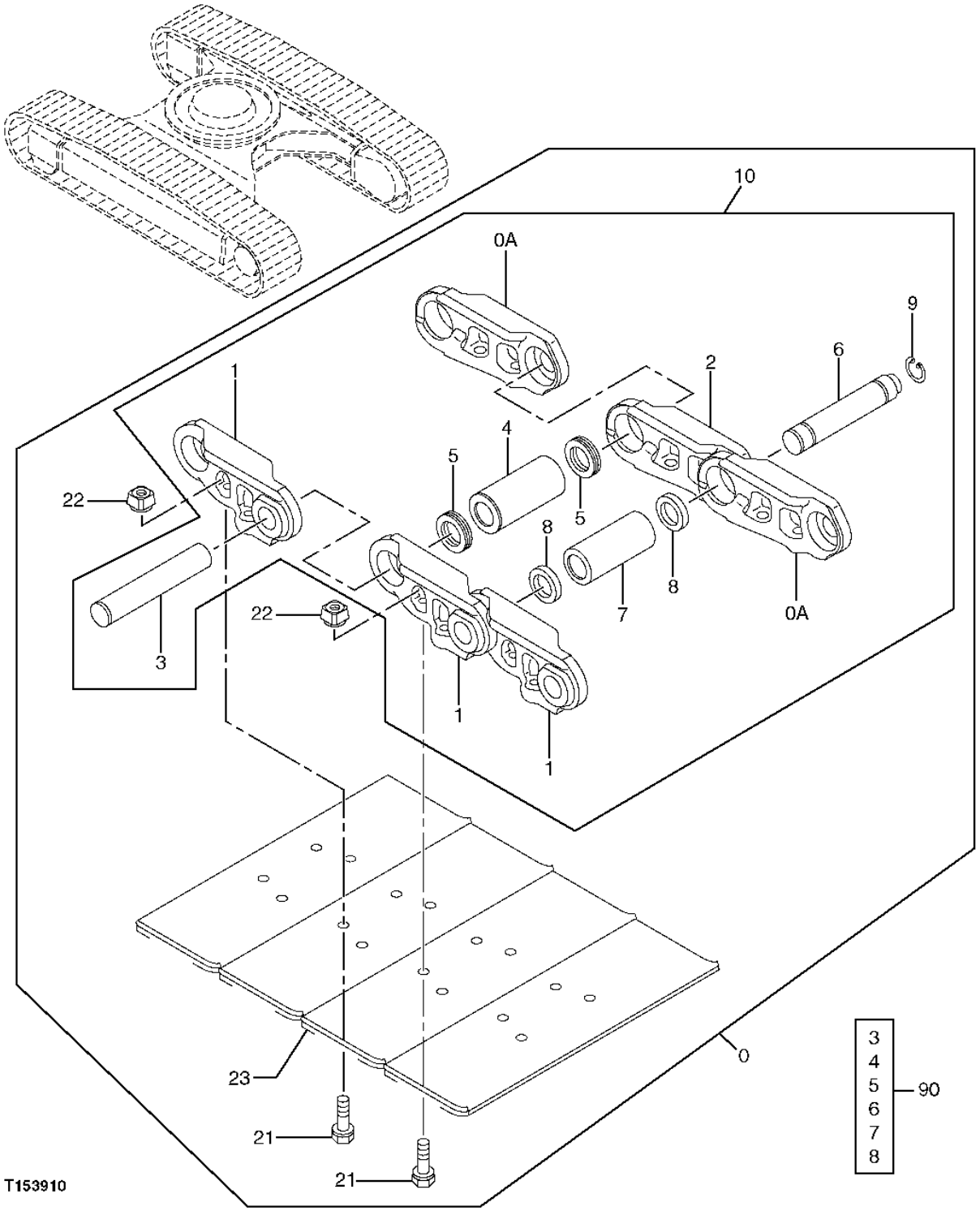

TRACK CHAIN AND SHOES (SN -702000)

KEY	PART NO.	PART NAME	QTY	SERIAL NO.	REMARKS
0	TH9167839	TRACK ASSEMBLY WITH SHOES	2		(600G) (OTHER TRACK CHAIN ASSEMBLIES MAY BE ORDERED FROM SN 702001-)
0A	.....	LINK	47		(SUB FOR AT219498 OR 0002690) (0004076 NO LONGER AVAILABLE)
1	.....	LINK	48		(SUB FOR AT219499 OR 0002691) (0004077 NO LONGER AVAILABLE)
2	.....	TRACK LINK	1		(SUB FOR AT250017 OR 4378890) (4456824 NOT AVAILABLE FOR SERVICE)
3	FFSB112368	PIN FASTENER	47		(K) (SUB FOR AT250018 OR 4378891)
4	T210808	TRACK BUSHING	47		(K) (SUB FOR 3077928) (SUB FOR AT219620)
5	FFSB112367	SEAL	94		(K) (SUB FOR 4378892) (SUB FOR AT250019)
6	T210811	MASTER TRACK PIN	1		(K) (SUB FOR 3077929) (SUB FOR AT219621)
7	T210809	MASTER TRACK BUSHING	1		(K) (SUB FOR 3077930) (SUB FOR AT219622)
8	FFSB112370	SPACER	2		(K) (SUB FOR 4378893) (SUB FOR AT250020)
9	T210813	SNAP RING	1		(SUB FOR TH111227)
10	9202852	TRACK LINK	1		(TRACK CHAIN W/O SHOES) (SUB FOR AT250256 OR 9167840)
21	T210807	TRACK BOLT	192		(SUB FOR AT219650, 3081343 OR 3095745)
22	T210814	NUT	192		(SUB FOR AT219651 OR 3081344)
23	2040403	OPEN CENTER 3 BAR SHOE	48		(SUB FOR AT219594) (600G)
	FFSB108844	TRIPLE BAR SHOE	48		(SUB FOR AT219606 OR 2042033) (800G)
90	AT187186	PIN & BUSHING KIT	1		(INCLUDES PARTS MARKED (K))

TRACK CHAIN AND SHOES (SN 702001-)

T200424 -UN-28MAY04

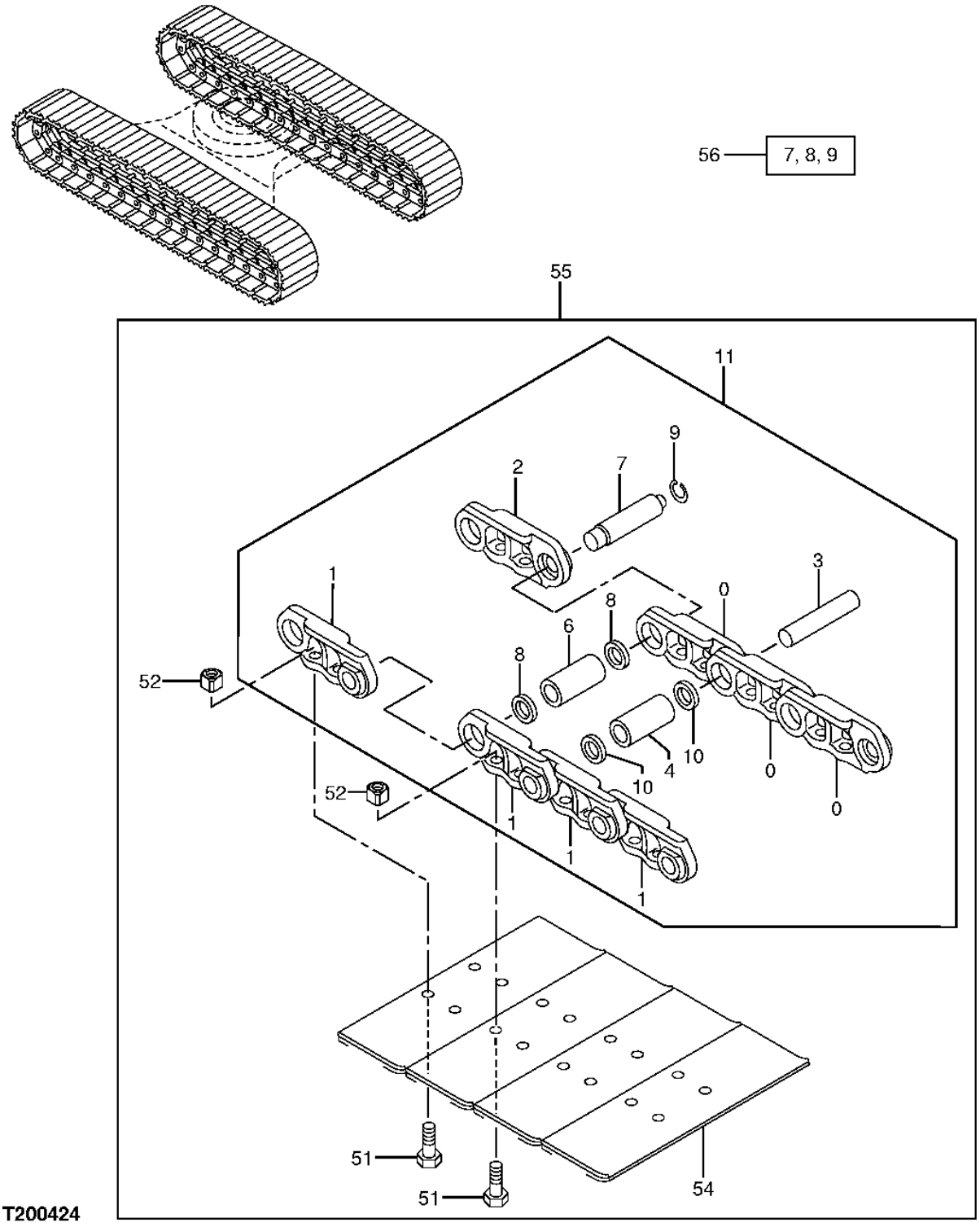

T200424

TRACK CHAIN AND SHOES (SN 702001-)

KEY	PART NO.	PART NAME	QTY	SERIAL NO.	REMARKS
0	T210798	TRACK LINK	47		(RIGHT LINK)
1	T210799	TRACK LINK	48		(LEFT LINK)
2	T210806	MASTER TRACK LINK-RH	1		
3	FFSB112368	PIN FASTENER	47		
4	T210808	TRACK BUSHING	47		
6	T210809	MASTER TRACK BUSHING	1		
7	T210811	MASTER TRACK PIN	1		
8	FFSB112370	SPACER	2		(SUB FOR 4378893)
9	T210813	SNAP RING	1		
10	FFSB112367	SEAL	94		(SUB FOR 4378892)
11	AT314410	TRACK CHAIN W/O SHOES	2		(QUANTITY OF 1 EACH SIDE OF UNIT)
51	T210807	TRACK BOLT	192		
52	T210814	NUT	192		
54	T210815	TRIPLE BAR SHOE	48		(600MM TRIPLE BAR SHOE)
	T210816	TRIPLE BAR SHOE	48		(700MM TRIPLE BAR SHOE)
	FFSB108844	TRIPLE BAR SHOE	48		(800MM TRIPLE BAR SHOE)
	T210817	TRIPLE BAR SHOE	48		(900MM TRIPLE BAR SHOE)
55	AT314416	TRACK ASSEMBLY WITH SHOES	2		(600MM TRIPLE BAR SHOE TRACK ASSEMBLY) (QUANTITY OF 1 EACH SIDE OF UNIT)
	AT314417	TRACK ASSEMBLY WITH SHOES	2		(700MM TRIPLE BAR SHOE TRACK ASSEMBLY) (QUANTITY OF 1 EACH SIDE OF UNIT)
	AT314418	TRACK ASSEMBLY WITH SHOES	2		(800MM TRIPLE BAR SHOE TRACK ASSEMBLY) (QUANTITY OF 1 EACH SIDE OF UNIT)
	AT314419	TRACK ASSEMBLY WITH SHOES	2		(900MM TRIPLE BAR SHOE TRACK ASSEMBLY) (QUANTITY OF 1 EACH SIDE OF UNIT)
56	AT314577	KIT	2		(INCLUDES T210811, FFSB112370 AND T210813) (MASTER PIN KIT)

CENTER JOINT COVER AND STOP

T143225 -UN-28JUN01

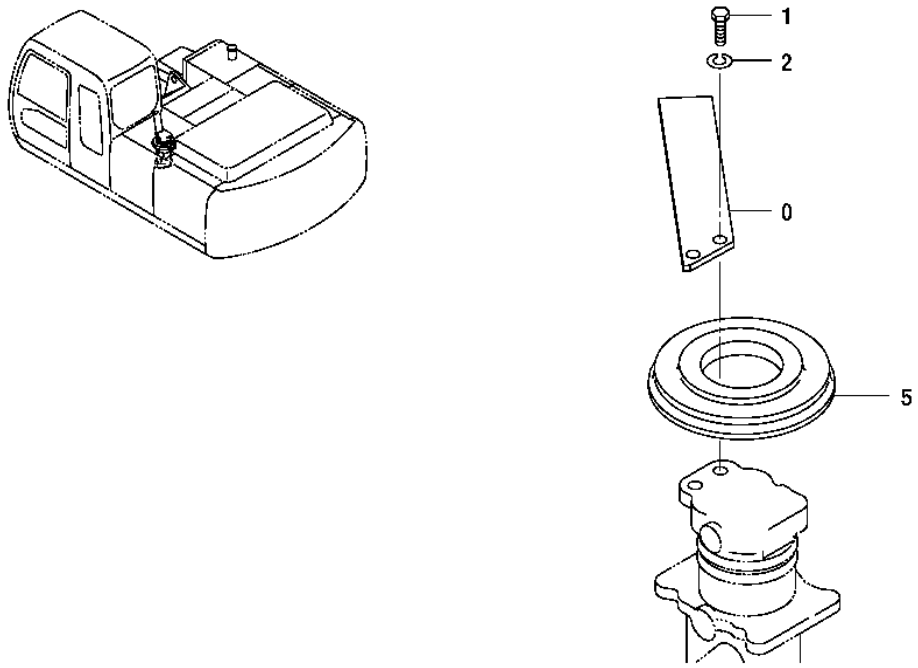

T143225

CENTER JOINT COVER AND STOP

KEY	PART NO.	PART NAME	QTY	SERIAL NO.	REMARKS
0	4274282	STOP	1		(SUB FOR AT155305)
1	19M6332	CAP SCREW	2		M14 X 35
2	12H317	LOCK WASHER	2		14.288 MM (9/16")
5	4428007	COVER	1		

TRAVEL DEVICE SUPPORT

T143310 -UN-28JUN01

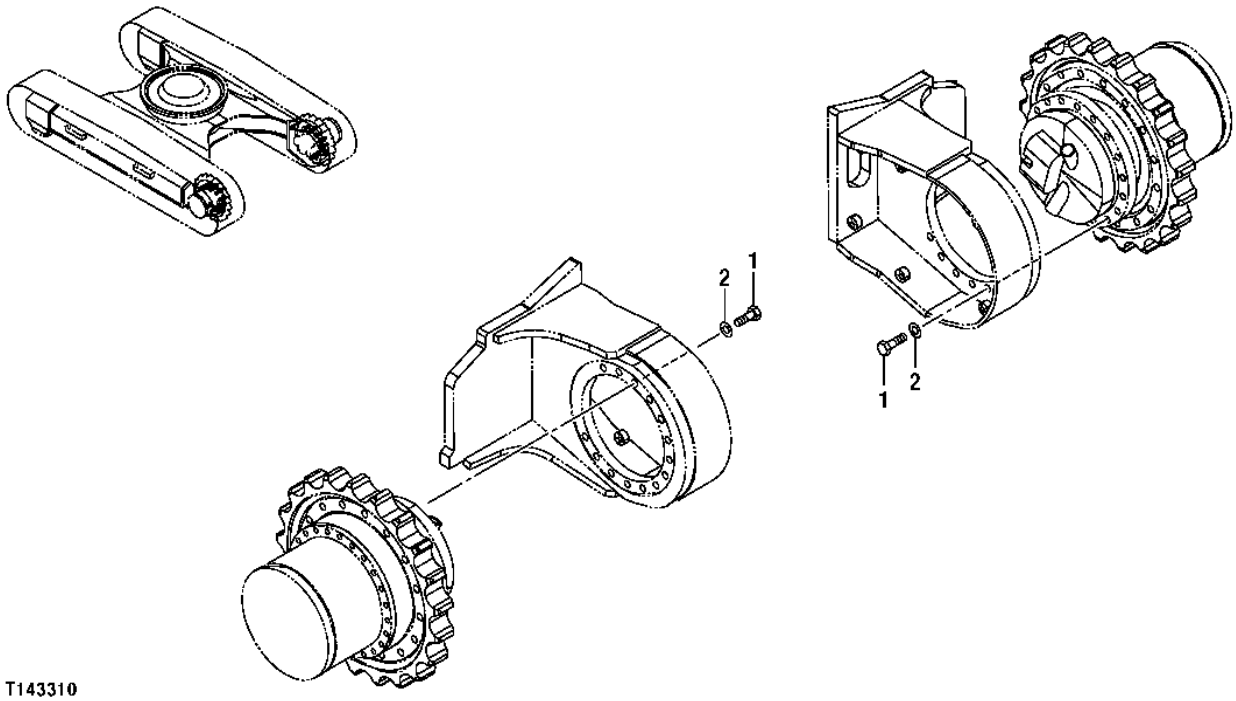

TRAVEL DEVICE SUPPORT

KEY	PART NO.	PART NAME	QTY	SERIAL NO.	REMARKS
1	4378639	SCREW	40		(SUB FOR AT250016)
2	N231749	WASHER	40		

ROTARY MANIFOLD

T162720 -UN-11DEC02

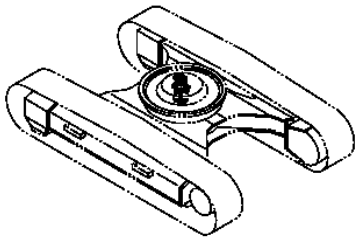

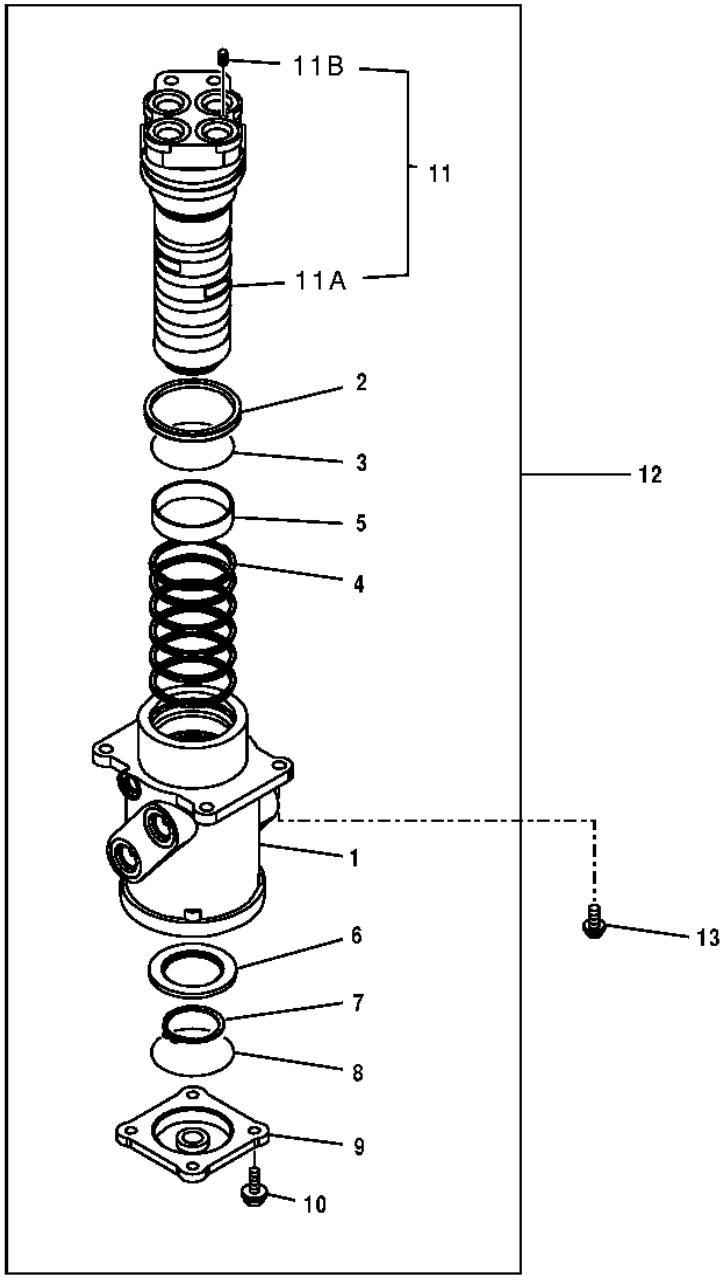

T162720

ROTARY MANIFOLD

KEY	PART NO.	PART NAME	QTY	SERIAL NO.	REMARKS
1	.....	HOUSING	1		(0003542 NOT AVAILABLE FOR SERVICE)
2	AT154321	SEAL	1		
3	AT264418	O-RING	1		(SUB FOR 4367664)
4	AT154162	SEAL	6		(SUB FOR 4231543)
5	4241780	BUSHING	1		
6	3070250	RING	1		
7	40M7048	SNAP RING	1		(SUB FOR 991347)
8	CH16109	PACKING	1		(SUB FOR A810100)
9	2034607	COVER	1		
10	19M7662	CAP SCREW	4		(SUB FOR J011030)
11	9145787	SPINDLE	1		
11A	.....	SPINDLE	1		(0001193 NOT AVAILABLE)
11B	4239611	PLUG	1		
12	9107265EX	MANIFOLD	1		(SUB FOR 9101521)
13	19M7403	CAP SCREW	4		(SUB FOR J011235)
	12H301	LOCK WASHER	4		

PROPEL GEAR BOX

T197815 -UN-10FEB04

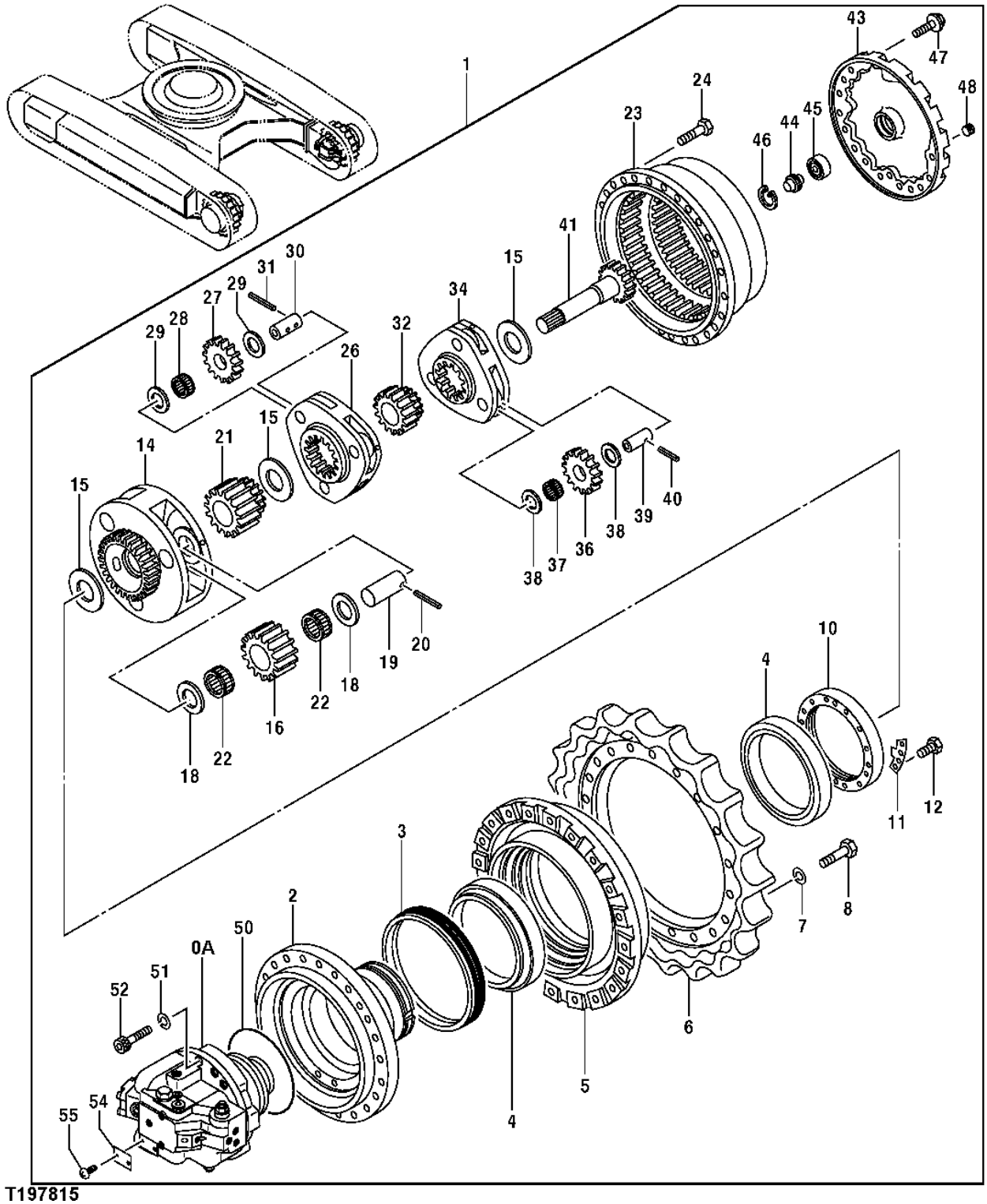

T197815

PROPEL GEAR BOX

KEY	PART NO.	PART NAME	QTY	SERIAL NO.	REMARKS
0A	9156041EX	HYDRAULIC MOTOR	1	-071231	(REMANUFACTURED)
	9231672	MOTOR	1	071232-701999	(HYDRAULIC)
	9156041EX	HYDRAULIC MOTOR	1	701200-	
1	TH9185360	HYDRAULIC MOTOR	2	-071231	AND GEAR BOX
	.....	MOTOR	2	071232-701999	(9232359 NO LONGER AVAILABLE) HYDRAULIC MOTOR AND GEAR BOX
	TH9185360	HYDRAULIC MOTOR	2	701200-	AND GEAR BOX
2	1022194	HOUSING	1	-071231	(SUB FOR AT219575)
3	TH102282	SEAL	1		
4	TH111245	TAPERED ROLLER BEARING	2		
5	1022179	HOUSING	1		(SUB FOR AT219574)
6	AT314423	CHAIN SPROCKET	1		(SUB FOR AT219573 OR 1022179)
7	12M7070	LOCK WASHER	20		20 MM
8	19M8224	CAP SCREW	20		M20 X 60
10	3036256	NUT	1	-071231	(SUB FOR TH111143)
	3094717	NUT	1	071232-	
11	4192974	LOCK PLATE	1	-071231	(SUB FOR TH111244)
	4470326	LOCK PLATE	1	071232-	
12	19M7872	CAP SCREW	2		M12 X 25
14	1022198	PLANET PINION CARRIER	1		(SUB FOR AT219579)
15	4401293	SPACER	3		(SUB FOR TH4401293)
16	3075003	GEAR	3		(SUB FOR AT219613)
18	4269470	THRUST WASHER	6		(SUB FOR AT202590)
19	4269452	PIN	3		(SUB FOR AT202591)
20	4192021	SPRING PIN	3		(SUB FOR TH111240)
21	3075005	SUN GEAR	1		(SUB FOR AT219614)
22	4455088	NEEDLE BEARING	6		(SUB FOR TH4455088)
23	1022195	RING GEAR	1		(SUB FOR AT219576)
24	19M7488	CAP SCREW	28		M16 X 40
26	1022197	PLANET PINION CARRIER	1		(SUB FOR AT219578)
27	3075002	GEAR	3		(SUB FOR AT219612)
28	4455099	NEEDLE BEARING	3		(SUB FOR TH4455099)
29	4284521	SHIM	6		(SUB FOR AT204941)
30	4269451	PIN	3		(SUB FOR AT202597)
31	34M7119	SPRING PIN	3		5 X 65 MM
32	3074989	SUN GEAR	1		(SUB FOR AT219610)
34	1022196	PLANET PINION CARRIER	1		(SUB FOR AT219577)
36	3075001	GEAR	3		(SUB FOR AT219611)
37	4455098	NEEDLE BEARING	3		(SUB FOR TH4455098)
38	4284520	SHIM	6		(SUB FOR AT204729)
39	4269472	PIN	3		(SUB FOR AT204730)
40	4192020	SPRING PIN	3		(SUB FOR TH111239)
41	2038915	PINION SHAFT	1	-071231	(SUB FOR AT219592)
	2048000	UNIVERSAL DRIVESHAFT	1	071232-	
43	2045031	COVER	1		(SUB FOR TH2045031)
44	4278011	PIN FASTENER	1		
45	4278168	BEARING	1		(SUB FOR AT130956)
46	40M7228	SNAP RING	1		
47	19M8011	CAP SCREW	16		M12 X 30
	12M7058	LOCK WASHER	16		12 MM, (SUB FOR 12M7067)
48	94-2013	FITTING PLUG	3		(SUB FOR TH100648)
50	4269473	O-RING	1	-071231	(SUB FOR AT203608)
51	4287213	WASHER	4	-071231	(SUB FOR AT204733)
52	M341885	SCREW	4	-071231	(SUB FOR AT204922)
54	.....	DECAL	1		(AT154130 NOT AVAILABLE)
55	37H99	SCREW	2		0.100" X 1/4"

TRAVEL MOTOR COVER

T147859 -UN-07JAN02

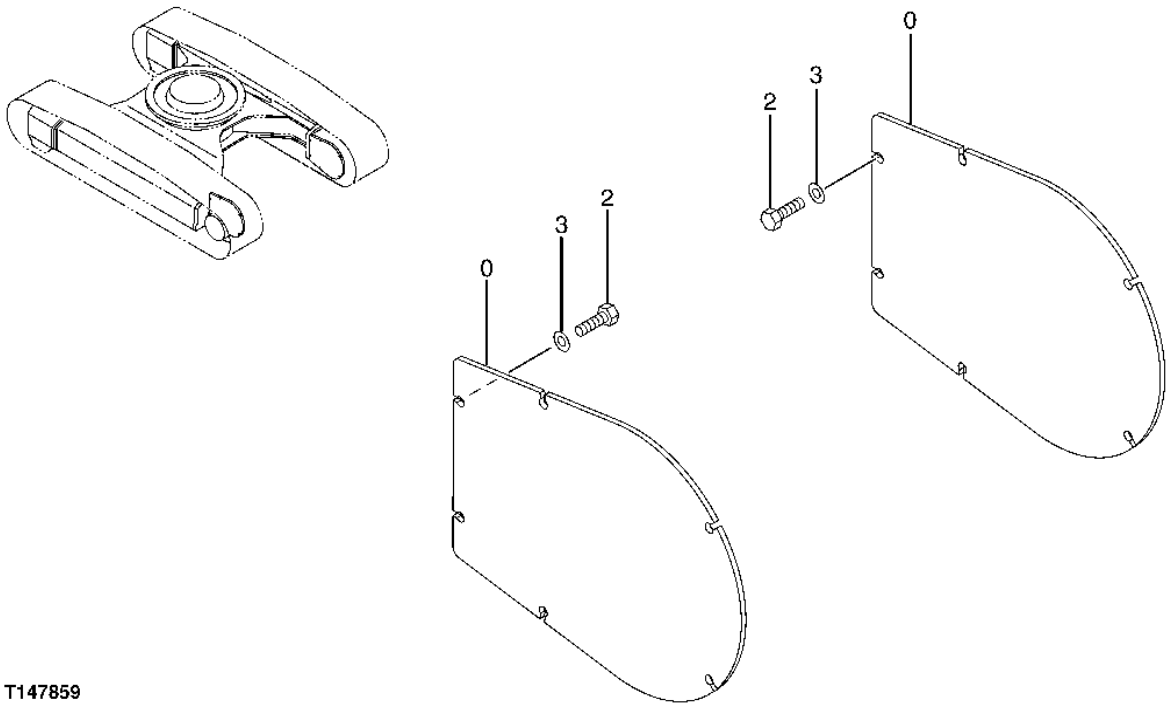

T147859

TRAVEL MOTOR COVER

KEY	PART NO.	PART NAME	QTY	SERIAL NO.	REMARKS
0	4380088	COVER	1		(SUB FOR AT250022)
2	19M6332	CAP SCREW	6		M14 X 35
3	J222014	WASHER	6		(SUB FOR AT200011)

PROPEL MOTOR COMPONENTS (S.N. -071231)

T147700 -UN-07JAN02

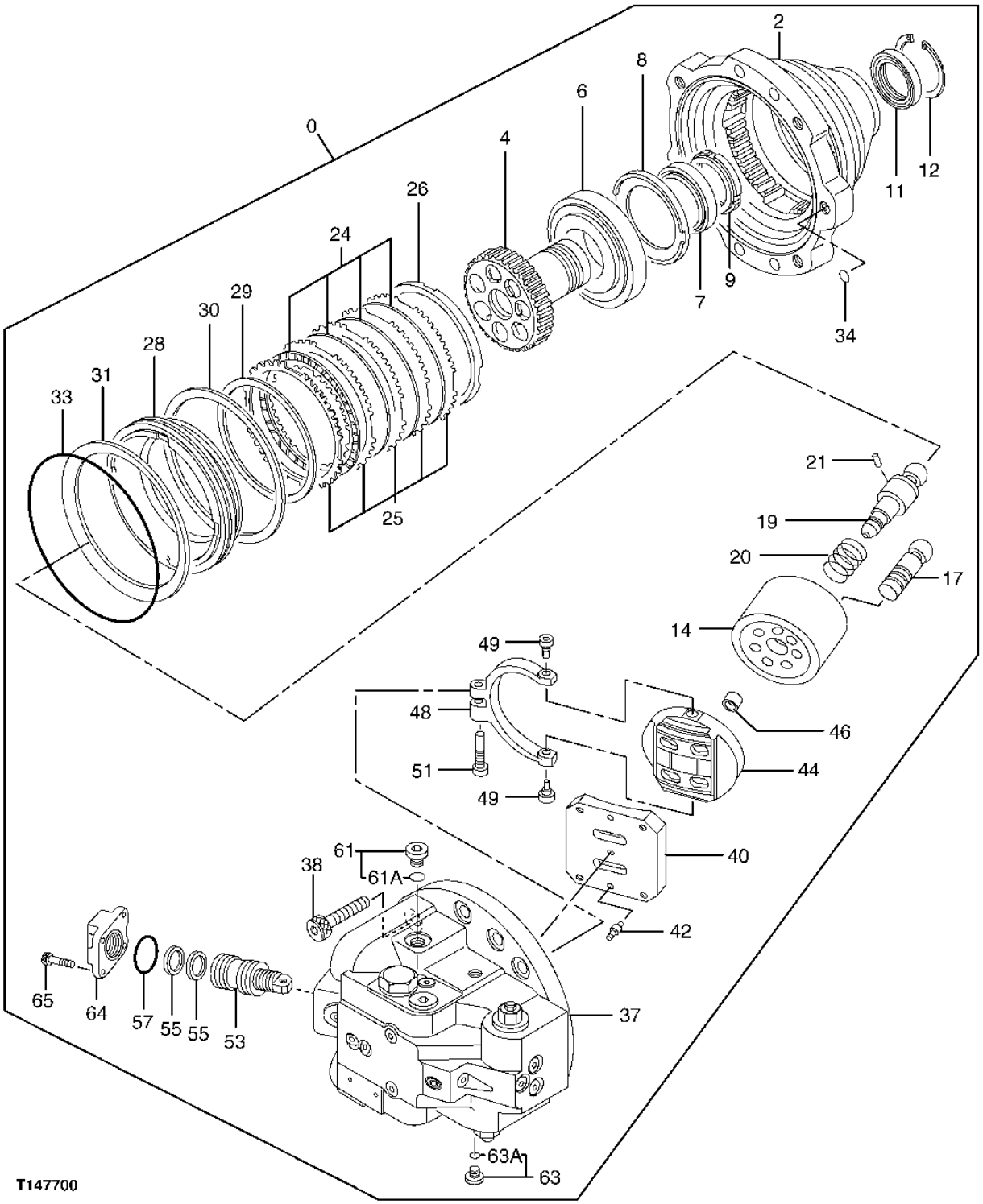

PROPEL MOTOR COMPONENTS (S.N. -071231)

KEY	PART NO.	PART NAME	QTY	SERIAL NO.	REMARKS
0	9156041EX	HYDRAULIC MOTOR	1		(SUB FOR 9156041) (REMANUFACTURED)
2	1019564	TRANSMISSION CASE	1		(SUB FOR AT203601)
4	2031327	SHAFT	1		(SUB FOR AT203602)
6	JD10304	TAPERED ROLLER BEARING	1		
7	JD10063	TAPERED ROLLER BEARING	1		
8	4227550	SPACER	1		(SUB FOR AT130838)
9	4191665	NUT	1		(SUB FOR TH111236)
11	TH112094	SEAL	1		
12	4038529	SNAP RING	1		(SUB FOR AT130840)
14	2022744	ROTOR	1		(SUB FOR TH111111)
17	8051275	PISTON	7		(SUB FOR AT203603)
19	3078298	SHAFT	1		(SUB FOR AT219625)
20	4194362	COMPRESSION SPRING	1		(SUB FOR TH111266)
21	4198956	PIN FASTENER	1		(SUB FOR T107766)
24	3036457	PLATE	4		(SUB FOR TH111154)
25	3036456	PLATE	5		(SUB FOR TH111153)
26	4193996	SPACER	1		(SUB FOR TH111260)
28	3078190	PISTON	1		(SUB FOR AT219623)
29	4252401	O-RING	1		(SUB FOR TH111261)
30	4269474	RING	1		(SUB FOR AT203606)
31	3054505	DISK	1		(SUB FOR AT203607)
33	4269473	O-RING	1		(SUB FOR AT203608)
34	T111819	O-RING	1		
37	9158391	FLOW CONTROL HYD. VALVE	1		
38	M341850	BOLT	4		(SUB FOR AT131557)
40	2035236	PLATE	1		(SUB FOR AT203609)
42	4364104	PIN	2		(SUB FOR AT217970)
44	2033787	MANIFOLD	1		(SUB FOR AT203610) (ALSO ORDER 4234628)
46	4234628	BUSHING	1		(SUB FOR AT154704)
48	2040803	LINK	1		(SUB FOR AT219601)
49	4255238	PLUG	2		(SUB FOR AT154745)
51	4262561	BOLT	1		(SUB FOR AT154768)
53	9098902	PISTON	1		(SUB FOR AT203612)
55	4260308	PISTON RING	2		(SUB FOR AT154759)
57	4265579	O-RING	1		(SUB FOR AT154770)
61	9134112	FITTING PLUG	1		(SUB FOR AT203657)
61A	4506418	O-RING	1		(SUB FOR U46489)
63	9134109	DRAIN PLUG	1		(SUB FOR AT203656)
63A	4506408	O-RING	1		(SUB FOR TH101490)
64	4364922	COVER	1		(SUB FOR AT217971)
65	19M8168	SCREW	4		M12 X 25

PROPEL MOTOR COMPONENTS (S.N. 071232-)

T193973 -UN-13AUG03

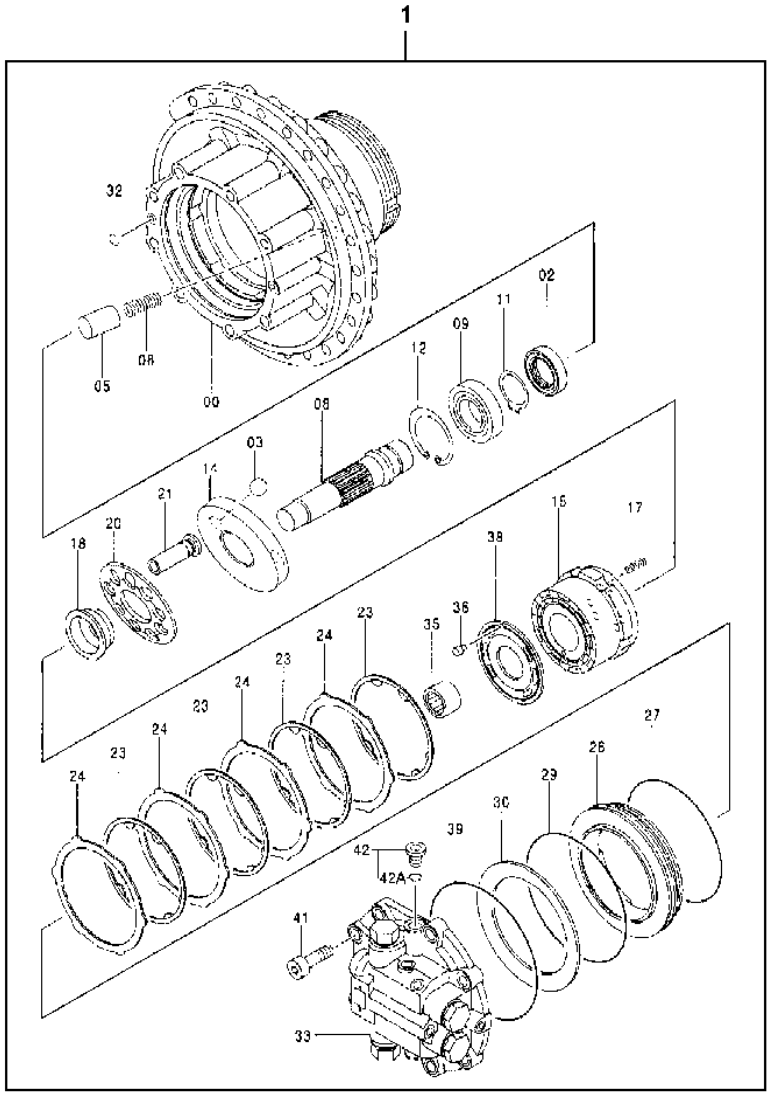

T193973

PROPEL MOTOR COMPONENTS (S.N. 071232-)

KEY	PART NO.	PART NAME	QTY	SERIAL NO.	REMARKS
0	.....	HOUSING	1		(0004501 NOT AVAILABLE)
1	9231672	MOTOR	1		
2	4396696	SEAL	1		
3	4355728	BALL	2		
5	4462038	PISTON	1		
6	4475147	COMPRESSION SPRING	1		
8	2047884	UNIVERSAL DRIVESHAFT	1		
9	4396755	CYLINDRICAL ROLLER BEARING	1		
11	40M7166	SNAP RING	1		
12	40M1873	SNAP RING	1		
14	3095397	SWASH PLATE	1		
15	2047885	ROTOR	1		
17	4468258	COMPRESSION SPRING	6		
18	4627480	BUSHING	1		(4461908 NO LONGER AVAILABLE) (USE ALONG WITH 3103491)
20	3103491	RETAINER	1		(3094362 NO LONGER AVAILABLE) (USE ALONG WITH 4627480)
21	8092512	PISTON	9		
23	3096779	PLATE	4		
24	3094376	PLATE	4		
26	3094377	PISTON	1		
27	4468248	O-RING	1		
29	4468249	O-RING	1		
30	4468250	DISK SPRING	1		
32	T111819	O-RING	2		(SUB FOR 4506415)
33	9229962	VALVE	1		(PROPEL MOTOR BRAKE VALVE) (SUB FOR 9213241)
35	4472355	NEEDLE BEARING	1		
36	4461910	PIN	1		
38	3103022	PLATE	1		(SUB FOR 3098526)
39	4468244	O-RING	1		
41	M342056	CAP SCREW	8		
42	9134112	FITTING PLUG	1		
42A	4506418	O-RING	1		

PROPEL MOTOR BRAKE VALVE COMPONENTS(S.N. -071231)

T154241 -UN-18APR02

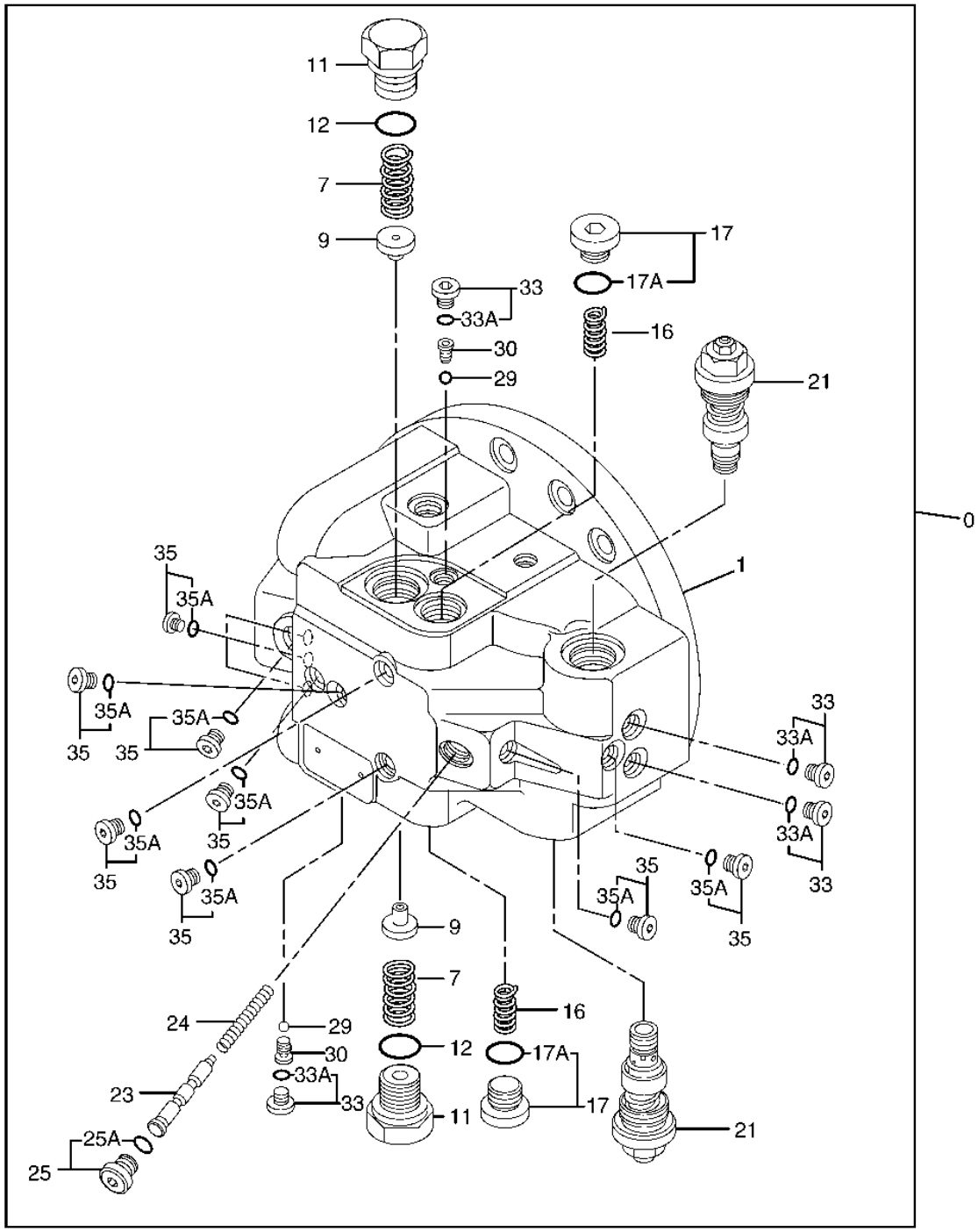

T154241

PROPEL MOTOR BRAKE VALVE(S.N. -071231)

KEY	PART NO.	PART NAME	QTY	SERIAL NO.	REMARKS
0	9158391	FLOW CONTROL HYD. VALVE	1		
1	7032724	CASE	1		(SUB FOR TH7032724)
7	4276785	COMPRESSION SPRING	2		(SUB FOR AT203613)
9	4276691	PLUG	2		(SUB FOR AT203614)
11	4276526	FITTING PLUG	2		(SUB FOR AT203615)
12	TH101926	O-RING	2		
16	4365007	SPRING	2		(SUB FOR AT176033)
17	9089488	PLUG	2		(SUB FOR AT154847)
17A	AT318035	O-RING	2		(SUB FOR 4506424, TH100055)
21	9134147	PRESSURE RELIEF VALVE	2		
23	4354415	VALVE SPOOL	1		(SUB FOR AT214454)
24	4185136	SPRING	1		(SUB FOR T107783)
25	0311336	PIPE PLUG	1		(SUB FOR TH109082)
25A	CH11570	O-RING	1		
29	R26552	BALL	2		
30	4311662	VALVE SEAT	2		(SUB FOR AT204877)
33	4208977	DRAIN PLUG	4		(SUB FOR TH111351)
33A	M800650	PACKING	1		
35	0215220	FITTING PLUG	10		(SUB FOR TH101485)
35A	4506408	O-RING	10		(SUB FOR TH101490)

PROPEL MOTOR BRAKE VALVE COMPONENTS(S.N. 071232-)

T193978 -UN-13AUG03

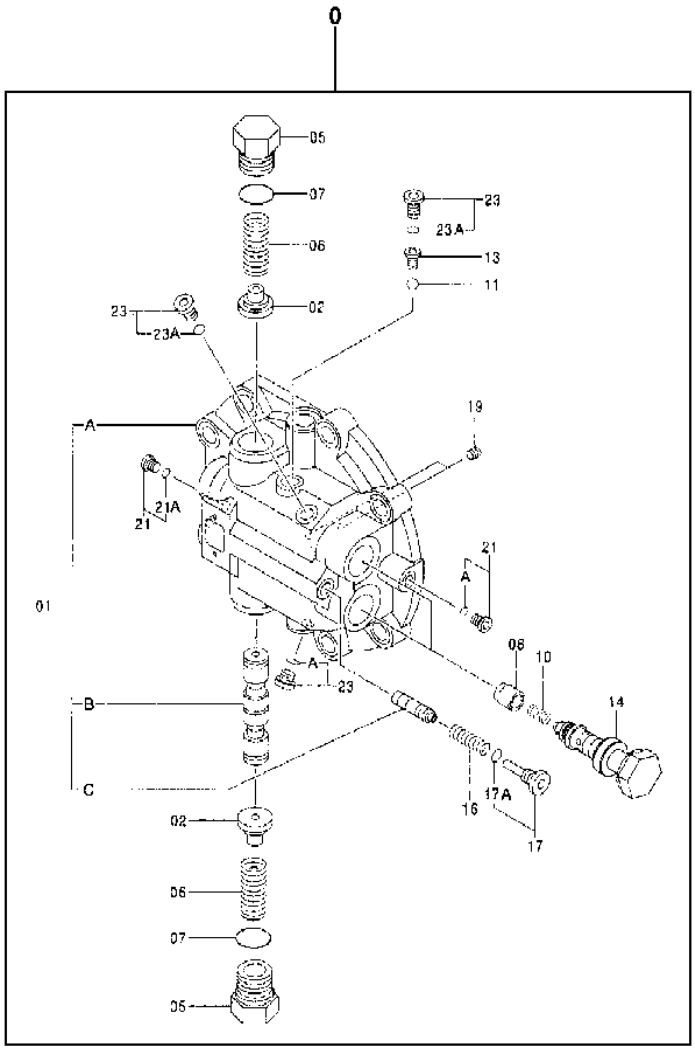

T193978

PROPEL MOTOR BRAKE VALVE COMPONENTS(S.N. 071232-)

KEY	PART NO.	PART NAME	QTY	SERIAL NO.	REMARKS
0	9229962	VALVE	1		(PROPEL MOTOR BRAKE VALVE) (SUB FOR 9213241)
1	8087943	CASE	1		(ASSEMBLY CASING)
1A	.....	CASE	1		(REAR CASING) (0004499 NOT AVAILABLE)
1B	.....	SPOOL	1		(3094360 NO LONGER AVAILABLE)
1C	.....	SPOOL	1		(4473063 NO LONGER AVAILABLE)
2	4461905	STOP	2		
5	4276526	FITTING PLUG	2		
6	4485473	COMPRESSION SPRING	2		
7	TH101926	O-RING	2		(SUB FOR 4506429)
8	4470238	POPPET	2		
10	4396771	SPRING	2		
11	R26552	BALL	1		
13	4311662	VALVE SEAT	1		
14	9213855	PRESSURE RELIEF VALVE	2		
16	4297257	COMPRESSION SPRING	1		
17	9167977	PIPE PLUG	1		
17A	M800650	PACKING	1		
19	15H560	PIPE PLUG	2		1/16"
21	9134109	DRAIN PLUG	2		
21A	4506408	O-RING	1		
23	4208977	DRAIN PLUG	3		
23A	M800650	PACKING	1		

PROPEL MOTOR CROSSOVER RELIEF VALVE COMPONENTS(S.N.-071231)

T147904 -UN-06NOV01

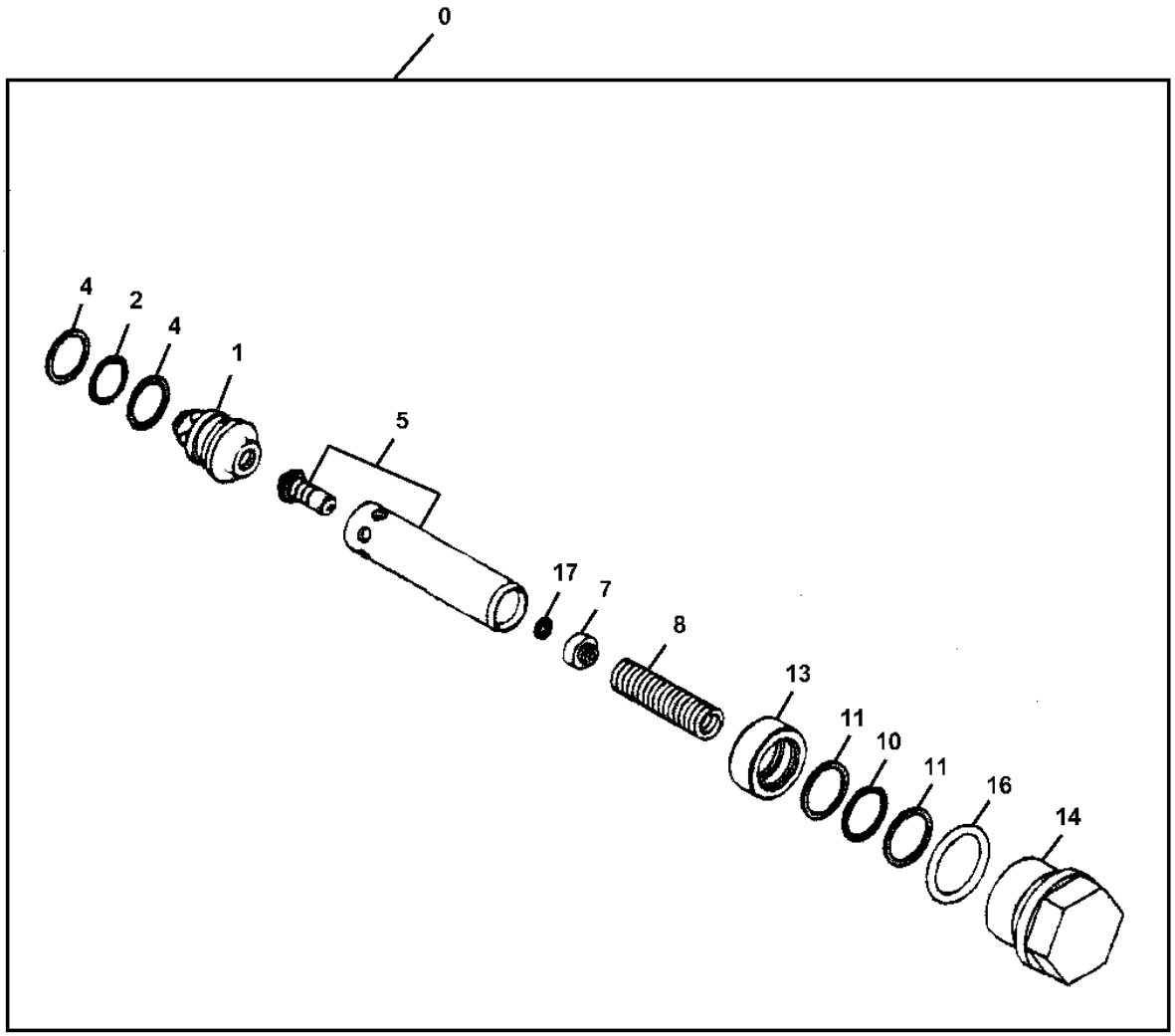

T147904

PROPEL MOTOR CROSSOVER RELIEF VALVE COMPONENTS(S.N.-071231)

KEY	PART NO.	PART NAME	QTY	SERIAL NO.	REMARKS
0	9185757	RELIEF VALVE	1		(PROPEL MOTOR BRAKE VALVE)
1	.....	SLEEVE	1		(TH3086417 NOT AVAILABLE)
2	4506418	O-RING	1		(SUB FOR U46489)
4	4033725	BACK-UP RING	2		(SUB FOR TH103576)
5	.....	VALVE	1		(TH9753750 NOT AVAILABLE)
7	.....	GUIDE	1		(TH4396955 NOT AVAILABLE)
8	.....	SPRING	1		(TH4396836 NOT AVAILABLE)
10	CH12329	PACKING	1		
11	4027959	BACK-UP RING	2		(SUB FOR TH100771)
13	.....	PISTON	1		(TH4396950 NOT AVAILABLE)
14	4397029	PIPE PLUG	1		(SUB FOR TH4397029)
16	TH101926	O-RING	1		28.700 X 3.500 MM (1.130" X 0.138")
17	24M7029	SHIM	1		0.500 MM (0.020")

PROPEL MOTOR CROSSOVER RELIEF VALVE COMPONENTS(S.N. 071232-)

T194001 -UN-13AUG03

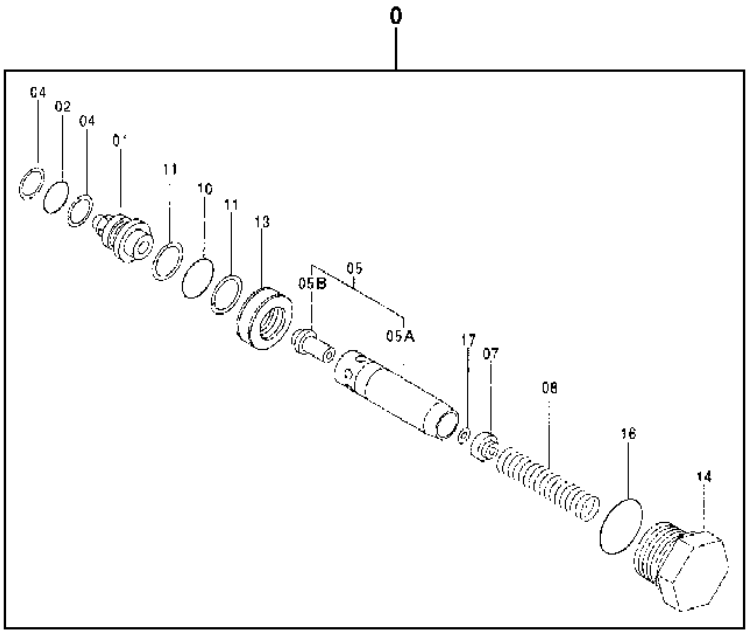

T194001

PROPEL MOTOR CROSSOVER RELIEF VALVE COMPONENTS(S.N. 071232-)

KEY	PART NO.	PART NAME	QTY	SERIAL NO.	REMARKS
0	9213855	PRESSURE RELIEF VALVE	1		(PROPEL MOTOR BRAKE VALVE)
1	3095161	SLEEVE	1		
2	4506418	O-RING	1		
4	4033725	BACK-UP RING	2		
5	9758777	VALVE	1		
5A	.....	VALVE	1		(4473065 NO LONGER AVAILABLE)
5B	.....	POPPET	1		(3095162 NO LONGER AVAILABLE)
7	4473064	GUIDE	1		
8	4396836	COMPRESSION SPRING	1		
10	4506420	PACKING	1		
11	4027959	BACK-UP RING	2		
13	4462422	PISTON	1		
14	4473080	PLUG	1		
16	TH101926	O-RING	1		
17	24M7029	SHIM	1		0.500 MM

TRAVEL HYDRAULIC LINES

T147858 -UN-07JAN02

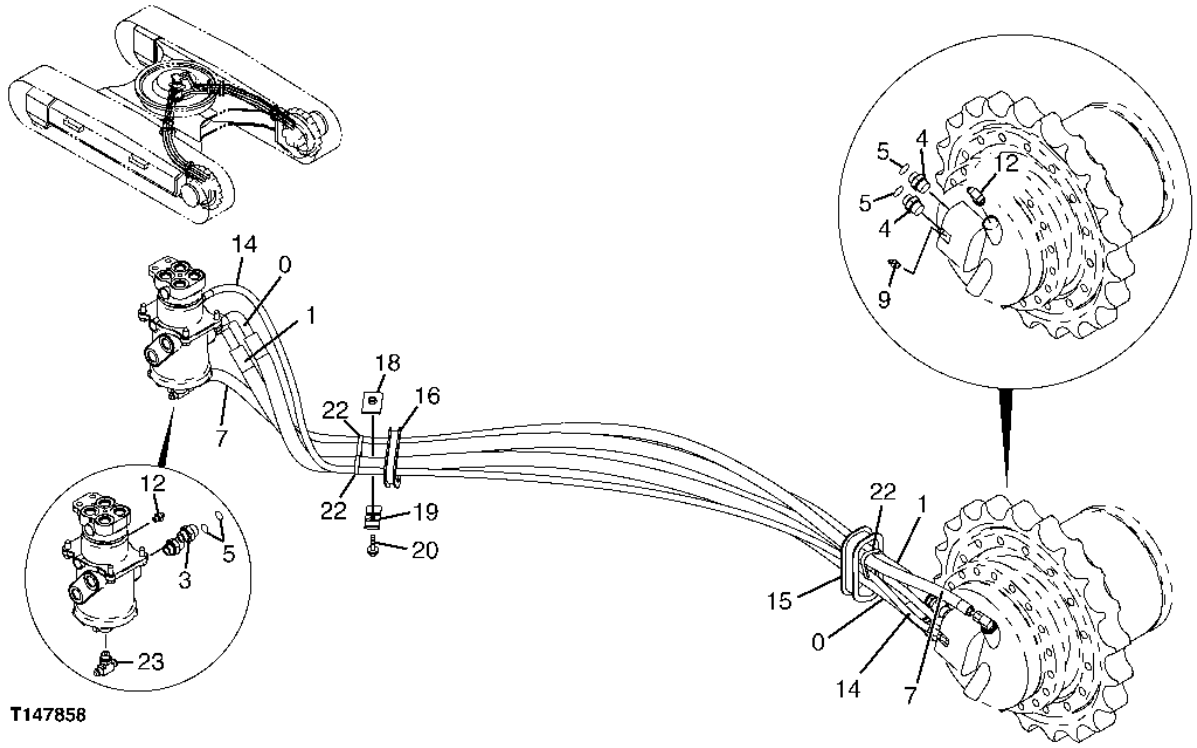

T147858

TRAVEL HYDRAULIC LINES

KEY	PART NO.	PART NAME	QTY	SERIAL NO.	REMARKS
0	AT217987	HYDRAULIC HOSE - FABRICATE	1		(SUB FOR AT204776)
1	AT217987	HYDRAULIC HOSE - FABRICATE	1		(SUB FOR AT204775)
3	A853168	ADAPTER	2		(SUB FOR THA853168)
	AT318035	O-RING	1		(SUB FOR 4506424, TH100055)
4	A853108	ADAPTER	2	-071231	
	A853188	ADAPTER	2	071232-701999	
	970860	O-RING	1	-702000	
5	T76938	O-RING	4		
7	4459641	HYDRAULIC HOSE - FABRICATE	1		(SUB FOR TH4459641)
9	A852144	ADAPTER	1		(SUB FOR THA852144)
	4506418	O-RING	1		(SUB FOR U46489)
12	P67968	ADAPTER	2		
	M800650	PACKING	1		
14	4429283	HYDRAULIC HOSE - FABRICATE	1	-071231	(SUB FOR TH4450505 OR 4450505)
	4429283	HYDRAULIC HOSE - FABRICATE	1	071232-701999	
	4450505	HYDRAULIC HOSE - FABRICATE	1	702000-	
15	4380020	GROMMET	1		(SUB FOR AT250021)
16	4428098	GROMMET	1		
18	4202103	CLAMP	1		(SUB FOR TH108302)
19	9736782	CLAMP	1		(SUB FOR AT201191)
20	19M8348	CAP SCREW	1		M12 X 65
	12H301	LOCK WASHER	1		12.700 MM (1/2")
22	H77698	TIE BAND	4		
23	A852544	TEE FITTING	1		(SUB FOR THA852544)
	4506418	O-RING	1		(SUB FOR U46489)

OIL MOTOR

T147700 -UN-07JAN02

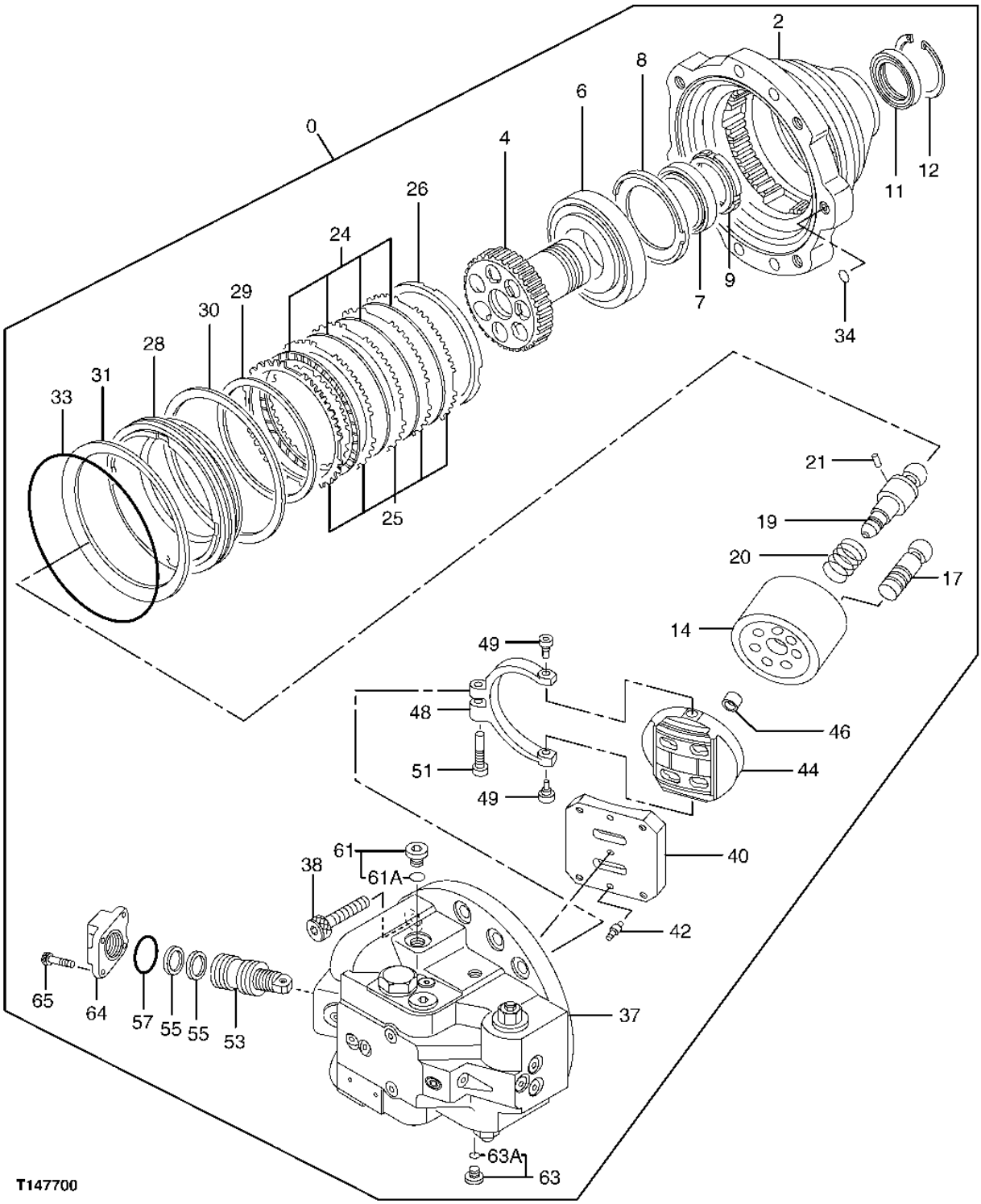

OIL MOTOR

KEY	PART NO.	PART NAME	QTY	SERIAL NO.	REMARKS
0	9156041EX	HYDRAULIC MOTOR	1		(SUB FOR 9156041) (REMANUFACTURED)
2	1019564	TRANSMISSION CASE	1		(SUB FOR AT203601)
4	2031327	SHAFT	1		(SUB FOR AT203602)
6	JD10304	TAPERED ROLLER BEARING	1		
7	JD10063	TAPERED ROLLER BEARING	1		
8	4227550	SPACER	1		(SUB FOR AT130838)
9	4191665	NUT	1		(SUB FOR TH111236)
11	TH112094	SEAL	1		
12	4038529	SNAP RING	1		(SUB FOR AT130840)
14	2022744	ROTOR	1		(SUB FOR TH111111)
17	8051275	PISTON	7		(SUB FOR AT203603)
19	3078298	SHAFT	1		(SUB FOR AT219625)
20	4194362	COMPRESSION SPRING	1		(SUB FOR TH111266)
21	4198956	PIN FASTENER	1		(SUB FOR T107766)
24	3036457	PLATE	4		(SUB FOR TH111154)
25	3036456	PLATE	5		(SUB FOR TH111153)
26	4193996	SPACER	1		(SUB FOR TH111260)
28	3078190	PISTON	1		(SUB FOR AT219623)
29	4252401	O-RING	1		(SUB FOR TH111261)
30	4269474	RING	1		(SUB FOR AT203606)
31	3054505	DISK	1		(SUB FOR AT203607)
33	4269473	O-RING	1		(SUB FOR AT203608)
34	T111819	O-RING	1		
37	9158391	FLOW CONTROL HYD. VALVE	1		
38	M341850	BOLT	4		(SUB FOR AT131557)
40	2035236	PLATE	1		(SUB FOR AT203609)
42	4364104	PIN	2		(SUB FOR AT217970)
44	2033787	MANIFOLD	1		(SUB FOR AT203610) (ALSO ORDER 4234628)
46	4234628	BUSHING	1		(SUB FOR AT154704)
48	2040803	LINK	1		(SUB FOR AT219601)
49	4255238	PLUG	2		(SUB FOR AT154745)
51	4262561	BOLT	1		(SUB FOR AT154768)
53	9098902	PISTON	1		(SUB FOR AT203612)
55	4260308	PISTON RING	2		(SUB FOR AT154759)
57	4265579	O-RING	1		(SUB FOR AT154770)
61	9134112	FITTING PLUG	1		(SUB FOR AT203657)
61A	4506418	O-RING	1		(SUB FOR U46489)
63	9134109	DRAIN PLUG	1		(SUB FOR AT203656)
63A	4506408	O-RING	1		(SUB FOR TH101490)
64	4364922	COVER	1		(SUB FOR AT217971)
65	19M8168	SCREW	4		M12 X 25

MEMORANDA

CRANKSHAFT, CRANKSHAFT GEAR, AND MAIN BEARINGS

T145420 -UN-14SEP01

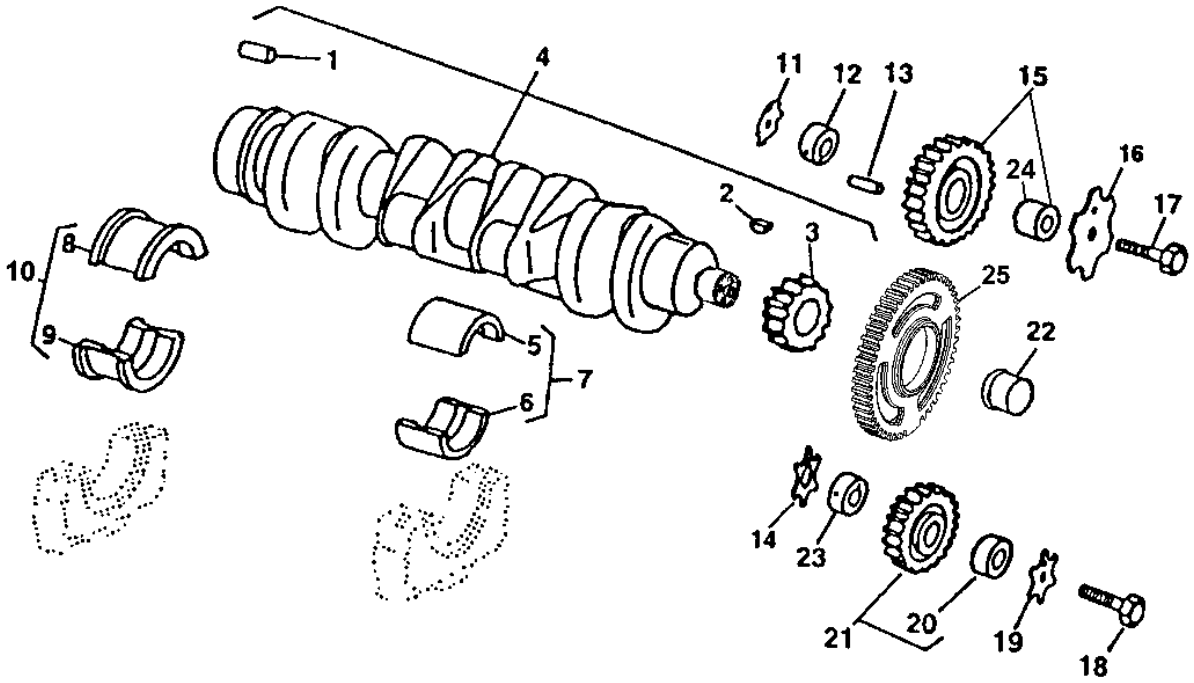

T145420

KEY	PART NO.	PART NAME	QTY	ENGINE SERIAL NO.	REMARKS
1	R48685	DOWEL PIN	1		12.700 X 28.448 MM (1/2" X 1.120")
2	26M4224	SHAFT KEY	1	-903206	
	R505609	SHAFT KEY	1	903207-	
3	R120631	HELICAL GEAR	1		(30 TEETH)
4	RE52850	CRANKSHAFT	1	-903206	(MARKED R116076) (ALSO ORDER RE59811) (SUB RE515785 AND RE516340)
	RE515785	CRANKSHAFT	1	903207-	(MARKED R116076)
5	.....	BEARING	6		STANDARD UPPER, (MARKED R123561)
	.....	BEARING	6		UNDERSIZE UPPER .254 MM, (MARKED R130576)
6	.....	BEARING	6		STANDARD LOWER, (MARKED R123562)
	.....	BEARING	6		UNDERSIZE LOWER .254 MM, (MARKED R130577)
7	RE65165	BEARING KIT	6		STANDARD
	RE65911	BEARING	6		UNDERSIZE .254 MM
8	.....	BEARING	1		STANDARD UPPER, (MARKED R123563)
	.....	BEARING	1		UNDERSIZE UPPER .254 MM, (MARKED R130574)
9	.....	BEARING	1		STANDARD LOWER, (MARKED R123564)
	.....	BEARING	1		UNDERSIZE LOWER .254 MM, (MARKED R130575)
10	RE65168	BEARING KIT	1		STANDARD
	RE65912	THRUST BEARING	1		UNDERSIZE .254 MM
11	R123174	LOCK WASHER	1		
12	R120641	SHAFT	1		
13	34H288	SPRING PIN	1		4.775 X 44.450 MM (3/16" X 1-3/4")
14	R101225	THRUST WASHER	1		
15	RE56313	GEAR	1		
16	R131206	THRUST WASHER	1		
17	19M8997	SCREW	1		M10 X 65
18	19M8966	SCREW	1		M10 X 50
19	R131283	THRUST WASHER	1		
20	R114193	BUSHING	1		
21	RE56369	GEAR	1		
22	RE59811	SLEEVE	1		WITH INSTALLATION TOOL
23	R114194	SHAFT	1		
24	.....	BUSHING	1		
25	R501489	WHEEL SPEED SENSOR	1		(CRANKSHAFT SPEED)

THIS PARTS LISTING IS CONTINUED

CAMSHAFT

T144825 -UN-22AUG01

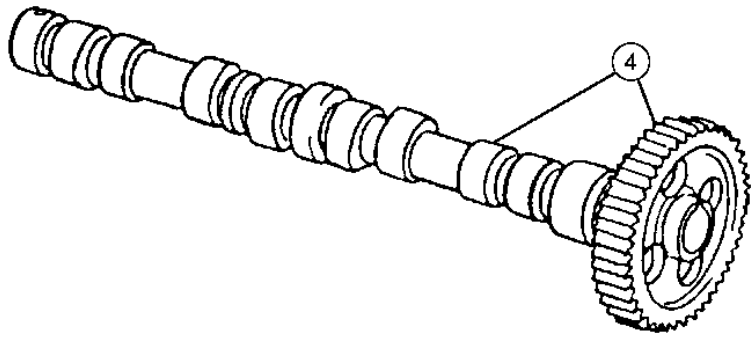

T144825

KEY	PART NO.	PART NAME	QTY	ENGINE SERIAL NO.	REMARKS
4	RE507149	CAMSHAFT	1		(WITH GEAR AND KEY) (MARKED R504535)

ROCKER ARM COVER AND ENGINE OIL FILL CAP

T144856 -UN-29AUG01

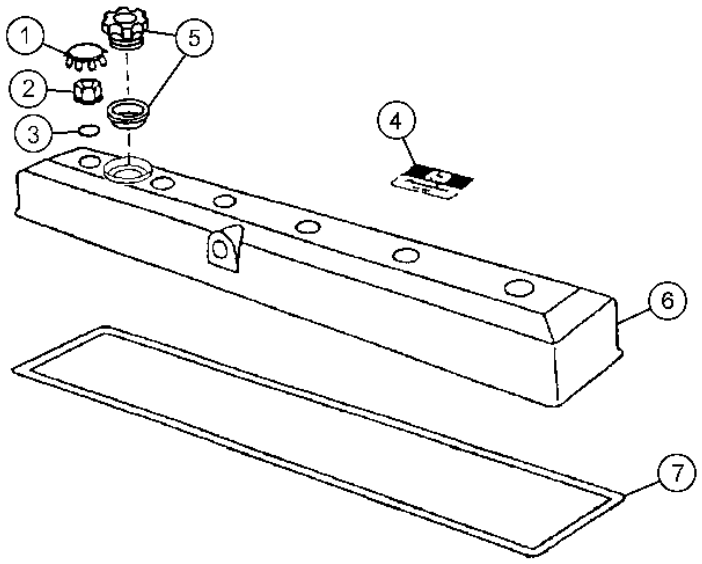

T144856

KEY	PART NO.	PART NAME	QTY	ENGINE SERIAL NO.	REMARKS
1	H23125	PLUG	6		
2	R123574	NUT	6		
3	R123575	O-RING	6		
4	R121674	MEDALLION	1		
5	RE500005	FILLER CAP	1		ENGINE OIL FILL
6	RE502986	VALVE COVER	1		
7	R123543	GASKET	1		
	RE520540	GASKET KIT	1		(HIGH TEMPERATURE)

TIMING GEAR COVER

T153624 -UN-05APR02

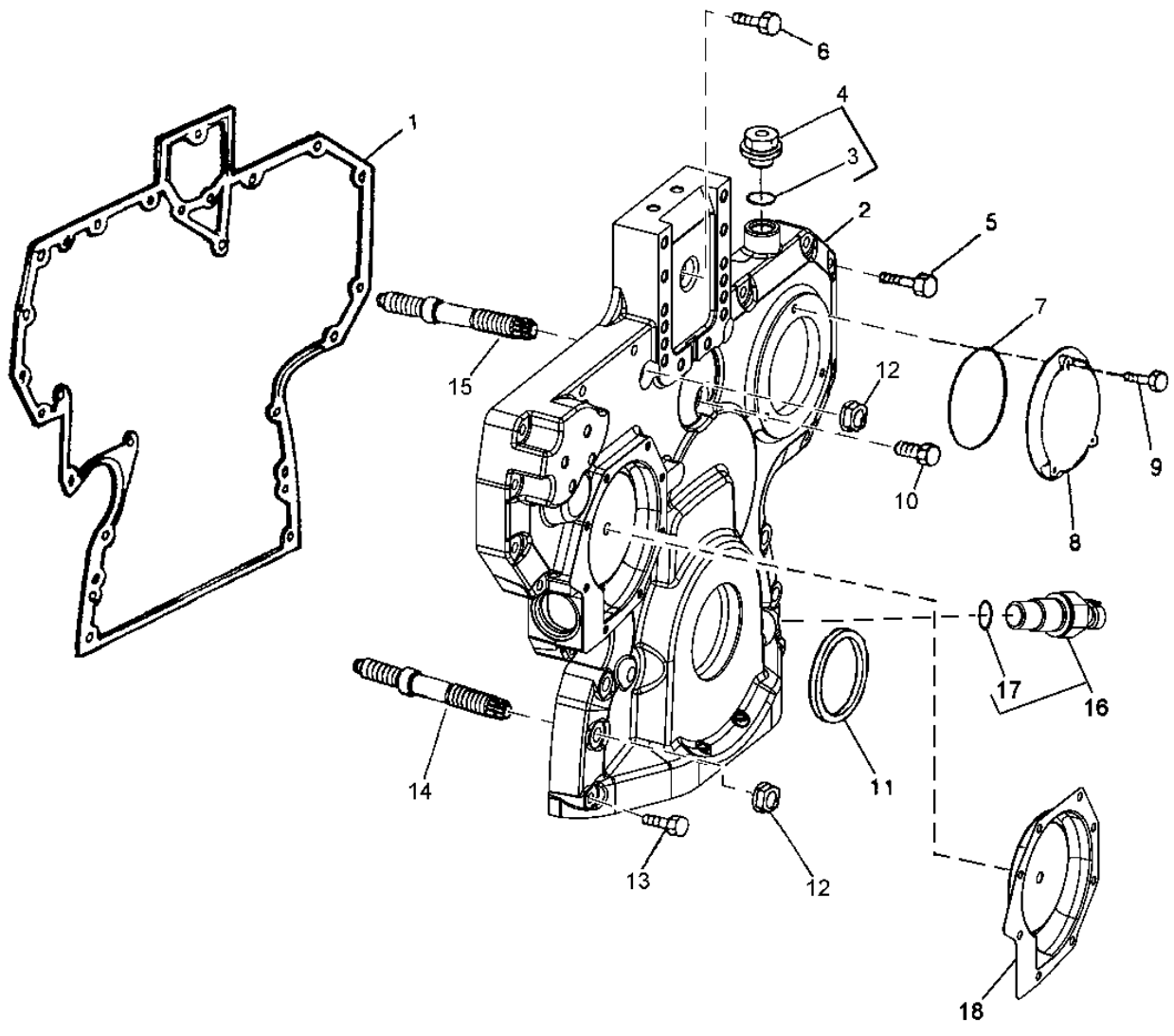

T153624

TIMING GEAR COVER

KEY	PART NO.	PART NAME	QTY	ENGINE SERIAL NO.	REMARKS
1	R136515	GASKET	1		
2	R504724	COVER	1		
3	51M7044	O-RING	1		(WITHOUT TACHOMETER SENSOR)
4	RE501938	PLUG	1		
5	19M8317	SCREW	10		M8 X 40
	RE67239	SCREW	1		
6	19M8291	SCREW	1		M8 X 35
7	R121424	O-RING	1		
8	R121411	COVER	1		
9	19M7775	SCREW	3		M6 X 16
10	19M7801	SCREW	1		M8 X 60
11	RE516340	SEAL	1		(MARKED RE52346 OR RE505515) (SUB FOR RE59810)
12	14M7296	FLANGE NUT	6		M10
13	19M7979	SCREW	2		M8 X 55
14	R123584	STUD	4		
15	R134518	STUD	2		
16	RE519144	SENSOR	1		(SUB FOR RE508195) (CONTAINS 51M7044) (CRANKSHAFT POSITION SENSOR)
17	51M7044	O-RING	1		
18	RE508566	KIT	1		

ROCKER ARM SHAFT, PUSH RODS, AND ROCKER ARMS

TP49263 -UN-20JUN95

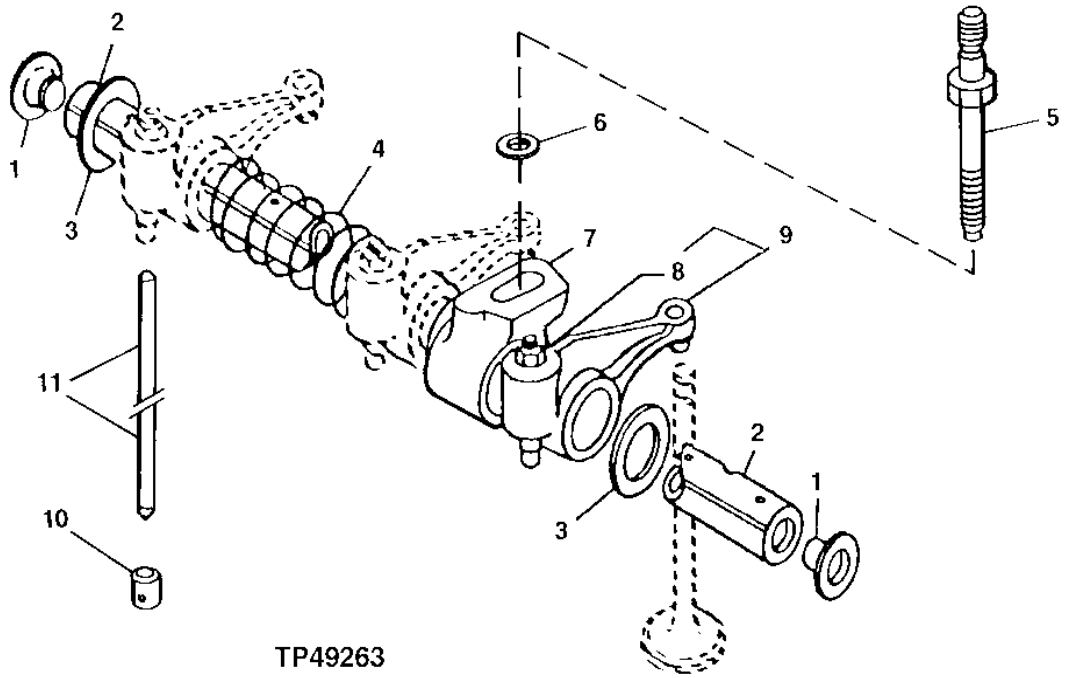

TP49263

KEY	PART NO.	PART NAME	QTY	ENGINE SERIAL NO.	REMARKS
1	R54565	PLUG	2		
2	R123514	ROCKER ARM SHAFT	1		
3	T20316	WASHER	2		
4	T20314	SPRING	5		
5	R123271	STUD	6		
6	24M7346	WASHER	6		
7	R123161	SUPPORT	6		
8	14M7148	NUT	1		M10
9	RE68695	ROCKER ARM	12		
10	R123565	FOLLOWER	12		
11	R107731	PUSH ROD	12		

MEMORANDA

CONNECTING ROD,BEARINGS,PISTONS AND CYLINDER LINER KIT

TP49283 -UN-17JUL95

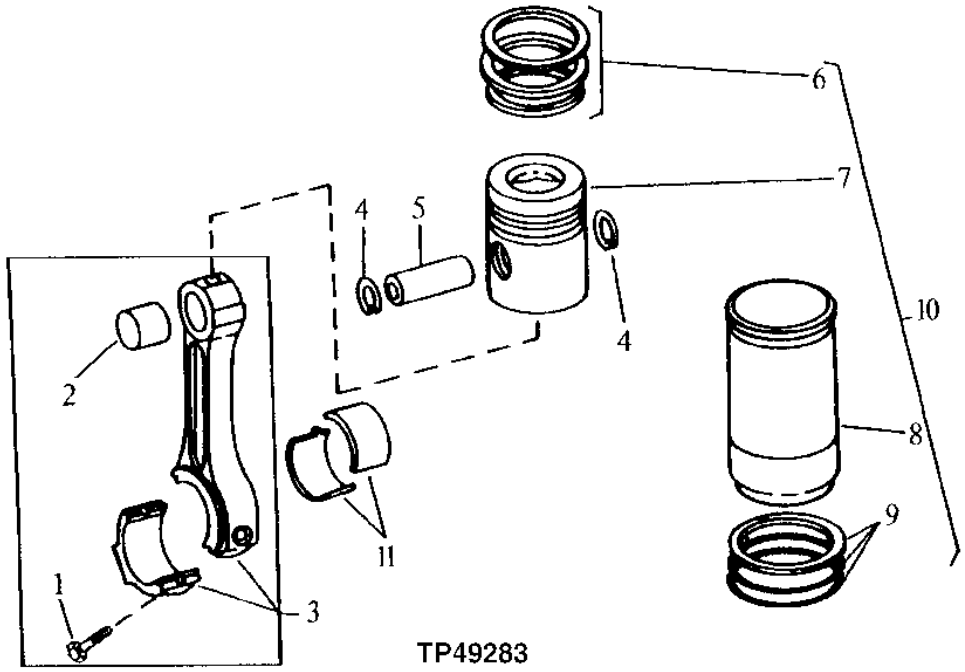

KEY	PART NO.	PART NAME	QTY	ENGINE SERIAL NO.	REMARKS
1	R501124	SCREW	12		
2	R114082	BUSHING	12		
3	RE500608	CONNECTING ROD	6		(MARKED R500335)
4	R54114	SNAP RING	12		
5	R123177	PISTON PIN	6		
6	RE507852	PISTON RING KIT	6		
7	.....	PISTON	6		
8	.....	CYLINDER LINER	6		
9	AR65507	O-RING KIT	6		CYLINDER LINER
10	RE507850	PISTON-LINER KIT	6		PISTON WITH LINER
11	RE65908	BEARING	6		STANDARD
	RE65909	BEARING	6		.010" UNDERSIZE

ENGINE FRONT PLATE AND AUXILIARY DRIVE COVER

T145113 -UN-28AUG01

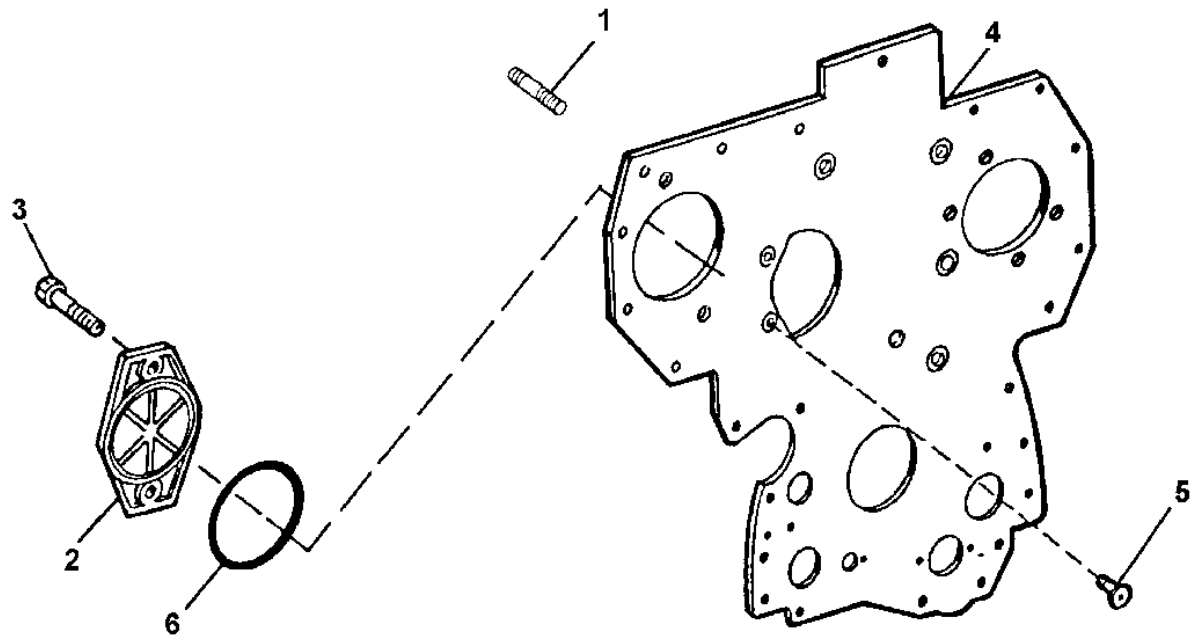

T145113

KEY	PART NO.	PART NAME	QTY	ENGINE SERIAL NO.	REMARKS
1	R122226	STUD	2		
2	R135757	COVER	1		
3	19M7790	SCREW	2		
4	R503550	PLATE	1		
5	R136475	SCREW	4		
6	T20758	O-RING	1		107.620 X 2.616 MM (4.237" X 0.103")

CYLINDER BLOCK AND MAIN BEARING CAPS

T144826 -UN-30AUG01

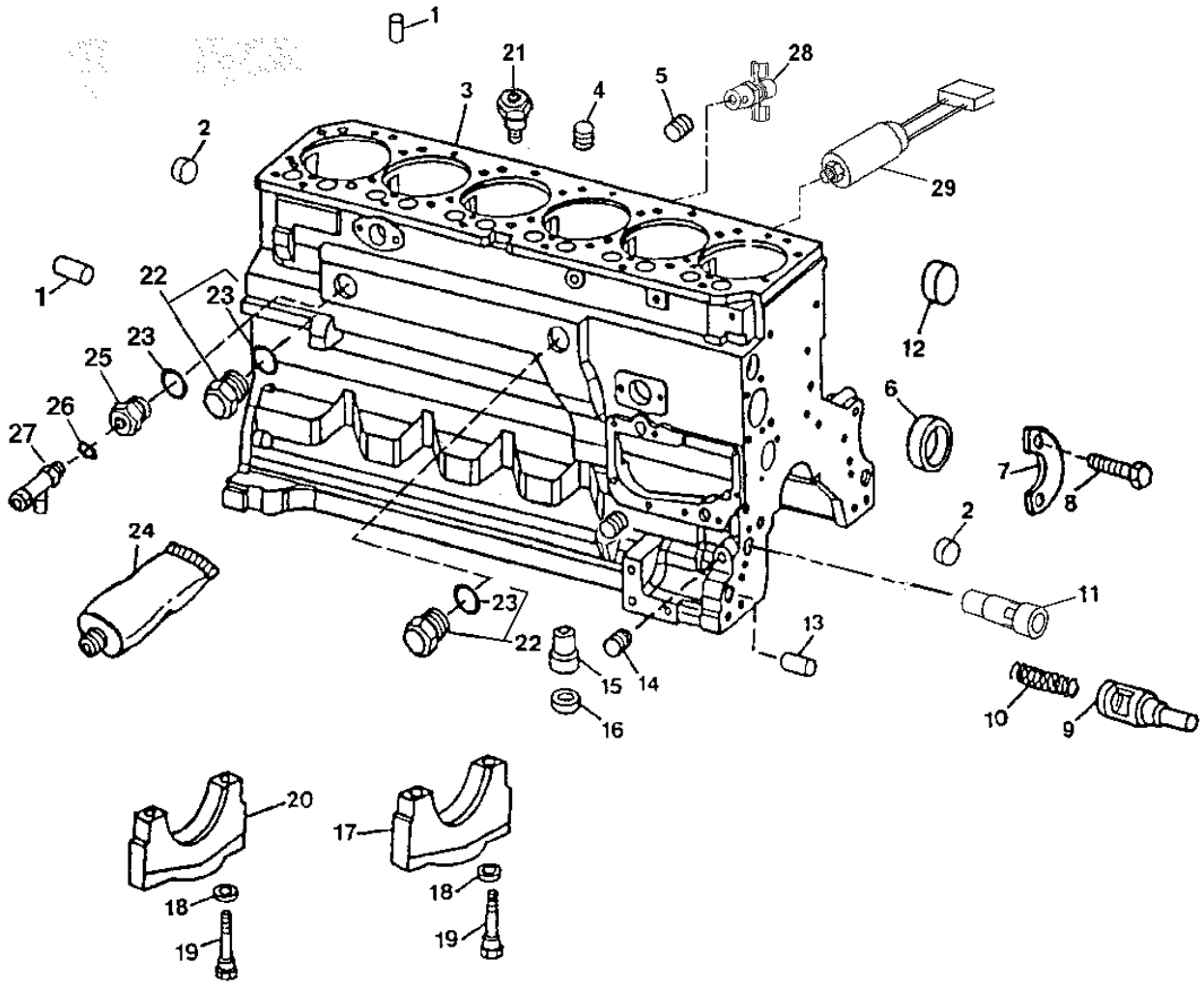

T144826

CYLINDER BLOCK AND MAIN BEARING CAPS

KEY	PART NO.	PART NAME	QTY	ENGINE SERIAL NO.	REMARKS
1	R48685	DOWEL PIN	4		
2	T18891	PLUG	2		
3	RE518527	SHORT BLOCK ASSEMBLY	1		(MARKED R119565) (SUB FOR RE507643)
4	15H624	PIPE PLUG	1		1/2", WITHOUT TURBOCHARGER
5	R104592	PIPE PLUG	6		
6	R119874	BUSHING	1		CAMSHAFT
7	R132518	PLATE	1		
8	19M8999	SCREW	2		M8 X 25
9	R121043	FLOW CONTROL HYD. VALVE	1		ENGINE OIL BY-PASS
10	R111137	SPRING	1		
11	RE505501	BLEED VALVE	1		OIL PRESSURE REGULATING
12	R116466	PLUG	1		
13	R26650	DOWEL PIN	2		
14	15H623	PIPE PLUG	1		3/8"
15	R115390	BUSHING	1		
16	R75892	O-RING	1		
17	R114241	BEARING CAP	6		MAIN BEARING
18	T20168	WASHER	14		
19	T23474	CAP SCREW	14		
20	R132186	BEARING CAP	1		MAIN THRUST BEARING
21	R131182	ORIFICE	6		
22	RE508185	DRAIN PLUG	2		(WITHOUT CAB HEAT)
23	U13639	O-RING	2		37.465 X 2.997 MM (1.475" X 0.118")
24	PM38656	SEALANT	1		(SUB FOR T43514) (PLASTIC GASKET)
25	R123616	PLUG	1		WITH CAB HEAT
26	51M7043	O-RING	1		15.300 X 2.200 MM, (WITH CAB HEAT)
27	RE507952	DRAIN VALVE	1		HEATER (WITH CAB HEAT)
28	AT13740	DRAIN VALVE	1		
29	RE55145	SWITCH	1		(OIL PRESSURE)

ENGINE SHORT BLOCK

T146131 -UN-09OCT01

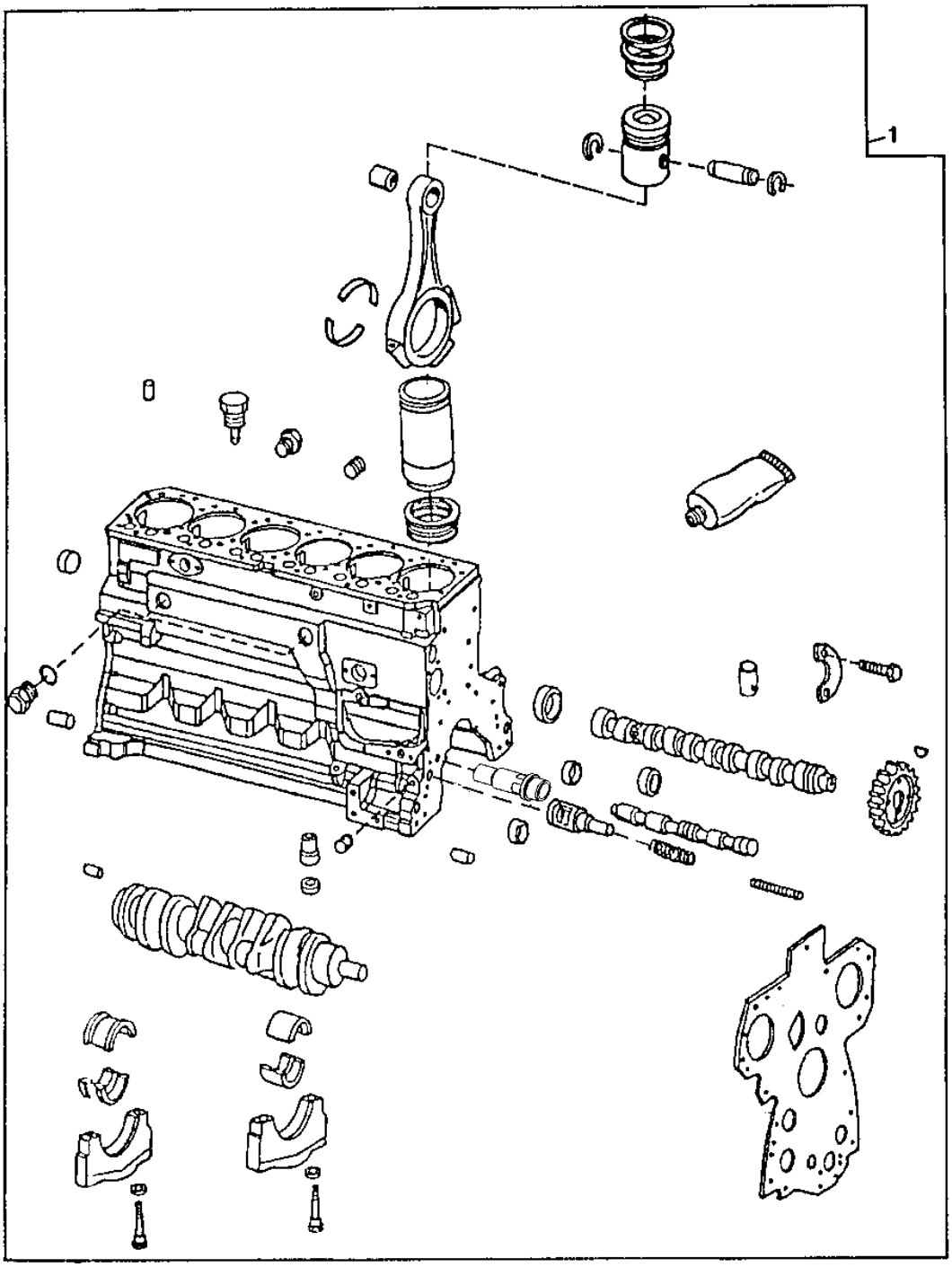

T146131

ENGINE SHORT BLOCK

KEY	PART NO.	PART NAME	QTY	ENGINE SERIAL NO.	REMARKS
1	RE518527	SHORT BLOCK ASSEMBLY	1		(MARKED R119565) (SUB FOR RE507643)

MEMORANDA

ENGINE OIL FILLER INLET COVER

TP62061 -UN-30APR99

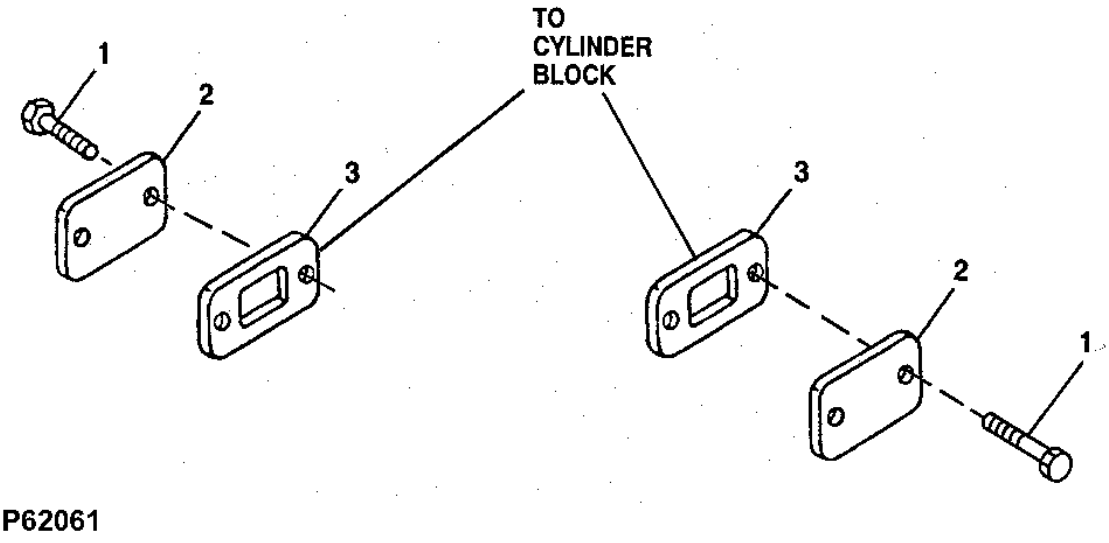

TP62061

KEY	PART NO.	PART NAME	QTY	ENGINE SERIAL NO.	REMARKS
1	RE67238	SCREW	4		M8 X 20 (WITH PRE-APPLIED SEALANT)
2	R116296	COVER	2		
3	R136495	GASKET	2		

ENGINE OIL DIPSTICK

TP69502 -UN-02MAY00

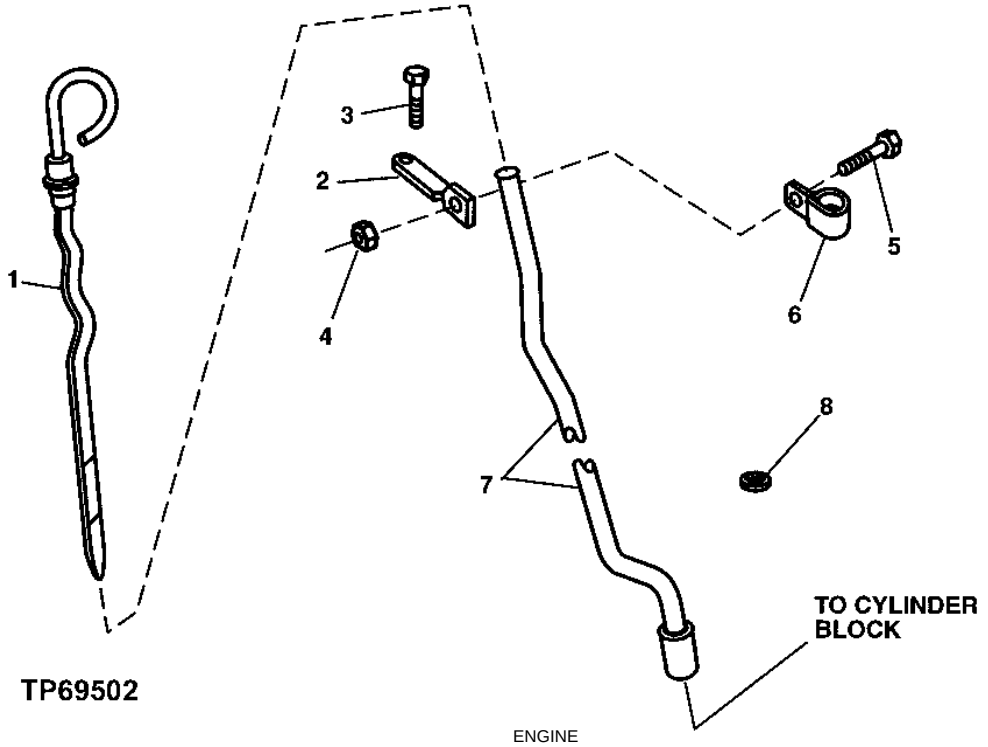

KEY	PART NO.	PART NAME	QTY	ENGINE SERIAL NO.	REMARKS
1	RE66178	DIPSTICK	1		
2	R134552	BRACKET	1		
3	19M7784	SCREW	1		M10 X 20
4	14M7298	FLANGE NUT	1		M8
5	19M7866	SCREW	1		M8 X 20
6	T28862	CLAMP	1		
7	R502465	DIPSTICK TUBE	1		
8	R502725	PLUG	1		

ENGINE OIL PUMP AND OIL INTAKE TUBE

TP53327 -UN-11SEP96

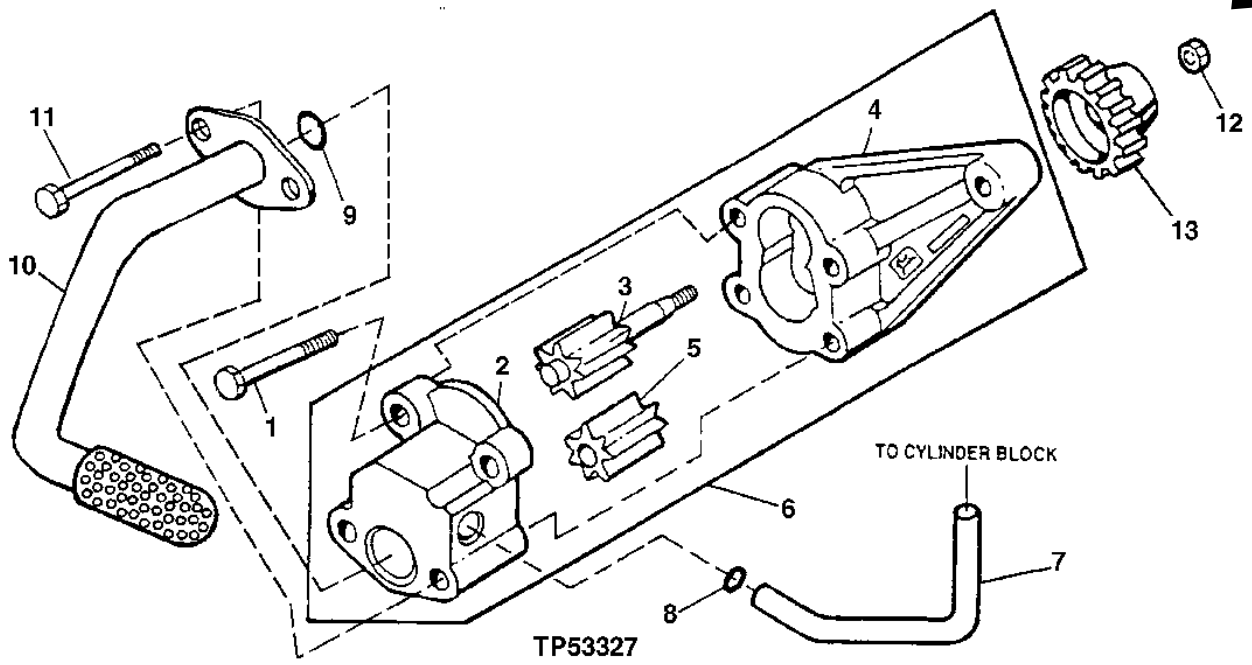

KEY	PART NO.	PART NAME	QTY	ENGINE SERIAL NO.	REMARKS
1	19M8987	SCREW	2		M8 X 65
2	.....	COVER	1		
3	.....	GEAR	1		
4	.....	HOUSING	1		
5	.....	GEAR	1		
6	RE504914	OIL PUMP	1		(MARKED R502687)
7	R121376	STRUCTURAL TUBING	1		
8	R97185	O-RING	1		
9	R61871	O-RING	1		
10	RE69568	OIL PUMP INTAKE	1		
11	19M8986	SCREW	2		M8 X 100
12	14M7066	NUT	1		M12
13	R120638	GEAR	1		(30 TEETH)

ENGINE OIL FILTER HEADER AND FILTER ELEMENT

T145377 -UN-14SEP01

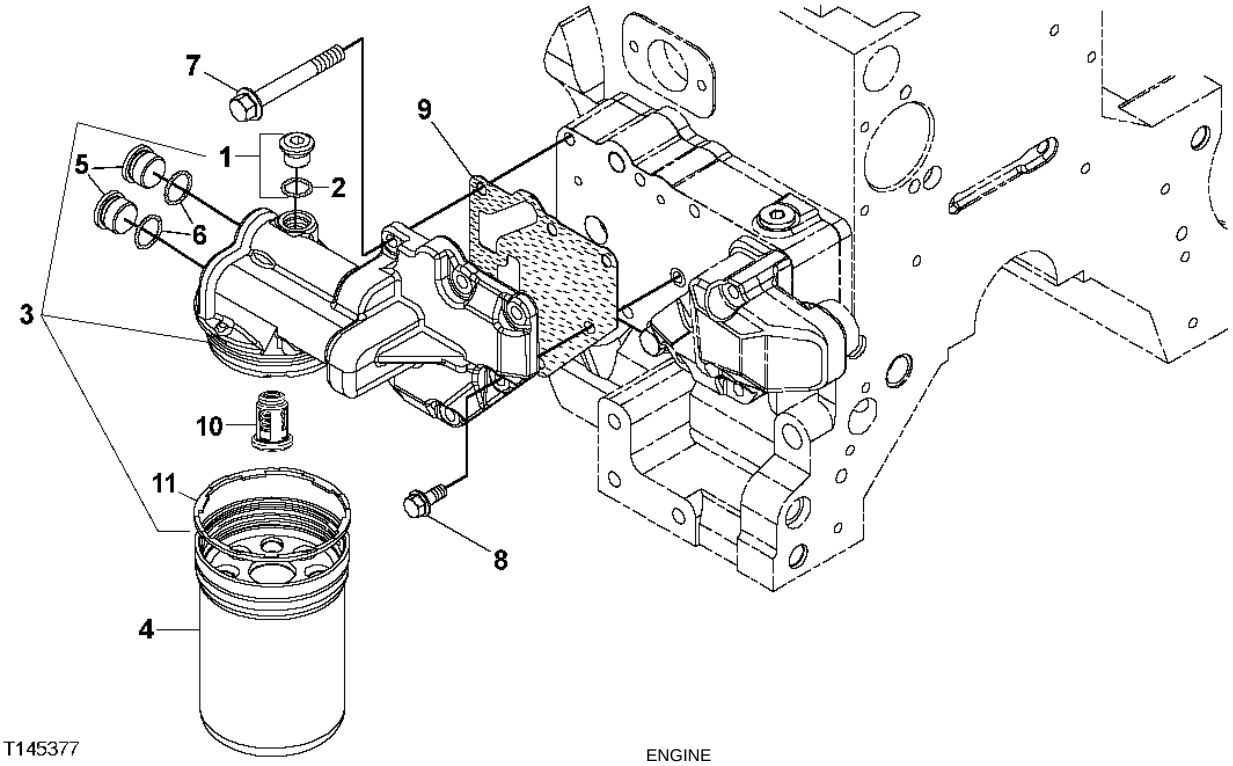

T145377

KEY	PART NO.	PART NAME	QTY	ENGINE SERIAL NO.	REMARKS
1	RE52242	DRAIN PLUG	1		M16 X 1.5
2	51M7042	O-RING	1		13.300 X 2.200 MM
3	RE504564	FILTER HEAD	1		(MARKED R502505)
4	RE504836	OIL FILTER	1		(ALSO ORDER R502513)
5	R116115	FITTING	2		
6	51M7045	O-RING	2		19.300 X 2.200 MM
7	19M7802	SCREW	5		M8 X 65
8	RE67238	SCREW	1		M22 X 1.5
9	R500374	GASKET	1		
10	RE504543	FLOW CONTROL HYD. VALVE	1		
11	R502513	SEAL	1		

ENGINE OIL PAN AND OIL LEVEL SENSOR

T144844 -UN-05SEP01

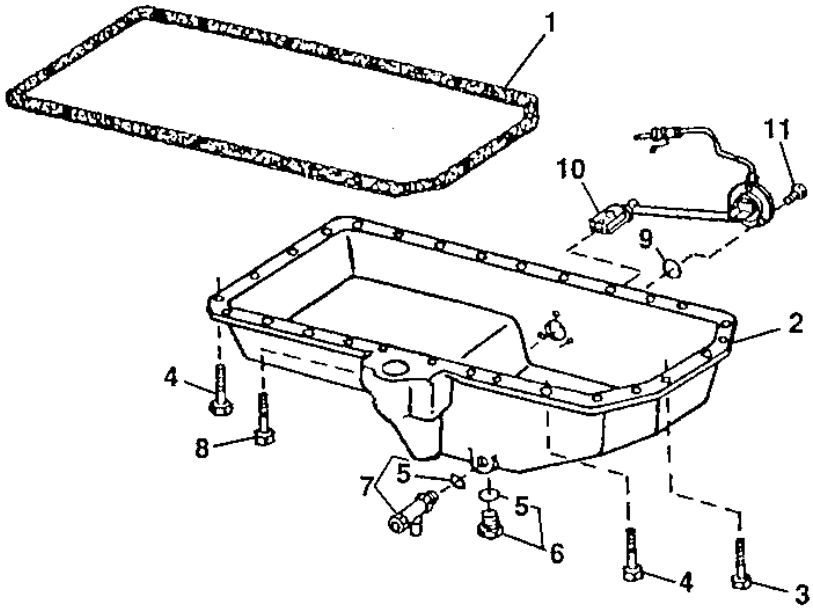

KEY	T144844 PART NO.	PART NAME	QTY	ENGINE SERIAL NO.	REMARKS
1	R123354	GASKET	1		
2	R502969	OIL PAN	1		
3	19M7868	SCREW	6		M8 X 30
4	19M7867	SCREW	26		M8 X 25
5	51M7043	O-RING	2		15.300 X 2.200 MM
6	RE46685	PLUG	1		
7	RE507952	DRAIN VALVE	1		(SUB FOR RE59579, THIS APPLICATION)
8	19M7799	SCREW	4		M8 X 45
9	R47154	O-RING	1		25.070 X 2.616 MM (0.987" X 0.103")
10	RE16223	SENSOR	1		OIL LEVEL
11	19M8425	CAP SCREW	3		M6 X 16

MEMORANDA

ENGINE VENTILATOR HOSE

T141314 -UN-16APR01

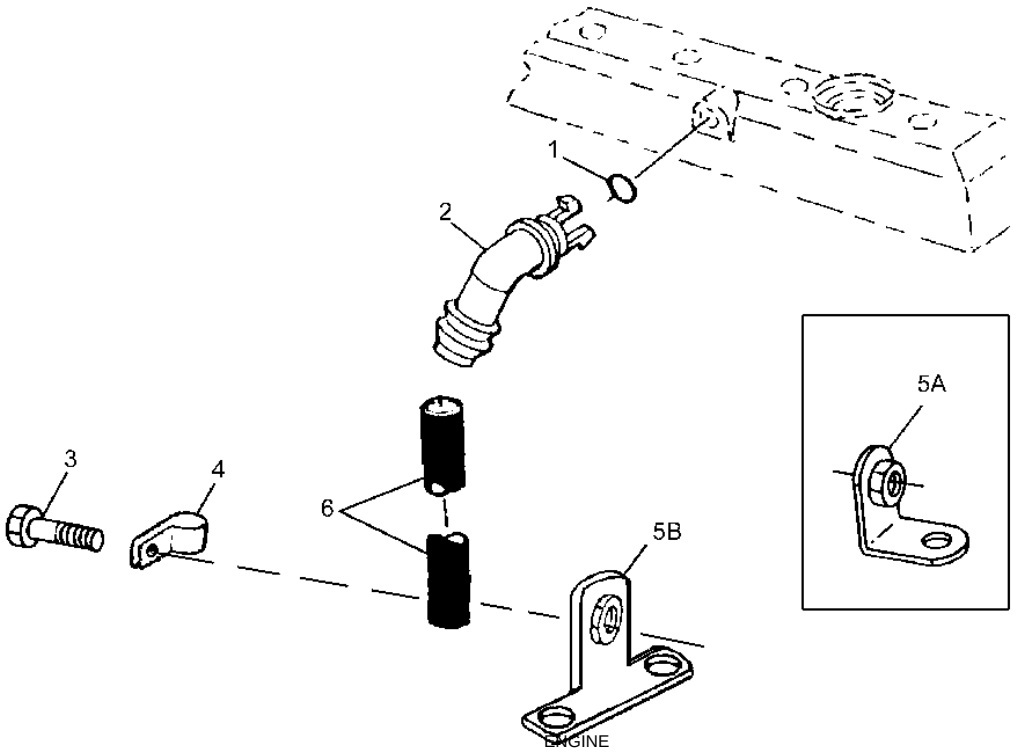

T141314

KEY	PART NO.	PART NAME	QTY	ENGINE SERIAL NO.	REMARKS
1	R72328	O-RING	1		18.720 X 2.616 MM
2	R123586	ELBOW FITTING	1		
3	19M7866	SCREW	1	-873371	M8 X 20, (SUB FOR T34037, THIS APPLICATION)
					(SUB FOR R122618, THIS APPLICATION)
	19M7783	SCREW	1	873372-	8 MM
4	R72659	CLAMP	1		
5A	RE504036	BRACKET	1	-873371	
5B	RE506871	BRACKET	1	873372-	
6	.....	HOSE	1		(MAKE FROM TY22450 BULK MATERIAL)

CYLINDER HEAD, HEAD GASKET AND VALVES

T145175 -UN-04SEP01

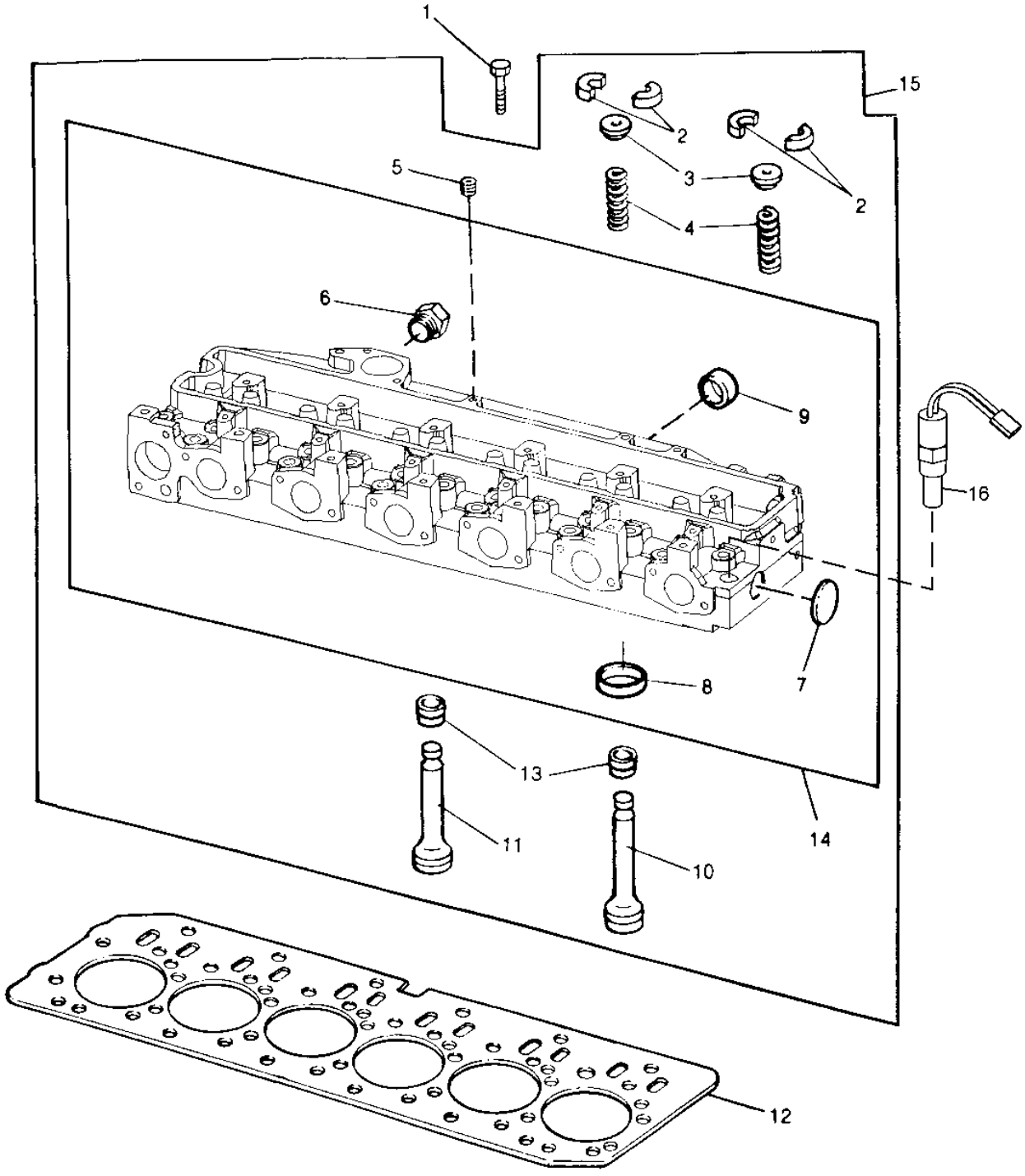

T145175

CYLINDER HEAD, HEAD GASKET AND VALVES

KEY	PART NO.	PART NAME	QTY	ENGINE SERIAL NO.	REMARKS
1	R85363	CAP SCREW	26		
2	R91889	RETAINER	24		
3	RE60005	ROTATOR	12		
4	R26125	SPRING	12		
5	R104592	PIPE PLUG	1		
6	T58477	FITTING	1		
	R26906	O-RING	1		
7	CD16284	PLUG	1		
8	R98063	VALVE SEAT INSERT	6		STANDARD SIZE INTAKE VALVE
	R98335	VALVE SEAT INSERT	6		OVERSIZE INTAKE VALVE
	R85687	VALVE SEAT INSERT	6		STANDARD SIZE EXHAUST VALVE
	R93910	VALVE SEAT INSERT	6		OVERSIZE EXHAUST VALVE
9	R43409	PLUG	3		
10	R90692	EXHAUST VALVE	6		STANDARD
11	R98062	INTAKE VALVE	6		STANDARD
12	R116516	ENGINE CYLINDER HEAD GASKET	1		
13	RE31617	SEAL	12		
14	.....	CYLINDER HEAD	1		(MARKED R121608)
15	RE57489	CYLINDER HEAD	1		(MARKED R121608)
16	AT174989	SWITCH	1		(ENGINE OVERHEAT SWITCH)
17	R78064	ELEC. CONNECTOR CAVITY PLUG	1		
18	R78053	ELECTRICAL CONNECTOR ASSY	1		
19	R26906	O-RING	1		

EXHAUST MANIFOLD

TP53335 -UN-11SEP96

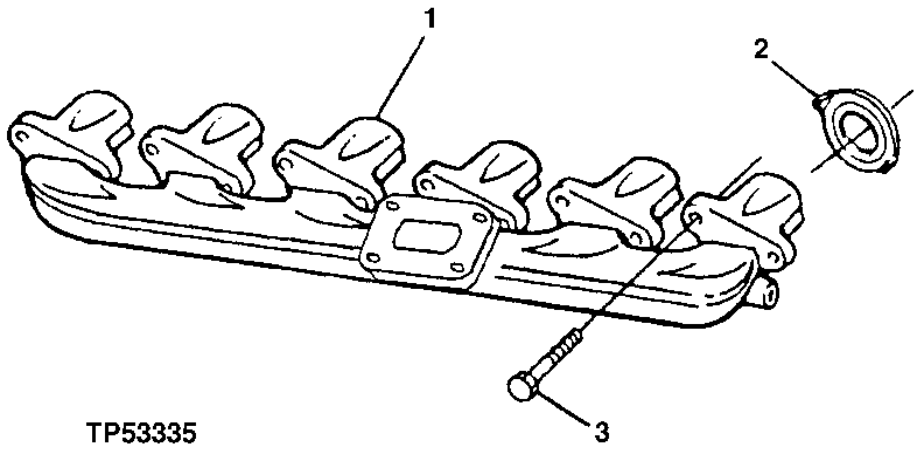

KEY	PART NO.	PART NAME	QTY	ENGINE SERIAL NO.	REMARKS
1	R132462	EXHAUST MANIFOLD	1		
2	R90658	GASKET	6		
3	19M7810	SCREW	12		M10 X 80

FUEL INJECTION NOZZLE

T160589 -UN-17OCT02

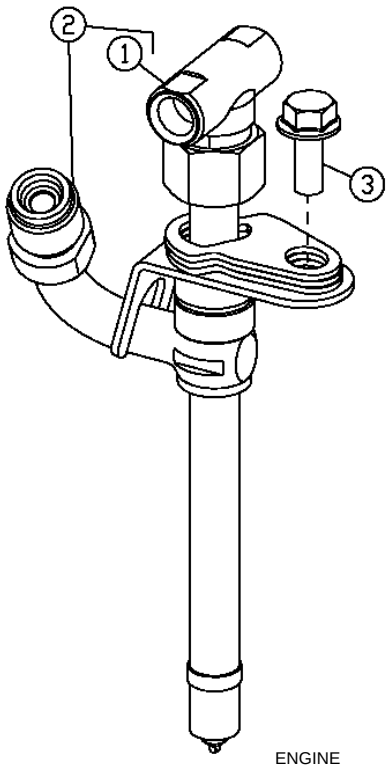

T160589

KEY	PART NO.	PART NAME	QTY	ENGINE SERIAL NO.	REMARKS
1	R71963	TEE FITTING	1		
2	RE506688	INJECTION NOZZLE	1		
	SE500835	NOZZLE	1		(REMANUFACTURED)
3	R116366	SCREW	1		

FUEL INJECTION SYSTEM

T192674 -UN-07JUL03

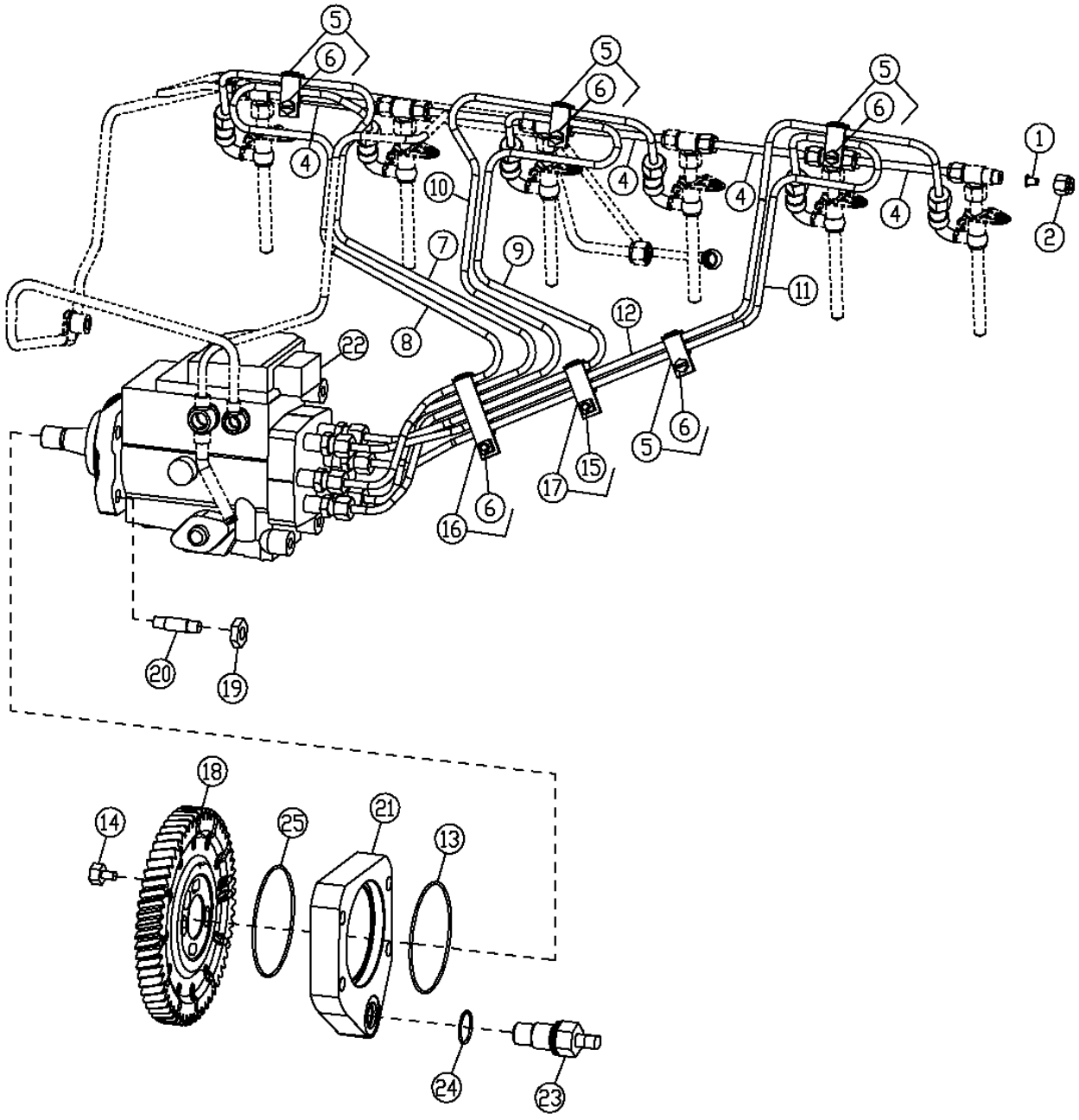

FUEL INJECTION SYSTEM

KEY	PART NO.	PART NAME	QTY	SERIAL NO.	REMARKS
1	AR85519	PLUG	1		
2	R123593	TUBE NUT	1		
4	RE68748	TUBE	4		
	R51936	SEALING WASHER	2		(NOT ILLUSTRATED)
5	RE19797	CLAMP	4		(FUEL LINE NO. 1-2, 3-4, 5-6)
6	19M7923	CAP SCREW	5		M6 X 12
7	RE507653	FUEL LINE	1		NO. 1
8	RE507654	FUEL LINE	1		NO. 2
9	RE507655	FUEL LINE	1		NO. 3
10	RE507656	FUEL LINE	1		NO. 4
11	RE507657	FUEL LINE	1		NO. 5
12	RE507658	FUEL LINE	1		NO. 6
13	R54873	O-RING	1		
14	R504798	SCREW	1		
15	19M8560	CAP SCREW	1		M6 X 12
16	RE19800	CLAMP	1		(FUEL LINE NO. 1,2,3,4,5,6)
17	RE20901	CLAMP	1		(FUEL LINE. NO. 4-6)
18	R515150	GEAR	1		
19	14M7276	NUT	4		M16
20	R134212	STUD	4		
21	R501039	ADAPTER	1		
22	RE522826	FUEL INJECTION PUMP	1		(SUB FOR RE506681) (ROBERT BOSCH-VP44)
23	RE519144	SENSOR	1		(SUB FOR RE508195) (CONTAINS 51M7044) (CRANKSHAFT POSITION SENSOR)
24	51M7044	O-RING	1		17.300 X 2.200 MM
25	R123295	O-RING	1		

AIR INTAKE SYSTEM

T144949 -UN-30AUG01

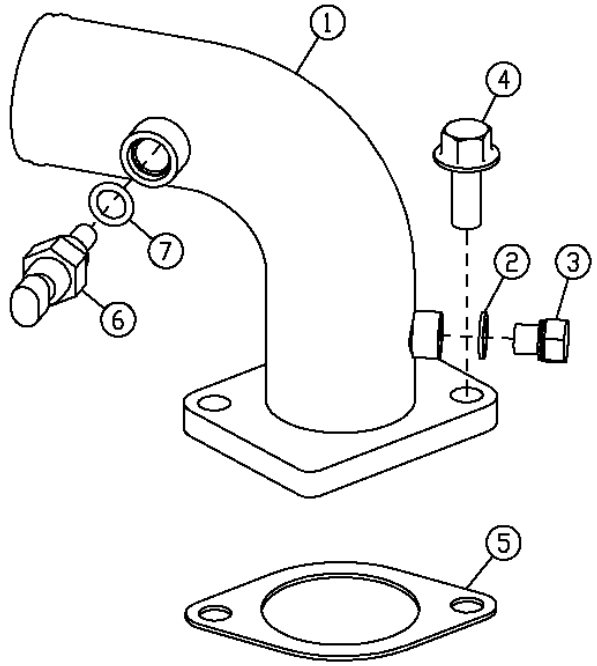

T144949

KEY	PART NO.	PART NAME	QTY	ENGINE SERIAL NO.	REMARKS
1	RE506991	AIR INTAKE	1		
2	51M7039	O-RING	1		8.100 X 1.600 MM
3	RE60071	FITTING	1		
4	19M7786	SCREW	2		M10 X 30
5	R81275	GASKET	1		
6	RE61812	SENSOR	1		(AIR TEMPERATURE SENSOR)
7	51M7041	O-RING	1		11.300 X 2.200 MM

MEMORANDA

TURBOCHARGER AND OIL LINES

T144911 -UN-04DEC01

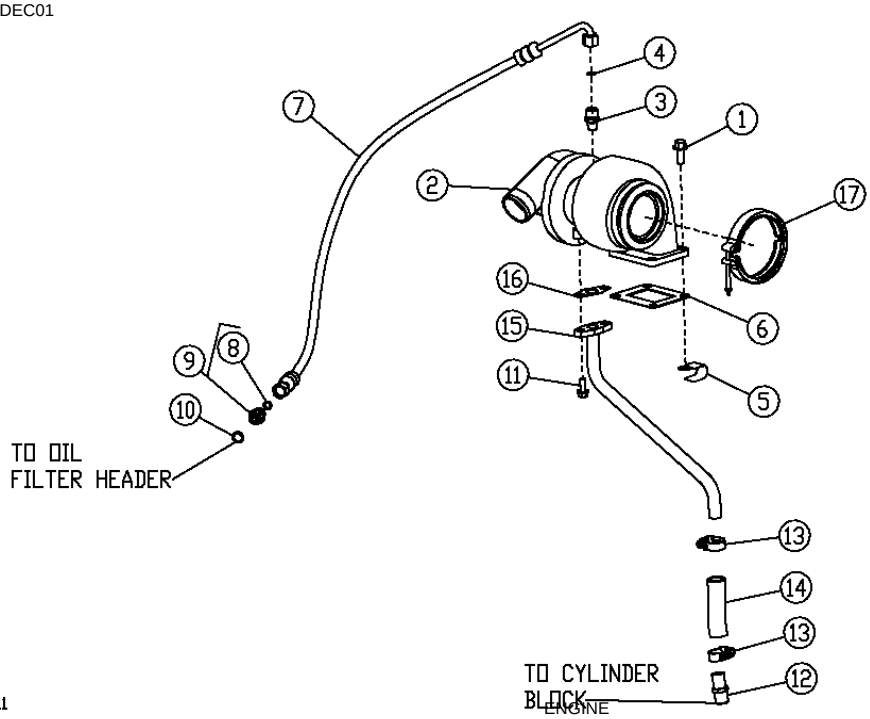

T144911
ENGINE

KEY	PART NO.	PART NAME	QTY	SERIAL NO.	REMARKS
1	19M7785	SCREW	4		M10 X 25
2	RE508719	TURBOCHARGER	1		(MARKED RE508657)
3	RE55871	ELBOW FITTING	1		
4	R63548	O-RING	1		
5	R72853	CLAMP	4		
6	R123572	GASKET	1		
7	RE503211	OIL LINE	1		
8	T77613	O-RING	1		
9	38H5037	ADAPTER	1		
10	51M7042	O-RING	2		
11	19M7866	SCREW	2		M8 X 20
12	RE54885	HOSE FITTING	1		
13	RE65978	CLAMP	2		
14	R115138	HOSE	1		
15	RE59992	OIL LINE	1		
16	R123570	GASKET	1		
17	RE40048	CLAMP	1		

MEMORANDA

WATER PUMP INLET AND PULLEY

T144824 -UN-27AUG01

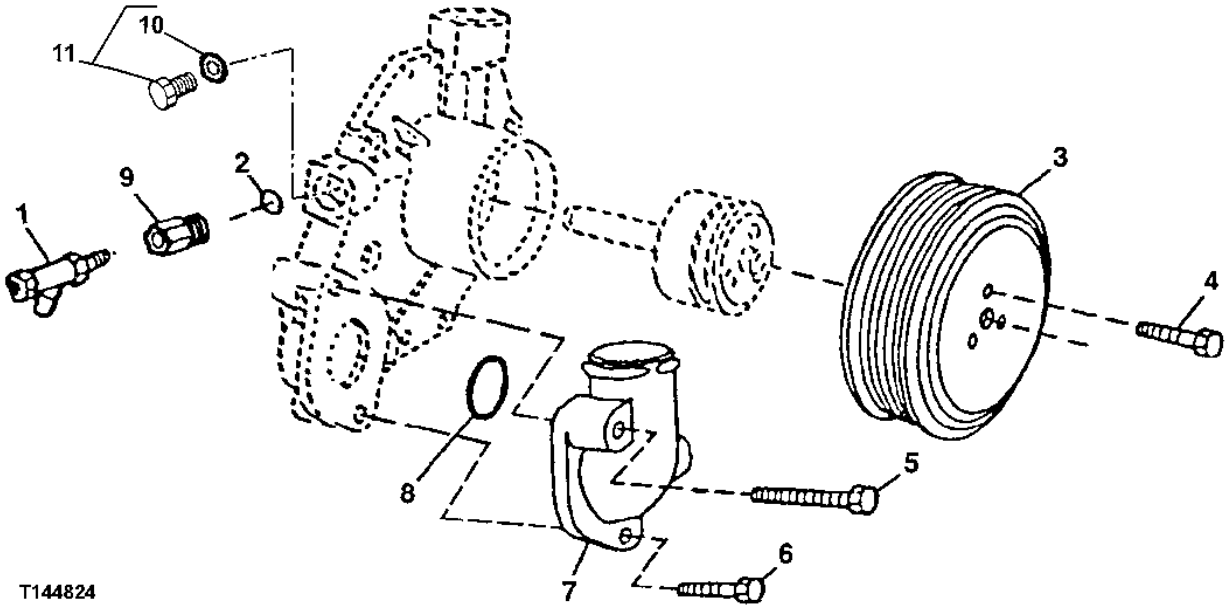

KEY	PART NO.	PART NAME	QTY	ENGINE SERIAL NO.	REMARKS
1	RE507952	DRAIN VALVE	1		WITH CAB HEAT
2	51M7043	O-RING	1		15.300 X 2.200 MM, WITH CAB HEAT
3	R115250	PULLEY	1		
4	19M7774	SCREW	3		M6 X 12
5	19M7802	SCREW	1		M8 X 65
6	19M7867	SCREW	1		M8 X 25
7	R121635	ELBOW FITTING	1		
8	R89944	O-RING	1		50.394 X 3.531 MM (1-63/64" X 0.139")
9	RE520229	ADAPTER	1		(SUB FOR RE68908) WITH CAB HEAT
10	51M7043	O-RING	1		15.300 X 2.200 MM, WITHOUT CAB HEAT
11	RE46685	PLUG	1		WITHOUT CAB HEAT

WATER PUMP ASSEMBLY AND REPAIR KIT

T158422 -UN-13AUG02

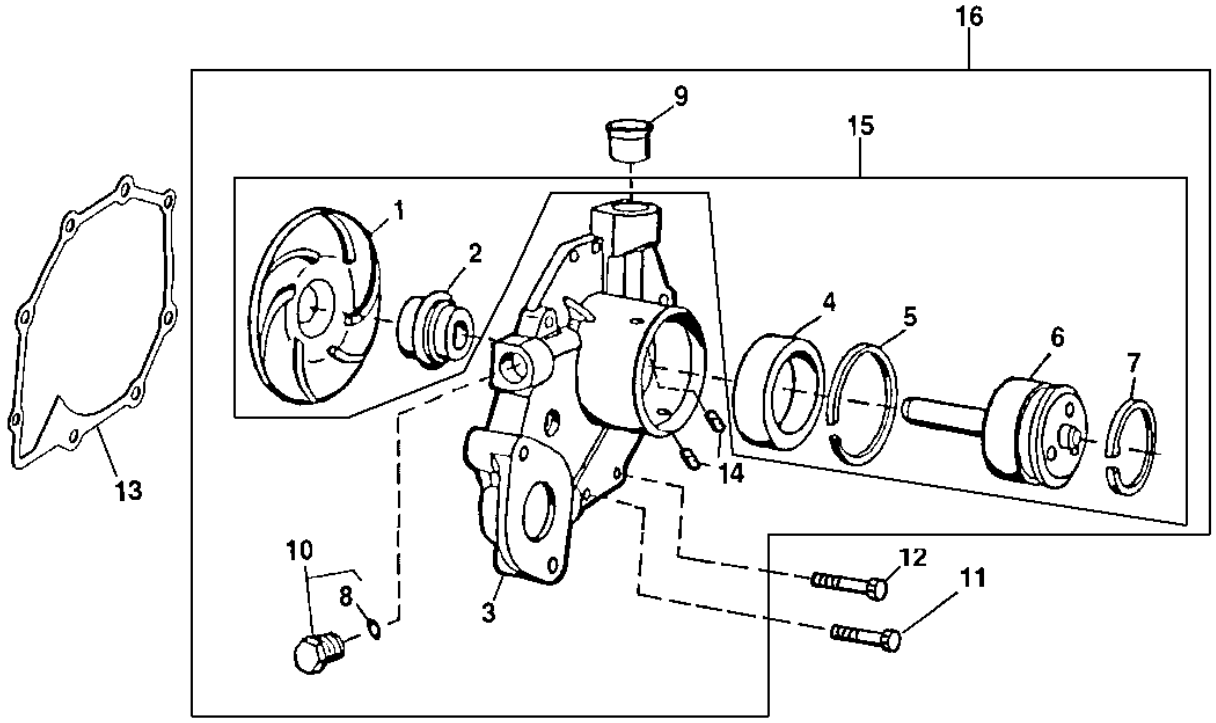

T158422

KEY	PART NO.	PART NAME	QTY	ENGINE SERIAL NO.	REMARKS
1	.....	IMPELLER	1		(MARKED R123395)
2	.....	SEAL	1		(MARKED R503509)
3	.....	HOUSING	1		
4	.....	BALL BEARING	1		
5	.....	RING	1		
6	.....	SHAFT	1		
7	A364R	SNAP RING	1		
8	51M7043	O-RING	1		15.300 X 2.200 MM
9	R123226	SEAL	1		
10	RE46685	PLUG	1		
11	19M7863	SCREW	5		M6 X 25
12	19M7796	SCREW	3		M6 X 30
13	R123417	GASKET	1		
14	R100369	FILTER	2		
15	RE70962	KIT	1		
16	RE505980	WATER PUMP	1		

THERMOSTAT, THERMOSTAT HOUSING, AND COVER

RGP9753 -UN-05JUN03

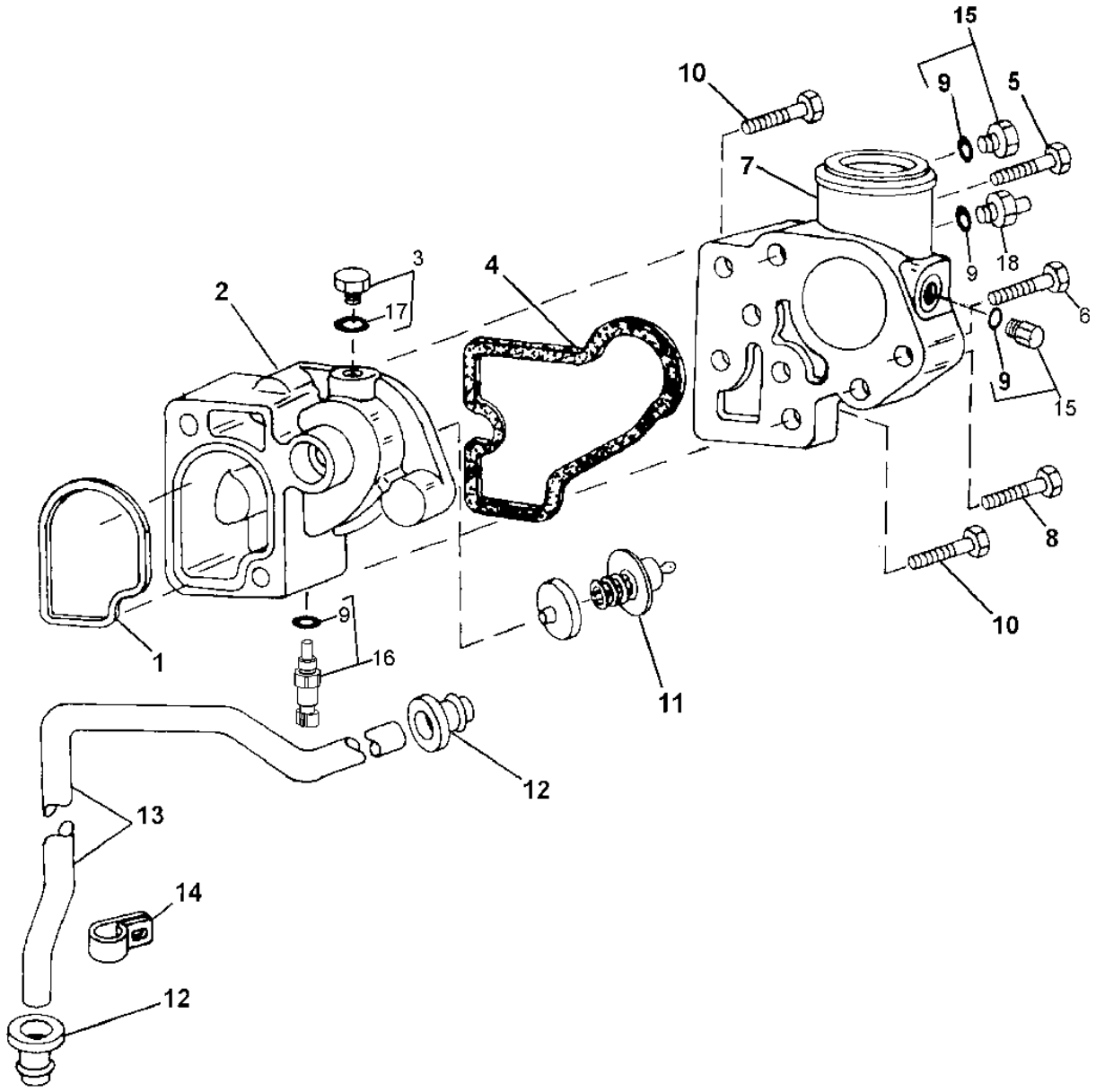

RGP9753

THERMOSTAT, THERMOSTAT HOUSING, AND COVER

KEY	PART NO.	PART NAME	QTY	ENGINE SERIAL NO.	REMARKS
1	R501228	SEAL	1		
2	R500471	HOUSING	1		
3	RE46686	PLUG	1		
4	R501227	SEAL	1		
5	19M7810	SCREW	1		M10 X 80
6	19M7785	SCREW	1		M10 X 25
7	R500472	COVER	1		
8	19M7809	SCREW	1		M10 X 70
9	51M7041	O-RING	4		
10	19M7811	SCREW	2		M10 X 90
11	RE520831	THERMOSTAT	1		
12	R123226	SEAL	1		
13	R500704	TUBE	1		BY-PASS TUBE
14	R123324	CLAMP	1		
15	RE46684	PLUG	3		
16	RE52722	SENSOR	1		(COOLANT TEMP FOR ECU)
17	51M7040	O-RING	1		9.300 X 2.200 MM
18	4456798	SENSOR	1		(TEMPERATURE GAUGE SENSOR)

ENGINE OIL COOLER AND ADAPTER

T144984 -UN-31AUG01

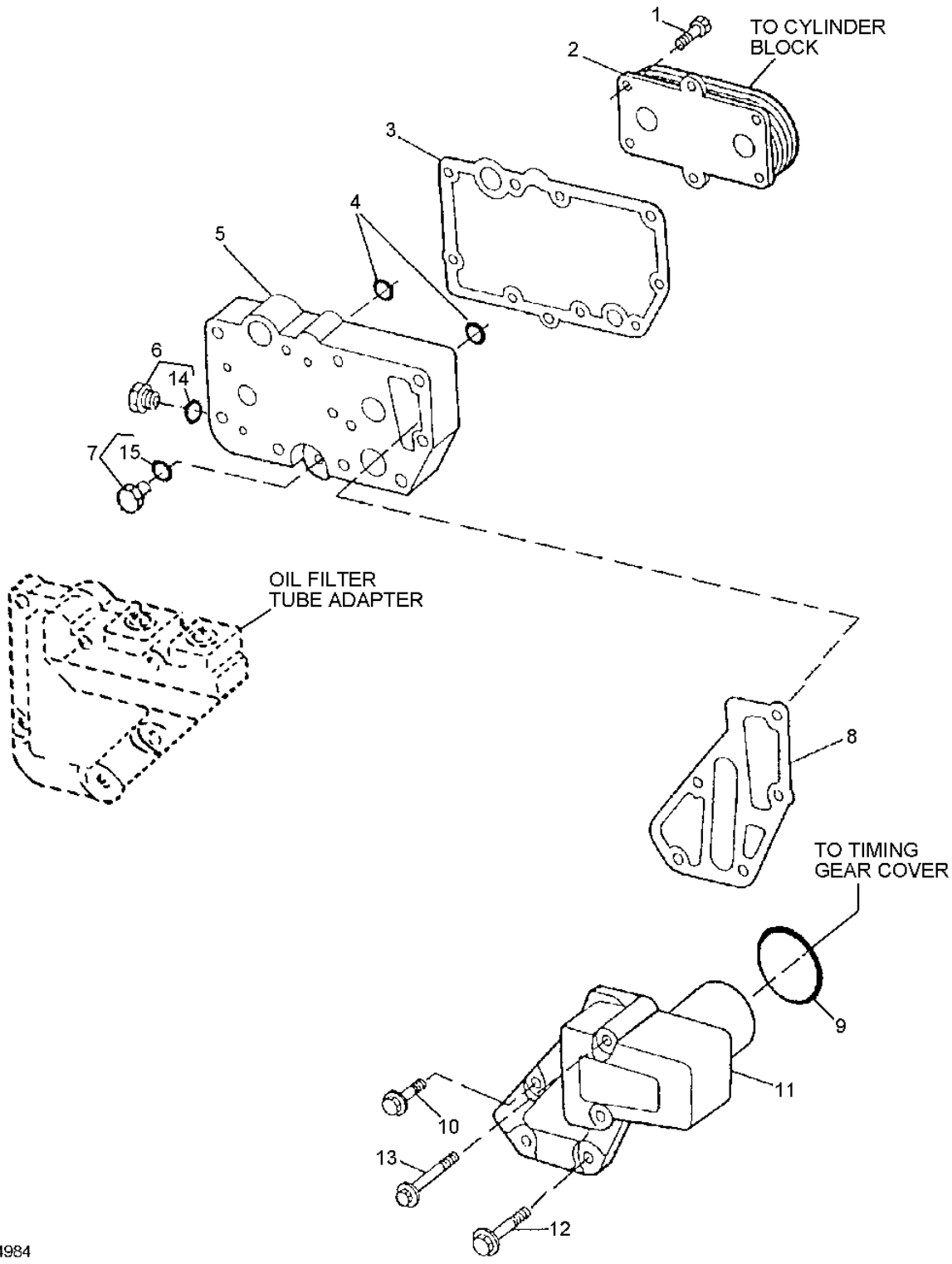

ENGINE OIL COOLER AND ADAPTER

KEY	PART NO.	PART NAME	QTY	ENGINE SERIAL NO.	REMARKS
1	RE67231	SCREW	6		M6 X 16 (WITH PRE-APPLIED SEALANT)
2	RE59298	OIL COOLER	1		(9 PLATE)
3	R123501	GASKET	1		
4	T122075	O-RING	2		1.174" X 0.103"
5	R123471	HOUSING	1		
6	RE46685	PLUG	1		
7	RE46686	PLUG	1		
8	R501428	GASKET	1		
9	R504734	O-RING	1		
10	19M7802	SCREW	2		M8 X 65
11	R502811	ADAPTER	1		
12	19M7970	SCREW	2		M8 X 100
13	RE67238	SCREW	1		M8 X 20 (WITH PRE-APPLIED SEALANT)
14	51M7043	O-RING	1		15.300 X 2.200 MM
15	51M7040	O-RING	1		9.300 X 2.200 MM

FINAL FUEL FILTER FUEL LINES AND BRACKET

T151707 -UN-20FEB02

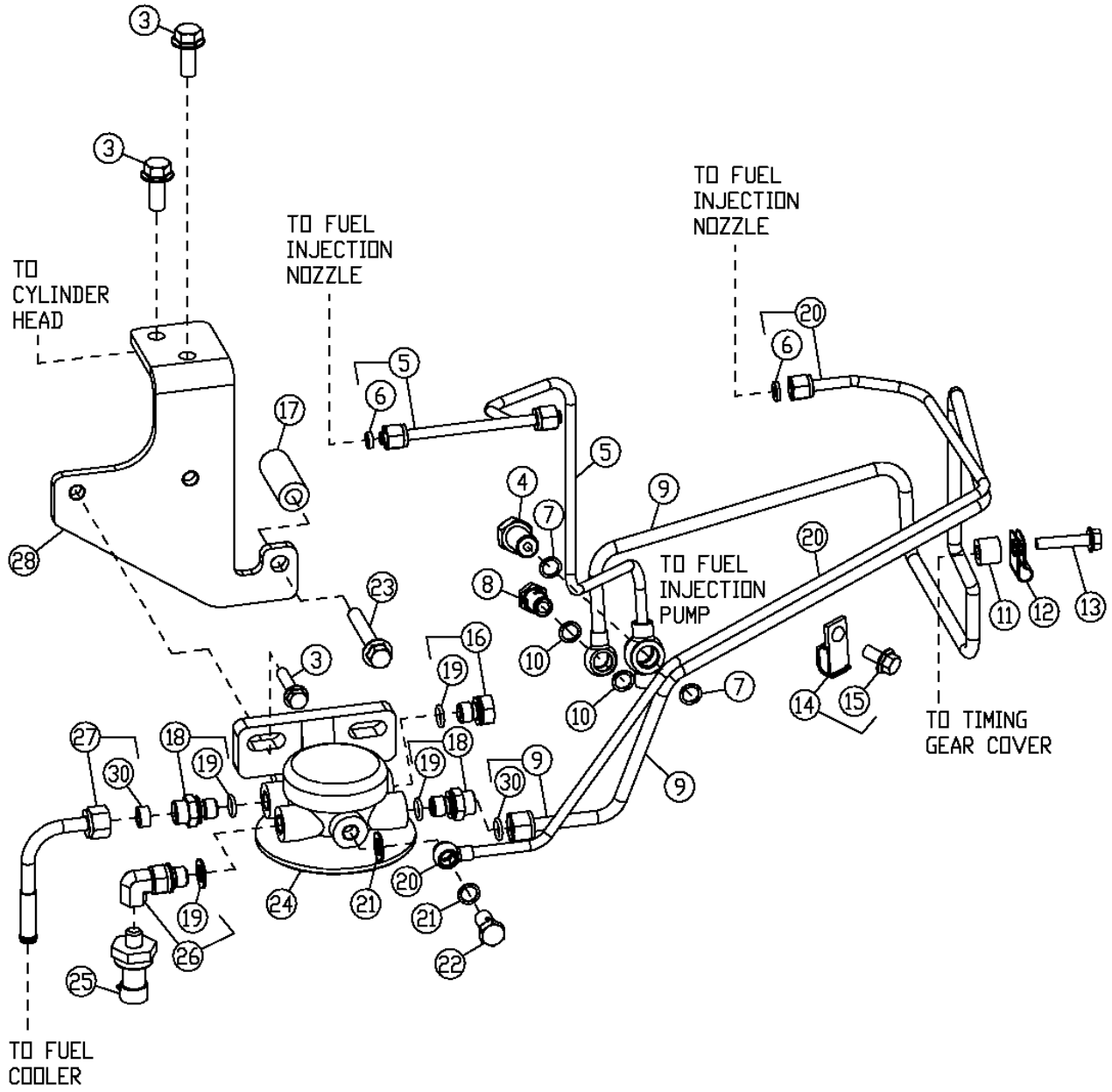

T151707

FINAL FUEL FILTER FUEL LINES AND BRACKET

KEY	PART NO.	PART NAME	QTY	ENGINE SERIAL NO.	REMARKS
3	19M7784	SCREW	4		M10 X 20
4	RE505227	FITTING	1		
5	RE506118	FUEL LINE	1		
6	R51936	SEALING WASHER	3		
7	R64857	WASHER	2		
8	38M6640	HOLLOW SCREW	1		
9	RE506116	FUEL LINE	1		
10	R504067	WASHER	2		
11	R55599	SLEEVE	1		
12	R504605	CLAMP	1		
13	19M8317	SCREW	1		M8 X 40
14	RE19797	CLAMP	2		
15	19M7923	CAP SCREW	2		M6 X 12, (SUB FOR 19M6614)
16	RE46686	PLUG	1		
17	R80670	SPACER	1		10.310 X 19.050 X 46 MM
18	RE60029	ADAPTER	2		
19	51M7040	O-RING	4		
20	RE506117	FUEL LINE	1		
21	R62107	WASHER	2		
22	38M7009	HOLLOW SCREW	1		
23	19M7808	SCREW	1		M10 X 65
24	.....	FILTER HEAD	1		(ORDER RE508985)
25	RE167207	SENSOR	1		(FUEL PRESSURE)
26	RE504969	HOSE FITTING	1		
27	RE60242	FUEL LINE	1		
28	R505143	BRACKET	1		
30	R74012	SEALING WASHER	2		

PRIMARY AND FINAL FUEL FILTER ELEMENTS AND SERVICE KITS

T152609 -UN-13MAR02

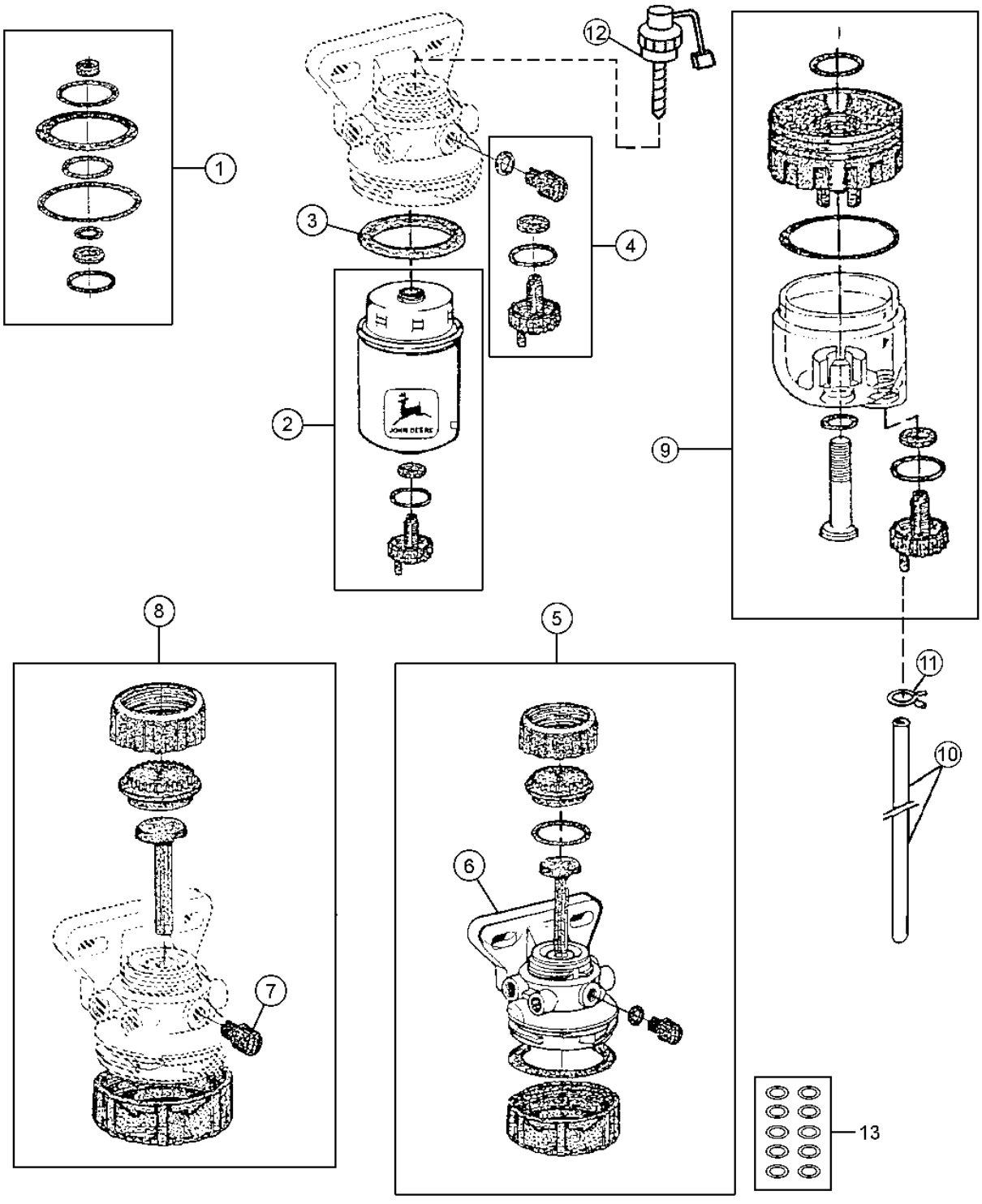

T152609

PRIMARY AND FINAL FUEL FILTER ELEMENTS AND SERVICE KITS

KEY	PART NO.	PART NAME	QTY	ENGINE SERIAL NO.	REMARKS
1	RE516553	KIT	1		(SUB FOR RE50752)
2	RE67901	FILTER ELEMENT	1		FINAL FUEL FILTER
	RE509036	FUEL FILTER	1		PRIMARY FUEL FILTER
3	R113565	SEAL	1		
4	RE60854	KIT	1		
5	RE508985	KIT	1		FINAL FUEL FILTER
	RE508847	FILTER HEAD	1		PRIMARY FUEL FILTER
6	.....	FILTER HEAD	2		(ORDER RE508985 FOR FINAL FILTER) (ORDER RE508847 FOR PRIMARY FILTER)
7	R113563	DRAIN PLUG	1		
8	RE51649	SEAL KIT	1		
9	RE51650	SEDIMENT BOWL	1		PRIMARY FUEL FILTER
10	R126086	HOSE	1		PRIMARY FUEL FILTER
11	T13254	CLAMP	1		PRIMARY FUEL FILTER
12	RE504134	KIT	1		(PRIMARY FUEL FILTER) (24 VOLT TOP LOAD HEATER)
13	RE516513	KIT	1		(WITH HAND PRIMER) (CONTAINS 10 O-RINGS)
	RE516512	KIT	1		(WITHOUT HAND PRIMER) (CONTAINS 10 O-RINGS)

FUEL TRANSFER PUMP COVER

TP53340 -UN-12SEP96

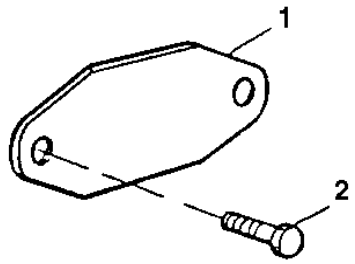

TP53340

KEY	PART NO.	PART NAME	QTY	ENGINE SERIAL NO.	REMARKS
1	R123396	COVER	1		
2	RE66334	SCREW	2		

MEMORANDA

FUEL TRANSFER PUMP, WIRING HARNESS, AND FITTINGS

T148187 -UN-15NOV01

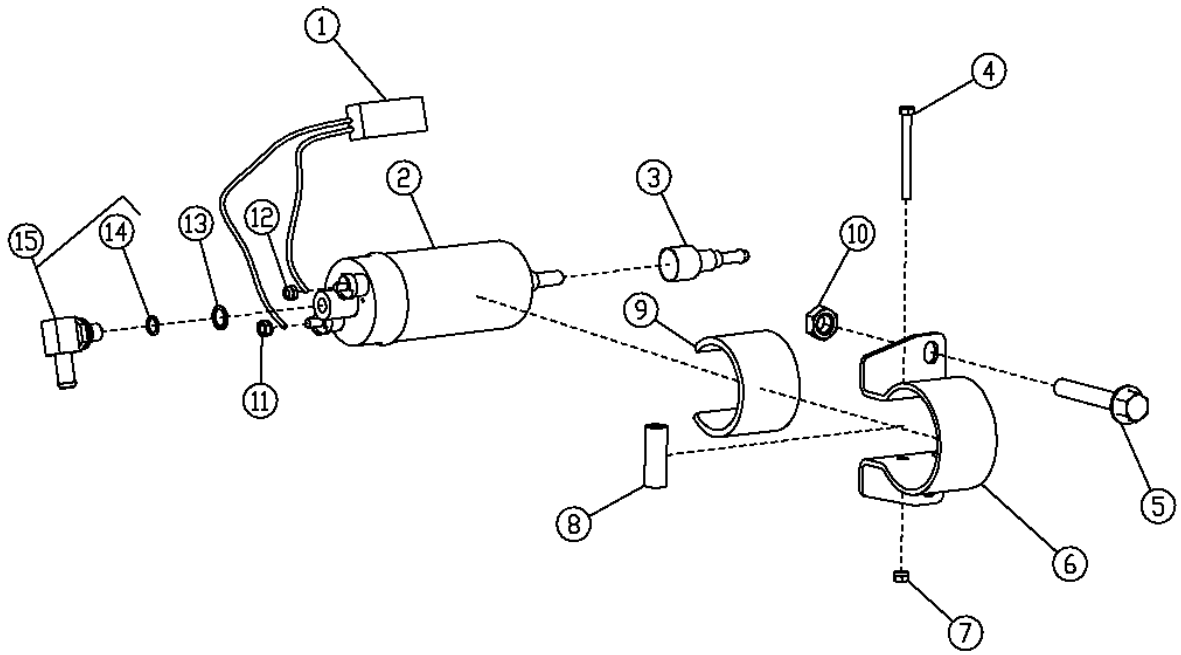

T148187

FUEL TRANSFER PUMP, WIRING HARNESS, AND FITTINGS

KEY	PART NO.	PART NAME	QTY	ENGINE SERIAL NO.	REMARKS
1	RE515326	WIRING HARNESS	1		
2	RE515718	PUMP	1		
3	RE515341	ADAPTER	1		
4	19M7986	CAP SCREW	1		M5 X 50
5	19M7139	CAP SCREW	2		
6	R515460	FILTER HEAD	1		
7	14M7265	LOCK NUT	1		M5
8	R515736	SPACER	1		
9	R515461	TOOL HOLDER	1		
10	.....	LOCK NUT	2		(NOT REQUIRED THIS APPLICATION)
11	14M7265	LOCK NUT	1		M5
12	14M7264	LOCK NUT	1		M4
13	R62107	WASHER	1		
14	51M7039	O-RING	1		8.100 X 1.600 MM
15	AT196563	ADAPTER	1		

STARTER MOTOR (24 VOLT)
(DENSO NO.228000-7011A)

T144800 -UN-14AUG01

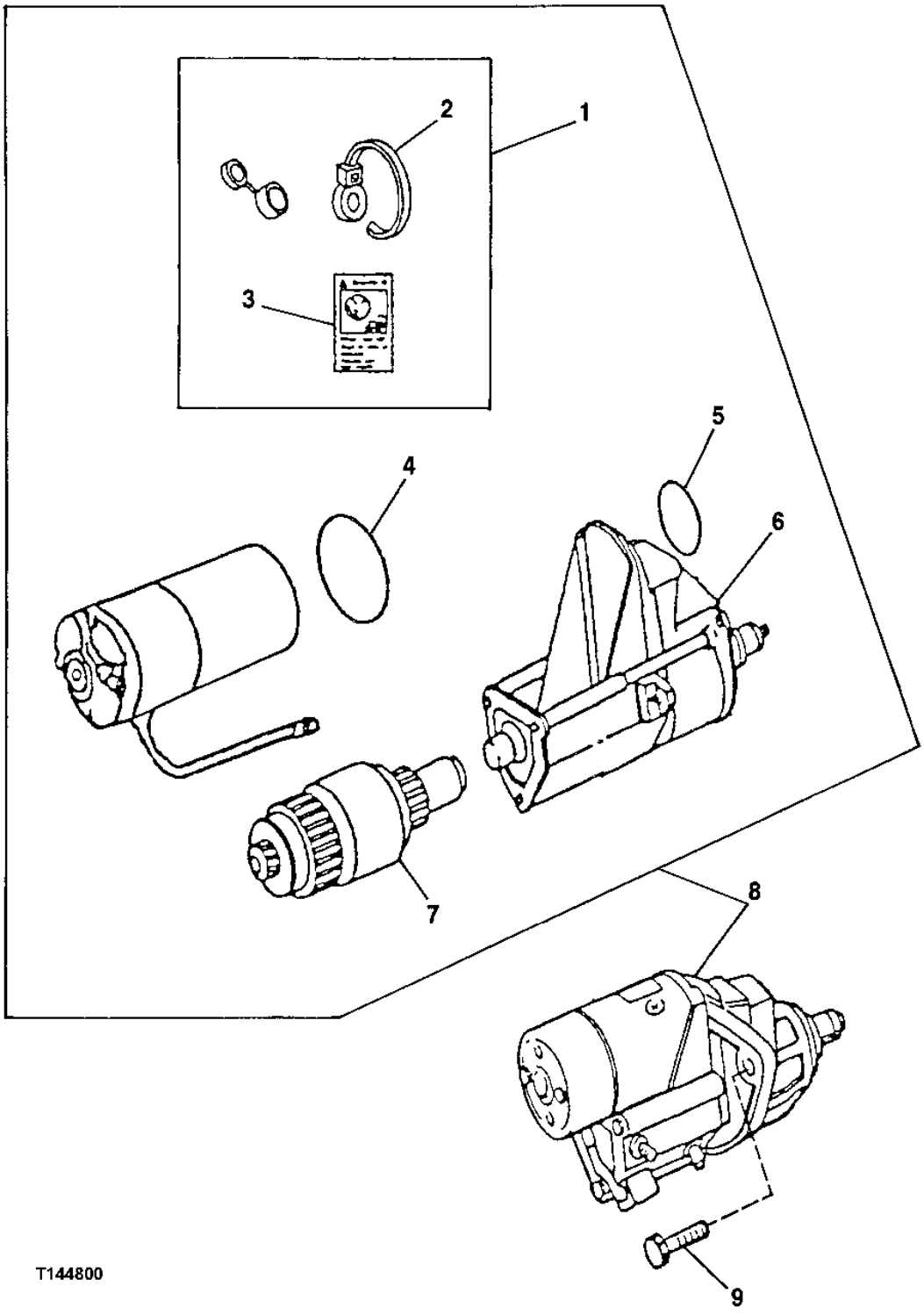

STARTING MOTOR (24 VOLT)
(DENSO NO.228000-7011A)

KEY	PART NO.	PART NAME	QTY	ENGINE SERIAL NO.	REMARKS
1	RE70756	KIT	1		BYPASS START
2	R96703	TIE BAND	1		
3	T146102	LABEL	1		BYPASS START
4	R135509	SEAL	1		
5	R135510	O-RING	1		
6	RE70681	SWITCH	1		
7	RE70487	CLUTCH	1		
8	RE500345	STARTER MOTOR	1		24-VOLT (DENSO NO.228000-7011A)
9	19M7786	SCREW	3		M10 X 30

ALTERNATOR MOUNTING BRACKETS

T144842 -UN-31AUG01

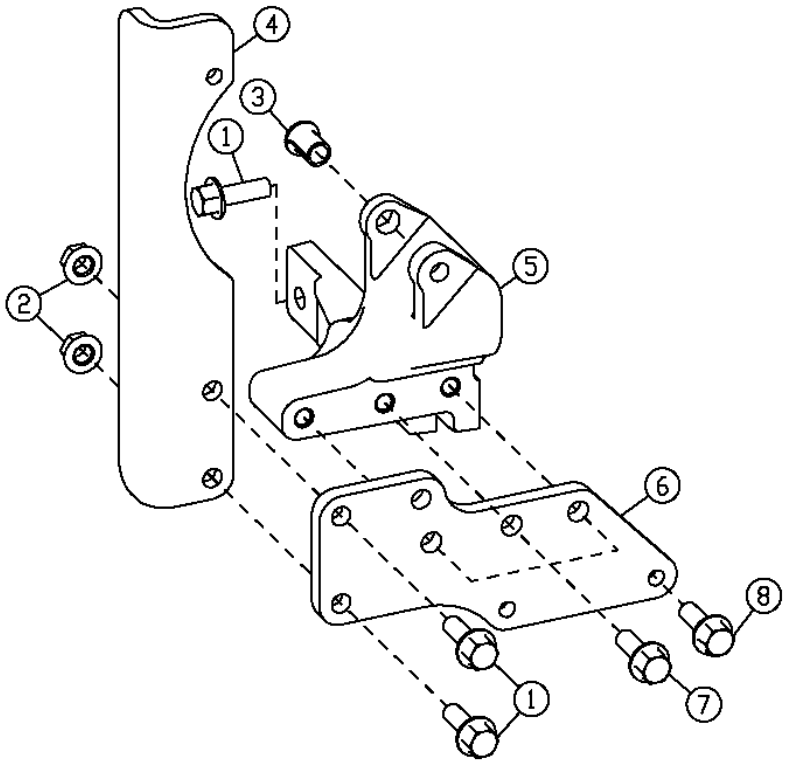

T144842

ALTERNATOR MOUNTING BRACKETS

KEY	PART NO.	PART NAME	QTY	ENGINE SERIAL NO.	REMARKS
1	19M7786	SCREW	2		M10 X 30
2	14M7296	FLANGE NUT	2		M10
3	R100377	BUSHING	1		
4	R500531	STRAP	1		
5	R132166	BRACKET	1		
6	R132913	SUPPORT	1		
7	19M7785	SCREW	3		M10 X 25
8	19M7801	SCREW	2		M8 X 60

MEMORANDA

CRANKSHAFT AUXILIARY DRIVE PULLEY

TP53330 -UN-05SEP96

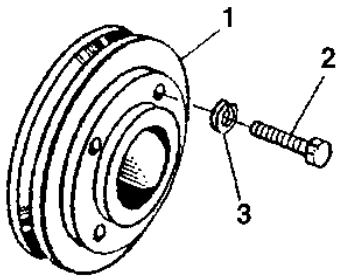

TP53330

KEY	PART NO.	PART NAME	QTY	ENGINE SERIAL NO.	REMARKS
1	R504762	PULLEY	1		
2	19H2633	CAP SCREW	1		3/8" X 1-1/2"
3	12H304	LOCK WASHER	2		3/8"

CRANKSHAFT PULLEY AND DAMPER

TP53318 -UN-21AUG96

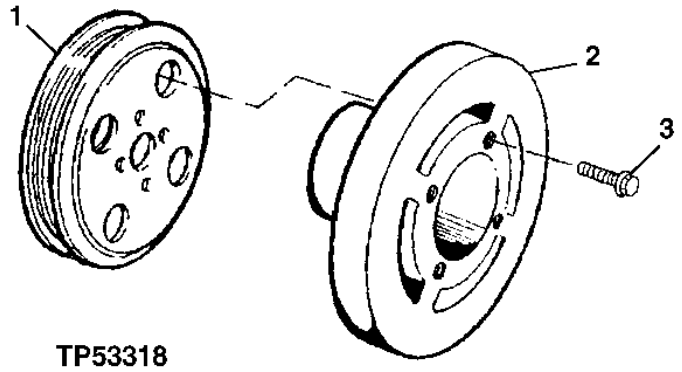

TP53318

KEY	PART NO.	PART NAME	QTY	ENGINE SERIAL NO.	REMARKS
1	R133295	PULLEY	1		
2	RE59355	TORSIONAL DAMPER	1		
3	R121897	SCREW	4		

CRANKSHAFT DAMPER PULLEY
(WITH AIR CONDITIONING)

TP53330 -UN-05SEP96

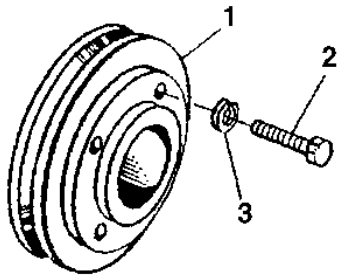

TP53330

KEY	PART NO.	PART NAME	QTY	ENGINE SERIAL NO.	REMARKS
1	R504762	PULLEY	1		(SUB FOR R123413, THIS APPLICATION)
2	19H2633	CAP SCREW	1		3/8" X 1-1/2"
3	12H304	LOCK WASHER	2		3/8"

FAN DRIVE, PULLEYS, AND BELT TENSIONERS

T145192 -UN-30AUG01

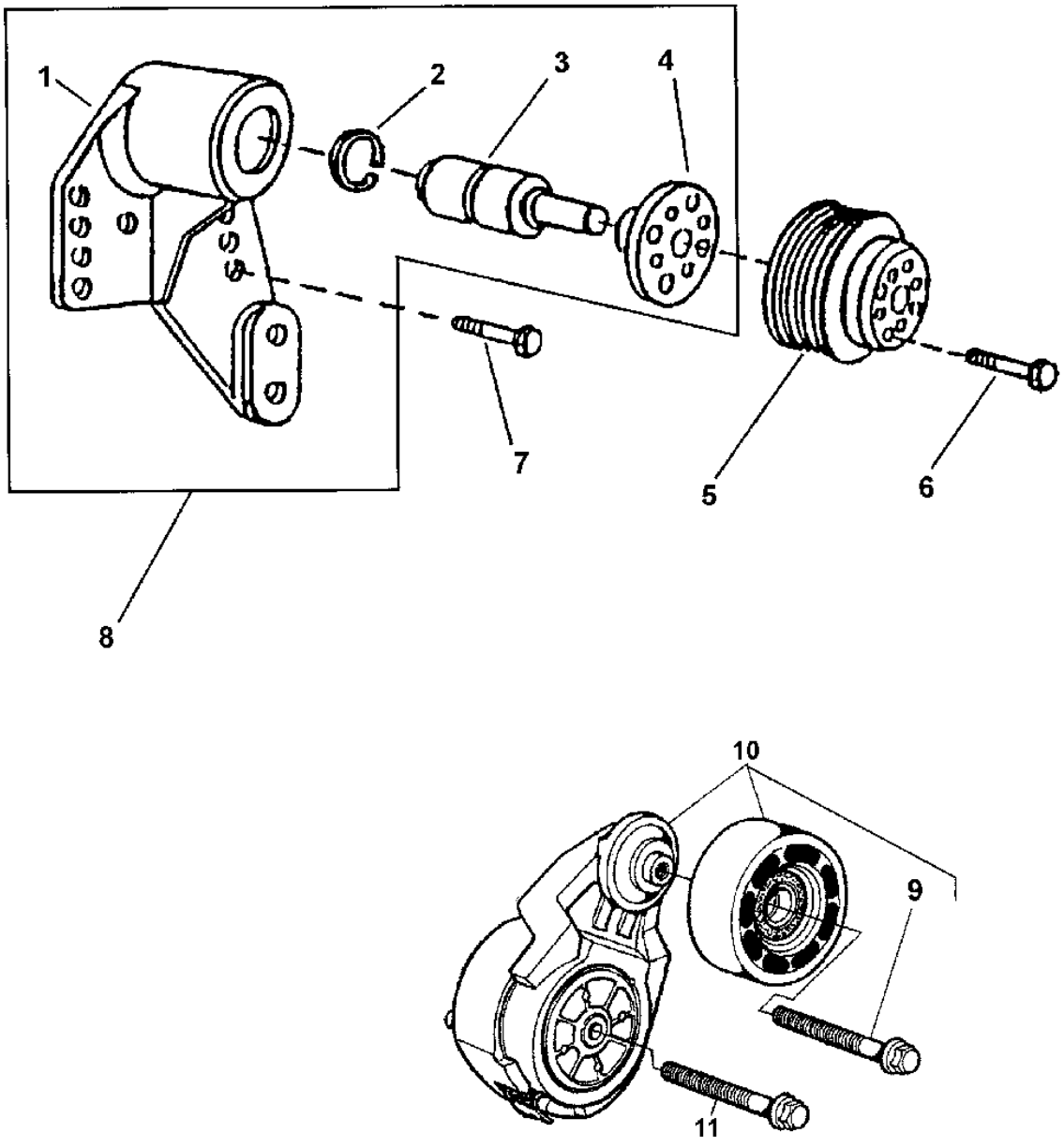

T145192

FAN DRIVE, PULLEYS, AND BELT TENSIONERS

KEY	PART NO.	PART NAME	QTY	ENGINE SERIAL NO.	REMARKS
1	.....	BEARING HOUSING W/ BEARING	1		
2	E1343FN	SNAP RING	1		
3	.....	SHAFT	1		SHAFT/BEARINGS
4	RE500538	BEARING HOUSING W/ BEARING	1		(MARKED R123284)
5	R128660	PULLEY	1		
6	19M7784	SCREW	4		M10 X 20
7	19M7835	SCREW	4		M10 X 35
8	RE503664	SUPPORT	1		(MARKED R502014)
9	R503813	BOLT	1		LEFT HAND THREAD
10	RE70536	PULLEY	1		
11	19M8131	SCREW	1		M10 X 70

FAN BELT AND PULLEY

TP58352 -UN-28OCT98

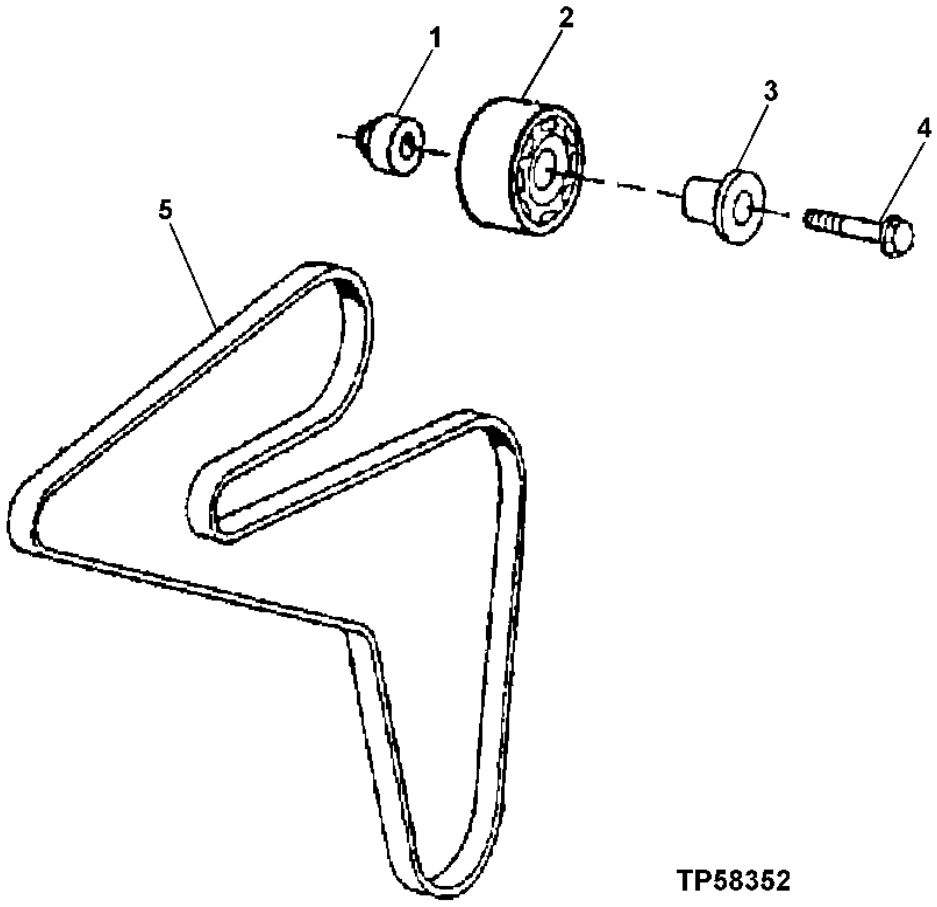

FAN BELT AND PULLEY

KEY	PART NO.	PART NAME	QTY	ENGINE SERIAL NO.	REMARKS
1	R500320	SPACER	1		
2	RE505264	IDLER	1		
3	R502079	SLEEVE	1		
4	19M7808	SCREW	1		M10 X 65
5	R504963	V-BELT	1		

ENGINE FLYWHEEL

TP49557 -UN-05FEB97

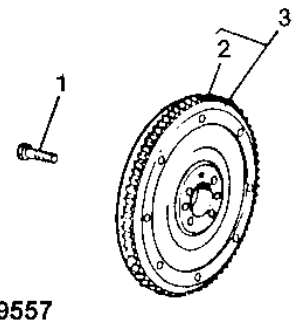

TP49557

KEY	PART NO.	PART NAME	QTY	ENGINE SERIAL NO.	REMARKS
1	R135918	BOLT	6		
2	R28811	RING GEAR	1		(129 TEETH)
3	RE500527	FLYWHEEL	1		

ENGINE FLYWHEEL HOUSING

T144896 -UN-22AUG01

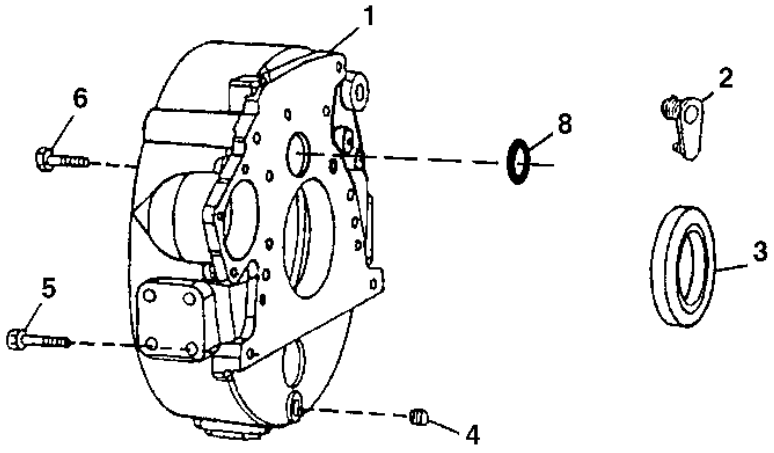

T144896

KEY	PART NO.	PART NAME	QTY	ENGINE SERIAL NO.	REMARKS
1	R503444	HOUSING	1		
2	R131768	PLUG	1		
3	RE44574	SEAL	1		
4	15H624	PIPE PLUG	1		1/2"
5	19M8306	SCREW	4		M12 X 50
6	R135918	BOLT	8		
8	R61467	O-RING	1		

MEMORANDA

CYLINDER HEAD REMOVAL AND IN VEHICLE OVERHAUL GASKET SETS

TP49294 -UN-28SEP95

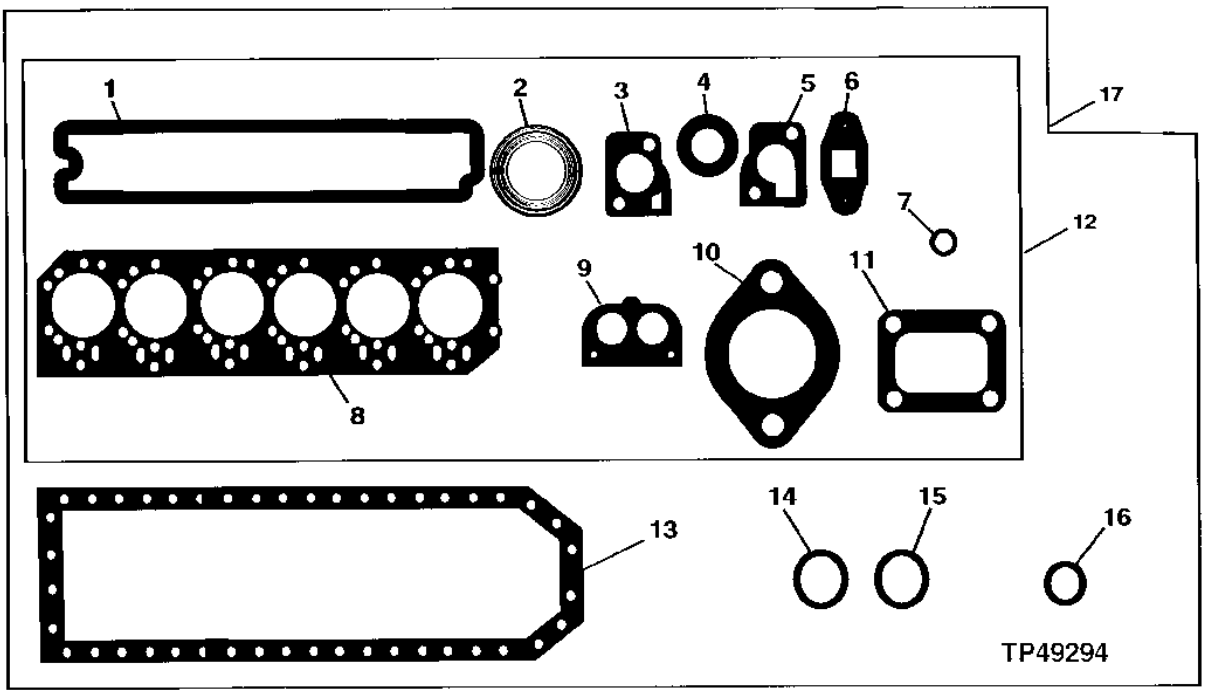

KEY	PART NO.	PART NAME	QTY	ENGINE SERIAL NO.	REMARKS
1	R123543	GASKET	1		ROCKER ARM COVER
	RE520540	GASKET KIT	1		(HIGH TEMPERATURE)
2	R90658	GASKET	6		EXHAUST MANIFOLD
3	R502814	GASKET	1		THERMOSTAT COVER
4	R123226	SEAL	2		WATER BY-PASS TUBE
5	R123345	GASKET	1		THERMOSTAT HOUSING
6	R123570	GASKET	1		TURBOCHARGER OIL OUTLET LINE
7	R123575	O-RING	6		ROCKER ARM COVER HOLD DOWN STUD
8	R116516	ENGINE CYLINDER HEAD GASKET	1		CYLINDER HEAD
9	R501373	GASKET	1		THERMOSTAT COVER
10	R81275	GASKET	1		AIR INLET
11	R123572	GASKET	1		TURBOCHARGER TO EXHAUST MANIFOLD
12	RE66083	GASKET KIT	1		CYLINDER HEAD REMOVAL
13	R123354	GASKET	1		ENGINE OIL PAN
14	R75892	GASKET	1		OIL PUMP TUBE CONNECTOR
15	R97185	O-RING	1		OIL PUMP OUTLET TUBE TO COVER
16	R61871	O-RING	1		OIL PUMP INTAKE TUBE TO COVER
17	RE66085	GASKET KIT	1		IN CHASSIS OVERHAUL

ENGINE MAJOR OVERHAUL GASKET SET AND ENGINE OVERHAUL KIT

TP58369 -UN-08FEB99

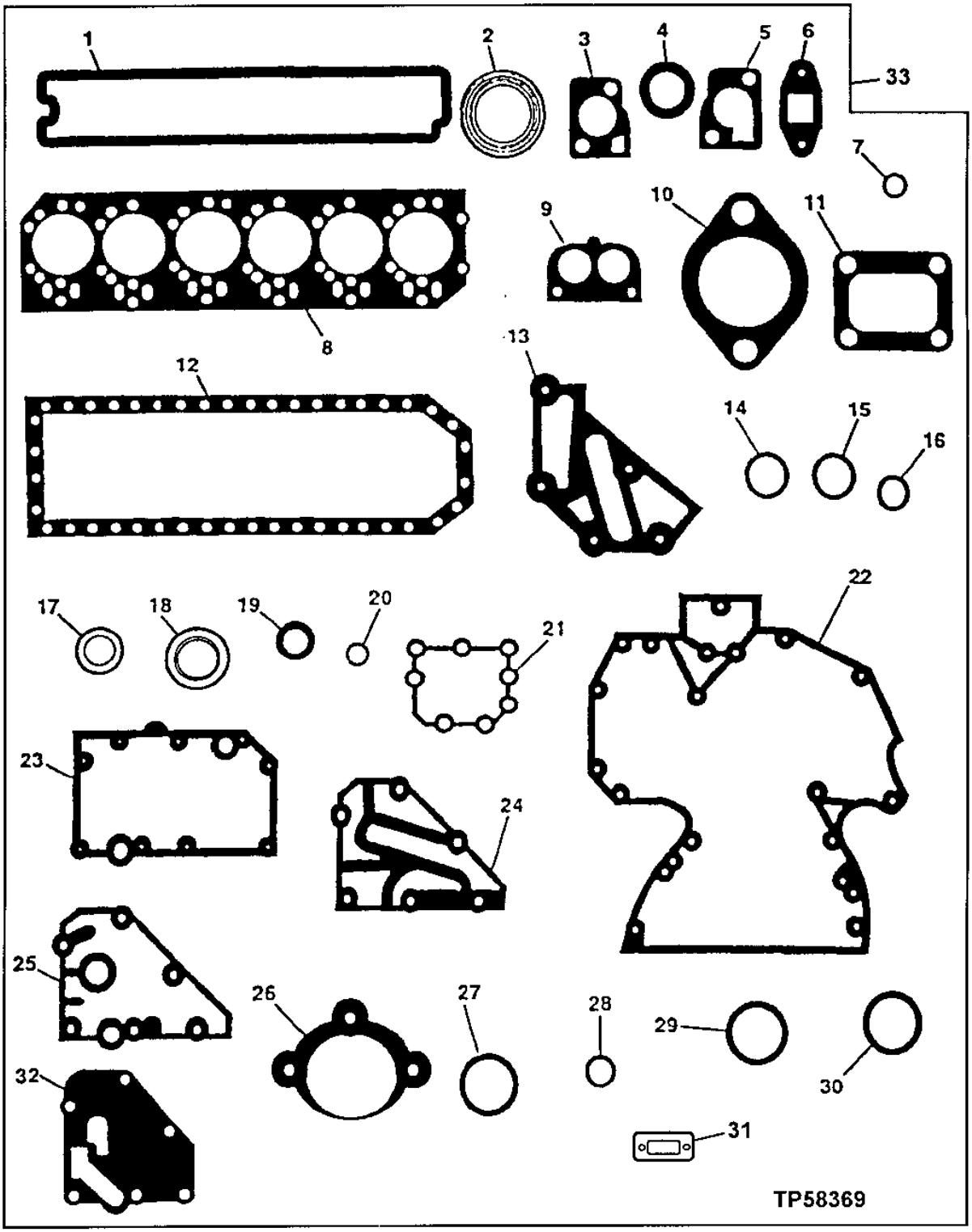

ENGINE MAJOR OVERHAUL GASKET SET AND ENGINE OVERHAUL KIT

KEY	PART NO.	PART NAME	QTY	ENGINE SERIAL NO.	REMARKS
1	R123543	GASKET	1		ROCKER ARM COVER
	RE520540	GASKET KIT	1		(HIGH TEMPERATURE)
2	R90658	GASKET	6		EXHAUST MANIFOLD
3	R502814	GASKET	1		THERMOSTAT COVER
4	R123226	GASKET	2		WATER BY-PASS TUBE
5	R123345	GASKET	1		THERMOSTAT HOUSING
6	R123570	GASKET	1		TURBOCHARGER OIL OUTLET TUBE
7	R123575	GASKET	4		ROCKER ARM COVER HOLD DOWN STUD
8	R116516	GASKET	1		CYLINDER HEAD
9	R501373	GASKET	1		THERMOSTAT COVER
10	R81275	GASKET	1		AIR INLET
11	R123572	GASKET	1		TURBOCHARGER TO EXHAUST MANIFOLD
12	R123354	GASKET	1		ENGINE OIL PAN
13	R501428	GASKET	1		COOLANT PASSAGE ADAPTER
14	R75892	O-RING	1		OIL PUMP TUBE CONNECTOR
15	R97185	O-RING	1		OIL PUMP OUTLET TUBE TO COVER
16	R61871	O-RING	1		OIL PUMP INTAKE TUBE
17	A4827R	WASHER	1		OIL PRESSURE REGULATOR PLUG
18	RE44574	SEAL	1		REAR OIL SEAL
19	RE516340	KIT	1		FRONT OIL SEAL, (MARKED RE52346 OR RE505515) (SUB FOR RE59810)
20	R123273	O-RING	1		FUEL TRANSFER PUMP
21	R123417	GASKET	1		WATER PUMP
22	R136516	GASKET	1		TIMING GEAR COVER
	R136515	GASKET	1		TIMING GEAR COVER FOR AUXILIARY DRIVE (NOT ILLUSTRATED)
23	R123501	GASKET	1		OIL COOLER HOUSING
24	R502864	GASKET	1		REMOTE OIL FILTER ADAPTER
25	R123525	GASKET	AR		OIL FILTER HEADER
26	R53108	GASKET	1		STARTING MOTOR
27	R72328	O-RING	4		REMOTE OIL FILTER TUBES
28	R89944	O-RING	1		WATER PUMP INLET
29	R61105	O-RING	2		CONNECTOR TUBE TO TIMING GEAR COVER
30	T122075	O-RING	2		OIL COOLER TO HOUSING
31	R136495	GASKET	2		OIL FILL COVER
32	R500374	GASKET	1		OIL FILTER HEADER
33	RE501456	GASKET KIT	1		ENGINE MAJOR OVERHAUL
	RE507864	ENGINE OVERHAUL KIT	1		(NOT ILLUSTRATED) (INCLUDES ENGINE MAJOR OVERHAUL GASKET SET,ENGINE CONNECTING ROD BEARINGS,ENGINE MAIN BEARINGS,AND PISTON AND CYLINDER LINER KITS)(ORDER ONE KIT PER ENGINE)

COLD WEATHER STARTING AID

T146933 -UN-22OCT01

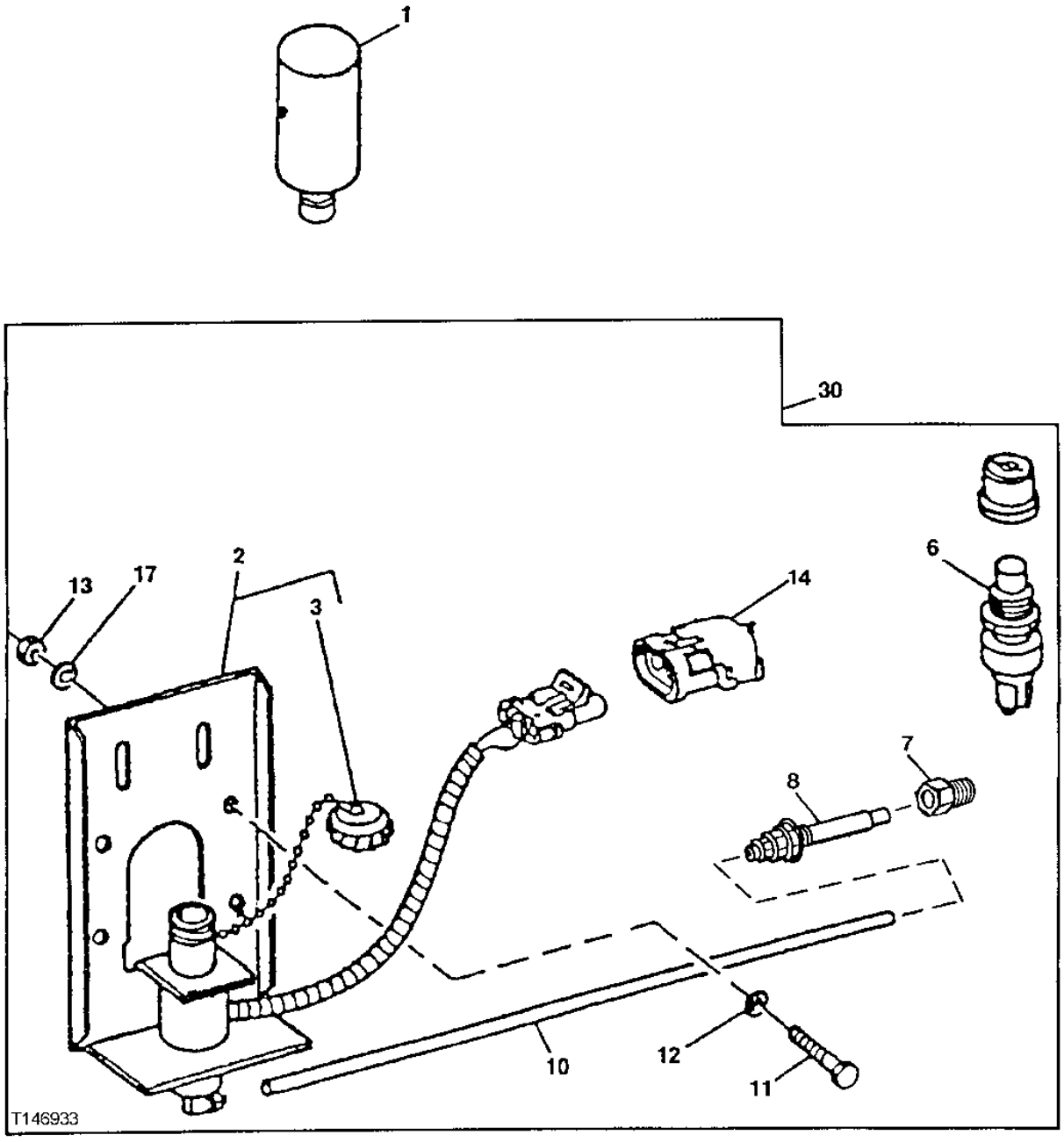

COLD WEATHER STARTING AID

KEY	PART NO.	PART NAME	QTY	SERIAL NO.	REMARKS
1	AT171162	STARTING FLUID	1		
2	AT170759	SOLENOID	1		
3	AT171539	CAP (HAT)	1		
6	4384759	SWITCH	1		(SUB FOR AT178893)
7	T175293	ADAPTER	1		
8	AT183222	NOZZLE	1		
10	.....	TUBE	1		(CUT TO LENGTH FROM T78593 BULK MATERIAL)
11	19M7407	CAP SCREW	4		M8 X 25
12	12M7056	LOCK WASHER	4		8 MM (0.315") (SUB FOR 12M7065)
13	14M7273	NUT	4		M8
14	.....	CONNECTOR	1		(AL2976T NO LONGER REQUIRED)
17	24M7055	WASHER	4		8.400 X 16 X 1.600 MM (0.331" X 0.630" X 0.063")
30	AT178845	STARTING AID	1		WHOLEGOODS

FUEL FIRED COOLANT HEATER KIT

T197545 -UN-09FEB04

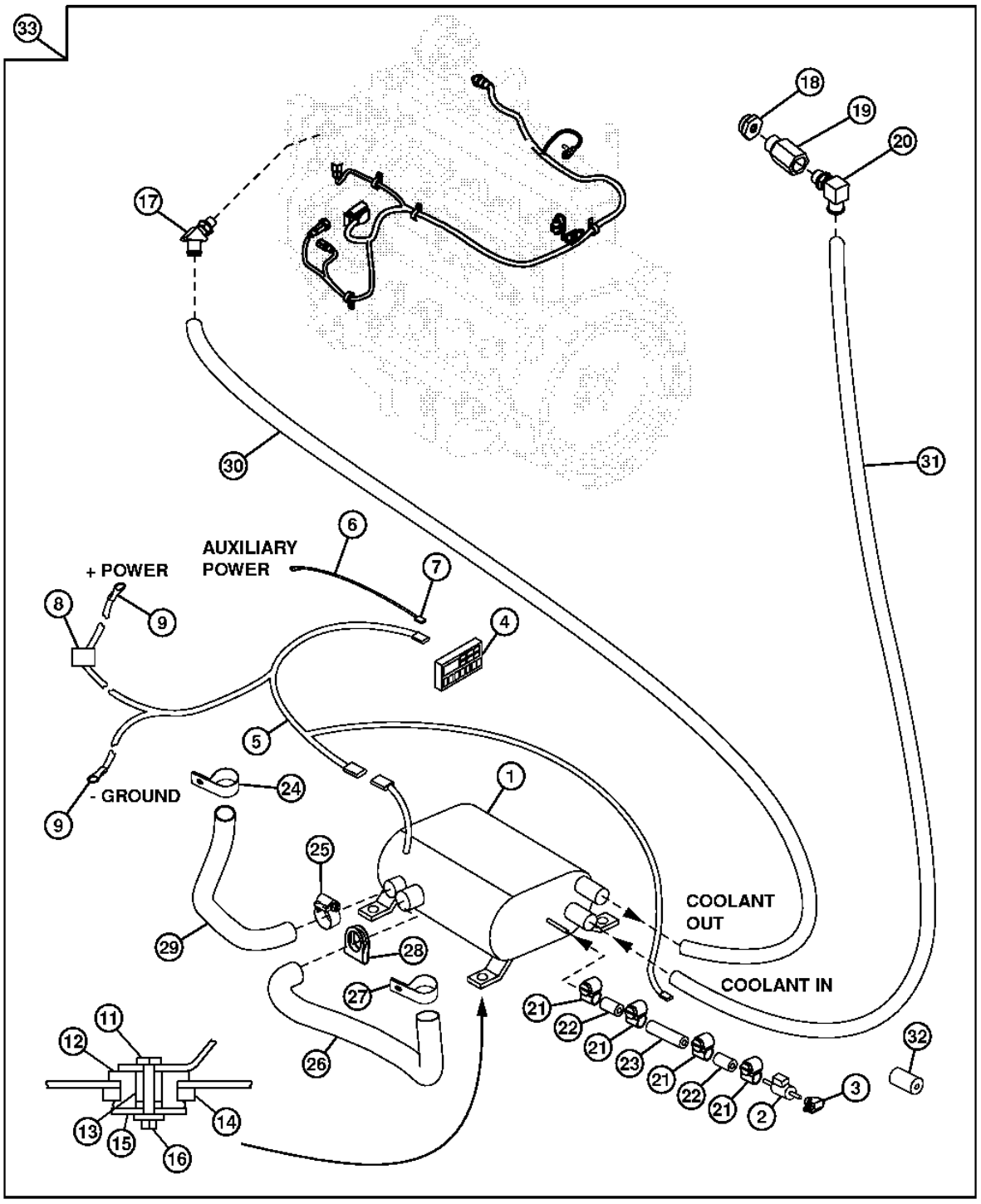

T197545

FUEL FIRED COOLANT HEATER KIT

KEY	PART NO.	PART NAME	QTY	SERIAL NO.	REMARKS
1	AT222697	COOLANT HEATER	1		
2	AT307812	FUEL PUMP	1		
3	T120343	TEE FITTING	1		
4	AT221990	DIGITAL DISPLAY	1		
5	AT307817	WIRING HARNESS	1		
6	AT307271	WIRING LEAD	1		
7	.....	ELEC. CONNECTOR TERMINAL	1		
8	AT307277	WIRING LEAD	1		
9	.....	EYELET	1		
11	19M7874	CAP SCREW	4		
12	AT116162	ISOLATOR	4		
13	L101283	SPACER	4		
14	24H1404	WASHER	4		
15	M142541	WASHER	4		
16	N207956	LOCK NUT	1		
17	AT221439	ELBOW FITTING	1		(TO OPEN PORT IN THERMOSTAT HOUSING COVER)
18	R123616	PLUG	1		
19	RE520229	ADAPTER	1		(SUB FOR RE68908)
20	AT221440	FITTING	4		
21	TY22462	CLAMP	2		(SUB FOR AR48236)
22	T177580	HOSE	1		
23	T206125	HOSE	1		
24	T179306	CLAMP	1		
25	AR21837	CLAMP	1		
26	T206126	EXHAUST PIPE	1		(EXHAUST PIPE)
27	T179306	CLAMP	1		
28	AT221605	CLAMP	1		
29	T206127	BULK HOSE	1		(AIR INLET HOSE)
30	.....	BULK HOSE	1		(MAKE FROM TY22330)(CUT TO 90 INCHES)
31	.....	BULK HOSE	1		(MAKE FROM TY22330)(CUT TO 100 INCHES)
32	**AT307815**	**KIT**	**1**		
33	**AT307267**	**KIT**	**1**		**(WHOLE GOODS) (DIESEL FIRED ENGINE COOLANT HEATER KIT)**

ENGINE COOLANT HEATER

TP15727 -UN-01JAN94

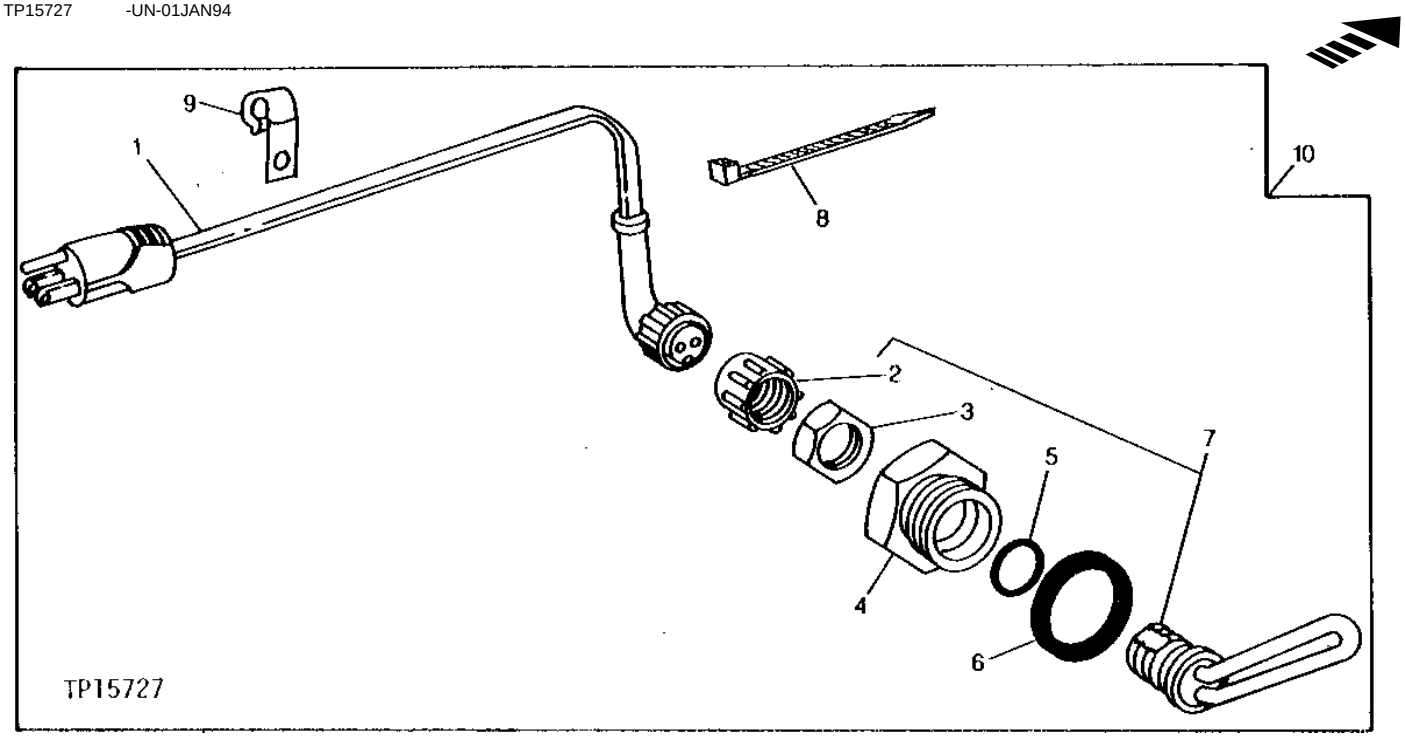

KEY	PART NO.	PART NAME	QTY	SERIAL NO.	REMARKS
1	AT73296	POWER CORD	1		
2	.....	CAP	1		(R54510 NO LONGER AVAILABLE)
3	.....	NUT	1		(R54511 NO LONGER AVAILABLE)
4	R54123	ADAPTER	1		
5	R206883	WASHER	1		(SUB FOR R47693)
6	U13639	O-RING	1		37.465 X 2.997 MM (1.475" X 0.118")
7	RE42139	HEATING ELEMENT	1		
8	H77698	TIE BAND	1		
9	T19935	CLAMP	1		
10	AT74940	COOLANT HEATER	1		WHOLEGOODS

MEMORANDA

RESERVE WATER TANK

T148536 -UN-08DEC01

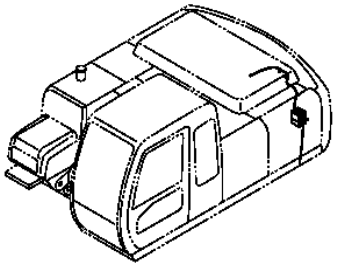

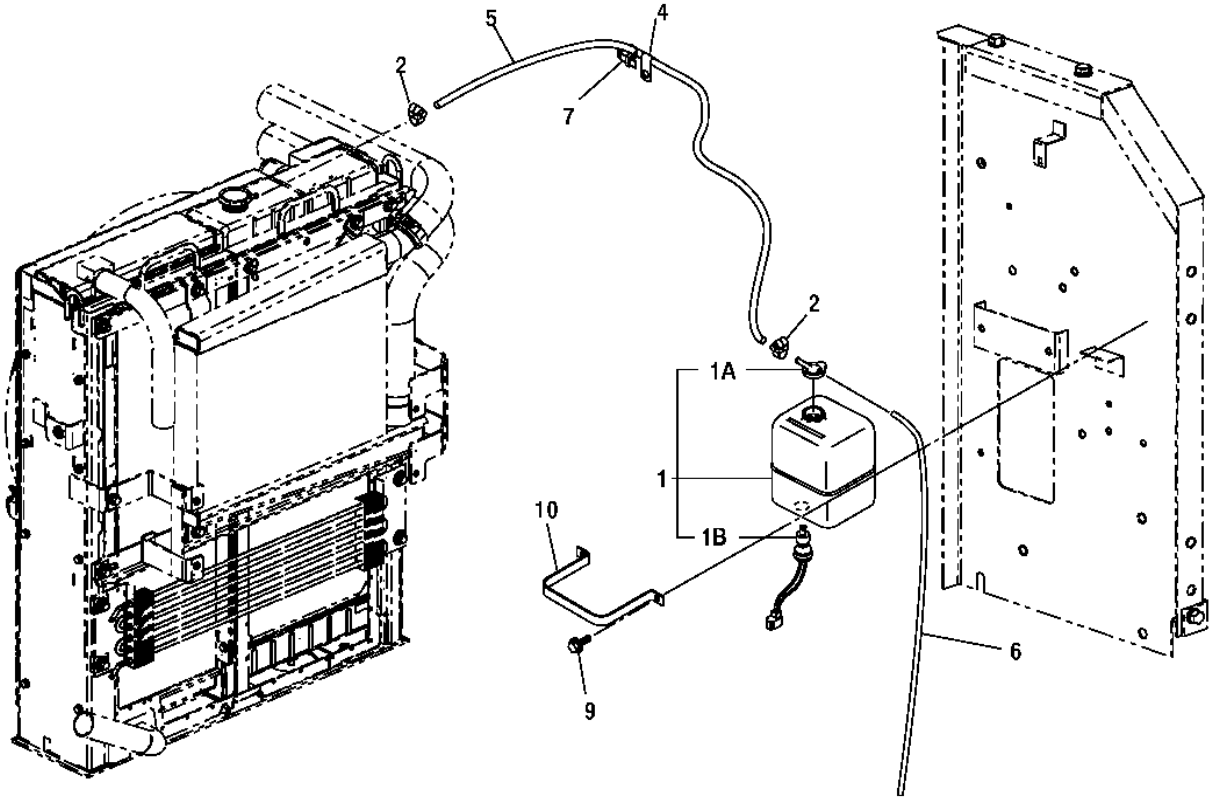

T148536

RESERVE WATER TANK

KEY	PART NO.	PART NAME	QTY	VEHICLE SERIAL NO.	REMARKS
1	4206452	TANK	1		(SUB FOR AT147301)
1A	4396809	CAP	1		(SUB FOR TH102933)
1B	4153251	SENDER	1		(SUB FOR TH102932)
2	TY22462	CLAMP	3		(SUB FOR AR48236)
4	4284094	CLAMP	1		(SUB FOR AT155337)
5	.....	HOSE	1		(FURNISH T79477 BULK MATERIAL CUT TO LENGTH) (AT154952 NOT AVAILABLE FOR SERVICE)
6	.....	HOSE	1		(FURNISH T79477 BULK MATERIAL CUT TO LENGTH)
7	H77698	TIE BAND	1		
9	19M7881	SCREW	2		M8 X 20
	12M7056	LOCK WASHER	2		8 MM (0.315") (SUB FOR 12M7065)
	24M7055	WASHER	2		8.400 X 16 X 1.600 MM (0.331" X 0.630" X 0.063")
10	4180555	BRACKET	1		(SUB FOR TH108579)

RADIATOR SUPPORT

T194860 -UN-24SEP03

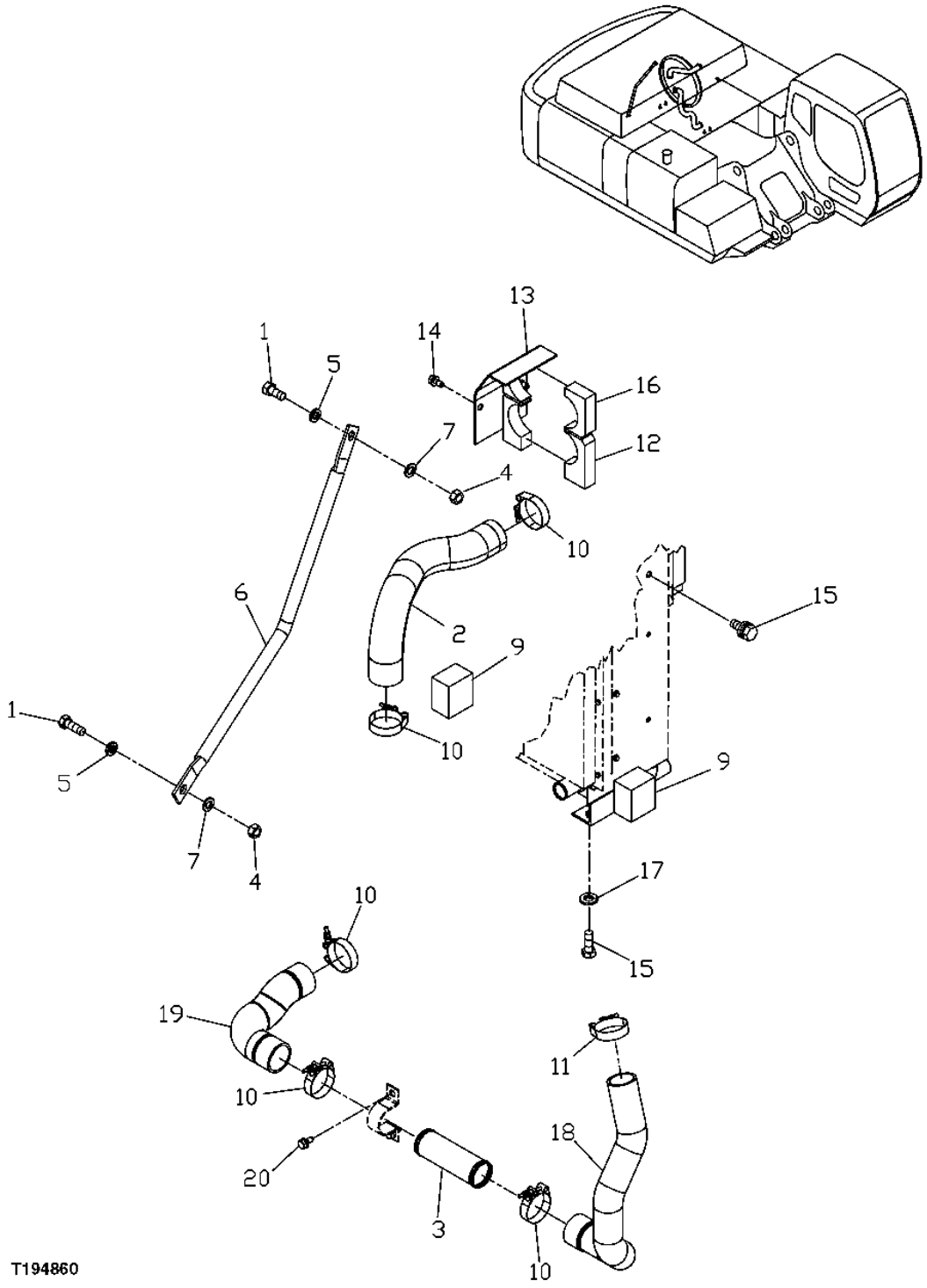

RADIATOR SUPPORT

KEY	PART NO.	PART NAME	QTY	SERIAL NO.	REMARKS
1	19M8035	CAP SCREW	2		M16 X 35
2	DH700038	RADIATOR HOSE	1		(SUB FOR THDH700038)
3	9748540	PIPE	1		(SUB FOR AT218154)
4	14M7276	NUT	2		M16
5	12H294	LOCK WASHER	3		5/8"
6	3079124	BRACKET	1		(SUB FOR AT218151)
7	24M7053	WASHER	3		17 X 30 X 3 MM
9	DH400418	ISOLATOR	2		(SUB FOR THDH400418)
10	DH400620	HOSE CLAMP	5		(SUB FOR THDH400103) (TY22472 NOT USED FOR THIS APPLICATION)
11	TY22470	CLAMP	1		(SUB FOR THDH400102)
12	DH400433	ISOLATOR	1		(SUB FOR THDH400433)
13	DH800060	COVER	1		(SUB FOR THDH800060)
14	19M7402	CAP SCREW	4		M10 X 25
	12M7066	LOCK WASHER	4		10 MM
	24M7028	WASHER	4		10.500 X 20 X 2 MM
15	19M7489	CAP SCREW	6		M16 X 45
16	AT318023	TEE FITTING	1		(SUB FOR 4384146, AT218202)
17	24M7241	WASHER	4		(SUB FOR TH101734 OR 4087197)
18	2047738	RADIATOR HOSE	1		
19	3094013	RADIATOR HOSE	1		
20	19M7935	CAP SCREW	2		M10 X 55

FAN BLADE AND SPACER

T144839 -UN-22AUG01

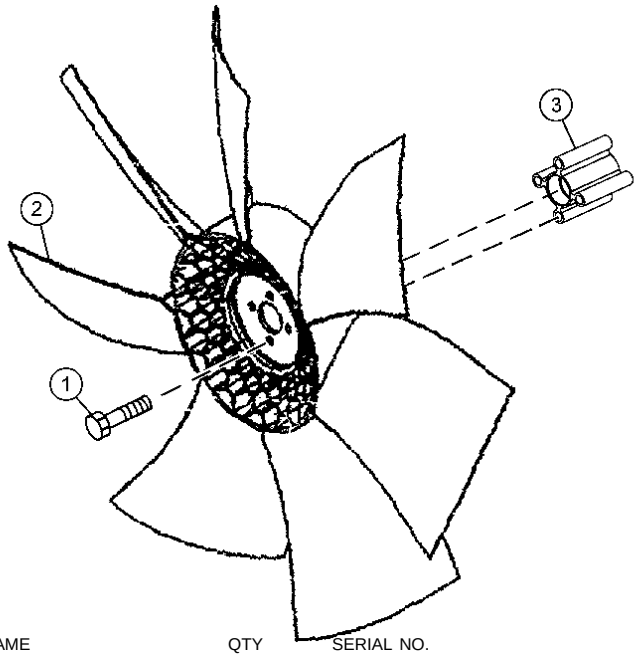

KEY	PART NO. T144839	PART NAME	QTY	SERIAL NO.	REMARKS
1	19M7836	SCREW	4		M10 X 110
2	AT192103	FAN	1		
3	R81876	HUB	1		

MEMORANDA

RADIATOR AND OIL COOLER

T158428 -UN-28AUG02

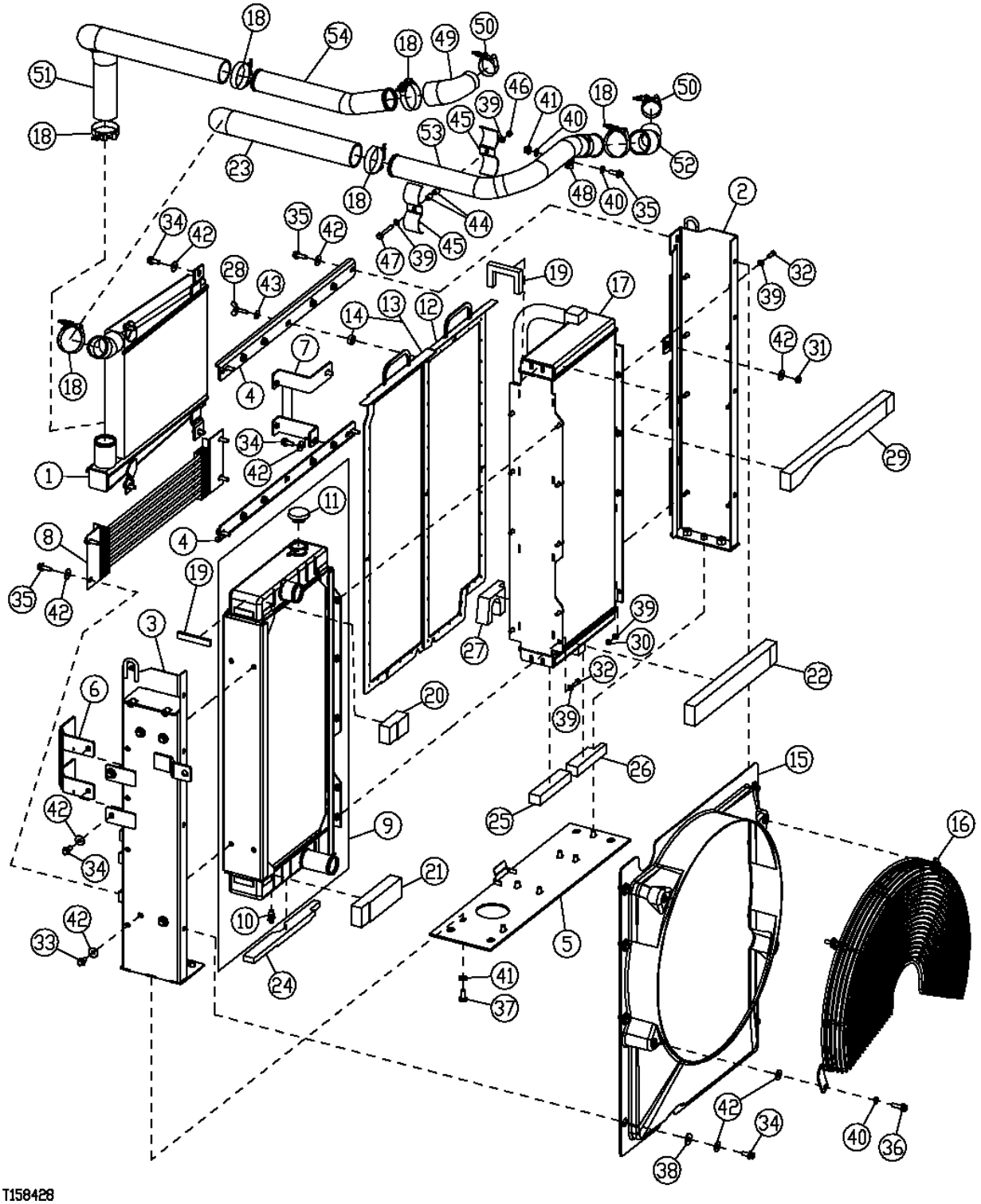

RADIATOR AND OIL COOLER

KEY	PART NO.	PART NAME	QTY	SERIAL NO.	REMARKS
1	AT176949	AIR COOLER	1		
2	AT183510	SUPPORT	1		
3	AT183511	SUPPORT	1		
4	AT183512	BRACKET	1		
5	AT183514	SUPPORT	1		
6	AT183529	BRACKET	1		
7	AT183531	BRACKET	1		
8	AT189613	OIL COOLER	1		
9	AT191168	RADIATOR	1		
10	AT13740	DRAIN VALVE	1		
11	AT173610	FILLER CAP	1		
12	AT191263	SCREEN	1		
13	AT191264	SCREEN	1		
14	28H1572	WASHER	1		
15	AT193810	SHROUD	1		
16	AT193819	GUARD	1		
17	AT197818	OIL COOLER	1		(SUB FOR AT191169)
18	AT198270	CLAMP	6		(SUB FOR AT39141)
19	AT66778	WEATHERSTRIP	1		
20	T160103	ISOLATOR	1		
21	T160105	ISOLATOR	1		
22	T160106	ISOLATOR	1		
23	T160124	HOSE	1		
24	T160598	PAD	1		
25	T160599	PAD	1		
26	T160600	PAD	1		
27	T164167	ISOLATOR	1		
28	T186158	WING SCREW	1		
29	T187951	ISOLATOR	1		
30	14M7273	NUT	8		M8
31	14M7274	NUT	1		M10
32	19M7407	CAP SCREW	17		M8 X 25
33	19M7784	SCREW	4		M10 X 20
34	19M7785	SCREW	16		M10 X 25
35	19M7786	SCREW	9		M10 X 30
36	19M7835	SCREW	4		M10 X 35
37	19M7872	CAP SCREW	7		M12 X 25
38	24H1330	WASHER	8		15/32" X 1-3/8" X 7/64"
39	24M7238	WASHER	17		8.700 X 17 X 2 MM
40	24M7239	WASHER	6		10.700 X 21 X 2.500 MM
41	24M7240	WASHER	7		13 X 25 X 3 MM
42	24M7296	WASHER	29		10.500 X 30 X 2.500 MM
43	24M7298	WASHER	1		8.400 X 25 X 2 MM
44	T161816	SPACER	2		
45	T162091	STRAP	2		
46	14M7166	LOCK NUT	1		M8
47	19M7803	SCREW	1		M8 X 70
48	F1451R	CLAMP	1		
49	T190408	HOSE	1		
50	AT105289	CLAMP	2		
51	T190409	HYDRAULIC HOSE	1		
52	T160123	HOSE	1		
53	T184989	TUBE	1		
54	T184990	TUBE	1		

AIR CLEANER

TP54425 -UN-14NOV96

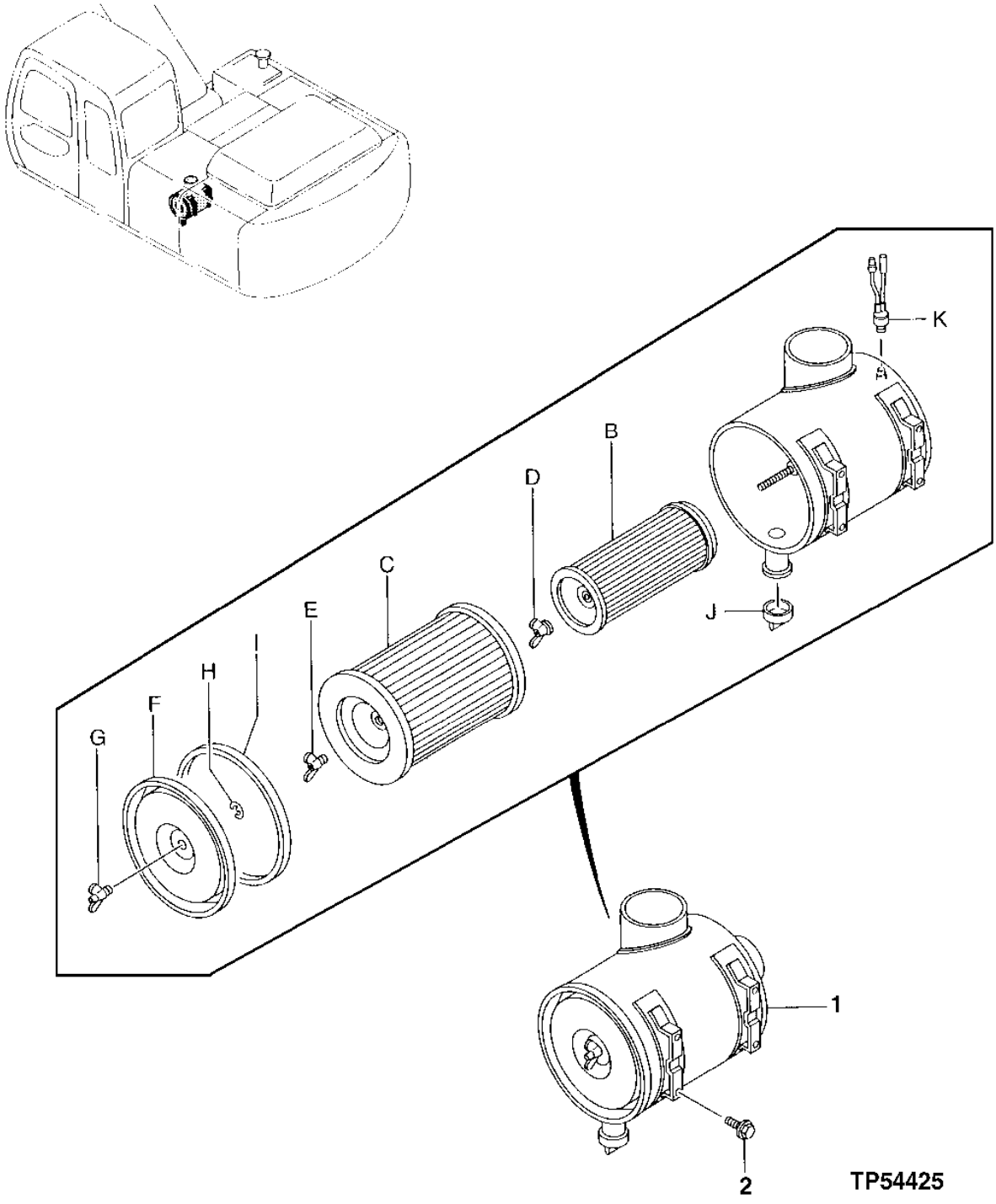

AIR CLEANER

KEY	PART NO.	PART NAME	QTY	SERIAL NO.	REMARKS
1	4288047	AIR CLEANER	1		(SUB FOR AT155622)
1B	T52224	AIR FILTER	1		
1C	T52223	AIR FILTER	1		
1D	AH20849	WING NUT	1		
1E	AR73234	WING NUT	1		11.125 MM (7/16")
1F	AT50529	COVER	1		
1G	AR73234	WING NUT	1		11.125 MM (7/16")
1H	P46402	SNAP RING	1		
1I	2030811	GASKET	1		(SUB FOR T52222)
1J	4152863	FLOW CONTROL HYD. VALVE	1		
1K	4224238	INDICATOR	1		(SUB FOR AT131922)
2	19M7662	CAP SCREW	4		M10 X 30
	12M7066	LOCK WASHER	4		10 MM (0.394")
	24M7028	WASHER	4		10.500 X 20 X 2 MM (0.413" X 0.787" X 0.079")

AIR CLEANER HOSES AND PIPE

T143234 -UN-01OCT01

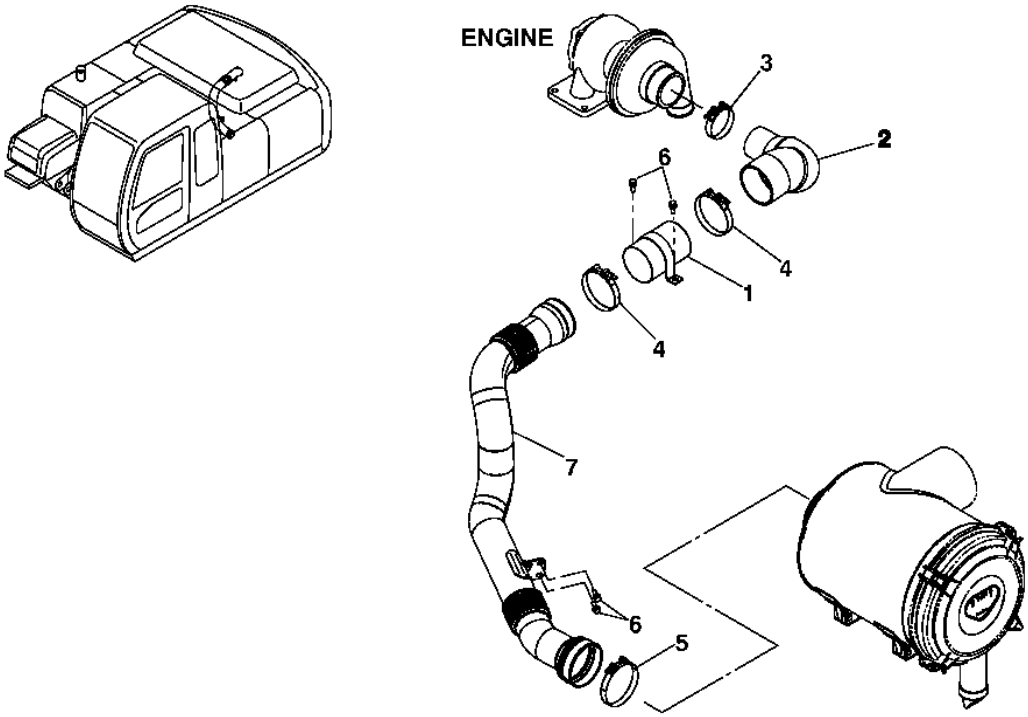

T143234

AIR CLEANER HOSES AND PIPE

KEY	PART NO.	PART NAME	QTY	SERIAL NO.	REMARKS
1	8067675	PIPE	1		
2	3079135	HOSE	1		(SUB FOR AT218159)
3	AT50923	HOSE CLAMP	1		
4	4282489	HOSE CLAMP	2		(SUB FOR AT215499)
5	AT39390	HOSE CLAMP	1		(SUB FOR AT53439)
6	19M7662	CAP SCREW	4		M10 X 30, (AT157059 NOT AVAILABLE FOR SERVICE)
	12M7066	LOCK WASHER	4		10 MM (0.394")
	24M7028	WASHER	4		10.500 X 20 X 2 MM (0.413" X 0.787" X 0.079")
7	4460662	AIR DUCT	1		(SUB FOR TH4460662)

AIR CLEANER SUPPORT

T148742 -UN-05DEC01

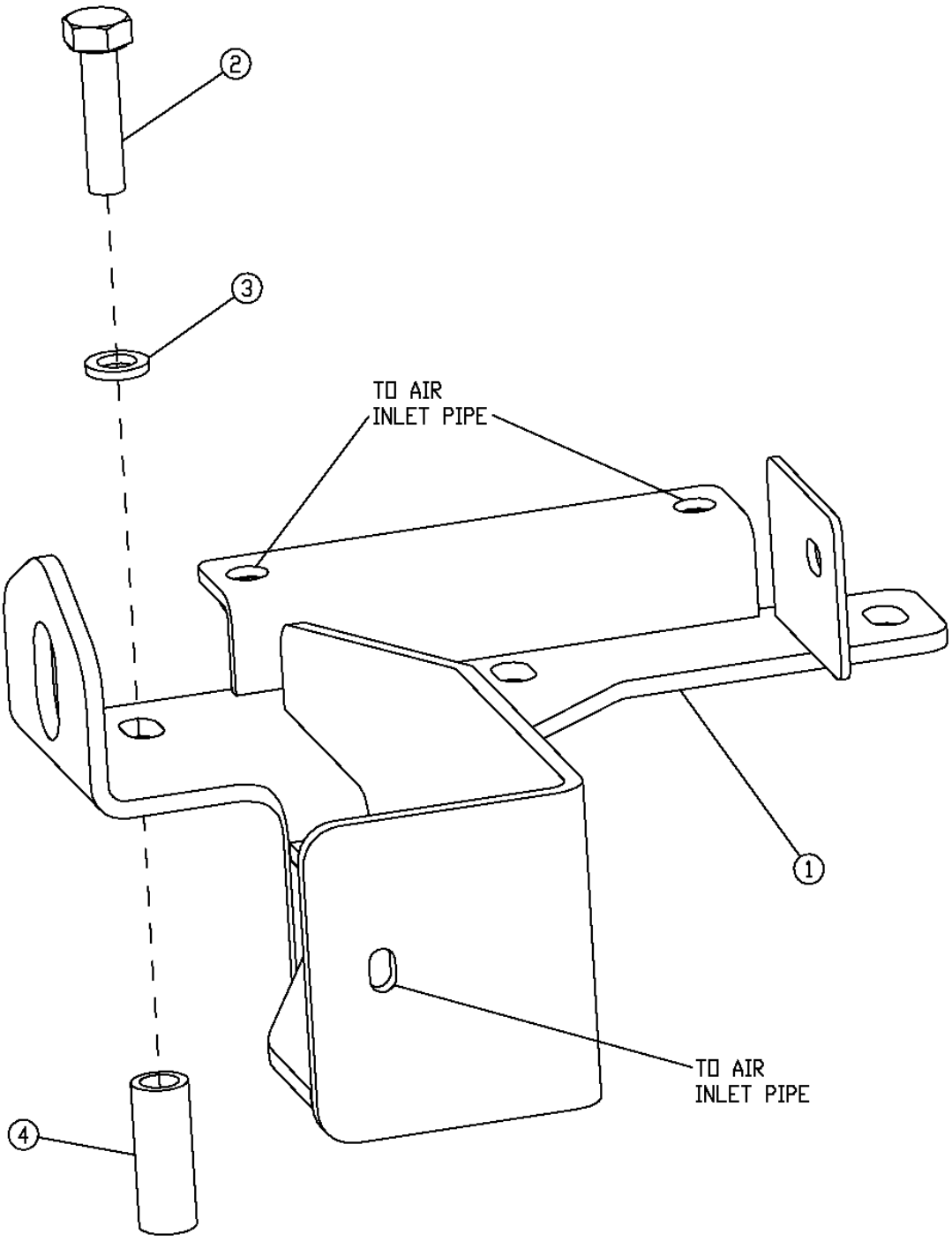

AIR CLEANER SUPPORT

KEY	PART NO.	PART NAME	QTY	SERIAL NO.	REMARKS
1	AT189991	BRACKET	1		
2	19M7820	SCREW	3		M12 X 100
3	24M7240	WASHER	3		13 X 25 X 3 MM
4	T161818	BUSHING	3		

MUFFLER,MUFFLER BRACKET AND EXHAUST PIPE

T145936 -UN-24SEP01

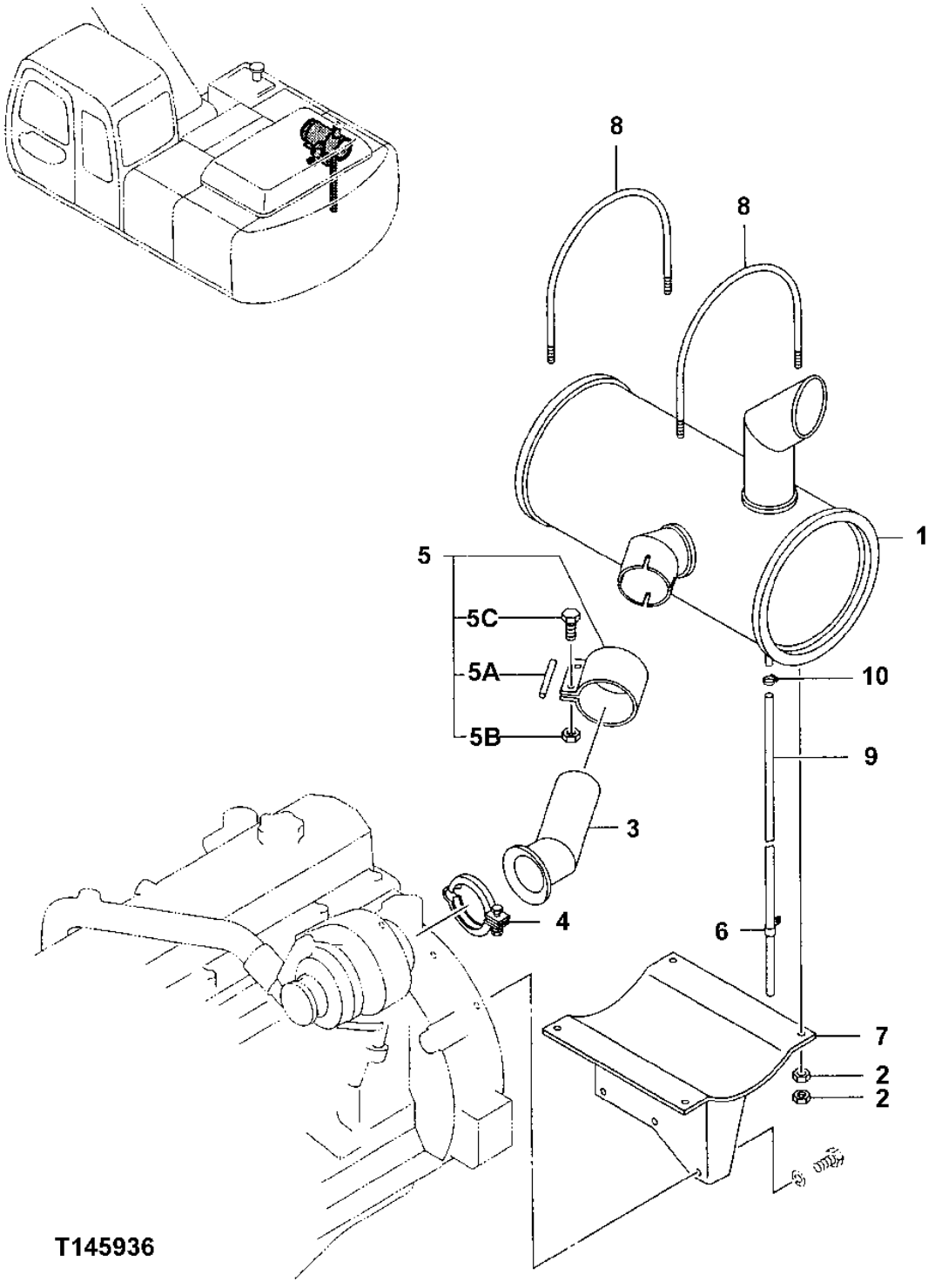

MUFFLER,MUFFLER BRACKET AND EXHAUST PIPE

KEY	PART NO.	PART NAME	QTY	SERIAL NO.	REMARKS
1	4383156	MUFFLER	1		(SUB FOR AT218160)
2	14M7274	NUT	8		M10
3	DH300084	EXHAUST PIPE	1		
4	RE40048	CLAMP	1		
5	4283787	CLAMP	1		(SUB FOR AT154968)
5A	T130341	GASKET	1		
5B	H80440	LOCK NUT	2		11.125 MM (7/16")
5C	4162836	BOLT	2		(SUB FOR AT154914)
6	4344303	CLIP	1		(SUB FOR AT215520)
7	DH700013	BRACKET	1		
8	4420083	U-BOLT	2		(SUB FOR TH4420083)
9	DH400304	PIPE	1		
10	TY22462	CLAMP	1		(SUB FOR AR48236)

ENGINE MOUNTING BRACKETS

T153976 -UN-16APR02

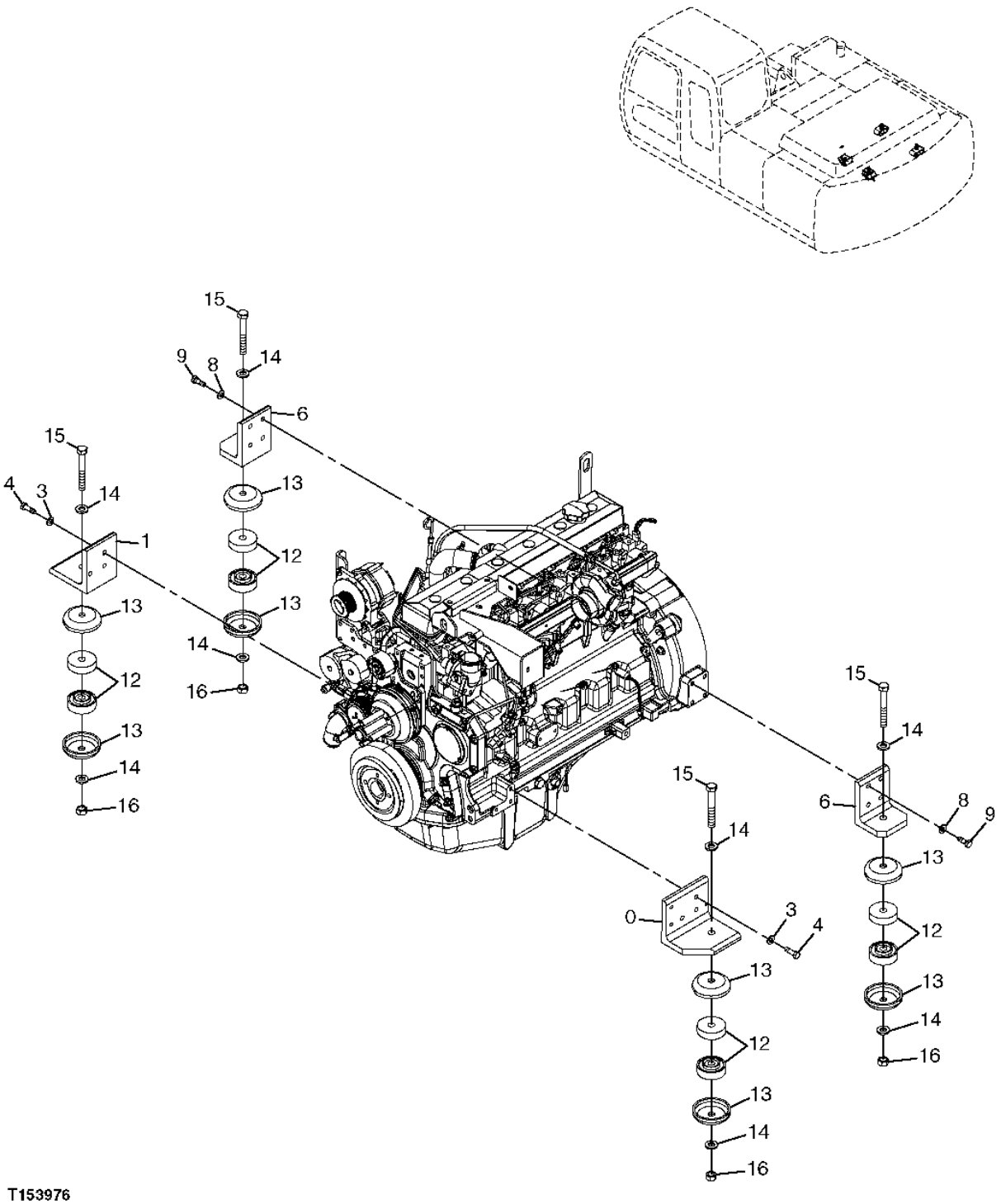

ENGINE MOUNTING BRACKETS

KEY	PART NO.	PART NAME	QTY	SERIAL NO.	REMARKS
0	3075901	BRACKET	1		
1	3075902	ANGLE	1		
2	24M7345	WASHER	1		
3	24M7345	WASHER	2		
4	J921240	CAP SCREW	4		
6	24M7345	WASHER	8		
8	24M7345	WASHER	4		
9	J921235	BOLT	14		
12	4188649	ISOLATOR	1		
13	4189018	STOP	1		
14	24M7353	WASHER	1		
15	J931806	BOLT	1		
16	J951018	NUT	1		

FUEL TANK,CAP,FILTER AND FLOAT

T148169 -UN-19NOV01

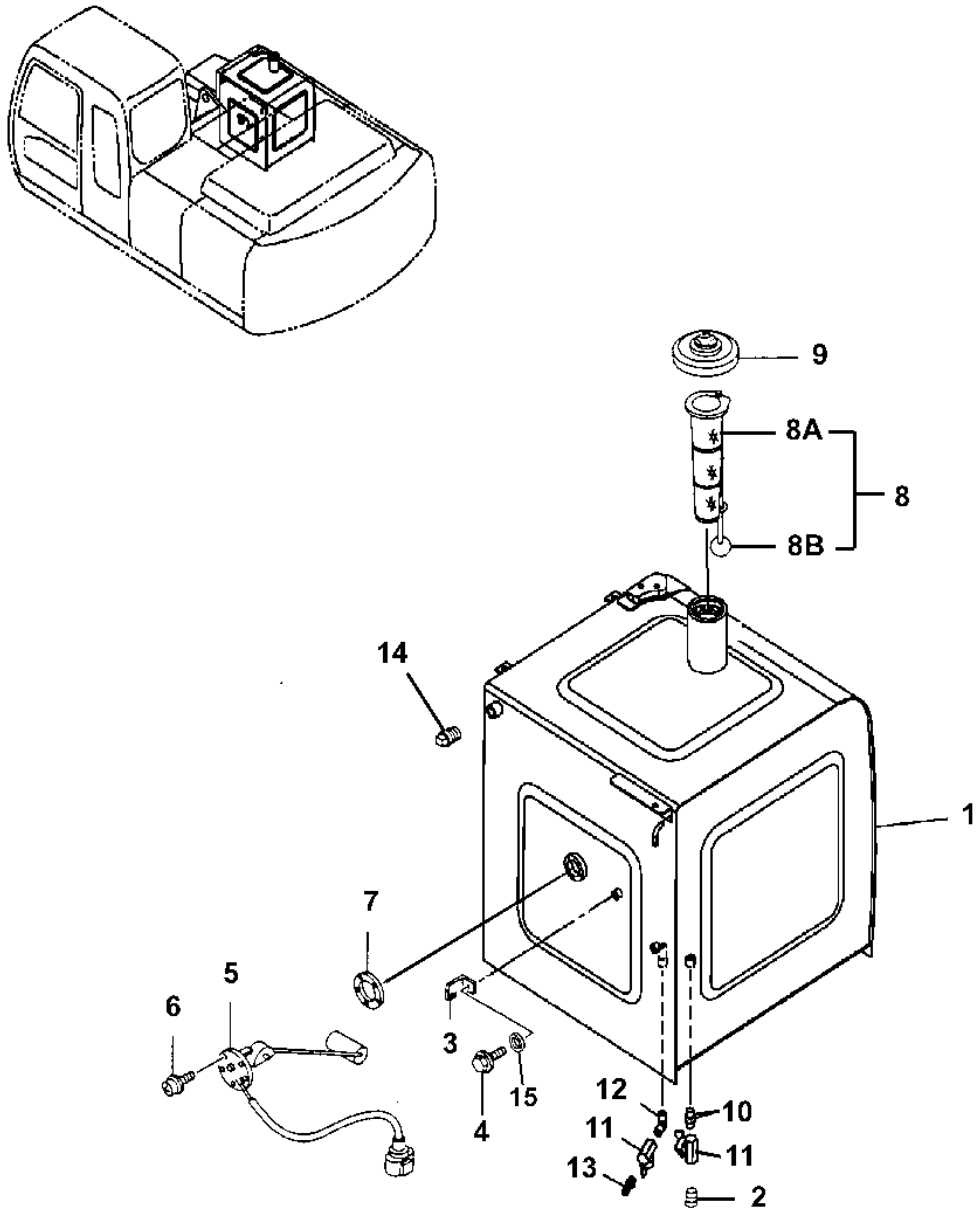

T148169

FUEL TANK,CAP,FILTER AND FLOAT

KEY	PART NO.	PART NAME	QTY	SERIAL NO.	REMARKS
1	5007087J	FUEL TANK	1		(SUB FOR TH5007087J)
2	94-2011	FITTING PLUG	1		(SUB FOR TH100434)
3	4257159	BRACKET	1		(SUB FOR AT154243)
4	19M8324	CAP SCREW	1		M10 X 16, (AT153802 NOT AVAILABLE FOR SERVICE)
	12M7058	LOCK WASHER	1		12 MM (0.472") (SUB FOR 12M7067)
5	4257128	FLOAT	1		(SUB FOR AT154239)
6	21M7278	SCREW	5		M5 X 10
7	U42323	GASKET	1		
8	4353560	STRAINER	1		(SUB FOR AT213970)
8A	4121496	FUEL FILTER	1		(SUB FOR TH100509)
8B	.....	FLOAT	1		
9	4361638	FILLER CAP	1		(SUB FOR AT175989)
	AT194969	KEY	1		(H800) (NOT ILLUSTRATED)
10	T116057	FITTING	1		
11	4374265	DRAIN VALVE	2		(SUB FOR AT177419)
12	4449361	ELBOW FITTING	1		(SUB FOR TH4449361)
13	4449362	ADAPTER	1		(SUB FOR TH4449362)
14	94-2013	FITTING PLUG	1		(SUB FOR TH100648)
15	24M7028	WASHER	1		10.500 X 20 X 2 MM (0.413" X 0.787" X 0.079")

FUEL TANK MOUNTING HARDWARE

T143237 -UN-28JUN01

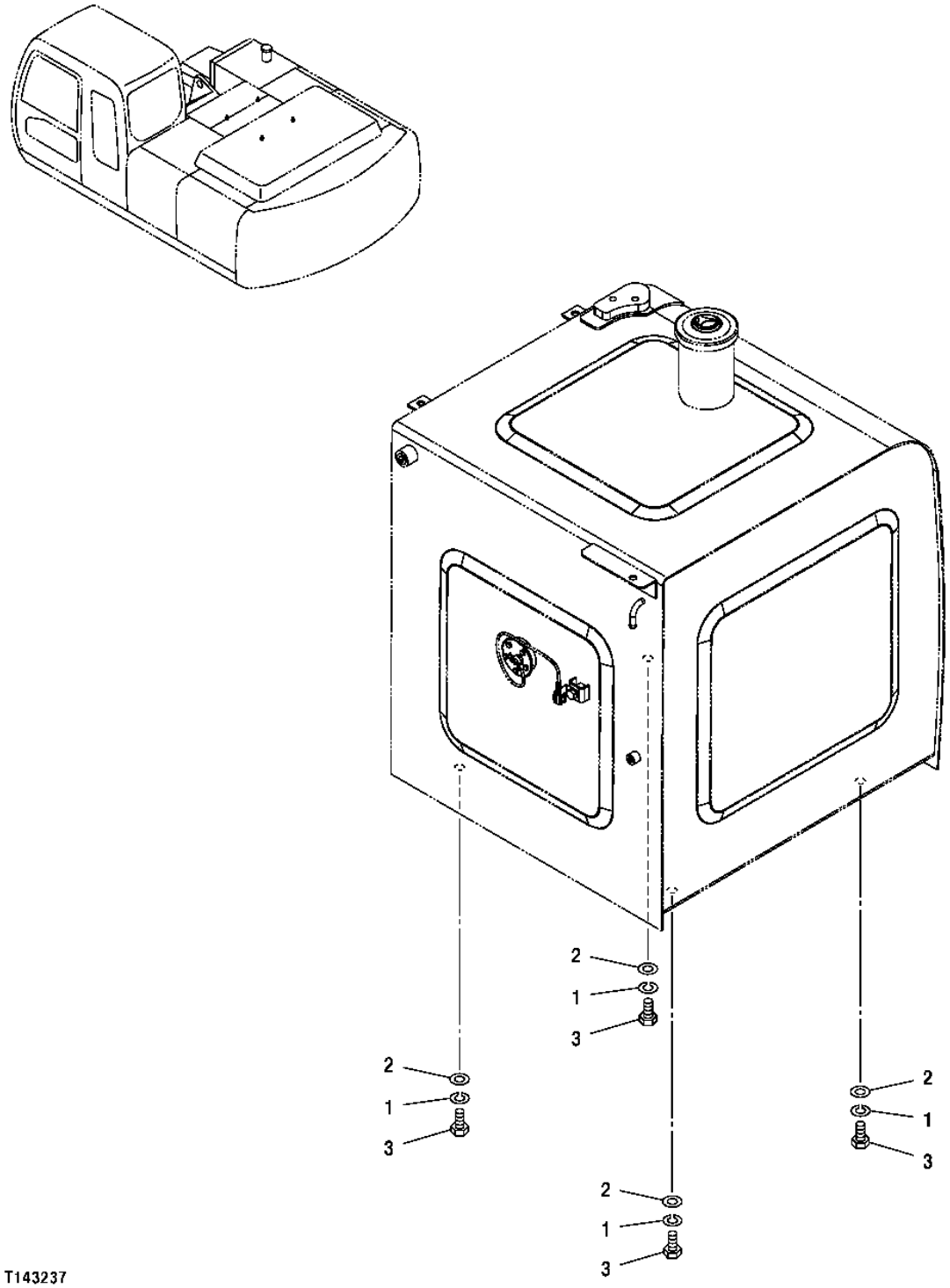

FUEL TANK MOUNTING HARDWARE

KEY	PART NO.	PART NAME	QTY	SERIAL NO.	REMARKS
1	12H294	LOCK WASHER	4		15.875 MM (5/8")
2	24M7338	WASHER	4		17 X 30 X 3 MM (0.669" X 1.181" X 0.118")
3	19M8035	CAP SCREW	4		M16 X 35

FUEL HOSES AND FITTINGS

T147625 -UN-04DEC01

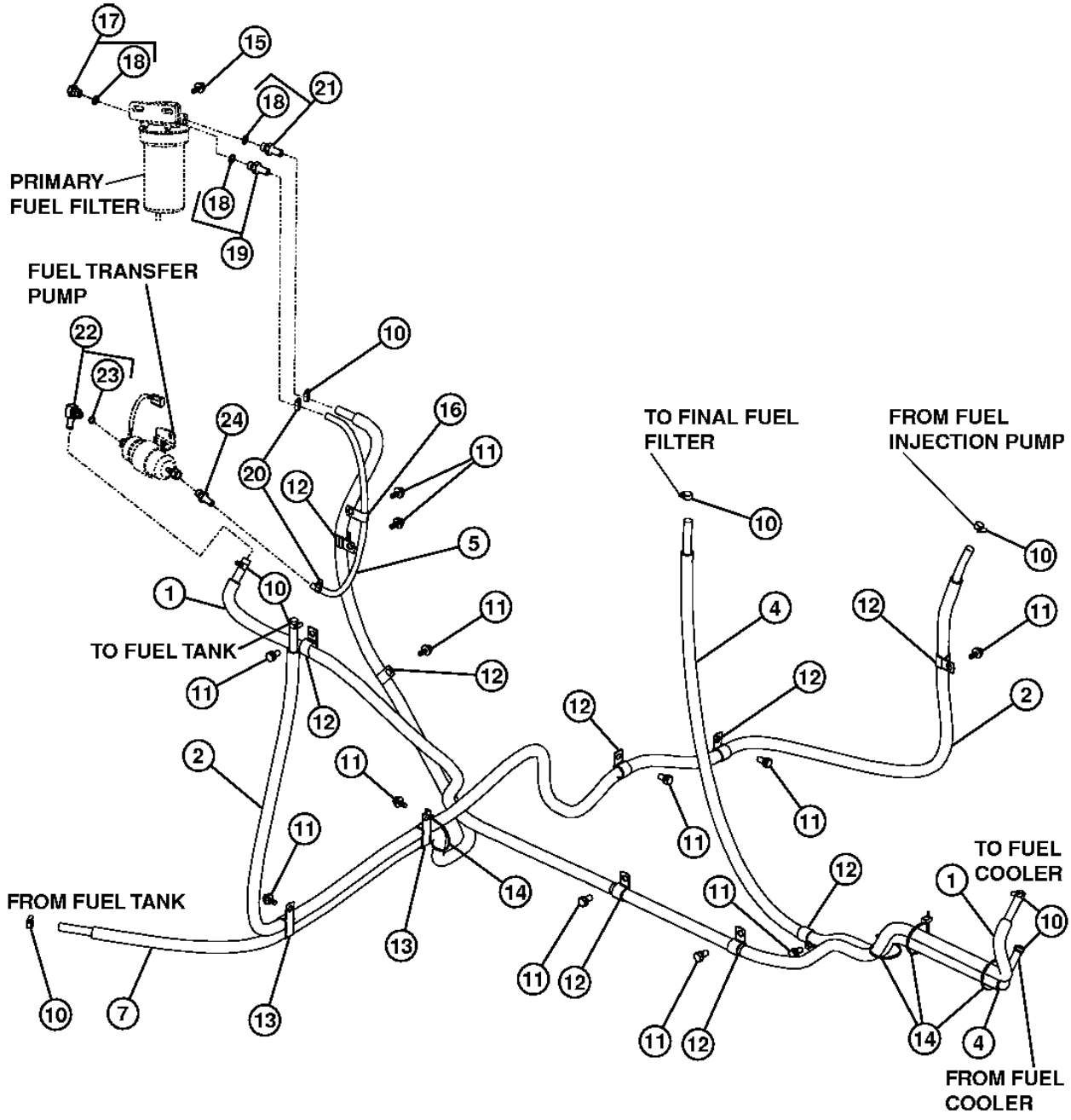

T147625

FUEL HOSES AND FITTINGS

KEY	PART NO.	PART NAME	QTY	SERIAL NO.	REMARKS
1	.....	BULK HOSE	1		(FURNISH TY24398 BULK MATERIAL CUT TO 2900MM) (THDH900288 NOT AVAILABLE FOR SERVICE) (4404758 NOT USED FOR THIS APPLICATION)
	.....	HOSE GUARD	1		(FURNISH DH400246 BULK MATERIAL CUT TO 2750MM) (DH400467 NO LONGER AVAILABLE) (Y404061 NOT USED ON THIS APPLICATION) (4259842 NOT AVAILABLE FOR THIS APPLICATION)
2	.....	BULK HOSE	1		(FURNISH TY24398 BULK MATERIAL CUT TO 3350MM) (THDH900163 NOT AVAILABLE FOR SERVICE) (AT219660 NOT USED ON THIS APPLICATION) (4374345 NOT AVAILABLE FOR THIS APPLICATION)
	.....	HOSE GUARD	1		(DH400248 NO LONGER AVAILABLE) (FURNISH DH400246 BULK MATERIAL CUT TO 3200MM) (4307858 NOT USED FOR THIS APPLICATION)
4	.....	BULK HOSE	2		(FURNISH TY24398 BULK MATERIAL CUT TO 1900MM) (THDH900289 NOT AVAILABLE FOR SERVICE) (4388235 NOT USED FOR THIS APPLICATION)
	.....	HOSE GUARD	1		(FURNISH DH400246 BULK MATERIAL CUT TO 1750MM) (4404657 NOT USED FOR THIS APPLICATION)
5	R515462	FUEL LINE	1		
7	.....	BULK HOSE	1		(THDH900287 NOT AVAILABLE FOR SERVICE) (FURNISH TY24398 BULK MATERIAL CUT TO 2450MM) (HOSE AND COVER ASSEMBLY)
	.....	HOSE GUARD	1		(DH400465 NO LONGER AVAILABLE) (FURNISH DH400246 BULK MATERIAL CUT TO 2300MM)
10	TY22464	CLAMP	8		(SUB FOR AT145649) (SUB FOR AR21836)
11	19M7938	CAP SCREW	8		M10 X 20
	12M7066	LOCK WASHER	8		10 MM (0.394")
12	T24432	CLAMP	8		(4235654 NOT USED FOR THIS APPLICATION)
13	4190266	CLIP	2		(SUB FOR TH108793) (4192034 NOT USED FOR THIS APPLICATION)
14	H77698	TIE BAND	4		
15	19M7923	CAP SCREW	2		M6 X 12
	12M7006	LOCK WASHER	2		6 MM
	24M7054	WASHER	2		6.400 X 12 X 1.600 MM
16	4344303	CLIP	1		(SUB FOR AT215520) (T30367 NOT USED FOR THIS APPLICATION)
17	RE46686	PLUG	2		(J020835 NOT USED FOR THIS APPLICATION)
18	51M7040	O-RING	2		9.300 X 2.200 MM
19	AT196589	ADAPTER	1		
20	TY22462	CLAMP	2		(SUB FOR AR48236)
21	RE500576	ADAPTER	1		
22	AT196563	ADAPTER	1		
23	51M7039	O-RING	1		8.100 X 1.600 MM
24	RE515341	ADAPTER	1		

LABELS, DECALS AND ANTI-SKID PADS

T188917 -UN-01APR03

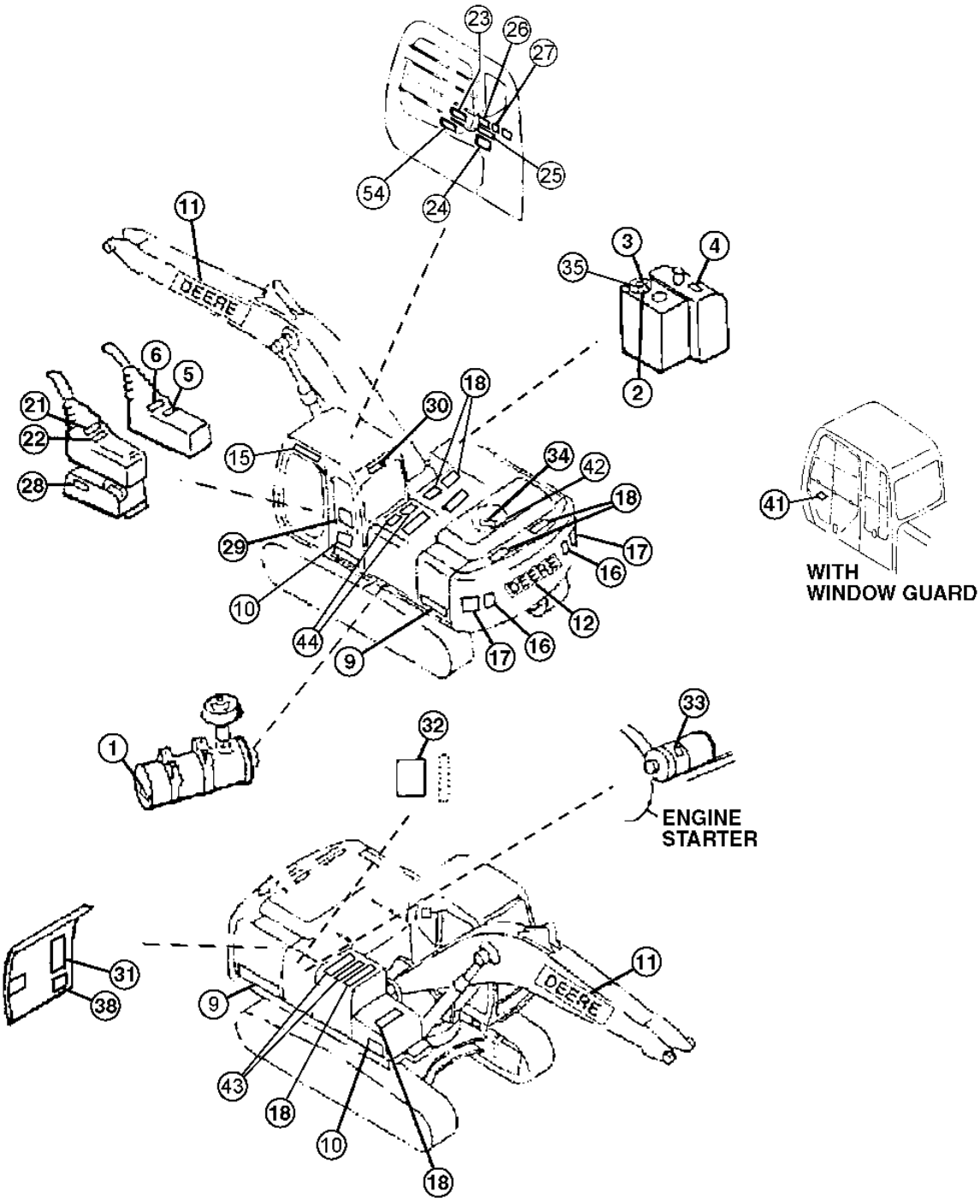

T188917

LABELS, DECALS AND ANTI-SKID PADS

KEY	PART NO.	PART NAME	QTY	SERIAL NO.	REMARKS
1	R56902	LABEL	1		(DRY AIR CLEANER)
2	P63448	LABEL	1		(PUMP BLEED INFORMATION)
3	T101942	LABEL	1		(HYDRAULIC OIL)
4	T79632	LABEL	1		(DIESEL ONLY)
5	4264805	LABEL	1		(IGNITION KEY SWITCH)
6	.....	LABEL	1		(SUB T201519) (SUB FOR T159842, THIS APPLICATION) (RIGHT CONTROL LEVER - SAE PATTERN) (WHITE BACKGROUND)
	T159843	LABEL	1		(RIGHT CONTROL LEVER - JOHN DEERE PATTERN) (YELLOW BACKGROUND)
9	T189062	LABEL	2		(270CLC)
10	JD5760	LABEL	2		(LEAPING DEER)
11	T185126	LABEL	2		(DEERE - ON BOOM)
12	T184759	LABEL	1		(DEERE - ON COUNTERWEIGHT)
15	T187642	STOP	1		(DOOR STOP)
16	JD5909	REFLECTOR	2		(RED REFLECTOR TAPE) (CUT TO LENGTH FROM JD5909 BULK MATERIAL) (T160910 NOT AVAILABLE FOR SERVICE)
17	T190310	SAFETY SIGN	2		(WARNING - STAY CLEAR)
18	H21259	MAT	8	-702144	(ANTI-SKID)
	H21259	MAT	7	702145-	(ANTI SKID)
21	.....	LABEL	1		(SUB T201519) (SUB FOR T159841, THIS APPLICATION) (LEFT CONTROL LEVER - SAE PATTERN) (WHITE BACKGROUND)
	T159844	LABEL	1		(LEFT CONTROL LEVER - JOHN DEERE PATTERN) (YELLOW BACKGROUND)
22	4288971	LABEL	1		(ETHER AID - MOTION CANCEL)
23	T188862	LABEL	1		ENGLISH (OPERATIONAL - START STOP)
24	T159887	SAFETY SIGN	1		ENGLISH (CAUTION)
25	T146668	SAFETY SIGN	1		(WARNING - AVOID CRUSHING)
26	T146667	SAFETY SIGN	1		(DANGER - ELECTROCUTION)
27	T190393	LABEL	1		(IMPORTANT - BREAK WINDOW FOR SECONDARY EXIT)
28	4299059	LABEL	1		(HYDRAULIC LOCKOUT)
29	T189060	LABEL	1		ENGLISH (LIFT CAPACITY)
30	T187535	LABEL	1		(CAUTION WINDOW LOCK - INSIDE CAB)
	T190799	SAFETY SIGN	1		(CAUTION-FRONT WINDOW LOCK FRENCH)
	T190803	LABEL	1		(CAUTION-FRONT WINDOW LOCK SPANISH)
31	T208028	LABEL	1		ENGLISH (PERIODIC MAINTENANCE) (SUB FOR T189061)
32	T149983	LABEL	1		(IMPORTANT - OIL LEVEL) (INSIDE RIGHT PUMP COMPARTMENT)
33	T146102	LABEL	1		(BYPASS START)
34	T152657	SAFETY SIGN	1		(IMPORTANT - RADIATOR)
35	T187710	LABEL	1		(RESERVOIR COVER)
	T190801	LABEL	1		(HYDRAULIC RESERVOIR CAP FRENCH)
	T190802	LABEL	1		(HYDRAULIC RESERVOIR CAP SPANISH)
38	.....	LABEL	1		(NOT REQUIRED FOR THIS APPLICATION)
41	T188737	LABEL	1		(WINDOW GUARD INSTALLATION)
42	T146671	SAFETY SIGN	1		(CAUTION) (LOCATED ON RADIATOR CAP)
43	4121128	MAT	2	-702144	(ANTI-SKID)
	4121128	MAT	4	702145-	(ANTI SKID)
44	T25838	MAT	5		(ANTI-SKID)
54	T201519	LABEL	1		(PATTERN CHANGER DECAL) (SUB FOR T159842, T159841)

LABELS, SUPER LONG FRONT

T201550 -UN-14JUL04

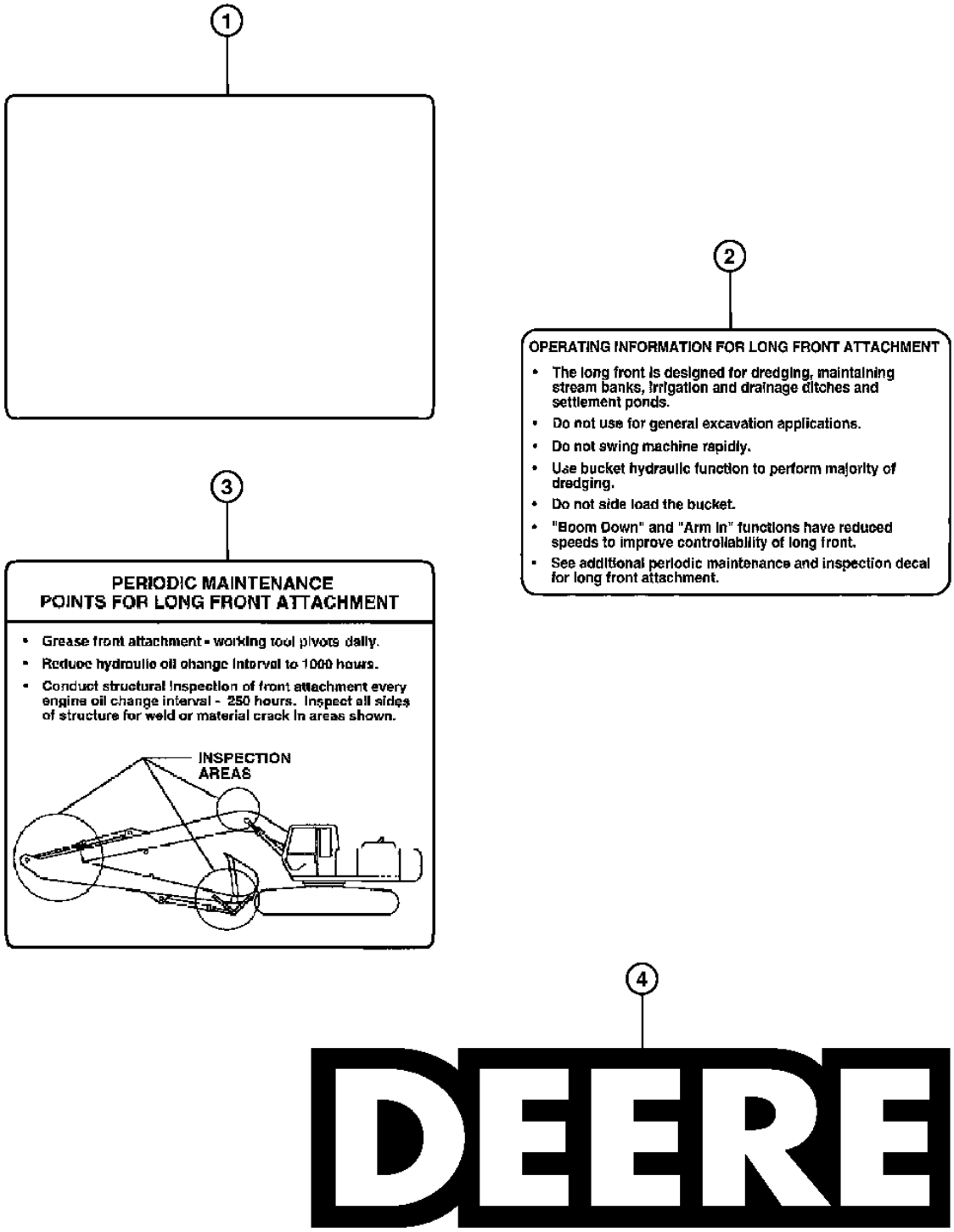

T201550

LABELS, SUPER LONG FRONT

KEY	PART NO.	PART NAME	QTY	SERIAL NO.	REMARKS
1	T211136	LABEL	1		(LIFT CHART)
2	T153672	LABEL	1		(LONG FRONT)
3	T153673	LABEL	1		(PERIODIC MAINTENANCE)
4	T185126	LABEL	2		(DEERE - BOOM)

METRIC O-RING KIT

TP70402 -UN-13JUL00

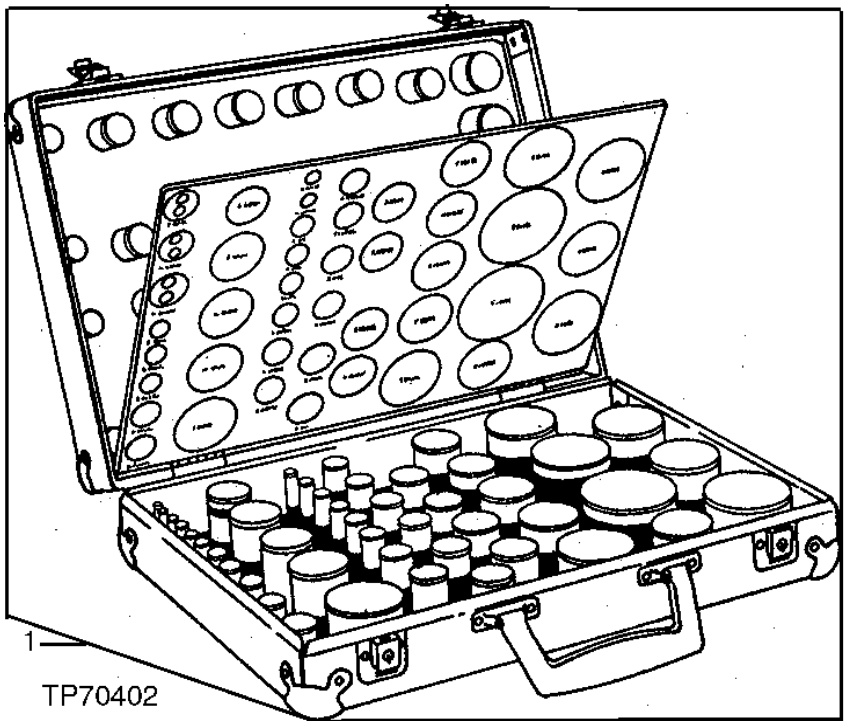

METRIC O-RING KIT

KEY	PART NO.	PART NAME	QTY	SERIAL NO.	REMARKS
1	AT130157	O-RING KIT	1		(CONTAINS ALL ITEMS LISTED BELOW)
..	CH11436	O-RING	5		49.400 X 3.100 MM (1.945" X 0.122")
..	CH11569	PACKING	5		
..	CH11570	O-RING	5		13.800 X 2.400 MM (0.543" X 0.094")
..	CH11571	PACKING	5		
..	CH11572	PACKING	2		
..	CH12329	PACKING	5		
..	CH14634	O-RING	5		17.800 X 2.400 MM (0.701" X 0.094")
..	CH14701	O-RING	5		39.400 X 3.100 MM (1.551" X 0.122")
..	CH17167	O-RING	2		9.800 X 1.900 MM (0.386" X 0.075")
..	CH19111	O-RING	5		7.645 X 1.778 MM (0.301" X 0.070")
..	M800650	PACKING	10		
..	M800893	PACKING	5		
..	AT264324	O-RING	5		(SUB FOR TH100044)
..	AT318035	O-RING	10		(SUB FOR 4506424, TH100055)
..	AT264347	O-RING	5		(SUB FOR TH100136, 4506428)
..	A811030	O-RING	5		29.400 X 3.100 MM (1.157" X 0.122") (SUB FOR TH101300)
..	4506408	O-RING	2		7.800 X 1.900 MM (0.307" X 0.075") (SUB FOR TH101490)
..	TH101926	O-RING	5		28.700 X 3.500 MM (1.130" X 0.138")
..	957474	O-RING	2		39.700 X 3.500 MM (1.563" X 0.138") (SUB FOR TH102706)
..	A811040	O-RING	2		39.400 X 3.100 MM (1.551" X 0.122") (SUB FOR TH102992)
..	4153084	O-RING	2		3.800 X 1.900 MM (0.150" X 0.075") (SUB FOR TH103446)
..	AT264354	O-RING	5		(SUB FOR TH103574)
..	970860	O-RING	2		37.700 X 3.500 MM (1.484" X 0.138") (SUB FOR TH104634)
..	AT264360	O-RING	2		(SUB FOR TH104930, 4506430)
..	T110590	PACKING	5		
..	T110593	PACKING	5		
..	T59014	O-RING	5		24.994 X 3.531 MM (63/64" X 0.139")
..	A811045	O-RING	5		(SUB FOR T74492)
..	U10778	O-RING	5		16.358 X 2.210 MM (0.644" X 0.087")
..	U17409	O-RING	5		26.619 X 2.946 MM (1.048" X 0.116")
..	4506418	O-RING	10		(SUB FOR U46489)

BATTERIES AND HARNESSES

T157021 -UN-12JUL02

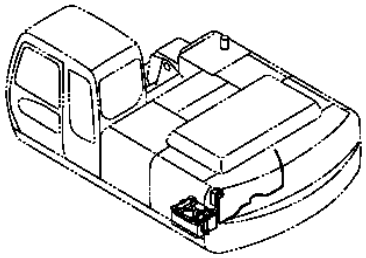

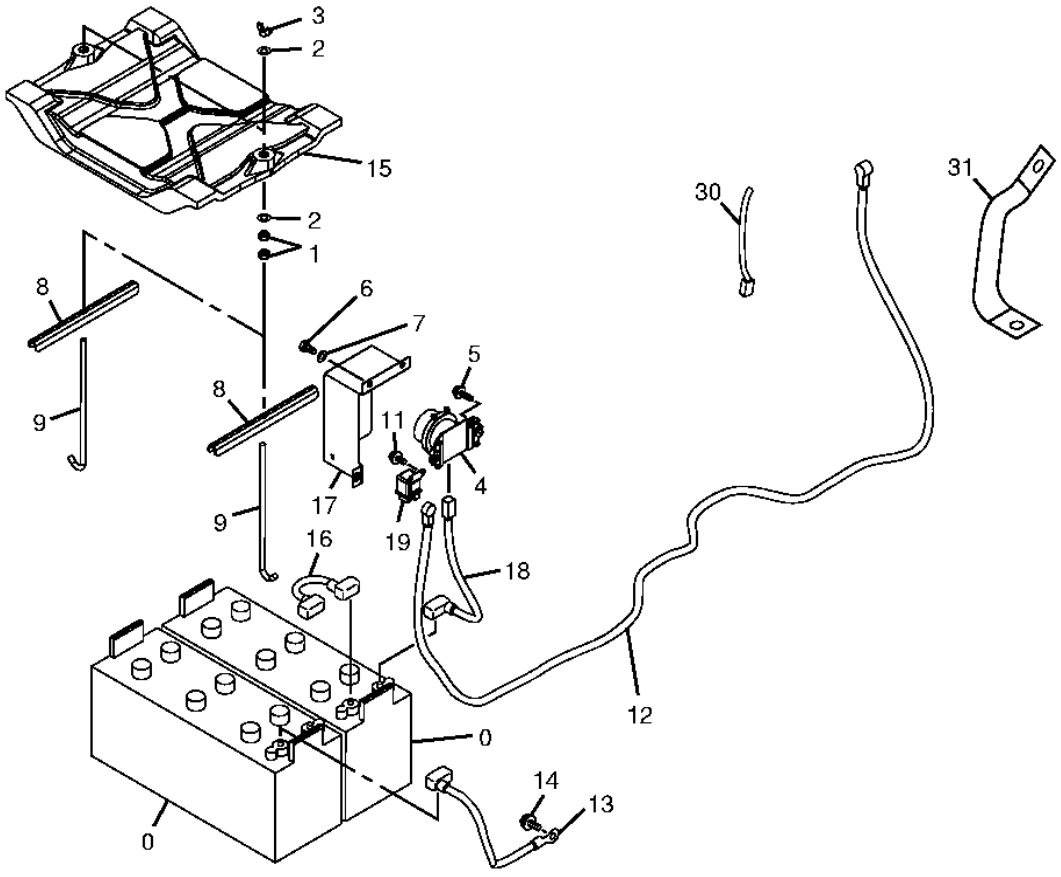

T157021

BATTERIES AND HARNESSES

KEY	PART NO.	PART NAME	QTY	SERIAL NO.	REMARKS
0	TY21709	DRY CHARGED BATTERY	2		(ALSO ORDER (2) TY15733)
1	14M7274	NUT	4		M10
2	24M7028	WASHER	4		10.500 X 20 X 2 MM, (SUB FOR A590110)
3	14M7025	WING NUT	2		M10
4	4255762	RELAY	1		
5	19M7513	CAP SCREW	2		M8 X 30, (SUB FOR 19M7288)
6	19M7932	CAP SCREW	3		M8 X 16, (SUB FOR 19M7162)
7	24M7055	WASHER	3		8.400 X 16 X 1.600 MM, (SUB FOR A590108)
8	4435074	CHANNEL	2	-702000	(SUB FOR TH104067)
	AT219489	SUPPORT	1	702001-	
9	4430289	ROD	2		
11	19M8425	CAP SCREW	2		(SUB FOR 19M7560)
12	4466876	WIRING HARNESS	1		
13	DH400205	WIRING HARNESS	1		(SUB FOR AR45925, THIS APPLICATION)
14	19M7402	CAP SCREW	1		M10 X 25
	12M7066	LOCK WASHER	1		10 MM
	24M7028	WASHER	1		10.500 X 20 X 2 MM
15	4351892	COVER	1	-702000	
	DH800054	COVER	1	702001-	
16	DH400410	WIRING HARNESS	1		(BATTERY TO BATTERY) (4350736 NOT USED FOR THIS APPLICATION)
17	3087816	COVER	1		
18	DH400206	WIRING HARNESS	1		(4445593 NOT REQUIRED THIS APPLICATION)
19	4452159	RELAY	1		
30	4448296	WIRING HARNESS	1		
31	4397839	WIRE	1		

ALTERNATOR

T157204 -UN-15JUL02

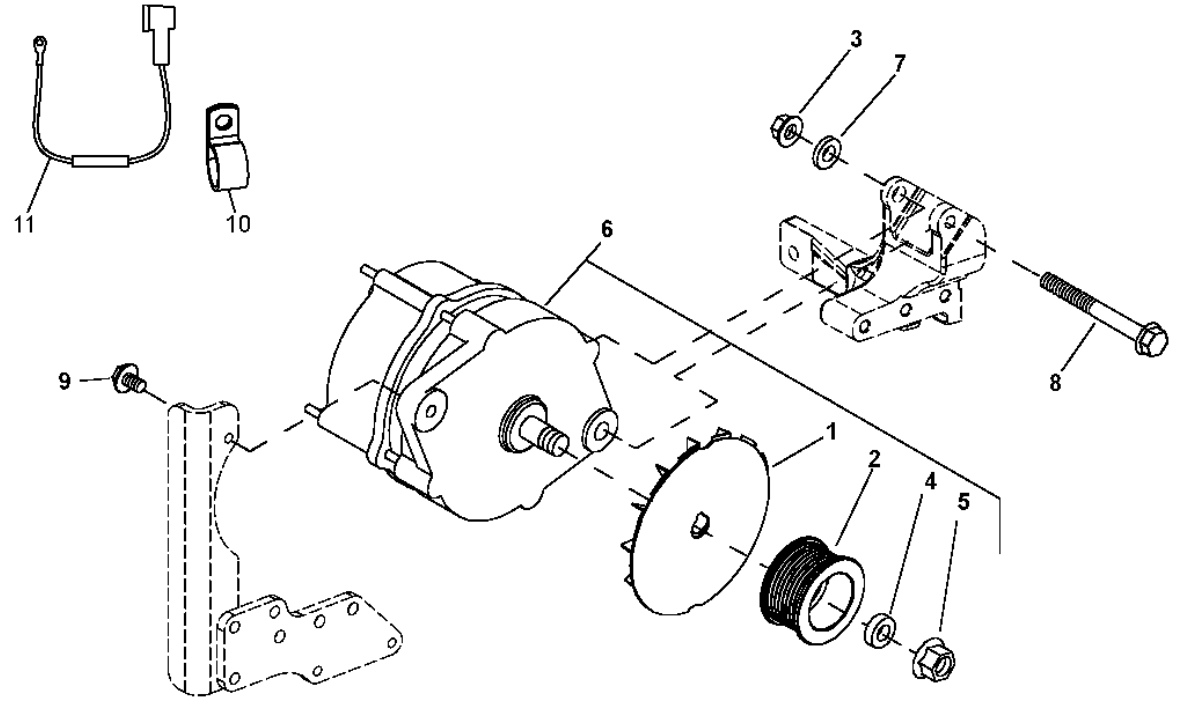

T157204

KEY	PART NO.	PART NAME	QTY	ENGINE SERIAL NO.	REMARKS
1	T158584	FAN	1		
2	R501486	PULLEY	1		
3	14M7296	FLANGE NUT	1		M10
4	R48808	WASHER	1		
5	14M7296	FLANGE NUT	1		M10
6	TY24322	ALTERNATOR	1		24V, 45 AMP, (SUB FOR AT185696) (NEW CONVENIENCE ASSEMBLY)
	TY24322	ALTERNATOR	1		(REMANUFACTURED)
7	R64525	THRUST WASHER	1		
8	19M7812	SCREW	1		M10 X 100
9	19M7867	SCREW	1		M8 X 25
10	T190303	CLAMP	1		
11	AT197149	WIRING HARNESS	1		

MEMORANDA

BOOM LIGHTS AND WORK LIGHTS

T146493 -UN-08OCT01

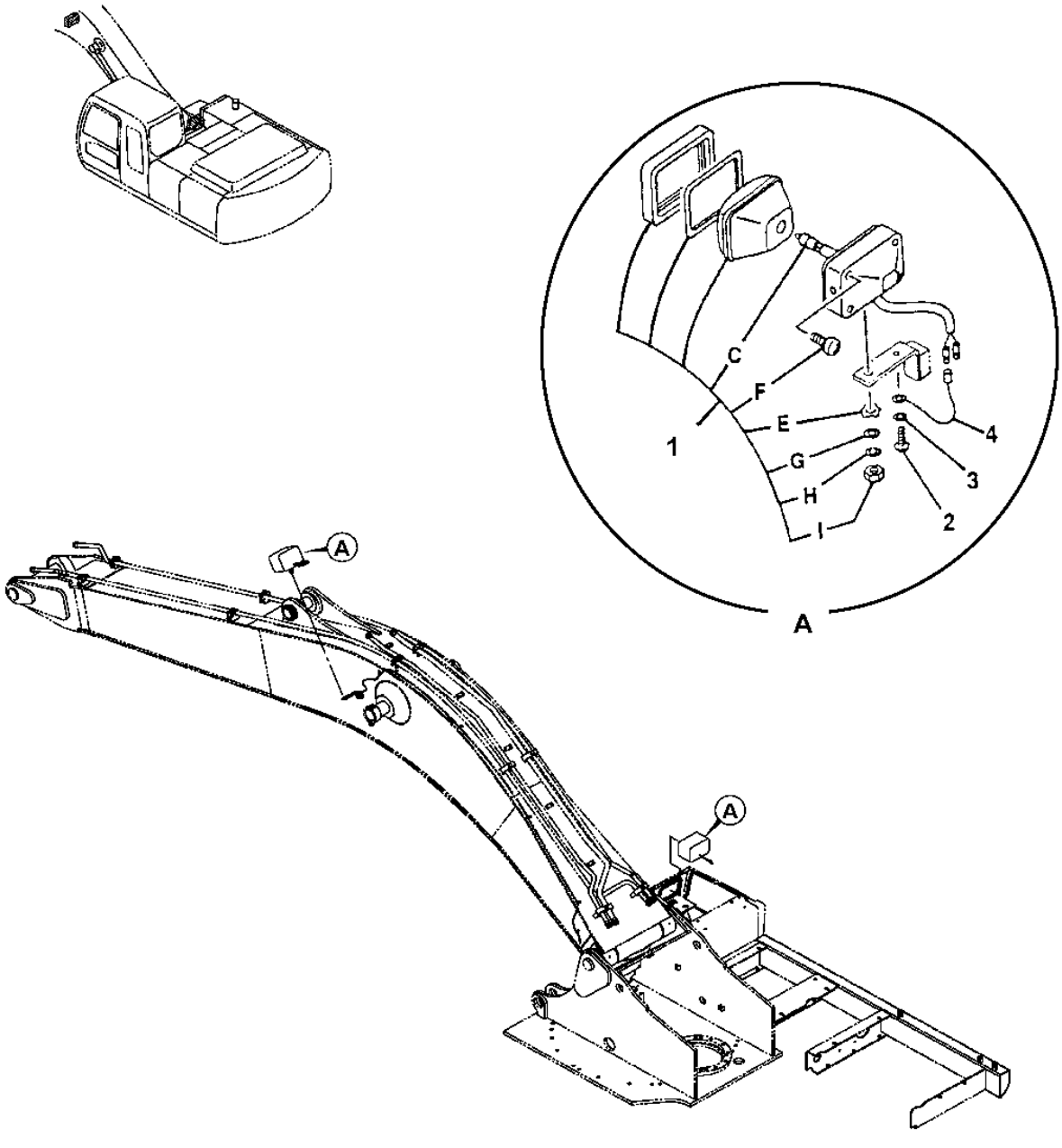

T146493

BOOM LIGHTS AND WORK LIGHTS

KEY	PART NO.	PART NAME	QTY	SERIAL NO.	REMARKS
1	4336570	LAMP	2		
1C	AT135758	BULB	1		
1E	4307026	WASHER	1		(SUB FOR T144361)
1F	4307027	SCREW	1		(SUB FOR T144362)
1G	24M7085	WASHER	1		15 X 28 X 2.500 MM (0.591" X 1.102" X 0.098")
1H	12H317	LOCK WASHER	1		14.288 MM (9/16")
1I	J952014	NUT	1		(SUB FOR TH103791)
2	21M7285	SCREW	1		M6 X 12
3	12M7006	LOCK WASHER	1		6 MM (0.236")
4	4254604	WIRING HARNESS	1		(SUB FOR AT154214)

ELECTRIC PARTS

T153839 -UN-16APR02

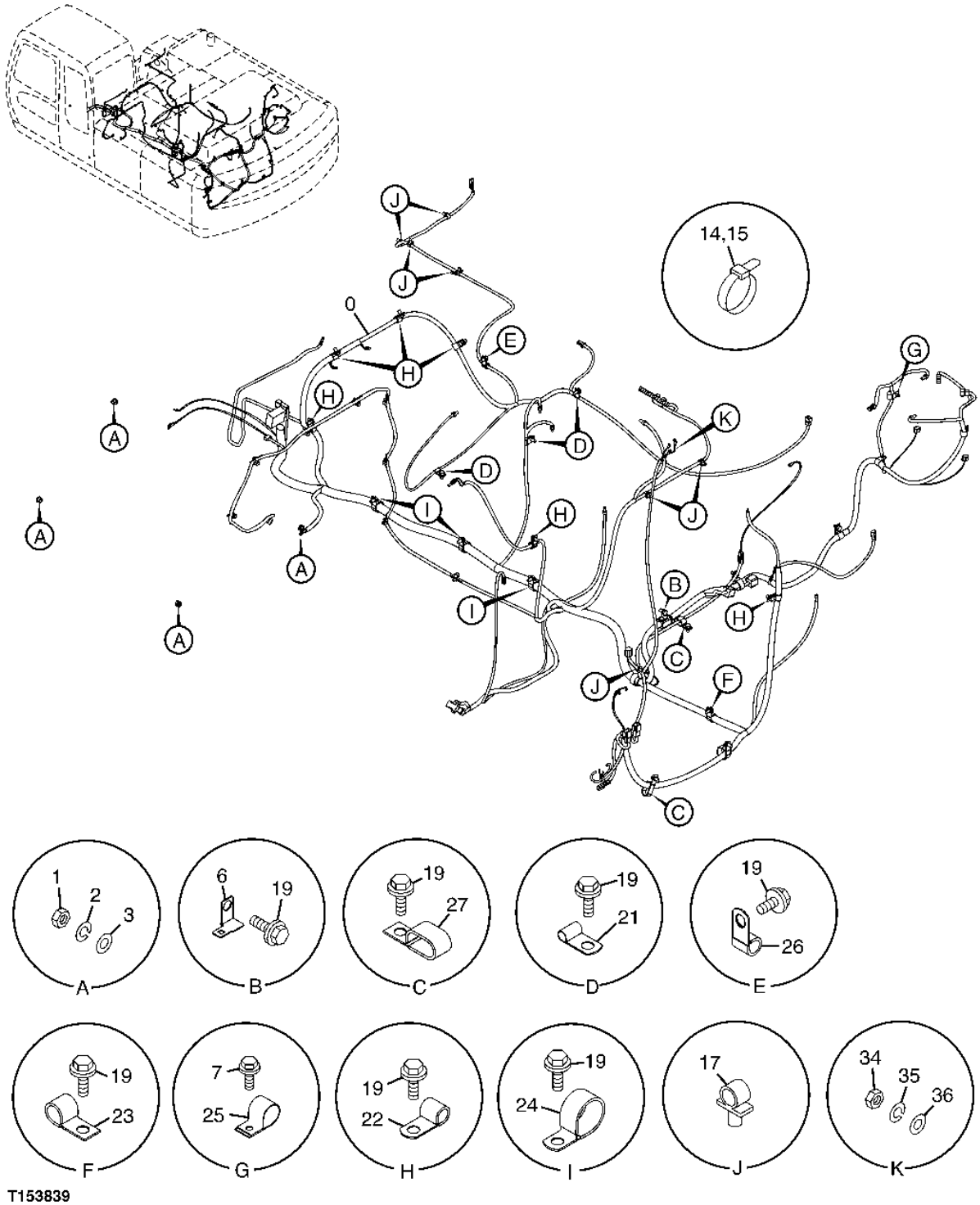

T153839

ELECTRIC PARTS

KEY	PART NO.	PART NAME	QTY	SERIAL NO.	REMARKS
0	.....	WIRING HARNESS	1		(0004091 NO LONGER AVAILABLE - FURNISH 0004912 AND 4487830 FOR SERVICE)
	4487830	WIRING HARNESS	1		(GROUND TO FRAME, CONNECT TO ENGINE OIL LEVEL SENSOR CONNECTOR ON MACHINE HARNESS) (NOT ILLUSTRATED)
	0004912	WIRING HARNESS	1		
1	14M7274	NUT	5		M10
2	12M7066	LOCK WASHER	5		10 MM (0.394")
3	24M7028	WASHER	5		10.500 X 20 X 2 MM (0.413" X 0.787" X 0.079")
6	4418301	BRACKET	1		
7	19M8425	CAP SCREW	3		M6 X 16
	12M7006	LOCK WASHER	3		6 MM (0.236")
14	H77698	TIE BAND	13		
15	H77698	TIE BAND	1		
17	4449250	CLIP	7		
19	19M7938	CAP SCREW	19		M10 X 20
	12M7066	LOCK WASHER	19		10 MM (0.394")
21	4190261	CLIP	3		
22	4190273	CLIP	6		
23	4235654	CLIP	1		(SUB FOR AT122384)
24	AT121321	HOSE CLAMP	4		
25	4450494	CLIP	1		
26	4190275	CLIP	3		
27	4190292	CLIP	2		
34	14M7297	NUT	1		M5
35	12M7064	LOCK WASHER	1		5 MM (0.197")
36	24M7027	WASHER	1		5.300 X 10 X 1 MM (0.209" X 0.394" X 0.039")

ELECTRIC PARTS

T161605 -UN-13NOV02

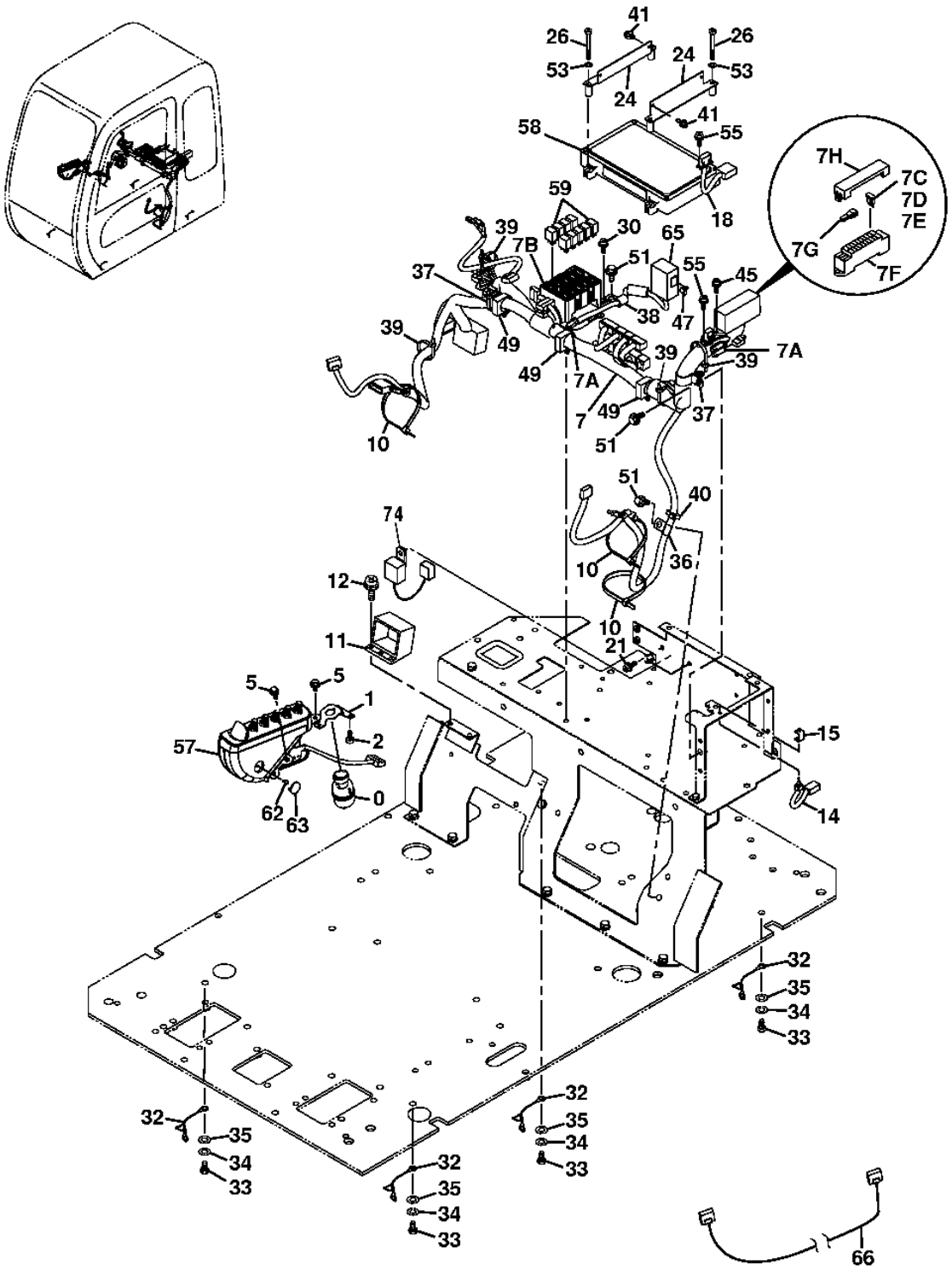

T161605

ELECTRIC PARTS

KEY	PART NO.	PART NAME	QTY	SERIAL NO.	REMARKS
0	4477373	SWITCH	1		
	AT194969	KEY	1		(SUB FOR AT147803)
1	3087882	BRACKET	1		
2	4361800	SCREW	3		(SUB FOR AT214011)
5	J010814	SCREW WITH WASHER	3		(SUB FOR AT132457)
7	0004616	WIRING HARNESS	1	-071173	
	0004069	WIRING HARNESS	1	071174-	
7A	4456778	DIODE	5		(SUB FOR TH4456778)
7B	4427429	CIRCUIT BOX	1		(SUB FOR TH4427429)
7C	57M7688	FUSE	10		5A
7D	57M7689	FUSE	7		10A
7E	57M7691	FUSE	2		20A
7F	4456735	FUSE HOLDER	1	-071173	(SUB FOR TH4456735)
	4460037	FUSE BOX	1	071174-	
7G	.....	SPECIAL SERVICE TOOL	1		(TH4436737 NOT AVAILABLE FOR SERVICE)
7H	4443490	COVER	1		(SUB FOR TH4443490)
10	H77698	TIE BAND	3		
11	4431090	ELECTRICAL CONNECTOR ASSY	1		(SUB FOR TH4431090)
12	J460620	SCREW WITH WASHER	2		(SUB FOR AT200012)
14	4359384	SWITCH	1		(SUB FOR AT213984)
15	4367375	BRACKET	1		(SUB FOR AT214036)
18	4439897	WIRING HARNESS	1		(SUB FOR TH4439897)
21	19M8425	CAP SCREW	2		M6 X 16
	12M7006	LOCK WASHER	2		6 MM
	24M7293	WASHER	2		6.500 X 13 X 1.600 MM
24	8082329	BRACKET	2		(SUB FOR TH8082329)
26	M430660	SCREW	4		(SUB FOR AT203691)
30	J460620	SCREW WITH WASHER	4		(SUB FOR AT200012)
32	4281293	GROUND CABLE	4		(SUB FOR AT154961)
33	19M8324	CAP SCREW	4		M10 X 16
34	12M7066	LOCK WASHER	4		10 MM
35	24M7028	WASHER	4		10.500 X 20 X 2 MM
36	4190261	CLIP	1		(SUB FOR TH109649)
37	4192035	CLIP	1		(SUB FOR TH108459)
38	4190253	CLIP	1		(SUB FOR TH108597)
39	H77698	TIE BAND	5		
40	H77698	TIE BAND	1		
41	19M7700	CAP SCREW	4		M5 X 10
	12M7064	LOCK WASHER	4		5 MM
	24M7348	WASHER	4		5.500 X 10 X 1 MM
45	J460620	SCREW WITH WASHER	2		(SUB FOR AT200012)
47	19M7932	CAP SCREW	2		M8 X 16, (SUB FOR 19M7162)
	12M7056	LOCK WASHER	2		8 MM, (SUB FOR 12M7065)
49	4449019	CLIP	3		(SUB FOR TH4449019)
51	19M7938	CAP SCREW	3		M10 X 20
	12M7066	LOCK WASHER	3		10 MM
53	24M7054	WASHER	4		6.400 X 12 X 1.600 MM
55	J460310	SCREW	4		(SUB FOR AT156974)
57	4454518	CONTROL CONSOLE	1		
58	4487331	RELAY	1	-071103	(SUB FOR 4452336)
	9226763	RELAY	1	071104-	
59	4436534	RELAY	9		(SUB FOR TH4436534)
62	4381572	SCREW	1		(SUB FOR TH4381572)
63	4426354	CAP	1		(SUB FOR FFSB110305)
65	4452160	RELAY	1		(SUB FOR TH4452160)
66	2048203	WIRING HARNESS	1		(2.75M EXTENSION)
	2048184	WIRING HARNESS	1		(4.6M EXTENSION)
74	AT195741	WIRING HARNESS	1		(WITH RELAY, ALTERNATOR)

MIC CONTROLLER (S.N. 071174-)

T151219 -UN-11FEB02

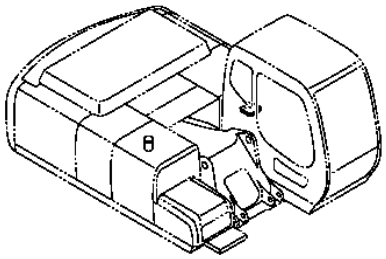

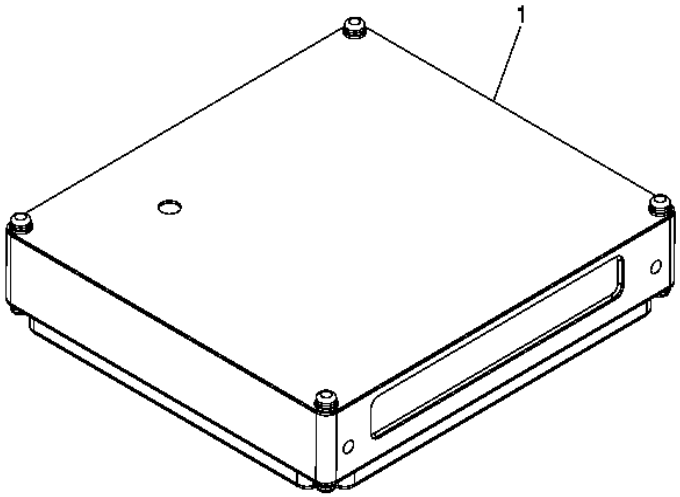

T151219

MIC CONTROLLER (S.N. 071174-)

KEY	PART NO.	PART NAME	QTY	SERIAL NO.	REMARKS
1	9239568	VEHICLE CONTROLLER	1		(SUB FOR 9212078)

MIC CUSTOMER KIT AND CABLE (S.N. 071174-)

T192372A -UN-19JUN03

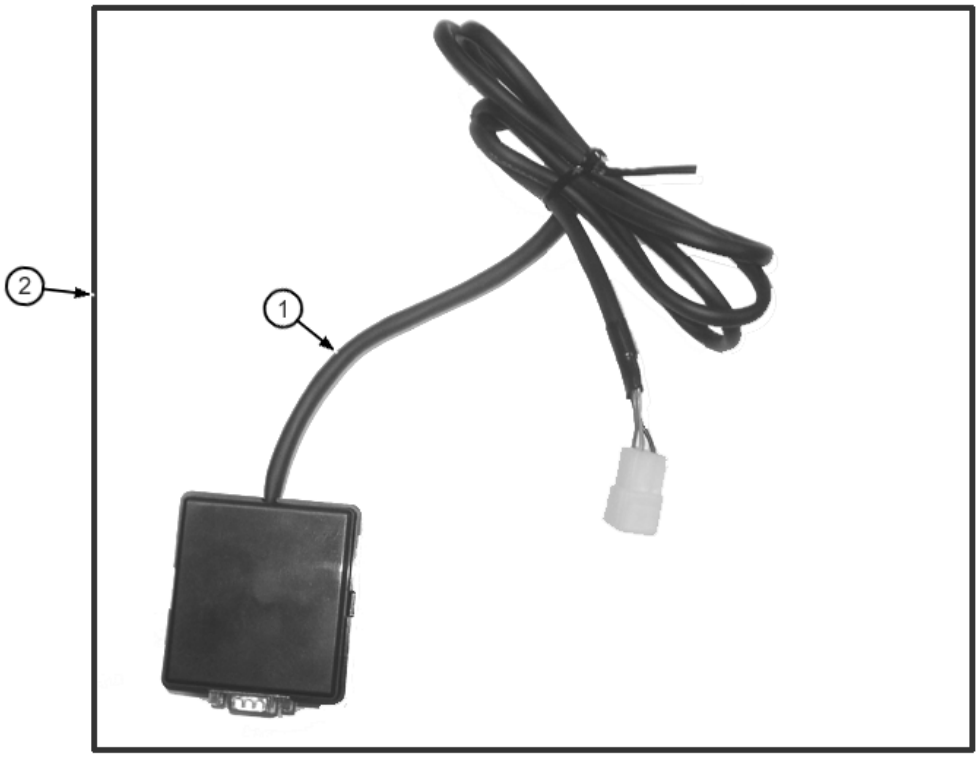

MIC CUSTOMER KIT AND CABLE (S.N. 071174-)

KEY	PART NO.	PART NAME	QTY	SERIAL NO.	REMARKS
1	TH3100010	CABLE	1		
2	AT301723	KIT	1		(WHOLEGOODS)(MIC CUSTOMER KIT)(INCLUDES SOFTWARE AND CABLE)

MONITOR

T143273 -UN-28JUN01

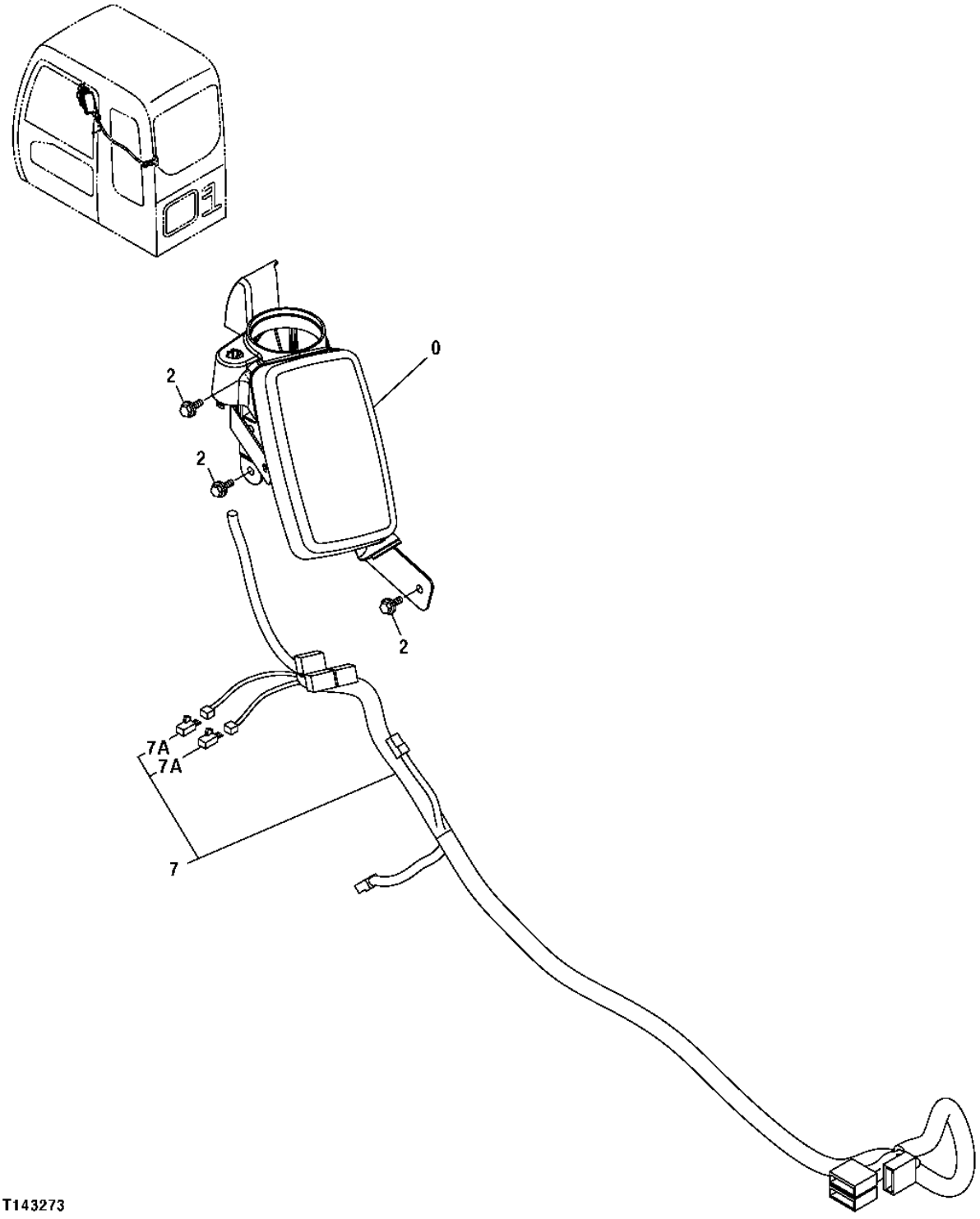

1H17

MONITOR

KEY	PART NO.	PART NAME	QTY	SERIAL NO.	REMARKS
0	4454519	MONITOR	1		
2	19M7932	CAP SCREW	3		M8 X 16
	12M7056	LOCK WASHER	3		8 MM (0.315") (SUB FOR 12M7065)
7	1027579	WIRING HARNESS	1		
7A	4456778	DIODE	2		(SUB FOR TH4456778)

CONVERTER
(24-VOLT TO 12-VOLT)

T146946 -UN-22OCT01

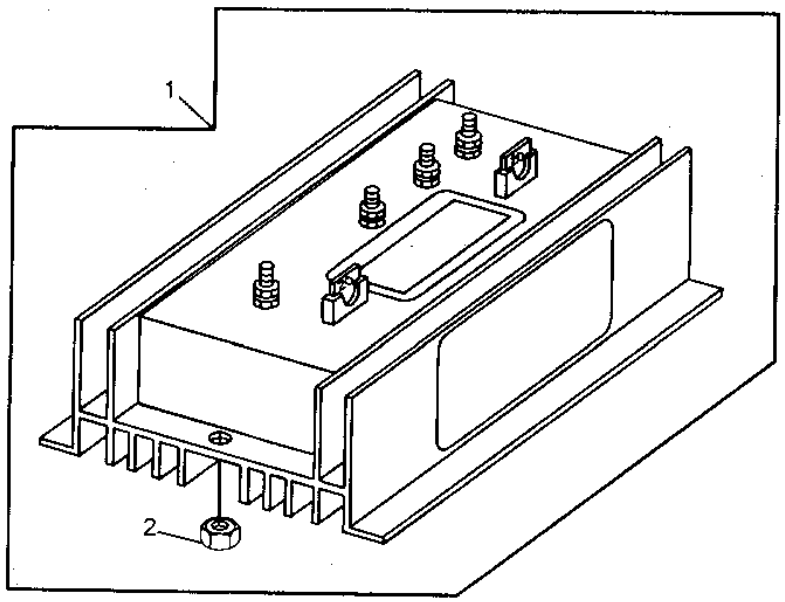

T146946

1H19

CONVERTER
(24-VOLT TO 12-VOLT)

KEY	PART NO.	PART NAME	QTY	SERIAL NO.	REMARKS
1	AT142288	CONVERTER	1		(10/20 AMP - 24/12 VOLT)
	14H786	NUT	2		1/4", (NOT ILLUSTRATED)
2	T141022	NUT	2		

ENGINE CONTROL UNIT ASSEMBLY

T151980 -UN-27FEB02

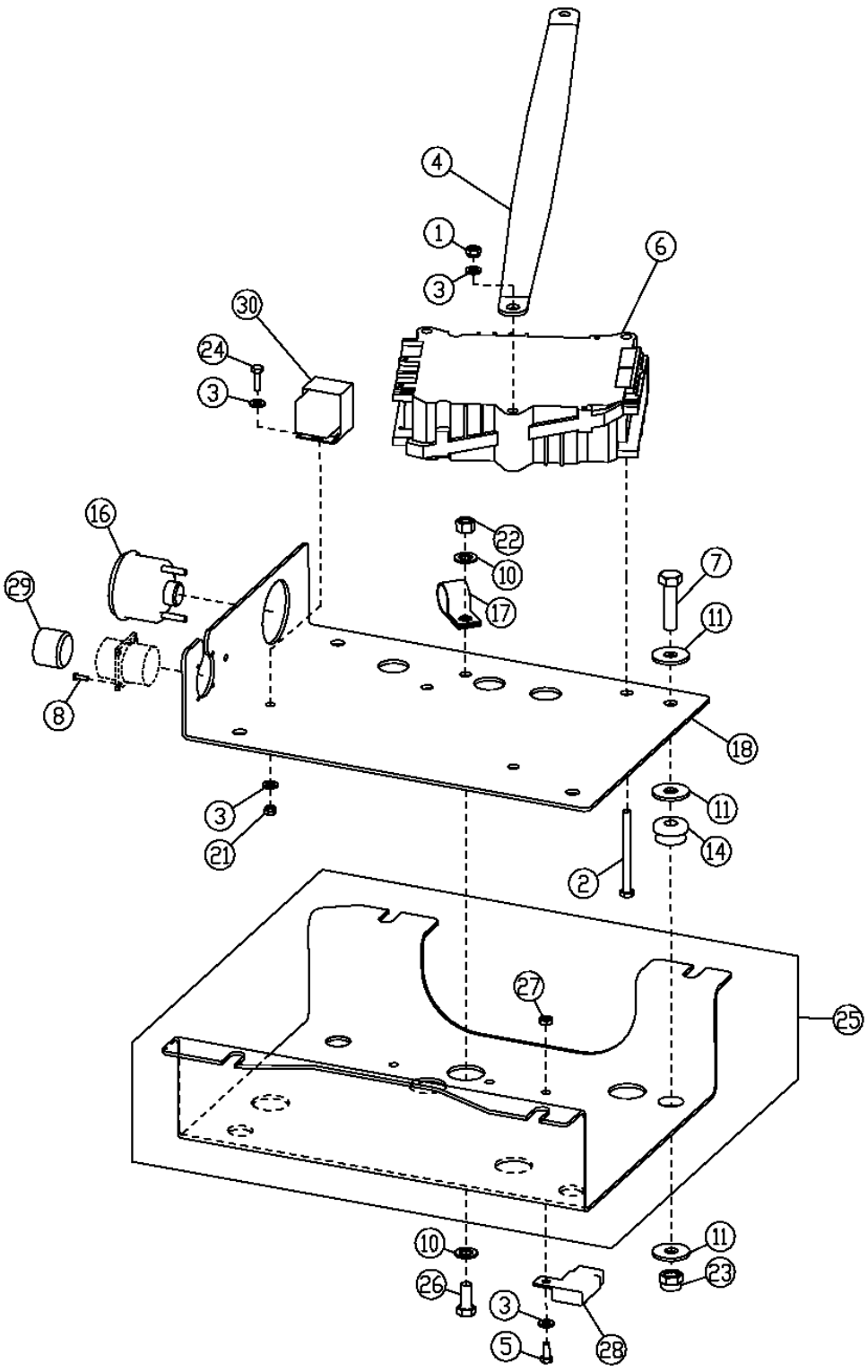

ENGINE CONTROL UNIT ASSEMBLY

KEY	PART NO.	PART NAME	QTY	SERIAL NO.	REMARKS
1	14M7165	LOCK NUT	3		M6
2	19M8786	SCREW	3		M6 X 70
3	24M7088	WASHER	8		6.600 X 12 X 1.600 MM
4	AT180705	GROUND CABLE	1		
5	19M7640	CAP SCREW	3		M5 X 12
6	RE506665	ELECTRONIC CONTROL UNIT	1		
7	19M8637	CAP SCREW	4		M10 X 40
8	21M7394	SCREW	4		M3 X 10
10	24M7096	WASHER	2		10.500 X 18 X 1.600 MM
11	24M7296	WASHER	12		10.500 X 30 X 2.500 MM
14	AT116162	ISOLATOR	4		
16	RE68155	GAUGE	1		DIAGNOSTIC DISPLAY UNIT
17	T78787	CLAMP	2		
18	T184964	PLATE	1		
21	14M7265	LOCK NUT	4		M5
22	14M7327	LOCK NUT	1		M8
23	14M7517	LOCK NUT	4		M10
24	19M7372	CAP SCREW	1		M5 X 16
25	T190276	COVER	1		
26	19M7881	SCREW	1		M8 X 20
27	14M7442	NUT	3		M5
28	99M7065	FUSE	3		
29	57M7477	ELECTRICAL CONNECTOR ASSY	1		
30	AT162863	RELAY	1		

ENGINE CONTROL UNIT WIRING HARNESS

T159315 -UN-11SEP02

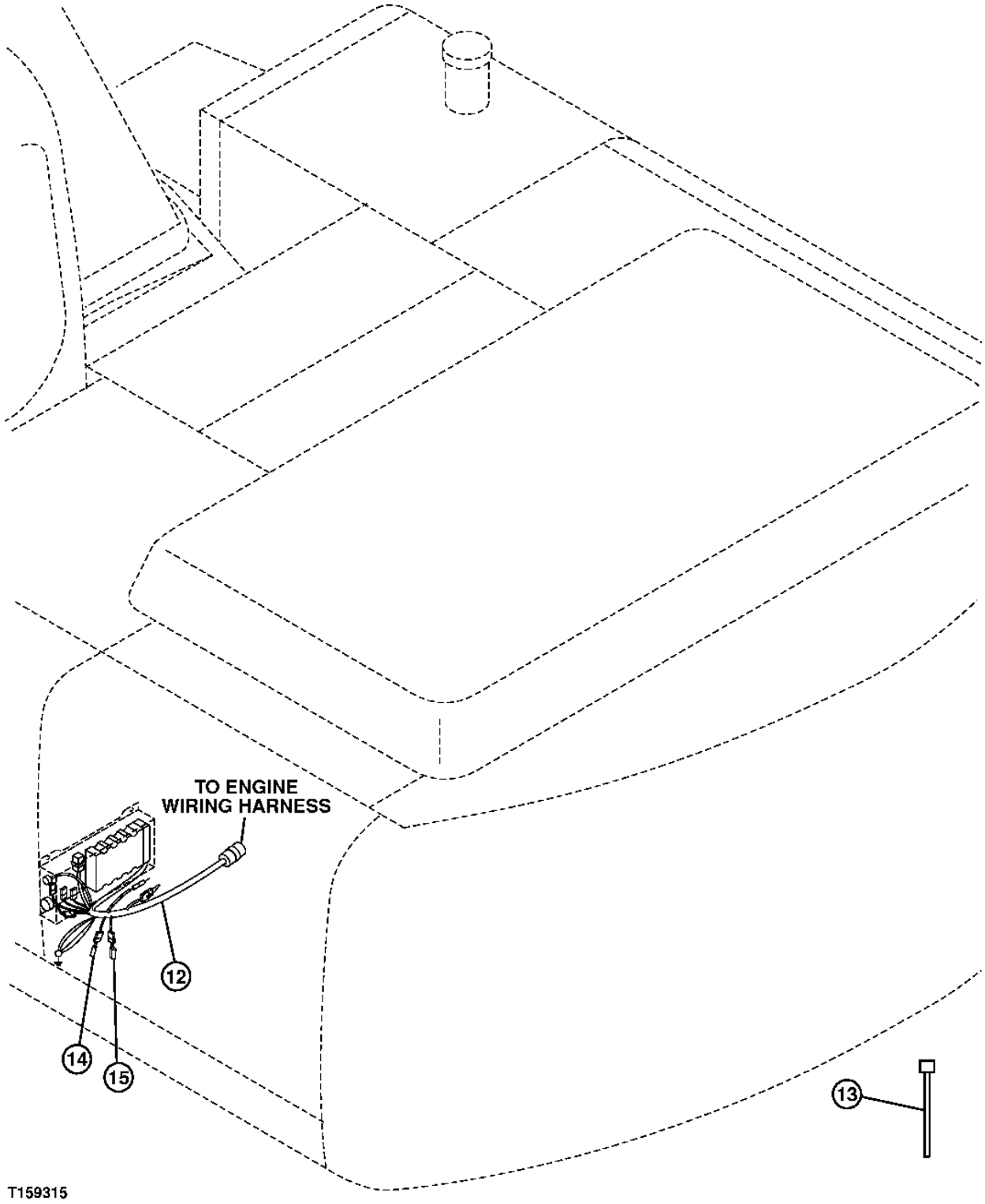

ENGINE CONTROL UNIT WIRING HARNESS

KEY	PART NO.	PART NAME	QTY	SERIAL NO.	REMARKS
12	AT191028	WIRING HARNESS	1		
13	H77698	TIE BAND	AR		
14	AT202778	WIRING HARNESS	1		(TERMINATION NODE)
15	AT190929	RESISTOR	1		

ENGINE WIRING HARNESS

T148745 -UN-08DEC01

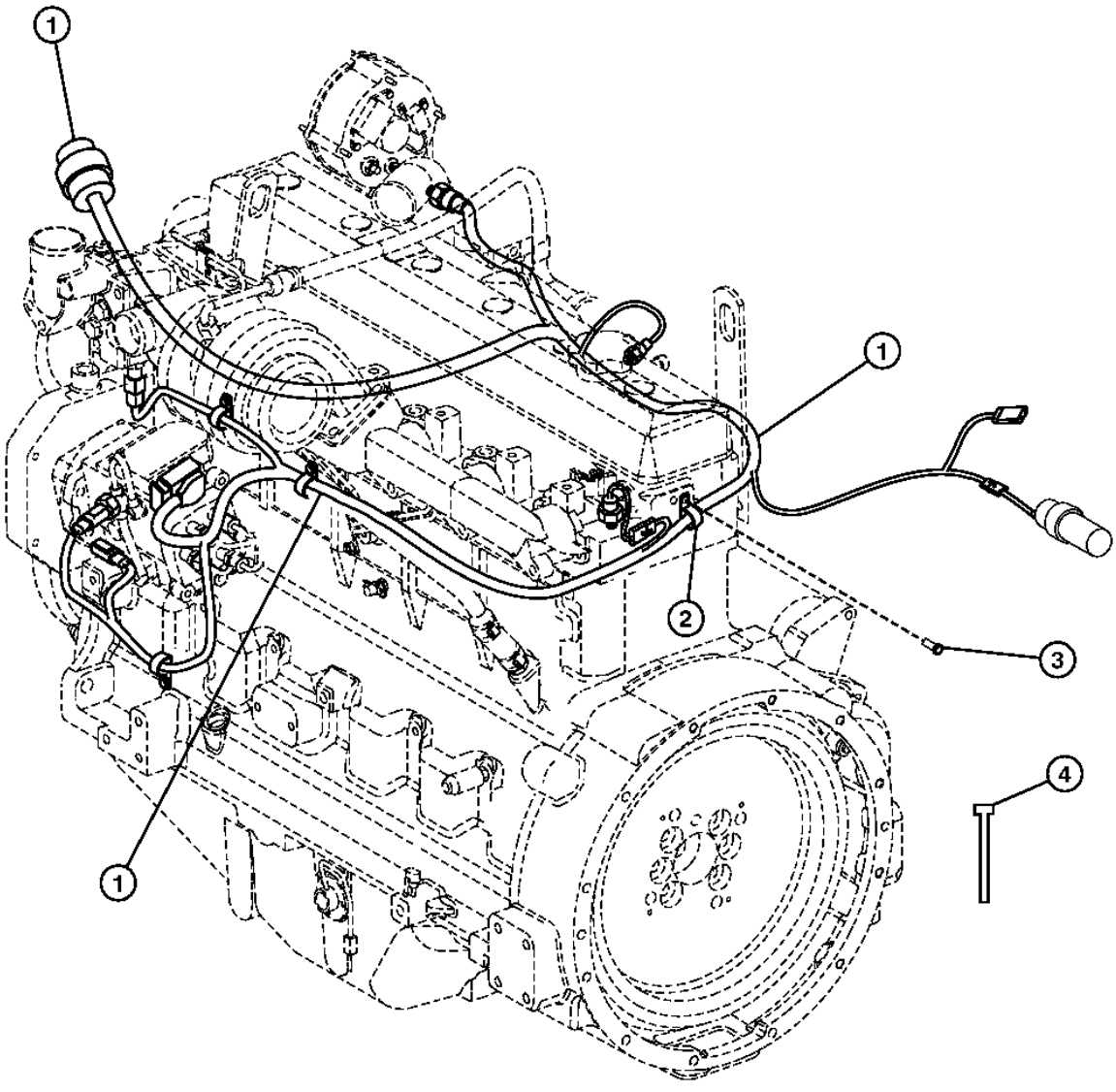

T148745

ENGINE WIRING HARNESS

KEY	PART NO.	PART NAME	QTY	SERIAL NO.	REMARKS
1	AT191027	WIRING HARNESS	1		
2	T75197	CLAMP	4		
3	19M7783	SCREW	4		M10 X 16
4	R44302	TIE BAND	8		

BOOM LIGHT HARNESS

T143274 -UN-28JUN01

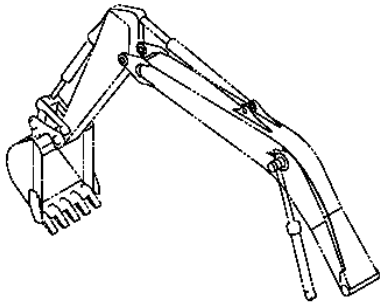

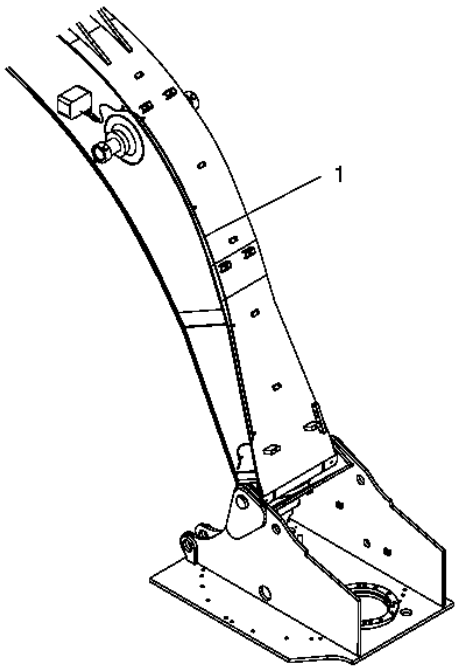

T143274

BOOM LIGHT HARNESS

KEY	PART NO.	PART NAME	QTY	SERIAL NO.	REMARKS
1	4437513	WIRING HARNESS	1		(SUB FOR TH4437513)

WIRE HARNESS, SUPER LONG FRONT

T201135 -UN-28JUN04

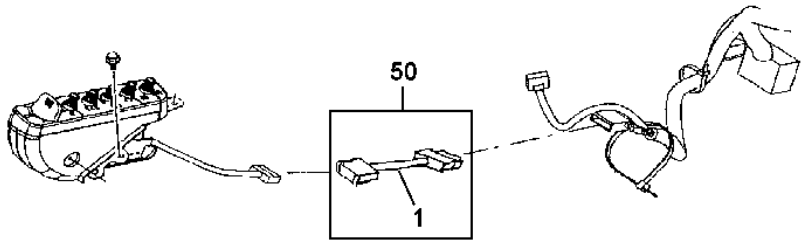

T201135

WIRE HARNESS, SUPER LONG FRONT

KEY	PART NO.	PART NAME	QTY	SERIAL NO.	REMARKS
1	3094087	WIRING HARNESS	1		
50	**AT314803**	**KIT**	**1**		**(WHOLEGOODS) (CONTAINS ALL ITEMS ON THIS PAGE - ADDITIONAL COMPONENTS LISTED ON SEPARATE PAGES) (ALSO ORDER T211127 INSTALLATION INSTRUCTION, T211136 LIFT CHART LABEL, T153672 LONG FRONT LABEL, T153673 PERIODIC MAINTENANCE LABEL, AND (2) T185126 BOOM LABELS)**

FRAME

T153919 -UN-16APR02

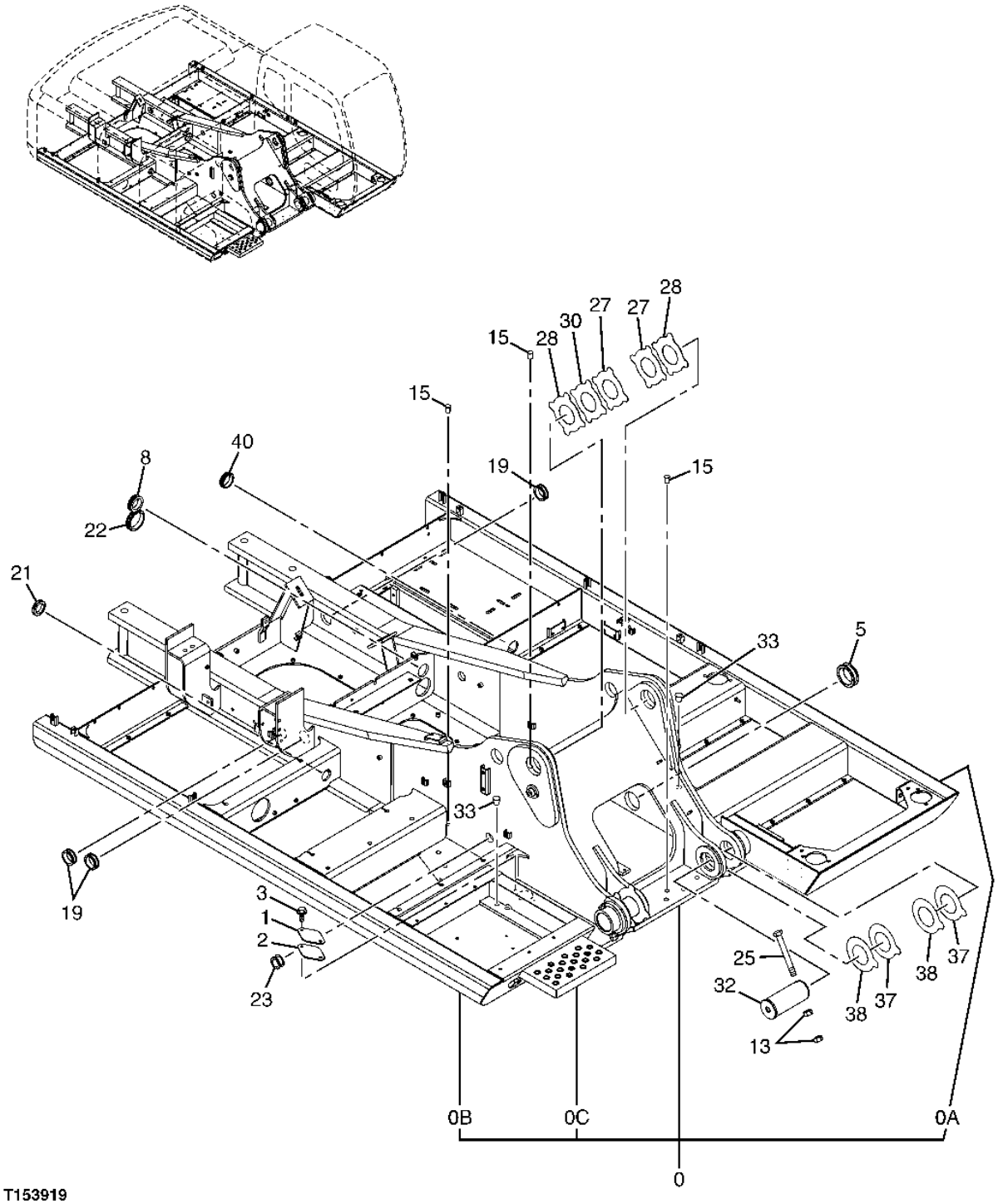

FRAME

KEY	PART NO.	PART NAME	QTY	SERIAL NO.	REMARKS
0	5008074	FRAME	1		
0A	.....	FRAME	1		(TH3088979 NOT AVAILABLE FOR SERVICE)
0B	.....	FRAME	1		(TH3088960 NOT AVAILABLE FOR SERVICE)
0C	3084653	STEP	1		
1	4255799	COVER	1		(SUB FOR AT154929)
2	4161735	GASKET	1		(SUB FOR AT130379)
3	19M7402	CAP SCREW	2		M10 X 25
	12M7066	LOCK WASHER	2		10 MM
	24M7028	WASHER	2		10.500 X 20 X 2 MM
5	4191977	GROMMET	1		(SUB FOR TH109399)
8	4208279	GROMMET	1		(SUB FOR AT131854)
13	14M7277	NUT	4		M20
15	4355382	PIN FASTENER	3		(SUB FOR AT217769)
19	4255567	BUSHING	3		(SUB FOR AT155271, 4255530)
21	4509404	GROMMET	1		(SUB FOR TH100553)
22	4345810	BUSHING	1		(SUB FOR AT217099)
23	4257181	GROMMET	1		(SUB FOR AT155274)
25	4435127	PIN FASTENER	2		(SUB FOR TH4435127)
27	4445638	THRUST WASHER	2		(SUB FOR TH4445638)
28	4445639	THRUST WASHER	2		(SUB FOR TH4445639)
30	TH4460372	PLATE	1		
31	4365859	BUSHING	1		
32	AT217951	PIN FASTENER	2		
33	.....	PLUG	2		(Z431578 NO LONGER AVAILABLE)
37	4470745	SHIM	4		
38	4470746	SHIM	4		

SWING BEARING SUPPORT

T147124 -UN-07JAN02

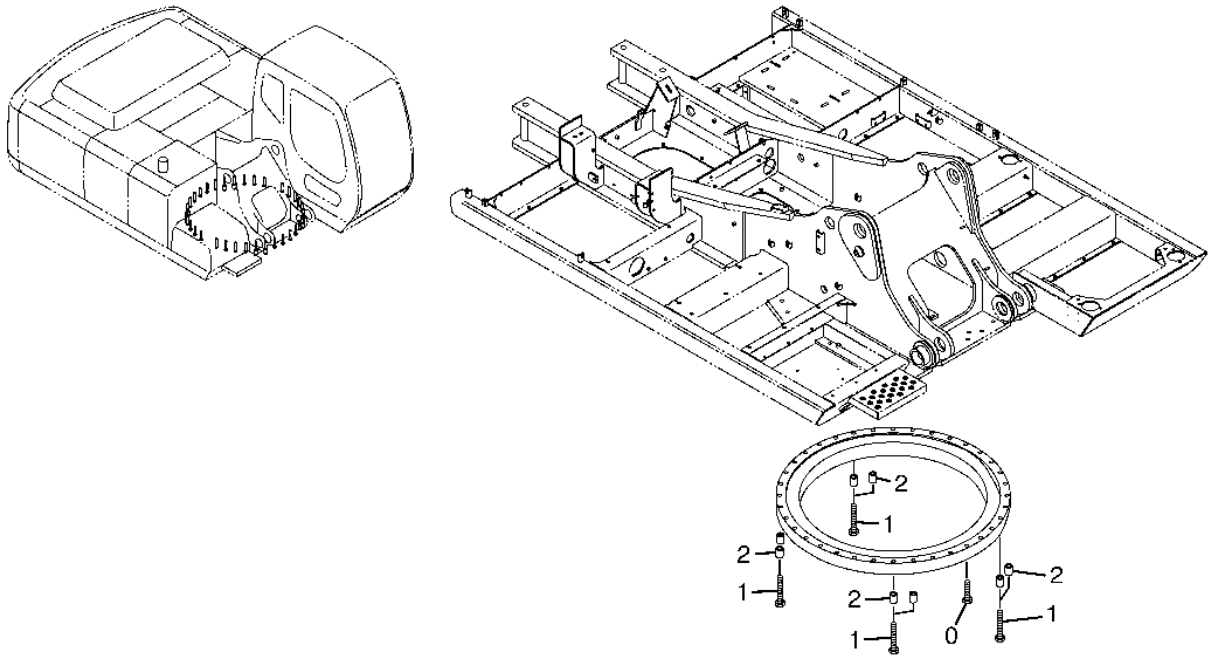

T147124

SWING BEARING SUPPORT

KEY	PART NO.	PART NAME	QTY	SERIAL NO.	REMARKS
0	J922203	BOLT	26		(SUB FOR AT217706)
1	J922212	BOLT	8		(SUB FOR AT217912)
2	4381637	SPACER	8		(SUB FOR AT217991)

MAIN FRAME BOOM FOOT PIN

T143224 -UN-28JUN01

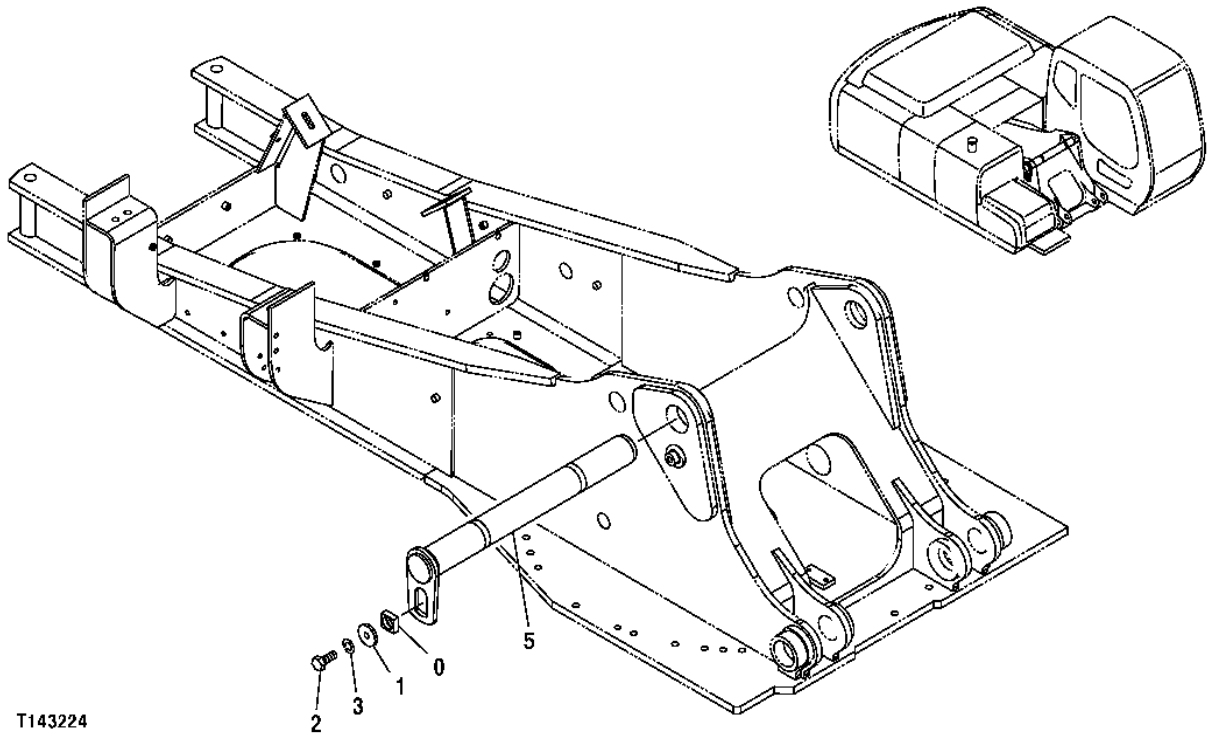

MAIN FRAME BOOM FOOT PIN

KEY	PART NO.	PART NAME	QTY	SERIAL NO.	REMARKS
0	4611688	BLOCK CLAMP	1		(SUB FOR 4424425)
1	4611733	PLATE	1		(SUB FOR 4426128)
2	J922245	BOLT	1		(SUB FOR THJ921840, T116332)
3	J257222	LOCK WASHER	1		(SUB FOR AT250277, J257218)
5	8094393	PIN	1		(SUB FOR 8080780)

COUNTERWEIGHT

T145901 -UN-11OCT01

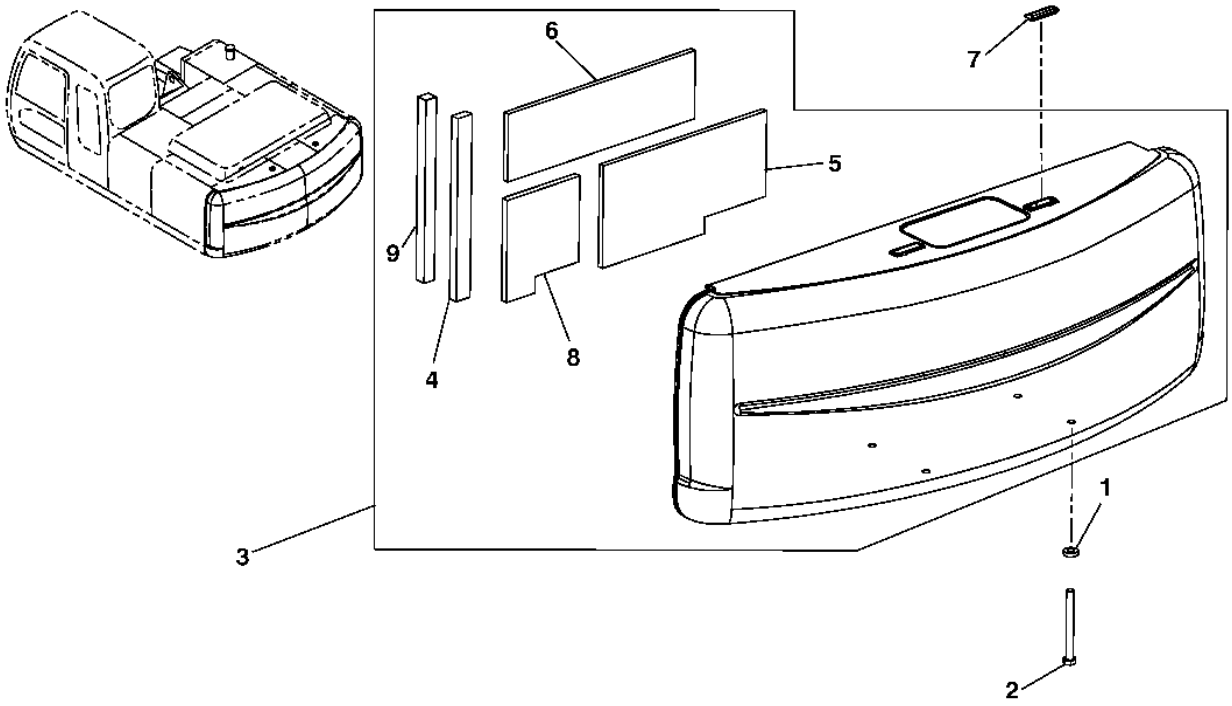

T145901

COUNTERWEIGHT

KEY	PART NO.	PART NAME	QTY	SERIAL NO.	REMARKS
1	4174859	BUSHING	4		
2	4470767	BOLT	4		
3	5007142	COUNTERWEIGHT	1		(SUB FOR TH5007142 OR DH500065)
4	DH400355	ISOLATOR	1		
5	DH400353	ISOLATOR	1		
6	DH400352	ISOLATOR	1		
7	DH400360	CAP	2		
8	4438194	ISOLATOR	1		
9	4430649	ISOLATOR	1		

SWING BEARING

T145807 -UN-19SEP01

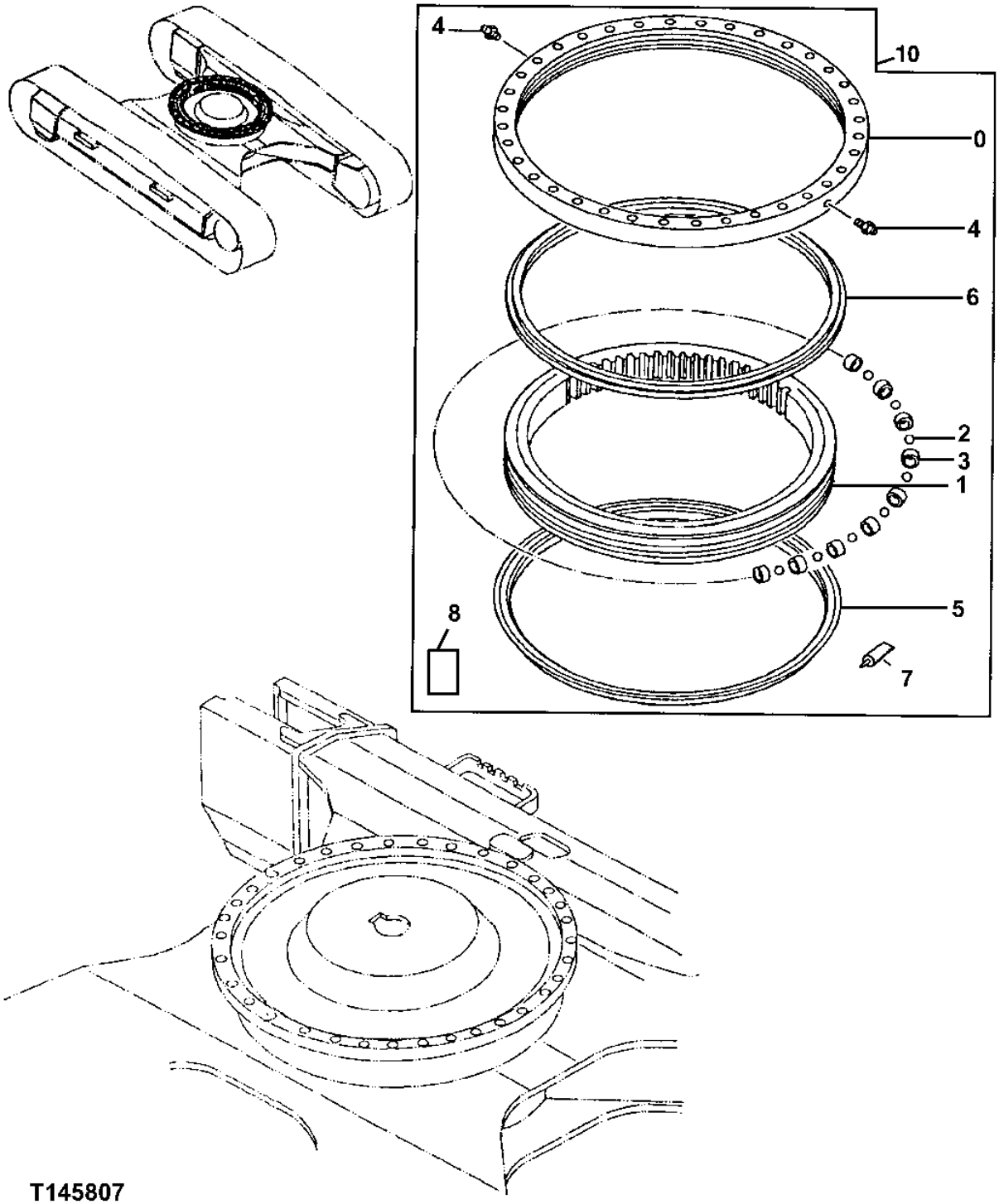

SWING BEARING

KEY	PART NO.	PART NAME	QTY	SERIAL NO.	REMARKS
0	.....	BEARING RACE	1		
1	.....	BEARING RACE	1		
2	4428919	BALL	90		(SUB FOR AT174888)
3	4127708	SPACER	79		(SUB FOR TH104232)
4	TH100074	LUBRICATION FITTING	2		
5	T203958	SEAL	1		(LOWER OUTER SEAL) (ALSO ORDER TY21517 ADHESIVE AND AT66866 CLEANING SOLVENT) (SUB FOR AT131732, AT213800, T191211) (SUB FOR 4199645)
6	T203958	SEAL	1		(UPPER INNER SEAL) (ALSO ORDER TY21517 ADHESIVE AND AT66866 CLEANING SOLVENT) (SUB FOR AT131732, AT213801 AND T191211) (SUB FOR 4199645)
7	TY21517	ADHESIVE	1		
8	AT66866	FLUID	1		
10	9154037EX	ROLLER	1		

SWING BEARING ATTACHMENTS

T147851 -UN-07JAN02

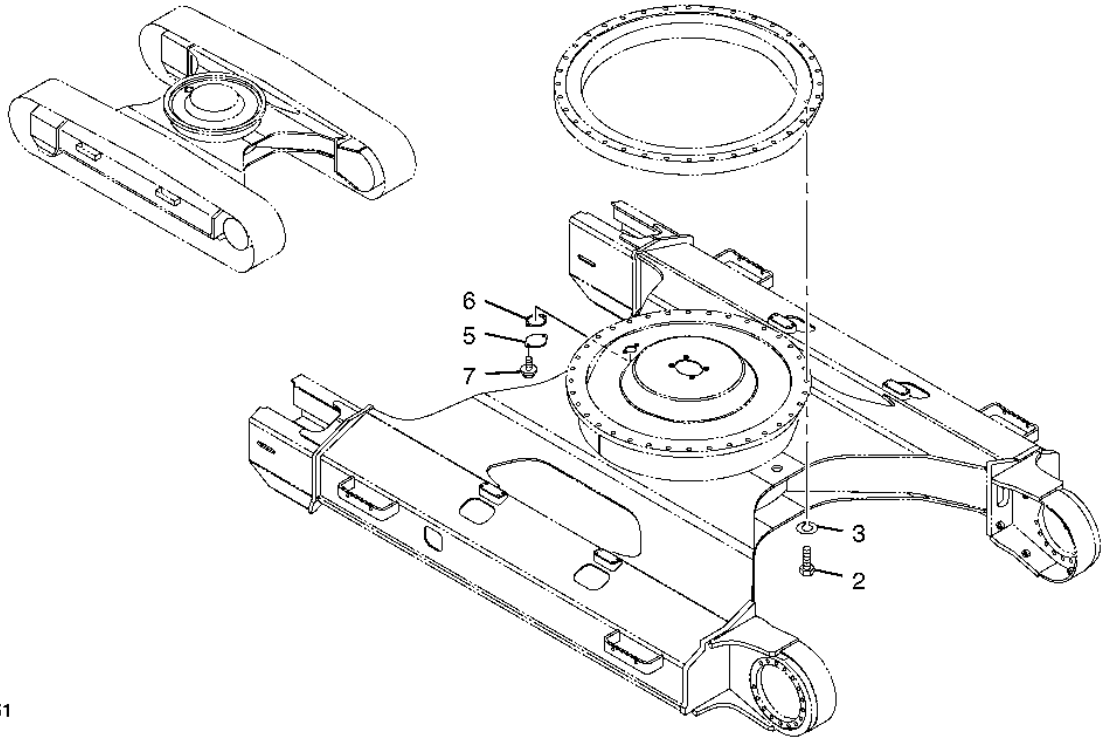

T147851

SWING BEARING ATTACHMENTS

KEY	PART NO.	PART NAME	QTY	SERIAL NO.	REMARKS
2	AT217784	BOLT	36		
3	J257222	LOCK WASHER	36		(SUB FOR AT217702)
5	4128863	PLATE	1		(SUB FOR TH102264)
6	4272297	GASKET	1		(SUB FOR TH110612 AND 4211149)
7	19M7402	CAP SCREW	2		M10 X 25
	12M7066	LOCK WASHER	2		10 MM
	24M7028	WASHER	2		10.500 X 20 X 2 MM

SWING BEARING SEAL

T196887 -UN-22JAN04

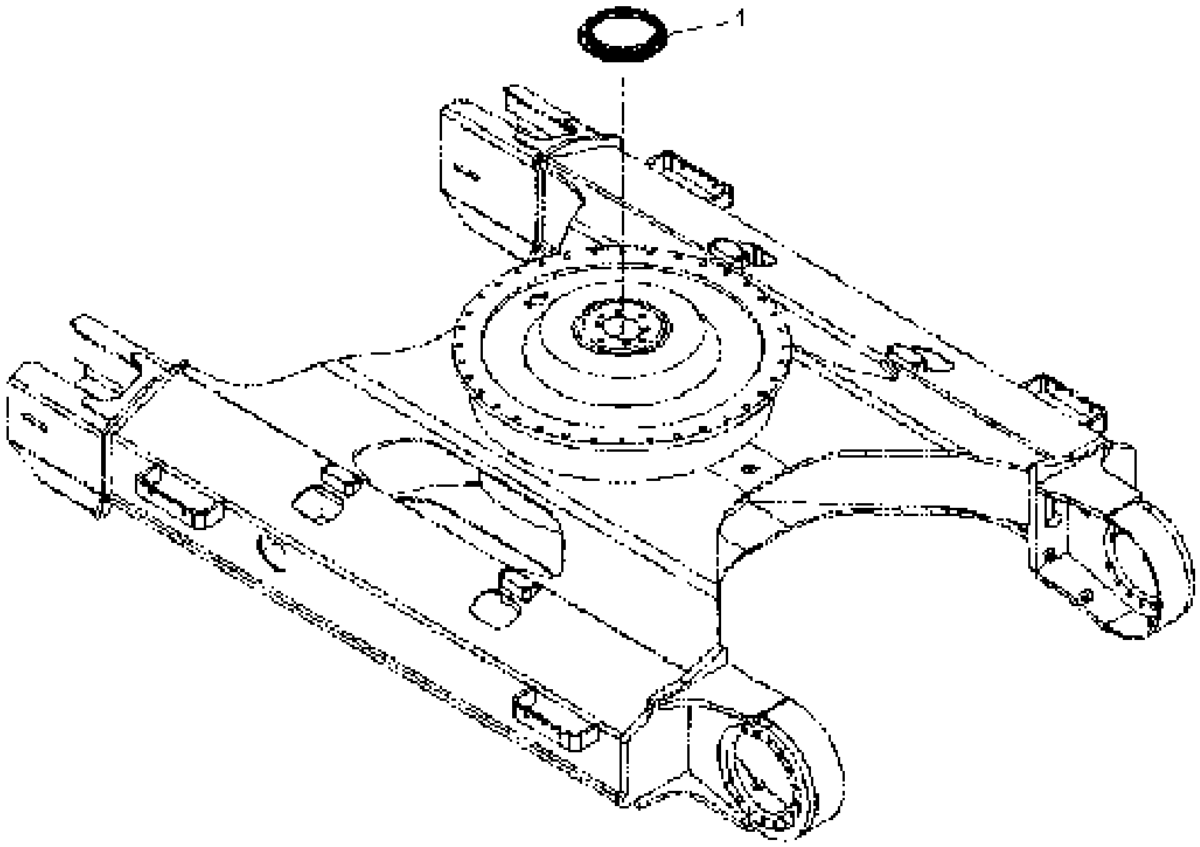

T196887

SWING BEARING SEAL

KEY	PART NO.	PART NAME	QTY	SERIAL NO.	REMARKS
1	4483676	SEAL	1	071186-	

CAB MOUNTING

T150989 -UN-06FEB02

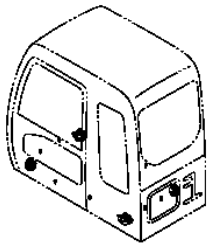

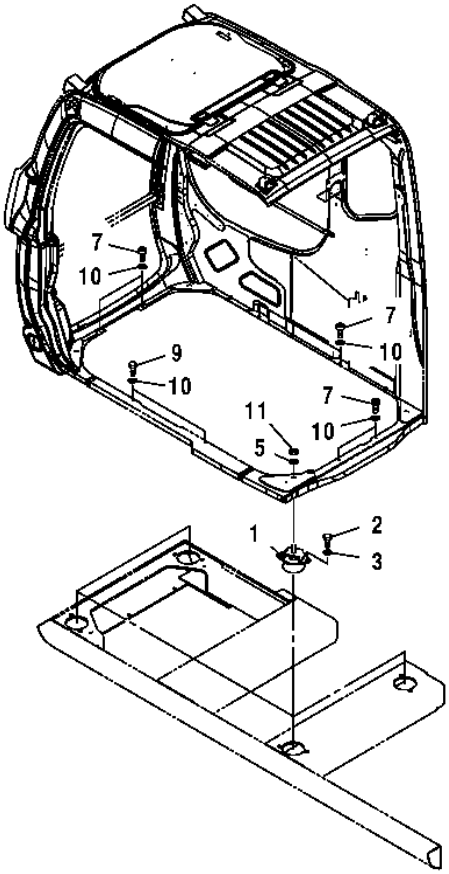

T150989

2B5

CAB MOUNTING

KEY	PART NO.	PART NAME	QTY	SERIAL NO.	REMARKS
1	4409999	ISOLATOR	4		(SUB FOR TH4409999)
2	19M7403	CAP SCREW	8		(SUB FOR 4330785)
3	12H301	LOCK WASHER	8		12.700 MM (1/2")
5	24M7338	WASHER	4		17 X 30 X 3 MM (0.669" X 1.181" X 0.118")
7	19M8337	SCREW	4		M10 X 30
9	19M7662	CAP SCREW	5		M10 X 30
10	24M7346	WASHER	4		11 X 20 X 2 MM (0.433" X 0.787" X 0.079")
11	14M7328	LOCK NUT	4		M16

CAB

T150990 -UN-06FEB02

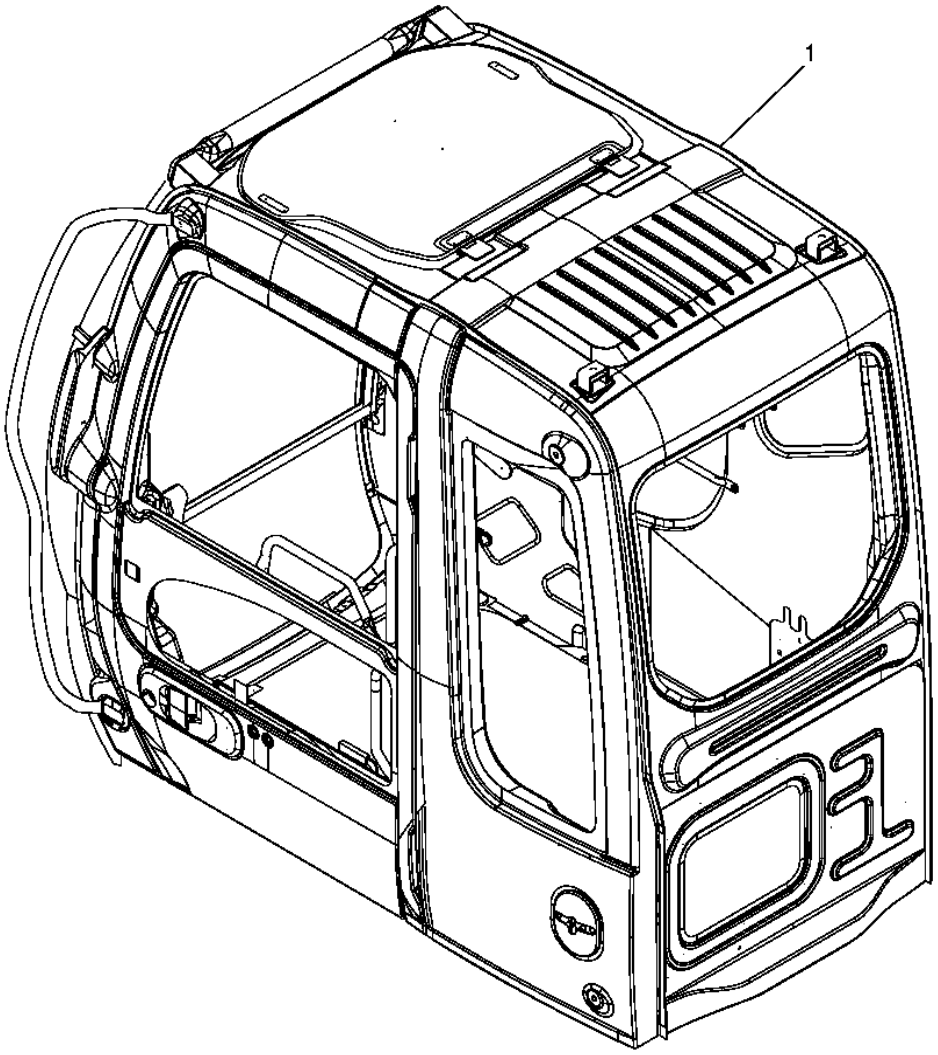

T150990

CAB

KEY	PART NO.	PART NAME	QTY	SERIAL NO.	REMARKS
1	4602549	CAB	1		(SUB FOR 4474296) (SEE FOLLOWING PAGES FOR COMPONENTS)

CAB COMPONENTS

T196845 -UN-19DEC03

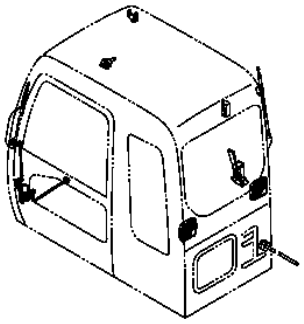

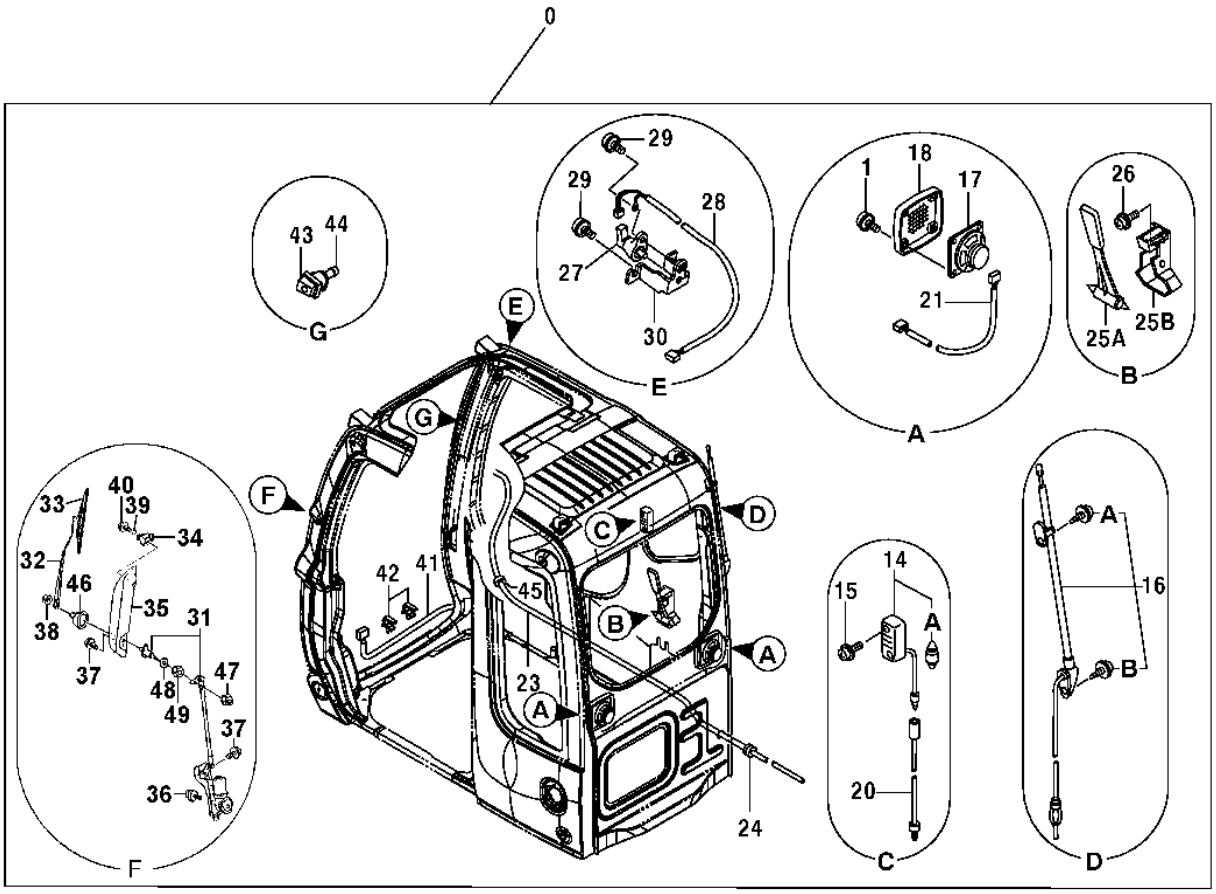

T196845

CAB COMPONENTS

KEY	PART NO.	PART NAME	QTY	SERIAL NO.	REMARKS
0	4602549	CAB	1		(SUB FOR 4474296) (CONTAINS ALL PARTS LISTED ON THIS PAGE - ADDITIONAL COMPONENTS LISTED ON FOLLOWING PAGES)
1	4456427	SCREW	8		(SUB FOR TH4456427)
14	4187082	LAMP	1		(SUB FOR TH108567)
14A	4187083	BULB	1		(SUB FOR TH108568)
15	4456428	SCREW	2		(SUB FOR TH4456428)
16	4123177	ANTENNA	1		(SUB FOR AT131697)
16A	4210412	SCREW	1		(SUB FOR AT131864)
16B	4210413	SCREW	1		(SUB FOR AT131865)
17	4361302	SPEAKER	2		(SUB FOR AT214007)
18	4364504	GRILLE	2		(SUB FOR AT214017)
20	4260369	WIRING HARNESS	1		(SUB FOR AT154278)
21	4369547	WIRING HARNESS	2		(SUB FOR AT214061)
23	4369549	HOSE	1		(SUB FOR AT214063)
24	4287903	GROMMET	1		(SUB FOR AT154413)
25A	4362700	HAMMER	1		(SUB FOR T158020)
25B	2038764	BRACKET	1		(SUB FOR T158021)
26	4456428	SCREW	2		(SUB FOR TH4456428)
27	4387837	SWITCH	1		(SUB FOR AT182625)
28	4402476	WIRING HARNESS	1		(SUB FOR AT182626)
29	4456428	SCREW	3		
30	4456429	BRACKET	1		(SUB FOR TH4456429)
31	4453690	WIPER MOTOR	1		(SUB FOR TH4453690)
32	4453687	WIPER ARM	1		(SUB FOR TH4453687)
33	4453686	WIPER BLADE	1		(SUB FOR TH4453686)
34	4456433	HOLDER	1		(SUB FOR TH4456433)
35	4456434	GUARD	1		(SUB FOR TH4456434)
36	19M7881	SCREW	3		M8 X 20
	12M7056	LOCK WASHER	3		8 MM (0.315") (SUB FOR 12M7065)
	24M7055	WASHER	3		8.400 X 16 X 1.600 MM (0.331" X 0.630" X 0.063")
37	4456238	BOLT	4		(SUB FOR TH4456238)
38	14M7273	NUT	1		M8
39	4092111	O-RING	1		(SUB FOR AT154150)
40	4456458	BOLT	1		(SUB FOR TH4456458)
41	4456435	WIRING HARNESS	1		(SUB FOR TH4456435)
42	4456436	CLIP	2		(SUB FOR TH4456436)
43	4456450	NOZZLE	1		(SUB FOR TH4456450)
44	4367481	FLOW CONTROL HYD. VALVE	1		
45	4369569	GROMMET	1		(SUB FOR AT214079)
46	4603011	CAP	1		
47	4603012	NUT	1		
48	4603013	WASHER	1		
49	4431859	NUT	1		

CAB COMPONENTS

T201892 -UN-26JUL04

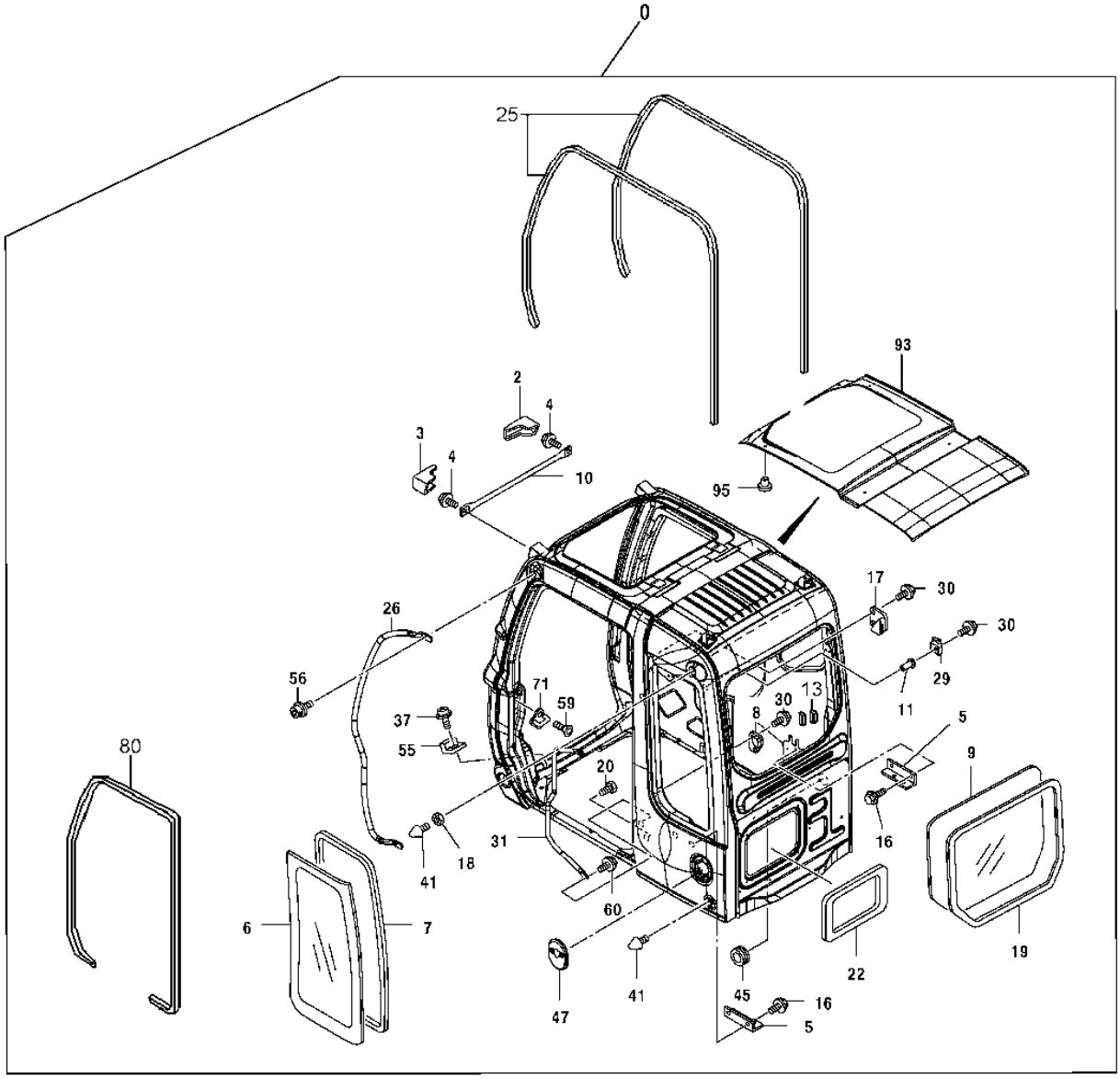

T201892

CAB COMPONETS

KEY	PART NO.	PART NAME	QTY	SERIAL NO.	REMARKS
0	4602549	CAB	1		(SUB FOR 4474296) (CONTAINS ALL ITEMS ON THIS PAGE - ADDITIONAL COMPONENTS LISTED ON PREVIOUS AND FOLLOWING PAGES)
2	4456177	COVER	1		(SUB FOR TH4456177)
3	4456178	COVER	1		(SUB FOR TH4456178)
4	4456179	BOLT	2		(SUB FOR TH4456179)
5	4456181	BRACKET	2		(SUB FOR TH4456181)
6	4448311	WINDOWPANE	1		(BRONZE) (SUB FOR 4468944 AND TH4468944)
	4602567	WINDOWPANE	1		(GREEN)
7	4400079	SEAL	1		(SUB FOR AT218190)
8	4456183	ISOLATOR	1		(SUB FOR TH4456183)
9	4448314	WINDOWPANE	1		(BRONZE) (SUB FOR TH4448314)
	4602569	WINDOWPANE	1		(GREEN)
10	4474300	BRAKE	1		
11	4456185	NUT	1		(SUB FOR TH4456185)
13	4603008	ISOLATOR	1		
16	19M7402	CAP SCREW	4		M10 X 25
	12M7066	LOCK WASHER	4		10 MM (0.394")
	24M7028	WASHER	4		10.500 X 20 X 2 MM (0.413" X 0.787" X 0.079")
17	4456182	ISOLATOR	1		(SUB FOR TH4456182)
18	4414857	NUT	1		(SUB FOR AT157068)
19	4448319	ISOLATOR	1		(USE WITH 4448314) (SUB FOR TH4448319)
	4602577	ISOLATOR	1		(USE WITH 4602569)
20	19M8425	CAP SCREW	1		M6 X 16
	24H1287	WASHER	1		7.137 X 15.875 X 1.651 MM (9/32" X 5/8" X 0.065")
	12M7006	LOCK WASHER	1		6 MM (0.236")
22	4453667	ISOLATOR	1		(SUB FOR TH4453667)
25	4456175	ISOLATOR	2		(SUB FOR TH4456175)
26	4474298	HANDRAIL	1		
29	4456184	ISOLATOR	1		(SUB FOR TH4456184)
30	4372224	SCREW WITH WASHER	5		(SUB FOR AT214310)
31	4453663	HANDRAIL	1		(SUB FOR TH4453663)
37	21M7246	SCREW	2		M6 X 16
	12M7006	LOCK WASHER	2		6 MM
	24M7293	WASHER	2		6.500 X 13 X 1.600 MM
41	4304827	BUMPER	2		(SUB FOR AT156970)
45	4369568	GROMMET	1		(SUB FOR AT214078)
47	4474299	COVER	1		
55	4369675	ISOLATOR	2		(SUB FOR AT214173)
56	19M7550	CAP SCREW	2		M10 X 35
	24H1305	WASHER	2		10.312 X 20.625 X 1.651 MM (13/32" X 13/16" X 0.065")
	12M7066	LOCK WASHER	2		10 MM (0.394")
59	4320163	SCREW	2		(SUB FOR AT200584)
60	4372219	SCREW WITH WASHER	2		(SUB FOR AT214305)
71	4369627	STRIKER	1		(SUB FOR AT214129)
80	4453672	ISOLATOR	1		
93	4453665	SHEET	1		(SUB FOR TH4453665)
95	4453666	PLUG	14		(SUB FOR TH4453666)

CAB DOOR AND WINDOW PANES

T146539 -UN-12OCT01

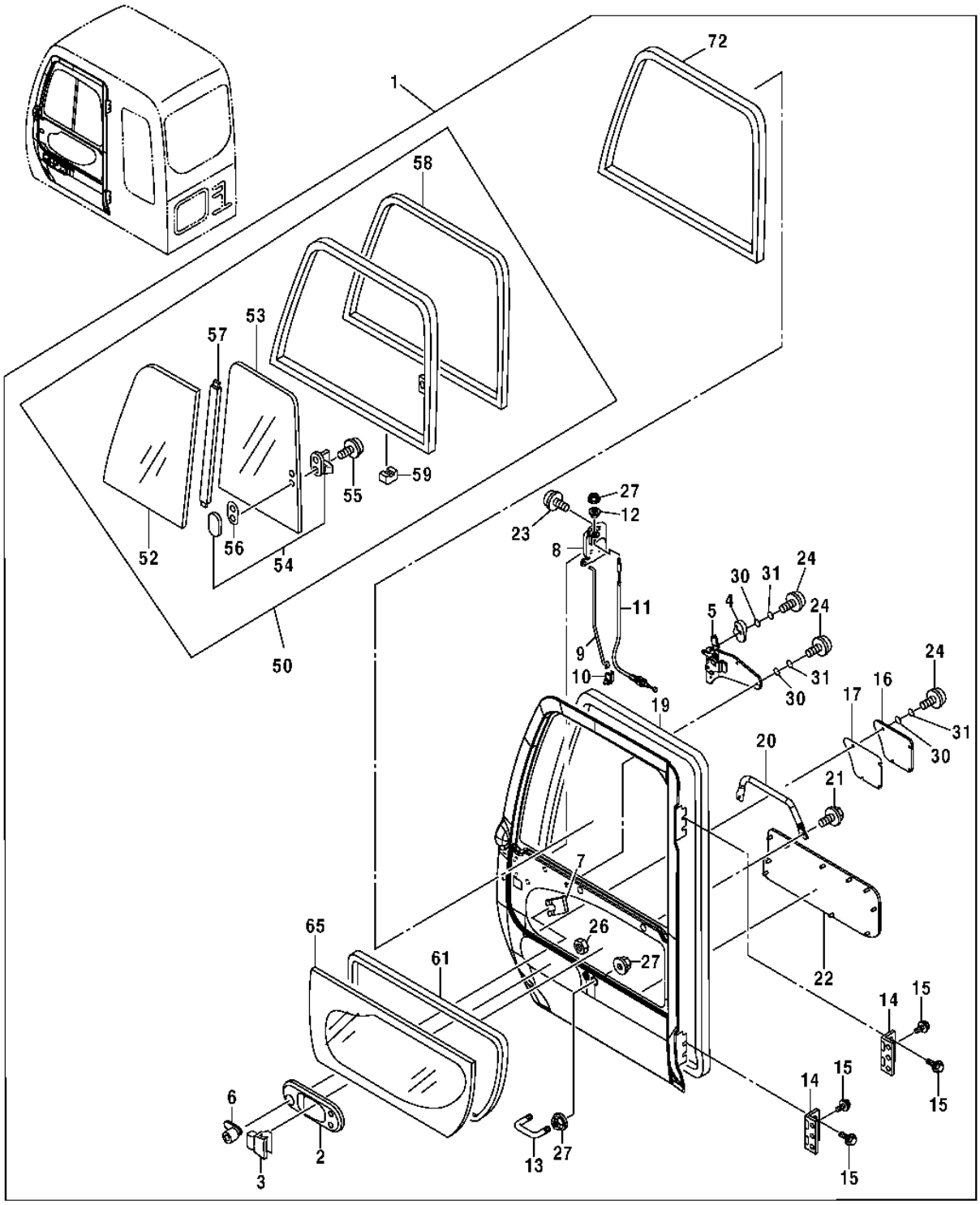

T146539

CAB DOOR AND WINDOW PANES

KEY	PART NO.	PART NAME	QTY	SERIAL NO.	REMARKS
0	4602549	CAB	1		(SUB FOR 4474296) (NOT ILLUSTRATED) (CONTAINS ALL ITEMS ON THIS PAGE - ADDITIONAL COMPONENTS LISTED ON PREVIOUS AND FOLLOWING PAGES)
1	4474301	DOOR	1		
2	4455979	COVER	1		(SUB FOR TH4455979)
3	4369645	HANDLE	1		(SUB FOR AT214145)
4	4455975	HANDLE	1		(SUB FOR TH4455975)
5	4620431	HANDLE	1		(SUB FOR 4474302, 4456173)
6	4362135	LOCK	1		(SUB FOR AT176789)
	AT194969	KEY	1		(H800) (NOT ILLUSTRATED)
7	4372091	CLIP	1		(SUB FOR AT214290)
8	4455982	LOCK	1		(SUB FOR TH4455982)
9	4455983	ROD	1		(SUB FOR TH4455983)
10	4444664	HOLDER	1		(SUB FOR TH4444664)
11	4456171	WIRE	1		(SUB FOR TH4456171)
12	4455981	BUSHING	1		(SUB FOR TH4455981)
13	4369661	U-BOLT	1		(SUB FOR AT214160)
14	4474303	HINGE	2		
15	4356695	BOLT	6		(SUB FOR AT214313, 4372261)
16	4474304	COVER	1		
17	4455977	ISOLATOR	1		(SUB FOR TH4455977)
19	4455978	WEATHERSTRIP	1		(SUB FOR TH4455978)
20	4453670	HANDRAIL	1		(SUB FOR TH4453670)
21	4372212	SCREW WITH WASHER	2		(SUB FOR AT214299)
22	4453671	SHEET	1		(SUB FOR TH4453671)
23	4382885	BOLT	3		(SUB FOR AT213624, M470625)
	4372560	WASHER	3		(SUB FOR AT214314)
24	21M7285	SCREW	8		M6 X 12, (SUB FOR 21M7246)
26	4456172	NUT	1		(SUB FOR TH4456172)
27	4414857	NUT	4		(SUB FOR AT157068)
30	12M7006	LOCK WASHER	8		6 MM (0.236")
31	24M7293	WASHER	8		6.500 X 13 X 1.600 MM (0.256" X 0.512" X 0.063")
50	4453676	WINDOW	1		(BRONZE) (SUB FOR TH4453676)
	4602582	WINDOW	1		(GREEN)
52	4448308	WINDOWPANE	1		(BRONZE) (SUB FOR TH4448308)
	4602564	WINDOWPANE	1		(GREEN)
53	4448309	WINDOWPANE	1		(BRONZE) (SUB FOR TH4448309)
	4602565	WINDOWPANE	1		(GREEN)
54	4369653	LOCK	1		(SUB FOR AT214152)
55	J680410	SCREW WITH WASHER	2		(SUB FOR AT213608)
56	4420531	SPACER	1		(SUB FOR AT214292, 4372093)
57	4453675	ISOLATOR	1		(SUB FOR TH4453675)
58	4453674	WINDOW	1		(SUB FOR TH4453674)
59	4147896	SPACER	3		(SUB FOR TH108646)
61	4400087	SEAL	1		(SUB FOR AT218141)
65	4448310	WINDOWPANE	1		(BRONZE) (SUB FOR TH4468943, 4468943)
	4602566	WINDOWPANE	1		(GREEN)
72	4448315	ISOLATOR	1		(SUB FOR TH4448315)

CAB WINDSHIELD

T202795 -UN-10SEP04

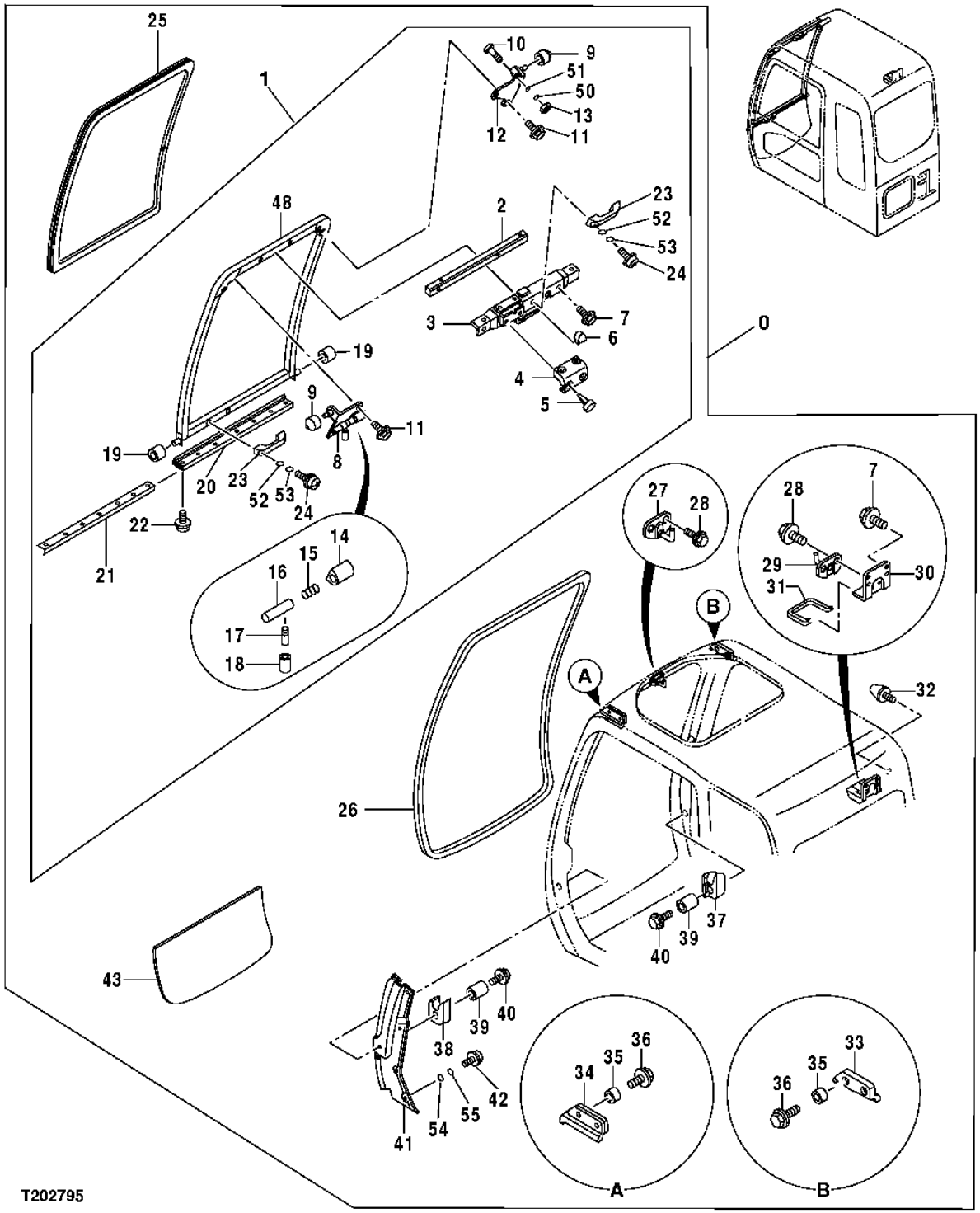

2B15

CAB WINDSHIELD

KEY	PART NO.	PART NAME	QTY	SERIAL NO.	REMARKS
0	4602549	CAB	1		(SUB FOR 4474296) (CONTAINS ALL ITEMS ON THIS PAGE - ADDITIONAL COMPONENTS LISTED ON PREVIOUS AND FOLLOWING PAGES)
1	4637257	WINDOW	1		(SUB FOR 4624730, 4453689, TH4453689)
2	4456218	WELD NUT	1		(SUB FOR TH4456218)
3	4456219	LOCK	1		(SUB FOR TH4456219)
4	4456220	COVER	1		(SUB FOR TH4456220)
5	4456221	CLIP	4		(SUB FOR TH4456221)
6	4456222	COVER	1		(SUB FOR TH4456222)
7	4372225	SCREW WITH WASHER	4		(SUB FOR AT214311)
8	.....	BRACKET	1		(4456223 NO LONGER AVAILABLE) (FURNISH 4633401 ALONG WITH 4633400) (SUB FOR TH4456223)
	4633401	BRACKET	1		
9	4456224	ROLLER	2		(SUB FOR TH4456224)
10	4456225	SCREW	1		(SUB FOR TH4456225)
11	4372219	SCREW WITH WASHER	4		(SUB FOR AT214305)
12	.....	BRACKET	1		(4456226 NO LONGER AVAILABLE) (FURNISH 4633400 ALONG WITH 4633401) (SUB FOR TH4456226)
	4633400	BRACKET	1		
13	19M7361	CAP SCREW	1		M12 X 50
14	4456227	COVER	1		(SUB FOR TH4456227)
15	494918	SPRING	1		(SUB FOR TH106783)
16	4403327	UNIVERSAL DRIVESHAFT	1		(SUB FOR AT214104, 4369599)
17	4295480	LEVER	1		(SUB FOR AT156993)
18	4295876	COVER	1		(SUB FOR AT156994)
19	4204558	ROLLER	2		(SUB FOR TH108638)
20	4456228	ISOLATOR	1		(SUB FOR TH4456228)
21	4456229	PLATE	1		(SUB FOR TH4456229)
22	4372214	SCREW	4		(SUB FOR AT214301)
23	4204579	HANDLE	2		(SUB FOR TH108661)
24	19M8425	CAP SCREW	4		M6 X 16
25	4448306	WINDOWPANE	1		(BRONZE) (SUB FOR 4474531)
	4602562	WINDOWPANE	1		(GREEN)
26	4456230	ISOLATOR	1		(SUB FOR TH4456230)
27	4456231	STRIKER	1		(SUB FOR TH4456231)
28	4372210	SCREW WITH WASHER	4		(SUB FOR AT214297)
29	4456232	STRIKER	1		(SUB FOR TH4456232)
30	4456233	BRACKET	1		(SUB FOR TH4456233)
31	4456234	ISOLATOR	1		(SUB FOR TH4456234)
32	4204586	STOP	1		(SUB FOR TH108668)
33	4456235	ISOLATOR	1		(SUB FOR TH4456235)
34	4456236	ISOLATOR	1		(SUB FOR TH4456236)
35	4456237	BUSHING	4		(SUB FOR TH4456237)
36	4456238	BOLT	4		(SUB FOR TH4456238)
37	4456239	STOP	1		(SUB FOR TH4456239)
38	4456240	STOP	1		(SUB FOR TH4456240)
39	4456241	BUSHING	2		(SUB FOR TH4456241)
40	4456242	BOLT	2		(SUB FOR TH4456242)
41	4474532	COVER	1		
42	21M7246	SCREW	6		M6 X 16
43	4448307	WINDOWPANE	1		(BRONZE) (SUB FOR TH4448307)
	4602563	WINDOWPANE	1		(GREEN)
48	4456217	FRAME	1		
50	12M7068	LOCK WASHER	1		14 MM (0.551")
51	24M7047	WASHER	1		13 X 24 X 2.500 MM (0.512" X 0.945" X 0.098")
52	12M7006	LOCK WASHER	4		6 MM (0.236")
53	24M7293	WASHER	4		6.500 X 13 X 1.600 MM (0.256" X 0.512" X 0.063")
54	12M7006	LOCK WASHER	6		6 MM (0.236")
55	24M7293	WASHER	6		6.500 X 13 X 1.600 MM (0.256" X 0.512" X 0.063")

CAB COMPONENTS

T158509 -UN-20AUG02

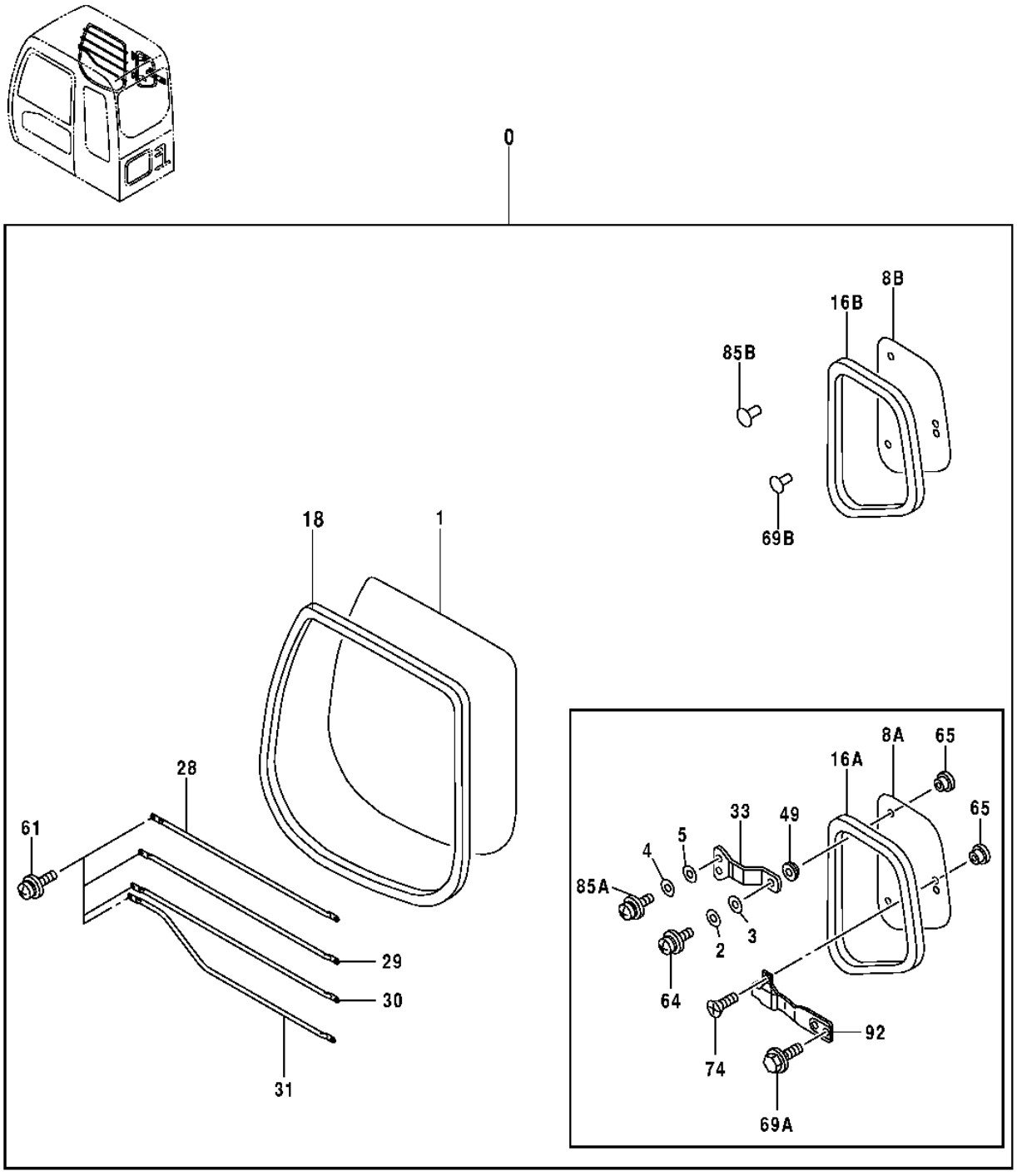

T158509

2B17

CAB COMPONENTS (RIGHT WINDOW)

KEY	PART NO.	PART NAME	QTY	SERIAL NO.	REMARKS
0	4602549	CAB	1		(SUB FOR 4474296) (CONTAINS ALL ITEMS ON THIS PAGE - ADDITIONAL COMPONENTS LISTED ON PREVIOUS AND FOLLOWING PAGES)
1	4448312	WINDOWPANE	1	-XXXXXX	(BRONZE TINT)
	4602568	WINDOWPANE	1	XXXXXX-	(GREEN TINT)
2	12M7064	LOCK WASHER	2	-XXXXXX	5 MM
3	24M7348	WASHER	2	-XXXXXX	5.500 X 10 X 1 MM
4	12M7006	LOCK WASHER	4	-XXXXXX	6 MM
5	24M7293	WASHER	4	-XXXXXX	6.500 X 13 X 1.600 MM
8A	4448313	WINDOWPANE	1	-XXXXXX	(BRONZE TINT)
8B	4602570	WINDOWPANE	1	XXXXXX-	(GREEN TINT)
16A	4463390	ISOLATOR	1	-XXXXXX	(SUB FOR 4453680)
16B	4602576	ISOLATOR	1	XXXXXX-	
18	4448318	ISOLATOR	1		(SUB FOR TH4448318)
28	4463391	GUARD	1		(SUB FOR 4453681)
29	4463392	GUARD	1		(SUB FOR 4453682 AND TH4453682)
30	4463393	GUARD	1		(SUB FOR TH4453683 AND 4453683)
31	4463394	GUARD	1		(SUB FOR TH4453684 AND 4453684)
33	4369670	BRACKET	2	-XXXXXX	(SUB FOR AT214169)
49	4369671	BUSHING	2	-XXXXXX	(SUB FOR AT214170)
61	4372212	SCREW WITH WASHER	8		(SUB FOR AT214299)
64	21M7271	SCREW	2	-XXXXXX	M5 X 16, (SUB FOR 21M6070)
65	4369674	BUSHING	4	-XXXXXX	(SUB FOR AT214172)
69A	4372223	SCREW WITH WASHER	2	-XXXXXX	(SUB FOR AT214309)
69B	4377817	CLIP	2	XXXXXX-	
74	4372213	SCREW	2	-XXXXXX	(SUB FOR AT214300)
85A	21M7246	SCREW	4	-XXXXXX	
85B	4372088	CLIP	4	XXXXXX-	
92	4369672	LOCK	1	-XXXXXX	(SUB FOR AT214171)

CAB COMPONENTS

T188477 -UN-13MAR03

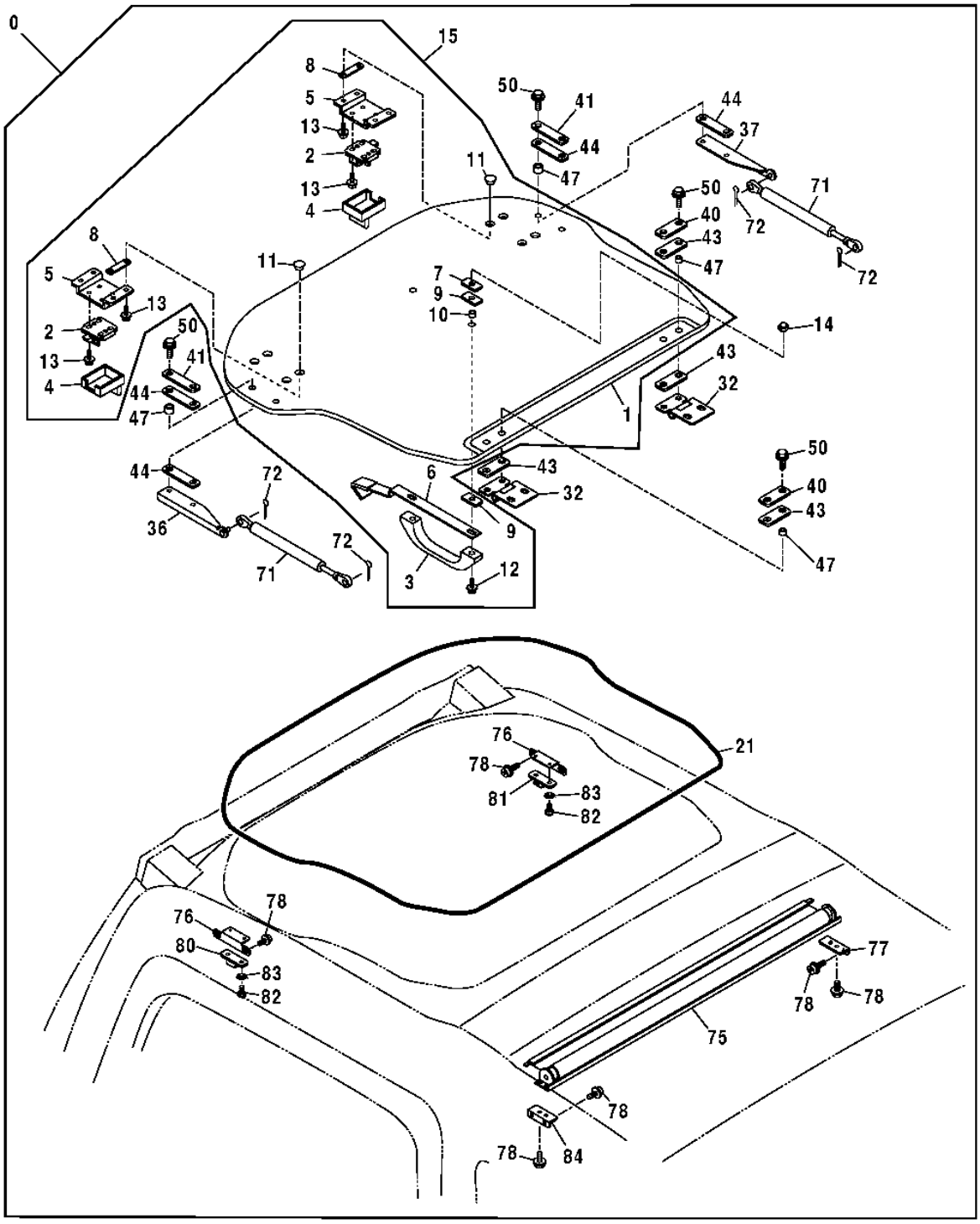

T188477

2B19

CAB COMPONENTS

KEY	PART NO.	PART NAME	QTY	SERIAL NO.	REMARKS
0	4602549	CAB	1		(SUB FOR 4474296) (CONTAINS ALL ITEMS ON THIS PAGE - ADDITIONAL COMPONENTS LISTED ON PREVIOUS AND FOLLOWING PAGES)
1	4460405	WINDOW	1		
2	4369615	LOCK	2		(SUB FOR (2) AT214118)
3	4204579	HANDLE	1		(SUB FOR 4411821)
4	4369616	COVER	2		(SUB FOR (2) AT214119)
5	4474479	BRACKET	2		
6	4474498	BRACKET	1		
7	4386452	PLATE	2		
8	4474480	PACKING	4		
9	4386450	PACKING	4		
10	4474494	BUSHING	2		
11	4369674	BUSHING	8		(SUB FOR (8) AT214172)
12	J680630	SCREW	2		
13	J680514	SCREW WITH WASHER	16		(SUB FOR (16) AT213610)
14	4474493	NUT	2		
15	.....	ROOF	1		KIT(ROOF ASSEMBLY) (4456952 NOT AVAILABLE)
21	4474515	ISOLATOR	1		
32	4474478	HINGE	2		
36	4477219	BRACKET	1		
37	4477218	BRACKET	1		
40	4474477	PLATE	2		
41	4477217	PLATE	2		
43	4474476	PACKING	4		
44	4477216	PACKING	4		
47	4474482	BUSHING	8		
50	19M7162	CAP SCREW	8		(SUB FOR (8) AT214307)
	12M7065	LOCK WASHER	8		
	24M1136	WASHER	8		
71	4369619	CYLINDER	2		(SUB FOR (2) AT214122)
72	H132922	COTTER PIN	4		
75	4474499	ROLLER	1		
76	4474514	BRACKET	2		
77	4609477	BRACKET	1		(SUB FOR 4474513) (RIGHT BRACKET)
	4609479	SCREW	1		
	4609480	ISOLATOR	1		
78	4444634	SCREW	12		
80	4474518	STOP	1		
81	4474517	STOP	1		
82	21M7258	SCREW	4		
83	4459249	WASHER	4		
84	4609478	BRACKET	1		(SUB FOR 4474513) (LEFT BRACKET)
	4609479	SCREW	1		
	4609480	ISOLATOR	1		

CAB DOOR HANDLE AND CATCH

T142617 -UN-14JUN01

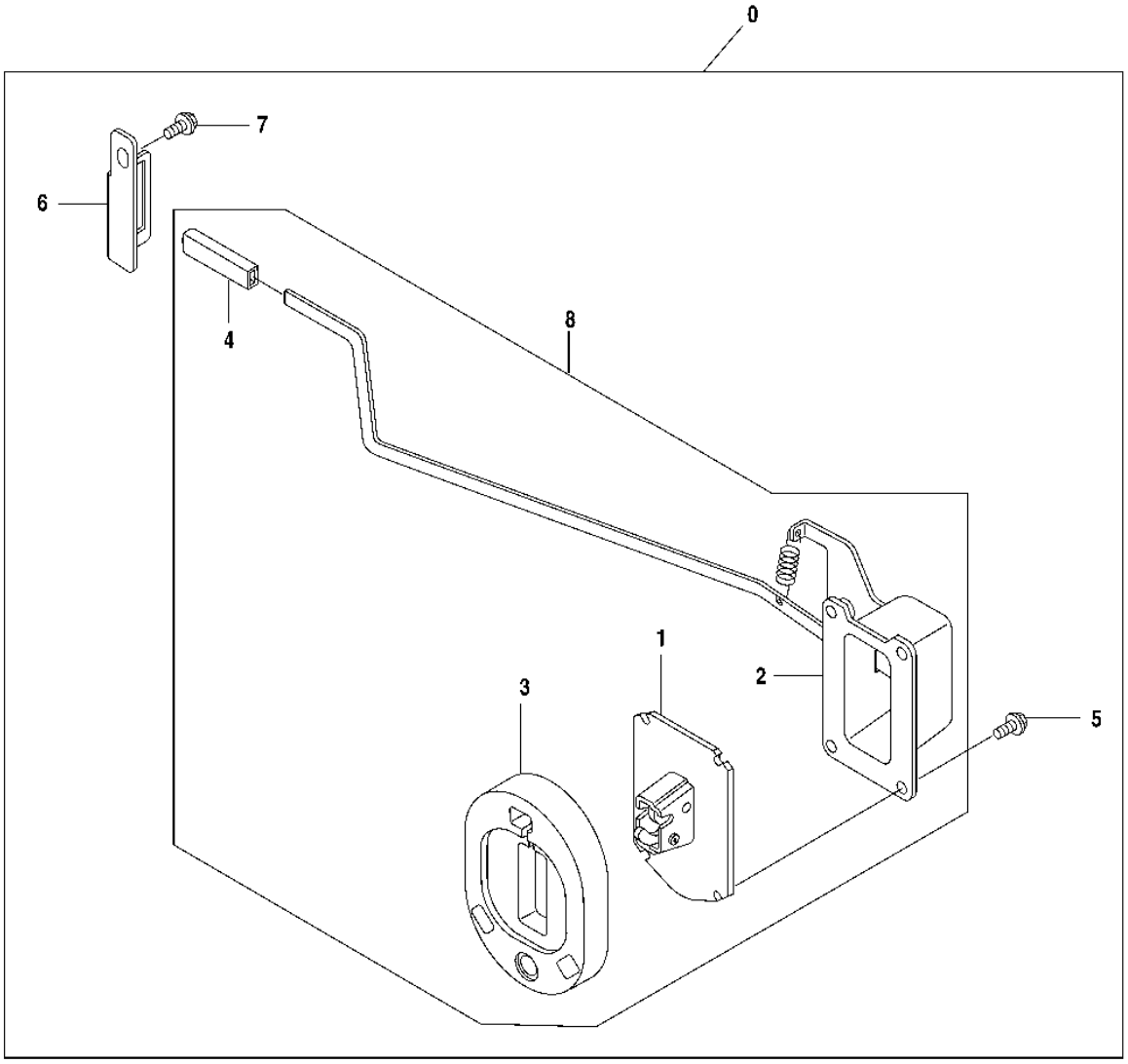

T142617

CAB DOOR HANDLE AND CATCH

KEY	PART NO.	PART NAME	QTY	SERIAL NO.	REMARKS
0	4602549	CAB	1		(CONTAINS ALL ITEMS ON THIS PAGE - ADDITIONAL COMPONENTS ON PREVIOUS PAGES) (SUB FOR 4474296)
1	4456245	CATCH	1		(ALSO ORDER 4456246, 4456247, 4089012)
2	4456246	CASE	1		(SUB FOR TH4456246)
3	4456247	STOP	1		(SUB FOR TH4456247)
4	4089012	CAP	4		(SUB FOR TH101184)
5	19M7881	SCREW	4		M8 X 20
	12M7056	LOCK WASHER	4		8 MM, (SUB FOR 12M7065)
6	4456248	STOP	1		(SUB FOR TH4456248)
7	19M7402	CAP SCREW	1		M10 X 25
	12M7066	LOCK WASHER	1		10 MM
	24M7028	WASHER	1		10.500 X 20 X 2 MM
8	.....	CATCH	1		DOOR CATCH ASSEMBLY (4456244 NOT AVAILABLE)

CAB SECONDARY EXIT KIT

T150988 -UN-06FEB02

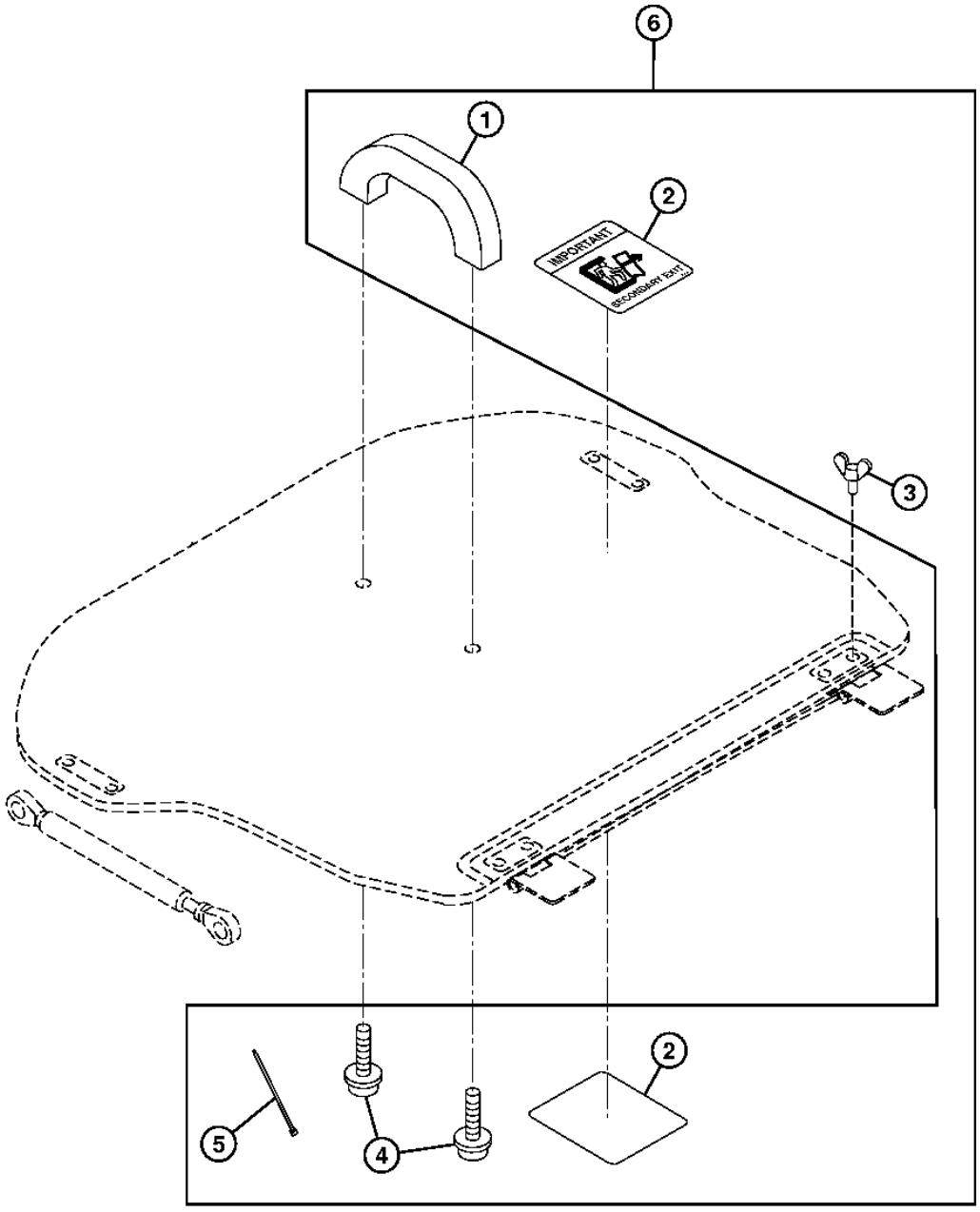

T150988

2B23

CAB SECONDARY EXIT KIT

KEY	PART NO.	PART NAME	QTY	SERIAL NO.	REMARKS
1	4204579	HANDLE	1		(SUB FOR TH108661)
2	T167256	LABEL	2		
3	21M7243	WING SCREW	4		M8 X 16
4	21M7085	SCREW	2		M6 X 20, (SUB FOR 21M7322)
5	R44302	TIE BAND	2		
6	**AT196567**	**KIT**	**1**		**(WHOLEGOODS) (SECONDARY EXIT KIT)**

CAB INSIDE RIGHT COVER

T143269 -UN-28JUN01

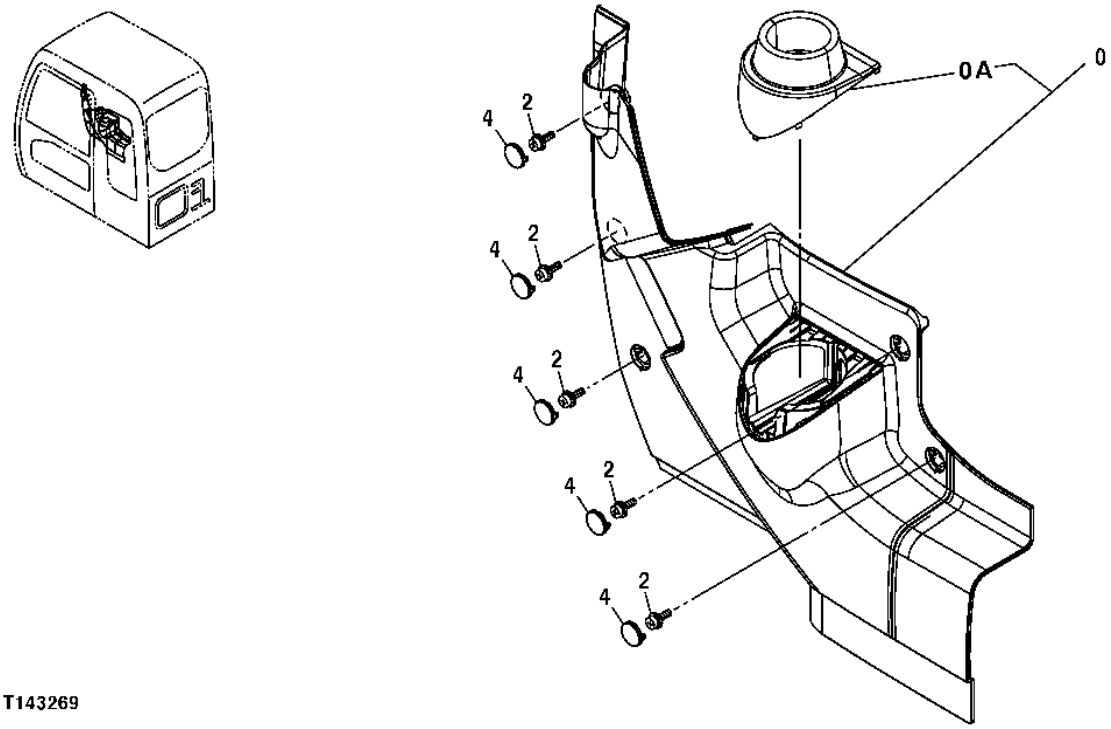

T143269

2B25

CAB INSIDE RIGHT COVER

KEY	PART NO.	PART NAME	QTY	SERIAL NO.	REMARKS
0	4445917	COVER	1		(SUB FOR 4426352)
0A	4445932	HOLDER	1		(SUB FOR 4445919)
2	19M8425	CAP SCREW	5		M6 X 16
	12M7006	LOCK WASHER	5		6 MM (0.236")
	24M7293	WASHER	5		6.500 X 13 X 1.600 MM (0.256" X 0.512" X 0.063")
4	4426354	CAP	5		(SUB FOR TH4426354)

CAB INSIDE RIGHT COVER
(FOR USE WITHOUT RADIO)

T142595 -UN-06JUL01

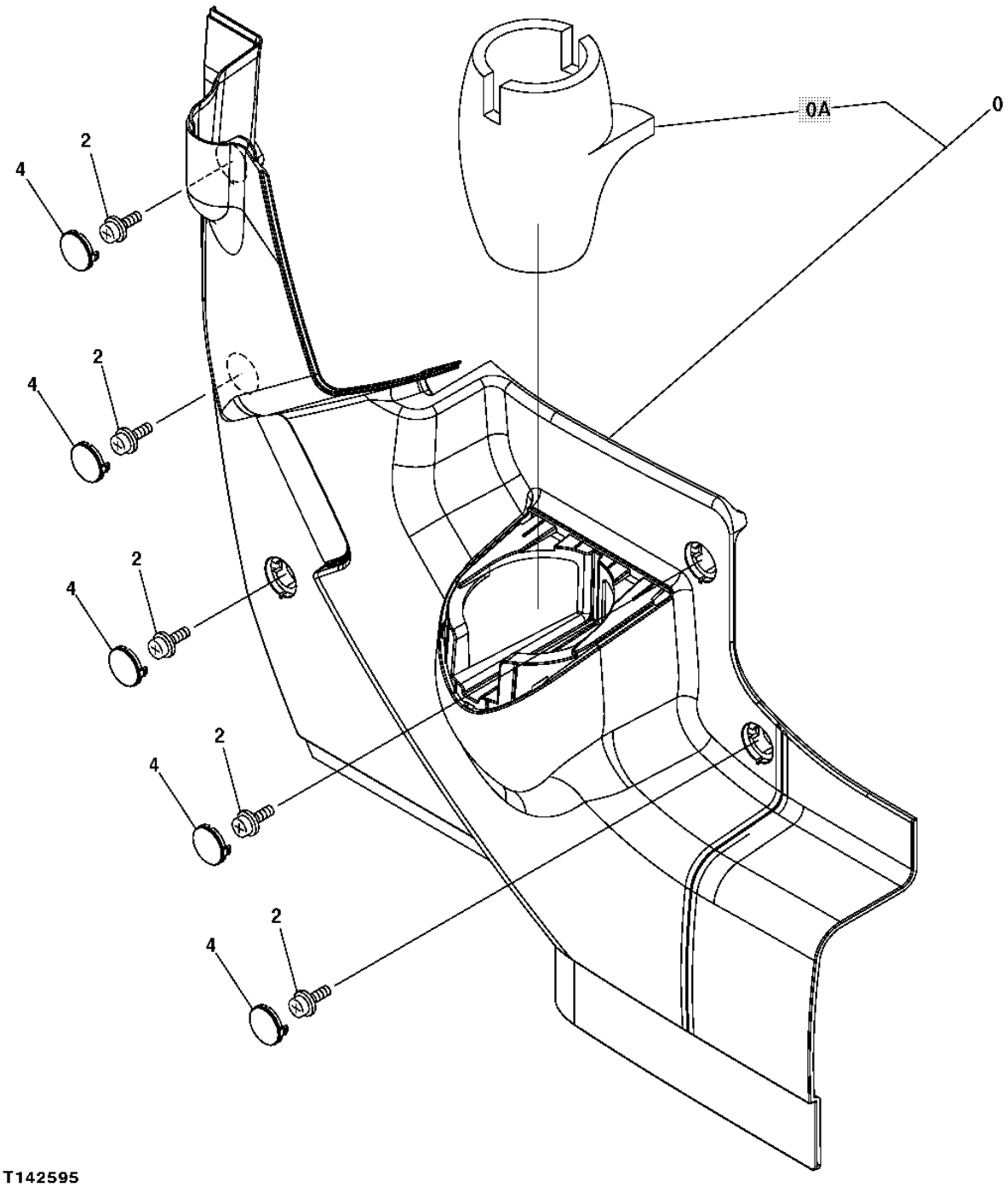

CAB INSIDE RIGHT COVER
(FOR USE WITHOUT RADIO)

KEY	PART NO.	PART NAME	QTY	SERIAL NO.	REMARKS
0	4445917	COVER	1		(SUB FOR TH4445917)
0A	4445932	HOLDER	1		(SUB FOR TH4445932)
2	19M8425	CAP SCREW	5		M6 X 16
	12M7006	LOCK WASHER	5		6 MM (0.236")
	24M7293	WASHER	5		6.500 X 13 X 1.600 MM (0.256" X 0.512" X 0.063")
4	4426354	CAP	5		(SUB FOR TH4426354)

CAB INSIDE LEFT COVER
(FOR USE WITHOUT RADIO)

T146240 -UN-11OCT01

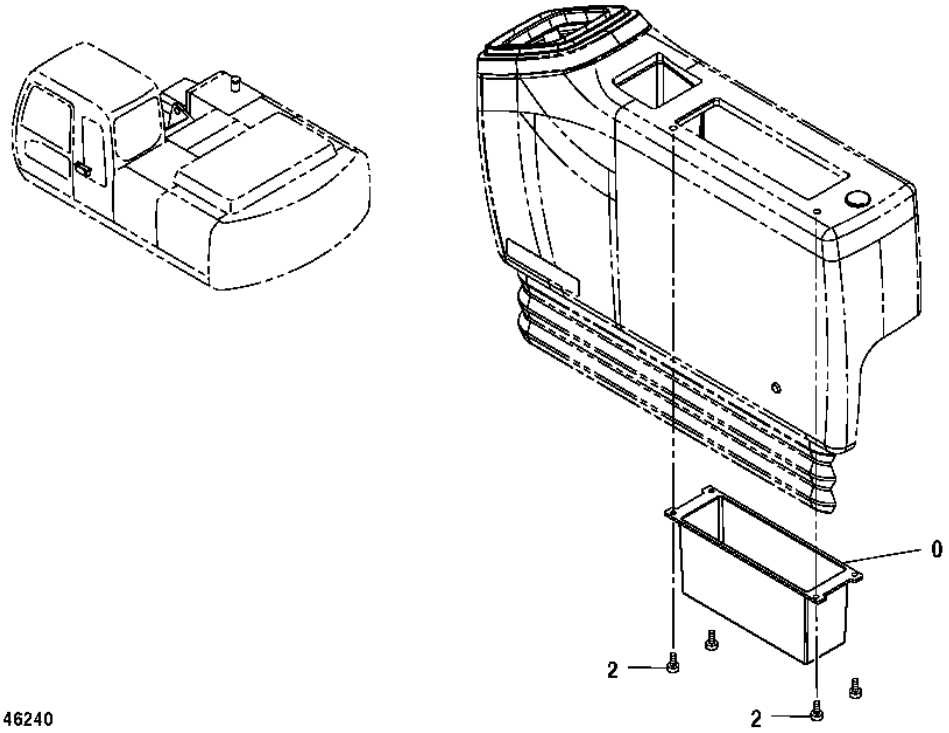

T146240

CAB INSIDE LEFT COVER
(FOR USE WITHOUT RADIO)

KEY	PART NO.	PART NAME	QTY	SERIAL NO.	REMARKS
0	3090025	HOLDER	1		(SUB FOR TH3090025)
2	4361800	SCREW	4		(SUB FOR AT214011)

WINDOW WASHER RESERVOIR AND PUMP

T143286 -UN-28JUN01

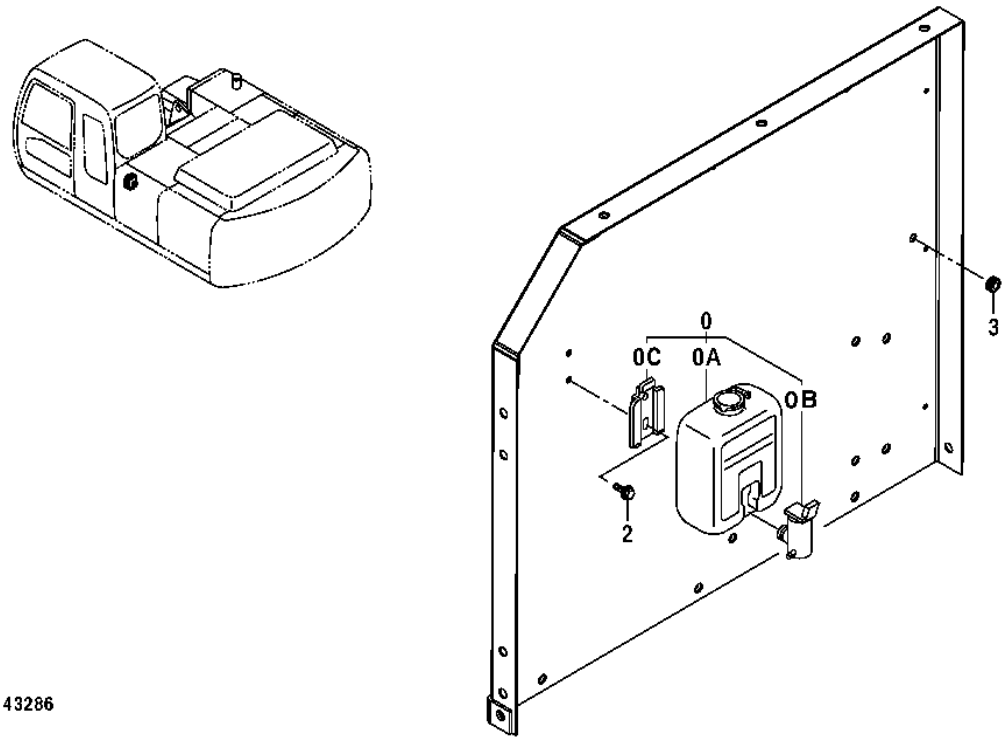

T143286

2C6

WINDOW WASHER RESERVOIR AND PUMP

KEY	PART NO.	PART NAME	QTY	SERIAL NO.	REMARKS
0	4333185	WINDSHIELD WASHER	1		(SUB FOR AT177804)
0A	4369472	RESERVOIR	1		(SUB FOR AT177805)
0B	AT106365	PUMP	1		
0C	4338974	BRACKET	1		(SUB FOR AT177806)
2	19M7923	CAP SCREW	2		M6 X 12
	24M7054	WASHER	2		6.400 X 12 X 1.600 MM (0.252" X 0.472" X 0.063")
	12M7006	LOCK WASHER	2		6 MM (0.236")
3	94-2817	GROMMET	1		(SUB FOR TH102171)

CAB FLOOR PARTS

T142627 -UN-14JUN01

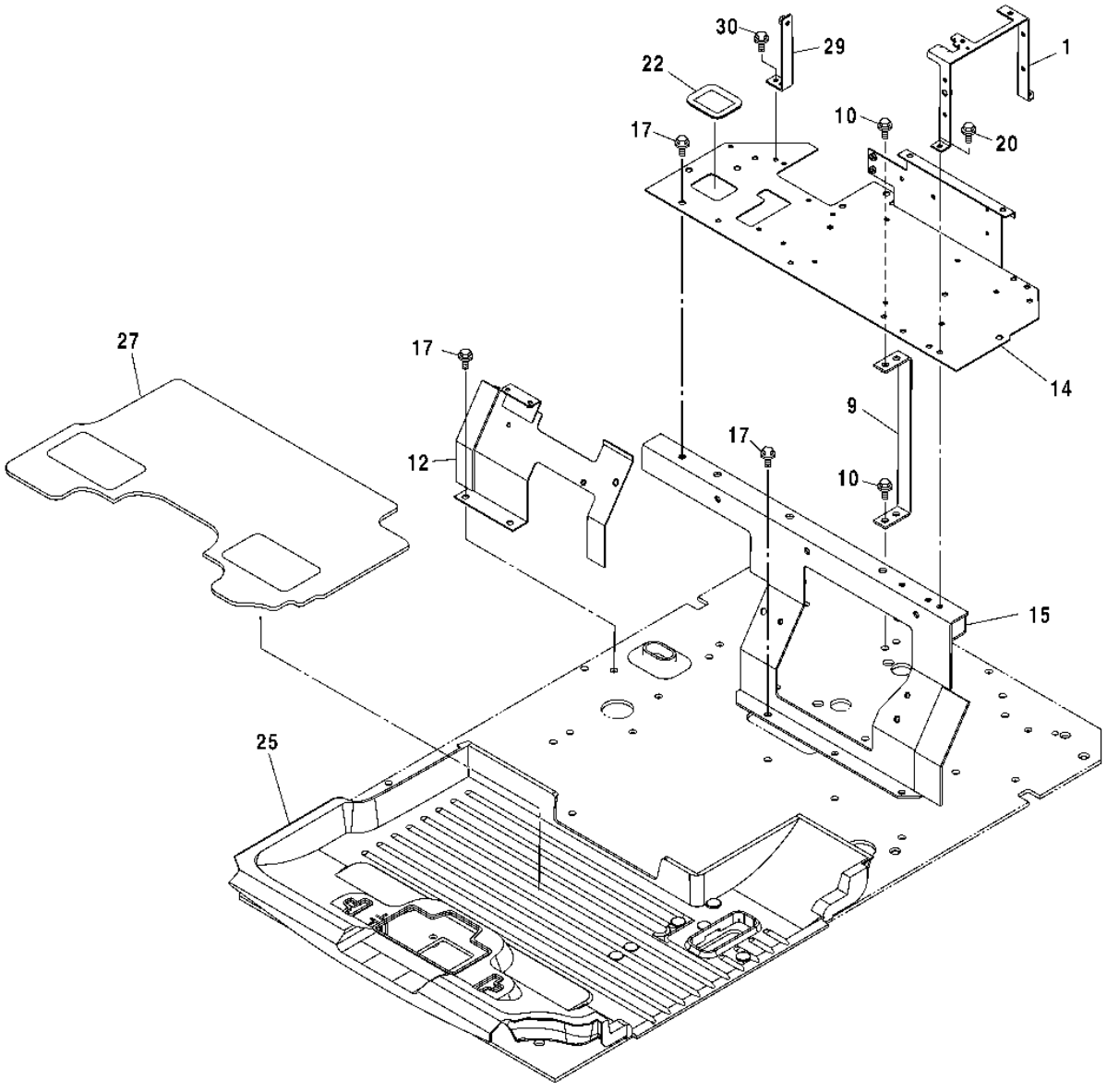

CAB FLOOR PARTS

KEY	PART NO.	PART NAME	QTY	SERIAL NO.	REMARKS
1	7039389	BRACKET	1		(SUB FOR TH7039389)
9	8076619	SUPPORT	1		(SUB FOR TH8076619)
10	19M7402	CAP SCREW	3		M10 X 25
	12M7066	LOCK WASHER	3		10 MM
12	6019838	BRACKET	1		(SUB FOR TH6019838)
14	6019252	BRACKET	1		(SUB FOR TH6019252)
15	5007342	BRACKET	1		(SUB FOR TH5007342)
17	19M7402	CAP SCREW	7		M10 X 25
	12M7066	LOCK WASHER	7		10 MM
	24M7028	WASHER	7		10.500 X 20 X 2 MM
20	19M7881	SCREW	2		M8 X 20
	12M7056	LOCK WASHER	2		8 MM, (SUB FOR 12M7065)
22	4445220	BUSHING	1		(SUB FOR TH4445220)
25	0003929	MAT	1		(SUB FOR TH0003929)
27	4448601	MAT	1		(SUB FOR TH4448601)
29	9757192	BRACKET	1		(SUB FOR TH9757192)
30	19M8425	CAP SCREW	2		M6 X 16
	12M7006	LOCK WASHER	2		6 MM
	24M7293	WASHER	2		6.500 X 13 X 1.600 MM

CAB FLOOR PLATE

T146603 -UN-17OCT01

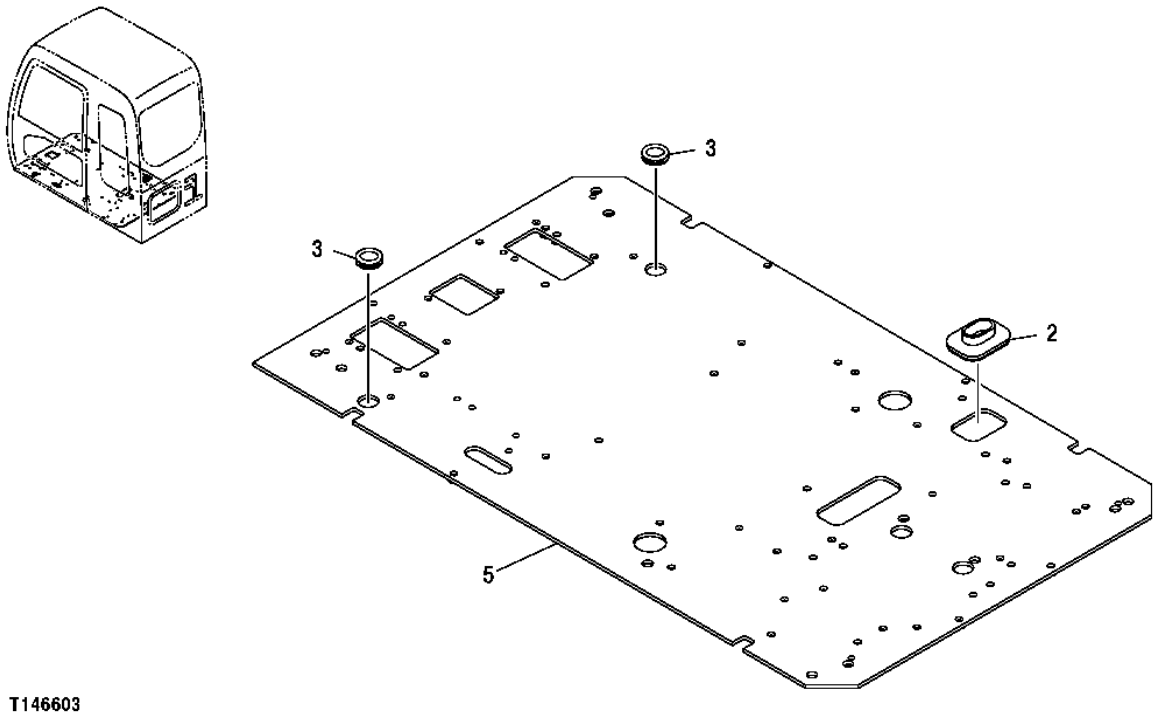

T146603

CAB FLOOR PLATE

KEY	PART NO.	PART NAME	QTY	SERIAL NO.	REMARKS
2	4351011	GROMMET	1		(SUB FOR AT213954)
3	4205084	GROMMET	2		(SUB FOR TH108616)
5	6017975	PLATE	1		(SUB FOR TH6017975)

CAB CONSOLE

T142593 -UN-14JUN01

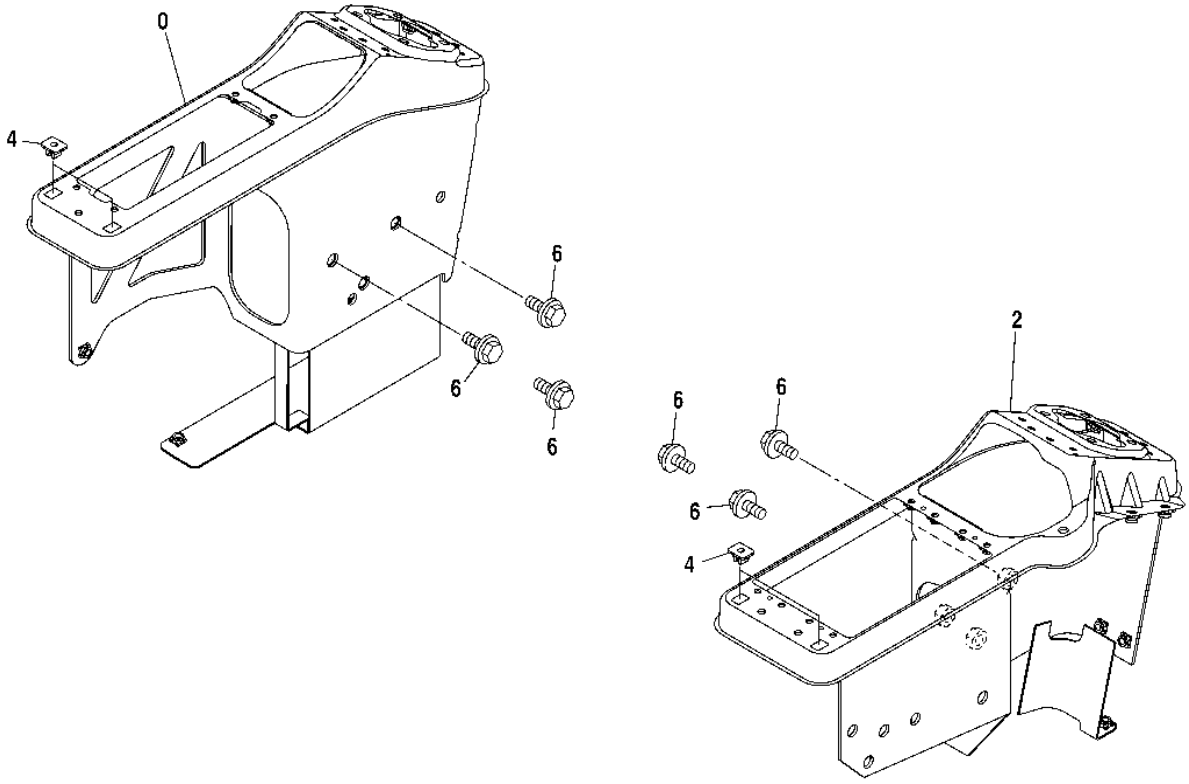

T142593

2C12

CAB CONSOLE

KEY	PART NO.	PART NAME	QTY	SERIAL NO.	REMARKS
0	7036594	CONSOLE	1		(SUB FOR TH7036594) LEFT
2	7036595	CONSOLE	1		(SUB FOR TH7036595) RIGHT
4	4351255	CLIP	4		(SUB FOR AT213958)
6	19M7402	CAP SCREW	6		M10 X 25
	24M7096	WASHER	6		10.500 X 18 X 1.600 MM
	12M7066	LOCK WASHER	6		10 MM

CAB CONSOLE COVERS

T142594 -UN-14JUN01

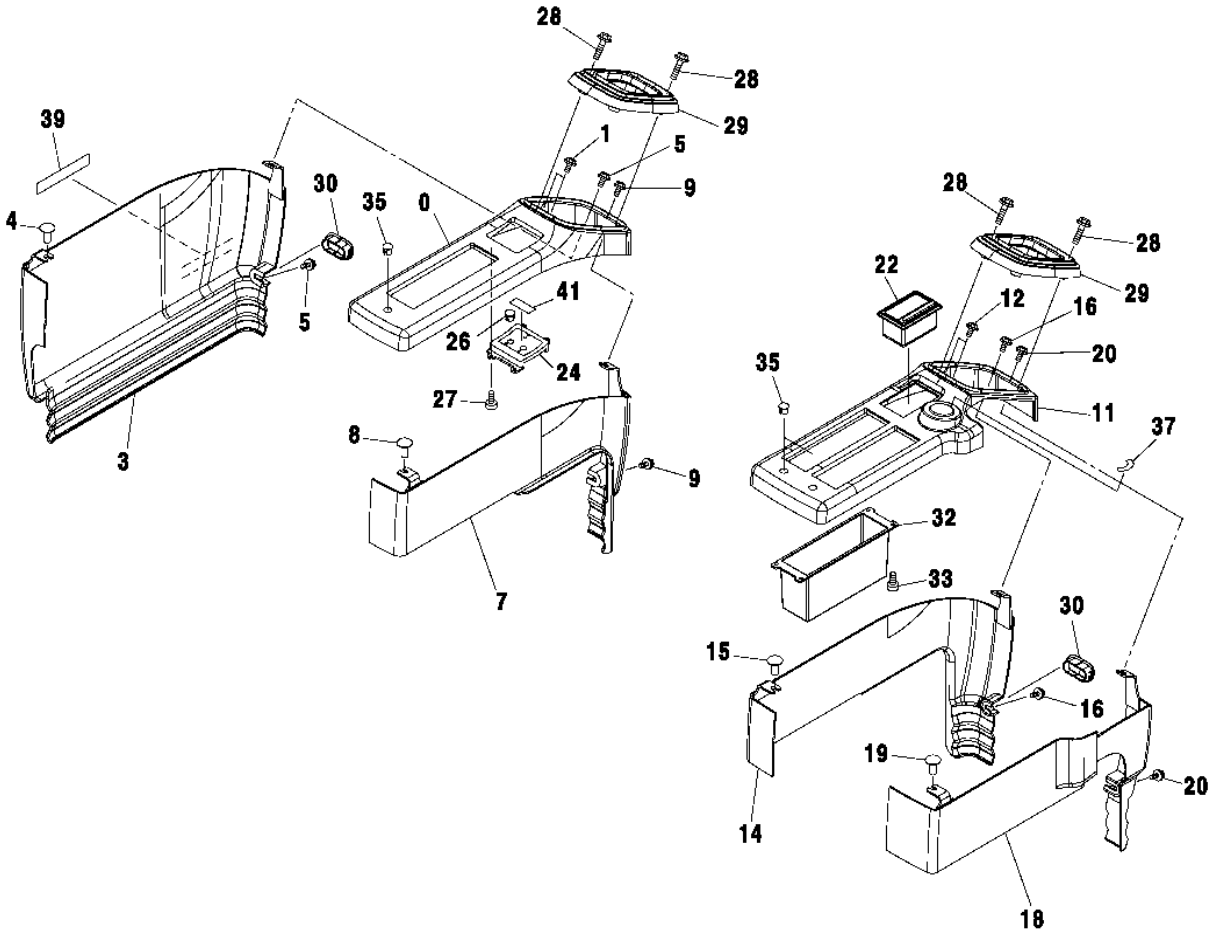

T142594

2C14

CONSOLE COVER

KEY	PART NO.	PART NAME	QTY	SERIAL NO.	REMARKS
0	4420875	COVER	1		(SUB FOR TH4420875)
1	21M7246	SCREW	3		M6 X 16
	12M7006	LOCK WASHER	3		6 MM
	24M7105	WASHER	3		6 X 12 X 1.600 MM
3	4420876	COVER	1		(SUB FOR TH4420876)
4	4361802	SCREW	1		(SUB FOR AT214012)
5	21M7246	SCREW	5		M6 X 16
	12M7006	LOCK WASHER	5		6 MM
	24M7105	WASHER	5		6 X 12 X 1.600 MM
7	4420877	COVER	1		(SUB FOR TH4420877)
8	4361802	SCREW	1		(SUB FOR AT214012)
9	21M7246	SCREW	2		M6 X 16
	12M7006	LOCK WASHER	2		6 MM
	24M7105	WASHER	2		6 X 12 X 1.600 MM
11	4420878	COVER	1		(SUB FOR TH4420878)
12	21M7246	SCREW	4		M6 X 16
	12M7006	LOCK WASHER	4		6 MM
	24M7105	WASHER	4		6 X 12 X 1.600 MM
14	4420879	COVER	1		(SUB FOR TH4420879)
15	4361802	SCREW	1		(SUB FOR AT214012)
16	21M7246	SCREW	2		M6 X 16
	12M7006	LOCK WASHER	2		6 MM
	24M7105	WASHER	2		6 X 12 X 1.600 MM
18	4420880	COVER	1		(SUB FOR TH4420880) (TH4451095 NOT AVAILABLE FOR SERVICE)
19	4361802	SCREW	1		(SUB FOR AT214012)
20	21M7246	SCREW	2		M6 X 16
	12M7006	LOCK WASHER	2		6 MM
	24M7105	WASHER	2		6 X 12 X 1.600 MM
22	4415024	ASHTRAY	1		(SUB FOR TH4415024)
24	3091842	PANEL	1		(SUB FOR TH3091842)
26	4294437	CAP	1		(SUB FOR AT215503)
27	4452613	SCREW	1		(SUB FOR TH4452613)
28	19M7177	CAP SCREW	8		M6 X 35
	12M7006	LOCK WASHER	8		6 MM
	24M7293	WASHER	8		6.500 X 13 X 1.600 MM
29	2045509	COVER	2		(SUB FOR TH2045509)
30	4441117	CAP	2		(SUB FOR TH4441117)
32	3090025	HOLDER	1		(SUB FOR TH3090025)
33	4361800	SCREW	4		(SUB FOR AT214011)
35	4448990	CAP	3		(SUB FOR TH4448990)
37	4264805	LABEL	1		(SUB FOR AT155730) (IGNITION KEY SWITCH)
39	4299059	LABEL	1		(SUB FOR T138886) (LOCKOUT)
41	.....	LABEL	1		(TH4459435 NOT AVAILABLE)

WINDOW GUARDS

T150991 -UN-06FEB02

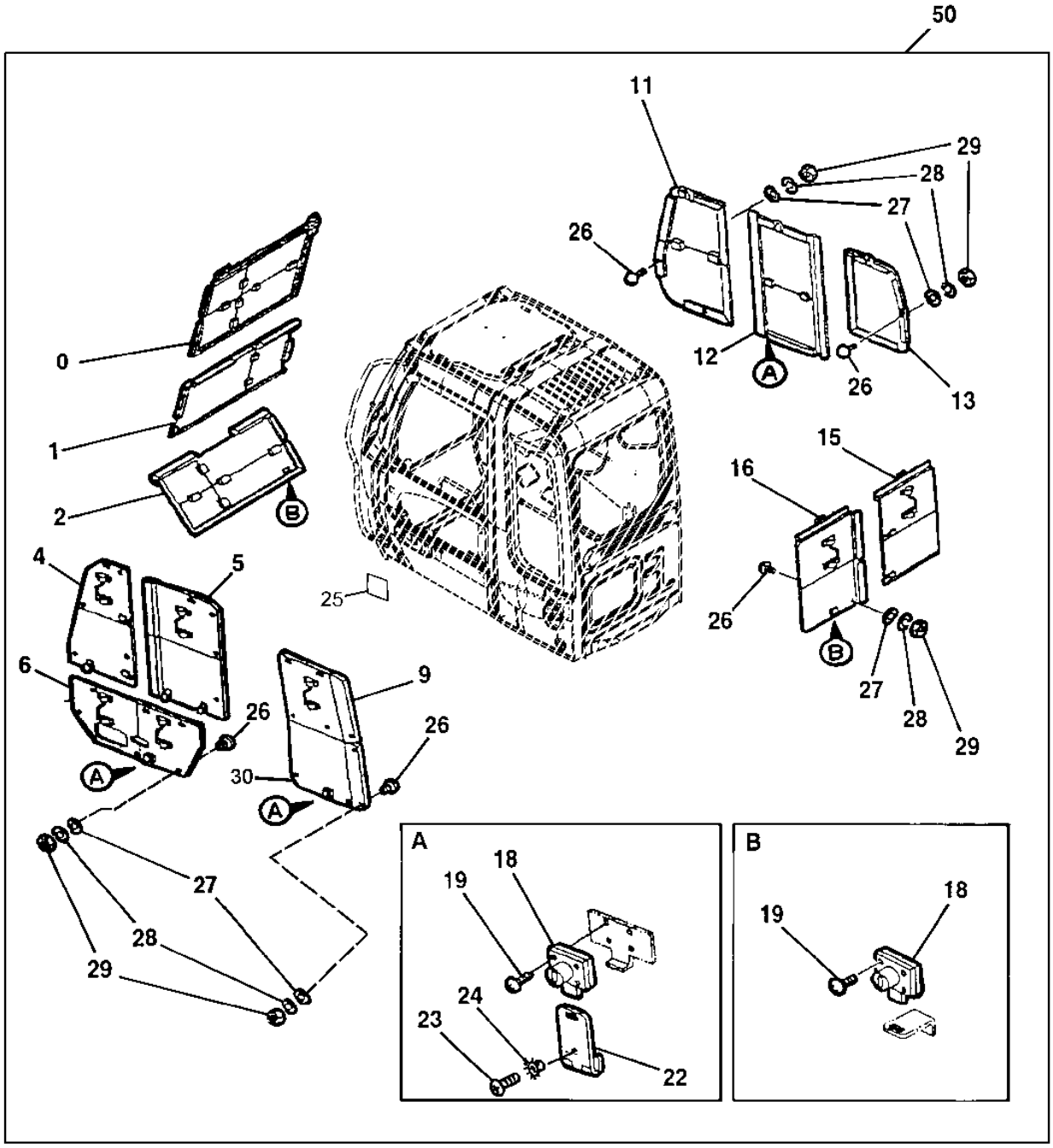

T150991

2C16

WINDOW GUARDS

KEY	PART NO.	PART NAME	QTY	SERIAL NO.	REMARKS
0	AP38748	COVER	1		
1	**AP38749**	**COVER**	**1**		
2	AP38750	COVER	1		
4	AP38751	COVER	1		
5	AP38752	COVER	1		
6	AP38753	COVER	1		
9	AP38754	COVER	1		
11	AP38756	COVER	1		
12	AP38757	COVER	1		
13	AP38758	COVER	1		
15	AP38760	COVER	1		
16	AP38759	COVER	1		
18	4361601	LOCK	5		(SUB FOR AT176636)
18A	AT194969	KEY	1		(SUB FOR AT147803) (H800) (NOT ILLUSTRATED)
19	21M7022	SCREW	20		M5 X 20
	12M7064	LOCK WASHER	20		5 MM (0.197")
22	TH108983	HINGE	3		
23	21M7249	SCREW	6		M5 X 10
24	T205218	WASHER	6		(SUB FOR TH111908, 4107762)
25	T188737	LABEL	1		
26	9738682	STOP	33		(SUB FOR AT155189)
27	24M7027	WASHER	33		5.300 X 10 X 1 MM
28	12M7064	LOCK WASHER	33		5 MM
29	14M7297	NUT	33		M5
30	AP38755	COVER	1		
50	**AP38763**	**KIT**	**1**		**WHOLEGOODS (VANDAL PROTECTION)**

SEAT AND SEAT SUSPENSION

T196825 -UN-15DEC03

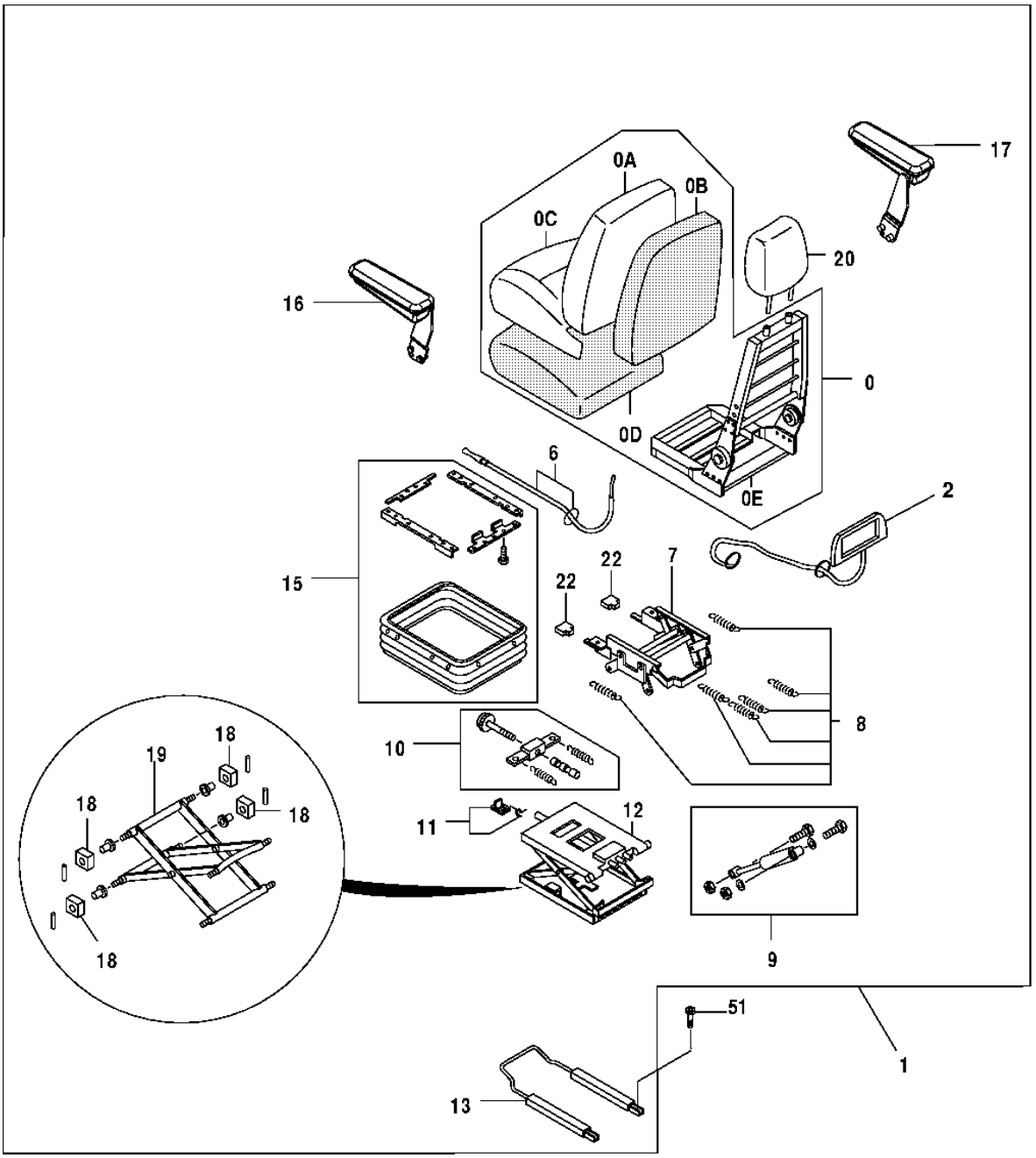

T196825

SEAT AND SEAT SUSPENSION

KEY	PART NO.	PART NAME	QTY	SERIAL NO.	REMARKS
0	AT195286	SEAT BACK	1		SEAT UPPER KIT
0A	AT309263	CUSHION COVER	1		
0B	AT309264	PAD	1		
0C	AT195278	CUSHION	1		(FABRIC)
0D	AT195279	PAD	1		(SEAT)
0E	.....	FRAME	1		
1	AT193964	SEAT	1		FABRIC
2	AT195284	KIT	1		(AIR LUMBAR KIT)
6	AT216522	CABLE	1		
7	4392801	STAND	1		(SUB FOR AT180971) RECLINER CABLE KIT
8	AT195287	SPRING	1		
9	4392803	TORSIONAL DAMPER	1		(KIT) (SUB FOR AT180973)
10	4392804	ADJUSTER	1		(SUB FOR AT180974) HEIGHT RISER SPRING
11	AT322189	LEVER	1		(SUB FOR AT180975 OR 4392805)
12	4392806	SEAT SUSPENSION	1		(SUB FOR AT180976)
13	4392807	ADJUSTER	1		(SUB FOR AT180977)
15	4392809	COVER	1		(SUB FOR AT180978) (SUSPENSION COVER KIT)
16	AT199748	ARMREST KIT	1		(SUB FOR AT195282) LEFT
17	AT199749	ARMREST KIT	1		(SUB FOR AT195283) RIGHT
18	4392812	BUSHING	1		KIT, (SUB FOR AT180979)
19	4392813	LINK	1		LEVER/CENTER PIVOT KIT, (SUB FOR AT180980)
20	AT195280	HEAD RESTRAINT	1		
21	AT216532	KIT	1	-020106	
	4610640	HANDLE	1	020107-	
22	AT216532	KIT	1	-020106	
	4610641	HANDLE	1	020107-	
51	19M7647	SCREW	4		M8 X 16

3.00 INCH SEAT BELT KIT

T144006 -UN-13JUL01

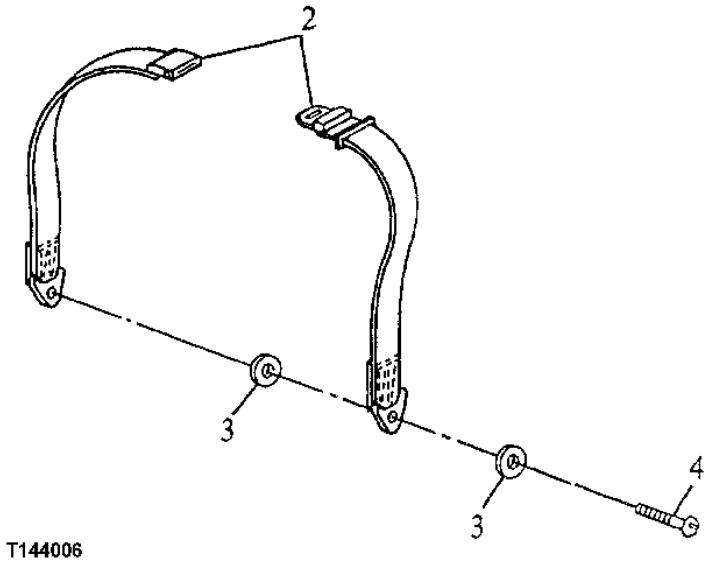

3.00 INCH SEAT BELT KIT

KEY	PART NO.	PART NAME	QTY	SERIAL NO.	REMARKS
2	**AT173678**	**SEAT BELT**	**1**		**WHOLEGOODS (INCLUDES HARDWARE)**
	T157779	FLANGE NUT	2		7/16" (NOT ILLUSTRATED)
3	T105740	WASHER	4		
4	R41778	BOLT	2		11.125 X 31.750 MM

SEAT BASE BRACKETS AND SLIDES

T142631 -UN-28JUN01

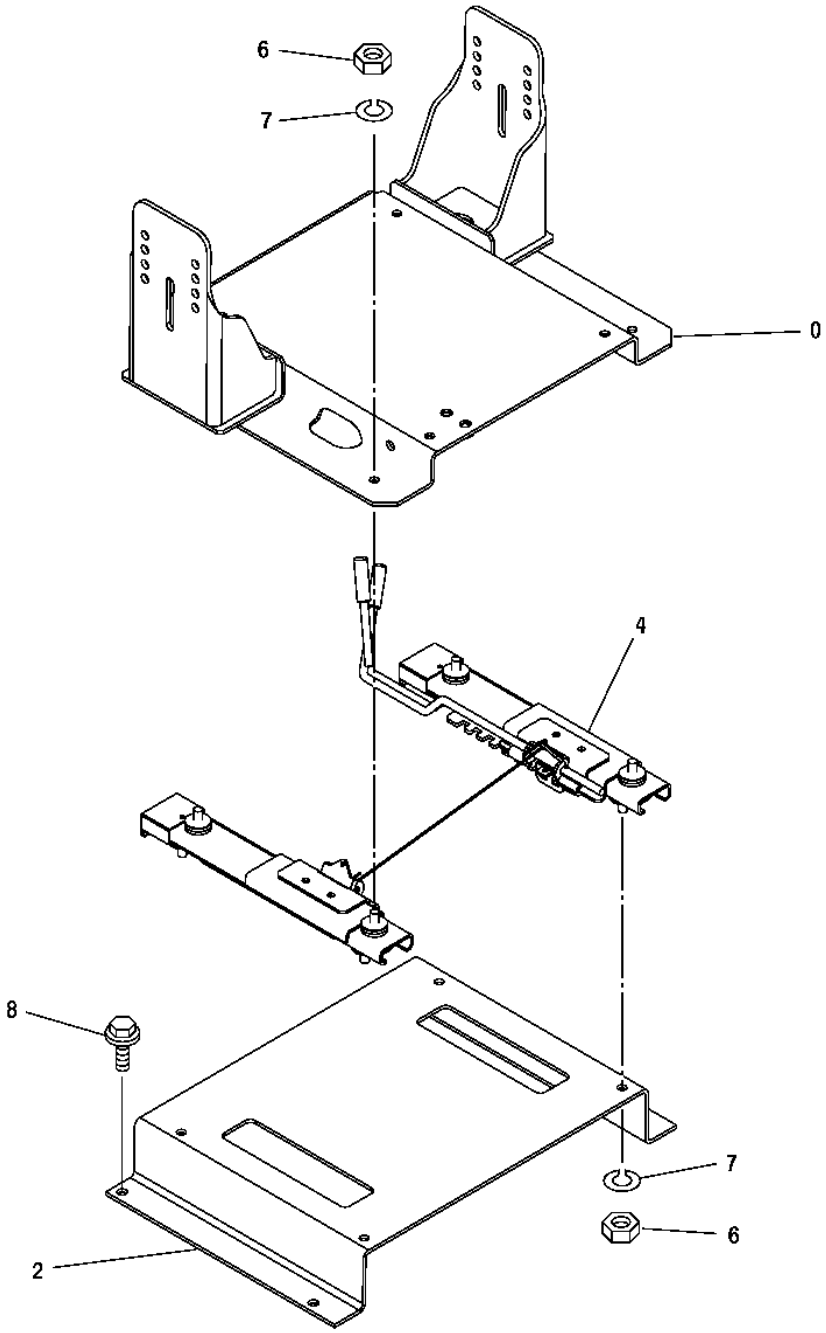

T142631

SEAT BASE BRACKETS AND SLIDES

KEY	PART NO.	PART NAME	QTY	SERIAL NO.	REMARKS
0	6020125	BRACKET	1		(SUB FOR TH6020171)
2	4405128	SEAT SLIDE TRACK KIT	1		
4	3089486	BRACKET	1		
6	J952010	NUT	8		(SUB FOR TH104196)
7	12M7066	LOCK WASHER	8		10 MM
8	19M7402	CAP SCREW	4		M10 X 25

SEAT BELT

T188984 -UN-26MAR03

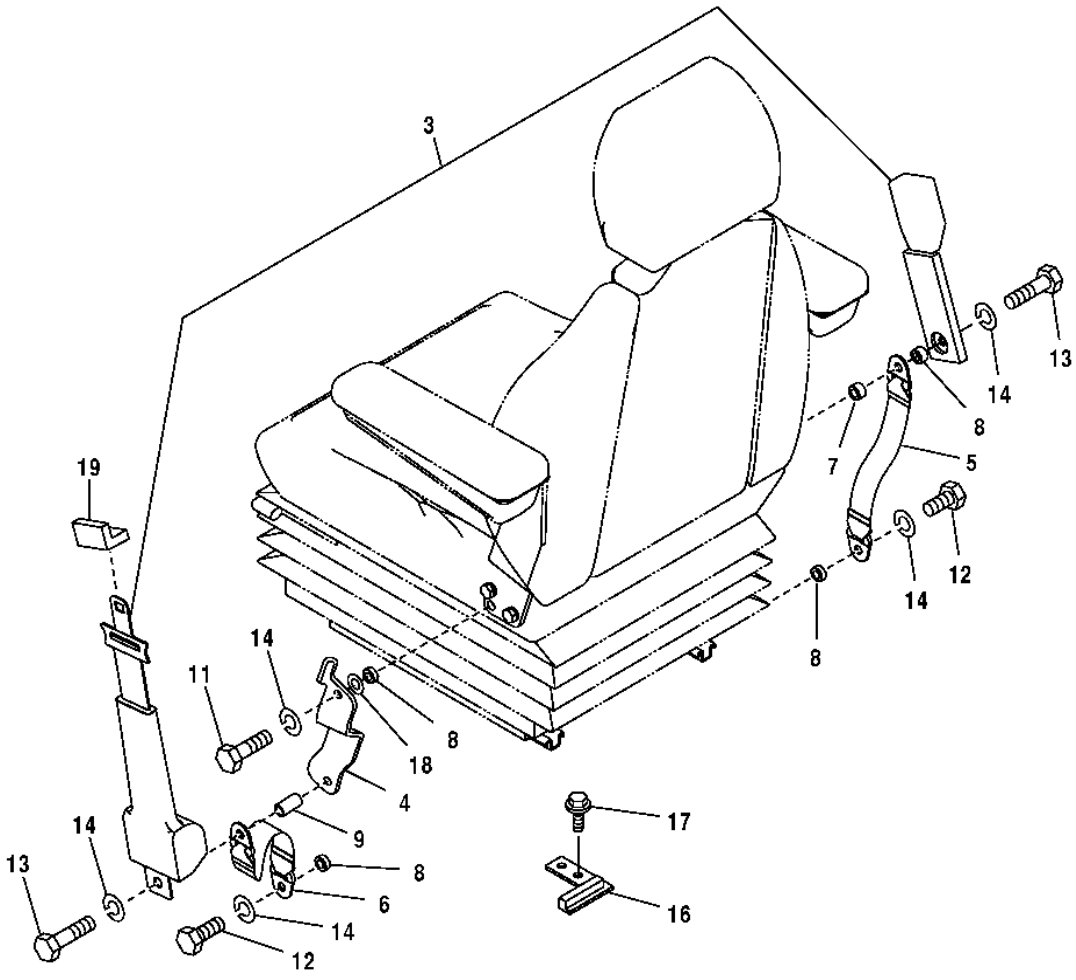

T188984

SEAT BELT

KEY	PART NO.	PART NAME	QTY	SERIAL NO.	REMARKS
3	4384239	SEAT BELT	1		
4	7042657	BRACKET	1		
5	4382410	SEAT BELT	1		
6	4453869	SEAT BELT	1		
7	4453874	SPACER	1		
8	4372200	SPACER	3		(SUB FOR P60915)
9	4382432	SLEEVE	1		
11	4333835	BOLT	2		
12	19H3187	CAP SCREW	2		7/16" X 1-1/2", (SUB FOR 4235232)
13	4380534	CAP SCREW	2		
14	J219167	SPRING WASHER	5		
16	9756736	BRACKET	1		
17	19M7402	CAP SCREW	2		M10 X 25
	12M7066	LOCK WASHER	2		10 MM
18	24M7047	WASHER	1		13 X 24 X 2.500 MM
19	3097862	BUSHING	1		

HEATER AND AIR CONDITIONER UNITS AND AIR DUCTING

T201844 -UN-26JUL04

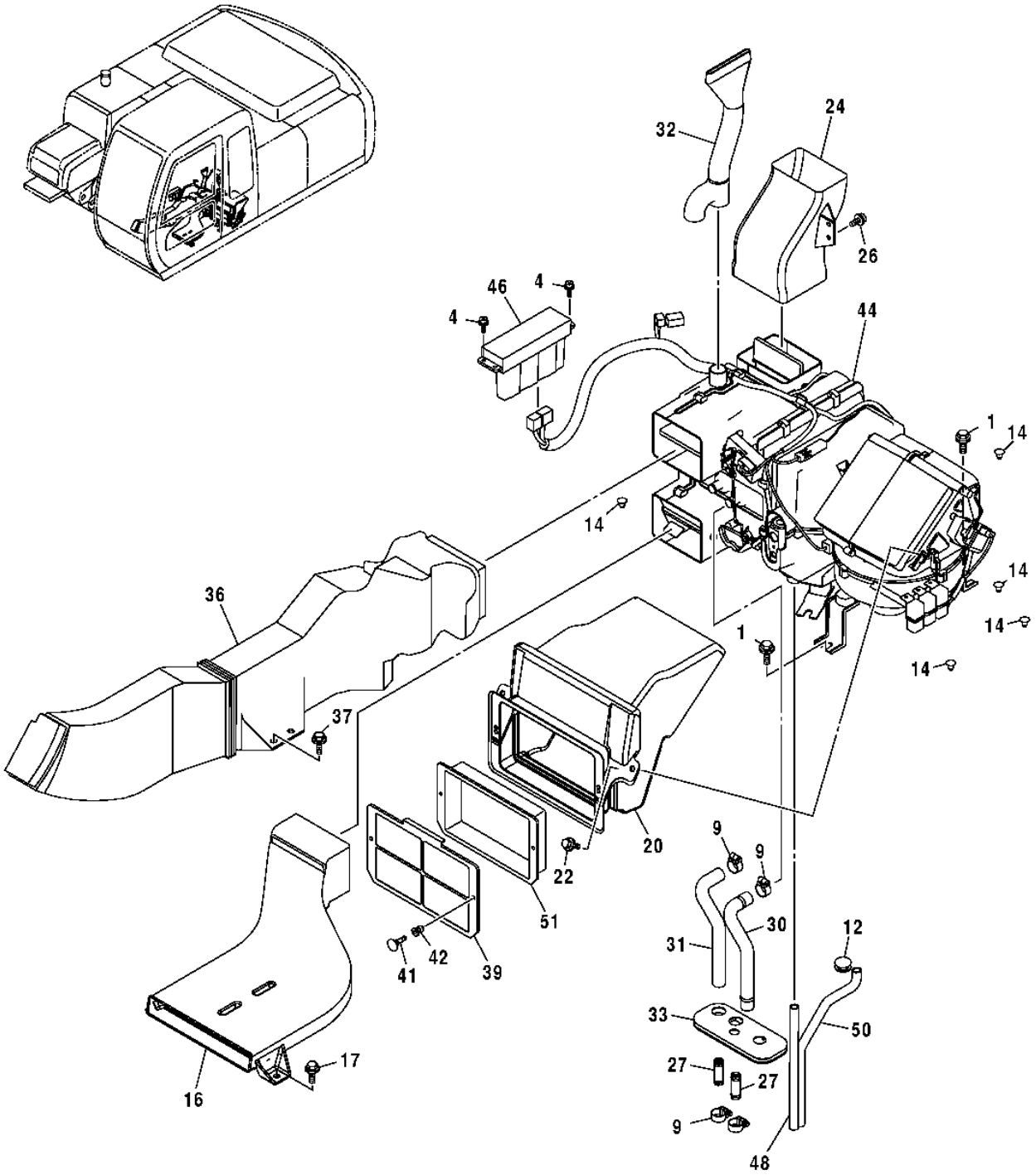

T201844

HEATER AND AIR CONDITIONER UNITS AND AIR DUCTING

KEY	PART NO.	PART NAME	QTY	SERIAL NO.	REMARKS
1	19M7402	CAP SCREW	6		M10 X 25
	12M7066	LOCK WASHER	6		10 MM (0.394")
	24M7028	WASHER	6		10.500 X 20 X 2 MM (0.413" X 0.787" X 0.079")
4	21M7265	SCREW	4		M5 X 12
9	WZ2141223	HOSE CLAMP	4		(SUB FOR AA34965)
12	4205084	GROMMET	2		(SUB FOR TH108616)
14	4280359	PLUG	6		(SUB FOR AT154351)
16	4426155	AIR DUCT	1		(SUB FOR TH4426155)
17	19M7662	CAP SCREW	2		M10 X 30
	12M7066	LOCK WASHER	2		10 MM (0.394")
	24M7028	WASHER	2		10.500 X 20 X 2 MM (0.413" X 0.787" X 0.079")
20	4426162	AIR DUCT	1		(SUB FOR TH4426162)
22	19M7881	SCREW	2		M8 X 20
	12M7056	LOCK WASHER	2		8 MM (0.315") (SUB FOR 12M7065)
	24M7055	WASHER	2		8.400 X 16 X 1.600 MM (0.331" X 0.630" X 0.063")
24	4426157	AIR DUCT	1		(SUB FOR TH4426157)
26	19M8425	CAP SCREW	2		M6 X 16
	12M7006	LOCK WASHER	2		6 MM (0.236")
	24M7293	WASHER	2		6.500 X 13 X 1.600 MM (0.256" X 0.512" X 0.063")
27	4347396	FITTING	2		(SUB FOR TH4347396)
30	.....	RADIATOR HOSE	1		(4430873 NO LONGER AVAILABLE) (SUB 4430872)
31	4430872	RADIATOR HOSE	1		
32	4436441	AIR DUCT	1		(SUB FOR TH4436441)
33	2044922	BUSHING	1		(SUB FOR TH2044922)
36	4426158	AIR DUCT	1		(SUB FOR TH4426158)
37	19M7662	CAP SCREW	2		M10 X 30
	12M7066	LOCK WASHER	2		10 MM (0.394")
	24M7028	WASHER	2		10.500 X 20 X 2 MM (0.413" X 0.787" X 0.079")
39	4441139	GRILLE	1		(SUB FOR TH4441139)
41	4441059	CLIP	2		(SUB FOR TH4441059)
42	4441061	CLIP	2		(SUB FOR TH4441061)
44	4609049	AIR CONDITIONER	1		(SUB FOR TH4426047, 4426047)
	4609676	HEATER	1		(SUB FOR TH4450707, 4450707) (ALSO ORDER 4610412)
45	4610412	WIRING HARNESS	1		(NOT ILLUSTRATED)
46	4426048	AIR HEATER CONTROLLER	1		(SUB FOR TH4426048) (AIR CONDITIONER)
	4450708	AIR HEATER CONTROLLER	1		(SUB FOR TH4450708) (HEATER)
48	4430870	HYDRAULIC HOSE	1		(SUB FOR TH4430870) (FOR USE WITH AIR CONDITIONER)
50	4430871	HYDRAULIC HOSE	1		(SUB FOR TH4430871) (FOR USE WITH AIR CONDITIONER)
51	4484453	FILTER	1		(RETURN AIR FILTER)

AIR CONDITIONER AND HEATER COMPONENTS

T147527 -UN-06NOV01

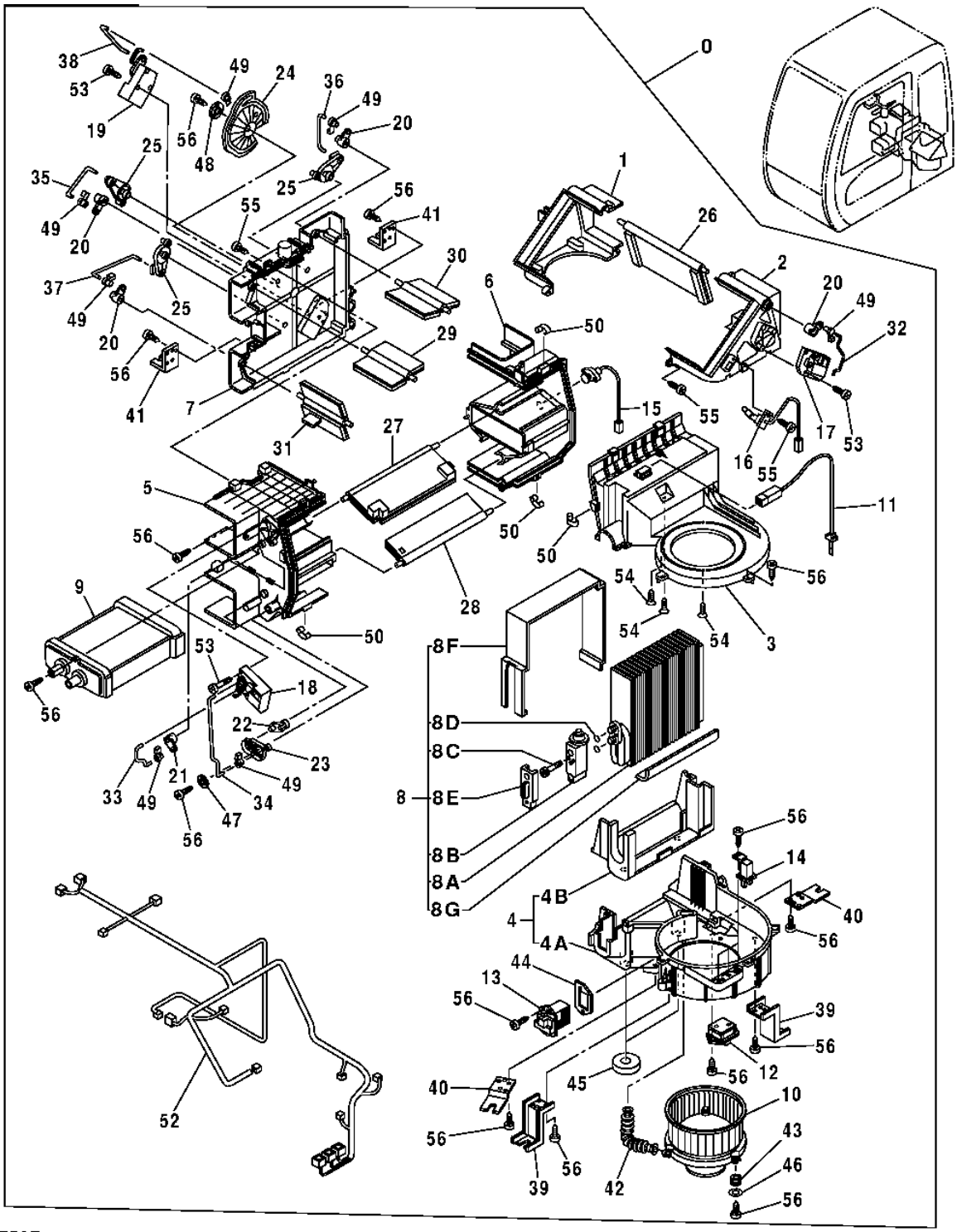

T147527

AIR CONDITIONER AND HEATER COMPONENTS

KEY	PART NO.	PART NAME	QTY	SERIAL NO.	REMARKS
0	4426047	AIR CONDITIONER	1		(SUB FOR TH4426047)
	4450707	HEATER	1		
1	4464341	CASE	1		(SUB FOR TH4464341)
2	4464342	CASE	1		(SUB FOR TH4464342)
3	4464343	CASE	1		(SUB FOR TH4464343)
4	.....	CASE	1		(4464344 NO LONGER AVAILABLE) (SUB FOR TH4464344)
4A	4464345	CASE	1		
4B	4464346	LINING	1		
5	4464347	CASE	1		(SUB FOR TH4464347)
6	4464349	CASE	1		(SUB FOR TH4464349)
7	4464350	CASE	1		(SUB FOR TH4464350)
8	4464352	EVAPORATOR	1		(SUB FOR TH4464352)
8A	.....	EVAPORATOR	1		(TH4464353 NOT AVAILABLE)
8B	4464354	FLOW CONTROL HYD. VALVE	1		(SUB FOR TH4464354)
8C	4464355	BOLT	2		(SUB FOR TH4464355)
8D	4370249	O-RING	2		
8E	4464356	CAP	1		(SUB FOR TH4464356)
8F	.....	ISOLATOR	1		(TH4464357 NOT AVAILABLE)
8G	.....	PLATE	1		(TH4464274 NOT AVAILABLE)
9	4464275	HEATER	1		(SUB FOR TH4464275)
10	4464276	ELECTRIC MOTOR	1	-020126	(SUB FOR TH4464276)
	4370266	BLOWER	1	020127-	
11	4464277	SWITCH	1		(SUB FOR TH4464277)
12	4464278	RESISTOR	1		(SUB FOR TH4464278)
13	4464279	TRANSISTOR	1		(SUB FOR TH4464279)
14	4370269	RELAY	3		
15	4464280	SENSOR	1		(SUB FOR TH4464280)
16	4448925	SENSOR	1		(SUB FOR TH4448925)
17	4464281	ELECTRIC MOTOR	1		(SUB FOR TH4464281)
18	4464282	ELECTRIC MOTOR	1		(SUB FOR TH4464282)
19	4464283	ELECTRIC MOTOR	1		(SUB FOR TH4464283)
20	4464284	LEVER	4		(SUB FOR TH4464284)
21	4464285	LEVER	1		(SUB FOR TH4464285)
22	4464286	LEVER	1		(SUB FOR TH4464286)
23	4464287	LEVER	1		(SUB FOR TH4464287)
24	4464288	LEVER	1		(SUB FOR TH4464288)
25	4464450	LEVER	3		(SUB FOR TH4464450)
26	4464451	DOOR	1		(SUB FOR TH4464451)
27	4464452	DOOR	1		(SUB FOR TH4464452)
28	4464453	DOOR	1		(SUB FOR TH4464453)
29	4464454	DOOR	1		(SUB FOR TH4464454)
30	4464455	DOOR	1		(SUB FOR TH4464455)

AIR CONDITIONER AND HEATER COMPONENTS CONTINUED

T147527 -UN-06NOV01

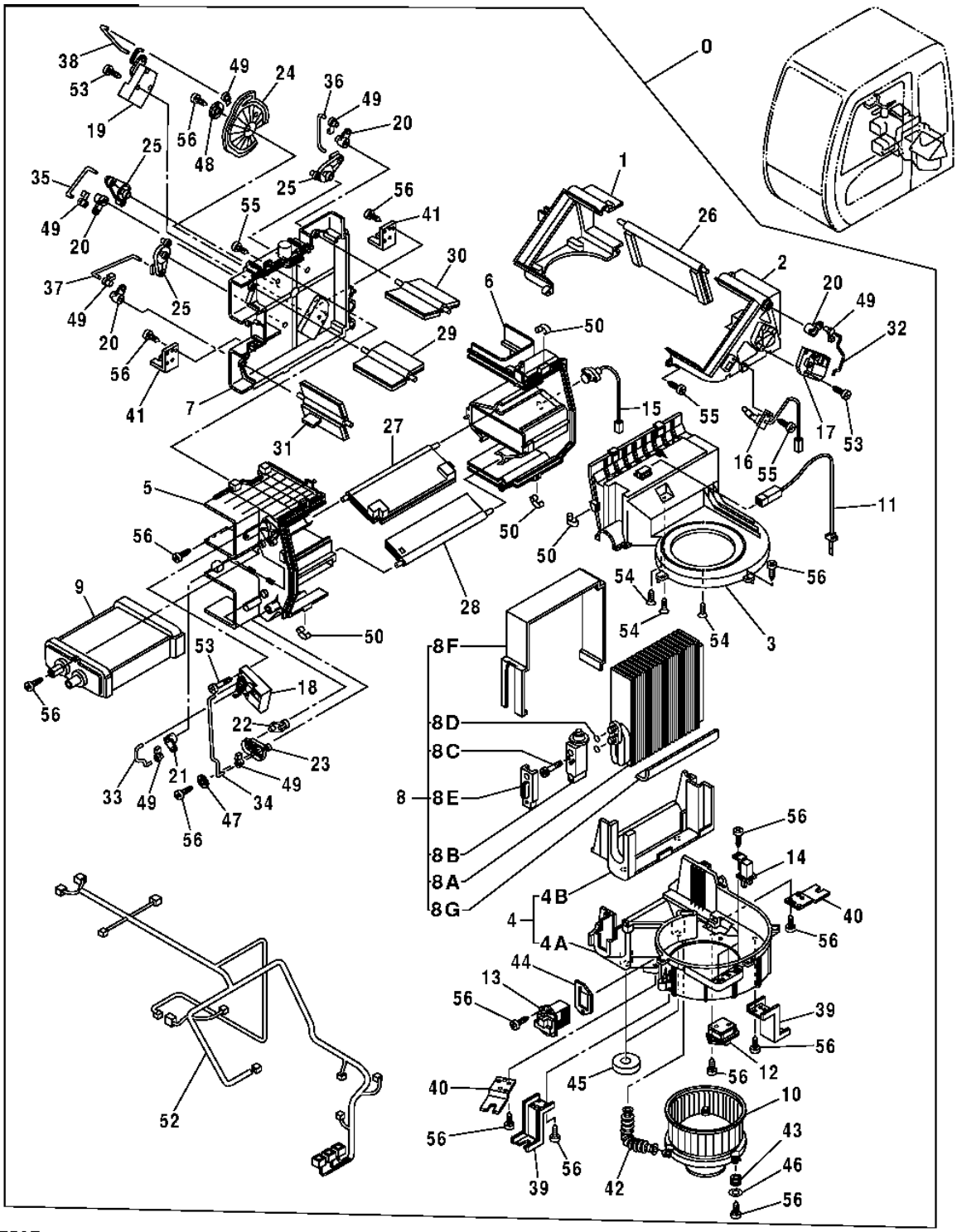

T147527

AIR CONDITIONER AND HEATER COMPONENTS CONTINUED

KEY	PART NO.	PART NAME	QTY	SERIAL NO.	REMARKS
31	4464456	DOOR	1		(SUB FOR TH4464456)
32	4464457	ROD	1		(SUB FOR TH4464457)
33	4464458	ROD	1		(SUB FOR TH4464458)
34	4464459	ROD	2		(SUB FOR TH4464459)
35	4464460	ROD	1		(SUB FOR TH4464460)
36	4464461	ROD	1		(SUB FOR TH4464461)
37	4464462	ROD	1		(SUB FOR TH4464462)
38	4464463	ROD	1		(SUB FOR TH4464463)
39	4370296	BRACKET	2		
40	4464465	BRACKET	2		(SUB FOR TH4464465)
41	4464466	BRACKET	2		(SUB FOR TH4464466)
42	4464473	HOSE	1		(SUB FOR TH4464473)
43	4370267	ISOLATOR	3		(SUB FOR AT214213)
44	4464474	SEAL	1		(SUB FOR TH4464474)
45	4464475	ISOLATOR	2		(SUB FOR TH4464475)
46	4370299	WASHER	3		(SUB FOR AT214245)
47	4464476	WASHER	1		(SUB FOR TH4464476)
48	4370298	WASHER	1		
49	4464477	CLIP	7		(SUB FOR TH4464477)
50	4464478	CLIP	12		(SUB FOR TH4464478)
52	4610412	WIRING HARNESS	1		(SUB FOR TH4464479, 4464479)
53	4370308	SCREW	9		
54	4464480	SCREW	5		(SUB FOR TH4464480)
55	4370309	SCREW	17		
56	4464483	SCREW	32		(SUB FOR TH4464483)

AIR CONDITIONER REFRIGERANT HOSES AND COMPRESSOR DRIVE BELT

T201973 -UN-02AUG04

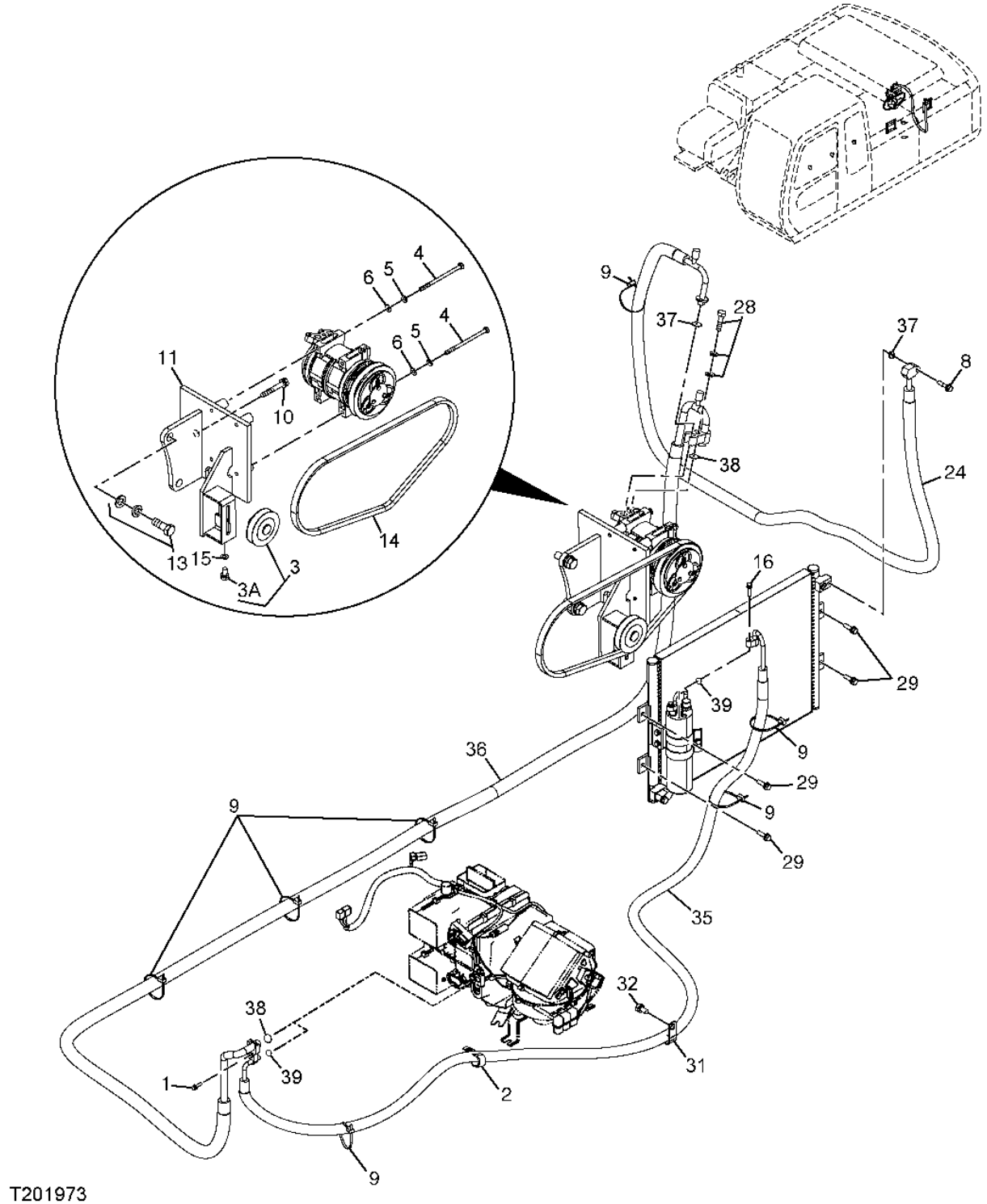

AIR CONDITIONER REFRIGERANT HOSES AND COMPRESSOR DRIVE BELT

KEY	PART NO.	PART NAME	QTY	SERIAL NO.	REMARKS
1	19M7286	CAP SCREW	1		M6 X 25
2	T24432	CLAMP	1		
3	4346770	PULLEY	1		(SUB FOR AT213915)
3A	4451204	BOLT	1		
4	19M8404	CAP SCREW	4		M8 X 130
5	12M7056	LOCK WASHER	4		8 MM (0.315") (SUB FOR 12M7065)
6	24M7055	WASHER	4		8.400 X 16 X 1.600 MM (0.331" X 0.630" X 0.063")
8	19M8008	CAP SCREW	1		M8 X 35
	24M7055	WASHER	1		8.400 X 16 X 1.600 MM (0.331" X 0.630" X 0.063")
	12M7056	LOCK WASHER	1		8 MM (0.315") (SUB FOR 12M7065)
9	H77698	TIE BAND	8		
10	THM111060	BOLT	1		
	24M7028	WASHER	1		10.500 X 20 X 2 MM
	12M7066	LOCK WASHER	1		10 MM
11	DH700012	BRACKET	1		(SUB FOR THDH700012)
13	T116333	BOLT	2		(SUB FOR THM111030)
	24M7028	WASHER	2		10.500 X 20 X 2 MM (0.413" X 0.787" X 0.079")
	12M7066	LOCK WASHER	2		10 MM (0.394")
14	DH400223	V-BELT	1		(SUB FOR THDH400223)
15	24M7055	WASHER	1		8.400 X 16 X 1.600 MM (0.331" X 0.630" X 0.063")
16	19M7874	CAP SCREW	1		M6 X 30
	24M7054	WASHER	1		6.400 X 12 X 1.600 MM (0.252" X 0.472" X 0.063")
	12H302	LOCK WASHER	1		6.350 MM (1/4")
24	DH400220	REFRIGERANT HOSE	1		(COMPRESSOR TO CONDENSER) (SUB FOR 4448284, THIS APPLICATION)
28	19M8260	CAP SCREW	1		M10 X 40
	24M7028	WASHER	1		10.500 X 20 X 2 MM
	12M7066	LOCK WASHER	1		10 MM
29	19M7139	CAP SCREW	4		M8 X 20
	12M7056	LOCK WASHER	4		8 MM, (SUB FOR 12M7065)
	24M7055	WASHER	4		8.400 X 16 X 1.600 MM
31	T24432	CLAMP	1		
32	19M7938	CAP SCREW	1		M10 X 20
	12M7066	LOCK WASHER	1		
35	4458908	REFRIGERANT HOSE	1		(CONDENSER TO AIR CONDITIONER UNIT)
36	4450993	REFRIGERANT HOSE	1		(AIR CONDITIONER UNIT TO COMPRESSOR)
37	4421946	O-RING	2		
38	4421939	O-RING	2		
39	4422000	O-RING	2		

AIR CONDITIONER COMPRESSOR AND CONDENSOR

T159759 -UN-24SEP02

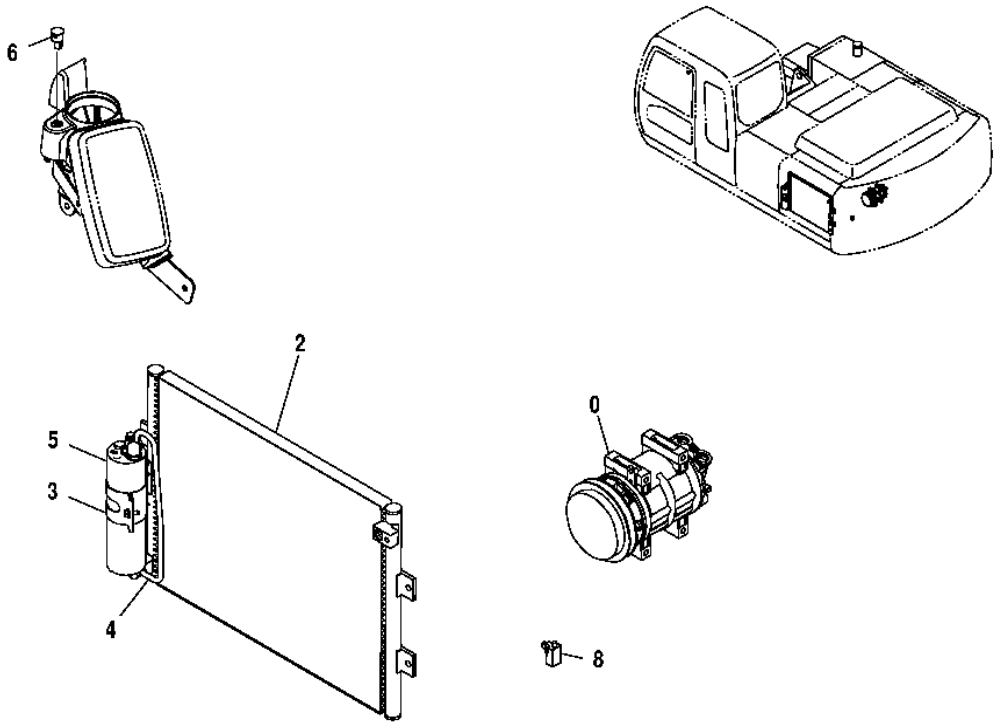

AIR CONDITIONER COMPRESSOR AND CONDENSOR

KEY	PART NO.	PART NAME	QTY	SERIAL NO.	REMARKS
0	4456130	COMPRESSOR	1		(SUB FOR TH4456130)
	4623638	CLUTCH	1		(MAGNETIC CLUTCH)
2	4602578	VAPOR CONDENSER	1		(SUB FOR TH4426046)
	J020835	BOLT	1		
	19M7077	CAP SCREW	4		M6 X 20, (SUB FOR J020630)
	19M7874	CAP SCREW	1		M6 X 30, (SUB FOR J020630)
	24M7054	WASHER	1		6.400 X 12 X 1.600 MM
	12H302	LOCK WASHER	1		1/4"
3	4460399	BRACKET	1		
4	4477526	PIPE	1		
5	4448179	RECEIVER-DRYER	1		
6	4405166	SENSOR	1		(SUB FOR TH4405166)
8	4405164	SENSOR	1		(SUB FOR TH4405164)

HEATER HOSES

T153915 -UN-16APR02

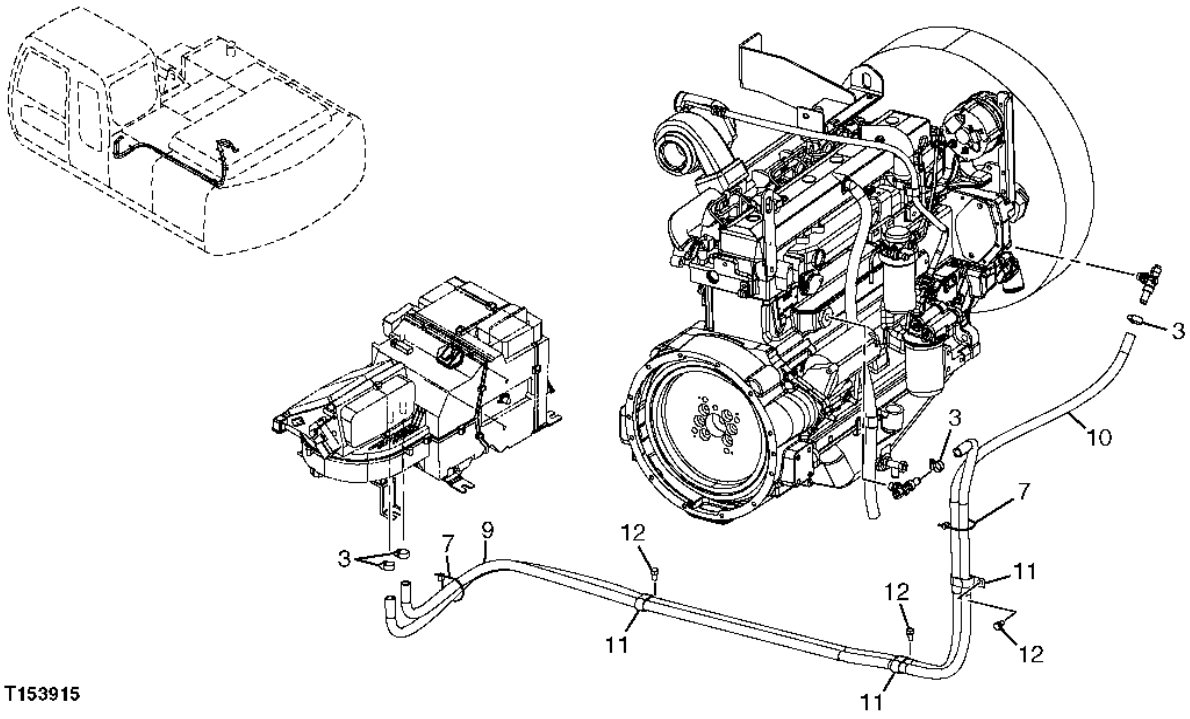

T153915

2D12

HEATER HOSES

KEY	PART NO.	PART NAME	QTY	SERIAL NO.	REMARKS
3	WZ2141223	HOSE CLAMP	4		(SUB FOR AA34965)
7	H77698	TIE BAND	2		
9	.....	BULK HOSE	1		(P63188 NOT AVAILABLE FOR SERVICE) (FURNISH TY22328 - CUT TO LENGTH 2750MM) (4374282 NO LONGER AVAILABLE)
10	.....	HOSE	1		(AT219667 NOT AVAILABLE FOR SERVICE) (FURNISH TY22328 BULK MATERIAL CUT TO LENGTH)
11	4192034	CLIP	3		(SUB FOR TH109445)
12	19M7402	CAP SCREW	3		M10 X 25
	12M7066	LOCK WASHER	3		10 MM (0.394")
	24M7028	WASHER	3		

AIR CONDITIONER DUCT AND FILTER

T147810 -UN-07JAN02

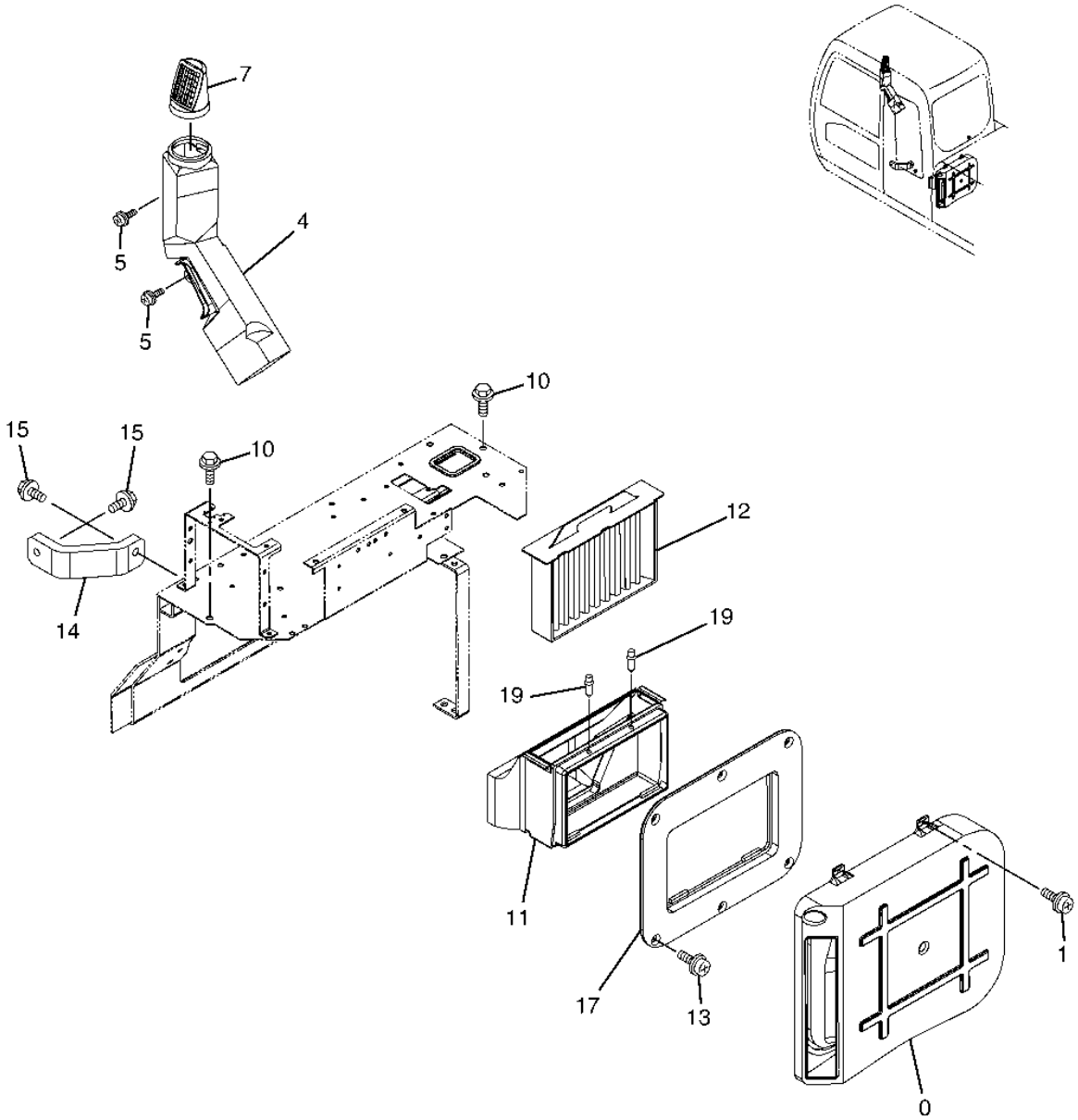

T147810

2D14

AIR CONDITIONER DUCT AND FILTER

KEY	PART NO.	PART NAME	QTY	SERIAL NO.	REMARKS
0	P68233	AIR DUCT	1		
1	19M8425	CAP SCREW	6		M6 X 16
	12M7006	LOCK WASHER	6		6 MM
	24M7293	WASHER	6		6.500 X 13 X 1.600 MM
4	4426159	AIR DUCT	1		
5	19M8425	CAP SCREW	2		M6 X 16
	12M7006	LOCK WASHER	2		6 MM
	24M7293	WASHER	2		6.500 X 13 X 1.600 MM
7	4449068	AIR DUCT	1		
10	19M7402	CAP SCREW	2		M10 X 25
	12M7058	LOCK WASHER	2		12 MM, (SUB FOR 12M7067)
	24M7346	WASHER	2		11 X 20 X 2 MM
11	4426161	AIR DUCT	1		(SUB FOR TH4426161)
12	4350249	FILTER ELEMENT	1		(SUB FOR AT213943)
13	19M8425	CAP SCREW	6		M6 X 16
	12M7006	LOCK WASHER	6		6 MM
	24M7293	WASHER	6		6.500 X 13 X 1.600 MM
14	P68229	SUPPORT	1		
15	J031045	BOLT	2		(SUB FOR AT200010)
17	4449348	AIR DUCT	1		
19	4445916	CLIP	2		(SUB FOR FFSB110372)

COVER(12 VOLT POWER SUPPLY)

T196517 -UN-21NOV03

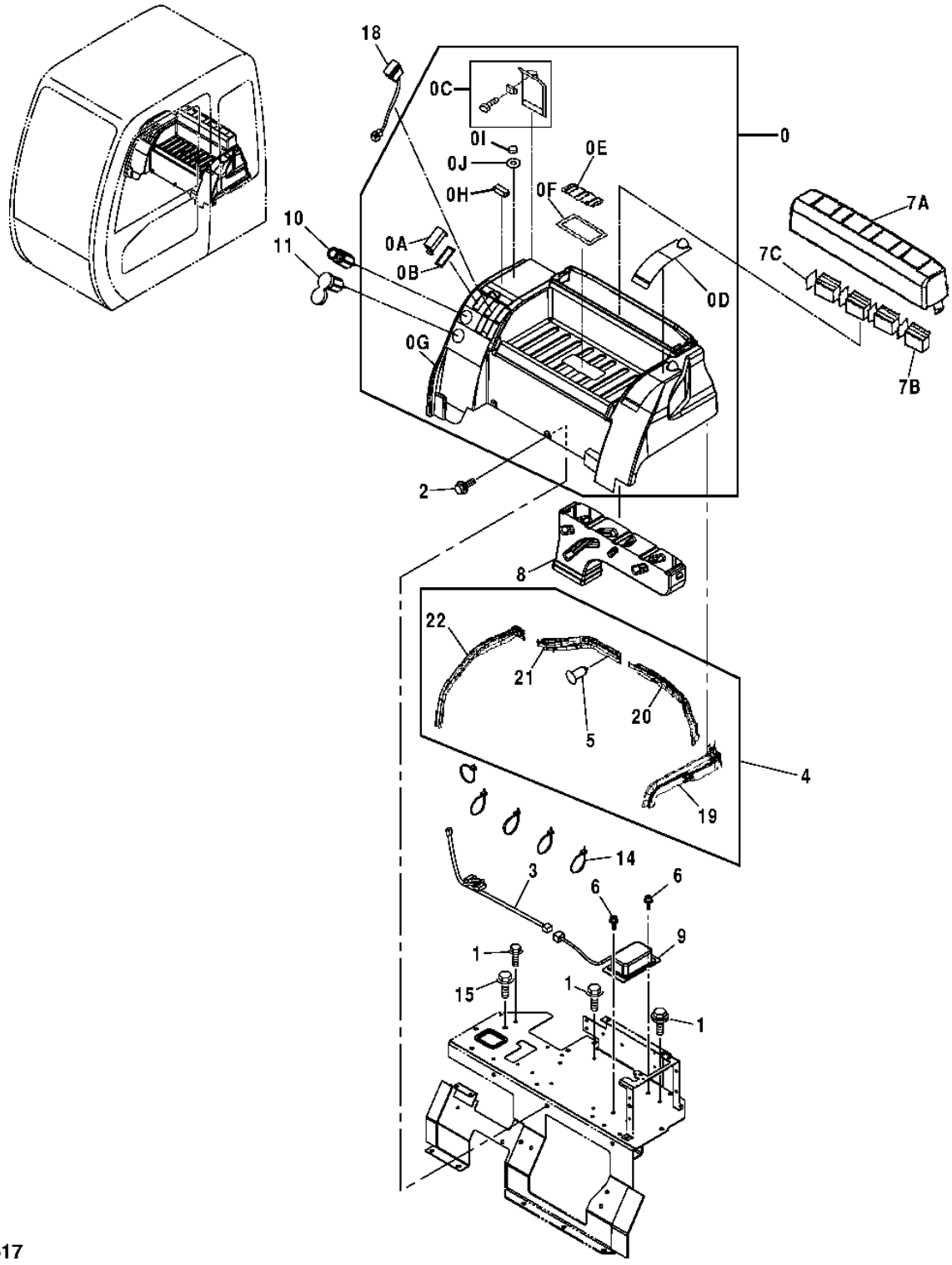

T196517

COVER (12V POWER SUPPLY)

KEY	PART NO.	PART NAME	QTY	SERIAL NO.	REMARKS
0	4433793	TRAY	1		(SUB FOR TH4433793)
0A	4456725	COVER	5		(SUB FOR TH4456725)
0B	4456723	ISOLATOR	5		(SUB FOR TH4456723)
0C	4458228	COVER	1		(RELAY)
0D	4458230	COVER	1		(FUSE)
0E	4458231	COVER	1		(CENTER)
0F	4458232	SEAL	1		
0G	4458227	TRAY	1		
0H	4458229	MAGNET	1		
0I	4458233	COVER	1		
0J	4458234	SEAL	1		
1	19M7866	SCREW	3		M8 X 20, (SUB FOR AT213603 OR J050820, ALONG WITH 24M7036 OR 12M7065)
	24M7036	WASHER	3		9 X 16 X 1.600 MM (0.354" X 0.630" X 0.063")
	12M7065	LOCK WASHER	3		8 MM (0.315")
2	19M7402	CAP SCREW	2		M10 X 25
	12M7066	LOCK WASHER	2		10 MM
	24M7028	WASHER	2		10.500 X 20 X 2 MM
3	3091204	WIRING HARNESS	1		(SUB FOR TH3091204)
4	.....	ISOLATOR	1		(4436132 NO LONGER AVAILABLE - FURNISH 4458238, 4458239, 4458240 AND 4458241)
5	4425573	CLIP	13		(SUB FOR TH4425573)
6	19M8425	CAP SCREW	2		M6 X 16
	12M7006	LOCK WASHER	2		6 MM
	24M7293	WASHER	2		6.500 X 13 X 1.600 MM
7	4433794	COVER	1		(SUB FOR TH4433794)
7A	4458235	COVER	1		
7B	4458236	LOUVER	4		
7C	4458237	BRACKET	4		
8	4426156	AIR DUCT	1		(SUB FOR TH4426156)
9	4450008	POWER SUPPLY	1		(SUB FOR TH4450008)
10	AR60937	ELECTRICAL LIGHTER	1		(12 VOLT)
	AU42809	RESISTOR	1		(12 VOLT)
	AT78634	WIRING LEAD	1		(12 VOLT)
	AT78633	HOUSING	1		(12 VOLT)
	.....	ELECTRICAL LIGHTER	1		(4357862 NO LONGER AVAILABLE) (SUB FOR AT190190) (24 VOLT)
11	4432965	ELEC. CONNECTOR TERMINAL	1		(SUB FOR TH4432965)
14	H77698	TIE BAND	5		
15	19M7938	CAP SCREW	1		M10 X 20
	12M7066	LOCK WASHER	1		10 MM
18	4352947	SWITCH	2		(SUB FOR TH4352947) (FOR USE WITH AUXILIARY FUNCTIONS)
19	4458238	SEAL	1		
20	4458239	SEAL	1		
21	4458240	SEAL	1		
22	4458241	SEAL	1		

POWER SUPPLY - 12V

T147839 -UN-07JAN02

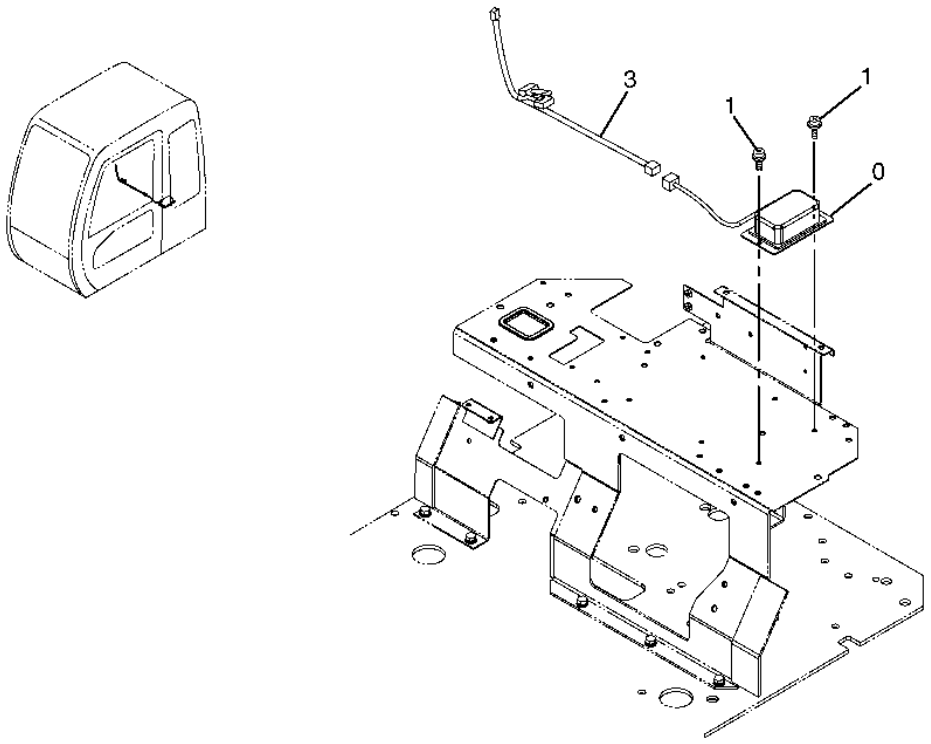

T147839

2D18

POWER SUPPLY - 12V

KEY	PART NO.	PART NAME	QTY	SERIAL NO.	REMARKS
0	4450008	POWER SUPPLY	1		(SUB FOR TH4450008)
1	19M8425	CAP SCREW	2		M6 X 16
	12M7006	LOCK WASHER	2		6 MM
	24M7293	WASHER	2		6.500 X 13 X 1.600 MM
3	3091204	WIRING HARNESS	1		(SUB FOR TH3091204)

DOOR AND COVERS

T153927 -UN-16APR02

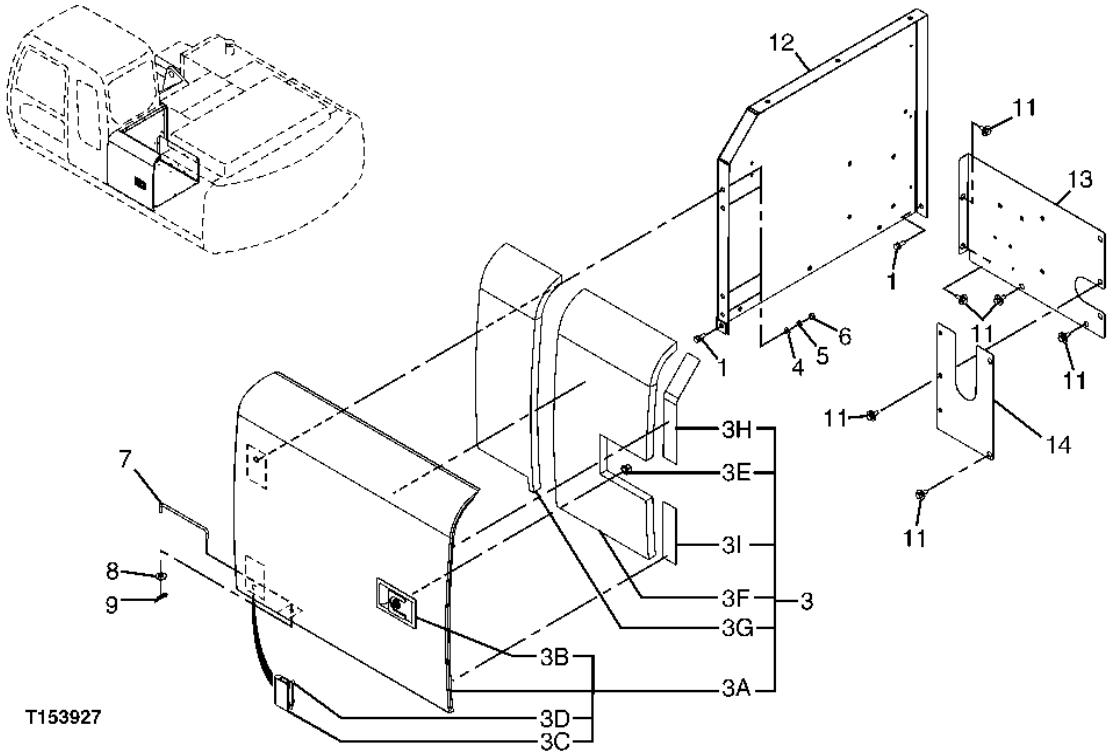

2D22

DOOR AND COVERS

KEY	PART NO.	PART NAME	QTY	SERIAL NO.	REMARKS
1	19M7662	CAP SCREW	2		M10 X 30
	12M7066	LOCK WASHER	2		10 MM
	24M7028	WASHER	2		10.500 X 20 X 2 MM
3	DH700048J	DOOR	1		
3A	.....	DOOR	1		
3B	4409394	LOCK	1		
3C	.....	HINGE	2		
3D	19M7402	CAP SCREW	4		M10 X 25
	12M7066	LOCK WASHER	4		10 MM
	24M7028	WASHER	4		10.500 X 20 X 2 MM
3E	4409396	LOCK	1		(SUB FOR TH4409396)
	4409394	LOCK	1		
3F	4436648	ISOLATOR	1		(SUB FOR TH4436648)
3G	4438027	ISOLATOR	1		(SUB FOR TH4438027)
3H	4453760	ISOLATOR	1		(SUB FOR TH4453760)
3I	4453765	ISOLATOR	1		(SUB FOR TH4453765)
3J	.....	CLIP	1		(TH4461342 NOT AVAILABLE FOR SERVICE)
4	24M7028	WASHER	4		10.500 X 20 X 2 MM
5	12M7066	LOCK WASHER	4		10 MM
6	14M7274	NUT	4		M10
7	4341788	ROD	1		(SUB FOR AT213884)
8	24M7055	WASHER	1		8.400 X 16 X 1.600 MM
9	H132922	COTTER PIN	1		
11	19M7662	CAP SCREW	6		M10 X 30
	12M7058	LOCK WASHER	6		12 MM, (SUB FOR 12M7067)
	24M7346	WASHER	6		11 X 20 X 2 MM
12	7035539	COVER	1		(SUB FOR TH7035539)
13	8083393	COVER	1		(SUB FOR TH8083393)
14	8086300	COVER	1		

2D23

COVER

T153926 -UN-16APR02

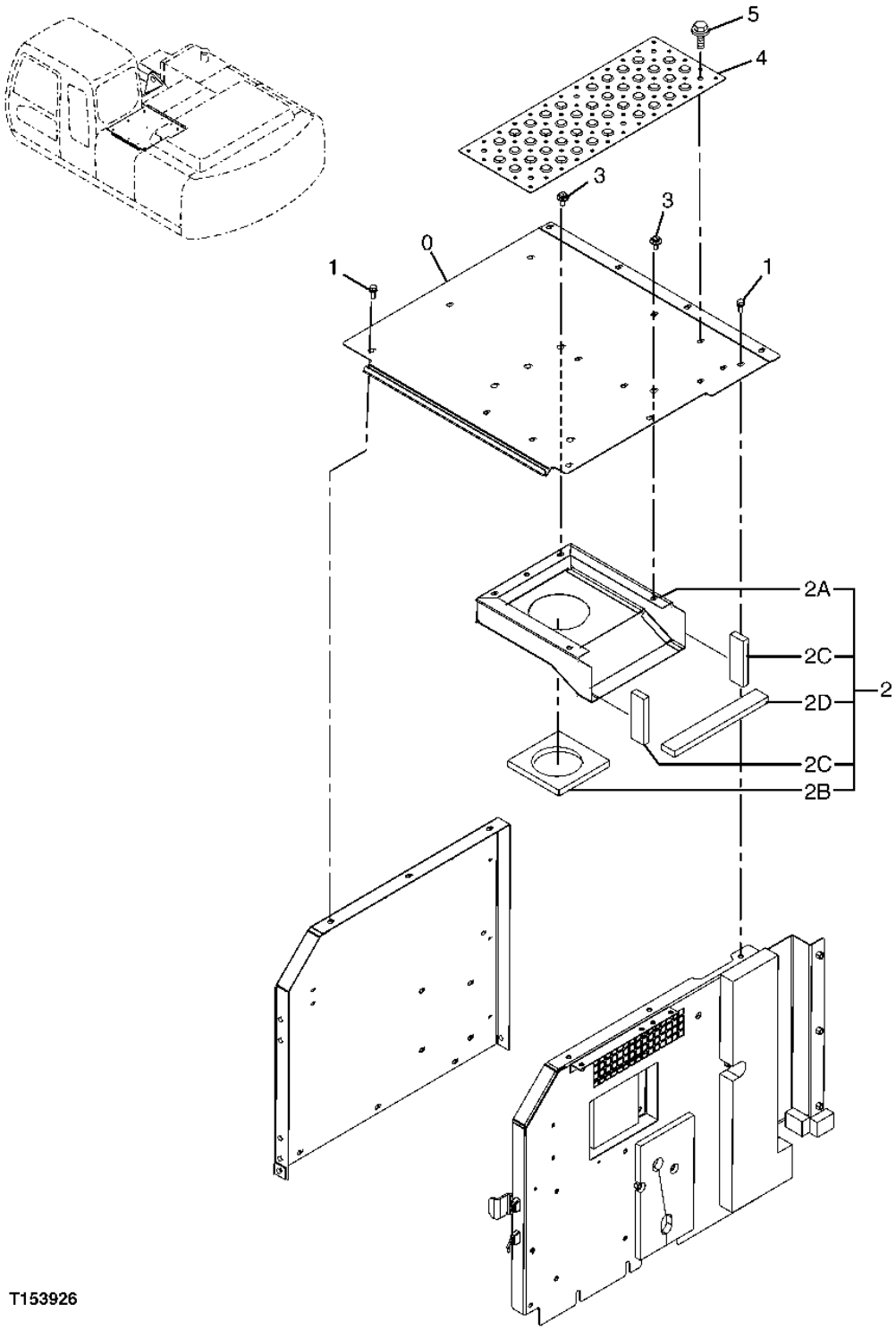

2D24

COVER

KEY	PART NO.	PART NAME	QTY	SERIAL NO.	REMARKS
0	DH700041	COVER	1		
1	19M7662	CAP SCREW	6		M10 X 30
	12M7066	LOCK WASHER	6		10 MM
	24M7028	WASHER	6		10.500 X 20 X 2 MM
2	8086233	COVER	1		
2A	DH700045	COVER	1		
2B	4385130	ISOLATOR	1		
2C	4385134	ISOLATOR	2		
2D	4385142	ISOLATOR	1		
3	19M7662	CAP SCREW	5		
	12M7058	LOCK WASHER	5		(SUB FOR 12M7067)
	24M7346	WASHER	5		
4	3091338	COVER	1		
5	19M7662	CAP SCREW	6		
	12M7066	LOCK WASHER	6		
	24M7028	WASHER	6		

COVER

T153928 -UN-16APR02

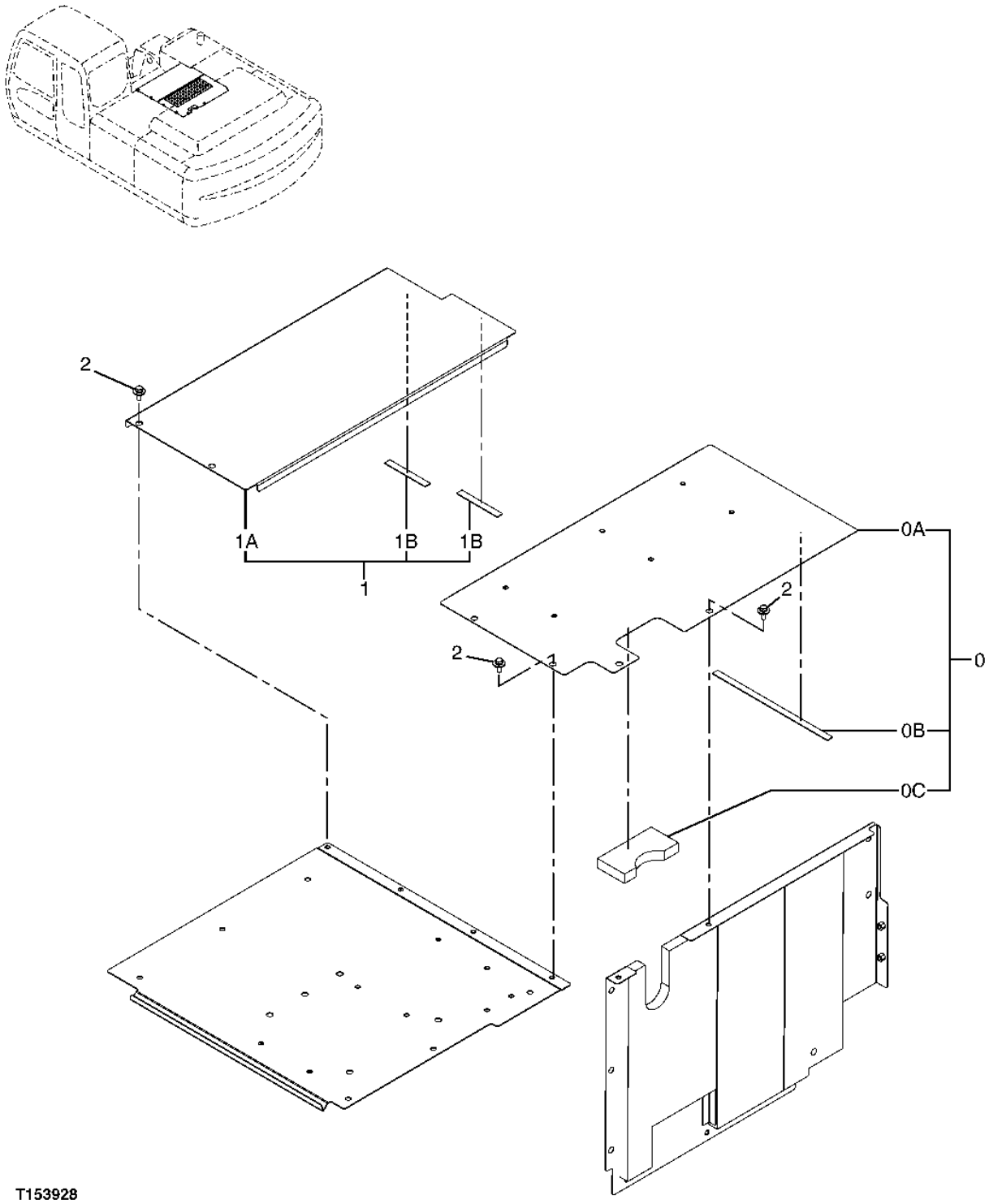

COVER

KEY	PART NO.	PART NAME	QTY	SERIAL NO.	REMARKS
0	8086329	COVER	1		
0A	.....	COVER	1	-702000	(SN BREAK DOES NOT RELATE TO EFFECTIVE DATE SEPT.2003) (7041468 NOT AVAILABLE)
	DH800065	COVER	1	702001-	(SN BREAK DOES NOT RELATE TO EFFECTIVE DATE SEPT.2003)
0B	4380814	ISOLATOR	1		
0C	4424566	ISOLATOR	1		
1	8083492	COVER	1	-XXXXXX	
	8097092	COVER	1	XXXXXX-	(UNITS MADE AFTER SEPT.2003)
1A	.....	COVER	1	-XXXXXX	(7039715 NOT AVAILABLE)
	.....	COVER	1	XXXXXX-	(7046683 NOT AVAILABLE) (UNITS MADE AFTER SEPT.2003)
1B	4415016	ISOLATOR	2		
2	19M7662	CAP SCREW	6		M10 X 30
	12M7058	LOCK WASHER	6		12 MM, (SUB FOR 12M7067)
	24M7346	WASHER	6		11 X 20 X 2 MM

COMPARTMENT INTERIOR PANELS

T153929 -UN-16APR02

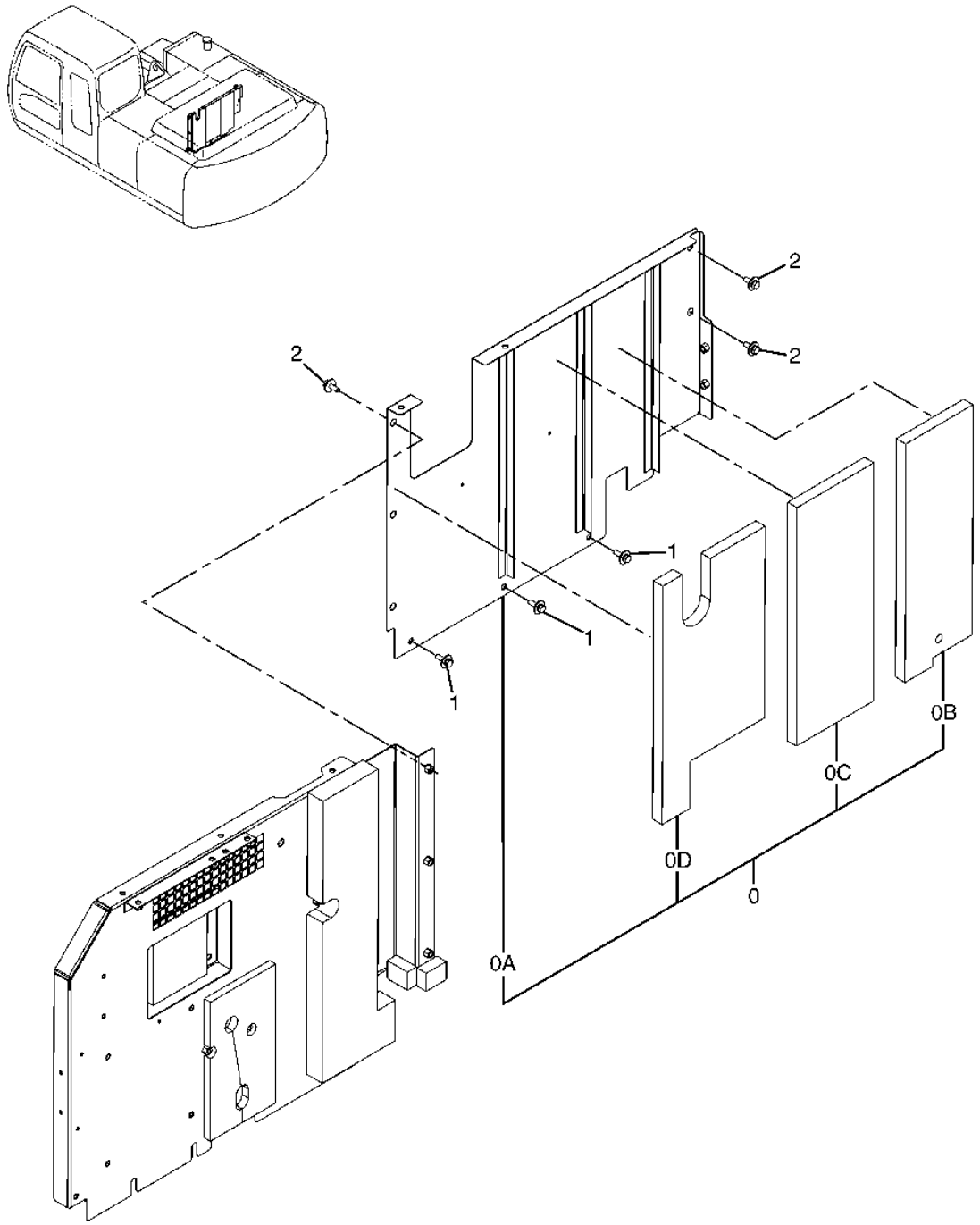

T153929

COMPARTMENT INTERIOR PANELS

KEY	PART NO.	PART NAME	QTY	SERIAL NO.	REMARKS
0	7041470	COVER	1		
0A	7041469	COVER	1		
0B	4465383	ISOLATOR	1		
0C	4465385	ISOLATOR	1		
0D	4465384	ISOLATOR	1		
1	19M7550	CAP SCREW	3		M10 X 35
	12M7066	LOCK WASHER	3		10 MM
	24M7346	WASHER	3		11 X 20 X 2 MM
2	19M7662	CAP SCREW	5		M10 X 30
	12M7058	LOCK WASHER	5		12 MM, (SUB FOR 12M7067)
	24M7346	WASHER	5		11 X 20 X 2 MM

COVER ASSEMBLY

T201833 -UN-19AUG04

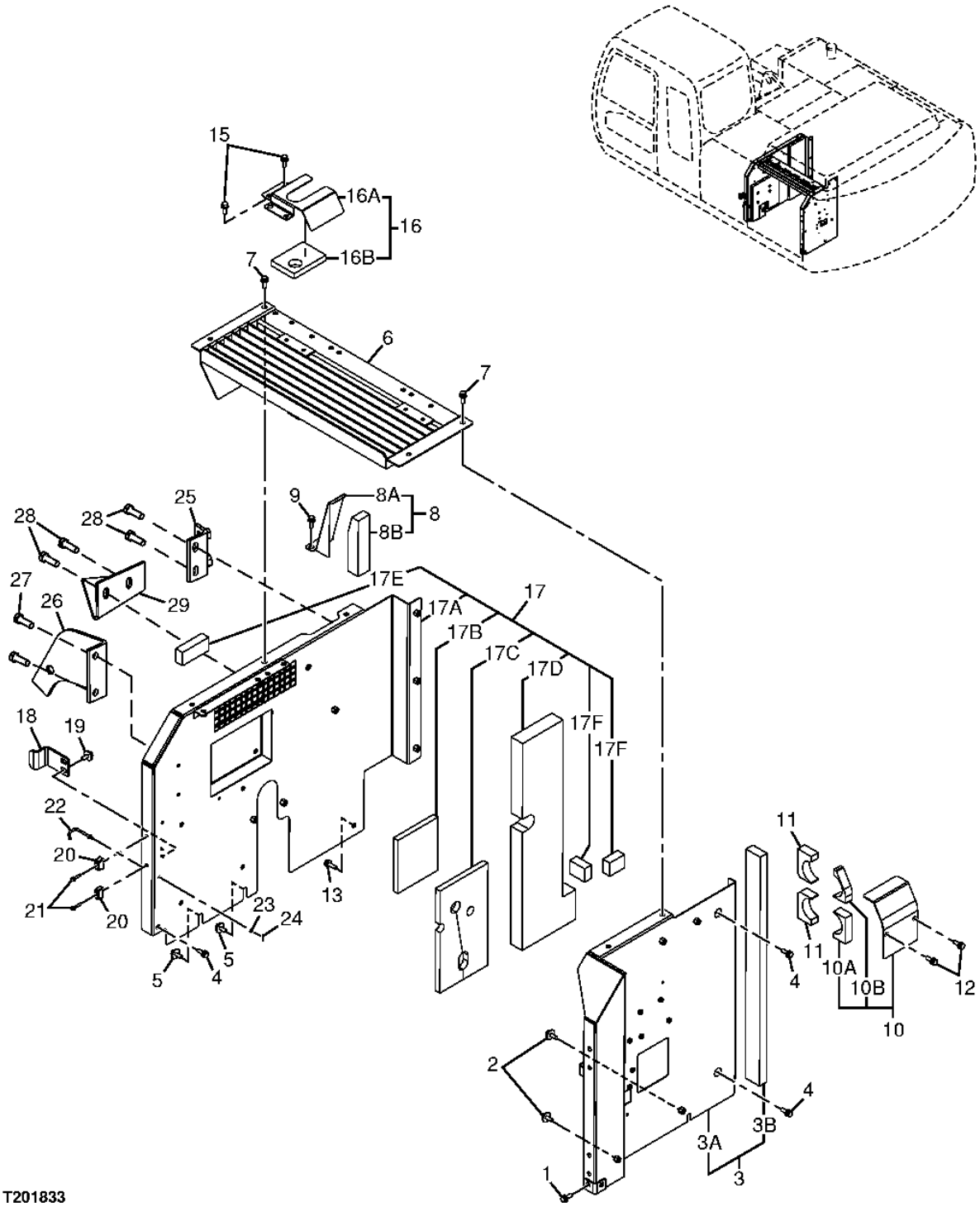

COVER ASSEMBLY

KEY	PART NO.	PART NAME	QTY	SERIAL NO.	REMARKS
1	19M7662	CAP SCREW	1		
	12M7066	LOCK WASHER	1		
	24M7028	WASHER	1		
2	19M7662	CAP SCREW	2		
	12M7058	LOCK WASHER	2		(SUB FOR 12M7067)
	24M7346	WASHER	2		
3	DH800079	COVER	1		(7041450 NOT USED FOR THIS APPLICATION)
3A	6020566	COVER	1		
3B	4465205	ISOLATOR	1		
4	19M7662	CAP SCREW	3		
	12M7066	LOCK WASHER	3		
	24M7028	WASHER	3		
5	19M7662	CAP SCREW	2		
	12M7058	LOCK WASHER	2		(SUB FOR 12M7067)
	24M7346	WASHER	2		
6	DH700017	COVER	1		(7041464 NOT AVAILABLE FOR THIS APPLICATION)
7	19M7662	CAP SCREW	4		
	12M7066	LOCK WASHER	4		
	24M7028	WASHER	4		
8	8086282	COVER	1	-702000	
	DH700028	COVER	1	702001-	
8A	3093851	COVER	1	-702000	
8B	4465226	ISOLATOR	1	-702000	
9	19M7662	CAP SCREW	2		
	12M7066	LOCK WASHER	2		
	24M7028	WASHER	2		
10	8067536	COVER	1		
10A	4386237	ISOLATOR	1		
10B	4386238	ISOLATOR	1		
11	AT318025	ISOLATOR	2		(SUB FOR 4384146)
12	19M7662	CAP SCREW	2		
	12M7066	LOCK WASHER	2		
	24M7028	WASHER	2		
13	19M7550	CAP SCREW	1		
	12M7066	LOCK WASHER	1		
	24M7028	WASHER	1		
15	19M7662	CAP SCREW	4		
	12M7066	LOCK WASHER	4		
	24M7028	WASHER	4		
16	8089576	COVER	1		
16A	3096201	COVER	1		
16B	4480769	ISOLATOR	1		
17	DH700018	COVER	1		(7041445 NOT AVAILABLE FOR THIS APPLICATION)
17A	6020563	COVER	1		
17B	4465146	ISOLATOR	1		
17C	4465147	ISOLATOR	1		
17D	4465148	ISOLATOR	1		
17E	4465143	ISOLATOR	1		
17F	4436276	ISOLATOR	2		
18	4431357	STOP	1		
19	19M7662	CAP SCREW	2		
	12M7058	LOCK WASHER	2		(SUB FOR 12M7067)
	24M7346	WASHER	2		
20	4424157	STOP	2		
21	19M7177	CAP SCREW	2		
22	DH900300	LATCH	1		(9751797 NOT USED FOR THIS APPLICATION)
23	24M7054	WASHER	1		
24	M800051	PIN	1		(SUB FOR CH10542)
25	DH800063	BRACKET	1		
26	DH800064	BRACKET	1		
27	19M7662	CAP SCREW	2		M10 X 30
	24M7346	WASHER	2		11 X 20 X 2 MM
28	19M7550	CAP SCREW	2		M10 X 35
	24M7346	WASHER	2		11 X 20 X 2 MM
29	DH800062	BRACKET	1		

SIDE COVER

T153931 -UN-16APR02

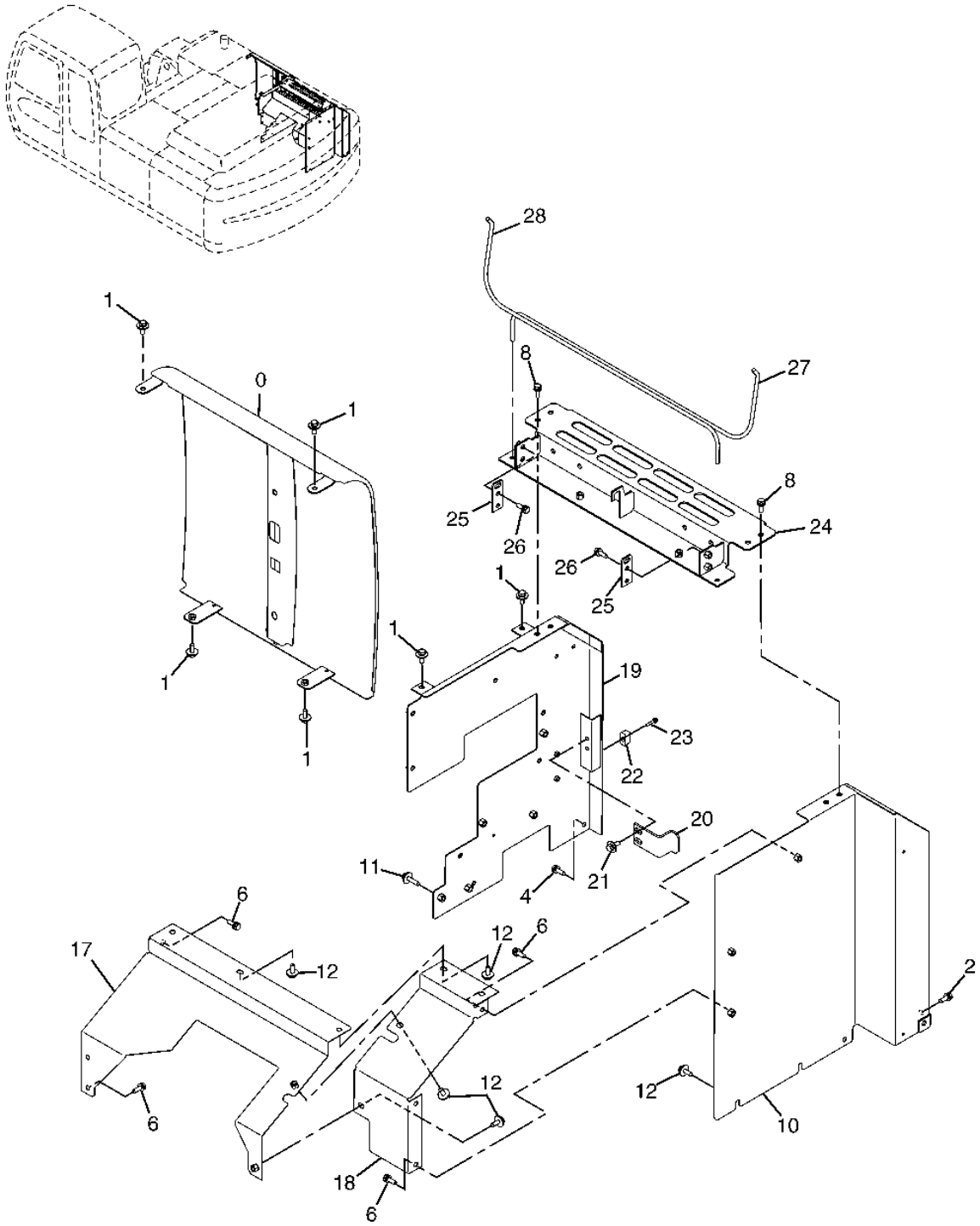

T153931

SIDE COVER

KEY	PART NO.	PART NAME	QTY	SERIAL NO.	REMARKS
0	DH600009J	COVER	1		(ALSO ORDER THDH400422) (6019197 NOT USED FOR THIS APPLICATION)
	THDH400422	ISOLATOR	1		(ALSO ORDER DH600009J)
1	19M7662	CAP SCREW	6		M10 X 30
	12M7058	LOCK WASHER	6		12 MM, (SUB FOR 12M7067)
	24M7346	WASHER	6		11 X 20 X 2 MM
2	19M7662	CAP SCREW	1		M10 X 30
	12M7066	LOCK WASHER	1		10 MM
	24M7028	WASHER	1		10.500 X 20 X 2 MM
4	19M7662	CAP SCREW	1		M10 X 30
	12M7066	LOCK WASHER	1		10 MM
	24M7028	WASHER	1		10.500 X 20 X 2 MM
6	19M7662	CAP SCREW	8		M10 X 30
	12M7066	LOCK WASHER	8		10 MM
	24M7028	WASHER	8		10.500 X 20 X 2 MM
8	19M7662	CAP SCREW	4		M10 X 30
	12M7066	LOCK WASHER	4		10 MM
	24M7028	WASHER	4		10.500 X 20 X 2 MM
10	7041400	COVER	1		
11	J031045	BOLT	1		
12	19M7662	CAP SCREW	6		M10 X 30
	12M7058	LOCK WASHER	6		12 MM, (SUB FOR 12M7067)
	24M7346	WASHER	7		11 X 20 X 2 MM
17	7041485	COVER	1	-702000	(EXHAUST MUFFLER)
	DH700025	COVER	1	702001-	(EXHAUST MUFFLER)
18	3093888	COVER	1	-702000	
	DH800032	COVER	1	702001-	
19	6020595	COVER	1		
20	4431357	STOP	1		
21	19M7662	CAP SCREW	2		
	12M7058	LOCK WASHER	2		(SUB FOR 12M7067)
	24M7346	WASHER	2		
22	4424157	STOP	1		
23	19M7177	CAP SCREW	1		M6 X 35
	12M7054	LOCK WASHER	1		19 MM
	24M7012	WASHER	1		6.400 X 24 X 1.200 MM
24	7040331	COVER	1	-702000	
	DH800035	COVER	1	702001-	
25	DH400498	BRACKET	1		(4261669 NOT USED FOR THIS APPLICATION)
26	19M7662	CAP SCREW	2		
	12M7066	LOCK WASHER	2		
	24M7028	WASHER	2		
27	3052306	BRACKET	1	-702000	
	DH300076	BRACKET	1	702001-	
28	3052305	BRACKET	1	-702000	
	DH300075	BRACKET	1	702001-	

COVER

T147830 -UN-07JAN02

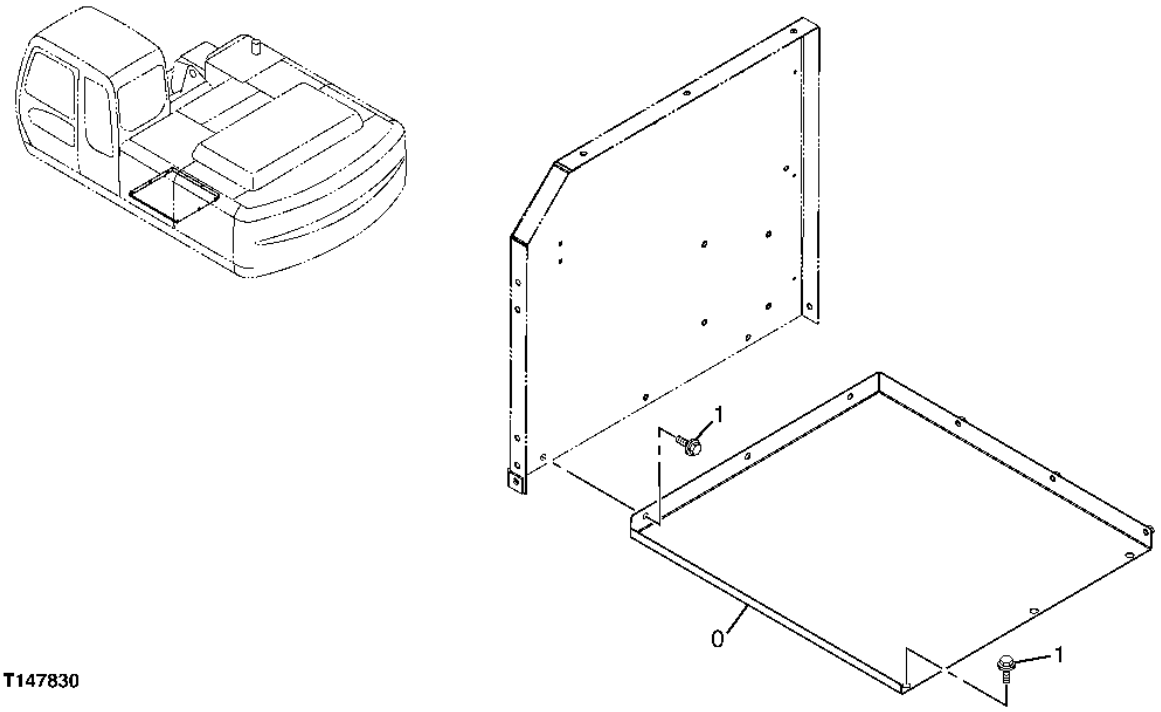

T147830

COVER

KEY	PART NO.	PART NAME	QTY	SERIAL NO.	REMARKS
0	7038365	COVER	1		(SUB FOR TH7038365)
1	19M7662	CAP SCREW	6		M10 X 30
	12M7058	LOCK WASHER	6		12 MM, (SUB FOR 12M7067)
	24M7346	WASHER	6		11 X 20 X 2 MM

DOOR LOCK ASSEMBLY

T153953 -UN-16APR02

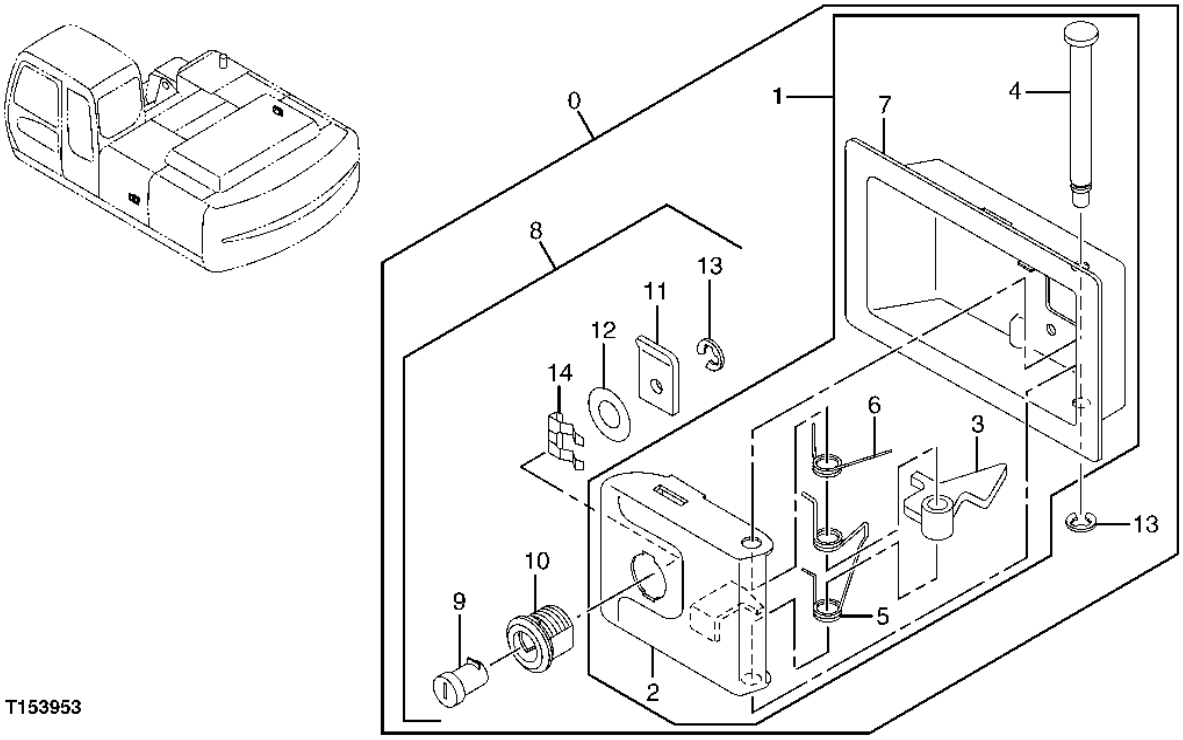

T153953

DOOR LOCK ASSEMBLY

KEY	PART NO.	PART NAME	QTY	SERIAL NO.	REMARKS
0	4409446	LOCK	2		(WELD IN) (SUB FOR TH4409446)
	DH400030	LOCK	1		(RIVET IN)
1	.....	LOCK	2		(TH4409447 NOT AVAILABLE FOR SERVICE)
2	.....	LATCH	2		(TH4461344 NOT AVAILABLE FOR SERVICE)
3	.....	LEVER	2		(TH4461345 NOT AVAILABLE FOR SERVICE)
4	.....	SHAFT	2		(TH4461346 NOT AVAILABLE FOR SERVICE)
5	.....	SPRING	2		(TH4461347 NOT AVAILABLE FOR SERVICE)
6	.....	SPRING	2		(TH4461348 NOT AVAILABLE FOR SERVICE)
7	.....	LOCK	2		(TH4461343 NOT AVAILABLE FOR SERVICE)
8	4409396	LOCK	2		(SUB FOR TH4409396)
9	.....	KEY	2		(TH4461338 NOT AVAILABLE FOR SERVICE)
10	.....	CASE	2		(TH4461339 NOT AVAILABLE FOR SERVICE)
11	.....	PLATE	2		(TH4461340 NOT AVAILABLE FOR SERVICE)
12	.....	WASHER	4		(TH4461341 NOT AVAILABLE FOR SERVICE)
13	.....	CLIP	4		(TH4461347 NOT AVAILABLE FOR SERVICE)
14	.....	CLIP	2		(TH4461342 NOT AVAILABLE FOR SERVICE)

MEMORANDA

MEMORANDA

WEATHER STRIP

T143300 -UN-28JUN01

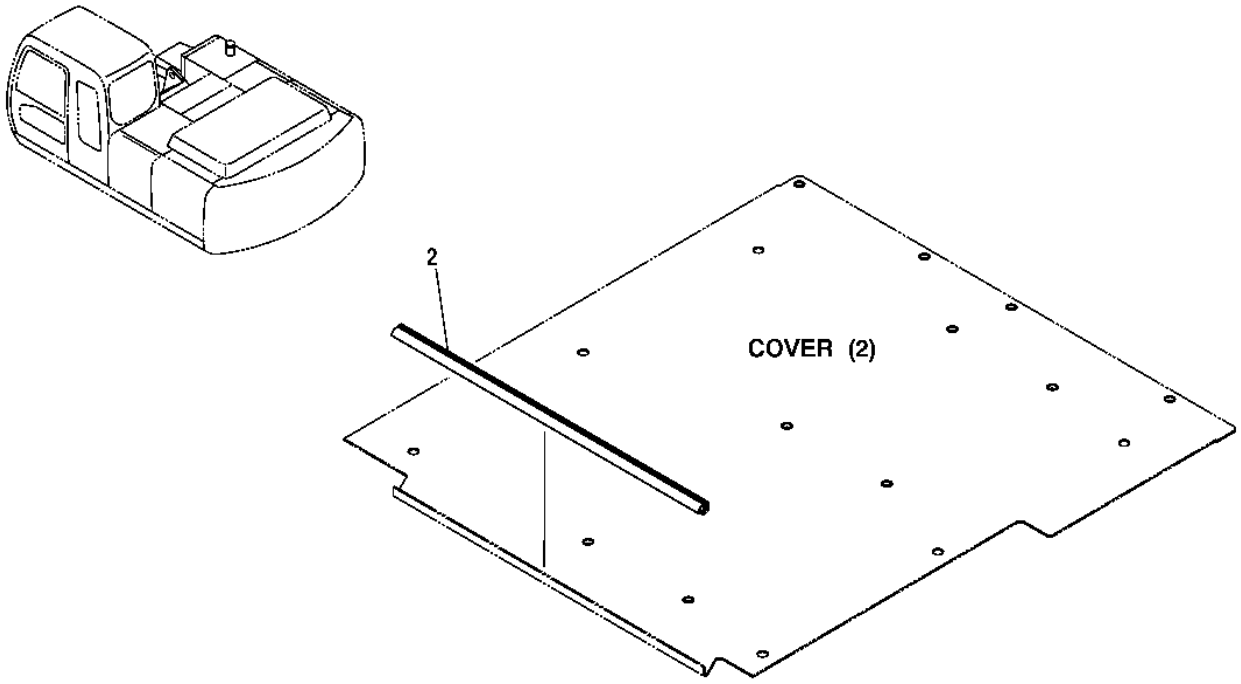

T143300

WEATHER STRIP

KEY	PART NO.	PART NAME	QTY	SERIAL NO.	REMARKS
2	4452345	SEALING TRIM	1		(SUB FOR TH4452345)

ENGINE COVER

T153905 -UN-16APR02

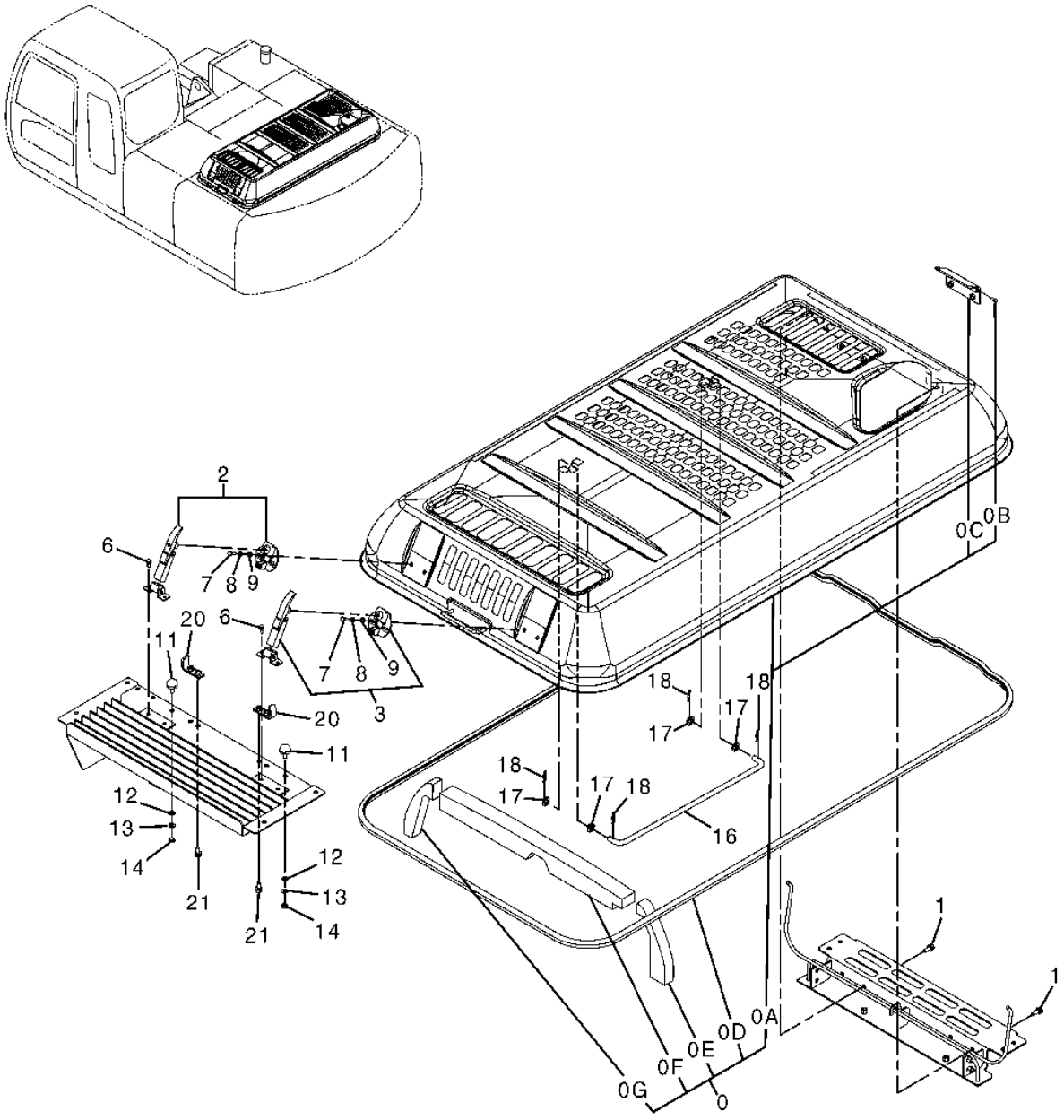

T153905

ENGINE COVER

KEY	PART NO.	PART NAME	QTY	SERIAL NO.	REMARKS
0	5008107	COVER	1		
0A	.....	COVER	1		
0B	4390074	HINGE	2		
0C	.....	NUT	4		
0D	4387043	ISOLATOR	1		(SUB FOR 4278601)
0E	DH400254	ISOLATOR	1		(4465396 NOT USED THIS APPLICATION)
0F	4465397	ISOLATOR	1		
0G	4465398	ISOLATOR	1		
1	19M7662	CAP SCREW	4		M10 X 30
	12M7066	LOCK WASHER	4		10 MM
	24M7028	WASHER	4		10.500 X 20 X 2 MM
2	4361455	CATCH	1		
3	4361455	CATCH	1		(SUB FOR TH111036)
6	19M7881	SCREW	4		M8 X 20
	12M7056	LOCK WASHER	4		(SUB FOR 12M7065)
7	21M7397	SCREW	4		
8	12M7065	LOCK WASHER	4		8 MM, (SUB FOR A590908)
9	24M7055	WASHER	4		8.400 X 16 X 1.600 MM, (SUB FOR A590108)
11	4294508	BUMPER	2		
12	24M7028	WASHER	2		10.500 X 20 X 2 MM, (SUB FOR A590110)
13	12M7066	LOCK WASHER	2		10 MM
14	14M7274	NUT	2		
16	4278783	BRACKET	1		
17	24M7053	WASHER	4		
18	M40461	PIN	4		
20	AT307244	BRACKET	2		(SUB FOR 9743889)
21	19M7402	CAP SCREW	4		
	12M7066	LOCK WASHER	4		
	24M7028	WASHER	4		

TOOL BOX

T198279 -UN-18MAR04

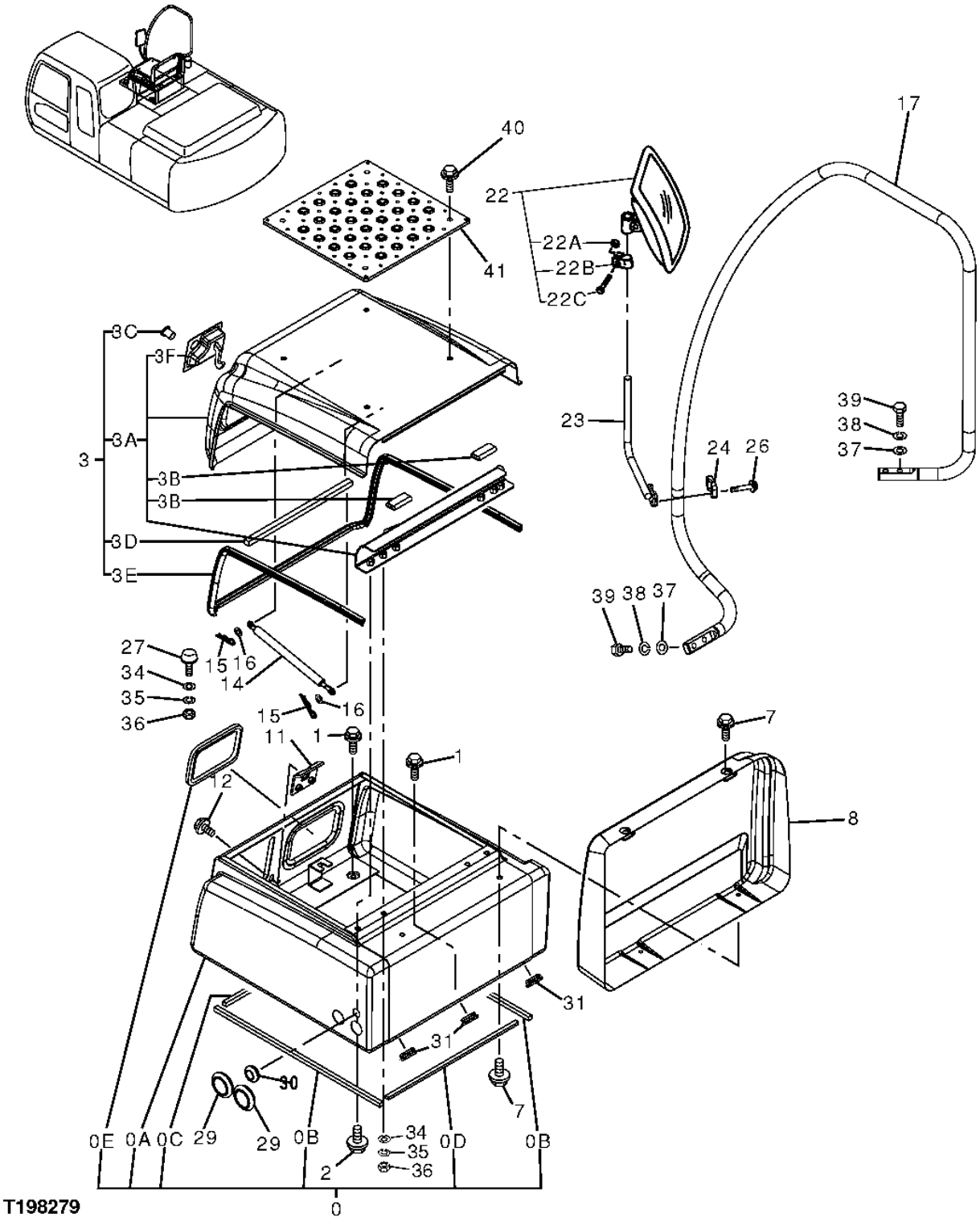

TOOL BOX

KEY	PART NO.	PART NAME	QTY	SERIAL NO.	REMARKS
0	.....	TOOLBOX	1		(NO LONGER AVAILABLE - ORDER COMPONENTS)
0A	6018671	TOOLBOX	1		(SUB FOR TH6018671)
0B	4426598	ISOLATOR	2		(SUB FOR TH4426598)
0C	4426599	ISOLATOR	1		(SUB FOR TH4426599)
0D	4429011	ISOLATOR	1		(SUB FOR TH4429011)
0E	4436409	ISOLATOR	1		(SUB FOR TH4436409)
1	19M7662	CAP SCREW	6		M10 X 30
	12M7066	LOCK WASHER	6		10 MM
	24M7028	WASHER	6		10.500 X 20 X 2 MM
2	19M7662	CAP SCREW	2		M10 X 30
	12M7066	LOCK WASHER	2		10 MM
	24M7028	WASHER	2		10.500 X 20 X 2 MM
3	8077778	COVER	1		(SUB FOR TH8077444)
3A	.....	COVER	1		(6018662 NO LONGER AVAILABLE) (SUB FOR TH6018662)
3B	TH4358031	HINGE	2		
3C	4379989	CYLINDER	1		(SUB FOR TH4379989)
3D	4436279	ISOLATOR	1		(SUB FOR TH4436279)
3E	4443342	SEALING TRIM	1		(SUB FOR TH4443342)
3F	4363915	LATCH	1		(SUB FOR 4379984)
7	19M7662	CAP SCREW	4		M10 X 30
	12M7066	LOCK WASHER	4		10 MM
	24M7028	WASHER	4		10.500 X 20 X 2 MM
8	7037241	COVER	1		(SUB FOR TH7037241)
11	9745798	CATCH	1		(SUB FOR AT214409)
12	19M7662	CAP SCREW	2		M10 X 30
	12M7058	LOCK WASHER	2		12 MM, (SUB FOR 12M7067)
	24M7346	WASHER	2		11 X 20 X 2 MM
14	4352457	CYLINDER	1		(SUB FOR AT213967)
15	H132922	COTTER PIN	2		
16	24M7028	WASHER	2		10.500 X 20 X 2 MM
17	7039248	HANDRAIL	1		
22	4420724	REAR VIEW MIRROR	1		(SUB FOR AT185207)
22A	14M7400	LOCK NUT	1		M10
22B	.....	CLAMP	1		(NOT AVAILABLE)
22C	03M7193	BOLT	1		M10 X 35
23	8077521	BRACKET	1		
24	DH400660	CLAMP	1		(4425481 NOT USED FOR THIS APPLICATION)
26	19M7184	CAP SCREW	2		M8 X 55
	12M7056	LOCK WASHER	2		8 MM, (SUB FOR 12M7065)
27	4294508	BUMPER	2		(SUB FOR AT201032)
29	4276215	GROMMET	2		(SUB FOR AT155307)
30	4613243	GROMMET	1		(SUB FOR AT122152, 94-2807)
31	4426597	BUSHING	3		(SUB FOR TH4426597)
34	24M7028	WASHER	4		10.500 X 20 X 2 MM
35	12M7066	LOCK WASHER	4		10 MM
36	14M7274	NUT	4		M10
37	24M7047	WASHER	4		13 X 24 X 2.500 MM
38	12H301	LOCK WASHER	4		1/2"
39	J921240	CAP SCREW	4		(SUB FOR AT215474)
40	19M7662	CAP SCREW	4		M10 X 30
	12M7066	LOCK WASHER	4		10 MM
	24M7028	WASHER	4		10.500 X 20 X 2 MM
41	3091337	COVER	1		(SUB FOR TH3091337)

BOTTOM PROTECTION COVERS

T153903 -UN-16APR02

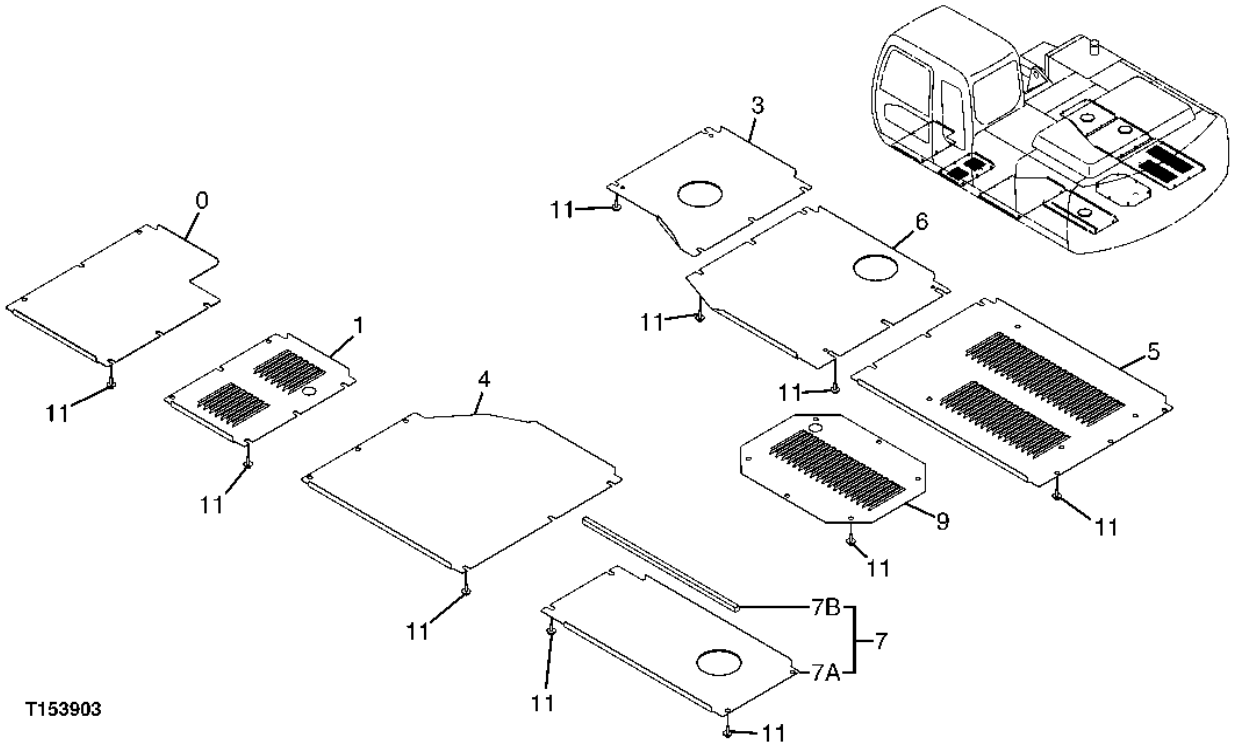

BOTTOM PROTECTION COVERS

KEY	PART NO.	PART NAME	QTY	SERIAL NO.	REMARKS
0	3087997	COVER	1		
1	3087920	COVER	1		
3	3087960	COVER	1		
4	2044598	COVER	1		
5	2044599	COVER	1		
6	2044600	COVER	1		
7	8086483	COVER	1	-702000	
	DH800043	COVER	1	702001-	
7A	3093913	COVER	1	-702000	
	DH300083	COVER	1	702001-	
7B	4466291	ISOLATOR	1	-702000	
	DH400308	ISOLATOR	1	702001-	
9	3070763	COVER	1		(SUB FOR AT179420)
11	19M7550	CAP SCREW	37		M10 X 35
	12M7066	LOCK WASHER	37		10 MM
	24M7346	WASHER	37		11 X 20 X 2 MM

COOLING PACKAGE AND HYDRAULIC PUMP COMPARTMENT DOORS(VENTED)

T165697 -UN-11MAR03

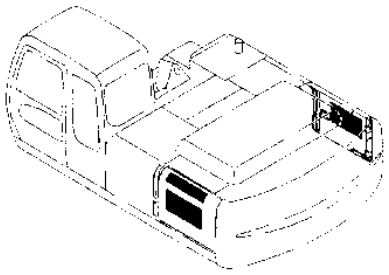

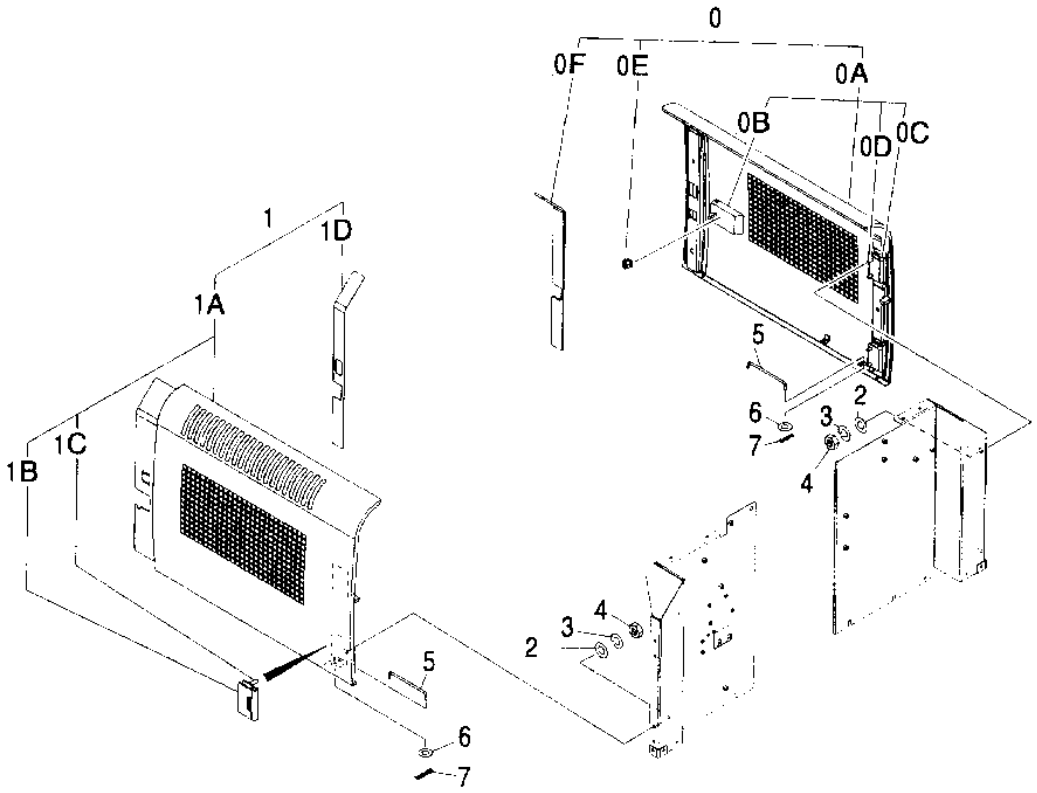

T165697

COOLING PACKAGE AND HYDRAULIC PUMP COMPARTMENT DOORS(VENTED)

KEY	PART NO.	PART NAME	QTY	SERIAL NO.	REMARKS
0	DH700049J	DOOR	1		(7040497 NOT USED FOR THIS APPLICATION) (ASSEMBLY)
0A	5007751	DOOR	1		
0B	4409446	LOCK	1		(WELD IN)
	DH400030	LOCK	1		(RIVET IN)
0C	4445380	HINGE	2		
0D	19M7402	CAP SCREW	4		M10 X 25
0E	4409446	LOCK	1		(WELD IN)
	DH400030	LOCK	1		(RIVET IN)
0F	4425575	ISOLATOR	1		
1	DH700128	DOOR	1		(7040496 NOT USED FOR THIS APPLICATION) (ASSEMBLY FOR VENTED TROPICAL DOOR)
1A	5007750	DOOR	1		
1B	4445380	HINGE	2		
1C	19M7402	CAP SCREW	4		M10 X 25
1D	4425576	ISOLATOR	1		
2	24M7028	WASHER	8		10.500 X 20 X 2 MM
3	12M7066	LOCK WASHER	8		10 MM
4	14M7274	NUT	8		M10
5	4341788	ROD	2		
6	24M7055	WASHER	2		8.400 X 16 X 1.600 MM, (SUB FOR A590108)
7	4022697	COTTER PIN	2		

RADIO AND MOUNTING BRACKETS

TP54582 -UN-07FEB97

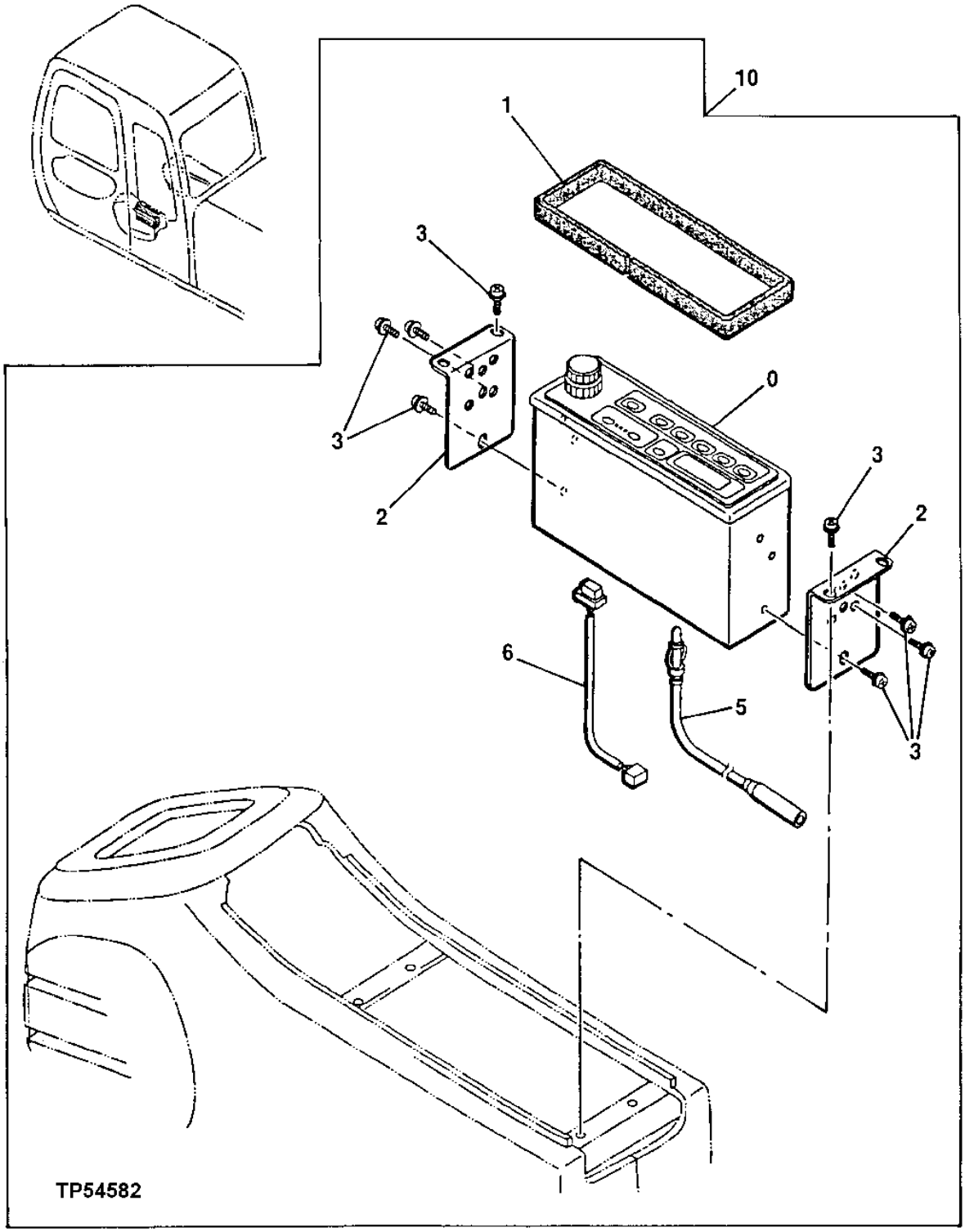

RADIO AND MOUNTING BRACKETS

KEY	PART NO.	PART NAME	QTY	SERIAL NO.	REMARKS
0	4640468	RADIO	1		(SUB FOR 4613913, AT214430, 4351187)
1	4368973	ISOLATOR	1		(SUB FOR AT215533)
2	4341706	BRACKET	2		(SUB FOR AT213883)
3	19M7700	CAP SCREW	10		M5 X 10
	12M7064	LOCK WASHER	10		5 MM (0.197")
	24M7348	WASHER	10		5.500 X 10 X 1 MM (0.217" X 0.394" X 0.039")
5	4102096	WIRING HARNESS	1		(SUB FOR AT154913)
6	2037305	WIRING HARNESS	1		(SUB FOR AT215479)
10	**AT181125**	**RADIO**	**1**		**(KIT) (WHOLEGOODS)**

LEFT REAR VIEW MIRROR

T151065 -UN-06FEB02

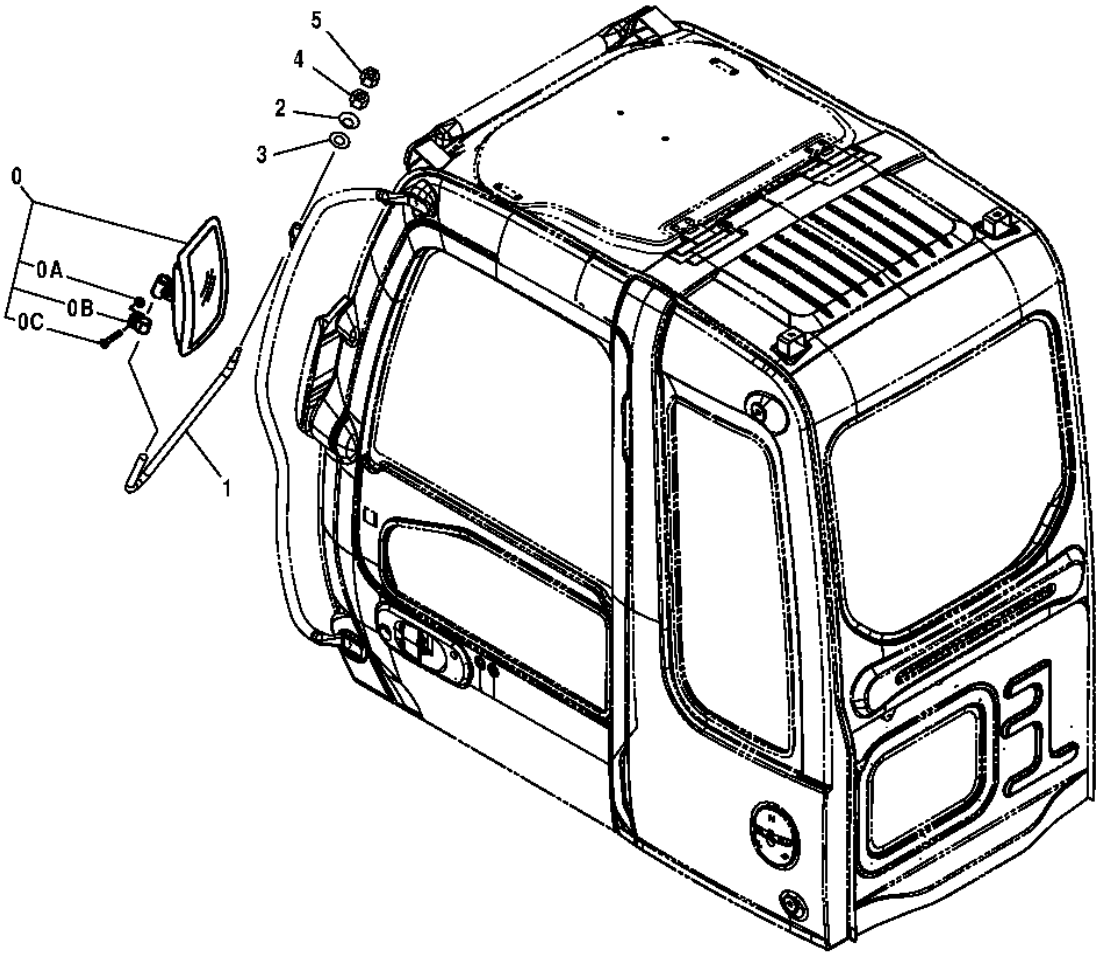

T151065

LEFT REAR VIEW MIRROR

KEY	PART NO.	PART NAME	QTY	SERIAL NO.	REMARKS
0	4420724	REAR VIEW MIRROR	1		(SUB FOR AT185207)
0A	14M7400	LOCK NUT	1		M10
0B	.....	CLAMP	1		(NOT AVAILABLE FOR SERVICE)
0C	03M7193	BOLT	1		M10 X 35
1	3091096	BRACKET	1		(SUB FOR TH3091096)
2	4172172	WASHER	2		(SUB FOR TH104118)
3	24M7047	WASHER	2		13 X 24 X 2.500 MM (0.512" X 0.945" X 0.098")
4	14M7275	NUT	1		M12
5	4449509	NUT	1		(SUB FOR TH4449509)

HORN

TP47966 -UN-21MAY96

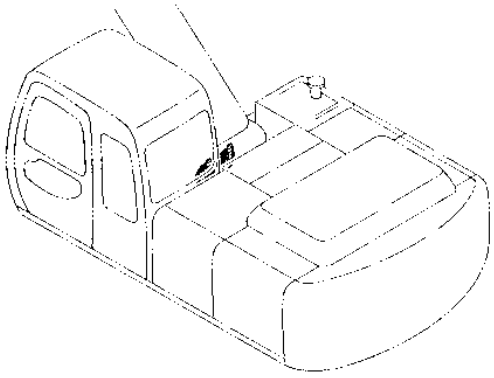

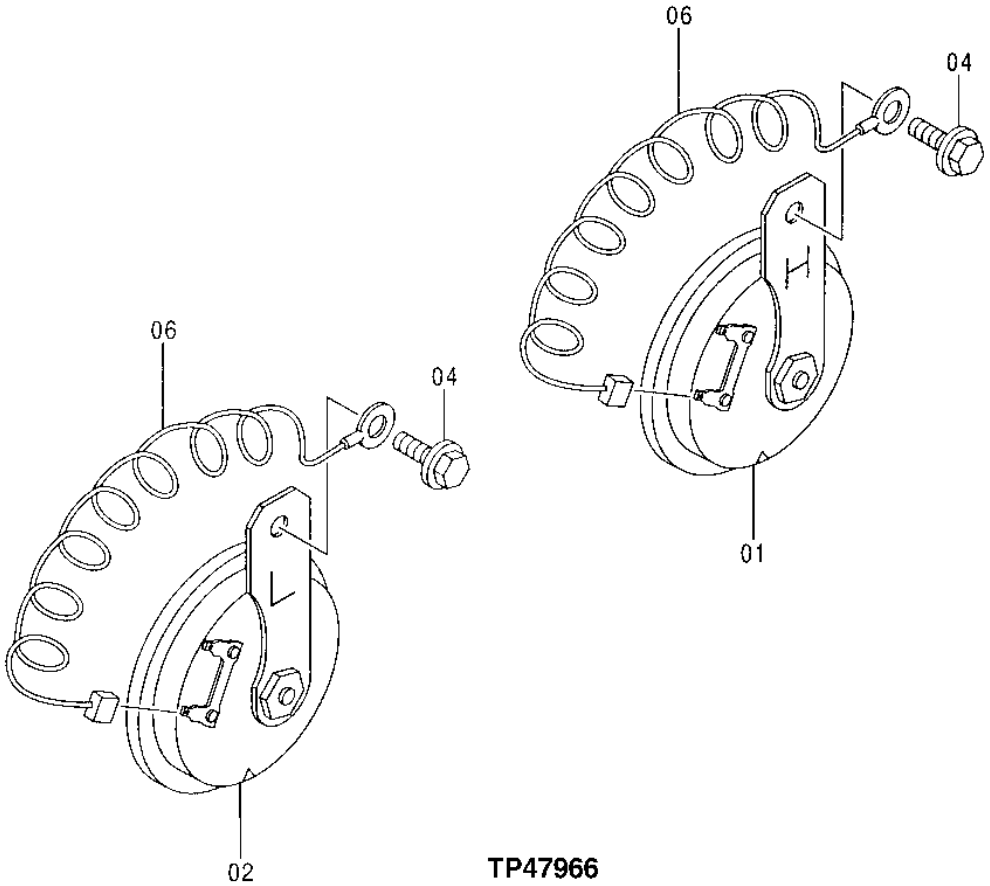

TP47966

HORN

KEY	PART NO.	PART NAME	QTY	SERIAL NO.	REMARKS
1	AT64237	HORN	1		
2	AT64237	HORN	1		
4	19M7163	CAP SCREW	2		M8 X 25
6	4254603	WIRING HARNESS	2		(SUB FOR AT154213)

TRAVEL MOTION ALARM

T143276 -UN-12OCT01

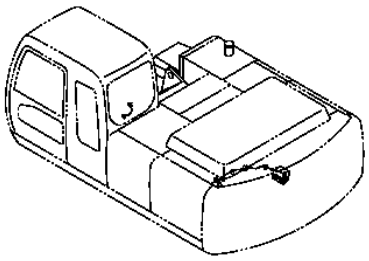

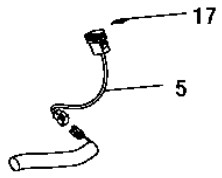

ELECTRIC PARTS

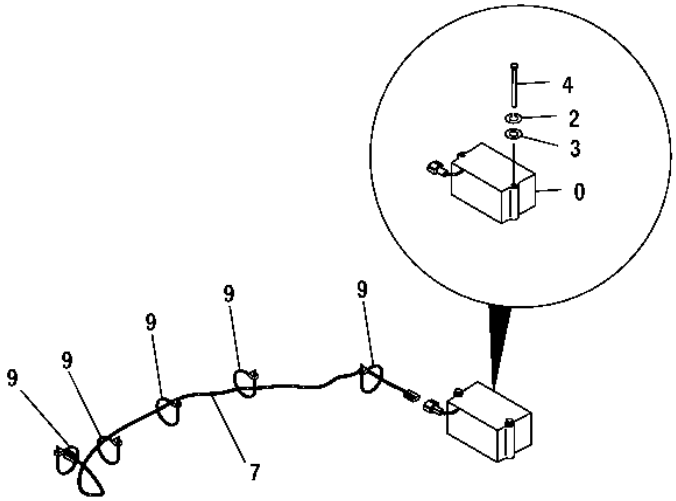

T143276

TRAVEL MOTION ALARM

KEY	PART NO.	PART NAME	QTY	SERIAL NO.	REMARKS
0	AT301074	ALARM SYSTEM	1		(SUB FOR AT154966, 4283028)
2	12M7056	LOCK WASHER	2		8 MM (0.315") (SUB FOR 12M7065)
3	24M7055	WASHER	2		8.400 X 16 X 1.600 MM (0.331" X 0.630" X 0.063")
4	19M7997	CAP SCREW	2		M8 X 110
5	4384758	SWITCH	1		(ROUND STYLE)
7	3088769	WIRING HARNESS	1		(SUB FOR TH3088769)
9	H77698	TIE BAND	6		
17	4450174	LABEL	1		(SUB FOR 4441246 AND TH4441246)

BUCKET
(GENERAL PURPOSE)
(ALSO ORDER BUCKET TOOTH ASSEMBLIES)

TP70466 -UN-08SEP00

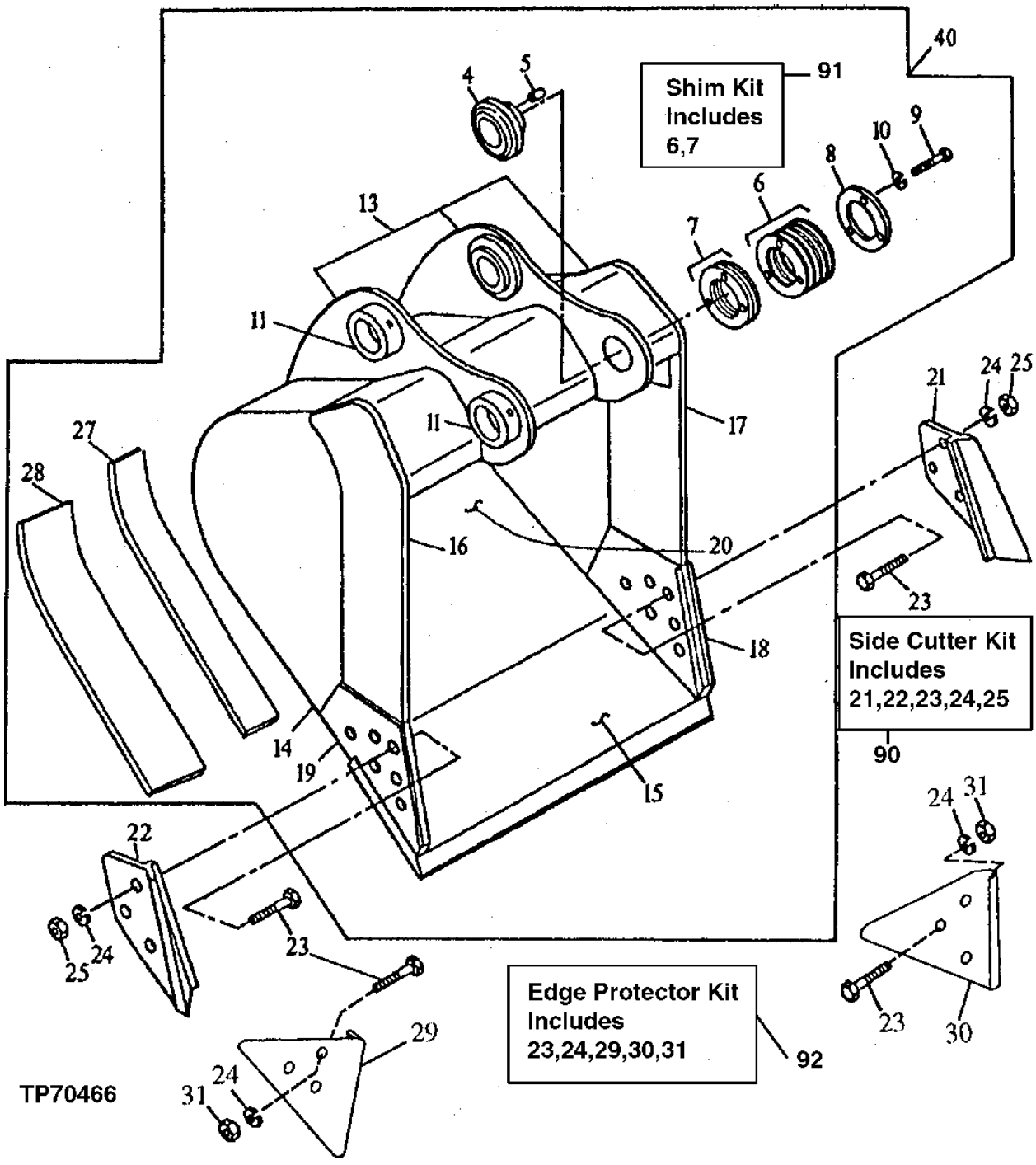

BUCKET
(GENERAL PURPOSE)
(ALSO ORDER BUCKET TOOTH ASSEMBLIES)

KEY	PART NO.	PART NAME	QTY	SERIAL NO.	REMARKS
4	AT131084	BUSHING	1		
5	R48685	DOWEL PIN	1		
6	TH102460	WASHER	6		(1 MM)
7	TH102461	SHIM	2		(.5 MM)
8	TH102463	PLATE	1		
9	19H2706	CAP SCREW	3		5/8" X 2"
10	12H294	LOCK WASHER	3		5/8"
11	TH102409	BUSHING	2		
13	C603692	PIVOT	1		(BUCKET EAR BLANK ASSEMBLY) (ORDER DIRECTLY FROM CENTRAL FABRICATORS)
14	307047	PLATE	2		(RIGHT AND LEFT SIDE) (ORDER DIRECTLY FROM CENTRAL FABRICATORS)
15	AT131090	CUTTING EDGE	1		(CUT TO LENGTH)
16	300483	VERTICAL CUTTER	1		(UPPER RIGHT SIDE CUTTER) (ORDER DIRECTLY FROM CENTRAL FABRICATORS)
17	300484	VERTICAL CUTTER	1		(UPPER LEFT SIDE CUTTER) (ORDER DIRECTLY FROM CENTRAL FABRICATORS)
18	300482	VERTICAL CUTTER	1		(LEFT SIDE CUTTER INSERT) (ORDER DIRECTLY FROM CENTRAL FABRICATORS)
19	300481	VERTICAL CUTTER	1		(RIGHT SIDE CUTTER INSERT) (ORDER DIRECTLY FROM CENTRAL FABRICATORS)
20A	600284	MOLDBOARD	1		(UPPER MOLDBOARD - 30 INCH BUCKET) (ORDER DIRECTLY FROM CENTRAL FABRICATORS)
	600285	MOLDBOARD	1		(UPPER MOLDBOARD - 36 INCH BUCKET) (ORDER DIRECTLY FROM CENTRAL FABRICATORS)
	600286	MOLDBOARD	1		(UPPER MOLDBOARD - 42 INCH BUCKET) (ORDER DIRECTLY FROM CENTRAL FABRICATORS)
	600287	MOLDBOARD	1		(UPPER MOLDBOARD - 48 INCH BUCKET) (ORDER DIRECTLY FROM CENTRAL FABRICATORS)
20B	600289	MOLDBOARD	1		(LOWER MOLDBOARD - 30 INCH BUCKET) (ORDER DIRECTLY FROM CENTRAL FABRICATORS)
	600290	MOLDBOARD	1		(LOWER MOLDBOARD - 36 INCH BUCKET) (ORDER DIRECTLY FROM CENTRAL FABRICATORS)
	600291	MOLDBOARD	1		(LOWER MOLDBOARD - 42 INCH BUCKET) (ORDER DIRECTLY FROM CENTRAL FABRICATORS)
	600392	MOLDBOARD	1		(LOWER MOLDBOARD - 48 INCH BUCKET) (ORDER DIRECTLY FROM CENTRAL FABRICATORS)

BUCKET
(GENERAL PURPOSE)
(ALSO ORDER BUCKET TOOTH ASSEMBLIES)

TP70466 -UN-08SEP00

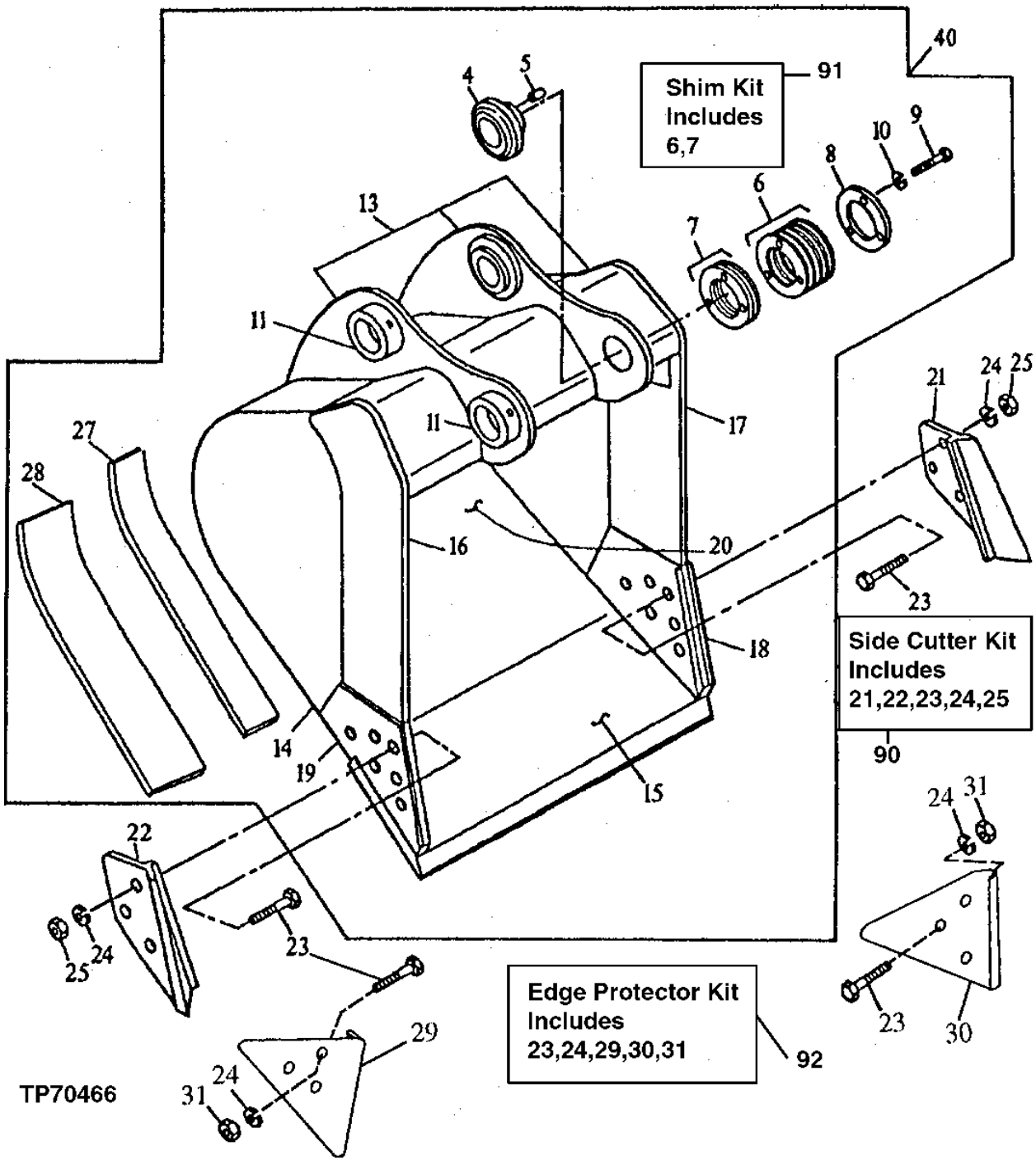

BUCKET
(GENERAL PURPOSE)
(ALSO ORDER BUCKET TOOTH ASSEMBLIES)

KEY	PART NO.	PART NAME	QTY	SERIAL NO.	REMARKS
21	.....	CUTTING EDGE	1		(K) (SUB AT131080) (LEFT)
22	.....	CUTTING EDGE	1		(K) (SUB AT131080) (RIGHT)
23	09H1770	BOLT	6		(K) 7/8" X 2-1/2", (K2)
24	12H245	LOCK WASHER	6		(K) 7/8", (K2)
25	14H1077	NUT	6		(K) 7/8"
27	307048	BAR	1		(INNER WEAR) (ORDER DRIECTLY FROM CENTRAL FABRICATORS)
28	300479	BAR	2		(OUTER WEAR) (ORDER DIRECTLY FROM CENTRAL FABRICATORS)
29	.....	SHROUD	1		(WEAR SHROUD) (SUB AT167874) (K2)
30	.....	SHROUD	1		(WEAR SHROUD) (SUB AT167874) (K2)
31	14H1044	NUT	6		22.225 MM (7/8") (K2)
40	**AT167279**	**EXCAVATOR BUCKET**	**1**		**WHOLEGOODS (24 INCH - .95 CUBIC YARD) (AVAILABLE TOOTH ASSEMBLIES ON SEPARATE PAGE)**
	AT163628	**EXCAVATOR BUCKET**	**1**		**WHOLEGOODS (30 INCH - 1.20 CUBIC YARD) (AVAILABLE TOOTH ASSEMBLIES ON SEPARATE PAGE)**
	AT163629	**EXCAVATOR BUCKET**	**1**		**WHOLEGOODS (36 INCH - 1.48 CUBIC YARD) (AVAILABLE TOOTH ASSEMBLIES ON SEPARATE PAGE)**
	AT163630	**EXCAVATOR BUCKET**	**1**		**WHOLEGOODS (42 INCH - 1.34 CUBIC YARD) (WITHOUT SIDE CUTTERS) (AVAILABLE TOOTH ASSEMBLIES ON SEPARATE PAGE)**
	AT163631	**EXCAVATOR BUCKET**	**1**		**WHOLEGOODS (42 INCH - 1.75 CUBIC YARD) (AVAILABLE TOOTH ASSEMBLIES ON SEPARATE PAGE)**
	AT163632	**EXCAVATOR BUCKET**	**1**		**WHOLEGOODS (48 INCH - 2.03 CUBIC YARD) (AVAILABLE TOOTH ASSEMBLIES ON SEPARATE PAGE)**
90	AT131080	END BIT	1		INCLUDES ALL (K) PARTS
92	AT167874	KIT	1		INCLUDES ALL (K2) PARTS

BUCKET
(HEAVY DUTY HIGH CAPACITY)
(ALSO ORDER BUCKET TOOTH ASSEMBLIES)

TP70466 -UN-08SEP00

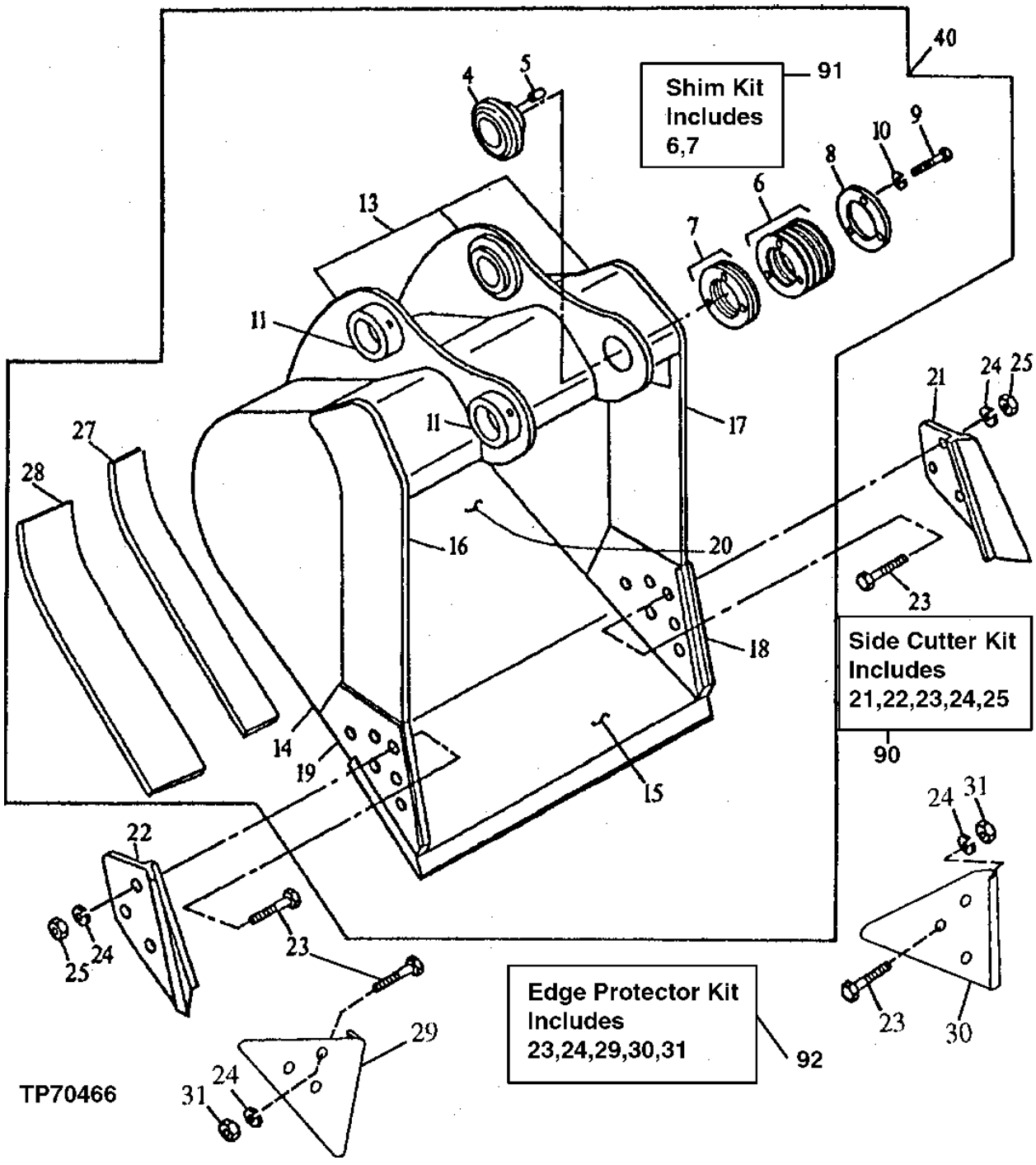

BUCKET
(HEAVY DUTY HIGH CAPACITY)
(ALSO ORDER BUCKET TOOTH ASSEMBLIES)

KEY	PART NO.	PART NAME	QTY	SERIAL NO.	REMARKS
4	AT131084	BUSHING	1		
5	R48685	DOWEL PIN	1		
6	TH102460	WASHER	6		(1 MM)
7	TH102461	SHIM	2		(.5 MM)
8	TH102463	PLATE	1		
9	19H2706	CAP SCREW	3		5/8" X 2"
10	12H294	LOCK WASHER	3		5/8"
11	TH102409	BUSHING	2		
13	C603692	PIVOT	1		(BUCKET EAR BLANK ASSEMBLY) (ORDER DIRECTLY FROM CENTRAL FABRICATORS)
14	306995	PLATE	2		(RIGHT AND LEFT SIDE) (ORDER DIRECTLY FROM CENTRAL FABRICATORS)
15	AT131097	CUTTING EDGE	1		(CUT TO LENGTH)
16	300283	VERTICAL CUTTER	1		(UPPER RIGHT SIDE CUTTER) (ORDER DIRECTLY FROM CENTRAL FABRICATORS)
17	300284	VERTICAL CUTTER	1		(UPPER LEFT SIDE CUTTER) (ORDER DIRECTLY FROM CENTRAL FABRICATORS)
18	304568	VERTICAL CUTTER	1		(LEFT SIDE CUTTER INSERT) (ORDER DIRECTLY FROM CENTRAL FABRICATORS)
19	304567	VERTICAL CUTTER	1		(RIGHT SIDE CUTTER INSERT) (ORDER DIRECTLY FROM CENTRAL FABRICATORS)
20A	600171	MOLDBOARD	1		(UPPER MOLDBOARD - 20 INCH BUCKET) (ORDER DIRECTLY FROM CENTRAL FABRICATORS)
	600172	MOLDBOARD	1		(UPPER MOLDBOARD - 36 INCH BUCKET) (ORDER DIRECTLY FROM CENTRAL FABRICATORS)
	600173	MOLDBOARD	1		(UPPER MOLDBOARD - 42 INCH BUCKET) (ORDER DIRECTLY FROM CENTRAL FABRICATORS)
20B	600166	MOLDBOARD	1		(LOWER MOLDBOARD - 30 INCH BUCKET) (ORDER DIRECTLY FROM CENTRAL FABRICATORS)
	600167	MOLDBOARD	1		(LOWER MOLDBOARD - 36 INCH BUCKET) (ORDER DIRECTLY FROM CENTRAL FABRICATORS)
	600168	MOLDBOARD	1		(LOWER MOLDBOARD - 42 INCH BUCKET) (ORDER DIRECTLY FROM CENTRAL FABRICATORS)

BUCKET
(HEAVY DUTY HIGH CAPACITY)
(ALSO ORDER BUCKET TOOTH ASSEMBLIES)

TP70466 -UN-08SEP00

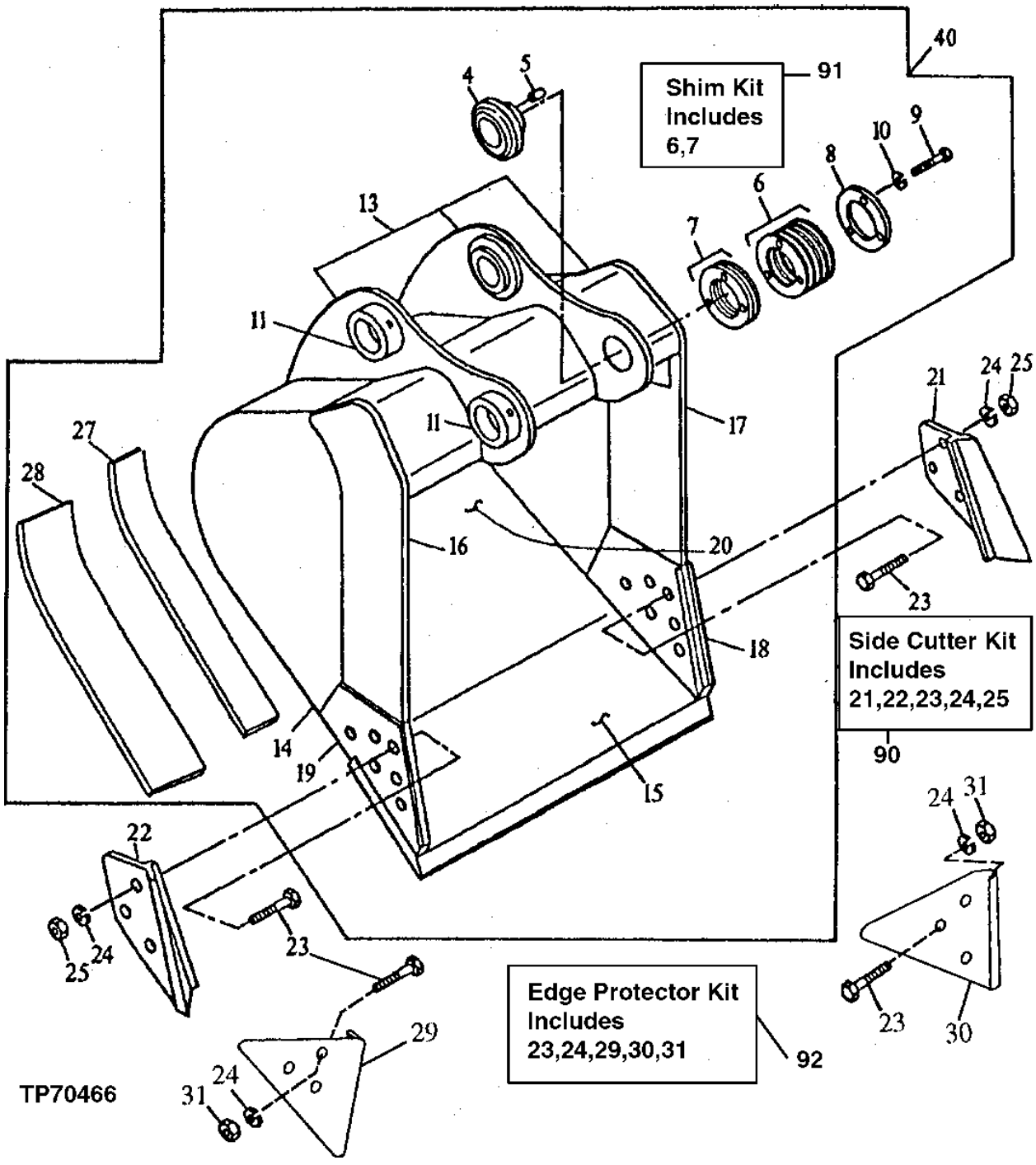

BUCKET
(HEAVY DUTY HIGH CAPACITY)
(ALSO ORDER BUCKET TOOTH ASSEMBLIES)

KEY	PART NO.	PART NAME	QTY	SERIAL NO.	REMARKS
21	.....	CUTTING EDGE	1		(K) (SUB AT131085)
22	.....	CUTTING EDGE	1		(K) (SUB AT131085)
23	09H1771	BOLT	6		(K) 7/8" X 3", (K2)
24	12H245	LOCK WASHER	6		(K) 7/8", (K2)
25	14H1077	NUT	6		(K) 7/8"
27	300291	BAR	2		(INNER WEAR) (ORDER DIRECTLY FROM CENTRAL FABRICATORS)
28	304559	BAR	2		(OUTER WEAR) (ORDER DIRECTLY FROM CENTRAL FABRICATORS)
29	.....	SHROUD	1		(WEAR SHROUD) (SUB AT167876) (K2)
30	.....	SHROUD	1		(WEAR SHROUD) (SUB AT167876) (K2)
31	14H1044	NUT	6		22.225 MM (7/8") (K2)
40	**AT163638**	**EXCAVATOR BUCKET**	**1**		**WHOLEGOODS (24 INCH - .92 CUBIC YARD) (AVAILABLE TOOTH ASSEMBLIES ON SEPARATE PAGE)**
	AT163639	**EXCAVATOR BUCKET**	**1**		**WHOLEGOODS (30 INCH - 1.20 CUBIC YARD) (AVAILABLE TOOTH ASSEMBLIES ON SEPARATE PAGE)**
	AT163640	**EXCAVATOR BUCKET**	**1**		**WHOLEGOODS (36 INCH - 1.48 CUBIC YARD) (AVAILABLE TOOTH ASSEMBLIES ON SEPARATE PAGE)**
	AT163641	**EXCAVATOR BUCKET**	**1**		**WHOLEGOODS (42 INCH - 1.75 CUBIC YARD) (AVAILABLE TOOTH ASSEMBLIES ON SEPARATE PAGE)**
90	AT131085	END BIT	1		(SIDE CUTTER KIT) INCLUDES ALL (K) PARTS
92	AT167876	KIT	1		(EDGE PROTECTOR) INCLUDES ALL (K2) PARTS, WHOLEGOODS

(F) CENTRAL FABRICATORS' PARTS. JOHN DEERE DEALER ORDER DIRECTLY FROM CENTRAL FABRICATORS.

BUCKET
(SEVERE DUTY CAST LIP)
(ALSO ORDER BUCKET TOOTH ASSEMBLIES)

TP70496 -UN-09JAN01

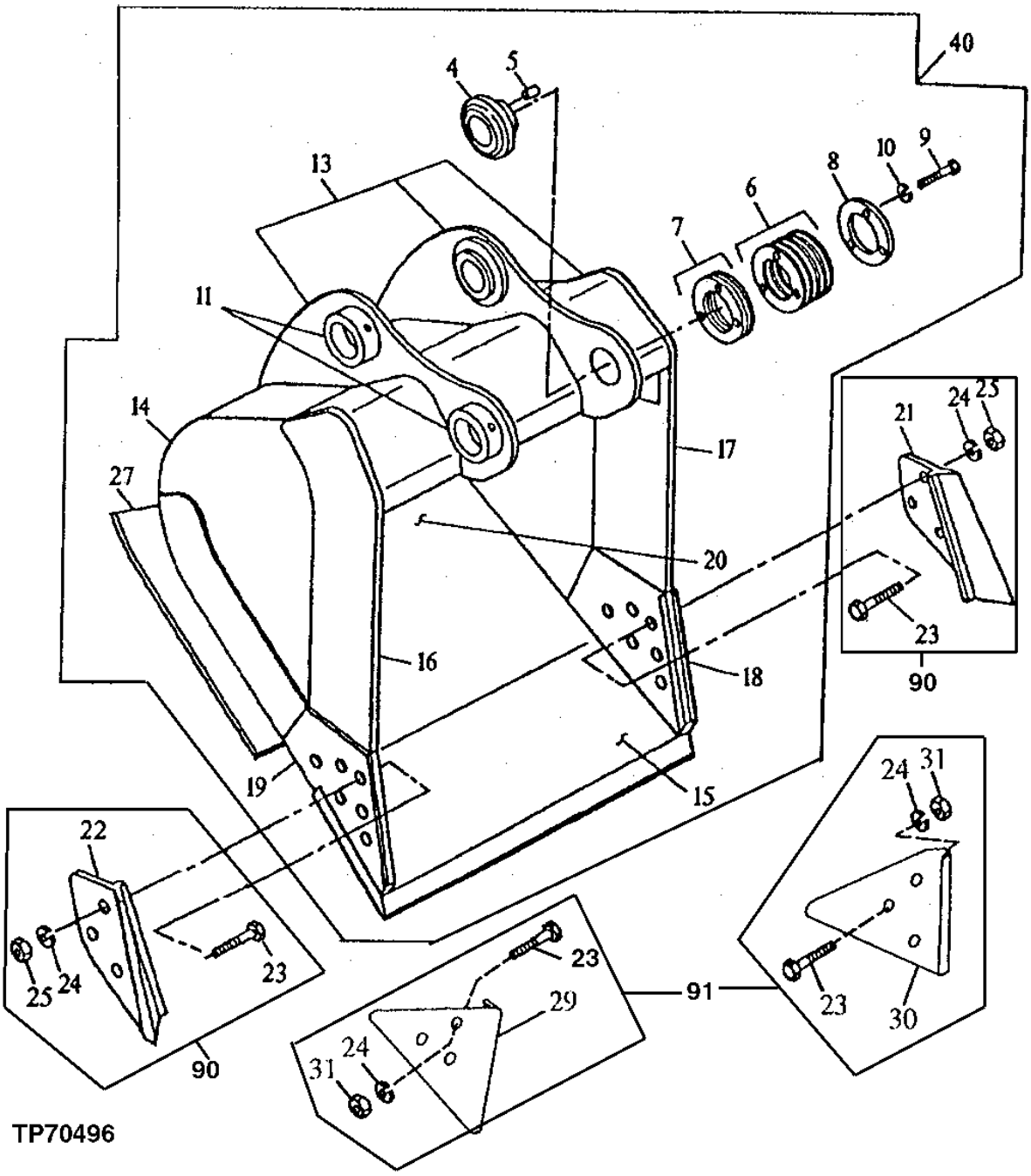

BUCKET
(SEVERE DUTY CAST LIP)
(ALSO ORDER BUCKET TOOTH ASSEMBLIES)

KEY	PART NO.	PART NAME	QTY	SERIAL NO.	REMARKS
4	AT131084	BUSHING	1		
5	R48685	DOWEL PIN	1		
6	TH102460	WASHER	6		(1 MM)
7	TH102461	SHIM	2		(.5 MM)
8	TH102463	PLATE	1		
9	19H2706	CAP SCREW	3		5/8" X 2"
10	12H294	LOCK WASHER	3		5/8"
11	TH102409	BUSHING	2		
13	C603692	PIVOT	1		(BUCKET EAR BLANK ASSEMBLY) (ORDER DIRECTLY FROM CENTRAL FABRICATORS)
14	300804	PLATE	2		(RIGHT AND LEFT SIDE) (ORDER DIRECTLY FROM CENTRAL FABRICATORS)
15	AT171742	CUTTING EDGE	1		(CUT TO LENGTH) (USE WITH 36 INCH BUCKET) (ORDER DIRECTLY FROM CENTRAL FABRICATORS)
	AT131094	CUTTING EDGE	1		(CUT TO LENGTH) (USE WITH 42 INCH BUCKET) (ORDER DIRECTLY FROM CENTRAL FABRICATORS)
16	300526	VERTICAL CUTTER	1		(UPPER RIGHT SIDE CUTTER) (ORDER DIRECTLY FROM CENTRAL FABRICATORS)
17	300527	VERTICAL CUTTER	1		(UPPER LEFT SIDE CUTTER) (ORDER DIRECTLY FROM CENTRAL FABRICATORS)
18	300803	VERTICAL CUTTER	1		(LEFT SIDE CUTTER INSERT) (ORDER DIRECTLY FROM CENTRAL FABRICATORS)
19	300802	VERTICAL CUTTER	1		(RIGHT SIDE CUTTER INSERT) (ORDER DIRECTLY FROM CENTRAL FABRICATORS)
20	600444	MOLDBOARD	1		(36 INCH) (ORDER DIRECTLY FROM CENTRAL FABRICATORS)
	600445	MOLDBOARD	1		(42 INCH) (ORDER DIRECTLY FROM CENTRAL FABRICATORS)
21	.....	CUTTING EDGE	1		(K) (SUB AT131085)
22	.....	CUTTING EDGE	1		(K) (SUB AT131085)
23	09H1771	BOLT	6		(K) 7/8" X 3", (K2)
24	12H245	LOCK WASHER	6		(K) 7/8", (K2)
25	14H1077	NUT	6		(K) 7/8"
27	606121	BAR	1		(DOUBLE BOTTOM WEAR BAR - 36 INCH BUCKET) (ORDER DIRECTLY FROM CENTRAL FABRICATORS)
	606122	BAR	1		(DOUBLE BOTTOM WEAR BAR - 42 INCH BUCKET) (ORDER DIRECTLY FROM CENTRAL FABRICATORS)
29	.....	SHROUD	1		(WEAR SHROUD) (SUB AT167876) (K2)
30	.....	SHROUD	1		(WEAR SHROUD) (SUB AT167876) (K2)
31	14H1044	NUT	6		22.225 MM (7/8") (K2)
40	**AT171743**	**EXCAVATOR BUCKET**	**1**		**WHOLEGOODS (36 INCH - 1.16 CUBIC YARD) (AVAILABLE TOOTH ASSEMBLIES ON SEPARATE PAGE)**
	AT171745	**EXCAVATOR BUCKET**	**1**		**WHOLEGOODS (42 INCH - 1.38 CUBIC YARD) (AVAILABLE TOOTH ASSEMBLIES ON SEPARATE PAGE)**
90	**AT131085**	**END BIT**	**1**		**(SIDE CUTTER KIT) INCLUDES ALL (K) PARTS**
91	**AT167876**	**KIT**	**1**		**(EDGE PROTECTOR) INCLUDES ALL (K2) PARTS, WHOLEGOODS**

BUCKET
(SEVERE DUTY PLATE LIP)
(ALSO ORDER BUCKET TOOTH ASSEMBLIES)

TP70496 -UN-09JAN01

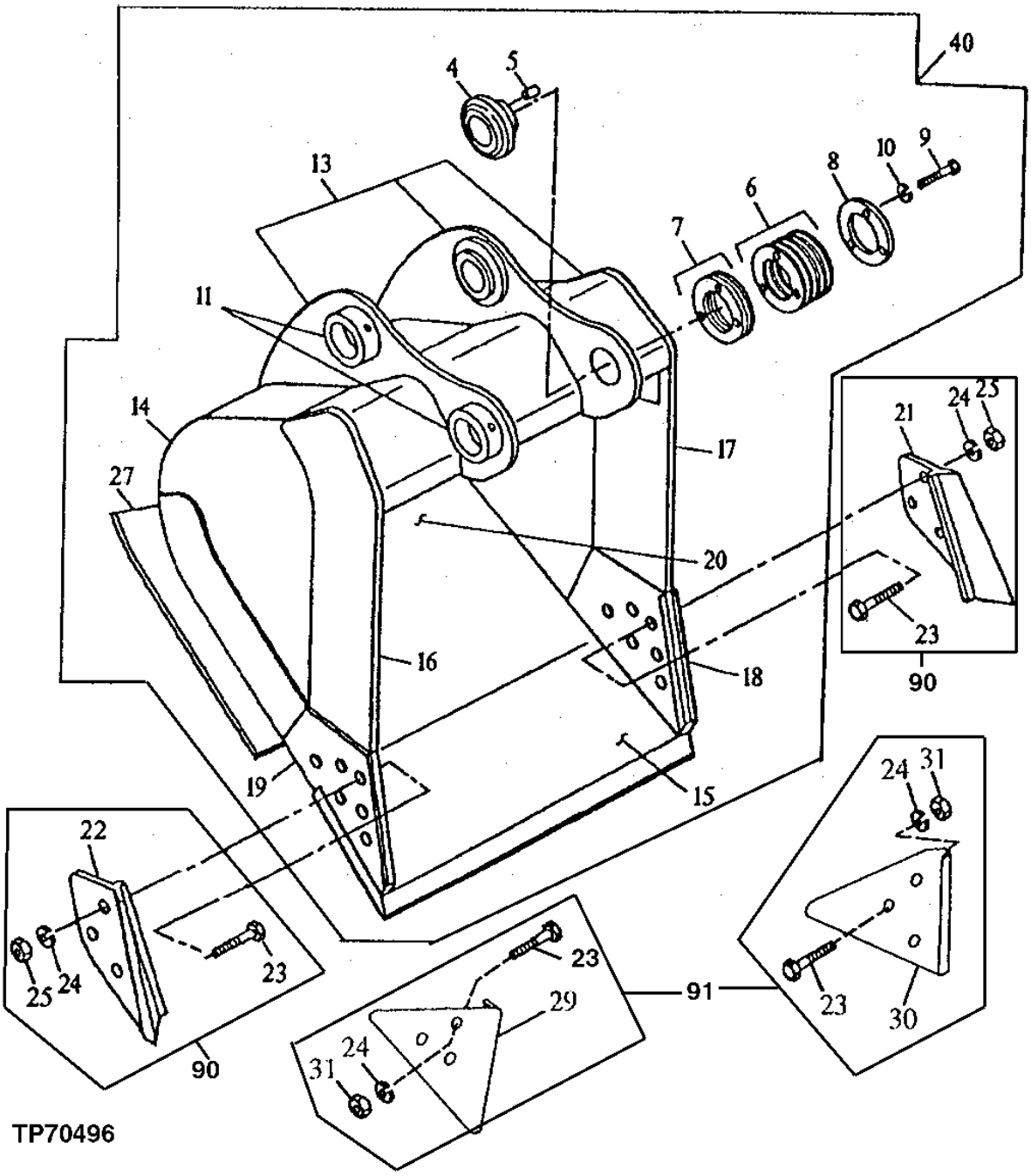

BUCKET
(SEVERE DUTY PLATE LIP)
(ALSO ORDER BUCKET TOOTH ASSEMBLIES)

KEY	PART NO.	PART NAME	QTY	SERIAL NO.	REMARKS
4	AT131084	BUSHING	1		
5	R48685	DOWEL PIN	1		
6	TH102460	WASHER	6		(1 MM)
7	TH102461	SHIM	2		(.5 MM)
8	TH102463	PLATE	1		
9	19H2706	CAP SCREW	3		
10	12H294	LOCK WASHER	3		
11	TH102409	BUSHING	2		
13	C603692	PIVOT	1		(BUCKET EAR BLANK ASSEMBLY) (ORDER DIRECTLY FROM CENTRAL FABRICATORS)
14	304371	PLATE	2		(RIGHT AND LEFT SIDE) (ORDER DIRECTLY FROM CENTRAL FABRICATORS)
15	AT131097	CUTTING EDGE	1		(CUT TO LENGTH) (ORDER DIRECTLY FROM CENTRAL FABRICATORS)
16	304368	VERTICAL CUTTER	1		(UPPER RIGHT SIDE CUTTER) (ORDER DIRECTLY FROM CENTRAL FABRICATORS)
17	304367	VERTICAL CUTTER	1		(UPPER LEFT SIDE CUTTER) (ORDER DIRECTLY FROM CENTRAL FABRICATORS)
18	304369	VERTICAL CUTTER	1		(LEFT SIDE CUTTER INSERT) (ORDER DIRECTLY FROM CENTRAL FABRICATORS)
19	304370	VERTICAL CUTTER	1		(RIGHT SIDE CUTTER INSERT) (ORDER DIRECTLY FROM CENTRAL FABRICATORS)
20	603868	MOLDBOARD	1		(30 INCH) (ORDER DIRECTLY FROM CENTRAL FABRICATORS)
	603869	MOLDBOARD	1		(36 INCH) (ORDER DIRECTLY FROM CENTRAL FABRICATORS)
	603870	MOLDBOARD	1		(42 INCH)
21	.....	CUTTING EDGE	1		(K) (SUB AT131085)
22	.....	CUTTING EDGE	1		(K) (SUB AT131085)
23	09H1771	BOLT	6		(K) 7/8" X 3", (K2)
24	12H245	LOCK WASHER	6		(K) 7/8", (K2)
25	14H1077	NUT	6		(K) 7/8"
27	603873	BAR	1		(DOUBLE BOTTOM WEAR BAR - 30 INCH BUCKET) (ORDER DIRECTLY FROM CENTRAL FABRICATORS)
	603874	BAR	1		(DOUBLE BOTTOM WEAR BAR - 36 INCH BUCKET) (ORDER DIRECTLY FROM CENTRAL FABRICATORS)
	603875	BAR	1		(DOUBLE BOTTOM WEAR BAR - 42 INCH BUCKET) (ORDER DIRECTLY FROM CENTRAL FABRICATORS)
29	.....	SHROUD	1		(WEAR SHROUD) (SUB AT167876) (K2)
30	.....	SHROUD	1		(WEAR SHROUD) (SUB AT167876) (K2)
31	14H1044	NUT	6		22.225 MM (7/8") (K2)
40	**AT163645**	**EXCAVATOR BUCKET**	**1**		**WHOLEGOODS (30 INCH- .95 CUBIC YARD) (AVAILABLE TOOTH ASSEMBLIES ON SEPARATE PAGE)**
	AT163646	**EXCAVATOR BUCKET**	**1**		**WHOLEGOODS (36 INCH - 1.16 CUBIC YARD) (AVAILABLE TOOTH ASSEMBLIES ON SEPARATE PAGE)**
	AT163647	**EXCAVATOR BUCKET**	**1**		**WHOLEGOODS (42 INCH - 1.38 CUBIC YARD) (AVAILABLE TOOTH ASSEMBLIES ON SEPARATE PAGE)**
90	**AT131085**	**END BIT**	**1**		**(SIDE CUTTER KIT) INCLUDES ALL (K) PARTS**
91	**AT167876**	**KIT**	**1**		**(EDGE PROTECTOR) INCLUDES ALL (K2) PARTS, WHOLEGOODS**

HEAVY DUTY BUCKET
(FOR USE WITH 400 SERIES TEETH)
(ALSO ORDER BUCKET TOOTH ASSEMBLIES)

TP70466 -UN-08SEP00

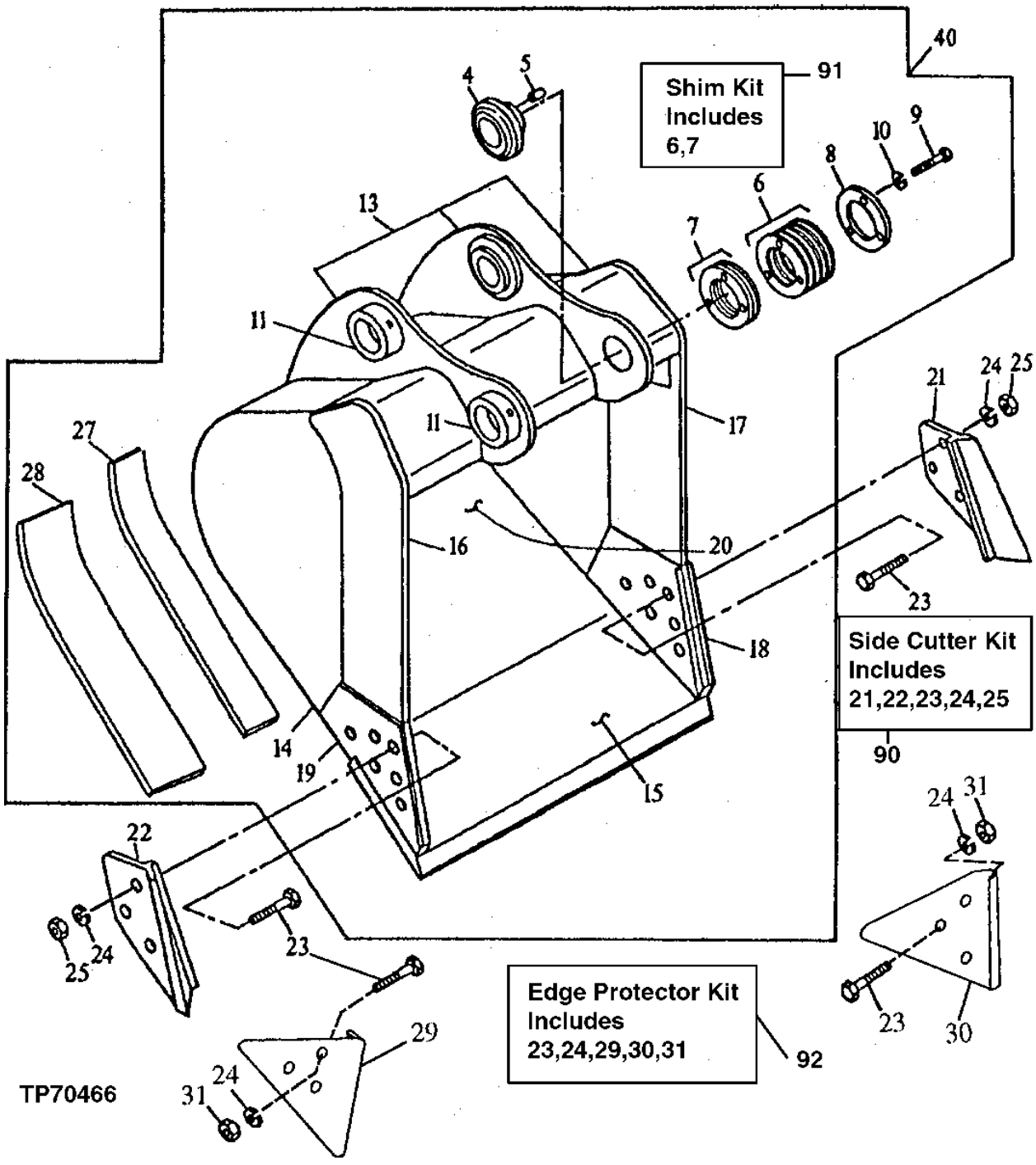

HEAVY DUTY BUCKET
(FOR USE WITH 400 SERIES TEETH)
(ALSO ORDER BUCKET TOOTH ASSEMBLIES)

KEY	PART NO.	PART NAME	QTY	SERIAL NO.	REMARKS
4	AT131084	BUSHING	1		
5	R48685	DOWEL PIN	1		
6	TH102460	WASHER	6		(1 MM)
7	TH102461	SHIM	2		(.5 MM)
8	TH102463	PLATE	1		
9	19H2706	CAP SCREW	3		5/8" X 2"
10	12H294	LOCK WASHER	3		5/8"
11	TH102409	BUSHING	2		
13	C603692	PIVOT	1		(BUCKET EAR BLANK ASSEMBLY) (ORDER DIRECTLY FROM CENTRAL FABRICATORS)
14	300804	PLATE	1		(RIGHT AND LEFT SIDE) (ORDER DIRECTLY FROM CENTRAL FABRICATORS)
15	AT131097	CUTTING EDGE	1		(CUT TO LENGTH) (72 INCHES)
16	300526	VERTICAL CUTTER	1		(UPPER RIGHT SIDE CUTTER) (ORDER DIRECTLY FROM CENTRAL FABRICATORS)
17	300527	VERTICAL CUTTER	1		(UPPER LEFT SIDE CUTTER) (ORDER DIRECTLY FROM CENTRAL FABRICATORS)
18	304568	VERTICAL CUTTER	1		(LEFT SIDE CUTTER INSERT) (ORDER DIRECTLY FROM CENTRAL FABRICATORS)
19	304567	VERTICAL CUTTER	1		(RIGHT SIDE CUTTER INSERT) (ORDER DIRECTLY FROM CENTRAL FABRICATORS)
20A	600312	MOLDBOARD	1		(UPPER MOLDBOARD - 30 INCH BUCKET) (ORDER DIRECTLY FROM CENTRAL FABRICATORS)
	600313	MOLDBOARD	1		(UPPER MOLDBOARD - 36 INCH BUCKET) (ORDER DIRECTLY FROM CENTRAL FABRICATORS)
	600314	MOLDBOARD	1		(UPPER MOLDBOARD - 42 INCH BUCKET) (ORDER DIRECTLY FROM CENTRAL FABRICATORS)
	600315	MOLDBOARD	1		(UPPER MOLDBOARD - 48 INCH BUCKET) (ORDER DIRECTLY FROM CENTRAL FABRICATORS)
	603302	MOLDBOARD	1		(UPPER MOLDBOARD - 54 INCH BUCKET) (ORDER DIRECTLY FROM CENTRAL FABRICATORS)
20B	600418	MOLDBOARD	1		(LOWER MOLDBOARD - 30 INCH BUCKET) (ORDER DIRECTLY FROM CENTRAL FABRICATORS)
	600419	MOLDBOARD	1		(LOWER MOLDBOARD - 36 INCH BUCKET) (ORDER DIRECTLY FROM CENTRAL FABRICATORS)
	600420	MOLDBOARD	1		(LOWER MOLDBOARD - 42 INCH BUCKET) (ORDER DIRECTLY FROM CENTRAL FABRICATORS)
	600421	MOLDBOARD	1		(LOWER MOLDBOARD - 48 INCH BUCKET) (ORDER DIRECTLY FROM CENTRAL FABRICATORS)
	603303	MOLDBOARD	1		(LOWER MOLDBOARD - 54 INCH BUCKET) (ORDER DIRECTLY FROM CENTRAL FABRICATORS)

HEAVY DUTY BUCKET
(FOR USE WITH 400 SERIES TEETH)
(ALSO ORDER BUCKET TOOTH ASSEMBLIES)

TP70466 -UN-08SEP00

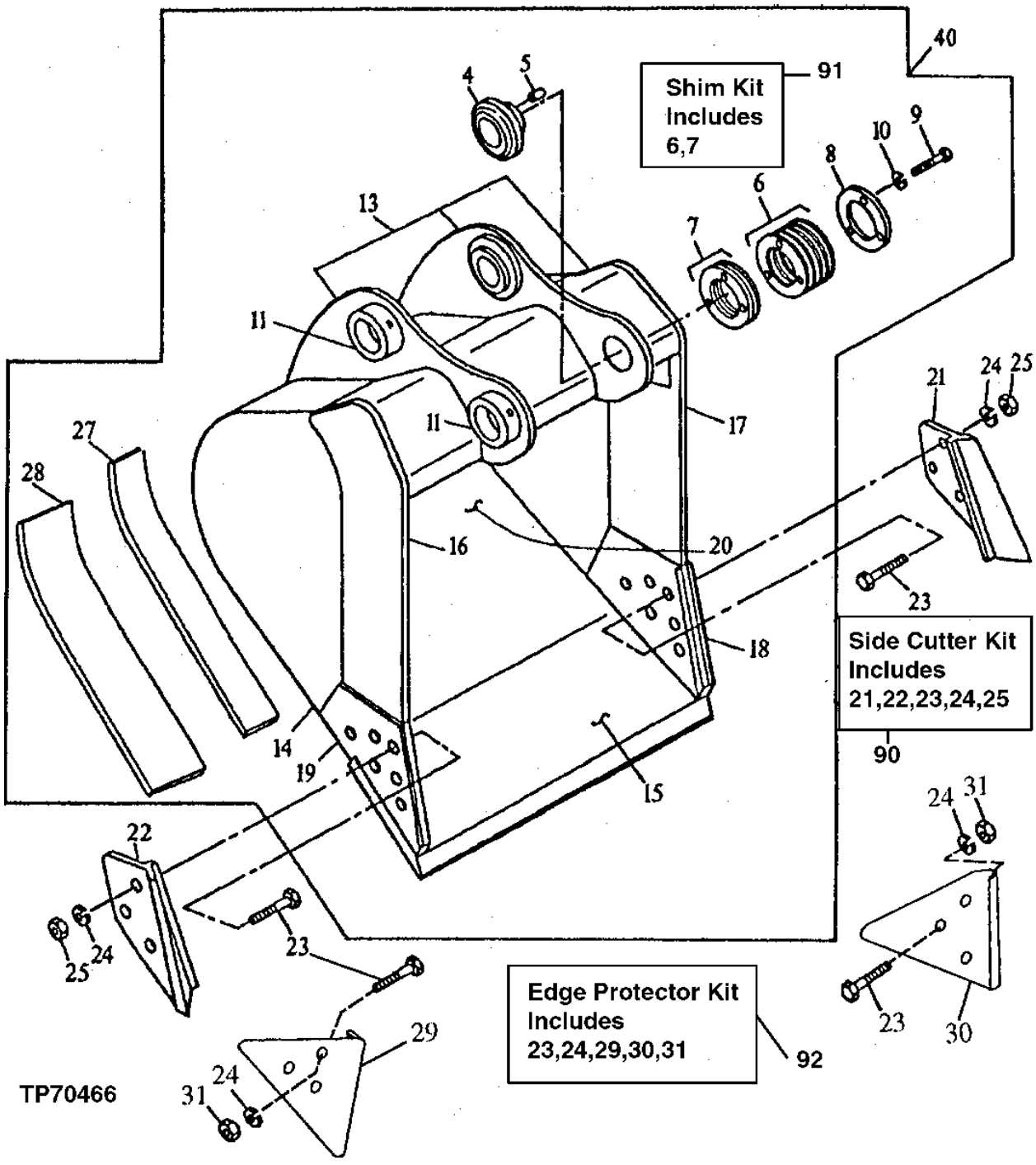

HEAVY DUTY BUCKET
(FOR USE WITH 400 SERIES TEETH)
(ALSO ORDER BUCKET TOOTH ASSEMBLIES)

KEY	PART NO.	PART NAME	QTY	SERIAL NO.	REMARKS
21	.....	CUTTING EDGE	1		(K) (SUB AT131080)
22	.....	CUTTING EDGE	1		(K) (SUB AT131080)
23	09H1770	BOLT	6		(K) 7/8" X 2-1/2", (K2)
24	12H245	LOCK WASHER	6		(K) 7/8", (K2)
25	14H1077	NUT	6		(K) 7/8"
27	300524	BAR	2		(INNER WEAR) (ORDER DIRECTLY FROM CENTRAL FABRICATORS)
28	304564	BAR	2		(OUTER WEAR) (ORDER DIRECTLY FROM CENTRAL FABRICATORS)
29	.....	SHROUD	1		(WEAR SHROUD) (SUB AT167874) (K2)
30	.....	SHROUD	1		(WEAR SHROUD) (SUB AT167874) (K2)
31	14H1044	NUT	6		22.225 MM (7/8") (K2)
40	**AT172476**	**EXCAVATOR BUCKET**	**1**		**WHOLEGOODS (30 INCH - .95 CUBIC YARD) (AVAILABLE TOOTH ASSEMBLIES ON SEPARATE PAGE)**
	AT172477	**EXCAVATOR BUCKET**	**1**		**WHOLEGOODS (36 INCH - 1.16 CUBIC YARD) (AVAILABLE TOOTH ASSEMBLIES ON SEPARATE PAGE)**
	AT172478	**EXCAVATOR BUCKET**	**1**		**WHOLEGOODS (42 INCH - 1.38 CUBIC YARD) (AVAILABLE TOOTH ASSEMBLIES ON SEPARATE PAGE)**
	AT172479	**EXCAVATOR BUCKET**	**1**		**WHOLEGOODS (48 INCH - 1.60 CUBIC YARD) (AVAILABLE TOOTH ASSEMBLIES ON SEPARATE PAGE)**
	AT172480	**EXCAVATOR BUCKET**	**1**		**WHOLEGOODS (54 INCH - 1.82 CUBIC YARD) (AVAILABLE TOOTH ASSEMBLIES ON SEPARATE PAGE)**
90	AT131080	END BIT	1		(SIDE CUTTER KIT) INCLUDES ALL (K) PARTS
92	AT167874	KIT	1		(EDGE PROTECTOR) INCLUDES ALL (K2) PARTS, WHOLEGOODS

(F) CENTRAL FABRICATORS' PARTS. JOHN DEERE DEALER ORDER DIRECTLY FROM CENTRAL FABRICATORS.

HEAVY DUTY HIGH CAPACITY BUCKET
(FOR USE WITH 400 SERIES TEETH)
(ALSO ORDER BUCKET TOOTH ASSEMBLIES)

TP70499 -UN-21SEP00

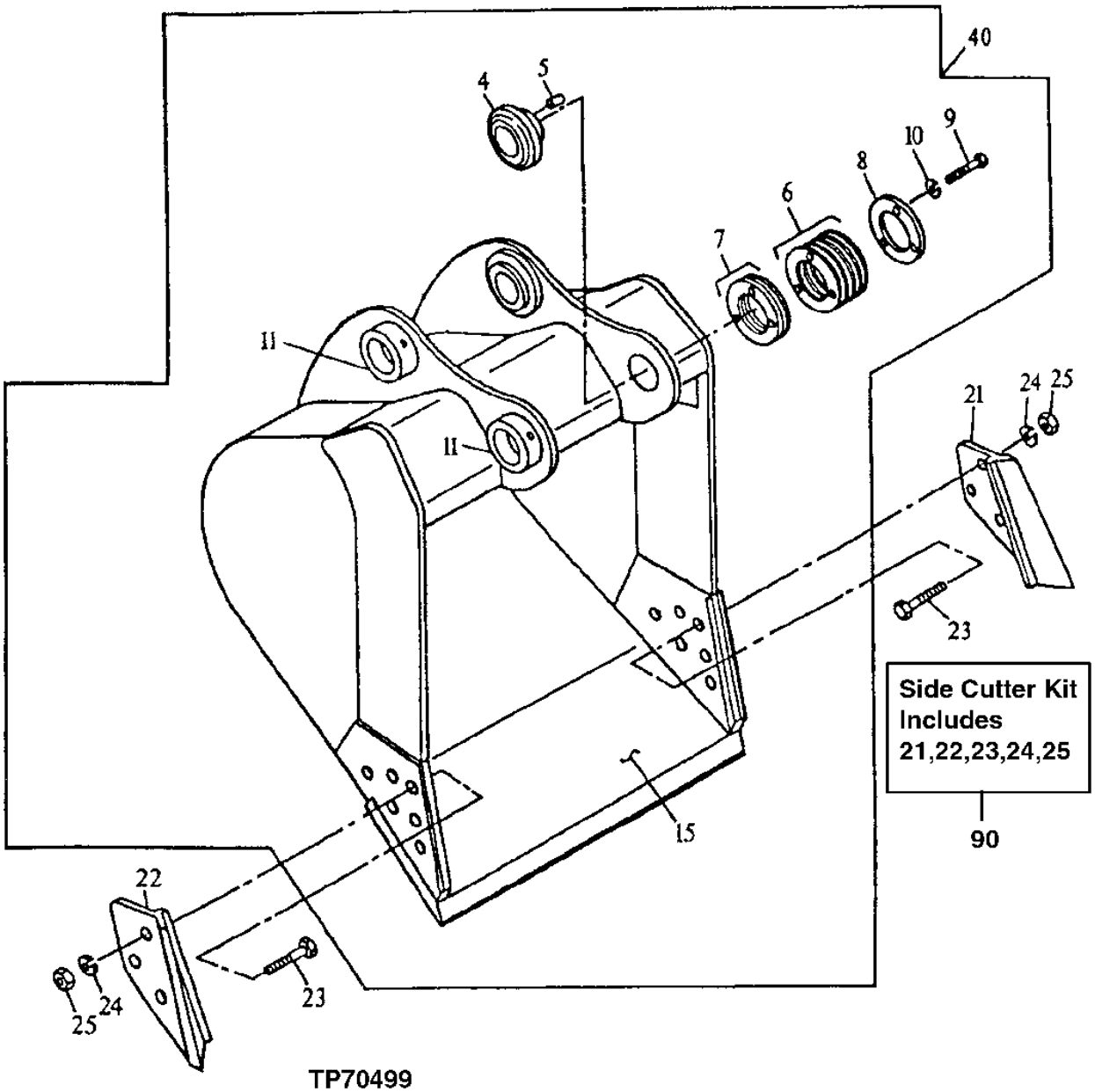

TP70499

HEAVY DUTY HIGH CAPACITY BUCKET
(FOR USE WITH 400 SERIES TEETH)
(ALSO ORDER BUCKET TOOTH ASSEMBLIES)

KEY	PART NO.	PART NAME	QTY	SERIAL NO.	REMARKS
4	AT131084	BUSHING	1		
5	R48685	DOWEL PIN	1		
6	TH102460	WASHER	6		(1 MM)
7	TH102461	SHIM	2		(.5 MM)
8	TH102463	PLATE	1		(SUB FOR AT185646)
9	19H2706	CAP SCREW	3		5/8" X 2"
10	12H294	LOCK WASHER	3		5/8"
11	TH102409	BUSHING	2		
15	AT131097	CUTTING EDGE	1		(CUT TO LENGTH)
21	.....	CUTTING EDGE	1		(K) (SUB AT131085)
22	.....	CUTTING EDGE	1		(K) (SUB AT131085)
23	09H1771	BOLT	6		(K) 7/8" X 3"
24	12H245	LOCK WASHER	6		(K) 7/8"
25	14H1077	NUT	6		(K) 7/8"
40	**AT185645**	**EXCAVATOR BUCKET**	**1**		**WHOLEGOODS (48 INCH - 2.03 CUBIC YARD)**
					(AVAILABLE TOOTH ASSEMBLIES ON SEPARATE PAGE)
90	AT131085	END BIT	1		(SIDE CUTTER KIT) INCLUDES ALL (K) PARTS

**DITCHING BUCKET
(LONG FRONT)**

TP32968 -UN-01JAN94

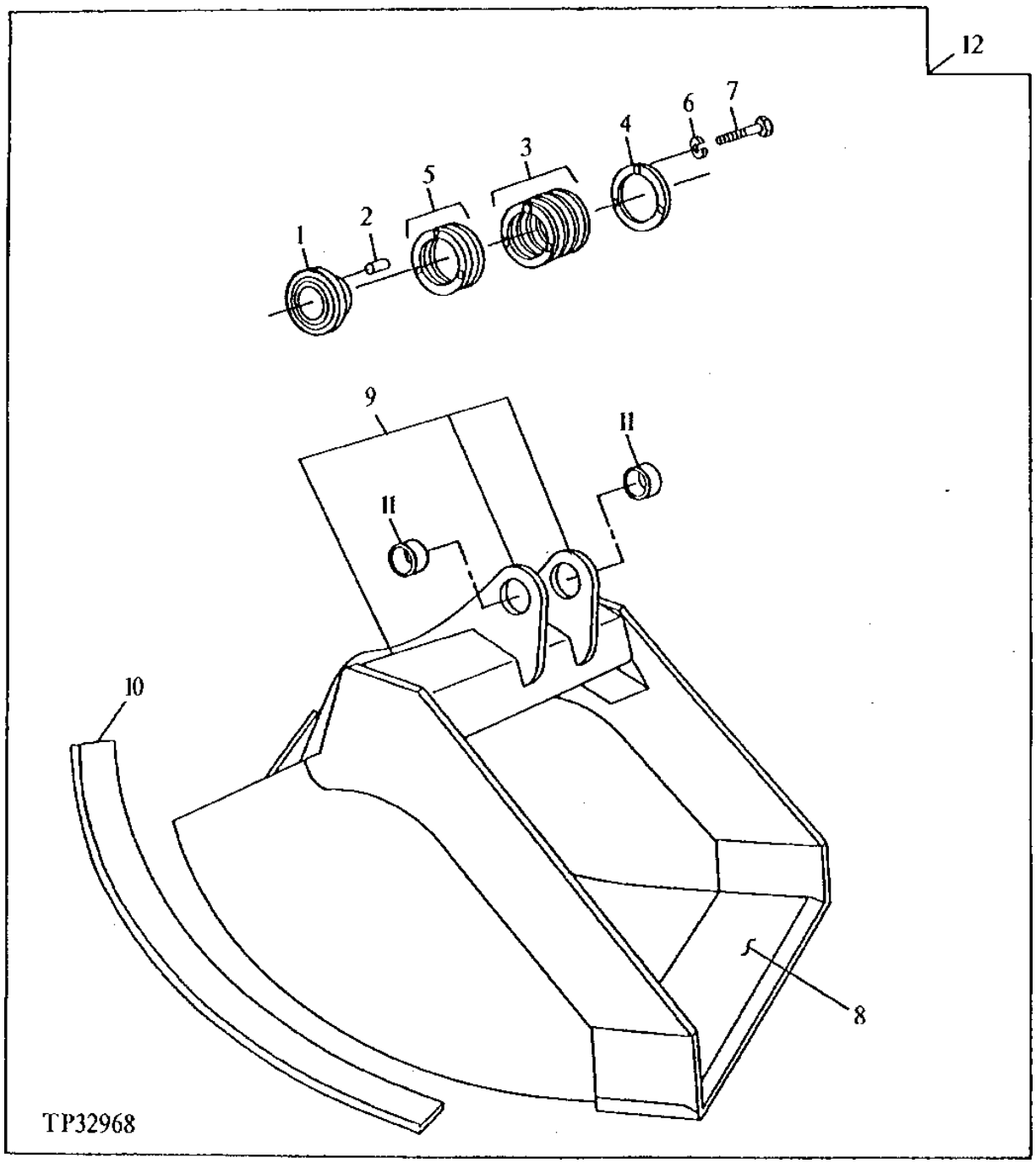

DITCHING BUCKET
(LONG FRONT)

KEY	PART NO.	PART NAME	QTY	SERIAL NO.	REMARKS
1	AT131084	BUSHING	1		(1" HEAD THICKNESS)
2	R48685	DOWEL PIN	1		
3	TH104512	WASHER	9		
4	TH104514	WASHER	1		
5	TH104513	SHIM	1		
6	12H294	LOCK WASHER	3		5/8"
7	19H2706	CAP SCREW	3		5/8" X 2"
8	.....	CUTTING EDGE	1		(CUT TO LENGTH FROM AT131088 BULK MATERIAL)
9	C607480	PIVOT	1		(BUCKET EAR BLANK ASSEMBLY) (ORDER DIRECTLY FROM CENTRAL FABRICATORS)
10	300204	BAR	5		(WEAR STRIP) (ORDER DIRECTLY FROM CENTRAL FABRICATORS)
11	TH108649	BUSHING	2		
12	**AT160685**	**EXCAVATOR BUCKET**	**1**		**60" WIDE .75 CU YD 835 LB. DITCHING, WHOLEGOODS**

BUCKET
(DITCH CLEANING)

TP43772 -UN-01JAN94

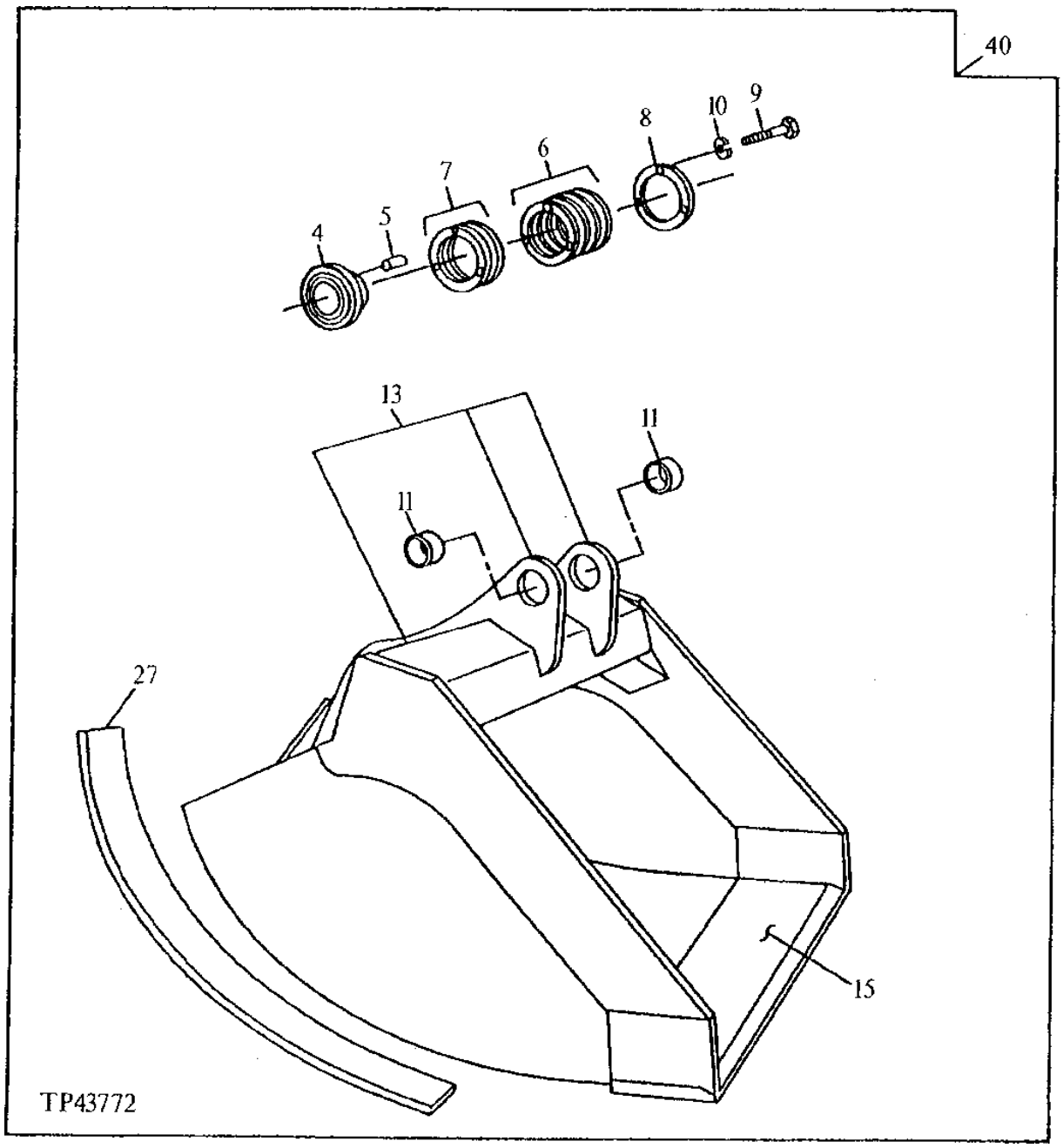

BUCKET
(DITCH CLEANING)

KEY	PART NO.	PART NAME	QTY	SERIAL NO.	REMARKS
4	AT131084	BUSHING	1		
5	R48685	DOWEL PIN	1		
6	TH102460	WASHER	6		(1.0 MM)
7	TH102461	SHIM	2		(0.5 MM)
8	TH102463	PLATE	1		
9	19H2706	CAP SCREW	3		5/8" X 2"
10	12H294	LOCK WASHER	3		5/8"
11	TH102409	BUSHING	2		
13	C610778	PIVOT	1		(BUCKET EAR BLANK ASSEMBLY) (ORDER DIRECTLY FROM CENTRAL FABRICATORS)
15	.....	CUTTING EDGE	1		(CUT TO LENGTH FROM AT131089 BULK MATERIAL)
27	300292	BAR	4		(WEAR STRIP) (ORDER DIRECTLY FROM CENTRAL FABRICATORS)
40	**AT160745**	**EXCAVATOR BUCKET**	**1**		**WHOLEGOODS (60 INCH, 1.34 CU. YD.) (ORDER DIRECTLY FROM CENTRAL FABRICATORS)**
	AT160746	**EXCAVATOR BUCKET**	**1**		**WHOLEGOODS (72 INCH, 1.66 CU. YD.) (ORDER DIRECTLY FROM CENTRAL FABRICATORS)**

ROADBUILDER BUCKET KIT
(ORDER HEAVY DUTY BUCKET TOOTH ASSEMBLIES)

T141017 -UN-05APR01

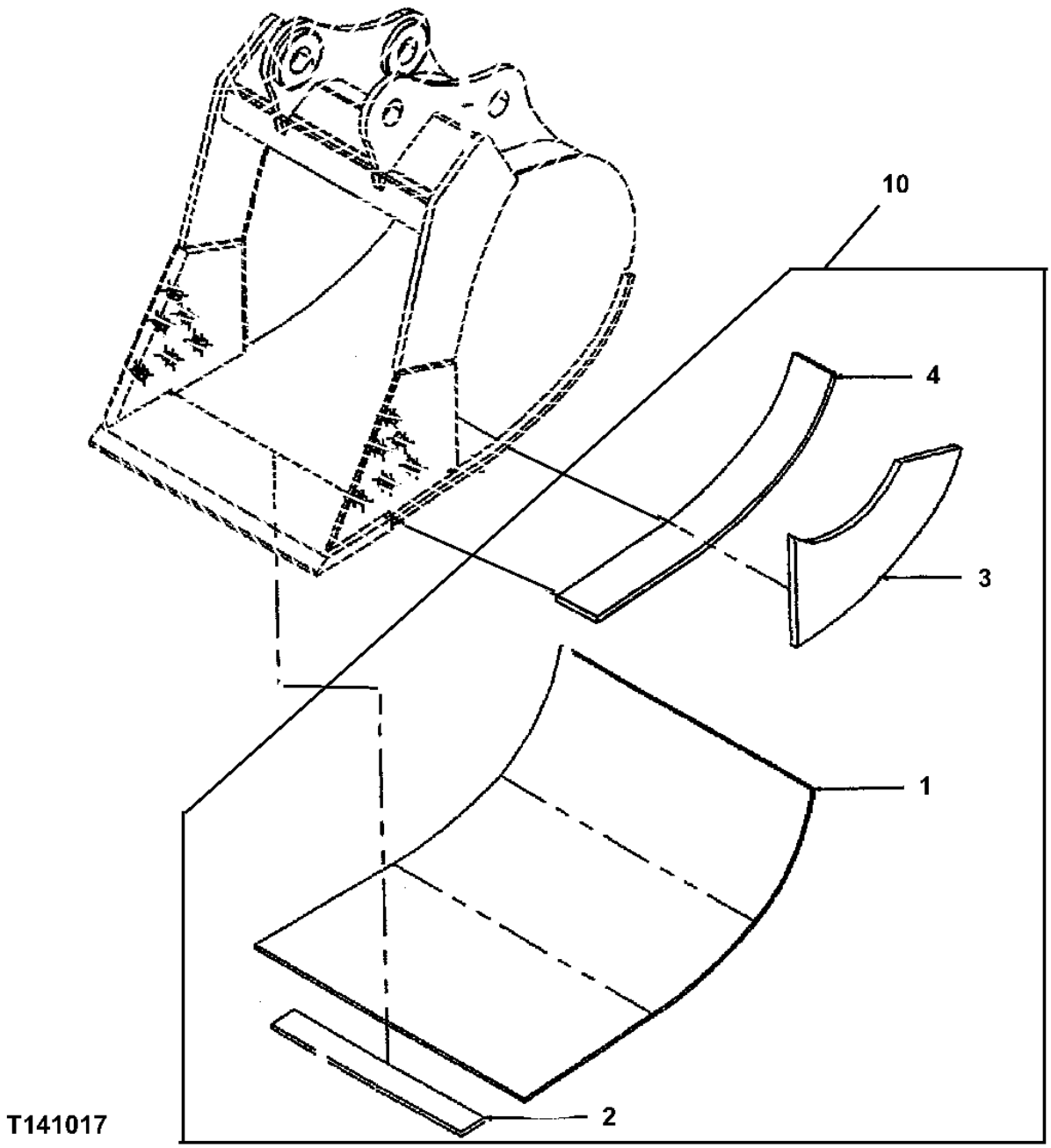

ROADBUILDER BUCKET KIT
(ORDER HEAVY DUTY BUCKET TOOTH ASSEMBLIES)

KEY	PART NO.	PART NAME	QTY	SERIAL NO.	REMARKS
1	623270	MOLDBOARD	1		(USE WITH 30 INCH BUCKET) (ORDER DIRECTLY FROM CENTRAL FABRICATORS)
	623559	MOLDBOARD	1		(USE WITH 24 INCH HEAVY DUTY HIGH CAPACITY BUCKET) (ORDER DIRECTLY FROM CENTRAL FABRICATORS)
	623560	MOLDBOARD	1		(USE WITH 30 INCH HEAVY DUTY HIGH CAPACITY BUCKET) (ORDER DIRECTLY FROM CENTRAL FABRICATORS)
	623561	MOLDBOARD	1		(USE WITH 36 INCH HEAVY DUTY HIGH CAPACITY BUCKET) (ORDER DIRECTLY FROM CENTRAL FABRICATORS)
	612759	MOLDBOARD	1		(USE WITH 42 INCH HEAVY DUTY HIGH CAPACITY BUCKET) (ORDER DIRECTLY FROM CENTRAL FABRICATORS)
2	28031	BAR	6		(HORIZONTAL WEAR BAR) (USE WITH 30 INCH BUCKET) (ORDER DIRECTLY FROM CENTRAL FABRICATORS)
	36875	BAR	7		(HORIZONTAL WEAR BAR) (USE WITH 24 INCH HEAVY DUTY HIGH CAPACITY BUCKET) (ORDER DIRECTLY FROM CENTRAL FABRICATORS)
	36881	BAR	7		(HORIZONTAL WEAR BAR) (USE WITH 36 INCH HEAVY DUTY HIGH CAPACITY BUCKET) (ORDER DIRECTLY FROM CENTRAL FABRICATORS)
	36887	BAR	7		(HORIZONTAL WEAR BAR) (USE WITH 36 INCH HEAVY DUTY HIGH CAPACITY BUCKET) (ORDER DIRECTLY FROM CENTRAL FABRICATORS)
	36893	BAR	7		(HORIZONTAL WEAR BAR) (USE WITH 42 INCH HEAVY DUTY HIGH CAPACITY BUCKET) (ORDER DIRECTLY FROM CENTRAL FABRICATORS)
3	313314	PLATE	2		
	310482	PLATE	2		(USE WITH 24, 30, 36, OR 42 INCH HEAVY DUTY HIGH CAPACITY BUCKET) (ORDER DIRECTLY FROM CENTRAL FABRICATORS)
4	304564	PLATE	2		(OUTER WEAR BAR) (ORDER DIRECTLY FROM CENTRAL FABRICATORS)
	304559	PLATE	2		(OUTER WEAR BAR) (USE WITH 24, 30, 36, OR 42 INCH HEAVY DUTY HIGH CAPACITY BUCKET) (ORDER DIRECTLY FROM CENTRAL FABRICATORS)
10	**AT187255**	**KIT**	**1**		**(WHOLEGOODS) (ALSO ORDER AT172476 30 INCH HEAVY DUTY BUCKET AND APPROPRIATE TOOTH KIT)**
	AT187260	**KIT**	**1**		**(WHOLEGOODS) (ALSO ORDER AT163638 24 INCH HEAVY DUTY HIGH CAPACITY BUCKET AND APPROPRIATE TOOTH KIT)**
	AT187261	**KIT**	**1**		**(WHOLEGOODS) (ALSO ORDER AT163639 30 INCH HEAVY DUTY HIGH CAPACITY BUCKET AND APPROPRIATE TOOTH KIT)**
	AT187262	**KIT**	**1**		**(WHOLEGOODS) (ALSO ORDER AT163640 36 INCH HEAVY DUTY HIGH CAPACITY BUCKET AND APPROPRIATE TOOTH KIT)**
	AT187263	**KIT**	**1**		**(WHOLEGOODS) (ALSO ORDER AT163641 42 INCH HEAVY DUTY HIGH CAPACITY BUCKET AND APPROPRIATE TOOTH KIT)**
	AT187256	**KIT**	**1**		**(WHOLEGOODS) (ALSO ORDER AT172477 36" HEAVY DUTY BUCKET)**
	AT187257	**KIT**	**1**		**(WHOLEGOODS) (ALSO ORDER AT172478 42" HEAVY DUTY BUCKET)**
	AT187258	**KIT**	**1**		**(WHOLEGOODS) (ALSO ORDER AT172479 48" HEAVY DUTY BUCKET)**
	AT187259	**KIT**	**1**		**(WHOLEGOODS) (ALSO ORDER AT172480 54" HEAVY DUTY BUCKET)**

SUPER LONG FRONT BUCKET, 30 INCH
(SEVERE DUTY PLATE LIP)
(ALSO ORDER BUCKET TOOTH ASSEMBLIES)

T202734 -UN-07SEP04

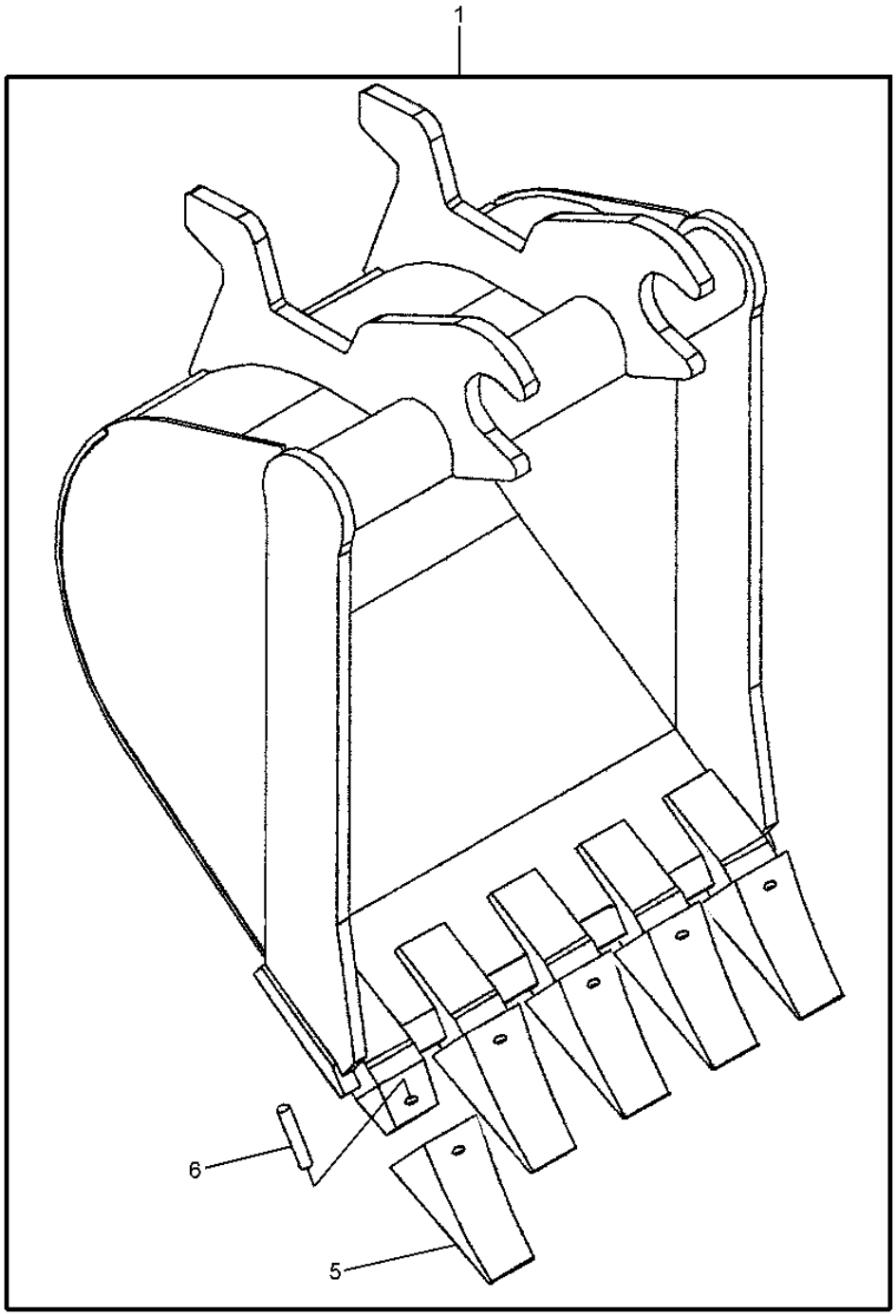

T202734

SUPER LONG FRONT BUCKET, 30 INCH
(SEVERE DUTY PLATE LIP)
(ALSO ORDER BUCKET TOOTH ASSEMBLIES)

KEY	PART NO.	PART NAME	QTY	SERIAL NO.	REMARKS
1	**AT317199**	**EXCAVATOR BUCKET**	**1**		**(WHOLEGOODS) (30 INCH)**
5	TF220	TOOTH	5		
6	TP160L	SPRING PIN	5		

SUPER LONG FRONT DITCH CLEANING BUCKET

T202735 -UN-07SEP04

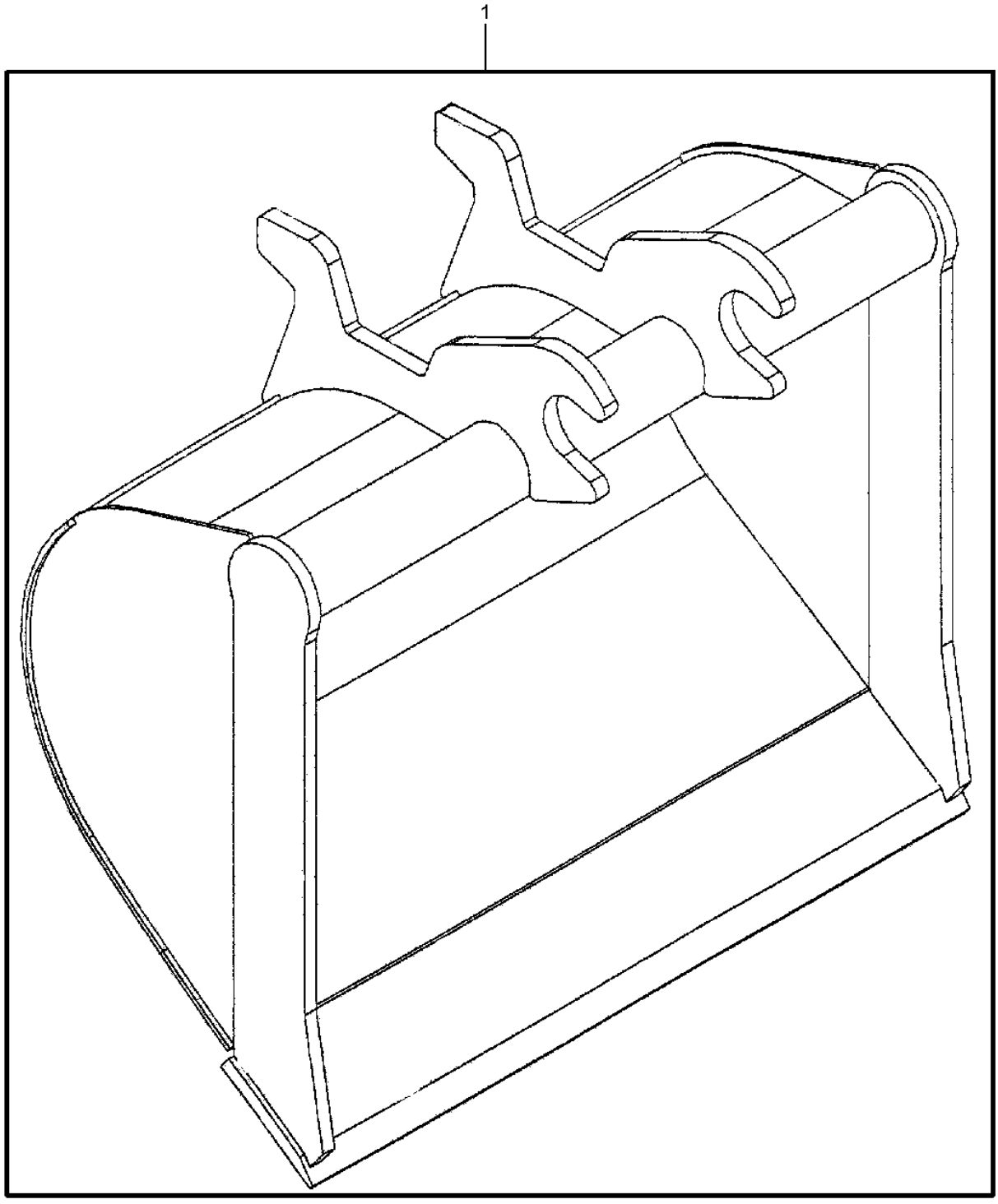

T202735

SUPER LONG FRONT DITCH CLEANING BUCKET

KEY	PART NO.	PART NAME	QTY	SERIAL NO.	REMARKS
1	**AT317202**	**EXCAVATOR BUCKET**	**1**		**(WHOLEGOODS) (60 INCH)**

ESCO BUCKET CUTTING EDGES, TEETH AND ADAPTERS

T149713 -UN-04JAN02

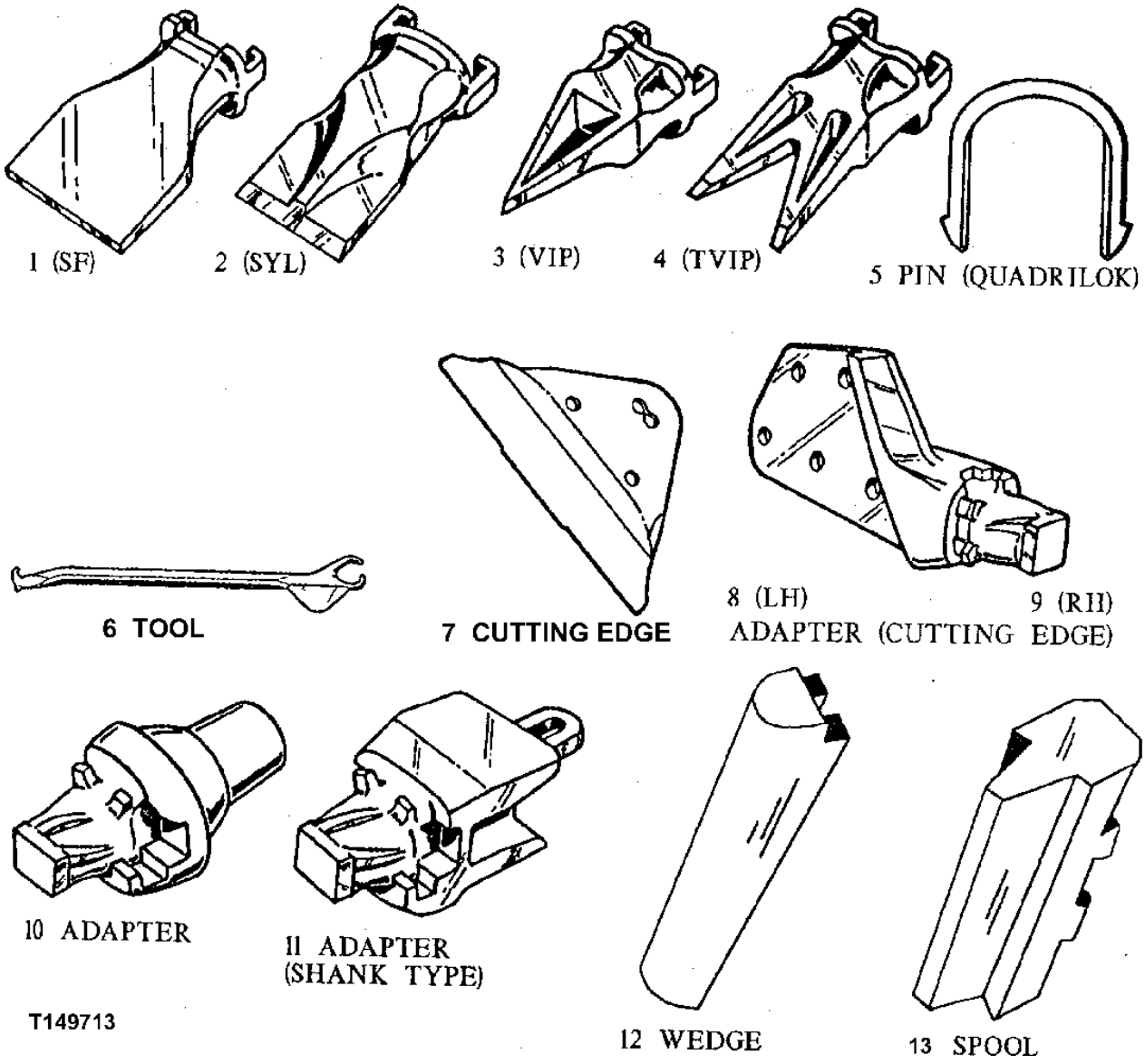

ESCO BUCKET CUTTING EDGES, TEETH AND ADAPTERS

KEY	PART NO.	PART NAME	QTY	SERIAL NO.	REMARKS
1	EX21S5F	TOOTH	AR		
2	EX21SYL	TOOTH	AR		
	EX47SYL	TOOTH	AR		
	EX27SYL	TOOTH	AR		
	EX37SYL	TOOTH	AR		
3	EX21VIP	TOOTH	AR		
4	EX21TVIP	TOOTH	AR		
5	EX21LKS	TOOTH RETAINER	AR		(SUB FOR EX21LK)
	EX47LK	PIN	AR		
	EX27LK	PIN	AR		
	EX37LKS	TOOTH RETAINER	AR		(SUB FOR EX37LK)
	EX27VPN	PIN	AR		
6	EX21-27QRT	TOOL	AR		
7	TPDE31329	SHROUD	AR		(SUB FOR EX31329-X)
8	.....	BUCKET TOOTH ADAPTER	AR		(EX1550-21 NLA)
9	.....	BUCKET TOOTH ADAPTER	AR		(EX1551-21 NLA)
10	EX360-21	BUCKET TOOTH ADAPTER	AR		
11	EX119-21	BUCKET TOOTH ADAPTER	AR		
	EX129A-37	BUCKET TOOTH ADAPTER	AR		
	EX5824-37	BUCKET TOOTH ADAPTER	AR		
	EX1829A-47	BUCKET TOOTH ADAPTER	AR		
	EX5849-21	BUCKET TOOTH ADAPTER	AR		(SUB FOR EX4894-21)
	EX5850-27V	BUCKET TOOTH ADAPTER	AR		
	EX5854-21	BUCKET TOOTH ADAPTER	AR		
	EX119-27	BUCKET TOOTH ADAPTER	AR		
12	EX29W1	WEDGE	AR		
	EX20W1	WEDGE	AR		
13	EX20SP	SPOOL	AR		
	EX29SP	SPOOL	AR		
14	EX27VPL	PLUG	AR		(NOT ILLUSTRATED)

GENERAL PURPOSE BUCKET TOOTH ASSEMBLY
(24, 30, 36, 42 OR 48 INCH BUCKET)

T159240 -UN-13SEP02

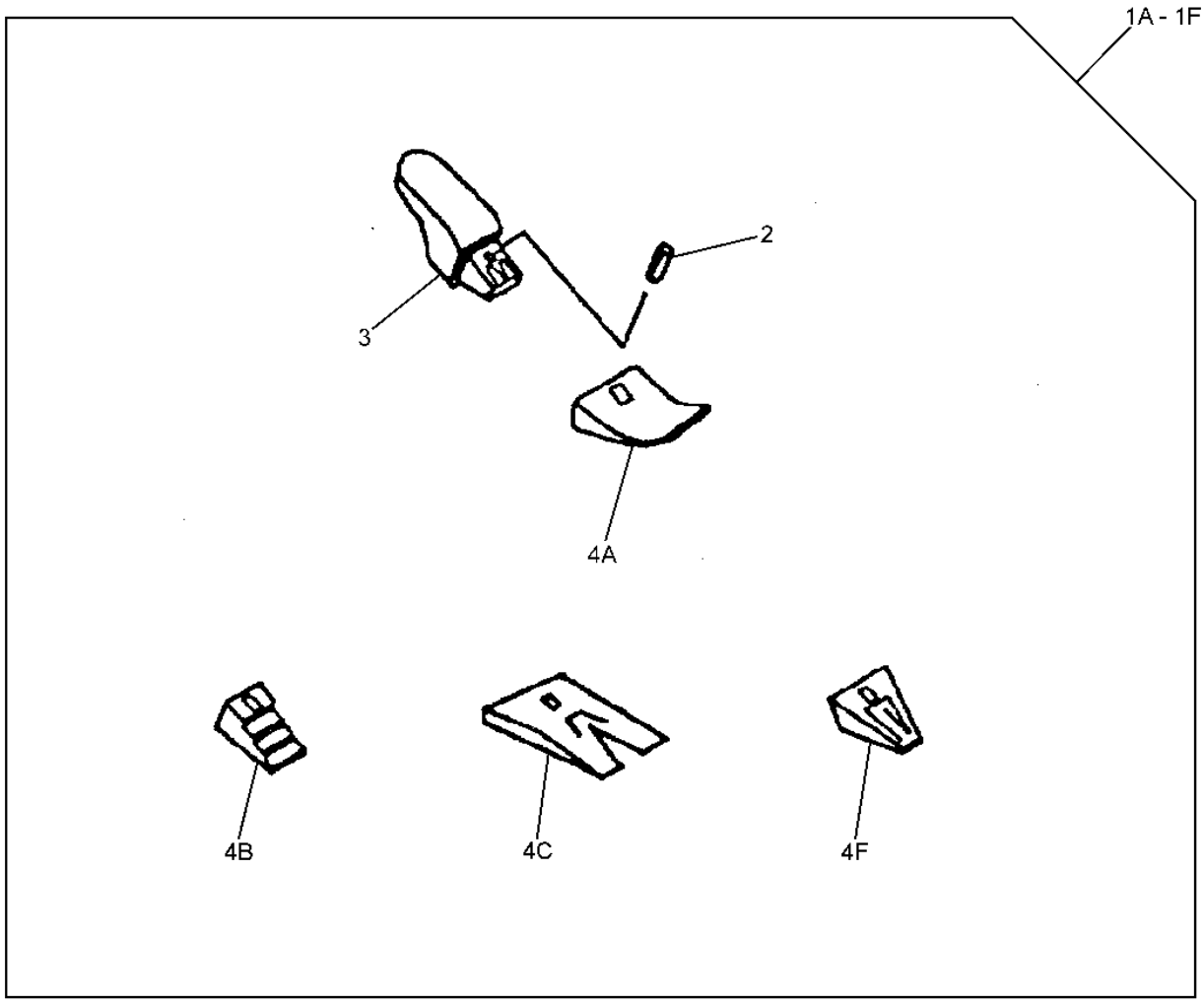

ORDER 3 SETS WITH 24 INCH BUCKET

ORDER 4 SETS WITH 30 INCH BUCKET

ORDER 5 SETS WITH 36 INCH BUCKET

ORDER 5 SETS WITH 42 INCH BUCKET

ORDER 6 SETS WITH 48 INCH BUCKET

T159240

GENERAL PURPOSE BUCKET TOOTH ASSEMBLY
(24, 30, 36, 42 OR 48 INCH BUCKET)

KEY	PART NO.	PART NAME	QTY	SERIAL NO.	REMARKS
1A	.....	KIT	1		(TOOTH) WHOLEGOODS (FANGGS 330 TOOTH ASSEMBLY) (AT178530 ONLY AVAILABLE WHEN ORDERING BUCKET)
1B	.....	KIT	1		(TOOTH) WHOLEGOODS (STANDARD 330 TOOTH ASSEMBLY) (AT178532 ONLY AVAILABLE WHEN ORDERING BUCKET)
1C	.....	KIT	1		(TOOTH) WHOLEGOODS (TWIN TIGER 330 TOOTH ASSEMBLY) (AT178536 ONLY AVAILABLE WHEN ORDERING BUCKET)
1F	.....	KIT	1		(TOOTH) HOLEGOODS (TIGER 330 TOOTH ASSEMBLY) (AT178534 ONLY AVAILABLE WHEN ORDERING BUCKET)
1G	.....	KIT	1		(TOOTH) WHOLEGOODS (ESCO STANDARD TOOTH ASSEMBLY) (NOT ILLUSTRATED) (AT163544 ONLY AVAILABLE WHEN ORDERING BUCKET)
1H	.....	KIT	1		(TOOTH) WHOLEGOODS (ESCO TWIN TIGER TOOTH ASSEMBLY) (NOT ILLUSTRATED) (AT163547 ONLY AVAILABLE WHEN ORDERING BUCKET)
1I	.....	KIT	1		(TOOTH) WHOLEGOODS (ESCO FLARE TOOTH ASSEMBLY) (NOT ILLUSTRATED) (AT163546 ONLY AVAILABLE WHEN ORDERING BUCKET)
1J	.....	KIT	1		(TOOTH) WHOLEGOODS (ESCO TIGER TOOTH ASSEMBLY) (NOT ILLUSTRATED) (AT163545 ONLY AVAILABLE WHEN ORDERING BUCKET)
1K	.....	KIT	1		(TOOTH) WHOLEGOODS (CATERPILLAR REPLACEMENT FANGGS TOOTH ASSEMBLY) (NOT ILLUSTRATED) (AT167192 ONLY AVAILABLE WHEN ORDERING BUCKET)
1L	.....	KIT	1		(TOOTH) WHOLEGOODS (CATERPILLAR REPLACEMENT STANDARD TOOTH ASSEMBLY) (NOT ILLUSTRATED) (AT167193 ONLY AVAILABLE WHEN ORDERING BUCKET)
1M	.....	KIT	1		(TOOTH) WHOLEGOODS (CATERPILLAR REPLACEMENT TWIN TIGER TOOTH ASSEMBLY) (NOT ILLUSTRATED) (AT167195 ONLY AVAILABLE WHEN ORDERING BUCKET)
1N	.....	KIT	1		(TOOTH) WHOLEGOODS (CATERPILLAR REPLACEMENT TIGER TOOTH ASSEMBLY) (NOT ILLUSTRATED) (AT167194 ONLY AVAILABLE WHEN ORDERING BUCKET)
1P	.....	KIT	1		(TOOTH) WHOLEGOODS (SUPER V-STYLE EV33SYL TOOTH KIT) (NOT ILLUSTRATED) (AT199374 ONLY AVAILABLE WHEN ORDERING BUCKET)
1Q	.....	KIT	1		(TOOTH) WHOLEGOODS (SUPER V-STYLE EV51SYL TOOTH KIT) (NOT ILLUSTRATED) (AT199375 ONLY AVAILABLE WHEN ORDERING BUCKET)
2	TK330	PIN	1		(USE WITH 330 TOOTH ASSEMBLY)
	EX27VPN	PIN	1		(ESCO) (NOT ILLUSTRATED ON THIS PAGE - SEE ESCO TOOTH PAGE)
	T9J2358	PIN FASTENER	1		(CATERPILLAR REPLACEMENT) (NOT ILLUSTRATED)
	EV39PN	PIN FASTENER	1		(FOR SUPER V-STYLE EV39SYL TOOTH KIT) (NOT ILLUSTRATED)
	EV33PN	PIN FASTENER	1		(FOR SUPER V-STYLE EV33SYL TOOTH KIT) (NOT ILLUSTRATED)
	EV51PN	PIN FASTENER	1		(FOR SUPER V-STYLE EV51SYL TOOTH KIT) (NOT ILLUSTRATED)

GENERAL PURPOSE BUCKET TOOTH ASSEMBLY
(24, 30, 36, 42 OR 48 INCH BUCKET)

T159240 -UN-13SEP02

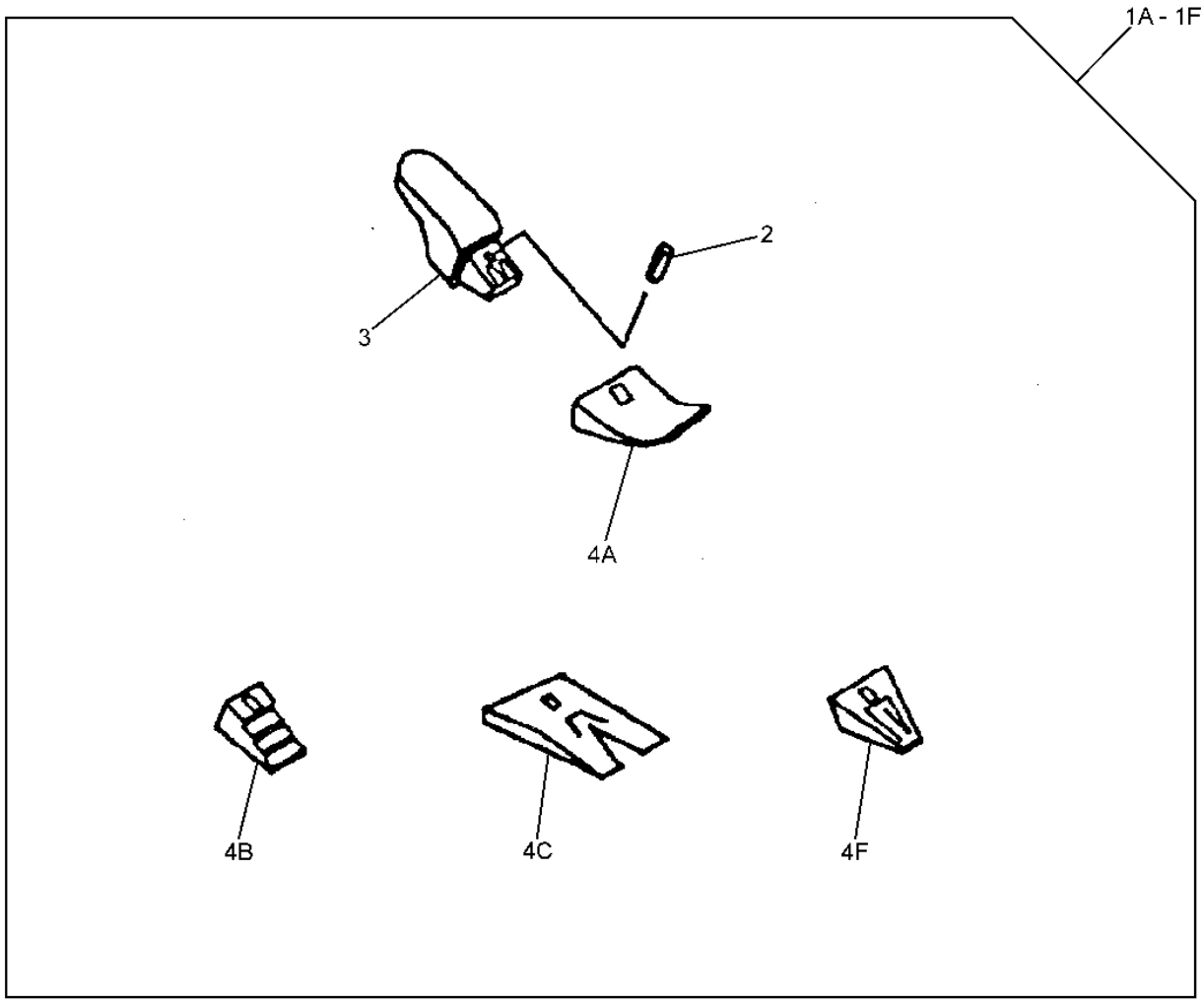

ORDER 3 SETS WITH 24 INCH BUCKET

ORDER 4 SETS WITH 30 INCH BUCKET

ORDER 5 SETS WITH 36 INCH BUCKET

ORDER 5 SETS WITH 42 INCH BUCKET

ORDER 6 SETS WITH 48 INCH BUCKET

T159240

GENERAL PURPOSE BUCKET TOOTH ASSEMBLY
(24, 30, 36, 42 OR 48 INCH BUCKET)

KEY	PART NO.	PART NAME	QTY	SERIAL NO.	REMARKS
3	T158X330	BUCKET TOOTH ADAPTER	1		(USE WITH 330 TOOTH ASSEMBLY)
	EX5850-27V	BUCKET TOOTH ADAPTER	1		(ESCO) (NOT ILLUSTRATED ON THIS PAGE - SEE ESCO TOOTH PAGE)
	T3G8354	BUCKET TOOTH ADAPTER	1		(CATERPILLAR REPLACEMENT) (NOT ILLUSTRATED)
	EV5856-V39	BUCKET TOOTH ADAPTER	1		(FOR SUPER V-STYLE EV39SYL TOOTH KIT) (NOT ILLUSTRATED)
	EV5855-V33	BUCKET TOOTH ADAPTER	1		(FOR SUPER V-STYLE EV33SYL TOOTH KIT) (NOT ILLUSTRATED)
	EV5857A-V51	BUCKET TOOTH ADAPTER	1		(FOR SUPER V-STYLE EV51SYL TOOTH KIT) (NOT ILLUSTRATED)
4A	TF330	TOOTH	1		(330 FANGGS)
4B	TX330	TOOTH	1		(330 STANDARD)
4C	TX330WT	TOOTH	1		(330 TWIN TIGER)
4F	TT330	TOOTH	1		(330 TIGER)
4G	EX27SYL	TOOTH	1		(ESCO STANDARD) (NOT ILLUSTRATED ON THIS PAGE - SEE ESCO TOOTH PAGE)
4H	EX27TVIP	TOOTH	1		(ESCO TWIN TIGER) (NOT ILLUSTRATED ON THIS PAGE - SEE ESCO TOOTH PAGE)
4I	EX27S6F	TOOTH	1		(ESCO FLARE) (NOT ILLUSTRATED ON THIS PAGE - SEE ESCO TOOTH PAGE)
4J	EX27VIP	TOOTH	1		(ESCO TIGER) (NOT ILLUSTRATED ON THIS PAGE - SEE ESCO TOOTH PAGE)
4K	TF1U3352D	TOOTH	1		(CATERPILLAR REPLACEMENT FANGGS) (NOT ILLUSTRATED)
4L	T1U3352	TOOTH	1		(CATERPILLAR REPLACEMENT STANDARD) (NOT ILLUSTRATED)
4M	TX1U3352WT	TOOTH	1		(CATERPILLAR REPLACEMENT TWIN TIGER) (NOT ILLUSTRATED)
4N	TT1U3352	TOOTH	1		(CATERPILLAR REPLACEMENT TIGER) (NOT ILLUSTRATED)
4O	EV39SYL	TOOTH	1		(FOR SUPER V-STYLE EV39SYL TOOTH KIT) (NOT ILLUSTRATED)
4P	EV33SYL	TOOTH	1		(FOR SUPER V-STYLE EV33SYL TOOTH KIT) (NOT ILLUSTRATED)
4Q	EV51SYL	TOOTH	1		(FOR SUPER V-STYLE EV51SYL TOOTH KIT) (NOT ILLUSTRATED)
5	T3G9549	RETAINER	1		(CATERPILLAR REPLACEMENT) (NOT ILLUSTRATED)
6	EX27VPL	PLUG	1		(NOT ILLUSTRATED ON THIS PAGE - SEE ESCO TOOTH PAGE)

HEAVY DUTY HIGH CAPACITY BUCKET TOOTH ASSEMBLY
(400 SERIES TEETH)
(24, 30, 36, 42 OR 48 INCH BUCKET)

TP43777 -UN-01JAN94

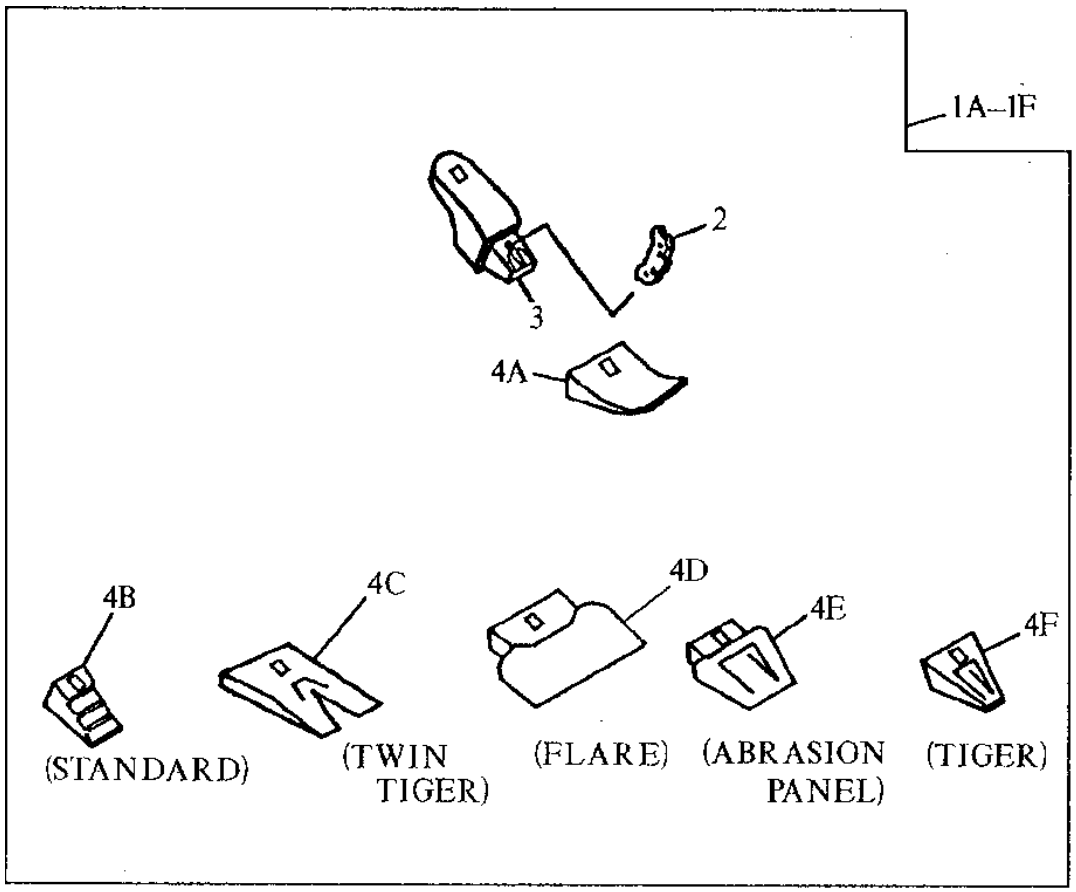

ORDER 3 SETS WITH EACH 24 INCH BUCKET
ORDER 4 SETS WITH EACH 30 INCH BUCKET
ORDER 4 SETS WITH EACH 36 INCH BUCKET
ORDER 5 SETS WITH EACH 42 INCH BUCKET
ORDER 6 SETS WITH EACH 48 INCH BUCKET
ORDER 6 SETS WITH EACH 54 INCH BUCKET
ORDER 7 SETS WITH EACH 60 INCH BUCKET
ORDER 7 SETS WITH EACH 66 INCH BUCKET
TP43777 ORDER 8 SETS WITH EACH 72 INCH BUCKET
ORDER 7 SETS WITH EACH 84 INCH BUCKET

HEAVY DUTY HIGH CAPACITY BUCKET TOOTH ASSEMBLY
(400 SERIES TEETH)
(24, 30, 36, 42 OR 48 INCH BUCKET)

KEY	PART NO.	PART NAME	QTY	SERIAL NO.	REMARKS
1A	.....	KIT	1		(TOOTH) WHOLEGOODS (FANGGS) (AT163548 ONLY AVAILABLE WHEN ORDERING BUCKET)
1B	.....	KIT	1		(TOOTH) WHOLEGOODS (STANDARD) (AT163549 ONLY AVAILABLE WHEN ORDERING BUCKET)
1C	.....	KIT	1		(TOOTH) WHOLEGOODS (TWIN TIGER) (AT163553 ONLY AVAILABLE WHEN ORDERING BUCKET)
1D	.....	KIT	1		(TOOTH) WHOLEGOODS (FLARE) (AT163552 ONLY AVAILABLE WHEN ORDERING BUCKET)
1E	.....	KIT	1		(TOOTH) WHOLEGOODS (ABRASION PANEL) (AT163551 ONLY AVAILABLE WHEN ORDERING BUCKET)
1F	.....	KIT	1		(TOOTH) WHOLEGOODS (TIGER) (AT163550 ONLY AVAILABLE WHEN ORDERING BUCKET)
1G	.....	KIT	1		(TOOTH) WHOLEGOODS (ESCO STANDARD) (NOT ILLUSTRATED) (AT163554 ONLY AVAILABLE WHEN ORDERING BUCKET)
1H	.....	KIT	1		(TOOTH) WHOLEGOODS (ESCO TWIN TIGER) (NOT ILLUSTRATED) (AT163557 ONLY AVAILABLE WHEN ORDERING BUCKET)
1I	.....	KIT	1		(TOOTH) WHOLEGOODS (ESCO FLARE) (NOT ILLUSTRATED) (AT163556 ONLY AVAILABLE WHEN ORDERING BUCKET)
1J	.....	KIT	1		(TOOTH) WHOLEGOODS (ESCO TIGER) (NOT ILLUSTRATED) (AT163555 ONLY AVAILABLE WHEN ORDERING BUCKET)
1K	.....	KIT	1		(TOOTH) WHOLEGOODS (CATERPILLAR REPLACEMENT FANGGS) (NOT ILLUSTRATED) (AT167196 ONLY AVAILABLE WHEN ORDERING BUCKET)
1L	.....	KIT	1		(TOOTH) WHOLEGOODS (CATERPILLAR REPLACEMENT STANDARD) (NOT ILLUSTRATED) (AT167197 ONLY AVAILABLE WHEN ORDERING BUCKET)
2	TP400HD	PIN	1		
	EX37VPN	PIN	1		(ESCO VERTALOK) (NOT ILLUSTRATED - SEE ESCO TOOTH PAGE)
	T1U1458	PIN FASTENER	1		(CATERPILLAR REPLACEMENT) (NOT ILLUSTRATED)
3	T802X400	SHANK	1		
	EX5856-37V	BUCKET TOOTH ADAPTER	1		(ESCO VERTALOK) (NOT ILLUSTRATED - SEE ESCO TOOTH PAGE)
	T8E6464	BUCKET TOOTH ADAPTER	1		(CATERPILLAR REPLACEMENT) (NOT ILLUSTRATED)
4A	TF400	TOOTH	1		
4B	TX400	TOOTH	1		
4C	TX400WT	TOOTH	1		
4D	TX400F	TOOTH	1		
4E	TX400AP	TOOTH	1		
4F	TT400	TOOTH	1		
4G	EX37SYL	TOOTH	1		(ESCO STANDARD) (NOT ILLUSTRATED - SEE ESCO TOOTH PAGE)
4H	EX37TVIP	TOOTH	1		(ESCO TWIN TIGER) (NOT ILLUSTRATED - SEE ESCO TOOTH PAGE)
4I	EX37S7F	TOOTH	1		(ESCO FLARE) (NOT ILLUSTRATED - SEE ESCO TOOTH PAGE)
4J	EX37VIP	TOOTH	1		(ESCO TIGER) (NOT ILLUSTRATED - SEE ESCO TOOTH PAGE)
4K	TF9W8452D	TOOTH	1		(CATERPILLAR REPLACEMENT FANGGS) (NOT ILLUSTRATED)
4L	T9W8452	TOOTH	1		(CATERPILLAR REPLACEMENT STANDARD) (NOT ILLUSTRATED)
5	EX37VPL	PLUG	1		(NOT ILLUSTRATED - SEE ESCO TOOTH PAGE)
	T3G9549	RETAINER	1		(CATERPILLAR REPLACEMENT) (NOT ILLUSTRATED)

SEVERE DUTY CAST LIP BUCKET TOOTH ASSEMBLY
(24, 30 OR 36 INCH BUCKET)

TP43782 -UN-01JAN94

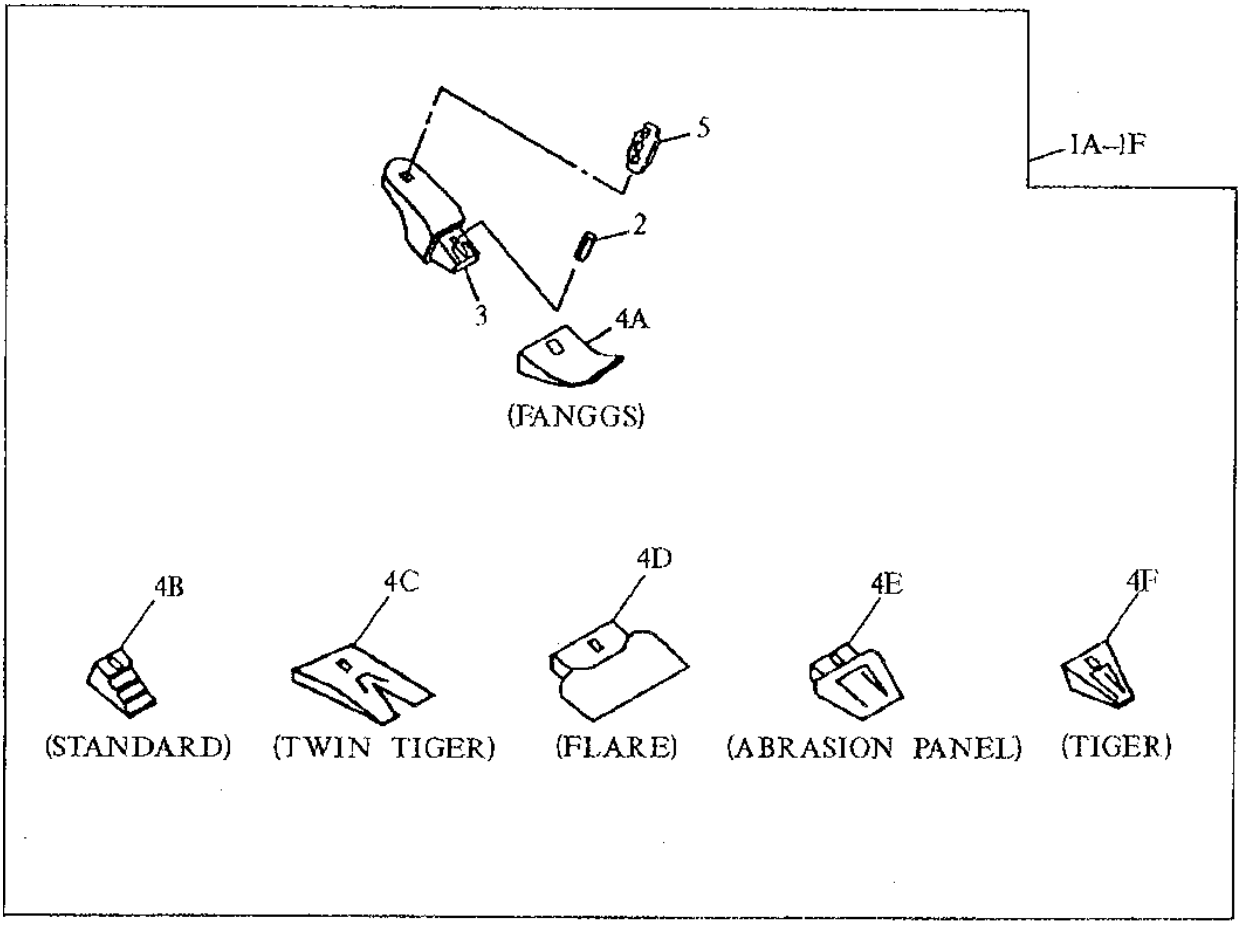

ORDER 4 SETS WITH 24 INCH BUCKET
ORDER 4 SETS WITH 30 INCH BUCKET
TP43782 ORDER 5 SETS WITH 36 INCH BUCKET

SEVERE DUTY CAST LIP BUCKET TOOTH ASSEMBLY
(24, 30 OR 36 INCH BUCKET)

KEY	PART NO.	PART NAME	QTY	SERIAL NO.	REMARKS
1A	.....	KIT	1		(TOOTH) WHOLEGOODS (FANGGS) (AT163825 ONLY AVAILABLE WHEN ORDERING BUCKET)
1B	.....	KIT	1		(TOOTH) WHOLEGOODS (STANDARD) (AT163826 ONLY AVAILABLE WHEN ORDERING BUCKET)
1C	.....	KIT	1		(TOOTH) WHOLEGOODS (TWIN TIGER) (AT163832 ONLY AVAILABLE WHEN ORDERING BUCKET)
1D	.....	KIT	1		(FLARE) (NOT AVAILABLE FOR THIS BUCKET)
1E	.....	KIT	1		(TOOTH) WHOLEGOODS (ABRASION PANEL) (AT163828 ONLY AVAILABLE WHEN ORDERING BUCKET)
1F	.....	KIT	1		(TOOTH) WHOLEGOODS (TIGER) (AT163827 ONLY AVAILABLE WHEN ORDERING BUCKET)
2	TP400HD	PIN	1		
3	T130X400	BUCKET TOOTH ADAPTER	1		
4A	TF400	TOOTH	1		
4B	TX400	TOOTH	1		
4C	TX400WT	TOOTH	1		
4D	.....	TOOTH	1		(NOT AVAILABLE FOR THIS BUCKET)
4E	TX400AP	TOOTH	1		
4F	TT400	TOOTH	1		
5	TK130	SHAFT KEY	1		

SEVERE DUTY CAST LIP BUCKET TOOTH ASSEMBLY
(36 OR 42 INCH BUCKET)

TP46053 -UN-24SEP94

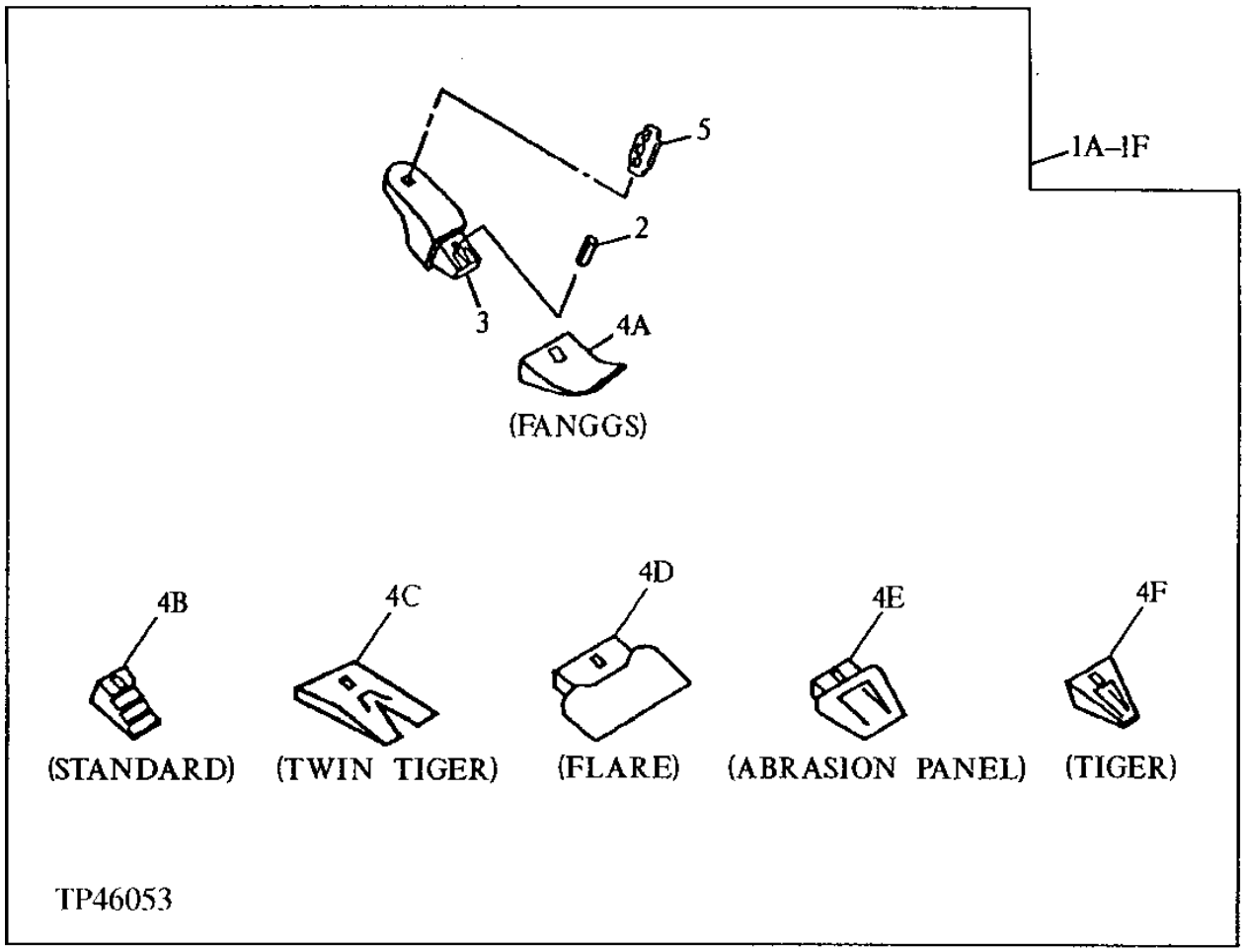

ORDER 5 SETS WITH 36 INCH BUCKET

ORDER 6 SETS WITH 42 INCH BUCKET

SEVERE DUTY CAST LIP BUCKET TOOTH ASSEMBLY
(36 OR 42 INCH BUCKET)

KEY	PART NO.	PART NAME	QTY	SERIAL NO.	REMARKS
1A	.....	KIT	1		(TOOTH) WHOLEGOODS (FANGGS) (AT163548 ONLY AVAILABLE WHEN ORDERING BUCKET)
1B	.....	KIT	1		(TOOTH) WHOLEGOODS (STANDARD) (AT163549 ONLY AVAILABLE WHEN ORDERING BUCKET)
1C	.....	KIT	1		(TOOTH) WHOLEGOODS (TWIN TIGER) (AT163553 ONLY AVAILABLE WHEN ORDERING BUCKET)
1D	.....	KIT	1		(FLARE) (NOT AVAILABLE FOR THIS BUCKET)
1E	.....	KIT	1		(TOOTH) WHOLEGOODS (ABRASION PANEL) (AT163551 ONLY AVAILABLE WHEN ORDERING BUCKET)
1F	.....	KIT	1		(TOOTH) WHOLEGOODS (TIGER) (AT163550 ONLY AVAILABLE WHEN ORDERING BUCKET)
2	TP400HD	PIN	1		
3	T802X400	BUCKET TOOTH ADAPTER	1		
4A	TF400	TOOTH	1		
4B	TX400	TOOTH	1		
4C	TX400WT	TOOTH	1		
4D	.....	TOOTH	1		(NOT AVAILABLE FOR THIS BUCKET)
4E	TX400AP	TOOTH	1		
4F	TT400	TOOTH	1		
5	.....	SHAFT KEY	1		(TP136 NO LONGER REQUIRED)

SEVERE DUTY PLATE LIP BUCKET TOOTH ASSEMBLY
(30, 36 OR 42 INCH BUCKET)

TP43777 -UN-01JAN94

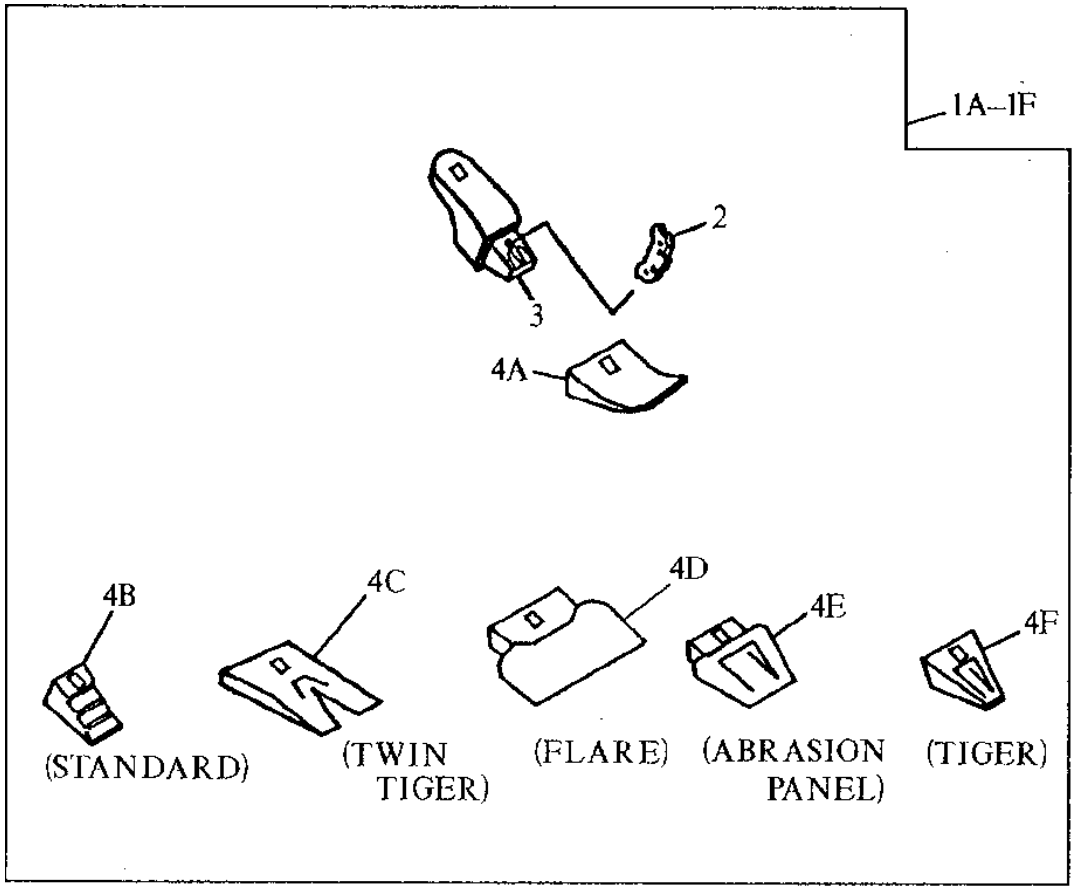

ORDER 3 SETS WITH EACH 24 INCH BUCKET
ORDER 4 SETS WITH EACH 30 INCH BUCKET
ORDER 4 SETS WITH EACH 36 INCH BUCKET
ORDER 5 SETS WITH EACH 42 INCH BUCKET
ORDER 6 SETS WITH EACH 48 INCH BUCKET
ORDER 6 SETS WITH EACH 54 INCH BUCKET
ORDER 7 SETS WITH EACH 60 INCH BUCKET
ORDER 7 SETS WITH EACH 66 INCH BUCKET
TP43777 ORDER 8 SETS WITH EACH 72 INCH BUCKET
ORDER 7 SETS WITH EACH 84 INCH BUCKET

SEVERE DUTY PLATE LIP BUCKET TOOTH ASSEMBLY
(30, 36 OR 42 INCH BUCKET)

KEY	PART NO.	PART NAME	QTY	SERIAL NO.	REMARKS
1A	.....	KIT	1		(TOOTH) WHOLEGOODS (FANGGS) (AT163548 ONLY AVAILABLE WHEN ORDERING BUCKET)
1B	.....	KIT	1		(TOOTH) WHOLEGOODS (STANDARD) (AT163549 ONLY AVAILABLE WHEN ORDERING BUCKET)
1C	.....	KIT	1		(TOOTH) WHOLEGOODS (TWIN TIGER) (AT163553 ONLY AVAILABLE WHEN ORDERING BUCKET)
1D	.....	KIT	1		(TOOTH) WHOLEGOODS (FLARE) (AT163552 ONLY AVAILABLE WHEN ORDERING BUCKET)
1E	.....	KIT	1		(TOOTH) WHOLEGOODS (ABRASION PANEL) (AT162551 ONLY AVAILABLE WHEN ORDERING BUCKET)
1F	.....	KIT	1		(TOOTH) WHOLEGOODS (TIGER) (AT163550 ONLY AVAILABLE WHEN ORDERING BUCKET)
1G	.....	KIT	1		(TOOTH) WHOLEGOODS (ESCO STANDARD) (NOT ILLUSTRATED) (AT163554 ONLY AVAILABLE WHEN ORDERING BUCKET)
1H	.....	KIT	1		(TOOTH) WHOLEGOODS (ESCO TWIN TIGER) (NOT ILLUSTRATED) (AT163557 ONLY AVAILABLE WHEN ORDERING BUCKET)
1I	.....	KIT	1		(TOOTH) WHOLEGOODS (ESCO FLARE) (NOT ILLUSTRATED) (AT163556 ONLY AVAILABLE WHEN ORDERING BUCKET)
1J	.....	KIT	1		(TOOTH) WHOLEGOODS (ESCO TIGER) (NOT ILLUSTRATED) (AT163555 ONLY AVAILABLE WHEN ORDERING BUCKET)
1K	.....	KIT	1		(TOOTH) WHOLEGOODS (CATERPILLAR REPLACEMENT FANGGS) (NOT ILLUSTRATED) (AT167196 ONLY AVAILABLE WHEN ORDERING BUCKET)
1L	.....	KIT	1		(TOOTH) WHOLEGOODS (CATERPILLAR REPLACEMENT STANDARD) (NOT ILLUSTRATED) (AT167197 ONLY AVAILABLE WHEN ORDERING BUCKET)
1O	.....	KIT	1		(TOOTH) WHOLEGOODS (SUPER V-STYLE EV39SYL TOOTH KIT) (NOT ILLUSTRATED) (AT199361 ONLY AVAILABLE WHEN ORDERING BUCKET)
2	TP400HD	PIN	1		
	EX37VPN	PIN	1		(ESCO VERTALOK) (NOT ILLUSTRATED - SEE ESCO TOOTH PAGE)
	T1U1458	PIN FASTENER	1		(CATERPILLAR REPLACEMENT) (NOT ILLUSTRATED)
3	T802X400	SHANK	1		
	EX5856-37V	BUCKET TOOTH ADAPTER	1		(ESCO VERTALOK) (NOT ILLUSTRATED - SEE ESCO TOOTH PAGE)
	T1U1454	BUCKET TOOTH ADAPTER	1		(CATERPILLAR REPLACEMENT) (NOT ILLUSTRATED)
4A	TF400	TOOTH	1		
4B	TX400	TOOTH	1		
4C	TX400WT	TOOTH	1		
4D	TX400F	TOOTH	1		
4E	TX400AP	TOOTH	1		
4F	TT400	TOOTH	1		
4G	EX37SYL	TOOTH	1		(ESCO STANDARD) (NOT ILLUSTRATED - SEE ESCO TOOTH PAGE)
4H	EX37TVIP	TOOTH	1		(ESCO TWIN TIGER) (NOT ILLUSTRATED - SEE ESCO TOOTH PAGE)
4I	EX37S7F	TOOTH	1		(ESCO FLARE) (NOT ILLUSTRATED - SEE ESCO TOOTH PAGE)
4J	EX37VIP	TOOTH	1		(ESCO TIGER) (NOT ILLUSTRATED - SEE ESCO TOOTH PAGE)
4K	TF9W8452D	TOOTH	1		(CATERPILLAR REPLACEMENT FANGGS) (NOT ILLUSTRATED)
4L	T9W8452	TOOTH	1		(CATERPILLAR REPLACEMENT STANDARD) (NOT ILLUSTRATED)
5	EX37VPL	PLUG	1		(NOT ILLUSTRATED - SEE ESCO TOOTH PAGE)
	T3G9549	RETAINER	1		(CATERPILLAR REPLACEMENT) (NOT ILLUSTRATED)

BUCKET PIN-UP DATA
(30, 36 OR 42 INCH BUCKET)

TP58748 -UN-07AUG97

EXCAVATOR BUCKET PIN-UP DATA

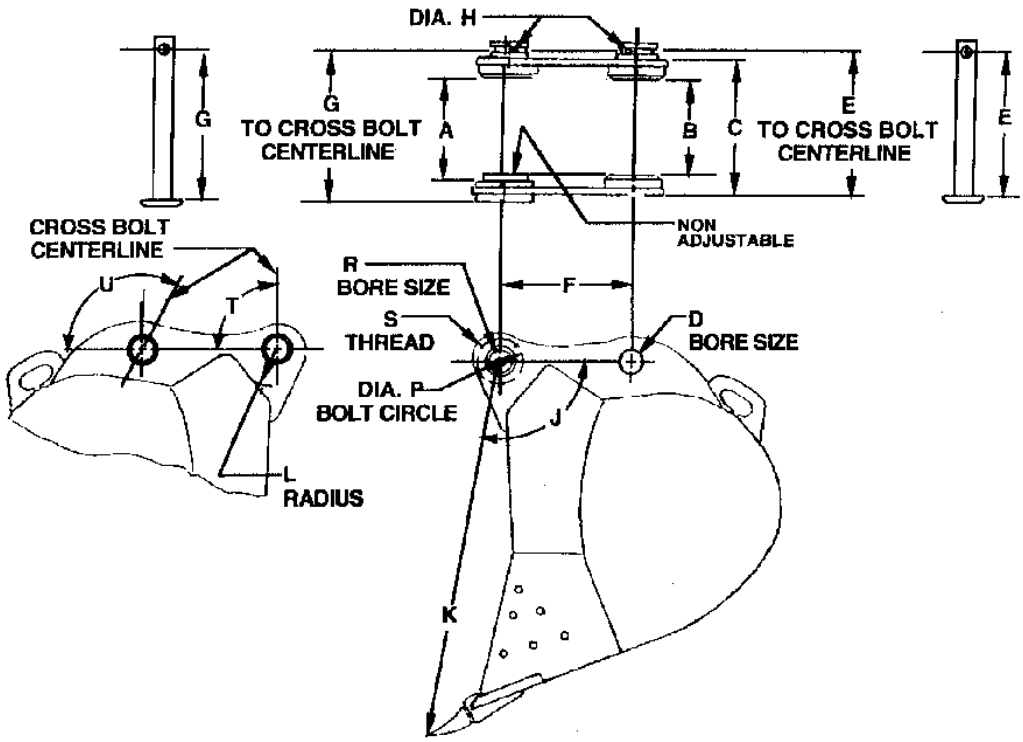

MODEL	230LC, 270LC 790, 790D 790E LC, 792D	LONG FRONTS 690E LC, 790E LC, 892E LC	MODEL	230LC, 270LC 790, 790D, 790E LC, 792D	LONG FRONTS 690E LC, 790E LC, 892E LC
A ADJUSTABLE BUSHING STYLE	[426] 16.77	[224] 8.82	J (ANGLE)	104°	104°
B	[410] 16.14	[224] 8.82	K	[1550] 61.00	[940] 37.01
C	[522] 20.55	[335] 13.19	L	[115] 4.53	[149] 5.87
D	[90] 3.543	[65] 2.559	P	[160] 6.30	[65] 2.559
E	[553] 21.77	[352] 13.85	R	[130] 5.12	N.A.
F	[475] 18.70	[325] 12.80	S (3 HOLES)	M16 X 2	N.A.
G	[572] 22.52	[352] 13.85	T (ANGLE)	127°	165°
H	[21] 0.827	[17] 0.67	U (ANGLE)	127°	75°

Company policy limits the use of the enclosed drawings and information to your company and any other usage is expresely prohibited without the written consent of Deere & Company. We regret we cannot keep you informed of subsequent changes in the specifications furnished. You are, therefore, responsible for the risks involved in their use.

It is to be understood that furnishing you with the requested material does not automatically constitute a Deere & Company endorsement of your products on or with any John Deere product.

(15JUL97)

TP58748

MEMORANDA

**CONTROL LEVER
(FRONT AND SWING)**

T146086 -UN-28SEP01

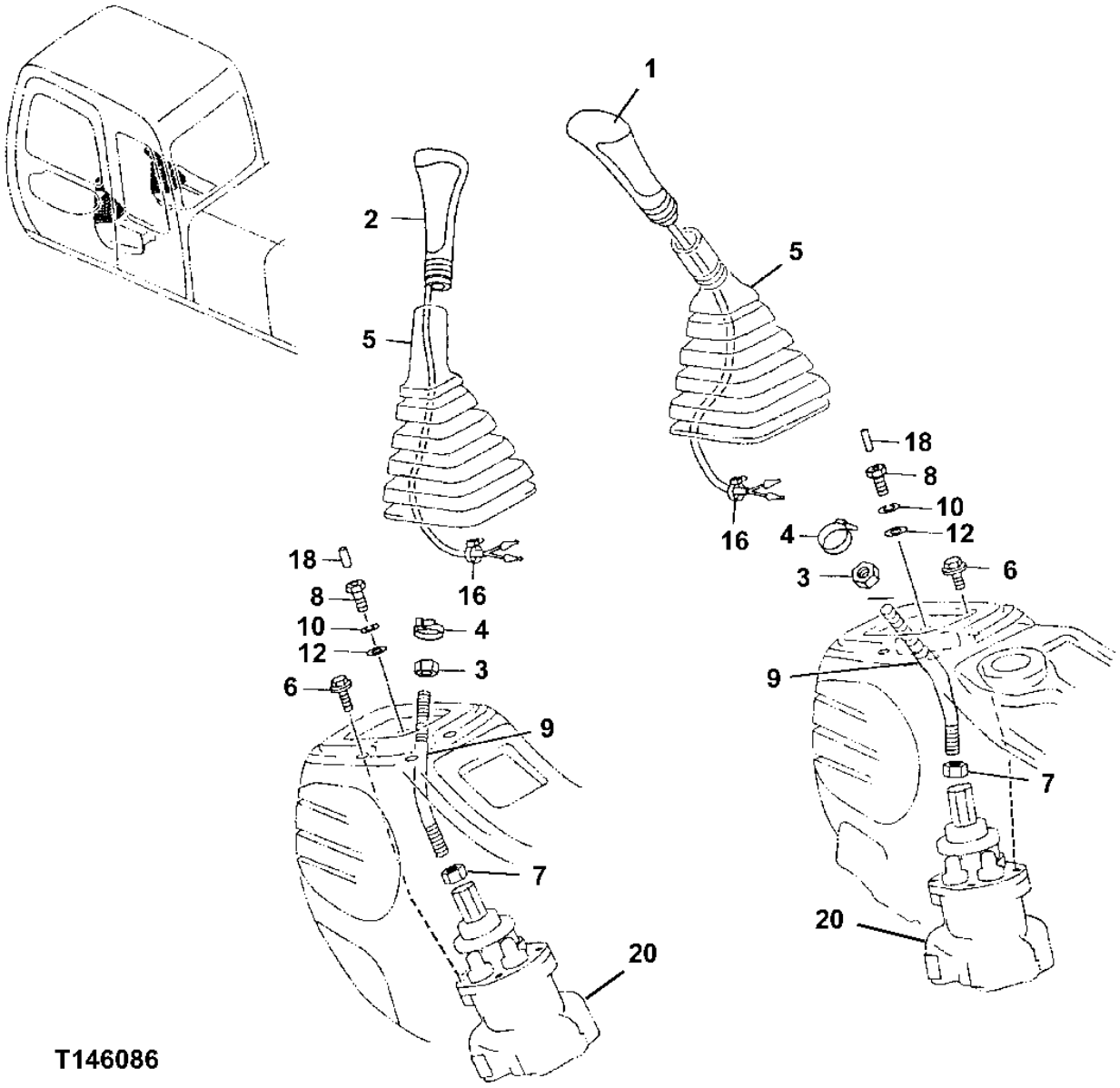

CONTROL LEVER
(FRONT AND SWING)

KEY	PART NO.	PART NAME	QTY	SERIAL NO.	REMARKS
1	2045471	GRIP	1		(SUB FOR TH2045471) (INCLUDES POWER LIFT SWITCH)
2	2045472	GRIP	1		(SUB FOR TH2045472) (INCLUDES HORN BUTTON)
3	14M7357	NUT	2		M12
4	H77698	TIE BAND	2		(SUB FOR M88199)
5	2045470	BOOT	2		(SUB FOR TH2045470)
6	12M7056	LOCK WASHER	6	-071384	8 MM (0.315") (SUB FOR 12M7065)
	24M7055	WASHER	6	-071384	8.400 X 16 X 1.600 MM (0.331" X 0.630" X 0.063")
	19M7163	CAP SCREW	6	-071384	M8 X 25
	19M7139	CAP SCREW	6	071385-	(SUB FOR J260820 OR J900820)
	24M7055	WASHER	6	071385-	(SUB FOR A590108)
7	14M7141	NUT	2		M14
8	4438279	BOLT	2	-071384	(SUB FOR TH4438279)
	4609956	BOLT	2	071385-	
9	4445322	LEVER	2		(SUB FOR TH4445322)
10	12M7056	LOCK WASHER	2		8 MM (0.315") (SUB FOR 12M7065)
12	24M7055	WASHER	2		8.400 X 16 X 1.600 MM (0.331" X 0.630" X 0.063")
16	H77698	TIE BAND	2		
18	34M7086	SPRING PIN	2		3 X 32 MM (0.118" X 1.260")
20	9195304	HYDR./PILOT CONTROL VALVE	2	-071384	(SUB FOR TH9195304) (USE IF AVAILABLE - IF NOT AVAILABLE SUB 9239583, ALONG WITH (3) 19M7139, (3) 24M7055, AND 4609956)
	9239583	HYDR./PILOT CONTROL VALVE	2	071385-	

PILOT CONTROLLER VALVE COMPONENTS(DIG AND SWING)(SN -071384)

T142561 -UN-18JUN01

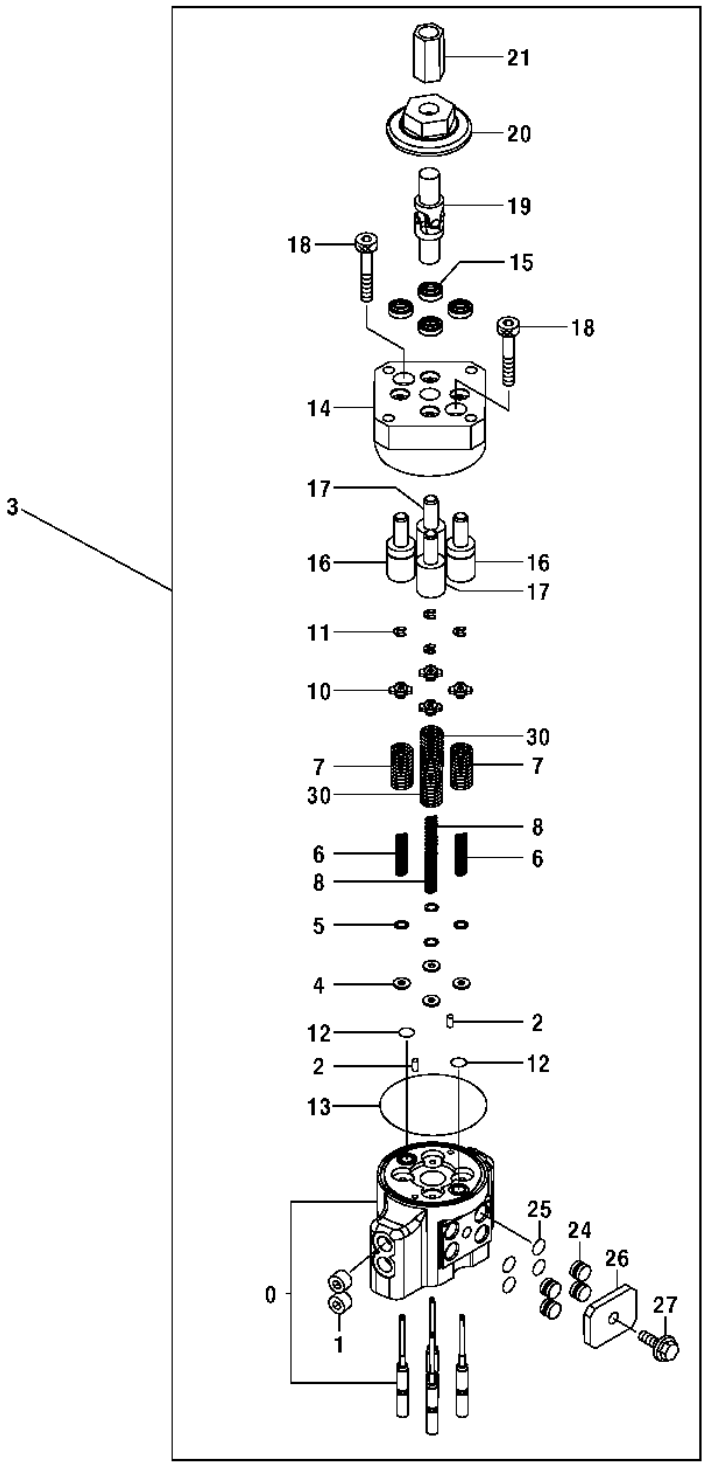

T142561

PILOT CONTROLLER VALVE COMPONENTS(DIG AND SWING)(SN -071384)

KEY	PART NO.	PART NAME	QTY	COMPONENT SERIAL NO.	REMARKS
0	.....	CASE	1		(TH8081319 NOT AVAILABLE)
1	94-2011	FITTING PLUG	2		
2	J400408	PIN	2		
3	9195304	HYDR./PILOT CONTROL VALVE	1	-071384	(USE IF AVAILABLE - IF NOT AVAILABLE SUB 9239583, ALONG WITH (3) 19M7139, (3) 24M7055, AND 4609956)
4	4410898	SPACER	4		
5	4173208	SHIM	12		
6	4425414	SPRING	2		
7	4421771	SPRING	2		
8	4429120	SPRING	2		
10	4429119	GUIDE	4		
11	4437333	SNAP RING	4		
12	4431914	O-RING	2		
13	4431915	O-RING	1		
14	.....	MANIFOLD	1	-071187	(2044350 NO LONGER AVAILABLE) (SUB 9234284, (4) 4477852, (2) 9759158 AND (2) 9759157) (MANIFOLD HAS ONE PUNCH MARK ON TOP FACE)
	9234284	MANIFOLD	1	071188-	(SUB FOR 2044350, ALONG WITH (4) 4477852, (2) 9759158 AND(2) 9759157) (MANIFOLD HAS TWO PUNCH MARKS ON TOP FACE)
15	.....	SEAL	4	-071187	(4447050 NO LONGER AVAILABLE) (SUB 9234284, (4) 4477852, (2) 9759158 AND (2) 9759157) (USE WITH 2044350)
	.....	SEAL	4	071188-	(SUB FOR 4447050, ALONG WITH 9234284, (2) 9759158, AND (2) 9759157) (USE WITH 9234284) (4477852 NO LONGER AVAILABLE FOR SERVICE)
16	.....	PISTON	2	-071187	(9754825 NO LONGER AVAILABLE) (SUB 9234284, (4) 4477852, (2) 9759158 AND (2) 9759157) (USE WITH 2044350)
	9759157	PISTON	2	071188-	(SUB FOR 9754825, ALONG WITH (4) 4477852, 9234284, AND (2) 9759158) (USE WITH 9234284)
17	.....	PISTON	2	-071187	(9754826 NO LONGER AVAILABLE) (SUB 9234284, (4) 4477852, (2) 9759158 AND (2) 9759157) (USE WITH 2044350)
	9759158	PISTON	2	071188-	(SUB FOR 9754826, ALONG WITH (4) 4477852, (2)9759158, AND 9234284) (USE WITH 9234284)
18	J780845	BOLT	2		
19	4335060	UNIVERSAL JOINT	1		
20	4437106	CAM	1		
21	4182067	JOINTER	1		
24	4442323	PIPE PLUG	4		
25	CH11560	PACKING	4		
26	4442339	PLATE	1		
27	19M7932	CAP SCREW	1		M8 X 16
30	4446960	SPRING	2		

PILOT CONTROLLER VALVE COMPONENTS (DIG AND SWING)(SN 071385-)

T206912 -UN-31JAN05

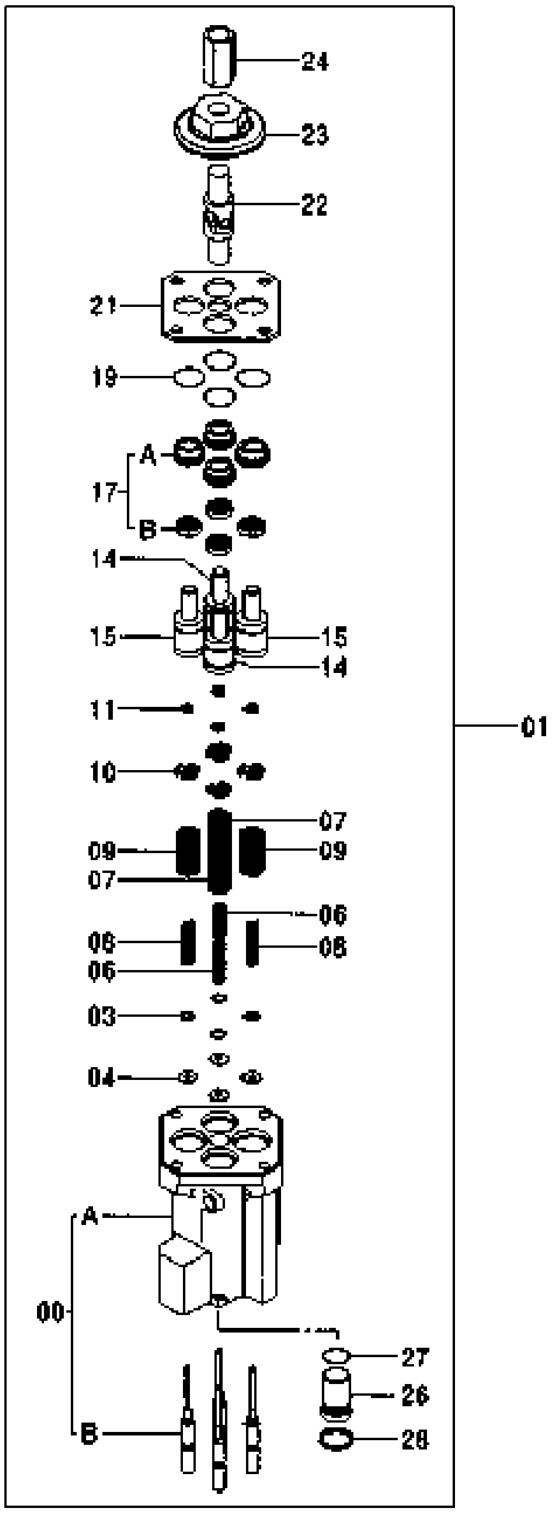

T206912

PILOT CONTROLLER VALVE COMPONENTS (DIG AND SWING)(SN 071385-)

KEY	PART NO.	PART NAME	QTY	COMPONENT SERIAL NO.	REMARKS
0	8094446	CASE	1		
0A	.....	HOUSING	1		(NOT CURRENTLY AVAILABLE)
0B	.....	SPOOL	4		(NOT CURRENTLY AVAILABLE)
3	4203411	SHIM	4		
4	4410898	SPACER	4		
6	4429120	SPRING	2		
7	4446960	SPRING	2		
8	4425414	SPRING	2		
9	4421771	SPRING	2		
10	4615610	GUIDE	4		
11	4437333	SNAP RING	4		
14	9759157	PISTON	2		
15	9759158	PISTON	2		
17	9246436	SLEEVE	4		
17A	.....	SLEEVE	1		(NOT CURRENTLY AVAILABLE)
17B	.....	SEAL	1		(NOT CURRENTLY AVAILABLE)
19	4201993	O-RING	4		
21	4614296	PLATE	1		
22	4335060	UNIVERSAL JOINT	1		
23	4437106	CAM	1		
24	4182067	JOINTER	1		
26	4614286	PLUG	1		
27	4170585	O-RING	1		
28	4614331	SNAP RING	1		

PILOT SYSTEM SHUTOFF LEVER

T142560 -UN-28JUN01

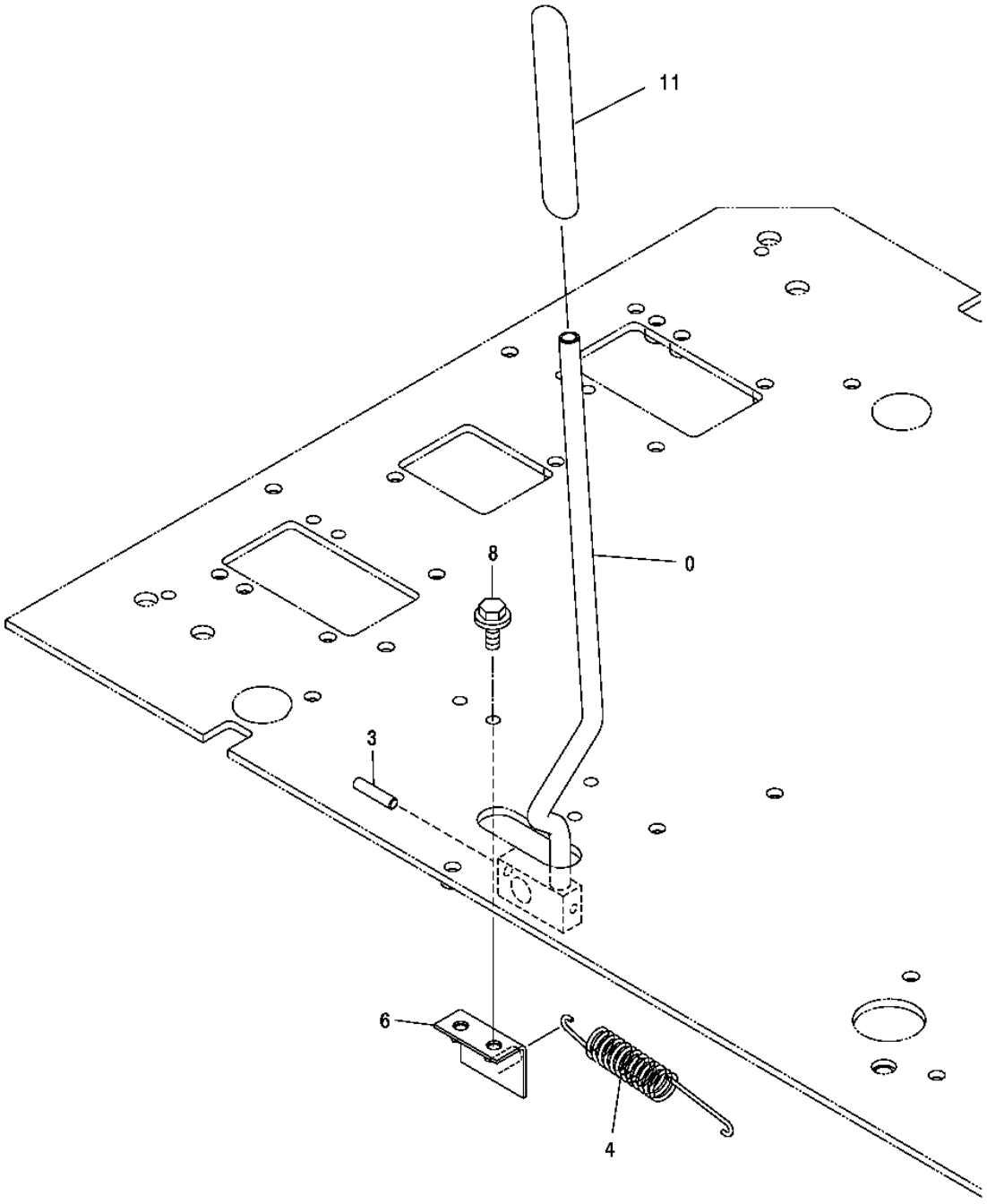

T142560

PILOT SYSTEM SHUTOFF LEVER

KEY	PART NO.	PART NAME	QTY	SERIAL NO.	REMARKS
0	7035503	LEVER	1		(SUB FOR TH7035503)
3	4116310	SPRING PIN	1		(SUB FOR TH4116310)
4	4189184	EXTENSION SPRING	1		(SUB FOR TH108392)
6	8073901	BRACKET	1		(SUB FOR TH8073901)
8	19M7662	CAP SCREW	2		M10 X 30
	12M7066	LOCK WASHER	2		10 MM
	24M7028	WASHER	2		10.500 X 20 X 2 MM
11	3089848	GRIP	1		(SUB FOR TH3089848)

PROPEL PILOT CONTROLLER LEVER AND PEDAL

T142559 -UN-18JUN01

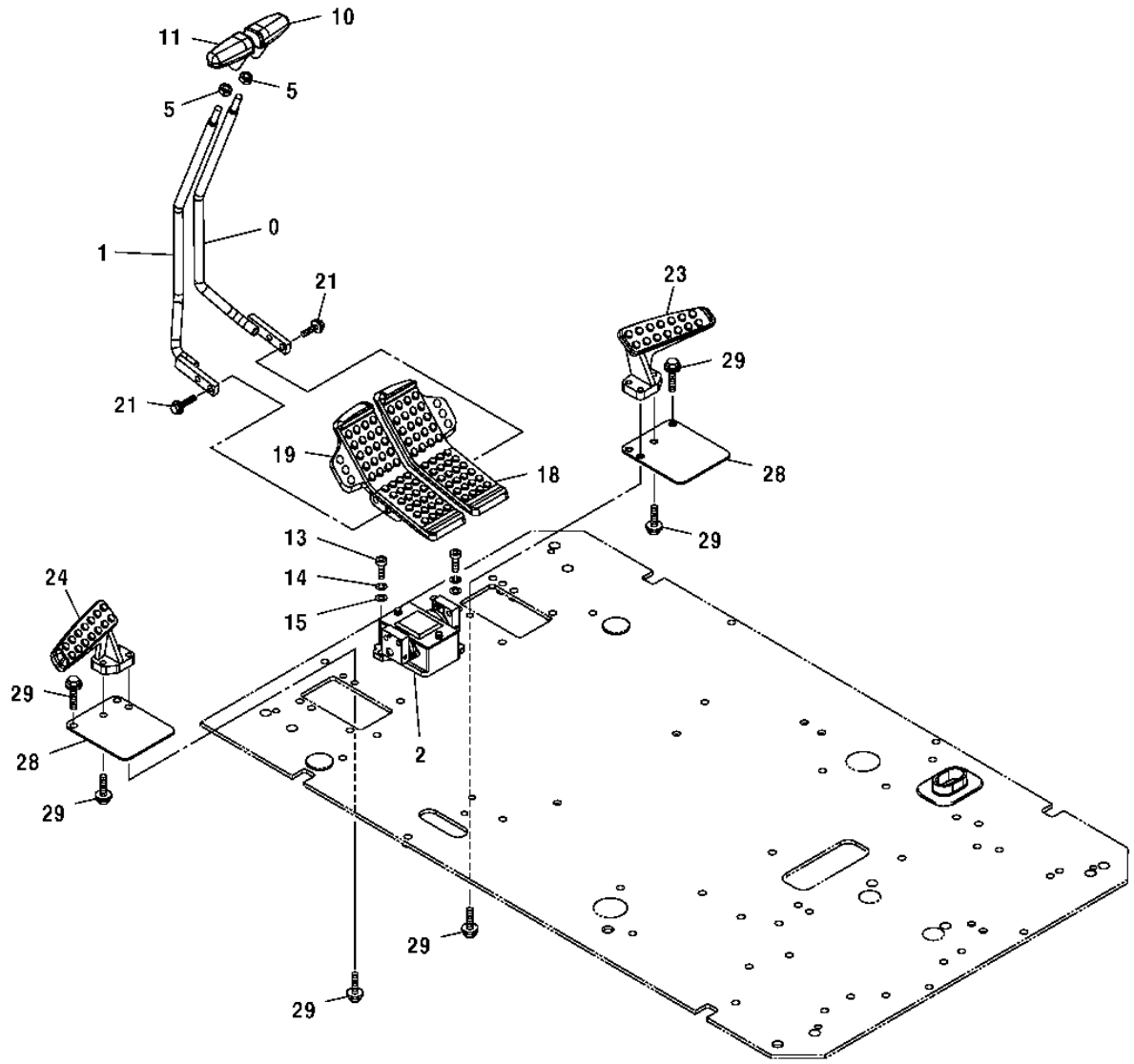

T142559

PROPEL PILOT CONTROLLER LEVER AND PEDAL

KEY	PART NO.	PART NAME	QTY	SERIAL NO.	REMARKS
0	8075450	LEVER	1		(SUB FOR TH8075450)
1	8075449	LEVER	1		(SUB FOR TH8075449)
2	9195307	HYDR./PILOT CONTROL VALVE	1	-XXXXXX	
	9235551	HYDR./PILOT CONTROL VALVE	1	XXXXXX-	
5	4424185	NUT	2		(SUB FOR TH4424185)
10	2051176	GRIP	1		(SUB FOR TH2045468, 2045468)
11	2051177	GRIP	1		(SUB FOR TH2045469, 2045469)
13	19M8337	SCREW	2		M10 X 30
14	12M7066	LOCK WASHER	2		10 MM
15	24M7028	WASHER	2		10.500 X 20 X 2 MM
18	1024384	PEDAL	1		(SUB FOR AT202292)
19	1024224	PEDAL	1		(SUB FOR AT202291)
21	19M7658	CAP SCREW	4		M10 X 50
	12M7066	LOCK WASHER	4		10 MM
	24M7096	WASHER	4		10.500 X 18 X 1.600 MM
23	1015478	FOOTREST	1		(SUB FOR AT154056)
24	1015477	FOOTREST	1		(SUB FOR AT154055)
28	3052543	COVER	2		(SUB FOR AT154127)
29	19M7550	CAP SCREW	8		M10 X 35
	12M7066	LOCK WASHER	8		10 MM

PILOT VALVE COMPONENTS

T142562 -UN-18JUN01

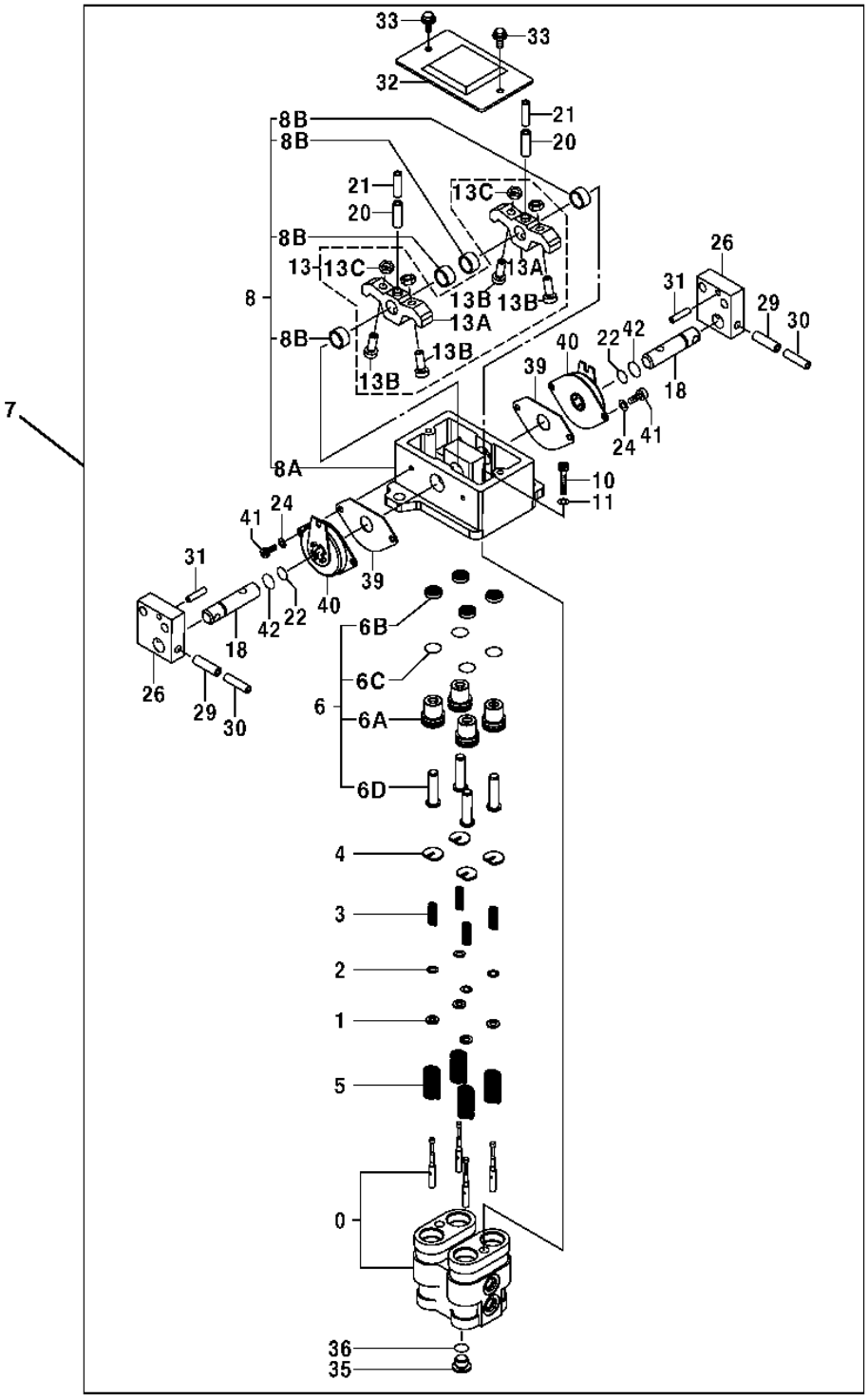

T142562

PILOT VALVE COMPONENTS

KEY	PART NO.	PART NAME	QTY	SERIAL NO.	REMARKS
0	8063718	HOUSING	1		(SUB FOR AT216001)
1	4319299	SPACER	4		(SUB FOR AT215885)
2	4203411	SHIM	12		(SUB FOR T108159)
3	4368629	COMPRESSION SPRING	4		(SUB FOR AT215954)
4	4364970	GUIDE	4		(SUB FOR AT215948)
5	4368630	COMPRESSION SPRING	4		(SUB FOR AT215955)
6	9151724	PLUNGER	4		(SUB FOR AT216016)
6A	.....	BUSHING	1		(AT217942 NOT AVAILABLE)
6B	4447050	SEAL	1		(SUB FOR TH4447050)
6C	CH11562	O-RING	1		
6D	3072517	PLUNGER	1		(SUB FOR AT215869)
7	9195307	HYDR./PILOT CONTROL VALVE	1		(SUB FOR TH9195307)
8	9184275	HOLDER	1		(SUB FOR TH9184275)
8A	.....	HOLDER	1		(TH2044332 NOT AVAILABLE)
8B	4437433	BUSHING	4		(SUB FOR TH4437433)
10	J781030	SCREW	2		(SUB FOR AT213614)
11	12M7066	LOCK WASHER	2		10 MM
13	9199146	KIT	2		(SUB FOR TH9199146)
13A	.....	CAM	1		(TH3087264 NOT AVAILABLE)
13B	4425290	SCREW	2		(SUB FOR TH4425290)
13C	4122395	NUT	2		(SUB FOR TH108364)
18	4425305	PIN FASTENER	2		(SUB FOR TH4425305)
20	34M7225	SPRING PIN	2		8 X 28 MM, (SUB FOR 34M6402)
21	4213419	SPRING PIN	2		(SUB FOR TH111654)
22	4185600	O-RING	2		(SUB FOR TH4185600)
24	12M7006	LOCK WASHER	4		6 MM
26	3087987	BRACKET	2		(SUB FOR TH3087987)
29	34M7124	SPRING PIN	2		8 X 30 MM
30	34M7062	SPRING PIN	2		5 X 32 MM
31	4051262	SPRING PIN	2		(SUB FOR AT213796)
32	8077903	COVER	1		(SUB FOR TH8077903)
33	19M7923	CAP SCREW	2		M6 X 12
	12M7006	LOCK WASHER	2		6 MM
	24M7293	WASHER	2		6.500 X 13 X 1.600 MM
35	4208977	DRAIN PLUG	1		(SUB FOR TH111351)
36	CH11561	PACKING	1		
39	4437432	GASKET	2		(SUB FOR TH4437432)
40	4428902	ABSORBER	2		
41	J780612	BOLT	4		
42	4447067	O-RING	2		(SUB FOR TH4447067)

AUXILIARY 2-WAY HYDRAULIC FOOT PEDAL CONTROL

T158465 -UN-16AUG02

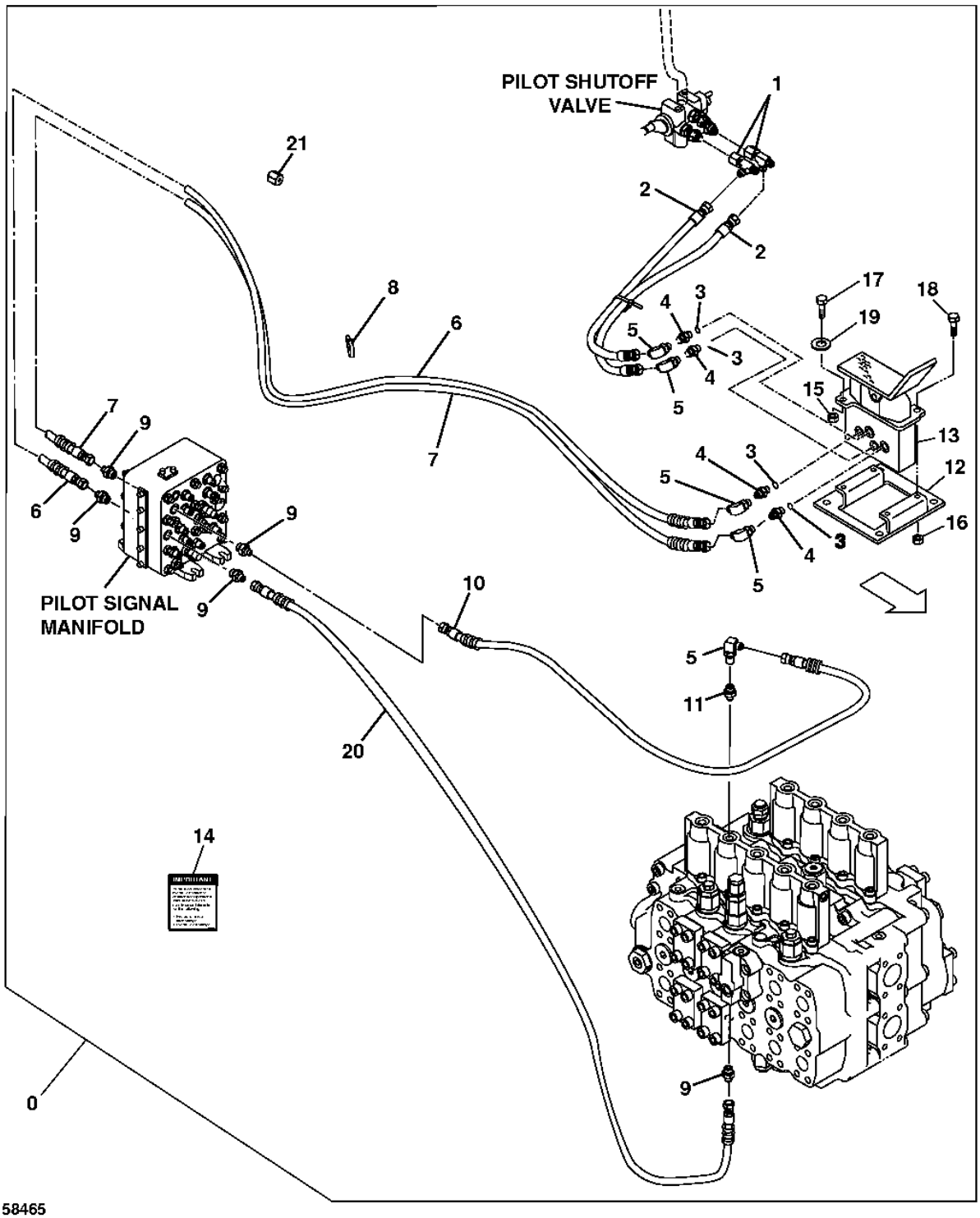

AUXILIARY 2-WAY HYDRAULIC FOOT PEDAL CONTROL

KEY	PART NO.	PART NAME	QTY	SERIAL NO.	REMARKS
0	**AT195684**	**KIT**	**1**		**WHOLEGOODS (AUXILIARY FOOT PEDAL CONTROL)**
1	AT36921	TEE FITTING	2		
2	AH108250	HOSE	2		9/16" X 787 MM (31") X 9/16"
3	R26448	O-RING	4		
4	R27212	FITTING	4		
5	AE24616	ELBOW FITTING	5		
6	AE42067	HYDRAULIC HOSE	1		9/16" X 3 700 MM (145-3/4") X 9/16"
7	AE42067	HYDRAULIC HOSE	1		9/16" X 3 700 MM (145-3/4") X 9/16"
8	H77698	TIE BAND	5		
9	4200466	ADAPTER	5		(SUB FOR TH108320)
	CH11570	O-RING	5		
10	AT68901	HYDRAULIC HOSE - FABRICATE	2		9/16" X 965 MM (38") X 9/16"
11	4202422	ADAPTER	1		(SUB FOR TH108440)
	CH11570	O-RING	1		
12	AT115535	SUPPORT	1		
13	AT152120	HAND OPERATED VALVE	1		
14	T149434	LABEL	1		
15	14M7296	FLANGE NUT	1		M10
16	14M7298	FLANGE NUT	4		M8
17	19M7784	SCREW	2		M10 X 20
18	19M7866	SCREW	4		M8 X 20
19	24M7296	WASHER	2		10.500 X 30 X 2.500 MM
20	AR90081	HYDRAULIC HOSE	1		
21	R31147	FITTING	1		(TANK PORT DRAIN LINE)

SINGLE PEDAL CONTROL KIT

T148421 -UN-06DEC01

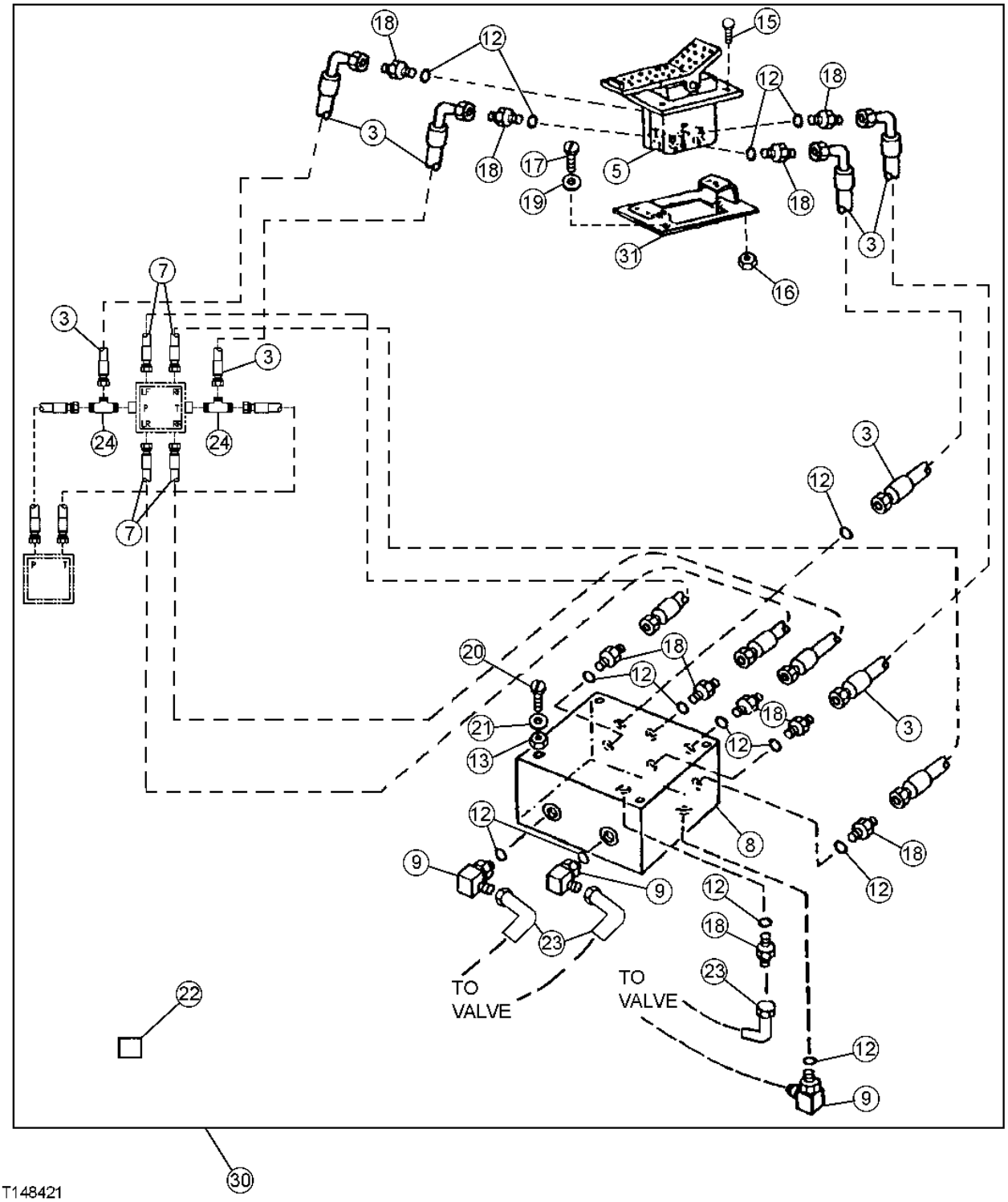

THIS PARTS LISTING IS CONTINUED

SINGLE PEDAL CONTROL KIT

KEY	PART NO.	PART NAME	QTY	SERIAL NO.	REMARKS
3	AT71082	HYDRAULIC HOSE - FABRICATE	4		9/16" X 711 MM (28") X 9/16"
5	AT152120	HAND OPERATED VALVE	1		(FOOT)
7	AT215538	HYDRAULIC HOSE - FABRICATE	4		9/16" X 880 MM (34-3/4") X 9/16"
8	AT170459	HYD ACTUATED CONTROL VALVE	1		
9	AT35121	ELBOW FITTING	3		
12	R26448	O-RING	14		11.887 X 1.981 MM (0.468" X 5/64")
13	14M7273	NUT	4		M8
15	19M7866	SCREW	4		M8 X 20
16	14M7298	FLANGE NUT	4		M8
17	19M7784	SCREW	2		M10 X 20
18	R27212	FITTING	11		
19	24M7296	WASHER	2		10.500 X 30 X 2.500 MM
20	19M8456	CAP SCREW	4		M8 X 100
21	24M7036	WASHER	4		9 X 16 X 1.600 MM (0.354" X 0.630" X 0.063")
22	T153674	LABEL	1		(WITHOUT AUXILIARY HYDRAULICS) (LOWER FRONT OF RIGHT SIDE CAB WINDOW)
	T153676	LABEL	1		(WITH AUXILIARY HYDRAULICS) (LOWER FRONT OF RIGHT SIDE CAB WINDOW)
23	AE24616	ELBOW FITTING	3		
24	AT36921	TEE FITTING	2		
30	**AT196435**	**KIT**	**1**		**(WHOLEGOODS) (SINGLE PEDAL PROPEL KIT)**
31	AT115535	SUPPORT	1		

STANDARD ARM 3.1M

T156214 -UN-20JUN02

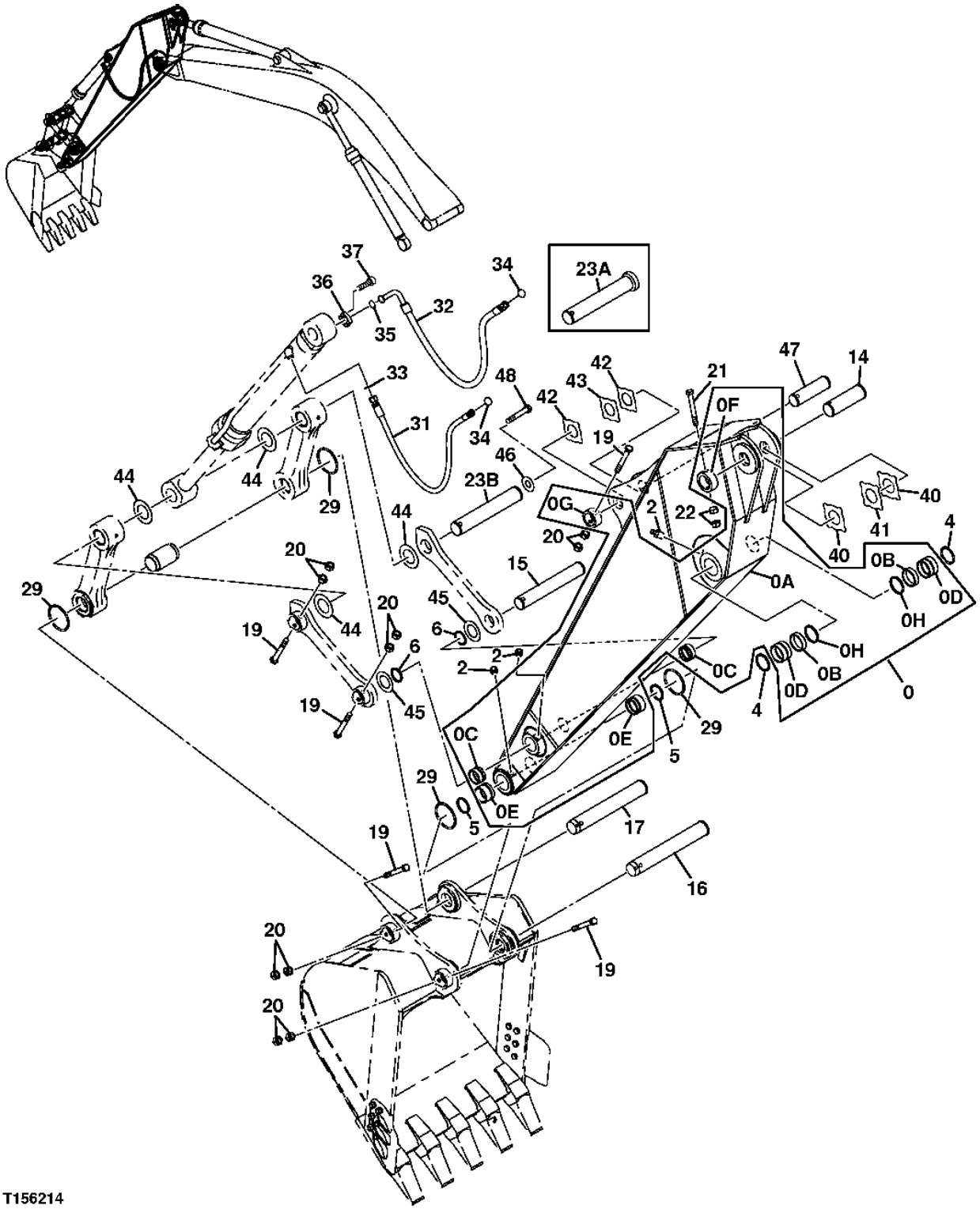

STANDARD ARM 3.1M

KEY	PART NO.	PART NAME	QTY	SERIAL NO.	REMARKS
0	TH7038671	ARM	1		
0A	TH5007003	ARM	1		
0B	4443880	BUSHING	2		
0C	4443883	BUSHING	2		(SUB FOR TH4434036)
0D	4434036	BUSHING	2		(SUB FOR TH4443883)
0E	TH4381983	BUSHING	2		(SUB FOR TH4443880)
0F	4434956	STOP	1		(SUB FOR TH4434956)
0G	4434953	STOP	1		(SUB FOR TH4434953)
0H	TH102411	SEAL	2		
2	TH100074	LUBRICATION FITTING	6		
4	TH102411	SEAL	2		
5	TH102445	SEAL	2		
6	TH102446	SEAL	2		
14	3088751	PIN FASTENER	1		(SUB FOR TH3088751)
15	TH3090168	PIN FASTENER	1		
16	3090166	PIN FASTENER	1		(SUB FOR TH3090166)
17	TH3090167	PIN FASTENER	1		
19	4435126	PIN FASTENER	5		(SUB FOR TH4435126)
20	14M7277	NUT	10		M20, (SUB FOR 14M7144)
21	4435128	STOP	1		(SUB FOR TH4435128)
22	J950022	NUT	2		(SUB FOR THJ950022)
23A	DH300121	PIN	1		(SUB FOR AT205820) (SUB AT196434 AND T138902 AND 19M7608)
23B	AT196434	PIN FASTENER	1		(SUB FOR AT205820, DH300121)
29	4089028	O-RING	4		(SUB FOR TH102444 OR T200732)
31	AT217993	HYDRAULIC HOSE - FABRICATE	1		
32	AT217965	HYDRAULIC HOSE	1		
33	T77858	O-RING	1		
34	T76938	O-RING	2		
35	T78313	O-RING	1		
36	4085560	FLANGE FITTING	2		(SUB FOR TH101960)
37	J781240	BOLT	4		(SUB FOR AT214413)
40	4470743	THRUST WASHER	2		(SUB FOR 4444284)
41	4444285	THRUST WASHER	1		(SUB FOR TH4444285)
42	4444286	THRUST WASHER	2		(SUB FOR TH4444286)
43	4444287	THRUST WASHER	1		(SUB FOR TH4444287)
44	4476062	THRUST WASHER	4		(SUB FOR 4450013, TH4450013)
45	4450012	THRUST WASHER	2		(SUB FOR TH4450012)
46	T138902	BUSHING	1		(FOR USE WITH AT196434)
47	AT217742	PIN FASTENER	1		
48	19M8029	CAP SCREW	1		M16 X 30, (SUB FOR 19M7608) (FOR USE WITH AT196434)

SHORT ARM 2.4M

T156214 -UN-20JUN02

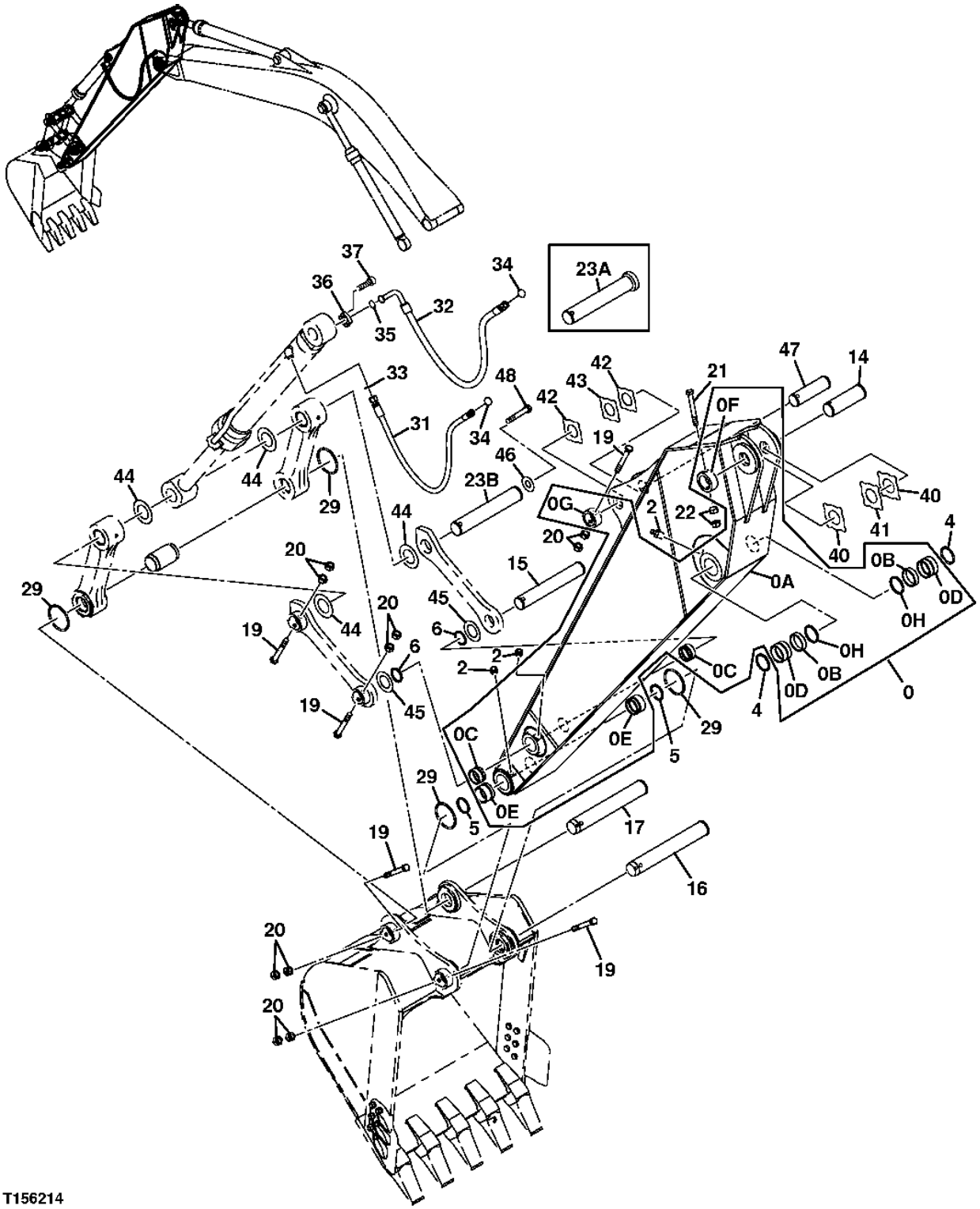

SHORT ARM 2.4M

KEY	PART NO.	PART NAME	QTY	SERIAL NO.	REMARKS
0	TH7039810	ARM	1		
0A	TH5007522	ARM	1		
0B	4443880	BUSHING	2		(SUB FOR TH4443883)
0C	4443883	BUSHING	2		
0D	4434036	BUSHING	2		(SUB FOR TH4443880)
0E	TH4381983	BUSHING	2		(SUB FOR TH4434036)
0F	4434956	STOP	1		(SUB FOR TH4434956)
0G	4434953	STOP	1		(SUB FOR TH4434953)
0H	TH102411	SEAL	2		
2	TH100074	LUBRICATION FITTING	6		
4	TH102411	SEAL	2		
5	TH102445	SEAL	2		
6	TH102446	SEAL	2		
14	3088751	PIN FASTENER	1		(SUB FOR TH3088751)
15	TH3090168	PIN FASTENER	1		
16	3090166	PIN FASTENER	1		(SUB FOR TH3090166)
17	TH3090167	PIN FASTENER	1		
19	4435126	PIN FASTENER	5		(SUB FOR TH4435126)
20	14M7277	NUT	10		M20
21	4435128	STOP	1		(SUB FOR TH4435128)
22	J950022	NUT	2		(SUB FOR THJ950022)
23A	DH300121	PIN	1		(SUB FOR AT205820) (SUB AT196434 AND T138902 AND 19M7608)
23B	AT196434	PIN FASTENER	1		(SUB FOR AT205820, DH300121)
29	4089028	O-RING	4		(SUB FOR TH102444 OR T200732)
31	TH4382025	HYDRAULIC HOSE	1		
32	4382024	HOSE	1		(SUB FOR TH4382024)
33	T77858	O-RING	1		
34	T76938	O-RING	2		
35	T78313	O-RING	1		
36	4085560	FLANGE FITTING	2		(SUB FOR TH101960)
37	J781240	BOLT	4		(SUB FOR AT214413)
40	4470743	THRUST WASHER	2		(SUB FOR 4444284)
41	4444285	THRUST WASHER	1		(SUB FOR TH4444285)
42	4444286	THRUST WASHER	2		(SUB FOR TH4444286)
43	4444287	THRUST WASHER	1		(SUB FOR TH4444287)
44	4476062	THRUST WASHER	4		(SUB FOR 4450013)
45	4450012	THRUST WASHER	2		(SUB FOR TH4450012)
46	T138902	BUSHING	1		(FOR USE WITH AT196434)
47	AT217742	PIN FASTENER	1		
48	19M8029	CAP SCREW	1		M16 X 30, (SUB FOR 19M7608) (FOR USE WITH AT196434)

LONG ARM 3.75M

T156214 -UN-20JUN02

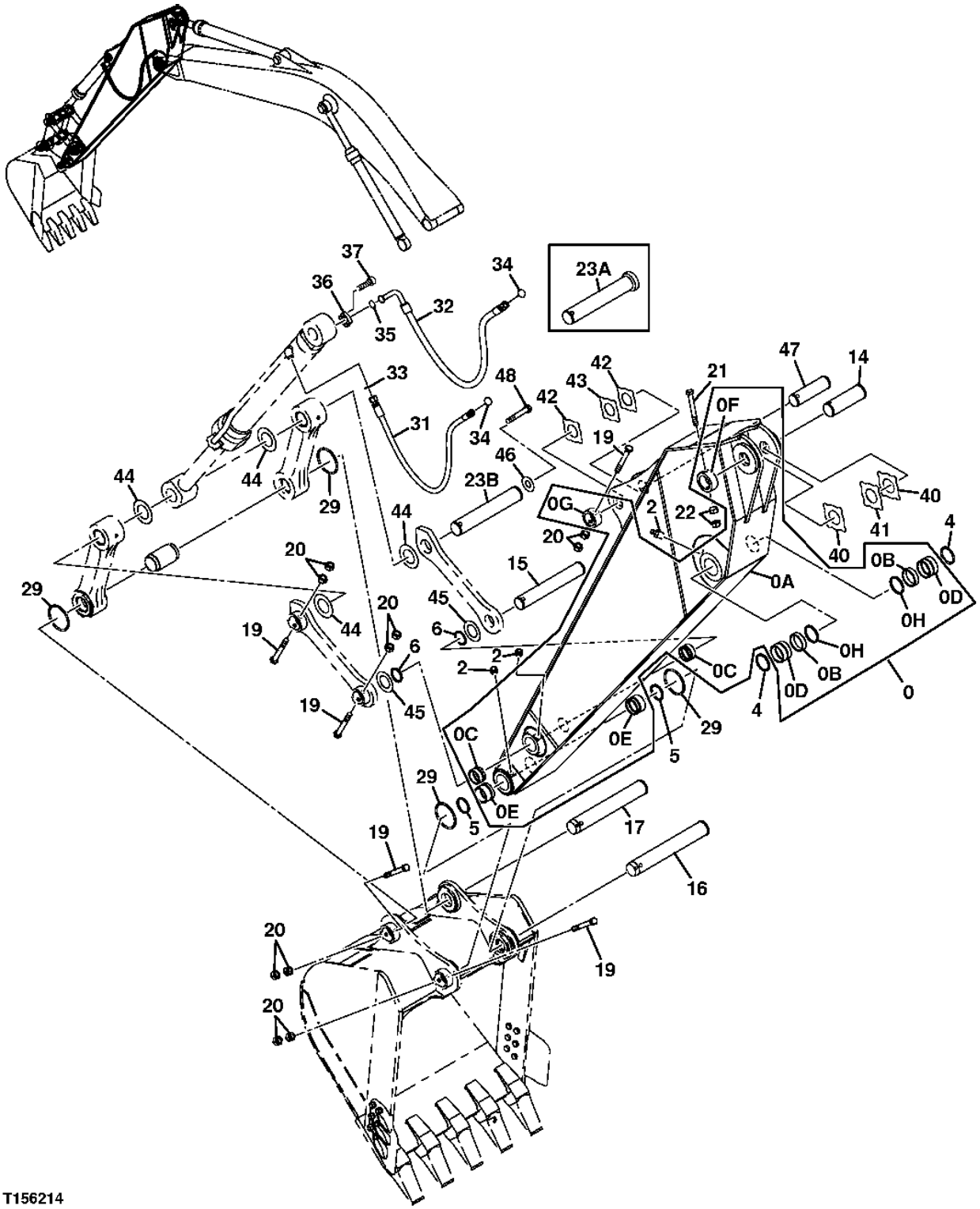

T156214

LONG ARM 3.75M

KEY	PART NO.	PART NAME	QTY	SERIAL NO.	REMARKS
0	TH7039663	ARM	1		
0A	TH5007482	ARM	1		
0B	4443880	BUSHING	2		(SUB FOR TH4443883)
0C	4443883	BUSHING	2		
0D	4434036	BUSHING	2		(SUB FOR TH4443880)
0E	TH4381983	BUSHING	2		(SUB FOR TH4434036)
0F	4434956	STOP	1		(SUB FOR TH4434956)
0G	4434953	STOP	1		(SUB FOR TH4434953)
0H	TH102411	SEAL	2		
2	TH100074	LUBRICATION FITTING	6		
4	TH102411	SEAL	2		
5	TH102445	SEAL	2		
6	TH102446	SEAL	2		
14	3088751	PIN FASTENER	1		(SUB FOR TH3088751)
15	TH3090168	PIN FASTENER	1		
16	3090166	PIN FASTENER	1		(SUB FOR TH3090166)
17	TH3090167	PIN FASTENER	1		
19	4435126	PIN FASTENER	5		(SUB FOR TH4435126)
20	14M7277	NUT	10		M20
21	4435128	STOP	1		(SUB FOR TH4435128)
22	J950022	NUT	2		(SUB FOR THJ950022)
23A	DH300121	PIN	1		(SUB FOR AT205820) (SUB AT196434 AND T138902 AND 19M7608)
23B	AT196434	PIN FASTENER	1		(SUB FOR AT205820, DH300121)
29	4089028	O-RING	4		(SUB FOR TH102444 OR T200732)
31	4385501	HYDRAULIC HOSE - FABRICATE	1		(SUB FOR AT217994)
32	AT217995	HYDRAULIC HOSE	1		
33	T77858	O-RING	1		
34	T76938	O-RING	2		
35	T78313	O-RING	1		
36	4085560	FLANGE FITTING	2		(SUB FOR TH101960)
37	J781240	BOLT	4		(SUB FOR AT214413)
40	4470743	THRUST WASHER	2		(SUB FOR 4444284)
41	4444285	THRUST WASHER	1		(SUB FOR TH4444285)
42	4444286	THRUST WASHER	2		(SUB FOR TH4444286)
43	4444287	THRUST WASHER	1		(SUB FOR TH4444287)
44	4476062	THRUST WASHER	4		(SUB FOR 4450013)
45	4450012	THRUST WASHER	2		(SUB FOR TH4450012)
46	T138902	BUSHING	1		(FOR USE WITH AT196434)
47	AT217742	PIN FASTENER	1		
48	19M8029	CAP SCREW	1		M16 X 30, (SUB FOR 19M7608) (FOR USE WITH AT196434)

ARM, SUPER LONG FRONT

T201408 -UN-01JUL04

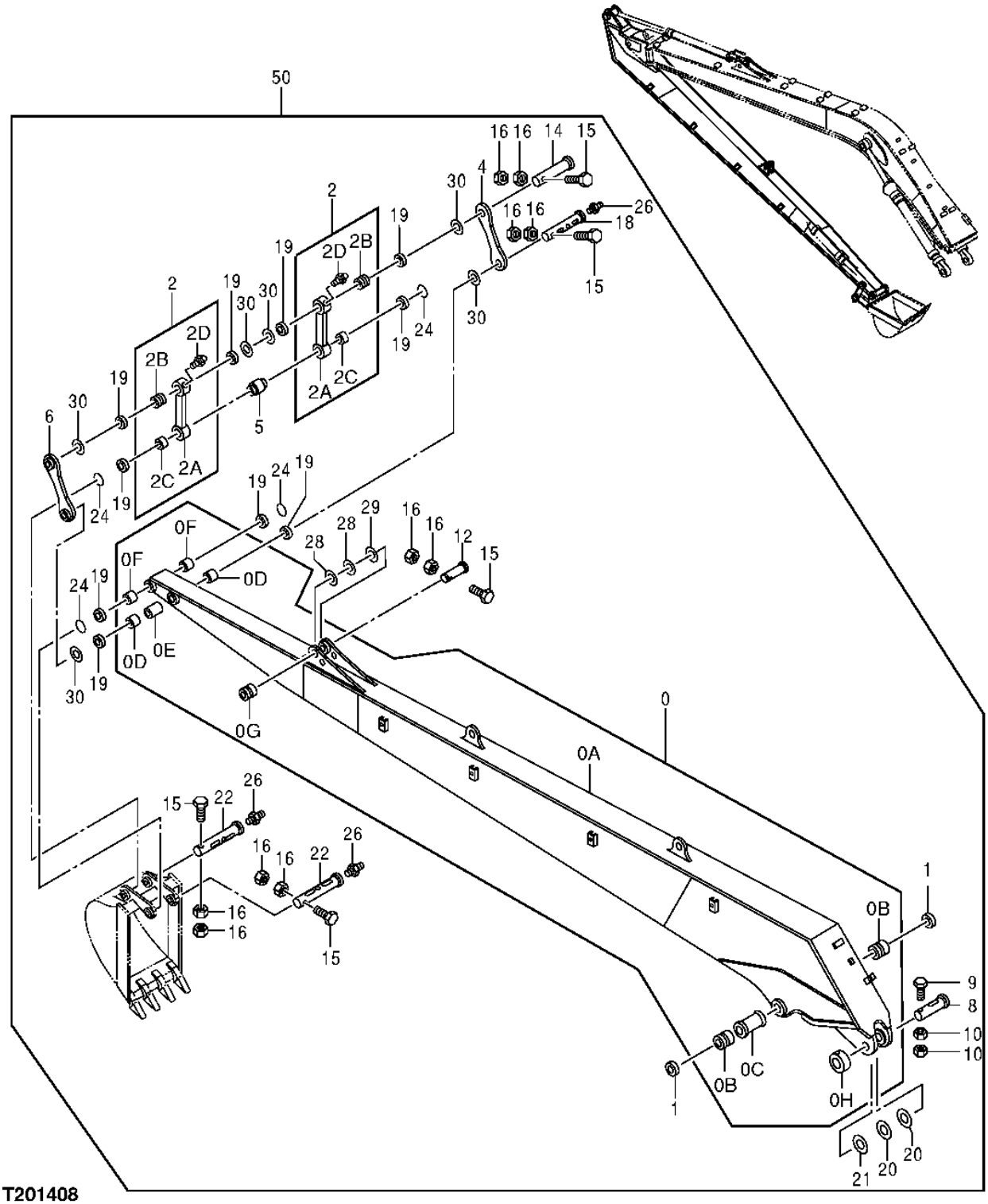

ARM, SUPER LONG FRONT

KEY	PART NO.	PART NAME	QTY	SERIAL NO.	REMARKS
0	7033463	ARM	1		
0A	.....	ARM	1		(5005597 NOT AVAILABLE FOR SERVICE)
0B	4443885	BUSHING	2		(SUB FOR 4355877)
0C	4388815	SPACER	1		
0D	4344898	BUSHING	2		
0E	4370877	SPACER	1		
0F	4444914	BUSHING	2		(SUB FOR 4344899)
0G	4434951	STOP	1		
0H	TH102409	BUSHING	1		(SUB FOR 4067720)
1	TH102411	SEAL	2		(SUB FOR 4074008)
2	8072993	LINK	2		
2A	.....	LINK	1		(SUB FOR 2042534)
2B	4371132	BUSHING	1		
2C	4344898	BUSHING	1		
2D	TH100074	LUBRICATION FITTING	1		(SUB FOR J75481)
4	9755663	LINK	1		
5	4287249	SPACER	1		
6	9755727	LINK	1		
8	AT318056	PIN	1		(SUB FOR 3060340)
9	4435126	PIN FASTENER	1		
10	3063826	NUT	2		(SUB FOR J950020)
12	3044367	PIN	1		(SUB FOR 3037078)
14	3091815	PIN	1		
15	4435123	PIN FASTENER	5		
16	14M7276	NUT	10		M16, (SUB FOR J951016)
18	3091814	PIN	1		
19	TH100374	SEAL	10		(SUB FOR 4065687)
20	4470743	THRUST WASHER	2		(SUB FOR 4444284)
21	4470744	PLATE	1		(SUB FOR 4444285)
22	AT159603	PIN	2		(SUB FOR 3058761)
24	4066923	O-RING	4		
26	TH100074	LUBRICATION FITTING	3		(SUB FOR J75481)
28	4444839	PLATE	2		
29	4444840	PLATE	1		
30	4444290	PLATE	6		
50	**AT314803**	**KIT**	**1**		**(WHOLEGOODS) (SUPER LONG FRONT KIT) (CONTAINS ALL ITEMS ON THIS PAGE - ADDITIONAL COMPONENTS LISTED ON SEPARATE PAGES) (ALSO ORDER T211127 INSTALLATION INSTRUCTION, T211136 LIFT CHART LABEL, T153672 LONG FRONT LABEL, T153673 PERIODIC MAINTENACE LABEL, AND (2) T185126 BOOM LABELS)**

BOOM

T199660 -UN-04MAY04

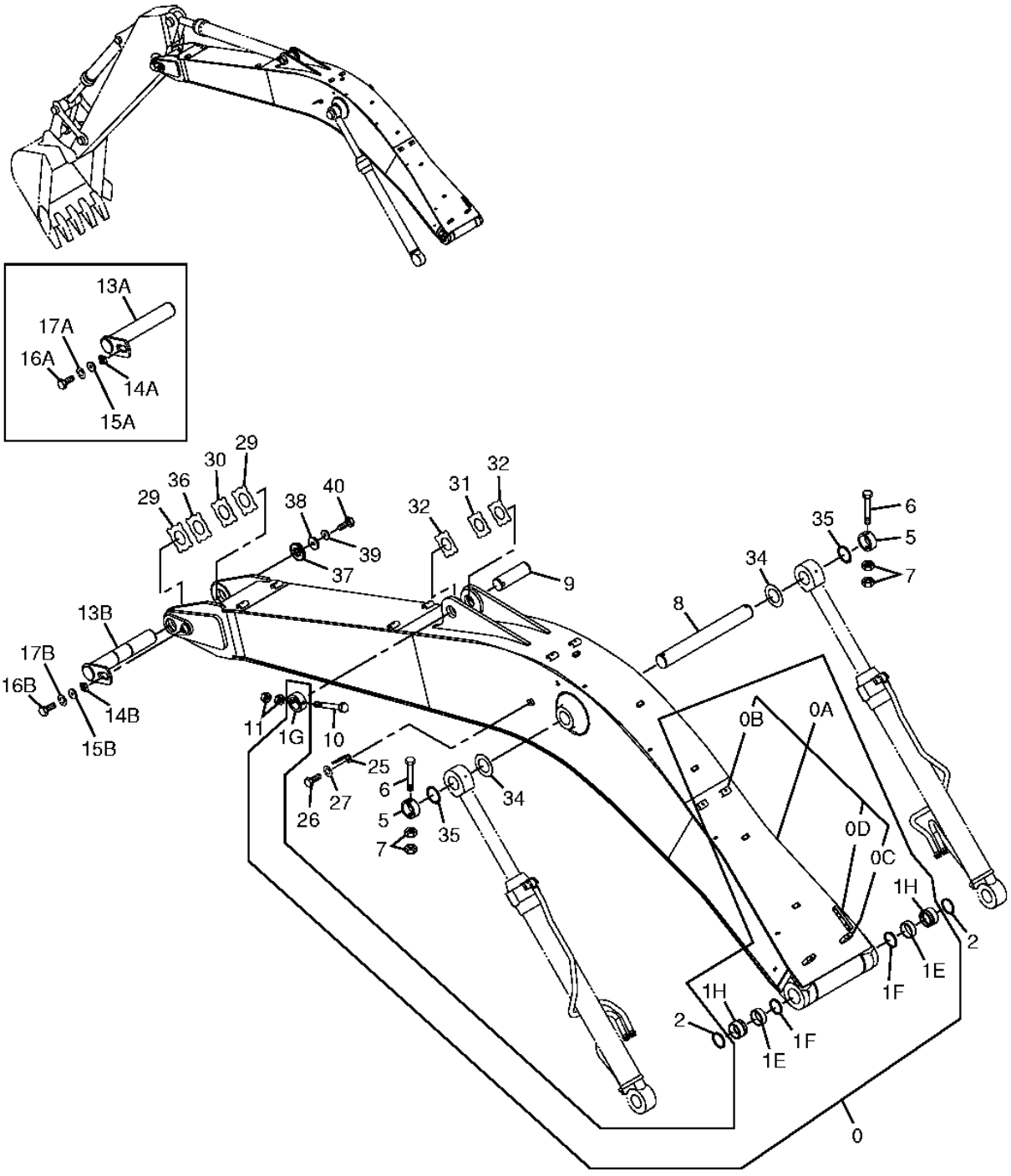

T199660

BOOM

KEY	PART NO.	PART NAME	QTY	SERIAL NO.	REMARKS
0	TH7038670	EXCAVATOR BOOM	1		
0A	TH5007002	EXCAVATOR BOOM	1		
0B	AP33691	SUPPORT	8		
0C	P64776	SUPPORT	2		
0D	T115120	STRAP	1		
1E	4364501	BUSHING	2		(SUB FOR AT217799)
1F	TH102411	SEAL	2		
1G	4434956	STOP	1		(SUB FOR TH4434956)
1H	4443885	BUSHING	2		(SUB FOR TH4443885)
2	TH102411	SEAL	2		
5	TH103198	BUSHING	2		
6	4435127	PIN FASTENER	2		(SUB FOR TH4435127)
7	14M7277	NUT	4		M20
8	3090165	PIN FASTENER	1		(SUB FOR TH3090165)
9	3088751	PIN FASTENER	1		(SUB FOR TH3088751)
10	4435128	STOP	1		(SUB FOR TH4435128)
11	J950022	NUT	2		(SUB FOR THJ950022)
13A	.....	PIN FASTENER	1	-XXXXXX	(UNITS BUILT BEFORE DECEMBER 2003) (TH8079425 NO LONGER AVAILABLE)
13B	8094392	PIN	1	XXXXXX-	(UNITS BUILT DECEMBER 2003 AND AFTER)
14A	4608853	WASHER	1	-XXXXXX	(UNITS BUILT BEFORE DECEMBER 2003) (SUB FOR 4424425)
14B	4611688	BLOCK CLAMP	1	XXXXXX-	(UNITS BUILT DECEMBER 2003 AND AFTER)
15A	4615566	WASHER	1	-XXXXXX	(UNITS BUILT BEFORE DECEMBER 2003) (SUB FOR 4426128)
15B	4611733	PLATE	1	XXXXXX-	(UNITS BUILT DECEMBER 2003 AND AFTER)
16A	J921840	BOLT	1	-XXXXXX	(UNITS BUILT BEFORE DECEMBER 2003)
16B	J922245	BOLT	1	XXXXXX-	(UNITS BUILT DECEMBER 2003 AND AFTER)
17A	J257218	LOCK WASHER	1	-XXXXXX	(UNITS BUILT BEFORE DECEMBER 2003)
17B	J257222	LOCK WASHER	1	XXXXXX-	(UNITS BUILT DECEMBER 2003 AND AFTER)
25	4224631	BRACKET	1		(SUB FOR TH111685)
26	J901425	CAP SCREW	1		(SUB FOR TH104071)
27	12H317	LOCK WASHER	1		9/16"
29	4445638	THRUST WASHER	2		(SUB FOR TH4445638)
30	4445639	THRUST WASHER	1		(SUB FOR TH4445639)
31	4444285	THRUST WASHER	1		(SUB FOR TH4444285)
32	4470743	THRUST WASHER	2		(SUB FOR 4444284)
34	4450014	PLATE	2		(SUB FOR TH4450014)
35	TH4445640	PLATE	2		
36	TH4460372	PLATE	1		
37	4615565	SPACER	1	XXXXXX-	(UNITS BUILT DECEMBER 2003 AND AFTER)
38	4611642	WASHER	1	XXXXXX-	(UNITS BUILT DECEMBER 2003 AND AFTER)
39	J257218	LOCK WASHER	1	XXXXXX-	(UNITS BUILT DECEMBER 2003 AND AFTER)
40	J921850	BOLT	1	XXXXXX-	(UNITS BUILT DECEMBER 2003 AND AFTER)

BOOM, SUPER LONG FRONT

T206613 -UN-12JAN05

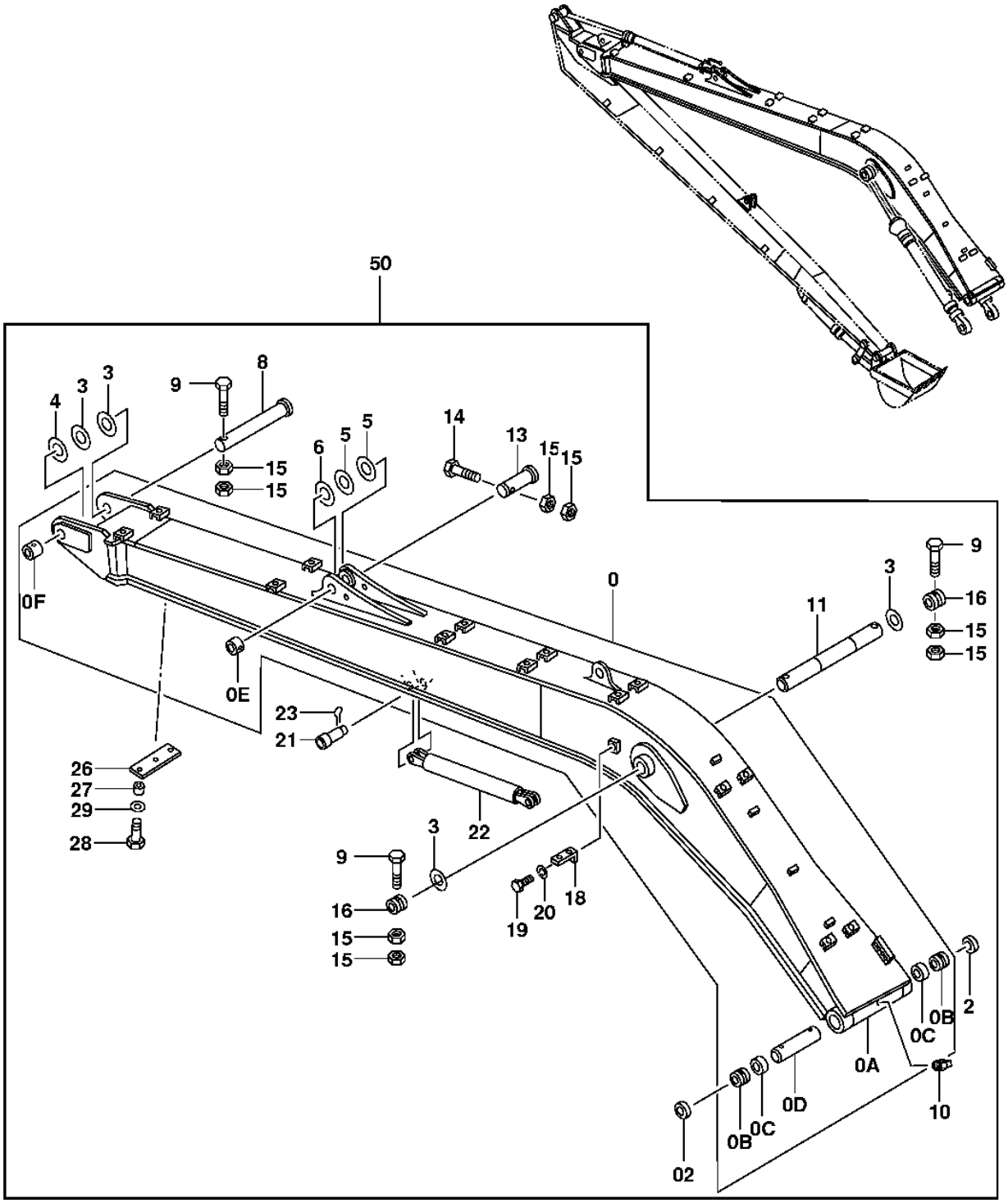

T206613

BOOM, SUPER LONG FRONT

KEY	PART NO.	PART NAME	QTY	SERIAL NO.	REMARKS
0	7040815	EXCAVATOR BOOM	1		
0A	.....	EXCAVATOR BOOM	1		(5007732 NOT AVAILABLE FOR SERVICE)
0B	4443885	BUSHING	2		(SUB FOR 4355877)
0C	4364501	BUSHING	2		
0D	4372730	SPACER	1		
0E	TH102409	BUSHING	1		(SUB FOR 4067720)
0F	TH103198	BUSHING	1		(SUB FOR 4143531)
2	TH102411	SEAL	2		(SUB FOR 4074008)
3	4445638	THRUST WASHER	4		(1.0 MM)
4	4445639	THRUST WASHER	1		(2.0 MM)
5	4470743	THRUST WASHER	2		(SUB FOR 4444284) (1.0 MM)
6	4470744	PLATE	1		(SUB FOR 4444285) (2.0 MM)
8	AT318055	PIN	1		(SUB FOR 3060072)
9	4435127	PIN FASTENER	3		
10	94-2011	FITTING PLUG	1		
11	AT217952	PIN FASTENER	1		(SUB FOR 3075797)
13	TH103204	PIN	1		(SUB FOR 3026126)
14	4435126	PIN FASTENER	1		
15	14M7277	NUT	8		M20, (SUB FOR J951020)
16	TH103198	BUSHING	2		(SUB FOR 4143531)
18	4224631	BRACKET	1		
19	J901425	CAP SCREW	1		
20	12H317	LOCK WASHER	1		9/16", (SUB FOR A590914)
21	4287251	PIN FASTENER	2		
22	9738224	BRACKET	1		
23	11M7034	COTTER PIN	2		5 X 63 MM, (SUB FOR A766063)
26	4381730	ISOLATOR	1		
27	4381729	SPACER	3		
28	19M7358	CAP SCREW	3		M10 X 40, (SUB FOR J901040)
29	24M7028	WASHER	3		10.500 X 20 X 2 MM, (SUB FOR A590110)
50	**AT314803**	**KIT**	**1**		**(WHOLEGOODS) (SUPER LONG FRONT KIT) (CONTAINS ALL ITEMS ON THIS PAGE - ADDITIONAL COMPONENTS LISTED ON SEPARATE PAGES) (ALSO ORDER T211127 INSTALLATION INSTRUCTION, T211136 LIFT CHART LABEL, T153672 LONG FRONT LABEL, T153673 PERIODIC MAINTENANCE LABEL, AND (2) T185126 BOOM LABELS)**

BUCKET LINK

T147863 -UN-07JAN02

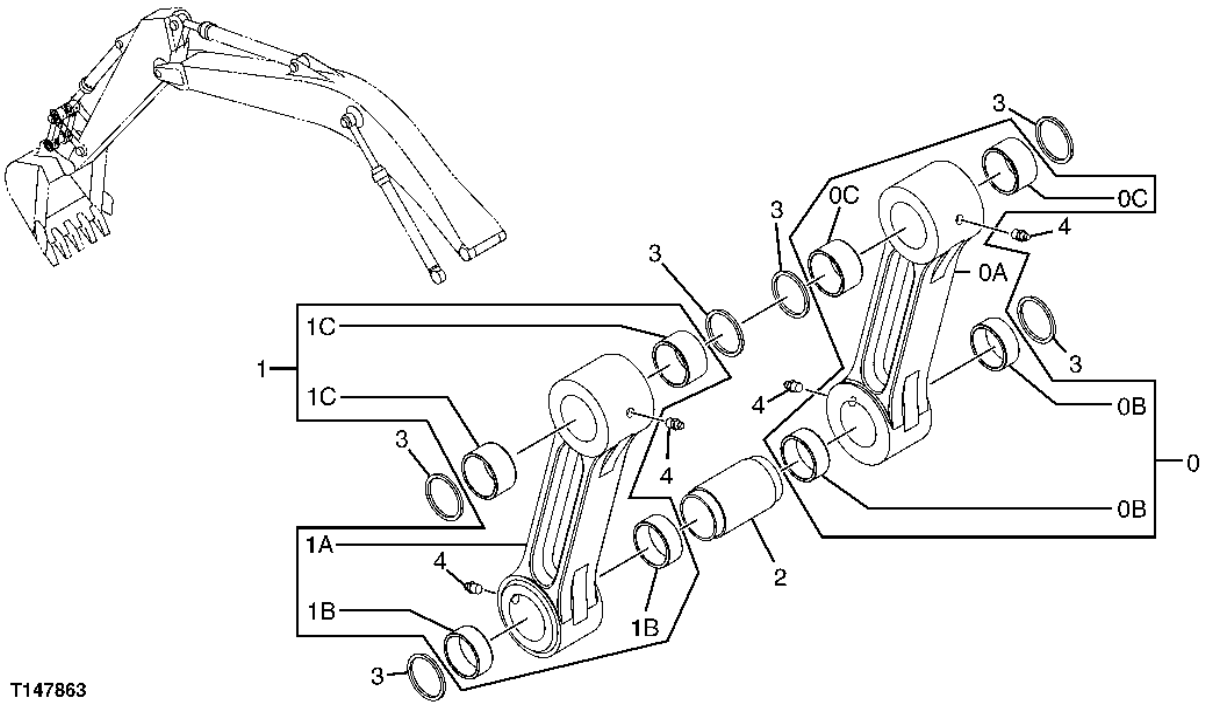

T147863

BUCKET LINK

KEY	PART NO.	PART NAME	QTY	SERIAL NO.	REMARKS
0	TH8084924	LINK	1		
0A	TH2047172	LINK	1		
0B	4355875	BUSHING	2		(SUB FOR AT213976)
0C	TH4397791	BUSHING	2		
1	TH8084925	LINK	1		
1A	TH2047173	LINK	1		
1B	4355875	BUSHING	2		(SUB FOR AT213976)
1C	TH4397791	BUSHING	2		
2	4155351	PIN FASTENER	1		(SUB FOR TH102439)
3	TH102445	SEAL	6		
4	TH100074	LUBRICATION FITTING	4		

BOOM LINK

T147864 -UN-07JAN02

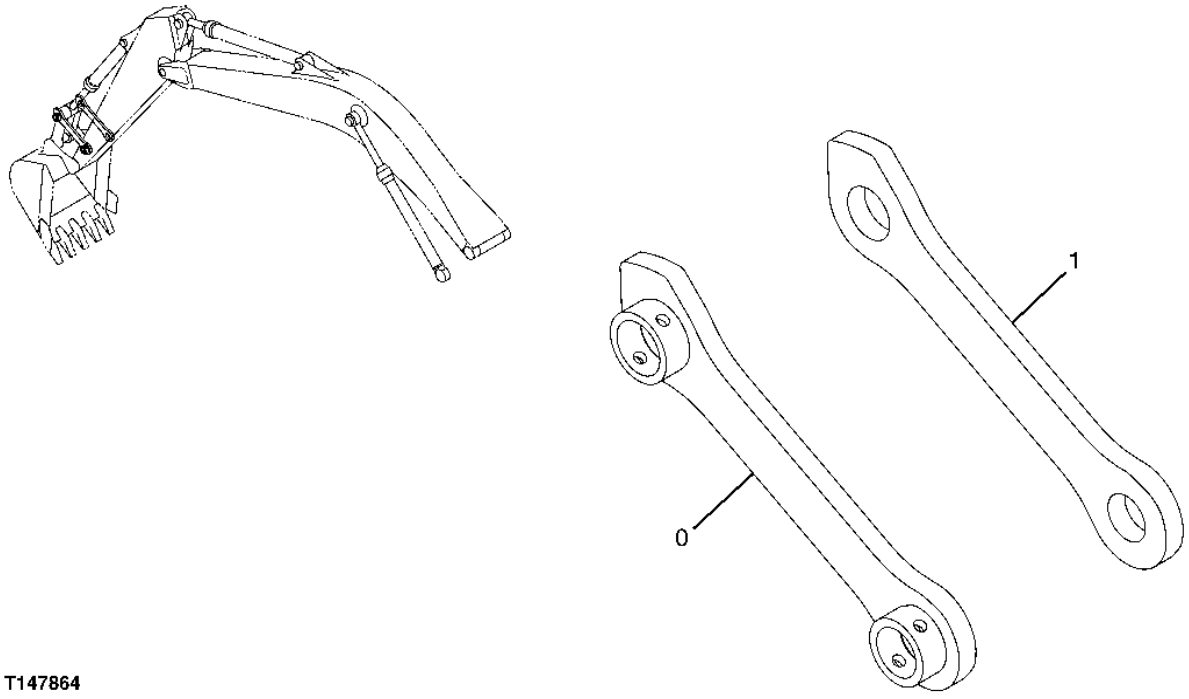

T147864

BOOM LINK

KEY	PART NO.	PART NAME	QTY	SERIAL NO.	REMARKS
0	TH8080569	LINK	1		
1	3075524	LINK	1		(SUB FOR AT217947)

CONTROL VALVE

T148945 -UN-11DEC01

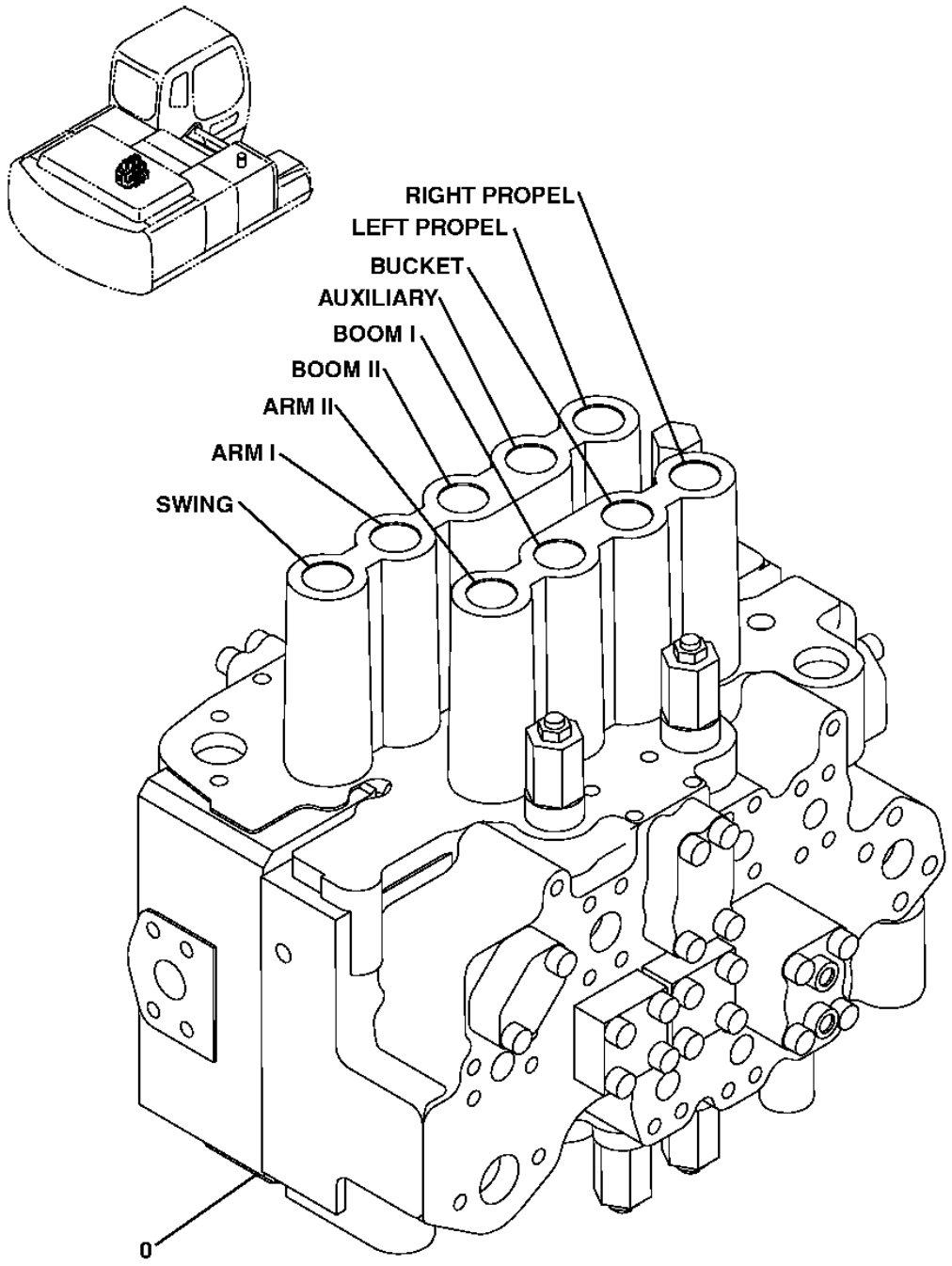

T148945

CONTROL VALVE

KEY	PART NO.	PART NAME	QTY	SERIAL NO.	REMARKS
0	4437242	HYD ACTUATED CONTROL VALVE	1		(SUB FOR 4437242EX) (TH4437242 NOT AVAILABLE FOR SERVICE) REFER TO SECTION 3362 FOR COMPONENT PARTS

CONTROL VALVE SUPPORT

T143257 -UN-28JUN01

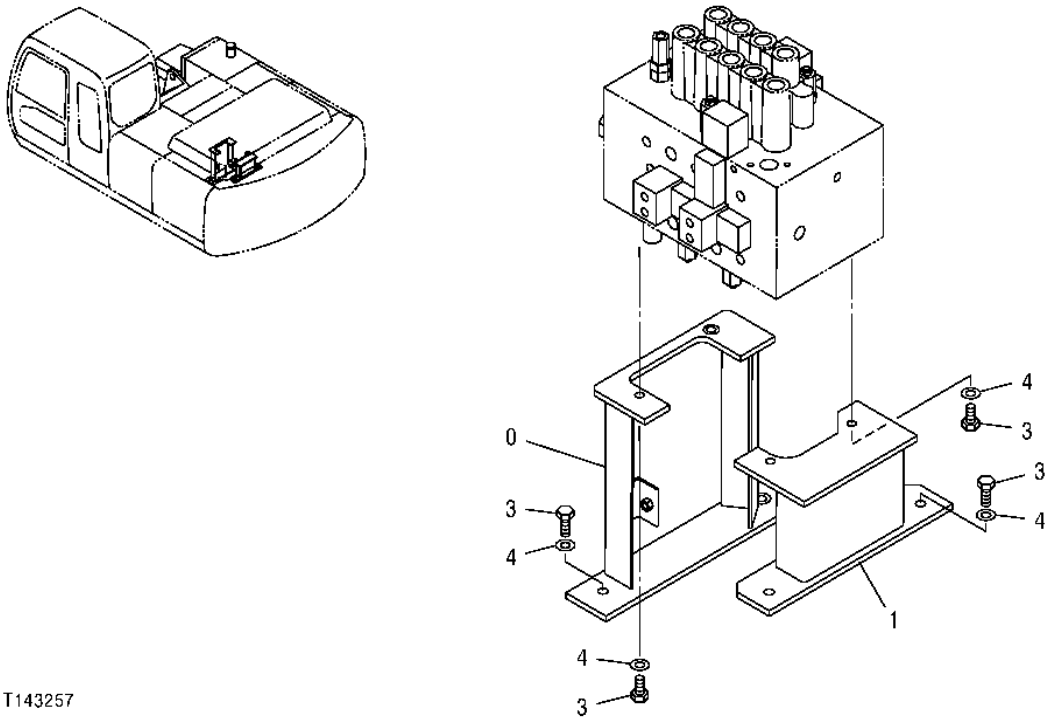

CONTROL VALVE SUPPORT

KEY	PART NO.	PART NAME	QTY	SERIAL NO.	REMARKS
0	8078454	BRACKET	1		(SUB FOR TH8078454)
1	8074128	BRACKET	1		(SUB FOR TH8074128)
3	19M7488	CAP SCREW	8		M16 X 40
4	12H294	LOCK WASHER	8		15.875 MM (5/8")

CONTROL VALVE, SUPER LONG FRONT

T148946 -UN-12DEC01

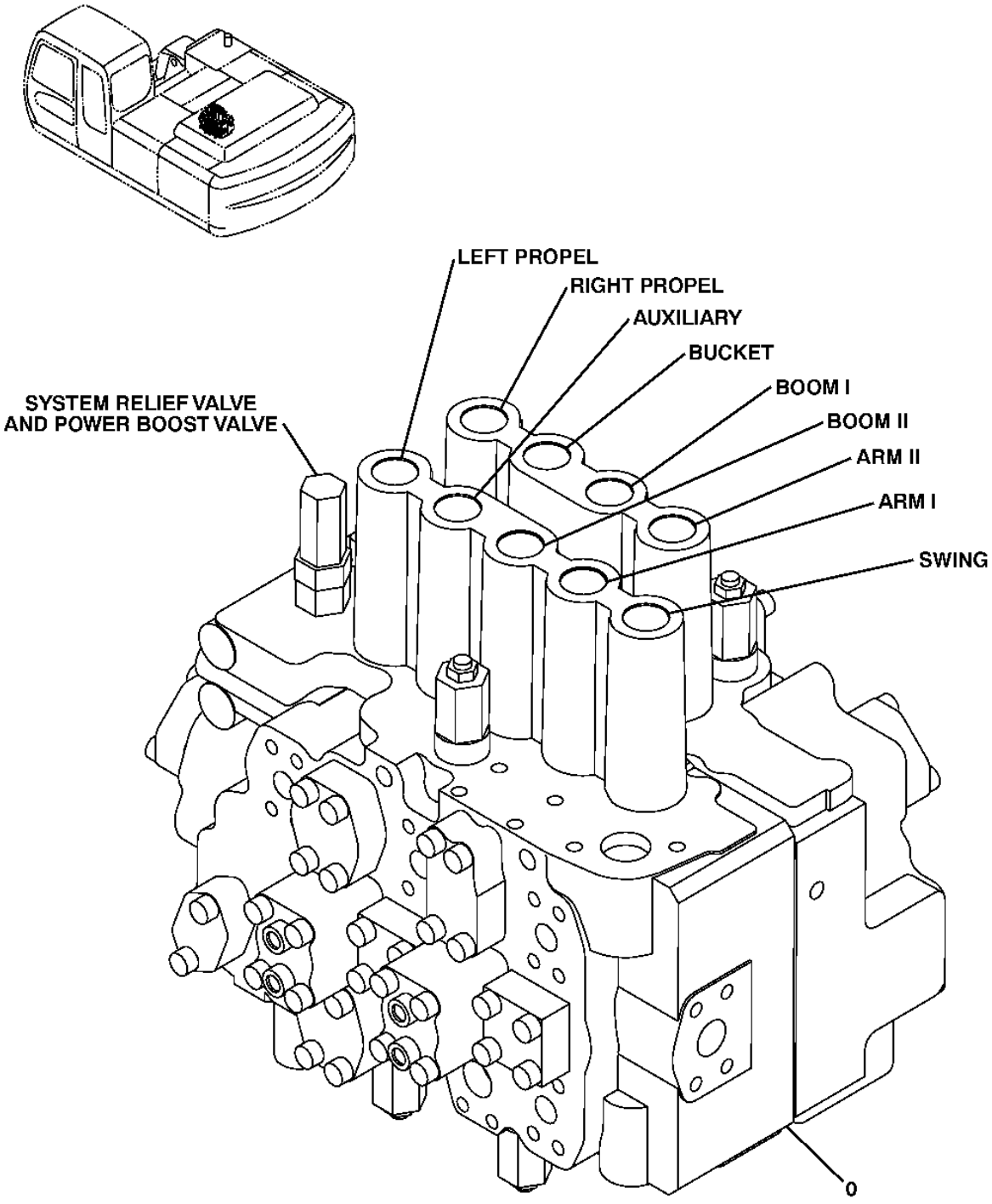

CONTROL VALVE, SUPER LONG FRONT

KEY	PART NO.	PART NAME	QTY	SERIAL NO.	REMARKS
0	.....	CONTROL VALVE	1		(4437242 CONTROL VALVE NOT INCLUDED IN SUPER LONG FRONT FIELD KIT)
0A	4354622	PRESSURE RELIEF VALVE	1		(BUCKET RELIEF VALVE) (NOT ILLUSTRATED)
0B	4282718	PRESSURE RELIEF VALVE	1		(ARM RELIEF VALVE) (NOT ILLUSTRATED)
50	**AT314803**	**KIT**	**1**		**(WHOLEGOODS) (SUPER LONG FRONT KIT) (CONTAINS ITEMS ON THIS PAGE - ADDITIONAL COMPONENTS LISTED ON SEPARATE PAGES) (ALSO ORDER T211127 INSTALLATION INSTRUCTION, T211136 LIFT CHART LABEL, T153672 LONG FRONT LABEL, T153673 PERIODIC MAINTENANCE LABEL, AND (2) T185126 BOOM LABELS)**

**HYDRAULIC FILTER RESTRICTION INDICATOR
(WITHOUT COUPLING)**

T147899 -UN-16NOV01

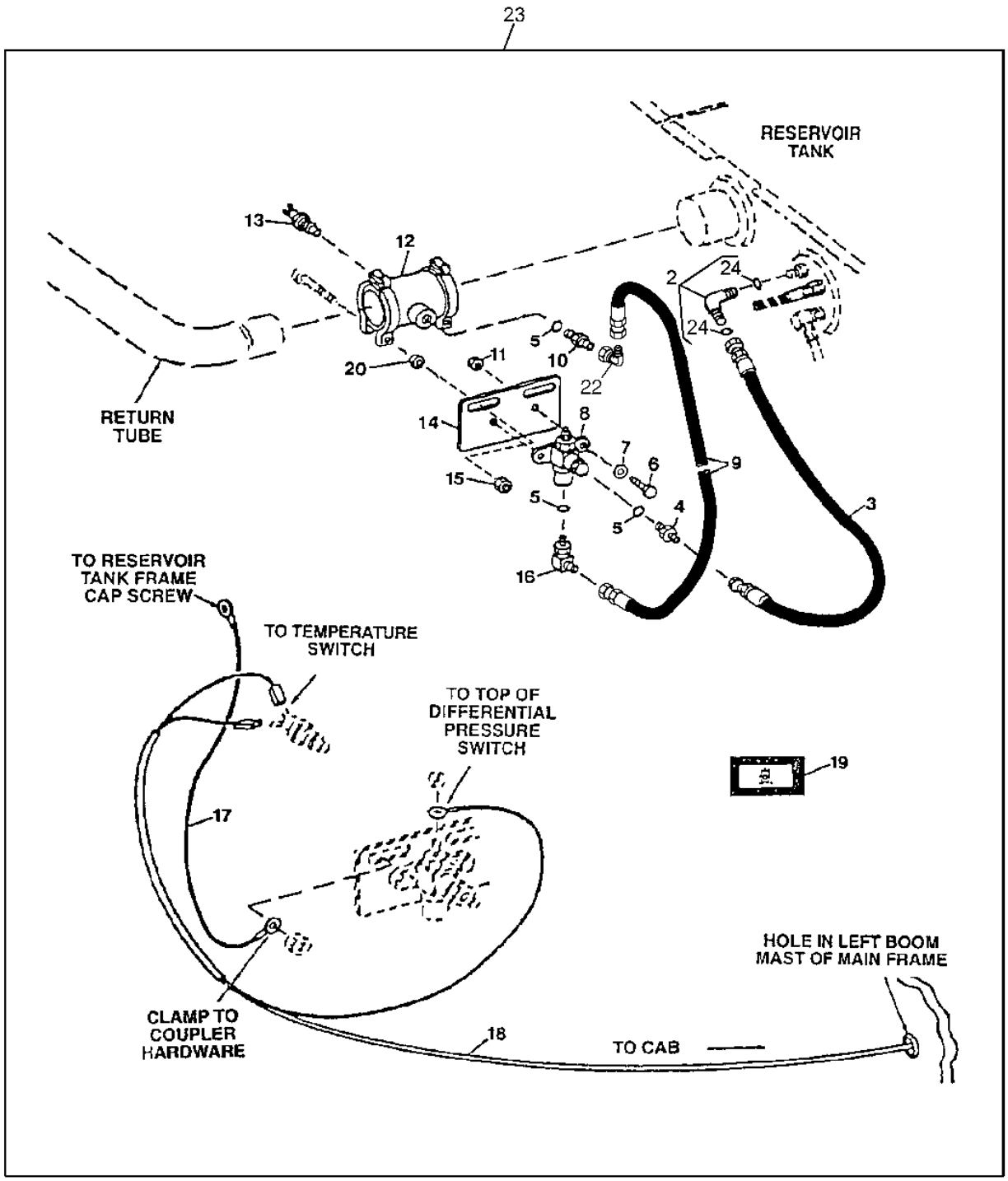

T147899

HYDRAULIC FILTER RESTRICTION INDICATOR
(WITHOUT COUPLING)

KEY	PART NO.	PART NAME	QTY	SERIAL NO.	REMARKS
2	4154670	ELBOW FITTING	1		
3	AH97777	HYDRAULIC HOSE	1		7/16" X 407 MM (16") X 7/16"
4	H75414	ADAPTER	1		
5	T70177	O-RING	3		11.887 X 1.981 MM (0.468" X 5/64")
6	19H1919	CAP SCREW	2		6.350 X 15.875 MM (1/4" X 5/8")
7	24H1286	WASHER	2		7.137 X 12.700 X 1.600 MM (9/32" X 1/2" X 1/16")
8	AT131436	PRESSURE SWITCH	1		
9	AT38628	HYDRAULIC HOSE - FABRICATE	1		9/16" X 381 MM (15") X 9/16"
10	R27212	FITTING	1		
11	14M7273	NUT	2		M8
12	AT134346	COUPLING	1		
13	AT131437	SWITCH	1		
14	T138910	BRACKET	1		
15	14M7273	NUT	2		M8
16	AT35121	ELBOW FITTING	1		
17	AR76140	WIRING LEAD	1		
18	AT196334	WIRING HARNESS	1		(SUB FOR AT157668)
19	T153187	LABEL	1		(AMBER) (SUB FOR T143272 CLEAR LABEL)
20	24M7036	WASHER	2		9 X 16 X 1.600 MM (0.354" X 0.630" X 0.063")
21	R44302	TIE BAND	7		(NOT ILLUSTRATED)
22	AE24616	ELBOW FITTING	1		
23	AT189640	KIT	1		WHOLEGOODS
24	M800650	PACKING	2		

**ELECTRIC FOOT SWITCH
FOR AUXILIARY CONTROL (ONE SOLENOID)**

TP44347 -UN-01JAN94

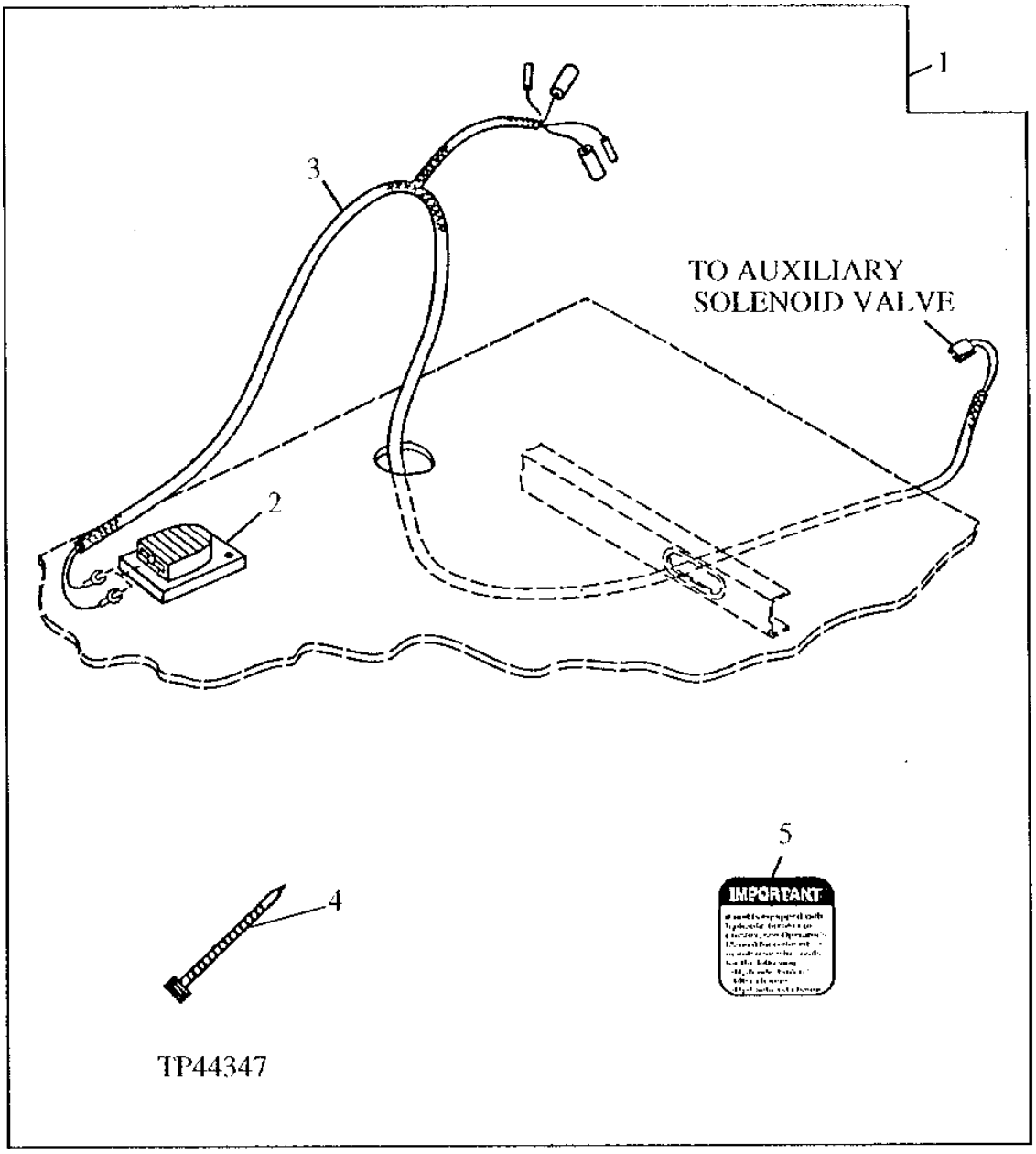

**ELECTRIC FOOT SWITCH
FOR AUXILIARY CONTROL (ONE SOLENOID)**

KEY	PART NO.	PART NAME	QTY	SERIAL NO.	REMARKS
1	AT196587	SWITCH	1		WHOLEGOODS (ELECTRIC FOOT SWITCH FOR AUXILIARY VALVE)
2	AT82210	SWITCH	1		(ELECTRIC FOOT CONTROL)
3	AT196588	WIRING HARNESS	1		
4	R44302	TIE BAND	2		(USE AS REQUIRED)
5	T149434	LABEL	1		(IMPORTANT - AUXILIARY ELECTRIC CONTROL)

ELECTRIC SOLENOID VALVE KIT
(1 WAY/2 WAY)
(WITHOUT PRESSURE SWITCH)

T200912 -UN-14JUN04

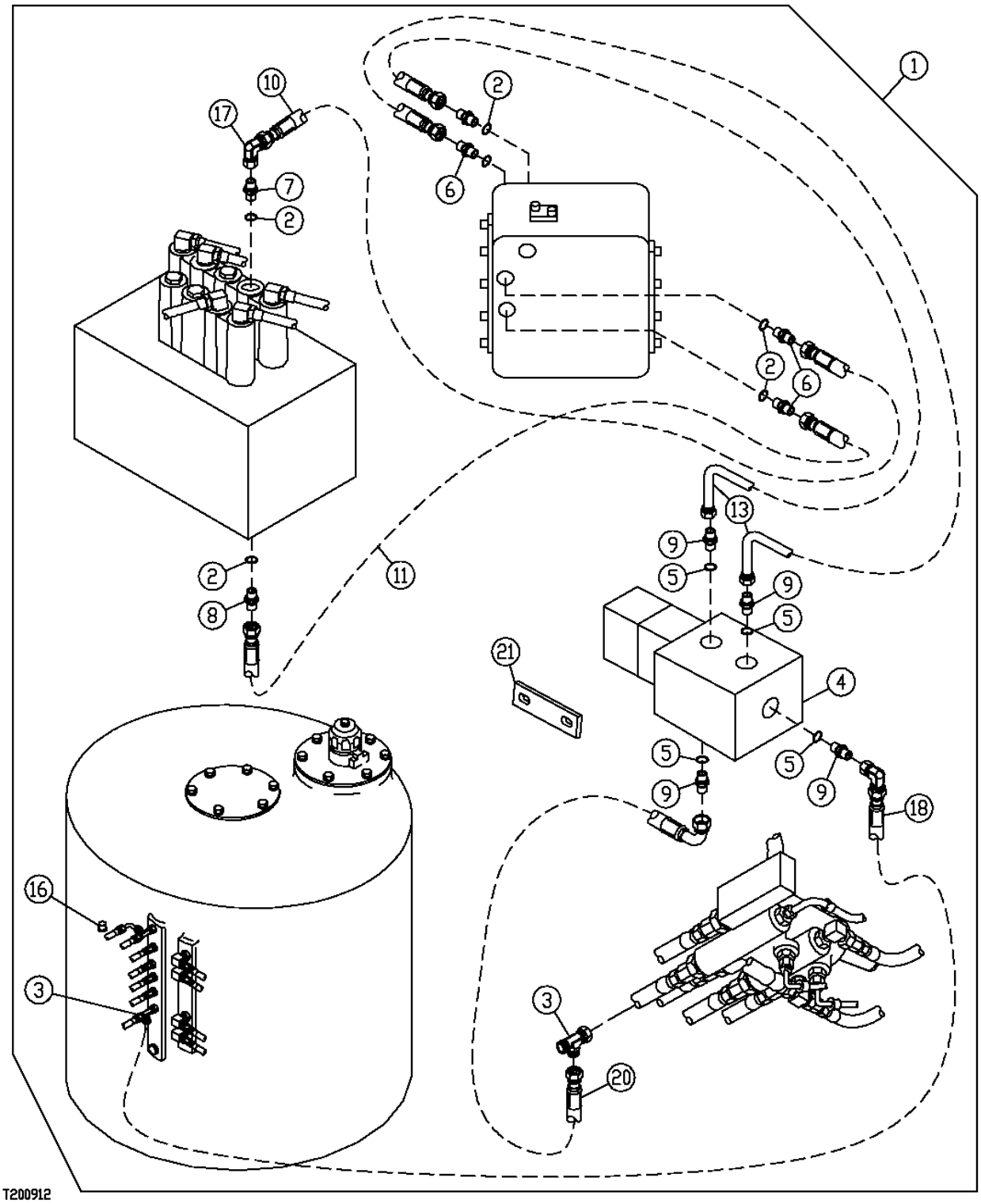

ELECTRIC SOLENOID VALVE KIT
(1 WAY/2 WAY)
(WITHOUT PRESSURE SWITCH)

KEY	PART NO.	PART NAME	QTY	SERIAL NO.	REMARKS
1	**AT195713**	**KIT**	**1**		**(WHOLEGOODS) ELECTRIC SOLENOID VALVE (INCLUDES H102543 FITTING)**
2	CH11570	O-RING	6		13.800 X 2.400 MM (0.543" X 0.094")
3	AT36921	TEE FITTING	2		
4	AT180585	SOLENOID	1		
5	R26448	O-RING	4		11.887 X 1.981 MM (0.468" X 5/64")
6	4200466	ADAPTER	4		(SUB FOR TH108320)
7	AT130053	ADAPTER	1		
8	AT131445	ADAPTER	1		
9	R27212	FITTING	4		
10	AT108783	HYDRAULIC HOSE - FABRICATE	1		9/16" X 567 MM (22-1/4") X 9/16"
11	AR90081	HYDRAULIC HOSE	1		9/16" X 1 270 MM (50") X 9/16"
12	24M7054	WASHER	4		6.400 X 12 X 1.600 MM, (NOT ILLUSTRATED)
13	AT68901	HYDRAULIC HOSE - FABRICATE	2		9/16" X 965 MM (38") X 9/16"
14	14M7272	NUT	2		M6, (NOT ILLUSTRATED)
15	19M7529	CAP SCREW	2		M6 X 55, (NOT ILLUSTRATED)
16	R31147	FITTING	1		(CAP)
17	AE24616	ELBOW FITTING	1		
18	AT71732	HYDRAULIC HOSE - FABRICATE	1		9/16" X 1 422 MM (56") X 9/16"
20	AT78124	HYDRAULIC HOSE - FABRICATE	1		9/16" X 3 531 MM (139") X 9/16"
21	T202379	STRAP	2		

**DUAL CONTROL HANDLE WITH WIRING
FOR AUXILIARY CONTROLS (2 SOLENOIDS)**

T144288 -UN-06AUG01

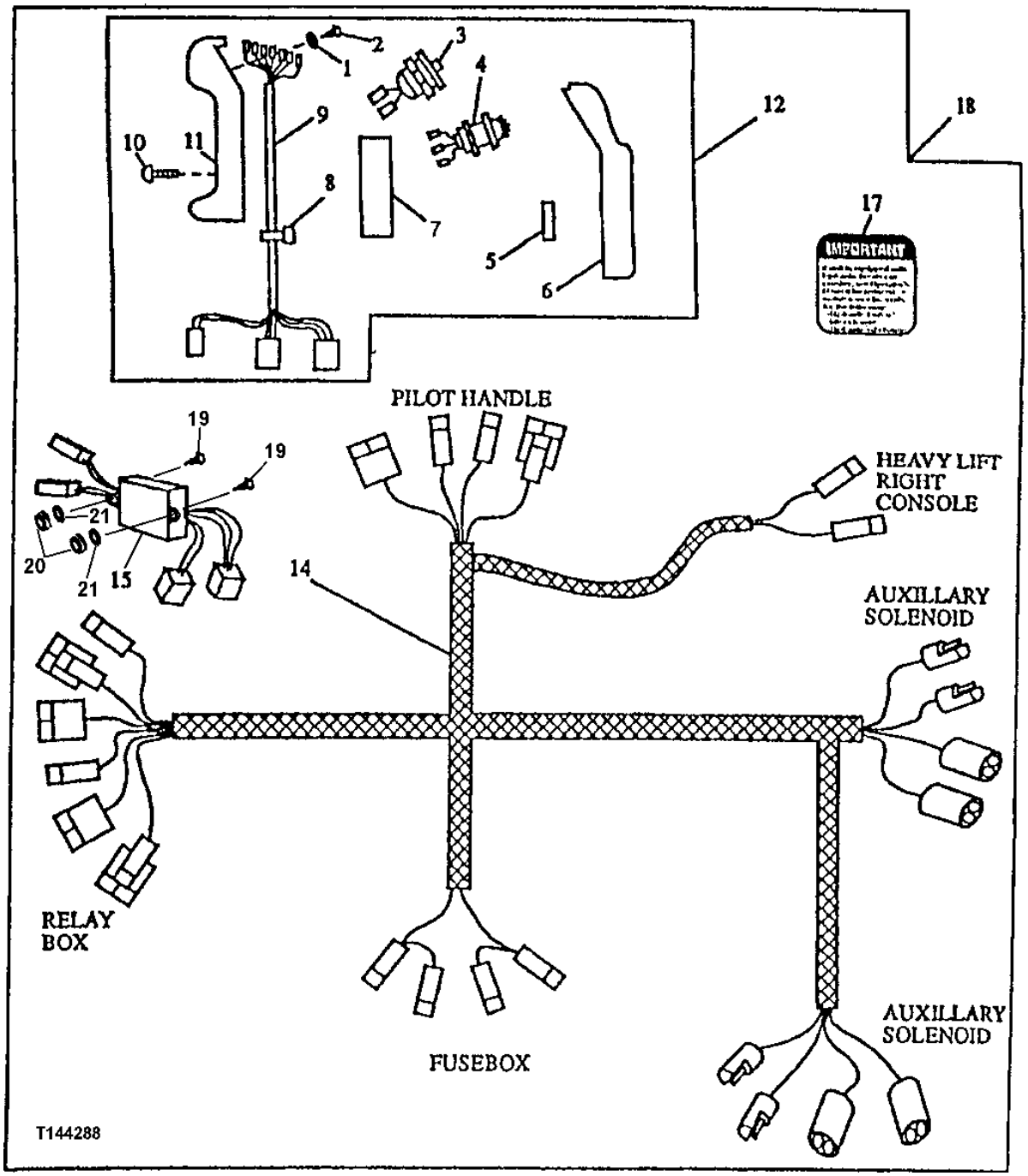

DUAL CONTROL HANDLE WITH WIRING
FOR AUXILIARY CONTROLS (2 SOLENOIDS)

KEY	PART NO.	PART NAME	QTY	SERIAL NO.	REMARKS
1	12H321	WASHER	7		3.505 MM (0.138")
2	21H1308	SCREW	7		3.505 X 9.525 MM (0.138" X 3/8")
3	AT139383	TOGGLE/ROCKER SWITCH	1		PUSH BUTTON (MOMENTARY)
4	AT139382	TOGGLE/ROCKER SWITCH	2		
5	R71799	NEEDLE ROLLER	2		
6	T114699	HANDLE	1		
7	T114698	SUPPORT	1		
8	R44302	TIE BAND	2		
9	AT195787	WIRING HARNESS	1		
10	T80394	SCREW	6		
11	AT115448	HANDLE	1		
12	AT195786	CONTROL LEVER	1		PILOT CONTROL
14	AT195788	WIRING HARNESS	1		SOLENOID VALVE
15	AT141562	RELAY MODULE	1		
17	T149434	LABEL	1		(IMPORTANT) (BETWEEN ASHTRAY AND OPERATOR'S CAUTION DECAL ON RIGHT SIDE OF CAB)
18	**AT195784**	**KIT**	**1**		**(CONTROL HANDLE WITH SWITCHES) WHOLEGOODS**
19	21M7246	SCREW	2		M6 X 16
20	14M7272	NUT	2		M6
21	24M7293	WASHER	2		6.500 X 13 X 1.600 MM

CONTROL PATTERN SELECTOR KIT

T191711 -UN-04JUN03

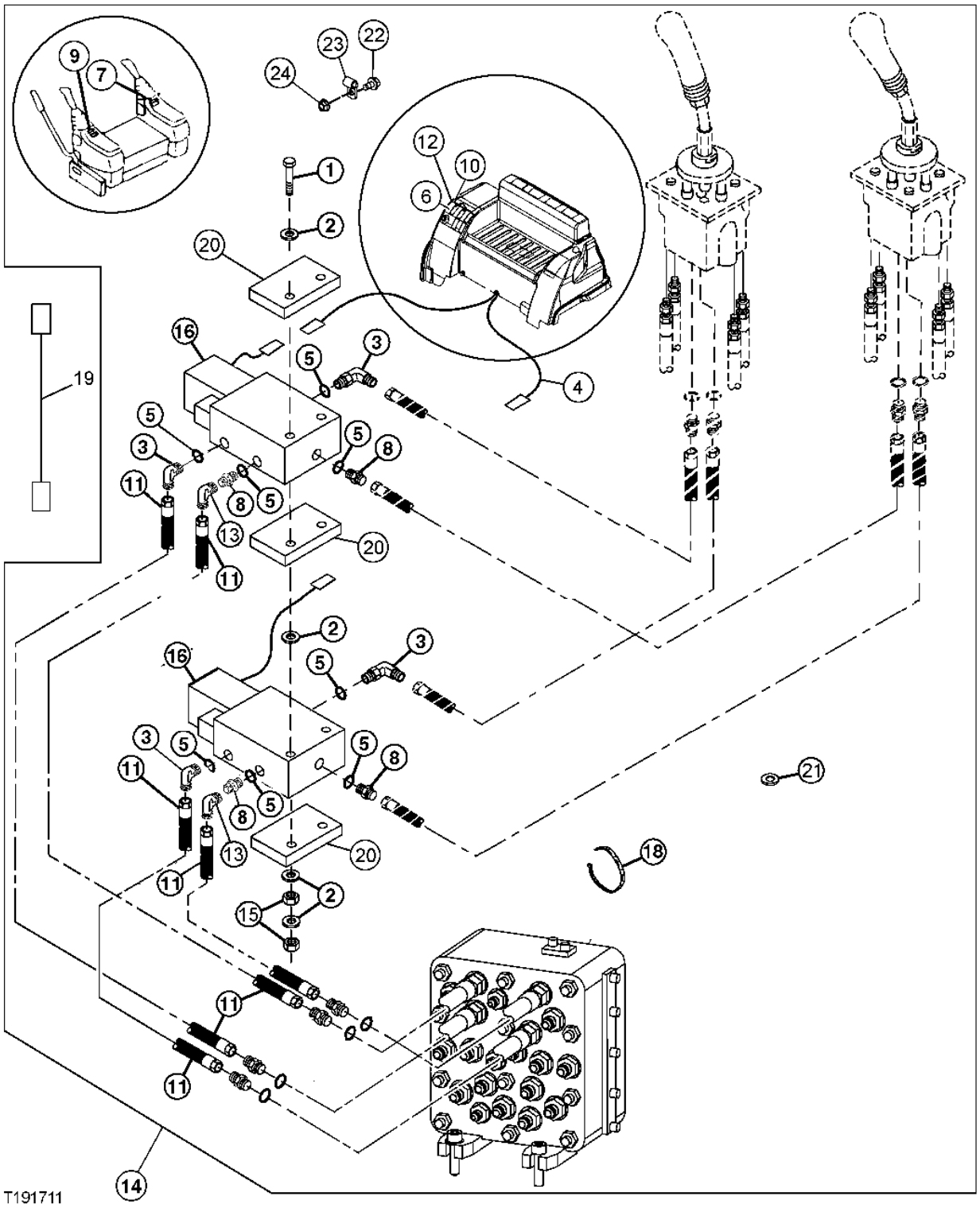

THIS PARTS LISTING IS CONTINUED

CONTROL PATTERN SELECTOR KIT

KEY	PART NO.	PART NAME	QTY	SERIAL NO.	REMARKS
1	19M8332	CAP SCREW	2		M6 X 90
2	24M7100	WASHER	10		6.600 X 22 X 2 MM
3	AT35121	ELBOW FITTING	4		37 DEG FLARE O-RING
4	AT307710	WIRING HARNESS	1		(SUB FOR AT190535)
5	R26448	O-RING	8		
6	AT83721	TOGGLE/ROCKER SWITCH	1		LOCKING
7	T159843	LABEL	4		CONTROL RIGHT
8	R27212	FITTING	4		
9	T159844	LABEL	1		CONTROL LEFT
10	T184858	LABEL	1		CONTROL PATTERN
11	AT71082	HYDRAULIC HOSE - FABRICATE	4		
12	37H43	SCREW	2		DRIVE SELF TAPPING
13	AE24616	ELBOW FITTING	2		
14	.....	KIT	1		(AT307709 NO LONGER AVAILABLE) (WHOLEGOODS) CONTROL PATTERN SELECTOR KIT, (SUB FOR AT191397)
15	14M7272	NUT	4		M6
16	AT306723	ELEC.PROPORTIONAL VALVE	2		(SUB FOR AT116486 AND AT140041) PIN DISCONNECT
	.....	ELECTRICAL COIL	1		(AT140041 NO LONGER AVAILABLE)
18	R44302	TIE BAND	AR		
20	T202379	BRACKET	3		
21	T63817	GROMMET	1		
22	19M7863	SCREW	3		
23	T22645	CLIP	4		
24	14M7272	NUT	3		
25	AR94101	DIODE	1		(NOT ILLUSTRATED)

MECHANICAL PATTERN CHANGER KIT

T197438 -UN-29JAN04

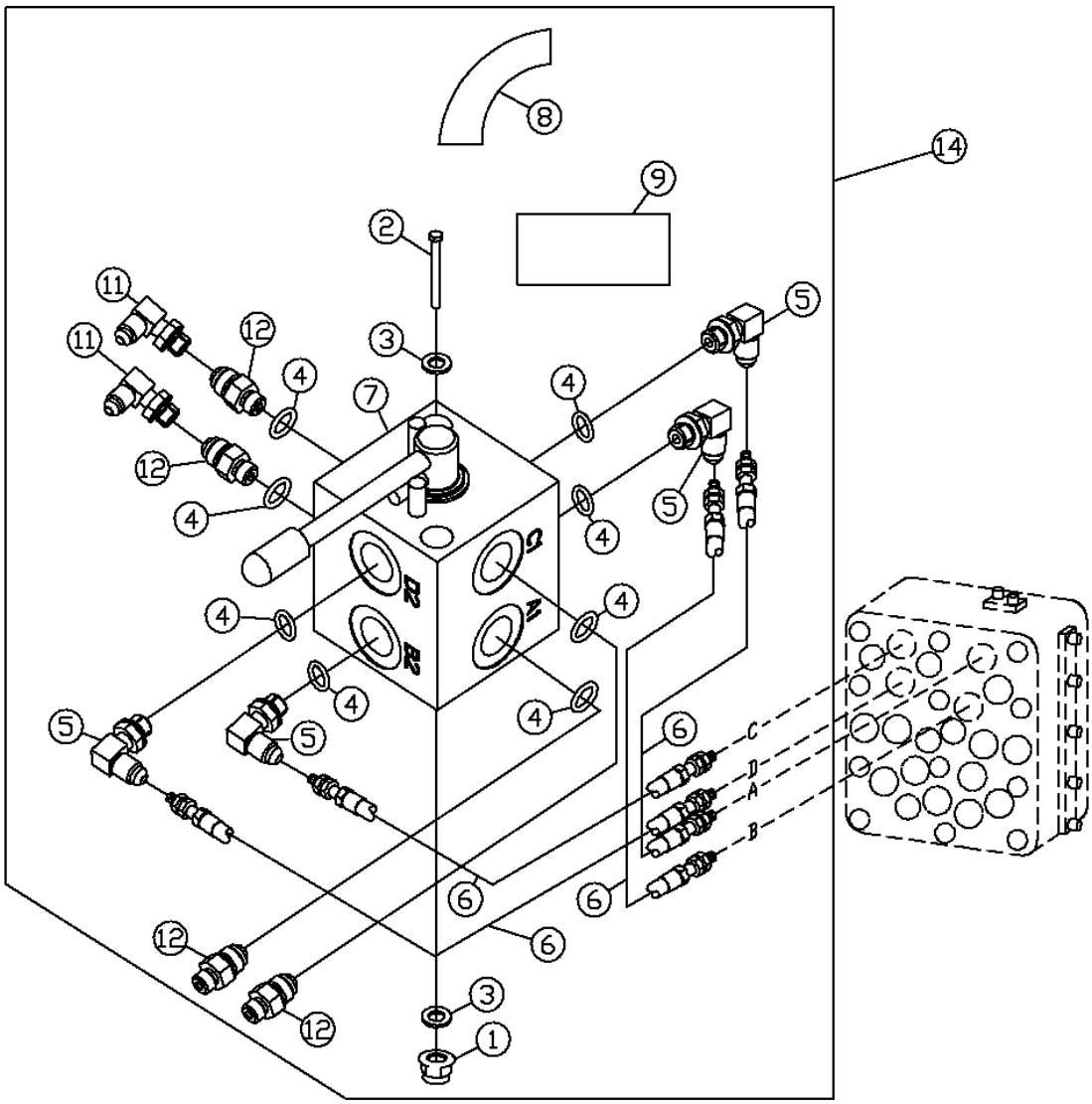

T197438

MECHANICAL PATTERN CHANGER KIT

KEY	PART NO.	PART NAME	QTY	SERIAL NO.	REMARKS
1	14M7396	LOCK NUT	2		M8
2	19M8504	CAP SCREW	2		M8 X 80
3	24M7095	WASHER	4		8.400 X 15 X 1.600 MM
4	R28782	O-RING	8		
5	AH63565	ELBOW FITTING	4		
6	AT306775	HYDRAULIC HOSE - FABRICATE	4		
7	AT306737	MANUAL HYDRAULIC VALVE	1		
8	T205175	LABEL	1		
9	T201519	LABEL	1		
11	AE24616	ELBOW FITTING	2		
12	T61120	ADAPTER	4		
14	**AT306757**	**KIT**	**1**		**(WHOLEGOODS)**

AUXILIARY SOLENOID AND FLOW CONTROL VALVE KIT (1-WAY)

T189802 -UN-21APR03

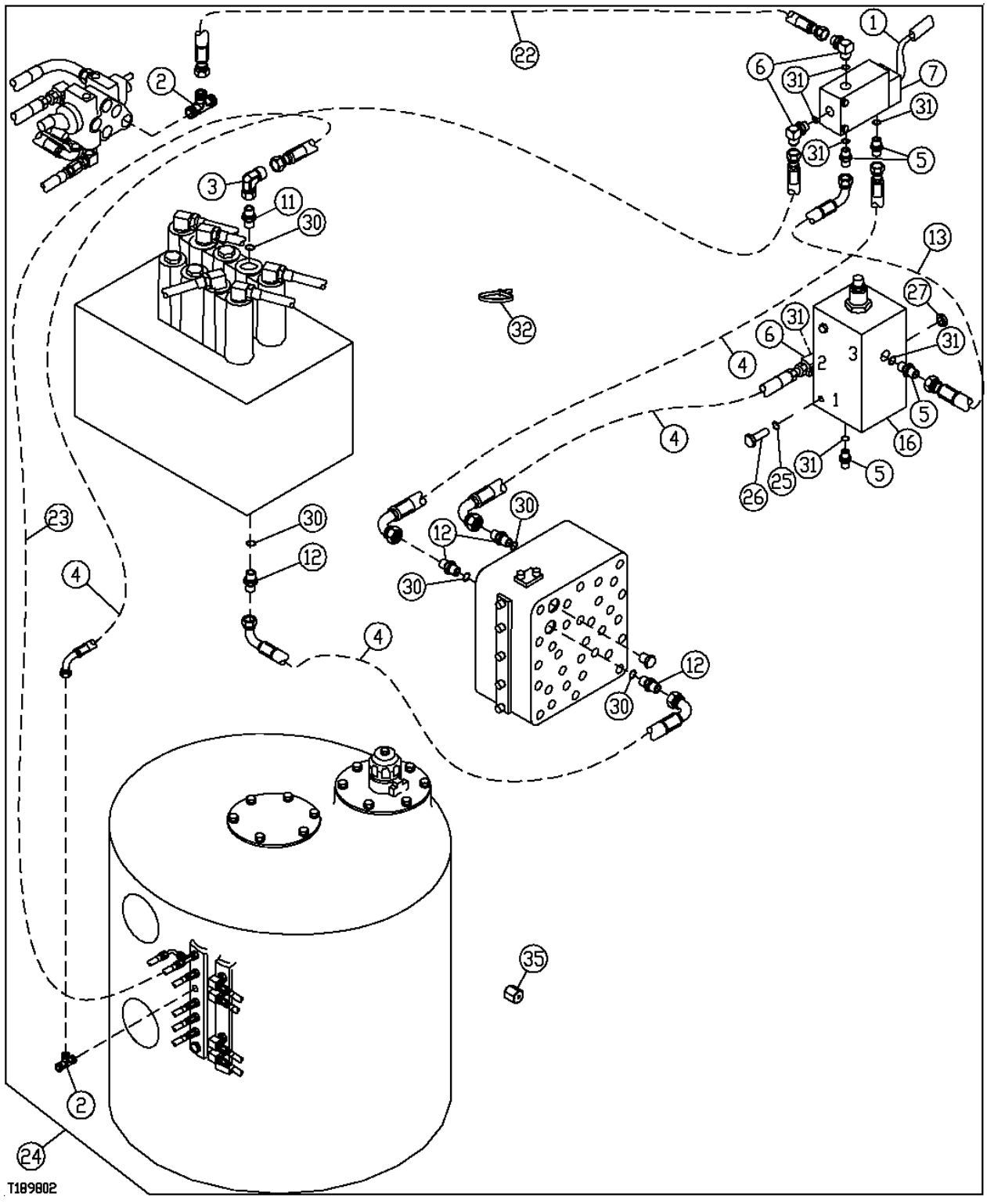

AUXILIARY SOLENOID AND FLOW CONTROL VALVE KIT (1-WAY)

KEY	PART NO.	PART NAME	QTY	SERIAL NO.	REMARKS
1	AT191297	WIRING HARNESS	1		
2	AT36921	TEE FITTING	3		
3	AE24616	ELBOW FITTING	1		
4	AT71732	HYDRAULIC HOSE - FABRICATE	4		
5	R27212	FITTING	4		
6	AT35121	ELBOW FITTING	4		
7	AT306723	ELEC.PROPORTIONAL VALVE	1		SOLENOID, (SUB FOR AT116486 AND AT140041)
	.....	ELECTRICAL COIL	1		(AT140041 NO LONGER AVAILABLE)
11	AT130053	ADAPTER	1		
12	4200466	ADAPTER	4		
13	AE42718	HYDRAULIC HOSE	1		
16	AT186623	HYDRAULIC PRESSURE VALVE	1		
22	AT130684	HYDRAULIC HOSE - FABRICATE	1		9/16" X 2 520 MM X 9/16"
23	AT71082	HYDRAULIC HOSE - FABRICATE	1		9/16" X 711 MM X 9/16"
24	**AT186622**	**SPOOL VALVE**	**1**		**(WHOLEGOODS) (COMPLETE KIT) (ALSO ORDER T188662 INSTRUCTIONS)**
25	24M7139	WASHER	4		6.400 X 18 X 1.600 MM, (NOT ILLUSTRATED)
26	19M7529	CAP SCREW	4		M6 X 55
27	14M7272	NUT	4		M6
30	CH11570	O-RING	5		
31	R26448	O-RING	7		
32	R44302	TIE BAND	4		
33	AH75160	ELBOW FITTING	2		(NOT ILLUSTRATED)
35	R31147	FITTING	1		

ARM ANTI-DRIFT KIT

T192468 -UN-02JUL03

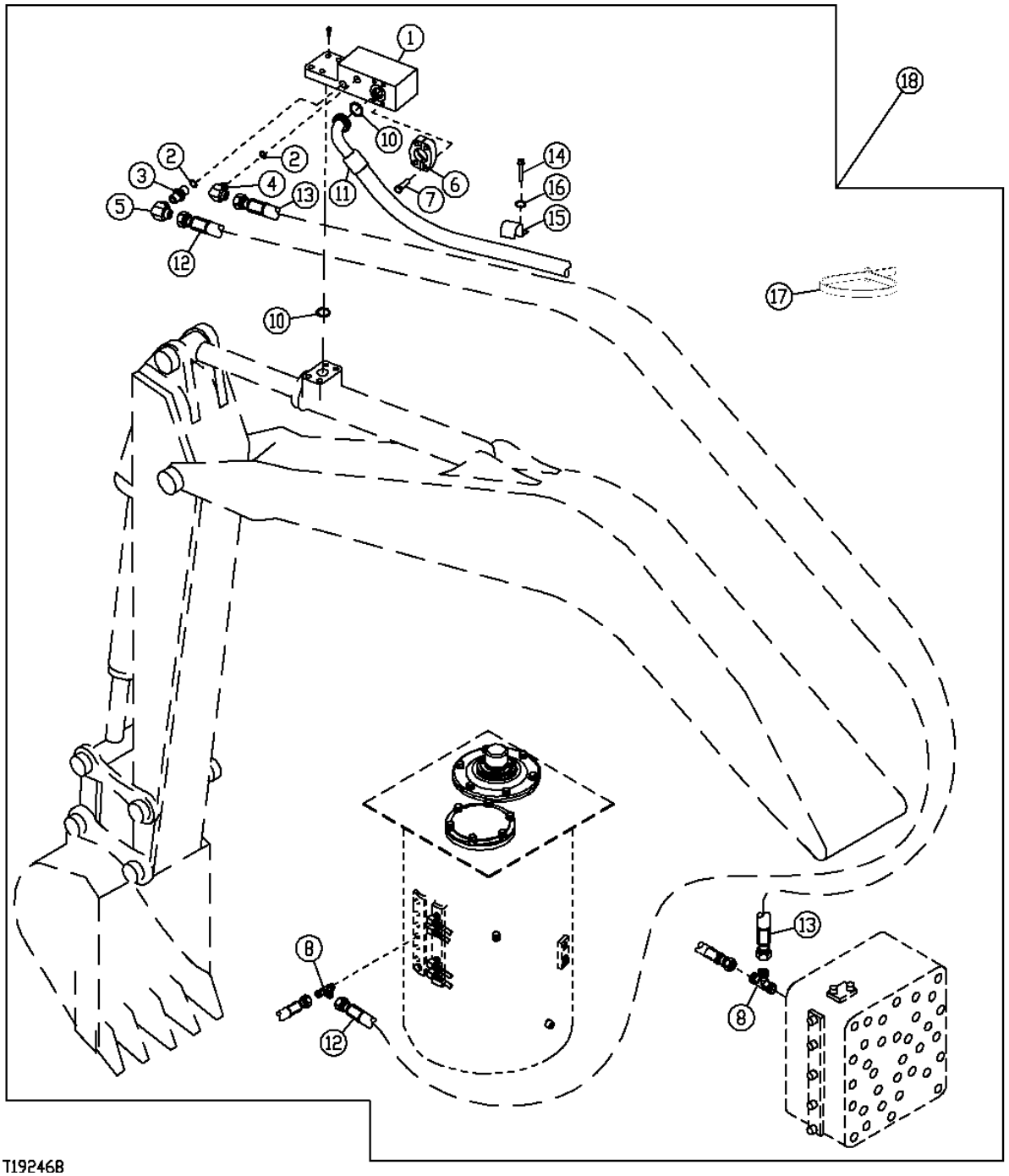

THIS PARTS LISTING IS CONTINUED

ARM ANTI-DRIFT KIT

KEY	PART NO.	PART NAME	QTY	SERIAL NO.	REMARKS
1	AT300303	CHECK VALVE	1		
2	AT300313	SEALING RING	2		
3	X6F4OMXS	ADAPTER	1		
4	X6C4OMXS	ELBOW FITTING	1		
5	AE24616	ELBOW FITTING	1		
6	T107068	FLANGE FITTING	2		
7	19M8395	SCREW	4		
8	AT36921	TEE FITTING	2		
10	T78313	O-RING	2		
11	AT300470	HYDRAULIC HOSE - FABRICATE	1		
12	AT300469	HYDRAULIC HOSE - FABRICATE	1		
13	AT300469	HYDRAULIC HOSE - FABRICATE	1		
14	19M7872	CAP SCREW	1		
15	T126057	CLAMP	1		
16	24M7044	WASHER	1		
17	H77698	TIE BAND	20		
18	**AT300478**	**KIT**	**1**		**ARM ANTI-DRIFT KIT**

BOOM ANTI-DRIFT KIT

T195776 -UN-31OCT03

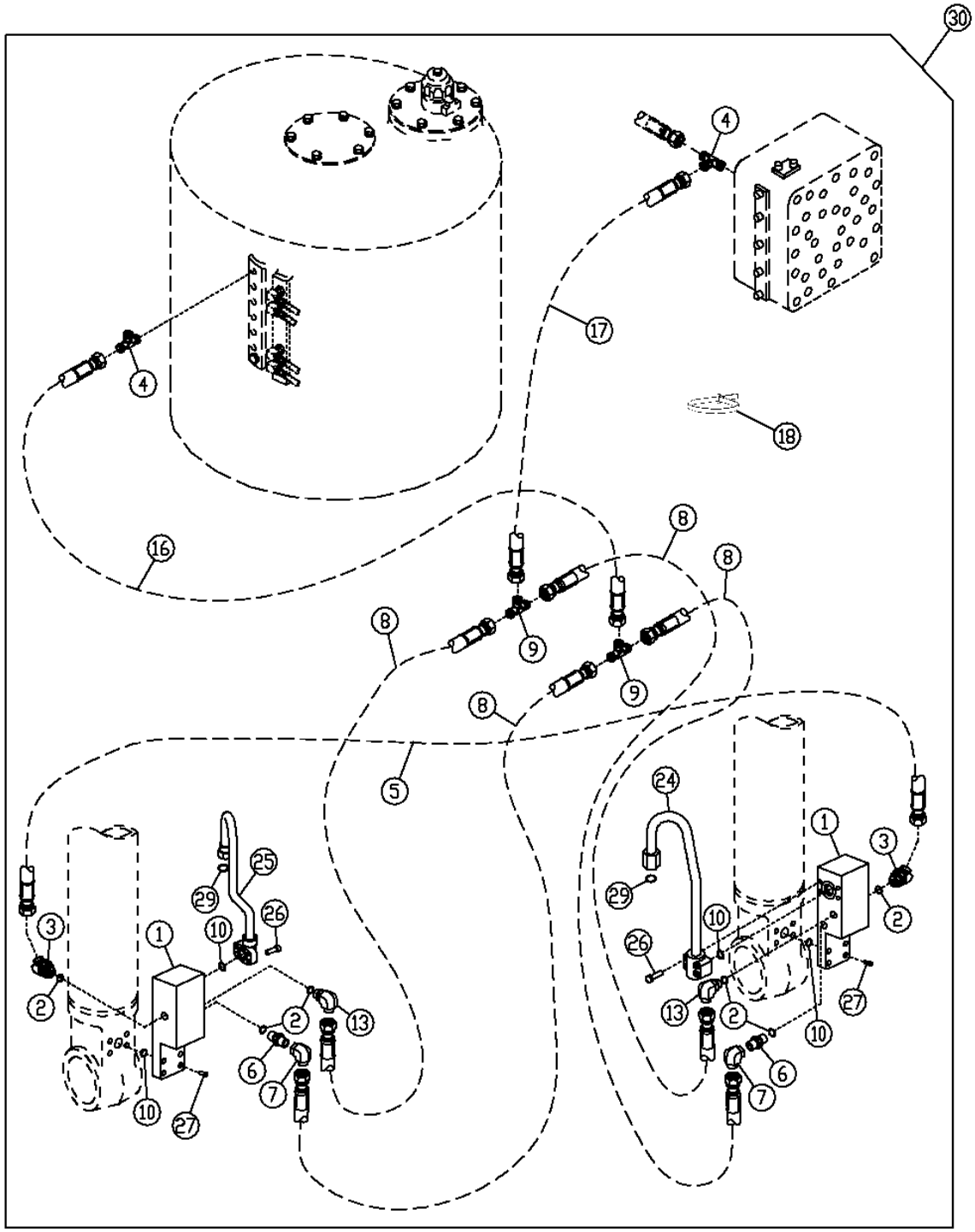

T195776

BOOM ANTI-DRIFT KIT

KEY	PART NO.	PART NAME	QTY	SERIAL NO.	REMARKS
1	AT300303	CHECK VALVE	2		
2	AT300313	SEALING RING	6		
3	X6V4OMXS	ELBOW FITTING	2		
4	AT36921	TEE FITTING	2		
5	AT300467	HYDRAULIC HOSE - FABRICATE	1		
6	X6F4OMXS	ADAPTER	2		
7	AE24616	ELBOW FITTING	2		
8	AT300338	HYDRAULIC HOSE - FABRICATE	4		
9	X6JTX-S	TEE FITTING	2		
10	T78313	O-RING	4		
13	X6C4OMXS	ELBOW FITTING	2		
16	AT300465	HYDRAULIC HOSE - FABRICATE	1		
17	AT300466	HYDRAULIC HOSE - FABRICATE	1		
18	H77698	TIE BAND	20		
24	AT300475	TUBE	1		(LEFT TUBE)
25	AT300476	TUBE	1		(RIGHT TUBE)
26	19M9012	SCREW	8		M12 X 55
27	19M8489	SCREW	8		M12 X 65
29	T77857	O-RING	2		
30	**AT300472**	**KIT**	**1**		**BOOM ANTI-DRIFT KIT**

CONTROL VALVE PRESSURE AND RETURN AUXILIARY PLUMBING (FACTORY)

T202621 -UN-17SEP04

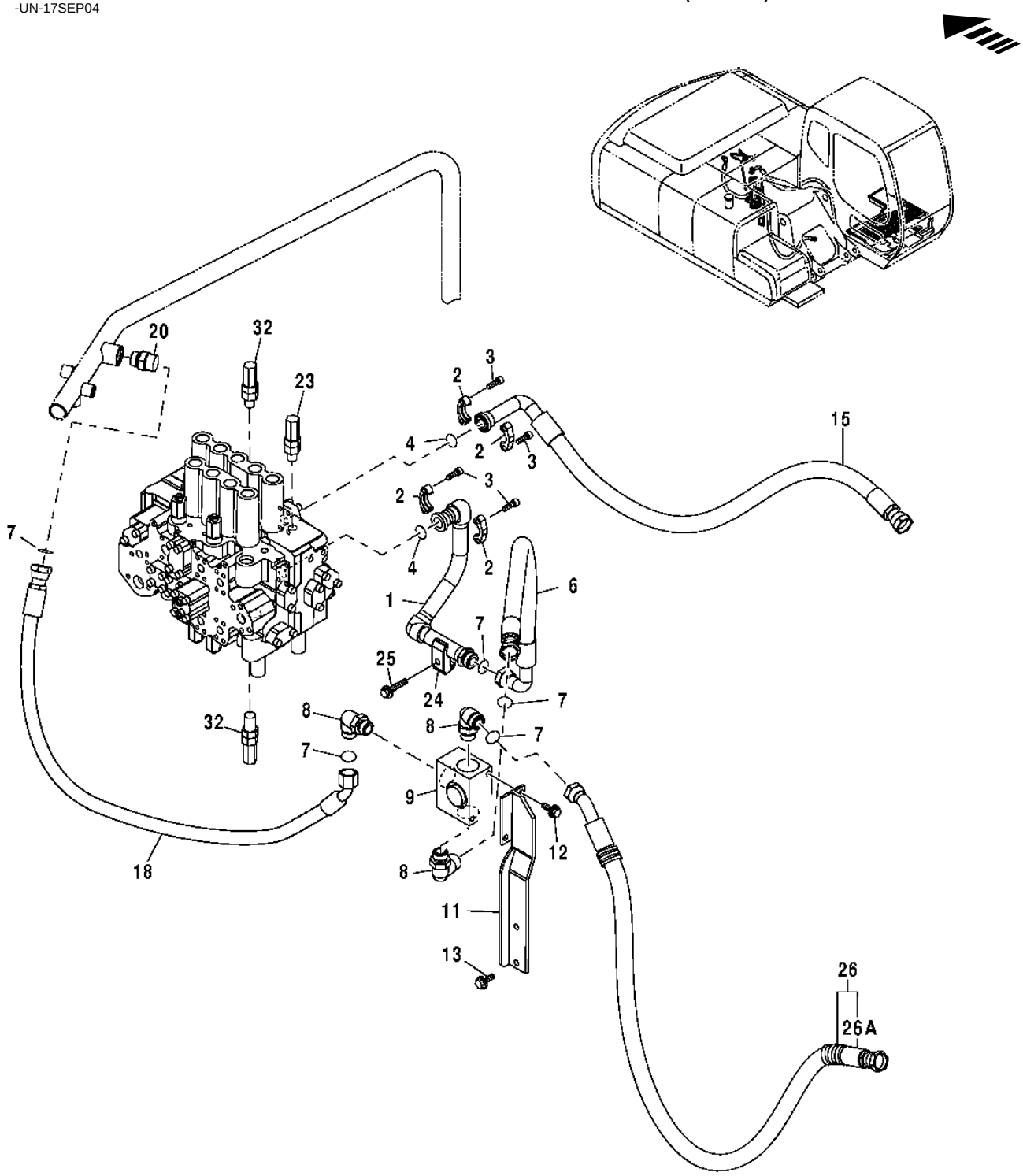

T202621

CONTROL VALVE PRESSURE AND RETURN AUXILIARY PLUMBING (FACTORY)

KEY	PART NO.	PART NAME	QTY	SERIAL NO.	REMARKS
1	8079794	OIL LINE	1		
2	H61354	FLANGE FITTING	4		(SUB FOR Z962453)
3	J781030	SCREW	8		
4	T78313	O-RING	2		
6	4457290	HYDRAULIC HOSE - FABRICATE	1		
7	T76938	O-RING	5		(SUB FOR 4187328)
8	A853388	ELBOW FITTING	3		
9	4609664	VALVE	1		
11	8080530	BRACKET	1		
12	19M8011	CAP SCREW	2		M12 X 30, (SUB FOR J011230)
13	19M7403	CAP SCREW	2		M12 X 35, (SUB FOR J021235)
	24M7345	WASHER	2		13.500 X 24 X 2.500 MM
15	4468515	HYDRAULIC HOSE	1		
18	4457286	HYDRAULIC HOSE - FABRICATE	1		
20	A853188	ADAPTER	1		
23	.....	PRESSURE RELIEF VALVE	1		(NOT REQUIRED THIS OPERATION)
24	4190127	CLAMP	1		
25	19M8088	CAP SCREW	1		M12 X 75, (SUB FOR J011275)
26	9234722	HYDRAULIC HOSE	1		
26A	4327294	HOSE GUARD	1		
32	4625941	PRESSURE RELIEF VALVE	2		

BOOM AUXILIARY HOSES AND LINES (FACTORY INSTALLED)

T202637 -UN-03SEP04

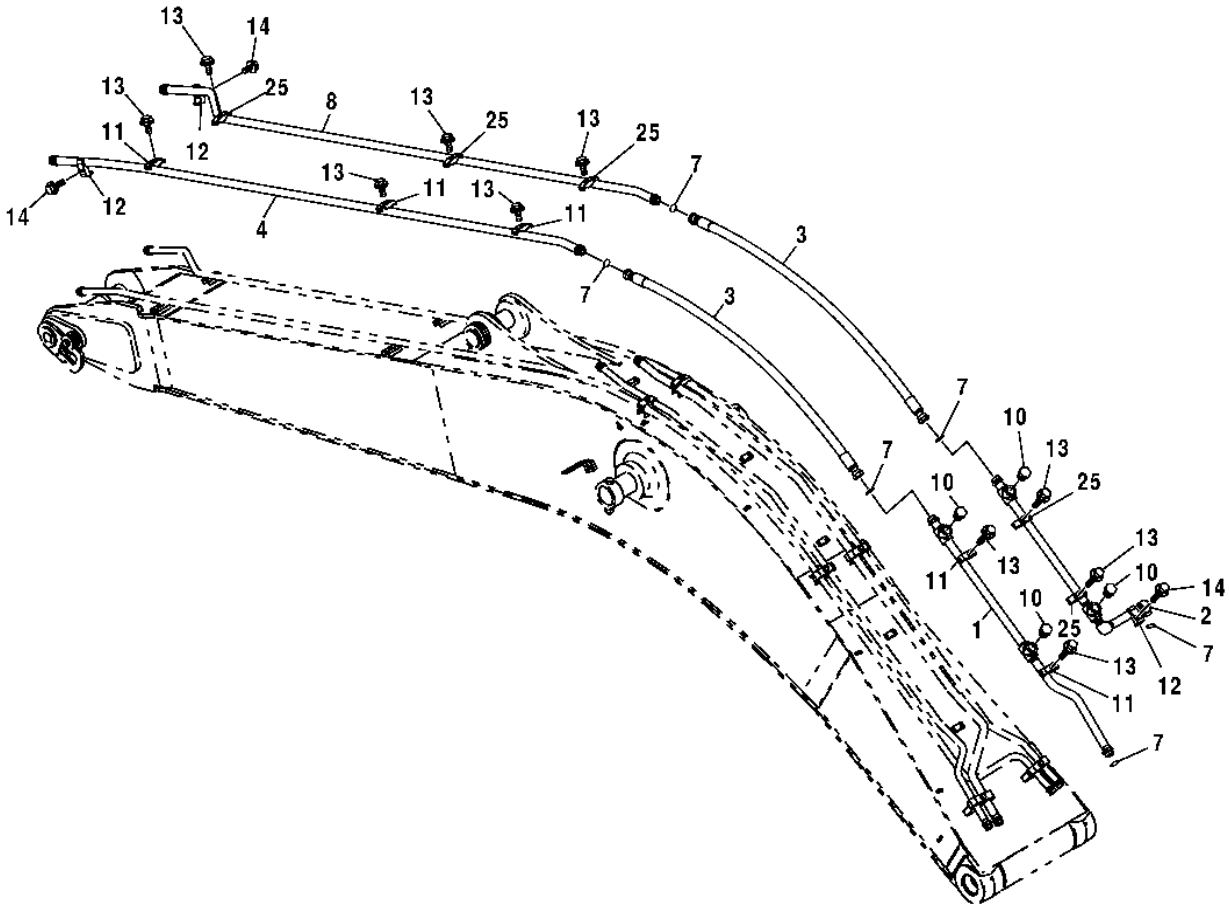

T202637

BOOM AUXILIARY HOSES AND LINES (FACTORY INSTALLED)

KEY	PART NO.	PART NAME	QTY	SERIAL NO.	REMARKS
1	8082662J	TUBE	1		
2	8082663J	TUBE	1		
3	4286876	HYDRAULIC HOSE	2		
4	DH800123J	TUBE	1		
7	4187328	O-RING	6		
8	DH800124J	TUBE	1		
10	THA885008	PIPE PLUG	4		(SUB FOR A885008)
11	4153488	CLAMP	5		
12	4190127	CLAMP	3		
13	19M8348	CAP SCREW	10		M12 X 65, (SUB FOR J011265)
14	19M8088	CAP SCREW	3		M12 X 75, (SUB FOR J011275)
25	4189860	CLAMP	5		

ARM AUXILIARY HOSES AND LINES (FACTORY INSTALLED)

T202638 -UN-17SEP04

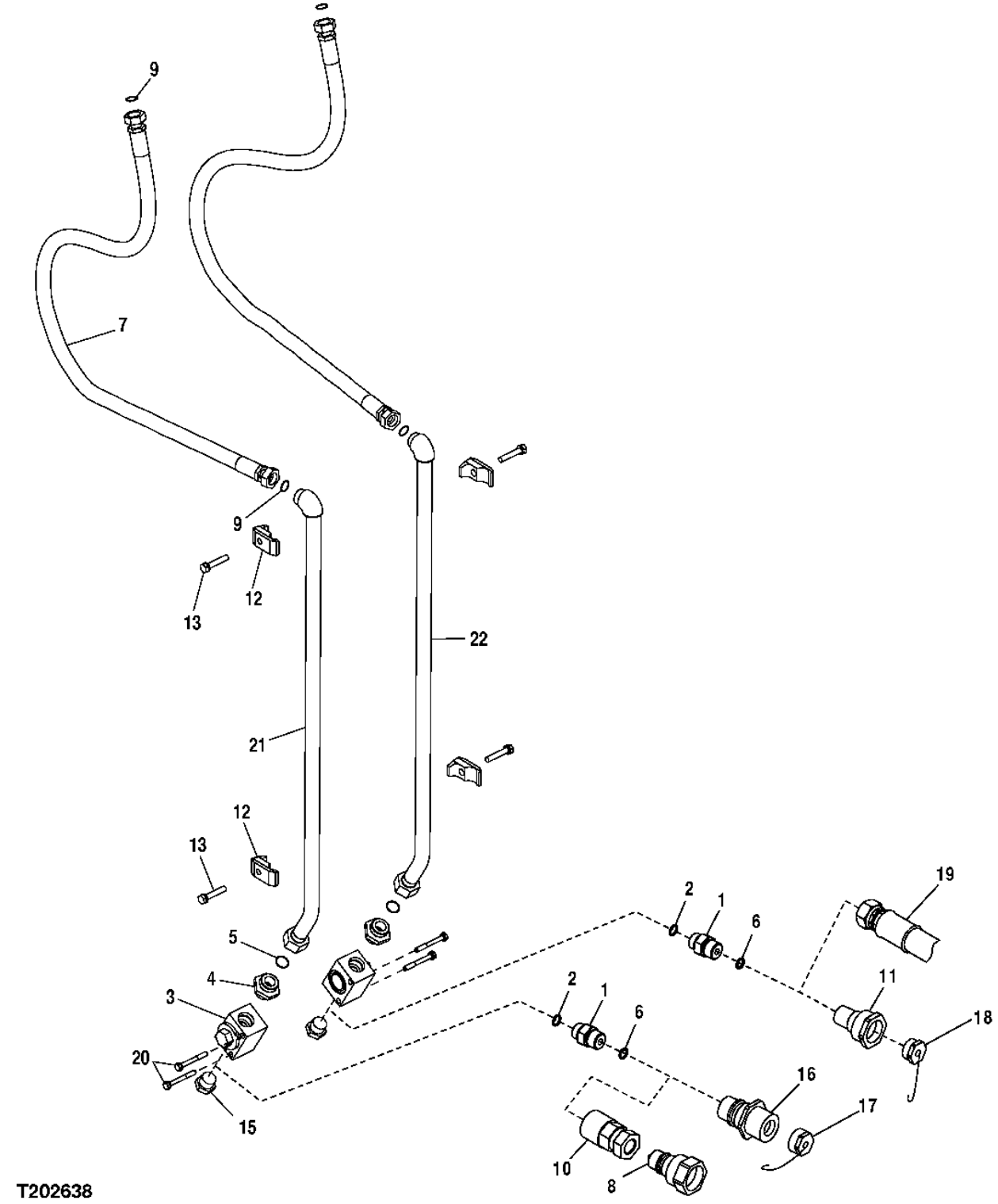

ARM AUXILIARY HOSES AND LINES (FACTORY INSTALLED)

KEY	PART NO.	PART NAME	QTY	SERIAL NO.	REMARKS
1	4189535	ADAPTER	2		(1" ORFS)
	AT318016	ADAPTER	2		(3/4" ORFS) (SUB FOR 4189537)
	AT301151	FITTING	2		(1" SAE, MALE)
	X12-16F4OMXS	ADAPTER	2		(3/4" 37 DEGREE)
	X12-16F4OMXS	ADAPTER	2		(1" 37 DEGREE)
	AT305641	FITTING	2		(3/4" SAE, MALE)
2	TH101926	O-RING	2		
3	4600164	CHECK VALVE	2		
4	A853180	ADAPTER	2		
5	T78612	O-RING	2		(SUB FOR 4187329)
6	R29936	O-RING	2		
7	4452263	HYDRAULIC HOSE	2		(USE WITH 3.1 M STANDARD ARM)
	4397354	HYDRAULIC HOSE - FABRICATE	2		(USE WITH 3.75 M LONG ARM)
8	AT117365	HYDR.QUICK COUPLER PLUG	2		MALE QUICK COUPLER (-12) 1 1/16 SAE O-RING
	AT120498	COUPLING	2		MALE QUICK COUPLER (-16) 1 5/16 SAE O-RING
9	T76938	O-RING	4		(SUB FOR 4187328)
10	AT117364	HYDR.QUICK COUPLER SOCKET	2		FEMALE QUICK COUPLER (-12) 1 1/16 SAE O-RING
	AT120499	COUPLING	2		FEMALE QUICK COUPLER (-16) 1 5/16 SAE O-RING
11	AT186111	QUICK COUPLER	1		(1" FEMALE)(SCREW TOGETHER COUPLER)
12	4190127	CLAMP	4		(PIPE)
13	19M8348	CAP SCREW	4		M12 X 65, (SUB FOR J011265)
15	THA885008	PIPE PLUG	2		
16	AT186112	QUICK COUPLER	1		(1" MALE) (SCREW TOGETHER COUPLER)
17	AT186113	CAP	1		
18	AT186114	PLUG	1		
19	X1JS78-20-16	HOSE FITTING	2		HOSE END - STRAIGHT - 1 1/4 X 1 IN
	X1J978-20-16	ELBOW FITTING	2		HOSE END - 90 DEG 1 1/4 X 1 IN
20	J271085	BOLT	4		
21	8085981J	TUBE	1		
22	8085973J	TUBE	1		

AUXILIARY HYDRAULIC PLUMBING

T191168 -UN-02JUN03

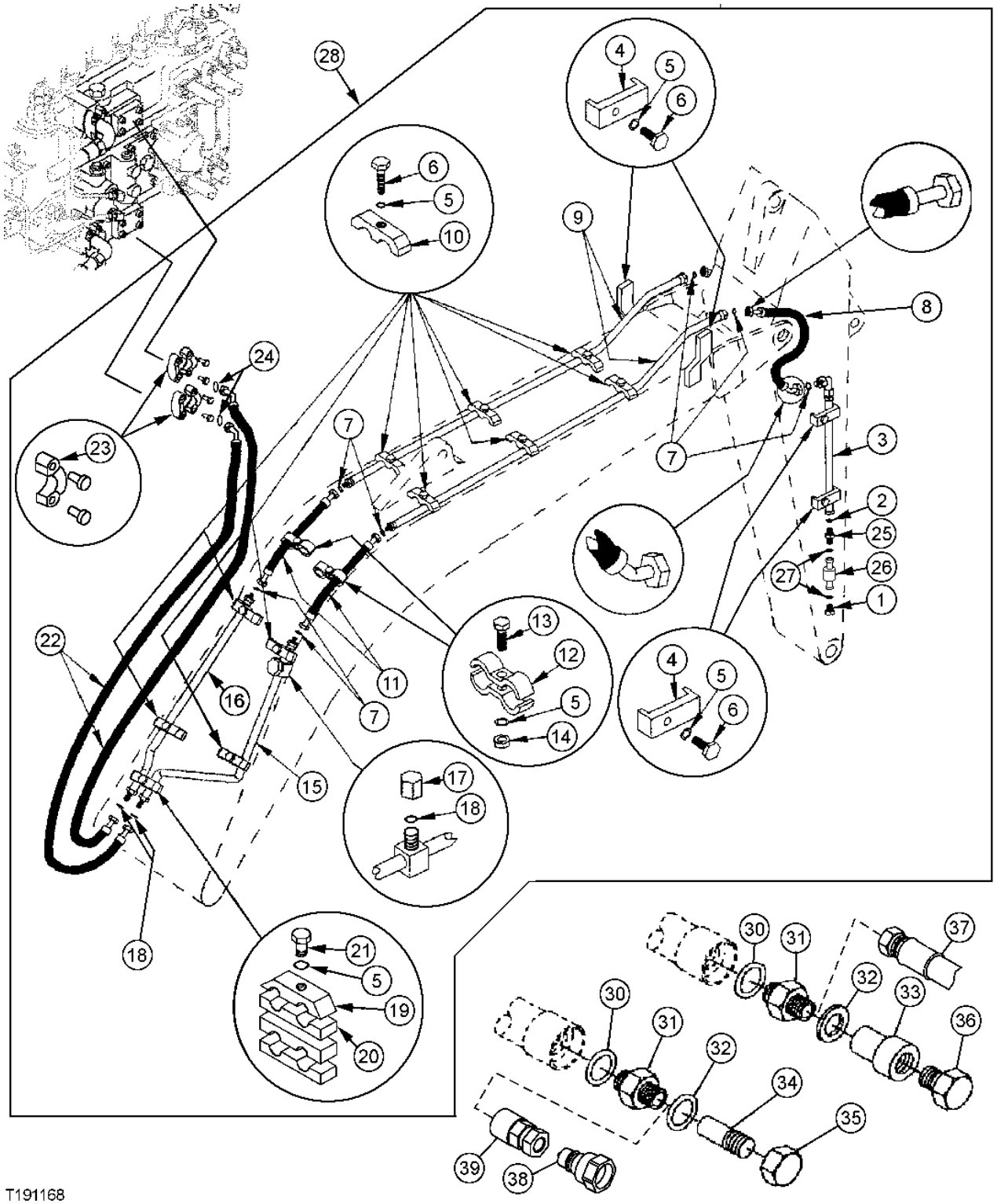

T191168

AUXILIARY HYDRAULIC PLUMBING

KEY	PART NO.	PART NAME	QTY	SERIAL NO.	REMARKS
1	38H1151	FITTING PLUG	2		
2	T78612	O-RING	2		
3	AT159934	OIL LINE	2		
4	4190127	CLAMP	6		(SUB FOR TH108313)
5	12H301	LOCK WASHER	19		1/2"
6	19M7753	CAP SCREW	16		M12 X 70
7	T76938	O-RING	8		
8	AT175002	HYDRAULIC HOSE - FABRICATE	2		(FOR USE WITH 3.1M STANDARD ARM)
	AT182115	HYDRAULIC HOSE - FABRICATE	2		(FOR USE WITH 3.75M ARM) (NOT INCLUDED WITH AT197062)
9	AT159786	OIL LINE	2		
10	4153488	CLAMP	10		(SUB FOR TH103780)
11	AT159782	HYDRAULIC HOSE - FABRICATE	2		
12	4202103	CLAMP	4		(SUB FOR TH108302)
13	19M7361	CAP SCREW	2		M12 X 50
14	14M7275	NUT	2		M12
15	AT182040	OIL LINE	1		
16	AT182039	OIL LINE	1		
17	38H1419	FITTING	1		
18	T77858	O-RING	3		
19	4189860	CLAMP	1		(SUB FOR TH108314)
20	4249704	CLAMP	1		(SUB FOR AT122946)
21	19M7758	CAP SCREW	1		
22	AT182213	HYDRAULIC HOSE	2		1" X 1 524 MM (60") X 1-7/16"
23	H61354	FLANGE FITTING	4		
24	T78313	O-RING	2		
25	38H1196	ADAPTER	2		
26	AT196851	BALL	2		(BALL VALVE)
27	R29936	O-RING	4		
28	**AT197062**	**KIT**	**1**		**(AUXILIARY HYDRAULIC LINE KIT) (FOR 3.75M ARM, ALSO ORDER AT182115 HOSE) (WHOLEGOODS)**
29	R36636	FITTING PLUG	2		(NOT ILLUSTRATED)
30	R29936	O-RING	2		
31	38H1216	ADAPTER	2		(ALSO ORDER T76938) (1" ORFS)
	38H1194	ADAPTER	2		(ALSO ORDER T77858) (3/4" ORFS)
	AT46961	UNION FITTING	2		(1" SAE, MALE)
	T27603	FITTING	2		(3/4" 37 DEGREE)
	T26767	FITTING	2		(1" 37 DEGREE)
	AT83306	ADAPTER	2		(3/4" SAE, MALE)
32	R29936	O-RING	2		
33	AT186111	QUICK COUPLER	1		(1" FEMALE)(SCREW TOGETHER COUPLER)
	.....	KIT	1		(AT189410 NO LONGER AVAILABLE)
34	AT186112	QUICK COUPLER	1		(1" MALE)(SCREW TOGETHER COUPLER)
	.....	KIT	1		(AT189409 NO LONGER AVAILABLE)
35	AT186113	CAP	1		
36	AT186114	PLUG	1		
37	X1JS78-20-16	HOSE FITTING	2		HOSE END - STRAIGHT - 1 1/4 X 1 IN
	X1J978-20-16	ELBOW FITTING	2		HOSE END - 90 DEG 1 1/4 X 1 IN
38	AT117365	HYDR.QUICK COUPLER PLUG	2		MALE QUICK COUPLER (-12) 1 1/16 SAE O-RING
	AT120498	COUPLING	2		MALE QUICK COUPLER (-16) 1 5/16 SAE O-RING
39	AT117364	HYDR.QUICK COUPLER SOCKET	2		FEMALE QUICK COUPLER (-12) 1 1/16 SAE O-RING
	AT120499	COUPLING	2		FEMALE QUICK COUPLER (-16) 1 5/16 SAE O-RING

AUXILIARY HYDRAULIC OPTIONAL LOW PRESSURE RETURN PLUMBING

T191246 -UN-03JUN03

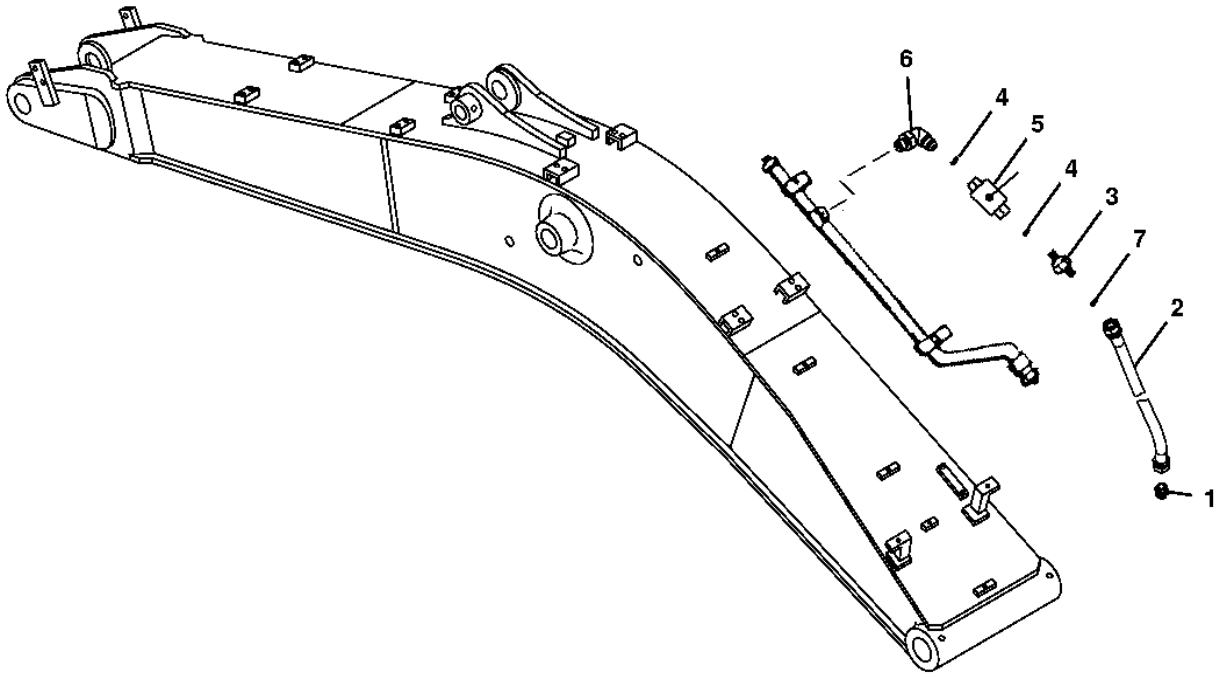

T191246

AUXILIARY HYDRAULIC OPTIONAL LOW PRESSURE RETURN PLUMBING

KEY	PART NO.	PART NAME	QTY	SERIAL NO.	REMARKS
1	4189535	ADAPTER	1		
2	AT304742	HYDRAULIC HOSE - FABRICATE	1		
3	38H1164	ADAPTER	1		
4	R29936	O-RING	2		
5	AT196851	BALL	1		
6	38H1086	ELBOW FITTING	1		
7	T78612	O-RING	1		

MAIN HYDRAULIC PUMP

T143240 -UN-01OCT01

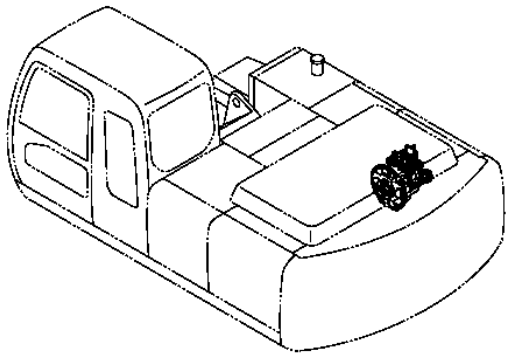

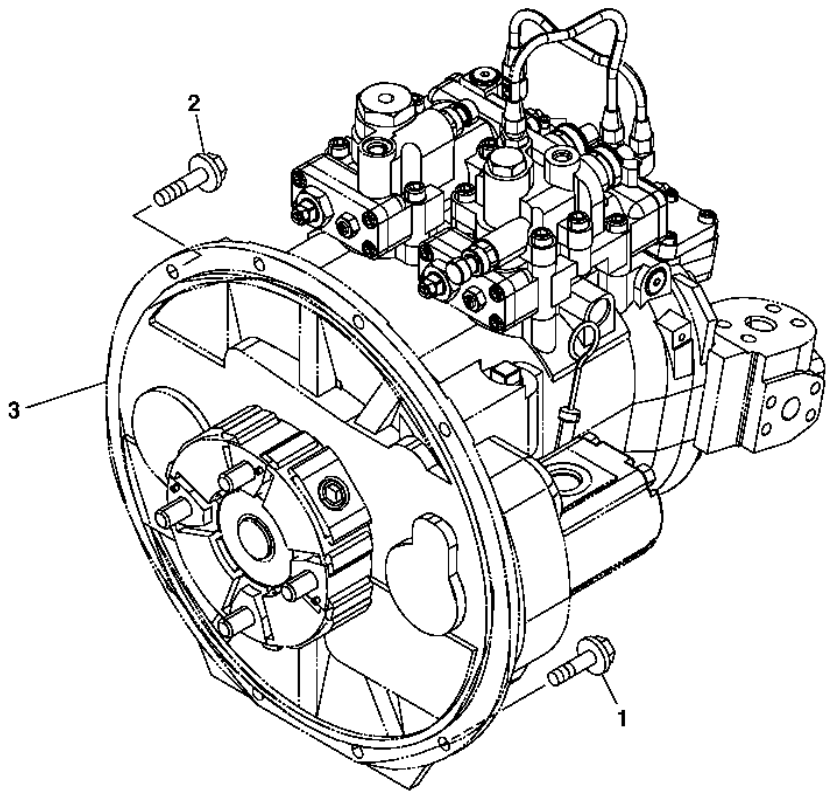

T143240

MAIN HYDRAULIC PUMP

KEY	PART NO.	PART NAME	QTY	SERIAL NO.	REMARKS
1	19M7662	CAP SCREW	5		M10 X 30
	12M7066	LOCK WASHER	5		10 MM (0.394")
2	19M7550	CAP SCREW	3		M10 X 35
	12M7066	LOCK WASHER	3		10 MM (0.394")
3	.....	HYDRAULIC PUMP	1		(TH9195237 NOT AVAILABLE FOR SERVICE)

PUMP DEVICE

T206427 -UN-04JAN05

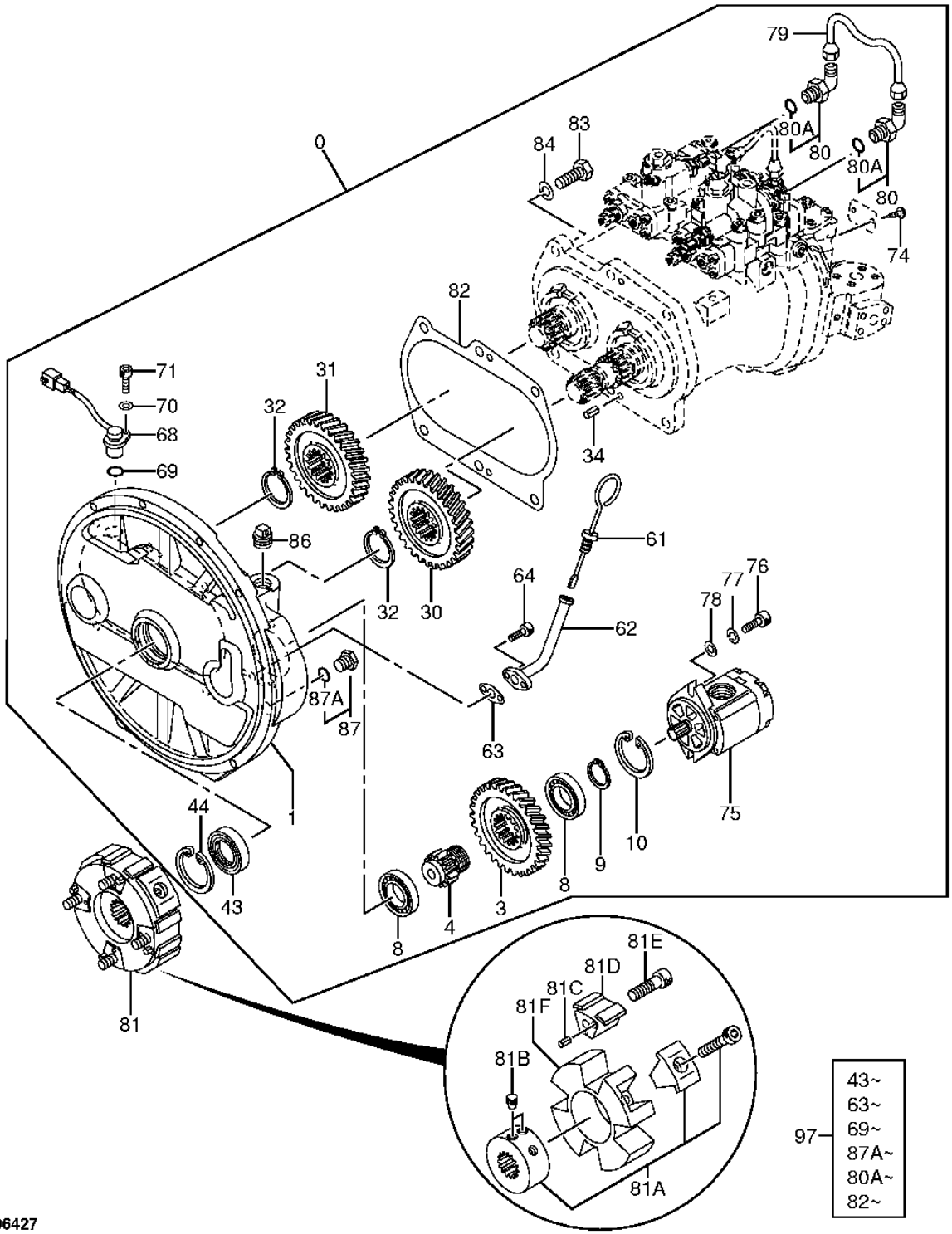

T206427

PUMP DEVICE

KEY	PART NO.	PART NAME	QTY	SERIAL NO.	REMARKS
0	9195237EX	HYDRAULIC PUMP	1		(SUB FOR 9195237)
1	1027184	HOUSING	1		(SUB FOR TH1027184)
3	3063840	GEAR	1		(SUB FOR AT202414)
4	3055594	SHAFT	1		(SUB FOR AT202412)
8	JD8514	BALL BEARING	2		
9	962002	SNAP RING	1		(SUB FOR TH100483)
10	40M7090	SNAP RING	1		
30	3063842	GEAR	1		(SUB FOR AT202415)
31	3063843	GEAR	1		(SUB FOR AT202416)
32	4274552	SNAP RING	2		(SUB FOR AT203647)
34	34M7061	SPRING PIN	2		
43	4310055	SEAL	1		(K) (SUB FOR AT202443)
44	40M7090	SNAP RING	1		
61	4438059	DIPSTICK	1		(SUB FOR TH4438059)
62	9743977	DIPSTICK TUBE	1		(SUB FOR AT214406)
63	9742779	GASKET	1		(K) (SUB FOR AT214401)
64	19M7647	SCREW	2		M8 X 16, (SUB FOR AT217709)
68	4265372	SENSOR	1		(SUB FOR AT154297)
69	4306888	O-RING	1		(K) (SUB FOR AT154310)
70	24M7054	WASHER	1		6.400 X 12 X 1.600 MM
71	19M8553	SCREW	1		M6 X 16
74	37H99	SCREW	2		0.100" X 1/4"
75	4276918	PUMP	1		(SUB FOR AT202122)
76	19M8337	SCREW	2		M10 X 30
77	12M7135	LOCK WASHER	2		10 MM, (SUB FOR 12M6791)
78	4114402	WASHER	2		(SUB FOR TH102181)
79	4369148	OIL LINE	1		(SUB FOR AT214046)
80	4293950	ELBOW FITTING	2		(SUB FOR AT160584)
80A	M800650	PACKING	1		(K)
81	4416605	COUPLING	1		(SUB FOR TH4416605)
81A	4463992	HUB	1		(SUB FOR TH4463992)
81B	4334899	SET SCREW	2		(SUB FOR AT203651)
81C	34M7117	SPRING PIN	4		
81D	4463993	INSERT	4		(SUB FOR TH4463993)
81E	4334894	BOLT	4		(SUB FOR TH4334894)
81F	.....	HOUSING	1		(TH4463994 NOT AVAILABLE FOR SERVICE)
82	8058352	GASKET	1		(K) (SUB FOR AT214350)
83	19M7489	CAP SCREW	6		M16 X 45
84	12H294	LOCK WASHER	6		5/8"
86	4234782	PLUG	1		(SUB FOR AT200990)
87	15M7036	DRAIN PLUG	1		(SUB FOR 0309805) (SUB FOR 4092534, ALONG WITH CH11570)
87A	CH11570	O-RING	1		(K)
97	4451036	SEAL KIT	1		(SUB FOR TH4451036) (INCLUDES ALL (K) PARTS)

MAIN HYDRAULIC PUMP HOUSING,DISK,ROTORS,HEAD AND REGULATORS

T147607 -UN-31OCT01

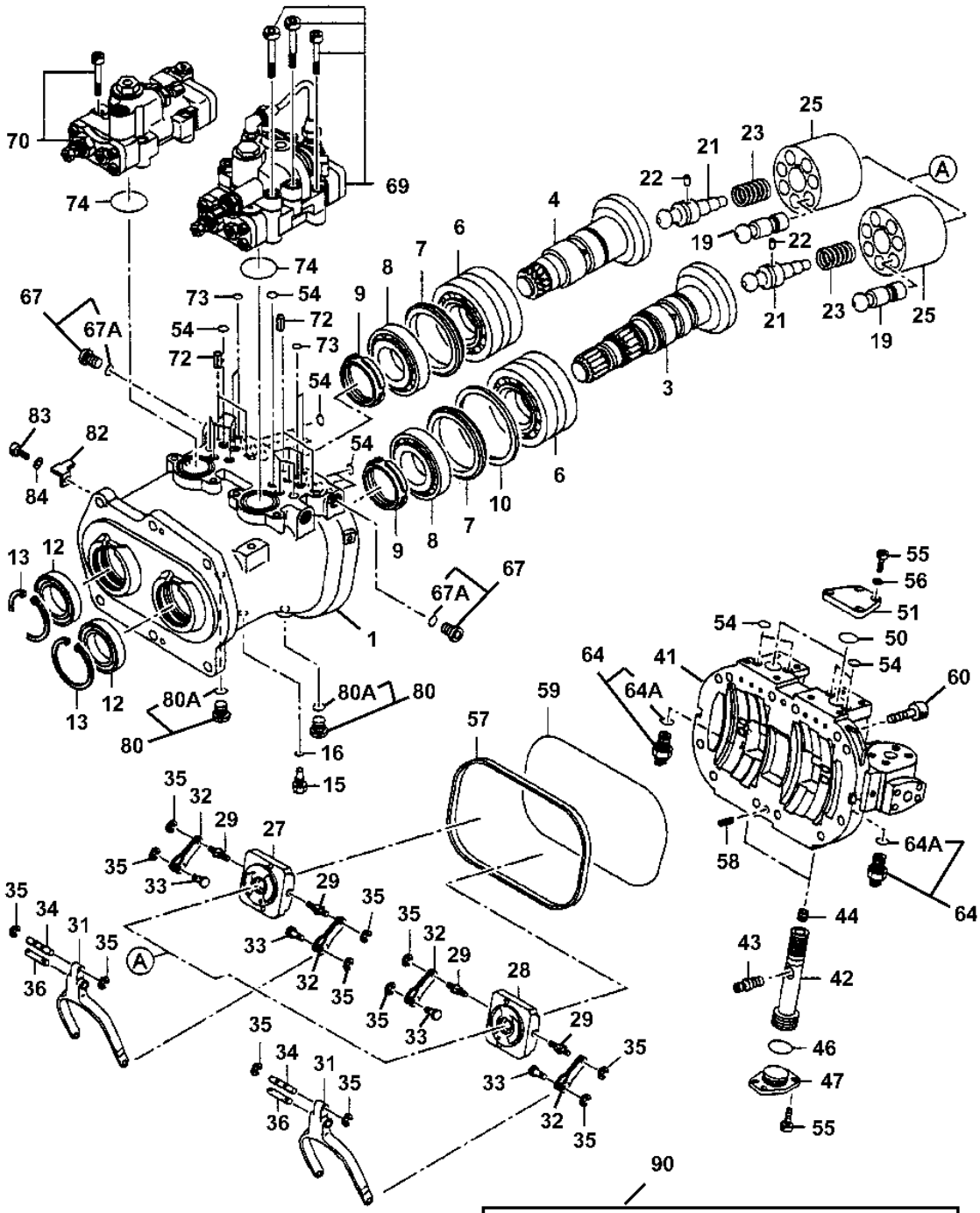

MAIN HYDRAULIC PUMP HOUSING,DISK,ROTORS,HEAD AND REGULATORS

KEY	PART NO.	PART NAME	QTY	SERIAL NO.	REMARKS
1	1026679	GEAR CASE	1		
3	2036807	DISK	1		(SUB FOR AT213734)
4	2036808	DISK	1		(SUB FOR AT213735)
6	4337419	CYLINDRICAL ROLLER BEARING	2		(SUB FOR AT213873)
7	4348182	RING	2		(SUB FOR AT213920)
8	4337483	CYLINDRICAL ROLLER BEARING	2		(SUB FOR AT213874)
9	4178173	NUT	2		M60, (SUB FOR T107755)
10	4330054	THRUST WASHER	1		(SUB FOR AT202466) (SUB FOR AT170630)
12	AT213847	SEAL	2		(K)
13	4116290	SNAP RING	2		(SUB FOR TH111929)
15	4233165	FITTING	1		(SUB FOR AT154164)
16	M800650	PACKING	1		(K)
19	8059452	PISTON	14		(SUB FOR AT214351)
21	4337035	SHAFT	2		(SUB FOR AT213871)
22	4198956	PIN FASTENER	2		(SUB FOR T107766)
23	4179181	COMPRESSION SPRING	2		(SUB FOR T107767)
25	2036744	ROTOR	2		(SUB FOR AT213730)
27	2036795	VALVE	1		(SUB FOR AT213733)
28	2036786	VALVE	1		(SUB FOR AT213732)
29	4179179	DOWEL PIN	4		(SUB FOR TH109874)
31	3075674	LINK	2		(SUB FOR AT213793)
32	9724756	LEVER	4		(SUB FOR TH109873)
33	4179177	DOWEL PIN	4		(SUB FOR TH109875)
34	4179176	DOWEL PIN	2		(SUB FOR TH109876)
35	CH17951	RING	12		
36	4200227	DOWEL PIN	2		(SUB FOR TH109878)
41	1027131	CYLINDER HEAD	1		(SUB FOR TH1027131)
42	3069541	PISTON	2		(SUB FOR AT213762)
43	4338053	PIN	2		(SUB FOR AT213876)
44	4337812	SET SCREW	2		(SUB FOR AT213875)
46	4355085	O-RING	2		(K) (SUB FOR AT213975)
47	4338060	STOP	2		(SUB FOR AT213877)
50	4355083	O-RING	2		(K) (SUB FOR AT213974)
51	4338061	COVER	2		(SUB FOR AT213878)
54	CH11560	PACKING	20		(K)
55	19M8439	SCREW	16		M8 X 25
56	4514388	SPRING WASHER	8		(SUB FOR TH101835)
57	3070581	PACKING	1		(SUB FOR AT213767)
58	34M7061	SPRING PIN	2		8 X 20 MM (0.315" X 0.787")
59	4342840	O-RING	1		(K) (SUB FOR AT213890)
60	19M8341	SCREW	12		M12 X 45
64	P69051	SENSOR	2		(SUB FOR AT175981) (PUMP PRESSURE)
64A	TH102560	O-RING	1		(K) 15.800 X 2.400 MM (0.622" X 0.094") (SUB FOR AT175984)
67	9134110	PIPE PLUG	2		(SUB FOR AT203649)
67A	M800650	PACKING	1		(K)
69	9207260	REGULATOR	1		(SUB FOR TH9207260)
70	9207261	REGULATOR	1		(SUB FOR TH9207261)
72	34M3845	SPRING PIN	4		4 X 10 MM (0.157" X 0.394")
73	4343074	O-RING	4		(K) (SUB FOR AT213894)
74	4348665	O-RING	2		(K) (SUB FOR AT213922)
80	9134111	PIPE PLUG	2		(SUB FOR AT203648)
80A	CH11570	O-RING	1		(K) 13.800 X 2.400 MM (0.543" X 0.094")
82	4252767	BRACKET	1		(SUB FOR AT154206)
83	0209423	BOLT	1		(SUB FOR TH100738)
84	12M7056	LOCK WASHER	1		8 MM (0.315") (SUB FOR 12M7065)
90	4451039	SEAL KIT	1		(SUB FOR TH4451039) (INCLUDES ALL (K) PARTS)

MAIN HYDRAULIC PUMP RIGHT HAND REGULATOR

T147697 -UN-07JAN02

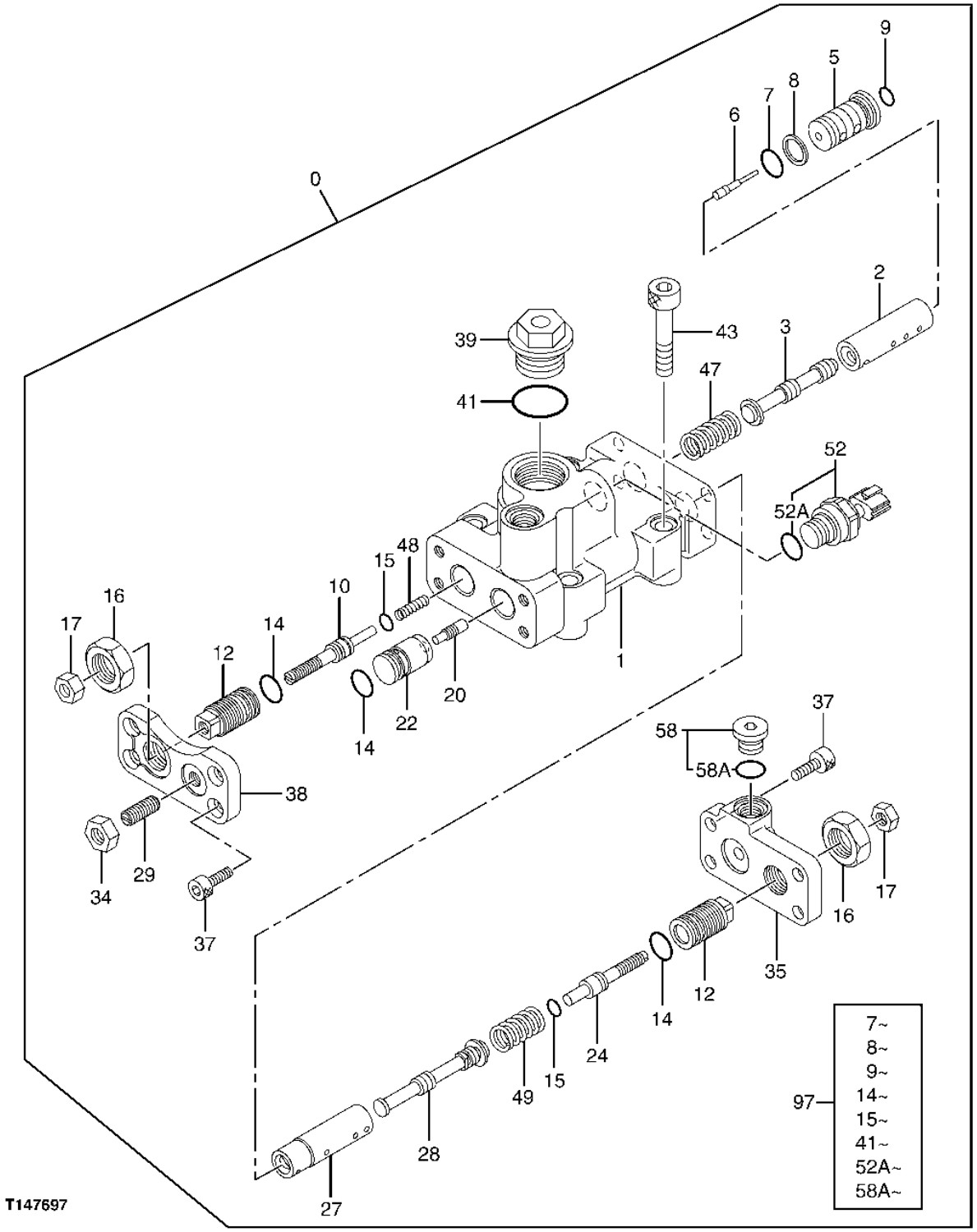

THIS PARTS LISTING IS CONTINUED

MAIN HYDRAULIC PUMP RIGHT HAND REGULATOR

KEY	PART NO.	PART NAME	QTY	SERIAL NO.	REMARKS
0	9207261	REGULATOR	1		(SUB FOR TH9207261)
1	.....	HOUSING	1		(TH1027149 NOT AVAILABLE FOR SERVICE)
2	4179155	SLEEVE	1		(SUB FOR TH109892)
3	4179156	SPOOL	1		(SUB FOR TH109893)
5	4435025	PISTON	1		(SUB FOR TH4435025)
6	4435024	FLOW CONTROL HYD. VALVE	1		
7	TH102560	O-RING	1		(K)
8	4085607	BACK-UP RING	1		(K) (SUB FOR TH102562)
9	CH11560	PACKING	1		(K)
10	4368619	STOP	1		(SUB FOR AT214045)
12	4179161	STOP	2		(SUB FOR TH109898)
14	4342843	O-RING	3		(K) (SUB FOR AT213892)
15	4342841	O-RING	2		(K) (SUB FOR AT213891)
16	4068898	NUT	2		(SUB FOR TH102567)
17	14M7273	NUT	2		M8
20	4179171	PISTON	1		(SUB FOR TH109911)
22	4451498	PISTON	1		(SUB FOR TH4451498)
24	4347107	STOP	1		(SUB FOR AT213917)
27	4346522	SLEEVE	1		(SUB FOR AT213913)
28	4346521	VALVE SPOOL	1		(SUB FOR AT213912)
29	4265964	SET SCREW	1		(SUB FOR AT201005)
34	14M7274	NUT	1		M10
35	3075775	END PLATE	1		(SUB FOR AT213794)
37	19M8446	SCREW	8		M8 X 20
38	4433327	COVER	1		(SUB FOR AT192511)
39	4447264	PIPE PLUG	1		(SUB FOR TH4447264)
41	4342846	O-RING	1		(K) (SUB FOR AT213893)
43	19M8339	SCREW	4		M10 X 55
47	4194176	COMPRESSION SPRING	1		(SUB FOR TH111263)
48	4423345	SPRING	1		(SUB FOR TH4423345)
49	4350928	COMPRESSION SPRING	1		(SUB FOR AT213951)
52	4436536	SENSOR	1		(SUB FOR TH4436536)
52A	CH11570	O-RING	1		(K) (SUB FOR AT123487)
58	9134110	PIPE PLUG	1		(SUB FOR AT203649)
58A	M800650	PACKING	1		(K)
97	4455719	SEAL KIT	1		(SUB FOR TH4455719) (INCLUDES ALL (K) PARTS)

MAIN HYDRAULIC PUMP LEFT HAND REGULATOR

T147698 -UN-07JAN02

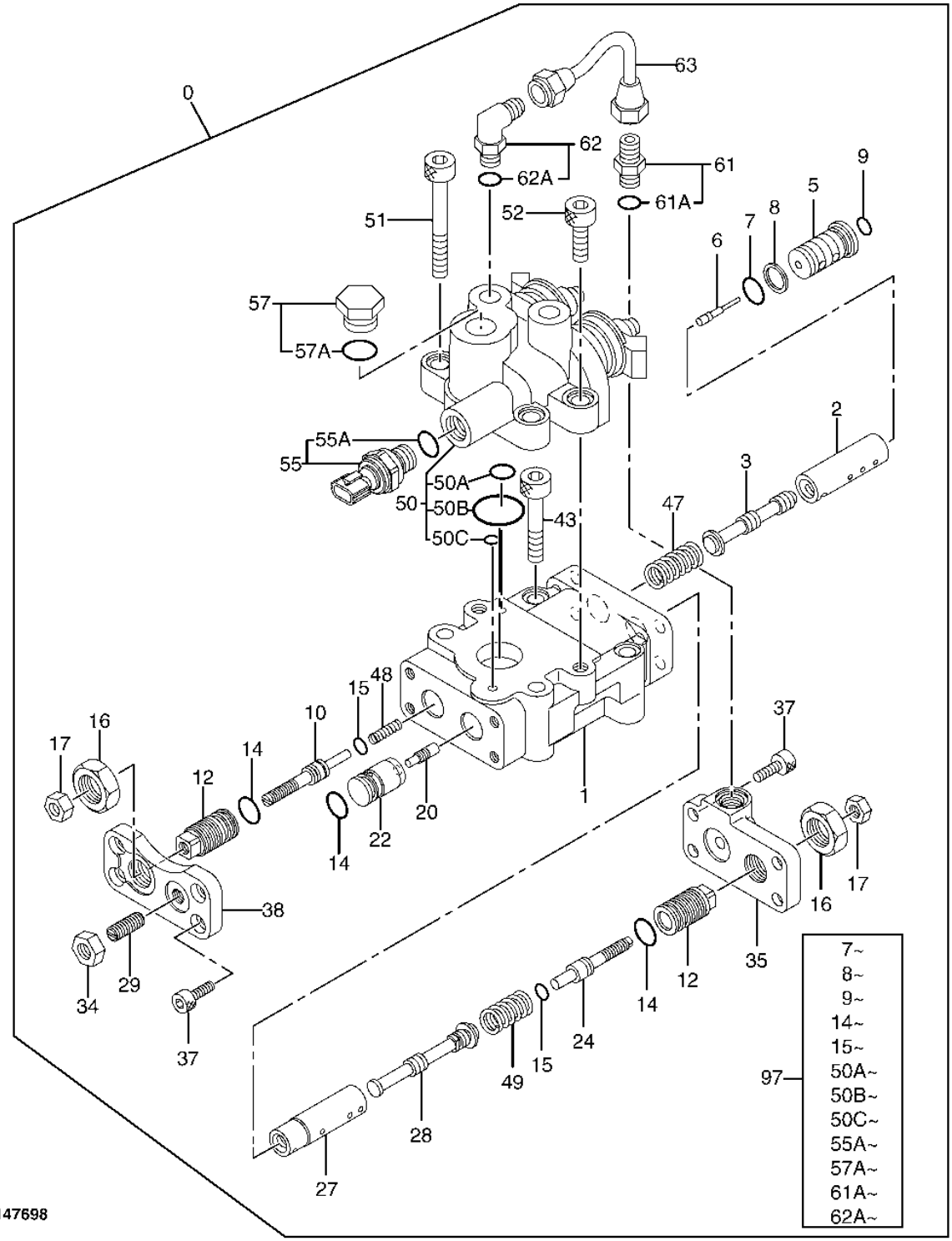

MAIN HYDRAULIC PUMP LEFT HAND REGULATOR

KEY	PART NO.	PART NAME	QTY	SERIAL NO.	REMARKS
0	9207260	REGULATOR	1		(SUB FOR TH9207260)
1	.....	HOUSING	1		(TH1026282 NOT AVAILABLE FOR SERVICE)
2	4179155	SLEEVE	1		(SUB FOR TH109892)
3	4179156	SPOOL	1		(SUB FOR TH109893)
5	4435025	PISTON	1		(SUB FOR TH4435025)
6	4435024	FLOW CONTROL HYD. VALVE	1		
7	TH102560	O-RING	1		(K)
8	4085607	BACK-UP RING	1		(K) (SUB FOR TH102562)
9	CH11560	PACKING	1		(K)
10	4368619	STOP	1		(SUB FOR AT214045)
12	4179161	STOP	2		(SUB FOR TH109898)
14	4342843	O-RING	3		(K) (SUB FOR AT213892)
15	4342841	O-RING	2		(K) (SUB FOR AT213891)
16	4068898	NUT	2		(SUB FOR TH102567)
17	14M7273	NUT	2		M8
20	4179171	PISTON	1		(SUB FOR TH109911)
22	4451498	PISTON	1		(SUB FOR TH4451498)
24	4347107	STOP	1		(SUB FOR AT213917)
27	4346522	SLEEVE	1		(SUB FOR AT213913)
28	4346521	VALVE SPOOL	1		(SUB FOR AT213912)
29	4265964	SET SCREW	1		(SUB FOR AT201005)
34	14M7274	NUT	1		M10
35	3075775	END PLATE	1		(SUB FOR AT213794)
37	19M8446	SCREW	8		M8 X 20
38	4433327	COVER	1		(SUB FOR AT192511)
43	19M8339	SCREW	2		M10 X 55
47	4194176	COMPRESSION SPRING	1		(SUB FOR TH111263)
48	4423345	SPRING	1		(SUB FOR TH4423345)
49	4350928	COMPRESSION SPRING	1		(SUB FOR AT213951)
50	4400442	SOLENOID VALVE	1		(SUB FOR TH4400442)
50A	TH102560	O-RING	1		(K)
50B	4153534	O-RING	1		(K) (SUB FOR AT202089)
50C	4153087	O-RING	1		(K) (SUB FOR TH4153087)
51	M341080	BOLT	2		(SUB FOR TH101483, 0215218)
52	19M8337	SCREW	2		M10 X 30
55	4436536	SENSOR	1		(SUB FOR TH4436536)
55A	CH11570	O-RING	1		(K) (SUB FOR AT123487)
57	4174541	DRAIN PLUG	1		(SUB FOR TH110477)
57A	4506418	O-RING	1		(K) (SUB FOR U46489)
61	4255304	ADAPTER	1		(SUB FOR AT155270)
61A	M800650	PACKING	1		(K)
62	4293950	ELBOW FITTING	1		(SUB FOR AT160584)
62A	M800650	PACKING	1		(K)
63	4436800	OIL LINE	1		(SUB FOR TH4436800)
97	4455733	SEAL KIT	1		(SUB FOR TH4455733) (INCLUDES ALL (K) PARTS)

MAIN HYDRAULIC PUMP DRIVE PUMP

T147699 -UN-03DEC01

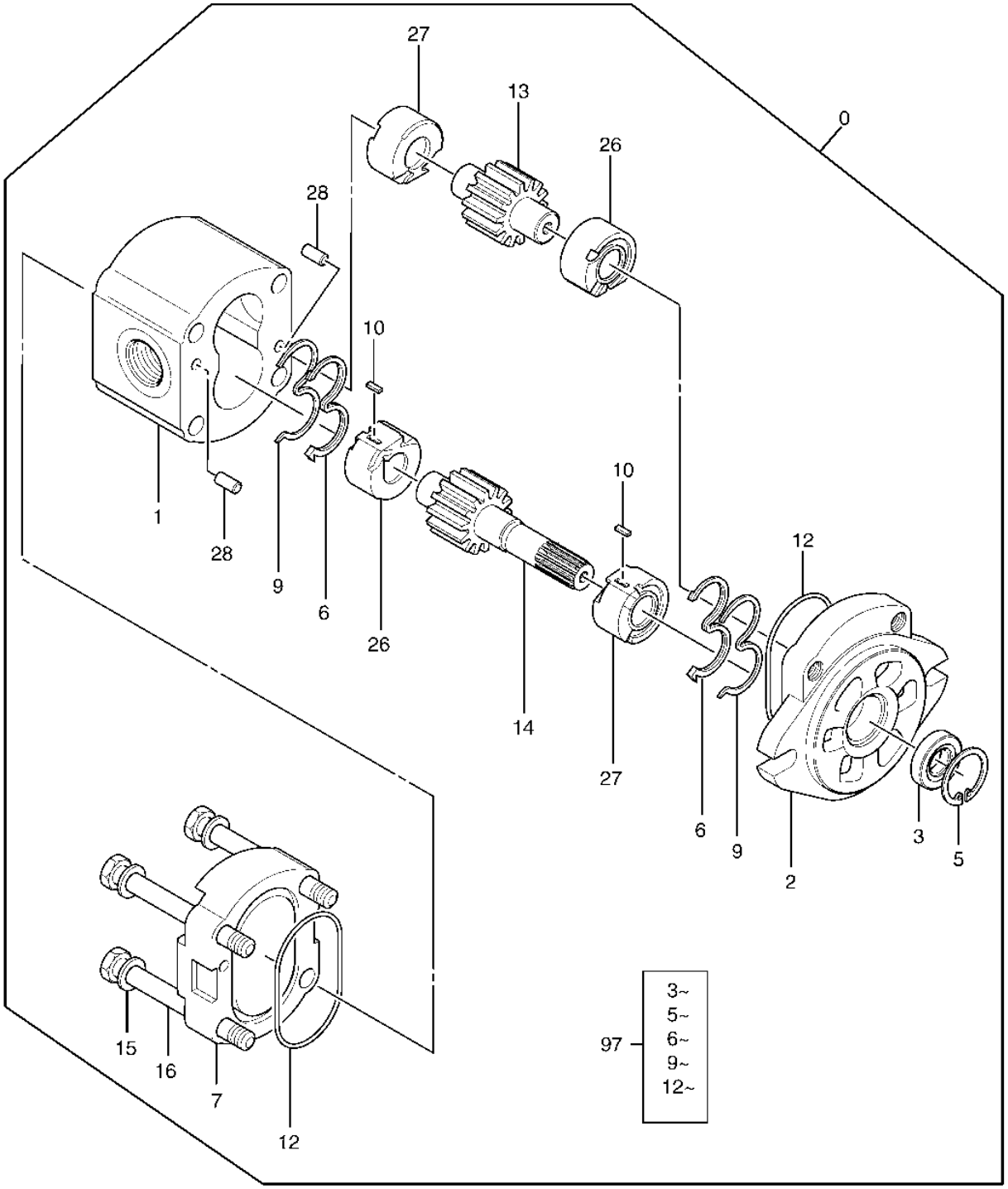

T147699

MAIN HYDRAULIC PUMP DRIVE PUMP

KEY	PART NO.	PART NAME	QTY	SERIAL NO.	REMARKS
0	4276918	PUMP	1		(SUB FOR AT202122)
1	.....	HOUSING	1		
2	AT203653	FLANGE	1		
3	0408202	SEAL	1		(A) (SUB FOR AT153880)
5	.....	SNAP RING	1		(A) (PART OF KIT AT153885)(AT153833 NOT AVAIL)
6	.....	BACK-UP RING	2		(A) (AT153881 NOT AVAILABLE AS INDIVIDUAL SERVICE PART)
7	.....	COVER	1		(AT153832 NOT AVAILABLE FOR SERVICE)
9	.....	BACK-UP RING	2		(A) (AT153834 NOT AVAILABLE AS INDIVIDUAL SERVICE PART)
10	4484119	KEY	2		(SUB FOR AT153838)
12	AT153835	O-RING	2		(A) 64.500 X 2.700 MM (2.539" X 0.106")
13	.....	GEAR	1		
14	.....	GEAR	1		
15	AT153837	WASHER	4		10.400 X 18 X 2 MM (0.409" X 0.709" X 0.079")
16	0408204	BOLT	4		(SUB FOR AT153882)
26	.....	BUSHING	2		
27	.....	BUSHING	2		
28	.....	PIN	4		(AT153836 NOT AVAILABLE FOR SERVICE)
97	0408207	SEAL KIT	1		(SUB FOR AT153885) (INCLUDES ALL PARTS MARKED (A))

RELIEF VALVE

T147702 -UN-07JAN02

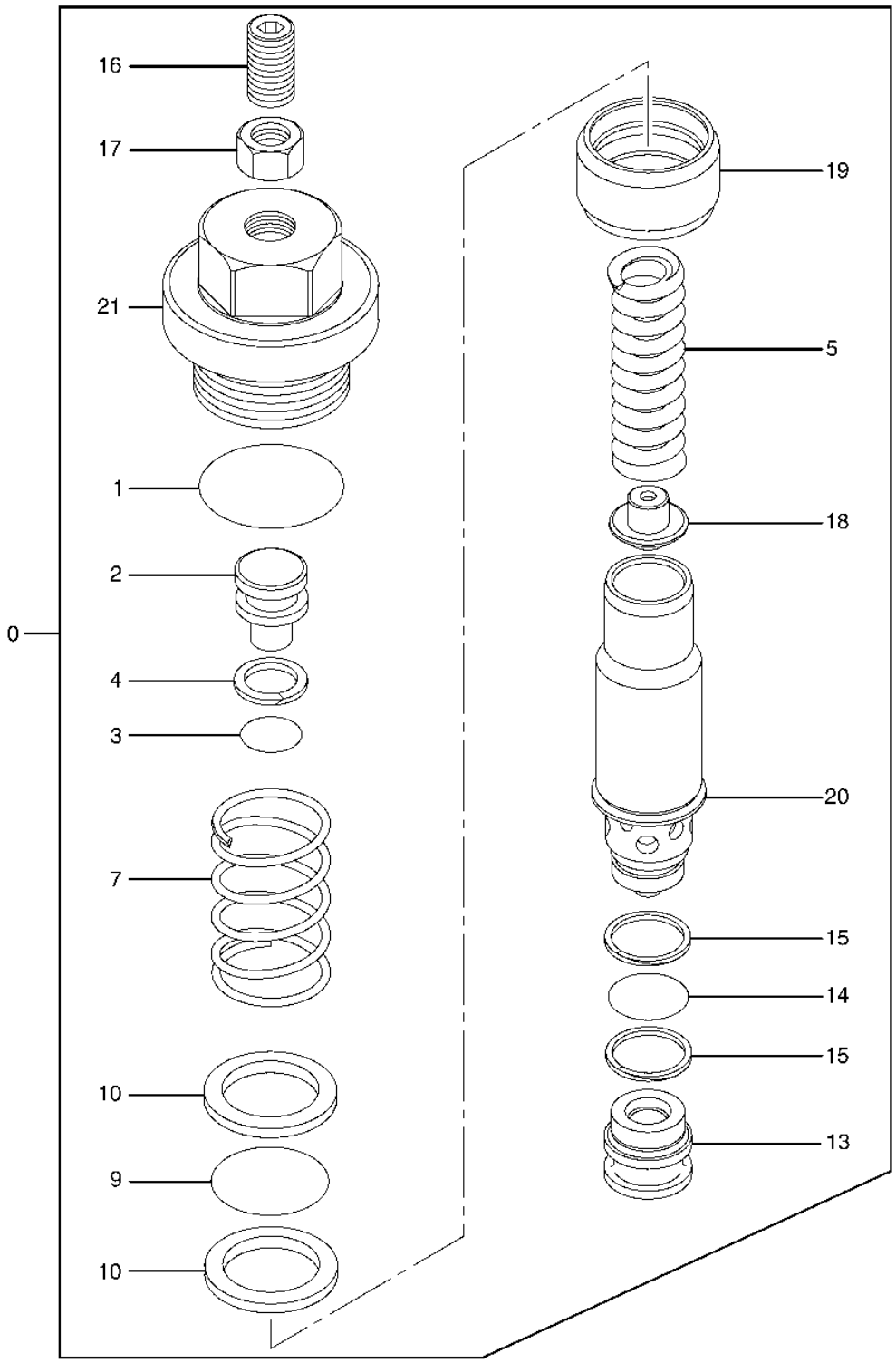

RELIEF VALVE

KEY	PART NO.	PART NAME	QTY	SERIAL NO.	REMARKS
0	9134147	PRESSURE RELIEF VALVE	1		
1	985098	O-RING	1		(SUB FOR TH102528)
2	4312883	PLUG	1		(SUB FOR AT215505)
3	CH10568	O-RING	1		
4	4027963	BACK-UP RING	1		(SUB FOR TH103579)
5	4312884	COMPRESSION SPRING	1		(SUB FOR AT215506)
7	4312894	COMPRESSION SPRING	1		(SUB FOR AT215508)
9	4314064	O-RING	1		(SUB FOR AT204885)
10	4314065	BACK-UP RING	2		(SUB FOR AT204886)
13	4312892	VALVE SEAT	1		(SUB FOR AT215507)
14	T111819	O-RING	1		
15	4040814	BACK-UP RING	2		(SUB FOR TH105938)
16	4312893	SCREW	1		(SUB FOR AT204883)
17	14M7275	NUT	1		M12
18	4337154	GUIDE	1		(SUB FOR AT215515)
19	4338110	PISTON	1		(SUB FOR AT215516)
20	9134147	PRESSURE RELIEF VALVE	1		
21	4312882	FITTING PLUG	1		(SUB FOR AT204879)

SERVO PISTON

T153958 -UN-16APR02

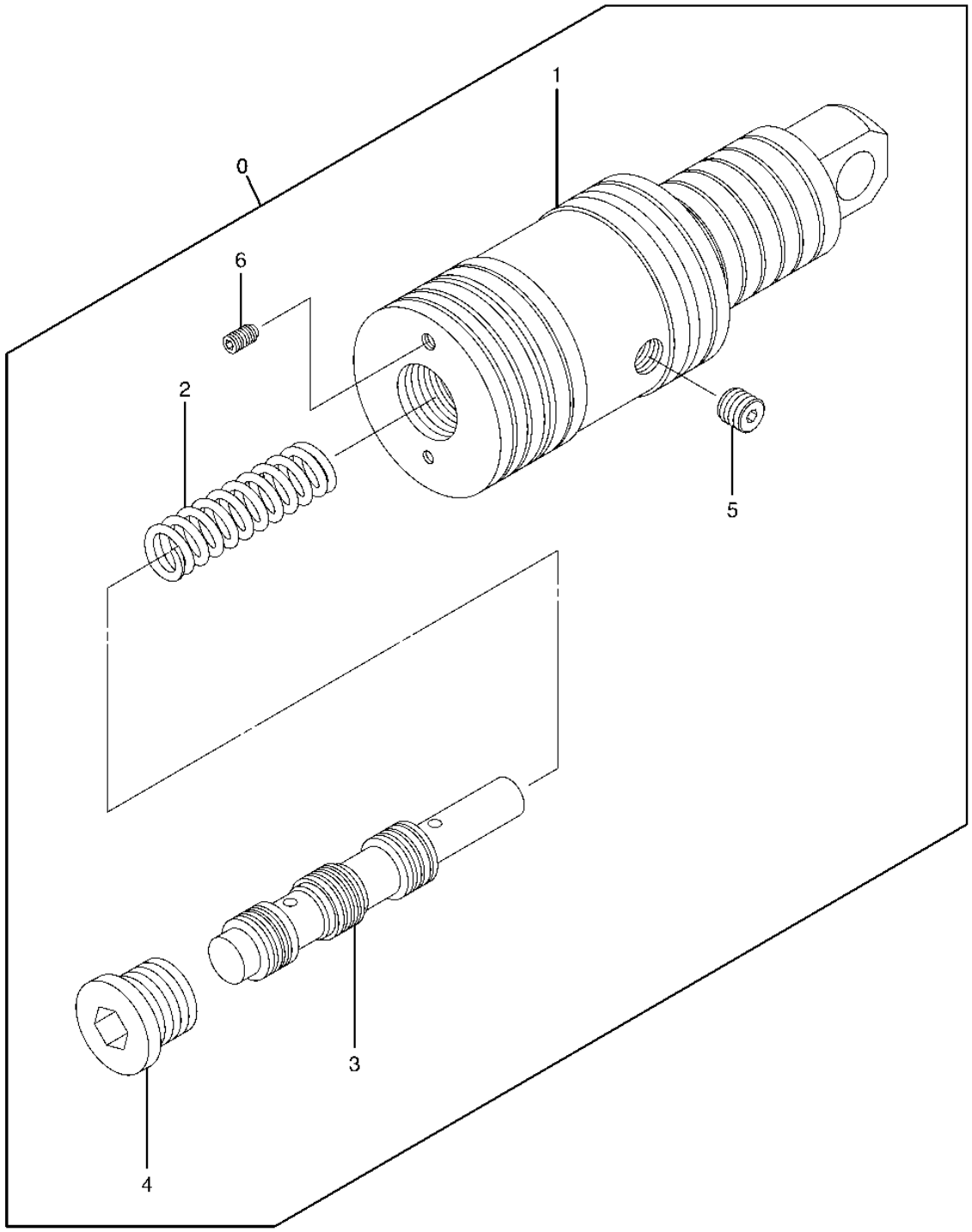

T153958

SERVO PISTON

KEY	PART NO.	PART NAME	QTY	SERIAL NO.	REMARKS
0	9098902	PISTON	1		(SUB FOR AT203612)
1	3054013	PISTON	1		(SUB FOR AT217938)
2	4252599	COMPRESSION SPRING	1		(SUB FOR AT154723)
3	4255977	SPOOL	1		(SUB FOR AT154750)
4	15M7036	DRAIN PLUG	1		(SUB FOR TH109285 OR 0309805) (ALSO ORDER CH11570)
5	4257661	PLUG	1		(SUB FOR AT154756)
6	4252655	ORIFICE	1		(SUB FOR AT154724)

CONTROL VALVE

T147704 -UN-07JAN02

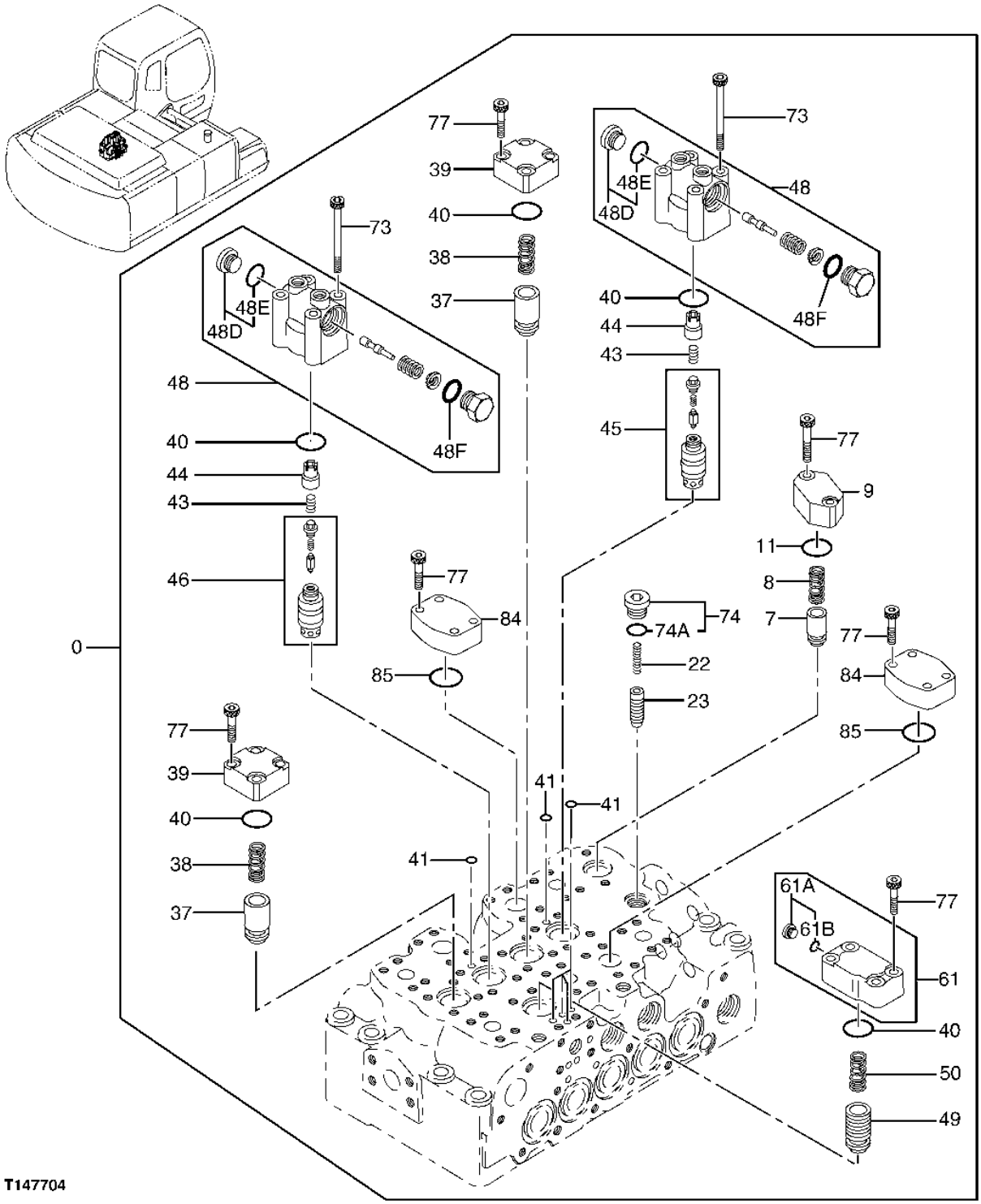

T147704

CONTROL VALVE

KEY	PART NO.	PART NAME	QTY	SERIAL NO.	REMARKS
0	4437242	HYD ACTUATED CONTROL VALVE	1		(SUB FOR 4437242EX) (CONTAINS ALL PARTS ON THIS PAGE - ADDITIONAL COMPONENTS LISTED ON FOLLOWING PAGES)
7	0668111	POPPET	1		(SUB FOR AT213700)
8	0668112	SPRING	1		(SUB FOR AT213701)
9	0791601	FLANGE	1		(SUB FOR TH0791601)
11	CH17886	PACKING	1		(SUB FOR 4509182)
22	0668007	SPRING	1		(SUB FOR AT213693)
23	0791602	POPPET	1		(SUB FOR TH0791602)
37	0791603	POPPET	2		(SUB FOR TH0791603)
38	0791604	SPRING	2		(SUB FOR TH0791604)
39	0791605	FLANGE	2		(SUB FOR TH0791605)
40	985098	O-RING	5		(SUB FOR TH102528)
41	4506406	O-RING	6		(SUB FOR TH104587)
43	0791606	SPRING	2		(SUB FOR TH0791606)
44	0791607	SPACER	2		(SUB FOR TH0791607)
45	4454194	POPPET	1		(SUB FOR TH4454194)
46	4454195	POPPET	1		(SUB FOR TH4454195)
48	4454197	FLOW CONTROL HYD. VALVE	2		
48D	0667817	FITTING PLUG	1		(SUB FOR AT213675)
48E	M800650	PACKING	1		
48F	4506418	O-RING	1		(SUB FOR U46489)
49	0791619	POPPET	1		(SUB FOR TH0791619)
50	0791620	SPRING	1		(SUB FOR TH0791620)
61	4454199	HOUSING	1		(SUB FOR TH4454199)
61A	0667713	FITTING PLUG	1		(SUB FOR AT213660)
61B	4506408	O-RING	1		(SUB FOR TH101490)
73	0791622	BOLT	8		(SUB FOR TH0791622)
74	0695007	FITTING PLUG	1		(SUB FOR AT250518)
74A	CH11570	O-RING	1		
77	0791623	BOLT	22		(SUB FOR TH0791623)
84	0667726	CAP	2		(SUB FOR AT213668)
85	T78313	O-RING	2		

CONTROL VALVE

T158006 -UN-06AUG02

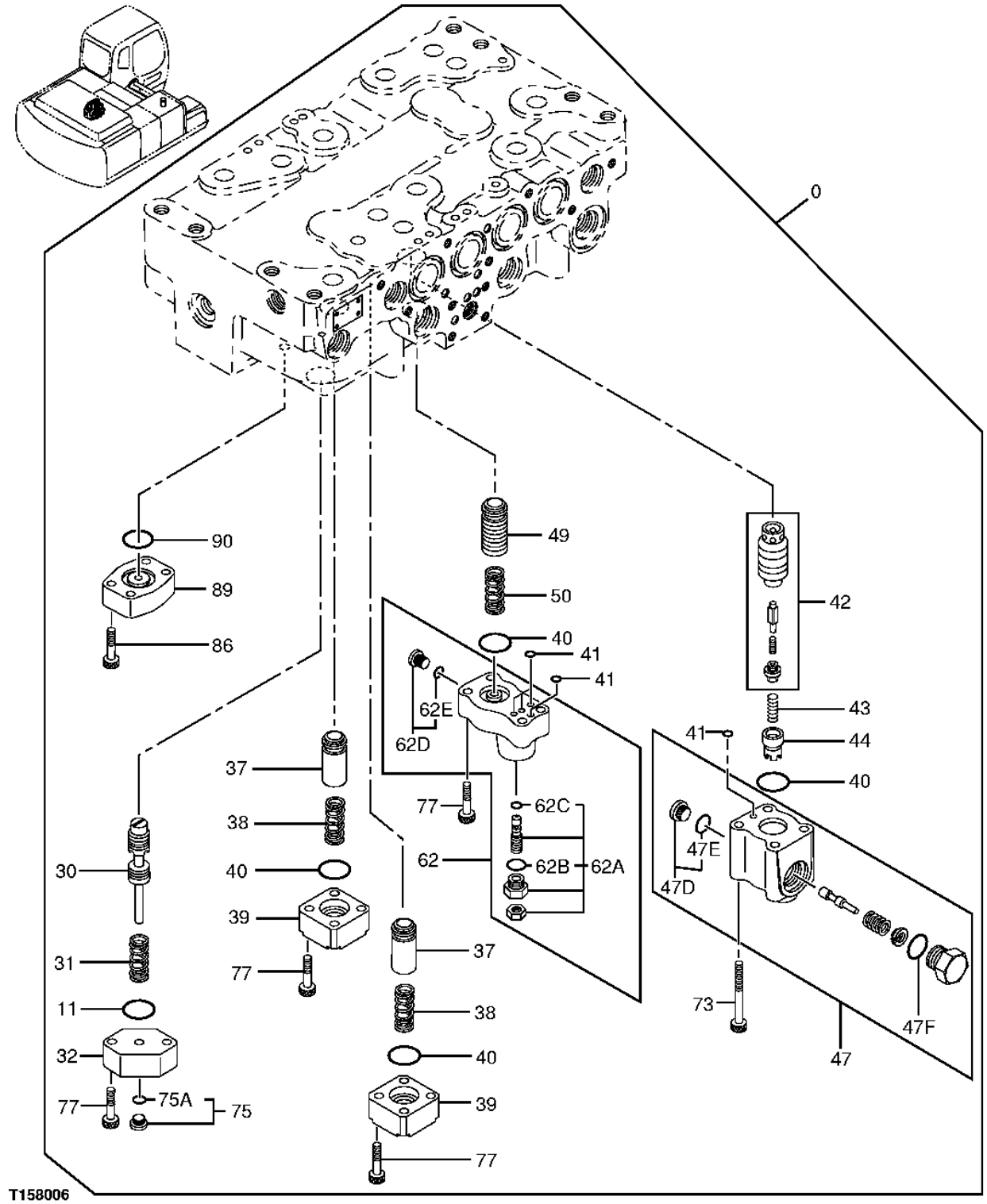

CONTROL VALVE

KEY	PART NO.	PART NAME	QTY	SERIAL NO.	REMARKS
0	4437242	HYD ACTUATED CONTROL VALVE	1		(SUB FOR 4437242EX) COMPONENTS LISTED ON PREVIOUS AND FOLLOWING PAGES)
11	CH17886	PACKING	1		(SUB FOR TH111690) (SUB FOR 4509182)
30	.....	VALVE SPOOL	1		
31	0791701	SPRING	1		(SUB FOR TH0791701)
32	0791702	FLANGE	1		(SUB FOR TH0791702)
37	0791603	POPPET	2		(SUB FOR TH0791603)
38	0791604	SPRING	2		(SUB FOR TH0791604)
39	0791605	FLANGE	2		(SUB FOR TH0791605)
40	985098	O-RING	4		(SUB FOR TH102528)
41	4506406	O-RING	5		(SUB FOR TH104587)
42	4454193	POPPET	1		(SUB FOR TH4454193)
43	0791606	SPRING	1		(SUB FOR TH0791606)
44	0791607	SPACER	1		(SUB FOR TH0791607)
47	4454196	FLOW CONTROL HYD. VALVE	1		
47D	0667817	FITTING PLUG	1		(SUB FOR AT213675)
47E	M800650	PACKING	1		
47F	4506418	O-RING	1		(SUB FOR U46489)
49	0791619	POPPET	1		(SUB FOR TH0791619)
50	0791620	SPRING	1		(SUB FOR TH0791620)
62	4454200	FLOW CONTROL HYD. VALVE	1		
62A	.....	VALVE	1		
62B	M800650	PACKING	1		
62C	4506408	O-RING	1		(SUB FOR TH101490)
62D	0667713	FITTING PLUG	1		(SUB FOR AT213660)
62E	4506408	O-RING	1		(SUB FOR TH101490)
73	0791622	BOLT	4		(SUB FOR TH0791622)
75	0689405	FITTING PLUG	1		(SUB FOR AT250517)
75A	M800650	PACKING	1		
77	0413909	BOLT	14		(SUB FOR AT154619)
86	0413619	BOLT	4		(SUB FOR AT154591)
89	.....	CAP	1		(AT154604 NOT AVAILABLE FOR SERVICE)
90	A4730R	O-RING	1		

CONTROL VALVE

T191710 -UN-01JUL03

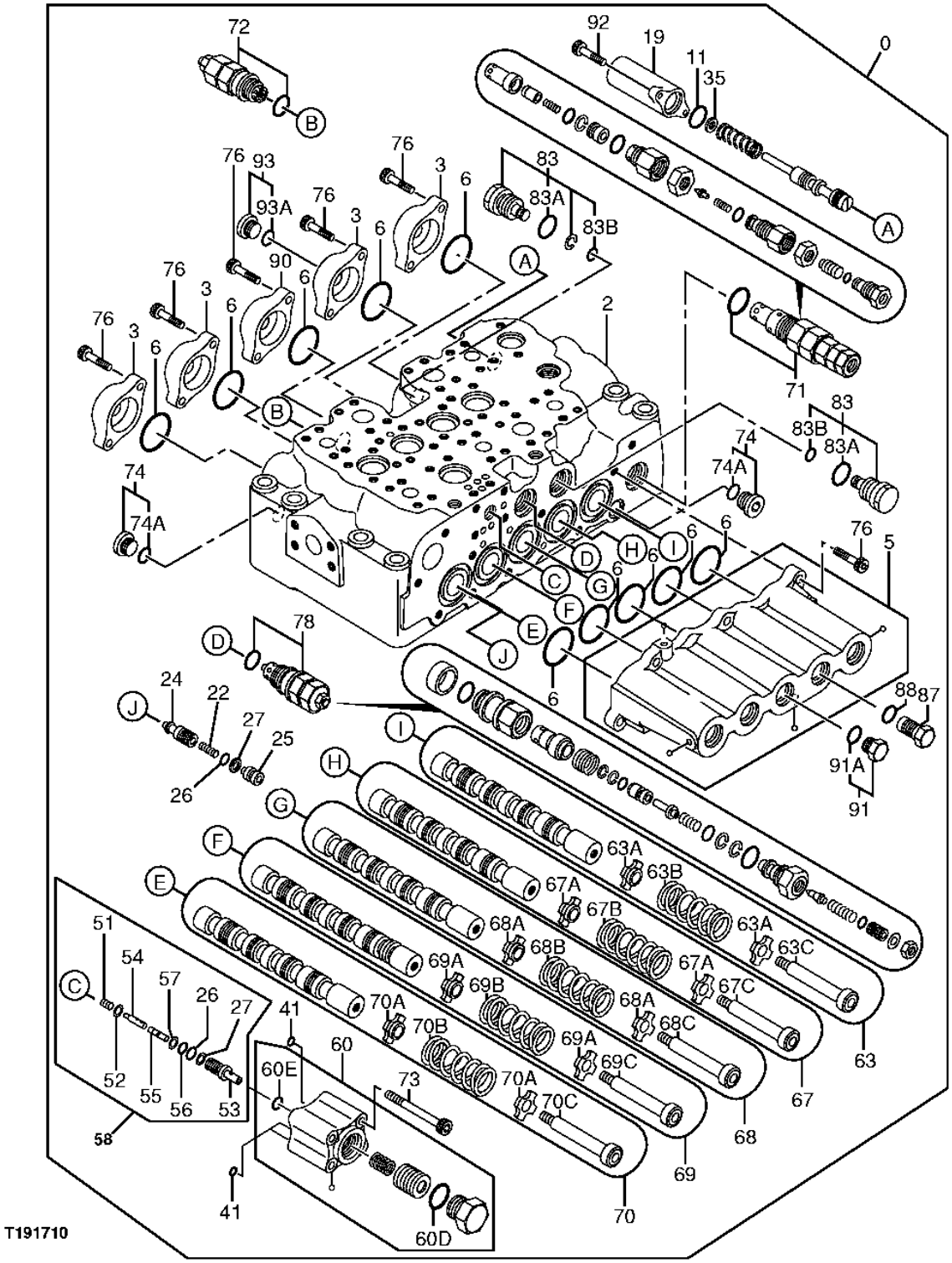

CONTROL VALVE

KEY	PART NO.	PART NAME	QTY	SERIAL NO.	REMARKS
0	4437242	HYD ACTUATED CONTROL VALVE	1		(SUB FOR 4437242EX) (CONTAINS ALL PARTS ON THIS PAGE - ADDITIONAL COMPONENTS LISTED ON PREVIOUS AND FOLLOWING PAGES)
2	.....	HOUSING	1		
3	0791801	CAP	4		(SUB FOR TH0791801)
5	4454202	CAP	1		(SUB FOR TH4454202)
6	A811045	O-RING	10		(SUB FOR T74492)
11	CH17886	PACKING	1		(SUB FOR TH111690) (SUB FOR 4509182)
19	0791803	CAP	1		(SUB FOR TH0791803)
22	0668007	SPRING	1		(SUB FOR AT213693)
24	0791804	POPPET	1		(SUB FOR TH0791804)
25	0791805	SPACER	1		(SUB FOR TH0791805)
26	4317636	O-RING	2		(SUB FOR AT202454)
27	0332924	BACK-UP RING	2		(SUB FOR TH110325)
33	.....	VALVE SPOOL	1		
34	0791806	SPRING	1		(SUB FOR TH0791806)
35	0791807	WASHER	1		(SUB FOR TH0791807)
41	4506406	O-RING	3		(SUB FOR TH104587)
51	0791808	SPRING	1		(SUB FOR TH0791808)
52	0791809	VALVE SEAT	1		(SUB FOR TH0791809)
53	.....	SLEEVE	1		(0791810 NO LONGER AVAILABLE)
54	.....	POPPET	1		(0791811 NO LONGER AVAILABLE)
55	.....	VALVE SPOOL	1		
56	CH11560	PACKING	1		
57	4105067	BACK-UP RING	1		(SUB FOR AT130859)
58	0791818	VALVE	1		(ASSEMBLY)
60	4454198	FLOW CONTROL HYD. VALVE	1		
60D	R29936	O-RING	1		
60E	CH17167	O-RING	1		
63	.....	VALVE SPOOL	1		
63A	0306003	PLUG	2		(SUB FOR TH109968)
63B	0309705	SPRING	1		(SUB FOR TH109970)
63C	0791815	STOP	1		(SUB FOR TH0791815)
67	.....	VALVE SPOOL	1		
67A	0306003	PLUG	2		(SUB FOR TH109968)
67B	0309705	SPRING	1		(SUB FOR TH109970)
67C	0791815	STOP	1		(SUB FOR TH0791815)
68	.....	VALVE SPOOL	1		
68A	0306003	PLUG	2		(SUB FOR TH109968)
68B	0309705	SPRING	1		(SUB FOR TH109970)
68C	0791815	STOP	1		(SUB FOR TH0791815)
69	.....	VALVE SPOOL	1		
69A	0306003	PLUG	2		(SUB FOR TH109968)
69B	0309705	SPRING	1		(SUB FOR TH109970)
69C	0791815	STOP	1		(SUB FOR TH0791815)
70	.....	VALVE SPOOL	1		
70A	0306003	PLUG	2		(SUB FOR TH109968)
70B	0309705	SPRING	1		(SUB FOR TH109970)
70C	0791815	STOP	1		(SUB FOR TH0791815)
71	4381811	RELIEF VALVE	1		(SUB FOR AT217834)
72	4372039	RELIEF VALVE	1		(SUB FOR AT214285)
73	0791622	BOLT	4		(SUB FOR TH0791622)
74	0695007	FITTING PLUG	2		(SUB FOR AT250518)
74A	CH11570	O-RING	1		
76	0459541	BOLT	16		(SUB FOR AT200931)
78	4358914	RELIEF VALVE	1		(SUB FOR AT213982)
83	0667927	FITTING PLUG	2		(SUB FOR AT213687)
83A	U12547	O-RING	1		
83B	4154207	O-RING	1		
87	0667931	FITTING PLUG	1		(SUB FOR AT213691)
88	CH11570	O-RING	1		
90	0791816	CAP	1		(SUB FOR TH0791816)
91	0332914	DRAIN PLUG	1		(SUB FOR TH110003)
91A	CH11570	O-RING	1		
92	12M7006	LOCK WASHER	2		(SUB FOR AT200303)
93	0218607	PIPE PLUG	1		(SUB FOR TH109998)
93A	CH11570	O-RING	1		

CONTROL VALVE

T191713 -UN-01JUL03

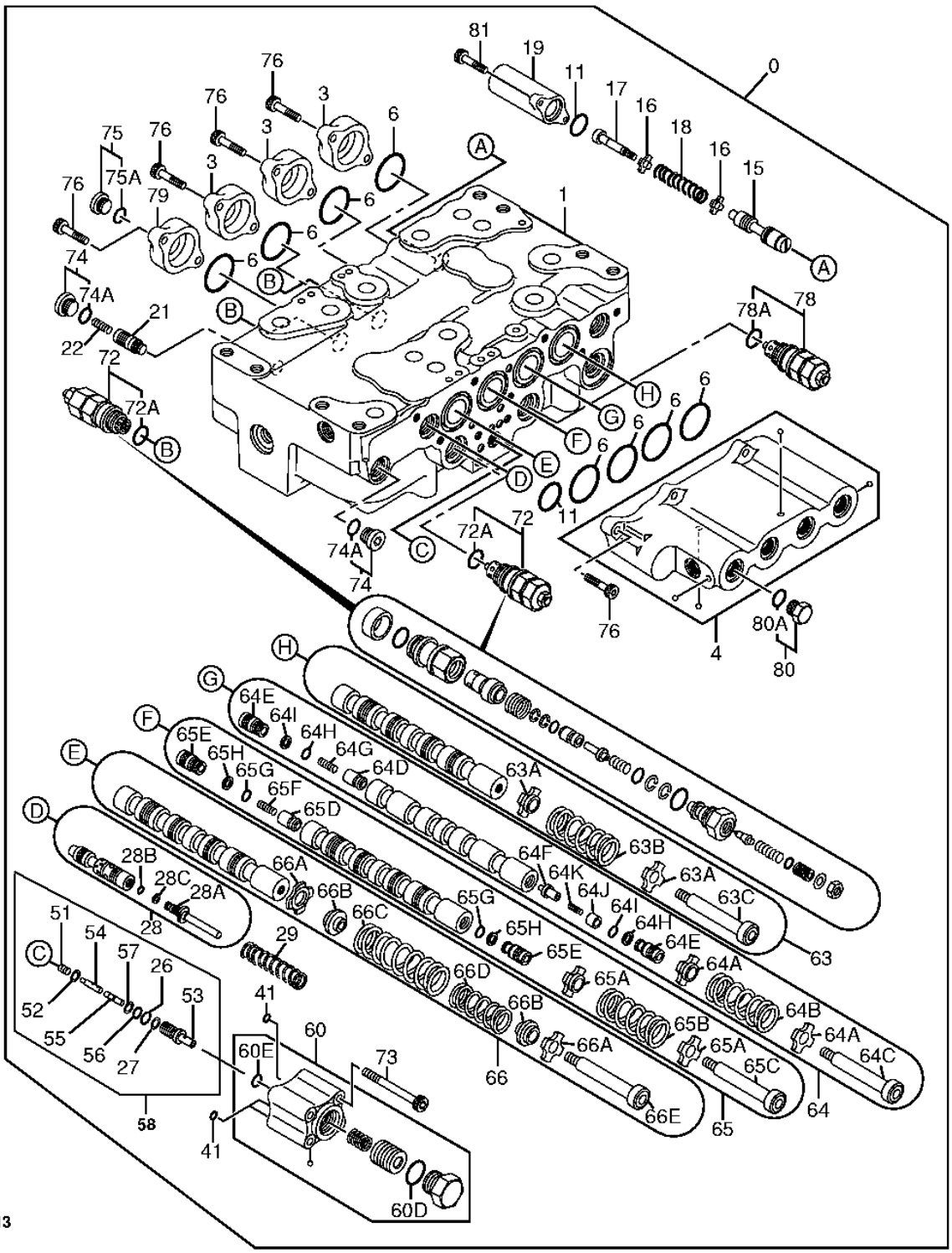

T191713

CONTROL VALVE

KEY	PART NO.	PART NAME	QTY	SERIAL NO.	REMARKS
0	4437242	HYD ACTUATED CONTROL VALVE	1		(SUB FOR 4437242EX) (CONTAINS ALL PARTS ON THIS PAGE - ADDITIONAL COMPONENTS LISTED ON PREVIOUS AND FOLLOWING PAGES)
1	.....	HOUSING	1		
3	0791801	CAP	3		(SUB FOR TH0791801)
4	4454201	CAP	1		(SUB FOR TH4454201)
6	A811045	O-RING	8		(SUB FOR T74492)
11	CH17886	PACKING	2		(SUB FOR TH111690) (SUB FOR 4509182)
15	.....	VALVE SPOOL	1		
16	0332904	RETAINER	2		(SUB FOR TH110305)
17	0735807	SPOOL	1		(SUB FOR TH0735807)
18	0791902	SPRING	1		(SUB FOR TH0791902)
19	0791803	CAP	1		(SUB FOR TH0791803)
21	0791903	POPPET	1		(SUB FOR TH0791903)
22	0668007	SPRING	1		(SUB FOR AT213693)
26	4317636	O-RING	1		(SUB FOR AT202454)
27	0332924	BACK-UP RING	1		(SUB FOR TH110325)
28	.....	VALVE SPOOL	1		
28A	0791904	SPACER	1		(SUB FOR TH0791904)
28B	4013748	O-RING	1		(SUB FOR TH4013748)
28C	0250914	BACK-UP RING	1		(SUB FOR AT218048)
29	0791914	SPRING	1		(SUB FOR TH0791914)
41	4506406	O-RING	3		(SUB FOR TH104587)
51	0791808	SPRING	1		(SUB FOR TH0791808)
52	0791809	VALVE SEAT	1		(SUB FOR TH0791809)
53	.....	SLEEVE	1		(0791810 NO LONGER AVAILABLE)
54	.....	POPPET	1		(0791811 NO LONGER AVAILABLE)
55	.....	VALVE SPOOL	1		
56	CH11560	PACKING	1		
57	4105067	BACK-UP RING	1		(SUB FOR AT130859)
58	0791818	VALVE	1		(ASSEMBLY)
60	4454198	FLOW CONTROL HYD. VALVE	1		
60D	R29936	O-RING	1		
60E	CH17167	O-RING	1		
63	.....	VALVE SPOOL	1		
63A	0306003	PLUG	2		(SUB FOR TH109968)
63B	0309705	SPRING	1		(SUB FOR TH109970)
63C	0791815	STOP	1		(SUB FOR TH0791815)
64	.....	VALVE SPOOL	1		
64A	0306003	PLUG	2		(SUB FOR TH109968)
64B	0309705	SPRING	1		(SUB FOR TH109970)
64C	0791815	STOP	1		(SUB FOR TH0791815)
64D	0791905	POPPET	1		(SUB FOR TH0791905)
64E	0791906	PIPE PLUG	2		(SUB FOR TH0791906)
64F	0791907	POPPET	1		(SUB FOR TH0791907)
64G	0668007	SPRING	1		(SUB FOR AT213693)
64H	4317636	O-RING	2		(SUB FOR AT202454)
64I	0332924	BACK-UP RING	2		(SUB FOR TH110325)
64J	.....	SLEEVE	1		(SUB FOR TH0791908) (0791908 NO LONGER AVAILABLE)
64K	.....	SPRING	1		(SUB FOR TH0791909) (0791909 NO LONGER AVAILABLE)

CONTROL VALVE

T147707 -UN-07JAN02

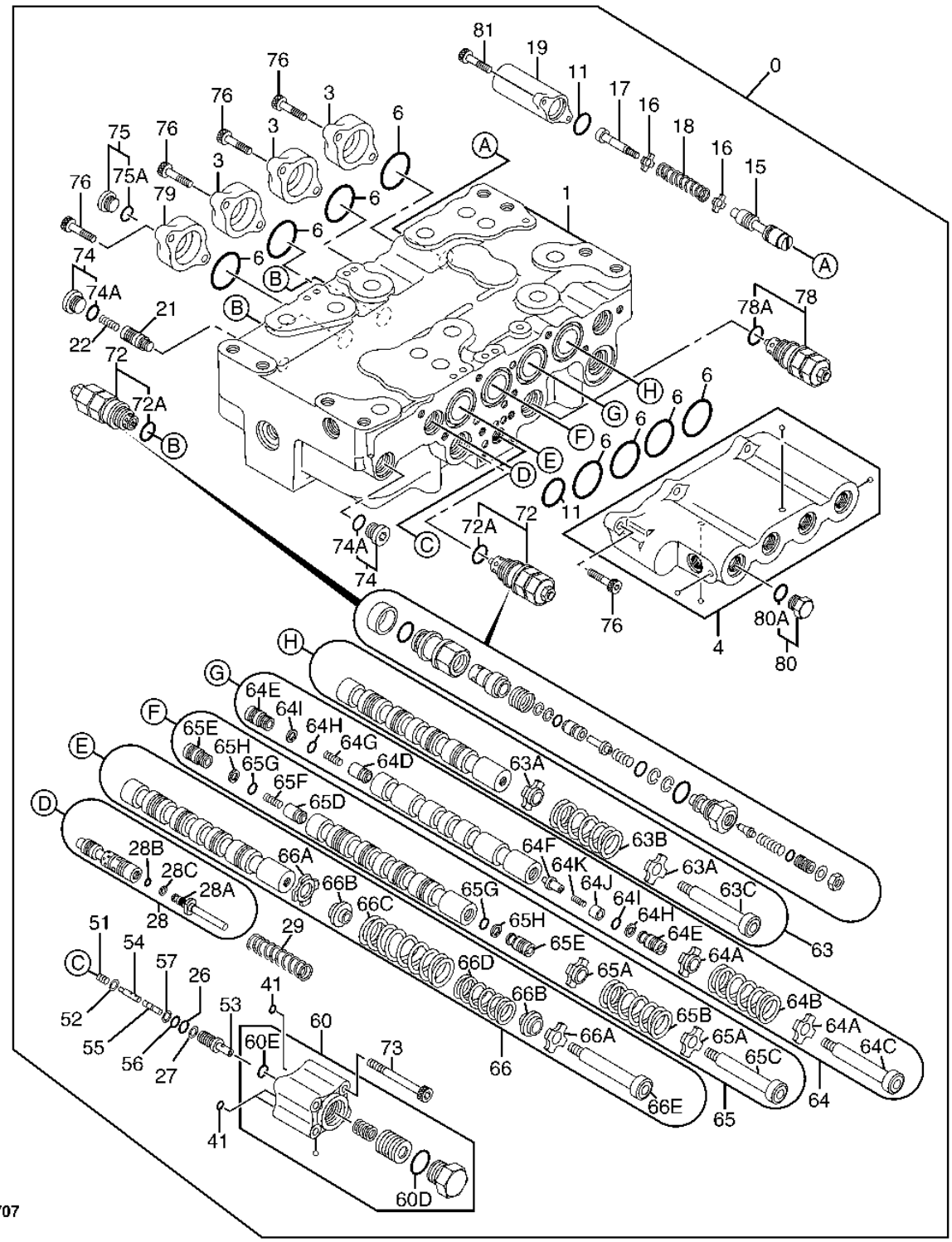

CONTROL VALVE

KEY	PART NO.	PART NAME	QTY	SERIAL NO.	REMARKS
0	4437242	HYD ACTUATED CONTROL VALVE	1		(SUB FOR 4437242EX) (CONTAINS ALL PARTS ON THIS PAGE - ADDITIONAL COMPONENTS LISTED ON PREVIOUS AND FOLLOWING PAGES)
65A	0306003	PLUG	2		(SUB FOR TH109968)
65B	0309705	SPRING	1		(SUB FOR TH109970)
65C	0791815	STOP	1		(SUB FOR TH0791815)
65D	0791905	POPPET	1		(SUB FOR TH0791905)
65E	0791906	PIPE PLUG	2		(SUB FOR TH0791906)
65F	0668007	SPRING	1		(SUB FOR AT213693)
65G	4317636	O-RING	2		(SUB FOR AT202454)
65H	0332924	BACK-UP RING	2		(SUB FOR TH110325)
66	.....	VALVE SPOOL	1		
66A	0791910	VALVE SEAT	2		(SUB FOR TH0791910)
66B	0791911	VALVE SEAT	2		(SUB FOR TH0791911)
66C	0791912	SPRING	1		(SUB FOR TH0791912)
66D	0791913	SPRING	1		(SUB FOR TH0791913)
66E	0791815	STOP	1		(SUB FOR TH0791815)
72	4372039	RELIEF VALVE	3		(SUB FOR AT214285)
73	0791622	BOLT	4		(SUB FOR TH0791622)
74	0695007	FITTING PLUG	2		(SUB FOR AT250518)
74A	CH11570	O-RING	1		
75	0689405	FITTING PLUG	1		(SUB FOR AT250517)
75A	M800650	PACKING	1		
76	0459541	BOLT	14		(SUB FOR AT200931)
78	4358914	RELIEF VALVE	1		(SUB FOR AT213982)
79	0791816	CAP	1		(SUB FOR TH0791816)
80	0332914	DRAIN PLUG	1		(SUB FOR TH110315)
80A	CH11570	O-RING	1		
81	19M7603	SCREW	2		M6 X 20
	12M7006	LOCK WASHER	2		6 MM
	24M7105	WASHER	2		6 X 12 X 1.600 MM

CONTROL VALVE

T147708 -UN-03DEC01

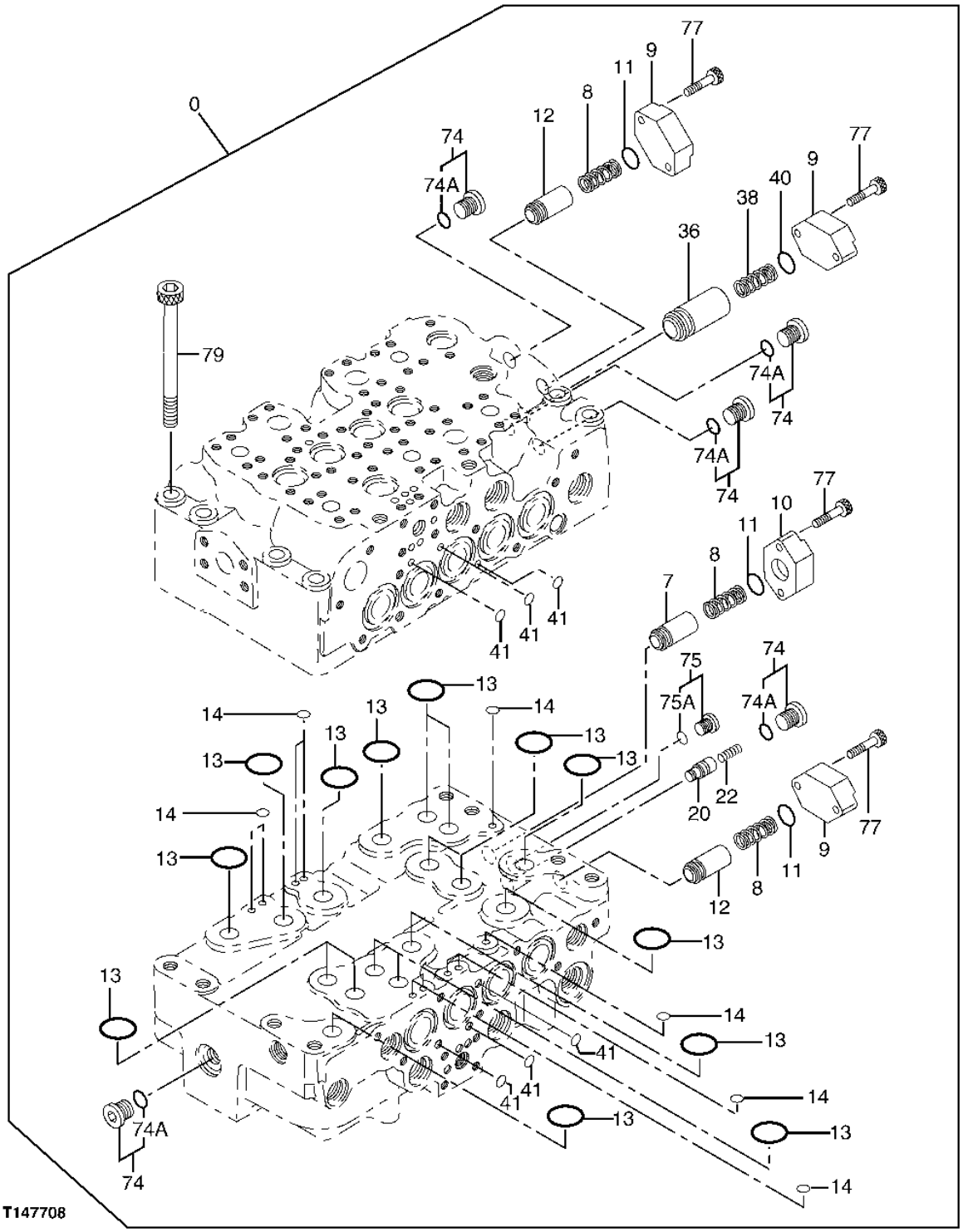

CONTROL VALVE

KEY	PART NO.	PART NAME	QTY	SERIAL NO.	REMARKS
0	4437242	HYD ACTUATED CONTROL VALVE	1		(SUB FOR 4437242EX) (CONTAINS ALL PARTS ON THIS PAGE - ADDITIONAL COMPONENTS LISTED ON PREVIOUS PAGES)
7	0668111	POPPET	1		(SUB FOR AT213700)
8	0668112	SPRING	3		(SUB FOR AT213701)
9	0791601	FLANGE	3		(SUB FOR TH0791601)
10	0792001	FLANGE	1		(SUB FOR TH0792001)
11	CH17886	PACKING	3		(SUB FOR TH111690) (SUB FOR 4509182)
12	0792002	POPPET	2		(SUB FOR TH0792002)
13	0792003	O-RING	16		(SUB FOR TH0792003)
14	0792004	O-RING	10		(SUB FOR TH0792004)
20	0792005	POPPET	1		(SUB FOR TH0792005)
22	0668007	SPRING	1		(SUB FOR AT213693)
36	0792006	POPPET	1		(SUB FOR TH0792006)
38	0791604	SPRING	1		(SUB FOR TH0791604)
40	985098	O-RING	1		(SUB FOR TH102528)
41	4506406	O-RING	6		(SUB FOR TH104587)
74	0695007	FITTING PLUG	5		(SUB FOR AT250518)
74A	CH11570	O-RING	1		
75	0689405	FITTING PLUG	1		(SUB FOR AT250517)
75A	M800650	PACKING	1		
77	0413909	BOLT	8		(SUB FOR AT154619)
79	0792007	BOLT	8		(SUB FOR TH0792007)

LOCK VALVE

T147718 -UN-03DEC01

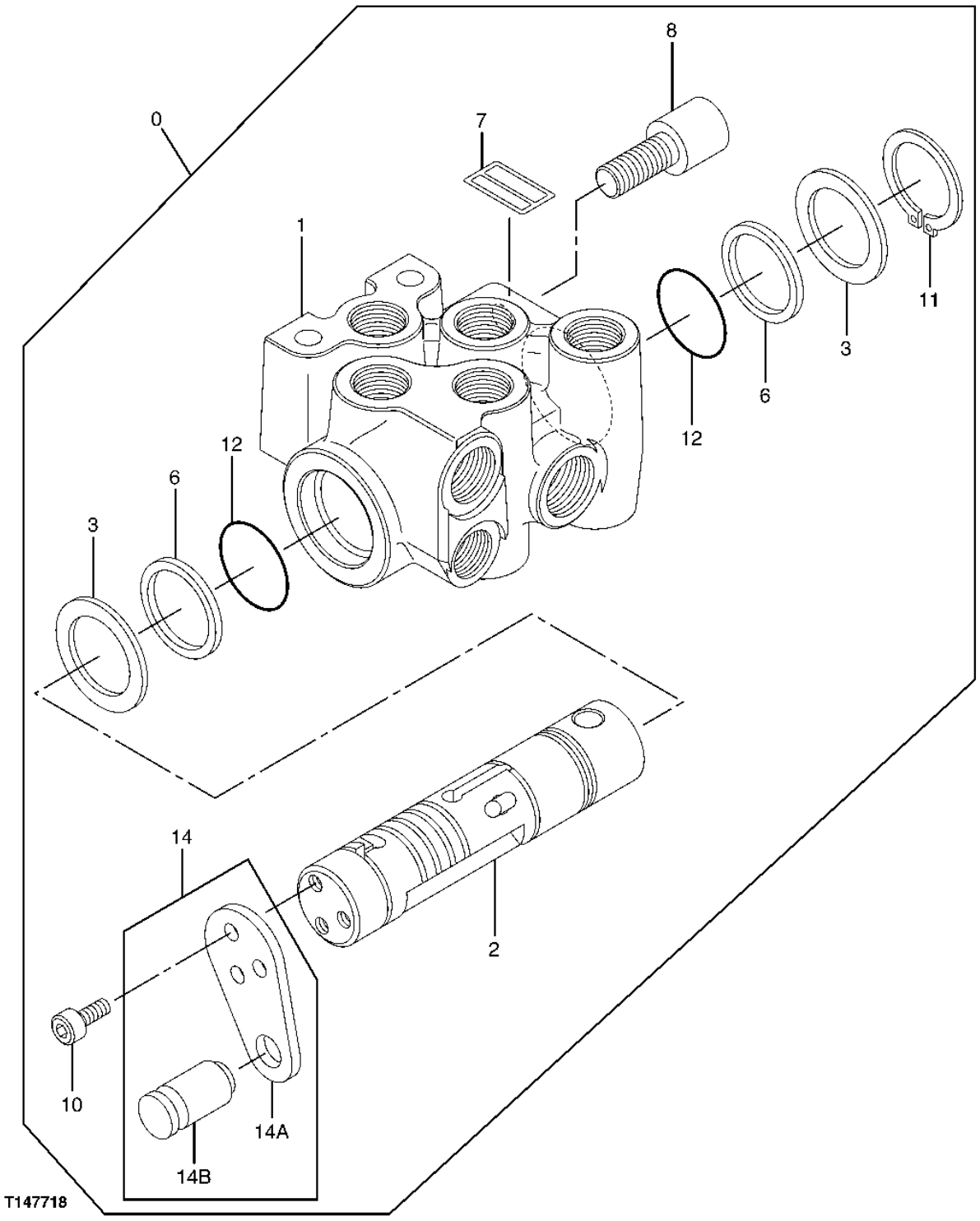

LOCK VALVE

KEY	PART NO.	PART NAME	QTY	SERIAL NO.	REMARKS
0	4407253	FLOW CONTROL HYD. VALVE	1		
1	.....	HOUSING	1		
2	.....	SPOOL VALVE	1		
3	0794201	WASHER	2		(SUB FOR TH0794201)
6	0794202	RING	2		(SUB FOR TH0794202)
7	.....	IDENTIFICATION PLATE	1		
8	0794203	PIN FASTENER	1		(SUB FOR TH0794203)
10	0794204	BOLT	3		(SUB FOR TH0794204)
11	0794205	SNAP RING	1		(SUB FOR TH0794205)
12	0794206	O-RING	2		(SUB FOR TH0794206)
14	0794207	BRACKET	1		(SUB FOR TH0794207)
14A	.....	BRACKET	1		
14B	.....	PIN	1		

SELECTOR VALVE

T198356 -UN-09MAR04

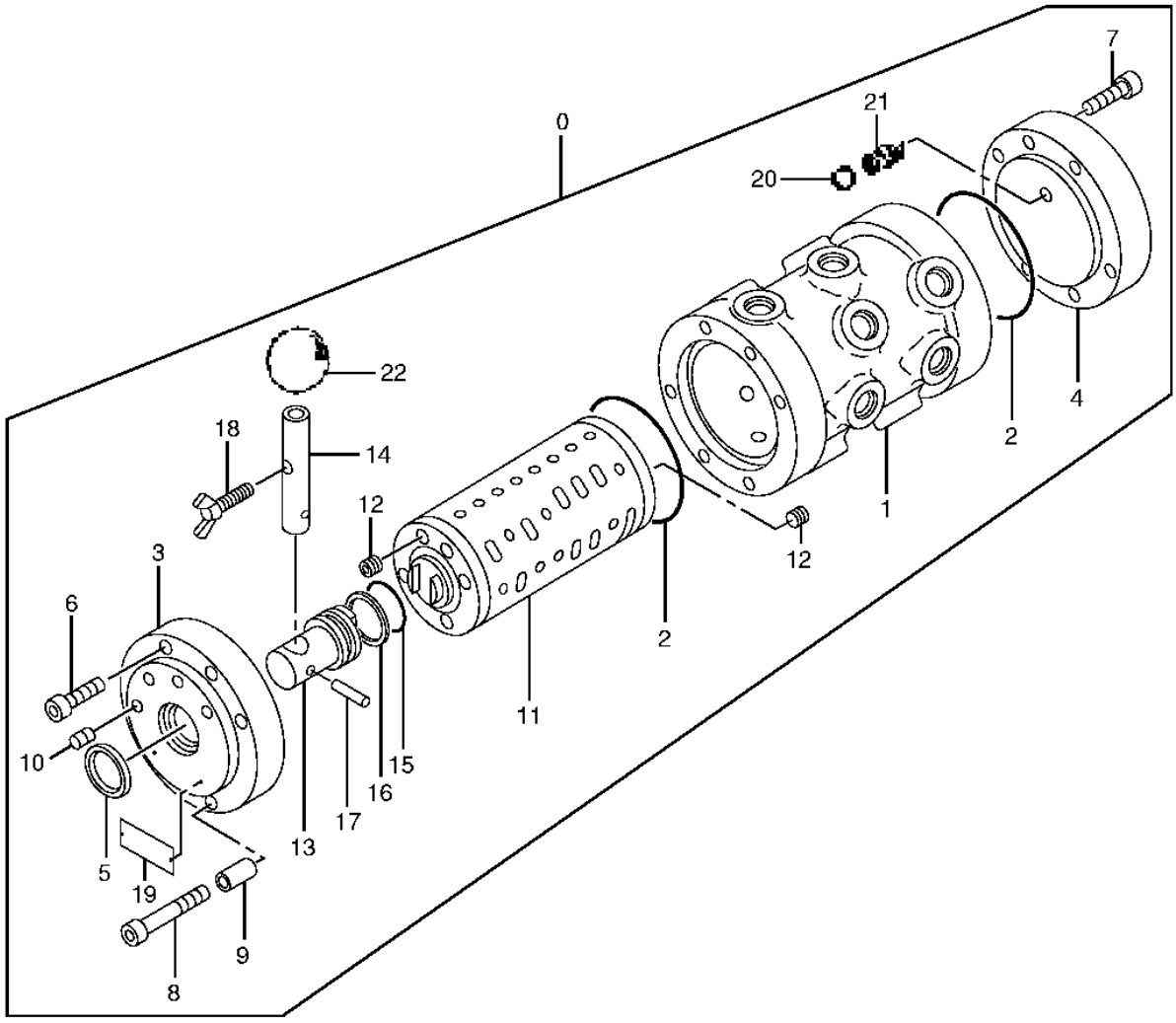

T198356

SELECTOR VALVE

KEY	PART NO.	PART NAME	QTY	SERIAL NO.	REMARKS
0	TH4447276	SELECTIVE CONTROL VALVE	1		
1	.....	CASE	1		
2	CH17160	PACKING	2		(SUB FOR A811080)
3	0824002	COVER	1		
4	0824003	COVER	1		
5	.....	SEAL	1		
6	0210718	SOCKET HEAD SCREW	4		
7	19M7660	SCREW	6		M8 X 20, (SUB FOR 0130519 OR 0134608)
8	0265201	BOLT	2		
9	0672707	SPACER	2		
10	0672708	INSERT	4		
11	.....	SPOOL VALVE	1		
12	0313107	BOLT	8		
13	0672709	PIN	1		
14	0672710	LEVER	1		
15	AT264347	O-RING	1		(SUB FOR TH100136, 4506428)
16	4044839	BACK-UP RING	1		(SUB FOR TH103457)
17	4051262	SPRING PIN	1		(SUB FOR AT213796)
18	M360830	BOLT	1		(SUB FOR 0672703)
19	.....	IDENTIFICATION PLATE	1		
20	0451104	BALL	1		
21	0672701	SPRING	1		
22	0824004	KNOB	1		

SOLENOID VALVE (SERIAL NO. -071103)

T148053 -UN-08NOV01

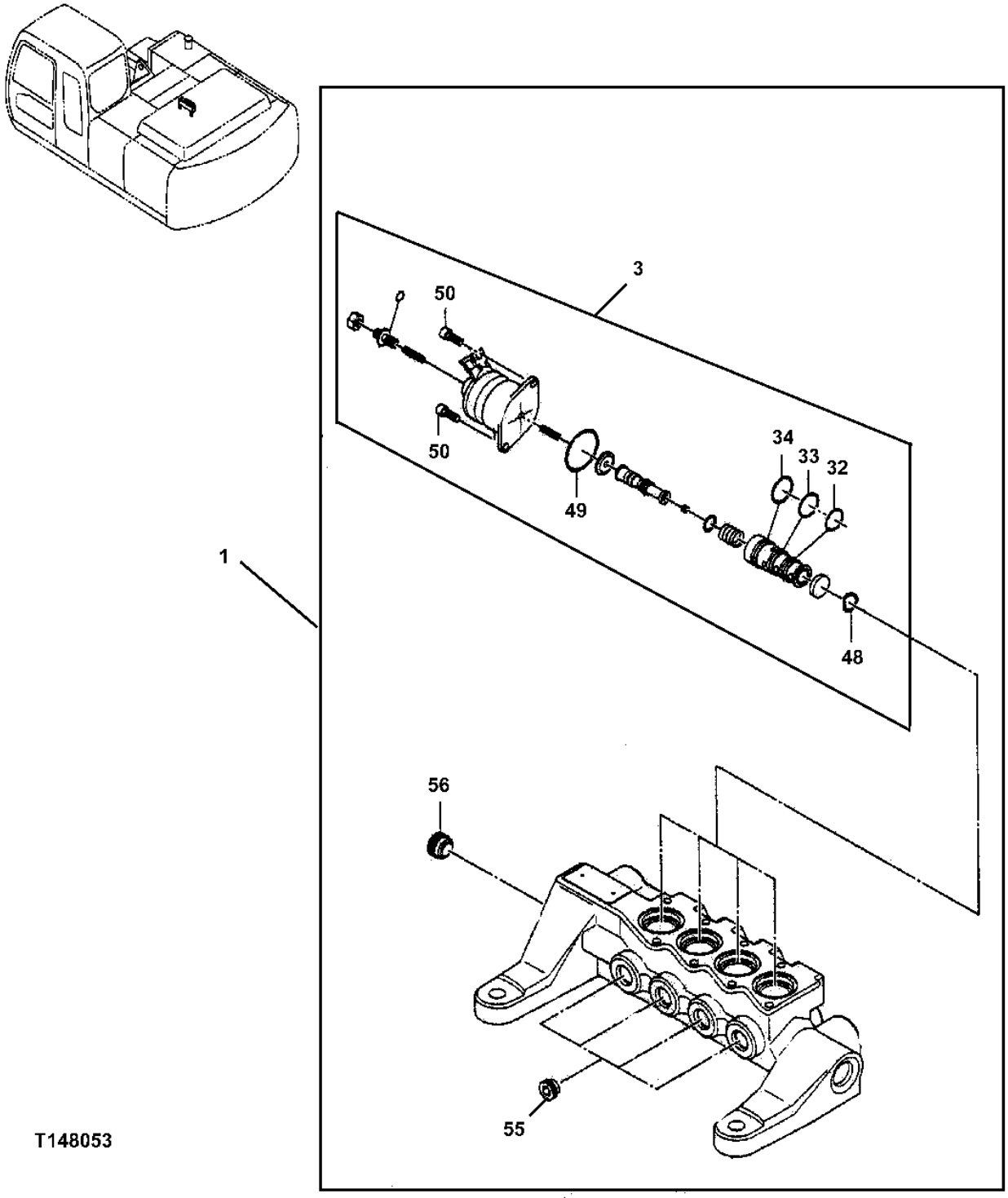

SOLENOID VALVE (SERIAL NO. -071103)

KEY	PART NO.	PART NAME	QTY	SERIAL NO.	REMARKS
1	.....	SOLENOID VALVE	1		(4480966 NO LONGER AVAILABLE - ORDER 9218270) (SUB FOR 4400477)
2	9218270	SOLENOID VALVE	1		(COMPLETE) (NOT ILLUSTRATED) (SUB FOR 4480966)
3	4455991	SOLENOID VALVE	4		(SUB FOR TH4455991)
32	4185600	O-RING	1		(SUB FOR AT153902)
33	R99052	O-RING	1		14.800 X 1.900 MM (0.583" X 0.075")
34	0408411	O-RING	1		16.800 X 1.900 MM (0.661" X 0.075") (SUB FOR AT153904)
48	4455990	WASHER	1		(SUB FOR TH4455990)
49	4455989	SEAL	1		(SUB FOR TH4455989)
50	0387804	SCREW	2		(SUB FOR AT215661)
55	9761179	FILTER	4		(SUB FOR TH4455986 OR 4455986)
56	4455987	PIPE PLUG	1		(SUB FOR TH4455987)

SOLENOID VALVE (SERIAL NO. 071104-)

T196767 -UN-16DEC03

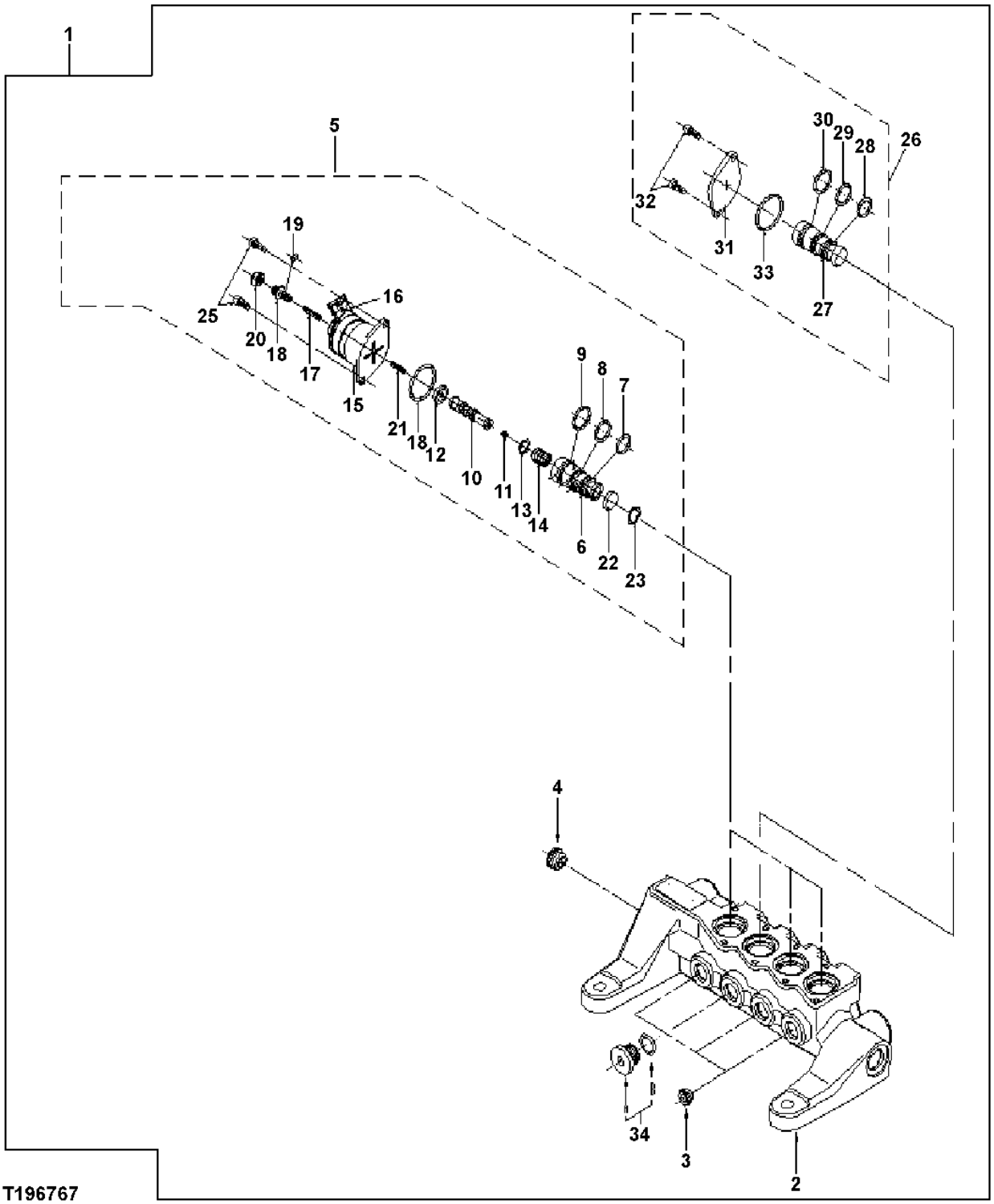

SOLENOID VALVE (SERIAL NO. 071104-)

KEY	PART NO.	PART NAME	QTY	SERIAL NO.	REMARKS
1	9223890	SOLENOID VALVE	1		
2	1031069	HOUSING	1		
3	.....	PLUG	3		
4	4487536	PLUG	1		
5	9218234	SOLENOID VALVE	3		
6	.....	SLEEVE	1		
7	4185600	O-RING	1		
8	R99052	O-RING	1		
9	0408411	O-RING	1		
10	.....	SPOOL	1		
11	.....	ORIFICE	1		
12	.....	DIAPHRAGM	1		
13	.....	WASHER	1		
14	.....	SPRING	1		
15	.....	SOLENOID	1		
16	.....	SOCKET	1		
17	.....	SPRING	1		
18	.....	SCREW	1		
19	.....	O-RING	1		
20	.....	NUT	1		
21	.....	SPRING	1		
22	.....	PLATE	1		
23	4489678	WASHER	1		
24	0670802	O-RING	1		
25	M340513	BOLT	2		
26	9223892	SLEEVE	1		
27	3095747	SLEEVE	1		
28	4185600	O-RING	1		
29	4484118	O-RING	1		
30	4484116	O-RING	1		
31	4484115	PLATE	1		
32	M340513	BOLT	2		
33	0670802	O-RING	1		
34	3097791	PLUG	1		

SOLENOID VALVE

T147712 -UN-03DEC01

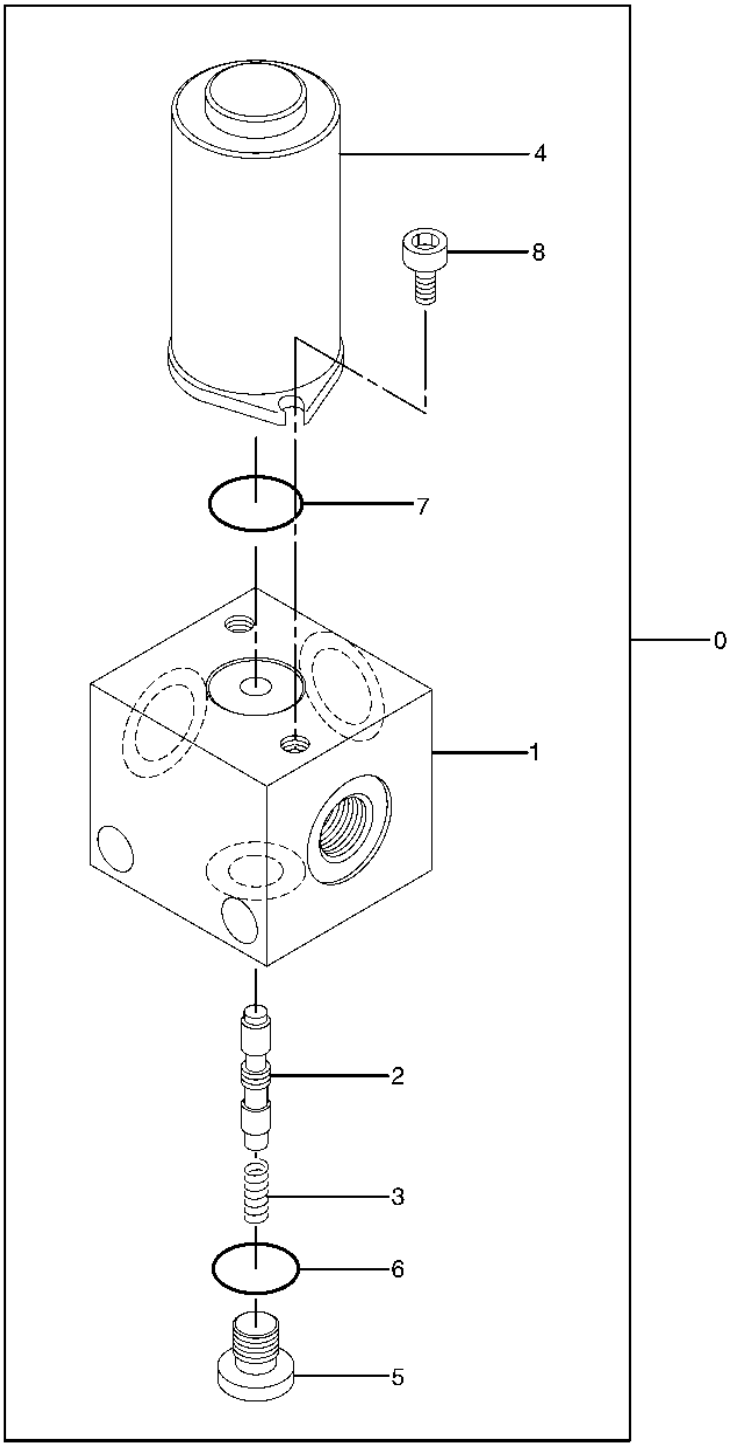

T147712

SOLENOID VALVE

KEY	PART NO.	PART NAME	QTY	SERIAL NO.	REMARKS
0	4261289	SOLENOID VALVE	1		(SUB FOR AT202111)
1	.....	HOUSING	1		
2	.....	SPOOL VALVE	1		
3	0444301	SPRING	1		(SUB FOR AT200231)
4	0444302	SOLENOID	1		(SUB FOR AT200232)
5	0215220	FITTING PLUG	1		(SUB FOR TH101485)
6	4506408	O-RING	1		(SUB FOR TH101490)
7	P50883	RING	1		
8	19M7887	SCREW	2		M5 X 10

PILOT SIGNAL MANIFOLD (HOUSING AND GASKETS)

T153960 -UN-16APR02

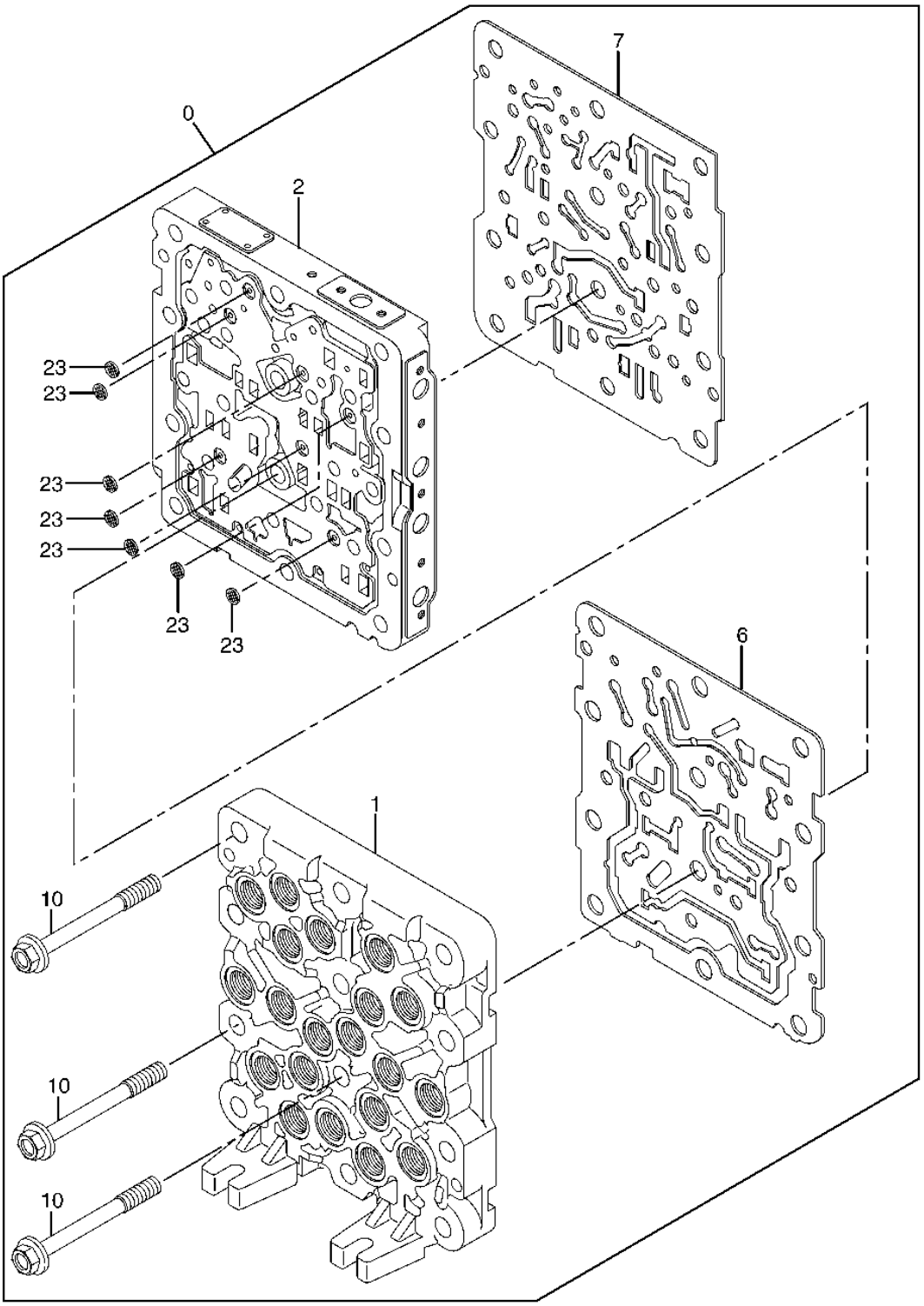

PILOT SIGNAL MANIFOLD (HOUSING AND GASKETS)

KEY	PART NO.	PART NAME	QTY	SERIAL NO.	REMARKS
0	4468337	FLOW CONTROL HYD. VALVE	1	-071103	(ADDITIONAL COMPONENTS LISTED ON FOLLOWING PAGES)
	4486321	VALVE	1	071104-	(ADDITIONAL COMPONENTS LISTED ON FOLLOWING PAGES)
1	.....	HOUSING	1		
2	.....	HOUSING	1		
6	.....	GASKET	1		
7	.....	GASKET	1		
10	.....	BOLSTER	12		
23	.....	FILTER	7		

PILOT SIGNAL MANIFOLD (VALVE SECTION)

T153961 -UN-16APR02

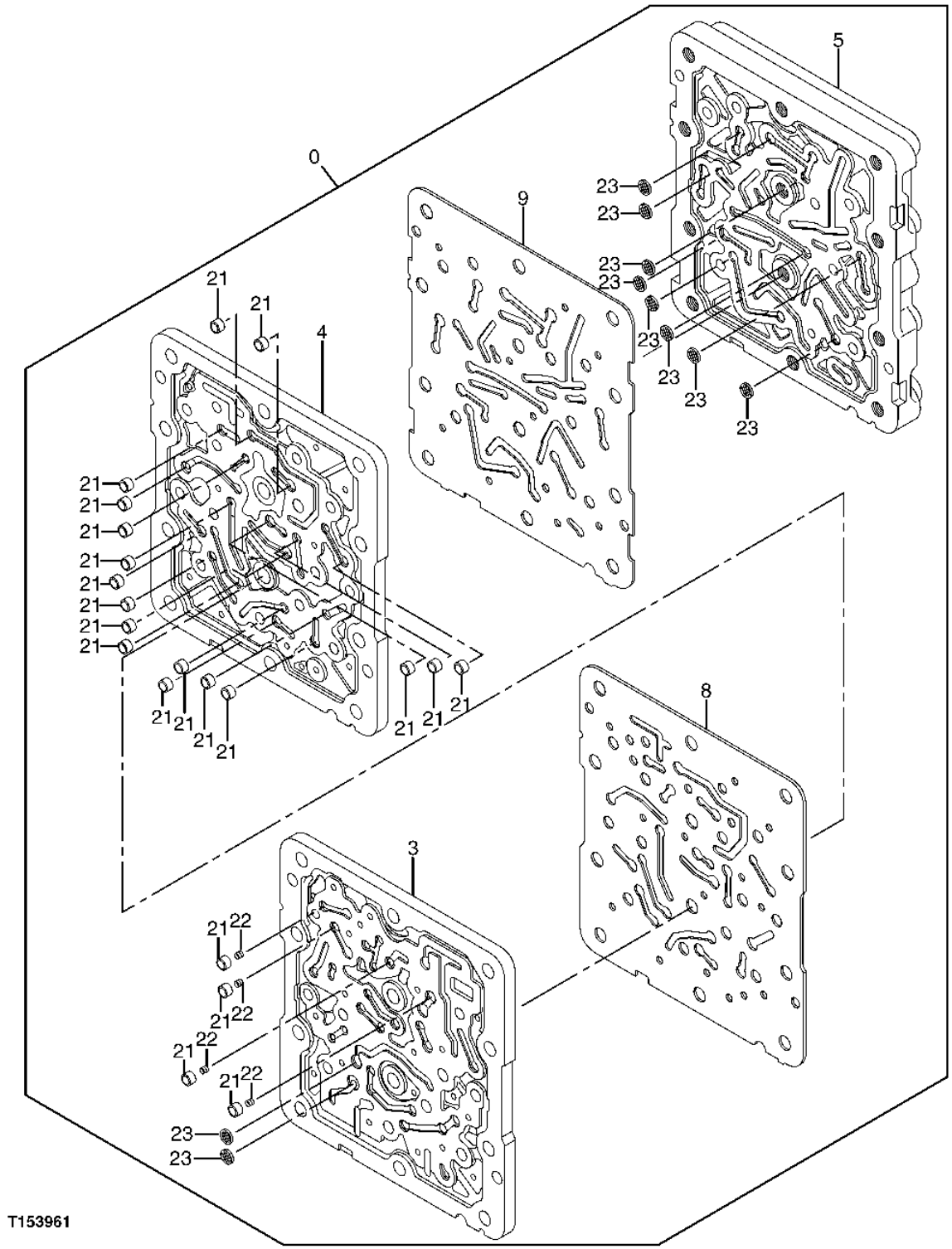

PILOT SIGNAL MANIFOLD (VALVE SECTION)

KEY	PART NO.	PART NAME	QTY	SERIAL NO.	REMARKS
0	4468337	FLOW CONTROL HYD. VALVE	1	-071103	(CONTAINS ALL PARTS ON THIS PAGE - ADDITIONAL COMPONENTS LISTED ON FOLLOWING PAGES)
	4486321	VALVE	1	071104-	(CONTAINS ALL PARTS ON THIS PAGE - ADDITIONAL COMPONENTS LISTED ON FOLLOWING PAGES)
3	.....	HOUSING	1		
4	.....	HOUSING	1		
5	.....	HOUSING	1		
8	.....	GASKET	1		
9	.....	GASKET	1		
21	.....	SLEEVE	21		
22	.....	SPRING	4		
23	.....	FILTER	10		

PILOT SIGNAL MANIFOLD (PILOT CONTROLLER SIDE)

T153964 -UN-16APR02

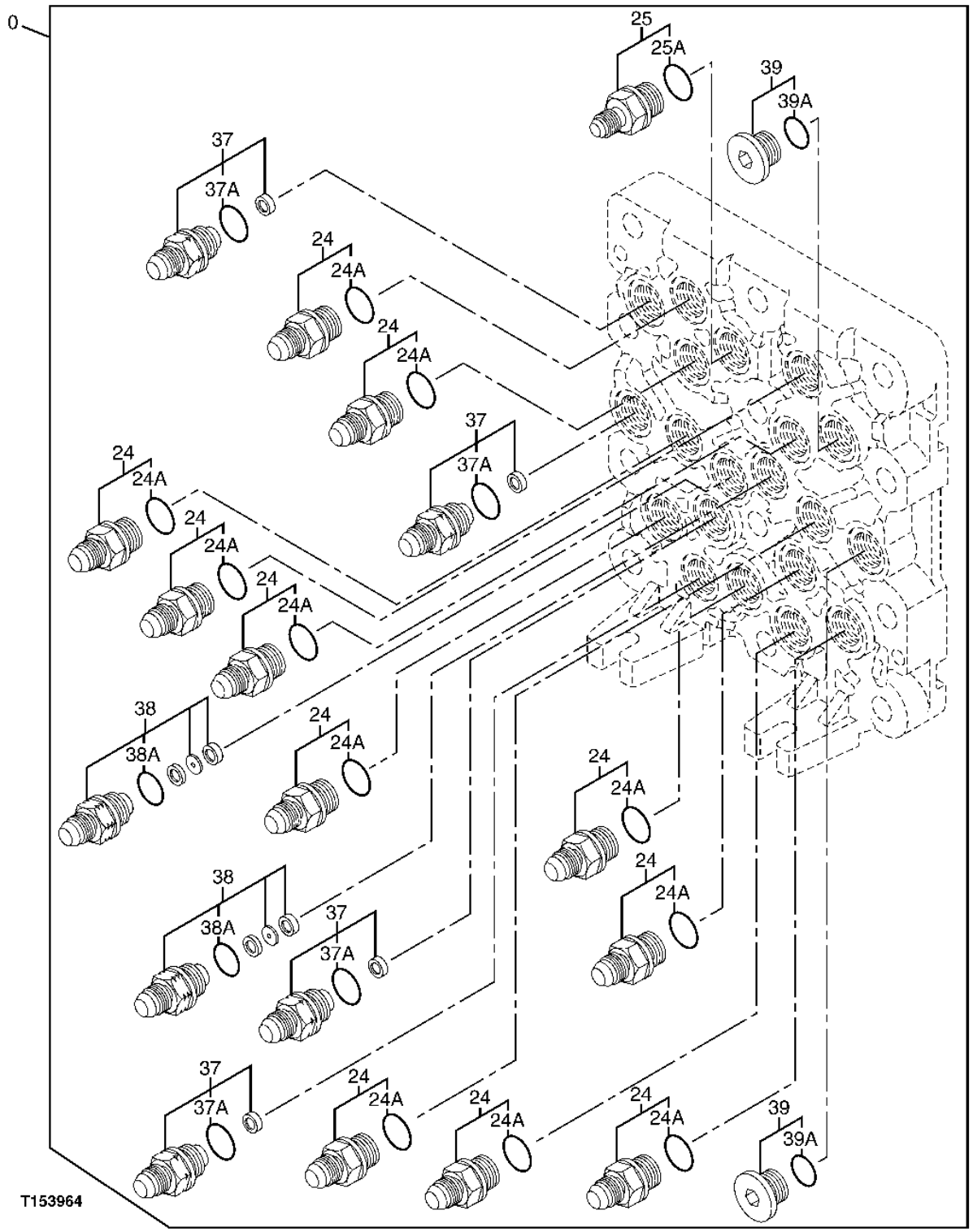

PILOT SIGNAL MANIFOLD (PILOT CONTROLLER SIDE)

KEY	PART NO.	PART NAME	QTY	SERIAL NO.	REMARKS
0	4468337	FLOW CONTROL HYD. VALVE	1	-071103	(CONTAINS ALL PARTS ON THIS PAGE - ADDITIONAL COMPONENTS LISTED ON PREVIOUS AND FOLLOWING PAGES)
	4486321	VALVE	1	071104-	(CONTAINS ALL PARTS ON THIS PAGE - ADDITIONAL COMPONENTS LISTED ON PREVIOUS AND FOLLOWING PAGES)
24	4451784	ADAPTER	11		(SUB FOR TH4451784)
24A	CH11570	O-RING	1		
25	4451785	ADAPTER	1		(SUB FOR TH4451785)
25A	CH11570	O-RING	1		
37	4451787	ADAPTER	4		(SUB FOR TH4451787)
37A	CH11570	O-RING	1		
38	4482233	ADAPTER	2		(SUB FOR TH4451788 OR 4451788)
38A	CH11570	O-RING	1		
39	4451789	PIPE PLUG	2		(SUB FOR TH4451789)
39A	CH11570	O-RING	1		

PILOT SIGNAL MANIFOLD (CONTROL VALVE SIDE)
(SERIAL NUMBER -071103)

T153963 -UN-16APR02

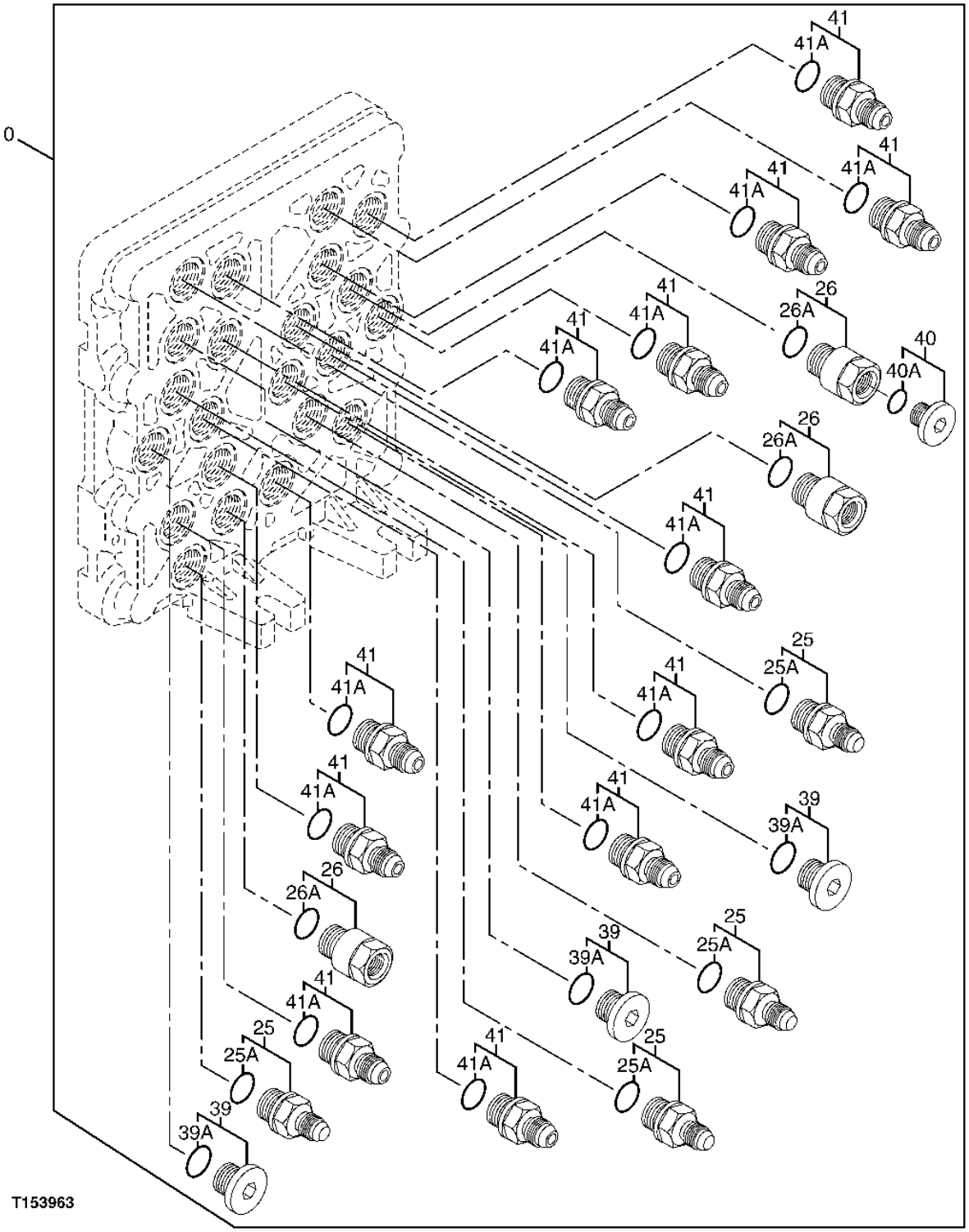

PILOT SIGNAL MANIFOLD (CONTROL VALVE SIDE)
(SERIAL NUMBER -071103)

KEY	PART NO.	PART NAME	QTY	SERIAL NO.	REMARKS
0	4468337	FLOW CONTROL HYD. VALVE	1		(CONTAINS ALL PARTS ON THIS PAGE -ADDITIONAL COMPONENTS LISTED ON PREVIOUS AND FOLLOWING PAGES)
25	4451785	ADAPTER	4		(SUB FOR TH4451785)
25A	CH11570	O-RING	1		
26	4451786	REDUCER	3		(SUB FOR TH4451786)
26A	CH11570	O-RING	1		
39	4451789	PIPE PLUG	3		(SUB FOR TH4451789)
39A	CH11570	O-RING	1		
40	4451790	PIPE PLUG	1		(SUB FOR TH4451790)
40A	M800650	PACKING	1		
41	4451797	ADAPTER	12		(SUB FOR TH4451797)
41A	CH11570	O-RING	1		

PILOT SIGNAL MANIFOLD (CONTROL VALVE SIDE)
(SERIAL NUMBER 071104-)

T164848 -UN-31JAN03

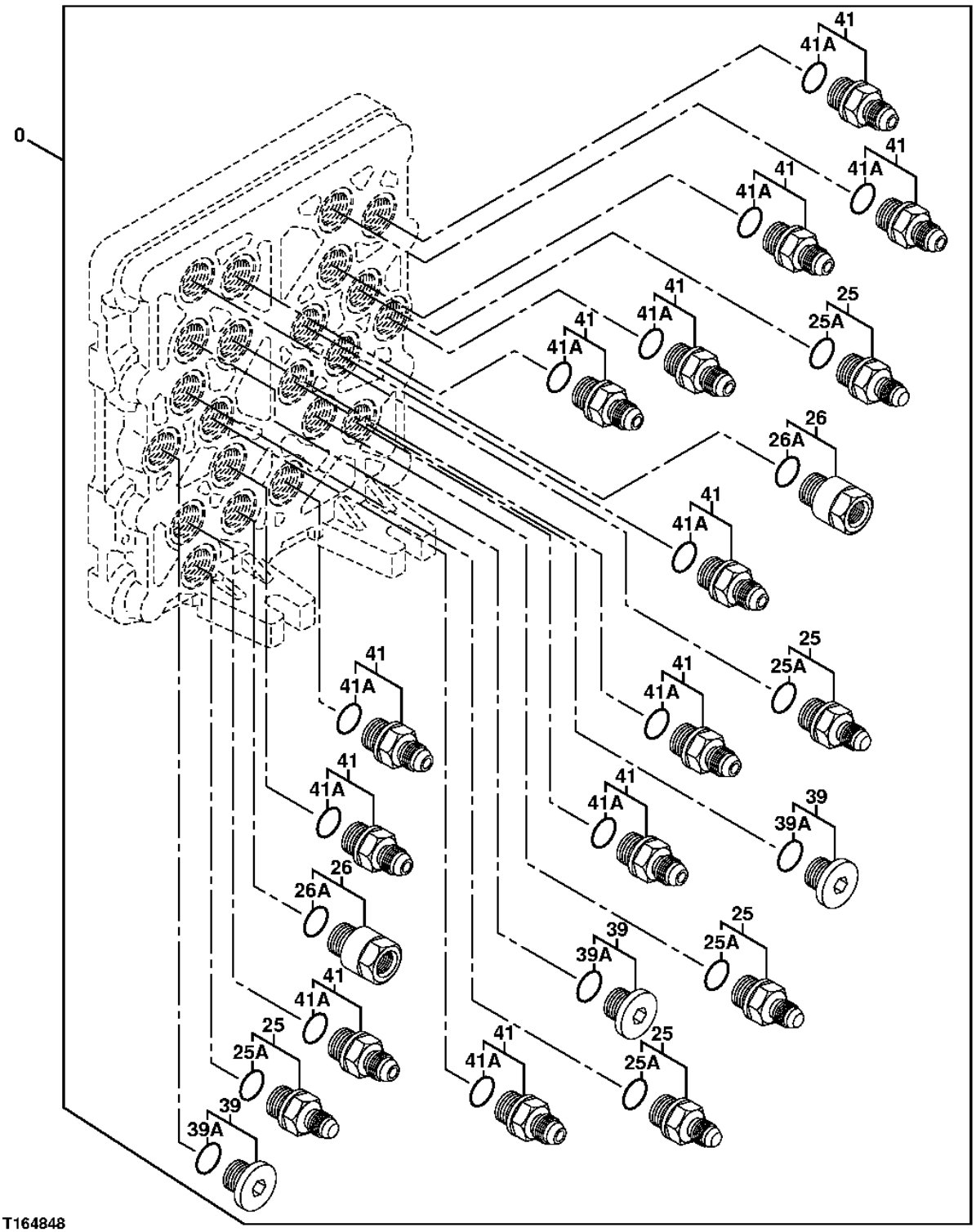

PILOT SIGNAL MANIFOLD (CONTROL VALVE SIDE)
(SERIAL NUMBER 071104-)

KEY	PART NO.	PART NAME	QTY	SERIAL NO.	REMARKS
0	4486321	VALVE	1		(CONTAINS ALL PARTS ON THIS PAGE -ADDITIONAL COMPONENTS LISTED ON PREVIOUS AND FOLLOWING PAGES)
25	4451785	ADAPTER	5		(SUB FOR TH4451785)
25A	CH11570	O-RING	1		
26	4451786	REDUCER	2		(SUB FOR TH4451786)
26A	CH11570	O-RING	1		
39	4451789	PIPE PLUG	3		(SUB FOR TH4451789)
39A	CH11570	O-RING	1		
41	4451797	ADAPTER	12		(SUB FOR TH4451797)
41A	CH11570	O-RING	1		

PILOT SIGNAL MANIFOLD VALVES

T153962 -UN-16APR02

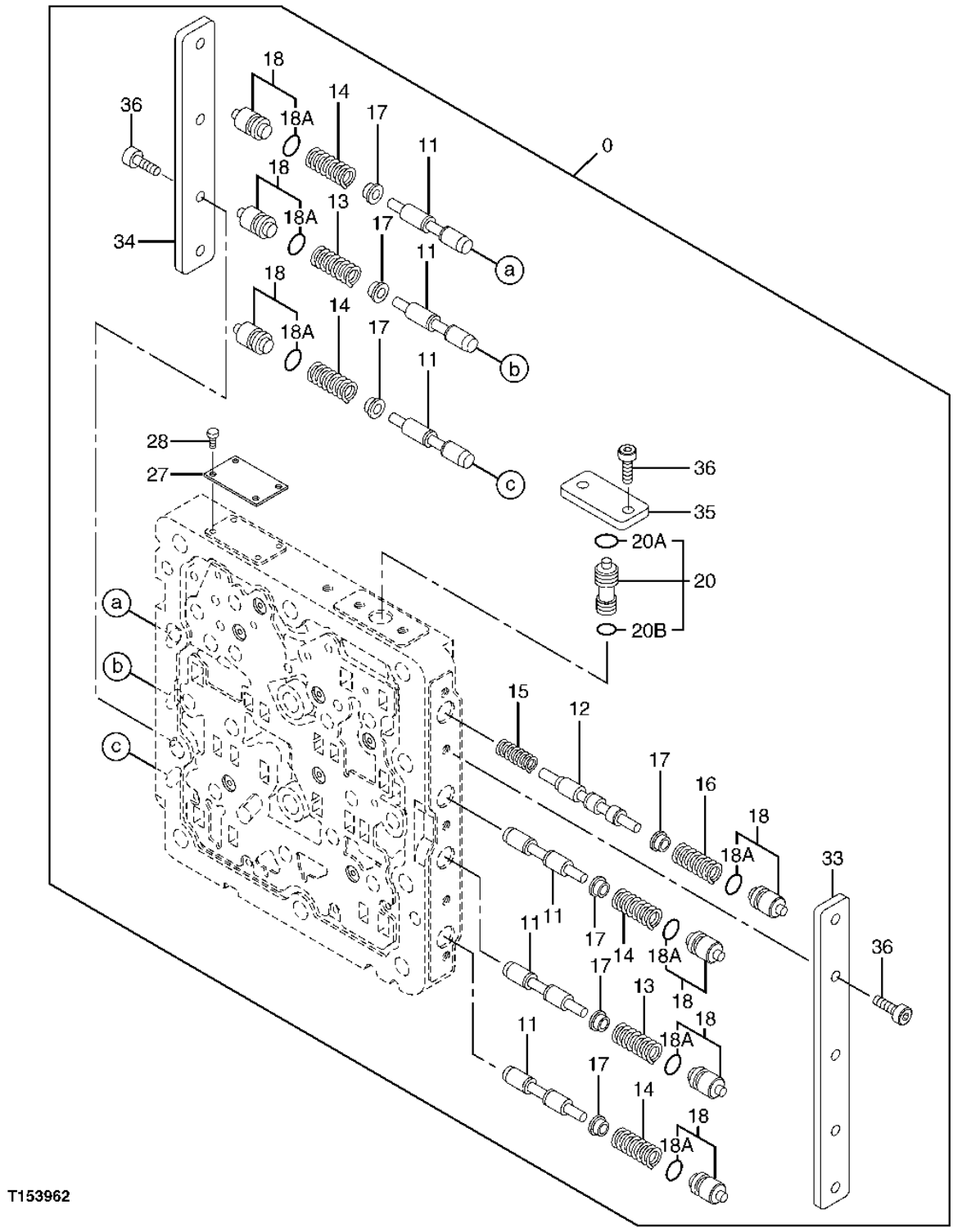

PILOT SIGNAL MANIFOLD VALVES

KEY	PART NO.	PART NAME	QTY	SERIAL NO.	REMARKS
0	4468337	FLOW CONTROL HYD. VALVE	1	-071103	(CONTAINS ALL PARTS ON THIS PAGE - ADDITIONAL COMPONENTS LISTED ON PREVIOUS PAGES)
	4486321	VALVE	1	071104-	(CONTAINS ALL PARTS ON THIS PAGE - ADDITIONAL COMPONENTS LISTED ON PREVIOUS PAGES)
11	4453819	SPOOL VALVE	6		(SUB FOR TH4453819)
12	4453820	SPOOL VALVE	1		(SUB FOR TH4453820)
13	0788703	SPRING	2		(SUB FOR TH0788703)
14	0788704	SPRING	4		(SUB FOR TH0788704)
15	0788705	SPRING	1		(SUB FOR TH0788705)
16	0788706	SPRING	1		(SUB FOR TH0788706)
17	0788707	VALVE SEAT	7		(SUB FOR TH0788707)
18	4452647	PIPE PLUG	7		(SUB FOR TH4452647)
18A	CH11560	PACKING	1		
20	4452648	SPOOL VALVE	1		(SUB FOR TH4452648)
20A	CH11560	PACKING	1		
20B	CH10567	PACKING	1		
33	0788710	PLATE	1		(SUB FOR TH0788710)
34	0788711	PLATE	1		(SUB FOR TH0788711)
35	0788712	PLATE	1		(SUB FOR TH0788712)
36	0788713	BOLT	11		(SUB FOR TH0788713)

SUCTION HYDRAULIC LINES

T153907 -UN-16APR02

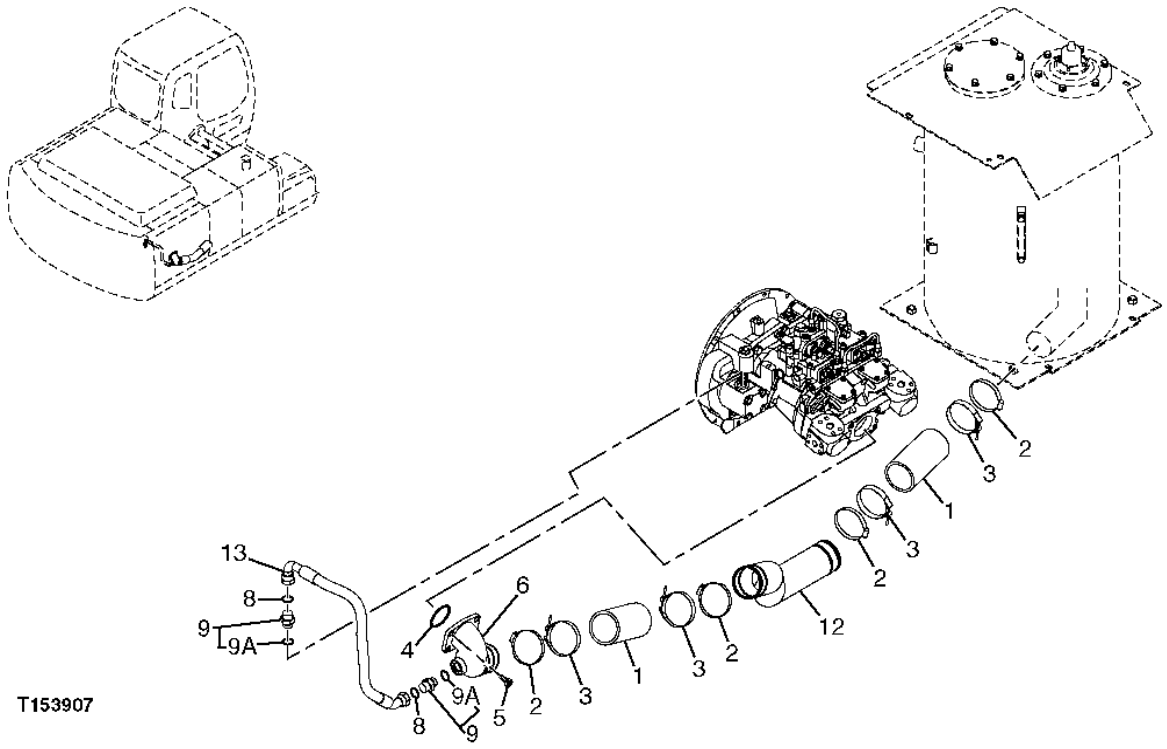

SUCTION HYDRAULIC LINES

KEY	PART NO.	PART NAME	QTY	SERIAL NO.	REMARKS
1	4348414	HOSE	2		
2	Z29925	CLAMP	4		(SUB FOR AH103182)
3	AT56658	HOSE CLAMP	4		
4	CH17854	PACKING	1		
5	J781228	BOLT	4		(SUB FOR P61967)
6	2037825	MANIFOLD	1		
8	T77858	O-RING	2		
9	A853166	ADAPTER	2		(SUB FOR THA853166)
9A	AT318035	O-RING	1		(SUB FOR 4506424)
12	7040198	PIPE	1		
13	4442642	HYDRAULIC HOSE - FABRICATE	1		

DELIVERY HYDRAULIC LINES

T153967 -UN-16APR02

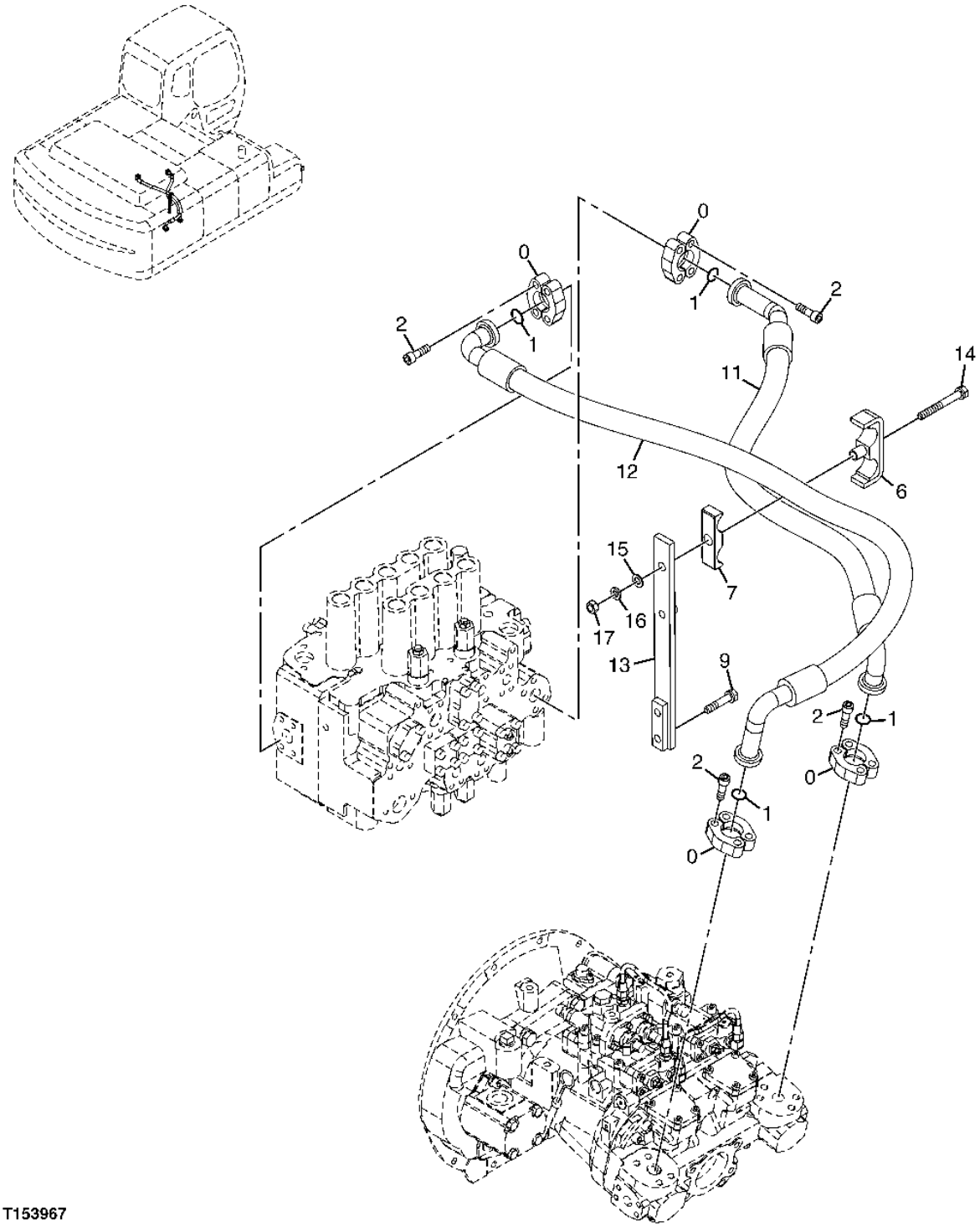

T153967

DELIVERY HYDRAULIC LINES

KEY	PART NO.	PART NAME	QTY	SERIAL NO.	REMARKS
0	4085560	FLANGE FITTING	8		
1	T78313	O-RING	4		
2	J781240	BOLT	16		
6	8065749	HALF CLAMP	1		
7	3075326	HALF CLAMP	1		
9	19M7363	CAP SCREW	2		
11	4385693	HYDRAULIC HOSE	1		(SUB FOR 4393150)
12	4439022	HYDRAULIC HOSE	1		
13	8086586	BRACKET	1	-702000	
	DH700031	BRACKET	1	702001-	
14	19M7949	CAP SCREW	1		(ALSO ORDER 12M7058) (SUB FOR AT128379)
15	24M7047	WASHER	1		13 X 24 X 2.500 MM
16	12H301	LOCK WASHER	1		1/2"
17	14M7275	NUT	1		M12

RETURN HYDRAULIC LINES

T153838 -UN-16APR02

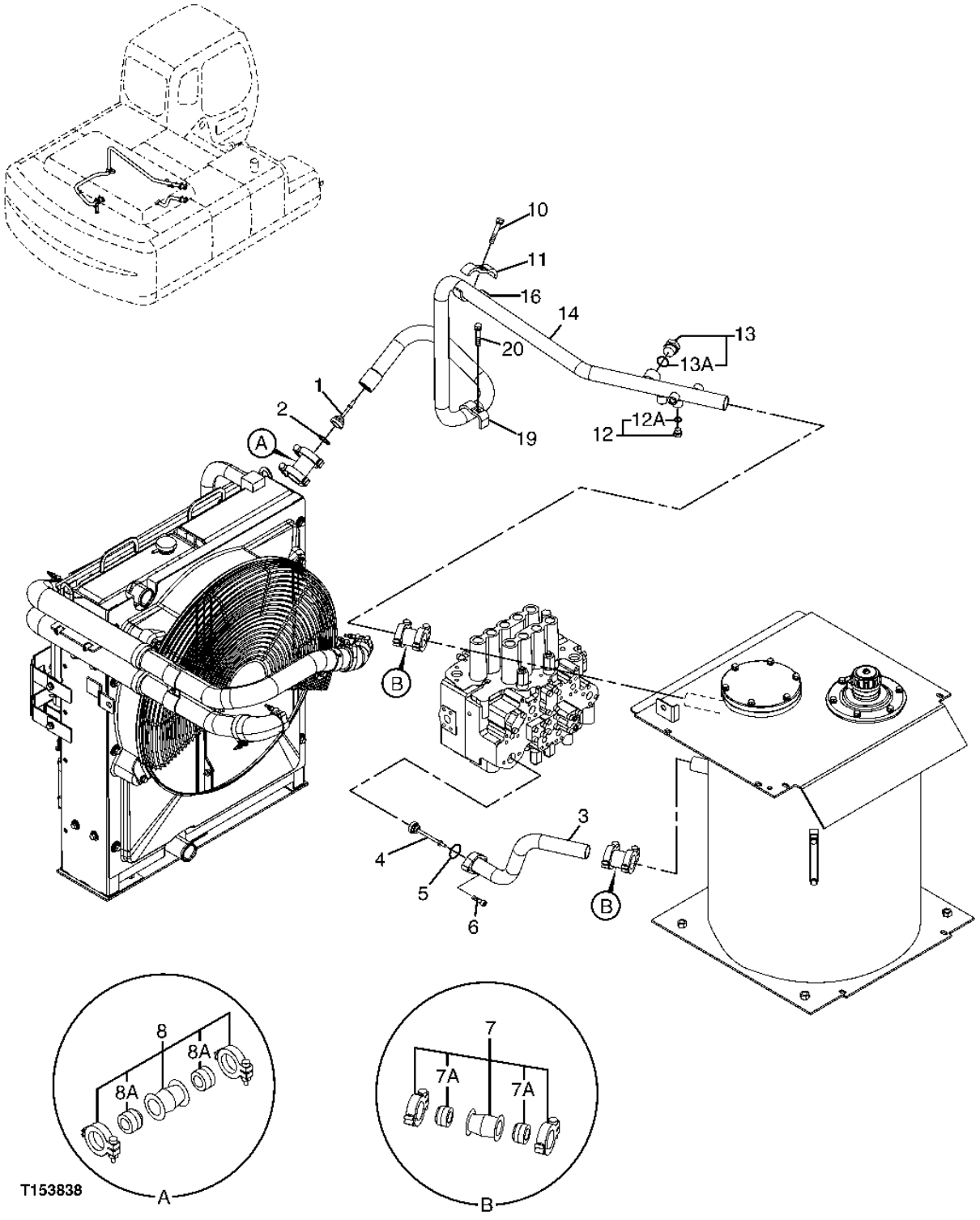

RETURN HYDRAULIC LINES

KEY	PART NO.	PART NAME	QTY	SERIAL NO.	REMARKS
1	4276584	FLOW CONTROL HYD. VALVE	1		
2	40M7225	SNAP RING	1		(SUB FOR 40M1861)
3	8079530	PIPE	1		
4	4484198	VALVE	1		(SUB FOR 4272164, THIS APPLICATION)
5	A811040	O-RING	1		
6	J781040	SCREW	2		
7	4069801	COUPLING	2		
7A	4196259	SEAL	2		
8	4067834	COUPLING	1		
8A	4196260	SEAL	2		
10	19M7753	CAP SCREW	3		M12 X 70
11	4053696	CLAMP	2		
12	A885003	PIPE PLUG	2		
12A	CH11570	O-RING	1		
13	4113926	DRAIN PLUG	1		(SUB FOR AT126200)
13A	TH101926	O-RING	1		
14	DH700033	PIPE	1		(7041467 NOT USED FOR THIS APPLICATION)
16	9756186	CLAMP	2		
19	4053698	CLAMP	1		
20	19M8348	CAP SCREW	1		
	12H301	LOCK WASHER	1		

RETURN HYDRAULIC LINES

T153837 -UN-16APR02

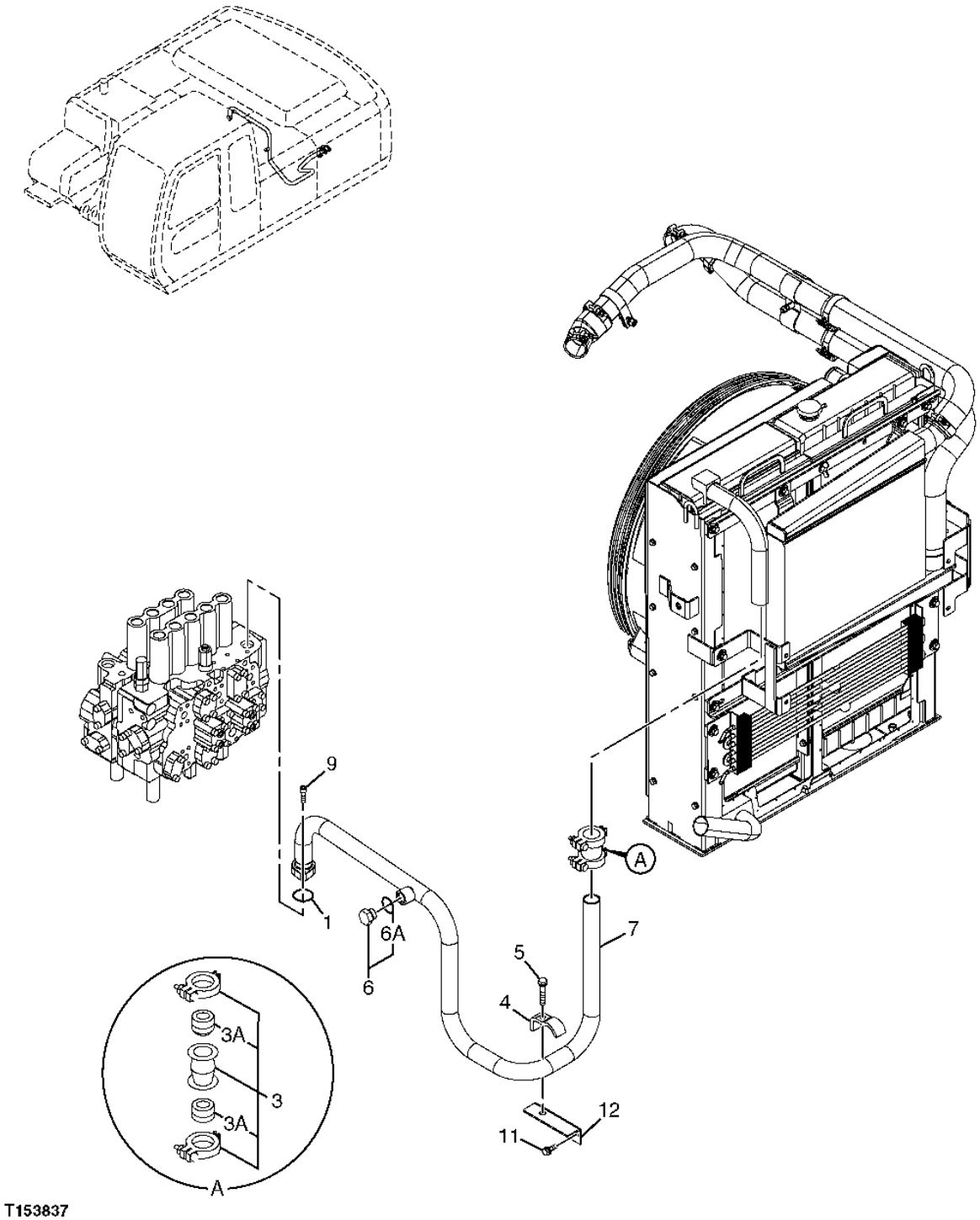

T153837

RETURN HYDRAULIC LINES

KEY	PART NO.	PART NAME	QTY	SERIAL NO.	REMARKS
1	A811040	O-RING	1		
3	4069801	COUPLING	1		
3A	4196259	SEAL	2		
4	4053698	CLAMP	1		
5	19M8348	CAP SCREW	1		
	12H301	LOCK WASHER	1		
6	A885006	PLUG	1		(SUB FOR P68008)
6A	AT318035	O-RING	1		(SUB FOR 4506424)
7	7041466	PIPE	1		
9	19M8337	SCREW	2		M10 X 30
11	19M7662	CAP SCREW	2		
	12M7066	LOCK WASHER	2		
	24M7028	WASHER	2		
12	9757787	BRACKET	2		

DRAIN HYDRAULIC LINES

T147738 -UN-07JAN02

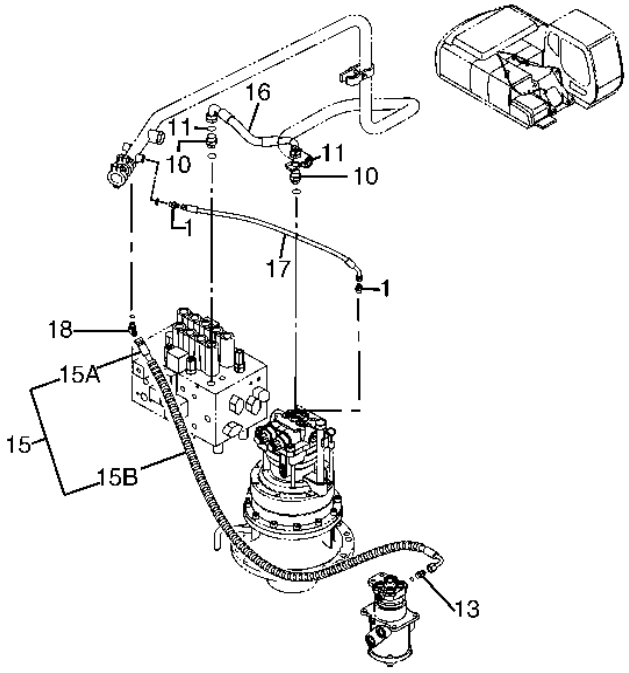

T147738

DRAIN HYDRAULIC LINES

KEY	PART NO.	PART NAME	QTY	SERIAL NO.	REMARKS
1	A852133	ADAPTER	2		(SUB FOR P67978)
	CH11570	O-RING	1		
10	A853168	ADAPTER	2		(SUB FOR THA853168)
	AT318035	O-RING	1		(SUB FOR 4506424, TH100055)
11	T76938	O-RING	2		
13	A852134	ADAPTER	1		
	CH11570	O-RING	1		
15	.....	HYDRAULIC HOSE	1		
15A	4313443	HYDRAULIC HOSE	1		(SUB FOR TH4313443)
15B	4327294	HOSE GUARD	3		(SUB FOR AT213832)
16	TH4453018	HYDRAULIC HOSE	1		
17	TH4448946	HYDRAULIC HOSE	1		
18	A852234	ELBOW FITTING	1		(SUB FOR THA852234)
	CH11570	O-RING	1		

MAIN HYDRAULIC LINES

T153969 -UN-16APR02

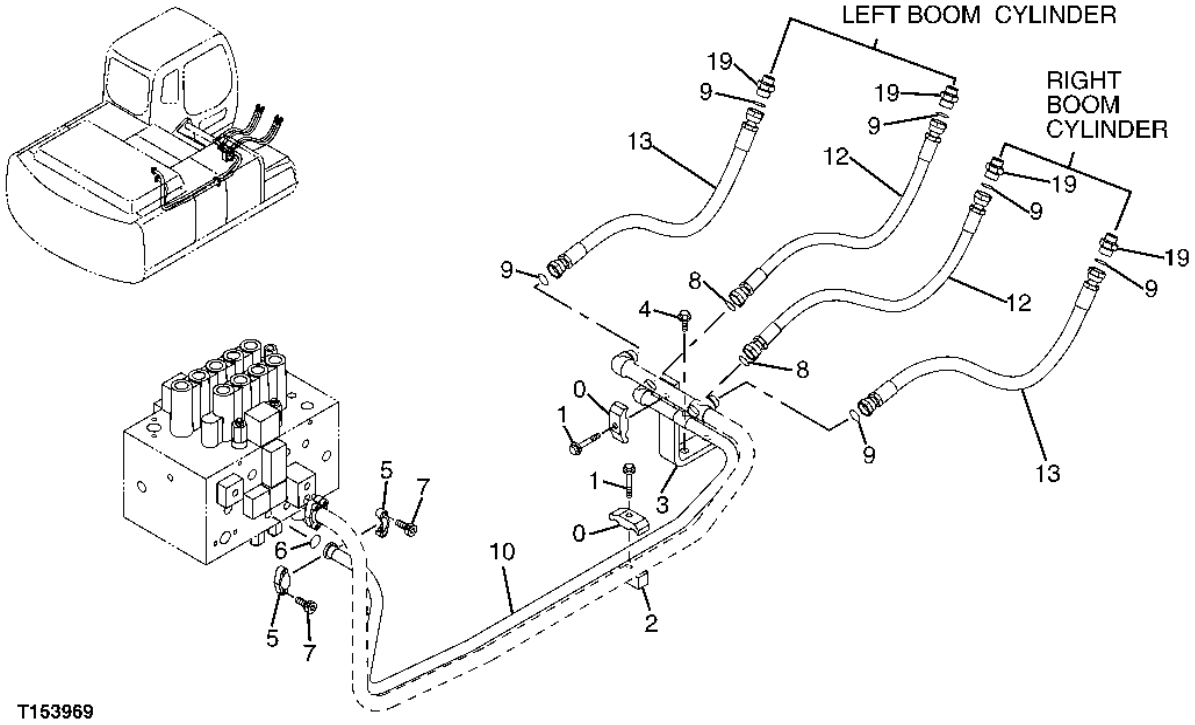

MAIN HYDRAULIC LINES

KEY	PART NO.	PART NAME	QTY	SERIAL NO.	REMARKS
0	4153488	CLAMP	2		(SUB FOR TH103780)
1	19M7753	CAP SCREW	2		M12 X 70
2	.....	STRAP	1		(AT155254 NOT AVAILABLE FOR SERVICE)
3	9725460	SUPPORT	1		(SUB FOR TH109547)
4	19M7872	CAP SCREW	2		M12 X 25
5	R29424	FLANGE FITTING	2		
6	T59014	O-RING	1		
7	J781030	SCREW	4		
8	T77858	O-RING	2		
9	T76938	O-RING	6		
10	8079307	PIPE	1		(SUB FOR TH8079307)
12	AT218224	HYDRAULIC HOSE - FABRICATE	2		
13	AT218223	HYDRAULIC HOSE - FABRICATE	2		
19	A853166	ADAPTER	4		(SUB FOR THA853166)

CONTROL VALVE HYDRAULIC LINES

T147740 -UN-07JAN02

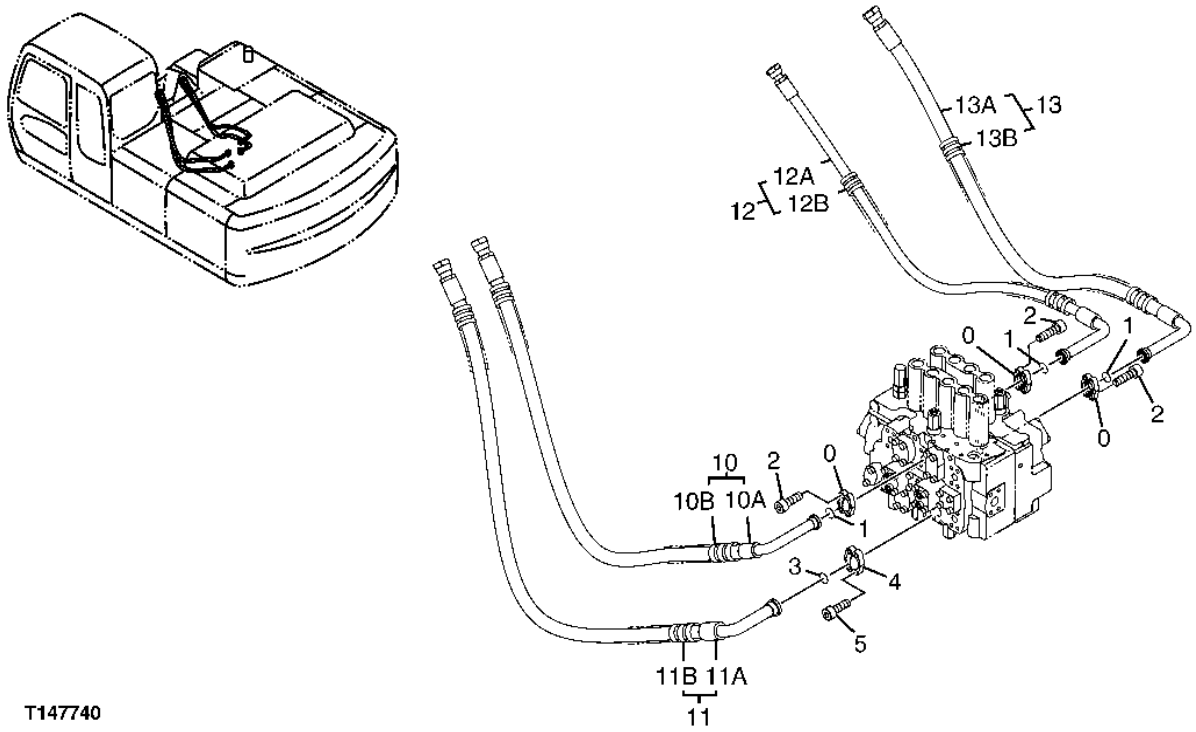

T147740

CONTROL VALVE HYDRAULIC LINES

KEY	PART NO.	PART NAME	QTY	SERIAL NO.	REMARKS
0	R29424	FLANGE FITTING	6		
1	T59014	O-RING	3		
2	J781030	SCREW	12		
3	T78313	O-RING	1		
4	H61354	FLANGE FITTING	2		
5	J781030	SCREW	4		
10	.....	HYDRAULIC HOSE	1		(TH9199749 NOT AVAILABLE FOR SERVICE)
10A	TH4438866	HYDRAULIC HOSE	1		
10B	4327294	HOSE GUARD	2		(SUB FOR AT213832)
11	.....	HYDRAULIC HOSE	1		(TH9199873 NOT AVAILABLE FOR SERVICE)
11A	4447099	HYDRAULIC HOSE	1		(SUB FOR TH4447099)
11B	4327294	HOSE GUARD	3		(SUB FOR AT213832)
12	.....	HYDRAULIC HOSE	1		(TH9209641 NOT AVAILABLE FOR SERVICE)
12A	4410314	HYDRAULIC HOSE	1		(SUB FOR TH4410314)
12B	4327294	HOSE GUARD	3		(SUB FOR AT213832)
13	.....	HYDRAULIC HOSE	1		(TH9209638 NOT AVAILABLE FOR SERVICE)
13A	TH4438866	HYDRAULIC HOSE	1		
13B	4327294	HOSE GUARD	3		(SUB FOR AT213832)

CONTROL VALVE HYDRAULIC LINES

T147742 -UN-07JAN02

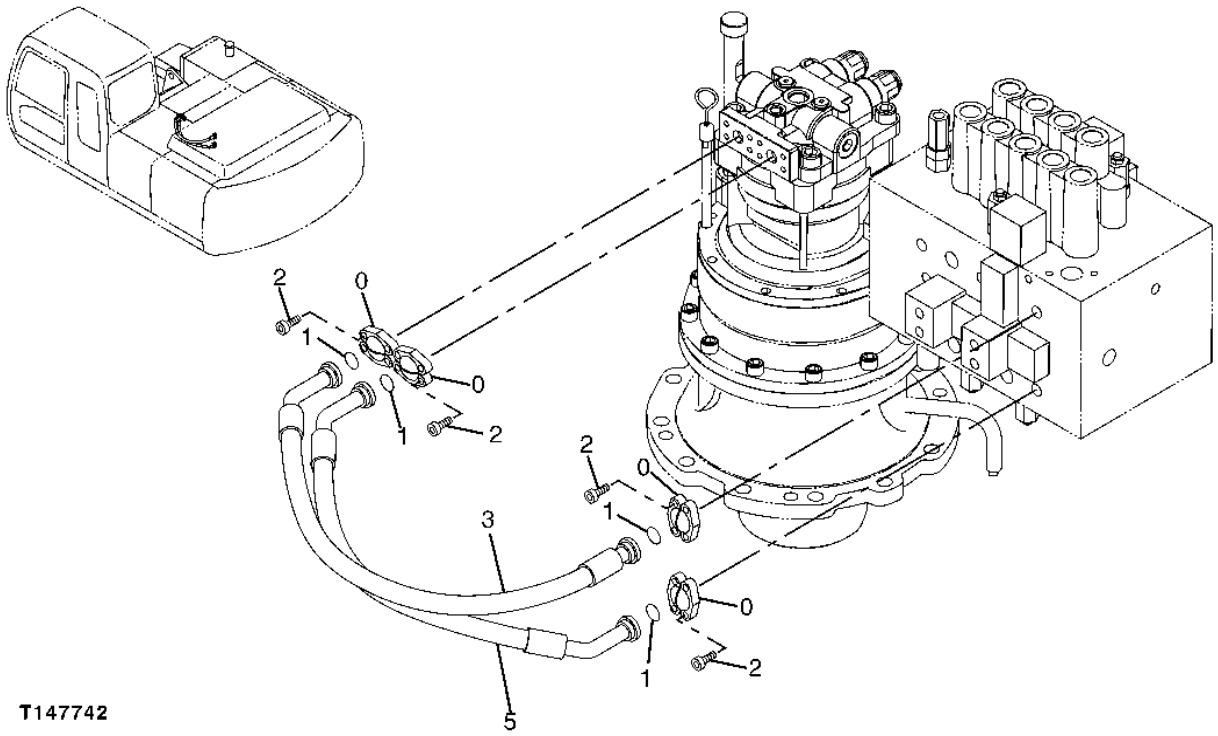

T147742

CONTROL VALVE HYDRAULIC LINES

KEY	PART NO.	PART NAME	QTY	SERIAL NO.	REMARKS
0	R29424	FLANGE FITTING	8		
1	T59014	O-RING	4		
2	J781030	SCREW	16		
3	4391350	HYDRAULIC HOSE	1		(SUB FOR AT217798)
5	TH4442841	HYDRAULIC HOSE	1		

CONTROL VALVE HYDRAULIC LINES

T147743 -UN-07JAN02

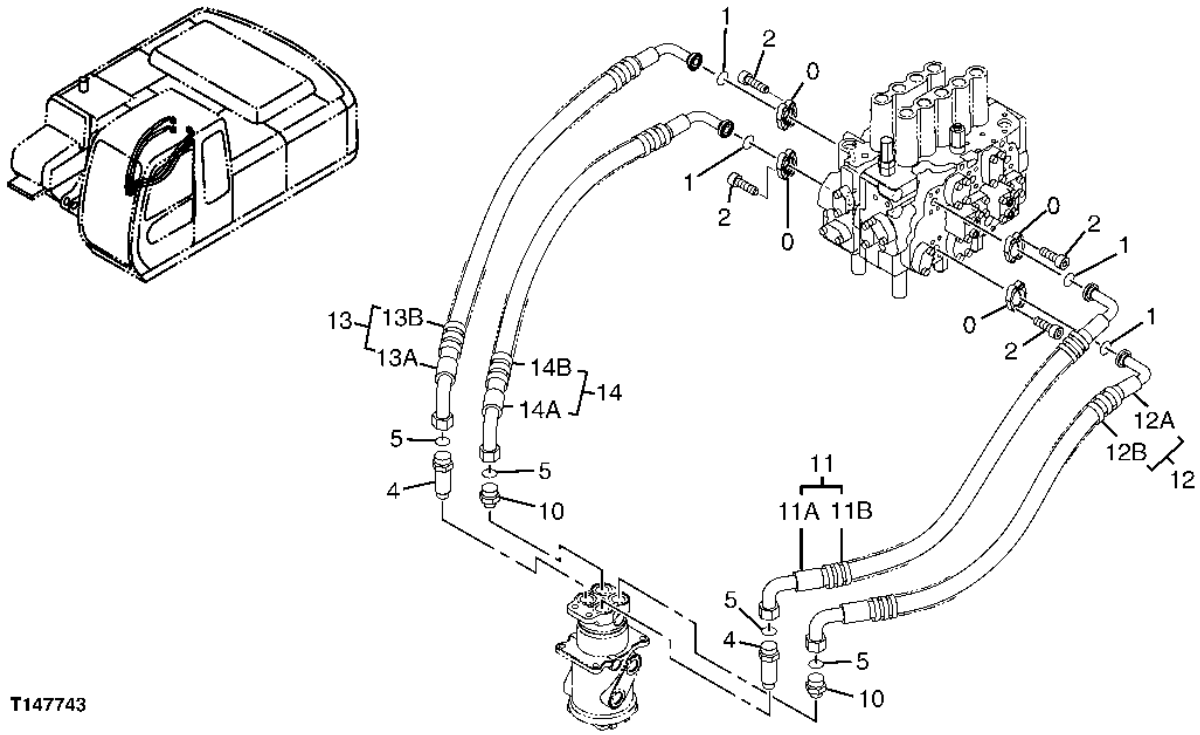

CONTROL VALVE HYDRAULIC LINES

KEY	PART NO.	PART NAME	QTY	SERIAL NO.	REMARKS
0	R29424	FLANGE FITTING	8		
1	T59014	O-RING	4		
2	J781030	SCREW	16		
4	4198411	ADAPTER	2		(SUB FOR TH111292)
	AT318035	O-RING	1		(SUB FOR 4506424, TH100055)
5	T76938	O-RING	4		
10	A853168	ADAPTER	2		(SUB FOR THA853168)
	AT318035	O-RING	1		(SUB FOR 4506424, TH100055)
11	.....	HYDRAULIC HOSE	1		(TH9199904 NOT AVAILABLE FOR SERVICE)
11A	TH4438881	HYDRAULIC HOSE	1		
11B	4327294	HOSE GUARD	2		(SUB FOR AT213832)
12	.....	HYDRAULIC HOSE	1		(TH9199905 NOT AVAILABLE FOR SERVICE)
12A	TH4438885	HYDRAULIC HOSE	1		
12B	4327294	HOSE GUARD	2		(SUB FOR AT213832)
13	.....	HYDRAULIC HOSE	1		(TH9206186 NOT AVAILABLE FOR SERVICE)
13A	TH4466479	HYDRAULIC HOSE	1		
13B	4327294	HOSE GUARD	2		(SUB FOR AT213832)
14	.....	HYDRAULIC HOSE	1		(TH9206187 NOT AVIALABLE FOR SERVICE)
14A	TH4466480	HYDRAULIC HOSE	1		
14B	4327294	HOSE GUARD	2		(SUB FOR AT213832)

CONTROL VALVE TO OIL COOLER LINE

T164949 -UN-04FEB03

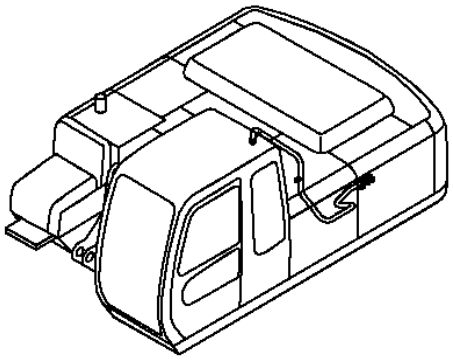

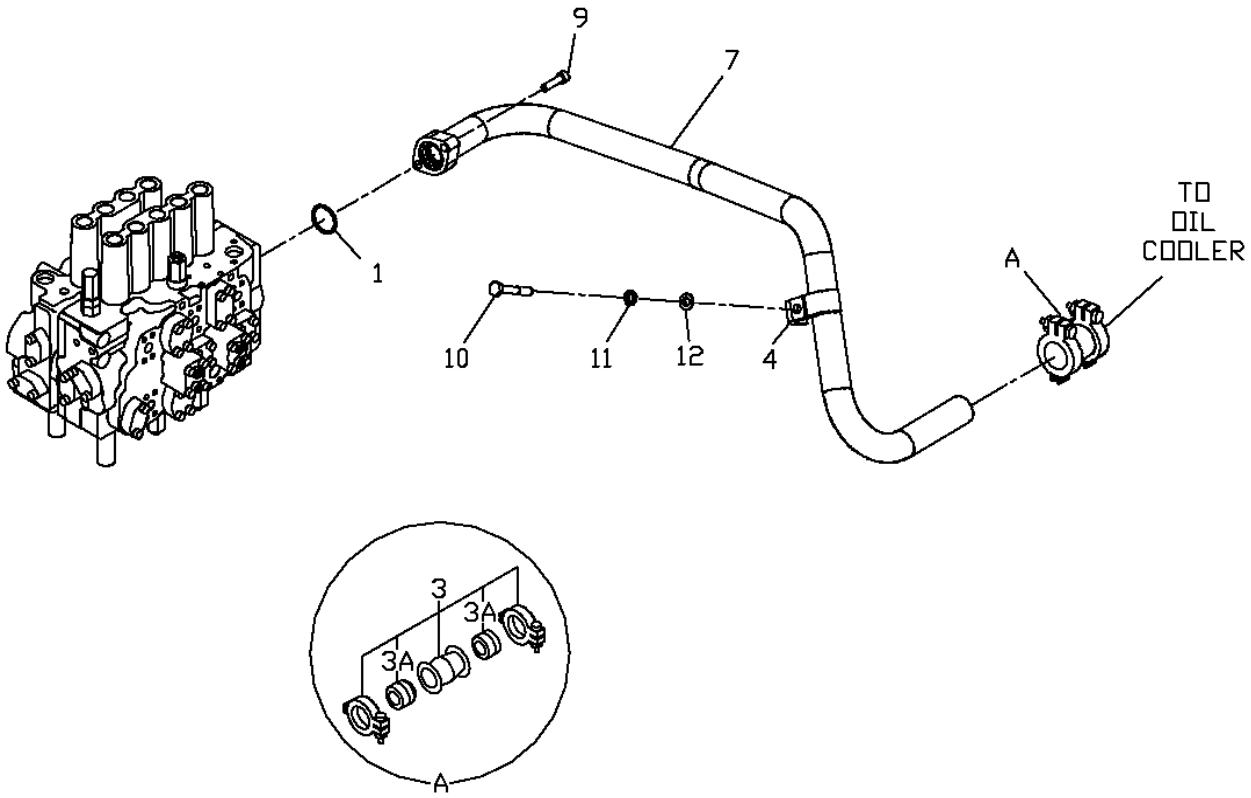

T164949

CONTROL VALVE TO OIL COOLER LINE

KEY	PART NO.	PART NAME	QTY	SERIAL NO.	REMARKS
1	A811040	O-RING	1		39.400 X 3.100 MM (1.551" X 0.122") (SUB FOR TH102992)
3	4069801	COUPLING	1		(SUB FOR TH101915)
3A	4196259	SEAL	2		(SUB FOR TH106966)
4	4053698	CLAMP	1		(SUB FOR TH101936)
7	DH700032	PIPE	1		
9	J781040	SCREW	2		(SUB FOR AT213615)
10	19M8088	CAP SCREW	1		M12 X 75
11	12H301	LOCK WASHER	1		12.700 MM (1/2")
12	24M7047	WASHER	1		13 X 24 X 2.500 MM (0.512" X 0.945" X 0.098")

BOOM BOTTOM HYDRAULIC LINES

T143254 -UN-28JUN01

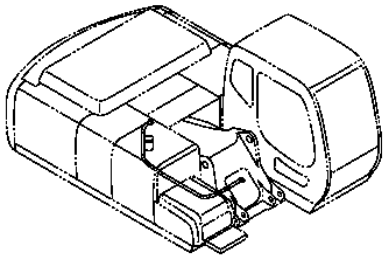

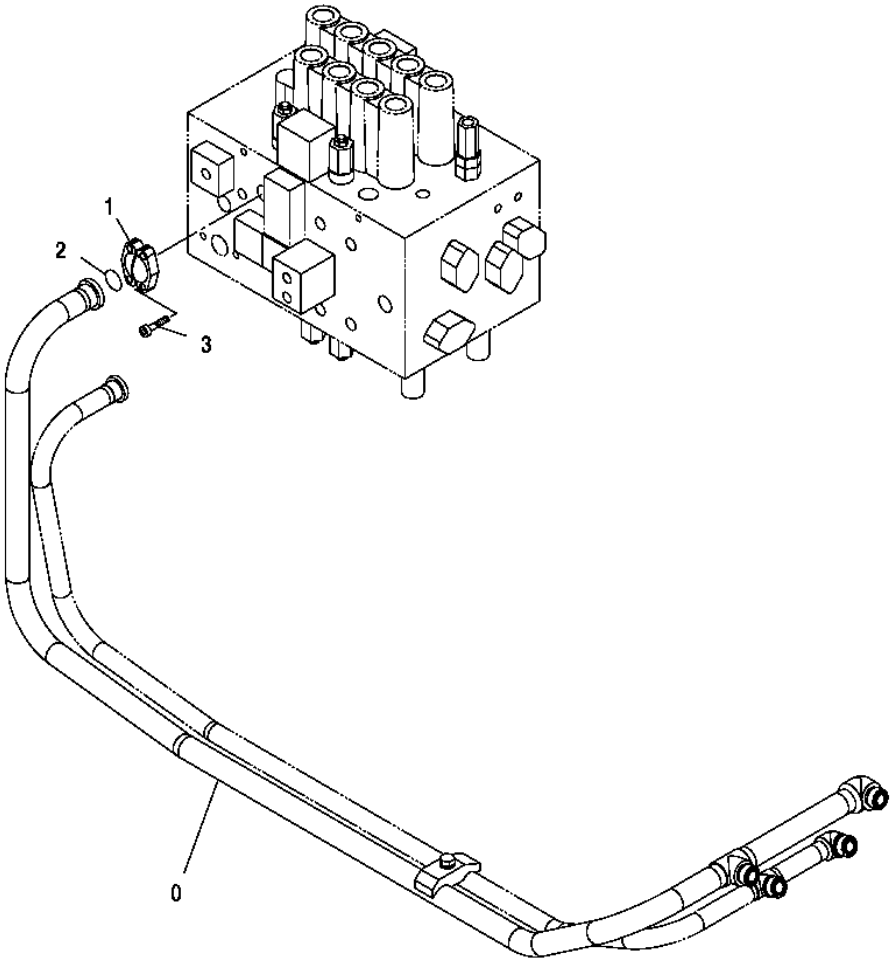

T143254

BOOM BOTTOM HYDRAULIC LINES

KEY	PART NO.	PART NAME	QTY	SERIAL NO.	REMARKS
0	TH8084765	PIPE	1		
1	H61354	FLANGE FITTING	2		
2	T78313	O-RING	1		
3	J781030	SCREW	4		

BOOM BOTTOM PIPINGS, SUPER LONG FRONT

T206608 -UN-12JAN05

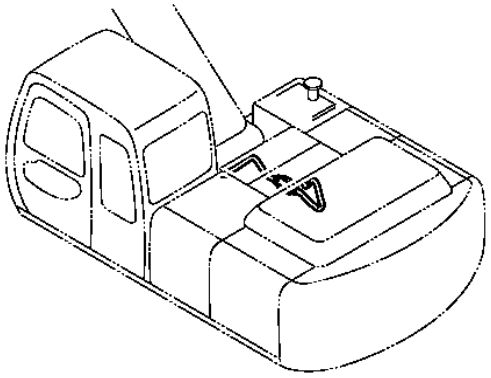

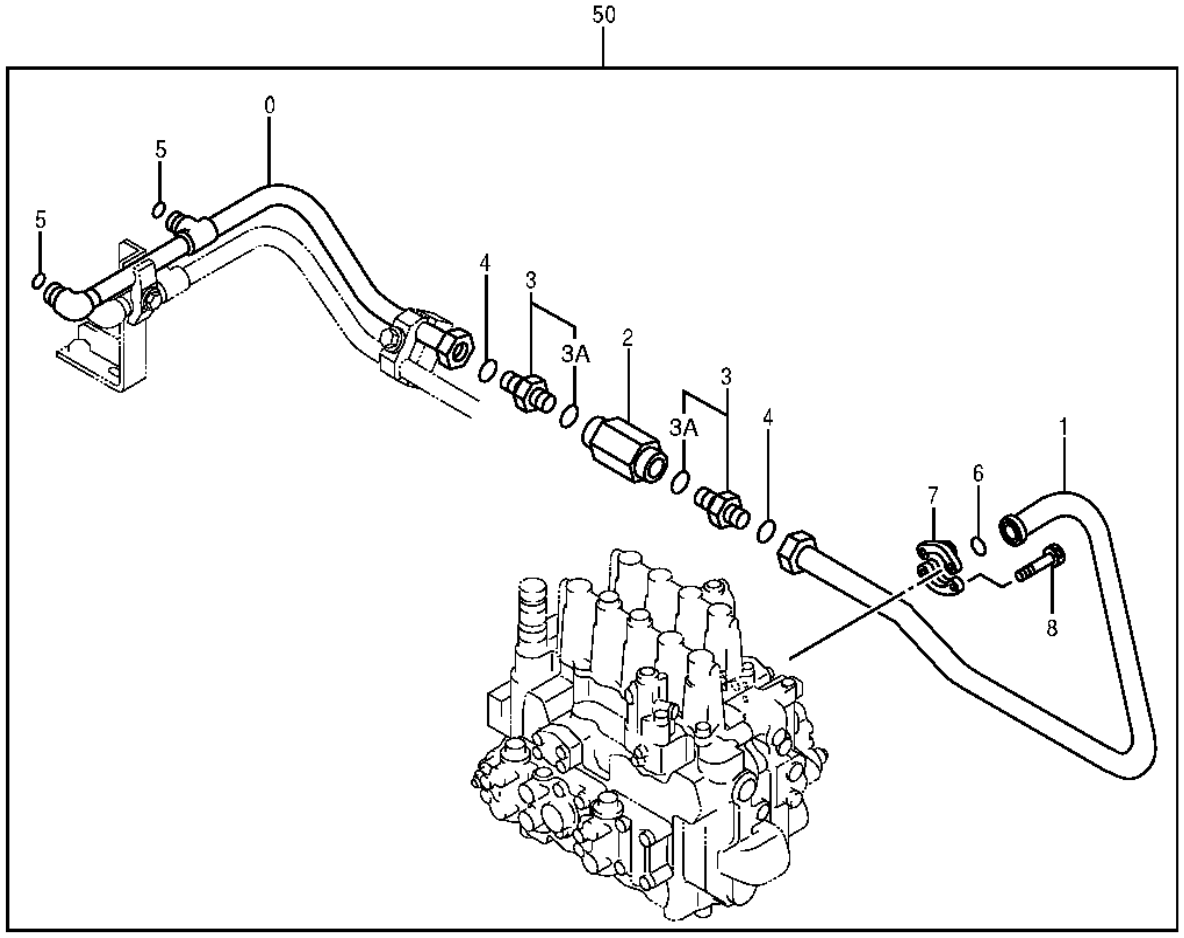

T206608

BOOM BOTTOM PIPINGS, SUPER LONG FRONT

KEY	PART NO.	PART NAME	QTY	SERIAL NO.	REMARKS
0	8087097	TUBE	1		
1	8092181	PIPE	1		
2	9075046	FLOW CONTROL HYD. VALVE	1		
3	A853180	ADAPTER	2		
3A	TH101926	O-RING	1		(SUB FOR 4506429)
4	T78313	O-RING	2		(SUB FOR 4187329)
5	T76938	O-RING	2		(SUB FOR 4187328)
6	T78313	O-RING	1		(SUB FOR 966993)
7	H61354	FLANGE FITTING	2		(SUB FOR 962453)
8	J781030	SCREW	4		
50	**AT314803**	**KIT**	**1**		**(WHOLEGOODS) (SUPER LONG FRONT KIT) (CONTAINS ALL ITEMS ON THIS PAGE - ADDITIONAL COMPONENTS LISTED ON SEPARATE PAGES) (ALSO ORDER T211127 INSTALLATION INSTRUCTION, T211136 LIFT CHART LABEL, T153672 LONG FRONT LABEL, T153673 PERIODIC MAINTENANCE LABEL, AND T185126 BOOM LABELS)**

SIDE BRANCH HYDRAULIC HOSES

T143255 -UN-29JUN01

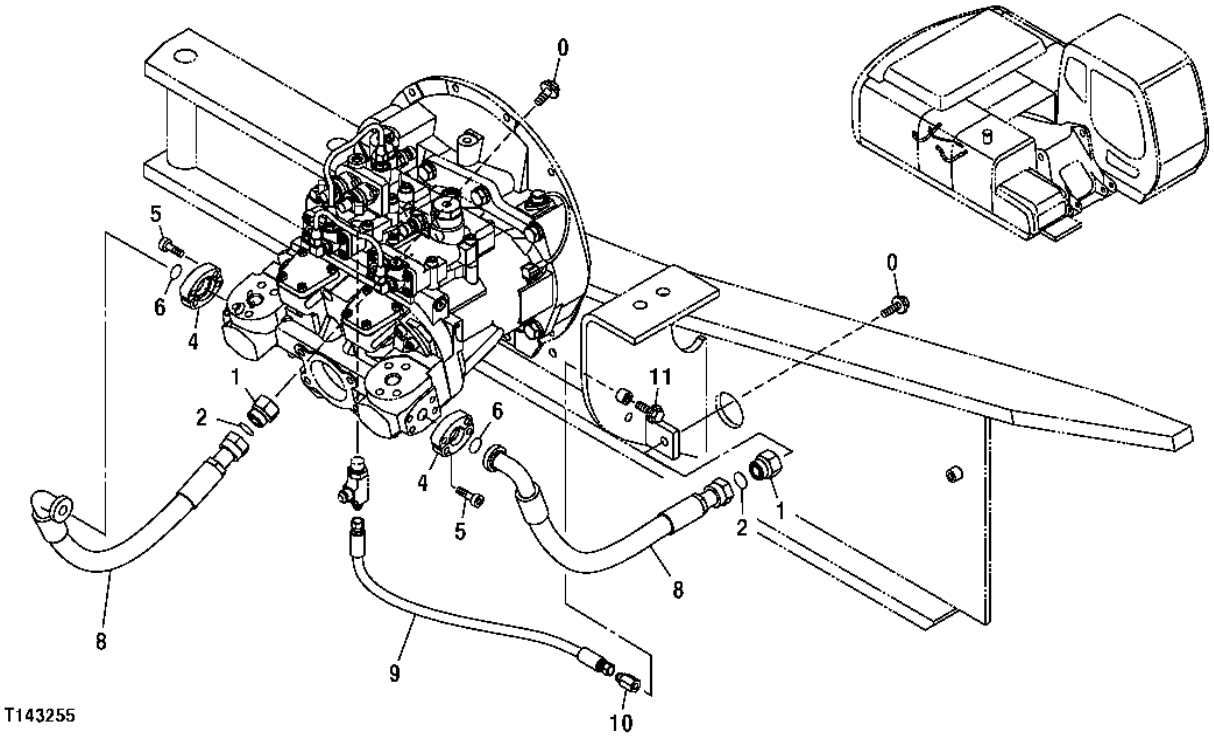

SIDE BRANCH HYDRAULIC HOSES

KEY	PART NO.	PART NAME	QTY	SERIAL NO.	REMARKS
0	19M7403	CAP SCREW	2		M12 X 35
	12H301	LOCK WASHER	2		12.700 MM (1/2")
1	4204882	FITTING PLUG	2		(SUB FOR TH109541)
2	T77858	O-RING	2		18.771 X 1.778 MM (0.739" X 0.070")
4	T107446	FLANGE FITTING	4		
5	19M8337	SCREW	8		M10 X 30
6	T59014	O-RING	2		24.994 X 3.531 MM (63/64" X 0.139")
8	4436937	HYDRAULIC HOSE - FABRICATE	2		(SUB FOR TH4436937)
9	4442133	HYDRAULIC HOSE - FABRICATE	1		(SUB FOR TH4442133)
10	4444381	PIPE PLUG	1		(SUB FOR TH4444381)
11	19M7662	CAP SCREW	1		M10 X 30
	12M7066	LOCK WASHER	1		10 MM (0.394")

PILOT HYDRAULIC HOSES, OIL LINES AND FILTER

T200620 -UN-07JUN04

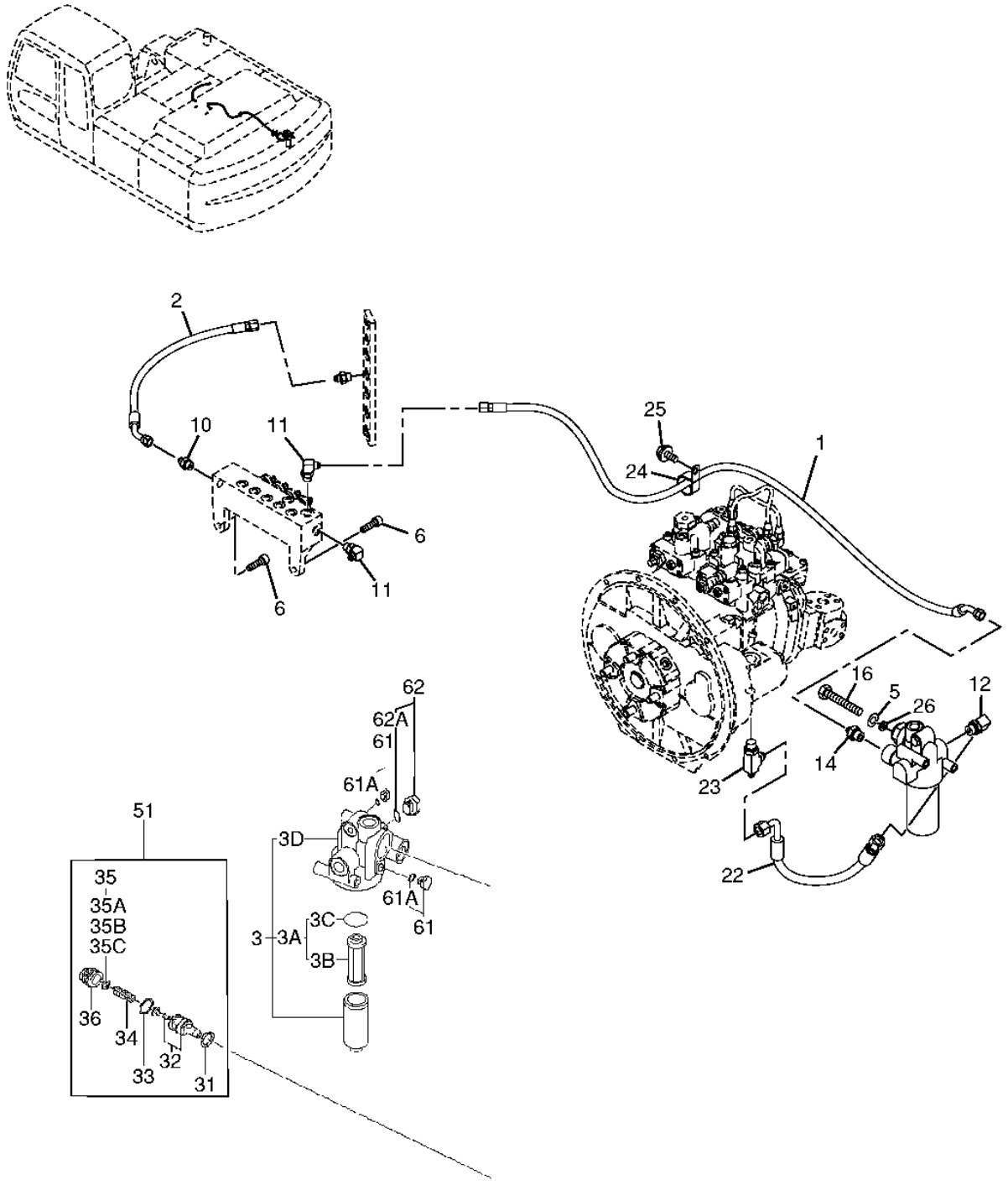

T200620

PILOT HYDRAULIC HOSES, OIL LINES AND FILTER

KEY	PART NO.	PART NAME	QTY	SERIAL NO.	REMARKS
1	4437930	HYDRAULIC HOSE - FABRICATE	1		(SUB FOR TH4437930)
2	4437934	HYDRAULIC HOSE - FABRICATE	1		(SUB FOR TH4437934)
3	4611025	OIL FILTER	1		(SUB FOR 4408959)
3A	AT186554	FILTER ELEMENT	1		(SUB FOR 4370435 OR AT214263)
3B	.....	FILTER ELEMENT	1		(4191301 NOT AVAILABLE FOR SERVICE)
3C	TH105683	O-RING	1		(SUB FOR A811060, 4153538, TH0430809 OR 0430809)
3D	4472430	PRESSURE RELIEF VALVE	1		
5	12M7066	LOCK WASHER	2		10 MM
6	J781030	SCREW	2		
10	A852133	ADAPTER	1		(SUB FOR P67978)
	CH11570	O-RING	1		
11	P67989	ELBOW FITTING	2		
	CH11570	O-RING	1		
12	A852344	ELBOW FITTING	1		
	4506418	O-RING	1		
14	A852143	ADAPTER	1		(SUB FOR THA852143)
	4506418	O-RING	1		
16	19M8166	CAP SCREW	2		M10 X 110
22	4450081	HYDRAULIC HOSE - FABRICATE	1		(SUB FOR TH4450081)
23	4445981	TEE FITTING	1		(SUB FOR P68010)
	4506418	O-RING	1		
24	4193848	CLIP	1		(SUB FOR TH110522)
25	19M7402	CAP SCREW	1		M10 X 25
26	24M7028	WASHER	1		10.500 X 20 X 2 MM, (SUB FOR A590110)
31	0308704	GASKET	1		
32	0308703	PRESSURE RELIEF VALVE	1		
33	0308705	O-RING	1		
34	.....	SPRING	1		
35	4293211	SHIM	1		
35A	4309836	SHIM	2		
35B	4309837	SHIM	2		
35C	4309838	SHIM	2		
36	0308709	FITTING PLUG	1		
51	0709701	RELIEF VALVE	1		
61	4174541	DRAIN PLUG	2		
61A	M800650	PACKING	1		
62	A885002	PLUG	1		
62A	4506418	O-RING	1		

PILOT HYDRAULIC LINES

T143260 -UN-11OCT01

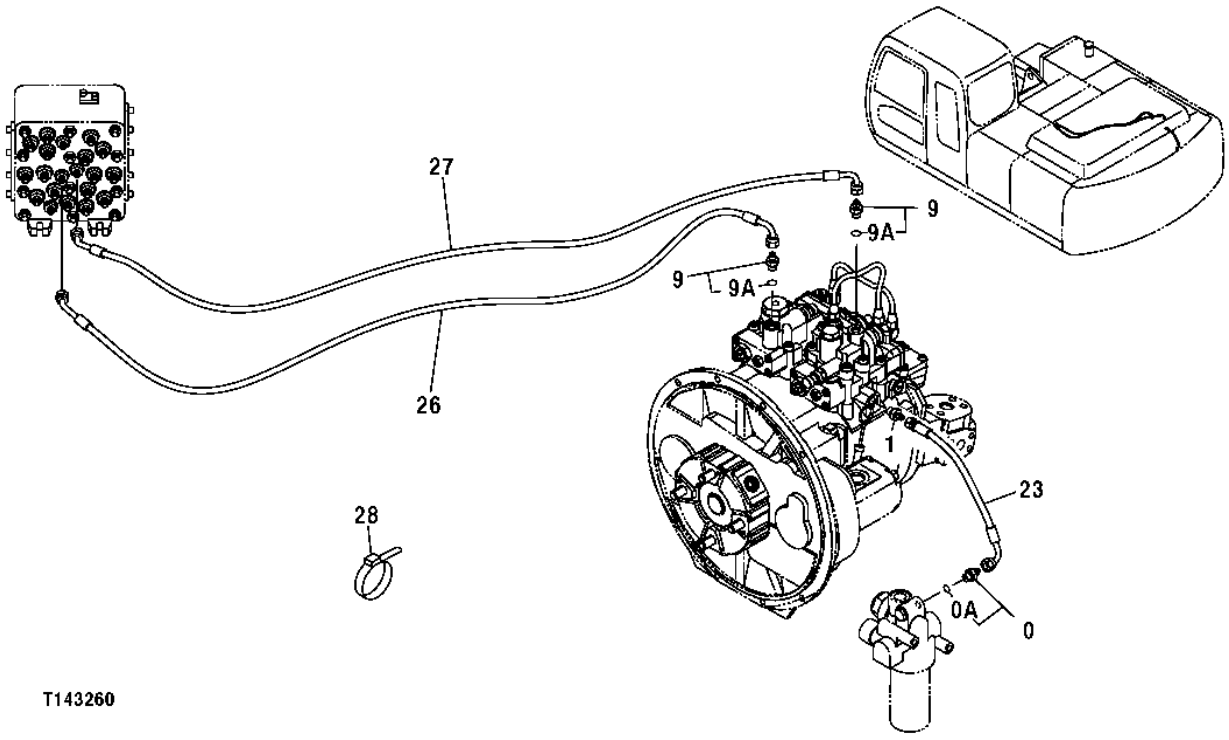

PILOT HYDRAULIC LINES

KEY	PART NO.	PART NAME	QTY	SERIAL NO.	REMARKS
0	P67968	ADAPTER	2		
0A	M800650	PACKING	1		
9	A852123	ADAPTER	2		
9A	M800650	PACKING	1		
23	DH400257	HYDRAULIC HOSE - FABRICATE	1		(SUB FOR TH4427359) (4427359 NOT USED FOR THIS APPLICATION)
26	4449771	HYDRAULIC HOSE - FABRICATE	1		(SUB FOR TH4449771)
27	4449772	HYDRAULIC HOSE - FABRICATE	1		(SUB FOR TH4449772)
28	H77698	TIE BAND	1		

PILOT LINES(CONTROL VALVE TO ROTARY AND SIGNAL MANIFOLD)
(SERIAL NUMBER -071103)

T164808 -UN-05FEB03

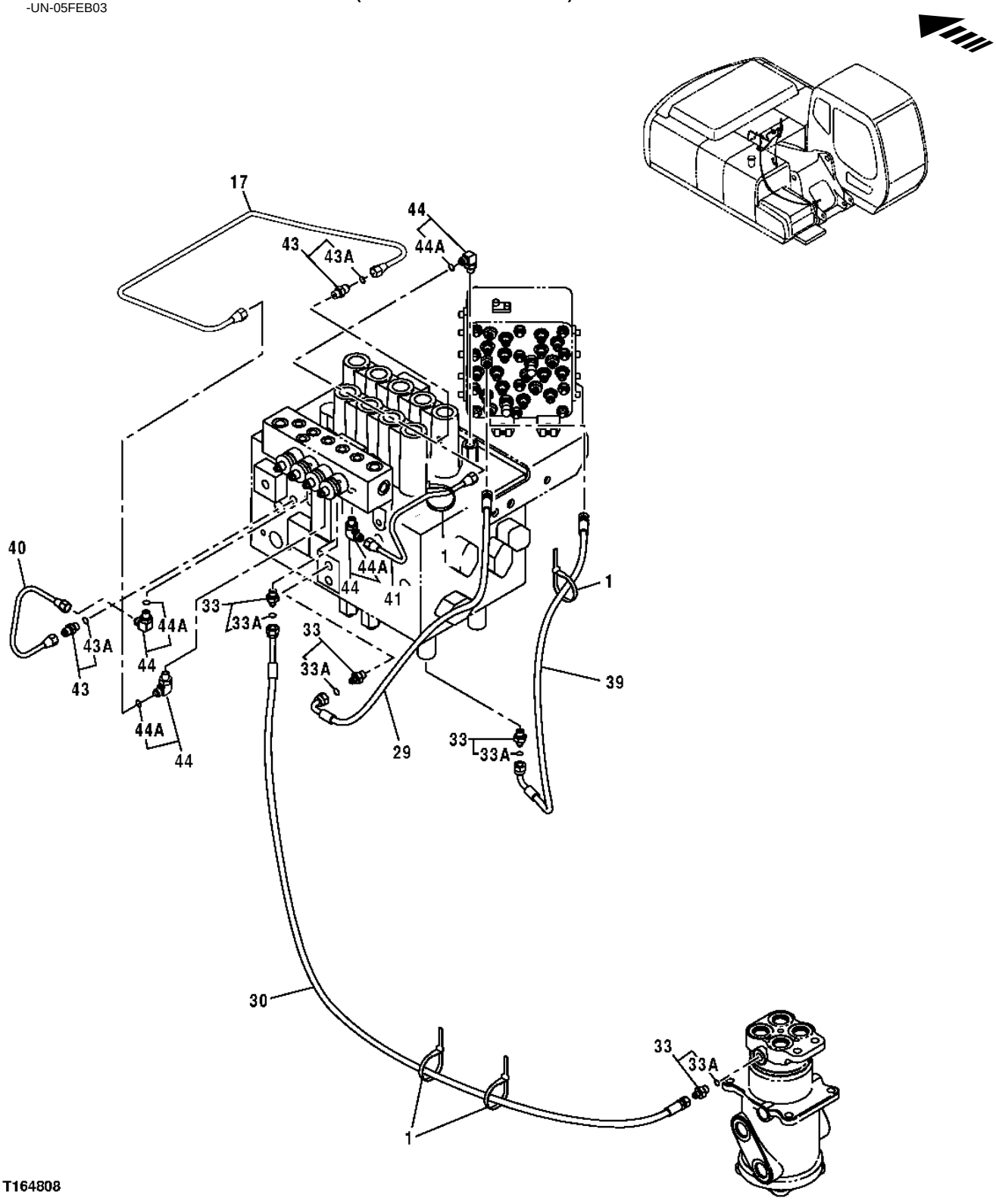

PILOT LINES(CONTROL VALVE TO ROTARY AND SIGNAL MANIFOLD)
(SERIAL NUMBER -071103)

KEY	PART NO.	PART NAME	QTY	SERIAL NO.	REMARKS
1	H77698	TIE BAND	4		
17	3091679	OIL LINE	1		
29	4427111	HYDRAULIC HOSE - FABRICATE	1		(SUB FOR TH4427111)
30	4437938	HYDRAULIC HOSE - FABRICATE	1		
33	P67968	ADAPTER	4		
33A	M800650	PACKING	1		
39	4435036	HYDRAULIC HOSE - FABRICATE	1		(SUB FOR TH4435036)
40	4452044	OIL LINE	1		(SUB FOR TH4452044)
41	4452045	OIL LINE	1		(SUB FOR TH4452045)
43	4255304	ADAPTER	2		(SUB FOR AT155270)
43A	M800650	PACKING	1		
44	4293950	ELBOW FITTING	4		(SUB FOR AT160584)
44A	M800650	PACKING	1		

PILOT LINES(CONTROL VALVE TO ROTARY AND SIGNAL MANIFOLD)
(SERIAL NUMBER 071104-)

T164824 -UN-05FEB03

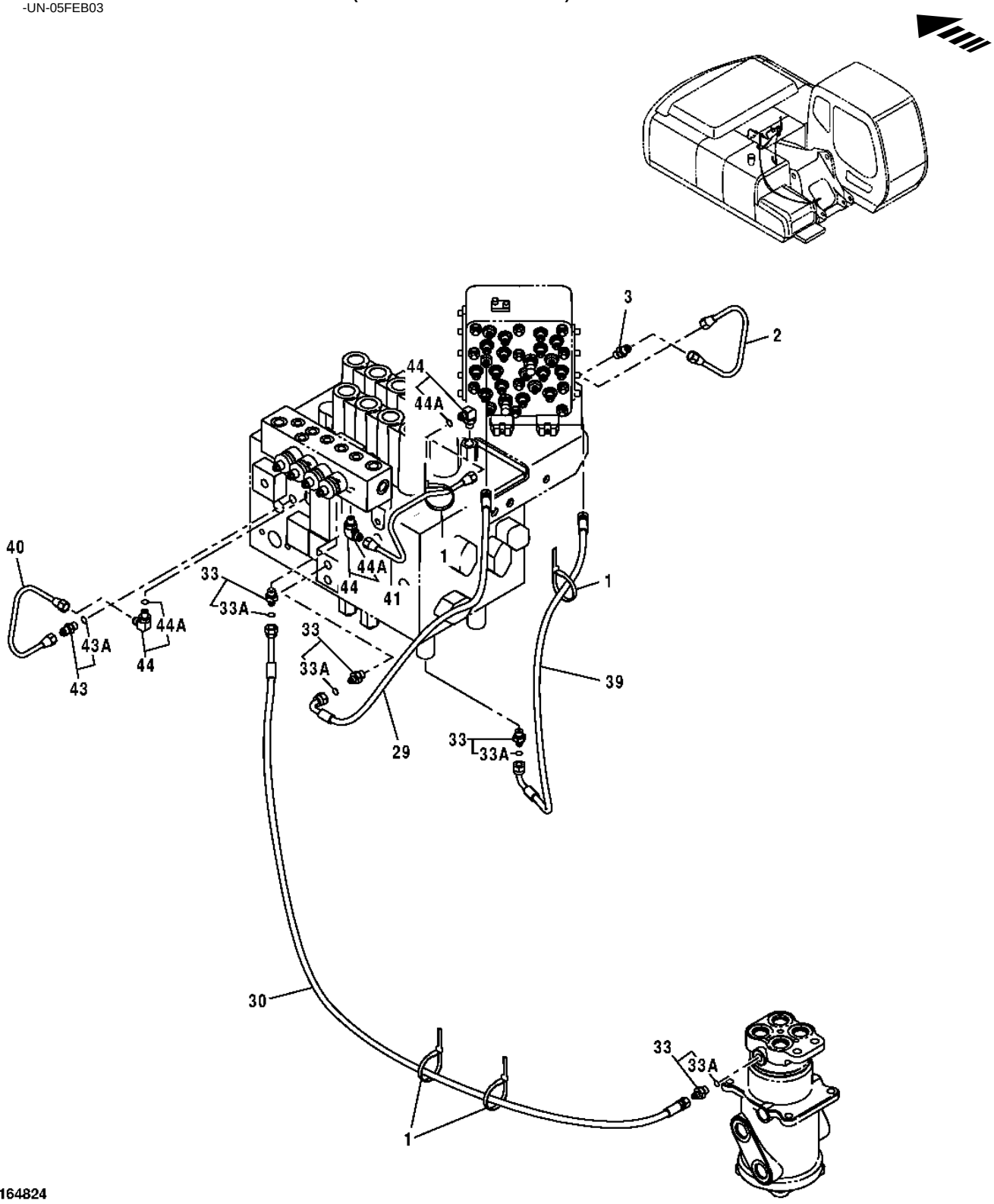

PILOT LINES(CONTROL VALVE TO ROTARY AND SIGNAL MANIFOLD)
(SERIAL NUMBER 071104-)

KEY	PART NO.	PART NAME	QTY	SERIAL NO.	REMARKS
1	H77698	TIE BAND	4		
2	4488663	HOSE	1		
3	A852122	ADAPTER	1		
29	4427111	HYDRAULIC HOSE - FABRICATE	1		(SUB FOR TH4427111)
30	4437938	HYDRAULIC HOSE - FABRICATE	1		
33	P67968	ADAPTER	4		
33A	M800650	PACKING	1		
39	4435036	HYDRAULIC HOSE - FABRICATE	1		(SUB FOR TH4435036)
40	4452044	OIL LINE	1		(SUB FOR TH4452044)
41	4452045	OIL LINE	1		(SUB FOR TH4452045)
43	4255304	ADAPTER	1		(SUB FOR AT155270)
43A	M800650	PACKING	1		
44	4293950	ELBOW FITTING	3		(SUB FOR AT160584)
44A	M800650	PACKING	1		

PILOT HYDRAULIC LINES

T147746 -UN-07JAN02

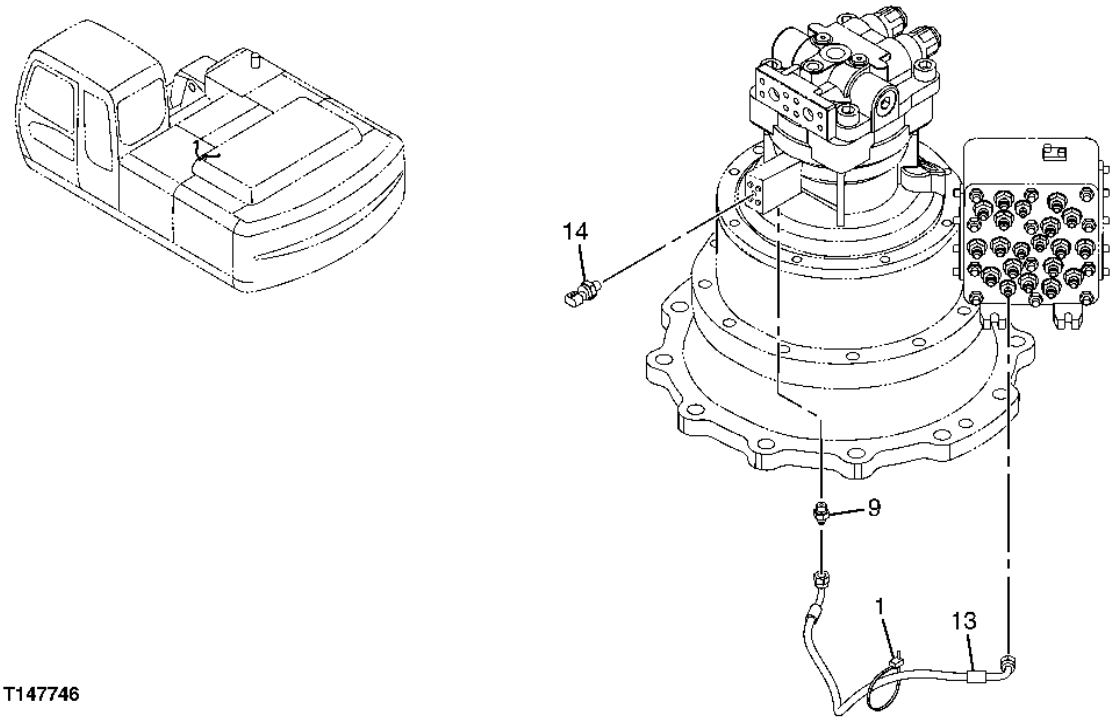

T147746

PILOT HYDRAULIC LINES

KEY	PART NO.	PART NAME	QTY	SERIAL NO.	REMARKS
1	H77698	TIE BAND	1		
9	.....	ADAPTER	1		
	M800650	PACKING	1		
13	4467914	HYDRAULIC HOSE	1		
14	4436535	SENSOR	1		(SUB FOR TH4436535)

PILOT HYDRAULIC LINES

T154041 -UN-16APR02

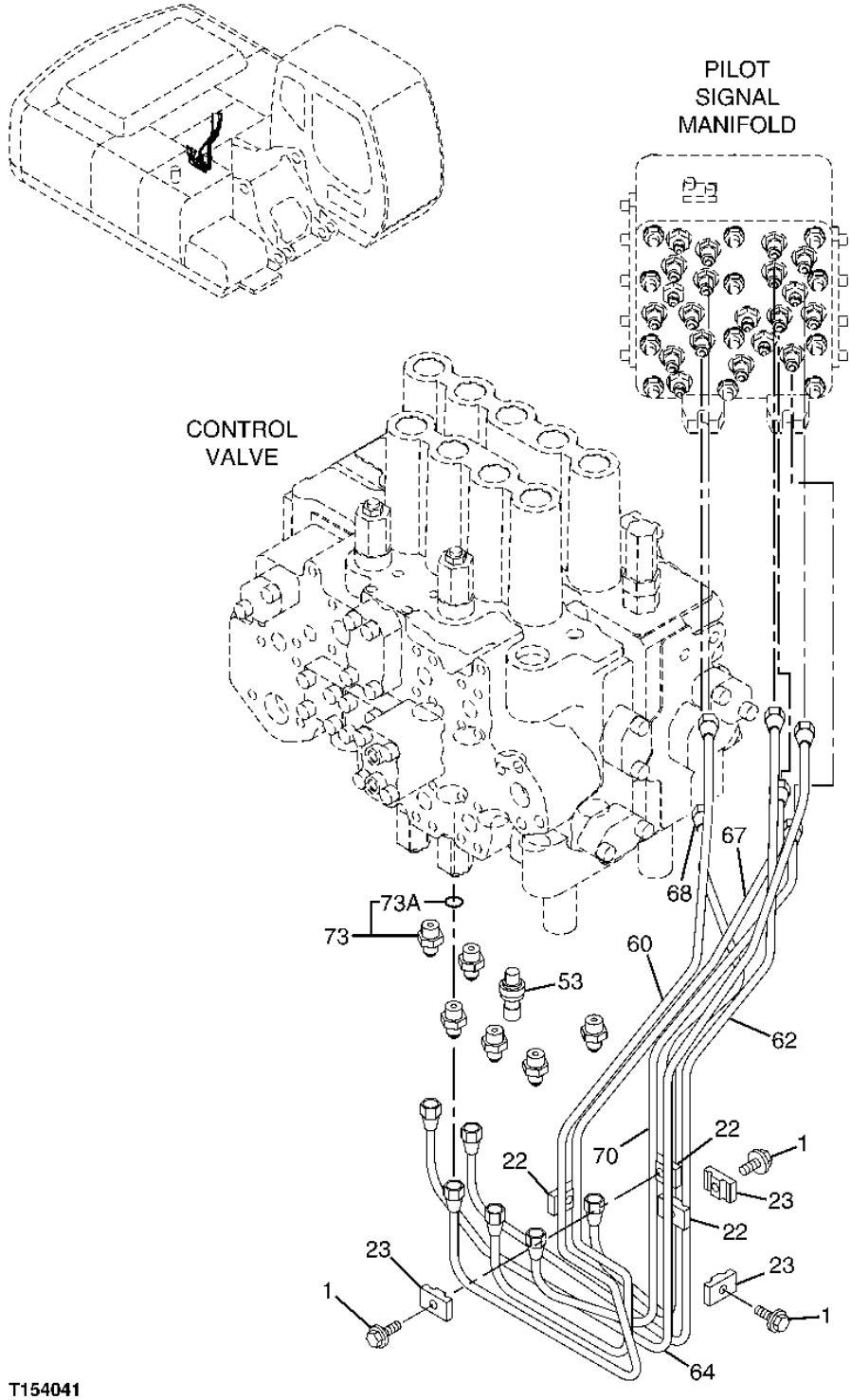

PILOT HYDRAULIC LINES

KEY	PART NO.	PART NAME	QTY	SERIAL NO.	REMARKS
1	19M7163	CAP SCREW	3		M8 X 25
	12M7056	LOCK WASHER	3		8 MM (0.315") (SUB FOR 12M7065)
22	9735305	CLAMP	3		(SUB FOR AP33637)
23	9735306	CLAMP	3		(SUB FOR AP33638)
53	4436535	SENSOR	1		(SUB FOR TH4436535)
	CH11570	O-RING	1		
60	3091680	OIL LINE	1		(SUB FOR TH3091680)
62	3091681	OIL LINE	1		(SUB FOR TH3091681)
64	3091682	OIL LINE	1		(SUB FOR TH3091682)
67	3091683	OIL LINE	1		(SUB FOR TH3091683)
68	3091684	OIL LINE	1		(SUB FOR TH3091684)
70	3091685	OIL LINE	1		(SUB FOR TH3091685)
73	4255305	ADAPTER	6		(SUB FOR AT213809)
73A	CH11570	O-RING	6		

PILOT HYDRAULIC LINES

T143265 -UN-11OCT01

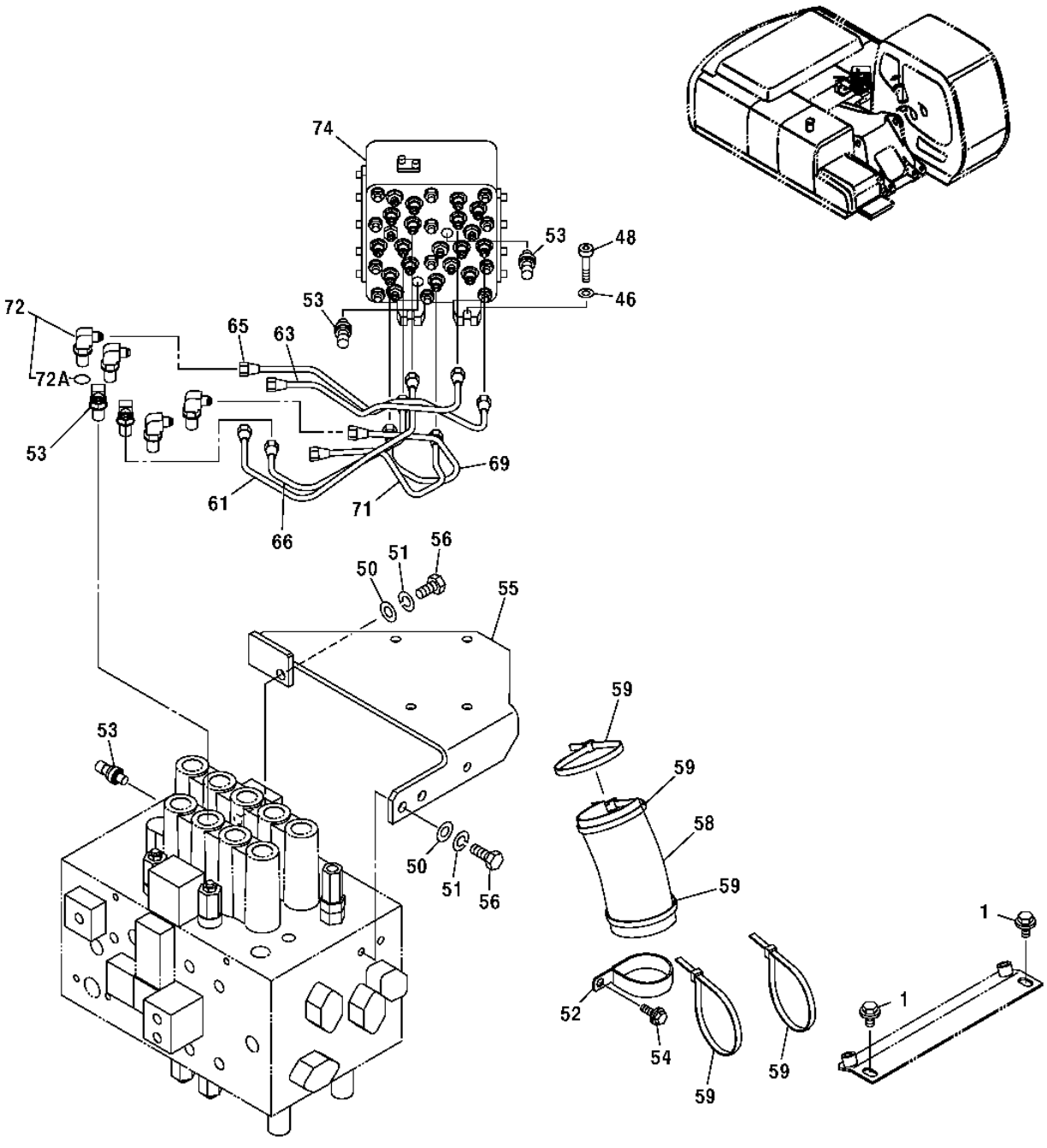

T143265

PILOT HYDRAULIC LINES

KEY	PART NO.	PART NAME	QTY	SERIAL NO.	REMARKS
1	19M7402	CAP SCREW	2		M10 X 25
	12M7058	LOCK WASHER	2		(SUB FOR 12M7067)
	24M7346	WASHER	2		
46	24M7028	WASHER	4		10.500 X 20 X 2 MM
48	J781040	SCREW	4		(SUB FOR AT213615)
50	12H317	LOCK WASHER	3		9/16"
51	24M7085	WASHER	3		15 X 28 X 2.500 MM
52	4204136	CLIP	1		(SUB FOR TH4204136)
53	4436535	SENSOR	3		(SUB FOR TH4436535)
	.....	O-RING	3		
54	19M7662	CAP SCREW	1		M10 X 30
55	8082452	BRACKET	1		(SUB FOR TH8082452)
56	19M6332	CAP SCREW	3		M14 X 35
58	4219918	BUSHING	1		(SUB FOR TH111416)
59	H77698	TIE BAND	5		
61	4452046	OIL LINE	1		(BOOM DOWN) (SUB FOR TH4452046)
63	4452047	OIL LINE	1		(ARM IN) (SUB FOR TH4452047)
65	4452048	OIL LINE	1		(RIGHT SWING) (SUB FOR TH4452048)
66	4452049	OIL LINE	1		(BUCKET CURL) (SUB FOR TH4452049)
69	4452050	OIL LINE	1		(LEFT PROPEL REVERSE) (SUB FOR TH4452050)
71	4452051	OIL LINE	1		(RIGHT PROPEL REVERSE) (SUB FOR TH4452051)
72	4420392	FITTING	6		(SUB FOR TH4420392)
72A	CH11570	O-RING	1		
74	4468337	FLOW CONTROL HYD. VALVE	1	-071103	(SHUTTLE)
	4486321	VALVE	1	071104-	(SHUTTLE)

PILOT HYDRAULIC LINES

T147783 -UN-07JAN02

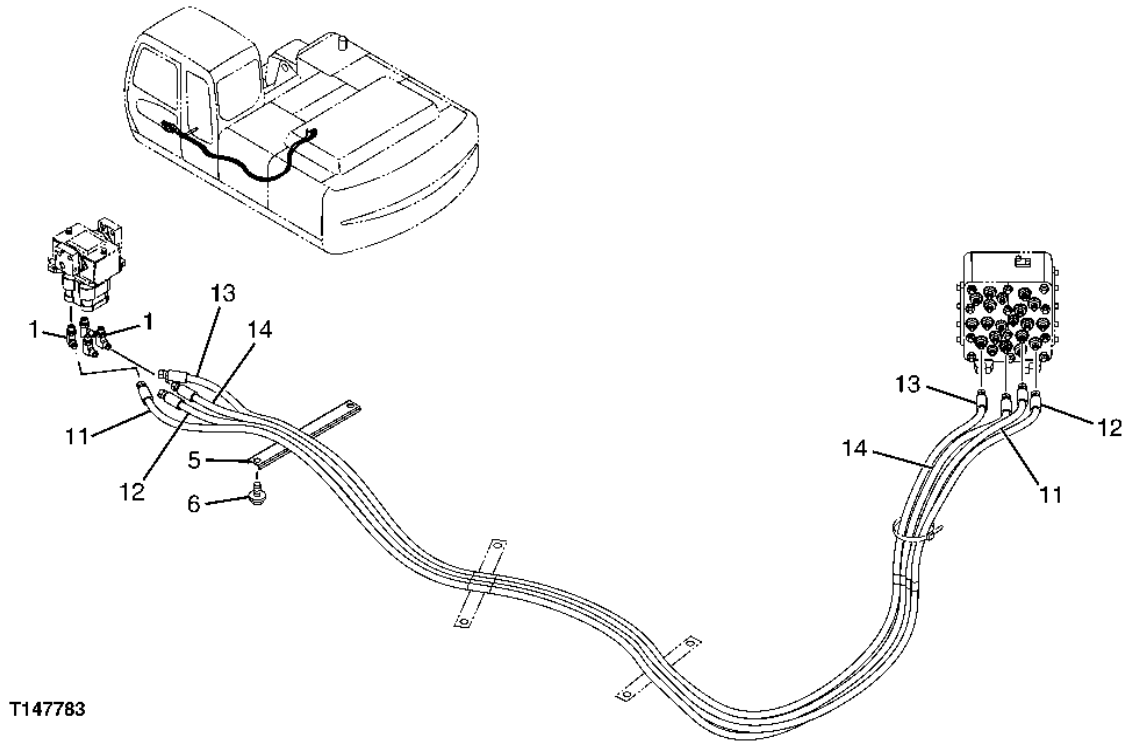

PILOT HYDRAULIC LINES

KEY	PART NO.	PART NAME	QTY	SERIAL NO.	REMARKS
1	A852323	ELBOW FITTING	4		
	M800650	PACKING	1		
5	4341877	CHANNEL	1		(SUB FOR AT213887)
6	19M7402	CAP SCREW	2		M10 X 25
	12M7096	LOCK WASHER	2		
	24M7096	WASHER	2		
11	4607990	HOSE	1		(SUB FOR TH4431841, 4431841)
12	4607850	HOSE	1		(SUB FOR 4431842)
13	4608801	HOSE	1		(SUB FOR TH4459263, 4459263)
14	4607964	HOSE	1		(SUB FOR 4431844)

PILOT HYDRAULIC LINES

T147785 -UN-07JAN02

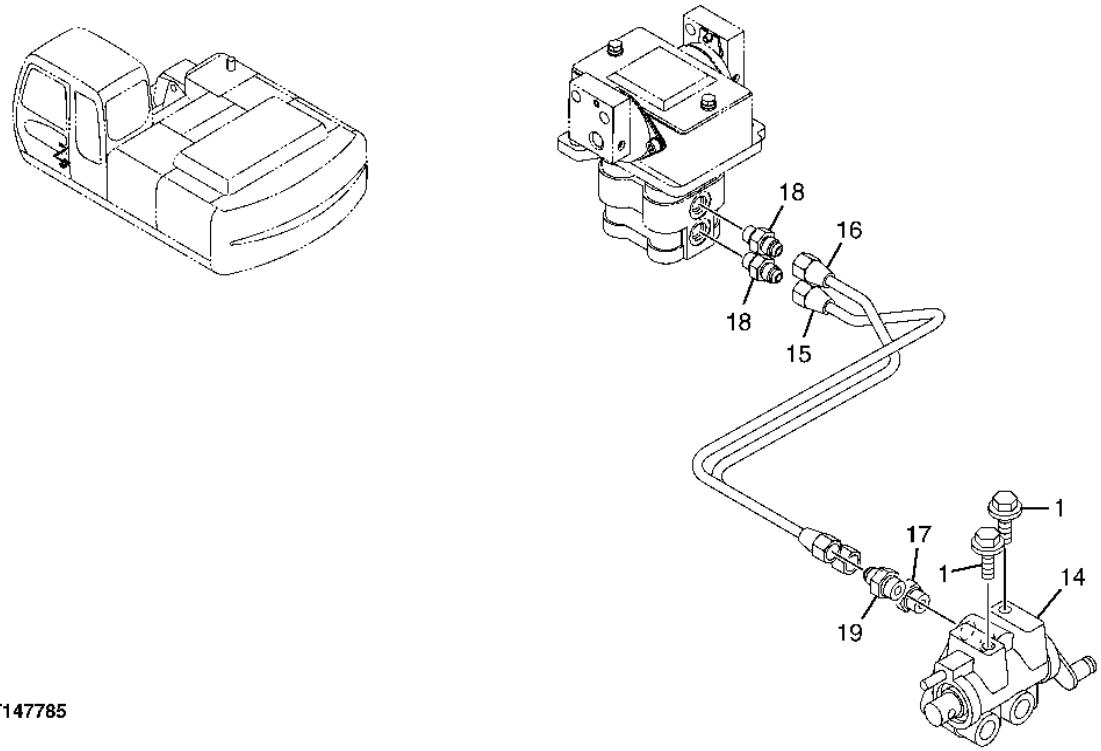

T147785

PILOT HYDRAULIC LINES

KEY	PART NO.	PART NAME	QTY	SERIAL NO.	REMARKS
1	19M7402	CAP SCREW	2		M10 X 25
	12M7066	LOCK WASHER	2		
	24M7028	WASHER	2		
14	4407253	FLOW CONTROL HYD. VALVE	1		
15	4452052	OIL LINE	1	-XXXXXX	
	4607398	OIL LINE	1	XXXXXX-	
16	4452053	OIL LINE	1	-XXXXXX	
	4607399	OIL LINE	1	XXXXXX-	
17	4255305	ADAPTER	1		(SUB FOR AT213809)
	CH11570	O-RING	1		
18	4255304	ADAPTER	2		(SUB FOR AT155270)
	M800650	PACKING	1		
19	4452326	FILTER ELEMENT	1		
	CH11570	O-RING	1		

PILOT HYDRAULIC LINES

T147836 -UN-07JAN02

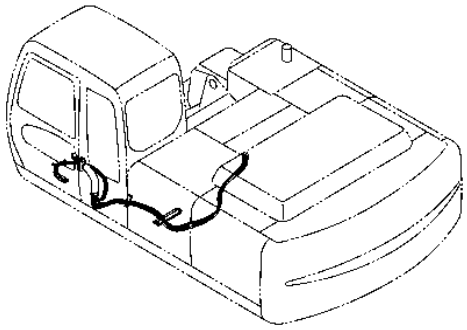

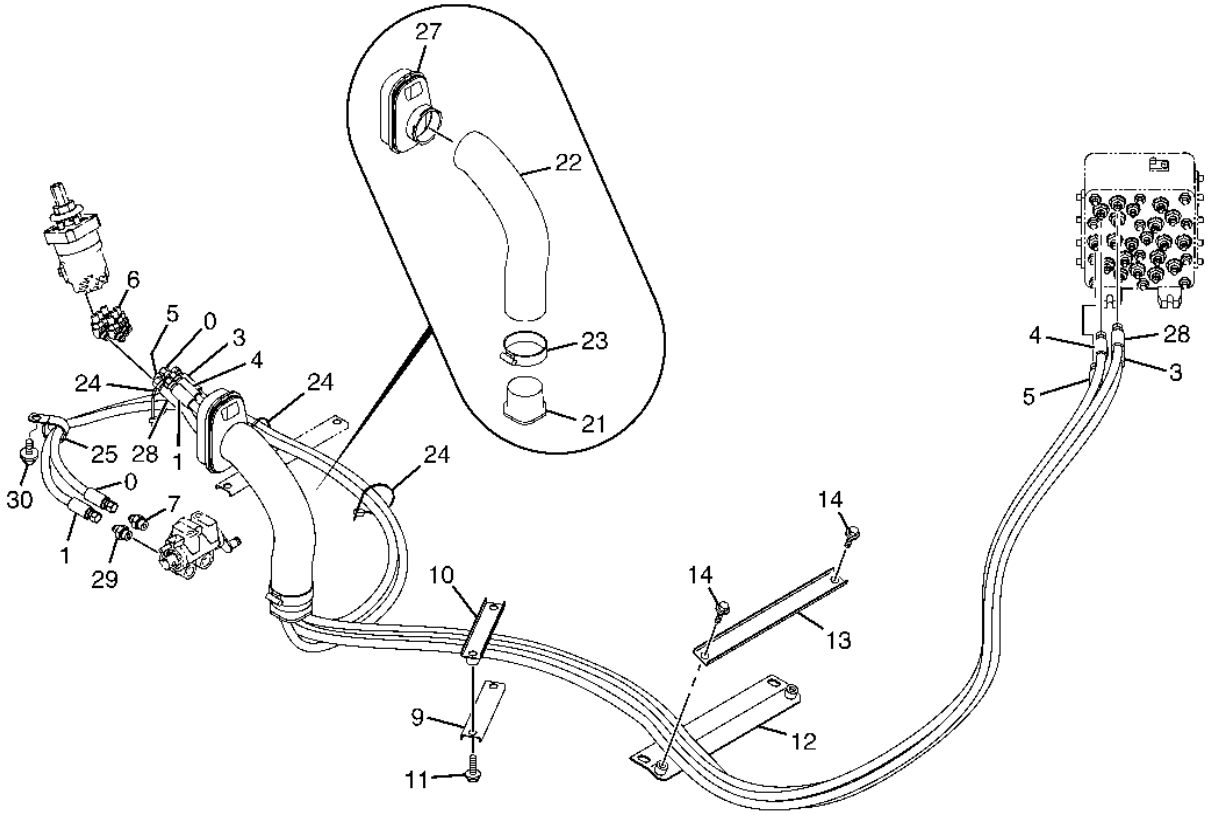

T147836

PILOT HYDRAULIC LINES

KEY	PART NO.	PART NAME	QTY	SERIAL NO.	REMARKS
0	4437653	HYDRAULIC HOSE - FABRICATE	1		(SUB FOR TH4437653)
1	4437656	HYDRAULIC HOSE - FABRICATE	1		(SUB FOR TH4437656)
3	TH4437634	HYDRAULIC HOSE	1		
4	TH4437636	HYDRAULIC HOSE	1		
5	TH4437637	HYDRAULIC HOSE	1		
6	A852223	ELBOW FITTING	6		(SUB FOR THA852223)
	M800650	PACKING	1		
7	A852133	ADAPTER	1		(SUB FOR P67978)
	CH11570	O-RING	1		
9	4412666	CLAMP	1		(SUB FOR TH4412666)
10	9751787	CLAMP	1		(SUB FOR TH9751787)
11	19M7358	CAP SCREW	2		M10 X 40
	12M7066	LOCK WASHER	2		10 MM
12	8077444	BRACKET	1		(SUB FOR TH8077444)
13	4425177	CLAMP	1		(SUB FOR TH4425177)
14	19M7402	CAP SCREW	2		M10 X 25
	12M7066	LOCK WASHER	2		10 MM
	24M7028	WASHER	2		10.500 X 20 X 2 MM
21	3079728	BUSHING	1		(SUB FOR AT250589)
22	4351175	HOSE	1		(SUB FOR AT213957)
23	4351774	CLAMP	1		(SUB FOR AT213962)
24	H77698	TIE BAND	3		
25	AT121321	HOSE CLAMP	1		
27	2045998	BUSHING	1		(SUB FOR TH2045998)
28	TH4444732	HYDRAULIC HOSE	1		
29	4261938	FITTING	1		(SUB FOR AT154285)
	CH11570	O-RING	1		
30	19M7938	CAP SCREW	1		M10 X 20

PILOT HYDRAULIC LINES

T148088 -UN-07JAN02

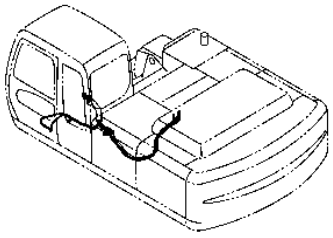

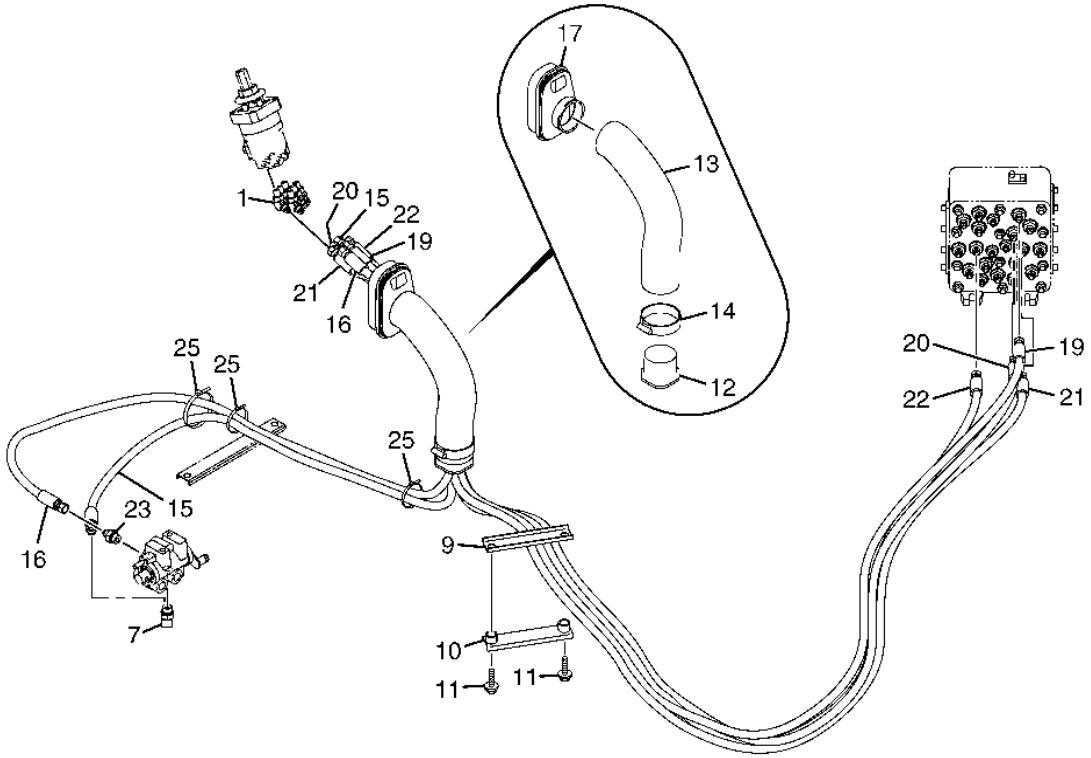

T148088

PILOT HYDRAULIC LINES

KEY	PART NO.	PART NAME	QTY	SERIAL NO.	REMARKS
1	A852223	ELBOW FITTING	6		(SUB FOR THA852223)
	M800650	PACKING	1		
7	P67989	ELBOW FITTING	1		
	CH11570	O-RING	1		
9	4412666	CLAMP	1		(SUB FOR TH4412666)
10	9751787	CLAMP	1		(SUB FOR TH9751787)
11	19M7358	CAP SCREW	2		M10 X 40
	12M7066	LOCK WASHER	2		10 MM
12	3079728	BUSHING	1		(SUB FOR AT250589)
13	4351175	HOSE	1		(SUB FOR AT213957)
14	4351774	CLAMP	1		(SUB FOR AT213962)
15	4438288	HYDRAULIC HOSE - FABRICATE	1		(SUB FOR TH4438288)
16	4438290	HYDRAULIC HOSE	1		(SUB FOR TH4438290)
17	2045998	BUSHING	1		(SUB FOR TH2045998)
19	TH4443896	HYDRAULIC HOSE	1		
20	4446841	HYDRAULIC HOSE - FABRICATE	1		(SUB FOR TH4443902 OR 4443902)
21	4446841	HYDRAULIC HOSE - FABRICATE	1		(SUB FOR TH4444719 OR 4444719)
22	TH4444720	HYDRAULIC HOSE	1		
23	4261938	FITTING	1		(SUB FOR AT154285)
	CH11570	O-RING	1		
25	H77698	TIE BAND	3		

PILOT HYDRAULIC LINES(SERIAL NUMBER -XXXXXX)

T153975 -UN-16APR02

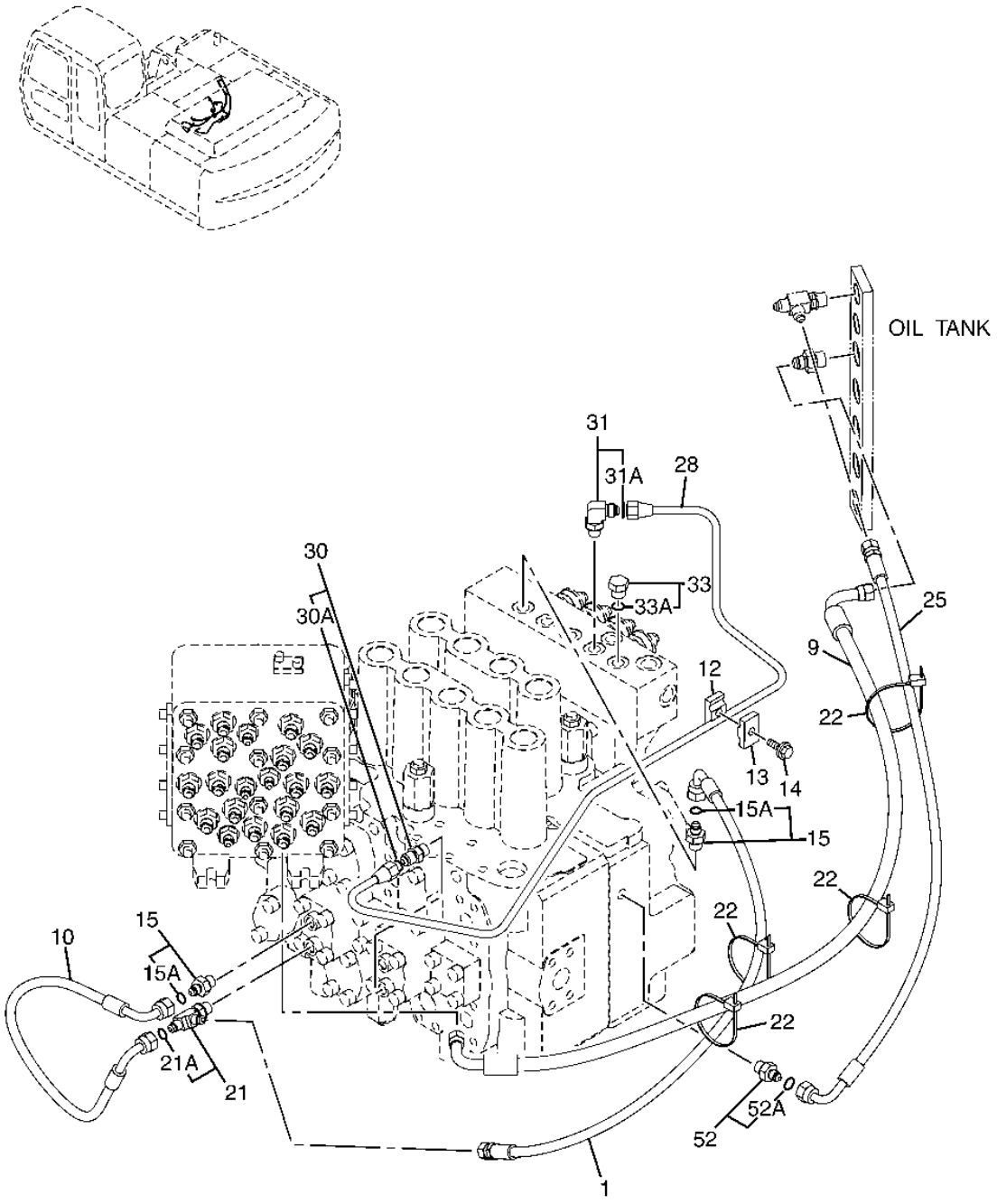

T153975

PILOT HYDRAULIC LINES(SERIAL NUMBER -XXXXXX)

KEY	PART NO.	PART NAME	QTY	SERIAL NO.	REMARKS
1	4427127	HYDRAULIC HOSE - FABRICATE	1		(ALSO ORDER 4327293, HOSE SLEEVE) (4468525 NOT USED FOR THIS APPLICATION)
	4327293	HOSE GUARD	1		
9	4437950	HYDRAULIC HOSE - FABRICATE	1		(ALSO ORDER 4327293 BULK HOSE COVER, CUT TO 200MM) (SUB FOR TH4437950)
	4327293	HOSE GUARD	1		
10	4427351	HYDRAULIC HOSE - FABRICATE	1		(SUB FOR TH4427351)
12	9735305	CLAMP	1		(SUB FOR AP33637)
13	9735306	CLAMP	1		(SUB FOR AP33638)
14	19M7163	CAP SCREW	1		M8 X 25
15	P67968	ADAPTER	3		
15A	M800650	PACKING	1		
21	A852422	TEE FITTING	1		(SUB FOR THA852422)
21A	M800650	PACKING	1		
22	H77698	TIE BAND	4		
25	4444735	HYDRAULIC HOSE - FABRICATE	1		(SUB FOR TH4444735)
28	3091686	OIL LINE	1		(SUB FOR TH3091686)
30	4255304	ADAPTER	1		(SUB FOR AT155270)
	M800650	PACKING	1		
30A	M800650	PACKING	1		
31	4293950	ELBOW FITTING	1		(SUB FOR AT160584)
	M800650	PACKING	1		
31A	M800650	PACKING	1		
33	A885002	PLUG	2		(SUB FOR THA885002)
33A	M800650	PACKING	1		
52	4200465	ADAPTER	1		(SUB FOR TH108328)
52A	M800650	PACKING	1		

PILOT HYDRAULIC LINES(SERIAL NUMBER XXXXXX-)

T165132 -UN-10FEB03

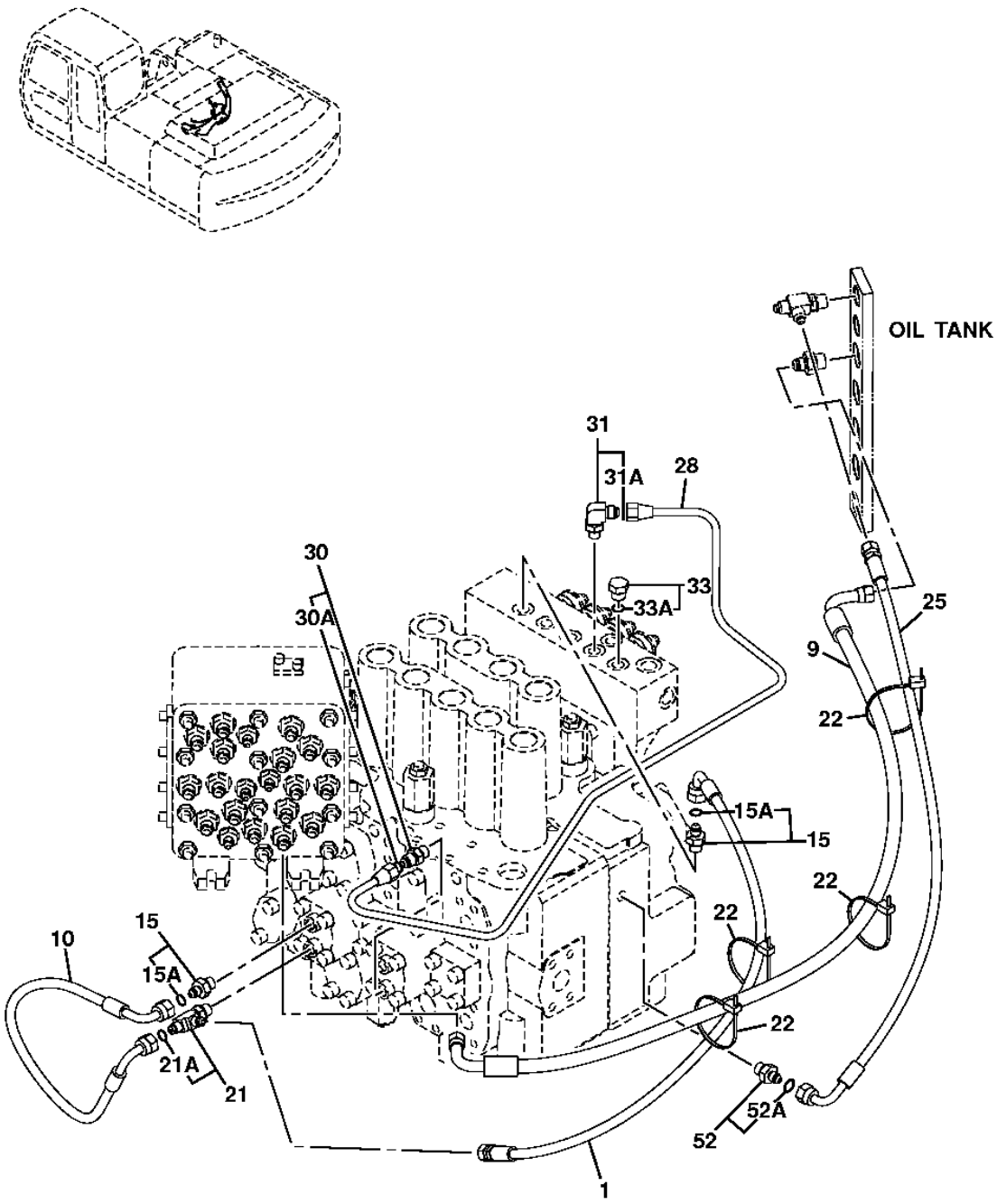

T165132

PILOT HYDRAULIC LINES(SERIAL NUMBER XXXXXX-)

KEY	PART NO.	PART NAME	QTY	SERIAL NO.	REMARKS
1	4427127	HYDRAULIC HOSE - FABRICATE	1		(ALSO ORDER 4327293, HOSE SLEEVE) (4468525 NOT USED FOR THIS APPLICATION)
	4327293	HOSE GUARD	1		
9	4437950	HYDRAULIC HOSE - FABRICATE	1		(ALSO ORDER 4327293 BULK HOSE COVER, CUT TO 200MM) (SUB FOR TH4437950)
	4327293	HOSE GUARD	1		(200MM)
10	4427351	HYDRAULIC HOSE - FABRICATE	1		(SUB FOR TH4427351)
15	P67968	ADAPTER	3		
15A	M800650	PACKING	1		
21	A852422	TEE FITTING	1		(SUB FOR THA852422)
21A	M800650	PACKING	1		
22	H77698	TIE BAND	4		
25	4444735	HYDRAULIC HOSE - FABRICATE	1		(SUB FOR TH4444735)
28	3091686	OIL LINE	1		(SUB FOR TH3091686)
30	4255304	ADAPTER	1		(SUB FOR AT155270)
	M800650	PACKING	1		
30A	M800650	PACKING	1		
31	4293950	ELBOW FITTING	1		(SUB FOR AT160584)
	M800650	PACKING	1		
31A	M800650	PACKING	1		
33	A885002	PLUG	2		(SUB FOR THA885002)
33A	M800650	PACKING	1		
52	4200465	ADAPTER	1		(SUB FOR TH108328)
52A	M800650	PACKING	1		

PILOT HYDRAULIC LINES

T153977 -UN-16APR02

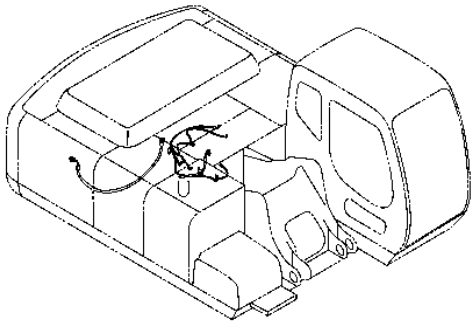

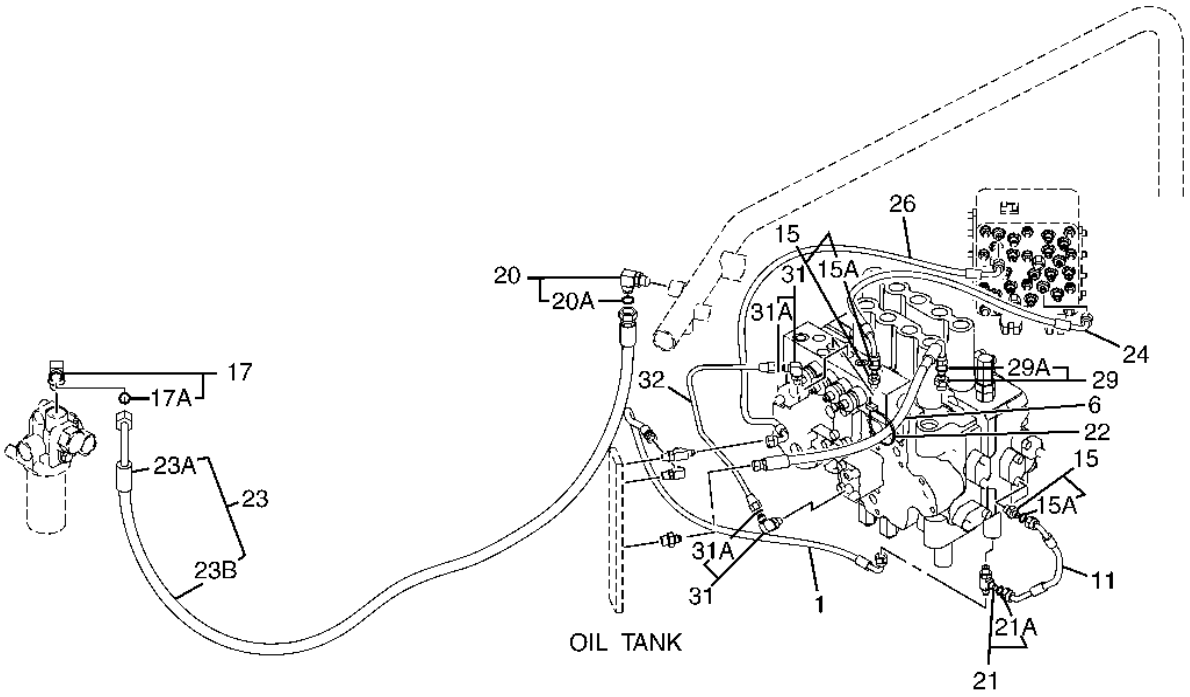

T153977

PILOT HYDRAULIC LINES

KEY	PART NO.	PART NAME	QTY	SERIAL NO.	REMARKS
1	4437943	HYDRAULIC HOSE - FABRICATE	1		(SUB FOR TH4437943)
6	4437944	HYDRAULIC HOSE - FABRICATE	1		(SUB FOR TH4437944)
11	4427357	HYDRAULIC HOSE - FABRICATE	1		(SUB FOR TH4427357)
15	A852122	ADAPTER	2		
15A	M800650	PACKING	2		
17	A852344	ELBOW FITTING	1		
17A	4506418	O-RING	1		
20	A852334	ELBOW FITTING	1		(SUB FOR THA852334)
20A	CH11570	O-RING	1		
21	A852422	TEE FITTING	1		
21A	M800650	PACKING	1		
22	H77698	TIE BAND	1		
23	.....	HYDRAULIC HOSE	1		(TH9191786 NOT AVAILABLE FOR SERVICE
23A	4331726	HOSE	1		(SUB FOR TH4331726)
23B	4327293	HOSE GUARD	3		(SUB FOR AT213831)
24	4442812	HYDRAULIC HOSE - FABRICATE	1		(SUB FOR TH4442812)
26	4444461	HYDRAULIC HOSE - FABRICATE	1		(SUB FOR TH4444461)
29	A852133	ADAPTER	1		(SUB FOR P67978)
29A	CH11570	O-RING	1		
31	4293950	ELBOW FITTING	2		(SUB FOR AT160584)
31A	M800650	PACKING	1		
32	4452054	OIL LINE	1		(SUB FOR TH4452054)

PILOT HYDRAULIC LINES

T147798 -UN-07JAN02

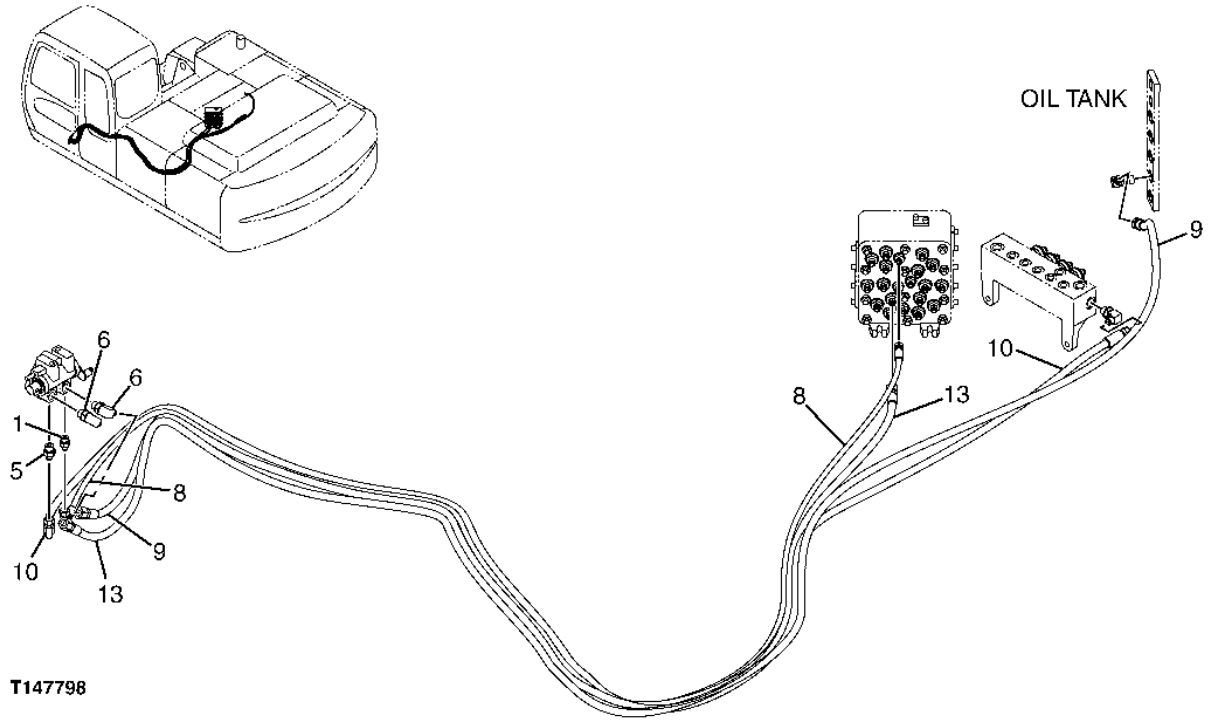

PILOT HYDRAULIC LINES

KEY	PART NO.	PART NAME	QTY	SERIAL NO.	REMARKS
1	P67968	ADAPTER	1		
	M800650	PACKING	1		
5	A852133	ADAPTER	1		(SUB FOR P67978)
	CH11570	O-RING	1		
6	P67989	ELBOW FITTING	2		
	CH11570	O-RING	1		
8	TH4442173	HYDRAULIC HOSE	1		
9	TH4444729	HYDRAULIC HOSE	1		
10	TH4444730	HYDRAULIC HOSE	1		
13	TH4465617	HYDRAULIC HOSE	1		

FRONT HYDRAULIC LINES

T147865 -UN-07JAN02

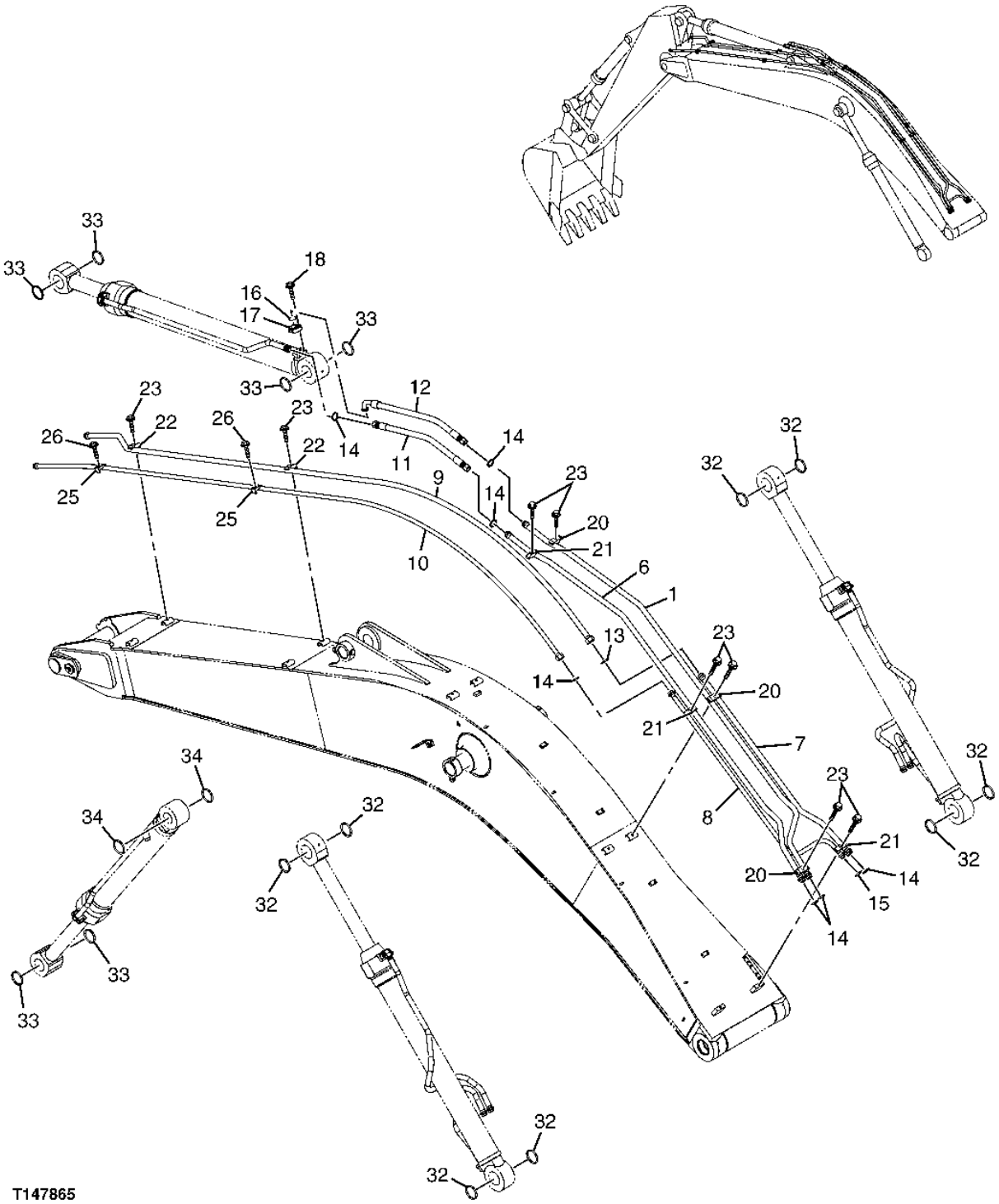

FRONT HYDRAULIC LINES

KEY	PART NO.	PART NAME	QTY	SERIAL NO.	REMARKS
1	8066502	OIL TUBE	1		(SUB FOR AT218026)
6	8066503	OIL TUBE	1		(SUB FOR AT218027)
7	9746887	OIL TUBE	1		(SUB FOR AT218046)
8	9746888	OIL TUBE	1		(SUB FOR AT218047)
9	8066506	OIL TUBE	1		(SUB FOR AT218028)
10	8066507	OIL TUBE	1		(SUB FOR AT218029)
11	AT159574	HYDRAULIC HOSE - FABRICATE	1		
12	AT131302	HYDRAULIC HOSE - FABRICATE	1		
13	T78612	O-RING	1		
14	T76938	O-RING	7		
15	T77858	O-RING	1		
16	T78313	O-RING	1		
17	4085560	FLANGE FITTING	2		(SUB FOR TH101960)
18	J781240	BOLT	4		(SUB FOR AT214413)
20	4189860	CLAMP	3		(SUB FOR TH108314)
21	4153488	CLAMP	3		(SUB FOR TH103780)
22	4190127	CLAMP	2		(SUB FOR TH108313)
23	19M8348	CAP SCREW	8		M12 X 65
	12H301	LOCK WASHER	8		
25	4190126	CLAMP	2		(SUB FOR TH109830)
26	19M7363	CAP SCREW	2		M12 X 60
	12H301	LOCK WASHER	2		
32	TH102411	SEAL	8		
33	TH102445	SEAL	6		
34	TH102446	SEAL	2		

SUPER LONG FRONT BOOM PLUMBING

T206694 -UN-07JAN05

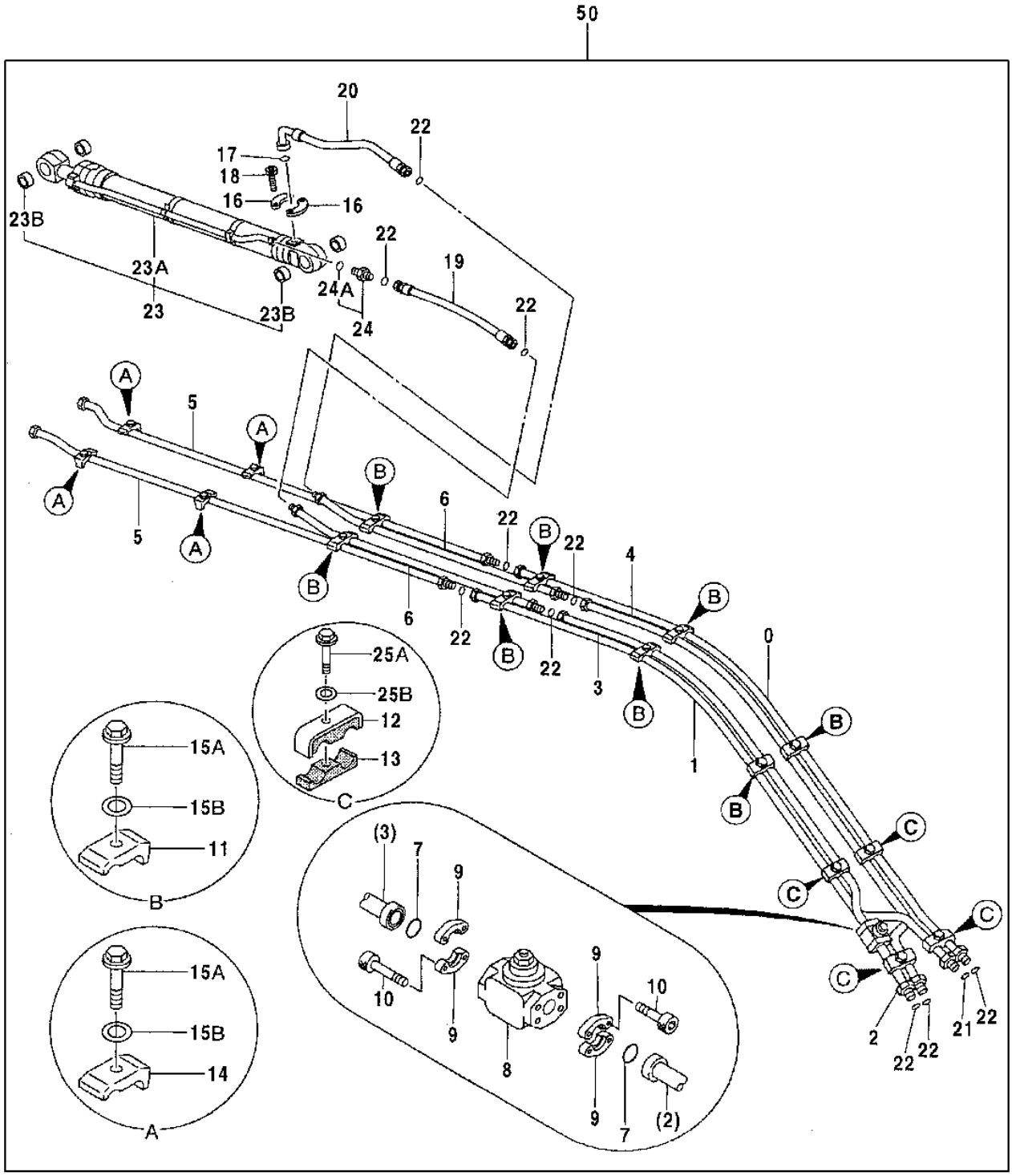

T206694

SUPER LONG FRONT BOOM PLUMBING

KEY	PART NO.	PART NAME	QTY	SERIAL NO.	REMARKS
0	8100183	PIPE	1		
1	8069730	TUBE	1		
2	9764181	PIPE	1		
3	8069731	TUBE	1		
4	8069732	TUBE	1		
5	8063527	PIPE	2		
6	8063526	TUBE	2		
7	T59014	O-RING	2		(SUB FOR 971489)
8	4330223	FLOW CONTROL HYD. VALVE	1		
9	R29424	FLANGE FITTING	4		(SUB FOR 986910)
10	19M8337	SCREW	8		M10 X 30, (SUB FOR M341030)
11	4189859	CLAMP	8		
12	4285723	CLAMP	4		
13	AT318021	CLAMP	4		(SUB FOR 4285722)
14	4190126	CLAMP	4		
15A	19M7363	CAP SCREW	12		M12 X 60, (SUB FOR J901260)
15B	24M7345	WASHER	12		13.500 X 24 X 2.500 MM, (SUB FOR J222012)
16	4085560	FLANGE FITTING	2		
17	T78313	O-RING	1		(SUB FOR 966993)
18	19M8395	SCREW	4		M12 X 40, (SUB FOR M341240)
19	AT159574	HYDRAULIC HOSE - FABRICATE	1		(SUB FOR 4272697)
20	AT131302	HYDRAULIC HOSE - FABRICATE	1		(SUB FOR 4252855)
21	T77858	O-RING	1		(SUB FOR 4187308)
22	T76938	O-RING	8		(SUB FOR 4187328)
23	.....	HYDRAULIC CYLINDER	1		(9162869 NOT AVAILABLE FOR SERVICE)
23A	4388916	HYDRAULIC CYLINDER	1		
23B	4358100	BUSHING	4		
24	4189535	ADAPTER	1		
24A	TH101926	O-RING	1		(SUB FOR 4506429)
25A	19M7753	CAP SCREW	1		M12 X 70, (SUB FOR J901270)
25B	24M7345	WASHER	1		13.500 X 24 X 2.500 MM, (SUB FOR J222012)
50	**AT314803**	**KIT**	**1**		**(WHOLEGOODS) (SUPER LONG FRONT KIT) (CONTAINS ALL ITEMS ON THIS PAGE - ADDITIONAL COMPONENTS LISTED ON SEPARATE PAGES) (ALSO ORDER T211127 INSTALLATION INSTRUCTION, T211136 LIFT CHART LABEL, T153672 LONG FRONT LABEL, T153673 PERIODIC MAINTENANCE LABEL, AND (2) T185126 BOOM LABELS)**

SUPER LONG FRONT BOOM PLUMBING

T201447 -UN-13JUL04

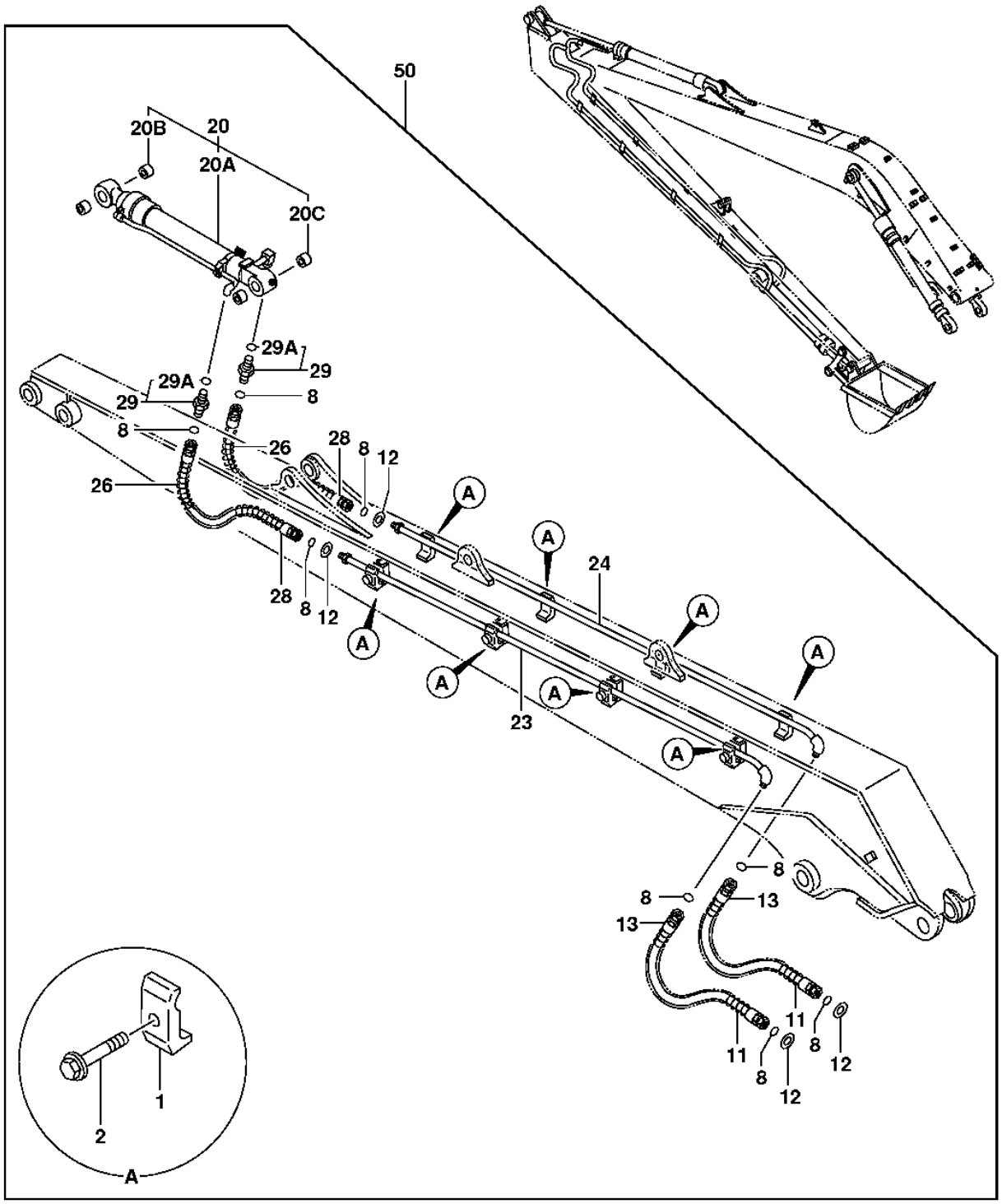

T201447

SUPER LONG FRONT BOOM PLUMBING

KEY	PART NO.	PART NAME	QTY	SERIAL NO.	REMARKS
1	4190126	CLAMP	8		
2	19M7363	CAP SCREW	8		M12 X 60, (SUB FOR J011260)
8	T77858	O-RING	8		(SUB FOR 4187308)
11	4055191	HOSE GUARD	2		
12	4203220	WASHER	4		
13	4250078	HOSE	2		
20	.....	HYDRAULIC CYLINDER	1		(9156726 NOT AVAILABLE FOR SERVICE)
20A	4379259	HYDRAULIC CYLINDER	1		
20B	4365448	BUSHING	2		
20C	4365897	BUSHING	2		
23	8063930	PIPE	1		
24	8063931	PIPE	1		
26	4053610	HOSE GUARD	2		
28	AT154876	HYDRAULIC HOSE - FABRICATE	2		(SUB FOR 4250889)
29	4197530	ADAPTER	2		
29A	4506418	O-RING	1		
50	**AT314803**	**KIT**	**1**		**(WHOLEGOODS) (SUPER LONG FRONT KIT) (CONTAINS ALL ITEMS ON THIS PAGE - ADDITIONAL COMPONENTS LISTED ON SEPARATE PAGES) (ALSO ORDER T211127 INSTALLATION INSTRUCTION, T211136 LIFT CHART LABEL, T153672 LONG FRONT LABEL, T153673 PERIODIC MAINTENANCE LABEL, AND (2) T185126 BOOM LABELS)**

LUBRICATION HYDRAULIC LINES

T148379 -UN-07JAN02

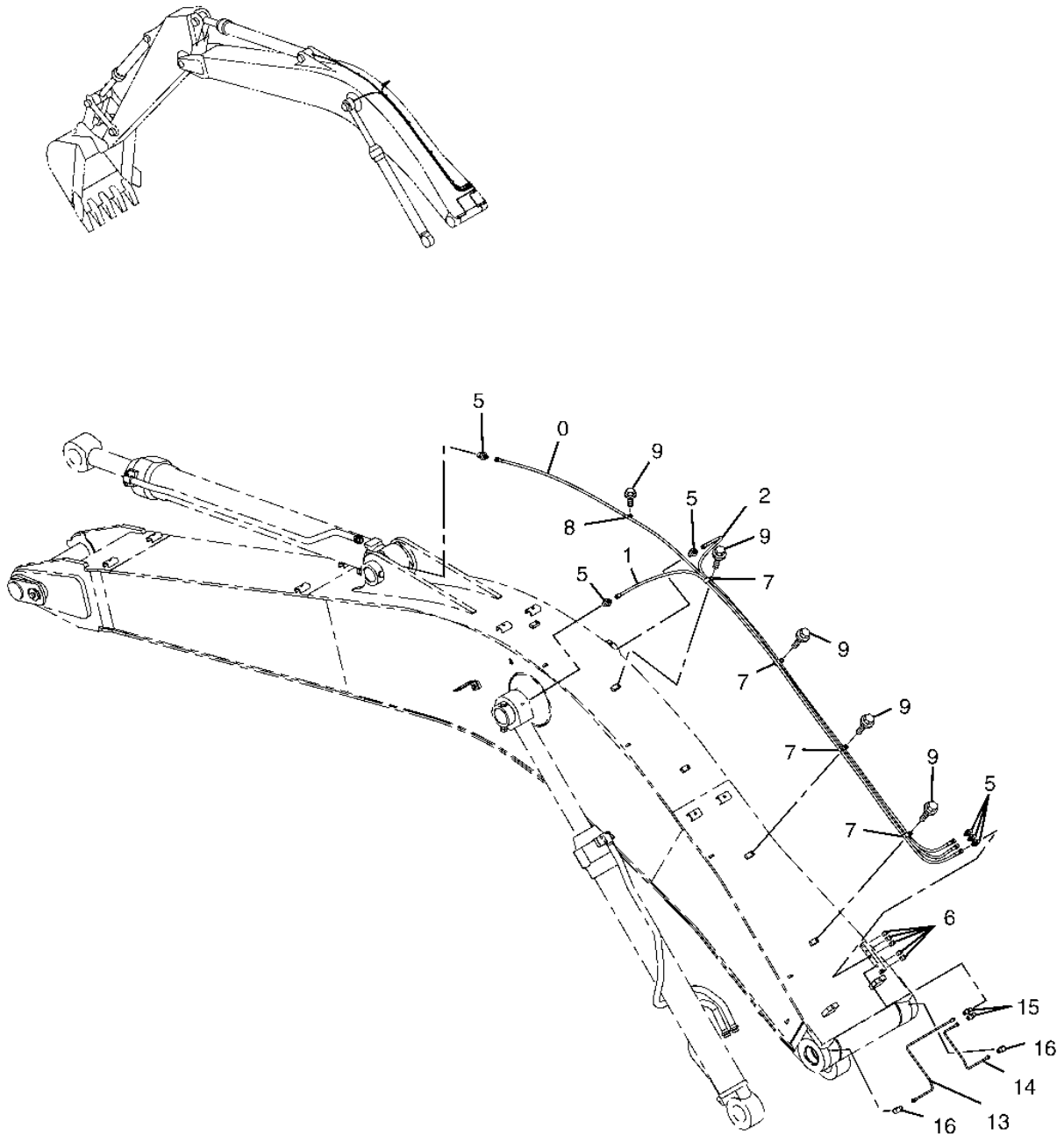

T148379

LUBRICATION HYDRAULIC LINES

KEY	PART NO.	PART NAME	QTY	SERIAL NO.	REMARKS
0	TH4437273	HYDRAULIC HOSE	1		
1	TH4437274	HYDRAULIC HOSE	1		
2	TH4437275	HYDRAULIC HOSE	1		
5	4154651	ADAPTER	6		(SUB FOR TH100963)
6	TH100364	LUBRICATION FITTING	5		
7	T152608	CLAMP	4		
8	4190261	CLIP	1		(SUB FOR TH109649)
9	19M8324	CAP SCREW	5		M10 X 16
	12M7058	LOCK WASHER	5		(SUB FOR 12M7067)
13	4372966	OIL TUBE	1		(SUB FOR AT217819)
14	4372967	OIL TUBE	1		(SUB FOR AT217820)
15	4360981	ADAPTER	2		(SUB FOR AT176256)
16	4345297	ELBOW FITTING	2		(SUB FOR AT176258)

LUBRICATE LINES, SUPER LONG FRONT

T201448 -UN-14JUL04

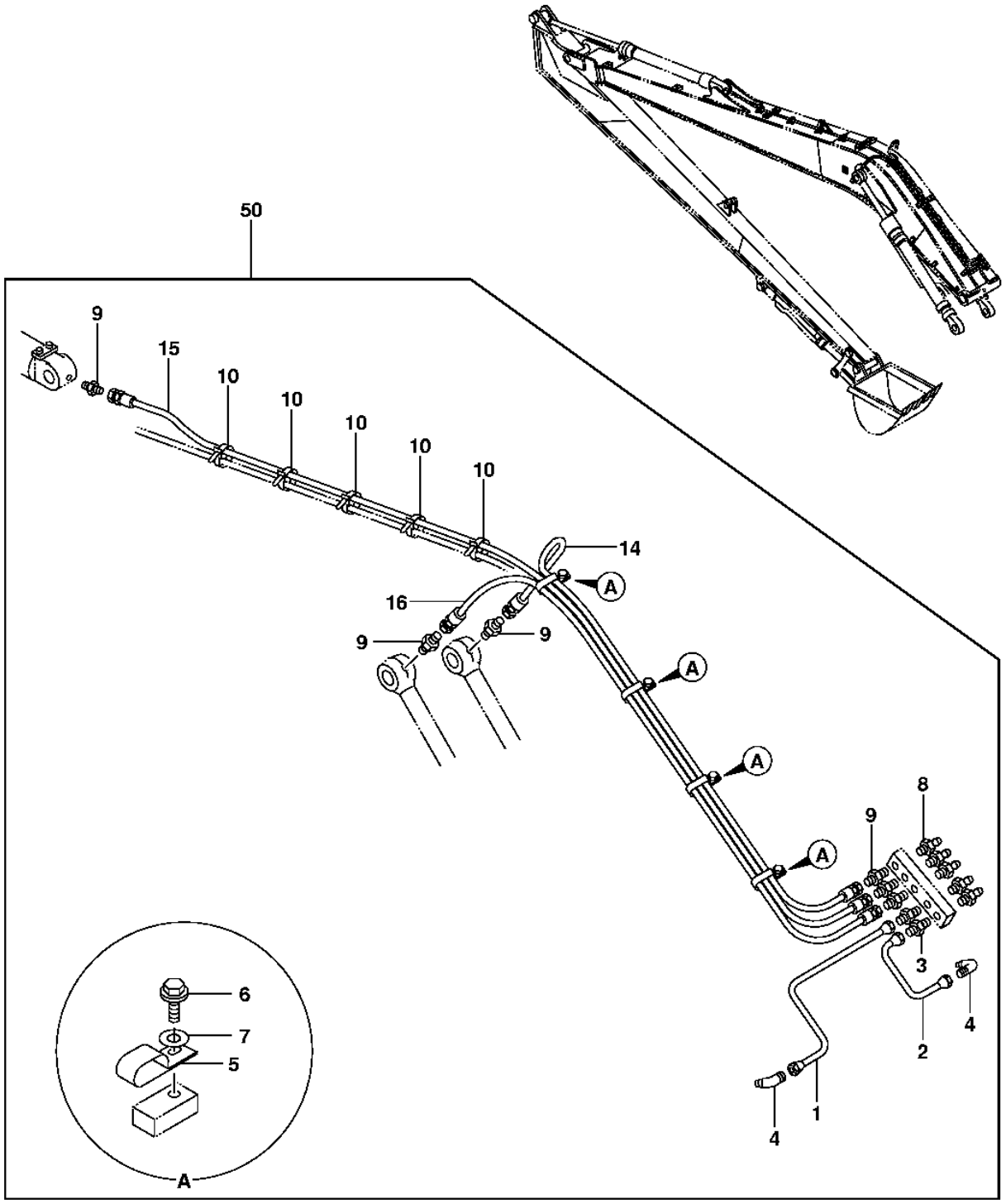

T201448

LUBRICATE LINES, SUPER LONG FRONT

KEY	PART NO.	PART NAME	QTY	SERIAL NO.	REMARKS
1	4372966	OIL TUBE	1		
2	4372967	OIL TUBE	1		
3	4360981	ADAPTER	2		
4	4345297	ELBOW FITTING	2		
5	T152608	CLAMP	4		(SUB FOR 4252877)
6	19M8324	CAP SCREW	4		M10 X 16, (SUB FOR J011016)
7	12M7066	LOCK WASHER	4		10 MM
8	TH100364	LUBRICATION FITTING	5		(SUB FOR J75482)
9	4154651	ADAPTER	6		
10	H77698	TIE BAND	5		(SUB FOR 4055311)
14	4358895	HYDRAULIC HOSE	1		
15	4358896	HYDRAULIC HOSE	1		
16	4358894	HYDRAULIC HOSE	1		
50	**AT314803**	**KIT**	**1**		**(WHOLEGOODS) (SUPER LONG FRONT KIT) (CONTAINS ALL ITEMS ON THIS PAGE - ADDITIONAL COMPONENTS LISTED ON SEPARATE PAGES) (ALSO ORDER T211127 INSTALLATION INSTRUCTION, T211136 LIFT CHART LABEL, T153672 LONG FRONT LABEL, T153673 PERIODIC MAINTENANCE LABEL, AND (2) T185126 BOOM LABELS)**

LUBRICATE LINES, SUPER LONG FRONT

T201449 -UN-13JUL04

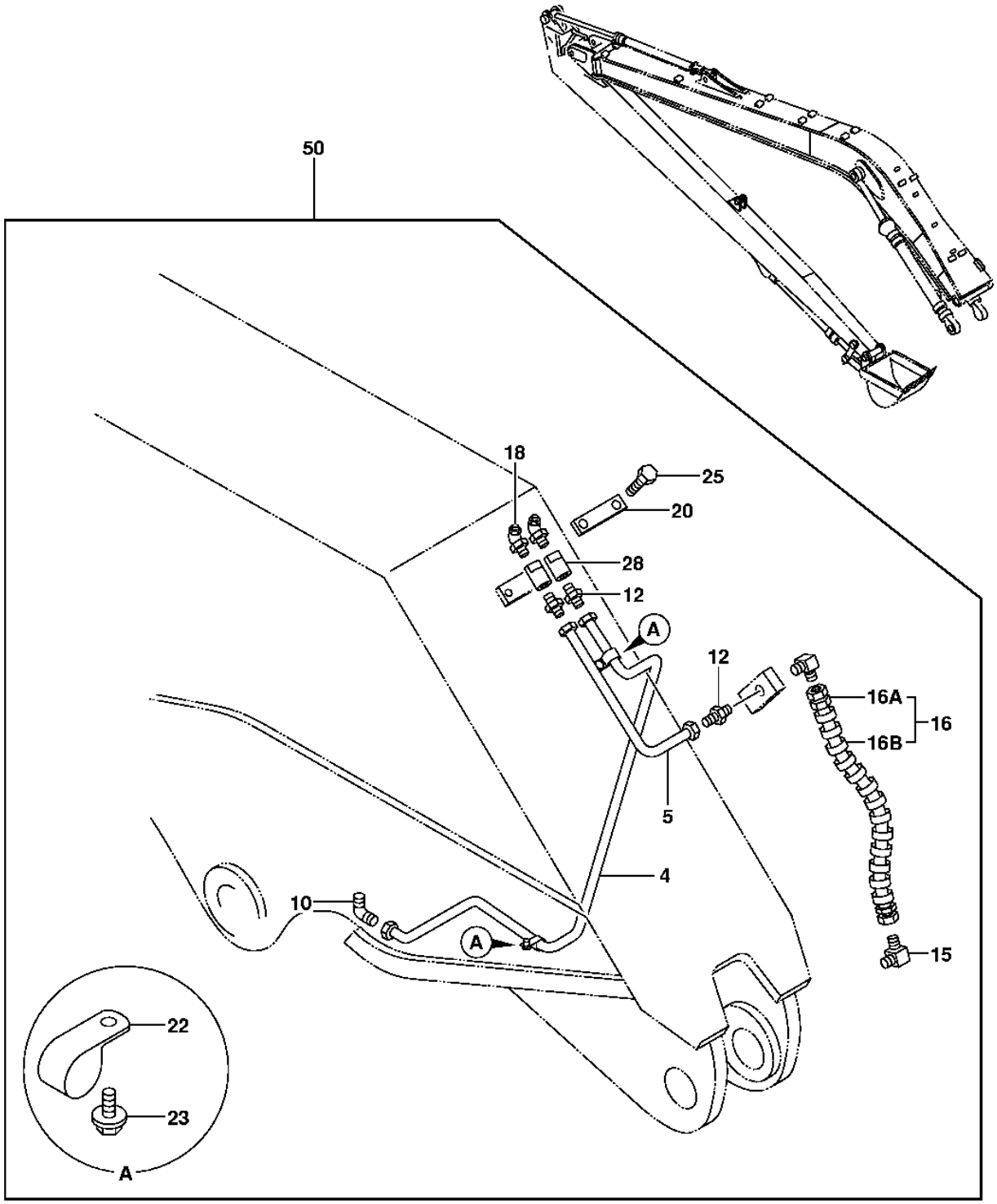

T201449

LUBRICATE LINES, SUPER LONG FRONT

KEY	PART NO.	PART NAME	QTY	SERIAL NO.	REMARKS
4	3080029	PIPE	1		
5	4357667	TUBE	1		
10	4130174	FITTING	1		
12	4130169	FITTING	3		
15	4154656	ELBOW FITTING	2		
16	.....	HYDRAULIC HOSE	1		(9114956 NOT AVAILABLE FOR SERVICE)
16A	AT120788	HOSE	1		(SUB FOR 4213825)
16B	4276481	COVER	1		
18	T116334	LUBRICATION FITTING	2		(SUB FOR J75581)
20	4054024	STRAP	1		
22	TH101388	CLIP	2		(SUB FOR 4000854)
23	19M7923	CAP SCREW	2		M6 X 12, (SUB FOR J010612)
25	19M7358	CAP SCREW	2		M10 X 40, (SUB FOR J901040)
28	4060162	ADAPTER	2		
50	**AT314803**	**KIT**	**1**		**(WHOLEGOODS) (SUPER LONG FRONT KIT) (CONTAINS ALL ITEMS ON THIS PAGE - ADDITIONAL COMPONENTS LISTED ON SEPARATE PAGES) (ALSO ORDER T211127 INSTALLATION INSTRUCTION, T211136 LIFT CHART LABEL, T153672 LONG FRONT LABEL, T153673 PERIODIC MAINTENANCE LABEL, AND (2) T185126 BOOM LABELS)**

HYDRAULIC OIL RESERVOIR AND FILTER ELEMENTS

T191804 -UN-11JUN03

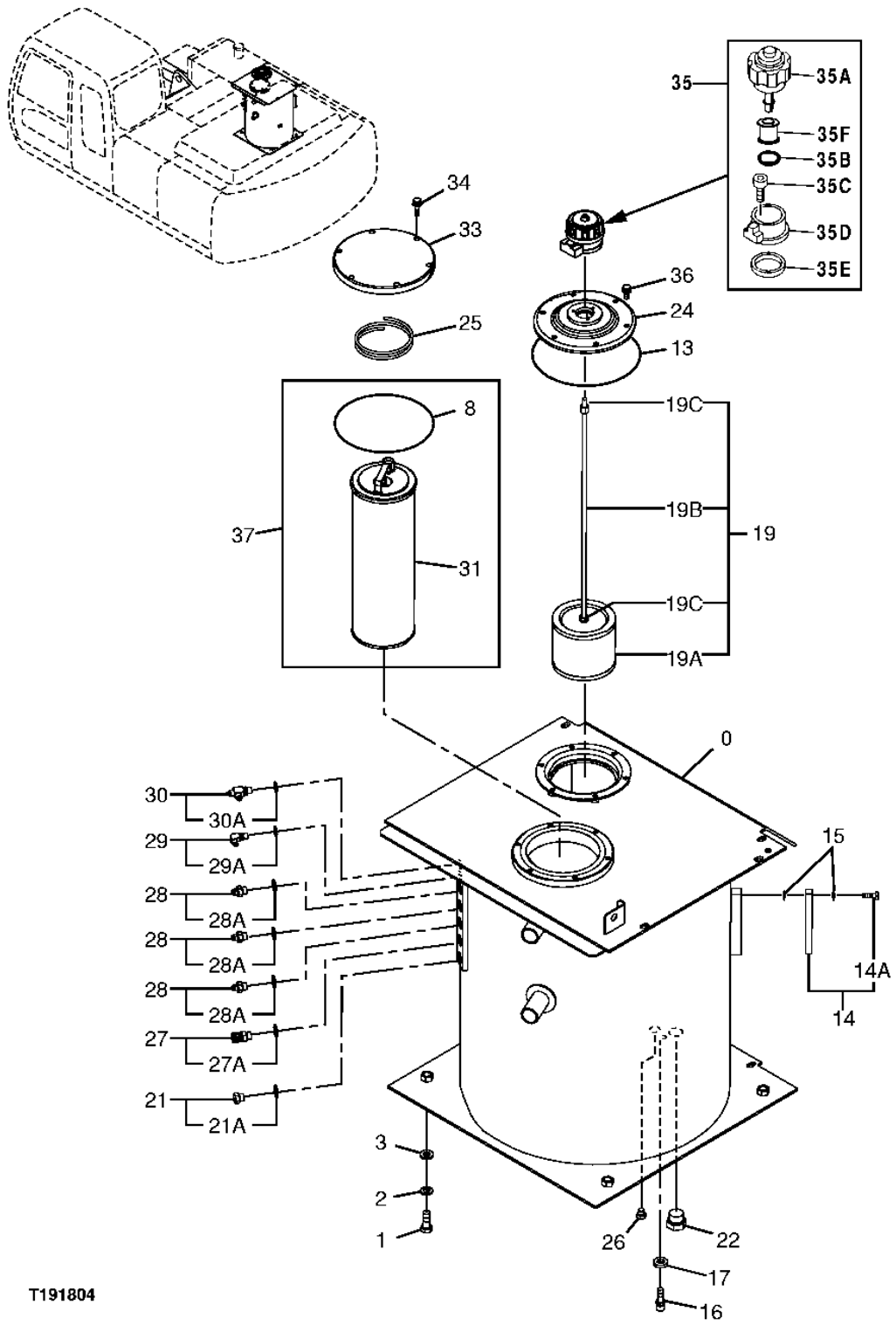

HYDRAULIC OIL RESERVOIR AND FILTER ELEMENTS

KEY	PART NO.	PART NAME	QTY	SERIAL NO.	REMARKS
0	5008007	HYDRAULIC RESERVOIR	1		
1	19M7488	CAP SCREW	4		
2	12H294	LOCK WASHER	4		15.875 MM
3	24M7338	WASHER	4		
8	T110444	O-RING	1		189.300 X 5.700 MM (7.453" X 0.224")
13	TH100679	O-RING	1		
14	8053499	LEVEL GAUGE	1		
14A	4100967	FITTING	2		
15	449558	WASHER	4		
16	4250260	SENSOR	1		
17	4250261	GASKET	1		
19	4396619	ROD	1		(SUB FOR AT250688)
19A	4210224	STRAINER	1		
19B	4396619	ROD	1		
19C	14M7274	NUT	3		
21	A885003	PIPE PLUG	1		
21A	CH11570	O-RING	1		
22	4113926	DRAIN PLUG	1		
22A	TH101926	O-RING	1		
24	8084816	COVER	3		(SUB FOR THA852133)
25	4472673	SPRING	1		(SUB FOR THA852333)
26	THA885008	PIPE PLUG	1		
26A	M800650	PACKING	1		
27	A852333	ELBOW FITTING	1		
27A	CH11570	O-RING	1		
28	A852133	ADAPTER	3		
28A	CH11570	O-RING	3		
29	4154670	ELBOW FITTING	1		(SUB FOR A852322, P67984 OR THA852322)
29A	M800650	PACKING	1		
30	A852422	TEE FITTING	1		(SUB FOR THA852422)
31	.....	FILTER ELEMENT	1		(CLEAN-UP FILTER) (SHORT TERM USE - APPROXIMATELY THREE HOURS) (IDLE SPEED)
33	4440802	COVER	1		
34	19M7550	CAP SCREW	6		
35	.....	BREATHER	1		
35A	4326285	CAP	1		
35B	953612	O-RING	1		
35C	19M8146	SCREW	3		
35D	4222875	BASE	1		
35E	4222876	PACKING	1		
35F	4251384	FILTER ELEMENT	1		
36	19M7402	CAP SCREW	6		
	12M7066	LOCK WASHER	6		
37	4448402	FILTER ELEMENT	1		

BOOM CYLINDER, RIGHT

T153979 -UN-16APR02

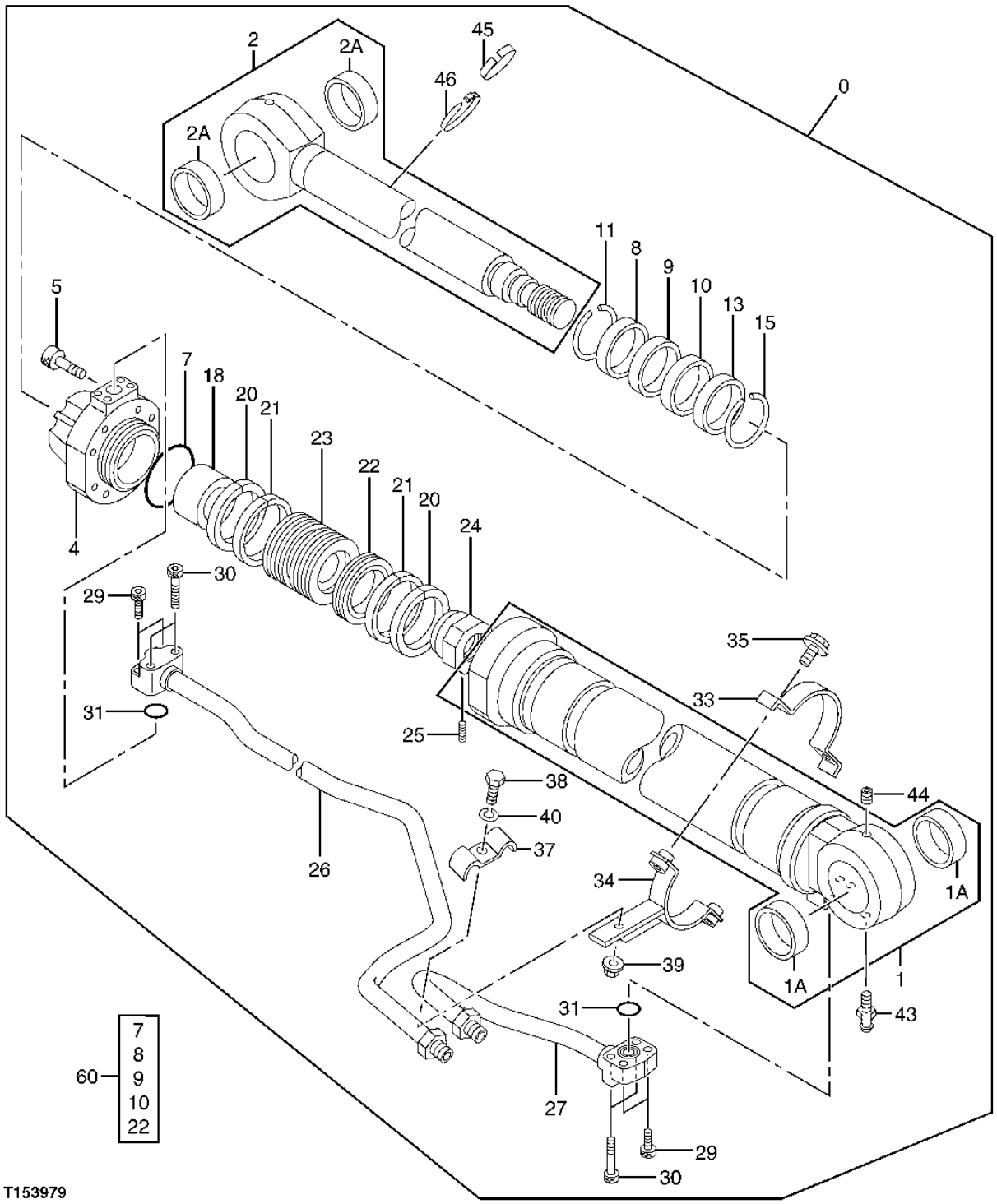

BOOM CYLINDER, RIGHT

KEY	PART NO.	PART NAME	QTY	SERIAL NO.	REMARKS
0	9206321Y	HYDRAULIC CYLINDER	1		(SUB FOR 9206321EX) (PAINTED PART - YELLOW)
1	9206352	HYDRAULIC CYLINDER BARREL	1		
1A	4364501	BUSHING	2		(SUB FOR AT217799)
2	TH7037671	ROD	1		
2A	4364501	BUSHING	2		(SUB FOR AT217799)
4	TH1027956	HYDR. CYLINDER ROD GUIDE	1		
5	19M8630	SCREW	8		M24 X 80
7	TH4439955	O-RING	1		(K)
8	AT264294	SEAL	1		(K) (SUB FOR AT217969, 4348201)
9	AT264408	SEAL	1		(K) (SUB FOR TH111216)
10	AT264409	RING	1		(K) (SUB FOR 4389326) (SUB FOR AT201003)
11	4369508	RING	1		(SUB FOR AT217983)
13	AT217959	WEAR RING	1		
15	4264982	SNAP RING	1		(SUB FOR AT131254)
18	TH3089936	RING	1		
20	AT264397	RING	2		(SUB FOR TH110033)
21	AT264266	WEAR RING	2		(SUB FOR AT154718)
22	AT264297	SEAL	1		(K) (SUB FOR AT218148)
23	3052363	PISTON	1		(SUB FOR AT217937)
24	3063059	NUT	1		(SUB FOR AT217940)
25	4201805	SET SCREW	1		(SUB FOR TH110037)
26	TH8083849	OIL TUBE	1		
27	8049356	OIL TUBE	1		(SUB FOR AT218003)
29	19M8341	SCREW	4		M12 X 45
30	19M8444	SCREW	4		M12 X 60
31	AT264324	O-RING	2		(SUB FOR TH100044)
33	TH3088623	CLAMP	1		
34	TH8079314	CLAMP	1		
35	19M7550	CAP SCREW	2		M10 X 35
	12M7066	LOCK WASHER	2		10 MM
37	4229234	CLAMP	1		(SUB FOR TH111990)
38	19M8348	CAP SCREW	1		M12 X 65
39	14M7275	NUT	1		M12
40	12H301	LOCK WASHER	1		1/2"
43	TH100074	LUBRICATION FITTING	1		
44	T115963	PLUG	1		
45	TH4451668	ISOLATOR	1		
46	TH4465818	CLAMP	1		
60	4485615	KIT	1		(SUB FOR TH9206355) (INCLUDES ITEMS MARKED (K))

BOOM CYLINDER, LEFT

T153980 -UN-16APR02

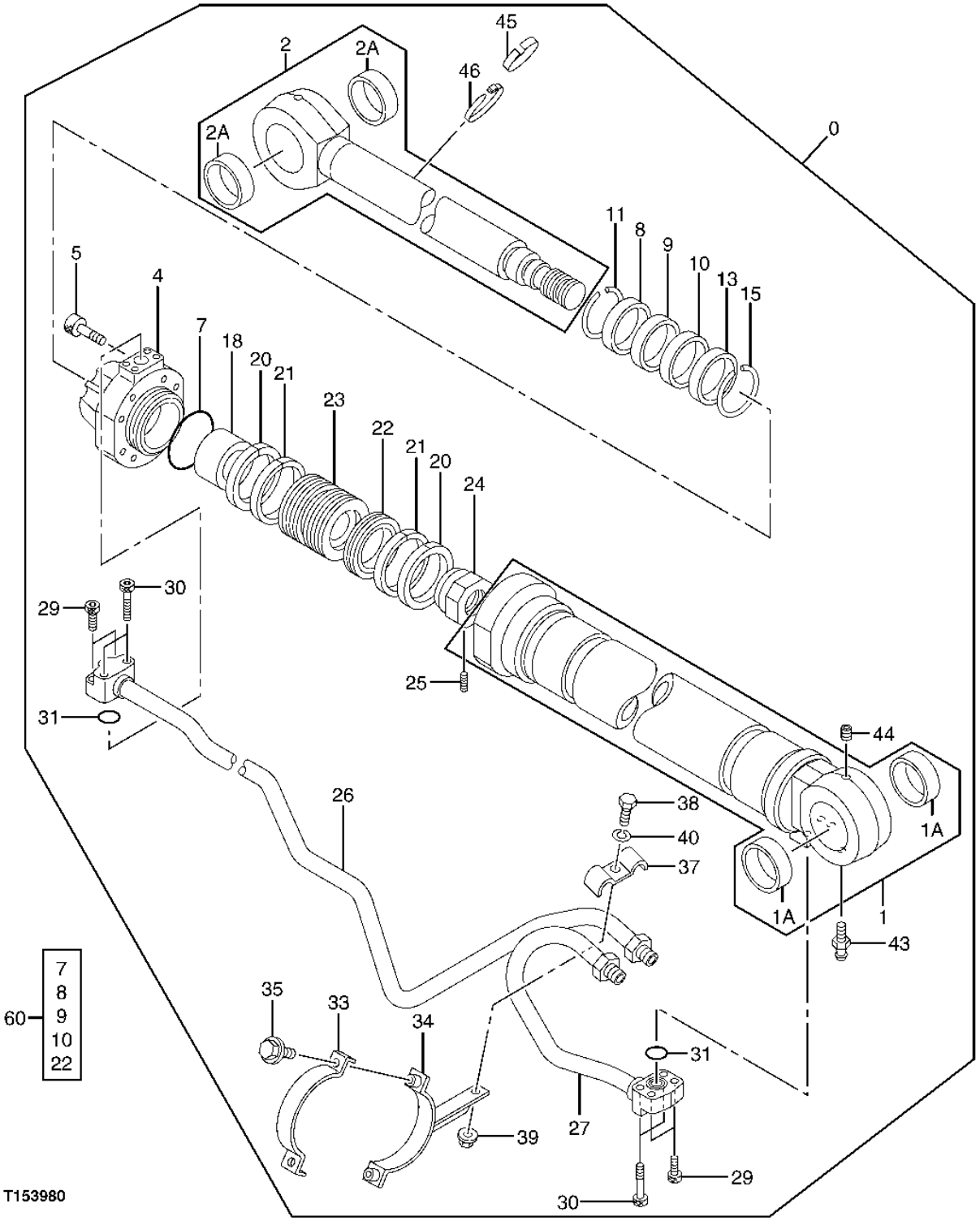

BOOM CYLINDER, LEFT

KEY	PART NO.	PART NAME	QTY	SERIAL NO.	REMARKS
0	9206322Y	CYLINDER	1		(SUB FOR 9206322EX) (WITHOUT TUBES) (PAINTED PART - YELLOW)
1	9206352	HYDRAULIC CYLINDER BARREL	1		
1A	4364501	BUSHING	2		(SUB FOR AT217799)
2	TH7037671	ROD	1		
2A	4364501	BUSHING	2		(SUB FOR AT217799)
4	TH1027956	HYDR. CYLINDER ROD GUIDE	1		
5	19M8630	SCREW	8		M24 X 80
7	TH4439955	O-RING	1		(K)
8	AT264294	SEAL	1		(K) (SUB FOR AT217969, 4348201)
9	AT264408	SEAL	1		(K) (SUB FOR TH111216)
10	AT264409	RING	1		(K) (SUB FOR 4389326) (SUB FOR AT201003)
11	4369508	RING	1		(SUB FOR AT217983)
13	AT217959	WEAR RING	1		
15	4264982	SNAP RING	1		(SUB FOR AT131254)
18	TH3089936	RING	1		
20	AT264397	RING	2		(SUB FOR TH110033)
21	AT264266	WEAR RING	2		(SUB FOR AT154718)
22	AT264297	SEAL	1		(K) (SUB FOR AT218148)
23	3052363	PISTON	1		(SUB FOR AT217937)
24	3063059	NUT	1		(SUB FOR AT217940)
25	4201805	SET SCREW	1		(SUB FOR TH110037)
26	TH8083850	OIL TUBE	1		
27	8049357	OIL TUBE	1		(SUB FOR AT218004)
29	19M8341	SCREW	4		M12 X 45
30	19M8444	SCREW	4		M12 X 60
31	AT264324	O-RING	2		(SUB FOR TH100044)
33	TH3088623	CLAMP	1		
34	TH8079315	CLAMP	1		
35	19M7550	CAP SCREW	2		M10 X 35
	12M7066	LOCK WASHER	2		10 MM
37	4229234	CLAMP	1		(SUB FOR TH111990)
38	19M8348	CAP SCREW	1		M12 X 65
39	14M7275	NUT	1		M12
40	12H301	LOCK WASHER	1		1/2"
43	TH100074	LUBRICATION FITTING	1		
44	T115963	PLUG	1		
45	TH4451668	ISOLATOR	1		
46	TH4465818	CLAMP	1		
60	4485615	KIT	1		(SUB FOR TH9206355) (INCLUDES ITEMS MARKED (K))

ARM CYLINDER

T192166 -UN-17JUN03

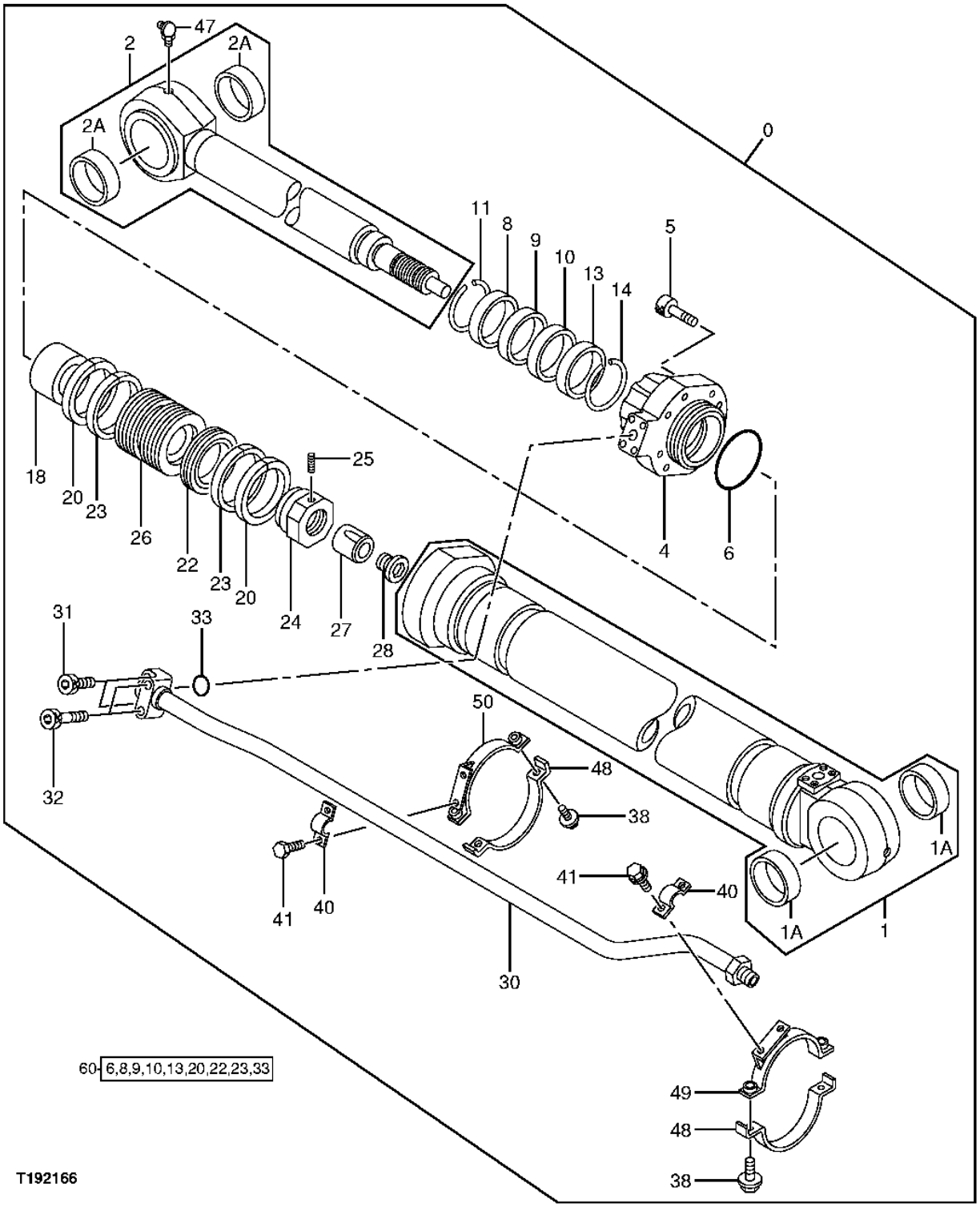

ARM CYLINDER

KEY	PART NO.	PART NAME	QTY	SERIAL NO.	REMARKS
0	9206323Y	HYDRAULIC CYLINDER	1		(SUB FOR 9206323 OR 9206323EX) (PAINTED PART - YELLOW)
1	9206353	HYDRAULIC CYLINDER BARREL	1		
1A	4397790	BUSHING	2		(SUB FOR TH4397790)
2	TH7037662	ROD	1		
2A	4397790	BUSHING	2		(SUB FOR TH4397790)
4	TH1027949	HYDR. CYLINDER ROD GUIDE	1		
5	19M8630	SCREW	8		M24 X 80
6	AT264295	O-RING	1		(SUB FOR AT217990, 4380144)
8	AT264277	SPACER	1		(SUB FOR AT181247, 4348207)
9	AT264398	SEAL	1		(SUB FOR TH110049)
10	AT264279	RING	1		(SUB FOR AT181790)
11	4369509	RING	1		(SUB FOR AT181248)
13	AT264237	BUSHING	1		(SUB FOR AT131414)
14	4267139	SNAP RING	1		(SUB FOR AT130817)
18	TH3088602	RING	1		
20	AT264400	RING	2		(SUB FOR TH110062)
22	AT264402	RING	1		(SUB FOR TH110065)
23	AT264275	WEAR RING	2		(SUB FOR AT159585, 4194621)
24	3063060	NUT	1		(SUB FOR AT217941)
25	4201806	SET SCREW	1		(SUB FOR TH110066)
26	3052364	PISTON	1		(SUB FOR AT159584)
27	3083091	RING	1		(SUB FOR AT185413)
28	4387203	PLUG	1		(SUB FOR AT185414)
30	8053093	PIPE	1		(SUB FOR AT159587)
31	19M8341	SCREW	2		M12 X 45
32	19M8444	SCREW	2		M12 X 60
33	AT264324	O-RING	1		(SUB FOR TH100044)
38	19M7550	CAP SCREW	4		M10 X 35
	12M7066	LOCK WASHER	4		10 MM
40	4174241	CLAMP	2		(SUB FOR TH110059)
41	19M7402	CAP SCREW	4		M10 X 25
	12M7066	LOCK WASHER	4		10 MM
47	T116334	LUBRICATION FITTING	1		
48	TH3090722	CLAMP	2		
49	8082044	CLAMP	1		
50	TH8082069	CLAMP	1		
60	AT264438	HYDRAULIC CYLINDER KIT	1		(SUB FOR AT218043, 9180579) (ALSO INCLUDES AT280434)

SUPER LONG FRONT ARM CYLINDER COMPONENTS

T201479 -UN-13JUL04

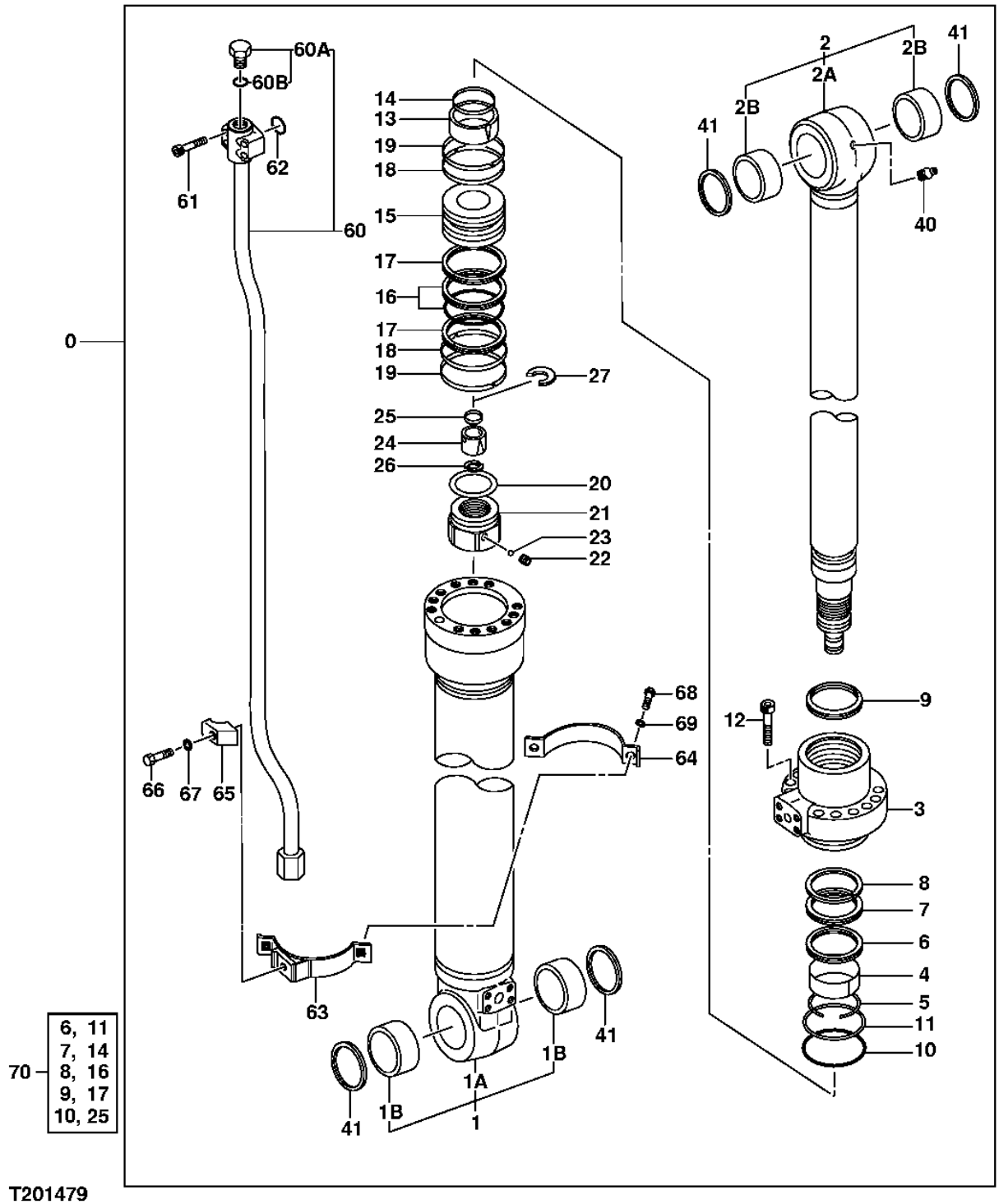

SUPER LONG FRONT ARM CYLINDER COMPONENTS

KEY	PART NO.	PART NAME	QTY	SERIAL NO.	REMARKS
0	4388916	HYDRAULIC CYLINDER	1		
1	0714301	HYDRAULIC CYLINDER BARREL	1		
1A	.....	HYDRAULIC CYLINDER BARREL	1		(0714302 NOT AVAILABLE FOR SERVICE)
1B	0714303	BUSHING	2		
2	0714304	ROD	1		
2A	.....	ROD	1		(0714305 NOT AVAILABLE FOR SERVICE)
2B	0714303	BUSHING	2		
3	0492203	CYLINDER HEAD	1		
4	0373405	BUSHING	1		
5	0237205	RING	1		
6	0492204	O-RING	1		
7	0127408	PACKING	1		
8	0237215	BACK-UP RING	1		
9	0492216	SEAL	1		
10	A811140	O-RING	1		
11	0212505	BACK-UP RING	1		
12	0714306	BOLT	12		
13	0492205	BEARING	1		
14	0492206	SEAL	1		
15	0714307	PISTON	1		
16	0373411	SEALING RING	1		
17	0492208	BACK-UP RING	2		
18	0492209	RING	2		
19	0373413	RING	2		
20	0373414	SHIM	1		
21	0373415	NUT	1		
22	0352715	SET SCREW	1		
23	R26552	BALL	1		(SUB FOR 0104404)
24	0492210	BEARING	1		
25	0492211	SEAL	1		
26	0492212	STOP	2		
27	0492213	SNAP RING	1		
40	TH100074	LUBRICATION FITTING	1		(SUB FOR J75481)
41	TH102445	SEAL	4		(SUB FOR 4067901)
60	0679105	TUBE	1		
60A	4113926	DRAIN PLUG	1		
60B	TH101926	O-RING	1		(SUB FOR 4506429)
61	M800636	BOLT	4		(SUB FOR 0309020)
62	984614	O-RING	1		
63	0492215	BAND	1		
64	0387311	BAND	1		
65	0309219	CLAMP	1		
66	19M7273	CAP SCREW	1		M12 X 60, (SUB FOR 0237417)
67	12M7067	LOCK WASHER	1		12 MM, (SUB FOR 0208516)
68	19M7550	CAP SCREW	2		M10 X 35, (SUB FOR 0408815)
69	12M7066	LOCK WASHER	2		10 MM, (SUB FOR 0325913)
70	4369943	SEAL KIT	1		
80	**AT314803**	**KIT**	**1**		**(WHOLEGOODS) (SUPER LONG FRONT KIT) (NOT ILLUSTRATED) (CONTAINS ALL ITEMS ON THIS PAGE - ADDITIONAL COMPONENTS LISTED ON SEPARATE PAGES) (ALSO ORDER T211127 INSTALLATION INSTRUCTION, T211136 LIFT CHART LABEL, T153672 LONG FRONT LABEL, T153673 PERIODIC MAINTENANCE LABEL, AND (2) T185126 BOOM LABELS)**

BUCKET CYLINDER

T192113 -UN-17JUN03

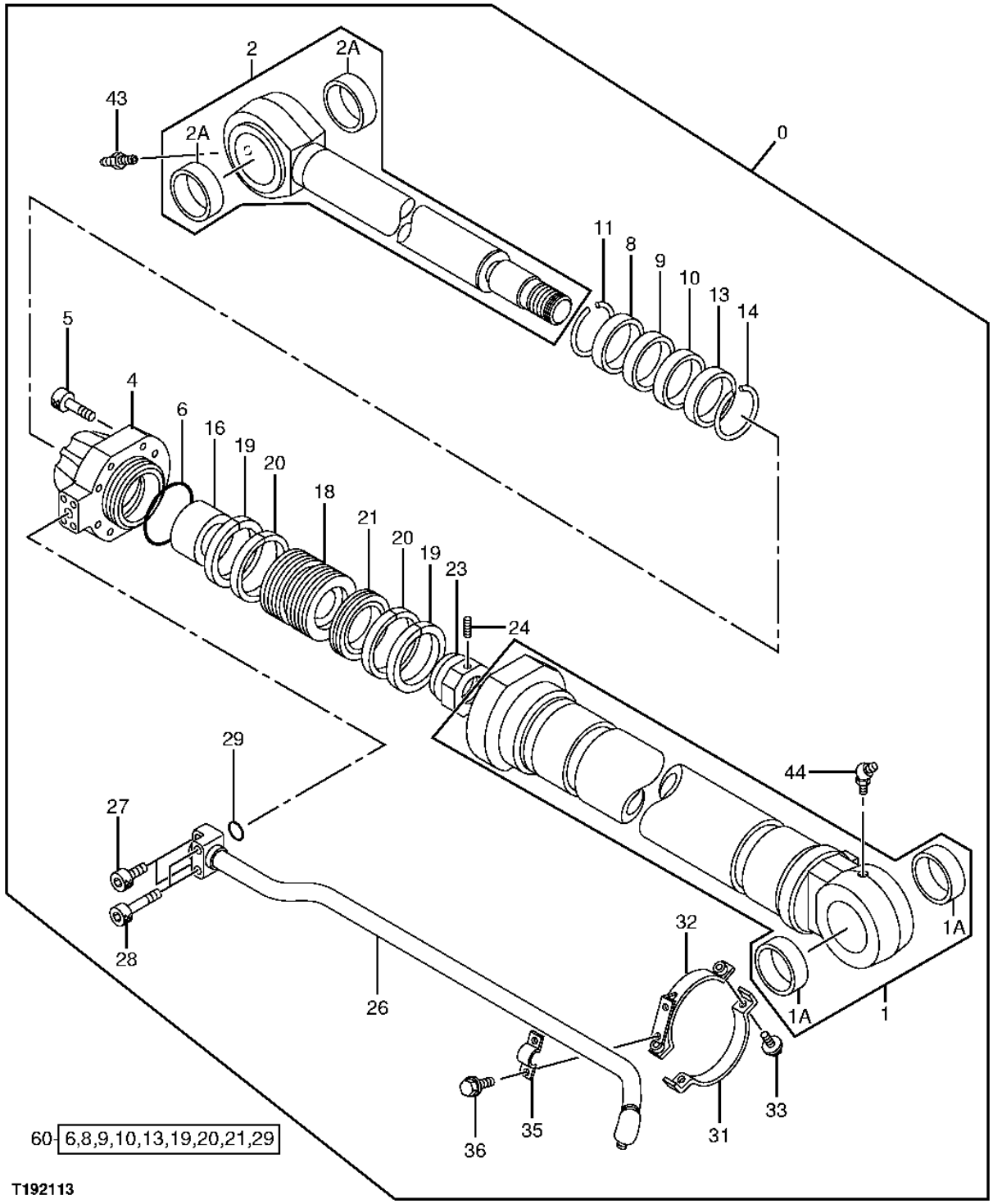

BUCKET CYLINDER

KEY	PART NO.	PART NAME	QTY	SERIAL NO.	REMARKS
0	9206324J	HYDRAULIC CYLINDER	1		(SUB FOR 9206324)
1	9206354	HYDRAULIC CYLINDER BARREL	1		
1A	4332285	BUSHING	2		(SUB FOR AT217750)
2	TH7037679	ROD	1		
2A	TH4397791	BUSHING	2		
4	1015437	HYDR. CYLINDER ROD GUIDE	1		(SUB FOR AT217934)
5	19M8630	SCREW	8		M24 X 80
6	AT264268	O-RING	1		(SUB FOR AT154722)
8	T204375	SEAL	1		(SUB FOR AT181238 AND AT264293)
9	AT264395	SEAL	1		(SUB FOR TH110018)
10	4253560	SEAL	1		
11	4369507	RING	1		
13	AT264273	BUSHING	1		(SUB FOR AT154779)
14	4264983	SNAP RING	1		
16	4264979	SPACER	1		(SUB FOR AT217957)
18	3052363	PISTON	1		(SUB FOR AT217937)
19	AT264397	RING	2		(SUB FOR TH110033)
20	AT264266	WEAR RING	2		(SUB FOR AT154718)
21	AT264297	SEAL	1		(SUB FOR AT218148)
23	3063059	NUT	1		(SUB FOR AT217940)
24	4201805	SET SCREW	1		(SUB FOR TH110037)
26	8049650	OIL TUBE	1		(SUB FOR AT218005)
27	19M8341	SCREW	2		M12 X 45
28	19M8444	SCREW	2		M12 X 60
29	AT264324	O-RING	1		(SUB FOR TH100044)
31	TH3088623	CLAMP	1		
32	TH8079292	CLAMP	1		
33	19M7550	CAP SCREW	2		M10 X 35
	12M7066	LOCK WASHER	2		10 MM
35	4174241	CLAMP	1		(SUB FOR TH110059)
36	19M7402	CAP SCREW	2		M10 X 25
	12M7066	LOCK WASHER	2		10 MM
43	T116334	LUBRICATION FITTING	1		
44	TH100074	LUBRICATION FITTING	1		
60	AT264439	HYDRAULIC CYLINDER KIT	1		(SEAL) (SUB FOR AT218044, 9180580)

SUPER LONG FRONT BUCKET CYLINDER COMPONENTS

T201238 -UN-01JUL04

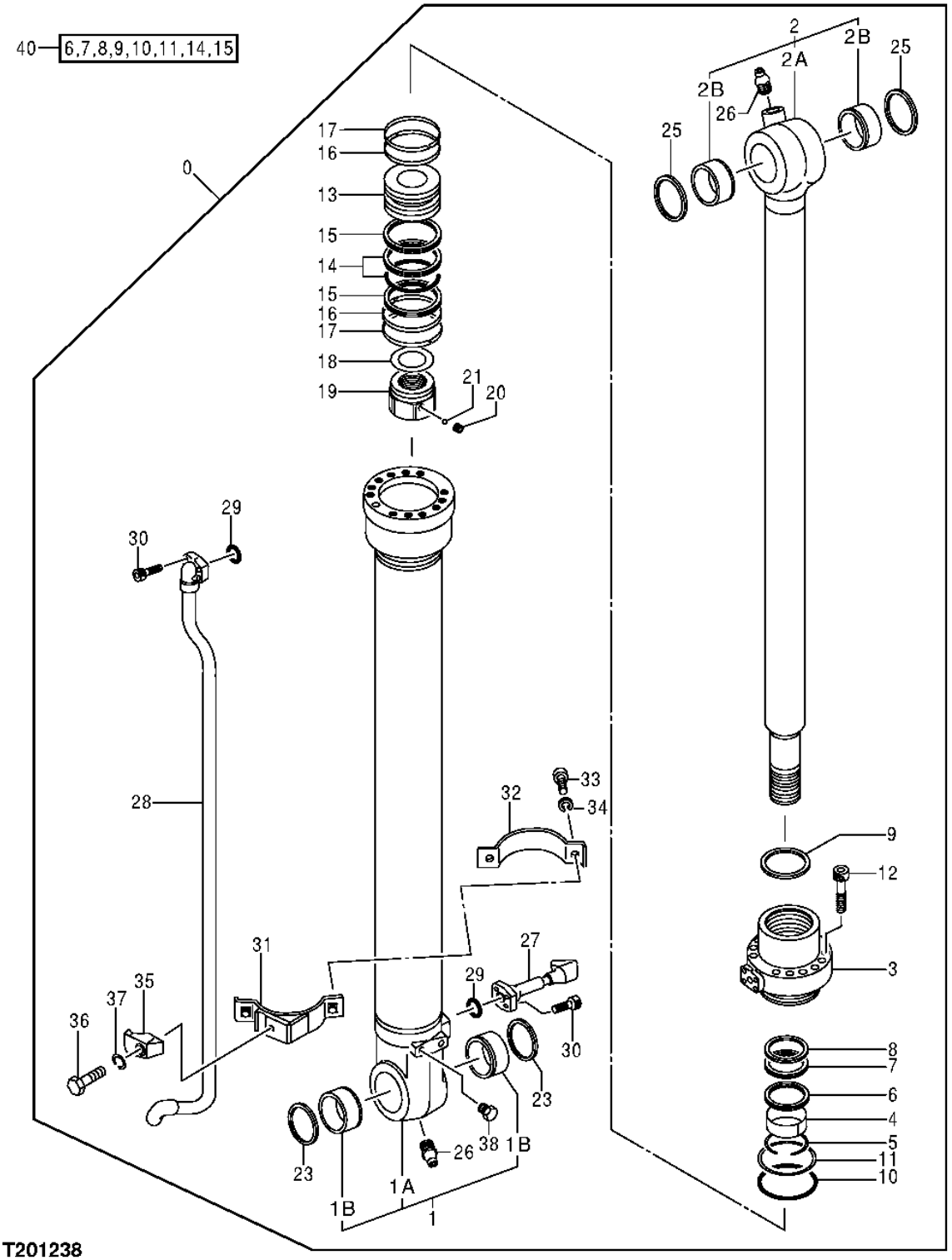

SUPER LONG FRONT BUCKET CYLINDER COMPONENTS

KEY	PART NO.	PART NAME	QTY	SERIAL NO.	REMARKS
0	4379259	HYDRAULIC CYLINDER	1		
1	0667101	HYDRAULIC CYLINDER BARREL	1		
1A	.....	HYDRAULIC CYLINDER BARREL	1		(0667102 NOT AVAILABLE FOR SERVICE)
1B	4365897	BUSHING	2		
2	0667103	ROD	1		
2A	.....	ROD	1		(0667104 NOT AVAILABLE FOR SERVICE)
2B	4365448	BUSHING	2		
3	H155194	HYDR. CYLINDER ROD GUIDE	1		(SUB FOR 0667105)
4	TH109372	WEAR RING	1		(SUB FOR 0310604)
5	4510494	SNAP RING	1		
6	AT153949	RING	1		(SUB FOR 0409104)
7	AT264374	SEAL	1		(SUB FOR 0225611)
8	TH105765	BACK-UP RING	1		(SUB FOR 0225612)
9	H158164	SCRAPER RING	1		(SUB FOR 0409117)
10	CH18696	PACKING	1		(SUB FOR A811090)
11	TH109374	BACK-UP RING	1		(SUB FOR 0310606)
12	0667107	BOLT	10		
13	H158173	PISTON	1		(SUB FOR 0409106)
14	TH109376	RING	1		(SUB FOR 0310608)
15	AT153951	BACK-UP RING	2		(SUB FOR 0409107)
16	H158170	SCRAPER RING	2		(SUB FOR 0667108)
17	AT264394	RING	2		(SUB FOR 0310610)
18	0326007	SHIM	1		
19	H158175	NUT	1		(SUB FOR 0667109)
20	22M7139	SET SCREW	1		M10 X 10, (SUB FOR 0310612)
21	400R	BALL	1		(SUB FOR 0111818)
23	TH105979	SEAL	2		(SUB FOR 4094086)
25	TH100374	SEAL	2		(SUB FOR 4065687)
26	TH100074	LUBRICATION FITTING	2		(SUB FOR J75481)
27	0679001	PIPE	1		
28	0679002	TUBE	1		
29	AT264354	O-RING	2		(SUB FOR 4509181)
30	19M8439	SCREW	8		M8 X 25, (SUB FOR M340825)
31	AH150599	CLAMP	1		(SUB FOR 0667111)
32	0409116	BAND	1		
33	19M7550	CAP SCREW	2		M10 X 35, (SUB FOR 0408815)
34	12M7066	LOCK WASHER	2		10 MM, (SUB FOR 0325913)
35	0310616	CLAMP	1		
36	19M7361	CAP SCREW	1		M12 X 50, (SUB FOR 0309022)
37	12M7067	LOCK WASHER	1		12 MM, (SUB FOR 0208516)
38	AT131538	BOLT	2		(SUB FOR 0409110)
40	AT196469	SEAL KIT	1		(SUB FOR 4369766)
50	**AT314803**	**KIT**	**1**		**(WHOLEGOODS) (SUPER LONG FRONT KIT) (NOT ILLUSTRATED) (CONTAINS ALL ITEMS ON THIS PAGE - ADDITIONAL COMPONENTS LISTED ON SEPARATE PAGES) (ALSO ORDER T211127 INSTALLATION INSTRUCTION, T211136 LIFT CHART LABEL, T153672 LONG FRONT LABEL, T153673 PERIODIC MAINTENANCE LABEL, AND (2) T185126 BOOM LABELS)**

SWING DEVICE

T147130 -UN-07JAN02

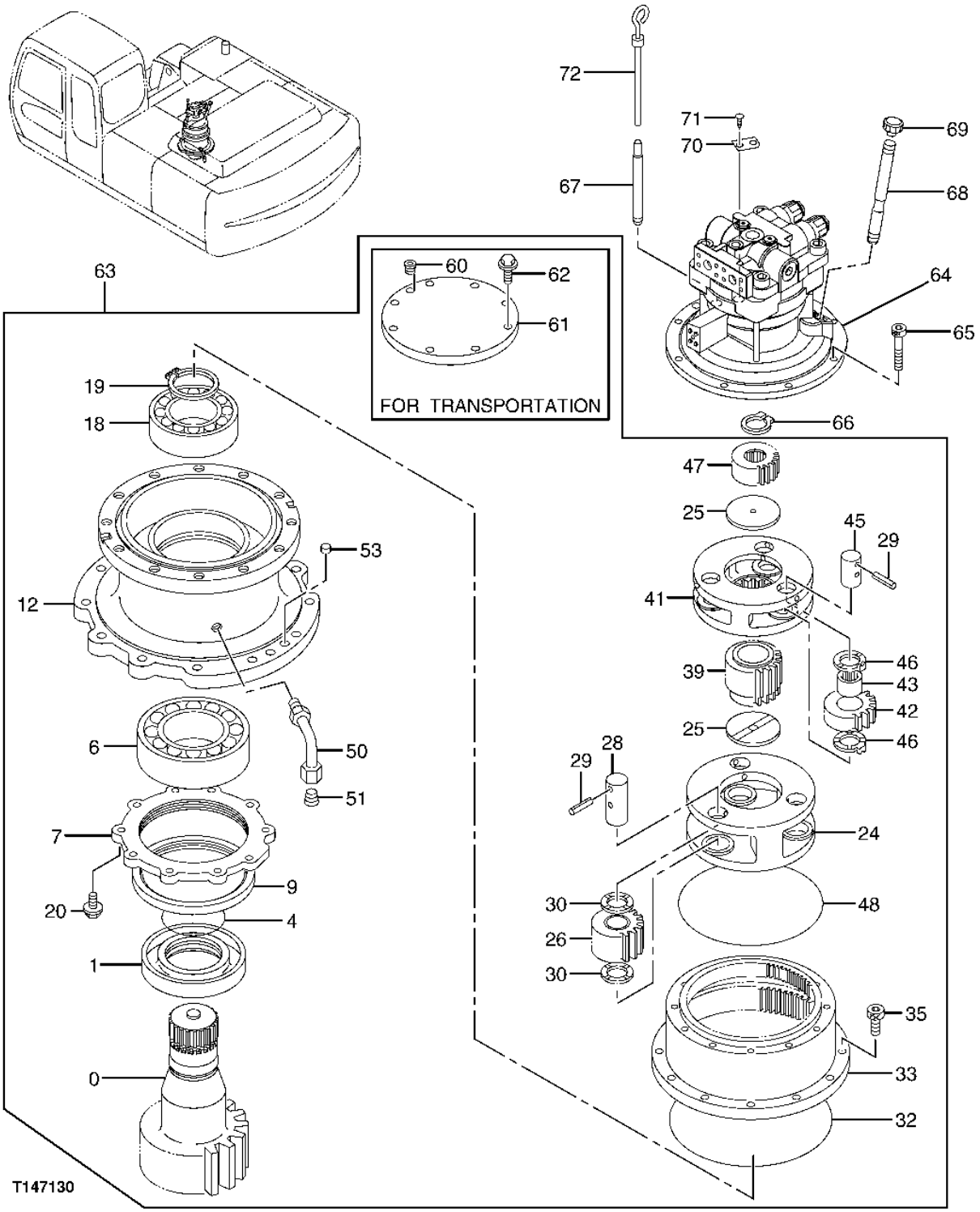

SWING DEVICE

KEY	PART NO.	PART NAME	QTY	SERIAL NO.	REMARKS
0	2040441	PINION SHAFT	1		(SUB FOR AT217936)
1	4256346	SLEEVE	1		(SUB FOR AT200996)
4	A811140	O-RING	1		(SUB FOR TH111062)
6	AT160517	SPHERICAL ROLLER BEARING	1		
7	3060561	COVER	1		(SUB FOR AT158507)
9	4424511	SEAL	1		
12	1014810	HOUSING	1		(SUB FOR AT200953)
18	TH104674	SPHERICAL ROLLER BEARING	1		
19	991354	SNAP RING	1		(SUB FOR TH111641)
20	19M7493	CAP SCREW	10		M12 X 40
	12H301	LOCK WASHER	10		12.700 MM
24	1014808	PLANET PINION CARRIER	1		(SUB FOR AT200951)
25	4194454	PLATE	2		(SUB FOR TH111267)
26	9734405	GEAR	3		(SUB FOR AT201190)
28	4244694	PIN FASTENER	3		(SUB FOR TH109481)
29	34M5564	SPRING PIN	6		
30	4266934	PLATE	6		(SUB FOR AT154772)
32	4254449	O-RING	1		(SUB FOR AT200993)
33	1014811	RING GEAR	1		(SUB FOR AT200954)
35	19M8609	CAP SCREW	12		M20 X 55
39	3050683	SUN GEAR	1		(SUB FOR AT200969)
41	1014809	PLANET PINION CARRIER	1		(SUB FOR AT200952)
42	3050684	GEAR	3		(SUB FOR AT200970)
43	4443139	NEEDLE BEARING	3		(SUB FOR T107728, 4183818)
45	4203533	PIN	3		(SUB FOR AT131753)
46	4273336	PLATE	6		(SUB FOR AT201013)
47	3050685	SUN GEAR	1		(SUB FOR AT200971)
48	4271596	O-RING	1		(SUB FOR AT131752)
50	8050212	PIPE	1		(SUB FOR AT154836)
51	94-2012	PLUG	1		
53	99M7010	PLUG	2		
60	94-2011	FITTING PLUG	1		(SUB FOR TH100434)
61	.....	COVER	1		(TH8066060 NOT AVAILABLE FOR SERVICE)
62	19M7361	CAP SCREW	6		M12 X 50
	12H301	LOCK WASHER	6		12.700 MM
63	9162234	DEVICE	1		(SUB FOR AT218045)
64	4439418EX	HYDRAULIC MOTOR	1	-071085	(SUB FOR 4439418)
	4484557	HYDRAULIC MOTOR	1	071086-	
65	19M8168	SCREW	12		M12 X 25
66	40M7047	SNAP RING	1		
67	4264452	TUBE	1		(SUB FOR AT154293)
68	4317032	PIPE	1		(SUB FOR AT201054)
69	4343365	CAP	1		(SUB FOR AT204965)
70	.....	IDENTIFICATION PLATE	1		(AT154128 NOT AVAILABLE FOR SERVICE)
71	37H99	SCREW	2		0.100" X 1/4"
72	3074223	DIPSTICK	1		(SUB FOR AT213790)

SWING DEVICE SUPPORT

T143242 -UN-28JUN01

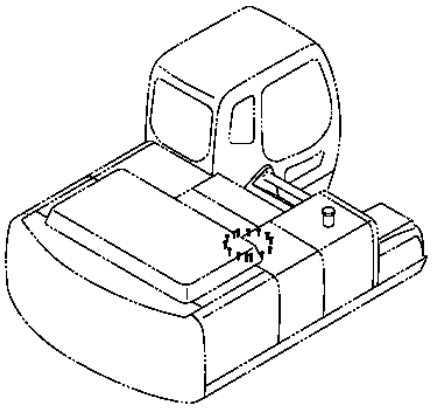

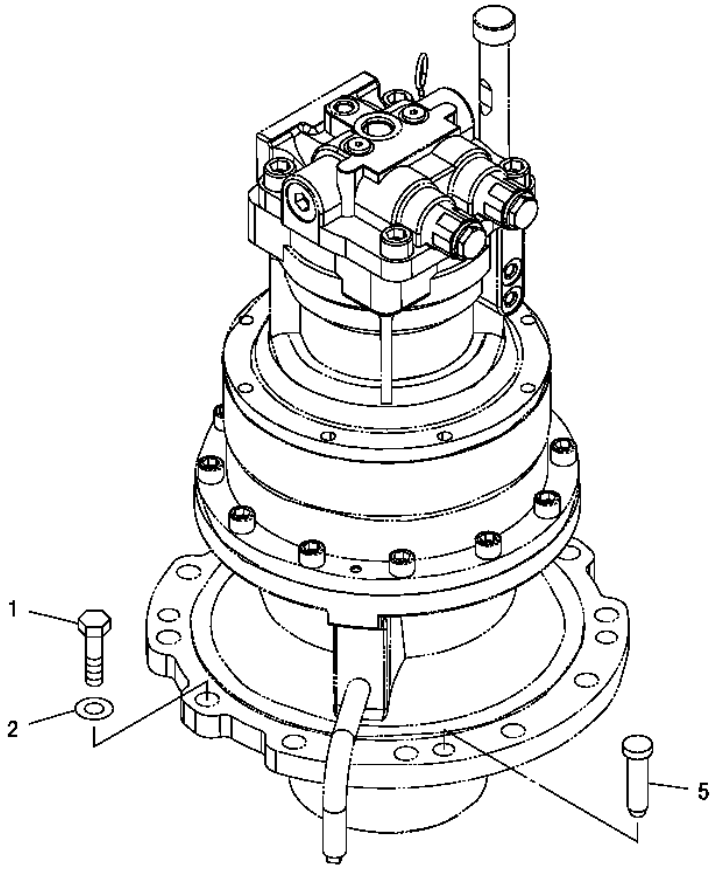

T143242

SWING DEVICE SUPPORT

KEY	PART NO.	PART NAME	QTY	SERIAL NO.	REMARKS
1	J922270	BOLT	12		
2	J222022	WASHER	12		
5	4080398	PIN FASTENER	2		(SUB FOR TH101880)

SLOW RETURN VALVE, SUPER LONG FRONT

T201237 -UN-28JUN04

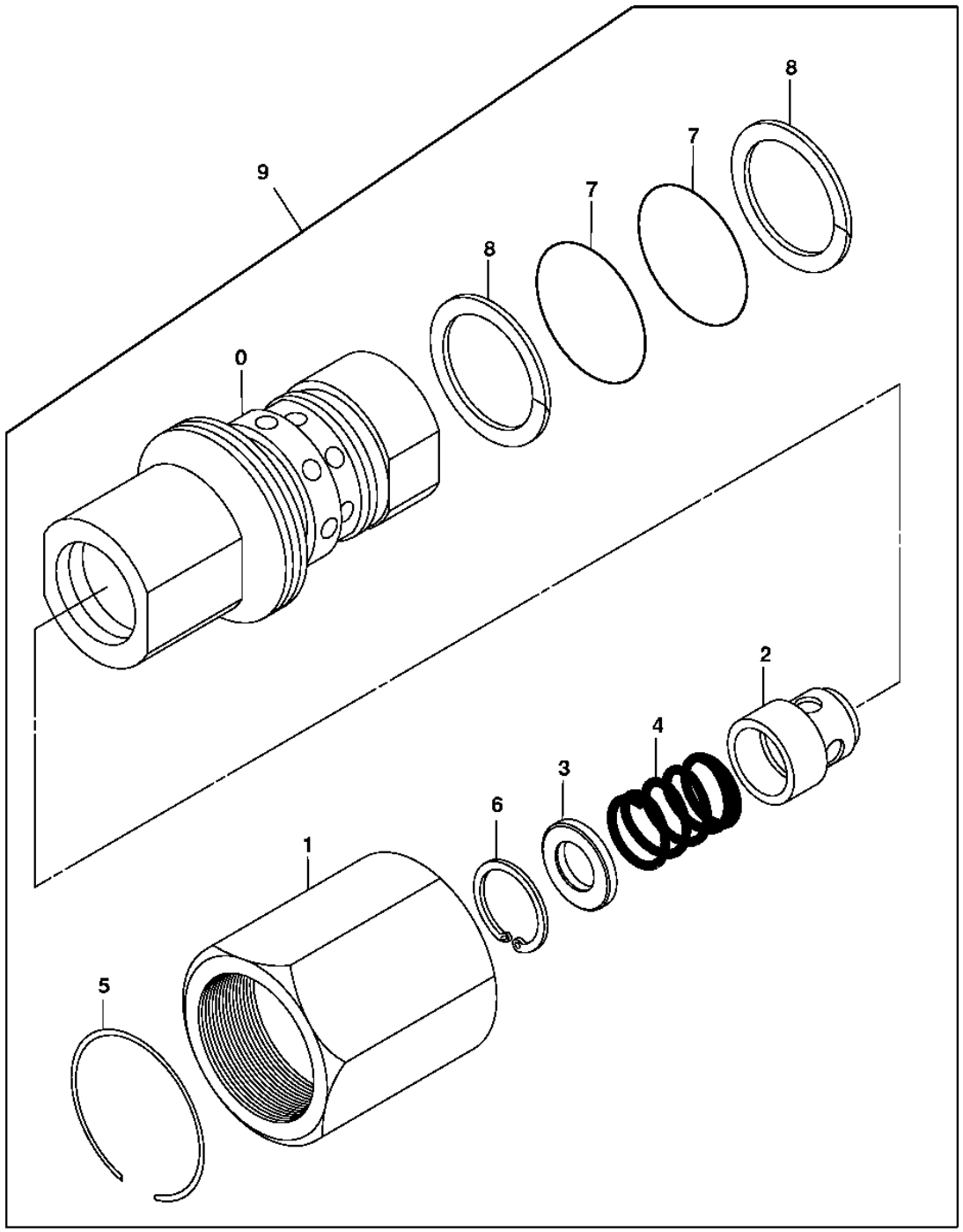

T201237

SLOW RETURN VALVE, SUPER LONG FRONT

KEY	PART NO.	PART NAME	QTY	SERIAL NO.	REMARKS
0	.....	CASE	1		(2024865 NOT AVAILABLE FOR SERVICE)
1	.....	HOUSING	1		(3012238 NOT AVAILABLE FOR SERVICE)
2	4077177	PISTON	1		
3	4077179	PLATE	1		
4	4077178	SPRING	1		
5	4077180	RING	1		
6	40M1855	SNAP RING	1		(SUB FOR 447068)
7	985096	O-RING	2		
8	4079355	BACK-UP RING	2		
9	9075046	FLOW CONTROL HYD. VALVE	1		
20	**AT314803**	**KIT**	**1**		**(WHOLEGOODS) (NOT ILLUSTRATED) (CONTAINS ALL ITEMS ON THIS PAGE - ADDITIONAL COMPONENTS LISTED ON SEPARATE PAGES) (ALSO ORDER T211127 INSTALLATION INSTRUCTION, T211136 LIFT CHART LABEL, T153672 LONG FRONT LABEL, T153673 PERIODIC MAINTENANCE LABEL, AND (2) T185126 BOOM LABELS)**

SWING OIL MOTOR (SERIAL NO. -071085)

T147131 -UN-07JAN02

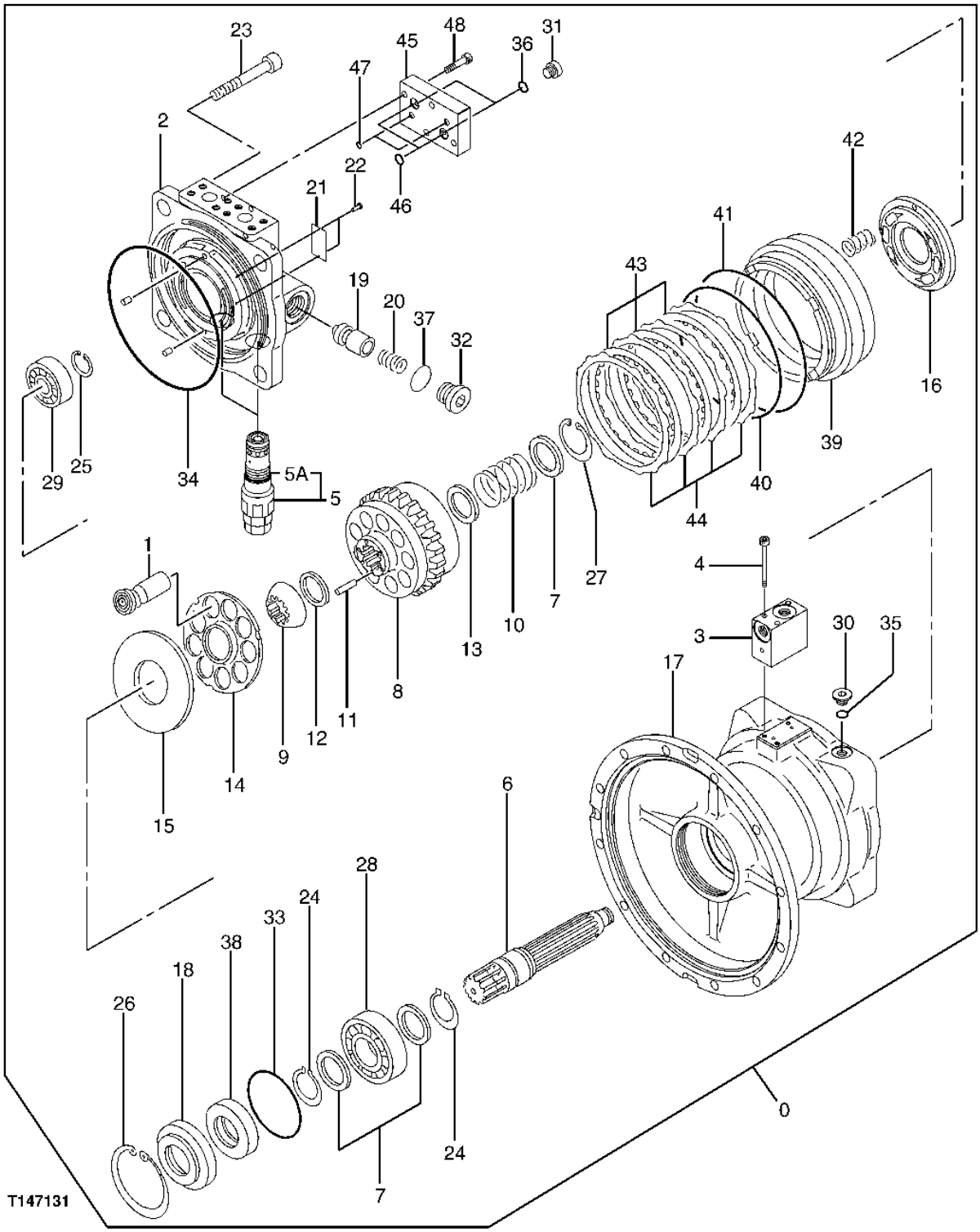

SWING OIL MOTOR (SERIAL NO. -071085)

KEY	PART NO.	PART NAME	QTY	SERIAL NO.	REMARKS
0	4439418EX	HYDRAULIC MOTOR	1		(SUB FOR 4439418)
1	0365401	PISTON	9		(SUB FOR TH112029)
2	TH0803001	HOUSING	1		
3	TH0803002	HYD ACTUATED CONTROL VALVE	1		
4	0384401	SCREW	3		(SUB FOR AT219502)
5	0692704	RELIEF VALVE	2		(SUB FOR AT217926)
5A	A811030	O-RING	2		(SUB FOR TH101300)
6	TH0803003	SHAFT	1		
	0365405	WASHER	3		(SUB FOR TH112034)
8	TH0803004	CYLINDER	1		
9	0365407	BUSHING	1		(SUB FOR TH112036)
10	0365408	SPRING	1		(SUB FOR TH112037)
11	0365409	PIN	12		(SUB FOR TH112038)
12	0365410	WASHER	1		(SUB FOR TH112039)
13	0365411	WASHER	1		(SUB FOR TH112040)
14	TH0803005	RETAINER	1		
15	0365413	WASHER	1		(SUB FOR TH112042)
16	0719603	PORT PLATE	1		(SUB FOR AT219570)
17	TH0803006	HOUSING	1		
18	0365416	COVER	1		(SUB FOR TH112045)
19	0803007	PLUNGER	2		(SUB FOR TH0803007)
20	0803008	SPRING	2		(SUB FOR TH0803008)
21	.....	PLATE	1		
22	0625509	CAP SCREW	2		
23	0365417	SCREW	4		(SUB FOR TH112046)
24	40M7166	SNAP RING	2		
25	TH0747305	SNAP RING	1		
26	Z973069	SNAP RING	1		(SUB FOR AT132424)
27	40M7043	SNAP RING	1		
28	AT132384	CYLINDRICAL ROLLER BEARING	1		
29	TH0747306	NEEDLE BEARING	1		
30	0629404	FITTING PLUG	1		(SUB FOR AT213630)
31	0629404	FITTING PLUG	2		(SUB FOR AT213630)
32	0803009	PIPE PLUG	2		(SUB FOR TH0803009)
33	AT264320	O-RING	1		(SUB FOR T110448)
34	4S00217	O-RING	1		(SUB FOR AT217931)
35	M800650	PACKING	1		
36	M800650	PACKING	2		
37	AT264348	O-RING	2		(SUB FOR TH102788)
38	0251914	SEAL	1		(SUB FOR TH109952)
39	TH0803010	PISTON	1		
40	U42016	O-RING	1		
41	0365427	O-RING	1		(SUB FOR TH112059)
42	0365331	SPRING	22		(SUB FOR TH112060)
43	0365428	PLATE	3		(SUB FOR TH112061)
44	0365429	PLATE	4		(SUB FOR TH112062)
45	0692710	PLATE	1		(SUB FOR AT217932)
46	CH10568	O-RING	2		
47	4506406	O-RING	2		(SUB FOR TH104587)
48	0150809	SCREW	4		(SUB FOR AT204900)

SWING OIL MOTOR (SERIAL NO. 071086-)

T195262 -UN-01OCT03

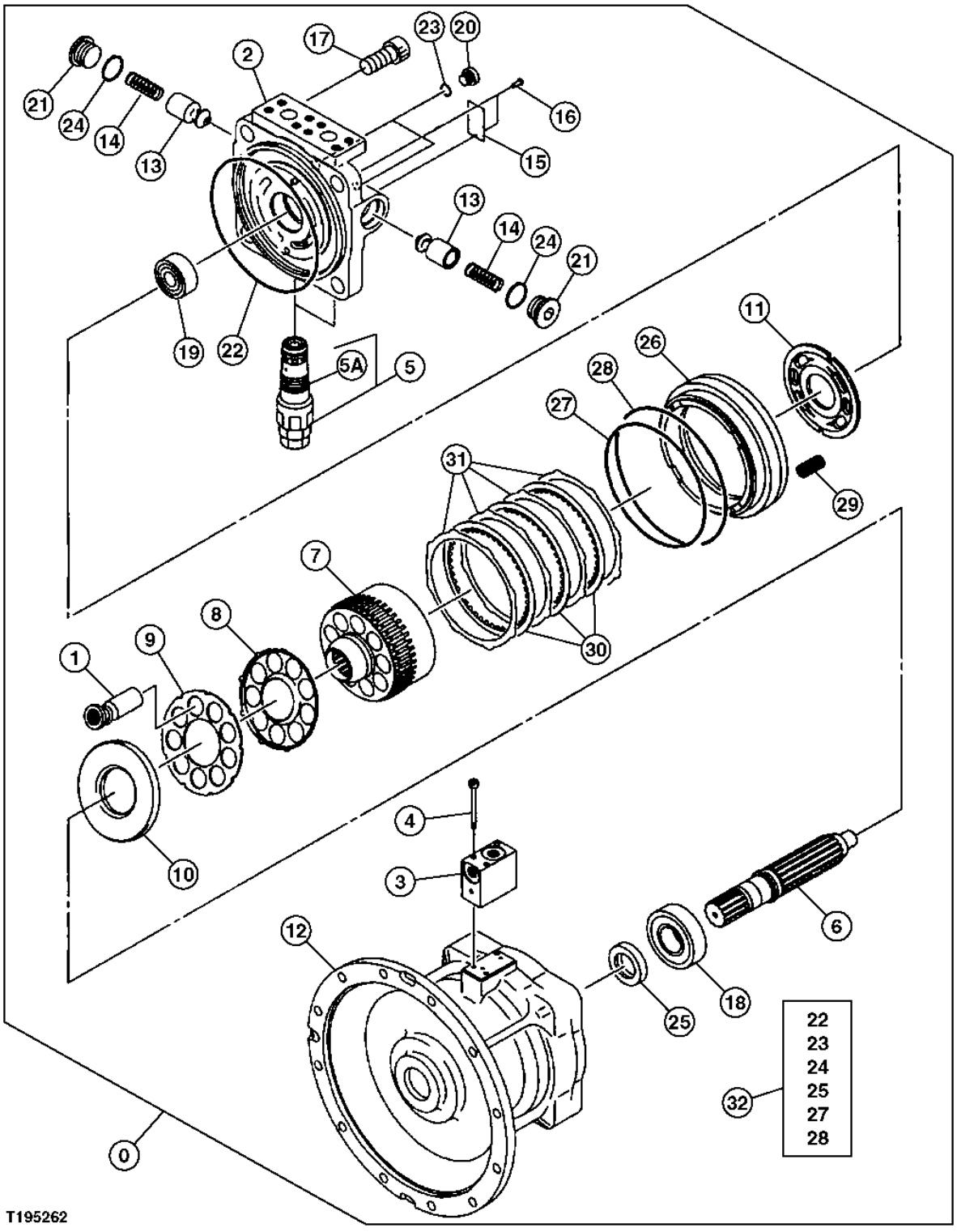

SWING OIL MOTOR (SERIAL NO. 071086-)

KEY	PART NO.	PART NAME	QTY	SERIAL NO.	REMARKS
0	4484557	HYDRAULIC MOTOR	1		
1	0816201	PISTON	9		
2	0816202	CASE	1		
3	0803002	VALVE	1		
4	0384401	SCREW	3		
5	4631105	PRESSURE RELIEF VALVE	2		(SUB FOR 0872301)
5A	A811030	O-RING	2		
6	0816205	SHAFT	1		
7	0816206	CYLINDER	1		
8	0816207	SPRING	1		
9	0816208	RETAINER	1		
10	0816209	PLATE	1		
11	0816210	PLATE	1		
12	0816211	CASE	1		
13	0803007	PLUNGER	2		
14	0803008	SPRING	2		
15	.....	IDENTIFICATION PLATE	1		(0625508 NO LONGER AVAILABLE)
16	0625509	CAP SCREW	2		
17	0365318	SCREW	4		
18	0816212	CYLINDRICAL ROLLER BEARING	1		
19	0872302	TAPERED ROLLER BEARING	1		
20	0629404	FITTING PLUG	2		
21	0803009	PIPE PLUG	2		
22	0401202	O-RING	1		
23	M800650	PACKING	2		(SUB FOR 957366)
24	984614	O-RING	2		
25	0353318	SEAL	1		
26	0816214	PISTON	1		
27	4S00219	O-RING	1		(SUB FOR 0365330 OR AT128303)
28	0308623	O-RING	1		
29	0747307	SPRING	20		
30	0816215	PLATE	3		
31	0816216	PLATE	4		
32	0816217	SEAL KIT	1		

MEMORANDA

1K20

NUMERICAL INDEX

PART NO.	GRID	KEY	PAGE
AA34965	2D2	9	1830 - 3
AA34965	2D12	3	1830 - 11
AE24616	3D19	5	3315 - 13
AE24616	3D21	23	3315 - 15
AE24616	3E20	22	3360 - 7
AE24616	3E24	17	3360 - 11
AE24616	3F4	13	3360 - 15
AE24616	3F6	11	3360 - 15B
AE24616	3F8	3	3360 - 21
AE24616	3F10	5	3360 - 23
AE24616	3F12	7	3360 - 25
AE42067	3D19	6	3315 - 13
AE42067	3D19	7	3315 - 13
AE42718	3F8	13	3360 - 21
AH103182	3I2	2	3363 - 3
AH108250	3D19	2	3315 - 13
AH150599	3L10	31	3365 - 11
AH20849	1F25	1D	0520 - 3
AH63565	3F6	5	3360 - 15B
AH75160	3F8	33	3360 - 21
AH97777	3E20	3	3360 - 7
AL2976T	1F13	14	0505 - 3
AP33637	3J14	22	3363 - 33
AP33637	3K2	12	3363 - 45
AP33638	3J14	23	3363 - 33
AP33638	3K2	13	3363 - 45
AP33691	3E6	0B	3344 - 3
AP38748	2C16	0	1810 - 37
AP38749	2C16	1	1810 - 37
AP38750	2C16	2	1810 - 37
AP38751	2C16	4	1810 - 37
AP38752	2C16	5	1810 - 37
AP38753	2C16	6	1810 - 37
AP38754	2C16	9	1810 - 37
AP38755	2C16	30	1810 - 37
AP38756	2C16	11	1810 - 37
AP38757	2C16	12	1810 - 37
AP38758	2C16	13	1810 - 37
AP38759	2C16	16	1810 - 37
AP38760	2C16	15	1810 - 37
AP38763	2C16	50	1810 - 37
AR21836	1G14	10	0560 - 7
AR21837	1F15	25	0505 - 5
AR45925	1H4	13	1671 - 3
AR48236	1F15	21	0505 - 5
AR48236	1F18	2	0510 - 3
AR48236	1G6	10	0530 - 3
AR48236	1G14	20	0560 - 7
AR60937	2D16	10	1830 - 15
AR65507	1D10	9	0403 - 2
AR73234	1F25	1E	0520 - 3
AR73234	1F25	1G	0520 - 3
AR76140	3E20	17	3360 - 7
AR85519	1E2	1	0413 - 3
AR90081	3D19	20	3315 - 13
AR90081	3E24	11	3360 - 11
AR94101	3F4	25	3360 - 15
AT105289	1F23	50	0510 - 13
AT106365	2C6	0B	1810 - 27
AT108783	3E24	10	3360 - 11
AT115448	3F2	11	3360 - 13
AT115535	3D19	12	3315 - 13
AT115535	3D21	31	3315 - 15
AT116162	1F15	12	0505 - 5
AT116162	1H21	14	1674 - 13
AT116486	3F4	16	3360 - 15
AT116486	3F8	7	3360 - 21
AT117364	3F18	10	3360 - 31
AT117364	3F20	39	3360 - 85
AT117365	3F18	8	3360 - 31
AT117365	3F20	38	3360 - 85
AT120498	3F18	8	3360 - 31
AT120498	3F20	38	3360 - 85
AT120499	3F18	10	3360 - 31
AT120499	3F20	39	3360 - 85
AT120788	3K20	16A	3363 - 57
AT121321	1H9	24	1674 - 5
AT121321	3J22	25	3363 - 41
AT122152	2E18	30	1910 - 27
AT122384	1H9	23	1674 - 5
AT122946	3F20	20	3360 - 85
AT123487	3G6	52A	3361 - 9
AT123487	3G8	55A	3361 - 11
AT126200	3I6	13	3363 - 7
AT128303	3L21	27	4367 - 5
AT128379	3I4	14	3363 - 5
AT130053	3E24	7	3360 - 11
AT130053	3F8	11	3360 - 21
AT130157	1G21	1	1369 - 3
AT130379	1I7	2	1740 - 3
AT130684	3F8	22	3360 - 21
AT130817	3L4	14	3365 - 7
AT130838	1C6	8	0260 - 13
AT130838	1C20	8	0267 - 3
AT130840	1C6	12	0260 - 13
AT130840	1C20	12	0267 - 3
AT130859	3G20	57	3362 - 11
AT130859	3G22	57	3362 - 13
AT130956	1C2	45	0260 - 9
AT131080	3B14	21	3302 - 3B
AT131080	3B14	22	3302 - 3B
AT131080	3B14	90	3302 - 3B
AT131080	3C2	21	3302 - 11B
AT131080	3C2	22	3302 - 11B
AT131080	3C2	90	3302 - 11B
AT131084	3B12	4	3302 - 3
AT131084	3B16	4	3302 - 5
AT131084	3B20	4	3302 - 7
AT131084	3B22	4	3302 - 9
AT131084	3B24	4	3302 - 11
AT131084	3C4	4	3302 - 13
AT131084	3C6	1	3302 - 15
AT131084	3C8	4	3302 - 17
AT131085	3B18	21	3302 - 5B
AT131085	3B18	22	3302 - 5B
AT131085	3B18	90	3302 - 5B
AT131085	3B20	21	3302 - 7
AT131085	3B20	22	3302 - 7
AT131085	3B20	90	3302 - 7
AT131085	3B22	21	3302 - 9
AT131085	3B22	22	3302 - 9
AT131085	3B22	90	3302 - 9
AT131085	3C4	21	3302 - 13
AT131085	3C4	22	3302 - 13
AT131085	3C4	90	3302 - 13
AT131088	3C6	8	3302 - 15
AT131089	3C8	15	3302 - 17
AT131090	3B12	15	3302 - 3
AT131094	3B20	15	3302 - 7
AT131097	3B16	15	3302 - 5
AT131097	3B22	15	3302 - 9
AT131097	3B24	15	3302 - 11
AT131097	3C4	15	3302 - 13
AT131254	3K24	15	3365 - 3
AT131254	3L2	15	3365 - 5
AT131302	3K10	12	3363 - 51
AT131302	3K12	20	3363 - 51B
AT131372	1B12	4	0130 - 15
AT131375	1B12	3	0130 - 15
AT131414	3L4	13	3365 - 7
AT131436	3E20	8	3360 - 7
AT131437	3E20	13	3360 - 7
AT131445	3E24	8	3360 - 11
AT131538	3L10	38	3365 - 11
AT131557	1C6	38	0260 - 13
AT131557	1C20	38	0267 - 3
AT131697	2B9	16	1810 - 7
AT131732	1I15	5	1740 - 11
AT131732	1I15	6	1740 - 11
AT131752	3L13	48	4360 - 3
AT131753	3L13	45	4360 - 3
AT131854	1I7	8	1740 - 3
AT131864	2B9	16A	1810 - 7
AT131865	2B9	16B	1810 - 7
AT131922	1F25	1K	0520 - 3
AT132384	3L19	28	4367 - 3
AT132424	3L19	26	4367 - 3
AT132457	1H11	5	1674 - 7
AT134346	3E20	12	3360 - 7
AT135758	1H7	1C	1674 - 3
AT13740	1D13	28	0404 - 3
AT13740	1F23	10	0510 - 13
AT139382	3F2	4	3360 - 13
AT139383	3F2	3	3360 - 13
AT140041	3F4	16	3360 - 15
AT140041	3F8	7	3360 - 21
AT141562	3F2	15	3360 - 13
AT142288	1H19	1	1674 - 11
AT145649	1G14	10	0560 - 7
AT147301	1F18	1	0510 - 3
AT147803	1H11	0	1674 - 7
AT147803	2C16	18A	1810 - 37
AT152109	1B8	8	0130 - 13
AT152109	1B10	5	0130 - 13B
AT152120	3D19	13	3315 - 13
AT152120	3D21	5	3315 - 15
AT153802	1G10	4	0560 - 3
AT153832	3G10	7	3361 - 13
AT153834	3G10	9	3361 - 13
AT153835	3G10	12	3361 - 13
AT153836	3G10	28	3361 - 13
AT153837	3G10	15	3361 - 13
AT153838	3G10	10	3361 - 13
AT153880	3G10	3	3361 - 13
AT153881	3G10	6	3361 - 13
AT153882	3G10	16	3361 - 13
AT153885	3G10	5	3361 - 13
AT153885	3G10	97	3361 - 13
AT153902	3H8	32	3362 - 23
AT153904	3H8	34	3362 - 23
AT153949	3L10	6	3365 - 11
AT153951	3L10	15	3365 - 11
AT154055	3D15	24	3315 - 9
AT154056	3D15	23	3315 - 9
AT154127	3D15	28	3315 - 9
AT154128	3L13	70	4360 - 3
AT154130	1C2	54	0260 - 9
AT154150	2B9	39	1810 - 7
AT154162	1B25	4	0260 - 7
AT154164	3G4	15	3361 - 7
AT154185	1B8	14	0130 - 13

NUMERICAL INDEX - CONTINUED

PART NO.	GRID	KEY	PAGE
AT154206	3G4	82	3361 - 7
AT154213	2F7	6	2004 - 3
AT154214	1H7	4	1674 - 3
AT154223	1B8	15	0130 - 13
AT154239	1G10	5	0560 - 3
AT154243	1G10	3	0560 - 3
AT154278	2B9	20	1810 - 7
AT154285	3J22	29	3363 - 41
AT154285	3J24	23	3363 - 43
AT154293	3L13	67	4360 - 3
AT154297	3G2	68	3361 - 5
AT154310	3G2	69	3361 - 5
AT154321	1B25	2	0260 - 7
AT154351	2D2	14	1830 - 3
AT154413	2B9	24	1810 - 7
AT154591	3G18	86	3362 - 9
AT154604	3G18	89	3362 - 9
AT154619	3G18	77	3362 - 9
AT154619	3H2	77	3362 - 17
AT154704	1C6	46	0260 - 13
AT154704	1C20	46	0267 - 3
AT154718	3K24	21	3365 - 3
AT154718	3L2	21	3365 - 5
AT154718	3L8	20	3365 - 9
AT154722	3L8	6	3365 - 9
AT154723	3G14	2	3362 - 5
AT154724	3G14	6	3362 - 5
AT154745	1C6	49	0260 - 13
AT154745	1C20	49	0267 - 3
AT154750	3G14	3	3362 - 5
AT154756	3G14	5	3362 - 5
AT154759	1C6	55	0260 - 13
AT154759	1C20	55	0267 - 3
AT154768	1C6	51	0260 - 13
AT154768	1C20	51	0267 - 3
AT154770	1C6	57	0260 - 13
AT154770	1C20	57	0267 - 3
AT154772	3L13	30	4360 - 3
AT154779	3L8	13	3365 - 9
AT154836	3L13	50	4360 - 3
AT154847	1C10	17	0260 - 15
AT154876	3K14	28	3363 - 51D
AT154913	2F3	5	2001 - 3
AT154914	1G6	5C	0530 - 3
AT154929	1I7	1	1740 - 3
AT154952	1F18	5	0510 - 3
AT154961	1H11	32	1674 - 7
AT154966	2F9	0	2004 - 5
AT154968	1G6	5	0530 - 3
AT155189	2C16	26	1810 - 37
AT155254	3I12	2	3363 - 13
AT155270	3G8	61	3361 - 11
AT155270	3J8	43	3363 - 29
AT155270	3J10	43	3363 - 29B
AT155270	3J20	18	3363 - 39
AT155270	3K2	30	3363 - 45
AT155270	3K4	30	3363 - 45B
AT155271	1I7	19	1740 - 3
AT155274	1I7	23	1740 - 3
AT155305	1B21	0	0260 - 3
AT155307	2E18	29	1910 - 27
AT155337	1F18	4	0510 - 3
AT155622	1F25	1	0520 - 3
AT155730	2C14	37	1810 - 35
AT156970	2B11	41	1810 - 9
AT156974	1H11	55	1674 - 7
AT156993	2B15	17	1810 - 13
AT156994	2B15	18	1810 - 13
AT157059	1G2	6	0520 - 5
AT157068	2B11	18	1810 - 9
AT157068	2B13	27	1810 - 11
AT157668	3E20	18	3360 - 7
AT158507	3L13	7	4360 - 3
AT159574	3K10	11	3363 - 51
AT159574	3K12	19	3363 - 51B
AT159584	3L4	26	3365 - 7
AT159585	3L4	23	3365 - 7
AT159587	3L4	30	3365 - 7
AT159603	3E4	22	3340 - 9
AT159782	3F20	11	3360 - 85
AT159786	3F20	9	3360 - 85
AT159934	3F20	3	3360 - 85
AT160517	3L13	6	4360 - 3
AT160584	3G2	80	3361 - 5
AT160584	3G8	62	3361 - 11
AT160584	3J8	44	3363 - 29
AT160584	3J10	44	3363 - 29B
AT160584	3K2	31	3363 - 45
AT160584	3K4	31	3363 - 45B
AT160584	3K6	31	3363 - 47
AT160685	3C6	12	3302 - 15
AT160745	3C8	40	3302 - 17
AT160746	3C8	40	3302 - 17
AT162551	3D4	1E	3302 - 33
AT162863	1H21	30	1674 - 13
AT163544	3C18	1G	3302 - 23
AT163545	3C18	1J	3302 - 23
AT163546	3C18	1I	3302 - 23
AT163547	3C18	1H	3302 - 23
AT163548	3C22	1A	3302 - 27
AT163548	3D2	1A	3302 - 31
AT163548	3D4	1A	3302 - 33
AT163549	3C22	1B	3302 - 27
AT163549	3D2	1B	3302 - 31
AT163549	3D4	1B	3302 - 33
AT163550	3C22	1F	3302 - 27
AT163550	3D2	1F	3302 - 31
AT163550	3D4	1F	3302 - 33
AT163551	3C22	1E	3302 - 27
AT163551	3D2	1E	3302 - 31
AT163552	3C22	1D	3302 - 27
AT163552	3D4	1D	3302 - 33
AT163553	3C22	1C	3302 - 27
AT163553	3D2	1C	3302 - 31
AT163553	3D4	1C	3302 - 33
AT163554	3C22	1G	3302 - 27
AT163554	3D4	1G	3302 - 33
AT163555	3C22	1J	3302 - 27
AT163555	3D4	1J	3302 - 33
AT163556	3C22	1I	3302 - 27
AT163556	3D4	1I	3302 - 33
AT163557	3C22	1H	3302 - 27
AT163557	3D4	1H	3302 - 33
AT163628	3B14	40	3302 - 3B
AT163629	3B14	40	3302 - 3B
AT163630	3B14	40	3302 - 3B
AT163631	3B14	40	3302 - 3B
AT163632	3B14	40	3302 - 3B
AT163638	3B18	40	3302 - 5B
AT163638	3C10	10	3302 - 19
AT163639	3B18	40	3302 - 5B
AT163639	3C10	10	3302 - 19
AT163640	3B18	40	3302 - 5B
AT163640	3C10	10	3302 - 19
AT163641	3B18	40	3302 - 5B
AT163641	3C10	10	3302 - 19
AT163645	3B22	40	3302 - 9
AT163646	3B22	40	3302 - 9
AT163647	3B22	40	3302 - 9
AT163825	3C24	1A	3302 - 29
AT163826	3C24	1B	3302 - 29
AT163827	3C24	1F	3302 - 29
AT163828	3C24	1E	3302 - 29
AT163832	3C24	1C	3302 - 29
AT167192	3C18	1K	3302 - 23
AT167193	3C18	1L	3302 - 23
AT167194	3C18	1N	3302 - 23
AT167195	3C18	1M	3302 - 23
AT167196	3C22	1K	3302 - 27
AT167196	3D4	1K	3302 - 33
AT167197	3C22	1L	3302 - 27
AT167197	3D4	1L	3302 - 33
AT167279	3B14	40	3302 - 3B
AT167874	3B14	29	3302 - 3B
AT167874	3B14	30	3302 - 3B
AT167874	3B14	92	3302 - 3B
AT167874	3C2	29	3302 - 11B
AT167874	3C2	30	3302 - 11B
AT167874	3C2	92	3302 - 11B
AT167876	3B18	29	3302 - 5B
AT167876	3B18	30	3302 - 5B
AT167876	3B18	92	3302 - 5B
AT167876	3B20	29	3302 - 7
AT167876	3B20	30	3302 - 7
AT167876	3B20	91	3302 - 7
AT167876	3B22	29	3302 - 9
AT167876	3B22	30	3302 - 9
AT167876	3B22	91	3302 - 9
AT170459	3D21	8	3315 - 15
AT170630	3G4	10	3361 - 7
AT170759	1F13	2	0505 - 3
AT171162	1F13	1	0505 - 3
AT171539	1F13	3	0505 - 3
AT171742	3B20	15	3302 - 7
AT171743	3B20	40	3302 - 7
AT171745	3B20	40	3302 - 7
AT172476	3C2	40	3302 - 11B
AT172476	3C10	10	3302 - 19
AT172477	3C2	40	3302 - 11B
AT172477	3C10	10	3302 - 19
AT172478	3C2	40	3302 - 11B
AT172478	3C10	10	3302 - 19
AT172479	3C2	40	3302 - 11B
AT172479	3C10	10	3302 - 19
AT172480	3C2	40	3302 - 11B
AT172480	3C10	10	3302 - 19
AT173610	1F23	11	0510 - 13
AT173678	2C20	2	1821 - 5
AT174888	1I15	2	1740 - 11
AT174989	1D23	16	0409 - 3
AT175002	3F20	8	3360 - 85
AT175981	3G4	64	3361 - 7
AT175984	3G4	64A	3361 - 7
AT175989	1G10	9	0560 - 3
AT176033	1C10	16	0260 - 15
AT176256	3K16	15	3363 - 53
AT176258	3K16	16	3363 - 53
AT176789	2B13	6	1810 - 11
AT176949	1F23	1	0510 - 13
AT177419	1G10	11	0560 - 3
AT177804	2C6	0	1810 - 27

NUMERICAL INDEX - CONTINUED

PART NO.	GRID	KEY	PAGE
AT177805	2C6	0A	1810 - 27
AT177806	2C6	0C	1810 - 27
AT178530	3C18	1A	3302 - 23
AT178532	3C18	1B	3302 - 23
AT178534	3C18	1F	3302 - 23
AT178536	3C18	1C	3302 - 23
AT178845	1F13	30	0505 - 3
AT178893	1F13	6	0505 - 3
AT179420	2E20	9	1910 - 29
AT179610	1B6	3B	0130 - 11
AT180006	1B12	4	0130 - 15
AT180007	1B6	7	0130 - 11
AT180007	1B12	8	0130 - 15
AT180007	1B14	5	0130 - 17
AT180008	1B12	9	0130 - 15
AT180017	1B14	3	0130 - 17
AT180019	1B14	4	0130 - 17
AT180047	1B10	1	0130 - 13B
AT180585	3E24	4	3360 - 11
AT180705	1H21	4	1674 - 13
AT180971	2C18	7	1821 - 3
AT180973	2C18	9	1821 - 3
AT180974	2C18	10	1821 - 3
AT180975	2C18	11	1821 - 3
AT180976	2C18	12	1821 - 3
AT180977	2C18	13	1821 - 3
AT180978	2C18	15	1821 - 3
AT180979	2C18	18	1821 - 3
AT180980	2C18	19	1821 - 3
AT181125	2F3	10	2001 - 3
AT181238	3L8	8	3365 - 9
AT181247	3L4	8	3365 - 7
AT181248	3L4	11	3365 - 7
AT181790	3L4	10	3365 - 7
AT182039	3F20	16	3360 - 85
AT182040	3F20	15	3360 - 85
AT182115	3F20	8	3360 - 85
AT182115	3F20	28	3360 - 85
AT182213	3F20	22	3360 - 85
AT182625	2B9	27	1810 - 7
AT182626	2B9	28	1810 - 7
AT183222	1F13	8	0505 - 3
AT183510	1F23	2	0510 - 13
AT183511	1F23	3	0510 - 13
AT183512	1F23	4	0510 - 13
AT183514	1F23	5	0510 - 13
AT183529	1F23	6	0510 - 13
AT183531	1F23	7	0510 - 13
AT184357	1B14	0B	0130 - 17
AT185207	2E18	22	1910 - 27
AT185207	2F5	0	2002 - 3
AT185413	3L4	27	3365 - 7
AT185414	3L4	28	3365 - 7
AT185645	3C4	40	3302 - 13
AT185646	3C4	8	3302 - 13
AT185696	1H5	6	1672 - 2
AT186111	3F18	11	3360 - 31
AT186111	3F20	33	3360 - 85
AT186112	3F18	16	3360 - 31
AT186112	3F20	34	3360 - 85
AT186113	3F18	17	3360 - 31
AT186113	3F20	35	3360 - 85
AT186114	3F18	18	3360 - 31
AT186114	3F20	36	3360 - 85
AT186554	3J4	3A	3363 - 25
AT186622	3F8	24	3360 - 21
AT186623	3F8	16	3360 - 21
AT187186	1B16	90	0130 - 19
AT187255	3C10	10	3302 - 19
AT187256	3C10	10	3302 - 19
AT187257	3C10	10	3302 - 19
AT187258	3C10	10	3302 - 19
AT187259	3C10	10	3302 - 19
AT187260	3C10	10	3302 - 19
AT187261	3C10	10	3302 - 19
AT187262	3C10	10	3302 - 19
AT187263	3C10	10	3302 - 19
AT189409	3F20	34	3360 - 85
AT189410	3F20	33	3360 - 85
AT189613	1F23	8	0510 - 13
AT189640	3E20	23	3360 - 7
AT189991	1G4	1	0520 - 7
AT190190	2D16	10	1830 - 15
AT190535	3F4	4	3360 - 15
AT190929	1H23	15	1674 - 15
AT191027	1H25	1	1674 - 17
AT191028	1H23	12	1674 - 15
AT191168	1F23	9	0510 - 13
AT191169	1F23	17	0510 - 13
AT191263	1F23	12	0510 - 13
AT191264	1F23	13	0510 - 13
AT191297	3F8	1	3360 - 21
AT191397	3F4	14	3360 - 15
AT192103	1F21	2	0510 - 10
AT192124	1A23	0A	0130 - 3
AT192511	3G6	38	3361 - 9
AT192511	3G8	38	3361 - 11
AT193810	1F23	15	0510 - 13
AT193819	1F23	16	0510 - 13
AT193964	2C18	1	1821 - 3
AT194969	1G10	9	0560 - 3
AT194969	1H11	0	1674 - 7
AT194969	2B13	6	1810 - 11
AT194969	2C16	18A	1810 - 37
AT195278	2C18	0C	1821 - 3
AT195279	2C18	0D	1821 - 3
AT195280	2C18	20	1821 - 3
AT195282	2C18	16	1821 - 3
AT195283	2C18	17	1821 - 3
AT195284	2C18	2	1821 - 3
AT195286	2C18	0	1821 - 3
AT195287	2C18	8	1821 - 3
AT195684	3D19	0	3315 - 13
AT195713	3E24	1	3360 - 11
AT195741	1H11	74	1674 - 7
AT195784	3F2	18	3360 - 13
AT195786	3F2	12	3360 - 13
AT195787	3F2	9	3360 - 13
AT195788	3F2	14	3360 - 13
AT196334	3E20	18	3360 - 7
AT196434	3D23	23A	3340 - 3
AT196434	3D23	23B	3340 - 3
AT196434	3D23	46	3340 - 3
AT196434	3D23	48	3340 - 3
AT196434	3D25	23A	3340 - 5
AT196434	3D25	23B	3340 - 5
AT196434	3D25	46	3340 - 5
AT196434	3D25	48	3340 - 5
AT196434	3E2	23A	3340 - 7
AT196434	3E2	23B	3340 - 7
AT196434	3E2	46	3340 - 7
AT196434	3E2	48	3340 - 7
AT196435	3D21	30	3315 - 15
AT196469	3L10	40	3365 - 11
AT196563	1E17	15	0421 - 5
AT196563	1G14	22	0560 - 7
AT196567	2B23	6	1810 - 21
AT196587	3E22	1	3360 - 9
AT196588	3E22	3	3360 - 9
AT196589	1G14	19	0560 - 7
AT196851	3F20	26	3360 - 85
AT196851	3F22	5	3360 - 85B
AT197062	3F20	28	3360 - 85
AT197149	1H5	11	1672 - 2
AT197818	1F23	17	0510 - 13
AT198270	1F23	18	0510 - 13
AT199361	3D4	1O	3302 - 33
AT199374	3C18	1P	3302 - 23
AT199375	3C18	1Q	3302 - 23
AT199748	2C18	16	1821 - 3
AT199749	2C18	17	1821 - 3
AT200010	2D14	15	1830 - 13
AT200011	1C4	3	0260 - 11
AT200012	1H11	12	1674 - 7
AT200012	1H11	30	1674 - 7
AT200012	1H11	45	1674 - 7
AT200231	3H12	3	3362 - 25
AT200232	3H12	4	3362 - 25
AT200303	3G20	92	3362 - 11
AT200584	2B11	59	1810 - 9
AT200931	3G20	76	3362 - 11
AT200931	3G24	76	3362 - 15
AT200951	3L13	24	4360 - 3
AT200952	3L13	41	4360 - 3
AT200953	3L13	12	4360 - 3
AT200954	3L13	33	4360 - 3
AT200969	3L13	39	4360 - 3
AT200970	3L13	42	4360 - 3
AT200971	3L13	47	4360 - 3
AT200975	1B8	10	0130 - 13
AT200990	3G2	86	3361 - 5
AT200993	3L13	32	4360 - 3
AT200996	3L13	1	4360 - 3
AT201003	3K24	10	3365 - 3
AT201003	3L2	10	3365 - 5
AT201005	3G6	29	3361 - 9
AT201005	3G8	29	3361 - 11
AT201013	3L13	46	4360 - 3
AT201032	2E18	27	1910 - 27
AT201054	3L13	68	4360 - 3
AT201128	1A25	4	0130 - 5
AT201190	3L13	26	4360 - 3
AT201191	1C18	19	0263 - 3
AT202089	3G8	50B	3361 - 11
AT202111	3H12	0	3362 - 25
AT202122	3G2	75	3361 - 5
AT202122	3G10	0	3361 - 13
AT202291	3D15	19	3315 - 9
AT202292	3D15	18	3315 - 9
AT202412	3G2	4	3361 - 5
AT202414	3G2	3	3361 - 5
AT202415	3G2	30	3361 - 5
AT202416	3G2	31	3361 - 5
AT202443	3G2	43	3361 - 5
AT202454	3G20	26	3362 - 11
AT202454	3G22	26	3362 - 13
AT202454	3G22	64H	3362 - 13
AT202454	3G24	65G	3362 - 15
AT202466	3G4	10	3361 - 7
AT202590	1C2	18	0260 - 9
AT202591	1C2	19	0260 - 9

NUMERICAL INDEX - CONTINUED

PART NO.	GRID	KEY	PAGE
AT202597	1C2	30	0260 - 9
AT202778	1H23	14	1674 - 15
AT203601	1C6	2	0260 - 13
AT203601	1C20	2	0267 - 3
AT203602	1C6	4	0260 - 13
AT203602	1C20	4	0267 - 3
AT203603	1C6	17	0260 - 13
AT203603	1C20	17	0267 - 3
AT203606	1C6	30	0260 - 13
AT203606	1C20	30	0267 - 3
AT203607	1C6	31	0260 - 13
AT203607	1C20	31	0267 - 3
AT203608	1C2	50	0260 - 9
AT203608	1C6	33	0260 - 13
AT203608	1C20	33	0267 - 3
AT203609	1C6	40	0260 - 13
AT203609	1C20	40	0267 - 3
AT203610	1C6	44	0260 - 13
AT203610	1C20	44	0267 - 3
AT203612	1C6	53	0260 - 13
AT203612	1C20	53	0267 - 3
AT203612	3G14	0	3362 - 5
AT203613	1C10	7	0260 - 15
AT203614	1C10	9	0260 - 15
AT203615	1C10	11	0260 - 15
AT203647	3G2	32	3361 - 5
AT203648	3G4	80	3361 - 7
AT203649	3G4	67	3361 - 7
AT203649	3G6	58	3361 - 9
AT203651	3G2	81B	3361 - 5
AT203653	3G10	2	3361 - 13
AT203656	1C6	63	0260 - 13
AT203656	1C20	63	0267 - 3
AT203657	1C6	61	0260 - 13
AT203657	1C20	61	0267 - 3
AT203691	1H11	26	1674 - 7
AT204729	1C2	38	0260 - 9
AT204730	1C2	39	0260 - 9
AT204733	1C2	51	0260 - 9
AT204775	1C18	1	0263 - 3
AT204776	1C18	0	0263 - 3
AT204877	1C10	30	0260 - 15
AT204879	3G12	21	3362 - 3
AT204883	3G12	16	3362 - 3
AT204885	3G12	9	3362 - 3
AT204886	3G12	10	3362 - 3
AT204900	3L19	48	4367 - 3
AT204922	1C2	52	0260 - 9
AT204941	1C2	29	0260 - 9
AT204965	3L13	69	4360 - 3
AT205820	3D23	23A	3340 - 3
AT205820	3D23	23B	3340 - 3
AT205820	3D25	23A	3340 - 5
AT205820	3D25	23B	3340 - 5
AT205820	3E2	23A	3340 - 7
AT205820	3E2	23B	3340 - 7
AT213603	2D16	1	1830 - 15
AT213608	2B13	55	1810 - 11
AT213610	2B19	13	1810 - 17
AT213614	3D17	10	3315 - 11
AT213615	3I20	9	3363 - 19B
AT213615	3J16	48	3363 - 35
AT213624	2B13	23	1810 - 11
AT213630	3L19	30	4367 - 3
AT213630	3L19	31	4367 - 3
AT213660	3G16	61A	3362 - 7
AT213660	3G18	62D	3362 - 9
AT213668	3G16	84	3362 - 7
AT213675	3G16	48D	3362 - 7
AT213675	3G18	47D	3362 - 9
AT213687	3G20	83	3362 - 11
AT213691	3G20	87	3362 - 11
AT213693	3G16	22	3362 - 7
AT213693	3G20	22	3362 - 11
AT213693	3G22	22	3362 - 13
AT213693	3G22	64G	3362 - 13
AT213693	3G24	65F	3362 - 15
AT213693	3H2	22	3362 - 17
AT213700	3G16	7	3362 - 7
AT213700	3H2	7	3362 - 17
AT213701	3G16	8	3362 - 7
AT213701	3H2	8	3362 - 17
AT213730	3G4	25	3361 - 7
AT213732	3G4	28	3361 - 7
AT213733	3G4	27	3361 - 7
AT213734	3G4	3	3361 - 7
AT213735	3G4	4	3361 - 7
AT213762	3G4	42	3361 - 7
AT213764	1B12	7	0130 - 15
AT213767	3G4	57	3361 - 7
AT213790	3L13	72	4360 - 3
AT213793	3G4	31	3361 - 7
AT213794	3G6	35	3361 - 9
AT213794	3G8	35	3361 - 11
AT213796	3D17	31	3315 - 11
AT213796	3H6	17	3362 - 21
AT213800	1I15	5	1740 - 11
AT213801	1I15	6	1740 - 11
AT213809	3J14	73	3363 - 33
AT213809	3J20	17	3363 - 39
AT213828	1B12	9	0130 - 15
AT213831	3K6	23B	3363 - 47
AT213832	3I10	15B	3363 - 11
AT213832	3I14	10B	3363 - 15
AT213832	3I14	11B	3363 - 15
AT213832	3I14	12B	3363 - 15
AT213832	3I14	13B	3363 - 15
AT213832	3I18	11B	3363 - 19
AT213832	3I18	12B	3363 - 19
AT213832	3I18	13B	3363 - 19
AT213832	3I18	14B	3363 - 19
AT213847	3G4	12	3361 - 7
AT213871	3G4	21	3361 - 7
AT213873	3G4	6	3361 - 7
AT213874	3G4	8	3361 - 7
AT213875	3G4	44	3361 - 7
AT213876	3G4	43	3361 - 7
AT213877	3G4	47	3361 - 7
AT213878	3G4	51	3361 - 7
AT213883	2F3	2	2001 - 3
AT213884	2D22	7	1910 - 3
AT213887	3J18	5	3363 - 37
AT213890	3G4	59	3361 - 7
AT213891	3G6	15	3361 - 9
AT213891	3G8	15	3361 - 11
AT213892	3G6	14	3361 - 9
AT213892	3G8	14	3361 - 11
AT213893	3G6	41	3361 - 9
AT213894	3G4	73	3361 - 7
AT213912	3G6	28	3361 - 9
AT213912	3G8	28	3361 - 11
AT213913	3G6	27	3361 - 9
AT213913	3G8	27	3361 - 11
AT213915	2D8	3	1830 - 5
AT213917	3G6	24	3361 - 9
AT213917	3G8	24	3361 - 11
AT213920	3G4	7	3361 - 7
AT213922	3G4	74	3361 - 7
AT213943	2D14	12	1830 - 13
AT213951	3G6	49	3361 - 9
AT213951	3G8	49	3361 - 11
AT213954	2C10	2	1810 - 31
AT213957	3J22	22	3363 - 41
AT213957	3J24	13	3363 - 43
AT213958	2C12	4	1810 - 33
AT213962	3J22	23	3363 - 41
AT213962	3J24	14	3363 - 43
AT213967	2E18	14	1910 - 27
AT213970	1G10	8	0560 - 3
AT213974	3G4	50	3361 - 7
AT213975	3G4	46	3361 - 7
AT213976	3E10	0B	3345 - 3
AT213976	3E10	1B	3345 - 3
AT213982	3G20	78	3362 - 11
AT213982	3G24	78	3362 - 15
AT213984	1H11	14	1674 - 7
AT214007	2B9	17	1810 - 7
AT214011	1H11	2	1674 - 7
AT214011	2C4	2	1810 - 25B
AT214011	2C14	33	1810 - 35
AT214012	2C14	4	1810 - 35
AT214012	2C14	8	1810 - 35
AT214012	2C14	15	1810 - 35
AT214012	2C14	19	1810 - 35
AT214017	2B9	18	1810 - 7
AT214036	1H11	15	1674 - 7
AT214045	3G6	10	3361 - 9
AT214045	3G8	10	3361 - 11
AT214046	3G2	79	3361 - 5
AT214061	2B9	21	1810 - 7
AT214063	2B9	23	1810 - 7
AT214078	2B11	45	1810 - 9
AT214079	2B9	45	1810 - 7
AT214104	2B15	16	1810 - 13
AT214118	2B19	2	1810 - 17
AT214119	2B19	4	1810 - 17
AT214122	2B19	71	1810 - 17
AT214129	2B11	71	1810 - 9
AT214145	2B13	3	1810 - 11
AT214152	2B13	54	1810 - 11
AT214160	2B13	13	1810 - 11
AT214169	2B17	33	1810 - 15
AT214170	2B17	49	1810 - 15
AT214171	2B17	92	1810 - 15
AT214172	2B17	65	1810 - 15
AT214172	2B19	11	1810 - 17
AT214173	2B11	55	1810 - 9
AT214213	2D6	43	1830 - 3D
AT214245	2D6	46	1830 - 3D
AT214263	3J4	3A	3363 - 25
AT214285	3G20	72	3362 - 11
AT214285	3G24	72	3362 - 15
AT214290	2B13	7	1810 - 11
AT214292	2B13	56	1810 - 11
AT214297	2B15	28	1810 - 13
AT214299	2B13	21	1810 - 11
AT214299	2B17	61	1810 - 15
AT214300	2B17	74	1810 - 15
AT214301	2B15	22	1810 - 13
AT214305	2B11	60	1810 - 9
AT214305	2B15	11	1810 - 13

NUMERICAL INDEX - CONTINUED

PART NO.	GRID	KEY	PAGE
AT214307	2B19	50	1810 - 17
AT214309	2B17	69A	1810 - 15
AT214310	2B11	30	1810 - 9
AT214311	2B15	7	1810 - 13
AT214313	2B13	15	1810 - 11
AT214314	2B13	23	1810 - 11
AT214350	3G2	82	3361 - 5
AT214351	3G4	19	3361 - 7
AT214401	3G2	63	3361 - 5
AT214406	3G2	62	3361 - 5
AT214409	2E18	11	1910 - 27
AT214413	3D23	37	3340 - 3
AT214413	3D25	37	3340 - 5
AT214413	3E2	37	3340 - 7
AT214413	3K10	18	3363 - 51
AT214430	2F3	0	2001 - 3
AT214454	1C10	23	0260 - 15
AT215474	2E18	39	1910 - 27
AT215479	2F3	6	2001 - 3
AT215499	1G2	4	0520 - 5
AT215503	2C14	26	1810 - 35
AT215505	3G12	2	3362 - 3
AT215506	3G12	5	3362 - 3
AT215507	3G12	13	3362 - 3
AT215508	3G12	7	3362 - 3
AT215515	3G12	18	3362 - 3
AT215516	3G12	19	3362 - 3
AT215520	1G6	6	0530 - 3
AT215520	1G14	16	0560 - 7
AT215533	2F3	1	2001 - 3
AT215538	3D21	7	3315 - 15
AT215661	3H8	50	3362 - 23
AT215869	3D17	6D	3315 - 11
AT215885	3D17	1	3315 - 11
AT215948	3D17	4	3315 - 11
AT215954	3D17	3	3315 - 11
AT215955	3D17	5	3315 - 11
AT216001	3D17	0	3315 - 11
AT216016	3D17	6	3315 - 11
AT216522	2C18	6	1821 - 3
AT216532	2C18	21	1821 - 3
AT216532	2C18	22	1821 - 3
AT217099	1I7	22	1740 - 3
AT217702	1I17	3	1740 - 13
AT217706	1I9	0	1740 - 5
AT217709	3G2	64	3361 - 5
AT217742	3D23	47	3340 - 3
AT217742	3D25	47	3340 - 5
AT217742	3E2	47	3340 - 7
AT217750	3L8	1A	3365 - 9
AT217769	1I7	15	1740 - 3
AT217784	1I17	2	1740 - 13
AT217798	3I16	3	3363 - 17
AT217799	3E6	1E	3344 - 3
AT217799	3K24	1A	3365 - 3
AT217799	3K24	2A	3365 - 3
AT217799	3L2	1A	3365 - 5
AT217799	3L2	2A	3365 - 5
AT217819	3K16	13	3363 - 53
AT217820	3K16	14	3363 - 53
AT217834	3G20	71	3362 - 11
AT217912	1I9	1	1740 - 5
AT217926	3L19	5	4367 - 3
AT217931	3L19	34	4367 - 3
AT217932	3L19	45	4367 - 3
AT217934	3L8	4	3365 - 9
AT217936	3L13	0	4360 - 3
AT217937	3K24	23	3365 - 3
AT217937	3L2	23	3365 - 5
AT217937	3L8	18	3365 - 9
AT217938	3G14	1	3362 - 5
AT217940	3K24	24	3365 - 3
AT217940	3L2	24	3365 - 5
AT217940	3L8	23	3365 - 9
AT217941	3L4	24	3365 - 7
AT217942	3D17	6A	3315 - 11
AT217947	3E12	1	3345 - 5
AT217950	1B8	13	0130 - 13
AT217951	1I7	32	1740 - 3
AT217952	3E8	11	3344 - 3B
AT217955	1B8	0A	0130 - 13
AT217957	3L8	16	3365 - 9
AT217959	3K24	13	3365 - 3
AT217959	3L2	13	3365 - 5
AT217965	3D23	32	3340 - 3
AT217969	3K24	8	3365 - 3
AT217969	3L2	8	3365 - 5
AT217970	1C6	42	0260 - 13
AT217970	1C20	42	0267 - 3
AT217971	1C6	64	0260 - 13
AT217971	1C20	64	0267 - 3
AT217983	3K24	11	3365 - 3
AT217983	3L2	11	3365 - 5
AT217987	1C18	0	0263 - 3
AT217987	1C18	1	0263 - 3
AT217990	3L4	6	3365 - 7
AT217991	1I9	2	1740 - 5
AT217993	3D23	31	3340 - 3
AT217994	3E2	31	3340 - 7
AT217995	3E2	32	3340 - 7
AT218003	3K24	27	3365 - 3
AT218004	3L2	27	3365 - 5
AT218005	3L8	26	3365 - 9
AT218026	3K10	1	3363 - 51
AT218027	3K10	6	3363 - 51
AT218028	3K10	9	3363 - 51
AT218029	3K10	10	3363 - 51
AT218043	3L4	60	3365 - 7
AT218044	3L8	60	3365 - 9
AT218045	3L13	63	4360 - 3
AT218046	3K10	7	3363 - 51
AT218047	3K10	8	3363 - 51
AT218048	3G22	28C	3362 - 13
AT218141	2B13	61	1810 - 11
AT218148	3K24	22	3365 - 3
AT218148	3L2	22	3365 - 5
AT218148	3L8	21	3365 - 9
AT218151	1F20	6	0510 - 9
AT218154	1F20	3	0510 - 9
AT218159	1G2	2	0520 - 5
AT218160	1G6	1	0530 - 3
AT218190	2B11	7	1810 - 9
AT218202	1F20	16	0510 - 9
AT218223	3I12	13	3363 - 13
AT218224	3I12	12	3363 - 13
AT219489	1H4	8	1671 - 3
AT219498	1B16	0A	0130 - 19
AT219499	1B16	1	0130 - 19
AT219502	3L19	4	4367 - 3
AT219570	3L19	16	4367 - 3
AT219573	1C2	6	0260 - 9
AT219574	1C2	5	0260 - 9
AT219575	1C2	2	0260 - 9
AT219576	1C2	23	0260 - 9
AT219577	1C2	34	0260 - 9
AT219578	1C2	26	0260 - 9
AT219579	1C2	14	0260 - 9
AT219584	1B6	4	0130 - 11
AT219585	1B6	8	0130 - 11
AT219592	1C2	41	0260 - 9
AT219594	1B16	23	0130 - 19
AT219599	1B8	0C	0130 - 13
AT219600	1B8	6	0130 - 13
AT219601	1C6	48	0260 - 13
AT219601	1C20	48	0267 - 3
AT219606	1B16	23	0130 - 19
AT219610	1C2	32	0260 - 9
AT219611	1C2	36	0260 - 9
AT219612	1C2	27	0260 - 9
AT219613	1C2	16	0260 - 9
AT219614	1C2	21	0260 - 9
AT219619	1B6	1	0130 - 11
AT219620	1B16	4	0130 - 19
AT219621	1B16	6	0130 - 19
AT219622	1B16	7	0130 - 19
AT219623	1C6	28	0260 - 13
AT219623	1C20	28	0267 - 3
AT219625	1C6	19	0260 - 13
AT219625	1C20	19	0267 - 3
AT219627	1B8	0B	0130 - 13
AT219628	1B8	17	0130 - 13
AT219629	1B8	5	0130 - 13
AT219630	1B8	16	0130 - 13
AT219650	1B16	21	0130 - 19
AT219651	1B16	22	0130 - 19
AT219660	1G14	2	0560 - 7
AT219667	2D12	10	1830 - 11
AT221439	1F15	17	0505 - 5
AT221440	1F15	20	0505 - 5
AT221605	1F15	28	0505 - 5
AT221990	1F15	4	0505 - 5
AT222697	1F15	1	0505 - 5
AT250016	1B23	1	0260 - 5
AT250017	1B16	2	0130 - 19
AT250018	1B16	3	0130 - 19
AT250019	1B16	5	0130 - 19
AT250020	1B16	8	0130 - 19
AT250021	1C18	15	0263 - 3
AT250022	1C4	0	0260 - 11
AT250037	1B8	3	0130 - 13
AT250250	1B6	3	0130 - 11
AT250256	1B16	10	0130 - 19
AT250257	1B14	0	0130 - 17
AT250257	1B14	7	0130 - 17
AT250277	1I11	3	1740 - 7
AT250448	1B4	0	0130 - 9
AT250449	1B4	1	0130 - 9
AT250450	1B6	0	0130 - 11
AT250517	3G18	75	3362 - 9
AT250517	3G24	75	3362 - 15
AT250517	3H2	75	3362 - 17
AT250518	3G16	74	3362 - 7
AT250518	3G20	74	3362 - 11
AT250518	3G24	74	3362 - 15
AT250518	3H2	74	3362 - 17
AT250589	3J22	21	3363 - 41
AT250589	3J24	12	3363 - 43
AT250688	3K22	19	3364 - 3
AT264237	3L4	13	3365 - 7
AT264266	3K24	21	3365 - 3
AT264266	3L2	21	3365 - 5

NUMERICAL INDEX - CONTINUED

PART NO.	GRID	KEY	PAGE
AT264266	3L8	20	3365 - 9
AT264268	3L8	6	3365 - 9
AT264273	3L8	13	3365 - 9
AT264275	3L4	23	3365 - 7
AT264277	3L4	8	3365 - 7
AT264279	3L4	10	3365 - 7
AT264293	3L8	8	3365 - 9
AT264294	3K24	8	3365 - 3
AT264294	3L2	8	3365 - 5
AT264295	3L4	6	3365 - 7
AT264297	3K24	22	3365 - 3
AT264297	3L2	22	3365 - 5
AT264297	3L8	21	3365 - 9
AT264320	3L19	33	4367 - 3
AT264324	1G21	..	1369 - 3
AT264324	3K24	31	3365 - 3
AT264324	3L2	31	3365 - 5
AT264324	3L4	33	3365 - 7
AT264324	3L8	29	3365 - 9
AT264347	1G21	..	1369 - 3
AT264347	3H6	15	3362 - 21
AT264348	3L19	37	4367 - 3
AT264354	1G21	..	1369 - 3
AT264354	3L10	29	3365 - 11
AT264360	1G21	..	1369 - 3
AT264374	3L10	7	3365 - 11
AT264394	3L10	17	3365 - 11
AT264395	3L8	9	3365 - 9
AT264397	3K24	20	3365 - 3
AT264397	3L2	20	3365 - 5
AT264397	3L8	19	3365 - 9
AT264398	3L4	9	3365 - 7
AT264400	3L4	20	3365 - 7
AT264402	3L4	22	3365 - 7
AT264408	3K24	9	3365 - 3
AT264408	3L2	9	3365 - 5
AT264409	3K24	10	3365 - 3
AT264409	3L2	10	3365 - 5
AT264418	1B25	3	0260 - 7
AT264438	3L4	60	3365 - 7
AT264439	3L8	60	3365 - 9
AT280434	3L4	60	3365 - 7
AT280814	1B8	15	0130 - 13
AT300303	3F10	1	3360 - 23
AT300303	3F12	1	3360 - 25
AT300313	3F10	2	3360 - 23
AT300313	3F12	2	3360 - 25
AT300338	3F12	8	3360 - 25
AT300465	3F12	16	3360 - 25
AT300466	3F12	17	3360 - 25
AT300467	3F12	5	3360 - 25
AT300469	3F10	12	3360 - 23
AT300469	3F10	13	3360 - 23
AT300470	3F10	11	3360 - 23
AT300472	3F12	30	3360 - 25
AT300475	3F12	24	3360 - 25
AT300476	3F12	25	3360 - 25
AT300478	3F10	18	3360 - 23
AT301074	2F9	0	2004 - 5
AT301151	3F18	1	3360 - 31
AT301723	1H15	2	1674 - 7D
AT304742	3F22	2	3360 - 85B
AT305641	3F18	1	3360 - 31
AT306723	3F4	16	3360 - 15
AT306723	3F8	7	3360 - 21
AT306737	3F6	7	3360 - 15B
AT306757	3F6	14	3360 - 15B
AT306775	3F6	6	3360 - 15B
AT307244	2E16	20	1910 - 25
AT307267	1F15	33	0505 - 5
AT307271	1F15	6	0505 - 5
AT307277	1F15	8	0505 - 5
AT307709	3F4	14	3360 - 15
AT307710	3F4	4	3360 - 15
AT307812	1F15	2	0505 - 5
AT307815	1F15	32	0505 - 5
AT307817	1F15	5	0505 - 5
AT309263	2C18	0A	1821 - 3
AT309264	2C18	0B	1821 - 3
AT310427	1A25	4	0130 - 5
AT314410	1B18	11	0130 - 19B
AT314416	1B18	55	0130 - 19B
AT314417	1B18	55	0130 - 19B
AT314418	1B18	55	0130 - 19B
AT314419	1B18	55	0130 - 19B
AT314420	1B12	12	0130 - 15
AT314421	1B14	7	0130 - 17
AT314422	1B6	0	0130 - 11
AT314423	1C2	6	0260 - 9
AT314577	1B18	56	0130 - 19B
AT314803	1I4	50	1674 - 21
AT314803	3E4	50	3340 - 9
AT314803	3E8	50	3344 - 3B
AT314803	3E18	50	3360 - 5B
AT314803	3I24	50	3363 - 21B
AT314803	3K12	50	3363 - 51B
AT314803	3K14	50	3363 - 51D
AT314803	3K18	50	3363 - 55
AT314803	3K20	50	3363 - 57
AT314803	3L6	80	3365 - 7B
AT314803	3L10	50	3365 - 11
AT314803	3L17	20	4360 - 7
AT315230	1B10	0	0130 - 13B
AT317199	3C12	1	3302 - 19B
AT317202	3C14	1	3302 - 19D
AT318016	3F18	1	3360 - 31
AT318021	3K12	13	3363 - 51B
AT318023	1F20	16	0510 - 9
AT318025	2E6	11	1910 - 11
AT318035	1C10	17A	0260 - 15
AT318035	1C18	3	0263 - 3
AT318035	1G21	..	1369 - 3
AT318035	3I2	9A	3363 - 3
AT318035	3I8	6A	3363 - 9
AT318035	3I10	10	3363 - 11
AT318035	3I18	4	3363 - 19
AT318035	3I18	10	3363 - 19
AT318055	3E8	8	3344 - 3B
AT318056	3E4	8	3340 - 9
AT322189	2C18	11	1821 - 3
AT35121	3D21	9	3315 - 15
AT35121	3E20	16	3360 - 7
AT35121	3F4	3	3360 - 15
AT35121	3F8	6	3360 - 21
AT36921	3D19	1	3315 - 13
AT36921	3D21	24	3315 - 15
AT36921	3E24	3	3360 - 11
AT36921	3F8	2	3360 - 21
AT36921	3F10	8	3360 - 23
AT36921	3F12	4	3360 - 25
AT38628	3E20	9	3360 - 7
AT39141	1F23	18	0510 - 13
AT39390	1G2	5	0520 - 5
AT46961	3F20	31	3360 - 85
AT50529	1F25	1F	0520 - 3
AT50923	1G2	3	0520 - 5
AT53439	1G2	5	0520 - 5
AT56658	3I2	3	3363 - 3
AT64237	2F7	1	2004 - 3
AT64237	2F7	2	2004 - 3
AT66778	1F23	19	0510 - 13
AT66866	1I15	5	1740 - 11
AT66866	1I15	6	1740 - 11
AT66866	1I15	8	1740 - 11
AT68901	3D19	10	3315 - 13
AT68901	3E24	13	3360 - 11
AT71082	3D21	3	3315 - 15
AT71082	3F4	11	3360 - 15
AT71082	3F8	23	3360 - 21
AT71732	3E24	18	3360 - 11
AT71732	3F8	4	3360 - 21
AT73296	1F16	1	0505 - 6
AT74940	1F16	10	0505 - 6
AT78124	3E24	20	3360 - 11
AT78633	2D16	10	1830 - 15
AT78634	2D16	10	1830 - 15
AT82210	3E22	2	3360 - 9
AT83306	3F20	31	3360 - 85
AT83721	3F4	6	3360 - 15
AU42809	2D16	10	1830 - 15
A364R	1E6	7	0417 - 3
A4730R	3G18	90	3362 - 9
A4827R	1F9	17	0452 - 3
A590108	1H4	7	1671 - 3
A590108	2E16	9	1910 - 25
A590108	2E22	6	1910 - 31
A590108	3D7	6	3315 - 3
A590110	1H4	2	1671 - 3
A590110	2E16	12	1910 - 25
A590110	3E8	29	3344 - 3B
A590110	3J4	26	3363 - 25
A590908	2E16	8	1910 - 25
A590914	3E8	20	3344 - 3B
A766063	3E8	23	3344 - 3B
A810100	1B25	8	0260 - 7
A811030	1G21	..	1369 - 3
A811030	3L19	5A	4367 - 3
A811030	3L21	5A	4367 - 5
A811040	1G21	..	1369 - 3
A811040	3I6	5	3363 - 7
A811040	3I8	1	3363 - 9
A811040	3I20	1	3363 - 19B
A811045	1G21	..	1369 - 3
A811045	3G20	6	3362 - 11
A811045	3G22	6	3362 - 13
A811060	3J4	3C	3363 - 25
A811080	3H6	2	3362 - 21
A811090	3L10	10	3365 - 11
A811140	3L6	10	3365 - 7B
A811140	3L13	4	4360 - 3
A852122	3J10	3	3363 - 29B
A852122	3K6	15	3363 - 47
A852123	3J6	9	3363 - 27
A852133	3I10	1	3363 - 11
A852133	3J4	10	3363 - 25
A852133	3J22	7	3363 - 41
A852133	3K6	29	3363 - 47
A852133	3K8	5	3363 - 49
A852133	3K22	28	3364 - 3
A852134	3I10	13	3363 - 11
A852143	3J4	14	3363 - 25

NUMERICAL INDEX - CONTINUED

PART NO.	GRID	KEY	PAGE
A852144	1C18	9	0263 - 3
A852223	3J22	6	3363 - 41
A852223	3J24	1	3363 - 43
A852234	3I10	18	3363 - 11
A852322	3K22	29	3364 - 3
A852323	3J18	1	3363 - 37
A852333	3K22	27	3364 - 3
A852334	3K6	20	3363 - 47
A852344	3J4	12	3363 - 25
A852344	3K6	17	3363 - 47
A852422	3K2	21	3363 - 45
A852422	3K4	21	3363 - 45B
A852422	3K6	21	3363 - 47
A852422	3K22	30	3364 - 3
A852544	1C18	23	0263 - 3
A853108	1C18	4	0263 - 3
A853166	3I2	9	3363 - 3
A853166	3I12	19	3363 - 13
A853168	1C18	3	0263 - 3
A853168	3I10	10	3363 - 11
A853168	3I18	10	3363 - 19
A853180	3F18	4	3360 - 31
A853180	3I24	3	3363 - 21B
A853188	1C18	4	0263 - 3
A853188	3F14	20	3360 - 27
A853388	3F14	8	3360 - 27
A885002	3J4	62	3363 - 25
A885002	3K2	33	3363 - 45
A885002	3K4	33	3363 - 45B
A885003	3I6	12	3363 - 7
A885003	3K22	21	3364 - 3
A885006	3I8	6	3363 - 9
A885008	3F16	10	3360 - 29
CD16284	1D23	7	0409 - 3
CH10542	2E6	24	1910 - 11
CH10567	3H24	20B	3362 - 35
CH10568	3G12	3	3362 - 3
CH10568	3L19	46	4367 - 3
CH11436	1G21	..	1369 - 3
CH11560	3D9	25	3315 - 5
CH11560	3G4	54	3361 - 7
CH11560	3G6	9	3361 - 9
CH11560	3G8	9	3361 - 11
CH11560	3G20	56	3362 - 11
CH11560	3G22	56	3362 - 13
CH11560	3H24	18A	3362 - 35
CH11560	3H24	20A	3362 - 35
CH11561	3D17	36	3315 - 11
CH11562	3D17	6C	3315 - 11
CH11569	1G21	..	1369 - 3
CH11570	1C10	25A	0260 - 15
CH11570	1G21	..	1369 - 3
CH11570	3D19	9	3315 - 13
CH11570	3D19	11	3315 - 13
CH11570	3E24	2	3360 - 11
CH11570	3F8	30	3360 - 21
CH11570	3G2	87A	3361 - 5
CH11570	3G4	80A	3361 - 7
CH11570	3G6	52A	3361 - 9
CH11570	3G8	55A	3361 - 11
CH11570	3G14	4	3362 - 5
CH11570	3G16	74A	3362 - 7
CH11570	3G20	74A	3362 - 11
CH11570	3G20	88	3362 - 11
CH11570	3G20	91A	3362 - 11
CH11570	3G20	93A	3362 - 11
CH11570	3G24	74A	3362 - 15
CH11570	3G24	80A	3362 - 15
CH11570	3H2	74A	3362 - 17
CH11570	3H18	24A	3362 - 31
CH11570	3H18	25A	3362 - 31
CH11570	3H18	37A	3362 - 31
CH11570	3H18	38A	3362 - 31
CH11570	3H18	39A	3362 - 31
CH11570	3H20	25A	3362 - 33
CH11570	3H20	26A	3362 - 33
CH11570	3H20	39A	3362 - 33
CH11570	3H20	41A	3362 - 33
CH11570	3H22	25A	3362 - 33B
CH11570	3H22	26A	3362 - 33B
CH11570	3H22	39A	3362 - 33B
CH11570	3H22	41A	3362 - 33B
CH11570	3I6	12A	3363 - 7
CH11570	3I10	1	3363 - 11
CH11570	3I10	13	3363 - 11
CH11570	3I10	18	3363 - 11
CH11570	3J4	10	3363 - 25
CH11570	3J4	11	3363 - 25
CH11570	3J14	53	3363 - 33
CH11570	3J14	73A	3363 - 33
CH11570	3J16	72A	3363 - 35
CH11570	3J20	17	3363 - 39
CH11570	3J20	19	3363 - 39
CH11570	3J22	7	3363 - 41
CH11570	3J22	29	3363 - 41
CH11570	3J24	7	3363 - 43
CH11570	3J24	23	3363 - 43
CH11570	3K6	20A	3363 - 47
CH11570	3K6	29A	3363 - 47
CH11570	3K8	5	3363 - 49
CH11570	3K8	6	3363 - 49
CH11570	3K22	21A	3364 - 3
CH11570	3K22	27A	3364 - 3
CH11570	3K22	28A	3364 - 3
CH11571	1G21	..	1369 - 3
CH11572	1G21	..	1369 - 3
CH11573	1B6	2	0130 - 11
CH12329	1C14	10	0260 - 17
CH12329	1G21	..	1369 - 3
CH14634	1G21	..	1369 - 3
CH14701	1G21	..	1369 - 3
CH16109	1B25	8	0260 - 7
CH17160	3H6	2	3362 - 21
CH17167	1G21	..	1369 - 3
CH17167	3G20	60E	3362 - 11
CH17167	3G22	60E	3362 - 13
CH17854	3I2	4	3363 - 3
CH17886	3G16	11	3362 - 7
CH17886	3G18	11	3362 - 9
CH17886	3G20	11	3362 - 11
CH17886	3G22	11	3362 - 13
CH17886	3H2	11	3362 - 17
CH17951	3G4	35	3361 - 7
CH18696	3L10	10	3365 - 11
CH19111	1G21	..	1369 - 3
C603692	3B12	13	3302 - 3
C603692	3B16	13	3302 - 5
C603692	3B20	13	3302 - 7
C603692	3B22	13	3302 - 9
C603692	3B24	13	3302 - 11
C607480	3C6	9	3302 - 15
C610778	3C8	13	3302 - 17
DH300075	2E8	28	1910 - 13
DH300076	2E8	27	1910 - 13
DH300083	2E20	7A	1910 - 29
DH300084	1G6	3	0530 - 3
DH300121	3D23	23A	3340 - 3
DH300121	3D23	23B	3340 - 3
DH300121	3D25	23A	3340 - 5
DH300121	3D25	23B	3340 - 5
DH300121	3E2	23A	3340 - 7
DH300121	3E2	23B	3340 - 7
DH400030	2E12	0	1910 - 17
DH400030	2E22	0B	1910 - 31
DH400030	2E22	0E	1910 - 31
DH400205	1H4	13	1671 - 3
DH400206	1H4	18	1671 - 3
DH400220	2D8	24	1830 - 5
DH400223	2D8	14	1830 - 5
DH400246	1G14	1	0560 - 7
DH400246	1G14	2	0560 - 7
DH400246	1G14	4	0560 - 7
DH400246	1G14	7	0560 - 7
DH400248	1G14	2	0560 - 7
DH400254	2E16	0E	1910 - 25
DH400257	3J6	23	3363 - 27
DH400304	1G6	9	0530 - 3
DH400308	2E20	7B	1910 - 29
DH400352	1I13	6	1740 - 9
DH400353	1I13	5	1740 - 9
DH400355	1I13	4	1740 - 9
DH400360	1I13	7	1740 - 9
DH400410	1H4	16	1671 - 3
DH400418	1F20	9	0510 - 9
DH400433	1F20	12	0510 - 9
DH400465	1G14	7	0560 - 7
DH400467	1G14	1	0560 - 7
DH400498	2E8	25	1910 - 13
DH400620	1F20	10	0510 - 9
DH400660	2E18	24	1910 - 27
DH500065	1I13	3	1740 - 9
DH600009J	2E8	0	1910 - 13
DH700012	2D8	11	1830 - 5
DH700013	1G6	7	0530 - 3
DH700017	2E6	6	1910 - 11
DH700018	2E6	17	1910 - 11
DH700025	2E8	17	1910 - 13
DH700028	2E6	8	1910 - 11
DH700031	3I4	13	3363 - 5
DH700032	3I20	7	3363 - 19B
DH700033	3I6	14	3363 - 7
DH700038	1F20	2	0510 - 9
DH700041	2D24	0	1910 - 5
DH700045	2D24	2A	1910 - 5
DH700048J	2D22	3	1910 - 3
DH700049J	2E22	0	1910 - 31
DH700128	2E22	1	1910 - 31
DH800032	2E8	18	1910 - 13
DH800035	2E8	24	1910 - 13
DH800043	2E20	7	1910 - 29
DH800054	1H4	15	1671 - 3
DH800060	1F20	13	0510 - 9
DH800062	2E6	29	1910 - 11
DH800063	2E6	25	1910 - 11
DH800064	2E6	26	1910 - 11
DH800065	2E2	0A	1910 - 7
DH800079	2E6	3	1910 - 11
DH800123J	3F16	4	3360 - 29
DH800124J	3F16	8	3360 - 29
DH900300	2E6	22	1910 - 11
EV33PN	3C18	2	3302 - 23

NUMERICAL INDEX - CONTINUED

PART NO.	GRID	KEY	PAGE
EV33SYL	3C20	4P	3302 - 23B
EV39PN	3C18	2	3302 - 23
EV39SYL	3C20	4O	3302 - 23B
EV51PN	3C18	2	3302 - 23
EV51SYL	3C20	4Q	3302 - 23B
EV5855-V33	3C20	3	3302 - 23B
EV5856-V39	3C20	3	3302 - 23B
EV5857A-V51	3C20	3	3302 - 23B
EX119-21	3C16	11	3302 - 21
EX119-27	3C16	11	3302 - 21
EX129A-37	3C16	11	3302 - 21
EX1829A-47	3C16	11	3302 - 21
EX20SP	3C16	13	3302 - 21
EX20W1	3C16	12	3302 - 21
EX21-27QRT	3C16	6	3302 - 21
EX21LK	3C16	5	3302 - 21
EX21LKS	3C16	5	3302 - 21
EX21SYL	3C16	2	3302 - 21
EX21S5F	3C16	1	3302 - 21
EX21TVIP	3C16	4	3302 - 21
EX21VIP	3C16	3	3302 - 21
EX27LK	3C16	5	3302 - 21
EX27SYL	3C16	2	3302 - 21
EX27SYL	3C20	4G	3302 - 23B
EX27S6F	3C20	4I	3302 - 23B
EX27TVIP	3C20	4H	3302 - 23B
EX27VIP	3C20	4J	3302 - 23B
EX27VPL	3C16	14	3302 - 21
EX27VPL	3C20	6	3302 - 23B
EX27VPN	3C16	5	3302 - 21
EX27VPN	3C18	2	3302 - 23
EX29SP	3C16	13	3302 - 21
EX29W1	3C16	12	3302 - 21
EX31329-X	3C16	7	3302 - 21
EX360-21	3C16	10	3302 - 21
EX37LK	3C16	5	3302 - 21
EX37LKS	3C16	5	3302 - 21
EX37SYL	3C16	2	3302 - 21
EX37SYL	3C22	4G	3302 - 27
EX37SYL	3D4	4G	3302 - 33
EX37S7F	3C22	4I	3302 - 27
EX37S7F	3D4	4I	3302 - 33
EX37TVIP	3C22	4H	3302 - 27
EX37TVIP	3D4	4H	3302 - 33
EX37VIP	3C22	4J	3302 - 27
EX37VIP	3D4	4J	3302 - 33
EX37VPL	3C22	5	3302 - 27
EX37VPL	3D4	5	3302 - 33
EX37VPN	3C22	2	3302 - 27
EX37VPN	3D4	2	3302 - 33
EX47LK	3C16	5	3302 - 21
EX47SYL	3C16	2	3302 - 21
EX4894-21	3C16	11	3302 - 21
EX5824-37	3C16	11	3302 - 21
EX5849-21	3C16	11	3302 - 21
EX5850-27V	3C16	11	3302 - 21
EX5850-27V	3C20	3	3302 - 23B
EX5854-21	3C16	11	3302 - 21
EX5856-37V	3C22	3	3302 - 27
EX5856-37V	3D4	3	3302 - 33
E1343FN	1F2	2	0429 - 5
FFSB108844	1B16	23	0130 - 19
FFSB108844	1B18	54	0130 - 19B
FFSB110305	1H11	63	1674 - 7
FFSB110372	2D14	19	1830 - 13
FFSB112102	1B10	12	0130 - 13B
FFSB112103	1B10	11	0130 - 13B
FFSB112104	1B10	10	0130 - 13B
FFSB112105	1B10	9	0130 - 13B
FFSB112107	1B10	7	0130 - 13B
FFSB112108	1B10	6	0130 - 13B
FFSB112111	1B8	0A	0130 - 13
FFSB112111	1B10	3	0130 - 13B
FFSB112112	1B10	2	0130 - 13B
FFSB112367	1B16	5	0130 - 19
FFSB112367	1B18	10	0130 - 19B
FFSB112368	1B16	3	0130 - 19
FFSB112368	1B18	3	0130 - 19B
FFSB112370	1B16	8	0130 - 19
FFSB112370	1B18	8	0130 - 19B
FFSB112370	1B18	56	0130 - 19B
F1451R	1F23	48	0510 - 13
H102543	3E24	1	3360 - 11
H132922	2B19	72	1810 - 17
H132922	2D22	9	1910 - 3
H132922	2E18	15	1910 - 27
H155194	3L10	3	3365 - 11
H158164	3L10	9	3365 - 11
H158170	3L10	16	3365 - 11
H158173	3L10	13	3365 - 11
H158175	3L10	19	3365 - 11
H21259	1G17	18	1322 - 3
H23125	1D6	1	0402 - 3
H61354	3F14	2	3360 - 27
H61354	3F20	23	3360 - 85
H61354	3I14	4	3363 - 15
H61354	3I22	1	3363 - 21
H61354	3I24	7	3363 - 21B
H75414	3E20	4	3360 - 7
H77698	1C18	22	0263 - 3
H77698	1F16	8	0505 - 6
H77698	1F18	7	0510 - 3
H77698	1G14	14	0560 - 7
H77698	1H9	14	1674 - 5
H77698	1H9	15	1674 - 5
H77698	1H11	10	1674 - 7
H77698	1H11	39	1674 - 7
H77698	1H11	40	1674 - 7
H77698	1H23	13	1674 - 15
H77698	2D8	9	1830 - 5
H77698	2D12	7	1830 - 11
H77698	2D16	14	1830 - 15
H77698	2F9	9	2004 - 5
H77698	3D7	4	3315 - 3
H77698	3D7	16	3315 - 3
H77698	3D19	8	3315 - 13
H77698	3F10	17	3360 - 23
H77698	3F12	18	3360 - 25
H77698	3J6	28	3363 - 27
H77698	3J8	1	3363 - 29
H77698	3J10	1	3363 - 29B
H77698	3J12	1	3363 - 31
H77698	3J16	59	3363 - 35
H77698	3J22	24	3363 - 41
H77698	3J24	25	3363 - 43
H77698	3K2	22	3363 - 45
H77698	3K4	22	3363 - 45B
H77698	3K6	22	3363 - 47
H77698	3K18	10	3363 - 55
H80440	1G6	5B	0530 - 3
JD10063	1C6	7	0260 - 13
JD10063	1C20	7	0267 - 3
JD10304	1C6	6	0260 - 13
JD10304	1C20	6	0267 - 3
JD5760	1G17	10	1322 - 3
JD5909	1G17	16	1322 - 3
JD8514	3G2	8	3361 - 5
J010612	3K20	23	3363 - 57
J010814	1H11	5	1674 - 7
J011016	3K18	6	3363 - 55
J011030	1B25	10	0260 - 7
J011230	3F14	12	3360 - 27
J011235	1B25	13	0260 - 7
J011260	3K14	2	3363 - 51D
J011265	3F16	13	3360 - 29
J011265	3F18	13	3360 - 31
J011275	3F14	25	3360 - 27
J011275	3F16	14	3360 - 29
J020630	2D10	2	1830 - 9
J020835	1G14	17	0560 - 7
J020835	2D10	2	1830 - 9
J021235	3F14	13	3360 - 27
J031045	2D14	15	1830 - 13
J031045	2E8	11	1910 - 13
J050820	2D16	1	1830 - 15
J219167	2C24	14	1821 - 9
J222012	3K12	15B	3363 - 51B
J222012	3K12	25B	3363 - 51B
J222014	1C4	3	0260 - 11
J222022	3L15	2	4360 - 5
J257218	1I11	3	1740 - 7
J257218	3E6	17A	3344 - 3
J257218	3E6	39	3344 - 3
J257222	1I11	3	1740 - 7
J257222	1I17	3	1740 - 13
J257222	3E6	17B	3344 - 3
J260820	3D7	6	3315 - 3
J271085	3F18	20	3360 - 31
J400408	3D9	2	3315 - 5
J460310	1H11	55	1674 - 7
J460620	1H11	12	1674 - 7
J460620	1H11	30	1674 - 7
J460620	1H11	45	1674 - 7
J680410	2B13	55	1810 - 11
J680514	2B19	13	1810 - 17
J680630	2B19	12	1810 - 17
J75481	3E4	2D	3340 - 9
J75481	3E4	26	3340 - 9
J75481	3L6	40	3365 - 7B
J75481	3L10	26	3365 - 11
J75482	3K18	8	3363 - 55
J75581	3K20	18	3363 - 57
J780612	3D17	41	3315 - 11
J780845	3D9	18	3315 - 5
J781030	3D17	10	3315 - 11
J781030	3F14	3	3360 - 27
J781030	3I12	7	3363 - 13
J781030	3I14	2	3363 - 15
J781030	3I14	5	3363 - 15
J781030	3I16	2	3363 - 17
J781030	3I18	2	3363 - 19
J781030	3I22	3	3363 - 21
J781030	3I24	8	3363 - 21B
J781030	3J4	6	3363 - 25
J781040	3I6	6	3363 - 7
J781040	3I20	9	3363 - 19B
J781040	3J16	48	3363 - 35
J781228	3I2	5	3363 - 3
J781240	3D23	37	3340 - 3
J781240	3D25	37	3340 - 5
J781240	3E2	37	3340 - 7

NUMERICAL INDEX - CONTINUED

PART NO.	GRID	KEY	PAGE
J781240	3I4	2	3363 - 5
J781240	3K10	18	3363 - 51
J900820	3D7	6	3315 - 3
J901040	3E8	28	3344 - 3B
J901040	3K20	25	3363 - 57
J901260	3K12	15A	3363 - 51B
J901270	3K12	25A	3363 - 51B
J901425	3E6	26	3344 - 3
J901425	3E8	19	3344 - 3B
J921235	1G8	9	0540 - 3
J921240	1G8	4	0540 - 3
J921240	2E18	39	1910 - 27
J921840	3E6	16A	3344 - 3
J921850	3E6	40	3344 - 3
J922203	1I9	0	1740 - 5
J922212	1I9	1	1740 - 5
J922245	1I11	2	1740 - 7
J922245	3E6	16B	3344 - 3
J922270	3L15	1	4360 - 5
J931806	1G8	15	0540 - 3
J950020	3E4	10	3340 - 9
J950022	3D23	22	3340 - 3
J950022	3D25	22	3340 - 5
J950022	3E2	22	3340 - 7
J950022	3E6	11	3344 - 3
J951016	3E4	16	3340 - 9
J951018	1G8	16	0540 - 3
J951020	3E8	15	3344 - 3B
J952010	2C22	6	1821 - 7
J952014	1H7	1I	1674 - 3
L101283	1F15	13	0505 - 5
M142541	1F15	15	0505 - 5
M340513	3H10	25	3362 - 23B
M340513	3H10	32	3362 - 23B
M340825	3L10	30	3365 - 11
M341022	1B8	12	0130 - 13
M341030	3K12	10	3363 - 51B
M341080	3G8	51	3361 - 11
M341240	3K12	18	3363 - 51B
M341850	1C6	38	0260 - 13
M341850	1C20	38	0267 - 3
M341885	1C2	52	0260 - 9
M342056	1C8	41	0260 - 13B
M351018	1B12	4	0130 - 15
M360830	3H6	18	3362 - 21
M40461	2E16	18	1910 - 25
M430660	1H11	26	1674 - 7
M470625	2B13	23	1810 - 11
M800051	2E6	24	1910 - 11
M800636	3L6	61	3365 - 7B
M800650	1C10	33A	0260 - 15
M800650	1C12	17A	0260 - 15B
M800650	1C12	23A	0260 - 15B
M800650	1C18	12	0263 - 3
M800650	1G21	..	1369 - 3
M800650	3E20	24	3360 - 7
M800650	3G2	80A	3361 - 5
M800650	3G4	16	3361 - 7
M800650	3G4	67A	3361 - 7
M800650	3G6	58A	3361 - 9
M800650	3G8	61A	3361 - 11
M800650	3G8	62A	3361 - 11
M800650	3G16	48E	3362 - 7
M800650	3G18	47E	3362 - 9
M800650	3G18	62B	3362 - 9
M800650	3G18	75A	3362 - 9
M800650	3G24	75A	3362 - 15
M800650	3H2	75A	3362 - 17
M800650	3H20	40A	3362 - 33
M800650	3J4	61A	3363 - 25
M800650	3J6	0A	3363 - 27
M800650	3J6	9A	3363 - 27
M800650	3J8	33A	3363 - 29
M800650	3J8	43A	3363 - 29
M800650	3J8	44A	3363 - 29
M800650	3J10	33A	3363 - 29B
M800650	3J10	43A	3363 - 29B
M800650	3J10	44A	3363 - 29B
M800650	3J12	9	3363 - 31
M800650	3J18	1	3363 - 37
M800650	3J20	18	3363 - 39
M800650	3J22	6	3363 - 41
M800650	3J24	1	3363 - 43
M800650	3K2	15A	3363 - 45
M800650	3K2	21A	3363 - 45
M800650	3K2	30	3363 - 45
M800650	3K2	30A	3363 - 45
M800650	3K2	31	3363 - 45
M800650	3K2	31A	3363 - 45
M800650	3K2	33A	3363 - 45
M800650	3K2	52A	3363 - 45
M800650	3K4	15A	3363 - 45B
M800650	3K4	21A	3363 - 45B
M800650	3K4	30	3363 - 45B
M800650	3K4	30A	3363 - 45B
M800650	3K4	31	3363 - 45B
M800650	3K4	31A	3363 - 45B
M800650	3K4	33A	3363 - 45B
M800650	3K4	52A	3363 - 45B
M800650	3K6	15A	3363 - 47
M800650	3K6	21A	3363 - 47
M800650	3K6	31A	3363 - 47
M800650	3K8	1	3363 - 49
M800650	3K22	26A	3364 - 3
M800650	3K22	29A	3364 - 3
M800650	3L19	35	4367 - 3
M800650	3L19	36	4367 - 3
M800650	3L21	23	4367 - 5
M800893	1G21	..	1369 - 3
M88199	3D7	4	3315 - 3
N207956	1F15	16	0505 - 5
N231749	1A25	3	0130 - 5
N231749	1B23	2	0260 - 5
PM38656	1D13	24	0404 - 3
P46402	1F25	1H	0520 - 3
P50883	3H12	7	3362 - 25
P60915	2C24	8	1821 - 9
P61967	3I2	5	3363 - 3
P63448	1G17	2	1322 - 3
P64776	3E6	0C	3344 - 3
P67968	1C18	12	0263 - 3
P67968	3J6	0	3363 - 27
P67968	3J8	33	3363 - 29
P67968	3J10	33	3363 - 29B
P67968	3K2	15	3363 - 45
P67968	3K4	15	3363 - 45B
P67968	3K8	1	3363 - 49
P67978	3I10	1	3363 - 11
P67978	3J4	10	3363 - 25
P67978	3J22	7	3363 - 41
P67978	3K6	29	3363 - 47
P67978	3K8	5	3363 - 49
P67984	3K22	29	3364 - 3
P67989	3J4	11	3363 - 25
P67989	3J24	7	3363 - 43
P67989	3K8	6	3363 - 49
P68008	3I8	6	3363 - 9
P68010	3J4	23	3363 - 25
P68229	2D14	14	1830 - 13
P68233	2D14	0	1830 - 13
P69051	3G4	64	3361 - 7
RE16223	1D20	10	0407 - 5
RE167207	1E12	25	0420 - 3
RE19797	1E2	5	0413 - 3
RE19797	1E12	14	0420 - 3
RE19800	1E2	16	0413 - 3
RE20901	1E2	17	0413 - 3
RE31617	1D23	13	0409 - 3
RE40048	1E4	17	0416 - 2
RE40048	1G6	4	0530 - 3
RE42139	1F16	7	0505 - 6
RE44574	1F6	3	0433 - 3
RE44574	1F9	18	0452 - 3
RE46684	1E8	15	0418 - 3
RE46685	1D20	6	0407 - 5
RE46685	1E5	11	0417 - 2
RE46685	1E6	10	0417 - 3
RE46685	1E10	6	0419 - 3
RE46686	1E8	3	0418 - 3
RE46686	1E10	7	0419 - 3
RE46686	1E12	16	0420 - 3
RE46686	1G14	17	0560 - 7
RE500005	1D6	5	0402 - 3
RE500345	1E19	8	0422 - 3
RE500527	1F5	3	0433 - 2
RE500538	1F2	4	0429 - 5
RE500576	1G14	21	0560 - 7
RE500608	1D10	3	0403 - 2
RE501456	1F9	33	0452 - 3
RE501938	1D8	4	0402 - 5
RE502986	1D6	6	0402 - 3
RE503211	1E4	7	0416 - 2
RE503664	1F2	8	0429 - 5
RE504036	1D21	5A	0408 - 1
RE504134	1E14	12	0420 - 5
RE504543	1D19	10	0407 - 4
RE504564	1D19	3	0407 - 4
RE504836	1D19	4	0407 - 4
RE504914	1D18	6	0407 - 3
RE504969	1E12	26	0420 - 3
RE505227	1E12	4	0420 - 3
RE505264	1F4	2	0429 - 7
RE505501	1D13	11	0404 - 3
RE505515	1D8	11	0402 - 5
RE505515	1F9	19	0452 - 3
RE505980	1E6	16	0417 - 3
RE506116	1E12	9	0420 - 3
RE506117	1E12	20	0420 - 3
RE506118	1E12	5	0420 - 3
RE506665	1H21	6	1674 - 13
RE506681	1E2	22	0413 - 3
RE506688	1D25	2	0413 - 1
RE506871	1D21	5B	0408 - 1
RE506991	1E3	1	0414 - 2
RE507149	1D5	4	0402 - 2
RE50752	1E14	1	0420 - 5
RE507643	1D13	3	0404 - 3
RE507643	1D15	1	0404 - 5
RE507653	1E2	7	0413 - 3
RE507654	1E2	8	0413 - 3
RE507655	1E2	9	0413 - 3

NUMERICAL INDEX - CONTINUED

PART NO.	GRID	KEY	PAGE
RE507656	1E2	10	0413 - 3
RE507657	1E2	11	0413 - 3
RE507658	1E2	12	0413 - 3
RE507850	1D10	10	0403 - 2
RE507852	1D10	6	0403 - 2
RE507864	1F9	33	0452 - 3
RE507952	1D13	27	0404 - 3
RE507952	1D20	7	0407 - 5
RE507952	1E5	1	0417 - 2
RE508185	1D13	22	0404 - 3
RE508195	1D8	16	0402 - 5
RE508195	1E2	23	0413 - 3
RE508566	1D8	18	0402 - 5
RE508657	1E4	2	0416 - 2
RE508719	1E4	2	0416 - 2
RE508847	1E14	5	0420 - 5
RE508847	1E14	6	0420 - 5
RE508985	1E14	5	0420 - 5
RE508985	1E14	6	0420 - 5
RE509036	1E14	2	0420 - 5
RE515326	1E17	1	0421 - 5
RE515341	1E17	3	0421 - 5
RE515341	1G14	24	0560 - 7
RE515718	1E17	2	0421 - 5
RE515785	1D4	4	0401 - 1
RE516340	1D4	4	0401 - 1
RE516340	1D8	11	0402 - 5
RE516340	1F9	19	0452 - 3
RE51649	1E14	8	0420 - 5
RE51650	1E14	9	0420 - 5
RE516512	1E14	13	0420 - 5
RE516513	1E14	13	0420 - 5
RE516553	1E14	1	0420 - 5
RE518527	1D13	3	0404 - 3
RE518527	1D15	1	0404 - 5
RE519144	1D8	16	0402 - 5
RE519144	1E2	23	0413 - 3
RE520229	1E5	9	0417 - 2
RE520229	1F15	19	0505 - 5
RE520540	1D6	7	0402 - 3
RE520540	1F7	1	0452 - 1
RE520540	1F9	1	0452 - 3
RE520831	1E8	11	0418 - 3
RE52242	1D19	1	0407 - 4
RE522826	1E2	22	0413 - 3
RE52346	1D8	11	0402 - 5
RE52346	1F9	19	0452 - 3
RE52722	1E8	16	0418 - 3
RE52850	1D4	4	0401 - 1
RE54885	1E4	12	0416 - 2
RE55145	1D13	29	0404 - 3
RE55871	1E4	3	0416 - 2
RE56313	1D4	15	0401 - 1
RE56369	1D4	21	0401 - 1
RE57489	1D23	15	0409 - 3
RE59298	1E10	2	0419 - 3
RE59355	1E23	2	0429 - 2
RE59579	1D20	7	0407 - 5
RE59810	1D8	11	0402 - 5
RE59810	1F9	19	0452 - 3
RE59811	1D4	4	0401 - 1
RE59811	1D4	22	0401 - 1
RE59992	1E4	15	0416 - 2
RE60005	1D23	3	0409 - 3
RE60029	1E12	18	0420 - 3
RE60071	1E3	3	0414 - 2
RE60242	1E12	27	0420 - 3
RE60854	1E14	4	0420 - 5
RE61812	1E3	6	0414 - 2
RE65165	1D4	7	0401 - 1
RE65168	1D4	10	0401 - 1
RE65908	1D10	11	0403 - 2
RE65909	1D10	11	0403 - 2
RE65911	1D4	7	0401 - 1
RE65912	1D4	10	0401 - 1
RE65978	1E4	13	0416 - 2
RE66083	1F7	12	0452 - 1
RE66085	1F7	17	0452 - 1
RE66178	1D17	1	0407 - 2
RE66334	1E15	2	0421 - 2
RE67231	1E10	1	0419 - 3
RE67238	1D16	1	0407 - 1
RE67238	1D19	8	0407 - 4
RE67238	1E10	13	0419 - 3
RE67239	1D8	5	0402 - 5
RE67901	1E14	2	0420 - 5
RE68155	1H21	16	1674 - 13
RE68695	1D9	9	0402 - 6
RE68748	1E2	4	0413 - 3
RE68908	1E5	9	0417 - 2
RE68908	1F15	19	0505 - 5
RE69568	1D18	10	0407 - 3
RE70487	1E19	7	0422 - 3
RE70536	1F2	10	0429 - 5
RE70681	1E19	6	0422 - 3
RE70756	1E19	1	0422 - 3
RE70962	1E6	15	0417 - 3
R100369	1E6	14	0417 - 3
R100377	1E21	3	0423 - 3
R101225	1D4	14	0401 - 1
R104592	1D13	5	0404 - 3
R104592	1D23	5	0409 - 3
R107731	1D9	11	0402 - 6
R111137	1D13	10	0404 - 3
R113563	1E14	7	0420 - 5
R113565	1E14	3	0420 - 5
R114082	1D10	2	0403 - 2
R114193	1D4	20	0401 - 1
R114194	1D4	23	0401 - 1
R114241	1D13	17	0404 - 3
R115138	1E4	14	0416 - 2
R115250	1E5	3	0417 - 2
R115390	1D13	15	0404 - 3
R116076	1D4	4	0401 - 1
R116115	1D19	5	0407 - 4
R116296	1D16	2	0407 - 1
R116366	1D25	3	0413 - 1
R116466	1D13	12	0404 - 3
R116516	1D23	12	0409 - 3
R116516	1F7	8	0452 - 1
R116516	1F9	8	0452 - 3
R119565	1D13	3	0404 - 3
R119565	1D15	1	0404 - 5
R119874	1D13	6	0404 - 3
R120631	1D4	3	0401 - 1
R120638	1D18	13	0407 - 3
R120641	1D4	12	0401 - 1
R121043	1D13	9	0404 - 3
R121376	1D18	7	0407 - 3
R121411	1D8	8	0402 - 5
R121424	1D8	7	0402 - 5
R121608	1D23	14	0409 - 3
R121608	1D23	15	0409 - 3
R121635	1E5	7	0417 - 2
R121674	1D6	4	0402 - 3
R121897	1E23	3	0429 - 2
R122226	1D11	1	0404 - 1
R122618	1D21	3	0408 - 1
R123161	1D9	7	0402 - 6
R123174	1D4	11	0401 - 1
R123177	1D10	5	0403 - 2
R123226	1E6	9	0417 - 3
R123226	1E8	12	0418 - 3
R123226	1F7	4	0452 - 1
R123226	1F9	4	0452 - 3
R123271	1D9	5	0402 - 6
R123273	1F9	20	0452 - 3
R123284	1F2	4	0429 - 5
R123295	1E2	25	0413 - 3
R123324	1E8	14	0418 - 3
R123345	1F7	5	0452 - 1
R123345	1F9	5	0452 - 3
R123354	1D20	1	0407 - 5
R123354	1F7	13	0452 - 1
R123354	1F9	12	0452 - 3
R123395	1E6	1	0417 - 3
R123396	1E15	1	0421 - 2
R123413	1E24	1	0429 - 3
R123417	1E6	13	0417 - 3
R123417	1F9	21	0452 - 3
R123471	1E10	5	0419 - 3
R123501	1E10	3	0419 - 3
R123501	1F9	23	0452 - 3
R123514	1D9	2	0402 - 6
R123525	1F9	25	0452 - 3
R123543	1D6	7	0402 - 3
R123543	1F7	1	0452 - 1
R123543	1F9	1	0452 - 3
R123561	1D4	5	0401 - 1
R123562	1D4	6	0401 - 1
R123563	1D4	8	0401 - 1
R123564	1D4	9	0401 - 1
R123565	1D9	10	0402 - 6
R123570	1E4	16	0416 - 2
R123570	1F7	6	0452 - 1
R123570	1F9	6	0452 - 3
R123572	1E4	6	0416 - 2
R123572	1F7	11	0452 - 1
R123572	1F9	11	0452 - 3
R123574	1D6	2	0402 - 3
R123575	1D6	3	0402 - 3
R123575	1F7	7	0452 - 1
R123575	1F9	7	0452 - 3
R123584	1D8	14	0402 - 5
R123586	1D21	2	0408 - 1
R123593	1E2	2	0413 - 3
R123616	1D13	25	0404 - 3
R123616	1F15	18	0505 - 5
R126086	1E14	10	0420 - 5
R128660	1F2	5	0429 - 5
R130574	1D4	8	0401 - 1
R130575	1D4	9	0401 - 1
R130576	1D4	5	0401 - 1
R130577	1D4	6	0401 - 1
R131182	1D13	21	0404 - 3
R131206	1D4	16	0401 - 1
R131283	1D4	19	0401 - 1
R131768	1F6	2	0433 - 3
R132166	1E21	5	0423 - 3
R132186	1D13	20	0404 - 3
R132462	1D24	1	0410 - 2

NUMERICAL INDEX - CONTINUED

PART NO.	GRID	KEY	PAGE
R132518	1D13	7	0404 - 3
R132913	1E21	6	0423 - 3
R133295	1E23	1	0429 - 2
R134212	1E2	20	0413 - 3
R134518	1D8	15	0402 - 5
R134552	1D17	2	0407 - 2
R135509	1E19	4	0422 - 3
R135510	1E19	5	0422 - 3
R135757	1D11	2	0404 - 1
R135918	1F5	1	0433 - 2
R135918	1F6	6	0433 - 3
R136475	1D11	5	0404 - 1
R136495	1D16	3	0407 - 1
R136495	1F9	31	0452 - 3
R136515	1D8	1	0402 - 5
R136515	1F9	22	0452 - 3
R136516	1F9	22	0452 - 3
R206883	1F16	5	0505 - 6
R26125	1D23	4	0409 - 3
R26448	3D19	3	3315 - 13
R26448	3D21	12	3315 - 15
R26448	3E24	5	3360 - 11
R26448	3F4	5	3360 - 15
R26448	3F8	31	3360 - 21
R26552	1C10	29	0260 - 15
R26552	1C12	11	0260 - 15B
R26552	3L6	23	3365 - 7B
R26650	1D13	13	0404 - 3
R26906	1D23	6	0409 - 3
R26906	1D23	19	0409 - 3
R27212	3D19	4	3315 - 13
R27212	3D21	18	3315 - 15
R27212	3E20	10	3360 - 7
R27212	3E24	9	3360 - 11
R27212	3F4	8	3360 - 15
R27212	3F8	5	3360 - 21
R28782	3F6	4	3360 - 15B
R28811	1F5	2	0433 - 2
R29424	3I12	5	3363 - 13
R29424	3I14	0	3363 - 15
R29424	3I16	0	3363 - 17
R29424	3I18	0	3363 - 19
R29424	3K12	9	3363 - 51B
R29936	3F18	6	3360 - 31
R29936	3F20	27	3360 - 85
R29936	3F20	30	3360 - 85
R29936	3F20	32	3360 - 85
R29936	3F22	4	3360 - 85B
R29936	3G20	60D	3362 - 11
R29936	3G22	60D	3362 - 13
R31147	3D19	21	3315 - 13
R31147	3E24	16	3360 - 11
R31147	3F8	35	3360 - 21
R36636	3F20	29	3360 - 85
R41778	2C20	4	1821 - 5
R43409	1D23	9	0409 - 3
R44302	1H25	4	1674 - 17
R44302	2B23	5	1810 - 21
R44302	3E20	21	3360 - 7
R44302	3E22	4	3360 - 9
R44302	3F2	8	3360 - 13
R44302	3F4	18	3360 - 15
R44302	3F8	32	3360 - 21
R47154	1D20	9	0407 - 5
R47693	1F16	5	0505 - 6
R48685	1D4	1	0401 - 1
R48685	1D13	1	0404 - 3
R48685	3B12	5	3302 - 3
R48685	3B16	5	3302 - 5
R48685	3B20	5	3302 - 7
R48685	3B22	5	3302 - 9
R48685	3B24	5	3302 - 11
R48685	3C4	5	3302 - 13
R48685	3C6	2	3302 - 15
R48685	3C8	5	3302 - 17
R48808	1H5	4	1672 - 2
R500320	1F4	1	0429 - 7
R500335	1D10	3	0403 - 2
R500374	1D19	9	0407 - 4
R500374	1F9	32	0452 - 3
R500471	1E8	2	0418 - 3
R500472	1E8	7	0418 - 3
R500531	1E21	4	0423 - 3
R500704	1E8	13	0418 - 3
R501039	1E2	21	0413 - 3
R501124	1D10	1	0403 - 2
R501227	1E8	4	0418 - 3
R501228	1E8	1	0418 - 3
R501373	1F7	9	0452 - 1
R501373	1F9	9	0452 - 3
R501428	1E10	8	0419 - 3
R501428	1F9	13	0452 - 3
R501486	1H5	2	1672 - 2
R501489	1D4	25	0401 - 1
R502014	1F2	8	0429 - 5
R502079	1F4	3	0429 - 7
R502465	1D17	7	0407 - 2
R502513	1D19	4	0407 - 4
R502513	1D19	11	0407 - 4
R502687	1D18	6	0407 - 3
R502725	1D17	8	0407 - 2
R502811	1E10	11	0419 - 3
R502814	1F7	3	0452 - 1
R502814	1F9	3	0452 - 3
R502864	1F9	24	0452 - 3
R502969	1D20	2	0407 - 5
R503444	1F6	1	0433 - 3
R503550	1D11	4	0404 - 1
R503813	1F2	9	0429 - 5
R504067	1E12	10	0420 - 3
R504535	1D5	4	0402 - 2
R504605	1E12	12	0420 - 3
R504724	1D8	2	0402 - 5
R504734	1E10	9	0419 - 3
R504762	1E22	1	0429 - 1
R504762	1E24	1	0429 - 3
R504798	1E2	14	0413 - 3
R504963	1F4	5	0429 - 7
R505143	1E12	28	0420 - 3
R505609	1D4	2	0401 - 1
R515150	1E2	18	0413 - 3
R515460	1E17	6	0421 - 5
R515461	1E17	9	0421 - 5
R515462	1G14	5	0560 - 7
R515736	1E17	8	0421 - 5
R51936	1E2	4	0413 - 3
R51936	1E12	6	0420 - 3
R53108	1F9	26	0452 - 3
R54114	1D10	4	0403 - 2
R54123	1F16	4	0505 - 6
R54510	1F16	2	0505 - 6
R54511	1F16	3	0505 - 6
R54565	1D9	1	0402 - 6
R54873	1E2	13	0413 - 3
R55599	1E12	11	0420 - 3
R56902	1G17	1	1322 - 3
R61105	1F9	29	0452 - 3
R61467	1F6	8	0433 - 3
R61871	1D18	9	0407 - 3
R61871	1F7	16	0452 - 1
R61871	1F9	16	0452 - 3
R62107	1E12	21	0420 - 3
R62107	1E17	13	0421 - 5
R63548	1E4	4	0416 - 2
R64525	1H5	7	1672 - 2
R64857	1E12	7	0420 - 3
R71799	3F2	5	3360 - 13
R71963	1D25	1	0413 - 1
R72328	1D21	1	0408 - 1
R72328	1F9	27	0452 - 3
R72659	1D21	4	0408 - 1
R72853	1E4	5	0416 - 2
R74012	1E12	30	0420 - 3
R75892	1D13	16	0404 - 3
R75892	1F7	14	0452 - 1
R75892	1F9	14	0452 - 3
R78053	1D23	18	0409 - 3
R78064	1D23	17	0409 - 3
R80670	1E12	17	0420 - 3
R81275	1E3	5	0414 - 2
R81275	1F7	10	0452 - 1
R81275	1F9	10	0452 - 3
R81876	1F21	3	0510 - 10
R85363	1D23	1	0409 - 3
R85687	1D23	8	0409 - 3
R89944	1E5	8	0417 - 2
R89944	1F9	28	0452 - 3
R90658	1D24	2	0410 - 2
R90658	1F7	2	0452 - 1
R90658	1F9	2	0452 - 3
R90692	1D23	10	0409 - 3
R91889	1D23	2	0409 - 3
R93910	1D23	8	0409 - 3
R96703	1E19	2	0422 - 3
R97185	1D18	8	0407 - 3
R97185	1F7	15	0452 - 1
R97185	1F9	15	0452 - 3
R98062	1D23	11	0409 - 3
R98063	1D23	8	0409 - 3
R98335	1D23	8	0409 - 3
R99052	3H8	33	3362 - 23
R99052	3H10	8	3362 - 23B
SE500835	1D25	2	0413 - 1
TF1U3352D	3C20	4K	3302 - 23B
TF220	3C12	5	3302 - 19B
TF330	3C20	4A	3302 - 23B
TF400	3C22	4A	3302 - 27
TF400	3C24	4A	3302 - 29
TF400	3D2	4A	3302 - 31
TF400	3D4	4A	3302 - 33
TF9W8452D	3C22	4K	3302 - 27
TF9W8452D	3D4	4K	3302 - 33
THA852133	3K22	24	3364 - 3
THA852143	3J4	14	3363 - 25
THA852144	1C18	9	0263 - 3
THA852223	3J22	6	3363 - 41
THA852223	3J24	1	3363 - 43
THA852234	3I10	18	3363 - 11
THA852322	3K22	29	3364 - 3
THA852333	3K22	25	3364 - 3
THA852334	3K6	20	3363 - 47

NUMERICAL INDEX - CONTINUED

PART NO.	GRID	KEY	PAGE
THA852422	3K2	21	3363 - 45
THA852422	3K4	21	3363 - 45B
THA852422	3K22	30	3364 - 3
THA852544	1C18	23	0263 - 3
THA853166	3I2	9	3363 - 3
THA853166	3I12	19	3363 - 13
THA853168	1C18	3	0263 - 3
THA853168	3I10	10	3363 - 11
THA853168	3I18	10	3363 - 19
THA885002	3K2	33	3363 - 45
THA885002	3K4	33	3363 - 45B
THA885008	3F16	10	3360 - 29
THA885008	3F18	15	3360 - 31
THA885008	3K22	26	3364 - 3
THDH400102	1F20	11	0510 - 9
THDH400103	1F20	10	0510 - 9
THDH400223	2D8	14	1830 - 5
THDH400418	1F20	9	0510 - 9
THDH400422	2E8	0	1910 - 13
THDH400433	1F20	12	0510 - 9
THDH700012	2D8	11	1830 - 5
THDH700038	1F20	2	0510 - 9
THDH800060	1F20	13	0510 - 9
THDH900163	1G14	2	0560 - 7
THDH900287	1G14	7	0560 - 7
THDH900288	1G14	1	0560 - 7
THDH900289	1G14	4	0560 - 7
THJ921840	1I11	2	1740 - 7
THJ950022	3D23	22	3340 - 3
THJ950022	3D25	22	3340 - 5
THJ950022	3E2	22	3340 - 7
THJ950022	3E6	11	3344 - 3
THM111030	2D8	13	1830 - 5
THM111060	2D8	10	1830 - 5
TH0003929	2C8	25	1810 - 29
TH0430809	3J4	3C	3363 - 25
TH0735807	3G22	17	3362 - 13
TH0747305	3L19	25	4367 - 3
TH0747306	3L19	29	4367 - 3
TH0788703	3H24	13	3362 - 35
TH0788704	3H24	14	3362 - 35
TH0788705	3H24	15	3362 - 35
TH0788706	3H24	16	3362 - 35
TH0788707	3H24	17	3362 - 35
TH0788710	3H24	33	3362 - 35
TH0788711	3H24	34	3362 - 35
TH0788712	3H24	35	3362 - 35
TH0788713	3H24	36	3362 - 35
TH0791601	3G16	9	3362 - 7
TH0791601	3H2	9	3362 - 17
TH0791602	3G16	23	3362 - 7
TH0791603	3G16	37	3362 - 7
TH0791603	3G18	37	3362 - 9
TH0791604	3G16	38	3362 - 7
TH0791604	3G18	38	3362 - 9
TH0791604	3H2	38	3362 - 17
TH0791605	3G16	39	3362 - 7
TH0791605	3G18	39	3362 - 9
TH0791606	3G16	43	3362 - 7
TH0791606	3G18	43	3362 - 9
TH0791607	3G16	44	3362 - 7
TH0791607	3G18	44	3362 - 9
TH0791619	3G16	49	3362 - 7
TH0791619	3G18	49	3362 - 9
TH0791620	3G16	50	3362 - 7
TH0791620	3G18	50	3362 - 9
TH0791622	3G16	73	3362 - 7
TH0791622	3G18	73	3362 - 9
TH0791622	3G20	73	3362 - 11
TH0791622	3G24	73	3362 - 15
TH0791623	3G16	77	3362 - 7
TH0791701	3G18	31	3362 - 9
TH0791702	3G18	32	3362 - 9
TH0791801	3G20	3	3362 - 11
TH0791801	3G22	3	3362 - 13
TH0791803	3G20	19	3362 - 11
TH0791803	3G22	19	3362 - 13
TH0791804	3G20	24	3362 - 11
TH0791805	3G20	25	3362 - 11
TH0791806	3G20	34	3362 - 11
TH0791807	3G20	35	3362 - 11
TH0791808	3G20	51	3362 - 11
TH0791808	3G22	51	3362 - 13
TH0791809	3G20	52	3362 - 11
TH0791809	3G22	52	3362 - 13
TH0791815	3G20	63C	3362 - 11
TH0791815	3G20	67C	3362 - 11
TH0791815	3G20	68C	3362 - 11
TH0791815	3G20	69C	3362 - 11
TH0791815	3G20	70C	3362 - 11
TH0791815	3G22	63C	3362 - 13
TH0791815	3G22	64C	3362 - 13
TH0791815	3G24	65C	3362 - 15
TH0791815	3G24	66E	3362 - 15
TH0791816	3G20	90	3362 - 11
TH0791816	3G24	79	3362 - 15
TH0791902	3G22	18	3362 - 13
TH0791903	3G22	21	3362 - 13
TH0791904	3G22	28A	3362 - 13
TH0791905	3G22	64D	3362 - 13
TH0791905	3G24	65D	3362 - 15
TH0791906	3G22	64E	3362 - 13
TH0791906	3G24	65E	3362 - 15
TH0791907	3G22	64F	3362 - 13
TH0791908	3G22	64J	3362 - 13
TH0791909	3G22	64K	3362 - 13
TH0791910	3G24	66A	3362 - 15
TH0791911	3G24	66B	3362 - 15
TH0791912	3G24	66C	3362 - 15
TH0791913	3G24	66D	3362 - 15
TH0791914	3G22	29	3362 - 13
TH0792001	3H2	10	3362 - 17
TH0792002	3H2	12	3362 - 17
TH0792003	3H2	13	3362 - 17
TH0792004	3H2	14	3362 - 17
TH0792005	3H2	20	3362 - 17
TH0792006	3H2	36	3362 - 17
TH0792007	3H2	79	3362 - 17
TH0794201	3H4	3	3362 - 19
TH0794202	3H4	6	3362 - 19
TH0794203	3H4	8	3362 - 19
TH0794204	3H4	10	3362 - 19
TH0794205	3H4	11	3362 - 19
TH0794206	3H4	12	3362 - 19
TH0794207	3H4	14	3362 - 19
TH0803001	3L19	2	4367 - 3
TH0803002	3L19	3	4367 - 3
TH0803003	3L19	6	4367 - 3
TH0803004	3L19	8	4367 - 3
TH0803005	3L19	14	4367 - 3
TH0803006	3L19	17	4367 - 3
TH0803007	3L19	19	4367 - 3
TH0803008	3L19	20	4367 - 3
TH0803009	3L19	32	4367 - 3
TH0803010	3L19	39	4367 - 3
TH100044	1G21	..	1369 - 3
TH100044	3K24	31	3365 - 3
TH100044	3L2	31	3365 - 5
TH100044	3L4	33	3365 - 7
TH100044	3L8	29	3365 - 9
TH100055	1C10	17A	0260 - 15
TH100055	1C18	3	0263 - 3
TH100055	1G21	..	1369 - 3
TH100055	3I10	10	3363 - 11
TH100055	3I18	4	3363 - 19
TH100055	3I18	10	3363 - 19
TH100074	1I15	4	1740 - 11
TH100074	3D23	2	3340 - 3
TH100074	3D25	2	3340 - 5
TH100074	3E2	2	3340 - 7
TH100074	3E4	2D	3340 - 9
TH100074	3E4	26	3340 - 9
TH100074	3E10	4	3345 - 3
TH100074	3K24	43	3365 - 3
TH100074	3L2	43	3365 - 5
TH100074	3L6	40	3365 - 7B
TH100074	3L8	44	3365 - 9
TH100074	3L10	26	3365 - 11
TH100136	1G21	..	1369 - 3
TH100136	3H6	15	3362 - 21
TH100364	3K16	6	3363 - 53
TH100364	3K18	8	3363 - 55
TH100374	3E4	19	3340 - 9
TH100374	3L10	25	3365 - 11
TH100433	1B14	3	0130 - 17
TH100433	1B14	4	0130 - 17
TH100434	1B12	8	0130 - 15
TH100434	1G10	2	0560 - 3
TH100434	3L13	60	4360 - 3
TH100483	3G2	9	3361 - 5
TH100509	1G10	8A	0560 - 3
TH100553	1I7	21	1740 - 3
TH100648	1C2	48	0260 - 9
TH100648	1G10	14	0560 - 3
TH100679	3K22	13	3364 - 3
TH100738	3G4	83	3361 - 7
TH100771	1C14	11	0260 - 17
TH100963	3K16	5	3363 - 53
TH101184	2B21	4	1810 - 19
TH101300	1G21	..	1369 - 3
TH101300	3L19	5A	4367 - 3
TH101388	3K20	22	3363 - 57
TH101483	3G8	51	3361 - 11
TH101485	1C10	35	0260 - 15
TH101485	3H12	5	3362 - 25
TH101490	1C6	63A	0260 - 13
TH101490	1C10	35A	0260 - 15
TH101490	1C20	63A	0267 - 3
TH101490	1G21	..	1369 - 3
TH101490	3G16	61B	3362 - 7
TH101490	3G18	62C	3362 - 9
TH101490	3G18	62E	3362 - 9
TH101490	3H12	6	3362 - 25
TH101734	1F20	17	0510 - 9
TH101835	3G4	56	3361 - 7
TH101880	3L15	5	4360 - 5
TH101915	3I20	3	3363 - 19B
TH101926	1C10	12	0260 - 15
TH101926	1C12	7	0260 - 15B
TH101926	1C14	16	0260 - 17
TH101926	1C16	16	0260 - 17B

NUMERICAL INDEX - CONTINUED

PART NO.	GRID	KEY	PAGE
TH101926	1G21	..	1369 - 3
TH101926	3F18	2	3360 - 31
TH101926	3I6	13A	3363 - 7
TH101926	3I24	3A	3363 - 21B
TH101926	3K12	24A	3363 - 51B
TH101926	3K22	22A	3364 - 3
TH101926	3L6	60B	3365 - 7B
TH101936	3I20	4	3363 - 19B
TH101960	3D23	36	3340 - 3
TH101960	3D25	36	3340 - 5
TH101960	3E2	36	3340 - 7
TH101960	3K10	17	3363 - 51
TH102171	2C6	3	1810 - 27
TH102181	3G2	78	3361 - 5
TH102264	1I17	5	1740 - 13
TH102282	1C2	3	0260 - 9
TH102409	3B12	11	3302 - 3
TH102409	3B16	11	3302 - 5
TH102409	3B20	11	3302 - 7
TH102409	3B22	11	3302 - 9
TH102409	3B24	11	3302 - 11
TH102409	3C4	11	3302 - 13
TH102409	3C8	11	3302 - 17
TH102409	3E4	0H	3340 - 9
TH102409	3E8	0E	3344 - 3B
TH102411	3D23	0H	3340 - 3
TH102411	3D23	4	3340 - 3
TH102411	3D25	0H	3340 - 5
TH102411	3D25	4	3340 - 5
TH102411	3E2	0H	3340 - 7
TH102411	3E2	4	3340 - 7
TH102411	3E4	1	3340 - 9
TH102411	3E6	1F	3344 - 3
TH102411	3E6	2	3344 - 3
TH102411	3E8	2	3344 - 3B
TH102411	3K10	32	3363 - 51
TH102439	3E10	2	3345 - 3
TH102444	3D23	29	3340 - 3
TH102444	3D25	29	3340 - 5
TH102444	3E2	29	3340 - 7
TH102445	3D23	5	3340 - 3
TH102445	3D25	5	3340 - 5
TH102445	3E2	5	3340 - 7
TH102445	3E10	3	3345 - 3
TH102445	3K10	33	3363 - 51
TH102445	3L6	41	3365 - 7B
TH102446	3D23	6	3340 - 3
TH102446	3D25	6	3340 - 5
TH102446	3E2	6	3340 - 7
TH102446	3K10	34	3363 - 51
TH102460	3B12	6	3302 - 3
TH102460	3B16	6	3302 - 5
TH102460	3B20	6	3302 - 7
TH102460	3B22	6	3302 - 9
TH102460	3B24	6	3302 - 11
TH102460	3C4	6	3302 - 13
TH102460	3C8	6	3302 - 17
TH102461	3B12	7	3302 - 3
TH102461	3B16	7	3302 - 5
TH102461	3B20	7	3302 - 7
TH102461	3B22	7	3302 - 9
TH102461	3B24	7	3302 - 11
TH102461	3C4	7	3302 - 13
TH102461	3C8	7	3302 - 17
TH102463	3B12	8	3302 - 3
TH102463	3B16	8	3302 - 5
TH102463	3B20	8	3302 - 7
TH102463	3B22	8	3302 - 9
TH102463	3B24	8	3302 - 11
TH102463	3C4	8	3302 - 13
TH102463	3C8	8	3302 - 17
TH102528	3G12	1	3362 - 3
TH102528	3G16	40	3362 - 7
TH102528	3G18	40	3362 - 9
TH102528	3H2	40	3362 - 17
TH102560	3G4	64A	3361 - 7
TH102560	3G6	7	3361 - 9
TH102560	3G8	7	3361 - 11
TH102560	3G8	50A	3361 - 11
TH102562	3G6	8	3361 - 9
TH102562	3G8	8	3361 - 11
TH102567	3G6	16	3361 - 9
TH102567	3G8	16	3361 - 11
TH1026282	3G8	1	3361 - 11
TH102706	1G21	..	1369 - 3
TH1027131	3G4	41	3361 - 7
TH1027149	3G6	1	3361 - 9
TH1027184	3G2	1	3361 - 5
TH102788	3L19	37	4367 - 3
TH1027949	3L4	4	3365 - 7
TH1027956	3K24	4	3365 - 3
TH1027956	3L2	4	3365 - 5
TH102932	1F18	1B	0510 - 3
TH102933	1F18	1A	0510 - 3
TH102992	1G21	..	1369 - 3
TH102992	3I20	1	3363 - 19B
TH103124	1B6	5	0130 - 11
TH103137	1B8	8	0130 - 13
TH103157	1B14	1	0130 - 17
TH103158	1B14	5	0130 - 17
TH103198	3E6	5	3344 - 3
TH103198	3E8	0F	3344 - 3B
TH103198	3E8	16	3344 - 3B
TH103204	3E8	13	3344 - 3B
TH103446	1G21	..	1369 - 3
TH103457	3H6	16	3362 - 21
TH103574	1G21	..	1369 - 3
TH103576	1C14	4	0260 - 17
TH103579	3G12	4	3362 - 3
TH103780	3F20	10	3360 - 85
TH103780	3I12	0	3363 - 13
TH103780	3K10	21	3363 - 51
TH103791	1H7	1I	1674 - 3
TH104067	1H4	8	1671 - 3
TH104071	3E6	26	3344 - 3
TH104118	2F5	2	2002 - 3
TH104196	2C22	6	1821 - 7
TH104232	1I15	3	1740 - 11
TH104512	3C6	3	3302 - 15
TH104513	3C6	5	3302 - 15
TH104514	3C6	4	3302 - 15
TH104587	3G16	41	3362 - 7
TH104587	3G18	41	3362 - 9
TH104587	3G20	41	3362 - 11
TH104587	3G22	41	3362 - 13
TH104587	3H2	41	3362 - 17
TH104587	3L19	47	4367 - 3
TH104634	1G21	..	1369 - 3
TH104674	3L13	18	4360 - 3
TH104930	1G21	..	1369 - 3
TH105683	3J4	3C	3363 - 25
TH105695	1B8	12	0130 - 13
TH105765	3L10	8	3365 - 11
TH105938	3G12	15	3362 - 3
TH105979	3L10	23	3365 - 11
TH106783	2B15	15	1810 - 13
TH106966	3I20	3A	3363 - 19B
TH108302	1C18	18	0263 - 3
TH108302	3F20	12	3360 - 85
TH108313	3F20	4	3360 - 85
TH108313	3K10	22	3363 - 51
TH108314	3F20	19	3360 - 85
TH108314	3K10	20	3363 - 51
TH108320	3D19	9	3315 - 13
TH108320	3E24	6	3360 - 11
TH108328	3K2	52	3363 - 45
TH108328	3K4	52	3363 - 45B
TH108364	3D17	13C	3315 - 11
TH108392	3D13	4	3315 - 7
TH108440	3D19	11	3315 - 13
TH108459	1H11	37	1674 - 7
TH108567	2B9	14	1810 - 7
TH108568	2B9	14A	1810 - 7
TH108579	1F18	10	0510 - 3
TH108597	1H11	38	1674 - 7
TH108616	2C10	3	1810 - 31
TH108616	2D2	12	1830 - 3
TH108638	2B15	19	1810 - 13
TH108646	2B13	59	1810 - 11
TH108649	3C6	11	3302 - 15
TH108661	2B15	23	1810 - 13
TH108661	2B23	1	1810 - 21
TH108668	2B15	32	1810 - 13
TH108793	1G14	13	0560 - 7
TH108983	2C16	22	1810 - 37
TH109082	1C10	25	0260 - 15
TH109285	3G14	4	3362 - 5
TH109372	3L10	4	3365 - 11
TH109374	3L10	11	3365 - 11
TH109376	3L10	14	3365 - 11
TH109399	1I7	5	1740 - 3
TH109445	2D12	11	1830 - 11
TH109481	3L13	28	4360 - 3
TH109541	3J2	1	3363 - 23
TH109547	3I12	3	3363 - 13
TH109649	1H11	36	1674 - 7
TH109649	3K16	8	3363 - 53
TH109830	3K10	25	3363 - 51
TH109873	3G4	32	3361 - 7
TH109874	3G4	29	3361 - 7
TH109875	3G4	33	3361 - 7
TH109876	3G4	34	3361 - 7
TH109878	3G4	36	3361 - 7
TH109892	3G6	2	3361 - 9
TH109892	3G8	2	3361 - 11
TH109893	3G6	3	3361 - 9
TH109893	3G8	3	3361 - 11
TH109898	3G6	12	3361 - 9
TH109898	3G8	12	3361 - 11
TH109911	3G6	20	3361 - 9
TH109911	3G8	20	3361 - 11
TH109952	3L19	38	4367 - 3
TH109968	3G20	63A	3362 - 11
TH109968	3G20	67A	3362 - 11
TH109968	3G20	68A	3362 - 11
TH109968	3G20	69A	3362 - 11
TH109968	3G20	70A	3362 - 11
TH109968	3G22	63A	3362 - 13
TH109968	3G22	64A	3362 - 13
TH109968	3G24	65A	3362 - 15
TH109970	3G20	63B	3362 - 11

NUMERICAL INDEX - CONTINUED

PART NO.	GRID	KEY	PAGE
TH109970	3G20	67B	3362 - 11
TH109970	3G20	68B	3362 - 11
TH109970	3G20	69B	3362 - 11
TH109970	3G20	70B	3362 - 11
TH109970	3G22	63B	3362 - 13
TH109970	3G22	64B	3362 - 13
TH109970	3G24	65B	3362 - 15
TH109998	3G20	93	3362 - 11
TH110003	3G20	91	3362 - 11
TH110018	3L8	9	3365 - 9
TH110033	3K24	20	3365 - 3
TH110033	3L2	20	3365 - 5
TH110033	3L8	19	3365 - 9
TH110037	3K24	25	3365 - 3
TH110037	3L2	25	3365 - 5
TH110037	3L8	24	3365 - 9
TH110049	3L4	9	3365 - 7
TH110059	3L4	40	3365 - 7
TH110059	3L8	35	3365 - 9
TH110062	3L4	20	3365 - 7
TH110065	3L4	22	3365 - 7
TH110066	3L4	25	3365 - 7
TH110305	3G22	16	3362 - 13
TH110315	3G24	80	3362 - 15
TH110325	3G20	27	3362 - 11
TH110325	3G22	27	3362 - 13
TH110325	3G22	64I	3362 - 13
TH110325	3G24	65H	3362 - 15
TH110477	3G8	57	3361 - 11
TH110522	3J4	24	3363 - 25
TH110612	1I17	6	1740 - 13
TH111036	2E16	3	1910 - 25
TH111062	3L13	4	4360 - 3
TH111110	1B14	2	0130 - 17
TH111111	1C6	14	0260 - 13
TH111111	1C20	14	0267 - 3
TH111143	1C2	10	0260 - 9
TH111153	1C6	25	0260 - 13
TH111153	1C20	25	0267 - 3
TH111154	1C6	24	0260 - 13
TH111154	1C20	24	0267 - 3
TH111216	3K24	9	3365 - 3
TH111216	3L2	9	3365 - 5
TH111224	1B8	7	0130 - 13
TH111227	1B16	9	0130 - 19
TH111236	1C6	9	0260 - 13
TH111236	1C20	9	0267 - 3
TH111239	1C2	40	0260 - 9
TH111240	1C2	20	0260 - 9
TH111244	1C2	11	0260 - 9
TH111245	1C2	4	0260 - 9
TH111260	1C6	26	0260 - 13
TH111260	1C20	26	0267 - 3
TH111261	1C6	29	0260 - 13
TH111261	1C20	29	0267 - 3
TH111263	3G6	47	3361 - 9
TH111263	3G8	47	3361 - 11
TH111266	1C6	20	0260 - 13
TH111266	1C20	20	0267 - 3
TH111267	3L13	25	4360 - 3
TH111283	1B6	6	0130 - 11
TH111292	3I18	4	3363 - 19
TH111351	1C10	33	0260 - 15
TH111351	3D17	35	3315 - 11
TH111416	3J16	58	3363 - 35
TH111641	3L13	19	4360 - 3
TH111654	3D17	21	3315 - 11
TH111685	3E6	25	3344 - 3
TH111690	3G18	11	3362 - 9
TH111690	3G20	11	3362 - 11
TH111690	3G22	11	3362 - 13
TH111690	3H2	11	3362 - 17
TH111908	2C16	24	1810 - 37
TH111929	3G4	13	3361 - 7
TH111990	3K24	37	3365 - 3
TH111990	3L2	37	3365 - 5
TH112029	3L19	1	4367 - 3
TH112034	3L19	6	4367 - 3
TH112036	3L19	9	4367 - 3
TH112037	3L19	10	4367 - 3
TH112038	3L19	11	4367 - 3
TH112039	3L19	12	4367 - 3
TH112040	3L19	13	4367 - 3
TH112042	3L19	15	4367 - 3
TH112045	3L19	18	4367 - 3
TH112046	3L19	23	4367 - 3
TH112059	3L19	41	4367 - 3
TH112060	3L19	42	4367 - 3
TH112061	3L19	43	4367 - 3
TH112062	3L19	44	4367 - 3
TH112094	1C6	11	0260 - 13
TH112094	1C20	11	0267 - 3
TH2044332	3D17	8A	3315 - 11
TH2044922	2D2	33	1830 - 3
TH2045031	1C2	43	0260 - 9
TH2045468	3D15	10	3315 - 9
TH2045469	3D15	11	3315 - 9
TH2045470	3D7	5	3315 - 3
TH2045471	3D7	1	3315 - 3
TH2045472	3D7	2	3315 - 3
TH2045509	2C14	29	1810 - 35
TH2045998	3J22	27	3363 - 41
TH2045998	3J24	17	3363 - 43
TH2047172	3E10	0A	3345 - 3
TH2047173	3E10	1A	3345 - 3
TH3086417	1C14	1	0260 - 17
TH3087264	3D17	13A	3315 - 11
TH3087987	3D17	26	3315 - 11
TH3088602	3L4	18	3365 - 7
TH3088623	3K24	33	3365 - 3
TH3088623	3L2	33	3365 - 5
TH3088623	3L8	31	3365 - 9
TH3088751	3D23	14	3340 - 3
TH3088751	3D25	14	3340 - 5
TH3088751	3E2	14	3340 - 7
TH3088751	3E6	9	3344 - 3
TH3088769	2F9	7	2004 - 5
TH3088960	1I7	0B	1740 - 3
TH3088979	1I7	0A	1740 - 3
TH3089848	3D13	11	3315 - 7
TH3089936	3K24	18	3365 - 3
TH3089936	3L2	18	3365 - 5
TH3090025	2C4	0	1810 - 25B
TH3090025	2C14	32	1810 - 35
TH3090165	3E6	8	3344 - 3
TH3090166	3D23	16	3340 - 3
TH3090166	3D25	16	3340 - 5
TH3090166	3E2	16	3340 - 7
TH3090167	3D23	17	3340 - 3
TH3090167	3D25	17	3340 - 5
TH3090167	3E2	17	3340 - 7
TH3090168	3D23	15	3340 - 3
TH3090168	3D25	15	3340 - 5
TH3090168	3E2	15	3340 - 7
TH3090722	3L4	48	3365 - 7
TH3091096	2F5	1	2002 - 3
TH3091204	2D16	3	1830 - 15
TH3091204	2D18	3	1830 - 17
TH3091337	2E18	41	1910 - 27
TH3091680	3J14	60	3363 - 33
TH3091681	3J14	62	3363 - 33
TH3091682	3J14	64	3363 - 33
TH3091683	3J14	67	3363 - 33
TH3091684	3J14	68	3363 - 33
TH3091685	3J14	70	3363 - 33
TH3091686	3K2	28	3363 - 45
TH3091686	3K4	28	3363 - 45B
TH3091842	2C14	24	1810 - 35
TH3100010	1H15	1	1674 - 7D
TH4013748	3G22	28B	3362 - 13
TH4116310	3D13	3	3315 - 7
TH4153087	3G8	50C	3361 - 11
TH4185600	3D17	22	3315 - 11
TH4204136	3J16	52	3363 - 35
TH4313443	3I10	15A	3363 - 11
TH4331726	3K6	23A	3363 - 47
TH4334894	3G2	81E	3361 - 5
TH4347396	2D2	27	1830 - 3
TH4352947	2D16	18	1830 - 15
TH4358031	2E18	3B	1910 - 27
TH4379989	2E18	3C	1910 - 27
TH4381572	1H11	62	1674 - 7
TH4381983	3D23	0E	3340 - 3
TH4381983	3D25	0E	3340 - 5
TH4381983	3E2	0E	3340 - 7
TH4382024	3D25	32	3340 - 5
TH4382025	3D25	31	3340 - 5
TH4396836	1C14	8	0260 - 17
TH4396950	1C14	13	0260 - 17
TH4396955	1C14	7	0260 - 17
TH4397029	1C14	14	0260 - 17
TH4397790	3L4	1A	3365 - 7
TH4397790	3L4	2A	3365 - 7
TH4397791	3E10	0C	3345 - 3
TH4397791	3E10	1C	3345 - 3
TH4397791	3L8	2A	3365 - 9
TH4400442	3G8	50	3361 - 11
TH4401293	1C2	15	0260 - 9
TH4405164	2D10	8	1830 - 9
TH4405166	2D10	6	1830 - 9
TH4409396	2D22	3E	1910 - 3
TH4409396	2E12	8	1910 - 17
TH4409446	2E12	0	1910 - 17
TH4409999	2B5	1	1810 - 3
TH4410314	3I14	12A	3363 - 15
TH4412666	3J22	9	3363 - 41
TH4412666	3J24	9	3363 - 43
TH4415024	2C14	22	1810 - 35
TH4416605	3G2	81	3361 - 5
TH4420083	1G6	8	0530 - 3
TH4420392	3J16	72	3363 - 35
TH4420875	2C14	0	1810 - 35
TH4420876	2C14	3	1810 - 35
TH4420877	2C14	7	1810 - 35
TH4420878	2C14	11	1810 - 35
TH4420879	2C14	14	1810 - 35
TH4420880	2C14	18	1810 - 35
TH4423345	3G6	48	3361 - 9
TH4423345	3G8	48	3361 - 11
TH4424185	3D15	5	3315 - 9
TH4425177	3J22	13	3363 - 41

NUMERICAL INDEX - CONTINUED

PART NO.	GRID	KEY	PAGE
TH4425290	3D17	13B	3315 - 11
TH4425305	3D17	18	3315 - 11
TH4425573	2D16	5	1830 - 15
TH4426046	2D10	2	1830 - 9
TH4426047	2D2	44	1830 - 3
TH4426047	2D4	0	1830 - 3B
TH4426048	2D2	46	1830 - 3
TH4426155	2D2	16	1830 - 3
TH4426156	2D16	8	1830 - 15
TH4426157	2D2	24	1830 - 3
TH4426158	2D2	36	1830 - 3
TH4426161	2D14	11	1830 - 13
TH4426162	2D2	20	1830 - 3
TH4426354	2B25	4	1810 - 23
TH4426354	2C2	4	1810 - 25
TH4426597	2E18	31	1910 - 27
TH4426598	2E18	0B	1910 - 27
TH4426599	2E18	0C	1910 - 27
TH4427111	3J8	29	3363 - 29
TH4427111	3J10	29	3363 - 29B
TH4427351	3K2	10	3363 - 45
TH4427351	3K4	10	3363 - 45B
TH4427357	3K6	11	3363 - 47
TH4427359	3J6	23	3363 - 27
TH4427429	1H11	7B	1674 - 7
TH4429011	2E18	0D	1910 - 27
TH4430870	2D2	48	1830 - 3
TH4430871	2D2	50	1830 - 3
TH4431090	1H11	11	1674 - 7
TH4431841	3J18	11	3363 - 37
TH4432965	2D16	11	1830 - 15
TH4433793	2D16	0	1830 - 15
TH4433794	2D16	7	1830 - 15
TH4434036	3D23	0C	3340 - 3
TH4434036	3D25	0E	3340 - 5
TH4434036	3E2	0E	3340 - 7
TH4434953	3D23	0G	3340 - 3
TH4434953	3D25	0G	3340 - 5
TH4434953	3E2	0G	3340 - 7
TH4434956	3D23	0F	3340 - 3
TH4434956	3D25	0F	3340 - 5
TH4434956	3E2	0F	3340 - 7
TH4434956	3E6	1G	3344 - 3
TH4435025	3G6	5	3361 - 9
TH4435025	3G8	5	3361 - 11
TH4435036	3J8	39	3363 - 29
TH4435036	3J10	39	3363 - 29B
TH4435126	3D23	19	3340 - 3
TH4435126	3D25	19	3340 - 5
TH4435126	3E2	19	3340 - 7
TH4435127	1I7	25	1740 - 3
TH4435127	3E6	6	3344 - 3
TH4435128	3D23	21	3340 - 3
TH4435128	3D25	21	3340 - 5
TH4435128	3E2	21	3340 - 7
TH4435128	3E6	10	3344 - 3
TH4436279	2E18	3D	1910 - 27
TH4436409	2E18	0E	1910 - 27
TH4436441	2D2	32	1830 - 3
TH4436534	1H11	59	1674 - 7
TH4436535	3J12	14	3363 - 31
TH4436535	3J14	53	3363 - 33
TH4436535	3J16	53	3363 - 35
TH4436536	3G6	52	3361 - 9
TH4436536	3G8	55	3361 - 11
TH4436648	2D22	3F	1910 - 3
TH4436737	1H11	7G	1674 - 7
TH4436800	3G8	63	3361 - 11
TH4436937	3J2	8	3363 - 23
TH4437242	3E14	0	3360 - 3
TH4437273	3K16	0	3363 - 53
TH4437274	3K16	1	3363 - 53
TH4437275	3K16	2	3363 - 53
TH4437432	3D17	39	3315 - 11
TH4437433	3D17	8B	3315 - 11
TH4437513	1I2	1	1674 - 19
TH4437634	3J22	3	3363 - 41
TH4437636	3J22	4	3363 - 41
TH4437637	3J22	5	3363 - 41
TH4437653	3J22	0	3363 - 41
TH4437656	3J22	1	3363 - 41
TH4437930	3J4	1	3363 - 25
TH4437934	3J4	2	3363 - 25
TH4437943	3K6	1	3363 - 47
TH4437944	3K6	6	3363 - 47
TH4437950	3K2	9	3363 - 45
TH4437950	3K4	9	3363 - 45B
TH4438027	2D22	3G	1910 - 3
TH4438059	3G2	61	3361 - 5
TH4438279	3D7	8	3315 - 3
TH4438288	3J24	15	3363 - 43
TH4438290	3J24	16	3363 - 43
TH4438866	3I14	10A	3363 - 15
TH4438866	3I14	13A	3363 - 15
TH4438881	3I18	11A	3363 - 19
TH4438885	3I18	12A	3363 - 19
TH4439897	1H11	18	1674 - 7
TH4439955	3K24	7	3365 - 3
TH4439955	3L2	7	3365 - 5
TH4441059	2D2	41	1830 - 3
TH4441061	2D2	42	1830 - 3
TH4441117	2C14	30	1810 - 35
TH4441139	2D2	39	1830 - 3
TH4441246	2F9	17	2004 - 5
TH4442133	3J2	9	3363 - 23
TH4442173	3K8	8	3363 - 49
TH4442812	3K6	24	3363 - 47
TH4442841	3I16	5	3363 - 17
TH4443342	2E18	3E	1910 - 27
TH4443490	1H11	7H	1674 - 7
TH4443880	3D23	0E	3340 - 3
TH4443880	3D25	0D	3340 - 5
TH4443880	3E2	0D	3340 - 7
TH4443883	3D23	0D	3340 - 3
TH4443883	3D25	0B	3340 - 5
TH4443883	3E2	0B	3340 - 7
TH4443885	3E6	1H	3344 - 3
TH4443896	3J24	19	3363 - 43
TH4443902	3J24	20	3363 - 43
TH4444285	3D23	41	3340 - 3
TH4444285	3D25	41	3340 - 5
TH4444285	3E2	41	3340 - 7
TH4444285	3E6	31	3344 - 3
TH4444286	3D23	42	3340 - 3
TH4444286	3D25	42	3340 - 5
TH4444286	3E2	42	3340 - 7
TH4444287	3D23	43	3340 - 3
TH4444287	3D25	43	3340 - 5
TH4444287	3E2	43	3340 - 7
TH4444381	3J2	10	3363 - 23
TH4444461	3K6	26	3363 - 47
TH4444664	2B13	10	1810 - 11
TH4444719	3J24	21	3363 - 43
TH4444720	3J24	22	3363 - 43
TH4444729	3K8	9	3363 - 49
TH4444730	3K8	10	3363 - 49
TH4444732	3J22	28	3363 - 41
TH4444735	3K2	25	3363 - 45
TH4444735	3K4	25	3363 - 45B
TH4445220	2C8	22	1810 - 29
TH4445322	3D7	9	3315 - 3
TH4445638	1I7	27	1740 - 3
TH4445638	3E6	29	3344 - 3
TH4445639	1I7	28	1740 - 3
TH4445639	3E6	30	3344 - 3
TH4445640	3E6	35	3344 - 3
TH4445917	2C2	0	1810 - 25
TH4445932	2C2	0A	1810 - 25
TH4447050	3D17	6B	3315 - 11
TH4447067	3D17	42	3315 - 11
TH4447099	3I14	11A	3363 - 15
TH4447264	3G6	39	3361 - 9
TH4447276	3H6	0	3362 - 21
TH4448307	2B15	43	1810 - 13
TH4448308	2B13	52	1810 - 11
TH4448309	2B13	53	1810 - 11
TH4448314	2B11	9	1810 - 9
TH4448315	2B13	72	1810 - 11
TH4448318	2B17	18	1810 - 15
TH4448319	2B11	19	1810 - 9
TH4448601	2C8	27	1810 - 29
TH4448925	2D4	16	1830 - 3B
TH4448946	3I10	17	3363 - 11
TH4448990	2C14	35	1810 - 35
TH4449019	1H11	49	1674 - 7
TH4449361	1G10	12	0560 - 3
TH4449362	1G10	13	0560 - 3
TH4449509	2F5	5	2002 - 3
TH4449771	3J6	26	3363 - 27
TH4449772	3J6	27	3363 - 27
TH4450008	2D16	9	1830 - 15
TH4450008	2D18	0	1830 - 17
TH4450012	3D23	45	3340 - 3
TH4450012	3D25	45	3340 - 5
TH4450012	3E2	45	3340 - 7
TH4450013	3D23	44	3340 - 3
TH4450014	3E6	34	3344 - 3
TH4450081	3J4	22	3363 - 25
TH4450505	1C18	14	0263 - 3
TH4450707	2D2	44	1830 - 3
TH4450708	2D2	46	1830 - 3
TH4451036	3G2	97	3361 - 5
TH4451039	3G4	90	3361 - 7
TH4451095	2C14	18	1810 - 35
TH4451498	3G6	22	3361 - 9
TH4451498	3G8	22	3361 - 11
TH4451668	3K24	45	3365 - 3
TH4451668	3L2	45	3365 - 5
TH4451784	3H18	24	3362 - 31
TH4451785	3H18	25	3362 - 31
TH4451785	3H20	25	3362 - 33
TH4451785	3H22	25	3362 - 33B
TH4451786	3H20	26	3362 - 33
TH4451786	3H22	26	3362 - 33B
TH4451787	3H18	37	3362 - 31
TH4451788	3H18	38	3362 - 31
TH4451789	3H18	39	3362 - 31
TH4451789	3H20	39	3362 - 33
TH4451789	3H22	39	3362 - 33B
TH4451790	3H20	40	3362 - 33
TH4451797	3H20	41	3362 - 33

NUMERICAL INDEX - CONTINUED

PART NO.	GRID	KEY	PAGE
TH4451797	3H22	41	3362 - 33B
TH4452044	3J8	40	3363 - 29
TH4452044	3J10	40	3363 - 29B
TH4452045	3J8	41	3363 - 29
TH4452045	3J10	41	3363 - 29B
TH4452046	3J16	61	3363 - 35
TH4452047	3J16	63	3363 - 35
TH4452048	3J16	65	3363 - 35
TH4452049	3J16	66	3363 - 35
TH4452050	3J16	69	3363 - 35
TH4452051	3J16	71	3363 - 35
TH4452054	3K6	32	3363 - 47
TH4452160	1H11	65	1674 - 7
TH4452345	2E14	2	1910 - 23
TH4452613	2C14	27	1810 - 35
TH4452647	3H24	18	3362 - 35
TH4452648	3H24	20	3362 - 35
TH4453018	3I10	16	3363 - 11
TH4453663	2B11	31	1810 - 9
TH4453665	2B11	93	1810 - 9
TH4453666	2B11	95	1810 - 9
TH4453667	2B11	22	1810 - 9
TH4453670	2B13	20	1810 - 11
TH4453671	2B13	22	1810 - 11
TH4453674	2B13	58	1810 - 11
TH4453675	2B13	57	1810 - 11
TH4453676	2B13	50	1810 - 11
TH4453682	2B17	29	1810 - 15
TH4453683	2B17	30	1810 - 15
TH4453684	2B17	31	1810 - 15
TH4453686	2B9	33	1810 - 7
TH4453687	2B9	32	1810 - 7
TH4453689	2B15	1	1810 - 13
TH4453690	2B9	31	1810 - 7
TH4453760	2D22	3H	1910 - 3
TH4453765	2D22	3I	1910 - 3
TH4453819	3H24	11	3362 - 35
TH4453820	3H24	12	3362 - 35
TH4454193	3G18	42	3362 - 9
TH4454194	3G16	45	3362 - 7
TH4454195	3G16	46	3362 - 7
TH4454199	3G16	61	3362 - 7
TH4454201	3G22	4	3362 - 13
TH4454202	3G20	5	3362 - 11
TH4455088	1C2	22	0260 - 9
TH4455098	1C2	37	0260 - 9
TH4455099	1C2	28	0260 - 9
TH4455719	3G6	97	3361 - 9
TH4455733	3G8	97	3361 - 11
TH4455975	2B13	4	1810 - 11
TH4455977	2B13	17	1810 - 11
TH4455978	2B13	19	1810 - 11
TH4455979	2B13	2	1810 - 11
TH4455981	2B13	12	1810 - 11
TH4455982	2B13	8	1810 - 11
TH4455983	2B13	9	1810 - 11
TH4455986	3H8	55	3362 - 23
TH4455987	3H8	56	3362 - 23
TH4455989	3H8	49	3362 - 23
TH4455990	3H8	48	3362 - 23
TH4455991	3H8	3	3362 - 23
TH4456130	2D10	0	1830 - 9
TH4456171	2B13	11	1810 - 11
TH4456172	2B13	26	1810 - 11
TH4456175	2B11	25	1810 - 9
TH4456177	2B11	2	1810 - 9
TH4456178	2B11	3	1810 - 9
TH4456179	2B11	4	1810 - 9
TH4456181	2B11	5	1810 - 9
TH4456182	2B11	17	1810 - 9
TH4456183	2B11	8	1810 - 9
TH4456184	2B11	29	1810 - 9
TH4456185	2B11	11	1810 - 9
TH4456218	2B15	2	1810 - 13
TH4456219	2B15	3	1810 - 13
TH4456220	2B15	4	1810 - 13
TH4456221	2B15	5	1810 - 13
TH4456222	2B15	6	1810 - 13
TH4456223	2B15	8	1810 - 13
TH4456224	2B15	9	1810 - 13
TH4456225	2B15	10	1810 - 13
TH4456226	2B15	12	1810 - 13
TH4456227	2B15	14	1810 - 13
TH4456228	2B15	20	1810 - 13
TH4456229	2B15	21	1810 - 13
TH4456230	2B15	26	1810 - 13
TH4456231	2B15	27	1810 - 13
TH4456232	2B15	29	1810 - 13
TH4456233	2B15	30	1810 - 13
TH4456234	2B15	31	1810 - 13
TH4456235	2B15	33	1810 - 13
TH4456236	2B15	34	1810 - 13
TH4456237	2B15	35	1810 - 13
TH4456238	2B9	37	1810 - 7
TH4456238	2B15	36	1810 - 13
TH4456239	2B15	37	1810 - 13
TH4456240	2B15	38	1810 - 13
TH4456241	2B15	39	1810 - 13
TH4456242	2B15	40	1810 - 13
TH4456246	2B21	2	1810 - 19
TH4456247	2B21	3	1810 - 19
TH4456248	2B21	6	1810 - 19
TH4456427	2B9	1	1810 - 7
TH4456428	2B9	15	1810 - 7
TH4456428	2B9	26	1810 - 7
TH4456429	2B9	30	1810 - 7
TH4456433	2B9	34	1810 - 7
TH4456434	2B9	35	1810 - 7
TH4456435	2B9	41	1810 - 7
TH4456436	2B9	42	1810 - 7
TH4456450	2B9	43	1810 - 7
TH4456458	2B9	40	1810 - 7
TH4456723	2D16	0B	1830 - 15
TH4456725	2D16	0A	1830 - 15
TH4456735	1H11	7F	1674 - 7
TH4456778	1H11	7A	1674 - 7
TH4456778	1H17	7A	1674 - 9
TH4459263	3J18	13	3363 - 37
TH4459435	2C14	41	1810 - 35
TH4459641	1C18	7	0263 - 3
TH4460372	1I7	30	1740 - 3
TH4460372	3E6	36	3344 - 3
TH4460662	1G2	7	0520 - 5
TH4461342	2D22	3J	1910 - 3
TH4463992	3G2	81A	3361 - 5
TH4463993	3G2	81D	3361 - 5
TH4463994	3G2	81F	3361 - 5
TH4464274	2D4	8G	1830 - 3B
TH4464275	2D4	9	1830 - 3B
TH4464276	2D4	10	1830 - 3B
TH4464277	2D4	11	1830 - 3B
TH4464278	2D4	12	1830 - 3B
TH4464279	2D4	13	1830 - 3B
TH4464280	2D4	15	1830 - 3B
TH4464281	2D4	17	1830 - 3B
TH4464282	2D4	18	1830 - 3B
TH4464283	2D4	19	1830 - 3B
TH4464284	2D4	20	1830 - 3B
TH4464285	2D4	21	1830 - 3B
TH4464286	2D4	22	1830 - 3B
TH4464287	2D4	23	1830 - 3B
TH4464288	2D4	24	1830 - 3B
TH4464341	2D4	1	1830 - 3B
TH4464342	2D4	2	1830 - 3B
TH4464343	2D4	3	1830 - 3B
TH4464344	2D4	4	1830 - 3B
TH4464347	2D4	5	1830 - 3B
TH4464349	2D4	6	1830 - 3B
TH4464350	2D4	7	1830 - 3B
TH4464352	2D4	8	1830 - 3B
TH4464353	2D4	8A	1830 - 3B
TH4464354	2D4	8B	1830 - 3B
TH4464355	2D4	8C	1830 - 3B
TH4464356	2D4	8E	1830 - 3B
TH4464357	2D4	8F	1830 - 3B
TH4464450	2D4	25	1830 - 3B
TH4464451	2D4	26	1830 - 3B
TH4464452	2D4	27	1830 - 3B
TH4464453	2D4	28	1830 - 3B
TH4464454	2D4	29	1830 - 3B
TH4464455	2D4	30	1830 - 3B
TH4464456	2D6	31	1830 - 3D
TH4464457	2D6	32	1830 - 3D
TH4464458	2D6	33	1830 - 3D
TH4464459	2D6	34	1830 - 3D
TH4464460	2D6	35	1830 - 3D
TH4464461	2D6	36	1830 - 3D
TH4464462	2D6	37	1830 - 3D
TH4464463	2D6	38	1830 - 3D
TH4464465	2D6	40	1830 - 3D
TH4464466	2D6	41	1830 - 3D
TH4464473	2D6	42	1830 - 3D
TH4464474	2D6	44	1830 - 3D
TH4464475	2D6	45	1830 - 3D
TH4464476	2D6	47	1830 - 3D
TH4464477	2D6	49	1830 - 3D
TH4464478	2D6	50	1830 - 3D
TH4464479	2D6	52	1830 - 3D
TH4464480	2D6	54	1830 - 3D
TH4464483	2D6	56	1830 - 3D
TH4465617	3K8	13	3363 - 49
TH4465818	3K24	46	3365 - 3
TH4465818	3L2	46	3365 - 5
TH4466479	3I18	13A	3363 - 19
TH4466480	3I18	14A	3363 - 19
TH4468943	2B13	65	1810 - 11
TH4468944	2B11	6	1810 - 9
TH5007002	3E6	0A	3344 - 3
TH5007003	3D23	0A	3340 - 3
TH5007087J	1G10	1	0560 - 3
TH5007142	1I13	3	1740 - 9
TH5007342	2C8	15	1810 - 29
TH5007482	3E2	0A	3340 - 7
TH5007522	3D25	0A	3340 - 5
TH5007618	1A23	0	0130 - 3
TH6016131	1B6	3A	0130 - 11
TH6017975	2C10	5	1810 - 31
TH6018662	2E18	3A	1910 - 27
TH6018671	2E18	0A	1910 - 27
TH6019252	2C8	14	1810 - 29
TH6019838	2C8	12	1810 - 29

NUMERICAL INDEX - CONTINUED

PART NO.	GRID	KEY	PAGE
TH6020171	2C22	0	1821 - 7
TH7032724	1C10	1	0260 - 15
TH7035503	3D13	0	3315 - 7
TH7035539	2D22	12	1910 - 3
TH7036594	2C12	0	1810 - 33
TH7036595	2C12	2	1810 - 33
TH7037241	2E18	8	1910 - 27
TH7037662	3L4	2	3365 - 7
TH7037671	3K24	2	3365 - 3
TH7037671	3L2	2	3365 - 5
TH7037679	3L8	2	3365 - 9
TH7038365	2E10	0	1910 - 15
TH7038670	3E6	0	3344 - 3
TH7038671	3D23	0	3340 - 3
TH7039389	2C8	1	1810 - 29
TH7039663	3E2	0	3340 - 7
TH7039810	3D25	0	3340 - 5
TH8066060	3L13	61	4360 - 3
TH8073901	3D13	6	3315 - 7
TH8074128	3E16	1	3360 - 5
TH8075449	3D15	1	3315 - 9
TH8075450	3D15	0	3315 - 9
TH8076619	2C8	9	1810 - 29
TH8077444	2E18	3	1910 - 27
TH8077444	3J22	12	3363 - 41
TH8077903	3D17	32	3315 - 11
TH8078454	3E16	0	3360 - 5
TH8079292	3L8	32	3365 - 9
TH8079307	3I12	10	3363 - 13
TH8079314	3K24	34	3365 - 3
TH8079315	3L2	34	3365 - 5
TH8079425	3E6	13A	3344 - 3
TH8080569	3E12	0	3345 - 5
TH8081319	3D9	0	3315 - 5
TH8082069	3L4	50	3365 - 7
TH8082329	1H11	24	1674 - 7
TH8082452	3J16	55	3363 - 35
TH8083393	2D22	13	1910 - 3
TH8083849	3K24	26	3365 - 3
TH8083850	3L2	26	3365 - 5
TH8084765	3I22	0	3363 - 21
TH8084924	3E10	0	3345 - 3
TH8084925	3E10	1	3345 - 3
TH9167839	1B16	0	0130 - 19
TH9184275	3D17	8	3315 - 11
TH9185360	1C2	1	0260 - 9
TH9191786	3K6	23	3363 - 47
TH9195237	3F24	3	3361 - 3
TH9195304	3D7	20	3315 - 3
TH9195307	3D17	7	3315 - 11
TH9199146	3D17	13	3315 - 11
TH9199749	3I14	10	3363 - 15
TH9199873	3I14	11	3363 - 15
TH9199904	3I18	11	3363 - 19
TH9199905	3I18	12	3363 - 19
TH9206186	3I18	13	3363 - 19
TH9206187	3I18	14	3363 - 19
TH9206355	3K24	60	3365 - 3
TH9206355	3L2	60	3365 - 5
TH9207260	3G4	69	3361 - 7
TH9207260	3G8	0	3361 - 11
TH9207261	3G4	70	3361 - 7
TH9207261	3G6	0	3361 - 9
TH9209638	3I14	13	3363 - 15
TH9209641	3I14	12	3363 - 15
TH9751787	3J22	10	3363 - 41
TH9751787	3J24	10	3363 - 43
TH9753750	1C14	5	0260 - 17
TH9757192	2C8	29	1810 - 29
TK130	3C24	5	3302 - 29
TK330	3C18	2	3302 - 23
TPDE31329	3C16	7	3302 - 21
TP136	3D2	5	3302 - 31
TP160L	3C12	6	3302 - 19B
TP400HD	3C22	2	3302 - 27
TP400HD	3C24	2	3302 - 29
TP400HD	3D2	2	3302 - 31
TP400HD	3D4	2	3302 - 33
TT1U3352	3C20	4N	3302 - 23B
TT330	3C20	4F	3302 - 23B
TT400	3C22	4F	3302 - 27
TT400	3C24	4F	3302 - 29
TT400	3D2	4F	3302 - 31
TT400	3D4	4F	3302 - 33
TX1U3352WT	3C20	4M	3302 - 23B
TX330	3C20	4B	3302 - 23B
TX330WT	3C20	4C	3302 - 23B
TX400	3C22	4B	3302 - 27
TX400	3C24	4B	3302 - 29
TX400	3D2	4B	3302 - 31
TX400	3D4	4B	3302 - 33
TX400AP	3C22	4E	3302 - 27
TX400AP	3C24	4E	3302 - 29
TX400AP	3D2	4E	3302 - 31
TX400AP	3D4	4E	3302 - 33
TX400F	3C22	4D	3302 - 27
TX400F	3D4	4D	3302 - 33
TX400WT	3C22	4C	3302 - 27
TX400WT	3C24	4C	3302 - 29
TX400WT	3D2	4C	3302 - 31
TX400WT	3D4	4C	3302 - 33
TY21517	1I15	5	1740 - 11
TY21517	1I15	6	1740 - 11
TY21517	1I15	7	1740 - 11
TY21709	1H4	0	1671 - 3
TY22328	2D12	9	1830 - 11
TY22328	2D12	10	1830 - 11
TY22330 (CUT	1F15	30	0505 - 5
TY22330 (CUT	1F15	31	0505 - 5
TY22462	1F15	21	0505 - 5
TY22462	1F18	2	0510 - 3
TY22462	1G6	10	0530 - 3
TY22462	1G14	20	0560 - 7
TY22464	1G14	10	0560 - 7
TY22470	1F20	11	0510 - 9
TY22472	1F20	10	0510 - 9
TY24322	1H5	6	1672 - 2
TY24398	1G14	1	0560 - 7
TY24398	1G14	2	0560 - 7
TY24398	1G14	4	0560 - 7
TY24398	1G14	7	0560 - 7
T1U1454	3D4	3	3302 - 33
T1U1458	3C22	2	3302 - 27
T1U1458	3D4	2	3302 - 33
T1U3352	3C20	4L	3302 - 23B
T101942	1G17	3	1322 - 3
T105740	2C20	3	1821 - 5
T107068	3F10	6	3360 - 23
T107446	3J2	4	3363 - 23
T107728	3L13	43	4360 - 3
T107755	3G4	9	3361 - 7
T107766	1C6	21	0260 - 13
T107766	1C20	21	0267 - 3
T107766	3G4	22	3361 - 7
T107767	3G4	23	3361 - 7
T107783	1C10	24	0260 - 15
T108159	3D17	2	3315 - 11
T110444	3K22	8	3364 - 3
T110448	3L19	33	4367 - 3
T110590	1G21	..	1369 - 3
T110593	1G21	..	1369 - 3
T111819	1C6	34	0260 - 13
T111819	1C8	32	0260 - 13B
T111819	1C20	34	0267 - 3
T111819	3G12	14	3362 - 3
T114698	3F2	7	3360 - 13
T114699	3F2	6	3360 - 13
T115120	3E6	0D	3344 - 3
T115963	3K24	44	3365 - 3
T115963	3L2	44	3365 - 5
T116057	1G10	10	0560 - 3
T116332	1I11	2	1740 - 7
T116333	2D8	13	1830 - 5
T116334	3K20	18	3363 - 57
T116334	3L4	47	3365 - 7
T116334	3L8	43	3365 - 9
T120343	1F15	3	0505 - 5
T122075	1E10	4	0419 - 3
T122075	1F9	30	0452 - 3
T126057	3F10	15	3360 - 23
T130X400	3C24	3	3302 - 29
T130341	1G6	5A	0530 - 3
T13254	1E14	11	0420 - 5
T138886	2C14	39	1810 - 35
T138902	3D23	23A	3340 - 3
T138902	3D23	46	3340 - 3
T138902	3D25	23A	3340 - 5
T138902	3D25	46	3340 - 5
T138902	3E2	23A	3340 - 7
T138902	3E2	46	3340 - 7
T138910	3E20	14	3360 - 7
T139457	1B8	11	0130 - 13
T139457	1B10	4	0130 - 13B
T141022	1H19	2	1674 - 11
T143272	3E20	19	3360 - 7
T144361	1H7	1E	1674 - 3
T144362	1H7	1F	1674 - 3
T146102	1E19	3	0422 - 3
T146102	1G17	33	1322 - 3
T146667	1G17	26	1322 - 3
T146668	1G17	25	1322 - 3
T146671	1G17	42	1322 - 3
T149434	3D19	14	3315 - 13
T149434	3E22	5	3360 - 9
T149434	3F2	17	3360 - 13
T149983	1G17	32	1322 - 3
T152608	3K16	7	3363 - 53
T152608	3K18	5	3363 - 55
T152657	1G17	34	1322 - 3
T153187	3E20	19	3360 - 7
T153672	1G19	2	1322 - 5
T153672	1I4	50	1674 - 21
T153672	3E4	50	3340 - 9
T153672	3E8	50	3344 - 3B
T153672	3E18	50	3360 - 5B
T153672	3I24	50	3363 - 21B
T153672	3K12	50	3363 - 51B
T153672	3K14	50	3363 - 51D
T153672	3K18	50	3363 - 55
T153672	3K20	50	3363 - 57
T153672	3L6	80	3365 - 7B

NUMERICAL INDEX - CONTINUED

PART NO.	GRID	KEY	PAGE
T153672	3L10	50	3365 - 11
T153672	3L17	20	4360 - 7
T153673	1G19	3	1322 - 5
T153673	1I4	50	1674 - 21
T153673	3E4	50	3340 - 9
T153673	3E8	50	3344 - 3B
T153673	3E18	50	3360 - 5B
T153673	3I24	50	3363 - 21B
T153673	3K12	50	3363 - 51B
T153673	3K14	50	3363 - 51D
T153673	3K18	50	3363 - 55
T153673	3K20	50	3363 - 57
T153673	3L6	80	3365 - 7B
T153673	3L10	50	3365 - 11
T153673	3L17	20	4360 - 7
T153674	3D21	22	3315 - 15
T153676	3D21	22	3315 - 15
T157779	2C20	2	1821 - 5
T158X330	3C20	3	3302 - 23B
T158020	2B9	25A	1810 - 7
T158021	2B9	25B	1810 - 7
T158584	1H5	1	1672 - 2
T159841	1G17	21	1322 - 3
T159841	1G17	54	1322 - 3
T159842	1G17	6	1322 - 3
T159842	1G17	54	1322 - 3
T159843	1G17	6	1322 - 3
T159843	3F4	7	3360 - 15
T159844	1G17	21	1322 - 3
T159844	3F4	9	3360 - 15
T159887	1G17	24	1322 - 3
T160103	1F23	20	0510 - 13
T160105	1F23	21	0510 - 13
T160106	1F23	22	0510 - 13
T160123	1F23	52	0510 - 13
T160124	1F23	23	0510 - 13
T160598	1F23	24	0510 - 13
T160599	1F23	25	0510 - 13
T160600	1F23	26	0510 - 13
T160910	1G17	16	1322 - 3
T161816	1F23	44	0510 - 13
T161818	1G4	4	0520 - 7
T162091	1F23	45	0510 - 13
T164167	1F23	27	0510 - 13
T167256	2B23	2	1810 - 21
T175293	1F13	7	0505 - 3
T177580	1F15	22	0505 - 5
T179306	1F15	24	0505 - 5
T179306	1F15	27	0505 - 5
T184759	1G17	12	1322 - 3
T184858	3F4	10	3360 - 15
T184964	1H21	18	1674 - 13
T184989	1F23	53	0510 - 13
T184990	1F23	54	0510 - 13
T185126	1G17	11	1322 - 3
T185126	1G19	4	1322 - 5
T185126	1I4	50	1674 - 21
T185126	3E4	50	3340 - 9
T185126	3E8	50	3344 - 3B
T185126	3E18	50	3360 - 5B
T185126	3I24	50	3363 - 21B
T185126	3K12	50	3363 - 51B
T185126	3K14	50	3363 - 51D
T185126	3K18	50	3363 - 55
T185126	3K20	50	3363 - 57
T185126	3L6	80	3365 - 7B
T185126	3L10	50	3365 - 11
T185126	3L17	20	4360 - 7
T186158	1F23	28	0510 - 13
T187535	1G17	30	1322 - 3
T187642	1G17	15	1322 - 3
T187710	1G17	35	1322 - 3
T187951	1F23	29	0510 - 13
T188662	3F8	24	3360 - 21
T188737	1G17	41	1322 - 3
T188737	2C16	25	1810 - 37
T188862	1G17	23	1322 - 3
T18891	1D13	2	0404 - 3
T189060	1G17	29	1322 - 3
T189061	1G17	31	1322 - 3
T189062	1G17	9	1322 - 3
T190276	1H21	25	1674 - 13
T190303	1H5	10	1672 - 2
T190310	1G17	17	1322 - 3
T190393	1G17	27	1322 - 3
T190408	1F23	49	0510 - 13
T190409	1F23	51	0510 - 13
T190799	1G17	30	1322 - 3
T190801	1G17	35	1322 - 3
T190802	1G17	35	1322 - 3
T190803	1G17	30	1322 - 3
T191211	1I15	5	1740 - 11
T191211	1I15	6	1740 - 11
T19935	1F16	9	0505 - 6
T200732	3D23	29	3340 - 3
T200732	3D25	29	3340 - 5
T200732	3E2	29	3340 - 7
T201519	1G17	6	1322 - 3
T201519	1G17	21	1322 - 3
T201519	1G17	54	1322 - 3
T201519	3F6	9	3360 - 15B
T20168	1D13	18	0404 - 3
T202379	3E24	21	3360 - 11
T202379	3F4	20	3360 - 15
T20314	1D9	4	0402 - 6
T20316	1D9	3	0402 - 6
T203958	1I15	5	1740 - 11
T203958	1I15	6	1740 - 11
T204375	3L8	8	3365 - 9
T205175	3F6	8	3360 - 15B
T205218	2C16	24	1810 - 37
T206125	1F15	23	0505 - 5
T206126	1F15	26	0505 - 5
T206127	1F15	29	0505 - 5
T20758	1D11	6	0404 - 1
T208028	1G17	31	1322 - 3
T210798	1B18	0	0130 - 19B
T210799	1B18	1	0130 - 19B
T210806	1B18	2	0130 - 19B
T210807	1B16	21	0130 - 19
T210807	1B18	51	0130 - 19B
T210808	1B16	4	0130 - 19
T210808	1B18	4	0130 - 19B
T210809	1B16	7	0130 - 19
T210809	1B18	6	0130 - 19B
T210811	1B16	6	0130 - 19
T210811	1B18	7	0130 - 19B
T210811	1B18	56	0130 - 19B
T210813	1B16	9	0130 - 19
T210813	1B18	9	0130 - 19B
T210813	1B18	56	0130 - 19B
T210814	1B16	22	0130 - 19
T210814	1B18	52	0130 - 19B
T210815	1B18	54	0130 - 19B
T210816	1B18	54	0130 - 19B
T210817	1B18	54	0130 - 19B
T210827	1B12	3	0130 - 15
T210828	1B12	1	0130 - 15
T210829	1B14	0B	0130 - 17
T210830	1B14	6	0130 - 17
T210831	1B6	4	0130 - 11
T210832	1B6	1	0130 - 11
T210833	1B6	2	0130 - 11
T210834	1B6	3	0130 - 11
T210836	1B6	3	0130 - 11
T210836	1B6	3B	0130 - 11
T210838	1B6	6	0130 - 11
T210839	1B6	0	0130 - 11
T210839	1B6	8	0130 - 11
T211127	1I4	50	1674 - 21
T211127	3E4	50	3340 - 9
T211127	3E8	50	3344 - 3B
T211127	3E18	50	3360 - 5B
T211127	3I24	50	3363 - 21B
T211127	3K12	50	3363 - 51B
T211127	3K14	50	3363 - 51D
T211127	3K18	50	3363 - 55
T211127	3K20	50	3363 - 57
T211127	3L6	80	3365 - 7B
T211127	3L10	50	3365 - 11
T211127	3L17	20	4360 - 7
T211136	1G19	1	1322 - 5
T211136	1I4	50	1674 - 21
T211136	3E4	50	3340 - 9
T211136	3E8	50	3344 - 3B
T211136	3E18	50	3360 - 5B
T211136	3I24	50	3363 - 21B
T211136	3K12	50	3363 - 51B
T211136	3K14	50	3363 - 51D
T211136	3K18	50	3363 - 55
T211136	3K20	50	3363 - 57
T211136	3L6	80	3365 - 7B
T211136	3L10	50	3365 - 11
T211136	3L17	20	4360 - 7
T211395	1B10	8	0130 - 13B
T22645	3F4	23	3360 - 15
T23474	1D13	19	0404 - 3
T24432	1G14	12	0560 - 7
T24432	2D8	2	1830 - 5
T24432	2D8	31	1830 - 5
T25838	1G17	44	1322 - 3
T26767	3F20	31	3360 - 85
T27603	3F20	31	3360 - 85
T28862	1D17	6	0407 - 2
T3G8354	3C20	3	3302 - 23B
T3G9549	3C20	5	3302 - 23B
T3G9549	3C22	5	3302 - 27
T3G9549	3D4	5	3302 - 33
T30367	1G14	16	0560 - 7
T34037	1D21	3	0408 - 1
T43514	1D13	24	0404 - 3
T52222	1F25	1I	0520 - 3
T52223	1F25	1C	0520 - 3
T52224	1F25	1B	0520 - 3
T58477	1D23	6	0409 - 3
T59014	1G21	..	1369 - 3
T59014	3I12	6	3363 - 13
T59014	3I14	1	3363 - 15
T59014	3I16	1	3363 - 17
T59014	3I18	1	3363 - 19
T59014	3J2	6	3363 - 23

NUMERICAL INDEX - CONTINUED

PART NO.	GRID	KEY	PAGE
T59014	3K12	7	3363 - 51B
T61120	3F6	12	3360 - 15B
T63817	3F4	21	3360 - 15
T70177	3E20	5	3360 - 7
T74492	1G21	..	1369 - 3
T74492	3G20	6	3362 - 11
T74492	3G22	6	3362 - 13
T75197	1H25	2	1674 - 17
T76938	1C18	5	0263 - 3
T76938	3D23	34	3340 - 3
T76938	3D25	34	3340 - 5
T76938	3E2	34	3340 - 7
T76938	3F14	7	3360 - 27
T76938	3F18	9	3360 - 31
T76938	3F20	7	3360 - 85
T76938	3F20	31	3360 - 85
T76938	3I10	11	3363 - 11
T76938	3I12	9	3363 - 13
T76938	3I18	5	3363 - 19
T76938	3I24	5	3363 - 21B
T76938	3K10	14	3363 - 51
T76938	3K12	22	3363 - 51B
T77613	1E4	8	0416 - 2
T77857	3F12	29	3360 - 25
T77858	3D23	33	3340 - 3
T77858	3D25	33	3340 - 5
T77858	3E2	33	3340 - 7
T77858	3F20	18	3360 - 85
T77858	3F20	31	3360 - 85
T77858	3I2	8	3363 - 3
T77858	3I12	8	3363 - 13
T77858	3J2	2	3363 - 23
T77858	3K10	15	3363 - 51
T77858	3K12	21	3363 - 51B
T77858	3K14	8	3363 - 51D
T78313	3D23	35	3340 - 3
T78313	3D25	35	3340 - 5
T78313	3E2	35	3340 - 7
T78313	3F10	10	3360 - 23
T78313	3F12	10	3360 - 25
T78313	3F14	4	3360 - 27
T78313	3F20	24	3360 - 85
T78313	3G16	85	3362 - 7
T78313	3I4	1	3363 - 5
T78313	3I14	3	3363 - 15
T78313	3I22	2	3363 - 21
T78313	3I24	4	3363 - 21B
T78313	3I24	6	3363 - 21B
T78313	3K10	16	3363 - 51
T78313	3K12	17	3363 - 51B
T78593	1F13	10	0505 - 3
T78612	3F18	5	3360 - 31
T78612	3F20	2	3360 - 85
T78612	3F22	7	3360 - 85B
T78612	3K10	13	3363 - 51
T78787	1H21	17	1674 - 13
T79477	1F18	5	0510 - 3
T79477	1F18	6	0510 - 3
T79632	1G17	4	1322 - 3
T8E6464	3C22	3	3302 - 27
T802X400	3C22	3	3302 - 27
T802X400	3D2	3	3302 - 31
T802X400	3D4	3	3302 - 33
T80394	3F2	10	3360 - 13
T9J2358	3C18	2	3302 - 23
T9W8452	3C22	4L	3302 - 27
T9W8452	3D4	4L	3302 - 33
U10778	1G21	..	1369 - 3
U12547	3G20	83A	3362 - 11
U13639	1D13	23	0404 - 3
U13639	1F16	6	0505 - 6
U17409	1G21	..	1369 - 3
U42016	3L19	40	4367 - 3
U42323	1G10	7	0560 - 3
U46489	1C6	61A	0260 - 13
U46489	1C14	2	0260 - 17
U46489	1C18	9	0263 - 3
U46489	1C18	23	0263 - 3
U46489	1C20	61A	0267 - 3
U46489	1G21	..	1369 - 3
U46489	3G8	57A	3361 - 11
U46489	3G16	48F	3362 - 7
U46489	3G18	47F	3362 - 9
WZ2141223	2D2	9	1830 - 3
WZ2141223	2D12	3	1830 - 11
X1JS78-20-16	3F18	19	3360 - 31
X1JS78-20-16	3F20	37	3360 - 85
X1J978-20-16	3F18	19	3360 - 31
X1J978-20-16	3F20	37	3360 - 85
X12-16F4OMXS	3F18	1	3360 - 31
X6C4OMXS	3F10	4	3360 - 23
X6C4OMXS	3F12	13	3360 - 25
X6F4OMXS	3F10	3	3360 - 23
X6F4OMXS	3F12	6	3360 - 25
X6JTX-S	3F12	9	3360 - 25
X6V4OMXS	3F12	3	3360 - 25
Y404061	1G14	1	0560 - 7
Z29925	3I2	2	3363 - 3
Z431578	1I7	33	1740 - 3
Z962453	3F14	2	3360 - 27
Z973069	3L19	26	4367 - 3
0001193	1B25	11A	0260 - 7
0002690	1B16	0A	0130 - 19
0002691	1B16	1	0130 - 19
0003542	1B25	1	0260 - 7
0003929	2C8	25	1810 - 29
0004069	1H11	7	1674 - 7
0004076	1B16	0A	0130 - 19
0004077	1B16	1	0130 - 19
0004091	1H9	0	1674 - 5
0004499	1C12	1A	0260 - 15B
0004501	1C8	0	0260 - 13B
0004616	1H11	7	1674 - 7
0004912	1H9	0	1674 - 5
0104404	3L6	23	3365 - 7B
0111818	3L10	21	3365 - 11
0127408	3L6	7	3365 - 7B
0130519	3H6	7	3362 - 21
0134608	3H6	7	3362 - 21
0150809	3L19	48	4367 - 3
0208516	3L6	67	3365 - 7B
0208516	3L10	37	3365 - 11
0209423	3G4	83	3361 - 7
0210718	3H6	6	3362 - 21
0212505	3L6	11	3365 - 7B
0215218	3G8	51	3361 - 11
0215220	1C10	35	0260 - 15
0215220	3H12	5	3362 - 25
0218607	3G20	93	3362 - 11
0225611	3L10	7	3365 - 11
0225612	3L10	8	3365 - 11
0237205	3L6	5	3365 - 7B
0237215	3L6	8	3365 - 7B
0237417	3L6	66	3365 - 7B
0250914	3G22	28C	3362 - 13
0251914	3L19	38	4367 - 3
0265201	3H6	8	3362 - 21
0306003	3G20	63A	3362 - 11
0306003	3G20	67A	3362 - 11
0306003	3G20	68A	3362 - 11
0306003	3G20	69A	3362 - 11
0306003	3G20	70A	3362 - 11
0306003	3G22	63A	3362 - 13
0306003	3G22	64A	3362 - 13
0306003	3G24	65A	3362 - 15
0308623	3L21	28	4367 - 5
0308703	3J4	32	3363 - 25
0308704	3J4	31	3363 - 25
0308705	3J4	33	3363 - 25
0308709	3J4	36	3363 - 25
0309020	3L6	61	3365 - 7B
0309022	3L10	36	3365 - 11
0309219	3L6	65	3365 - 7B
0309705	3G20	63B	3362 - 11
0309705	3G20	67B	3362 - 11
0309705	3G20	68B	3362 - 11
0309705	3G20	69B	3362 - 11
0309705	3G20	70B	3362 - 11
0309705	3G22	63B	3362 - 13
0309705	3G22	64B	3362 - 13
0309705	3G24	65B	3362 - 15
0309805	3G2	87	3361 - 5
0309805	3G14	4	3362 - 5
0310604	3L10	4	3365 - 11
0310606	3L10	11	3365 - 11
0310608	3L10	14	3365 - 11
0310610	3L10	17	3365 - 11
0310612	3L10	20	3365 - 11
0310616	3L10	35	3365 - 11
0311336	1C10	25	0260 - 15
0313107	3H6	12	3362 - 21
0325913	3L6	69	3365 - 7B
0325913	3L10	34	3365 - 11
0326007	3L10	18	3365 - 11
0332904	3G22	16	3362 - 13
0332914	3G20	91	3362 - 11
0332914	3G24	80	3362 - 15
0332924	3G20	27	3362 - 11
0332924	3G22	27	3362 - 13
0332924	3G22	64I	3362 - 13
0332924	3G24	65H	3362 - 15
0352715	3L6	22	3365 - 7B
0353318	3L21	25	4367 - 5
0365318	3L21	17	4367 - 5
0365330	3L21	27	4367 - 5
0365331	3L19	42	4367 - 3
0365401	3L19	1	4367 - 3
0365405	3L19	6	4367 - 3
0365407	3L19	9	4367 - 3
0365408	3L19	10	4367 - 3
0365409	3L19	11	4367 - 3
0365410	3L19	12	4367 - 3
0365411	3L19	13	4367 - 3
0365413	3L19	15	4367 - 3
0365416	3L19	18	4367 - 3
0365417	3L19	23	4367 - 3
0365427	3L19	41	4367 - 3
0365428	3L19	43	4367 - 3
0365429	3L19	44	4367 - 3
0373405	3L6	4	3365 - 7B
0373411	3L6	16	3365 - 7B

NUMERICAL INDEX - CONTINUED

PART NO.	GRID	KEY	PAGE
0373413	3L6	19	3365 - 7B
0373414	3L6	20	3365 - 7B
0373415	3L6	21	3365 - 7B
0384401	3L19	4	4367 - 3
0384401	3L21	4	4367 - 5
0387311	3L6	64	3365 - 7B
0387804	3H8	50	3362 - 23
0401202	3L21	22	4367 - 5
0408202	3G10	3	3361 - 13
0408204	3G10	16	3361 - 13
0408207	3G10	97	3361 - 13
0408411	3H8	34	3362 - 23
0408411	3H10	9	3362 - 23B
0408815	3L6	68	3365 - 7B
0408815	3L10	33	3365 - 11
0409104	3L10	6	3365 - 11
0409106	3L10	13	3365 - 11
0409107	3L10	15	3365 - 11
0409110	3L10	38	3365 - 11
0409116	3L10	32	3365 - 11
0409117	3L10	9	3365 - 11
0413619	3G18	86	3362 - 9
0413909	3G18	77	3362 - 9
0413909	3H2	77	3362 - 17
0430809	3J4	3C	3363 - 25
0444301	3H12	3	3362 - 25
0444302	3H12	4	3362 - 25
0451104	3H6	20	3362 - 21
0459541	3G20	76	3362 - 11
0459541	3G24	76	3362 - 15
0492203	3L6	3	3365 - 7B
0492204	3L6	6	3365 - 7B
0492205	3L6	13	3365 - 7B
0492206	3L6	14	3365 - 7B
0492208	3L6	17	3365 - 7B
0492209	3L6	18	3365 - 7B
0492210	3L6	24	3365 - 7B
0492211	3L6	25	3365 - 7B
0492212	3L6	26	3365 - 7B
0492213	3L6	27	3365 - 7B
0492215	3L6	63	3365 - 7B
0492216	3L6	9	3365 - 7B
0625508	3L21	15	4367 - 5
0625509	3L19	22	4367 - 3
0625509	3L21	16	4367 - 5
0629404	3L19	30	4367 - 3
0629404	3L19	31	4367 - 3
0629404	3L21	20	4367 - 5
0667101	3L10	1	3365 - 11
0667102	3L10	1A	3365 - 11
0667103	3L10	2	3365 - 11
0667104	3L10	2A	3365 - 11
0667105	3L10	3	3365 - 11
0667107	3L10	12	3365 - 11
0667108	3L10	16	3365 - 11
0667109	3L10	19	3365 - 11
0667111	3L10	31	3365 - 11
0667713	3G16	61A	3362 - 7
0667713	3G18	62D	3362 - 9
0667726	3G16	84	3362 - 7
0667817	3G16	48D	3362 - 7
0667817	3G18	47D	3362 - 9
0667927	3G20	83	3362 - 11
0667931	3G20	87	3362 - 11
0668007	3G16	22	3362 - 7
0668007	3G20	22	3362 - 11
0668007	3G22	22	3362 - 13
0668007	3G22	64G	3362 - 13
0668007	3G24	65F	3362 - 15
0668007	3H2	22	3362 - 17
0668111	3G16	7	3362 - 7
0668111	3H2	7	3362 - 17
0668112	3G16	8	3362 - 7
0668112	3H2	8	3362 - 17
0670802	3H10	24	3362 - 23B
0670802	3H10	33	3362 - 23B
0672701	3H6	21	3362 - 21
0672703	3H6	18	3362 - 21
0672707	3H6	9	3362 - 21
0672708	3H6	10	3362 - 21
0672709	3H6	13	3362 - 21
0672710	3H6	14	3362 - 21
0679001	3L10	27	3365 - 11
0679002	3L10	28	3365 - 11
0679105	3L6	60	3365 - 7B
0689405	3G18	75	3362 - 9
0689405	3G24	75	3362 - 15
0689405	3H2	75	3362 - 17
0692704	3L19	5	4367 - 3
0692710	3L19	45	4367 - 3
0695007	3G16	74	3362 - 7
0695007	3G20	74	3362 - 11
0695007	3G24	74	3362 - 15
0695007	3H2	74	3362 - 17
0709701	3J4	51	3363 - 25
0714301	3L6	1	3365 - 7B
0714302	3L6	1A	3365 - 7B
0714303	3L6	1B	3365 - 7B
0714303	3L6	2B	3365 - 7B
0714304	3L6	2	3365 - 7B
0714305	3L6	2A	3365 - 7B
0714306	3L6	12	3365 - 7B
0714307	3L6	15	3365 - 7B
0719603	3L19	16	4367 - 3
0735807	3G22	17	3362 - 13
0747307	3L21	29	4367 - 5
0788703	3H24	13	3362 - 35
0788704	3H24	14	3362 - 35
0788705	3H24	15	3362 - 35
0788706	3H24	16	3362 - 35
0788707	3H24	17	3362 - 35
0788710	3H24	33	3362 - 35
0788711	3H24	34	3362 - 35
0788712	3H24	35	3362 - 35
0788713	3H24	36	3362 - 35
0791601	3G16	9	3362 - 7
0791601	3H2	9	3362 - 17
0791602	3G16	23	3362 - 7
0791603	3G16	37	3362 - 7
0791603	3G18	37	3362 - 9
0791604	3G16	38	3362 - 7
0791604	3G18	38	3362 - 9
0791604	3H2	38	3362 - 17
0791605	3G16	39	3362 - 7
0791605	3G18	39	3362 - 9
0791606	3G16	43	3362 - 7
0791606	3G18	43	3362 - 9
0791607	3G16	44	3362 - 7
0791607	3G18	44	3362 - 9
0791619	3G16	49	3362 - 7
0791619	3G18	49	3362 - 9
0791620	3G16	50	3362 - 7
0791620	3G18	50	3362 - 9
0791622	3G16	73	3362 - 7
0791622	3G18	73	3362 - 9
0791622	3G20	73	3362 - 11
0791622	3G24	73	3362 - 15
0791623	3G16	77	3362 - 7
0791701	3G18	31	3362 - 9
0791702	3G18	32	3362 - 9
0791801	3G20	3	3362 - 11
0791801	3G22	3	3362 - 13
0791803	3G20	19	3362 - 11
0791803	3G22	19	3362 - 13
0791804	3G20	24	3362 - 11
0791805	3G20	25	3362 - 11
0791806	3G20	34	3362 - 11
0791807	3G20	35	3362 - 11
0791808	3G20	51	3362 - 11
0791808	3G22	51	3362 - 13
0791809	3G20	52	3362 - 11
0791809	3G22	52	3362 - 13
0791810	3G20	53	3362 - 11
0791810	3G22	53	3362 - 13
0791811	3G20	54	3362 - 11
0791811	3G22	54	3362 - 13
0791815	3G20	63C	3362 - 11
0791815	3G20	67C	3362 - 11
0791815	3G20	68C	3362 - 11
0791815	3G20	69C	3362 - 11
0791815	3G20	70C	3362 - 11
0791815	3G22	63C	3362 - 13
0791815	3G22	64C	3362 - 13
0791815	3G24	65C	3362 - 15
0791815	3G24	66E	3362 - 15
0791816	3G20	90	3362 - 11
0791816	3G24	79	3362 - 15
0791818	3G20	58	3362 - 11
0791818	3G22	58	3362 - 13
0791902	3G22	18	3362 - 13
0791903	3G22	21	3362 - 13
0791904	3G22	28A	3362 - 13
0791905	3G22	64D	3362 - 13
0791905	3G24	65D	3362 - 15
0791906	3G22	64E	3362 - 13
0791906	3G24	65E	3362 - 15
0791907	3G22	64F	3362 - 13
0791908	3G22	64J	3362 - 13
0791909	3G22	64K	3362 - 13
0791910	3G24	66A	3362 - 15
0791911	3G24	66B	3362 - 15
0791912	3G24	66C	3362 - 15
0791913	3G24	66D	3362 - 15
0791914	3G22	29	3362 - 13
0792001	3H2	10	3362 - 17
0792002	3H2	12	3362 - 17
0792003	3H2	13	3362 - 17
0792004	3H2	14	3362 - 17
0792005	3H2	20	3362 - 17
0792006	3H2	36	3362 - 17
0792007	3H2	79	3362 - 17
0794201	3H4	3	3362 - 19
0794202	3H4	6	3362 - 19
0794203	3H4	8	3362 - 19
0794204	3H4	10	3362 - 19
0794205	3H4	11	3362 - 19
0794206	3H4	12	3362 - 19
0794207	3H4	14	3362 - 19
0803002	3L21	3	4367 - 5
0803007	3L19	19	4367 - 3
0803007	3L21	13	4367 - 5

NUMERICAL INDEX - CONTINUED

PART NO.	GRID	KEY	PAGE
0803008	3L19	20	4367 - 3
0803008	3L21	14	4367 - 5
0803009	3L19	32	4367 - 3
0803009	3L21	21	4367 - 5
0816201	3L21	1	4367 - 5
0816202	3L21	2	4367 - 5
0816205	3L21	6	4367 - 5
0816206	3L21	7	4367 - 5
0816207	3L21	8	4367 - 5
0816208	3L21	9	4367 - 5
0816209	3L21	10	4367 - 5
0816210	3L21	11	4367 - 5
0816211	3L21	12	4367 - 5
0816212	3L21	18	4367 - 5
0816214	3L21	26	4367 - 5
0816215	3L21	30	4367 - 5
0816216	3L21	31	4367 - 5
0816217	3L21	32	4367 - 5
0824002	3H6	3	3362 - 21
0824003	3H6	4	3362 - 21
0824004	3H6	22	3362 - 21
0872301	3L21	5	4367 - 5
0872302	3L21	19	4367 - 5
1014808	3L13	24	4360 - 3
1014809	3L13	41	4360 - 3
1014810	3L13	12	4360 - 3
1014811	3L13	33	4360 - 3
1015437	3L8	4	3365 - 9
1015477	3D15	24	3315 - 9
1015478	3D15	23	3315 - 9
1019564	1C6	2	0260 - 13
1019564	1C20	2	0267 - 3
1022179	1C2	5	0260 - 9
1022179	1C2	6	0260 - 9
1022194	1C2	2	0260 - 9
1022195	1C2	23	0260 - 9
1022196	1C2	34	0260 - 9
1022197	1C2	26	0260 - 9
1022198	1C2	14	0260 - 9
1023376	1B6	4	0130 - 11
1023479	1B6	8	0130 - 11
1024224	3D15	19	3315 - 9
1024384	3D15	18	3315 - 9
1026679	3G4	1	3361 - 7
1027131	3G4	41	3361 - 7
1027184	3G2	1	3361 - 5
1027579	1H17	7	1674 - 9
1031069	3H10	2	3362 - 23B
2022744	1C6	14	0260 - 13
2022744	1C20	14	0267 - 3
2024865	3L17	0	4360 - 7
2030811	1F25	1I	0520 - 3
2031327	1C6	4	0260 - 13
2031327	1C20	4	0267 - 3
2033787	1C6	44	0260 - 13
2033787	1C20	44	0267 - 3
2034607	1B25	9	0260 - 7
2035236	1C6	40	0260 - 13
2035236	1C20	40	0267 - 3
2036744	3G4	25	3361 - 7
2036786	3G4	28	3361 - 7
2036795	3G4	27	3361 - 7
2036807	3G4	3	3361 - 7
2036808	3G4	4	3361 - 7
2037305	2F3	6	2001 - 3
2037825	3I2	6	3363 - 3
2038764	2B9	25B	1810 - 7
2038915	1C2	41	0260 - 9
2040403	1B16	23	0130 - 19
2040441	3L13	0	4360 - 3
2040778	1B8	0C	0130 - 13
2040803	1C6	48	0260 - 13
2040803	1C20	48	0267 - 3
2042033	1B16	23	0130 - 19
2042534	3E4	2A	3340 - 9
2044350	3D9	14	3315 - 5
2044350	3D9	15	3315 - 5
2044350	3D9	16	3315 - 5
2044350	3D9	17	3315 - 5
2044598	2E20	4	1910 - 29
2044599	2E20	5	1910 - 29
2044600	2E20	6	1910 - 29
2044922	2D2	33	1830 - 3
2045031	1C2	43	0260 - 9
2045468	3D15	10	3315 - 9
2045469	3D15	11	3315 - 9
2045470	3D7	5	3315 - 3
2045471	3D7	1	3315 - 3
2045472	3D7	2	3315 - 3
2045509	2C14	29	1810 - 35
2045998	3J22	27	3363 - 41
2045998	3J24	17	3363 - 43
2047738	1F20	18	0510 - 9
2047884	1C8	8	0260 - 13B
2047885	1C8	15	0260 - 13B
2048000	1C2	41	0260 - 9
2048184	1H11	66	1674 - 7
2048203	1H11	66	1674 - 7
2051176	3D15	10	3315 - 9
2051177	3D15	11	3315 - 9
28031	3C10	2	3302 - 19
300204	3C6	10	3302 - 15
300283	3B16	16	3302 - 5
300284	3B16	17	3302 - 5
300291	3B18	27	3302 - 5B
300292	3C8	27	3302 - 17
300479	3B14	28	3302 - 3B
300481	3B12	19	3302 - 3
300482	3B12	18	3302 - 3
300483	3B12	16	3302 - 3
300484	3B12	17	3302 - 3
300524	3C2	27	3302 - 11B
300526	3B20	16	3302 - 7
300526	3B24	16	3302 - 11
300527	3B20	17	3302 - 7
300527	3B24	17	3302 - 11
300802	3B20	19	3302 - 7
300803	3B20	18	3302 - 7
300804	3B20	14	3302 - 7
300804	3B24	14	3302 - 11
3012238	3L17	1	4360 - 7
3026126	3E8	13	3344 - 3B
3036256	1C2	10	0260 - 9
3036456	1C6	25	0260 - 13
3036456	1C20	25	0267 - 3
3036457	1C6	24	0260 - 13
3036457	1C20	24	0267 - 3
3037078	3E4	12	3340 - 9
304367	3B22	17	3302 - 9
304368	3B22	16	3302 - 9
304369	3B22	18	3302 - 9
304370	3B22	19	3302 - 9
304371	3B22	14	3302 - 9
3044367	3E4	12	3340 - 9
304559	3B18	28	3302 - 5B
304559	3C10	4	3302 - 19
304564	3C2	28	3302 - 11B
304564	3C10	4	3302 - 19
304567	3B16	19	3302 - 5
304567	3B24	19	3302 - 11
304568	3B16	18	3302 - 5
304568	3B24	18	3302 - 11
3050683	3L13	39	4360 - 3
3050684	3L13	42	4360 - 3
3050685	3L13	47	4360 - 3
3052305	2E8	28	1910 - 13
3052306	2E8	27	1910 - 13
3052363	3K24	23	3365 - 3
3052363	3L2	23	3365 - 5
3052363	3L8	18	3365 - 9
3052364	3L4	26	3365 - 7
3052543	3D15	28	3315 - 9
3053246	1B8	10	0130 - 13
3054013	3G14	1	3362 - 5
3054505	1C6	31	0260 - 13
3054505	1C20	31	0267 - 3
3055594	3G2	4	3361 - 5
3058761	3E4	22	3340 - 9
3060072	3E8	8	3344 - 3B
3060340	3E4	8	3340 - 9
3060561	3L13	7	4360 - 3
3063059	3K24	24	3365 - 3
3063059	3L2	24	3365 - 5
3063059	3L8	23	3365 - 9
3063060	3L4	24	3365 - 7
3063826	3E4	10	3340 - 9
3063840	3G2	3	3361 - 5
3063842	3G2	30	3361 - 5
3063843	3G2	31	3361 - 5
3069541	3G4	42	3361 - 7
306995	3B16	14	3302 - 5
3070078	1B12	7	0130 - 15
3070250	1B25	6	0260 - 7
307047	3B12	14	3302 - 3
307048	3B14	27	3302 - 3B
3070581	3G4	57	3361 - 7
3070763	2E20	9	1910 - 29
3072517	3D17	6D	3315 - 11
3074223	3L13	72	4360 - 3
3074989	1C2	32	0260 - 9
3075001	1C2	36	0260 - 9
3075002	1C2	27	0260 - 9
3075003	1C2	16	0260 - 9
3075005	1C2	21	0260 - 9
3075326	3I4	7	3363 - 5
3075524	3E12	1	3345 - 5
3075674	3G4	31	3361 - 7
3075766	1B6	3B	0130 - 11
3075775	3G6	35	3361 - 9
3075775	3G8	35	3361 - 11
3075797	3E8	11	3344 - 3B
3075901	1G8	0	0540 - 3
3075902	1G8	1	0540 - 3
3077237	1B6	1	0130 - 11
3077928	1B16	4	0130 - 19
3077929	1B16	6	0130 - 19
3077930	1B16	7	0130 - 19
3078190	1C6	28	0260 - 13
3078190	1C20	28	0267 - 3
3078298	1C6	19	0260 - 13
3078298	1C20	19	0267 - 3

NUMERICAL INDEX - CONTINUED

PART NO.	GRID	KEY	PAGE
3078696	1B8	17	0130 - 13
3079124	1F20	6	0510 - 9
3079135	1G2	2	0520 - 5
3079728	3J22	21	3363 - 41
3079728	3J24	12	3363 - 43
3080029	3K20	4	3363 - 57
3081250	1B14	0B	0130 - 17
3081343	1B16	21	0130 - 19
3081344	1B16	22	0130 - 19
3083091	3L4	27	3365 - 7
3084653	1I7	0C	1740 - 3
3087816	1H4	17	1671 - 3
3087882	1H11	1	1674 - 7
3087920	2E20	1	1910 - 29
3087960	2E20	3	1910 - 29
3087987	3D17	26	3315 - 11
3087997	2E20	0	1910 - 29
3088751	3D23	14	3340 - 3
3088751	3D25	14	3340 - 5
3088751	3E2	14	3340 - 7
3088751	3E6	9	3344 - 3
3088769	2F9	7	2004 - 5
3089486	2C22	4	1821 - 7
3089848	3D13	11	3315 - 7
3090025	2C4	0	1810 - 25B
3090025	2C14	32	1810 - 35
3090165	3E6	8	3344 - 3
3090166	3D23	16	3340 - 3
3090166	3D25	16	3340 - 5
3090166	3E2	16	3340 - 7
3091096	2F5	1	2002 - 3
3091204	2D16	3	1830 - 15
3091204	2D18	3	1830 - 17
3091337	2E18	41	1910 - 27
3091338	2D24	4	1910 - 5
3091679	3J8	17	3363 - 29
3091680	3J14	60	3363 - 33
3091681	3J14	62	3363 - 33
3091682	3J14	64	3363 - 33
3091683	3J14	67	3363 - 33
3091684	3J14	68	3363 - 33
3091685	3J14	70	3363 - 33
3091686	3K2	28	3363 - 45
3091686	3K4	28	3363 - 45B
3091814	3E4	18	3340 - 9
3091815	3E4	14	3340 - 9
3091842	2C14	24	1810 - 35
3093851	2E6	8A	1910 - 11
3093888	2E8	18	1910 - 13
3093913	2E20	7A	1910 - 29
3094013	1F20	19	0510 - 9
3094087	1I4	1	1674 - 21
3094360	1C12	1B	0260 - 15B
3094362	1C8	20	0260 - 13B
3094376	1C8	24	0260 - 13B
3094377	1C8	26	0260 - 13B
3094717	1C2	10	0260 - 9
3095161	1C16	1	0260 - 17B
3095162	1C16	5B	0260 - 17B
3095397	1C8	14	0260 - 13B
3095745	1B16	21	0130 - 19
3095747	3H10	27	3362 - 23B
3096201	2E6	16A	1910 - 11
3096779	1C8	23	0260 - 13B
3097791	3H10	34	3362 - 23B
3097862	2C24	19	1821 - 9
3098287	1B8	17	0130 - 13
3098526	1C8	38	0260 - 13B
3103022	1C8	38	0260 - 13B
3103491	1C8	18	0260 - 13B
3103491	1C8	20	0260 - 13B
310482	3C10	3	3302 - 19
313314	3C10	3	3302 - 19
36875	3C10	2	3302 - 19
36881	3C10	2	3302 - 19
36887	3C10	2	3302 - 19
36893	3C10	2	3302 - 19
4S00217	3L19	34	4367 - 3
4S00219	3L21	27	4367 - 5
4S00520	1B12	12	0130 - 15
400R	3L10	21	3365 - 11
4000854	3K20	22	3363 - 57
4013748	3G22	28B	3362 - 13
4022697	2E22	7	1910 - 31
4027959	1C14	11	0260 - 17
4027959	1C16	11	0260 - 17B
4027963	3G12	4	3362 - 3
4033725	1C14	4	0260 - 17
4033725	1C16	4	0260 - 17B
4038529	1C6	12	0260 - 13
4038529	1C20	12	0267 - 3
4040814	3G12	15	3362 - 3
4044839	3H6	16	3362 - 21
4051262	3D17	31	3315 - 11
4051262	3H6	17	3362 - 21
4053610	3K14	26	3363 - 51D
4053696	3I6	11	3363 - 7
4053698	3I6	19	3363 - 7
4053698	3I8	4	3363 - 9
4053698	3I20	4	3363 - 19B
4054024	3K20	20	3363 - 57
4055191	3K14	11	3363 - 51D
4055311	3K18	10	3363 - 55
4060162	3K20	28	3363 - 57
4065687	3E4	19	3340 - 9
4065687	3L10	25	3365 - 11
4066923	3E4	24	3340 - 9
4067720	3E4	0H	3340 - 9
4067720	3E8	0E	3344 - 3B
4067834	3I6	8	3363 - 7
4067901	3L6	41	3365 - 7B
4068898	3G6	16	3361 - 9
4068898	3G8	16	3361 - 11
4069801	3I6	7	3363 - 7
4069801	3I8	3	3363 - 9
4069801	3I20	3	3363 - 19B
4074008	3E4	1	3340 - 9
4074008	3E8	2	3344 - 3B
4077177	3L17	2	4360 - 7
4077178	3L17	4	4360 - 7
4077179	3L17	3	4360 - 7
4077180	3L17	5	4360 - 7
4079355	3L17	8	4360 - 7
4080398	3L15	5	4360 - 5
4085560	3D23	36	3340 - 3
4085560	3D25	36	3340 - 5
4085560	3E2	36	3340 - 7
4085560	3I4	0	3363 - 5
4085560	3K10	17	3363 - 51
4085560	3K12	16	3363 - 51B
4085607	3G6	8	3361 - 9
4085607	3G8	8	3361 - 11
4087197	1F20	17	0510 - 9
4089012	2B21	1	1810 - 19
4089012	2B21	4	1810 - 19
4089028	3D23	29	3340 - 3
4089028	3D25	29	3340 - 5
4089028	3E2	29	3340 - 7
4092111	2B9	39	1810 - 7
4092534	3G2	87	3361 - 5
4094086	3L10	23	3365 - 11
4100967	3K22	14A	3364 - 3
4102096	2F3	5	2001 - 3
4105067	3G20	57	3362 - 11
4105067	3G22	57	3362 - 13
4107762	2C16	24	1810 - 37
4113926	3I6	13	3363 - 7
4113926	3K22	22	3364 - 3
4113926	3L6	60A	3365 - 7B
4114402	3G2	78	3361 - 5
4116290	3G4	13	3361 - 7
4116310	3D13	3	3315 - 7
4121128	1G17	43	1322 - 3
4121496	1G10	8A	0560 - 3
4122395	3D17	13C	3315 - 11
4123177	2B9	16	1810 - 7
4127708	1I15	3	1740 - 11
4128863	1I17	5	1740 - 13
4130169	3K20	12	3363 - 57
4130174	3K20	10	3363 - 57
4137684	1B14	5	0130 - 17
4138084	1B6	5	0130 - 11
4143531	3E8	0F	3344 - 3B
4143531	3E8	16	3344 - 3B
4147896	2B13	59	1810 - 11
4152863	1F25	1J	0520 - 3
4153084	1G21	..	1369 - 3
4153087	3G8	50C	3361 - 11
4153251	1F18	1B	0510 - 3
4153488	3F16	11	3360 - 29
4153488	3F20	10	3360 - 85
4153488	3I12	0	3363 - 13
4153488	3K10	21	3363 - 51
4153534	3G8	50B	3361 - 11
4153538	3J4	3C	3363 - 25
4154207	3G20	83B	3362 - 11
4154651	3K16	5	3363 - 53
4154651	3K18	9	3363 - 55
4154656	3K20	15	3363 - 57
4154670	3E20	2	3360 - 7
4154670	3K22	29	3364 - 3
4155351	3E10	2	3345 - 3
4161735	1I7	2	1740 - 3
4162836	1G6	5C	0530 - 3
4170585	3D11	27	3315 - 5B
4172172	2F5	2	2002 - 3
4173208	3D9	5	3315 - 5
4174241	3L4	40	3365 - 7
4174241	3L8	35	3365 - 9
4174541	3G8	57	3361 - 11
4174541	3J4	61	3363 - 25
4174859	1I13	1	1740 - 9
4178173	3G4	9	3361 - 7
4179155	3G6	2	3361 - 9
4179155	3G8	2	3361 - 11
4179156	3G6	3	3361 - 9
4179156	3G8	3	3361 - 11
4179161	3G6	12	3361 - 9
4179161	3G8	12	3361 - 11
4179171	3G6	20	3361 - 9
4179171	3G8	20	3361 - 11

NUMERICAL INDEX - CONTINUED

PART NO.	GRID	KEY	PAGE
4179176	3G4	34	3361 - 7
4179177	3G4	33	3361 - 7
4179179	3G4	29	3361 - 7
4179181	3G4	23	3361 - 7
4180555	1F18	10	0510 - 3
4182067	3D9	21	3315 - 5
4182067	3D11	24	3315 - 5B
4183818	3L13	43	4360 - 3
4185136	1C10	24	0260 - 15
4185600	3D17	22	3315 - 11
4185600	3H8	32	3362 - 23
4185600	3H10	7	3362 - 23B
4185600	3H10	28	3362 - 23B
4187082	2B9	14	1810 - 7
4187083	2B9	14A	1810 - 7
4187308	3K12	21	3363 - 51B
4187308	3K14	8	3363 - 51D
4187328	3F14	7	3360 - 27
4187328	3F16	7	3360 - 29
4187328	3F18	9	3360 - 31
4187328	3I24	5	3363 - 21B
4187328	3K12	22	3363 - 51B
4187329	3F18	5	3360 - 31
4187329	3I24	4	3363 - 21B
4188649	1G8	12	0540 - 3
4189018	1G8	13	0540 - 3
4189184	3D13	4	3315 - 7
4189535	3F18	1	3360 - 31
4189535	3F22	1	3360 - 85B
4189535	3K12	24	3363 - 51B
4189537	3F18	1	3360 - 31
4189859	3K12	11	3363 - 51B
4189860	3F16	25	3360 - 29
4189860	3F20	19	3360 - 85
4189860	3K10	20	3363 - 51
4190126	3K10	25	3363 - 51
4190126	3K12	14	3363 - 51B
4190126	3K14	1	3363 - 51D
4190127	3F14	24	3360 - 27
4190127	3F16	12	3360 - 29
4190127	3F18	12	3360 - 31
4190127	3F20	4	3360 - 85
4190127	3K10	22	3363 - 51
4190253	1H11	38	1674 - 7
4190261	1H9	21	1674 - 5
4190261	1H11	36	1674 - 7
4190261	3K16	8	3363 - 53
4190266	1G14	13	0560 - 7
4190273	1H9	22	1674 - 5
4190275	1H9	26	1674 - 5
4190292	1H9	27	1674 - 5
4191301	3J4	3B	3363 - 25
4191665	1C6	9	0260 - 13
4191665	1C20	9	0267 - 3
4191977	1I7	5	1740 - 3
4192020	1C2	40	0260 - 9
4192021	1C2	20	0260 - 9
4192034	1G14	13	0560 - 7
4192034	2D12	11	1830 - 11
4192035	1H11	37	1674 - 7
4192974	1C2	11	0260 - 9
4193848	3J4	24	3363 - 25
4193996	1C6	26	0260 - 13
4193996	1C20	26	0267 - 3
4194176	3G6	47	3361 - 9
4194176	3G8	47	3361 - 11
4194362	1C6	20	0260 - 13
4194362	1C20	20	0267 - 3
4194454	3L13	25	4360 - 3
4194621	3L4	23	3365 - 7
4196259	3I6	7A	3363 - 7
4196259	3I8	3A	3363 - 9
4196259	3I20	3A	3363 - 19B
4196260	3I6	8A	3363 - 7
4197530	3K14	29	3363 - 51D
4198411	3I18	4	3363 - 19
4198956	1C6	21	0260 - 13
4198956	1C20	21	0267 - 3
4198956	3G4	22	3361 - 7
4199645	1I15	5	1740 - 11
4199645	1I15	6	1740 - 11
4200227	3G4	36	3361 - 7
4200465	3K2	52	3363 - 45
4200465	3K4	52	3363 - 45B
4200466	3D19	9	3315 - 13
4200466	3E24	6	3360 - 11
4200466	3F8	12	3360 - 21
4201805	3K24	25	3365 - 3
4201805	3L2	25	3365 - 5
4201805	3L8	24	3365 - 9
4201806	3L4	25	3365 - 7
4201993	3D11	19	3315 - 5B
4202103	1C18	18	0263 - 3
4202103	3F20	12	3360 - 85
4202422	3D19	11	3315 - 13
4203220	3K14	12	3363 - 51D
4203411	3D11	3	3315 - 5B
4203411	3D17	2	3315 - 11
4203533	3L13	45	4360 - 3
4204136	3J16	52	3363 - 35
4204558	2B15	19	1810 - 13
4204579	2B15	23	1810 - 13
4204579	2B19	3	1810 - 17
4204579	2B23	1	1810 - 21
4204586	2B15	32	1810 - 13
4204882	3J2	1	3363 - 23
4205084	2C10	3	1810 - 31
4205084	2D2	12	1830 - 3
4206452	1F18	1	0510 - 3
4208279	1I7	8	1740 - 3
4208977	1C10	33	0260 - 15
4208977	1C12	23	0260 - 15B
4208977	3D17	35	3315 - 11
4210224	3K22	19A	3364 - 3
4210412	2B9	16A	1810 - 7
4210413	2B9	16B	1810 - 7
4211149	1I17	6	1740 - 13
4213419	3D17	21	3315 - 11
4213825	3K20	16A	3363 - 57
4219918	3J16	58	3363 - 35
4222875	3K22	35D	3364 - 3
4222876	3K22	35E	3364 - 3
4224238	1F25	1K	0520 - 3
4224631	3E6	25	3344 - 3
4224631	3E8	18	3344 - 3B
4227550	1C6	8	0260 - 13
4227550	1C20	8	0267 - 3
4229234	3K24	37	3365 - 3
4229234	3L2	37	3365 - 5
4231543	1B25	4	0260 - 7
4233165	3G4	15	3361 - 7
4234628	1C6	44	0260 - 13
4234628	1C6	46	0260 - 13
4234628	1C20	44	0267 - 3
4234628	1C20	46	0267 - 3
4234782	3G2	86	3361 - 5
4235232	2C24	12	1821 - 9
4235654	1G14	12	0560 - 7
4235654	1H9	23	1674 - 5
4239611	1B25	11B	0260 - 7
4241780	1B25	5	0260 - 7
4244694	3L13	28	4360 - 3
4249704	3F20	20	3360 - 85
4250078	3K14	13	3363 - 51D
4250260	3K22	16	3364 - 3
4250261	3K22	17	3364 - 3
4250889	3K14	28	3363 - 51D
4251384	3K22	35F	3364 - 3
4252401	1C6	29	0260 - 13
4252401	1C20	29	0267 - 3
4252599	3G14	2	3362 - 5
4252655	3G14	6	3362 - 5
4252767	3G4	82	3361 - 7
4252855	3K12	20	3363 - 51B
4252877	3K18	5	3363 - 55
4253560	3L8	10	3365 - 9
4254449	3L13	32	4360 - 3
4254603	2F7	6	2004 - 3
4254604	1H7	4	1674 - 3
4255238	1C6	49	0260 - 13
4255238	1C20	49	0267 - 3
4255304	3G8	61	3361 - 11
4255304	3J8	43	3363 - 29
4255304	3J10	43	3363 - 29B
4255304	3J20	18	3363 - 39
4255304	3K2	30	3363 - 45
4255304	3K4	30	3363 - 45B
4255305	3J14	73	3363 - 33
4255305	3J20	17	3363 - 39
4255530	1I7	19	1740 - 3
4255567	1I7	19	1740 - 3
4255762	1H4	4	1671 - 3
4255799	1I7	1	1740 - 3
4255977	3G14	3	3362 - 5
4256346	3L13	1	4360 - 3
4257128	1G10	5	0560 - 3
4257159	1G10	3	0560 - 3
4257181	1I7	23	1740 - 3
4257661	3G14	5	3362 - 5
4259842	1G14	1	0560 - 7
4260308	1C6	55	0260 - 13
4260308	1C20	55	0267 - 3
4260369	2B9	20	1810 - 7
4261289	3H12	0	3362 - 25
4261669	2E8	25	1910 - 13
4261938	3J22	29	3363 - 41
4261938	3J24	23	3363 - 43
4262561	1C6	51	0260 - 13
4262561	1C20	51	0267 - 3
4264452	3L13	67	4360 - 3
4264805	1G17	5	1322 - 3
4264805	2C14	37	1810 - 35
4264979	3L8	16	3365 - 9
4264982	3K24	15	3365 - 3
4264982	3L2	15	3365 - 5
4264983	3L8	14	3365 - 9
4265372	3G2	68	3361 - 5
4265579	1C6	57	0260 - 13
4265579	1C20	57	0267 - 3
4265964	3G6	29	3361 - 9
4265964	3G8	29	3361 - 11

NUMERICAL INDEX - CONTINUED

PART NO.	GRID	KEY	PAGE
4266934	3L13	30	4360 - 3
4267139	3L4	14	3365 - 7
4269451	1C2	30	0260 - 9
4269452	1C2	19	0260 - 9
4269470	1C2	18	0260 - 9
4269472	1C2	39	0260 - 9
4269473	1C2	50	0260 - 9
4269473	1C6	33	0260 - 13
4269473	1C20	33	0267 - 3
4269474	1C6	30	0260 - 13
4269474	1C20	30	0267 - 3
4271596	3L13	48	4360 - 3
4272164	3I6	4	3363 - 7
4272297	1I17	6	1740 - 13
4272697	3K12	19	3363 - 51B
4273336	3L13	46	4360 - 3
4274282	1B21	0	0260 - 3
4274552	3G2	32	3361 - 5
4276215	2E18	29	1910 - 27
4276481	3K20	16B	3363 - 57
4276526	1C10	11	0260 - 15
4276526	1C12	5	0260 - 15B
4276584	3I6	1	3363 - 7
4276691	1C10	9	0260 - 15
4276785	1C10	7	0260 - 15
4276918	3G2	75	3361 - 5
4276918	3G10	0	3361 - 13
4278011	1C2	44	0260 - 9
4278168	1C2	45	0260 - 9
4278601	2E16	0D	1910 - 25
4278783	2E16	16	1910 - 25
4280359	2D2	14	1830 - 3
4281293	1H11	32	1674 - 7
4282489	1G2	4	0520 - 5
4282718	3E18	0B	3360 - 5B
4282842	1B12	3	0130 - 15
4283028	2F9	0	2004 - 5
4283787	1G6	5	0530 - 3
4284094	1F18	4	0510 - 3
4284520	1C2	38	0260 - 9
4284521	1C2	29	0260 - 9
4285722	3K12	13	3363 - 51B
4285723	3K12	12	3363 - 51B
4286876	3F16	3	3360 - 29
4287213	1C2	51	0260 - 9
4287249	3E4	5	3340 - 9
4287251	3E8	21	3344 - 3B
4287903	2B9	24	1810 - 7
4288047	1F25	1	0520 - 3
4288971	1G17	22	1322 - 3
4293211	3J4	35	3363 - 25
4293950	3G2	80	3361 - 5
4293950	3G8	62	3361 - 11
4293950	3J8	44	3363 - 29
4293950	3J10	44	3363 - 29B
4293950	3K2	31	3363 - 45
4293950	3K4	31	3363 - 45B
4293950	3K6	31	3363 - 47
4294437	2C14	26	1810 - 35
4294508	2E16	11	1910 - 25
4294508	2E18	27	1910 - 27
4295480	2B15	17	1810 - 13
4295876	2B15	18	1810 - 13
4297257	1C12	16	0260 - 15B
4299059	1G17	28	1322 - 3
4299059	2C14	39	1810 - 35
4304827	2B11	41	1810 - 9
4306888	3G2	69	3361 - 5
4307026	1H7	1E	1674 - 3
4307027	1H7	1F	1674 - 3
4307858	1G14	2	0560 - 7
4309836	3J4	35A	3363 - 25
4309837	3J4	35B	3363 - 25
4309838	3J4	35C	3363 - 25
4310055	3G2	43	3361 - 5
4311662	1C10	30	0260 - 15
4311662	1C12	13	0260 - 15B
4312882	3G12	21	3362 - 3
4312883	3G12	2	3362 - 3
4312884	3G12	5	3362 - 3
4312892	3G12	13	3362 - 3
4312893	3G12	16	3362 - 3
4312894	3G12	7	3362 - 3
4313443	3I10	15A	3363 - 11
4314064	3G12	9	3362 - 3
4314065	3G12	10	3362 - 3
4317032	3L13	68	4360 - 3
4317584	1B12	9	0130 - 15
4317636	3G20	26	3362 - 11
4317636	3G22	26	3362 - 13
4317636	3G22	64H	3362 - 13
4317636	3G24	65G	3362 - 15
4319299	3D17	1	3315 - 11
4320163	2B11	59	1810 - 9
4326285	3K22	35A	3364 - 3
4327293	3K2	1	3363 - 45
4327293	3K2	9	3363 - 45
4327293	3K4	1	3363 - 45B
4327293	3K4	9	3363 - 45B
4327293	3K6	23B	3363 - 47
4327294	3F14	26A	3360 - 27
4327294	3I10	15B	3363 - 11
4327294	3I14	10B	3363 - 15
4327294	3I14	11B	3363 - 15
4327294	3I14	12B	3363 - 15
4327294	3I14	13B	3363 - 15
4327294	3I18	11B	3363 - 19
4327294	3I18	12B	3363 - 19
4327294	3I18	13B	3363 - 19
4327294	3I18	14B	3363 - 19
4330054	3G4	10	3361 - 7
4330223	3K12	8	3363 - 51B
4330785	2B5	2	1810 - 3
4331726	3K6	23A	3363 - 47
4332285	3L8	1A	3365 - 9
4333185	2C6	0	1810 - 27
4333835	2C24	11	1821 - 9
4334894	3G2	81E	3361 - 5
4334899	3G2	81B	3361 - 5
4335060	3D9	19	3315 - 5
4335060	3D11	22	3315 - 5B
4336570	1H7	1	1674 - 3
4337035	3G4	21	3361 - 7
4337154	3G12	18	3362 - 3
4337419	3G4	6	3361 - 7
4337483	3G4	8	3361 - 7
4337812	3G4	44	3361 - 7
4338053	3G4	43	3361 - 7
4338060	3G4	47	3361 - 7
4338061	3G4	51	3361 - 7
4338110	3G12	19	3362 - 3
4338974	2C6	0C	1810 - 27
4339137	1A23	0A	0130 - 3
4341706	2F3	2	2001 - 3
4341788	2D22	7	1910 - 3
4341788	2E22	5	1910 - 31
4341877	3J18	5	3363 - 37
4342840	3G4	59	3361 - 7
4342841	3G6	15	3361 - 9
4342841	3G8	15	3361 - 11
4342843	3G6	14	3361 - 9
4342843	3G8	14	3361 - 11
4342846	3G6	41	3361 - 9
4343074	3G4	73	3361 - 7
4343365	3L13	69	4360 - 3
4344303	1G6	6	0530 - 3
4344303	1G14	16	0560 - 7
4344898	3E4	0D	3340 - 9
4344898	3E4	2C	3340 - 9
4344899	3E4	0F	3340 - 9
4345297	3K16	16	3363 - 53
4345297	3K18	4	3363 - 55
4345810	1I7	22	1740 - 3
4346521	3G6	28	3361 - 9
4346521	3G8	28	3361 - 11
4346522	3G6	27	3361 - 9
4346522	3G8	27	3361 - 11
4346770	2D8	3	1830 - 5
4347107	3G6	24	3361 - 9
4347107	3G8	24	3361 - 11
4347396	2D2	27	1830 - 3
4348182	3G4	7	3361 - 7
4348201	3K24	8	3365 - 3
4348201	3L2	8	3365 - 5
4348207	3L4	8	3365 - 7
4348414	3I2	1	3363 - 3
4348665	3G4	74	3361 - 7
4350249	2D14	12	1830 - 13
4350736	1H4	16	1671 - 3
4350928	3G6	49	3361 - 9
4350928	3G8	49	3361 - 11
4351011	2C10	2	1810 - 31
4351175	3J22	22	3363 - 41
4351175	3J24	13	3363 - 43
4351187	2F3	0	2001 - 3
4351255	2C12	4	1810 - 33
4351774	3J22	23	3363 - 41
4351774	3J24	14	3363 - 43
4351892	1H4	15	1671 - 3
4352457	2E18	14	1910 - 27
4352947	2D16	18	1830 - 15
4353560	1G10	8	0560 - 3
4354415	1C10	23	0260 - 15
4354622	3E18	0A	3360 - 5B
4355083	3G4	50	3361 - 7
4355085	3G4	46	3361 - 7
4355382	1I7	15	1740 - 3
4355728	1C8	3	0260 - 13B
4355875	3E10	0B	3345 - 3
4355875	3E10	1B	3345 - 3
4355877	3E4	0B	3340 - 9
4355877	3E8	0B	3344 - 3B
4356695	2B13	15	1810 - 11
4357667	3K20	5	3363 - 57
4357862	2D16	10	1830 - 15
4358100	3K12	23B	3363 - 51B
4358894	3K18	16	3363 - 55
4358895	3K18	14	3363 - 55
4358896	3K18	15	3363 - 55
4358914	3G20	78	3362 - 11
4358914	3G24	78	3362 - 15

NUMERICAL INDEX - CONTINUED

PART NO.	GRID	KEY	PAGE
4359384	1H11	14	1674 - 7
4360981	3K16	15	3363 - 53
4360981	3K18	3	3363 - 55
4361302	2B9	17	1810 - 7
4361455	2E16	2	1910 - 25
4361455	2E16	3	1910 - 25
4361601	2C16	18	1810 - 37
4361638	1G10	9	0560 - 3
4361800	1H11	2	1674 - 7
4361800	2C4	2	1810 - 25B
4361800	2C14	33	1810 - 35
4361802	2C14	4	1810 - 35
4361802	2C14	8	1810 - 35
4361802	2C14	15	1810 - 35
4361802	2C14	19	1810 - 35
4362135	2B13	6	1810 - 11
4362700	2B9	25A	1810 - 7
4363915	2E18	3F	1910 - 27
4364104	1C6	42	0260 - 13
4364104	1C20	42	0267 - 3
4364501	3E6	1E	3344 - 3
4364501	3E8	0C	3344 - 3B
4364501	3K24	1A	3365 - 3
4364501	3K24	2A	3365 - 3
4364501	3L2	1A	3365 - 5
4364501	3L2	2A	3365 - 5
4364504	2B9	18	1810 - 7
4364922	1C6	64	0260 - 13
4364922	1C20	64	0267 - 3
4364970	3D17	4	3315 - 11
4365007	1C10	16	0260 - 15
4365448	3K14	20B	3363 - 51D
4365448	3L10	2B	3365 - 11
4365859	1I7	31	1740 - 3
4365897	3K14	20C	3363 - 51D
4365897	3L10	1B	3365 - 11
4367375	1H11	15	1674 - 7
4367481	2B9	44	1810 - 7
4367664	1B25	3	0260 - 7
4368619	3G6	10	3361 - 9
4368619	3G8	10	3361 - 11
4368629	3D17	3	3315 - 11
4368630	3D17	5	3315 - 11
4368973	2F3	1	2001 - 3
4369148	3G2	79	3361 - 5
4369472	2C6	0A	1810 - 27
4369507	3L8	11	3365 - 9
4369508	3K24	11	3365 - 3
4369508	3L2	11	3365 - 5
4369509	3L4	11	3365 - 7
4369547	2B9	21	1810 - 7
4369549	2B9	23	1810 - 7
4369568	2B11	45	1810 - 9
4369569	2B9	45	1810 - 7
4369599	2B15	16	1810 - 13
4369615	2B19	2	1810 - 17
4369616	2B19	4	1810 - 17
4369619	2B19	71	1810 - 17
4369627	2B11	71	1810 - 9
4369645	2B13	3	1810 - 11
4369653	2B13	54	1810 - 11
4369661	2B13	13	1810 - 11
4369670	2B17	33	1810 - 15
4369671	2B17	49	1810 - 15
4369672	2B17	92	1810 - 15
4369674	2B17	65	1810 - 15
4369674	2B19	11	1810 - 17
4369675	2B11	55	1810 - 9
4369766	3L10	40	3365 - 11
4369943	3L6	70	3365 - 7B
4370249	2D4	8D	1830 - 3B
4370266	2D4	10	1830 - 3B
4370267	2D6	43	1830 - 3D
4370269	2D4	14	1830 - 3B
4370296	2D6	39	1830 - 3D
4370298	2D6	48	1830 - 3D
4370299	2D6	46	1830 - 3D
4370308	2D6	53	1830 - 3D
4370309	2D6	55	1830 - 3D
4370435	3J4	3A	3363 - 25
4370877	3E4	0E	3340 - 9
4371132	3E4	2B	3340 - 9
4372039	3G20	72	3362 - 11
4372039	3G24	72	3362 - 15
4372088	2B17	85B	1810 - 15
4372091	2B13	7	1810 - 11
4372093	2B13	56	1810 - 11
4372200	2C24	8	1821 - 9
4372210	2B15	28	1810 - 13
4372212	2B13	21	1810 - 11
4372212	2B17	61	1810 - 15
4372213	2B17	74	1810 - 15
4372214	2B15	22	1810 - 13
4372219	2B11	60	1810 - 9
4372219	2B15	11	1810 - 13
4372223	2B17	69A	1810 - 15
4372224	2B11	30	1810 - 9
4372225	2B15	7	1810 - 13
4372261	2B13	15	1810 - 11
4372560	2B13	23	1810 - 11
4372730	3E8	0D	3344 - 3B
4372966	3K16	13	3363 - 53
4372966	3K18	1	3363 - 55
4372967	3K16	14	3363 - 53
4372967	3K18	2	3363 - 55
4374265	1G10	11	0560 - 3
4374282	2D12	9	1830 - 11
4374345	1G14	2	0560 - 7
4377817	2B17	69B	1810 - 15
4378639	1B23	1	0260 - 5
4378890	1B16	2	0130 - 19
4378891	1B16	3	0130 - 19
4378892	1B16	5	0130 - 19
4378892	1B18	10	0130 - 19B
4378893	1B16	8	0130 - 19
4378893	1B18	8	0130 - 19B
4379259	3K14	20A	3363 - 51D
4379259	3L10	0	3365 - 11
4379845	1A23	0B	0130 - 3
4379984	2E18	3F	1910 - 27
4379989	2E18	3C	1910 - 27
4380020	1C18	15	0263 - 3
4380088	1C4	0	0260 - 11
4380144	3L4	6	3365 - 7
4380534	2C24	13	1821 - 9
4380814	2E2	0B	1910 - 7
4381572	1H11	62	1674 - 7
4381637	1I9	2	1740 - 5
4381729	3E8	27	3344 - 3B
4381730	3E8	26	3344 - 3B
4381811	3G20	71	3362 - 11
4382024	3D25	32	3340 - 5
4382410	2C24	5	1821 - 9
4382432	2C24	9	1821 - 9
4382885	2B13	23	1810 - 11
4383156	1G6	1	0530 - 3
4384146	1F20	16	0510 - 9
4384146	2E6	11	1910 - 11
4384239	2C24	3	1821 - 9
4384758	2F9	5	2004 - 5
4384759	1F13	6	0505 - 3
4385130	2D24	2B	1910 - 5
4385134	2D24	2C	1910 - 5
4385142	2D24	2D	1910 - 5
4385501	3E2	31	3340 - 7
4385693	3I4	11	3363 - 5
4386237	2E6	10A	1910 - 11
4386238	2E6	10B	1910 - 11
4386450	2B19	9	1810 - 17
4386452	2B19	7	1810 - 17
4387043	2E16	0D	1910 - 25
4387203	3L4	28	3365 - 7
4387837	2B9	27	1810 - 7
4388235	1G14	4	0560 - 7
4388815	3E4	0C	3340 - 9
4388916	3K12	23A	3363 - 51B
4388916	3L6	0	3365 - 7B
4389326	3K24	10	3365 - 3
4389326	3L2	10	3365 - 5
4390074	2E16	0B	1910 - 25
4391350	3I16	3	3363 - 17
4392801	2C18	7	1821 - 3
4392803	2C18	9	1821 - 3
4392804	2C18	10	1821 - 3
4392805	2C18	11	1821 - 3
4392806	2C18	12	1821 - 3
4392807	2C18	13	1821 - 3
4392809	2C18	15	1821 - 3
4392812	2C18	18	1821 - 3
4392813	2C18	19	1821 - 3
4393150	3I4	11	3363 - 5
4396619	3K22	19	3364 - 3
4396619	3K22	19B	3364 - 3
4396696	1C8	2	0260 - 13B
4396755	1C8	9	0260 - 13B
4396771	1C12	10	0260 - 15B
4396809	1F18	1A	0510 - 3
4396836	1C16	8	0260 - 17B
4397029	1C14	14	0260 - 17
4397354	3F18	7	3360 - 31
4397790	3L4	1A	3365 - 7
4397790	3L4	2A	3365 - 7
4397839	1H4	31	1671 - 3
4400079	2B11	7	1810 - 9
4400087	2B13	61	1810 - 11
4400442	3G8	50	3361 - 11
4400477	3H8	1	3362 - 23
4401293	1C2	15	0260 - 9
4402476	2B9	28	1810 - 7
4403327	2B15	16	1810 - 13
4404657	1G14	4	0560 - 7
4404758	1G14	1	0560 - 7
4405128	2C22	2	1821 - 7
4405164	2D10	8	1830 - 9
4405166	2D10	6	1830 - 9
4407253	3H4	0	3362 - 19
4407253	3J20	14	3363 - 39
4408959	3J4	3	3363 - 25
4409394	2D22	3B	1910 - 3
4409394	2D22	3E	1910 - 3
4409396	2D22	3E	1910 - 3

NUMERICAL INDEX - CONTINUED

PART NO.	GRID	KEY	PAGE
4409396	2E12	8	1910 - 17
4409446	2E12	0	1910 - 17
4409446	2E22	0B	1910 - 31
4409446	2E22	0E	1910 - 31
4409999	2B5	1	1810 - 3
4410314	3I14	12A	3363 - 15
4410898	3D9	4	3315 - 5
4410898	3D11	4	3315 - 5B
4411821	2B19	3	1810 - 17
4412666	3J22	9	3363 - 41
4412666	3J24	9	3363 - 43
4414857	2B11	18	1810 - 9
4414857	2B13	27	1810 - 11
4415016	2E2	1B	1910 - 7
4415024	2C14	22	1810 - 35
4416605	3G2	81	3361 - 5
4418301	1H9	6	1674 - 5
4420083	1G6	8	0530 - 3
4420392	3J16	72	3363 - 35
4420531	2B13	56	1810 - 11
4420724	2E18	22	1910 - 27
4420724	2F5	0	2002 - 3
4420875	2C14	0	1810 - 35
4420876	2C14	3	1810 - 35
4420877	2C14	7	1810 - 35
4420878	2C14	11	1810 - 35
4420879	2C14	14	1810 - 35
4420880	2C14	18	1810 - 35
4421771	3D9	7	3315 - 5
4421771	3D11	9	3315 - 5B
4421939	2D8	38	1830 - 5
4421946	2D8	37	1830 - 5
4422000	2D8	39	1830 - 5
4423345	3G6	48	3361 - 9
4423345	3G8	48	3361 - 11
4424157	2E6	20	1910 - 11
4424157	2E8	22	1910 - 13
4424185	3D15	5	3315 - 9
4424425	1I11	0	1740 - 7
4424425	3E6	14A	3344 - 3
4424511	3L13	9	4360 - 3
4424566	2E2	0C	1910 - 7
4425177	3J22	13	3363 - 41
4425290	3D17	13B	3315 - 11
4425305	3D17	18	3315 - 11
4425414	3D9	6	3315 - 5
4425414	3D11	8	3315 - 5B
4425481	2E18	24	1910 - 27
4425573	2D16	5	1830 - 15
4425575	2E22	0F	1910 - 31
4425576	2E22	1D	1910 - 31
4426047	2D2	44	1830 - 3
4426047	2D4	0	1830 - 3B
4426048	2D2	46	1830 - 3
4426128	1I11	1	1740 - 7
4426128	3E6	15A	3344 - 3
4426155	2D2	16	1830 - 3
4426156	2D16	8	1830 - 15
4426157	2D2	24	1830 - 3
4426158	2D2	36	1830 - 3
4426159	2D14	4	1830 - 13
4426161	2D14	11	1830 - 13
4426162	2D2	20	1830 - 3
4426352	2B25	0	1810 - 23
4426354	1H11	63	1674 - 7
4426354	2B25	4	1810 - 23
4426354	2C2	4	1810 - 25
4426597	2E18	31	1910 - 27
4426598	2E18	0B	1910 - 27
4426599	2E18	0C	1910 - 27
4427111	3J8	29	3363 - 29
4427111	3J10	29	3363 - 29B
4427127	3K2	1	3363 - 45
4427127	3K4	1	3363 - 45B
4427351	3K2	10	3363 - 45
4427351	3K4	10	3363 - 45B
4427357	3K6	11	3363 - 47
4427359	3J6	23	3363 - 27
4427429	1H11	7B	1674 - 7
4428007	1B21	5	0260 - 3
4428098	1C18	16	0263 - 3
4428902	3D17	40	3315 - 11
4428919	1I15	2	1740 - 11
4429011	2E18	0D	1910 - 27
4429119	3D9	10	3315 - 5
4429120	3D9	8	3315 - 5
4429120	3D11	6	3315 - 5B
4429283	1C18	14	0263 - 3
4430289	1H4	9	1671 - 3
4430649	1I13	9	1740 - 9
4430870	2D2	48	1830 - 3
4430871	2D2	50	1830 - 3
4430872	2D2	30	1830 - 3
4430872	2D2	31	1830 - 3
4430873	2D2	30	1830 - 3
4431090	1H11	11	1674 - 7
4431357	2E6	18	1910 - 11
4431357	2E8	20	1910 - 13
4431841	3J18	11	3363 - 37
4431842	3J18	12	3363 - 37
4431844	3J18	14	3363 - 37
4431859	2B9	49	1810 - 7
4431914	3D9	12	3315 - 5
4431915	3D9	13	3315 - 5
4432965	2D16	11	1830 - 15
4433327	3G6	38	3361 - 9
4433327	3G8	38	3361 - 11
4433793	2D16	0	1830 - 15
4433794	2D16	7	1830 - 15
4434036	3D23	0D	3340 - 3
4434036	3D25	0D	3340 - 5
4434036	3E2	0D	3340 - 7
4434951	3E4	0G	3340 - 9
4434953	3D23	0G	3340 - 3
4434953	3D25	0G	3340 - 5
4434953	3E2	0G	3340 - 7
4434956	3D23	0F	3340 - 3
4434956	3D25	0F	3340 - 5
4434956	3E2	0F	3340 - 7
4434956	3E6	1G	3344 - 3
4435024	3G6	6	3361 - 9
4435024	3G8	6	3361 - 11
4435025	3G6	5	3361 - 9
4435025	3G8	5	3361 - 11
4435036	3J8	39	3363 - 29
4435036	3J10	39	3363 - 29B
4435074	1H4	8	1671 - 3
4435123	3E4	15	3340 - 9
4435126	3D23	19	3340 - 3
4435126	3D25	19	3340 - 5
4435126	3E2	19	3340 - 7
4435126	3E4	9	3340 - 9
4435126	3E8	14	3344 - 3B
4435127	1I7	25	1740 - 3
4435127	3E6	6	3344 - 3
4435127	3E8	9	3344 - 3B
4435128	3D23	21	3340 - 3
4435128	3D25	21	3340 - 5
4435128	3E2	21	3340 - 7
4435128	3E6	10	3344 - 3
4436132	2D16	4	1830 - 15
4436276	2E6	17F	1910 - 11
4436279	2E18	3D	1910 - 27
4436409	2E18	0E	1910 - 27
4436441	2D2	32	1830 - 3
4436534	1H11	59	1674 - 7
4436535	3J12	14	3363 - 31
4436535	3J14	53	3363 - 33
4436535	3J16	53	3363 - 35
4436536	3G6	52	3361 - 9
4436536	3G8	55	3361 - 11
4436648	2D22	3F	1910 - 3
4436800	3G8	63	3361 - 11
4436937	3J2	8	3363 - 23
4437106	3D9	20	3315 - 5
4437106	3D11	23	3315 - 5B
4437242	3E14	0	3360 - 3
4437242	3E18	0	3360 - 5B
4437242	3G16	0	3362 - 7
4437242	3G18	0	3362 - 9
4437242	3G20	0	3362 - 11
4437242	3G22	0	3362 - 13
4437242	3G24	0	3362 - 15
4437242	3H2	0	3362 - 17
4437242EX	3E14	0	3360 - 3
4437242EX	3G16	0	3362 - 7
4437242EX	3G18	0	3362 - 9
4437242EX	3G20	0	3362 - 11
4437242EX	3G22	0	3362 - 13
4437242EX	3G24	0	3362 - 15
4437242EX	3H2	0	3362 - 17
4437333	3D9	11	3315 - 5
4437333	3D11	11	3315 - 5B
4437432	3D17	39	3315 - 11
4437433	3D17	8B	3315 - 11
4437513	1I2	1	1674 - 19
4437653	3J22	0	3363 - 41
4437656	3J22	1	3363 - 41
4437930	3J4	1	3363 - 25
4437934	3J4	2	3363 - 25
4437938	3J8	30	3363 - 29
4437938	3J10	30	3363 - 29B
4437943	3K6	1	3363 - 47
4437944	3K6	6	3363 - 47
4437950	3K2	9	3363 - 45
4437950	3K4	9	3363 - 45B
4438027	2D22	3G	1910 - 3
4438059	3G2	61	3361 - 5
4438194	1I13	8	1740 - 9
4438279	3D7	8	3315 - 3
4438288	3J24	15	3363 - 43
4438290	3J24	16	3363 - 43
4439022	3I4	12	3363 - 5
4439418	3L13	64	4360 - 3
4439418	3L19	0	4367 - 3
4439418EX	3L13	64	4360 - 3
4439418EX	3L19	0	4367 - 3
4439897	1H11	18	1674 - 7
4440802	3K22	33	3364 - 3
4441059	2D2	41	1830 - 3
4441061	2D2	42	1830 - 3

NUMERICAL INDEX - CONTINUED

PART NO.	GRID	KEY	PAGE
4441117	2C14	30	1810 - 35
4441139	2D2	39	1830 - 3
4441246	2F9	17	2004 - 5
4442133	3J2	9	3363 - 23
4442323	3D9	24	3315 - 5
4442339	3D9	26	3315 - 5
4442642	3I2	13	3363 - 3
4442812	3K6	24	3363 - 47
4443139	3L13	43	4360 - 3
4443342	2E18	3E	1910 - 27
4443490	1H11	7H	1674 - 7
4443880	3D23	0B	3340 - 3
4443880	3D25	0B	3340 - 5
4443880	3E2	0B	3340 - 7
4443883	3D23	0C	3340 - 3
4443883	3D25	0C	3340 - 5
4443883	3E2	0C	3340 - 7
4443885	3E4	0B	3340 - 9
4443885	3E6	1H	3344 - 3
4443885	3E8	0B	3344 - 3B
4443902	3J24	20	3363 - 43
4444284	3D23	40	3340 - 3
4444284	3D25	40	3340 - 5
4444284	3E2	40	3340 - 7
4444284	3E4	20	3340 - 9
4444284	3E6	32	3344 - 3
4444284	3E8	5	3344 - 3B
4444285	3D23	41	3340 - 3
4444285	3D25	41	3340 - 5
4444285	3E2	41	3340 - 7
4444285	3E4	21	3340 - 9
4444285	3E6	31	3344 - 3
4444285	3E8	6	3344 - 3B
4444286	3D23	42	3340 - 3
4444286	3D25	42	3340 - 5
4444286	3E2	42	3340 - 7
4444287	3D23	43	3340 - 3
4444287	3D25	43	3340 - 5
4444287	3E2	43	3340 - 7
4444290	3E4	30	3340 - 9
4444381	3J2	10	3363 - 23
4444461	3K6	26	3363 - 47
4444634	2B19	78	1810 - 17
4444664	2B13	10	1810 - 11
4444719	3J24	21	3363 - 43
4444735	3K2	25	3363 - 45
4444735	3K4	25	3363 - 45B
4444839	3E4	28	3340 - 9
4444840	3E4	29	3340 - 9
4444914	3E4	0F	3340 - 9
4445220	2C8	22	1810 - 29
4445322	3D7	9	3315 - 3
4445380	2E22	0C	1910 - 31
4445380	2E22	1B	1910 - 31
4445593	1H4	18	1671 - 3
4445638	1I7	27	1740 - 3
4445638	3E6	29	3344 - 3
4445638	3E8	3	3344 - 3B
4445639	1I7	28	1740 - 3
4445639	3E6	30	3344 - 3
4445639	3E8	4	3344 - 3B
4445916	2D14	19	1830 - 13
4445917	2B25	0	1810 - 23
4445917	2C2	0	1810 - 25
4445919	2B25	0A	1810 - 23
4445932	2B25	0A	1810 - 23
4445932	2C2	0A	1810 - 25
4445981	3J4	23	3363 - 25
4446841	3J24	20	3363 - 43
4446841	3J24	21	3363 - 43
4446960	3D9	30	3315 - 5
4446960	3D11	7	3315 - 5B
4447050	3D9	15	3315 - 5
4447050	3D17	6B	3315 - 11
4447067	3D17	42	3315 - 11
4447099	3I14	11A	3363 - 15
4447264	3G6	39	3361 - 9
4448179	2D10	5	1830 - 9
4448284	2D8	24	1830 - 5
4448296	1H4	30	1671 - 3
4448306	2B15	25	1810 - 13
4448307	2B15	43	1810 - 13
4448308	2B13	52	1810 - 11
4448309	2B13	53	1810 - 11
4448310	2B13	65	1810 - 11
4448311	2B11	6	1810 - 9
4448312	2B17	1	1810 - 15
4448313	2B17	8A	1810 - 15
4448314	2B11	9	1810 - 9
4448314	2B11	19	1810 - 9
4448315	2B13	72	1810 - 11
4448318	2B17	18	1810 - 15
4448319	2B11	19	1810 - 9
4448402	3K22	37	3364 - 3
4448601	2C8	27	1810 - 29
4448925	2D4	16	1830 - 3B
4448990	2C14	35	1810 - 35
4449019	1H11	49	1674 - 7
4449068	2D14	7	1830 - 13
4449250	1H9	17	1674 - 5
4449348	2D14	17	1830 - 13
4449361	1G10	12	0560 - 3
4449362	1G10	13	0560 - 3
4449509	2F5	5	2002 - 3
4449771	3J6	26	3363 - 27
4449772	3J6	27	3363 - 27
4450008	2D16	9	1830 - 15
4450008	2D18	0	1830 - 17
4450012	3D23	45	3340 - 3
4450012	3D25	45	3340 - 5
4450012	3E2	45	3340 - 7
4450013	3D23	44	3340 - 3
4450013	3D25	44	3340 - 5
4450013	3E2	44	3340 - 7
4450014	3E6	34	3344 - 3
4450081	3J4	22	3363 - 25
4450174	2F9	17	2004 - 5
4450494	1H9	25	1674 - 5
4450505	1C18	14	0263 - 3
4450707	2D2	44	1830 - 3
4450707	2D4	0	1830 - 3B
4450708	2D2	46	1830 - 3
4450993	2D8	36	1830 - 5
4451036	3G2	97	3361 - 5
4451039	3G4	90	3361 - 7
4451204	2D8	3A	1830 - 5
4451498	3G6	22	3361 - 9
4451498	3G8	22	3361 - 11
4451784	3H18	24	3362 - 31
4451785	3H18	25	3362 - 31
4451785	3H20	25	3362 - 33
4451785	3H22	25	3362 - 33B
4451786	3H20	26	3362 - 33
4451786	3H22	26	3362 - 33B
4451787	3H18	37	3362 - 31
4451788	3H18	38	3362 - 31
4451789	3H18	39	3362 - 31
4451789	3H20	39	3362 - 33
4451789	3H22	39	3362 - 33B
4451790	3H20	40	3362 - 33
4451797	3H20	41	3362 - 33
4451797	3H22	41	3362 - 33B
4452044	3J8	40	3363 - 29
4452044	3J10	40	3363 - 29B
4452045	3J8	41	3363 - 29
4452045	3J10	41	3363 - 29B
4452046	3J16	61	3363 - 35
4452047	3J16	63	3363 - 35
4452048	3J16	65	3363 - 35
4452049	3J16	66	3363 - 35
4452050	3J16	69	3363 - 35
4452051	3J16	71	3363 - 35
4452052	3J20	15	3363 - 39
4452053	3J20	16	3363 - 39
4452054	3K6	32	3363 - 47
4452159	1H4	19	1671 - 3
4452160	1H11	65	1674 - 7
4452263	3F18	7	3360 - 31
4452326	3J20	19	3363 - 39
4452336	1H11	58	1674 - 7
4452345	2E14	2	1910 - 23
4452613	2C14	27	1810 - 35
4452647	3H24	18	3362 - 35
4452648	3H24	20	3362 - 35
4453663	2B11	31	1810 - 9
4453665	2B11	93	1810 - 9
4453666	2B11	95	1810 - 9
4453667	2B11	22	1810 - 9
4453670	2B13	20	1810 - 11
4453671	2B13	22	1810 - 11
4453672	2B11	80	1810 - 9
4453674	2B13	58	1810 - 11
4453675	2B13	57	1810 - 11
4453676	2B13	50	1810 - 11
4453680	2B17	16A	1810 - 15
4453681	2B17	28	1810 - 15
4453682	2B17	29	1810 - 15
4453683	2B17	30	1810 - 15
4453684	2B17	31	1810 - 15
4453686	2B9	33	1810 - 7
4453687	2B9	32	1810 - 7
4453689	2B15	1	1810 - 13
4453690	2B9	31	1810 - 7
4453760	2D22	3H	1910 - 3
4453765	2D22	3I	1910 - 3
4453819	3H24	11	3362 - 35
4453820	3H24	12	3362 - 35
4453869	2C24	6	1821 - 9
4453874	2C24	7	1821 - 9
4454193	3G18	42	3362 - 9
4454194	3G16	45	3362 - 7
4454195	3G16	46	3362 - 7
4454196	3G18	47	3362 - 9
4454197	3G16	48	3362 - 7
4454198	3G20	60	3362 - 11
4454198	3G22	60	3362 - 13
4454199	3G16	61	3362 - 7
4454200	3G18	62	3362 - 9
4454201	3G22	4	3362 - 13
4454202	3G20	5	3362 - 11
4454518	1H11	57	1674 - 7

NUMERICAL INDEX - CONTINUED

PART NO.	GRID	KEY	PAGE
4454519	1H17	0	1674 - 9
4455088	1C2	22	0260 - 9
4455098	1C2	37	0260 - 9
4455099	1C2	28	0260 - 9
4455719	3G6	97	3361 - 9
4455733	3G8	97	3361 - 11
4455975	2B13	4	1810 - 11
4455977	2B13	17	1810 - 11
4455978	2B13	19	1810 - 11
4455979	2B13	2	1810 - 11
4455981	2B13	12	1810 - 11
4455982	2B13	8	1810 - 11
4455983	2B13	9	1810 - 11
4455986	3H8	55	3362 - 23
4455987	3H8	56	3362 - 23
4455989	3H8	49	3362 - 23
4455990	3H8	48	3362 - 23
4455991	3H8	3	3362 - 23
4456130	2D10	0	1830 - 9
4456171	2B13	11	1810 - 11
4456172	2B13	26	1810 - 11
4456173	2B13	5	1810 - 11
4456175	2B11	25	1810 - 9
4456177	2B11	2	1810 - 9
4456178	2B11	3	1810 - 9
4456179	2B11	4	1810 - 9
4456181	2B11	5	1810 - 9
4456182	2B11	17	1810 - 9
4456183	2B11	8	1810 - 9
4456184	2B11	29	1810 - 9
4456185	2B11	11	1810 - 9
4456217	2B15	48	1810 - 13
4456218	2B15	2	1810 - 13
4456219	2B15	3	1810 - 13
4456220	2B15	4	1810 - 13
4456221	2B15	5	1810 - 13
4456222	2B15	6	1810 - 13
4456223	2B15	8	1810 - 13
4456224	2B15	9	1810 - 13
4456225	2B15	10	1810 - 13
4456226	2B15	12	1810 - 13
4456227	2B15	14	1810 - 13
4456228	2B15	20	1810 - 13
4456229	2B15	21	1810 - 13
4456230	2B15	26	1810 - 13
4456231	2B15	27	1810 - 13
4456232	2B15	29	1810 - 13
4456233	2B15	30	1810 - 13
4456234	2B15	31	1810 - 13
4456235	2B15	33	1810 - 13
4456236	2B15	34	1810 - 13
4456237	2B15	35	1810 - 13
4456238	2B9	37	1810 - 7
4456238	2B15	36	1810 - 13
4456239	2B15	37	1810 - 13
4456240	2B15	38	1810 - 13
4456241	2B15	39	1810 - 13
4456242	2B15	40	1810 - 13
4456244	2B21	8	1810 - 19
4456245	2B21	1	1810 - 19
4456246	2B21	1	1810 - 19
4456246	2B21	2	1810 - 19
4456247	2B21	1	1810 - 19
4456247	2B21	3	1810 - 19
4456248	2B21	6	1810 - 19
4456427	2B9	1	1810 - 7
4456428	2B9	15	1810 - 7
4456428	2B9	26	1810 - 7
4456428	2B9	29	1810 - 7
4456429	2B9	30	1810 - 7
4456433	2B9	34	1810 - 7
4456434	2B9	35	1810 - 7
4456435	2B9	41	1810 - 7
4456436	2B9	42	1810 - 7
4456450	2B9	43	1810 - 7
4456458	2B9	40	1810 - 7
4456723	2D16	0B	1830 - 15
4456725	2D16	0A	1830 - 15
4456735	1H11	7F	1674 - 7
4456778	1H11	7A	1674 - 7
4456778	1H17	7A	1674 - 9
4456798	1E8	18	0418 - 3
4456824	1B16	2	0130 - 19
4456952	2B19	15	1810 - 17
4457286	3F14	18	3360 - 27
4457290	3F14	6	3360 - 27
4458227	2D16	0G	1830 - 15
4458228	2D16	0C	1830 - 15
4458229	2D16	0H	1830 - 15
4458230	2D16	0D	1830 - 15
4458231	2D16	0E	1830 - 15
4458232	2D16	0F	1830 - 15
4458233	2D16	0I	1830 - 15
4458234	2D16	0J	1830 - 15
4458235	2D16	7A	1830 - 15
4458236	2D16	7B	1830 - 15
4458237	2D16	7C	1830 - 15
4458238	2D16	4	1830 - 15
4458238	2D16	19	1830 - 15
4458239	2D16	4	1830 - 15
4458239	2D16	20	1830 - 15
4458240	2D16	4	1830 - 15
4458240	2D16	21	1830 - 15
4458241	2D16	4	1830 - 15
4458241	2D16	22	1830 - 15
4458908	2D8	35	1830 - 5
4459249	2B19	83	1810 - 17
4459263	3J18	13	3363 - 37
4459641	1C18	7	0263 - 3
4460037	1H11	7F	1674 - 7
4460399	2D10	3	1830 - 9
4460405	2B19	1	1810 - 17
4460662	1G2	7	0520 - 5
4461905	1C12	2	0260 - 15B
4461908	1C8	18	0260 - 13B
4461910	1C8	36	0260 - 13B
4462038	1C8	5	0260 - 13B
4462422	1C16	13	0260 - 17B
4463390	2B17	16A	1810 - 15
4463391	2B17	28	1810 - 15
4463392	2B17	29	1810 - 15
4463393	2B17	30	1810 - 15
4463394	2B17	31	1810 - 15
4463992	3G2	81A	3361 - 5
4463993	3G2	81D	3361 - 5
4464275	2D4	9	1830 - 3B
4464276	2D4	10	1830 - 3B
4464277	2D4	11	1830 - 3B
4464278	2D4	12	1830 - 3B
4464279	2D4	13	1830 - 3B
4464280	2D4	15	1830 - 3B
4464281	2D4	17	1830 - 3B
4464282	2D4	18	1830 - 3B
4464283	2D4	19	1830 - 3B
4464284	2D4	20	1830 - 3B
4464285	2D4	21	1830 - 3B
4464286	2D4	22	1830 - 3B
4464287	2D4	23	1830 - 3B
4464288	2D4	24	1830 - 3B
4464341	2D4	1	1830 - 3B
4464342	2D4	2	1830 - 3B
4464343	2D4	3	1830 - 3B
4464344	2D4	4	1830 - 3B
4464345	2D4	4A	1830 - 3B
4464346	2D4	4B	1830 - 3B
4464347	2D4	5	1830 - 3B
4464349	2D4	6	1830 - 3B
4464350	2D4	7	1830 - 3B
4464352	2D4	8	1830 - 3B
4464354	2D4	8B	1830 - 3B
4464355	2D4	8C	1830 - 3B
4464356	2D4	8E	1830 - 3B
4464450	2D4	25	1830 - 3B
4464451	2D4	26	1830 - 3B
4464452	2D4	27	1830 - 3B
4464453	2D4	28	1830 - 3B
4464454	2D4	29	1830 - 3B
4464455	2D4	30	1830 - 3B
4464456	2D6	31	1830 - 3D
4464457	2D6	32	1830 - 3D
4464458	2D6	33	1830 - 3D
4464459	2D6	34	1830 - 3D
4464460	2D6	35	1830 - 3D
4464461	2D6	36	1830 - 3D
4464462	2D6	37	1830 - 3D
4464463	2D6	38	1830 - 3D
4464465	2D6	40	1830 - 3D
4464466	2D6	41	1830 - 3D
4464473	2D6	42	1830 - 3D
4464474	2D6	44	1830 - 3D
4464475	2D6	45	1830 - 3D
4464476	2D6	47	1830 - 3D
4464477	2D6	49	1830 - 3D
4464478	2D6	50	1830 - 3D
4464479	2D6	52	1830 - 3D
4464480	2D6	54	1830 - 3D
4464483	2D6	56	1830 - 3D
4465143	2E6	17E	1910 - 11
4465146	2E6	17B	1910 - 11
4465147	2E6	17C	1910 - 11
4465148	2E6	17D	1910 - 11
4465205	2E6	3B	1910 - 11
4465226	2E6	8B	1910 - 11
4465383	2E4	0B	1910 - 9
4465384	2E4	0D	1910 - 9
4465385	2E4	0C	1910 - 9
4465396	2E16	0E	1910 - 25
4465397	2E16	0F	1910 - 25
4465398	2E16	0G	1910 - 25
4466291	2E20	7B	1910 - 29
4466876	1H4	12	1671 - 3
4467914	3J12	13	3363 - 31
4468244	1C8	39	0260 - 13B
4468248	1C8	27	0260 - 13B
4468249	1C8	29	0260 - 13B
4468250	1C8	30	0260 - 13B
4468258	1C8	17	0260 - 13B
4468337	3H14	0	3362 - 27
4468337	3H16	0	3362 - 29
4468337	3H18	0	3362 - 31
4468337	3H20	0	3362 - 33

NUMERICAL INDEX - CONTINUED

PART NO.	GRID	KEY	PAGE
4468337	3H24	0	3362 - 35
4468337	3J16	74	3363 - 35
4468515	3F14	15	3360 - 27
4468525	3K2	1	3363 - 45
4468525	3K4	1	3363 - 45B
4468943	2B13	65	1810 - 11
4468944	2B11	6	1810 - 9
4470238	1C12	8	0260 - 15B
4470326	1C2	11	0260 - 9
447068	3L17	6	4360 - 7
4470743	3D23	40	3340 - 3
4470743	3D25	40	3340 - 5
4470743	3E2	40	3340 - 7
4470743	3E4	20	3340 - 9
4470743	3E6	32	3344 - 3
4470743	3E8	5	3344 - 3B
4470744	3E4	21	3340 - 9
4470744	3E8	6	3344 - 3B
4470745	1I7	37	1740 - 3
4470746	1I7	38	1740 - 3
4470767	1I13	2	1740 - 9
4472355	1C8	35	0260 - 13B
4472430	3J4	3D	3363 - 25
4472673	3K22	25	3364 - 3
4473063	1C12	1C	0260 - 15B
4473064	1C16	7	0260 - 17B
4473065	1C16	5A	0260 - 17B
4473080	1C16	14	0260 - 17B
4474296	2B7	1	1810 - 5
4474296	2B9	0	1810 - 7
4474296	2B11	0	1810 - 9
4474296	2B13	0	1810 - 11
4474296	2B15	0	1810 - 13
4474296	2B17	0	1810 - 15
4474296	2B19	0	1810 - 17
4474296	2B21	0	1810 - 19
4474298	2B11	26	1810 - 9
4474299	2B11	47	1810 - 9
4474300	2B11	10	1810 - 9
4474301	2B13	1	1810 - 11
4474302	2B13	5	1810 - 11
4474303	2B13	14	1810 - 11
4474304	2B13	16	1810 - 11
4474476	2B19	43	1810 - 17
4474477	2B19	40	1810 - 17
4474478	2B19	32	1810 - 17
4474479	2B19	5	1810 - 17
4474480	2B19	8	1810 - 17
4474482	2B19	47	1810 - 17
4474493	2B19	14	1810 - 17
4474494	2B19	10	1810 - 17
4474498	2B19	6	1810 - 17
4474499	2B19	75	1810 - 17
4474513	2B19	77	1810 - 17
4474513	2B19	84	1810 - 17
4474514	2B19	76	1810 - 17
4474515	2B19	21	1810 - 17
4474517	2B19	81	1810 - 17
4474518	2B19	80	1810 - 17
4474531	2B15	25	1810 - 13
4474532	2B15	41	1810 - 13
4475147	1C8	6	0260 - 13B
4476062	3D23	44	3340 - 3
4476062	3D25	44	3340 - 5
4476062	3E2	44	3340 - 7
4477216	2B19	44	1810 - 17
4477217	2B19	41	1810 - 17
4477218	2B19	37	1810 - 17
4477219	2B19	36	1810 - 17
4477373	1H11	0	1674 - 7
4477526	2D10	4	1830 - 9
4477852	3D9	14	3315 - 5
4477852	3D9	15	3315 - 5
4477852	3D9	16	3315 - 5
4477852	3D9	17	3315 - 5
4478084	1B6	7	0130 - 11
4478084	1B14	6	0130 - 17
4480769	2E6	16B	1910 - 11
4480966	3H8	1	3362 - 23
4480966	3H8	2	3362 - 23
4482233	3H18	38	3362 - 31
4483676	1I19	1	1740 - 15
4484115	3H10	31	3362 - 23B
4484116	3H10	30	3362 - 23B
4484118	3H10	29	3362 - 23B
4484119	3G10	10	3361 - 13
4484198	3I6	4	3363 - 7
4484453	2D2	51	1830 - 3
4484557	3L13	64	4360 - 3
4484557	3L21	0	4367 - 5
4485473	1C12	6	0260 - 15B
4485615	3K24	60	3365 - 3
4485615	3L2	60	3365 - 5
4486321	3H14	0	3362 - 27
4486321	3H16	0	3362 - 29
4486321	3H18	0	3362 - 31
4486321	3H22	0	3362 - 33B
4486321	3H24	0	3362 - 35
4486321	3J16	74	3363 - 35
4487331	1H11	58	1674 - 7
4487536	3H10	4	3362 - 23B
4487830	1H9	0	1674 - 5
4488663	3J10	2	3363 - 29B
4489678	3H10	23	3362 - 23B
449558	3K22	15	3364 - 3
4506406	3G16	41	3362 - 7
4506406	3G18	41	3362 - 9
4506406	3G20	41	3362 - 11
4506406	3G22	41	3362 - 13
4506406	3H2	41	3362 - 17
4506406	3L19	47	4367 - 3
4506408	1C6	63A	0260 - 13
4506408	1C10	35A	0260 - 15
4506408	1C12	21A	0260 - 15B
4506408	1C20	63A	0267 - 3
4506408	1G21	..	1369 - 3
4506408	3G16	61B	3362 - 7
4506408	3G18	62C	3362 - 9
4506408	3G18	62E	3362 - 9
4506408	3H12	6	3362 - 25
4506415	1C8	32	0260 - 13B
4506418	1C6	61A	0260 - 13
4506418	1C8	42A	0260 - 13B
4506418	1C14	2	0260 - 17
4506418	1C16	2	0260 - 17B
4506418	1C18	9	0263 - 3
4506418	1C18	23	0263 - 3
4506418	1C20	61A	0267 - 3
4506418	1G21	..	1369 - 3
4506418	3G8	57A	3361 - 11
4506418	3G16	48F	3362 - 7
4506418	3G18	47F	3362 - 9
4506418	3J4	12	3363 - 25
4506418	3J4	14	3363 - 25
4506418	3J4	23	3363 - 25
4506418	3J4	62A	3363 - 25
4506418	3K6	17A	3363 - 47
4506418	3K14	29A	3363 - 51D
4506420	1C16	10	0260 - 17B
4506424	1C10	17A	0260 - 15
4506424	1C18	3	0263 - 3
4506424	1G21	..	1369 - 3
4506424	3I2	9A	3363 - 3
4506424	3I8	6A	3363 - 9
4506424	3I10	10	3363 - 11
4506424	3I18	4	3363 - 19
4506424	3I18	10	3363 - 19
4506428	1G21	..	1369 - 3
4506428	3H6	15	3362 - 21
4506429	1C12	7	0260 - 15B
4506429	3I24	3A	3363 - 21B
4506429	3K12	24A	3363 - 51B
4506429	3L6	60B	3365 - 7B
4506430	1G21	..	1369 - 3
4509181	3L10	29	3365 - 11
4509182	3G16	11	3362 - 7
4509182	3G18	11	3362 - 9
4509182	3G20	11	3362 - 11
4509182	3G22	11	3362 - 13
4509182	3H2	11	3362 - 17
4509404	1I7	21	1740 - 3
4510494	3L10	5	3365 - 11
4514388	3G4	56	3361 - 7
4600164	3F18	3	3360 - 31
4602549	2B7	1	1810 - 5
4602549	2B9	0	1810 - 7
4602549	2B11	0	1810 - 9
4602549	2B13	0	1810 - 11
4602549	2B15	0	1810 - 13
4602549	2B17	0	1810 - 15
4602549	2B19	0	1810 - 17
4602549	2B21	0	1810 - 19
4602562	2B15	25	1810 - 13
4602563	2B15	43	1810 - 13
4602564	2B13	52	1810 - 11
4602565	2B13	53	1810 - 11
4602566	2B13	65	1810 - 11
4602567	2B11	6	1810 - 9
4602568	2B17	1	1810 - 15
4602569	2B11	9	1810 - 9
4602569	2B11	19	1810 - 9
4602570	2B17	8B	1810 - 15
4602576	2B17	16B	1810 - 15
4602577	2B11	19	1810 - 9
4602578	2D10	2	1830 - 9
4602582	2B13	50	1810 - 11
4603008	2B11	13	1810 - 9
4603011	2B9	46	1810 - 7
4603012	2B9	47	1810 - 7
4603013	2B9	48	1810 - 7
4607398	3J20	15	3363 - 39
4607399	3J20	16	3363 - 39
4607850	3J18	12	3363 - 37
4607964	3J18	14	3363 - 37
4607990	3J18	11	3363 - 37
4608801	3J18	13	3363 - 37
4608853	3E6	14A	3344 - 3
4609049	2D2	44	1830 - 3
4609477	2B19	77	1810 - 17
4609478	2B19	84	1810 - 17
4609479	2B19	77	1810 - 17

NUMERICAL INDEX - CONTINUED

PART NO.	GRID	KEY	PAGE
4609479	2B19	84	1810 - 17
4609480	2B19	77	1810 - 17
4609480	2B19	84	1810 - 17
4609664	3F14	9	3360 - 27
4609676	2D2	44	1830 - 3
4609956	3D7	8	3315 - 3
4609956	3D7	20	3315 - 3
4609956	3D9	3	3315 - 5
4610412	2D2	44	1830 - 3
4610412	2D2	45	1830 - 3
4610412	2D6	52	1830 - 3D
4610640	2C18	21	1821 - 3
4610641	2C18	22	1821 - 3
4611025	3J4	3	3363 - 25
4611642	3E6	38	3344 - 3
4611688	1I11	0	1740 - 7
4611688	3E6	14B	3344 - 3
4611733	1I11	1	1740 - 7
4611733	3E6	15B	3344 - 3
4613243	2E18	30	1910 - 27
4613913	2F3	0	2001 - 3
4614286	3D11	26	3315 - 5B
4614296	3D11	21	3315 - 5B
4614331	3D11	28	3315 - 5B
4615565	3E6	37	3344 - 3
4615566	3E6	15A	3344 - 3
4615610	3D11	10	3315 - 5B
4619604	1B8	14	0130 - 13
4619605	1B8	15	0130 - 13
4619607	1B8	0A	0130 - 13
4619608	1B8	0B	0130 - 13
4619609	1B8	3	0130 - 13
4619610	1B8	5	0130 - 13
4619611	1B8	6	0130 - 13
4619612	1B8	8	0130 - 13
4619613	1B8	11	0130 - 13
4619614	1B8	16	0130 - 13
4619615	1B8	13	0130 - 13
4620431	2B13	5	1810 - 11
4623638	2D10	0	1830 - 9
4624730	2B15	1	1810 - 13
4625941	3F14	32	3360 - 27
4627480	1C8	18	0260 - 13B
4627480	1C8	20	0260 - 13B
4631105	3L21	5	4367 - 5
4633400	2B15	8	1810 - 13
4633400	2B15	12	1810 - 13
4633401	2B15	8	1810 - 13
4633401	2B15	12	1810 - 13
4637257	2B15	1	1810 - 13
4640468	2F3	0	2001 - 3
494918	2B15	15	1810 - 13
5005597	3E4	0A	3340 - 9
5007087J	1G10	1	0560 - 3
5007142	1I13	3	1740 - 9
5007342	2C8	15	1810 - 29
5007732	3E8	0A	3344 - 3B
5007750	2E22	1A	1910 - 31
5007751	2E22	0A	1910 - 31
5008007	3K22	0	3364 - 3
5008074	1I7	0	1740 - 3
5008107	2E16	0	1910 - 25
600166	3B16	20B	3302 - 5
600167	3B16	20B	3302 - 5
600168	3B16	20B	3302 - 5
600171	3B16	20A	3302 - 5
600172	3B16	20A	3302 - 5
600173	3B16	20A	3302 - 5
600284	3B12	20A	3302 - 3
600285	3B12	20A	3302 - 3
600286	3B12	20A	3302 - 3
600287	3B12	20A	3302 - 3
600289	3B12	20B	3302 - 3
600290	3B12	20B	3302 - 3
600291	3B12	20B	3302 - 3
600312	3B24	20A	3302 - 11
600313	3B24	20A	3302 - 11
600314	3B24	20A	3302 - 11
600315	3B24	20A	3302 - 11
600392	3B12	20B	3302 - 3
600418	3B24	20B	3302 - 11
600419	3B24	20B	3302 - 11
600420	3B24	20B	3302 - 11
600421	3B24	20B	3302 - 11
600444	3B20	20	3302 - 7
600445	3B20	20	3302 - 7
6017975	2C10	5	1810 - 31
6018662	2E18	3A	1910 - 27
6018671	2E18	0A	1910 - 27
6019197	2E8	0	1910 - 13
6019252	2C8	14	1810 - 29
6019838	2C8	12	1810 - 29
6020125	2C22	0	1821 - 7
6020563	2E6	17A	1910 - 11
6020566	2E6	3A	1910 - 11
6020595	2E8	19	1910 - 13
603302	3B24	20A	3302 - 11
603303	3B24	20B	3302 - 11
603868	3B22	20	3302 - 9
603869	3B22	20	3302 - 9
603870	3B22	20	3302 - 9
603873	3B22	27	3302 - 9
603874	3B22	27	3302 - 9
603875	3B22	27	3302 - 9
606121	3B20	27	3302 - 7
606122	3B20	27	3302 - 7
612759	3C10	1	3302 - 19
623270	3C10	1	3302 - 19
623559	3C10	1	3302 - 19
623560	3C10	1	3302 - 19
623561	3C10	1	3302 - 19
7032724	1C10	1	0260 - 15
7033463	3E4	0	3340 - 9
7035503	3D13	0	3315 - 7
7035539	2D22	12	1910 - 3
7036594	2C12	0	1810 - 33
7036595	2C12	2	1810 - 33
7037241	2E18	8	1910 - 27
7038365	2E10	0	1910 - 15
7039248	2E18	17	1910 - 27
7039389	2C8	1	1810 - 29
7039715	2E2	1A	1910 - 7
7040198	3I2	12	3363 - 3
7040331	2E8	24	1910 - 13
7040496	2E22	1	1910 - 31
7040497	2E22	0	1910 - 31
7040815	3E8	0	3344 - 3B
7041400	2E8	10	1910 - 13
7041445	2E6	17	1910 - 11
7041450	2E6	3	1910 - 11
7041464	2E6	6	1910 - 11
7041466	3I8	7	3363 - 9
7041467	3I6	14	3363 - 7
7041468	2E2	0A	1910 - 7
7041469	2E4	0A	1910 - 9
7041470	2E4	0	1910 - 9
7041485	2E8	17	1910 - 13
7042657	2C24	4	1821 - 9
7046683	2E2	1A	1910 - 7
8049356	3K24	27	3365 - 3
8049357	3L2	27	3365 - 5
8049578	1A25	4	0130 - 5
8049650	3L8	26	3365 - 9
8050212	3L13	50	4360 - 3
8051275	1C6	17	0260 - 13
8051275	1C20	17	0267 - 3
8053093	3L4	30	3365 - 7
8053499	3K22	14	3364 - 3
8058352	3G2	82	3361 - 5
8059452	3G4	19	3361 - 7
8063526	3K12	6	3363 - 51B
8063527	3K12	5	3363 - 51B
8063718	3D17	0	3315 - 11
8063930	3K14	23	3363 - 51D
8063931	3K14	24	3363 - 51D
8065749	3I4	6	3363 - 5
8066502	3K10	1	3363 - 51
8066503	3K10	6	3363 - 51
8066506	3K10	9	3363 - 51
8066507	3K10	10	3363 - 51
8067536	2E6	10	1910 - 11
8067675	1G2	1	0520 - 5
8069730	3K12	1	3363 - 51B
8069731	3K12	3	3363 - 51B
8069732	3K12	4	3363 - 51B
8072993	3E4	2	3340 - 9
8073901	3D13	6	3315 - 7
8074128	3E16	1	3360 - 5
8075449	3D15	1	3315 - 9
8075450	3D15	0	3315 - 9
8076619	2C8	9	1810 - 29
8077444	3J22	12	3363 - 41
8077521	2E18	23	1910 - 27
8077778	2E18	3	1910 - 27
8077903	3D17	32	3315 - 11
8078454	3E16	0	3360 - 5
8079307	3I12	10	3363 - 13
8079530	3I6	3	3363 - 7
8079794	3F14	1	3360 - 27
8080530	3F14	11	3360 - 27
8080780	1I11	5	1740 - 7
8082044	3L4	49	3365 - 7
8082329	1H11	24	1674 - 7
8082452	3J16	55	3363 - 35
8082662J	3F16	1	3360 - 29
8082663J	3F16	2	3360 - 29
8083393	2D22	13	1910 - 3
8083492	2E2	1	1910 - 7
8084816	3K22	24	3364 - 3
8085973J	3F18	22	3360 - 31
8085981J	3F18	21	3360 - 31
8086233	2D24	2	1910 - 5
8086282	2E6	8	1910 - 11
8086300	2D22	14	1910 - 3
8086329	2E2	0	1910 - 7
8086483	2E20	7	1910 - 29
8086586	3I4	13	3363 - 5
8087097	3I24	0	3363 - 21B
8087943	1C12	1	0260 - 15B
8089576	2E6	16	1910 - 11
8092181	3I24	1	3363 - 21B

NUMERICAL INDEX - CONTINUED

PART NO.	GRID	KEY	PAGE
8092512	1C8	21	0260 - 13B
8094392	3E6	13B	3344 - 3
8094393	1I11	5	1740 - 7
8094446	3D11	0	3315 - 5B
8097092	2E2	1	1910 - 7
8100183	3K12	0	3363 - 51B
9075046	3I24	2	3363 - 21B
9075046	3L17	9	4360 - 7
9089488	1C10	17	0260 - 15
9098902	1C6	53	0260 - 13
9098902	1C20	53	0267 - 3
9098902	3G14	0	3362 - 5
9101521	1B25	12	0260 - 7
9107265EX	1B25	12	0260 - 7
9114956	3K20	16	3363 - 57
9134109	1C6	63	0260 - 13
9134109	1C12	21	0260 - 15B
9134109	1C20	63	0267 - 3
9134110	3G4	67	3361 - 7
9134110	3G6	58	3361 - 9
9134111	3G4	80	3361 - 7
9134112	1C6	61	0260 - 13
9134112	1C8	42	0260 - 13B
9134112	1C20	61	0267 - 3
9134147	1C10	21	0260 - 15
9134147	3G12	0	3362 - 3
9134147	3G12	20	3362 - 3
9141304	1B12	0	0130 - 15
9145787	1B25	11	0260 - 7
9151724	3D17	6	3315 - 11
9154037EX	1I15	10	1740 - 11
9154690	1B6	0	0130 - 11
9154691	1B6	3	0130 - 11
9156041	1C6	0	0260 - 13
9156041	1C20	0	0267 - 3
9156041EX	1C2	0A	0260 - 9
9156041EX	1C6	0	0260 - 13
9156041EX	1C20	0	0267 - 3
9156726	3K14	20	3363 - 51D
9158391	1C6	37	0260 - 13
9158391	1C10	0	0260 - 15
9158391	1C20	37	0267 - 3
9159015	1B8	0	0130 - 13
9162234	3L13	63	4360 - 3
9162869	3K12	23	3363 - 51B
9167840	1B16	10	0130 - 19
9167977	1C12	17	0260 - 15B
9168173	1B14	0	0130 - 17
9168173	1B14	7	0130 - 17
9180579	3L4	60	3365 - 7
9180580	3L8	60	3365 - 9
9184275	3D17	8	3315 - 11
9185757	1C14	0	0260 - 17
9191054	1B12	12	0130 - 15
9191062	1B12	1	0130 - 15
9195237	3G2	0	3361 - 5
9195237EX	3G2	0	3361 - 5
9195304	3D7	20	3315 - 3
9195304	3D9	3	3315 - 5
9195307	3D15	2	3315 - 9
9195307	3D17	7	3315 - 11
9199146	3D17	13	3315 - 11
9202852	1B16	10	0130 - 19
9206321EX	3K24	0	3365 - 3
9206321Y	3K24	0	3365 - 3
9206322EX	3L2	0	3365 - 5
9206322Y	3L2	0	3365 - 5
9206323	3L4	0	3365 - 7
9206323EX	3L4	0	3365 - 7
9206323Y	3L4	0	3365 - 7
9206324	3L8	0	3365 - 9
9206324J	3L8	0	3365 - 9
9206352	3K24	1	3365 - 3
9206352	3L2	1	3365 - 5
9206353	3L4	1	3365 - 7
9206354	3L8	1	3365 - 9
9207260	3G4	69	3361 - 7
9207260	3G8	0	3361 - 11
9207261	3G4	70	3361 - 7
9207261	3G6	0	3361 - 9
9212078	1H13	1	1674 - 7B
9213241	1C8	33	0260 - 13B
9213241	1C12	0	0260 - 15B
9213855	1C12	14	0260 - 15B
9213855	1C16	0	0260 - 17B
9218234	3H10	5	3362 - 23B
9218270	3H8	1	3362 - 23
9218270	3H8	2	3362 - 23
9223890	3H10	1	3362 - 23B
9223892	3H10	26	3362 - 23B
9226763	1H11	58	1674 - 7
9229962	1C8	33	0260 - 13B
9229962	1C12	0	0260 - 15B
9231672	1C2	0A	0260 - 9
9231672	1C8	1	0260 - 13B
9232359	1C2	1	0260 - 9
9234284	3D9	14	3315 - 5
9234284	3D9	15	3315 - 5
9234284	3D9	16	3315 - 5
9234284	3D9	17	3315 - 5
9234722	3F14	26	3360 - 27
9235551	3D15	2	3315 - 9
9239568	1H13	1	1674 - 7B
9239583	3D7	20	3315 - 3
9239583	3D9	3	3315 - 5
9246436	3D11	17	3315 - 5B
94-2011	1B12	8	0130 - 15
94-2011	1G10	2	0560 - 3
94-2011	3D9	1	3315 - 5
94-2011	3E8	10	3344 - 3B
94-2011	3L13	60	4360 - 3
94-2012	3L13	51	4360 - 3
94-2013	1C2	48	0260 - 9
94-2013	1G10	14	0560 - 3
94-2807	2E18	30	1910 - 27
94-2817	2C6	3	1810 - 27
953612	3K22	35B	3364 - 3
957366	3L21	23	4367 - 5
957474	1G21	..	1369 - 3
962002	3G2	9	3361 - 5
962453	3I24	7	3363 - 21B
966993	3I24	6	3363 - 21B
966993	3K12	17	3363 - 51B
970860	1C18	4	0263 - 3
970860	1G21	..	1369 - 3
971489	3K12	7	3363 - 51B
9724756	3G4	32	3361 - 7
9725460	3I12	3	3363 - 13
9734405	3L13	26	4360 - 3
9735305	3J14	22	3363 - 33
9735305	3K2	12	3363 - 45
9735306	3J14	23	3363 - 33
9735306	3K2	13	3363 - 45
9736782	1C18	19	0263 - 3
9738224	3E8	22	3344 - 3B
9738383	1B4	0	0130 - 9
9738384	1B4	1	0130 - 9
9738682	2C16	26	1810 - 37
9742779	3G2	63	3361 - 5
9743889	2E16	20	1910 - 25
9743977	3G2	62	3361 - 5
9745798	2E18	11	1910 - 27
9746887	3K10	7	3363 - 51
9746888	3K10	8	3363 - 51
9748540	1F20	3	0510 - 9
9751787	3J22	10	3363 - 41
9751787	3J24	10	3363 - 43
9751797	2E6	22	1910 - 11
9754825	3D9	16	3315 - 5
9754826	3D9	17	3315 - 5
9755663	3E4	4	3340 - 9
9755727	3E4	6	3340 - 9
9756186	3I6	16	3363 - 7
9756736	2C24	16	1821 - 9
9757149	1B2	0	0130 - 7
9757192	2C8	29	1810 - 29
9757787	3I8	12	3363 - 9
9758777	1C16	5	0260 - 17B
9759157	3D9	14	3315 - 5
9759157	3D9	15	3315 - 5
9759157	3D9	16	3315 - 5
9759157	3D9	17	3315 - 5
9759157	3D11	14	3315 - 5B
9759158	3D9	14	3315 - 5
9759158	3D9	15	3315 - 5
9759158	3D9	16	3315 - 5
9759158	3D9	17	3315 - 5
9759158	3D11	15	3315 - 5B
9761179	3H8	55	3362 - 23
9764181	3K12	2	3363 - 51B
984614	3L6	62	3365 - 7B
984614	3L21	24	4367 - 5
985096	3L17	7	4360 - 7
985098	3G12	1	3362 - 3
985098	3G16	40	3362 - 7
985098	3G18	40	3362 - 9
985098	3H2	40	3362 - 17
986910	3K12	9	3363 - 51B
991347	1B25	7	0260 - 7
991354	3L13	19	4360 - 3