RUTHZIL TRATOR COMERCIAL DE PEÇAS LTDA 11 97083-6812 ROLANDO

275IIIA Articulated Tractor Shovel

CLARK® EQUIPMENT

FEVEREIRO 1969

MICHIGAN

TRADEMARK OF CLARK EQUIPMENT CO. U.S.A.

PARTS MANUAL
Publication No.84
Model 275 IIIA Articulated Tractor Shovel

SERIAL

333EN2001-1 Thru

MANUFACTURED UNDER LICENCE BY
CLARK EQUIPMENT LIMITED
P O BOX 3 YORKTOWN WORKS · CAMBERLEY SURREY ENGLAND
TEL CAMBERLEY 63421

ENGLISH Information contained in this Parts Manual pertains to Machine Serial Numbers listed below.

FRANCAIS Les informations contenues dans ce manual des piéces de rechange se réferènt aux numeros de serie donnes ci-apres.

DEUTSCH In diesem Ersatzteilkatalog enthaltenen Angaben beziehen sich auf die unten angefuhrten Maschinen-Seriennummern.

ITALIANO L'informazione contenuta in questo manuale di accessori si riferisce ai numeri di macchine di serie qui sotto descritti.

ESPAÑOL La información contenida en este Manual de Repuestos se refiere a los números de serie de las máquinas que se dan a continuación.

275IIIA	333EN2001-1 Thru.	Cummins.	NT. 335-CI

PARTS MANUAL

ABOUT THIS PARTS BOOK

This book is arranged in Sections or Groups. Those shown in the Basic Group Number Index are Main Groups, which are in turn divided into the Sub Groups that appear in the Contents List Index.

Page numbers are made up as follows :-

PAGE NUMBER 00E - 001

BASIC GROUP	COUNTRY OF ORIGIN	PAGE NUMBER (WITHIN GROUP)
00	E	001

The Basic Group Index is presented in five languages and is accompanied by an exploded drawing of a typical machine. The Contents List Index shows every page that is contained in this book.

Illustrations used, are not always an exact representation of the actual machine sections but they are typical.

Before using the book become thoroughly conversant with its layout.

HOW TO USE THIS BOOK

Let us assume that you are replacing a Hydraulic Pump (Main).

(1) Refer to the PICTORIAL INDEX in conjunction with the BASIC GROUP NUMBER INDEX.

(2) Select the number of the BASIC GROUP containing the parts required :-

Group Number 18 - Hydraulic Pumps

(3) Turn to the CONTENTS LISTS and refer to the Page Number Column. All page numbers in which the first two digits coincide with the selected Basic Group Number are pages within that same group :-
e.g. 18E - 000, 18E - 001, 18E - 011.

(4) Determine from the designation column the page or pages containing the part required.

In this example :-
Page Number 18E - 001 Pump Hydraulic - Main

(5) Turn to page or pages selected and check page heading for specific model number and or machine serial number application. In conjunction with the associated illustration read off the requisite part number.

(6) Transmit the correct part number, description and quantity of the part required, together with the machine serial number to your Distributor.

SPECIAL SYMBOLS

The following symbols are used throughout the book :-

\+ Not illustrated. No pictorial reference exists for this item.
¤ Not sold separately. This item sold only as part of an assembly.
See Makers List. For this item, see individual makers list.

* Footnote 1.
** Footnote 2.
*** Footnote 3.

Used for various footnotes as necessary.

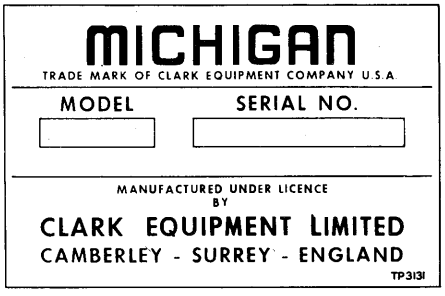

SERIAL NUMBERS

The machine serial number plate illustrated here is located in the operators compartment or its vicinity and the information stamped on the plate identifies the machine model and serial number.

It is important to quote the complete serial number to your distributor when ordering replacement parts for your machine.

IMPORTANT: Your only source of supply for genuine Clark replacement parts is your authorised Clark distributor.

ORDERING REPLACEMENT PARTS

To be complete, your order to the distributor must include :-

(1) Part Number
(2) Description of part
(3) Machine serial number
(4) Quantity required.

WHEN PARTS ARE RECEIVED

Check immediately for correctness, condition and quantity. Advise your Clark distributor of any errors. Claims for damage during shipment should be made to the carrier immediately.

A PROPOS DE CE MANUEL DE PIECES DETACHEES

Ce manuel est disposé en Sections ou Groupes-Ceux qui sont repris dans l'Index de Numéros de Groupes de base sont les Groupes Principaux, qui, à leur tour, sont divisés en Sous-Groupes apparaissant dans la Table des Matières-

La numeration des pages est agencée comme suit:.

PAGE NUMERO 00E-001

GROUPE DE BASE	PAYS D'ORIGINE	NUMERO DE PAGE (DANS LE GROUPE)
00	E	001

L'index des groupes de base est présenté en cinq langues et accompagné par une vue éclatée d'une l'engin typique. L'index de la table des matières reprend toutes les pages contenues dans ce manuel.

Les illustrations ne sont pas toujours une représentation exacte des sections réelles de l'engin, mais elles sont typiques.

Avant d'utiliser le manuel, familiarisez-vous à fond avec sa disposition.

COMMENT UTILISER CE MANUEL

Supposons que vous remplacez une pompe Hydraulique (Principal).

(1) Réferez-vous a L'INDEX ILLUSTRE en même temps qu'à L'INDEX DES NUMEROS DE GROUPES DE BASE.

(2) Sélectionnez le numéro du GROUPE DE BASE contenant la pièce recherchée:

Groupe No.18 - Pompes Hydrauliques

(3) Passez à la TABLE DES MATIERES et référez-vous à la colonne des numéros de pages. Tous les numéros de pages dont les deux premiers chiffres avec le numéro de Groupe de Base choisi font partie du même groupe:

18E - 000, 18E - 001, 18E - 011

(4) Déterminer de la colonne désignation la page ou les pages qui contient la pièce requise.

Dans cet exemple: Page Numéro 18E - 001 Pompe Hydraulique - Principal

(5) Tourner à la page ou aux pages choisies et vérifier l'entete de la page pour le numero de modèle specifique et/ou l'application du numéro de série de la machine en conjonction avec l'illustration associee donner le numero de pièce requis.

(6) Transmettez à votre distributeur le numéro de pièce correct, la description et la quantité, ainsi que le numéro de série de l'engin.

SYMBOLES SPECIAUX

Les symboles suivants sont utilisés au fil du manuel:

\+ Pas illustré
Il n'y a pas de référence illustrée pour cet article.

¤ Pas vendu séparément
Cette pièce est uniquement vendue comme partie d'une ensemble

\# Voir liste du fabricant
Pour cette pièce, voir liste individuelle du fabricant

* Note 1. ** Note 2. *** Note 3.

Utilisé pour les différentes notes selon besions.

NUMEROS DE SERIE

La plaque portant le numéro de série de la machine est située dans le compartiment de l'operateur ou pres du compartiment et les renseignements ecrits sur la plaque servent à identifier le modèle et le numéro de série de la machine.

Il est important de donner le numéro de série complet à votre distributeur lorsque vous placez une commande de pièces detachées pour votre machine.

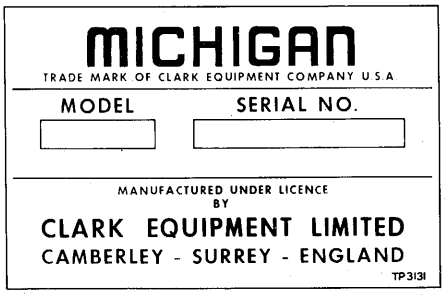

IMPORTANT: Votre unique source de pièces de rechange d'origine CLARK est votre distributeur autorisé CLARK.

COMMANDE DES PIECES DE RECHANGE

Pour être complet, votre bon de commande au distributeur doit comprendre les points suivants:

(1) Numéro de pièce (3) Numéro de serie de l'engin
(2) Description de la pièce (4) Quantité nécessaire

LORS DE LA RECEPTION DES PIECES

Contrôler immédiatement l'état, la quantité et l'exactitude des pièces. Aviser immédiatement votre distributeur Clark de toute erreur. Les plaintes relatives à des dégâts pendant le transport doivent immédiatement être adressées au transporteur.

UBER DEN VORLIEGENDEN ERSATZTEILKATALOG

Dieser Katalog ist in Abschnitte und Gruppen unterteilt. Die im Hauptgruppen-Nummernregister enthaltenen Hauptgruppen sind wiederum in Untergruppen eingeteilt die in der Inhaltsverzeichnisliste aufgeführt sind.

Seitennummern setzen sich wie folgt zusammen: SEITENNUMMER 00E - 001.

HAUPTGRUPPE	URSPRUNGSLAND	SEITENNUMMER (INNERHALB DER GRUPPE)
00	E	001

Das Hauptgruppenregister ist fünfsprachig und enthält ein Montagebild eines typischen Maschinen. Im Inhaltsverzeichnis ist jede Seite des Buches aufgeführt.

Die verwendeten Illustrationen sind typische Abbildungen und nicht immer exakte Darfstellungen des wirklichen Maschinenteiles.

Machen Sie sich mit der allgemeinen Aufmachung des Kataloges grundlich vertraut, bevor Sie ihn benutzen.

HINWEISE FUR DIE BENUTZUNG DES KATALOGES

Nehmen wir einmal an, Sie wollen eine Hydraulikpumpe (Haupt).

(1) Schlagen Sie das BILDVERZEICHNIS in Verbindung mit dem HAUPTGRUPPEN-NUMMERNREGISTER auf.

(2) Suchen Sie die Nummer der HAUPTGRUPPE, die die benötigten Teile enthält.

Gruppe Nr. 18 - Hydraulikpumpen.

(3) Schlagen Sie die Spalte der Seitennummern im INHALTSVERZEICHNIS auf. Alle Seitennummern, deren ersten zwei Ziffern mit der Hauptgruppen-Nummer übereinstimmen, befinden sich innerhalb dieser selben Gruppe:
z.B. 18E - 000, 18E - 001, 18E - 011.

(4) Aus der Spalte mit den Bezeichnungen die Seite bzw. Seiten heraussuchen auf welchen das gewünschte Teil zu finden ist.

In diesem Biespeil:
Seite Nr. 18E - 001 - Hydraulikpumpe - Haupt.

(5) Dann die betreffende Seite bzw. Seiten aufschlagen und anhand der Titelzeile der Seite feststellen für welche Modell- und Fabriknummernserien das Teil infrage kommt. Anschliessend unter Bezugnahme auf die entsprechende Abbildung die betreffender Teilnummer ablesen.

(6) Die richtige Teilnummer, Bezeichnung und Stückzahl des benötigten Teiles zusammen mit der Motornummer dem Händler mitteilen.

BESONDERE ZEICHEN

Die folgenden Zeichen wurden im Katalogverwendet:

\+ Nicht abgebildet.
Für dieses Teil liegt kein Bildmaterial vor.

¤ Einzeln nicht lieferbar.
Dieses Teil wird nur als Bestandteil einer kompletten Einheit verkauft.

\# Siehe Herstellerliste.
Dieses Teil der betreffenden Herstellerliste entnehmen.

* Fußnote 1. ** Fußnote 2. *** Fußnote 3.

Nach Bedarf für verschiedene Fußnoten verwendet.

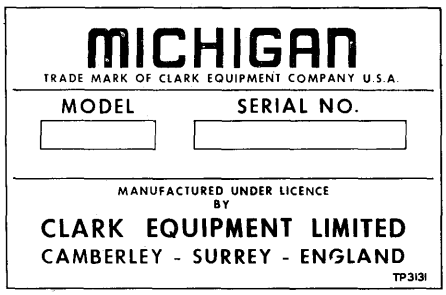

SERIENNUMMERN

Das hier abgebildete Typenschild des Fahrzeuges ist im bzw. in der Nähe des Fahrerstandes angebracht. Auf dieses sind Modell- und Fabriknummer des Fahrzeuges eingestanzt.

Bei Bestellungen von Ersatzteilen von Ihrem Grosshandler ist stets die vollständige Fabriknummer der Maschine anzugeben.

WICHTIGER HINWEIS: Die Original-Clark Austauschteile erhalten Sie nur bei Ihrem Clark Vertragshandler.

BESTELLUNG VON AUSTAUSCHTEILEN

Ein vollständiger Auftrag für Ihren Händler muß folgende Angaben enthalten:

(1) Teilnummer
(2) Bezeichnung der Teile
(3) Maschinenserienummer
(4) Benötigte Stuckzahl

BEI EINGANG DER TEILE

Sofort Richtigkeit, Zustand und Stückzahl überprüfen. Jeden Fehler dem Clark Händler mitteilen.
Kostenerstattungsansprüche für Transportschäden sind sofort an die Speditionsfirma zu richten.

DESCRIZIONE DEL CATALOGO PARTI DI RICAMBIO

Il catalogo è ordinato in Sezioni. Quelle indicate nell'Indice Numerico Sezioni Base sono le Sezioni Principali, a loro volta suddivise nelle Sottosezioni dell'Indice Descrittivo.

I numeri di pagina sono cosi composti:-

NUMERO DI PAGINA 00E - 001

SEZIONI BASE	PAESE DI ORIGINE	NUMERO DI PAGINA (PER SEZIONE)
00	E	001

L'Indice Numerico per le Sezioni-Base è in cinque lingue e vi è allegato un disegno con parti esplose dell'macchina cui si riferisce. L'Indice Descrittivo indica tutte le pagine du cui il catalogo è composto.

Le illustrazioni non sempre forniscono un disegno preciso dei vari complessivi della macchina, ma ne danno l'idea.

Prima di consultare il catalogo è bene averne una conoscenza completa onde da rendersi conto di come esso è ordinato.

USO DEL CATALOGO

Facciamo il caso che occorra sostituire una Pompa Idraulica (Principale).

(1) Andare a vedere l'INDICE ILLUSTRATO assieme all'INDICE NUMERICO DELLE SEZIONE-BASE.

(2) Rilevare il numero della SEZIONE-BASE in cui è compresa la parte che occorre sostituire:-

Sezione Numero 18 - Pompe Idrauliche

(3) Consultare l'INDICE DESCRITTIVO alla Colonna Numeri di Pagina. Tutti i numeri di pagina in cui le prime due cifre coincidono con le corrispondenti della Sezione-Base scelta indicano le pagina che riguardano una medesima sezione.

Per le Pompe Idrauliche: 18E - 000, 18E - 001, 18E - 011.

(4) Dalla colonna delle designazioni determinare la pagina o le pagine che contengono la parte richiesta.

Per il caso scelto ad esempio:-
Pagina Numero 18E - 001 - Pompa Idraulica - Principale

(5) Aprire la pagina o le pagine cosi' trovate e controllare che l'intestazione corrisponda al numero di modello o al numero di serie della macchina in questione. Con l'aiuto dell'illustrazione trovare il numero di ricambio della parte richiesta.

(6) Trasmettere al proprio Distributore l'esatto numero di parte trovato, la relativa descrizione e la quantitá richiesta, assiema al numero di serie della macchina.

SIMBOLI SPECIALI

Nel corso del catalogo possono trovarsi i seguenti simboli:-

\+ Non Illustrato.
Non vi è alcun riferimento illustrativo per questo particolare.

¤ Non venduto separatamente.
Questo particolare viene fornito soltanto con l'intero complessivo.

\# Vedere Elenco Fabbricante.
Per questo particolare consultare l'elenco della specifica casa fornitrice.

* Nota 1 a piè di pagina. ** Nota 2 a piè di pagina. *** Nota 3 a piè di pagina.

Simboli usati quando occorrono delle note a piè di pagina.

NUMERI DI SERIE

La targhetta di numero serie macchina qui illustrata si trova nello scompartimento dell'operatore o nelle sue vicinanze e contiene informazioni per identificare il modello di macchina e il numero di serie.

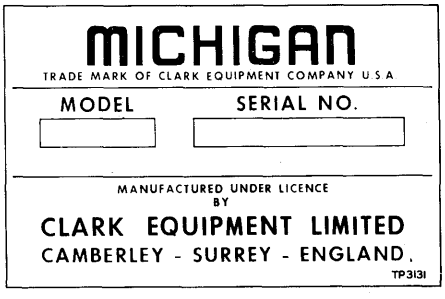

All 'atto dell'ordinazione di parti di ricambio, e'indispensabile comunicare il numero di serie al completo della macchina in questione.

IMPORTANTE: L'unica fonte di fornitura delle parti di ricambio originali CLARK è il vostro Distributore Autorizzato CLARK.

ORDINAZIONE DELLE PARTI DI RICAMBIO

L'ordinazione da inoltrare al Distributore, per risultare completa, deve comprendre:-

(1) Numero di Parte (3) Numero di serie della macchina

(2) Descrizione della parte (4) Quantitá richiesta.

ALL'ARRIVO DELLE PARTI

Controllare immediatamente l'esattezza, la quantitá e lo stato delle parti. Per gli eventuali errori tenere subito informato il proprio Distributore Clark. I reclami per eventuali danni avvenuti duranti il trasporto devono essere presentati immediatamente allo spedizionere.

COMO SE EMPLEA ESTE LIBRO

Este libro está clasificado y ordenado en Secciones llamadas Grupos. En el Indice de Grupos Básicos aparecen los números de los grupos principales los que a su vez se dividen en Sub-Grupos que aparecen en el Indice del Contenido.

El número de cada página se ha formado asi: PAGINA No. 00E - 001

GRUPO BASICO	PAIS DE ORIGEN	No DE LA PAGINA (EN CADA GRUPO)
00	E	001

El Indice de Grupos Básicos se presenta en cinco idiomas y está ilustrado por una vista de las partes que forman una maquina tipica, separadas pero en orden de ensamblaje. El indice del Contenido indica todas las páginas de este libro.

Las partes que se ilustran no son siempre una representación exacta de las que realmente puede tener una máquina determinada, sino de un componente tipico.

Antes de usar este libro familaricese con su ordenación y empleo.

EJEMPLO DEL EMPLEO DE ESTE LIBRO

Supongamos que usted desea pedir una bomba hidráulica para el sistema principal.

(1) En la ILUSTRACION DE LA MAQUINA y con la ayuda del INDICE DE GRUPOS BASICOS haga lo siguiente:

(2) Seleccione el GRUPO BASICO que comprende la parte que necesita, en este caso:
Grupo No. 18 - Bombas Hidráulicas

(3) Ahora refiérase al INDICE DEL CONTENIDO y busque alli, en la Columna de Nos. de Página, la que corresponde a la parte que desea. Todos los numeros de las páginas cuyas primeras dos cifras son iguales a los del Grupo Básico seleccionado, corresponden a dicho Grupo.
p.e. 18E - 000, 18E - 001, 18E - 011.

(4) En la columna de títulos determine la página o páginas que contienen la pieza requerida.

En este ejemplo:
Pagina No. 18E - 001 Bomba Hidráulica - Principal.

(5) Vuelva a la página o Páginas seleccionadas y compruebe el título para el número del modelo específico y/o aplicación del número de serie de la máquina. Junto con la ilustración asociada lea el número de pieza necesaria.

(6) Envie su pedido al Distribuidor de CLARK con la siguiente informacion: Pieza No., denominacion y cantidad que necesita de la parte de la máquina.

SIMBOLOS ESPECIALES

En este libro se usan los siguientes simbolos:

\+ No se ilustra.
No existe dibujo o fotografia de esta parte en el libro.

¤ No se suminstra por separado.
Esta parte se vende solamente como parte de un conjunto.

\# Ver la Lista de Repuestos del Fabricante.
Para pedir esta parte debe consultarse la Lista de Repuestos de la empresa que la fabrica.

* Nota 1. ** Nota 2. ***Nota 3.

Usados para las notas al pie de una pagina, segun sea necesario.

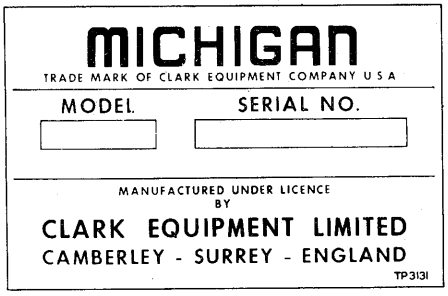

NUMERO DE SERIE

La placa del número de serie de la máquina ilustrada aqui, está situada en el compartimiento del conductor y la información impresa identifica el modelo y número de serie de la máquina.

Es importante indicar el número de serie completo al hacer pedidos de recambios para su máquina, a su distribuidor.

IMPORTANTE: los repuestos legitimos CLARK sólo se obtienen de los Distribuidores Autorizados CLARK.

REQUISITOS PARA HACER LOS PEDIDOS

Un pedido para ser completo y, por consiguiente, agilizar su despacho, debe contener:

(1) El No. de la pieza. (3) El No. de serie de la máquina.

(2) La denominación de la pieza pedida. (4) La cantidad de unidades que se necesitan.

CUANDO SE RECIBEN LAS PIEZAS

Verifique de immediato que son las partes pedidas, la condición en que se encuentran y que la cantidad es correcta. Los reclamos por daños durante el acarreo deben hacerse de immediato a la empresa de transporte.

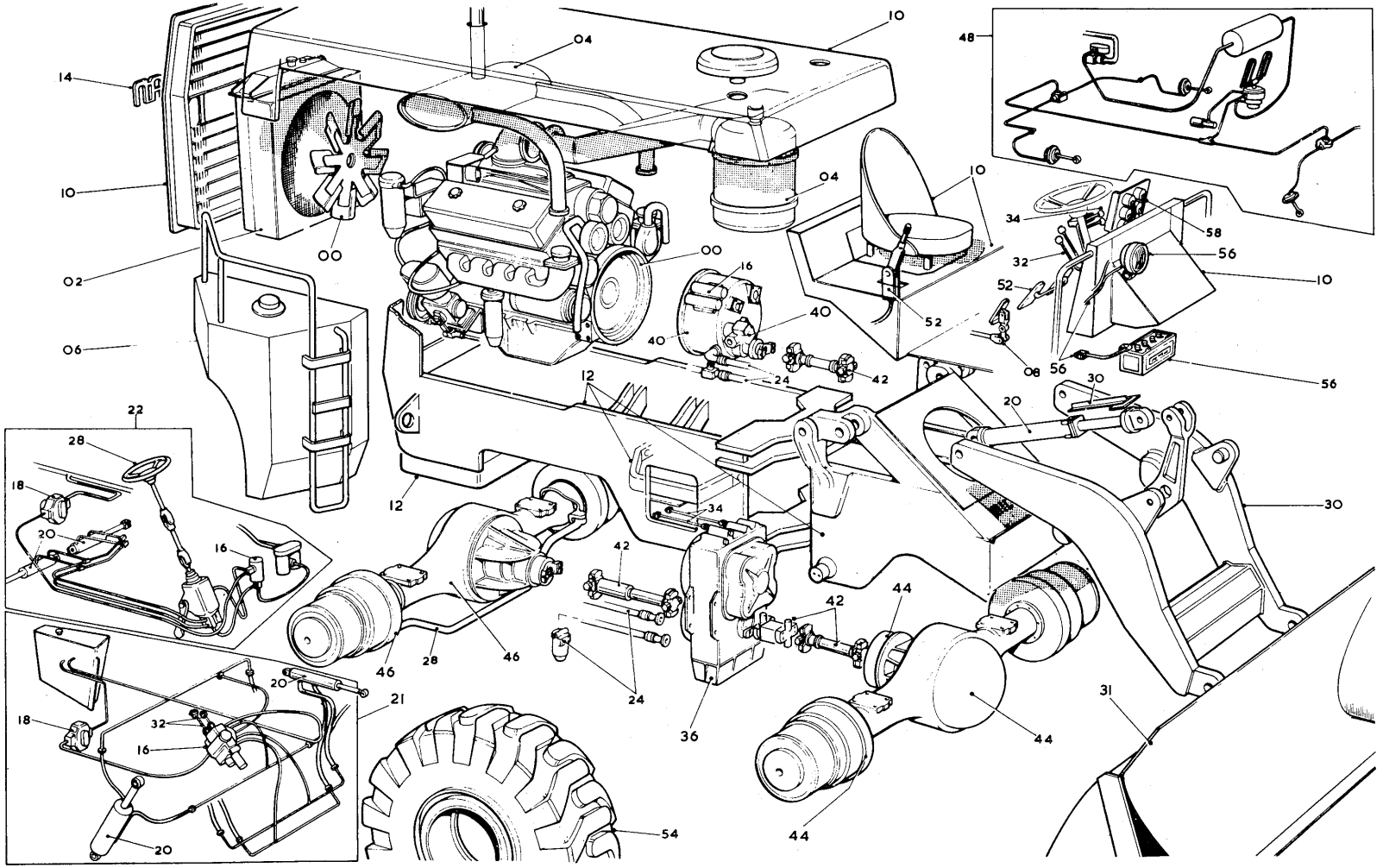

TYPICAL ARTICULATED TRACTOR SHOVEL BASIC GROUPS

TP3110

ENGLISH	FRANCAIS	DEUTSCH	ITALIANO	ESPAÑOL
BASIC GROUP NUMBER INDEX	REPERTOIRE NUMERIQUE DES GROUPES DE BASE	GRUNDBAUGRUPPENVERZEICHNIS	INDICE NUMERICO DEI GRUPPI DI BASE	INDICE DE NUMERO DE GRUPO BASICO
00 Engine	Moteur	00 Motor	Motore	00 Motor
02 Engine Cooling System	Système de refroidissement du moteur	02 Kühlsystem	Impianto di raffreddamento	02 Sistema de refrigeración
04 Air Intake & Exhaust System	Admission d'air et système d'échappement	04 Ablassleitung und Luftansaug	Scarico e aspirazione	04 Admisión de aire y sistema de escape
06 Fuel System	Système d'aspiration du carburant	06 Kraftstoffsystem	Sistema di alimentazione	06 Sistema de combustible
08 Engine Control System	Système de commande du moteur	08 Motorsteuerung	Sistema di comando motore	08 Sistema de mando del motor
10 Superstructure	Superstructure	10 Aufbau	Sovrastruttura	10 Superestructura
12 Frame	Châssis	12 Chassis	Telaio	12 Bastidor
14 Name Plates & Decals	Plaques de constructeurs et décalcomanies	14 Typenschilder und Abziehbilder	Targhe di fabbricazione e decalcomanie	14 Placas identificadoras de fábrica y calcomanías
16 Hydraulic Valves	Soupapes hydrauliques	16 Hydraulikventile	Valvole idrauliche	16 Válvulas hidráulicas
18 Hydraulic Pump	Pompes hydrauliques	18 Hydraulikpumpen	Pompe idrauliche	18 Bombas hidráulicas
20 Hydraulic Cylinders	Cylindres hydrauliques	20 Hydraulische Zylinder	Cilindri idraulici	20 Cilindros hidráulicos
21 Hydraulic System-Main	Système Hydraulique-Principal	21 Hydraulische Hauptanlage	Impianto idraulico-Principale	21 Sistema hidraulico-Principal
22 Hydraulic System Steering	Système de direction hydraulique	22 Hydraulik-Steuerung	Servosterzo idraulico	22 Dirección de sistema hidráulico
24 Hydraulic System Transmission	Système de transmission hydraulique	24 Hydraulische Kraftübertragung	Trasmissione idraulica	24 Transmisión de sistema hidráulico
28 Steering	Direction	28 Lenkung	Sterzo	28 Dirección
30 Front End Equipment	Equipement avant	30 Vorderausrüstung	Equipaggiamento anteriore	30 Equipo frontal
31 Front End Attachments	Accessoires d'extremite avant	31 Anbaugeräte Vorderes Ende	Attacchi Frontali	31 Adimentos delanteros
32 Front End Equipment Controls	Commandes pour équipement avant	32 Vorderseitige Steuerorgane	Comandi equipaggiamento anteriore	32 Control de equipo delantero
34 Transmission Controls	Commandes de transmission	34 Getriebesteuerung	Comandi trasmissione	34 Mandos de la transmisión
36 Transmission Assembly	Boîte de vitesses	36 Schaltgetriebe	Cambio di velocità	36 Cambio
40 Torque Converter	Convertisseur de couple	40 Drehmomentwandler	Variatore di coppia	40 Convertidor del par motor
42 Propeller Shafts	Arbres de transmission	42 Antriebswellen	Alberi di trasmissione	42 Árbol de transmisión
44 Front Axle	Essieu avant	44 Vorderachse	Assale anteriore	44 Eje delantero
46 Rear Axle	Essieu arrière	46 Hinterachse	Assale posteriore	46 Eje trasero
48 Brake System -Main	Système de freinage-Principal	48 Bremssystem Hauptanlage	Impianto Freno -Principale	48 Sistema principal de frenos
52 Brake Controls	Commandes de frein	52 Bremse Gestänge	Freno di-Comandi	52 Controles del freno
54 Wheels & Tyres	Roues et pneus	54 Räder und Reifen	Ruote e pneumatici	54 Ruedas y neumáticos
56 Electrical Equipment & Wiring	Equipement électrique et câblage	56 Elektrische Ausrüstung und Ver Kabelung	Equipaggiamento elettrico e Cavi	56 Equipo electrico y cableaje
58 Instrument Panel	Tableu de bord	58 Instrumententafel	Quadro Strumenti	58 Tablero de instrumentos

66

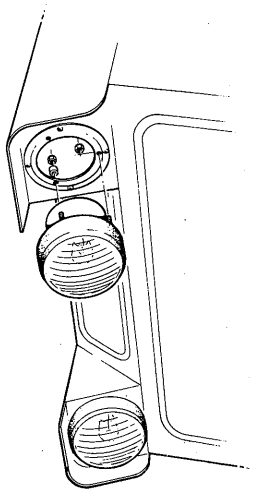

72

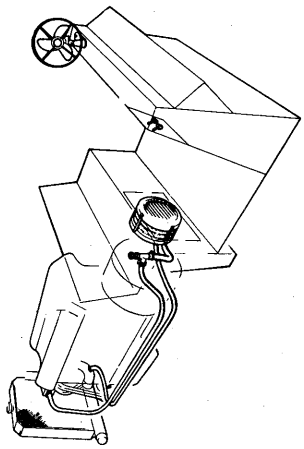

64

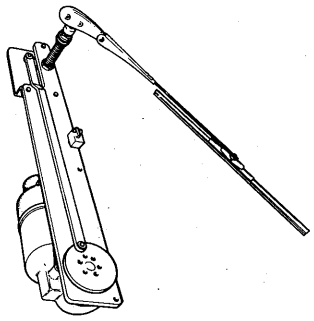

70

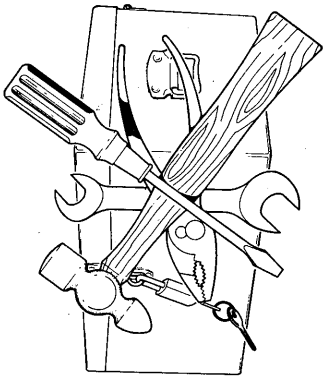

62

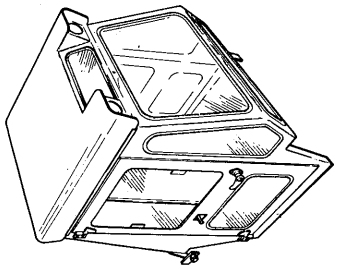

68

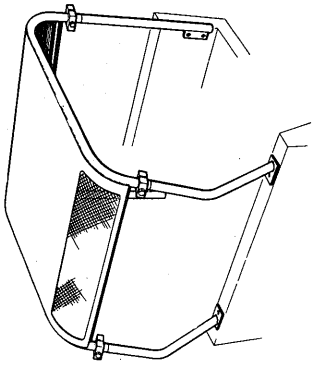

BASIC GROUPS – TRACTOR ACCESSORIES

ENGLISH	FRANCAIS	DEUTSCH	ITALIANO	ESPANOL
BASIC GROUP NUMBER	REPERTOIRE NUMERIQUE DES GROUPES DE BASE	GRUNDBAUGRUPPENVERZEICHNIS	INDICE NUMERICO DEI GRUPPI DI BASE	INDICE DE NUMERO DE GRUPO BASICO
62 Cab	Cabine	62 Fahrerhaus	Cabina	62 Cabina
64 Windscreen Wipers	Essuie Glace	64 Scheibenwischer	Tergicristallo	64 Limpiaparabrisas
66 Lamps	Phares	66 Scheinwerfer	Proiettori	66 Faros
68 Canopy	Toit	68 Dach	Tetto	68 Techo
70 Tools	Outils	70 Werkzeugausrustung	Dotazione di Attrezzi	70 Juego de Herramientas
72 Heater and Demister	Appareil de Chauffage	72 Heizung	Riscaldatore	72 Calefacción

PAGE NO.	DESIGNATION	REVISED
00P003	Engine Mountings	Apr. 69
00P051	Engine Assembly	Apr. 69
00P151	Engine Cold Start Equipment	Apr. 69
00P201	Engine Oil Pressure Line	Jan. 70
02P005	Radiator Assembly	Apr. 69
02P051	Radiator Mountings	Apr. 69
02P101	Radiator Connections	Apr. 69
02P153	Engine Fan Assembly	Apr. 69
04P009	Air Cleaner Assembly	Apr. 69
04P075	Air Cleaner Connections	Jan. 70
04P125	Muffler Exhaust	Apr. 69
06P037	Fuel Lines	Apr. 69
06P061	Fuel Tank	Apr. 69
08P029	Engine Controls	Apr. 69
10P013	Hood Shroud	Apr. 69
10P055	Operators Compartment	Apr. 69
10P101	Seat Assembly	Apr. 69
12P000	(Illustration) Frame & Axle Cradle	Jan. 70
12P001	Frame & Axle Cradle	Jan. 70
12P055	Counterweight & Drawbar	Apr. 69
14P001	Nameplates & Decals	Jan. 70
16P051	Valve Pressure Regulating Torque Converter	Apr. 69
16P107	Valve Pressure Relief Steering	Apr. 69
16P150	(Illustration) Control Valve - Main Hydraulic	Apr. 69
16P151	Control Valve - Main Hydraulic	Apr. 69
16P152	(Illustration) Control Valve - Main Hydraulic	Oct. 70
16P153	Control Valve - Main Hydraulic	Oct. 70
18P009	Pump Steering	Apr. 69
18P051	Pump Front End Equipment	Apr. 69
20P009	Cylinder Steering	Apr. 69
20P059	Cylinder Bucket	Apr. 69
20P061	Cylinder Bucket	Jan. 70
20P107	Cylinder Boom	Apr. 69
20P109	Cylinder Boom	Jan. 70
22P025	Hydraulic Lines - Steering	Apr. 69
24P072	(Illustration) Hydraulic Lines - Transmission	Apr. 69
24P073	Hydraulic Lines - Transmission	Apr. 69
26P009	Reservoir Hydraulic	Apr. 69
26P050	(Illustration) Hydraulic Lines - Main	Oct. 70
26P051	Hydraulic Lines - Main	Oct. 70
26P053	Hydraulic Lines - Main (Continued)	Oct. 70
26P151	Filter Hydraulic Reservoir	Apr. 69
26P177	Filter Hydraulic Reservoir Pressure	Apr. 69
28P001	Drag Link Steering	Apr. 69
28P059	Steering Linkage	Apr. 69
28P209	Steering Gear Assembly	Apr. 69
30P001	Linkage Front End Equipment	Apr. 69
30P050	(Illustration) Bucket Assembly	Apr. 69
30P051	Bucket Assembly - Data	Apr. 69
30P101	Boom Assembly	Apr. 69
30P151	Bucket Indicator	Apr. 69
32P009	Controls - Front End Equipment	Apr. 69
34P009	Controls - Transmission	Apr. 69
36P011	Transmission Assembly & Clutch Cover Group	Apr. 69
36P051	Transmission Case & Internal Tubing	Apr. 69
36P103	Transmission Control Cover Assembly	Apr. 69
36P201	Transmission Mountings	Apr. 69
38P003	Input Shaft Group	Apr. 69
38P051	Reverse Shaft Group	Apr. 69
38P101	Idler Shaft Group	Apr. 69
38P151	Second & Fourth Shaft Group	Apr. 69
38P201	First & Third Shaft Group	Apr. 69
38P251	Output Shaft Group	Apr. 69
38P351	First & Second Clutch Group	Apr. 69
38P401	Clutch Group Input Reverse, Third & Fourth	Apr. 69
40P000	(Illustration) Torque Converter Assembly	Apr. 69
40P001	Torque Converter Assembly	Apr. 69
42P001	Propellor Shaft Transmission to Rear Axle	Jan. 70
42P051	Propellor Shaft Converter to Transmission	Apr. 69
42P101	Propellor Shafts Transmission to Front Axle	Apr. 69
42P151	Mid Mount Bearing Assembly	Apr. 69
44P001	Planet Carrier Assembly - Front	Apr. 69
44P051	Differential & Carrier Assembly - Front	Apr. 69
44P100	(Illustration) Axle Assembly - Front	Apr. 69

MPM 84
CL1/1
REVISED OCT. 70

CONTENTS LIST INDEX - 275IIIA - TRACTOR SHOVEL - MODEL 333 EN 2001 THRU

PAGE NO.	DESIGNATION	REVISED
44P101	Axle Assembly - Front	Apr. 69
46P001	Planet Carrier Assembly - Rear Axle	Apr. 69
46P051	Differential & Carrier Assembly - Rear	Apr. 69
46P112	(Illustration) Axle Assembly - Rear	Apr. 69
46P113	Axle Assembly - Rear	Apr. 69
48P001	Brake Foot Valve	Apr. 69
48P051	Brake Foot Declutch Valve	Apr. 69
48P100	(Illustration) Brake System - Main	Jan. 70
48P101	Brake System - Main	Jan. 70
48P103	Brake System - Main (Continued)	Jan. 70
48P201	Foot Brake Controls	Apr. 69
50P001	Brake Assembly Front	Apr. 69
50P051	Brake Assembly Rear	Apr. 69
52P001	Brake Assembly Parking	Apr. 69
52P053	Parking Brake Linkage	Apr. 69
52P101	Lever Parking Brake	Apr. 69
54P000	(Illustration) Wheel & Tyre Assembly	Apr. 69
54P001	Wheel & Tyre Assembly	Apr. 69
56P011	Battery Carrier	Apr. 69
56P051	Battery & Electrical Equipment	Apr. 69
58P000	(Illustration) Instrument Panel	Jan. 70
58P001	Instrument Panel	Jan. 70
58P053	Lamps & Mountings	Apr. 69
60P011	Wiring & Clips	Apr. 69
62P000	(Illustration) Cab Assembly	Apr. 69
62P001	Cab Assembly	Apr. 69
62P003	Cab Assembly (Continued)	Apr. 69
64P001	Windscreen Wiper Kit	Apr. 69
66P001	Cab Lights	Apr. 69
68P001	Canopy Kit	Apr. 69
70P001	Tool Kit - Basic	Apr. 69
70P021	Tool Kit - Comprehensive	Apr. 69
72P000	(Illustration) Heater & Demister Kit	Apr. 69
72P001	Heater & Demister Kit	Apr. 69

PAGE NO.	DESIGNATION	REVISED

MPM 84

CL1/2

REVISED OCT. 70

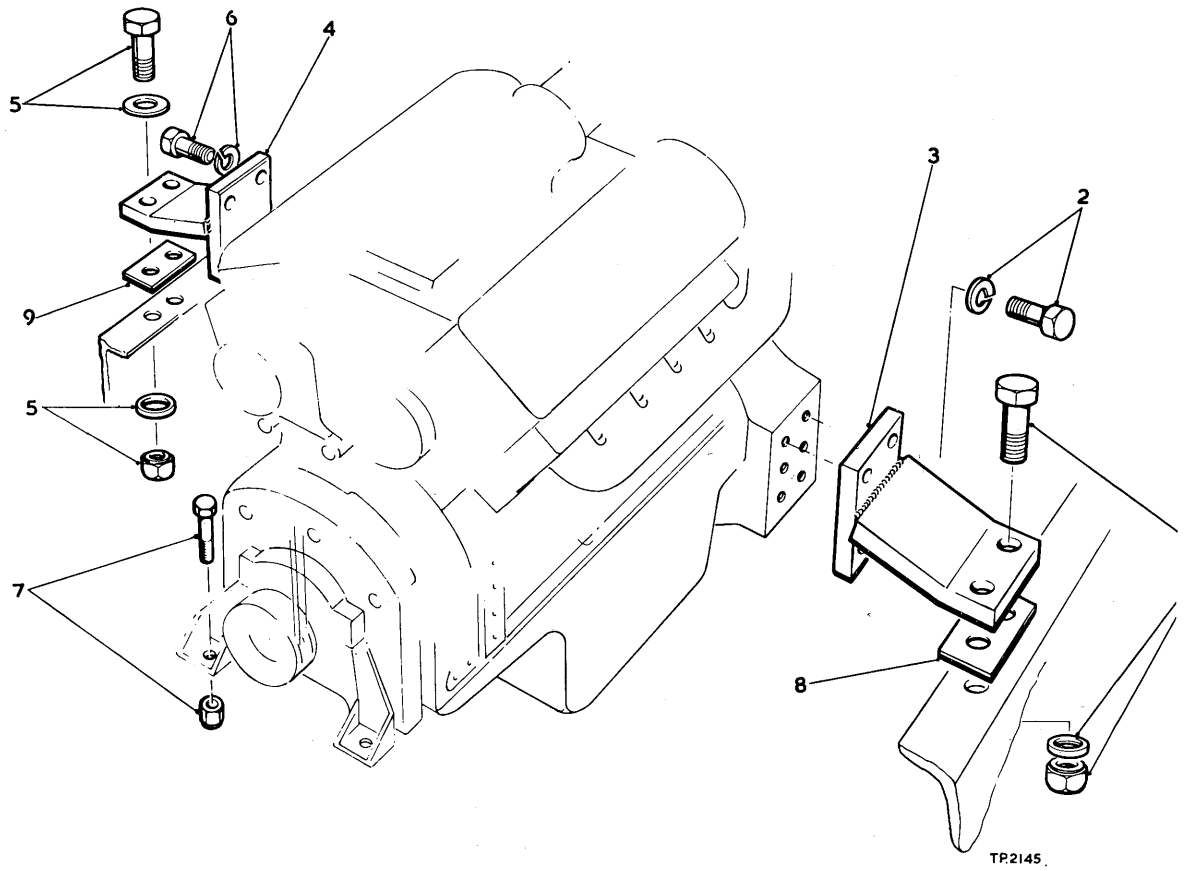

ENGINE MOUNTING

ITEM	PART	DESCRIPTION	QTY.
1	570419	SPRING	2
1	616805	FLATWASHER	2
1	2C-1288	BOLT	2
1	68D-12	LOCKNUT	2
2	8C-1028	BOLT	4
3	152108C	SUPPORT RH	1
	152107S	SUPPORT LH	1
5	2C-1256	BOLT	2
5	68D-12	LOCKNUT	2
6	8C-1028	BOLT	4
7	2C-1052	BOLT	2
7	18D-10	LOCKNUT	2

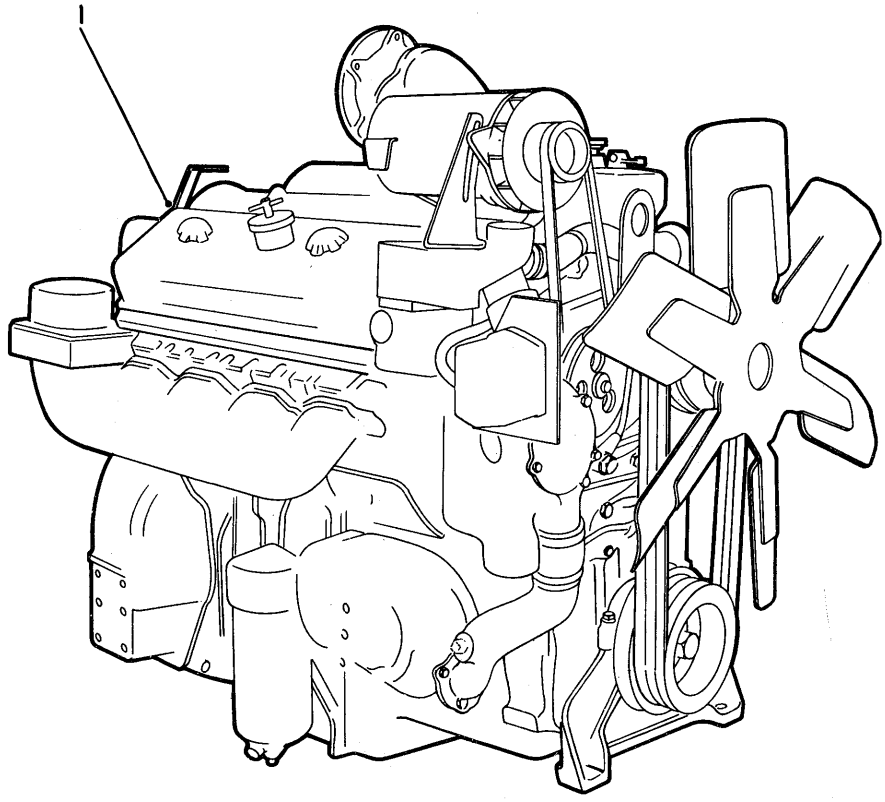

TP 2097

ENGINE ASSEMBLY

ITEM	PART	DESCRIPTION	QTY.	ITEM	PART	DESCRIPTION	QTY.
1	1526622	ENGINE CUMMINS NT-325-C1	1				

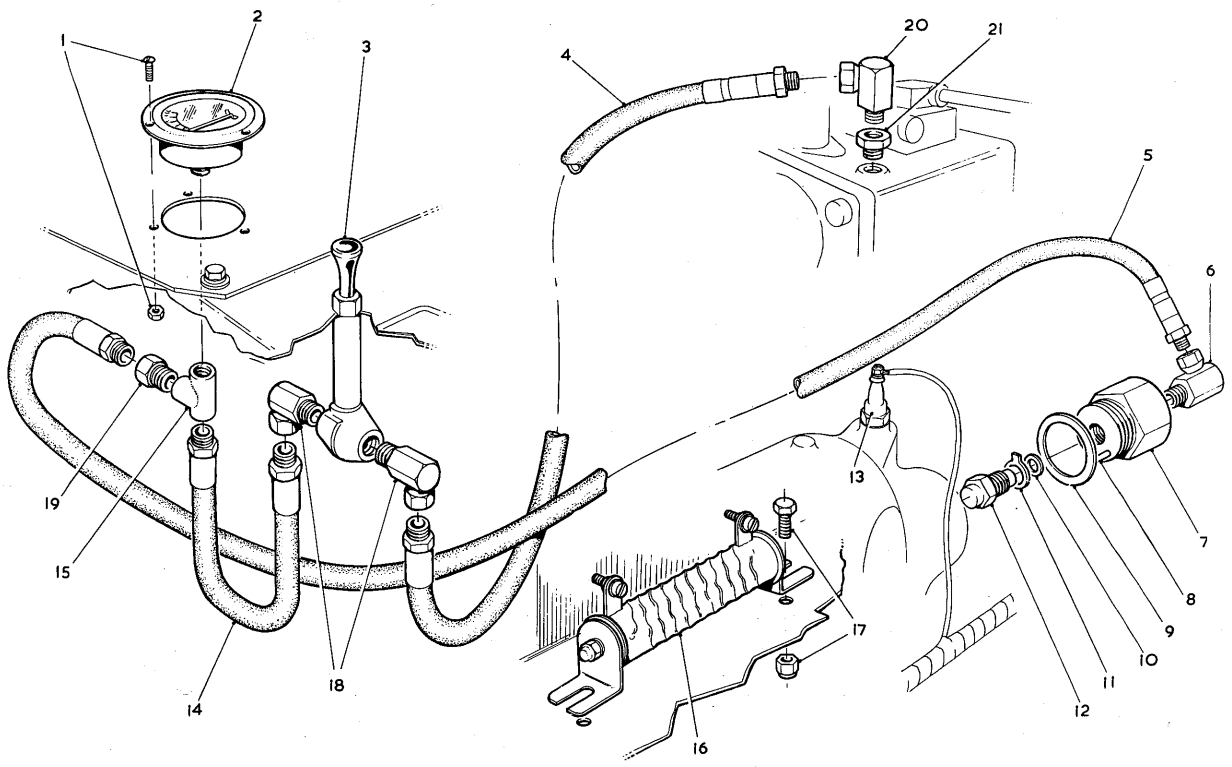

COLD START EQUIPMENT TP2373

ITEM	PART	DESCRIPTION	QTY.
1	3220882	NUT	3
1	3220884	SCREW	3
2	518700	GAUGE	1
3	518701	PUMP	1
4	3230035	HOSE	1
5	3230036	HOSE	1
6	31F-1	ELBOW	1
7	3228458	ADAPTOR	1
8	3228459	PIN	1
9	3228460	GASKET	1
10	3228461	O RING	1
11	3228462	LOCKPLATE	1
12	3228463	NOZZLE	1
13	3228464	PLUG	1
14	588076	HOSE	1
15	18F-1	TEE	1
16	518702	RESISTOR	1
17	20-410	BOLT	2
17	18D-04	LOCKNUT	2
18	31F-1	ELBOW	2
19	36F-1	ADAPTOR	1
20	33F-1	ELBOW	1

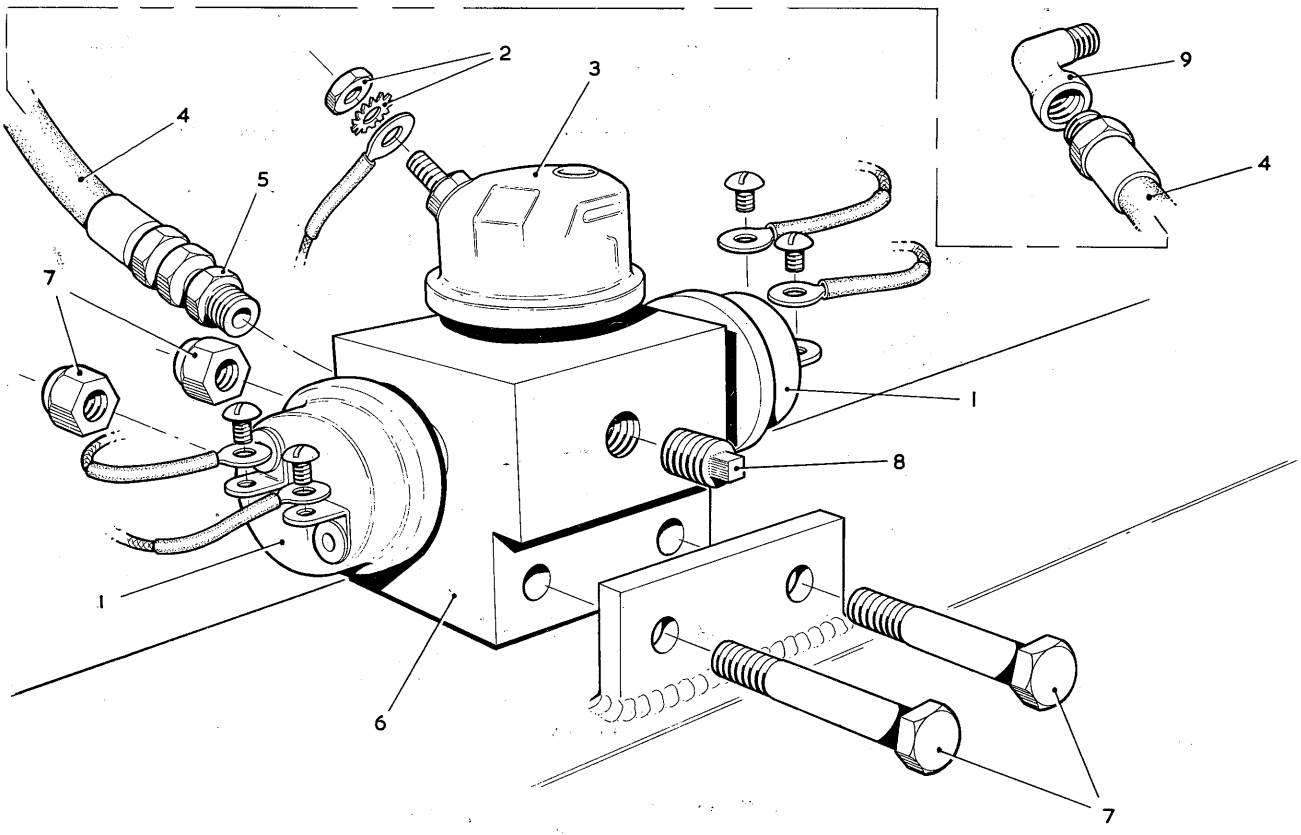

ENGINE OIL PRESSURE LINE

TP 2303

ITEM	PART	DESCRIPTION	QTY.
1	572421	SWITCH OIL PRESSURE	2
2	14D-10	NUT	5
2A	12E-10	LOCKWASHER	5
3	1618574	SENDER UNIT	1
4	3225859	HOSE	1
5	31F-1	ADAPTOR HOSE TO BLOCK	1
6	3225794	MOUNTING BLOCK	1
7	1C-436	BOLT BLOCK TO FRAME	2
7A	18D-04	LOCKNUT	2
8	13F-02	PLUG	1
9	19F-1	BUSH REDUCING	1

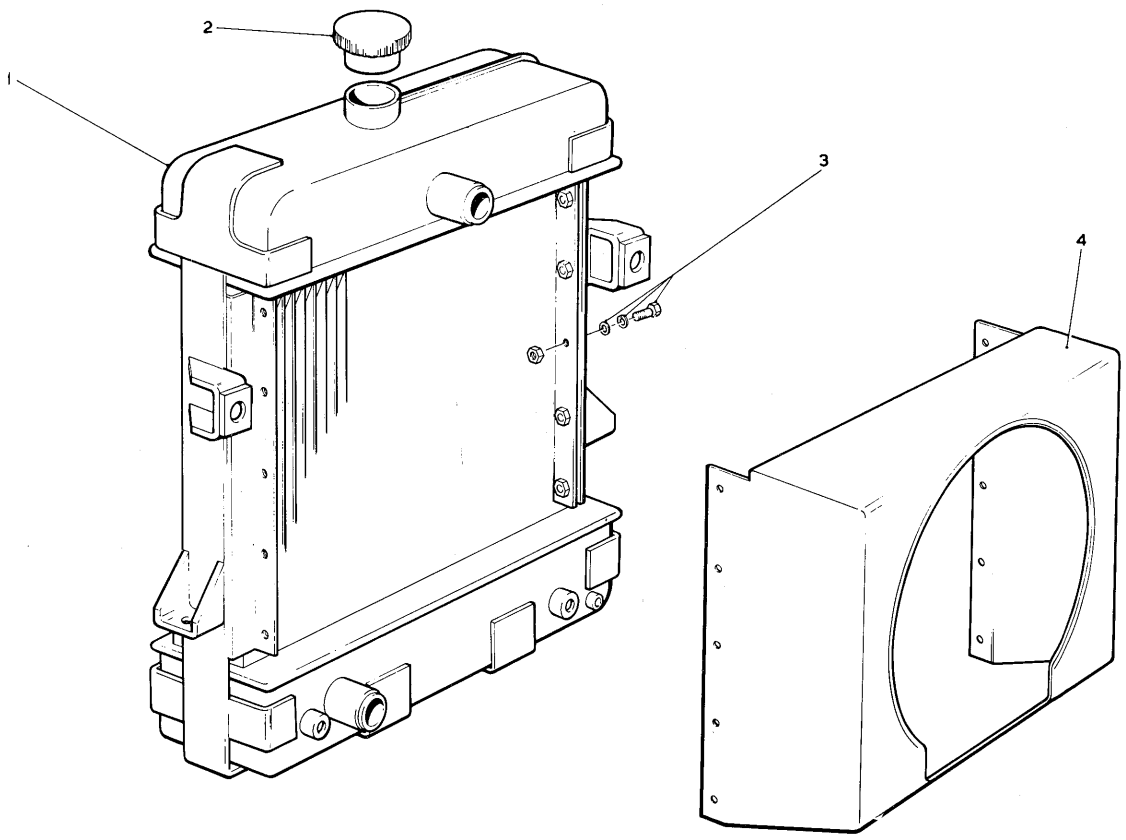

RADIATOR ASSEMBLY TP 2190

ITEM	PART	DESCRIPTION	QTY.	ITEM	PART	DESCRIPTION	QTY.
1	3230079	RADIATOR	1	3	10-412	BOLT	8
2	3213420	CAP	1	3	4E-04	LOCKWASHER	8
3	619018	FLATWASHER	8	4	570520	FAN SHROUD	1

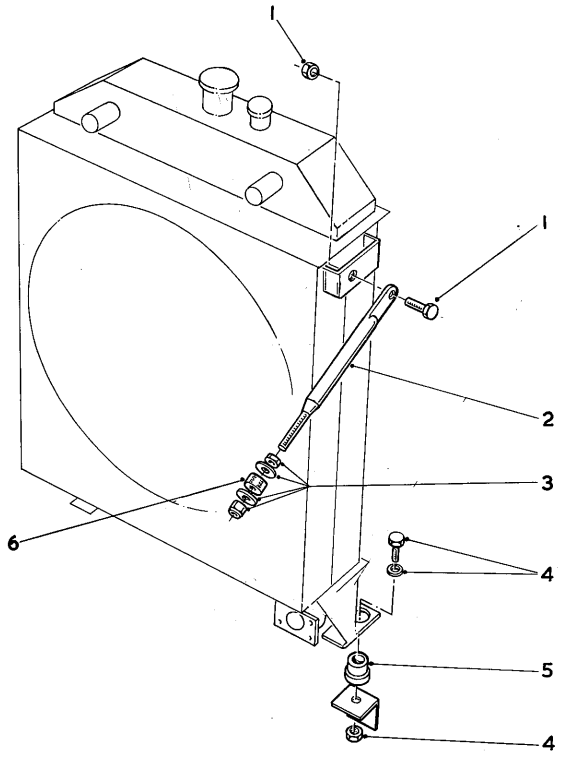

TP2047

RADIATOR MOUNTINGS

ITEM	PART	DESCRIPTION	QTY.	ITEM	PART	DESCRIPTION	QTY.
1	2C-820	BOLT	2	3	18D-08	LOCKNUT	2
1	8E-08	LOCKWASHER	2	4	569070	WASHER	2
2	570523	ROD	2	4	2C-1052	BOLT	2
3	569909	FLATWASHER	4	4	18D-10	LOCKNUT	2
3	616791	FLATWASHER	AR	5	569069	VIBRATION DAMPER	2
3	635682	FLATWASHER	AR	6	569739	VIBRATION DAMPER	2

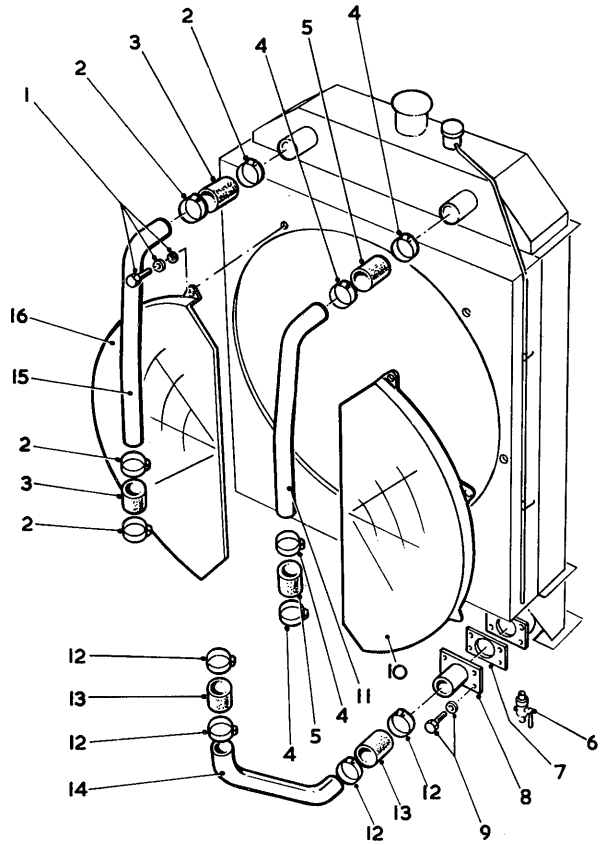

TP2031

RADIATOR CONNECTIONS

ITEM	PART	DESCRIPTION	QTY.	ITEM	PART	DESCRIPTION	QTY
1	103293	FLATWASHER	8	9	1C-816	BOLT	4
1	2C-616	BOLT	8	9	4E-08	LOCKWASHER	4
1	4E-06	LOCKWASHER	8	10	588468	FANGUARD	1
4	3221846	CLAMP	2	11	1521192	TUBE	1
5	1M-18034	HOSE	1	12	3221846	CLAMP	4
6	72F-2	DRAINCOCK	1	13	1M-18034	HOSE	2
7	542023	GASKET	1	14	1521195	TUBE	1
8	1521191	STEM	1	16	588468	FANGUARD	1

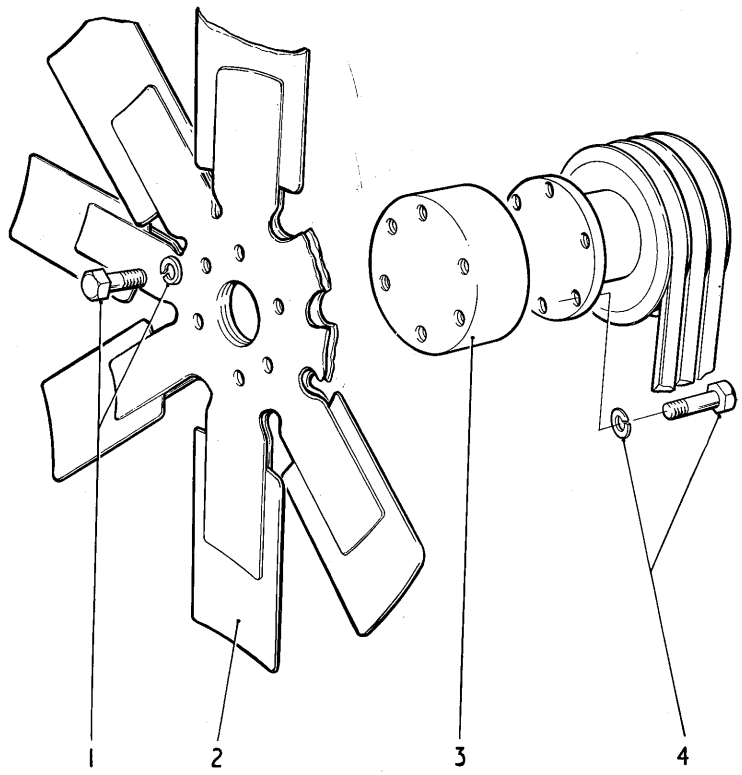

TP2101

ENGINE FAN ASSEMBLY

ITEM	PART	DESCRIPTION	QTY.	ITEM	PART	DESCRIPTION	QTY.
2	3222727	FAN	1				

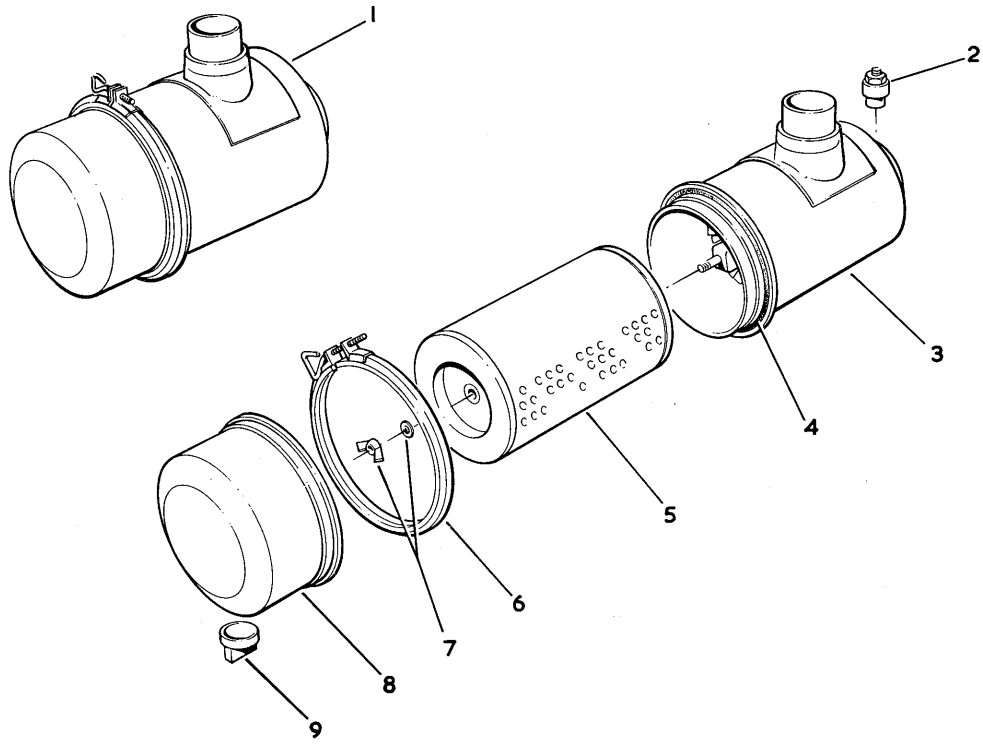

AIR CLEANER T.P 2786

ITEM	PART	DESCRIPTION	QTY.	ITEM	PART	DESCRIPTION	QTY.
1	1529622	AIR CLEANER	1	7	886526	THUMB SCREW	1
2	1529625	INDICATOR SERVICE	1	7	886527	WASHER	1
4	944494	O RING	1	8	946859	CAP DUST	1
3		BODY SEE ITEM 1		9	946860	VALVE	1
5	946857	ELEMENT	1				
6	945021	CLAMP	1				

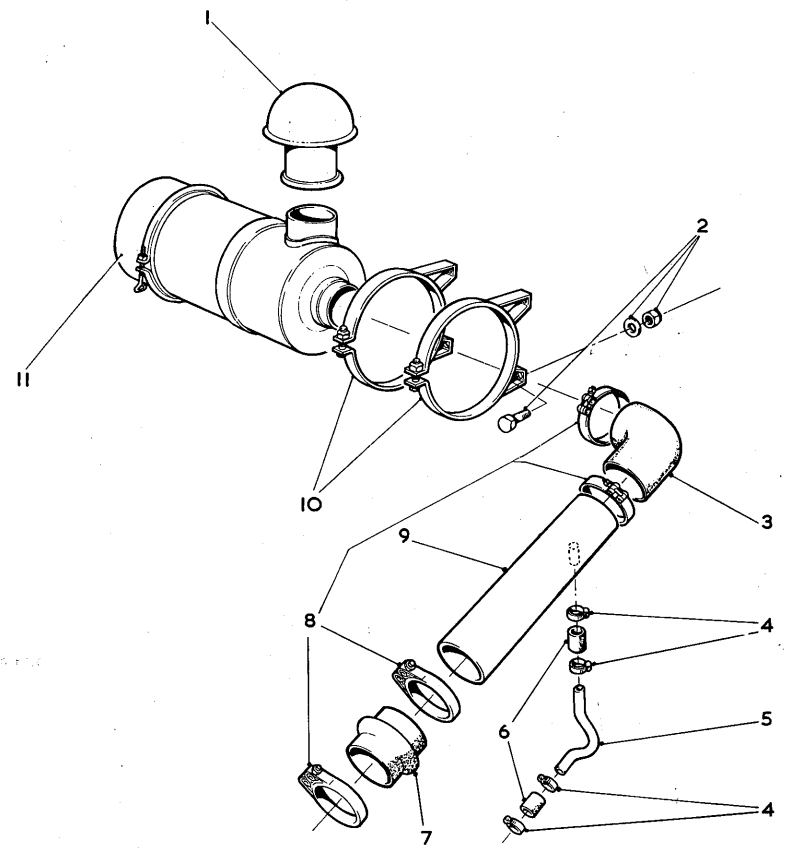

AIR CLEANER CONNECTIONS TP2560

ITEM	PART	DESCRIPTION	QTY.
1	1529623	CAP AIR CLEANER	1
2	2C-620	BOLT CLEANER TO HOOD	4
2A	18D-06	LOCKNUT	4
2B	656672	FLATWASHER	4
3	1529315	HOSE	1
4		OMIT	
5		OMIT	
6		OMIT	
7	1522454	HOSE TUBE TO MANIFOLD	1
8		CLAMP HOSE TO TUBE	
	540797	CLAMP	1
	1500793	CLAMP	3
9	1504407	TUBE AIR SUCTION	1
10	1529624	STRAP AIR CLEANER	2
11		AIR CLEANER SEE INDEX	

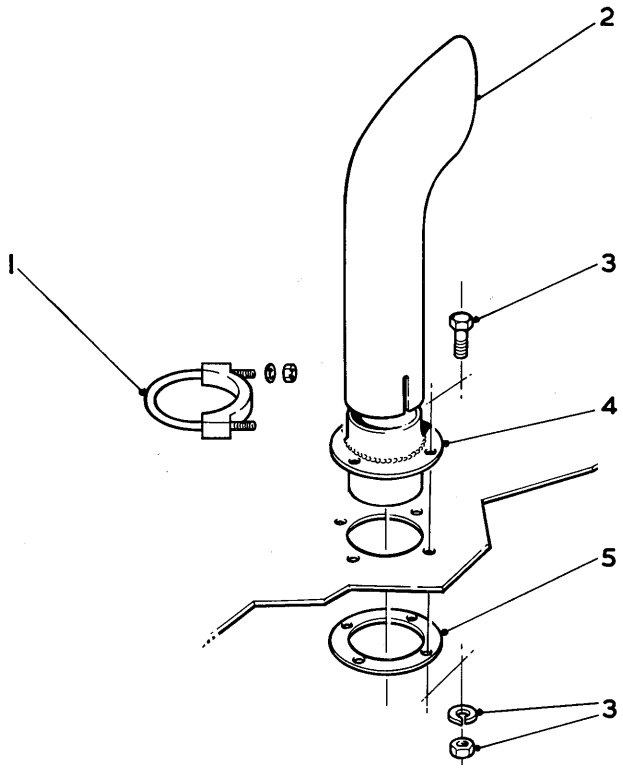

MUFFLER EXHAUST TP2889

ITEM	PART	DESCRIPTION	QTY.	ITEM	PART	DESCRIPTION	QTY.
1	1500453	CLAMP	1	3	15D-06	NUT	4
2	1529635	TAILPIPE	1	4	1526794	EXHAUST PIPE	1
3	1C-620	BOLT	4	5	1524162	FLANGE	1
3	4E-06	LOCKWASHER	4				

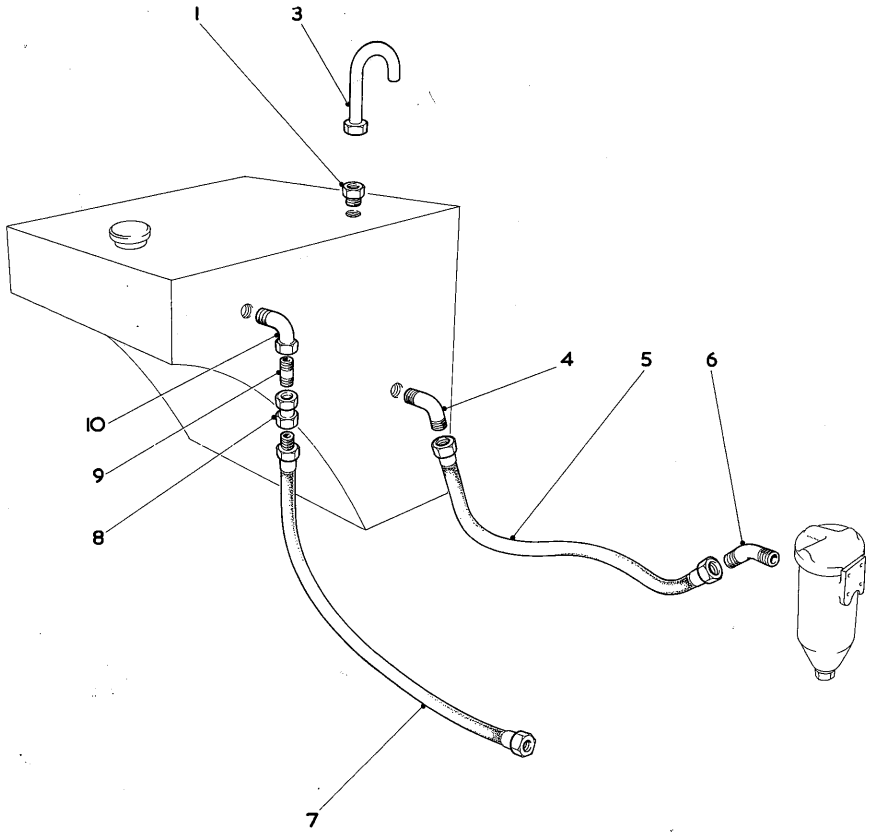

FUEL LINES

TP 2787

ITEM	PART	DESCRIPTION	QTY.
1	38F-4	CONNECTOR	1
3	572075	BREATHER TUBE	1
4	81F-3	PIPE FITTING 45 DEG	1
5	1521421	HOSE	1
6	18K-7	ELBOW	1
7	1521417	HOSE	1
8	3229861	VALVE CHECK	1
9	5K-308	NIPPLE PIPE	1
10	81F-2	ELBOW	1

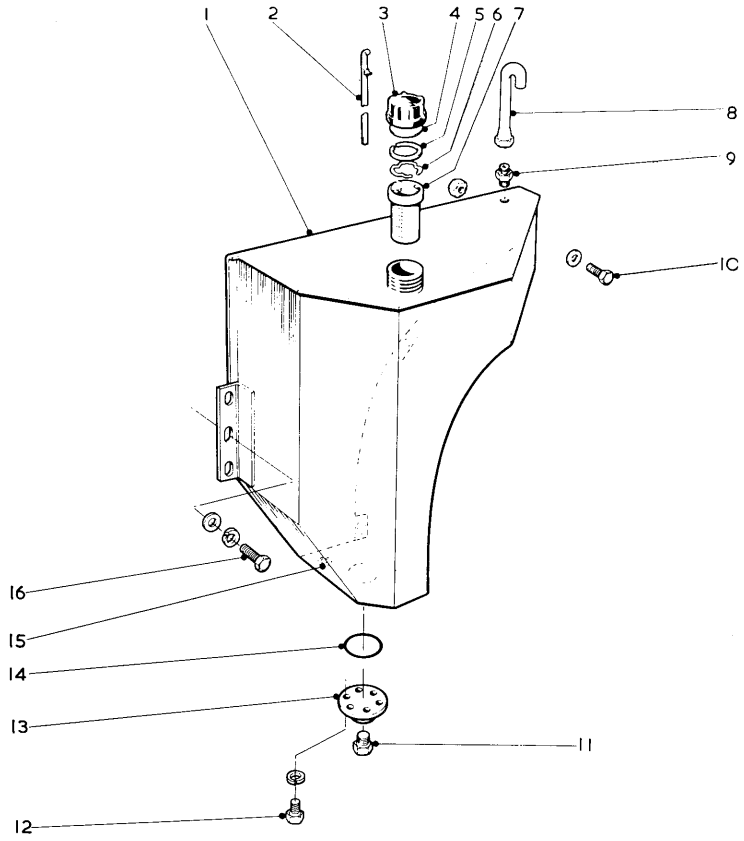

FUEL TANK TP 2571

ITEM	PART	DESCRIPTION	QTY.
1	1529087	TANK	1
2	569497	DIPSTICK	1
3	556655	CAP ASSEMBLY	1
4	3220937	PLATE BACKING	1
5	3220936	RING SEAL	1
6	569914	RING SNAP	1
7	943957	SCREEN	1
8	572079	BREATHER TUBE	1
9	38F-4	CONNECTOR	1
10	61680C	FLATWASHER	1
10	2C-1028	BOLT	1

ITEM	PART	DESCRIPTION	QTY.
10	18D-10	LOCKNUT	1
11	40K-16	PLUG	1
12	2C-616	BOLT	6
12	4E-06	LOCKWASHER	6
13	587613	PLATE	1
14	25K-40428	O RING	1
15	525293	MAGNET	1
16	61680C	WASHER	5
16	2C-1020	BOLT	5
16	4E-10	LOCKWASHER	5

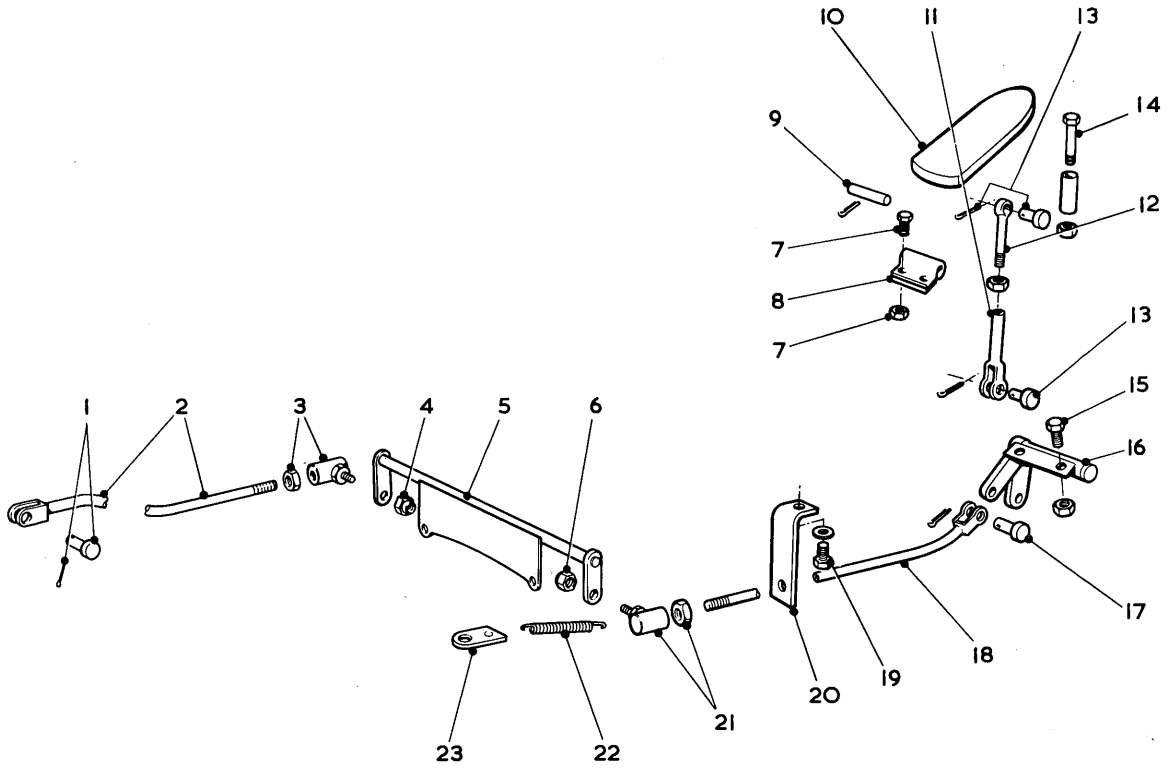

ENGINE CONTROLS TP2581

ITEM	PART	DESCRIPTION	QTY.	ITEM	PART	DESCRIPTION	QTY.
1	18D-05	LOCKNUT	1	13	4F-04051	PIN CLEVIS	2
2	569130	ROD	1	14	551016	STOP	1
3	1301361	BALLJOINT	2	14	2C-448	BOLT	1
3	8D-05	NUT	2	14	18D-04	LOCKNUT	1
4	18D-05	LOCKNUT	1	15	2C-416	BOLT	2
5	568595	BELLCRANK	1	15	18D-04	LOCKNUT	2
6	66D-05	NUT	1	16	568941	BELLCRANK	1
7	2C-416	BOLT	2	17	1F-208	PIN COTTER	1
7	18D-04	NUT	2	17	4F-04051	PIN CLEVIS	1
8	572556	SPACER	1	18	1521673	ROD	1
9	623760	BRACKET	1	19	2C-616	BOLT	1
9	623762	PIN	1	19	4E-06	LOCKWASHER	1
9	1F-216	COTTER	1	20	569761	BRACKET	1
10	623829	PEDAL	1	21	1301361	BALLJOINT	1
11	2J-420C	CLEVIS	1	21	8D-05	NUT	1
11	8D-04	NUT	1	22	551014	SPRING	1
12	550619	ROD	1	23	551778	ANCHOR	1
13	1F-207	PIN COTTER	2				

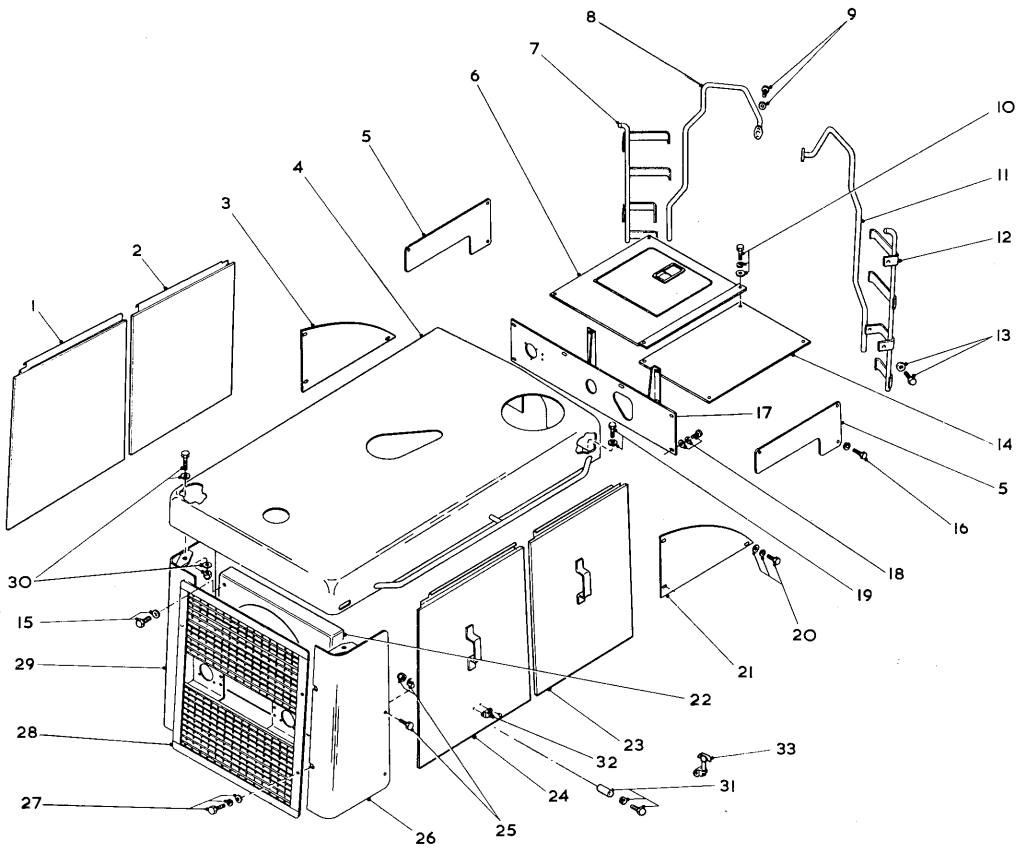

HOODS SHROUDS AND GRILLE TP2578

ITEM	PART	DESCRIPTION	QTY.
1	3229878	SIDE PANEL	2
2	3229878	SIDE PANEL	1
3	569321	PANEL LH	1
4	3230398	REAR HOOD	1
5	569763	PLATE	2
6	569325	COVER ASSEMBLY	1
7	1524178	STEP LH	1
8	1529082	HANDLE LH	1
9	619029	WASHER	8
9	2C-824	BOLT	8
9	4E-08	LOCKWASHER	8
10	656672	FLATWASHER	6
10	1C-620	BOLT	6
10	4E-06	LOCKWASHER	6
11	1529083	HANDLE RH	1
12	1524177	STEP RH	1
13	619029	WASHER	16
13	2C-828	BOLT	8
13	18D-08	LOCKNUT	8
14	569323	COVER	1
16	2C-616	BOLT	6
16	4E-06	LOCKWASHER	6
17	1529021	PLATE	1
18	656672	FLATWASHER	6
18	1C-620	BOLT	6
18	4E-06	LOCKWASHER	6
19	619021	WASHER	4
19	2C-624	BOLT	2
19	18D-06	LOCKNUT	2
20	656672	FLATWASHER	6
20	2C-616	BOLT	2
20	2C-624	BOLT	4
20	4E-06	LOCKWASHER	2
20	18D-06	LOCKNUT	4
21	569321	PANEL RH	1
23	3229878	SIDE PANEL	1
24	3229878	SIDE PANEL	2
25	616809	FLATWASHER	4
25	635682	WASHER	2
25	2C-828	BOLT	2
25	2C-1240	BOLT	4
25	18D-08	LOCKNUT	2
25	18D-12	LOCKNUT	4
26	569543	PLATE	1
27	635682	FLATWASHER	4
27	2C-824	BOLT	4
27	4E-08	LOCKWASHER	4
28	3230047	REAR GRILLE ASSEMBLY	1
29	569542	PLATE	1
30	569276	VIBRATION DAMPER	4
30	619021	FLATWASHER	6
30	2C-632	BOLT	2
30	18D-06	LOCKNUT	2
31	616776	WASHER	6
31	3215436	BUMPER	6
31	3220856	SCREW	6
31	3220859	NUT	6
32	1H-207	RIVET	13
33	3215035	CLIP	6

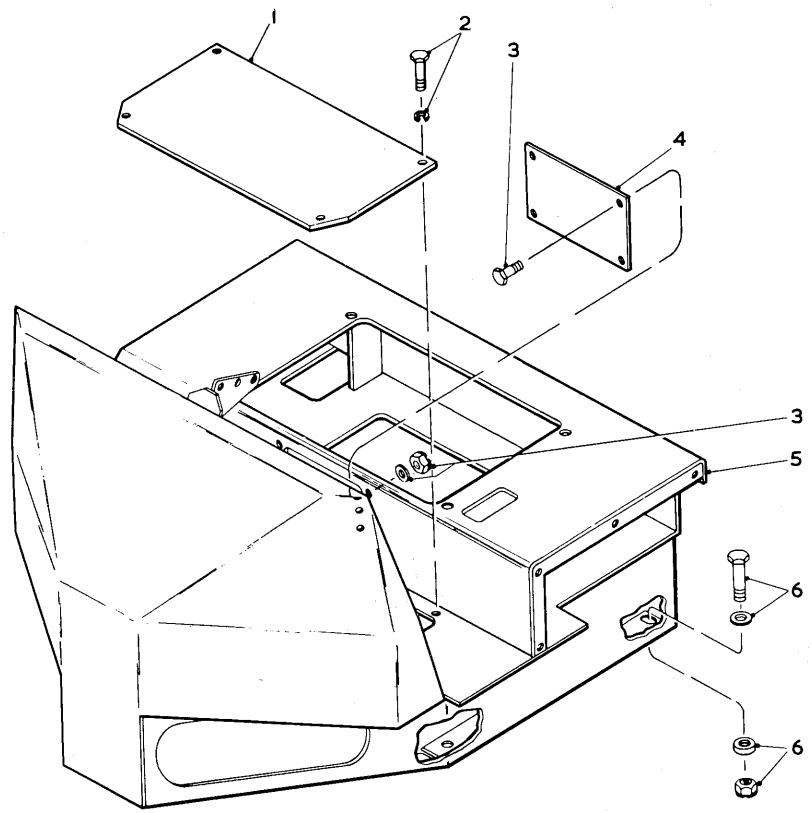

OPERATORS COMPARTMENT TP2595

ITEM	PART	DESCRIPTION	QTY.	ITEM	PART	DESCRIPTION	QTY.
1	568946	PLATE	1	4	557057	PLATE	1
2	1C-816	BOLT	4	5	3229512	OPERATORS COMPARTMENT	1
2	4E-08	LOCKWASHER	4	6	619029	FLATWASHER	4
3	2C-412	BOLT	4	6	2C-840	BOLT	4
3	18D-04	NUT	4	6	18D-08	LOCKNUT	4

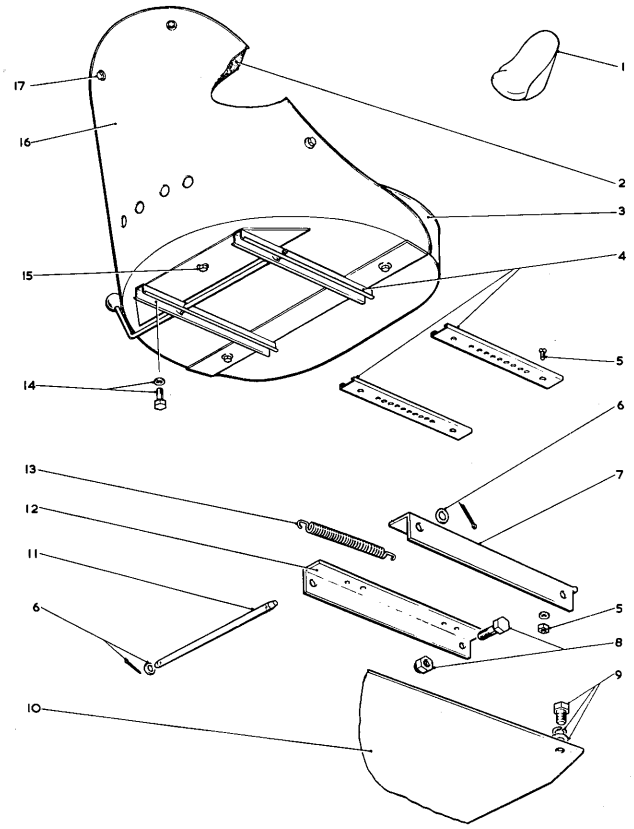

TP 2106

SEAT ASSEMBLY

ITEM	PART	DESCRIPTION	QTY.	ITEM	PART	DESCRIPTION	QTY.
1	3203873	BUCKET SEAT AND SLIDE	1	9	1C-820	BOLT	4
2	3203876	CUSHION	1	9	4E-08	LOCKWASHER	4
3	3203875	CUSHION	1	10	568781	SEAT BASE	1
4	3203877	SLIDE SET	1	11	557458	BAR	1
5	619019	WASHER	4	12	558779	ANGLE LEFT HAND	1
5	8G-518	SCREW	4	13	550301	SPRING	1
5	67D-05	NUT	4	14	2C-512	BOLT	4
6	664406	FLATWASHER	2	14	5E-05	WASHER	4
6	1F-420	COTTER PIN	2	15	619018	WASHER	3
7	558777	ANGLE ASSEMBLY	1	15	2C-412	BOLT	3
8	2C-824	BOLT	2	16	3203874	PAN	1
8	18D-08	LOCKNUT	2	17	619018	WASHER	5
9	619029	FLATWASHER	4	17	2C-408	BOLT	5

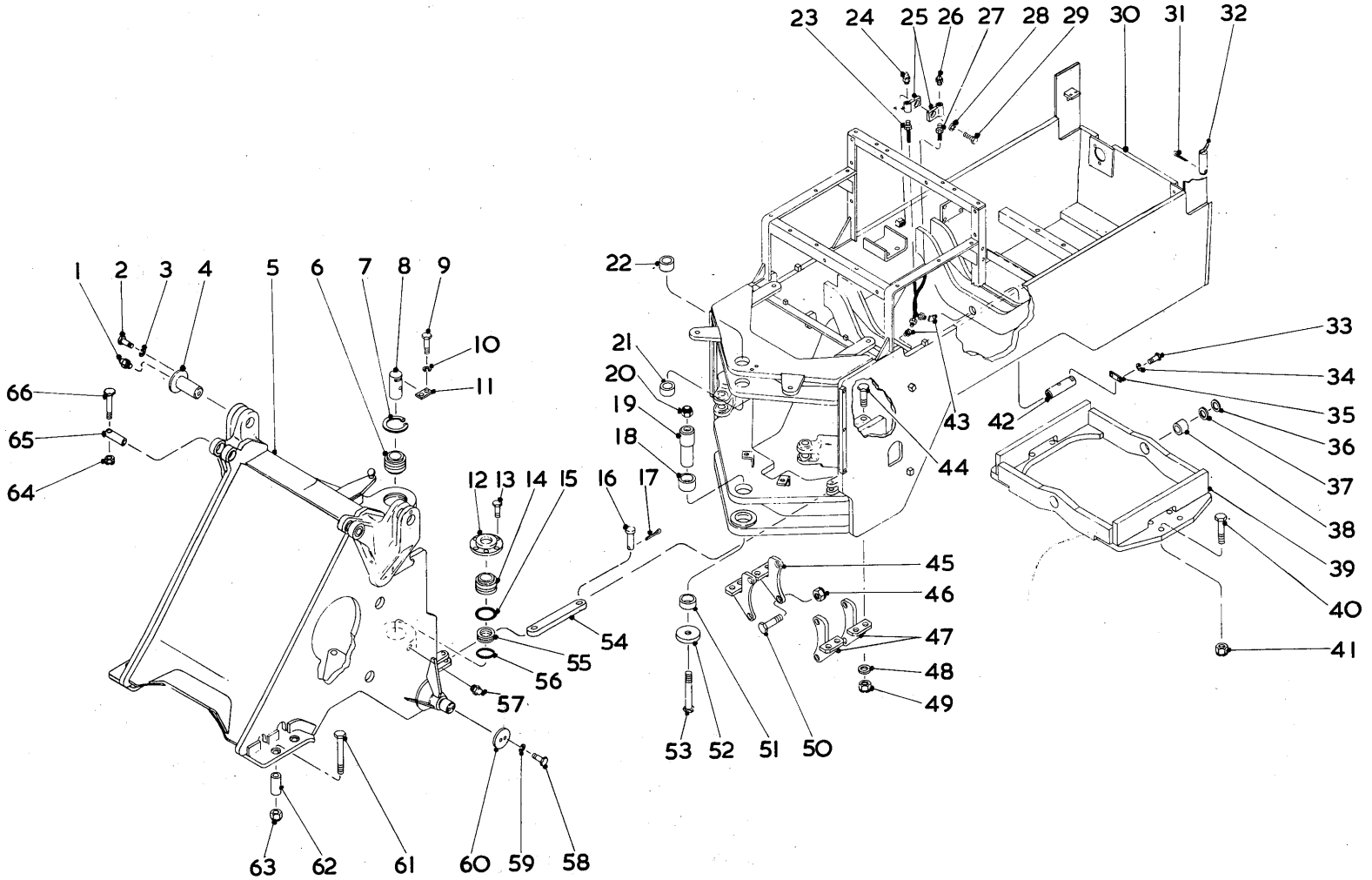

FRONT & REAR FRAME & CRADLE

TP 3420

FRAME & AXLE CRADLE

ITEM	PART	DESCRIPTION	QTY.
1	10H-25	FITTING GREASE	2
2	1C-1236	BOLT BOOM PIN	2
3	4E-12	LOCKWASHER	2
4	1526491	PIN BOOM	2
5	1528006	FRAME ASSY - FRONT	1
6	561085	BUSH UPPER HINGE PIN	1
7	743848	RING RETAINING	1
8	3230596	PIN UPPER HINGE	1
9	2C-1224	BOLT LOCKPLATE	2
10	4E-12	LOCKWASHER	2
11	561315	LOCKPLATE HINGE PIN	1
12	561087	PLATE LOWER HINGE PIN	1
13	24C-1436	BOLT PLATE	6
14	561085	BUSH LOWER HINGE	1
15	25K-40524	O RING	1
16	1533717	PIN CLEVIS SAFETY LINK	
17	1F-528	PIN COTTER	
18	1522161	BUSHING LOWER PIVOT	1
19	561090	PIN LOWER HINGE	1
20	18D-24	LOCKNUT	1
21	1525299	BUSHING UPPER PIVOT	1
22	1525299	BUSHING UPPER PIVOT	1
23	545566	HOSE FITTING-CRADLE PIN	1
24	10H-25	FITTING GREASE	1
25	1504336	COUPLING HOSE	2
26	10H-25	FITTING GREASE	1
27	545566	HOSE FITTING-CRADLE PIN	1
28	4E-06	LOCKWASHER	1
29	24C-620	BOLT COUPLING TO FRAME	1
30	3229890	FRAME ASSY - REAR	
31	1F-1252	PIN COTTER	1
32	1506818	PIN DRAWBAR	1
33	2C-824	BOLT LOCKPLATE TO CRADLE	4
34	4E-08	LOCKWASHER	4
35	587931	LOCKPLATE	2
36	514400	SHIM CRADLE MOUNTING	AR
37	514401	SHIM CRADLE MOUNTING	AR
38	562432	BUSHING CRADLE	2
39	568982	CRADLE ASSY REAR AXLE	
40	24C-2080	BOLT AXLE TO CRADLE	8
41	18D-20	NUT AXLE TO CRADLE	8
42	1504330	PIN CRADLE TO FRAME	2
43	25F-1	ELBOW HOSE TO PIN	2
44	24C-1680	BOLT BRACKET TO FRAME	4
45	1508786	BRACKET TRANSMISSION RH	2
46	68D-16	NUT TRANS - BRACKET	8
47	1508787	BRACKET TRANSMISSION LH	2
48	539404	WASHER LH SIDE ONLY	2
49	68D-16	NUT BRKT - FRAME	4
50	24C-1664	BOLT TRANS - BRACKET	8
51	1522162	BUSHING LOWER PIVOT	1
52	561087	PLATE RETAINER	1
53	24C-24184	BOLT LOWER HINGE PIN	1
54	1533717	LINK SAFETY	1
55	561088	SPACER LOWER HINGE	1
56	25K-40416	O RING	1
57	10H-25	FITTING GREASE	2
58	1C-820	BOLT BOOM CYL RETAINER	4
59	4E-08	LOCKWASHER	4
60	566710	PLATE RETAINER	1
61	24C-20144	BOLT AXLE TO FRAME	8
62	570203	SPACER ONLY	8
63	537015	LOCKNUT	8
64	18D-12	NUT PIN RETAINING	2
65	519582	PIN BUCKET CYL TO FRAME	2
66	2C-12136	BOLT PIN RETAINING	2

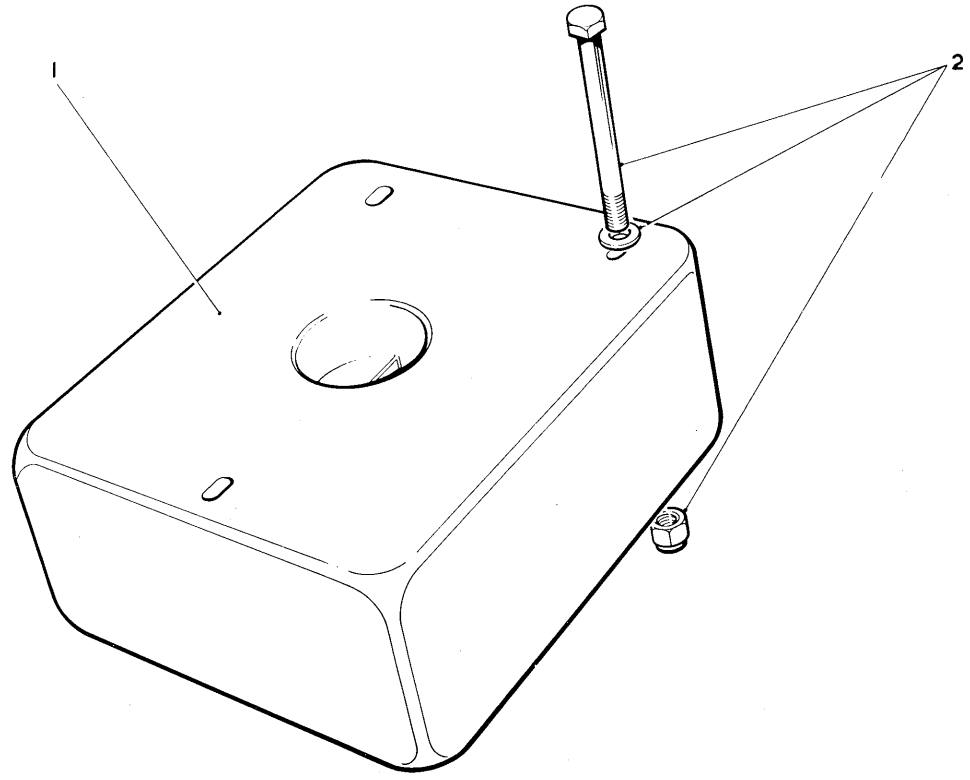

TP2199

COUNTER WEIGHT

ITEM	PART	DESCRIPTION	QTY.	ITEM	PART	DESCRIPTION	QTY.
1	3232438	COUNTERWEIGHT	1	2	2C-12200	BOLT	3
2	564962	WASHER	3	2	18D-12	NUT	3

NAMEPLATES & DECALS (Not Illustrated)

ITEM	PART	DESCRIPTION	QTY.
1	572154	DECAL MODEL	2
2	547851	DECAL CLARK EQUIPMENT	2
3	547852	DECAL MICHIGAN	3
4	538256	DECAL TRANSMISSION DRAIN	1
5	572740	DECAL WARNING	2
6	1505581	DECAL SAFETY WIRING	1
7	1505537	DECAL SAFETY WARNING	1
8	3230118	DECAL LEVER MOVEMENT	1
9	3230516	DECAL WARNING	1
10	548074	PLATE OPERATING INSTR	1
10A	65G-406	SCREW	4
11	535649	NAMEPLATE CASTING GRILLE	1
11A	7G-418	SCREW	4
11B	20E-04	LOCKWASHER	4
12	3235258	PLATE SERIAL NUMBER	1
12A	6G-605	DRIVE SCREW	4
13	1527430	PLATE RESERVOIR SERVICE	1
14	565139	STRIP NON SKID	1
15	565138	STRIP NON SKID	1
16	1531606	STRIP NON SKID	6

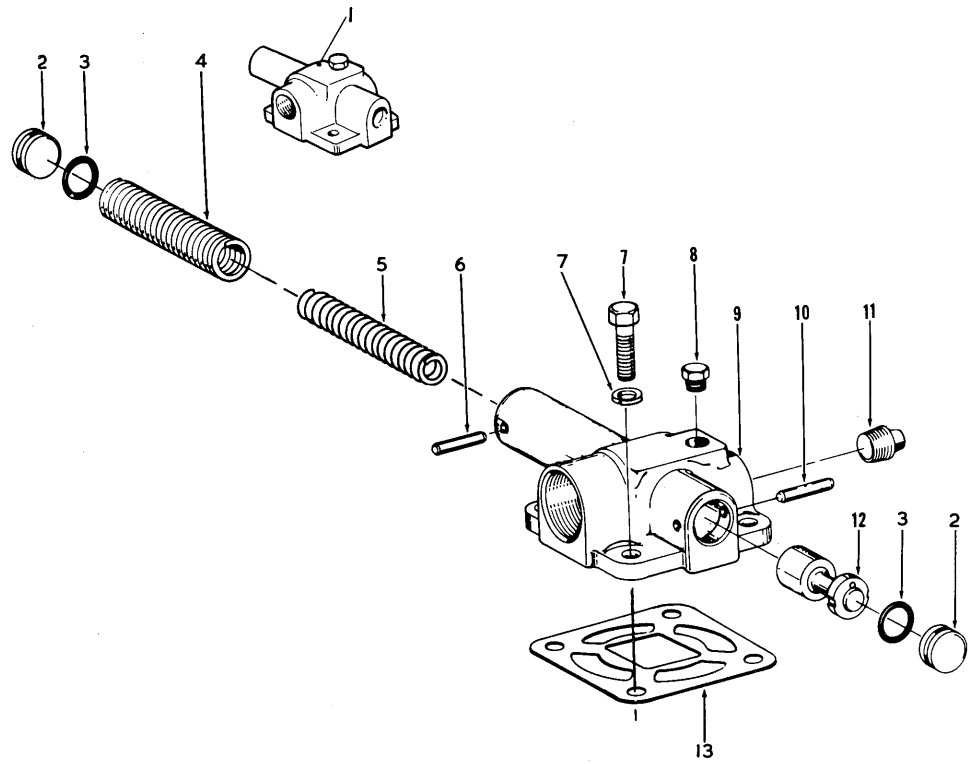

PRESSURE REGULATING VALVE ASSEMBLY

ITEM	PART	DESCRIPTION	QTY.	ITEM	PART	DESCRIPTION	QTY.
1	228499	VALVE ASSEMBLY	1	7	4E-07	LOCKWASHER	4
2	222041	STOP	1	8	40K-04	PLUG	1
3	25K-40024	O RING	2	9	227076	BODY	1
4	214668	SPRING	1	10	633157	PIN	1
5	227292	SPRING	1	11	13F-08	PLUG	1
6	633157	PIN	1	12	228500	PISTON	1
7	1C-722	BOLT	4	13	227087	GASKET	1

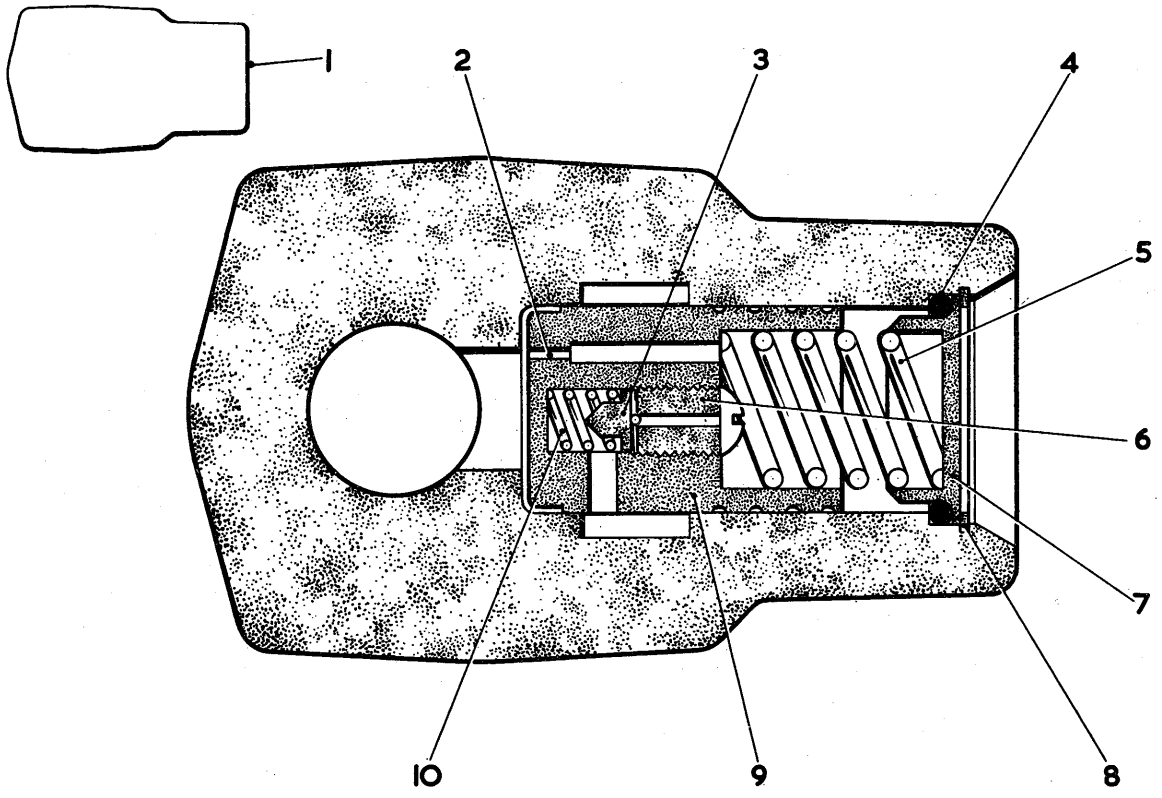

RELIEF VALVE STEERING

T.P. 2891

ITEM	PART	DESCRIPTION	QTY.
1	945751	VALVE ASSEMBLY	1
2	873208	PLUG	1
3	944185	BALL AND STEM	1
4	25K-40104	O RING	1
5	944196	SPRING	1
6	945508	PLUG	1
7	944985	SEAT	1
8	944984	RING	1
9		PISTON SEE ITEM 1	
10	945752	SPRING	1

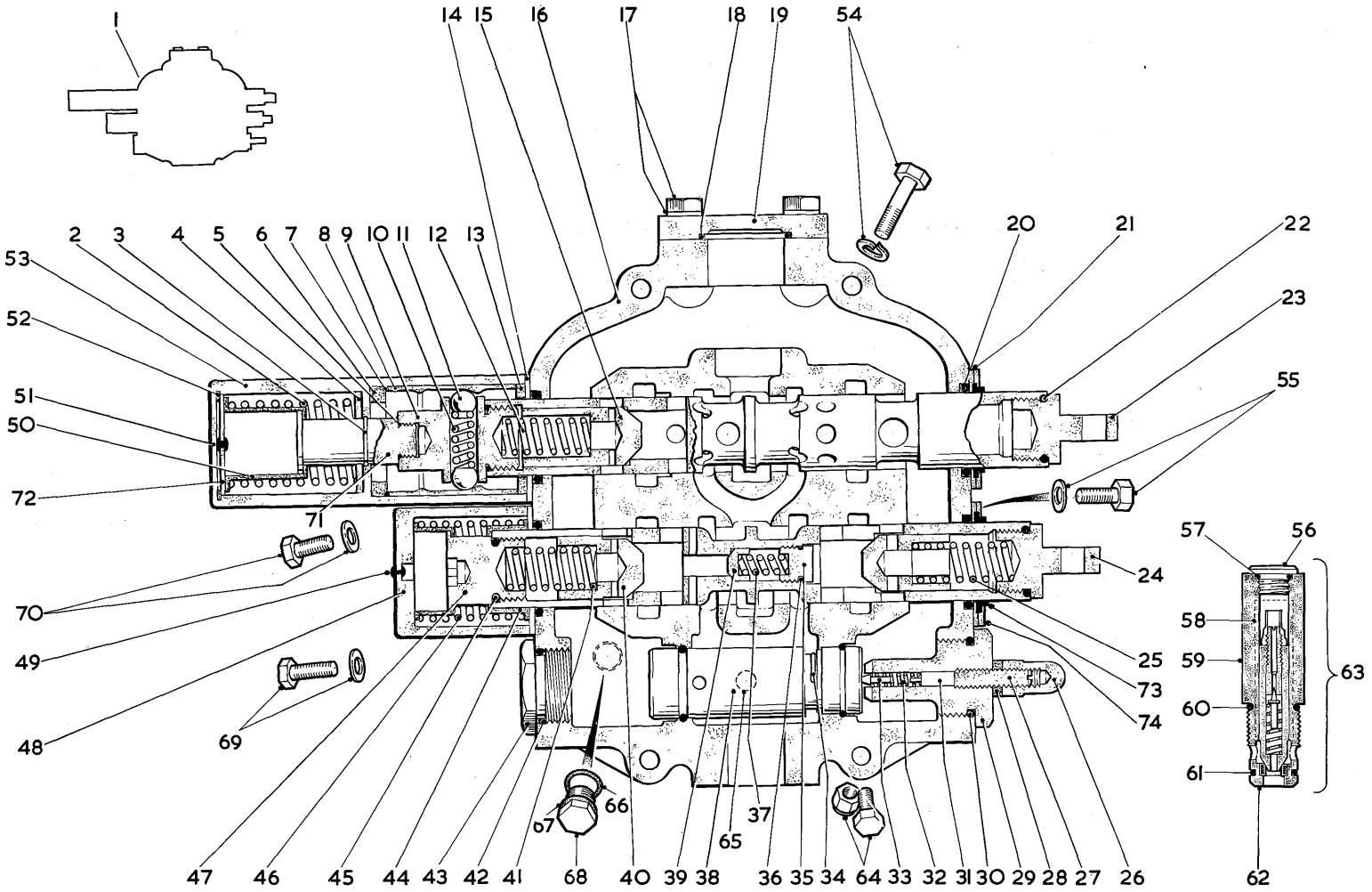

CONTROL VALVE-FRONT END EQUIPMENT

ITEM	PART	DESCRIPTION	QTY.	ITEM	PART	DESCRIPTION	QTY.
1	3229993	CONTROL VALVE	1	38	3290189	CARTRIDGE	1
2	3290890	SPRING	1	39	944885	CHECK MAKE UP	1
3	3290210	CIRCLIP	1	40	945302	VALVE CHECK	2
4	3290216	WASHER	1	41	3290201	SPRING	1
5	3290219	O RING	1	42	3206255	O RING	1
6	3290209	SPACER	1	43	943190	CAP	1
7	3290213	RING SEAL	1	44	3290198	RETAINER	2
8	3290214	SLEEVE DETENT	1	45	25K-40112	O RING	2
9	3290215	CAP POPPET	1	46	3290890	SPRING	1
10	3290212	SPRING	1	47	3290197	CAP	1
11	10J-20	BALL	2	48	329020C	COVER	1
12	945303	SPRING	1	49	3213907	PLUG	1
13	3290217	SPACER	1	50	3290891	RETAINER	1
14	3290188	RETAINER	2	51	3213907	PLUG BLEED	1
15	945302	VALVE	1	52	3290220	RING SNAP	1
16	3290257	HOUSING AND PLUNGERS	1	53	3290206	COVER	1
17	329019C	LOCKWASHER	4	54	2C-880	BOLT	3
17	1C-824	CAPSCREW	4	54	4E-08	LOCKWASHER	3
18	3290191	O RING	1	55	619019	WASHER	8
19	943197	COVER	1	55	3290465	CAPSCREW	8
20	3290221	RING SEAL	4	56	3215244	CAP	1
21	3290222	RETAINER	2	57	3215249	O RING	1
22	25K-40112	O RING	2	58	3290961	CARTRIDGE	1
23	945298	EYE	1	59	3290195	SLEEVE	1
24	945298	EYE	1	60	3290192	O RING	1
25	945303	SPRING	1	61	25K-20024	O RING	1
26	944853	NUT ACORN	1	62	3290194	SEAT	1
27	945327	SCREW	1	63	3290962	RELIEF VALVE	1
28	3213840	WASHER	2	65	16F-04	PLUG	1
28	8D-08	JAM NUT	1	66	25K-20024	O RING	1
29	3290889	CAP	1	67	3290192	O RING	1
				68	3290224	PLUG	1
30	3206255	O RING	1	69	619019	WASHER	4
31	945325	SPRING GUIDE	1	69	3290465	CAPSCREW	4
32	3213775	SPRING	1	70	619019	WASHER	4
33	886739	POPPET	1	70	3290465	CAPSCREW	4
34	3213842	SEAL RING	1	71	3290205	CAP SPRING	1
35	3290202	CAP	1	72	3290207	PLUG	1
36	3290203	O RING	1	73	329048C	WIPER	2
37	3214044	SPRING MAKE UP	1	74	3290481	FLANGE	2

* FOR SERVICE REPLACEMENT USE CONTROL VALVE 3237153

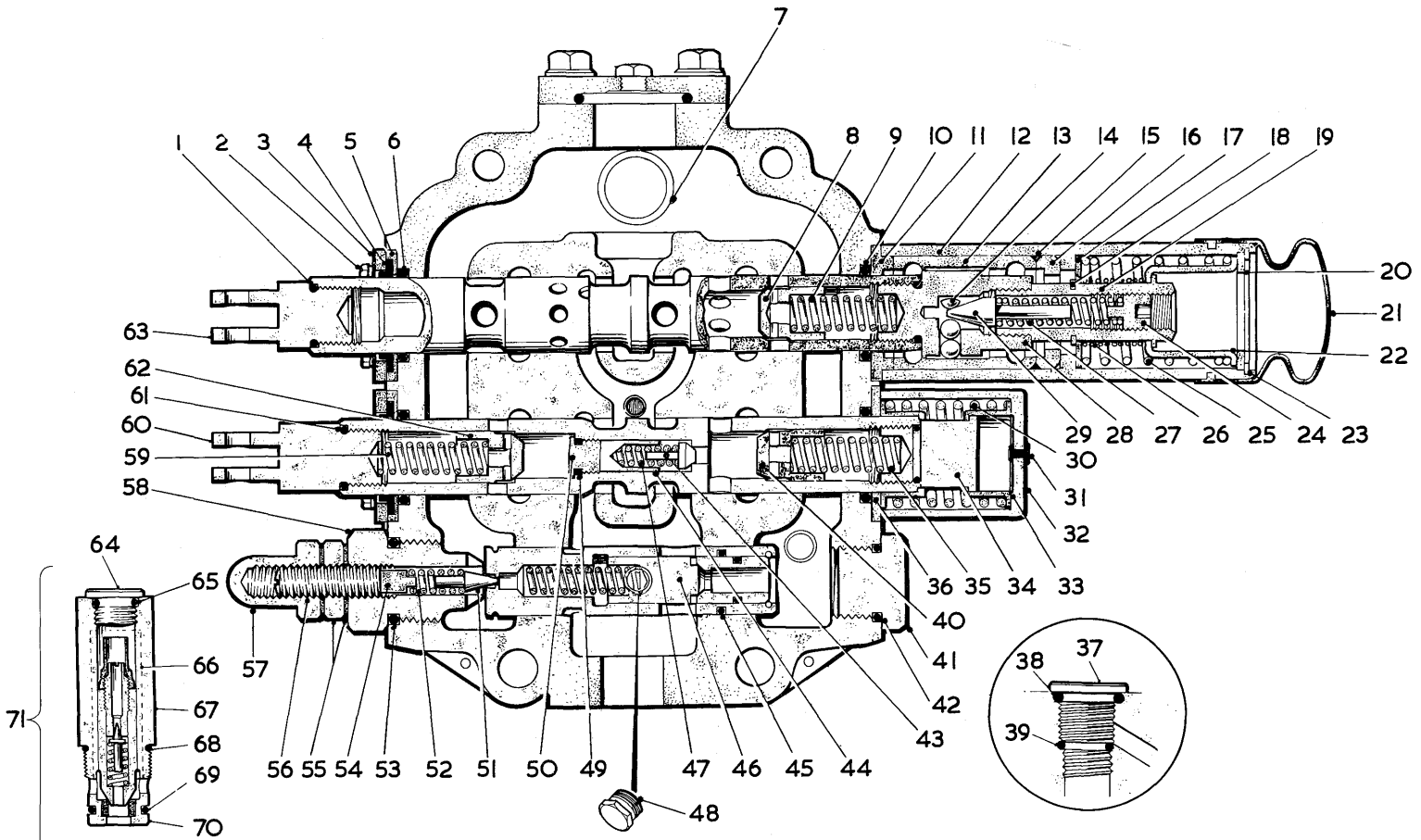

CONTROL VALVE–MAIN HYDRAULIC

TP3587

ITEM	PART		DESCRIPTION	QTY.
A	3237153		CONTROL VALVE ASSY 1-71	1
1		¤	O RING SEE 72	2
2	1C-512		BOLT WIPER RETAINER	8
2A	3292344		WASHER	8
3	3290481		RETAINER WIPER	2
4		¤	WIPER SEE 72	2
5	3290222		RETAINER O RING	2
6		¤	O RING SEE 72	2
7	25K-40216		O RING	1
8	945302		VALVE CHECK	1
9	945303		SPRING CHECK	1
10		¤	O RING SEE 72	2
11	3291792		RETAINER O RING	1
12	3290206		COVER DETENT	1
12A	1C-514	+	BOLT DETENT COVER	4
12B	3292344	+	WASHER	4
13	3291793		SLEEVE DETENT	1
14	10J-16		BALL DETENT	6
15		¤	O RING SEE 72	1
16	3291796		SLEEVE SPACING	1
17	3290216		RETAINER SPRING	1
18	3290210		RING SNAP	1
19	3291800		CAP SPRING	1
20	3291801		PLATE COVER	1
21	3291799		COVER RUBBER	1
22	3292620		RETAINER SPRING	1
23	945310		RING SNAP	1
24	3291798		SCREW ADJUSTING	1
25	3290890		SPRING RETURN	1
26	3292619		RETURN SPRING SECONDARY	1
27	3291797		SPRING POPPET	1
28	3291795		CAP DETENT	1
29	3291794		POPPET	1
30	3290890		SPRING RETURN	1
31	3213907		PLUG BLEED	1
32	3290200		COVER DETENT	1
32A	1C-514	+	BOLT	4
32B	3292344	+	WASHER	4
33	3290198		RETAINER SPRING	2
34	3290197		CAP SPRING	1
35	3290201		SPRING CHECK	1
36	3290188		RETAINER O RING	1
37	3290224		PLUG	1
38		¤	O RING SEE 72	1
39		¤	O RING SEE 72	1
40	945302		VALVE CHECK	1
41	943190		CAP	1
42		¤	O RING SEE 72	1
43		¤	VALVE CHECK SEE 73	1
44		¤	SLUG PRESSURE SEE 73	1
45		¤	O RING SEE 72	1
46	3290189		CARTRIDGE ASSY	1
47		¤	SPRING CHECK SEE 73	1
48	24K-3		PLUG INC 48A	1
48A	91F-3	+	O RING	1
49		¤	O RING SEE 72	1
50	3290202		CAP	1
51	886739		POPPET	1
52	3213775		SPRING	1
53		¤	O RING SEE 72	1
54	945325		PIN	1
55	8D-08		JAM NUT	1
55A		¤	WASHER SEE 72	2
56	945327		SCREW ADJUSTING	1
57	944853		NUT ACORN	1
58	3292354		CAP	1
59	945303		SPRING CHECK	1
60	946338		EYE	1
61		¤	O RING SEE 72	2
62	945302		VALVE CHECK	1
63	946338		EYE	1
64		¤	CAP SEE 71	1
65		¤	O RING SEE 72	1
66		¤	CARTRIDGE ASSY SEE 71	1
67		¤	HOUSING SEE 71	1
68		¤	O RING SEE 72	1
69		¤	O RING SEE 72	1
70		¤	SEAT SEE 71	1
71	3292303		RELIEF VALVE INC 64-70	1
72	3292569	+	SEAL KIT	AR
			INC 1,4,6,10,15,38,39, 42,45,49,53,55A,61,65, 68 & 69	
73	3292635	+	KIT CHECK VALVE	AR
			INC 43,44 & 47	
74		¤	NOT SOLD SEPARATELY	
75		+	NOT ILLUSTRATED	

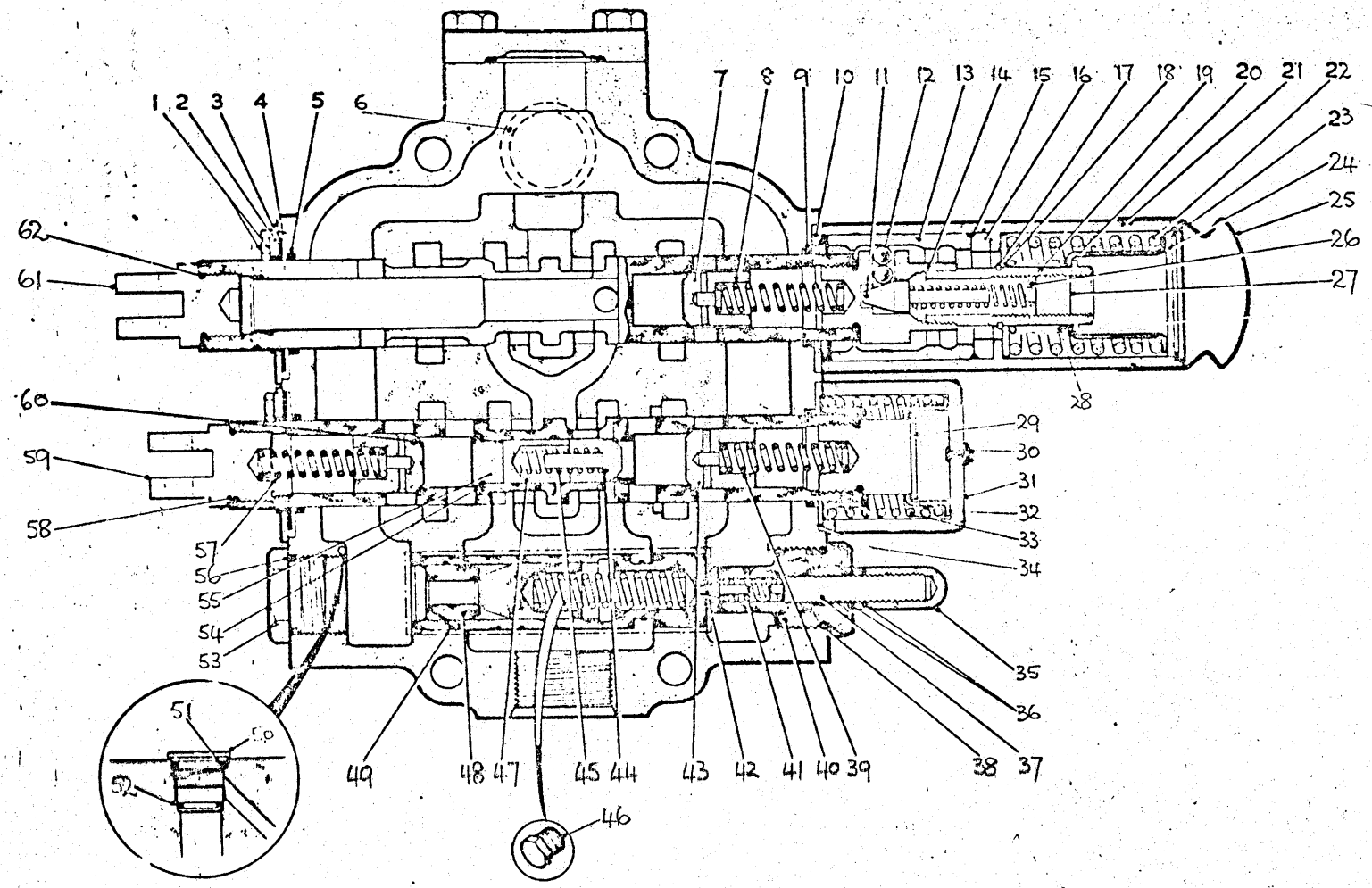

CONTROL VALVE MAIN HYDRAULIC

Mod TP3458

REF 2237151

CONTROL VALVE - MAIN HYDRAULIC

Plate No. TP.

Item No.	Part No.		Description	Quantity
A	3237151		Control Valve Assembly inc. 1-62	1
1	1C-510		Bolt Wiper Retainer	4
1A	3292344		Washer	4
2	3214328		Retainer Wiper	2
3		⌅	Wiper - see 63	2
4	3214329		Retainer O Ring	2
5		⌅	O Ring - see 63	2
6	25K-40120		O Ring	1
7	943184		Valve Check	1
8	3214346		Spring Check	1
9		⌅	O Ring - see 63	2
10	3291779		Retainer O Ring	1
11	3291780		Poppet	1
12	10J-12		Ball Detent	6
13	3292615		Sleeve Detent	1
14	3291783		Cap Detent	1
15		⌅	O Ring - see 63	1
16	3291784		Spacer	1
17	3215248		Ring Snap	1
18	3290305		Retainer Spring	1
19	3291785		Cap Spring	1
20	3292617		Retainer Spring	1
21	3291781		Cover Detent	1
21A	1C-514	+	Bolt Detent Cover	4
21B	3292344	+	Washer	4
22	3292616		Spring Return	1
23	1301171		Ring Snap	1
24	3291786		Plug	1
25	3291789		Cover Rubber	1
26	3291787		Spring Poppet	1
27	3291788		Screw Adjusting	1
28	3292619		Return Spring Secondary	1
29	3290309		Cap Spring	1
30	3213907		Plug Bleed	1
31	3290312		Cover Detent	1
31A	1C-514	+	Bolt	4
31B	3292344	+	Washer	4
32	3214342		Retainer Spring	2
33	3215420		Spring Return	1
34	3214329		Retainer O Ring	1
35	944853		Nut Acorn	1
36	8D-08		Jam Nut	1
36A		⌅	Washer - see 63	2
37	944855		Screw Adjusting	1
38		⌅	O Ring - see 63	1
39	3290310		Spring Check	1
40	3292322		Cap	1
41	3213775		Spring	1

CONTROL VALVE - MAIN HYDRAULIC (Continued)

Item No.	Part No.		Description	Quantity
42	886739		Poppet	1
43	943184		Valve Check	1
44		✡	Valve Check - see 64	1
45		✡	Spring Check - see 64	1
46	24K-3		Plug INC. 46A	1
46A	91F-3	+	O Ring	1
47		✡	Slug Pressure - see 64	1
48	3291083		Cartridge Assy.	1
49		✡	O Ring - see 63	1
50	3290224		Plug	2
		✡	O Ring -see 63	2
52		✡	O Ring - see 63	2
53	875279		Cap	1
54		✡	O Ring - see 63	1
55	3290202		Cap	1
56		✡	O Ring - see 63	1
57	3214346		Spring Check	1
58		✡	O Ring - see 63	2
59	3290511		Eye	1
60	943184		Valve Check	1
61	3290511		Eye	1
62		✡	O Ring - see 63	2
63		+	Seal Kit inc. 3,5,9,15,36A,38,49,51,52,54,56, 58 & 62	As Req.
64	3292635	+	Kit, Check valve inc. 44,45 & 47	As Req.

✡ Not sold separately
\+ Not illustrated

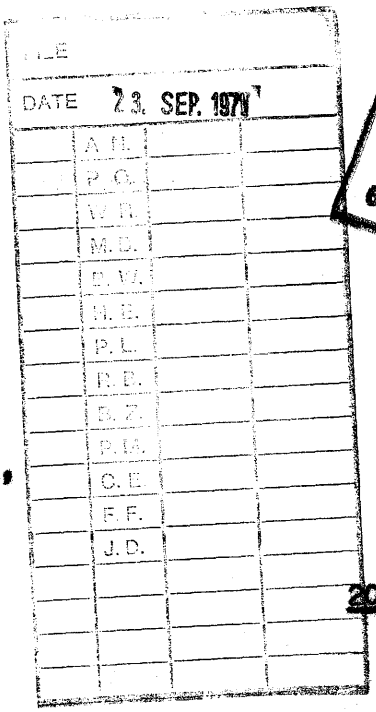

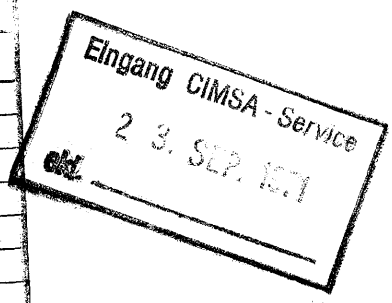

Charles Keller G.M.B.H. Baumaschinen,
4-6 Sachsenplatz,
Vienna 20,
AUSTRIA

20th September, 1971.

For the attention of Mr. Lahner

Dear Sirs,

3 Spool Control Valve No. 3237154

As requested in your letter dated 10th September, 1971, we have pleasure in enclosing herewith the requisite 6 (six) copies of temporary Parts List and Illustration No. TP.3587 to cover the subject Control Valve.

Yours very truly,
for CLARK EQUIPMENT LIMITED.

D. S. Weeks
Technical Publications Manager

CC: Mr. F. Lee
R. Payne

Eingang CIMSA - Service
2 2 ...
ekl.

CONTROL VALVE - MAIN HYDRAULIC (3 SPOOL)

Plate No. TP.3587

Item No.	Part No.	Description	Quantity
A	3237154	Control Valve Assembly inc. 1-71 & 74-84	1
1		¤ O Ring - see 72	2
2	1C-512	Bolt Wiper Retainer	12
2A	3292344	Washer	12
3	3290481	Retainer Wiper	3
4		¤ Wiper - see 72	3
5	3290222	Retainer O Ring	3
6		¤ O Ring - see 72	2
7	25K-40216	O Ring	1
8	945302	Valve Check	1
9	945303	Spring Check	1
10		¤ O Ring - see 72	2
11	3291792	Retainer O Ring	1
12	3290206	Cover Detent	1
12A	1C-514	+ Bolt Detent Cover	4
12B	3292344	+ Washer	4
13	3291793	Sleeve Detent	1
14	10J-16	Ball Detent	6
15		¤ O Ring - see 72	1
16	3291796	Sleeve Spacing	1
17	3290216	Retainer Spring	1
18	3290210	Ring Snap	1
19	3291800	Cap Spring	1
20	3291801	Plate Cover	1
21	3291799	Cover Rubber	1
22	3292620	Retainer Spring	1
23	945310	Ring Snap	1
24	3291798	Screw Adjusting	1
25	3290890	Spring Return	1
26	3292619	Return Spring Secondary	1
27	3291797	Spring Poppet	1
28	3291795	Cap Detent	1
29	3291794	Poppet	1
30	3290890	Spring Return	1
31	3213907	Plug Bleed	1
32	3290200	Cover Detent	1
32A	1C-514	+ Bolt Detent Cover	4
32B	3292344	+ Washer	4
33	3290198	Retainer Spring	2
34	3290197	Cap Spring	1
35	3290201	Spring Check	1
36	3290188	Retainer O Ring	1
37	3290224	Plug	1
38		¤ O Ring - see 72	1
39		¤ O Ring - see 72	1
40	945302	Valve Check	1
41	943190	Cap	1
42		¤ O Ring - see 72	1
43		¤ Valve Check - see 73	1
44		¤ Slug Pressure - see 73	1

CONTROL VALVE - MAIN HYDRAULIC (Continued)

Item No.	Part No.	Description	Quantity
45		¤ O Ring - see 72	1
46	3290189	Cartridge Assy.	1
47		¤ Spring Check - see 73	1
48	24K-3	Plug inc. 48A	1
48A	91F-3	+ O Ring	1
49		¤ O Ring - see 72	1
50	3290202	Cap	1
51	886739	Poppet	1
52	3213775	Spring	1
53		¤ O Ring - see 72	1
54	945325	Pin	1
55	8D-08	Jam Nut	1
55A		¤ Washer - see 72	2
56	945327	Screw Adjusting	1
57	944853	Nut Acorn	1
58	3292354	Cap	1
59	945303	Spring Check	1
60	946338	Eye	1
61		¤ O Ring - see 72	2
62	945302	Valve Check	1
63	946338	Eye	1
64		¤ Cap - see 71	1
65		¤ O Ring - see 72	1
66		¤ Cartridge Assembly - see 71	1
67		¤ Housing - see 71	1
68		¤ O Ring - see 72	1
69		¤ O Ring - see 72	1
70		¤ Seat - see 71	1
71	3292303	Relief Valve Assembly inc. 64-70	1
72	3292569	+ Seal Kit inc.1,4,6,10,15,38,39,42,45,53,55A,49, 61,65,68,69,79 & 84	A/R
73	3292635	+ Kit Check Valve inc.43,44 & 47	A/R

D PLUNGER & SPOOL - NOT ILLUSTRATED

74	3213907	Plug Bleed	1
75	3290200	Cover	1
75A	1C-514	Bolt Cover to Housing	4
75B	3292344	Washer	4
76	3290198	Retainer Spring	2
77	3290197	Cap Spring	1
78	3290890	Spring Return	1
79		¤ O Ring Spool - see 90	2
80	945302	Valve Check	2
81	945303	Spring Check Valve	2
82	3290188	Retainer O Ring	1
83	946388	Eye	1
84		¤ O Ring Cap/Eye - see 90	2

¤ Not sold seperately
\+ Not illustrated

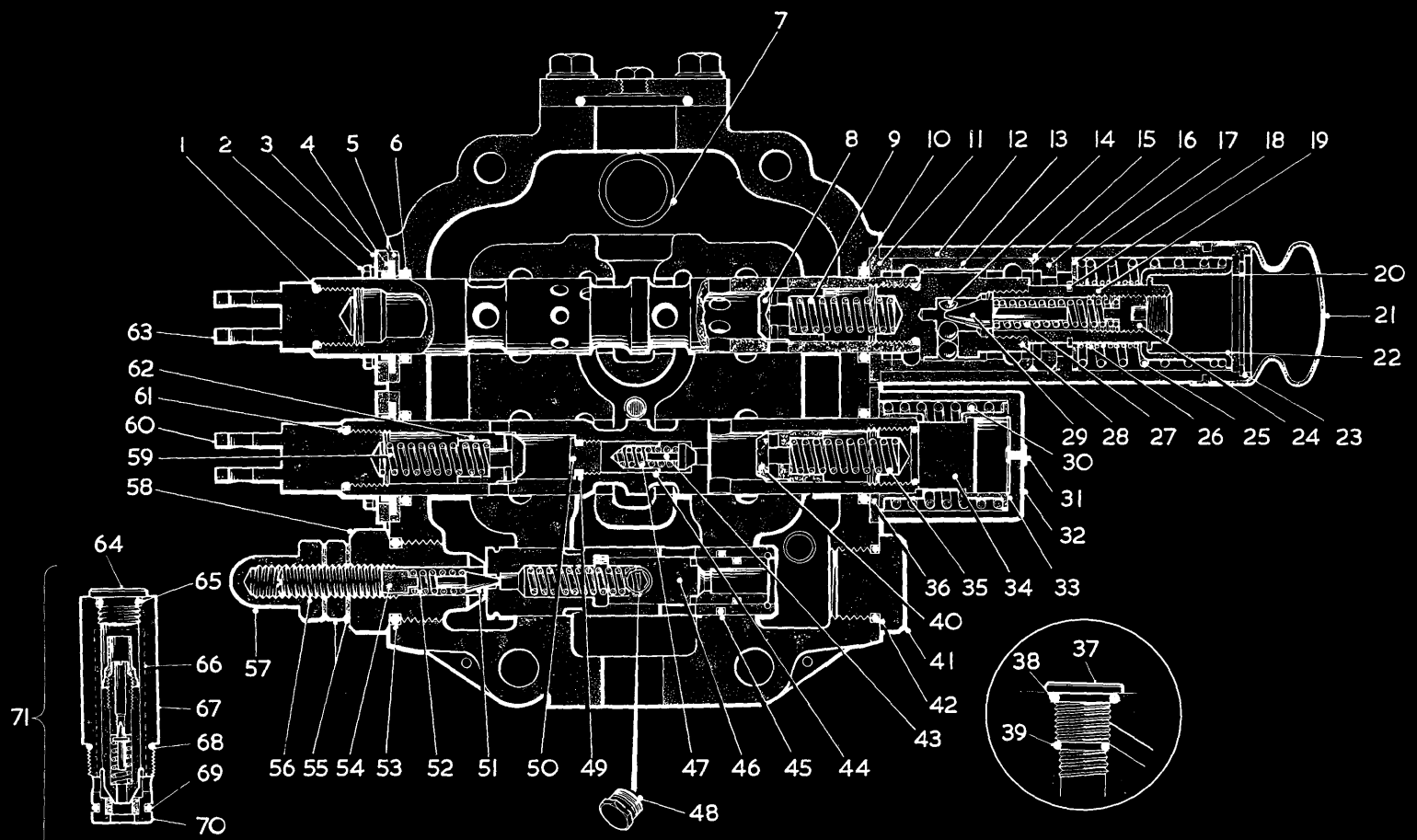

CONTROL VALVE–MAIN HYDRAULIC

TP3587

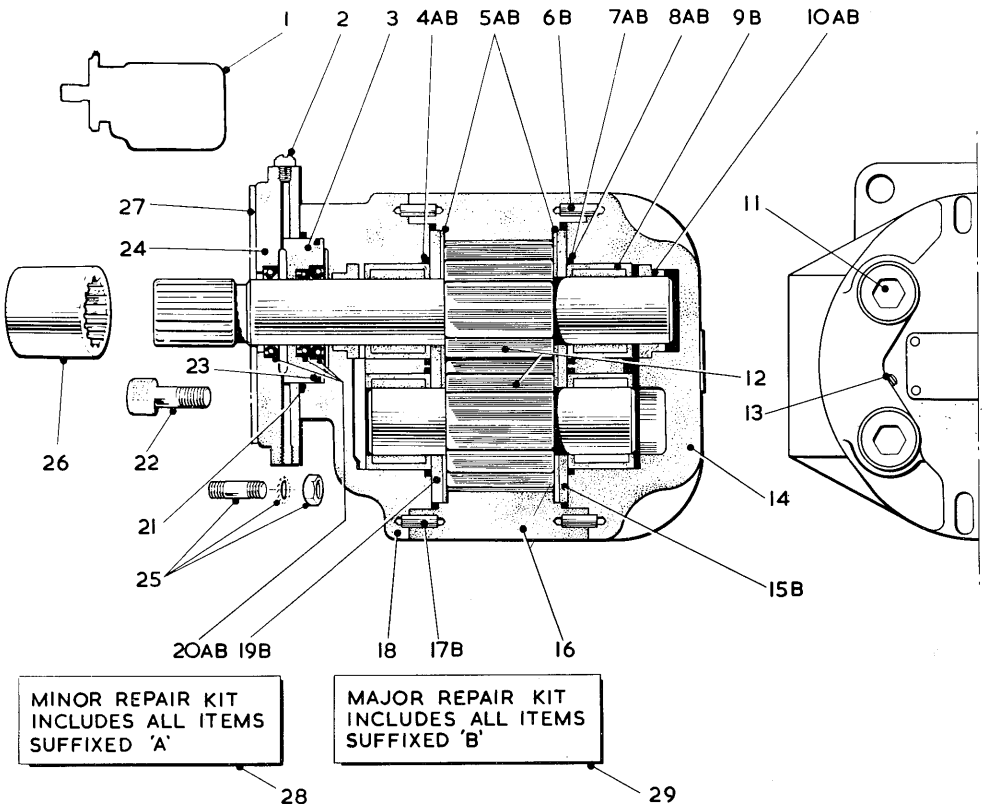

PUMP HYDRAULIC–STEERING TP 2593

ITEM	PART	DESCRIPTION	QTY.	ITEM	PART	DESCRIPTION	QTY.
1	3229988	PUMP ASSEMBLY	1	17	3212076	DOWEL	2
2	3212072	SCREW	1	18	3291218	ADAPTOR	1
3	3212281	SPACER	1	19	3216653	PLATE	1
4	3200996	O RING	2	20	3212070	SEAL	2
5	3212075	SHIMS	2	20	3212290	SEAL	1
6	3212076	DOWEL	2	21	3291023	O RING	1
7	3291212	RING	4	22	3290673	CAPSCREW	8
8	3291213	SEAL	4	23	3291022	O RING	1
9	3291214	BEARING	4	24	3291135	FLANGE	1
10	3212073	SEAL	2	25	571511	STUD	4
11	3291219	CAPSCREW	4	25	20-08	NUT	4
12	3291215	GEARS ASSEMBLY	1	25	4E-08	LOCKWASHER	4
13	16F-02	PLUG	1	26	219413	SLEEVE	1
14	3291216	COVER	1	27	552161	GASKET	1
15	3216653	PLATE	1	28	3291323	REPAIR KIT MINOR	1
16	3291217	HOUSING	1	29	3291324	REPAIR KIT MAJOR	1

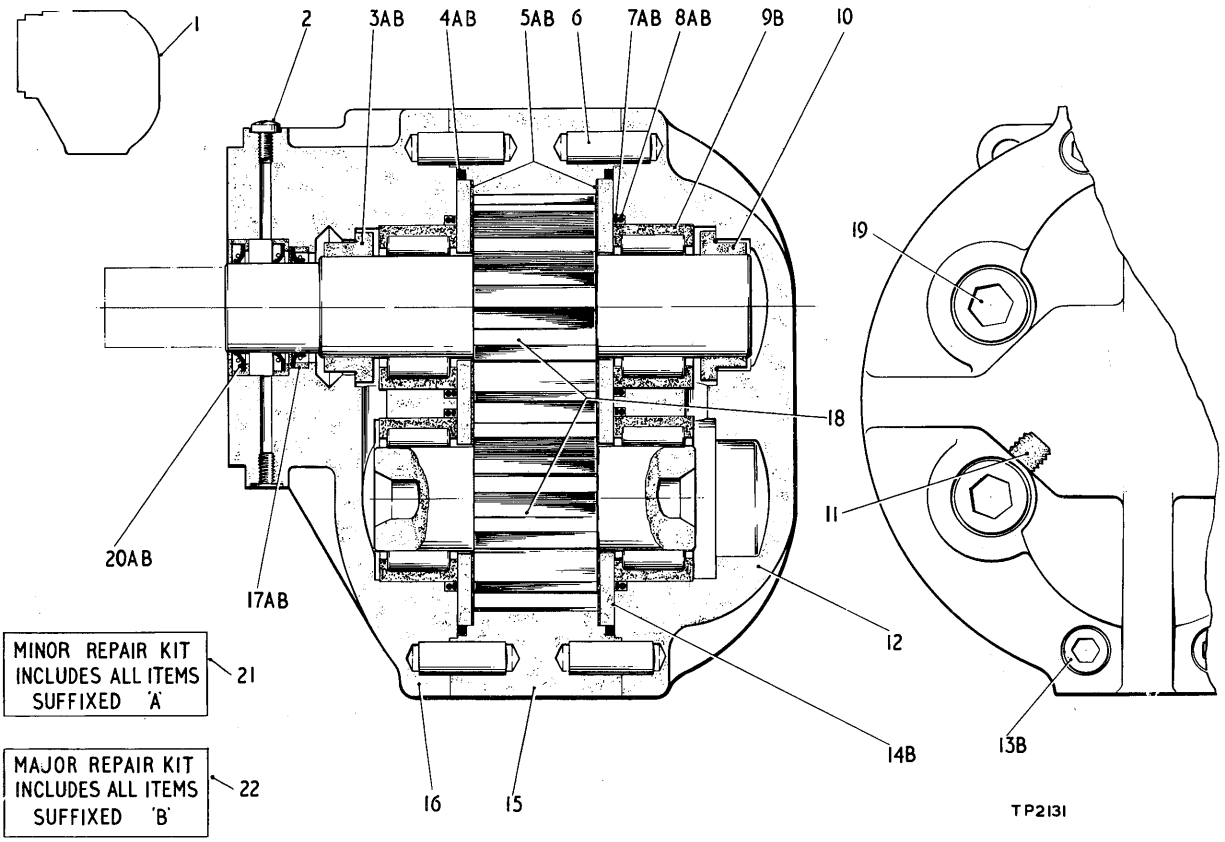

PUMP HYDRAULIC - FRONT END

ITEM	PART	DESCRIPTION	QTY.
1	3221609	PUMP ASSEMBLY	1
2	3212072	SCREW	1
3	3290226	SEAL	1
4	875257	O RING	2
5	3290225	SHIM	2
6	3290230	DOWEL	4
7	3290231	WASHER	4
8	3290227	O RING	4
9	3216857	BEARING	4
10	3290226	SEAL	1
11	16F-02	PLUG	2
12	3290234	COVER	1
13	3290240	NUT	4
13	3290652	CAPSCREW	4
14	3290237	PLATE	2
15	3290649	HOUSING	1
16	3290233	ADAPTOR	1
17	3212261	SEAL	1
18	3290650	GEARS ASSEMBLY	1
19	3290651	CAPSCREW	4
20	3212262	SEAL	2
21	3290375	MINOR REPAIR KIT	1
22	3290236	MAJOR REPAIR KIT	1
23	571511	STUD	4
23	20-08	NUT	4
23	4E-08	LOCKWASHER	4
24	552161	GASKET	1
25	664140	SNAP RING	1
26	219413	SLEEVE	1

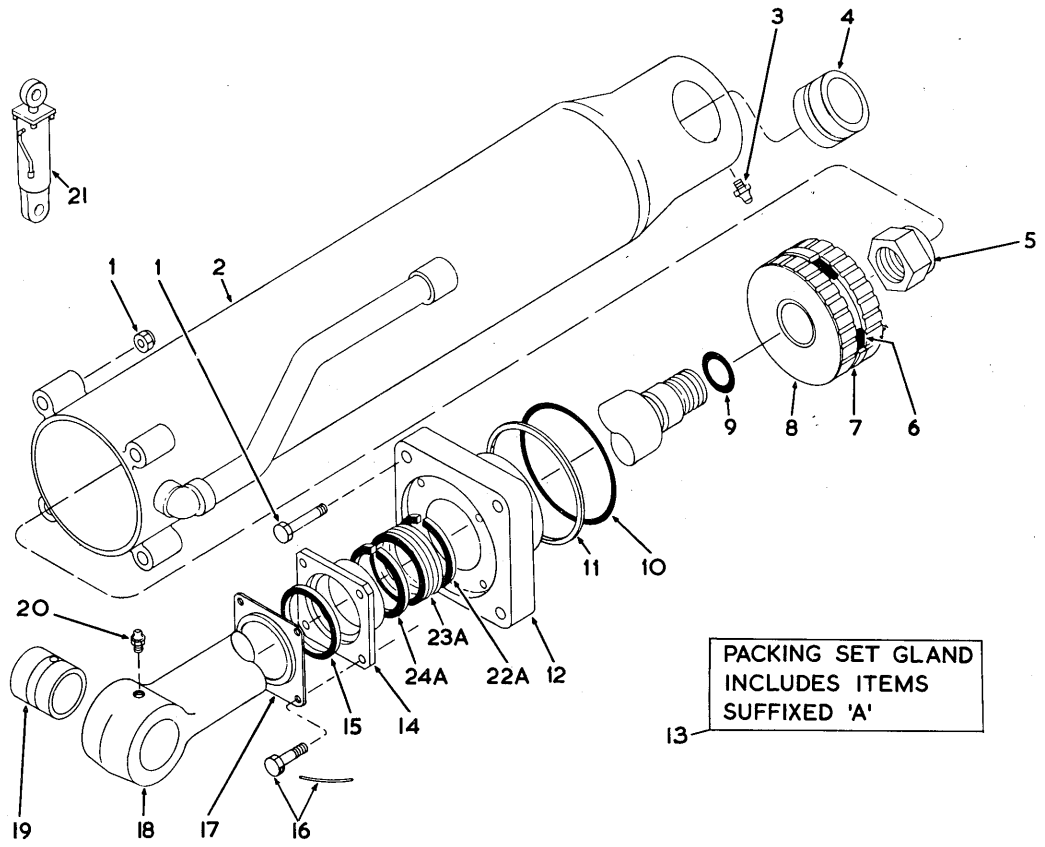

STEERING CYLINDER TP 2854

ITEM	PART	DESCRIPTION	QTY.
1	2C-1080	BOLT	4
1	680-10	LOCKNUT	4
2	569969	CASE CYLINDER	1
3	10H-25	GREASER	1
4	713418	BUSHING	1
5	1520467	NUT	1
6	25K-40420	O RING	1
7	573834	SEALING RING	1
8	569989	PISTON	1
9	25K-40120	O RING	1
10	25K-40500	O RING	1
11	549132	BACK UP RING	1
12	583067	CAP	1

ITEM	PART	DESCRIPTION	QTY.
13	3226192	PACKING SET	1
14	591513	GLAND PACKING	1
15	591525	SEAL	1
16	4C-616	CAPSCREW	4
16	28H-1611C	LOCKWIRE	2
17	591514	RETAINER	1
18	1530877	ROD PISTON	1
19	713418	BUSHING	1
20	10H-35	GREASER	1
21	3229841	CYLINDER ASSEMBLY	2
22	3226195	ADAPTOR MALE	2
23	3226193	SPLIT RING PACKING SET	1
24	3226196	ADAPTOR FEMALE	2

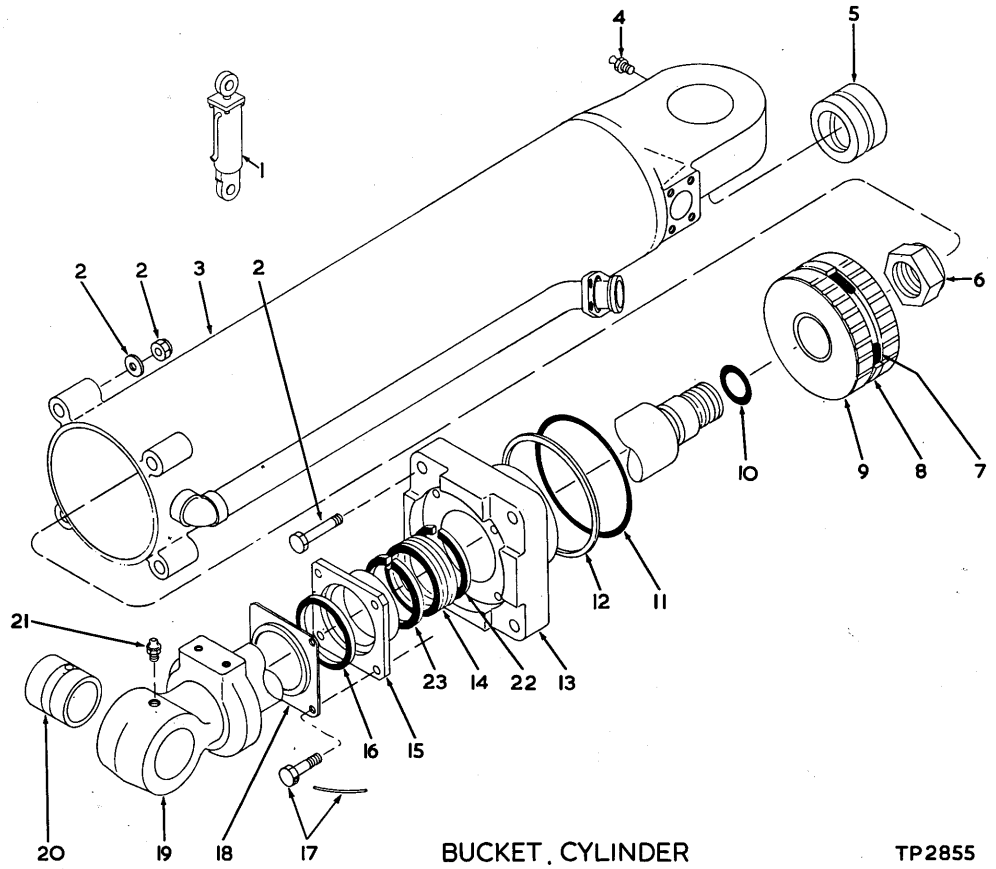

BUCKET, CYLINDER TP2855

SERIALS 333EN2001 THRU 333EN2032

ITEM	PART	DESCRIPTION	QTY.
1	X3230569X	CYLINDER ASSEMBLY	2
1	3230922	CYLINDER ASSEMBLY	2
2	1534237	WASHER	4
2	1535586	STUD	4
2	18D-14	LOCKNUT	4
3	1530526	CASE CYLINDER	1
4	10H-25	GREASER	1
5	1522727	BUSHING	1
6	1535218	NUT	1
6	1F-856	PIN COTTER	1
7	25K-40608	O RING	1
8	573835	SEALING RING	1
9	569997	PISTON	1
10	25K-60120	O RING	1
11	25K-80616	O RING	1
12	532727	BACK UP RING	1
13	562582	CAP	1
14	3220163	SPLIT RINGS PACKING SET	1
15	1520109	GLAND	1
16	550450	SEAL	1
17	3C-820	BOLT	4
17	28H-16130	LOCKWIRE	2
18	522617	RETAINER	1
19	1534241	ROD PISTON	1
20	1522727	BUSHING	1
21	10H-25	GREASER	1
22	3211897	ADAPTOR MALE	1
23	3211711	ADAPTOR FEMALE	1

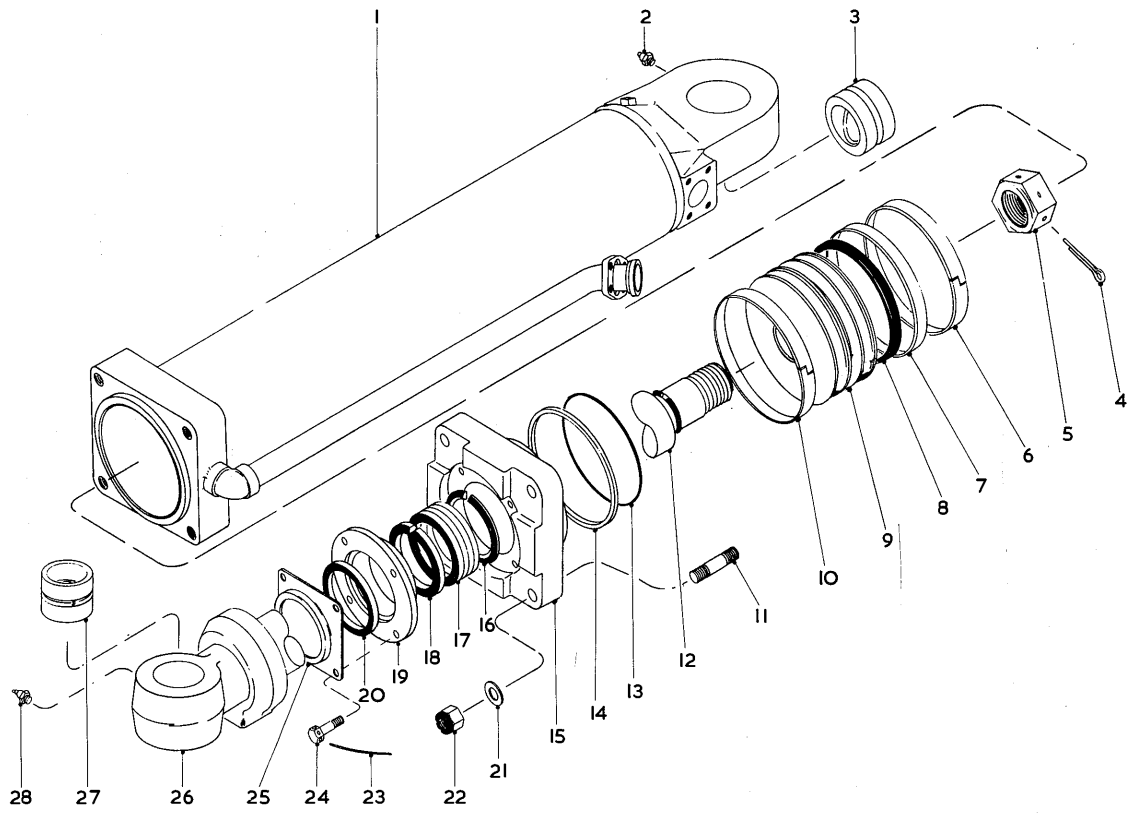

CYLINDER – BUCKET TP 3422

SERIALS 333EN2033 THRU

ITEM	PART	DESCRIPTION	QTY.
A		CYLINDER ASSY INC 1-28	
	3235520	CYLINDER	2
		QUANTITIES INDICATED	
		ARE FOR ONE ASSEMBLY	
1		CYLINDER INC 2	
	1530526		1
2	10H-25	FITTING GREASE	1
3	1522727	BUSHING	1
4	1F-856	PIN COTTER	1
5	1535218	NUT PISTON ROD	1
6	1503014	WEAR RING	1
7	1503020	RING SEAL OUTER	1
8	1503468	RING SEAL INNER	1
9	1503028	PISTON	1
10	1503014	WEAR RING	1
11	1535586	STUD	4
12	25K-60120	O RING	1
13	25K-40608	O RING	1
14	532727	RING BACKUP	1
15	562582	CAP CYLINDER	1
16	3211897	ADAPTOR MALE	1
17	3220163	PACKING SET	1
18	3211711	ADAPTOR FEMALE	1
19	1520109	GLAND PACKING	1
20	550450	SEAL	1
21	1534237	WASHER	4
22	18D-14	LOCKNUT	4
23	28H-16130	LOCKWIRE	AR
24	3C-820	BOLT	4
25	522617	RETAINER SEAL	1
26	1534241	PISTON ROD ASSY	1
27	1522727	BUSHING	1
28	10H-25	FITTING GREASE	1

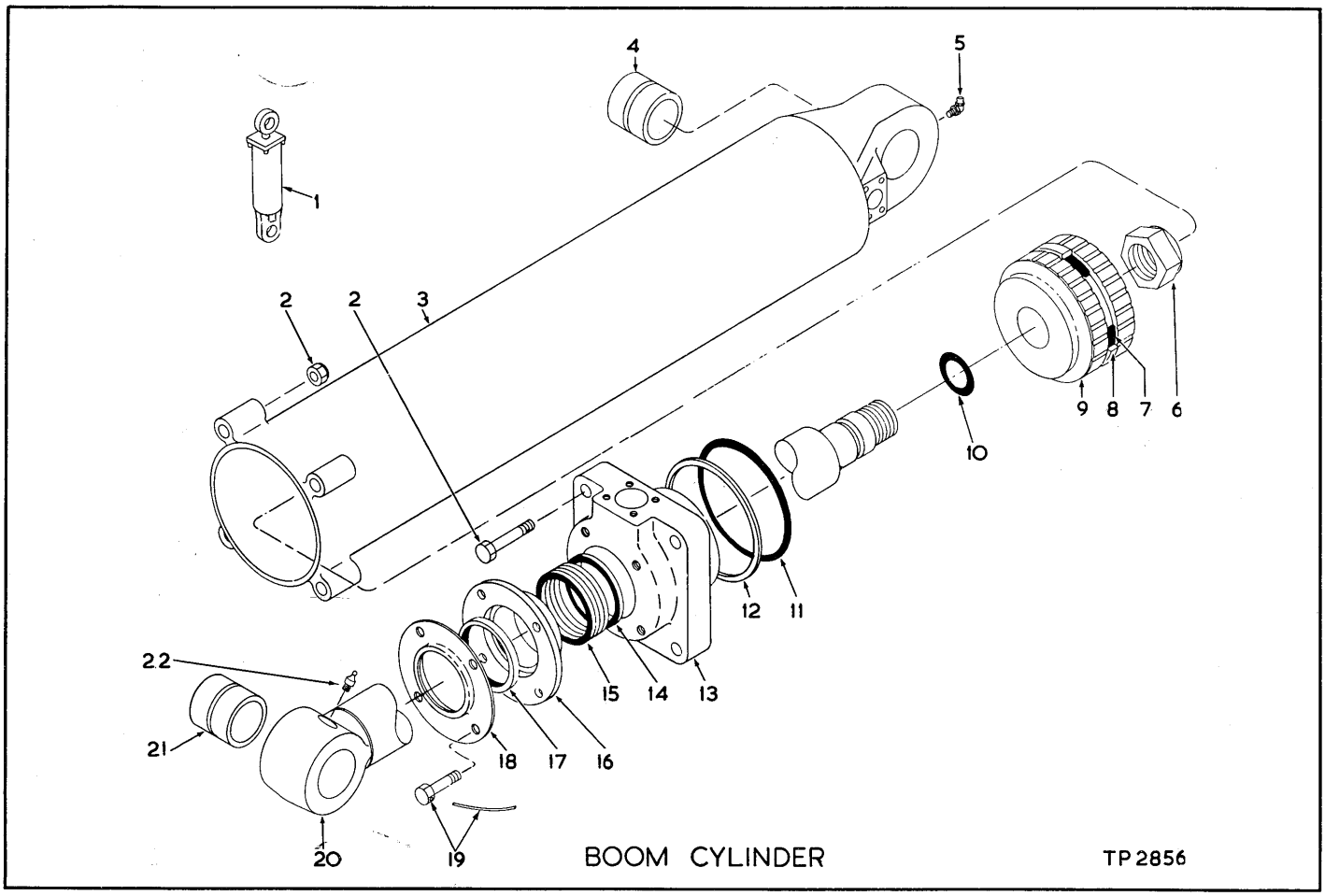

SERIALS 333EN2001 THRU 333EN2019

ITEM	PART	DESCRIPTION	QTY.	ITEM	PART	DESCRIPTION	QTY.
1	3230561	CYLINDER ASSEMBLY L H	1	12	534998	BACK UP RING	1
1	3230562	CYLINDER ASSEMBLY R H	1	13	534656	CAP	1
2	18D-16	LOCKNUT	4	14	514740	ADAPTOR MALE PACKING	1
2	24C-1696	BOLT	4	15	3213999	SPLIT RINGS PACKING SET	1
3	1520116	CASE	1	16	528103	GLAND	1
4	1522724	BUSHING	1	17	541569	SEAL	1
5	11H-15	GREASER	1	18	512747	RETAINER	1
6	1502931	NUT	1	19	4C-824	CAPSCREW	4
6	1F-1072	PIN SPLIT	1	19	28H-16240	LOCKWIRE	2
7	25K-40808	O RING	1	20	549627	ROD PISTON	1
8	1522072	SEALING RING	1	21	1522728	BUSHING	1
9	1521907	PISTON	1	22	3229498	BOLT	1
10	25K-60212	O RING	1	22	7E-08	LOCKWASHER	1
11	25K-80816	O RING	1	22	10H-35	GREASER	1

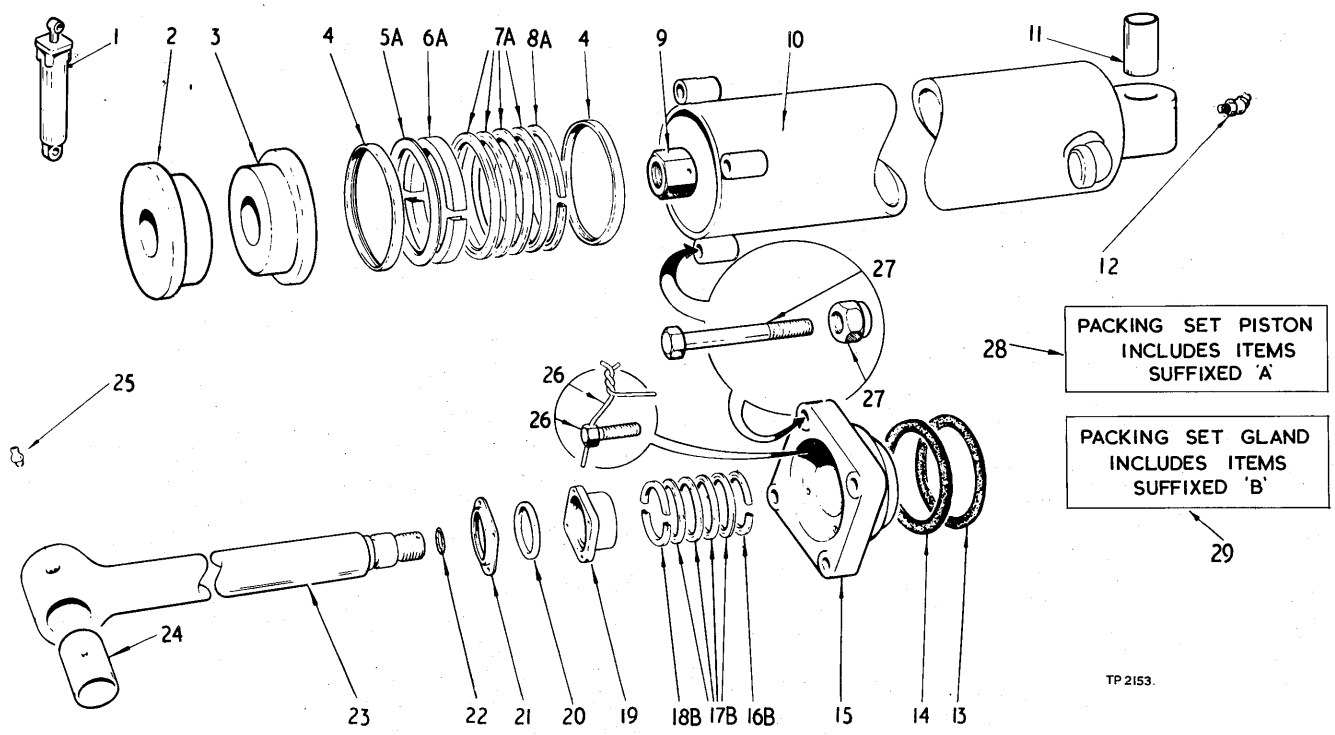

BOOM CYLINDER

SERIALS 333EN2020 THRU

ITEM	PART	DESCRIPTION	QTY.
1	3227766	CYLINDER ASSY RH	
		INC 2-27	1
	3227765	CYLINDER ASSY LH	
		INC 2-27	1
		QUANTITIES INDICATED	
		ARE FOR ONE ASSEMBLY	
2	542029	PISTON	1
3	542029	PISTON	1
4	3227764	WEAR RING	2
5	3227284	SHIM	AR
6	3227759	ADAPTOR FEMALE	1
7	3227760	PACKING CHEVRON	4
8	3227761	ADAPTOR MALE	1
9	1502931	NUT PISTON ROD	1
9A	1F-1072	PIN COTTER	1
10	1520116	CYLINDER INC 11	1
11	1522724	BUSHING	1
12	10H-35	FITTING GREASE	1
13	25K-80816	O RING	1
14	534998	RING BACKUP	1
15	534656	CAP CYLINDER	1
16	514740	ADAPTOR MALE	1
17	3213999	PACKING CHEVRON	1
18		OMIT	
19	528103	GLAND PACKING	1
20	941569	SEAL	1
21	512747	RETAINER SEAL	1
22	25K-60212	O RING	1
23	549627	PISTON ROD ASSY	1
24	1522728	BUSHING	1
25	11H-15	FITTING GREASE	1
26	4C-824	CAPSCREW	4
26A	28H-16240	LOCKWIRE	AR
27	24C-1696	BOLT	4
	18D-16	LOCKNUT	4
28	3227758	PACKING ASSY PISTON	
		INC 5,6,7 & 8	1
29		OMIT	

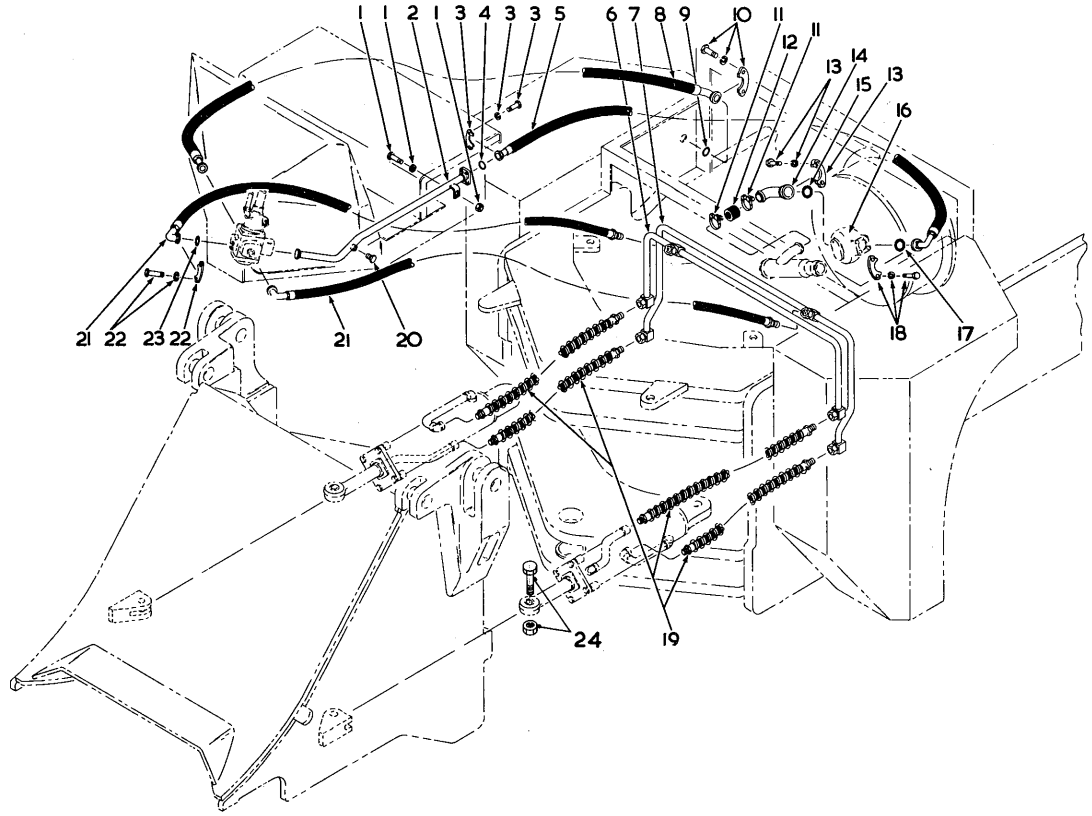

HYDRAULIC SYSTEM - STEERING T.P. 2857

ITEM	PART	DESCRIPTION	QTY.
1	656672	FLATWASHER	1
1	2C-624	BOLT	1
1	18D-06	LOCKNUT	1
2	1525485	TUBE	1
3	663093	FLANGE	2
3	1C-620	BOLT	4
3	4E-06	WASHER	4
4	1306622	O RING	1
5	3230773	HOSE	1
6	569589	TUBE	1
7	569592	TUBE	1
8	1520095	HOSE	1
9	1306623	O RING	1
10	663094	FLANGE	2
10	1C-724	BOLT	4
10	4E-07	WASHER	4
11	3221846	CLAMP	2
12	541181	HOSE	1
13	663097	FLANGE	2

ITEM	PART	DESCRIPTION	QTY.
13	1C-828	BOLT	4
13	4E-08	WASHER	4
14	3230779	STEM	1
15	886851	O RING	1
16	3229988	PUMP ASSEMBLY	1
17	1306624	O RING	1
18	663095	FLANGE	2
18	1C-824	BOLT	4
18	4E-08	WASHER	4
19	569555	HOSE	4
20	40K-04	PLUG	1
21	569552	HOSE	2
22	663093	FLANGE	4
22	1C-620	BOLT	8
22	4E-06	WASHER	8
23	1306622	O RING	2
24	561132	BOLT	4
24	18D-22	LOCKNUT	4

T.P. 2859

HYDRAULIC SYSTEM - TRANS. AND TORQUE CONVERTER

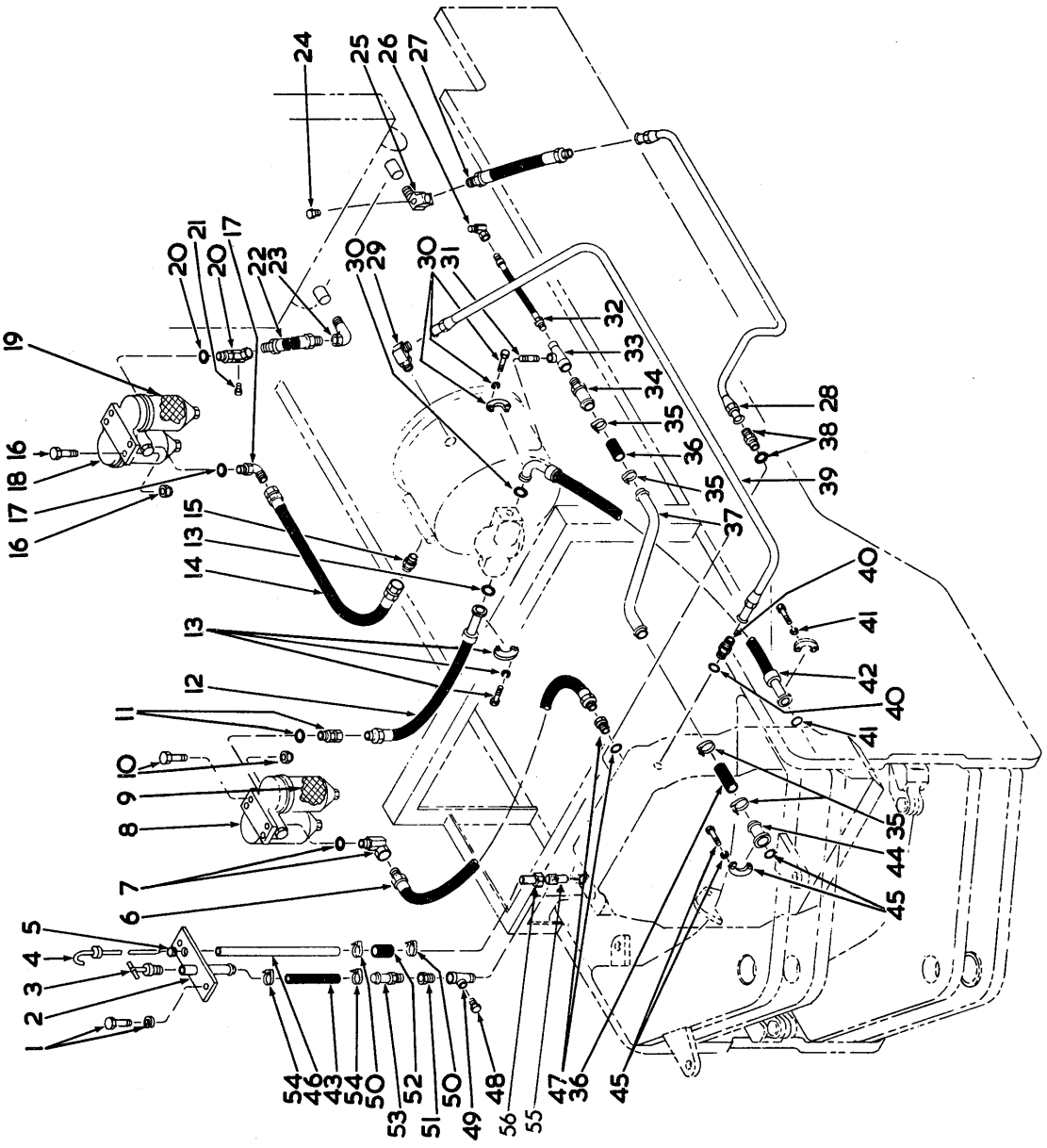

ITEM	PART	DESCRIPTION	QTY.	ITEM	PART	DESCRIPTION	QTY.
1	1C-616	BOLT	2	30	1306623	O RING	1
1	4E-06	LOCKWASHER	2	30	1C-724	BOLT	4
2	568807	FILLER PLATE	1	30	4E-07	WASHER	4
3	568824	PLUG	1	31	5K-1020	NIPPLE	1
4	572215	DIPSTICK	1	32	587036	HOSE	1
5	560640	GROMMET	1	33	20F-45	TEE	1
7	1520566	ADAPTOR 90 DEG	1	34	592849	STEM	1
8	228189	FILTER	1	35	3221844	CLAMP	4
9	215502	CARTRIDGE KIT	2	36	585883	HOSE	2
10	2C-724	BOLT	4	37	569632	TUBE	1
10	18D-07	LOCKNUT	4	38	15K-10	CONNECTOR	1
11	587075	ADAPTOR UNION	1	38	91F-10	O RING	1
11	91F-10	O RING	1	39	569633	TUBE	1
12	574551	HOSE	1				
13	663093	FLANGE HALVES	2	40	15K-10	CONNECTOR	1
13	1306622	O RING	1	40	91F-10	O RING	1
13	1C-620	BOLT	4	41	663095	FLANGE HALVES	2
13	4E-06	WASHER	4	41	1306624	O RING	1
14	564489	HOSE	1	41	1C-824	BOLT	4
15	564386	CONNECTOR	1	41	4E-08	WASHER	4
15	91F-11	O RING	1	42	558793	HOSE	1
16	2C-724	BOLT	4	43	563810	HOSE	1
16	18D-07	LOCKNUT	4	44	799020	STEM ASSEMBLY	1
17	17K-10	ELBOW 90 DEG	1	45	663095	FLANGES	2
17	91F-10	O RING	1	45	1306624	O RING	1
18	228189	FILTER	1	45	1C-824	BOLT	4
19	215502	ELEMENT	2	45	4E-08	WASHER	4
20	58264C	ADAPTOR UNION	1	46	572213	TUBE	1
20	91F-10	O RING	1	47	522969	CONNECTOR	1
21	40K-02	PLUG PIPE	1	47	91F-10	O RING	1
22	53664C	HOSE	1	48	40K-12	PLUG	1
23	26F-6	ADAPTOR	1	49	17F-5	TEE	1
24	40K-04	PLUG	1	50	3220861	CLAMP	2
25	574552	ELBOW	1	51	19F-12	BUSHING REDUCING	1
26	550700	ADAPTOR 90 DEG SWIVEL	1	52	743563	HOSE	1
27	536769	HOSE	1	53	667288	STEM	1
28	569628	TUBE	1	54	3221842	CLAMP	2
29	588820	ELBOW	1	55	1502876	TUBE	1
30	663094	FLANGES	2	56	92F-7	CONNECTOR	1

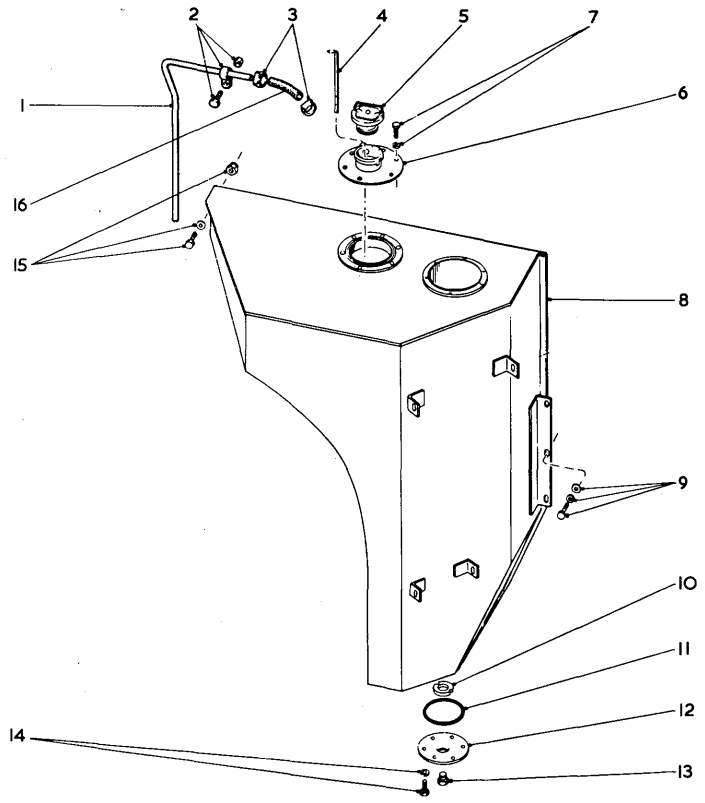

HYDRAULIC OIL RESERVOIR TP2603

ITEM	PART	DESCRIPTION	QTY.
1	567746	TUBE	1
2	2C-612	BOLT	1
2	4E-06	LOCKWASHER	1
2	30H-31	CLIP	1
3	3220864	CLAMP	2
4	567741	DIPSTICK	1
5	554843	CAP	1
6	567742	FILLER NECK	1
6	25K-40624	O RING	1
7	2C-612	BOLT	6
7	4E-06	LOCKWASHER	6
8	1529C9C	RESERVOIR	1
9	61680C	WASHER	5

ITEM	PART	DESCRIPTION	QTY.
9	2C-1020	BOLT	5
9	4E-1C	LOCKWASHER	5
10	525293	MAGNET	1
11	25K-40428	O RING	1
12	587613	COVER PLATE	1
13	40K-16	PLUG	1
14	2C-612	BOLT	6
14	4E-06	WASHER	6
15	61680C	WASHER	1
15	2C-1C28	BOLT	1
15	18D-10	LOCKNUT	1
16	743563	HOSE	AR

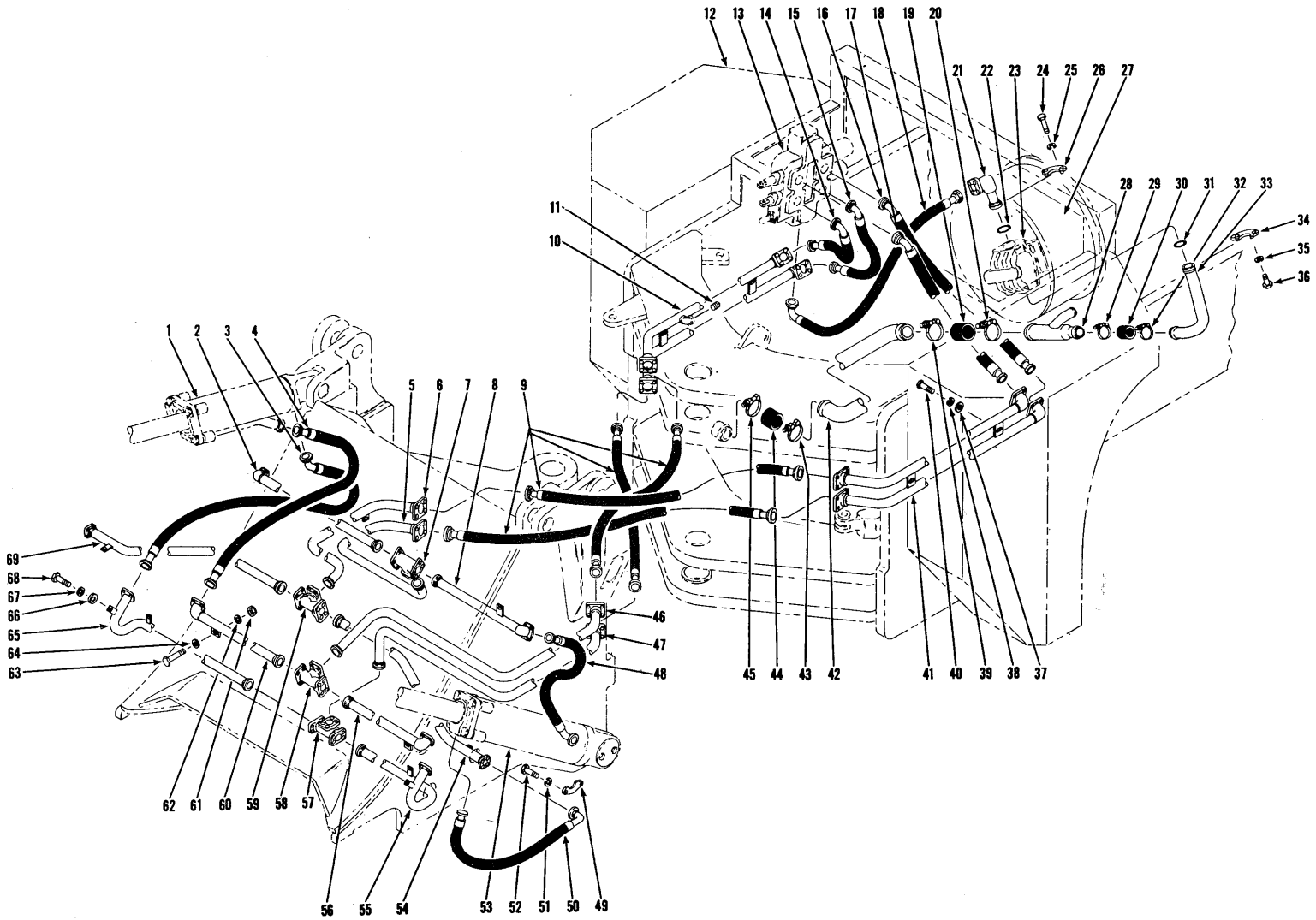

HYDRAULIC LINES – FRONT END EQUIPMENT

TP3585

HYDRAULIC LINES—MAIN

ITEM	PART		DESCRIPTION	QTY.	ITEM	PART		DESCRIPTION	QTY.
1			CYLINDER ASSY SEE INDEX		26	663096		FLANGE HALF	2
2	570057		TUBE RH BOOM CYLINDER	1	27			CONVERTER SEE INDEX	
2A		+	FLANGE ASSY SEE ITEM 70		28	3229986		TUBE SUCTION	1
3	1521839		HOSE TUBE TO BUCKET CYL	2	29	3221847		CLAMP HOSE TO TUBE	1
3A		+	FLANGE ASSY SEE ITEM 70		30	536748		HOSE TUBE TO TUBE	1
4	1530368		HOSE TUBE TO BUCKET CYL	2	31	886851		O RING	1
4A		+	FLANGE ASSY SEE ITEM 70		32	3221847		CLAMP HOSE TO TUBE	1
5	570069		TUBE LOWER RH BOOM CYL	1	33	3229984		TUBE SUCTION	1
5A		+	FLANGE ASSY SEE ITEM 71		34	663097		FLANGE HALF	2
6	3231201		TUBE UPPER RH BUCKET CYL	1	35	4E-08		LOCKWASHER	4
6A		+	FLANGE ASSY SEE ITEM 71		36	1C-828		BOLT	4
7	568034		TEE BOOM CYL CROSS TUBES	1	37	656672		WASHER TUBE LOWER	4
8	570058		TUBE LH BOOM CYL	1	38	4E-06		LOCKWASHER	4
8A		+	FLANGE ASSY SEE ITEM 70		39	3221850		CLAMP HOSE TO TUBE	1
9	3232491		HOSES CENTRE PIVOT	4	40	2C-620		BOLT	4
9A		+	FLANGE ASSY SEE ITEM 71		41	569531		TUBE LOWER LH BOOM CYL	1
10	569526		TUBE ASSY BUCKET CYL	1	42	3229987		TUBE SUCTION	1
11	10F-20		PLUG	1	43	3221850		CLAMP HOSE TO TUBE	1
12			RESERVOIR SEE INDEX		44	536942		HOSE TUBE TO TUBE	1
13			CONTROL VALVE SEE INDEX		45	3221850		CLAMP HOSE TO TUBE	1
14	569664		HOSE VALVE TO BUCKET TUBE	1	46	570067		TUBE UPPER LH BUCKET CYL	1
14A		+	FLANGE ASSY SEE ITEM 71		46A		+	FLANGE ASSY SEE ITEM 71	
15	569665		HOSE VALVE TO BUCKET TUBE	1	47	570068		TUBE LOWER LH BUCKET CYL	1
15A		+	FLANGE ASSY SEE ITEM 71		47A		+	FLANGE ASSY SEE ITEM 71	
16	569501		HOSE VALVE TO BOOM CYL	1	48	558970		HOSE BOOM CYL	1
16A		+	FLANGE ASSY SEE ITEM 71		48A		+	FLANGE ASSY SEE ITEM 70	
17	570834		HOSE VALVE TO BOOM CYL	1	49		+	FLANGE ASSY SEE ITEM 70	
17A		+	FLANGE ASSY SEE ITEM 71		50	1521840		HOSE BOOM CYL	1
18	569499		HOSE PUMP TO VALVE	1	51		+	FLANGE ASSY SEE ITEM 70	
18A		+	FLANGE ASSY SEE ITEM 71		52		+	FLANGE ASSY SEE ITEM 70	
19	536942		HOSE TUBE TO TUBE	1	53			BOOM CYLINDER SEE INDEX	
20	3221850		CLAMP HOSE TO TUBE	1	54	570050		TUBE LOWER LH BOOM CYL	1
21	1524351		TUBE PUMP TO HOSE	1	54A		+	FLANGE ASSY SEE ITEM 70	
22	1306625		O RING	1	55	570060		TUBE LOWER LH BUCKET CYL	1
23	3221609		PUMP SEE INDEX		55A		+	FLANGE ASSY SEE ITEM 70	
24	1C-824		BOLT FLANG HALF	4	56	570056		TUBE UPPER LH BUCKET CYL	1
25	4E-08		LOCKWASHER	4	56A		+	FLANGE ASSY SEE ITEM 70	

HYDRAULIC LINES—MAIN (Contd.)

ITEM	PART		DESCRIPTION	QTY.	ITEM	PART		DESCRIPTION	QTY.
57	568034		TEE BUCKET CYL CROSS TUBE	1	69	570050		TUBE LOWER RH BOOM CYL	1
58	568034		TEE BUCKET CYL CROSS TUBE	1	69A		+	FLANGE ASSY SEE ITEM 70	
59	568034		TEE BOOM CYL CROSS TUBE	1	70	663094	+	FLANGE HALF	2
60	570055		TUBE UPPER RH BUCKET CYL	1	70A	1306623	+	O RING	1
60A		+	FLANGE ASSY SEE ITEM 70		70B	1C-724	+	BOLT	4
61	18D-06		NUT TUBE MOUNTING	8	70C	4E-07	+	LOCKWASHER	4
62	656672		WASHER TUBE MOUNTING	8	70D			ITEMS LISTED ARE FOR	
63	2C-624		BOLT TUBE MOUNTING	8	70E			ONE CONNECTION	
64	656672		WASHER TUBE MOUNTING	8	71	663095	+	FLANGE HALF	2
65	570059		TUBE LOWER RH BUCKET CYL	1	71A	1306624	+	O RING	1
65A		+	FLANGE ASSY SEE ITEM 70		71B	1C-824	+	BOLT	4
66	656672		WASHER TUBE MOUNTING	6	71C	4E-08	+	LOCKWASHER	4
67	4E-06		LOCKWASHER	6	71D			ITEMS LISTED ARE FOR	
68	2C-620		BOLT	6	71E			ONE CONNECTION	

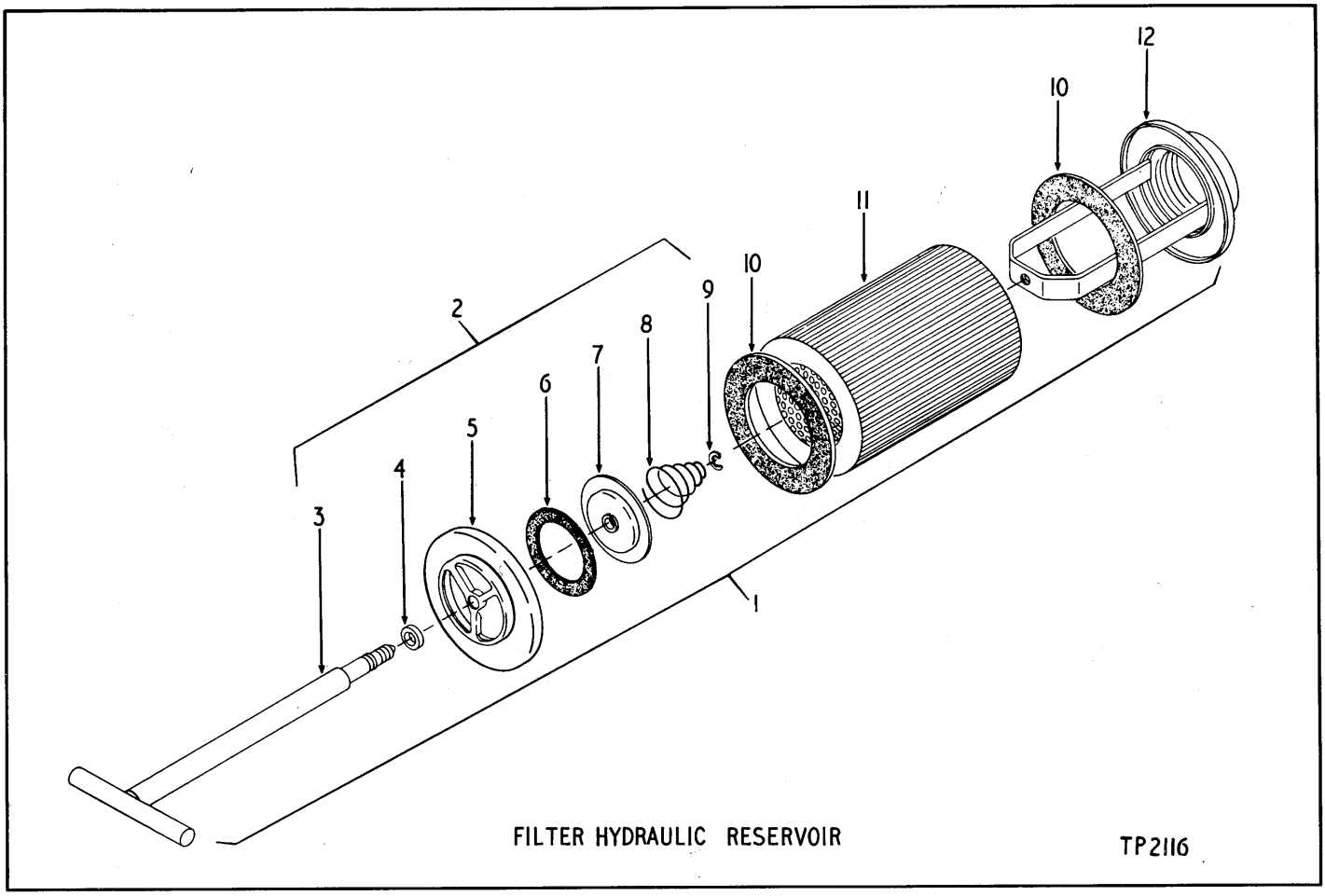

FILTER HYDRAULIC RESERVOIR

TP2116

ITEM	PART	DESCRIPTION	QTY.	ITEM	PART	DESCRIPTION	QTY.
1	1532445	FILTER ASSEMBLY	1				

SOLD AS A COMPLETE ASSEMBLY ONLY

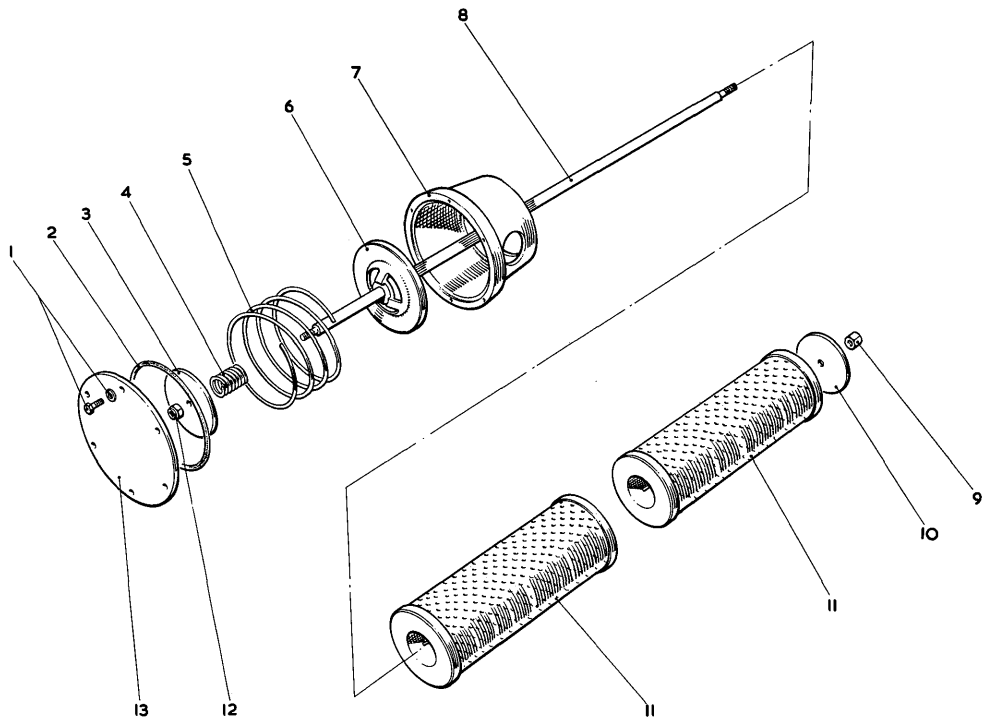

FILTER HYDRAULIC RESERVOIR PRESSURE

TP 2861

ITEM	PART	DESCRIPTION	QTY.	ITEM	PART	DESCRIPTION	QTY.
1	2C-614	BOLT	6	7	1529621	SUPPORT	1
1	4E-06	LOCKWASHER	6	8	1529703	ROD	1
2	25K-40808	O RING	1	9	39D-06	NUT	1
3	1529704	WASHER	1	10	1529704	PLATE	1
4	1530598	SPRING	1	11	945989	CARTRIDGE	1
5	1530595	SPRING	1	12	18D-06	NUT	1
6	1529679	RETAINER	1	13	1529896	PLATE	1

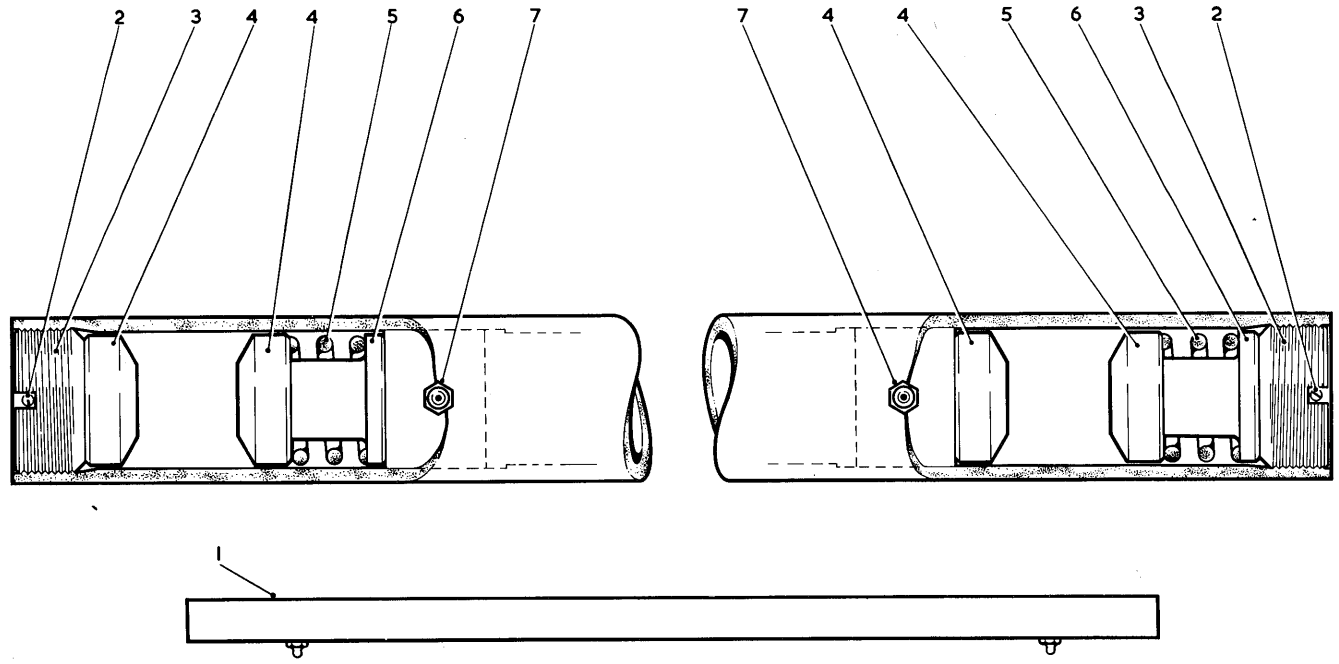

TP2091

STEERING DRAG LINK FRONT

ITEM	PART	DESCRIPTION	QTY.
1	569509	DRAG LINK ASSEMBLY	1
2	1F-432	COTTER PIN	2
3	940604	PLUG	2
4	940015	SEAT	4
5	940605	SPRING	2
6	3229708	PLUG	2
7	12H-15	GREASE FITTING	2

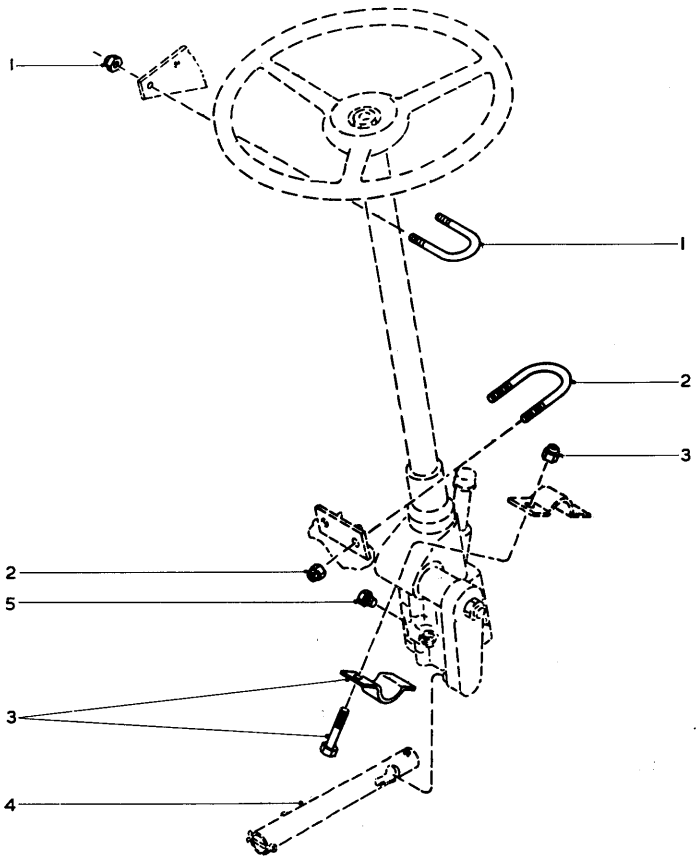

STEERING LINKAGE TP2624

ITEM	PART	DESCRIPTION	QTY.
1	571441	U BOLT	1
1	18D-06	NUT	2
2	545941	U BOLT	1
2	18D-08	NUT	2
3	550044	CLAMP	1

ITEM	PART	DESCRIPTION	QTY.
3	2C-836	BOLT	2
3	18D-08	LOCKNUT	2
4	569509	DRAG LINK ASSEMBLY	1
5	40K-02	PLUG	1

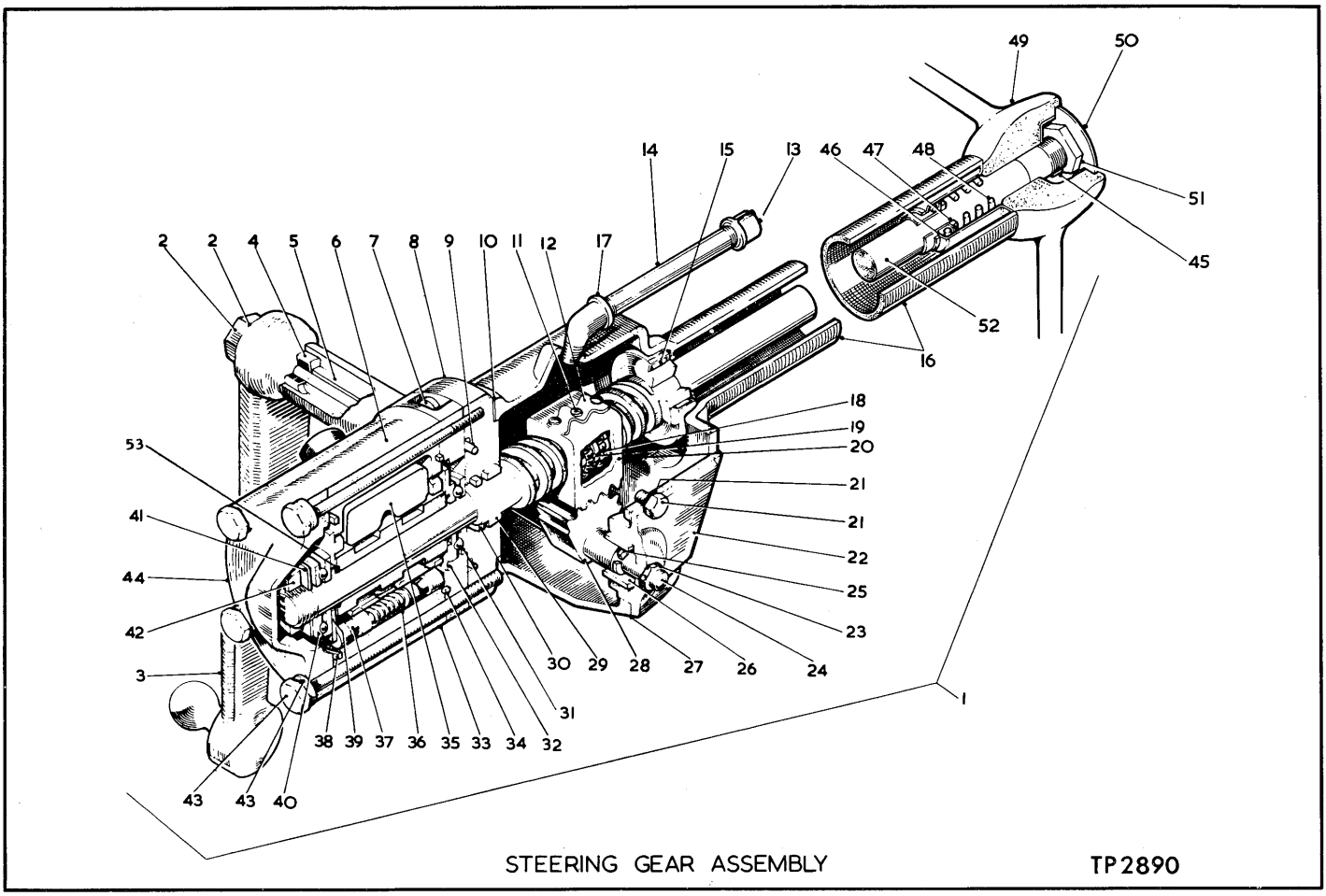

STEERING GEAR ASSEMBLY TP2890

ITEM	PART	DESCRIPTION	QTY.
1	569507	STEERING GEAR ASSEMBLY	1
2	850756	NUT	1
2	853396	LOCKWASHER	1
3	1525483	ARM	1
4	853391	SEAL	1
5	853357	BUSHING	1
6	945751	VALVE ASSEMBLY	1
7	73G-728	SCREW	4
7	4F-07	LOCKWASHER	4
8	944186	ADAPTOR	1
9	886851	O RING	1
10	853380	GASKET	1
11	851762	BOLT AND WASHER	3
12	853527	CLAMP	1
13	22F-4	CAP	1
14	5K-432	NIPPLE	1
15	730143	BEARING	1
16	946138	HOUSING	1
17	25F-4	ELBOW	1
18	10J-09	BALL	106
19	853526	GUIDE	4
20	853525	NUT	1
21	1C-612	BOLT	3
21	4F-06	LOCKWASHER	3
22	853182	COVER	1
23	8D-07	NUT	1
24	851770	ADJUSTER	1
25	853187	SHIM KIT	1
26		BUSHING USE ITEM 22	1

ITEM	PART	DESCRIPTION	QTY.
27	851756	GASKET	1
28	940111	SHAFT	1
29	861741	BEARING	1
30	25K-40108	O RING	1
31	860997	BEARING	1
32	943438	WASHER	1
33	944197	SPACER	1
34	1306626	O RING	1
35		SPOOL VALVE USE ITEM 6	1
36	944195	SPRING	4
37	944192	PLUNGER	8
38	1306626	O RING	1
39	943438	WASHER	1
40	860997	BEARING	2
41	943429	SPRING	1
42	873250	NUT	1
43	544198	BOLT	4
43	3F-09	LOCKWASHER	4
44	944667	COVER	1
45	853384	KEY	1
46	857729	BEARING	1
47	861768	WASHER	1
48	853395	SPRING	1
49	518331	WHEEL	1
50	548074	PLATE	1
51	648304	NUT	1
52	946437	SHAFT	1
53	25K-30118	O RING	1

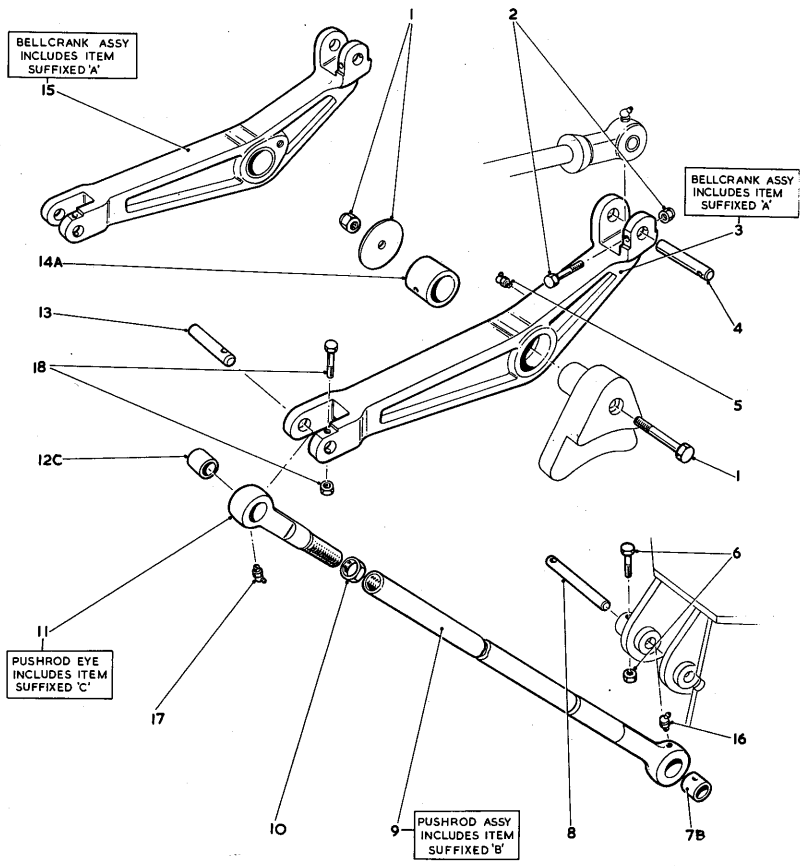

FRONT END LINKAGE

TP2021

ITEM	PART	DESCRIPTION	QTY.	ITEM	PART	DESCRIPTION	QTY.
1	588917	WASHER	2	8	588666	PIN	2
1	619028	WASHER	2	9	1505087	PUSHROD	2
1	18D-16	LOCKNUT	2	10	1520686	NUT	2
1	24C-16184	BOLT	2	11	569708	EYE ADJUSTING	2
2	2C-12112	BOLT	2	12	1522726	BUSH	2
2	18D-12	LOCKNUT	2	13	557946	PIN	2
3	1526297	BELLCRANK R H	1	14	1524036	BUSH	2
4	549659	PIN	2	15	1526298	BELLCRANK L H	1
5	10H-25	GREASE FITTING	2	16	10H-25	GREASE FITTING	2
6	2C-896	BOLT	2	17	10H-25	GREASE FITTING	2
6	18D-08	LOCKNUT	2	18	2C-892	BOLT	2
7	1522726	BUSH	2	18	18D-08	LOCKNUT	2

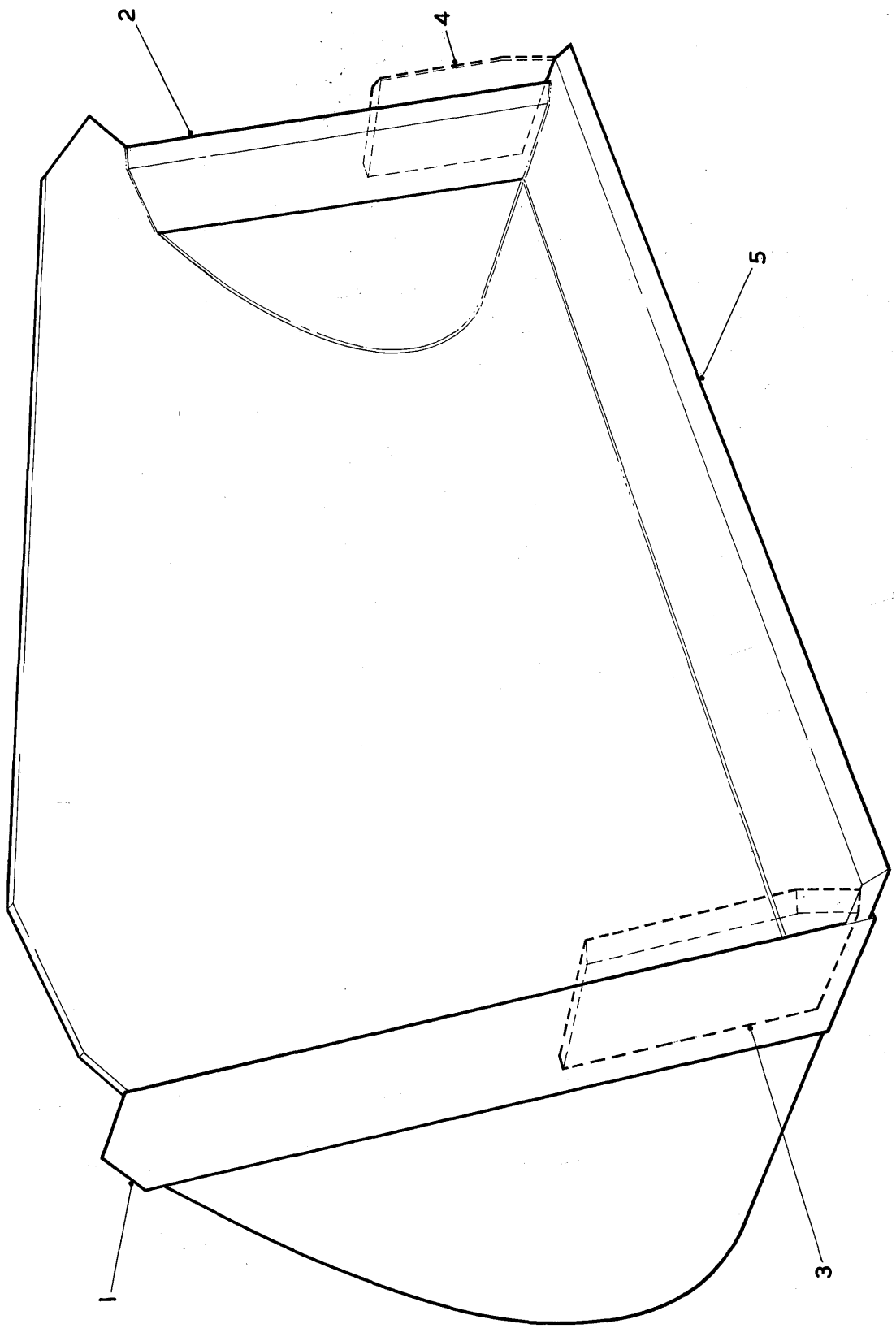

TP3054

BUCKET ASSEMBLY

BUCKET 5 CUBIC YARDS (3822 LITRES)

ITEM	PART	DESCRIPTION	QTY.	ITEM	PART		DESCRIPTION	QTY.
A	3232795	BUCKET SPADE NOSE 5CUBIC	1	3			OMIT	
A		YDS (3822 LITRES)		4			OMIT	
A		INC 1-5 REF PL1520341		5	1524628		CUTTING EDGE MAIN RH	1
1		OMIT		5A	1524630		CUTTING EDGE MAIN LH	1
2		OMIT						

BUCKET 5.5 CUBIC YARDS (4205 LITRES)

A	3232768	BUCKET 5.5 CUBIC YARDS	1	2	588631		CUTTING EDGE LH	1
A		(4205 LITRES) INC 1-5		3			OMIT	
A		REF PL3285100		4			OMIT	
1	588630	CUTTING EDGE RH	1	5	546009		CUTTING EDGE MAIN	1

BUCKET 6 CUBIC YARDS (4587 LITRES)

A	572536	BUCKET 6 CUBIC YARDS	1	2	572292		CUTTING EDGE LH	1
A		(4587 LITRES) INC 1-5		3			OMIT	
A		REF PL572537		4			OMIT	
1	572291	CUTTING EDGE RH	1	5	572533		CUTTING EDGE MAIN	1

BUCKET 6.25 CUBIC YARDS (4778 LITRES)

A	3230313	BUCKET 6.25 CUBIC YARDS	1	2	1527379		CUTTING EDGE LH	1
A		(4778 LITRES) INC 1-5		3			OMIT	
A		REF PL3285165		4			OMIT	
1	1527378	CUTTING EDGE RH	1	5	546009		CUTTING EDGE MAIN	1

BUCKET 10 CUBIC YARDS (7645 LITRES)

A	572285	BUCKET 10 CUBIC YARDS	1	5	546327		CUTTING EDGE MAIN	1
A		(7645 LITRES) INC 1-5		6	3224661	+	PACKER	AR
A		REF PL572538		7	3201636	+	TOOTH	AR
1	572291	CUTTING EDGE RH	1	8	2C-1276	+	BOLT	AR
2	572292	CUTTING EDGE LH	1	8A	62D-12	+	NUT	AR
3		OMIT		8B	3E-12	+	LOCKWASHER	AR
4		OMIT						

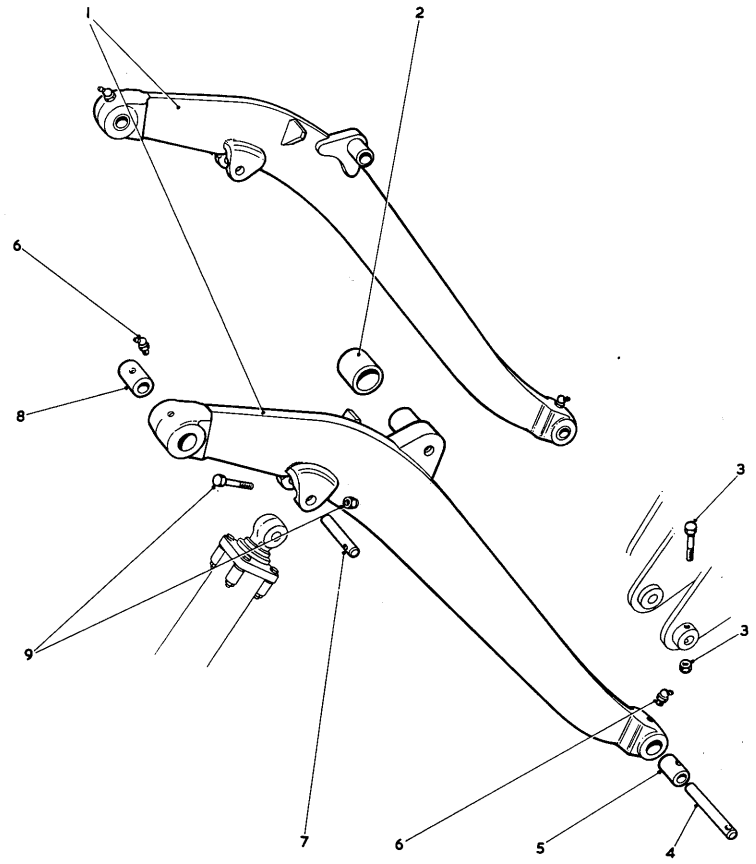

BOOM TP2023

ITEM	PART	DESCRIPTION	QTY.
1	1526274	BOOM ASSEMBLY	1
3	2C-12112	BOLT	2
3	18D-12	LOCKNUT	2
4	588544	PIN	2
5	533794	BUSH	2
6	10H-25	GREASE FITTING	4
7	519582	PIN	2
8	1526213	BUSH	2
9	2C-12112	BOLT	2
9	18D-12	LOCKNUT	2

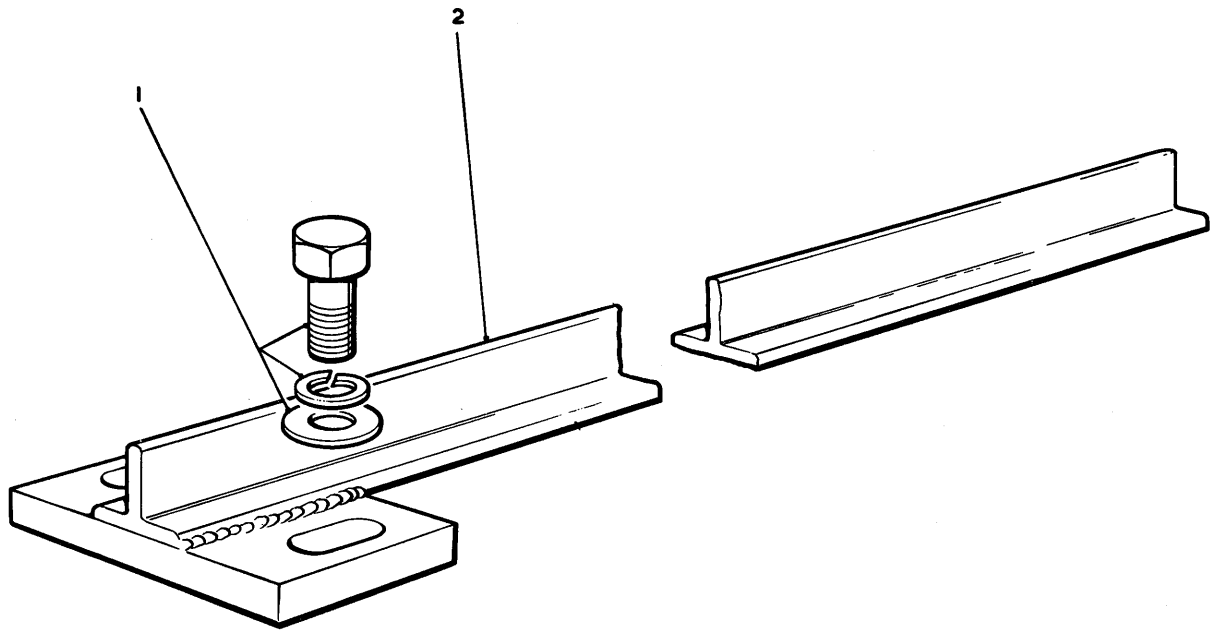

TP2109

BUCKET INDICATOR

ITEM	PART	DESCRIPTION	QTY.	ITEM	PART	DESCRIPTION	QTY.
1	656672	WASHER	2	1	4E-06	LOCKWASHER	2
1	2C-62C	BOLT	2	2	573551	ROD	1

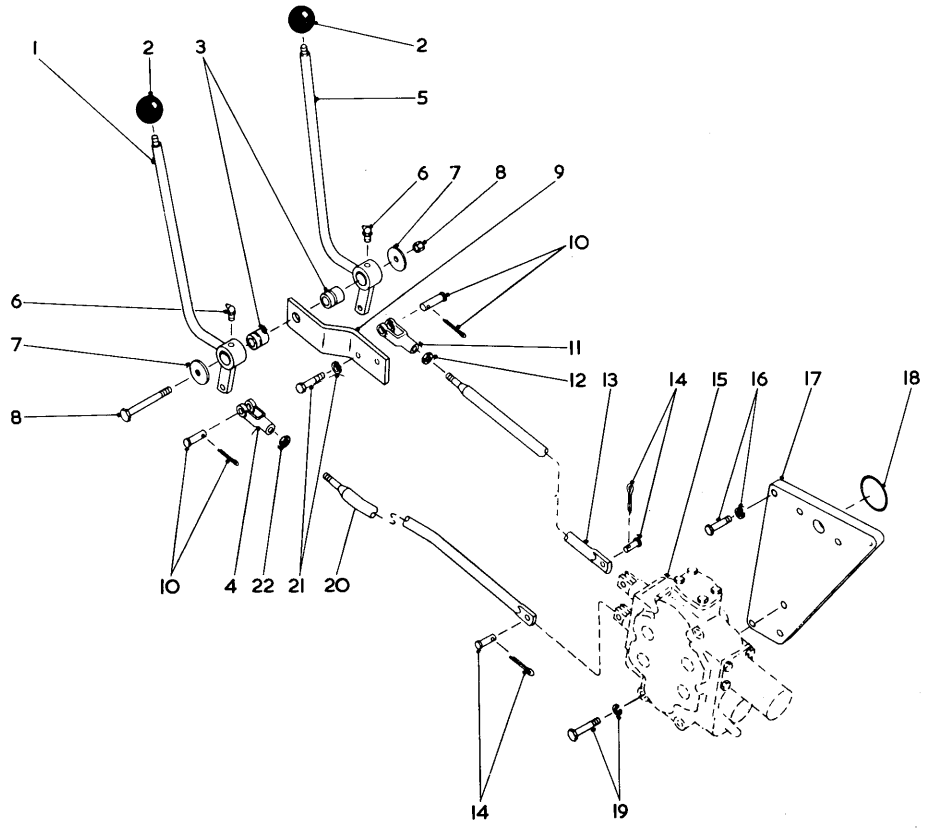

FRONT END CONTROLS AND LINKAGE TP2627

ITEM	PART	DESCRIPTION	QTY.
1	1527552	VALVE LEVER	1
2	565389	KNOB	2
3	570676	SLEEVE	2
4	2J-8300	CLEVIS	1
5	1527551	VALVE LEVER	1
6	12H-15	FITTING GREASE	2
7	585972	WASHER	2
8	2C-1280	BOLT	1
8	18D-12	LOCKNUT	1
9	1528633	BRACKET	1
10	1F-416	PIN COTTER	2
10	4F-08127	PIN CLEVIS	2
11	2J-8300	CLEVIS	1
12	8D-08	NUT ADJUSTING	1

ITEM	PART	DESCRIPTION	QTY.
13	1520665	VALVE ROD ASSEMBLY	1
14	1F-416	PIN COTTER	2
14	4F-10146	PIN CLEVIS	2
15	3229993	CONTROL VALVE	1
16	2C-828	BOLT	3
16	4E-08	LOCKWASHER	3
17	1520677	PLATE	1
18	25K-40312	O RING	1
19	2C-880	BOLT	3
19	4E-08	LOCKWASHER	3
20	1520623	VALVE ROD ASSEMBLY	1
21	2C-824	BOLT	2
21	4E-08	LOCKWASHER	2
22	8D-08	NUT ADJUSTING	1

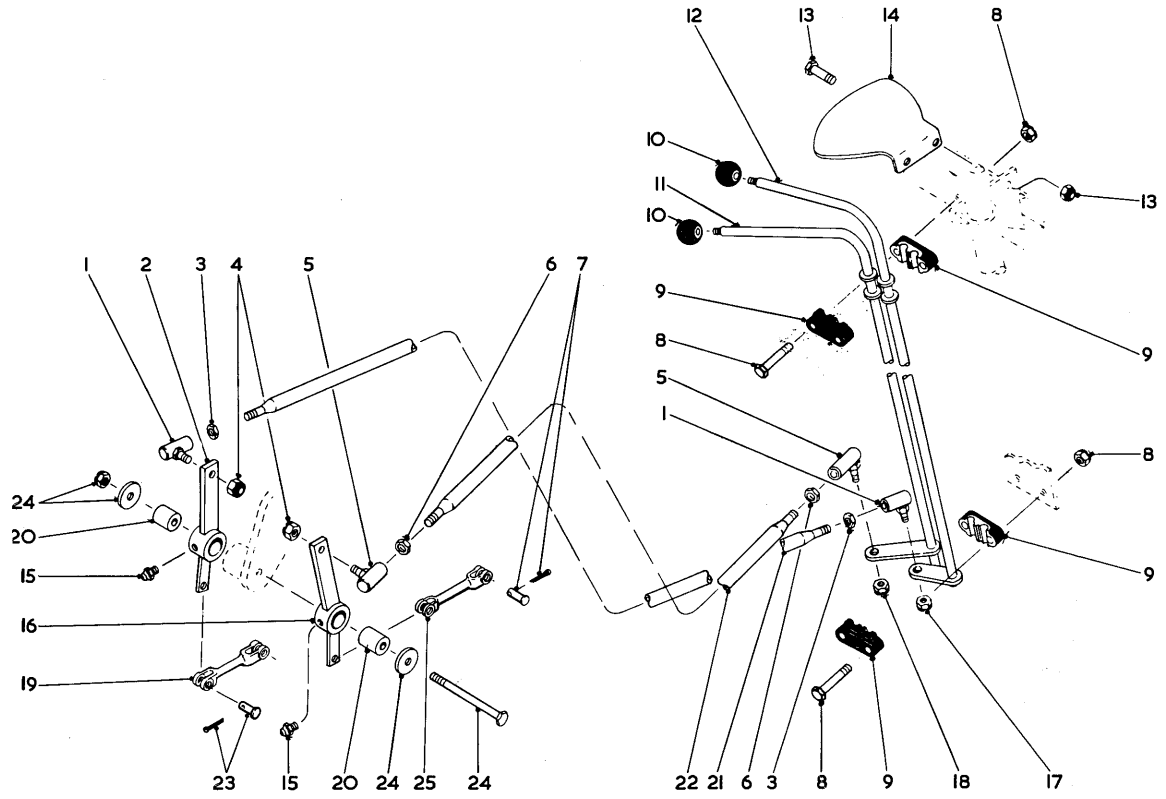

TRANSMISSION CONTROLS AND LINKAGE TP2628

ITEM	PART	DESCRIPTION	QTY.
1	1301363	BALL SOCKET	2
2	569777	BELLCRANK	1
3	8D-08	JAM NUT	2
4	18D-08	NUT	2
5	1301363	BALL SOCKET	2
6	8D-08	JAM NUT	2
7	1F-312	PIN COTTER	2
7	4F-05062	PIN CLEVIS	2
8	2C-536	BOLT	4
8	18D-05	LOCKNUT	4
9	568478	SUPPORT	2
9	568479	SUPPORT	2
10	509772	KNOB	2
11	568366	SHIFT LEVER ASSEMBLY	1
12	568363	SHIFT LEVER ASSEMBLY	1
13	2C-616	BOLT	1

ITEM	PART	DESCRIPTION	QTY.
13	18D-06	LOCKNUT	1
14	568477	SHIFT QUADRANT	1
15	10H-25	NIPPLE	2
16	1525C75	BELLCRANK	1
17	18D-08	NUT	1
18	18D-08	NUT	1
19	1526206	ROD ASSEMBLY	1
20	570676	SLEEVE	2
21	569772	ROD ASSEMBLY	1
22	1525077	ROD ASSEMBLY	1
23	1F-312	PIN COTTER	2
23	4F-05062	PIN CLEVIS	2
24	585972	WASHER	2
24	2C-1280	BOLT	2
24	18D-12	LOCKNUT	2
25	569764	ROD ASSEMBLY	1

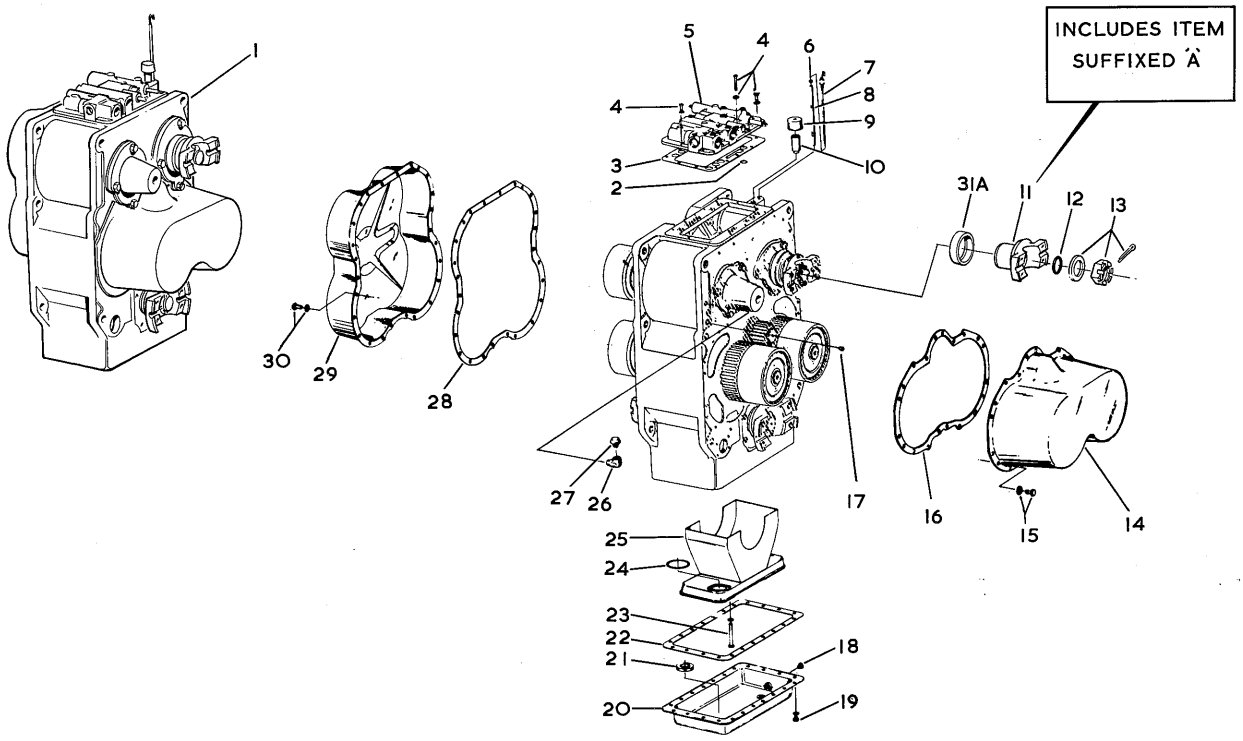

TRANSMISSION ASSEMBLY — CLUTCH COVER GROUP T.P 2703

ITEM	PART	DESCRIPTION	QTY.
1	282714	TRANSMISSION 5421-14	1
2	25K-40026	O RING	6
3	217653	GASKET	1
4	1C-616	BOLT	4
4	1C-624	BOLT	2
4	1C-640	BOLT	6
4	4E-06	LOCKWASHER	12
5	217746	COVER VALVE CONTROL	1
6	92F-7	FITTING	1
7	217590	DIPSTICK	1
8	217595	TUBE	1
9	22F-6	CAP	1
10	5K-824	NIPPLE	1
11	222232	FLANGE	1
12	25K-60116	O RING	1
13	2C592E	NUT	1
13	222179	WASHER	1
13	1F-636	COTTER	1
14	217712	COVER	1
15	5C-612	BOLT AND LOCKWASHER	20
16	217713	GASKET	1
17	13F-12	PLUG	1
18	13F-12	PLUG	1
19	5C-612	BOLT AND LOCKWASHER	18
20	217562	SUMP	1
21	525293	MAGNET	2
22	217563	GASKET	1
23	1C-636	BOLT	3
23	4E-06	LOCKWASHER	3
24	218376	GASKET	1
25	218358	FRAME AND SCREEN ASSEMBLY	1
26	26F-?	ELBOW	1
27	211433	AIR BREATHER	1
28	217620	GASKET	1
29	217619	COVER	1
30	5C-612	BOLT AND LOCKWASHER	26
31	100949	DEFLECTOR	1

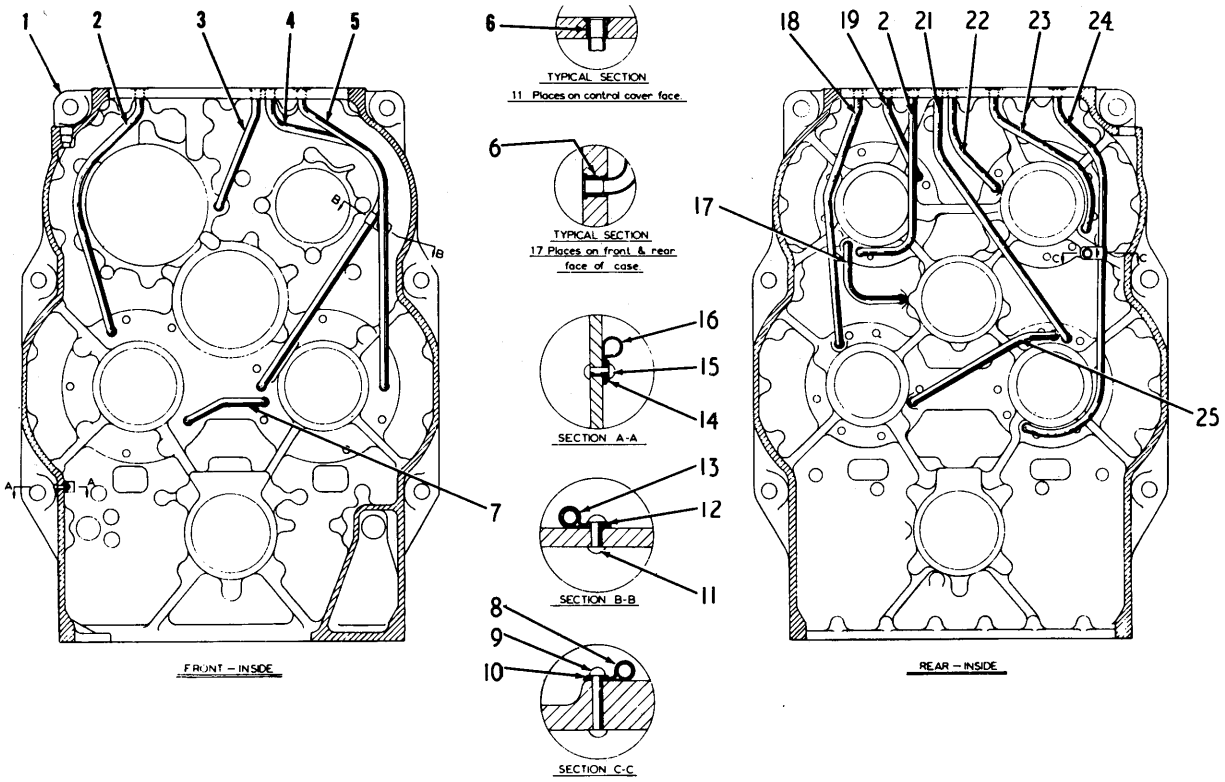

TRANSMISSION CASE AND INTERNAL TUBING TP2035

ITEM	PART	DESCRIPTION	QTY.	ITEM	PART	DESCRIPTION	QTY.
1	217572	CASE ASSEMBLY	1	14	619C18	WASHER	1
2	217708	TUBE	1	15	1H-414	RIVET	1
4	217710	TUBE	1	16	6H-32	CLIP	1
5	217709	TUBE	1	17	217704	TUBE	1
6	222067	SLEEVE	26	18	217706	TUBE	1
7	217698	TUBE	1	19	217699	TUBE	1
8	6H-29	CLIP	1	20	217703	TUBE	1
9	1H-534	RIVET	1	21	217707	TUBE	1
10	619C19	WASHER	1	22	217701	TUBE	1
11	1H-518	RIVET	1	23	217700	TUBE	1
12	619C19	WASHER	1	24	217705	TUBE	1
13	6H-29	CLIP	1	25	217702	TUBE	1

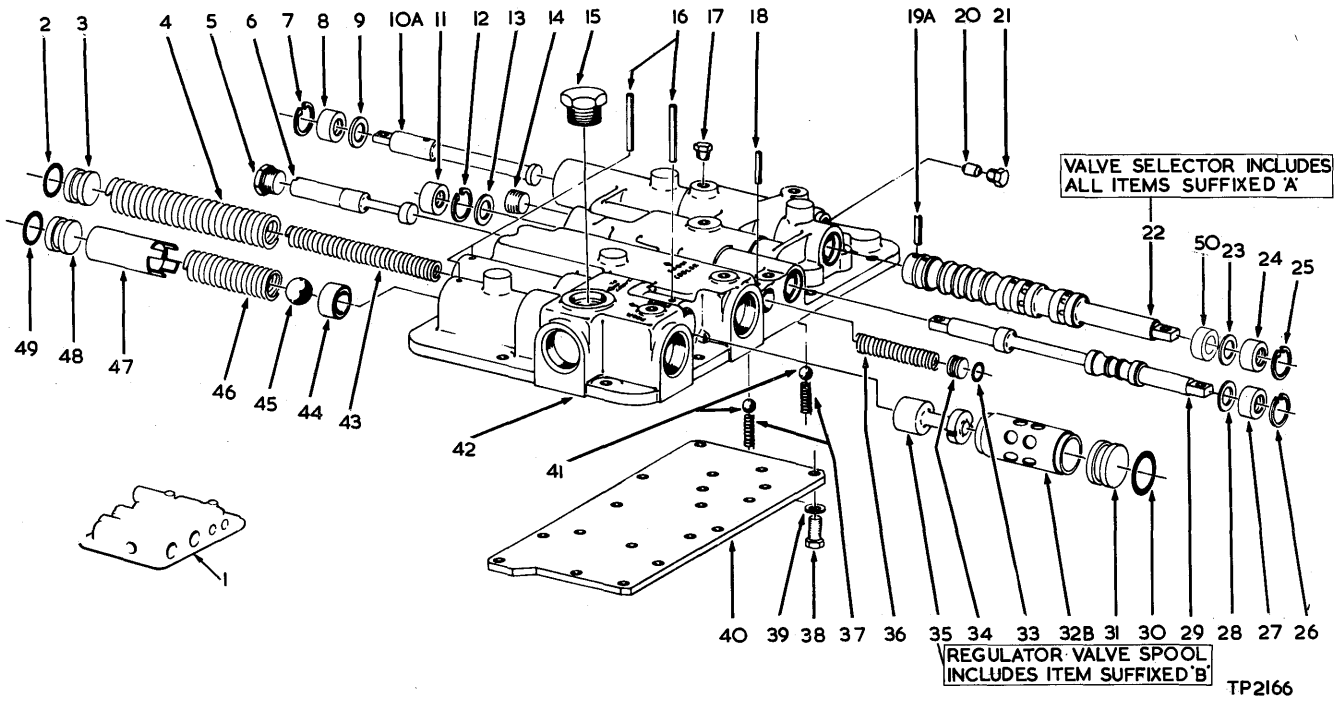

TRANSMISSION ASSEMBLY VALVE CONTROL COVER

ITEM	PART	DESCRIPTION	QTY.
1	217746	COVER VALVE CONTROL	1
2	25K-40024	O RING	1
3	222041	STOP	1
4	217649	SPRING	1
5	24K-7	PLUG	1
6	217644	SPOOL	1
7	664140	RING	1
8	225856	SEAL	1
9	217657	WASHER	1
10	217635	VALVE	1
11	225856	SEAL	1
12	664140	RING	1
13	217657	WASHER	1
14	16F-08	PLUG	1
15	24K-10	PLUG	1
16	300058	PIN	3
17	40K-02	PLUG	5
18	654724	PIN	1
19	667209	PIN	1
20	217654	VALVE	1
21	47K-3	PLUG	1
21	91F-3	O RING	1
22	217633	VALVE	1
23	217657	WASHER	1
24	225856	SEAL	1
25	664140	RING	1

ITEM	PART	DESCRIPTION	QTY.
26	664140	RING	1
27	225856	SEAL	1
28	217657	WASHER	1
29	217637	VALVE	1
30	25K-40100	O RING	1
31	217647	STOP	1
32		SLEEVE USE ITEM 35	
33	25K-30018	O RING	1
34	220983	STOP	1
35	801437	SPOOL AND SLEEVE	1
36	217645	SPRING	1
37	202200	SPRING	2
38	1C-51	IBOLT	17
39	5F-05	LOCKWASHER	17
40	217632	PLATE	1
41	10J-12	BALL	2
42	217745	COVER	1
43	217648	SPRING	1
44	217650	SEAT	1
45	10J-24	BALL	1
46	217651	SPRING	1
47	217652	SPACER	1
48	222041	STOP	1
49	25K-40024	O RING	1
50	225869	SPACER	1

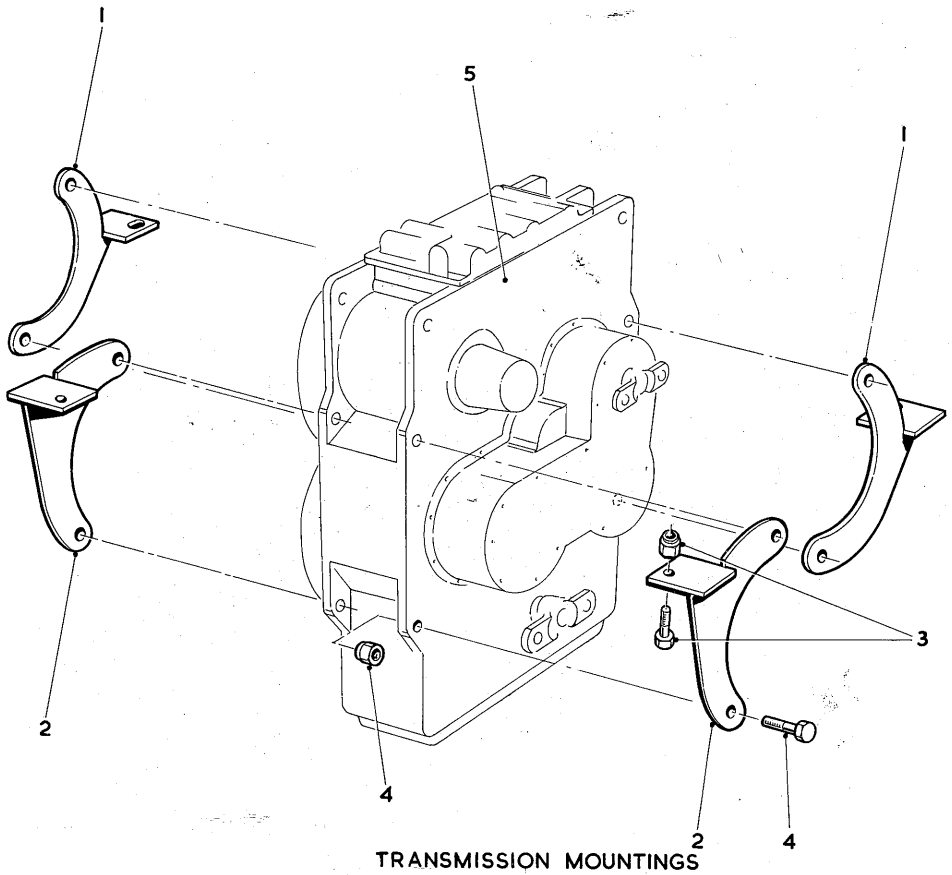

TRANSMISSION MOUNTINGS

TP 2052

ITEM	PART	DESCRIPTION	QTY.
1	1508787	MOUNT ASSEMBLY L H	2
2	1508786	MOUNT ASSEMBLY RH	2
3	539404	WASHER	2
3	24C-1680	BOLT	4

ITEM	PART	DESCRIPTION	QTY.
3	68D-16	LOCKNUT	4
4	2C-1664	BOLT	8
4	68D-16	LOCKNUT	8
5	282714	TRANSMISSION 5421-14	1

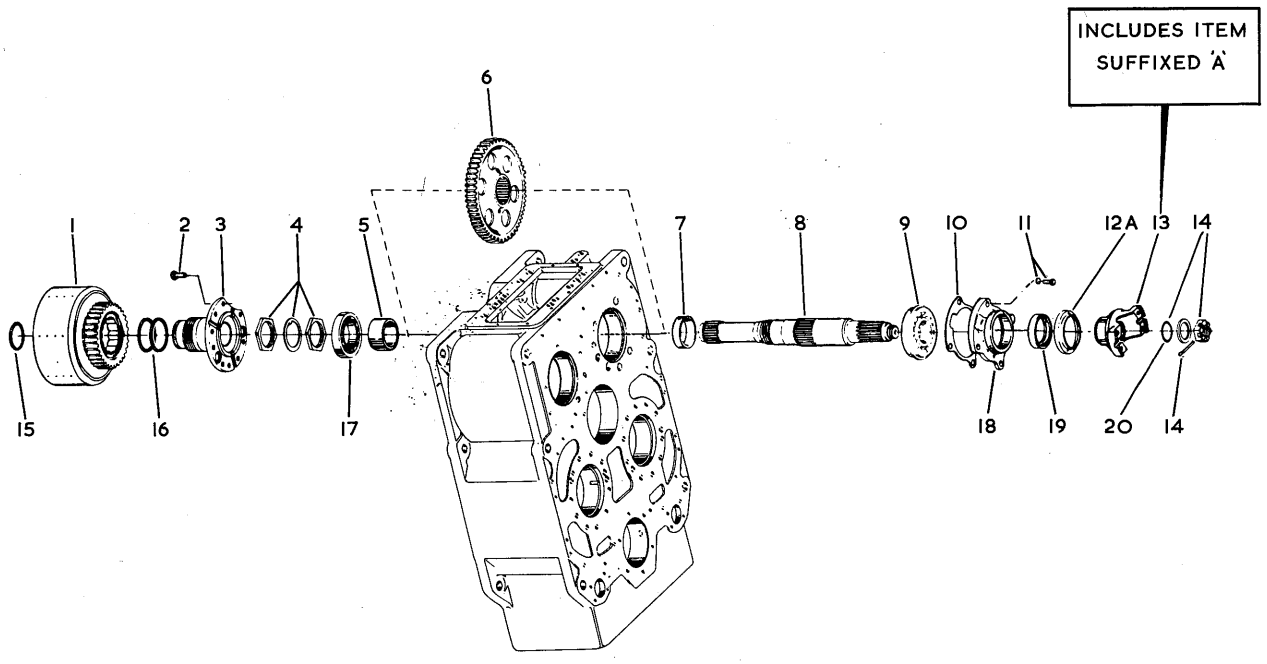

INPUT SHAFT GROUP T.P 2704

ITEM	PART	DESCRIPTION	QTY.
1		NOT SOLD AS AN ASSEMBLY	
2	8C-820	BOLT	8
3	217156	SUPPORT	1
4	217506	NUT	2
4	217507	LOCK RING	1
5	217508	SPACER	1
6	217399	GEAR	1
7	217500	SPACER	1
8	217545	SHAFT	1
9	225842	BEARING	1
10	217490	GASKET	1
11	1C-820	BOLT	4

ITEM	PART	DESCRIPTION	QTY.
11	4E-08	LOCKWASHER	4
12	100949	DEFLECTOR	1
13	222232	FLANGE	1
14	205928	NUT	1
14	222179	WASHER	1
14	1F-636	COTTER	1
15	659764	RING	1
16	223740	RING	2
17	225840	BEARING	1
18	217489	CARRIER	1
19	209587	SEAL	1
20	25K-60116	O RING	1

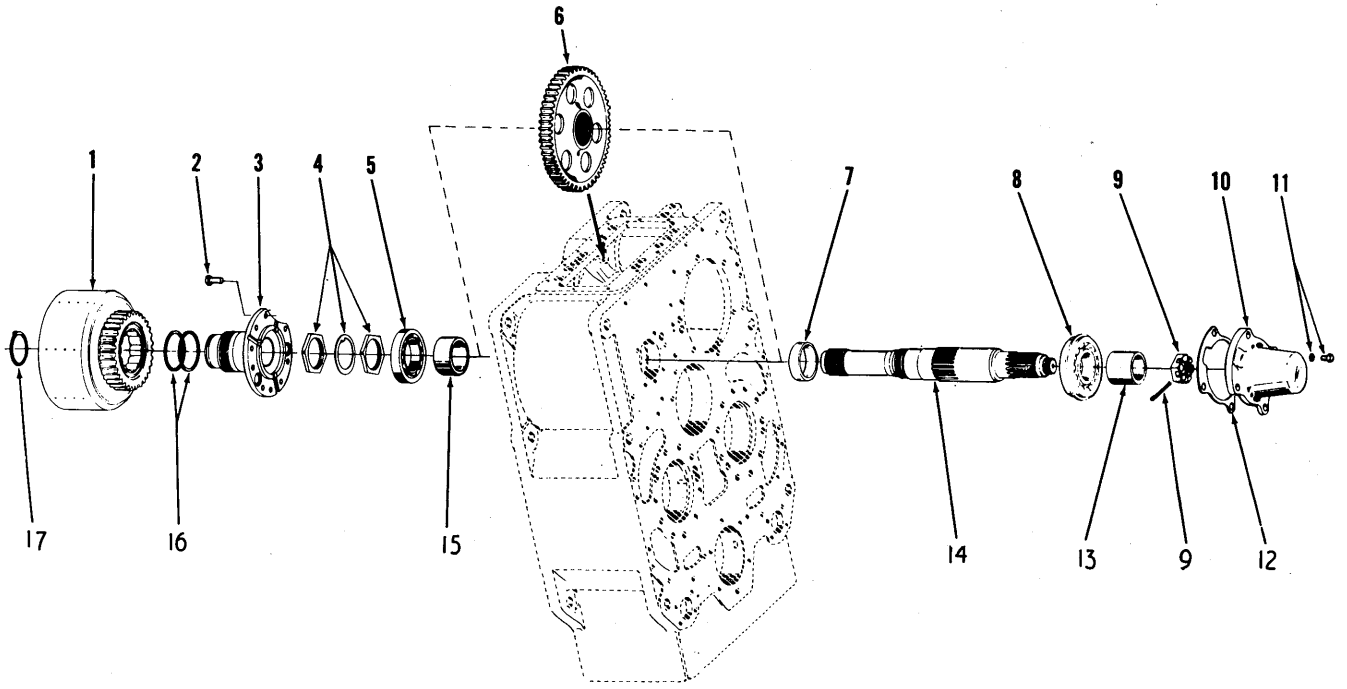

REVERSE SHAFT GROUP

TP2037

ITEM	PART	DESCRIPTION	QTY.	ITEM	PART	DESCRIPTION	QTY.
1		NOT SOLD AS AN ASSEMBLY		9	1F-636	COTTER	1
2	8C-820	BOLT	8	10	217488	CAP	1
3	217156	SUPPORT	1	11	1C-820	BOLT	4
4	217506	NUT	2	11	4E-08	LOCKWASHER	4
4	217507	LOCK RING	1	12	217490	GASKET	1
5	225840	BEARING	1	13	217504	SPACER	1
6	217399	GEAR	1	14	217545	SHAFT	1
7	217500	SPACER	1	15	217508	SPACER	1
8	225842	BEARING	1	16	223740	RING	2
9	205928	NUT	1	17	659764	RING	1

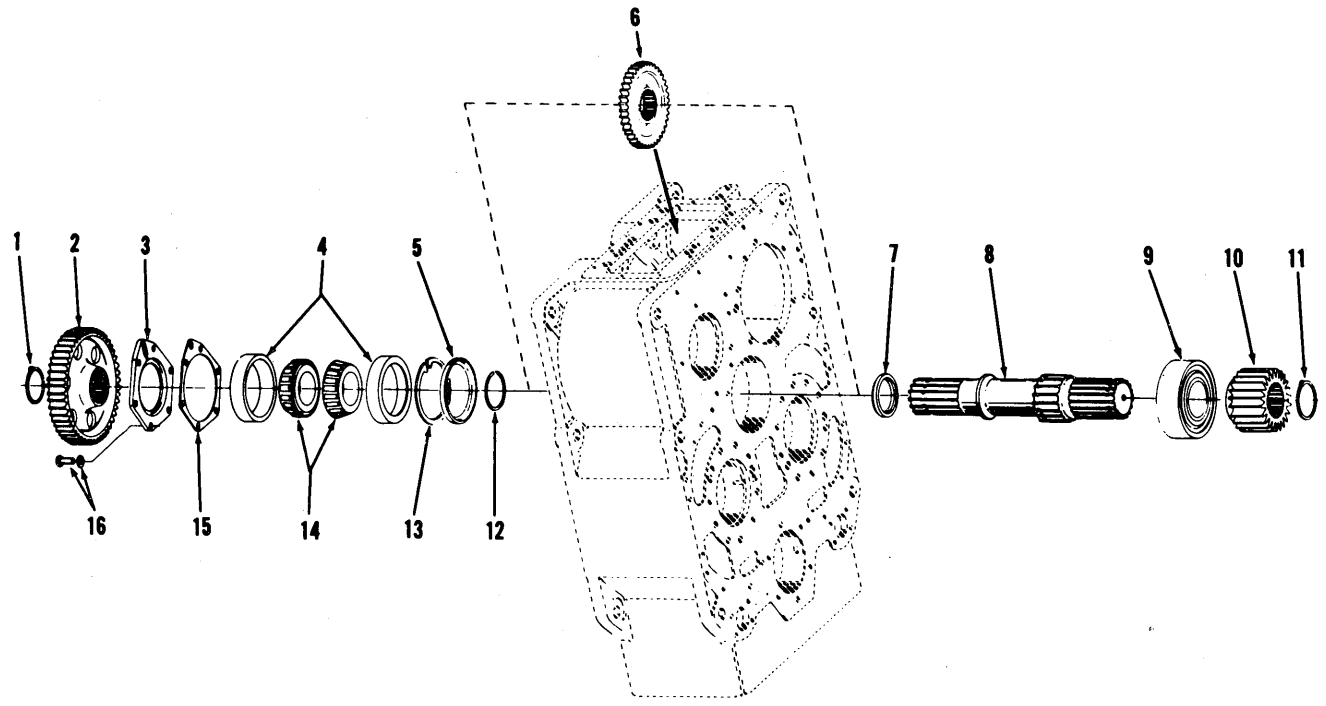

IDLER SHAFT GROUP

TP2038

ITEM	PART	DESCRIPTION	QTY.
1	711161	RING	1
2	217398	GEAR	1
3	217629	CAP	1
4	730503	CUP	2
5	217598	BAFFLE	1
7	217628	SPACER	1
8	217352	SHAFT	1
9	225845	BEARING	1
10	227883	GEAR	1
11	507688	RING	1
13	223879	RING	1
14	710971	CONE	2
15	217689	SHIM .004	AR
15	217690	SHIM .007	AR
15	217691	SHIM .010	AR
16	10-820	BOLT	5
16	4E-08	LOCKWASHER	5

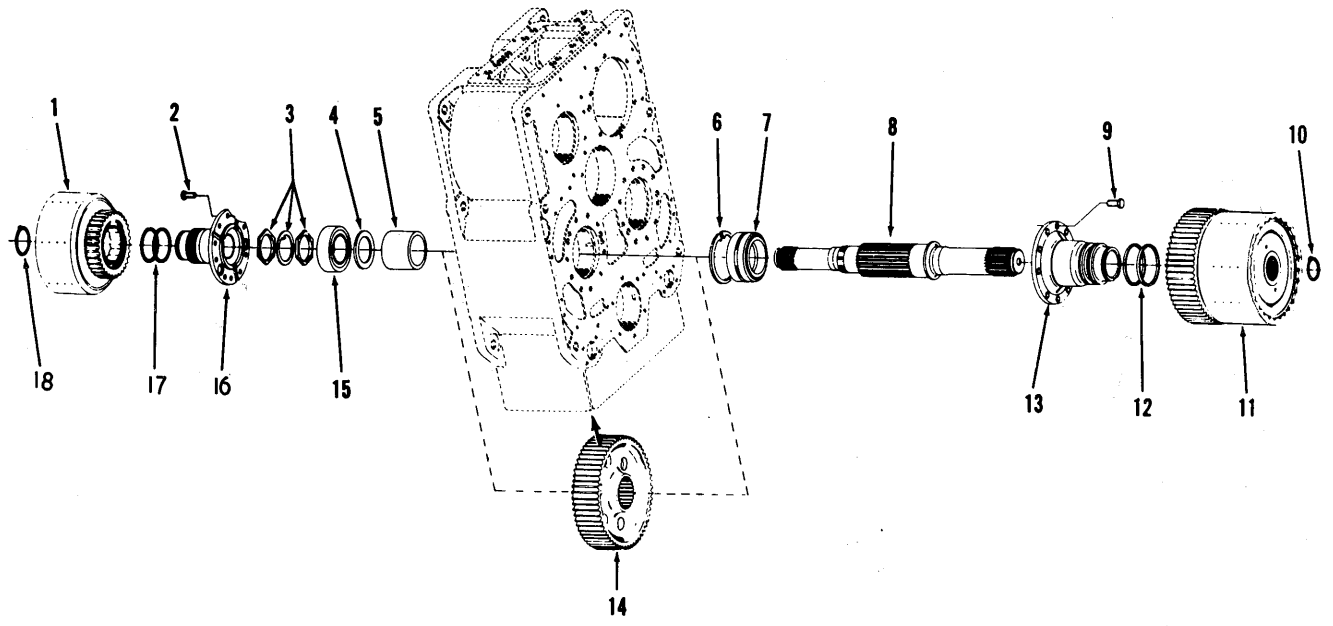

TP 2039

SECOND AND FOURTH SHAFT GROUP

ITEM	PART	DESCRIPTION	QTY.
1		NOT SOLD AS AN ASSEMBLY	
2	8C-82C	BOLT	8
3	217506	NUT	2
3	217507	LOCK RING	1
4	222181	SPACER	1
5	217502	SPACER	1
6	223982	RING	1
7	225400	BEARING	1
8	217341	SHAFT	1
9	8C-82C	BOLT	8
10	660516	RING	1
11		NOT SOLD AS AN ASSEMBLY	
12	217418	RING	2
13	217128	SUPPORT	1
14	217342	GEAR	1
15	225844	BEARING	1
16	217156	SUPPORT	1
17	223740	RING	2
18	659764	RING	1

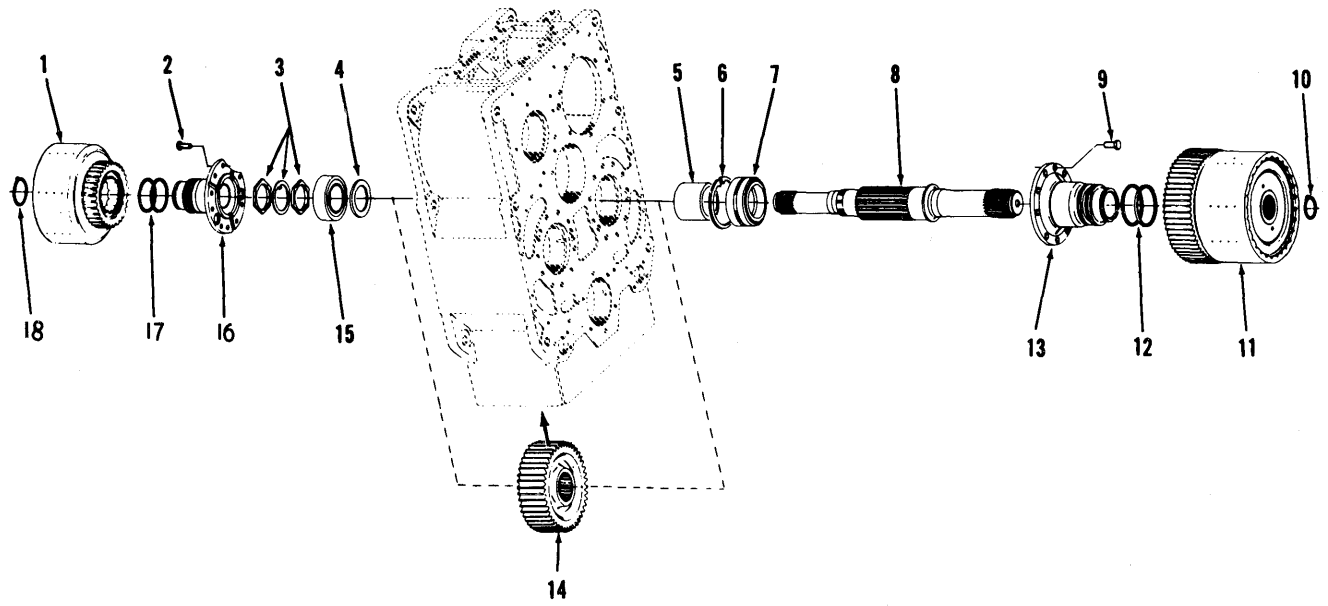

TP2040

FIRST AND THIRD SHAFT GROUP

ITEM	PART	DESCRIPTION	QTY.
1		NOT SOLD AS AN ASSEMBLY	
2	8C-82C	BOLT	8
3	217506	NUT	2
3	217507	LOCK RING	1
4	222181	SPACER	1
5	217502	SPACER	1
6	223982	RING	1
7	225400	BEARING	1
8	217341	SHAFT	1
9	8C-82C	BOLT	8
10	660516	RING	1
11		NOT SOLD AS AN ASSEMBLY	
12	217418	RING	2
13	217128	SUPPORT	1
14	217359	GEAR	1
15	225844	BEARING	1
16	217156	SUPPORT	1
17	223740	RING	2
18	659764	RING	1

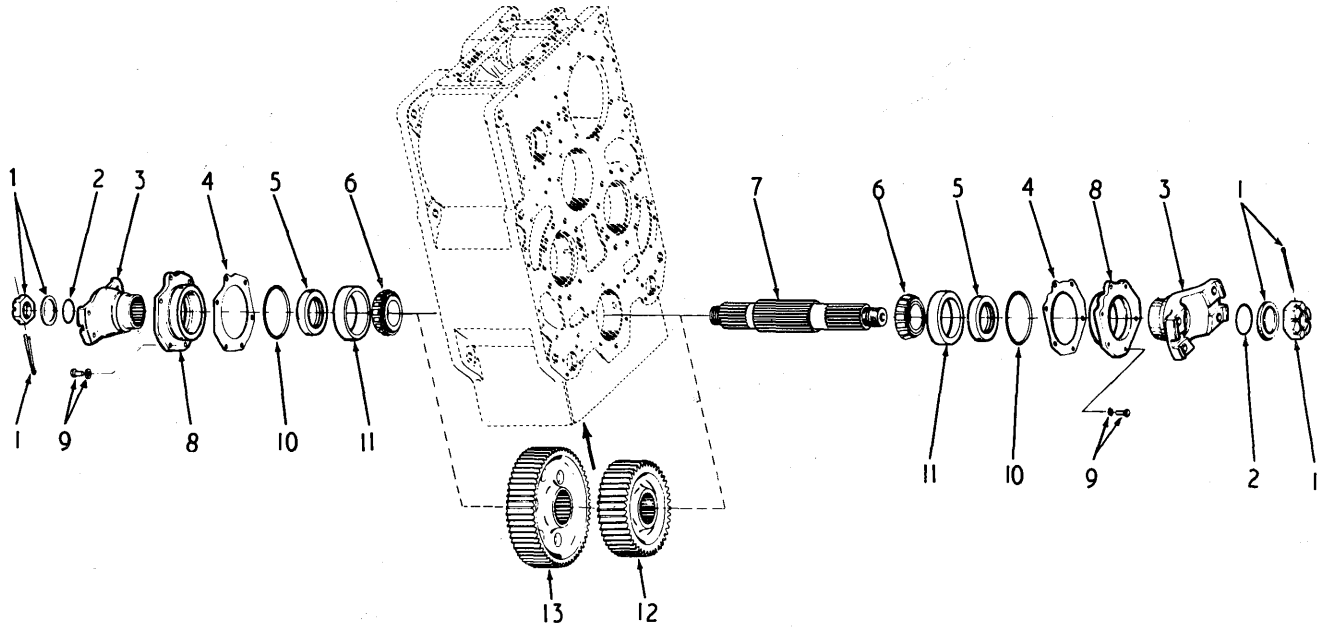

TP2041

OUTPUT SHAFT GROUP

ITEM	PART	DESCRIPTION	QTY.
1	201262	NUT	2
1	222181	WASHER	2
1	1F-632	COTTER	2
2	25K-60204	O RING	2
3	217457	FLANGE	2
4	217686	SHIM .004	AR
4	217687	SHIM .007	AR
4	217688	SHIM .010	AR
5	225763	SEAL	2
6	225850	CONE	2
7	218703	SHAFT	1
8	217626	CAP	2
9	10-820	BOLT	12
9	4E-08	LOCKWASHER	12
10	25K-40408	O RING	2
11	742243	CUP	2
12	217343	GEAR	1
13	217358	GEAR	1

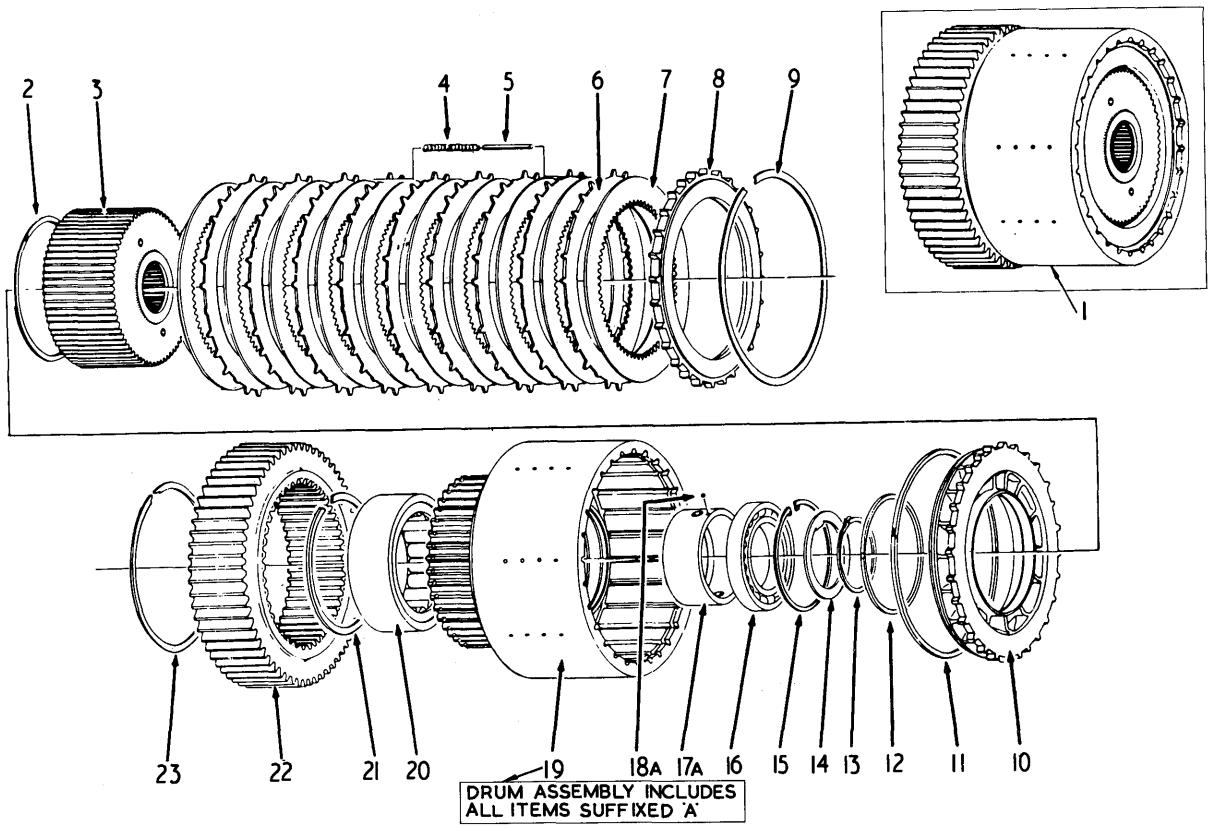

TP 2043

FIRST AND SECOND CLUTCH GROUP

ITEM	PART	DESCRIPTION	QTY.
2	217510	RING	2
3	217133	HUB ASSEMBLY	2
4	217334	SPRING	16
5	217599	PIN	16
6	217140	DISC	18
7	227496	DISC	20
8	217137	PLATE	2
9	217416	RING	2
10	217138	PISTON	2
11	217415	RING	2
12	21742C	RING	2
13	791018	RING	2
14	217417	WASHER	2
15	223982	RING	2
16	225768	BEARING	2
17	217136	RACE	2
18	10J-08	BALL	2
19	21713C	DRUM	2
20	225766	BEARING	2
21	223852	RING	2
22	227884	GEAR	2
23	217692	RING	2

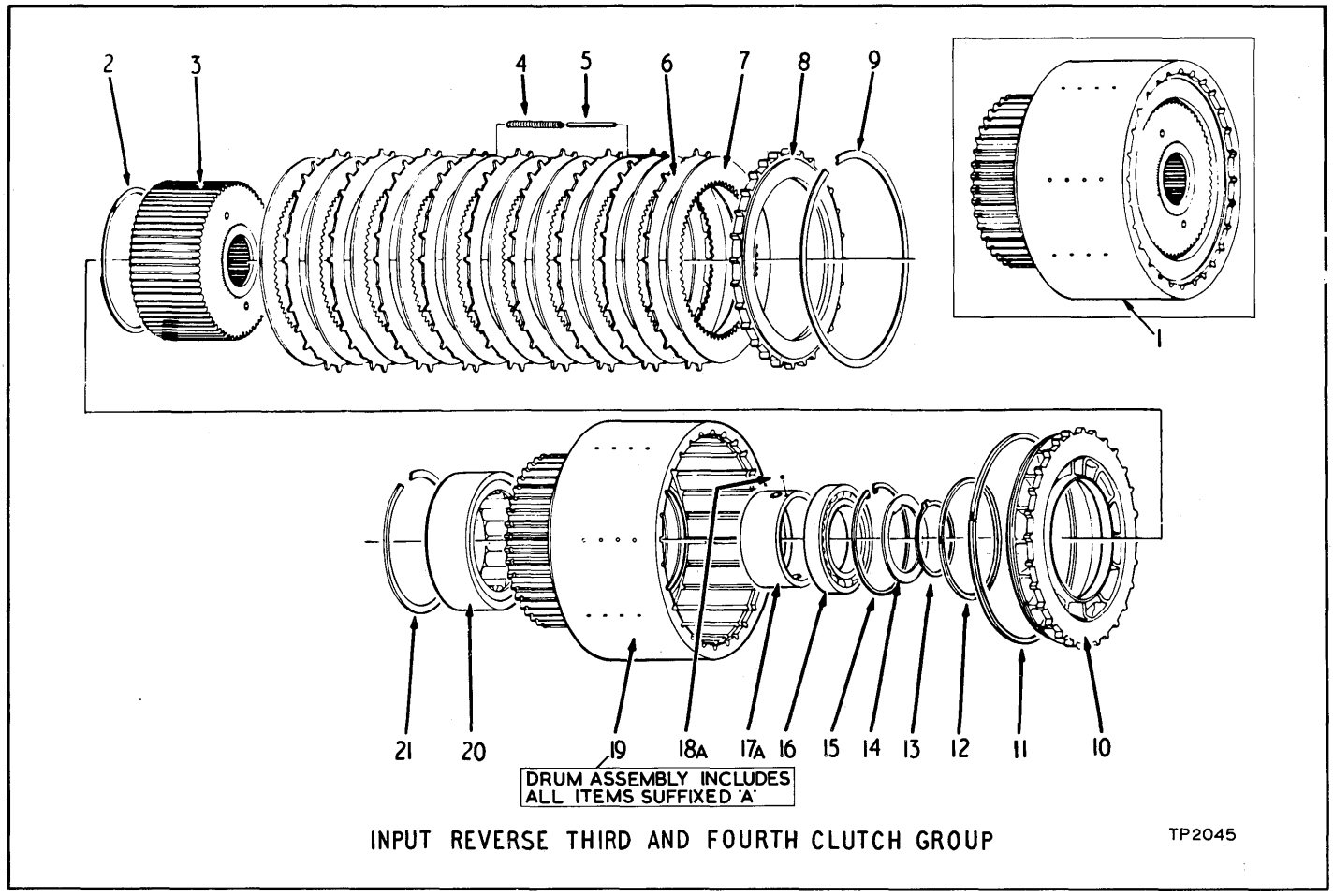

INPUT REVERSE THIRD AND FOURTH CLUTCH GROUP TP2045

ITEM	PART	DESCRIPTION	QTY.
1		NOT SOLD AS AN ASSEMBLY	
2	217509	RING	4
3	217158	HUB ASSEMBLY	4
4	217334	SPRING	24
5	217599	PIN	24
6	217162	DISC	36
7	227495	DISC	40
8	217161	PLATE	4
9	217099	RING	4
10	217164	PISTON	4
11	217361	RING	4
12	217411	RING	4
13	731627	RING	2
14	217165	WASHER	2
15	664116	RING	2
16	225813	BEARING	2
17	217155	RACE	2
18	10J-08	BALL	2
19	217152	DRUM	2
20	225796	BEARING	2
21	223997	RING	2

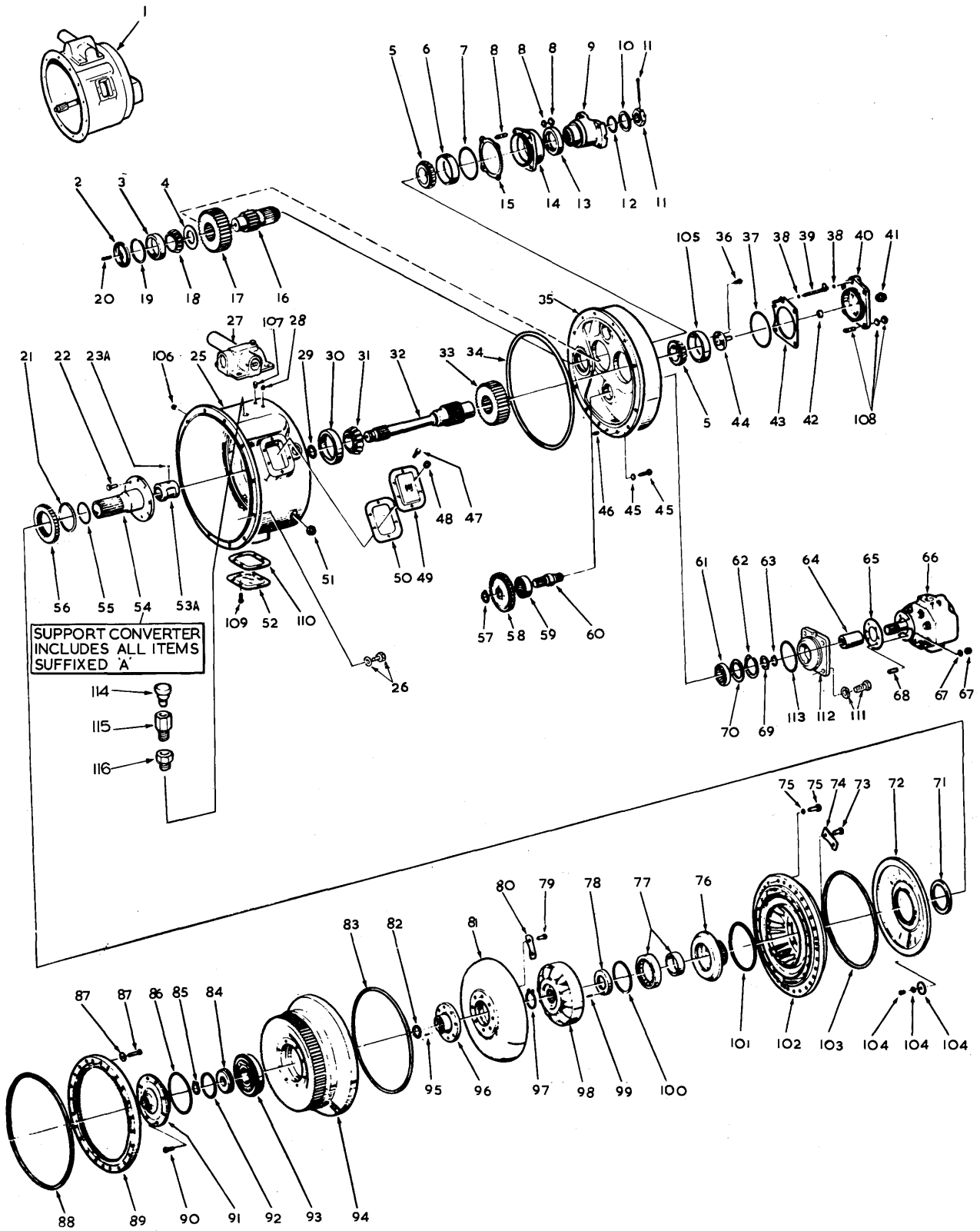

TP. 2025

TORQUE CONVERTER

ITEM	PART	DESCRIPTION	QTY.
1	282732	CONVERTER C8602-14	1
2	222027	BAFFLE	1
3	675543	CUP	1
4	218738	SPACER	1
5	710791	CONE	2
6	710790	CUP	1
7	25K-40420	O RING	1
8	204347	STUD	4
8	4E-08	LOCKWASHER	4
8	8D-08	NUT	4
9	217475	FLANGE ASSEMBLY	1
10	222181	WASHER	1
11	201262	NUT	1
11	1F-632	COTTER	1
12	25K-60204	O RING	1
13	225763	SEAL	1
14	218791	CAP	1
15	218742	SHIM .004	AR
15	218743	SHIM .007	AR
15	218744	SHIM .010	AR
16	218733	SHAFT	1
17	218728	GEAR	1
18	731283	CONE	1
19	223900	RING	1
20	222031	TUBE	1
21	224009	RING	1
22	8C-820	BOLT	8
23	10J-08	BALL	1
25	227065	HOUSING	1
26	1C-724	BOLT	12
26	4E-07	LOCKWASHER	12
28	40K-02	PLUG	1
29	223570	RING	1
30	226026	CUP	1
31	226027	CONE	1
32	218731	SHAFT	1
33	218729	GEAR	1
34	218779	O RING	1
35	227064	COVER	1
36	4C-612	BOLT	3
37	25K-40424	O RING	1
38	25K-30012	O RING	2
39	218737	TUBE	1
40	218752	CAP	1
41	202459	NUT	1
42	226056	SEAL	1
43	218739	SHIM .004	AR
43	218740	SHIM .007	AR
43	218741	SHIM .010	AR
44	218862	ADAPTOR	1
45	1C-722	BOLT	12
45	4E-07	LOCKWASHER	12
46	214295	PIN	1
47	208261	BOLT AND LOCKWASHER	6
48	16F-06	PLUG PIPE	1
49	226856	PLATE	1
50	201400	GASKET	1
51	13F-20	PLUG	1
52	201398	PLATE	2
53	218725	SLEEVE	1
54	218723	SUPPORT	1
55	209673	RING	1
56	222035	GEAR	1
57	224036	RING	3
58	222037	GEAR	3
59	225385	BEARING	3
60	216095	SHAFT	3
61	226025	BEARING	3
62	223961	RING	3
63	224039	RING	3
64	221992	SLEEVE	1
65	551906	GASKET	1
66	450246	* PUMP	1
67	4E-06	LOCKWASHER	3
67	8D-06	NUT	3
68	202253	STUD	3
69	100838	WASHER	3
70	222038	WASHER	3
71	214941	SEAL	1
72	218721	BAFFLE	1
73	222221	BOLT	8
74	222019	LOCKPLATE	4
75	1C-724	BOLT	32
75	4E-07	LOCKWASHER	32
76	222018	HUB	1
77	225778	BEARING	1
78	218782	SPACER	1
79	222223	BOLT	8
80	222008	LOCKPLATE	4
81	222002	TURBINE	1
82	223866	RING	1
83	218776	O RING	1
84	218855	RETAINER	1
85	663834	RING	1
86	60K-40608	O RING	1
87	228987	BELLEVILLE WASHER	96
87	229768	STUD	24
87	230594	RING	1
87	68D-06	LOCKNUT	24
88	219234	O RING	1
89	226595	GEAR	1
90	8C-716	BOLT	8
91	218717	CAP	1
92	211323	RING	1
93	225781	BEARING	1
94	218755	IMPELLER COVER	1
95	221478	PIN	2
96	218753	HUB	1
97	711161	RING	1
98	218781	REACTION MEMBER	1
99	302602	PIN	1
100	223988	RING	1
101	60K-40700	O RING	1
102	222017	IMPELLER	1
103	218777	O RING	1
104	616786	WASHER	3
104	1C-612	BOLT	3
104	5E-06	LOCKWASHER	3
105	710790	CUP	1
106	40K-04	PLUG	1
107	40K-04	PLUG	1
108	204347	STUD	4
108	4E-08	LOCKWASHER	4
108	8D-08	NUT	4
109	208261	BOLT AND LOCKWASHER	12
110	201400	GASKET	2
111	4E-08	LOCKWASHER	4
111	17C-820	BOLT	4
112	227034	ADAPTOR	1
113	25K-40416	O RING	1
114	211433	AIR BREATHER	1
115	227765	CHECK	1
116	356626	BUSHING	1

* NOTE WHEN CONVERTER CHARGING PUMP REPLACEMENT IS REQUIRED ONLY A NEW FACTORY BUILT AND TESTED PUMP SHOULD BE USED PROPER OPERATION OF CONVERTER AND TRANSMISSION IS DEPENDENT ON AN EFFICIENT CHARGING PUMP DAMAGE POSSIBLE BY USE OF A FIELD REBUILT PUMP CAN RESULT IN REPAIR COST EXCEEDING COST OF NEW PUMP ALONE

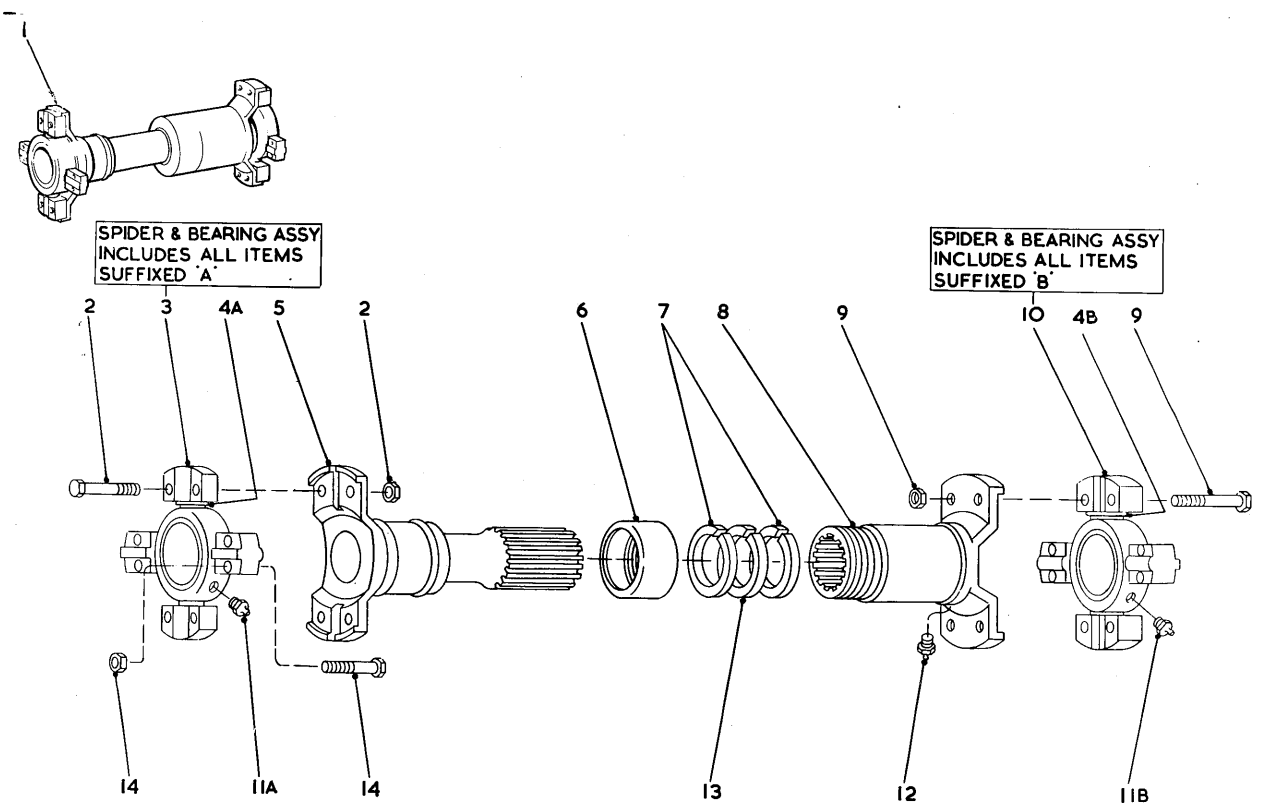

PROPELLER SHAFT - TRANSMISSION TO REAR AXLE

ITEM	PART	DESCRIPTION	QTY.
1	1506669	SHAFT PROPELLER INC 2-13	1
2	940229	BOLT SPIDER & BEARING	4
2A	8D-08	NUT	4
3	941573	SPIDER & BEARING INC 4&11	1
4		¤ SEAL SEE 3	
5	947396	TUBE	1
6	940256	RETAINER	1
7	940257	WASHER	2
8	940227	SLIP YOKE INC 12	1
9	940229	BOLT SPIDER & BEARING	4
9A	8D-08	NUT	4
10	941573	SPIDER & BEARING INC 4&11	1
11	10H-35	FITTING GREASE	2
12	10H-25	FITTING GREASE	1
13	940259	FELT WASHER	1
14	940229	BOLT SHAFT ATTACHING	8
14A	8D-08	NUT	8

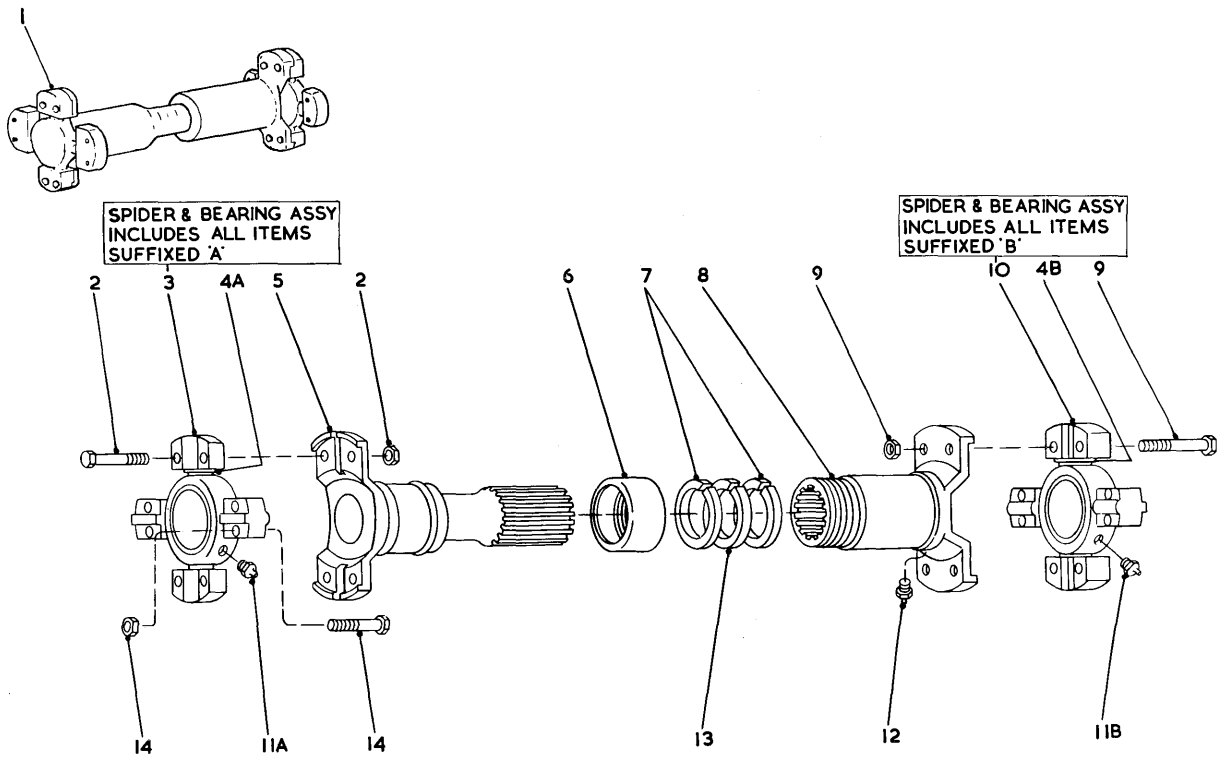

TP 2113

PROPELLER SHAFT — CONVERTER TO TRANSMISSION

ITEM	PART	DESCRIPTION	QTY.
1	556432	PROPELLER SHAFT	1
2	940229	BOLT	4
2	8D-08	NUT	4
3	946641	SPIDER & BEARING ASSY	1
4	94150S	SEAL	4
5	946642	TUBE	1
6	980615	RETAINER KIT	1
7		WASHER NOT SOLD	2
7		USE 98C615 RETAINER KIT	2
8	946643	SLIP YOKE	1
9	940229	BOLT	4
9	8D-08	NUT	4
10	946641	SPIDER & BEARING ASSY	1
11	10H-35	FITTING	1
12	10H-25	FITTING	1
13		WASHER NOT SOLD	1
13		USE 98C615 RETAINER KIT	1
14	940229	BOLT	8
14	8D-08	NUT	8

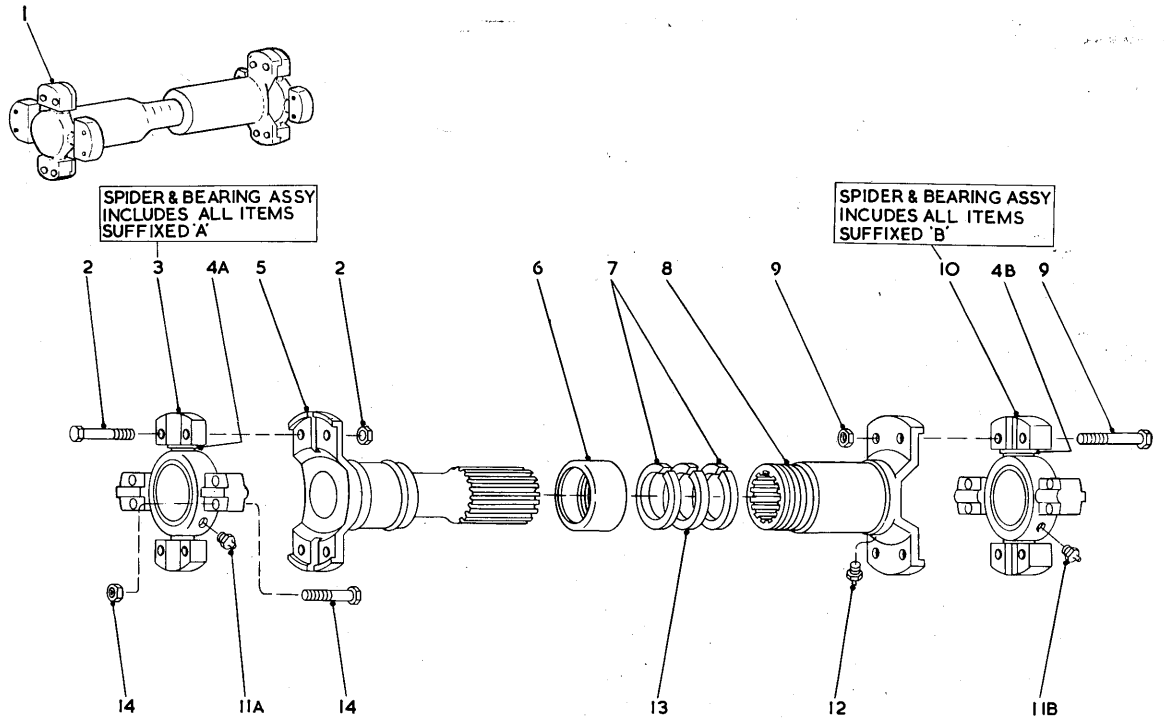

PROPELLER SHAFT - TRANSMISSION TO FRONT AXLE TP2120

ITEM	PART	DESCRIPTION	QTY.
1	1506670	PROP SHAFT TRANS TO BRG	1
1	574785	PROP SHAFT BRG TO AXLE	1
2	940229	BOLT	4
2	8D-08	NUT	4
3	941573	SPIDER AND BEARING ASSY	1
4	941509	SEAL	4
5	947395	TUBE	1
5	946626	TUBE	1
6	940256	RETAINER	1
7	940257	WASHER	2
8	940227	SLIP YOKE	1
9	940229	BOLT	4
9	8D-08	NUT	4
10	941573	SPIDER AND BEARING ASSY	1
11	10H-35	FITTING GREASE	1
12	10H-25	FITTING GREASE	1
13	940259	FELT WASHER	1
14	940229	BOLT	16
14	8D-08	NUT	16

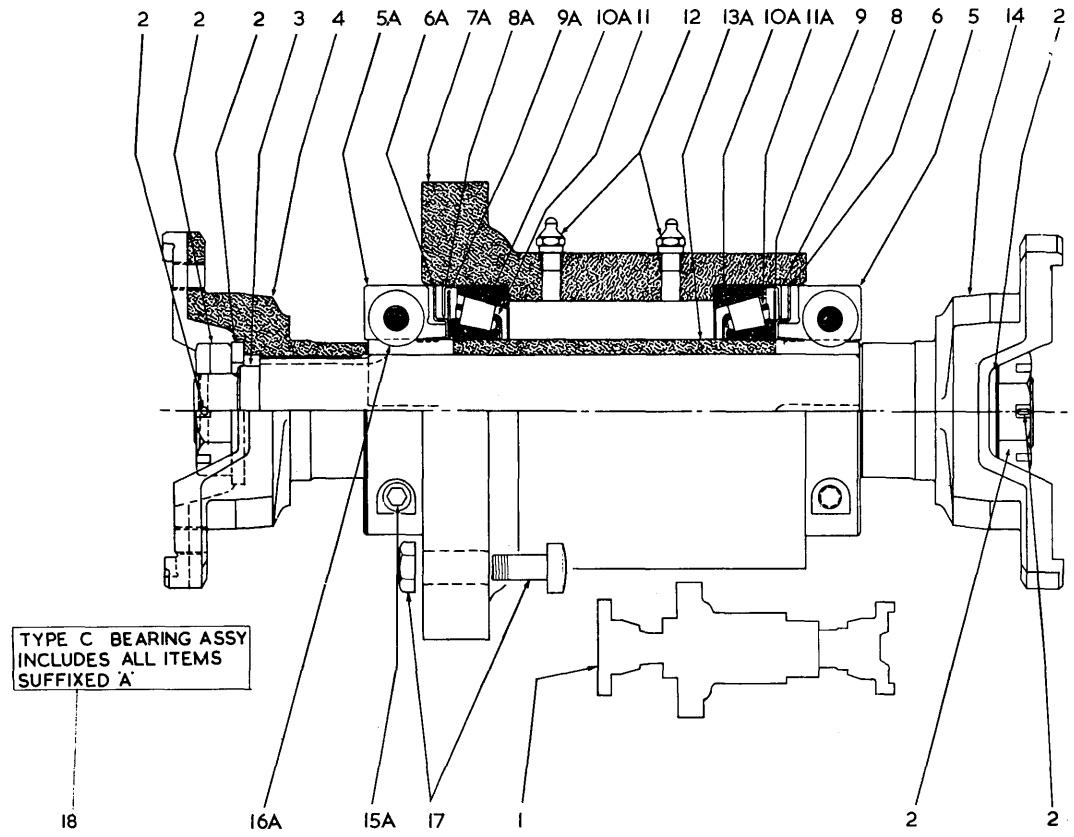

PROPELLER SHAFT BEARING ASSEMBLY TP. 2629

ITEM	PART	DESCRIPTION	QTY.
1	574869	BEARING ASSEMBLY	1
2	201262	NUT	2
2	221181	WASHER	2
2	1F-632	COTTER	2
3	569252	SHAFT	1
4	574797	FLANGE	1
5	574780	COLLAR	2
6	574783	SEAL	2
7	574788	HOUSING	1
8	574784	SEAL	2
9	574782	SEAL	2

ITEM	PART	DESCRIPTION	QTY.
10	658987	CUP	2
11	791085	CONE	2
12	12H-15	FITTING	2
13	574781	TUBE	1
14	574797	FLANGE	1
15		SOLD WITH ITEM 5	4
16		SOLD WITH ITEM 5	4
17	2C-1264	BOLT	4
17	18D-12	NUT	4
	574868	BEARING ASSY	1

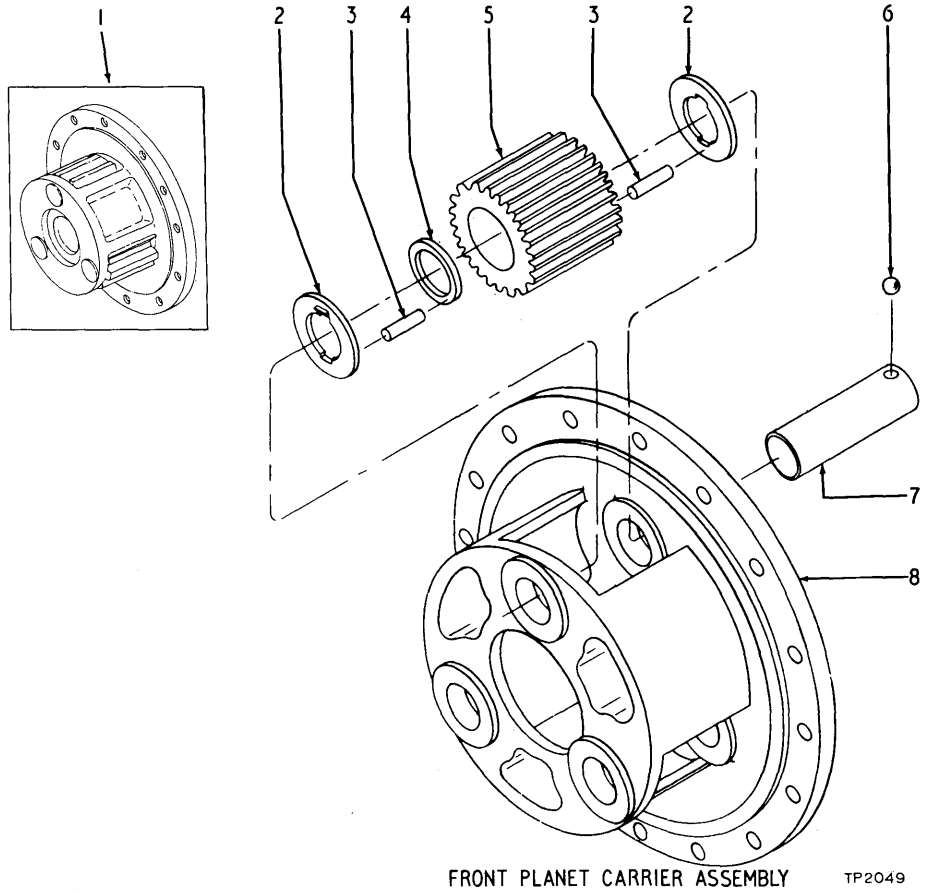

FRONT PLANET CARRIER ASSEMBLY TP2049

ITEM	PART	DESCRIPTION	QTY.	ITEM	PART	DESCRIPTION	QTY.
1	117484	CARRIER PLANET ASSEMBLY	2	5	107990	PINION	3
2	107991	WASHER	6	6	10J-16	BALL	3
3	107992	ROLLER	86	7	107989	SHAFT	3
4	107993	SPACER	3	8	117485	CARRIER	1

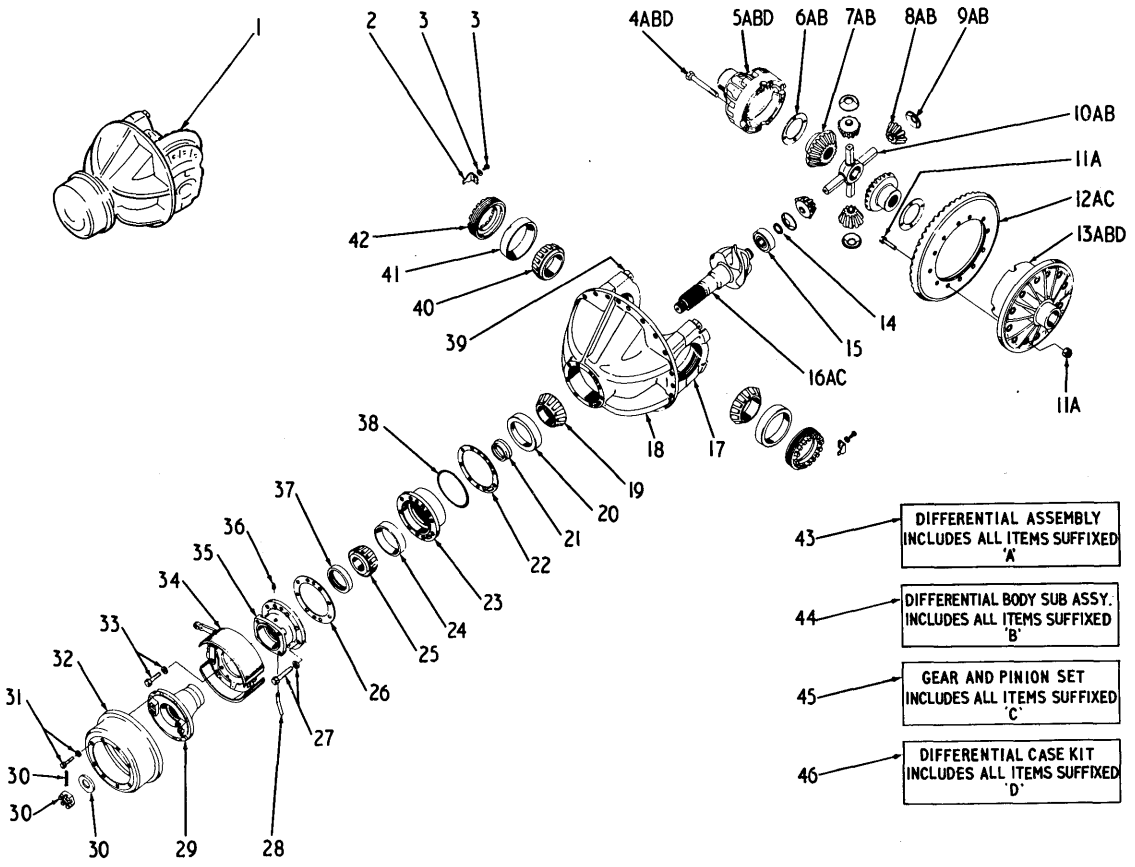

DIFFERENTIAL AND CARRIER ASSEMBLY — FRONT DRIVE TP.2069.

ITEM	PART	DESCRIPTION	QTY.
1	116980	DIFF AND CARRIER ASSY	1
2	107901	LOCK	2
3	3C-716	BOLT	2
3	4E-07	LOCKWASHER	2
6	116426	WASHER	2
7	107958	GEAR	2
8	X116421X	PINION	4
9	116422	WASHER	4
10	116427	SPIDER	1
11	104168	NUT	12
11	18C-940	BOLT	12
14	224052	RING	1
15	731995	BEARING	1
18	107962	CARRIER ASSEMBLY	1
19	710987	CONE	1
20	710986	CUP	1
21	815352	SPACER KIT	1
22	107973	SHIM .004	AR
22	107974	SHIM .007	AR
22	107975	SHIM .010	AR
23	108451	CAGE	1
24	710035	CUP	1
25	710034	CONE	1
26	107971	GASKET	1

ITEM	PART	DESCRIPTION	QTY.
27	1C-1036	BOLT	8
27	4E-10	LOCKWASHER	8
28	107912	TUBE	1
29	108455	FLANGE	1
30	107977	NUT	1
30	107978	WASHER	1
30	1E-748	COTTER	1
31	2C-720	BOLT	8
31	4E-07	LOCKWASHER	8
32	107914	DRUM	1
33	1C-1024	BOLT	4
33	4E-10	LOCKWASHER	4
34	110594	BRAKE ASSEMBLY	1
35	108454	RETAINER	1
36	10E-04	PLUG PIPE	1
37	111368	SEAL	1
38	25K-40700	O RING	1
40	731981	CONE	2
41	672004	CUP	2
42	107969	NUT	2
43	116981	DIFFERENTIAL ASSEMBLY	1
44	116523	DIFF BODY SUB ASSY	1
45	112377	GEAR AND PINION SET	1
46	815648	DIFFERENTIAL CASE KIT	1

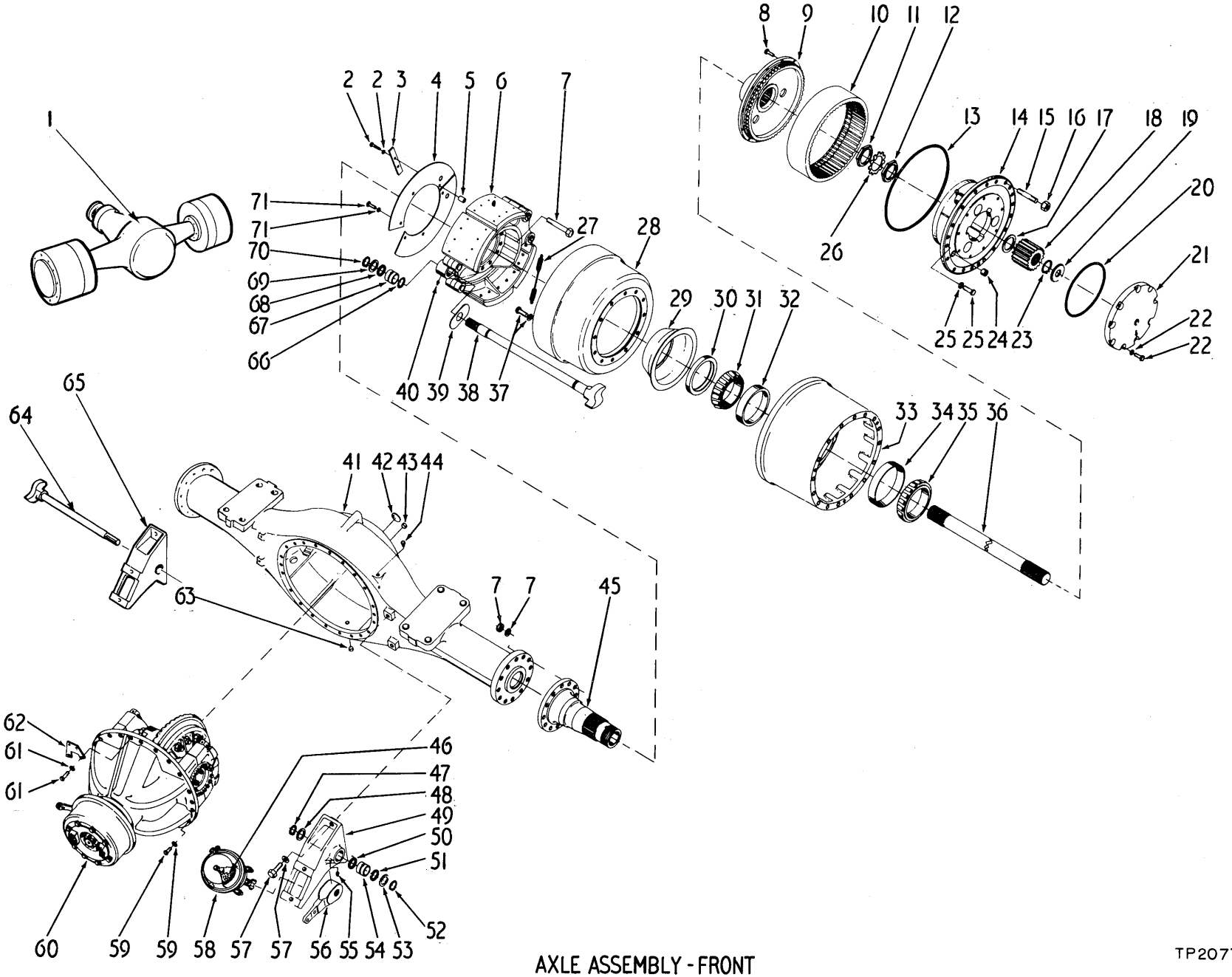

AXLE ASSEMBLY - FRONT

TP2077

ITEM	PART	DESCRIPTION	QTY.	ITEM	PART	DESCRIPTION	QTY.
1	131585	AXLE ASSEMBLY	1	36	116975	SHAFT	2
2	1C-636	BOLT	4	37	111461	BOLT	24
2	4E-06	LOCKWASHER	4	37	111656	LOCKWASHER	24
3	112695	PLATE	2	38	116977	CAM SHAFT	1
4	118306	COVER	4	39	107735	WASHER	2
5	655673	SPACER	8	40	12H-15	FITTING	2
6	114303	BRAKE ASSEMBLY	2	41	116974	HOUSING	1
7	107732	NUT	24	42	12F-300	PLUG EXPANSION	1
7	108472	BOLT	24	43	11F-16	PLUG PIPE	1
7	111658	WASHER	24	44	103452	BREATHER	1
8	111338	BOLT	24	45	116944	SPINDLE	2
				46	882444	DIAPHRAGM	1
8	118700	WASHER	24	47	224032	RING	2
9	107995	HUB	2	48	107010	WASHER	2
10	107996	GEAR	2	49	111255	BRACKET R H	1
11	114434	NUT	2	50	11E-135	RETAINER	2
12	114434	NUT	2	51	11E-135	RETAINER	2
13	108031	O RING	2	52	660516	RING	2
14	117484	CARRIER PLANET ASSEMBLY	2	53	107736	WASHER	2
15	119858	STUD	32	54	107739	BUSHING	2
16	107985	NUT	32	55	10H-25	FITTING	2
17	108478	WASHER	2	56	108476	ADJUSTER BW 226655	2
18	108030	GEAR	2	57	1C-1236	BOLT	4
19	108475	WASHER	2	57	4E-12	LOCKWASHER	4
20	116923	O RING	2	58	X112335X	AIR CHAMBER BW 229363	2
21	815719	CAP KIT	2	59	104412	WASHER	4
22	106762	WASHER	18	59	112537	BOLT	4
22	1C-824	BOLT	18	60	116980	DIFF AND CARRIER ASSY	1
23	224073	RING	2	61	104412	WASHER	20
24	11947C	PLUG	2	61	17C-1032	BOLT	18
25	1C-1030	BOLT	6	62	536879	BRACKET	1
25	4E-10	LOCKWASHER	6	63	731221	PLUG	1
26	10802F	LOCK	2	64	116976	CAM SHAFT L H	1
27	11965C	SPRING	2	65	111256	BRACKET L H	1
28	108464	DRUM	2	66	25K-60124	O RING	2
29	112217	CATCHER	2	67	107739	BUSHING	2
30	112332	SEAL	2	68	11E-135	RETAINER	2
31	791503	CONE	2	69	107736	WASHER	2
32	742264	CUP	2	70	660516	RING	2
33	112327	HUB ASSEMBLY	2	71	1C-632	BOLT	4
34	742260	CUP	2	71	4E-06	LOCKWASHER	4
35	731988	CONE	2				

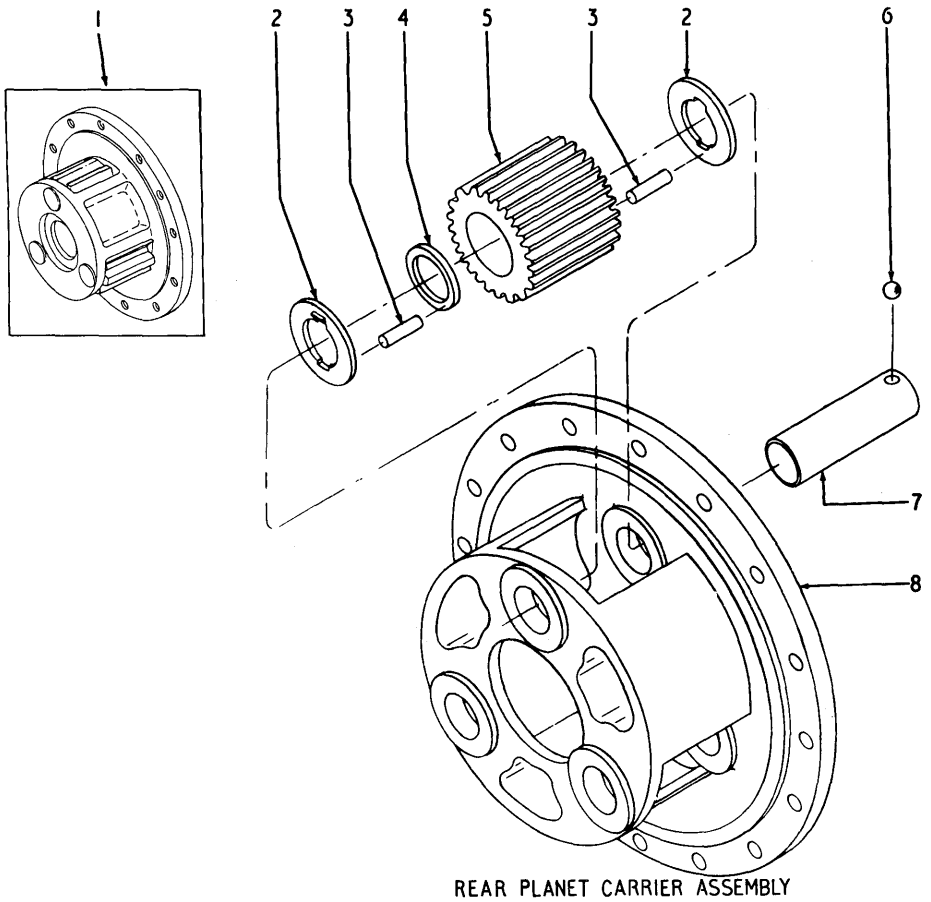

REAR PLANET CARRIER ASSEMBLY

ITEM	PART	DESCRIPTION	QTY.	ITEM	PART	DESCRIPTION	QTY.
1	117484	CARRIER PLANET ASSEMBLY	2	5	107990	PINION	3
2	107991	WASHER	6	6	10J-16	BALL	3
3	107992	ROLLER	86	7	107989	SHAFT	3
4	107993	SPACER	3	8	117485	CARRIER	1

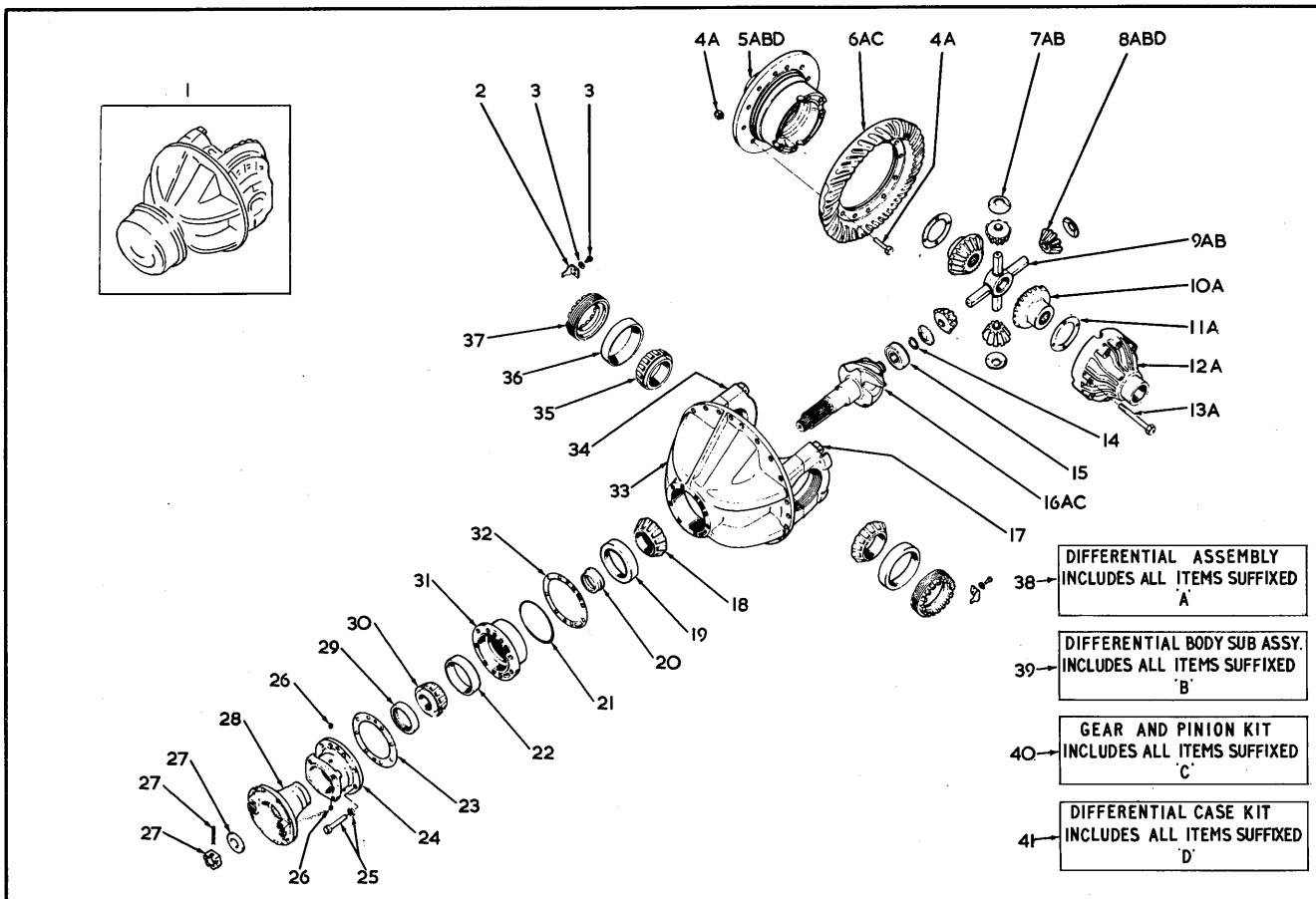

DIFFERENTIAL AND CARRIER ASSEMBLY — REAR DRIVE STEER TP2075

ITEM	PART	DESCRIPTION	QTY.
1	119268	DIFF AND CARRIER ASSY	1
2	107901	LOCK	2
3	3C-716	BOLT	2
3	4E-07	LOCKWASHER	2
4	104168	NUT	12
4	19C-940	BOLT	12
7	116422	WASHER	4
8	X116421X	PINION	4
9	116427	SPIDER	1
10	107958	GEAR	2
11	116426	WASHER	2
13	107892	BOLT	8
14	224052	RING	1
15	731995	BEARING	1
18	710987	CONE	1
19	710986	CUP	1
20	815352	SPACER KIT	1
21	25K-40700	O RING	1
22	710035	CUP	1
23	107971	GASKET	1
24	108454	RETAINER	1
25	1C-1036	BOLT	8
25	4E-10	LOCKWASHER	8
26	10F-04	PLUG PIPE	2
27	107977	NUT	1
27	107978	WASHER	1
27	1F-748	COTTER	1
28	108455	FLANGE	1
29	111368	SEAL	1
30	710034	CONE	1
31	108451	CAGE	1
32	107973	SHIM .004	AR
32	107974	SHIM .007	AR
32	107975	SHIM .010	AR
33	107962	CARRIER ASSEMBLY	1
35	731981	CONE	2
36	672004	CUP	2
37	107969	NUT	2
38	116563	DIFFERENTIAL ASSEMBLY	1
39	116523	DIFF BODY SUB ASSY	1
40	112382	GEAR AND PINION SET	1
41	815648	DIFFERENTIAL CASE KIT	1

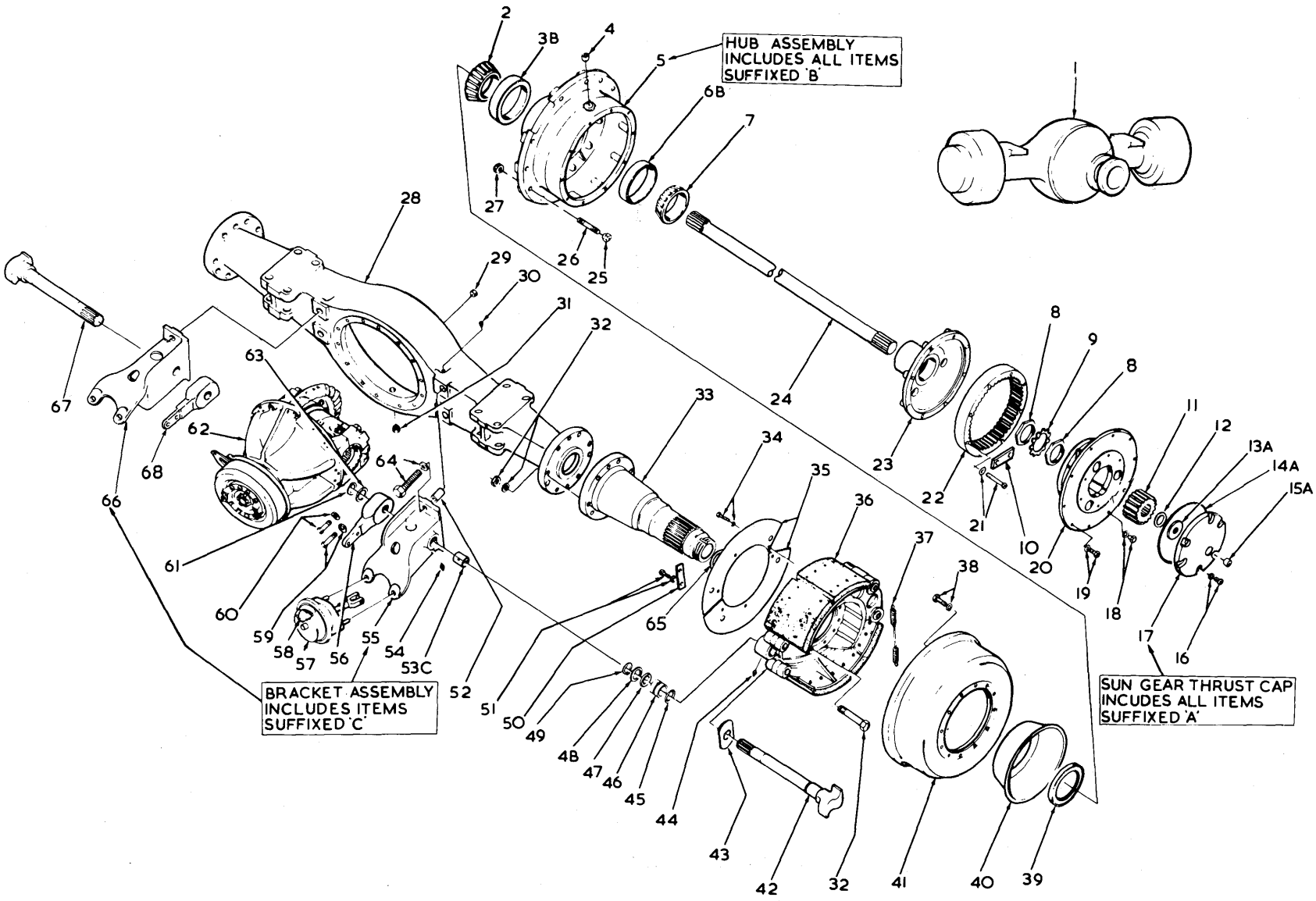

AXLE ASSEMBLY REAR

TP2633

ITEM	PART	DESCRIPTION	QTY.	ITEM	PART	DESCRIPTION	QTY.
1	190185	AXLE ASSEMBLY	1	36	114303	BRAKE ASSEMBLY	2
2	791503	CONE	2	37	11965C	SPRING	2
3	742264	CUP	2	38	111461	BOLT	24
5	112327	HUB ASSEMBLY	2	38	11165E	WASHER	24
6	742260	CUP	2	39	112332	SEAL	2
7	731588	CONE	2	40	112217	CATCHER	2
8	114434	NUT	4	41	108464	DRUM	2
9	108028	LOCK	2	42	116977	CAM SHAFT	1
11	108030	SUN GEAR	2	43	107735	WASHER	2
12	224073	RING	2	44	12H-15	FITTING	2
13	108478	WASHER	2	45	25K-60124	O RING	2
14	116923	O RING	2	46	107739	BUSHING	2
15	11947C	PLUG PIPE	2	47	11E-135	RETAINER	2
16	106762	WASHER	18	48	107736	WASHER	2
16	1C-824	BOLT	18	49	660516	RING	2
17	815719	CAP KIT	2	50	112695	PLATE	2
19	1C-1030	BOLT	6	51	655673	SPACER	4
19	4E-10	LOCKWASHER	6	51	1C-632	BOLT	4
20	117484	CARRIER PLANET ASSEMBLY	2	51	4E-06	LOCKWASHER	4
21	111338	BOLT	24	53	107739	BUSHING	2
21	118700	WASHER	24	54	10H-25	FITTING GREASE	2
22	119160	GEAR AND HUB	2	55	111255	BRACKET	1
23	119160	HUB AND GEAR	2	56	108476	ADJUSTER BW 226655	1
24	116975	SHAFT	2	57	11020E	AIR CHAMBER BW 229403	2
25	107985	NUT	32	58	944735	DIAPHRAGM BW 234362	1
26	120219	STUD	32	59	104412	WASHER	18
28	116974	HOUSING	1	59	17C-1032	BOLT	18
29	11F-16	PLUG PIPE	1	60	104412	WASHER	4
30	103452	BREATHER	1	60	112537	BOLT	4
31	731221	PLUG	1	61	224032	RING	2
32	107732	NUT	24	62	119268	DIFF AND CARRIER ASSY	1
32	108472	BOLT	24	63	1C701C	WASHER	2
32	11165E	WASHER	24	64	1C-1236	BOLT	4
33	116944	SPINDLE	2	64	4E-12	LOCKWASHER	4
34	655673	SPACER	4	66	111256	BRACKET	1
34	1C-636	BOLT	4	67	116976	CAMSHAFT RH	1
34	4E-06	LOCKWASHER	4	68	108476	ADJUSTER BW 226655	1
35	118306	COVER	2				

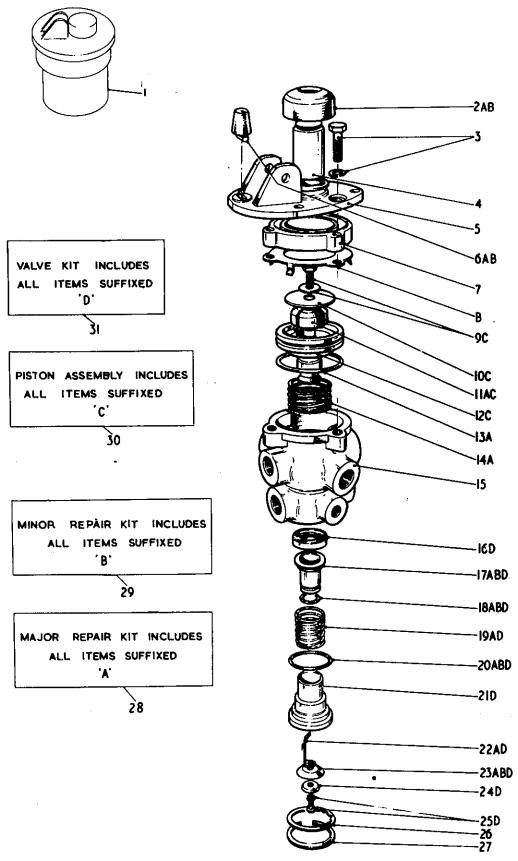

TP 2078

AIR BRAKE VALVE

ITEM	PART	DESCRIPTION	QTY.	ITEM	PART	DESCRIPTION	QTY.
1	556562	VALVE ASSEMBLY	1	16	3290107	RETAINER	1
2	3206404	BOOT RUBBER	1	17	3290108	VALVE	1
3	3206401	WASHER SPRING	3	18	3290112	O RING	1
3	3290121	BOLT	3	19	3290113	SPRING	1
4	3290122	PLUNGER	1	20	3290109	O RING	1
5	3206400	PLATE	1	21	3290110	SEAT	1
6	3206382	STOP	1	22	3290111	SPRING PRE LOAD	1
7	3290123	SPACER	1	23	3290114	DIAPHRAGM	1
8	3290131	RETAINER	1	24	3290115	WASHER	1
9	3290102	CAP SCREW	1	25	3290116	SCREW	1
9	3290103	WASHER	1	25	3290117	WASHER SHAKEPROOF	1
10	3290101	SEAT	1	26	3290120	WASHER	1
11	3290104	SPRING	1	27	3290119	CIRCLIP	1
12	3290100	PISTON	1	28	3290125	REPAIR KIT	1
13	3290118	O RING	1	29	3290124	REPAIR KIT	1
14	3206398	SPRING	1	30	3290099	PISTON ASSEMBLY	1
15	3290105	BODY	1	31	3290106	VALVE KIT	1

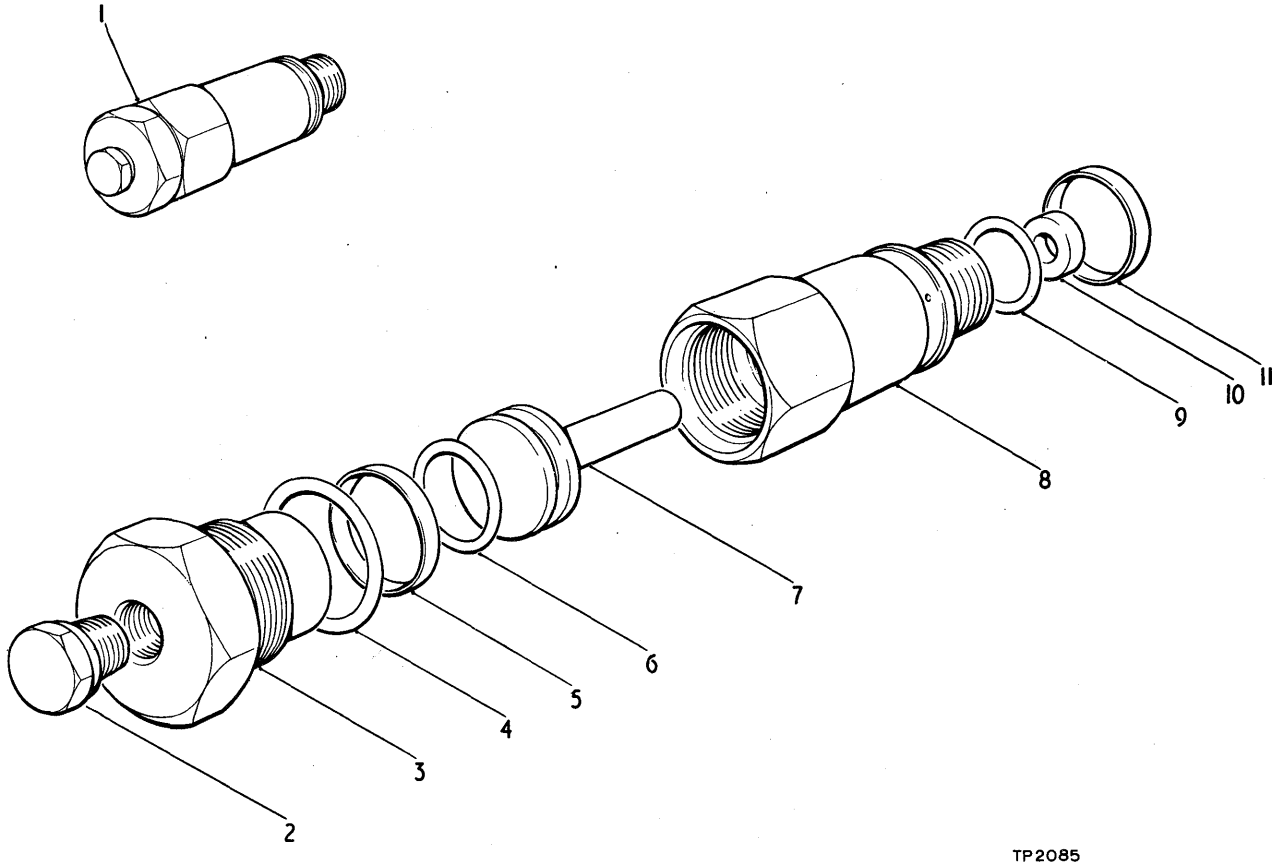

BRAKE DE-CLUTCH VALVE

ITEM	PART	DESCRIPTION	QTY.
1	217927	DECLUTCH VALVE	1
2	40K-02	PIPE PLUG	1
3	217928	REDUCING BUSHING	1
4	91E-8	O RING	1
5	227672	GLIDE RING	1
6	25K-3002C	O RING	1
7	227673	PISTON	1
8	217929	HOUSING	1
9	25K-30022	O RING	1
10	224715	SEAL	1
11	216967	SEAL	1

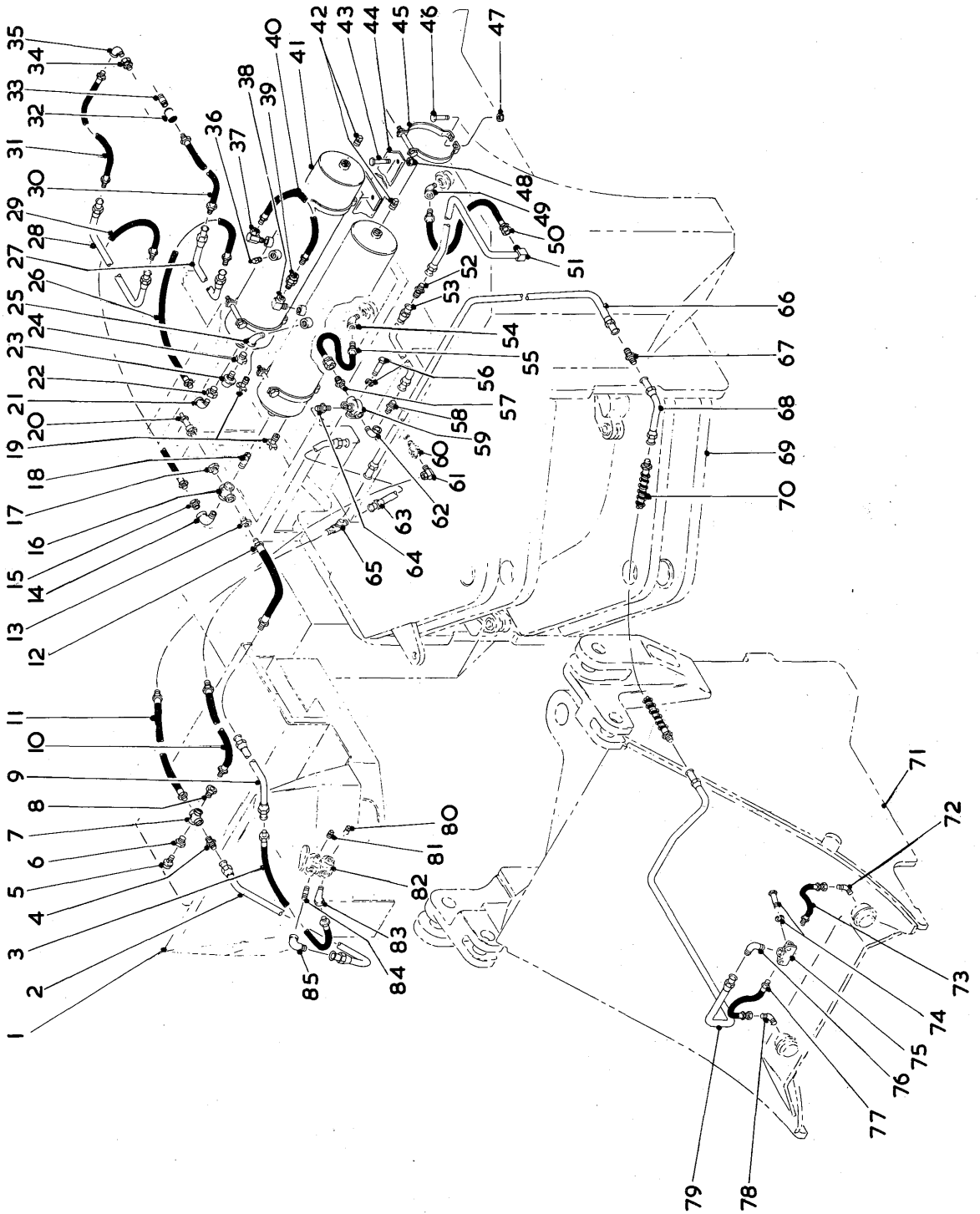
TP 3436
BRAKE SYSTEM – MAIN

BRAKE SYSTEM - MAIN

ITEM	PART	DESCRIPTION	QTY.
1		COCKPIT SEE INDEX	
2	571693	TUBE CROSS TO VALVE	1
3	571695	HOSE ELBOW TO TUBE	1
4	38F-10	CONNECTOR	1
5	636260	SWITCH STOP LIGHT	1
6	19F-4	BUSHING	1
7	21F-4	CROSS CONNECTOR	1
8	19F-4	BUSHING	1
9	568581	TUBE RESERVOIR TO VALVE	1
10	543697	HOSE CROSS TO VALVE DE-CLUTCH	1
11	1521315	HOSE CROSS TO TEE	1
12	566576	HOSE	1
13	356617	BUSHING	1
14	26F-5	ELBOW	1
15	356620	BUSHING	1
16	21F-5	CROSS CONNECTOR	1
17	356619	BUSHING	1
18	5K-612	NIPPLE	1
19	72F-2	DRAIN COCK	2
20	507815	VALVE SAFETY	1
21	26F-4	ELBOW	1
22	356617	BUSHING	1
23	1534135	SENDER UNIT AIR PRESSURE	1
24	19F-2	BUSHING	1
25	26F-3	ELBOW	1
26	523786	HOSE RESERVOIR TO TUBE	1
27	1521412	TUBE RESERVOIR TO COMPRESSOR	1
28	1528118	TUBE RESERVOIR TO GOVERNOR	1
29	548541	HOSE RESERVOIR TO TUBE	1
30	526090	HOSE TUBE TO COMPRESSOR	1
31	515401	HOSE TUBE TO GOVERNOR	1
32	37K-308	COUPLING	1
33	5K-410	NIPPLE	1
34	5K-110	NIPPLE	1
35	24F-1	ELBOW	1
36	13F-06	PLUG AIR RESERVOIR	1
37	31F-3	ADAPTOR	1
38	731333	ELBOW	1
39	593370	VALVE CHECK	1
40	530513	HOSE RESERVOIR-RESERVOIR	1
41	539164	RESERVOIR AIR	2
42	13F-12	PLUG AIR RESERVOIR	2
43	2C-620	BOLT BRACKET TO FRAME	2
43A	619023 +	WASHER	2
44	1531453	BRACKET RESV MOUNTING	1
45	941813	BRACKET RESERVOIR-BRACKET	4
46	2C-616	BOLT BRKT TO BRKT	8
47	18D-06	NUT	8
48	18D-06	NUT BRKT TO FRAME	2
49	25F-2	ELBOW HOSE TO AIR CHAMBER	1
50	569719	HOSE TUBE TO AIR CHAMBER	1
51	569803	TUBE HOSE TO TUBE	1
52	40F-7	CONNECTOR	1
53	569804	TUBE Q.R.V. TO TUBE	1
54	25F-2	ELBOW HOSE TO AIR CHAMBER	1
55	569719	HOSE TUBE TO AIR CHAMBER	1
56	2C-510	BOLT VALVE MOUNTING	2
56A	4E-05	LOCKWASHER	2
57	38F-9	CONNECTOR	1
58	38F-9	CONNECTOR	1
59	521439	VALVE QUICK RELEASE	1
60		VALVE DE-CLUTCH SEE INDEX	
61	31F-1	ADAPTOR	1
62	26F-3	BUSHING	1
63	567809	TUBE TEE TO Q.R.V.	1
64	38F-10	CONNECTOR	1
65	44F-8	TEE CONNECTOR	1
66	567791	TUBE	1
67	40F-8	CONNECTOR	1
68	567790	TUBE	1
69		FRAME REAR SEE INDEX	
70	1521318	HOSE CENTRE PIVOT	1
71		FRAME FRONT SEE INDEX	

(continued)

BRAKE SYSTEM - MAIN

ITEM	PART	DESCRIPTION	QTY.
72	42F-6	ELBOW HOSE TO AIR CHAMBER	1
73	570145	HOSE Q.R.V TO AIR CHAMBER	1
74	2C-510	BOLT VALVE MOUNTING	2
74A	4E-05	LOCKWASHER	2
75	521439	VALVE QUICK RELEASE	1
76	42F-9	ELBOW	1
77	570145	HOSE	1
78	42F-6	ELBOW	1
79	1503742	TUBE Q.R.V TO PIVOT HOSE	1
80	13F-04	PLUG BRAKE VALVE	2
81	13F-08	PLUG BRAKE VALVE	4
82		VALVE BRAKE SEE INDEX	
83	26F-4	ELBOW	1
84	36F-4	ADAPTOR	1
85	1535735	ELBOW	1

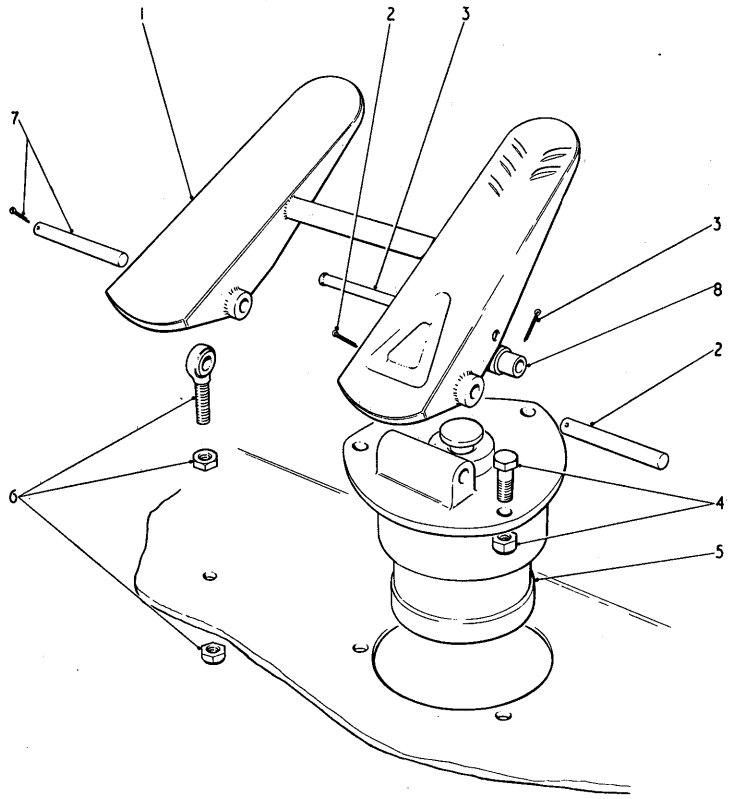

BRAKE FOOT CONTROLS TP2087

ITEM	PART	DESCRIPTION	QTY.
1	568659	PEDAL	1
2	2C-664	BOLT	1
2	66D-06	NUT	1
3	875766	TENSION PIN	1
3	1F-312	PIN COTTER	1
4	2C-520	BOLT	3
4	18D-05	NUT	3
5	556562	VALVE ASSEMBLY	1
6	1525089	BEARING SPHERICAL	1
6	8D-06	NUT BEARING MOUNTING	1
6	66D-06	LOCKNUT	1
7	875767	PIN ROLLER	1
7	1F-320	PIN COTTER	1
8	518259	ROLLER	1

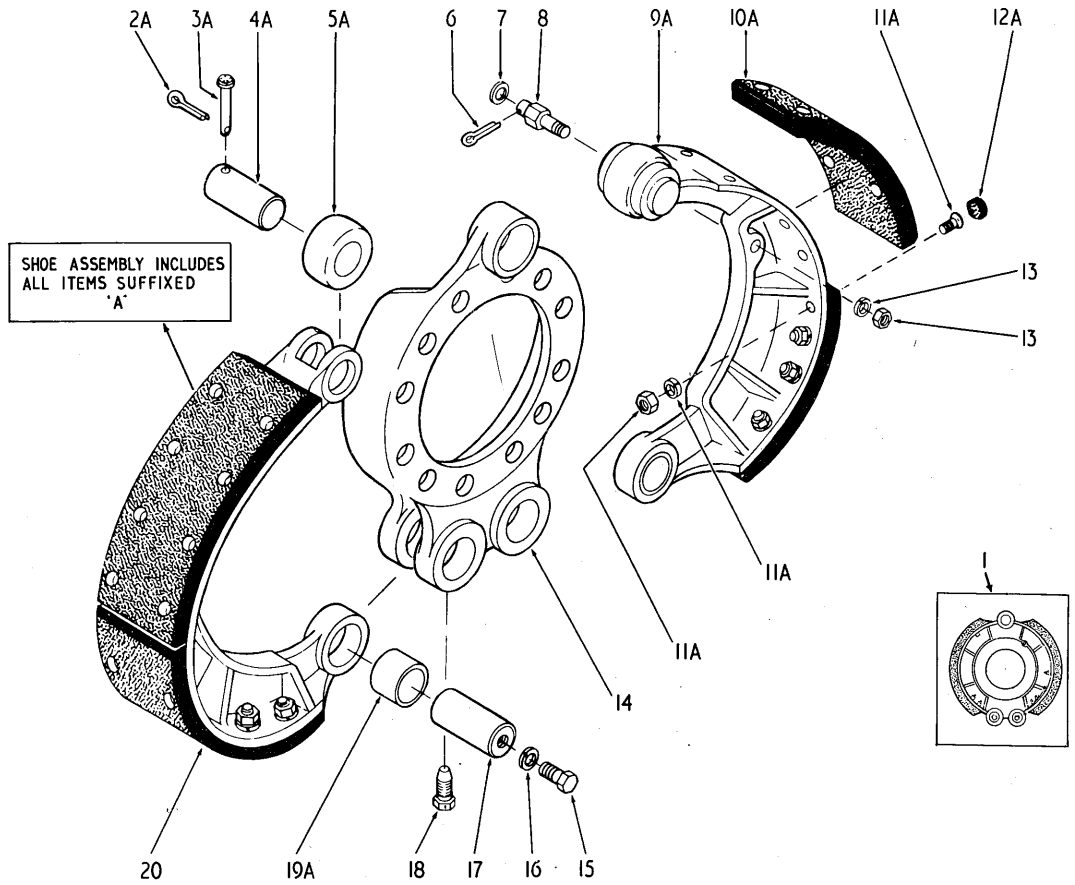

BRAKE ASSEMBLY- FRONT AND REAR TP.2051.

ITEM	PART	DESCRIPTION	QTY.
1	114303	BRAKE ASSEMBLY	2
2	1F-308	COTTER	2
3	110855	PIN LOCK	2
4	112211	PIN	2
5	112210	ROLLER	2
6	1F-412	COTTER	2
7	619C27	WASHER	2
8	112216	PIN	2
9		SHOE SEE ITEM 20	
10	114306	LINING	4
11	111439	SCREW	32
11	20-06	NUT	32

ITEM	PART	DESCRIPTION	QTY.
11	24E-06	LOCKWASHER	32
12	113249	PLUG	32
13	20-06	NUT	2
13	4E-06	LOCKWASHER	2
14	112214	SPIDER	1
15	1C-812	BOLT	2
16	4E-08	LOCKWASHER	2
17	112213	PIN	2
18	109597	SCREW	2
19	112212	BUSHING	2
20	114304	SHOE ASSEMBLY	2

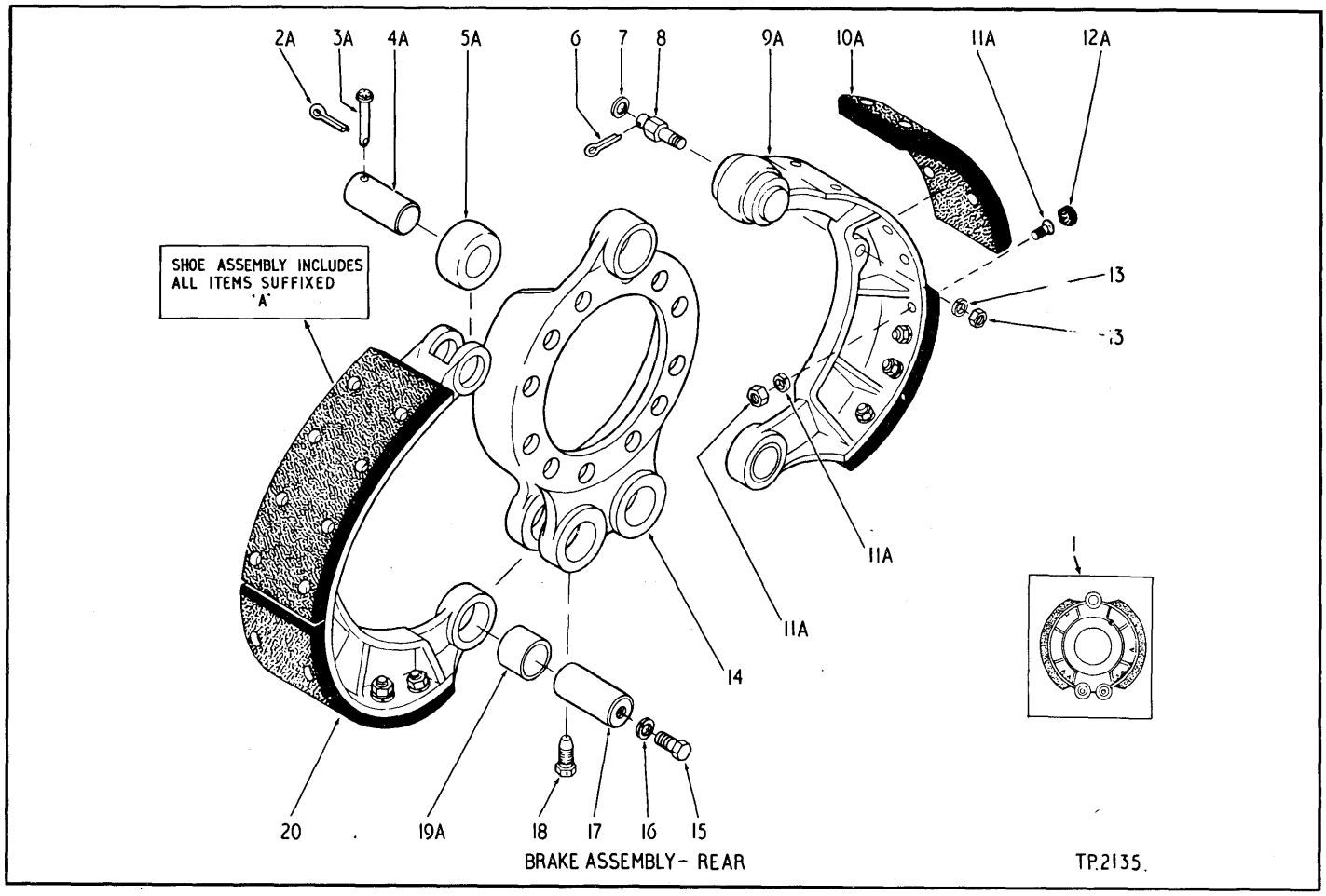

BRAKE ASSEMBLY- REAR TP.2135.

ITEM	PART	DESCRIPTION	QTY.
1	114303	BRAKE ASSEMBLY	2
2	1F-308	COTTER	2
3	110855	PIN LOCK	2
4	112211	PIN	2
5	112210	ROLLER	2
6	1F-412	COTTER	2
7	619027	WASHER	2
8	112216	PIN	2
9		SHOE SEE ITEM 20	
10	114306	LINING	4
11	111439	SCREW	32
11	2D-06	NUT	32

ITEM	PART	DESCRIPTION	QTY.
11	24E-06	LOCKWASHER	32
12	113249	PLUG	32
13	2D-06	NUT	2
13	4E-06	LOCKWASHER	2
14	112214	SPIDER	1
15	1C-812	BOLT	2
16	4E-08	LOCKWASHER	2
17	112213	PIN	2
18	109597	SCREW	2
19	112212	BUSHING	2
20	114304	SHOE ASSEMBLY	2

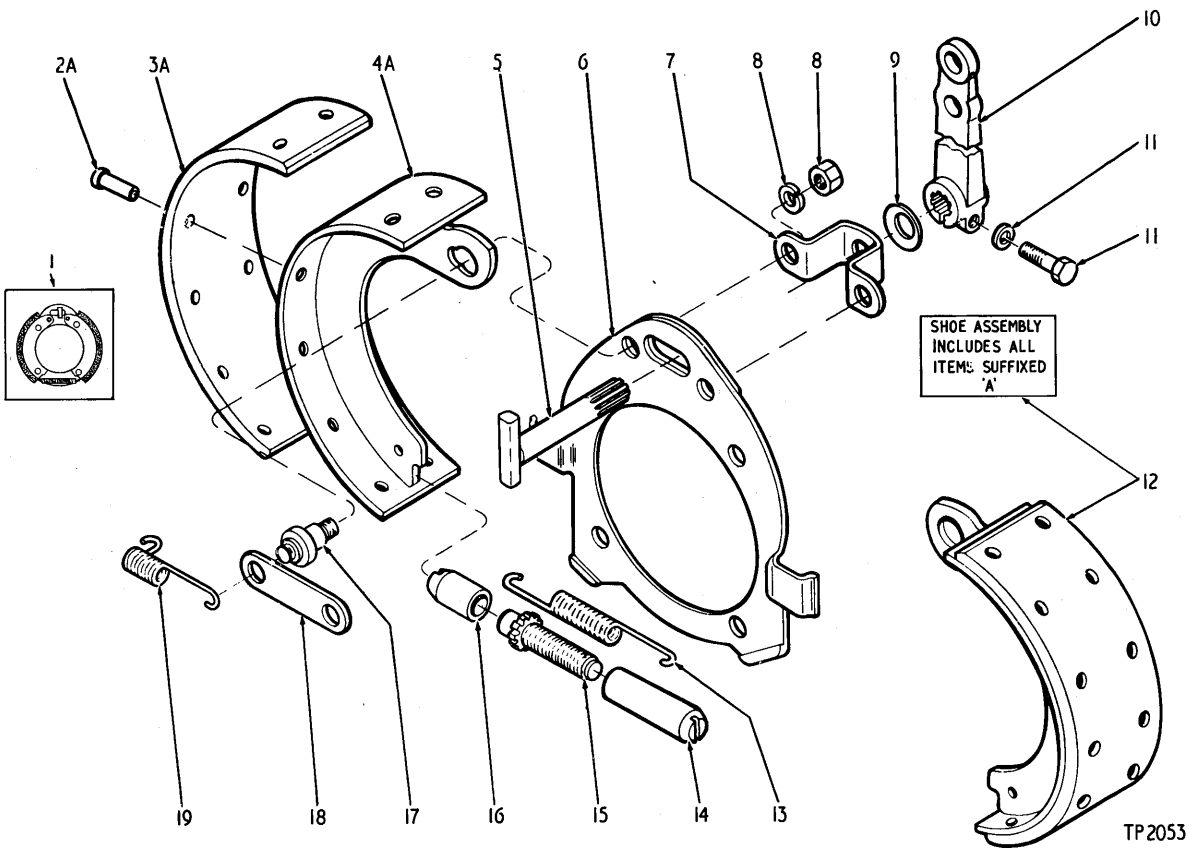

PARKING BRAKE ASSEMBLY

ITEM	PART	DESCRIPTION	QTY.
1	110594	BRAKE ASSEMBLY	1
2		RIVET SEE ITEM 3	
3	944664	LINING KIT	1
4		SHOE SEE ITEM 12	
5	944659	CAM SHAFT	1
6	944656	PLATE	1
7	944658	BRACKET	1
8	2D-12	NUT	2
8	4E-12	LOCKWASHER	2
9	944663	WASHER	1
10	943455	LEVER	1
11	943464	BOLT	1

ITEM	PART	DESCRIPTION	QTY.
11	4E-06	LOCKWASHER	1
12	944665	SHOE ASSEMBLY	2
13	943458	SPRING	1
14	943463	NUT	1
15	943462	SCREW	1
16	943465	SOCKET	1
17	944657	PIN	2
18	944660	BRACE	1
19	944661	SPRING	2

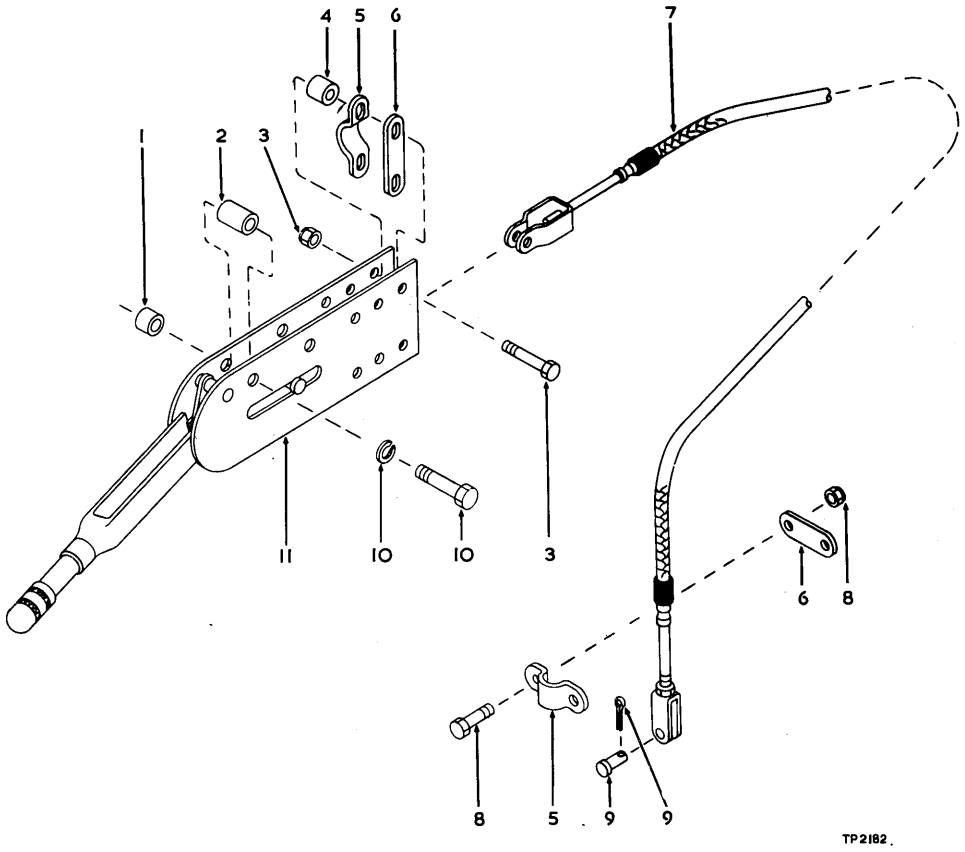

PARKING BRAKE LINKAGE

ITEM	PART	DESCRIPTION	QTY.
1	545006	SPACER	2
2	545005	SPACER	2
3	2C-528	BOLT	2
3	18D-05	LOCKNUT	2
4	545006	SPACER	2
5	544512	CLAMP	2
6	645092	SPACER	2
7	572661	CABLE	1

ITEM	PART	DESCRIPTION	QTY.
8	2C-520	BOLT	2
8	18D-05	LOCKNUT	2
9	1F-414	PIN COTTER	1
9	4F-08127	PIN CLEVIS	1
10	2C-644	BOLT	2
10	18D-06	LOCKNUT	2
11	3213830	LEVER	1

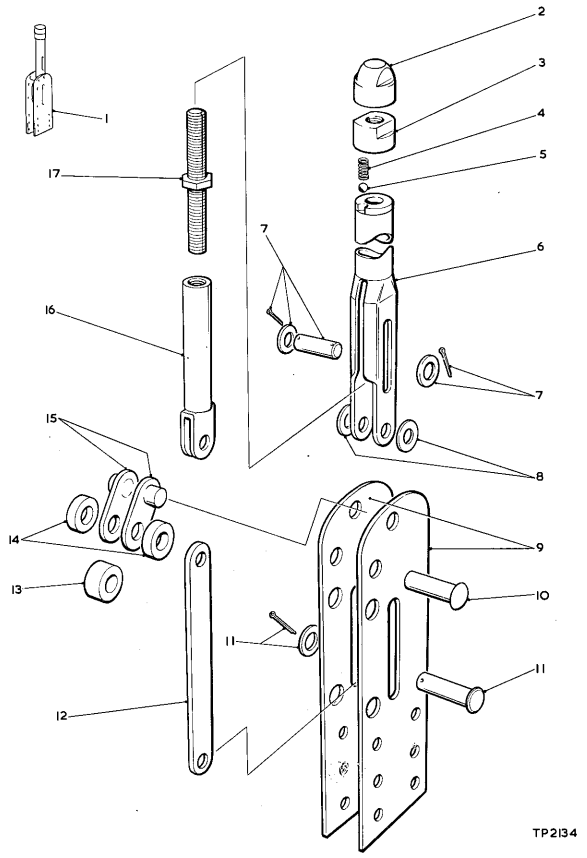

LEVER- PARKING BRAKE

ITEM	PART	DESCRIPTION	QTY.
1	3213830	LEVER	1
2	3290407	CAP	1
3	3290406	HOUSING	1
4	3290392	SPRING	1
5	3290391	BALL BEARING	1
6	3290405	BODY AND BUSH	1
7	3290400	PIN	1
7	3290402	PIN SPLIT	2
7	3290404	WASHER	2
8	3290399	WASHER	2
9	3290393	BRACKET	2
10	3290398	RIVET	1
11	3290394	RIVET	1
11	3290403	SPLIT PIN	1
11	3290404	WASHER	1
12	3290402	LINK	1
13	3290395	SPACER	1
14	3290396	SPACER	2
15	3290397	BRACKET	2
16	3290401	CLEVIS	1
17	3290390	SCREW	1

PM,

TELEX TELEX TELEX TELEX TELEX

⊕
211087 muah d
4186228y cim d no 9-249 3-9-75 wwh/ho

to: herrn darr

subject: 275 iii a s/ n 333 en 2211-1

ihr telex 3/710

ersatzteilnr. fuer die felge 29.5-29 fuer obige maschine
ist 557066.

mfg
w.hahn

cimsa wiesbaden

4186228y cim d

⊕
211087 muah d

WHEEL ASSY 29.50 x 25 & 29.50 x 25 TUBELESS

ITEM	PART	DESCRIPTION	QTY.	ITEM	PART		DESCRIPTION	QTY.
A	3220041	WHEEL ASSY FOR 29.5 X 25	4	4	543558		WHEEL	4
A		& 29.5 X 25 TUBELESS		5	580278		O RING	4
A		TYRES INC 4,5, 7 & 8		6		¤	TYRE	
A		REF PL 3285213/3285301		7	522329		FLANGE	8
1	551685	CAP VALVE	4	8	543563		LOCKRING	4
2	551684	ADAPTOR	4	9	573366	+	SEAL BEAD FLANGE XR ONLY	8
3	509445	STEM VALVE INC 1,2	4					

WHEEL ASSY 29.5 x 25 (XR) TUBELESS

A	3220825	WHEEL ASSY FOR 29.5 X 25		3	509445		STEM VALVE INC 1,2	4
A		XR TUBELESS		4	557066		WHEEL	4
A		TYRES INC 5,5,7 & 8		5	513117		O RING	4
A		REF PL 3285214/3285098		6		¤	TYRE	
A		3285250/3285339/3285526		7	513113		FLANGE	8
1	551685	CAP VALVE	4	8	523253		LOCKRING	4
2	551684	ADAPTOR	4	9	3230455	+	SEAL BEAD FLANGE XR ONLY	8

WHEEL ASSY 26.50 x 29 TUBED

A	3221603	WHEEL ASSY FOR 26.5 X 29	4	4	543588		WHEEL	4
A		TYRE INC 4,5,7 & 8		5	580278		O RING	4
A		REF PL 3285502		6		¤	TYRE	
1	551685	CAP VALVE	4	7	522329		FLANGE	8
2	551684	ADAPTOR	4	8	543563		LOCKRING	4
3	509445	STEM VALVE INC 1,2	4					

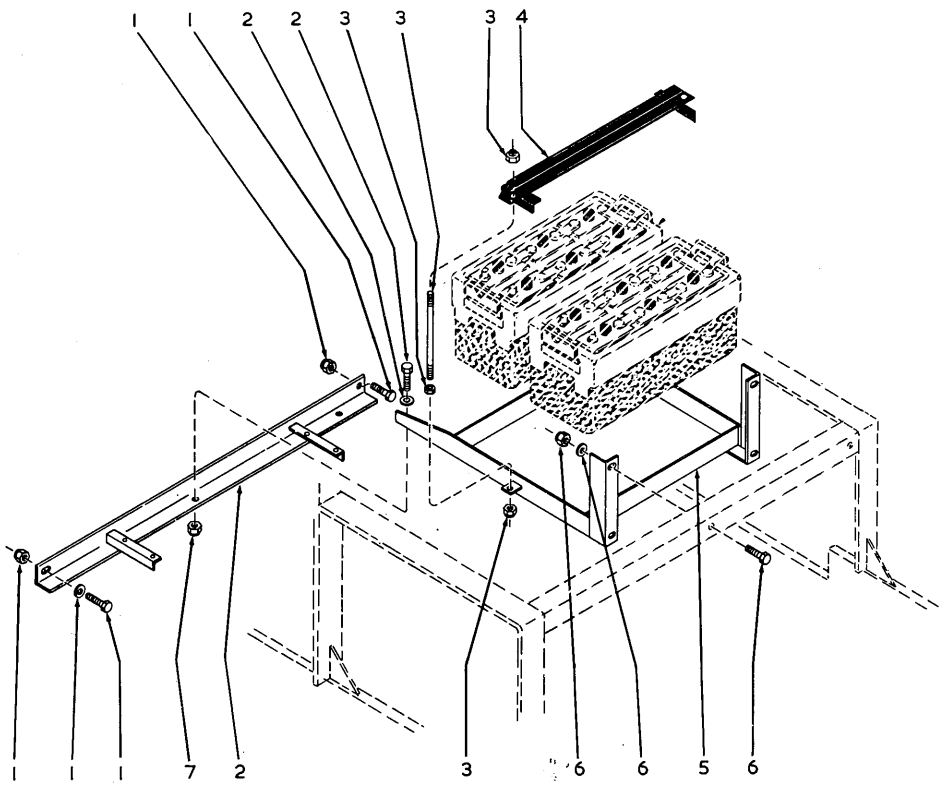

BATTERY CARRIER TP. 2634

ITEM	PART	DESCRIPTION	QTY.
1	635682	WASHER	1
1	2C-832	BOLT	2
1	18D-08	NUT	2
2	635682	WASHER	2
2	2C-824	BOLT	2
2	18D-08	LOCKNUT	2
3	664422	WASHER	4
3	3229477	STUD	2
3	7D-05	NUT	4
3	17D-2	NUT	2
4	3229206	HOLD DOWN ASSEMBLY	1
5	569380	BATTERY BOX	1
6	635682	FLATWASHER	2
6	1C-820	BOLT	2
6	4E-08	LOCKWASHER	2
7	569408	ANGLE SUPPORT	1

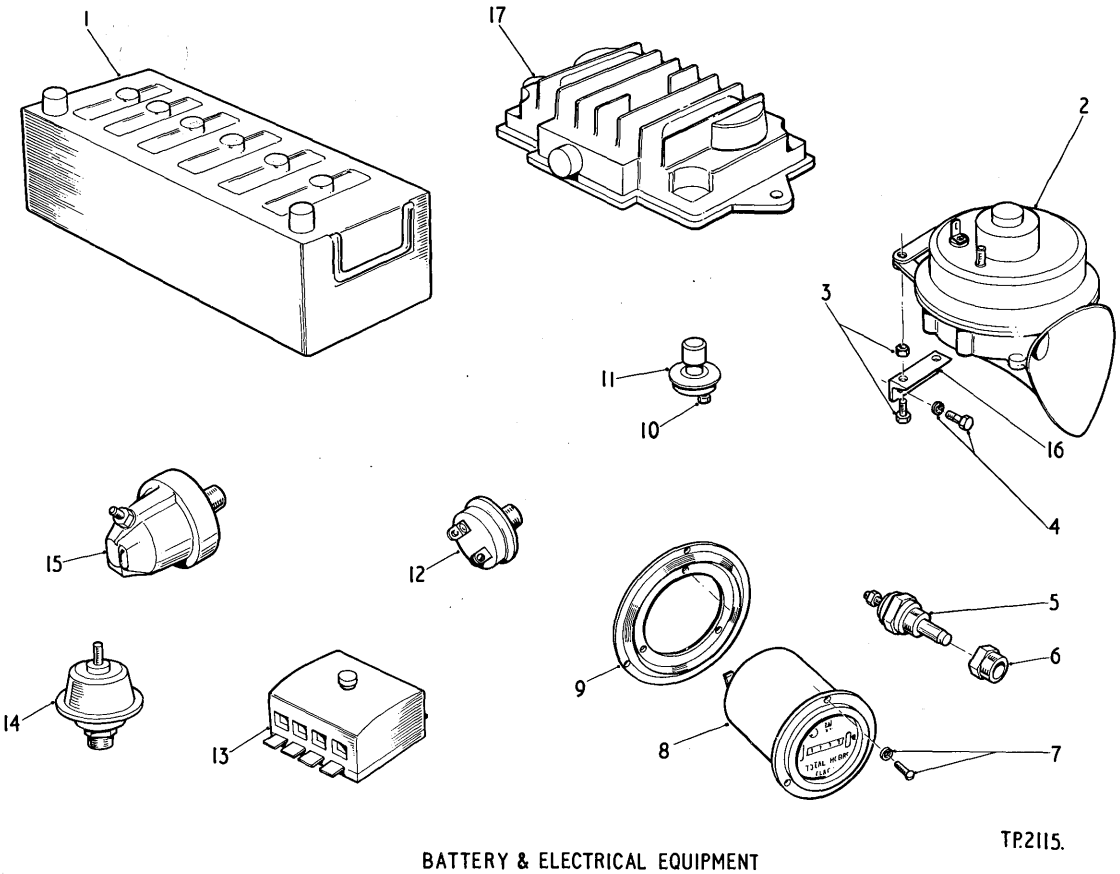

BATTERY & ELECTRICAL EQUIPMENT

ITEM	PART	DESCRIPTION	QTY.
1	672128	BATTERY	2
2	3215046	HORN	1
4	10-418	BOLT	2
4	170-1	LOCKNUT	2
5	3200221	SENDER UNIT TEMP	2
5	3220841	WASHER	2
6	3200337	ADAPTOR TORQUE CONVERTER	1
6	3202708	ADAPTOR ENGINE	1
7	30-608	SCREW	3
7	12F-6	LOCKWASHER	3
8	1307619	HOURMETER	1
9	551251	VIBRATION DAMPER	1
10	20-414	BOLT	2

ITEM	PART	DESCRIPTION	QTY.
10	18D-04	LOCKNUT	2
11	778570	FOOT SWITCH	1
12	572421	SWITCH HOURMETER & ALTERN	3
12	636260	SWITCH PRESSURE	1
13	3222535	BOX FUSE	1
13	3233583	MOUNTING INSULATED	1
13	3290724	FUSE 8 AMP	1
13	3290726	FUSE 25 AMP	3
14	13F-04	PLUG	1
15	550832	SENDER UNIT OIL PRESS	1
15	940643	SENDER UNIT BRAKE PRESS	1

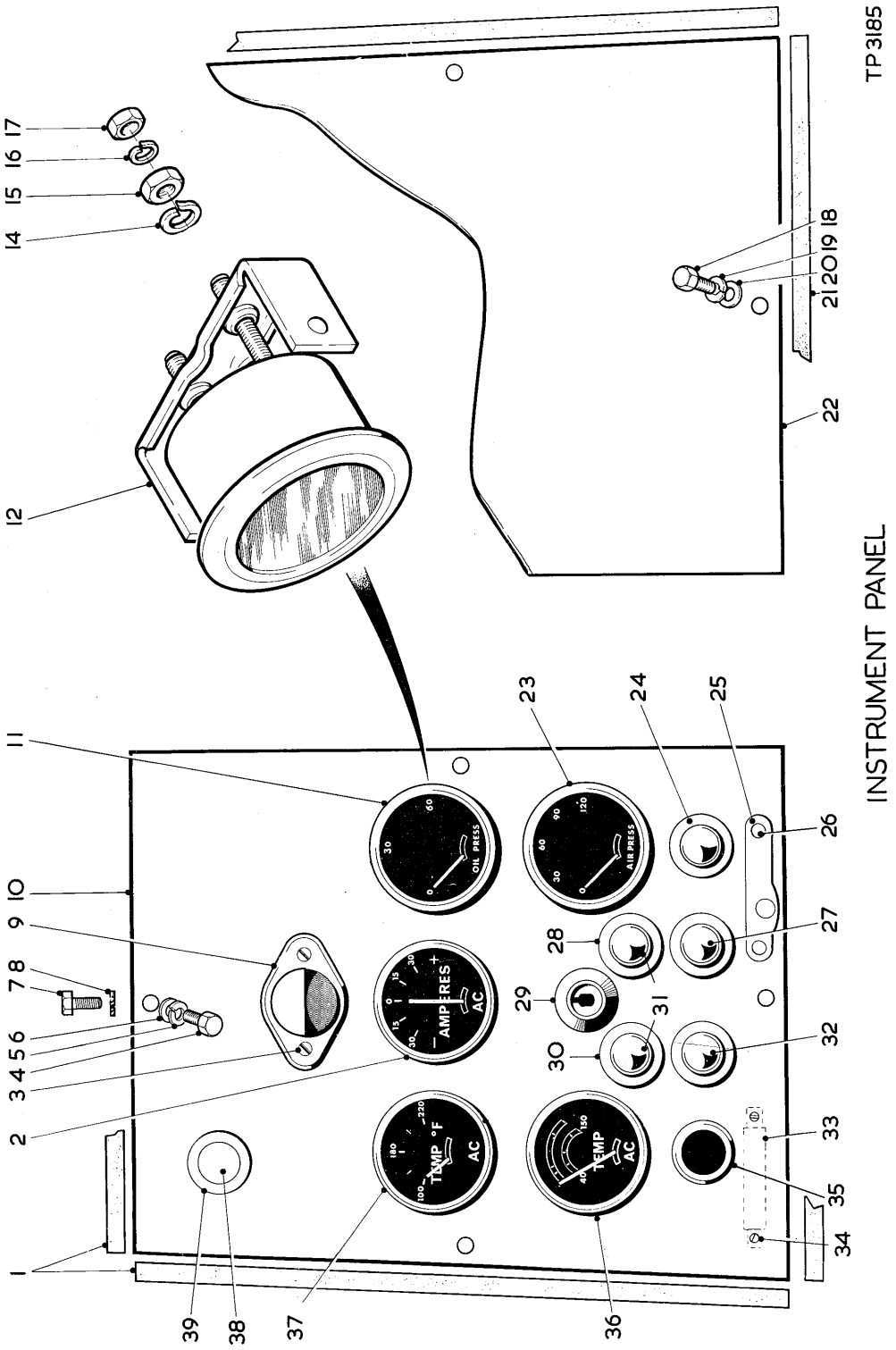
TP3185
INSTRUMENT PANEL
OIL PRESS
AIR PRESS
AMP
TEMP °F
TEMP
AC

INSTRUMENT PANEL

ITEM	PART		DESCRIPTION	QTY.
1	3229503		STRIP SEALING LH PANEL	AR
2	3224162		AMMETER	1
3	3220881		SCREW PANEL LIGHT	2
3A	3220859	+	LOCKNUT	2
4	1C-416		BOLT PANEL TO COCKPIT	4
5	4E-04		LOCKWASHER	4
6	664421		WASHER	4
7	1C-612		BOLT SEALING CAB MTG HOLE	2
8	3220838		WASHER FIBRE	2
9	3214208		DASHLAMP	1
9A	3220954	+	BULB 24V	1
10	3232828		PANEL INSTRUMENT LH	1
11	1534139		GAUGE OIL PRESSURE	1
12	1534136		CLAMP GAUGE TO PANEL	2
13			NOT USED	
14	12E-10		LOCKWASHER	4
15	14D-10		NUT TERMINAL TO GAUGE	4
16	12E-6		LOCKWASHER	4
17	12D-6		NUT TERMINAL TO GAUGE	4
18	1C-416		BOLT PANEL TO COCKPIT	2
19	4E-04		LOCKWASHER	2
20	664421		WASHER	2
21	3229503		STRIP SEALING RH PANEL	AR
22	3229048		PANEL INSTRUMENT RH	1
23	1534140		GAUGE AIR PRESSURE	1
24	3232829		SWITCH STARTER	1
25	518442		CIRCUIT BREAKER	1
26	3G-812		SCREW	2
27	3232829		SWITCH FUEL SOLENOID	1
28	3220876		NAMEPLATE HEAD/TAIL LAMPS	1
29	3222520		SWITCH IGNITION	1
30	3220877		NAME PLATE REVERSE LAMPS	1
31	3227780		SWITCH LIGHTS	2
32	3232829		SWITCH GLOW PLUG	1
33	556489		RESISTOR	1
34	3G-608		SCREW	2
34A	17E-6	+	LOCKWASHER	2
34B	12D-6	+	NUT	2
35	3209569		RECEPTACLE LIGHTER	1
35A	3209565	+	ELEMENT	1
36	3200105		GAUGE CONVERTER TEMP	1
37	3200107		GAUGE ENGINE TEMP	1
38	518443		LAMP GLOW PLUG WARNING	1
39	3224104		NAMEPLATE WARNING LAMP	1

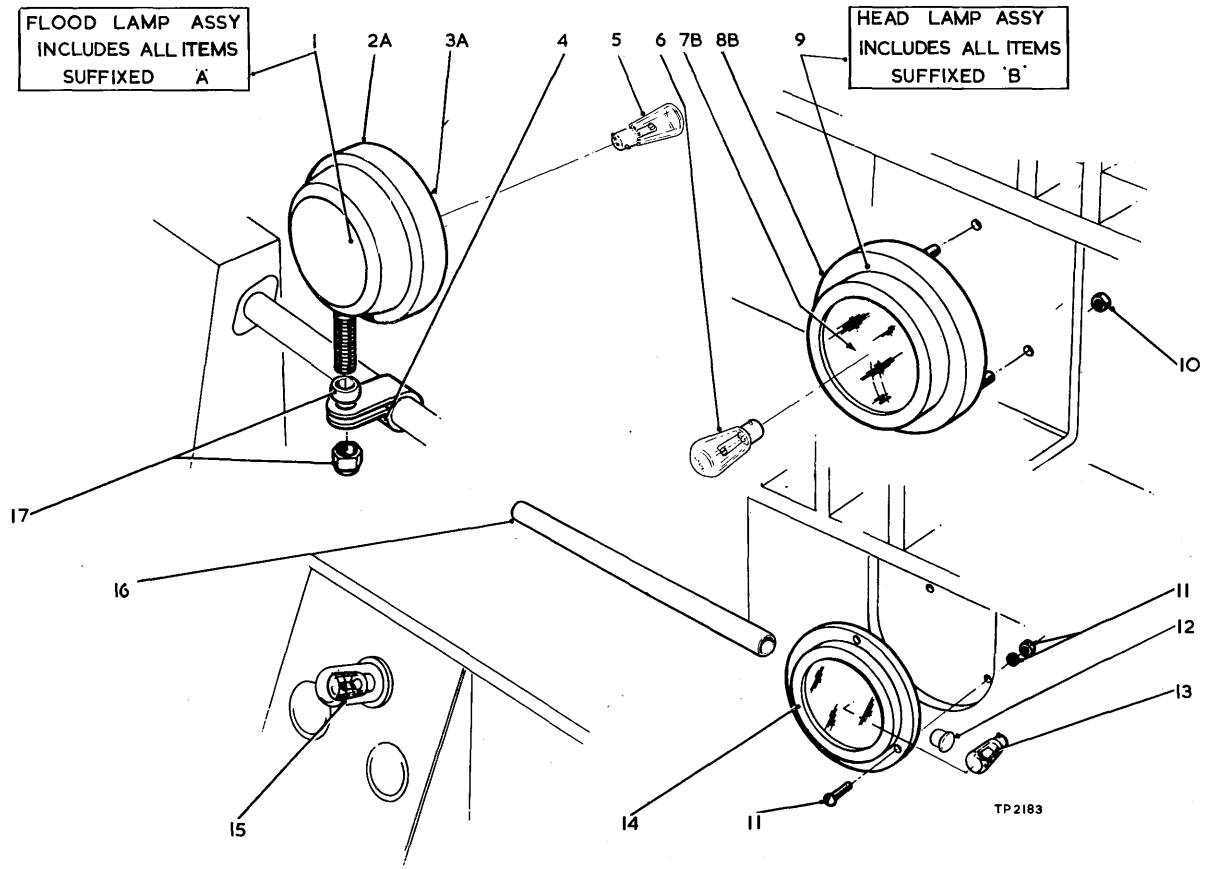

LAMPS AND MOUNTINGS

ITEM	PART	DESCRIPTION	QTY.
1	3224357	LAMP FLOOD ASSY	3
2	3290414	RETAINER	1
3	3290413	LIGHT UNIT	1
4	569233	BRACKET	1
4	3232614	BRACKET RH	1
4	3232615	BRACKET LH	1
5	3224545	BULB 24V	3
6	3224545	BULB 24V	2
7	3290413	LIGHT UNIT	1
8	3290414	RETAINER	1
9	3224356	HEAD LAMP ASSY	2
10	502-10	NUT	6
11	2G-1012	SCREW	6
11	14D-10	NUT	6
11	17E-10	LOCKWASHER	6
12	1010736	PLUG	1
13	3220984	BULB 24V	2
14	562641	LAMP INCLUDES	2
14	1103680	LENS	2
15	3220954	BULB 24V	1
17	652448	SPACER	3
17	19D-08	LOCKNUT	3

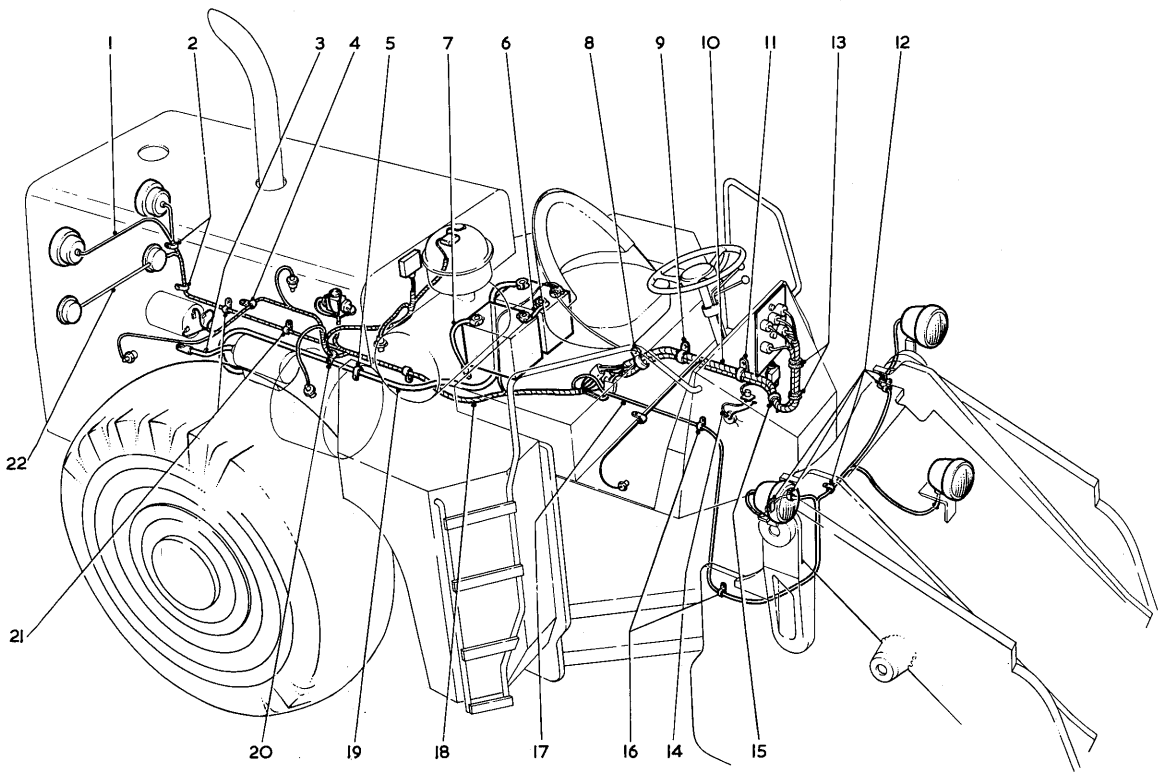

WIRING AND CLIPS TP2642

ITEM	PART	DESCRIPTION	QTY.
1		INCLUDED IN ENGINE HARNESS	
2	30H-14	CLIP	2
3	3221171	CABLE	1
4	30H-31	CLIP	1
5	30H-38	CLIP	2
5	4E-06	LOCKWASHER	2
5	2C-612	BOLT	2
6	3229459	CABLE	1
7	3221122	CABLE	1
8	30H-46	CLIP	1
9	3232557	WIRING HARNESS	1
10	3229252	WIRING HARNESS	1
10	3229563	SUB LOOM ASSEMBLY	1
11	30H-46	CLIP	2
11	2C-612	BOLT	2
11	4E-06	LOCKWASHER	2
12	30H-20	CLIP	2
12	30H-23	CLIP	5
12	2C-612	BOLT	5
12	4E-06	LOCKWASHER	5
13	562435	GROMMET	1
13	3221997	GROMMET	1
13	3229225	GROMMET	1
14	3229778	WIRE ASSEMBLY	1
15	30H-46	CLIP	1
15	4E-06	LOCKWASHER	1
15	2C-612	BOLT	1
16	30H-20	CLIP	1
17	3232558	WIRE ASSEMBLY	1
18	3232557	WIRING HARNESS	1
19	3221117	CABLE	1
20	30H-32	CLIP	1
21	30H-20	CLIP	2
21	2C-612	BOLT	2
21	4E-06	LOCKWASHER	2
22		INCLUDED IN ENGINE HARNESS	

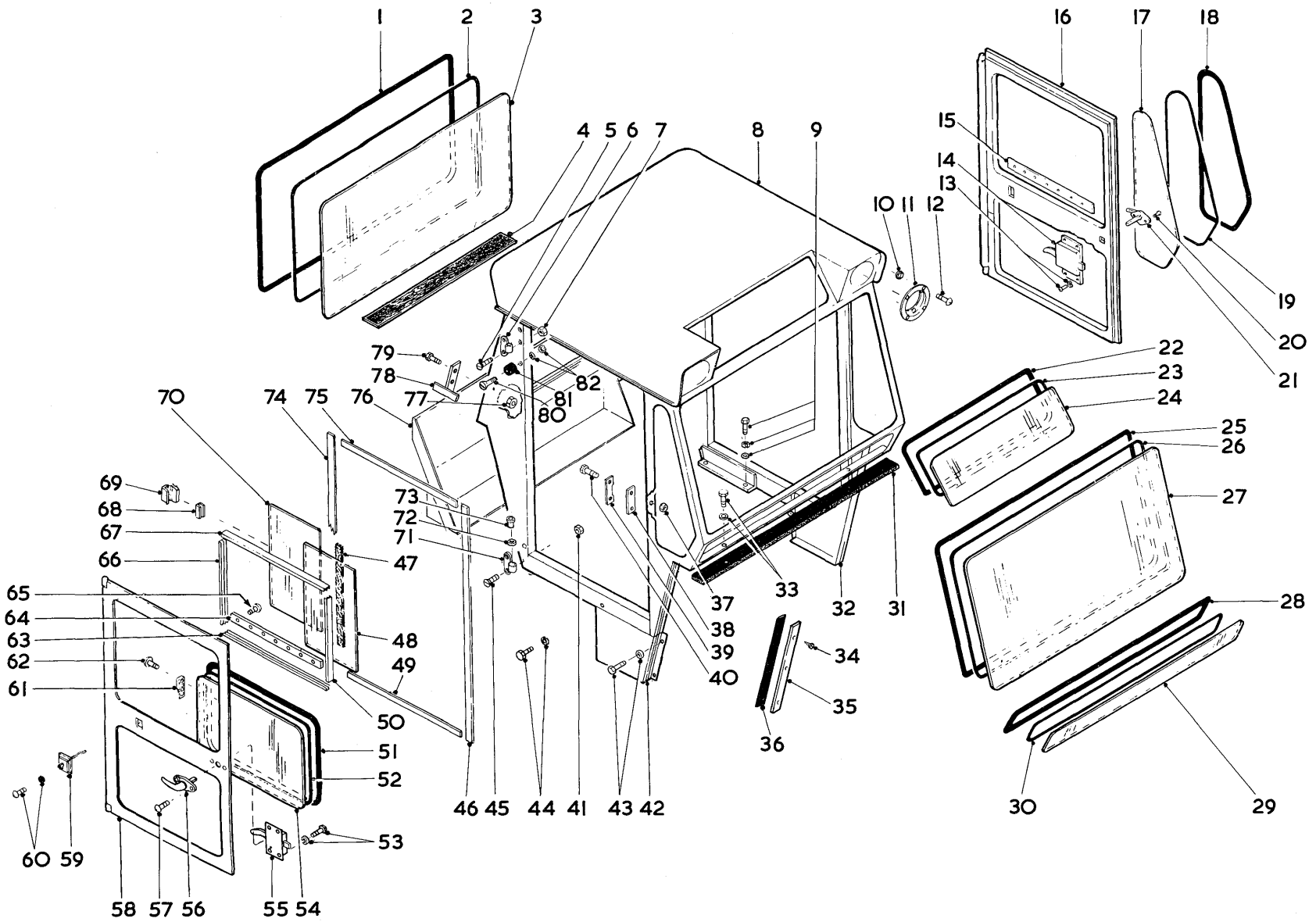

CAB ASSEMBLY—FULLY ENCLOSED

TP 3190

ITEM	PART		DESCRIPTION	QTY.
A	L 3286561		CAB ENCLOSED INC 1-84	1
A	3235907		CAB ASSY INC 1-3,5-8,10-	
A			30,37-41,45-75,77-80	1
1	3223805		MOULDING REAR WINDOW	1
2	3223811		STRIP FILLER	1
3		¤	GLASS PATTERN SEE 84	
4	3227459		STRIP SEALING	1
5	8G-516		SCREW UPPER HINGE	4
6	3223910		HINGE UPPER INC 73	2
7	18D-05		LOCKNUT UPPER HINGE	4
8		¤	CAB SEE A	
9	1C-620		BOLT CAB TO COCKPIT	4
9A	3221750		LOCKWASHER	4
9B	619023		WASHER	4
10	51D-10		LOCKNUT ADAPTOR	8
11	568675		ADAPTOR HEADLIGHT	2
12	2G-1008		SCREW ADAPTOR	8
13	3220852		SCREW DOOR LOCK	4
13A	17E-10		LOCKWASHER	4
14	3224425		LOCK DOOR LH	1
14A	3224429	+	PACKER	1
15		¤	SEE ITEM 85	
16	3236127		DOOR LH INC 13,14,20,21,	
16			46-49 51-54,59,60,74 & 75	1
17		¤	GLASS PATTERN SEE 84	
18	3223807		MOULDING QUARTER WINDOW	2
19	3223813		STRIP FILLER	2
20	3220881		SCREW DOOR HANDLE	2
21	3212358		HANDLE DOOR LH	1
22	3223806		MOULDING ROOF WINDOW	1
23	3223812		STRIP FILLER	1
24		¤	GLASS PATTERN SEE 84	
25	3223808		MOULDING FRONT WINDOW	1
26	3223814		STRIP FILLER	1
27		¤	GLASS PATTERN SEE 84	
28	3223809		MOULDING LOWER WINDOW	1
29		¤	GLASS PATTERN SEE 84	
30	3223815		STRIP FILLER	1
31	3224613		STRIP SEALING	1
32	3226999		PANEL LOWER QUARTER LH	1
33	1C-632		BOLT CAB TO COCKPIT	2
33A	3221750	+	LOCKWASHER	2
33B	619023		WASHER	2
34	18G-408		SCREW RETAINER	10
35	3227461		RETAINER SEALING STRIP	2
36	3227460		STRIP SEALING	2
37	18D-04		LOCKNUT DOOR STRIKE	4
38	3224424		LOCKPLATE DOOR STRIKE	2
39	945576		STRIKE DOOR LOCK	2
40	2C-412		BOLT DOOR STRIKE	4
41	18D-05		LOCKNUT LOWER HINGE	4
42	3226998		PANEL LOWER QUARTER RH	1
43	1C-412		BOLT PANEL TO COCKPIT	8
43A	17D-1		LOCKNUT	8
44	1C-410		BOLT PANEL TO CAB	4
44A	4E-04		LOCKWASHER	4
45	8G-516		SCREW LOWER HINGE	4
46	568667		SEAL DOOR FRONT	2
47		¤	SEE ITEM 85	
48		¤	GLASS PATTERN SEE 84	
49	568668		SEAL DOOR BOTTOM	2
50		¤	SEE ITEM 85	
51	3233030		MOULDING DOOR WINDOW	2
52	3232990		STRIP FILLER	2
53	3220852		SCREW DOOR LOCK	4
53A	17E-10		LOCKWASHER	4
54		¤	GLASS PATTERN SEE 84	
55	3224425		LOCK DOOR RH	1
55A	3224429	+	PACKER	1
56	3212358		HANDLE DOOR RH	1
57	3220881		SCREW DOOR HANDLE	2
58	3236079		DOOR RH INC 46-49,51-54,	
58			59,60,74 & 75	1
59	3227351		LATCH ASSY DOOR	2
60	3220851		SCREW DOOR LATCH	8
60A	17E-10		LOCKWASHER	8
61		¤	SEE ITEM 85	
62		¤	SEE ITEM 85	

ITEM	PART		DESCRIPTION	QTY.
63		¤	SEE ITEM 85	
64		¤	SEE ITEM 85	
65		¤	SEE ITEM 85	
66		¤	SEE ITEM 85	
67		¤	SEE ITEM 85	
68		¤	SEE ITEM 85	
69		¤	SEE ITEM 85	
70		¤	GLASS PATTERN SEE 84	
71	3224084		HINGE LOWER INC 73	2
72	664423		WASHER DOOR HINGE	4
73	568700		BUSHING DOOR HINGE	8
74	3224563		SEAL DOOR REAR	2
75	568668		SEAL DOOR TOP	2
76	3226997		PANEL REAR	1
76A	1C-616	+	BOLT PANEL TO COCKPIT/CAB	7
76B	619023	+	WASHER	7
76C	17D-3	+	LOCKNUT	7
77	18D-04		LOCKNUT STRIKE TO CAB	4
77A	619018	+	WASHER	8
78	3233107		STRIKE ASSY LATCH RH	1
78A	3225148	+	STRIKE ASSY LATCH LH	1
79	2C-416		BOLT STRIKE TO CAB	4
80	3221865		SCREW BUMPER	2
81	3215486		BUMPER RUBBER	2
82	3220859		LOCKNUT BUMPER	2
82A	616776		WASHER	2
83	3230118	+	DECAL LEVER MOVEMENT	1
84	945999	+	KIT GLASS PATTERN INC 3,	
84			17,24,27,29,48,54 & 70	1
85	3236561	+	SLIDING WINDOW UNIT	2
85A	18G-406	+	SCREWS	36

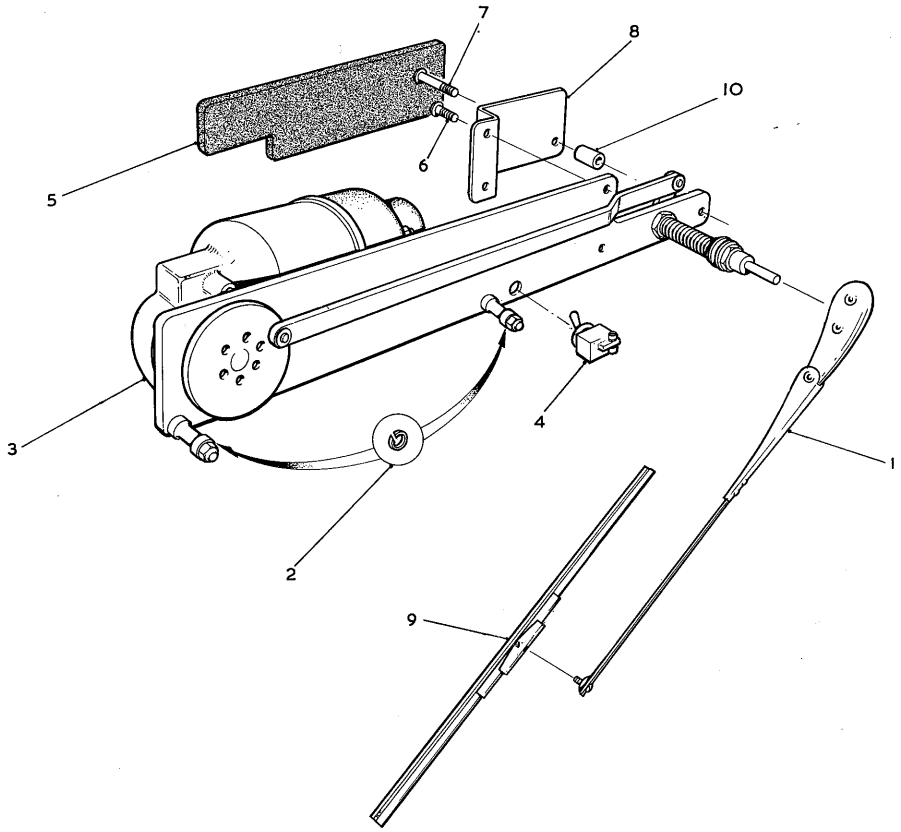

WINDSCREEN WIPER KIT TP2444

ITEM		PART	DESCRIPTION	QTY.
A	L	3224478	WIPER KIT FRONT 24V	
A			INC 1-4,6-11	1
A	L	3224479	WIPER KIT REAR 24V	
A			INC 1-10	1
1		3223817	WIPER ARM FRONT	1
1A		3223816	WIPER ARM REAR	1
2		4E-04	LOCKWASHER BOLT TO CAB	2
3		3225032	MOTOR ASSY 24V	1
4		3204336	SWITCH TOGGLE	1
5		3224956	STRIP RUBBER REAR	1
6		66G-1006	SCREW COVER PLATE	2
7		66G-1010	SCREW COVER PLATE	1
8		3224925	PLATE COVER	1
9		3213498	BLADE WIPER	1
10		3224924	SPACER COVER PLATE	1
11	+	3221429	GROMMET WIRING FRONT	1

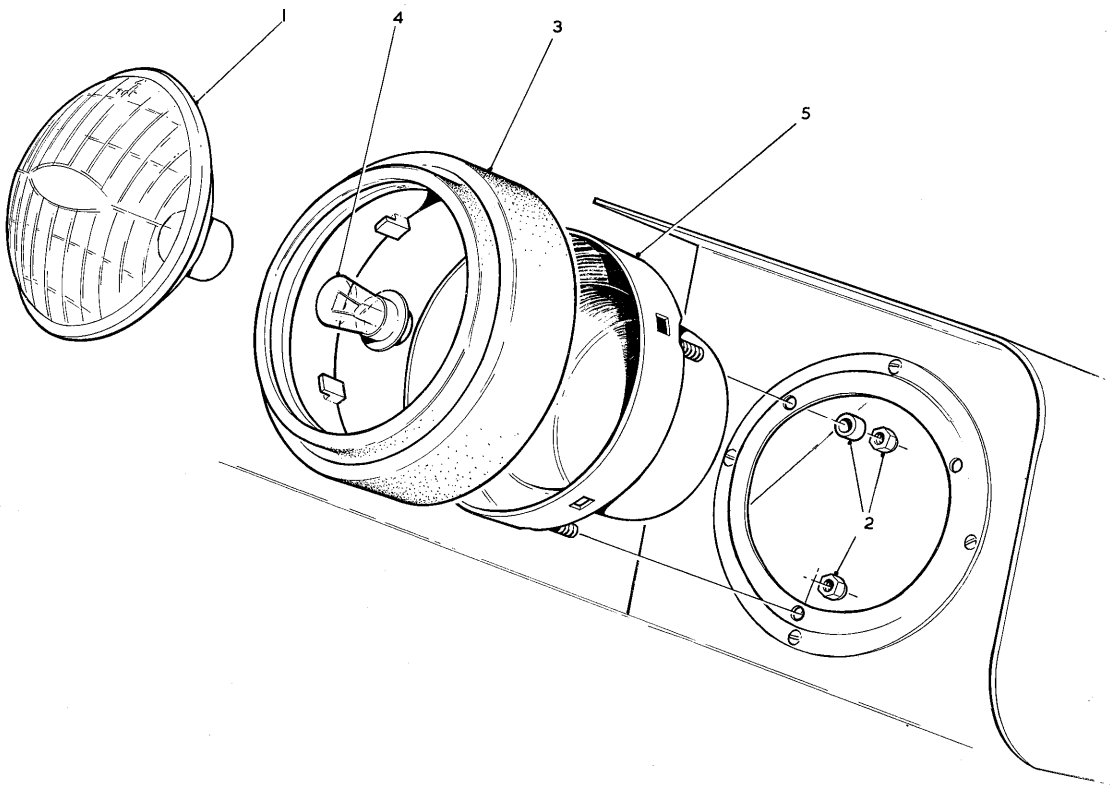

CAB LIGHT KIT TP 2445

ITEM	PART	DESCRIPTION	QTY.
A	L 3224911	CAB LIGHT KIT INC 1-5	1
1	3224356	LAMP ASSY INC 3 & 5	2
2	500-10	LOCKNUT LAMP TO CAB	6
2A	3225666	SPACER	4
2B	664419	WASHER	4
3	3290414	RETAINER	2
4	3224545	BULB 24V	2
5	3290413	LIGHT UNIT	2

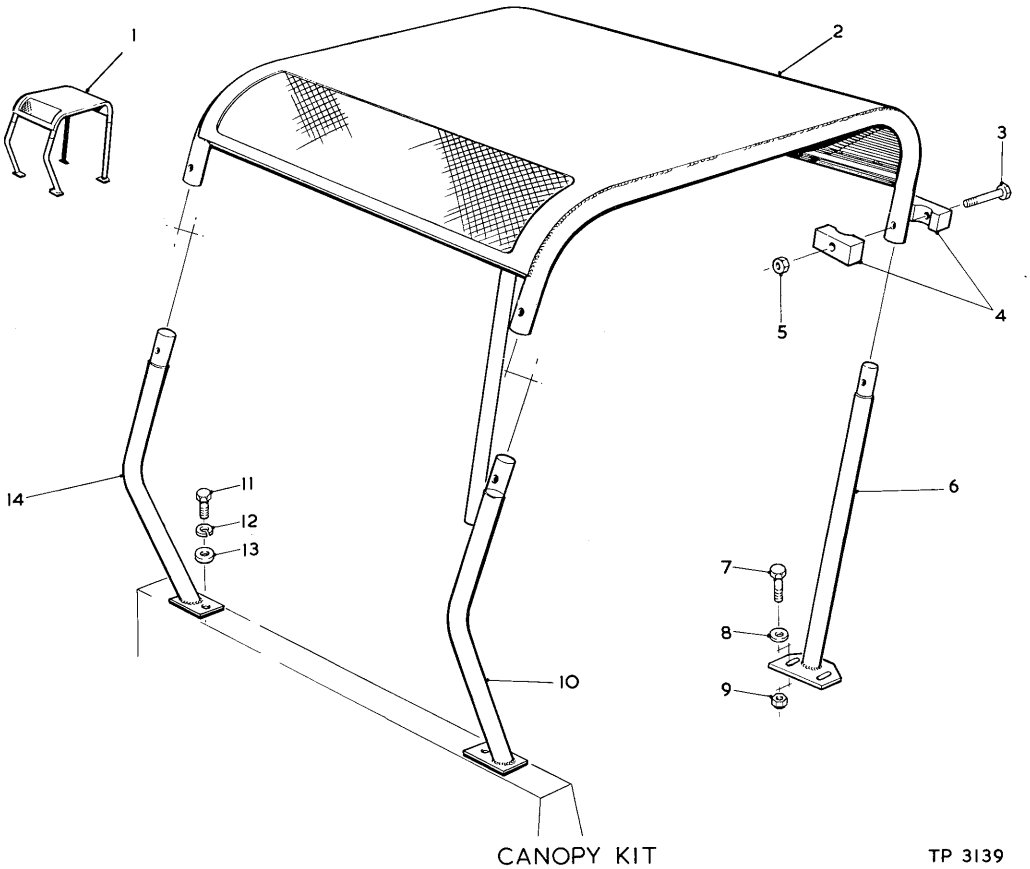

CANOPY KIT TP 3139

ITEM	PART	DESCRIPTION	QTY.
A	L 3285383	CANOPY KIT INC 1,7-9,	
A		11-13	1
1	3232484	CANOPY ASSY INC 2-6,10&14	1
2	3232531	ROOF ASSEMBLY	1
3	2C-644	BOLT ROOF ATTACHING	4
4	3225168	SADDLE	8
5	18D-06	LOCKNUT	4
6	3232532	POST ASSY REAR	1
7	2C-616	BOLT REAR POST ATTACHING	4
8	619023	WASHER	4
9	18D-06	LOCKNUT	4
10	3232533	POST ASSY FRONT L H	1
11	1C-614	BOLT FRONT POST ATTACHING	2
12	4E-06	LOCKWASHER	2
13	619023	WASHER	2
14	3232534	POST ASSY FRONT RH	1

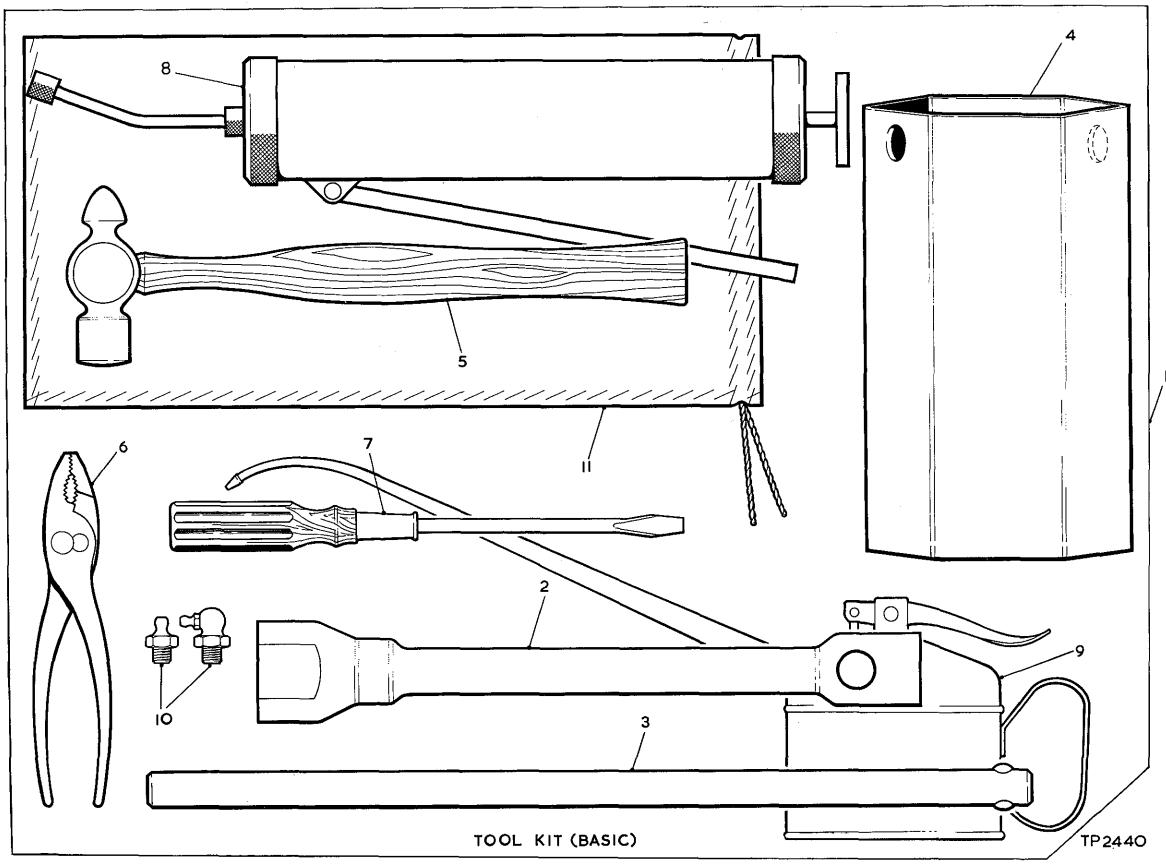

ITEM	PART	DESCRIPTION	QTY.
1	L 3226186	TOOL KIT INC 2-11	1
2	553412	WRENCH WHEEL	1
3	552164	HANDLE WHEEL WRENCH	1
4	522996	WRENCH HUB BEARING	1
5	552165	HAMMER	1
6	552166	PLIERS	1
7	552167	SCREWDRIVER	1
8	518897	GREASE GUN	1
9	3201708	OIL CAN	1
10	10H-2	FITTING GREASE	6
11	552171	BAG TOOL	1

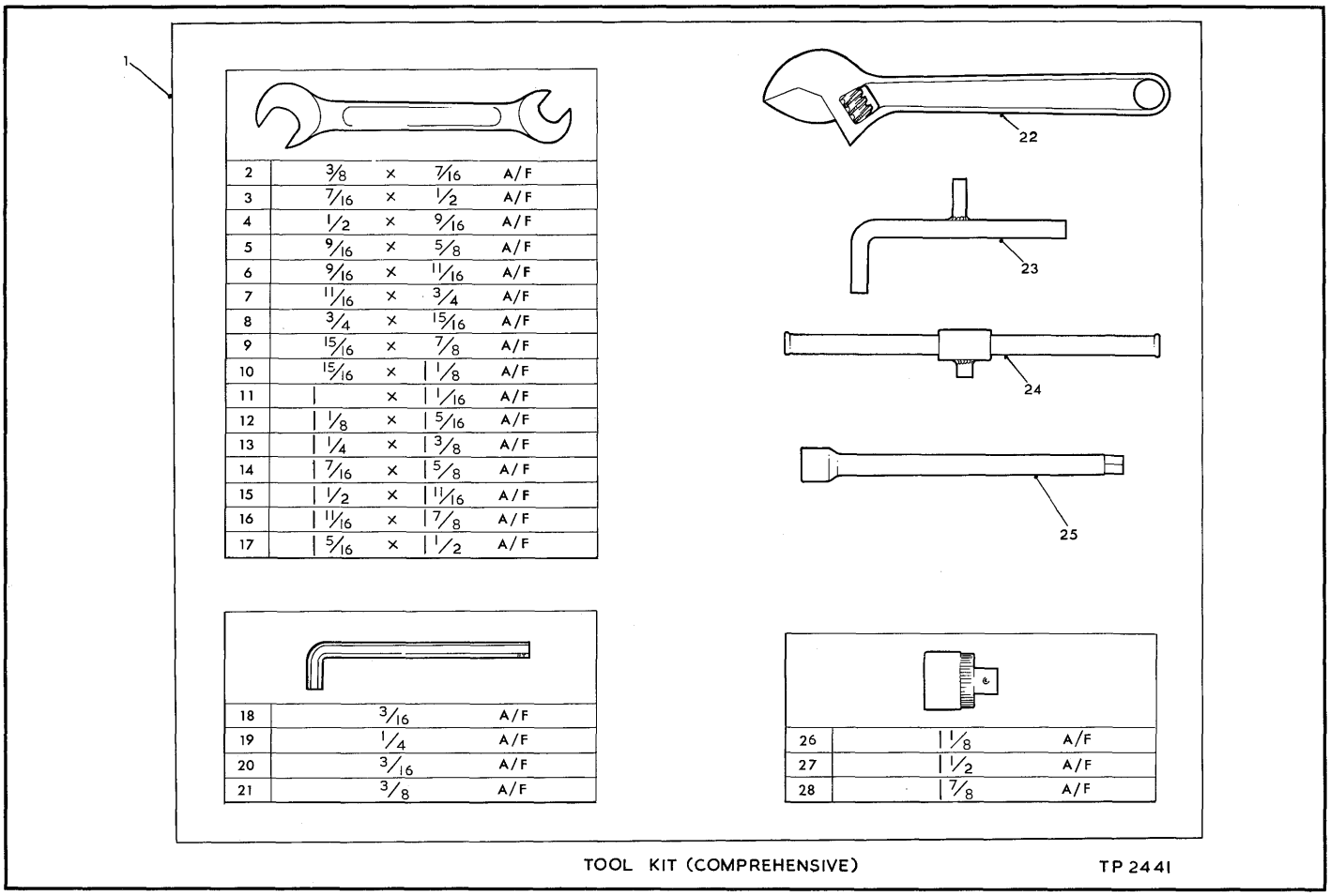

TOOL KIT (COMPREHENSIVE) TP 2441

ITEM	PART	DESCRIPTION	QTY.
1	L 3226191	TOOL KIT INC 2-7,9-28	1
2	3226040	SPANNER .375 X .4375 AF	1
3	3221777	SPANNER .4375 X .500 AF	1
4	3221778	SPANNER .500 X .5625 AF	1
5	3221779	SPANNER .5625 X .625 AF	1
6	3221788	SPANNER .5625 X .6875 AF	1
7	3225944	SPANNER .6875 X .750 AF	1
8	3221782	SPANNER .75 X .9375 AF	1
9	3221789	SPANNER .9375 X .875 AF	1
10	3226758	SPANNER .9375 X 1.125 AF	1
11	3221790	SPANNER 1.000 X 1.0625 AF	1
12	3221783	SPANNER 1.125 X 1.3125 AF	1
13	3221791	SPANNER 1.250 X 1.375 AF	1
14	3221792	SPANNER 1.4375 X 1.625 AF	1
15	3221785	SPANNER 1.500 X 1.6875 AF	1
16	3221786	SPANNER 1.6875 X 1.875 AF	1
17	3221784	SPANNER 1.3125 X 1.500 AF	1
18	3221991	WRENCH HEX .1875 AF	1
19	3225945	WRENCH HEX .250 AF	1
20	3225946	WRENCH HEX .3125 AF	1
21	3221992	WRENCH HEX .375 AF	1
22	3201707	SPANNER ADJUSTABLE 12 IN	1
23	3201660	KEY AXLE DRAIN PLUG	1
24	3226041	BAR SLIDING TEE	1
25	3226045	BAR EXTENSION	1
26	3226042	SOCKET 1.125 AF	1
27	3226043	SOCKET 1.500 AF	1
28	3226044	SOCKET 1.875 AF	1

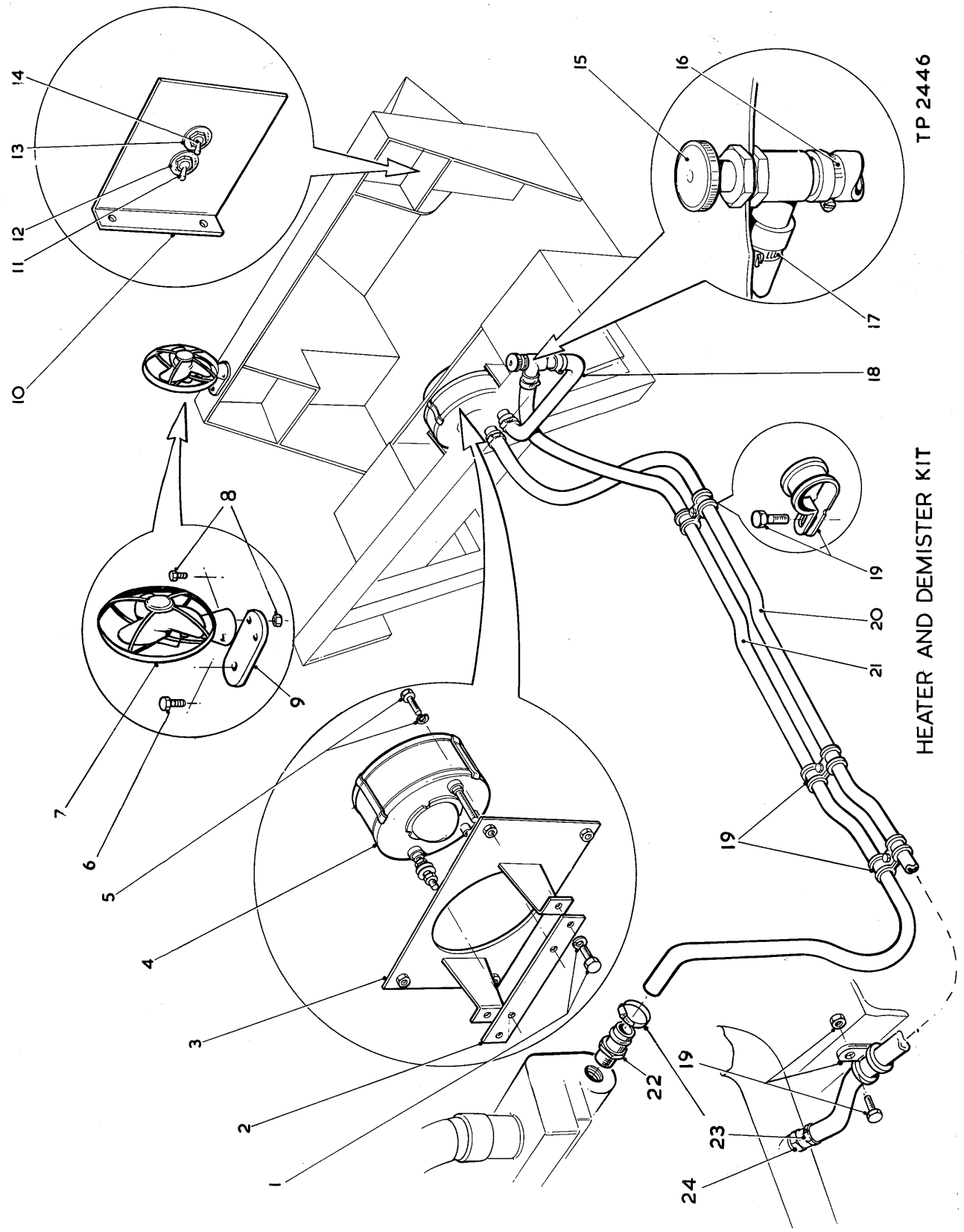
TP 2446
HEATER AND DEMISTER KIT
1
2
3
4
5
6
7
8
9
10
11
12
13
14
15
16
17
18
19
20
21
22
23
24

ITEM	PART	DESCRIPTION	QTY.	ITEM	PART	DESCRIPTION	QTY.
A	L 3285363	CAB HEATER KIT INC 1-5		10	3233786	PANEL INSTRUMENT R H	1
A		10-12,15-24	1	11	3204336	SWITCH HEATER	1
B	L 3225213	CAB DEMISTER KIT INC 6-10		12	3225254	NAMEPLATE HEATER SWITCH	1
B		13 & 14	1	13	3225255	NAMEPLATE DEMISTER SWITCH	1
1	1C-614	BOLT STRAP TO MTG BRACKET	2	14	3204336	SWITCH DEMISTER	1
1A	3221750	LOCKWASHER	2	15	3224669	STOPCOCK	1
2	3224654	STRAP HEATER MOUNTING	1	16	3220865	CLAMP HOSE	2
3	3224651	BRACKET HEATER MOUNTING	1	17	3220865	CLAMP HOSE	2
4	3224738	HEATER ASSEMBLY	1	18	3228573	HOSE STOPCOCK TO HEATER	1
5	1C-414	BOLT BRACKET TO COCKPIT	4	19	31H-46	CLIP HOSE	2
5A	3221748	LOCKWASHER	4	20	3225885	HOSE ENGINE TO HEATER	1
6	1C-634	BOLT BRACKET TO CAB	1	21	3228630	HOSE STOPCOCK TO ENGINE	1
7	3225208	DEMISTER FAN ASSEMBLY	1	22	3225171	ADAPTOR HOSE TO ENGINE	1
8	3220881	BOLT FAN TO BRACKET	2	23	3220865	CLAMP HOSE	2
8A	3220859	LOCKNUT	2	24	3225171	ADAPTOR HOSE TO ENGINE	1
9	3225207	BRACKET FAN MOUNTING	1				

275 III Tractor Shovel

Michigan Parts Manual Supplement
Publication No. 74

This Supplement pertains to Model 275 III Michigan Tractor Shovels equipped with Fail-Safe Brake System with Spring Brake Actuators.

(Effective on 275 III Machines Serial Nos. 314EN2038-1 & 314EN2042-1)

Use this supplement in conjunction with CMD. Distributor Parts Manual information reference Contents List 275 III (CL10 Revised 30 June 68)

INDEX

	Page
Main Brake System - Fail Safe Brakes	1, 2, 3, 4 & 5.
Valve Foot Brake.....	6, 7 & 8.
Spring Brake Actuator	9 & 10.

Clark Equipment Limited,
Yorktown Works,
P.O. Box No. 3,
Camberley,
Surrey.

REF. SPR 191
SPC 133, 142, 151, 196

T.P 3075

BRAKE SYSTEM-FAIL SAFE BRAKES

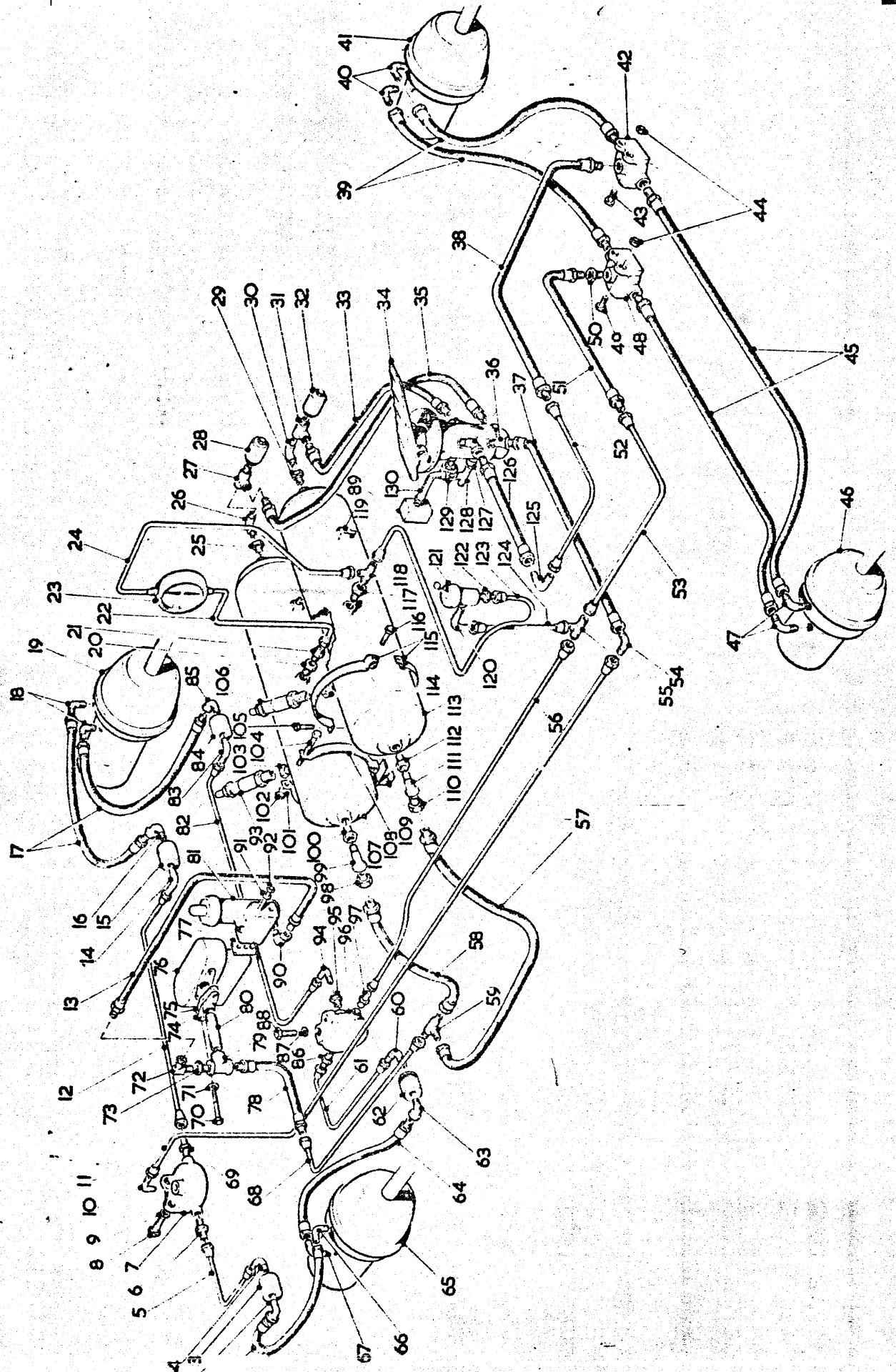

MAIN BRAKE SYSTEM - FAIL SAFE BRAKES

Plate No. TP 3075

Item No.	Part No.	Description	Quantity
1	545633	Hose Line to Spring Brake	1
2	26F-3	Elbow Hose to Adaptor	1
3	75F-3	Adaptor Welded Assy	1
4	42F-8	Elbow Line to Adaptor	1
5	3224182	Tube Brake Line	1
6	38F-9	Connector Line to Valve	1
7	521439	Quick Release Valve	1
8	20-512	Bolt Valve to Frame	2
9	4E-05	Lockwasher	2
10	42F-9	Elbow Line to Valve	1
11	588726	Line Valve to Tee	1
12	3224183	Tube Brake Line	1
13	593650	Hose Governor	1
14	42F-8	Elbow Line to Adaptor	1
15	75F-3	Adaptor Welded Assy	1
16	26F-3	Elbow Hose to Adaptor	1
17	545633	Hose to Spring Brake	2
18	42F-6	Elbow to Spring Brake	2
19	- - -	Spring Brake see Index	1
20	19F-2	Reducer Line to Reservoir	1
21	49F-2	Connector Line to Reducer	1
22	3234658	Line Reservoir to Gauge	1
23	3230607	Dual Air Pressure Gauge	1
24	3234658	Line Gauge to Tee	1
25	19F-9	Reducer	1
26	26F-4	Elbow	1
27	30F-3	Tee Switch to Reservoir	1
28	3234285	Pressure Switch	1
28A	19F-5	+ Reducer Switch to Tee	1
29	19F-9	Reducer	1
30	26F-4	Elbow	1
31	30F-3	Tee Switch to Reservoir	1
32	3234285	Pressure Switch to Tee	1
32A	19F-5	+ Reducer Switch to Tee	1
33	3234287	Hose Tee to Foot Valve	1
34	- - -	Foot Valve see Index	1
35	3234314	Hose Tee to Foot Valve	1
36	661417	Elbow Hose to Foot Valve	4
37	521444	Hose Foot Valve to Line	1
38	523786	Hose Tube to Valve	1
39	545633	Hose Line to Spring Brake	2
40	42F-6	Elbow to Spring Brake	2

MAIN BRAKE SYSTEM - FAIL SAFE BRAKES (Cont.)

Plate No. TP. 3075

Item No.	Part No.	Description	Quantity
41	- - -	Spring Brake see Index	1
42	521439	Quick Release Valve	1
43	2C-516	Bolt Valve to Frame	2
44	18D-05	Locknut	4
45	545633	Hose Line to Spring Brake	2
46	- - -	Spring Brake see Index	1
47	42F-6	Elbow to Spring Brake	2
48	521439	Quick Release Valve	1
49	2C-516	Bolt Valve to Frame	2
50	19F-4	Reducer Hose to Valve	1
51	3234321	Hose Line to Valve	1
52	588725	Tube Brake Line	1
53	3234322	Tube Tee to Hose	1
54	41F-8	Elbow Hose to Brake Line	1
55	44F-3	Tee Line Connecting	1
56	3234323	Tube Valve to Tee	1
57	3234286	Hose Line to Reservoir	1
58	3234313	Hose Tee to Reservoir	1
59	44F-8	Tee Compressor Line	1
60	42F-8	Elbow Line to Adaptor	1
61	3234223	Tube Brake Line	1
62	75F-3	Adaptor Welded Assy	1
63	26F-3	Elbow Hose to Adaptor	1
64	545633	Hose Line to Spring Brake	1
65	- - -	Spring Brake see Index	
66	42F-6	Elbow to Spring Brake	1
67	42F-6	Elbow to Spring Brake	1
68	588729	Tube Compressor Line	1
69	38F-9	Connector Line to Valve	1
70	1C-514	Bolt Discharge Flange	2
71	4E-05	Lockwasher	2
72	31F-1	Adaptor Line to Governor	1
73	19F-4	Reducer Adaptor to Tee	1
74	510452	Flange Discharge	1
75	951948	Gasket Discharge Flange	1
76	- - -	* Compressor	
77	942646	Gasket Governor	1
78	1536566	Hose Compressor to Line	1
79	18F-4	Tee Compressor to Line	1
80	5K-414	Connector Tee to Flange	1
81	540306	Governor	
82	3234224	Tube Brake Line	1

MAIN BRAKE SYSTEM - FAIL SAFE BRAKES (Cont.)

Plate No. TP 3075

Item No.	Part No.	Description	Quantity
83	42F-8	Elbow Line to Adaptor	1
84	75F-3	Adaptor Welded Assy	1
85	26F-3	Elbow Hose to Adaptor	1
86	38F-9	Connector Line to Valve	1
87	4E-05	Lockwasher	2
88	2C-512	Bolt Valve to Frame	2
89	217927	Declutch Valve	
90	26F-1	Elbow Hose to Governor	1
91	4E-05	Lockwasher	2
92	1C-548	Bolt Governor Mounting	2
93	507815	Safety Valve	1
94	42F-3	Elbow Line to Valve	1
95	19F-4	Reducer Elbow to Valve	1
96	521439	Quick Release Valve	1
97	38F-9	Connector Line to Valve	1
98	593370	Check Valve	1
99	26F-4	Elbow Valve to Reservoir	1
100	19F-9	Reducer	1
101	619023	Washer	2
102	18D-06	Locknut	2
103	19F-3	Reducer	1
104	2C-688	Bolt Reservoir Bracket	2
105	2C-688	Bolt Reservoir Bracket	2
105A	18D-06	+ Locknut	2
106	507815	Safety Valve	1
107	3214014	Reservoir Air	1
108	3200332	Reservoir MTG Bracket	4
108A	2C-616	+ Bolt Mounting Bracket	4
108B	619023	+ Washer	4
108C	18D-06	+ Locknut	4
109	3235400	Reservoir MTG Platform	1
109A	2C-618	+ Bolt Platform to Frame	2
109B	18D-06	+ Locknut	2
109C	619023	+ Washer	2
110	593370	Check Valve	1
111	26F-4	Elbow Valve to Reservoir	1
112	19F-9	Reducer	1
113	3214014	Reservoir Air	1
114	19F-3	Reducer Safety Valve	1
115	3200332	Reservoir MTG Bracket	4
116	1C-616	Bolt Bracket to Cockpit	4
116A	4E-06	+ Washer	4

MAIN BRAKE SYSTEM - FAIL SAFE BRAKES (Cont.)

Plate No. TP 3075

Item No.	Part No.	Description	Quantity
117	19F-2	Reducer Tee to Reservoir	1
118	46F-3	Tee Line to Reservoir	1
119	3234280	Drain Cock Reservoir	2
120	42F-3	Elbow Valve Parking Brake	1
121	3234309	Valve Parking Brake	1
121A	3234341	Valve Mounting Bracket	1
122	38F-3	Adaptor Valve to Line	1
123	3234324	Line Valve to Tee	1
124	3234325	Tube Valve to Brake Line	1
125	41F-8	Elbow Hose to Brake Line	1
126	521444	Hose Foot Valve to Line	1
127	19F-1	Reducer Tee to Foot Valve	1
128	626582	Tee	1
129	134135	Switch Stop Light	1
130	543697	Hose to Declutch Valve	1
131	3215044	+ Horn	1
132	30H-16	+ Pipe Clips	AR

+ Not Illustrated

* Supplied with Engine

VALVE FOOT BRAKE

Plate No. TP 3021

Item No.	Part No.	Description	Quantity
A	3230553	Brake Valve & Treadle Assy Inc 1-41	1
B	3291325	Dual Valve Assy Inc 14-41	1
C	3291353	Treadle Assy Inc 1-2 4-5	1
1	3291354	Treadle	1
2	3291355	Roller	1
3	- - -	§§ Boot see Item 43	
4	3291356	Cotter Pin	1
5	3291357	Pin Treadle	1
6	3291359	Pin Assy Inc Item 13	1
7	3206382	Stop Button	1
8	3291351	Plunger	1
9	3291350	Bolt	3
10	3291349	Washer	3
11	3291352	Mounting Plate	1
12	3291358	Pin Tension	1
13		Collar Pin Retainer see 6	
14	3291336	Bolt	1
15	3291337	Washer	1
16	3290131	Retainer	1
17	3291339	Spring Seat	1
18		§§ Rubber Spring see 42-43	1
19		§§ O Ring see 42-43	4
20	3291340	Piston Upper	1
21		§§ Spring Piston see 43	1
22	3291344	Valve Carrier	1
23		§§ Valve see 42-43	2
24		§§ O Ring see 42-43	2
25	3290107	Valve Retainer	2
26		§§ Spring Valve see 42-43	2
27	3291345	Valve Guide	1
28		§§ O Ring see 42-43	1
29	3291329	Circlip	1
30	3291346	Piston Lower	1
31		§§ Spring Piston see 43	1
32	3291338	Valve Body	1
33	- - -	§§ Washer Alum see 42-43	1
34	3291342	Bolt	1
35	3291332	Seat Exhaust	1
36	- - -	§§ O Ring see 42-43	1
37	3290120	Washer	1
38	3291334	Clip	1

VALVE FOOT BRAKE (Cont.)

Plate No. TP 3021

Item No.	Part No.	Description	Quantity
39	- - -	§ Diaphragm see 42-43	1
40	3291348	Cover Exhaust	1
41	3291333	Screw	1
42	3291360	Minor Repair Kit Inc Items 18, 19, 23, 24, 26, 28, 33, 36, & 39	1
43	3291361	Major Repair Kit Inc Items 3, 18, 19, 21, 23, 24, 26, 28, 31, 33, 36, & 39	1

§ Not Sold Separately

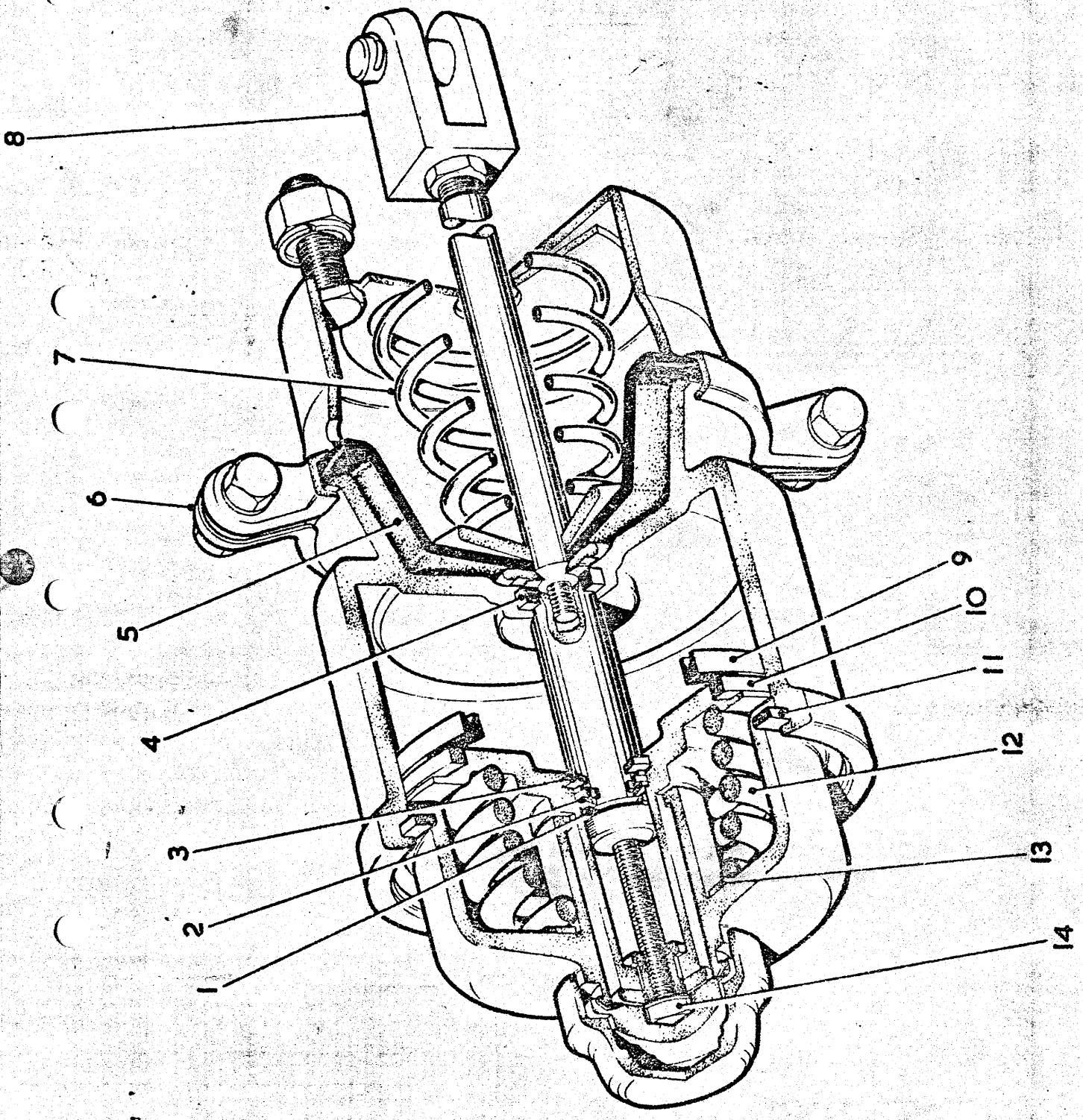
8
7
6
5
4
3
2
1
9
10
11
12
13
14

SPRING BRAKE ACTUATOR

Plate No. TP 3088

Item No.	Part No.	Description	Quantity
A	3234289	Brake Actuator Front Inc 1-14	2
A	3234288	Brake Actuator Rear Inc 1-14	2
		Quantities Indicated are for One Assembly	
1	3292144	Ring Snap	1
2	3292145	Collar Push Rod Inc 2A-2B	1
2A	3292146	O Ring Outer	1
2B	3292147	O Ring Inner	1
3	3292148	Ring Snap	1
4	3292149	Seal Push Rod	1
5	944735	Diaphragm	1
6	3292150	Clamp Ring Assy	1
7	3292161	Spring Return	1
8	3292162	Yoke Assy	1
9	3292163	Seal	1
10	3292154	Washer Felt	1
11	3292164	Ring Snap	1
12	3292165	Spring	1
13	3292157	Washer Thrust	2
14	3292166	Bolt Release	1