GEHL

Form No.
909786

# 303
# Compact Excavator

RUTHZIL TRATOR COMERCIAL DE PEÇAS LTDA  11 97083-6812 ROLANDO CITRANGULO

## PARTS MANUAL

GEHL®

## Introduction

When ordering service parts, specify the correct part number, full description, quantity required, the unit model number and serial number. For your safety and continued proper operation, use only genuine GEHL service parts.

The model and serial number for this unit are on a tag located on a panel on the front of the cabin.

‘‘Right’’ and ‘‘left’’ are determined from a position sitting on the seat and facing forward. From this position, the cab is on the ‘‘left’’ and the hydraulic valve compartment is on the ‘‘right’’.

GEHL® Company reserves the right to make changes or improvements in the design or construction of any part of the unit without incurring the obligation to install such changes on any previously delivered units.

Refer to the abbreviations table located on this page for the various fastener descriptions. Standard attaching hardware torque values are also provided on the inside back cover. Metric torque values shown in the illustrations are in Newton-meters and can be converted to Foot-pounds by multiplying by 0.738.

In the exploded view parts list, Reference Numbers may have additional information following the Reference Number.

Unless otherwise specified, all Cap Screws or Bolts are Grade 5, cadmium or zinc plated; Hexagon Nuts for Grade 5 Screws or Bolts are Grade B; Hexagon Nuts for other Screws or Bolts are Grade A.

**NOTE:** *The following abbreviations may be used herein:*

| | |
|---|---|
| CP | – Cotter Pin |
| CS | – Cap Screw (Hexagon Head) |
| FHCS | – Flat Head Cap Screw |
| HN | – Hex Nut |
| LN | – Lock Nut |
| LT | – Left Hand |
| M | – Metric |
| MM/mm | – Millimeter |
| RT | – Right |

# TABLE OF CONTENTS


Introduction ..... Inside Front Cover
Decal Locations ..... 2–7
Undercarriage ..... 8
Track Tensioning ..... 9
Track-Supporting Roller ..... 10
Track Roller ..... 11
Dozer Blade ..... 12
Uppercarriage ..... 13
Lubrication Block ..... 14
Rear Wall ..... 15
Counterweight ..... 16
Valve Cover ..... 17
Lifting Arm ..... 18
Short Dipper Arm ..... 19
Long Dipper Arm ..... 20
Connecting Link ..... 21
Cabin Windows ..... 22
Windshield ..... 23
Cabin Door ..... 24
Cabin Frame ..... 25-27
Open Canopy ..... 28
Sash Window ..... 29
Cabin Wiring ..... 30
Operator's Seat ..... 31
Cabin Floor ..... 32
Cabin Heating ..... 33
Engine Mounts ..... 34
Radiator ..... 35
Air Cleaner ..... 36
Exhaust ..... 37
Fuel Tank ..... 38
Fuel System ..... 39
Throttle ..... 40
Oil Pump, Pan & Filter ..... 41
Cylinder Head ..... 42
Stop Solenoid ..... 43
Fuel Injection Pump ..... 44
Fuel Injection ..... 45
Fuel Filter ..... 46
Fuel Pump ..... 47
Alternator ..... 48
Starter ..... 49
Thermostat ..... 50
Water Pump & Fan ..... 51
Exhaust Manifold ..... 52
Intake Manifold ..... 53
Pump Drive ..... 54
Hydraulic Oil Tank ..... 55
Oil Cooler ..... 56
Hydraulic Pump ..... 57
Travel Motors ..... 58
Swivel Joint ..... 59-60
Turning Gear ..... 61
Control Valve ..... 62–63
Pilot Oil Supply ..... 64-66
Pilot Operation Check Valve ..... 67
Dozer Blade Reversing Valve ..... 68
Lock Valve ..... 69
Manifold Block ..... 70
Joysticks ..... 71
Traveling Valve ..... 72
Auxiliary Hydraulics ..... 73
Lifting Arm Cylinder ..... 74
Dipper Arm Cylinder ..... 75
Dipper Cylinder ..... 76
Swivel Cylinder ..... 77
Dozer Blade Cylinder ..... 78
Hoses, Hydraulic Oil Cooler ..... 79
Hoses, Hydraulic Pump ..... 80
Hoses, Traveling Gears ..... 81
Hoses, Turning Gear ..... 82
Hoses, Swivel Cylinder ..... 83
Hoses, Dozer Blade Cylinder ..... 84
Hoses, Joysticks ..... 85
Hoses, Traveling Valve ..... 86
Tubes, Control Valve ..... 87
Tubes, Short Liftarm ..... 88
Tubes, Long Liftarm ..... 89
Battery ..... 90
Engine Harness ..... 91
Harness, Right Armrest ..... 92
Harness, Uppercarriage ..... 93
Headlight ..... 94
Tool Kit ..... 95
Tool Box, Grease Gun Bracket ..... 96
Alphabetical Index ..... 97
Numerical Index ..... 98-105
Torque Chart ..... Inside Rear Cover

# DECAL LOCATIONS

## GENERAL INFORMATION

Decal location information is provided to assist in the proper selection and application of new decals, in the event the original decals become damaged or the machine is repainted. Refer to the listing for the illustration reference number, part number, description and quantity of each decal provided in the kit. Refer to the appropriate illustrations for replacement locations.

To ensure proper selection of the correct replacement decals, compare all of the various closeup location drawings to your machine before starting to refinish the unit. Then circle each shown decal (applicable to your machine) while checking off its part number in the listing. After you have verified all the decals needed for replacement, place any extra unnecessary decals aside for disposal.

**NOTE:** *Refer to the SAFETY chapter of the Operator's Manual for the specific information provided on all of the various safety decals furnished in the decal kit(s).*

## NEW DECAL APPLICATION

Surfaces MUST be free from dirt, dust, grease and other foreign material before applying the new decal. To apply, remove the smaller portion of the decal backing paper and apply this part of the exposed adhesive backing to the clean surface while maintaining proper position and alignment. Peel the other portion of the backing paper off slowly while applying hand pressure to smooth out the decal surface.

## CAUTION

**ALWAYS follow safety precautions on decals. Replace the decals if they are damaged, or if the unit is repainted. If repainting, BE SURE all applicable decals are affixed to your unit.**

**PAINT NOTICE**

**Use this list to order paint for refinishing:**

| | |
|---|---|
| **906213** | **One Gal. Construction Yellow** |
| **906323** | **One Qt. Charcoal Grey** |
| **906317** | **One Gal. Charcoal Grey** |
| **906214** | **6 (12 oz. Spray Cans) Yellow** |
| **906318** | **6 (12 oz. Spray Cans) Grey** |

The decal kit for the model 303 Compact Excavator is listed below:

| Ref. No. | Part No. | Description & Quantity |
|---|---|---|
| | 163985 | Decal Kit - **303** |
| 1 | 161965 | Diesel Fuel |
| 2 | 161966 | Hydraulic Oil |
| 3 | 161967 | Lubrication |
| 4 | 161968 | Heater Valve (cab models only) |
| 5 | 161969 | WARNING – Hydraulic Reservoir |
| 6 | 161970 | Arrow (2 places) |
| 7 | 161981 | Lift Point (4 places) |
| 8 | 161982 | Tiedown Point (4 places) |
| 9 | 161985 | WARNING – Keep Away (2 places) |
| 10 | 161986 | WARNING – Read Manual |
| 11 | 161987 | WARNING – Engine Fan |
| 12 | 162450 | Travel – Left |
| 13 | 162451 | Travel – Right |
| 14 | 162452 | Right Joystick Control |
| 15 | 162453 | Left Joystick Control |
| 16 | 162832 | Hydraulics Compartment Latch |
| 17 | 163973 | WARNING – Mandatory Shutdown |
| 18 | 163975 | WARNING – Avoid Injury (2 places) |
| 19 | 163976 | WARNING – Avoid Injury |
| 20 | 163977 | WARNING – Entanglement Hazard |
| 21 | 163978 | WARNING – Hot Surface |
| 22 | 163979 | Valve Position |
| 23 | 163992 | Left Graphic |
| 24 | 163993 | Right Graphic |
| 25 | 163994 | WARNING – Counterweight (2 places) |
| 26 | 163995 | Dozer Blade Control |
| 27 | 163996 | Bypass Ball Valve |
| 28 | 164853 | Engine Compartment Latch |
| 29 | 164854 | WARNING – Avoid Injury |
| 30 | 165898 | Manual Throttle |
| 31 | 165906 | Glow plug |
| 32 | 159519 | GEHL |
| 33 | L82282 | GEHL (4 places, 3 places on canopy models) |
| 34 | 164988 | 303 (2 places) |

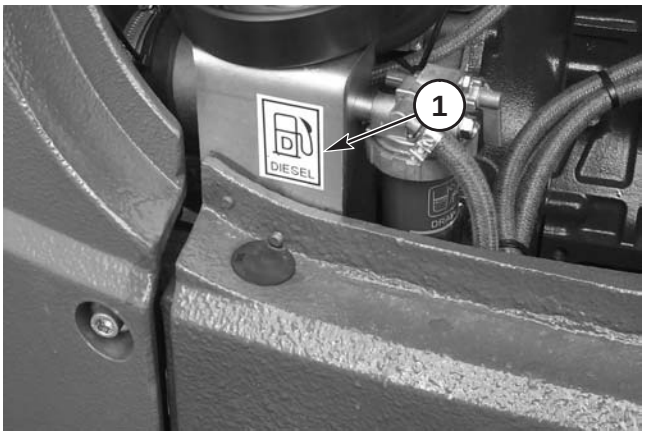


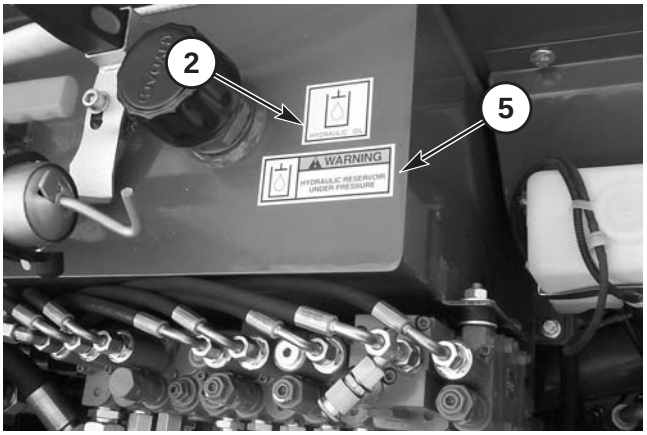


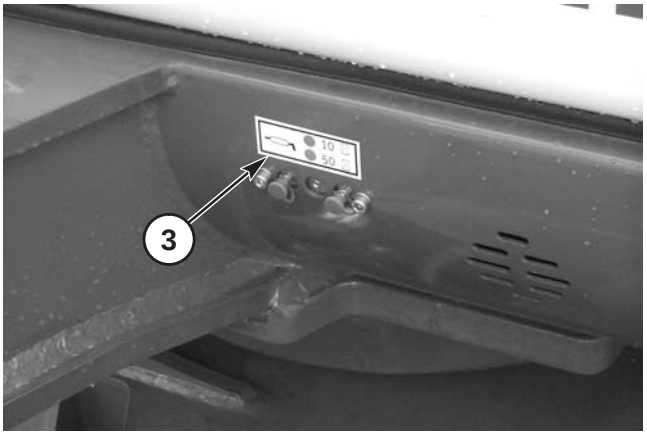


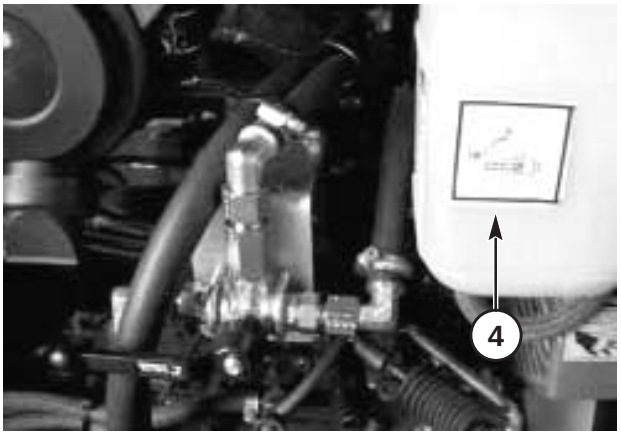


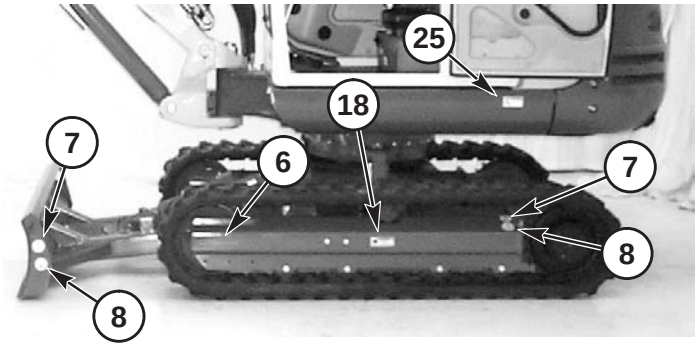


Both Sides

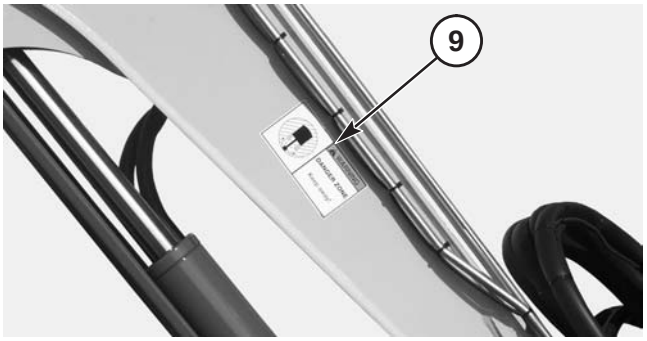


Both Sides

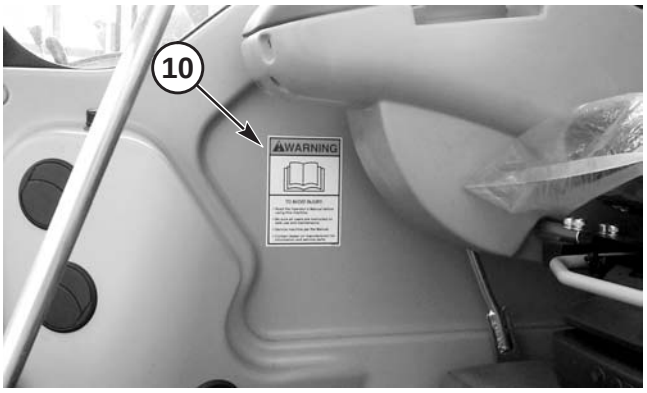


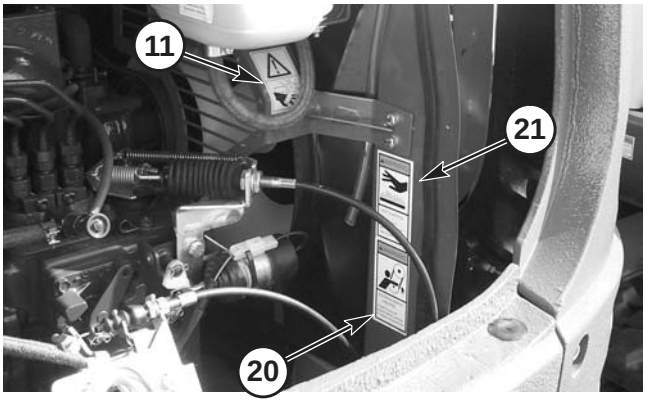

The decal listing has been repeated for your convenience.

| Ref. No. | Part No. | Description & Quantity |
|---|---|---|
| | 163985 | Decal Kit - **303** |
| 1 | 161965 | Diesel Fuel |
| 2 | 161966 | Hydraulic Oil |
| 3 | 161967 | Lubrication |
| 4 | 161968 | Heater Valve (cab models only) |
| 5 | 161969 | WARNING – Hydraulic Reservoir |
| 6 | 161970 | Arrow (2 places) |
| 7 | 161981 | Lift Point (4 places) |
| 8 | 161982 | Tiedown Point (4 places) |
| 9 | 161985 | WARNING – Keep Away (2 places) |
| 10 | 161986 | WARNING – Read Manual |
| 11 | 161987 | WARNING – Engine Fan |
| 12 | 162450 | Travel – Left |
| 13 | 162451 | Travel – Right |
| 14 | 162452 | Right Joystick Control |
| 15 | 162453 | Left Joystick Control |
| 16 | 162832 | Hydraulics Compartment Latch |
| 17 | 163973 | WARNING – Mandatory Shutdown |
| 18 | 163975 | WARNING – Avoid Injury (2 places) |
| 19 | 163976 | WARNING – Avoid Injury |
| 20 | 163977 | WARNING – Entanglement Hazard |
| 21 | 163978 | WARNING – Hot Surface |
| 22 | 163979 | Valve Position |
| 23 | 163992 | Left Graphic |
| 24 | 163993 | Right Graphic |
| 25 | 163994 | WARNING – Counterweight (2 places) |
| 26 | 163995 | Dozer Blade Control |
| 27 | 163996 | Bypass Ball Valve |
| 28 | 164853 | Engine Compartment Latch |
| 29 | 164854 | WARNING – Avoid Injury |
| 30 | 165898 | Manual Throttle |
| 31 | 165906 | Glow plug |
| 32 | 159519 | GEHL |
| 33 | L82282 | GEHL (4 places, 3 places on canopy models) |
| 34 | 164988 | 303 (2 places) |

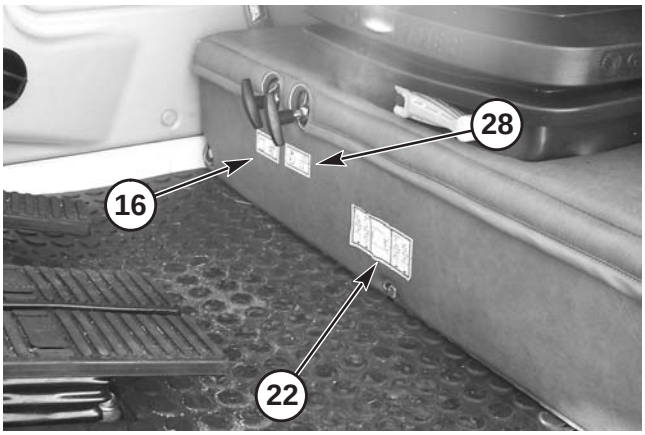


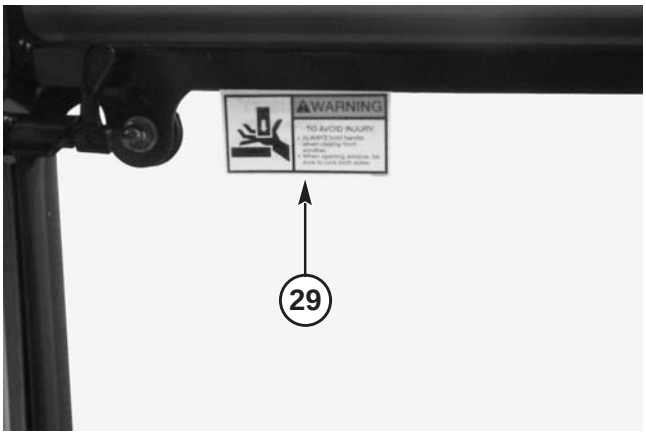


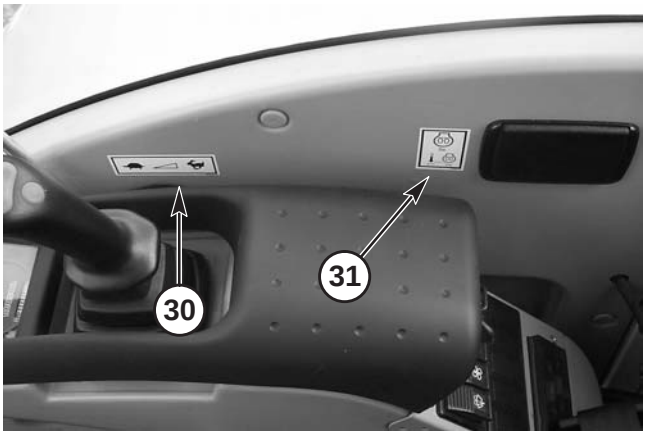


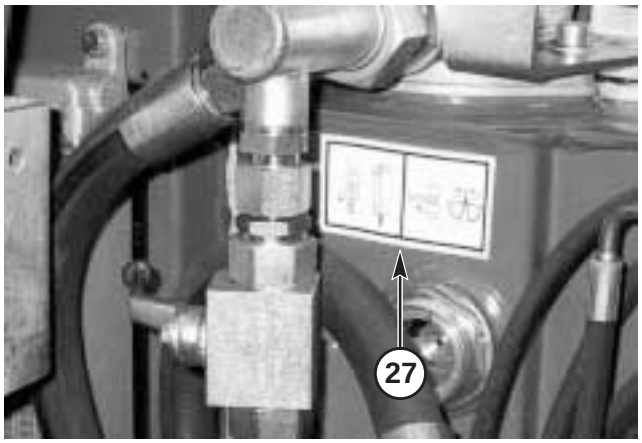


## Overhead Panel Decals – positioning may vary by model and cabin style

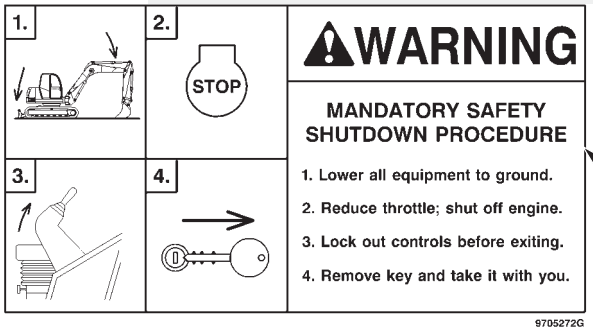


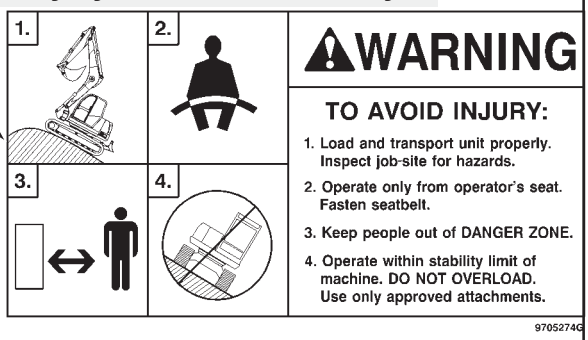


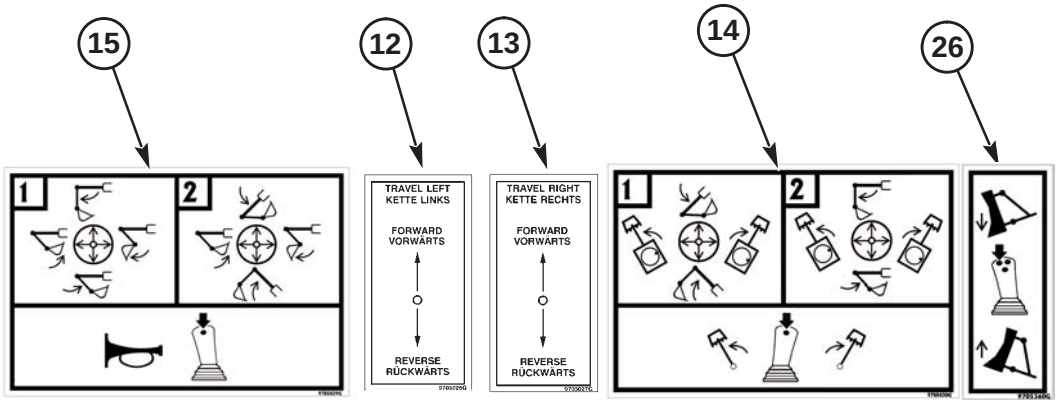

The decal listing has been repeated for your convenience.

| Ref. No. | Part No. | Description & Quantity |
|---|---|---|
| | 163985 | Decal Kit - **303** |
| 1 | 161965 | Diesel Fuel |
| 2 | 161966 | Hydraulic Oil |
| 3 | 161967 | Lubrication |
| 4 | 161968 | Heater Valve (cab models only) |
| 5 | 161969 | WARNING – Hydraulic Reservoir |
| 6 | 161970 | Arrow (2 places) |
| 7 | 161981 | Lift Point (4 places) |
| 8 | 161982 | Tiedown Point (4 places) |
| 9 | 161985 | WARNING – Keep Away (2 places) |
| 10 | 161986 | WARNING – Read Manual |
| 11 | 161987 | WARNING – Engine Fan |
| 12 | 162450 | Travel – Left |
| 13 | 162451 | Travel – Right |
| 14 | 162452 | Right Joystick Control |
| 15 | 162453 | Left Joystick Control |
| 16 | 162832 | Hydraulics Compartment Latch |
| 17 | 163973 | WARNING – Mandatory Shutdown |
| 18 | 163975 | WARNING – Avoid Injury (2 places) |
| 19 | 163976 | WARNING – Avoid Injury |
| 20 | 163977 | WARNING – Entanglement Hazard |
| 21 | 163978 | WARNING – Hot Surface |
| 22 | 163979 | Valve Position |
| 23 | 163992 | Left Graphic |
| 24 | 163993 | Right Graphic |
| 25 | 163994 | WARNING – Counterweight (2 places) |
| 26 | 163995 | Dozer Blade Control |
| 27 | 163996 | Bypass Ball Valve |
| 28 | 164853 | Engine Compartment Latch |
| 29 | 164854 | WARNING – Avoid Injury |
| 30 | 165898 | Manual Throttle |
| 31 | 165906 | Glow plug |
| 32 | 159519 | GEHL |
| 33 | L82282 | GEHL (4 places, 3 places on canopy models) |
| 34 | 164988 | 303 (2 places) |

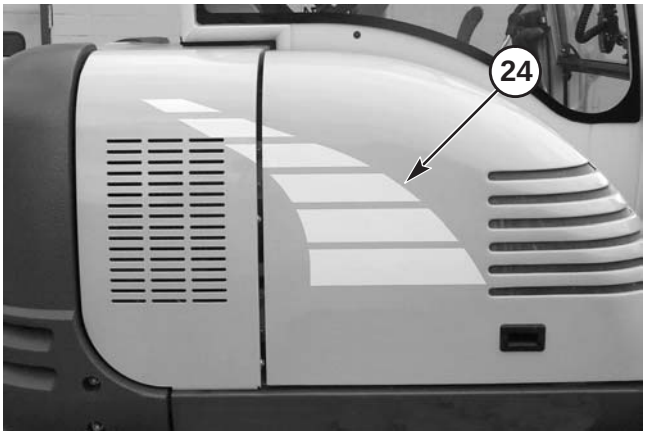





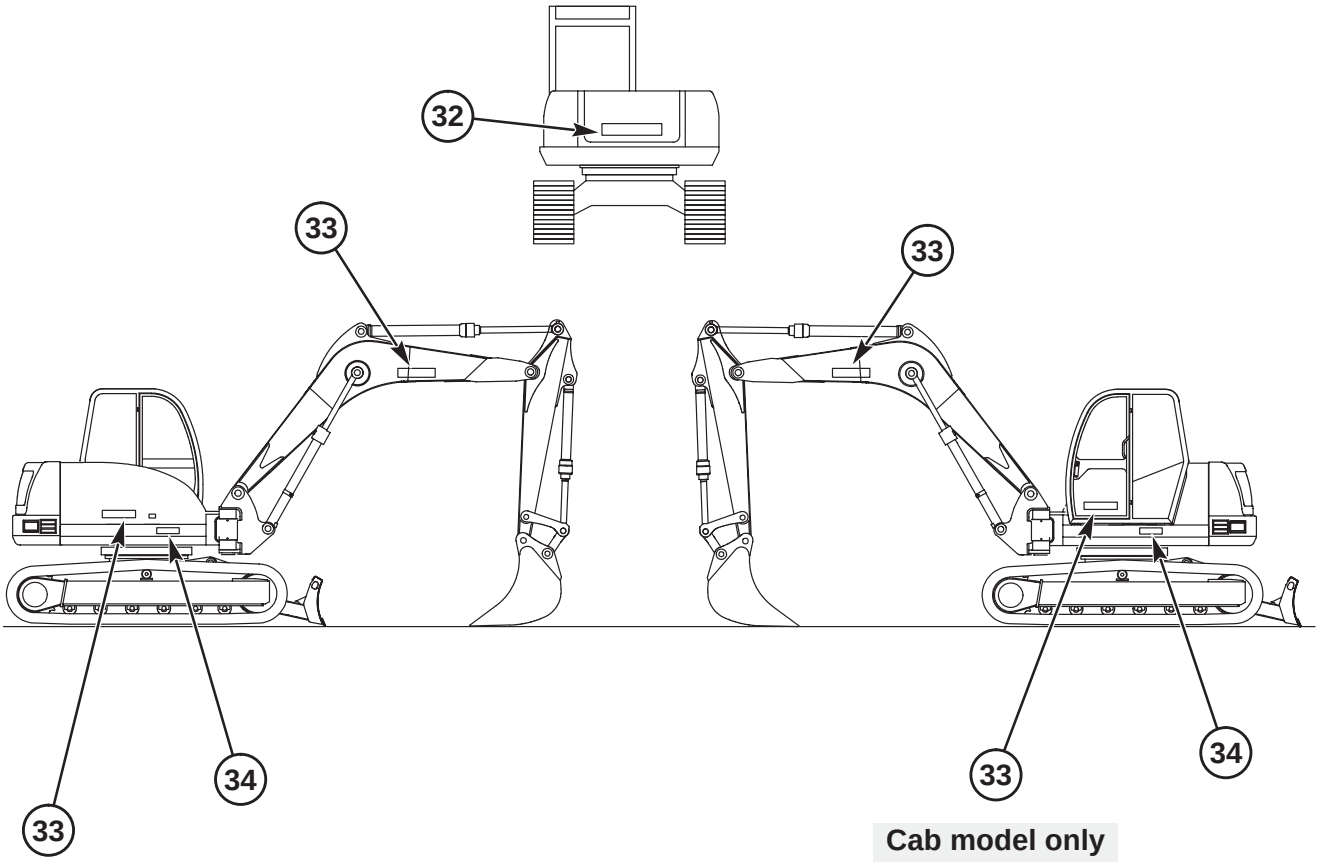


Cab model only

# 303 - UNDERCARRIAGE

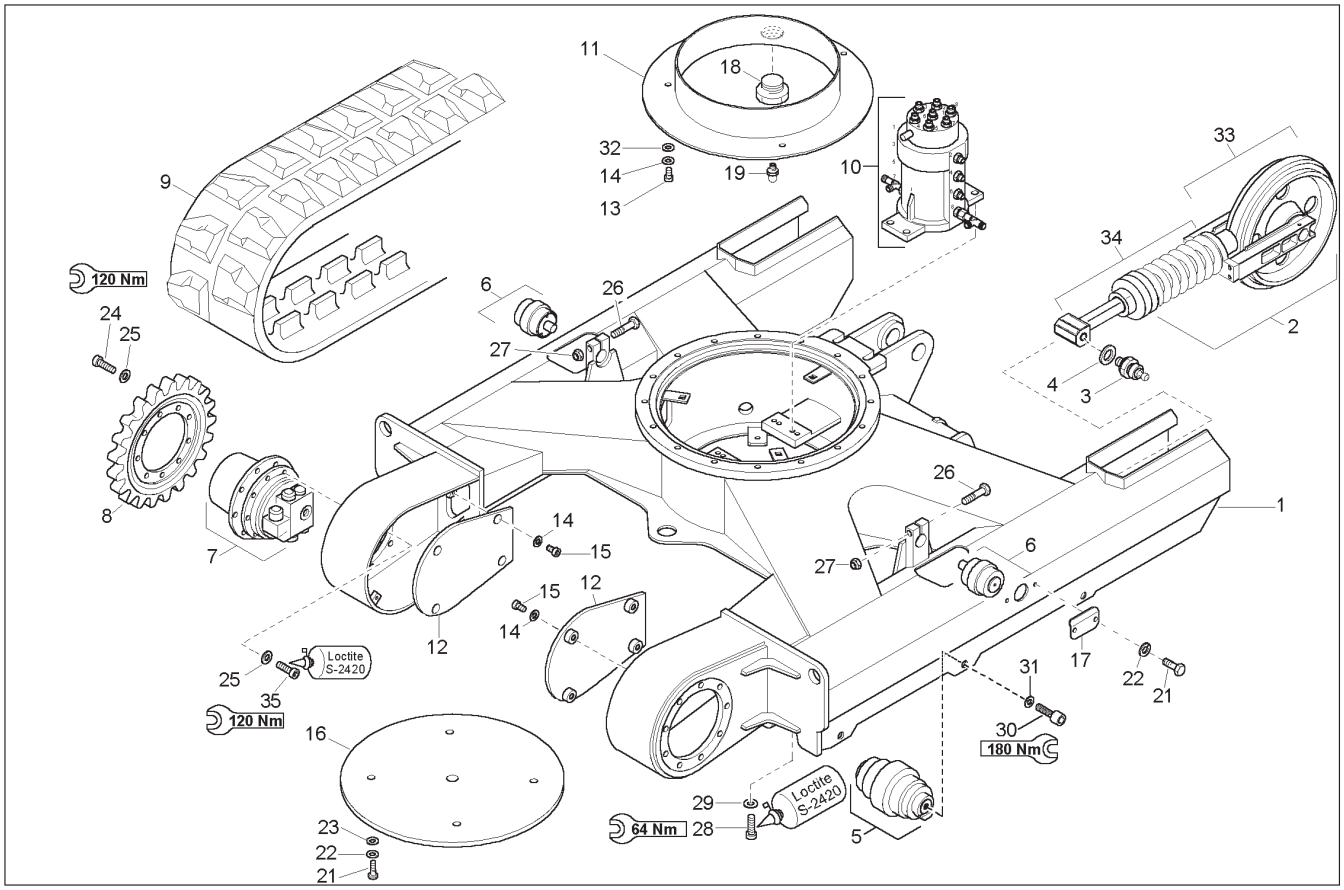


| Ref. No. | Part No. | Description | Qty. Req. |
|---|---|---|---|
| 01 | 165597 | UNDERCARRIAGE | 1 |
| 02 | 165605 | TRACK TENSIONING COMPLETE | 2 |
| 03 | 160638 | NON RETURN VALVE | 2 |
| 04 | 160865 | SCREW SEAL | 2 |
| 05 | 165122 | ROLLER COMPLETE | 8 |
| 06 | 165124 | ROLLER COMPLETE | 2 |
| 07 | 165662 | TRACK DRIVE UNIT | 2 |
| 08 | 165121 | SPROCKET | 2 |
| 09 | 165603 | RUBBER CHAIN | 2 |
| 10 | 162526 | SWIVEL JOINT | 1 |
| 11 | 165602 | BRACKET | 1 |
| | | (AFTER SN AB00285) | |
| | 165599 | BRACKET | 1 |
| | | (BEFORE SN AB00286) | |
| 12 | 165117 | COVER | 2 |
| 13 | 656001 | CS M8–1.2 X 20 C 8.8 | 11 |
| 14 | 161676 | RING/SNAP S8 | 11 |
| 15 | 161661 | WASHER/GR A 8.4 | 8 |
| 16 | 165598 | COVER | 1 |
| 17 | 162331 | COVER | 2 |
| 18 | 165119 | PLUG | 1 |
| 19 | 161412 | LUBRICATION NIPPLE | 1 |
| 20 | 161416 | PROTECTION CAP | 1 |
| 21 | 656090 | CS M10–1.5 X 16 C 8.8 | 8 |
| 22 | 161669 | RING/SNAP S10 | 8 |
| 23 | 161640 | WASHER/GR A 10.5 | 4 |
| 24 | 651480 | SHCS HS M12–1.7 X 30 10.9 | 18 |
| 25 | 161620 | LW SPRING 12 | 36 |
| 26 | 651489 | SHCS HS M12–1.7 X 65 10.9 | 2 |
| 27 | 651449 | HLN INS M12–1.7 | 2 |
| 28 | 162022 | SCREW | 4 |
| 29 | 161635 | WASHER/NORD–LOCK NL 10 STUCK | 4 |
| 30 | 165945 | SCREW | 16 |
| 31 | 164920 | WASHER | 16 |
| 32 | 161662 | WASHER/GR A 8.4 | 3 |
| 33 | 165126 | TENSION WHEEL + SLIDE PART | 2 |
| 34 | 165606 | SPRING SET | 2 |
| 35 | 163628 | SCREW | 18 |

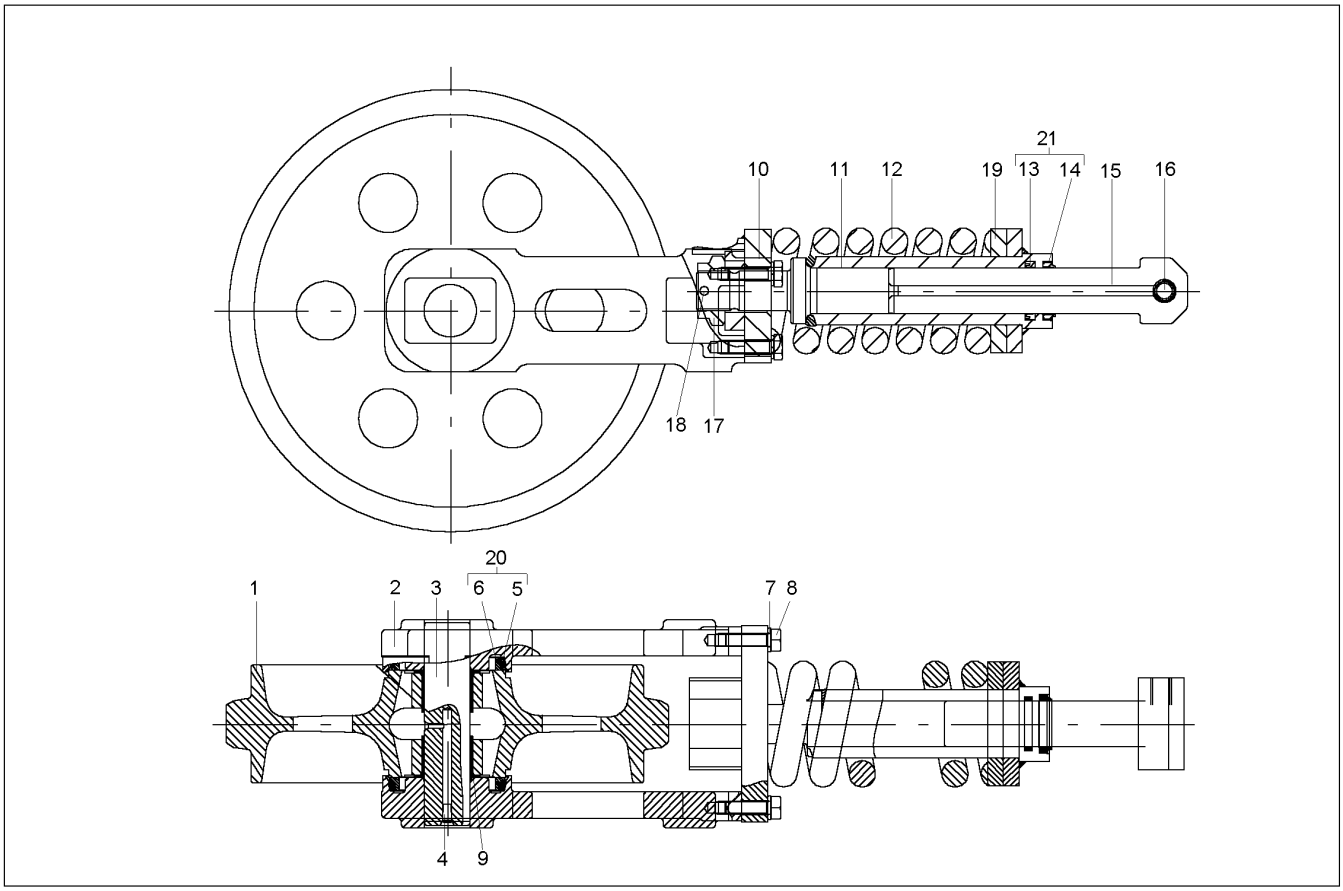


| Ref. No. | Part No. | Description | Qty. Req. |
|---|---|---|---|
| 01 | 165140 | TENSION WHEEL | 1 |
| 02 | 165139 | BRACKET | 2 |
| 03 | 165138 | SHAFT | 1 |
| 04 | 162750 | PLUG | 1 |
| 05 | 165137 | SEAL | 2 |
| 06 | 165136 | SEAL | 2 |
| 07 | 165135 | SPRING | 4 |
| 08 | 165134 | SCREW | 4 |
| 09 | 162754 | BUSHING | 2 |
| 10 | 165133 | GUIDE | 1 |
| 11 | 165132 | TENSION CYLINDER | 1 |
| 12 | 165131 | SPRING | 1 |
| 13 | 165130 | SEAL | 1 |
| 14 | 165129 | SEAL | 1 |
| 15 | 165128 | GLAND | 1 |
| 16 | 165141 | PLUG | 1 |
| 17 | 162757 | NUT | 1 |
| 18 | 162758 | COTTERPIN | 1 |
| 19 | 165607 | SPACER | 1 |
| 20 | 160983 | O–RING | 1 |
| 21 | 165608 | SEAL KIT | 1 |

# 303 - TRACK-SUPPORTING ROLLER

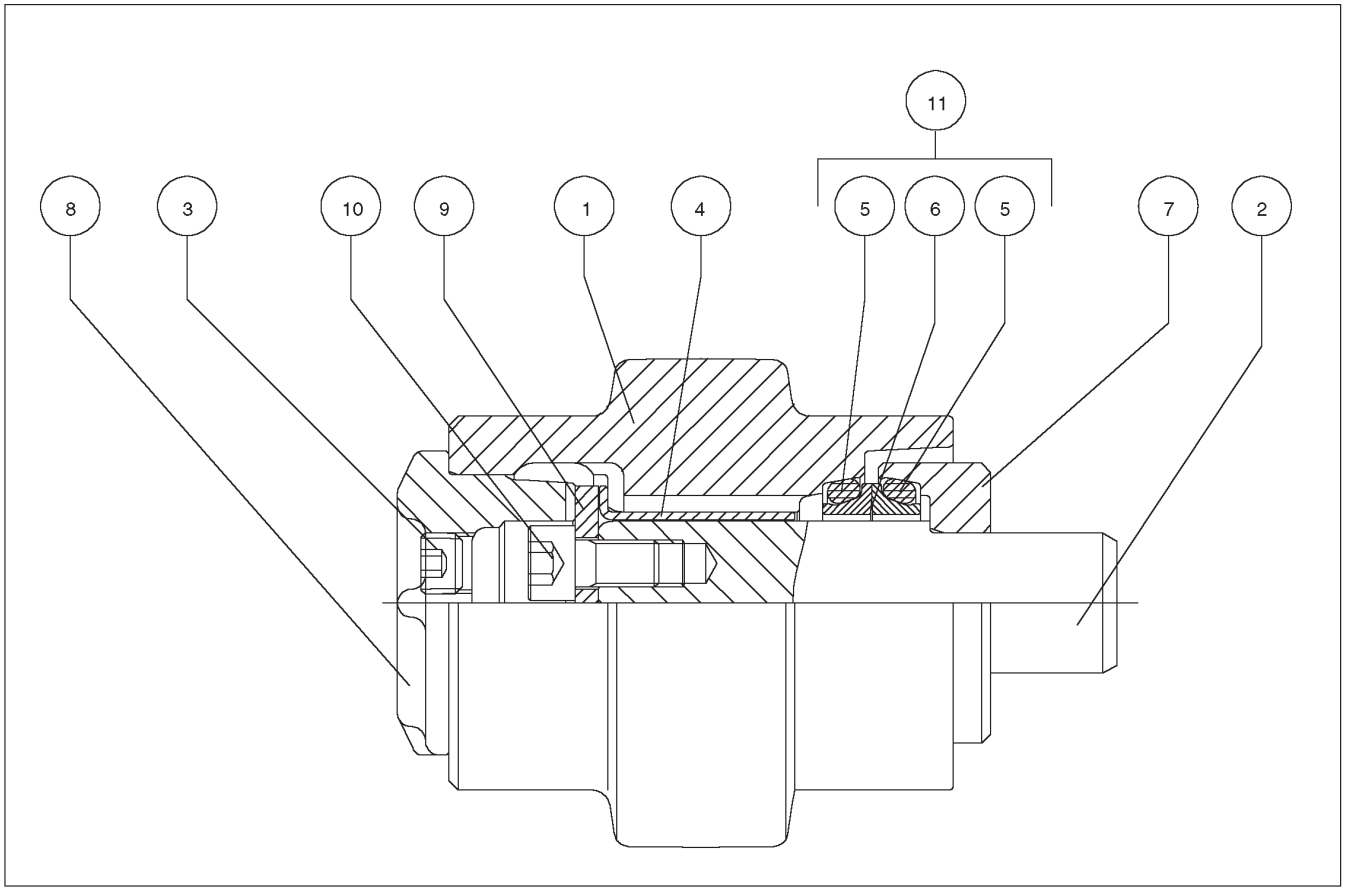


| Ref. No. | Part No. | Description | Qty. Req. |
|---|---|---|---|
| 01 | 165144 | ROLLER | 1 |
| 02 | 165143 | SHAFT | 1 |
| 03 | 163178 | PLUG | 1 |
| 04 | 163179 | BUSHING | 1 |
| 05 | 164244 | O–RING | 2 |
| 06 | 164245 | SEAL | 2 |
| 07 | 165142 | CUFF | 1 |
| 08 | 163183 | COVER | 1 |
| 09 | 163184 | WASHER | 1 |
| 10 | 163185 | SCREW | 1 |
| 11 | 161074 | SEALS FOR ROLLER | 1 |

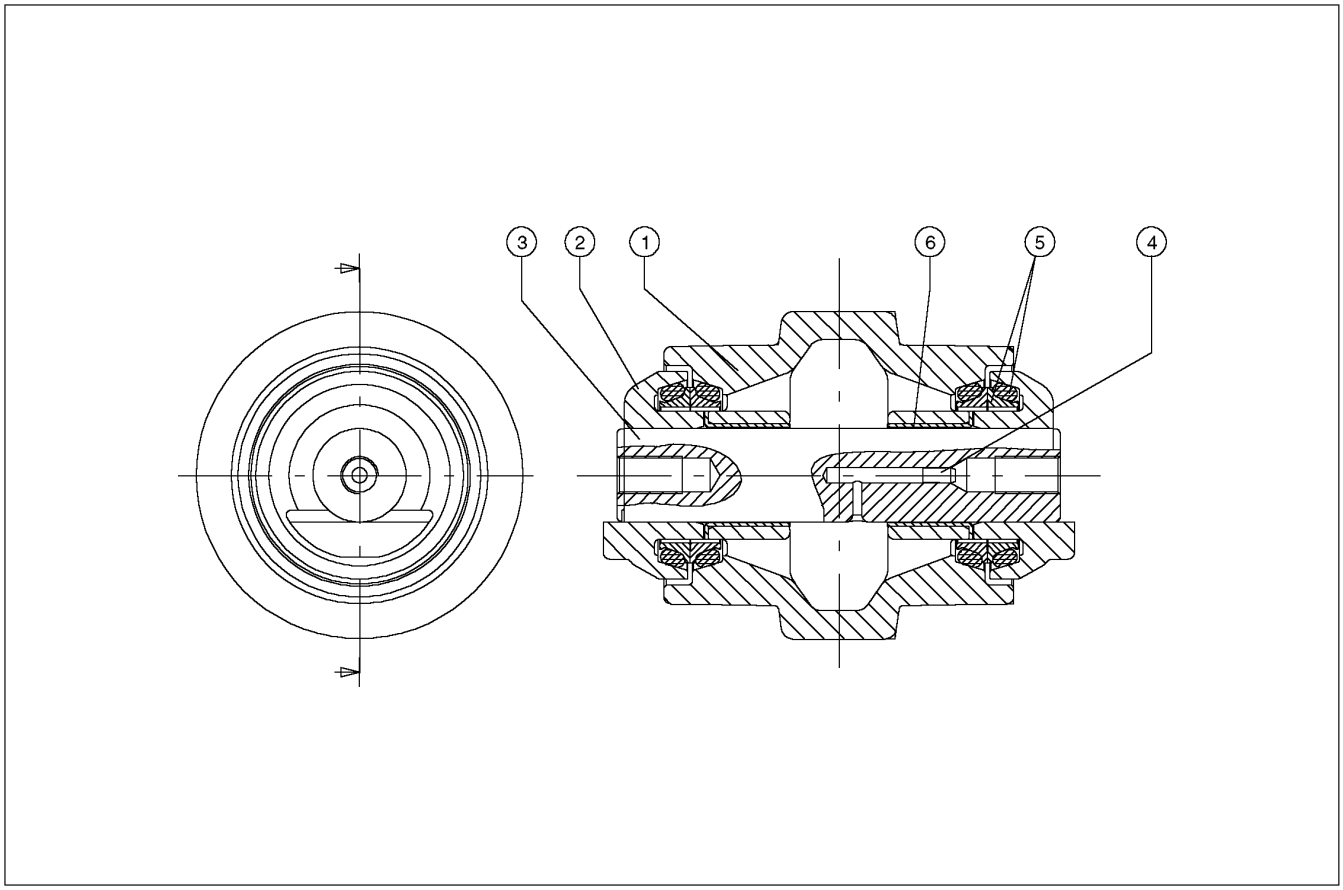


| Ref. No. | Part No. | Description | Qty. Req. | Ref. No. | Part No. | Description | Qty. Req. |
|---|---|---|---|---|---|---|---|
| 01 | 165149 | ROLLER | 1 | 04 | 162750 | PLUG | 1 |
| 02 | 165148 | PILLOW BLOCK | 2 | 05 | 165146 | SEAL KIT | 1 |
| 03 | 165147 | SHAFT | 1 | 06 | 165145 | BUSHING | 2 |

# 303 - DOZER BLADE

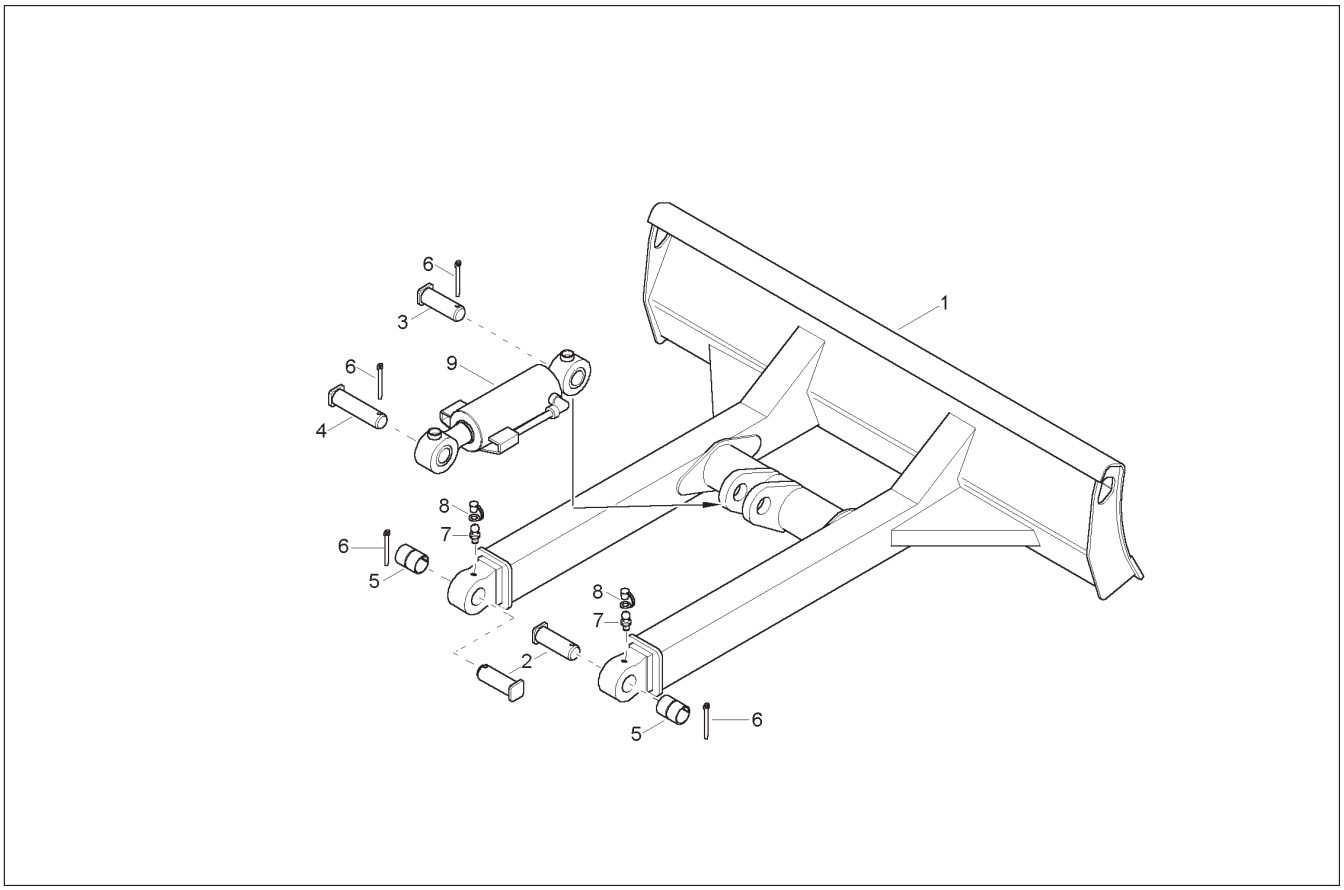


| Ref. No. | Part No. | Description | Qty. Req. |
|---|---|---|---|
| 01 | 165601 | DOZER BLADE | 1 |
| 02 | 160811 | PIN | 2 |
| 03 | 160813 | PIN | 1 |
| 04 | 160812 | PIN | 1 |
| 05 | 161537 | BUSHING | 2 |
| 06 | 161682 | PIN/SPLIT 6.3 X 63 | 4 |
| 07 | 161411 | LUBRICATION NIPPLE | 2 |
| 08 | 161416 | PROTECTION CAP | 2 |
| 09 | 165631 | DOZER BLADE CYLINDER | 1 |

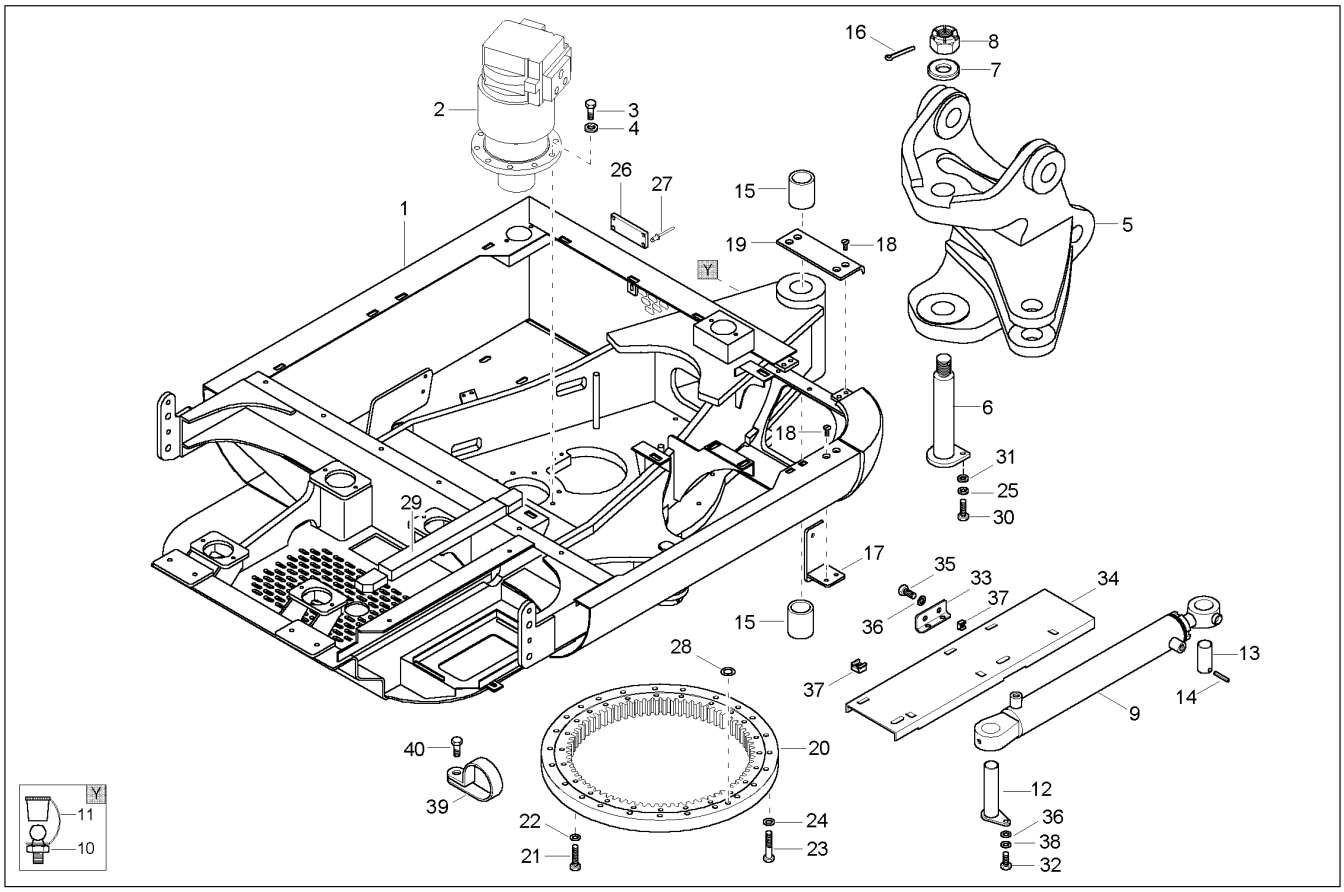


| Ref. No. | Part No. | Description | Qty. Req. |
|---|---|---|---|
| 01 | 165591 | UPPERCARRIAGE | 1 |
| 02 | 165660 | ROTARY ACTUATOR COMPLETE | 1 |
| 03 | 163628 | SCREW | 10 |
| 04 | 161636 | WASHER/NORD–LOCK NL 12 STUCK | 10 |
| 05 | 165621 | SWING BRACKET | 1 |
| 06 | 160810 | PIN | 1 |
| 07 | 162345 | COVER | 1 |
| 08 | 651443 | HN SLTD M36–4 | 1 |
| 09 | 165630 | BOOM OFFSET CYLINDER | 1 |
| 10 | 161411 | LUBRICATION NIPPLE | 1 |
| 11 | 161422 | PROTECTION CAP | 1 |
| 12 | 160815 | PIN | 1 |
| 13 | 165803 | PIN DM=40x115 | 1 |
| 14 | 651470 | PIN/SPRING M8 X 80 | 1 |
| 15 | 161534 | BUSHING | 2 |
| 16 | 165956 | COTTERPIN | 2 |
| 17 | 165090 | BRACKET | 1 |
| 18 | 165925 | SCREW | 6 |
| 19 | 165596 | COVER | 1 |
| 20 | 162522 | TURNTABLE | 1 |
| 21 | 165940 | SCREW | 16 |
| 22 | 161647 | WASHER/ROUND HI–TENS 17 | 16 |
| 23 | 162485 | SCREW | 24 |
| 24 | 165953 | WASHER | 24 |
| 25 | 161670 | RING/SNAP S12 | 4 |
| 26 | 160409 | REFLECTOR | 1 |
| 27 | 161627 | RIVET/BLIND A4 X 12 | 2 |
| 28 | 161570 | O–RING | 1 |
| 29 | 165557 | ISOLATION MAT | 1 |
| 30 | 162026 | SCREW | 2 |
| 31 | 161642 | WASHER/GR A 13 | 6 |
| 32 | 163649 | SCREW | 1 |
| 33 | 165634 | BRACKET | 1 |
| 34 | 165592 | PROFILE | 1 |
| 35 | 656001 | CS M8–1.2 X 20 C 8.8 | 2 |
| 36 | 161661 | WASHER/GR A 8.4 | 3 |
| 37 | 161615 | NUT/CAGE M8 | 10 |
| 38 | 161676 | RING/SNAP S8 | 1 |
| 39 | 165983 | PIPE CLAMP | 1 |
| 40 | 165943 | SCREW | 1 |

# 303 - LUBRICATION BLOCK

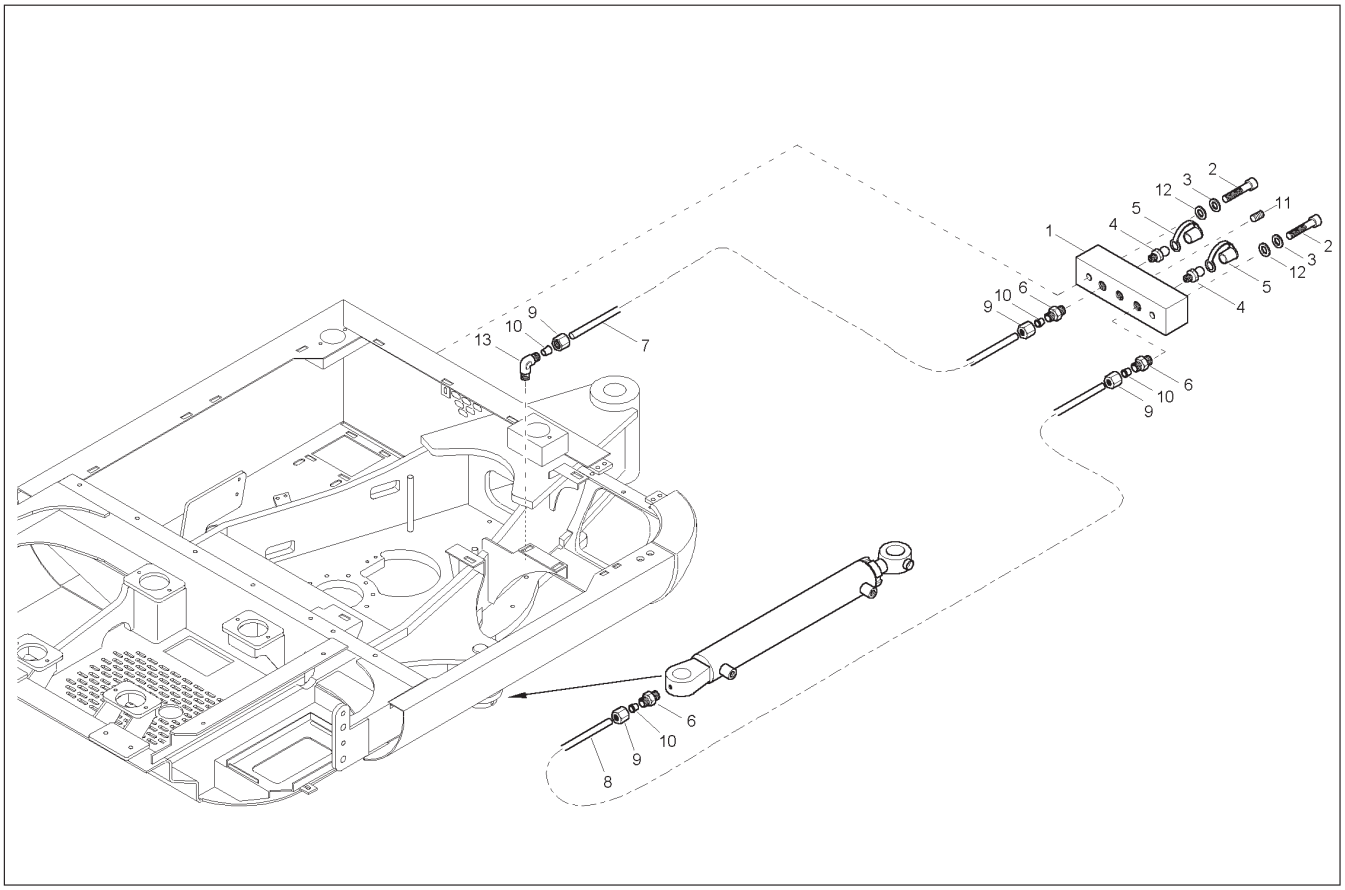


| Ref. No. | Part No. | Description | Qty. Req. |
|---|---|---|---|
| 01 | 161722 | LUBRICATION NIPPLE BLOCK | 1 |
| 02 | 651425 | CS M6–1.0 X 30 C 8.8 | 2 |
| 03 | 161675 | RING/SNAP S6 | 2 |
| 04 | 161411 | LUBRICATION NIPPLE | 2 |
| 05 | 161422 | PROTECTION CAP | 2 |
| 06 | 161461 | SCREW JOINT | 4 |
| 07 | 165916 | LUBRICATION TUBE | 0.4 |
| 08 | 165916 | LUBRICATION TUBE | 1.6 |
| 09 | 161468 | NUT | 4 |
| 10 | 161469 | WASHER | 4 |
| 11 | 161401 | SCREW MOUNT | 1 |
| 12 | 161660 | WASHER/GR A 6.4 | 2 |
| 13 | 165964 | ELBOW | 1 |

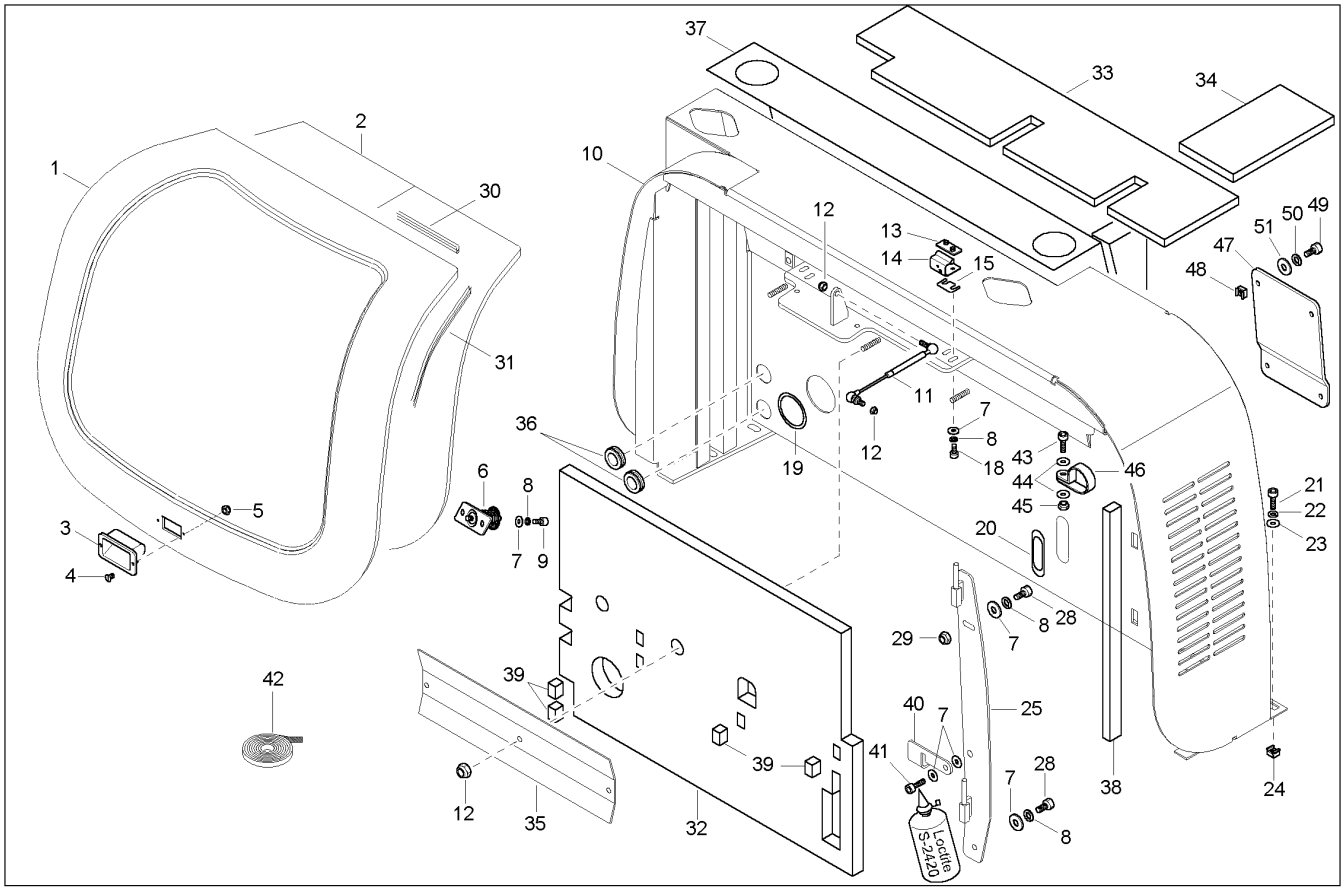


| Ref. No. | Part No. | Description | Qty. Req. |
|---|---|---|---|
| 01 | 165987 | HOOD | 1 |
| 02 | 165551 | ISOLATION MAT | 1 |
| 03 | 161064 | HANDLE | 1 |
| 04 | 651459 | SCREW FCHC HS M14–2.0 X 16 8.8 | 2 |
| 05 | 656116 | HN M4–.7 | 2 |
| 06 | 161061 | BRACKET | 1 |
| 07 | 161661 | WASHER/GR A 8.4 | 10 |
| 08 | 161676 | RING/SNAP S8 | 8 |
| 09 | 656093 | CS M8–1.2 X 16 C 8.8 | 2 |
| 10 | 165988 | REAR WALL | 1 |
| 11 | 161204 | PNEUMATIC SPRING | 1 |
| 12 | 651458 | HLN INS M8–1.2 8 | 5 |
| 13 | 162716 | PLATE | 2 |
| 14 | 160882 | HINGE | 2 |
| 15 | 162675 | BRACKET | 2 |
| 18 | 651517 | SHCS HS M8–1.2 X 30 8.8 | 4 |
| 19 | 165818 | RUBBER PROFILE | 0.15 |
| 20 | 165818 | RUBBER PROFILE | 0.2 |
| 21 | 165942 | SCREW | 12 |
| 22 | 161669 | RING/SNAP S10 | 12 |
| 23 | 161663 | WASHER/GR A 10.5 | 12 |
| 24 | 161610 | NUT/CAGE M10 | 8 |
| 25 | 165079 | STEERING | 1 |
| 28 | 656001 | CS M8–1.2 X 20 C 8.8 | 2 |
| 29 | 161616 | NUT/CAGE M8 | 1 |
| 30 | 165921 | RUBBER PROFILE | 0.072 |
| 31 | 165921 | RUBBER PROFILE | 0.23 |
| 32 | 165552 | ISOLATION MAT | 1 |
| 33 | 165553 | ISOLATION MAT | 1 |
| 34 | 165556 | ISOLATION MAT | 1 |
| 35 | 165068 | STEEL | 1 |
| 36 | 165913 | RUBBER FUNNEL | 2 |
| 37 | 165698 | THERMAL BLANKET 1 | 1 |
| 38 | 165560 | ISOLATION MAT | 1 |
| 39 | 165559 | ISOLATION MAT BELOW | 4 |
| 40 | 165094 | BRACKET | 1 |
| 41 | 651430 | CS M8–1.2 X 12 C 8.8 | 1 |
| 42 | 165574 | FIXING STRIP | 4 |
| 43 | 651505 | SHCS HS M5–0.8 X 20 8.8 | 1 |
| 44 | 161659 | WASHER/GR A 5.3 | 2 |
| 45 | 165950 | NUT | 1 |
| 46 | 165114 | CLAMP | 1 |
| 47 | 165104 | COVER | 1 |
| 48 | 161613 | NUT/CAGE M6 | 4 |
| 49 | 656149 | CS M6–1.0 X 16 C 8.8 | 4 |
| 50 | 161675 | RING/SNAP S6 | 4 |
| 51 | 161660 | WASHER/GR A 6.4 | 4 |

# 303 - COUNTERWEIGHT

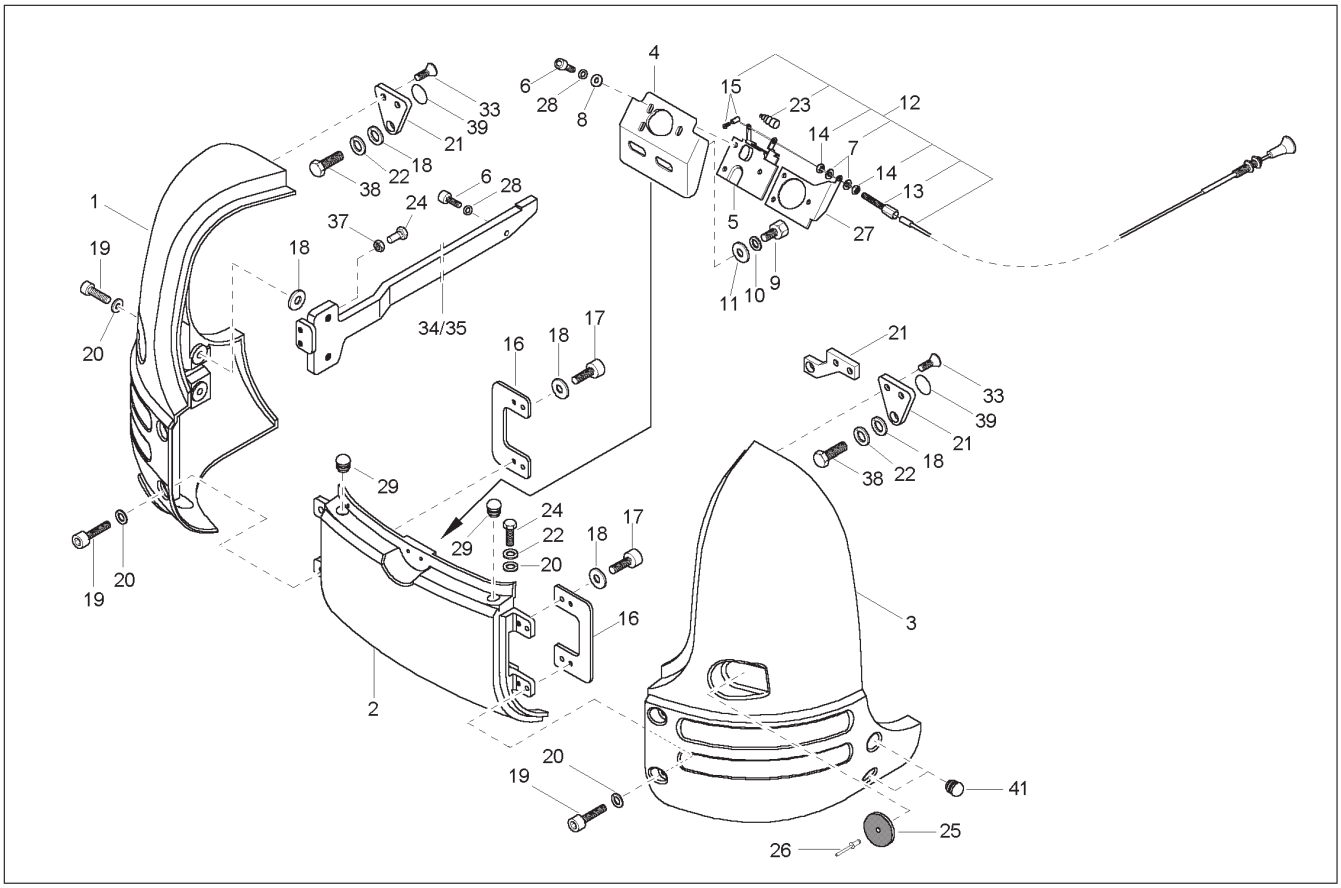


| Ref. No. | Part No. | Description | Qty. Req. |
|---|---|---|---|
| 01 | 165101 | FENDER | 1 |
| 02 | 165099 | FENDER | 1 |
| 03 | 165100 | FENDER | 1 |
| 04 | 165078 | BRACKET | 1 |
| 05 | 161062 | BRACKET | 1 |
| 06 | 651507 | SHCS HS M6–1 X 20 8.8 | 5 |
| 07 | 161661 | WASHER/GR A 8.4 | 2 |
| 08 | 161660 | WASHER/GR A 6.4 | 3 |
| 09 | 163649 | SCREW | 2 |
| 10 | 161676 | RING/SNAP S8 | 2 |
| 11 | 161667 | WASHER/GR A 8.4 | 2 |
| 12 | 165059 | CABLE | 1 |
| 13 | 165565 | SCREW | 1 |
| 14 | 163650 | NUT | 2 |
| 15 | 161929 | NIPPLE | 1 |
| 16 | 165097 | BRACKET | 2 |
| 17 | 656016 | CS M12–1.7 X 30 C 8.8 | 4 |
| 18 | 161664 | WASHER/GR A 13 | 8 |
| 19 | 651487 | SHCS HS M12–1.7 X 50 10.9 | 8 |
| 20 | 161642 | WASHER/GR A 13 | 11 |
| 21 | 165098 | BRACKET | 2 |
| 21 | 165106 | BRACKET | 1 |
| 22 | 161670 | RING/SNAP S12 | 5 |
| 23 | 164698 | BELLOWS | 1 |
| 24 | 651407 | CS M12–1.7 X 40 C 8.8 | 7 |
| 25 | 165222 | REFLECTOR | 2 |
| 26 | 161627 | RIVET/BLIND A4 X 12 | 2 |
| 27 | 164667 | ANGLE | 1 |
| 28 | 161675 | RING/SNAP S6 | 2 |
| 29 | 165105 | PLUG | 2 |
| 33 | 162041 | SCREW | 4 |
| 34 | 165096 | FENDER LEFT | 1 |
| 35 | 165095 | FENDER RIGHT | 1 |
| 37 | 656050 | HN M12–1.7 | 4 |
| 38 | 656017 | CS M12–1.7 X 35 C 8.8 | 2 |
| 39 | 165107 | COVER | 2 |
| 41 | 165115 | PLUG | 4 |

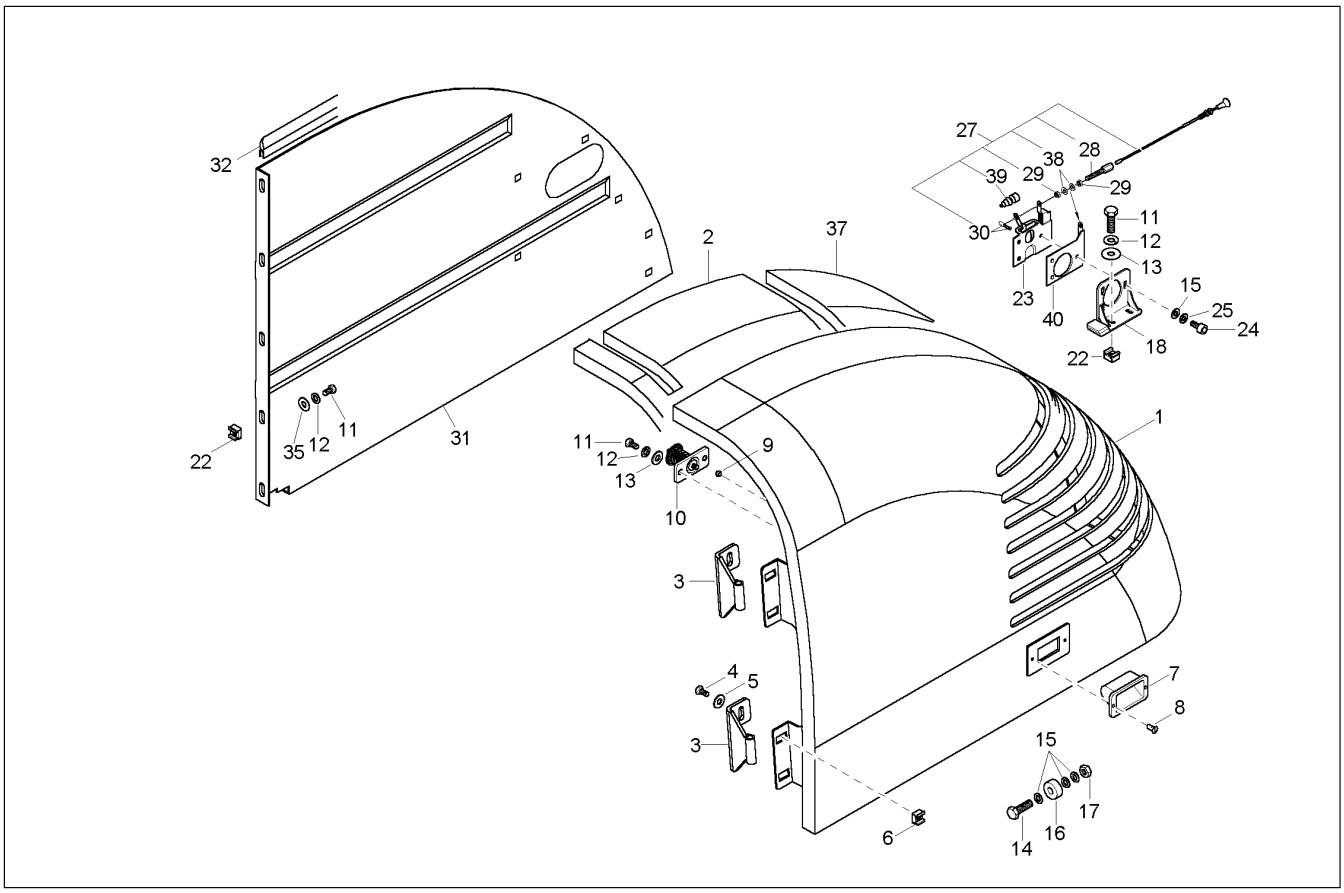


| Ref. No. | Part No. | Description | Qty. Req. |
|---|---|---|---|
| 01 | 165989 | VALVE COVER | 1 |
| 02 | 165554 | ISOLATION MAT | 1 |
| 03 | 165080 | HINGE | 2 |
| 04 | 651394 | CS M10–1.5 X 25 C 10.9 | 4 |
| 05 | 161641 | WASHER/GRA 10.5 | 4 |
| 06 | 161610 | NUT/CAGE M10 | 4 |
| 07 | 161064 | HANDLE | 1 |
| 08 | 651459 | SCREW FCHC HS M14–2.0 X 16 8.8 | 2 |
| 09 | 656116 | HN M4–.7 | 2 |
| 10 | 161061 | BRACKET | 1 |
| 11 | 656001 | CS M8–1.2 X 20 C 8.8 | 13 |
| 12 | 161676 | RING/SNAP S8 | 13 |
| 13 | 161667 | WASHER/GR A 8.4 | 4 |
| 14 | 651427 | HB M6–1.0 X 35 C 8.8 | 1 |
| 15 | 161660 | WASHER/GR A 6.4 | 6 |
| 16 | 165109 | WHEEL | 1 |
| 17 | 656047 | HN M6–1.0 | 1 |
| 18 | 165077 | BRACKET | 1 |
| 22 | 161615 | NUT/CAGE M8 | 7 |
| 23 | 161062 | BRACKET | 1 |
| 24 | 651507 | SHCS HS M6–1 X 20 8.8 | 3 |
| 25 | 161675 | RING/SNAP S6 | 3 |
| 27 | 165061 | CABLE | 1 |
| 28 | 165565 | SCREW | 1 |
| 29 | 163650 | NUT | 2 |
| 30 | 161929 | NIPPLE | 1 |
| 31 | 165071 | PARTION WALL | 1 |
| 32 | 165821 | RUBBER PROFILE | 1.3 |
| 35 | 161662 | WASHER/GR A 8.4 | 9 |
| 37 | 165555 | ISOLATION MAT | 1 |
| 38 | 161661 | WASHER/GR A 8.4 | 2 |
| 39 | 164698 | BELLOWS | 1 |
| 40 | 164667 | ANGLE | 1 |

# 303 - LIFTING ARM

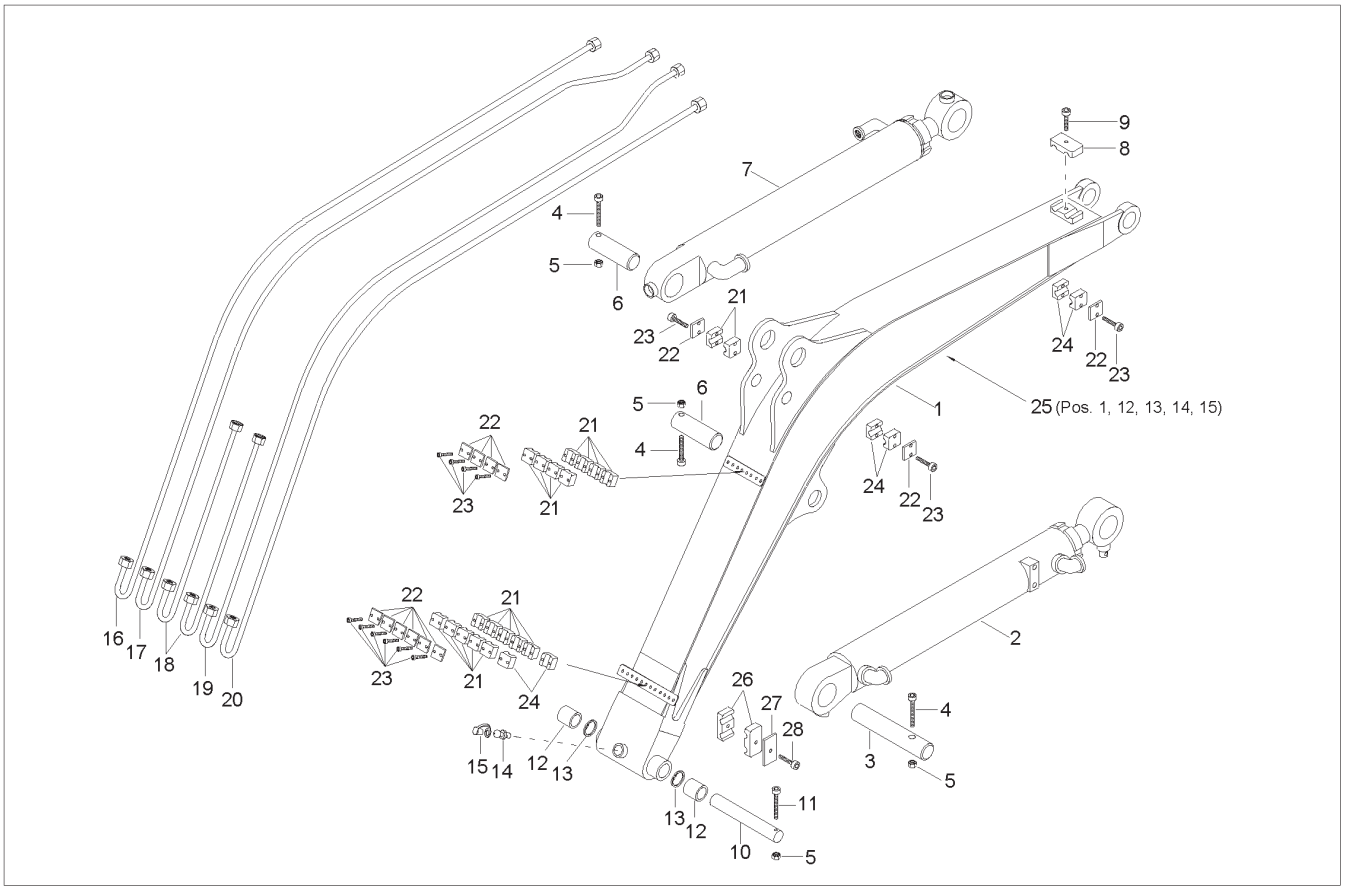


| Ref. No. | Part No. | Description | Qty. Req. |
|---|---|---|---|
| 01 | 165614 | BOOM | 1 |
| 02 | 165629 | BOOM CYLINDER | 1 |
| 03 | 165694 | PIN DM=40x182 | 1 |
| 04 | 651439 | HB M8–1.2 X 80 C 8.8 | 3 |
| 05 | 651458 | HLN INS M8–1.2 | 4 |
| 06 | 160805 | PIN | 2 |
| 07 | 165628 | DIPPER ARM CYLINDER | 1 |
| 08 | 165619 | COLLAR | 2 |
| 09 | 651396 | CS M10–1.5 X 30 C 8.8 | 1 |
| 10 | 165695 | PIN DM=50x316 | 1 |
| 11 | 651440 | HB M8–1.2 X 90 C 8.8 | 1 |
| 12 | 161535 | BUSHING | 2 |
| 13 | 162599 | WASHER | 2 |
| 14 | 161411 | LUBRICATION NIPPLE | 1 |
| 15 | 161422 | PROTECTION CAP | 1 |
| 16 | 165651 | TUBE AD15 LEFT | 1 |
| 17 | 165653 | TUBE AD15 UPPER LEFT | 1 |
| 18 | 165649 | TUBE AD15 | 2 |
| 19 | 165652 | TUBE AD15 UPPER RIGHT | 1 |
| 20 | 165650 | TUBE AD18 RIGHT | 1 |
| 21 | 161557 | COLLAR | 22 |
| 22 | 162066 | COVER | 14 |
| 23 | 651426 | CS M6–1.0 X 35 C 8.8 | 28 |
| 24 | 161554 | COLLAR | 6 |
| 25 | 165624 | PRE–ASSEMBLED BOOM | 1 |
| 26 | 162503 | COLLAR | 2 |
| 27 | 162502 | COVER | 1 |
| 28 | 651434 | HB M8–1.2 X 45 C 8.8 | 1 |

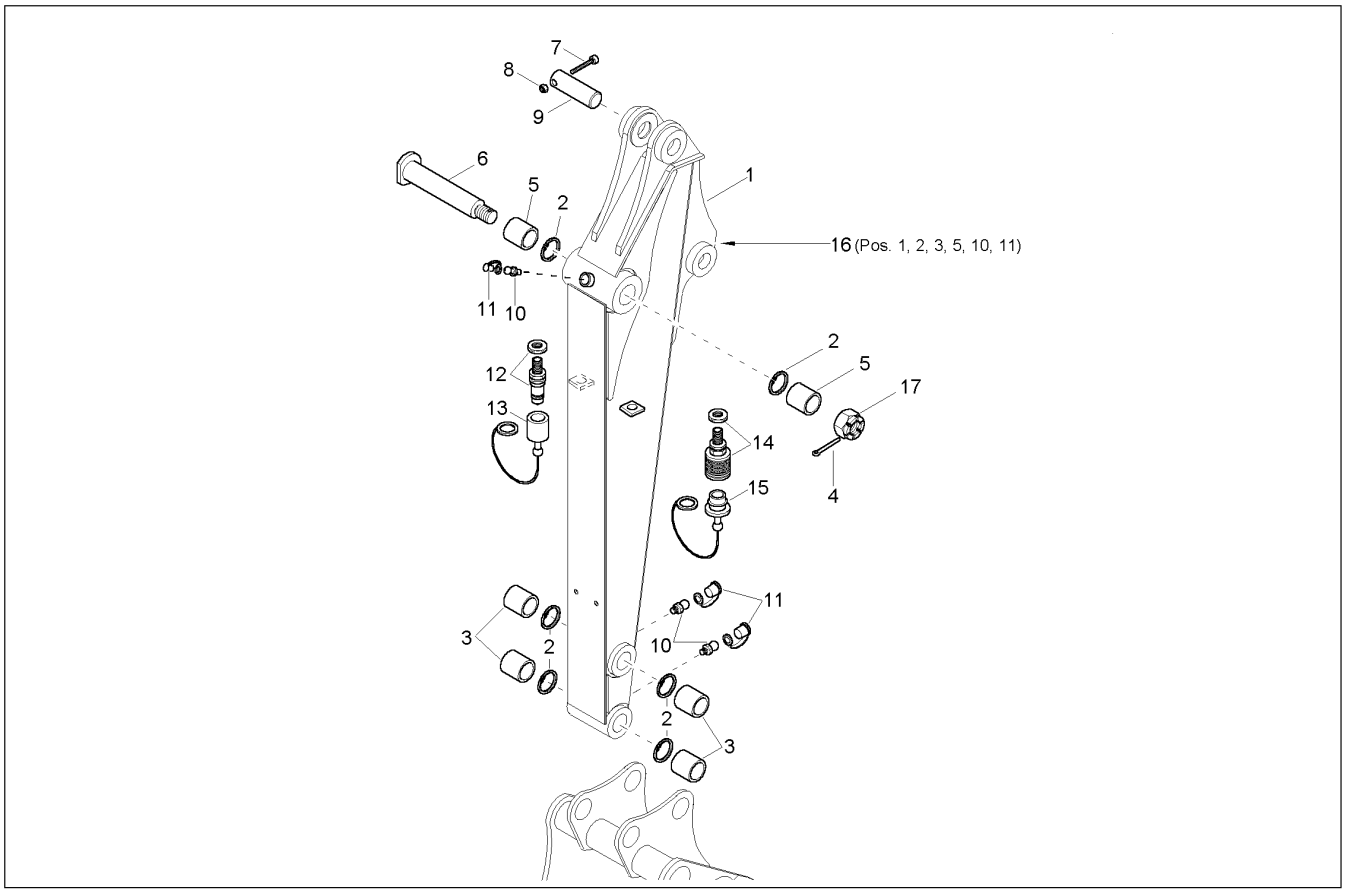


| Ref. No. | Part No. | Description | Qty. Req. |
|---|---|---|---|
| 01 | 165615 | DIPPER ARM | 1 |
| 02 | 161686 | RING/SNAP B50 | 6 |
| 03 | 161536 | BUSHING | 4 |
| 04 | 161682 | PIN/SPLIT 6.3 X 63 | 1 |
| 05 | 161536 | BUSHING | 2 |
| 06 | 165692 | PIN DM=40x265 | 1 |
| 07 | 651439 | HB M8–1.2 X 80 C 8.8 | 1 |
| 08 | 651458 | HLN INS M8–1.2 8 | 1 |
| 09 | 160805 | PIN | 1 |
| 10 | 161411 | LUBRICATION NIPPLE | 3 |
| 11 | 161422 | PROTECTION CAP | 3 |
| 12 | 160725 | QUICK COUPLER | 1 |
| 13 | 160459 | DUST CAP | 1 |
| 14 | 160724 | QUICK COUPLER | 1 |
| 15 | 160458 | DUST PLUG | 1 |
| 16 | 165625 | PRE–ASSEMBLED DIPPER ARM | 1 |
| 17 | 651443 | HN SLTD M36–4 | 1 |

# 303 - LONG DIPPER ARM

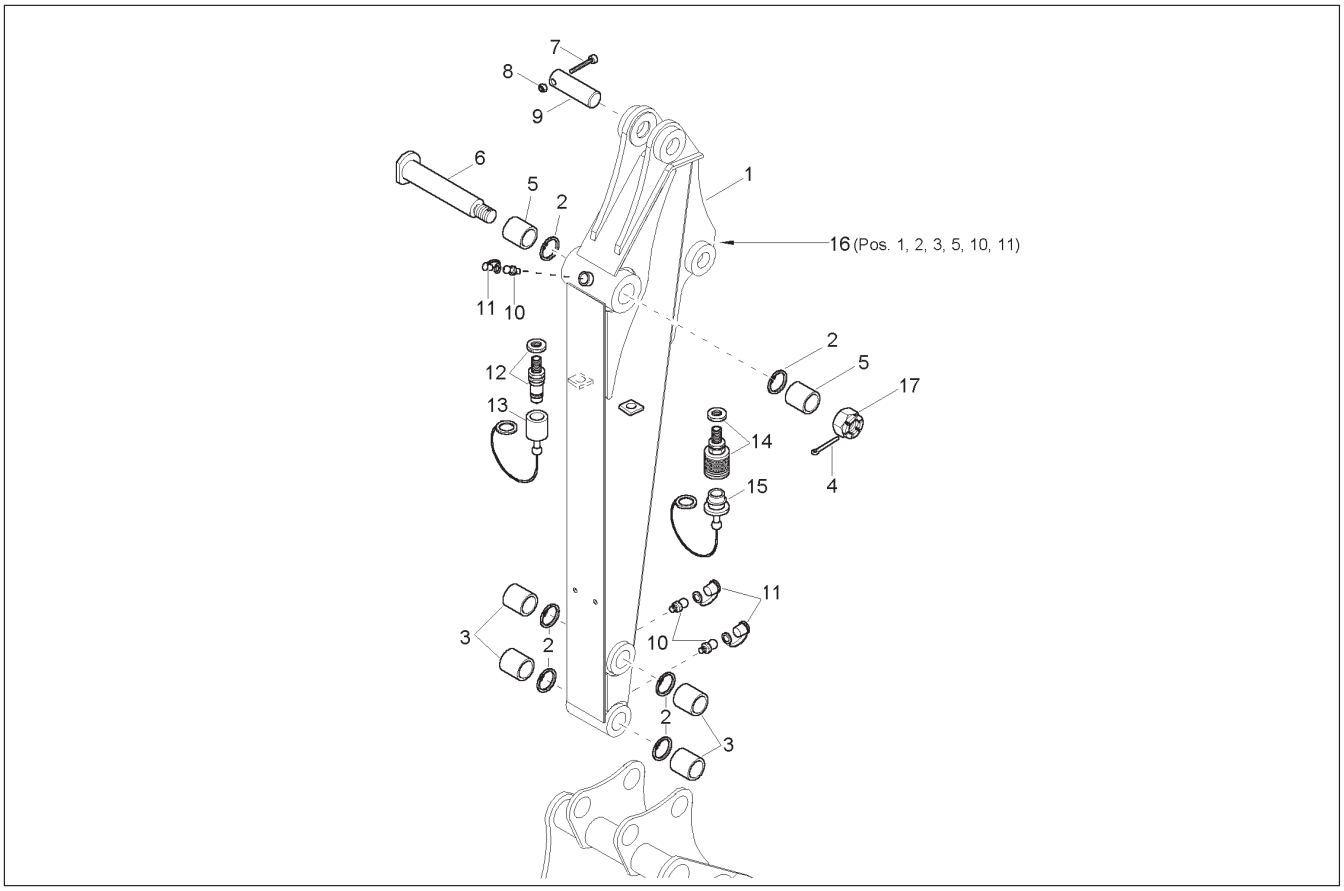


| Ref. No. | Part No. | Description | Qty. Req. |
|---|---|---|---|
| 01 | 165620 | DIPPER ARM LONG | 1 |
| 02 | 161686 | RING/SNAP B50 | 6 |
| 03 | 161536 | BUSHING | 4 |
| 04 | 161682 | PIN/SPLIT 6.3 X 63 | 1 |
| 05 | 161536 | BUSHING | 2 |
| 06 | 165692 | PIN DM=40x265 | 1 |
| 07 | 651439 | HB M8–1.2 X 80 C 8.8 | 1 |
| 08 | 651458 | HLN INS M8–1.2 8 | 1 |
| 09 | 160805 | PIN | 1 |
| 10 | 161411 | LUBRICATION NIPPLE | 3 |
| 11 | 161422 | PROTECTION CAP | 3 |
| 12 | 160725 | QUICK COUPLER | 1 |
| 13 | 160459 | DUST CAP | 1 |
| 14 | 160724 | QUICK COUPLER | 1 |
| 15 | 160458 | DUST PLUG | 1 |
| 16 | 165626 | PRE–ASSEMBLED DIPPER ARM LONG | 1 |
| 17 | 651443 | HN SLTD M36–4 | 1 |

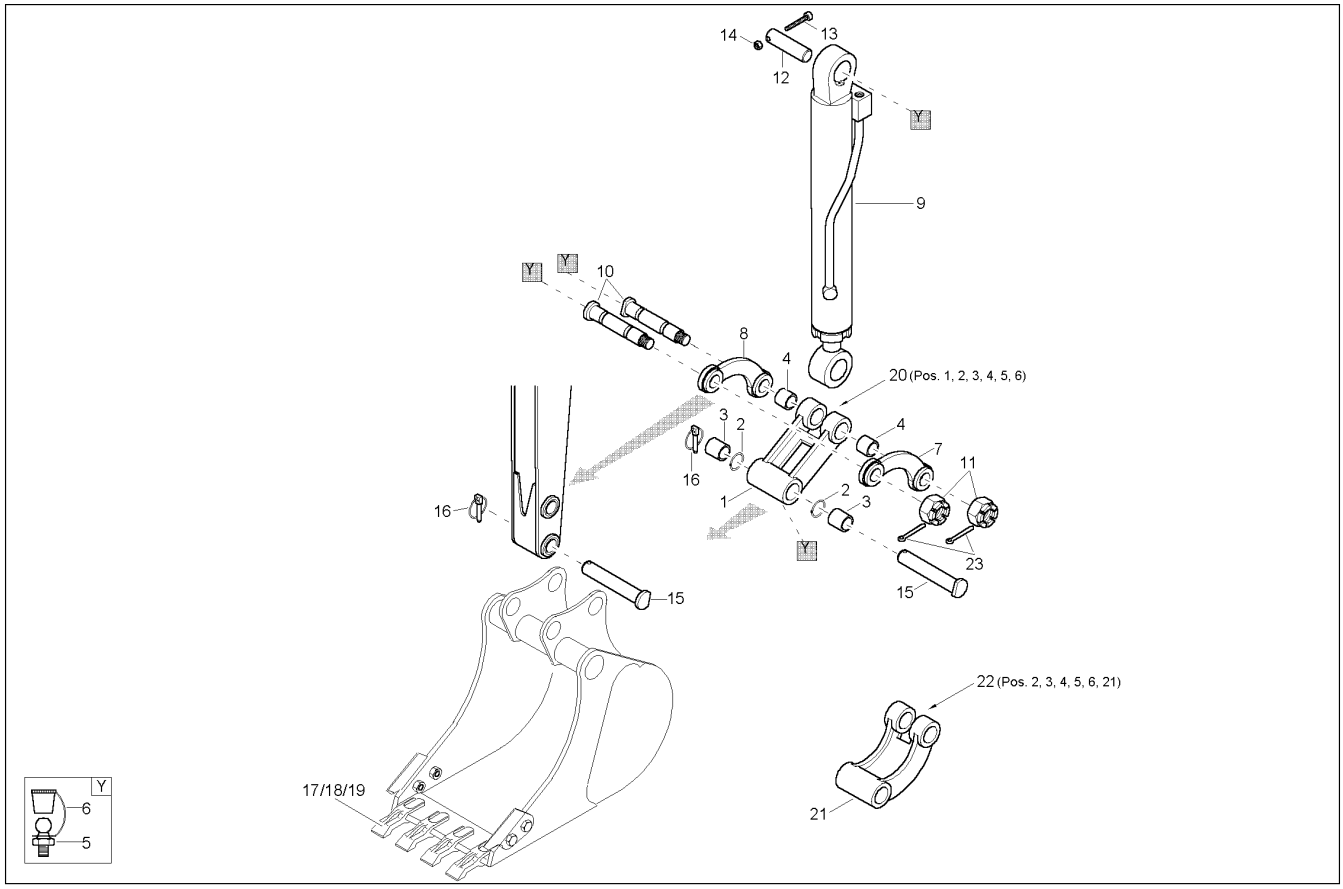


| Ref. No. | Part No. | Description | Qty. Req. |
|---|---|---|---|
| 01 | 165618 | CONNECTING LINK | 1 |
| 02 | 161686 | RING/SNAP B50 | 2 |
| 03 | 161536 | BUSHING | 2 |
| 04 | 161533 | BUSHING | 2 |
| 05 | 161411 | LUBRICATION NIPPLE | 4 |
| 06 | 161422 | PROTECTION CAP | 4 |
| 07 | 165617 | CONNECTING LINK LEFT | 1 |
| 08 | 165616 | CONNECTING LINK RIGHT | 1 |
| 09 | 165627 | BUCKET CYLINDER | 1 |
| 10 | 160802 | PIN | 2 |
| 11 | 651443 | HN SLTD M36–4 | 2 |
| 12 | 165693 | PIN DM=40x126 | 1 |
| 13 | 651439 | HB M8–1.2 X 80 C 8.8 | 1 |
| 14 | 651458 | HLN INS M8–1.2 8 | 1 |
| 15 | 160803 | PIN | 2 |
| 16 | 162489 | COTTERPIN | 2 |
| 17 | 161927 | BUCKET TOOTH | 3 |
| 18 | 162024 | SCREW | 6 |
| 19 | 656050 | HN M12–1.7 | 6 |
| 20 | 165622 | PRE–ASSEMBLED CONNECTING LINK | 1 |
| 21 | 159409 | LINK/BUCKET | 1 |
| 22 | 165623 | PRE–ASSEMBLED CONNECTING LINK | 1 |
| 23 | 161682 | PIN/SPLIT 6.3 X 63 | 2 |

# 303 - CABIN WINDOWS

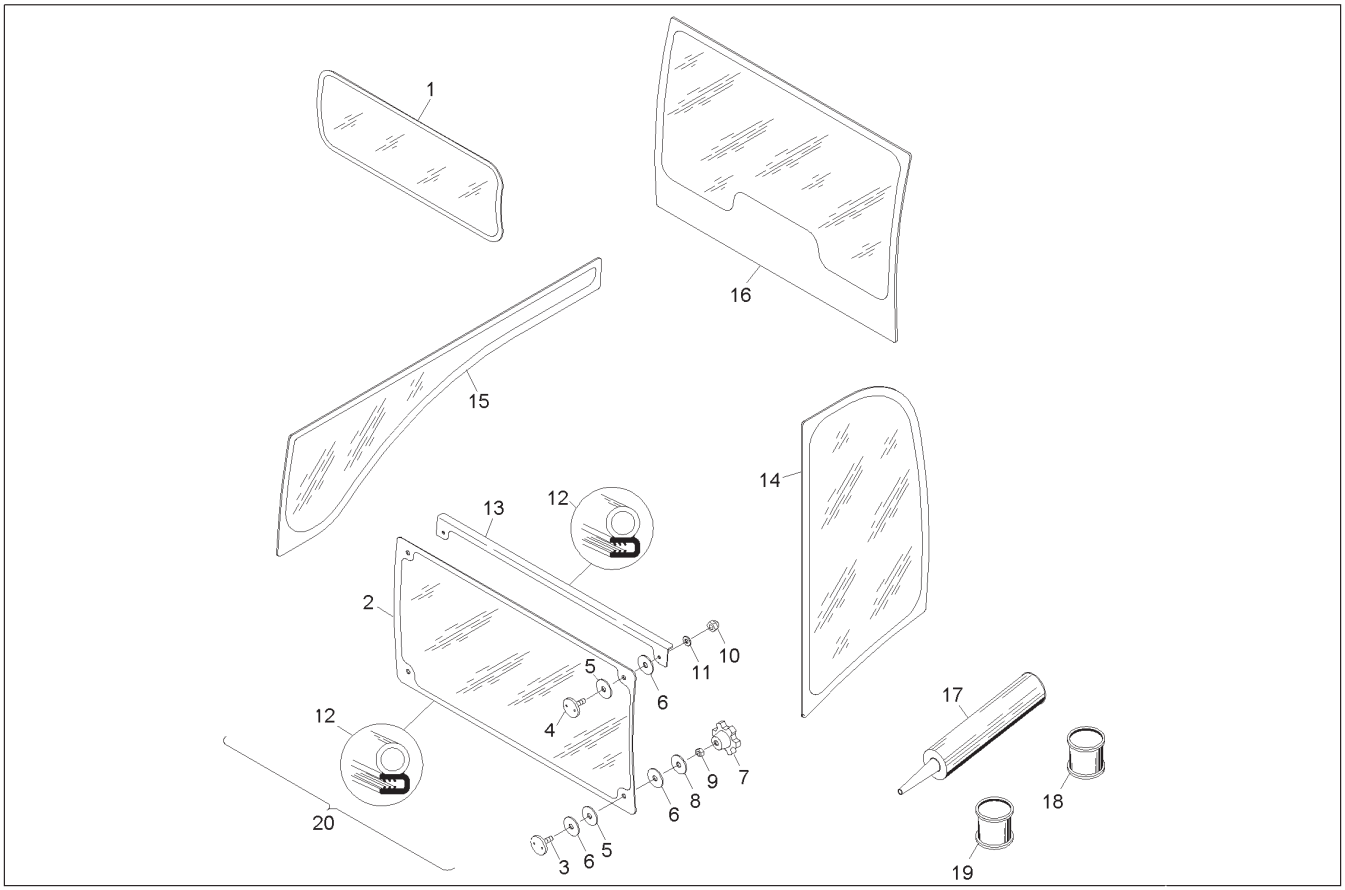


| Ref. No. | Part No. | Description | Qty. Req. | Ref. No. | Part No. | Description | Qty. Req. |
|---|---|---|---|---|---|---|---|
| 01 | 160496 | FRONT WINDOW | 1 | 11 | 161668 | WASHER/GR A 8.4 | 2 |
| 02 | 165170 | LOWER WINDSHIELD | 1 | 12 | 164675 | PROFILE | 2.7 |
| 03 | 164671 | PVC–WASHER | 2 | 13 | 165163 | SHIELD | 1 |
| 04 | 161091 | PVC WASHER | 2 | 14 | 165164 | SIDE PANE | 1 |
| 05 | 160640 | RUBBER WASHER | 4 | 15 | 165171 | SIDE PANE | 1 |
| 06 | 160639 | RUBBER WASHER | 12 | 16 | 165172 | REAR WINDOW | 1 |
| 07 | 164672 | NUT | 2 | 17 | 165035 | GLUE DINITROL | 1 |
| 08 | 162812 | WASHER | 2 | 18 | 164744 | AKTIVATOR | 1 |
| 09 | 163650 | NUT | 2 | 19 | 164745 | REMOVER 208 | 1 |
| 10 | 161618 | NUT/HEX DOMED CAP M8 | 2 | 20 | 165173 | LOWER WINDSHIELD | 1 |

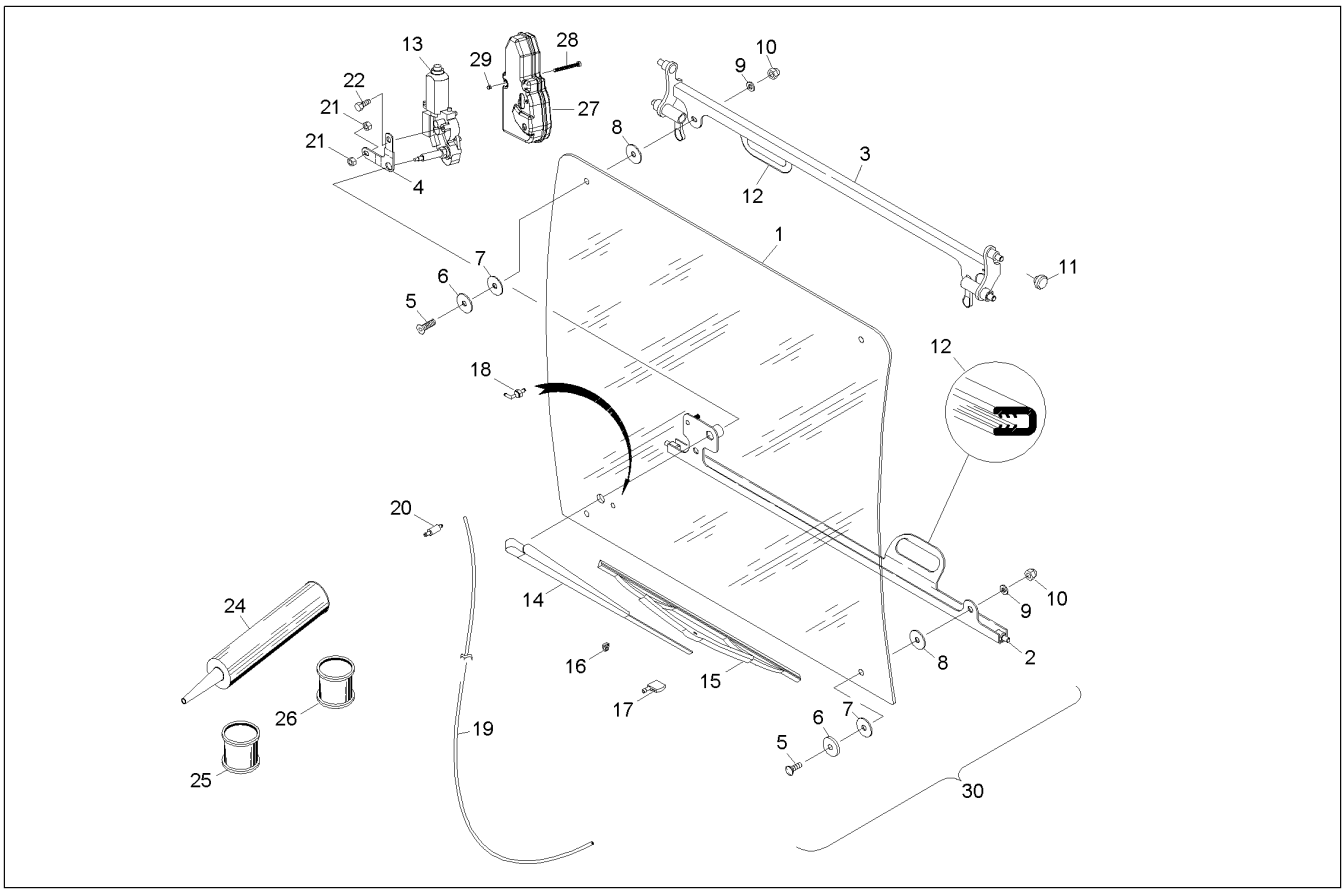


| Ref. No. | Part No. | Description | Qty. Req. |
|---|---|---|---|
| 01 | 165165 | FRONT WINDOW | 1 |
| 02 | 165166 | LOWER WINDSHIELD FRAME | 1 |
| 03 | 165167 | UPPER WINDSHIELD FRAME | 1 |
| 04 | 165168 | BAR LOCK | 1 |
| 05 | 651466 | SCREW FCHC HS M8–1.2 X 20 8.8 | 4 |
| 06 | 165046 | WASHER | 4 |
| 07 | 160640 | RUBBER WASHER | 4 |
| 08 | 160639 | RUBBER WASHER | 4 |
| 09 | 161668 | WASHER/GR A 8.4 | 4 |
| 10 | 161618 | NUT/HEX DOMED CAP M8 | 4 |
| 11 | 160494 | PVC–WASHERS | 4 |
| 12 | 164691 | EDGE PROTECTION | 1 |
| 13 | 165206 | MOTOR FOR WINDSHIELD WASHER | 1 |
| 14 | 161939 | BRUSH HOLDER | 1 |
| 15 | 161940 | WIPER BLADE | 1 |
| 16 | 161086 | CLIPS | 2 |
| 17 | 161087 | NOZZLE | 1 |
| 18 | 165032 | BRACKET | 1 |
| 19 | 165826 | WATER HOSE | 3 |
| 20 | 164673 | NON RETURN VALVE | 1 |
| 21 | 163650 | NUT | 2 |
| 22 | 651430 | CS M8–1.2 X 12 C 8.8 | 1 |
| 24 | 165035 | GLUE - DINITROL | 1 |
| 25 | 164744 | AKTIVATOR | 1 |
| 26 | 164745 | REMOVER 208 | 1 |
| 27 | 165159 | COVER | 1 |
| 28 | 165048 | SCREW | 2 |
| 29 | 165948 | NUT | 2 |
| 30 | 165169 | FRONT WINDOW | 1 |

# 303 - CABIN DOOR

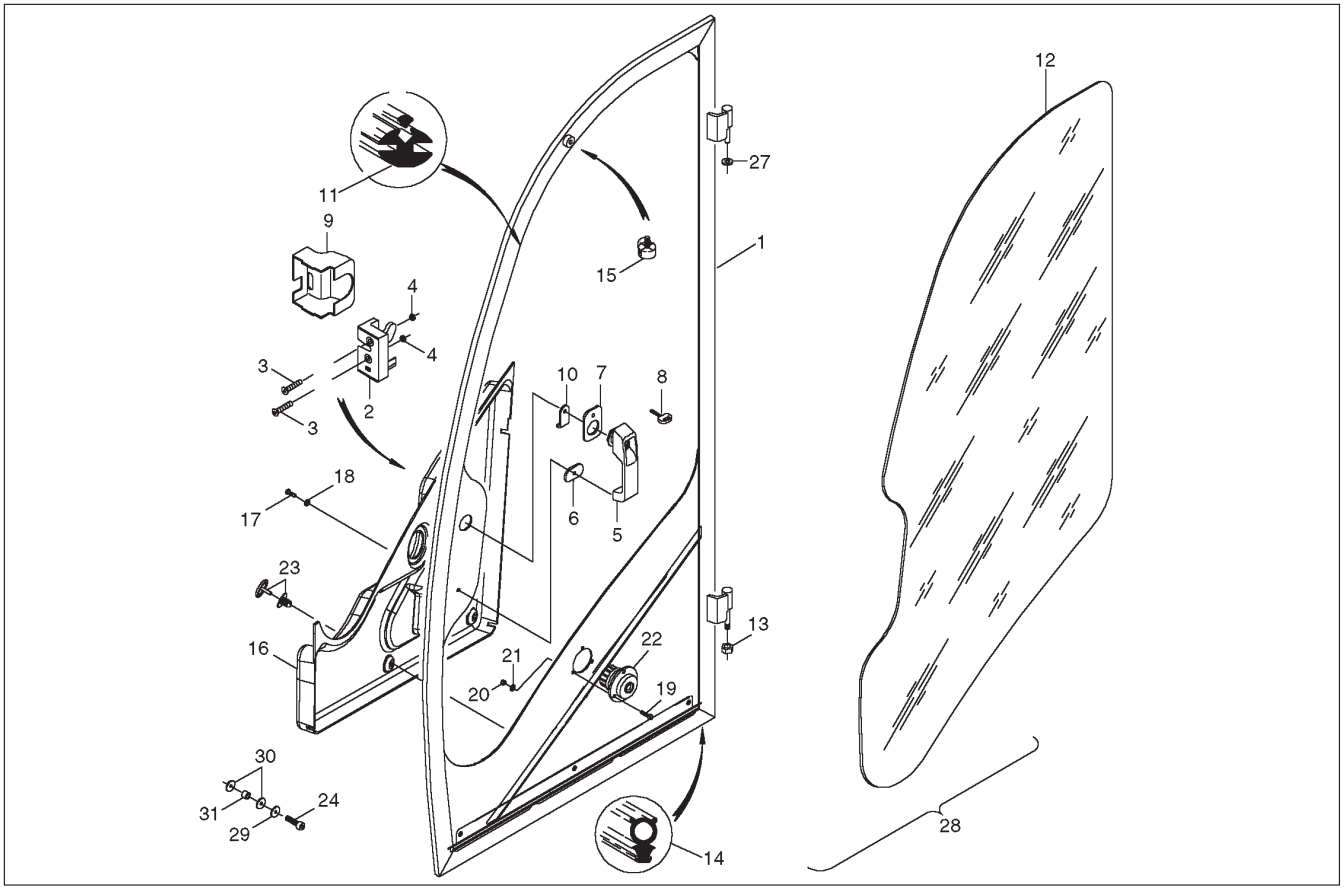


| Ref. No. | Part No. | Description | Qty. Req. |
|---|---|---|---|
| 01 | 165180 | DOOR FRAME | 1 |
| 02 | 160525 | LOCK | 1 |
| 03 | 162864 | SCREW | 2 |
| 04 | 651458 | HLN INS M8–1.2 | 2 |
| 05 | 161096 | HANDLE | 1 |
| 06 | 164700 | SHIM | 1 |
| 07 | 164701 | SHIM | 1 |
| 08 | 160713 | KEY | 2 |
| 09 | 165221 | COVER | 1 |
| 10 | 165174 | CALIPERS | 1 |
| 11 | 165923 | RUBBER PROFILE | 3.3 |
| 12 | 165175 | DOOR WINDOW | 1 |
| 13 | 651448 | HLN INS M10–1.5 | 1 |
| 14 | 165176 | SEAL | 3.9 |
| 15 | 165215 | RUBBER–BUFFER | 1 |
| 16 | 165156 | COVER | 1 |
| 17 | 651424 | CS M6–1.0 X 20 C 8.8 | 1 |
| 18 | 162813 | WASHER | 1 |
| 19 | 164904 | CHEESE HEAD SCREW | 3 |
| 20 | 651456 | HLN INS M5–.8 8 | 3 |
| 21 | 162925 | WASHER | 3 |
| 22 | 164674 | DOOR LOCK | 1 |
| 23 | 164689 | RIVET 11MM | 10 |
| 24 | 165216 | CHEESE HEAD M5x25 | 10 |
| 27 | 164688 | WASHER | 2 |
| 28 | 165179 | CABIN DOOR | 1 |
| 29 | 165178 | SQUARE NUT | 10 |
| 30 | 165217 | RUBBER WASHER 5x20x2 | 20 |
| 31 | 165218 | WASHER L=8MM DM=12MM | 10 |

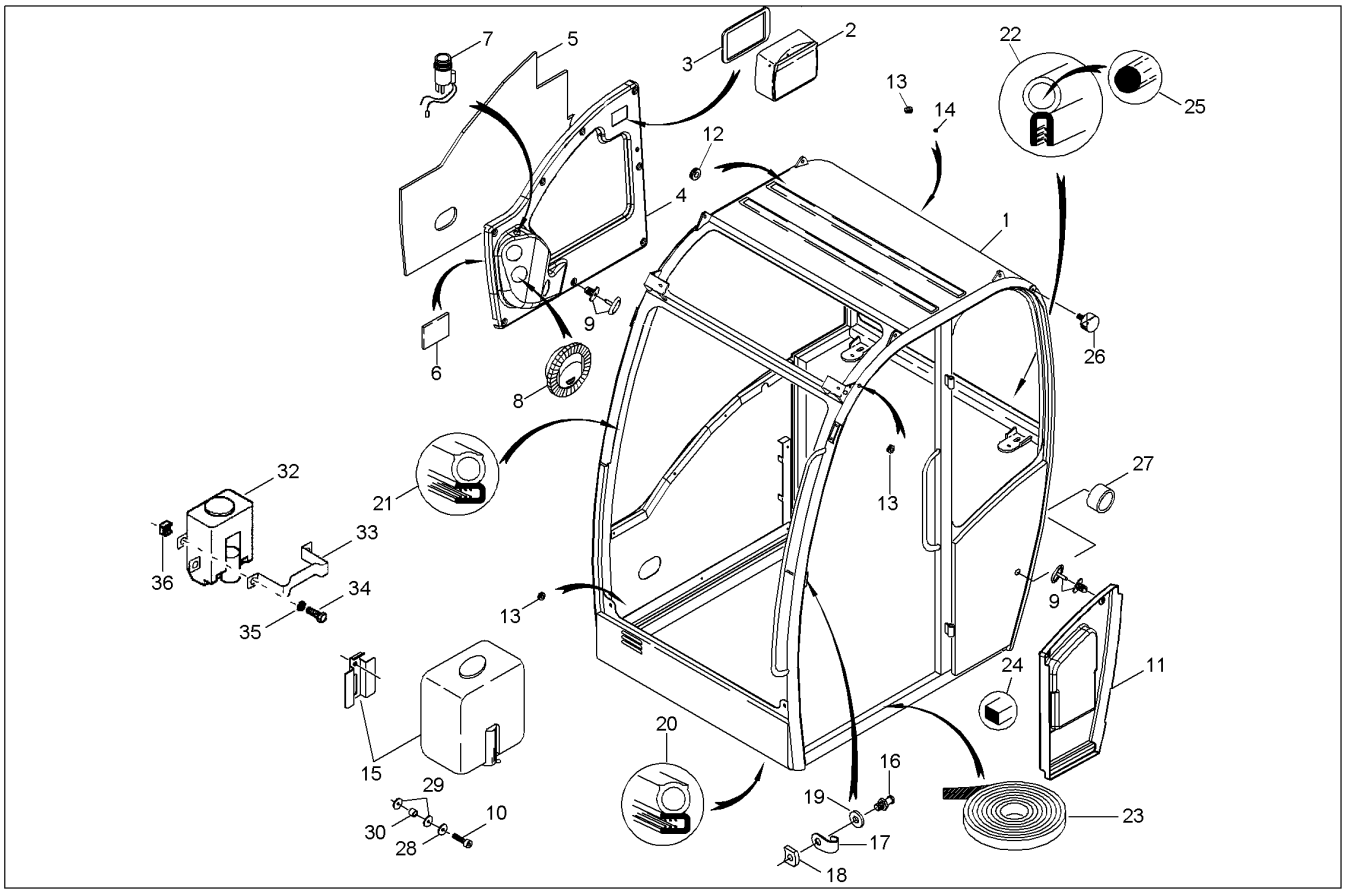


| Ref. No. | Part No. | Description | Qty. Req. |
|---|---|---|---|
| 01 | 165181 | CABIN FRAME | 1 |
| 02 | 164676 | ASHTRAY | 1 |
| 03 | 165182 | FRAME | 1 |
| 04 | 165155 | COVER | 1 |
| 05 | 165161 | ISOLATION | 1 |
| 06 | 165184 | ISOLATION | 1 |
| 07 | 164696 | IGNITER | 1 |
| 08 | 164670 | AIR NOZZLE | 3 |
| 09 | 164689 | RIVET 11MM | 10 |
| 10 | 165216 | CHEESE HEAD M5x25 | 10 |
| 11 | 165154 | COVER | 1 |
| 12 | 165042 | LOCK | 1 |
| 13 | 162797 | PLUG | 7 |
| 14 | 164677 | PLUG | 2 |
| 15 | 160716 | WINDSHIELD WASHER | 1 |
| 16 | 161921 | PIN | 1 |
| 17 | 164771 | BRACKET | 1 |
| 18 | 164678 | PLATE | 1 |
| 19 | 161923 | WASHER | 1 |
| 20 | 165922 | RUBBER PROFILE | 3 |
| 21 | 165922 | RUBBER PROFILE | 2.4 |
| 22 | 165033 | RUBBER PROFILE | 2.7 |
| 23 | 165034 | NON–SKIDDING | 0.6 |
| 24 | 164188 | PLATE 10X15 | 0.3 |
| 25 | 165211 | TOROIDAL SEALING RING 10MM | 0.12 |
| 26 | 165215 | RUBBER–BUFFER | 1 |
| 27 | 164674 | DOOR LOCK | 1 |
| 28 | 165178 | SQUARE NUT | 10 |
| 29 | 165217 | RUBBER WASHER 5x20x2 | 20 |
| 30 | 165218 | WASHER L=8MM DM=12MM | 10 |
| 32 | 164690 | WINDSHIELD WASHING | 1 |
| 33 | 164668 | CLAMP | 1 |
| 34 | 651505 | SHCS HS M5–0.8 X 20 8.8 | 2 |
| 35 | 161659 | WASHER/GR A 5.3 | 2 |
| 36 | 165947 | NUT | 2 |

# 303 - CABIN FRAME

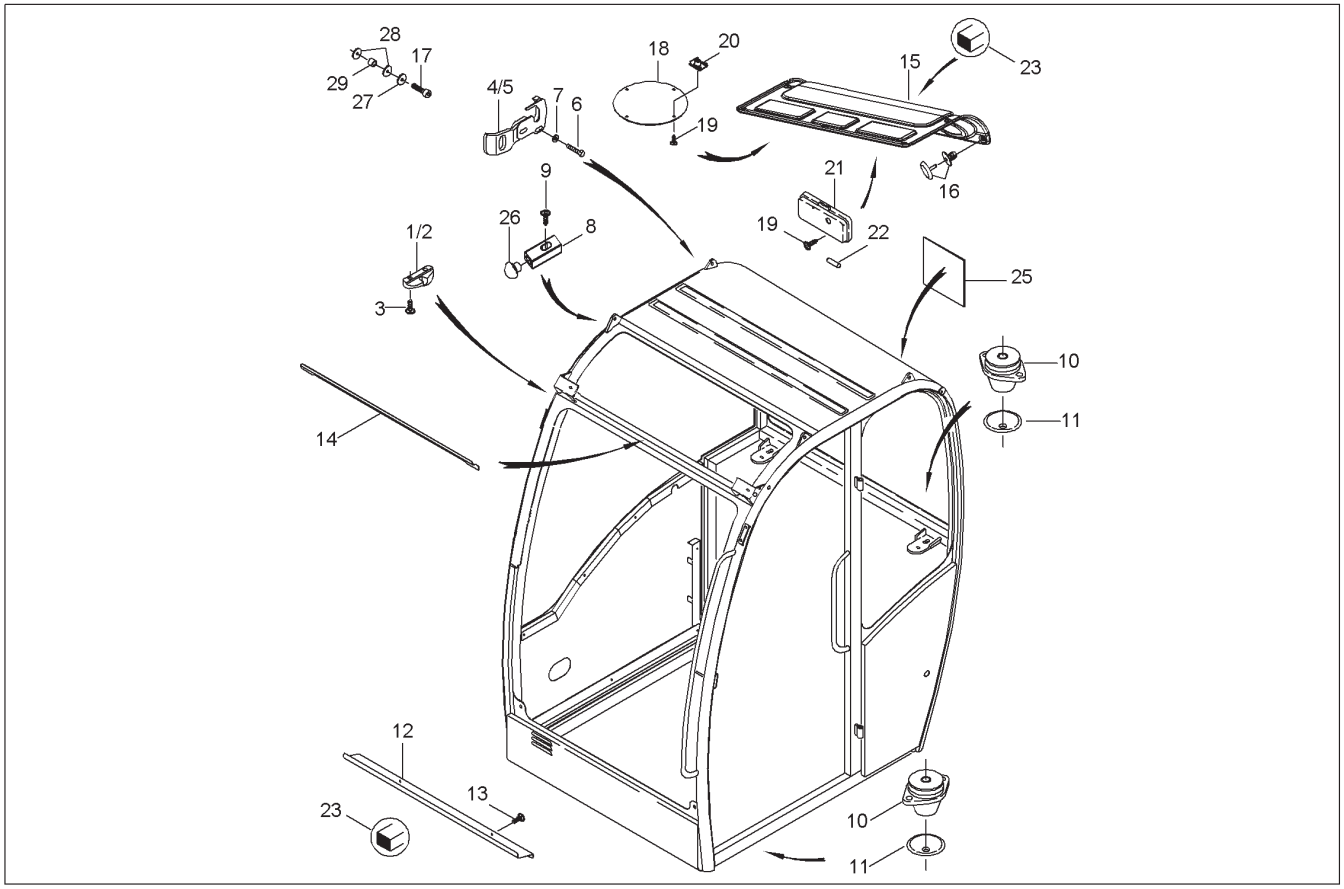


| Ref. No. | Part No. | Description | Qty. Req. | Ref. No. | Part No. | Description | Qty. Req. |
|---|---|---|---|---|---|---|---|
| 01 | 160526 | LOCK | 2 | 15 | 165157 | COVER | 1 |
| 02 | 160527 | LOCK | 2 | 16 | 164689 | RIVET 11MM | 9 |
| 03 | 162029 | SCREW | 4 | 17 | 165216 | CHEESE HEAD M5x25 | 9 |
| 04 | 164679 | BRACKET | 1 | 18 | 165187 | COVER | 2 |
| 05 | 164680 | BRACKET | 1 | 19 | 164894 | SCREW | 10 |
| 06 | 651425 | CS M6–1.0 X 30 C 8.8 | 4 | 20 | 164683 | NUT | 8 |
| 07 | 162924 | WASHER | 4 | 21 | 160488 | ILLUMINATION | 1 |
| 08 | 164681 | RESILIENT PAD | 2 | 22 | 164182 | LAMP | 1 |
| 09 | 164907 | SCREW | 2 | 23 | 164188 | PLATE 10X15 | 3.7 |
| 10 | 164682 | CUSHION | 4 | 25 | 165212 | INSULATING PLY | 2 |
| 11 | 164184 | SUPPORT | 4 | 26 | 164686 | RUBBER PLUG | 2 |
| 12 | 165186 | COVER | 1 | 27 | 165178 | SQUARE NUT | 9 |
| 13 | 161629 | SCREW/PAN HEAD TAP | 2 | 28 | 165217 | RUBBER WASHER 5x20x2 | 18 |
| 14 | 162806 | GUTTER | 1 | 29 | 165218 | WASHER L=8MM DM=12MM | 9 |

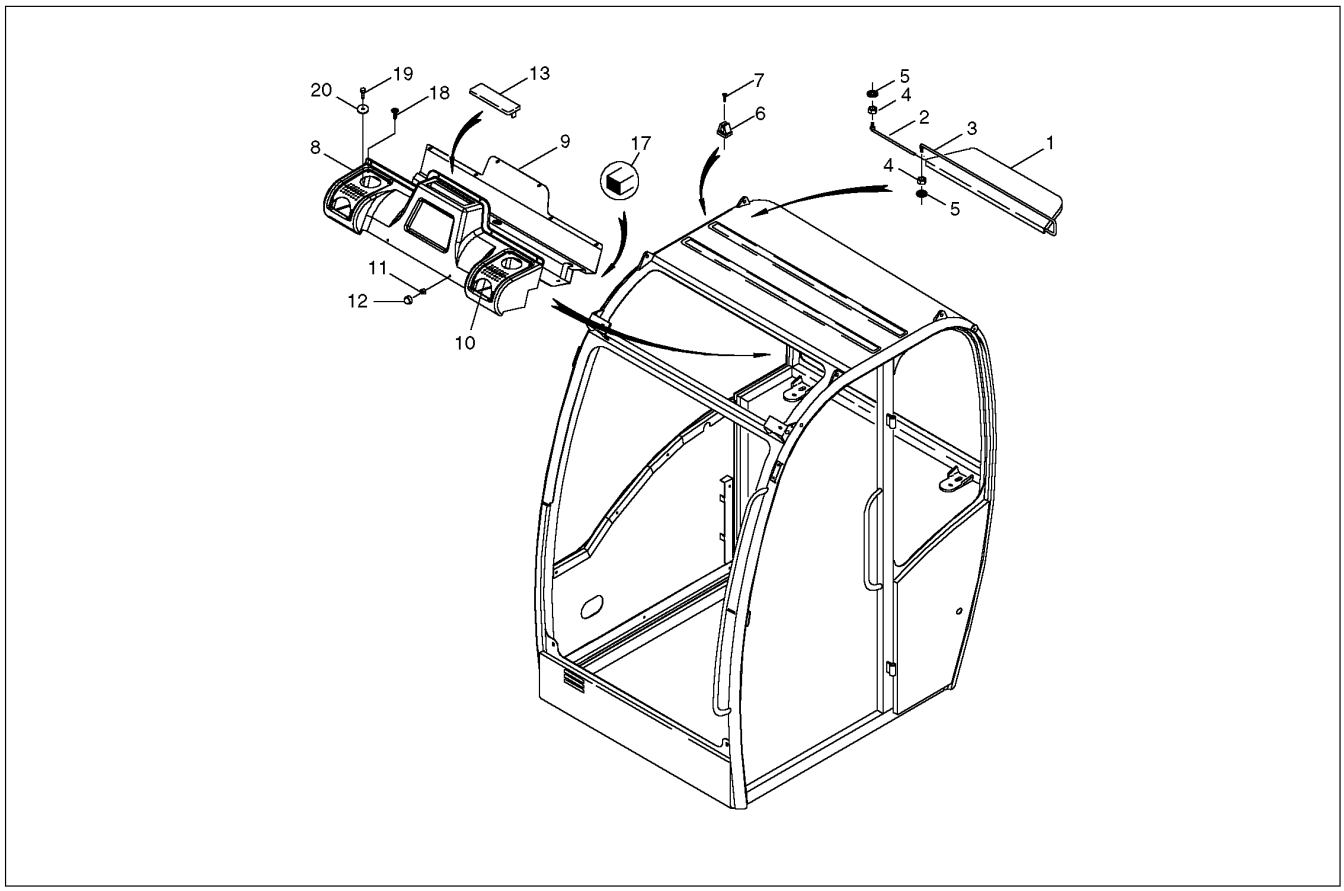


| Ref. No. | Part No. | Description | Qty. Req. |
|---|---|---|---|
| 01 | 164770 | SUN VISOR | 1 |
| 02 | 165188 | ROD | 1 |
| 03 | 165189 | ROD | 1 |
| 04 | 651458 | HLN INS M8–1.2 8 | 2 |
| 05 | 165190 | SERRATED LOCK WASHER | 2 |
| 06 | 165191 | COLLAR | 1 |
| 07 | 165936 | SCREW | 1 |
| 08 | 165158 | STORAGE BOX | 1 |
| 09 | 165192 | COVER | 1 |
| 10 | 165193 | COVER | 2 |
| 11 | 651456 | HLN INS M5–.8 8 | 8 |
| 12 | 165214 | CAP D=5MM | 8 |
| 13 | 165195 | COVER | 1 |
| 17 | 164188 | PLATE 10X15 | 0.9 |
| 18 | 164894 | SCREW | 8 |
| 19 | 651422 | CS M5–0.8 X 20 C 8.8 | 2 |
| 20 | 165213 | SQUARE NUT 5x20 | 2 |

# 303 - OPEN CANOPY

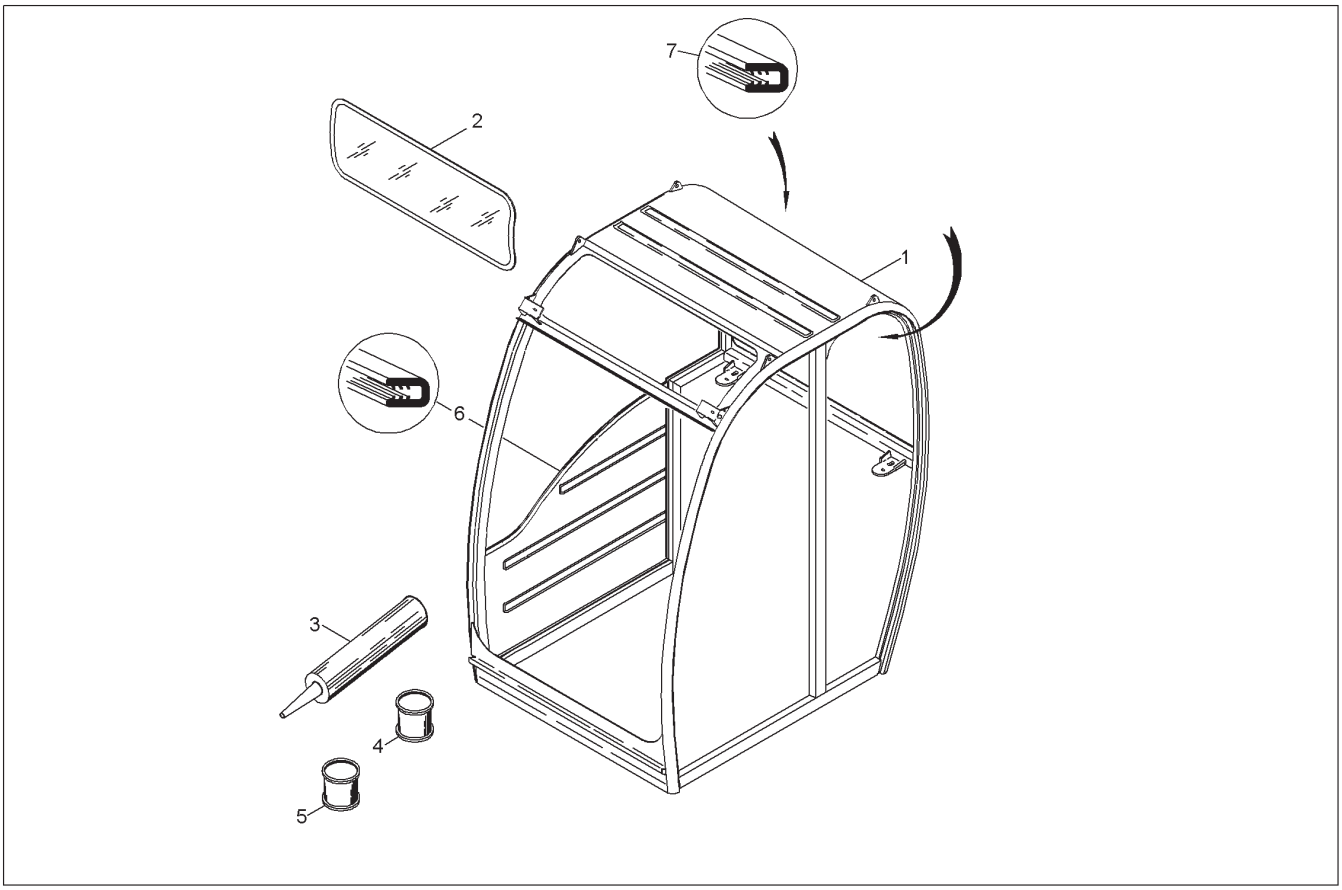


| Ref. No. | Part No. | Description | Qty. Req. | Ref. No. | Part No. | Description | Qty. Req. |
|---|---|---|---|---|---|---|---|
| 01 | 165220 | CANOPY CABIN FRAME | 1 | 05 | 164745 | REMOVER 208 | 1 |
| 02 | 160496 | FRONT WINDOW | 1 | 06 | 165047 | EDGE PROTECTION | 1 |
| 03 | 165035 | GLUE - DINITROL | 1 | 07 | 165219 | EDGE PROTECTION | 1 |
| 04 | 164744 | AKTIVATOR | 1 | | | | |

# 303 - SASH WINDOW

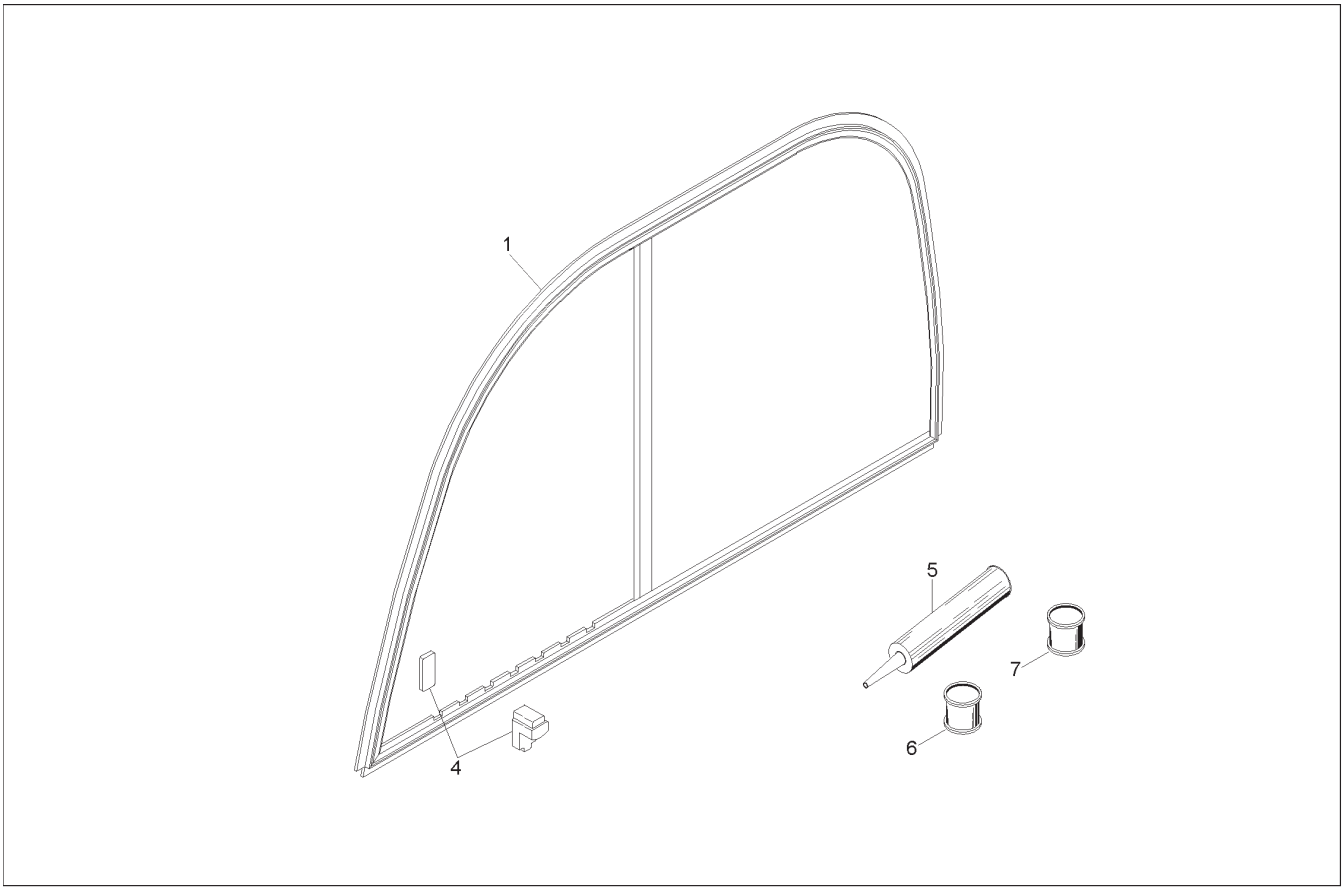


| Ref. No. | Part No. | Description | Qty. Req. | Ref. No. | Part No. | Description | Qty. Req. |
|---|---|---|---|---|---|---|---|
| 01 | 165196 | SLIDING WINDOW COMPLETE | 1 | 06 | 164744 | AKTIVATOR | 1 |
| 04 | 164684 | LOCK | 1 | 07 | 164745 | REMOVER 208 | 1 |
| 05 | 165035 | GLUE - DINITROL | 1 | | | | |

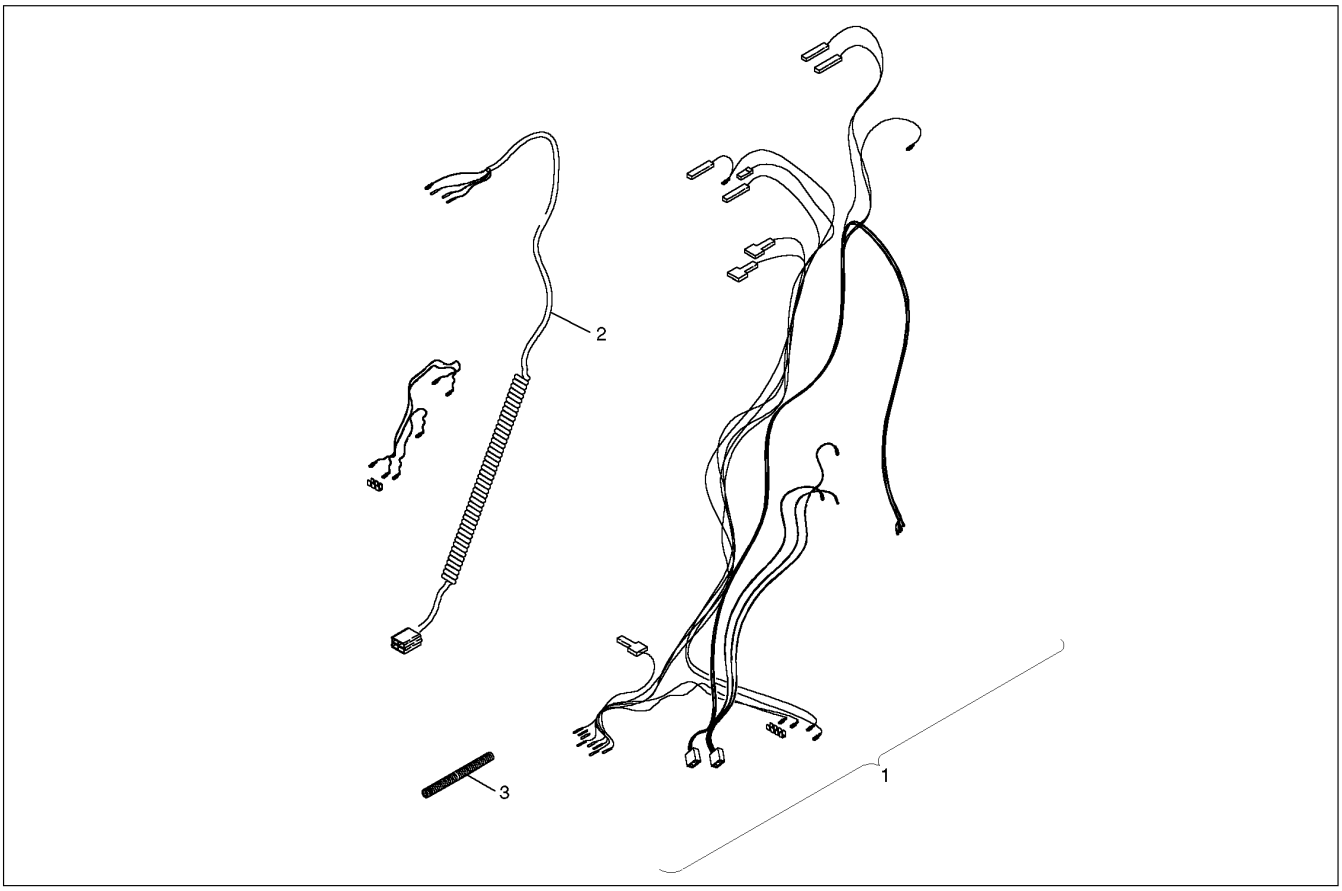


| Ref. No. | Part No. | Description | Qty. Req. | Ref. No. | Part No. | Description | Qty. Req. |
|---|---|---|---|---|---|---|---|
| 01 | 165243 | MAIN HARNESS WIRING | 1 | 03 | 164687 | SLOTTED INSULATING TUBE | 2 |
| 02 | 165244 | WIRE | 1 | | | | |

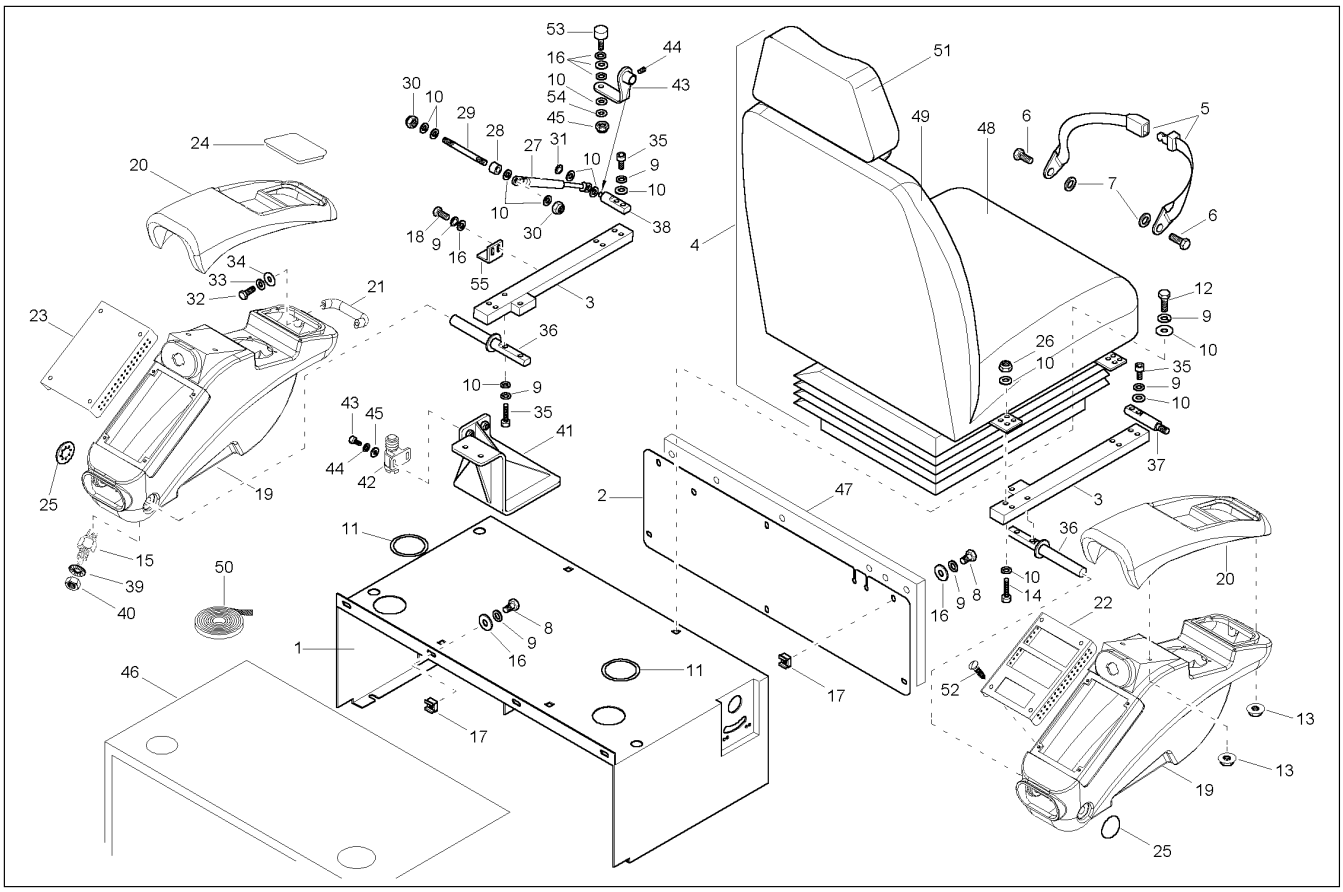

| Ref. No. | Part No. | Description | Qty. Req. |
|---|---|---|---|
| 01 | 165593 | SEAT CONSOLE | 1 |
| 02 | 165595 | COVER | 1 |
| 03 | 164707 | FIXING PLATE | 2 |
| 04 | 162218 | DRIVER SEAT | 1 |
| 05 | 161728 | SEAT BELT | 1 |
| 06 | 162026 | SCREW | 2 |
| 07 | 161642 | WASHER/GR A 13 | 2 |
| 08 | 656001 | CS M8–1.2 X 20 C 8.8 | 10 |
| 09 | 161676 | RING/SNAP S8 | 20 |
| 10 | 161661 | WASHER/GR A 8.4 | 35 |
| 11 | 165587 | PVC–EDGE PROTECTION | 0.3 |
| 12 | 163649 | SCREW | 4 |
| 13 | 165952 | NUT | 8 |
| 14 | 165932 | SCREW | 8 |
| 15 | 164980 | MICROSWITCH | 1 |
| 16 | 161667 | WASHER/GR A 8.4 | 15 |
| 17 | 161615 | NUT/CAGE M8 | 10 |
| 18 | 656093 | CS M8–1.2 X 16 C 8.8 | 2 |
| 19 | 164969 | CONTROL LEVER CONSOLE | 2 |
| 20 | 164970 | ARMREST | 2 |
| 21 | 164971 | HANDLE | 1 |
| 22 | 164972 | CONSOLE RIGHT | 1 |
| 23 | 165152 | CONSOLE FOR DASHBOARD LEFT | 1 |
| 24 | 164974 | COVER | 1 |
| 25 | 161730 | PLUG | 2 |
| 26 | 651458 | HLN INS M8–1.2 8 | 8 |
| 27 | 160611 | PNEUMATIC SPRING | 1 |
| 28 | 161805 | TUBE | 1 |
| 29 | 164976 | PIN | 1 |
| 30 | 161618 | NUT/HEX DOMED CAP M8 | 2 |
| 31 | 161848 | QUICK FIX | 1 |
| 32 | 651424 | CS M6–1.0 X 20 C 8.8 | 2 |
| 33 | 161675 | RING/SNAP S6 | 2 |
| 34 | 161666 | WASHER/GR A 6.4 | 2 |
| 35 | 651517 | SHCS HS M8–1.2 X 30 8.8 | 8 |
| 36 | 165610 | PIN | 2 |
| 37 | 164978 | PIN | 1 |
| 38 | 164979 | PIN | 1 |
| 39 | 164982 | WASHER | 1 |
| 40 | 164981 | NUT | 1 |
| 41 | 165611 | BRACKET | 1 |
| 42 | 165911 | MICRO SWITCH | 1 |
| 43 | 164669 | PROFILE | 1 |
| 44 | 651446 | SHSS M8 X 12 45H CP | 1 |
| 45 | 163650 | NUT | 1 |
| 46 | 165697 | THERMAL BLANKET 2 | 1 |
| 47 | 165696 | THERMAL BLANKET 3 | 1 |
| 48 | 165589 | SEAT UPHOLSTERY (STUFF) | 1 |
| 49 | 165588 | BACK OF A SEAT (STUFF) | 1 |
| 50 | 165574 | FIXING STRIP | 4 |
| 51 | 165824 | HEAD REST | 1 |
| 52 | 161634 | SCREW/C'SUNK HD M5 X 16 | 8 |
| 53 | 164699 | RUBBER–METAL–BUFFER | 1 |
| 54 | 656110 | LW REG M8 | 1 |
| 55 | 165612 | BRACKET | 1 |

# 303 - CABIN FLOOR

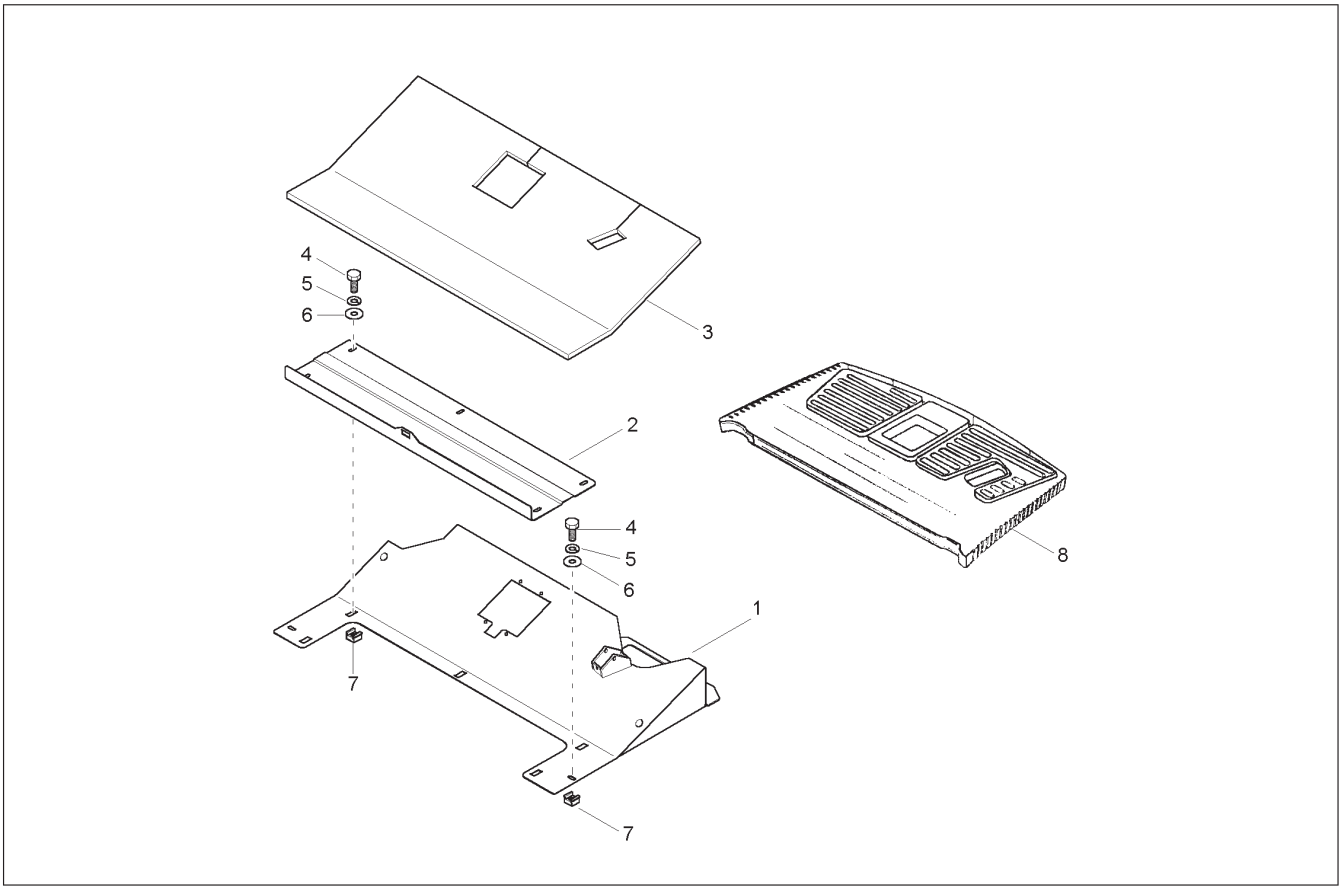


| Ref. No. | Part No. | Description | Qty. Req. | Ref. No. | Part No. | Description | Qty. Req. |
|---|---|---|---|---|---|---|---|
| 01 | 165075 | BRACKET | 1 | 05 | 161676 | RING/SNAP S8 | 13 |
| 02 | 165076 | BRACKET | 1 | 06 | 161667 | WASHER/GR A 8.4 | 13 |
| 03 | 165547 | FOOT MAT | 1 | 07 | 161616 | NUT/CAGE M8 | 13 |
| 04 | 656001 | CS M8–1.2 X 20 C 8.8 | 13 | 08 | 165564 | FOOT MAT | 1 |

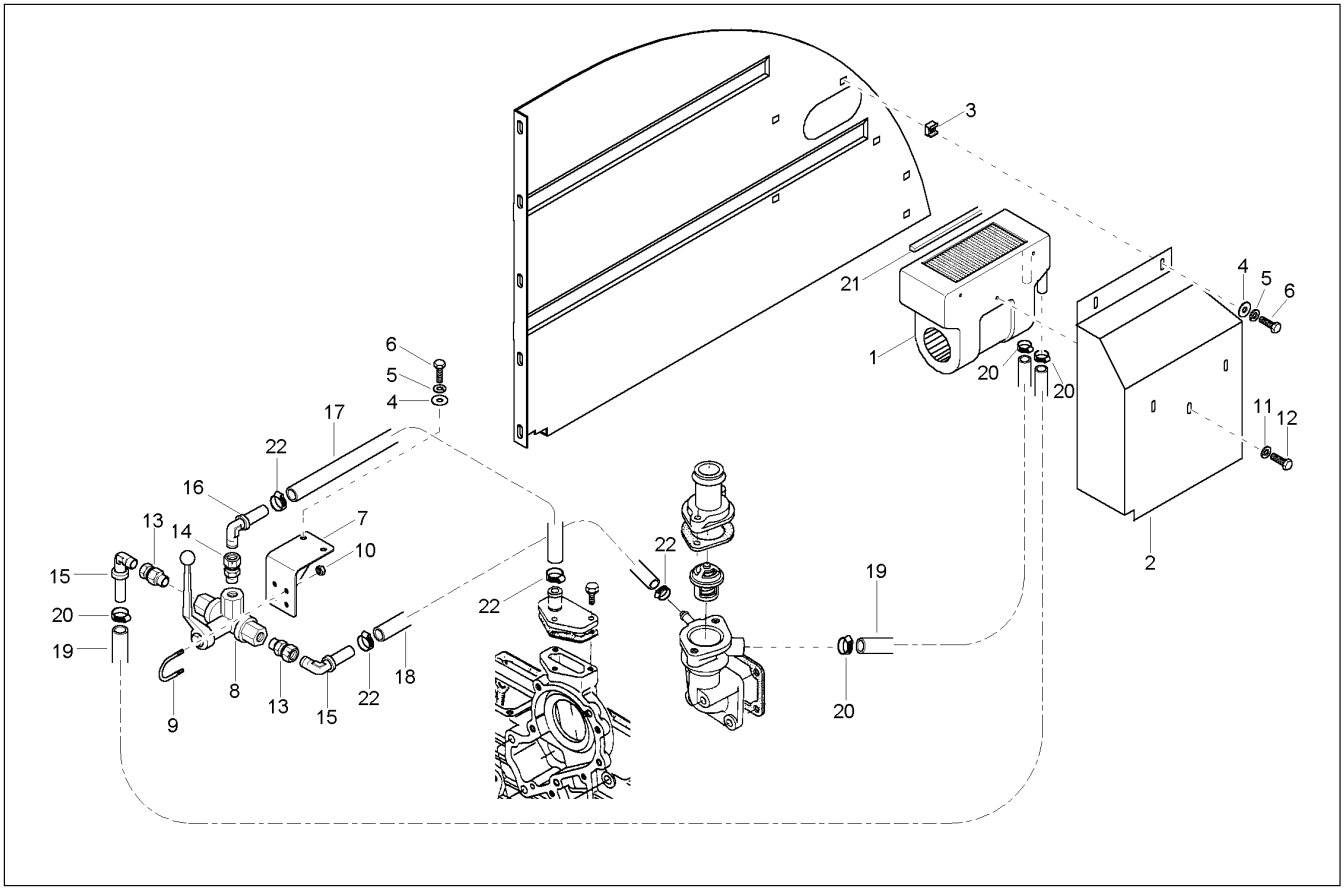


| Ref. No. | Part No. | Description | Qty. Req. | Ref. No. | Part No. | Description | Qty. Req. |
|---|---|---|---|---|---|---|---|
| 01 | 165162 | CAB HEATING | 1 | 12 | 161630 | SCREW/HEX HD TAP B5.5X19 | 3 |
| 02 | 165082 | CAB HEATING CONSOLE | 1 | 13 | 165502 | SCREW JOINT | 2 |
| 03 | 161615 | NUT/CAGE M8 | 4 | 14 | 165503 | SCREW JOINT LG=52MM | 1 |
| 04 | 161667 | WASHER/GR A 8.4 | 6 | 15 | 165500 | CONNECTION PIECE | 2 |
| 05 | 161676 | RING/SNAP S8 | 6 | 16 | 165501 | CONNECTION PIECE | 1 |
| 06 | 656093 | CS M8–1.2 X 16 C 8.8 | 6 | 17 | 165919 | HOSE | 0.22 |
| 07 | 165263 | BRACKET | 1 | 18 | 165919 | HOSE | 0.27 |
| 08 | 165112 | BALL VALVE | 2 | 19 | 165914 | HOSE | 3 |
| 09 | 165262 | CLAMP | 2 | 20 | 162064 | COLLAR | 4 |
| 10 | 651457 | HLN INS M6–1.0 8 | 4 | 21 | 165920 | RUBBER SEAL | 0.5 |
| 11 | 161666 | WASHER/GR A 6.4 | 3 | 22 | 165982 | COLLAR | 4 |

# 303 - ENGINE MOUNTS

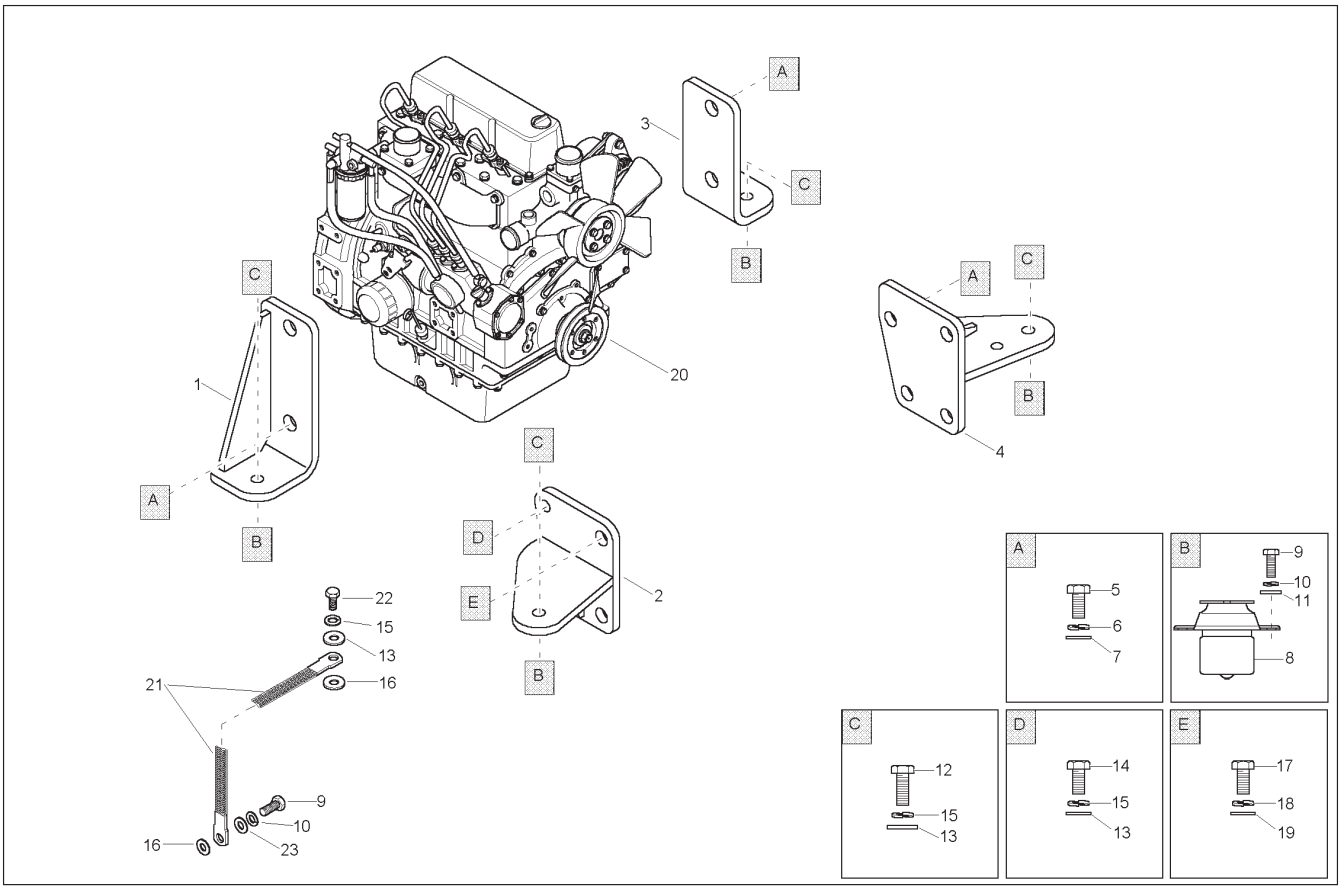


| Ref. No. | Part No. | Description | Qty. Req. |
|---|---|---|---|
| 01 | 165251 | ENGINE CARRIER | 1 |
| 02 | 165254 | ENGINE CARRIER | 1 |
| 03 | 165252 | ENGINE CARRIER | 1 |
| 04 | 165253 | ENGINE CARRIER | 1 |
| 05 | 165933 | SCREW | 8 |
| 06 | 161671 | RING/SNAP S14 | 8 |
| 07 | 161646 | WASHER/GR A 15 | 8 |
| 08 | 160645 | HYDRO SUSPENSION | 4 |
| 09 | 656093 | CS M8–1.2 X 16 C 8.8 | 9 |
| 10 | 161676 | RING/SNAP S8 | 9 |
| 11 | 161661 | WASHER/GR A 8.4 | 8 |
| 12 | 651395 | CS M10–1.5 X 30 C 10.9 | 4 |
| 13 | 161640 | WASHER/GR A 10.5 | 5 |
| 14 | 165929 | SCREW | 1 |
| 15 | 161669 | RING/SNAP S10 | 6 |
| 16 | 163130 | WASHER | 2 |
| 17 | 165934 | SCREW | 3 |
| 18 | 161670 | RING/SNAP S12 | 3 |
| 19 | 161642 | WASHER/GR A 13 | 3 |
| 20 | 165613 | DIESEL ENGINE | 1 |
| 21 | 165224 | CORD | 1 |
| 22 | 651391 | CS M10–1.5 X 20 C 8.8 | 1 |
| 23 | 161661 | WASHER/GR A 8.4 | 1 |

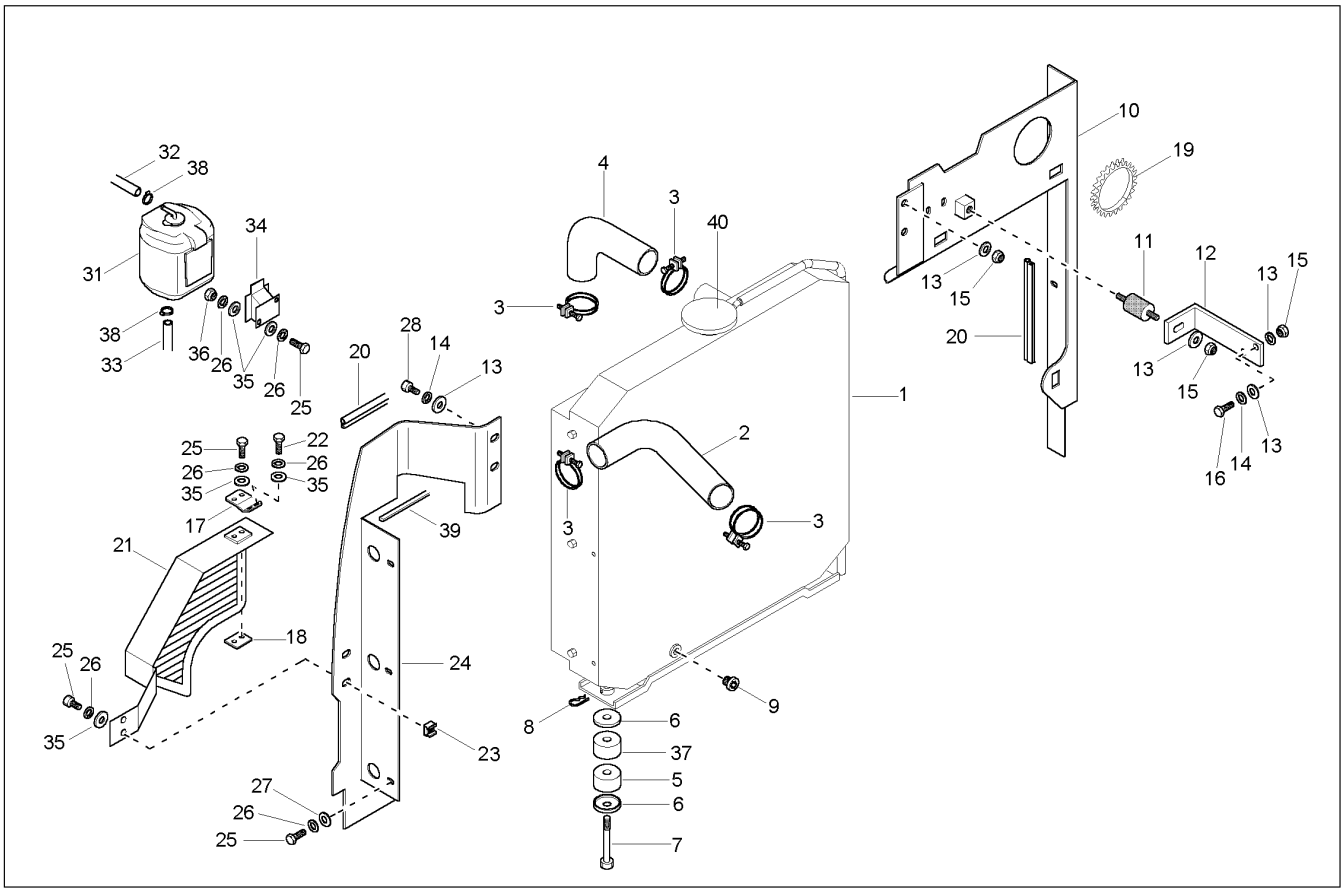


| Ref. No. | Part No. | Description | Qty. Req. |
|---|---|---|---|
| 01 | 165307 | WATER COOLER | 1 |
| 02 | 165304 | WATER HOSE | 1 |
| 03 | 165305 | COLLAR | 4 |
| 04 | 165303 | WATER HOSE | 1 |
| 05 | 165298 | CUSHION | 2 |
| 06 | 165301 | WASHER | 4 |
| 07 | 165300 | PIN | 2 |
| 08 | 165302 | COLLAR | 2 |
| 09 | 161415 | SCREW | 1 |
| 10 | 165594 | AIR GUIDING PLATE | 1 |
| 11 | 165895 | RUBBER METAL BUFFER | 1 |
| 12 | 165086 | BRACKET | 1 |
| 13 | 161667 | WASHER/GR A 8.4 | 7 |
| 14 | 161676 | RING/SNAP S8 | 3 |
| 15 | 651458 | HLN INS M8–1.2 8 | 4 |
| 16 | 656094 | CS M8–1.2 X 30 C 8.8 | 1 |
| 17 | 165266 | BRACKET | 1 |
| 18 | 165265 | PLATE | 1 |
| 19 | 165587 | PVC–EDGE PROTECTION | 0.2 |
| 20 | 165819 | RUBBER PROFILE | 1.8 |
| 21 | 165264 | VENTILATOR | 1 |
| 22 | 656092 | CS M6–1.0 X 12 C 8.8 | 2 |
| 23 | 161613 | NUT/CAGE M6 | 2 |
| 24 | 165085 | BRACKET | 1 |
| 25 | 656149 | CS M6–1.0 X 16 C 8.8 | 12 |
| 26 | 161675 | RING/SNAP S6 | 16 |
| 27 | 161660 | WASHER/GR A 6.4 | 6 |
| 28 | 656001 | CS M8–1.2 X 20 C 8.8 | 2 |
| 31 | 165291 | EXPANSION CONTAINER | 1 |
| 32 | 165915 | HOSE | 0.6 |
| 33 | 165915 | HOSE | 1 |
| 34 | 165306 | BRACKET | 1 |
| 35 | 161666 | WASHER/GR A 6.4 | 8 |
| 36 | 651457 | HLN INS M6–1.0 8 | 2 |
| 37 | 165299 | CUSHION | 2 |
| 38 | 162504 | COLLAR | 4 |
| 39 | 165573 | ISOLATION MAT | 1 |
| 40 | 165349 | PLUG | 1 |

# 303 - AIR CLEANER

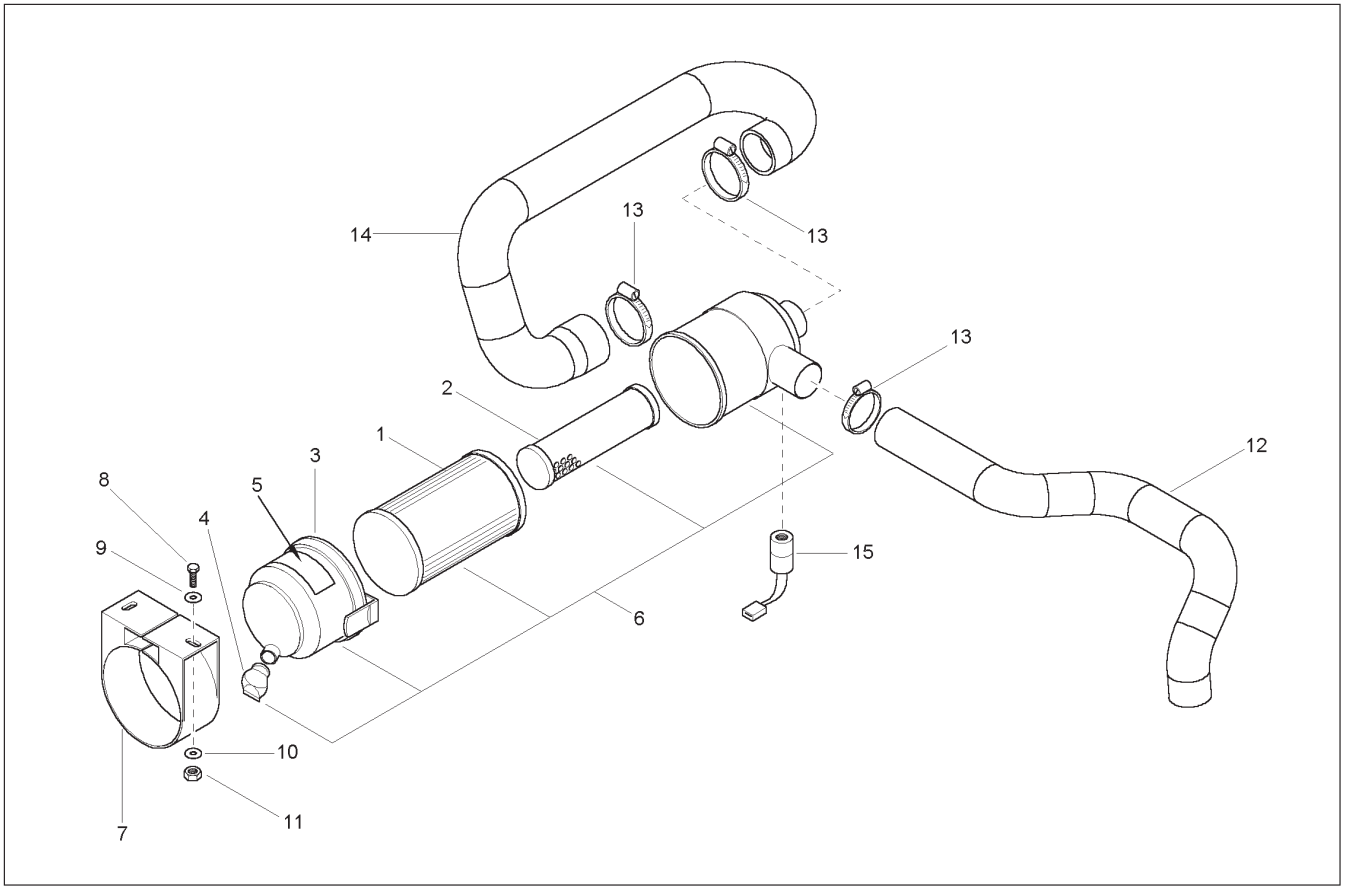


| Ref. No. | Part No. | Description | Qty. Req. |
|---|---|---|---|
| 01 | 165293 | AIR FILTER | 1 |
| 02 | 165294 | AIR FILTER | 1 |
| 03 | 165295 | COVER | 1 |
| 04 | 165296 | DUST VALVE | 1 |
| 05 | 165297 | MARKING AIR FILTER | 1 |
| 06 | 165272 | AIR FILTER | 1 |
| 07 | 165273 | COLLAR | 1 |
| 08 | 656094 | CS M8–1.2 X 30 C 8.8 | 2 |
| 09 | 161661 | WASHER/GR A 8.4 | 2 |
| 10 | 161667 | WASHER/GR A 8.4 | 2 |
| 11 | 651458 | HLN INS M8–1.2 8 | 2 |
| 12 | 165258 | SUCTION HOSE | 1 |
| 13 | 162611 | COLLAR | 3 |
| 14 | 165249 | SUCTION HOSE | 1 |
| 15 | 165292 | DUST INDICATOR | 1 |

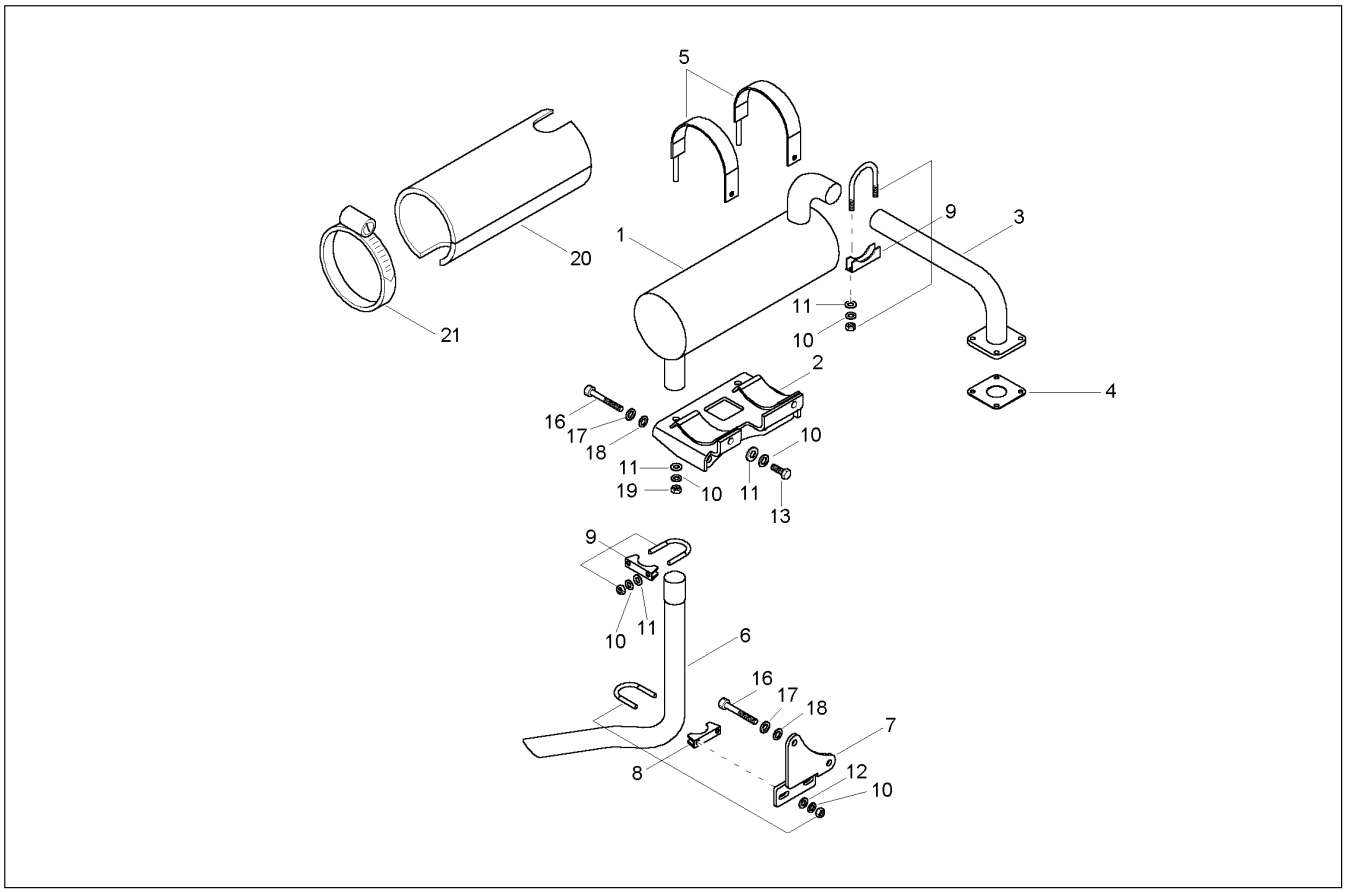


| Ref. No. | Part No. | Description | Qty. Req. |
|---|---|---|---|
| 01 | 165246 | SILENCER | 1 |
| 02 | 165256 | BRACKET | 1 |
| 03 | 165247 | TUBE | 1 |
| 04 | 165410 | SEAL | 1 |
| 05 | 165257 | COLLAR | 2 |
| 06 | 165248 | EXHAUST TUBE | 1 |
| 07 | 165255 | BRACKET | 1 |
| 08 | 165822 | COLLAR | 1 |
| 09 | 160848 | COLLAR | 2 |
| 10 | 161676 | RING/SNAP S8 | 10 |
| 11 | 161661 | WASHER/GR A 8.4 | 8 |
| 12 | 161667 | WASHER/GR A 8.4 | 2 |
| 13 | 163649 | SCREW | 2 |
| 16 | 165937 | SCREW | 4 |
| 17 | 161669 | RING/SNAP S10 | 4 |
| 18 | 161640 | WASHER/GR A 10.5 | 4 |
| 19 | 651458 | HLN INS M8–1.2 8 | 2 |
| 20 | 165267 | ISOLATION MAT | 1 |
| 21 | 165269 | HOSE COLLAR | 1 |

# 303 - FUEL TANK

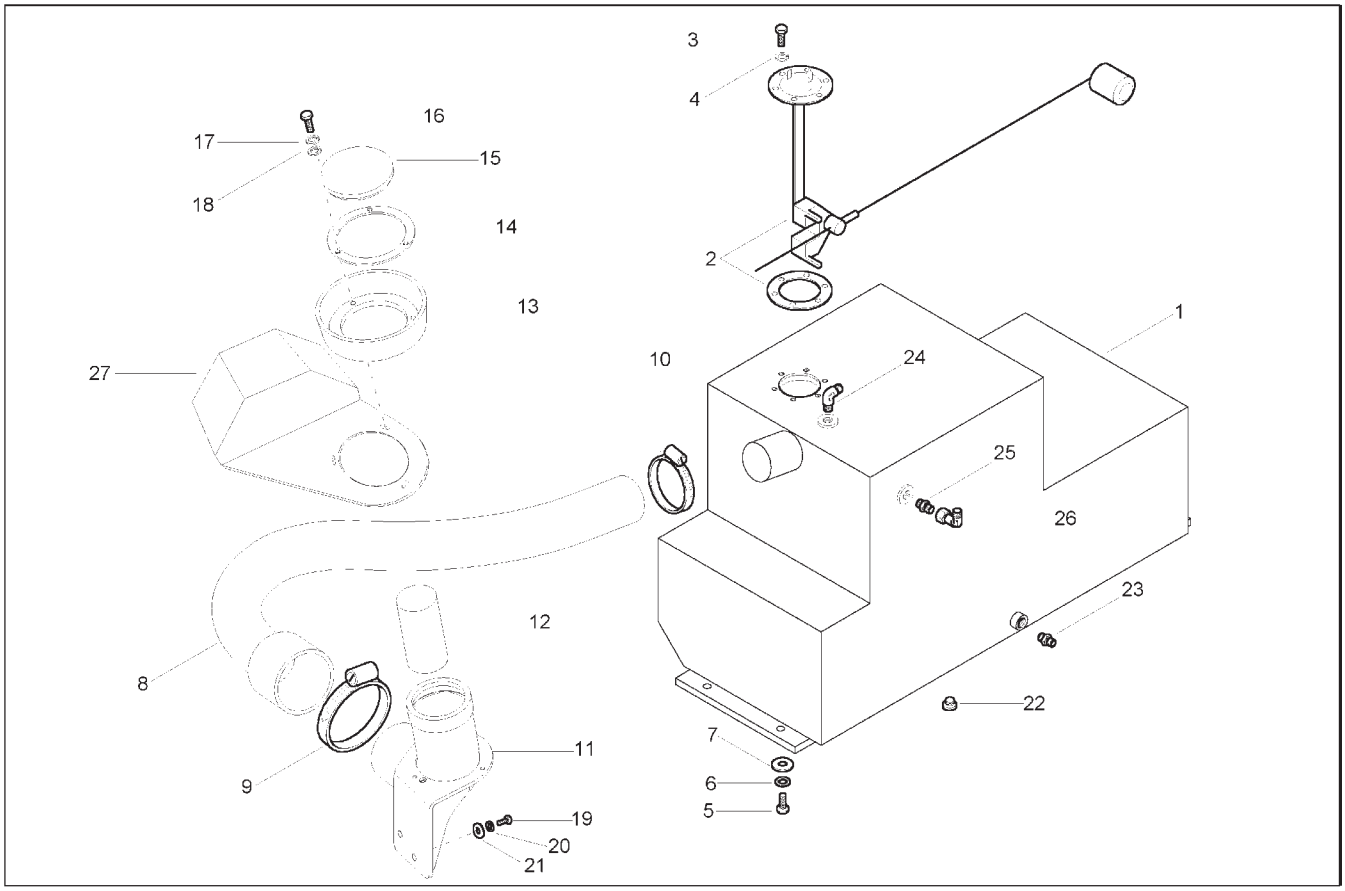


| Ref. No. | Part No. | Description | Qty. Req. |
|---|---|---|---|
| 01 | 165066 | FUEL TANK | 1 |
| 02 | 160536 | TRANSMITTER | 1 |
| 03 | 651421 | SCREW | 6 |
| 04 | 161658 | WASHER/GR A 4.3 | 6 |
| 05 | 163630 | SCREW | 4 |
| 06 | 161669 | RING/SNAP S10 | 4 |
| 07 | 161663 | WASHER/GR A 10.5 | 4 |
| 08 | 165250 | DIESEL HOSE | 1 |
| 09 | 165270 | HOSE COLLAR | 1 |
| 10 | 162611 | COLLAR | 1 |
| 11 | 165074 | FILLER NECK | 1 |
| 12 | 160436 | STRAINER | 1 |
| 13 | 165072 | RUBBER | 1 |
| 14 | 165073 | BRACKET | 1 |
| 15 | 165110 | TANK COVER | 1 |
| 16 | 651505 | SHCS HS M5–0.8 X 20 8.8 | 3 |
| 17 | 161674 | RING/SNAP S5 | 3 |
| 18 | 161659 | WASHER/GR A 5.3 | 3 |
| 19 | 656093 | CS M8–1.2 X 16 C 8.8 | 2 |
| 20 | 161676 | RING/SNAP S8 | 2 |
| 21 | 161661 | WASHER/GR A 8.4 | 2 |
| 22 | 161415 | SCREW | 1 |
| 23 | 161427 | SCREW JOINT | 1 |
| 24 | 161438 | ELBOW | 1 |
| 25 | 165960 | SCREW JOINT | 1 |
| 26 | 165962 | ANGLE | 1 |
| 27 | 165990 | SPLASH SHIELD | 1 |

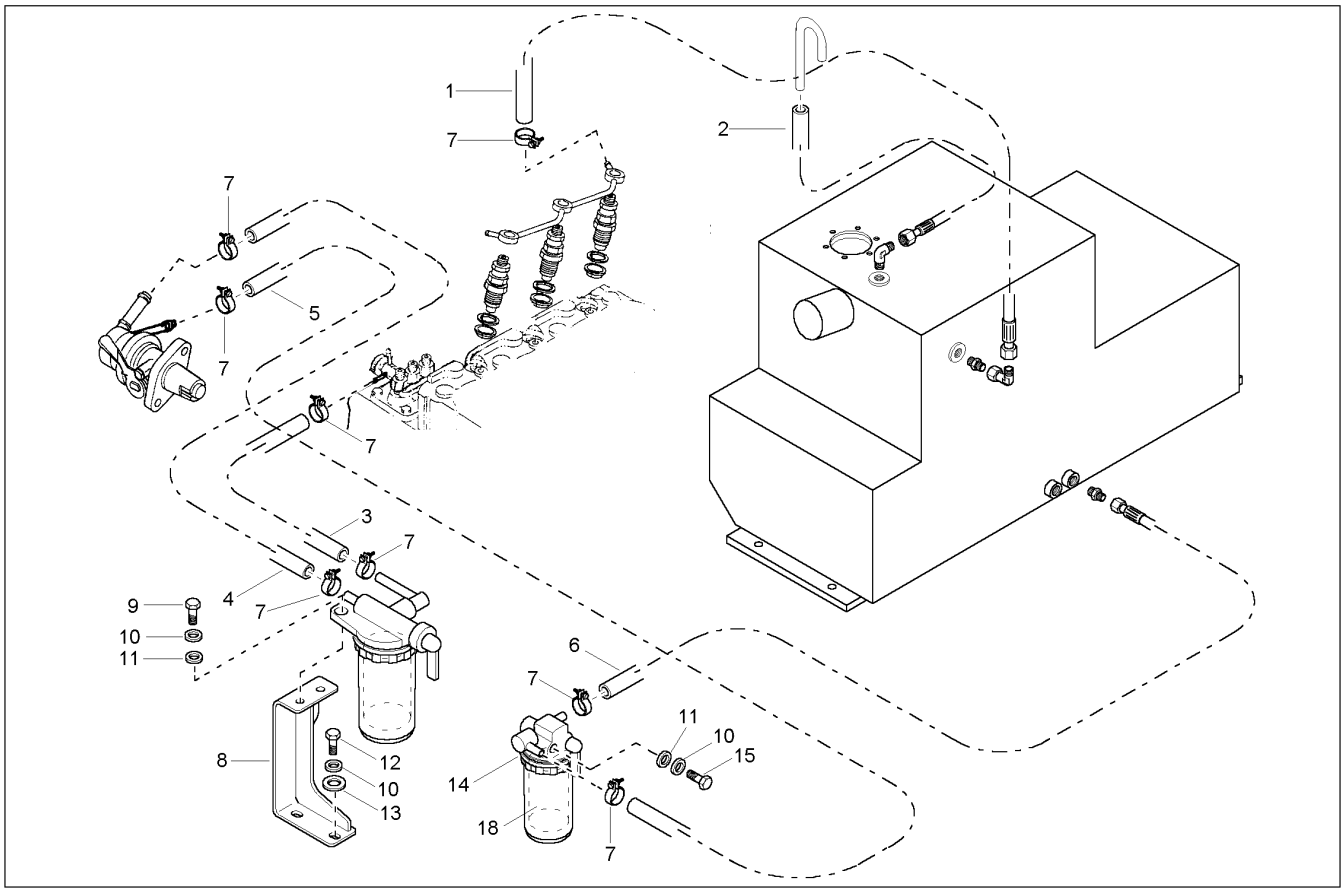


| Ref. No. | Part No. | Description | Qty. Req. | Ref. No. | Part No. | Description | Qty. Req. |
|---|---|---|---|---|---|---|---|
| 01 | 165275 | TUBE | 1 | 09 | 163649 | SCREW | 2 |
| 02 | 165274 | TUBE | 1 | 10 | 161676 | RING/SNAP S8 | 5 |
| 03 | 160844 | TUBE | 1 | 11 | 161661 | WASHER/GR A 8.4 | 3 |
| 04 | 165915 | HOSE | 0.4 | 12 | 656093 | CS M8–1.2 X 16 C 8.8 | 2 |
| 05 | 165915 | HOSE | 0.5 | 13 | 161667 | WASHER/GR A 8.4 | 2 |
| 06 | 165915 | HOSE | 0.7 | 14 | 165268 | WATER SEPARATOR | 1 |
| 07 | 162504 | COLLAR | 8 | 15 | 651438 | HB M8–1.2 X 70 C 8.8 | 1 |
| 08 | 165261 | BRACKET | 1 | 18 | 425–36091 | FUEL FILTER | 1 |

# 303 - THROTTLE

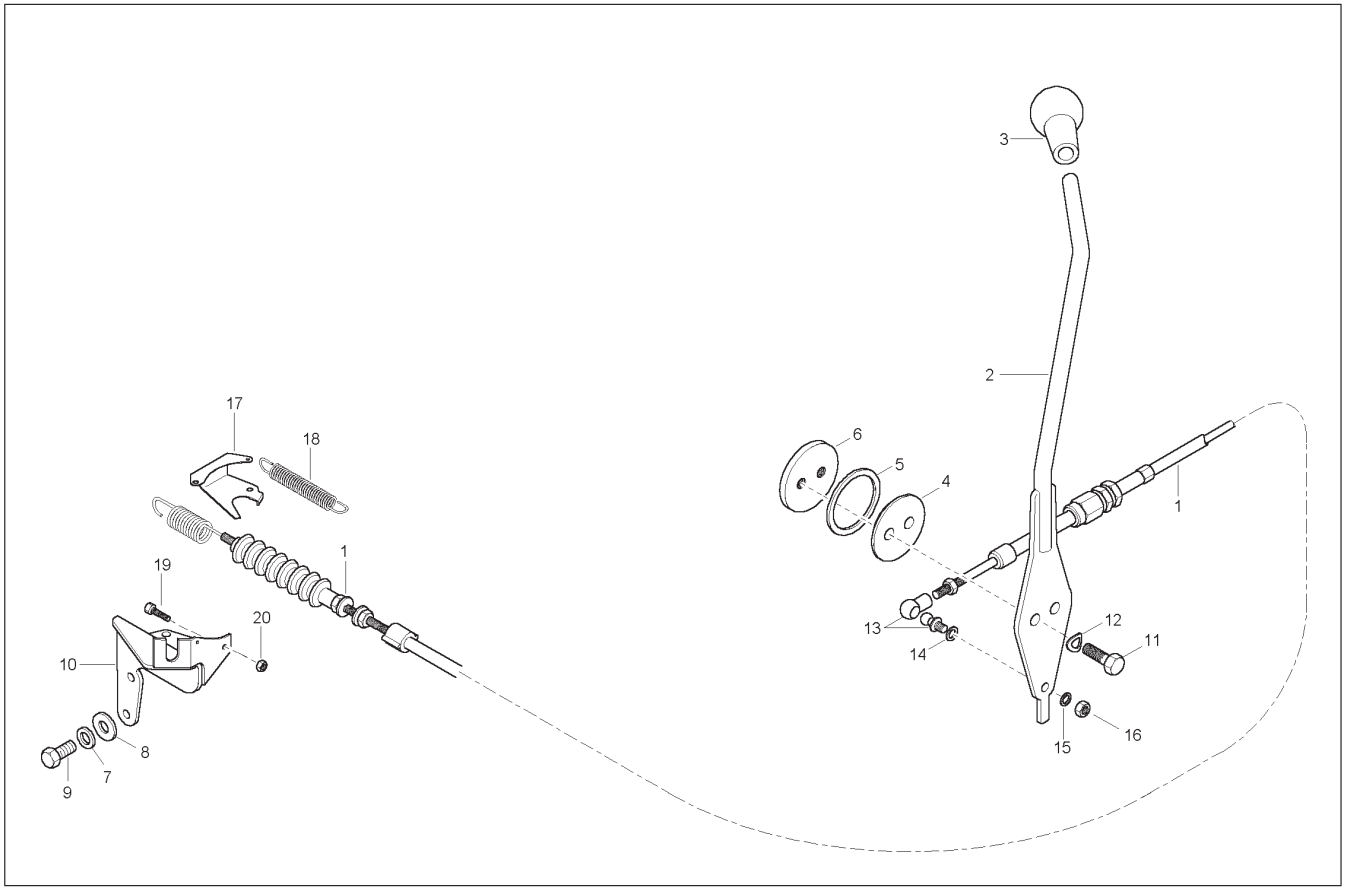


| Ref. No. | Part No. | Description | Qty. Req. | Ref. No. | Part No. | Description | Qty. Req. |
|---|---|---|---|---|---|---|---|
| 01 | 165060 | CABLE | 1 | 11 | 163649 | SCREW | 2 |
| 02 | 165609 | GAS LEVER | 1 | 12 | 162487 | WASHER | 2 |
| 03 | 162398 | HANDLE | 1 | 13 | 162505 | BALL AND SOCKET | 1 |
| 04 | 162349 | WASHER | 1 | 14 | 161660 | WASHER/GR A 6.4 | 1 |
| 05 | 162351 | BRAKE DISC | 1 | 15 | 165977 | BUSHING | 1 |
| 06 | 162350 | WASHER | 1 | 16 | 651457 | HLN INS M6–1.0 8 | 1 |
| 07 | 161676 | RING/SNAP S8 | 2 | 17 | 165260 | BRACKET | 1 |
| 08 | 161661 | WASHER/GR A 8.4 | 2 | 18 | 160480 | SPRING | 1 |
| 09 | 656001 | CS M8–1.2 X 20 C 8.8 | 2 | 19 | 651426 | CS M6–1.0 X 35 C 8.8 | 1 |
| 10 | 165259 | CABLE BRACKET | 1 | 20 | 656047 | HN M6–1.0 | 1 |

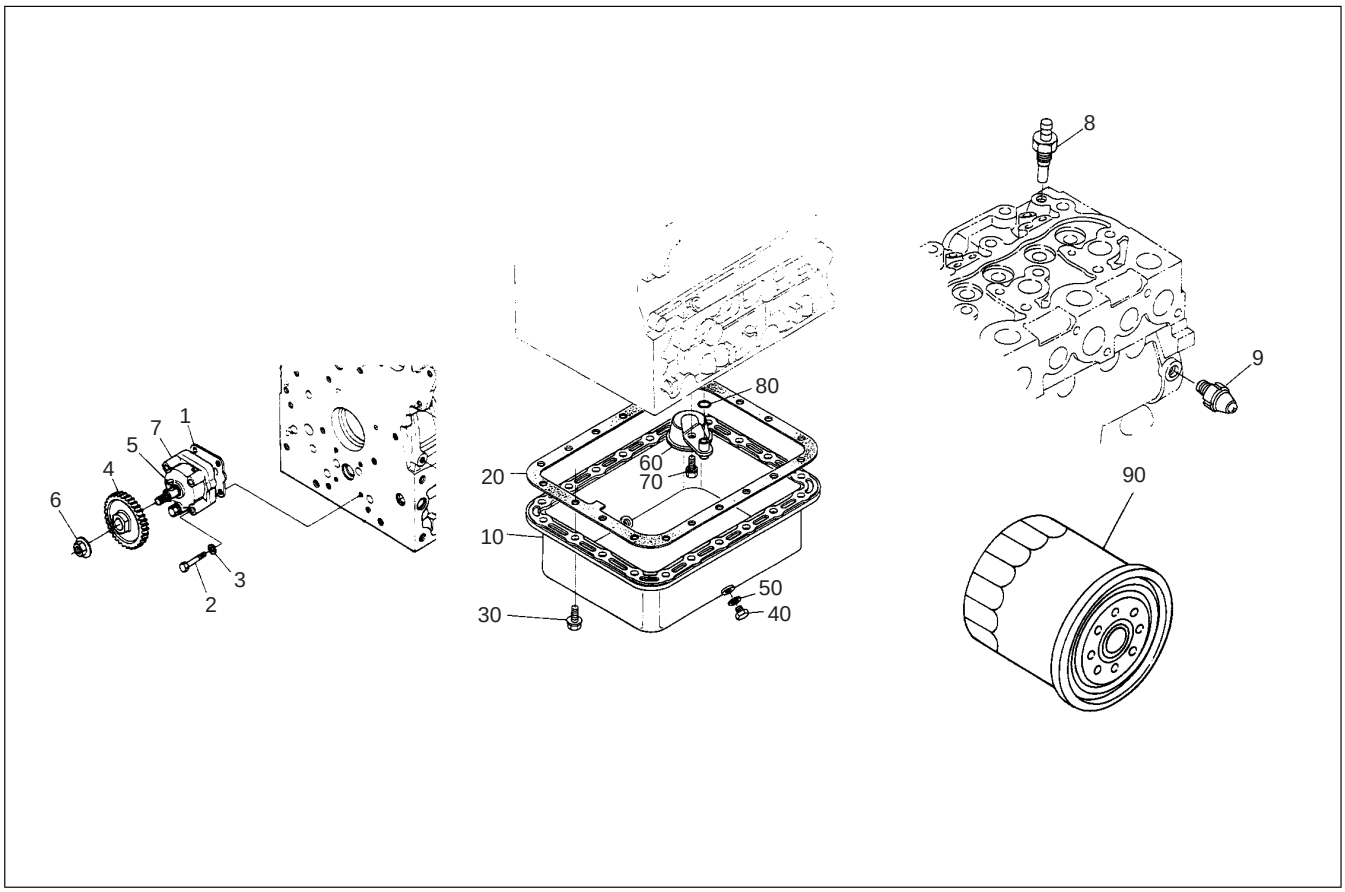


| Ref. No. | Part No. | Description | Qty. Req. | Ref. No. | Part No. | Description | Qty. Req. |
|---|---|---|---|---|---|---|---|
| 01 | 165387 | SEAL | 1 | 10 | 165278 | SUMP ASSY LUB OIL SYS. | 1 |
| 02 | 165388 | SCREW | 4 | 20 | 165338 | SEAL | 1 |
| 03 | 165336 | SPRING | 4 | 30 | 165339 | SCREW | 20 |
| 04 | 165389 | GEAR | 1 | 40 | 165340 | SCREW | 2 |
| 05 | 165390 | KEY | 1 | 50 | 165341 | SEAL | 2 |
| 06 | 165391 | NUT | 1 | 60 | 165342 | STRAINER | 1 |
| 07 | 165392 | OILPUMP | 1 | 70 | 165343 | SCREW | 1 |
| 08 | 165578 | WATER TEMPERATURE SWITCH | 1 | 80 | 165344 | O–RING | 1 |
| 09 | 165279 | OIL PRESSURE SWITCH | 1 | 90 | 121965 | OIL FILTER | 1 |

# 303 - CYLINDER HEAD

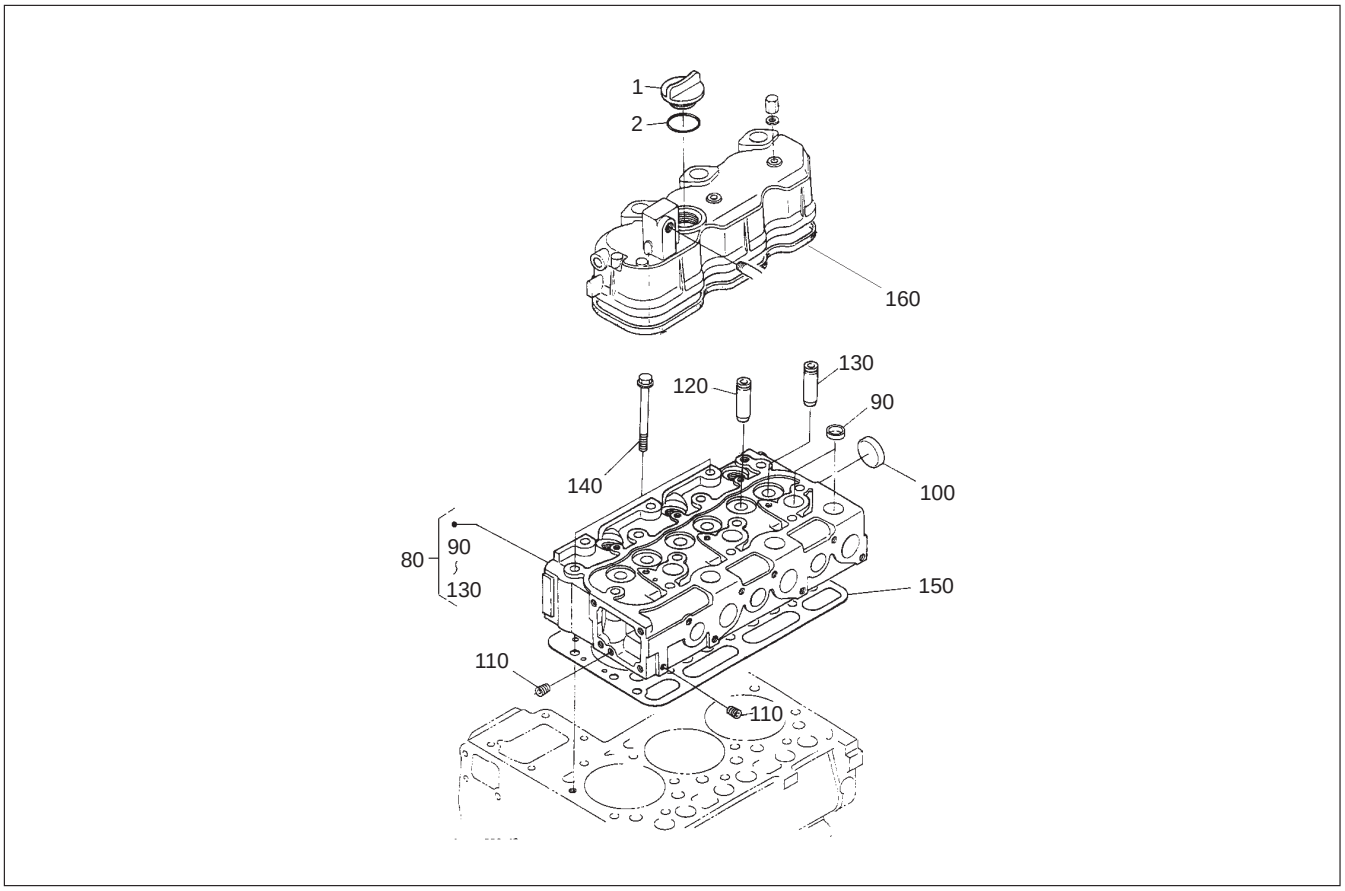


| Ref. No. | Part No. | Description | Qty. Req. |
|---|---|---|---|
| 01 | 165412 | PLUG | 1 |
| 02 | 165393 | O–RING | 1 |
| 80 | 165394 | CYLINDER HEAD COMPLETE | 1 |
| 90 | 165395 | SEAL | 9 |
| 100 | 165577 | PLUG | 1 |
| 110 | 165396 | PLUG | 2 |
| 120 | 165397 | GUIDE/ INLET VALVE | 3 |
| 130 | 165398 | GUIDE/ EXHAUST VALVE | 3 |
| 140 | 165399 | SCREW | 14 |
| 150 | 165433 | CYLINDER HEAD GASKET | 1 |
| 160 | 165432 | VALVE COVER SEAL | 1 |

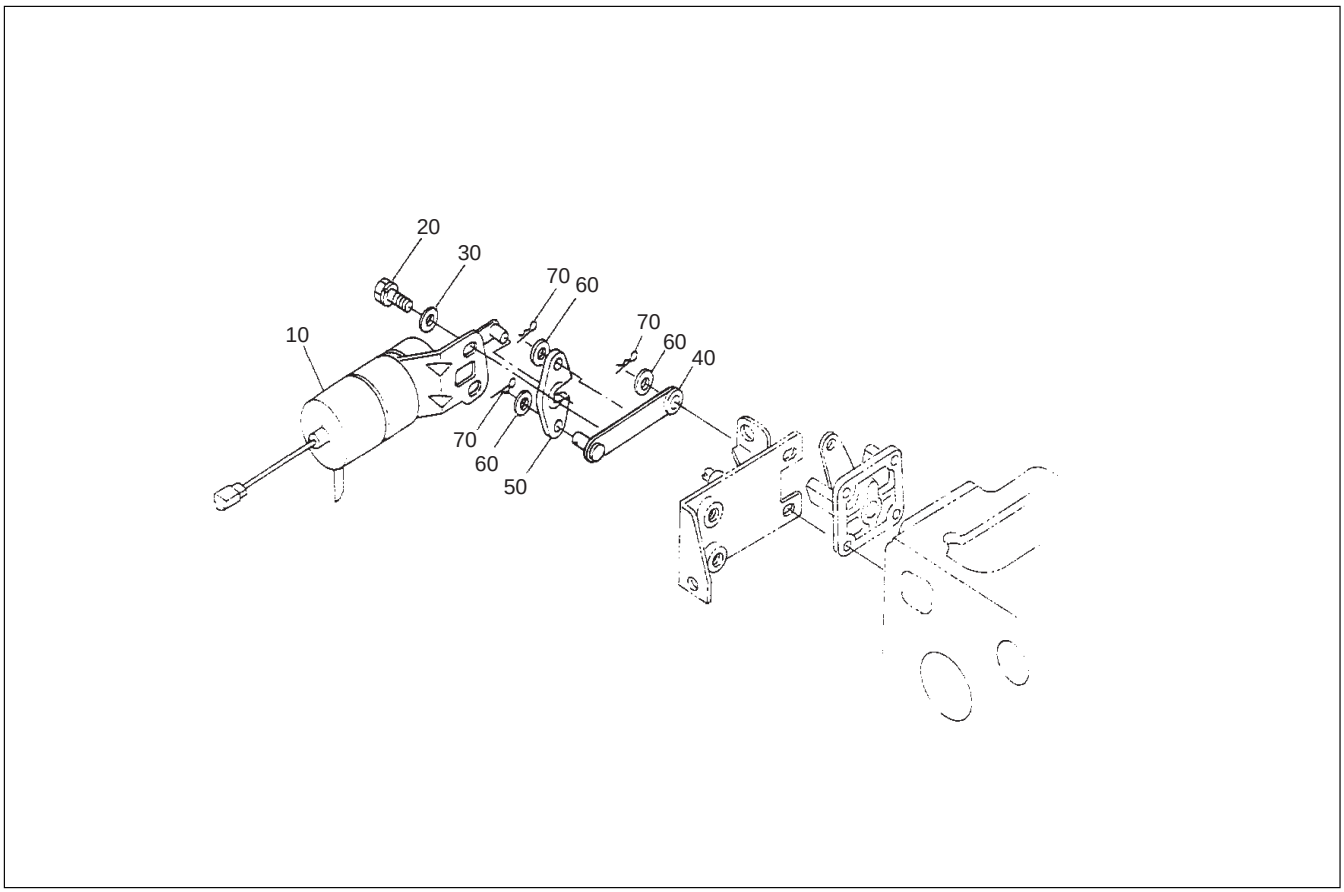


| Ref. No. | Part No. | Description | Qty. Req. |
|---|---|---|---|
| 10 | 165284 | STOP SOLENOID | 1 |
| 20 | 165345 | SCREW | 2 |
| 30 | 165346 | WASHER | 2 |
| 40 | 165414 | LEVER | 1 |
| 50 | 165415 | LEVER | 1 |
| 60 | 165347 | WASHER | 3 |
| 70 | 165348 | LOCKING PIN | 3 |

# 303 - FUEL INJECTION PUMP

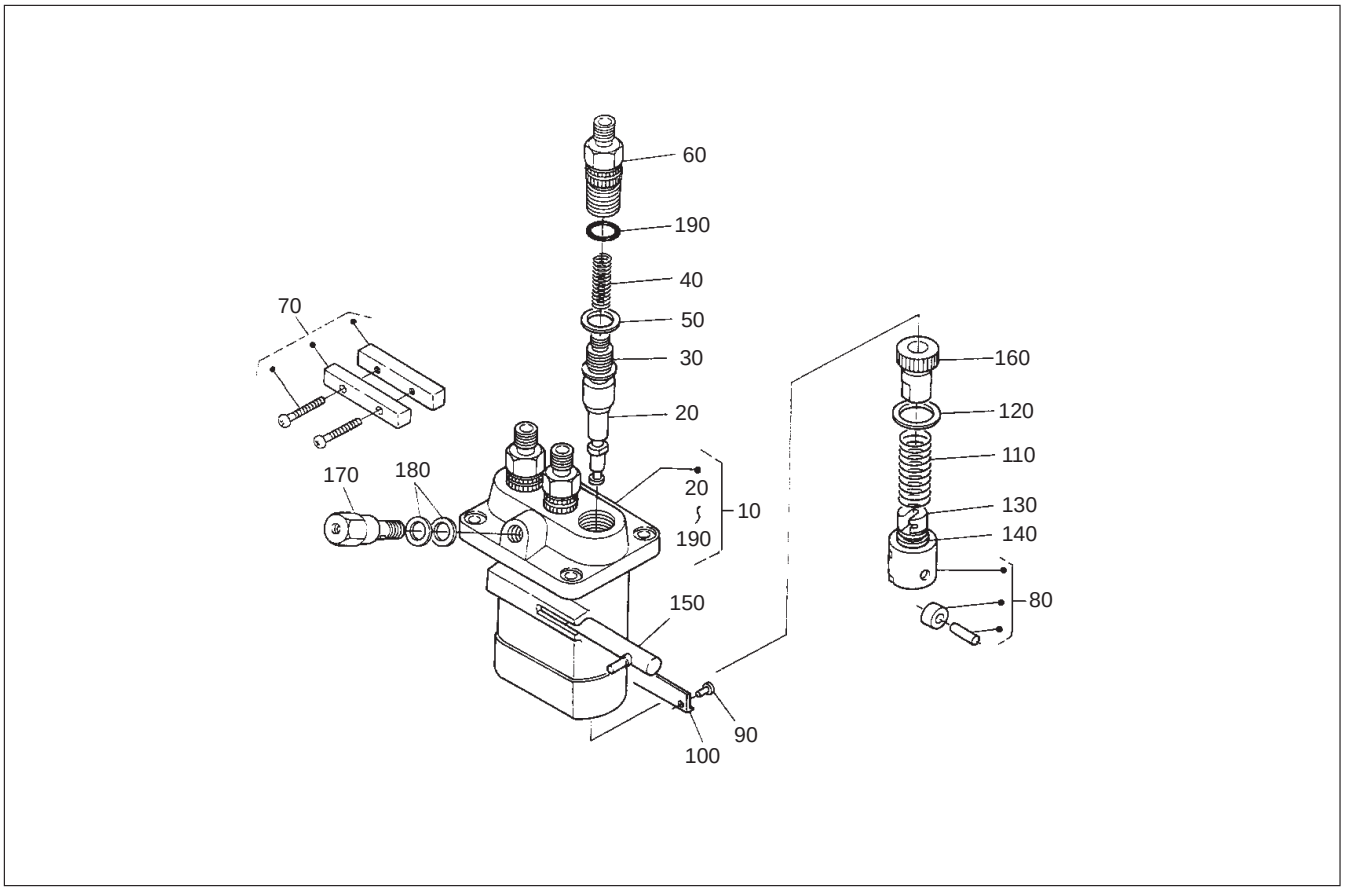


| Ref. No. | Part No. | Description | Qty. Req. |
|---|---|---|---|
| 10 | 165416 | FUEL INJECTION PUMP | 1 |
| 20 | 165369 | PLUNGER | 3 |
| 30 | 165370 | VALVE | 3 |
| 40 | 165371 | SPRING | 3 |
| 50 | 165372 | SEAL | 3 |
| 60 | 165374 | BRACKET | 3 |
| 70 | 165373 | PLATE | 1 |
| 80 | 165375 | TAPPET | 3 |
| 90 | 165376 | PIN | 3 |
| 100 | 165377 | PLATE | 1 |
| 110 | 165378 | SPRING | 3 |
| 120 | 165379 | SEAT SPRING UPPER | 3 |
| 130 | 165380 | SEAT SPRING LOWER | 3 |
| 140 | 165381 | SHIM | 3 |
| 150 | 165382 | RACK CONTROL | 1 |
| 160 | 165383 | SLEEVE | 3 |
| 170 | 165384 | SCREW | 1 |
| 180 | 165385 | GASKET | 2 |
| 190 | 165386 | O–RING | 3 |

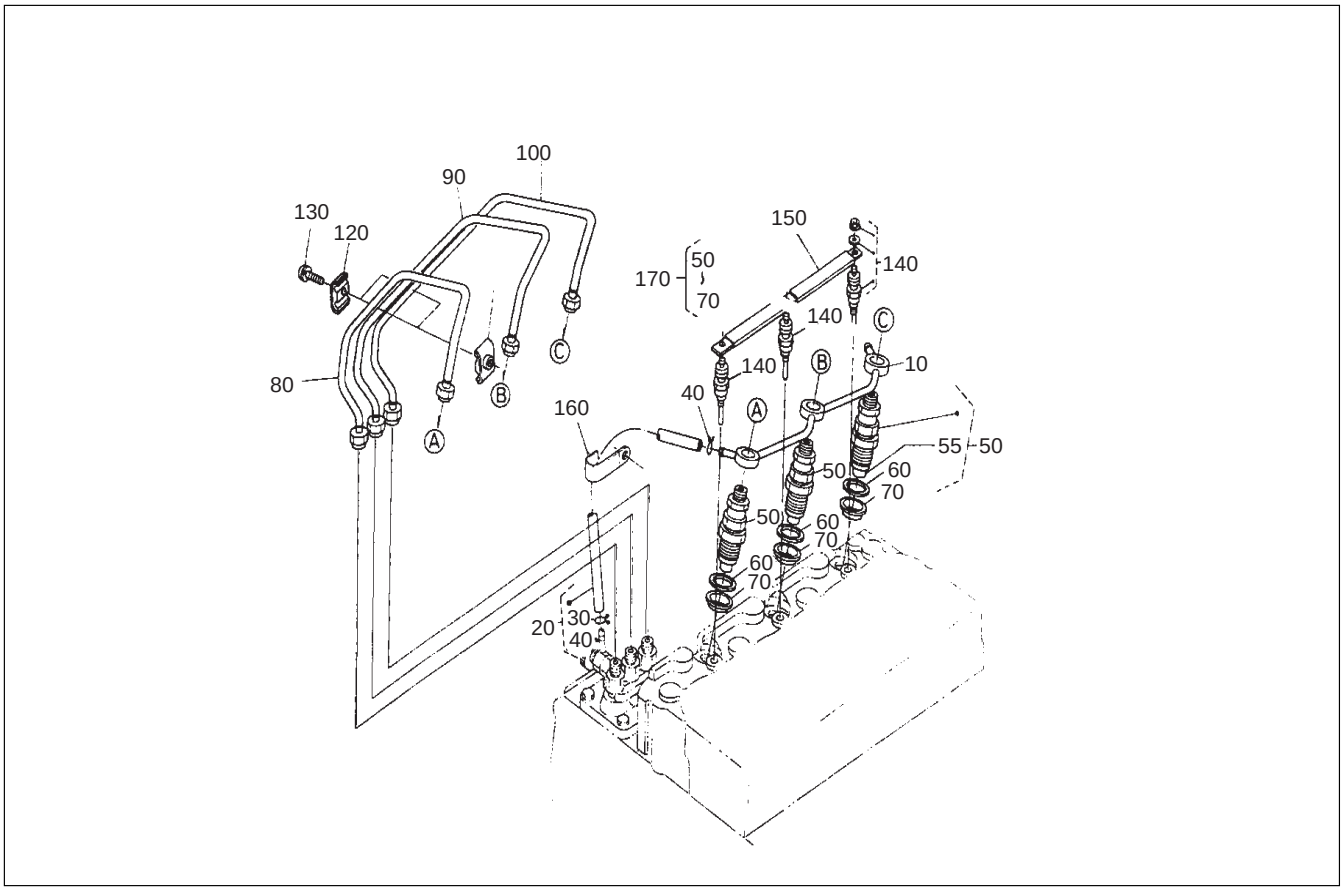


| Ref. No. | Part No. | Description | Qty. Req. | Ref. No. | Part No. | Description | Qty. Req. |
|---|---|---|---|---|---|---|---|
| 10 | 165417 | HOSE | 1 | 90 | 165405 | INJECTION PIPE | 1 |
| 20 | 165400 | OVER FLOW PIPE | 1 | 100 | 165406 | INJECTION PIPE | 1 |
| 30 | 165401 | CLIP | 1 | 110 | 165420 | CLAMP | 2 |
| 40 | 165402 | CLIP | 1 | 120 | 165421 | CLAMP | 2 |
| 50 | 165403 | NOZZLE HOLDER | 3 | 130 | 165407 | SCREW | 2 |
| 55 | 165418 | REPAIR KIT | 3 | 140 | 165422 | GLOW PLUG | 3 |
| 60 | 165581 | SEAL | 3 | 150 | 165408 | CORD – GLOW PLUG | 1 |
| 70 | 165419 | SEAL | 3 | 160 | 165409 | CLAMP | 1 |
| 80 | 165404 | INJECTION PIPE | 1 | 170 | 165423 | INJECTION VALVE | 1 |

# 303 - FUEL FILTER

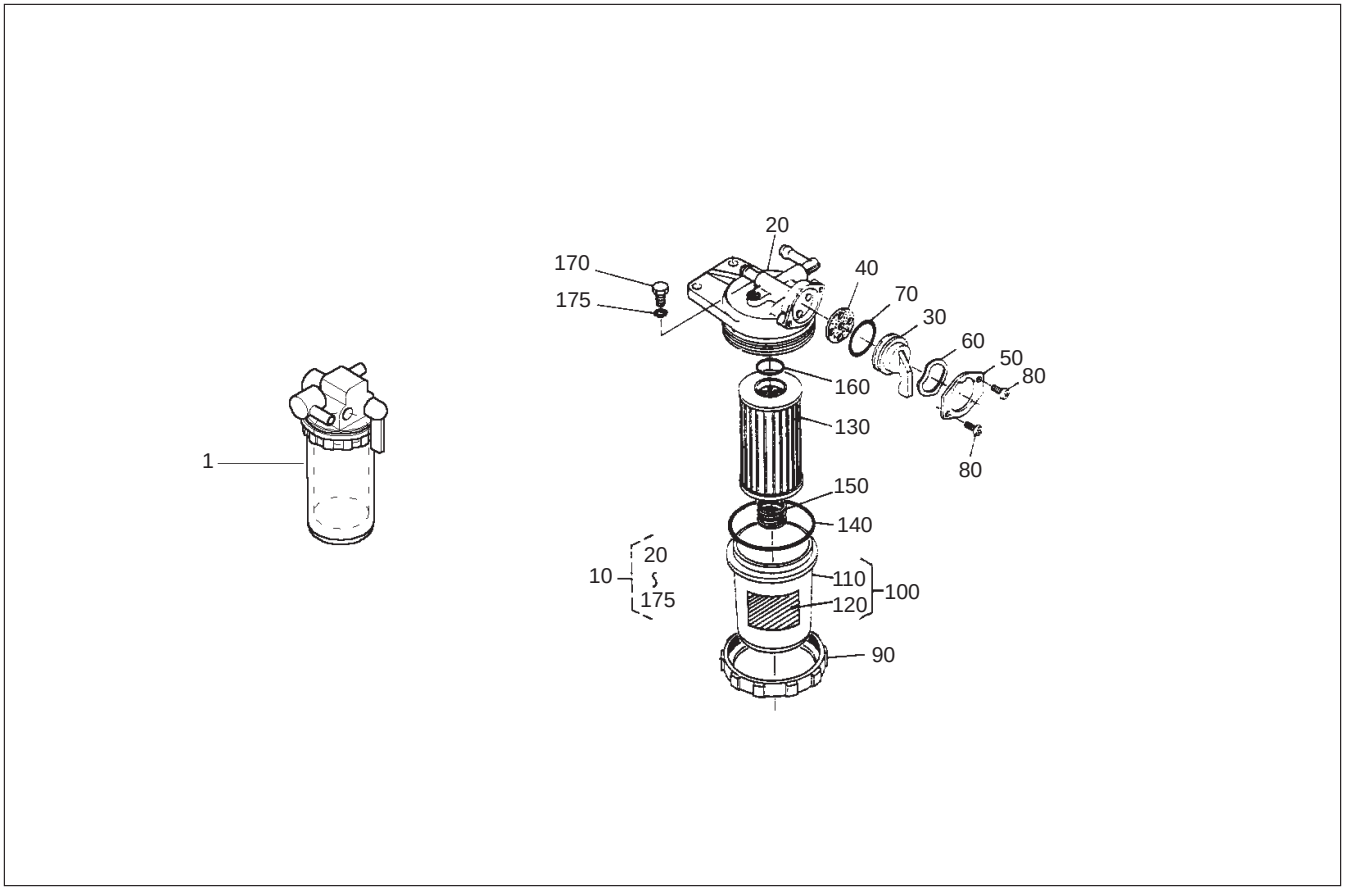


| Ref. No. | Part No. | Description | Qty. Req. |
|---|---|---|---|
| 01 | 165268 | WATER SEPARATOR | 1 |
| 10 | 165290 | FUEL FILTER | 1 |
| 20 | 165353 | HOUSING | 1 |
| 30 | 165354 | HANDLE | 1 |
| 40 | 165355 | SEAL | 1 |
| 50 | 165356 | BRACKET | 1 |
| 60 | 165357 | PLATE | 1 |
| 70 | 165358 | O–RING | 1 |
| 80 | 165359 | SCREW | 2 |
| 90 | 165360 | RING | 1 |
| 100 | 165361 | ASSY CUP FILTER | 1 |
| 110 | 165362 | CUP FILTER | 1 |
| 120 | 165363 | STICKER | 1 |
| 130 | 425–34636 | FUEL FILTER | 1 |
| 140 | 165364 | O–RING | 1 |
| 150 | 165365 | SPRING | 1 |
| 160 | 165344 | O–RING | 1 |
| 170 | 165366 | SCREW | 1 |
| 175 | 165367 | O–RING | 1 |

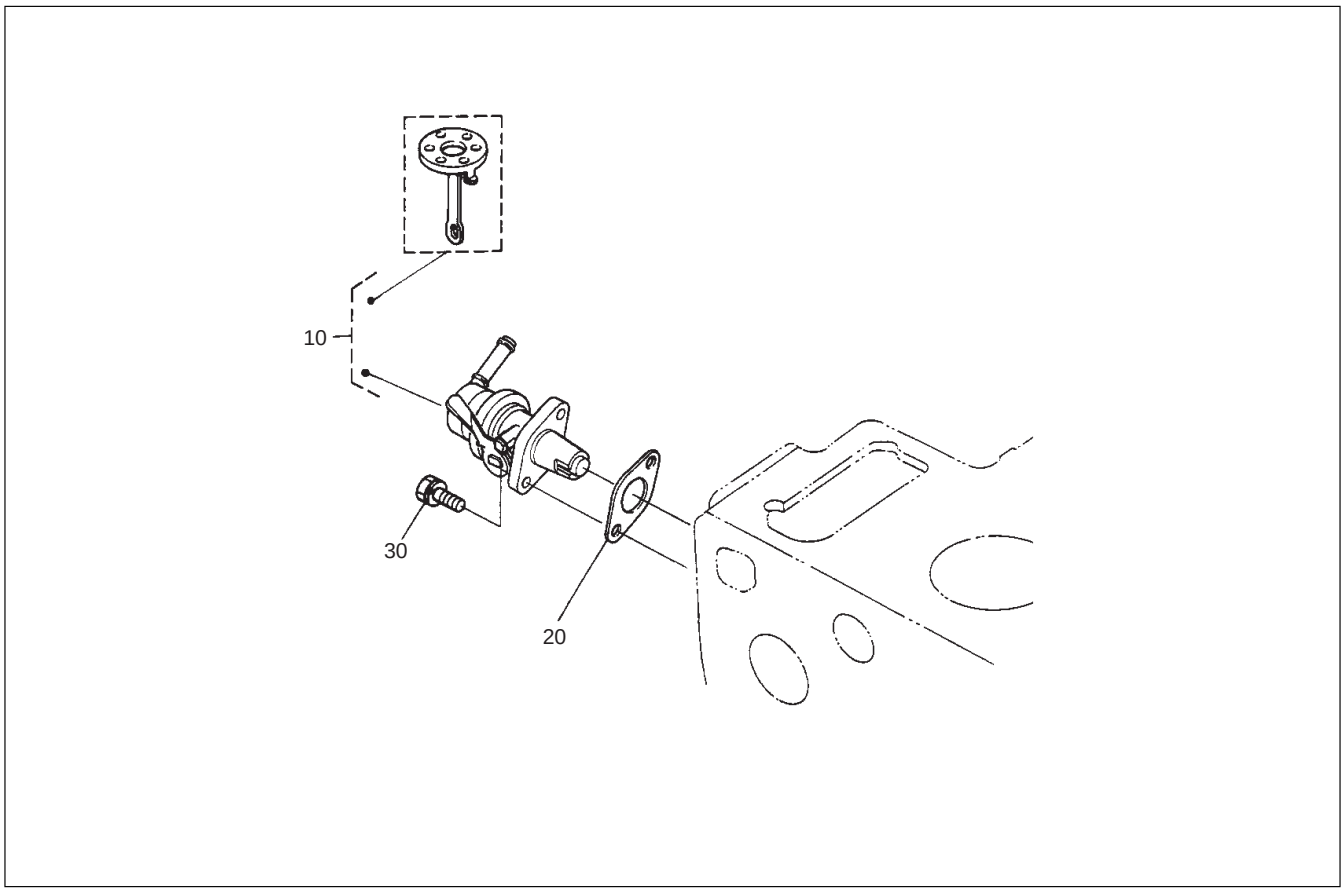


| Ref. No. | Part No. | Description | Qty. Req. | Ref. No. | Part No. | Description | Qty. Req. |
|---|---|---|---|---|---|---|---|
| 10 | 165288 | FUEL PUMP | 1 | 30 | 165368 | SCREW | 2 |
| 20 | 165054 | SEAL | 1 | | | | |

# 303 - ALTERNATOR

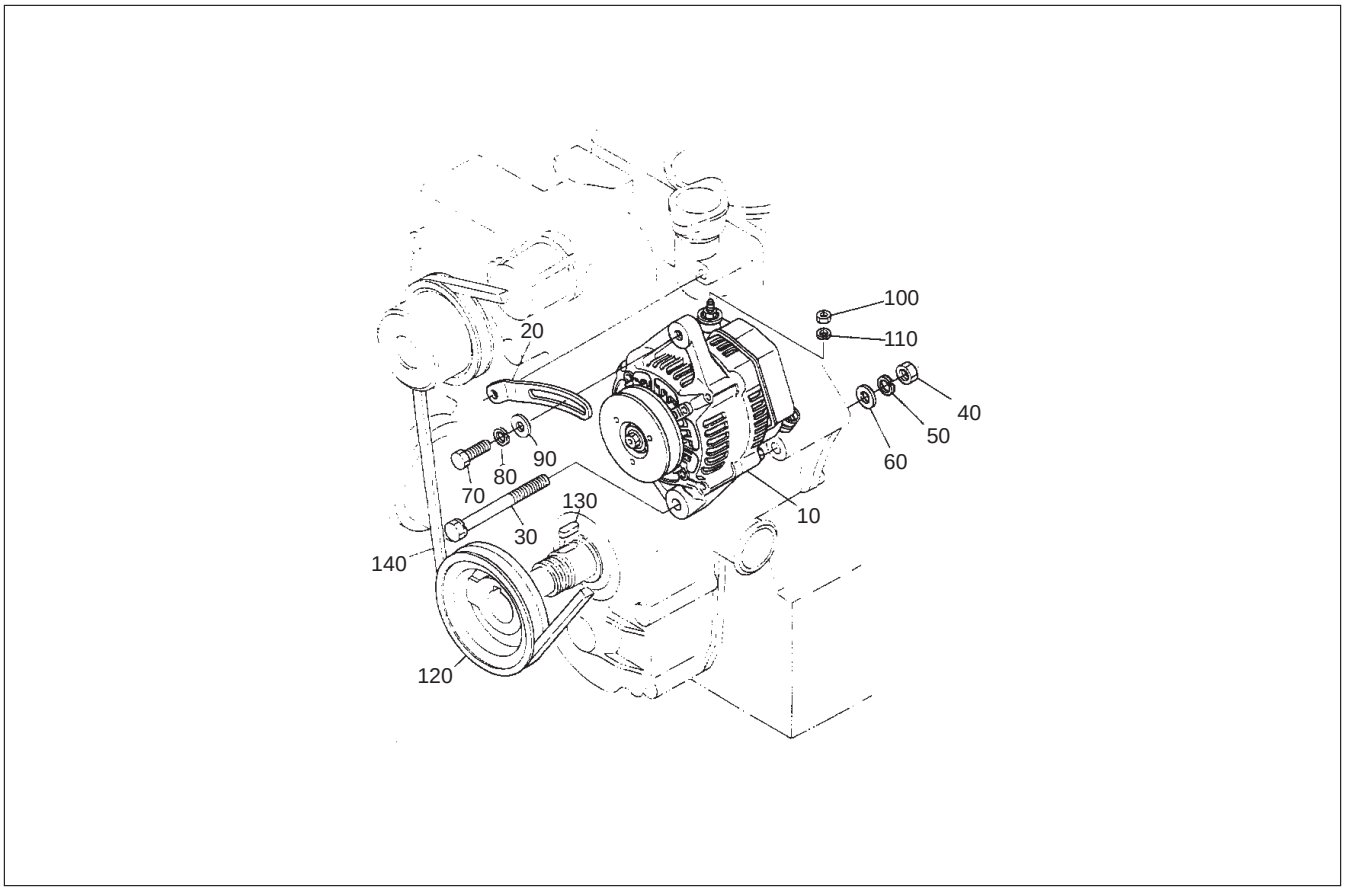


| Ref. No. | Part No. | Description | Qty. Req. | Ref. No. | Part No. | Description | Qty. Req. |
|---|---|---|---|---|---|---|---|
| 10 | 165283 | GENERATOR | 1 | 80 | 165312 | WASHER | 1 |
| 20 | 165424 | CLAMP CLIP | 1 | 90 | 165334 | WASHER | 1 |
| 30 | 165329 | STAY DYNAMO | 1 | 100 | 165335 | NUT | 1 |
| 40 | 165330 | NUT | 1 | 110 | 165336 | SPRING | 1 |
| 50 | 165331 | SPRING | 1 | 120 | 165287 | PULLEY | 1 |
| 60 | 165332 | WASHER | 1 | 130 | 165337 | KEY FEATHER | 1 |
| 70 | 165333 | SCREW | 1 | 140 | 165425 | BELT | 1 |

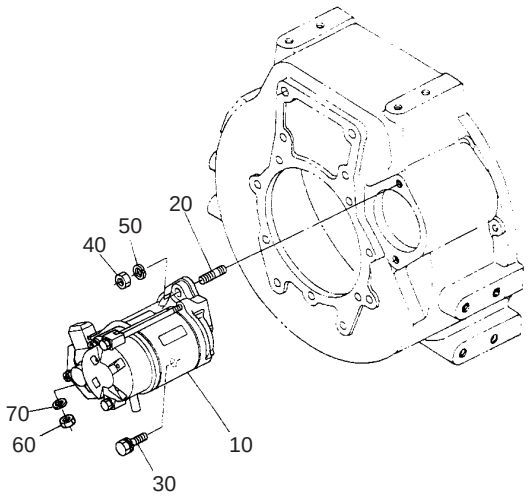


| Ref. No. | Part No. | Description | Qty. Req. |
|---|---|---|---|
| 10 | 165282 | STARTER | 1 |
| 20 | 165350 | STUD BOLT | 1 |
| 30 | 165351 | SCREW | 1 |
| 40 | 165330 | NUT | 1 |
| 50 | 165331 | SPRING | 1 |
| 60 | 165352 | NUT | 1 |
| 70 | 165312 | WASHER | 1 |

# 303 - THERMOSTAT

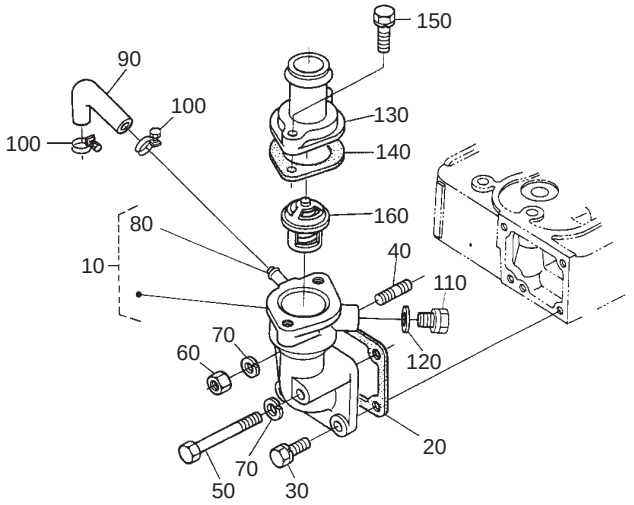


| Ref. No. | Part No. | Description | Qty. Req. | Ref. No. | Part No. | Description | Qty. Req. |
|---|---|---|---|---|---|---|---|
| 10 | 165426 | FLANGE | 1 | 90 | 165428 | HOSE | 1 |
| 20 | 165427 | SEAL | 1 | 100 | 165576 | SEAL | 2 |
| 30 | 165580 | PIN | 2 | 110 | 165327 | PLUG | 1 |
| 40 | 165324 | STUD BOLT | 1 | 120 | 165328 | WASHER WITH RUBBER | 1 |
| 50 | 165325 | SCREW | 1 | 130 | 165285 | THERMOSTAT HOUSING | 1 |
| 60 | 165579 | NUT | 1 | 140 | 165429 | SEAL | 1 |
| 70 | 165312 | WASHER | 2 | 150 | 165328 | WASHER WITH RUBBER | 2 |
| 80 | 165326 | PIPE | 1 | 160 | 165430 | THERMOSTAT | 1 |

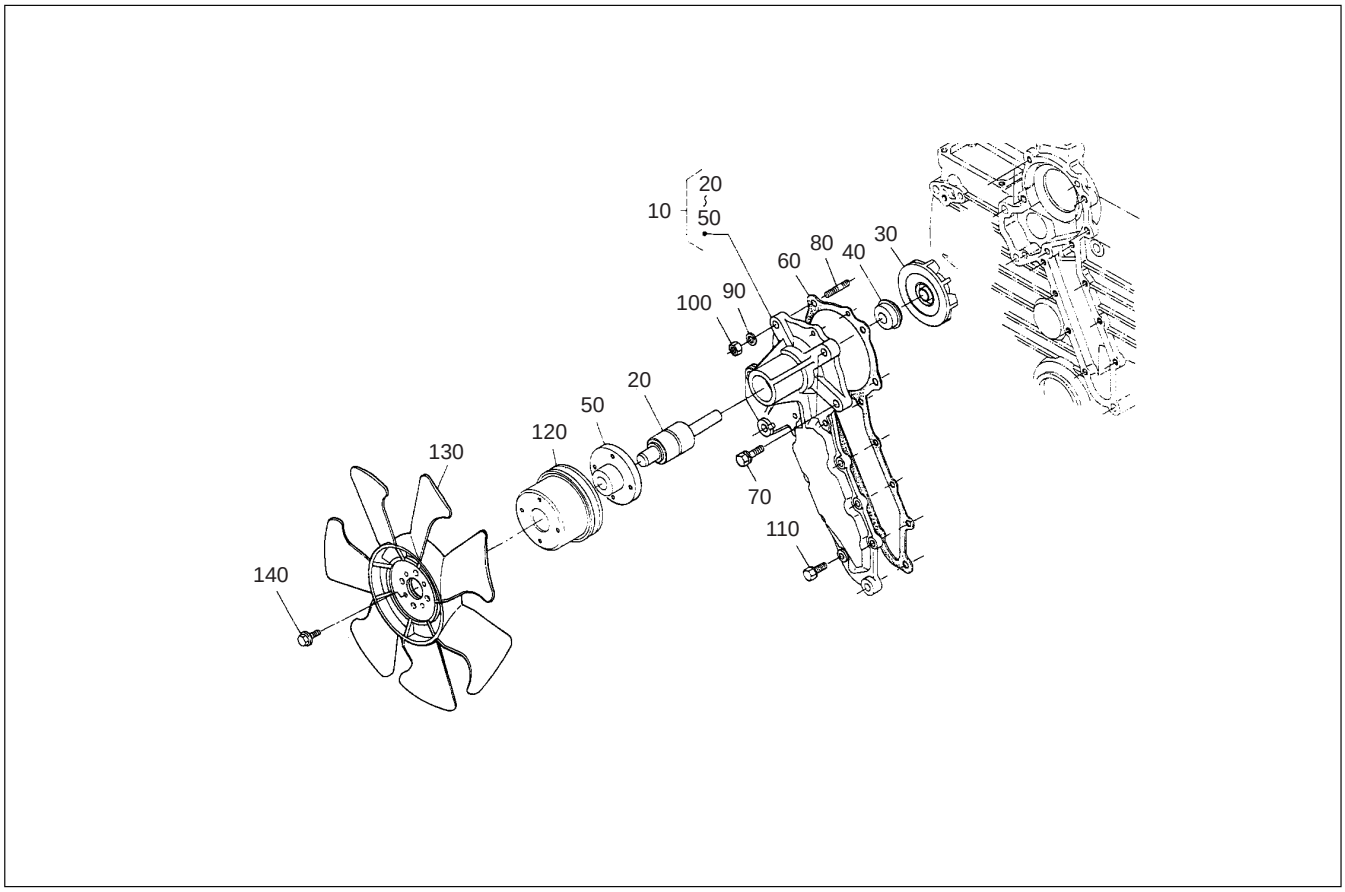


| Ref. No. | Part No. | Description | Qty. Req. | Ref. No. | Part No. | Description | Qty. Req. |
|---|---|---|---|---|---|---|---|
| 10 | 165315 | WATER PUMP COMPLETE | 1 | 80 | 165322 | STUD BOLT | 2 |
| 20 | 165316 | BEARING | 1 | 90 | 165312 | WASHER | 2 |
| 30 | 165317 | IMPELLER | 1 | 100 | 165310 | NUT | 2 |
| 40 | 165318 | SEAL | 1 | 110 | 165323 | SCREW | 8 |
| 50 | 165319 | FLANGE | 1 | 120 | 165985 | WATER PUMP DRIVE PULLEY | 1 |
| 60 | 165321 | SEAL | 1 | 130 | 165286 | VENTILATOR | 1 |
| 70 | 165320 | SCREW | 2 | 140 | 165314 | SCREW | 4 |

# 303 - EXHAUST MANIFOLD

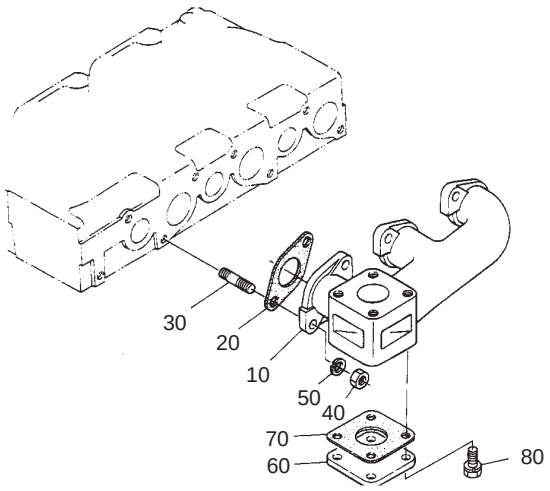


| Ref. No. | Part No. | Description | Qty. Req. | Ref. No. | Part No. | Description | Qty. Req. |
|---|---|---|---|---|---|---|---|
| 10 | 165281 | MANIFOLD–AIR EXHAUST | 1 | 50 | 165312 | WASHER | 6 |
| 20 | 165313 | SEAL | 1 | 60 | 165311 | COVER | 1 |
| 30 | 165309 | STUD BOLT | 6 | 70 | 165410 | SEAL | 1 |
| 40 | 165310 | NUT | 6 | 80 | 165308 | SCREW | 4 |

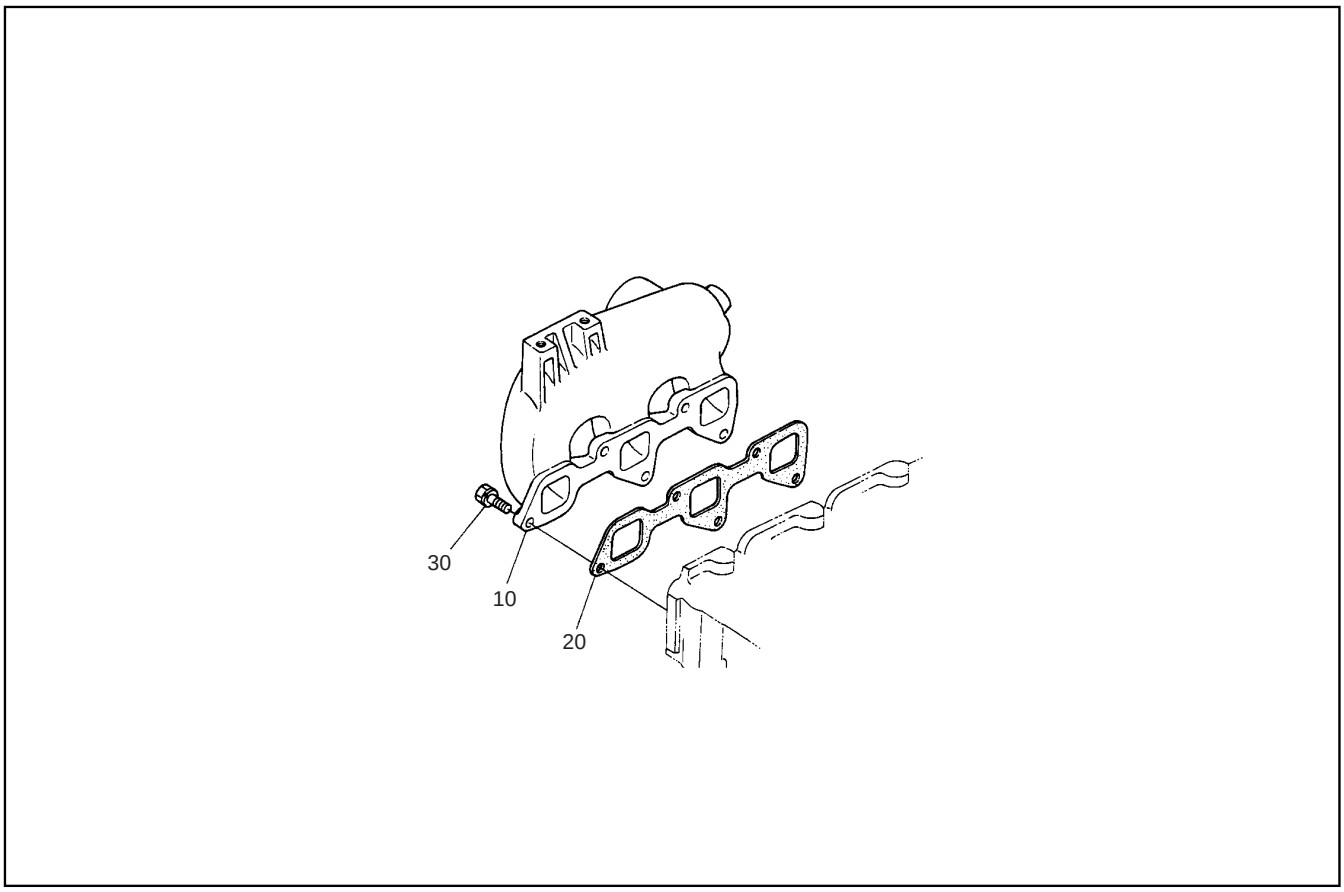


| Ref. No. | Part No. | Description | Qty. Req. | Ref. No. | Part No. | Description | Qty. Req. |
|---|---|---|---|---|---|---|---|
| 10 | 165280 | MANIFOLD–AIR EXHAUST | 1 | 30 | 165308 | SCREW | 1 |
| 20 | 165431 | SEAL | 1 | | | | |

# 303 - PUMP DRIVE

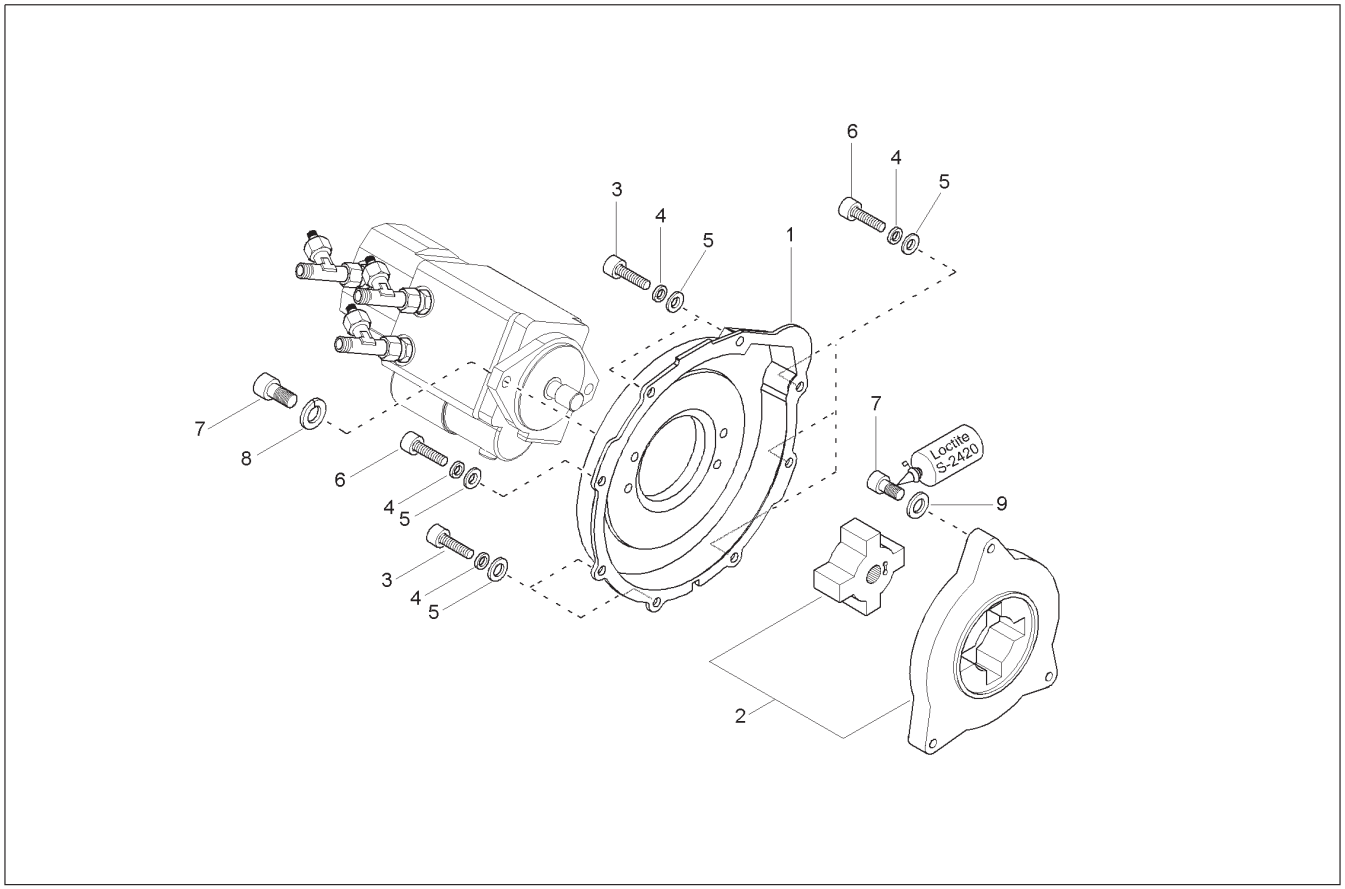


| Ref. No. | Part No. | Description | Qty. Req. | Ref. No. | Part No. | Description | Qty. Req. |
|---|---|---|---|---|---|---|---|
| 01 | 165277 | PUMP DRIVE | 1 | 06 | 165935 | SCREW | 4 |
| 02 | 165276 | CLUTCH | 1 | 07 | 651480 | SHCS HS M12–1.7 X 30 10.9 | 5 |
| 03 | 165937 | SCREW | 4 | 08 | 161670 | RING/SNAP S12 | 2 |
| 04 | 161669 | RING/SNAP S10 | 8 | 09 | 161642 | WASHER/GR A 13 | 3 |
| 05 | 161640 | WASHER/GR A 10.5 | 8 | 10 | 164928 | PLUG | 1 |

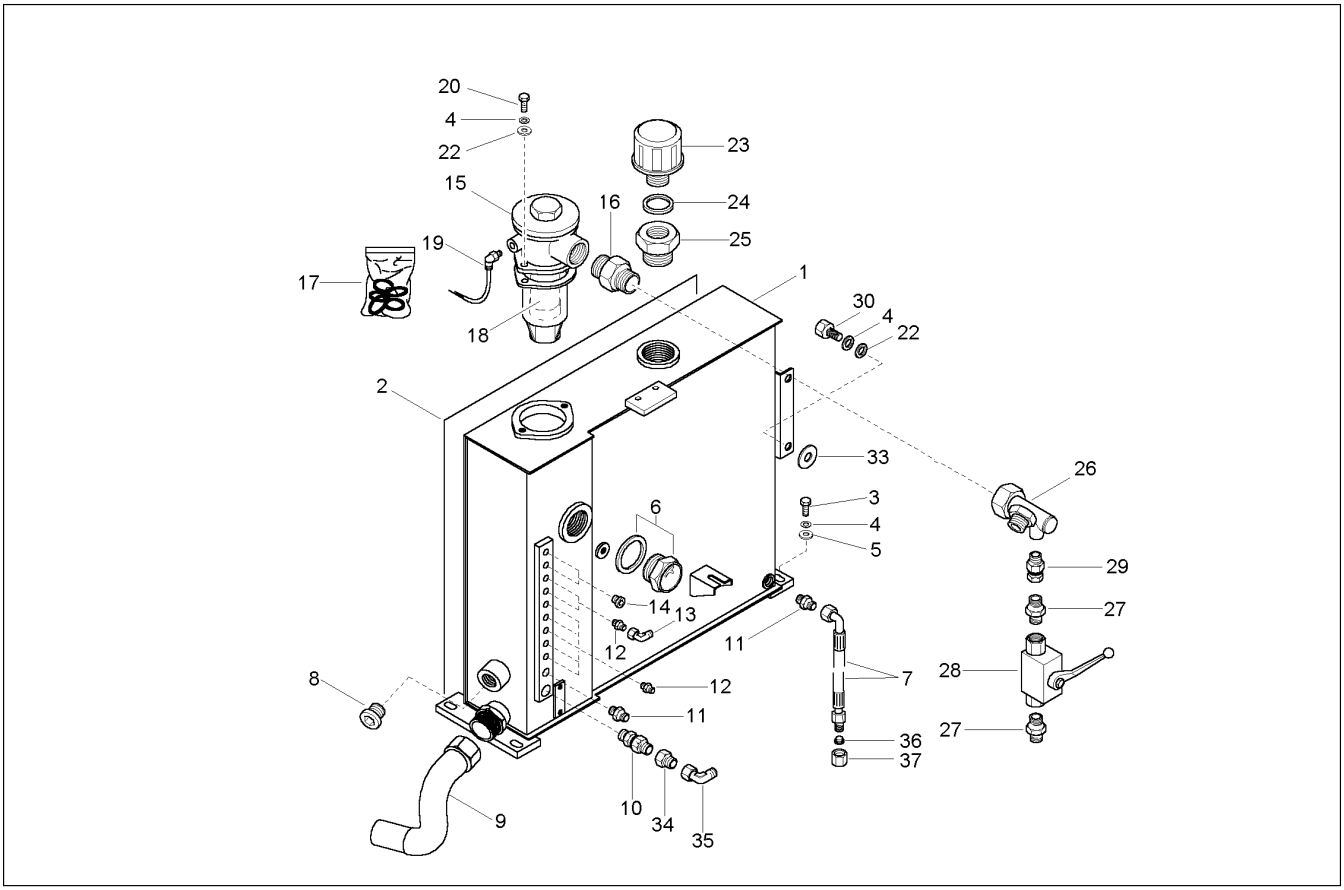


| Ref. No. | Part No. | Description | Qty. Req. | Ref. No. | Part No. | Description | Qty. Req. |
|---|---|---|---|---|---|---|---|
| 01 | 165063 | HYDRAULIC OIL STORAGE TANK | 1 | 18 | 165111 | HYDRAULIC OIL FILTER – ELEMENT | 1 |
| 02 | 165558 | ISOLATION MAT | 1 | 19 | 163001 | PRESSURE SWITCH | 1 |
| 03 | 651399 | CS M10–1.5 X 40 C 8.8 | 4 | 20 | 651475 | SHCS HS M10–1.2 X 30 8.8 | 2 |
| 04 | 161669 | RING/SNAP S10 | 8 | 22 | 161640 | WASHER/GR A 10.5 | 4 |
| 05 | 161641 | WASHER/GRA 10.5 | 4 | 23 | 160949 | FILTER | 1 |
| 06 | 160439 | OIL LEVEL GLASS | 1 | 24 | 161579 | SEAL | 1 |
| 07 | 165863 | HP HOSE | 1 | 25 | 161485 | REDUCTION JOINT | 1 |
| 08 | 164925 | SCREW | 1 | 26 | 165478 | TUBE | 1 |
| 09 | 165471 | TUBE | 1 | 27 | 161430 | SCREW JOINT | 2 |
| 10 | 161511 | NON RETURN VALVE | 1 | 28 | 160972 | BALL VALVE | 1 |
| 11 | 161429 | SCREW JOINT | 2 | 29 | 162495 | SCREW JOINT | 1 |
| 12 | 161426 | SCREW JOINT | 7 | 30 | 163630 | SCREW | 2 |
| 13 | 161443 | ANGLE | 2 | 33 | 160887 | CORK WASHER | 2 |
| 14 | 161414 | SCREW | 2 | 34 | 161441 | REDUCTION JOINT | 1 |
| 15 | 165108 | HYDRAULIC OILFILTER COMPLETE | 1 | 35 | 161446 | ANGLE | 1 |
| 16 | 161490 | SCREW JOINT | 1 | 36 | 161418 | PLUG | 1 |
| 17 | 165113 | SEAL KIT – HYDRAULIC OILFILTER | 1 | 37 | 161423 | NUT | 1 |

# 303 - OIL COOLER

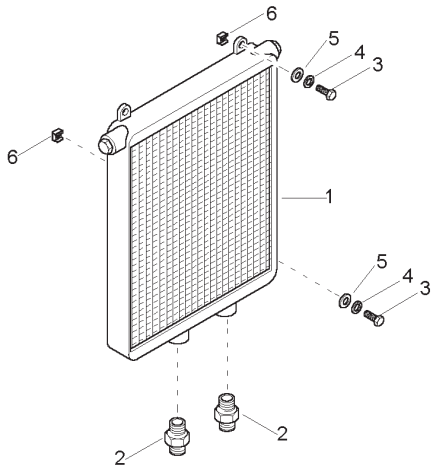


| Ref. No. | Part No. | Description | Qty. Req. | Ref. No. | Part No. | Description | Qty. Req. |
|---|---|---|---|---|---|---|---|
| 01 | 160864 | HYDRAULIC OIL COOLER | 1 | 04 | 161676 | RING/SNAP S8 | 3 |
| 02 | 161464 | SCREW JOINT | 2 | 05 | 161661 | WASHER/GR A 8.4 | 3 |
| 03 | 163649 | SCREW | 3 | 06 | 161615 | NUT/CAGE M8 | 3 |

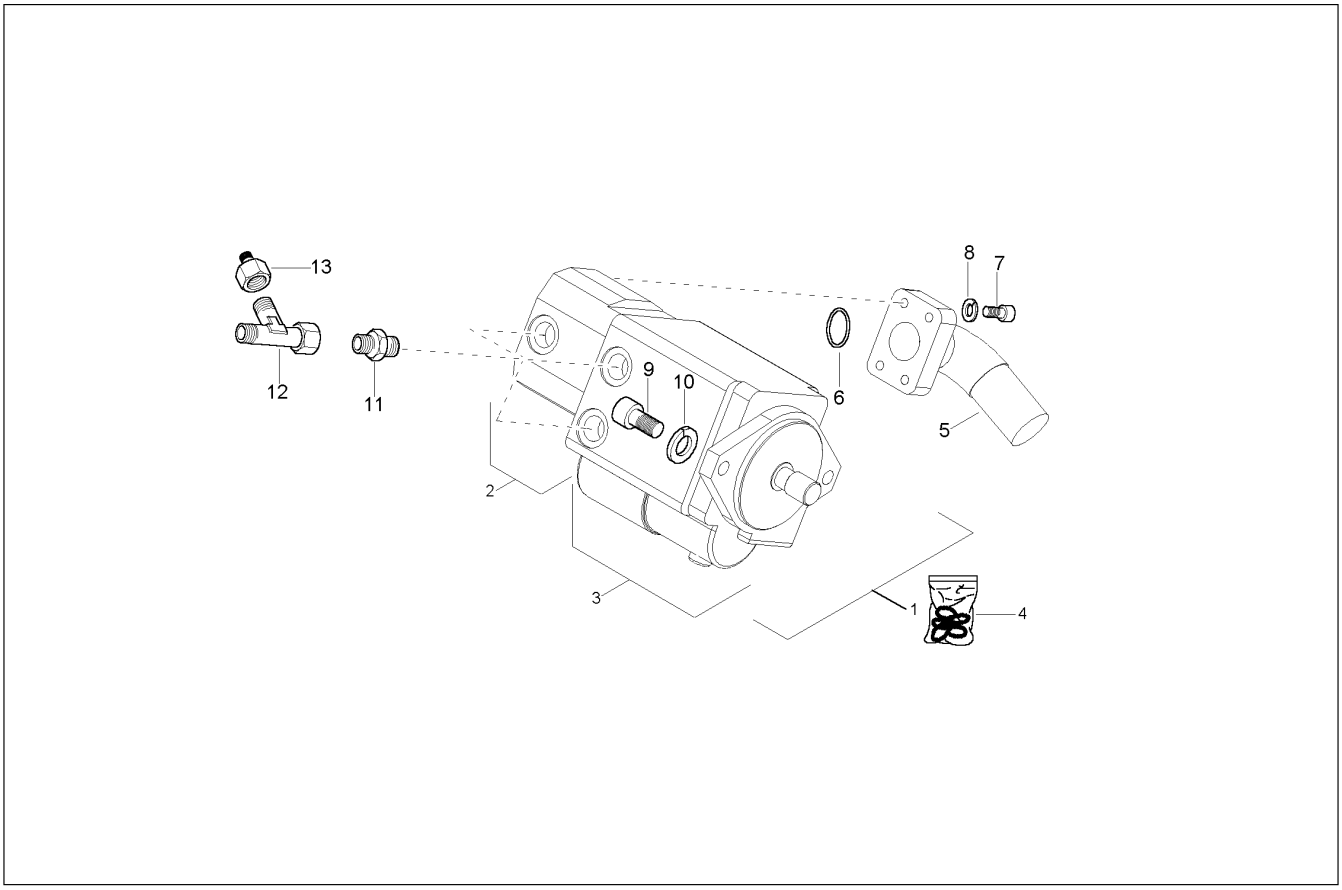


| Ref. No. | Part No. | Description | Qty. Req. |
|---|---|---|---|
| 01 | 165661 | VARIABLE PUMP + GEAR PUMP | 1 |
| 02 | 165688 | GEAR PUMP | 1 |
| 03 | 165689 | VARIABLE PUMP | 1 |
| 04 | 165703 | SEAK KIT | 1 |
| 05 | 165472 | FLANGE | 1 |
| 06 | 161565 | O–RING | 1 |
| 07 | 651475 | SHCS HS M10–1.2 X 30 8.8 | 4 |
| 08 | 161669 | RING/SNAP S10 | 4 |
| 09 | 651480 | SHCS HS M12–1.7 X 30 10.9 | 2 |
| 10 | 161670 | RING/SNAP S12 | 2 |
| 11 | 165971 | SCREW JOINT | 3 |
| 12 | 165499 | REDUCTION JOINT | 3 |
| 13 | 161493 | REDUCTION JOINT | 3 |

# 303 - TRAVEL MOTORS

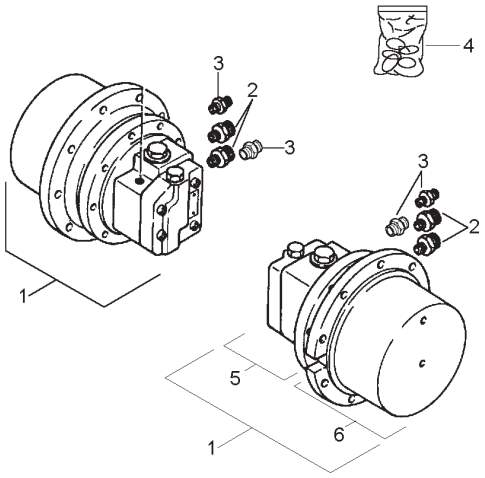


| Ref. No. | Part No. | Description | Qty. Req. | Ref. No. | Part No. | Description | Qty. Req. |
|---|---|---|---|---|---|---|---|
| 01 | 165662 | TRACK DRIVE UNIT | 2 | 04 | 165538 | SEAL–KIT | 2 |
| 02 | 165965 | SCREW JOINT | 4 | 05 | 165539 | ENGINE COMPLETE | 2 |
| 03 | 164945 | SCREW JOINT | 4 | 06 | 165691 | GEARBOX COMPLETE | 2 |

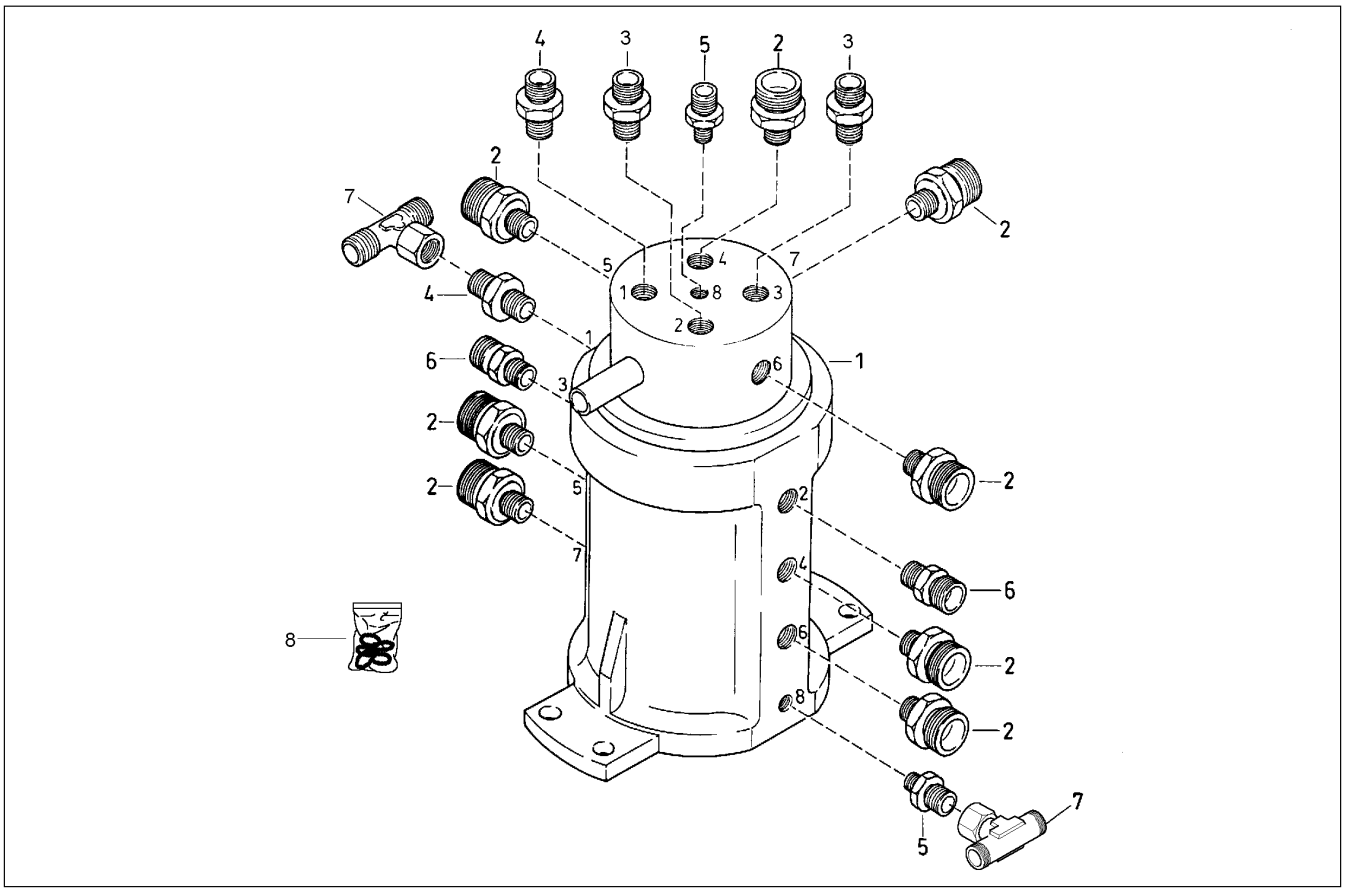

| Ref. No. | Part No. | Description | Qty. Req. | Ref. No. | Part No. | Description | Qty. Req. |
|---|---|---|---|---|---|---|---|
| 01 | 162526 | SWIVEL JOINT | 1 | 05 | 161426 | SCREW JOINT | 2 |
| 02 | 161463 | SCREW JOINT | 8 | 06 | 161429 | SCREW JOINT | 2 |
| 03 | 161428 | SCREW JOINT | 2 | 07 | 161450 | TEE | 2 |
| 04 | 161427 | SCREW JOINT | 2 | 08 | 165582 | SEAL KIT | 1 |

# 303 - SWIVEL JOINT, DISASSEMBLED

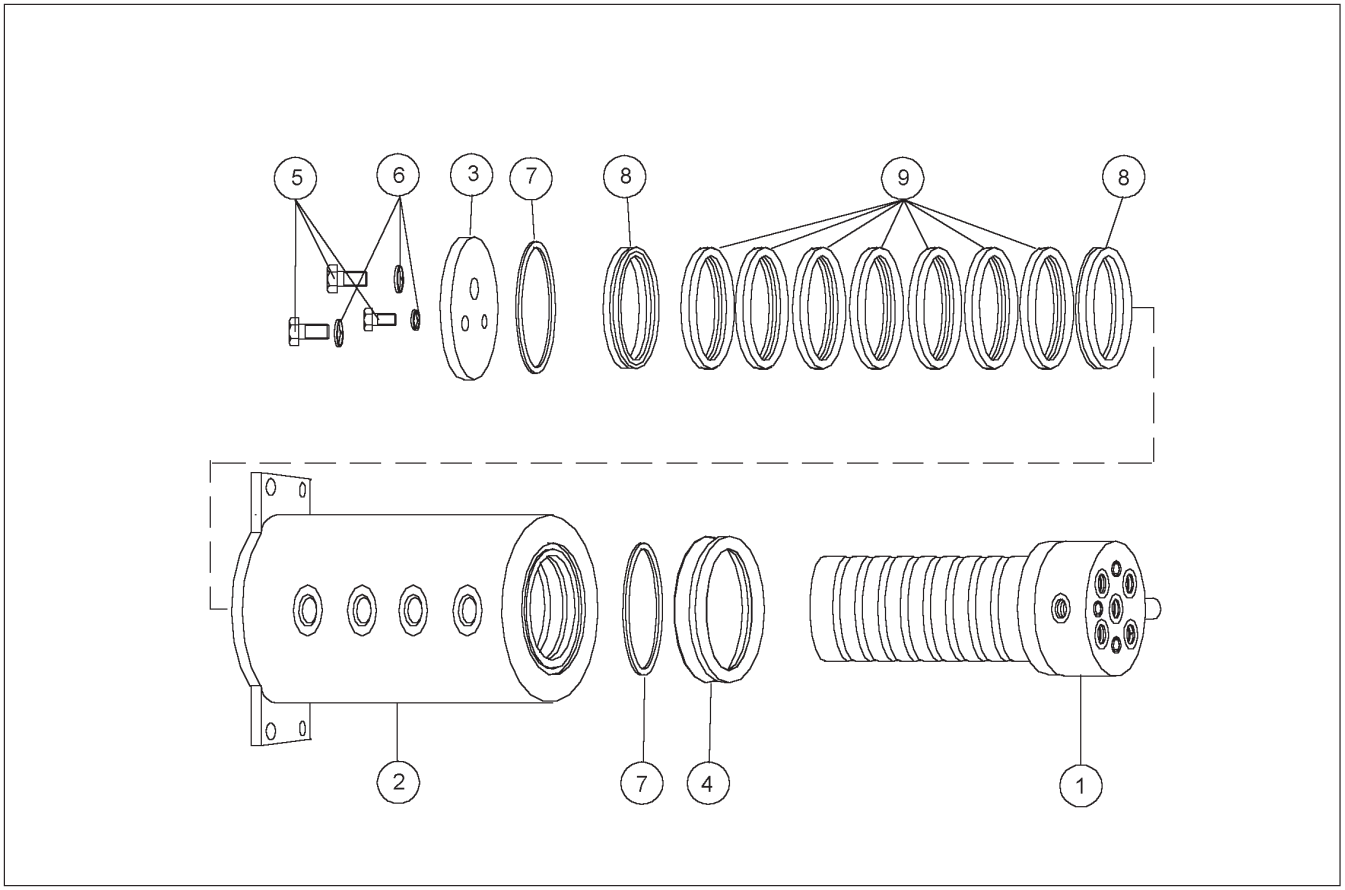


| Ref. No. | Part No. | Description | Qty. Req. |
|---|---|---|---|
| 01 | 165584 | INNER PART – SWIVEL JOINT | 1 |
| 02 | 165585 | OUTER PART – SWIVEL JOINT | 1 |
| 03 | 165495 | COVER | 1 |
| 04 | 165583 | V–SEAL | 1 |
| 05 | 656001 | CS M8–1.2 X 20 C 8.8 | 3 |
| 06 | 656110 | LW REG M8 | 3 |
| 07 | 165498 | WASHER | 2 |
| 08 | 165497 | WASHER | 2 |
| 09 | 165496 | WASHER | 7 |

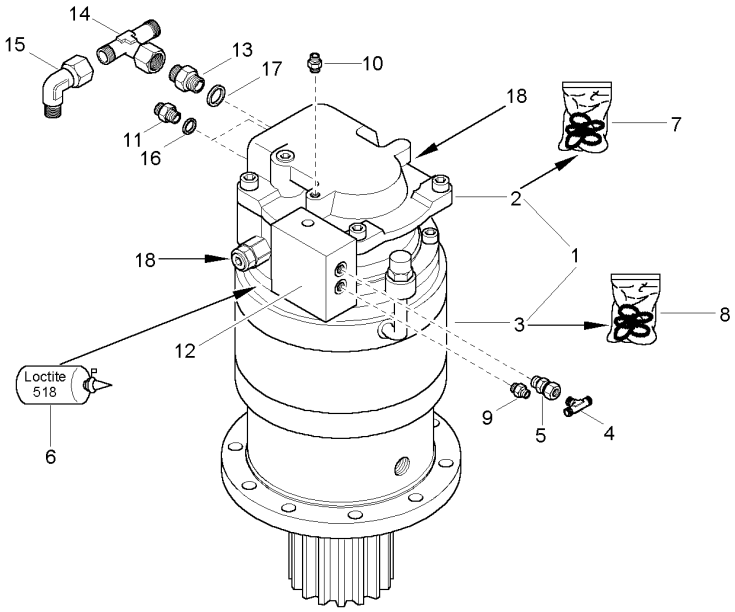


| Ref. No. | Part No. | Description | Qty. Req. | Ref. No. | Part No. | Description | Qty. Req. |
|---|---|---|---|---|---|---|---|
| 01 | 165660 | ROTARY ACTUATOR COMPLETE | 1 | 10 | 165969 | SCREW JOINT | 1 |
| 02 | 165508 | TORQUE MOTOR | 1 | 11 | 165966 | SCREW JOINT | 2 |
| 03 | 165690 | TURNING GEAR | 1 | 12 | 165513 | VALVE | 1 |
| 04 | 161474 | VALVE | 1 | 13 | 165965 | SCREW JOINT | 1 |
| 05 | 165973 | SCREW JOINT | 1 | 14 | 161467 | TEE | 1 |
| 06 | 165897 | LOCTITE 518 | 1 | 15 | 161446 | ANGLE | 1 |
| 07 | 165510 | SEAL KIT – TORQUE MOTOR | 1 | 16 | 161590 | O–RING | 2 |
| 08 | 165511 | SEAL KIT – TURNING GEAR | 1 | 17 | 161585 | O–RING | 1 |
| 09 | 164945 | SCREW JOINT | 1 | 18 | 165512 | PRESSURE CONTROL | 2 |

# 303 - CONTROL VALVE 1

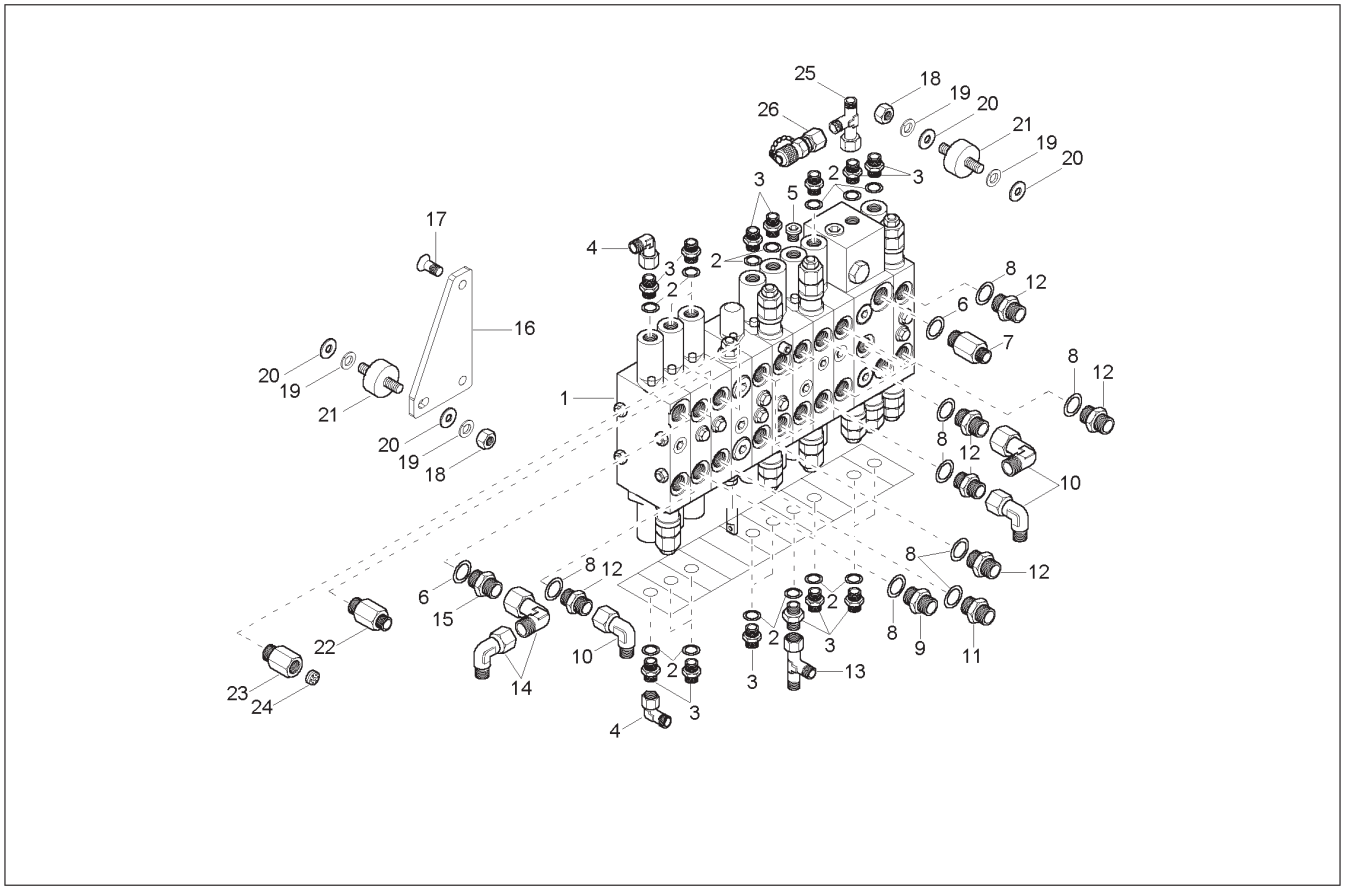


| Ref. No. | Part No. | Description | Qty. Req. |
|---|---|---|---|
| 01 | 165663 | CONTROL VALVE | 1 |
| 02 | 161574 | O–RING | 17 |
| 03 | 164945 | SCREW JOINT | 17 |
| 04 | 161443 | ANGLE | 2 |
| 05 | 161414 | SCREW | 1 |
| 06 | 161585 | O–RING | 2 |
| 07 | 165504 | SCREW JOINT | 1 |
| 08 | 161590 | O–RING | 19 |
| 09 | 165966 | SCREW JOINT | 1 |
| 10 | 161446 | ANGLE | 3 |
| 11 | 165972 | SCREW JOINT | 1 |
| 12 | 165971 | SCREW JOINT | 15 |
| 13 | 161448 | ELBOW | 1 |
| 14 | 161456 | ANGLE | 2 |
| 15 | 165968 | SCREW JOINT | 1 |
| 16 | 165065 | PLATE | 1 |
| 17 | 162041 | SCREW | 2 |
| 18 | 163630 | SCREW | 3 |
| 18 | 656102 | HN M10–1.2 | 3 |
| 19 | 161669 | RING/SNAP S10 | 3 |
| 20 | 161640 | WASHER/GR A 10.5 | 4 |
| 21 | 165566 | RUBBER–METAL–BUFFER | 3 |
| 22 | 165505 | SCREW JOINT | 1 |
| 23 | 161357 | CONNECTOR | 1 |
| 24 | 160651 | THROTTLE | 1 |
| 25 | 161448 | ELBOW | 1 |
| 26 | 161514 | MEASURE JOINT | 1 |

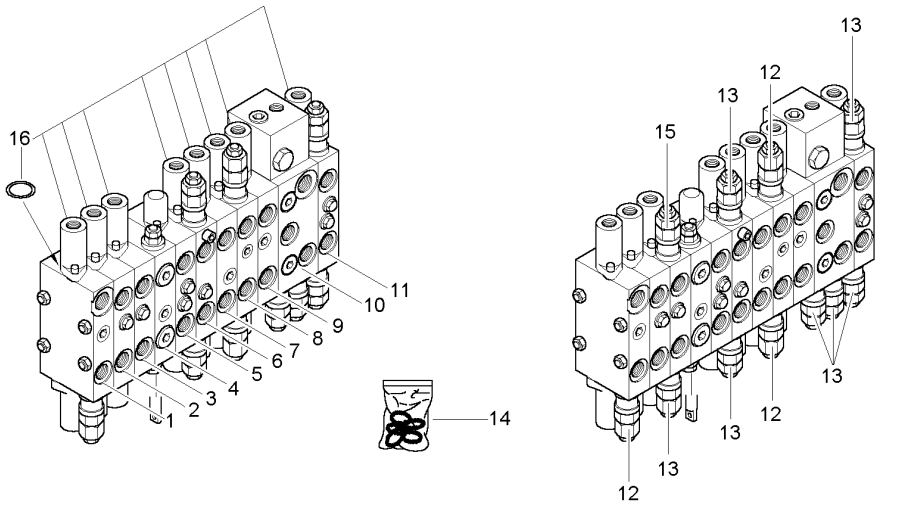


| Ref. No. | Part No. | Description | Qty. Req. | Ref. No. | Part No. | Description | Qty. Req. |
|---|---|---|---|---|---|---|---|
| 01 | 165524 | SEGMENT | 1 | 09 | 165532 | SEGMENT (RIGHT) | 1 |
| 02 | 165525 | SEGMENT | 1 | 10 | 165533 | SEGMENT | 1 |
| 03 | 165526 | SEGMENT | 1 | 11 | 165534 | SEGMENT | 1 |
| 04 | 165527 | SEGMENT | 1 | 12 | 165535 | MAIN PRESSURE CONTROL | 3 |
| 05 | 165528 | SEGMENT | 1 | 13 | 165536 | PRESSURE LIMITING VALVE | 7 |
| 06 | 165529 | SEGMENT | 1 | 14 | 165569 | SEAL KIT | 1 |
| 07 | 165530 | SEGMENT (LEFT) | 1 | 15 | 165543 | NON RETURN VALVE | 1 |
| 08 | 165531 | SEGMENT | 1 | 16 | 165541 | SEAL | 16 |

# 303 - PILOT OIL SUPPLY (BEFORE SN AB00865)

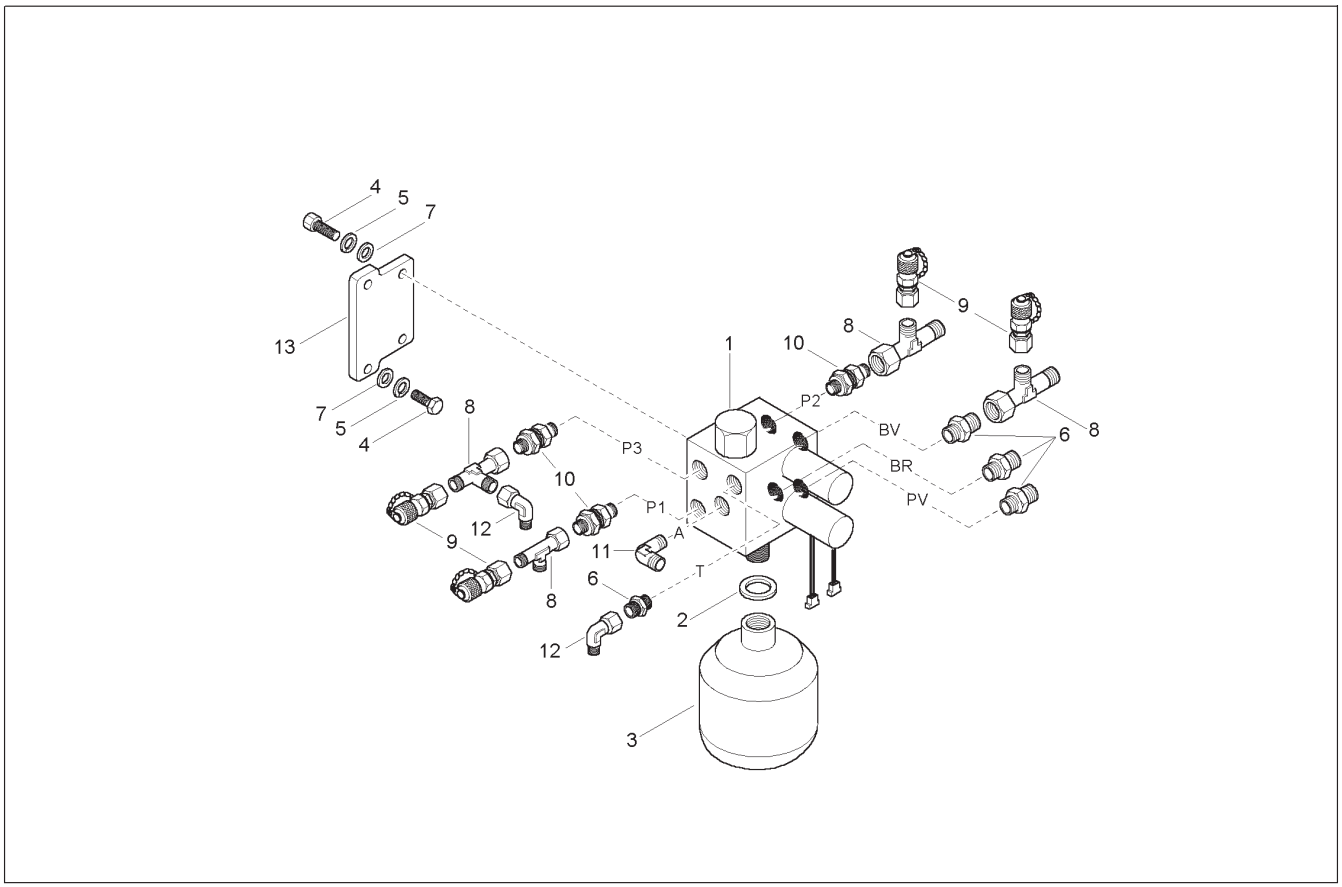


| Ref. No. | Part No. | Description | Qty. Req. |
|---|---|---|---|
| 01 | 160594 | PILOT OIL SUPPLY UNIT | 1 |
| 02 | 161567 | SEAL | 1 |
| 03 | 160437 | ACCUMULATOR | 1 |
| 04 | 656001 | CS M8–1.2 X 20 C 8.8 | 4 |
| 05 | 161676 | RING/SNAP S8 | 4 |
| 06 | 161426 | SCREW JOINT | 4 |
| 07 | 161661 | WASHER/GR A 8.4 | 4 |
| 08 | 161448 | ELBOW | 4 |
| 09 | 161514 | MEASURE JOINT | 4 |
| 10 | 165975 | NON RETURN VALVE | 3 |
| 11 | 161438 | ELBOW | 1 |
| 12 | 161443 | ANGLE | 2 |
| 13 | 162790 | PLATE | 1 |

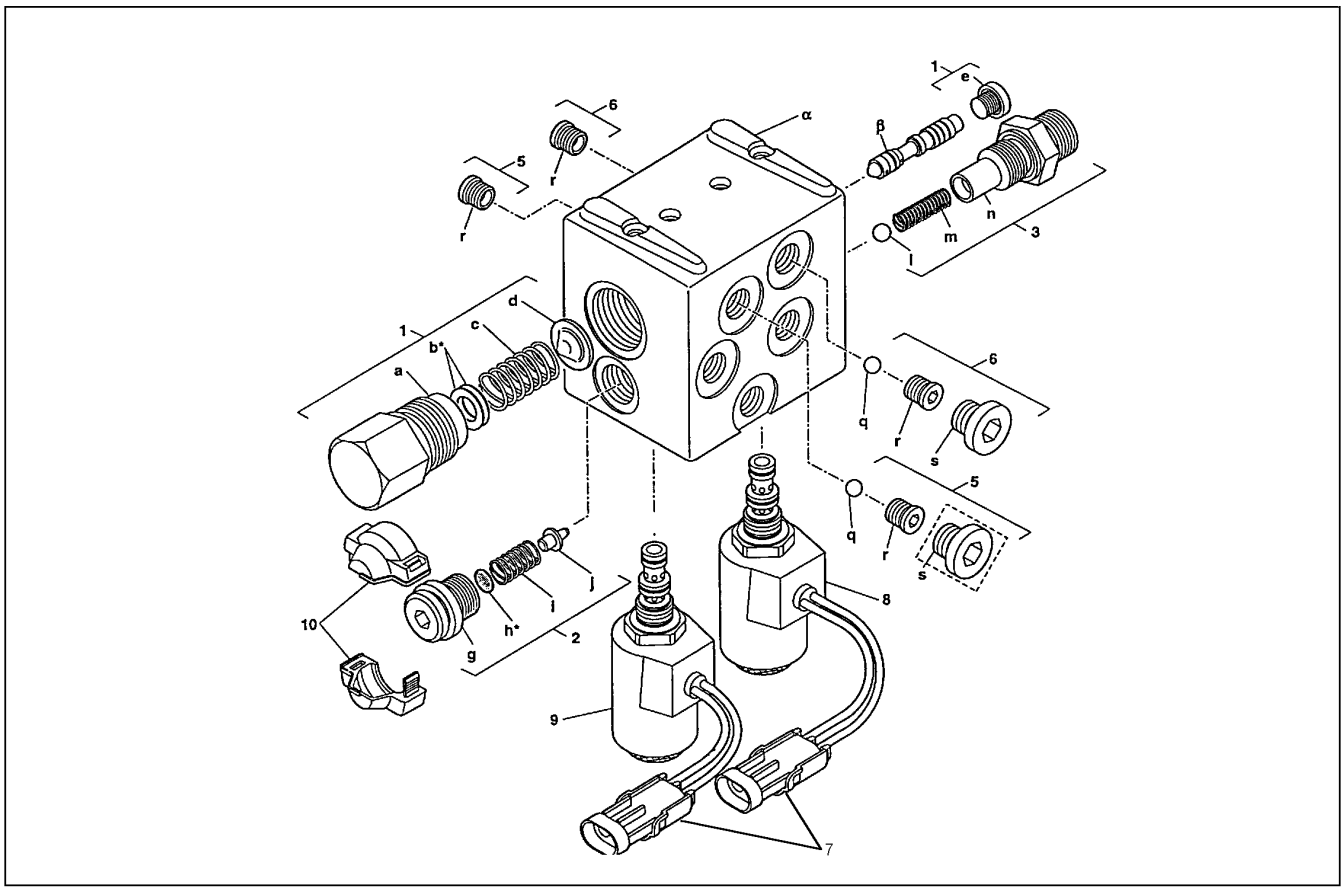


| Ref. No. | Part No. | Description | Qty. Req. |
|---|---|---|---|
| 01 | 160572 | PLUG | 1 |
| 02 | 162519 | PRESSURE RELIEF VALVE KIT | 1 |
| 03 | 162520 | CONNECTION KIT | 1 |
| 05 | 162521 | SHUTTLE VALVE KIT | 1 |
| 06 | 162521 | SHUTTLE VALVE KIT | 1 |
| 07 | 162471 | PLUG | 2 |
| 08 | 160571 | SOLENOID SWITCH | 1 |
| 09 | 160571 | SOLENOID SWITCH | 1 |
| 10 | 162518 | HALF COVERS | 1 |

# 303 - PILOT OIL SUPPLY (AFTER SN AB00864)

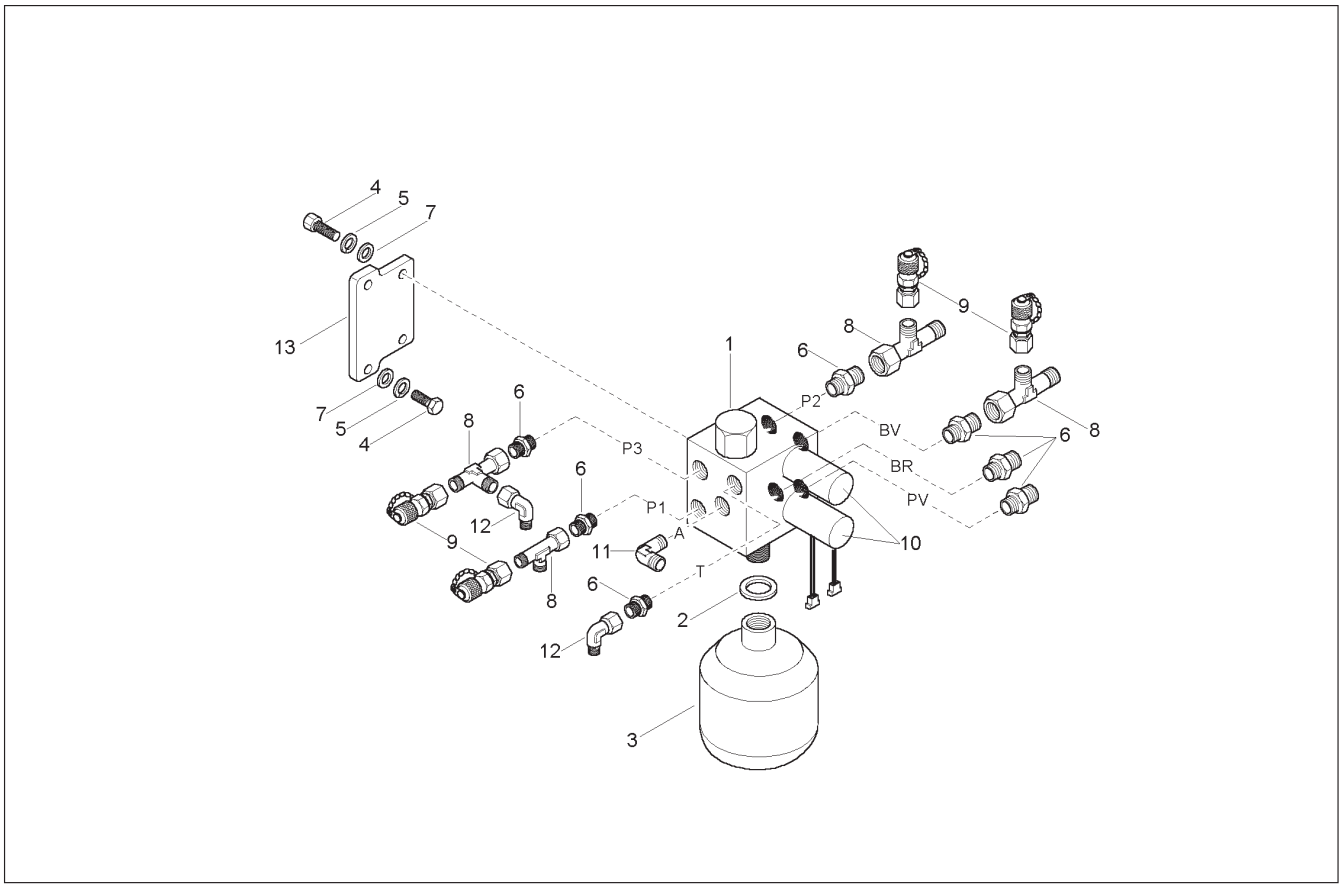


| Ref. No. | Part No. | Description | Qty. Req. |
|---|---|---|---|
| 01 | 165045 | PILOT OIL SUPPLY UNIT | 1 |
| 02 | 161567 | SEAL | 1 |
| 03 | 160437 | ACCUMULATOR | 1 |
| 04 | 656001 | CS M8–1.2 X 20 C 8.8 | 4 |
| 05 | 161676 | RING/SNAP S8 | 4 |
| 06 | 161426 | SCREW JOINT | 7 |
| 07 | 161667 | WASHER/GR A 8.4 | 4 |
| 08 | 161448 | ELBOW | 4 |
| 09 | 161514 | MEASURE JOINT | 4 |
| 10 | 165043 | SOLENOID SWITCH | 2 |
| 11 | 161438 | ELBOW | 1 |
| 12 | 161443 | ANGLE | 2 |
| 13 | 162790 | PLATE | 1 |

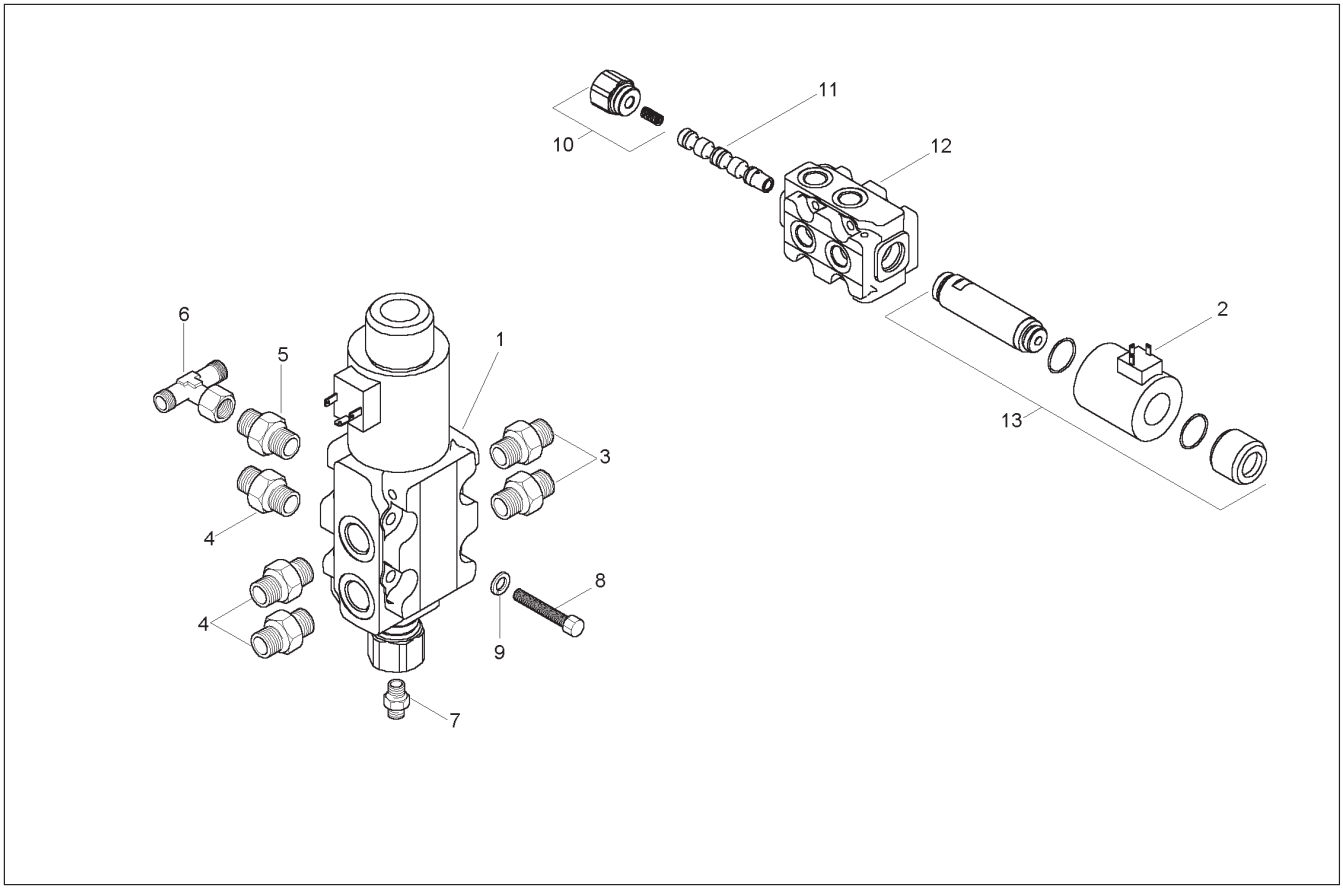


| Ref. No. | Part No. | Description | Qty. Req. |
|---|---|---|---|
| 01 | 165488 | SELECTION VALVE | 1 |
| 02 | 165516 | COIL | 1 |
| 03 | 165961 | SCREW JOINT | 2 |
| 04 | 161431 | SCREW JOINT | 3 |
| 05 | 161432 | SCREW JOINT | 1 |
| 06 | 161467 | TEE | 1 |
| 07 | 161426 | SCREW JOINT | 1 |
| 08 | 165928 | SCREW | 2 |
| 09 | 161661 | WASHER/GR A 8.4 | 2 |
| 10 | 165515 | STOP SOLENOID | 1 |
| 11 | 165519 | CONTROL PLUNGER | 1 |
| 12 | 165518 | HOUSING | 1 |
| 13 | 165517 | MAGNET | 1 |

# 303 - DOZER BLADE REVERSING VALVE

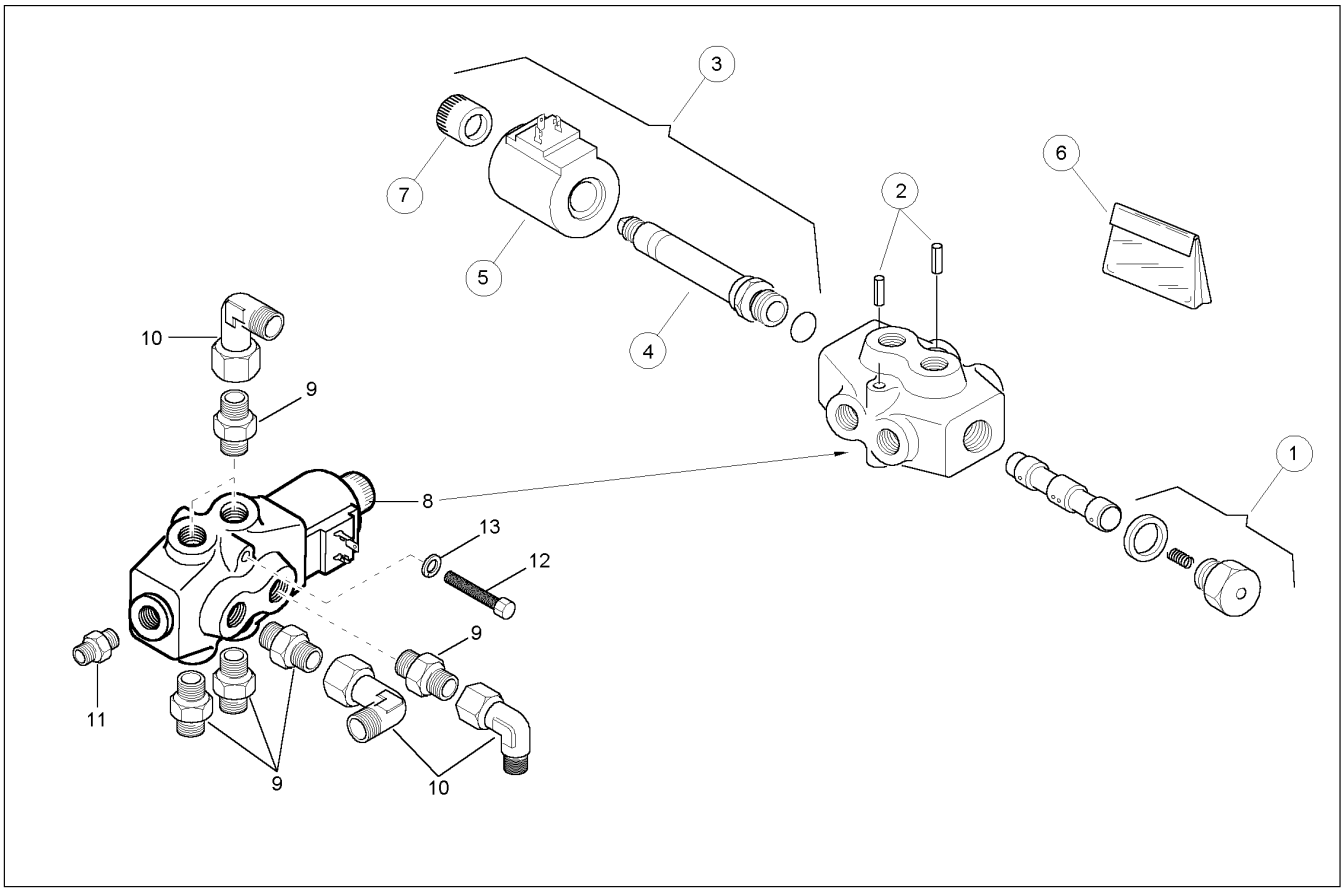


| Ref. No. | Part No. | Description | Qty. Req. |
|---|---|---|---|
| 01 | 162241 | STOP SOLENOID | 1 |
| 02 | 162242 | PLUG | 2 |
| 03 | 162243 | STOP SOLENOID | 1 |
| 04 | 162244 | PIPE SUPPORT | 1 |
| 05 | 162245 | MAGNETIC REEL | 1 |
| 06 | 162246 | SEAL KIT | 1 |
| 07 | 164706 | NUT | 1 |
| 08 | 160763 | SELECTION VALVE | 1 |
| 09 | 161427 | SCREW JOINT | 6 |
| 10 | 161443 | ANGLE | 4 |
| 11 | 161426 | SCREW JOINT | 1 |
| 12 | 165946 | SCREW | 2 |
| 13 | 161675 | RING/SNAP S6 | 2 |

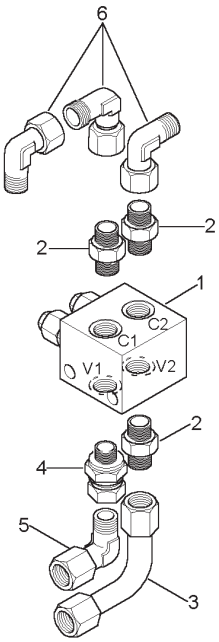


| Ref. No. | Part No. | Description | Qty. Req. | Ref. No. | Part No. | Description | Qty. Req. |
|---|---|---|---|---|---|---|---|
| 01 | 165490 | LOCK VALVE | 1 | 04 | 165963 | SCREW JOINT | 1 |
| 02 | 163113 | SCREW JOINT | 3 | 05 | 161444 | ANGLE | 1 |
| 03 | 165481 | TUBE | 1 | | | | |

# 303 - MANIFOLD BLOCK

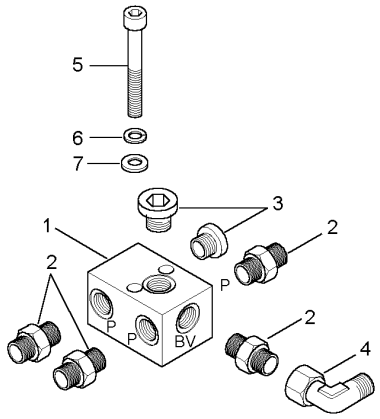


| Ref. No. | Part No. | Description | Qty. Req. | Ref. No. | Part No. | Description | Qty. Req. |
|---|---|---|---|---|---|---|---|
| 01 | 165089 | DISTRIBUTION BLOCK | 1 | 05 | 162028 | SCREW | 2 |
| 02 | 161426 | SCREW JOINT | 4 | 06 | 161675 | RING/SNAP S6 | 2 |
| 03 | 161414 | SCREW | 2 | 07 | 161661 | WASHER/GR A 8.4 | 2 |
| 04 | 161443 | ANGLE | 1 | | | | |

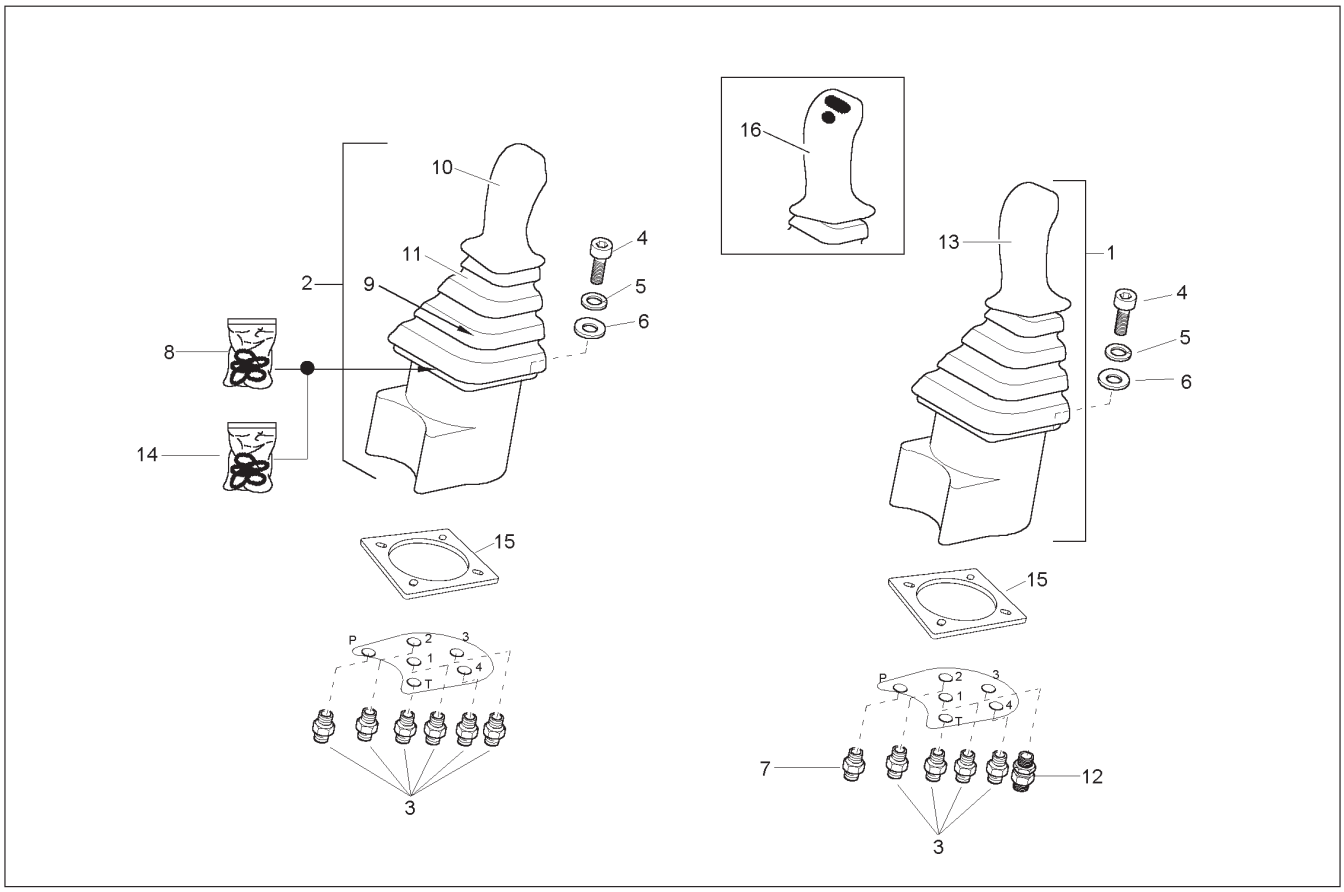


| Ref. No. | Part No. | Description | Qty. Req. |
|---|---|---|---|
| 01 | 165489 | CONTROL LEVER RIGHT COMPLETE | 1 |
| 02 | 160761 | CONTROL LEVER | 1 |
| 03 | 161426 | SCREW JOINT | 10 |
| 04 | 651507 | SHCS HS M6–1 X 20 8.8 | 8 |
| 05 | 161675 | RING/SNAP S6 | 8 |
| 06 | 161660 | WASHER/GR A 6.4 | 8 |
| 07 | 164535 | PILOT CONTROL FILTER | 1 |
| 08 | 165040 | SEAL KIT II | 2 |
| 09 | 165037 | UNIVERSAL JOINT FOR JOYSTICK | 2 |
| 10 | 165039 | HANDLE | 1 |
| 11 | 165038 | BELLOWS | 2 |
| 12 | 165976 | RESTRICTOR | 1 |
| 13 | 165816 | HANDLE | 1 |
| 14 | 165041 | SEAL KIT I (TAPPET) LEFT/RIGHT | 2 |
| 15 | 165825 | PLATE | 2 |
| 16 | 165044 | HANDLE | 1 |

# 303 - TRAVELING VALVE

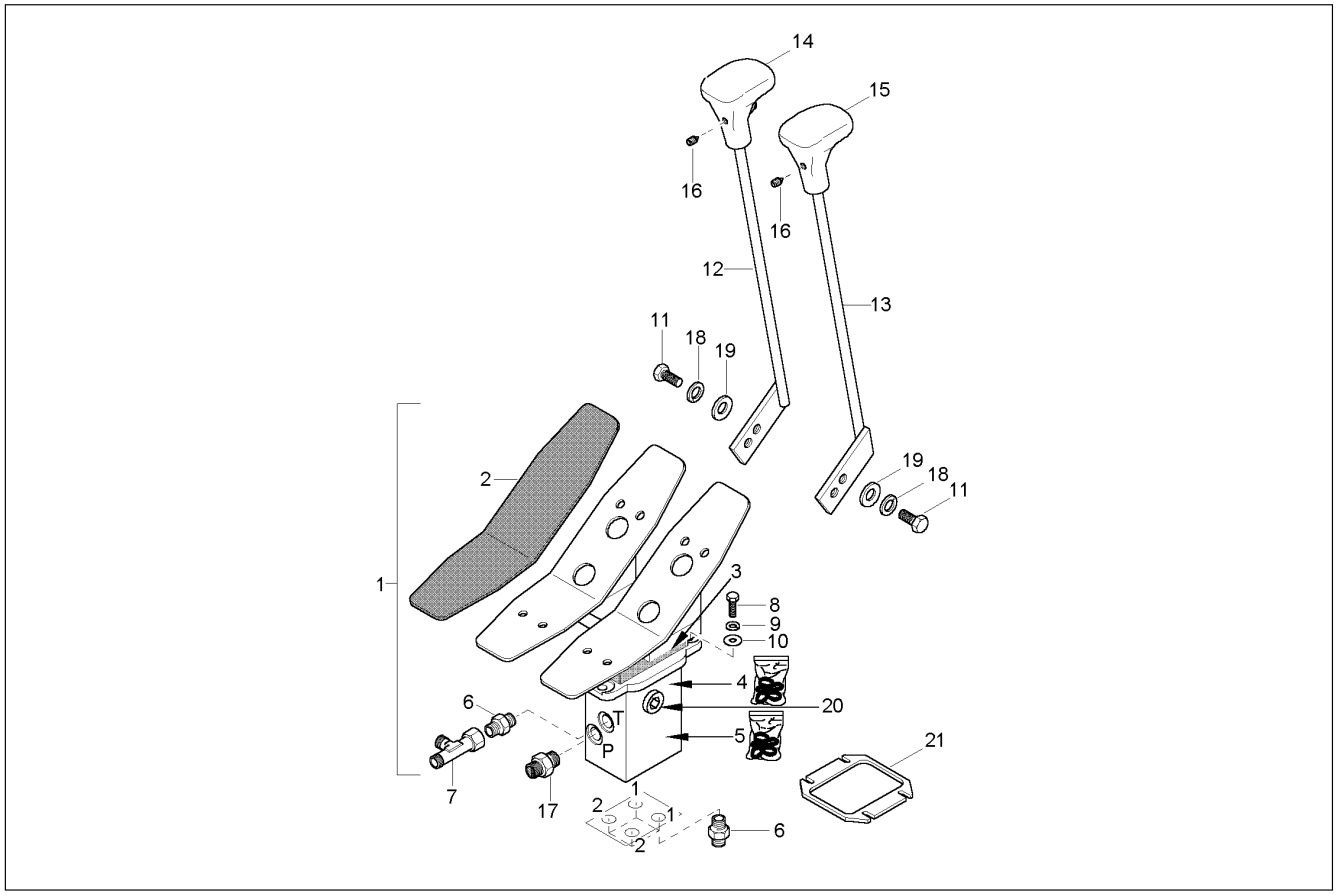


| Ref. No. | Part No. | Description | Qty. Req. | Ref. No. | Part No. | Description | Qty. Req. |
|---|---|---|---|---|---|---|---|
| 01 | 165487 | CONTROL LEVER | 1 | 11 | 651472 | SHCS HS M10–1.2 X 20 8.8 | 4 |
| 02 | 165523 | RUBBER | 2 | 12 | 165057 | HAND LEVER TRAVELLING LEFT | 1 |
| 03 | 165522 | BELLOWS | 1 | 13 | 165056 | HAND LEVER TRAVELLING RIGHT | 1 |
| 04 | 165521 | SEAL KIT (TAPPET) LEFT/RIGHT | 1 | 14 | 160658 | KNOB WITH RED SWITCH | 1 |
| 05 | 165520 | SEAL KIT | 1 | 15 | 161764 | KNOB | 1 |
| 06 | 161426 | SCREW JOINT | 6 | 16 | 162027 | SCREW MOUNT | 2 |
| 07 | 161448 | ELBOW | 1 | 17 | 164535 | PILOT CONTROL FILTER | 1 |
| 08 | 656001 | CS M8–1.2 X 20 C 8.8 | 4 | 18 | 161669 | RING/SNAP S10 | 4 |
| 08 | 163649 | SCREW | 4 | 19 | 161640 | WASHER/GR A 10.5 | 4 |
| 09 | 161676 | RING/SNAP S8 | 4 | 20 | 165514 | SCREW | 2 |
| 10 | 161661 | WASHER/GR A 8.4 | 4 | 21 | 165153 | PLATE | 1 |

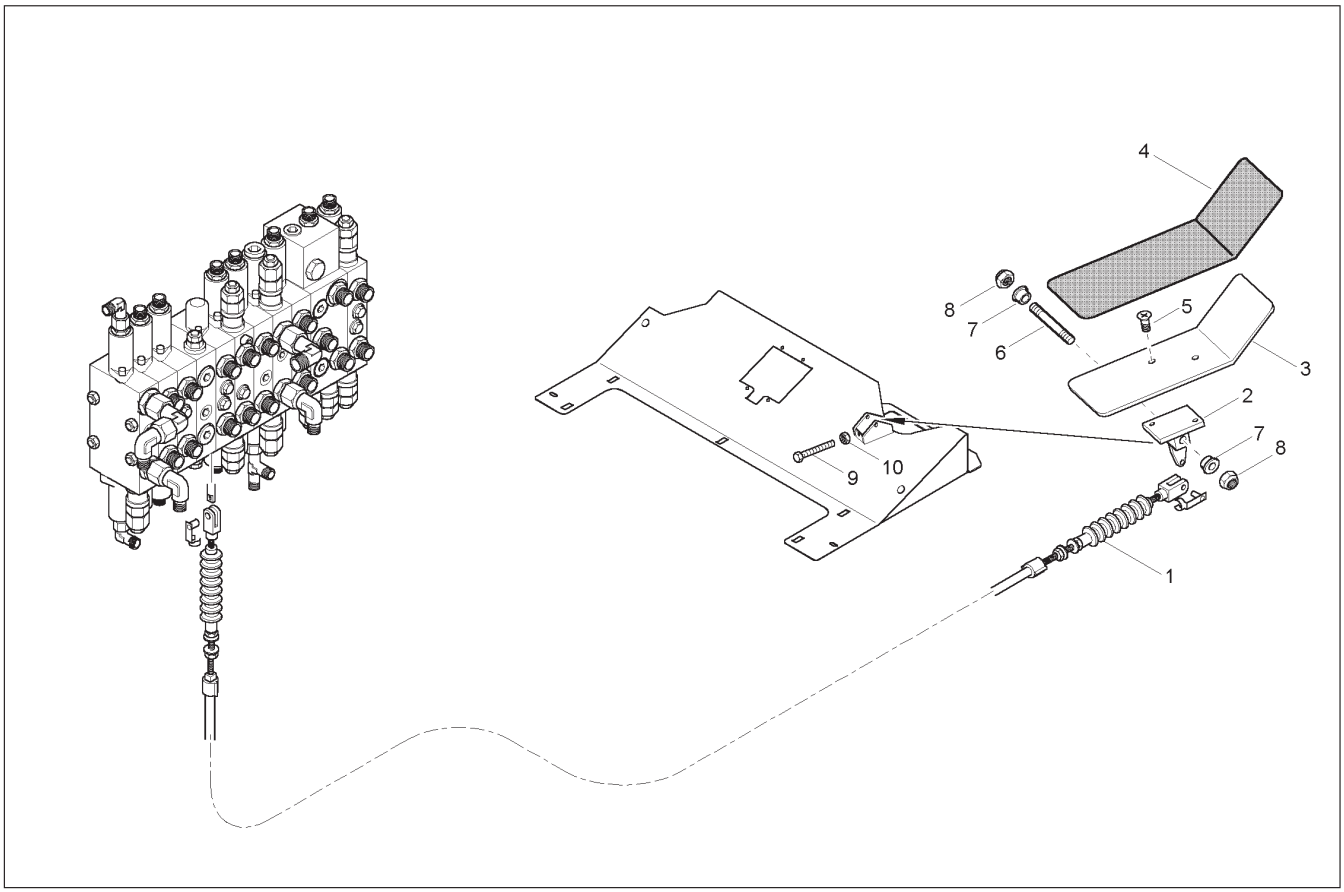


| Ref. No. | Part No. | Description | Qty. Req. | Ref. No. | Part No. | Description | Qty. Req. |
|---|---|---|---|---|---|---|---|
| 01 | 165058 | CABLE | 1 | 06 | 165550 | PIN | 1 |
| 02 | 165548 | LEVER | 1 | 07 | 165567 | BEARING | 2 |
| 03 | 165549 | PEDAL FOR AUXILIARY HYDRAULICS | 1 | 08 | 651449 | HLN INS M12–1.7 | 2 |
| 04 | 165523 | RUBBER | 1 | 09 | 165944 | SCREW | 2 |
| 05 | 651465 | SCREW FCHC HS M8–1.2 X 16 8.8 | 2 | 10 | 656100 | HN M5–.8 | 2 |

# 303 - LIFTING ARM CYLINDER

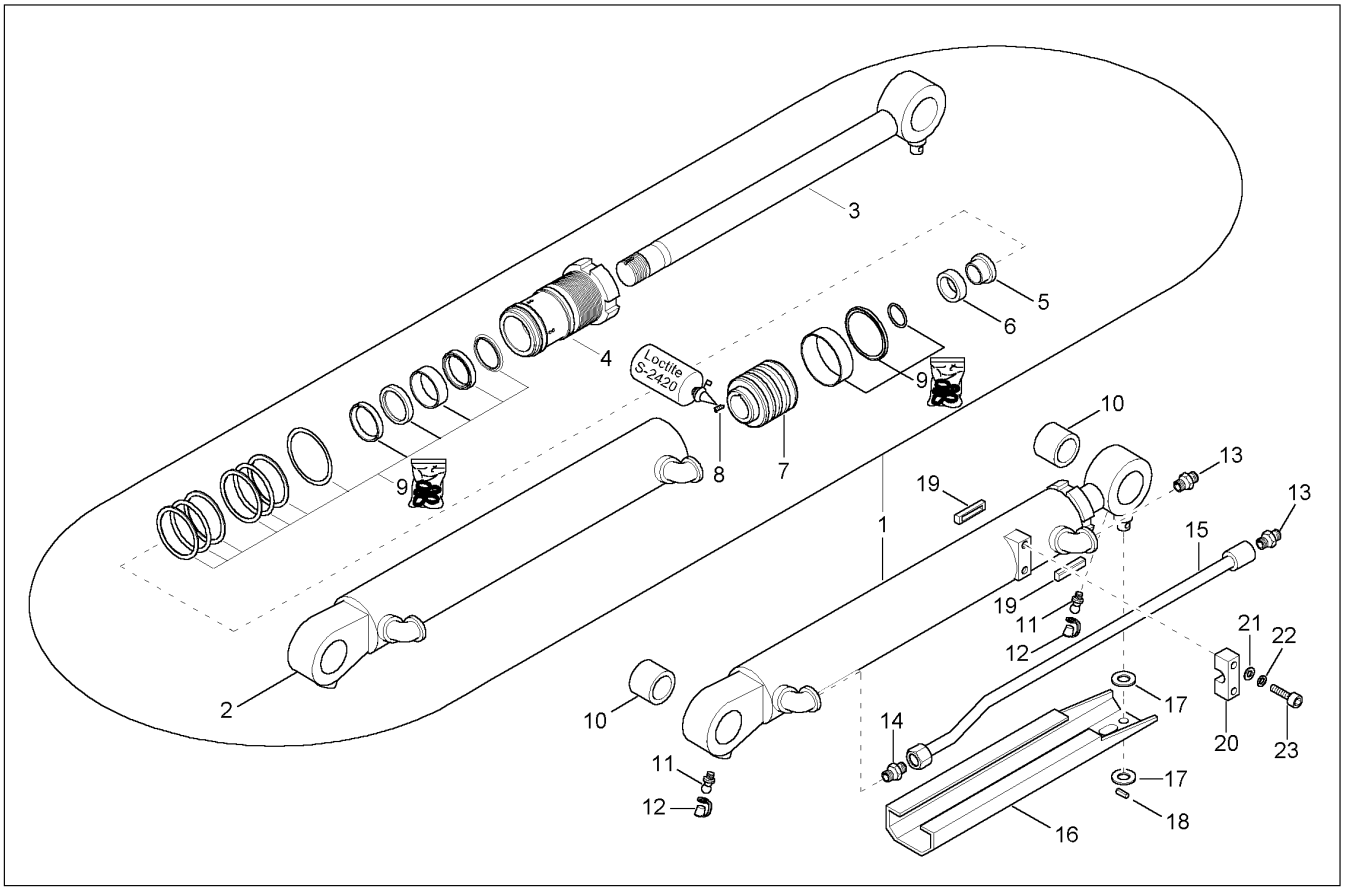


| Ref. No. | Part No. | Description | Qty. Req. |
|---|---|---|---|
| 01 | 165629 | BOOM CYLINDER | 1 |
| 02 | 165670 | CYLINDER HOUSING | 1 |
| 03 | 165671 | PISTON ROD | 1 |
| 04 | 165673 | BUSHING | 1 |
| 05 | 165675 | BUSHING | 1 |
| 06 | 165674 | BUSHING | 1 |
| 07 | 165672 | PISTON | 1 |
| 08 | 165938 | GRUB SCREW | 1 |
| 09 | 165699 | SEAL KIT | 1 |
| 10 | 161538 | BUSHING | 2 |
| 11 | 165823 | LUBRICATION NIPPLE | 2 |
| 12 | 161422 | PROTECTION CAP | 2 |
| 13 | 161463 | SCREW JOINT | 2 |
| 14 | 161431 | SCREW JOINT | 1 |
| 15 | 165658 | TUBES | 1 |
| 16 | 160836 | PROTECTION RAIL | 1 |
| 17 | 161650 | WASHER/GR A 19 | 2 |
| 18 | 651468 | PIN/SPRING M8 X 70 | 1 |
| 19 | 161205 | SEAL | 2 |
| 20 | 165659 | COLLAR | 1 |
| 21 | 161661 | WASHER/GR A 8.4 | 2 |
| 22 | 161676 | RING/SNAP S8 | 2 |
| 23 | 651517 | SHCS HS M8–1.2 X 30 8.8 | 2 |

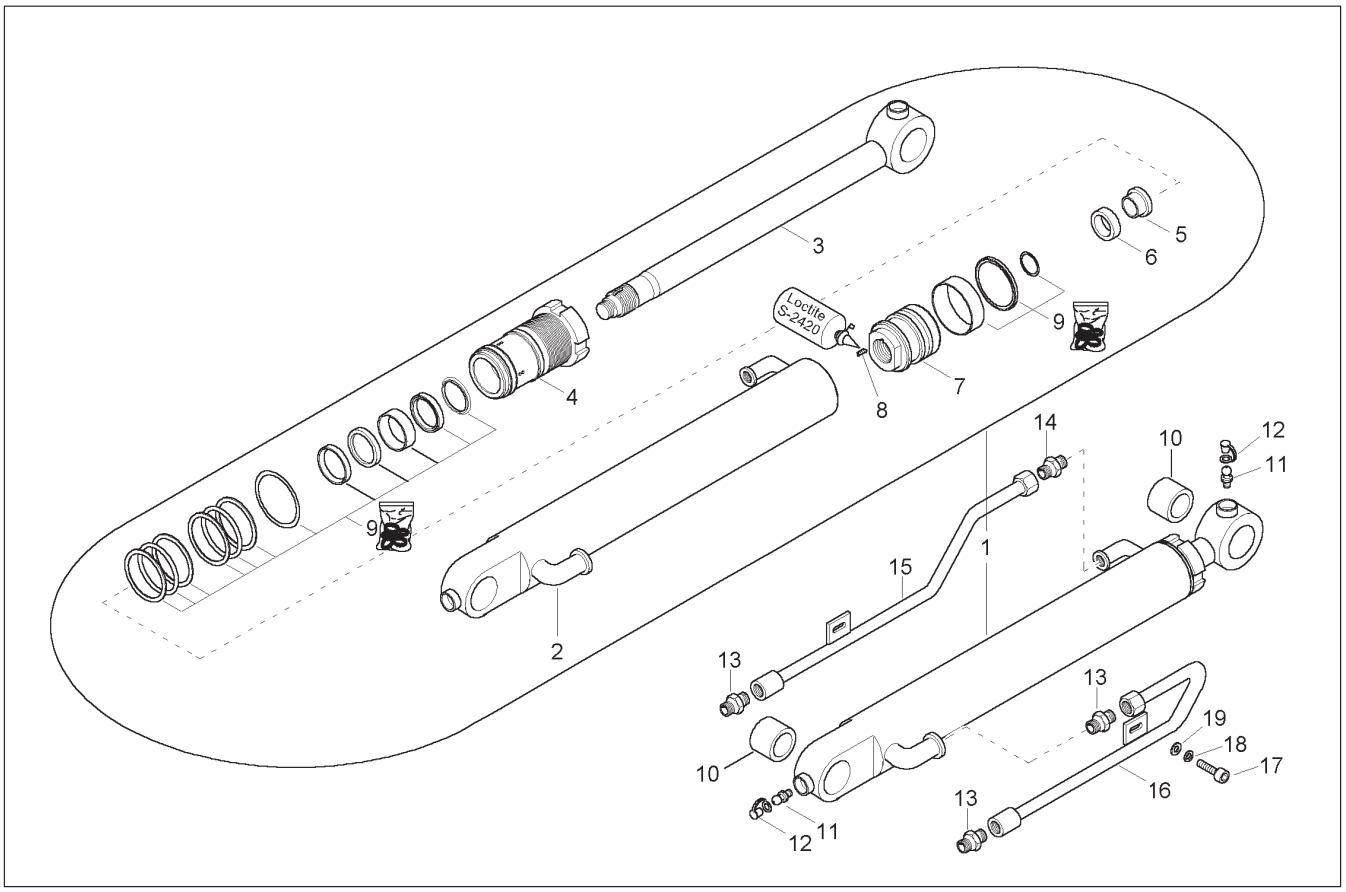


| Ref. No. | Part No. | Description | Qty. Req. |
|---|---|---|---|
| 01 | 165628 | DIPPER ARM CYLINDER | 1 |
| 02 | 165676 | CYLINDER HOUSING | 1 |
| 03 | 165677 | PISTON ROD | 1 |
| 04 | 165679 | BUSHING | 1 |
| 05 | 165675 | BUSHING | 1 |
| 06 | 165674 | BUSHING | 1 |
| 07 | 165678 | PISTON | 1 |
| 08 | 165938 | GRUB SCREW | 1 |
| 09 | 165700 | SEAL KIT | 1 |
| 10 | 161538 | BUSHING | 2 |
| 11 | 165823 | LUBRICATION NIPPLE | 2 |
| 12 | 161422 | PROTECTION CAP | 2 |
| 13 | 161463 | SCREW JOINT | 3 |
| 14 | 161431 | SCREW JOINT | 1 |
| 15 | 165657 | TUBES | 1 |
| 16 | 165656 | TUBES | 1 |
| 17 | 656093 | CS M8–1.2 X 16 C 8.8 | 2 |
| 18 | 161676 | RING/SNAP S8 | 2 |
| 19 | 161667 | WASHER/GR A 8.4 | 2 |

# 303 - DIPPER CYLINDER

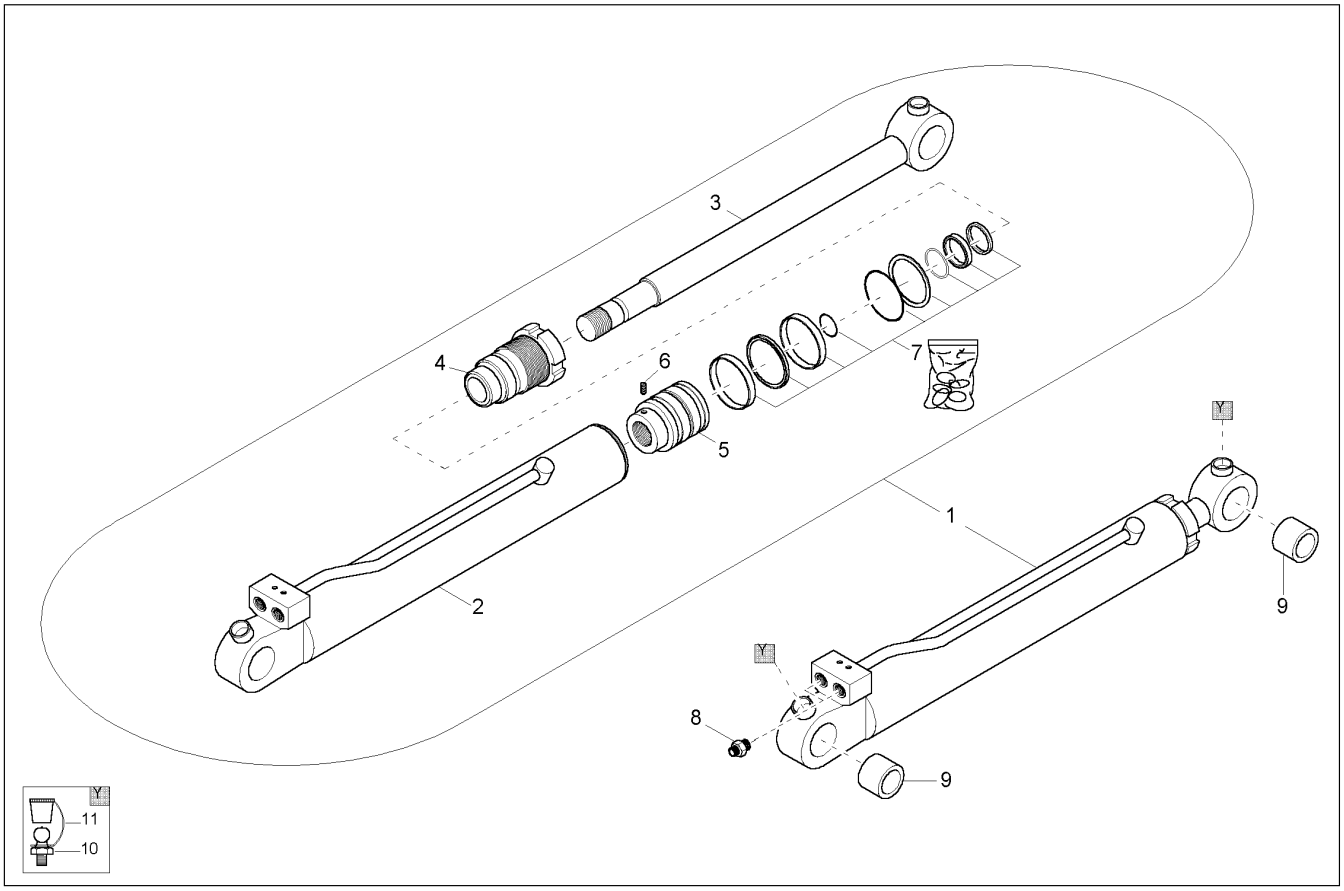


| Ref. No. | Part No. | Description | Qty. Req. |
|---|---|---|---|
| 01 | 165627 | BUCKET CYLINDER | 1 |
| 02 | 165680 | CYLINDER HOUSING | 1 |
| 03 | 165681 | PISTON ROD | 1 |
| 04 | 165682 | BUSHING | 1 |
| 05 | 165678 | PISTON | 1 |
| 06 | 165938 | GRUB SCREW | 1 |
| 07 | 165701 | SEAL KIT | 1 |
| 08 | 161429 | SCREW JOINT | 2 |
| 09 | 161538 | BUSHING | 2 |
| 10 | 165823 | LUBRICATION NIPPLE | 2 |
| 11 | 161422 | PROTECTION CAP | 2 |

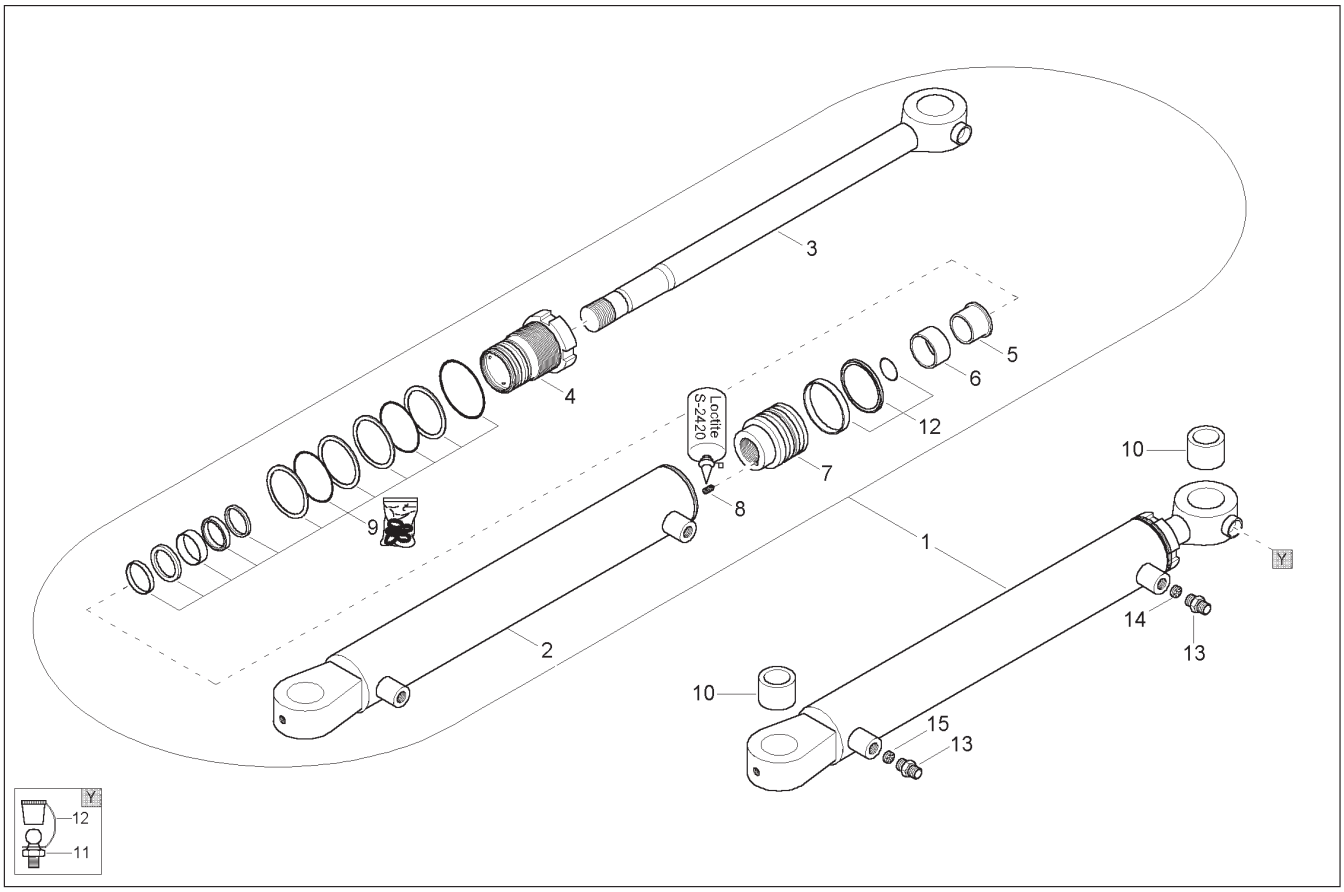


| Ref. No. | Part No. | Description | Qty. Req. |
|---|---|---|---|
| 01 | 165630 | BOOM OFFSET CYLINDER | 1 |
| 02 | 165683 | CYLINDER HOUSING | 1 |
| 03 | 165684 | PISTON ROD | 1 |
| 04 | 165686 | BUSHING | 1 |
| 05 | 165675 | BUSHING | 1 |
| 06 | 165674 | BUSHING | 1 |
| 07 | 165685 | PISTON | 1 |
| 08 | 165938 | GRUB SCREW | 1 |
| 09 | 165702 | SEAL KIT | 1 |
| 10 | 161538 | BUSHING | 2 |
| 11 | 165823 | LUBRICATION NIPPLE | 1 |
| 12 | 161422 | PROTECTION CAP | 1 |
| 13 | 165972 | SCREW JOINT | 2 |
| 14 | 165896 | THROTTLE | 1 |
| 15 | 160651 | THROTTLE | 1 |

# 303 - DOZER BLADE CYLINDER

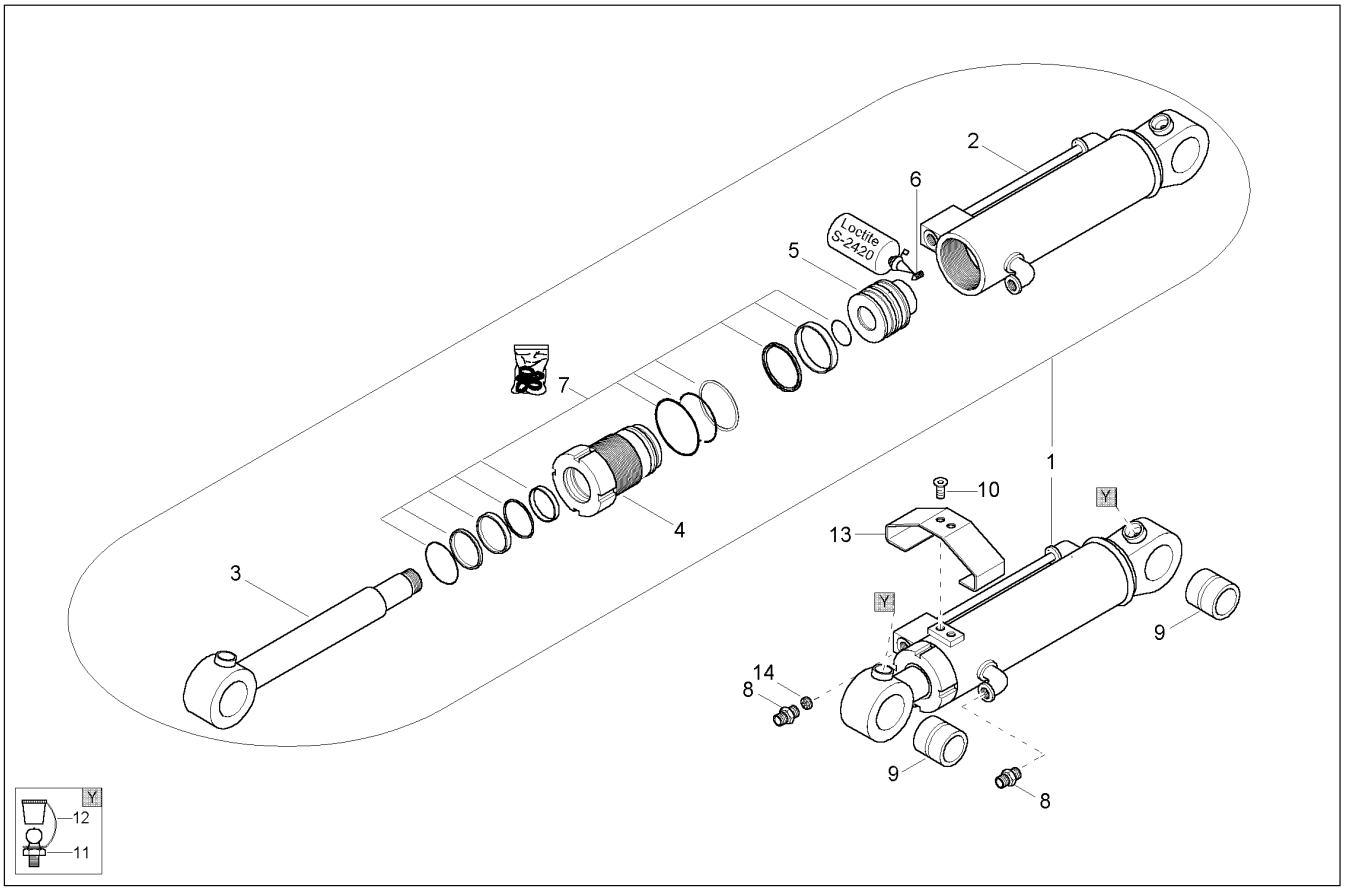


| Ref. No. | Part No. | Description | Qty. Req. | Ref. No. | Part No. | Description | Qty. Req. |
|---|---|---|---|---|---|---|---|
| 01 | 165631 | DOZER BLADE CYLINDER | 1 | 08 | 161428 | SCREW JOINT | 2 |
| 02 | 165664 | CYLINDER TUBE | 1 | 09 | 161538 | BUSHING | 2 |
| 03 | 165665 | PISTON ROD | 1 | 10 | 162041 | SCREW | 2 |
| 04 | 165667 | CYLINDER HEAD | 1 | 11 | 161412 | LUBRICATION NIPPLE | 2 |
| 05 | 165666 | PISTON | 1 | 12 | 161416 | PROTECTION CAP | 2 |
| 06 | 165668 | GRUB SCREW | 1 | 13 | 162360 | PROTECTION | 1 |
| 07 | 165669 | SEAL KIT | 1 | 14 | 165687 | TUBE BURST PROTECTION | 1 |

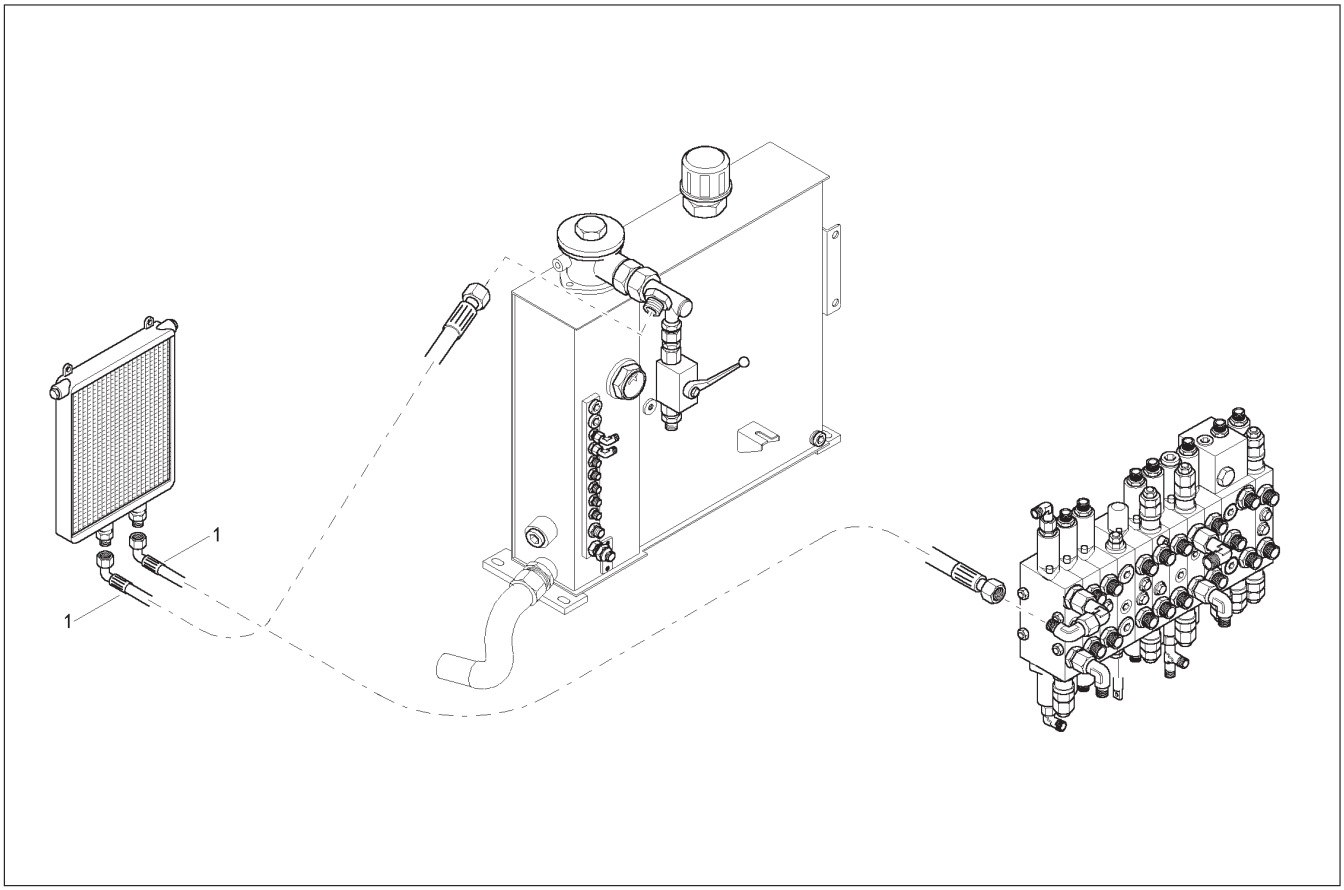


| Ref. No. | Part No. | Description | Qty. Req. | Ref. No. | Part No. | Description | Qty. Req. |
|---|---|---|---|---|---|---|---|
| 01 | 163325 | HP HOSE | 2 | | | | |

# 303 - HOSES, HYDRAULIC PUMP

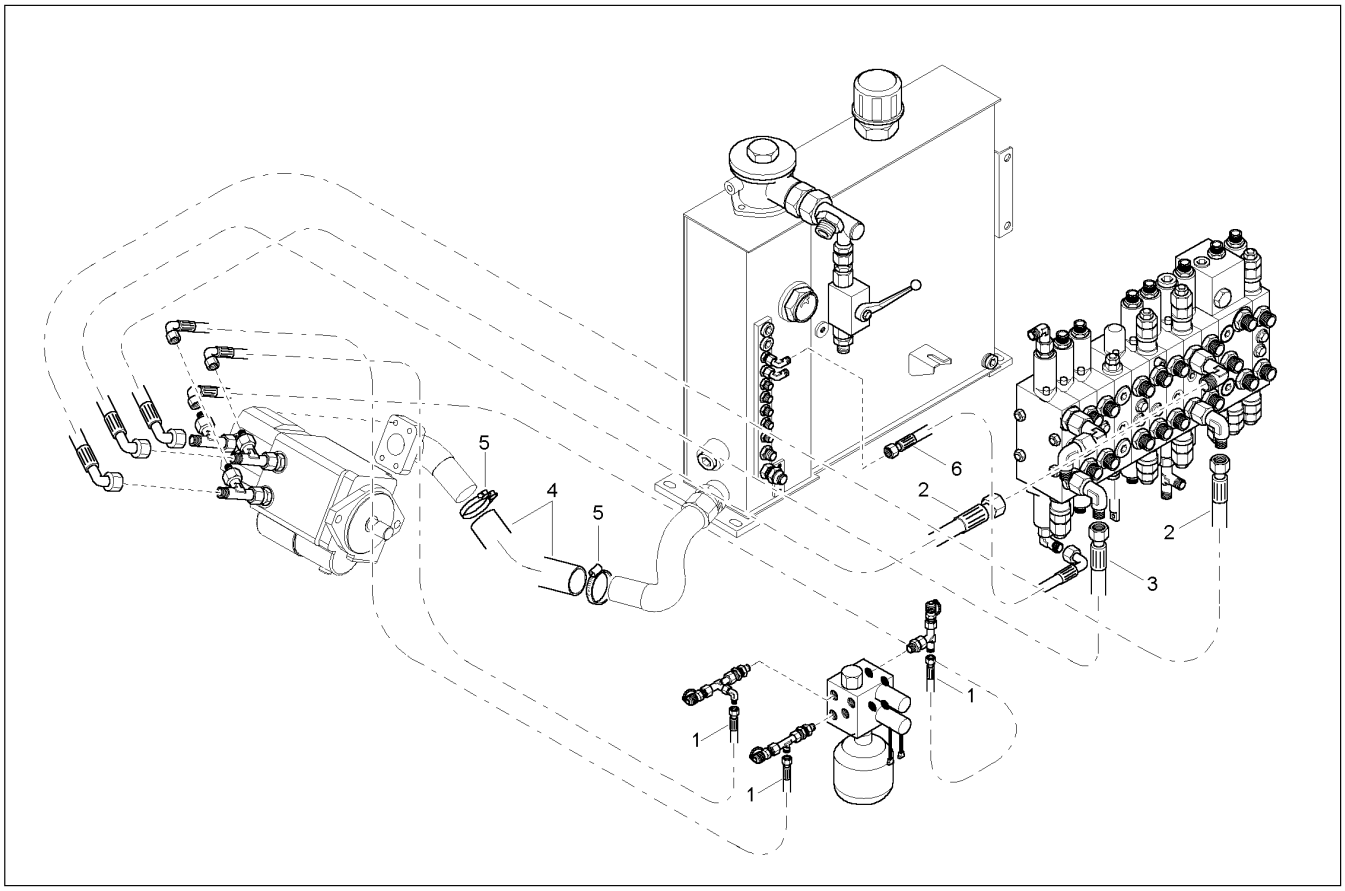


| Ref. No. | Part No. | Description | Qty. Req. | Ref. No. | Part No. | Description | Qty. Req. |
|---|---|---|---|---|---|---|---|
| 01 | 162404 | HP HOSE | 3 | 04 | 160840 | SUCTION HOSE | 1 |
| 02 | 165870 | HP HOSE | 2 | 05 | 162071 | COLLAR | 2 |
| 03 | 165871 | HP HOSE | 1 | 06 | 164804 | HP HOSE | 1 |

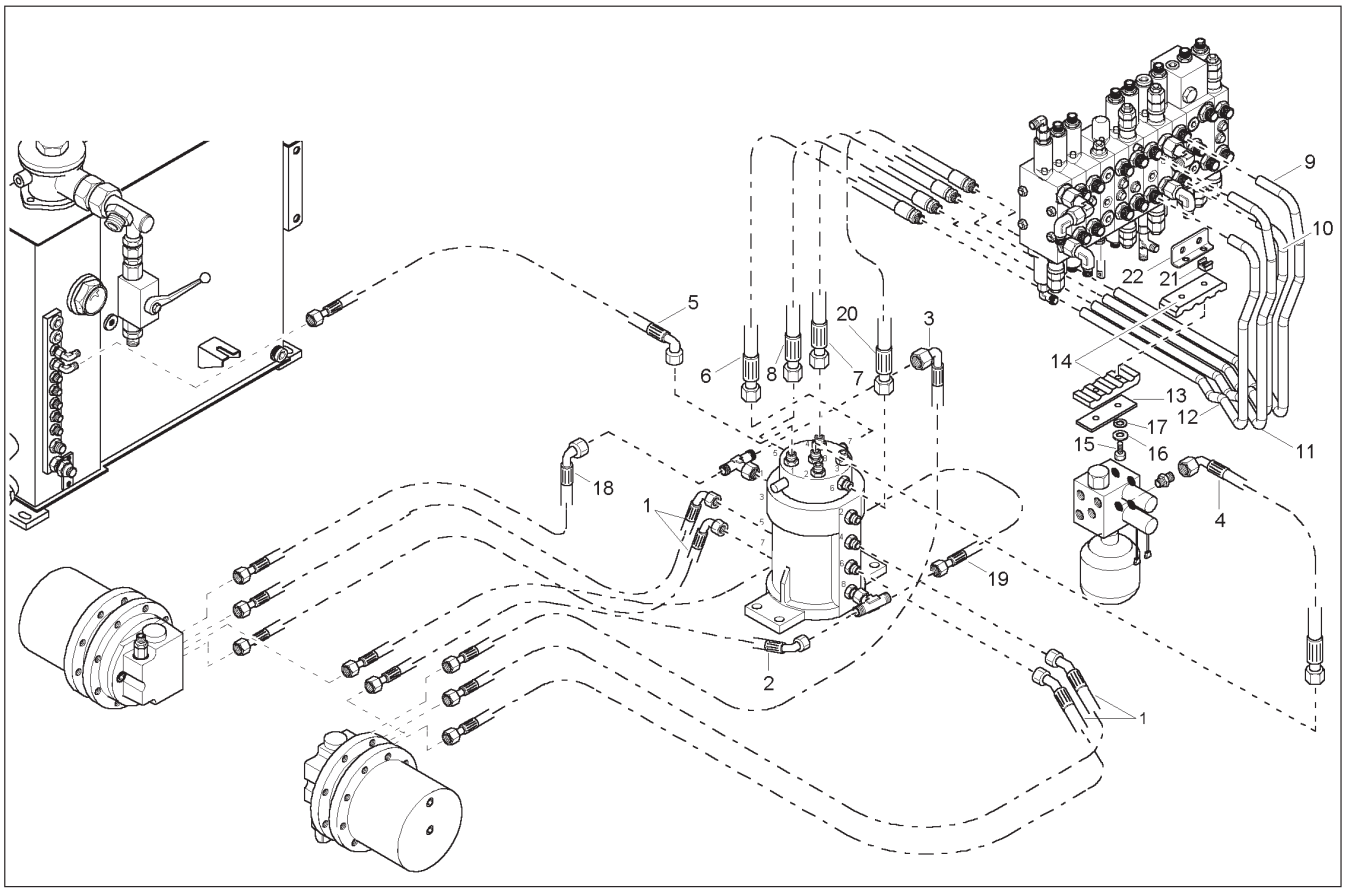


| Ref. No. | Part No. | Description | Qty. Req. | Ref. No. | Part No. | Description | Qty. Req. |
|---|---|---|---|---|---|---|---|
| 01 | 165876 | HP HOSE | 4 | 12 | 165639 | TUBES | 1 |
| 02 | 165839 | HP TUBE | 1 | 13 | 165633 | COVER | 1 |
| 03 | 162409 | HP HOSE | 1 | 14 | 165632 | COLLAR | 1 |
| 04 | 165829 | HP–HOSE | 1 | 15 | 651434 | HB M8–1.2 X 45 C 8.8 | 2 |
| 05 | 165832 | HP HOSE | 1 | 16 | 161676 | RING/SNAP S8 | 2 |
| 06 | 165880 | HP HOSE | 1 | 17 | 161661 | WASHER/GR A 8.4 | 2 |
| 07 | 165877 | HP HOSE | 1 | 18 | 165838 | HP HOSE | 2 |
| 08 | 165879 | HP HOSE | 1 | 19 | 165840 | HP HOSE | 1 |
| 09 | 165642 | TUBES | 1 | 20 | 165878 | HP HOSE | 1 |
| 10 | 165641 | TUBES | 1 | 21 | 161615 | NUT/CAGE M8 | 2 |
| 11 | 165640 | TUBES | 1 | 22 | 165634 | BRACKET | 1 |

# 303 - HOSES, TURNING GEAR

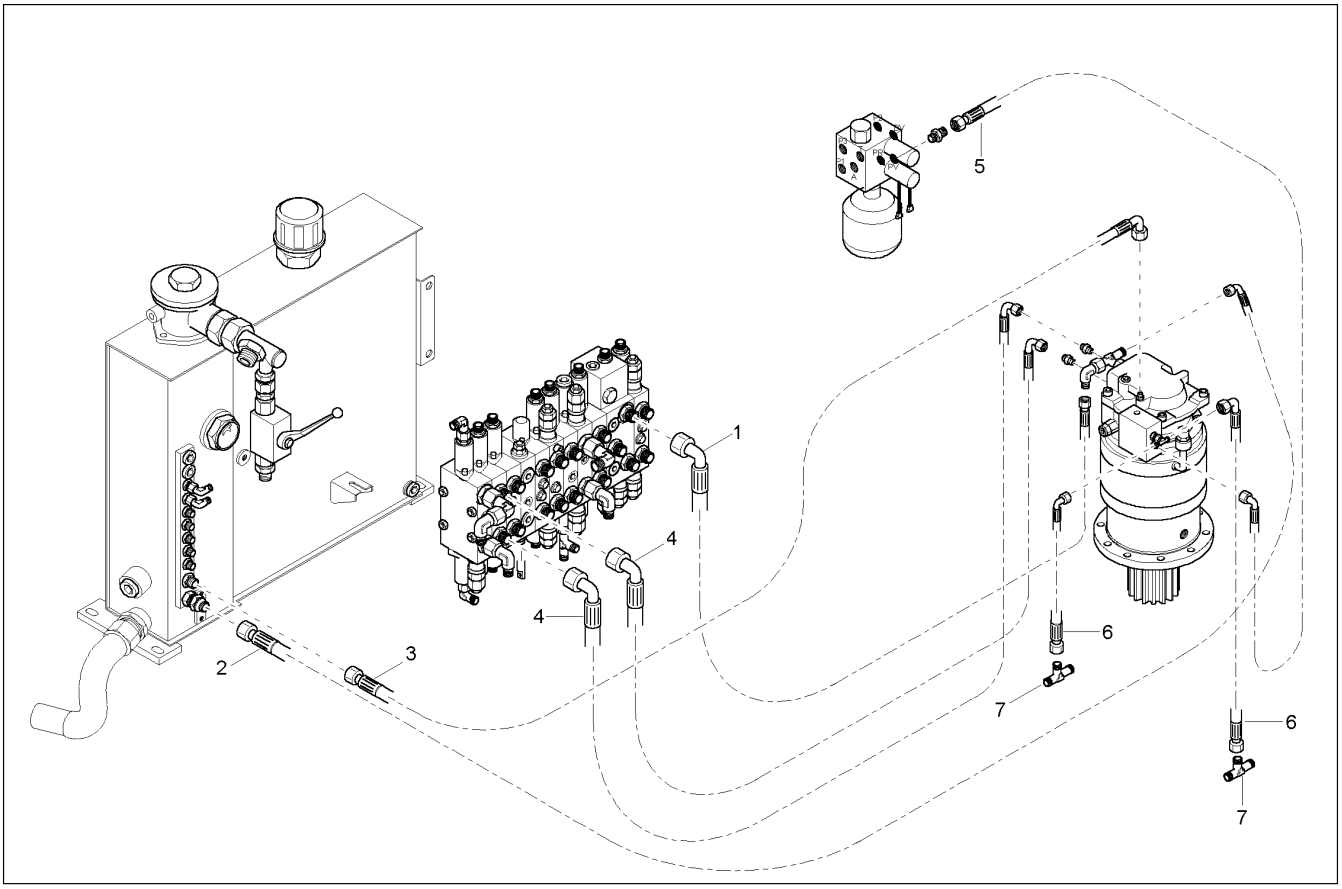


| Ref. No. | Part No. | Description | Qty. Req. |
|---|---|---|---|
| 01 | 165874 | HP–HOSE | 1 |
| 02 | 165873 | HP–HOSE | 1 |
| 03 | 161277 | HIGH PRESSURE HOSE | 1 |
| 04 | 162418 | HP HOSE | 2 |
| 05 | 161227 | HIGH PRESSURE HOSE | 1 |
| 06 | 161236 | HIGH PRESSURE HOSE | 2 |
| 07 | 161465 | TEE | 2 |

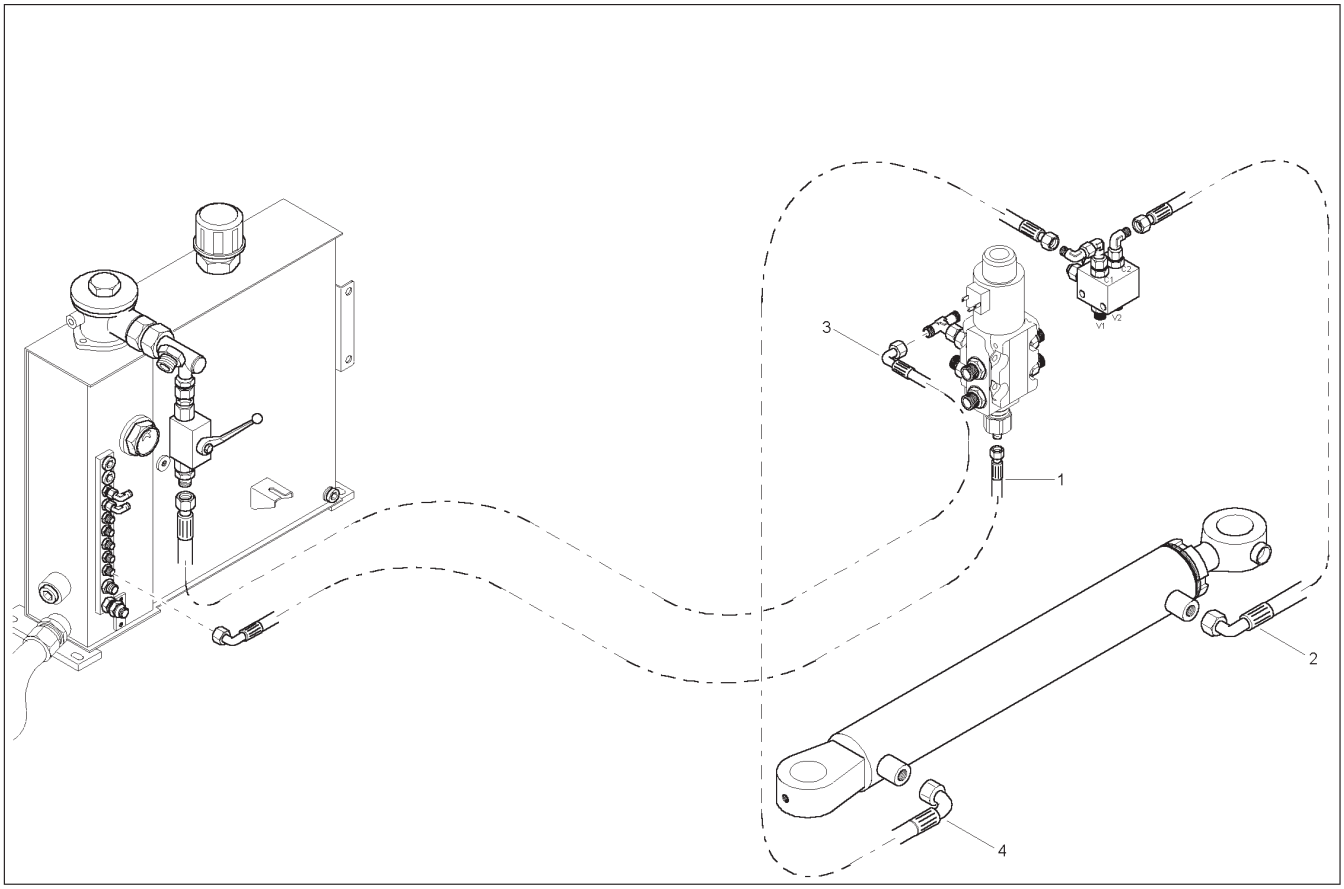


| Ref. No. | Part No. | Description | Qty. Req. | Ref. No. | Part No. | Description | Qty. Req. |
|---|---|---|---|---|---|---|---|
| 01 | 161245 | HIGH PRESSURE HOSE | 1 | 03 | 165834 | HP HOSE | 1 |
| 02 | 165848 | HIGH–PRESSURE HOSE | 1 | 04 | 161290 | HIGH PRESSURE HOSE | 1 |

# 303 - HOSES, DOZER BLADE CYLINDER

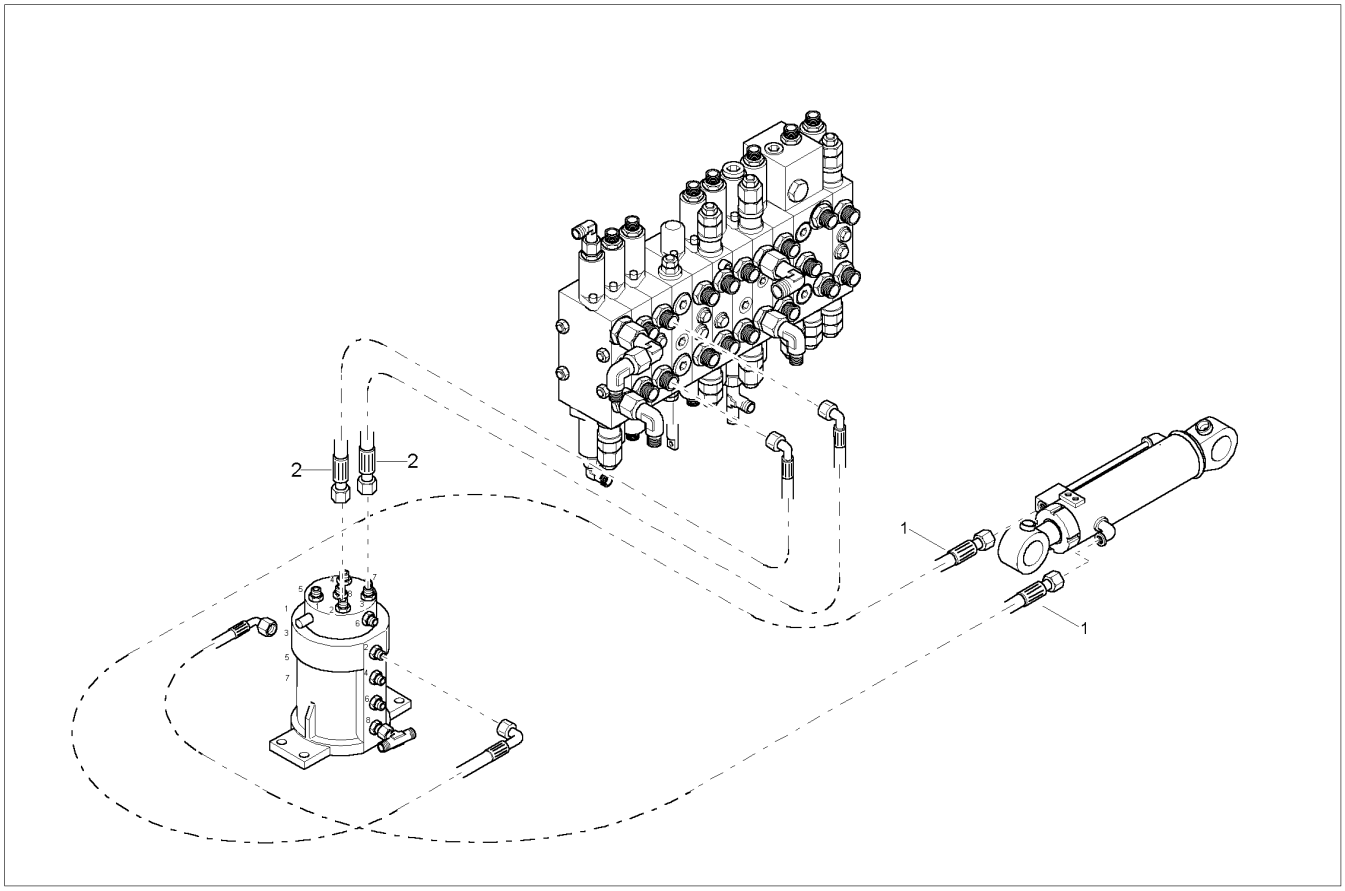


| Ref. No. | Part No. | Description | Qty. Req. | Ref. No. | Part No. | Description | Qty. Req. |
|---|---|---|---|---|---|---|---|
| 01 | 165852 | HP HOSE | 2 | 02 | 165845 | HIGH–PRESSURE HOSE | 2 |

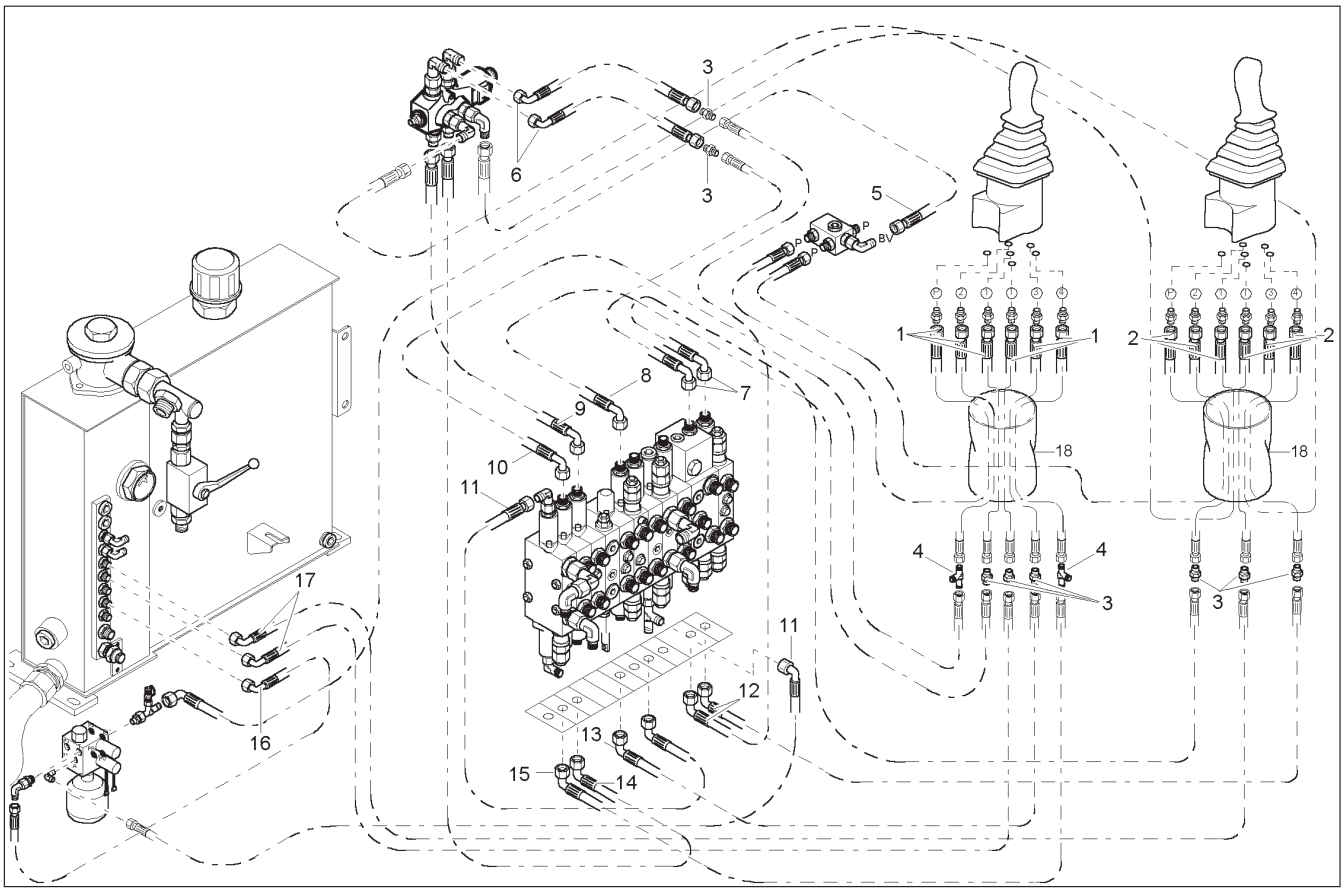


| Ref. No. | Part No. | Description | Qty. Req. | Ref. No. | Part No. | Description | Qty. Req. |
|---|---|---|---|---|---|---|---|
| 01 | 165828 | HP HOSE | 6 | 10 | 162445 | HP HOSE | 1 |
| 02 | 161224 | HIGH PRESSURE HOSE | 6 | 11 | 165894 | HP HOSE | 2 |
| 03 | 161479 | SCREW JOINT | 8 | 12 | 162956 | HP HOSE | 2 |
| 04 | 161465 | TEE | 2 | 13 | 163288 | HP HOSE | 1 |
| 05 | 165830 | HP HOSE | 1 | 14 | 163290 | HP HOSE | 1 |
| 06 | 161236 | HIGH PRESSURE HOSE | 2 | 15 | 163289 | HP HOSE | 1 |
| 07 | 161220 | HIGH PRESSURE HOSE | 2 | 16 | 161351 | HIGH PRESSURE HOSE | 1 |
| 08 | 161276 | HIGH PRESSURE HOSE | 1 | 17 | 161350 | HIGH PRESSURE HOSE | 2 |
| 09 | 163335 | HP HOSE | 1 | 18 | 164892 | PROTECTION HOSE | 2 |

# 303 - HOSES, TRAVELING VALVE

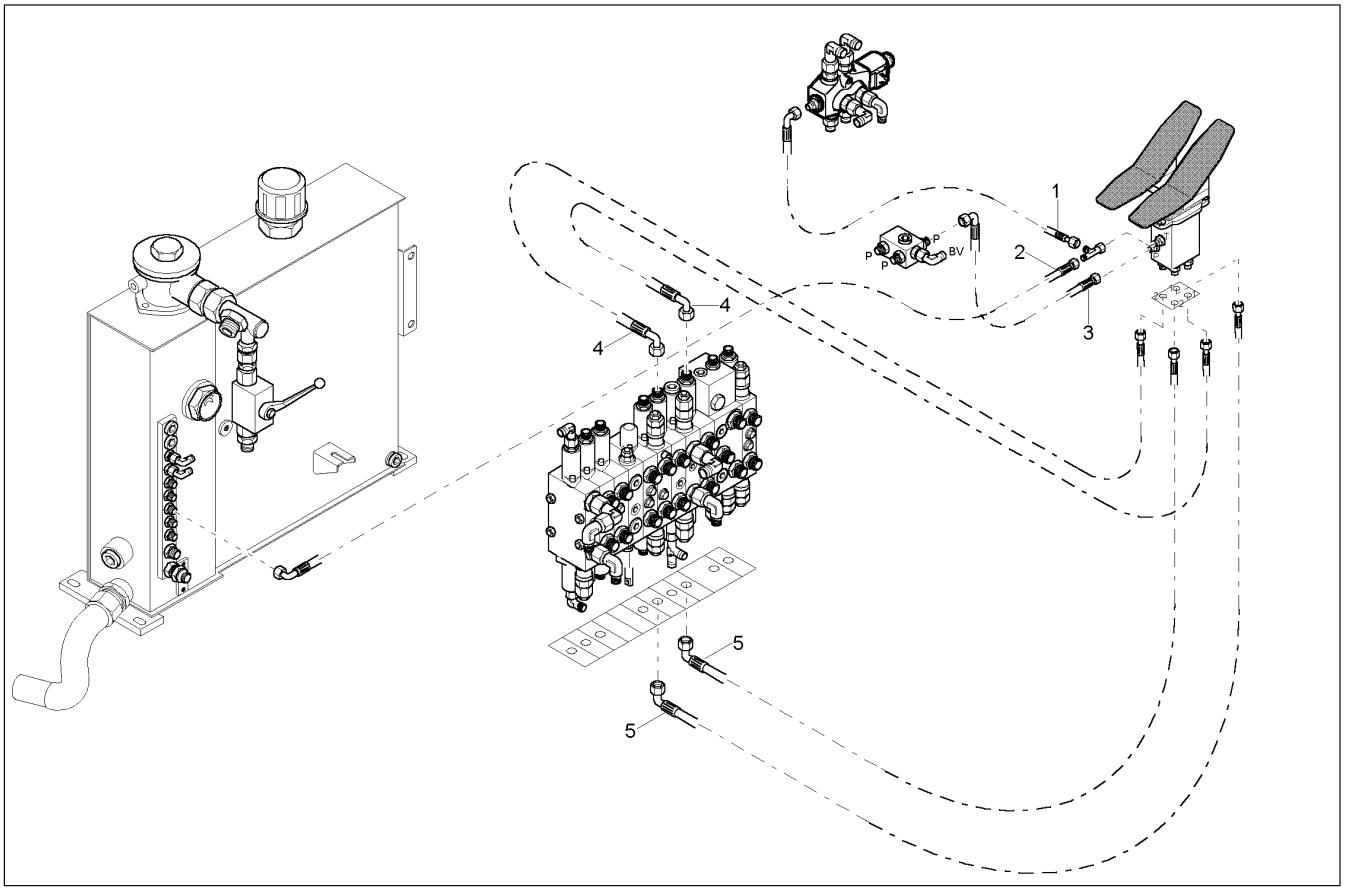


| Ref. No. | Part No. | Description | Qty. Req. | Ref. No. | Part No. | Description | Qty. Req. |
|---|---|---|---|---|---|---|---|
| 01 | 164800 | HIGH–PRESSURE HOSE | 1 | 04 | 163335 | HP HOSE | 2 |
| 02 | 161276 | HIGH PRESSURE HOSE | 1 | 05 | 161224 | HIGH PRESSURE HOSE | 2 |
| 03 | 161236 | HIGH PRESSURE HOSE | 1 | | | | |

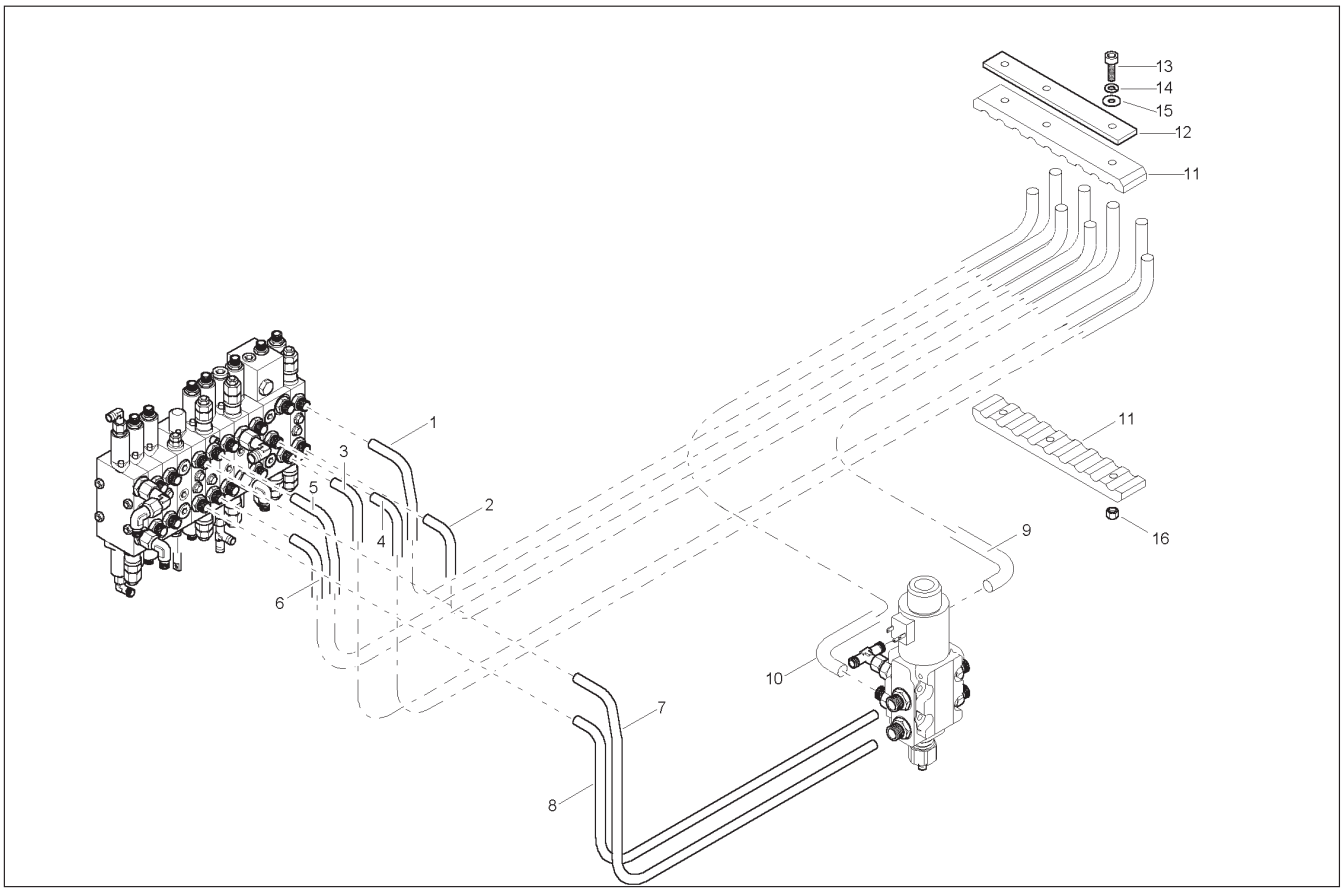


| Ref. No. | Part No. | Description | Qty. Req. | Ref. No. | Part No. | Description | Qty. Req. |
|---|---|---|---|---|---|---|---|
| 01 | 165635 | TUBE | 1 | 09 | 165648 | TUBE | 1 |
| 02 | 165636 | TUBE | 1 | 10 | 165647 | TUBE | 1 |
| 03 | 165637 | TUBE | 1 | 11 | 165654 | COLLAR | 1 |
| 04 | 165638 | TUBE | 1 | 12 | 165655 | COVER | 1 |
| 05 | 165643 | TUBE | 1 | 13 | 651435 | CS M8–1.2 X 45 C 8.8 | 3 |
| 06 | 165644 | TUBE | 1 | 14 | 161676 | RING/SNAP S8 | 3 |
| 07 | 165646 | TUBE | 1 | 15 | 161661 | WASHER/GR A 8.4 | 3 |
| 08 | 165645 | TUBE | 1 | 16 | 651458 | HLN INS M8–1.2 8 | 3 |

# 303 - TUBES, LIFTARM (SHORT)

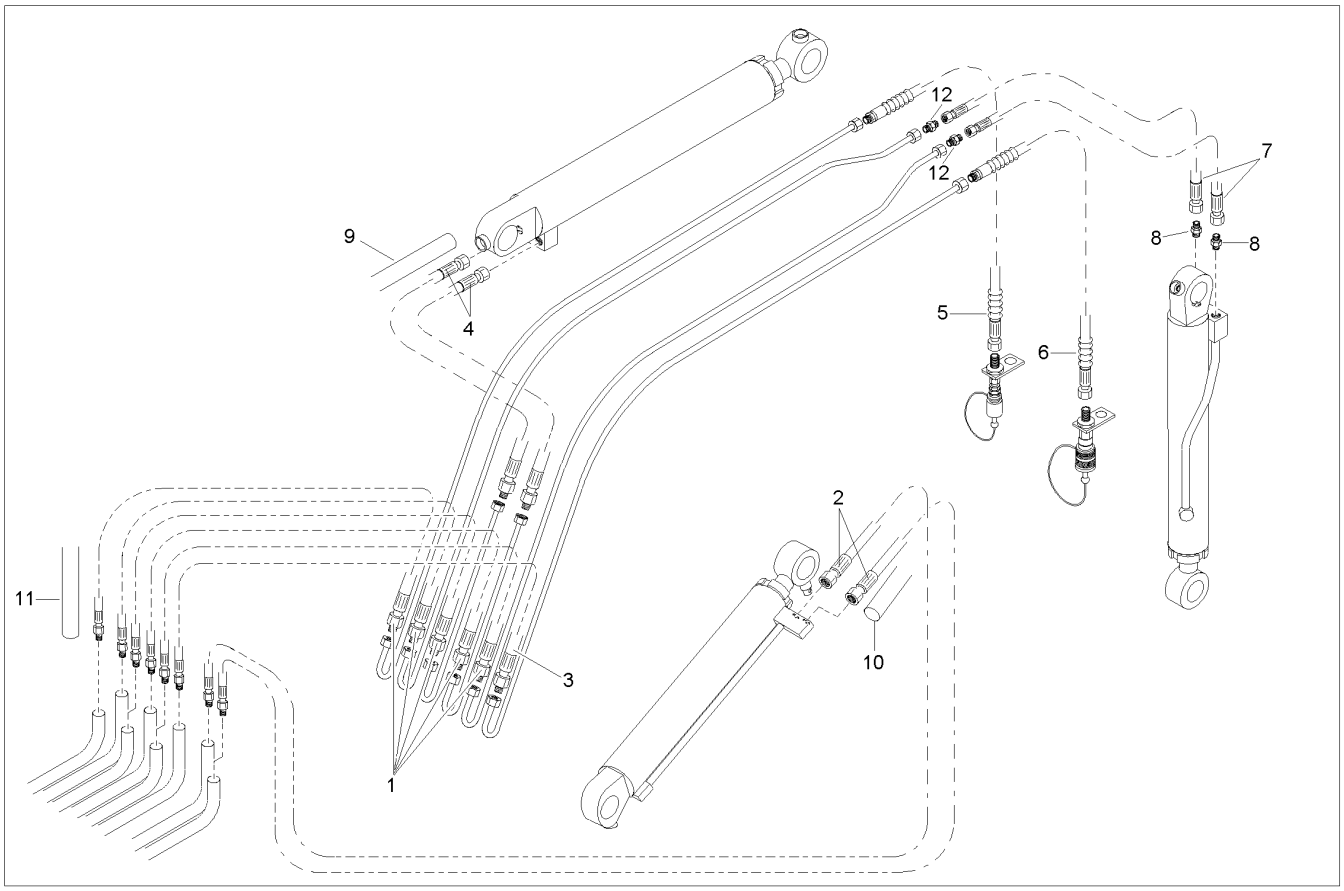


| Ref. No. | Part No. | Description | Qty. Req. | Ref. No. | Part No. | Description | Qty. Req. |
|---|---|---|---|---|---|---|---|
| 01 | 165860 | HP TUBE | 5 | 07 | 165862 | HP TUBE | 2 |
| 02 | 165861 | HP TUBE | 2 | 08 | 161429 | SCREW JOINT | 2 |
| 03 | 165892 | HP TUBE | 1 | 09 | 165918 | PROTECTION HOSE | 0.4 |
| 04 | 165886 | HP TUBE | 2 | 10 | 165918 | PROTECTION HOSE | 2.1 |
| 05 | 162419 | HP HOSE | 1 | 11 | 165918 | PROTECTION HOSE | 1.1 |
| 06 | 162441 | HP HOSE | 1 | 12 | 165974 | REDUCTION JOINT | 2 |

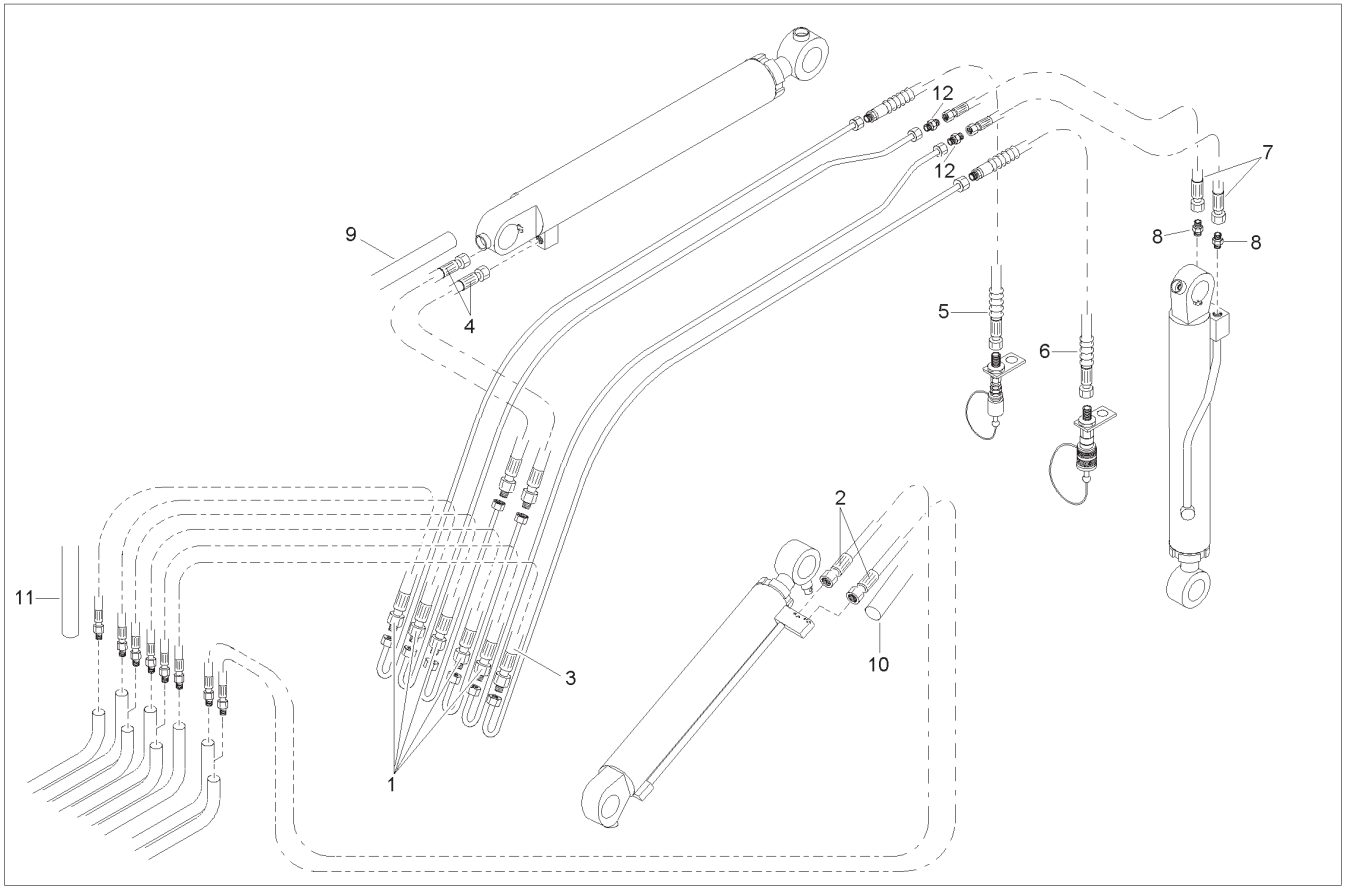


| Ref. No. | Part No. | Description | Qty. Req. | Ref. No. | Part No. | Description | Qty. Req. |
|---|---|---|---|---|---|---|---|
| 01 | 165860 | HP TUBE | 5 | 07 | 165864 | HP HOSE | 2 |
| 02 | 165861 | HP TUBE | 2 | 08 | 161429 | SCREW JOINT | 2 |
| 03 | 165892 | HP TUBE | 1 | 09 | 165918 | PROTECTION HOSE | 0.4 |
| 04 | 165886 | HP TUBE | 2 | 10 | 165918 | PROTECTION HOSE | 2.1 |
| 05 | 162419 | HP HOSE | 1 | 11 | 165918 | PROTECTION HOSE | 1.1 |
| 06 | 162441 | HP HOSE | 1 | 12 | 165974 | REDUCTION JOINT | 2 |

# 303 - BATTERY

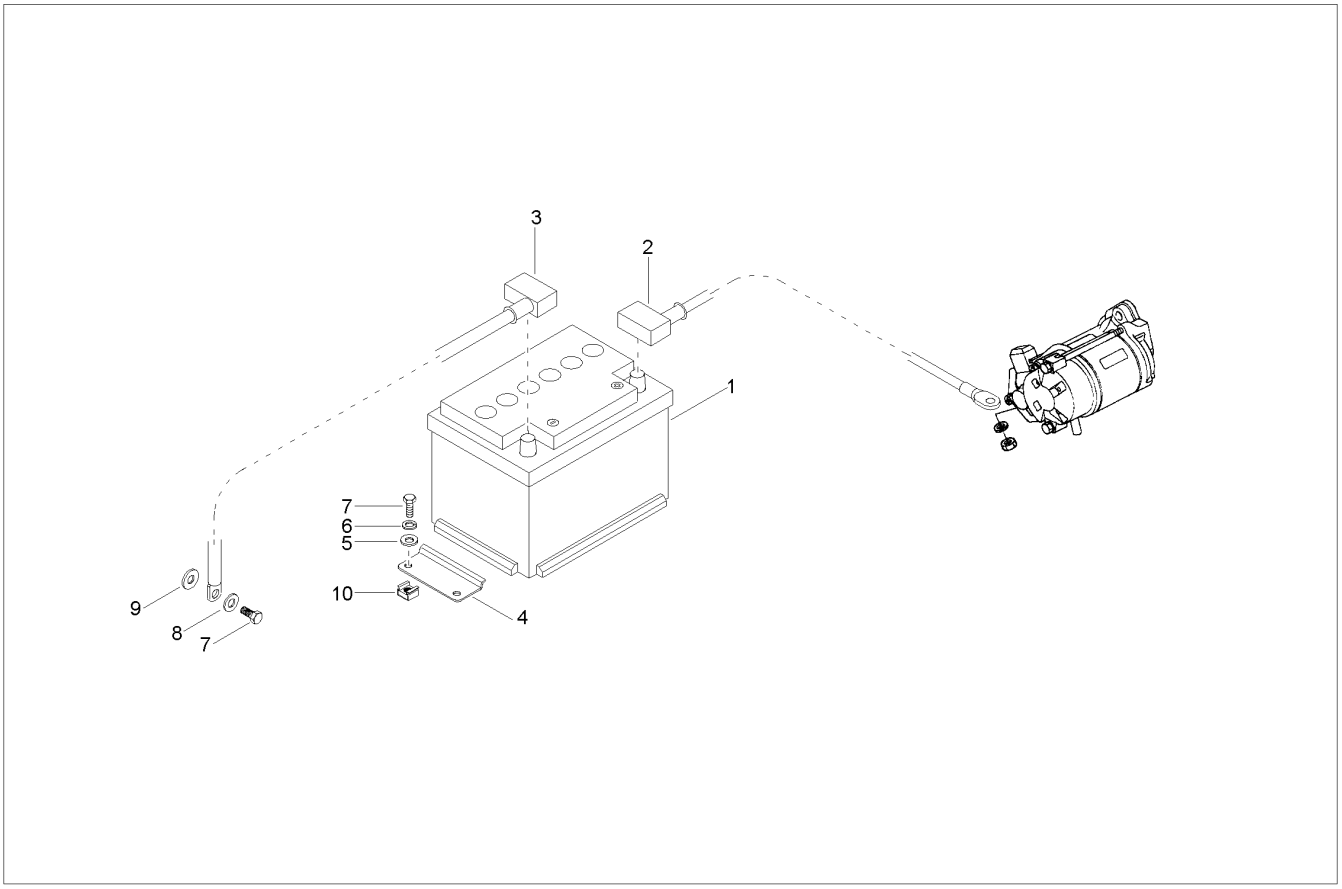


| Ref. No. | Part No. | Description | Qty. Req. | Ref. No. | Part No. | Description | Qty. Req. |
|---|---|---|---|---|---|---|---|
| 01 | 165912 | BATTERY | 1 | 06 | 161668 | WASHER/GR A 8.4 | 2 |
| 02 | 165228 | CABLE | 1 | 07 | 656001 | CS M8–1.2 X 20 C 8.8 | 3 |
| 03 | 165227 | CABLE | 1 | 08 | 161667 | WASHER/GR A 8.4 | 1 |
| 04 | 165036 | BRACKET | 1 | 09 | 163130 | WASHER | 1 |
| 05 | 161676 | RING/SNAP S8 | 2 | 10 | 161615 | NUT/CAGE M8 | 2 |

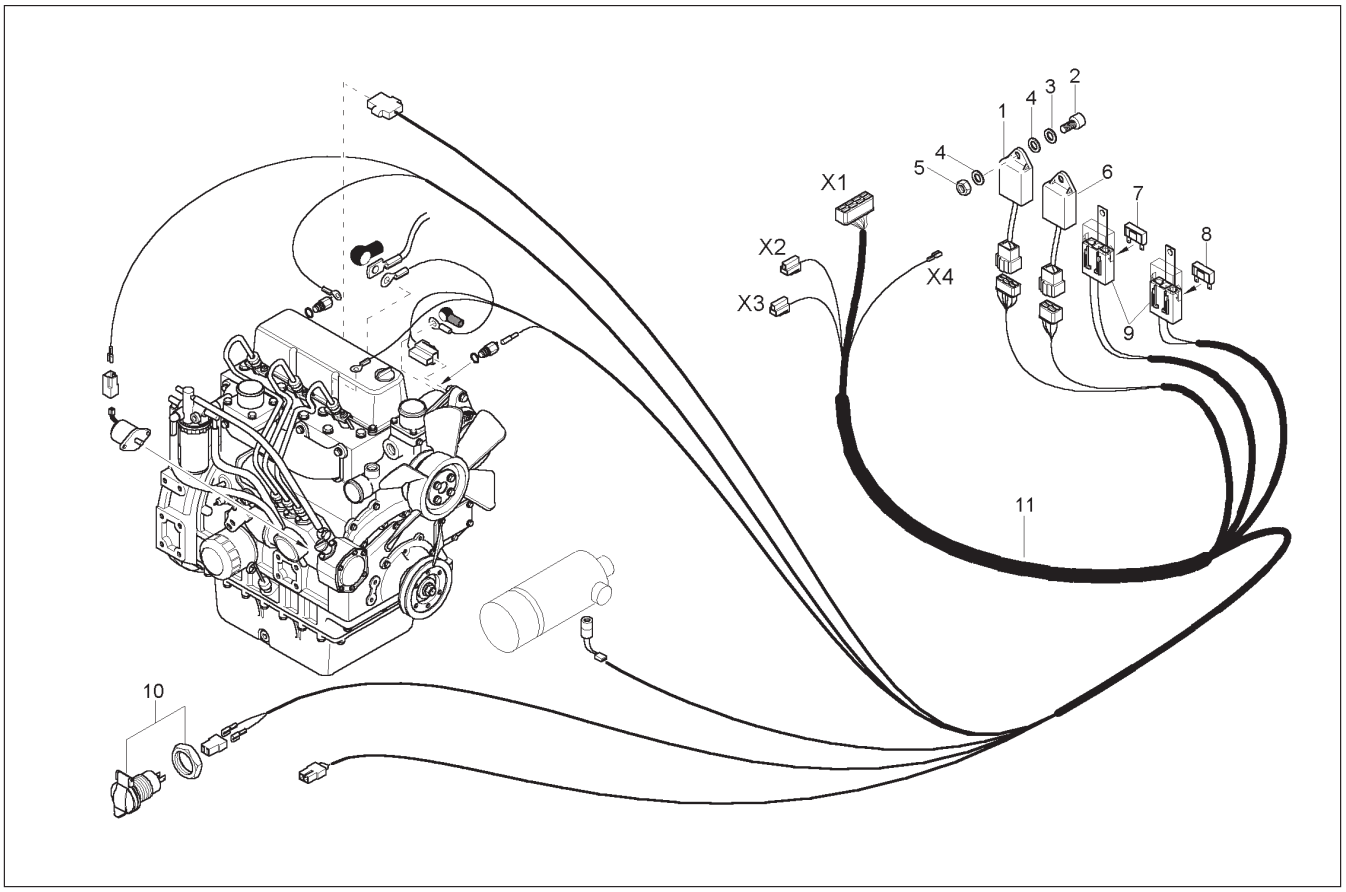


| Ref. No. | Part No. | Description | Qty. Req. |
|---|---|---|---|
| 01 | 165575 | RELAY (GLOW) KUBOTA | 1 |
| 02 | 651507 | SHCS HS M6–1 X 20 8.8 | 3 |
| 03 | 161675 | RING/SNAP S6 | 3 |
| 04 | 161660 | WASHER/GR A 6.4 | 6 |
| 05 | 656047 | HN M6–1.0 | 3 |
| 06 | 165289 | RELAY STOP SOLENOID | 1 |
| 07 | 161998 | FUSE | 1 |
| 08 | 164868 | FUSE | 1 |
| 09 | 161858 | FUSE HOUSING | 2 |
| 10 | 161732 | SOCKET | 1 |
| 11 | 165229 | HARNESS WIRING (ENGINE) | 1 |

# 303 - HARNESS, RIGHT ARMREST

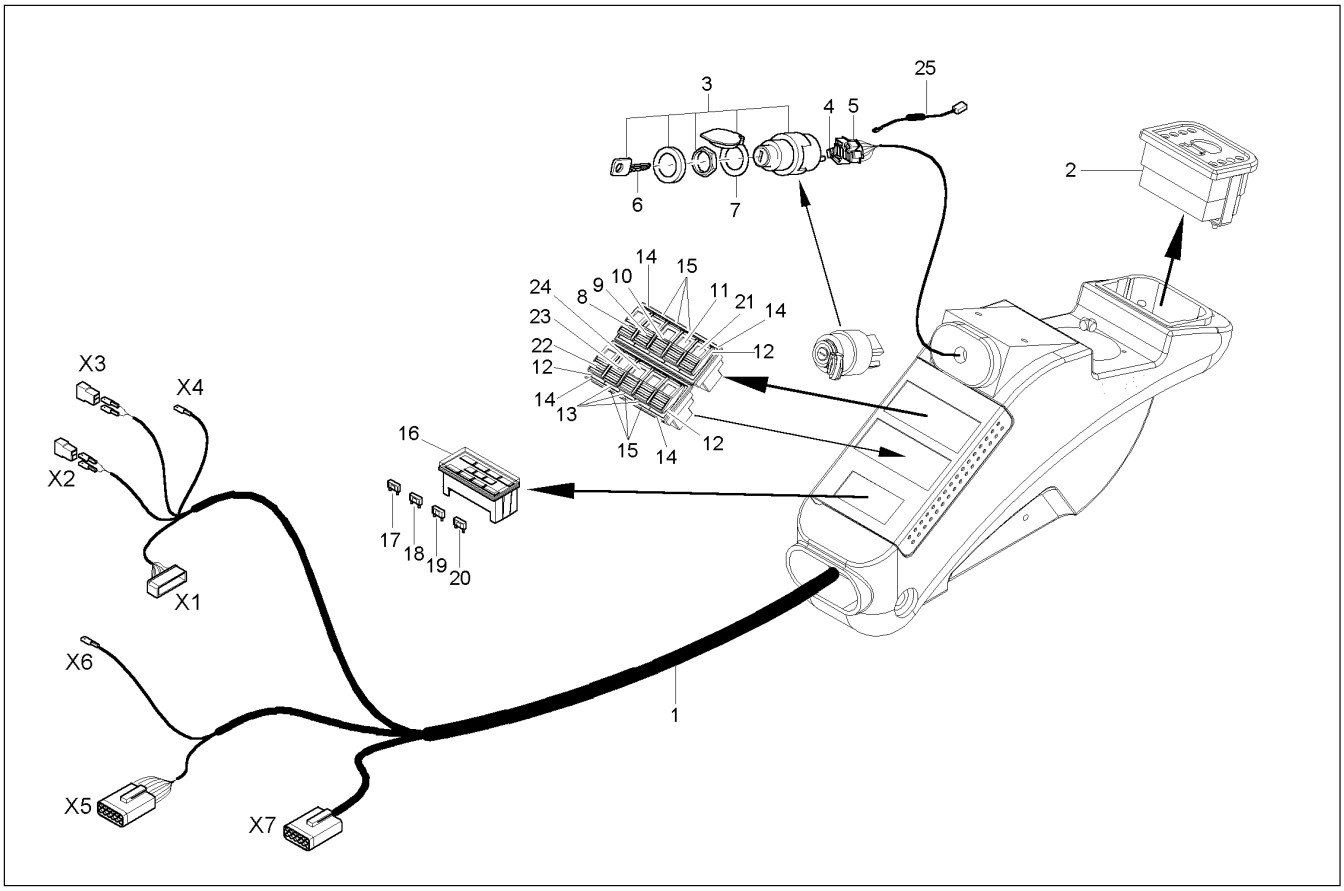


| Ref. No. | Part No. | Description | Qty. Req. |
|---|---|---|---|
| 01 | 165231 | ARMREST–HARNESS WIRING | 1 |
| 02 | 165223 | DISPLAY UNIT | 1 |
| 03 | 164695 | IGNITION LOCK | 1 |
| 04 | 164889 | CONNECTOR | 1 |
| 05 | 164878 | CONNECTOR | 1 |
| 06 | 164685 | KEY | 1 |
| 07 | 164697 | COVER | 1 |
| 08 | 165235 | SWITCH WINDSHIELD WIPER/WASHER | 1 |
| 09 | 165236 | SWITCH HEATING | 1 |
| 10 | 165237 | SWITCH FAST SPEED | 1 |
| 11 | 165238 | SWITCH ARM LIGHT | 1 |
| 12 | 165226 | COVER | 3 |
| 13 | 164692 | COVER | 3 |
| 14 | 164693 | FRAME | 4 |
| 15 | 164694 | FRAME | 6 |
| 16 | 165234 | FUSE BOX | 1 |
| 17 | 161376 | FUSE | 1 |
| 18 | 161374 | FUSE | 1 |
| 19 | 161375 | FUSE | 1 |
| 20 | 162836 | FUSE | 1 |
| 21 | 165241 | SWITCH | 1 |
| 22 | 165242 | SWITCH FRONT/SIDE LIGHT | 1 |
| 23 | 165240 | SWITCH | 1 |
| 24 | 165239 | SWITCH | 1 |
| 25 | 165245 | RECOVERY DIODE | 1 |

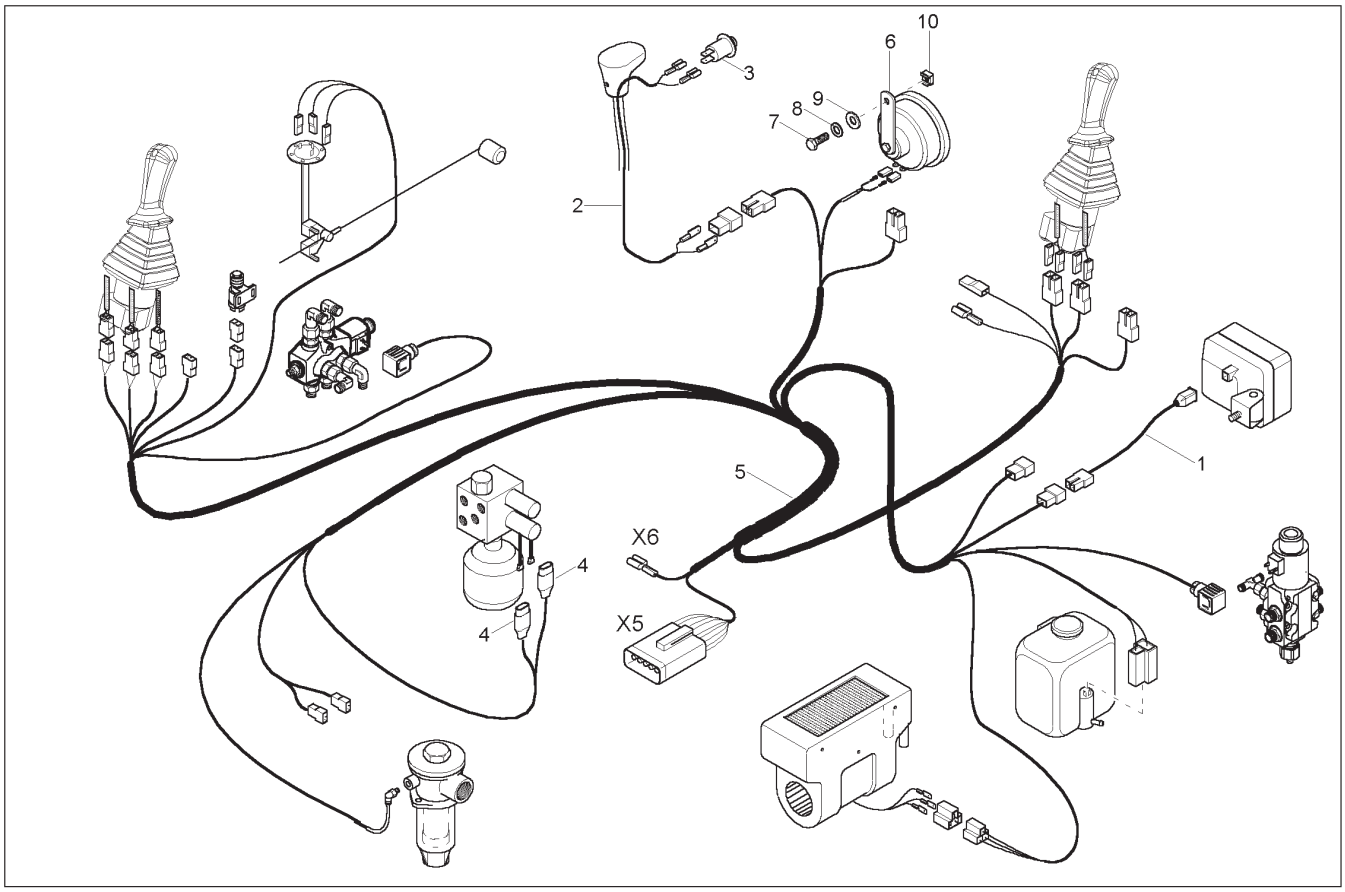


| Ref. No. | Part No. | Description | Qty. Req. | Ref. No. | Part No. | Description | Qty. Req. |
|---|---|---|---|---|---|---|---|
| 01 | 165233 | HARNESS WIRING | 1 | 06 | 161366 | HORN | 1 |
| 02 | 165232 | HARNESS WIRING | 1 | 07 | 656001 | CS M8–1.2 X 20 C 8.8 | 1 |
| 03 | 161363 | SWITCH | 1 | 08 | 161676 | RING/SNAP S8 | 1 |
| 04 | 162472 | PLUG | 2 | 09 | 161667 | WASHER/GR A 8.4 | 1 |
| 05 | 165230 | CHASSIS HARNESS WIRING | 1 | 10 | 161616 | NUT/CAGE M8 | 1 |

# 303 - HEADLIGHT

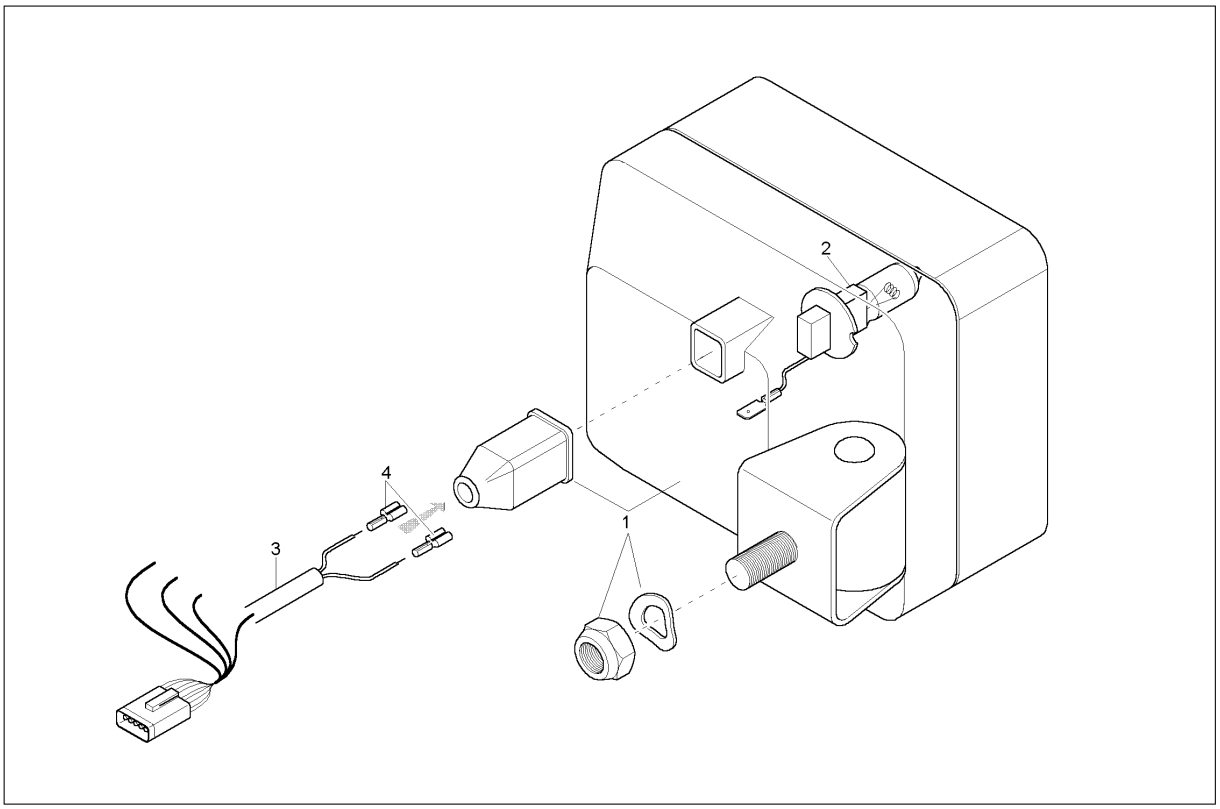


| Ref. No. | Part No. | Description | Qty. Req. | Ref. No. | Part No. | Description | Qty. Req. |
|---|---|---|---|---|---|---|---|
| 01 | 160537 | WORKING LIGHT | 1 | 03 | 165233 | HARNESS WIRING | 1 |
| 02 | 161367 | HALOGEN LAMP | 1 | 04 | 161995 | PLUG | 2 |

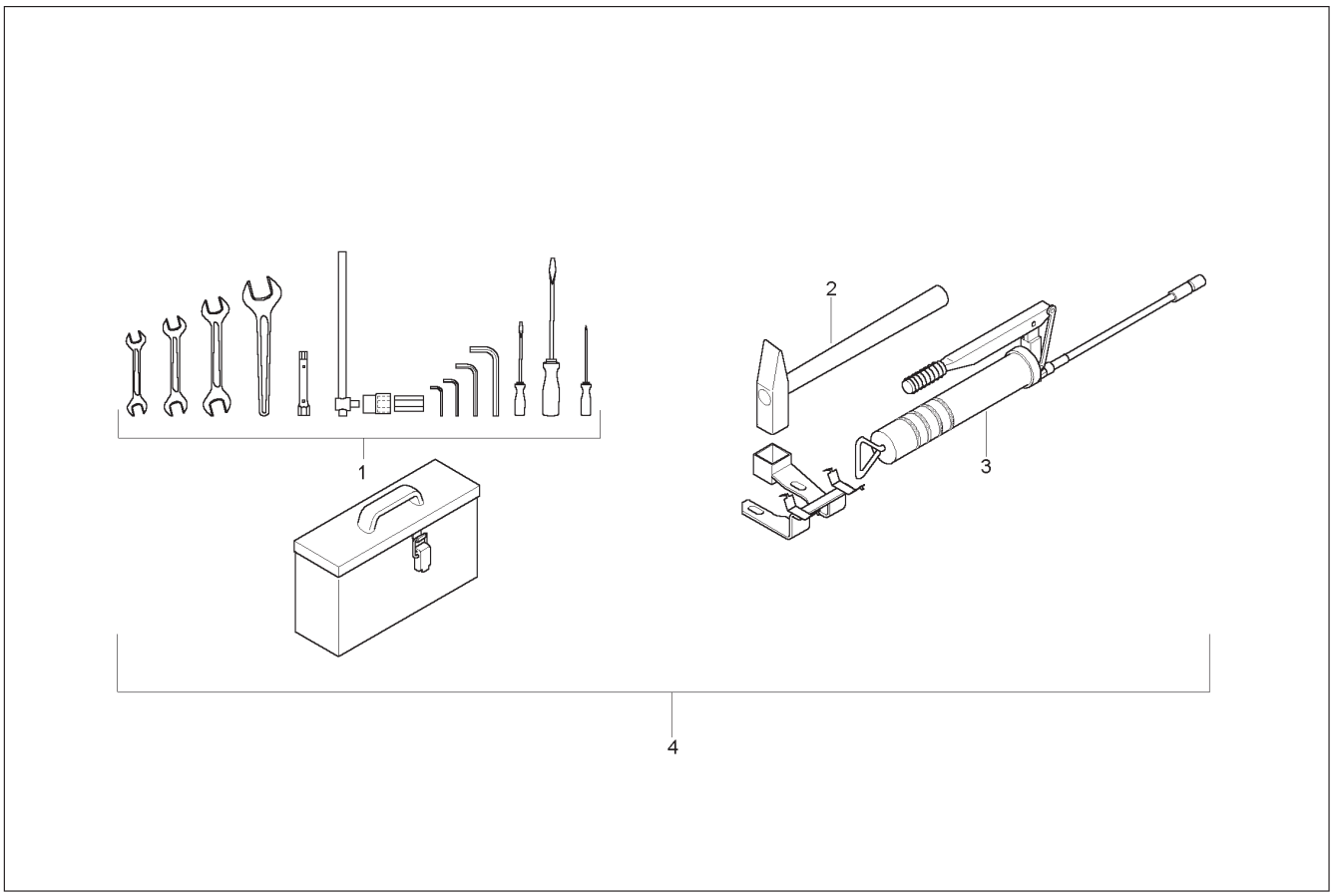


| Ref. No. | Part No. | Description | Qty. Req. | Ref. No. | Part No. | Description | Qty. Req. |
|---|---|---|---|---|---|---|---|
| 01 | 161990 | SCREW DRIVERS/FLAT SPANNERS | 1 | 03 | 161992 | GREASE GUN | 1 |
| 02 | 161991 | HAMMER | 1 | 04 | 161988 | TOOL KIT | 1 |

# 303 - TOOL BOX, GREASE GUN BRACKET

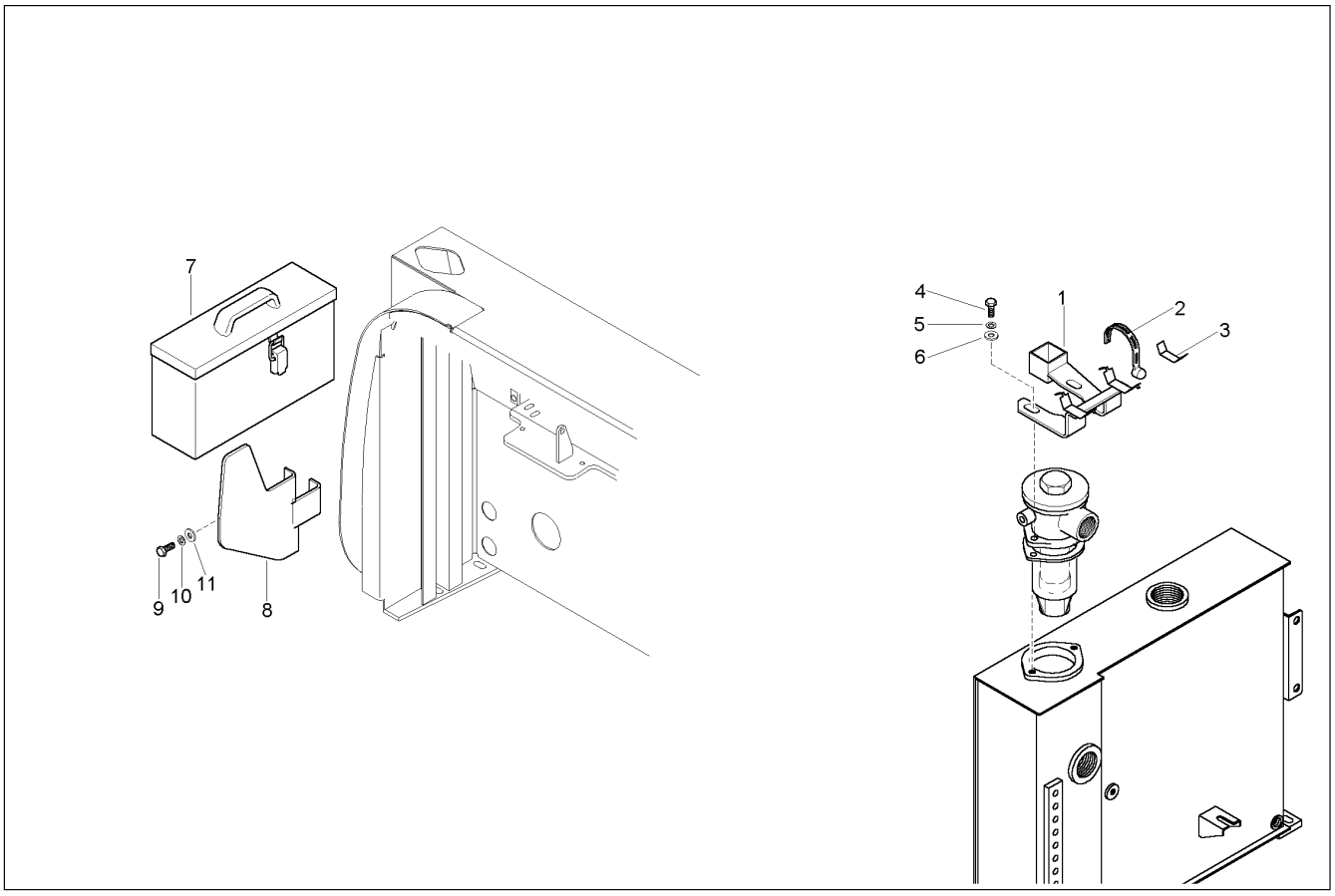


| Ref. No. | Part No. | Description | Qty. Req. |
|---|---|---|---|
| 01 | 165093 | GREASE GUN BRACKET | 1 |
| 02 | 165572 | RUBBER TENSION JACK | 2 |
| 03 | 165817 | SEAL | 0.15 |
| 04 | 651475 | SHCS HS M10–1.2 X 30 8.8 | 2 |
| 05 | 161669 | RING/SNAP S10 | 2 |
| 06 | 161640 | WASHER/GR A 10.5 | 2 |
| 07 | 165092 | TOOL BOX | 1 |
| 08 | 165091 | BRACKET | 1 |
| 09 | 656001 | CS M8–1.2 X 20 C 8.8 | 3 |
| 10 | 161676 | RING/SNAP S8 | 3 |
| 11 | 161661 | WASHER/GR A 8.4 | 3 |

# Index


## A

Air cleaner, 36
Alternator, 48
Auxiliary hydraulics, 73

## B

Battery, 90

## C

Cab Heating, 33
Cabin door, 24
Cabin floor, 32
Cabin frame, 25, 26, 27
Cabin windows, 22
Cabin wiring, 30
Connecting link, 21
Control valve 1, 62
Control valve 2, 63
Counterweight, 16
Cylinder head, 42

## D

Decal Locations, 2–7
Dipper arm
  Long, 20
  Short, 19
Dipper arm cylinder, 75
Dipper cylinder, 76
Dozer blade, 12
  Reversing valve, 68
Dozer blade cylinder, 78
Driver's seat, 31

## E

Engine mounts, 34
Exhaust, 37
Exhaust manifold, 52

## F

Fuel filter, 46
Fuel injection, 45
Fuel injection pump, 44
Fuel pump, 47
Fuel system, 39
Fuel tank, 38

## H

Harness
  Engine, 91
  Right armrest, 92
  Upper carriage, 93
Headlight, 94
Hoses
  Dozer blade cylinder, 84
  Hydraulic oil cooler, 79
  Hydraulic pump, 80
  Joysticks, 85
  Swivel cylinder, 83
  Traveling gears, 81
  Traveling valve, 86
  Turning gear, 82
Hydraulic oil tank, 55
Hydraulic pump, 57

## I

Intake manifold, 53

## J

Joysticks, 71

## L

Lifting arm, 18
Lifting arm cylinder, 74
Lock valve, 69
Lubrication block, 14

## M

Manifold block, 70

## O

Oil cooler, 56
Oil pump, pan & filter, 41
Open canopy, 28

## P

Pilot oil supply
  After SN AB00864, 66
  Before SN AB00865, 64
  Breakdown, 65
Pilot operation check valve, 67
Pump drive, 54

## R

Radiator, 35
Rear wall, 15

## S

Sash window, 29
Starter, 49
Stop solenoid, 43
Swivel cylinder, 77
Swivel joint, 59
  Disassembled, 60

## T

Table Of Contents, 1
Thermostat, 50
Throttle, 40
Tool box, Grease gun bracket, 96
Tool kit, 95
Track roller, 11
Track tensioning, 9
Track–supporting roller, 10
Travel motors, 58
Traveling valve, 72
Tubes
  Control valve, 87
  Liftarm (Long), 89
  Liftarm (short), 88
Turning gear, 61

## U

Undercarriage, 8
Uppercarriage, 13

## V

Valve cover, 17

## W

Water Pump & Fan, 51
Windshield, 23

# 303 - NUMERICAL INDEX


| Part No. | Page No. | Ref. No. | Part No. | Page No. | Ref. No. | Part No. | Page No. | Ref. No. | Part No. | Page No. | Ref. No. |
|---|---|---|---|---|---|---|---|---|---|---|---|
| L82282 | 02 | 33 | 160803 | 21 | 15 | 161351 | 85 | 16 | 161426 | 72 | 06 |
| L82282 | 02 | 34 | 160805 | 18 | 06 | 161357 | 62 | 23 | 161427 | 38 | 23 |
| 121965 | 41 | 90 | 160805 | 19 | 09 | 161363 | 93 | 03 | 161427 | 59 | 04 |
| 159409 | 21 | 21 | 160805 | 20 | 09 | 161366 | 93 | 06 | 161427 | 68 | 09 |
| 159519 | 02 | 32 | 160810 | 13 | 06 | 161367 | 94 | 02 | 161428 | 59 | 03 |
| 160409 | 13 | 26 | 160811 | 12 | 02 | 161374 | 92 | 18 | 161428 | 78 | 08 |
| 160436 | 38 | 12 | 160812 | 12 | 04 | 161375 | 92 | 19 | 161429 | 55 | 11 |
| 160437 | 64 | 03 | 160813 | 12 | 03 | 161376 | 92 | 17 | 161429 | 59 | 06 |
| 160437 | 66 | 03 | 160815 | 13 | 12 | 161401 | 14 | 11 | 161429 | 76 | 08 |
| 160439 | 55 | 06 | 160836 | 74 | 16 | 161411 | 12 | 07 | 161429 | 88 | 08 |
| 160458 | 19 | 15 | 160840 | 80 | 04 | 161411 | 13 | 10 | 161429 | 89 | 08 |
| 160458 | 20 | 15 | 160844 | 39 | 03 | 161411 | 14 | 04 | 161430 | 55 | 27 |
| 160459 | 19 | 13 | 160848 | 37 | 09 | 161411 | 18 | 14 | 161431 | 67 | 04 |
| 160459 | 20 | 13 | 160864 | 56 | 01 | 161411 | 19 | 10 | 161431 | 74 | 14 |
| 160480 | 40 | 18 | 160865 | 08 | 04 | 161411 | 20 | 10 | 161431 | 75 | 14 |
| 160488 | 26 | 21 | 160882 | 15 | 14 | 161411 | 21 | 05 | 161432 | 67 | 05 |
| 160494 | 23 | 11 | 160887 | 55 | 33 | 161412 | 08 | 19 | 161438 | 38 | 24 |
| 160496 | 22 | 01 | 160949 | 55 | 23 | 161412 | 78 | 11 | 161438 | 64 | 11 |
| 160496 | 28 | 02 | 160972 | 55 | 28 | 161414 | 55 | 14 | 161438 | 66 | 11 |
| 160525 | 24 | 02 | 160983 | 09 | 20 | 161414 | 62 | 05 | 161441 | 55 | 34 |
| 160526 | 26 | 01 | 161061 | 15 | 06 | 161414 | 70 | 03 | 161443 | 55 | 13 |
| 160527 | 26 | 02 | 161061 | 17 | 10 | 161415 | 35 | 09 | 161443 | 62 | 04 |
| 160536 | 38 | 02 | 161062 | 16 | 05 | 161415 | 38 | 22 | 161443 | 64 | 12 |
| 160537 | 94 | 01 | 161062 | 17 | 23 | 161416 | 08 | 20 | 161443 | 66 | 12 |
| 160571 | 65 | 08 | 161064 | 15 | 03 | 161416 | 12 | 08 | 161443 | 68 | 10 |
| 160571 | 65 | 09 | 161064 | 17 | 07 | 161416 | 78 | 12 | 161443 | 70 | 04 |
| 160572 | 65 | 01 | 161074 | 10 | 11 | 161418 | 55 | 36 | 161444 | 69 | 05 |
| 160594 | 64 | 01 | 161086 | 23 | 16 | 161422 | 13 | 11 | 161446 | 55 | 35 |
| 160611 | 31 | 27 | 161087 | 23 | 17 | 161422 | 14 | 05 | 161446 | 61 | 15 |
| 160638 | 08 | 03 | 161091 | 22 | 04 | 161422 | 18 | 15 | 161446 | 62 | 10 |
| 160639 | 22 | 06 | 161096 | 24 | 05 | 161422 | 19 | 11 | 161448 | 62 | 13 |
| 160639 | 23 | 08 | 161204 | 15 | 11 | 161422 | 20 | 11 | 161448 | 62 | 25 |
| 160640 | 22 | 05 | 161205 | 74 | 19 | 161422 | 21 | 06 | 161448 | 64 | 08 |
| 160640 | 23 | 07 | 161220 | 85 | 07 | 161422 | 74 | 12 | 161448 | 66 | 08 |
| 160645 | 34 | 08 | 161224 | 85 | 02 | 161422 | 75 | 12 | 161448 | 72 | 07 |
| 160651 | 62 | 24 | 161224 | 86 | 05 | 161422 | 76 | 11 | 161450 | 59 | 07 |
| 160651 | 77 | 15 | 161227 | 82 | 05 | 161422 | 77 | 12 | 161456 | 62 | 14 |
| 160658 | 72 | 14 | 161236 | 82 | 06 | 161423 | 55 | 37 | 161461 | 14 | 06 |
| 160713 | 24 | 08 | 161236 | 85 | 06 | 161426 | 55 | 12 | 161463 | 59 | 02 |
| 160724 | 19 | 14 | 161236 | 86 | 03 | 161426 | 59 | 05 | 161463 | 74 | 13 |
| 160724 | 20 | 14 | 161245 | 83 | 01 | 161426 | 64 | 06 | 161463 | 75 | 13 |
| 160725 | 19 | 12 | 161276 | 85 | 08 | 161426 | 66 | 06 | 161464 | 56 | 02 |
| 160725 | 20 | 12 | 161276 | 86 | 02 | 161426 | 67 | 07 | 161465 | 82 | 07 |
| 160761 | 71 | 02 | 161277 | 82 | 03 | 161426 | 68 | 11 | 161465 | 85 | 04 |
| 160763 | 68 | 08 | 161290 | 83 | 04 | 161426 | 70 | 02 | 161467 | 61 | 14 |
| 160802 | 21 | 10 | 161350 | 85 | 17 | 161426 | 71 | 03 | 161467 | 67 | 06 |
| | | | | | | | | | 161468 | 14 | 09 |

| Part No. | Page No. | Ref. No. | Part No. | Page No. | Ref. No. | Part No. | Page No. | Ref. No. | Part No. | Page No. | Ref. No. |
|---|---|---|---|---|---|---|---|---|---|---|---|
| 161469 | 14 | 10 | 161615 | 90 | 10 | 161661 | 13 | 36 | 161669 | 15 | 22 |
| 161474 | 61 | 04 | 161616 | 15 | 29 | 161661 | 15 | 07 | 161669 | 34 | 15 |
| 161479 | 85 | 03 | 161616 | 32 | 07 | 161661 | 16 | 07 | 161669 | 37 | 17 |
| 161485 | 55 | 25 | 161616 | 93 | 10 | 161661 | 17 | 38 | 161669 | 38 | 06 |
| 161490 | 55 | 16 | 161618 | 22 | 10 | 161661 | 31 | 10 | 161669 | 54 | 04 |
| 161493 | 57 | 13 | 161618 | 23 | 10 | 161661 | 34 | 11 | 161669 | 55 | 04 |
| 161511 | 55 | 10 | 161618 | 31 | 30 | 161661 | 34 | 23 | 161669 | 57 | 08 |
| 161514 | 62 | 26 | 161620 | 08 | 25 | 161661 | 36 | 09 | 161669 | 62 | 19 |
| 161514 | 64 | 09 | 161627 | 13 | 27 | 161661 | 37 | 11 | 161669 | 72 | 18 |
| 161514 | 66 | 09 | 161627 | 16 | 26 | 161661 | 38 | 21 | 161669 | 96 | 05 |
| 161533 | 21 | 04 | 161629 | 26 | 13 | 161661 | 39 | 11 | 161670 | 13 | 25 |
| 161534 | 13 | 15 | 161630 | 33 | 12 | 161661 | 40 | 08 | 161670 | 16 | 22 |
| 161535 | 18 | 12 | 161634 | 31 | 52 | 161661 | 56 | 05 | 161670 | 34 | 18 |
| 161536 | 19 | 03 | 161635 | 08 | 29 | 161661 | 64 | 07 | 161670 | 54 | 08 |
| 161536 | 19 | 05 | 161636 | 13 | 04 | 161661 | 67 | 09 | 161670 | 57 | 10 |
| 161536 | 20 | 03 | 161640 | 08 | 23 | 161661 | 70 | 07 | 161671 | 34 | 06 |
| 161536 | 20 | 05 | 161640 | 34 | 13 | 161661 | 72 | 10 | 161674 | 38 | 17 |
| 161536 | 21 | 03 | 161640 | 37 | 18 | 161661 | 74 | 21 | 161675 | 14 | 03 |
| 161537 | 12 | 05 | 161640 | 54 | 05 | 161661 | 81 | 17 | 161675 | 15 | 50 |
| 161538 | 74 | 10 | 161640 | 55 | 22 | 161661 | 87 | 15 | 161675 | 16 | 28 |
| 161538 | 75 | 10 | 161640 | 62 | 20 | 161661 | 96 | 11 | 161675 | 17 | 25 |
| 161538 | 76 | 09 | 161640 | 72 | 19 | 161662 | 08 | 32 | 161675 | 31 | 33 |
| 161538 | 77 | 10 | 161640 | 96 | 06 | 161662 | 17 | 35 | 161675 | 35 | 26 |
| 161538 | 78 | 09 | 161641 | 17 | 05 | 161663 | 15 | 23 | 161675 | 68 | 13 |
| 161554 | 18 | 24 | 161641 | 55 | 05 | 161663 | 38 | 07 | 161675 | 70 | 06 |
| 161557 | 18 | 21 | 161642 | 13 | 31 | 161664 | 16 | 18 | 161675 | 71 | 05 |
| 161565 | 57 | 06 | 161642 | 16 | 20 | 161666 | 31 | 34 | 161675 | 91 | 03 |
| 161567 | 64 | 02 | 161642 | 31 | 07 | 161666 | 33 | 11 | 161676 | 08 | 14 |
| 161567 | 66 | 02 | 161642 | 34 | 19 | 161666 | 35 | 35 | 161676 | 13 | 38 |
| 161570 | 13 | 28 | 161642 | 54 | 09 | 161667 | 16 | 11 | 161676 | 15 | 08 |
| 161574 | 62 | 02 | 161646 | 34 | 07 | 161667 | 17 | 13 | 161676 | 16 | 10 |
| 161579 | 55 | 24 | 161647 | 13 | 22 | 161667 | 31 | 16 | 161676 | 17 | 12 |
| 161585 | 61 | 17 | 161650 | 74 | 17 | 161667 | 32 | 06 | 161676 | 31 | 09 |
| 161585 | 62 | 06 | 161658 | 38 | 04 | 161667 | 33 | 04 | 161676 | 32 | 05 |
| 161590 | 61 | 16 | 161659 | 15 | 44 | 161667 | 35 | 13 | 161676 | 33 | 05 |
| 161590 | 62 | 08 | 161659 | 25 | 35 | 161667 | 36 | 10 | 161676 | 34 | 10 |
| 161610 | 15 | 24 | 161659 | 38 | 18 | 161667 | 37 | 12 | 161676 | 35 | 14 |
| 161610 | 17 | 06 | 161660 | 14 | 12 | 161667 | 39 | 13 | 161676 | 37 | 10 |
| 161613 | 15 | 48 | 161660 | 15 | 51 | 161667 | 66 | 07 | 161676 | 38 | 20 |
| 161613 | 35 | 23 | 161660 | 16 | 08 | 161667 | 75 | 19 | 161676 | 39 | 10 |
| 161615 | 13 | 37 | 161660 | 17 | 15 | 161667 | 90 | 08 | 161676 | 40 | 07 |
| 161615 | 17 | 22 | 161660 | 35 | 27 | 161667 | 93 | 09 | 161676 | 56 | 04 |
| 161615 | 31 | 17 | 161660 | 40 | 14 | 161668 | 22 | 11 | 161676 | 64 | 05 |
| 161615 | 33 | 03 | 161660 | 71 | 06 | 161668 | 23 | 09 | 161676 | 66 | 05 |
| 161615 | 56 | 06 | 161660 | 91 | 04 | 161668 | 90 | 06 | 161676 | 72 | 09 |
| 161615 | 81 | 21 | 161661 | 08 | 15 | 161669 | 08 | 22 | 161676 | 74 | 22 |
| | | | | | | | | | 161676 | 75 | 18 |

| Part No. | Page No. | Ref. No. | Part No. | Page No. | Ref. No. | Part No. | Page No. | Ref. No. | Part No. | Page No. | Ref. No. |
|---|---|---|---|---|---|---|---|---|---|---|---|
| 161676 | 81 | 16 | 162026 | 31 | 06 | 162505 | 40 | 13 | 163628 | 13 | 03 |
| 161676 | 87 | 14 | 162027 | 72 | 16 | 162518 | 65 | 10 | 163630 | 38 | 05 |
| 161676 | 90 | 05 | 162028 | 70 | 05 | 162519 | 65 | 02 | 163630 | 55 | 30 |
| 161676 | 93 | 08 | 162029 | 26 | 03 | 162520 | 65 | 03 | 163630 | 62 | 18 |
| 161676 | 96 | 10 | 162041 | 16 | 33 | 162521 | 65 | 05 | 163649 | 13 | 32 |
| 161682 | 12 | 06 | 162041 | 62 | 17 | 162521 | 65 | 06 | 163649 | 16 | 09 |
| 161682 | 19 | 04 | 162041 | 78 | 10 | 162522 | 13 | 20 | 163649 | 31 | 12 |
| 161682 | 20 | 04 | 162064 | 33 | 20 | 162526 | 08 | 10 | 163649 | 37 | 13 |
| 161682 | 21 | 23 | 162066 | 18 | 22 | 162526 | 59 | 01 | 163649 | 39 | 09 |
| 161686 | 19 | 02 | 162071 | 80 | 05 | 162599 | 18 | 13 | 163649 | 40 | 11 |
| 161686 | 20 | 02 | 162218 | 31 | 04 | 162611 | 36 | 13 | 163649 | 56 | 03 |
| 161686 | 21 | 02 | 162241 | 68 | 01 | 162611 | 38 | 10 | 163649 | 72 | 08 |
| 161722 | 14 | 01 | 162242 | 68 | 02 | 162675 | 15 | 15 | 163650 | 16 | 14 |
| 161728 | 31 | 05 | 162243 | 68 | 03 | 162716 | 15 | 13 | 163650 | 17 | 29 |
| 161730 | 31 | 25 | 162244 | 68 | 04 | 162750 | 09 | 04 | 163650 | 22 | 09 |
| 161732 | 91 | 10 | 162245 | 68 | 05 | 162750 | 11 | 04 | 163650 | 23 | 21 |
| 161764 | 72 | 15 | 162246 | 68 | 06 | 162754 | 09 | 09 | 163650 | 31 | 45 |
| 161805 | 31 | 28 | 162331 | 08 | 17 | 162757 | 09 | 17 | 163973 | 02 | 17 |
| 161848 | 31 | 31 | 162345 | 13 | 07 | 162758 | 09 | 18 | 163975 | 02 | 18 |
| 161858 | 91 | 09 | 162349 | 40 | 04 | 162790 | 64 | 13 | 163976 | 02 | 19 |
| 161923 | 25 | 19 | 162350 | 40 | 06 | 162790 | 66 | 13 | 163977 | 02 | 20 |
| 161927 | 21 | 17 | 162351 | 40 | 05 | 162806 | 26 | 14 | 163978 | 02 | 21 |
| 161929 | 16 | 15 | 162360 | 78 | 13 | 162812 | 22 | 08 | 163979 | 02 | 22 |
| 161929 | 17 | 30 | 162398 | 40 | 03 | 162813 | 24 | 18 | 163992 | 02 | 23 |
| 161939 | 23 | 14 | 162404 | 80 | 01 | 162832 | 02 | 16 | 163993 | 02 | 24 |
| 161940 | 23 | 15 | 162409 | 81 | 03 | 162836 | 92 | 20 | 163994 | 02 | 25 |
| 161965 | 02 | 01 | 162418 | 82 | 04 | 162864 | 24 | 03 | 163995 | 02 | 26 |
| 161966 | 02 | 02 | 162419 | 88 | 05 | 162924 | 26 | 07 | 163996 | 02 | 27 |
| 161967 | 02 | 03 | 162419 | 89 | 05 | 162925 | 24 | 21 | 164182 | 26 | 22 |
| 161968 | 02 | 04 | 162441 | 88 | 06 | 162956 | 85 | 12 | 164184 | 26 | 11 |
| 161969 | 02 | 05 | 162441 | 89 | 06 | 163001 | 55 | 19 | 164188 | 25 | 24 |
| 161970 | 02 | 06 | 162445 | 85 | 10 | 163113 | 69 | 02 | 164188 | 26 | 23 |
| 161981 | 02 | 07 | 162450 | 02 | 12 | 163130 | 34 | 16 | 164188 | 27 | 17 |
| 161982 | 02 | 08 | 162451 | 02 | 13 | 163130 | 90 | 09 | 164244 | 10 | 05 |
| 161985 | 02 | 09 | 162452 | 02 | 14 | 163178 | 10 | 03 | 164245 | 10 | 06 |
| 161986 | 02 | 10 | 162453 | 02 | 15 | 163179 | 10 | 04 | 164535 | 71 | 07 |
| 161987 | 02 | 11 | 162471 | 65 | 07 | 163183 | 10 | 08 | 164535 | 72 | 17 |
| 161988 | 95 | 04 | 162472 | 93 | 04 | 163184 | 10 | 09 | 164667 | 16 | 27 |
| 161990 | 95 | 01 | 162485 | 13 | 23 | 163185 | 10 | 10 | 164667 | 17 | 40 |
| 161991 | 95 | 02 | 162487 | 40 | 12 | 163288 | 85 | 13 | 164668 | 25 | 33 |
| 161992 | 95 | 03 | 162489 | 21 | 16 | 163289 | 85 | 15 | 164669 | 31 | 43 |
| 161995 | 94 | 04 | 162495 | 55 | 29 | 163290 | 85 | 14 | 164671 | 22 | 03 |
| 161998 | 91 | 07 | 162502 | 18 | 27 | 163325 | 79 | 01 | 164672 | 22 | 07 |
| 162022 | 08 | 28 | 162503 | 18 | 26 | 163335 | 85 | 09 | 164673 | 23 | 20 |
| 162024 | 21 | 18 | 162504 | 35 | 38 | 163335 | 86 | 04 | 164674 | 24 | 22 |
| 162026 | 13 | 30 | 162504 | 39 | 07 | 163628 | 08 | 35 | 164674 | 25 | 27 |
| | | | | | | | | | 164675 | 22 | 12 |

| Part No. | Page No. | Ref. No. | Part No. | Page No. | Ref. No. | Part No. | Page No. | Ref. No. | Part No. | Page No. | Ref. No. |
|---|---|---|---|---|---|---|---|---|---|---|---|
| 164679 | 26 | 04 | 164907 | 26 | 09 | 165066 | 38 | 01 | 165128 | 09 | 15 |
| 164680 | 26 | 05 | 164920 | 08 | 31 | 165068 | 15 | 35 | 165129 | 09 | 14 |
| 164681 | 26 | 08 | 164925 | 55 | 08 | 165071 | 17 | 31 | 165130 | 09 | 13 |
| 164682 | 26 | 10 | 164928 | 54 | 10 | 165072 | 38 | 13 | 165131 | 09 | 12 |
| 164683 | 26 | 20 | 164945 | 58 | 03 | 165073 | 38 | 14 | 165132 | 09 | 11 |
| 164684 | 29 | 04 | 164945 | 61 | 09 | 165074 | 38 | 11 | 165133 | 09 | 10 |
| 164685 | 92 | 06 | 164945 | 62 | 03 | 165075 | 32 | 01 | 165134 | 09 | 08 |
| 164686 | 26 | 26 | 164969 | 31 | 19 | 165076 | 32 | 02 | 165135 | 09 | 07 |
| 164687 | 30 | 03 | 164970 | 31 | 20 | 165077 | 17 | 18 | 165136 | 09 | 06 |
| 164688 | 24 | 27 | 164971 | 31 | 21 | 165078 | 16 | 04 | 165137 | 09 | 05 |
| 164689 | 24 | 23 | 164972 | 31 | 22 | 165079 | 15 | 25 | 165138 | 09 | 03 |
| 164689 | 26 | 16 | 164974 | 31 | 24 | 165080 | 17 | 03 | 165139 | 09 | 02 |
| 164690 | 25 | 32 | 164976 | 31 | 29 | 165082 | 33 | 02 | 165140 | 09 | 01 |
| 164691 | 23 | 12 | 164978 | 31 | 37 | 165085 | 35 | 24 | 165141 | 09 | 16 |
| 164692 | 92 | 13 | 164979 | 31 | 38 | 165086 | 35 | 12 | 165142 | 10 | 07 |
| 164693 | 92 | 14 | 164980 | 31 | 15 | 165089 | 70 | 01 | 165143 | 10 | 02 |
| 164694 | 92 | 15 | 164981 | 31 | 40 | 165090 | 13 | 17 | 165144 | 10 | 01 |
| 164695 | 92 | 03 | 164982 | 31 | 39 | 165091 | 96 | 08 | 165145 | 11 | 06 |
| 164697 | 92 | 07 | 165032 | 23 | 18 | 165092 | 96 | 07 | 165146 | 11 | 05 |
| 164698 | 16 | 23 | 165033 | 25 | 22 | 165093 | 96 | 01 | 165147 | 11 | 03 |
| 164698 | 17 | 39 | 165034 | 25 | 23 | 165094 | 15 | 40 | 165148 | 11 | 02 |
| 164699 | 31 | 53 | 165035 | 22 | 17 | 165095 | 16 | 35 | 165149 | 11 | 01 |
| 164700 | 24 | 06 | 165035 | 23 | 24 | 165096 | 16 | 34 | 165152 | 31 | 23 |
| 164701 | 24 | 07 | 165035 | 28 | 03 | 165097 | 16 | 16 | 165153 | 72 | 21 |
| 164706 | 68 | 07 | 165035 | 29 | 05 | 165098 | 16 | 21 | 165156 | 24 | 16 |
| 164707 | 31 | 03 | 165036 | 90 | 04 | 165099 | 16 | 02 | 165157 | 26 | 15 |
| 164744 | 22 | 18 | 165037 | 71 | 09 | 165100 | 16 | 03 | 165158 | 27 | 08 |
| 164744 | 23 | 25 | 165038 | 71 | 11 | 165101 | 16 | 01 | 165159 | 23 | 27 |
| 164744 | 28 | 04 | 165039 | 71 | 10 | 165104 | 15 | 47 | 165162 | 33 | 01 |
| 164744 | 29 | 06 | 165040 | 71 | 08 | 165105 | 16 | 29 | 165163 | 22 | 13 |
| 164745 | 22 | 19 | 165041 | 71 | 14 | 165106 | 16 | 21 | 165164 | 22 | 14 |
| 164745 | 23 | 26 | 165043 | 66 | 10 | 165107 | 16 | 39 | 165165 | 23 | 01 |
| 164745 | 28 | 05 | 165044 | 71 | 16 | 165108 | 55 | 15 | 165166 | 23 | 02 |
| 164745 | 29 | 07 | 165045 | 66 | 01 | 165109 | 17 | 16 | 165167 | 23 | 03 |
| 164770 | 27 | 01 | 165046 | 23 | 06 | 165110 | 38 | 15 | 165168 | 23 | 04 |
| 164800 | 86 | 01 | 165047 | 28 | 06 | 165111 | 55 | 18 | 165169 | 23 | 30 |
| 164804 | 80 | 06 | 165048 | 23 | 28 | 165112 | 33 | 08 | 165170 | 22 | 02 |
| 164853 | 02 | 28 | 165054 | 47 | 20 | 165113 | 55 | 17 | 165171 | 22 | 15 |
| 164854 | 02 | 29 | 165056 | 72 | 13 | 165114 | 15 | 46 | 165172 | 22 | 16 |
| 164868 | 91 | 08 | 165057 | 72 | 12 | 165115 | 16 | 41 | 165173 | 22 | 20 |
| 164878 | 92 | 05 | 165058 | 73 | 01 | 165117 | 08 | 12 | 165174 | 24 | 10 |
| 164889 | 92 | 04 | 165059 | 16 | 12 | 165119 | 08 | 18 | 165175 | 24 | 12 |
| 164892 | 85 | 18 | 165060 | 40 | 01 | 165121 | 08 | 08 | 165176 | 24 | 14 |
| 164894 | 26 | 19 | 165061 | 17 | 27 | 165122 | 08 | 05 | 165178 | 24 | 29 |
| 164894 | 27 | 18 | 165063 | 55 | 01 | 165124 | 08 | 06 | 165178 | 25 | 28 |
| 164904 | 24 | 19 | 165065 | 62 | 16 | 165126 | 08 | 33 | 165178 | 26 | 27 |
| | | | | | | | | | 165179 | 24 | 28 |

# 303 - NUMERICAL INDEX


| Part No. | Page No. | Ref. No. | Part No. | Page No. | Ref. No. | Part No. | Page No. | Ref. No. | Part No. | Page No. | Ref. No. |
|---|---|---|---|---|---|---|---|---|---|---|---|
| 165180 | 24 | 01 | 165239 | 92 | 24 | 165285 | 50 | 130 | 165325 | 50 | 50 |
| 165186 | 26 | 12 | 165240 | 92 | 23 | 165286 | 51 | 130 | 165326 | 50 | 80 |
| 165187 | 26 | 18 | 165241 | 92 | 21 | 165287 | 48 | 120 | 165327 | 50 | 110 |
| 165188 | 27 | 02 | 165242 | 92 | 22 | 165288 | 47 | 10 | 165328 | 50 | 120 |
| 165189 | 27 | 03 | 165243 | 30 | 01 | 165289 | 91 | 06 | 165328 | 50 | 150 |
| 165190 | 27 | 05 | 165244 | 30 | 02 | 165290 | 46 | 10 | 165329 | 48 | 30 |
| 165191 | 27 | 06 | 165245 | 92 | 25 | 165291 | 35 | 31 | 165330 | 48 | 40 |
| 165192 | 27 | 09 | 165246 | 37 | 01 | 165292 | 36 | 15 | 165330 | 49 | 40 |
| 165193 | 27 | 10 | 165247 | 37 | 03 | 165293 | 36 | 01 | 165331 | 48 | 50 |
| 165195 | 27 | 13 | 165248 | 37 | 06 | 165294 | 36 | 02 | 165331 | 49 | 50 |
| 165196 | 29 | 01 | 165249 | 36 | 14 | 165295 | 36 | 03 | 165332 | 48 | 60 |
| 165206 | 23 | 13 | 165250 | 38 | 08 | 165296 | 36 | 04 | 165333 | 48 | 70 |
| 165211 | 25 | 25 | 165251 | 34 | 01 | 165297 | 36 | 05 | 165334 | 48 | 90 |
| 165212 | 26 | 25 | 165252 | 34 | 03 | 165298 | 35 | 05 | 165335 | 48 | 100 |
| 165213 | 27 | 20 | 165253 | 34 | 04 | 165299 | 35 | 37 | 165336 | 41 | 03 |
| 165214 | 27 | 12 | 165254 | 34 | 02 | 165300 | 35 | 07 | 165336 | 48 | 110 |
| 165215 | 24 | 15 | 165255 | 37 | 07 | 165301 | 35 | 06 | 165337 | 48 | 130 |
| 165215 | 25 | 26 | 165256 | 37 | 02 | 165302 | 35 | 08 | 165338 | 41 | 20 |
| 165216 | 24 | 24 | 165257 | 37 | 05 | 165303 | 35 | 04 | 165339 | 41 | 30 |
| 165216 | 26 | 17 | 165258 | 36 | 12 | 165304 | 35 | 02 | 165340 | 41 | 40 |
| 165217 | 24 | 30 | 165259 | 40 | 10 | 165305 | 35 | 03 | 165341 | 41 | 50 |
| 165217 | 25 | 29 | 165260 | 40 | 17 | 165306 | 35 | 34 | 165342 | 41 | 60 |
| 165217 | 26 | 28 | 165261 | 39 | 08 | 165307 | 35 | 01 | 165343 | 41 | 70 |
| 165218 | 24 | 31 | 165262 | 33 | 09 | 165308 | 52 | 80 | 165344 | 41 | 80 |
| 165218 | 25 | 30 | 165263 | 33 | 07 | 165308 | 53 | 30 | 165344 | 46 | 160 |
| 165218 | 26 | 29 | 165264 | 35 | 21 | 165309 | 52 | 30 | 165345 | 43 | 20 |
| 165219 | 28 | 07 | 165265 | 35 | 18 | 165310 | 51 | 100 | 165346 | 43 | 30 |
| 165220 | 28 | 01 | 165266 | 35 | 17 | 165310 | 52 | 40 | 165347 | 43 | 60 |
| 165221 | 24 | 09 | 165267 | 37 | 20 | 165311 | 52 | 60 | 165348 | 43 | 70 |
| 165222 | 16 | 25 | 165268 | 39 | 14 | 165312 | 48 | 80 | 165349 | 35 | 40 |
| 165223 | 92 | 02 | 165268 | 46 | 01 | 165312 | 49 | 70 | 165350 | 49 | 20 |
| 165224 | 34 | 21 | 165269 | 37 | 21 | 165312 | 50 | 70 | 165351 | 49 | 30 |
| 165226 | 92 | 12 | 165270 | 38 | 09 | 165312 | 51 | 90 | 165352 | 49 | 60 |
| 165227 | 90 | 03 | 165272 | 36 | 06 | 165312 | 52 | 50 | 165353 | 46 | 20 |
| 165228 | 90 | 02 | 165273 | 36 | 07 | 165313 | 52 | 20 | 165354 | 46 | 30 |
| 165229 | 91 | 11 | 165274 | 39 | 02 | 165314 | 51 | 140 | 165355 | 46 | 40 |
| 165230 | 93 | 05 | 165275 | 39 | 01 | 165315 | 51 | 10 | 165356 | 46 | 50 |
| 165231 | 92 | 01 | 165276 | 54 | 02 | 165316 | 51 | 20 | 165357 | 46 | 60 |
| 165232 | 93 | 02 | 165277 | 54 | 01 | 165317 | 51 | 30 | 165358 | 46 | 70 |
| 165233 | 93 | 01 | 165278 | 41 | 10 | 165318 | 51 | 40 | 165359 | 46 | 80 |
| 165233 | 94 | 03 | 165279 | 41 | 09 | 165319 | 51 | 50 | 165360 | 46 | 90 |
| 165234 | 92 | 16 | 165280 | 53 | 10 | 165320 | 51 | 70 | 165361 | 46 | 100 |
| 165235 | 92 | 08 | 165281 | 52 | 10 | 165321 | 51 | 60 | 165362 | 46 | 110 |
| 165236 | 92 | 09 | 165282 | 49 | 10 | 165322 | 51 | 80 | 165363 | 46 | 120 |
| 165237 | 92 | 10 | 165283 | 48 | 10 | 165323 | 51 | 110 | 165364 | 46 | 140 |
| 165238 | 92 | 11 | 165284 | 43 | 10 | 165324 | 50 | 40 | 165365 | 46 | 150 |
| | | | | | | | | | 165366 | 46 | 170 |

| Part No. | Page No. | Ref. No. | Part No. | Page No. | Ref. No. | Part No. | Page No. | Ref. No. | Part No. | Page No. | Ref. No. |
|---|---|---|---|---|---|---|---|---|---|---|---|
| 165367 | 46 | 175 | 165414 | 43 | 40 | 165516 | 67 | 02 | 165572 | 96 | 02 |
| 165368 | 47 | 30 | 165415 | 43 | 50 | 165517 | 67 | 13 | 165573 | 35 | 39 |
| 165369 | 44 | 20 | 165416 | 44 | 10 | 165518 | 67 | 12 | 165574 | 15 | 42 |
| 165370 | 44 | 30 | 165417 | 45 | 10 | 165519 | 67 | 11 | 165574 | 31 | 50 |
| 165371 | 44 | 40 | 165418 | 45 | 55 | 165520 | 72 | 05 | 165575 | 91 | 01 |
| 165372 | 44 | 50 | 165419 | 45 | 70 | 165521 | 72 | 04 | 165576 | 50 | 100 |
| 165373 | 44 | 70 | 165420 | 45 | 110 | 165522 | 72 | 03 | 165577 | 42 | 100 |
| 165374 | 44 | 60 | 165421 | 45 | 120 | 165523 | 72 | 02 | 165578 | 41 | 08 |
| 165375 | 44 | 80 | 165422 | 45 | 140 | 165523 | 73 | 04 | 165579 | 50 | 60 |
| 165376 | 44 | 90 | 165423 | 45 | 170 | 165524 | 63 | 01 | 165580 | 50 | 30 |
| 165377 | 44 | 100 | 165424 | 48 | 20 | 165525 | 63 | 02 | 165581 | 45 | 60 |
| 165378 | 44 | 110 | 165425 | 48 | 140 | 165526 | 63 | 03 | 165582 | 59 | 08 |
| 165379 | 44 | 120 | 165426 | 50 | 10 | 165527 | 63 | 04 | 165583 | 60 | 04 |
| 165380 | 44 | 130 | 165427 | 50 | 20 | 165528 | 63 | 05 | 165584 | 60 | 01 |
| 165381 | 44 | 140 | 165428 | 50 | 90 | 165529 | 63 | 06 | 165585 | 60 | 02 |
| 165382 | 44 | 150 | 165429 | 50 | 140 | 165530 | 63 | 07 | 165587 | 31 | 11 |
| 165383 | 44 | 160 | 165430 | 50 | 160 | 165531 | 63 | 08 | 165587 | 35 | 19 |
| 165384 | 44 | 170 | 165431 | 53 | 20 | 165532 | 63 | 09 | 165588 | 31 | 49 |
| 165385 | 44 | 180 | 165432 | 42 | 160 | 165533 | 63 | 10 | 165589 | 31 | 48 |
| 165386 | 44 | 190 | 165433 | 42 | 150 | 165534 | 63 | 11 | 165591 | 13 | 01 |
| 165387 | 41 | 01 | 165471 | 55 | 09 | 165535 | 63 | 12 | 165592 | 13 | 34 |
| 165388 | 41 | 02 | 165472 | 57 | 05 | 165536 | 63 | 13 | 165593 | 31 | 01 |
| 165389 | 41 | 04 | 165478 | 55 | 26 | 165538 | 58 | 04 | 165594 | 35 | 10 |
| 165390 | 41 | 05 | 165481 | 69 | 03 | 165539 | 58 | 05 | 165595 | 31 | 02 |
| 165391 | 41 | 06 | 165487 | 72 | 01 | 165541 | 63 | 16 | 165596 | 13 | 19 |
| 165392 | 41 | 07 | 165488 | 67 | 01 | 165543 | 63 | 15 | 165597 | 08 | 01 |
| 165393 | 42 | 02 | 165489 | 71 | 01 | 165547 | 32 | 03 | 165598 | 08 | 16 |
| 165394 | 42 | 80 | 165490 | 69 | 01 | 165548 | 73 | 02 | 165599 | 08 | 11 |
| 165395 | 42 | 90 | 165495 | 60 | 03 | 165549 | 73 | 03 | 165601 | 12 | 01 |
| 165396 | 42 | 110 | 165496 | 60 | 09 | 165550 | 73 | 06 | 165602 | 08 | 11 |
| 165397 | 42 | 120 | 165497 | 60 | 08 | 165551 | 15 | 02 | 165603 | 08 | 09 |
| 165398 | 42 | 130 | 165498 | 60 | 07 | 165552 | 15 | 32 | 165605 | 08 | 02 |
| 165399 | 42 | 140 | 165499 | 57 | 12 | 165553 | 15 | 33 | 165606 | 08 | 34 |
| 165400 | 45 | 20 | 165500 | 33 | 15 | 165554 | 17 | 02 | 165607 | 09 | 19 |
| 165401 | 45 | 30 | 165501 | 33 | 16 | 165555 | 17 | 37 | 165608 | 09 | 21 |
| 165402 | 45 | 40 | 165502 | 33 | 13 | 165556 | 15 | 34 | 165609 | 40 | 02 |
| 165403 | 45 | 50 | 165503 | 33 | 14 | 165557 | 13 | 29 | 165610 | 31 | 36 |
| 165404 | 45 | 80 | 165504 | 62 | 07 | 165558 | 55 | 02 | 165611 | 31 | 41 |
| 165405 | 45 | 90 | 165505 | 62 | 22 | 165559 | 15 | 39 | 165612 | 31 | 55 |
| 165406 | 45 | 100 | 165508 | 61 | 02 | 165560 | 15 | 38 | 165613 | 34 | 20 |
| 165407 | 45 | 130 | 165510 | 61 | 07 | 165564 | 32 | 08 | 165614 | 18 | 01 |
| 165408 | 45 | 150 | 165511 | 61 | 08 | 165565 | 16 | 13 | 165615 | 19 | 01 |
| 165409 | 45 | 160 | 165512 | 61 | 18 | 165565 | 17 | 28 | 165616 | 21 | 08 |
| 165410 | 37 | 04 | 165513 | 61 | 12 | 165566 | 62 | 21 | 165617 | 21 | 07 |
| 165410 | 52 | 70 | 165514 | 72 | 20 | 165567 | 73 | 07 | 165618 | 21 | 01 |
| 165412 | 42 | 01 | 165515 | 67 | 10 | 165569 | 63 | 14 | 165619 | 18 | 08 |
| | | | | | | | | | 165620 | 20 | 01 |

# 303 - NUMERICAL INDEX


| Part No. | Page No. | Ref. No. | Part No. | Page No. | Ref. No. | Part No. | Page No. | Ref. No. | Part No. | Page No. | Ref. No. |
|---|---|---|---|---|---|---|---|---|---|---|---|
| 165621 | 13 | 05 | 165660 | 61 | 01 | 165699 | 74 | 09 | 165880 | 81 | 06 |
| 165622 | 21 | 20 | 165661 | 57 | 01 | 165700 | 75 | 09 | 165886 | 88 | 04 |
| 165623 | 21 | 22 | 165662 | 08 | 07 | 165701 | 76 | 07 | 165886 | 89 | 04 |
| 165624 | 18 | 25 | 165662 | 58 | 01 | 165702 | 77 | 09 | 165892 | 88 | 03 |
| 165625 | 19 | 16 | 165663 | 62 | 01 | 165703 | 57 | 04 | 165892 | 89 | 03 |
| 165626 | 20 | 16 | 165664 | 78 | 02 | 165803 | 13 | 13 | 165894 | 85 | 11 |
| 165627 | 21 | 09 | 165665 | 78 | 03 | 165816 | 71 | 13 | 165895 | 35 | 11 |
| 165627 | 76 | 01 | 165666 | 78 | 05 | 165817 | 96 | 03 | 165896 | 77 | 14 |
| 165628 | 18 | 07 | 165667 | 78 | 04 | 165818 | 15 | 19 | 165897 | 61 | 06 |
| 165628 | 75 | 01 | 165668 | 78 | 06 | 165818 | 15 | 20 | 165898 | 02 | 30 |
| 165629 | 18 | 02 | 165669 | 78 | 07 | 165819 | 35 | 20 | 165906 | 02 | 31 |
| 165629 | 74 | 01 | 165670 | 74 | 02 | 165821 | 17 | 32 | 165911 | 31 | 42 |
| 165630 | 13 | 09 | 165671 | 74 | 03 | 165822 | 37 | 08 | 165912 | 90 | 01 |
| 165630 | 77 | 01 | 165672 | 74 | 07 | 165823 | 74 | 11 | 165913 | 15 | 36 |
| 165631 | 12 | 09 | 165673 | 74 | 04 | 165823 | 75 | 11 | 165914 | 33 | 19 |
| 165631 | 78 | 01 | 165674 | 74 | 06 | 165823 | 76 | 10 | 165915 | 35 | 32 |
| 165632 | 81 | 14 | 165674 | 75 | 06 | 165823 | 77 | 11 | 165915 | 35 | 33 |
| 165633 | 81 | 13 | 165674 | 77 | 06 | 165824 | 31 | 51 | 165915 | 39 | 04 |
| 165634 | 13 | 33 | 165675 | 74 | 05 | 165825 | 71 | 15 | 165915 | 39 | 05 |
| 165634 | 81 | 22 | 165675 | 75 | 05 | 165826 | 23 | 19 | 165915 | 39 | 06 |
| 165635 | 87 | 01 | 165675 | 77 | 05 | 165828 | 85 | 01 | 165916 | 14 | 07 |
| 165636 | 87 | 02 | 165676 | 75 | 02 | 165829 | 81 | 04 | 165916 | 14 | 08 |
| 165637 | 87 | 03 | 165677 | 75 | 03 | 165830 | 85 | 05 | 165918 | 88 | 09 |
| 165638 | 87 | 04 | 165678 | 75 | 07 | 165832 | 81 | 05 | 165918 | 88 | 10 |
| 165639 | 81 | 12 | 165678 | 76 | 05 | 165834 | 83 | 03 | 165918 | 88 | 11 |
| 165640 | 81 | 11 | 165679 | 75 | 04 | 165838 | 81 | 18 | 165918 | 89 | 09 |
| 165641 | 81 | 10 | 165680 | 76 | 02 | 165839 | 81 | 02 | 165918 | 89 | 10 |
| 165642 | 81 | 09 | 165681 | 76 | 03 | 165840 | 81 | 19 | 165918 | 89 | 11 |
| 165643 | 87 | 05 | 165682 | 76 | 04 | 165845 | 84 | 02 | 165919 | 33 | 17 |
| 165644 | 87 | 06 | 165683 | 77 | 02 | 165848 | 83 | 02 | 165919 | 33 | 18 |
| 165645 | 87 | 08 | 165684 | 77 | 03 | 165852 | 84 | 01 | 165920 | 33 | 21 |
| 165646 | 87 | 07 | 165685 | 77 | 07 | 165860 | 88 | 01 | 165921 | 15 | 30 |
| 165647 | 87 | 10 | 165686 | 77 | 04 | 165860 | 89 | 01 | 165921 | 15 | 31 |
| 165648 | 87 | 09 | 165687 | 78 | 14 | 165861 | 88 | 02 | 165922 | 25 | 20 |
| 165649 | 18 | 18 | 165688 | 57 | 02 | 165861 | 89 | 02 | 165922 | 25 | 21 |
| 165650 | 18 | 20 | 165689 | 57 | 03 | 165862 | 88 | 07 | 165923 | 24 | 11 |
| 165651 | 18 | 16 | 165690 | 61 | 03 | 165863 | 55 | 07 | 165925 | 13 | 18 |
| 165652 | 18 | 19 | 165691 | 58 | 06 | 165864 | 89 | 07 | 165928 | 67 | 08 |
| 165653 | 18 | 17 | 165692 | 19 | 06 | 165870 | 80 | 02 | 165929 | 34 | 14 |
| 165654 | 87 | 11 | 165692 | 20 | 06 | 165871 | 80 | 03 | 165932 | 31 | 14 |
| 165655 | 87 | 12 | 165693 | 21 | 12 | 165873 | 82 | 02 | 165933 | 34 | 05 |
| 165656 | 75 | 16 | 165694 | 18 | 03 | 165874 | 82 | 01 | 165934 | 34 | 17 |
| 165657 | 75 | 15 | 165695 | 18 | 10 | 165876 | 81 | 01 | 165935 | 54 | 06 |
| 165658 | 74 | 15 | 165696 | 31 | 47 | 165877 | 81 | 07 | 165936 | 27 | 07 |
| 165659 | 74 | 20 | 165697 | 31 | 46 | 165878 | 81 | 20 | 165937 | 37 | 16 |
| 165660 | 13 | 02 | 165698 | 15 | 37 | 165879 | 81 | 08 | 165937 | 54 | 03 |
| | | | | | | | | | 165938 | 74 | 08 |

| Part No. | Page No. | Ref. No. | Part No. | Page No. | Ref. No. | Part No. | Page No. | Ref. No. | Part No. | Page No. | Ref. No. |
|---|---|---|---|---|---|---|---|---|---|---|---|
| 165938 | 75 | 08 | 165989 | 17 | 01 | 651458 | 15 | 12 | 656001 | 17 | 11 |
| 165938 | 76 | 06 | 165990 | 38 | 27 | 651458 | 18 | 05 | 656001 | 31 | 08 |
| 165938 | 77 | 08 | 651391 | 34 | 22 | 651458 | 19 | 08 | 656001 | 32 | 04 |
| 165940 | 13 | 21 | 651394 | 17 | 04 | 651458 | 20 | 08 | 656001 | 35 | 28 |
| 165942 | 15 | 21 | 651395 | 34 | 12 | 651458 | 21 | 14 | 656001 | 40 | 09 |
| 165943 | 13 | 40 | 651396 | 18 | 09 | 651458 | 24 | 04 | 656001 | 60 | 05 |
| 165944 | 73 | 09 | 651399 | 55 | 03 | 651458 | 27 | 04 | 656001 | 64 | 04 |
| 165945 | 08 | 30 | 651407 | 16 | 24 | 651458 | 31 | 26 | 656001 | 66 | 04 |
| 165946 | 68 | 12 | 651421 | 38 | 03 | 651458 | 35 | 15 | 656001 | 72 | 08 |
| 165947 | 25 | 36 | 651422 | 27 | 19 | 651458 | 36 | 11 | 656001 | 90 | 07 |
| 165948 | 23 | 29 | 651424 | 24 | 17 | 651458 | 37 | 19 | 656001 | 93 | 07 |
| 165950 | 15 | 45 | 651424 | 31 | 32 | 651458 | 87 | 16 | 656001 | 96 | 09 |
| 165952 | 31 | 13 | 651425 | 14 | 02 | 651459 | 15 | 04 | 656016 | 16 | 17 |
| 165953 | 13 | 24 | 651425 | 26 | 06 | 651459 | 17 | 08 | 656017 | 16 | 38 |
| 165956 | 13 | 16 | 651426 | 18 | 23 | 651465 | 73 | 05 | 656047 | 17 | 17 |
| 165960 | 38 | 25 | 651426 | 40 | 19 | 651466 | 23 | 05 | 656047 | 40 | 20 |
| 165961 | 67 | 03 | 651427 | 17 | 14 | 651468 | 74 | 18 | 656047 | 91 | 05 |
| 165962 | 38 | 26 | 651430 | 15 | 41 | 651470 | 13 | 14 | 656050 | 16 | 37 |
| 165963 | 69 | 04 | 651430 | 23 | 22 | 651472 | 72 | 11 | 656050 | 21 | 19 |
| 165964 | 14 | 13 | 651434 | 18 | 28 | 651475 | 55 | 20 | 656090 | 08 | 21 |
| 165965 | 58 | 02 | 651434 | 81 | 15 | 651475 | 57 | 07 | 656092 | 35 | 22 |
| 165965 | 61 | 13 | 651435 | 87 | 13 | 651475 | 96 | 04 | 656093 | 15 | 09 |
| 165966 | 61 | 11 | 651438 | 39 | 15 | 651480 | 08 | 24 | 656093 | 31 | 18 |
| 165966 | 62 | 09 | 651439 | 18 | 04 | 651480 | 54 | 07 | 656093 | 33 | 06 |
| 165968 | 62 | 15 | 651439 | 19 | 07 | 651480 | 57 | 09 | 656093 | 34 | 09 |
| 165969 | 61 | 10 | 651439 | 20 | 07 | 651487 | 16 | 19 | 656093 | 38 | 19 |
| 165971 | 57 | 11 | 651439 | 21 | 13 | 651489 | 08 | 26 | 656093 | 39 | 12 |
| 165971 | 62 | 12 | 651440 | 18 | 11 | 651505 | 15 | 43 | 656093 | 75 | 17 |
| 165972 | 62 | 11 | 651443 | 13 | 08 | 651505 | 25 | 34 | 656094 | 35 | 16 |
| 165972 | 77 | 13 | 651443 | 19 | 17 | 651505 | 38 | 16 | 656094 | 36 | 08 |
| 165973 | 61 | 05 | 651443 | 20 | 17 | 651507 | 16 | 06 | 656100 | 73 | 10 |
| 165974 | 88 | 12 | 651443 | 21 | 11 | 651507 | 17 | 24 | 656102 | 62 | 18 |
| 165974 | 89 | 12 | 651446 | 31 | 44 | 651507 | 71 | 04 | 656110 | 31 | 54 |
| 165975 | 64 | 10 | 651448 | 24 | 13 | 651507 | 91 | 02 | 656110 | 60 | 06 |
| 165976 | 71 | 12 | 651449 | 08 | 27 | 651517 | 15 | 18 | 656116 | 15 | 05 |
| 165977 | 40 | 15 | 651449 | 73 | 08 | 651517 | 31 | 35 | 656116 | 17 | 09 |
| 165982 | 33 | 22 | 651456 | 24 | 20 | 651517 | 74 | 23 | 656149 | 15 | 49 |
| 165983 | 13 | 39 | 651456 | 27 | 11 | 656001 | 08 | 13 | 656149 | 35 | 25 |
| 165985 | 51 | 120 | 651457 | 33 | 10 | 656001 | 13 | 35 | 425–34636 | 46 | 130 |
| 165987 | 15 | 01 | 651457 | 35 | 36 | 656001 | 15 | 28 | 425–36091 | 39 | 18 |
| 165988 | 15 | 10 | 651457 | 40 | 16 | | | | | | |

# NOTES

# TORQUE SPECIFICATIONS

**NOTE:** *Use these torque values when tightening* ***GEHL*** *hardware (excluding: Locknuts and Self-tapping, Thread Forming and Sheet Metal Screws) unless specified otherwise.*

**All torque values are in Lb-Ft except those marked with an * which are Lb-In**
**(For metric torque value Nm, multiply Lb-Ft value by 1.355 or Lb-In value by 0.113)**

| Unified National Thread | Grade 2 | | Grade 5 | | Grade 8 | |
|---|---|---|---|---|---|---|
| | Dry | Lubed | Dry | Lubed | Dry | Lubed |
| **8-32** | 19* | 14* | 30* | 22* | 41* | 31* |
| **8-36** | 20* | 15* | 31* | 23* | 43* | 32* |
| **10-24** | 27* | 21* | 43* | 32* | 60* | 45* |
| **10-32** | 31* | 23* | 49* | 36* | 68* | 51* |
| **1/4-20** | 66* | 50* | 9 | 75* | 12 | 9 |
| **1/4-28** | 76* | 56* | 10 | 86* | 14 | 10 |
| **5/16-18** | 11 | 9 | 17 | 13 | 25 | 18 |
| **5/16-24** | 12 | | 19 | 14 | | 20 |
| **3/8-16** | 20 | 15 | 30 | 23 | 45 | 35 |
| **3/8-24** | 23 | 17 | 35 | 25 | 50 | |
| **7/16-14** | 32 | 24 | 50 | 35 | 70 | 55 |
| **7/16-20** | 36 | 27 | 55 | 40 | 80 | 60 |
| **1/2-13** | 50 | 35 | 75 | 55 | 110 | 80 |
| **1/2-20** | 55 | 40 | 90 | 65 | 120 | 90 |
| **9/16-12** | 70 | 55 | 110 | 80 | 150 | 110 |
| **9/16-18** | 80 | 60 | 120 | 90 | 170 | 130 |
| **5/8-11** | 100 | 75 | 150 | 110 | 220 | 170 |
| **5/8-18** | 110 | 85 | 180 | 130 | 240 | 180 |
| **3/4-10** | 175 | 130 | 260 | 200 | 380 | 280 |
| **3/4-16** | 200 | 150 | 300 | 220 | 420 | 320 |
| **7/8-9** | 170 | 125 | 430 | 320 | 600 | 460 |
| **7/8-14** | 180 | 140 | 470 | 360 | 660 | 500 |
| **1-8** | 250 | 190 | 640 | 480 | 900 | 680 |
| **1-14** | 270 | 210 | 710 | 530 | 1000 | 740 |
| **Metric Course Thread** | **Grade 8.8** (8.8) | | **Grade 10.9** (10.9) | | **Grade 12.9** (12.9) | |
| | **Dry** | **Lubed** | **Dry** | **Lubed** | **Dry** | **Lubed** |
| **M6-1** | 8 | 6 | 11 | 8 | 13.5 | 10 |
| **M8-1.25** | 19 | 14 | 27 | 20 | 32.5 | 24 |
| **M10-1.5** | 37.5 | 28 | 53 | 39 | 64 | 47 |
| **M12-1.75** | 65 | 48 | 91.5 | 67.5 | 111.5 | 82 |
| **M14-2** | 103.5 | 76.5 | 145.5 | 108 | 176.5 | 131 |
| **M16-2** | 158.5 | 117.5 | 223.5 | 165.5 | 271 | 200 |



**Gehl Company** 143 Water Street, P.O. Box 179, West Bend, WI 53095-0179, U.S.A.
www.gehl.com

**909786/AP0202**
**©2002 GEHL Company, All Rights Reserved**
**Printed in U.S.A.**