SEBP5957-13
March 2014

RUTHZIL TRATOR COMERCIAL DE PEÇAS LTDA 11 97083-6812 ROLANDO

Parts Manual

303.5E Mini Hydraulic Excavator

RKY1-Up (Machine)

Powered By C1.8 Engine

Product and Dealer Information

Note: For product identification plate locations, see the section “Product Identification Information” in the Operation and Maintenance Manual.

Delivery Date: _____

Product Information

Model: _____

Product Identification Number: _____

Engine Serial Number: _____

Transmission Serial Number: _____

Generator Serial Number: _____

Attachment Serial Numbers: _____

Attachment Information: _____

Customer Equipment Number: _____

Dealer Equipment Number: _____

Dealer Information

Name: _____ Branch: _____

Address: _____

_____

_____

	Dealer Contact	Phone Number	Hours
Sales:	_____	_____	_____
Parts:	_____	_____	_____
Service:	_____	_____	_____

MEMORANDA

TABLE OF CONTENTS

NAME	PAGE
GENERAL INFORMATION	**A4**
REPAIR ALTERNATIVES	**A7**
SUPPLEMENTAL COOLANT ADDITIVES	A8
MAINTENANCE PARTS	**A9**
INDEX	**A11**
MACHINE ARRANGEMENT	**1**
CHASSIS AR	1
COMMON AR	1
ENGINE ARRANGEMENT	**2**
ENGINE AR-COMPLETE	2
ENGINE AR-PRIMARY	3
INSTALLATION AR-ENGINE	4
BASIC ENGINE	**5**
BELT TENSIONER GP	5
CAMSHAFT GP	6
COVER GP-VALVE MECHANISM	7
CRANKSHAFT GP	8
CYLINDER BLOCK AS	10
CYLINDER BLOCK GP	11
CYLINDER HEAD AS	13
CYLINDER HEAD GP	14
DRAIN GP-ENGINE OIL	16
FLYWHEEL GP	17
GUARD GP-FAN	18
HOUSING GP-FRONT	20
LIFTING GP-ENGINE	22
MOUNTING GP-ENGINE	23
PAN GP-OIL	26
PISTON & ROD GP	27
PULLEY GP-FAN DRIVE	28
VALVE MECHANISM GP	29
LUBRICATION SYSTEM	**31**
FILLER GP-ENGINE OIL	31
FILTER GP-ENGINE OIL	32
GAUGE GP-OIL LEVEL (DIPSTICK)	33
PUMP GP-ENGINE OIL	34
COOLING SYSTEM	**35**
LINES GP-WATER	35
PUMP GP-WATER	36
RADIATOR & HYD OIL COOLER GP	37
AIR INLET AND EXHAUST SYSTEM	**40**
ACCESSORY GP-ENGINE	40
AIR CLEANER GP	41
EXTENSION GP-EXHAUST	43
LINES GP-AIR	44
MANIFOLD GP-EXHAUST	45
MANIFOLD GP-INLET	46
MUFFLER GP	47
FUEL SYSTEM	**48**
CAMSHAFT AS	48
CONTROL AR-GOVERNOR	49
CONTROL GP-GOVERNOR	50
FILTER GP-WATER SEP & FUEL	52
GOVERNOR GP	53
LINES GP-FUEL	55
LINES GP-FUEL FILTER	56
LINES GP-FUEL INJECTION	59
NOZZLE GP-UNIT INJECTOR	60
PUMP GP-FUEL INJECTION	61
SHUTOFF GP-MANUAL	63
TANK & MTG GP-FUEL	64
ELECTRICAL AND STARTING SYSTEM	66
ALARM GP-TRAVEL	66
ALTERNATOR GP-CHARGING	68
BATTERY & WIRING GP	69
CONTROL & MTG GP-ELECTRONIC	76
ELECTRONICS GP-MACHINE	77
ELECTRONICS GP-MONITOR	77
GLOW PLUG GP	78
HARNESS AS-CHASSIS	79
HARNESS AS-CONSOLE	81
HARNESS AS-CONTROL	85
HARNESS AS-QUICK COUPLER	85
HARNESS AS-SENSOR	85
HARNESS AS-SOLENOID	86
HEATER GP-JACKET WATER	87
LAMP GP-FLOOD	89
LIGHTING AR-FLOOD	90
LIGHTING GP-FLOOD	91
MOUNTING GP-ELECTRONIC CONTROL	95
STARTING MOTOR GP-ELECTRIC	96
SWITCH GP-ROTARY	97
WIRING GP-CAB	98
WIRING GP-CONSOLE	99
WIRING GP-ENGINE	113
WIRING GP-LIGHTING	114
WIRING GP-OVERLOAD WARNING	117
WIRING GP-QUICK COUPLER	118
WIRING GP-RELAY PANEL	119
POWER TRAIN	**121**
DRIVE GP-FINAL	121
MOTOR & MTG GP-TRAVEL	125
POWER TRAIN AR	126
SPROCKET GP	127
FRAME AND BODY	**128**

TABLE OF CONTENTS

NAME	PAGE
C-FRAME GP-POWER ANGLING	128
COUNTERWEIGHT & MOUNTING GP	129
COVER AS.	130
COVER GP-ACCESS	131
COVER GP-FENDER	133
COVER GP-SOUND SUPPRESSION	134
FENDER GP	136
FRAME GP-REAR	137
FRAME GP-SWING	142
FRAME GP-UPPER	144
GUARD GP-BOTTOM	145
GUARD GP-CYLINDER	146
GUARD GP-FRONT	148
HOOD & GUARD GP	150
HOOD AS.	153
HOOD GP	154
LINES GP-GREASE	155
PLATE AS	156
STOP GP-SWING.	157
SUPPRESSION AR-SOUND	158
SUPPRESSION GP-SOUND	159
UNDERCARRIAGE	**160**
FRAME GP-UNDERCARRIAGE	160
GEAR & BEARING GP-SWING	161
GUARD GP-TRACK GUIDE	162
IDLER GP-FRONT	163
LINK AS-TRACK	168
ROLLER AR-TRACK & CARRIER	169
ROLLER GP-TRACK CARRIER	170
ROLLER GP-TRACK-CENTER FLANGE	171
TRACK GP	172
UNDERCARRIAGE AR	174
HYDRAULIC SYSTEM	**175**
ACCUMULATOR GP-HYDRAULIC	175
CONTROL AR-AUXILIARY	182
CONTROL AR-COUPLER	183
CONTROL AR-HYDRAULIC	187
CONTROL AR-PILOT HYDRAULIC	187
CYLINDER GP-BLADE	188
CYLINDER GP-BOOM	192
CYLINDER GP-BUCKET	194
CYLINDER GP-HYDRAULIC	196
CYLINDER GP-STICK	198
CYLINDER GP-SWING BOOM	200
CYLINDER GP-TILT	202
DRAIN GP-OIL	203
DRIVE GP-SWING	206
FASTENER GP-LINES	207
GAUGE GP-SIGHT	209
HYDRAULIC AR	210
LINES AR-BOOM	210
LINES AR-BUCKET	210
LINES GP-AUXILIARY HYDRAULIC	212
LINES GP-BLADE	219
LINES GP-BOOM CHECK VALVE	221
LINES GP-BUCKET	226
LINES GP-BUCKET CYLINDER	230
LINES GP-CONNECTING	231
LINES GP-COUPLER	233
LINES GP-FRONT	239
LINES GP-HYDRAULIC PUMP	246
LINES GP-PILOT	248
LINES GP-RETURN	266
LINES GP-STICK	270
LINES GP-SWING CYLINDER	272
LINES GP-SWING MOTOR	275
LINES GP-TRAVEL MOTOR	281
MANIFOLD & SOLENOID GP-CONTROL	285
MANIFOLD GP-CONTROL	286
MOTOR & MTG GP-SWING	288
MOTOR GP-SWING	289
PLANETARY GP-SWING DRIVE	291
PUMP & MTG GP-MAIN HYDRAULIC	292
PUMP GP-PISTON & GEAR	293
SWIVEL GP	295
TANK & FILTER GP-HYDRAULIC	299
TANK & MTG GP-HYDRAULIC	301
VALVE & MOUNTING GP	302
VALVE & MTG GP-BANK	303
VALVE & MTG GP-CONTROL	305
VALVE & MTG GP-MAIN CONTROL	309
VALVE & MTG GP-PILOT	310
VALVE GP-CHECK	313
VALVE GP-CONTROL	314
VALVE GP-MAIN CONTROL	341
VALVE GP-PILOT	349
VALVE GP-PUMP CONTROL	357
VALVE GP-RELIEF	359
VALVE GP-SOLENOID	361
VALVE GP-SOLENOID & MANIFOLD	365
IMPLEMENTS	**366**
BOOM AR	366
BOOM GP	367
BRACKET GP-MOUNTING	369
LINKAGE AR-BUCKET	370
LINKAGE GP-BUCKET	372
STICK AR	377
STICK AR-HOE	377
STICK GP-HOE	381
WORK TOOLS	**388**
BLADE & MOUNTING GP	388
BLADE AR-ANGLING	391
BLADE AR-STRAIGHT	391

TABLE OF CONTENTS

NAME	PAGE
BLADE AS-ANGLING	392
BLADE GP-STRAIGHT	393
BUCKET AR-GENERAL PURPOSE	395
BUCKET AR-TILTABLE	396
BUCKET AS-DITCH CLEANING	397
BUCKET AS-GENERAL PURPOSE	401
BUCKET AS-HOE	404
BUCKET GP-EXCAVATION	411
BUCKET GP-GENERAL PURPOSE	413
BUCKET GP-HOE	419
COUPLER AR-QUICK	426
COUPLER GP-QUICK	430
LOCK GP-QUICK COUPLER	434
MOUNTING GP-BUCKET	437
THUMB GP	440
OPERATOR STATION	**443**
AIR CONDITIONER & MOUNTING GP	443
AIR CONDITIONER GP	444
CAB AR	446
CAB GP	449
CANOPY AR	471
CANOPY GP	472
COMPRESSOR GP-REFRIGERANT	474
CONDENSER & MTG GP-REFRIGERANT	475
CONSOLE GP-OPERATOR	476
CONTROL & MTG GP-PEDAL	480
CONTROL GP-HYDRAULIC HAND	482
CONTROL GP-JOYSTICK	483
CONTROL GP-PILOT OPERATED HYD	489
COVER GP-ACCESS	495
COVER GP-CAB	496
DOOR GP-CAB	497
DUCT GP-CAB AIR	499
GUARD GP-VANDALISM	501
HANDRAIL GP	503
HEATER & MTG GP-CAB	504
HEATER AR-CAB	505
HEATER GP-CAB	506
HORN GP-ELECTRIC	508
KIT-GUARD	509
LINES GP-AIR CONDITIONER	510
LINES GP-HEATER	514
LINK GP-WINDOW	516
MIRROR GP-DOWN VIEW	517
MIRROR GP-REAR VIEW	519
MOUNTING GP-MIRROR	526
OPERATOR AR	527
PLATFORM GP	528
PLATFORM GP-OPERATOR	530
SEAT & MOUNTING GP	535
SEAT BELT GP	536
SEAT GP-SUSPENSION	539
WASHER GP-WINDOW	541
WINDOW GP-CAB	542
WINDOW GP-SLIDING	544
SERVICE EQUIPMENT AND SUPPLIES	545
FILM GP	545
FILM GP-INTERNATIONAL	557
FILM GP-U.S.	560
PLATE & FILM GP	564
PART NUMBER INDEX	**B1**

1. MACHINE IDENTIFICATION

Cat machines are identified by Product Identification Numbers (PIN). Some components included in a machine may be identified by Serial Numbers (S/N). Typical components that will be serialized include engines, transmissions, bulldozers, and rippers. The machine and engine are further identified by arrangement numbers and in some cases modification numbers. These numbers are shown on the product identification plate(s) and on the master plate in the operator's compartment.

Cat dealers need all of these numbers to determine accurate parts identification.

Effective First Quarter 2001 the Cat Product Identification Number (PIN) changed from 8 to 17 characters. In an effort to provide uniform equipment identification, Caterpillar and other construction equipment manufacturers are moving to comply with the latest version of the product identification numbering standard. Non-road machine PINs are defined by ISO 10261. The new PIN format will apply to all Cat machines and generator sets. The PIN plates and frame marking will display the 17 character PIN. The new format will look like the following:

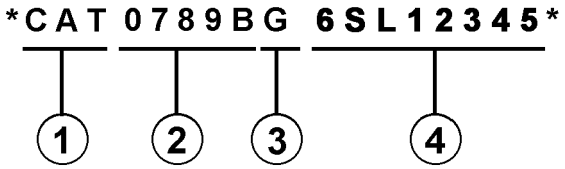

Where:

1. Caterpillar's World Manufacturing Code (characters 1-3)

2. Machine Descriptor (characters 4-8)

3. Check Character (character 9)

4. Machine Indicator Section (MIS) or Product Sequence Number (characters 10-17). These were previously referred to as the Serial Number.

Machines and generator sets produced before First Quarter 2001 will maintain their 8 character PIN format.

Components such as engines, transmissions, axles, etc. and work tools will continue to use an 8 character Serial Number (S/N).

2. ORDERING PARTS

⚠ WARNING

When replacement parts are required for this product Caterpillar recommends using Caterpillar replacement parts or parts with equivalent specifications including, but not limited to, physical dimensions, type, strength and material.

Failure to heed this warning can lead to premature failures, product damage, personal injury or death.

Quality Cat replacement parts are available from Cat dealers throughout the world. Their parts inventories are up to date and include all parts normally required to protect your investment in Cat machines. Dealers may offer repair kits or remanufactured parts to allow selection of the most effective repair alternative for a particular situation. When ordering parts, your order should specify the quantity, part number, part name, and the serial number/product identification number of the machine for which the parts are needed.

3. PARTS MANUAL ORGANIZATION

Product information in this manual is presented as "information elements" that represent all of the components for the specific model. Engine Arrangement and Seat Group are examples of information elements. The information elements are organized alphabetically by part name and secondarily by part number within each major section of the manual.

4. TABLE OF CONTENTS

A table of contents (TOC) is found at the beginning of the manual. The TOC lists each section of the manual with a complete list of all information elements organized as they appear in the manual. Page numbers are provided for quick reference to detailed parts identification illustrations and serviceable consist lists.

5. MAINTENANCE PARTS INDEX

The Maintenance Parts Index, located near the beginning of the manual, references most frequently used maintenance part numbers, providing description, quantity, usage and page number. This information is organized alphabetically by part description.

6. INDEX

The index located near the front of the manual is an alphabetical listing of all information elements included in the manual. Page numbers are provided for quick reference to detailed parts identification illustrations and serviceable consist lists.

7. PART NUMBER INDEX

A numerical index listing all part numbers and the corresponding page number(s) appears at the back of the manual.

8. CAPTIONS

Captions located at the beginning of each information element identify the part number and part name along with additional descriptive information. PIN and S/N information found in each caption should be used to select correct information for a specific machine. Field replacement options, identification of optional attachment components, and where used ("part of") information is also provided.

The first line of a caption is shown in larger type font to indicate the beginning of an information element. Captions for additional pages that may be required to illustrate an information element will be shown in standard type font and will include the term *(contd.)* .

9. NON-SERVICED PARTS

In some instances it is necessary to display non-serviced parts that are a link to a lower level serviceable consist lists. These non-serviced part numbers are shown in *italic* type indicating that they are not available.

10. PARTS LIST REFERENCE NUMBERS

Numbers shown in the Ref No column correspond to numbers used in the associated graphic(s). An alphabetic suffix may be added to a reference number to identify lower level consist items. Numbers shown in the Graphic Ref column refer to the graphic number identifier displayed in the lower left corner of each illustration. The Graphic Ref number may be used in combination with the item Ref No to determine the correct part number. There may be intentional omission of a Ref No in a consist list as information is updated to reflect the latest serviceable part numbers.

11. INDENTED PART NAMES

When a part name is indented in a parts list, it is part of (included in) the group or assembly under which it is indented.

12. ILLUSTRATION REFERENCE LETTERS

When necessary, illustrations contain reference letters (A, B, C etc.) that are intended to track lines and harnesses from one point to another. They are also used to show where to reconnect illustrations that have been separated.

13. ABBREVIATIONS AND SYMBOLS

O.D. – Outside Diameter
I.D. – Inside Diameter
A – Not Part Of This Group
B – Use As Required
C – Change From Previous Type
D – Order By The Meter
E – Order By The Centimeter
F – Not Shown
G – Order By The Inch
I – Refer To Hydraulic Information System
M – Metric Part
R – Remfg Part May Be Available
Y – Separate Illustration
Z – Not Serviced Separately

14. DESCRIPTION OF TYPE CHANGES

Type - A type is defined as any configuration change that requires an additional Information Element for an Arrangement, Group, or Assembly. If serial number breaks for types are not available, a type # (Type 1, Type 2, etc.) will be displayed in the caption. These "type" changes are identified with a "C" note (change from previous type) in the Parts List. Only the "types" that apply to this Parts Manual will be included. Additional types may exist causing "C" notes to appear on an Information Element when no other types are shown.

15.<END>

This symbol indicates the end of an information element.

NOTE:

Continuing improvement and advancement of product design may cause changes to your machine which may not be included in this publication. Whenever a question arises regarding your Cat product or this publication, please consult your Cat dealer for the latest available information.

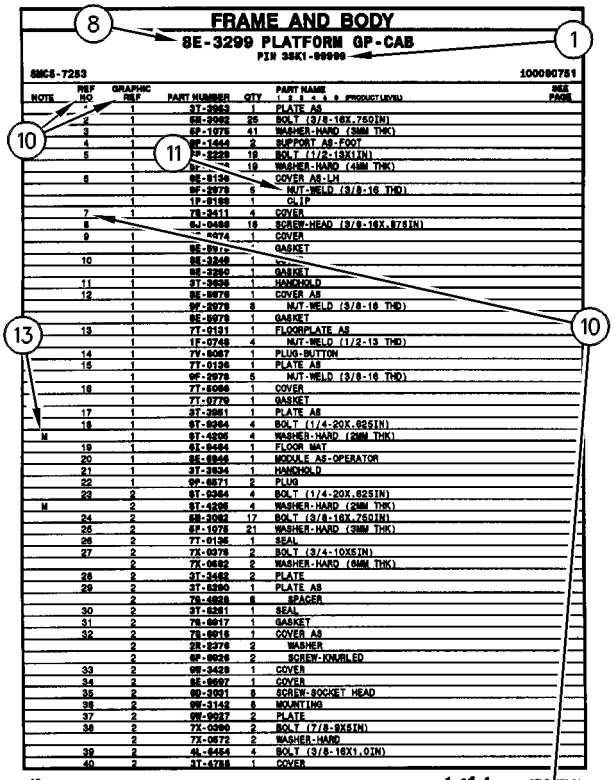

FRAME AND BODY

8E-3299 PLATFORM GP-CAB

PIN 3SK1-00999

SMCS-7283 100090751

NOTE	REF NO	GRAPHIC REF	PART NUMBER	QTY	PART NAME (1 2 3 4 5 6 PRODUCT LEVEL)	SEE PAGE
	1	1	3T-3963	1	PLATE AS	
	2	1	6M-3982	25	BOLT (3/8-16X.75DIN)	
	3	1	5P-1078	41	WASHER-HARD (3MM THK)	
	4	1	9F-1444	2	SUPPORT AS-FOOT	
	5	1	7P-2229	19	BOLT (1/2-13X1IN)	
		1	5P-[illegible]	19	WASHER-HARD (4MM THK)	
	6	1	8E-8136	1	COVER AS-LH	
		1	9F-2979	5	NUT-WELD (3/8-16 THD)	
		1	1F-8188	1	CLIP	
	7	1	7S-3411	4	COVER	
	8		5J-0488	19	SCREW-HEAD (3/8-16X.875IN)	
	9	1	[illegible]-0474	1	COVER	
		1	8E-8976	1	GASKET	
	10	1	8E-3249	1	[illegible]	
		1	8E-3250	1	GASKET	
	11	1	3T-3935	1	HANDHOLD	
	12	1	8E-8978	1	COVER AS	
		1	9F-2979	8	NUT-WELD (3/8-16 THD)	
		1	8E-8979	1	GASKET	
	13	1	7T-0131	1	FLOORPLATE AS	
		1	1F-0748	4	NUT-WELD (1/2-13 THD)	
	14	1	7V-8067	1	PLUG-BUTTON	
	15	1	7T-0136	1	PLATE AS	
		1	9F-2979	5	NUT-WELD (3/8-16 THD)	
	16	1	7T-8066	1	COVER	
		1	7T-0779	1	GASKET	
	17	1	3T-3961	1	PLATE AS	
	18	1	6T-9364	4	BOLT (1/4-20X.625IN)	
M		1	6T-4236	4	WASHER-HARD (2MM THK)	
	19	1	6I-9494	1	FLOOR MAT	
	20	1	8E-8946	1	MODULE AS-OPERATOR	
	21	1	3T-3934	1	HANDHOLD	
	22	1	9F-8571	2	PLUG	
	23	2	6T-9364	4	BOLT (1/4-20X.625IN)	
M		2	6T-4236	4	WASHER-HARD (2MM THK)	
	24	2	6M-3982	17	BOLT (3/8-16X.75DIN)	
	25	2	5P-1078	21	WASHER-HARD (3MM THK)	
	26	2	7T-0136	1	SEAL	
	27	2	7X-0378	2	BOLT (3/4-10X5IN)	
		2	7X-0682	2	WASHER-HARD (6MM THK)	
	28	2	3T-3462	2	PLATE	
	29	2	3T-8280	1	PLATE AS	
		2	7S-4828	6	SPACER	
	30	2	3T-8281	1	SEAL	
	31	2	7S-8917	1	GASKET	
	32	2	7S-8916	1	COVER AS	
		2	2S-2376	2	WASHER	
		2	9F-8628	2	SCREW-KNURLED	
	33	2	9W-3429	1	COVER	
	34	2	8E-8697	1	COVER	
	35	2	9D-3931	8	SCREW-SOCKET HEAD	
	36	2	9W-3142	8	MOUNTING	
	37	2	9W-9927	2	PLATE	
	38	2	7X-0290	2	BOLT (7/8-9X5IN)	
		2	7X-0572	2	WASHER-HARD	
	39	2	4L-6454	4	BOLT (3/8-16X1.0IN)	
	40	2	3T-4788	1	COVER	

12 FRAME AND BODY 1 of 4 SELP[illegible]70-01

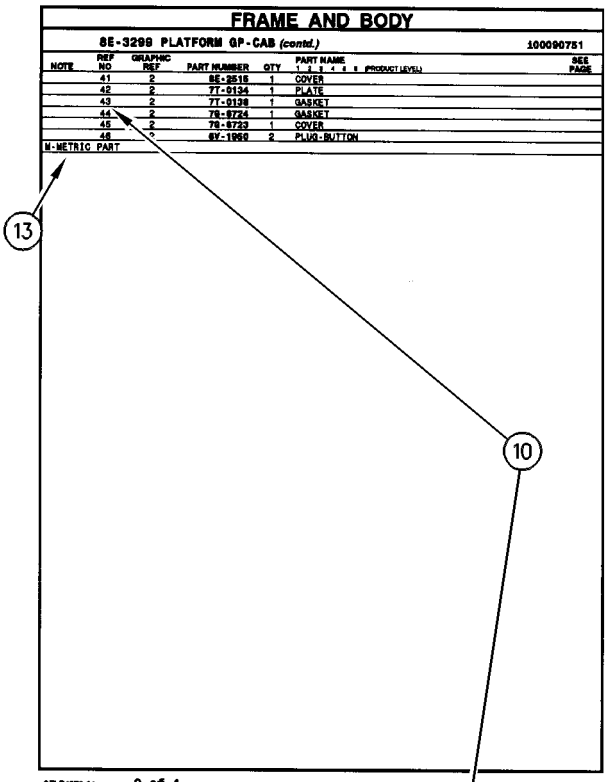

FRAME AND BODY

8E-3299 PLATFORM GP-CAB (contd.) 100090751

NOTE	REF NO	GRAPHIC REF	PART NUMBER	QTY	PART NAME (1 2 3 4 5 6 PRODUCT LEVEL)	SEE PAGE
	41	2	8E-2516	1	COVER	
	42	2	7T-0134	1	PLATE	
	43	2	7T-0138	1	GASKET	
	44	2	7S-8724	1	GASKET	
	45	2	7S-8723	1	COVER	
	46	6	6V-1960	2	PLUG-BUTTON	

M-METRIC PART

SELP4570-01 2 of 4 FRAME AND BODY 13

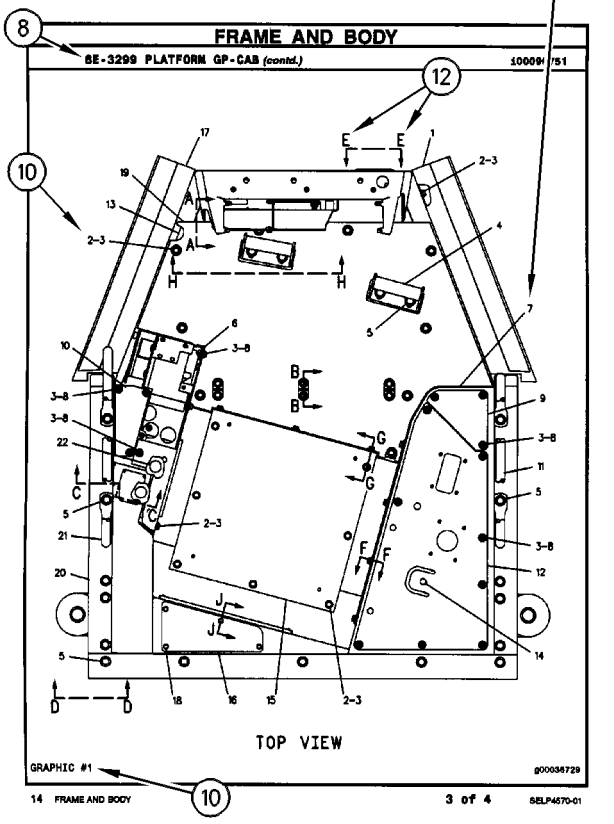

FRAME AND BODY

8E-3299 PLATFORM GP-CAB (contd.) 100090751

TOP VIEW

GRAPHIC #1 g00036729

14 FRAME AND BODY 3 of 4 SELP4570-01

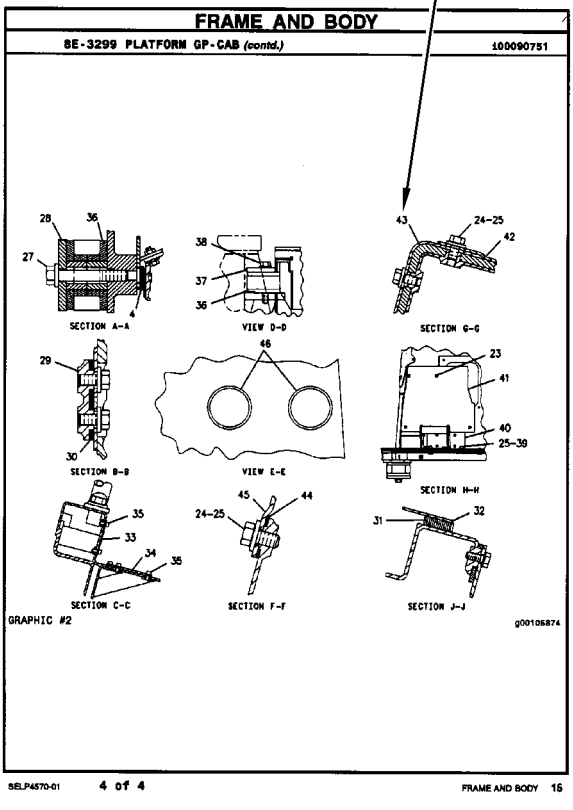

FRAME AND BODY

8E-3299 PLATFORM GP-CAB (contd.) 100090751

SECTION A-A

VIEW D-D

SECTION G-G

SECTION B-B

VIEW E-E

SECTION H-H

SECTION C-C

SECTION F-F

SECTION J-J

GRAPHIC #2 g00105874

SELP4570-01 4 of 4 FRAME AND BODY 15

REMANUFACTURED COMPONENTS

As an option when making repairs consider Cat Remanufactured Components. Components that are available through the Cat Remanufactured Program are identified three ways in the parts book:

- with the letter R in the note field of the parts list
- with an R* at the beginning of the first line of the caption
- with an *R at the end of the first line of the caption

Typical components included in the Remanufacturing Program include:

ALTERNATORS
CONNECTING RODS
CRANKSHAFTS - UNDERSIZE
CRANKSHAFTS - UPGRADE TO NEW
CYLINDER HEADS
ELECTRONIC CONTROL MODULES (ECM)
ELECTRONIC SENSORS
FUEL INJECTORS
FUEL NOZZLES
FUEL PUMPS
GOVERNORS
OIL PUMPS
PISTONS
SHORT BLOCKS
STARTERS
TURBOCHARGERS - COMPLETE
TURBOCHARGER CARTRIDGES
WATER PUMPS

Cat Remanufactured engines for many engine arrangements are also available.

SUPPLEMENTAL COOLANT ADDITIVES

CUSTOMER BENEFITS:

Protects against cavitation, foam, erosion, corrosion, and scale buildup in cooling systems.

- Provides measured coolant conditioner.

DESCRIPTION:

Additives deplete from the coolant with normal operation. For this reason, Supplemental Coolant Additives (SCA) must be added to all heavy duty coolants at regular intervals. In addition, when not using a fully formulated, pre-charged antifreeze, like Cat DEAC, an initial charge of SCA must be added to the cooling system. The amount of SCA added to the system is dependent on the capacity of the system.

The SCA for initial fill is provided as a liquid. SCA's for maintenance intervals are available in liquid form and as a spin-on element. (No Spin-on available for 3600 Family of Engines)

NOTE:

The amount of SCA added at initial fill is not the same as the amount added at maintenance intervals.

The coolant additive elements can be used with any ethylene or propylene glycol type antifreeze which meets ASTM D4985 or ASTM D5345 Specifications.

NOTE:

For use with standard heavy duty coolant only, not for use with Extended Life Coolant.

PARTS NEEDED:

Cooling System Capacity		Liquid SCA at Initial Fill	Liquid SCA at Maintenance*	Spin-on SCA Maintenance Element*
Liters	Gallons			
22-30	(6-8)	3P-2044 (1)	6V-3542 (1)	111-2370 (1)
30-38	(8-10)	3P-2044 (1) 6V-3542 (1)	111-2372 (1)	111-2369 (1)
38-49	(10-13)	3P-2044 (1) 8T-1589 (1)	111-2372 (1)	111-2369 (1)
49-64	(13-17)	3P-2044 (2)	8T-1589 (1)	9N-3368 (1)
64-83	(17-22)	3P-2044 (2) 8T-1589 (1)	111-2372 (1) 6V-3542 (1)	111-2371 (1)
83-114	(22-30)	3P-2044 (3) 8T-1589 (1)	3P-2044 (1)	9N-3718 (1)
114-163	(30-43)	3P-2044 (5)	3P-2044 (1) 6V-3542 (1)	111-2371 (2)
163-242	(43-64)	3P-2044 (8)	3P-2044 (2)	9N-3718 (2)

** Normal maintenance period is 250 hrs. See your Operation and Maintenance Manual for complete coolant maintenance instructions.*

( ) Indicates quantity required.

MAINTENANCE PARTS

DESCRIPTION	PART NUMBER	QTY	WHERE USED	PAGE
AIR INLET AND EXHAUST SYSTEM				
FILTER ELEMENT AS-AIR (PRIMARY)	134-8726	1	AIR CLEANER GP	41
FILTER ELEMENT AS-AIR (SECONDARY)	140-2334	1	AIR CLEANER GP	41
BASIC ENGINE				
PLUG (DRAIN, ENGINE OIL)	386-6918	1	PAN GP-OIL	26
V-BELT (FAN DRIVE)	383-0480	1	PULLEY GP-FAN DRIVE	28
COOLING SYSTEM				
CAP AS (COOLANT RECOVERY)	140-4238	1	RADIATOR & HYD OIL COOLER GP	37
CAP-RADIATOR	247-5086	1	RADIATOR & HYD OIL COOLER GP	37
GASKET (THERMOSTAT HOUSING)	383-0335	1	LINES GP-WATER	35
GASKET (WATER TEMPERATURE REGULATOR)	383-0421	1	LINES GP-WATER	35
REGULATOR AS (WATER TEMPERATURE)	392-0266	1	LINES GP-WATER	35
ELECTRICAL AND STARTING SYSTEM				
BATTERY (12-VOLT, MAINTENANCE FREE)	153-5656	1	BATTERY & WIRING GP	69
		1	BATTERY & WIRING GP	73
FUSE (10-AMPERE)	113-8490	8	HARNESS AS-CONSOLE	81
		9	HARNESS AS-CONSOLE	83
		9	WIRING GP-CONSOLE	99
		8	WIRING GP-CONSOLE	105
FUSE (15-AMPERE)	113-8491	4	HARNESS AS-CONSOLE	81
		4	HARNESS AS-CONSOLE	83
		4	WIRING GP-CONSOLE	99
		4	WIRING GP-CONSOLE	105
FUSE (20-AMPERE)	113-8492	1	HARNESS AS-CONSOLE	81
		2	HARNESS AS-CONSOLE	83
		2	WIRING GP-CONSOLE	99
		1	WIRING GP-CONSOLE	105
FUSE (30-AMPERE)	124-3548	2	HARNESS AS-CONSOLE	81
		3	HARNESS AS-CONSOLE	83
		3	WIRING GP-CONSOLE	99
		2	WIRING GP-CONSOLE	105
	8T-9636	1	HARNESS AS-CHASSIS	79
		1	HARNESS AS-CHASSIS	80
FUSE (5-AMPERE)	141-2759	3	HARNESS AS-CONSOLE	81
		3	HARNESS AS-CONSOLE	83
		3	WIRING GP-CONSOLE	99
		3	WIRING GP-CONSOLE	105
FUSE (60-AMPERE)	232-6314	1	HARNESS AS-CHASSIS	79
		1	HARNESS AS-CHASSIS	80
	379-0828	2	HARNESS AS-CHASSIS	79

MAINTENANCE PARTS

DESCRIPTION	PART NUMBER	QTY	WHERE USED	PAGE
		2	HARNESS AS-CHASSIS	80
GLOW PLUG	383-0538	3	GLOW PLUG GP	78
LAMP (12-VOLT, 55-WATT)	142-9572	1	LAMP GP-FLOOD	89
		1	LIGHTING GP-FLOOD	91
		1	LIGHTING GP-FLOOD	94
FUEL SYSTEM				
BOWL AS-WATER COLLECTION	112-9401	1	FILTER GP-WATER SEP & FUEL	52
CAP-FUEL (LOCKABLE, VENTED)	265-8575	1	TANK & MTG GP-FUEL	64
FILTER ELEMENT-FUEL (WATER SEPARATOR)	156-1200	1	FILTER GP-WATER SEP & FUEL	52
STRAINER-FUEL (TANK)	265-8579	1	TANK & MTG GP-FUEL	64
HYDRAULIC SYSTEM				
CAP AS	6V-9828	3	LINES GP-COUPLER	237
CAP-PRESSURE (HYDRAULIC TANK)	4I-3745	1	TANK & FILTER GP-HYDRAULIC	299
FILTER ELEMENT AS-OIL (HYDRAULIC, PILOT)	217-2456	1	LINES GP-PILOT	252
FILTER ELEMENT-OIL (HYDRAULIC)	304-7196	1	TANK & FILTER GP-HYDRAULIC	299
STRAINER-SUCTION (HYDRAULIC TANK)	285-1951	1	TANK & FILTER GP-HYDRAULIC	299
LUBRICATION SYSTEM				
FILTER-ENGINE OIL (LUBE)	377-6969	1	FILTER GP-ENGINE OIL	32
STRAINER-OIL (ENGINE)	383-0531	1	FILTER GP-ENGINE OIL	32
OPERATOR STATION				
BLADE AS-WIPER (450-MM) (FRONT)	275-8631	1	WINDOW GP-CAB	542
DRYER-REFRIGERANT (RECEIVER) (AIR CONDITIONER)	176-1902	1	LINES GP-AIR CONDITIONER	510
FILTER ELEMENT-CAB AIR	284-5686	1	AIR CONDITIONER GP	444
		1	HEATER GP-CAB	506
LAMP (12-VOLT, 5-WATT)	303-9236	1	CAB GP	455
		1	CAB GP	462
		1	CAB GP	469
LAMP AS (12-VOLT, 5-WATT)	281-1159	1	CAB GP	455
		1	CAB GP	462
		1	CAB GP	469
SEAT BELT GP (RETRACTABLE, 2-IN)	378-2506	1	SEAT BELT GP	536
SEAT BELT GP (RETRACTABLE, 3-IN)	378-2508	1	SEAT BELT GP	536
SEAT BELT GP (RETRACTABLE, 51-MM (2-IN))	258-4095	1	SEAT BELT GP	537
SEAT BELT GP (RETRACTABLE, 76-MM (3-IN))	258-4096	1	SEAT BELT GP	538
V-BELT (AIR CONDITIONER COMPRESSOR)	272-7881	1	COMPRESSOR GP-REFRIGERANT	474

INDEX

NAME PAGE

A

ACCESSORY GP-ENGINE 40
ACCUMULATOR GP-HYDRAULIC. 181
ACCUMULATOR GP-HYDRAULIC–CANADA 181
ACCUMULATOR GP-HYDRAULIC–CHARGED. . . 175
176
177
178
180
ACCUMULATOR GP-HYDRAULIC–
UNCHARGED 179
AIR CLEANER GP 41
42
AIR CONDITIONER & MOUNTING GP. 443
AIR CONDITIONER GP. 444
AIR CONDITIONER GP–WITH AIR DUCT 446
ALARM GP-TRAVEL. 66
ALTERNATOR GP-CHARGING 68

B

BATTERY (12-VOLT, MAINTENANCE FREE) 69
73
BATTERY & WIRING GP 69
BATTERY & WIRING GP–CANOPY. 73
BELT TENSIONER GP. 5
BLADE & MOUNTING GP. 389
390
BLADE & MOUNTING GP–POWER ANGLE 388
BLADE AR-ANGLING 391
BLADE AR-STRAIGHT 391
BLADE AS-ANGLING 392
BLADE AS-WIPER (450-MM) (FRONT) 542
BLADE GP-STRAIGHT. 393
394
BLOCK GP-HYDRAULIC 252
BOOM AR 366
BOOM GP 367
BOWL AS-WATER COLLECTION 52
BRACKET GP-MOUNTING–BUCKET 369
BUCKET AR-GENERAL PURPOSE 395
BUCKET AR-TILTABLE 396
BUCKET AS-DITCH CLEANING 397
398
399
400
BUCKET AS-GENERAL PURPOSE 401
402
403
BUCKET AS-HOE 404
405
406
407
408
409
BUCKET AS-HOE–HEAVY-DUTY 410
BUCKET GP-EXCAVATION. 411
412

NAME PAGE

BUCKET GP-GENERAL PURPOSE 413
414
415
416
417
418
BUCKET GP-HOE 421
422
423
424
BUCKET GP-HOE–HEAVY-DUTY 419
420
425

C

C-FRAME GP-POWER ANGLING 128
CAB AR–WITH AIR CONDITIONER. 446
447
CAB AR–WITH HEATER. 447
448
CAB GP 449
451
453
455
457
462
469
CAB GP–WITH FRONT GUARD. 459
460
461
CAMSHAFT AS 48
CAMSHAFT GP 6
CANOPY AR. 471
CANOPY AR–WITH GUARD. 471
CANOPY GP. 472
473
CAP AS 237
CAP AS (COOLANT RECOVERY) 37
CAP-FUEL (LOCKABLE, VENTED). 64
CAP-PRESSURE (HYDRAULIC TANK) 299
CAP-RADIATOR. 37
CHASSIS AR. 1
COIL GP-EVAPORATOR. 444
COMMON AR 1
COMPRESSOR GP-REFRIGERANT. 474
CONDENSER & MTG GP-REFRIGERANT. 475
CONSOLE GP-OPERATOR. 476
CONSOLE GP-OPERATOR–LH 478
CONSOLE GP-OPERATOR–RH. 477
CONTROL & MTG GP-ELECTRONIC 76
CONTROL & MTG GP-PEDAL–TRAVEL. 480
481
CONTROL AR-AUXILIARY. 182
CONTROL AR-AUXILIARY–2-WAY 183
CONTROL AR-AUXILIARY–2ND AUXILIARY, LONG
STICK 183
CONTROL AR-AUXILIARY–2ND AUXILIARY,
STANDARD STICK 182
CONTROL AR-AUXILIARY–SWING BOOM. 182

INDEX

NAME	PAGE
CONTROL AR-COUPLER	184
CONTROL AR-COUPLER–LONG STICK	183
CONTROL AR-COUPLER–STANDARD STICK	183
CONTROL AR-GOVERNOR–AUTOMATIC IDLE	49
CONTROL AR-GOVERNOR–AUTOMATIC IDLE, TRAVEL ALARM	49
CONTROL AR-HYDRAULIC–2ND AUXILIARY	187
CONTROL AR-HYDRAULIC–STANDARD JOYSTICK	187
CONTROL AR-PILOT HYDRAULIC–STANDARD	187
CONTROL GP-GOVERNOR–AUTOMATIC IDLE	50
CONTROL GP-HANDLE (LH)	483 484
CONTROL GP-HANDLE (RH)	485
CONTROL GP-HYDRAULIC HAND–TRAVEL	482
CONTROL GP-JOYSTICK–LH	483 484 486 488
CONTROL GP-JOYSTICK–RH	485 487
CONTROL GP-MACHINE (ELECTRONIC CONTROL)	76
CONTROL GP-PILOT OPERATED HYD	490 493
CONTROL GP-PILOT OPERATED HYD–2ND AUXILIARY	491
CONTROL GP-PILOT OPERATED HYD–BLADE	489 492 494
CORE AS-HYDRAULIC OIL COOLER	37
COUNTERWEIGHT & MOUNTING GP	129
COUPLER AR-QUICK	426 427 428 429
COUPLER GP-QUICK	430 431 432 433
COVER AS–LH	130
COVER GP-ACCESS	495
COVER GP-ACCESS–LH	131
COVER GP-ACCESS–RH	132
COVER GP-CAB–TOP	496
COVER GP-FENDER	133
COVER GP-SOUND SUPPRESSION	134
COVER GP-VALVE MECHANISM	7
CRANKSHAFT GP	8
CYLINDER BLOCK AS	10
CYLINDER BLOCK GP	11
CYLINDER GP-BLADE–ANGLE	190
CYLINDER GP-BLADE–RAISE, LOWER	188
CYLINDER GP-BOOM	192
CYLINDER GP-BUCKET	194
CYLINDER GP-HYDRAULIC	196 197
CYLINDER GP-STICK	198
CYLINDER GP-SWING BOOM	200
CYLINDER GP-TILT	202
CYLINDER HEAD AS	13
CYLINDER HEAD GP	14

D

DOOR GP-CAB	497
DRAIN GP-ENGINE OIL–ECOLOGY	16
DRAIN GP-OIL–ECOLOGY, HYDRAULIC TANK	205
DRAIN GP-OIL–ENGINE, HYDRAULIC TANK	203
DRAIN GP-OIL–HYDRAULIC TANK, STANDARD	203 204
DRIVE GP-FINAL	121 123
DRIVE GP-SWING	206
DRYER-REFRIGERANT (RECEIVER) (AIR CONDITIONER)	510
DUCT GP-CAB AIR	499 500

E

ELECTRONICS GP-MACHINE	77
ELECTRONICS GP-MONITOR	77
ENGINE AR-COMPLETE	2
ENGINE AR-PRIMARY	3 4
EXTENSION GP-EXHAUST	43

F

FASTENER GP-LINES	208
FASTENER GP-LINES–STICK	207
FENDER GP–LH	136
FILLER GP-ENGINE OIL	31
FILM GP	554 556
FILM GP-INTERNATIONAL	557
FILM GP-INTERNATIONAL–COUPLER	559
FILM GP-U.S.	560
FILM GP-U.S.–COUPLER	562 563
FILM GP–2-WAY	549 552
FILM GP–2ND AUXILIARY	548
FILM GP–ANGLE BLADE	553
FILM GP–AUXILIARY	546
FILM GP–CAB HEATER	550 555
FILM GP–COUPLER	551
FILM GP–STRAIGHT BLADE	545
FILM-IDENTIFICATION (DIESEL FUEL)	557
FILM-IDENTIFICATION (LIFT EYE, TIE-DOWN LOCATION)	556
FILM-NOTICE (LIFT EYE LOCATION)	564

INDEX

NAME PAGE

FILM-WARNING (CRUSH HAZARD, READ OMM, U.S.). 184
FILM-WARNING (HIGH PRESSURE CYLINDER) 180
FILM-WARNING (JUMP START, READ OMM, U. S.). 560
FILM-WARNING (NO WELD, NO DRILL, READ OMM). 564
FILTER ELEMENT AS-AIR (PRIMARY) 41
FILTER ELEMENT AS-AIR (SECONDARY) 41
FILTER ELEMENT AS-OIL (HYDRAULIC, PILOT). 252
FILTER ELEMENT-CAB AIR. 444 506
FILTER ELEMENT-FUEL (WATER SEPARATOR) 52
FILTER ELEMENT-OIL (HYDRAULIC) 299
FILTER GP-ENGINE OIL 32
FILTER GP-WATER SEP & FUEL 52
FILTER-ENGINE OIL (LUBE) 32
FINAL DRIVE GP 121 123
FLOOR MAT 446 447 448 471
FLYWHEEL GP 17
FRAME GP-REAR–CAB 137
FRAME GP-REAR–CANOPY. 139
FRAME GP-SWING. 142
FRAME GP-UNDERCARRIAGE 160
FRAME GP-UPPER. 144
FUSE (10-AMPERE) 81 83 99 105
FUSE (15-AMPERE) 81 83 99 105
FUSE (20-AMPERE) 81 83 99 105
FUSE (30-AMPERE) 79 80 81 83 99 105
FUSE (5-AMPERE) 81 83 99 105
FUSE (60-AMPERE) 79 80

G

GASKET (THERMOSTAT HOUSING). 35
GASKET (WATER TEMPERATURE REGULATOR) 35
GAUGE GP-OIL LEVEL (DIPSTICK)–ENGINE. . . . 33
GAUGE GP-SIGHT–HYDRAULIC OIL LEVEL . . . 209
GAUGE-OIL LEVEL (ENGINE) (DIPSTICK) 33
GEAR & BEARING GP-SWING. 161
GLOW PLUG. 78
GLOW PLUG GP. 78
GOVERNOR GP. 53
GUARD GP-BOTTOM. 145
GUARD GP-CYLINDER–BOOM 146
GUARD GP-CYLINDER–POWER ANGLE 147
GUARD GP-FAN 18 19
GUARD GP-FRONT. 148
GUARD GP-FRONT–MESH. 149
GUARD GP-TRACK GUIDE 162
GUARD GP-VANDALISM. 501 502

H

HANDRAIL GP 503
HARNESS AS-CAB 455 463 469
HARNESS AS-CHASSIS 79 80
HARNESS AS-CONSOLE (CAB). 99
HARNESS AS-CONSOLE (CANOPY). 105
HARNESS AS-CONSOLE–CAB 83
HARNESS AS-CONSOLE–CANOPY 81
HARNESS AS-CONTROL (CAB, CANOPY) 111
HARNESS AS-CONTROL–CAB, CANOPY 85
HARNESS AS-HEATER. 506
HARNESS AS-HEATER & AIR COND 444
HARNESS AS-HEATER & AIR COND (CAB) . . . 443 504
HARNESS AS-LIGHTING. 115
HARNESS AS-LIGHTING (CANOPY) 94
HARNESS AS-LIGHTING (WARNING BEACON, POWER RECEP) 114
HARNESS AS-QUICK COUPLER 85
HARNESS AS-SENSOR–OVERLOAD. 85
HARNESS AS-SOLENOID–CAB, CANOPY. 86
HARNESS AS-WIRING (JACKET WATER HEATER) 87
HARNESS AS-WIRING (WIPER MOTOR) 455 462 469
HEATER & MTG GP-CAB. 504
HEATER AR-CAB 505
HEATER GP-CAB 506
HEATER GP-JACKET WATER. 87 88
HOOD & GUARD GP. 150 152
HOOD AS 153
HOOD GP 154
HORN GP-ELECTRIC. 508

INDEX

NAME PAGE

HOUSING GP-FRONT 20
HYDRAULIC AR 210

I

IDLER GP-FRONT 163
IDLER GP-FRONT–LH 164
IDLER GP-FRONT–RH 166
INDICATOR-AIR FILTER CHANGE 41
INSTALLATION AR-ENGINE 4

K

KIT-GUARD–CANOPY 509

L

LAMP (12-VOLT, 5-WATT) 455 462 469
LAMP (12-VOLT, 55-WATT) 89 91 94
LAMP AS (12-VOLT, 5-WATT) 455 462 469
LAMP GP-FLOOD (12-VOLT) 94
LAMP GP-FLOOD (12-VOLT) (CAB) 91
LAMP GP-FLOOD–BOOM 89
LIFTING GP-ENGINE 22
LIGHTING AR-FLOOD–CANOPY 90
LIGHTING GP-FLOOD–BOOM 92
LIGHTING GP-FLOOD–CAB 91 93
LIGHTING GP-FLOOD–CANOPY 94
LINES AR-BOOM 210
LINES AR-BOOM–CHECK VALVE 210
LINES AR-BUCKET 210
LINES AR-BUCKET–LONG STICK 211
LINES GP-AIR 44
LINES GP-AIR CONDITIONER 510
LINES GP-AUXILIARY HYDRAULIC–2ND AUXILIARY, BOOM 218
LINES GP-AUXILIARY HYDRAULIC–2ND AUXILIARY, LONG STICK 215
LINES GP-AUXILIARY HYDRAULIC–2ND AUXILIARY, STANDARD STICK 214
LINES GP-AUXILIARY HYDRAULIC–BOOM 212
LINES GP-AUXILIARY HYDRAULIC–LONG STICK 216 217
LINES GP-AUXILIARY HYDRAULIC–STANDARD STICK 213 216
LINES GP-BLADE–ANGLE 219
LINES GP-BLADE–RAISE, LOWER 220
LINES GP-BOOM CHECK VALVE 221 223
LINES GP-BUCKET CYLINDER 230
LINES GP-BUCKET–LONG STICK 226 228
LINES GP-CONNECTING–LH 232
LINES GP-CONNECTING–RH 231
LINES GP-COUPLER 233
LINES GP-COUPLER–LONG STICK 237
LINES GP-COUPLER–STANDARD STICK 234
LINES GP-FRONT 240 242
LINES GP-FRONT–BOOM CYLINDER 239
LINES GP-FRONT–QUICK COUPLER 244
LINES GP-FUEL 55
LINES GP-FUEL FILTER 56
LINES GP-FUEL INJECTION 59
LINES GP-GREASE 155
LINES GP-HEATER 514
LINES GP-HYDRAULIC PUMP 246
LINES GP-PILOT 252
LINES GP-PILOT–2-WAY 259
LINES GP-PILOT–AUXILIARY 263
LINES GP-PILOT–BLADE ANGLE 264
LINES GP-PILOT–JOYSTICK 248
LINES GP-PILOT–JOYSTICK, 2-WAY 250
LINES GP-PILOT–STANDARD 256
LINES GP-RETURN 266
LINES GP-RETURN–BLADE 268
LINES GP-STICK 270
LINES GP-SWING CYLINDER–2ND AUXILIARY 273
LINES GP-SWING CYLINDER–BOOM 272
LINES GP-SWING MOTOR 278
LINES GP-SWING MOTOR–STANDARD 275
LINES GP-TRAVEL MOTOR 281 283
LINES GP-WATER 35
LINK AS-TRACK 168
LINK GP-WINDOW 516
LINKAGE AR-BUCKET 370
LINKAGE AR-BUCKET–WITH LIFTING EYE 370
LINKAGE AR-BUCKET–WITHOUT LIFTING EYE 370 371
LINKAGE GP-BUCKET 372 376
LINKAGE GP-BUCKET–WITH LIFTING EYE 374
LOCK GP (FENDER) 136
LOCK GP-MECHANICAL 430 431
LOCK GP-MECHANICAL (QUICK COUPLER) . . . 432
LOCK GP-QUICK COUPLER 434 435 436

M

MANIFOLD & SOLENOID GP-CONTROL–AUXILIARY, BOOM SWING 285
MANIFOLD GP-CONTROL 286
MANIFOLD GP-EXHAUST 45

INDEX

NAME PAGE

MANIFOLD GP-INLET 46
MIRROR GP-DOWN VIEW–CAB 518
MIRROR GP-DOWN VIEW–EXTERIOR, REAR, RH 517
MIRROR GP-REAR VIEW–CAB, WITH FRONT GUARD 521
MIRROR GP-REAR VIEW–EXTERIOR, LH. 519 522 523
MIRROR GP-REAR VIEW–EXTERIOR, RH 520 522 524
MIRROR GP-REAR VIEW–LH 525
MIRROR GP-REAR VIEW–RH 525
MONITOR GP-OPERATOR (CAB CONSOLE) . . . 100 103 106 109
MOTOR & MTG GP-SWING. 288
MOTOR & MTG GP-TRAVEL. 125
MOTOR GP-SWING 289
MOUNTING GP-BUCKET. 437 438 439
MOUNTING GP-ELECTRONIC CONTROL 95
MOUNTING GP-ENGINE 23 24
MOUNTING GP-MIRROR. 526
MUFFLER GP 47

N

NOZZLE GP-UNIT INJECTOR 60

O

OPERATOR AR 527

P

PADLOCK GP. 501
PAN GP-OIL–ENGINE. 26
PISTON & ROD GP 27
PLANETARY GP-SWING DRIVE 291
PLATE & FILM GP 564
PLATE & FILM GP–CAB 567
PLATE AS 156
PLATFORM GP 528
PLATFORM GP-OPERATOR. 530 533
PLATFORM GP-OPERATOR–CAB 532
PLUG (DRAIN, ENGINE OIL). 26
POWER TRAIN AR. 126
PULLEY GP-FAN DRIVE. 28
PUMP & MTG GP-MAIN HYDRAULIC. 292
PUMP GP-ENGINE OIL 34
PUMP GP-FUEL INJECTION 61
PUMP GP-PISTON & GEAR–MAIN HYDRAULIC. 293
PUMP GP-WATER. 36

R

RADIATOR & HYD OIL COOLER GP. 37
REGULATOR AS (WATER TEMPERATURE) 35
RELAY AS (12-VOLT). 99 103 105 109
RELAY AS (12-VOLT) (2ND AUXILIARY). 120
RELAY AS (12-VOLT) (BACKUP ALARM) 66
RELAY AS (12-VOLT) (MAIN) 69 73 109
RELAY AS (12-VOLT) (PATTERN CHANGE) . . . 119
RELAY AS (24-VOLT) (ENGINE START) 40
RELAY AS (AIR CONDITIONER COMPRESSOR) 506
RELAY AS (BLOWER FAN) 444
RELAY AS (BLOWER MOTOR). 444
ROLLER AR-TRACK & CARRIER. 169
ROLLER GP-TRACK CARRIER. 170
ROLLER GP-TRACK-CENTER FLANGE 171

S

SEAL (FRONT). 11
SEAL (REAR) 11
SEAL GP 471
SEAL GP-DUO-CONE. 164 166
SEAL GP-METAL FACE 171
SEAT & MOUNTING GP–HIGH BACK, CLOTH, SUSPENSION 536
SEAT & MOUNTING GP–LOW BACK, SUSPENSION, VINYL. 535
SEAT BELT GP (RETRACTABLE, 2-IN). 536
SEAT BELT GP (RETRACTABLE, 3-IN). 536
SEAT BELT GP (RETRACTABLE, 51-MM (2-IN)). 537
SEAT BELT GP (RETRACTABLE, 76-MM (3-IN)). 538
SEAT BELT GP–3-IN 536
SEAT BELT GP–RETRACTABLE, 2-IN 536 537
SEAT BELT GP–RETRACTABLE, 3-IN 538
SEAT GP (VINYL, LOW BACK, TILT). 535
SEAT GP-SUSPENSION (CLOTH, HIGH BACK) 540
SEAT GP-SUSPENSION–CLOTH, HIGH BACK. 540
SEAT GP-SUSPENSION–VINYL 539
SENDER AS-FUEL LEVEL 69 73
SENSOR (THERMOCOUPLE). 69 73

INDEX

NAME	PAGE
SENSOR GP-PRESSURE (BOWL CYLINDER, ROD END)	223
SENSOR-TEMPERATURE (REFRIGERANT)	444
SERVICE GP-MONITOR	77
SHUTOFF GP-MANUAL–ENGINE	63
SOFTWARE GP-MACHINE	77
SOFTWARE GP-MONITOR	77, 100, 103, 106, 109
SOLENOID (HYDRAULIC LOCKOUT)	286
SOLENOID (SPEED SELECT)	286
SOLENOID AS (ENGINE SHUTOFF)	78
SPRING AS-GAS (LOCKABLE)	150
SPROCKET GP	127
STARTING MOTOR GP-ELECTRIC	96
STICK AR	377
STICK AR-HOE–2ND AUXILIARY, LONG	378, 379, 380
STICK AR-HOE–2ND AUXILIARY, STANDARD	379
STICK AR-HOE–LONG	378, 379
STICK AR-HOE–LONG, HEAVY-DUTY	377
STICK AR-HOE–LONG, THUMB	377
STICK AR-HOE–STANDARD	378, 379
STICK AR-HOE–STANDARD, THUMB	377
STICK GP-HOE–LONG, HEAVY-DUTY	381
STICK GP-HOE–LONG, THUMB	384
STICK GP-HOE–STANDARD	382
STICK GP-HOE–STANDARD, THUMB	386
STOP GP-SWING–BOOM	157
STRAINER-FUEL (TANK)	64
STRAINER-OIL (ENGINE)	32
STRAINER-SUCTION (HYDRAULIC TANK)	299
SUPPRESSION AR-SOUND	158
SUPPRESSION AR-SOUND–HIGH AMBIENT	158
SUPPRESSION GP-SOUND	159
SWITCH AS (ENGINE SHUTOFF)	53
SWITCH AS-LIMIT (HYDRAULIC LOCKOUT)	99, 103, 105, 109
SWITCH AS-PRESSURE (PILOT OIL)	69, 73
SWITCH AS-PRESSURE (PILOT, TRAVEL)	50
SWITCH AS-ROCKER (LIGHT)	99, 103, 105, 109
SWITCH AS-ROCKER (OVERLOAD WARNING)	117
SWITCH AS-ROCKER (TRAVEL ALARM CANCEL)	66
SWITCH AS-ROCKER (WINDOW WASHER, WIPER)	99, 103
SWITCH AS-START (ENGINE)	99, 103, 105, 109
SWITCH GP-ROTARY–THROTTLE POSITION	97
SWITCH-PRESSURE (OIL, ENGINE)	32
SWIVEL GP	295, 297

T

NAME	PAGE
TANK & FILTER GP-HYDRAULIC	299
TANK & MTG GP-FUEL	64
TANK & MTG GP-HYDRAULIC	301
TANK GP-WINDOW WASHER	541
THUMB GP	440, 442
TIP GP-LONG	419, 420, 421, 422, 423, 424, 425
TOOTH GP-UNI	413, 414, 415, 416, 417, 418
TRACK GP	174
TRACK GP–DOUBLE GROUSER SHOE	172
TRACK GP–RUBBER BELT	174
TRACK GP–STEEL	173

U

NAME	PAGE
UNDERCARRIAGE AR	174

V

NAME	PAGE
V-BELT (AIR CONDITIONER COMPRESSOR)	474
V-BELT (FAN DRIVE)	28
VALVE & MOUNTING GP–CANOPY	302
VALVE & MTG GP-BANK	303, 304
VALVE & MTG GP-CONTROL–2-WAY	307
VALVE & MTG GP-CONTROL–AUXILIARY, BOOM SWING	305
VALVE & MTG GP-MAIN CONTROL	309
VALVE & MTG GP-PILOT–CAB	312
VALVE & MTG GP-PILOT–TRAVEL	310, 311
VALVE AS-RELIEF	343
VALVE AS-RELIEF (ANGLE BLADE)	347

INDEX

NAME PAGE

VALVE AS-RELIEF (LINE) 341 345 347 360
VALVE AS-RELIEF (LINE) (THUMB) 343
VALVE GP-CHECK (HYDRAULIC CONTROL LOCK) 197
VALVE GP-CHECK (PILOT OPERATED) 223 270
VALVE GP-CHECK (QUICK COUPLER) 365
VALVE GP-CHECK–HYDRAULIC CONTROL LOCK 313
VALVE GP-CONTROL 314 327
VALVE GP-CONTROL (SWING BOOM, WORK TOOL) 273
VALVE GP-CONTROL–ANGLE 319
VALVE GP-CONTROL–AUXILIARY 323
VALVE GP-CONTROL–BLADE 326 333 335
VALVE GP-CONTROL–BOOM SWING 321 325
VALVE GP-CONTROL–BUCKET 316
VALVE GP-CONTROL–INLET 315
VALVE GP-CONTROL–OUTLET 318
VALVE GP-CONTROL–STICK 329 337 339
VALVE GP-CONTROL–SWING 317
VALVE GP-CONTROL–TRAVEL RIGHT 331
VALVE GP-LOAD CONTROL 221
VALVE GP-MAIN CONTROL 341 345
VALVE GP-MAIN CONTROL–ANGLE BLADE . . . 343 347
VALVE GP-PILOT (CANOPY) 302
VALVE GP-PILOT–BLADE CONTROL 350 354
VALVE GP-PILOT–JOYSTICK 349
VALVE GP-PILOT–WITH SHUTTLE 352 356
VALVE GP-PRESSURE REDUCING (QUICK COUPLER) 365
VALVE GP-PUMP CONTROL 357
VALVE GP-PUMP CONTROL–303C CR 358
VALVE GP-REDUCING (SLOW RETURN) 256 259
VALVE GP-RELIEF 359
VALVE GP-RELIEF (OUTLET) 318
VALVE GP-RELIEF–THUMB 360
VALVE GP-SHUTOFF (DRAIN, HYDRAULIC OIL) 205
VALVE GP-SOLENOID 361 362 363 364
VALVE GP-SOLENOID (12-VOLT) (FLOW CONTROL) 364
VALVE GP-SOLENOID (12-VOLT) (QUICK COUPLER) 365
VALVE GP-SOLENOID (AUXILIARY, BOOM SWING) 285
VALVE GP-SOLENOID (BLADE) 264 363
VALVE GP-SOLENOID (FLOW CONTROL) (2-WAY) 307
VALVE GP-SOLENOID & MANIFOLD–QUICK COUPLER 365
VALVE MECHANISM GP 29

W

WASHER GP-WINDOW 541
WINDOW GP-CAB 542
WINDOW GP-SLIDING 544
WIRING GP-CAB–CANOPY 98
WIRING GP-CONSOLE–CAB 99 103
WIRING GP-CONSOLE–CANOPY 105 109
WIRING GP-CONSOLE–POWER ANGLE 111
WIRING GP-ENGINE–REFRIGERANT COMPRESSOR 113
WIRING GP-LIGHTING–BOOM 115
WIRING GP-LIGHTING–WARNING BEACON, POWER RECEP 114
WIRING GP-OVERLOAD WARNING 117
WIRING GP-QUICK COUPLER 118
WIRING GP-RELAY PANEL–2ND AUXILIARY . . . 120
WIRING GP-RELAY PANEL–PATTERN CHANGE 119

MEMORANDA

MACHINE ARRANGEMENT

376-6676 CHASSIS AR

PART OF 376-6672 COMMON AR

SMCS-7000 **i04725141**

NOTE	PART NUMBER	QTY	PART NAME 1 2 3 4 5 6 (PRODUCT LEVEL)	SEE PAGE
Y	*367-0902*	1	COUNTERWEIGHT & MOUNTING GP	129
Y	*367-0912*	1	COVER GP-FENDER	133
Y	*376-6212*	1	FRAME GP-UPPER	144
Y	*384-5724*	1	GUARD GP-BOTTOM	145
Y	*367-0918*	1	HOOD & GUARD GP	150
Y	*266-6835*	1	HORN GP-ELECTRIC	508
Y	*379-4728*	1	LINES GP-FUEL FILTER	56
Y	*379-4691*	1	LINES GP-GREASE	155
Y	*379-3624*	1	OPERATOR AR	527
Y	*377-9698*	1	PLATE & FILM GP	564
Y	*367-0930*	1	TANK & MTG GP-FUEL	64

Y - SEPARATE ILLUSTRATION

<END>

376-6672 COMMON AR

SMCS-7000 **i05289935**

NOTE	PART NUMBER	QTY	PART NAME 1 2 3 4 5 6 (PRODUCT LEVEL)	SEE PAGE
Y	*376-6680*	1	BOOM AR	366
Y	*376-6676*	1	CHASSIS AR	1
Y	*355-3393*	1	CONTROL & MTG GP-PEDAL (TRAVEL)	481
Y	*379-4715*	1	CONTROL AR-AUXILIARY	182
Y	*392-4756*	1	ELECTRONICS GP-MACHINE	77
Y	*377-0326*	1	ELECTRONICS GP-MONITOR	77
Y	**380-1777**	1	ENGINE AR-COMPLETE	2
			S/N: RKY1-1439	
Y	*379-4713*	1	HYDRAULIC AR	210
Y	*383-0640*	1	INSTALLATION AR-ENGINE	4
Y	*356-0571*	1	POWER TRAIN AR	126
Y	*380-8799*	1	UNDERCARRIAGE AR	174

Y - SEPARATE ILLUSTRATION

<END>

ENGINE ARRANGEMENT

380-1777 ENGINE AR-COMPLETE

S/N: RKY1-1439
25 BRAKE KW (33 BHP) AT 2400 RPM
FIELD REPLACEMENT ORDER 416-6081—PAGE: 4
PART OF 376-6672 COMMON AR

SMCS-1000 **i04669614**

NOTE	PART NUMBER	QTY	PART NAME 1 2 3 4 5 6 (PRODUCT LEVEL)	SEE PAGE
Y	*383-0133*	1	ACCESSORY GP-ENGINE	40
Y	*383-0134*	1	ALTERNATOR GP-CHARGING	68
Y	*386-4564*	1	CAMSHAFT GP	6
Y	*386-4566*	1	COVER GP-VALVE MECHANISM	7
Y	*386-4570*	1	CRANKSHAFT GP	8
Y	*386-4561*	1	CYLINDER BLOCK GP	11
Y	*386-4637*	1	CYLINDER HEAD GP	14
Y	*383-0250*	1	FILLER GP-ENGINE OIL	31
Y	*383-0141*	1	FILTER GP-ENGINE OIL (WITH SWITCH)	32
Y	*386-4592*	1	FLYWHEEL GP	17
Y	*383-0144*	1	GAUGE GP-OIL LEVEL (DIPSTICK) (ENGINE)	33
Y	*386-4647*	1	GLOW PLUG GP	78
Y	*386-4635*	1	GOVERNOR GP	53
Y	*383-0503*	1	HOUSING GP-FRONT	20
Y	*386-4638*	1	LIFTING GP-ENGINE	22
Y	*386-4639*	1	LINES GP-FUEL	55
Y	*386-4640*	1	LINES GP-FUEL INJECTION	59
Y	*386-4588*	1	LINES GP-WATER	35
Y	*386-4641*	1	MANIFOLD GP-EXHAUST	45
Y	*386-4642*	1	MANIFOLD GP-INLET	46
Y	*386-4644*	1	NOZZLE GP-UNIT INJECTOR	60
Y	*386-4645*	1	PAN GP-OIL	26
Y	*386-4646*	1	PISTON & ROD GP	27
Y	*386-4648*	1	PULLEY GP-FAN DRIVE	28
Y	*383-0161*	1	PUMP GP-ENGINE OIL	34
Y	*386-4650*	1	PUMP GP-FUEL INJECTION	61
Y	*383-0162*	1	PUMP GP-WATER	36
Y	*383-0154*	1	STARTING MOTOR GP-ELECTRIC	96
Y	*386-4643*	1	VALVE MECHANISM GP	29

Y - SEPARATE ILLUSTRATION

<END>

431-6151 ENGINE AR-COMPLETE

AN ATTACHMENT

SMCS-1000 **i05425016**

NOTE	PART NUMBER	QTY	PART NAME 1 2 3 4 5 6 (PRODUCT LEVEL)	SEE PAGE
Y	**380-1776**	1	ENGINE AR-PRIMARY	3

Y - SEPARATE ILLUSTRATION

<END>

ENGINE ARRANGEMENT

380-1776 ENGINE AR-PRIMARY

25 BRAKE KW (33 BHP) AT 2400 RPM
PART OF 431-6151 ENGINE AR-COMPLETE
AN ATTACHMENT

SMCS-1000 **i05336640**

NOTE	PART NUMBER	QTY	PART NAME 1 2 3 4 5 6 (PRODUCT LEVEL)	SEE PAGE
Y	*383-0133*	1	ACCESSORY GP-ENGINE	40
Y	*383-0134*	1	ALTERNATOR GP-CHARGING	68
Y	*386-4564*	1	CAMSHAFT GP	6
Y	*386-4566*	1	COVER GP-VALVE MECHANISM	7
Y	*386-4570*	1	CRANKSHAFT GP	8
Y	*386-4561*	1	CYLINDER BLOCK GP	11
Y	*386-4637*	1	CYLINDER HEAD GP	14
Y	*383-0250*	1	FILLER GP-ENGINE OIL	31
Y	*383-0141*	1	FILTER GP-ENGINE OIL (WITH SWITCH)	32
Y	*386-4592*	1	FLYWHEEL GP	17
Y	*383-0144*	1	GAUGE GP-OIL LEVEL (DIPSTICK) (ENGINE)	33
Y	*386-4647*	1	GLOW PLUG GP	78
Y	*386-4635*	1	GOVERNOR GP	53
Y	*383-0503*	1	HOUSING GP-FRONT	20
Y	*386-4638*	1	LIFTING GP-ENGINE	22
Y	*386-4639*	1	LINES GP-FUEL	55
Y	*386-4640*	1	LINES GP-FUEL INJECTION	59
Y	*386-4588*	1	LINES GP-WATER	35
Y	*386-4641*	1	MANIFOLD GP-EXHAUST	45
Y	*386-4642*	1	MANIFOLD GP-INLET	46
Y	*386-4644*	1	NOZZLE GP-UNIT INJECTOR	60
Y	*386-4645*	1	PAN GP-OIL (ENGINE)	26
Y	*386-4646*	1	PISTON & ROD GP	27
Y	*386-4648*	1	PULLEY GP-FAN DRIVE	28
Y	*383-0161*	1	PUMP GP-ENGINE OIL	34
Y	*386-4650*	1	PUMP GP-FUEL INJECTION	61
Y	*383-0162*	1	PUMP GP-WATER	36
Y	*383-0154*	1	STARTING MOTOR GP-ELECTRIC	96
Y	*386-4643*	1	VALVE MECHANISM GP	29

Y - SEPARATE ILLUSTRATION

<END>

ENGINE ARRANGEMENT

416-6081 ENGINE AR-PRIMARY

25 BRAKE KW (34 BHP) AT 2400 RPM

SMCS-1000 **i05314040**

NOTE	PART NUMBER	QTY	PART NAME 1 2 3 4 5 6 (PRODUCT LEVEL)	SEE PAGE
Y	*383-0133*	1	ACCESSORY GP-ENGINE	40
Y	*383-0134*	1	ALTERNATOR GP-CHARGING	68
Y	*386-4564*	1	CAMSHAFT GP	6
Y	*386-4566*	1	COVER GP-VALVE MECHANISM	7
Y	*386-4570*	1	CRANKSHAFT GP	8
Y	*386-4561*	1	CYLINDER BLOCK GP	11
Y	*386-4637*	1	CYLINDER HEAD GP	14
Y	*383-0250*	1	FILLER GP-ENGINE OIL	31
Y	*383-0141*	1	FILTER GP-ENGINE OIL (WITH SWITCH)	32
Y	*386-4592*	1	FLYWHEEL GP	17
Y	*383-0144*	1	GAUGE GP-OIL LEVEL (DIPSTICK) (ENGINE)	33
Y	*386-4647*	1	GLOW PLUG GP	78
Y	*386-4635*	1	GOVERNOR GP	53
Y	*383-0503*	1	HOUSING GP-FRONT	20
Y	*386-4638*	1	LIFTING GP-ENGINE	22
Y	*386-4639*	1	LINES GP-FUEL	55
Y	*386-4640*	1	LINES GP-FUEL INJECTION	59
Y	*386-4588*	1	LINES GP-WATER	35
Y	*386-4641*	1	MANIFOLD GP-EXHAUST	45
Y	*386-4642*	1	MANIFOLD GP-INLET	46
Y	*386-4644*	1	NOZZLE GP-UNIT INJECTOR	60
Y	*386-4645*	1	PAN GP-OIL (ENGINE)	26
Y	*386-4646*	1	PISTON & ROD GP	27
Y	*386-4648*	1	PULLEY GP-FAN DRIVE	28
Y	*383-0161*	1	PUMP GP-ENGINE OIL	34
Y	*386-4650*	1	PUMP GP-FUEL INJECTION	61
Y	*383-0162*	1	PUMP GP-WATER	36
Y	*383-0154*	1	STARTING MOTOR GP-ELECTRIC	96
Y	*386-4643*	1	VALVE MECHANISM GP	29

Y - SEPARATE ILLUSTRATION

<END>

383-0640 INSTALLATION AR-ENGINE

PART OF 376-6672 COMMON AR

SMCS-1000 **i04732215**

NOTE	PART NUMBER	QTY	PART NAME 1 2 3 4 5 6 (PRODUCT LEVEL)	SEE PAGE
Y	*383-8499*	1	AIR CLEANER GP	42
Y	*380-6597*	1	BELT TENSIONER GP	5
Y	*383-0643*	1	EXTENSION GP-EXHAUST	43
Y	*383-0641*	1	LINES GP-AIR	44
Y	*384-1056*	1	MUFFLER GP	47
Y	*380-6364*	1	RADIATOR & HYD OIL COOLER GP	37
Y	*378-2140*	1	SHUTOFF GP-MANUAL (FUEL INJECTION PUMP)	63

Y - SEPARATE ILLUSTRATION

<END>

380-6597 BELT TENSIONER GP

PART OF 383-0640 INSTALLATION AR-ENGINE

SMCS-1357, 1358, 1397 **i05437155**

NOTE	REF NO	GRAPHIC REF	PART NUMBER	QTY	PART NAME 1 2 3 4 5 6 (PRODUCT LEVEL)	SEE PAGE
	1	1	**382-4808**	1	BRACKET AS	
		1	**381-5786**	1	SPACER (9X16X54-MM THK)	
	2	1	**382-4810**	1	BRACKET AS	
M		1	**8T-3612**	1	NUT-WELD (M8X1.25-THD)	
	3	1	**382-4812**	1	SPACER (9X22X8.5-MM THK)	
	4	1	**382-4813**	1	BRACKET AS	
M		1	**8T-3612**	1	NUT-WELD (M8X1.25-THD)	
	5	1	**382-4815**	1	SLEEVE	
M	6	1	**099-3649**	1	BOLT (M8X1.25X40-MM)	
	7	1	**304-2819**	1	BOLT (M8X1.25X100-MM)	
M	8	1	**5C-7261**	1	NUT (M8X1.25-THD)	
M	9	1	**8T-3647**	2	BOLT (M8X1.25X80-MM)	
	10	1	**8T-4224**	6	WASHER-HARD (8.8X16X2-MM THK)	
M	11	1	**8T-4908**	1	BOLT (M8X1.25X25-MM)	

M - METRIC PART

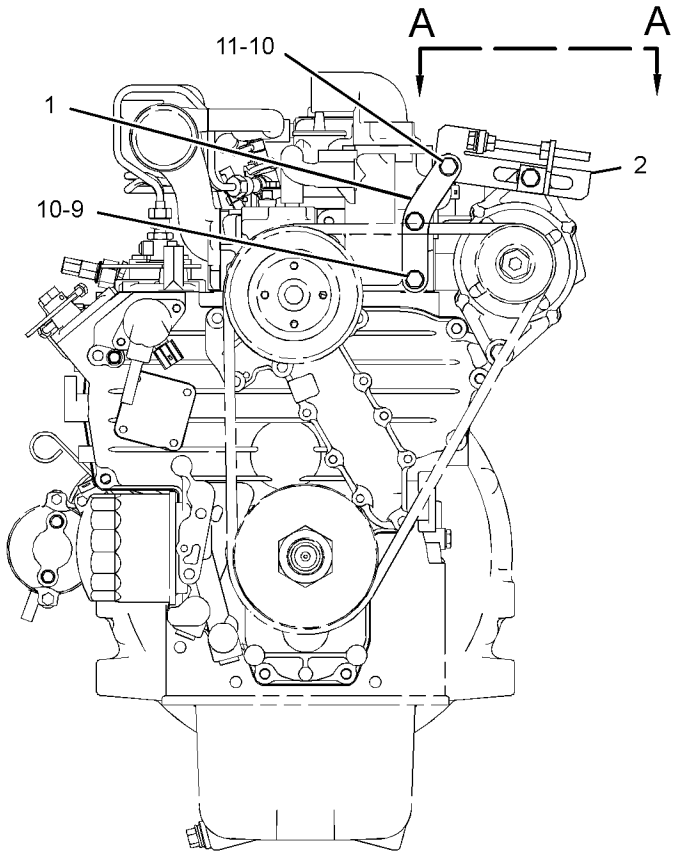

FRONT VIEW OF ENGINE

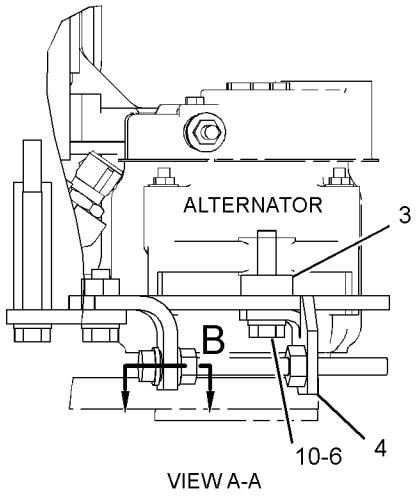

VIEW A-A

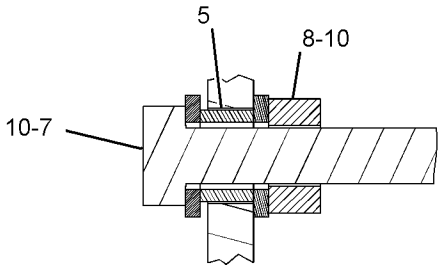

SECTION B

GRAPHIC #1 **<END>** g02769076

386-4564 CAMSHAFT GP

S/N: RKY1-1439

PART OF 380-1777 ENGINE AR-COMPLETE, 380-1776, 416-6081 ENGINE AR-PRIMARY

ALSO AN ATTACHMENT

SMCS-1210, 1211, 1212 **i04681109**

NOTE	REF NO	GRAPHIC REF	PART NUMBER	QTY	PART NAME 1 2 3 4 5 6 (PRODUCT LEVEL)	SEE PAGE
	1	1	**383-0171**	2	BOLT	
	2	1	**386-6934**	1	CAMSHAFT AS	
	2A	1	**383-0227**	1	KEY-FEATHER	
	2B	1	**383-0231**	1	BALL	
	2C	1	**383-0270**	1	STOPPER (CAMSHAFT)	
	2D	1	**383-0465**	1	GEAR-CAMSHAFT (68-TEETH)	

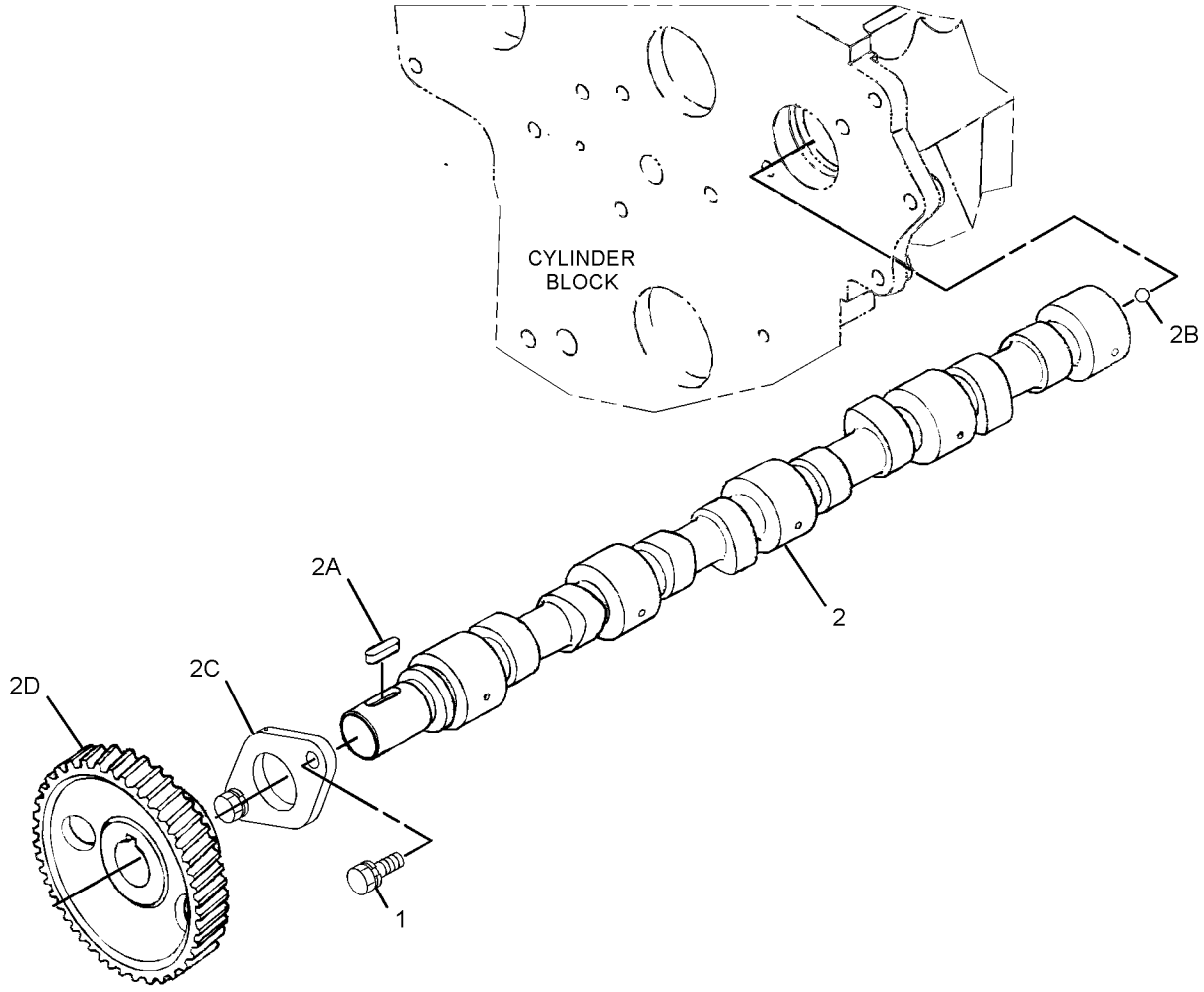

GRAPHIC #1 **<END>** g02789469

386-4566 COVER GP-VALVE MECHANISM

S/N: RKY1-1439

PART OF 380-1777 ENGINE AR-COMPLETE, 380-1776, 416-6081 ENGINE AR-PRIMARY
ALSO AN ATTACHMENT

SMCS-1107, 1120

i04790563

NOTE	REF NO	GRAPHIC REF	PART NUMBER	QTY	PART NAME 1 2 3 4 5 6 (PRODUCT LEVEL)	SEE PAGE
	1	1	**383-0217**	1	SEAL-O-RING	
	2	1	**383-0321**	1	PLUG-FILLER (ENGINE OIL)	
	3	1	**386-6930**	1	COVER AS-VALVE	
		1	**383-0203**	4	SCREW	
		1	**383-0382**	1	PIPE	
		1	**383-0524**	1	COVER	
		1	**383-0563**	1	VALVE-BREATHER	
	4	1	**386-6933**	1	GASKET	
	5	1	**383-0574**	8	BOLT	
	6	1	**395-0080**	1	HOSE-BREATHER	
	7	1	**389-1593**	2	CLAMP	
					PARTS SHOWN IN GRAPHIC(S) WITHOUT A REFERENCE NUMBER ARE NOT SERVICED SEPARATELY	

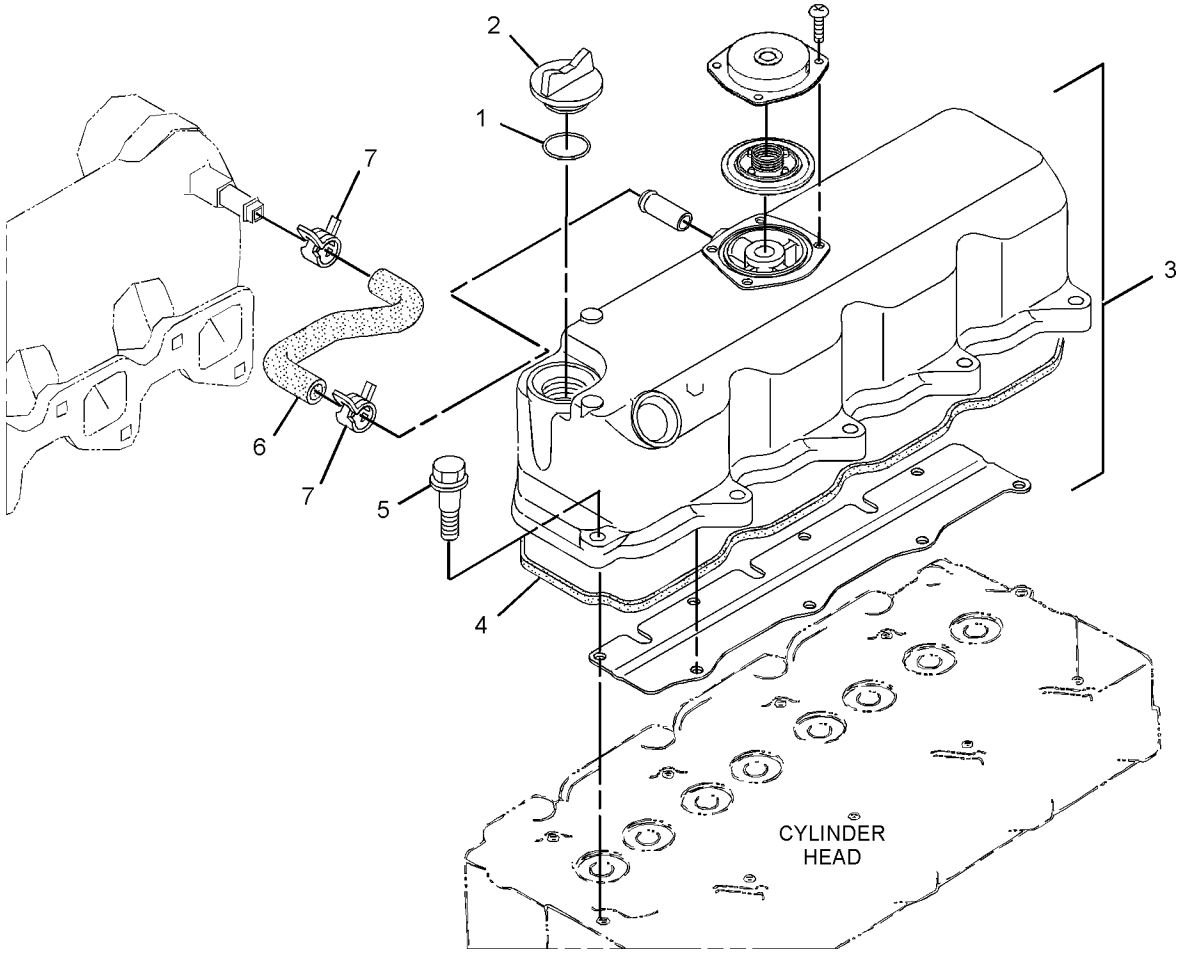

GRAPHIC #1

<END>

g02906057

386-4570 CRANKSHAFT GP

S/N: RKY1-1439

PART OF 380-1777 ENGINE AR-COMPLETE, 380-1776, 416-6081 ENGINE AR-PRIMARY

ALSO AN ATTACHMENT

SMCS-1160, 1161, 1202, 1203, 1204, 1230, 1231, 1232 **i05325177**

NOTE	REF NO	GRAPHIC REF	PART NUMBER	QTY	PART NAME 1 2 3 4 5 6 (PRODUCT LEVEL)	SEE PAGE
	1	1	**383-0467**	1	BEARING-CRANKSHAFT	
		1	**389-0724**	1	BEARING-MAIN (0.20-MM UNDERSIZE)	
		1	**389-0725**	1	BEARING-MAIN (0.40-MM UNDERSIZE)	
	2	1	**383-0469**	2	BUSHING	
		1	**389-0726**	2	BEARING-THRUST (0.20-MM OVERSIZE)	
		1	**389-0727**	2	BEARING-THRUST (0.40-MM OVERSIZE)	
	3	1	**383-0470**	2	BUSHING	
		1	**389-0728**	2	BEARING-THRUST (0.20 OVERSIZE)	
		1	**389-0729**	2	BEARING-THRUST (0.40 OVERSIZE)	
	4	1	**383-0392**	1	COLLAR-CAMSHAFT	
	5	1	**386-6936**	1	CRANKSHAFT AS	
	5A	1	**383-0231**	4	BALL	
	5B	1	**383-0393**	1	BEARING-CRANKSHAFT	
	6	1	**383-0515**	1	GEAR AS-IDLER (79-TEETH)	
		1	**383-0401**	1	GEAR-IDLER	
	7	1	**383-0587**	1	COLLAR-GEAR CONTROL	
	8	1	**383-0399**	1	GEAR-CRANKSHAFT (34-TEETH)	
	9	1	**383-0228**	1	KEY-FEATHER	
	10	1	**383-0271**	1	NUT	
	11	1	**383-0398**	1	PIN-STRAIGHT	
	12	1	**383-0210**	1	SEAL-O-RING	
	13	1	**383-0400**	1	SHAFT-GEAR	
	14	1	**383-0292**	1	SLINGER-OIL	
	15	1	**383-0171**	3	BOLT	
	16	1	**393-7502**	2	BOLT-FLANGE HEAD	

386-4570 **CRANKSHAFT GP (*contd.*)** **i05325177**

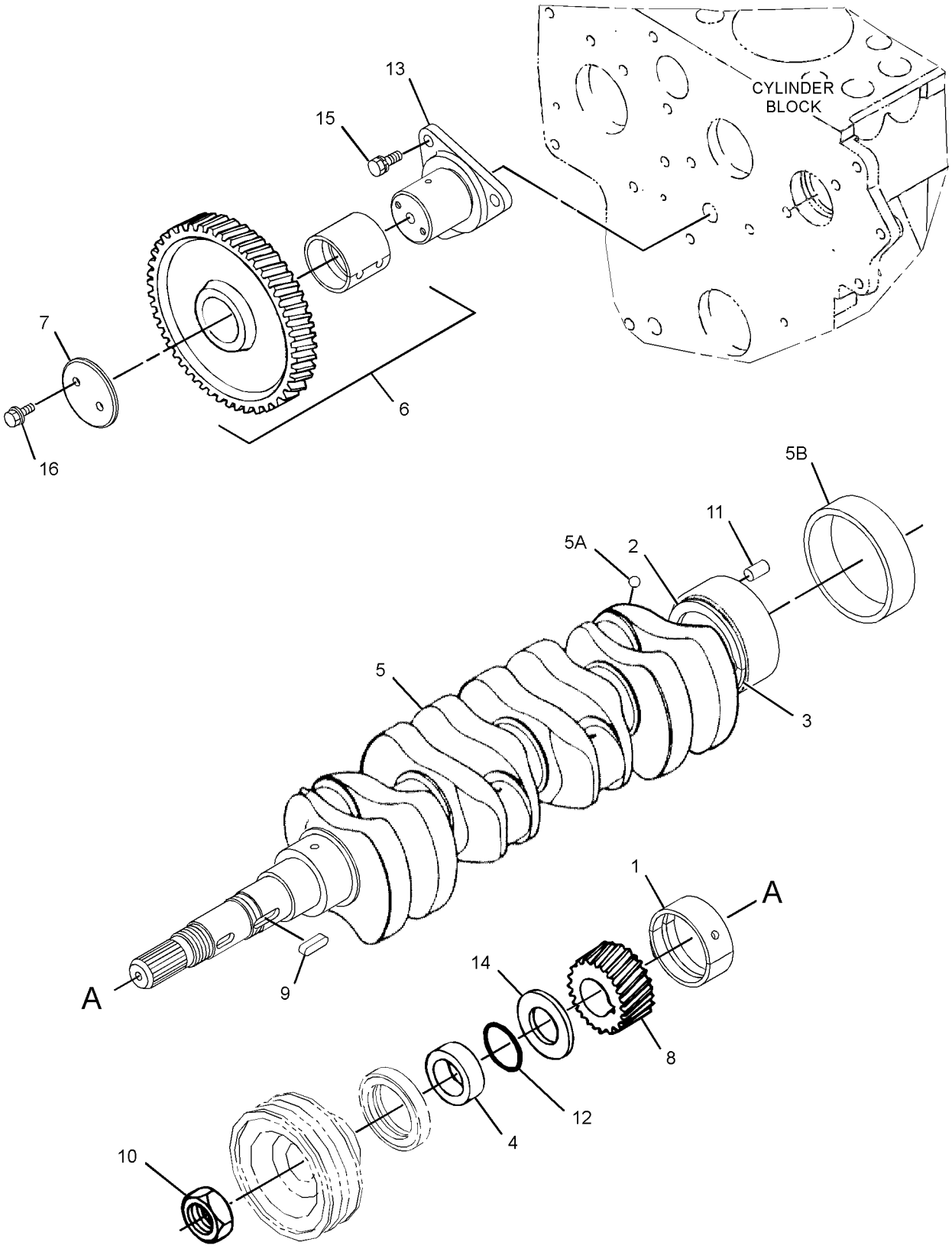

GRAPHIC #1 **<END>** g02789532

386-6914 CYLINDER BLOCK AS

PART OF 386-4561 CYLINDER BLOCK GP
ALSO AN ATTACHMENT

SMCS-1201 **i05723589**

NOTE	REF NO	GRAPHIC REF	PART NUMBER	QTY	PART NAME 1 2 3 4 5 6 (PRODUCT LEVEL)	SEE PAGE
	1	1	**383-0260**	5	CAP	
	2	1	**383-0261**	2	CAP	
	3	1	**383-0358**	1	CAP	
	4	1	**383-0218**	2	PIN	
	5	1	**383-0219**	3	PIN	
	6	1	**383-0220**	2	PIN	
	7	1	**383-0221**	1	PIN	
	8	1	**383-0272**	1	PIN	
	9	1	**383-0229**	1	PLUG	
	10	1	**383-0303**	5	PLUG	
	11	1	**383-0304**	2	PLUG	
	12	1	**383-0337**	1	PLUG	
	13	1	**383-0385**	3	PLUG	

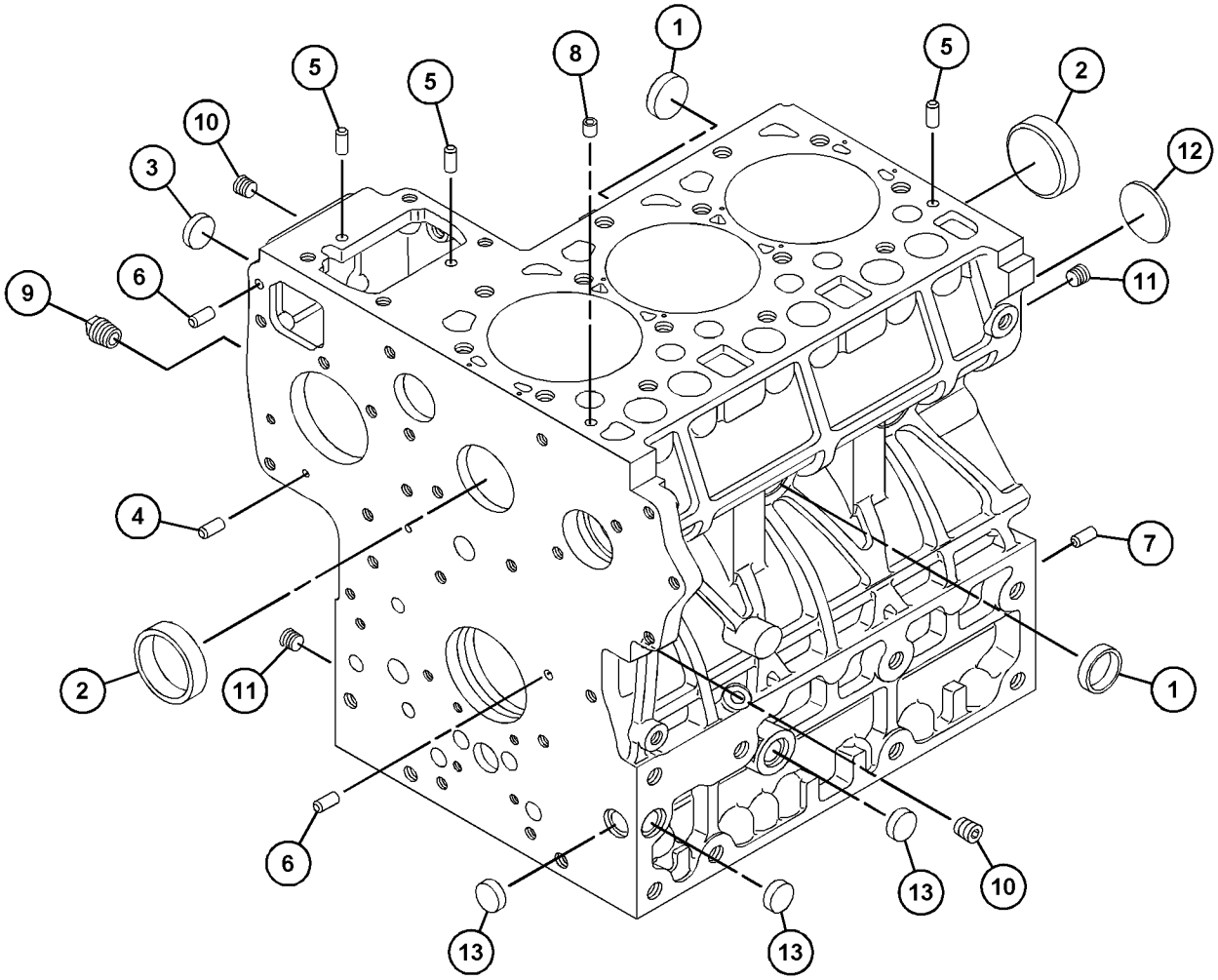

GRAPHIC #1 **<END>** g03645933

386-4561 CYLINDER BLOCK GP

S/N: RKY1-1439

PART OF 380-1777 ENGINE AR-COMPLETE, 380-1776, 416-6081 ENGINE AR-PRIMARY

ALSO AN ATTACHMENT

SMCS-1201 **i04688410**

NOTE	REF NO	GRAPHIC REF	PART NUMBER	QTY	PART NAME 1 2 3 4 5 6 (PRODUCT LEVEL)	SEE PAGE
Y	1	1	*386-6914*	1	CYLINDER BLOCK AS	10
	2	1	*383-0432*	1	CASE AS	
	2A	1	**383-0447**	2	BOLT	
	2B	1	**383-0468**	2	BEARING	
		1	**383-0430**	2	BEARING (0.20-MM UNDERSIZE)	
		1	**383-0431**	2	BEARING (0.40-MM UNDERSIZE)	
	3	1	*383-0457*	1	CASE AS	
	3A	1	**383-0447**	2	BOLT	
	3B	1	**383-0468**	2	BEARING	
		1	**383-0430**	2	BEARING (0.20-MM UNDERSIZE)	
		1	**383-0431**	2	BEARING (0.40-MM UNDERSIZE)	
	4	1	*383-0458*	1	CASE AS	
	4A	1	**383-0447**	2	BOLT	
	4B	1	**383-0468**	2	BEARING	
		1	**383-0430**	2	BEARING (0.20-MM UNDERSIZE)	
		1	**383-0431**	2	BEARING (0.40-MM UNDERSIZE)	
	6	1	**383-0174**	8	BOLT	
	7	1	**383-0175**	8	BOLT	
	8	1	**383-0305**	3	BOLT	
	9	1	**383-0532**	1	COVER	
	10	1	**383-0386**	1	FITTING	
	11	1	**383-0256**	1	GASKET	
	12	1	**383-0446**	1	GASKET	
	13	1	**383-0451**	1	GASKET	
	15	1	**383-0557**	1	PLUG	
	16	1	**383-0347**	1	SEAL (REAR)	
	17	1	**383-0553**	1	SEAL (FRONT)	

Y - SEPARATE ILLUSTRATION

386-4561 **CYLINDER BLOCK GP (*contd.*)** **i04688410**

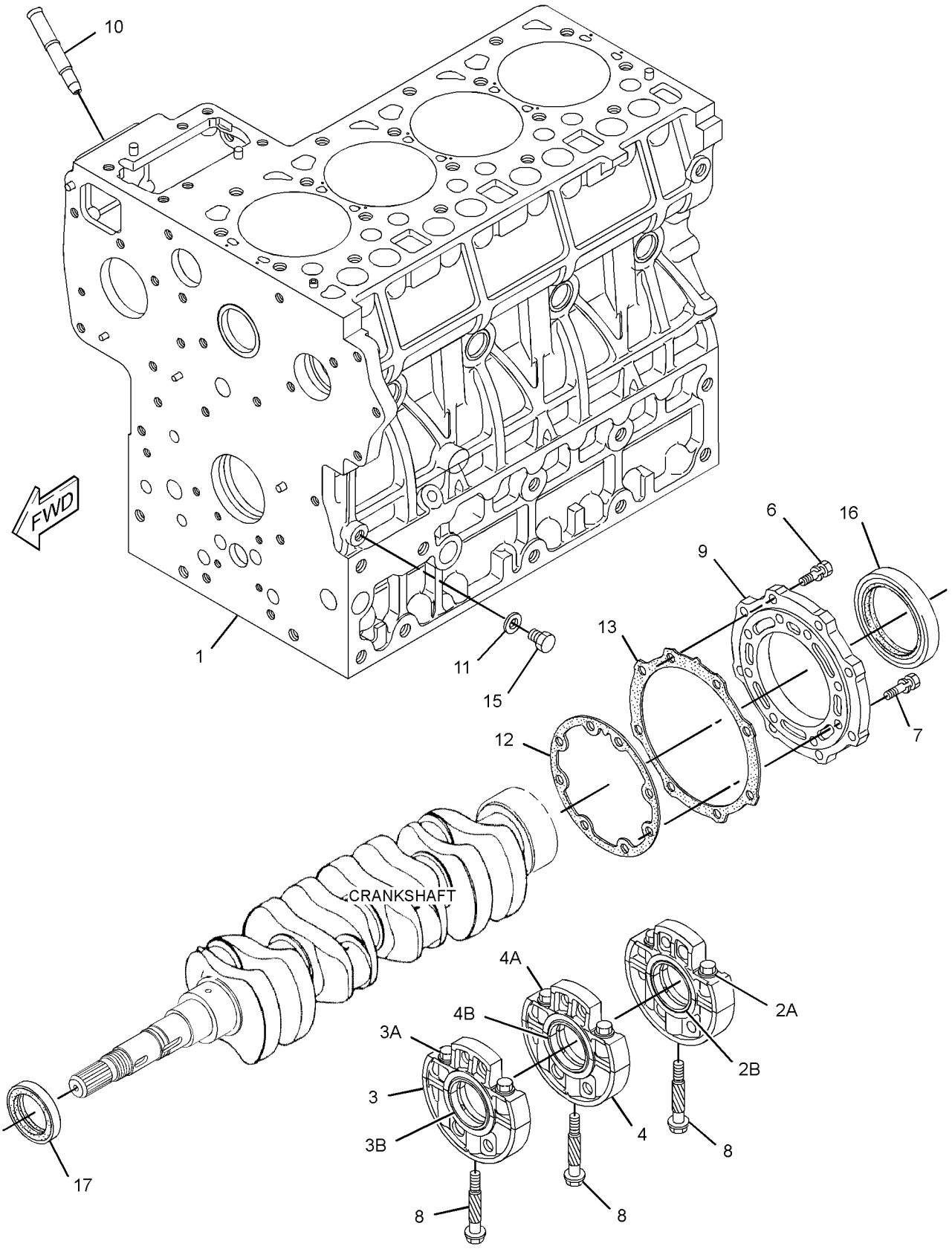

GRAPHIC #1 **<END>** g02798305

386-6920 CYLINDER HEAD AS

PART OF 386-4637 CYLINDER HEAD GP

ALSO AN ATTACHMENT

SMCS-1100 **i04794764**

NOTE	PART NUMBER	QTY	PART NAME 1 2 3 4 5 6 (PRODUCT LEVEL)	SEE PAGE
	383-0259	9	CAP	
	383-0262	1	CAP	
	383-0473	3	GUIDE-VALVE (EXHAUST)	
	383-0555	3	GUIDE-VALVE (INLET)	
	383-0283	2	PLUG	
	383-0360	3	SEAT-VALVE (EXHAUST)	
	383-0361	3	SEAT-VALVE (INLET)	

<END>

386-4637 CYLINDER HEAD GP

S/N: RKY1-1439

PART OF 380-1777 ENGINE AR-COMPLETE, 380-1776, 416-6081 ENGINE AR-PRIMARY

ALSO AN ATTACHMENT

SMCS-1100 **i05757975**

NOTE	REF NO	GRAPHIC REF	PART NUMBER	QTY	PART NAME 1 2 3 4 5 6 (PRODUCT LEVEL)	SEE PAGE
	1	1	**383-0263**	6	SEAL	
	2	1	**383-0264**	6	CAP	
	3	1	**383-0265**	6	RETAINER	
	4	1	**383-0266**	6	COLLAR	
	5	1	**383-0387**	14	BOLT	
	6	1	**386-6921**	1	GASKET (1.20-MM THK)	
			386-6922	1	GASKET (1.15-MM THK)	
			386-6923	1	GASKET (1.25-MM THK)	
			386-6924	1	GASKET (1.30-MM THK)	
			386-6925	1	GASKET (1.35-MM THK)	
Y	7	1	**386-6920**	1	CYLINDER HEAD AS	13
	8	1	**383-0534**	3	VALVE-INLET	
	9	1	**383-0535**	3	VALVE-EXHAUST	
	10	1	**383-0554**	6	SPRING-VALVE	
	11	1	**395-3381**	1	PLUG	

Y - SEPARATE ILLUSTRATION

386-4637 **CYLINDER HEAD GP (*contd.*)** **i05757975**

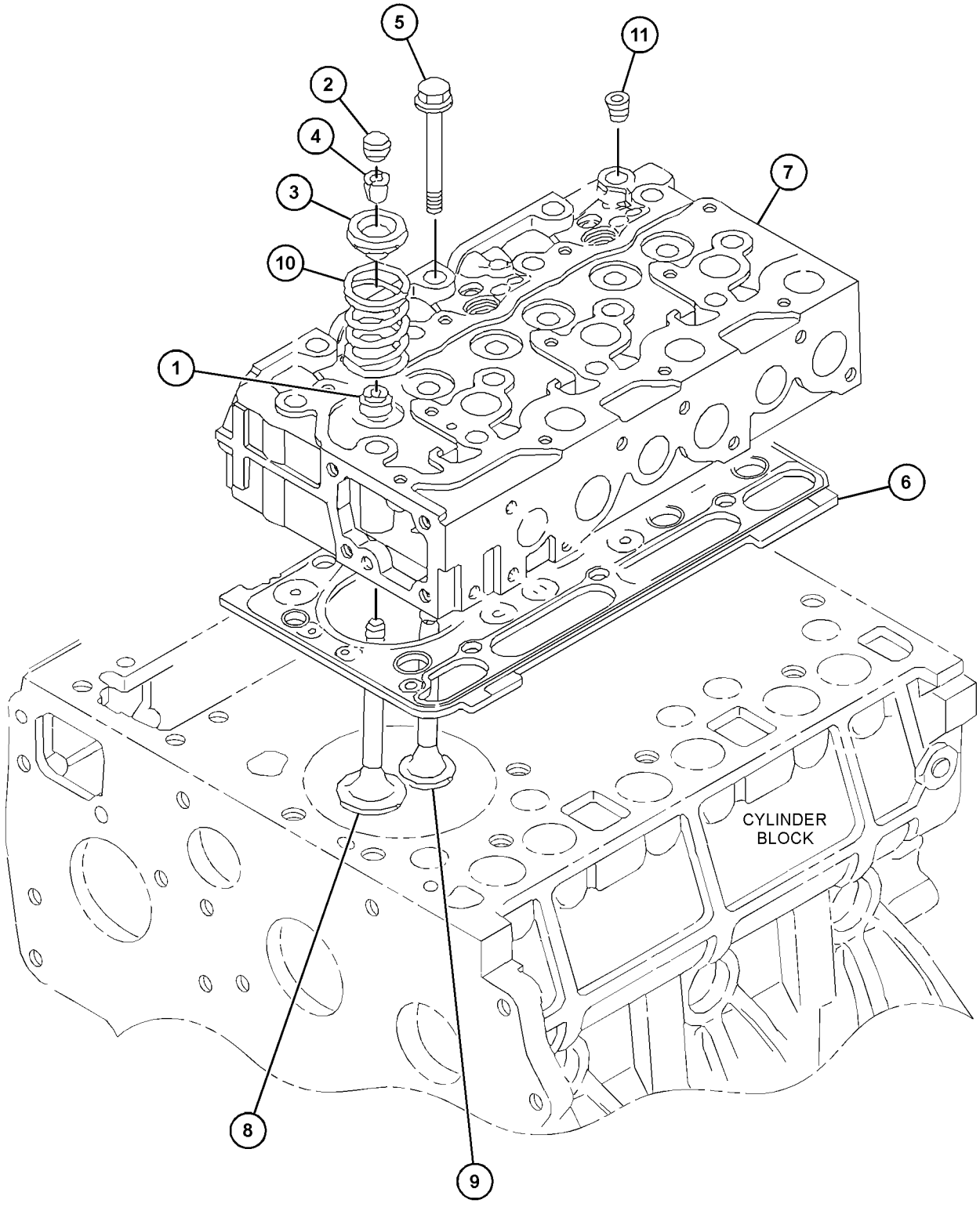

GRAPHIC #1 **<END>** g03655298

378-2141 DRAIN GP-ENGINE OIL–ECOLOGY

PART OF 379-4727 DRAIN GP-OIL

AN ATTACHMENT

SMCS-1302 **i04935892**

NOTE	REF NO	GRAPHIC REF	PART NUMBER	QTY	PART NAME 1 2 3 4 5 6 (PRODUCT LEVEL)	SEE PAGE
	1	1	**381-1122**	1	SHUTOFF AS (ENGINE OIL)	
		1	**381-1123**	1	GASKET	

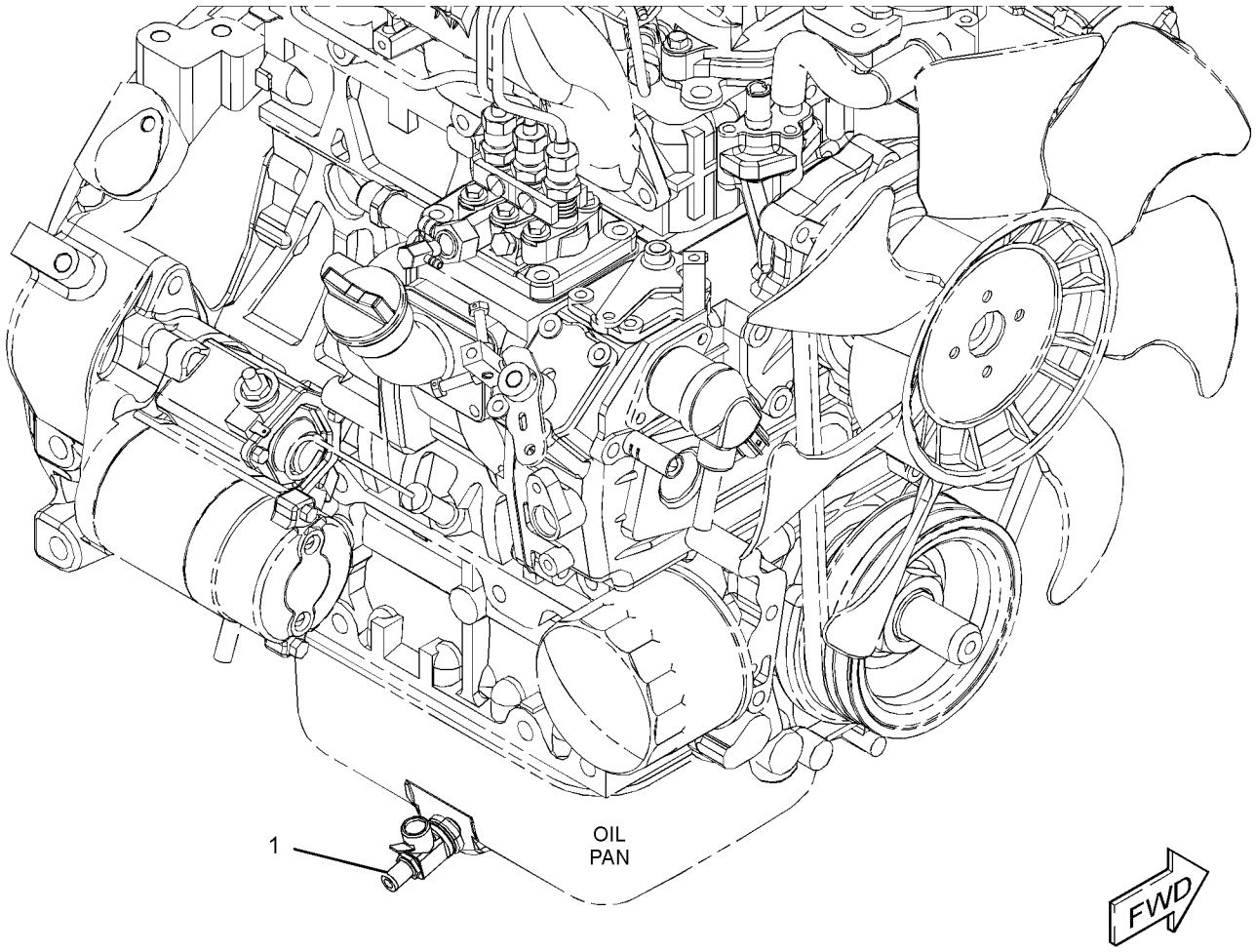

GRAPHIC #1 **<END>** g02765999

386-4592 FLYWHEEL GP

S/N: RKY1-1439

PART OF 380-1777 ENGINE AR-COMPLETE, 380-1776, 416-6081 ENGINE AR-PRIMARY

ALSO AN ATTACHMENT

SMCS-1156, 1157, 1158 **i04794306**

NOTE	REF NO	GRAPHIC REF	PART NUMBER	QTY	PART NAME 1 2 3 4 5 6 (PRODUCT LEVEL)	SEE PAGE
	1	1	**383-0180**	1	BOLT	
	2	1	**383-0207**	1	WASHER	
	3	1	**383-0345**	11	BOLT	
	4	1	**383-0576**	6	BOLT	
	5	1	**383-0598**	1	COVER	
	6	1	**386-6938**	1	HOUSING-FLYWHEEL	
	7	1	**386-6937**	1	FLYWHEEL AS	
	7A	1	**383-0420**	1	GEAR-RING	

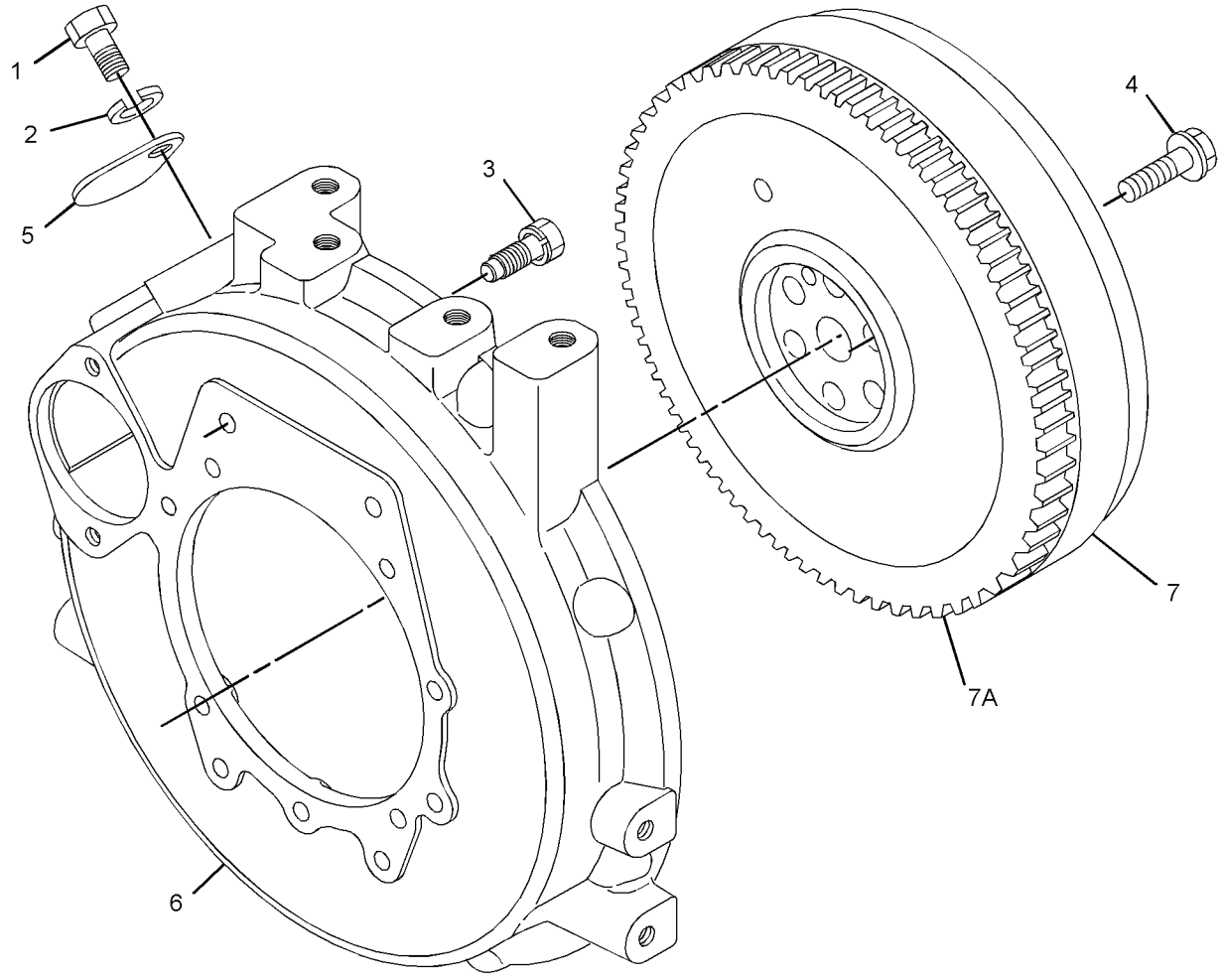

GRAPHIC #1 **<END>** g02790762

380-6386 GUARD GP-FAN

PART OF 377-8933, 383-5929 CANOPY AR
AN ATTACHMENT

SMCS-1360 **i04623158**

NOTE	REF NO	GRAPHIC REF	PART NUMBER	QTY	PART NAME 1 2 3 4 5 6 (PRODUCT LEVEL)	SEE PAGE
	1	1	**380-6387**	1	PLATE	
M	2	1	**6V-9189**	2	LOCKNUT (M8X1.25-THD)	
	3	1	**8T-4224**	2	WASHER-HARD (8.8X16X2-MM THK)	
M	4	1	**8T-7547**	2	BOLT (M8X1.25X30-MM)	

M - METRIC PART

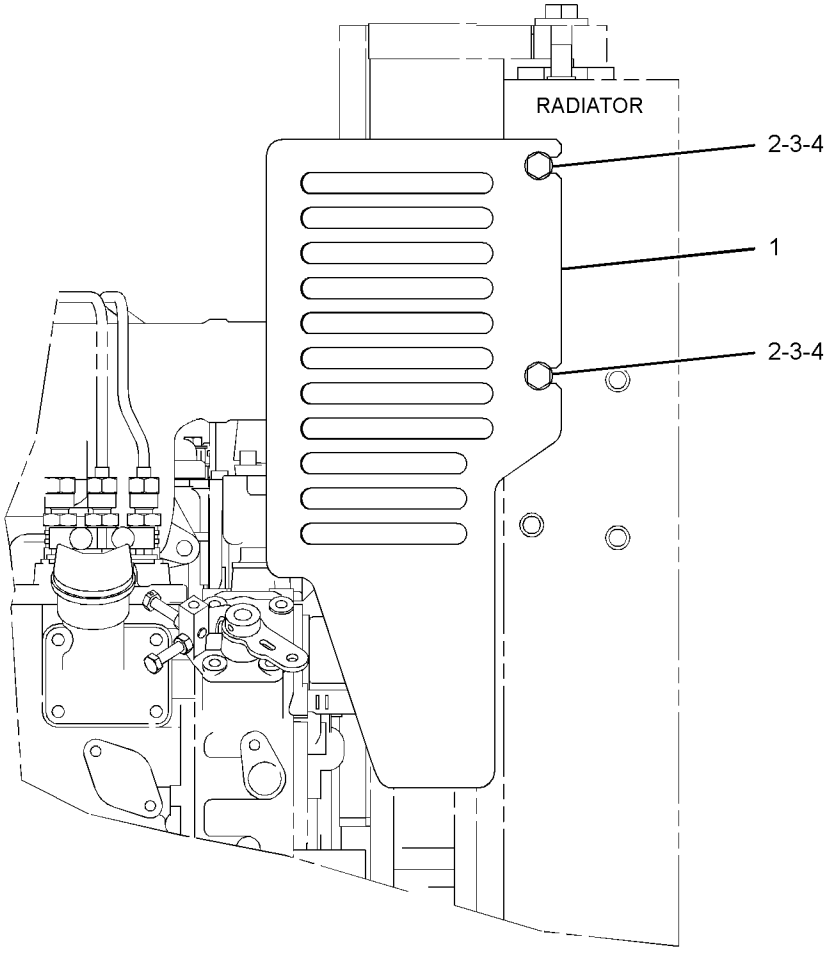

REAR VIEW

GRAPHIC #1 **<END>** g02798488

380-6393 GUARD GP-FAN

PART OF 376-6692, 376-6696, 383-5927, 383-5928 CAB AR
AN ATTACHMENT

SMCS-1360 **i04617857**

NOTE	REF NO	GRAPHIC REF	PART NUMBER	QTY	PART NAME 1 2 3 4 5 6 (PRODUCT LEVEL)	SEE PAGE
	1	1	**380-6394**	1	PLATE AS	
M		1	**6V-9632**	2	NUT-WELD (M6X1-THD)	
M	2	1	**6V-9189**	2	LOCKNUT (M8X1.25-THD)	
	3	1	**8T-4224**	2	WASHER-HARD (8.8X16X2-MM THK)	
M	4	1	**8T-7547**	2	BOLT (M8X1.25X30-MM)	

M - METRIC PART

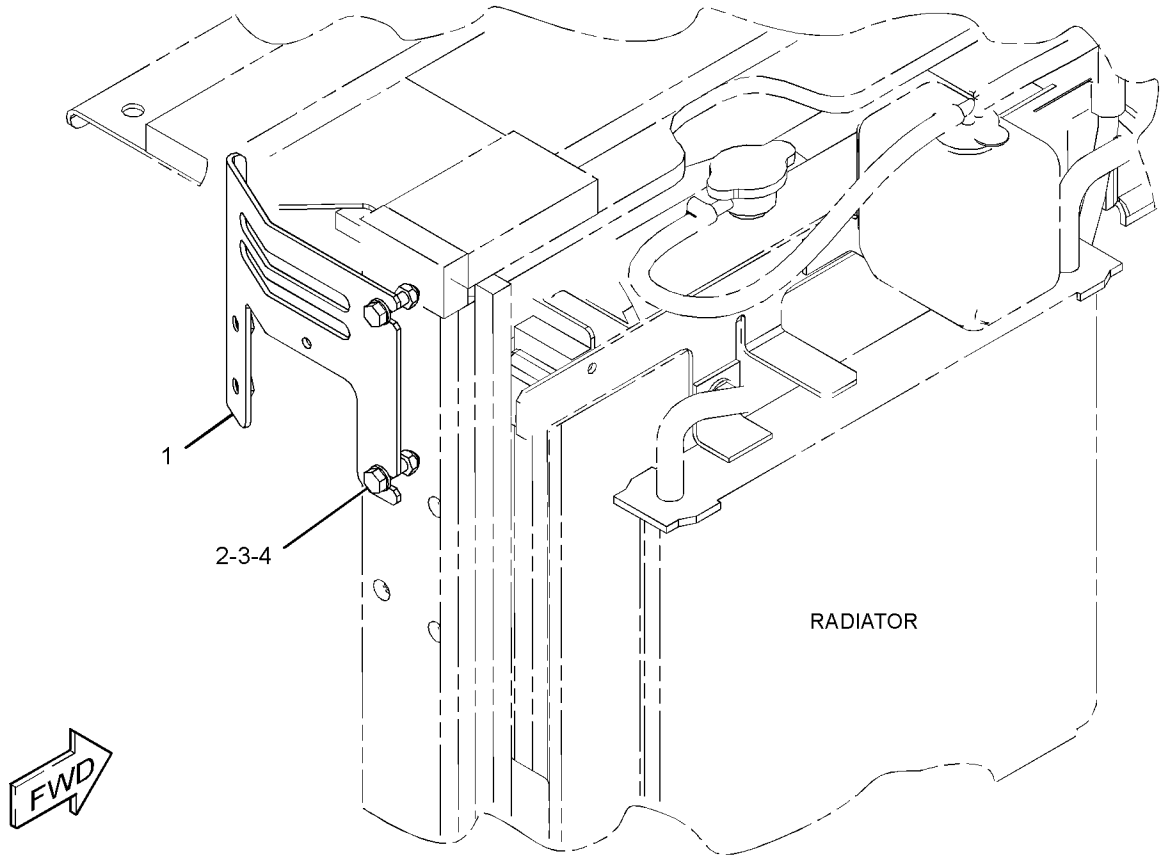

GRAPHIC #1 **<END>** g02801518

383-0503 HOUSING GP-FRONT

S/N: RKY1-1439

PART OF 380-1777 ENGINE AR-COMPLETE, 380-1776, 416-6081 ENGINE AR-PRIMARY

ALSO AN ATTACHMENT

SMCS-1151, 1162, 1166, 1206 **i04603486**

NOTE	REF NO	GRAPHIC REF	PART NUMBER	QTY	PART NAME 1 2 3 4 5 6 (PRODUCT LEVEL)	SEE PAGE
	1	1	**383-0165**	3	BOLT	
	2	1	**383-0189**	1	BOLT	
	3	1	**383-0190**	2	BOLT	
	4	1	**383-0192**	1	BOLT	
	5	1	**383-0193**	4	BOLT	
	6	1	**383-0220**	2	PIN	
	7	1	**383-0230**	1	CAP	
	8	1	**383-0234**	1	BALL	
	9	1	**383-0281**	1	SPRING	
	10	1	**383-0302**	1	GUIDE	
	11	1	**383-0402**	1	PIPE	
	12	1	**383-0423**	1	GASKET	
	13	1	**383-0426**	7	BOLT	
	14	1	**383-0438**	1	GASKET	
	15	1	*383-0440*	1	FLANGE AS	
	15A	1	**383-0427**	1	PLUG	
	16	1	**383-0492**	1	GASKET	
	17	1	**383-0506**	1	COLLAR	
	18	1	**383-0530**	2	BOLT	
	19	1	**383-0551**	1	HOUSING AS-FRONT	
	19A	1	**383-0336**	2	PLUG	
	20	1	*383-0595*	1	FLANGE AS	
	20A	1	**383-0382**	1	PIPE	
	20B	1	**383-0486**	1	PLUG	

383-0503 **HOUSING GP-FRONT (*contd.*)** **i04603486**

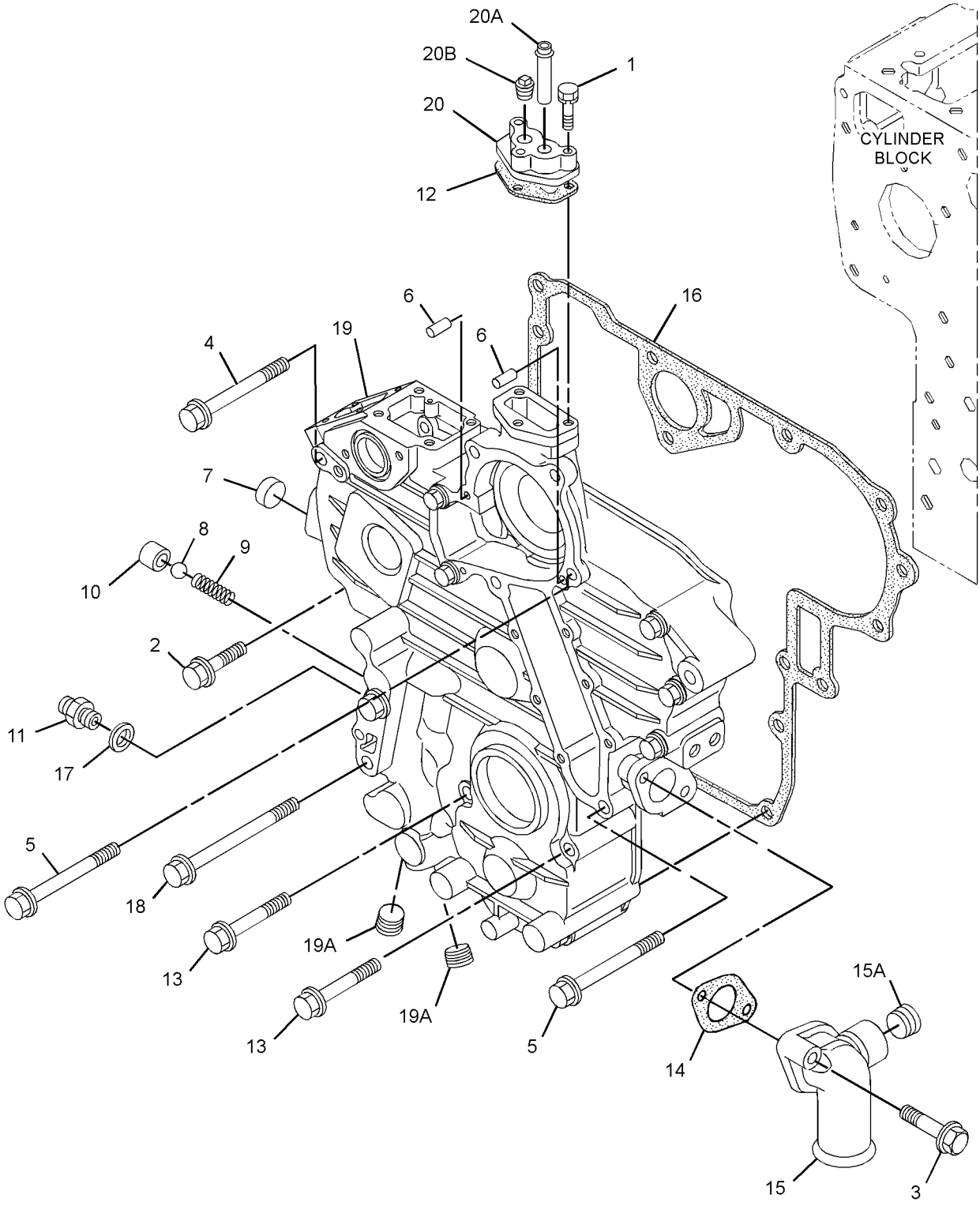

GRAPHIC #1 **<END>** g02791277

386-4638 LIFTING GP-ENGINE

S/N: RKY1-1439

PART OF 380-1777 ENGINE AR-COMPLETE, 380-1776, 416-6081 ENGINE AR-PRIMARY

ALSO AN ATTACHMENT

SMCS-1122 **i04790564**

NOTE	REF NO	GRAPHIC REF	PART NUMBER	QTY	PART NAME 1 2 3 4 5 6 (PRODUCT LEVEL)	SEE PAGE
	1	1	**383-0170**	1	BOLT	
	2	1	**383-0197**	1	NUT	
	3	1	**383-0204**	1	WASHER	
	4	1	**383-0207**	1	WASHER	
	5	1	**383-0300**	2	STUD	
	6	1	**383-0258**	1	PLATE	
	7	1	**389-2309**	1	PLATE	
M		1	**6V-9632**	1	NUT-WELD (M6X1-THD)	

M - METRIC PART

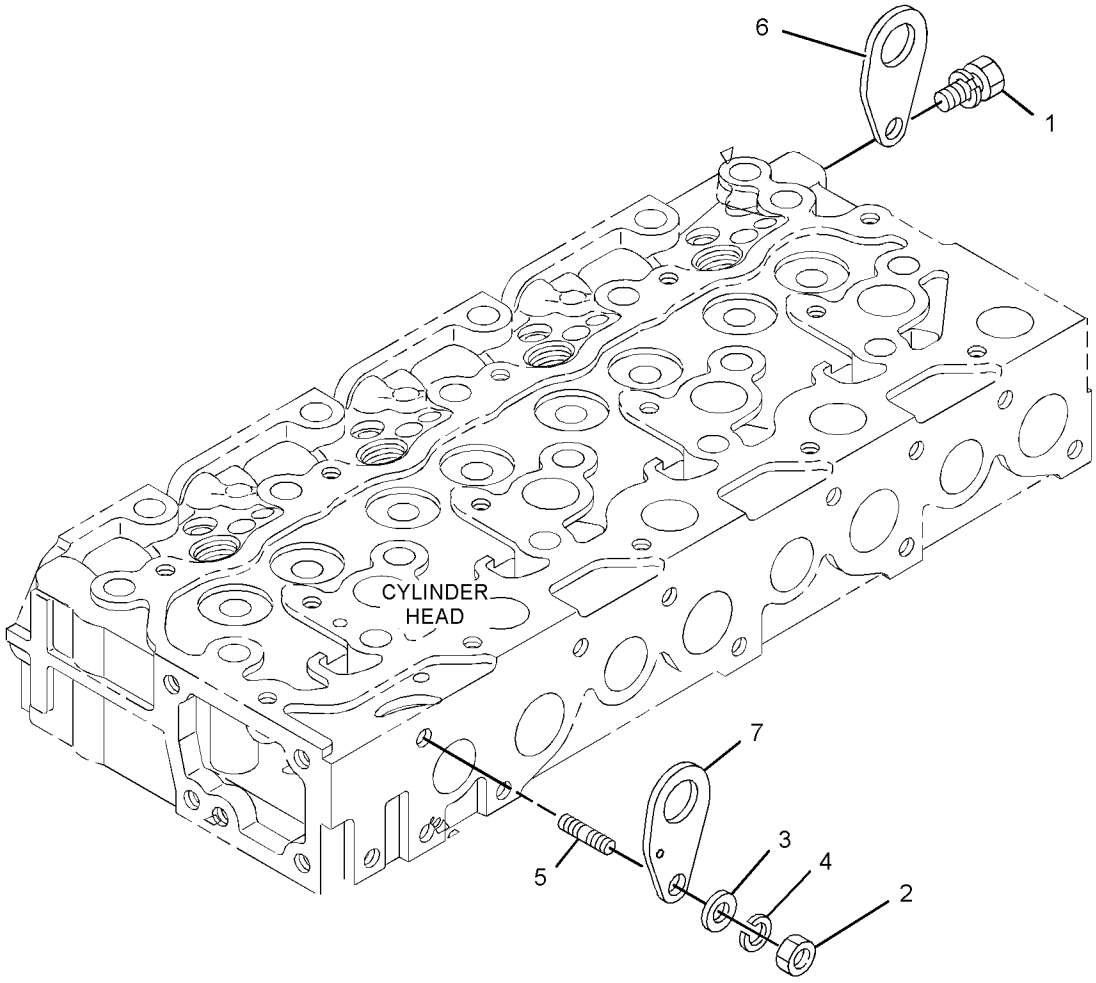

GRAPHIC #1 **<END>** g02906096

380-6385 MOUNTING GP-ENGINE

PART OF 376-6696, 383-5928 CAB AR, 377-8933, 383-5929 CANOPY AR
AN ATTACHMENT

SMCS-1152, 1153, 1154 **i04728082**

NOTE	REF NO	GRAPHIC REF	PART NUMBER	QTY	PART NAME 1 2 3 4 5 6 (PRODUCT LEVEL)	SEE PAGE
	1	1	**119-9880**	6	BOLT (M12X1.25X30-MM)	
	2	1	**163-6838**	4	STOP	
	3	1	**176-8440**	2	STOP	
	4	1	**270-2002**	4	MOUNT-RUBBER	
	5	1	**270-2003**	4	MOUNT-RUBBER	
	6	1	**378-2137**	1	SUPPORT AS	
	7	1	**379-0855**	1	SUPPORT AS	
	8	1	**5P-1076**	2	WASHER-HARD (13.5X30X4-MM THK)	
M	9	1	**7X-2550**	4	BOLT (M12X1.75X110-MM)	
	10	1	**8T-4223**	8	WASHER-HARD (13.5X25.5X3-MM THK)	
	11	1	**8T-4821**	2	WASHER (13.5X40X3-MM THK)	

M - METRIC PART

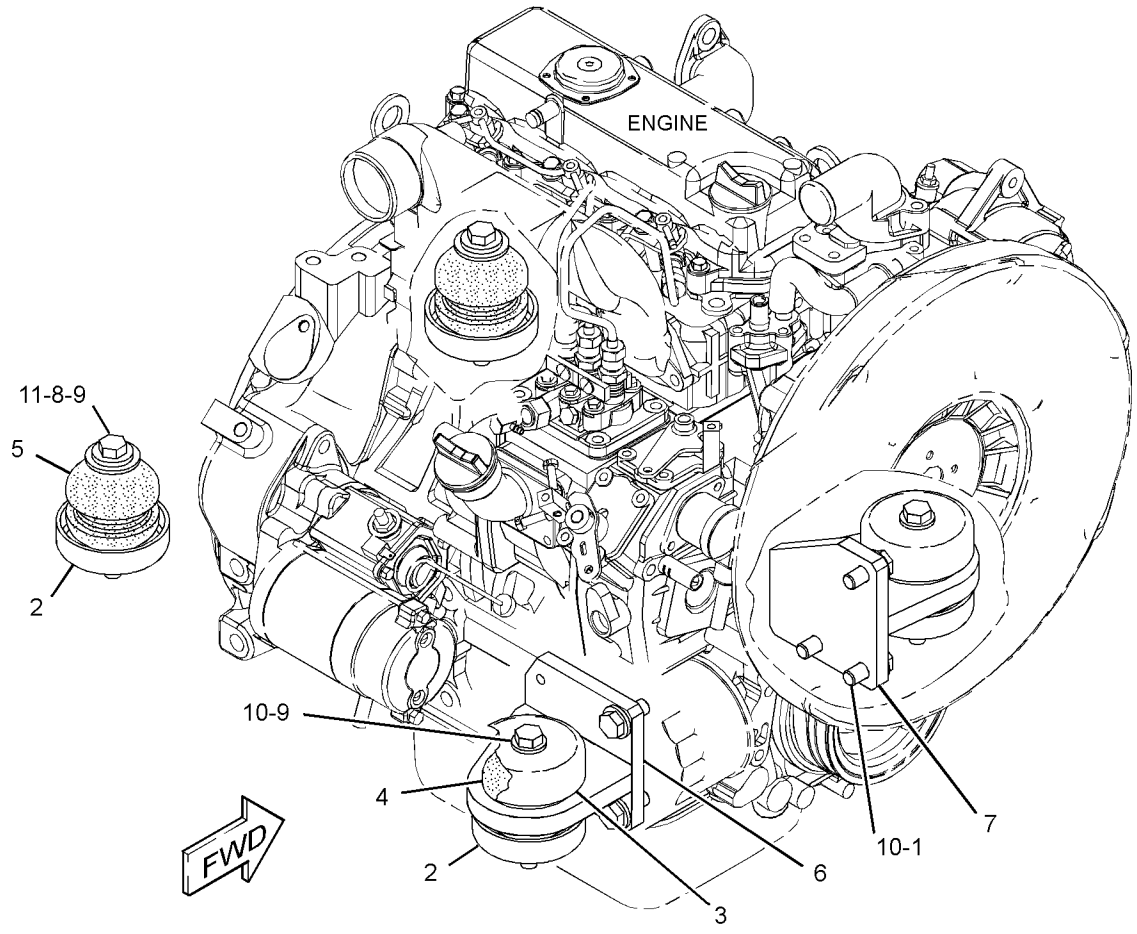

GRAPHIC #1 **<END>** g02881578

380-6388 MOUNTING GP-ENGINE

PART OF 376-6692, 383-5927 CAB AR

AN ATTACHMENT

SMCS-1152, 1153, 1154 **i04728083**

NOTE	REF NO	GRAPHIC REF	PART NUMBER	QTY	PART NAME 1 2 3 4 5 6 (PRODUCT LEVEL)	SEE PAGE
	1	1	**119-9880**	6	BOLT (M12X1.25X30-MM)	
	2	1	**163-6838**	4	STOP	
	3	1	**176-8440**	1	STOP	
	4	1	**291-5214**	1	STOP	
	5	1	**270-2002**	4	MOUNT-RUBBER	
	6	1	**270-2003**	4	MOUNT-RUBBER	
	7	1	**378-2137**	1	SUPPORT AS	
	8	1	**378-2138**	1	SUPPORT AS	
	9	1	**378-2139**	1	SUPPORT AS	
	10	1	**5P-1076**	2	WASHER-HARD (13.5X30X4-MM THK)	
M	11	1	**7X-2550**	4	BOLT (M12X1.75X110-MM)	
	12	1	**8T-4223**	8	WASHER-HARD (13.5X25.5X3-MM THK)	
	13	1	**8T-4224**	2	WASHER-HARD (8.8X16X2-MM THK)	
	14	1	**8T-4821**	2	WASHER (13.5X40X3-MM THK)	
M	15	1	**8T-4908**	2	BOLT (M8X1.25X25-MM)	

M - METRIC PART

380-6388 **MOUNTING GP-ENGINE (*contd.*)** **i04728083**

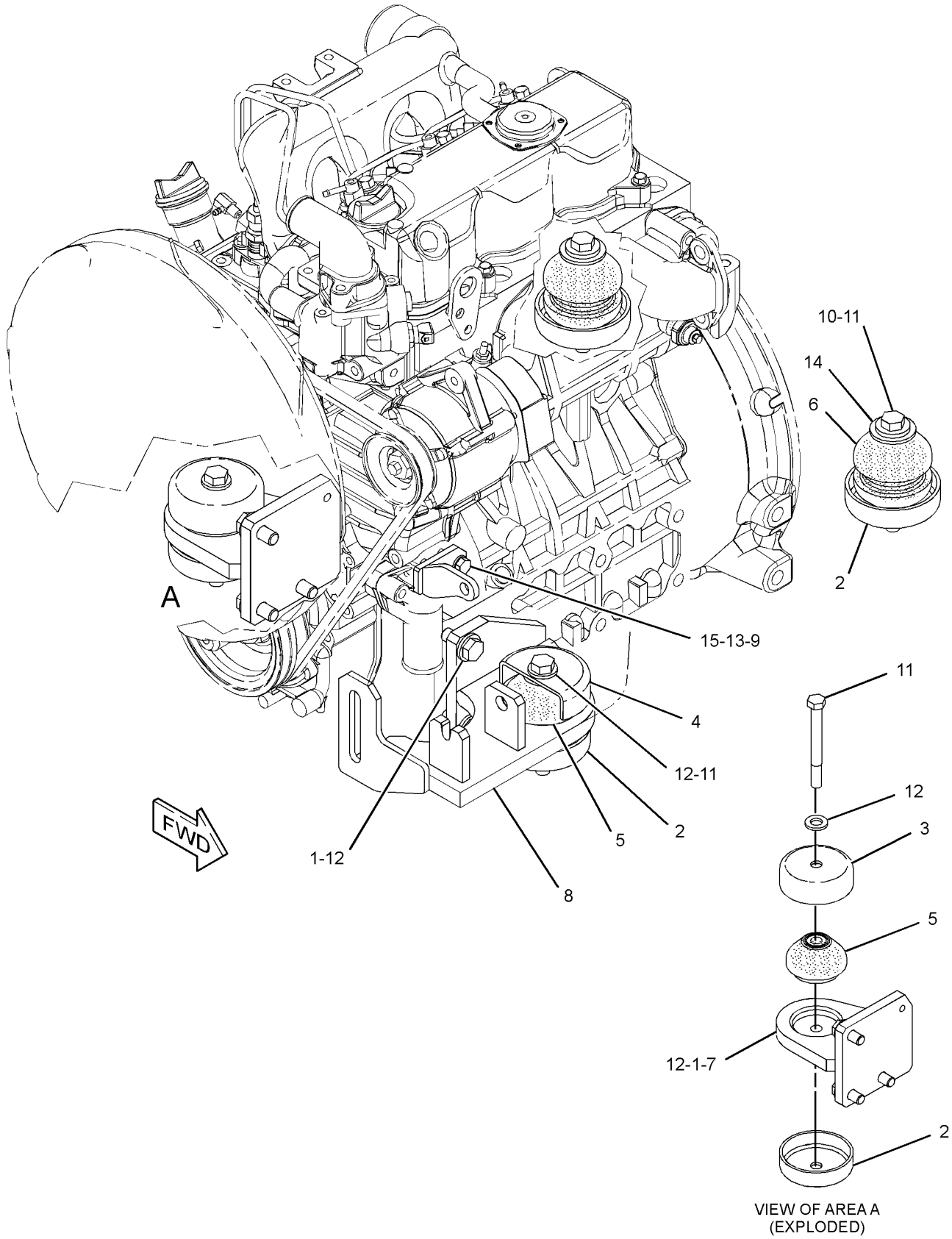

GRAPHIC #1 **<END>** g02871958

386-4645 PAN GP-OIL—ENGINE

S/N: RKY1-1439

PART OF 380-1777 ENGINE AR-COMPLETE, 380-1776, 416-6081 ENGINE AR-PRIMARY

ALSO AN ATTACHMENT

SMCS-1302 **i04795186**

NOTE	REF NO	GRAPHIC REF	PART NUMBER	QTY	PART NAME 1 2 3 4 5 6 (PRODUCT LEVEL)	SEE PAGE
	1	1	**386-6918**	1	PLUG (DRAIN, ENGINE OIL)	
	2	1	**386-6919**	1	GASKET	
	3	1	**395-0661**	1	PAN AS-OIL (ENGINE)	
	4	1	**389-2308**	20	BOLT-FLANGE HEAD	

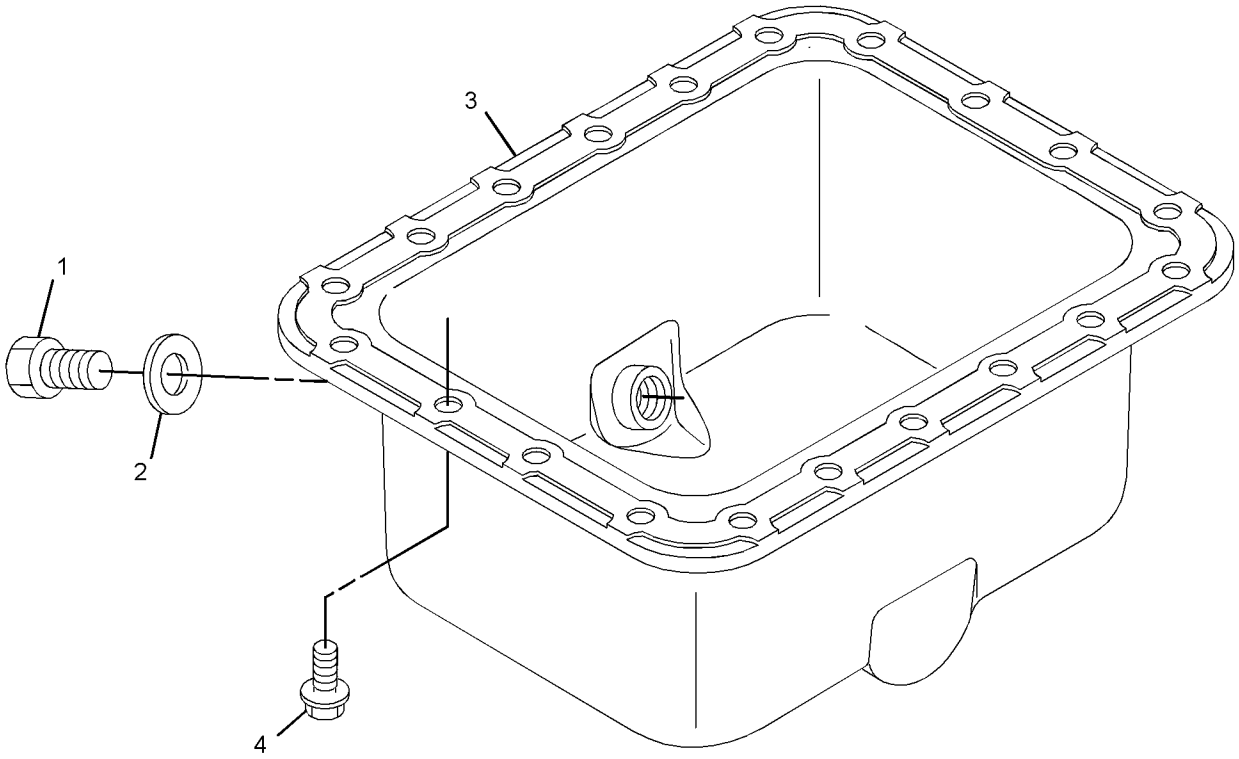

GRAPHIC #1 **<END>** g02913876

386-4646 PISTON & ROD GP

S/N: RKY1-1439

PART OF 380-1777 ENGINE AR-COMPLETE, 380-1776, 416-6081 ENGINE AR-PRIMARY

ALSO AN ATTACHMENT

SMCS-1213, 1214, 1215, 1218, 1219, 1225, 1239 **i04822086**

NOTE	REF NO	GRAPHIC REF	PART NUMBER	QTY	PART NAME 1 2 3 4 5 6 (PRODUCT LEVEL)	SEE PAGE
	1	1	**383-0374**	3	ROD AS	
					(EACH INCLUDES)	
	1A	1	**383-0579**	2	BOLT	
	1B	1	**389-1607**	1	BEARING	
	1C	1	**383-0375**	1	BEARING-CRANKSHAFT	
	1D	1	**389-1596**	1	BEARING-CRANKSHAFT (0.20-MM US)	
	1E	1	**389-1597**	1	BEARING-CRANKSHAFT (0.40-MM US)	
	2	1	**383-0397**	3	PIN-PISTON	
	3	1	**383-0479**	6	CLIP-PIN	
	4	1	**383-0502**	3	RING AS-PISTON	
	5	1	**383-0528**	3	PISTON	

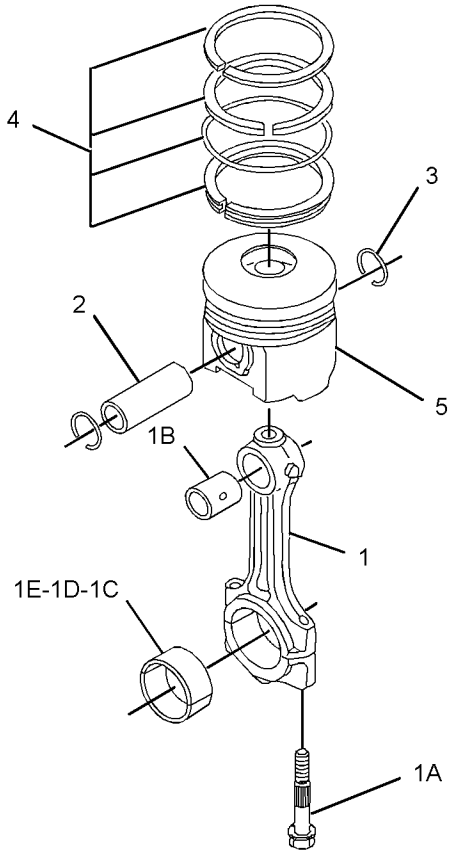

GRAPHIC #1 **<END>** g02906216

386-4648 PULLEY GP-FAN DRIVE

S/N: RKY1-1439

PART OF 380-1777 ENGINE AR-COMPLETE, 380-1776, 416-6081 ENGINE AR-PRIMARY

ALSO AN ATTACHMENT

SMCS-1357, 1359

i04790217

NOTE	REF NO	GRAPHIC REF	PART NUMBER	QTY	PART NAME 1 2 3 4 5 6 (PRODUCT LEVEL)	SEE PAGE
	1	1	**383-0227**	1	KEY-FEATHER	
	2	1	**383-0391**	1	FAN-SUCTION	
	3	1	**386-4792**	4	BOLT-FLANGE HEAD	
	4	1	**383-0383**	1	PULLEY-FAN	
	5	1	**389-1588**	1	SPACER-FAN	
	6	1	**386-4794**	1	PULLEY-FAN DRIVE	
	7	1	**383-0480**	1	V-BELT (FAN DRIVE)	

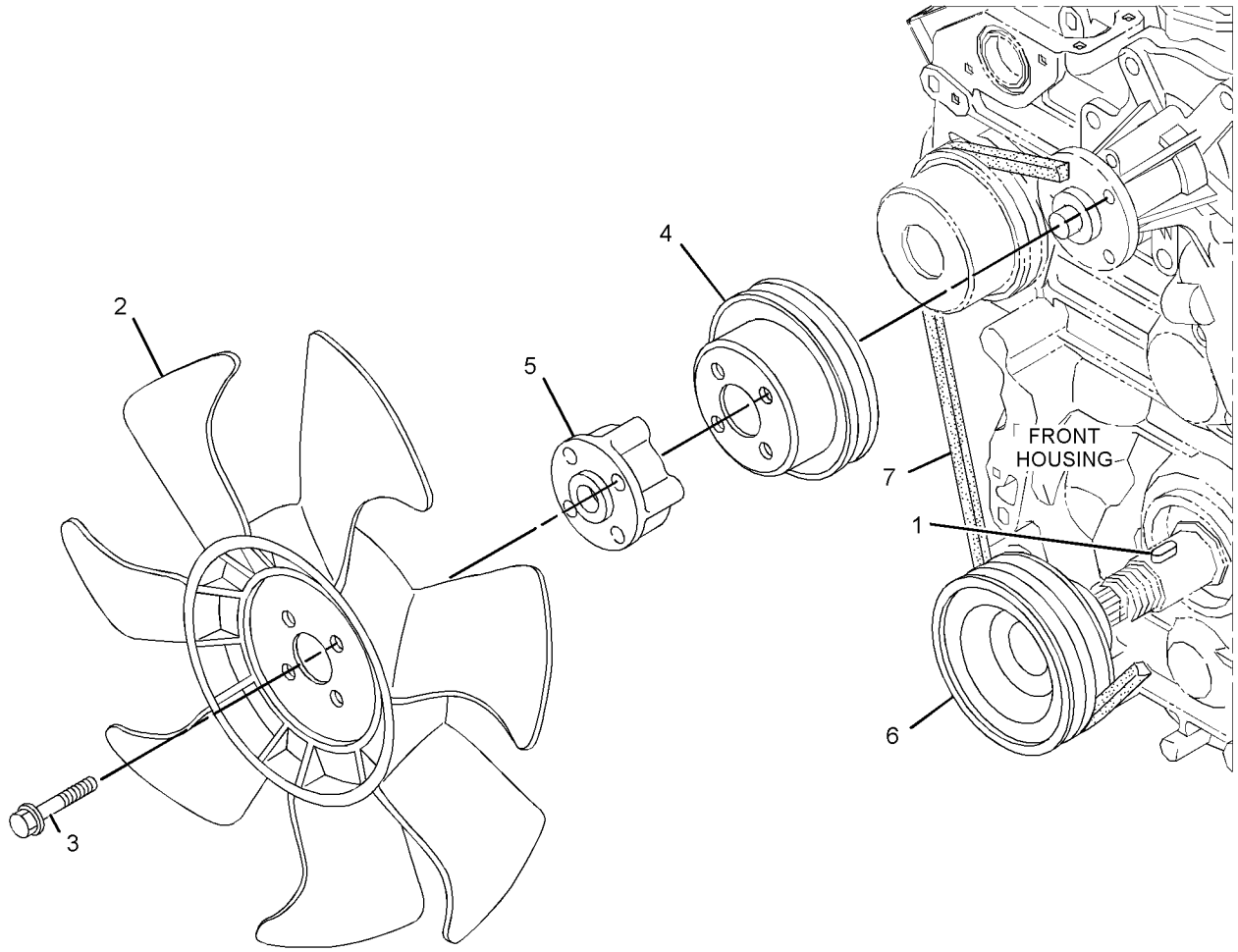

GRAPHIC #1 **<END>** g02792040

386-4643 VALVE MECHANISM GP

S/N: RKY1-1439

PART OF 380-1777 ENGINE AR-COMPLETE, 380-1776, 416-6081 ENGINE AR-PRIMARY

ALSO AN ATTACHMENT

SMCS-1102, 1112, 1121, 1123, 1208, 1209

i04794762

NOTE	REF NO	GRAPHIC REF	PART NUMBER	QTY	PART NAME 1 2 3 4 5 6 (PRODUCT LEVEL)	SEE PAGE
	1	1	**383-0180**	2	BOLT	
	2	1	**383-0191**	3	BOLT	
	3	1	**383-0205**	2	WASHER	
	4	1	**383-0207**	2	WASHER	
	5	1	**383-0224**	1	SPRING	
	6	1	**383-0267**	2	SPRING	
	7	1	**383-0268**	3	BRACKET	
	8	1	**383-0269**	2	WASHER	
	9	1	**383-0306**	6	TAPPET	
	10	1	**383-0310**	6	ARM AS (VALVE MECHANISM)	
					(EACH INCLUDES)	
	10A	1	**383-0556**	1	SCREW	
	10B	1	**383-0255**	1	NUT	
	11	1	**395-0662**	1	SHAFT	
	12	1	**383-0464**	6	PUSHROD	

386-4643 **VALVE MECHANISM GP (*contd.*)** **i04794762**

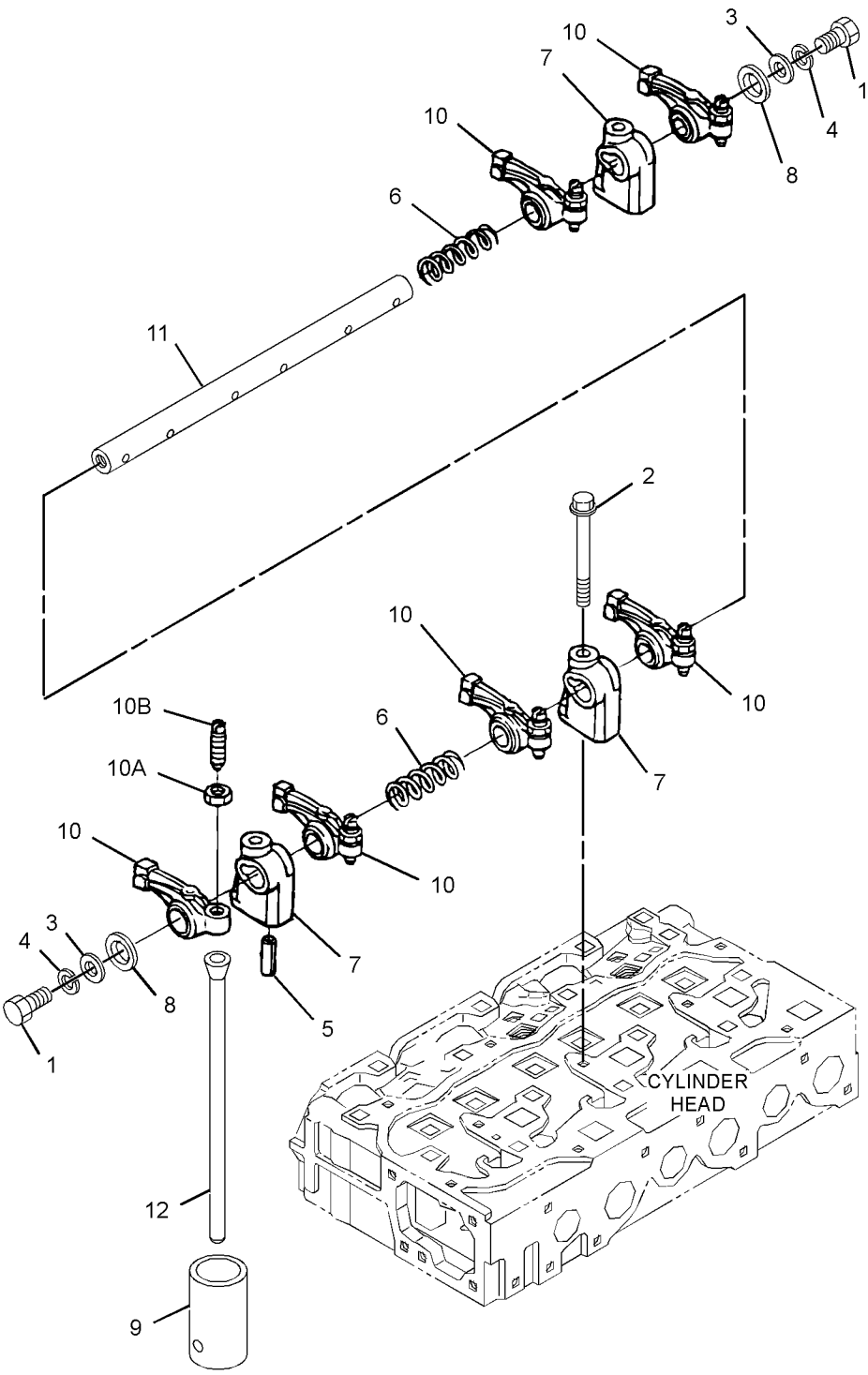

GRAPHIC #1 **<END>** g03248616

383-0250 FILLER GP-ENGINE OIL

S/N: RKY1-1439

PART OF 380-1777 ENGINE AR-COMPLETE, 380-1776, 416-6081 ENGINE AR-PRIMARY

ALSO AN ATTACHMENT

SMCS-1316 **i05006755**

NOTE	REF NO	GRAPHIC REF	PART NUMBER	QTY	PART NAME 1 2 3 4 5 6 (PRODUCT LEVEL)	SEE PAGE
	1	1	**383-0163**	4	BOLT	
	2	1	**383-0217**	1	SEAL-O-RING	
	3	1	**383-0321**	1	PLUG-FILLER (ENGINE OIL)	
	4	1	**383-0404**	1	GASKET	
	5	1	**383-0481**	1	FLANGE	

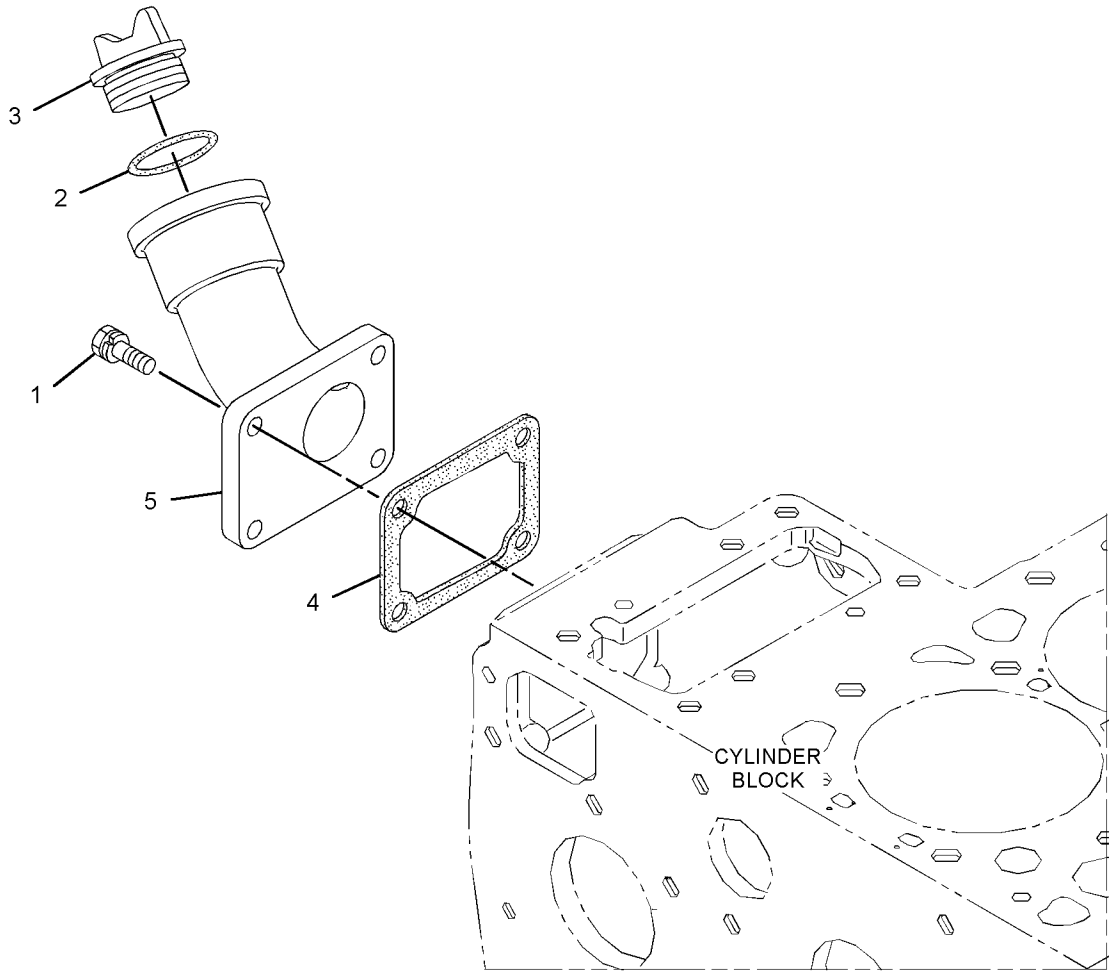

GRAPHIC #1 **<END>** g02790220

383-0141 FILTER GP-ENGINE OIL

S/N: RKY1-1439

PART OF 380-1777 ENGINE AR-COMPLETE, 380-1776, 416-6081 ENGINE AR-PRIMARY

ALSO AN ATTACHMENT

SMCS-1306, 1308, 1318

i05597970

NOTE	REF NO	GRAPHIC REF	PART NUMBER	QTY	PART NAME 1 2 3 4 5 6 (PRODUCT LEVEL)	SEE PAGE
	1	1	**383-0187**	1	BOLT	
	2	1	**383-0216**	1	SEAL-O-RING	
	3	1	**377-6969**	1	FILTER-ENGINE OIL (LUBE)	
	4	1	**383-0531**	1	STRAINER-OIL (ENGINE)	
	5	1	**387-9910**	1	SWITCH-PRESSURE (OIL, ENGINE)	

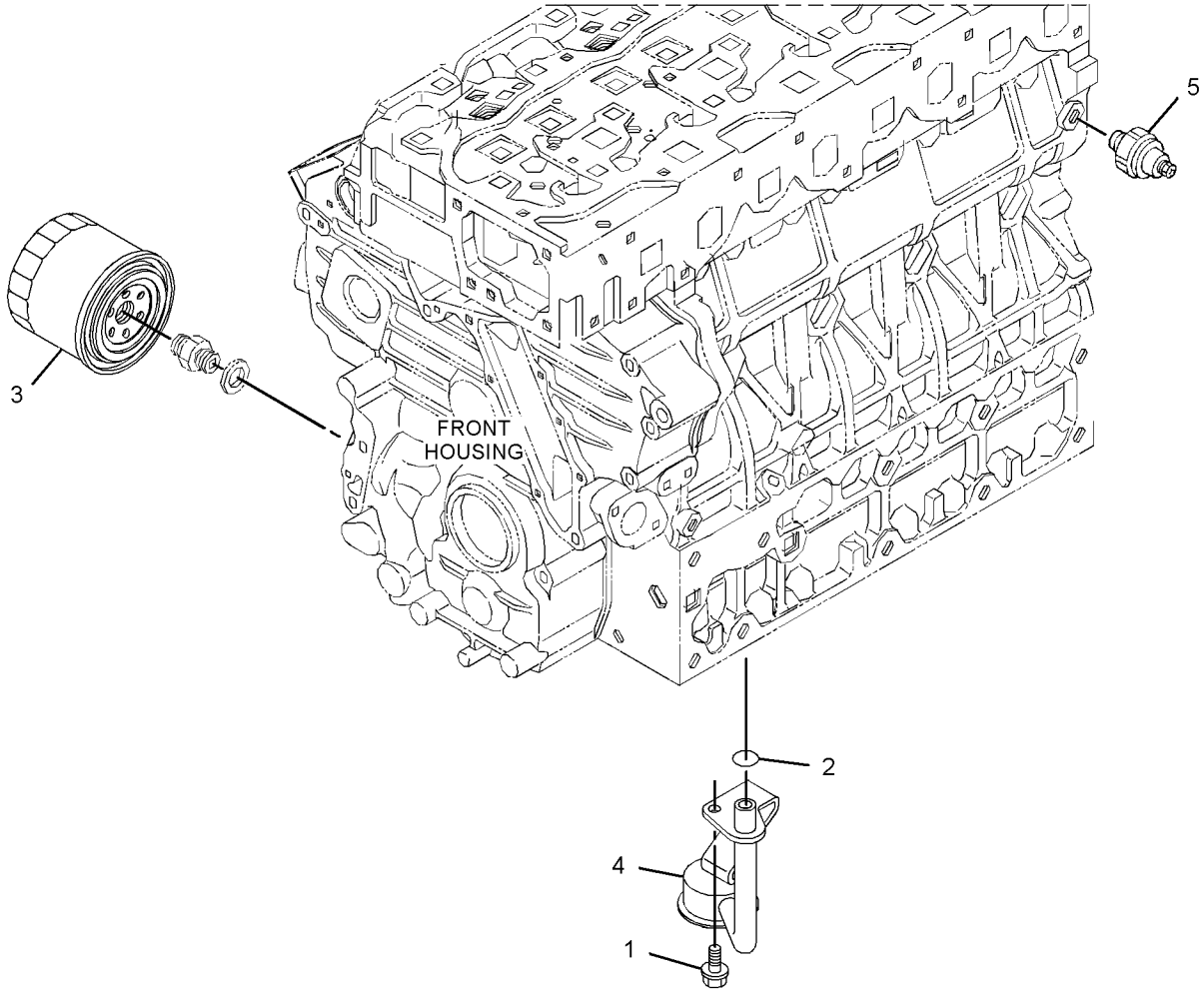

GRAPHIC #1 **<END>** g02791517

383-0144 GAUGE GP-OIL LEVEL (DIPSTICK)—ENGINE

S/N: RKY1-1439

PART OF 380-1777 ENGINE AR-COMPLETE, 380-1776, 416-6081 ENGINE AR-PRIMARY

ALSO AN ATTACHMENT

SMCS-1326 **i04639956**

NOTE	REF NO	GRAPHIC REF	PART NUMBER	QTY	PART NAME 1 2 3 4 5 6 (PRODUCT LEVEL)	SEE PAGE
	1	1	**383-0437**	1	GAUGE-OIL LEVEL (ENGINE) (DIPSTICK)	
	2	1	**383-0489**	1	PLUG	

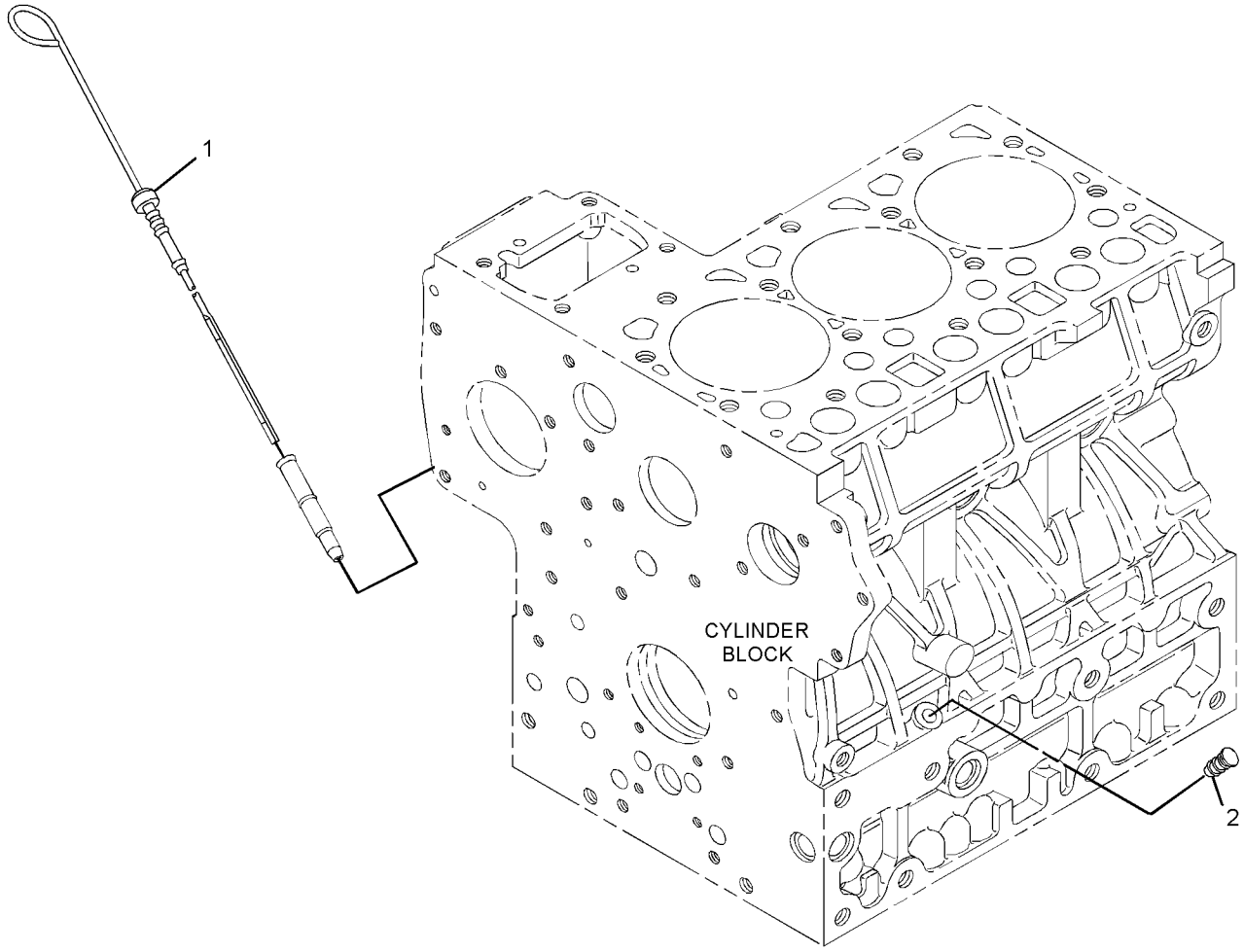

GRAPHIC #1 **<END>** g02790001

383-0161 PUMP GP-ENGINE OIL

S/N: RKY1-1439

PART OF 380-1777 ENGINE AR-COMPLETE, 380-1776, 416-6081 ENGINE AR-PRIMARY

ALSO AN ATTACHMENT

SMCS-1304, 1315

i05437158

NOTE	REF NO	GRAPHIC REF	PART NUMBER	QTY	PART NAME 1 2 3 4 5 6 (PRODUCT LEVEL)	SEE PAGE
	1	1	**383-0167**	4	BOLT	
	2	1	**383-0225**	1	KEY-FEATHER	
	3	1	**383-0273**	1	NUT	
	4	1	**383-0293**	1	PUMP AS-ENGINE OIL	
	5	1	**383-0403**	1	GASKET-OIL PUMP	
	6	1	**383-0558**	1	GEAR (45-TEETH)	

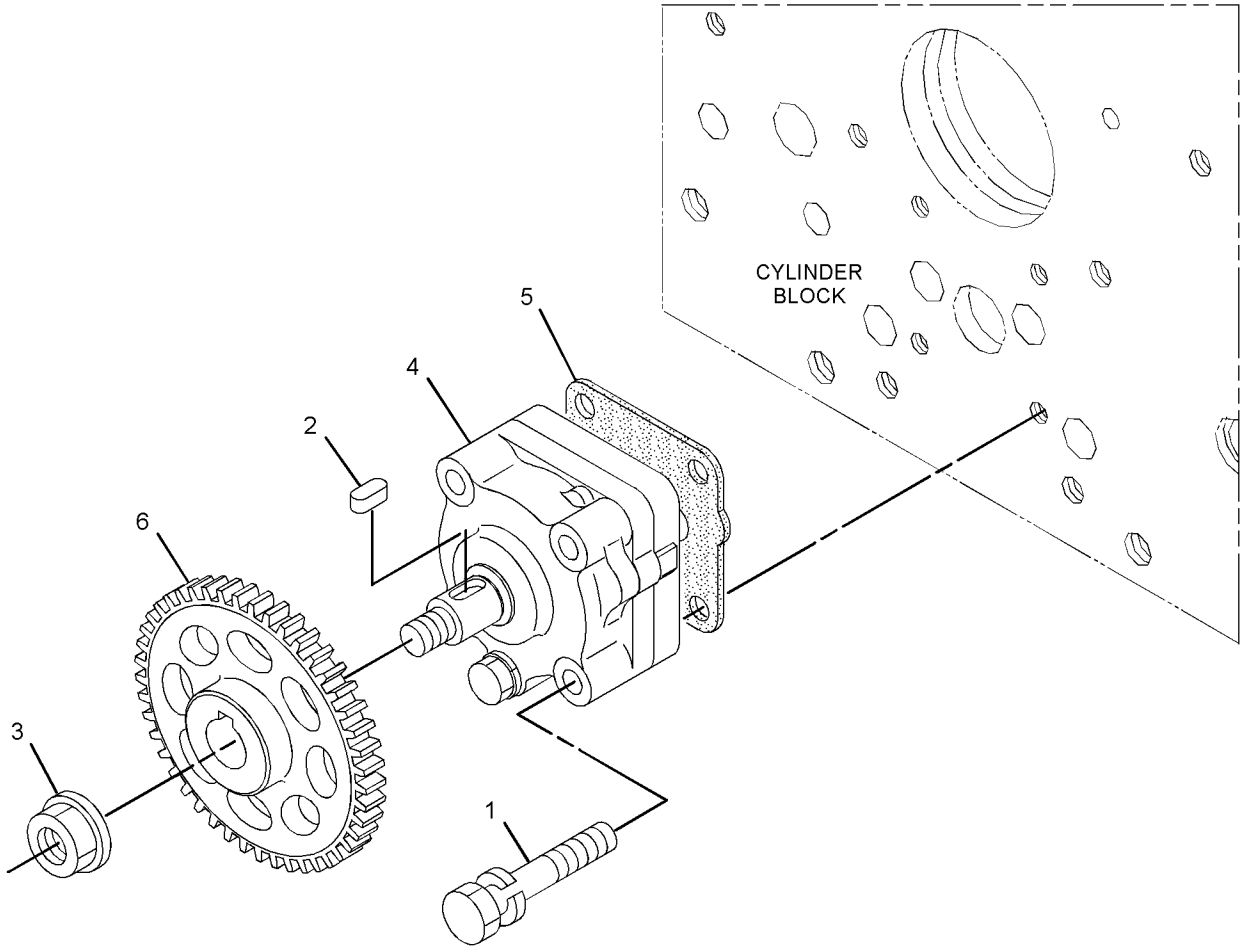

GRAPHIC #1 **<END>** g02790780

386-4588 LINES GP-WATER

S/N: RKY1-1439

PART OF 380-1777 ENGINE AR-COMPLETE, 380-1776, 416-6081 ENGINE AR-PRIMARY

ALSO AN ATTACHMENT

SMCS-1355, 1380, 1393 **i04794311**

NOTE	REF NO	GRAPHIC REF	PART NUMBER	QTY	PART NAME 1 2 3 4 5 6 (PRODUCT LEVEL)	SEE PAGE
	1	1	**383-0172**	2	BOLT	
	2	1	**383-0176**	2	BOLT	
	3	1	**383-0197**	1	NUT	
	4	1	**383-0207**	1	WASHER	
	5	1	**383-0257**	1	CLIP	
	6	1	**383-0279**	1	STUD	
	7	1	**383-0335**	1	GASKET (THERMOSTAT HOUSING)	
	8	1	**383-0396**	1	CLAMP-HOSE	
	9	1	**383-0421**	1	GASKET (WATER TEMPERATURE REGULATOR)	
	10	1	**392-0266**	1	REGULATOR AS (WATER TEMPERATURE)	
	11	1	**383-0425**	1	BOLT	
	12	1	**383-0439**	1	FLANGE AS	
	12A	1	**383-0185**	2	BOLT-FLANGE HEAD	
	12B	1	**383-0186**	1	BOLT-FLANGE HEAD	
	12C	1	**383-0427**	1	PLUG	
	13	1	**383-0472**	1	HOSE-WATER	
	14	1	**383-0356**	1	COVER-THERMOSTAT	
	15	1	**387-9912**	1	WASHER	
	16	1	**389-1591**	1	ADAPTER	

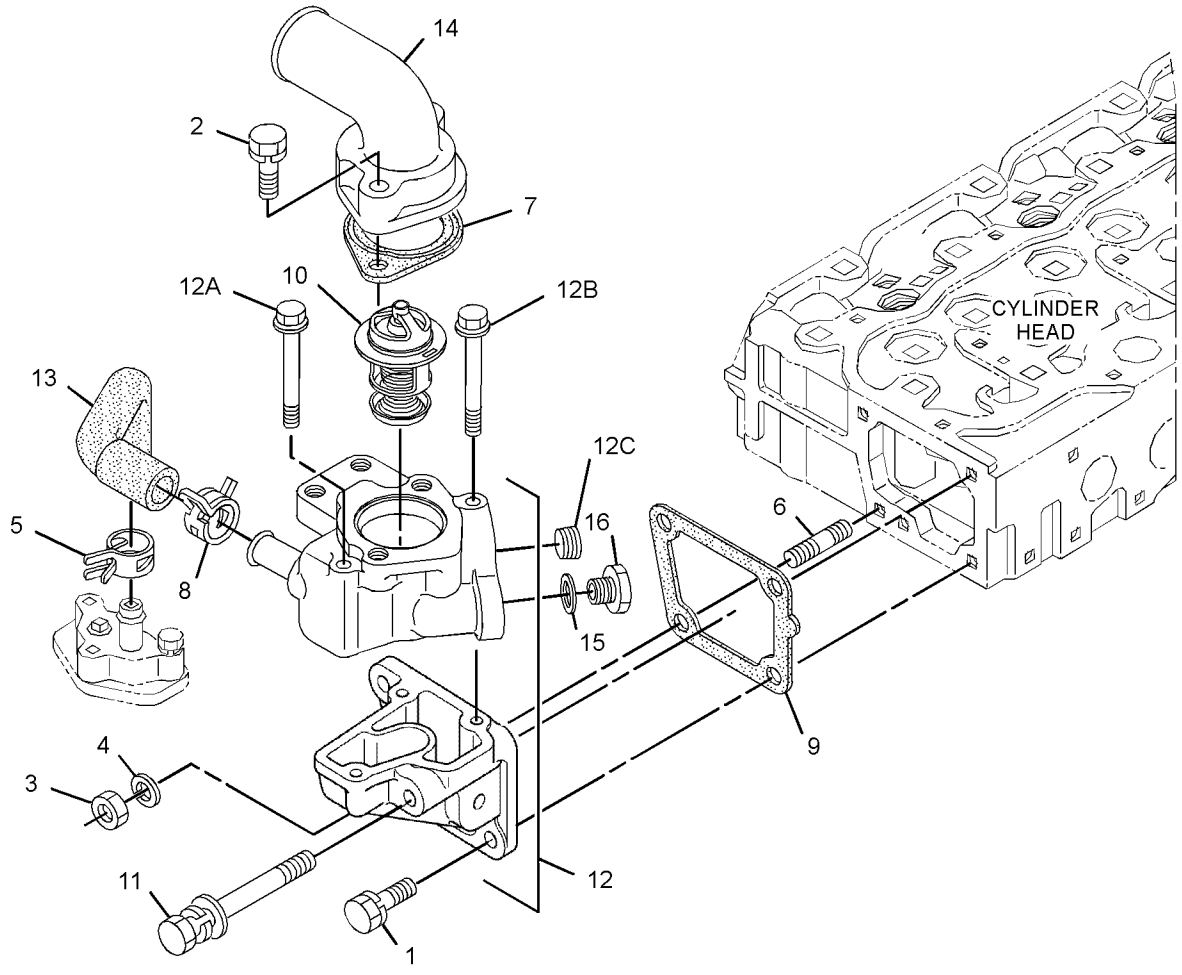

GRAPHIC #1 **<END>** g02921476

383-0162 PUMP GP-WATER

S/N: RKY1-1439

PART OF 380-1777 ENGINE AR-COMPLETE, 380-1776, 416-6081 ENGINE AR-PRIMARY

ALSO AN ATTACHMENT

SMCS-1355, 1361, 1364, 1373, 1384, 1389 **i04603484**

NOTE	REF NO	GRAPHIC REF	PART NUMBER	QTY	PART NAME 1 2 3 4 5 6 (PRODUCT LEVEL)	SEE PAGE
	1	1	**383-0163**	6	BOLT	
	2	1	**383-0175**	2	BOLT	
	3	1	**383-0182**	1	STUD	
	4	1	**383-0197**	1	NUT	
	5	1	**383-0207**	1	WASHER	
	6	1	**383-0433**	1	PUMP AS-WATER	
	7	1	**383-0435**	1	GASKET-WATER PUMP	

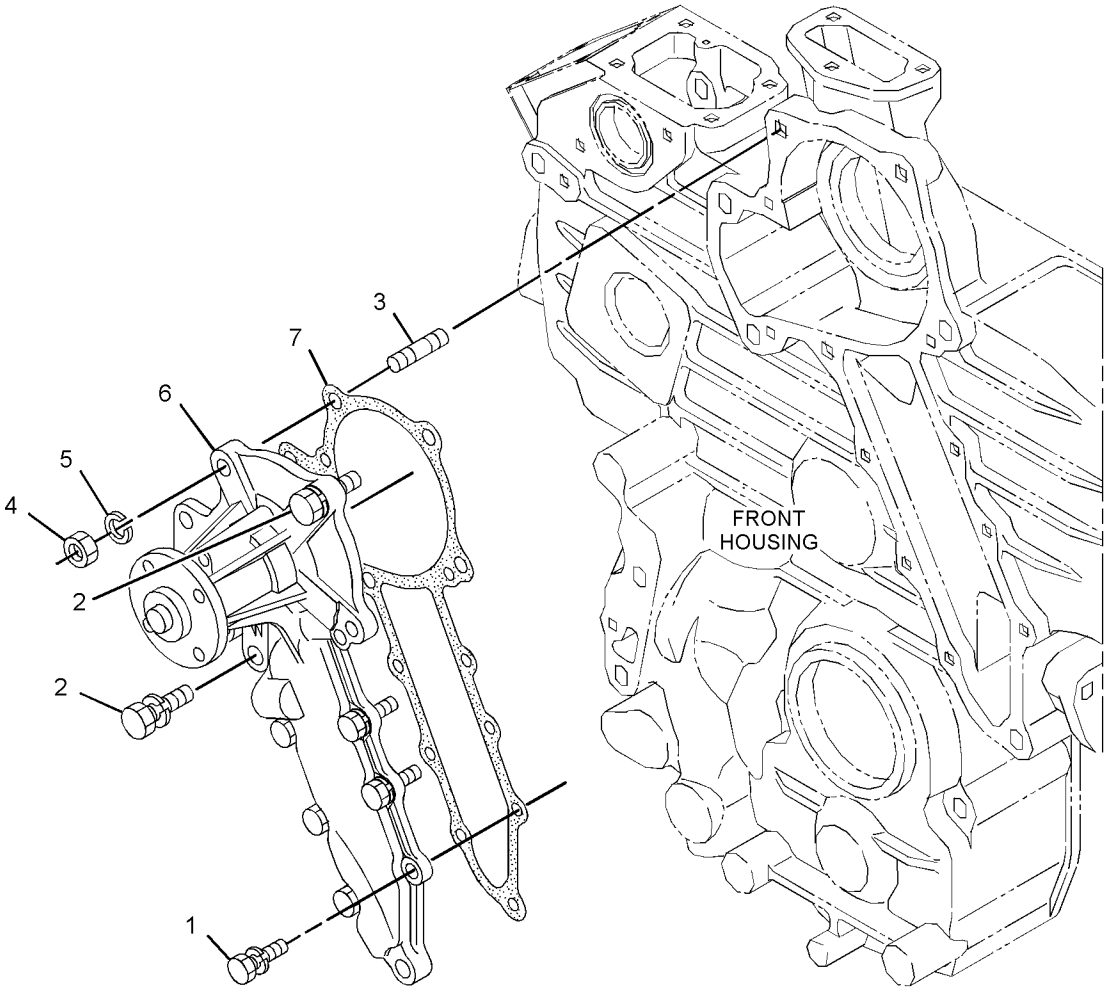

GRAPHIC #1 **<END>** g02792139

380-6364 RADIATOR & HYD OIL COOLER GP

PART OF 383-0640 INSTALLATION AR-ENGINE

SMCS-1351, 1353, 1356, 1374, 1382, 1386 **i05204637**

NOTE	REF NO	GRAPHIC REF	PART NUMBER	QTY	PART NAME 1 2 3 4 5 6 (PRODUCT LEVEL)	SEE PAGE
	1	1	**3S-2093**	1	STRAP-CABLE	
	2	1	**140-3355**	6	SPACER (17X28X4.5-MM THK)	
	3	1	**140-4236**	1	TANK AS-COOLANT (RECOVERY)	
		1	**140-4238**	1	CAP AS (COOLANT RECOVERY)	
	4	1	**140-4763**	1	CLAMP	
	5	1	**140-4766**	2	CLAMP	
	6	1	**232-3543**	1	COCK AS	
	7	1	**266-7379**	1	STRAP-CABLE	
	8	1	**380-3496**	1	CORE AS-HYDRAULIC OIL COOLER	
	9	1	**380-6365**	1	HOSE	
	10	1	**380-6366**	1	HOSE	
	11	1	**380-6367**	1	RADIATOR AS	
		1	**247-5086**	1	CAP-RADIATOR	
	12	1	**380-6369**	1	BRACKET AS	
M		1	**6V-9632**	2	NUT-WELD (M6X1-THD)	
M		1	**8T-3490**	5	NUT-WELD (M10X1.5-THD)	
M		1	**8T-3612**	2	NUT-WELD (M8X1.25-THD)	
	13	1	**380-6370**	1	BRACKET AS	
M		1	**8T-3490**	5	NUT-WELD (M10X1.5-THD)	
		1	**154-2302**	1	SPACER (11X20X15-MM THK)	
	14	1	**380-6371**	1	SHROUD AS	
M		1	**8T-3612**	4	NUT-WELD (M8X1.25-THD)	
M		1	**9R-2821**	1	BOSS (M10X1.5X15-MM)	
	16	1	**380-6374**	1	FOAM	
	17	1	**380-6375**	1	FOAM	
	18	1	**380-6376**	1	FOAM	
	19	1	**292-8504**		TUBE (130-CM)	
	20	1	**382-2969**	1	PLATE AS	
	21	1	**382-2970**	1	PLATE AS	
	22	1	**382-8180**	1	FOAM	
	23	1	**383-4984**	1	FOAM	
	24	1	**383-4985**	1	FOAM	
	25	1	**095-1390**	2	CLAMP-HOSE	
	26	1	**1P-4278**	4	CLAMP-HOSE	
	27	1	**210-1304**	2	MOUNT-RUBBER	
	28	1	**6K-8178**	1	CLIP	
	30	1	**8T-4121**	12	WASHER-HARD (11X21X2.5-MM THK)	
M	31	1	**8T-4137**	15	BOLT (M10X1.5X20-MM)	
M	32	1	**8T-4138**	2	BOLT (M6X1X20-MM)	
M	33	1	**8T-4177**	2	BOLT (M8X1.25X90-MM)	
M	34	1	**8T-4186**	1	BOLT (M10X1.5X40-MM)	
M	35	1	**8T-4195**	2	BOLT (M10X1.5X30-MM)	
M	36	1	**8T-4200**	2	BOLT (M8X1.25X16-MM)	
	37	1	**8T-4205**	2	WASHER-HARD (7.2X14.5X2-MM THK)	
	38	1	**8T-4222**	6	WASHER-PLATED (11X32X2.5-MM THK)	
	39	1	**8T-4224**	6	WASHER-HARD (8.8X16X2-MM THK)	
E	40	1	**7I-7439**		GUARD (6-CM)	
E	41	1	**7Y-1976**		HOSE-WATER (35-CM)	
E	41A	1	**7Y-1976**		HOSE-WATER (36-CM)	
D	42	1	**5P-9205**		SEAL (0.2-M)	
D	43	1	**5P-5687**		SEAL (0.1-M EACH)	
D	43A	1	**5P-5687**		SEAL (0.5-M)	
D	43B	1	**5P-5687**		SEAL (0.2-M)	
E	44	1	**195-0601**		SEAL (10-CM EACH)	
E	44A	1	**195-0601**		SEAL (4.5-CM)	
E	44B	1	**195-0601**		SEAL (5-CM EACH)	
E	44C	1	**195-0601**		SEAL (42-CM)	
E	44D	1	**195-0601**		SEAL (50-CM EACH)	

380-6364 **RADIATOR & HYD OIL COOLER GP (*contd.*)** **i05204637**

NOTE	REF NO	GRAPHIC REF	PART NUMBER	QTY	PART NAME 1 2 3 4 5 6 (PRODUCT LEVEL)	SEE PAGE
E	44E	1	**195-0601**		SEAL (13.5-CM EACH)	
E	44F	1	**195-0601**		SEAL (61.5-CM)	
E	44G	1	**195-0601**		SEAL (38.2-CM)	
E	44H	1	**195-0601**		SEAL (2.5-CM)	
E	44I	1	**195-0601**		SEAL (8-CM)	
E	44J	1	**195-0601**		SEAL (56-CM EACH)	
E	44K	1	**195-0601**		SEAL (6-CM EACH)	

D - ORDER BY THE METER
E - ORDER BY THE CENTIMETER
M - METRIC PART

380-6364 **RADIATOR & HYD OIL COOLER GP (*contd.*)** **i05204637**

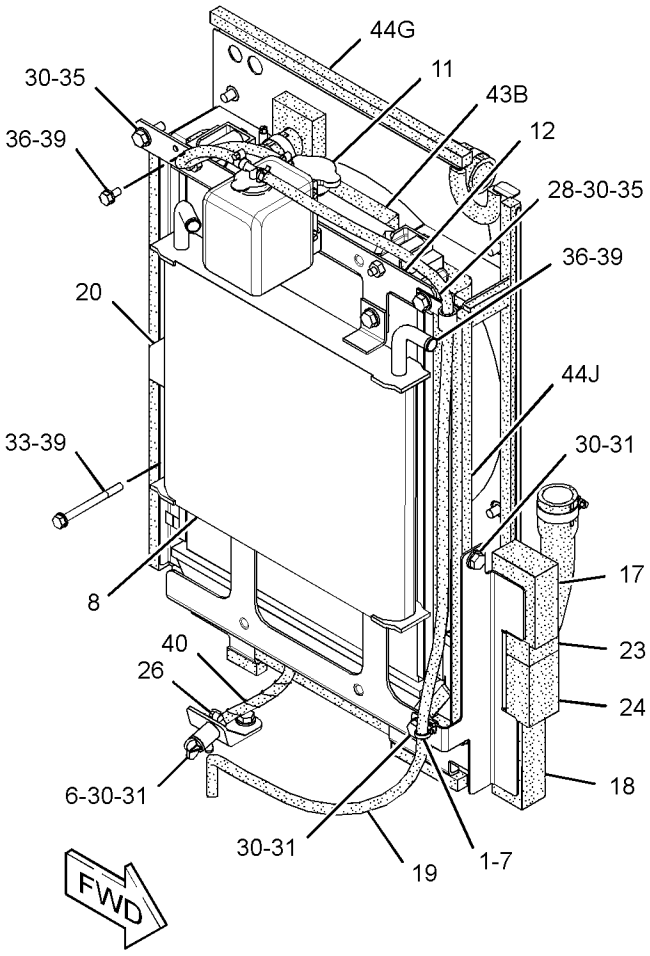

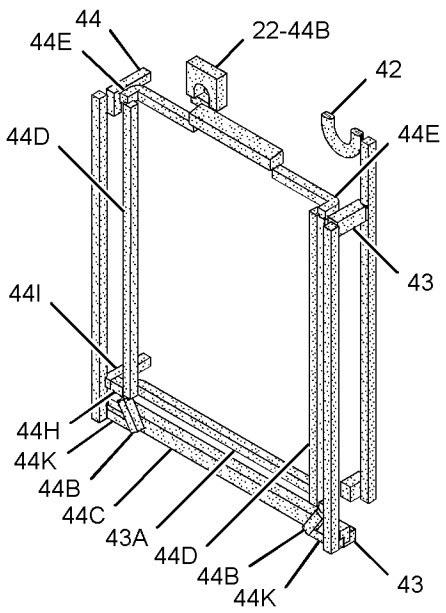

(PARTS REMOVED FOR CLARITY)

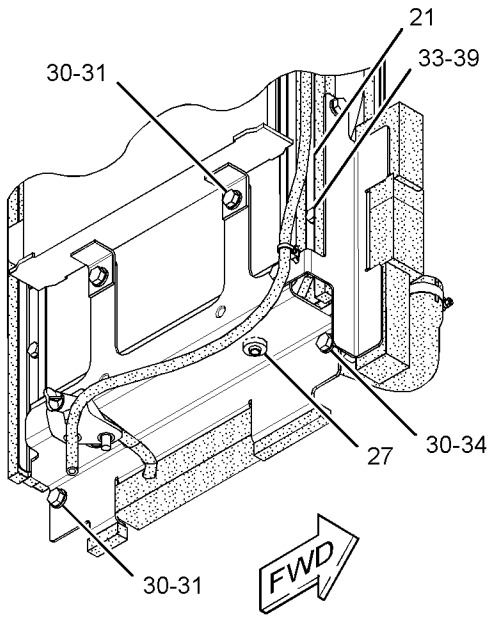

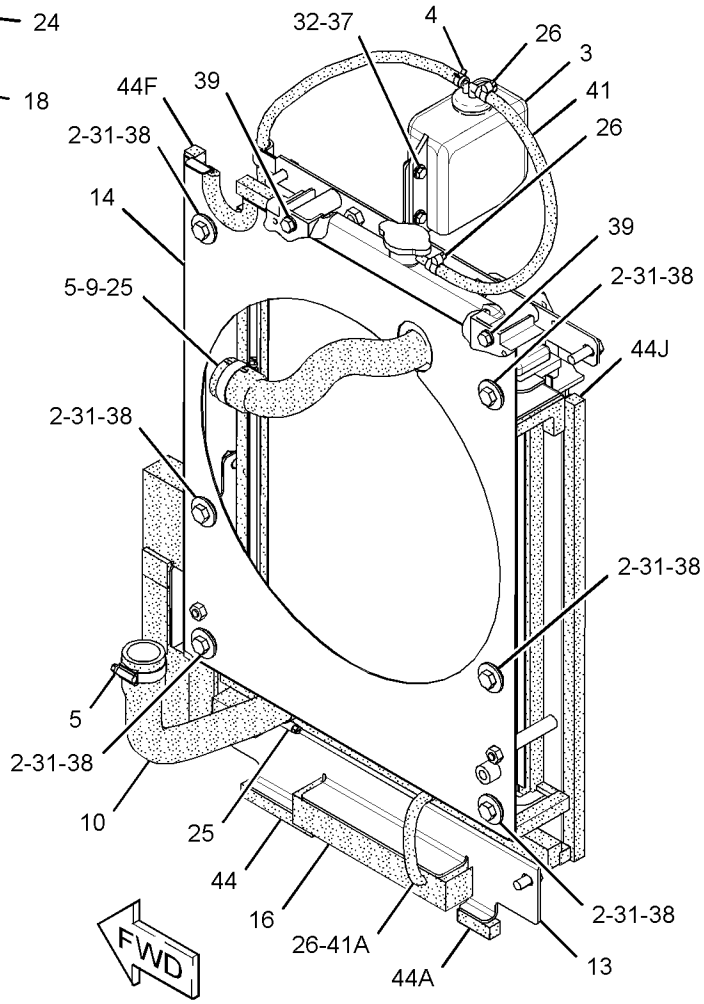

GRAPHIC #1

<END>

g03334270

383-0133 ACCESSORY GP-ENGINE

S/N: RKY1-1439

PART OF 380-1777 ENGINE AR-COMPLETE, 380-1776, 416-6081 ENGINE AR-PRIMARY

ALSO AN ATTACHMENT

SMCS-1059, 1395

i04785874

NOTE	REF NO	GRAPHIC REF	PART NUMBER	QTY	PART NAME 1 2 3 4 5 6 (PRODUCT LEVEL)	SEE PAGE
	1	1	**378-1267**	1	GASKET	
	2	1	**379-0869**	1	CONNECTOR (WATER RETURN)	
F			**379-2015**	1	RELAY AS (24-VOLT) (ENGINE START)	

F - NOT SHOWN

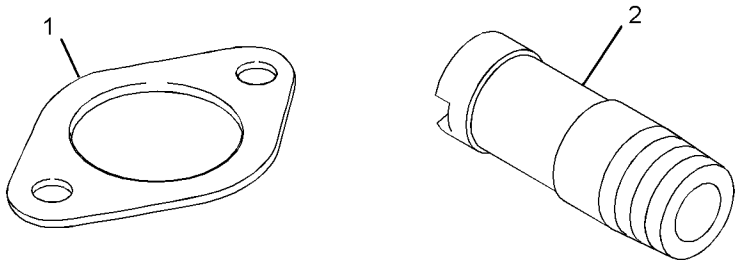

GRAPHIC #1

<END>

g02789465

380-5727 AIR CLEANER GP

PART OF 383-8499 AIR CLEANER GP

SMCS-1051, 1054 **i04589469**

NOTE	REF NO	GRAPHIC REF	PART NUMBER	QTY	PART NAME 1 2 3 4 5 6 (PRODUCT LEVEL)	SEE PAGE
	1	1	**096-4177**	1	VALVE-EVACUATION (AIR CLEANER)	
	2	1	**096-5028**	1	INDICATOR-AIR FILTER CHANGE	
	3	1	**134-8726**	1	FILTER ELEMENT AS-AIR (PRIMARY)	
	4	1	**140-2334**	1	FILTER ELEMENT AS-AIR (SECONDARY)	
	5	1	**284-3880**	1	CAP-PROTECTIVE	

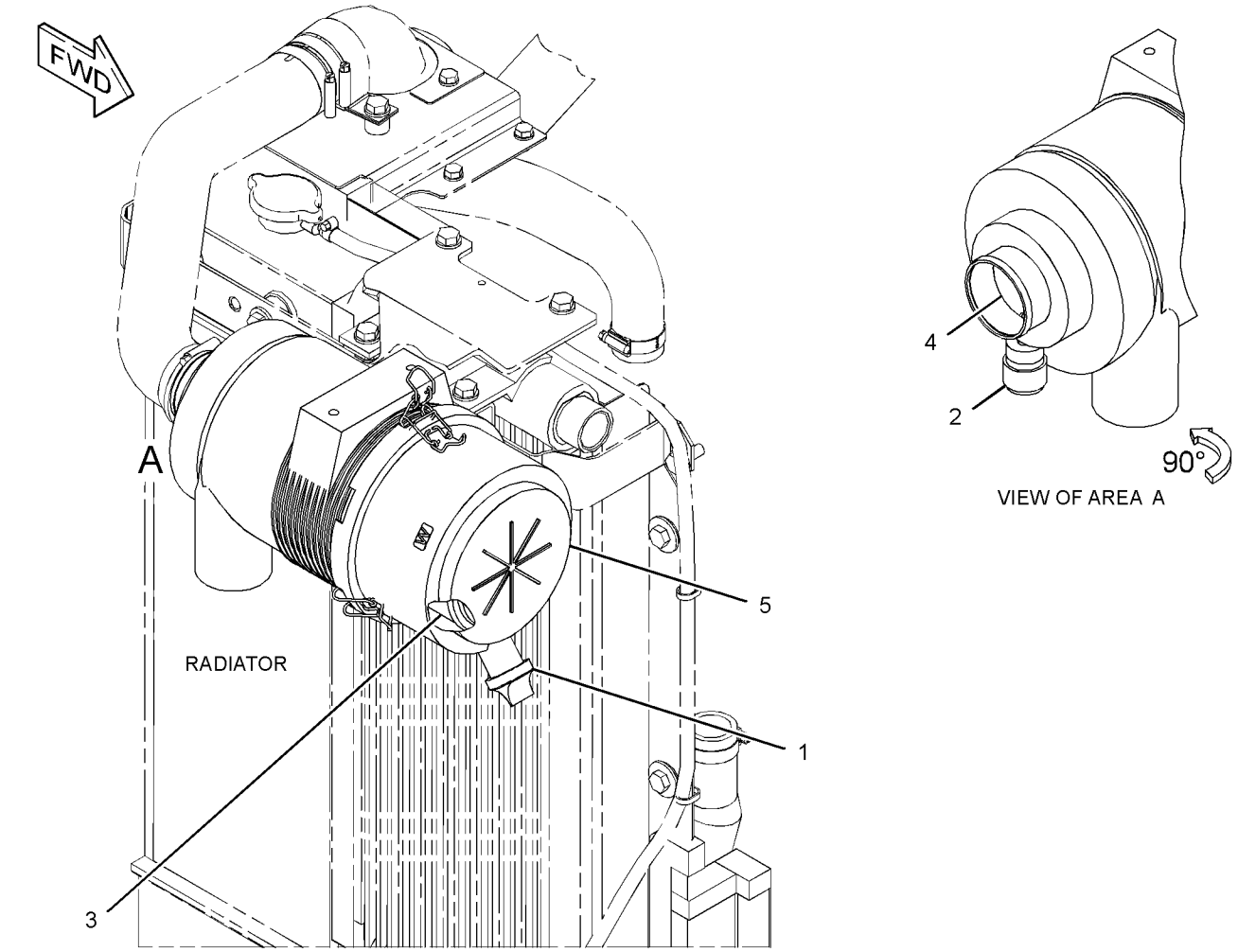

GRAPHIC #1 **<END>** g02764323

383-8499 AIR CLEANER GP

PART OF 383-0640 INSTALLATION AR-ENGINE

SMCS-1051, 1054 **i04629857**

NOTE	REF NO	GRAPHIC REF	PART NUMBER	QTY	PART NAME 1 2 3 4 5 6 (PRODUCT LEVEL)	SEE PAGE
Y	1	1	**380-5727**	1	AIR CLEANER GP	41
	2	1	**383-8501**	1	BRACKET	
	3	1	**8T-4121**	2	WASHER-HARD (11X21X2.5-MM THK)	
M	4	1	**8T-4136**	2	BOLT (M10X1.5X25-MM)	
M	5	1	**8T-4200**	2	BOLT (M8X1.25X16-MM)	
	6	1	**8T-4224**	2	WASHER-HARD (8.8X16X2-MM THK)	

M - METRIC PART
Y - SEPARATE ILLUSTRATION

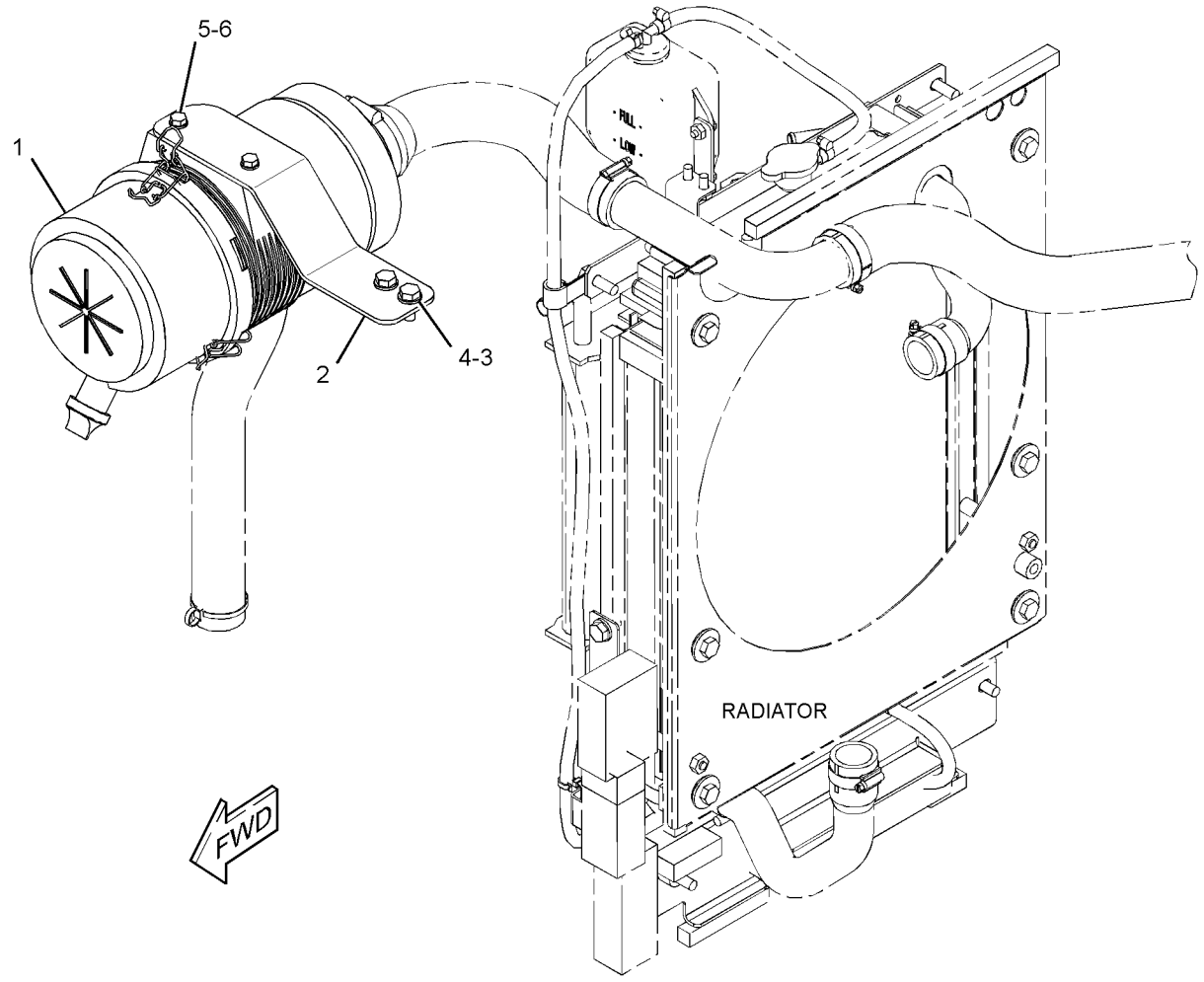

GRAPHIC #1 **<END>** g02789070

383-0643 EXTENSION GP-EXHAUST

PART OF 383-0640 INSTALLATION AR-ENGINE

SMCS-1061 **i04732218**

NOTE	REF NO	GRAPHIC REF	PART NUMBER	QTY	PART NAME 1 2 3 4 5 6 (PRODUCT LEVEL)	SEE PAGE
	1	1	**171-0689**	1	CLAMP AS-EXHAUST	
	2	1	**299-3784**	1	U-BOLT	
	3	1	**8T-4224**	4	WASHER-HARD (8.8X16X2-MM THK)	
M	4	1	**8T-4908**	2	BOLT (M8X1.25X25-MM)	
M	5	1	**5C-7261**	4	NUT (M8X1.25-THD)	

M - METRIC PART

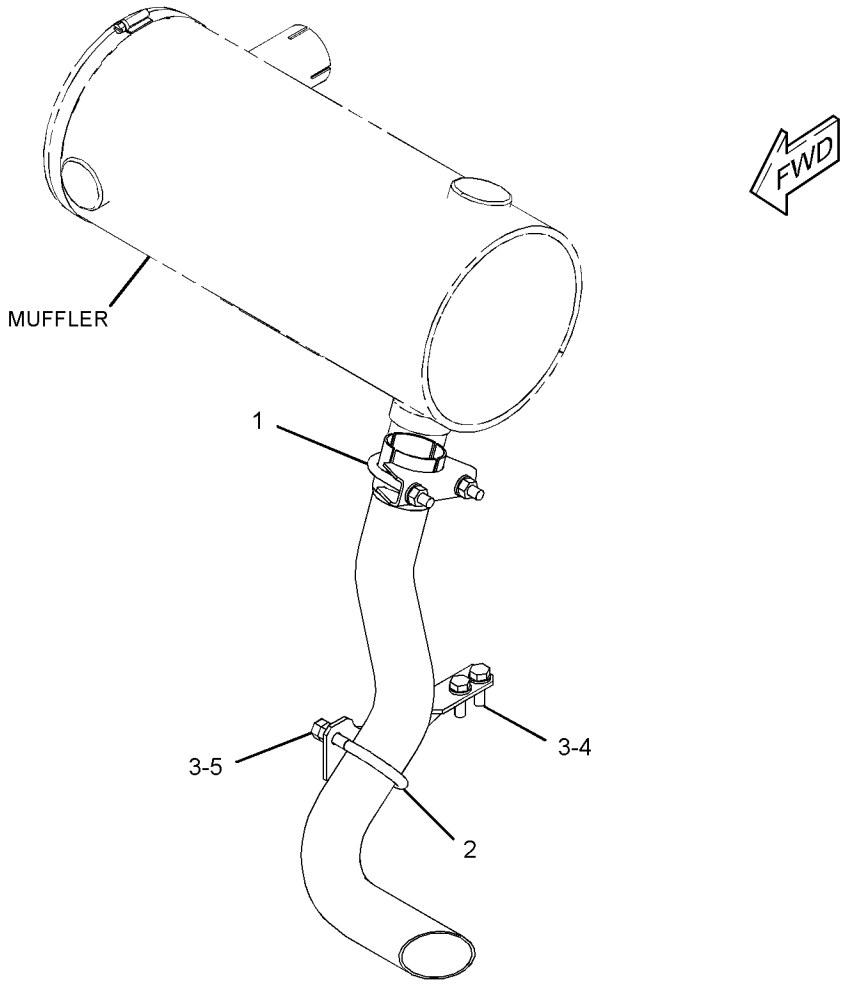

GRAPHIC #1 **<END>** g02853680

383-0641 LINES GP-AIR

PART OF 383-0640 INSTALLATION AR-ENGINE

SMCS-1071 **i04935898**

NOTE	REF NO	GRAPHIC REF	PART NUMBER	QTY	PART NAME 1 2 3 4 5 6 (PRODUCT LEVEL)	SEE PAGE
	1	1	**3S-2093**	1	STRAP-CABLE	
	2	1	**095-1392**	1	CLAMP-HOSE	
	3	1	**095-1393**	2	CLAMP-HOSE	
	4	1	**240-0454**	2	CLAMP-HOSE	
	5	1	**266-7379**	1	STRAP-CABLE	
	6	1	**380-6363**	1	TUBE AS	
	7	1	**383-0642**	1	HOSE	
	8	1	**383-8502**	1	HOSE	
	9	1	**383-8503**	1	HOSE	
M	10	1	**8T-4200**	2	BOLT (M8X1.25X16-MM)	
	11	1	**8T-4224**	2	WASHER-HARD (8.8X16X2-MM THK)	

M - METRIC PART

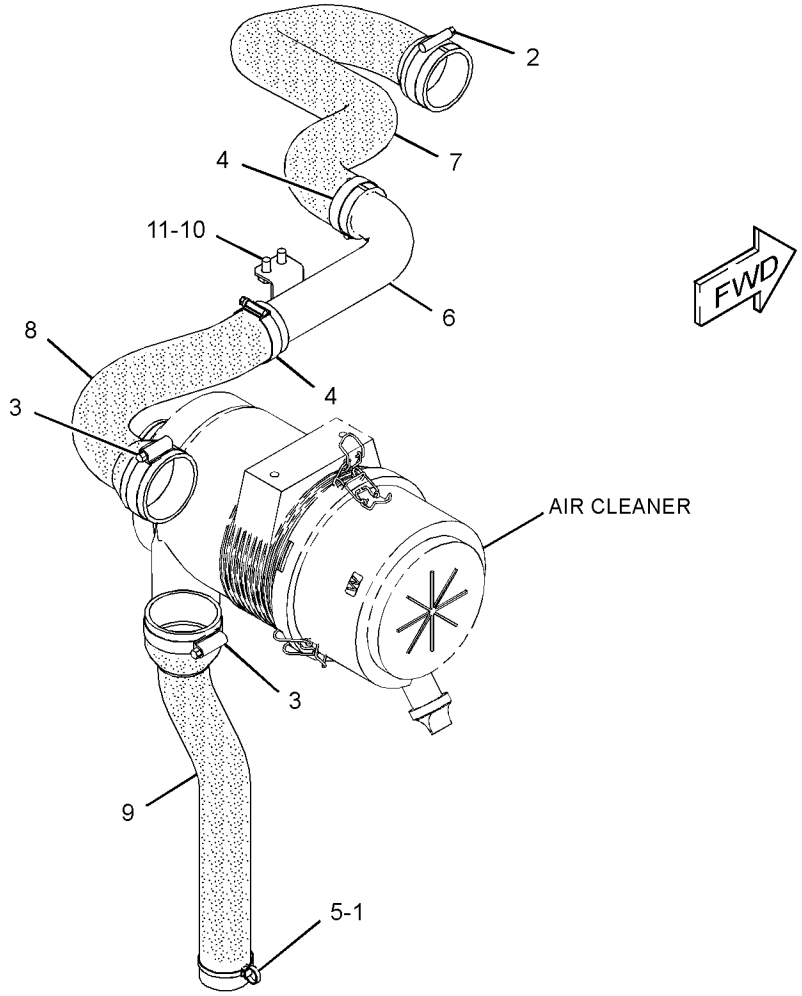

GRAPHIC #1 **<END>** g02853578

386-4641 MANIFOLD GP-EXHAUST

S/N: RKY1-1439

PART OF 380-1777 ENGINE AR-COMPLETE, 380-1776, 416-6081 ENGINE AR-PRIMARY

ALSO AN ATTACHMENT

SMCS-1059 **i04794309**

NOTE	REF NO	GRAPHIC REF	PART NUMBER	QTY	PART NAME 1 2 3 4 5 6 (PRODUCT LEVEL)	SEE PAGE
	1	1	**383-0279**	3	STUD	
	2	1	**383-0315**	3	STUD	
	3	1	**383-0346**	6	NUT	
	4	1	**386-4787**	1	MANIFOLD-EXHAUST	
	5	1	**386-4788**	1	GASKET	

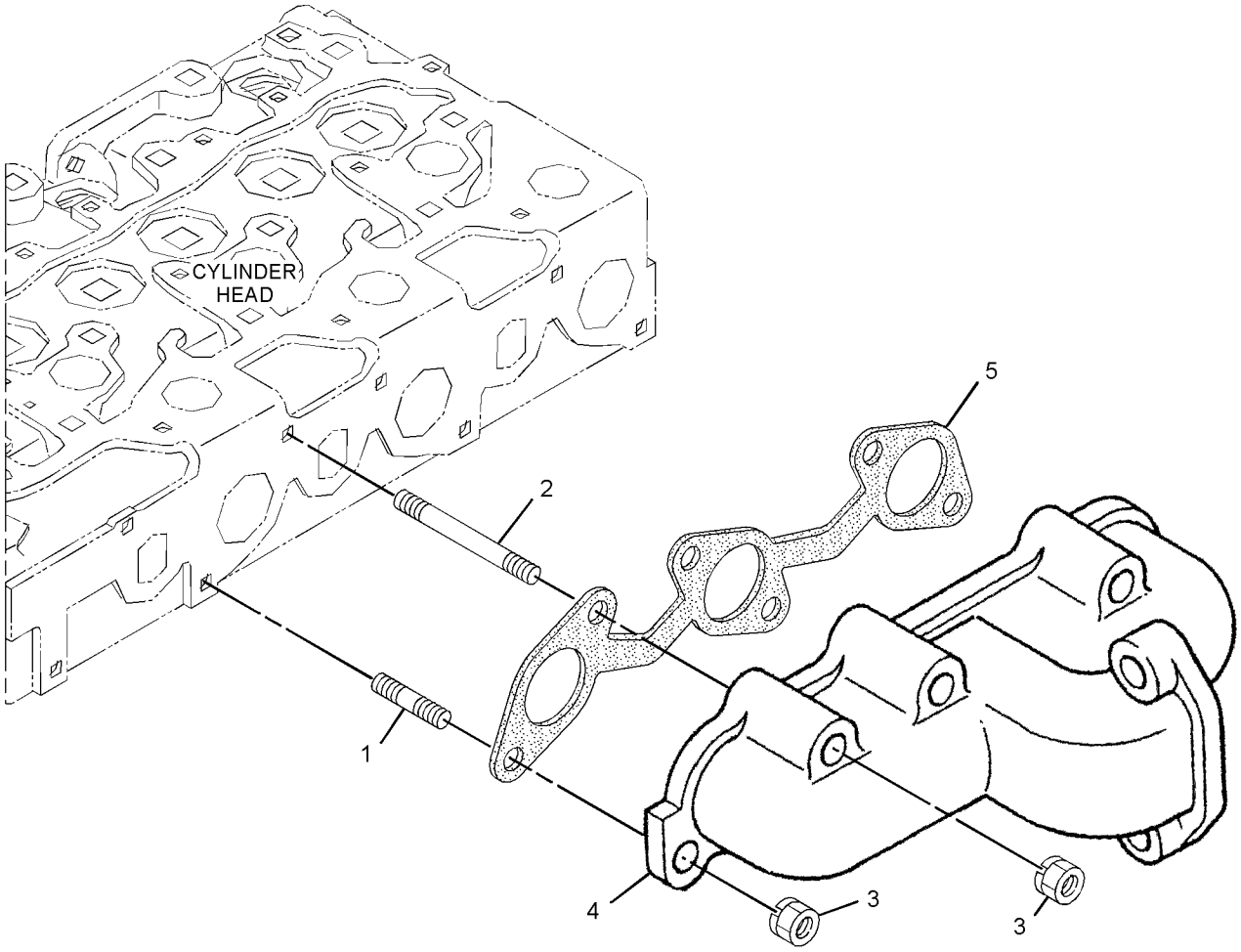

GRAPHIC #1 **<END>** g02921276

386-4642 MANIFOLD GP-INLET

S/N: RKY1-1439

PART OF 380-1777 ENGINE AR-COMPLETE, 380-1776, 416-6081 ENGINE AR-PRIMARY

ALSO AN ATTACHMENT

SMCS-1058 **i04794308**

NOTE	REF NO	GRAPHIC REF	PART NUMBER	QTY	PART NAME 1 2 3 4 5 6 (PRODUCT LEVEL)	SEE PAGE
	1	1	**383-0173**	5	BOLT	
	2	1	**386-6928**	1	GASKET	
	3	1	**395-0083**	1	MANIFOLD AS	
	3A	1	**383-0382**	1	PIPE	

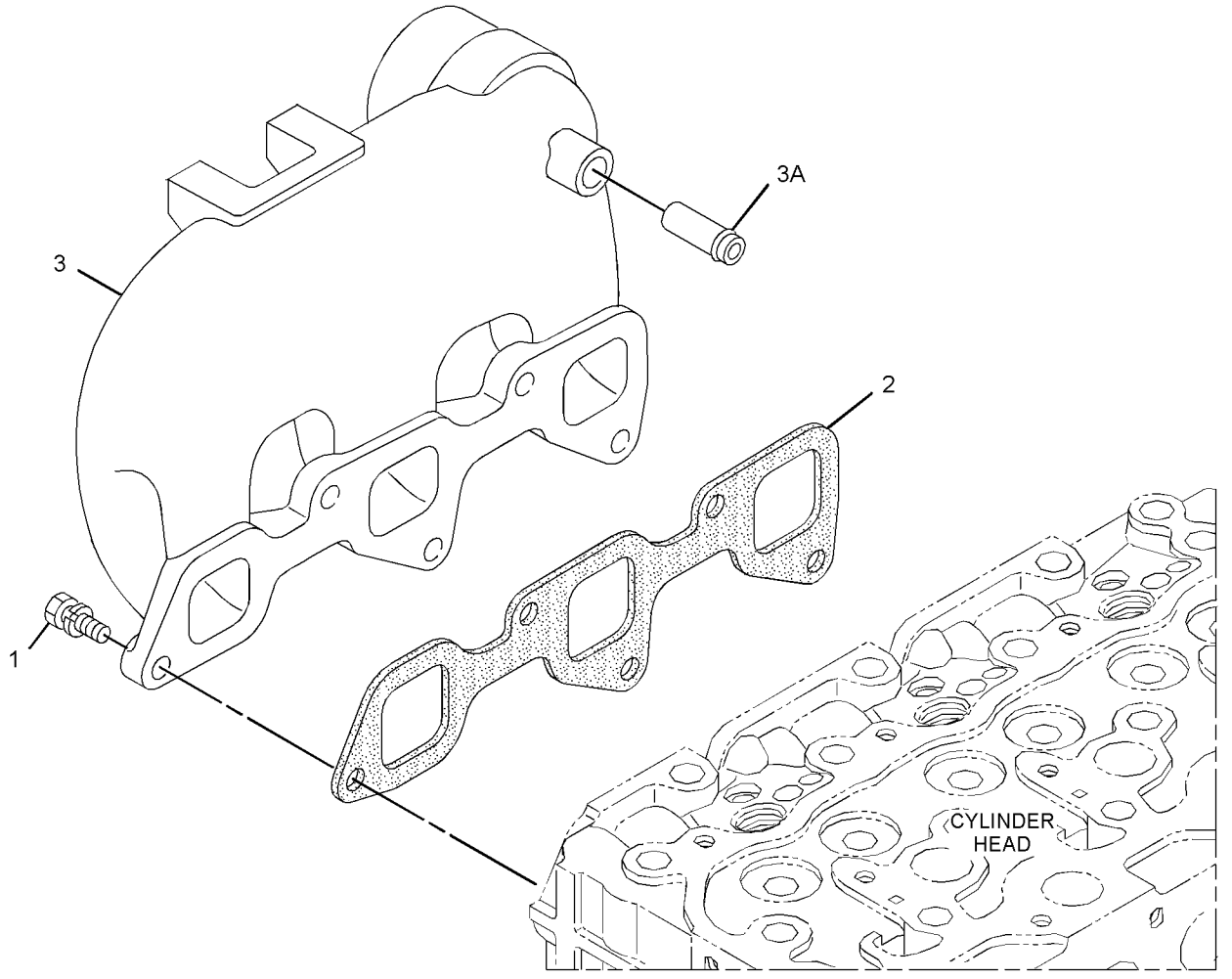

GRAPHIC #1 **<END>** g02921236

384-1056 MUFFLER GP

PART OF 383-0640 INSTALLATION AR-ENGINE

SMCS-1062 **i04732219**

NOTE	REF NO	GRAPHIC REF	PART NUMBER	QTY	PART NAME 1 2 3 4 5 6 (PRODUCT LEVEL)	SEE PAGE
	1	1	**171-0689**	1	CLAMP AS-EXHAUST	
	2	1	**285-7033**	1	CLAMP-HOSE	
	3	1	**378-1265**	1	MUFFLER AS	
	4	1	**378-1266**	1	INSULATOR	
	5	1	**391-7843**	1	TUBE AS	
M	6	1	**127-4839**	2	BOLT (M10X1.25X25-MM)	
	7	1	**6V-5839**	2	WASHER (11X21X2.5-MM THK)	
	8	1	**7X-7729**	2	WASHER (11X25X3-MM THK)	
M	9	1	**8T-4136**	2	BOLT (M10X1.5X25-MM)	

M - METRIC PART

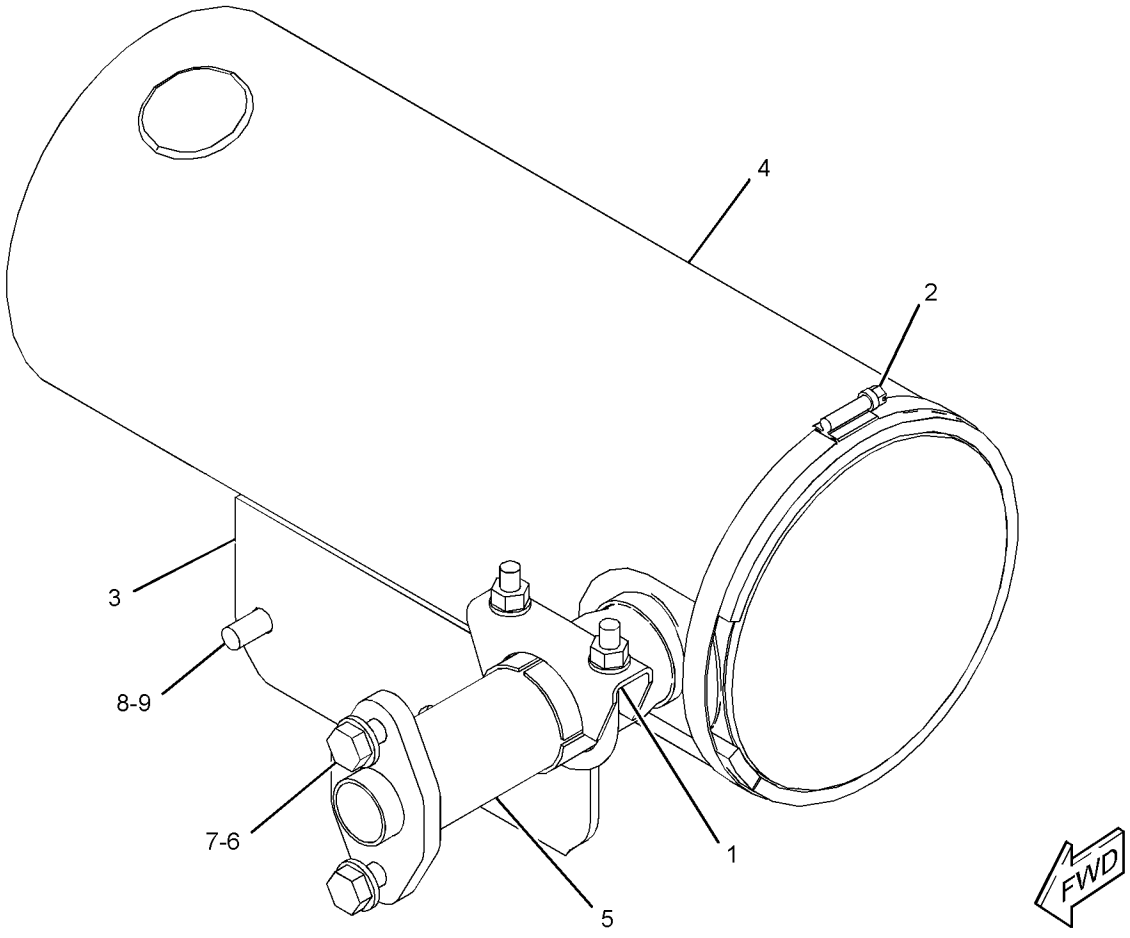

GRAPHIC #1 **<END>** g02852696

386-6945 CAMSHAFT AS

PART OF 386-4650 PUMP GP-FUEL INJECTION
ALSO AN ATTACHMENT

SMCS-1292 **i04794313**

NOTE	REF NO	GRAPHIC REF	PART NUMBER	QTY	PART NAME 1 2 3 4 5 6 (PRODUCT LEVEL)	SEE PAGE
	1	1	**383-0226**	1	KEY-FEATHER	
	2	1	**383-0232**	7	BALL	
	3	1	**383-0233**	39	BALL	
	4	1	**383-0274**	1	RING-SNAP	
	5	1	**383-0275**	1	RING-SNAP	
	6	1	**383-0309**	1	SLEEVE	
	7	1	**383-0547**	1	COVER-GOVERNOR	
	8	1	**383-0588**	1	BALL BEARING	
	9	1	**386-6946**	1	GEAR-PUMP	
					PARTS SHOWN IN GRAPHIC(S) WITHOUT A REFERENCE NUMBER ARE NOT SERVICED SEPARATELY	

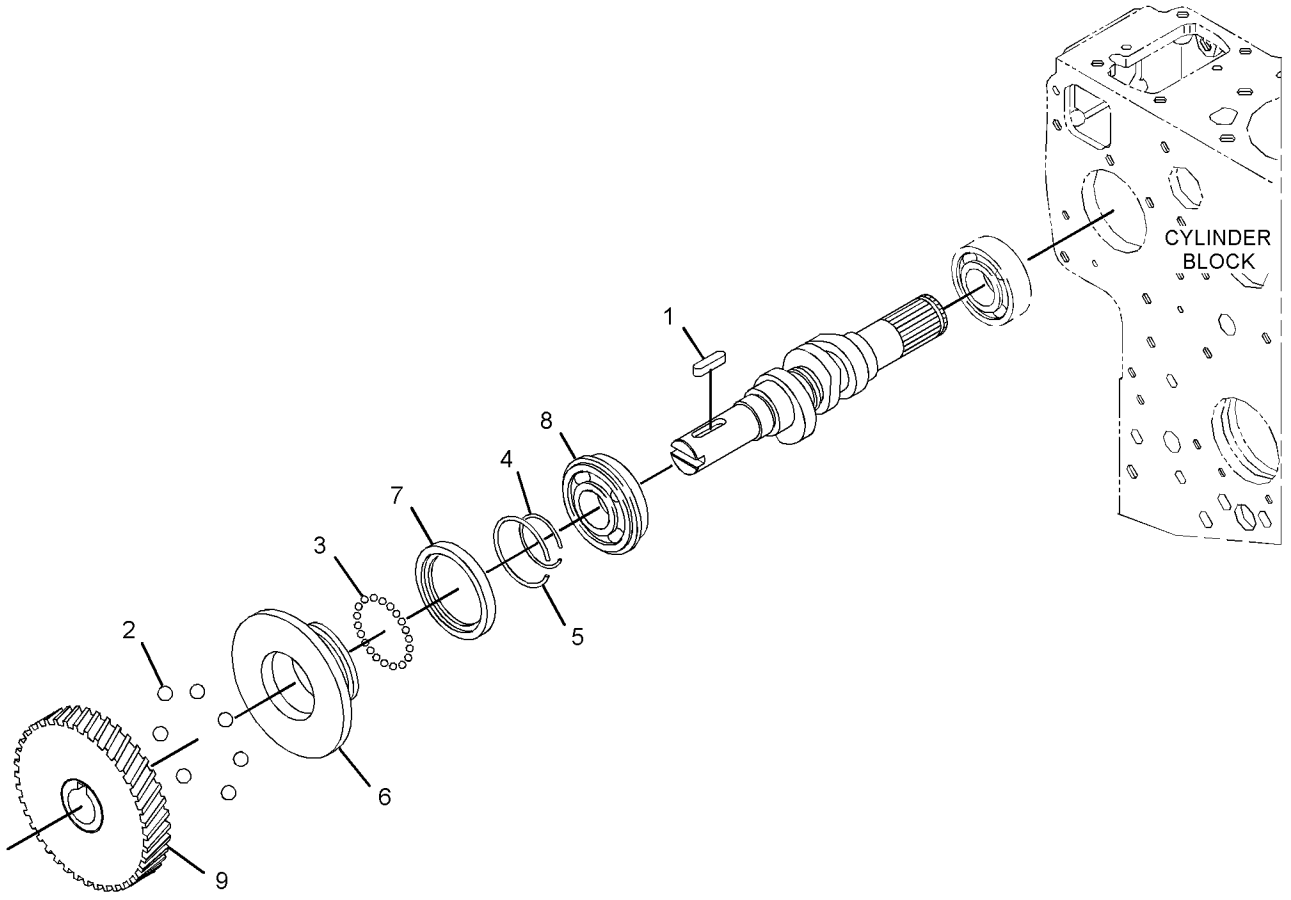

GRAPHIC #1 **<END>** g02923222

377-8934 CONTROL AR-GOVERNOR—AUTOMATIC IDLE
AN ATTACHMENT

SMCS-1264, 1265, 1276 **i04728053**

NOTE	PART NUMBER	QTY	PART NAME 1 2 3 4 5 6 (PRODUCT LEVEL)	SEE PAGE
Y	*380-6300*	1	CONTROL GP-GOVERNOR	50
Y	*356-4545*	1	VALVE & MTG GP-PILOT (TRAVEL)	310

Y - SEPARATE ILLUSTRATION

<END>

377-8935 CONTROL AR-GOVERNOR—AUTOMATIC IDLE, TRAVEL ALARM
AN ATTACHMENT

SMCS-1264, 1265, 1276 **i04728054**

NOTE	PART NUMBER	QTY	PART NAME 1 2 3 4 5 6 (PRODUCT LEVEL)	SEE PAGE
Y	*370-5338*	1	ALARM GP-TRAVEL	66
Y	*380-6300*	1	CONTROL GP-GOVERNOR	50
Y	*356-4545*	1	VALVE & MTG GP-PILOT (TRAVEL)	310

Y - SEPARATE ILLUSTRATION

<END>

380-6300 CONTROL GP-GOVERNOR—AUTOMATIC IDLE

PART OF 377-8934, 377-8935 CONTROL AR-GOVERNOR

AN ATTACHMENT

SMCS-1265, 1276 **i04728080**

NOTE	REF NO	GRAPHIC REF	PART NUMBER	QTY	PART NAME 1 2 3 4 5 6 (PRODUCT LEVEL)	SEE PAGE
	1	1	**3S-2093**	4	STRAP-CABLE	
	2	1	**266-7379**	1	STRAP-CABLE	
	3	1	**298-0663**	1	CLIP	
	4	1	**362-3225**	1	SWITCH AS-PRESSURE (PILOT, TRAVEL)	
		1	**9X-3401**	2	PIN-CONNECTOR (16-GA TO 18-GA)	
		1	**243-4505**	1	RECEPTACLE AS-CONNECTOR (2-PIN)	
	5	1	**376-9492**	1	CONTROL AS	
	6	1	**379-0803**	1	MOTOR AS-GOVERNOR (12-VOLT)	
	7	1	**380-6298**	1	BRACKET AS	
M		1	**6V-9632**	3	NUT-WELD (M6X1-THD)	
		1	**7T-1099**	1	LINK	
	8	1	**383-3160**	1	BRACKET AS	
		1	**7T-1099**	1	LINK	
	9	1	**3J-1907**	1	SEAL-O-RING	
M	10	1	**5C-2890**	1	NUT (M6X1-THD)	
M	11	1	**6V-7357**	2	BOLT (M6X1X25-MM)	
	12	1	**8T-4121**	3	WASHER-HARD (11X21X2.5-MM THK)	
M	13	1	**8T-4137**	3	BOLT (M10X1.5X20-MM)	
M	14	1	**8T-4138**	3	BOLT (M6X1X20-MM)	
M	15	1	**8T-4171**	2	BOLT (M6X1X12-MM)	
	16	1	**9X-8256**	9	WASHER (6.6X12X2-MM THK)	

M - METRIC PART

380-6300 **CONTROL GP-GOVERNOR (*contd.*)** **i04728080**

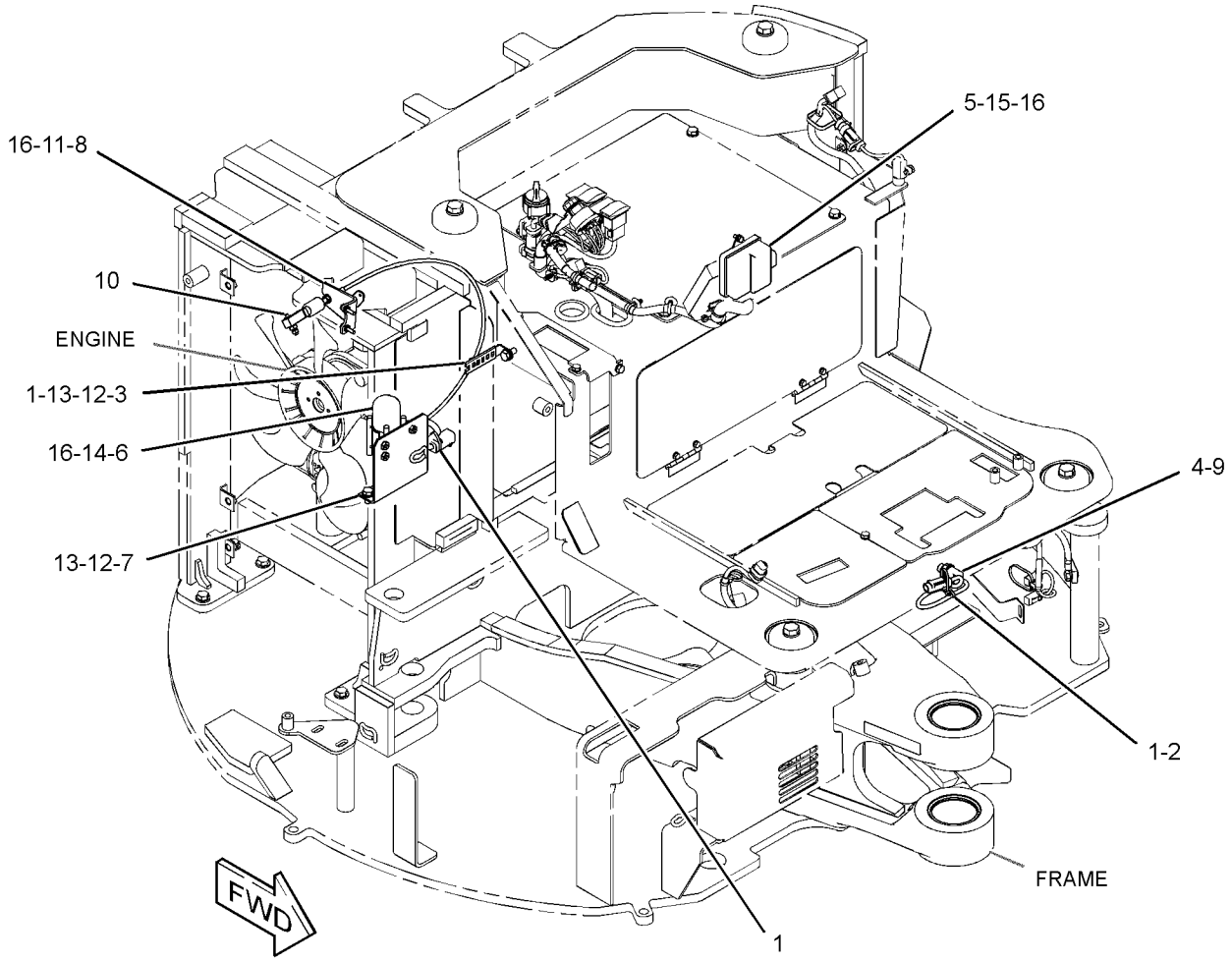

GRAPHIC #1 **<END>** g02885017

144-9962 FILTER GP-WATER SEP & FUEL

PART OF 379-4728 LINES GP-FUEL FILTER

SMCS-1261, 1263 **i03998686**

NOTE	REF NO	GRAPHIC REF	PART NUMBER	QTY	PART NAME 1 2 3 4 5 6 (PRODUCT LEVEL)	SEE PAGE
	1	1	**156-1200**	1	FILTER ELEMENT-FUEL (WATER SEPARATOR)	
	2	1	**149-3516**	1	BASE AS	
	3	1	**118-8118**	1	RING-RETAINING	
	4	1	**112-9401**	1	BOWL AS-WATER COLLECTION	
		1	**128-8614**	1	KIT-SEAL (WATER SEPARATOR)	
					(INCLUDES SEALS FOR HEADER/ELEMENT, DRAIN VALVE, HEADER/BOWL & BOLT/BOWL)	
	5	1	**118-8119**	1	NUT	
					AVAILABLE REPAIR KIT(S):	
			121-4480	1	KIT-WATER BASE (WATER SEPARATOR)	
					(INCLUDES CAP NUT, HEADER CAP, CAP SEAL, VOLUME PLUG, VENT PLUG, DUST SEAL, O-RING SEAL & RETAINING RING)	

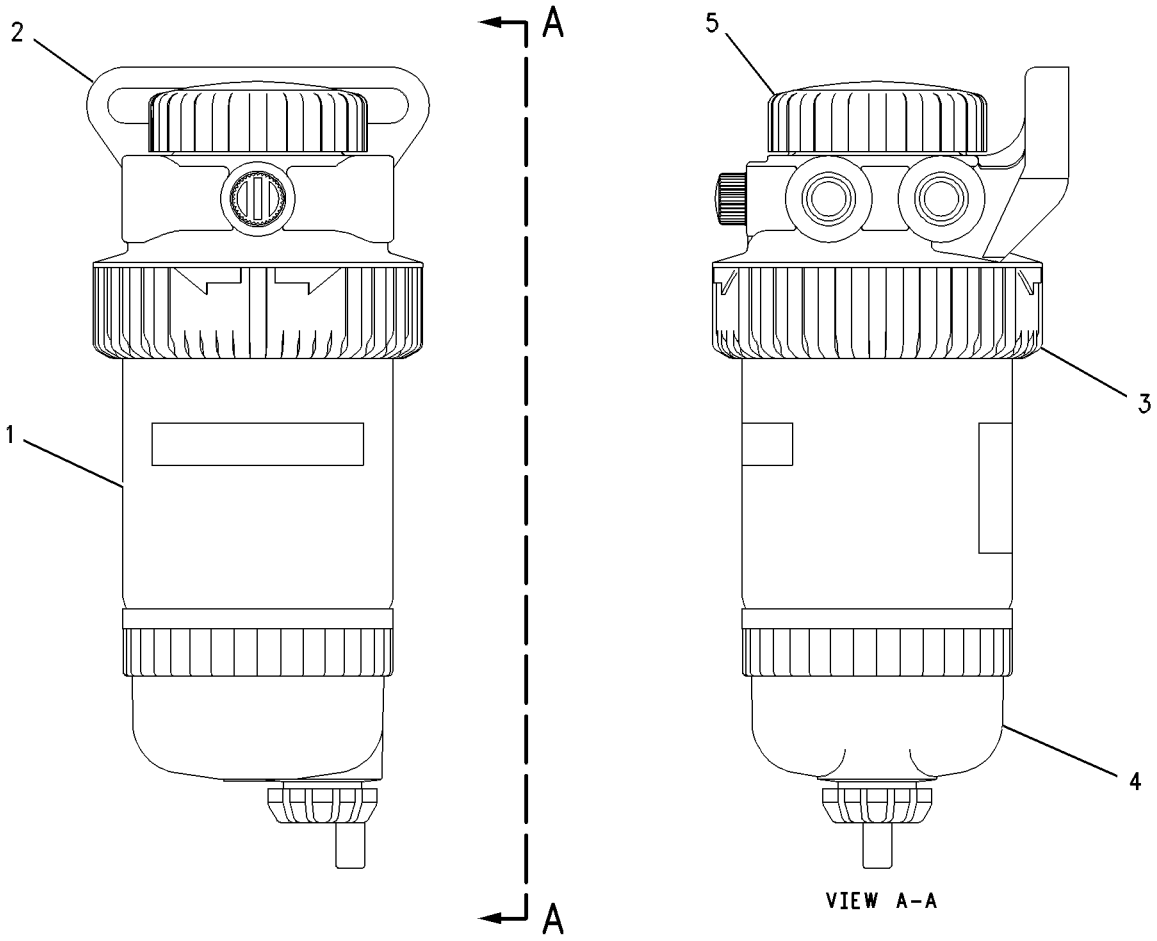

GRAPHIC #1 **<END>** g00430959

386-4635 GOVERNOR GP

S/N: RKY1-1439

PART OF 380-1777 ENGINE AR-COMPLETE, 380-1776, 416-6081 ENGINE AR-PRIMARY

ALSO AN ATTACHMENT

SMCS-1264, 1908

i05086309

NOTE	REF NO	GRAPHIC REF	PART NUMBER	QTY	PART NAME 1 2 3 4 5 6 (PRODUCT LEVEL)	SEE PAGE
	1	1	**383-0164**	4	BOLT	
	2	1	**383-0168**	1	BOLT	
	3	1	**383-0189**	2	BOLT	
	4	1	**383-0198**	4	NUT-FLANGE	
	5	1	**383-0209**	4	GASKET	
	6	1	**383-0278**	4	STUD	
	7	1	**383-0308**	2	GASKET	
	8	1	**383-0317**	1	CAP	
	9	1	**383-0406**	1	BOLT-ADJUSTMENT	
	11	1	**383-0416**	2	GASKET	
	12	1	**386-6951**	1	SPRING-GOVERNOR	
	13	1	**386-6952**	1	SPRING-GOVERNOR	
	14	1	**383-0512**	1	LEVER AS-CONTROL (SPEED CONTROL)	
	14A	1	**383-0223**	1	PIN-SPRING	
	14B	1	**383-0355**	1	SEAL-OIL	
	14C	1	**383-0407**	1	LEVER AS-GOVERNOR	
	14D	1	**383-0418**	1	SPRING-RETURN	
	14E	1	**383-0513**	1	LEVER-CONTROL	
	15	1	**383-0521**	1	SWITCH AS (ENGINE SHUTOFF)	
	15A	1	**383-0211**	1	SEAL-O-RING	
	15B	1	**383-0520**	1	BOLT-ADJUSTMENT	
	15C	1	**383-0575**	1	NUT-SELF LOCKING	
	16	1	**383-0571**	1	CAP	
	17	1	**383-0583**	1	SPRING GP-GOVERNOR (LEVER STOP)	
	17A	1	**383-0222**	1	PIN-SPRING	
	17B	1	**383-0418**	1	SPRING-RETURN	
	17C	1	**383-0584**	1	LEVER AS-STOP	
	17D	1	**383-0585**	1	LEVER-STOP	
	17E	1	**383-0586**	2	SEAL	
	18	1	**386-6948**	1	LEVER AS-FORK	
	18A	1	**383-0206**	1	LOCKWASHER	
	18B	1	**383-0276**	1	HOLDER	
	18C	1	**383-0277**	1	BOLT	
	18D	1	**383-0409**	1	LEVER	
F		1	**386-6950**	1	SHAFT-FORK	
F		1	**383-0183**	1	BOLT	

F - NOT SHOWN

386-4635 **GOVERNOR GP (*contd.*)** **i05086309**

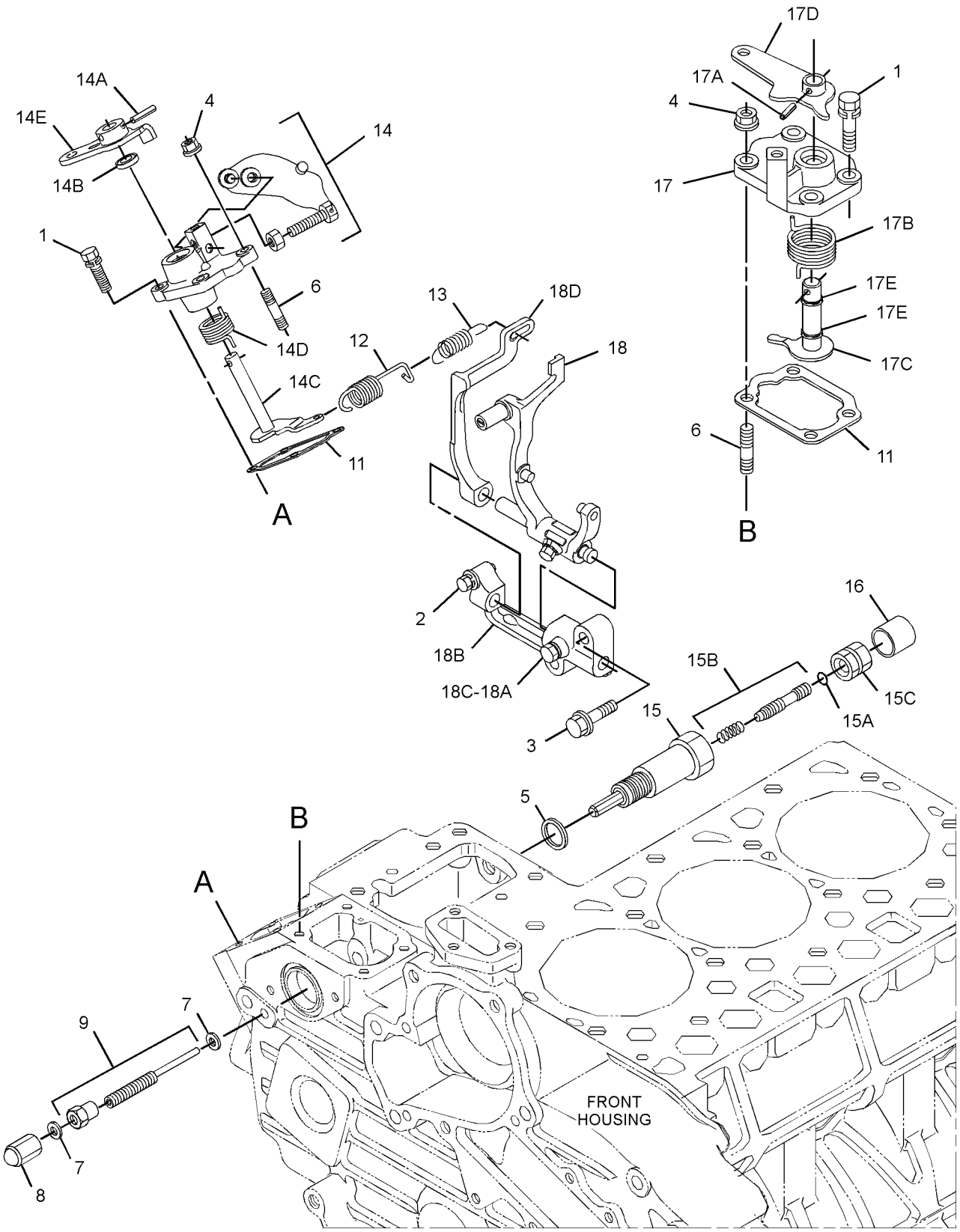

GRAPHIC #1 **<END>** g03252716

386-4639 LINES GP-FUEL

S/N: RKY1-1439

PART OF 380-1777 ENGINE AR-COMPLETE, 380-1776, 416-6081 ENGINE AR-PRIMARY

ALSO AN ATTACHMENT

SMCS-1274 **i04794305**

NOTE	REF NO	GRAPHIC REF	PART NUMBER	QTY	PART NAME 1 2 3 4 5 6 (PRODUCT LEVEL)	SEE PAGE
	1	1	**383-0282**	1	CLAMP AS	
	2	1	**383-0474**	3	BOLT	
	3	1	**383-0559**	1	TUBE AS-FUEL	
	3A	1	**383-0284**	2	CLIP-PIPE	
	4	1	**386-4789**	1	PIPE AS	

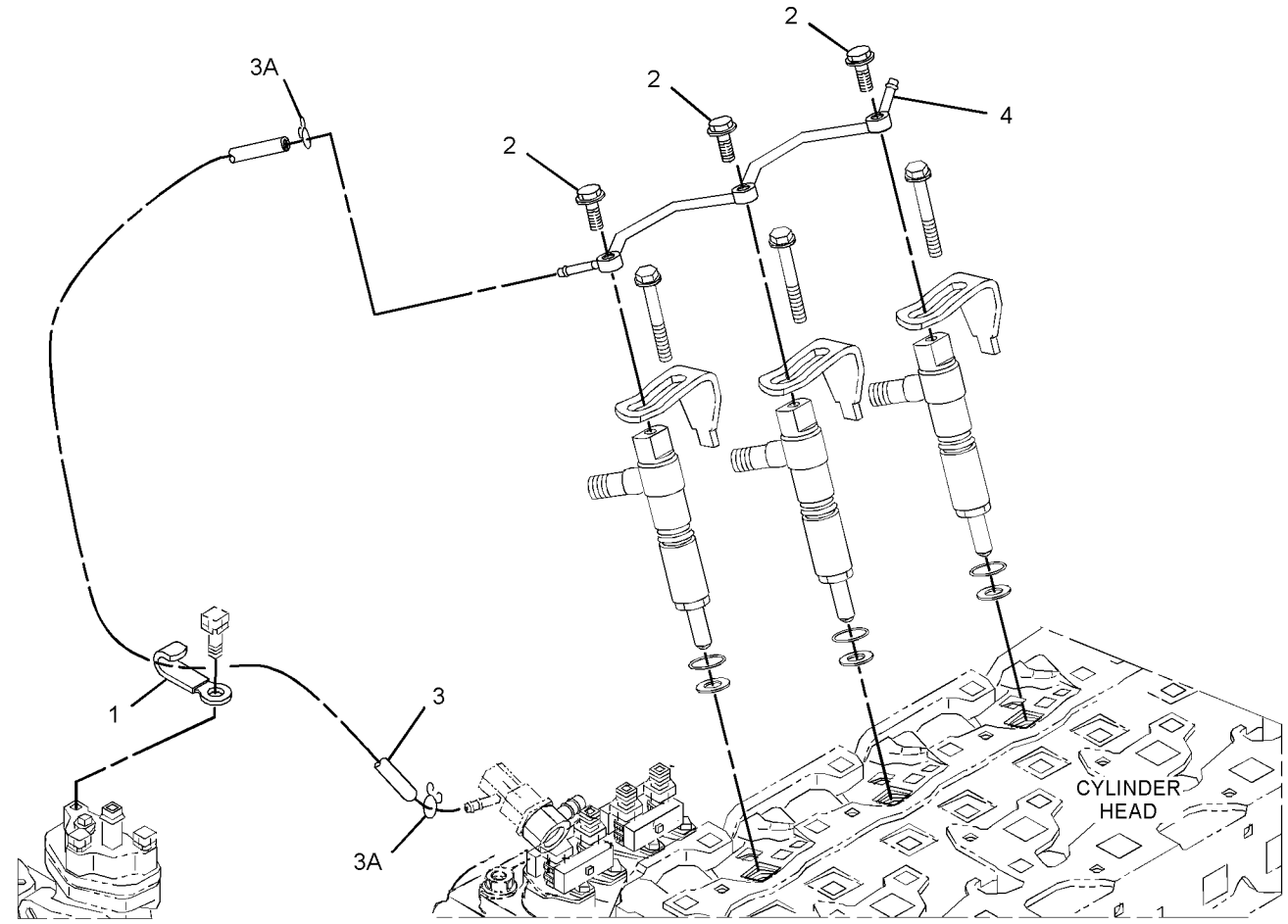

GRAPHIC #1 **<END>** g02906239

379-4728 LINES GP-FUEL FILTER

PART OF 376-6676 CHASSIS AR

SMCS-1261, 1274 **i05032791**

NOTE	REF NO	GRAPHIC REF	PART NUMBER	QTY	PART NAME 1 2 3 4 5 6 (PRODUCT LEVEL)	SEE PAGE
	1	1,2	**1P-4278**	8	CLAMP-HOSE	
	2	2	**3S-2093**	1	STRAP-CABLE	
	3	2	**7I-2673**	2	STRAP-CABLE	
	4	2	**7K-1181**	7	STRAP-CABLE	
Y	5	2	**144-9962**	1	FILTER GP-WATER SEP & FUEL	52
	6	2	**151-1975**	1	CONNECTOR	
	7	1	**216-1980**	1	GROMMET	
	8	2	**204-1611**	1	STRAP (DUAL)	
	9	2	**246-2622**	1	ELBOW AS	
	10	2	**266-7379**	1	STRAP-CABLE	
	11	2	**279-4732**	1	STRAP-CABLE (YELLOW)	
	12	2	**298-0663**	2	CLIP	
	13	2	**370-4008**	1	PUMP AS-FUEL	
	14	2	**380-7205**	1	BRACKET AS	
	15	2	*148-8405*	2	PLUG AS	
					(EACH INCLUDES)	
		2	**1J-9671**	1	SEAL-O-RING	
		2	**3K-8460**	1	PLUG	
	16	2	**1J-9671**	1	SEAL-O-RING	
	17	2	**277-1873**	1	CLIP	
	18	1,2	**5P-4116**	4	WASHER-HARD (8.8X20.5X2-MM THK)	
	19	1	**5P-9299**	2	CLIP	
	20	1	**6K-8178**	2	CLIP	
M	21	2	**7X-2533**	2	BOLT (M6X1X35-MM)	
	22	1	**8K-1433**	1	GROMMET	
	23	2	**8T-4121**	4	WASHER-HARD (11X21X2.5-MM THK)	
M	24	2	**8T-4136**	2	BOLT (M10X1.5X25-MM)	
M	25	2	**8T-4137**	2	BOLT (M10X1.5X20-MM)	
M	26	1	**8T-4200**	2	BOLT (M8X1.25X16-MM)	
M	27	2	**8T-7547**	2	BOLT (M8X1.25X30-MM)	
	28	2	**9X-6165**	4	WASHER (6.5X22X2.5-MM THK)	
E	29	1	**7I-7439**		GUARD (33-CM)	
E	29A	2	**7I-7439**		GUARD (43-CM)	
E	30	1	**5I-4200**		GUARD (38-CM)	
E	30A	2	**5I-4200**		GUARD (83-CM)	
E	31	2	**8C-6959**		HOSE (26-CM)	
E	32	1	**263-0768**		HOSE (304-CM)	
E	33	1	**5P-1507**		HOSE (148-CM)	
E	33A	2	**5P-1507**		HOSE (29.5-CM)	
E	33B	2	**5P-1507**		HOSE (162-CM)	
	34	2	**096-6079**	1	TAPE (WHITE)	
	35	1	**096-6085**	1	TAPE (RED)	

E - ORDER BY THE CENTIMETER
M - METRIC PART
Y - SEPARATE ILLUSTRATION

379-4728 **LINES GP-FUEL FILTER (*contd.*)** **i05032791**

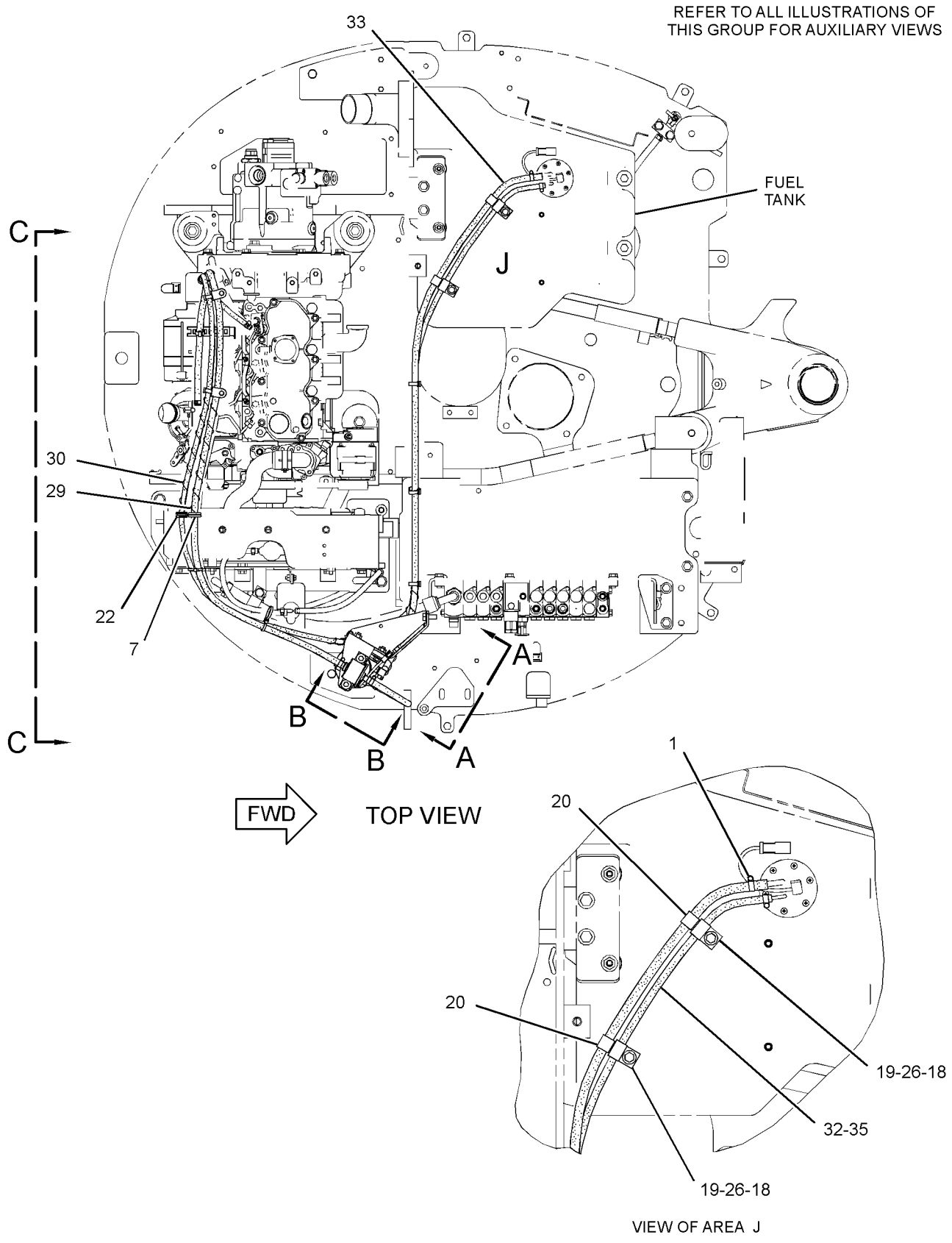

GRAPHIC #1 g03220539

379-4728 **LINES GP-FUEL FILTER (*contd.*)** **i05032791**

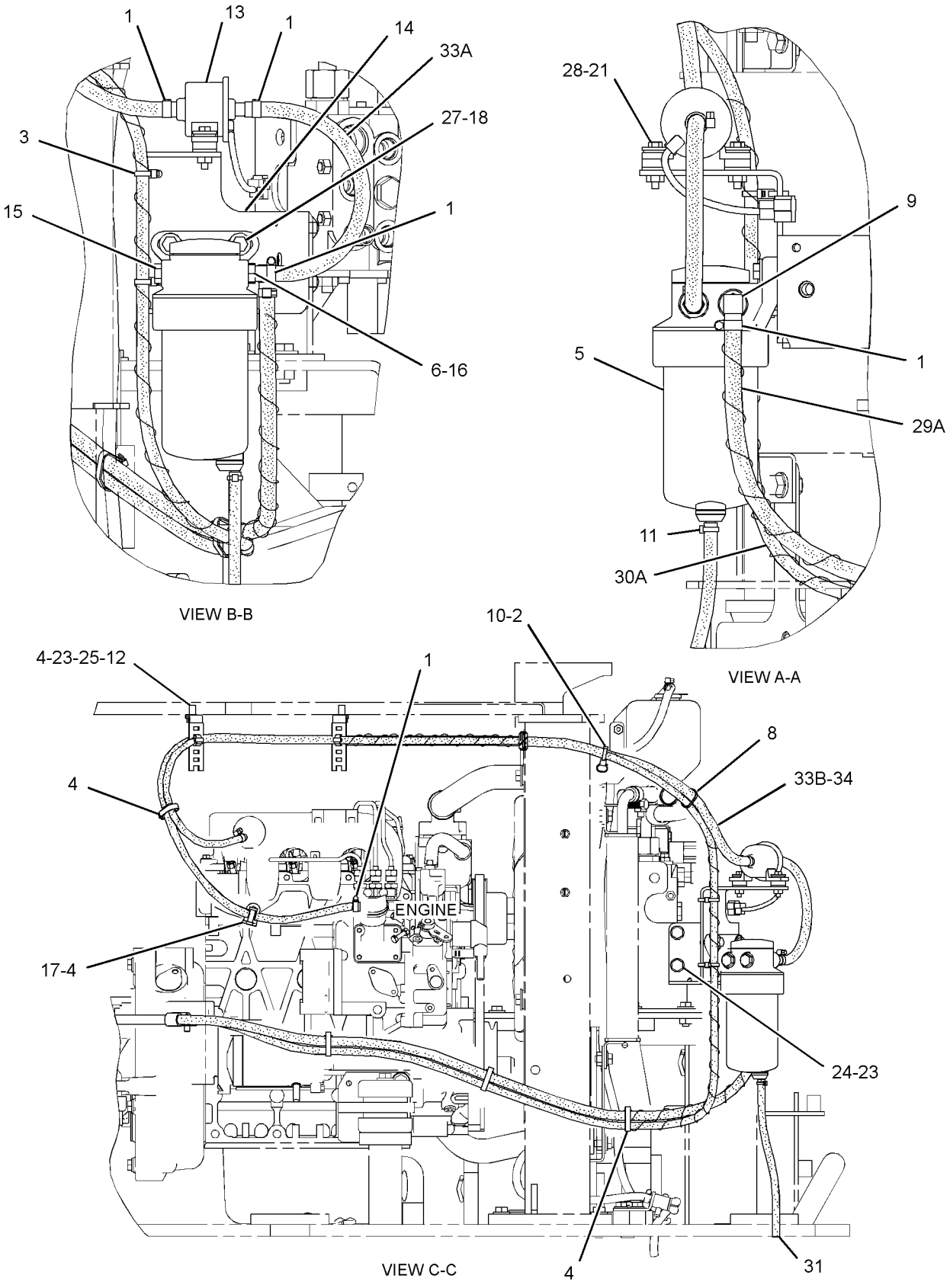

GRAPHIC #2 **<END>** g03220540

386-4640 LINES GP-FUEL INJECTION

S/N: RKY1-1439

PART OF 380-1777 ENGINE AR-COMPLETE, 380-1776, 416-6081 ENGINE AR-PRIMARY

ALSO AN ATTACHMENT

SMCS-1252, 1254

i04794307

NOTE	REF NO	GRAPHIC REF	PART NUMBER	QTY	PART NAME 1 2 3 4 5 6 (PRODUCT LEVEL)	SEE PAGE
	1	1	**383-0202**	1	SCREW	
	2	1	**383-0319**	1	CLAMP-PIPE	
	3	1	**383-0320**	3	CLAMP-PIPE	
	4	1	**383-0508**	1	TUBE	
	5	1	**383-0509**	1	TUBE	
	6	1	**383-0510**	1	TUBE	
	7	1	**394-8600**	1	SCREW	

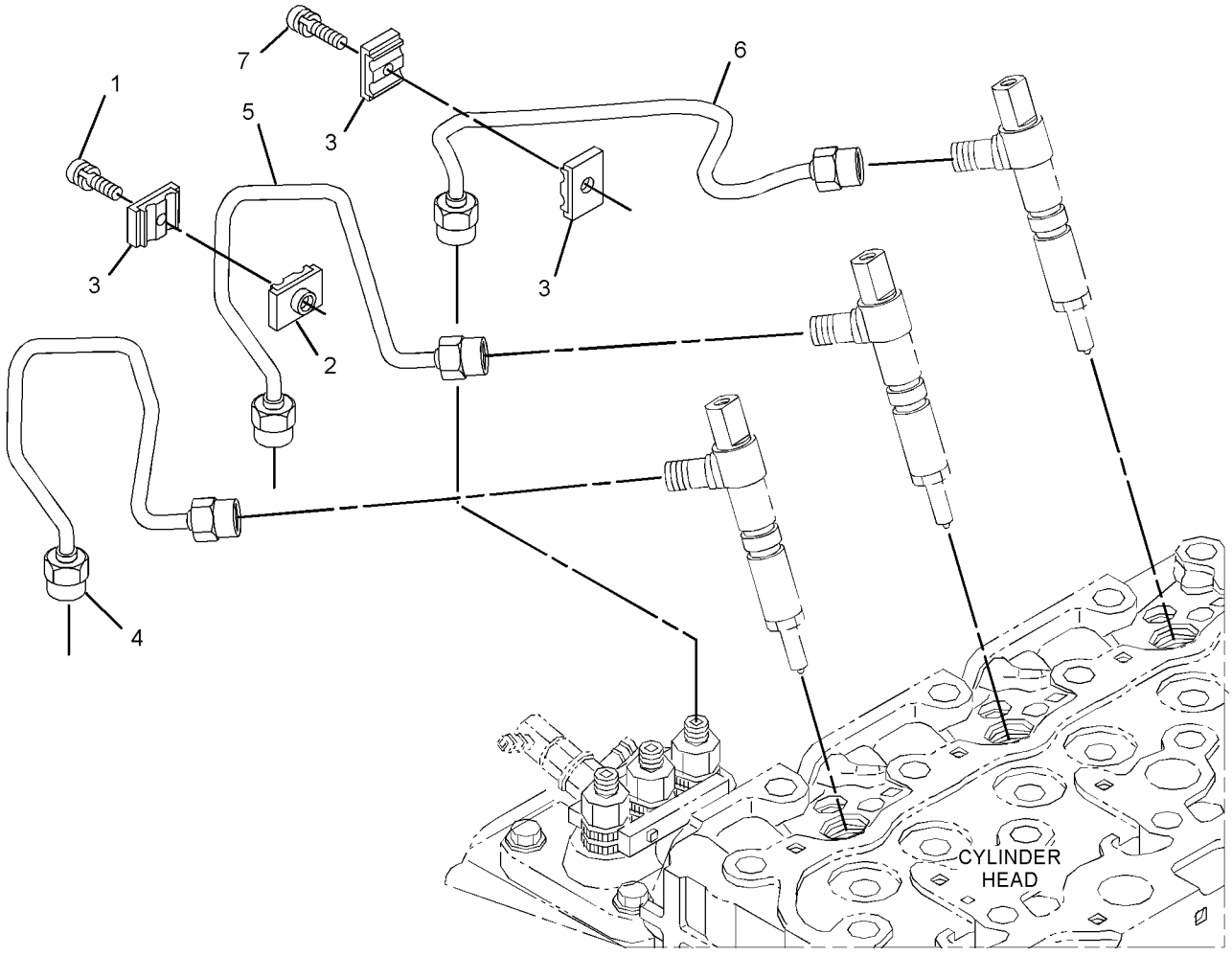

GRAPHIC #1

<END>

g02921292

386-4644 NOZZLE GP-UNIT INJECTOR

S/N: RKY1-1439

PART OF 380-1777 ENGINE AR-COMPLETE, 380-1776, 416-6081 ENGINE AR-PRIMARY

ALSO AN ATTACHMENT

SMCS-1254, 1290

i04794304

NOTE	REF NO	GRAPHIC REF	PART NUMBER	QTY	PART NAME 1 2 3 4 5 6 (PRODUCT LEVEL)	SEE PAGE
	1	1	**383-0212**	3	SEAL-O-RING	
	2	1	**383-0475**	3	GASKET	
	3	1	**383-0519**	3	PACKING	
	4	1	**383-0537**	3	CLAMP-NOZZLE	
	5	1	**383-0544**	3	HOLDER AS (NOZZLE)	
	6	1	**383-0568**	3	BOLT	

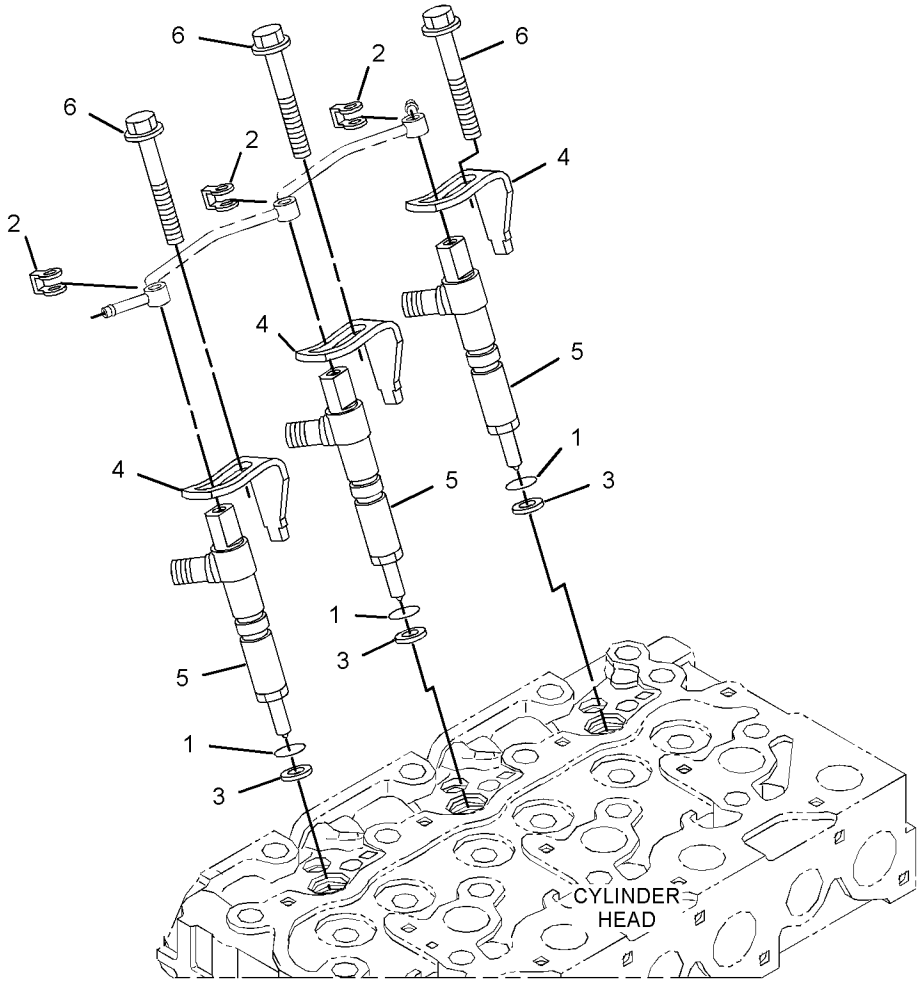

GRAPHIC #1

<END>

g02921416

386-4650 PUMP GP-FUEL INJECTION

S/N: RKY1-1439

PART OF 380-1777 ENGINE AR-COMPLETE, 380-1776, 416-6081 ENGINE AR-PRIMARY

ALSO AN ATTACHMENT

SMCS-1251, 1290

i05150731

NOTE	REF NO	GRAPHIC REF	PART NUMBER	QTY	PART NAME 1 2 3 4 5 6 (PRODUCT LEVEL)	SEE PAGE
	1	1	**383-0169**	2	BOLT	
	2	1	**383-0177**	4	BOLT	
	3	1	**383-0188**	2	BOLT	
	4	1	**383-0199**	2	NUT-FLANGE	
	5	1	**383-0208**	1	RING-SNAP	
	6	1	**383-0279**	2	STUD	
	7	1	**383-0280**	1	COVER-FUEL	
	8	1	**383-0314**	1	ORIFICE AS	
B	9	1	**386-6942**	1	SHIM (0.2-MM THK)	
B	10	1	**386-6943**	1	SHIM (0.25-MM THK)	
B	11	1	**386-6944**	1	SHIM (0.3-MM THK)	
	12	1	**383-0487**	1	GASKET	
B	13	1	**386-6940**	1	SHIM	
	14	1	**386-6939**	1	PUMP AS-FUEL INJECTION (0.35-MM THK)	
	14A	1	**383-0287**	1	SCREW	
	14B	1	**383-0288**	1	PACKING	
Y	15	1	**386-6945**	1	CAMSHAFT AS (FUEL INJECTION PUMP)	48
	16	1	**386-6947**	1	COLLAR	
	17	1	**383-0550**	1	BALL BEARING	
	18	1	**383-0560**	1	BOLT	
B	19	1	**386-6941**	1	SHIM (0.175-MM THK)	
	20	1	**383-0562**	2	GASKET	
	21	1	**383-0577**	1	STOPPER (FUEL)	
	22	1	**383-0252**	1	JOINT	

B - USE AS REQUIRED
Y - SEPARATE ILLUSTRATION

386-4650 **PUMP GP-FUEL INJECTION (*contd.*)** **i05150731**

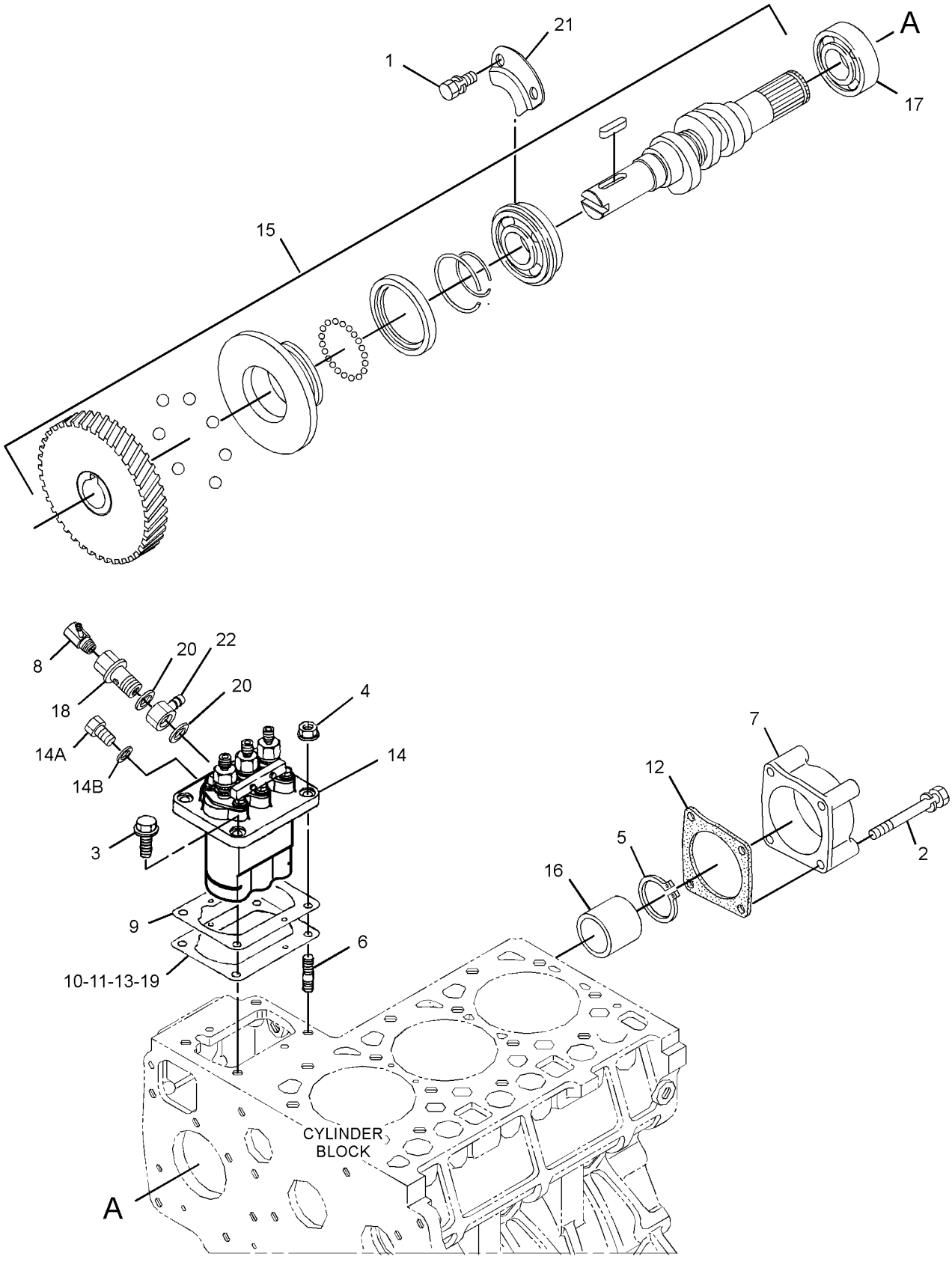

GRAPHIC #1 **<END>** g02923000

378-2140 SHUTOFF GP-MANUAL–ENGINE

PART OF 383-0640 INSTALLATION AR-ENGINE

SMCS-1265, 1704, 7418 **i04589460**

NOTE	REF NO	GRAPHIC REF	PART NUMBER	QTY	PART NAME 1 2 3 4 5 6 (PRODUCT LEVEL)	SEE PAGE
	1	1	**5P-7958**	2	SLEEVE-CABLE SPLICE	
	2	1	**382-9349**	1	CABLE-LANYARD	

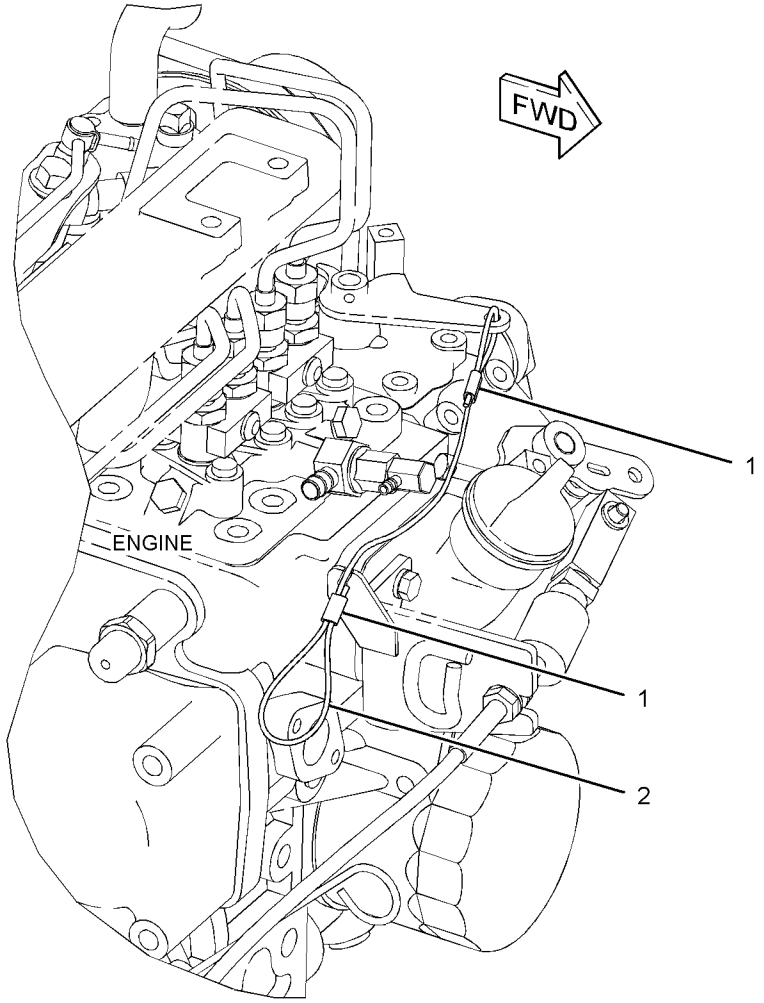

GRAPHIC #1 **<END>** g02766420

367-0930 TANK & MTG GP-FUEL

PART OF 376-6676 CHASSIS AR

SMCS-1273 **i04629823**

NOTE	REF NO	GRAPHIC REF	PART NUMBER	QTY	PART NAME 1 2 3 4 5 6 (PRODUCT LEVEL)	SEE PAGE
	1	1	**265-8577**	1	SEAL	
	2	1	**1P-4278**	2	CLAMP-HOSE	
	3	1	**9D-7924**	2	MOUNTING AS	
	4	1	**9M-7959**	2	CLAMP-HOSE	
	5	1	**265-8575**	1	CAP-FUEL (LOCKABLE, VENTED)	
	6	1	**265-8578**	2	MOUNT	
	7	1	**265-8579**	1	STRAINER-FUEL (TANK)	
	8	1	**276-9302**	1	FILLER AS-FUEL (TANK)	
	9	1	**367-1089**	1	PLATE AS	
M		1	**8T-3490**	2	NUT-WELD (M10X1.5-THD)	
	10	1	**367-1090**	1	BLOCK AS	
	11	1	**367-1092**	1	VALVE (DRAIN, FUEL TANK)	
	12	1	**367-1095**	1	TANK AS-FUEL	
	13	1	**367-1096**	1	HOSE	
	14	1	**367-1097**	1	FOAM	
	15	1	**7X-0632**	2	WASHER-HARD (11X36X6-MM THK)	
	16	1	**7X-7729**	7	WASHER (11X25X3-MM THK)	
	17	1	**8T-4121**	2	WASHER-HARD (11X21X2.5-MM THK)	
M	18	1	**8T-4133**	3	NUT (M10X1.5-THD)	
M	19	1	**8T-4137**	4	BOLT (M10X1.5X20-MM)	
M	20	1	**8T-4182**	2	BOLT (M10X1.5X45-MM)	
	21	1	**8T-4226**	2	WASHER-PLATED (10.5X45X3-MM THK)	
M	22	1	**8T-6466**	2	BOLT (M10X1.5X60-MM)	
E	23	1	**5P-1507**		HOSE (39-CM)	

E - ORDER BY THE CENTIMETER
M - METRIC PART

367-0930 **TANK & MTG GP-FUEL (*contd.*)** **i04629823**

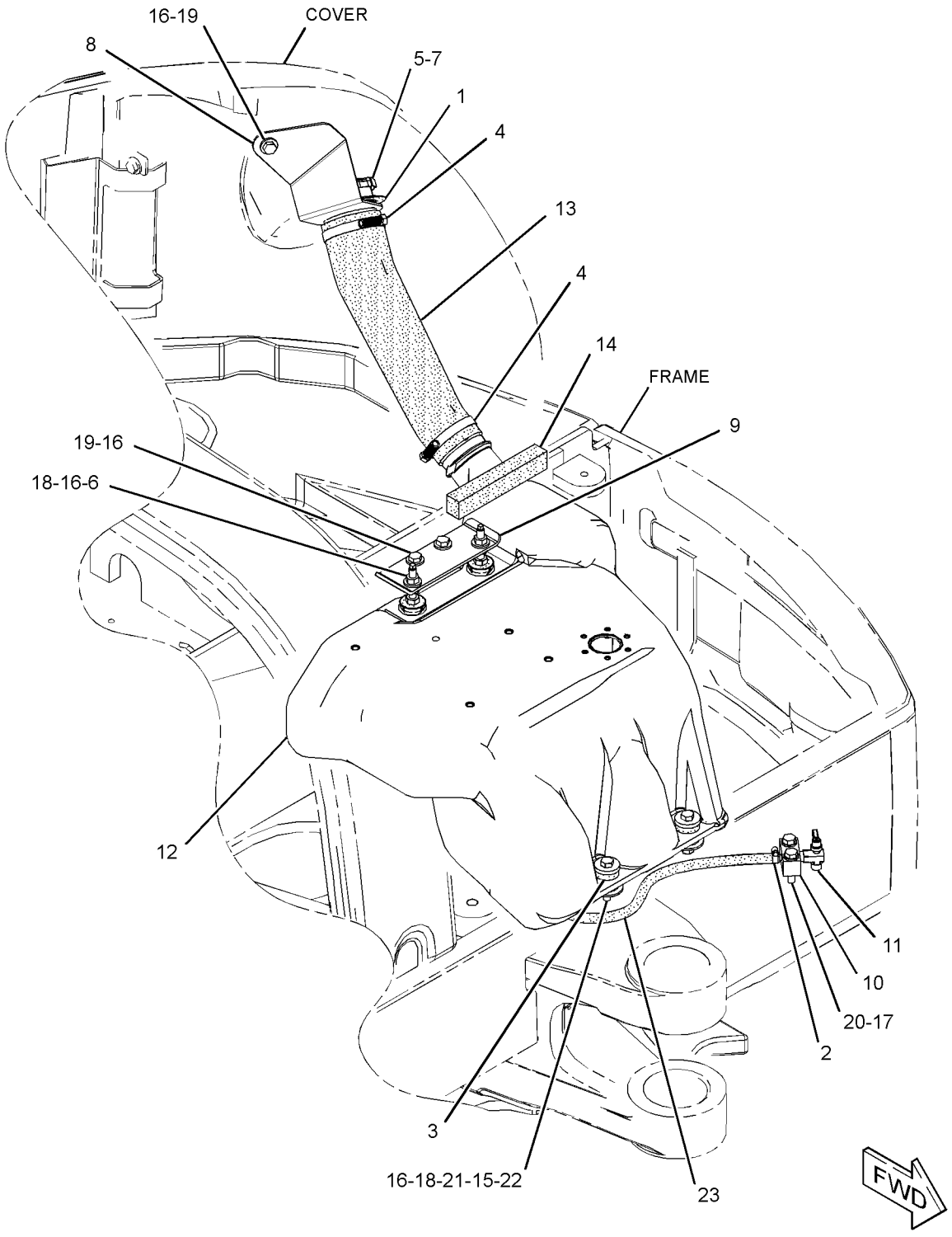

GRAPHIC #1 **<END>** g02802277

370-5338 ALARM GP-TRAVEL

PART OF 377-8935 CONTROL AR-GOVERNOR

AN ATTACHMENT

SMCS-7429 **i05033594**

NOTE	REF NO	GRAPHIC REF	PART NUMBER	QTY	PART NAME 1 2 3 4 5 6 (PRODUCT LEVEL)	SEE PAGE
	1	1	**3S-2093**	2	STRAP-CABLE	
	2	1	**140-9378**	1	RELAY AS (12-VOLT) (BACKUP ALARM)	
	3	1	**161-2539**	1	ALARM AS (BACKUP)	
		1	**4B-2043**	2	NUT (8-32-THD)	
	4	1	**266-1406**	1	SWITCH AS-ROCKER (TRAVEL ALARM CANCEL)	
		1	**111-7899**	1	GASKET	
	5	1	**266-7379**	1	STRAP-CABLE	
M	6	1	**5C-2890**	2	NUT (M6X1-THD)	
M	7	1	**8C-8451**	2	BOLT (M6X1X40-MM)	
	8	1	**9X-8256**	4	WASHER (6.6X12X2-MM THK)	

M - METRIC PART

370-5338 **ALARM GP-TRAVEL (*contd.*)** **i05033594**

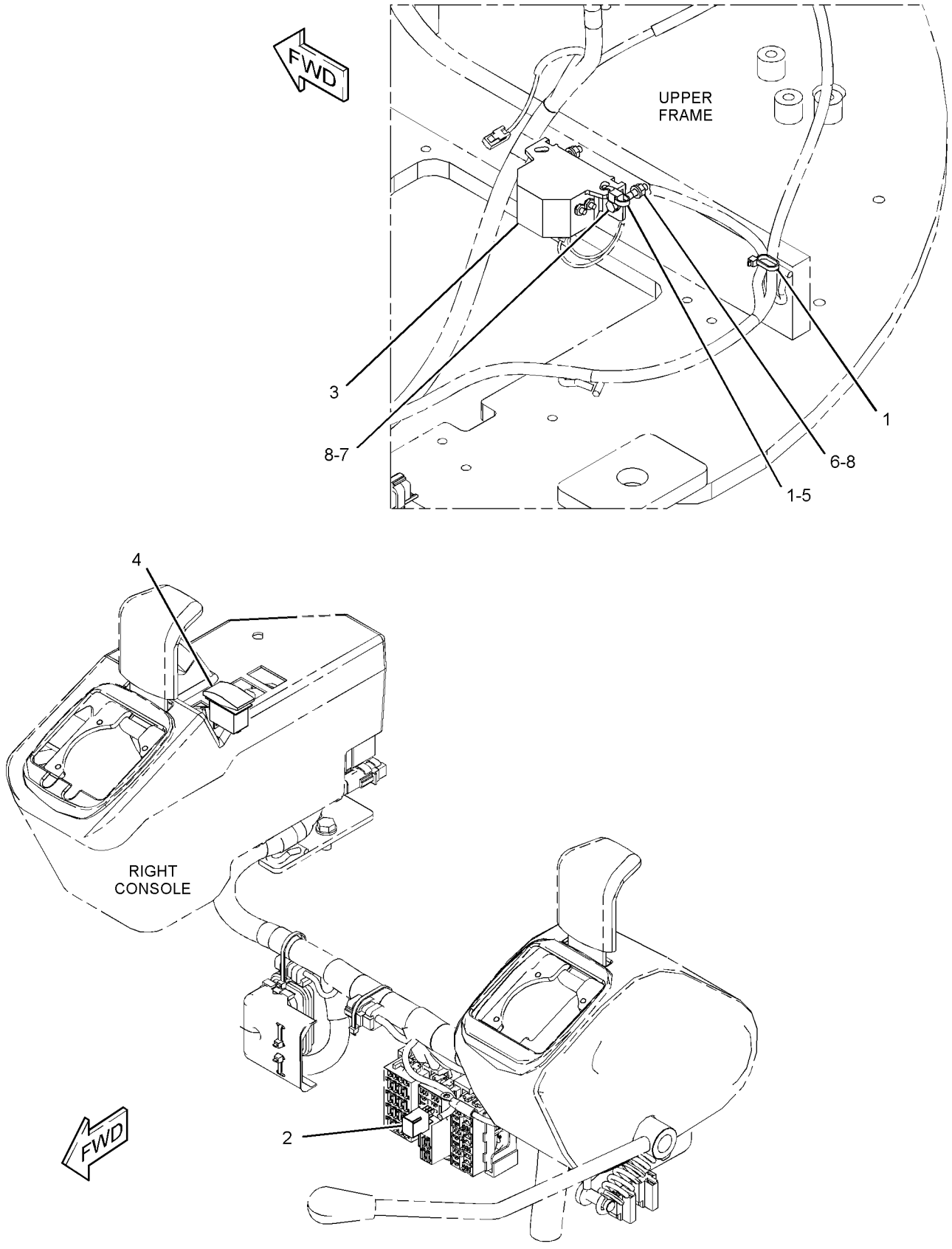

GRAPHIC #1 **<END>** g02801598

383-0134 ALTERNATOR GP-CHARGING

S/N: RKY1-1439
12-VOLT, 60-AMPERE
PART OF 380-1777 ENGINE AR-COMPLETE, 380-1776, 416-6081 ENGINE AR-PRIMARY
ALSO AN ATTACHMENT

SMCS-1405 **i05006746**

NOTE	REF NO	GRAPHIC REF	PART NUMBER	QTY	PART NAME 1 2 3 4 5 6 (PRODUCT LEVEL)	SEE PAGE
	1	1	**383-0592**	1	ALTERNATOR AS (12-VOLT, 60-AMPERE)	
	1A	1	**383-0323**	1	COLLAR	
	1B	1	**383-0330**	1	NUT	
	1C	1	**383-0344**	1	PULLEY-ALTERNATOR	
	2	1	**383-0178**	1	BOLT	
	3	1	**389-0705**	1	BOLT-FLANGE HEAD	
	4	1	**383-0206**	1	LOCKWASHER	
	5	1	**383-0195**	1	NUT-HEX	

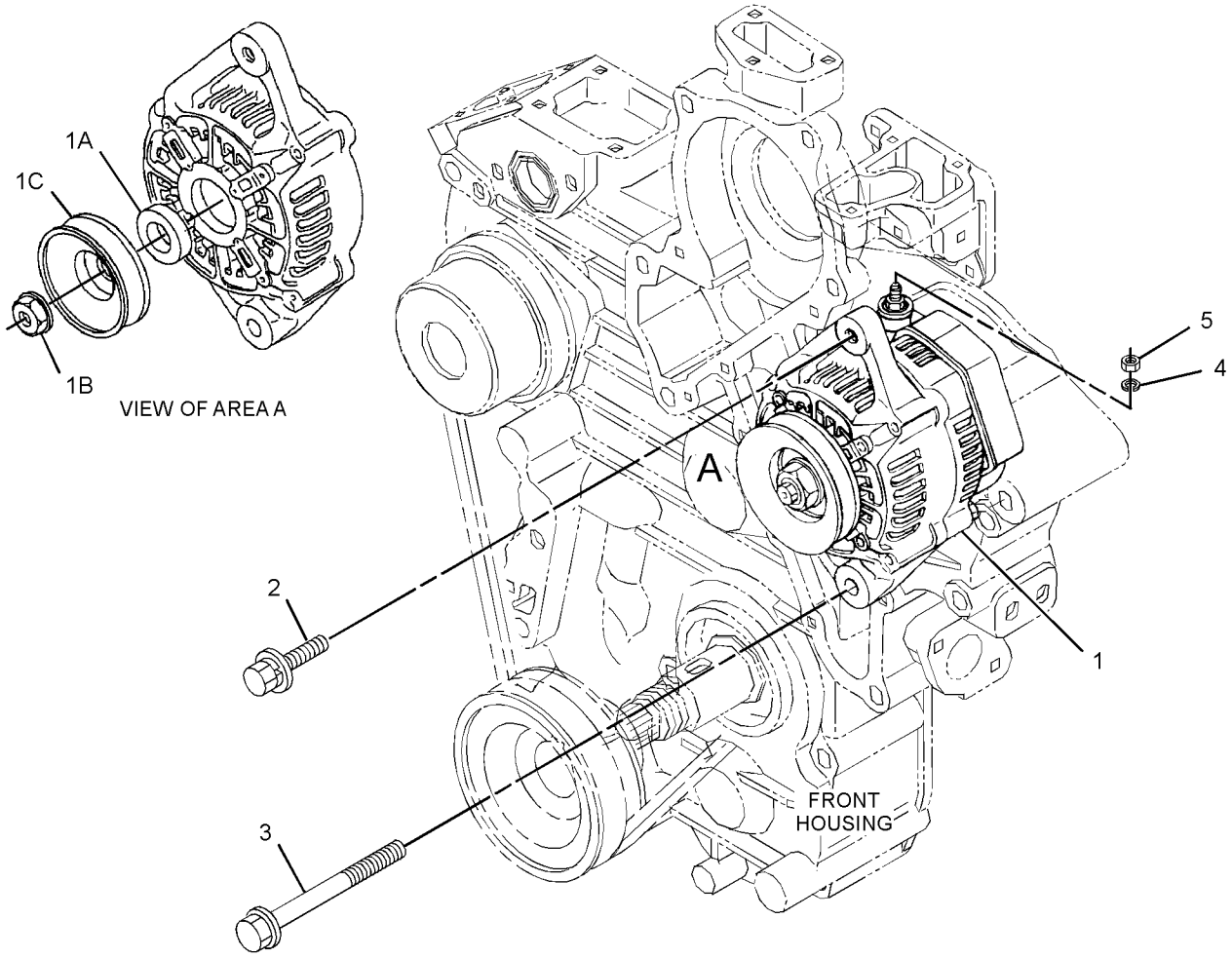

GRAPHIC #1 **<END>** g02788441

370-5342 BATTERY & WIRING GP

PART OF 376-6692, 376-6696, 383-5927, 383-5928 CAB AR
AN ATTACHMENT

SMCS-1401, 1402, 1408 **i05032862**

NOTE	REF NO	GRAPHIC REF	PART NUMBER	QTY	PART NAME 1 2 3 4 5 6 (PRODUCT LEVEL)	SEE PAGE
	1	1	**1S-1150**	2	SPACER (0.391X0.5X0.19-IN THK)	
	2	1,2	**3S-2093**	37	STRAP-CABLE	
	3	1,2	**7K-1181**	7	STRAP-CABLE	
	4	1,2	**111-4837**	5	CLIP	
	5	2	**153-5656**	1	BATTERY (12-VOLT, MAINTENANCE FREE)	
	6	2	**163-6795**	1	STRAP-CABLE	
	7	1,2	**204-1611**	5	STRAP (DUAL)	
	8	2	**232-7405**	1	BRACKET	
	9	2	**251-1391**	2	BOLT (M10X1.25X16-MM)	
	10	2	**266-6935**	1	RELAY AS (12-VOLT) (MAIN)	
	11	1,2	**266-7379**	4	STRAP-CABLE	
	12	2	**267-4767**	1	CLAMP	
	13	2	**267-4768**	2	ROD	
	14	1	**282-2151**	1	GROMMET	
	15	2	**298-0663**	1	CLIP	
	16	1	**349-1812**	1	SWITCH AS-PRESSURE (PILOT OIL)	
		1	**108-7516**	1	FITTING	
		1	**3J-1907**	1	SEAL-O-RING	
		1	*349-1756*	1	SWITCH AS-PRESSURE (PILOT OIL)	
		1	**230-4011**	1	PLUG AS-CONNECTOR (2-PIN)	
		1	**264-7029**	1	SEAL-CONNECTOR	
		1	**9X-3402**	2	SOCKET-CONNECTOR (16-GA TO 18-GA)	
					—OR—	
		1	**126-1768**	2	SOCKET-CONNECTOR (14-GA TO 16-GA)	
Y	17	1	**370-5357**	1	HARNESS AS-CHASSIS	79
	18	1	**370-5363**	1	CABLE AS-BATTERY (POSITIVE)	
D		1	**5P-5675**		WIRE (6-GA, BLACK) (1.1-M)	
		1	**9X-4519**	1	BOOT (RED)	
		1	**8L-8413**	1	STRAP-CABLE	
E		1	**159-8049**		CABLE (00-GA, RED) (201-CM)	
		1	**2L-8050**	1	TERMINAL-RING (6-GA, 1/4-IN SCREW)	
		1	**3S-6049**	1	TERMINAL AS-BATTERY (POSITIVE)	
		1	**1M-6119**	1	BOLT (5/16-18X1.375-IN)	
		1	**1M-6120**	1	NUT (5/16-18-THD)	
	19	1	**370-5366**	1	CABLE AS-BATTERY (NEGATIVE)	
		1	**1M-6119**	1	BOLT (5/16-18X1.375-IN)	
E		1	**159-8050**		CABLE (00-GA, BLACK) (33-CM)	
		1	**7N-5274**	1	COVER AS-TERMINAL (BLACK)	
		1	**8L-8413**	1	STRAP-CABLE	
		1	**1M-6120**	1	NUT (5/16-18-THD)	
		1	**311-8804**	1	TERMINAL	
		1	**3S-6050**	1	TERMINAL AS-BATTERY (NEGATIVE)	
		1	**1M-6119**	1	BOLT (5/16-18X1.375-IN)	
		1	**1M-6120**	1	NUT (5/16-18-THD)	
	20	2	**370-5367**	1	STRAP AS-GROUND	
	21	1	**370-5372**	1	GROMMET	
	22	1	**370-5375**	1	PLATE	
	23	1	**376-9480**	1	SENDER AS-FUEL LEVEL	
		1	**102-8802**	1	KIT-RECEPTACLE (2-PIN)	
					(INCLUDES RECEPTACLE AS & WEDGE)	
		1	**379-2007**	1	GASKET	
	24	2	**383-0342**	1	SENSOR (THERMOCOUPLE)	
	25	2	**387-5260**	1	PLATE AS	
M		2	**6V-9632**	2	NUT-WELD (M6X1-THD)	
M		2	**8T-3490**	2	NUT-WELD (M10X1.5-THD)	
M		2	**8T-3612**	3	NUT-WELD (M8X1.25-THD)	
M		2	**8T-8874**	1	NUT-WELD (M5X0.8-THD)	

370-5342 **BATTERY & WIRING GP (*contd.*)** **i05032862**

NOTE	REF NO	GRAPHIC REF	PART NUMBER	QTY	PART NAME 1 2 3 4 5 6 (PRODUCT LEVEL)	SEE PAGE
M		2	**9X-2032**	2	NUT-WELD (M4X0.7-THD)	
M	26	1	**095-0736**	6	SCREW-MACHINE (M5X0.8X10-MM)	
M	27	2	**127-4839**	2	BOLT (M10X1.25X25-MM)	
	28	2	**132-5789**	1	CLIP	
	29	2	**132-7551**	1	SPACER (11X19X6-MM THK)	
M	30	2	**150-4086**	2	SCREW (M4X0.7X16-MM)	
	31	2	**156-6175**	2	CLIP	
	32	2	**277-1873**	1	CLIP	
	33	1	**2M-3432**	1	GROMMET	
	34	2	**4B-4863**	2	WASHER (4.7X11X1.2-MM THK)	
	35	2	**4P-7581**	3	CLIP	
	36	2	**4P-8134**	2	CLIP	
M	37	2	**5C-2890**	5	NUT (M6X1-THD)	
M	38	1	**5C-7261**	1	NUT (M8X1.25-THD)	
M	39	2	**5C-9553**	1	BOLT (M6X1X16-MM)	
	40	2	**5P-4115**	2	WASHER-HARD (7.2X19X2-MM THK)	
	41	2	**5P-4116**	1	WASHER-HARD (8.8X20.5X2-MM THK)	
	42	2	**8M-2773**	2	CLIP	
M	43	2	**8T-0288**	1	BOLT (M5X0.8X12-MM)	
	44	2	**8T-0328**	1	WASHER-HARD (5.5X10X1-MM THK)	
	45	1,2	**8T-4121**	14	WASHER-HARD (11X21X2.5-MM THK)	
M	46	1	**8T-4136**	4	BOLT (M10X1.5X25-MM)	
M	47	1,2	**8T-4137**	4	BOLT (M10X1.5X20-MM)	
M	48	2	**8T-4171**	2	BOLT (M6X1X12-MM)	
M	49	1	**8T-4189**	2	BOLT (M8X1.25X20-MM)	
M	50	2	**8T-4196**	2	BOLT (M10X1.5X35-MM)	
M	51	2	**8T-4200**	6	BOLT (M8X1.25X16-MM)	
	52	1,2	**8T-4224**	8	WASHER-HARD (8.8X16X2-MM THK)	
	53	1,2	**8T-8799**	2	BOOT (RED)	
	54	2	**9M-8406**	1	CLIP	
	55	2	**9X-8256**	4	WASHER (6.6X12X2-MM THK)	

D - ORDER BY THE METER
E - ORDER BY THE CENTIMETER
M - METRIC PART
Y - SEPARATE ILLUSTRATION

370-5342 **BATTERY & WIRING GP (*contd.*)** **i05032862**

REFER TO ALL ILLUSTRATIONS OF
THIS GROUP FOR AUXILIARY VIEWS

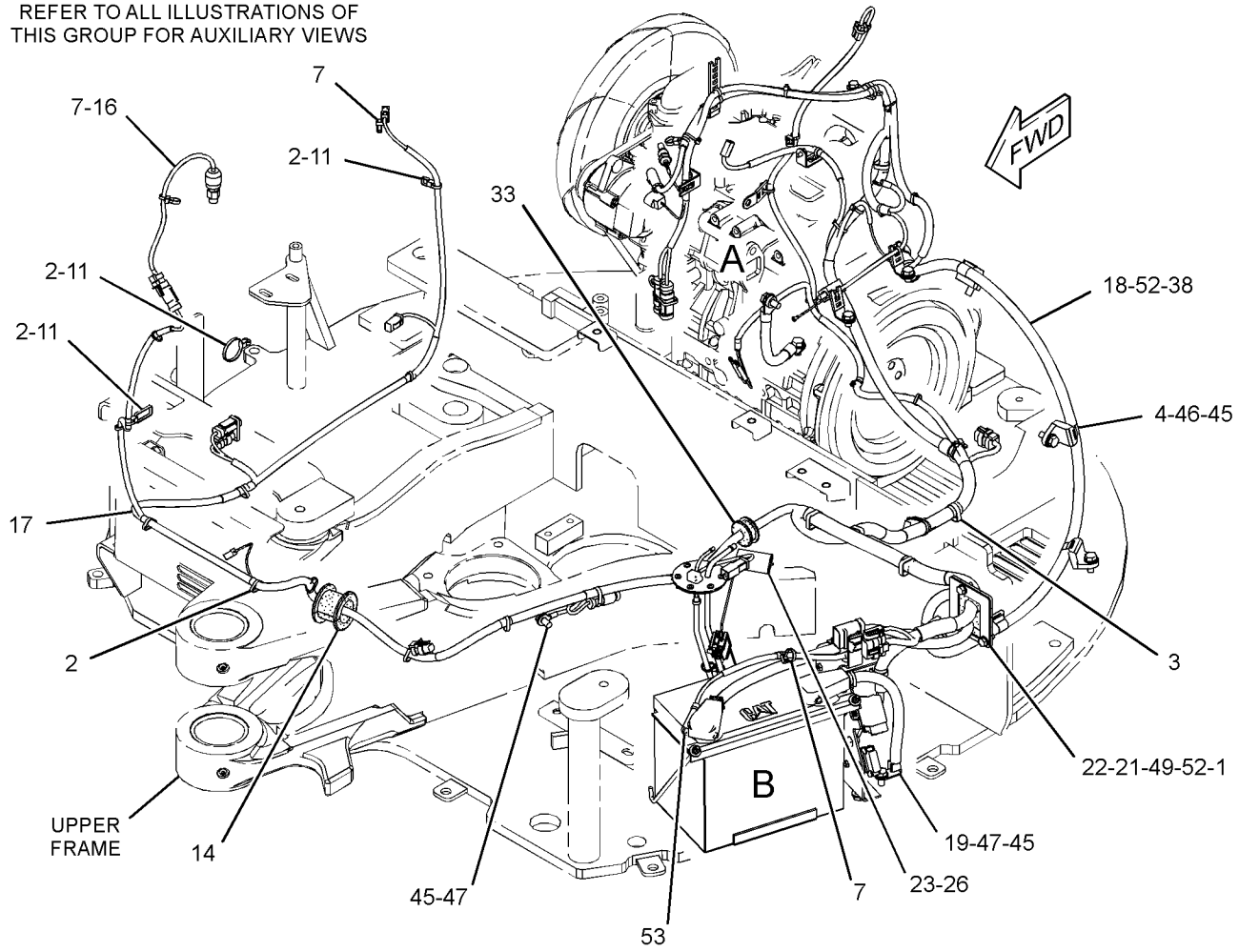

GRAPHIC #1 g03037056

370-5342 **BATTERY & WIRING GP (*contd.*)** **i05032862**

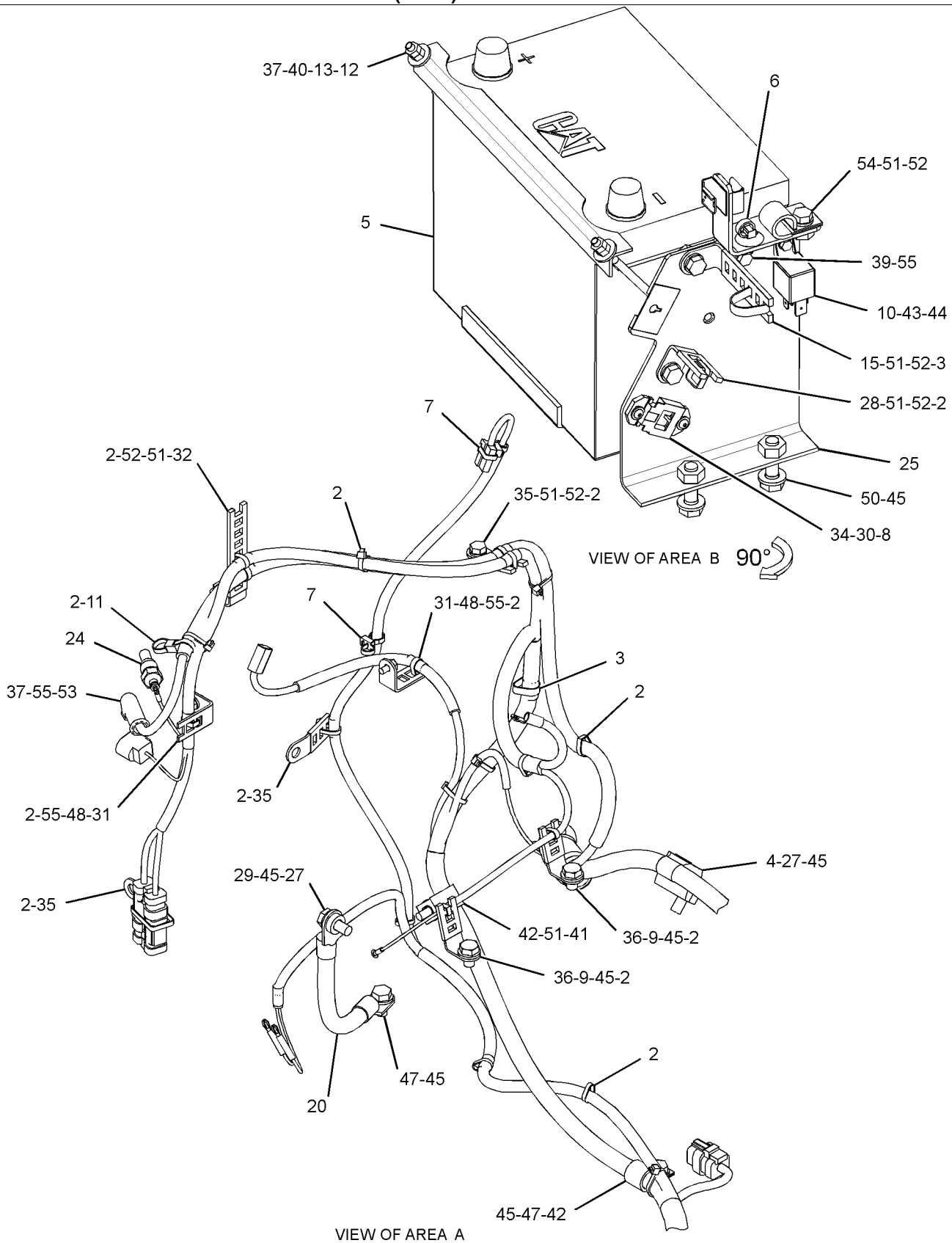

GRAPHIC #2 **<END>** g03037057

370-5345 BATTERY & WIRING GP–CANOPY

PART OF 377-8933, 383-5929 CANOPY AR

AN ATTACHMENT

SMCS-1401, 1402, 1408 **i04817931**

NOTE	REF NO	GRAPHIC REF	PART NUMBER	QTY	PART NAME 1 2 3 4 5 6 (PRODUCT LEVEL)	SEE PAGE
	1	1	**1S-1150**	2	SPACER (0.391X0.5X0.19-IN THK)	
	2	1	**3S-2093**	33	STRAP-CABLE	
	3	1	**7K-1181**	7	STRAP-CABLE	
	4	1	**111-4837**	5	CLIP	
	5	1	**153-5656**	1	BATTERY (12-VOLT, MAINTENANCE FREE)	
	6	1	**163-6795**	1	STRAP-CABLE	
	7	1	**204-1611**	3	STRAP (DUAL)	
	8	1	**232-7405**	1	BRACKET	
	9	1	**251-1391**	2	BOLT (M10X1.25X16-MM)	
	10	1	**266-6935**	1	RELAY AS (12-VOLT) (MAIN)	
	11	1	**266-7379**	3	STRAP-CABLE	
	12	1	**267-4767**	1	CLAMP	
	13	1	**267-4768**	2	ROD	
	14	1	**282-2151**	1	GROMMET	
	15	1	**298-0663**	1	CLIP	
	16	1	**349-1812**	1	SWITCH AS-PRESSURE (PILOT OIL)	
		1	**3J-1907**	1	SEAL-O-RING	
		1	**108-7516**	1	FITTING	
		1	*349-1756*	1	SWITCH AS-PRESSURE (PILOT OIL)	
		1	**9X-3402**	2	SOCKET-CONNECTOR (16-GA TO 18-GA)	
					–OR–	
		1	**126-1768**	2	SOCKET-CONNECTOR (14-GA TO 16-GA)	
		1	**230-4011**	1	PLUG AS-CONNECTOR (2-PIN)	
		1	**264-7029**	1	SEAL-CONNECTOR	
Y	17	1	**370-5360**	1	HARNESS AS-CHASSIS	80
	18	1	**370-5363**	1	CABLE AS-BATTERY (POSITIVE)	
D		1	**5P-5675**		WIRE (6-GA, BLACK) (1.1-M)	
		1	**9X-4519**	1	BOOT (RED)	
		1	**8L-8413**	1	STRAP-CABLE	
E		1	**159-8049**		CABLE (00-GA, RED) (201-CM)	
		1	**2L-8050**	1	TERMINAL-RING (6-GA, 1/4-IN SCREW)	
		1	**3S-6049**	1	TERMINAL AS-BATTERY (POSITIVE)	
		1	**1M-6119**	1	BOLT (5/16-18X1.375-IN)	
		1	**1M-6120**	1	NUT (5/16-18-THD)	
	19	1	**370-5366**	1	CABLE AS-BATTERY (NEGATIVE)	
		1	**3S-6050**	1	TERMINAL AS-BATTERY (NEGATIVE)	
		1	**1M-6119**	1	BOLT (5/16-18X1.375-IN)	
		1	**1M-6120**	1	NUT (5/16-18-THD)	
		1	**1M-6119**	1	BOLT (5/16-18X1.375-IN)	
		1	**1M-6120**	1	NUT (5/16-18-THD)	
		1	**7N-5274**	1	COVER AS-TERMINAL (BLACK)	
		1	**8L-8413**	1	STRAP-CABLE	
E		1	**159-8050**		CABLE (00-GA, BLACK) (33-CM)	
		1	**311-8804**	1	TERMINAL	
	20	1	**370-5367**	1	STRAP AS-GROUND	
	21	1	**370-5372**	1	GROMMET	
	22	1	**370-5375**	1	PLATE	
	23	1	**376-9480**	1	SENDER AS-FUEL LEVEL	
		1	**102-8802**	1	KIT-RECEPTACLE (2-PIN)	
					(INCLUDES RECEPTACLE AS & WEDGE)	
		1	**379-2007**	1	GASKET	
	24	1	**383-0342**	1	SENSOR (THERMOCOUPLE)	
	25	1	**387-5260**	1	PLATE AS	
M		1	**6V-9632**	2	NUT-WELD (M6X1-THD)	
M		1	**8T-3490**	2	NUT-WELD (M10X1.5-THD)	
M		1	**8T-3612**	3	NUT-WELD (M8X1.25-THD)	
M		1	**8T-8874**	1	NUT-WELD (M5X0.8-THD)	

370-5345 **BATTERY & WIRING GP (*contd.*)** **i04817931**

NOTE	REF NO	GRAPHIC REF	PART NUMBER	QTY	PART NAME 1 2 3 4 5 6 (PRODUCT LEVEL)	SEE PAGE
M		1	**9X-2032**	2	NUT-WELD (M4X0.7-THD)	
M	26	1	**095-0736**	6	SCREW-MACHINE (M5X0.8X10-MM)	
M	27	1	**127-4839**	2	BOLT (M10X1.25X25-MM)	
	28	1	**132-5789**	1	CLIP	
	29	1	**132-7551**	1	SPACER (11X19X6-MM THK)	
M	30	1	**150-4086**	2	SCREW (M4X0.7X16-MM)	
	31	1	**156-6175**	2	CLIP	
	32	1	**174-5907**	2	CLIP	
	33	1	**277-1873**	1	CLIP	
	34	1	**2M-3432**	1	GROMMET	
	35	1	**4B-4863**	2	WASHER (4.7X11X1.2-MM THK)	
	36	1	**4P-7581**	1	CLIP	
	37	1	**4P-8134**	2	CLIP	
M	38	1	**5C-2890**	5	NUT (M6X1-THD)	
M	39	1	**5C-7261**	1	NUT (M8X1.25-THD)	
M	40	1	**5C-9553**	1	BOLT (M6X1X16-MM)	
	41	1	**5P-4115**	2	WASHER-HARD (7.2X19X2-MM THK)	
	42	1	**5P-4116**	1	WASHER-HARD (8.8X20.5X2-MM THK)	
M	43	1	**8T-0288**	1	BOLT (M5X0.8X12-MM)	
	44	1	**8T-0328**	1	WASHER-HARD (5.5X10X1-MM THK)	
	45	1	**8T-4121**	14	WASHER-HARD (11X21X2.5-MM THK)	
M	46	1	**8T-4136**	4	BOLT (M10X1.5X25-MM)	
M	47	1	**8T-4137**	4	BOLT (M10X1.5X20-MM)	
M	48	1	**8T-4171**	2	BOLT (M6X1X12-MM)	
M	49	1	**8T-4189**	2	BOLT (M8X1.25X20-MM)	
M	50	1	**8T-4196**	2	BOLT (M10X1.5X35-MM)	
M	51	1	**8T-4200**	6	BOLT (M8X1.25X16-MM)	
	52	1	**8T-4224**	8	WASHER-HARD (8.8X16X2-MM THK)	
	53	1	**8T-8799**	2	BOOT (RED)	
	54	1	**9M-8406**	1	CLIP	
	55	1	**9X-8256**	4	WASHER (6.6X12X2-MM THK)	

D - ORDER BY THE METER
E - ORDER BY THE CENTIMETER
M - METRIC PART
Y - SEPARATE ILLUSTRATION

370-5345 **BATTERY & WIRING GP (*contd.*)** **i04817931**

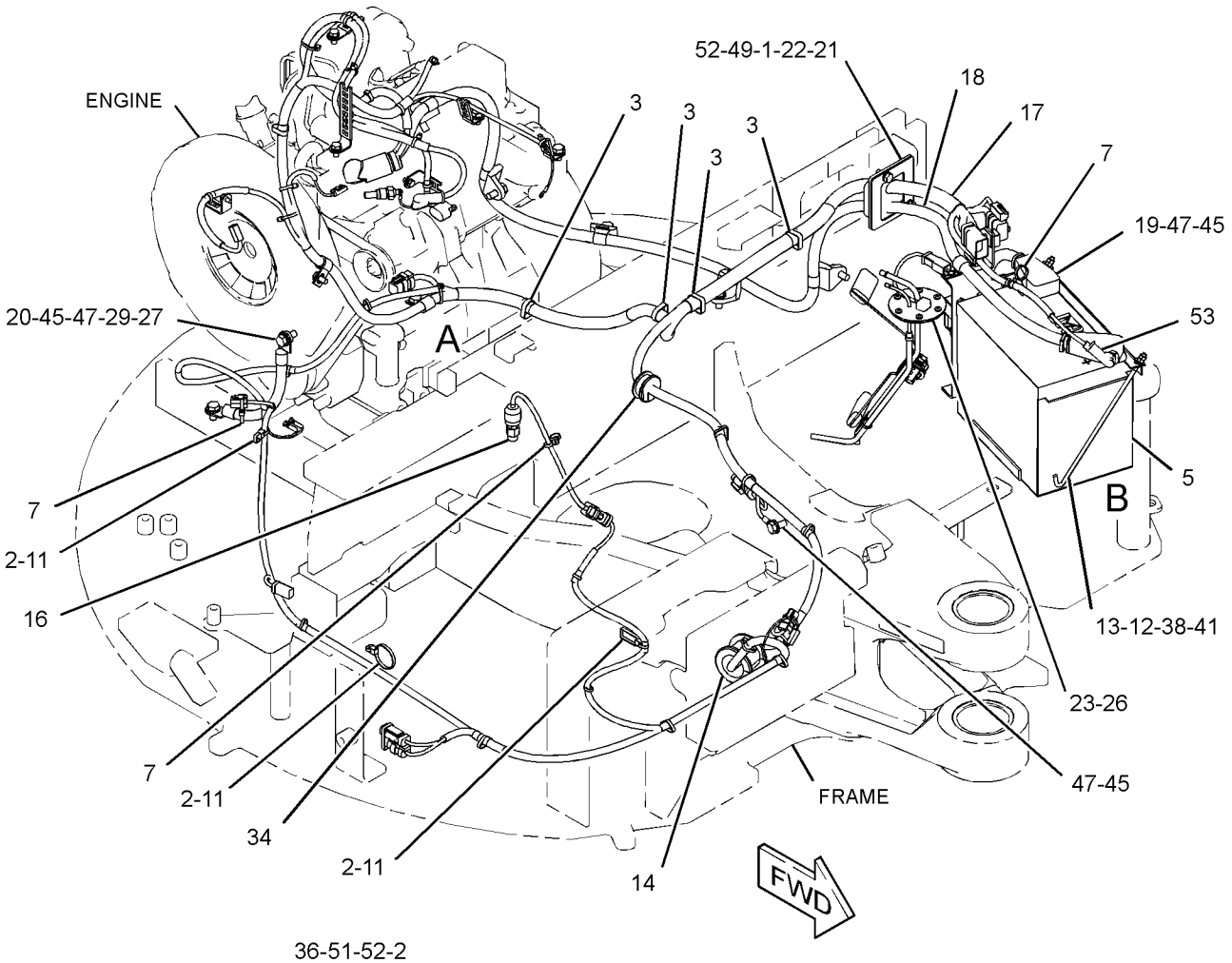

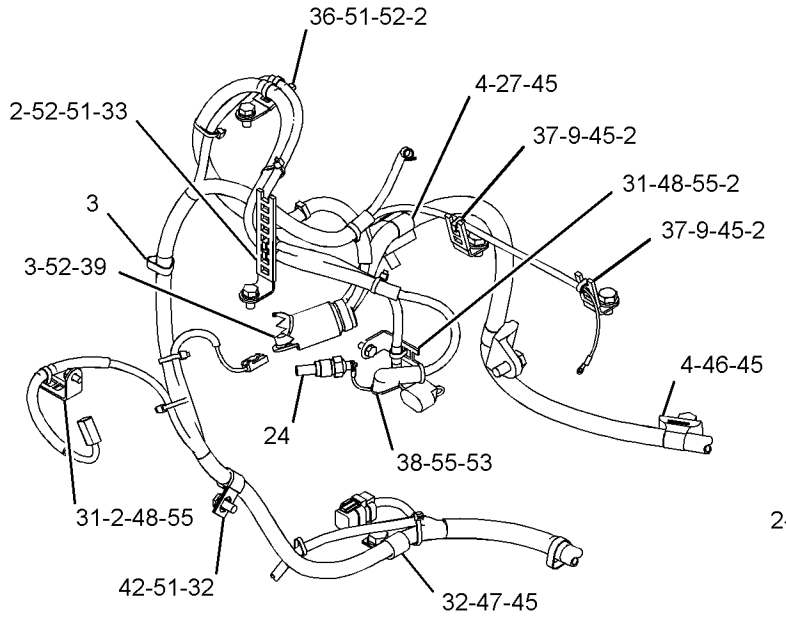

VIEW OF AREA A

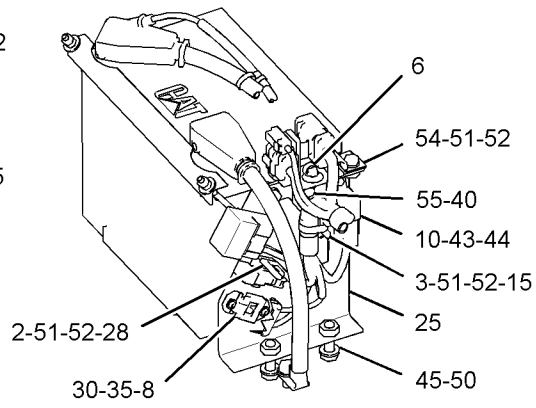

VIEW OF AREA B 180°

GRAPHIC #1 **<END>** g03037656

377-0325 CONTROL & MTG GP-ELECTRONIC

PART OF 377-8920 BLADE AR-STRAIGHT

AN ATTACHMENT

SMCS-1901, 7490, 7610 **i04560856**

NOTE	REF NO	GRAPHIC REF	PART NUMBER	QTY	PART NAME 1 2 3 4 5 6 (PRODUCT LEVEL)	SEE PAGE
	1	1	**6I-1418**	4	SPACER (8.2X12.7X28.7-MM THK)	
	2	1	**155-0576**	8	MOUNT-ISOLATION	
	3	1	**376-8859**	1	CONTROL GP-MACHINE (ELECTRONIC CONTROL)	
M	4	1	**7X-0818**	4	BOLT (M8X1.25X45-MM)	
	5	1	**8T-4224**	1	WASHER-HARD (8.8X16X2-MM THK)	
	6	1	**9N-0869**	8	WASHER-HARD (8.8X25.5X2-MM THK)	

M - METRIC PART

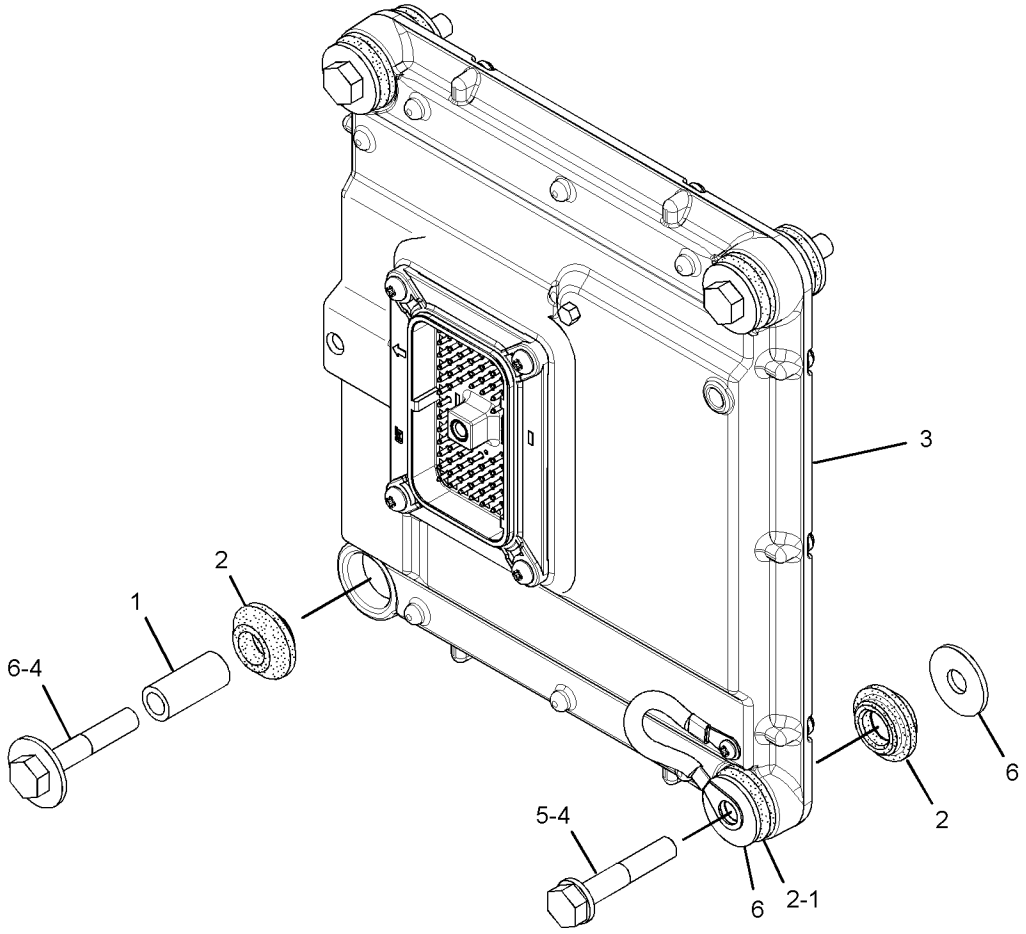

GRAPHIC #1 **<END>** g02766536

392-4756 ELECTRONICS GP-MACHINE

PART OF 376-6672 COMMON AR

SMCS-7610, 7620 **i05628630**

NOTE	PART NUMBER	QTY	PART NAME 1 2 3 4 5 6 (PRODUCT LEVEL)	SEE PAGE
	433-5567	1	SOFTWARE GP-MACHINE	
			<END>	

377-0326 ELECTRONICS GP-MONITOR

PART OF 376-6672 COMMON AR

SMCS-7490, 7601, 7603, 7610, 7620 **i05221683**

NOTE	PART NUMBER	QTY	PART NAME 1 2 3 4 5 6 (PRODUCT LEVEL)	SEE PAGE
	392-4768	1	SOFTWARE GP-MONITOR	
			—OR—	
	416-4255	1	SERVICE GP-MONITOR	
			(OPTIONAL SERVICE REPLACEMENT)(INCLUDES CONTROL GP & SOFTWARE)	
			<END>	

386-4647 GLOW PLUG GP

S/N: RKY1-1439

PART OF 380-1777 ENGINE AR-COMPLETE, 380-1776, 416-6081 ENGINE AR-PRIMARY

ALSO AN ATTACHMENT

SMCS-1412 **i04698932**

NOTE	REF NO	GRAPHIC REF	PART NUMBER	QTY	PART NAME 1 2 3 4 5 6 (PRODUCT LEVEL)	SEE PAGE
	1	1	**383-0198**	2	NUT-FLANGE	
	2	1	**383-0200**	3	NUT-FLANGE	
	3	1	**383-0214**	1	SEAL-O-RING	
	4	1	**383-0278**	2	STUD	
	5	1	**383-0419**	1	SOLENOID AS (ENGINE SHUTOFF)	
	6	1	**383-0538**	3	GLOW PLUG	
	7	1	**386-4790**	1	WIRE-GLOW PLUG	
	8	1	**383-0412**	1	GUIDE AS (FUEL SHUTOFF)	

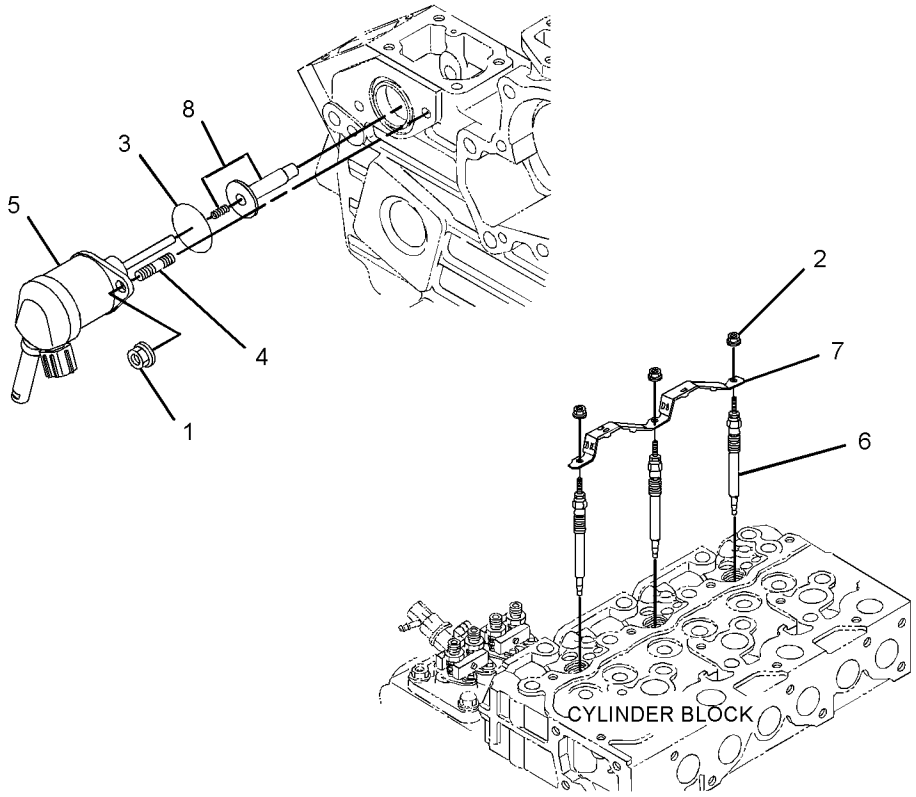

GRAPHIC #1 **<END>** g02906399

370-5357 HARNESS AS-CHASSIS

PART OF 370-5342 BATTERY & WIRING GP

AN ATTACHMENT

SMCS-1408 **i04916887**

NOTE	PART NUMBER	QTY	PART NAME 1 2 3 4 5 6 (PRODUCT LEVEL)	SEE PAGE
	7Y-3952	3	PLUG-CONNECTOR (2-PIN)	
	7Y-3995	1	CONNECTOR-PLUG	
	153-2602	1	RECEPTACLE-CONNECTOR (1-PIN)	
	8T-9636	1	FUSE (30-AMPERE)	
	185-1290	1	HOLDER-FUSE	
	232-6314	1	FUSE (60-AMPERE)	
	379-0828	2	FUSE (60-AMPERE)	
	225-4950	1	HOLDER AS-FUSE	
	107-3134	1	HOUSING-CONNECTOR	
	8T-8729	10	PIN-CONNECTOR (16-GA TO 18-GA)	
	9W-0852	8	PIN-CONNECTOR (14-GA TO 16-GA)	
	9X-3401	2	PIN-CONNECTOR (16-GA TO 18-GA)	
	155-2270	2	KIT-CONNECTING PLUG (2-PIN)	
			(EACH INCLUDES PLUG AS, WEDGE & INTERFACE SEAL)	
	230-4009	1	PLUG AS-CONNECTOR (12-PIN)	
	264-7034	1	SEAL-CONNECTOR	
	230-4011	4	PLUG AS-CONNECTOR (2-PIN)	
			(EACH INCLUDES)	
	264-7029	1	SEAL-CONNECTOR	
	230-5010	1	PLUG AS-CONNECTOR (6-PIN)	
	264-7032	1	SEAL-CONNECTOR	
	174-3016	1	PLUG AS-CONNECTOR (3-PIN)	
	8T-8737	7	PLUG-SEAL	
	107-3136	2	PLUG-SEAL	
	102-8803	1	KIT-RECEPTACLE (3-PIN)	
			(INCLUDES RECEPTACLE AS & WEDGE)	
	243-4505	4	RECEPTACLE AS-CONNECTOR (2-PIN)	
	243-4510	1	RECEPTACLE AS-CONNECTOR (12-PIN)	
	8T-8730	10	SOCKET-CONNECTOR (16-GA TO 18-GA)	
	9W-0844	14	SOCKET-CONNECTOR (14-GA TO 16-GA)	
	9X-3402	2	SOCKET-CONNECTOR (16-GA TO 18-GA)	
	3S-2093	4	STRAP-CABLE	
	232-6311	2	TERMINAL	
	363-9173	2	TERMINAL (14-GA TO 18-GA)	
	5P-1475	2	TERMINAL-FORK (14-GA TO 16-GA, NO. 8 SCREW)	
	131-1489	1	TERMINAL AS-RING (6-GA TO 8-GA)	
	6H-3592	1	TERMINAL-RING (6-GA TO 8-GA, 5/16-IN SCREW)	
E	**119-3662**		TUBE-HEAT SHRINK (10.85-MM DIA) (4-CM)	
	2L-8075	2	TERMINAL-RING (14-GA TO 16-GA, NO. 8 SCREW)	
	2L-8049	1	TERMINAL-RING (6-GA, NO. 10 SCREW)	
	272-6304	1	TERMINAL AS	
	272-6271	1	TERMINAL-RING	
E	**125-7875**		TUBE-HEAT SHRINK (7.44-MM DIA) (4-CM)	
	107-3135	1	TERMINAL (16-GA TO 20-GA)	
	7Y-3951	4	TERMINAL-BLADE (14-GA)	
	7Y-3993	2	TERMINAL-BLADE (12-GA)	
	7Y-3996	1	TERMINAL-BLADE (14-GA TO 20-GA)	
	7Y-5556	2	TERMINAL	
	116-0255	2	TERMINAL-BLADE (10-GA TO 20-GA)	
	153-2631	1	TERMINAL (FEMALE)	
E	**125-7874**		TUBE-HEAT SHRINK (5.72-MM DIA) (30-CM)	

E - ORDER BY THE CENTIMETER

<END>

370-5360 HARNESS AS-CHASSIS

PART OF 370-5345 BATTERY & WIRING GP

AN ATTACHMENT

SMCS-1408 **i04916889**

NOTE	PART NUMBER	QTY	PART NAME 1 2 3 4 5 6 (PRODUCT LEVEL)	SEE PAGE
	7Y-3952	2	PLUG-CONNECTOR (2-PIN)	
	7Y-3995	1	CONNECTOR-PLUG	
	153-2602	1	RECEPTACLE-CONNECTOR (1-PIN)	
	8T-9636	1	FUSE (30-AMPERE)	
	185-1290	1	HOLDER-FUSE	
	232-6314	1	FUSE (60-AMPERE)	
	379-0828	2	FUSE (60-AMPERE)	
	225-4950	1	HOLDER AS-FUSE	
	107-3134	1	HOUSING-CONNECTOR	
	8T-8729	10	PIN-CONNECTOR (16-GA TO 18-GA)	
	9W-0852	6	PIN-CONNECTOR (14-GA TO 16-GA)	
	9X-3401	2	PIN-CONNECTOR (16-GA TO 18-GA)	
	155-2270	1	KIT-CONNECTING PLUG (2-PIN)	
			(INCLUDES PLUG AS, WEDGE & INTERFACE SEAL)	
	230-4009	1	PLUG AS-CONNECTOR (12-PIN)	
	264-7034	1	SEAL-CONNECTOR	
	230-4011	2	PLUG AS-CONNECTOR (2-PIN)	
			(EACH INCLUDES)	
	264-7029	1	SEAL-CONNECTOR	
	230-5010	1	PLUG AS-CONNECTOR (6-PIN)	
	264-7032	1	SEAL-CONNECTOR	
	174-3016	1	PLUG AS-CONNECTOR (3-PIN)	
	8T-8737	5	PLUG-SEAL	
	107-3136	2	PLUG-SEAL	
	102-8803	1	KIT-RECEPTACLE (3-PIN)	
			(INCLUDES RECEPTACLE AS & WEDGE)	
	243-4505	2	RECEPTACLE AS-CONNECTOR (2-PIN)	
	243-4510	1	RECEPTACLE AS-CONNECTOR (12-PIN)	
	8T-8730	10	SOCKET-CONNECTOR (16-GA TO 18-GA)	
	9W-0844	8	SOCKET-CONNECTOR (14-GA TO 16-GA)	
	9X-3402	2	SOCKET-CONNECTOR (16-GA TO 18-GA)	
	3S-2093	3	STRAP-CABLE	
	232-6311	2	TERMINAL	
	363-7173	2	TUBE AS	
	5P-1475	2	TERMINAL-FORK (14-GA TO 16-GA, NO. 8 SCREW)	
	131-1489	1	TERMINAL AS-RING (6-GA TO 8-GA)	
	6H-3592	1	TERMINAL-RING (6-GA TO 8-GA, 5/16-IN SCREW)	
E	**119-3662**		TUBE-HEAT SHRINK (10.85-MM DIA) (4-CM)	
	2L-8075	2	TERMINAL-RING (14-GA TO 16-GA, NO. 8 SCREW)	
	2L-8049	1	TERMINAL-RING (6-GA, NO. 10 SCREW)	
	272-6304	1	TERMINAL AS	
	272-6271	1	TERMINAL-RING	
E	**125-7875**		TUBE-HEAT SHRINK (7.44-MM DIA) (4-CM)	
	107-3135	1	TERMINAL (16-GA TO 20-GA)	
	7Y-3951	2	TERMINAL-BLADE (14-GA)	
	7Y-3993	2	TERMINAL-BLADE (12-GA)	
	7Y-3996	1	TERMINAL-BLADE (14-GA TO 20-GA)	
	7Y-5556	2	TERMINAL	
	116-0255	2	TERMINAL-BLADE (10-GA TO 20-GA)	
	153-2631	1	TERMINAL (FEMALE)	
E	**125-7874**		TUBE-HEAT SHRINK (5.72-MM DIA) (25-CM)	

E - ORDER BY THE CENTIMETER

<END>

425-7013 HARNESS AS-CONSOLE–CANOPY

S/N: RKY1442-UP
PART OF 370-5350 WIRING GP-CONSOLE
AN ATTACHMENT

SMCS-1408, 7451

i05384852

NOTE	PART NUMBER	QTY	PART NAME 1 2 3 4 5 6 (PRODUCT LEVEL)	SEE PAGE
	116-4159	1	BASE	
	112-9609	1	BLOCK-MICRORELAY	
	124-9636	1	BLOCK-MINIFUSE	
	116-4157	1	BLOCK-RELAY & FUSE	
	8C-6354	1	CAP-RECEPTACLE (ET CONNECTOR)	
	111-7898	3	CONNECTOR	
	126-1774	1	COVER-CONNECTOR	
	113-8490	8	FUSE (10-AMPERE)	
	113-8491	4	FUSE (15-AMPERE)	
	113-8492	1	FUSE (20-AMPERE)	
	124-3548	2	FUSE (30-AMPERE)	
	141-2759	3	FUSE (5-AMPERE)	
	128-2032	6	LATCH	
	112-9610	2	LOCK-MICRORELAY	
	124-9637	1	LOCK-MINIFUSE	
	116-4158	1	LOCK-RELAY & FUSE	
	8T-8729	6	PIN-CONNECTOR (16-GA TO 18-GA)	
	9W-0852	5	PIN-CONNECTOR (14-GA TO 16-GA)	
	9X-3401	8	PIN-CONNECTOR (16-GA TO 18-GA)	
			–OR–	
	126-1767	8	PIN-CONNECTOR (14-GA TO 16-GA)	
	147-1444	1	PLUG AS-CONNECTOR (70-PIN)	
	159-9322	1	SEAL-O-RING	
	155-2270	8	KIT-CONNECTING PLUG (2-PIN)	
	155-2274	2	KIT-CONNECTING PLUG (6-PIN)	
			(EACH PLUG KIT INCLUDES PLUG AS, WEDGE & INTERFACE SEAL)	
	174-3016	1	PLUG AS-CONNECTOR (3-PIN)	
	230-4009	1	PLUG AS-CONNECTOR (12-PIN)	
	264-7034	1	SEAL-CONNECTOR	
	230-4011	3	PLUG AS-CONNECTOR (2-PIN)	
			(EACH INCLUDES)	
	264-7029	1	SEAL-CONNECTOR	
	230-4013	2	PLUG AS-CONNECTOR (3-PIN)	
			(EACH INCLUDES)	
	264-7030	1	SEAL-CONNECTOR	
	230-5008	2	PLUG AS-CONNECTOR (4-PIN)	
			(EACH INCLUDES)	
	264-7031	1	SEAL-CONNECTOR	
	230-5010	2	PLUG AS-CONNECTOR (6-PIN)	
			(EACH INCLUDES)	
	264-7032	1	SEAL-CONNECTOR	
	275-6785	1	PLUG AS-CONNECTOR	
	379-0830	1	PLUG AS-CONNECTOR	
	8T-8737	49	PLUG-SEAL	
	110-9198	5	PLUG-SEAL	
	340-2566	23	PLUG-SEAL	
	102-8803	1	KIT-RECEPTACLE (3-PIN)	
			(INCLUDES RECEPTACLE AS & WEDGE)	
	243-4505	1	RECEPTACLE AS-CONNECTOR (2-PIN)	
	243-4506	1	RECEPTACLE AS-CONNECTOR (3-PIN)	
	243-4510	1	RECEPTACLE AS-CONNECTOR (12-PIN)	
	9W-1951	1	RECEPTACLE-CONNECTOR (9-PIN)	
	153-2602	3	RECEPTACLE-CONNECTOR (1-PIN)	
	8T-8730	91	SOCKET-CONNECTOR (16-GA TO 18-GA)	
	9W-0844	10	SOCKET-CONNECTOR (14-GA TO 16-GA)	

425-7013 **HARNESS AS-CONSOLE (*contd.*)** **i05384852**

NOTE	PART NUMBER	QTY	PART NAME 1 2 3 4 5 6 (PRODUCT LEVEL)	SEE PAGE
	9X-3402	2	SOCKET-CONNECTOR (16-GA TO 18-GA)	
			—OR—	
	126-1768	2	SOCKET-CONNECTOR (14-GA TO 16-GA)	
	167-3593	1	STRAP	
	3S-2093	14	STRAP-CABLE	
	122-4401	5	TERMINAL	
	153-2631	3	TERMINAL (FEMALE)	
	363-9173	2	TERMINAL (14-GA TO 18-GA)	
	3T-4693	2	TERMINAL-RING (8-GA, 7/16-IN SCREW)	
			—OR—	
	3T-4696	2	TERMINAL-RING (10-GA TO 12-GA, 7/16-IN SCREW)	
	112-9604	6	TERMINAL-BLADE (16-GA TO 18-GA)	
	112-9611	19	TERMINAL-BLADE	
	112-9612	20	TERMINAL-BLADE	
	116-4160	3	TERMINAL-BLADE (12-GA TO 14-GA)	
	116-4161	9	TERMINAL-BLADE (16-GA TO 18-GA)	
	113-5099	2	TERMINAL-BUS	
	113-5100	2	TERMINAL-BUS	
	3E-9179	3	TERMINAL-RECEPTACLE (14-GA TO 18-GA)	
E	**125-7874**		TUBE-HEAT SHRINK (5.72-MM DIA) (110-CM)	

E - ORDER BY THE CENTIMETER

<END>

425-7014 HARNESS AS-CONSOLE—CAB

S/N: RKY1442-UP

PART OF 370-5349 WIRING GP-CONSOLE

AN ATTACHMENT

SMCS-1408, 7451

i05384849

NOTE	PART NUMBER	QTY	PART NAME 1 2 3 4 5 6 (PRODUCT LEVEL)	SEE PAGE
	116-4159	1	BASE	
	112-9609	1	BLOCK-MICRORELAY	
	124-9636	1	BLOCK-MINIFUSE	
	116-4157	1	BLOCK-RELAY & FUSE	
	8C-6354	1	CAP-RECEPTACLE (ET CONNECTOR)	
	111-7898	4	CONNECTOR	
	153-2602	3	RECEPTACLE-CONNECTOR (1-PIN)	
	126-1774	1	COVER-CONNECTOR	
	113-8490	9	FUSE (10-AMPERE)	
	113-8491	4	FUSE (15-AMPERE)	
	113-8492	2	FUSE (20-AMPERE)	
	124-3548	3	FUSE (30-AMPERE)	
	141-2759	3	FUSE (5-AMPERE)	
	128-2032	6	LATCH	
	112-9610	2	LOCK-MICRORELAY	
	124-9637	1	LOCK-MINIFUSE	
	116-4158	1	LOCK-RELAY & FUSE	
	8T-8729	8	PIN-CONNECTOR (16-GA TO 18-GA)	
	9W-0852	11	PIN-CONNECTOR (14-GA TO 16-GA)	
	9X-3401	8	PIN-CONNECTOR (16-GA TO 18-GA)	
	126-1767	6	PIN-CONNECTOR (14-GA TO 16-GA)	
	275-6785	1	PLUG AS-CONNECTOR	
	147-1444	1	PLUG AS-CONNECTOR (70-PIN)	
	159-9322	1	SEAL-O-RING	
	155-2270	8	KIT-CONNECTING PLUG (2-PIN)	
	155-2274	2	KIT-CONNECTING PLUG (6-PIN)	
			(EACH PLUG KIT INCLUDES PLUG AS,WEDGE & INTERFACE SEAL)	
	230-4009	1	PLUG AS-CONNECTOR (12-PIN)	
	264-7034	1	SEAL-CONNECTOR	
	230-4011	3	PLUG AS-CONNECTOR (2-PIN)	
			(EACH INCLUDES)	
	264-7029	1	SEAL-CONNECTOR	
	230-4013	1	PLUG AS-CONNECTOR (3-PIN)	
	264-7030	1	SEAL-CONNECTOR	
	230-5008	3	PLUG AS-CONNECTOR (4-PIN)	
			(EACH INCLUDES)	
	264-7031	1	SEAL-CONNECTOR	
	230-5010	2	PLUG AS-CONNECTOR (6-PIN)	
			(EACH INCLUDES)	
	264-7032	1	SEAL-CONNECTOR	
	379-0830	1	PLUG AS-CONNECTOR	
	174-3016	1	PLUG AS-CONNECTOR (3-PIN)	
	8T-8737	47	PLUG-SEAL	
	110-9198	5	PLUG-SEAL	
	340-2566	23	PLUG-SEAL	
	102-8803	1	KIT-RECEPTACLE (3-PIN)	
			(INCLUDES RECEPTACLE AS & WEDGE)	
	243-4505	1	RECEPTACLE AS-CONNECTOR (2-PIN)	
	243-4510	2	RECEPTACLE AS-CONNECTOR (12-PIN)	
	9W-1951	1	RECEPTACLE-CONNECTOR (9-PIN)	
	325-9922	2	SEAL	
	8T-8730	92	SOCKET-CONNECTOR (16-GA TO 18-GA)	
	9W-0844	13	SOCKET-CONNECTOR (14-GA TO 16-GA)	
	9X-3402	2	SOCKET-CONNECTOR (16-GA TO 18-GA)	
			—OR—	

425-7014 **HARNESS AS-CONSOLE (*contd.*)** **i05384849**

NOTE	PART NUMBER	QTY	PART NAME 1 2 3 4 5 6 (PRODUCT LEVEL)	SEE PAGE
	126-1768	2	SOCKET-CONNECTOR (14-GA TO 16-GA)	
	340-2567	11	WIRE AS	
	167-3593	1	STRAP	
	3S-2093	15	STRAP-CABLE	
	122-4401	8	TERMINAL	
	363-9173	4	TERMINAL (14-GA TO 18-GA)	
	2L-8079	1	TERMINAL-RING (14-GA TO 16-GA, 3/8-IN SCREW)	
	3T-4693	2	TERMINAL-RING (8-GA, 7/16-IN SCREW)	
			—OR—	
	3T-4696	2	TERMINAL-RING (10-GA TO 12-GA, 7/16-IN SCREW)	
	112-9604	6	TERMINAL-BLADE (16-GA TO 18-GA)	
	112-9611	19	TERMINAL-BLADE	
	112-9612	20	TERMINAL-BLADE	
	116-4160	4	TERMINAL-BLADE (12-GA TO 14-GA)	
	116-4161	11	TERMINAL-BLADE (16-GA TO 18-GA)	
	113-5099	2	TERMINAL-BUS	
	113-5100	3	TERMINAL-BUS	
	153-2631	3	TERMINAL (FEMALE)	
	3E-9179	7	TERMINAL-RECEPTACLE (14-GA TO 18-GA)	
E	**125-7874**		TUBE-HEAT SHRINK (5.72-MM DIA) (120-CM)	

E - ORDER BY THE CENTIMETER

<END>

383-3164 HARNESS AS-CONTROL—CAB, CANOPY

PART OF 383-3163 WIRING GP-CONSOLE

AN ATTACHMENT

SMCS-1408 **i05046509**

NOTE	PART NUMBER	QTY	PART NAME 1 2 3 4 5 6 (PRODUCT LEVEL)	SEE PAGE
	155-2270	2	KIT-CONNECTING PLUG (2-PIN)	
			(EACH INCLUDES PLUG AS, WEDGE & INTERFACE SEAL)	
	8T-8729	3	PIN-CONNECTOR (16-GA TO 18-GA)	
	8T-8737	1	PLUG-SEAL	
	243-4507	1	RECEPTACLE AS-CONNECTOR (4-PIN)	
	8T-8730	4	SOCKET-CONNECTOR (16-GA TO 18-GA)	
E	**125-7874**		TUBE-HEAT SHRINK (5.72-MM DIA) (5-CM)	

E - ORDER BY THE CENTIMETER

<END>

381-9236 HARNESS AS-QUICK COUPLER

PART OF 381-9235 WIRING GP-QUICK COUPLER

AN ATTACHMENT

SMCS-1408, 6129 **i05297807**

NOTE	PART NUMBER	QTY	PART NAME 1 2 3 4 5 6 (PRODUCT LEVEL)	SEE PAGE
	8T-8729	2	PIN-CONNECTOR (16-GA TO 18-GA)	
	9W-9615	1	RING	
	155-2270	2	KIT-CONNECTING PLUG (2-PIN)	
			(EACH PLUG KIT INCLUDES PLUG AS, WEDGE & INTERFACE SEAL)	
	8T-8737	1	PLUG-SEAL	
	243-4507	1	RECEPTACLE AS-CONNECTOR (4-PIN)	
	8T-8730	4	SOCKET-CONNECTOR (16-GA TO 18-GA)	
E	**125-7874**		TUBE-HEAT SHRINK (5.72-MM DIA) (5-CM)	

E - ORDER BY THE CENTIMETER

<END>

422-2949 HARNESS AS-SENSOR—OVERLOAD

PART OF 422-2948 WIRING GP-OVERLOAD WARNING

AN ATTACHMENT

SMCS-1408, 1901 **i05376431**

NOTE	PART NUMBER	QTY	PART NAME 1 2 3 4 5 6 (PRODUCT LEVEL)	SEE PAGE
E	**103-2529**		HOSE (122-CM)	
	8T-8729	3	PIN-CONNECTOR (16-GA TO 18-GA)	
	230-4013	1	PLUG AS-CONNECTOR (3-PIN)	
	264-7030	1	SEAL-CONNECTOR	
	243-4506	1	RECEPTACLE AS-CONNECTOR (3-PIN)	
	8T-8730	3	SOCKET-CONNECTOR (16-GA TO 18-GA)	

E - ORDER BY THE CENTIMETER

<END>

383-3158 HARNESS AS-SOLENOID—CAB, CANOPY

PART OF 383-3163 WIRING GP-CONSOLE

AN ATTACHMENT

SMCS-1408 **i04916635**

NOTE	PART NUMBER	QTY	PART NAME 1 2 3 4 5 6 (PRODUCT LEVEL)	SEE PAGE
	8T-8729	6	PIN-CONNECTOR (16-GA TO 18-GA)	
	155-2271	1	KIT-CONNECTING PLUG (4-PIN)	
			(INCLUDES PLUG AS, WEDGE & INTERFACE SEAL)	
	230-5008	1	PLUG AS-CONNECTOR (4-PIN)	
	264-7031	1	SEAL-CONNECTOR	
	8T-8737	2	PLUG-SEAL	
	243-4508	1	RECEPTACLE AS-CONNECTOR (6-PIN)	
	8T-8730	6	SOCKET-CONNECTOR (16-GA TO 18-GA)	

<END>

378-9630 HEATER GP-JACKET WATER

120-VOLT

PART OF 380-2485 HEATER GP-JACKET WATER

AN ATTACHMENT

SMCS-1383 **i04559503**

NOTE	REF NO	GRAPHIC REF	PART NUMBER	QTY	PART NAME 1 2 3 4 5 6 (PRODUCT LEVEL)	SEE PAGE
	1	1	**3S-2093**	2	STRAP-CABLE	
	2	1	**251-1391**	1	BOLT (M10X1.25X16-MM)	
	3	1	**321-6069**	1	CORD AS-HEATER ELEMENT (120-VOLT)	
	4	1	**378-9631**	1	HEATER AS	
	5	1	**381-7473**	1	HARNESS AS-WIRING (JACKET WATER HEATER)	
		1	**8T-8737**	3	PLUG-SEAL	
		1	**155-2260**	1	KIT-CONNECTING PLUG (3-PIN)	
					(INCLUDES PLUG AS, WEDGE & INTERFACE SEAL)	
	6	1	**4P-8134**	1	CLIP	
	7	1	**8T-4121**	1	WASHER-HARD (11X21X2.5-MM THK)	

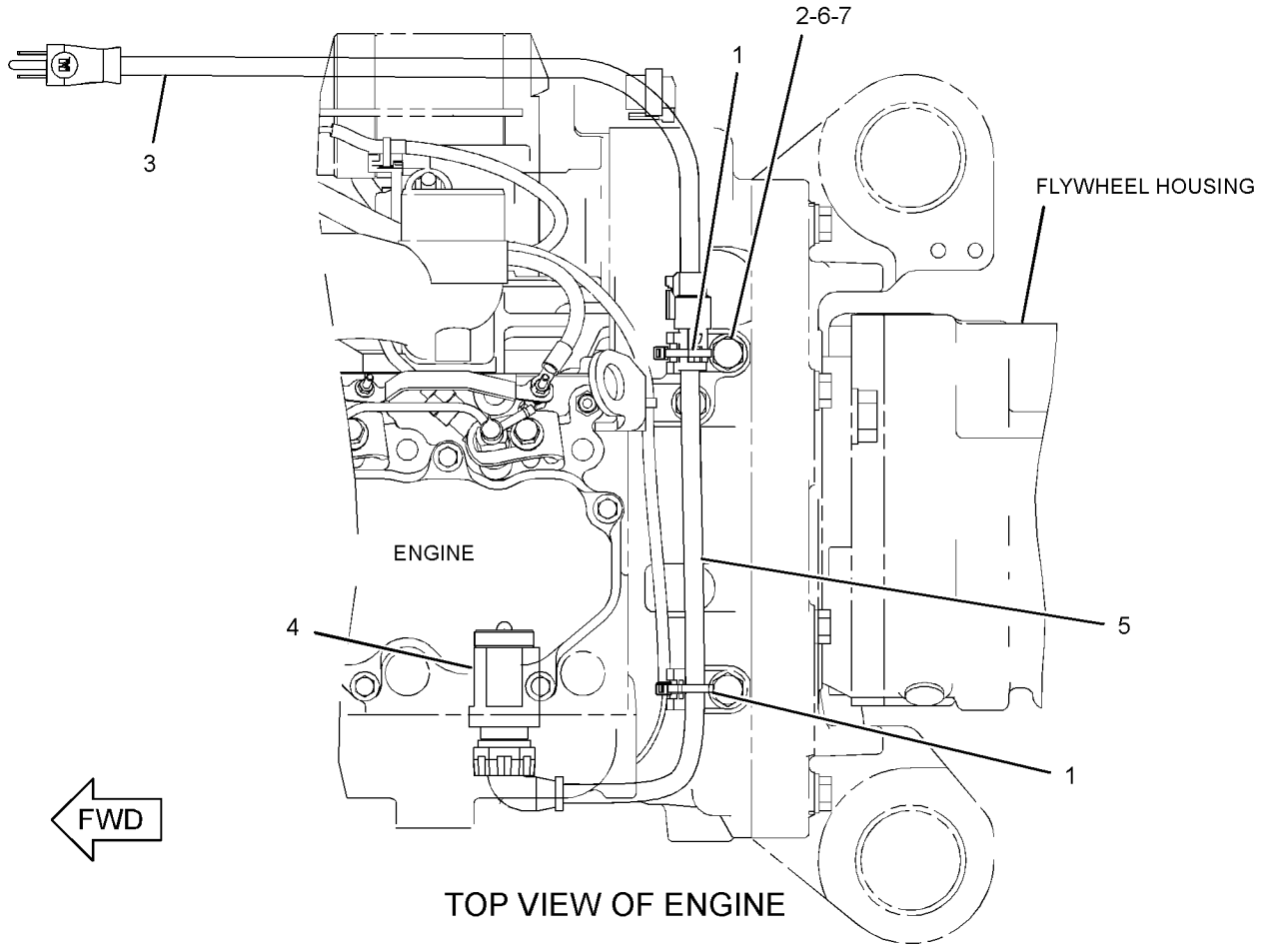

TOP VIEW OF ENGINE

GRAPHIC #1 **<END>** g02776877

380-2485 HEATER GP-JACKET WATER

AN ATTACHMENT

SMCS-1383 **i04629186**

NOTE	PART NUMBER	QTY	PART NAME 1 2 3 4 5 6 (PRODUCT LEVEL)	SEE PAGE
Y	*378-9630*	1	HEATER GP-JACKET WATER	87

Y - SEPARATE ILLUSTRATION

<END>

233-0099 LAMP GP-FLOOD–BOOM

12-VOLT

PART OF 292-5739 LIGHTING GP-FLOOD

SMCS-1429, 1434

i05298542

NOTE	REF NO	GRAPHIC REF	PART NUMBER	QTY	PART NAME 1 2 3 4 5 6 (PRODUCT LEVEL)	SEE PAGE
	1	1	**142-9572**	1	LAMP (12-VOLT, 55-WATT)	
M	2	1	**6V-9492**	2	SCREW-MACHINE (M4X0.7X25-MM)	
	3	1	**096-6166**	2	WASHER-HARD (4.5X9X1-MM THK)	
	4	1	**8T-4223**	1	WASHER-HARD (13.5X25.5X3-MM THK)	
M	5	1	**9X-8488**	1	NUT-HEX THIN (M12X1.5-THD)	

M - METRIC PART

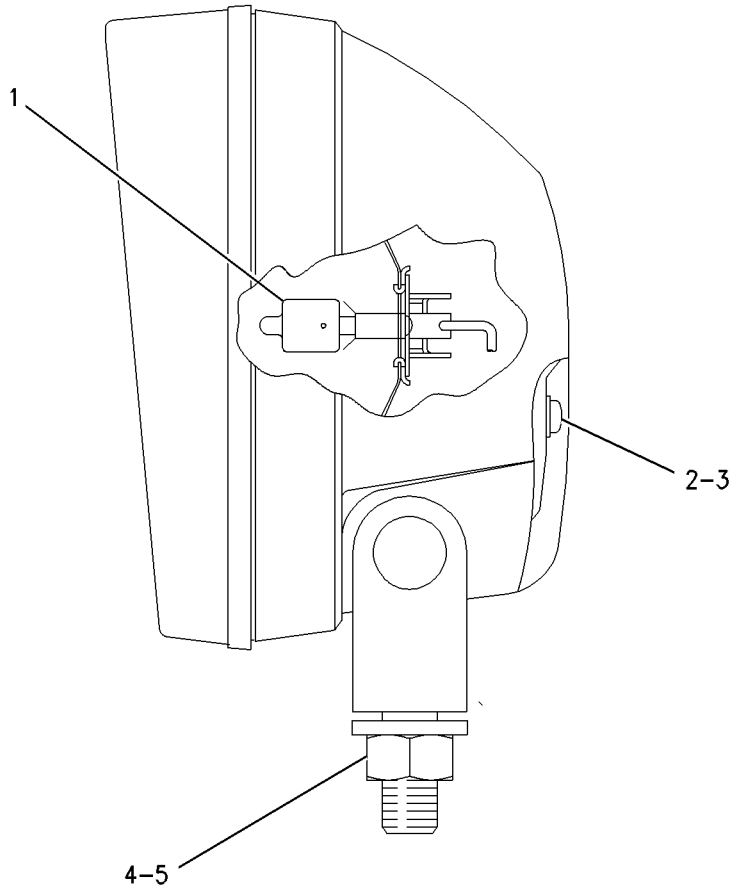

GRAPHIC #1

<END>

g00861794

381-9232 LIGHTING AR-FLOOD—CANOPY

AN ATTACHMENT

SMCS-1434 **i04629194**

NOTE	PART NUMBER	QTY	PART NAME 1 2 3 4 5 6 (PRODUCT LEVEL)	SEE PAGE
Y	*370-5352*	1	LIGHTING GP-FLOOD (CANOPY)	94

Y - SEPARATE ILLUSTRATION

<END>

266-6843 LIGHTING GP-FLOOD–CAB

CANNOT BE USED WITH CANOPY
PART OF 355-3411 LIGHTING GP-FLOOD
AN ATTACHMENT

SMCS-1434 **i03964912**

NOTE	REF NO	GRAPHIC REF	PART NUMBER	QTY	PART NAME 1 2 3 4 5 6 (PRODUCT LEVEL)	SEE PAGE
	1	1	**198-0852**	1	LAMP GP-FLOOD (12-VOLT) (CAB)	
		1	**142-9572**	1	LAMP (12-VOLT, 55-WATT)	
	2	1	**8T-4121**	1	WASHER-HARD (11X21X2.5-MM THK)	
M	3	1	**8T-4137**	1	BOLT (M10X1.5X20-MM)	
	4	1	**3S-2093**	1	STRAP-CABLE	

M - METRIC PART

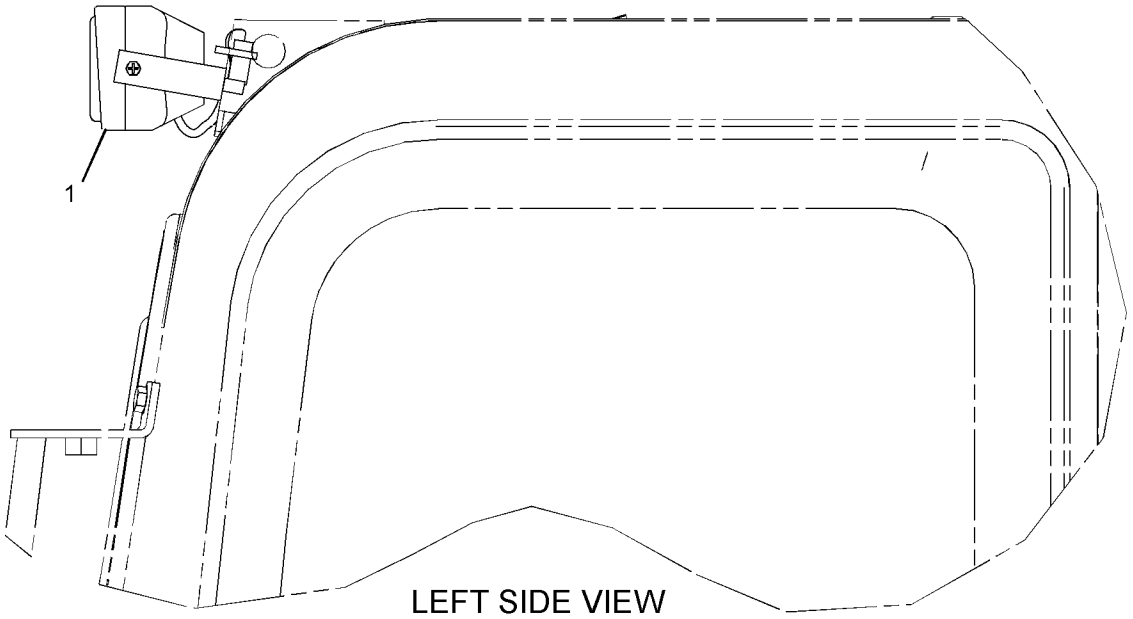

LEFT SIDE VIEW

GRAPHIC #1 **<END>** g01205353

292-5739 LIGHTING GP-FLOOD–BOOM

PART OF 376-6680 BOOM AR

SMCS-1434 **i03970700**

NOTE	REF NO	GRAPHIC REF	PART NUMBER	QTY	PART NAME 1 2 3 4 5 6 (PRODUCT LEVEL)	SEE PAGE
	1	1	**3S-2093**	1	STRAP-CABLE	
Y	2	1	**233-0099**	1	LAMP GP-FLOOD (12-VOLT) (BOOM)	89
	3	1	**292-5740**	1	PLATE	
	4	1	**5P-1076**	1	WASHER-HARD (13.5X30X4-MM THK)	
M	5	1	**8T-4192**	1	BOLT (M12X1.75X25-MM)	
	6	1	**8T-4223**	1	WASHER-HARD (13.5X25.5X3-MM THK)	

M - METRIC PART
Y - SEPARATE ILLUSTRATION

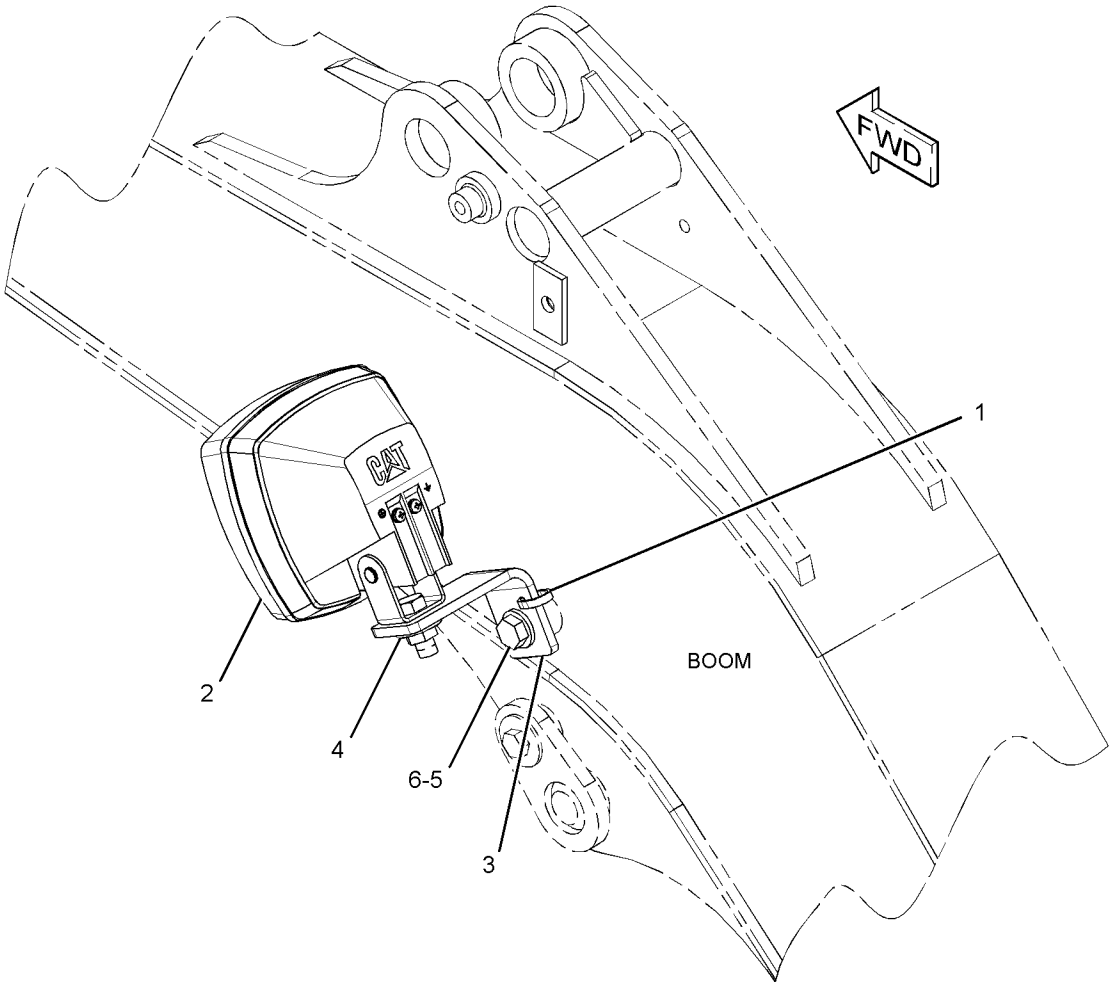

GRAPHIC #1 **<END>** g01311751

355-3411 LIGHTING GP-FLOOD–CAB
AN ATTACHMENT

SMCS-1434 **i04006591**

NOTE	PART NUMBER	QTY	PART NAME 1 2 3 4 5 6 (PRODUCT LEVEL)	SEE PAGE
Y	*266-6843*	1	LIGHTING GP-FLOOD (CAB)	91

Y - SEPARATE ILLUSTRATION

<END>

370-5352 LIGHTING GP-FLOOD—CANOPY

PART OF 381-9232 LIGHTING AR-FLOOD

AN ATTACHMENT

SMCS-1434 **i05425787**

NOTE	REF NO	GRAPHIC REF	PART NUMBER	QTY	PART NAME 1 2 3 4 5 6 (PRODUCT LEVEL)	SEE PAGE
	1	1	**3S-2093**	11	STRAP-CABLE	
	2	1	**163-6795**	1	STRAP-CABLE	
	3	1	**198-0852**	1	LAMP GP-FLOOD (12-VOLT)	
		1	**142-9572**	1	LAMP (12-VOLT, 55-WATT)	
	4	1	**298-0663**	1	CLIP	
	5	1	**370-5371**	1	HARNESS AS-LIGHTING (CANOPY)	
		1	**230-4011**	1	PLUG AS-CONNECTOR (2-PIN)	
		1	**264-7029**	1	SEAL-CONNECTOR	
		1	**8T-8730**	1	SOCKET-CONNECTOR (16-GA TO 18-GA)	
		1	**9W-0844**	1	SOCKET-CONNECTOR (14-GA TO 16-GA)	
		1	*7Y-3966*	1	TERMINAL AS	
		1	**7Y-3962**	1	TERMINAL-BULLET (MALE)	
		1	**7Y-3964**	1	TUBE (CONNECTOR TERMINAL)	
		1	*7Y-3967*	1	TERMINAL AS	
		1	**7Y-3963**	1	TERMINAL-BULLET (FEMALE)	
		1	**7Y-3965**	1	TUBE (RECEPTACLE TERMINAL)	
	6	1	**8T-4121**	1	WASHER-HARD (11X21X2.5-MM THK)	
M	7	1	**8T-4137**	1	BOLT (M10X1.5X20-MM)	
M	8	1	**8T-4189**	1	BOLT (M8X1.25X20-MM)	
	9	1	**8T-4224**	1	WASHER-HARD (8.8X16X2-MM THK)	

M - METRIC PART

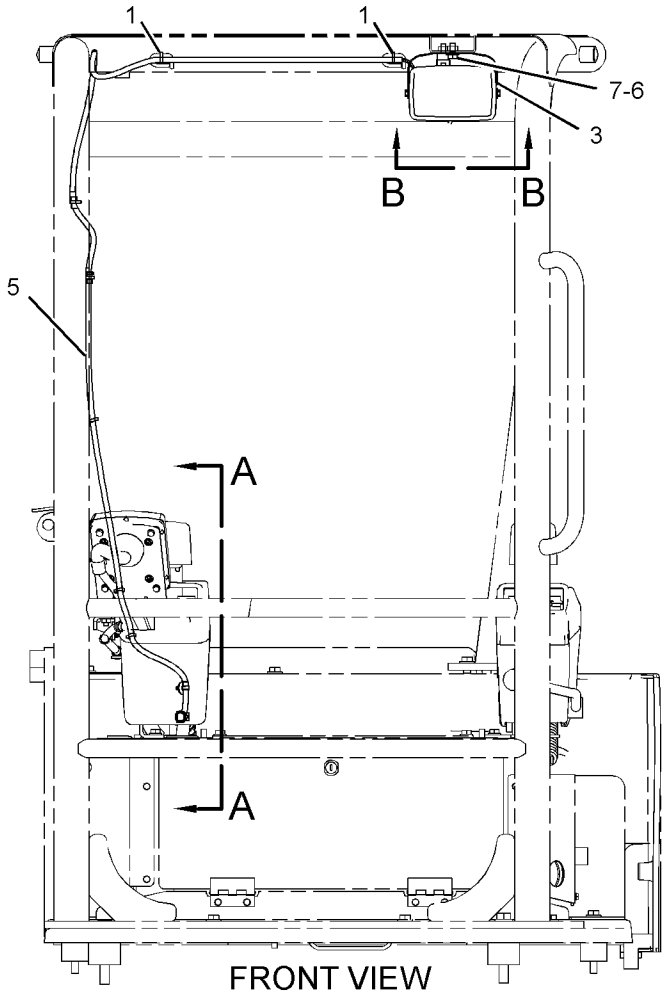

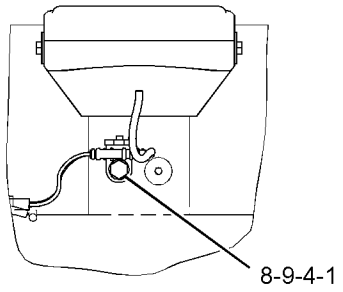

VIEW B-B

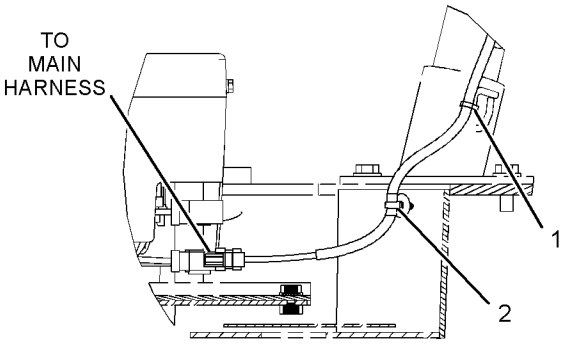

VIEW A-A

GRAPHIC #1 **<END>** g02791406

385-1277 MOUNTING GP-ELECTRONIC CONTROL

PART OF 377-8930 BLADE AR-ANGLING
AN ATTACHMENT

SMCS-1901, 7610

i04728120

NOTE	REF NO	GRAPHIC REF	PART NUMBER	QTY	PART NAME 1 2 3 4 5 6 (PRODUCT LEVEL)	SEE PAGE
	1	1	**6I-1418**	4	SPACER (8.2X12.7X28.7-MM THK)	
	2	1	**155-0576**	8	MOUNT-ISOLATION	
	3	1	**9N-0869**	8	WASHER-HARD (8.8X25.5X2-MM THK)	
M	4	1	**7X-0818**	4	BOLT (M8X1.25X45-MM)	
	5	1	**8T-4224**	1	WASHER-HARD (8.8X16X2-MM THK)	

M - METRIC PART

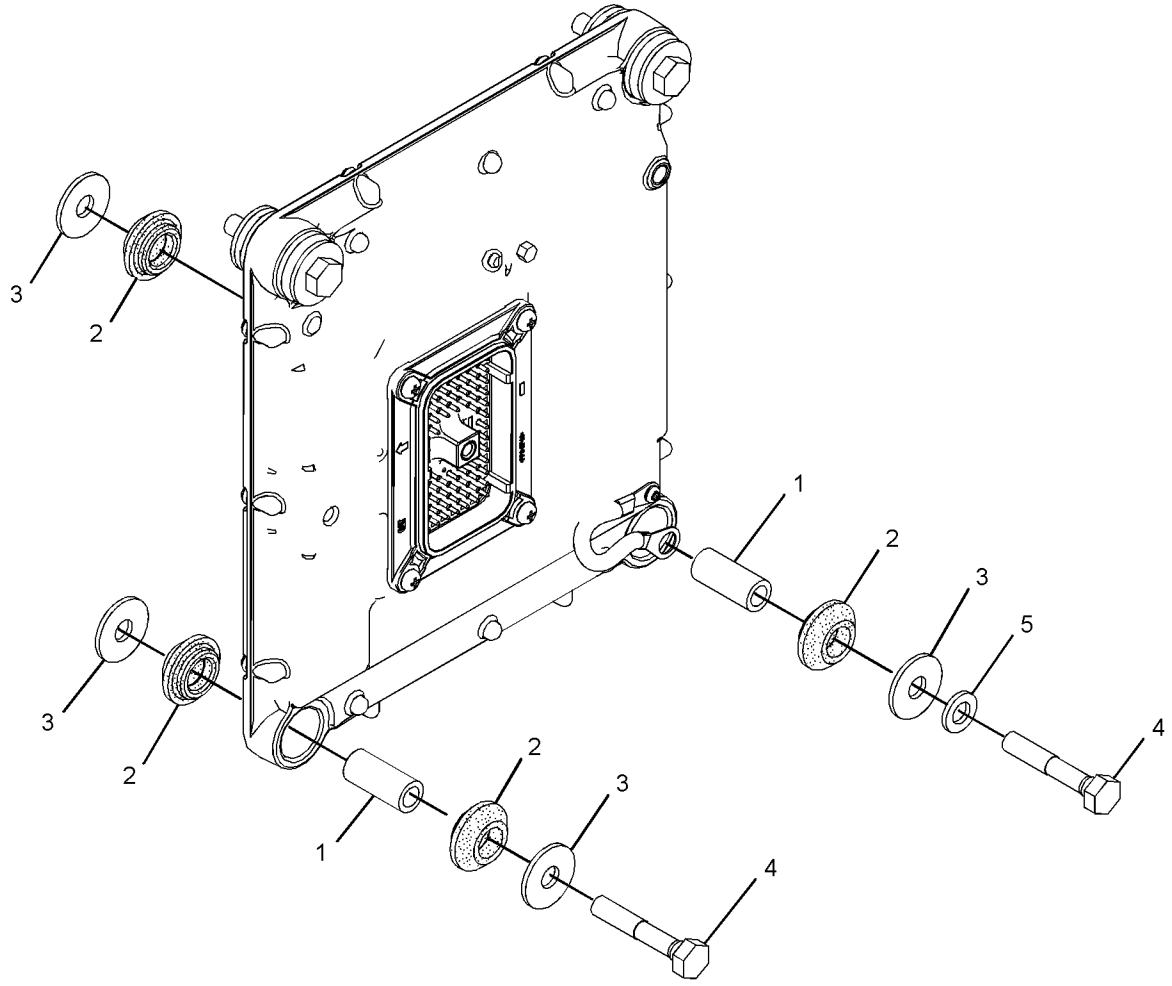

GRAPHIC #1 **<END>** g02853159

383-0154 STARTING MOTOR GP-ELECTRIC

S/N: RKY1-1439
12-VOLT
PART OF 380-1777 ENGINE AR-COMPLETE, 380-1776, 416-6081 ENGINE AR-PRIMARY
ALSO AN ATTACHMENT

SMCS-1453 **i04603473**

NOTE	REF NO	GRAPHIC REF	PART NUMBER	QTY	PART NAME 1 2 3 4 5 6 (PRODUCT LEVEL)	SEE PAGE
	1	1	**383-0179**	1	BOLT	
	2	1	**383-0181**	1	STUD	
	3	1	**383-0196**	1	NUT-HEX	
	4	1	**383-0201**	1	NUT-FLANGE	
	5	1	**383-0207**	1	WASHER	
	6	1	**383-0589**	1	STARTING MOTOR AS	

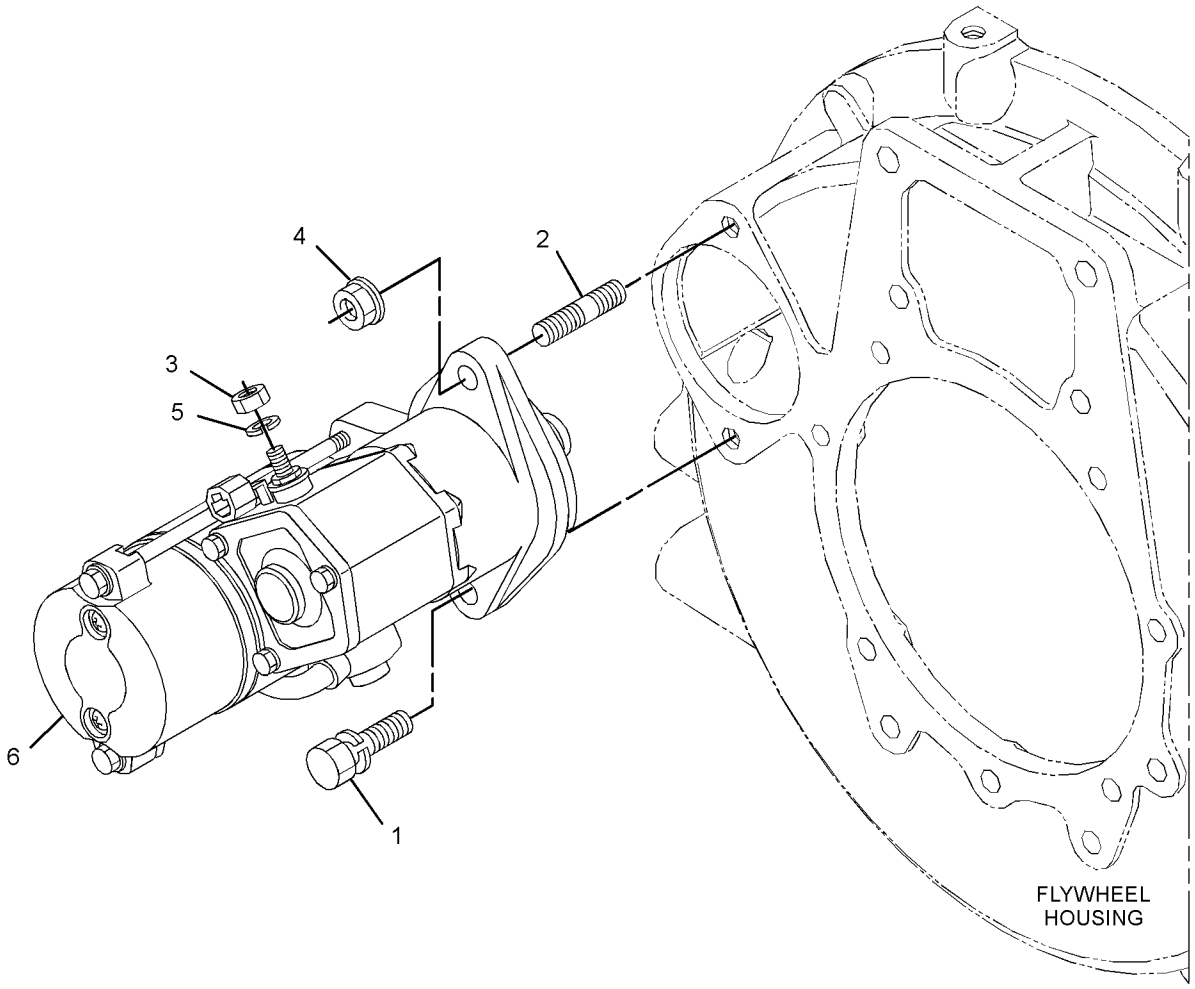

GRAPHIC #1 **<END>** g02791238

319-4420 SWITCH GP-ROTARY–THROTTLE POSITION

PART OF 370-5349, 370-5350 WIRING GP-CONSOLE
AN ATTACHMENT

SMCS-7332 **i04655678**

NOTE	REF NO	GRAPHIC REF	PART NUMBER	QTY	PART NAME 1 2 3 4 5 6 (PRODUCT LEVEL)	SEE PAGE
	1	1	**243-4508**	1	RECEPTACLE AS-CONNECTOR (6-PIN)	
	2	1	**9X-3401**	5	PIN-CONNECTOR (16-GA TO 18-GA)	
					–OR–	
		1	**126-1767**	5	PIN-CONNECTOR (14-GA TO 16-GA)	
	3	1	**8T-8737**	1	PLUG-SEAL	
M	4	1	**7Y-5458**	1	NUT (M12X1-THD)	
	5	1	**7Y-5464**	1	WASHER (12.2X15.4X0.5-MM THK)	
	6	1	**106-0210**	1	SEAL	

M - METRIC PART

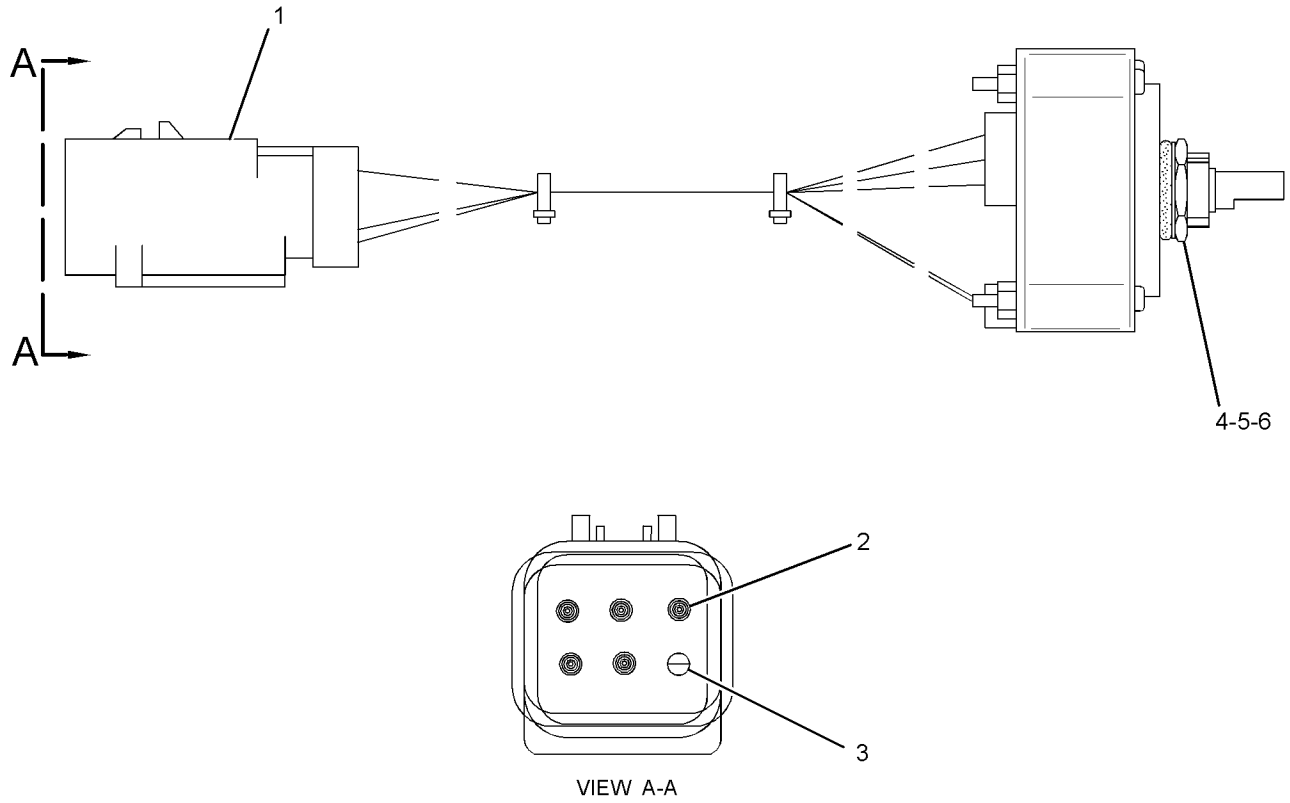

GRAPHIC #1 **<END>** g01588034

381-9239 WIRING GP-CAB—CANOPY
AN ATTACHMENT

SMCS-1408, 7301 **i04629196**

NOTE	PART NUMBER	QTY	PART NAME 1 2 3 4 5 6 (PRODUCT LEVEL)	SEE PAGE
Y	*370-5351*	1	WIRING GP-LIGHTING	114

Y - SEPARATE ILLUSTRATION

<END>

370-5349 WIRING GP-CONSOLE–CAB

S/N: RKY1-1441

PART OF 376-6692, 376-6696, 383-5927, 383-5928 CAB AR

AN ATTACHMENT

SMCS-1408 **i05209228**

NOTE	REF NO	GRAPHIC REF	PART NUMBER	QTY	PART NAME 1 2 3 4 5 6 (PRODUCT LEVEL)	SEE PAGE
	1	1	**3S-2093**	8	STRAP-CABLE	
	2	1	**7K-1181**	22	STRAP-CABLE	
	3	1	**8X-5804**	1	STRAP AS-GROUND	
	4	1	**109-2356**	4	PLUG	
	5	1	**110-6109**	1	KNOB-CONTROL (FLOW CONTROL SWITCH)	
	6	1	**116-7471**	1	PULLER-MINIFUSE	
	7	1	**140-9378**	6	RELAY AS (12-VOLT)	
	8	1	**158-7802**	1	SWITCH AS-ROCKER (WINDOW WASHER, WIPER)	
		1	**111-7899**	1	GASKET	
	9	1	**163-6795**	3	STRAP-CABLE	
	10	1	**204-1611**	1	STRAP (DUAL)	
	11	1	**266-1404**	1	SWITCH AS-ROCKER (LIGHT)	
		1	**111-7899**	1	GASKET	
	12	1	**266-6935**	2	RELAY AS (12-VOLT)	
	13	1	**266-7379**	1	STRAP-CABLE	
	14	1	**267-7058**	1	SWITCH AS-LIMIT (HYDRAULIC LOCKOUT)	
		1	**8T-8729**	2	PIN-CONNECTOR (16-GA TO 18-GA)	
		1	**243-4505**	1	RECEPTACLE AS-CONNECTOR (2-PIN)	
Y	15	1	**319-4420**	1	SWITCH GP-ROTARY (THROTTLE POSITION)	97
J	16	1	**322-8964**	1	SWITCH AS-START (ENGINE)	
		1	**7T-6799**	1	NUT-MOUNTING (1-32-THD)	
		1	**8T-8729**	4	PIN-CONNECTOR (16-GA TO 18-GA)	
		1	**243-4507**	1	RECEPTACLE AS-CONNECTOR (4-PIN)	
	17	1	**366-4622**	1	KIT-SERVICE METER	
					(INCLUDES SERVICE METER & FILM)	
	18	1	**364-3882**	1	BUZZER (12-VOLT)	
	19	1	**370-5353**	1	BRACKET	
	20	1	**370-5354**	1	PLATE AS	
	21	1	**370-5368**	1	HARNESS AS-CONSOLE (CAB)	
		1	**116-4159**	1	BASE	
		1	**112-9609**	1	BLOCK-MICRORELAY	
		1	**124-9636**	1	BLOCK-MINIFUSE	
		1	**116-4157**	1	BLOCK-RELAY & FUSE	
		1	**8C-6354**	1	CAP-RECEPTACLE (ET CONNECTOR)	
		1	**111-7898**	3	CONNECTOR	
		1	**153-2602**	3	RECEPTACLE-CONNECTOR (1-PIN)	
		1	**126-1774**	1	COVER-CONNECTOR	
		1	**113-8490**	9	FUSE (10-AMPERE)	
		1	**113-8491**	4	FUSE (15-AMPERE)	
		1	**113-8492**	2	FUSE (20-AMPERE)	
		1	**124-3548**	3	FUSE (30-AMPERE)	
		1	**141-2759**	3	FUSE (5-AMPERE)	
		1	**128-2032**	6	LATCH	
		1	**112-9610**	2	LOCK-MICRORELAY	
		1	**124-9637**	1	LOCK-MINIFUSE	
		1	**116-4158**	1	LOCK-RELAY & FUSE	
		1	**8T-8729**	8	PIN-CONNECTOR (16-GA TO 18-GA)	
		1	**9W-0852**	11	PIN-CONNECTOR (14-GA TO 16-GA)	
		1	**9X-3401**	8	PIN-CONNECTOR (16-GA TO 18-GA)	
					-OR-	
		1	**126-1767**	8	PIN-CONNECTOR (14-GA TO 16-GA)	
		1	**275-6785**	1	PLUG AS-CONNECTOR	
		1	**147-1444**	1	PLUG AS-CONNECTOR (70-PIN)	
		1	**159-9322**	1	SEAL-O-RING	
		1	**155-2270**	8	KIT-CONNECTING PLUG (2-PIN)	
		1	**155-2274**	2	KIT-CONNECTING PLUG (6-PIN)	

370-5349 **WIRING GP-CONSOLE (*contd.*)** **i05209228**

NOTE	REF NO	GRAPHIC REF	PART NUMBER	QTY	PART NAME 1 2 3 4 5 6 (PRODUCT LEVEL)	SEE PAGE
					(EACH PLUG KIT INCLUDES PLUG AS, WEDGE & INTERFACE SEAL)	
		1	**230-4009**	1	PLUG AS-CONNECTOR (12-PIN)	
		1	**264-7034**	1	SEAL-CONNECTOR	
		1	**230-4011**	3	PLUG AS-CONNECTOR (2-PIN)	
					(EACH INCLUDES)	
		1	**264-7029**	1	SEAL-CONNECTOR	
		1	**230-5008**	3	PLUG AS-CONNECTOR (4-PIN)	
					(EACH INCLUDES)	
		1	**264-7031**	1	SEAL-CONNECTOR	
		1	**230-5010**	2	PLUG AS-CONNECTOR (6-PIN)	
					(EACH INCLUDES)	
		1	**264-7032**	1	SEAL-CONNECTOR	
		1	**379-0830**	1	PLUG AS-CONNECTOR	
		1	**174-3016**	1	PLUG AS-CONNECTOR (3-PIN)	
		1	**8T-8737**	49	PLUG-SEAL	
		1	**110-9198**	5	PLUG-SEAL	
		1	**340-2566**	23	PLUG-SEAL	
		1	**102-8803**	1	KIT-RECEPTACLE (3-PIN)	
					(INCLUDES RECEPTACLE AS & WEDGE)	
		1	**243-4505**	1	RECEPTACLE AS-CONNECTOR (2-PIN)	
		1	**243-4510**	2	RECEPTACLE AS-CONNECTOR (12-PIN)	
		1	**9W-1951**	1	RECEPTACLE-CONNECTOR (9-PIN)	
		1	**8T-8730**	87	SOCKET-CONNECTOR (16-GA TO 18-GA)	
		1	**9W-0844**	13	SOCKET-CONNECTOR (14-GA TO 16-GA)	
		1	**9X-3402**	2	SOCKET-CONNECTOR (16-GA TO 18-GA)	
					-OR-	
		1	**126-1768**	2	SOCKET-CONNECTOR (14-GA TO 16-GA)	
		1	**167-3593**	1	STRAP	
		1	**3S-2093**	13	STRAP-CABLE	
		1	**122-4401**	5	TERMINAL	
		1	**363-9173**	4	TERMINAL (14-GA TO 18-GA)	
		1	**2L-8079**	1	TERMINAL-RING (14-GA TO 16-GA, 3/8-IN SCREW)	
					—OR—	
		1	**3T-4696**	1	TERMINAL-RING (10-GA TO 12-GA, 7/16-IN SCREW)	
		1	**3T-4693**	2	TERMINAL-RING (8-GA, 7/16-IN SCREW)	
					—OR—	
		1	**3T-4696**	2	TERMINAL-RING (10-GA TO 12-GA, 7/16-IN SCREW)	
		1	**112-9604**	6	TERMINAL-BLADE (16-GA TO 18-GA)	
		1	**112-9611**	18	TERMINAL-BLADE	
		1	**112-9612**	20	TERMINAL-BLADE	
		1	**116-4160**	4	TERMINAL-BLADE (12-GA TO 14-GA)	
		1	**116-4161**	11	TERMINAL-BLADE (16-GA TO 18-GA)	
		1	**113-5099**	2	TERMINAL-BUS	
		1	**113-5100**	3	TERMINAL-BUS	
		1	**153-2631**	3	TERMINAL (FEMALE)	
		1	**3E-9179**	7	TERMINAL-RECEPTACLE (14-GA TO 18-GA)	
E		1	**125-7874**		TUBE-HEAT SHRINK (5.72-MM DIA) (120-CM)	
	22	1	**376-8858**	1	MONITOR GP-OPERATOR (CAB CONSOLE)	
		1	**392-4768**	1	SOFTWARE GP-MONITOR	
M	23	1	**095-0742**	2	SCREW-MACHINE (M6X1X16-MM)	
M	24	1	**096-9278**	3	SCREW-PAN HEAD	
	25	1	**132-5789**	2	CLIP	
M	26	1	**9X-2044**	2	SCREW-TRUSS HEAD (M6X1X16-MM)	
	27	1	**277-1873**	1	CLIP	
M	28	1	**5C-9553**	4	BOLT (M6X1X16-MM)	
M	29	1	**7I-2272**	2	BOLT (M5X0.8X12-MM)	
	30	1	**8T-0328**	2	WASHER-HARD (5.5X10X1-MM THK)	
	31	1	**8T-4121**	6	WASHER-HARD (11X21X2.5-MM THK)	
M	32	1	**8T-4137**	2	BOLT (M10X1.5X20-MM)	

370-5349 **WIRING GP-CONSOLE (*contd.*)** **i05209228**

NOTE	REF NO	GRAPHIC REF	PART NUMBER	QTY	PART NAME 1 2 3 4 5 6 (PRODUCT LEVEL)	SEE PAGE
M	33	1	**8T-4191**	4	BOLT (M10X1.5X16-MM)	
M	34	1	**8T-4200**	2	BOLT (M8X1.25X16-MM)	
	35	1	**8T-4224**	2	WASHER-HARD (8.8X16X2-MM THK)	
M	36	1	**8T-4970**	1	BOLT (M6X1X14-MM)	
	37	1	**9X-8256**	5	WASHER (6.6X12X2-MM THK)	
E	38	1	**103-2543**		SEAL (3-CM)	

E - ORDER BY THE CENTIMETER
J - REQUIRES CORPORATE KEY
M - METRIC PART
Y - SEPARATE ILLUSTRATION

370-5349 **WIRING GP-CONSOLE (*contd.*)** **i05209228**

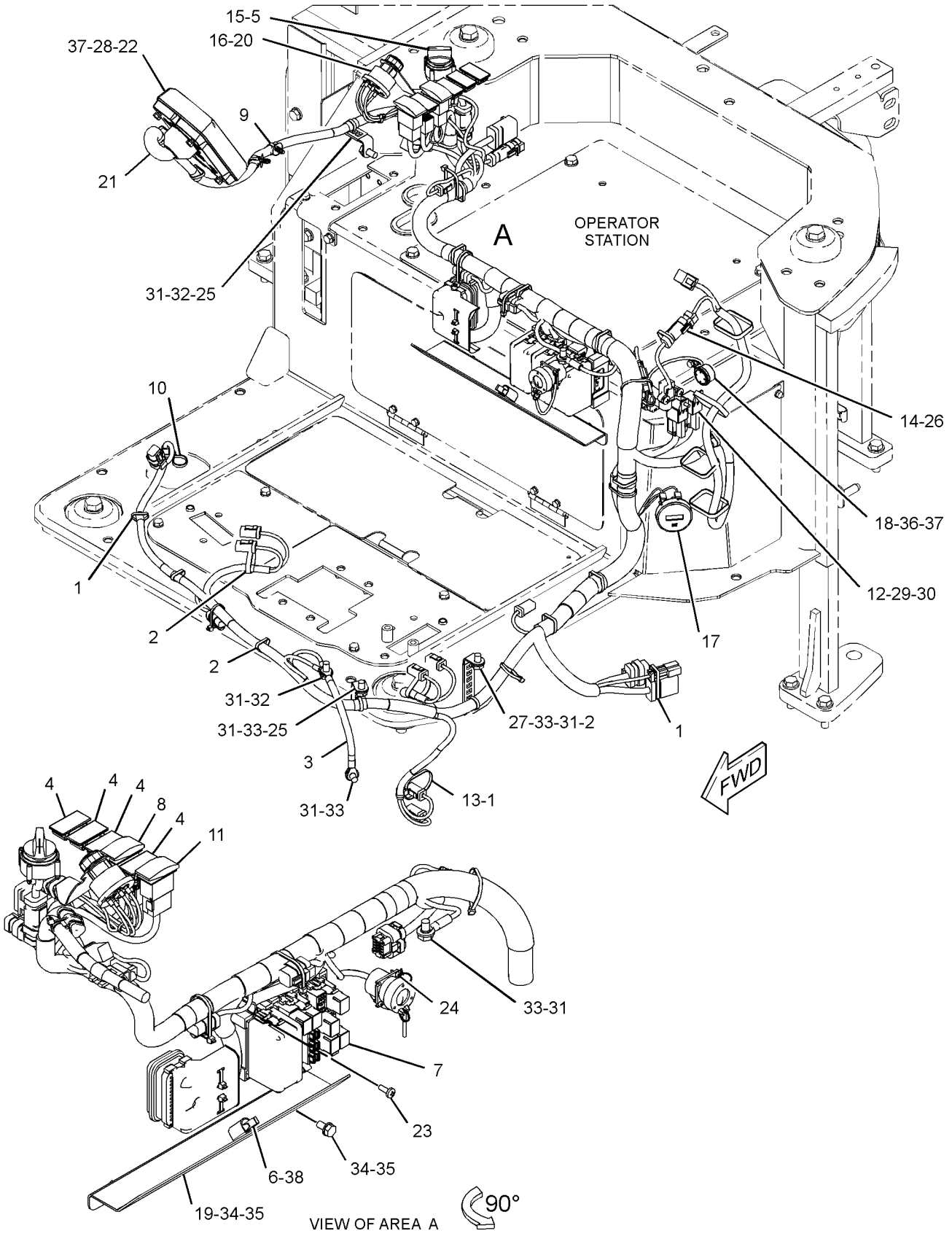

GRAPHIC #1 **<END>** g03404261

370-5349 WIRING GP-CONSOLE–CAB

S/N: RKY1442-UP
PART OF 376-6692, 376-6696, 383-5927, 383-5928 CAB AR
AN ATTACHMENT

SMCS-1408 **i05384839**

NOTE	REF NO	GRAPHIC REF	PART NUMBER	QTY	PART NAME 1 2 3 4 5 6 (PRODUCT LEVEL)	SEE PAGE
	1	1	**3S-2093**	8	STRAP-CABLE	
	2	1	**7K-1181**	22	STRAP-CABLE	
	3	1	**8X-5804**	1	STRAP AS-GROUND	
	4	1	**109-2356**	4	PLUG	
	5	1	**110-6109**	1	KNOB-CONTROL (FLOW CONTROL SWITCH)	
	6	1	**116-7471**	1	PULLER-MINIFUSE	
	7	1	**140-9378**	6	RELAY AS (12-VOLT)	
	8	1	**158-7802**	1	SWITCH AS-ROCKER (WINDOW WASHER, WIPER)	
		1	**111-7899**	1	GASKET	
	9	1	**163-6795**	3	STRAP-CABLE	
	10	1	**204-1611**	1	STRAP (DUAL)	
	11	1	**266-1404**	1	SWITCH AS-ROCKER (LIGHT)	
		1	**111-7899**	1	GASKET	
	12	1	**266-6935**	2	RELAY AS (12-VOLT)	
	13	1	**266-7379**	1	STRAP-CABLE	
	14	1	**267-7058**	1	SWITCH AS-LIMIT (HYDRAULIC LOCKOUT)	
		1	**8T-8729**	2	PIN-CONNECTOR (16-GA TO 18-GA)	
		1	**243-4505**	1	RECEPTACLE AS-CONNECTOR (2-PIN)	
Y	15	1	**319-4420**	1	SWITCH GP-ROTARY (THROTTLE POSITION)	97
J	16	1	**322-8964**	1	SWITCH AS-START (ENGINE)	
		1	**7T-6799**	1	NUT-MOUNTING (1-32-THD)	
		1	**8T-8729**	4	PIN-CONNECTOR (16-GA TO 18-GA)	
		1	**243-4507**	1	RECEPTACLE AS-CONNECTOR (4-PIN)	
	17	1	**366-4622**	1	KIT-SERVICE METER	
					(INCLUDES SERVICE METER & FILM)	
	18	1	**364-3882**	1	BUZZER (12-VOLT)	
	19	1	**370-5353**	1	BRACKET	
	20	1	**370-5354**	1	PLATE AS	
CY	21	1	**425-7014**	1	HARNESS AS-CONSOLE (CAB)	83
	22	1	**376-8858**	1	MONITOR GP-OPERATOR (CAB CONSOLE)	
		1	**392-4768**	1	SOFTWARE GP-MONITOR	
M	23	1	**095-0742**	2	SCREW-MACHINE (M6X1X16-MM)	
M	24	1	**096-9278**	3	SCREW-PAN HEAD	
	25	1	**132-5789**	2	CLIP	
M	26	1	**9X-2044**	2	SCREW-TRUSS HEAD (M6X1X16-MM)	
	27	1	**277-1873**	1	CLIP	
M	28	1	**5C-9553**	4	BOLT (M6X1X16-MM)	
M	29	1	**7I-2272**	2	BOLT (M5X0.8X12-MM)	
	30	1	**8T-0328**	2	WASHER-HARD (5.5X10X1-MM THK)	
	31	1	**8T-4121**	6	WASHER-HARD (11X21X2.5-MM THK)	
M	32	1	**8T-4137**	2	BOLT (M10X1.5X20-MM)	
M	33	1	**8T-4191**	4	BOLT (M10X1.5X16-MM)	
M	34	1	**8T-4200**	2	BOLT (M8X1.25X16-MM)	
	35	1	**8T-4224**	2	WASHER-HARD (8.8X16X2-MM THK)	
M	36	1	**8T-4970**	1	BOLT (M6X1X14-MM)	
	37	1	**9X-8256**	5	WASHER (6.6X12X2-MM THK)	
E	38	1	**103-2543**		SEAL (3-CM)	

C - CHANGE FROM PREVIOUS TYPE
E - ORDER BY THE CENTIMETER
J - REQUIRES CORPORATE KEY
M - METRIC PART
Y - SEPARATE ILLUSTRATION

370-5349 **WIRING GP-CONSOLE (*contd.*)** **i05384839**

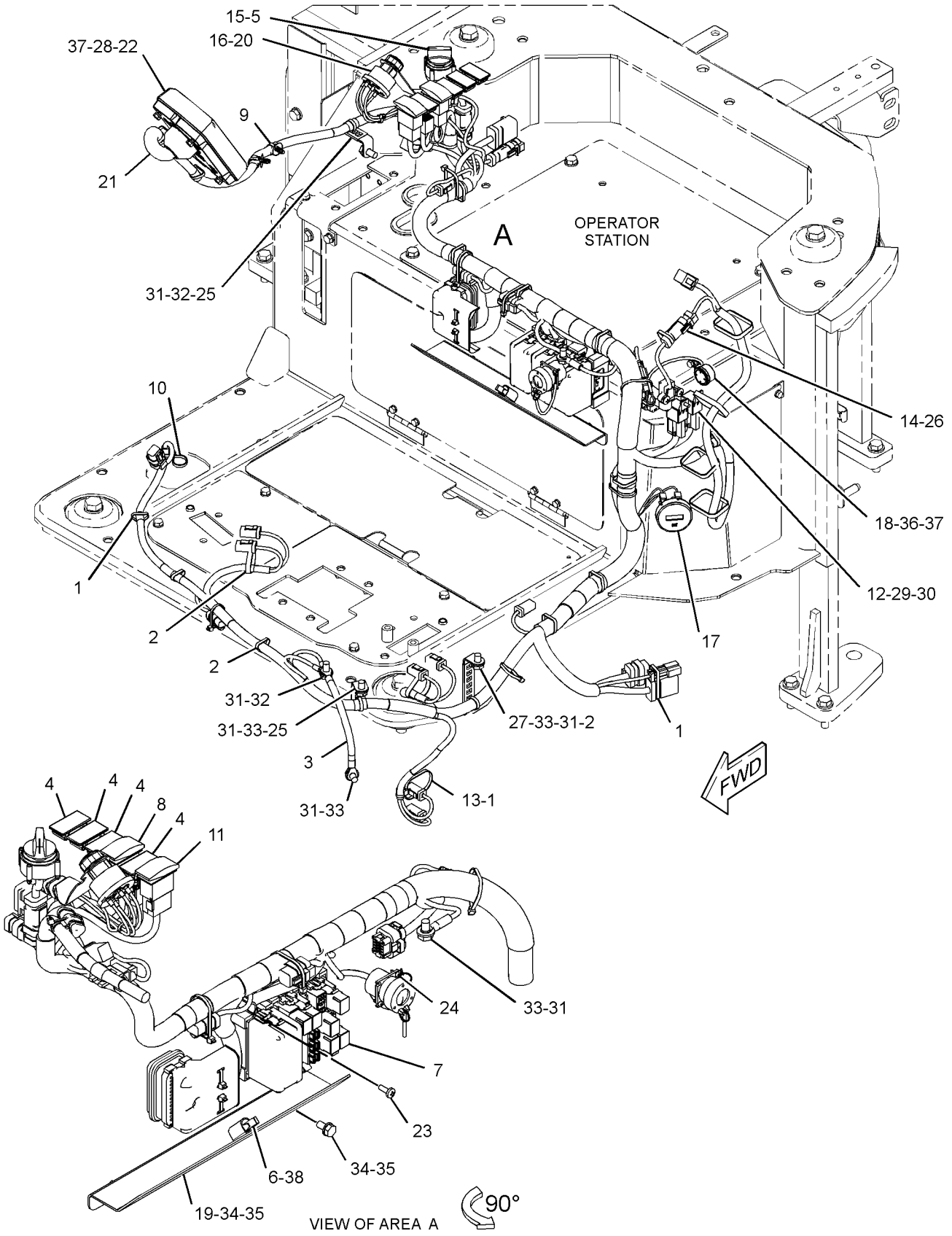

GRAPHIC #1 **<END>** g03404261

370-5350 WIRING GP-CONSOLE–CANOPY

S/N: RKY1-1441

PART OF 377-8933, 383-5929 CANOPY AR

AN ATTACHMENT

SMCS-1408 **i05437152**

NOTE	REF NO	GRAPHIC REF	PART NUMBER	QTY	PART NAME 1 2 3 4 5 6 (PRODUCT LEVEL)	SEE PAGE
	1	1	**3S-2093**	8	STRAP-CABLE	
	2	1	**7K-1181**	21	STRAP-CABLE	
	3	1	**8X-5804**	1	STRAP AS-GROUND	
	4	1	**109-2356**	5	PLUG	
	5	1	**110-6109**	1	KNOB-CONTROL (THROTTLE)	
	6	1	**116-7471**	1	PULLER-MINIFUSE	
	7	1	**140-9378**	6	RELAY AS (12-VOLT)	
	8	1	**163-6795**	3	STRAP-CABLE	
	9	1	**266-1404**	1	SWITCH AS-ROCKER (LIGHT)	
		1	**111-7899**	1	GASKET	
	10	1	**266-6935**	1	RELAY AS (12-VOLT)	
	11	1	**266-7379**	1	STRAP-CABLE	
	12	1	**267-7058**	1	SWITCH AS-LIMIT (HYDRAULIC LOCKOUT)	
		1	**8T-8729**	2	PIN-CONNECTOR (16-GA TO 18-GA)	
		1	**243-4505**	1	RECEPTACLE AS-CONNECTOR (2-PIN)	
	13	1	**306-9039**	1	COVER AS-PROTECTION	
Y	14	1	**319-4420**	1	SWITCH GP-ROTARY (THROTTLE POSITION)	97
J	15	1	**322-8964**	1	SWITCH AS-START (ENGINE)	
		1	**7T-6799**	1	NUT-MOUNTING (1-32-THD)	
		1	**8T-8729**	4	PIN-CONNECTOR (16-GA TO 18-GA)	
		1	**243-4507**	1	RECEPTACLE AS-CONNECTOR (4-PIN)	
	16	1	**366-4622**	1	KIT-SERVICE METER	
					(INCLUDES SERVICE METER & FILM)	
	17	1	**364-3882**	1	BUZZER (12-VOLT)	
	18	1	**370-5353**	1	BRACKET	
	19	1	**370-5354**	1	PLATE AS	
	20	1	**370-5369**	1	HARNESS AS-CONSOLE (CANOPY)	
		1	**116-4159**	1	BASE	
		1	**112-9609**	1	BLOCK-MICRORELAY	
		1	**124-9636**	1	BLOCK-MINIFUSE	
		1	**116-4157**	1	BLOCK-RELAY & FUSE	
		1	**8C-6354**	1	CAP-RECEPTACLE (ET CONNECTOR)	
		1	**111-7898**	2	CONNECTOR	
		1	**153-2602**	3	RECEPTACLE-CONNECTOR (1-PIN)	
		1	**126-1774**	1	COVER-CONNECTOR	
		1	**113-8490**	8	FUSE (10-AMPERE)	
		1	**113-8491**	4	FUSE (15-AMPERE)	
		1	**113-8492**	1	FUSE (20-AMPERE)	
		1	**124-3548**	2	FUSE (30-AMPERE)	
		1	**141-2759**	3	FUSE (5-AMPERE)	
		1	**128-2032**	6	LATCH	
		1	**112-9610**	2	LOCK-MICRORELAY	
		1	**124-9637**	1	LOCK-MINIFUSE	
		1	**116-4158**	1	LOCK-RELAY & FUSE	
		1	**8T-8729**	6	PIN-CONNECTOR (16-GA TO 18-GA)	
		1	**9W-0852**	5	PIN-CONNECTOR (14-GA TO 16-GA)	
		1	**9X-3401**	8	PIN-CONNECTOR (16-GA TO 18-GA)	
					–OR–	
		1	**126-1767**	8	PIN-CONNECTOR (14-GA TO 16-GA)	
		1	**275-6785**	1	PLUG AS-CONNECTOR	
		1	**147-1444**	1	PLUG AS-CONNECTOR (70-PIN)	
		1	**155-2270**	8	KIT-CONNECTING PLUG (2-PIN)	
		1	**155-2274**	2	KIT-CONNECTING PLUG (6-PIN)	
					(EACH PLUG KIT INCLUDES PLUG AS, WEDGE & INTERFACE SEAL)	
		1	**230-4009**	1	PLUG AS-CONNECTOR (12-PIN)	

370-5350 **WIRING GP-CONSOLE (*contd.*)** **i05437152**

NOTE	REF NO	GRAPHIC REF	PART NUMBER	QTY	PART NAME 1 2 3 4 5 6 (PRODUCT LEVEL)	SEE PAGE
		1	**264-7034**	1	SEAL-CONNECTOR	
		1	**230-4011**	3	PLUG AS-CONNECTOR (2-PIN)	
					(EACH INCLUDES)	
		1	**264-7029**	1	SEAL-CONNECTOR	
		1	**230-4013**	1	PLUG AS-CONNECTOR (3-PIN)	
		1	**264-7030**	1	SEAL-CONNECTOR	
		1	**230-5008**	2	PLUG AS-CONNECTOR (4-PIN)	
					(EACH INCLUDES)	
		1	**264-7031**	1	SEAL-CONNECTOR	
		1	**230-5010**	2	PLUG AS-CONNECTOR (6-PIN)	
					(EACH INCLUDES)	
		1	**264-7032**	1	SEAL-CONNECTOR	
		1	**379-0830**	1	PLUG AS-CONNECTOR	
		1	**174-3016**	1	PLUG AS-CONNECTOR (3-PIN)	
		1	**8T-8737**	51	PLUG-SEAL	
		1	**110-9198**	5	PLUG-SEAL	
		1	**340-2566**	23	PLUG-SEAL	
		1	**102-8803**	1	KIT-RECEPTACLE (3-PIN)	
					(INCLUDES RECEPTACLE AS & WEDGE)	
		1	**243-4505**	1	RECEPTACLE AS-CONNECTOR (2-PIN)	
		1	**243-4506**	1	RECEPTACLE AS-CONNECTOR (3-PIN)	
		1	**243-4510**	1	RECEPTACLE AS-CONNECTOR (12-PIN)	
		1	**9W-1951**	1	RECEPTACLE-CONNECTOR (9-PIN)	
		1	**8T-8730**	86	SOCKET-CONNECTOR (16-GA TO 18-GA)	
		1	**9W-0844**	10	SOCKET-CONNECTOR (14-GA TO 16-GA)	
		1	**9X-3402**	2	SOCKET-CONNECTOR (16-GA TO 18-GA)	
					—OR—	
		1	**126-1768**	2	SOCKET-CONNECTOR (14-GA TO 16-GA)	
		1	**340-2567**	11	WIRE AS	
		1	**167-3593**	1	STRAP	
		1	**3S-2093**	12	STRAP-CABLE	
		1	**122-4401**	2	TERMINAL	
		1	**363-9173**	2	TERMINAL (14-GA TO 18-GA)	
		1	**2L-8079**	1	TERMINAL-RING (14-GA TO 16-GA, 3/8-IN SCREW)	
					—OR—	
		1	**3T-4696**	1	TERMINAL-RING (10-GA TO 12-GA, 7/16-IN SCREW)	
		1	**3T-4693**	1	TERMINAL-RING (8-GA, 7/16-IN SCREW)	
					—OR—	
		1	**3T-4696**	1	TERMINAL-RING (10-GA TO 12-GA, 7/16-IN SCREW)	
		1	**112-9604**	6	TERMINAL-BLADE (16-GA TO 18-GA)	
		1	**112-9611**	18	TERMINAL-BLADE	
		1	**112-9612**	20	TERMINAL-BLADE	
		1	**116-4160**	3	TERMINAL-BLADE (12-GA TO 14-GA)	
		1	**116-4161**	9	TERMINAL-BLADE (16-GA TO 18-GA)	
		1	**113-5099**	2	TERMINAL-BUS	
		1	**113-5100**	2	TERMINAL-BUS	
		1	**153-2631**	3	TERMINAL (FEMALE)	
		1	**3E-9179**	3	TERMINAL-RECEPTACLE (14-GA TO 18-GA)	
E		1	**125-7874**		TUBE-HEAT SHRINK (5.72-MM DIA) (110-CM)	
	21	1	**376-8858**	1	MONITOR GP-OPERATOR (CAB CONSOLE)	
		1	**392-4768**	1	SOFTWARE GP-MONITOR	
M	22	1	**095-0742**	2	SCREW-MACHINE (M6X1X16-MM)	
M	23	1	**096-9278**	3	SCREW-PAN HEAD	
	24	1	**132-5789**	2	CLIP	
M	25	1	**9X-2044**	2	SCREW-TRUSS HEAD (M6X1X16-MM)	
	26	1	**277-1873**	1	CLIP	
M	27	1	**5C-9553**	4	BOLT (M6X1X16-MM)	
M	28	1	**7I-2272**	1	BOLT (M5X0.8X12-MM)	
	29	1	**8T-0328**	1	WASHER-HARD (5.5X10X1-MM THK)	

370-5350 **WIRING GP-CONSOLE (*contd.*)** **i05437152**

NOTE	REF NO	GRAPHIC REF	PART NUMBER	QTY	PART NAME 1 2 3 4 5 6 (PRODUCT LEVEL)	SEE PAGE
	30	1	**8T-4121**	6	WASHER-HARD (11X21X2.5-MM THK)	
M	31	1	**8T-4137**	2	BOLT (M10X1.5X20-MM)	
M	32	1	**8T-4191**	4	BOLT (M10X1.5X16-MM)	
M	33	1	**8T-4200**	2	BOLT (M8X1.25X16-MM)	
	34	1	**8T-4224**	2	WASHER-HARD (8.8X16X2-MM THK)	
M	35	1	**8T-4970**	1	BOLT (M6X1X14-MM)	
	36	1	**9X-8256**	5	WASHER (6.6X12X2-MM THK)	
E	37	1	**103-2543**		SEAL (3-CM)	

E - ORDER BY THE CENTIMETER
J - REQUIRES CORPORATE KEY
M - METRIC PART
Y - SEPARATE ILLUSTRATION

370-5350 **WIRING GP-CONSOLE (*contd.*)** **i05437152**

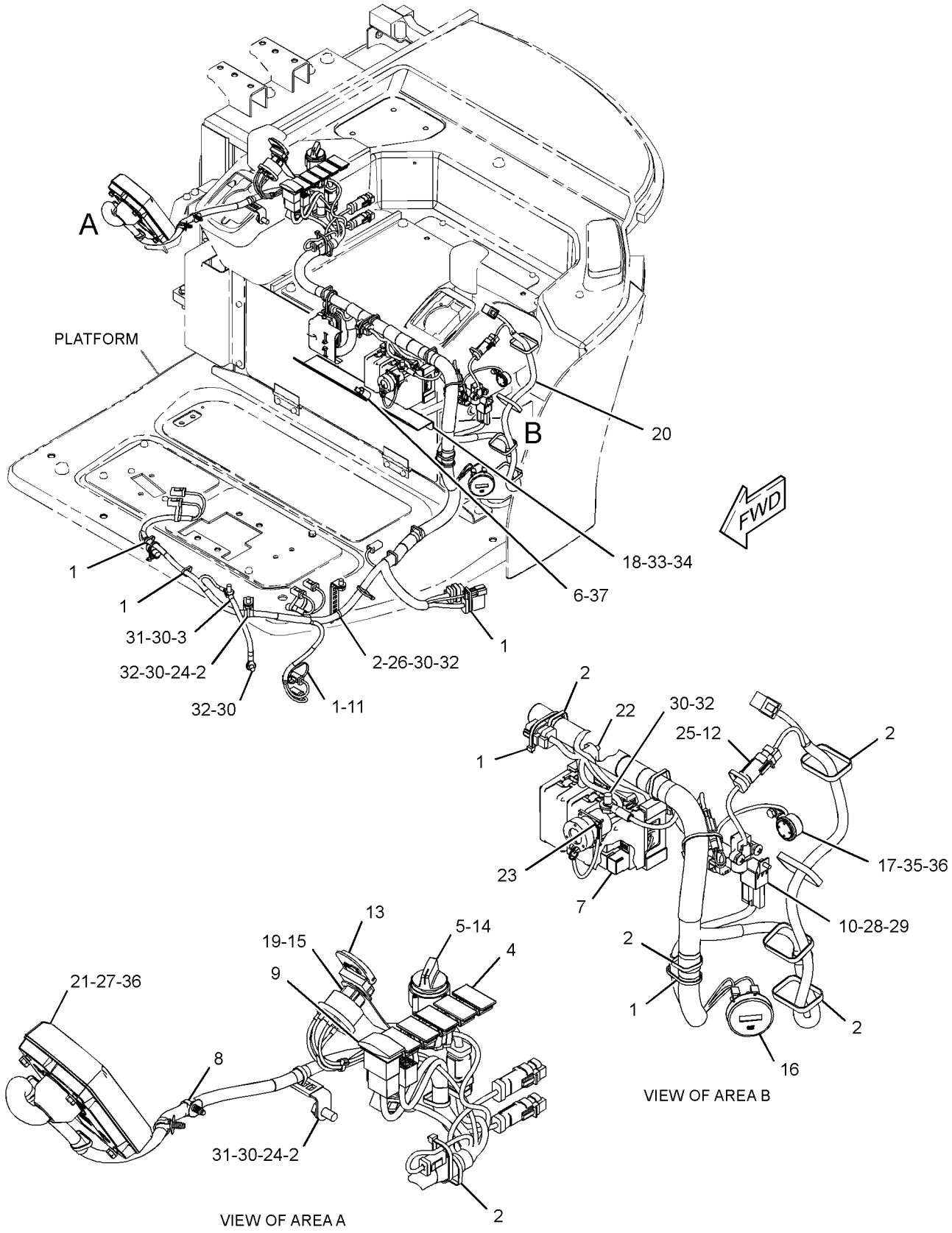

GRAPHIC #1 **<END>** g03404565

370-5350 WIRING GP-CONSOLE–CANOPY

S/N: RKY1442-UP
PART OF 377-8933, 383-5929 CANOPY AR
AN ATTACHMENT

SMCS-1408 **i05437153**

NOTE	REF NO	GRAPHIC REF	PART NUMBER	QTY	PART NAME 1 2 3 4 5 6 (PRODUCT LEVEL)	SEE PAGE
	1	1	**3S-2093**	8	STRAP-CABLE	
	2	1	**7K-1181**	21	STRAP-CABLE	
	3	1	**8X-5804**	1	STRAP AS-GROUND	
	4	1	**109-2356**	5	PLUG	
	5	1	**110-6109**	1	KNOB-CONTROL (THROTTLE)	
	6	1	**116-7471**	1	PULLER-MINIFUSE	
	7	1	**140-9378**	6	RELAY AS (12-VOLT)	
	8	1	**163-6795**	3	STRAP-CABLE	
	9	1	**266-1404**	1	SWITCH AS-ROCKER (LIGHT)	
		1	**111-7899**	1	GASKET	
	10	1	**266-6935**	1	RELAY AS (12-VOLT) (MAIN)	
	11	1	**266-7379**	1	STRAP-CABLE	
	12	1	**267-7058**	1	SWITCH AS-LIMIT (HYDRAULIC LOCKOUT)	
		1	**8T-8729**	2	PIN-CONNECTOR (16-GA TO 18-GA)	
		1	**243-4505**	1	RECEPTACLE AS-CONNECTOR (2-PIN)	
	13	1	**306-9039**	1	COVER AS-PROTECTION	
Y	14	1	**319-4420**	1	SWITCH GP-ROTARY (THROTTLE POSITION)	97
J	15	1	**322-8964**	1	SWITCH AS-START (ENGINE)	
		1	**7T-6799**	1	NUT-MOUNTING (1-32-THD)	
		1	**8T-8729**	4	PIN-CONNECTOR (16-GA TO 18-GA)	
		1	**243-4507**	1	RECEPTACLE AS-CONNECTOR (4-PIN)	
	16	1	**366-4622**	1	KIT-SERVICE METER	
					(INCLUDES SERVICE METER & FILM)	
	17	1	**364-3882**	1	BUZZER (12-VOLT)	
	18	1	**370-5353**	1	BRACKET	
	19	1	**370-5354**	1	PLATE AS	
CY	20	1	**425-7013**	1	HARNESS AS-CONSOLE (CANOPY)	81
	21	1	**376-8858**	1	MONITOR GP-OPERATOR (CAB CONSOLE)	
		1	**392-4768**	1	SOFTWARE GP-MONITOR	
M	22	1	**095-0742**	2	SCREW-MACHINE (M6X1X16-MM)	
M	23	1	**096-9278**	3	SCREW-PAN HEAD	
	24	1	**132-5789**	2	CLIP	
M	25	1	**9X-2044**	2	SCREW-TRUSS HEAD (M6X1X16-MM)	
	26	1	**277-1873**	1	CLIP	
M	27	1	**5C-9553**	4	BOLT (M6X1X16-MM)	
M	28	1	**7I-2272**	1	BOLT (M5X0.8X12-MM)	
	29	1	**8T-0328**	1	WASHER-HARD (5.5X10X1-MM THK)	
	30	1	**8T-4121**	6	WASHER-HARD (11X21X2.5-MM THK)	
M	31	1	**8T-4137**	2	BOLT (M10X1.5X20-MM)	
M	32	1	**8T-4191**	4	BOLT (M10X1.5X16-MM)	
M	33	1	**8T-4200**	2	BOLT (M8X1.25X16-MM)	
	34	1	**8T-4224**	2	WASHER-HARD (8.8X16X2-MM THK)	
M	35	1	**8T-4970**	1	BOLT (M6X1X14-MM)	
	36	1	**9X-8256**	5	WASHER (6.6X12X2-MM THK)	
E	37	1	**103-2543**		SEAL (3-CM)	

C - CHANGE FROM PREVIOUS TYPE
E - ORDER BY THE CENTIMETER
J - REQUIRES CORPORATE KEY
M - METRIC PART
Y - SEPARATE ILLUSTRATION

370-5350 **WIRING GP-CONSOLE (*contd.*)** **i05437153**

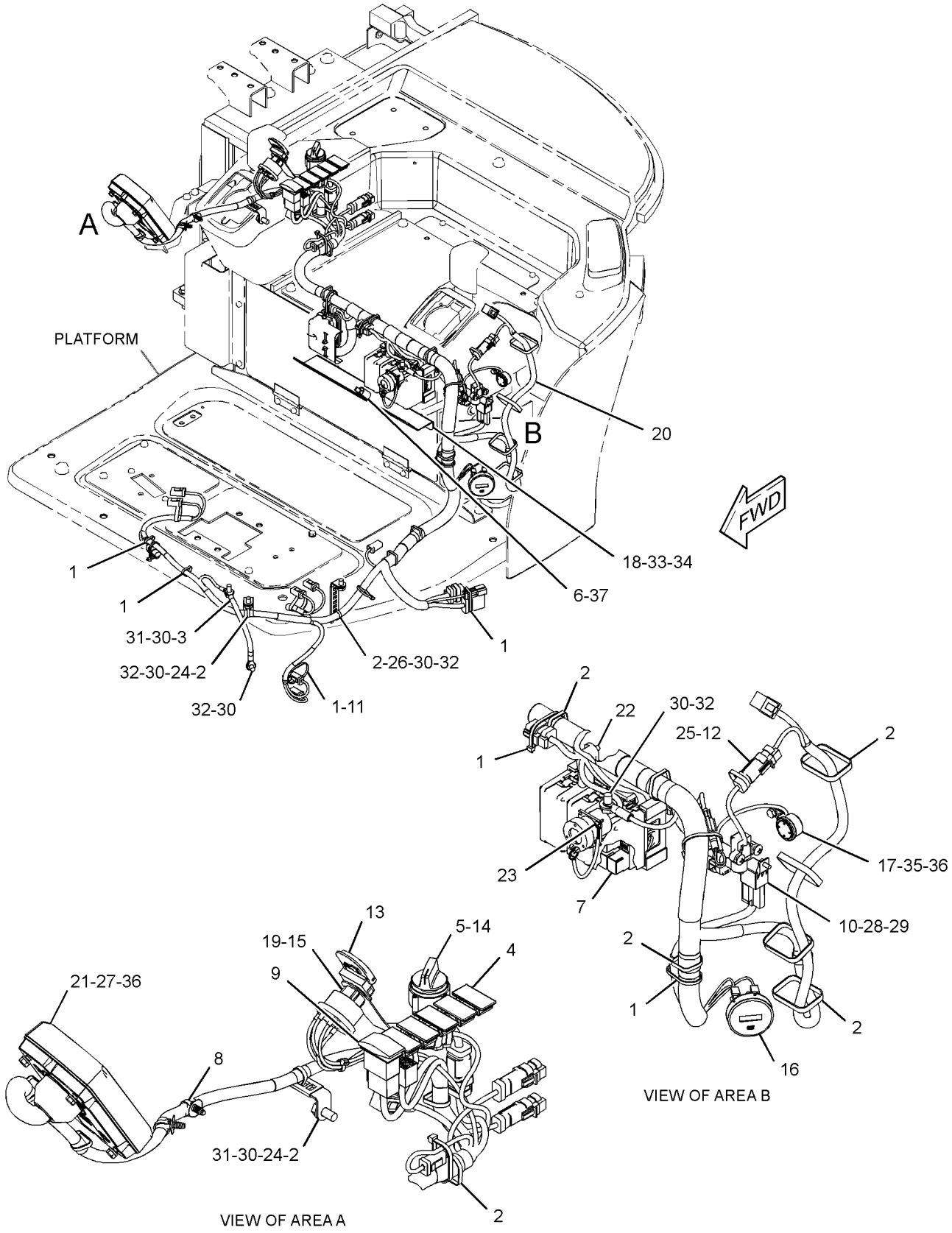

GRAPHIC #1 **<END>** g03404565

383-3163 WIRING GP-CONSOLE–POWER ANGLE

PART OF 377-8930 BLADE AR-ANGLING
AN ATTACHMENT

SMCS-1408 **i05033720**

NOTE	REF NO	GRAPHIC REF	PART NUMBER	QTY	PART NAME 1 2 3 4 5 6 (PRODUCT LEVEL)	SEE PAGE
	1	1	**3S-2093**	13	STRAP-CABLE	
	2	1	**7K-1181**	1	STRAP-CABLE	
	3	1	**204-1611**	2	STRAP (DUAL)	
	4	1	**266-7379**	2	STRAP-CABLE	
Y	5	1	**383-3158**	1	HARNESS AS-SOLENOID (CAB, CANOPY)	86
Y	6	1	**383-3164**	1	HARNESS AS-CONTROL (CAB, CANOPY)	85
	7	1	**4P-7581**	1	CLIP	

Y - SEPARATE ILLUSTRATION

383-3163 **WIRING GP-CONSOLE (*contd.*)** **i05033720**

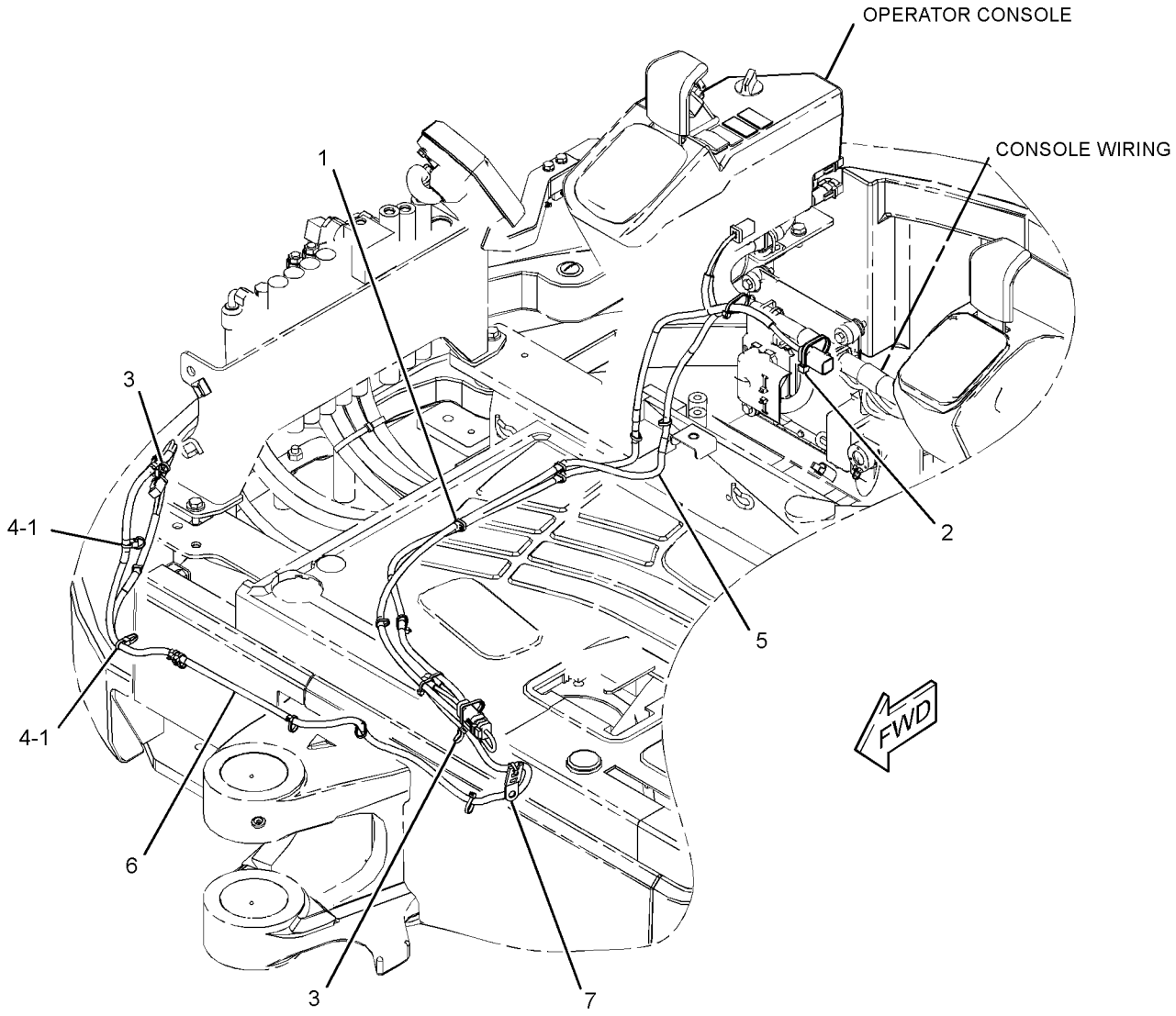

GRAPHIC #1 **<END>** g02799120

370-5348 WIRING GP-ENGINE–REFRIGERANT COMPRESSOR

PART OF 376-6692, 383-5927 CAB AR

AN ATTACHMENT

SMCS-1408 **i04565437**

NOTE	REF NO	GRAPHIC REF	PART NUMBER	QTY	PART NAME 1 2 3 4 5 6 (PRODUCT LEVEL)	SEE PAGE
	1	1	**3S-2093**	1	STRAP - CABLE	
	2	1	**189-3158**	1	SUPPRESSOR - ARC	

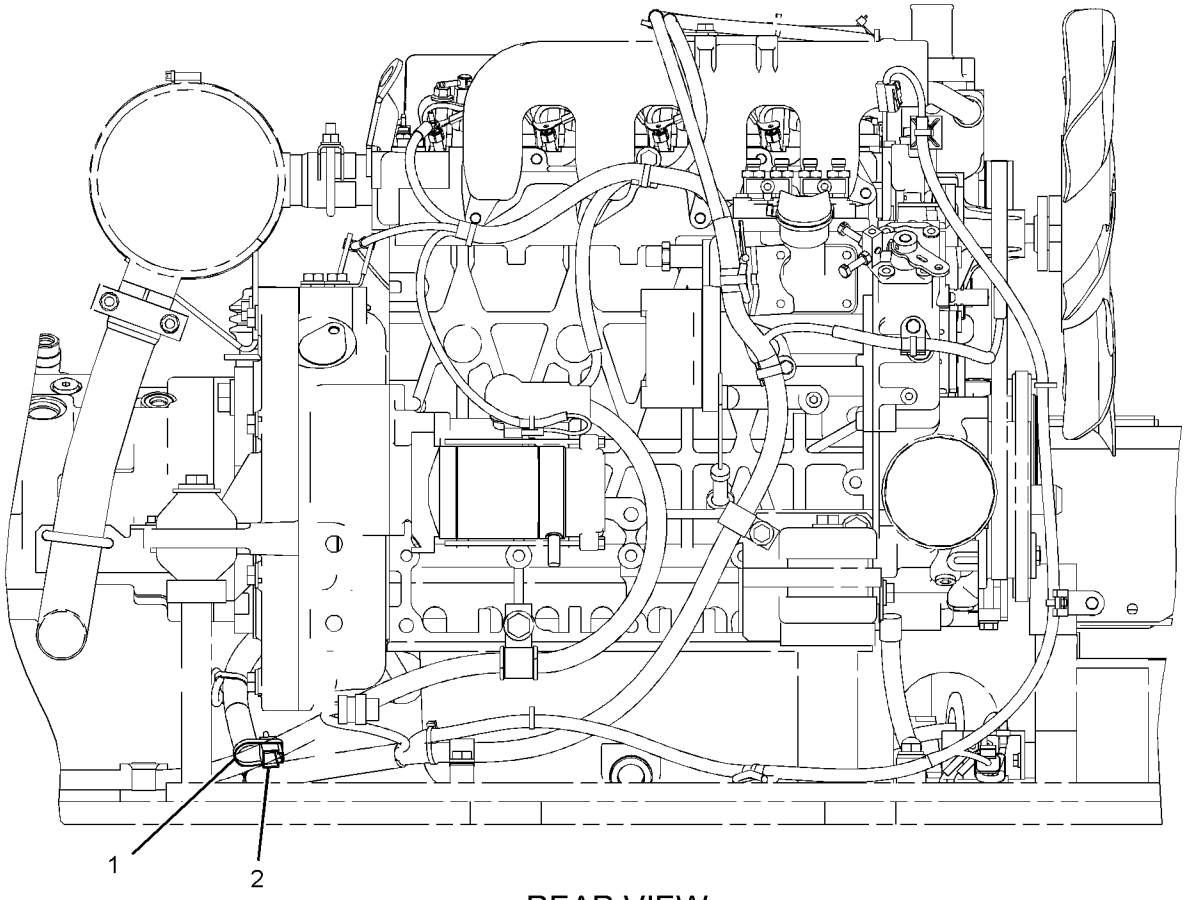

REAR VIEW

GRAPHIC #1 **<END>** g02786039

370-5351 WIRING GP-LIGHTING—WARNING BEACON, POWER RECEP

PART OF 381-9239 WIRING GP-CAB

AN ATTACHMENT

SMCS-1408, 1429 **i04652870**

NOTE	REF NO	GRAPHIC REF	PART NUMBER	QTY	PART NAME 1 2 3 4 5 6 (PRODUCT LEVEL)	SEE PAGE
	1	1	**3S-2093**	4	STRAP-CABLE	
	2	1	**163-6795**	1	STRAP-CABLE	
	3	1	**207-1686**	1	SOCKET	
	4	1	**266-7379**	1	STRAP-CABLE	
	5	1	**370-5370**	1	HARNESS AS-LIGHTING (WARNING BEACON, POWER RECEP)	
		1	**230-4013**	1	PLUG AS-CONNECTOR (3-PIN)	
		1	**264-7030**	1	SEAL-CONNECTOR	
		1	**8T-8737**	1	PLUG-SEAL	
		1	**9W-0844**	2	SOCKET-CONNECTOR (14-GA TO 16-GA)	
		1	**5P-4571**	2	TERMINAL-BLADE (14-GA TO 16-GA)	

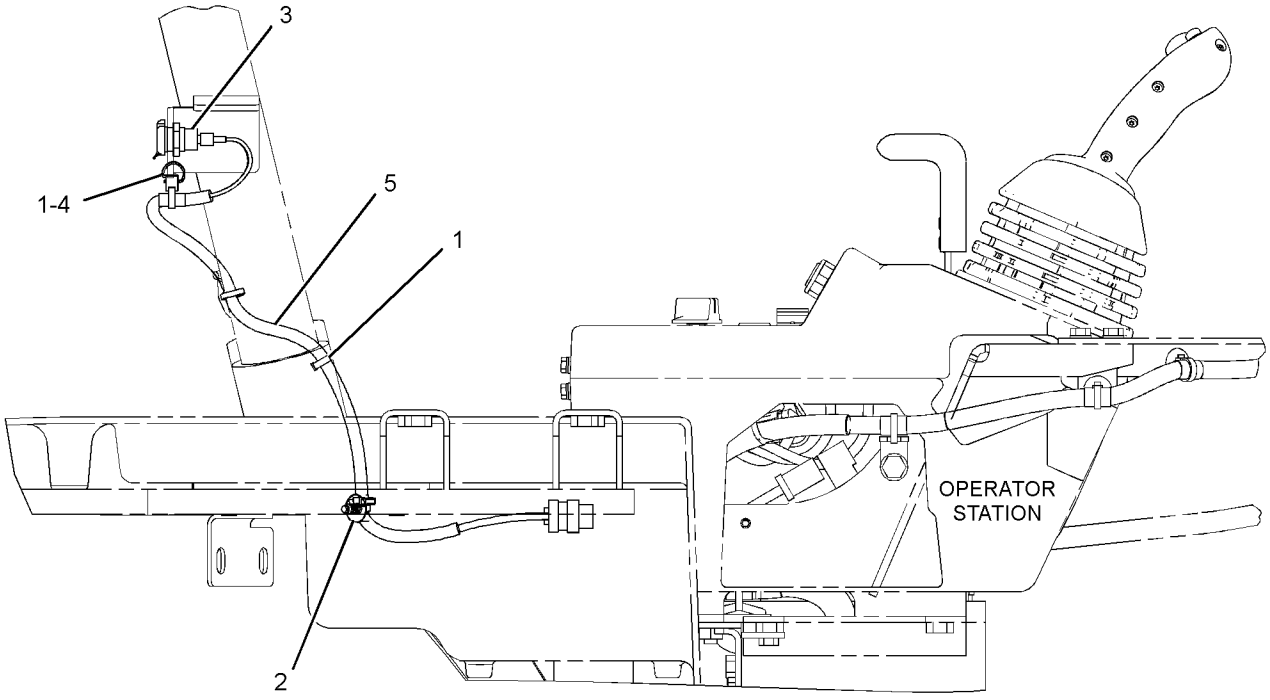

RIGHT SIDE VIEW

GRAPHIC #1 **<END>** g02791495

380-6303 WIRING GP-LIGHTING–BOOM

PART OF 376-6680 BOOM AR

SMCS-1408, 1429 **i04728081**

NOTE	REF NO	GRAPHIC REF	PART NUMBER	QTY	PART NAME 1 2 3 4 5 6 (PRODUCT LEVEL)	SEE PAGE
	1	1	**3S-2093**	1	STRAP-CABLE	
	2	1	**7K-1181**	2	STRAP-CABLE	
	3	1	**204-1611**	3	STRAP (DUAL)	
	4	1	**370-5396**	1	HARNESS AS-LIGHTING	
E		1	**103-2529**		HOSE (167-CM)	
		1	**9W-0852**	1	PIN-CONNECTOR (14-GA TO 16-GA)	
		1	**8T-8729**	1	PIN-CONNECTOR (16-GA TO 18-GA)	
		1	**243-4505**	1	RECEPTACLE AS-CONNECTOR (2-PIN)	
		1	**2L-8075**	2	TERMINAL-RING (14-GA TO 16-GA, NO. 8 SCREW)	
	5	1	**4K-8302**	1	CLIP	
	6	1	**8T-4121**	2	WASHER-HARD (11X21X2.5-MM THK)	
M	7	1	**8T-4137**	2	BOLT (M10X1.5X20-MM)	
	8	1	**9M-8406**	1	CLIP	

E - ORDER BY THE CENTIMETER
M - METRIC PART

380-6303 **WIRING GP-LIGHTING (*contd.*)** **i04728081**

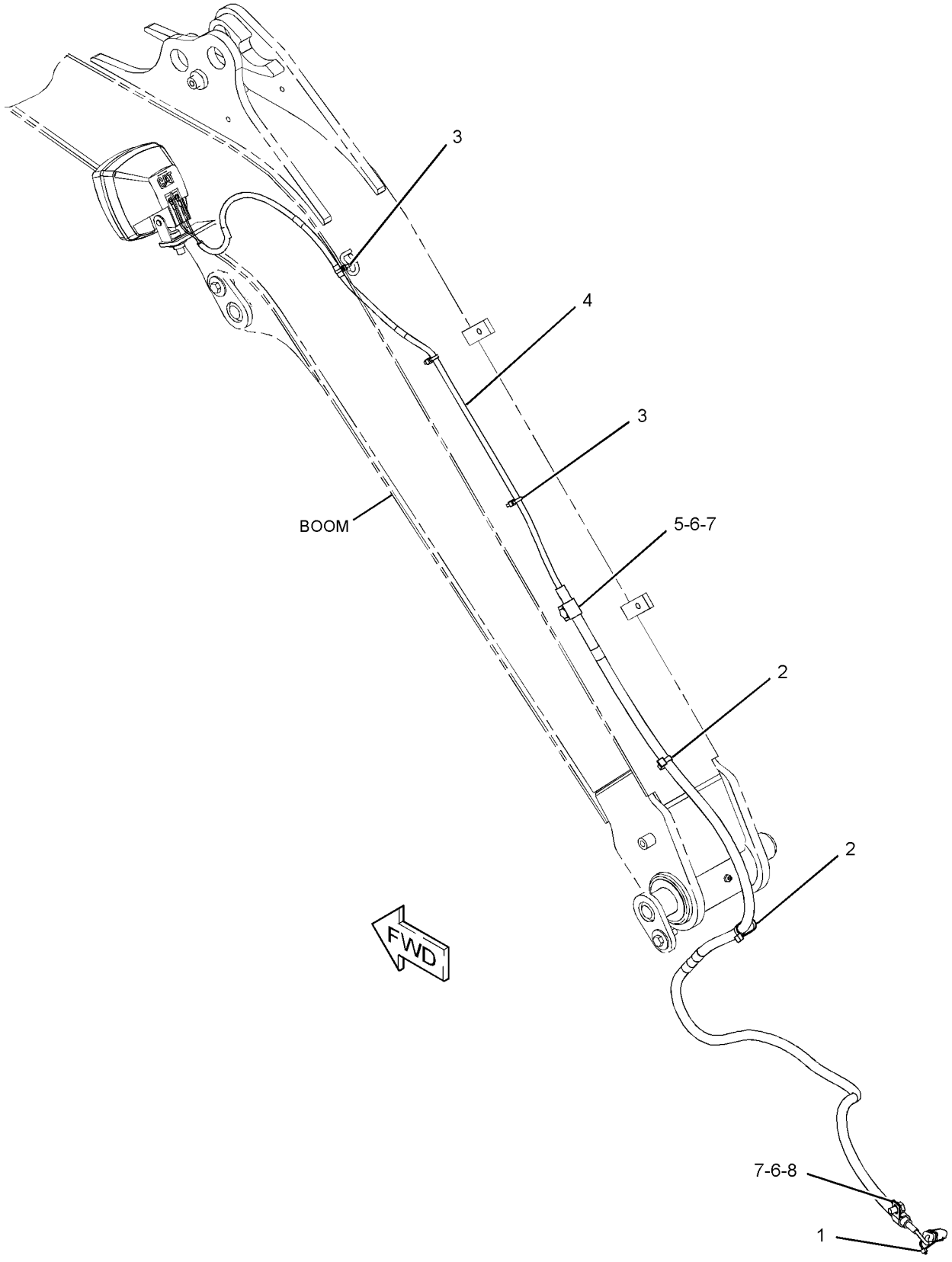

GRAPHIC #1 **<END>** g02858696

422-2948 WIRING GP-OVERLOAD WARNING

PART OF 379-4720 LINES AR-BOOM
AN ATTACHMENT

SMCS-1408 **i05376430**

NOTE	REF NO	GRAPHIC REF	PART NUMBER	QTY	PART NAME 1 2 3 4 5 6 (PRODUCT LEVEL)	SEE PAGE
	1	1	**3S-2093**	7	STRAP-CABLE	
	2	1	**204-1611**	1	STRAP (DUAL)	
	3	1	**379-0817**	1	SWITCH AS-ROCKER (OVERLOAD WARNING)	
		1	**111-7899**	1	GASKET	
Y	4	1	**422-2949**	1	HARNESS AS-SENSOR (OVERLOAD)	85
	5	1	**277-1873**	1	CLIP	
	6	1	**4K-8302**	1	CLIP	
	7	1	**4P-7581**	1	CLIP	
	8	1	**7X-7729**	1	WASHER (11X25X3-MM THK)	
	9	1	**8T-4121**	1	WASHER-HARD (11X21X2.5-MM THK)	
M	10	1	**8T-4137**	2	BOLT (M10X1.5X20-MM)	

M - METRIC PART
Y - SEPARATE ILLUSTRATION

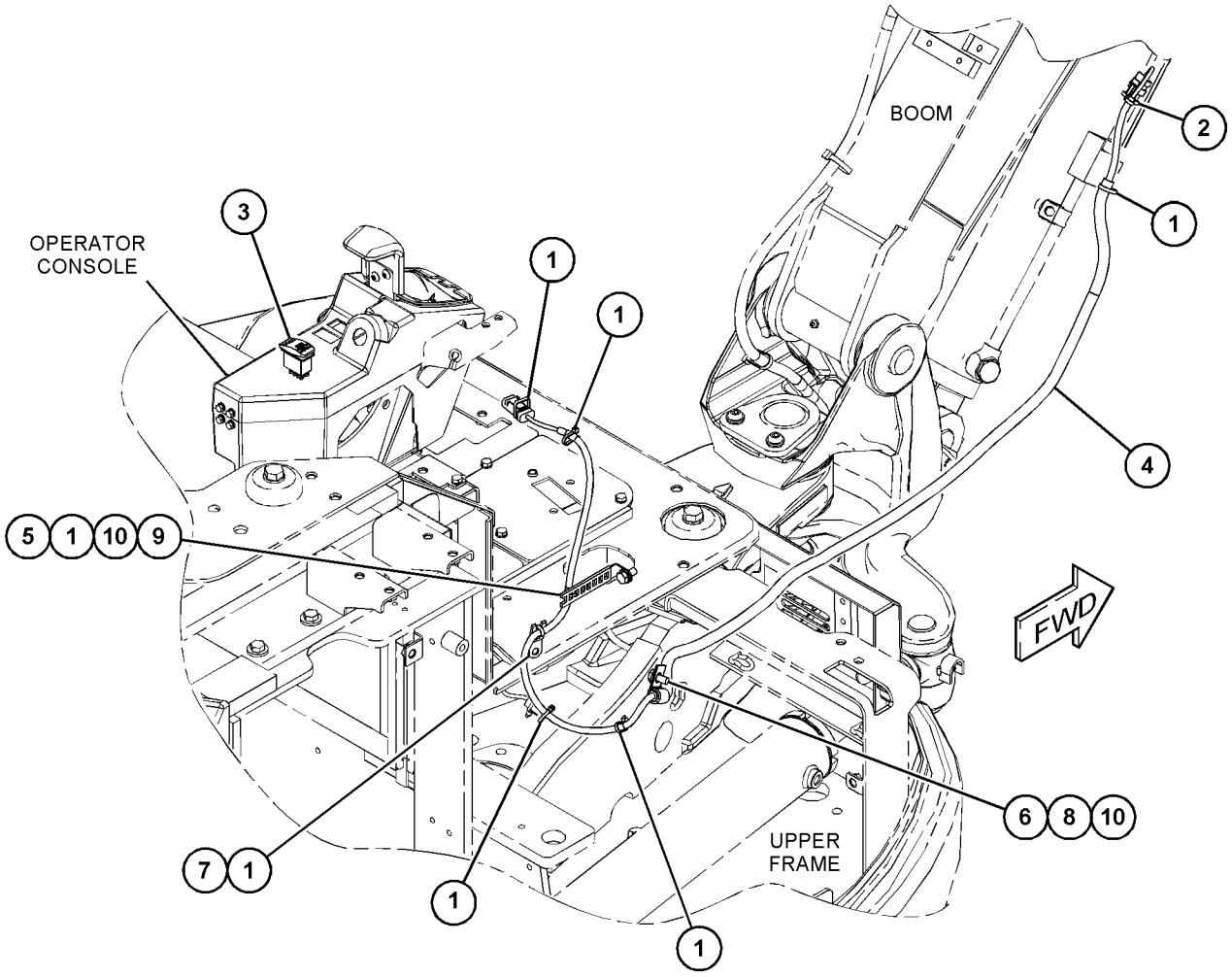

GRAPHIC #1 **<END>** g03405144

381-9235 WIRING GP-QUICK COUPLER

PART OF 382-2543, 382-2544 CONTROL AR-COUPLER

AN ATTACHMENT

SMCS-1408, 6129 **i05437156**

NOTE	REF NO	GRAPHIC REF	PART NUMBER	QTY	PART NAME 1 2 3 4 5 6 (PRODUCT LEVEL)	SEE PAGE
	1	1	**3S-2093**	6	STRAP-CABLE	
Y	2	1	**381-9236**	1	HARNESS AS-QUICK COUPLER	85

Y - SEPARATE ILLUSTRATION

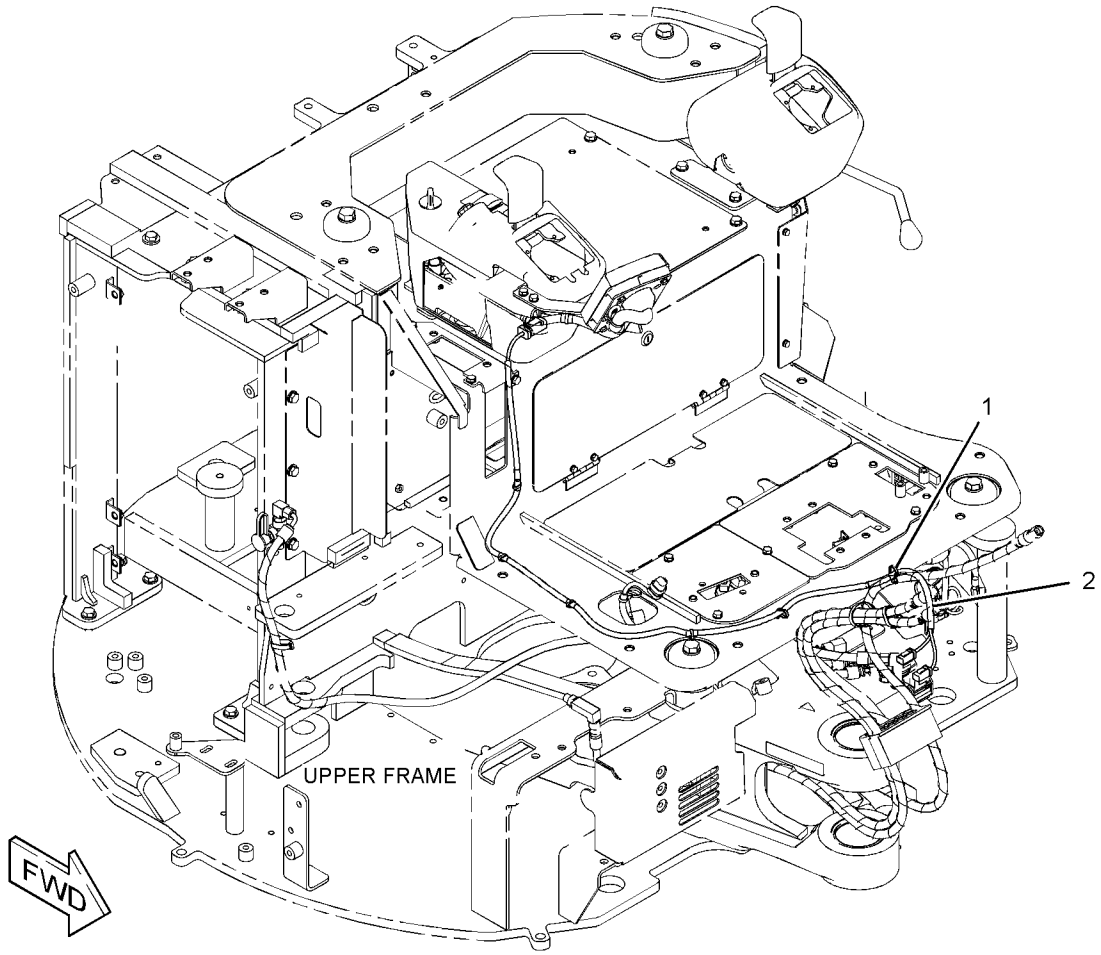

GRAPHIC #1 **<END>** g02777052

387-6389 WIRING GP-RELAY PANEL—PATTERN CHANGE

PART OF 379-4724 CONTROL AR-AUXILIARY

AN ATTACHMENT

SMCS-1408, 1420, 1422 **i04623163**

NOTE	REF NO	GRAPHIC REF	PART NUMBER	QTY	PART NAME 1 2 3 4 5 6 (PRODUCT LEVEL)	SEE PAGE
	1	1	**140-9378**	1	RELAY AS (12-VOLT) (PATTERN CHANGE)	

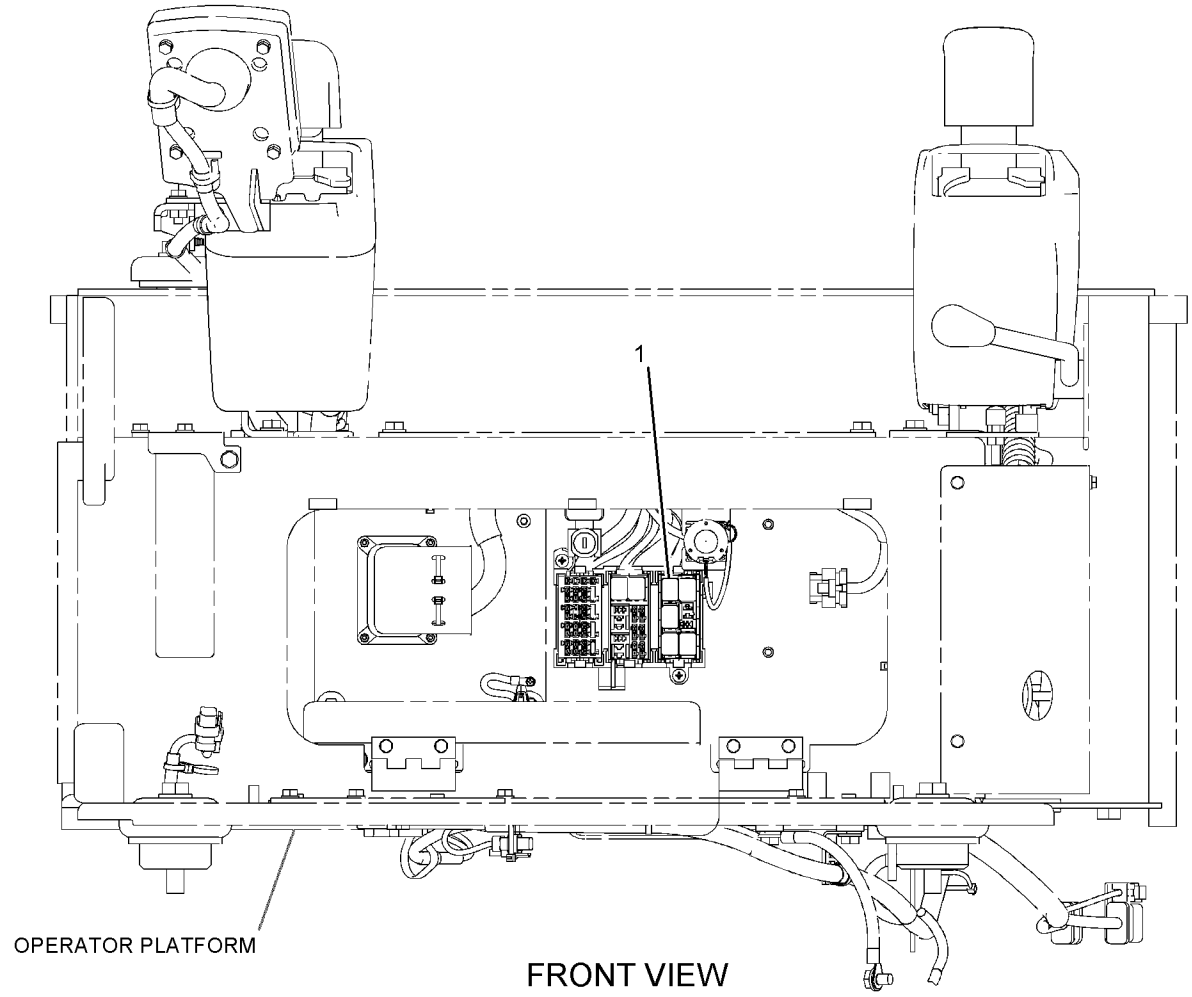

GRAPHIC #1

<END>

g02798865

387-6390 WIRING GP-RELAY PANEL–2ND AUXILIARY

PART OF 379-4721, 379-4722 CONTROL AR-AUXILIARY

AN ATTACHMENT

SMCS-1408, 1420, 1422 **i04623164**

NOTE	REF NO	GRAPHIC REF	PART NUMBER	QTY	PART NAME 1 2 3 4 5 6 (PRODUCT LEVEL)	SEE PAGE
	1	1	**140-9378**	1	RELAY AS (12-VOLT) (2ND AUXILIARY)	

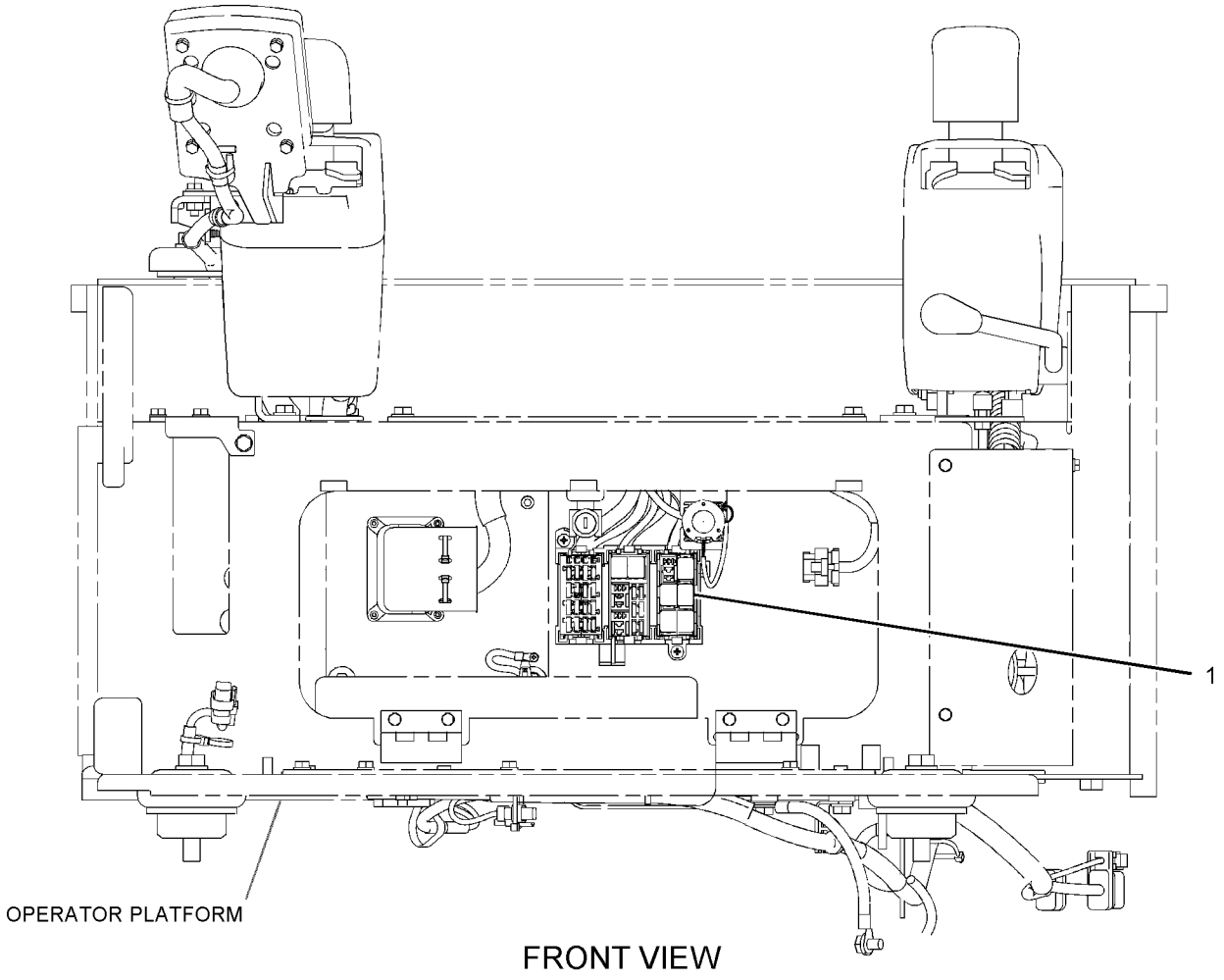

FRONT VIEW

GRAPHIC #1 **<END>** g02798945

280-3097 DRIVE GP-FINAL

PART OF 288-3462 DRIVE GP-FINAL

SMCS-4050 **i04019566**

NOTE	REF NO	GRAPHIC REF	PART NUMBER	QTY	PART NAME 1 2 3 4 5 6 (PRODUCT LEVEL)	SEE PAGE
	1	1	**192-1134**	2	SEAL	
	2	1	**150-0909**	1	BEARING	
	3	1	**280-3098**	1	NUT	
	4	1	**150-0810**	2	PLUG	
	5	1	**192-0633**	132	BALL	
	6	1	**096-5971**	2	PLUG	
	7	1	**150-0811**	4	GEAR	
	8	1	**150-0812**	4	BEARING AS-NEEDLE	
	9	1	**150-0813**	4	RACE-INNER	
	10	1	**150-0814**	4	WASHER	
	11	1	**143-2343**	1	PLATE	
	12	1	**143-2344**	4	SCREW	
	13	1	**150-0815**	1	GEAR	
	14	1	**280-3100**	1	HOLDER	
	15	1	**280-3101**	3	GEAR	
	16	1	**150-0818**	3	BEARING	
	17	1	**150-0819**	3	RACE	
	18	1	**280-3102**	1	GEAR	
	19	1	**280-3103**	1	COVER	
	20	1	**095-1725**	1	SEAL-O-RING	
	21	1	**143-2358**	1	WIRE	
	22	1	**279-4706**	3	PLUG	
	23	1	**3J-1907**	3	SEAL-O-RING	
	24	1	**143-2346**	1	RING	

280-3097 **DRIVE GP-FINAL (*contd.*)** **i04019566**

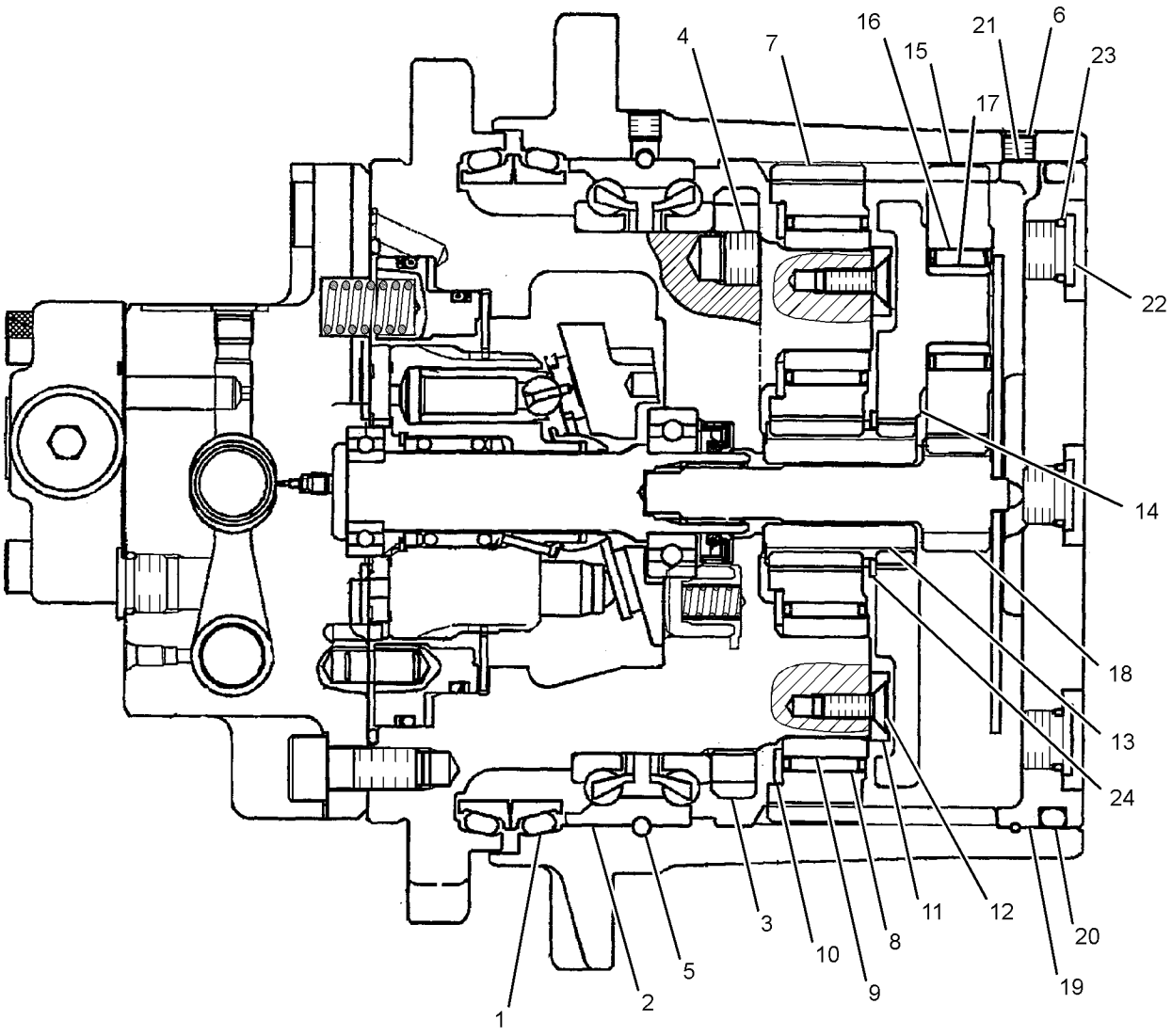

GRAPHIC #1 **<END>** g01387686

288-3462 DRIVE GP-FINAL

PART OF 265-8754 MOTOR & MTG GP-TRAVEL

SMCS-4050 **i04046741**

NOTE	REF NO	GRAPHIC REF	PART NUMBER	QTY	PART NAME 1 2 3 4 5 6 (PRODUCT LEVEL)	SEE PAGE
Y	1	1	**280-3097**	1	DRIVE GP-FINAL	121
	2	1	**192-1134**	2	SEAL	
	3	1	**279-4706**	4	PLUG	
	4	1	**3J-1907**	4	SEAL-O-RING	
	5	1	**150-0826**	1	SHAFT	
	6	1	**150-0827**	1	BEARING	
	7	1	**202-7187**	1	SEAL	
	8	1	**280-3104**	1	SWASHPLATE	
	9	1	**150-0829**	2	BALL	
	10	1	**280-3105**	2	PISTON	
	11	1	**280-3106**	2	SPRING	
	12	1	**150-0832**	1	PLATE	
	13	1	**139-7325**	1	PIN	
	14	1	**150-0834**	1	BEARING	
	15	1	**095-1676**	1	SEAL-O-RING	
	16	1	**095-1574**	4	SEAL-O-RING	
	17	1	**150-0873**	2	SEAT	
	18	1	**150-0874**	2	SPRING	
	19	1	**202-7174**	2	CAP	
	20	1	**095-1596**	2	SEAL-O-RING	
	21	1	**150-0881**	8	ORIFICE	
	22	1	**280-3107**	1	SPRING	
	23	1	**099-7197**	1	PLUG	
	24	1	**095-1582**	2	SEAL-O-RING	
	25	1	**1R-5468**	3	PLUG	
	26	1	**280-3108**	1	PLUG	
M	27	1	**8T-9080**	6	BOLT-SOCKET HEAD (M12X1.75X20-MM)	
	28	1	**280-3109**	4	PIN	
	29	1	**096-5971**	1	PLUG	
	30	1	**280-3110**	1	PISTON	
	31	1	**280-3111**	1	DISC	
	32	1	**280-3112**	8	SPRING	
	33	1	**288-6900**	1	KIT-BLOCK (TRAVEL MOTOR)	
					(INCLUDES O-RING SEALS, BASE PLATE, SPOOLS, SPOOL AS, CHECK VALVE, SPRING & PLUGS)	
	34	1	**280-3116**	1	KIT-BARREL (TRAVEL MOTOR)	
					(INCLUDES BARREL, COLLAR, SPRING, WASHER, SNAP RING, PINS, RETAINER HOLDER, RETAINER PLATE & PISTON AS)	
	35	1	**288-6899**	1	VALVE AS	
M		1	**6V-5192**	3	BOLT-SOCKET HEAD (M8X1.25X30-MM)	
		1	**095-1580**	3	SEAL-O-RING	
		1	**095-1582**	2	SEAL-O-RING	
	36	1	**288-6901**	1	KIT-SEAL (TRAVEL MOTOR)	
					(INCLUDES WIRE, SEALS & O-RING SEALS)	
	37	1	**280-3118**	1	KIT-BRAKE (TRAVEL MOTOR)	
					(INCLUDES O-RING SEALS & RINGS)	

M - METRIC PART
Y - SEPARATE ILLUSTRATION

288-3462 **DRIVE GP-FINAL (*contd.*)** **i04046741**

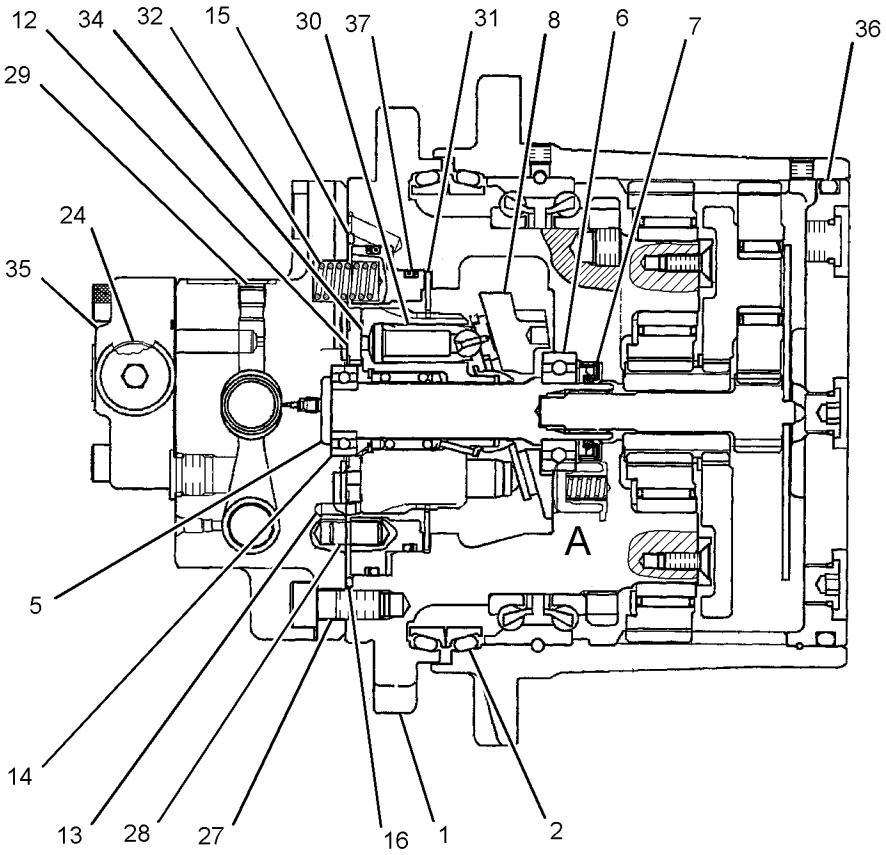

SECTION A-A

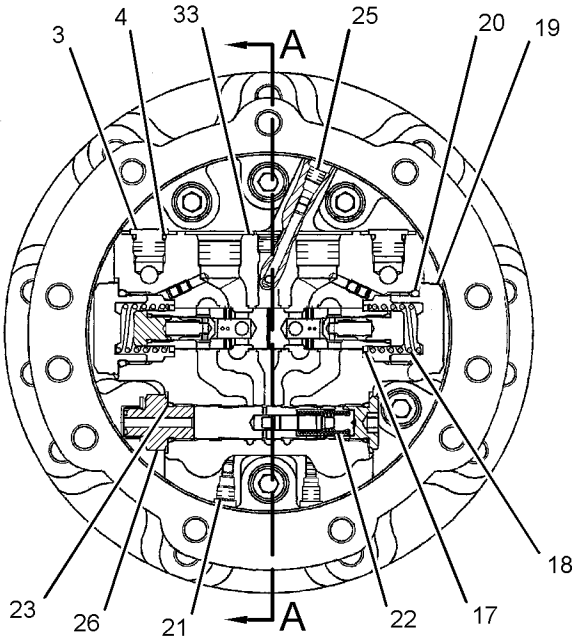

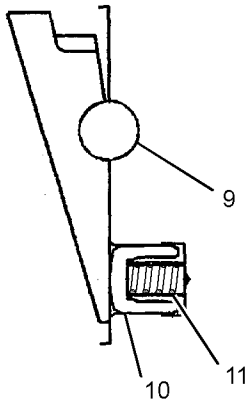

VIEW OF AREA A

GRAPHIC #1 **<END>** g01384526

265-8754 MOTOR & MTG GP-TRAVEL

PART OF 356-0571 POWER TRAIN AR

SMCS-4351 **i04023271**

NOTE	REF NO	GRAPHIC REF	PART NUMBER	QTY	PART NAME 1 2 3 4 5 6 (PRODUCT LEVEL)	SEE PAGE
Y	1	1	**288-3462**	2	DRIVE GP-FINAL	123
	2	1	**8T-4223**	22	WASHER-HARD (13.5X25.5X3-MM THK)	
M	3	1	**8T-4956**	22	BOLT (M12X1.75X35-MM)	

M - METRIC PART
Y - SEPARATE ILLUSTRATION

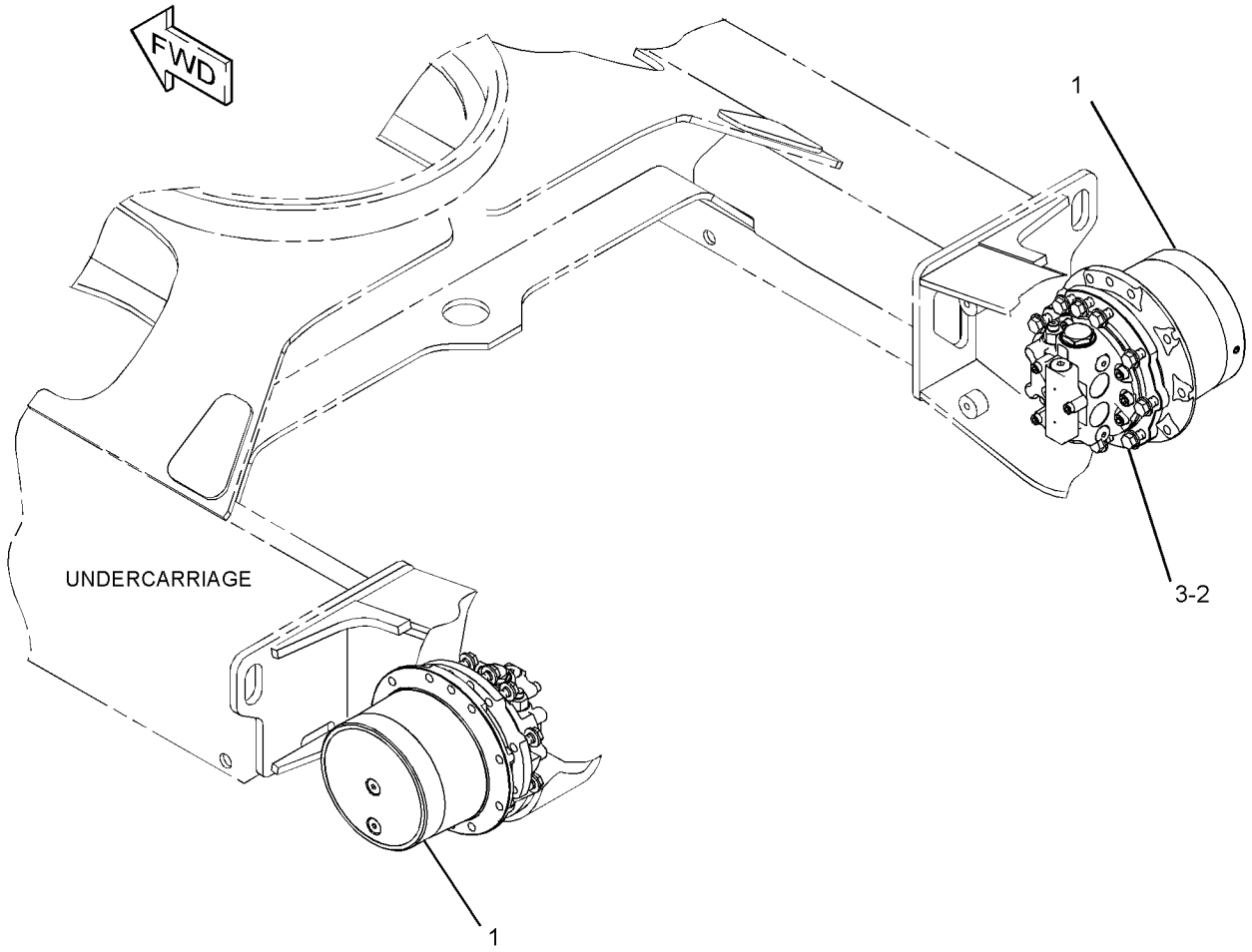

GRAPHIC #1 **<END>** g01319911

356-0571 POWER TRAIN AR

PART OF 376-6672 COMMON AR

SMCS-3000, 4000 **i04023275**

NOTE	PART NUMBER	QTY	PART NAME 1 2 3 4 5 6 (PRODUCT LEVEL)	SEE PAGE
Y	*265-8752*	1	MOTOR & MTG GP-SWING	288
Y	*265-8754*	1	MOTOR & MTG GP-TRAVEL	125
Y	*264-5370*	2	SPROCKET GP	127

Y - SEPARATE ILLUSTRATION

<END>

264-5370 SPROCKET GP

PART OF 356-0571 POWER TRAIN AR

SMCS-4164 **i04019563**

NOTE	REF NO	GRAPHIC REF	PART NUMBER	QTY	PART NAME 1 2 3 4 5 6 (PRODUCT LEVEL)	SEE PAGE
	1	1	**264-5371**	1	SPROCKET	
	2	1	**8T-4223**	11	WASHER-HARD (13.5X25.5X3-MM THK)	
M	3	1	**8T-4956**	11	BOLT (M12X1.75X35-MM)	

M - METRIC PART

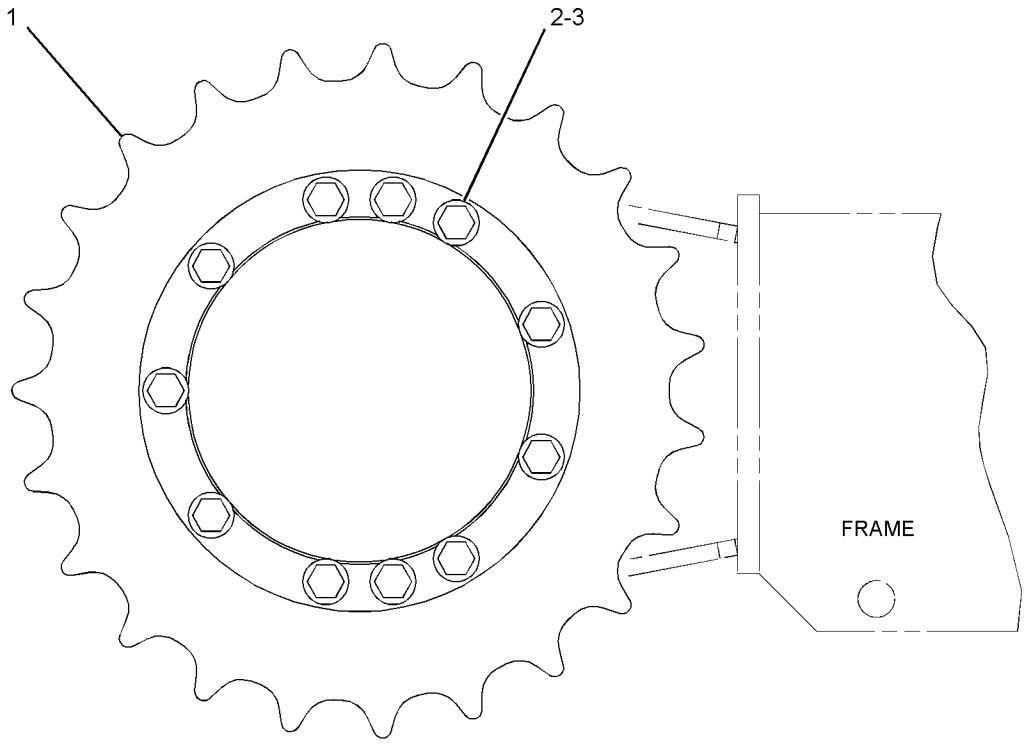

RIGHT SIDE VIEW

GRAPHIC #1 **<END>** g01944766

352-7765 C-FRAME GP-POWER ANGLING

PART OF 281-8699 BLADE & MOUNTING GP

AN ATTACHMENT

SMCS-6063 **i04016793**

NOTE	REF NO	GRAPHIC REF	PART NUMBER	QTY	PART NAME 1 2 3 4 5 6 (PRODUCT LEVEL)	SEE PAGE
	1	1	**121-3709**	2	SEAL-LIP TYPE	
	2	1	**140-3734**	4	SEAL-DUST	
	3	1	**352-7766**	1	FRAME & BEARING AS	
		1	**265-8713**	2	BUSHING	
		1	**287-0035**	2	BUSHING	
	4	1	**3B-8485**	2	FITTING-GREASE	
	5	1	**3B-8488**	1	FITTING-GREASE	

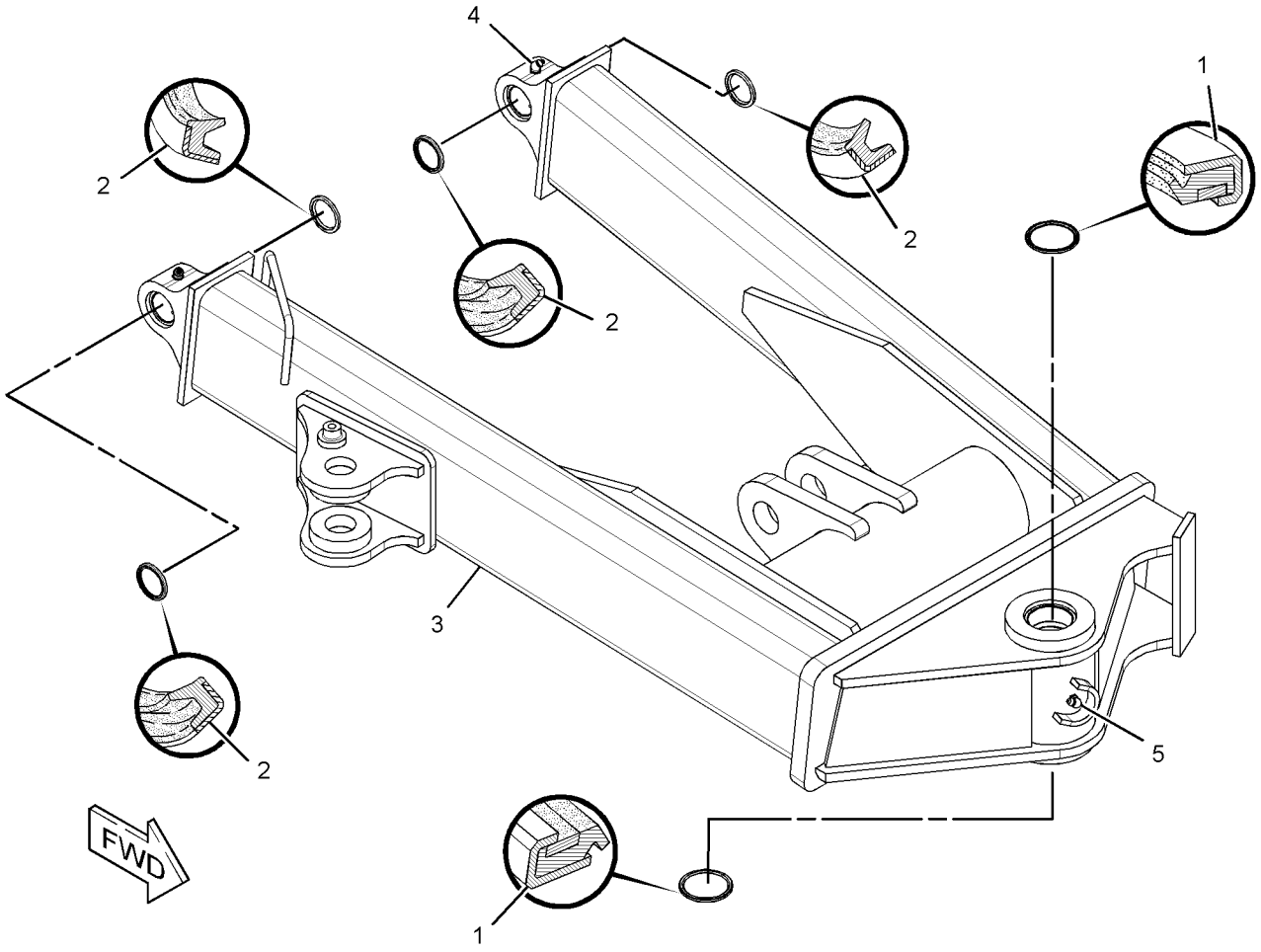

GRAPHIC #1 **<END>** g01365731

367-0902 COUNTERWEIGHT & MOUNTING GP

PART OF 376-6676 CHASSIS AR

SMCS-7056 **i04725133**

NOTE	REF NO	GRAPHIC REF	PART NUMBER	QTY	PART NAME 1 2 3 4 5 6 (PRODUCT LEVEL)	SEE PAGE
	1	1	**258-2111**	3	CAP	
	2	1	*367-0952*	1	CONTERWEIGHT AS	
		1	**367-0962**	1	COUNTERWEIGHT AS	
		1	**367-1101**	1	FOAM	
	3	1	**086-0299**	2	WASHER (22X60X9-MM THK)	
M	4	1	**7X-2563**	1	BOLT (M20X2.5X60-MM)	
M	5	1	**7X-2564**	1	BOLT (M20X2.5X90-MM)	
	6	1	**8T-5439**	1	WASHER-HARD (21.5X45X6-MM THK)	
M	7	1	**8T-6381**	1	BOLT (M20X2.5X120-MM)	

M - METRIC PART

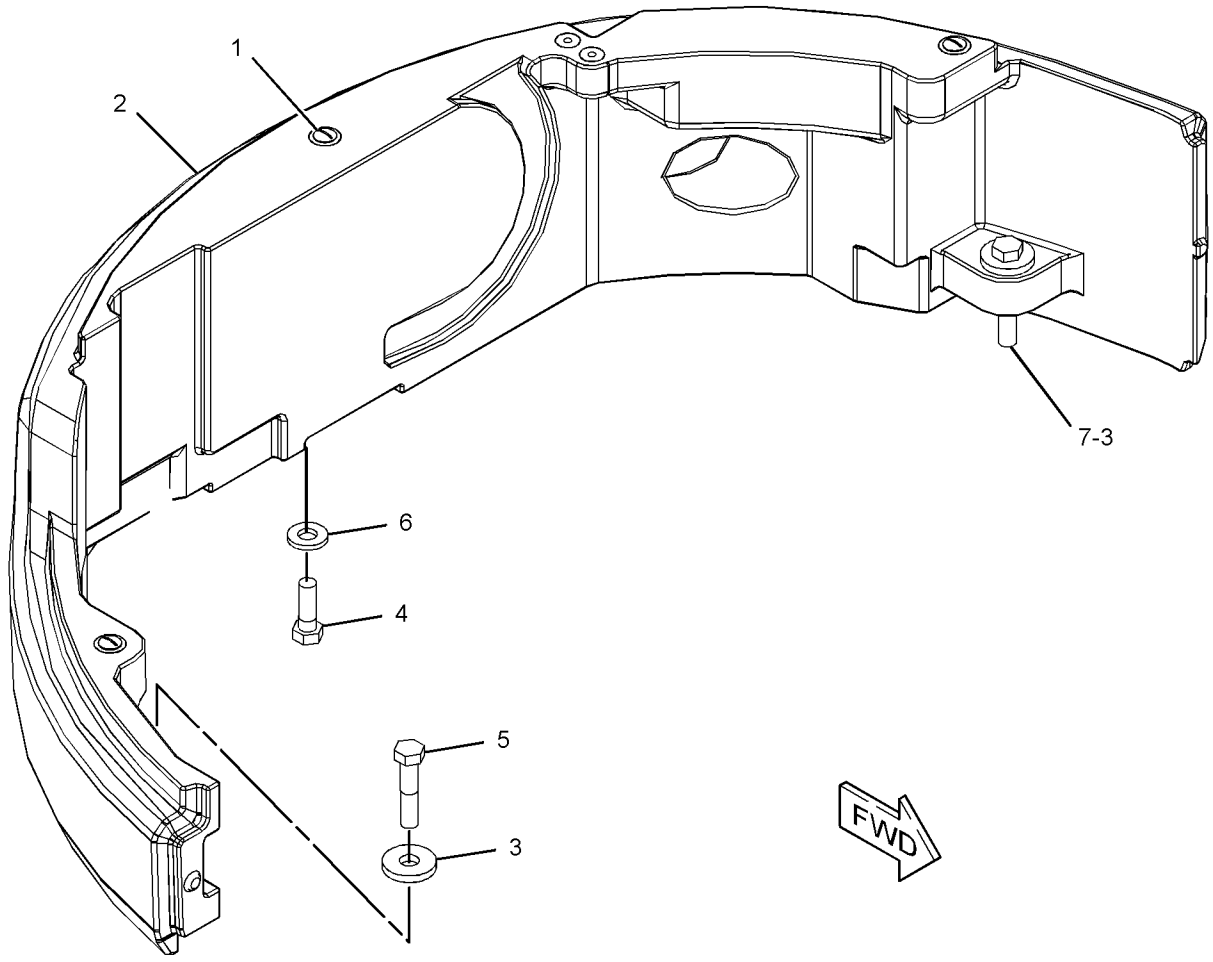

GRAPHIC #1 **<END>** g02852843

377-7888 COVER AS–LH

PART OF 377-7883 COVER GP-ACCESS

SMCS-7253 **i04638090**

NOTE	REF NO	GRAPHIC REF	PART NUMBER	QTY	PART NAME 1 2 3 4 5 6 (PRODUCT LEVEL)	SEE PAGE
	1	1	*377-7893*	1	COVER AS (LH)	
M		1	**8T-3490**	2	NUT-WELD (M10X1.5-THD)	
	2	1	**377-7937**	1	FOAM	
	3	1	**377-7938**	1	FOAM	
	4	1	**377-7939**	1	FOAM	
	5	1	**379-6414**	1	INSULATION	
	6	1	**382-5689**	1	INSULATION	

M - METRIC PART

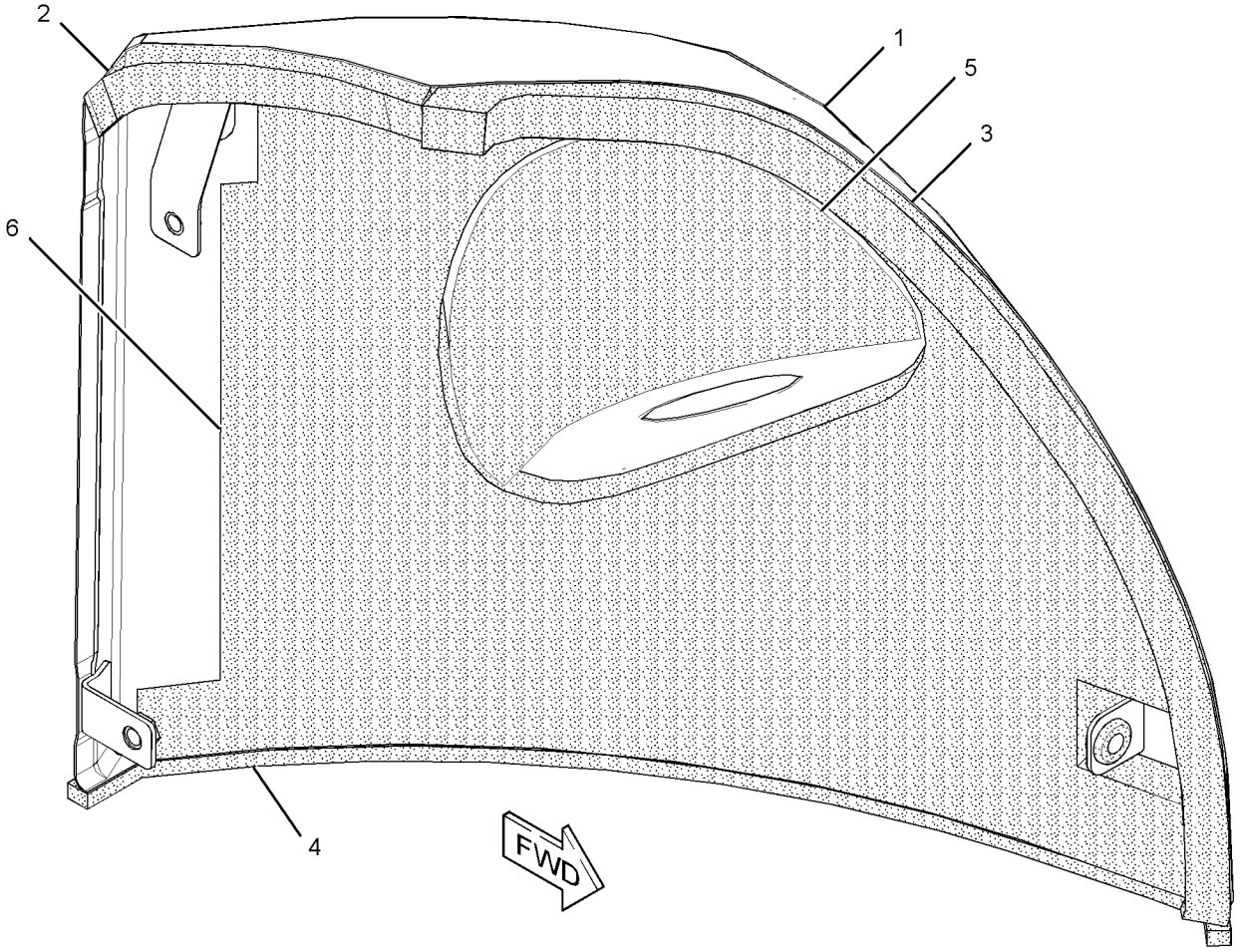

GRAPHIC #1 **<END>** g02801396

377-7883 COVER GP-ACCESS–LH

PART OF 367-0918 HOOD & GUARD GP

SMCS-726A **i04638089**

NOTE	REF NO	GRAPHIC REF	PART NUMBER	QTY	PART NAME 1 2 3 4 5 6 (PRODUCT LEVEL)	SEE PAGE
Y	1	1	*377-7888*	1	COVER AS (LH)	130
	2	1	**140-3201**	1	GROMMET	

Y - SEPARATE ILLUSTRATION

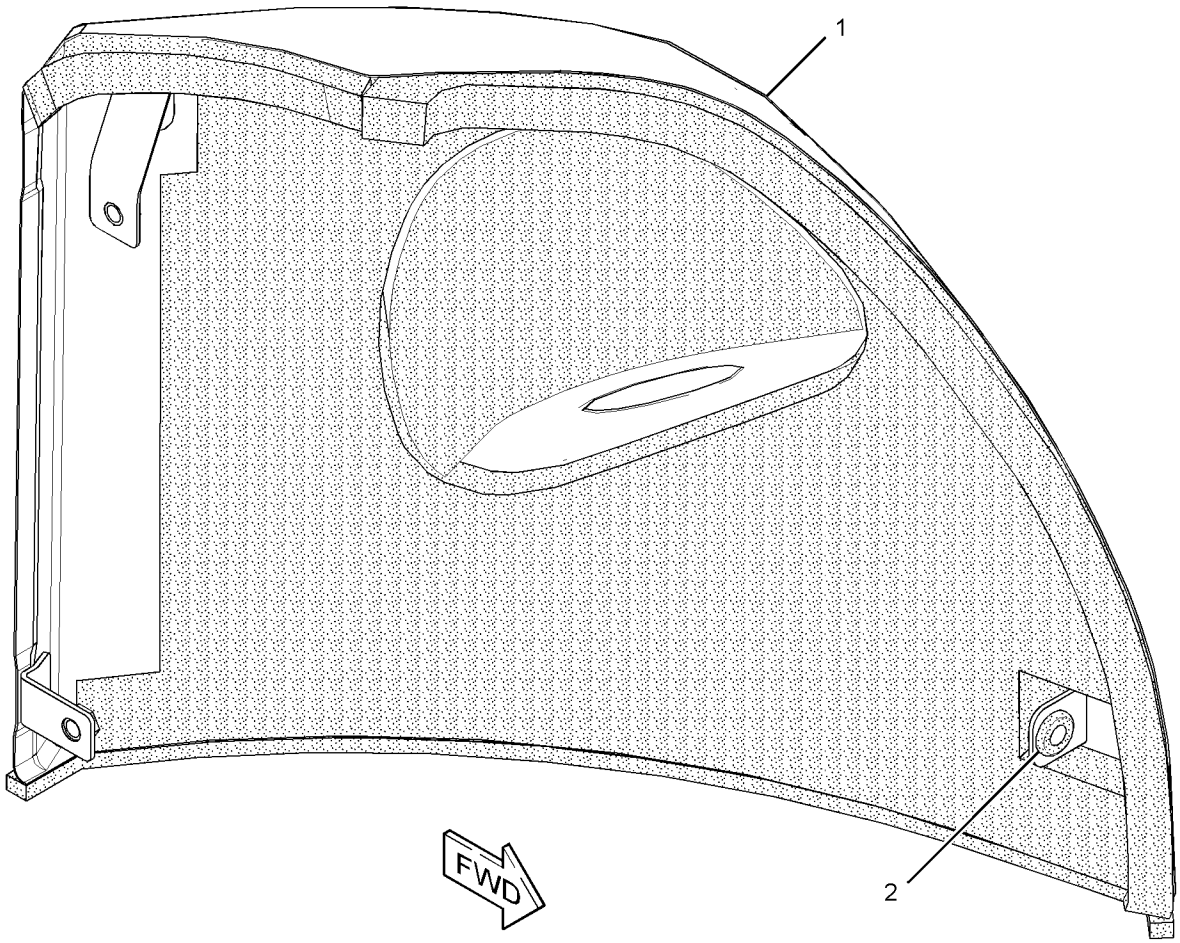

GRAPHIC #1 **<END>** g02801059

377-7886 COVER GP-ACCESS–RH

PART OF 379-6419 SUPPRESSION AR-SOUND
AN ATTACHMENT

SMCS-726A **i04629109**

NOTE	REF NO	GRAPHIC REF	PART NUMBER	QTY	PART NAME 1 2 3 4 5 6 (PRODUCT LEVEL)	SEE PAGE
	1	1	**265-8463**	1	STUD-BALL	
	2	1	**276-9254**	3	BUMPER	
	3	1	**334-0257**	2	BUMPER	
	4	1	**377-7862**	1	LATCH AS	
		1	**191-0348**	1	GROMMET	
	5	1	*377-7892*	1	COVER AS (RH)	
M		1	**8T-3490**	10	NUT-WELD (M10X1.5-THD)	
M	6	1	**5C-7261**	1	NUT (M8X1.25-THD)	
	7	1	**5P-4116**	1	WASHER-HARD (8.8X20.5X2-MM THK)	
	8	1	**7X-7729**	4	WASHER (11X25X3-MM THK)	
M	9	1	**8T-4133**	2	NUT (M10X1.5-THD)	
M	10	1	**8T-4136**	2	BOLT (M10X1.5X25-MM)	
D	11	1	**5P-7483**		SEAL (0.5-M)	
J	12	1	**214-8827**		SEAL (19.7-DM)	
J	12A	1	**214-8827**		SEAL (7.3-DM)	
J	12B	1	**214-8827**		SEAL (8.7-DM)	

D - ORDER BY THE METER
J - ORDER BY THE DECIMETER
M - METRIC PART

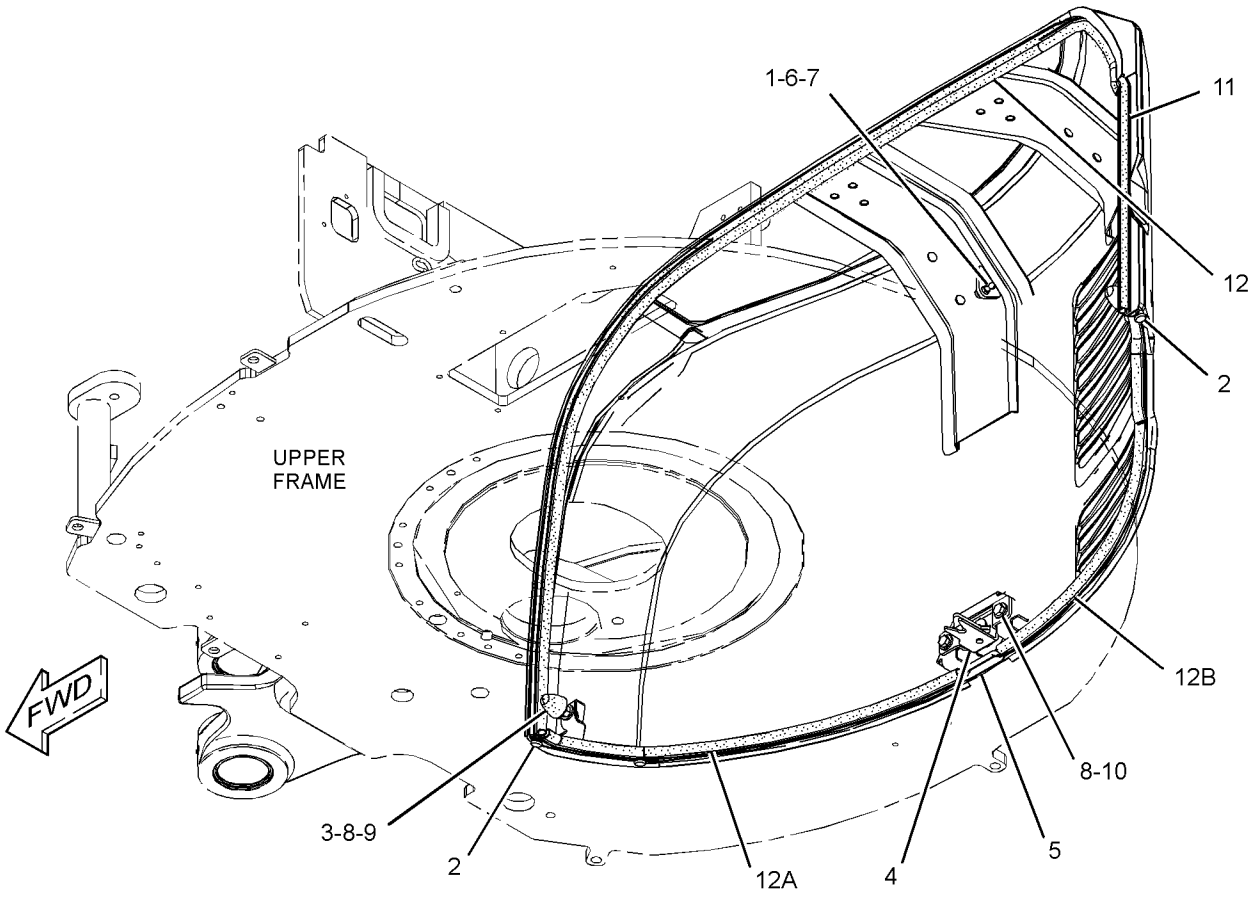

GRAPHIC #1 **<END>** g02799961

367-0912 COVER GP-FENDER

PART OF 376-6676 CHASSIS AR

SMCS-7252 **i04629809**

NOTE	REF NO	GRAPHIC REF	PART NUMBER	QTY	PART NAME 1 2 3 4 5 6 (PRODUCT LEVEL)	SEE PAGE
	1	1	*367-0980*	1	FENDER AS (RH)	
M		1	**8T-3490**	3	NUT-WELD (M10X1.5-THD)	
Y	2	1	*367-0984*	1	FENDER GP (LH)	136
	3	1	**7X-7729**	7	WASHER (11X25X3-MM THK)	
M	4	1	**8T-4136**	2	BOLT (M10X1.5X25-MM)	
M	5	1	**8T-4186**	2	BOLT (M10X1.5X40-MM)	
M	6	1	**8T-4195**	3	BOLT (M10X1.5X30-MM)	

M - METRIC PART
Y - SEPARATE ILLUSTRATION

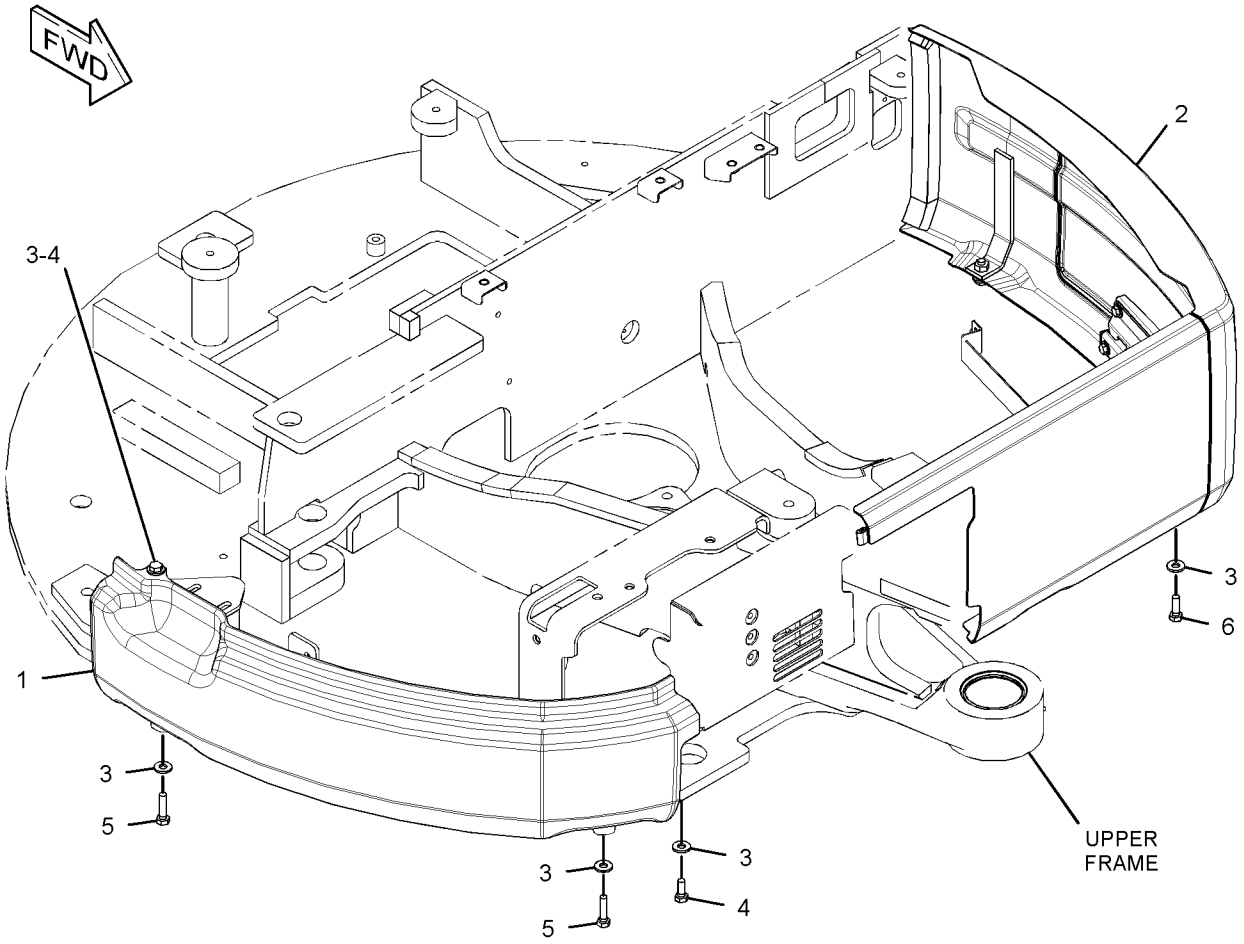

GRAPHIC #1 **<END>** g02798344

382-2177 COVER GP-SOUND SUPPRESSION

PART OF 382-0400 PLATFORM GP-OPERATOR

AN ATTACHMENT

SMCS-1801, 7251 **i04775403**

NOTE	REF NO	GRAPHIC REF	PART NUMBER	QTY	PART NAME 1 2 3 4 5 6 (PRODUCT LEVEL)	SEE PAGE
	1	1	**380-7159**	1	COVER AS	
	2	1	**380-7160**	1	COVER AS (LH)	
	3	1	**382-2151**	1	COVER	
	4	1	**382-2152**	2	INSULATION	
	5	1	**382-2153**	1	INSULATION	
	6	1	**382-2154**	1	INSULATION	
	7	1	**382-2155**	1	INSULATION	
	8	1	**382-2156**	1	INSULATION	
	9	1	**382-2158**	1	INSULATION	
	10	1	**382-2159**	1	INSULATION	
	11	1	**382-2160**	2	SEAL	
	12	1	**382-2162**	1	SEAL	
	13	1	**382-2163**	1	INSULATION	
	14	1	**382-2164**	1	INSULATION	
	15	1	**382-2165**	1	INSULATION	
	16	1	**382-2166**	1	SEAL	
	17	1	**382-2167**	1	SEAL	
	18	1	**382-2168**	1	SEAL	
	19	1	**382-2169**	1	SEAL	
	20	1	**382-2170**	1	SEAL	
	21	1	**382-2171**	1	SEAL	
	22	1	**382-2172**	1	SEAL	
	23	1	**382-2173**	1	SEAL	
	24	1	**382-2174**	1	SEAL	
	25	1	**382-2175**	1	SEAL	
	26	1	**382-2176**	2	SEAL	
	27	1	**382-6321**	1	SEAL	
	28	1	**389-8671**	1	INSULATION	
	29	1	**389-8672**	1	INSULATION	
	30	1	**389-8673**	2	INSULATION	
	31	1	**5P-4116**	2	WASHER-HARD (8.8X20.5X2-MM THK)	
M	32	1	**8T-4171**	4	BOLT (M6X1X12-MM)	
M	33	1	**8T-4200**	2	BOLT (M8X1.25X16-MM)	
	34	1	**9X-8256**	4	WASHER (6.6X12X2-MM THK)	

M - METRIC PART

382-2177 **COVER GP-SOUND SUPPRESSION (*contd.*)** **i04775403**

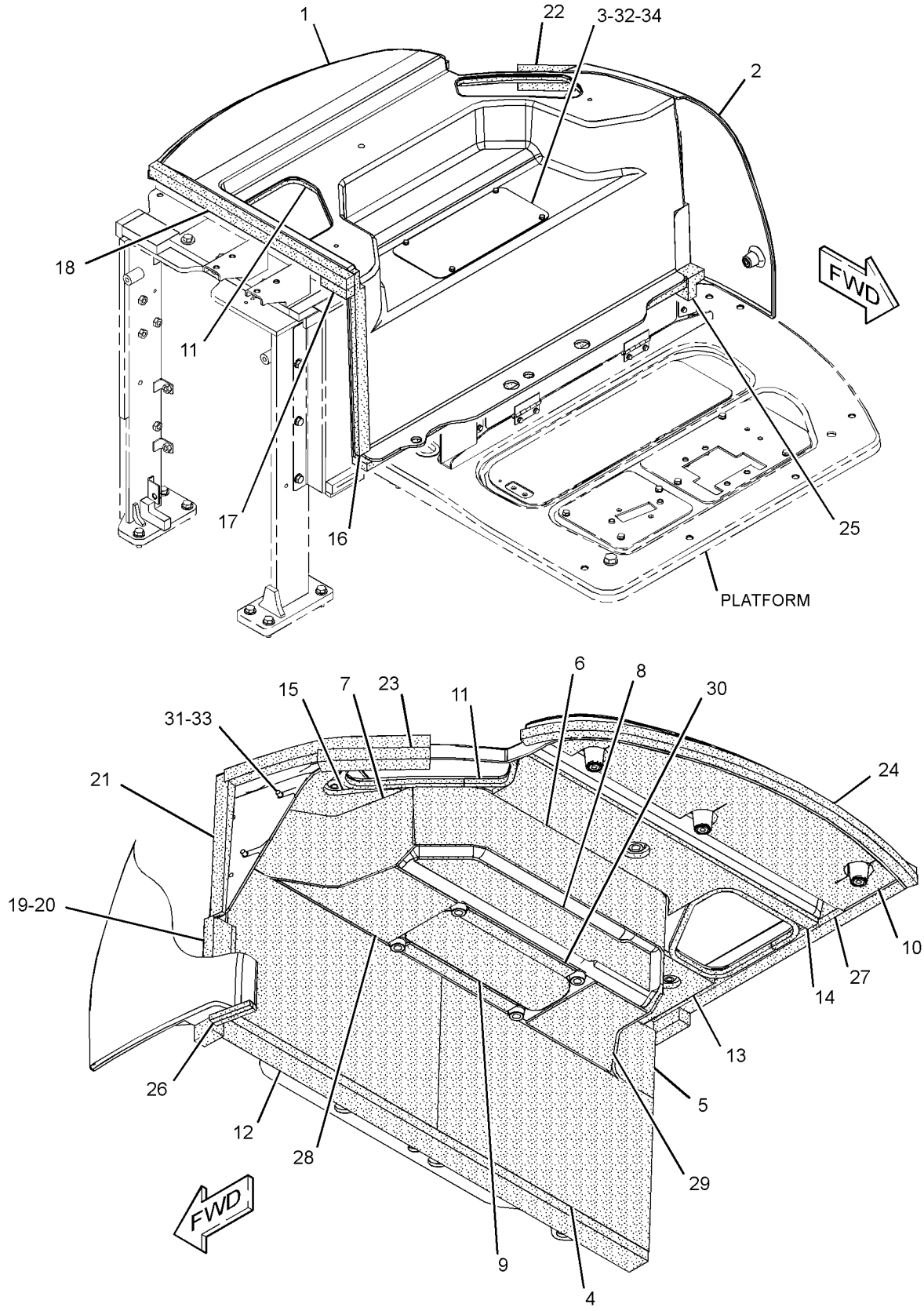

GRAPHIC #1 **<END>** g02800756

367-0984 FENDER GP–LH

PART OF 367-0912 COVER GP-FENDER

SMCS-7252 **i04629814**

NOTE	REF NO	GRAPHIC REF	PART NUMBER	QTY	PART NAME 1 2 3 4 5 6 (PRODUCT LEVEL)	SEE PAGE
	1	1	*8T-2888*	1	LOCK GP (FENDER)	
J		1	**226-0294**	1	LOCK AS	
		1	**226-0338**	1	CAM	
	2	1	**339-1545**	1	COVER AS-FENDER	
M		1	**8T-3612**	2	NUT-WELD (M8X1.25-THD)	
	3	1	**339-1548**	1	HINGE AS	
		1	**3B-4605**	2	PIN-COTTER	
		1	**9X-8256**	2	WASHER (6.6X12X2-MM THK)	
	4	1	**367-0985**	1	FENDER AS (LH)	
M		1	**8T-3490**	3	NUT-WELD (M10X1.5-THD)	
M		1	**8T-3612**	2	NUT-WELD (M8X1.25-THD)	
	5	1	**5P-4116**	4	WASHER-HARD (8.8X20.5X2-MM THK)	
	6	1	**8P-5348**	1	GROMMET	
M	7	1	**8T-4200**	4	BOLT (M8X1.25X16-MM)	
	8	1	**9M-5617**	2	GROMMET	
E	9	1	**3E-6600**		SEAL (2-CM)	

E - ORDER BY THE CENTIMETER
J - REQUIRES CORPORATE KEY
M - METRIC PART

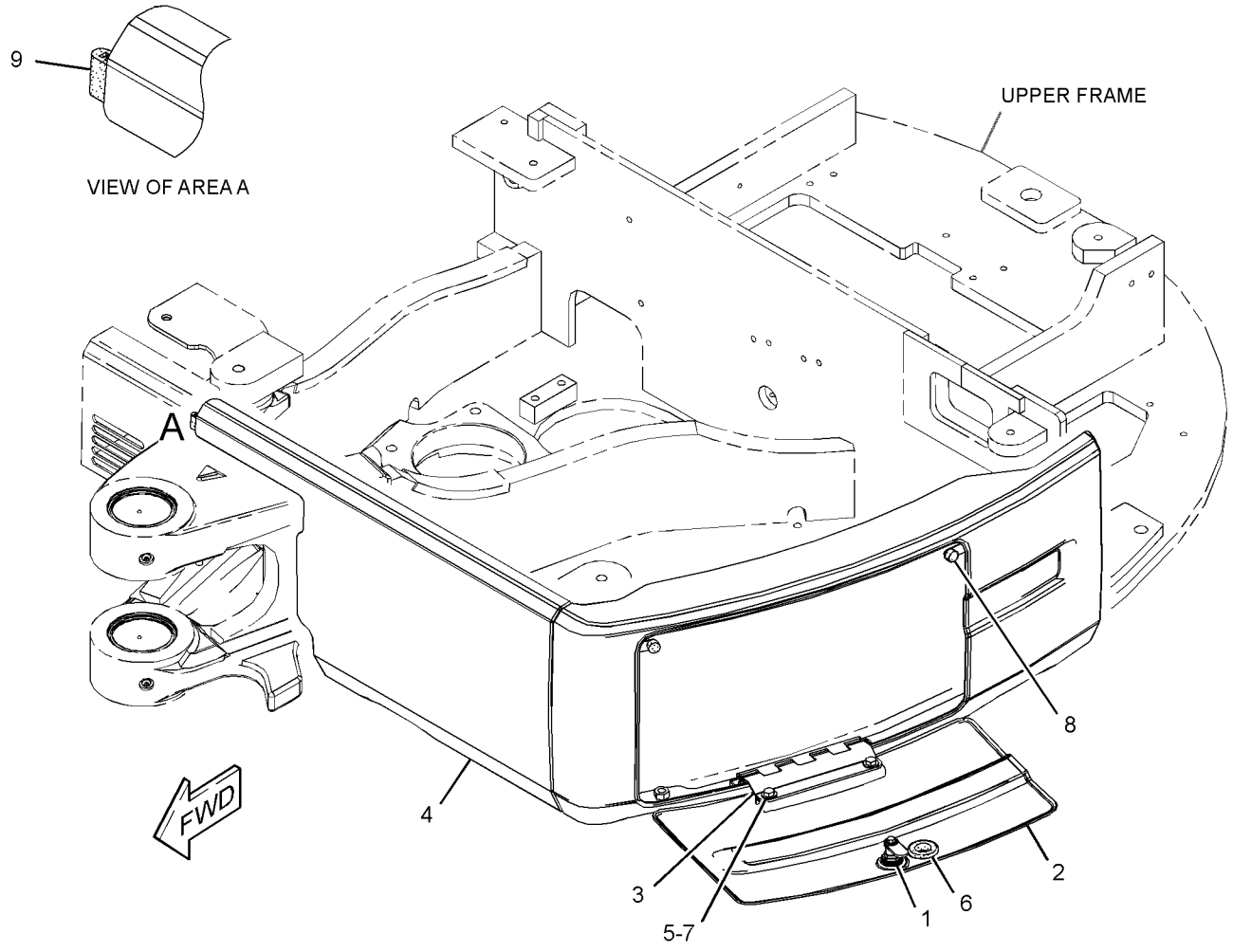

GRAPHIC #1 **<END>** g02798870

377-5062 FRAME GP-REAR–CAB

PART OF 379-3625 PLATFORM GP-OPERATOR

AN ATTACHMENT

SMCS-7051 **i04617852**

NOTE	REF NO	GRAPHIC REF	PART NUMBER	QTY	PART NAME 1 2 3 4 5 6 (PRODUCT LEVEL)	SEE PAGE
	1	1	**6N-6984**	2	MOUNT-RUBBER	
	2	1	**377-5063**	1	FRAME AS-REAR (LH)	
	3	1	**377-5075**	1	FRAME AS-REAR (RH)	
	4	1	**377-5085**	1	PLATE	
	5	1	**377-5086**	1	INSULATION	
	6	1	**377-5087**	1	INSULATION	
	7	1	**377-5088**	1	INSULATION	
	8	1	**377-5089**	1	FOAM	
	9	1	**377-5090**	1	FOAM	
	10	1	**377-5091**	1	FOAM	
	11	1	**377-5092**	1	FOAM	
	12	1	**377-5093**	1	FOAM	
	13	1	**377-5094**	1	FOAM	
	14	1	**377-5095**	1	FOAM	
Y	15	1	**377-5096**	1	PLATE AS	156
	16	1	**378-8137**	1	FOAM	
	18	1	**5P-1076**	3	WASHER-HARD (13.5X30X4-MM THK)	
	19	1	**8T-4121**	3	WASHER-HARD (11X21X2.5-MM THK)	
M	20	1	**8T-4137**	3	BOLT (M10X1.5X20-MM)	
M	21	1	**8T-4183**	3	BOLT (M12X1.75X40-MM)	
M	22	1	**8T-4184**	5	BOLT (M12X1.75X45-MM)	
M	23	1	**8T-4196**	2	BOLT (M10X1.5X35-MM)	
	24	1	**8T-4223**	8	WASHER-HARD (13.5X25.5X3-MM THK)	
M	25	1	**8T-4956**	3	BOLT (M12X1.75X35-MM)	
	26	1	**9L-8781**	2	WASHER (0.406X1.5X0.188-IN THK)	
D	27	1	**5P-5687**		SEAL (0.1-M EACH)	
D	27A	1	**5P-5687**		SEAL (0.2-M EACH)	

D - ORDER BY THE METER
M - METRIC PART
Y - SEPARATE ILLUSTRATION

377-5062 **FRAME GP-REAR (*contd.*)** **i04617852**

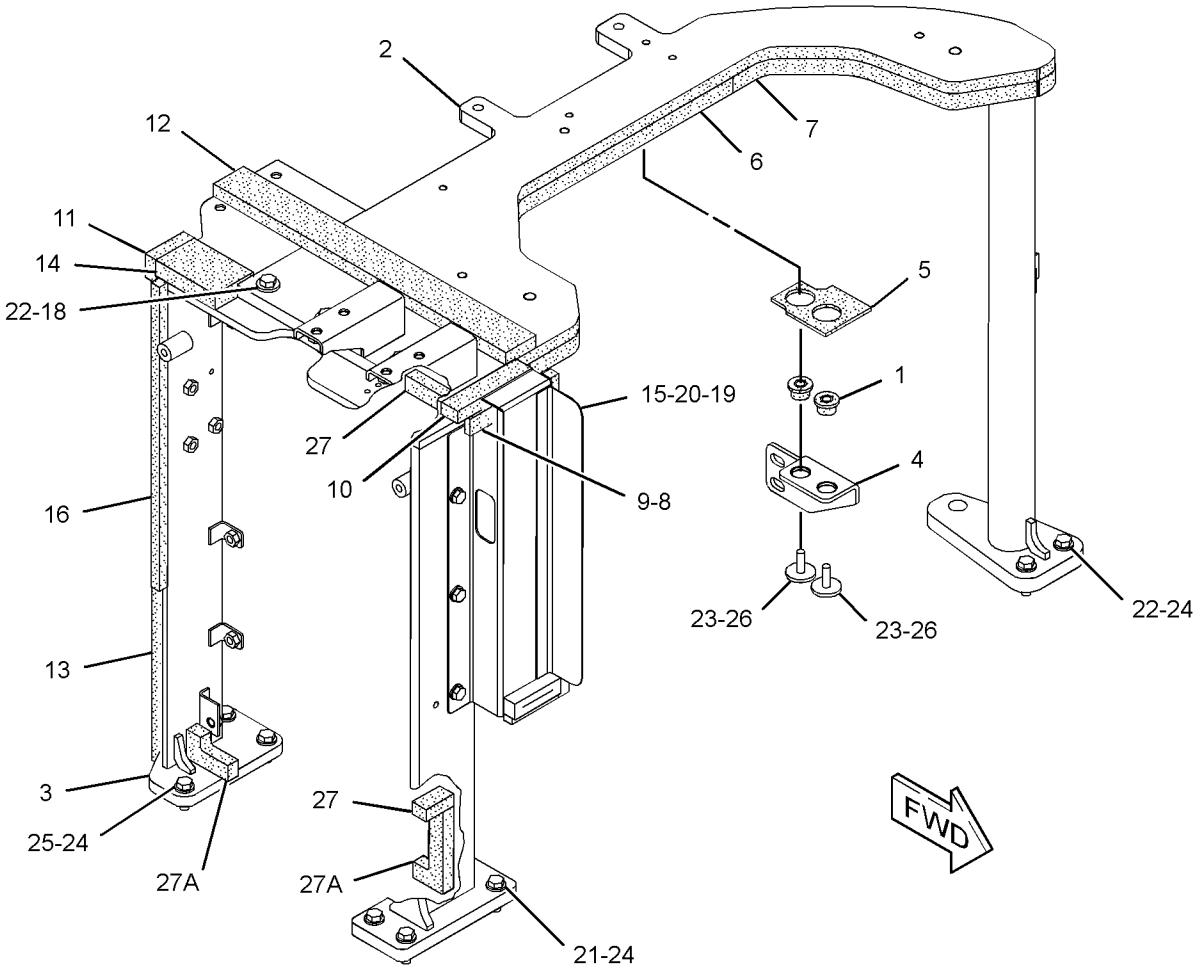

GRAPHIC #1 **<END>** g02811496

382-0401 FRAME GP-REAR–CANOPY

PART OF 382-0400 PLATFORM GP-OPERATOR

AN ATTACHMENT

SMCS-7051 **i04623160**

NOTE	REF NO	GRAPHIC REF	PART NUMBER	QTY	PART NAME 1 2 3 4 5 6 (PRODUCT LEVEL)	SEE PAGE
	1	2	**6N-6984**	2	MOUNT-RUBBER	
	2	1	**377-5075**	1	FRAME AS-REAR (RH)	
		1	**4Y-8939**	1	BOSS (M10X1.5X40-MM)	
M		1	**7Y-8763**	1	BOSS (M10X1.5X25-MM)	
M		1	**8T-3490**	11	NUT-WELD (M10X1.5-THD)	
M		1	**8T-3597**	3	NUT-WELD (M12X1.75-THD)	
	3	2	**377-5085**	1	PLATE	
	4	2	**377-5086**	1	INSULATION	
	5	2	**377-5087**	1	INSULATION	
	6	2	**377-5088**	1	INSULATION	
	7	2	**377-5089**	1	FOAM	
	8	1	**377-5090**	1	FOAM	
	9	1	**377-5091**	1	FOAM	
	10	1	**377-5092**	1	FOAM	
	11	1	**377-5093**	1	FOAM	
	12	1	**377-5094**	1	FOAM	
	13	1	**377-5095**	1	FOAM	
	14	1	**378-8137**	1	FOAM	
	15	1	**382-0402**	1	FRAME AS-REAR (LH)	
M		1	**8T-3490**	4	NUT-WELD (M10X1.5-THD)	
	16	1	**382-0404**	1	SEAL AS	
		1	**377-5098**	1	FOAM	
		1	**377-5100**	1	FOAM	
		1	**377-5101**	1	FOAM	
		1	**377-5102**	1	FOAM	
	17	2	**382-2181**	1	INSULATION	
	18	1	**5P-1076**	3	WASHER-HARD (13.5X30X4-MM THK)	
	19	1	**8T-4121**	3	WASHER-HARD (11X21X2.5-MM THK)	
M	20	1	**8T-4137**	3	BOLT (M10X1.5X20-MM)	
M	21	1	**8T-4183**	3	BOLT (M12X1.75X40-MM)	
M	22	1	**8T-4184**	5	BOLT (M12X1.75X45-MM)	
M	23	2	**8T-4196**	2	BOLT (M10X1.5X35-MM)	
	24	1	**8T-4223**	8	WASHER-HARD (13.5X25.5X3-MM THK)	
M	25	1	**8T-4956**	3	BOLT (M12X1.75X35-MM)	
	26	2	**9L-8781**	2	WASHER (0.406X1.5X0.188-IN THK)	
D	27	1,2	**5P-5687**		SEAL (0.1-M EACH)	
D	27A	2	**5P-5687**		SEAL (0.2-M)	

D - ORDER BY THE METER
M - METRIC PART

382-0401 **FRAME GP-REAR (*contd.*)** **i04623160**

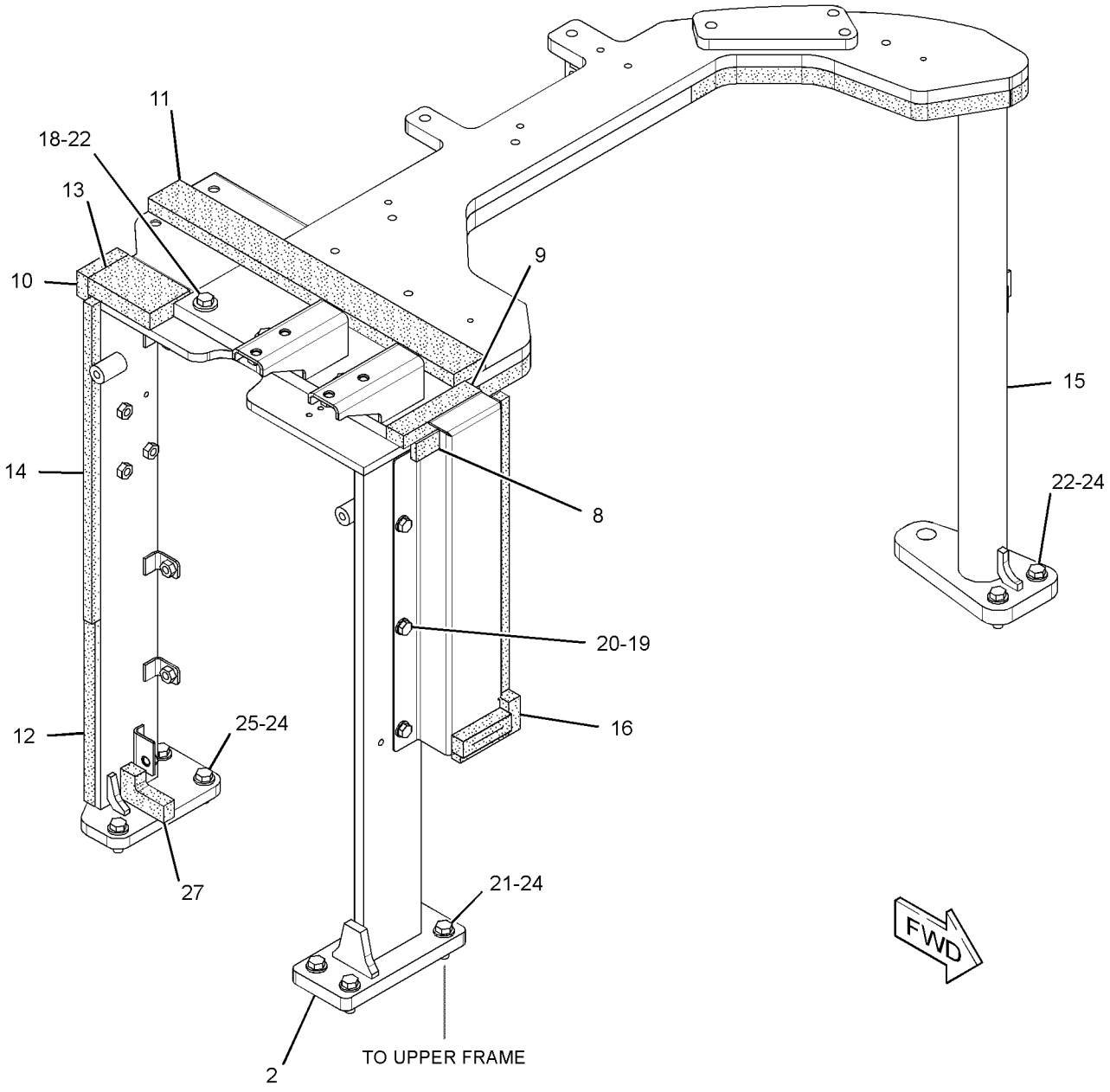

GRAPHIC #1 g02814217

382-0401 **FRAME GP-REAR (*contd.*)** **i04623160**

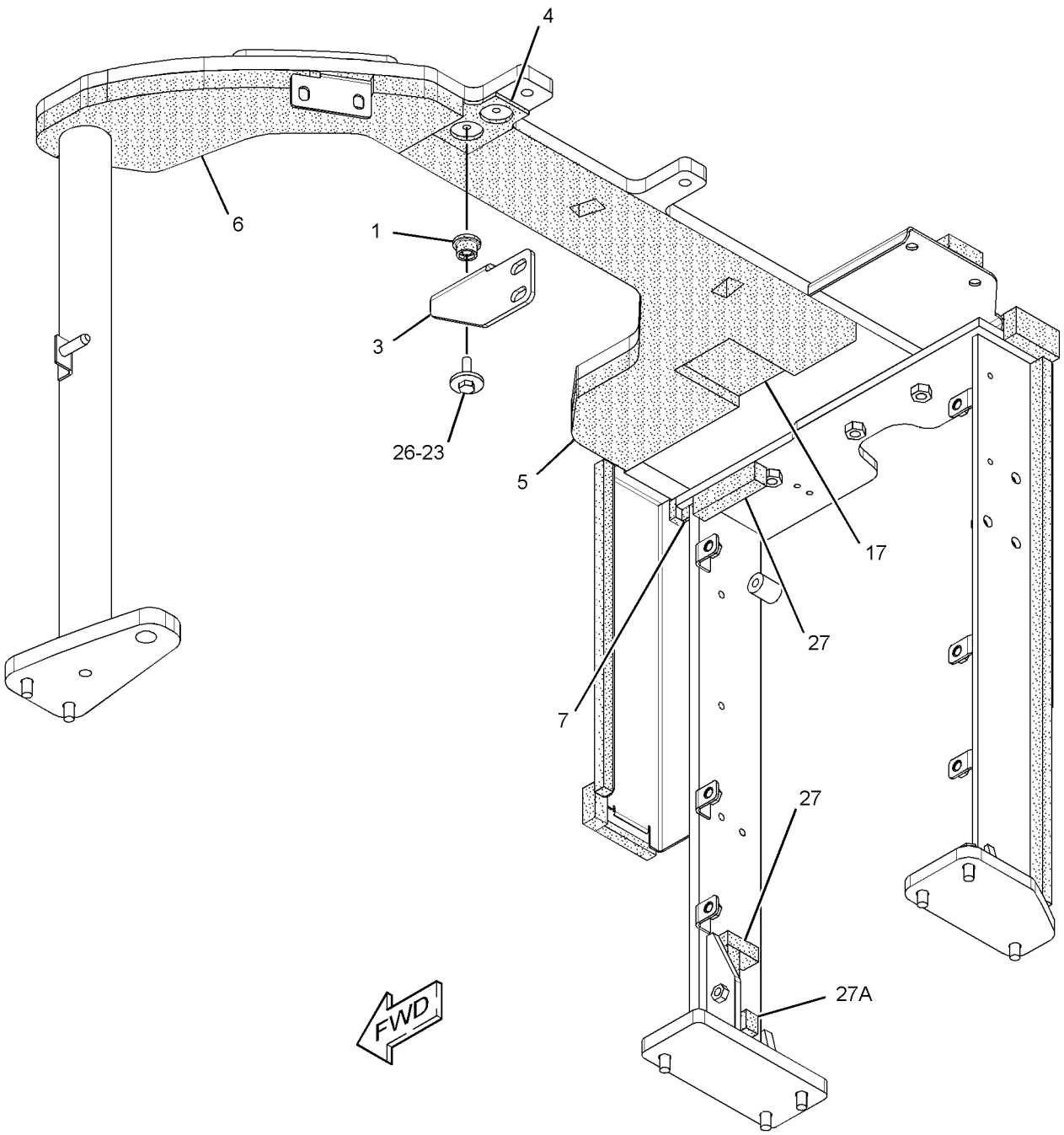

GRAPHIC #2 **<END>** g02814656

266-4069 FRAME GP-SWING

PART OF 376-6680 BOOM AR

SMCS-6506 **i04243213**

NOTE	REF NO	GRAPHIC REF	PART NUMBER	QTY	PART NAME 1 2 3 4 5 6 (PRODUCT LEVEL)	SEE PAGE
B	1	1	**093-0083**	2	SHIM (1-MM THK)	
B	2	1	**133-2425**	1	SHIM (0.5-MM THK)	
B	3	1	**140-4741**	4	SHIM (1-MM THK)	
	4	1	**266-3872**	1	BOSS	
	5	1	**266-4071**	1	PIN AS	
	6	1	**266-4078**	2	WASHER-THRUST (82X140X3-MM THK)	
	7	1	**271-5889**	2	SCREW (M12X1.75X50-MM)	
	8	1	**281-0902**	1	PIN AS	
	9	1	**367-7122**	1	SUPPORT & BEARING AS	
	9A	1	**281-0923**	1	BUSHING	
	9B	1	**281-0924**	2	BUSHING	
	9C	1	**281-0925**	1	BUSHING	
	10	1	**281-0926**	2	BOSS	
	11	1	**294-3097**	1	PIN AS	
	12	1	**281-0930**	1	PIN	
	13	1	**6V-8513**	2	WASHER-HARD (11X35X2.5-MM THK)	
	14	1	**8T-4121**	1	WASHER-HARD (11X21X2.5-MM THK)	
M	15	1	**8T-4137**	2	BOLT (M10X1.5X20-MM)	
M	16	1	**8T-4196**	1	BOLT (M10X1.5X35-MM)	
	17	1	**8T-4223**	2	WASHER-HARD (13.5X25.5X3-MM THK)	
	18	1	**292-0153**	1	PIN AS	

B - USE AS REQUIRED
M - METRIC PART

266-4069 **FRAME GP-SWING (*contd.*)** **i04243213**

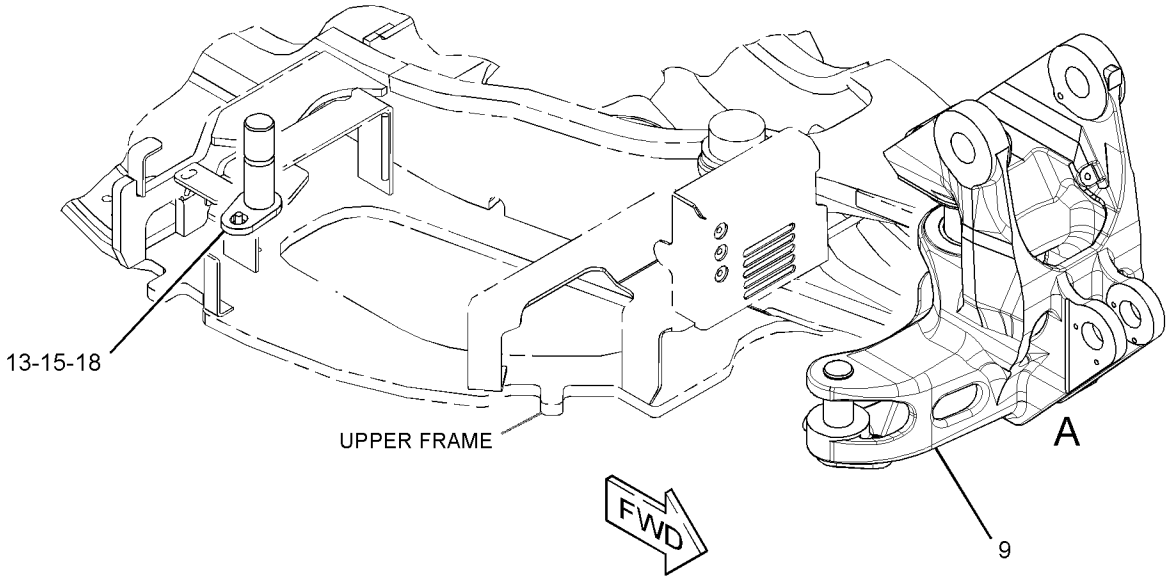

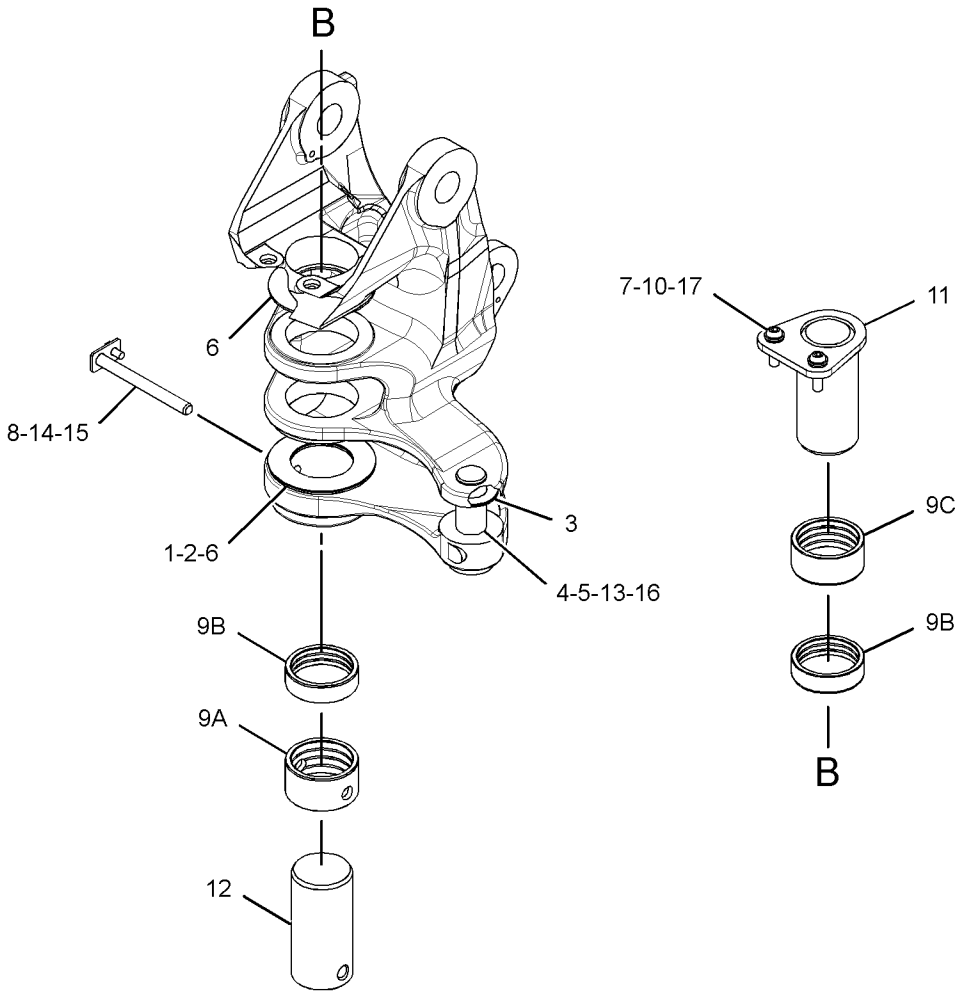

VIEW OF AREA A
(EXPLODED)

GRAPHIC #1

<END>

g02220254

376-6212 FRAME GP-UPPER

PART OF 376-6676 CHASSIS AR

SMCS-7051 **i04725139**

NOTE	REF NO	GRAPHIC REF	PART NUMBER	QTY	PART NAME 1 2 3 4 5 6 (PRODUCT LEVEL)	SEE PAGE
	1	1	**376-6213**	1	FRAME AS-UPPER	
	1A	1	**199-4803**	4	SEAL-LIP TYPE	
	1B	1	**266-4050**	2	BUSHING	
	2	1	**378-8105**	1	SEAL	
	3	1	**378-8111**	1	SEAL	
	4	1	**378-8113**	1	FOAM	
	5	1	**378-8121**	1	FOAM	
	6	1	**378-8125**	1	FOAM	
	7	1	**378-8129**	1	FOAM	
	8	1	**380-6374**	1	FOAM	
	9	1	**383-6388**	1	FOAM	
	10	1	**3B-8489**	2	FITTING-GREASE	

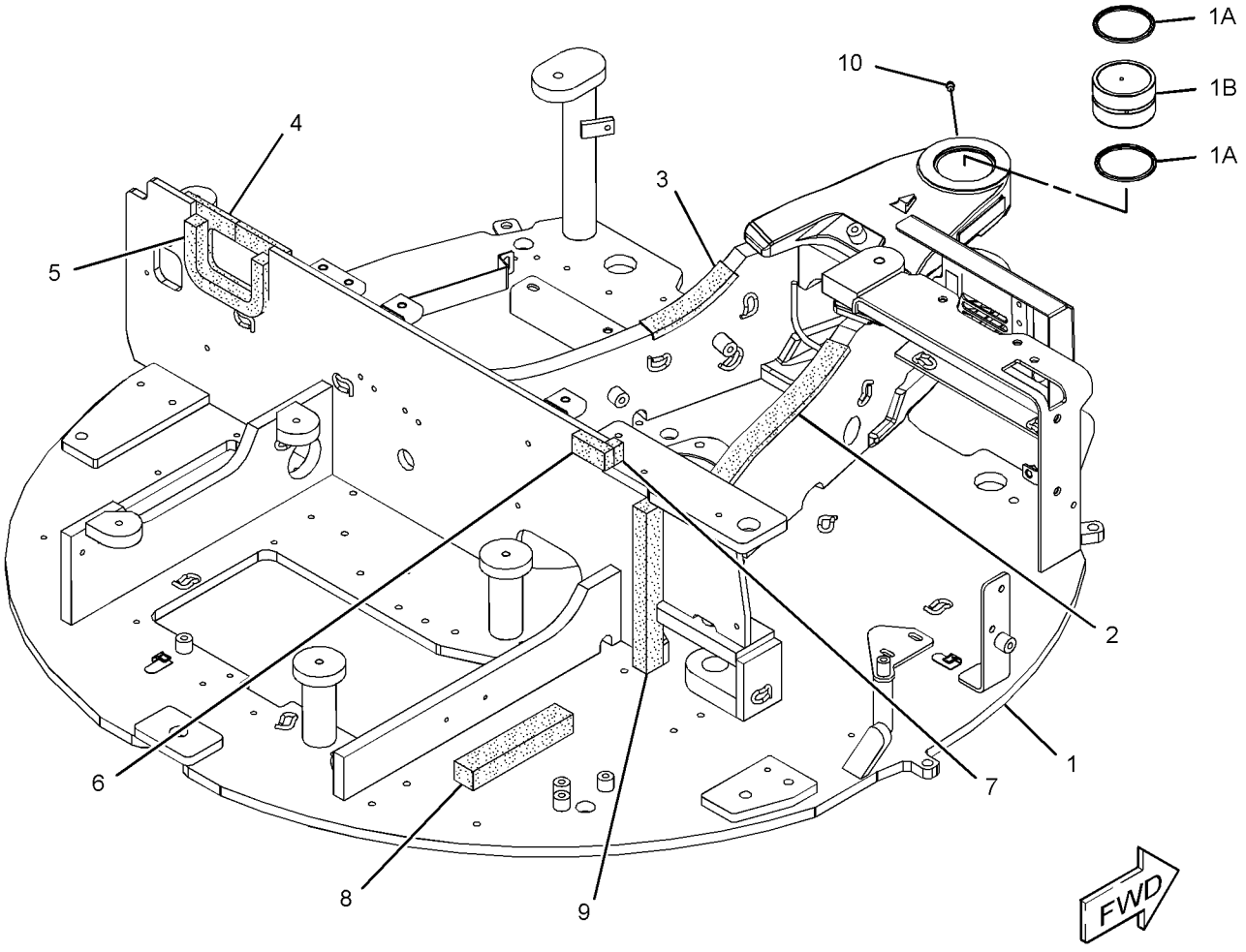

GRAPHIC #1 **<END>** g02866617

384-5724 GUARD GP-BOTTOM

PART OF 376-6676 CHASSIS AR

SMCS-7153 **i04728118**

NOTE	REF NO	GRAPHIC REF	PART NUMBER	QTY	PART NAME 1 2 3 4 5 6 (PRODUCT LEVEL)	SEE PAGE
	1	1	**384-5725**	1	COVER	
	2	1	**7X-7729**	5	WASHER (11X25X3-MM THK)	
M	3	1	**8T-4137**	5	BOLT (M10X1.5X20-MM)	

M - METRIC PART

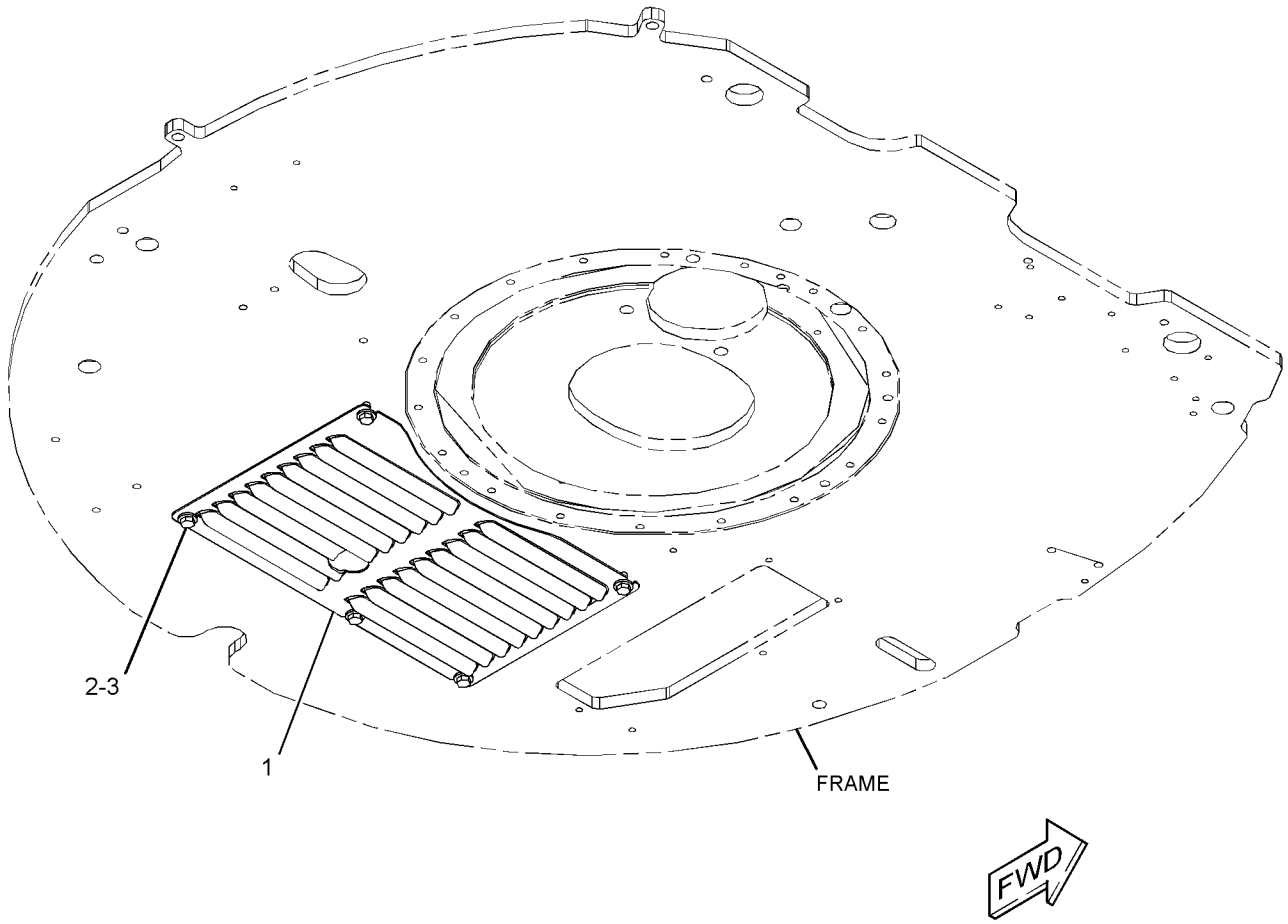

GRAPHIC #1 **<END>** g02852942

270-6501 GUARD GP-CYLINDER–BOOM

PART OF 376-6680 BOOM AR

SMCS-7164 **i04046736**

NOTE	REF NO	GRAPHIC REF	PART NUMBER	QTY	PART NAME 1 2 3 4 5 6 (PRODUCT LEVEL)	SEE PAGE
	1	1	**140-4780**	1	WASHER (10.5X32X3.2-MM THK)	
	2	1	**172-2596**	2	TUBE	
	3	1	**266-4024**	1	WASHER-SPRING	
	4	1	**363-5744**	1	COVER-ROD	
M	5	1	**8T-4137**	1	BOLT (M10X1.5X20-MM)	

M - METRIC PART

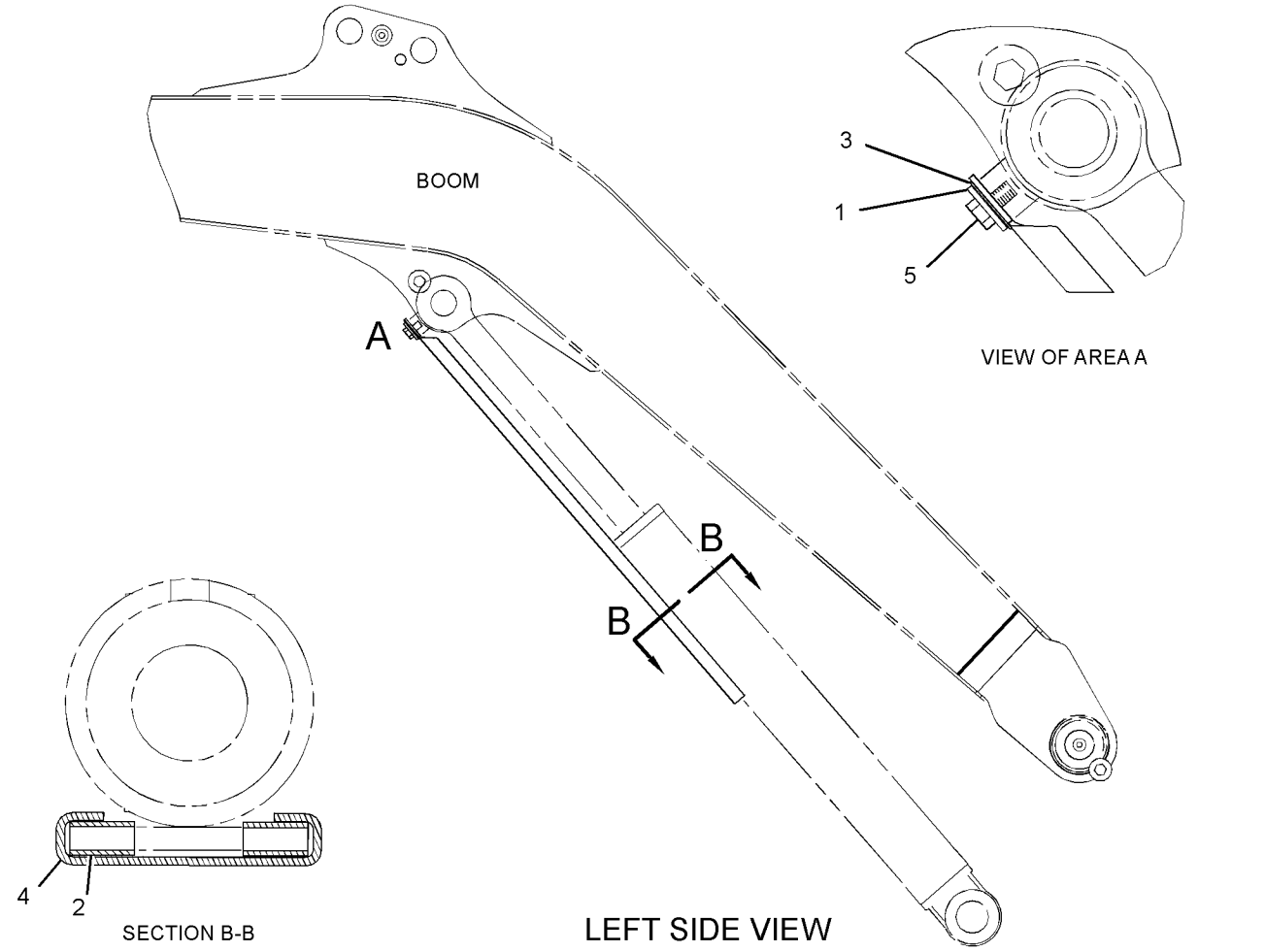

GRAPHIC #1

<END>

g01222640

290-8287 GUARD GP-CYLINDER—POWER ANGLE

PART OF 377-8930 BLADE AR-ANGLING

AN ATTACHMENT

SMCS-7164 **i04015470**

NOTE	REF NO	GRAPHIC REF	PART NUMBER	QTY	PART NAME 1 2 3 4 5 6 (PRODUCT LEVEL)	SEE PAGE
	1	1	**195-8154**	2	GUIDE	
	2	1	**290-8288**	1	COVER AS	
	3	1	**290-8290**	1	COVER AS	
	4	1	**290-8293**	1	COVER-ROD	
	5	1	**7X-0632**	1	WASHER-HARD (11X36X6-MM THK)	
	6	1	**8T-4121**	6	WASHER-HARD (11X21X2.5-MM THK)	
M	7	1	**8T-4136**	4	BOLT (M10X1.5X25-MM)	
M	8	1	**8T-4137**	3	BOLT (M10X1.5X20-MM)	

M - METRIC PART

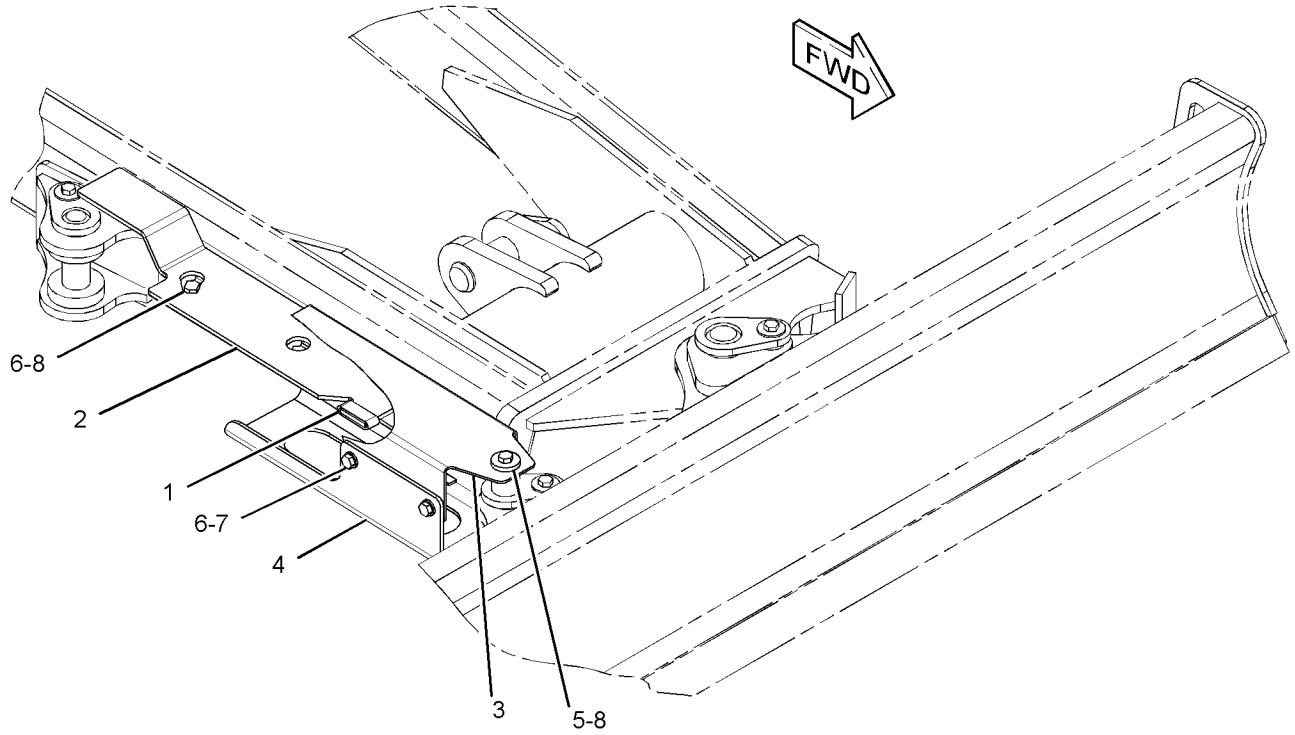

GRAPHIC #1 **<END>** g01359560

389-8702 GUARD GP-FRONT

PART OF 389-8701 CAB GP

AN ATTACHMENT

SMCS-7182 **i04633349**

NOTE	PART NUMBER	QTY	PART NAME 1 2 3 4 5 6 (PRODUCT LEVEL)	SEE PAGE
	276-3323	1	GUARD AS	
	280-0407	2	BOLT	
	281-6177	6	BOLT	
	281-1184	1	PLATE	
	281-1185	2	PLATE	
	276-3324	1	SEAL	

<END>

389-8733 GUARD GP-FRONT–MESH

PART OF 383-5929 CANOPY AR

AN ATTACHMENT

SMCS-7182 **i04728121**

NOTE	REF NO	GRAPHIC REF	PART NUMBER	QTY	PART NAME 1 2 3 4 5 6 (PRODUCT LEVEL)	SEE PAGE
	1	1	**389-8734**	1	FRAME AS	
M	2	1	**8T-4192**	8	BOLT (M12X1.75X25-MM)	
	3	1	**8T-4223**	8	WASHER-HARD (13.5X25.5X3-MM THK)	

M - METRIC PART

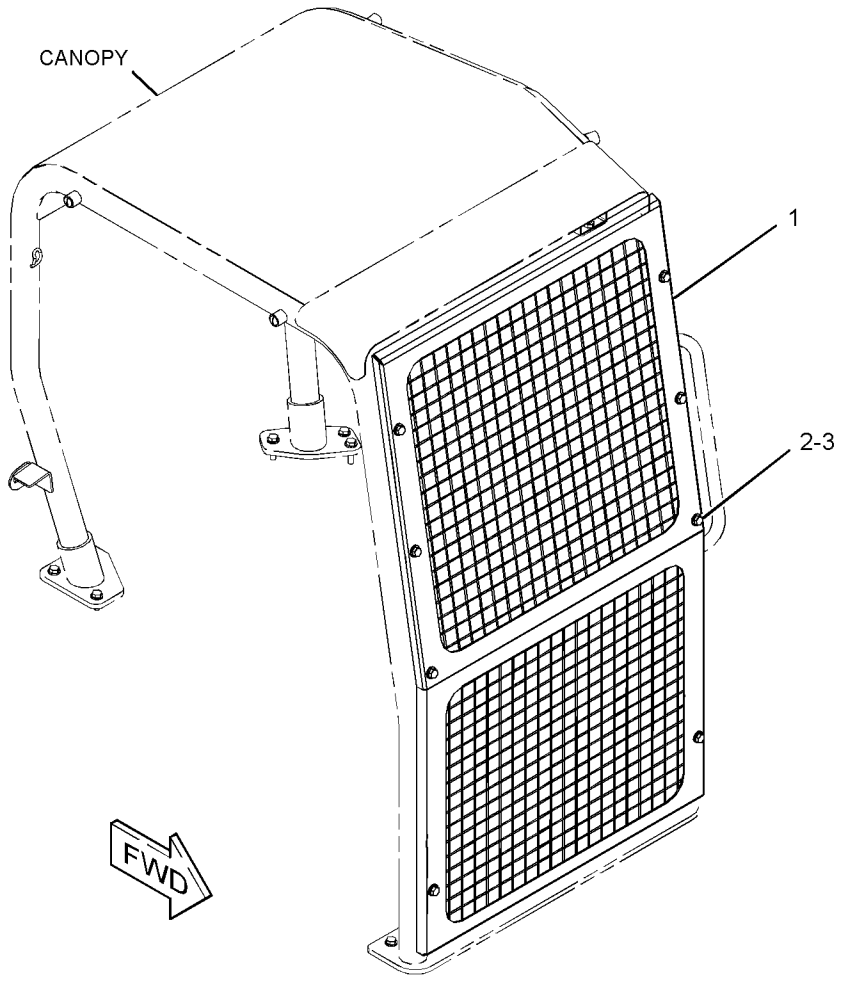

GRAPHIC #1 **<END>** g02853116

367-0918 HOOD & GUARD GP

PART OF 376-6676 CHASSIS AR

SMCS-7150, 7251 **i04824651**

NOTE	REF NO	GRAPHIC REF	PART NUMBER	QTY	PART NAME 1 2 3 4 5 6 (PRODUCT LEVEL)	SEE PAGE
	1	1	**3B-4610**	1	PIN-COTTER	
	2	1	**265-8405**	1	HINGE AS-HOOD	
	3	1	**265-8407**	2	HINGE AS (RH)	
	4	1	**265-8409**	1	BRACKET	
	5	1	**265-8463**	1	STUD-BALL	
B	6	1	**270-9557**	2	SHIM (3-MM THK)	
B	7	1	**270-9558**	2	SHIM (1-MM THK)	
	8	1	**276-9257**	1	PLATE AS	
B	9	1	**276-9258**	1	SHIM (3-MM THK)	
	10	1	**285-7703**	1	PLATE AS	
	11	1	**296-0219**	1	COVER (SPRING)	
	12	1	**377-7814**	1	COVER AS-CENTER	
		1	**378-1240**	1	INSULATION	
	13	1	**377-7864**	1	STRIKER AS	
Y	14	1	**377-7881**	1	HOOD GP	154
Y	15	1	**377-7883**	1	COVER GP-ACCESS (LH)	131
	16	1	**377-7885**	1	COVER AS-CENTER	
M		1	**8T-3490**	1	NUT-WELD (M10X1.5-THD)	
		1	**377-7940**	1	FOAM	
		1	**379-6415**	1	INSULATION	
		1	**379-6416**	1	INSULATION	
	17	1	**377-7929**	1	SPRING AS-GAS (LOCKABLE)	
	18	1	**377-7930**	1	STRIKER AS-HOOD	
M	19	1	**5C-7261**	3	NUT (M8X1.25-THD)	
	20	1	**5P-4116**	1	WASHER-HARD (8.8X20.5X2-MM THK)	
	21	1	**7X-0579**	1	WASHER-HARD (8.8X25.5X2-MM THK)	
	22	1	**377-7874**	1	SPACER-RUBBER	
	23	1	**7X-7729**	29	WASHER (11X25X3-MM THK)	
M	24	1	**8T-4136**	20	BOLT (M10X1.5X25-MM)	
M	25	1	**8T-4137**	7	BOLT (M10X1.5X20-MM)	
M	26	1	**8T-4195**	6	BOLT (M10X1.5X30-MM)	
	27	1	**8T-4222**	1	WASHER-PLATED (11X32X2.5-MM THK)	
	28	1	**8T-4224**	2	WASHER-HARD (8.8X16X2-MM THK)	
M	29	1	**8T-7547**	1	BOLT (M8X1.25X30-MM)	

B - USE AS REQUIRED
M - METRIC PART
Y - SEPARATE ILLUSTRATION

367-0918 **HOOD & GUARD GP (*contd.*)** **i04824651**

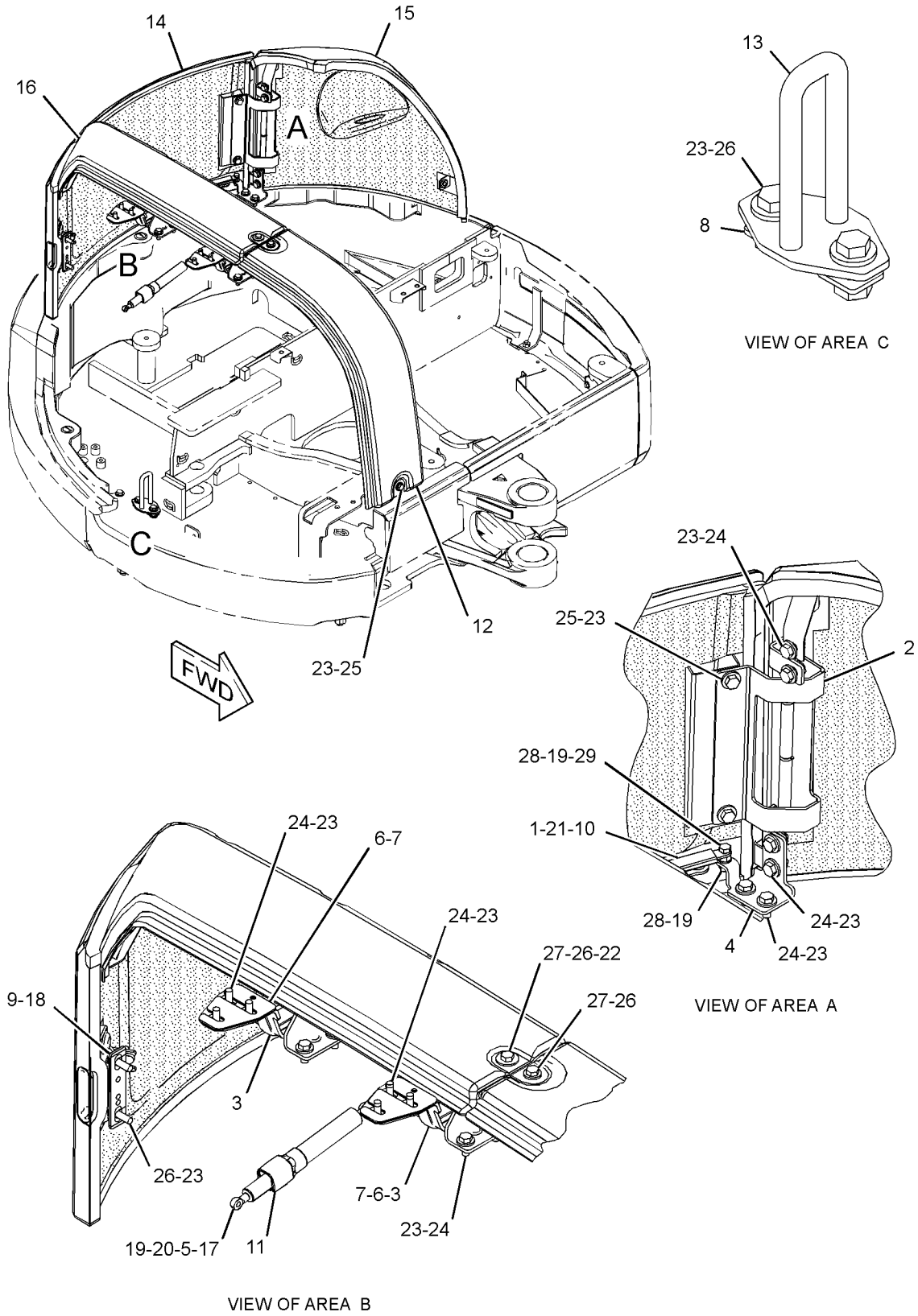

GRAPHIC #1 **<END>** g02799259

377-7882 HOOD & GUARD GP

PART OF 382-0497 SUPPRESSION AR-SOUND

AN ATTACHMENT

SMCS-7150, 7251 **i04629090**

NOTE	REF NO	GRAPHIC REF	PART NUMBER	QTY	PART NAME 1 2 3 4 5 6 (PRODUCT LEVEL)	SEE PAGE
	1	1	**265-8463**	1	STUD-BALL	
	2	1	**276-9254**	3	BUMPER	
	3	1	**334-0257**	2	BUMPER	
	4	1	**377-7862**	1	LATCH AS	
		1	**191-0348**	1	GROMMET	
	5	1	**377-7889**	1	COVER AS (RH)	
M		1	**8T-3490**	10	NUT-WELD (M10X1.5-THD)	
		1	**381-4596**	1	INSULATION	
		1	**381-4597**	1	INSULATION	
		1	**381-4598**	1	INSULATION	
M	6	1	**5C-7261**	1	NUT (M8X1.25-THD)	
	7	1	**5P-4116**	1	WASHER-HARD (8.8X20.5X2-MM THK)	
	8	1	**7X-7729**	4	WASHER (11X25X3-MM THK)	
M	9	1	**8T-4133**	2	NUT (M10X1.5-THD)	
M	10	1	**8T-4136**	2	BOLT (M10X1.5X25-MM)	
D	11	1	**5P-7483**		SEAL (0.5-M)	
J	12	1	**214-8827**		SEAL (7.3-DM)	
J	12A	1	**214-8827**		SEAL (8.7-DM)	
J	12B	1	**214-8827**		SEAL (19.7-DM)	

D - ORDER BY THE METER
J - ORDER BY THE DECIMETER
M - METRIC PART

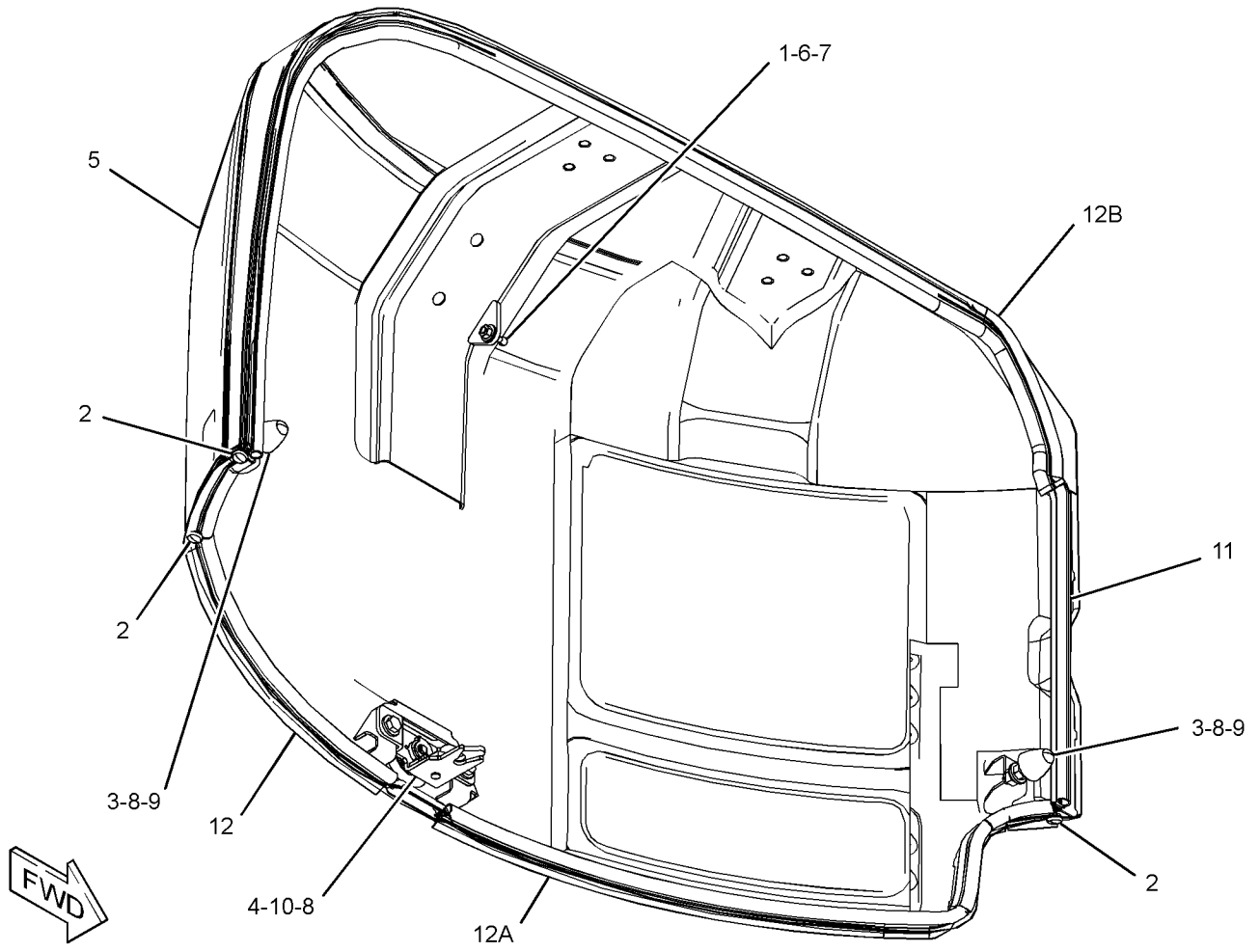

GRAPHIC #1 **<END>** g02798869

377-7887 HOOD AS

PART OF 377-7881 HOOD GP

SMCS-7251 **i04629829**

NOTE	REF NO	GRAPHIC REF	PART NUMBER	QTY	PART NAME 1 2 3 4 5 6 (PRODUCT LEVEL)	SEE PAGE
	1	1	**341-0449**	1	FOAM	
	2	1	*377-7891*	1	HOOD AS	
M		1	**8T-3490**	4	NUT-WELD (M10X1.5-THD)	
	3	1	**377-7934**	1	FOAM	
	4	1	**377-7935**	1	FOAM	
	5	1	**377-7936**	1	FOAM	
	6	1	**379-6412**	1	INSULATION	

M - METRIC PART

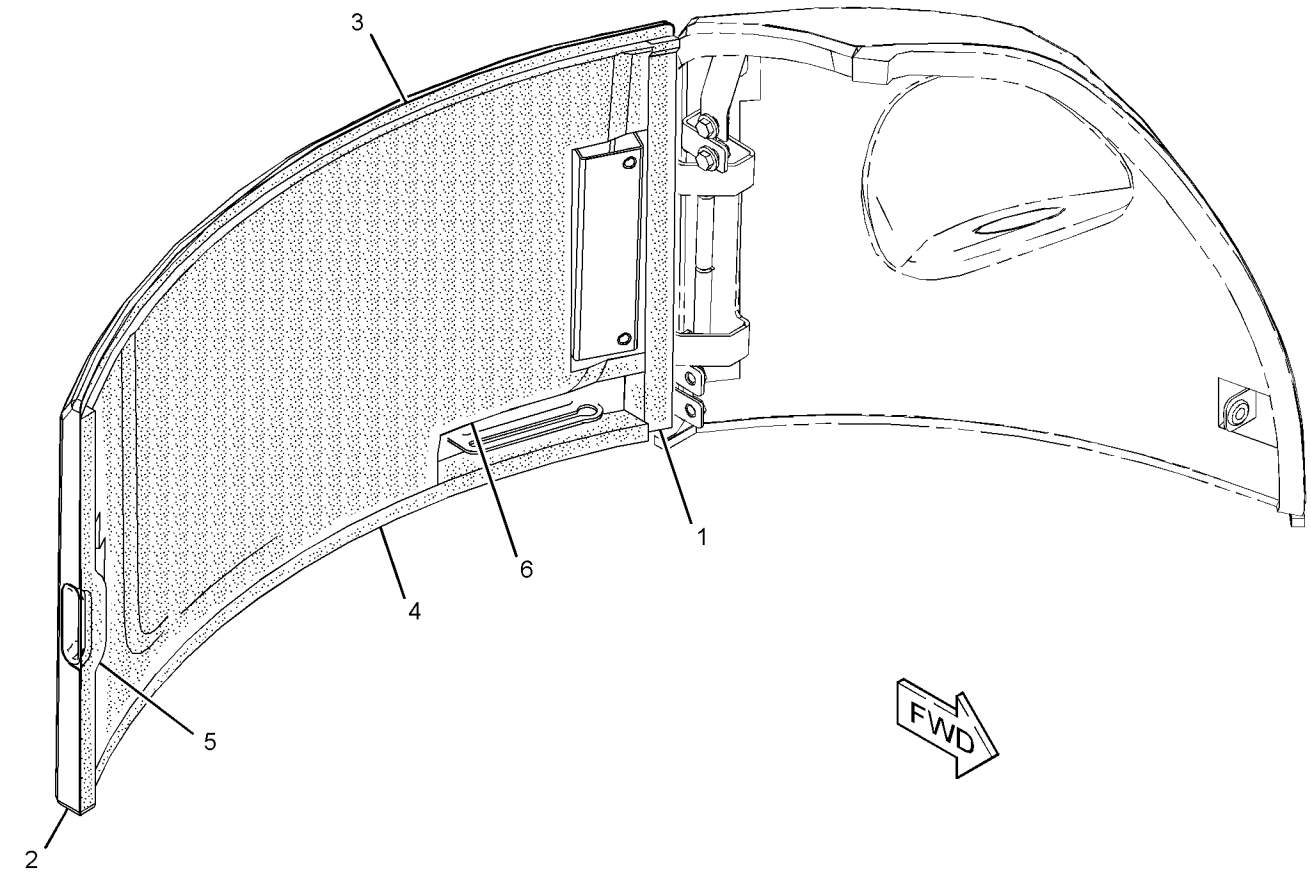

GRAPHIC #1 **<END>** g02798406

377-7881 HOOD GP

PART OF 367-0918 HOOD & GUARD GP

SMCS-7251 **i04629828**

NOTE	REF NO	GRAPHIC REF	PART NUMBER	QTY	PART NAME 1 2 3 4 5 6 (PRODUCT LEVEL)	SEE PAGE
	1	1	**285-7702**	1	COVER-LATCH	
	2	1	**369-3699**	1	LATCH AS	
		1	**191-0348**	1	GROMMET	
Y	3	1	*377-7887*	1	HOOD AS	153
	4	1	**7X-7729**	2	WASHER (11X25X3-MM THK)	
M	5	1	**8T-4136**	2	BOLT (M10X1.5X25-MM)	

M - METRIC PART
Y - SEPARATE ILLUSTRATION

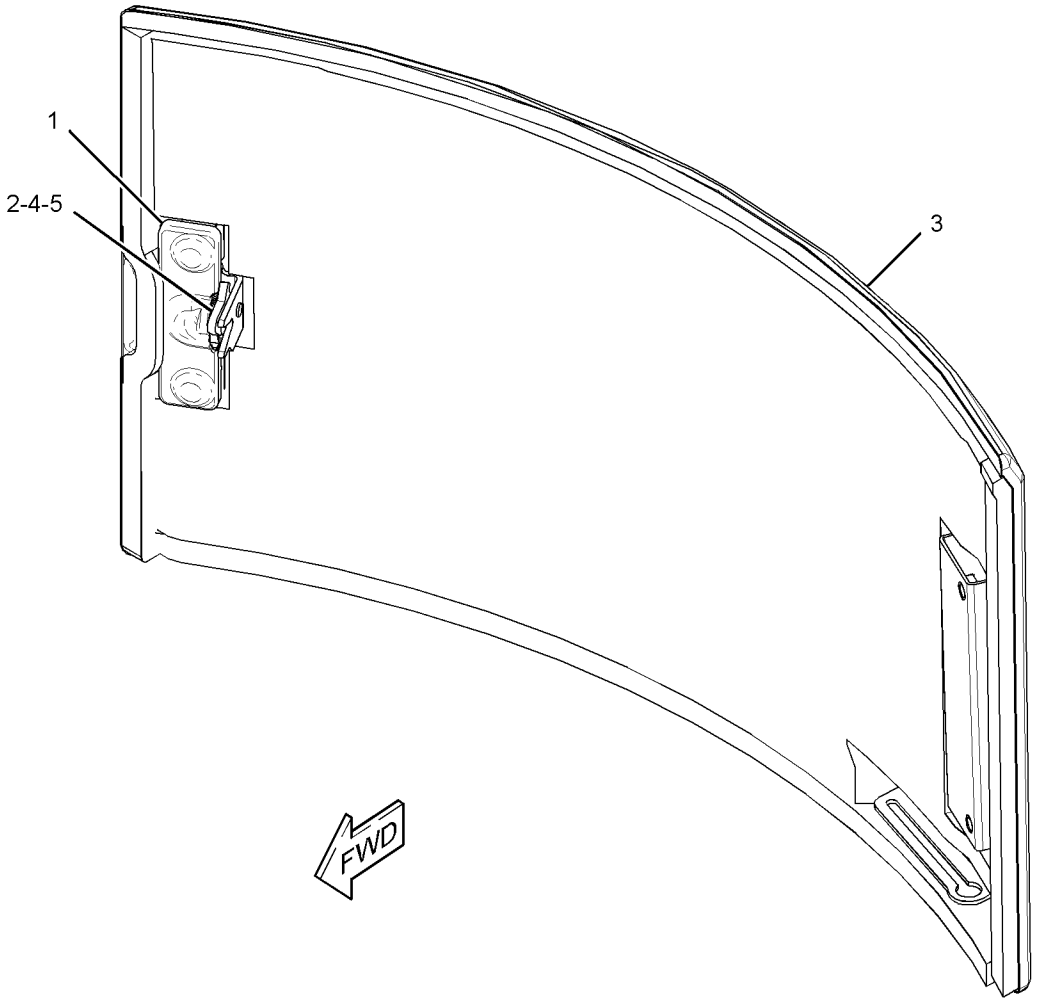

GRAPHIC #1 **<END>** g02800997

379-4691 LINES GP-GREASE

PART OF 376-6676 CHASSIS AR

SMCS-7510 **i04629836**

NOTE	REF NO	GRAPHIC REF	PART NUMBER	QTY	PART NAME 1 2 3 4 5 6 (PRODUCT LEVEL)	SEE PAGE
	1	1	**3B-8489**	3	FITTING-GREASE	
	2	1	**3S-2093**	1	STRAP-CABLE	
	3	1	**7K-1181**	5	STRAP-CABLE	
	4	1	**002-0639**	2	ADAPTER-PIPE	
	5	1	**4P-7581**	1	CLIP	
	6	1	**5P-4423**	6	ELBOW	
	7	1	**8T-4121**	1	WASHER-HARD (11X21X2.5-MM THK)	
M	8	1	**8T-4137**	1	BOLT (M10X1.5X20-MM)	
L	9	1	**205-6079**		TUBE (14.5-DM)	
L	9A	1	**205-6079**		TUBE (8.2-DM)	
L	9B	1	**205-6079**		TUBE (7.6-DM)	

L - ORDER BY THE DECIMETER
M - METRIC PART

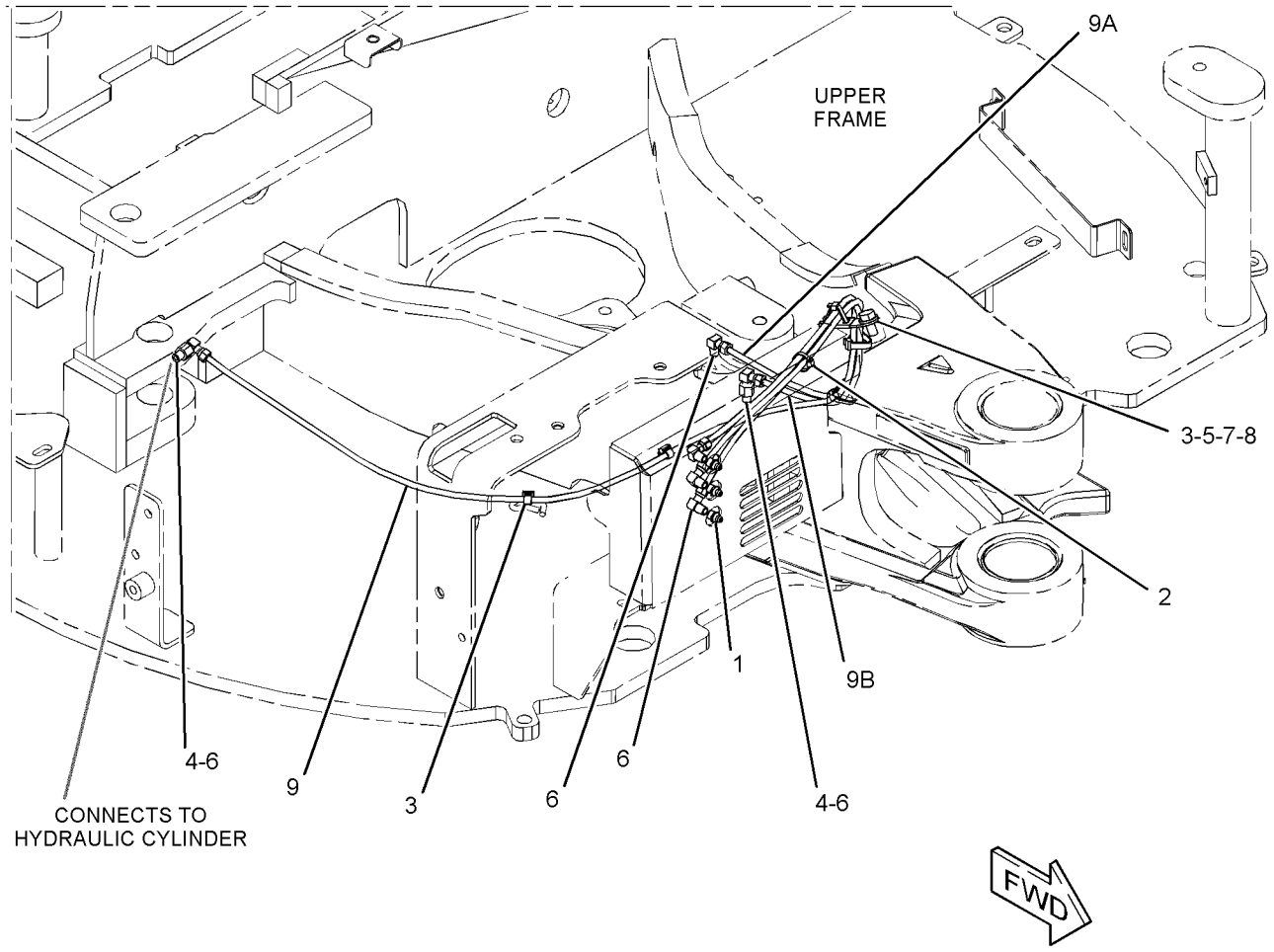

GRAPHIC #1 **<END>** g02798896

377-5096 PLATE AS

PART OF 377-5062 FRAME GP-REAR

AN ATTACHMENT

SMCS-7262 **i04678649**

NOTE	REF NO	GRAPHIC REF	PART NUMBER	QTY	PART NAME 1 2 3 4 5 6 (PRODUCT LEVEL)	SEE PAGE
	1	1	**377-5098**	1	FOAM	
	2	1	**377-5100**	1	FOAM	
	3	1	**377-5101**	1	FOAM	
	4	1	**377-5102**	1	FOAM	
	5	1	**377-5103**	1	FOAM	

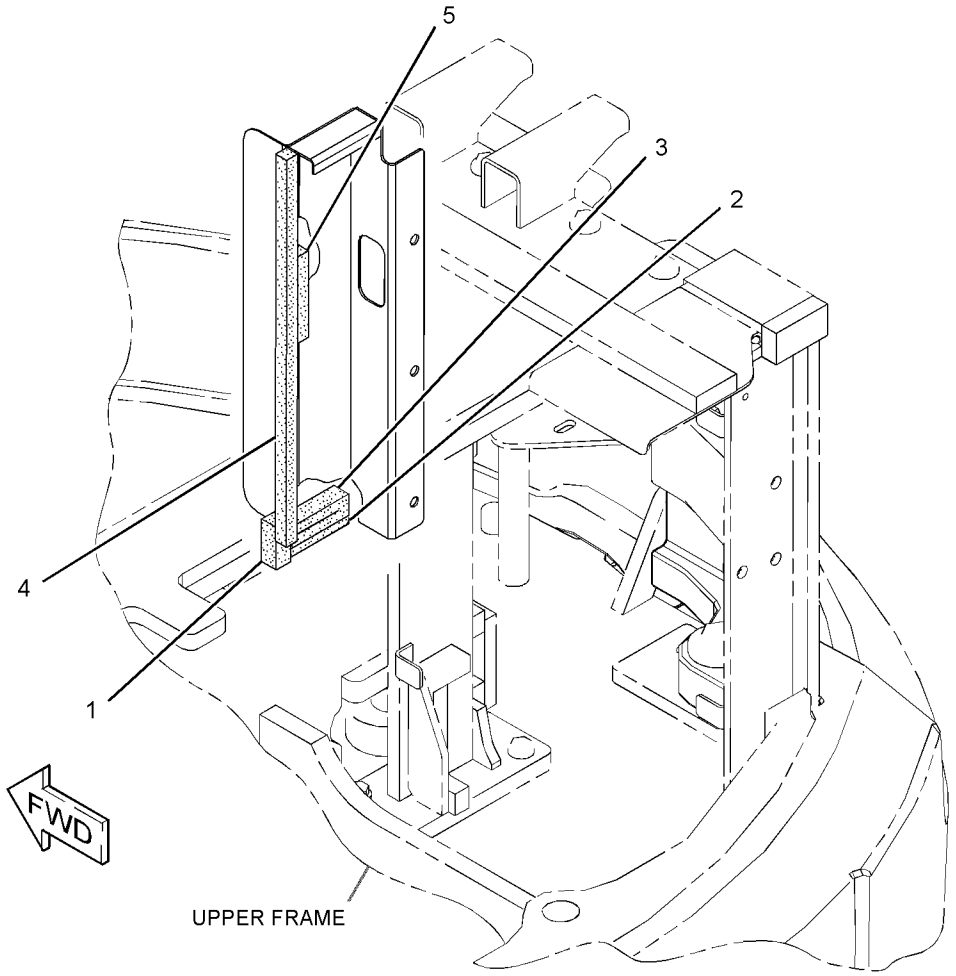

GRAPHIC #1 **<END>** g02799557

281-1020 STOP GP-SWING–BOOM

FIELD INSTALLATION

SMCS-6544 **i04019718**

NOTE	REF NO	GRAPHIC REF	PART NUMBER	QTY	PART NAME 1 2 3 4 5 6 (PRODUCT LEVEL)	SEE PAGE
	1	1	**284-6393**	1	STOP AS	
M	2	1	**8T-4183**	3	BOLT (M12X1.75X40-MM)	
	3	1	**8T-4223**	3	WASHER-HARD (13.5X25.5X3-MM THK)	

M - METRIC PART

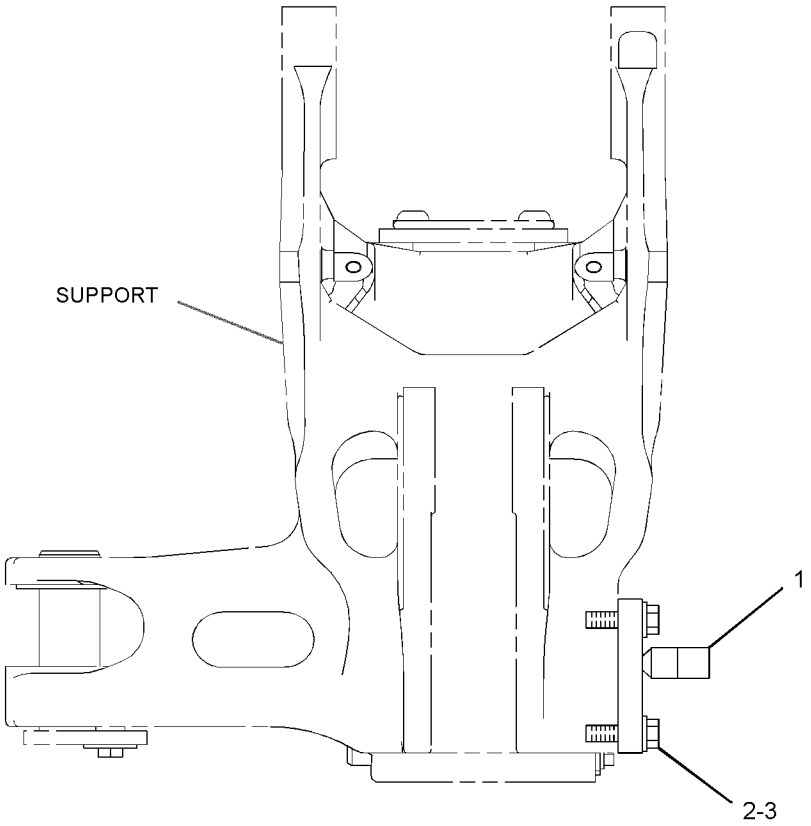

FRONT VIEW

GRAPHIC #1 **<END>** g01223108

379-6419 SUPPRESSION AR-SOUND—HIGH AMBIENT

AN ATTACHMENT

SMCS-1801 **i04629185**

NOTE	PART NUMBER	QTY	PART NAME 1 2 3 4 5 6 (PRODUCT LEVEL)	SEE PAGE
Y	**377-7886**	1	COVER GP-ACCESS (RH)	132

Y - SEPARATE ILLUSTRATION

<END>

382-0497 SUPPRESSION AR-SOUND

AN ATTACHMENT

SMCS-1801 **i04728096**

NOTE	PART NUMBER	QTY	PART NAME 1 2 3 4 5 6 (PRODUCT LEVEL)	SEE PAGE
Y	**377-7882**	1	HOOD & GUARD GP	152
Y	*391-3148*	1	SUPPRESSION GP-SOUND	159

Y - SEPARATE ILLUSTRATION

<END>

391-3148 SUPPRESSION GP-SOUND

PART OF 382-0497 SUPPRESSION AR-SOUND

AN ATTACHMENT

SMCS-7076 **i04728123**

NOTE	REF NO	GRAPHIC REF	PART NUMBER	QTY	PART NAME 1 2 3 4 5 6 (PRODUCT LEVEL)	SEE PAGE
	1	1	**391-3149**	1	INSULATION	
	2	1	**391-3150**	1	INSULATION	
	3	1	**391-3151**	1	INSULATION	
	4	1	**391-3152**	1	INSULATION	
	5	1	**391-3153**	1	INSULATION	
	6	1	**391-3154**	1	INSULATION	
	7	1	**391-3155**	1	INSULATION	
	8	1	**391-3156**	1	INSULATION	
	9	1	**391-3157**	1	INSULATION	
	10	1	**391-3158**	1	INSULATION	
	11	1	**391-3159**	1	INSULATION	
	12	1	**391-3160**	1	INSULATION	
	13	1	**391-3161**	1	INSULATION	
	14	1	**391-3162**	1	INSULATION	
	15	1	**391-3163**	1	INSULATION	
	16	1	**391-3164**	1	INSULATION	
	17	1	**391-3165**	1	INSULATION	
	18	1	**391-3166**	1	INSULATION	

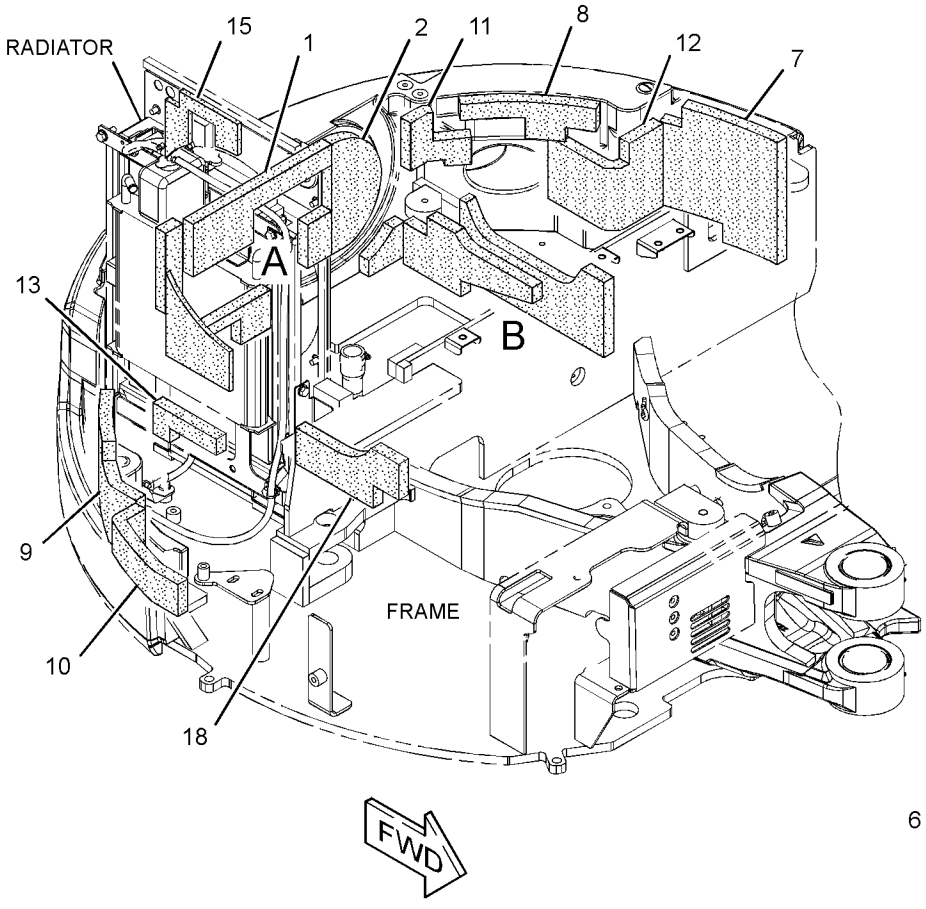

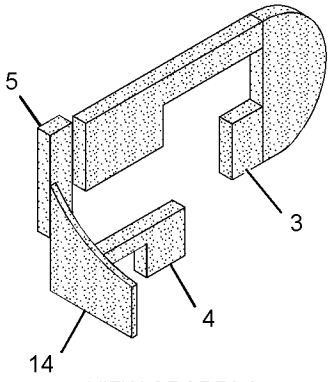

VIEW OF AREA A

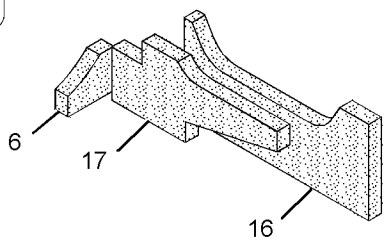

VIEW OF AREA B

GRAPHIC #1 **<END>** g02883127

377-1150 FRAME GP-UNDERCARRIAGE

PART OF 380-8799 UNDERCARRIAGE AR

SMCS-7050 **i04821704**

NOTE	REF NO	GRAPHIC REF	PART NUMBER	QTY	PART NAME 1 2 3 4 5 6 (PRODUCT LEVEL)	SEE PAGE
	1	1	**394-2887**	1	COVER	
	2	1	**266-8792**	2	COVER	
	3	1	**377-1151**	1	FRAME AS-UNDERCARRIAGE	
	4	1	**8T-4121**	6	WASHER-HARD (11X21X2.5-MM THK)	
M	5	1	**8T-4137**	6	BOLT (M10X1.5X20-MM)	
M	6	1	**8T-4139**	4	BOLT (M12X1.75X30-MM)	
	7	1	**8T-4223**	4	WASHER-HARD (13.5X25.5X3-MM THK)	
E	8	1	**3E-8299**		SEAL (6-CM EACH)	
E	8A	1	**3E-8299**		SEAL (5.5-CM EACH)	

E - ORDER BY THE CENTIMETER
M - METRIC PART

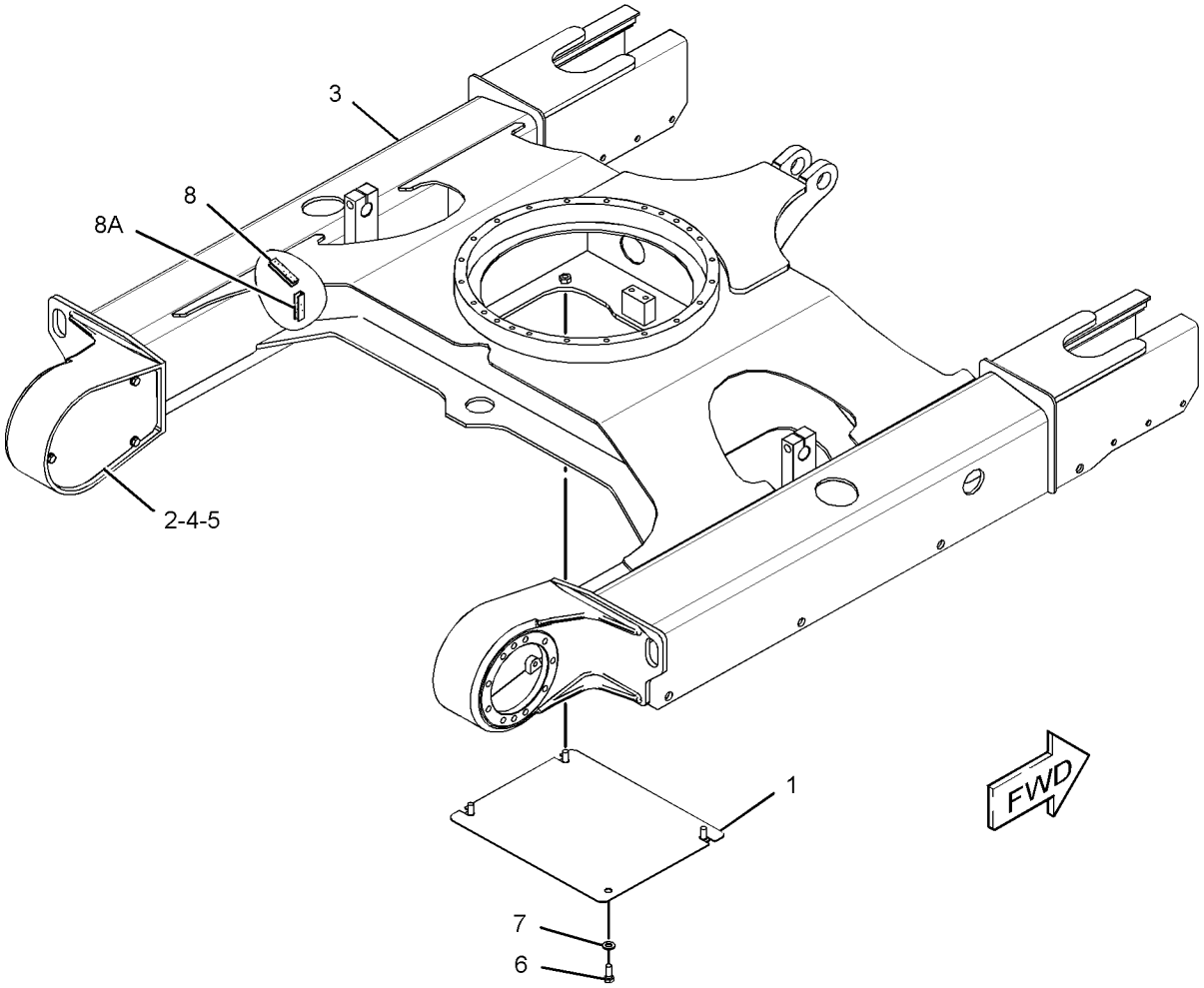

GRAPHIC #1 **<END>** g02866058

380-9952 GEAR & BEARING GP-SWING

PART OF 380-8799 UNDERCARRIAGE AR

SMCS-7063 **i04629856**

NOTE	REF NO	GRAPHIC REF	PART NUMBER	QTY	PART NAME 1 2 3 4 5 6 (PRODUCT LEVEL)	SEE PAGE
	1	1	**260-6348**	1	BEARING AS	
E		1	**225-5851**		SEAL (180-CM)	
E		1	**225-5852**		SEAL (180-CM)	
M	2	1	**8T-4910**	44	BOLT (M12X1.75X60-MM)	
	3	1	**140-4986**	2	DOWEL	
	4	1	**5P-1076**	20	WASHER-HARD (13.5X30X4-MM THK)	

E - ORDER BY THE CENTIMETER
M - METRIC PART

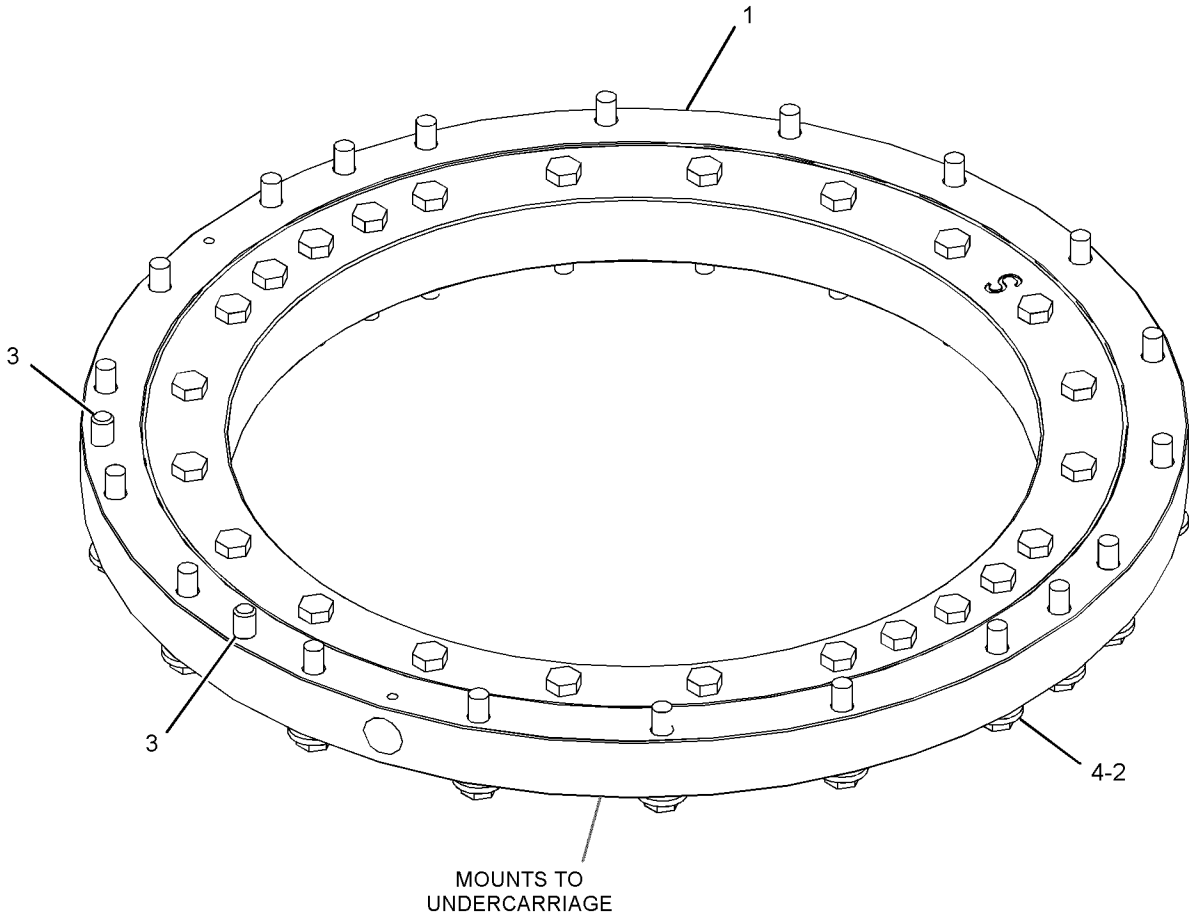

GRAPHIC #1 **<END>** g02798962

263-9266 GUARD GP-TRACK GUIDE

PART OF 263-9251 TRACK GP

AN ATTACHMENT

SMCS-4177 **i04032493**

NOTE	REF NO	GRAPHIC REF	PART NUMBER	QTY	PART NAME 1 2 3 4 5 6 (PRODUCT LEVEL)	SEE PAGE
	1	1	**263-9267**	1	GUARD AS-TRACK GUIDE (LH)	
	2	1	**263-9268**	1	GUARD AS-TRACK GUIDE (RH)	
	3	1	**8T-4223**	6	WASHER-HARD (13.5X25.5X3-MM THK)	
M	4	1	**8T-4956**	6	BOLT (M12X1.75X35-MM)	

M - METRIC PART

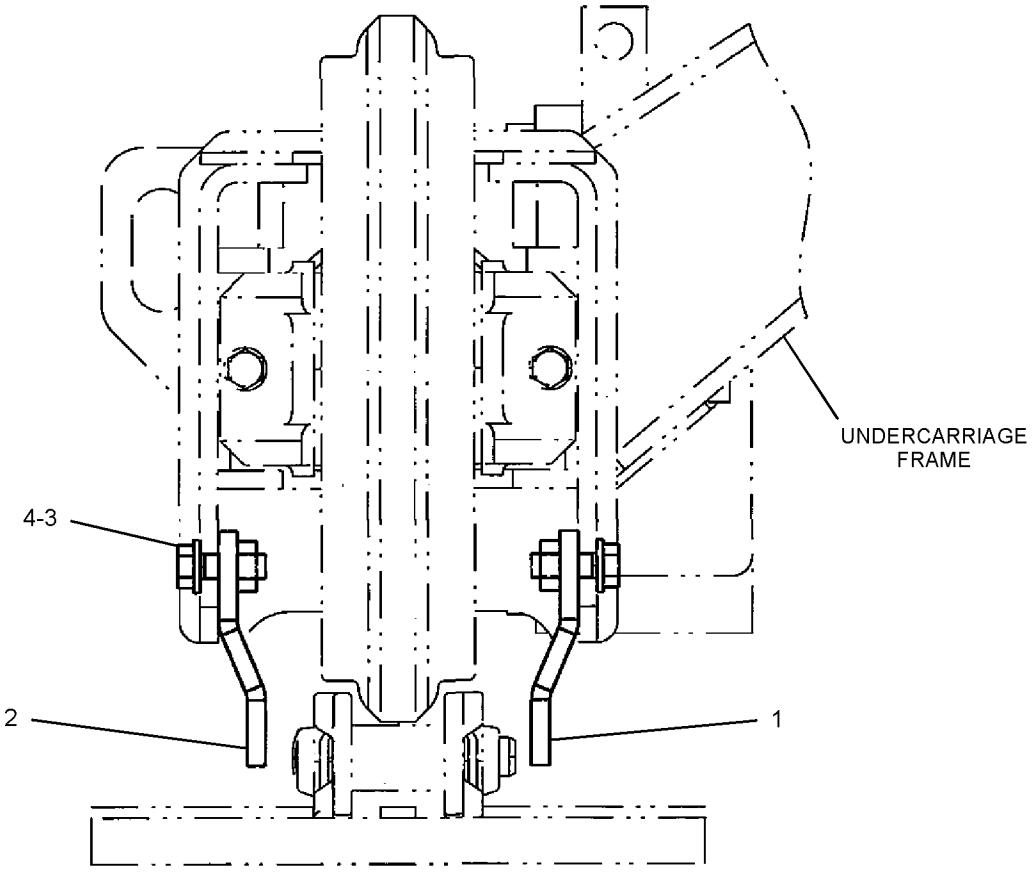

FRONT VIEW

GRAPHIC #1 **<END>** g01223582

265-8734 IDLER GP-FRONT

PART OF 380-8799 UNDERCARRIAGE AR

SMCS-4159 **i05357866**

NOTE	REF NO	GRAPHIC REF	PART NUMBER	QTY	PART NAME 1 2 3 4 5 6 (PRODUCT LEVEL)	SEE PAGE
CY	1	1	*392-7373*	1	IDLER GP-FRONT (LH)	164
CY	2	1	*392-7374*	1	IDLER GP-FRONT (RH)	166

C - CHANGE FROM PREVIOUS TYPE
Y - SEPARATE ILLUSTRATION

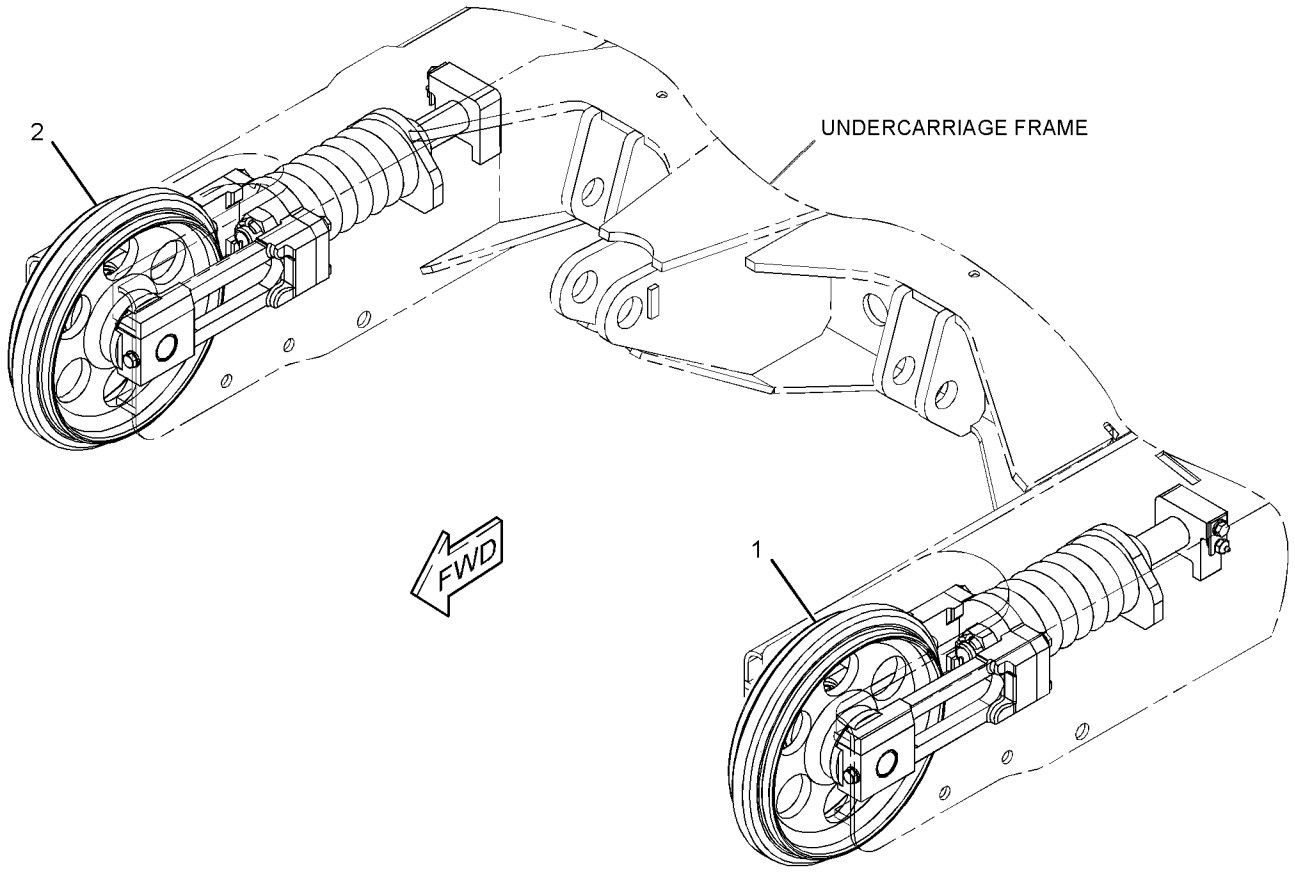

GRAPHIC #1 **<END>** g01220459

392-7373 IDLER GP-FRONT—LH

PART OF 265-8734 IDLER GP-FRONT

SMCS-4159 **i05357867**

NOTE	REF NO	GRAPHIC REF	PART NUMBER	QTY	PART NAME 1 2 3 4 5 6 (PRODUCT LEVEL)	SEE PAGE
	1	1	**267-4829**	1	IDLER & BEARING AS	
	1A	1	**154-2233**	2	BUSHING	
	2	1	**267-4831**	1	SHAFT-TRACK IDLER	
	3	1	**267-4832**	1	SUPPORT	
	4	1	**234-8984**	2	SEAL GP-DUO-CONE	
	5	1	**095-1595**	2	SEAL-O-RING	
	6	1	**154-2235**	2	BOLT (M10X1.25X45-MM)	
	7	1	**154-2236**	3	WASHER (10.2X22X3.2-MM THK)	
	8	1	**267-4833**	1	CYLINDER AS	
	9	1	**095-1604**	1	SEAL-O-RING	
	10	1	**095-1794**	1	RING-BACKUP	
	11	1	**120-4664**	1	SEAL-DUST	
	12	1	**274-8127**	1	ROD AS-PISTON (LH)	
	13	1	**232-7692**	1	FITTING-GREASE	
	14	1	**274-5381**	1	PLATE-LOCK	
M	15	1	**8T-4137**	1	BOLT (M10X1.5X20-MM)	
	16	1	**267-4835**	1	SPRING	
	17	1	**267-4836**	1	PLATE	
	18	1	**120-4636**	1	NUT (M30X3-THD)	
	19	1	**3B-4639**	1	PIN-COTTER	
M	20	1	**8T-4194**	4	BOLT (M12X1.75X50-MM)	
	21	1	**8T-4223**	4	WASHER-HARD (13.5X25.5X3-MM THK)	
	22	1	**381-7474**	1	SUPPORT	
	23	1	**190-4896**	1	PLUG	

M - METRIC PART

392-7373 **IDLER GP-FRONT (*contd.*)** **i05357867**

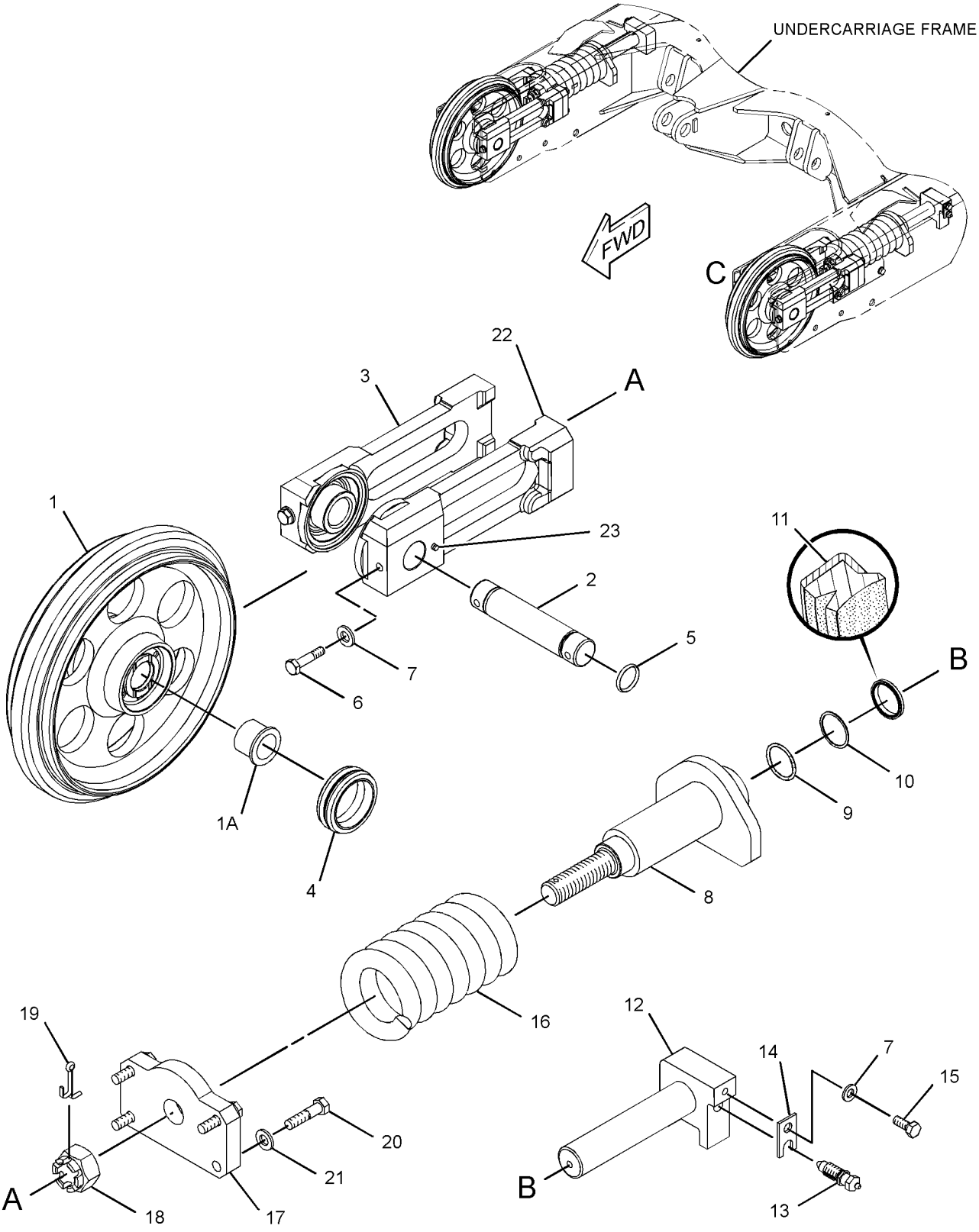

VIEW OF AREA C
(EXPLODED)

GRAPHIC #1 **<END>** g02890516

392-7374 IDLER GP-FRONT–RH

PART OF 265-8734 IDLER GP-FRONT

SMCS-4159 **i05357868**

NOTE	REF NO	GRAPHIC REF	PART NUMBER	QTY	PART NAME 1 2 3 4 5 6 (PRODUCT LEVEL)	SEE PAGE
	1	1	**267-4829**	1	IDLER & BEARING AS	
	1A	1	**154-2233**	2	BUSHING	
	2	1	**267-4831**	1	SHAFT-TRACK IDLER	
	3	1	**267-4832**	1	SUPPORT	
	4	1	**234-8984**	2	SEAL GP-DUO-CONE	
	5	1	**095-1595**	2	SEAL-O-RING	
	6	1	**154-2235**	2	BOLT (M10X1.25X45-MM)	
	7	1	**154-2236**	3	WASHER (10.2X22X3.2-MM THK)	
	8	1	**267-4833**	1	CYLINDER AS	
	9	1	**095-1604**	1	SEAL-O-RING	
	10	1	**095-1794**	1	RING-BACKUP	
	11	1	**120-4664**	1	SEAL-DUST	
	12	1	**274-8128**	1	ROD AS-PISTON (RH)	
	13	1	**232-7692**	1	FITTING-GREASE	
	14	1	**274-5381**	1	PLATE-LOCK	
M	15	1	**8T-4137**	1	BOLT (M10X1.5X20-MM)	
	16	1	**267-4835**	1	SPRING	
	17	1	**267-4836**	1	PLATE	
	18	1	**120-4636**	1	NUT (M30X3-THD)	
	19	1	**3B-4639**	1	PIN-COTTER	
M	20	1	**8T-4194**	4	BOLT (M12X1.75X50-MM)	
	21	1	**8T-4223**	4	WASHER-HARD (13.5X25.5X3-MM THK)	
	22	1	**381-7474**	1	SUPPORT	
	23	1	**190-4896**	1	PLUG	

M - METRIC PART

392-7374 **IDLER GP-FRONT (*contd.*)** **i05357868**

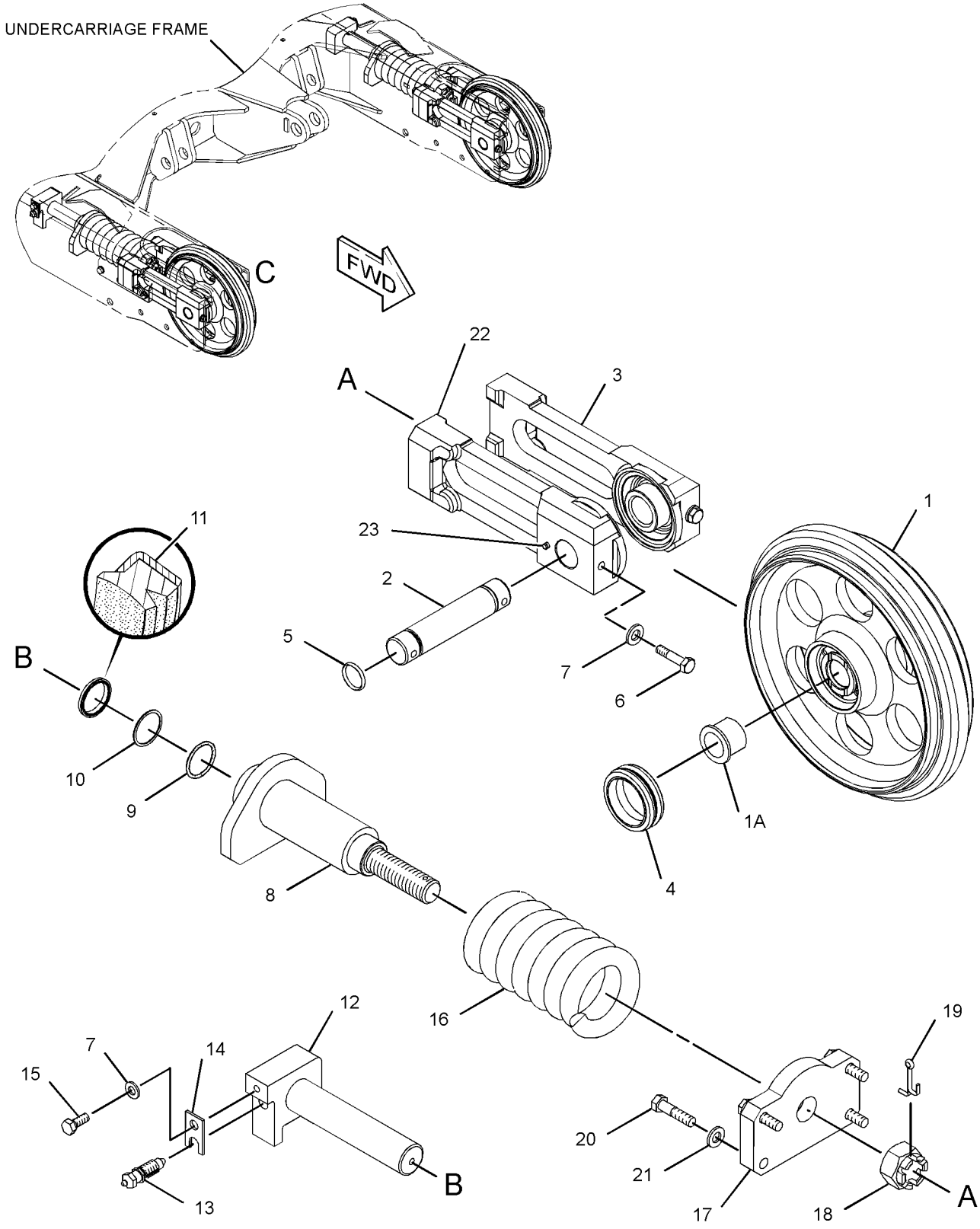

VIEW OF AREA C
(EXPLODED)

GRAPHIC #1 **<END>** g02893624

263-9253 LINK AS-TRACK

PART OF 263-9252 TRACK GP

AN ATTACHMENT

SMCS-4169, 4171 **i04032492**

NOTE	REF NO	GRAPHIC REF	PART NUMBER	QTY	PART NAME 1 2 3 4 5 6 (PRODUCT LEVEL)	SEE PAGE
	1	1	**158-4676**	45	LINK-TRACK (RH)	
	2	1	**158-4677**	45	LINK-TRACK (LH)	
	3	1	**158-4678**	1	LINK-MASTER (RH)	
	4	1	**158-4679**	1	LINK-MASTER (LH)	
	5	1	**158-4680**	45	BUSHING	
	6	1	**158-4681**	45	PIN-TRACK	
	7	1	**158-4682**	1	PIN-MASTER	
	8	1	**158-4683**	1	PIN	
	9	1	**260-6400**	1	BUSHING	

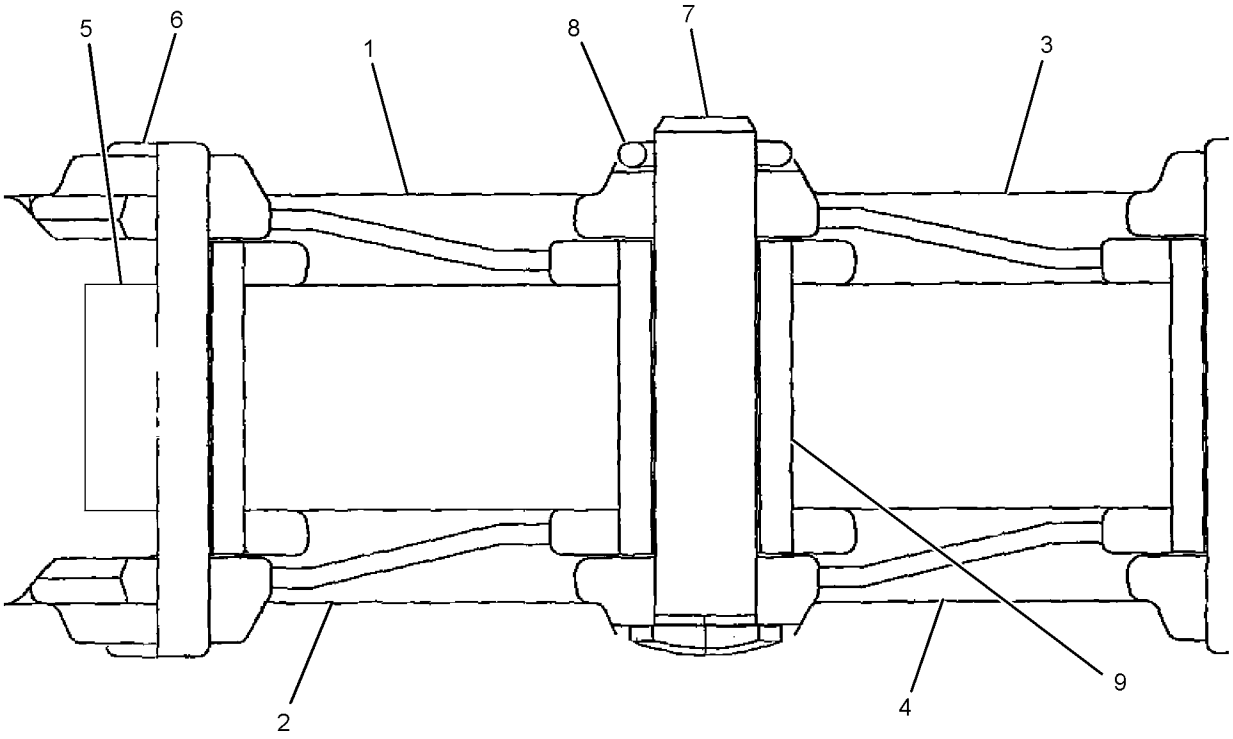

GRAPHIC #1 **<END>** g01221818

260-6342 ROLLER AR-TRACK & CARRIER

PART OF 380-8799 UNDERCARRIAGE AR

SMCS-4154, 4180 **i05090830**

NOTE	REF NO	GRAPHIC REF	PART NUMBER	QTY	PART NAME 1 2 3 4 5 6 (PRODUCT LEVEL)	SEE PAGE
Y	1	1	**266-8793**	8	ROLLER GP-TRACK-CENTER FLANGE	171
Y	2	1	**266-8794**	2	ROLLER GP-TRACK CARRIER	170
	3	1	**7X-0515**	20	WASHER-HARD (17X35X5-MM THK)	
M	4	1	**8T-4132**	4	NUT (M16X2-THD)	
M	5	1	**8T-4173**	2	BOLT (M16X2X110-MM)	
M	6	1	**8T-7338**	16	BOLT (M16X2X45-MM)	

M - METRIC PART
Y - SEPARATE ILLUSTRATION

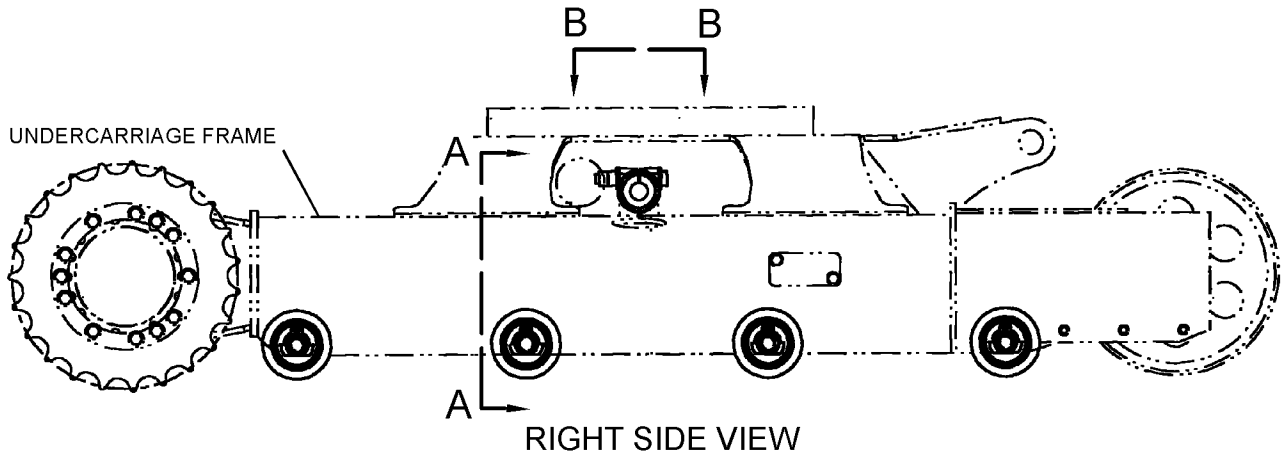

RIGHT SIDE VIEW

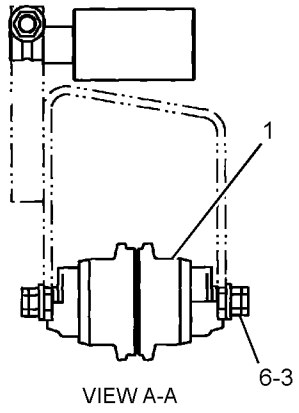

VIEW A-A

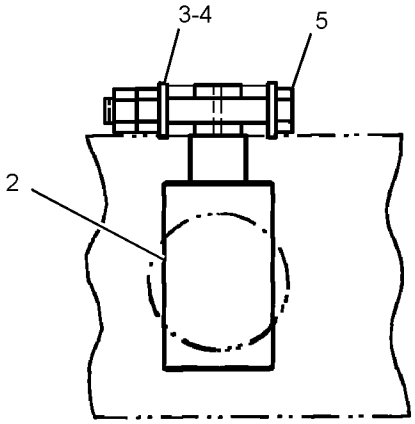

VIEW B-B

GRAPHIC #1 **<END>** g01220066

266-8794 ROLLER GP-TRACK CARRIER

PART OF 260-6342 ROLLER AR-TRACK & CARRIER

SMCS-4154 **i04019612**

NOTE	REF NO	GRAPHIC REF	PART NUMBER	QTY	PART NAME 1 2 3 4 5 6 (PRODUCT LEVEL)	SEE PAGE
	1	1	**277-4196**	1	SEAL AS	
	2	1	**277-4197**	1	CAP AS	
	3	1	**6V-7644**	1	RING-RETAINING	
	4	1	**6B-1124**	2	BALL BEARING	

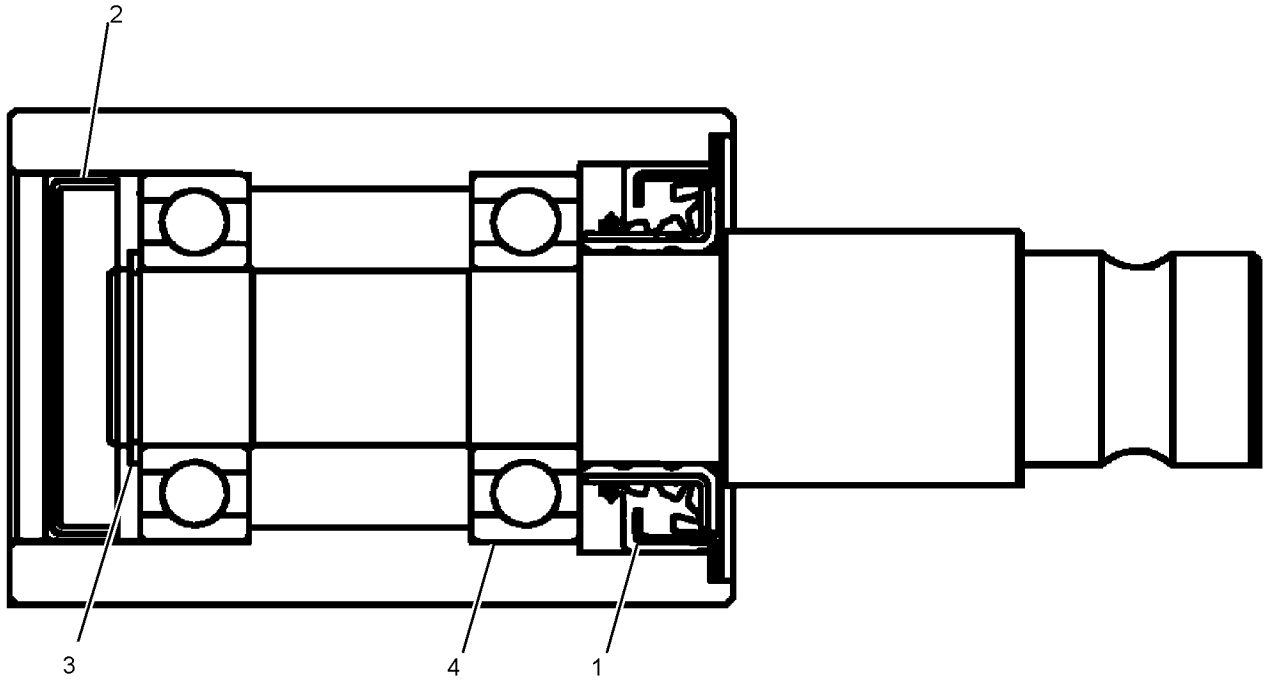

GRAPHIC #1 **<END>** g01220094

266-8793 ROLLER GP-TRACK-CENTER FLANGE

PART OF 260-6342 ROLLER AR-TRACK & CARRIER

SMCS-4180 **i04652822**

NOTE	REF NO	GRAPHIC REF	PART NUMBER	QTY	PART NAME 1 2 3 4 5 6 (PRODUCT LEVEL)	SEE PAGE
	1	1	**279-9095**	1	ROLLER & BEARING AS	
		1	**234-8956**	2	BUSHING	
	2	1	**234-8958**	1	COLLAR-TRACK ROLLER	
	3	1	**280-2313**	1	SHAFT AS-TRACK ROLLER	
	4	1	**234-8962**	1	RING-RETAINING	
	5	1	**234-8959**	2	SEAL GP-METAL FACE	
	6	1	**095-1657**	1	SEAL-O-RING	
	7	1	**8T-6757**	1	PLUG-PIPE	

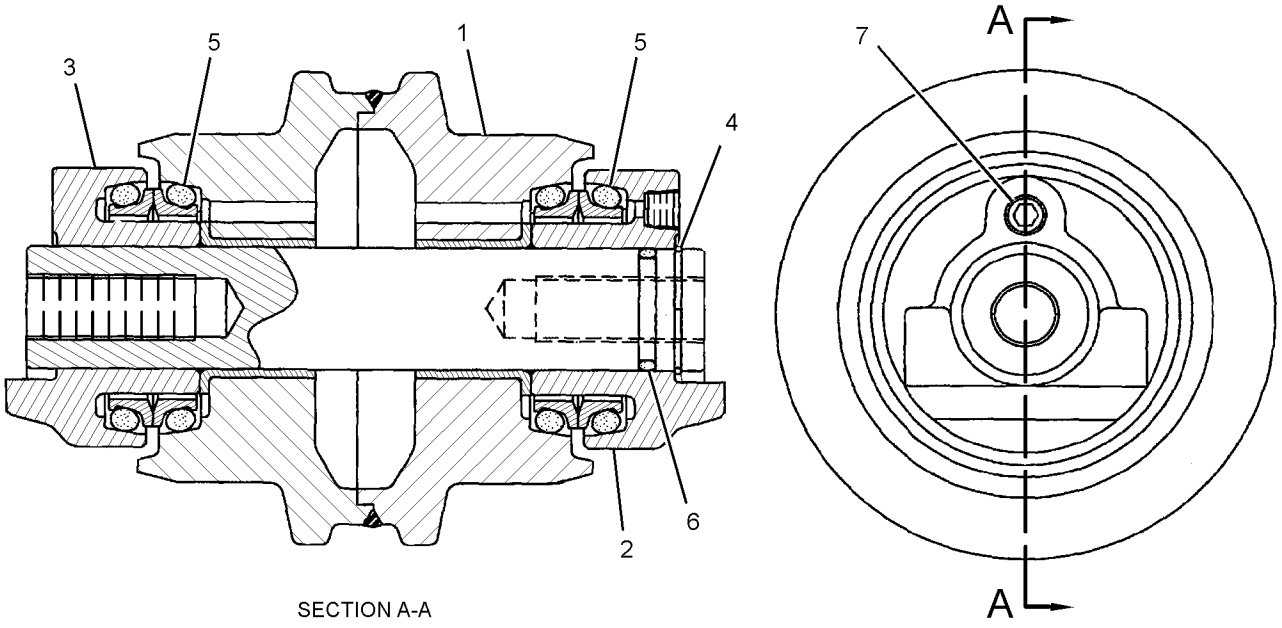

SECTION A-A

GRAPHIC #1 **<END>** g01220065

263-9251 TRACK GP—DOUBLE GROUSER SHOE

300-MM (12-IN) WIDE
PART OF 315-7663 TRACK GP
AN ATTACHMENT

SMCS-4170, 4198

i04021991

NOTE	PART NUMBER	QTY	PART NAME 1 2 3 4 5 6 (PRODUCT LEVEL)	SEE PAGE
Y	*263-9266*	1	GUARD GP-TRACK GUIDE	162
Y	**263-9252**	1	TRACK GP (STEEL)	173

Y - SEPARATE ILLUSTRATION

<END>

263-9252 TRACK GP–STEEL

PART OF 263-9251 TRACK GP

AN ATTACHMENT

SMCS-4170, 4198 **i04032491**

NOTE	REF NO	GRAPHIC REF	PART NUMBER	QTY	PART NAME 1 2 3 4 5 6 (PRODUCT LEVEL)	SEE PAGE
Y	1	1	**263-9253**	1	LINK AS-TRACK	168
	2	1	**158-4684**	46	SHOE-TRACK	

Y - SEPARATE ILLUSTRATION

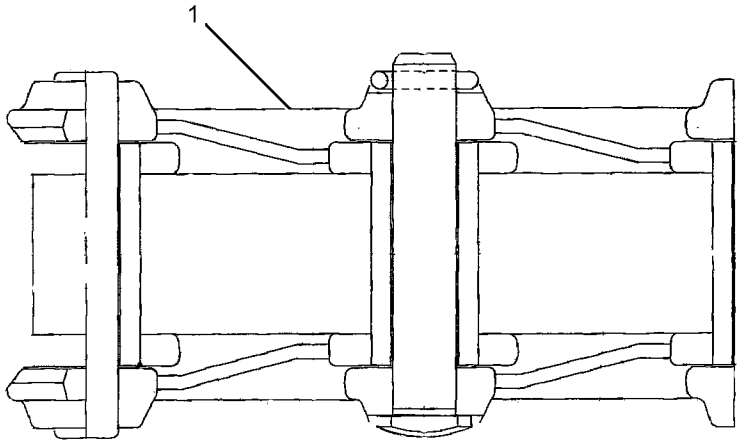

VIEW A-A

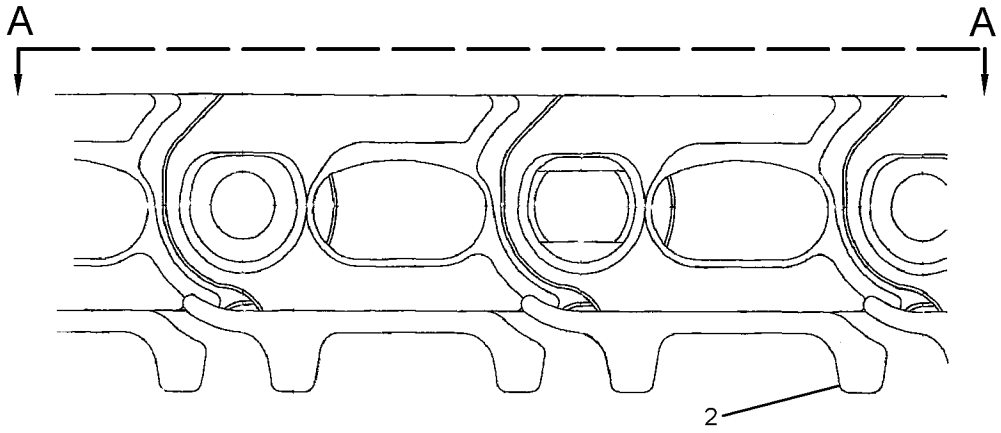

GRAPHIC #1 **<END>** g01221991

315-7663 TRACK GP

AN ATTACHMENT

SMCS-4170, 4198 **i04022375**

NOTE	PART NUMBER	QTY	PART NAME 1 2 3 4 5 6 (PRODUCT LEVEL)	SEE PAGE
Y	*263-9251*	1	TRACK GP (STEEL)	172

Y - SEPARATE ILLUSTRATION

<END>

382-3843 TRACK GP—RUBBER BELT

AN ATTACHMENT

SMCS-4170, 4198 **i04728103**

NOTE	PART NUMBER	QTY	PART NAME 1 2 3 4 5 6 (PRODUCT LEVEL)	SEE PAGE
	382-3844	1	TRACK AS (RUBBER BELT)	

<END>

380-8799 UNDERCARRIAGE AR

PART OF 376-6672 COMMON AR

SMCS-4150 **i04732214**

NOTE	PART NUMBER	QTY	PART NAME 1 2 3 4 5 6 (PRODUCT LEVEL)	SEE PAGE
Y	*377-1150*	1	FRAME GP-UNDERCARRIAGE	160
Y	*380-9952*	1	GEAR & BEARING GP-SWING	161
Y	*265-8734*	1	IDLER GP-FRONT	163
Y	*260-6342*	1	ROLLER AR-TRACK & CARRIER	169

Y - SEPARATE ILLUSTRATION

<END>

4I-1536 ACCUMULATOR GP-HYDRAULIC–CHARGED

PART OF 087-4456 ACCUMULATOR GP-HYDRAULIC
AN ATTACHMENT

SMCS-5077 **i01220551**

NOTE	REF NO	GRAPHIC REF	PART NUMBER	QTY	PART NAME 1 2 3 4 5 6 (PRODUCT LEVEL)	SEE PAGE
	1	1	**4I-5862**	1	CAP	
	2	1	**4I-1539**	1	CORE	

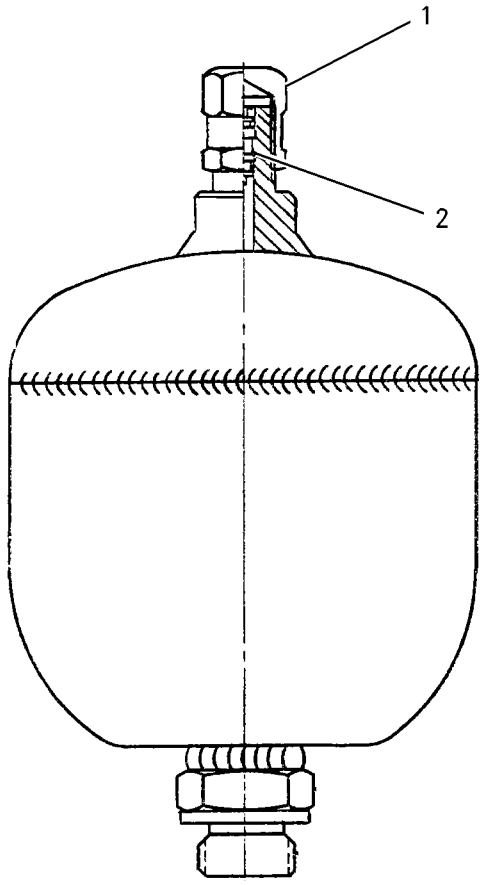

GRAPHIC #1 **<END>** g00654351

5I-8416 ACCUMULATOR GP-HYDRAULIC—CHARGED

PART OF 087-4456 ACCUMULATOR GP-HYDRAULIC
AN ATTACHMENT

SMCS-5077 **i02062425**

NOTE	REF NO	GRAPHIC REF	PART NUMBER	QTY	PART NAME 1 2 3 4 5 6 (PRODUCT LEVEL)	SEE PAGE
	1	1	**4I-8267**	1	CAP	
Y	2	1	*087-4454*	1	ACCUMULATOR GP-HYDRAULIC (CHARGED)	177

Y - SEPARATE ILLUSTRATION

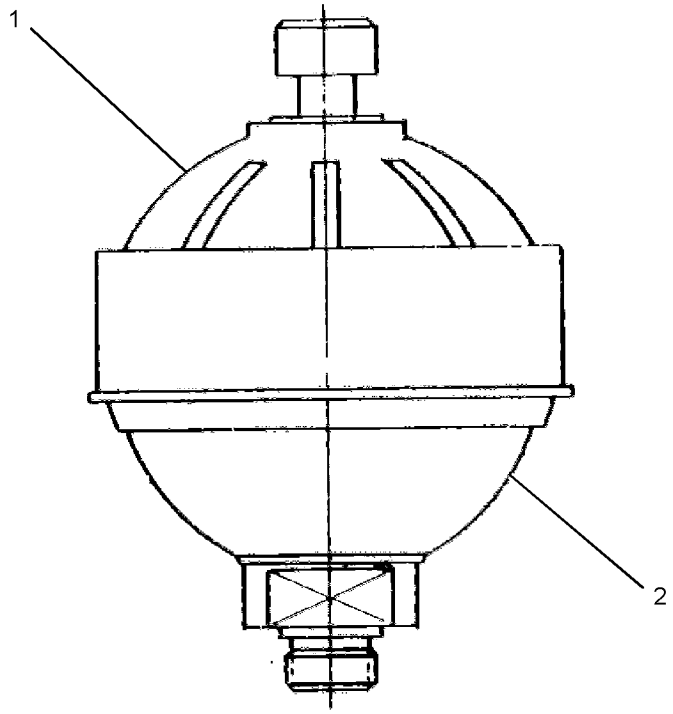

GRAPHIC #1 **<END>** g01056827

087-4454 ACCUMULATOR GP-HYDRAULIC—CHARGED

PART OF 5I-8416 ACCUMULATOR GP-HYDRAULIC
AN ATTACHMENT

SMCS-5077 **i02062433**

NOTE	REF NO	GRAPHIC REF	PART NUMBER	QTY	PART NAME 1 2 3 4 5 6 (PRODUCT LEVEL)	SEE PAGE
	1	1	**087-4575**	1	CORE	
	2	1	**087-4576**	1	CAP	
	3	1	**087-4577**	1	SEAL	

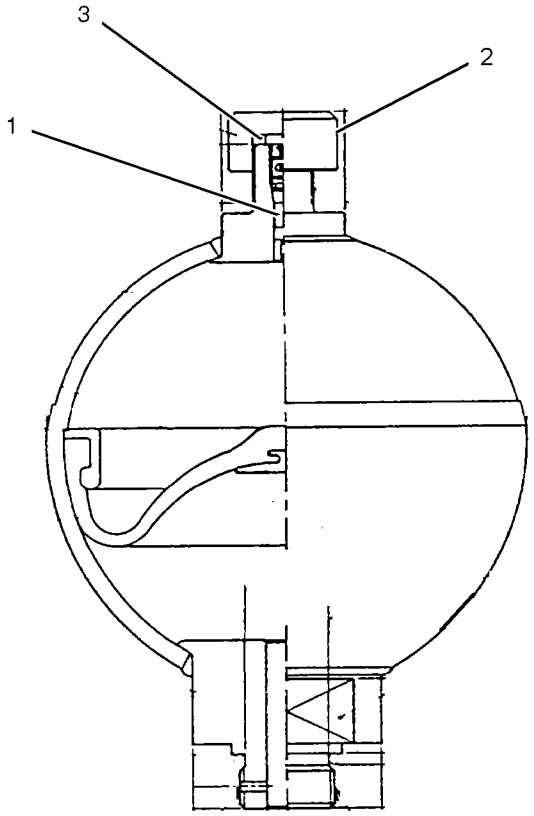

GRAPHIC #1 **<END>** g01056847

087-4456 ACCUMULATOR GP-HYDRAULIC—CHARGED

PART OF 378-7478 ACCUMULATOR GP-HYDRAULIC
AN ATTACHMENT

SMCS-5077 **i01866518**

NOTE	PART NUMBER	QTY	PART NAME 1 2 3 4 5 6 (PRODUCT LEVEL)	SEE PAGE
Y	*4I-1536*	1	ACCUMULATOR GP-HYDRAULIC (CHARGED)	175
			—OR—	
Y	*5I-8416*	1	ACCUMULATOR GP-HYDRAULIC (CHARGED)	176

Y - SEPARATE ILLUSTRATION

<END>

227-8807 ACCUMULATOR GP-HYDRAULIC—UNCHARGED

FIELD REPLACEMENT FOR 087-4456—PAGE: 178

SMCS-5077 **i04644930**

NOTE	REF NO	GRAPHIC REF	PART NUMBER	QTY	PART NAME 1 2 3 4 5 6 (PRODUCT LEVEL)	SEE PAGE
					(NO SERVICED PARTS)	

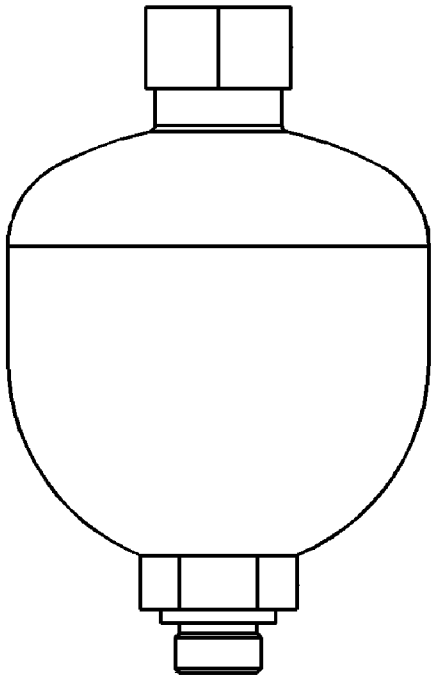

GRAPHIC #1 **<END>** g01423820

335-0517 ACCUMULATOR GP-HYDRAULIC–CHARGED

PART OF 378-7480 ACCUMULATOR GP-HYDRAULIC
AN ATTACHMENT

SMCS-5077 **i03970912**

NOTE	REF NO	GRAPHIC REF	PART NUMBER	QTY	PART NAME 1 2 3 4 5 6 (PRODUCT LEVEL)	SEE PAGE
	1	1	**159-4700**	1	FILM-WARNING (HIGH PRESSURE CYLINDER)	

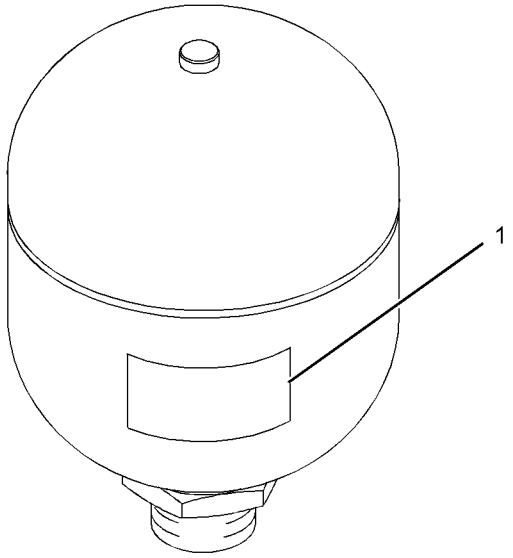

GRAPHIC #1 **<END>** g01135721

378-7478 ACCUMULATOR GP-HYDRAULIC

CANNOT BE USED WITH 378-7480—PAGE: 181
PART OF 379-5264 ACCUMULATOR GP-HYDRAULIC
AN ATTACHMENT

SMCS-5077 **i04559501**

NOTE	PART NUMBER	QTY	PART NAME 1 2 3 4 5 6 (PRODUCT LEVEL)	SEE PAGE
Y	*087-4456*	1	ACCUMULATOR GP-HYDRAULIC (CHARGED)	178
	3K-0360	1	SEAL-O-RING	

Y - SEPARATE ILLUSTRATION

<END>

378-7480 ACCUMULATOR GP-HYDRAULIC

CANNOT BE USED WITH 378-7478—PAGE: 181
PART OF 379-5265 ACCUMULATOR GP-HYDRAULIC
AN ATTACHMENT

SMCS-5077 **i04559502**

NOTE	PART NUMBER	QTY	PART NAME 1 2 3 4 5 6 (PRODUCT LEVEL)	SEE PAGE
Y	*335-0517*	1	ACCUMULATOR GP-HYDRAULIC (CHARGED)	180
	3K-0360	1	SEAL-O-RING	

Y - SEPARATE ILLUSTRATION

<END>

379-5264 ACCUMULATOR GP-HYDRAULIC

CANNOT BE USED WITH 379-5265—PAGE: 181
AN ATTACHMENT

SMCS-5077 **i04629178**

NOTE	PART NUMBER	QTY	PART NAME 1 2 3 4 5 6 (PRODUCT LEVEL)	SEE PAGE
Y	*378-7478*	1	ACCUMULATOR GP-HYDRAULIC	181

Y - SEPARATE ILLUSTRATION

<END>

379-5265 ACCUMULATOR GP-HYDRAULIC—CANADA

CANNOT BE USED WITH 379-5264—PAGE: 181
AN ATTACHMENT

SMCS-5077 **i04629179**

NOTE	PART NUMBER	QTY	PART NAME 1 2 3 4 5 6 (PRODUCT LEVEL)	SEE PAGE
Y	*378-7480*	1	ACCUMULATOR GP-HYDRAULIC	181

Y - SEPARATE ILLUSTRATION

<END>

379-4683 CONTROL AR-AUXILIARY—SWING BOOM

PART OF 383-5899, 383-5900, 383-5910, 383-5911 STICK AR-HOE
AN ATTACHMENT

SMCS-5051 **i04623141**

NOTE	PART NUMBER	QTY	PART NAME 1 2 3 4 5 6 (PRODUCT LEVEL)	SEE PAGE
Y	*379-4704*	1	LINES GP-SWING CYLINDER (BOOM)	272

Y - SEPARATE ILLUSTRATION

<END>

379-4715 CONTROL AR-AUXILIARY

PART OF 376-6672 COMMON AR

SMCS-5051 **i04732212**

NOTE	PART NUMBER	QTY	PART NAME 1 2 3 4 5 6 (PRODUCT LEVEL)	SEE PAGE
Y	*377-9707*	1	FILM GP (AUXILIARY)	546
Y	*269-3795*	1	LINES GP-AUXILIARY HYDRAULIC (BOOM)	212
Y	*379-4732*	1	LINES GP-FRONT	242
Y	*380-4661*	1	LINES GP-PILOT (AUXILIARY)	263
Y	*377-8861*	1	VALVE & MTG GP-CONTROL (AUXILIARY, BOOM SWING)	305

Y - SEPARATE ILLUSTRATION

<END>

379-4721 CONTROL AR-AUXILIARY—2ND AUXILIARY, STANDARD STICK

CANNOT BE USED WITH 379-4683—PAGE: 182, 379-4722—PAGE: 183
PART OF 383-5901, 383-5912 STICK AR-HOE
AN ATTACHMENT

SMCS-5051 **i04728058**

NOTE	PART NUMBER	QTY	PART NAME 1 2 3 4 5 6 (PRODUCT LEVEL)	SEE PAGE
Y	*356-7138*	1	FASTENER GP-LINES (BOOM)	208
Y	*377-9708*	1	FILM GP (2ND AUXILIARY)	548
Y	*292-8308*	1	LINES GP-AUXILIARY HYDRAULIC (2ND AUXILIARY, STANDARD STICK)	214
Y	*380-2456*	1	LINES GP-AUXILIARY HYDRAULIC	218
Y	*379-4735*	1	LINES GP-SWING CYLINDER	273
Y	*387-6390*	1	WIRING GP-RELAY PANEL (2ND AUXILIARY)	120

Y - SEPARATE ILLUSTRATION

<END>

379-4722 CONTROL AR-AUXILIARY—2ND AUXILIARY, LONG STICK

CANNOT BE USED WITH 379-4683—PAGE: 182, 379-4721—PAGE: 182
PART OF 383-5902, 383-5913 STICK AR-HOE
AN ATTACHMENT

SMCS-5051 **i04728059**

NOTE	PART NUMBER	QTY	PART NAME 1 2 3 4 5 6 (PRODUCT LEVEL)	SEE PAGE
Y	*356-7138*	1	FASTENER GP-LINES (BOOM)	208
Y	*377-9708*	1	FILM GP (2ND AUXILIARY)	548
Y	*292-8310*	1	LINES GP-AUXILIARY HYDRAULIC (2ND AUXILIARY, LONG STICK)	215
Y	*380-2456*	1	LINES GP-AUXILIARY HYDRAULIC	218
Y	*379-4735*	1	LINES GP-SWING CYLINDER	273
Y	*387-6390*	1	WIRING GP-RELAY PANEL (2ND AUXILIARY)	120

Y - SEPARATE ILLUSTRATION

<END>

379-4724 CONTROL AR-AUXILIARY—2-WAY

CANNOT BE USED WITH 379-4723—PAGE: 187
AN ATTACHMENT

SMCS-5051 **i04728061**

NOTE	PART NUMBER	QTY	PART NAME 1 2 3 4 5 6 (PRODUCT LEVEL)	SEE PAGE
Y	*377-9709*	1	FILM GP (2-WAY)	549
Y	*377-8874*	1	LINES GP-PILOT (JOYSTICK, 2-WAY)	250
Y	*379-4737*	1	LINES GP-PILOT	259
Y	*377-8876*	1	VALVE & MTG GP-CONTROL (2-WAY)	307
Y	*387-6389*	1	WIRING GP-RELAY PANEL (PATTERN CHANGE)	119

Y - SEPARATE ILLUSTRATION

<END>

382-2543 CONTROL AR-COUPLER—STANDARD STICK

CANNOT BE USED WITH 382-2544—PAGE: 183
AN ATTACHMENT

SMCS-6129 **i04728100**

NOTE	PART NUMBER	QTY	PART NAME 1 2 3 4 5 6 (PRODUCT LEVEL)	SEE PAGE
Y	*365-2794*	1	LINES GP-COUPLER	234
Y	*382-2551*	1	LINES GP-FRONT (QUICK COUPLER)	244
Y	*381-9235*	1	WIRING GP-QUICK COUPLER	118

Y - SEPARATE ILLUSTRATION

<END>

382-2544 CONTROL AR-COUPLER—LONG STICK

CANNOT BE USED WITH 382-2543—PAGE: 183
AN ATTACHMENT

SMCS-6129 **i04728101**

NOTE	PART NUMBER	QTY	PART NAME 1 2 3 4 5 6 (PRODUCT LEVEL)	SEE PAGE
Y	*365-2796*	1	LINES GP-COUPLER	237
Y	*382-2551*	1	LINES GP-FRONT (QUICK COUPLER)	244
Y	*381-9235*	1	WIRING GP-QUICK COUPLER	118

Y - SEPARATE ILLUSTRATION

<END>

384-5013 CONTROL AR-COUPLER

AN ATTACHMENT

SMCS-6129 **i04782418**

NOTE	REF NO	GRAPHIC REF	PART NUMBER	QTY	PART NAME 1 2 3 4 5 6 (PRODUCT LEVEL)	SEE PAGE
	1	1	**7K-1181**	8	STRAP-CABLE	
	2	1	*164-5546*	1	TEE AS	
		1	**3E-7410**	1	TEE-O-RING	
		1	**3J-1907**	1	SEAL-O-RING	
	3	1	*267-4048*	1	ELBOW AS	
		1	**3J-1907**	1	SEAL-O-RING	
		1	**4J-5477**	1	SEAL-O-RING	
		1	**267-4047**	1	ELBOW	
	4	1	**268-4530**	1	FILM-WARNING (CRUSH HAZARD, READ OMM, U.S.)	
	5	1	**268-8872**	1	FILM-WARNING (CRUSH HAZARD, READ OMM, U.S.)	
	6	1	**279-4735**	3	STRAP-CABLE (ORANGE)	
	7	1	**279-4737**	3	STRAP-CABLE (GREEN)	
	8	1	**279-4738**	3	STRAP-CABLE (PURPLE)	
Y	9	1	**358-2091**	1	VALVE GP-SOLENOID & MANIFOLD (QUICK COUPLER)	365
	10	1	**365-6912**	1	GROMMET	
	11	1	**365-6918**	1	BRACKET	
	12	1	**365-6919**	1	BRACKET	
I	13	1	**373-2363**	3	HOSE AS	
I	14	1	**381-0002**	1	HOSE AS	
	15	1	**381-2053**	1	BRACKET	
	16	1	**381-9236**	1	HARNESS AS-QUICK COUPLER	
		1	**8T-8729**	2	PIN-CONNECTOR (16-GA TO 18-GA)	
		1	**9W-0852**	1	PIN-CONNECTOR (14-GA TO 16-GA)	
		1	**155-2270**	2	KIT-CONNECTING PLUG (2-PIN)	
					(EACH INCLUDES PLUG AS, WEDGE & INTERFACE SEAL)	
		1	**8T-8737**	1	PLUG-SEAL	
		1	**243-4507**	1	RECEPTACLE AS-CONNECTOR (4-PIN)	
		1	**8T-8730**	4	SOCKET-CONNECTOR (16-GA TO 18-GA)	
E		1	**125-7874**		TUBE-HEAT SHRINK (5.72-MM DIA) (5-CM)	
I	17	1	**382-9365**	1	HOSE AS	
	18	1	**067-2551**	3	CLIP	
	19	1	**124-2111**	6	COUPLING-PERMANENT	
	20	1	*148-8325*	4	CONNECTOR AS	
					(EACH INCLUDES)	
		1	**3J-1907**	1	SEAL-O-RING	
		1	**4J-5477**	1	SEAL-O-RING	
		1	**6V-8641**	1	CONNECTOR	
	21	1	*148-8368*	2	ELBOW AS	
					(EACH INCLUDES)	
		1	**3J-1907**	1	SEAL-O-RING	
		1	**4J-5477**	1	SEAL-O-RING	
		1	**6V-8627**	1	ELBOW	
	22	1	*150-4052*	6	UNION AS	
					(EACH INCLUDES)	
		1	**4J-5477**	2	SEAL-O-RING	
		1	**6V-8993**	1	UNION	
	23	1	**2J-1020**	2	SPACER (13.9X21.34X35-MM THK)	
	24	1	**2P-1279**	6	LOCKNUT (9/16-18-THD)	
	25	1	**3S-2093**	6	STRAP-CABLE	
	26	1	**4D-7733**	3	CLIP	
	27	1	**6V-9828**	3	CAP AS	
	28	1	**7S-3916**	3	CLIP (TAB)	
	29	1	**7S-3919**	3	CLIP (SLOT)	
	30	1	**7V-6571**	3	GROMMET	
	31	1	**8T-4121**	10	WASHER-HARD (11X21X2.5-MM THK)	
M	32	1	**8T-4137**	2	BOLT (M10X1.5X20-MM)	
M	33	1	**8T-4185**	8	BOLT (M10X1.5X50-MM)	
M	34	1	**8T-4189**	2	BOLT (M8X1.25X20-MM)	

384-5013 **CONTROL AR-COUPLER (*contd.*)** **i04782418**

NOTE	REF NO	GRAPHIC REF	PART NUMBER	QTY	PART NAME 1 2 3 4 5 6 (PRODUCT LEVEL)	SEE PAGE
	35	1	**8T-4223**	2	WASHER-HARD (13.5X25.5X3-MM THK)	
	36	1	**8T-4224**	2	WASHER-HARD (8.8X16X2-MM THK)	
M	37	1	**8T-4648**	1	BOLT (M12X1.75X70-MM)	
M	38	1	**8T-4910**	1	BOLT (M12X1.75X60-MM)	

E - ORDER BY THE CENTIMETER
I - REFER TO HYDRAULIC INFORMATION SYSTEM
M - METRIC PART
Y - SEPARATE ILLUSTRATION

384-5013 **CONTROL AR-COUPLER (*contd.*)** **i04782418**

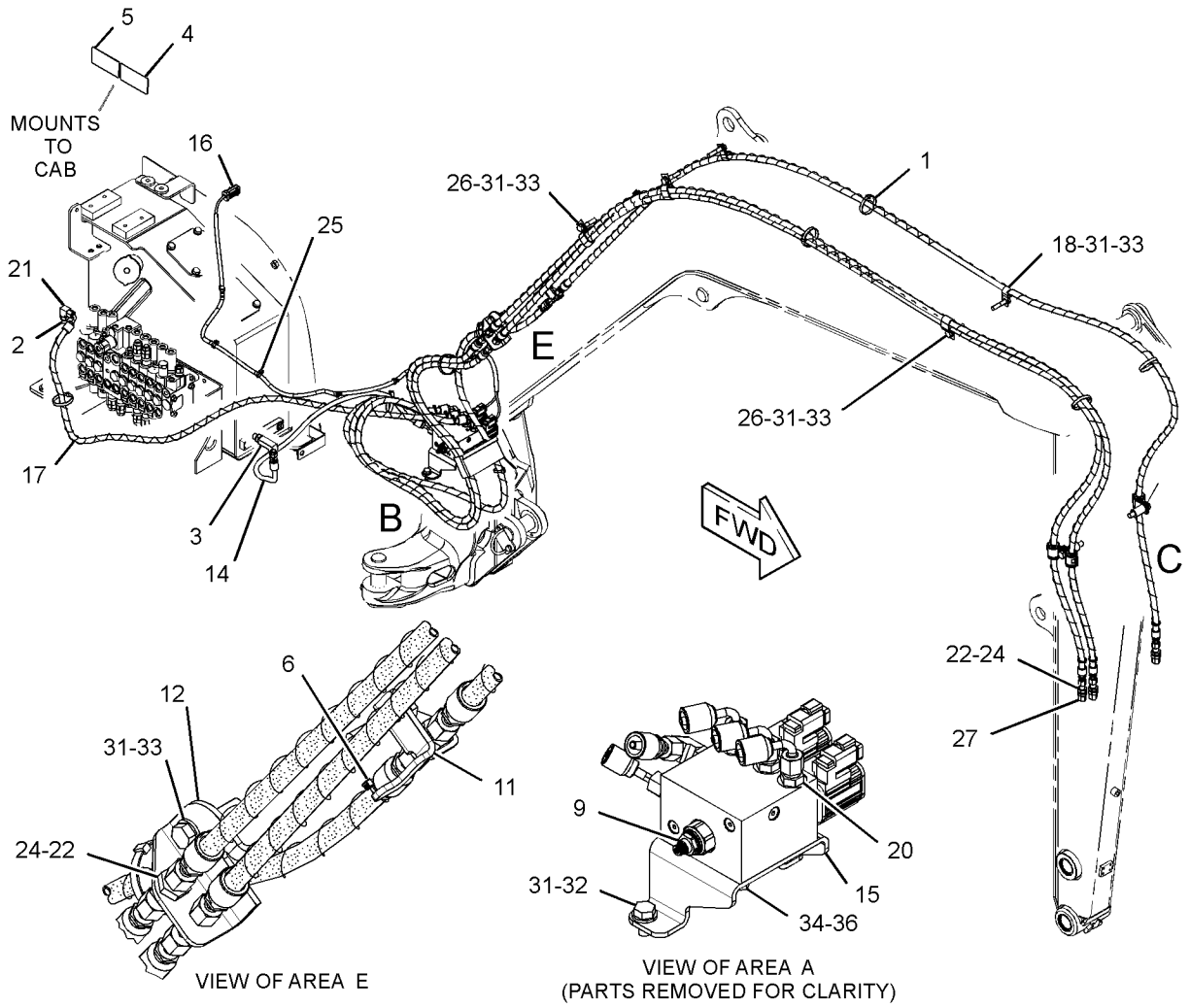

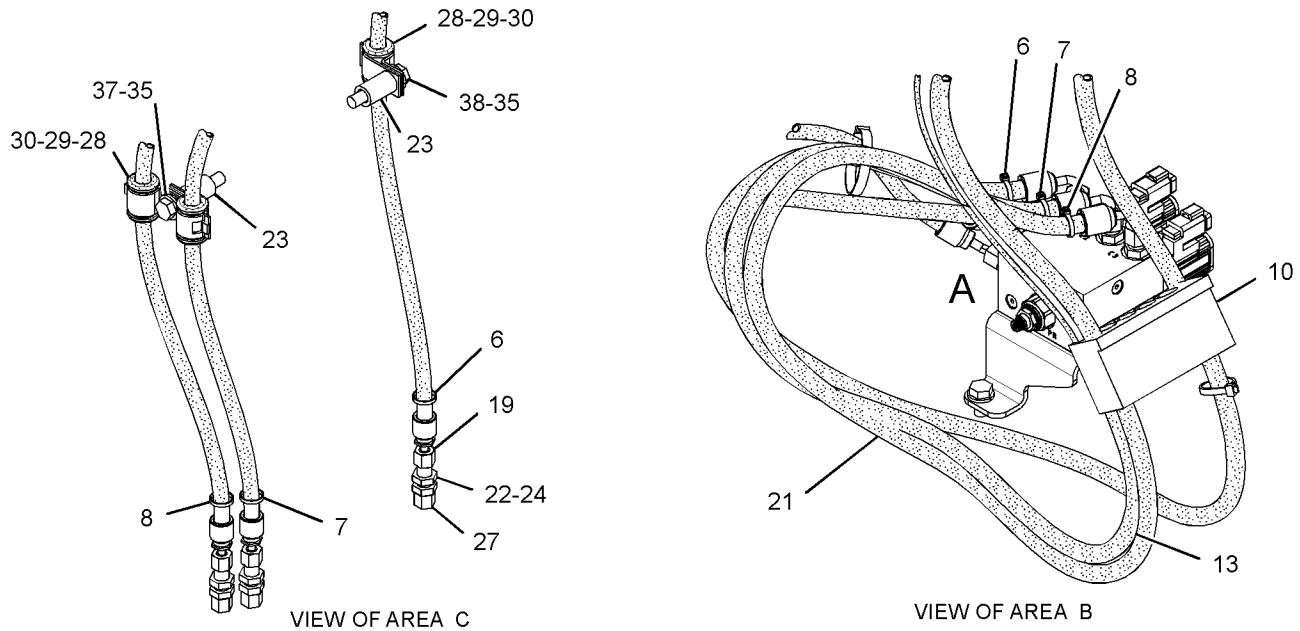

GRAPHIC #1 **<END>** g02904888

378-2500 CONTROL AR-HYDRAULIC—2ND AUXILIARY

PART OF 383-5901, 383-5902, 383-5912, 383-5913 STICK AR-HOE

AN ATTACHMENT

SMCS-5050, 5051, 5057, 5059, 5705 **i04611686**

NOTE	PART NUMBER	QTY	PART NAME 1 2 3 4 5 6 (PRODUCT LEVEL)	SEE PAGE
Y	*378-2497*	1	CONTROL GP-PILOT OPERATED HYD (2ND AUXILIARY)	491

Y - SEPARATE ILLUSTRATION

<END>

378-2501 CONTROL AR-HYDRAULIC—STANDARD JOYSTICK

PART OF 383-5899, 383-5900, 383-5910, 383-5911 STICK AR-HOE

AN ATTACHMENT

SMCS-5050, 5051, 5057, 5059, 5705 **i04611692**

NOTE	PART NUMBER	QTY	PART NAME 1 2 3 4 5 6 (PRODUCT LEVEL)	SEE PAGE
Y	*378-2495*	1	CONTROL GP-PILOT OPERATED HYD	490

Y - SEPARATE ILLUSTRATION

<END>

379-4723 CONTROL AR-PILOT HYDRAULIC—STANDARD

CANNOT BE USED WITH 379-4724—PAGE: 183

AN ATTACHMENT

SMCS-1329, 5057 **i04728060**

NOTE	PART NUMBER	QTY	PART NAME 1 2 3 4 5 6 (PRODUCT LEVEL)	SEE PAGE
Y	*377-8872*	1	LINES GP-PILOT (JOYSTICK)	248
Y	*379-4736*	1	LINES GP-PILOT	256

Y - SEPARATE ILLUSTRATION

<END>

266-6979 CYLINDER GP-BLADE–RAISE, LOWER

PART OF 377-8930 BLADE AR-ANGLING, 377-8920 BLADE AR-STRAIGHT AN ATTACHMENT

SMCS-5102, 7164 **i04015134**

NOTE	REF NO	GRAPHIC REF	PART NUMBER	QTY	PART NAME 1 2 3 4 5 6 (PRODUCT LEVEL)	SEE PAGE
	1	1	**265-8716**	2	BUSHING	
	2	1	**278-9474**	1	CYLINDER AS	
	3	1	**278-9475**	1	ROD AS	
	4	1	**294-7869**	1	HEAD	
	5	1	**237-8377**	1	BUSHING	
	6	1	**146-3916**	1	RING	
	7	1	**146-1086**	1	RING	
	8	1	**095-1709**	1	SEAL-O-RING	
	9	1	**237-6124**	1	RING	
	10	1	**095-1710**	1	SEAL-O-RING	
	11	1	**237-6135**	1	PISTON	
	12	1	**146-3923**	1	SEAL AS	
	13	1	**237-6136**	2	RING	
	14	1	**216-7643**	1	SETSCREW (M8X1.25X8-MM)	
	15	1	**146-3969**	1	BALL	
	16	1	**192-0638**	1	SEAL	
	17	1	**3B-8489**	1	FITTING-GREASE	
	18	1	**3B-8488**	1	FITTING-GREASE	
F			**294-7868**	1	HEAD AS	
F			**237-7086**	1	PISTON AS	
					AVAILABLE REPAIR KIT(S):	
			278-8641	1	KIT-SEAL (BLADE CYLINDER)	

F - NOT SHOWN

266-6979 **CYLINDER GP-BLADE (*contd.*)** **i04015134**

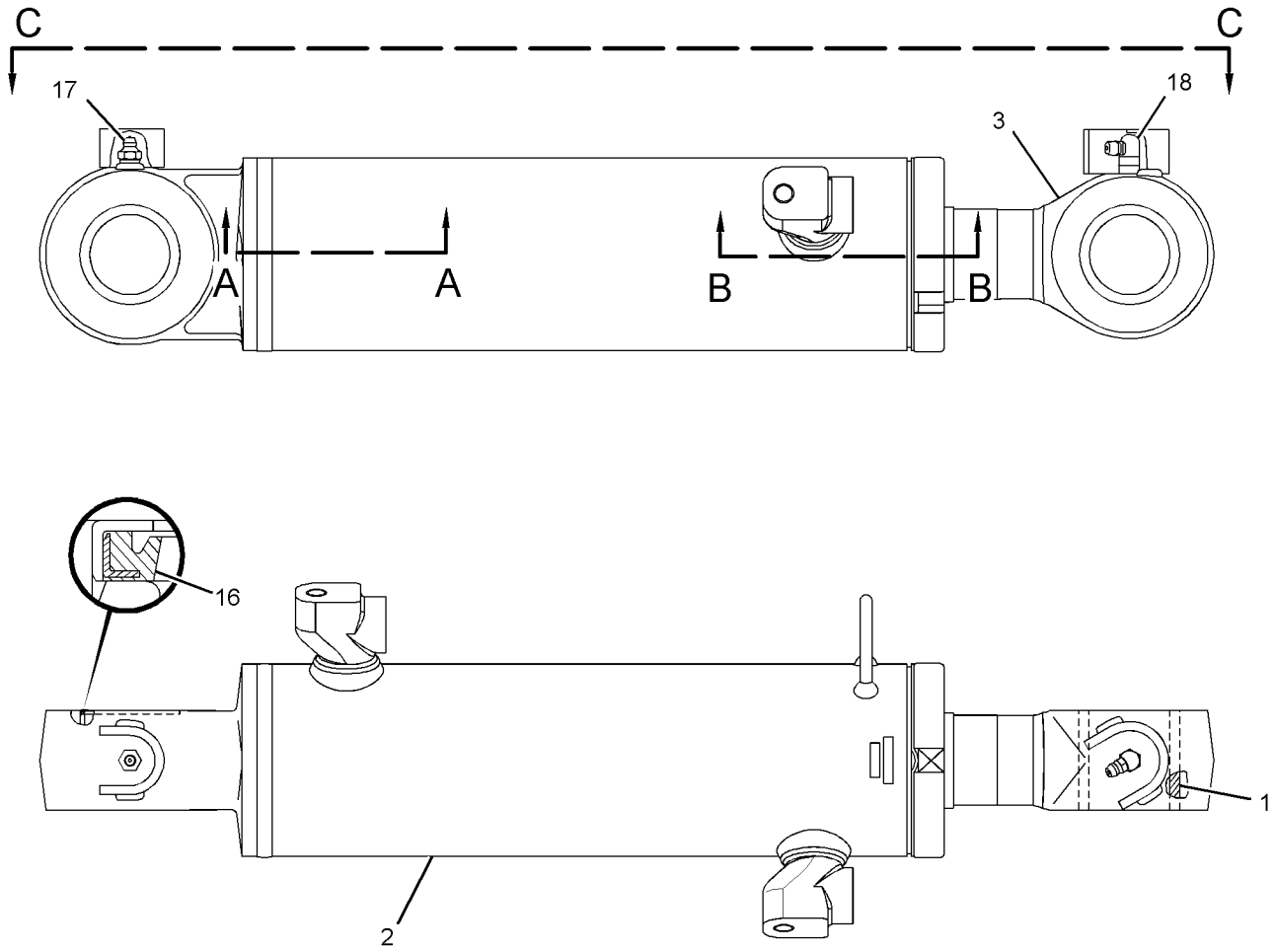

VIEW C-C

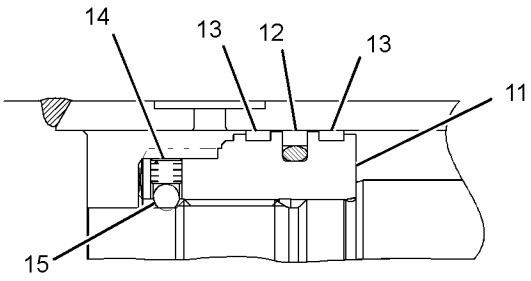

SECTION A-A

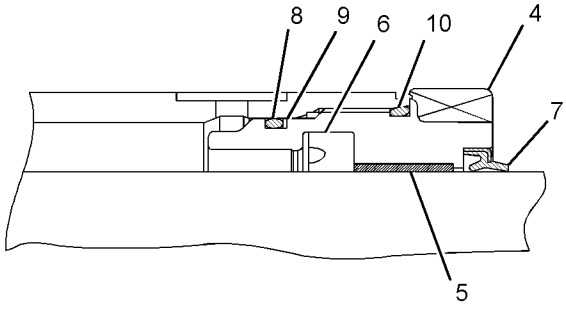

SECTION B-B

GRAPHIC #1 **<END>** g01345811

286-6384 CYLINDER GP-BLADE–ANGLE

PART OF 377-8930 BLADE AR-ANGLING
AN ATTACHMENT

SMCS-5102, 7164 **i04015469**

NOTE	REF NO	GRAPHIC REF	PART NUMBER	QTY	PART NAME 1 2 3 4 5 6 (PRODUCT LEVEL)	SEE PAGE
	1	1	**286-7323**	1	CYLINDER AS (BLADE)	
		1	**3B-8488**	1	FITTING-GREASE	
		1	**140-5169**	1	BUSHING	
		1	**175-4723**	2	SEAL	
	2	1	**286-7324**	1	ROD AS	
		1	**3B-8489**	1	FITTING-GREASE	
		1	**140-5169**	1	BUSHING	
		1	**175-4723**	2	SEAL	
	3	1	**283-9117**	1	HEAD AS (CYLINDER)	
	3A	1	**095-1707**	1	SEAL-O-RING	
	3B	1	**095-1710**	1	SEAL-O-RING	
	3C	1	**140-4934**	1	RING	
	3D	1	**203-2343**	1	BUSHING	
	3E	1	**203-2344**	1	RING	
	3F	1	**237-7901**	1	RING	
	3G	1	**283-9118**	1	HEAD	
	4	1	**283-9119**	1	PISTON AS (CYLINDER)	
	4A	1	**140-3750**	1	RING AS	
	4B	1	**192-0633**	1	BALL	
	4C	1	**237-7904**	2	RING	
	4D	1	**283-9120**	1	PISTON	
	4E	1	**283-9121**	1	SCREW (M6X1X6-MM)	
					AVAILABLE REPAIR KIT(S):	
			283-9122	1	KIT-SEAL (BLADE)	
					(INCLUDES SEALS & RINGS)	

286-6384 **CYLINDER GP-BLADE (*contd.*)** **i04015469**

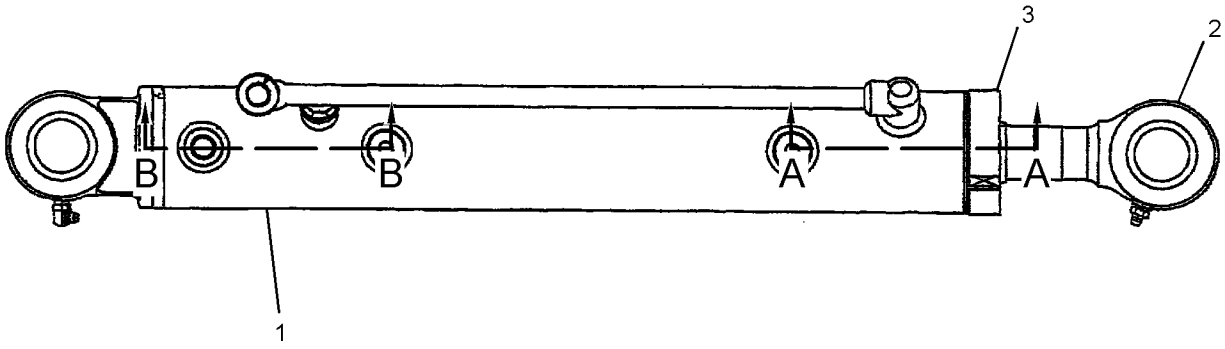

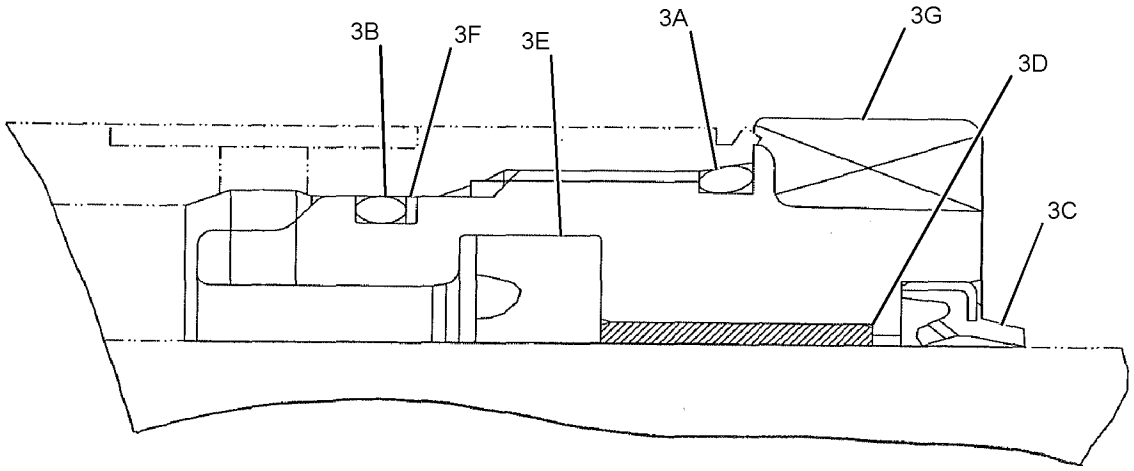

SECTION A-A

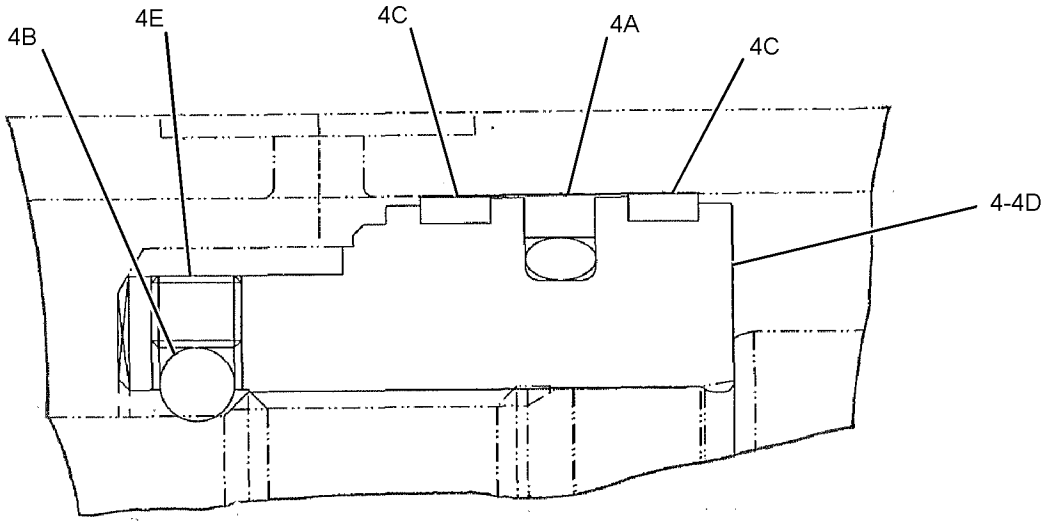

SECTION B-B

GRAPHIC #1 **<END>** g01390873

284-0420 CYLINDER GP-BOOM

PART OF 376-6680 BOOM AR

SMCS-5456 **i04022680**

NOTE	REF NO	GRAPHIC REF	PART NUMBER	QTY	PART NAME 1 2 3 4 5 6 (PRODUCT LEVEL)	SEE PAGE
	1	1	**265-8716**	2	BUSHING	
	2	1	**301-6892**	1	CYLINDER AS-HYDRAULIC	
	3	1	**278-8626**	1	ROD AS	
	4	1	**294-7869**	1	HEAD	
	5	1	**237-8377**	1	BUSHING	
J	6	1	**146-3916**	1	RING	
J	7	1	**146-1086**	1	RING	
J	8	1	**095-1709**	2	SEAL-O-RING	
J	9	1	**237-6124**	1	RING	
J	10	1	**095-1710**	1	SEAL-O-RING	
	11	1	**237-6128**	1	HOLDER	
	12	1	**237-6129**	1	SPACER (54X63.4X4-MM THK)	
	13	1	**237-6130**	1	SEAL	
	14	1	**237-6131**	1	COLLAR	
J	15	1	**278-8633**	1	RING	
	16	1	**278-8635**	1	PISTON	
J	17	1	**146-3923**	1	SEAL AS	
J	18	1	**237-6136**	2	RING	
	19	1	**216-7643**	1	SETSCREW (M8X1.25X8-MM)	
	20	1	**146-3969**	1	BALL	
	21	1	**278-8638**	1	BEARING	
	22	1	**301-6894**	1	TUBE AS	
	23	1	**304-3525**	1	PLUG	
	24	1	**304-3526**	2	SEAL	
	25	1	**304-3527**	1	BOLT	
	26	1	**199-1148**	1	HOLDER	
	27	1	**192-0638**	4	SEAL	
	28	1	**3B-8489**	1	FITTING-GREASE	
	29	1	**3B-8488**	1	FITTING-GREASE	
					AVAILABLE REPAIR KIT(S):	
J			**278-8641**	1	KIT-SEAL (BOOM CYLINDER)	

J - KIT MARKED J INCLUDES PARTS MARKED J

284-0420 **CYLINDER GP-BOOM (*contd.*)** **i04022680**

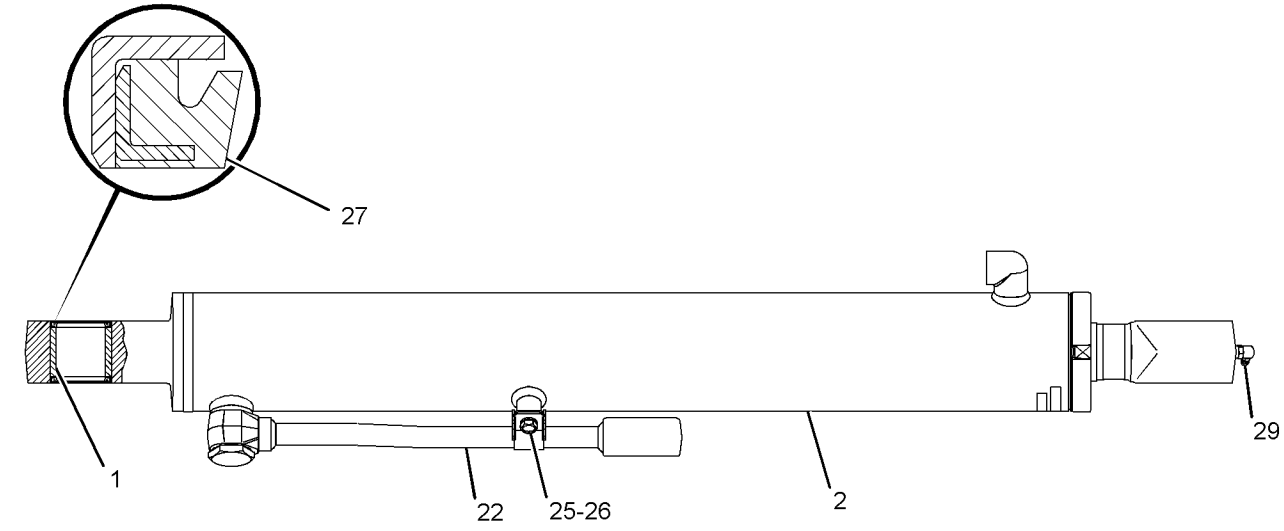

VIEW C-C

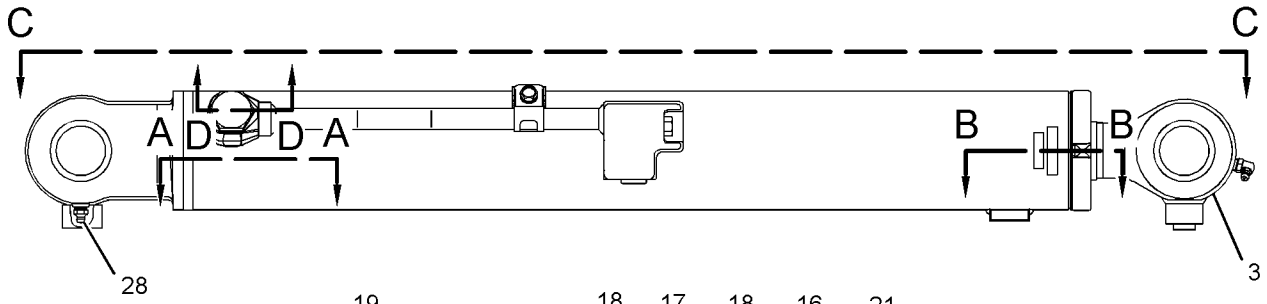

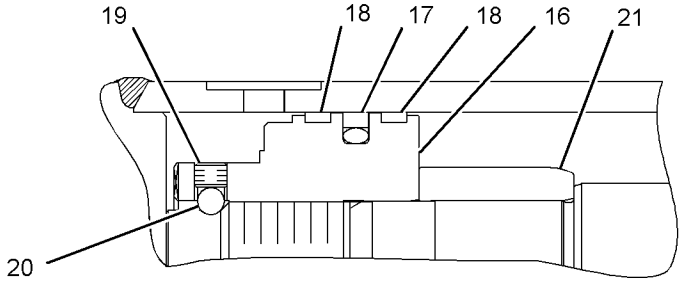

SECTION A-A

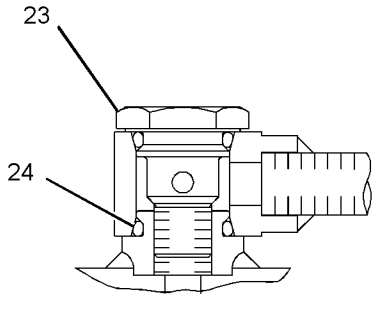

SECTION D-D

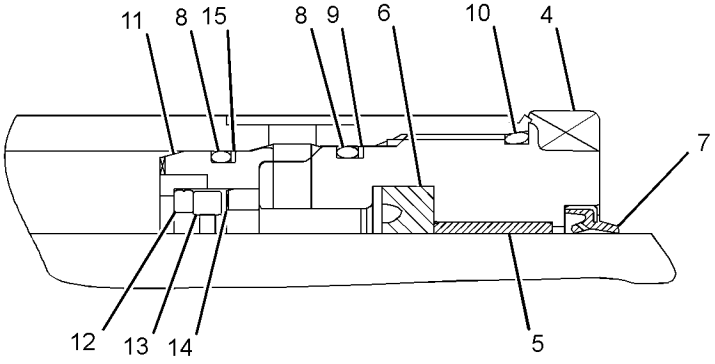

SECTION B-B

GRAPHIC #1 **<END>** g01591159

376-0170 CYLINDER GP-BUCKET

70-MM (2.8-IN) BORE X 497.5-MM (19.6-IN) STROKE
PART OF 377-8918, 377-8919, 418-1566 LINKAGE AR-BUCKET
AN ATTACHMENT

SMCS-5457 **i04725136**

NOTE	REF NO	GRAPHIC REF	PART NUMBER	QTY	PART NAME 1 2 3 4 5 6 (PRODUCT LEVEL)	SEE PAGE
HJ	1	1	**265-8716**	2	BUSHING	
H	2	1	**383-3206**	1	CYLINDER AS-HYDRAULIC	
J	3	1	**278-9164**	1	ROD AS	
L	4	1	**309-5680**	1	HEAD	
L	5	1	**310-8780**	1	BUSHING	
LS	6	1	**212-6073**	1	RING	
LS	7	1	**175-4734**	1	RING	
LS	8	1	**095-1707**	1	SEAL-O-RING	
LS	9	1	**237-7078**	1	RING	
LS	10	1	**095-1708**	1	SEAL-O-RING	
P	11	1	**237-7087**	1	PISTON	
PS	12	1	**175-4721**	1	SEAL AS	
PS	13	1	**237-7088**	2	RING	
P	14	1	**216-7643**	1	SETSCREW (M8X1.25X8-MM)	
P	15	1	**146-3969**	1	BALL	
HN	16	1	**301-6897**	1	TUBE AS	
NT	17	1	**304-3525**	1	PLUG	
NT	18	1	**304-3526**	2	SEAL	
NT	19	1	**304-3527**	1	BOLT	
NT	20	1	**199-1148**	1	HOLDER	
	21	1	**192-0638**	4	SEAL	
	22	1	**3B-8489**	1	FITTING-GREASE	
	23	1	**3B-8488**	1	FITTING-GREASE	
FL			**309-5679**	1	HEAD AS	
FP			**237-7086**	1	PISTON AS	
FJT			**304-3524**	1	PLUG AS	
					AVAILABLE REPAIR KIT(S):	
S			**251-9845**	1	KIT-SEAL (BUCKET CYLINDER)	

F - NOT SHOWN
H - KIT MARKED H SERVICES PARTS MARKED H
J - KIT MARKED J SERVICES PARTS MARKED J
L - KIT MARKED L SERVICES PARTS MARKED L
N - KIT MARKED N SERVICES PARTS MARKED N
P - KIT MARKED P SERVICES PARTS MARKED P
S - KIT MARKED S SERVICES PARTS MARKED S
T - KIT MARKED T SERVICES PARTS MARKED T

376-0170 **CYLINDER GP-BUCKET (*contd.*)** **i04725136**

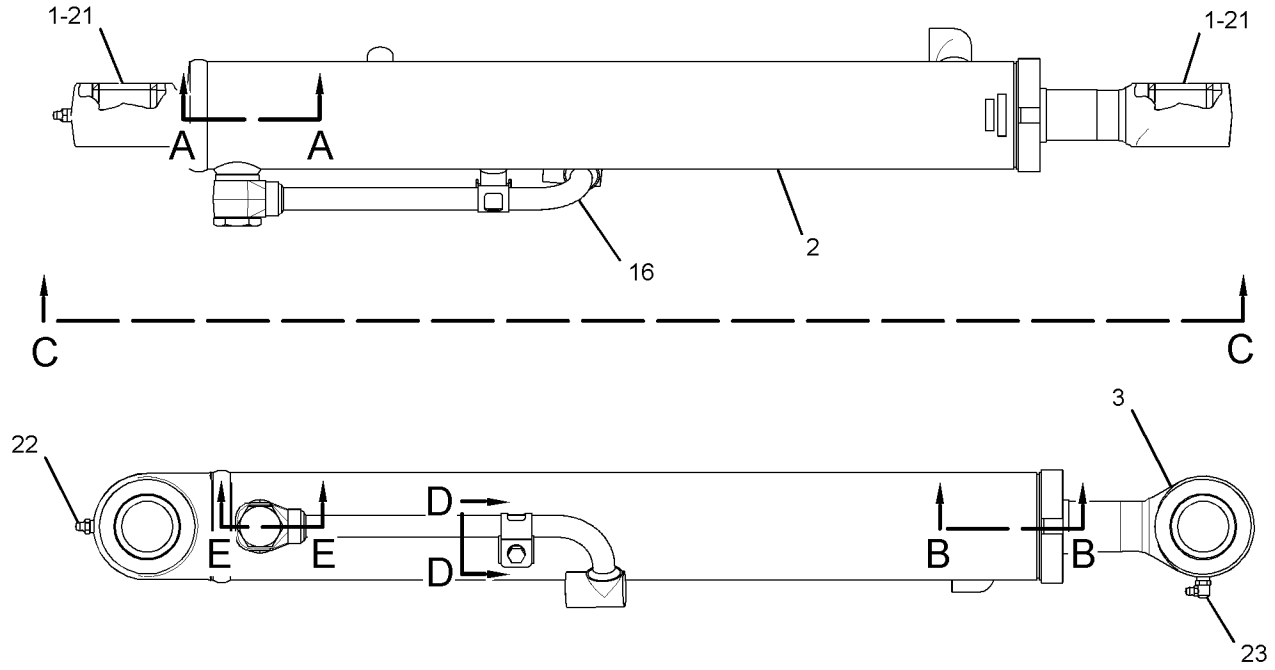

VIEW C-C

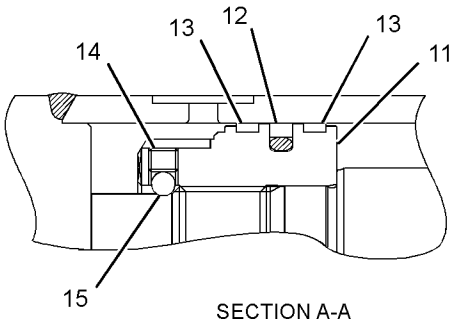

SECTION A-A

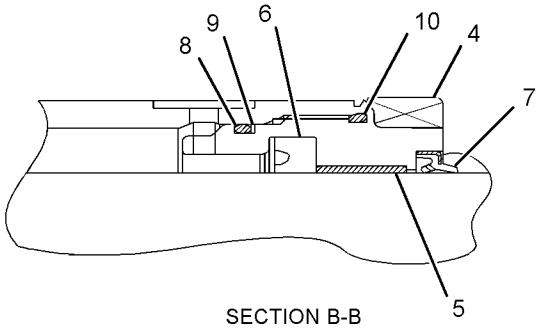

SECTION B-B

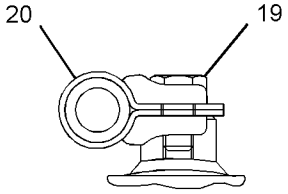

SECTION D-D

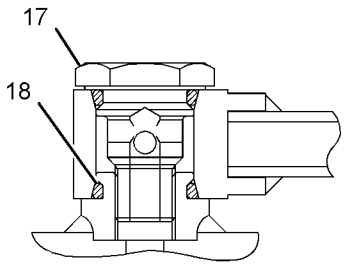

SECTION E-E

GRAPHIC #1 **<END>** g02852457

268-8224 CYLINDER GP-HYDRAULIC

63.5-MM (2.5-IN) BORE X 431.8-MM (17-IN) STROKE
PART OF 309-1917, 309-1938 THUMB GP
AN ATTACHMENT

SMCS-4303, 5105, 5362, 7562 **i05455910**

NOTE	REF NO	GRAPHIC REF	PART NUMBER	QTY	PART NAME 1 2 3 4 5 6 (PRODUCT LEVEL)	SEE PAGE
	1	1	**3B-8489**	2	FITTING-GREASE	
	2	1	**5D-1986**	1	LOCKNUT (7/8-14-THD)	
	3	1	**233-8447**	2	BUSHING	
	4	1	*244-3712*	2	PLUG AS	
					(EACH INCLUDES)	
		1	**9S-4191**	1	PLUG	
		1	**214-7568**	1	SEAL-O-RING	
	5	1	**278-2246**	1	PISTON	
	6	1	**278-2248**	1	BUSHING	
	7	1	**278-2254**	1	ROD AS-PISTON	
	8	1	**278-2256**	1	SEAL	
					AVAILABLE REPAIR KIT(S):	
			278-2257	1	KIT-PACKING (HYDRAULIC CYLINDER)	

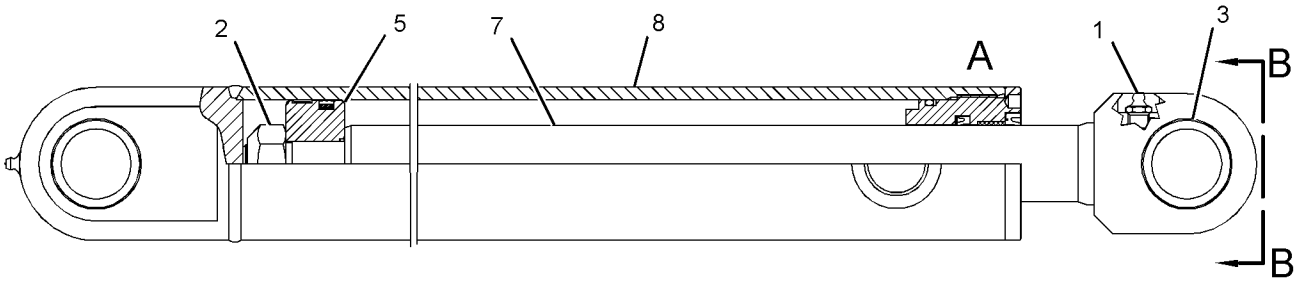

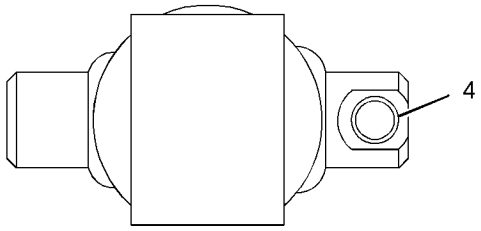

VIEW B-B

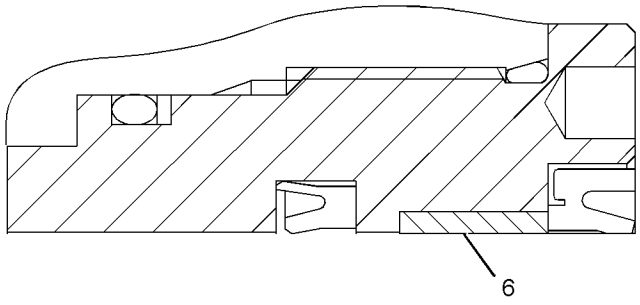

VIEW OF AREA A

GRAPHIC #1 **<END>** g03449736

361-1125 CYLINDER GP-HYDRAULIC

PART OF 361-1123 LOCK GP-QUICK COUPLER
AN ATTACHMENT

SMCS-4303, 5105, 5362, 7562 **i05437847**

NOTE	REF NO	GRAPHIC REF	PART NUMBER	QTY	PART NAME 1 2 3 4 5 6 (PRODUCT LEVEL)	SEE PAGE
	1	1	**361-1078**	1	KIT-SEAL	
					(INCLUDES O-RINGS & SEALS)	
	2	1	**361-1127**	1	ROD AS	
	3	1	**361-1128**	1	SEAL	
	4	1	**361-1129**	1	PISTON	
	5	1	**361-1156**	1	PISTON	
Y	6	1	**361-1132**	1	VALVE GP-CHECK (HYDRAULIC CONTROL LOCK)	313
	7	1	**3J-1907**	1	SEAL-O-RING	
	8	1	**9S-8004**	1	PLUG-O-RING	

Y - SEPARATE ILLUSTRATION

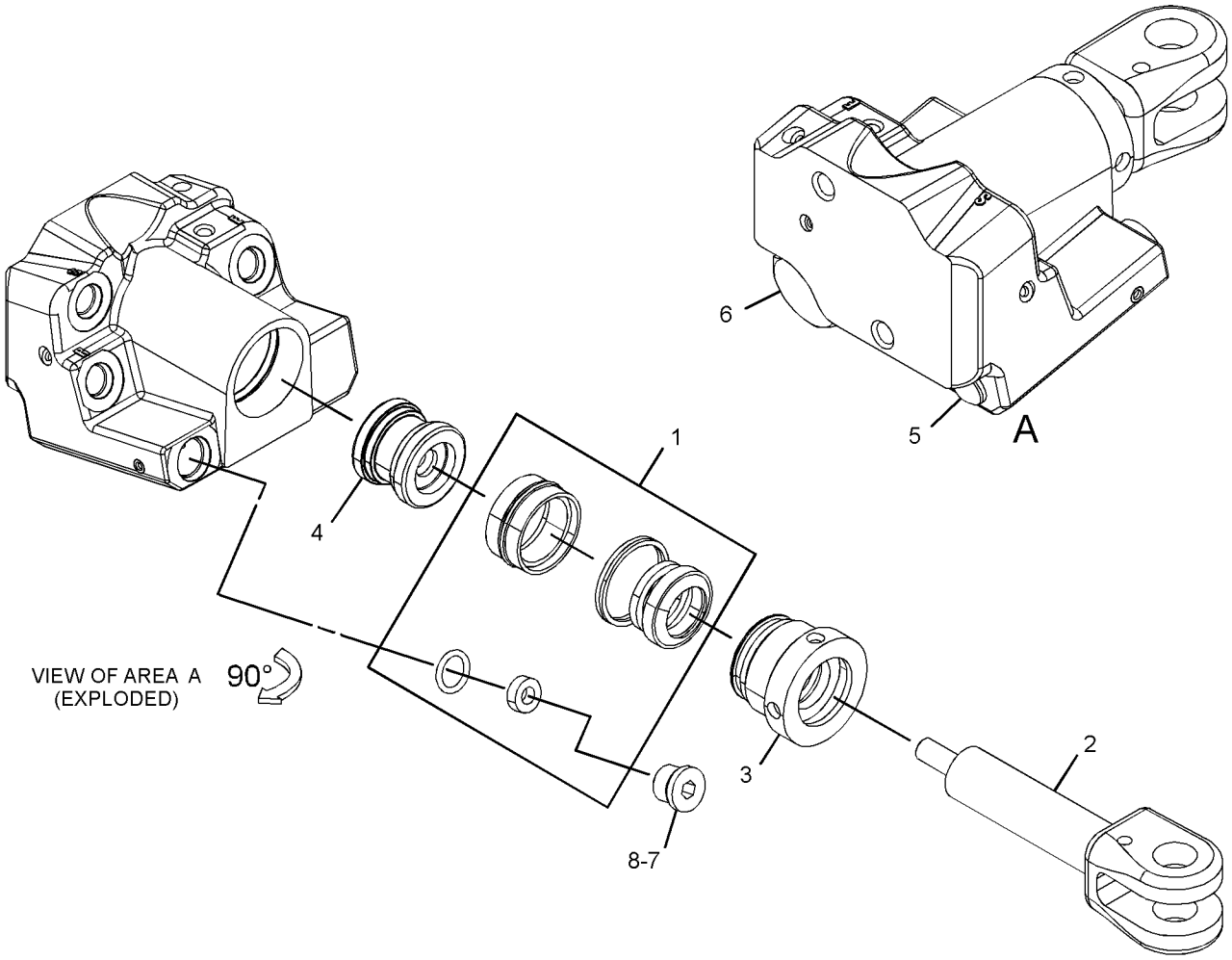

GRAPHIC #1 **<END>** g02913286

284-0863 CYLINDER GP-STICK

PART OF 421-8461 STICK AR
AN ATTACHMENT

SMCS-5458 **i04021007**

NOTE	REF NO	GRAPHIC REF	PART NUMBER	QTY	PART NAME 1 2 3 4 5 6 (PRODUCT LEVEL)	SEE PAGE
	1	1	**265-8717**	2	BUSHING	
	2	1	**284-0884**	1	CYLINDER AS-STICK	
	3	1	**278-9122**	1	ROD AS	
	4	1	**294-7869**	1	HEAD	
	5	1	**237-8377**	1	BUSHING	
	6	1	**146-3916**	1	RING	
	7	1	**146-1086**	1	RING	
	8	1	**095-1709**	1	SEAL-O-RING	
	9	1	**237-6124**	1	RING	
	10	1	**095-1710**	1	SEAL-O-RING	
	11	1	**237-6135**	1	PISTON	
	12	1	**146-3923**	1	SEAL AS	
	13	1	**237-6136**	2	RING	
	14	1	**216-7643**	1	SETSCREW (M8X1.25X8-MM)	
	15	1	**146-3969**	1	BALL	
	16	1	**278-9127**	1	BEARING	
	17	1	**278-9128**	1	SEAL	
	18	1	**278-9129**	2	STOP	
	19	1	**278-9130**	1	RING	
	20	1	**192-0638**	4	SEAL	
	21	1	**3B-8488**	2	FITTING-GREASE	
F			**278-9126**	1	CUSHION AS	
F			**294-7868**	1	HEAD AS	
F			**237-6134**	1	PISTON AS	
					AVAILABLE REPAIR KIT(S):	
			279-7940	1	KIT-SEAL (STICK CYLINDER)	

F - NOT SHOWN

284-0863 **CYLINDER GP-STICK (*contd.*)** **i04021007**

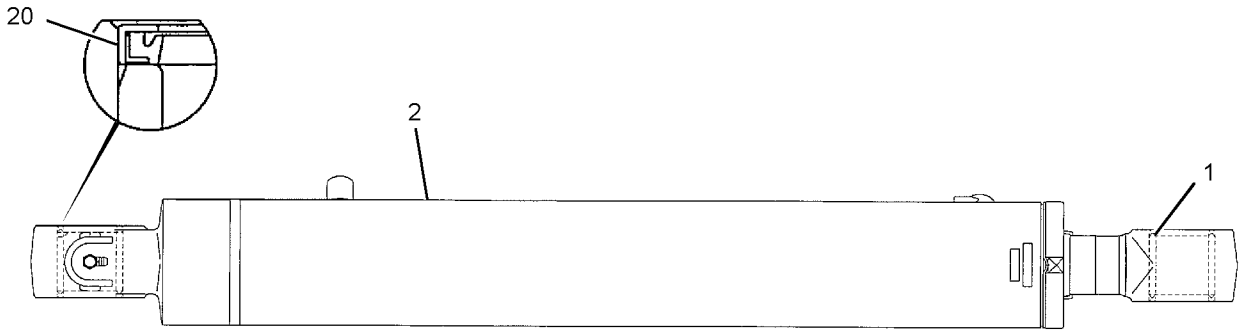

VIEW C-C

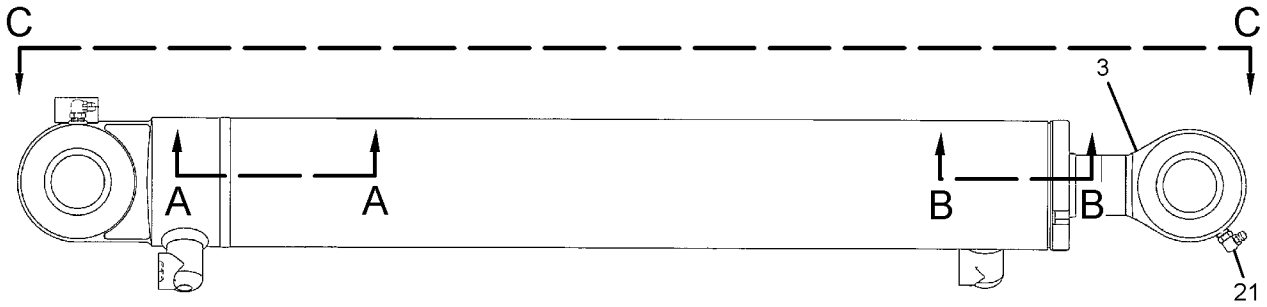

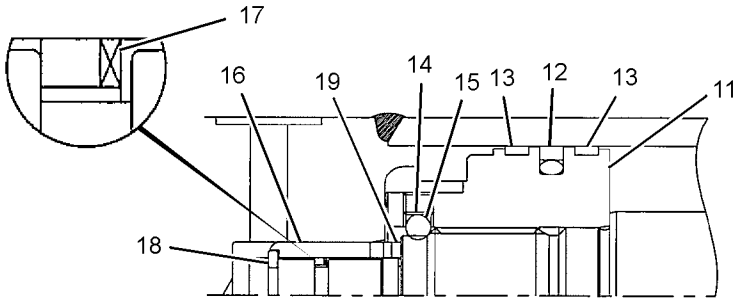

SECTION A-A

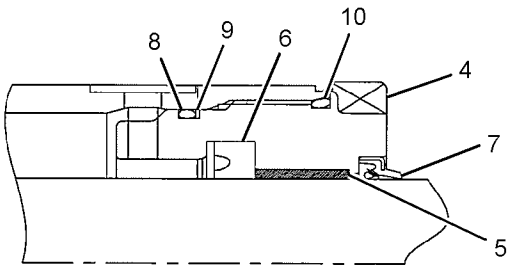

SECTION B-B

GRAPHIC #1 **<END>** g01221452

376-0171 CYLINDER GP-SWING BOOM

85-MM (3.3-IN) BORE X 483-MM (19-IN) STROKE

PART OF 376-6680 BOOM AR

SMCS-5105 **i04775401**

NOTE	REF NO	GRAPHIC REF	PART NUMBER	QTY	PART NAME 1 2 3 4 5 6 (PRODUCT LEVEL)	SEE PAGE
	1	1	**265-8717**	2	BUSHING	
	2	1	**382-1147**	1	CYLINDER AS-SWING BOOM	
	3	1	**278-1983**	1	ROD AS	
P	4	1	**309-5902**	1	HEAD	
P	5	1	**311-1031**	1	BUSHING	
JP	6	1	**146-3957**	1	RING	
JP	7	1	**146-3958**	1	RING	
JP	8	1	**095-1710**	1	SEAL-O-RING	
JP	9	1	**237-8378**	1	RING	
JP	10	1	**095-1711**	1	SEAL-O-RING	
N	11	1	**278-1985**	1	PISTON	
JN	12	1	**146-3968**	1	SEAL AS	
JN	13	1	**278-1986**	2	RING	
N	14	1	**216-7643**	1	SETSCREW (M8X1.25X8-MM)	
N	15	1	**146-3969**	1	BALL	
	16	1	**192-0638**	4	SEAL	
	17	1	**3B-8489**	1	FITTING-GREASE	
FP			**309-5903**	1	HEAD AS-END	
			170-8794	1	RING	
			278-1990	1	SEAL	
FN			**278-1988**	1	PISTON AS	
					AVAILABLE REPAIR KIT(S):	
J			**279-0639**	1	KIT-SEAL (SWING BOOM CYLINDER)	

F - NOT SHOWN
J - KIT MARKED J SERVICES PARTS MARKED J
N - KIT MARKED N SERVICES PARTS MARKED N
P - KIT MARKED P SERVICES PARTS MARKED P

376-0171 **CYLINDER GP-SWING BOOM (*contd.*)** **i04775401**

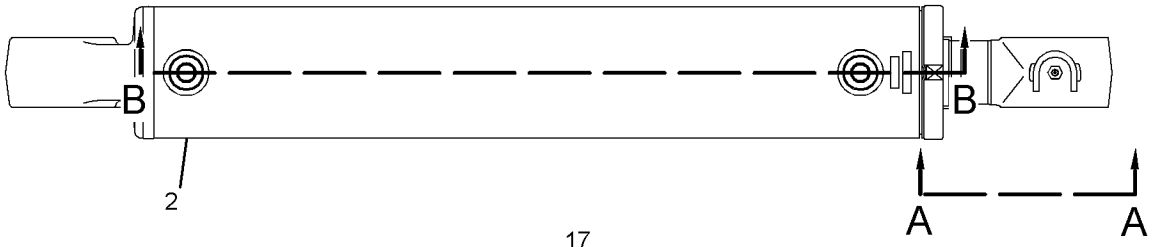

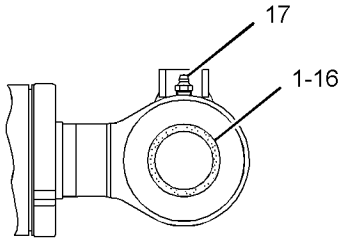

VIEW A-A

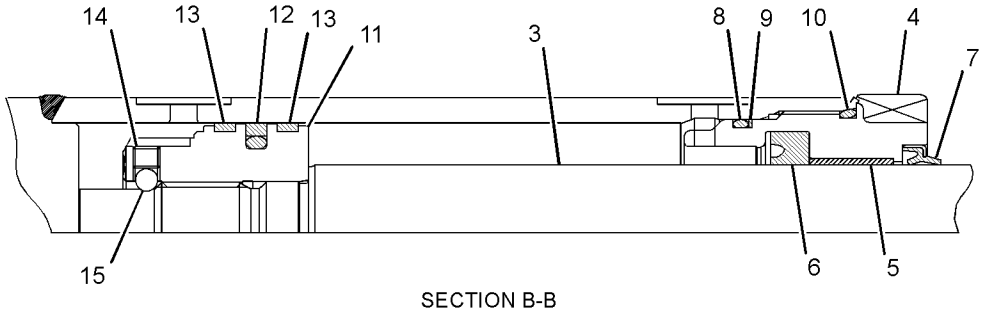

SECTION B-B

GRAPHIC #1 **<END>** g02799208

246-0192 CYLINDER GP-TILT

76.2-MM (3-IN) BORE X 120-MM (4.7-IN) STROKE
PART OF 279-4325 BUCKET AR-TILTABLE
AN ATTACHMENT

SMCS-5104 **i05426576**

NOTE	REF NO	GRAPHIC REF	PART NUMBER	QTY	PART NAME 1 2 3 4 5 6 (PRODUCT LEVEL)	SEE PAGE
	1	1	**1H-7339**	1	SEAL-O-RING	
	2	1	**6E-0122**	1	HEAD	
J	3	1	**6J-1972**	1	SEAL AS	
J	4	1	**6J-5733**	1	RING-WEAR	
	5	1	**9T-2212**	1	PISTON	
J	6	1	**167-2186**	1	SEAL AS-BUFFER	
J	7	1	**167-2294**	1	SEAL-U-CUP	
J	8	1	**226-8202**	1	SEAL-WIPER	
	9	1	**249-4175**	1	ROD AS	
	9A	1	**9T-4007**	2	BEARING	
Z	10	1		1	CYLINDER AS	
J	11	1	**4T-6780**	1	RING-WEAR	
	12	1	**5P-8250**	1	WASHER (28X49X5-MM THK)	
	13	1	**6F-7037**	1	BOLT (1-14X3.25-IN)	
J	14	1	**8J-2574**	1	RING-BACKUP	
					AVAILABLE REPAIR KIT(S):	
J			**235-0354**		KIT-SEAL (HYDRAULIC CYLINDER)	
					'(ALSO INCLUDES BACKUP RING & O-RING SEAL)	

J - (KIT MARKED J SERVICES PART(S) MARKED J
Z - NOT SERVICED SEPARATELY

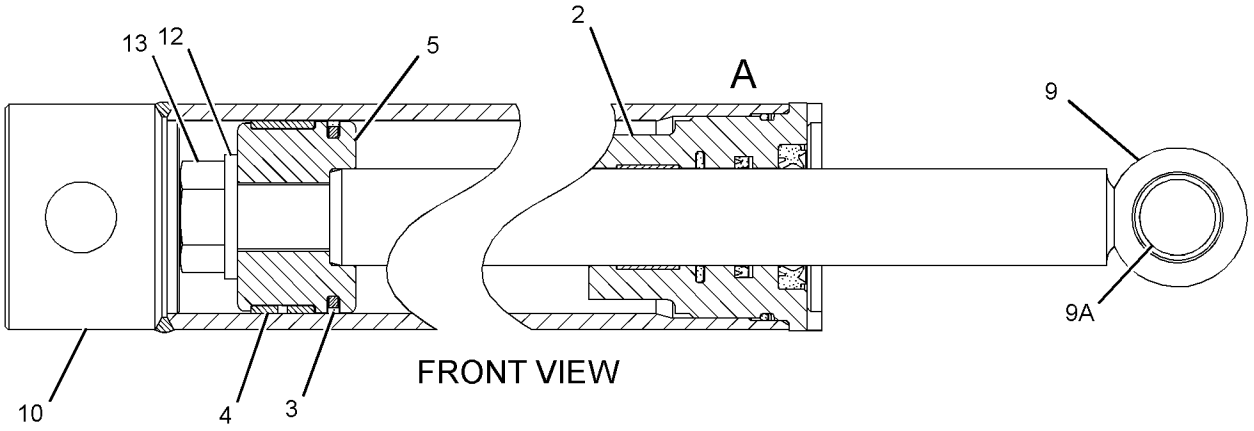

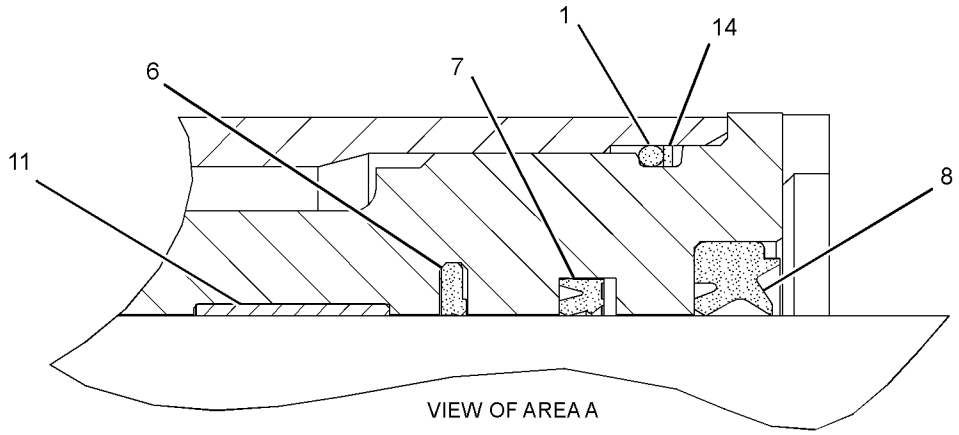

GRAPHIC #1 **<END>** g01158069

379-4726 DRAIN GP-OIL—HYDRAULIC TANK, STANDARD

CANNOT BE USED WITH 379-4724—PAGE: 183

AN ATTACHMENT

SMCS-5056 **i04728063**

NOTE	PART NUMBER	QTY	PART NAME 1 2 3 4 5 6 (PRODUCT LEVEL)	SEE PAGE
Y	*379-4739*	1	DRAIN GP-OIL (HYDRAULIC TANK, STANDARD)	204

Y - SEPARATE ILLUSTRATION

<END>

379-4727 DRAIN GP-OIL—ENGINE, HYDRAULIC TANK

CANNOT BE USED WITH 379-4726—PAGE: 203

AN ATTACHMENT

SMCS-5056 **i04728064**

NOTE	PART NUMBER	QTY	PART NAME 1 2 3 4 5 6 (PRODUCT LEVEL)	SEE PAGE
Y	*378-2141*	1	DRAIN GP-ENGINE OIL (ECOLOGY)	16
Y	*379-4740*	1	DRAIN GP-OIL (ECOLOGY, HYDRAULIC TANK)	205

Y - SEPARATE ILLUSTRATION

<END>

379-4739 DRAIN GP-OIL—HYDRAULIC TANK, STANDARD

PART OF 379-4726 DRAIN GP-OIL
AN ATTACHMENT

SMCS-5056 **i04728076**

NOTE	REF NO	GRAPHIC REF	PART NUMBER	QTY	PART NAME 1 2 3 4 5 6 (PRODUCT LEVEL)	SEE PAGE
	1	1	*148-8411*	1	PLUG AS	
		1	**3K-0360**	1	SEAL-O-RING	
		1	**9S-4185**	1	PLUG-O-RING	
	2	1	*194-2903*	1	ELBOW AS	
		1	**3K-0360**	1	SEAL-O-RING	
		1	**8T-0119**	1	ELBOW	

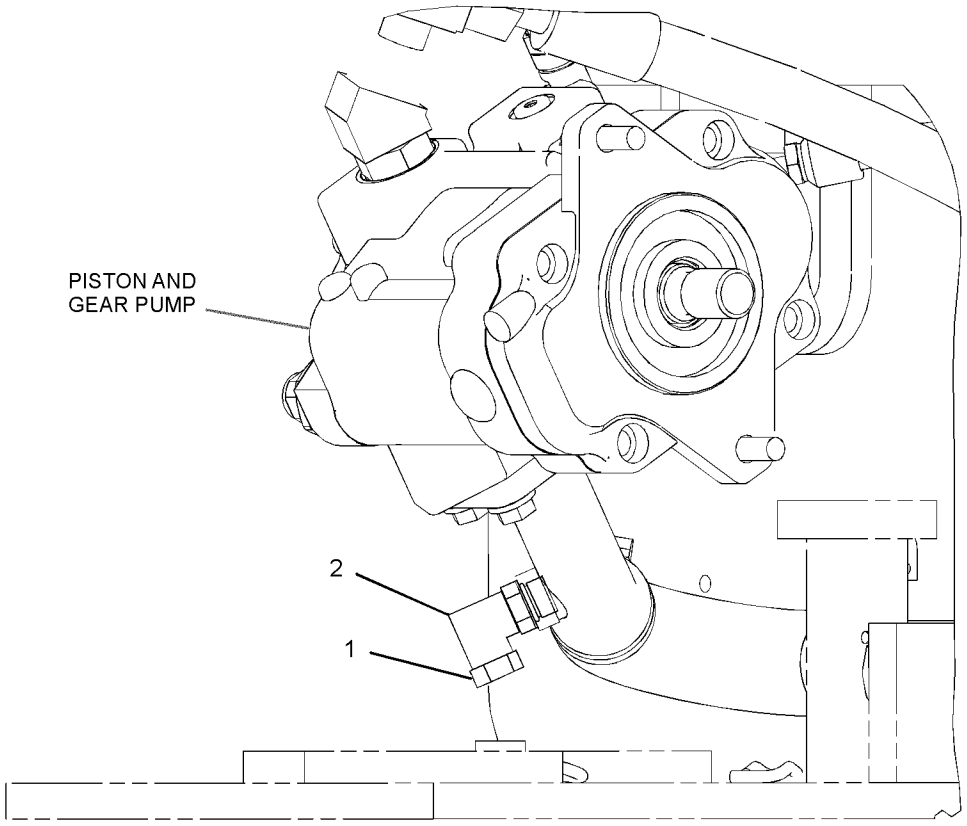

(VIEW FROM RIGHT REAR OF MACHINE)

GRAPHIC #1 **<END>** g02856003

379-4740 DRAIN GP-OIL—ECOLOGY, HYDRAULIC TANK

PART OF 379-4727 DRAIN GP-OIL
AN ATTACHMENT

SMCS-5056 **i04728077**

NOTE	REF NO	GRAPHIC REF	PART NUMBER	QTY	PART NAME 1 2 3 4 5 6 (PRODUCT LEVEL)	SEE PAGE
	1	1	*165-2273*	1	VALVE GP-SHUTOFF (DRAIN, HYDRAULIC OIL)	
		1	**3K-0360**	1	SEAL-O-RING	
		1	**6V-7238**	1	VALVE-SHUTOFF	

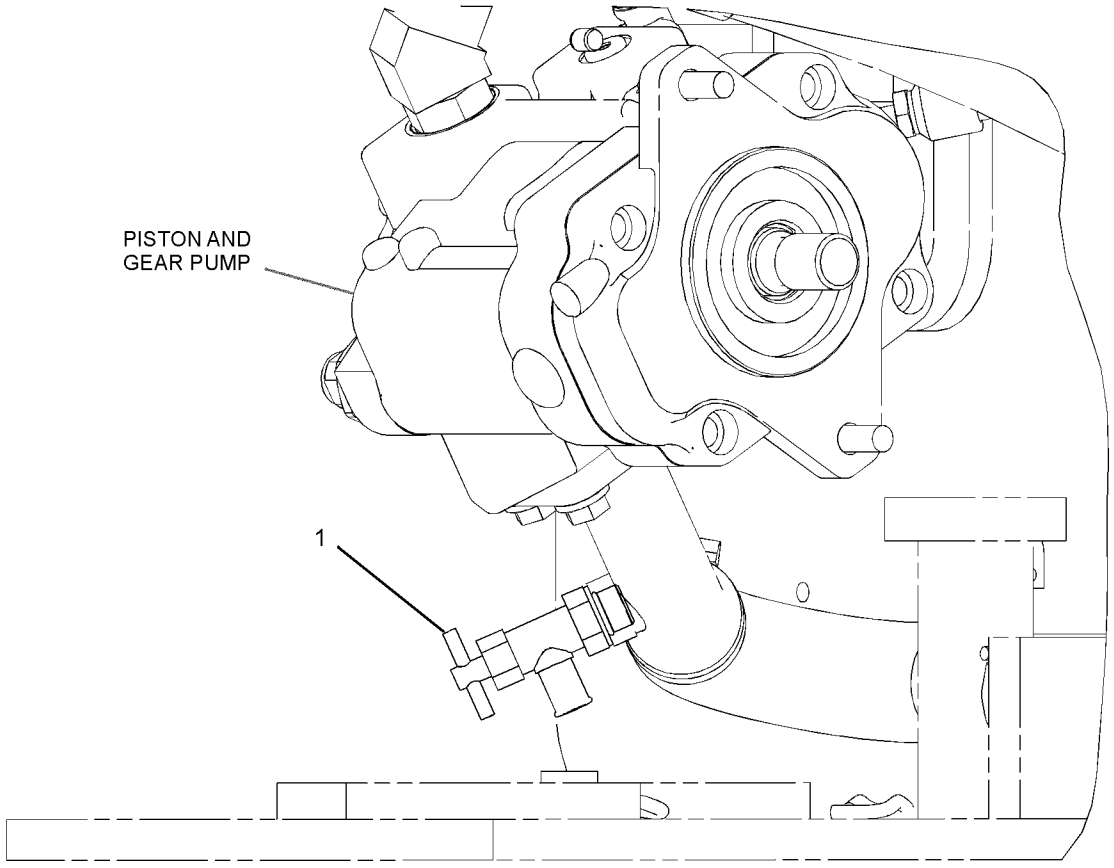

(VIEW FROM RIGHT REAR OF MACHINE)

GRAPHIC #1 **<END>** g02856284

266-6396 DRIVE GP-SWING

PART OF 265-8752 MOTOR & MTG GP-SWING

SMCS-5459 **i04019569**

NOTE	REF NO	GRAPHIC REF	PART NUMBER	QTY	PART NAME 1 2 3 4 5 6 (PRODUCT LEVEL)	SEE PAGE
Y	1	1	**280-2355**	1	PLANETARY GP-SWING DRIVE	291
Y	2	1	**281-3052**	1	MOTOR GP-SWING	289

Y - SEPARATE ILLUSTRATION

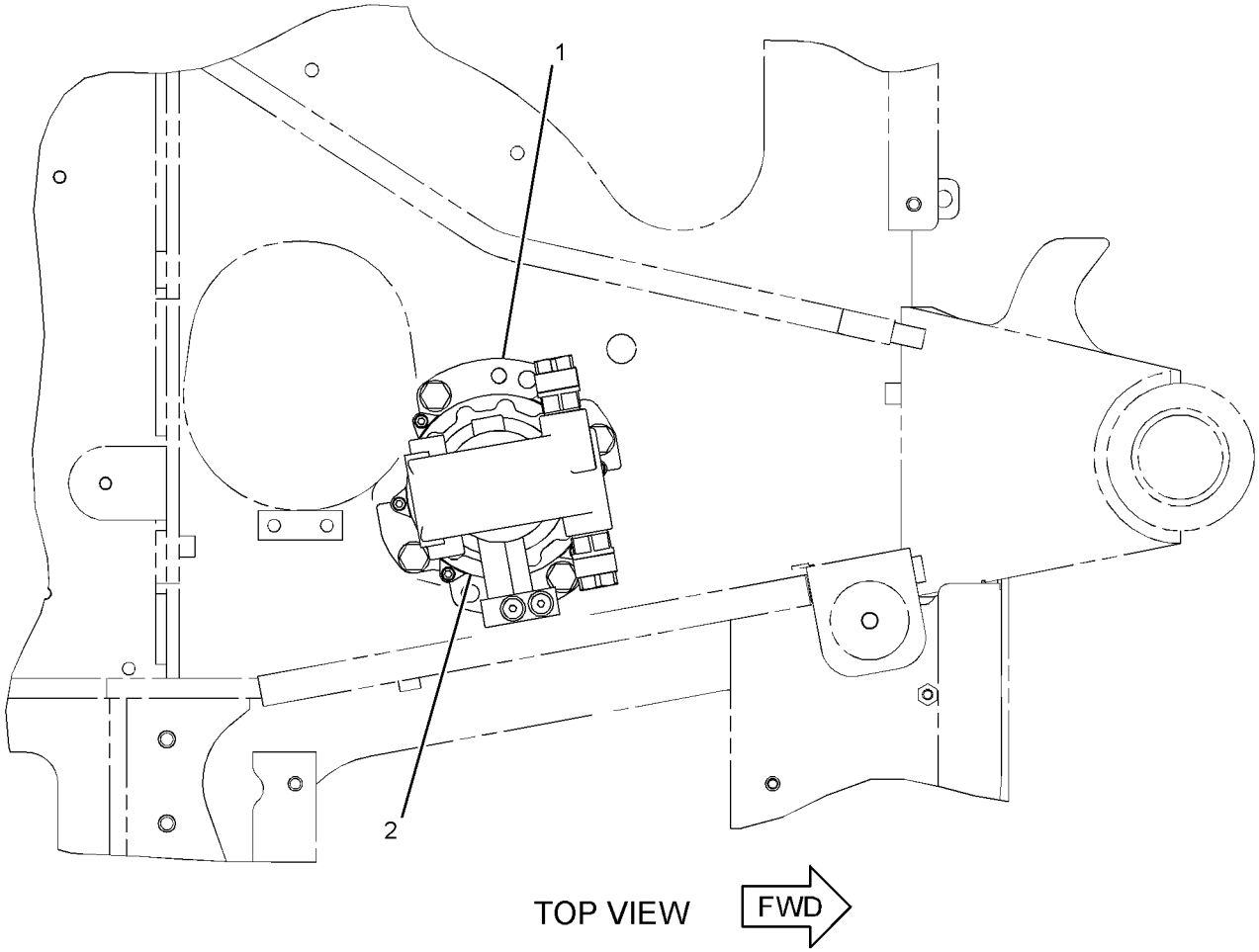

GRAPHIC #1 **<END>** g01235869

269-4197 FASTENER GP-LINES–STICK

PART OF 421-8461 STICK AR
AN ATTACHMENT

SMCS-5057 **i04021005**

NOTE	REF NO	GRAPHIC REF	PART NUMBER	QTY	PART NAME 1 2 3 4 5 6 (PRODUCT LEVEL)	SEE PAGE
	1	1	**274-6552**	4	CLAMP	
M	2	1	**7X-2537**	4	BOLT (M8X1.25X35-MM)	
	3	1	**8T-4224**	4	WASHER-HARD (8.8X16X2-MM THK)	

M - METRIC PART

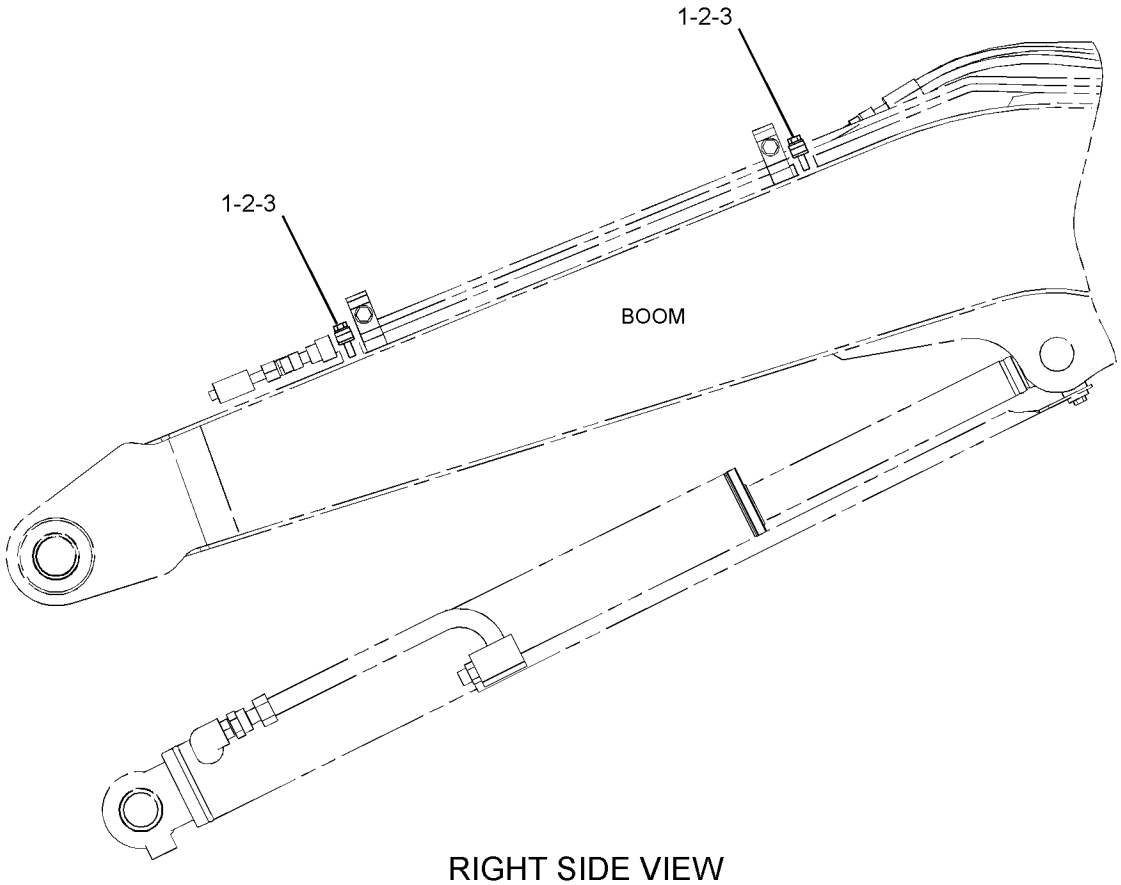

RIGHT SIDE VIEW

GRAPHIC #1 **<END>** g01221262

356-7138 FASTENER GP-LINES

PART OF 379-4721, 379-4722 CONTROL AR-AUXILIARY
AN ATTACHMENT

SMCS-5057 **i04021064**

NOTE	REF NO	GRAPHIC REF	PART NUMBER	QTY	PART NAME 1 2 3 4 5 6 (PRODUCT LEVEL)	SEE PAGE
	1	1	**093-1294**	4	CLAMP	
	2	1	**274-6552**	2	CLAMP	
	3	1	**278-0797**	2	PLATE	
	4	1	**356-7139**	4	PLATE	
M	5	1	**7X-0818**	4	BOLT (M8X1.25X45-MM)	
M	6	1	**7X-2537**	2	BOLT (M8X1.25X35-MM)	
	7	1	**8T-4121**	4	WASHER-HARD (11X21X2.5-MM THK)	
M	8	1	**8T-4182**	2	BOLT (M10X1.5X45-MM)	
M	9	1	**8T-4186**	2	BOLT (M10X1.5X40-MM)	
	10	1	**8T-4224**	6	WASHER-HARD (8.8X16X2-MM THK)	

M - METRIC PART

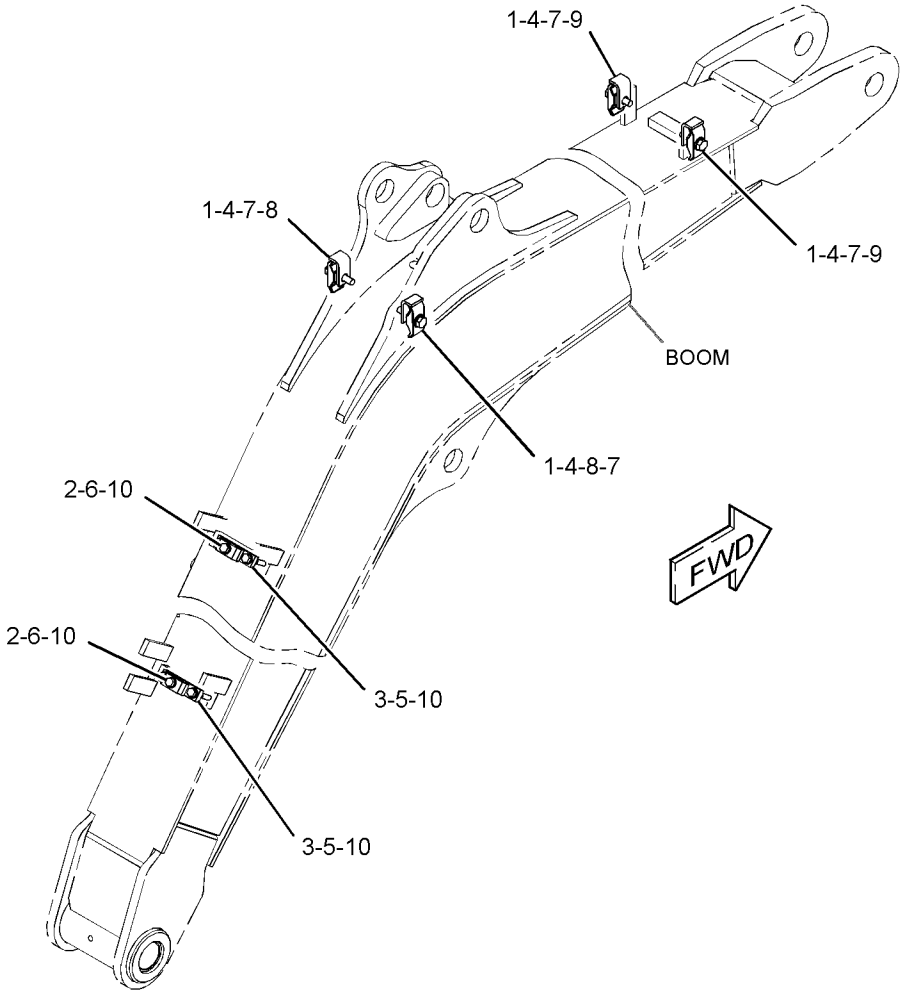

GRAPHIC #1 **<END>** g02210936

347-6081 GAUGE GP-SIGHT–HYDRAULIC OIL LEVEL

PART OF 367-1050 TANK & FILTER GP-HYDRAULIC

SMCS-7479 **i04177750**

NOTE	REF NO	GRAPHIC REF	PART NUMBER	QTY	PART NAME 1 2 3 4 5 6 (PRODUCT LEVEL)	SEE PAGE
	1	1	**347-6082**	2	BLOCK	
M	2	1	**236-3259**	2	BOLT-SPECIAL	
	3	1	**236-3257**	1	PIPE	
	4	1	**6F-6672**	4	SEAL-O-RING	
	5	1	**6F-4855**	4	SEAL-O-RING	

M - METRIC PART

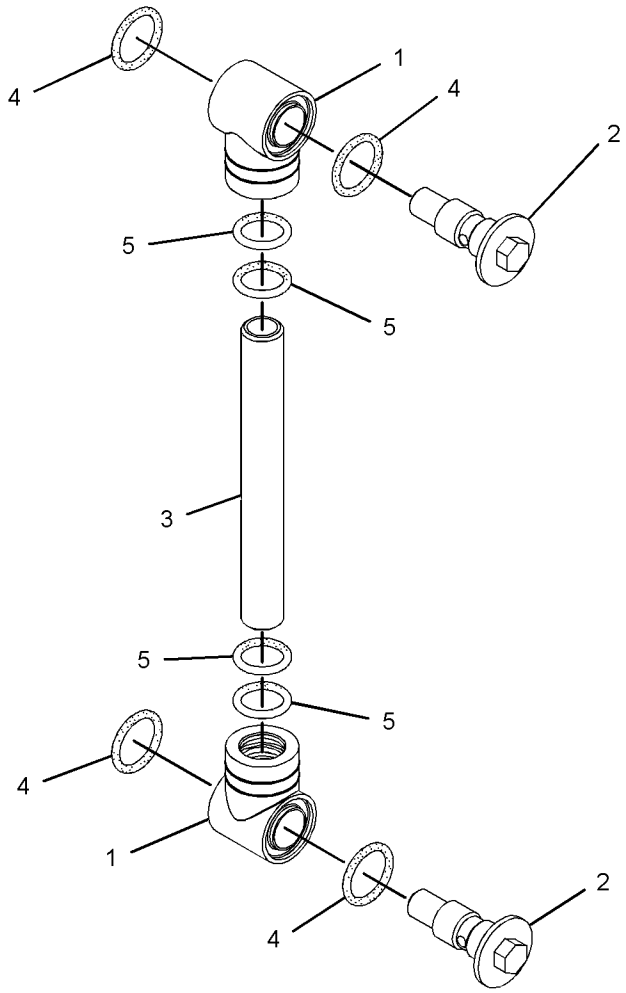

GRAPHIC #1 **<END>** g02270933

379-4713 HYDRAULIC AR

PART OF 376-6672 COMMON AR

SMCS-5050 **i04728056**

NOTE	PART NUMBER	QTY	PART NAME 1 2 3 4 5 6 (PRODUCT LEVEL)	SEE PAGE
Y	*379-4731*	1	LINES GP-FRONT	240
Y	*379-4730*	1	LINES GP-PILOT	252
Y	*379-4729*	1	LINES GP-HYDRAULIC PUMP	246
Y	*376-2012*	1	PUMP & MTG GP-MAIN HYDRAULIC	292
Y	*367-0936*	1	TANK & MTG GP-HYDRAULIC	301

Y - SEPARATE ILLUSTRATION

<END>

379-4681 LINES AR-BOOM

AN ATTACHMENT

SMCS-5057 **i04611688**

NOTE	PART NUMBER	QTY	PART NAME 1 2 3 4 5 6 (PRODUCT LEVEL)	SEE PAGE
Y	*379-4699*	1	LINES GP-FRONT (BOOM CYLINDER)	239

Y - SEPARATE ILLUSTRATION

<END>

379-4720 LINES AR-BOOM—CHECK VALVE

CANNOT BE USED WITH 379-4681—PAGE: 210

AN ATTACHMENT

SMCS-5057 **i05376429**

NOTE	PART NUMBER	QTY	PART NAME 1 2 3 4 5 6 (PRODUCT LEVEL)	SEE PAGE
Y	*382-0560*	1	FILM GP (OVERLOAD WARNING)	552
Y	*379-4733*	1	LINES GP-BOOM CHECK VALVE	221
Y	*422-2948*	1	WIRING GP-OVERLOAD WARNING	117

Y - SEPARATE ILLUSTRATION

<END>

382-1316 LINES AR-BUCKET

CANNOT BE USED WITH 382-1317—PAGE: 211

PART OF 383-5899, 383-5901, 383-5910, 383-5912 STICK AR-HOE

AN ATTACHMENT

SMCS-5057 **i04728098**

NOTE	PART NUMBER	QTY	PART NAME 1 2 3 4 5 6 (PRODUCT LEVEL)	SEE PAGE
Y	*383-0615*	1	LINES GP-BUCKET	226

Y - SEPARATE ILLUSTRATION

<END>

382-1317 LINES AR-BUCKET—LONG STICK

CANNOT BE USED WITH 382-1316—PAGE: 210

PART OF 383-5900, 383-5902, 383-5911, 383-5913 STICK AR-HOE

AN ATTACHMENT

SMCS-5057 **i04728099**

NOTE	PART NUMBER	QTY	PART NAME 1 2 3 4 5 6 (PRODUCT LEVEL)	SEE PAGE
Y	*383-0616*	1	LINES GP-BUCKET	228

Y - SEPARATE ILLUSTRATION

<END>

269-3795 LINES GP-AUXILIARY HYDRAULIC–BOOM

PART OF 379-4715 CONTROL AR-AUXILIARY

SMCS-5057 **i05032861**

NOTE	REF NO	GRAPHIC REF	PART NUMBER	QTY	PART NAME 1 2 3 4 5 6 (PRODUCT LEVEL)	SEE PAGE
	1	1	**093-1290**	8	CLAMP	
	2	1	**282-9320**	1	TUBE AS	
	3	1	**282-9321**	1	TUBE AS	
	4	1	**6V-8398**	4	SEAL-O-RING	
	5	1	**8T-4121**	8	WASHER-HARD (11X21X2.5-MM THK)	
M	6	1	**8T-4182**	4	BOLT (M10X1.5X45-MM)	
M	7	1	**8T-4186**	4	BOLT (M10X1.5X40-MM)	

M - METRIC PART

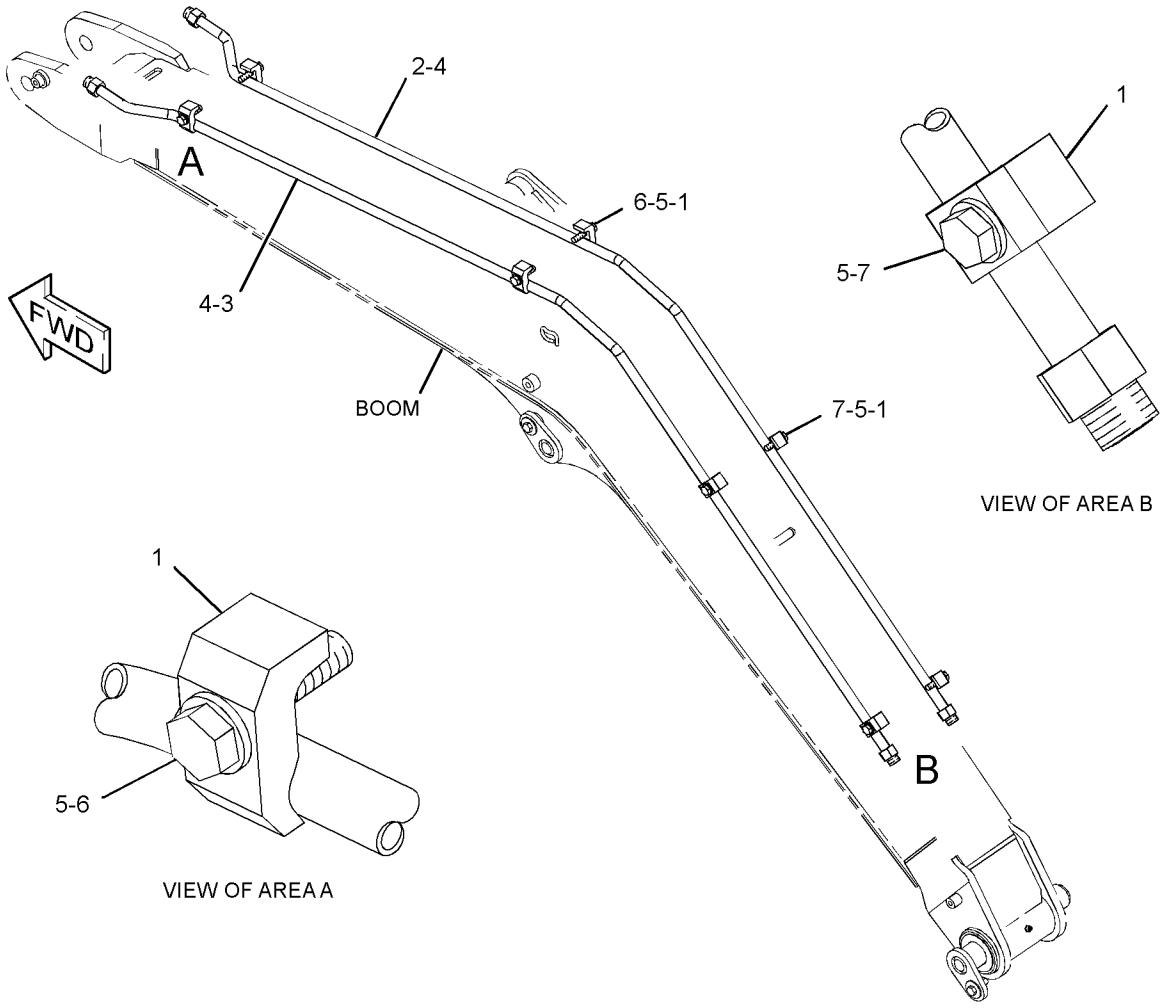

GRAPHIC #1 **<END>** g01221962

269-4194 LINES GP-AUXILIARY HYDRAULIC—STANDARD STICK

PART OF 355-5382 LINES GP-AUXILIARY HYDRAULIC
AN ATTACHMENT

SMCS-5057 **i05218200**

NOTE	REF NO	GRAPHIC REF	PART NUMBER	QTY	PART NAME 1 2 3 4 5 6 (PRODUCT LEVEL)	SEE PAGE
	1	1	**152-5717**	1	CAP-DUST	
	2	1	**152-5718**	1	CAP-DUST	
	3	1	**153-2994**	1	COUPLING (FEMALE)	
	4	1	**153-2995**	1	COUPLING (MALE)	
	5	1	*190-5236*	2	UNION AS	
		1	**2M-9780**	1	SEAL-O-RING	
		1	**6V-8398**	1	SEAL-O-RING	
		1	**163-7050**	1	CONNECTOR	
I	6	1	**292-8349**	2	HOSE AS	
	7	1	**365-6920**	1	BRACKET	
	8	1	**365-6921**	1	BRACKET	
	9	1	**6V-9169**	2	NUT (13/16-16-THD)	
M	10	1	**8T-4179**	4	BOLT (M12X1.75X20-MM)	
	11	1	**8T-4223**	4	WASHER-HARD (13.5X25.5X3-MM THK)	

I - REFER TO HYDRAULIC INFORMATION SYSTEM
M - METRIC PART

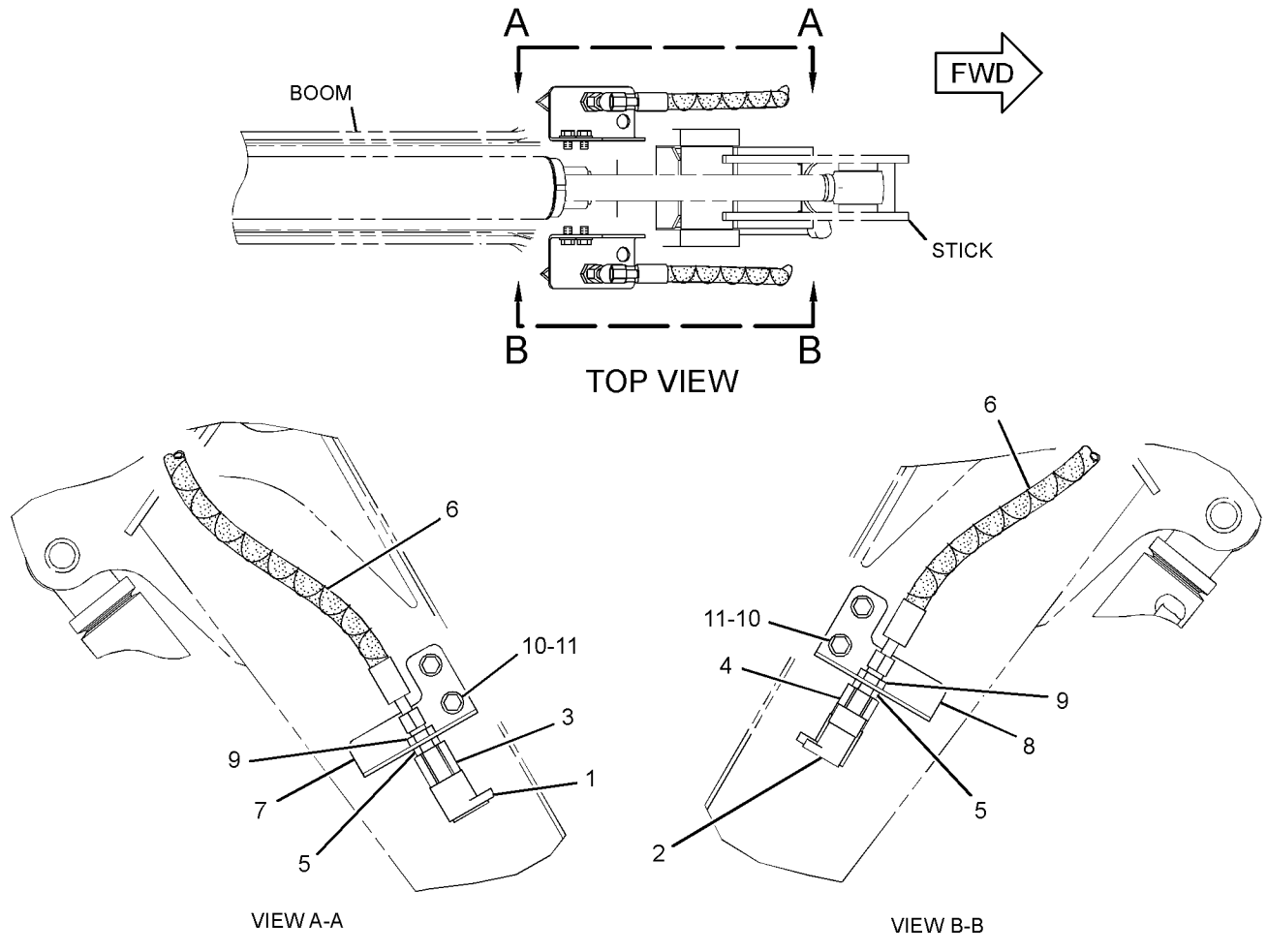

GRAPHIC #1 **<END>** g01223416

292-8308 LINES GP-AUXILIARY HYDRAULIC–2ND AUXILIARY, STANDARD STICK

PART OF 379-4721 CONTROL AR-AUXILIARY AN ATTACHMENT

SMCS-5057 **i04021057**

NOTE	REF NO	GRAPHIC REF	PART NUMBER	QTY	PART NAME 1 2 3 4 5 6 (PRODUCT LEVEL)	SEE PAGE
	1	1	**153-2996**	1	FITTING AS (QUICK DISCONNECT, MALE)	
	2	1	**153-2997**	1	FITTING AS (QUICK DISCONNECT, FEMALE)	
	3	1	**161-2560**	1	CAP-DUST	
	4	1	**161-2561**	1	CAP-DUST	
	5	1	**267-4159**	2	CONNECTOR-BULKHEAD	
I	6	1	**292-8364**	2	HOSE AS	
	7	1	**3K-0360**	2	SEAL-O-RING	
	8	1	**6V-8397**	2	SEAL-O-RING	
	9	1	**6V-9168**	2	NUT (11/16-16-THD)	

I - REFER TO HYDRAULIC INFORMATION SYSTEM

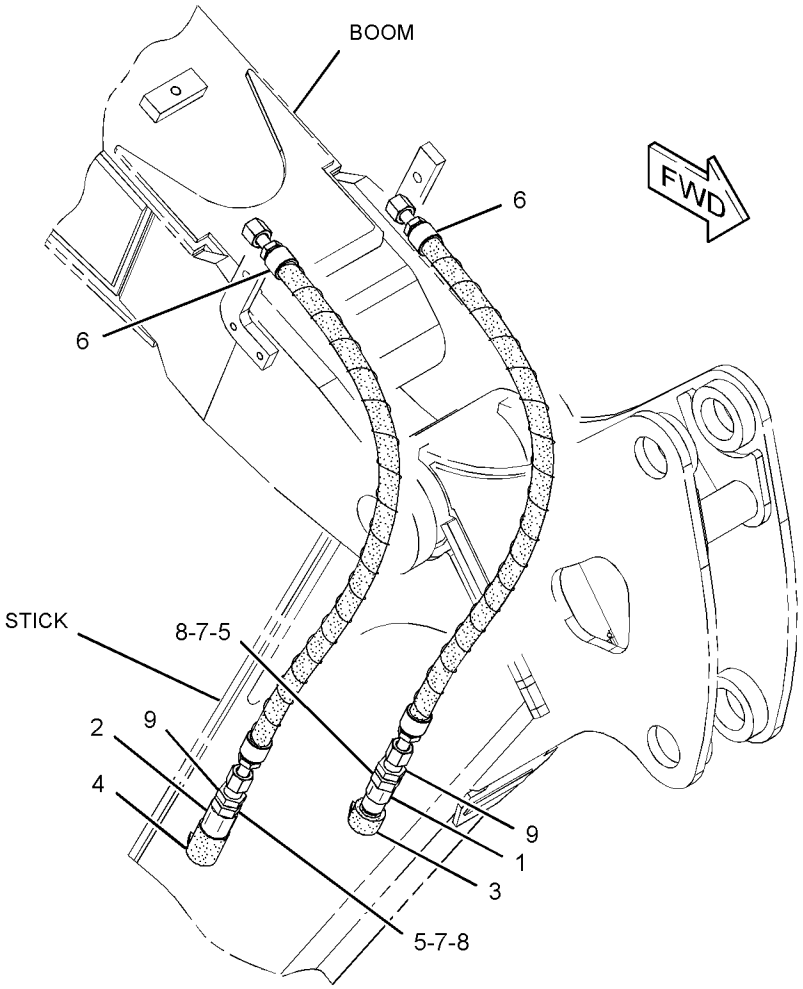

GRAPHIC #1 **<END>** g01311788

292-8310 LINES GP-AUXILIARY HYDRAULIC—2ND AUXILIARY, LONG STICK

PART OF 379-4722 CONTROL AR-AUXILIARY
AN ATTACHMENT

SMCS-5057 **i04021075**

NOTE	REF NO	GRAPHIC REF	PART NUMBER	QTY	PART NAME 1 2 3 4 5 6 (PRODUCT LEVEL)	SEE PAGE
	1	1	**153-2996**	1	FITTING AS (QUICK DISCONNECT, MALE)	
	2	1	**153-2997**	1	FITTING AS (QUICK DISCONNECT, FEMALE)	
	3	1	**161-2560**	1	CAP-DUST	
	4	1	**161-2561**	1	CAP-DUST	
	5	1	**267-4159**	2	CONNECTOR-BULKHEAD	
	6	1	**292-8366**	2	HOSE AS	
	7	1	**3K-0360**	2	SEAL-O-RING	
	8	1	**5P-7462**	2	CLIP (SLOT)	
	9	1	**5P-7463**	2	CLIP (TAB)	
	10	1	**6V-0683**	2	GROMMET	
	11	1	**6V-8397**	2	SEAL-O-RING	
	12	1	**6V-9168**	2	NUT (11/16-16-THD)	
M	13	1	**8T-4192**	2	BOLT (M12X1.75X25-MM)	
	14	1	**8T-4223**	2	WASHER-HARD (13.5X25.5X3-MM THK)	

M - METRIC PART

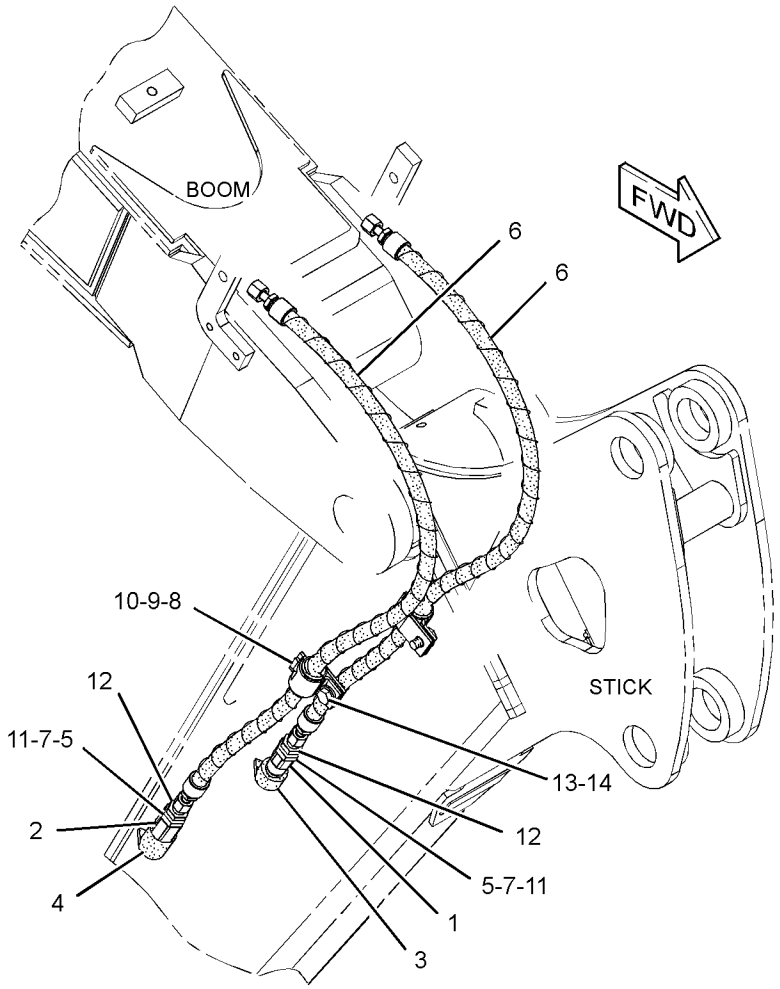

GRAPHIC #1 **<END>** g01320665

355-5382 LINES GP-AUXILIARY HYDRAULIC—STANDARD STICK

PART OF 383-5899, 383-5901, 383-5910, 383-5912 STICK AR-HOE
AN ATTACHMENT

SMCS-5057 **i04020994**

NOTE	PART NUMBER	QTY	PART NAME 1 2 3 4 5 6 (PRODUCT LEVEL)	SEE PAGE
Y	*269-4194*	1	LINES GP-AUXILIARY HYDRAULIC (STANDARD STICK)	213

Y - SEPARATE ILLUSTRATION

<END>

379-4725 LINES GP-AUXILIARY HYDRAULIC—LONG STICK

CANNOT BE USED WITH 355-5382—PAGE: 216
PART OF 383-5900, 383-5902, 383-5911, 383-5913 STICK AR-HOE
AN ATTACHMENT

SMCS-5057 **i04728062**

NOTE	PART NUMBER	QTY	PART NAME 1 2 3 4 5 6 (PRODUCT LEVEL)	SEE PAGE
Y	*379-4738*	1	LINES GP-AUXILIARY HYDRAULIC	217

Y - SEPARATE ILLUSTRATION

<END>

379-4738 LINES GP-AUXILIARY HYDRAULIC—LONG STICK

PART OF 379-4725 LINES GP-AUXILIARY HYDRAULIC
AN ATTACHMENT

SMCS-5057 **i04728075**

NOTE	REF NO	GRAPHIC REF	PART NUMBER	QTY	PART NAME 1 2 3 4 5 6 (PRODUCT LEVEL)	SEE PAGE
	1	1	**152-5717**	1	CAP-DUST	
	2	1	**152-5718**	1	CAP-DUST	
	3	1	**153-2994**	1	COUPLING (FEMALE)	
	4	1	**153-2995**	1	COUPLING (MALE)	
	5	1	*190-5236*	2	UNION AS	
					(EACH INCLUDES)	
		1	**2M-9780**	1	SEAL-O-RING	
		1	**6V-8398**	1	SEAL-O-RING	
		1	**163-7050**	1	CONNECTOR	
I	6	1	**292-8353**	2	HOSE AS	
	7	1	**365-6920**	1	BRACKET	
	8	1	**365-6921**	1	BRACKET	
	9	1	**6V-1249**	2	GROMMET (22-MM ID)	
	10	1	**6V-9169**	2	NUT (13/16-16-THD)	
	11	1	**8C-7534**	2	CLIP	
M	12	1	**8T-4179**	4	BOLT (M12X1.75X20-MM)	
M	13	1	**8T-4192**	2	BOLT (M12X1.75X25-MM)	
	14	1	**8T-4223**	6	WASHER-HARD (13.5X25.5X3-MM THK)	

I - REFER TO HYDRAULIC INFORMATION SYSTEM
M - METRIC PART

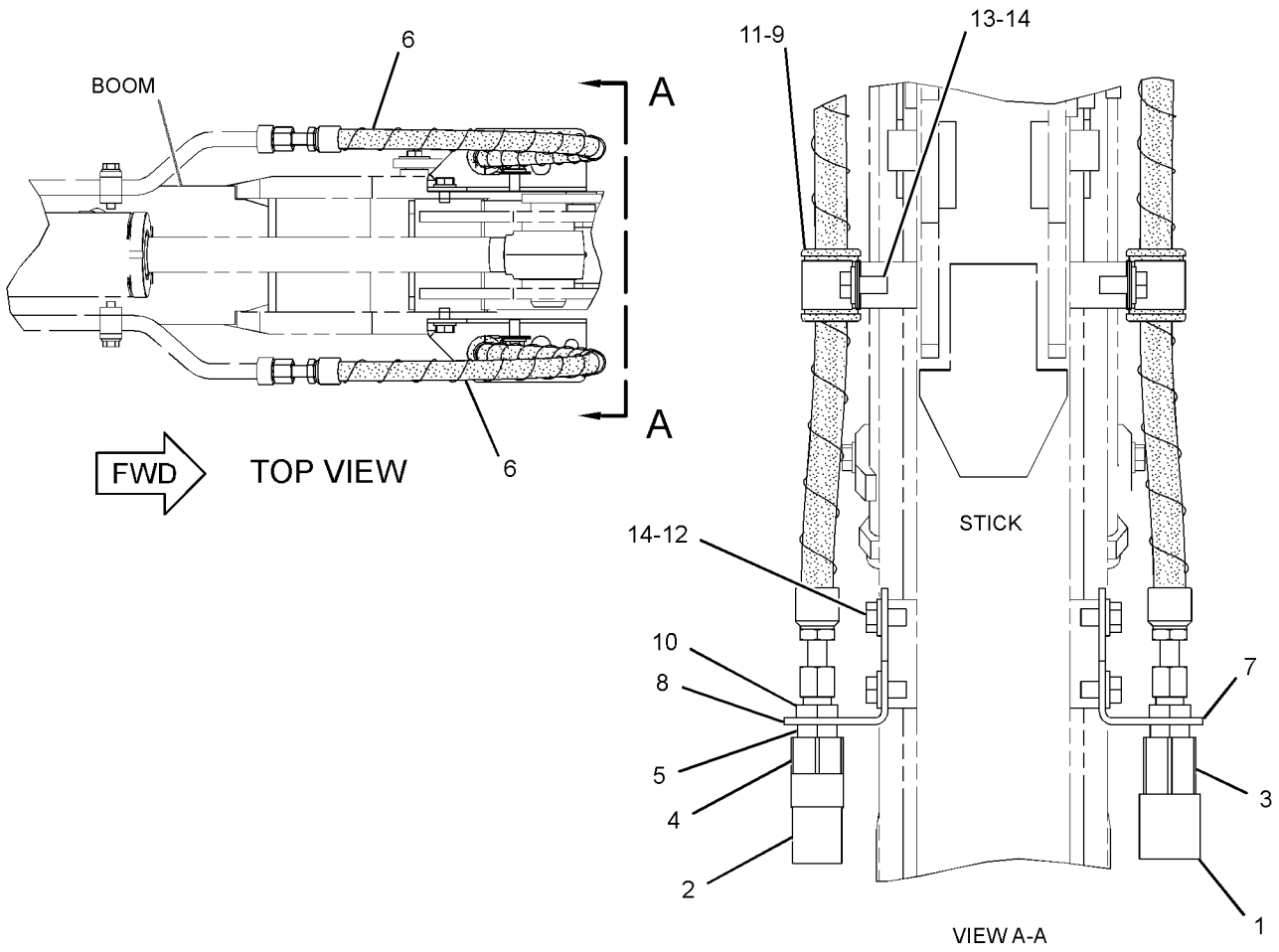

GRAPHIC #1 **<END>** g02858641

380-2456 LINES GP-AUXILIARY HYDRAULIC–2ND AUXILIARY, BOOM

PART OF 379-4721, 379-4722 CONTROL AR-AUXILIARY AN ATTACHMENT

SMCS-5057 **i04728079**

NOTE	REF NO	GRAPHIC REF	PART NUMBER	QTY	PART NAME 1 2 3 4 5 6 (PRODUCT LEVEL)	SEE PAGE
	1	1	**282-9328**	1	TUBE AS	
	2	1	**375-8117**	1	TUBE AS	
	3	1	**6V-8397**	4	SEAL-O-RING	

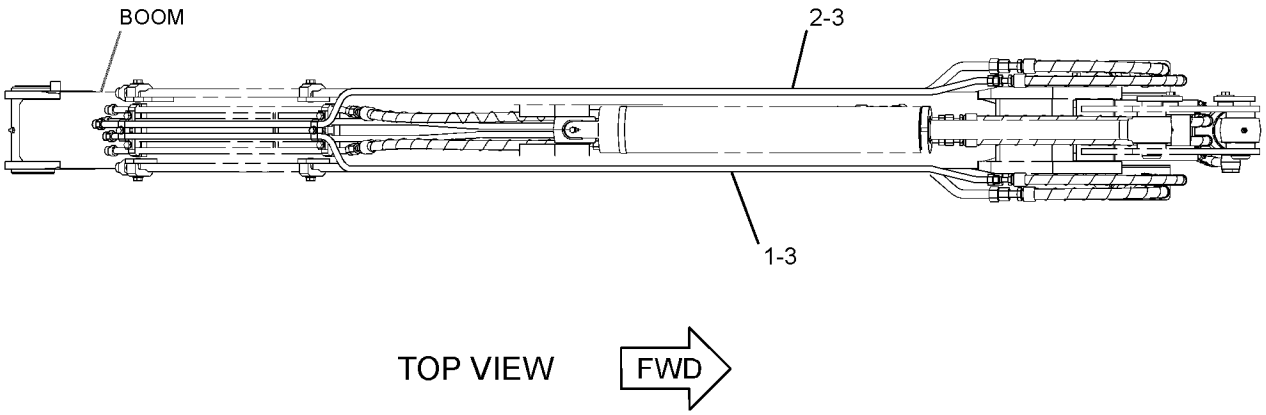

GRAPHIC #1 **<END>** g02858556

280-7609 LINES GP-BLADE–ANGLE

PART OF 377-8930 BLADE AR-ANGLING
AN ATTACHMENT

SMCS-5057 **i04015432**

NOTE	REF NO	GRAPHIC REF	PART NUMBER	QTY	PART NAME 1 2 3 4 5 6 (PRODUCT LEVEL)	SEE PAGE
	1	1	*148-8353*	1	ELBOW AS	
		1	**3J-1907**	1	SEAL-O-RING	
		1	**6V-8397**	1	SEAL-O-RING	
		1	**6V-9001**	1	ELBOW	
	2	1	*148-8378*	3	ELBOW AS	
					(EACH INCLUDES)	
		1	**3J-1907**	1	SEAL-O-RING	
		1	**6V-8397**	1	SEAL-O-RING	
		1	**6V-8724**	1	ELBOW	
I	3	1	**294-7850**	1	HOSE AS	
I	4	1	**294-7851**	1	HOSE AS	

I - REFER TO HYDRAULIC INFORMATION SYSTEM

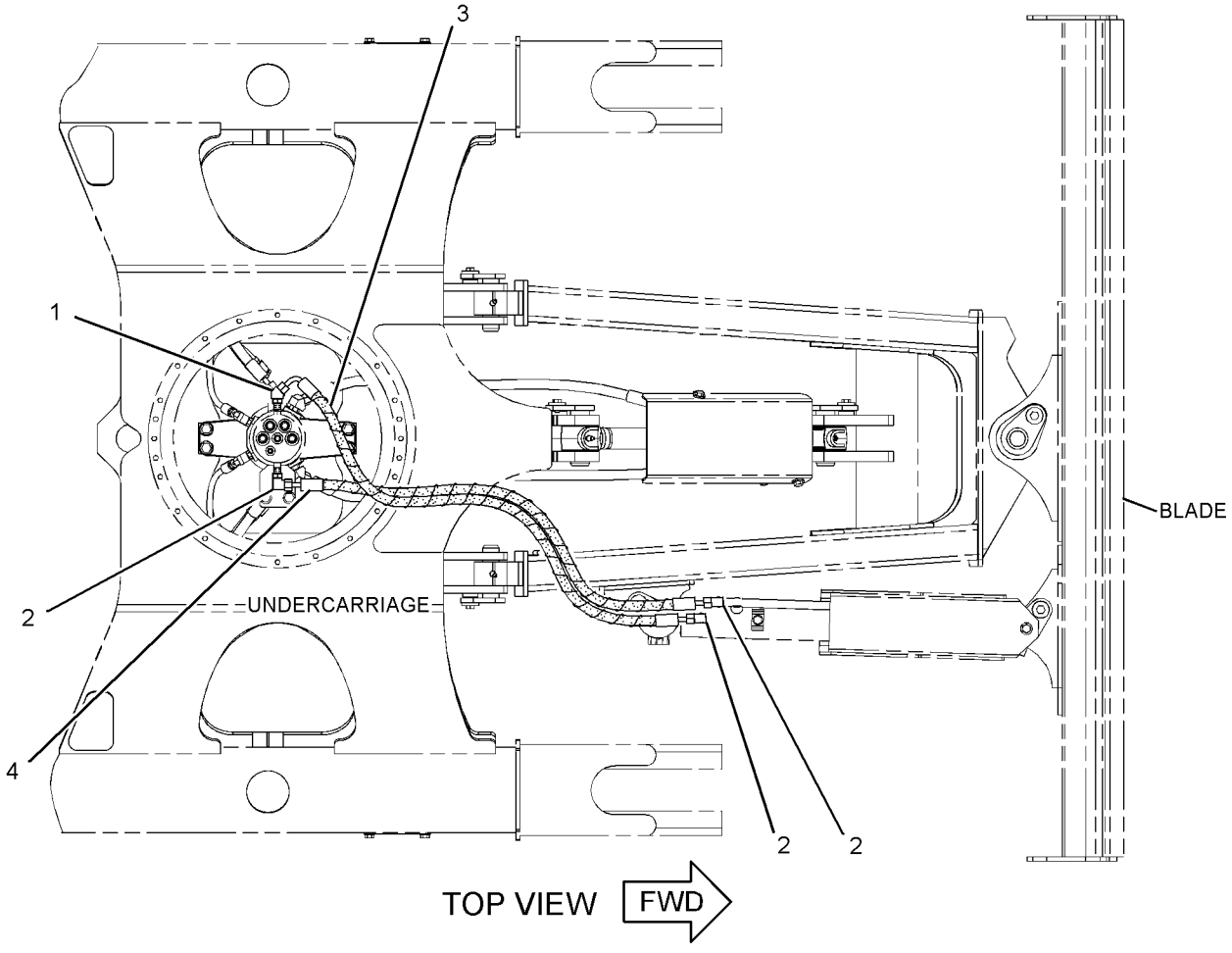

GRAPHIC #1 **<END>** g01354626

292-8290 LINES GP-BLADE–RAISE, LOWER

PART OF 377-8930 BLADE AR-ANGLING, 377-8920 BLADE AR-STRAIGHT AN ATTACHMENT

SMCS-5057 **i04015471**

NOTE	REF NO	GRAPHIC REF	PART NUMBER	QTY	PART NAME 1 2 3 4 5 6 (PRODUCT LEVEL)	SEE PAGE
	1	1	**267-4279**	1	COVER	
I	2	1	**292-8335**	1	HOSE AS	
I	3	1	**292-8336**	1	HOSE AS	
	4	1	*148-8336*	1	CONNECTOR AS	
		1	**3J-1907**	1	SEAL-O-RING	
		1	**6V-8397**	1	SEAL-O-RING	
		1	**6V-8636**	1	CONNECTOR	
	5	1	*148-8353*	3	ELBOW AS	
					(EACH INCLUDES)	
		1	**3J-1907**	1	SEAL-O-RING	
		1	**6V-8397**	1	SEAL-O-RING	
		1	**6V-9001**	1	ELBOW	
	6	1	**7X-7729**	2	WASHER (11X25X3-MM THK)	
M	7	1	**8T-4137**	2	BOLT (M10X1.5X20-MM)	

I - REFER TO HYDRAULIC INFORMATION SYSTEM
M - METRIC PART

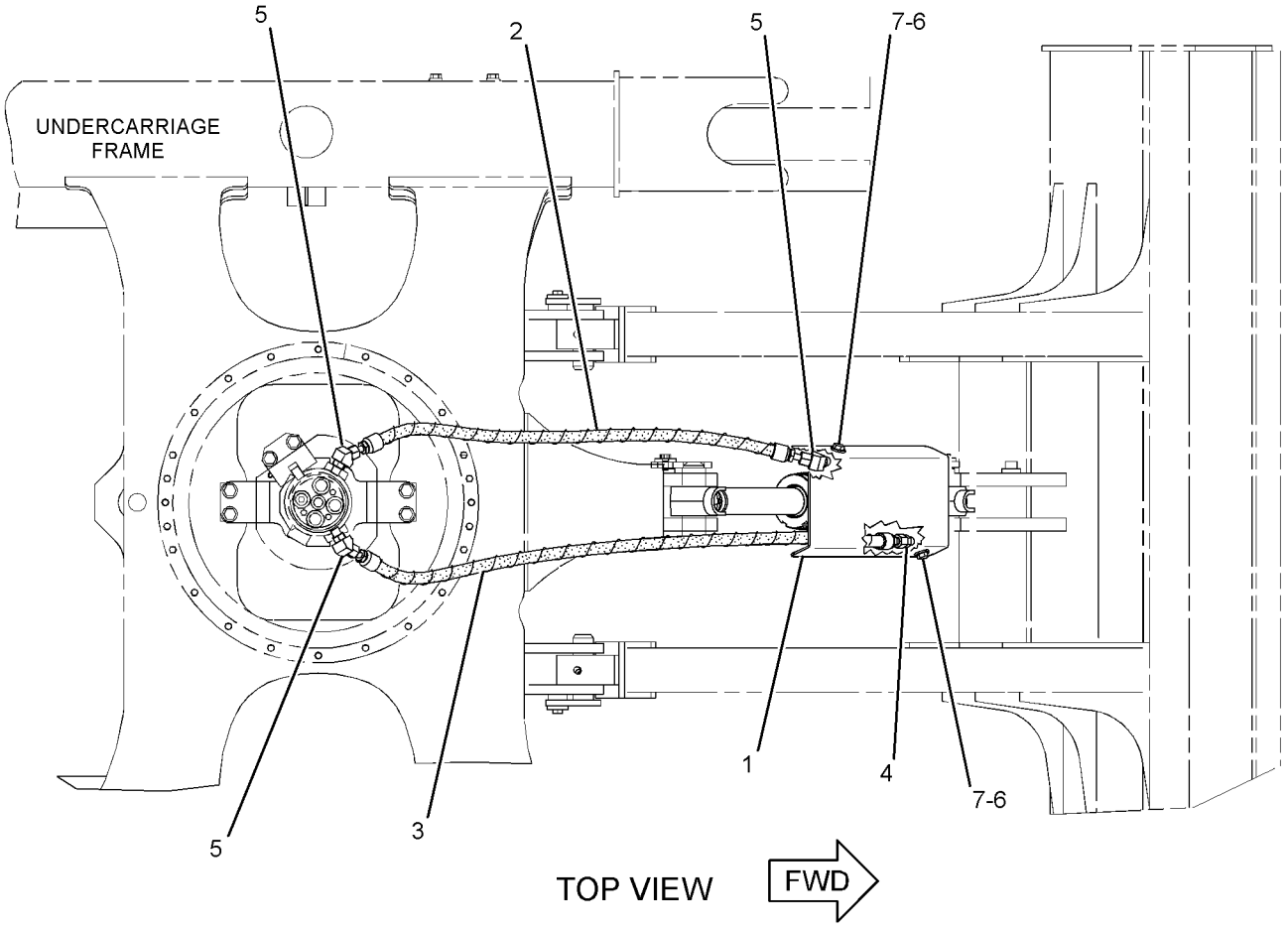

GRAPHIC #1 **<END>** g01348156

379-4733 LINES GP-BOOM CHECK VALVE

S/N: RKY1-1509
PART OF 379-4720 LINES AR-BOOM
AN ATTACHMENT

SMCS-5057, 5453 **i05223454**

NOTE	REF NO	GRAPHIC REF	PART NUMBER	QTY	PART NAME 1 2 3 4 5 6 (PRODUCT LEVEL)	SEE PAGE
	1	1	**7K-1181**	4	STRAP-CABLE	
	2	1	**9F-2167**	1	SCREW-PURGE (3/8-24X1.164-IN)	
	3	1	**093-1290**	1	CLAMP	
	4	1	**278-0800**	1	TUBE AS	
	5	1	**279-4737**	1	STRAP-CABLE (GREEN)	
	6	1	**279-4738**	1	STRAP-CABLE (PURPLE)	
J	7	1	**288-8570**	1	VALVE GP-LOAD CONTROL	
	8	1	**307-8151**	1	PLATE AS	
	10	1	**307-8153**	2	SUPPORT AS	
	11	1	**307-8156**	1	TUBE AS	
	12	1	**308-4577**	1	SUPPORT AS	
I	13	1	**397-6699**	1	HOSE AS	
I	14	1	**381-0565**	1	HOSE AS	
I	15	1	**397-6742**	1	HOSE AS	
	16	1	*148-8328*	1	CONNECTOR AS	
		1	**3D-2824**	1	SEAL-O-RING	
		1	**6V-8398**	1	SEAL-O-RING	
		1	**6V-8633**	1	CONNECTOR	
	17	1	*148-8336*	2	CONNECTOR AS	
					(EACH INCLUDES)	
		1	**3J-1907**	1	SEAL-O-RING	
		1	**6V-8397**	1	SEAL-O-RING	
		1	**6V-8636**	1	CONNECTOR	
	18	1	*148-8340*	1	CONNECTOR AS	
		1	**3K-0360**	1	SEAL-O-RING	
		1	**6V-8398**	1	SEAL-O-RING	
		1	**6V-8639**	1	CONNECTOR	
	19	1	*148-8368*	1	ELBOW AS	
		1	**3J-1907**	1	SEAL-O-RING	
		1	**4J-5477**	1	SEAL-O-RING	
		1	**6V-8627**	1	ELBOW	
	20	1	*150-4029*	1	TEE AS	
		1	**3J-7354**	1	SEAL-O-RING	
		1	**4J-5477**	2	SEAL-O-RING	
		1	**6V-8780**	1	TEE-FACE SEAL	
	21	1	**152-3411**	1	ELBOW	
	22	1	*164-9869*	1	CONNECTOR AS	
		1	**3J-1907**	1	SEAL-O-RING	
		1	**6V-8397**	1	SEAL-O-RING	
		1	**9X-2297**	1	CONNECTOR	
	23	1	**208-0616**	1	TEE	
	24	1	**3D-2824**	1	SEAL-O-RING	
	25	1	**4S-1962**	1	CLIP	
	26	1	**6V-8397**	2	SEAL-O-RING	
	27	1	**8T-4121**	10	WASHER-HARD (11X21X2.5-MM THK)	
M	28	1	**8T-4133**	2	NUT (M10X1.5-THD)	
M	29	1	**8T-4137**	3	BOLT (M10X1.5X20-MM)	
M	30	1	**8T-4182**	1	BOLT (M10X1.5X45-MM)	
M	31	1	**8T-4196**	2	BOLT (M10X1.5X35-MM)	
M	32	1	**8T-6466**	2	BOLT (M10X1.5X60-MM)	
					AVAILABLE REPAIR KIT(S):	
J			**170-4635**	1	KIT-SEAL (LOAD CONTROL VALVE)	

I - REFER TO HYDRAULIC INFORMATION SYSTEM
J - KIT MARKED J SERVICES PARTS MARKED J
M - METRIC PART

379-4733 **LINES GP-BOOM CHECK VALVE (*contd.*)** **i05223454**

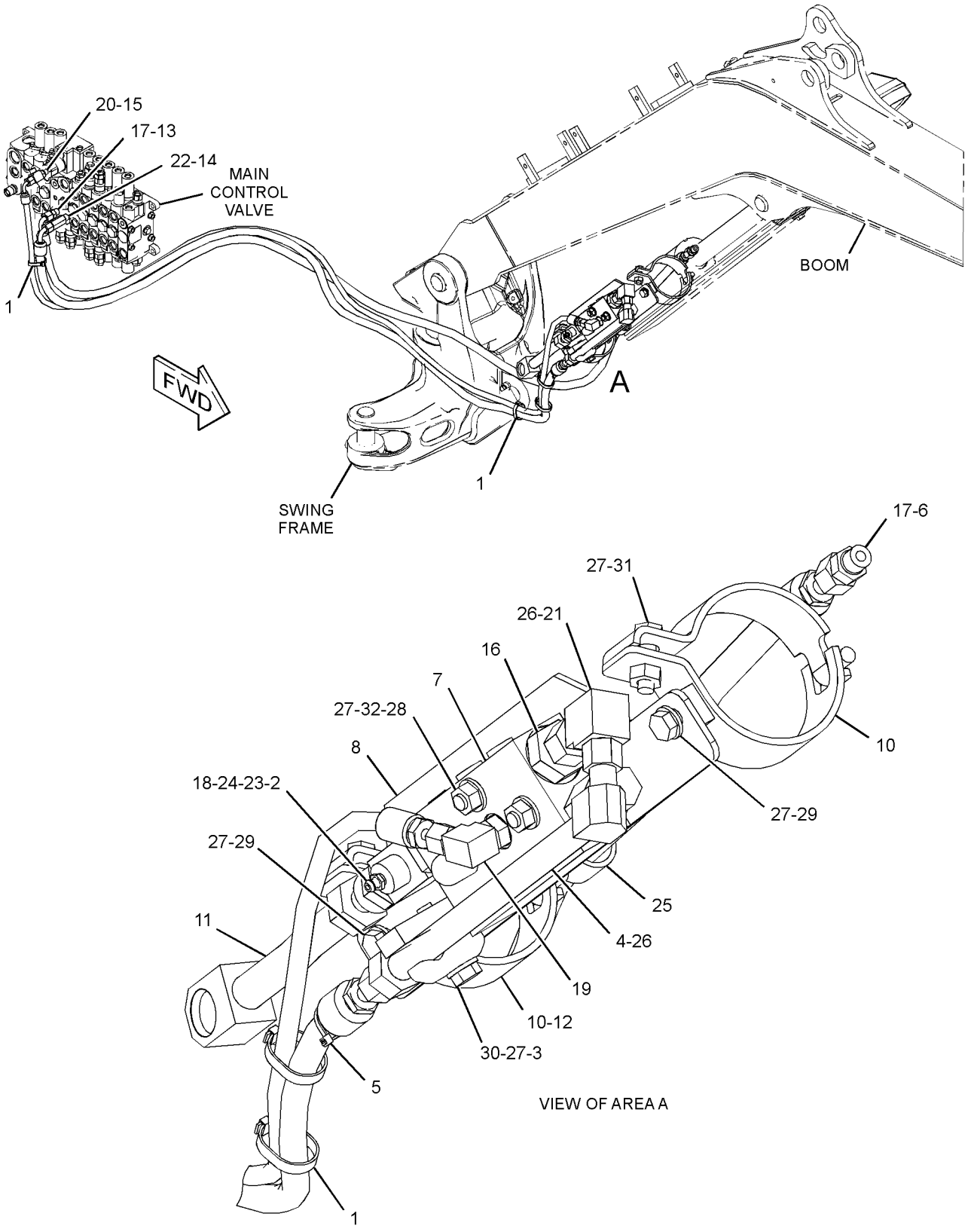

GRAPHIC #1 **<END>** g03426919

379-4733 LINES GP-BOOM CHECK VALVE

S/N: RKY1510-UP
PART OF 379-4720 LINES AR-BOOM
AN ATTACHMENT

SMCS-5057, 5453 **i05435067**

NOTE	REF NO	GRAPHIC REF	PART NUMBER	QTY	PART NAME 1 2 3 4 5 6 (PRODUCT LEVEL)	SEE PAGE
	1	1	**7K-1181**	4	STRAP-CABLE	
	2	1	**9F-2167**	1	SCREW-PURGE (3/8-24X1.164-IN)	
	3	1	**093-1290**	1	CLAMP	
	4	1	**278-0800**	1	TUBE AS	
	5	1	**279-4737**	1	STRAP-CABLE (GREEN)	
	6	1	**279-4738**	1	STRAP-CABLE (PURPLE)	
	7	1	**307-8151**	1	PLATE AS	
	8	1	**307-8152**	1	SUPPORT	
	9	1	**308-4577**	1	SUPPORT AS	
C	10	1	**344-7391**	1	SENSOR GP-PRESSURE (BOWL CYLINDER, ROD END)	
I	11	1	**381-0565**	1	HOSE AS	
I	12	1	**397-6699**	1	HOSE AS	
I	13	1	**397-6742**	1	HOSE AS	
C	14	1	**417-1094**	1	VALVE GP-CHECK (PILOT OPERATED)	
C	15	1	**426-0195**	1	TUBE AS	
C	16	1	**426-0196**	2	SUPPORT AS	
	17	1	*148-8328*	1	CONNECTOR AS	
		1	**3D-2824**	1	SEAL-O-RING	
		1	**6V-8398**	1	SEAL-O-RING	
		1	**6V-8633**	1	CONNECTOR	
	18	1	*148-8336*	2	CONNECTOR AS	
					(EACH INCLUDES)	
		1	**3J-1907**	1	SEAL-O-RING	
		1	**6V-8397**	1	SEAL-O-RING	
		1	**6V-8636**	1	CONNECTOR	
	19	1	*148-8340*	1	CONNECTOR AS	
		1	**3K-0360**	1	SEAL-O-RING	
		1	**6V-8398**	1	SEAL-O-RING	
		1	**6V-8639**	1	CONNECTOR	
	20	1	*148-8368*	1	ELBOW AS	
		1	**3J-1907**	1	SEAL-O-RING	
		1	**4J-5477**	1	SEAL-O-RING	
		1	**6V-8627**	1	ELBOW	
	21	1	*150-4029*	1	TEE AS	
		1	**3J-7354**	1	SEAL-O-RING	
		1	**4J-5477**	2	SEAL-O-RING	
		1	**6V-8780**	1	TEE-FACE SEAL	
	22	1	**152-3411**	1	ELBOW	
	23	1	*164-9869*	1	CONNECTOR AS	
		1	**3J-1907**	1	SEAL-O-RING	
		1	**6V-8397**	1	SEAL-O-RING	
		1	**9X-2297**	1	CONNECTOR	
	24	1	**208-0616**	1	TEE	
C	25	1	*241-6215*	1	ELBOW AS	
		1	**3J-1907**	1	SEAL-O-RING	
		1	**6V-8076**	1	ELBOW	
	26	1	**3D-2824**	1	SEAL-O-RING	
C	27	1	**3J-1907**	1	SEAL-O-RING	
	28	1	**4S-1962**	1	CLIP	
	29	1	**6V-8397**	2	SEAL-O-RING	
	30	1	**8T-4121**	10	WASHER-HARD (11X21X2.5-MM THK)	
M	31	1	**8T-4133**	2	NUT (M10X1.5-THD)	
M	32	1	**8T-4137**	3	BOLT (M10X1.5X20-MM)	
M	33	1	**8T-4182**	1	BOLT (M10X1.5X45-MM)	
M	34	1	**8T-4196**	2	BOLT (M10X1.5X35-MM)	
M	35	1	**8T-6466**	2	BOLT (M10X1.5X60-MM)	

379-4733 **LINES GP-BOOM CHECK VALVE (*contd.*)** **i05435067**

NOTE	REF NO	GRAPHIC REF	PART NUMBER	QTY	PART NAME 1 2 3 4 5 6 (PRODUCT LEVEL)	SEE PAGE

C - CHANGE FROM PREVIOUS TYPE
I - REFER TO HYDRAULIC INFORMATION SYSTEM
M - METRIC PART

379-4733 **LINES GP-BOOM CHECK VALVE (*contd.*)** **i05435067**

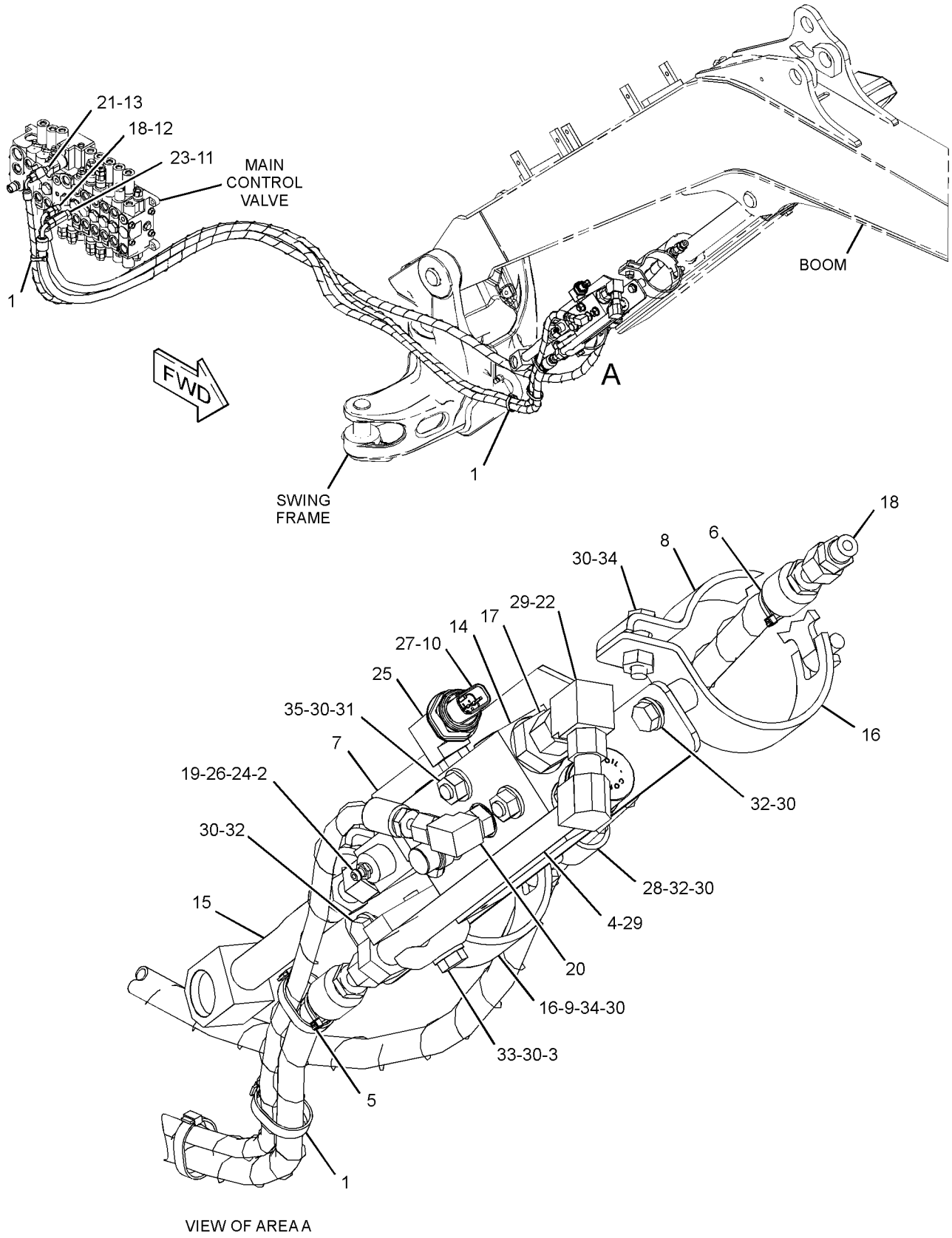

VIEW OF AREA A

GRAPHIC #1 **<END>** g03531387

383-0615 LINES GP-BUCKET—LONG STICK

PART OF 382-1316 LINES AR-BUCKET

AN ATTACHMENT

SMCS-5057 **i04728104**

NOTE	REF NO	GRAPHIC REF	PART NUMBER	QTY	PART NAME 1 2 3 4 5 6 (PRODUCT LEVEL)	SEE PAGE
	1	1	**282-9326**	1	TUBE AS	
	2	1	**282-9327**	1	TUBE AS	
	3	1	**311-7937**	1	CLIP	
I	4	1	**382-2547**	1	HOSE AS	
I	5	1	**382-2548**	1	HOSE AS	
	6	1	*148-8336*	2	CONNECTOR AS	
					(EACH INCLUDES)	
		1	**3J-1907**	1	SEAL-O-RING	
		1	**6V-8397**	1	SEAL-O-RING	
		1	**6V-8636**	1	CONNECTOR	
	7	1	**1S-0994**	1	CLIP	
	8	1	**298-7736**	1	COLLAR	
	9	1	**6V-8397**	4	SEAL-O-RING	
	10	1	**8T-4121**	2	WASHER-HARD (11X21X2.5-MM THK)	
M	11	1	**8T-4136**	1	BOLT (M10X1.5X25-MM)	
M	12	1	**8T-4195**	1	BOLT (M10X1.5X30-MM)	

I - REFER TO HYDRAULIC INFORMATION SYSTEM
M - METRIC PART

383-0615 **LINES GP-BUCKET (*contd.*)** **i04728104**

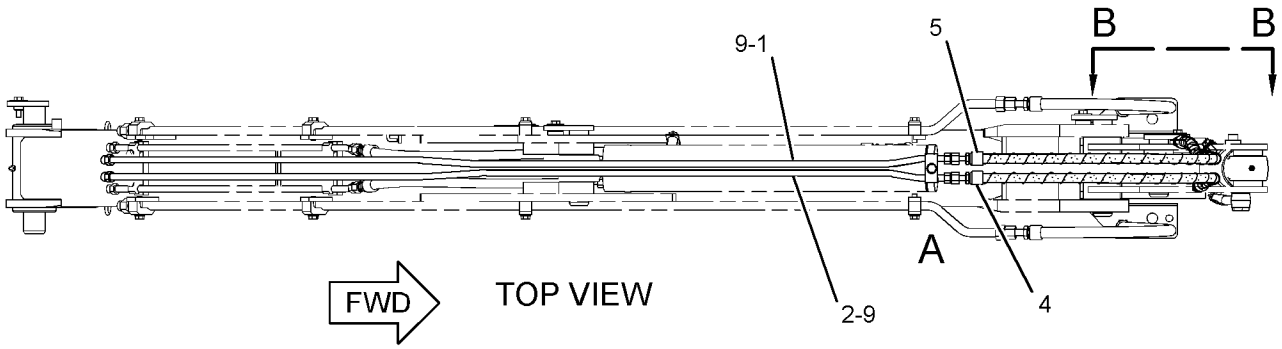

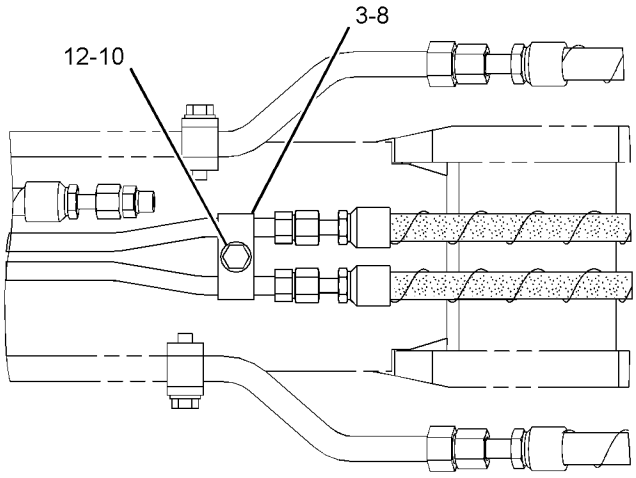

VIEW OF AREA A

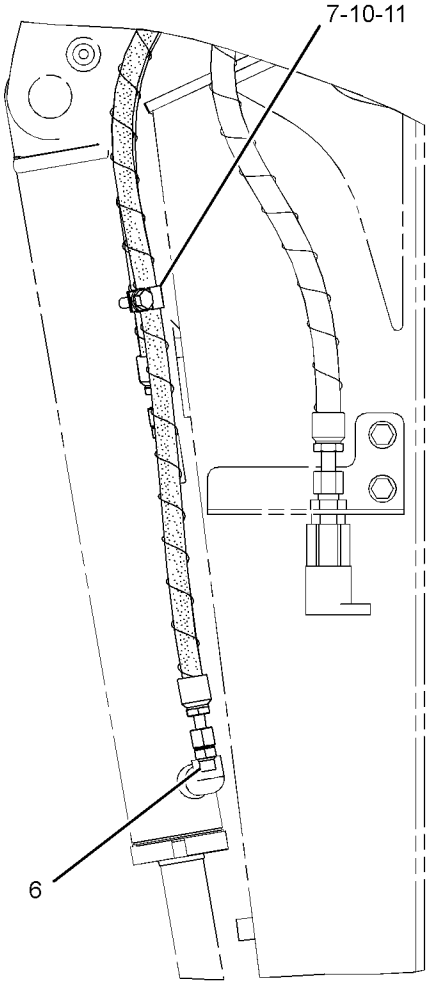

VIEW B-B

GRAPHIC #1 **<END>** g02857599

383-0616 LINES GP-BUCKET—LONG STICK

PART OF 382-1317 LINES AR-BUCKET

AN ATTACHMENT

SMCS-5057 **i04728105**

NOTE	REF NO	GRAPHIC REF	PART NUMBER	QTY	PART NAME 1 2 3 4 5 6 (PRODUCT LEVEL)	SEE PAGE
	1	1	**282-9326**	1	TUBE AS	
	2	1	**282-9327**	1	TUBE AS	
	3	1	**311-7937**	1	CLIP	
I	4	1	**382-2558**	1	HOSE AS	
I	5	1	**382-2559**	1	HOSE AS	
	6	1	*148-8336*	2	CONNECTOR AS	
					(EACH INCLUDES)	
		1	**3J-1907**	1	SEAL-O-RING	
		1	**6V-8397**	1	SEAL-O-RING	
		1	**6V-8636**	1	CONNECTOR	
	7	1	**1S-0994**	1	CLIP	
	8	1	**298-7736**	1	COLLAR	
	9	1	**6V-8397**	4	SEAL-O-RING	
	10	1	**8T-4121**	2	WASHER-HARD (11X21X2.5-MM THK)	
M	11	1	**8T-4136**	1	BOLT (M10X1.5X25-MM)	
M	12	1	**8T-4195**	1	BOLT (M10X1.5X30-MM)	

I - REFER TO HYDRAULIC INFORMATION SYSTEM
M - METRIC PART

383-0616 **LINES GP-BUCKET (*contd.*)** **i04728105**

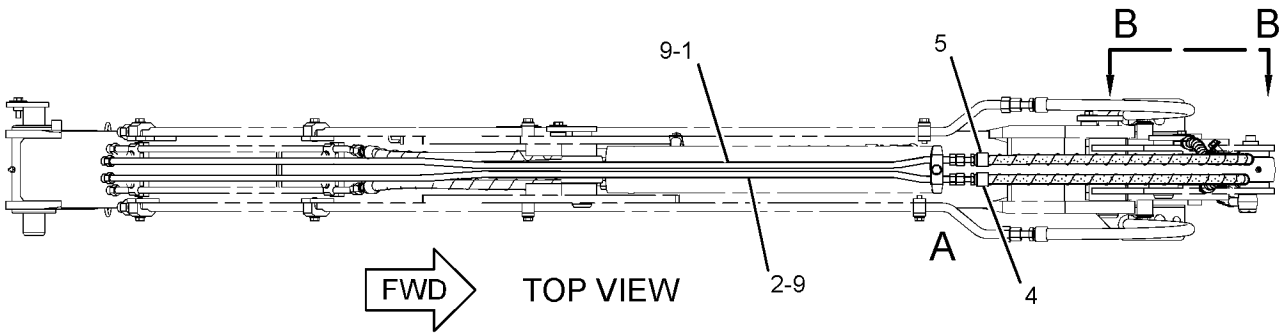

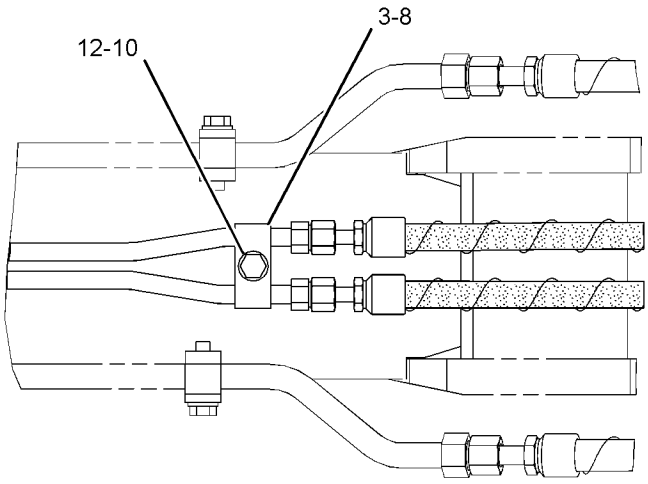

VIEW OF AREA A

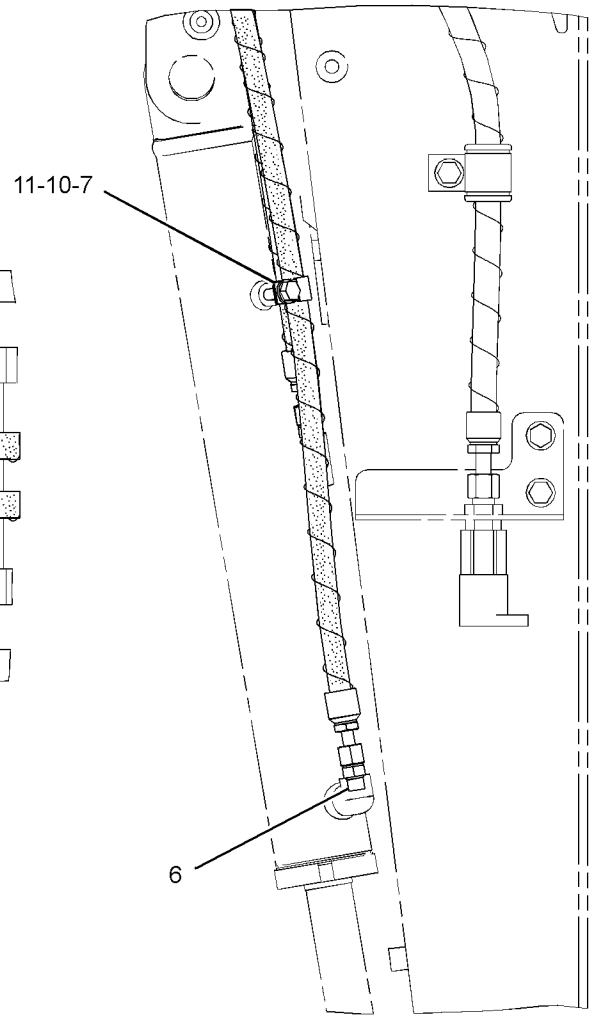

VIEW B-B

GRAPHIC #1 **<END>** g02856516

252-6793 LINES GP-BUCKET CYLINDER

PART OF 279-4325 BUCKET AR-TILTABLE

AN ATTACHMENT

SMCS-5057, 5457 **i02595096**

NOTE	REF NO	GRAPHIC REF	PART NUMBER	QTY	PART NAME 1 2 3 4 5 6 (PRODUCT LEVEL)	SEE PAGE
	1	1	**5P-1404**	2	ADAPTER	
	2	1	**7K-1181**	1	STRAP-CABLE	
	3	1	**151-4841**	1	BLOCK	
	4	1	**153-2995**	1	COUPLING (MALE)	
	5	1	*164-9639*	2	CONNECTOR AS	
					(EACH INCLUDES)	
		1	**3J-1907**	1	SEAL-O-RING	
		1	**4J-5477**	1	SEAL-O-RING	
		1	**148-7925**	1	CONNECTOR	
I	6	1	**251-2025**	1	HOSE AS	
I	7	1	**251-2026**	1	HOSE AS	
	8	1	**153-2994**	1	COUPLING (FEMALE)	
	9	1	**1S-0994**	2	CLIP	
	10	1	**2M-9780**	2	SEAL-O-RING	
	11	1	**6V-8398**	2	SEAL-O-RING	
	12	1	**8T-4121**	1	WASHER-HARD (11X21X2.5-MM THK)	
M	13	1	**8T-4137**	1	BOLT (M10X1.5X20-MM)	

I - REFER TO HYDRAULIC INFORMATION SYSTEM
M - METRIC PART

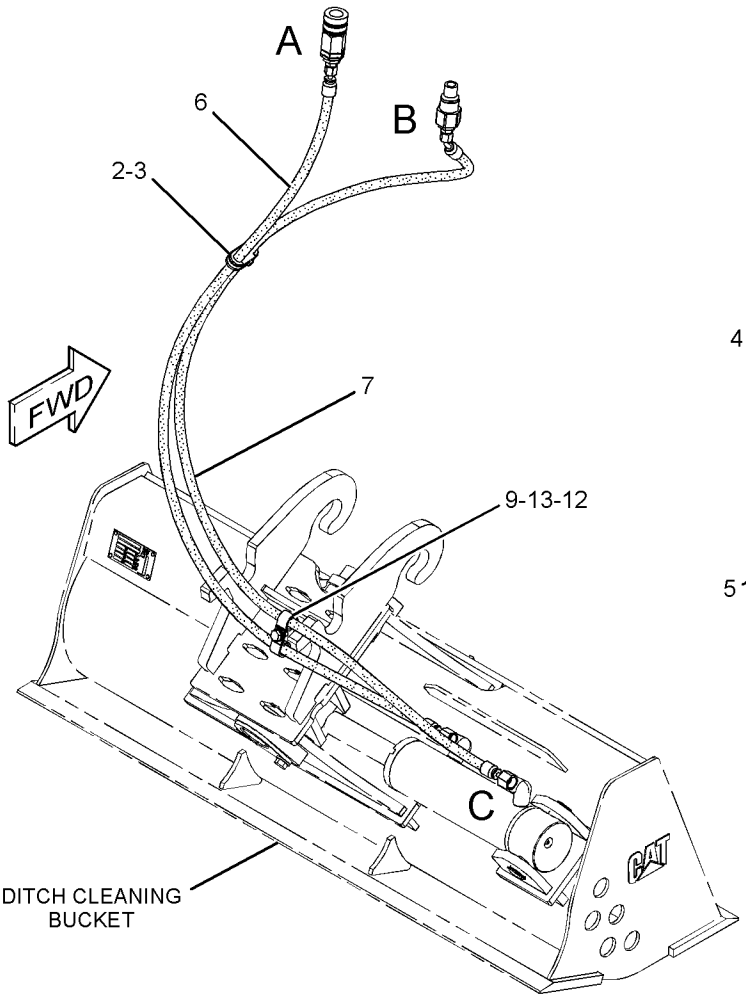

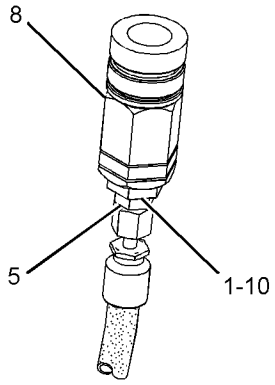

VIEW OF AREA A

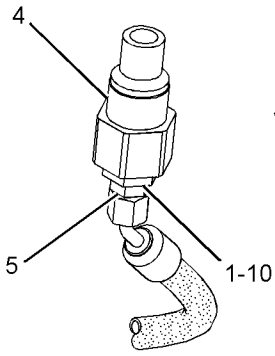

VIEW OF AREA B

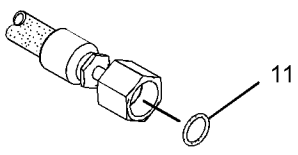

VIEW OF AREA C

GRAPHIC #1 **<END>** g01296148

359-6059 LINES GP-CONNECTING–RH

PART OF 309-1917, 309-1938 THUMB GP
AN ATTACHMENT

SMCS-5057 **i05426582**

NOTE	REF NO	GRAPHIC REF	PART NUMBER	QTY	PART NAME 1 2 3 4 5 6 (PRODUCT LEVEL)	SEE PAGE
	1	1	**280-2652**	1	VALVE-BALL (HYDRAULIC OIL)	
	2	1	**359-5545**	1	BRACKET	
	3	1	**359-5548**	1	BRACKET	
I	4	1	**361-5149**	1	HOSE AS	
	5	1	**3J-1907**	1	SEAL-O-RING	
	6	1	**3K-0360**	2	SEAL-O-RING	
	7	1	**6V-1889**	1	CLIP	
M	8	1	**6V-3668**	2	BOLT (M12X1.75X30-MM)	
	9	1	**6V-8398**	5	SEAL-O-RING	
	10	1	**6V-8639**	1	CONNECTOR	
	11	1	**6V-9837**	1	TEE-SWIVEL	
	12	1	**6V-9851**	1	ELBOW	
	13	1	**6V-9873**	1	CONNECTOR	
	14	1	**7X-3164**	1	ADAPTER-SWIVEL	
	15	1	**8T-4121**	2	WASHER-HARD (11X21X2.5-MM THK)	
M	16	1	**8T-4133**	1	NUT (M10X1.5-THD)	
M	17	1	**8T-4136**	1	BOLT (M10X1.5X25-MM)	
	18	1	**8T-4223**	2	WASHER-HARD (13.5X25.5X3-MM THK)	

I - REFER TO HYDRAULIC INFORMATION SYSTEM
M - METRIC PART

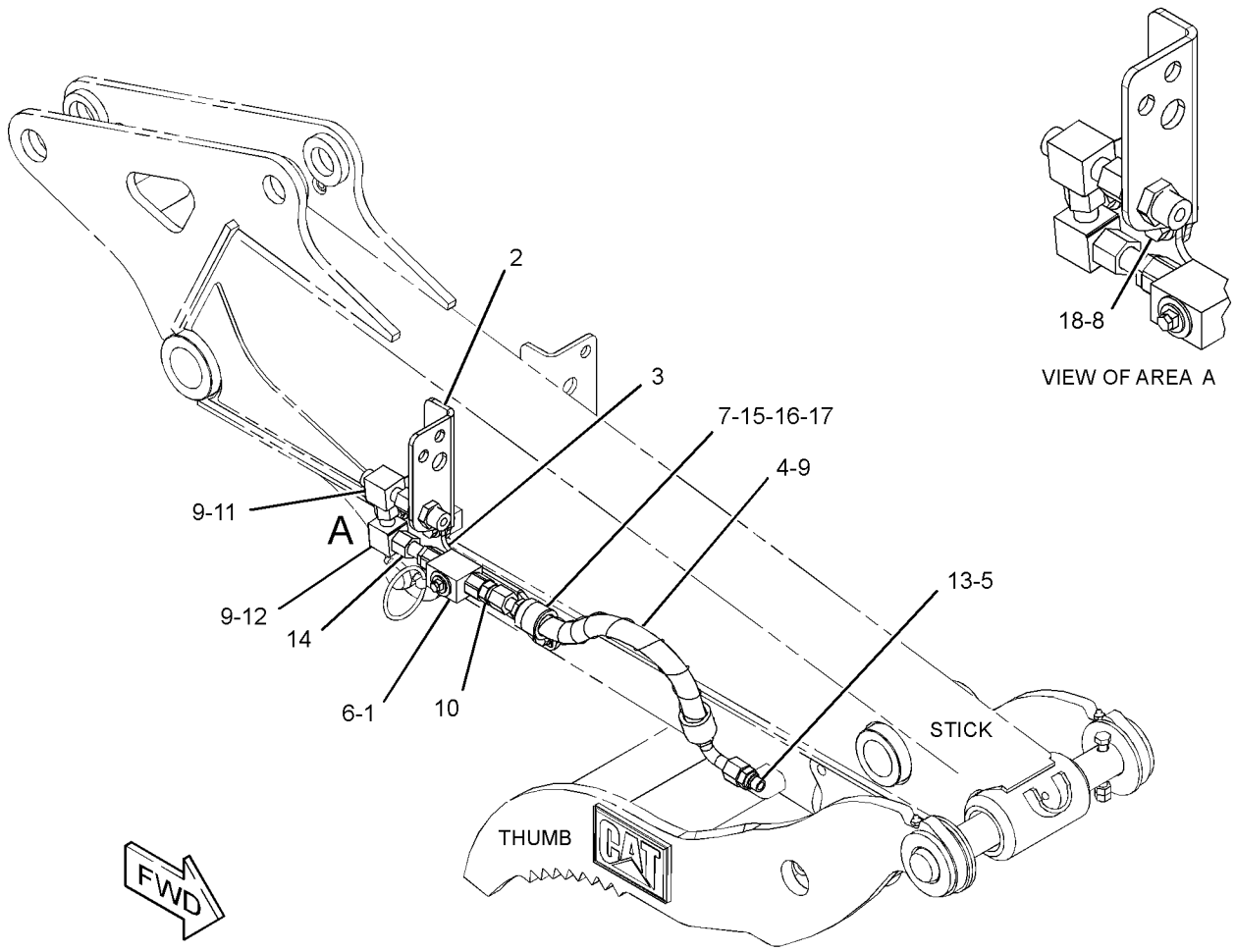

GRAPHIC #1 **<END>** g03401074

369-3693 LINES GP-CONNECTING—LH

PART OF 309-1917, 309-1938 THUMB GP
AN ATTACHMENT

SMCS-5057 **i05426587**

NOTE	REF NO	GRAPHIC REF	PART NUMBER	QTY	PART NAME 1 2 3 4 5 6 (PRODUCT LEVEL)	SEE PAGE
	1	1	**280-2652**	1	VALVE-BALL (HYDRAULIC OIL)	
	2	1	**359-5544**	1	BRACKET	
	3	1	**359-5547**	1	BRACKET	
I	4	1	**361-5148**	1	HOSE AS	
	5	1	**3J-1907**	1	SEAL-O-RING	
	6	1	**3K-0360**	2	SEAL-O-RING	
	7	1	**6V-1889**	1	CLIP	
M	8	1	**6V-3668**	2	BOLT (M12X1.75X30-MM)	
	9	1	**6V-8398**	5	SEAL-O-RING	
	10	1	**6V-8639**	1	CONNECTOR	
	11	1	**6V-9837**	1	TEE-SWIVEL	
	12	1	**6V-9851**	1	ELBOW	
	13	1	**6V-9873**	1	CONNECTOR	
	14	1	**7X-3164**	1	ADAPTER-SWIVEL	
	15	1	**8T-4121**	2	WASHER-HARD (11X21X2.5-MM THK)	
M	16	1	**8T-4133**	1	NUT (M10X1.5-THD)	
M	17	1	**8T-4136**	1	BOLT (M10X1.5X25-MM)	
	18	1	**8T-4223**	2	WASHER-HARD (13.5X25.5X3-MM THK)	

I - REFER TO HYDRAULIC INFORMATION SYSTEM
M - METRIC PART

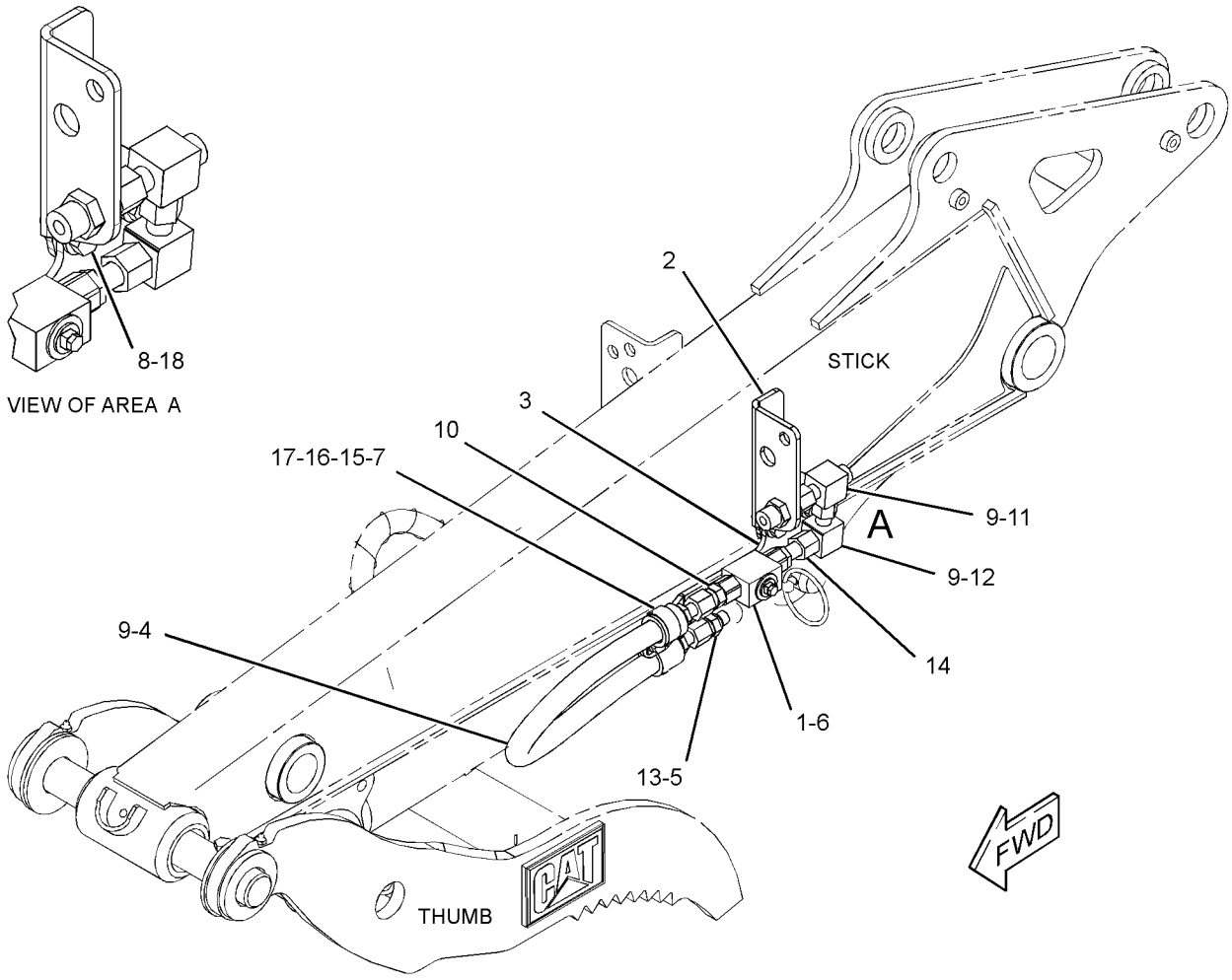

GRAPHIC #1 **<END>** g03401117

361-1090 LINES GP-COUPLER

PART OF 361-1095 COUPLER AR-QUICK

AN ATTACHMENT

SMCS-5057, 5133 **i05645892**

NOTE	REF NO	GRAPHIC REF	PART NUMBER	QTY	PART NAME 1 2 3 4 5 6 (PRODUCT LEVEL)	SEE PAGE
	1	1	**204-2281**	1	STRAP-CABLE	
	2	1	**260-2659**	1	BOLT (M10X1.5X20-MM)	
	3	1	**361-1207**	1	STRAP-CABLE	
	4	1	**361-1208**	2	CLIP-HOSE	
	5	1	**371-8268**	4	SCREW-SOCKET HEAD (M6X1X10-MM)	
	6	1	*148-8351*	1	ELBOW AS	
		1	**4J-5477**	1	SEAL-O-RING	
		1	**6V-9849**	1	ELBOW	
	7	1	**166-1579**	1	CLIP	
	8	1	**7K-1181**	3	STRAP-CABLE	
	9	1	**7X-7729**	1	WASHER (11X25X3-MM THK)	
M	10	1	**8T-4138**	1	BOLT (M6X1X20-MM)	
	11	1	**9X-8256**	1	WASHER (6.6X12X2-MM THK)	

M - METRIC PART

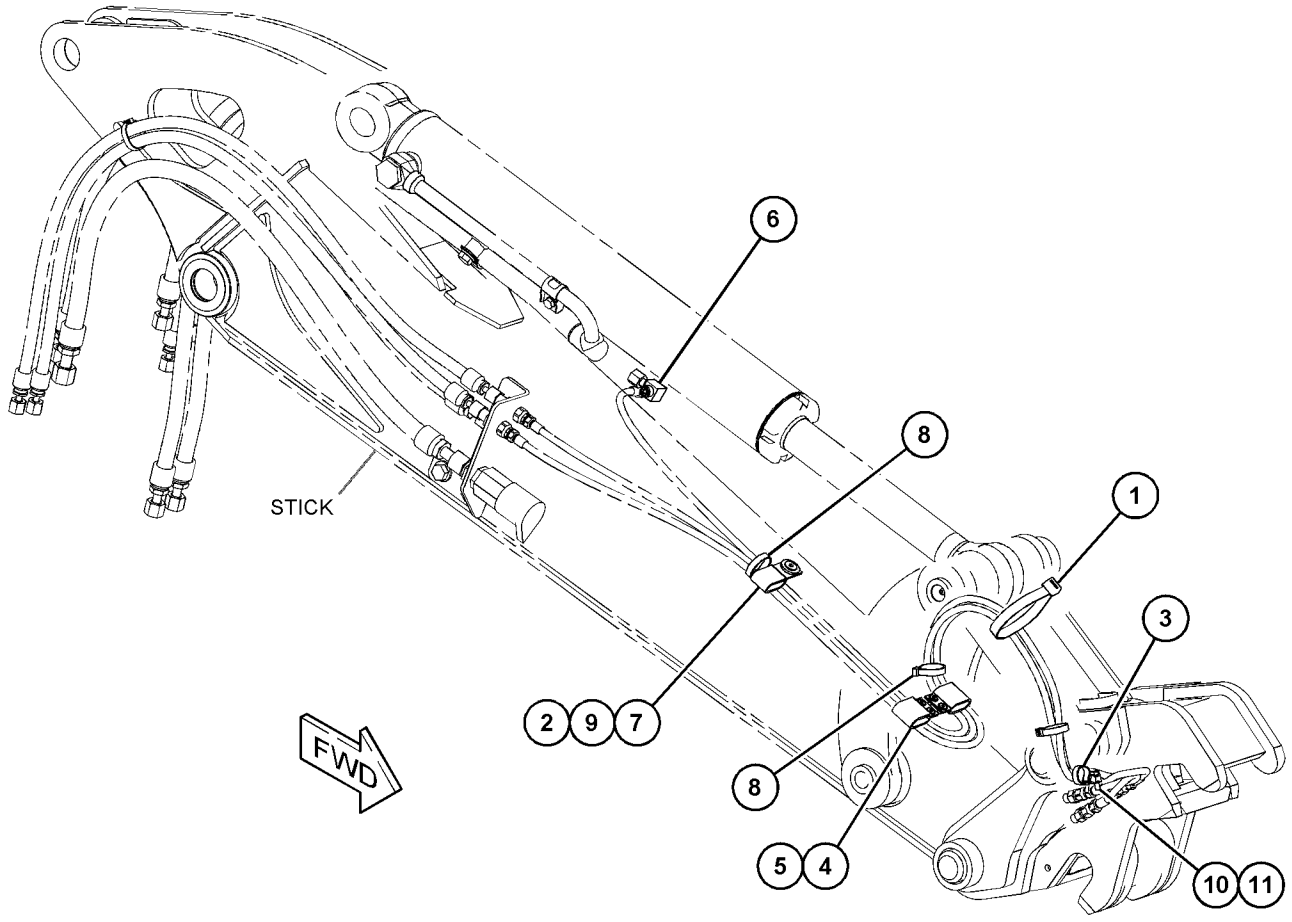

GRAPHIC #1 **<END>** g03584479

365-2794 LINES GP-COUPLER—STANDARD STICK

PART OF 382-2543 CONTROL AR-COUPLER

AN ATTACHMENT

SMCS-5057, 5133 **i05371536**

NOTE	REF NO	GRAPHIC REF	PART NUMBER	QTY	PART NAME 1 2 3 4 5 6 (PRODUCT LEVEL)	SEE PAGE
	1	1	**7K-1181**	2	STRAP-CABLE	
	2	1	**279-4735**	1	STRAP-CABLE (ORANGE)	
	3	1	**279-4737**	1	STRAP-CABLE (GREEN)	
	4	1	**279-4738**	1	STRAP-CABLE (PURPLE)	
	5	1	**365-6913**	1	TUBE AS	
	6	1	**365-6914**	1	TUBE AS	
	7	1	**365-6915**	1	TUBE AS	
I	8	1	**365-6916**	1	HOSE AS	
I	9	1	**365-6917**	2	HOSE AS	
	10	1	**422-1360**	1	BRACKET	
	11	1	**365-6919**	1	BRACKET	
	12	2	**119-5708**	1	CLIP	
	13	1	*150-4052*	3	UNION AS	
					(EACH INCLUDES)	
		1	**4J-5477**	2	SEAL-O-RING	
		1	**6V-8993**	1	UNION	
	14	1	**2P-1279**	6	LOCKNUT (9/16-18-THD)	
	15	1	**4J-5477**	6	SEAL-O-RING	
	16	2	**5P-9297**	8	CLIP	
	17	1	**6V-9828**	3	CAP AS	
	18	1,2	**8T-4121**	8	WASHER-HARD (11X21X2.5-MM THK)	
M	19	1,2	**8T-4185**	8	BOLT (M10X1.5X50-MM)	

I - REFER TO HYDRAULIC INFORMATION SYSTEM
M - METRIC PART

365-2794 **LINES GP-COUPLER (*contd.*)** **i05371536**

REFER TO ALL ILLUSTRATIONS OF THIS GROUP FOR AUXILIARY VIEWS

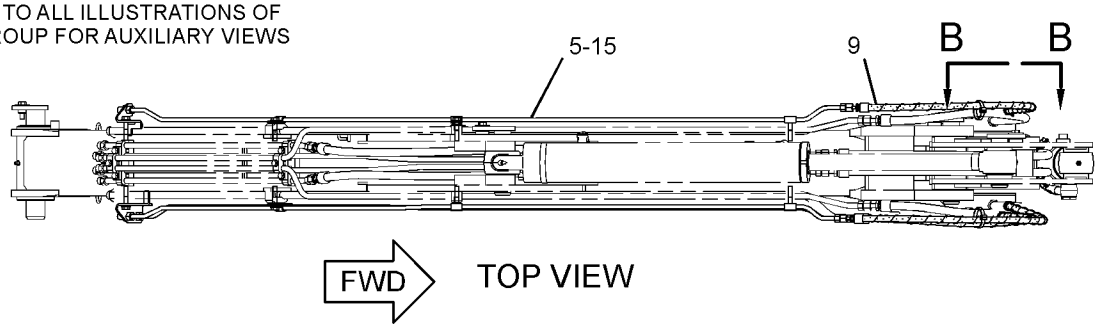

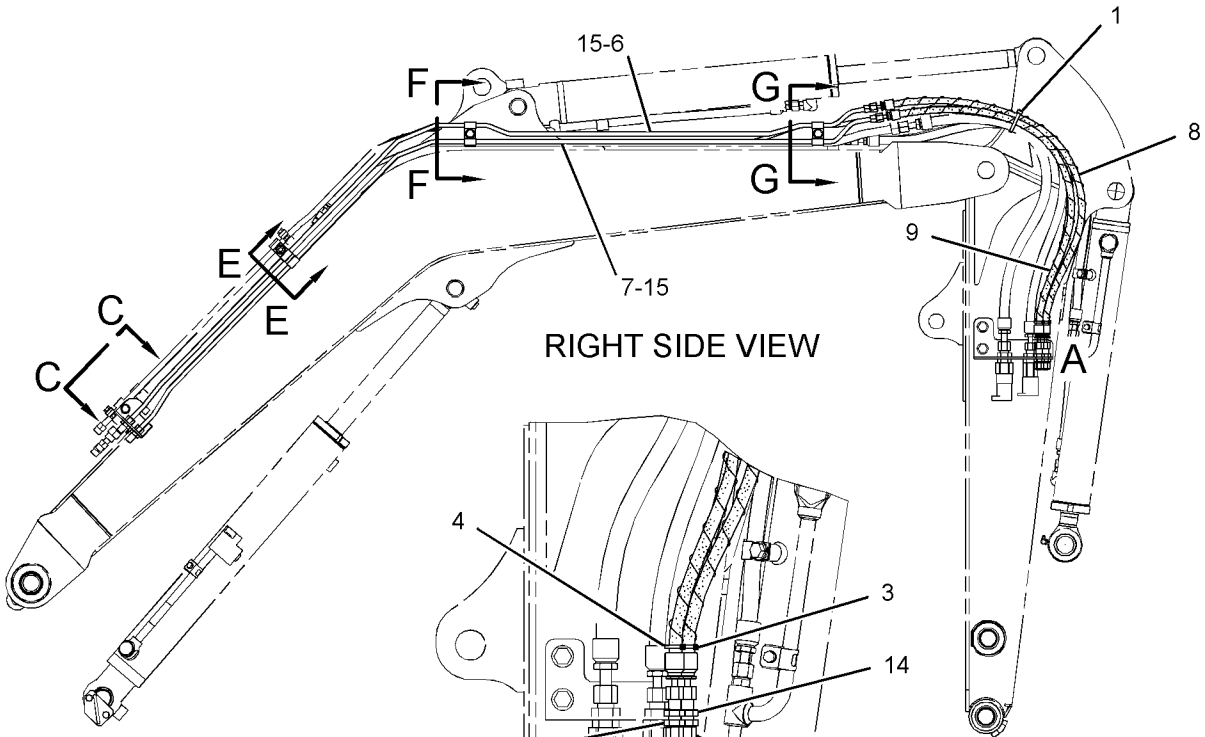

VIEW OF AREA A

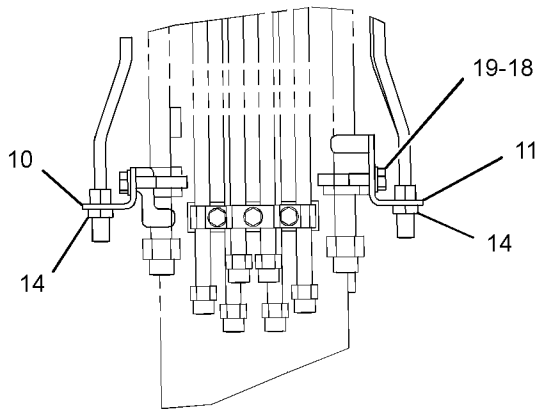

VIEW C-C

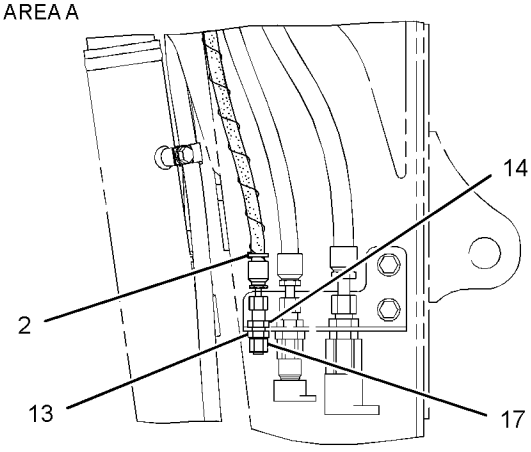

VIEW B-B

GRAPHIC #1

g02860176

365-2794 **LINES GP-COUPLER (*contd.*)** **i05371536**

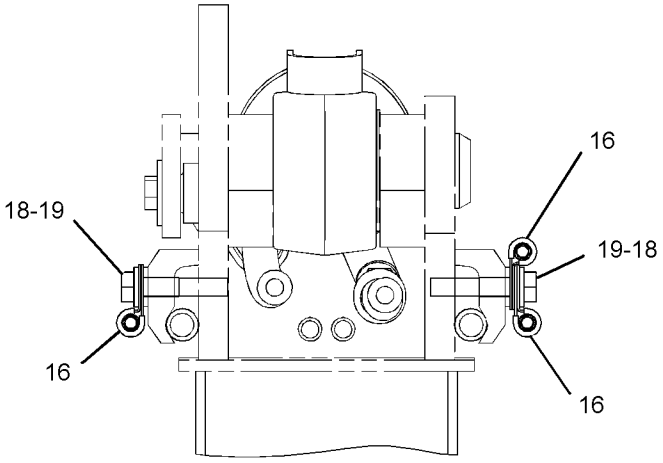

SECTION F-F
(WITHOUT 2ND AUXILIARY TUBE)

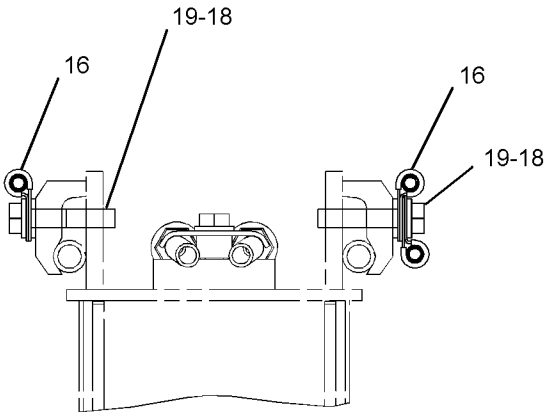

SECTION G-G
(WITHOUT 2ND AUXILIARY TUBE)

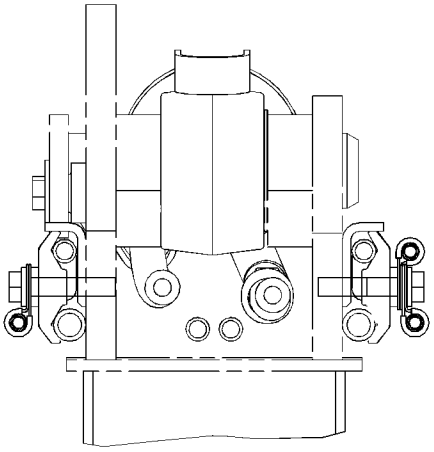

SECTION F-F
(WITH 2ND AUXILIARY TUBE)

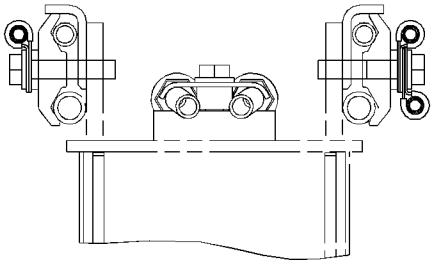

SECTION G-G
(WITH 2ND AUXILIARY TUBE)

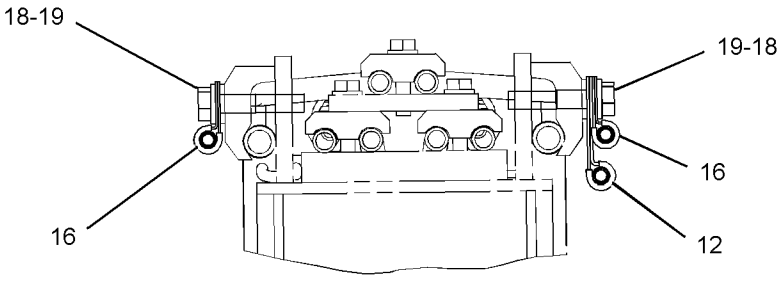

SECTION E-E

GRAPHIC #2 **<END>** g02861178

365-2796 LINES GP-COUPLER—LONG STICK

PART OF 382-2544 CONTROL AR-COUPLER

AN ATTACHMENT

SMCS-5057, 5133 **i05371535**

NOTE	REF NO	GRAPHIC REF	PART NUMBER	QTY	PART NAME 1 2 3 4 5 6 (PRODUCT LEVEL)	SEE PAGE
	1	1	**7K-1181**	2	STRAP-CABLE	
	2	1	**279-4735**	1	STRAP-CABLE (ORANGE)	
	3	1	**279-4737**	1	STRAP-CABLE (GREEN)	
	4	1	**279-4738**	1	STRAP-CABLE (PURPLE)	
	5	1	**365-6913**	1	TUBE AS	
	6	1	**365-6914**	1	TUBE AS	
	7	1	**365-6915**	1	TUBE AS	
	8	1	**422-1360**	1	BRACKET	
	9	1	**365-6919**	1	BRACKET	
I	10	1	**365-6961**	1	HOSE AS	
I	11	1	**365-6962**	2	HOSE AS	
	12	1	**119-5708**	1	CLIP	
	13	1	*150-4052*	3	UNION AS	
					(EACH INCLUDES)	
		1	**4J-5477**	2	SEAL-O-RING	
		1	**6V-8993**	1	UNION	
	14	1	**2J-1020**	2	SPACER (13.9X21.34X35-MM THK)	
	15	1	**2P-1279**	6	LOCKNUT (9/16-18-THD)	
	16	1	**4J-5477**	6	SEAL-O-RING	
	17	1	**5P-9297**	8	CLIP	
	18	1	**6V-9828**	3	CAP AS	
	19	1	**7S-3916**	3	CLIP (TAB)	
	20	1	**7S-3919**	3	CLIP (SLOT)	
	21	1	**7V-6571**	3	GROMMET	
	22	1	**8T-4121**	8	WASHER-HARD (11X21X2.5-MM THK)	
M	23	1	**8T-4185**	8	BOLT (M10X1.5X50-MM)	
	24	1	**8T-4223**	2	WASHER-HARD (13.5X25.5X3-MM THK)	
BM	25	1	**8T-4648**	2	BOLT (M12X1.75X70-MM)	
BM	26	1	**8T-4910**	2	BOLT (M12X1.75X60-MM)	

B - USE AS REQUIRED
I - REFER TO HYDRAULIC INFORMATION SYSTEM
M - METRIC PART

365-2796 **LINES GP-COUPLER (*contd.*)** **i05371535**

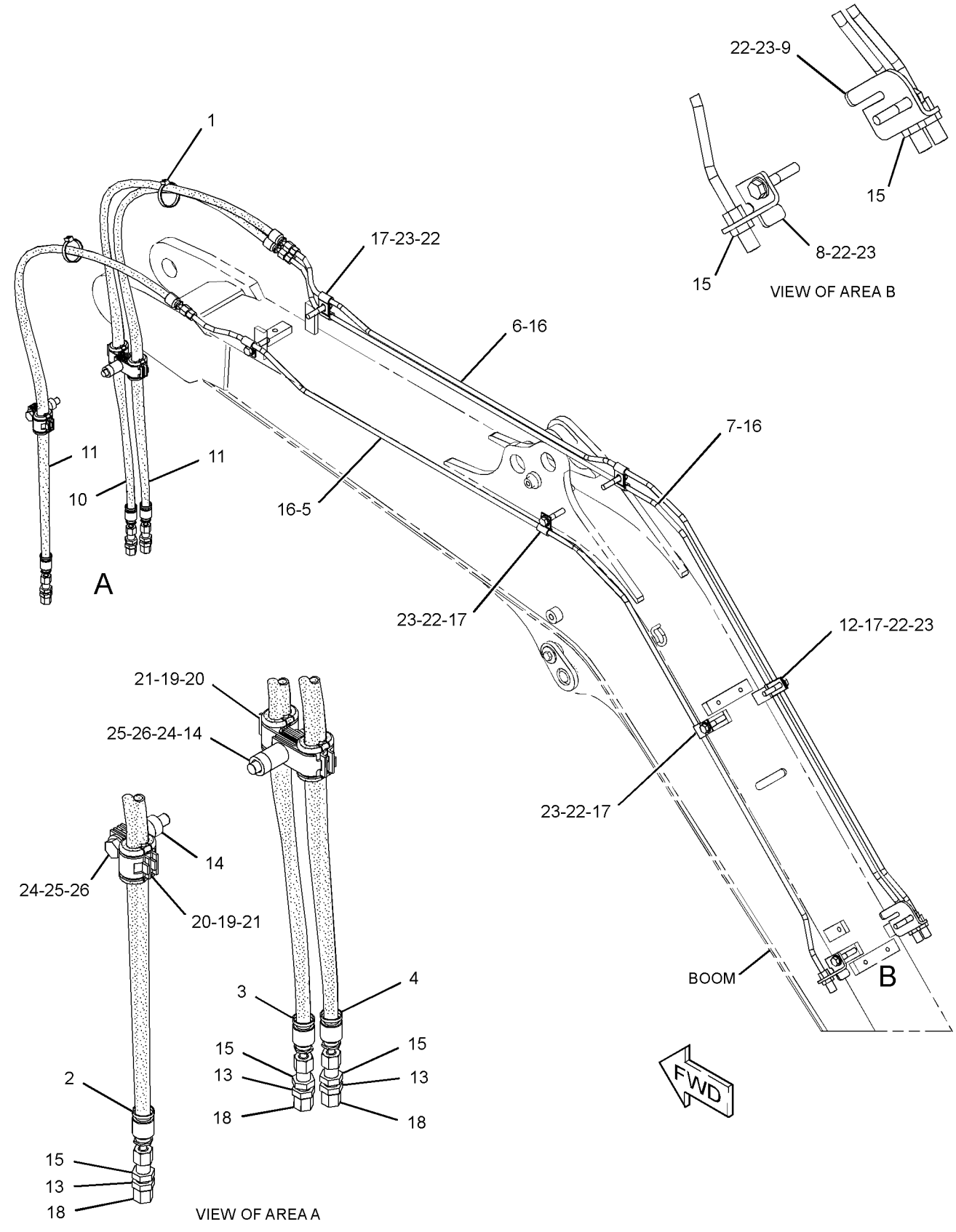

GRAPHIC #1 **<END>** g02864479

379-4699 LINES GP-FRONT–BOOM CYLINDER

PART OF 379-4681 LINES AR-BOOM

AN ATTACHMENT

SMCS-5057 **i04611689**

NOTE	REF NO	GRAPHIC REF	PART NUMBER	QTY	PART NAME 1 2 3 4 5 6 (PRODUCT LEVEL)	SEE PAGE
	1	1	**9F-2167**	1	SCREW-PURGE (3/8-24X1.164-IN)	
	2	1	**279-4737**	1	STRAP-CABLE (GREEN)	
	3	1	**279-4738**	1	STRAP-CABLE (PURPLE)	
I	4	1	**381-0564**	1	HOSE AS	
I	5	1	**381-0565**	1	HOSE AS	
	6	1	*148-8336*	3	CONNECTOR AS	
					(EACH INCLUDES)	
		1	**3J-1907**	1	SEAL-O-RING	
		1	**6V-8397**	1	SEAL-O-RING	
		1	**6V-8636**	1	CONNECTOR	
	7	1	*164-9869*	1	CONNECTOR AS	
		1	**3J-1907**	1	SEAL-O-RING	
		1	**6V-8397**	1	SEAL-O-RING	
		1	**9X-2297**	1	CONNECTOR	

I - REFER TO HYDRAULIC INFORMATION SYSTEM

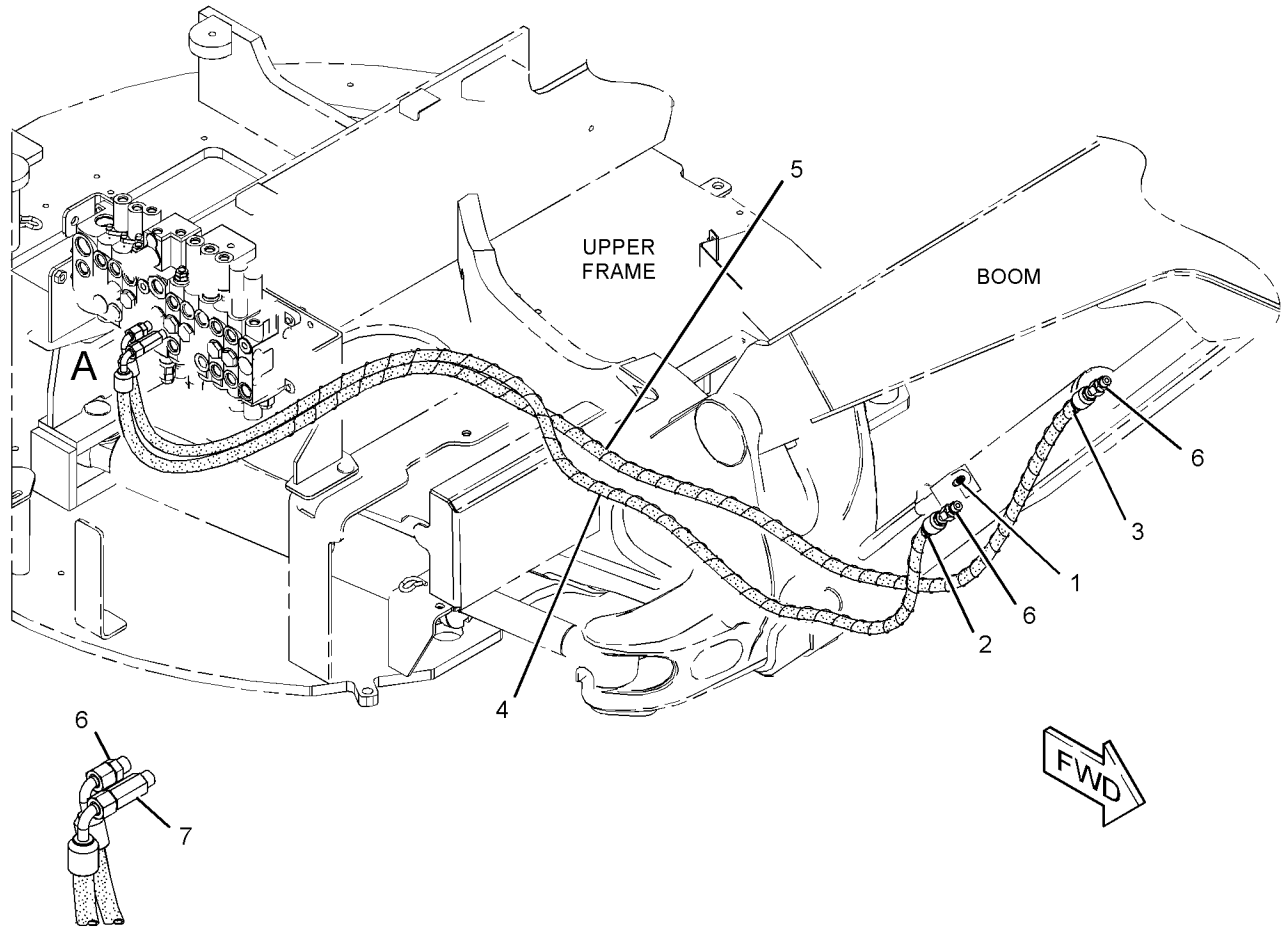

VIEW OF AREA A

GRAPHIC #1 **<END>** g02798919

379-4731 LINES GP-FRONT

PART OF 379-4713 HYDRAULIC AR

SMCS-5057 **i04728068**

NOTE	REF NO	GRAPHIC REF	PART NUMBER	QTY	PART NAME 1 2 3 4 5 6 (PRODUCT LEVEL)	SEE PAGE
	1	1	**096-6079**	4	TAPE (WHITE)	
	2	1	**136-0207**	2	STRAP-CABLE	
	3	1	**267-4229**	1	PLATE	
	4	1	**279-4731**	1	STRAP-CABLE (RED)	
	5	1	**279-4732**	1	STRAP-CABLE (YELLOW)	
	6	1	**279-4733**	1	STRAP-CABLE (BLUE)	
	7	1	**279-4735**	1	STRAP-CABLE (ORANGE)	
	8	1	**346-8085**	1	GROMMET	
	9	1	**346-8086**	1	GROMMET	
I	10	1	**382-8809**	1	HOSE AS	
I	11	1	**382-8810**	1	HOSE AS	
I	12	1	**382-8811**	1	HOSE AS	
I	13	1	**382-8812**	1	HOSE AS	
	14	1	*148-8336*	2	CONNECTOR AS	
					(EACH INCLUDES)	
		1	**3J-1907**	1	SEAL-O-RING	
		1	**6V-8397**	1	SEAL-O-RING	
		1	**6V-8636**	1	CONNECTOR	
	15	1	*164-9869*	2	CONNECTOR AS	
					(EACH INCLUDES)	
		1	**3J-1907**	1	SEAL-O-RING	
		1	**6V-8397**	1	SEAL-O-RING	
		1	**9X-2297**	1	CONNECTOR	
	16	1	**8T-4121**	2	WASHER-HARD (11X21X2.5-MM THK)	
M	17	1	**8T-4186**	2	BOLT (M10X1.5X40-MM)	
E	18	1	**310-4984**		SLEEVE (20-CM)	
E	18A	1	**310-4984**		SLEEVE (30-CM)	

E - ORDER BY THE CENTIMETER
I - REFER TO HYDRAULIC INFORMATION SYSTEM
M - METRIC PART

379-4731 **LINES GP-FRONT (*contd.*)** **i04728068**

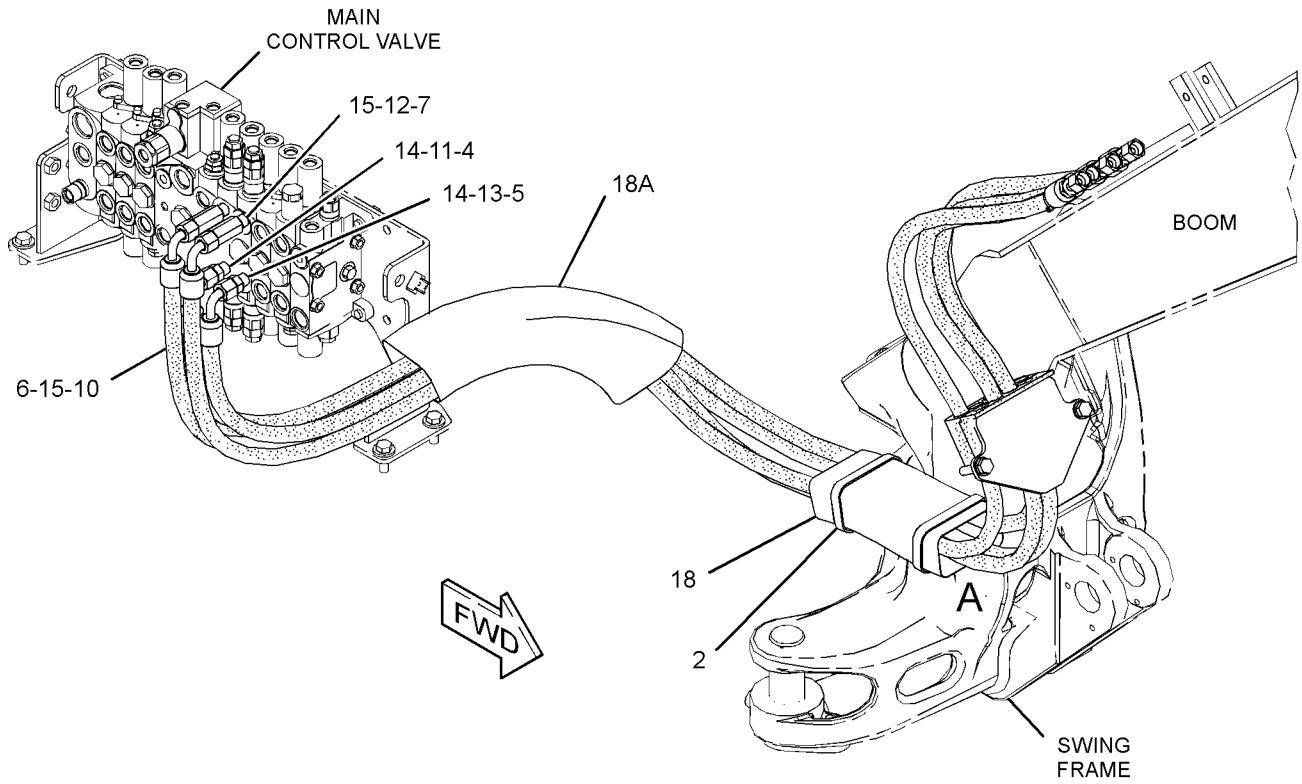

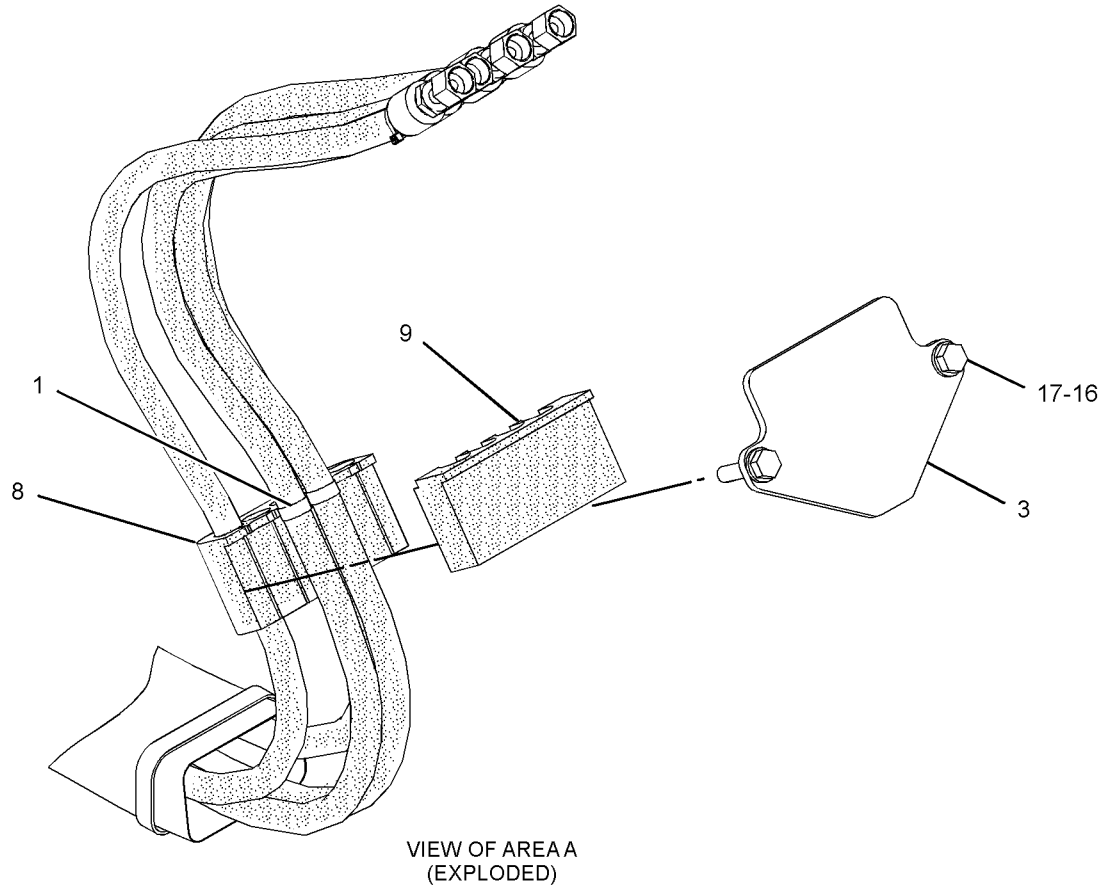

VIEW OF AREA A
(EXPLODED)

GRAPHIC #1 **<END>** g02861536

379-4732 LINES GP-FRONT

PART OF 379-4715 CONTROL AR-AUXILIARY

SMCS-5057 **i04732213**

NOTE	REF NO	GRAPHIC REF	PART NUMBER	QTY	PART NAME 1 2 3 4 5 6 (PRODUCT LEVEL)	SEE PAGE
	1	1	**096-6079**	2	TAPE (WHITE)	
	2	1	*267-4050*	1	TEE AS	
		1	**3J-1907**	1	SEAL-O-RING	
		1	**6V-8398**	2	SEAL-O-RING	
		1	**267-4049**	1	TEE	
	3	1	**279-4734**	1	STRAP-CABLE (BROWN)	
	4	1	**8L-8413**	1	STRAP-CABLE	
	5	1	**362-1008**	1	VALVE AS-BALL (1-WAY, 2-WAY FLOW)	
		1	**134-7113**	1	HANDLE	
M		1	**134-7114**	1	BOLT-SPECIAL	
		1	**134-7115**	1	PLATE	
		1	**195-0090**	1	PLATE-DETENT	
I	6	1	**381-0561**	1	HOSE AS	
I	7	1	**382-8814**	1	HOSE AS	
I	8	1	**382-8815**	1	HOSE AS	
	9	1	*148-8340*	1	CONNECTOR AS	
		1	**3K-0360**	1	SEAL-O-RING	
		1	**6V-8398**	1	SEAL-O-RING	
		1	**6V-8639**	1	CONNECTOR	
	10	1	*150-4043*	1	CONNECTOR AS	
		1	**3J-1907**	1	SEAL-O-RING	
		1	**6V-8398**	1	SEAL-O-RING	
		1	**6V-9873**	1	CONNECTOR	
	11	1	*171-6728*	1	ELBOW AS	
		1	**3K-0360**	1	SEAL-O-RING	
		1	**8T-0249**	1	ELBOW	

I - REFER TO HYDRAULIC INFORMATION SYSTEM
M - METRIC PART

379-4732 **LINES GP-FRONT (*contd.*)** **i04732213**

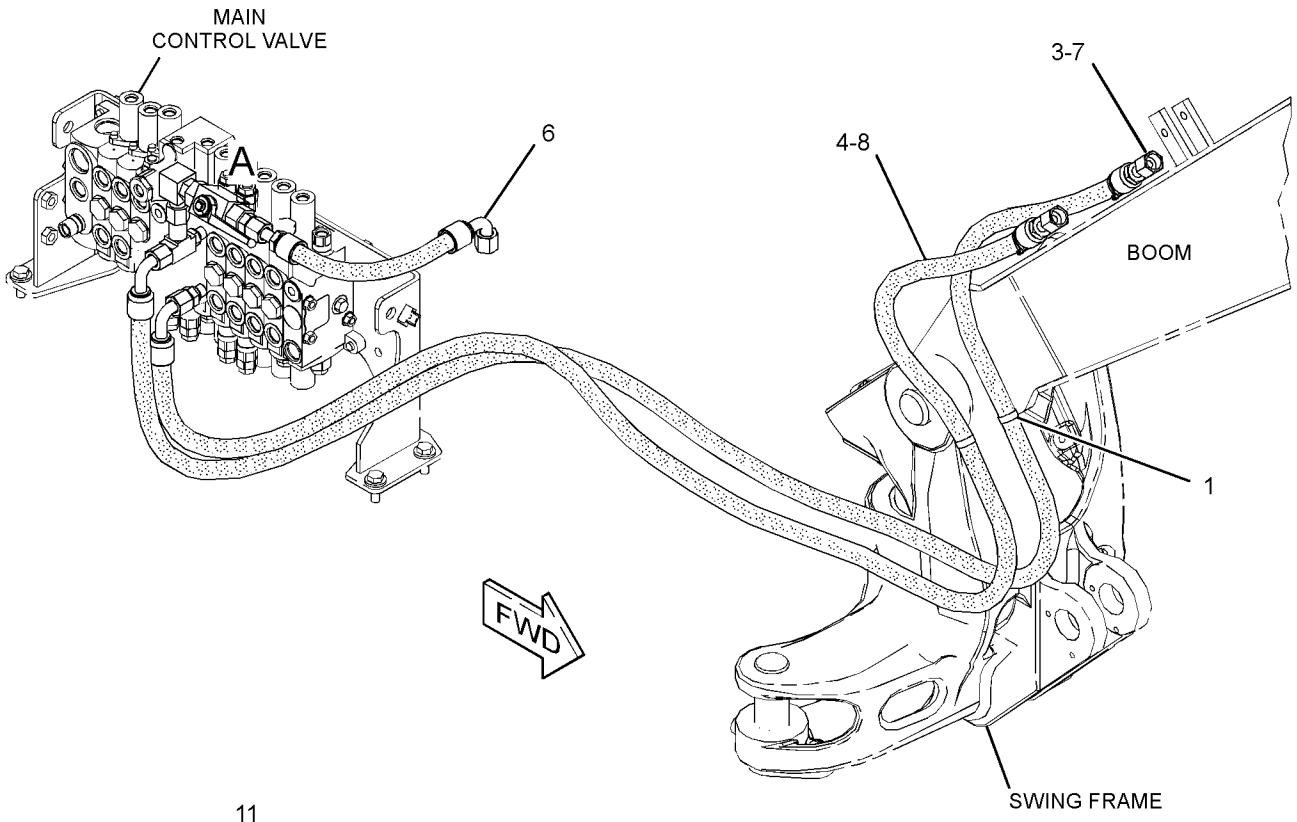

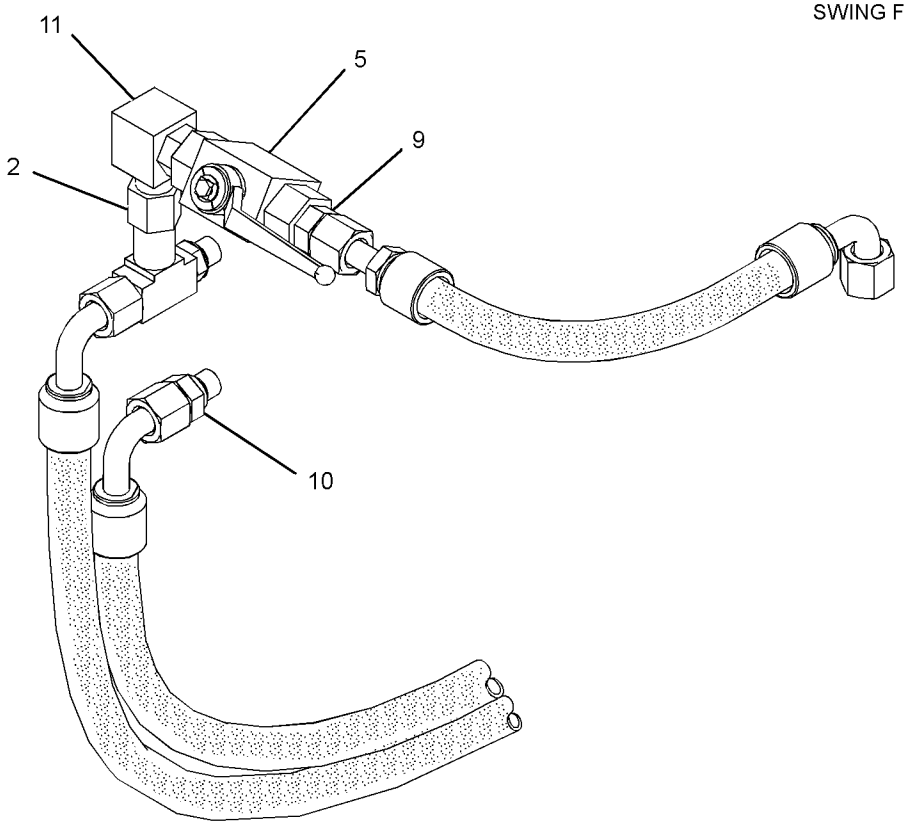

VIEW OF AREA A

GRAPHIC #1 **<END>** g02862657

382-2551 LINES GP-FRONT—QUICK COUPLER

PART OF 382-2543, 382-2544 CONTROL AR-COUPLER

AN ATTACHMENT

SMCS-5057 **i05371533**

NOTE	REF NO	GRAPHIC REF	PART NUMBER	QTY	PART NAME 1 2 3 4 5 6 (PRODUCT LEVEL)	SEE PAGE
	1	1	**7K-1181**	5	STRAP-CABLE	
	2	1	**096-6079**	3	TAPE (WHITE)	
	3	1	*164-5546*	1	TEE AS	
		1	**3E-7410**	1	TEE-O-RING	
		1	**3J-1907**	1	SEAL-O-RING	
	4	1	**210-0686**	1	SHEET-RUBBER	
	5	1	*267-4048*	2	ELBOW AS	
					(EACH INCLUDES)	
		1	**3J-1907**	1	SEAL-O-RING	
		1	**4J-5477**	1	SEAL-O-RING	
		1	**267-4047**	1	ELBOW	
	6	1	**279-4735**	2	STRAP-CABLE (ORANGE)	
	7	1	**279-4737**	2	STRAP-CABLE (GREEN)	
	8	1	**279-4738**	2	STRAP-CABLE (PURPLE)	
Y	9	1	**358-2091**	1	VALVE GP-SOLENOID & MANIFOLD (QUICK COUPLER)	365
	10	1	**369-3043**	1	GROMMET	
	11	1	**422-1361**	1	GROMMET	
I	12	1	**381-0002**	1	HOSE AS	
	13	1	**381-2053**	1	BRACKET	
I	14	1	**382-9362**	1	HOSE AS	
I	15	1	**382-9363**	1	HOSE AS	
I	16	1	**382-9364**	1	HOSE AS	
I	17	1	**382-9365**	1	HOSE AS	
	18	1	*148-8310*	1	ADAPTER AS	
		1	**3J-1907**	1	SEAL-O-RING	
		1	**8T-0151**	1	ADAPTER	
	19	1	*148-8325*	1	CONNECTOR AS	
		1	**3J-1907**	1	SEAL-O-RING	
		1	**4J-5477**	1	SEAL-O-RING	
		1	**6V-8641**	1	CONNECTOR	
	20	1	*148-8368*	4	ELBOW AS	
					(EACH INCLUDES)	
		1	**3J-1907**	1	SEAL-O-RING	
		1	**4J-5477**	1	SEAL-O-RING	
		1	**6V-8627**	1	ELBOW	
	21	1	*150-3065*	1	ELBOW AS	
		1	**3J-1907**	1	SEAL-O-RING	
		1	**6V-0484**	1	ELBOW	
	22	1	**8T-4121**	2	WASHER-HARD (11X21X2.5-MM THK)	
M	23	1	**8T-4137**	2	BOLT (M10X1.5X20-MM)	
M	24	1	**8T-4189**	2	BOLT (M8X1.25X20-MM)	
	25	1	**8T-4224**	2	WASHER-HARD (8.8X16X2-MM THK)	

I - REFER TO HYDRAULIC INFORMATION SYSTEM
M - METRIC PART
Y - SEPARATE ILLUSTRATION

382-2551 **LINES GP-FRONT (*contd.*)** **i05371533**

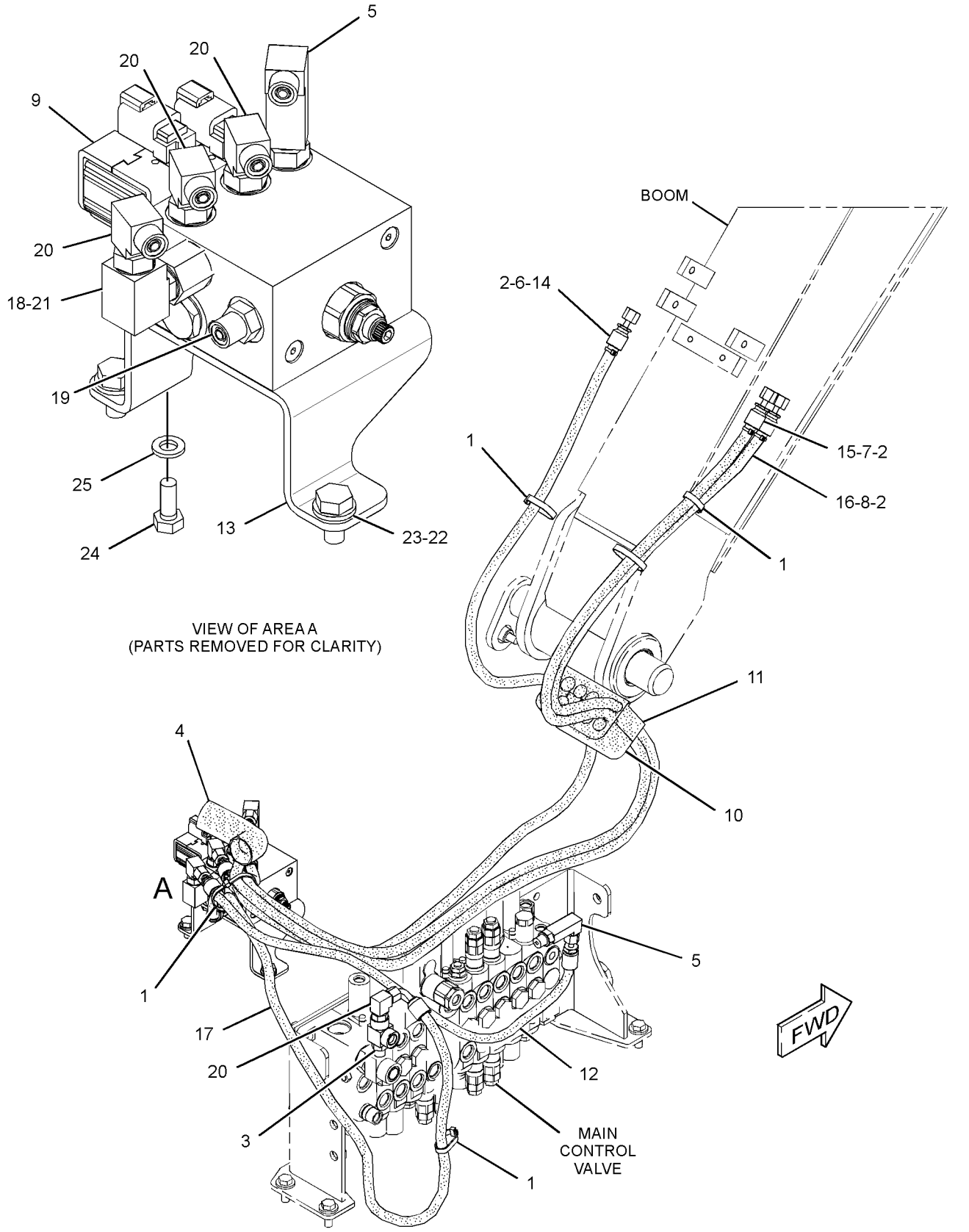

GRAPHIC #1 **<END>** g02872245

379-4729 LINES GP-HYDRAULIC PUMP

PART OF 379-4713 HYDRAULIC AR

SMCS-5057 **i04728066**

NOTE	REF NO	GRAPHIC REF	PART NUMBER	QTY	PART NAME 1 2 3 4 5 6 (PRODUCT LEVEL)	SEE PAGE
	1	1	**5P-0597**	4	CLAMP-HOSE	
	2	1	**7K-1181**	2	STRAP-CABLE	
	3	1	*267-4042*	1	CONNECTOR AS	
		1	**3J-1907**	1	SEAL-O-RING	
		1	**4J-5477**	1	SEAL-O-RING	
		1	**267-4041**	1	CONNECTOR	
	4	1	*346-8792*	1	TEE AS	
		1	**4K-1388**	1	SEAL-O-RING	
		1	**6V-9746**	1	SEAL-O-RING	
		1	**346-8791**	1	TEE	
	5	1	**380-7210**	1	TUBE AS	
	6	1	**380-7215**	1	PLATE	
	7	1	**380-7216**	2	PLATE	
	8	1	**380-9992**	1	GROMMET	
	9	1	**380-9993**	2	GROMMET	
	10	1	**380-9994**	1	HOSE	
	11	1	**380-9996**	1	INSULATION	
I	12	1	**382-8802**	1	HOSE AS	
I	13	1	**382-8804**	1	HOSE AS	
I	14	1	**382-8805**	1	HOSE AS	
	15	1	**382-8806**	1	TUBE AS	
	16	1	**382-8808**	1	HOSE	
	17	1	*148-8336*	1	CONNECTOR AS	
		1	**3J-1907**	1	SEAL-O-RING	
		1	**6V-8397**	1	SEAL-O-RING	
		1	**6V-8636**	1	CONNECTOR	
	18	1	*148-8353*	1	ELBOW AS	
		1	**3J-1907**	1	SEAL-O-RING	
		1	**6V-8397**	1	SEAL-O-RING	
		1	**6V-9001**	1	ELBOW	
	19	1	*148-8392*	1	ELBOW AS	
		1	**6V-9746**	1	SEAL-O-RING	
		1	**6V-9853**	1	ELBOW	
	20	1	*150-3033*	1	ELBOW AS	
		1	**3J-1907**	1	SEAL-O-RING	
		1	**4J-5477**	1	SEAL-O-RING	
		1	**8T-0164**	1	ELBOW	
	21	1	*150-3065*	1	ELBOW AS	
		1	**3J-1907**	1	SEAL-O-RING	
		1	**6V-0484**	1	ELBOW	
	22	1	*153-6237*	1	ELBOW AS	
		1	**3D-2824**	1	SEAL-O-RING	
		1	**6V-9004**	1	ELBOW	
		1	**6V-9746**	1	SEAL-O-RING	
	23	1	*164-5567*	1	COUPLER AS-QUICK DISCONNECT (MALE)	
		1	**6V-3965**	1	FITTING (QUICK DISCONNECT)	
		1	**214-7568**	1	SEAL-O-RING	
	24	1	**4J-0524**	1	SEAL-O-RING	
	25	1	**6V-0852**	1	CAP-DUST	
M	26	1	**7X-2621**	2	BOLT (M10X1.5X12-MM)	
	27	1	**7X-7729**	2	WASHER (11X25X3-MM THK)	
	28	1	**8T-4121**	6	WASHER-HARD (11X21X2.5-MM THK)	
M	29	1	**8T-4136**	2	BOLT (M10X1.5X25-MM)	
M	30	1	**8T-4137**	6	BOLT (M10X1.5X20-MM)	
M	31	1	**8T-4183**	4	BOLT (M12X1.75X40-MM)	
	32	1	**8T-4223**	4	WASHER-HARD (13.5X25.5X3-MM THK)	

I - REFER TO HYDRAULIC INFORMATION SYSTEM
M - METRIC PART

379-4729 **LINES GP-HYDRAULIC PUMP (*contd.*)** **i04728066**

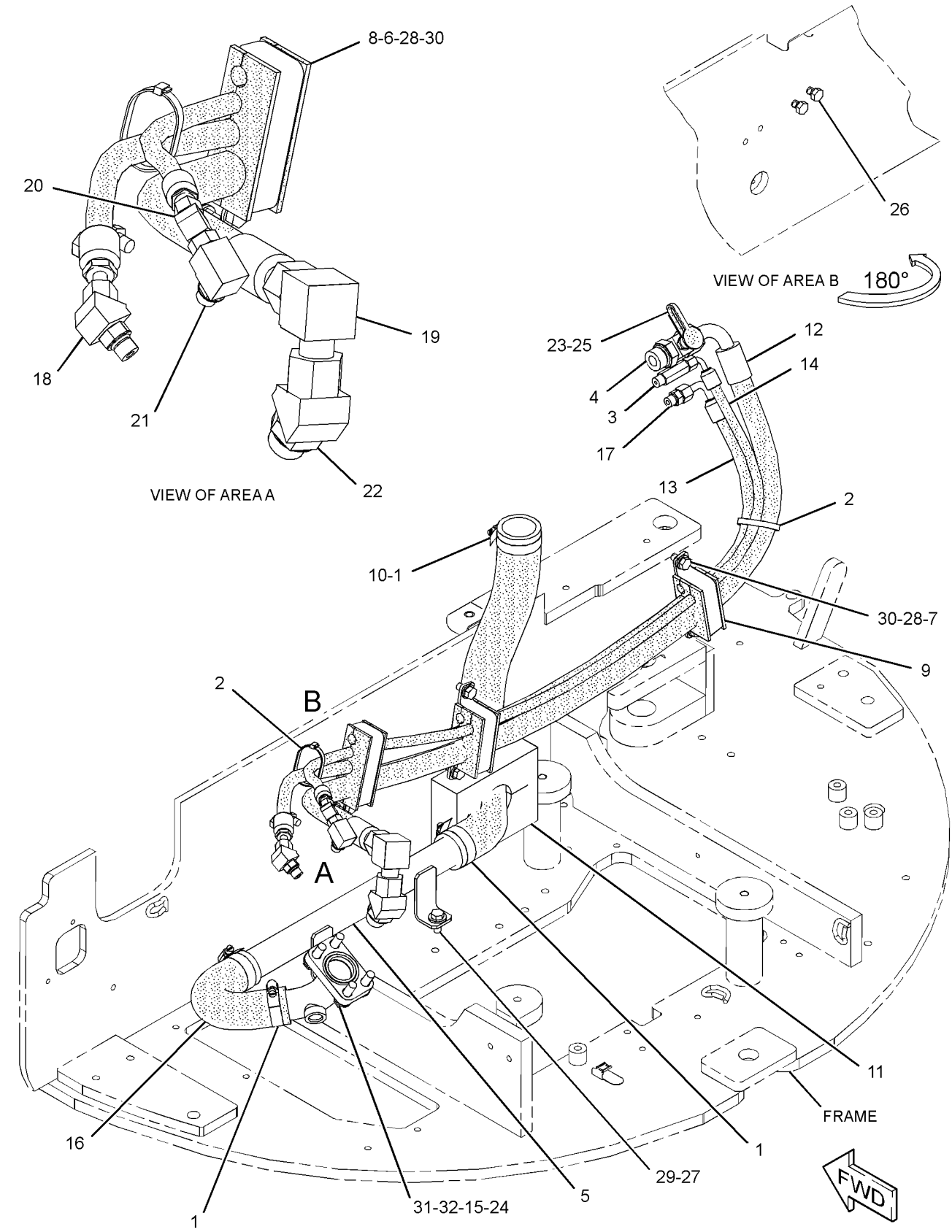

GRAPHIC #1 **<END>** g02867550

377-8872 LINES GP-PILOT—JOYSTICK

PART OF 379-4723 CONTROL AR-PILOT HYDRAULIC

AN ATTACHMENT

SMCS-5057, 5059 **i04707629**

NOTE	REF NO	GRAPHIC REF	PART NUMBER	QTY	PART NAME 1 2 3 4 5 6 (PRODUCT LEVEL)	SEE PAGE
	1	1	**4I-9531**	2	BAND-MARKER (RED)	
	2	1	**4I-9532**	2	BAND-MARKER (YELLOW)	
	3	1	**4I-9533**	2	BAND-MARKER (BLUE)	
	4	1	**4I-9534**	2	BAND-MARKER (BROWN)	
	5	1	**4I-9535**	2	BAND-MARKER (ORANGE)	
	6	1	**4I-9536**	2	BAND-MARKER (WHITE)	
	7	1	**4I-9537**	2	BAND-MARKER (GREEN)	
	8	1	**4I-9538**	2	BAND-MARKER (PURPLE)	
	9	1	**7K-1181**	5	STRAP-CABLE	
	10	1	**096-6079**	4	TAPE (WHITE)	
I	11	1	**163-9768**	2	HOSE AS	
	12	1	*164-9640*	1	CONNECTOR AS	
		1	**3J-1907**	1	SEAL-O-RING	
		1	**4J-5477**	1	SEAL-O-RING	
		1	**145-2237**	1	CONNECTOR	
	13	1	*267-4038*	1	CONNECTOR AS	
		1	**3J-1907**	1	SEAL-O-RING	
		1	**4J-5477**	1	SEAL-O-RING	
		1	**267-4037**	1	CONNECTOR-FILTER	
	14	1	*267-4051*	1	CONNECTOR AS	
		1	**3J-1907**	1	SEAL-O-RING	
		1	**4J-5477**	1	SEAL-O-RING	
		1	**156-8845**	1	CONNECTOR	
	15	1	*267-4093*	1	CONNECTOR AS	
		1	**3J-1907**	1	SEAL-O-RING	
		1	**4J-5477**	1	SEAL-O-RING	
		1	**216-3247**	1	CONNECTOR	
I	16	1	**267-4096**	2	HOSE AS	
	17	1	**314-4242**	1	HOSE AS	
	18	1	**317-9220**	2	HOSE AS	
	19	1	**349-2709**	2	HOSE AS	
	20	1	**377-9064**	1	HOSE AS	
	21	1	**377-9065**	2	HOSE AS	
	22	1	**377-9066**	1	PLATE	
	23	1	**377-9068**	1	SHEET-RUBBER	
	24	1	*148-8325*	8	CONNECTOR AS	
					(EACH INCLUDES)	
		1	**3J-1907**	1	SEAL-O-RING	
		1	**4J-5477**	1	SEAL-O-RING	
		1	**6V-8641**	1	CONNECTOR	
	25	1	**5P-4116**	3	WASHER-HARD (8.8X20.5X2-MM THK)	
	26	1	**7D-7233**	4	CLIP	
	27	1	**8T-4121**	1	WASHER-HARD (11X21X2.5-MM THK)	
M	28	1	**8T-4191**	1	BOLT (M10X1.5X16-MM)	
M	29	1	**8T-4199**	2	BOLT (M8X1.25X12-MM)	
M	30	1	**8T-4200**	3	BOLT (M8X1.25X16-MM)	
	31	1	**8T-4224**	2	WASHER-HARD (8.8X16X2-MM THK)	
G	32	1	**160-2252**		SLEEVE-ABRASION (14.6-IN)	
G	32A	1	**160-2252**		SLEEVE-ABRASION (21.5-IN)	
E	33	1	**379-4566**		SLEEVE (10-CM)	

E - ORDER BY THE CENTIMETER
G - ORDER BY THE INCH
I - REFER TO HYDRAULIC INFORMATION SYSTEM
M - METRIC PART

377-8872 **LINES GP-PILOT (*contd.*)** **i04707629**

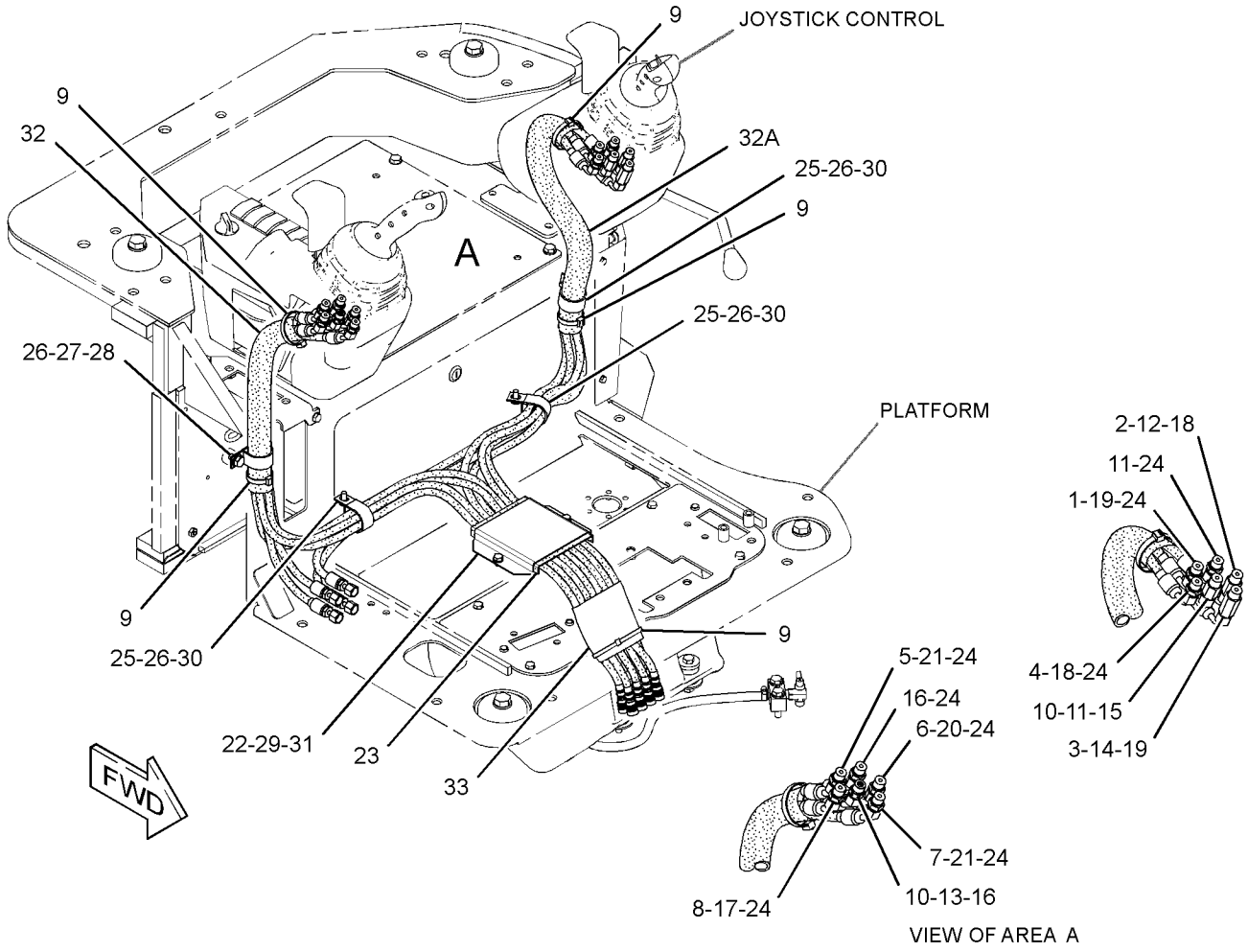

GRAPHIC #1 **<END>** g02808836

377-8874 LINES GP-PILOT—JOYSTICK, 2-WAY

PART OF 379-4724 CONTROL AR-AUXILIARY

AN ATTACHMENT

SMCS-5057, 5059 **i04559392**

NOTE	REF NO	GRAPHIC REF	PART NUMBER	QTY	PART NAME 1 2 3 4 5 6 (PRODUCT LEVEL)	SEE PAGE
	1	1	**4I-9531**	2	BAND-MARKER (RED)	
	2	1	**4I-9532**	2	BAND-MARKER (YELLOW)	
	3	1	**4I-9533**	2	BAND-MARKER (BLUE)	
	4	1	**4I-9534**	2	BAND-MARKER (BROWN)	
	5	1	**4I-9535**	2	BAND-MARKER (ORANGE)	
	6	1	**4I-9536**	2	BAND-MARKER (WHITE)	
	7	1	**4I-9537**	2	BAND-MARKER (GREEN)	
	8	1	**4I-9538**	2	BAND-MARKER (PURPLE)	
	9	1	**7K-1181**	4	STRAP-CABLE	
	10	1	**096-6079**	4	TAPE (WHITE)	
I	11	1	**163-9768**	2	HOSE AS	
	12	1	*164-9640*	1	CONNECTOR AS	
		1	**3J-1907**	1	SEAL-O-RING	
		1	**4J-5477**	1	SEAL-O-RING	
		1	**145-2237**	1	CONNECTOR	
I	13	1	**214-1324**	1	HOSE AS	
	14	1	*267-4038*	1	CONNECTOR AS	
		1	**3J-1907**	1	SEAL-O-RING	
		1	**4J-5477**	1	SEAL-O-RING	
		1	**267-4037**	1	CONNECTOR-FILTER	
	15	1	*267-4051*	1	CONNECTOR AS	
		1	**3J-1907**	1	SEAL-O-RING	
		1	**4J-5477**	1	SEAL-O-RING	
		1	**156-8845**	1	CONNECTOR	
	16	1	*267-4093*	1	CONNECTOR AS	
		1	**3J-1907**	1	SEAL-O-RING	
		1	**4J-5477**	1	SEAL-O-RING	
		1	**216-3247**	1	CONNECTOR	
I	17	1	**267-4096**	2	HOSE AS	
	18	1	**314-4242**	1	HOSE AS	
	19	1	**317-9220**	2	HOSE AS	
	20	1	**377-9064**	1	HOSE AS	
	21	1	**377-9066**	1	PLATE	
	22	1	**377-9068**	1	SHEET-RUBBER	
I	23	1	**378-9508**	1	HOSE AS	
I	24	1	**378-9509**	2	HOSE AS	
	25	1	*148-8325*	8	CONNECTOR AS	
					(EACH INCLUDES)	
		1	**3J-1907**	1	SEAL-O-RING	
		1	**4J-5477**	1	SEAL-O-RING	
		1	**6V-8641**	1	CONNECTOR	
	26	1	**5P-4116**	3	WASHER-HARD (8.8X20.5X2-MM THK)	
	27	1	**7D-7233**	4	CLIP	
	28	1	**8T-4121**	1	WASHER-HARD (11X21X2.5-MM THK)	
M	29	1	**8T-4191**	1	BOLT (M10X1.5X16-MM)	
M	30	1	**8T-4199**	2	BOLT (M8X1.25X12-MM)	
M	31	1	**8T-4200**	3	BOLT (M8X1.25X16-MM)	
	32	1	**8T-4224**	2	WASHER-HARD (8.8X16X2-MM THK)	
G	33	1	**160-2252**		SLEEVE-ABRASION (14.6-IN)	
G	33A	1	**160-2252**		SLEEVE-ABRASION (21.5-IN)	
E	34	1	**379-4566**		SLEEVE (10-CM)	

E - ORDER BY THE CENTIMETER
G - ORDER BY THE INCH
I - REFER TO HYDRAULIC INFORMATION SYSTEM
M - METRIC PART

377-8874 **LINES GP-PILOT (*contd.*)** **i04559392**

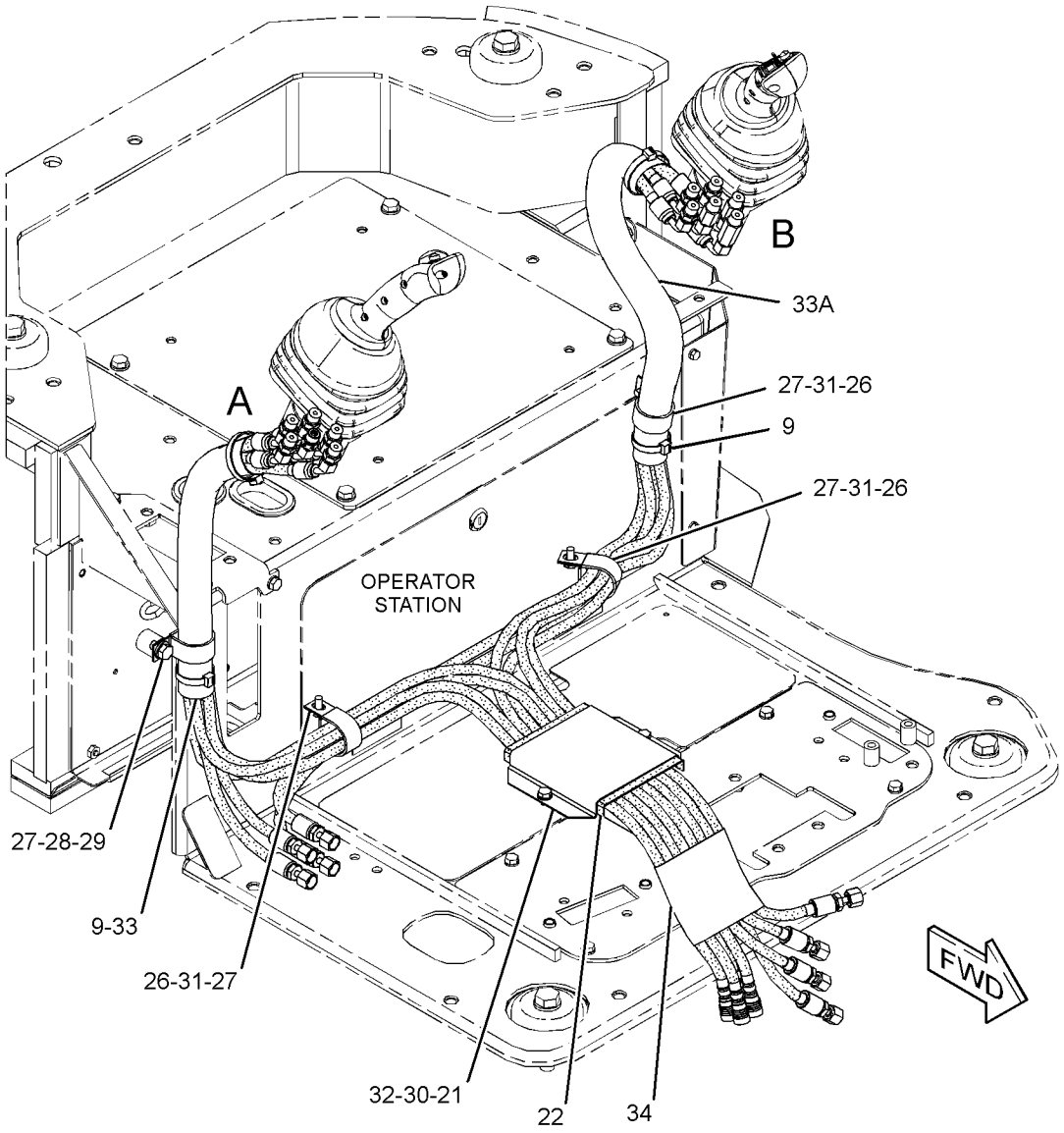

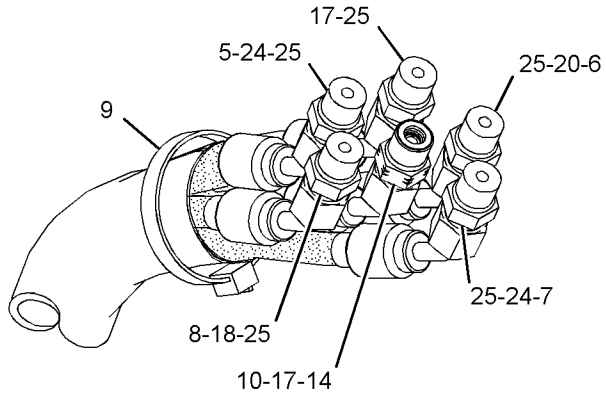

VIEW OF AREA A

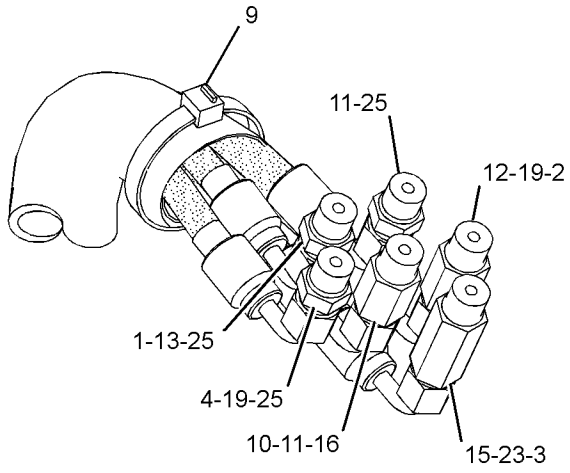

VIEW OF AREA B

GRAPHIC #1 **<END>** g02777576

379-4730 LINES GP-PILOT

PART OF 379-4713 HYDRAULIC AR

SMCS-5057, 5059 **i05221619**

NOTE	REF NO	GRAPHIC REF	PART NUMBER	QTY	PART NAME 1 2 3 4 5 6 (PRODUCT LEVEL)	SEE PAGE
	1	1	**3S-2093**	1	STRAP-CABLE	
	2	1,2	**7K-1181**	7	STRAP-CABLE	
	3	2	**096-1366**	1	CLAMP-HOSE	
	4	1,2	**096-6079**	2	TAPE (WHITE)	
	5	1	*148-8443*	1	TEE AS	
		1	**3J-1907**	1	SEAL-O-RING	
		1	**6V-8397**	1	SEAL-O-RING	
		1	**7X-2459**	1	TEE-O-RING	
I	6	1,2	**163-9772**	1	HOSE AS	
I	7	2	**393-8686**	2	HOSE AS	
	9	2	**217-2456**	1	FILTER ELEMENT AS-OIL (HYDRAULIC, PILOT)	
		2	**3J-1907**	1	SEAL-O-RING	
I	10	2	**240-2590**	1	HOSE AS	
	11	1	**245-8595**	1	SHEET-RUBBER	
I	12	1	**255-3727**	2	HOSE AS	
	13	1	**266-7379**	1	STRAP-CABLE	
	14	1	*267-4036*	2	UNION AS-CROSS	
					(EACH INCLUDES)	
		1	**4J-5477**	3	SEAL-O-RING	
		1	**267-4035**	1	FITTING-CROSS	
	15	1	*267-4046*	1	ELBOW AS	
		1	**3J-7354**	1	SEAL-O-RING	
		1	**4J-5477**	1	SEAL-O-RING	
		1	**267-4045**	1	ELBOW	
	16	2	*267-4048*	1	ELBOW AS	
		2	**3J-1907**	1	SEAL-O-RING	
		2	**4J-5477**	1	SEAL-O-RING	
		2	**267-4047**	1	ELBOW	
	17	1	*267-4093*	1	CONNECTOR AS	
		1	**3J-1907**	1	SEAL-O-RING	
		1	**4J-5477**	1	SEAL-O-RING	
		1	**216-3247**	1	CONNECTOR	
Y	18	2	**274-4199**	1	MANIFOLD GP-CONTROL	286
	19	1	*288-0266*	1	ELBOW AS	
		1	**4J-5477**	1	SEAL-O-RING	
		1	**288-0267**	1	ELBOW	
I	20	1	**365-6895**	2	HOSE AS	
	21	2	*377-9033*	1	BLOCK GP-HYDRAULIC	
		2	**2P-1279**	2	LOCKNUT (9/16-18-THD)	
		2	**6V-9168**	2	NUT (11/16-16-THD)	
		2	**293-9743**	2	MANIFOLD	
		2	**377-9034**	1	BRACKET AS	
M		2	**8T-3490**	2	NUT-WELD (M10X1.5-THD)	
I	22	2	**381-0556**	1	HOSE AS	
I	23	2	**381-0557**	1	HOSE AS	
I	24	2	**379-0559**	1	HOSE AS	
I	25	1	**381-9194**	1	HOSE AS	
I	26	1	**382-5803**	1	HOSE AS	
I	27	1	**385-2812**	1	HOSE AS	
	28	2	*148-8316*	1	CONNECTOR AS	
		2	**3J-7354**	1	SEAL-O-RING	
		2	**4J-5477**	1	SEAL-O-RING	
		2	**6V-8647**	1	CONNECTOR	
	29	1,2	*148-8325*	4	CONNECTOR AS	
					(EACH INCLUDES)	
		1,2	**3J-1907**	1	SEAL-O-RING	
		1,2	**4J-5477**	1	SEAL-O-RING	
		1,2	**6V-8641**	1	CONNECTOR	
	30	2	*148-8336*	3	CONNECTOR AS	
					(EACH INCLUDES)	

379-4730 **LINES GP-PILOT (*contd.*)** **i05221619**

NOTE	REF NO	GRAPHIC REF	PART NUMBER	QTY	PART NAME 1 2 3 4 5 6 (PRODUCT LEVEL)	SEE PAGE
		2	**3J-1907**	1	SEAL-O-RING	
		2	**6V-8397**	1	SEAL-O-RING	
		2	**6V-8636**	1	CONNECTOR	
	31	1	*148-8351*	2	ELBOW AS	
					(EACH INCLUDES)	
		1	**4J-5477**	1	SEAL-O-RING	
		1	**6V-9849**	1	ELBOW	
	32	2	*148-8361*	1	ELBOW AS	
		2	**3J-7354**	1	SEAL-O-RING	
		2	**6V-8397**	1	SEAL-O-RING	
		2	**6V-9200**	1	ELBOW	
	33	1	*148-8363*	1	ELBOW AS	
		1	**3K-0360**	1	SEAL-O-RING	
		1	**6V-8397**	1	SEAL-O-RING	
		1	**6V-9876**	1	ELBOW	
	34	2	*148-8367*	1	ELBOW AS	
		2	**6V-8397**	1	SEAL-O-RING	
		2	**6V-9850**	1	ELBOW	
	35	2	*148-8368*	2	ELBOW AS	
					(EACH INCLUDES)	
		2	**3J-1907**	1	SEAL-O-RING	
		2	**4J-5477**	1	SEAL-O-RING	
		2	**6V-8627**	1	ELBOW	
	36	1	*148-8369*	1	ELBOW AS	
		1	**3J-7354**	1	SEAL-O-RING	
		1	**4J-5477**	1	SEAL-O-RING	
		1	**6V-8628**	1	ELBOW	
	37	2	*148-8407*	1	PLUG AS	
		2	**3J-1907**	1	SEAL-O-RING	
		2	**9S-4191**	1	PLUG	
	38	2	*150-3036*	1	ELBOW AS	
		2	**3J-1907**	1	SEAL-O-RING	
		2	**6V-8397**	1	SEAL-O-RING	
		2	**8T-1905**	1	ELBOW	
	39	2	*150-3065*	1	ELBOW AS	
		2	**3J-1907**	1	SEAL-O-RING	
		2	**6V-0484**	1	ELBOW	
	40	1	*150-4047*	1	ADAPTER AS	
		1	**3J-7354**	1	SEAL-O-RING	
		1	**8T-2353**	1	ADAPTER	
	41	2	*150-5968*	1	TEE AS	
		2	**4J-5477**	2	SEAL-O-RING	
		2	**6V-9835**	1	TEE-SWIVEL	
	42	1	*165-7014*	1	TEE AS	
		1	**3J-1907**	1	SEAL-O-RING	
		1	**4J-5477**	1	SEAL-O-RING	
		1	**8C-3309**	1	TEE	
	43	2	*187-2120*	1	ELBOW AS	
		2	**4J-5477**	1	SEAL-O-RING	
		2	**8C-8408**	1	ELBOW	
	44	2	**3J-1907**	1	SEAL-O-RING	
	45	2	**4J-5477**	8	SEAL-O-RING	
	46	2	**6V-0852**	1	CAP-DUST	
	47	2	**6V-3965**	1	FITTING (QUICK DISCONNECT)	
	48	2	**6V-8397**	2	SEAL-O-RING	
	49	2	**7X-7729**	2	WASHER (11X25X3-MM THK)	
	50	2	**8T-4121**	2	WASHER-HARD (11X21X2.5-MM THK)	
M	51	2	**8T-4136**	2	BOLT (M10X1.5X25-MM)	
M	52	2	**8T-4137**	2	BOLT (M10X1.5X20-MM)	
I	53	1	**325-4870**	1	HOSE AS	

I - REFER TO HYDRAULIC INFORMATION SYSTEM
M - METRIC PART
Y - SEPARATE ILLUSTRATION

379-4730 **LINES GP-PILOT (*contd.*)** **i05221619**

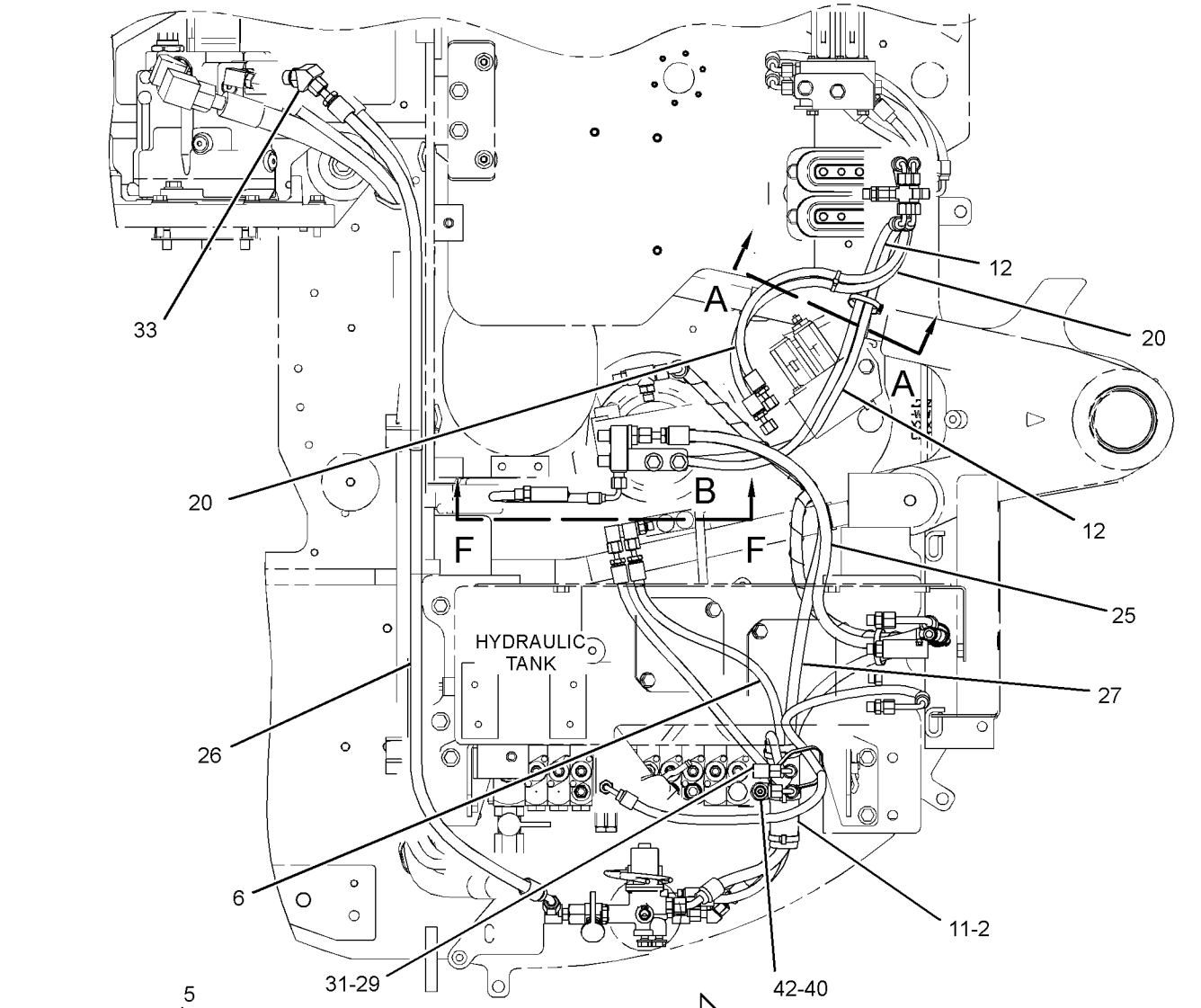

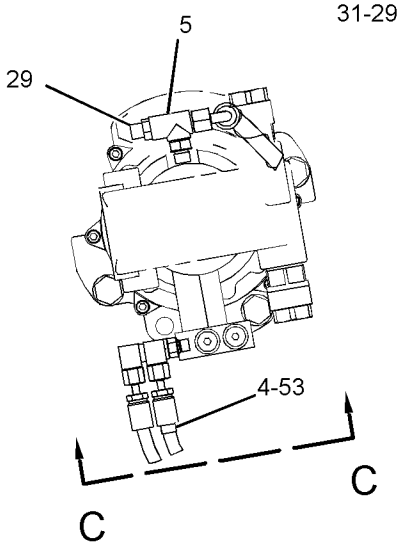

VIEW OF AREA B
(PARTS REMOVED FOR CLARITY)

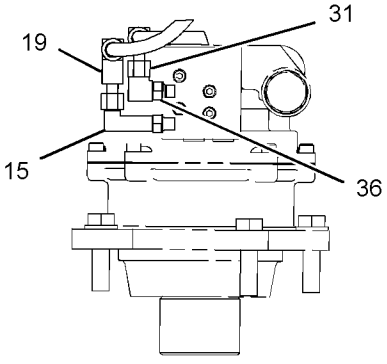

VIEW C-C

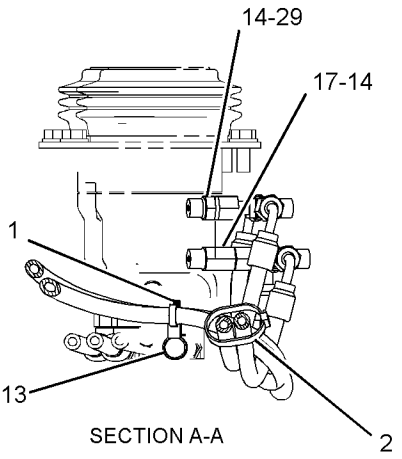

SECTION A-A

REFER TO ALL ILLUSTRATIONS OF THIS GROUP FOR AUXILIARY VIEWS

GRAPHIC #1

g03616458

379-4730 **LINES GP-PILOT (*contd.*)** **i05221619**

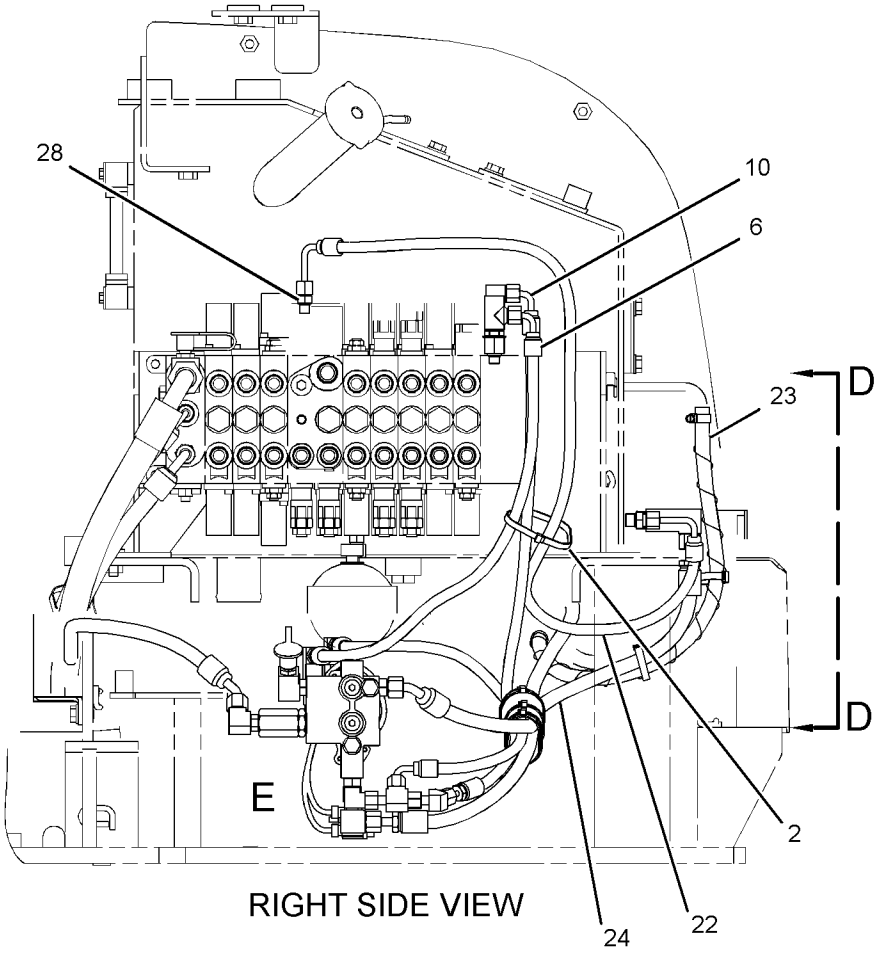

RIGHT SIDE VIEW

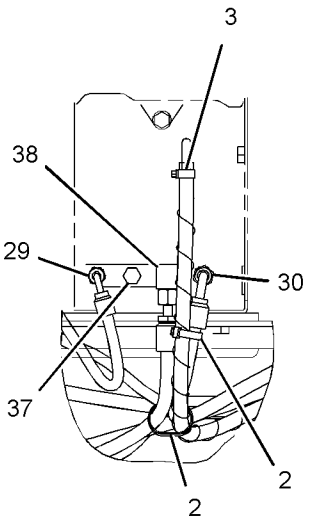

VIEW D-D

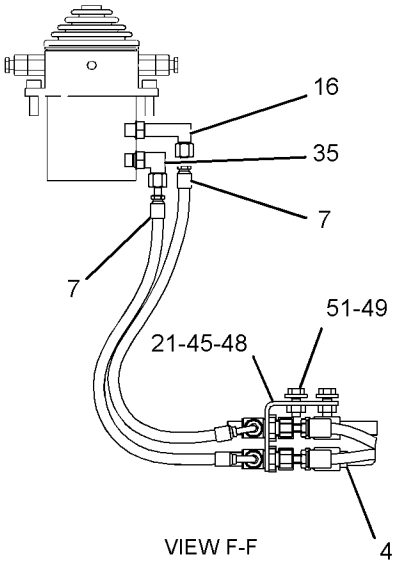

VIEW F-F

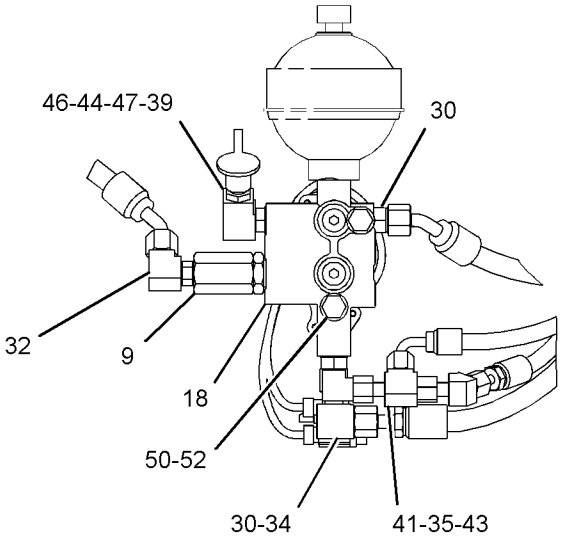

VIEW OF AREA E
(PARTS REMOVED FOR CLARITY)

GRAPHIC #2 **<END>** g03616476

379-4736 LINES GP-PILOT–STANDARD

PART OF 379-4723 CONTROL AR-PILOT HYDRAULIC

AN ATTACHMENT

SMCS-5057, 5059 **i04728072**

NOTE	REF NO	GRAPHIC REF	PART NUMBER	QTY	PART NAME 1 2 3 4 5 6 (PRODUCT LEVEL)	SEE PAGE
	1	1	**4I-9531**	1	BAND-MARKER (RED)	
	2	1	**4I-9532**	2	BAND-MARKER (YELLOW)	
	3	1	**4I-9533**	1	BAND-MARKER (BLUE)	
	4	1	**4I-9534**	2	BAND-MARKER (BROWN)	
	5	1	**4I-9535**	1	BAND-MARKER (ORANGE)	
	6	1	**4I-9536**	1	BAND-MARKER (WHITE)	
	7	1	**4I-9537**	1	BAND-MARKER (GREEN)	
	8	1	**4I-9538**	1	BAND-MARKER (PURPLE)	
	9	1	**7K-1181**	10	STRAP-CABLE	
	10	1	**096-6078**	1	TAPE (PURPLE)	
	11	1	**096-6079**	1	TAPE (WHITE)	
	12	1	**096-6080**	1	TAPE (BLUE)	
	13	1	**096-6081**	2	TAPE (ORANGE)	
	14	1	**096-6083**	1	TAPE (GREEN)	
	15	1	**146-5009**	1	RUBBER	
I	16	1	**196-3895**	1	HOSE AS	
I	17	1	**208-0164**	1	HOSE AS	
	18	1	**210-0686**	1	SHEET-RUBBER	
I	19	1	**214-1324**	1	HOSE AS	
	20	1	**239-3781**	1	HOSE AS	
	21	1	*268-1601*	1	CONNECTOR AS-ORIFICE	
		1	**3J-7354**	1	SEAL-O-RING	
		1	**4J-5477**	1	SEAL-O-RING	
		1	**112-2628**	1	CONNECTOR	
I	22	1	**280-3035**	1	HOSE AS	
	23	1	**283-2847**	1	VALVE GP-REDUCING (SLOW RETURN)	
	24	1	**311-3072**	2	CONNECTOR AS	
	25	1	**320-3430**	1	HOSE AS	
	26	1	**326-7184**	1	HOSE AS	
	27	1	*329-4756*	1	CONNECTOR AS	
		1	**3J-1907**	1	SEAL-O-RING	
		1	**4J-5477**	1	SEAL-O-RING	
		1	**329-4757**	1	CONNECTOR	
	28	1	**330-5698**	1	HOSE AS	
I	29	1	**377-9071**	1	HOSE AS	
	30	1	**381-2048**	2	HOSE AS	
	31	1	**381-2049**	1	HOSE AS	
	32	1	**381-2050**	1	HOSE AS	
	33	1	**381-2051**	2	HOSE AS	
	34	1	**381-2052**	1	HOSE AS	
	35	1	**381-9195**	1	HOSE AS	
	36	1	*148-8316*	9	CONNECTOR AS	
					(EACH INCLUDES)	
		1	**3J-7354**	1	SEAL-O-RING	
		1	**4J-5477**	1	SEAL-O-RING	
		1	**6V-8647**	1	CONNECTOR	
	37	1	*148-8351*	1	ELBOW AS	
		1	**4J-5477**	1	SEAL-O-RING	
		1	**6V-9849**	1	ELBOW	
	38	1	*148-8368*	4	ELBOW AS	
					(EACH INCLUDES)	
		1	**3J-1907**	1	SEAL-O-RING	
		1	**4J-5477**	1	SEAL-O-RING	
		1	**6V-8627**	1	ELBOW	
	39	1	*148-8369*	1	ELBOW AS	
		1	**3J-7354**	1	SEAL-O-RING	
		1	**4J-5477**	1	SEAL-O-RING	
		1	**6V-8628**	1	ELBOW	

379-4736 **LINES GP-PILOT (*contd.*)** **i04728072**

NOTE	REF NO	GRAPHIC REF	PART NUMBER	QTY	PART NAME 1 2 3 4 5 6 (PRODUCT LEVEL)	SEE PAGE
	40	1	*148-8385*	3	ELBOW AS	
					(EACH INCLUDES)	
		1	**3J-7354**	1	SEAL-O-RING	
		1	**4J-5477**	1	SEAL-O-RING	
		1	**6V-9000**	1	ELBOW	
	41	1	*150-4042*	1	CONNECTOR AS	
		1	**3J-7354**	1	SEAL-O-RING	
		1	**4J-5477**	1	SEAL-O-RING	
		1	**6V-9010**	1	CONNECTOR-PORT	
	42	1	*150-4047*	2	ADAPTER AS	
					(EACH INCLUDES)	
		1	**3J-7354**	1	SEAL-O-RING	
		1	**8T-2353**	1	ADAPTER	
	43	1	*150-5968*	1	TEE AS	
		1	**4J-5477**	2	SEAL-O-RING	
		1	**6V-9835**	1	TEE-SWIVEL	
	44	1	*187-2120*	1	ELBOW AS	
		1	**4J-5477**	1	SEAL-O-RING	
		1	**8C-8408**	1	ELBOW	
	45	1	**277-1873**	1	CLIP	
	46	1	**3J-1907**	1	SEAL-O-RING	
	47	1	**4J-5477**	1	SEAL-O-RING	
	48	1	**8T-4121**	1	WASHER-HARD (11X21X2.5-MM THK)	
M	49	1	**8T-4137**	1	BOLT (M10X1.5X20-MM)	

I - REFER TO HYDRAULIC INFORMATION SYSTEM
M - METRIC PART

379-4736 **LINES GP-PILOT (*contd.*)** **i04728072**

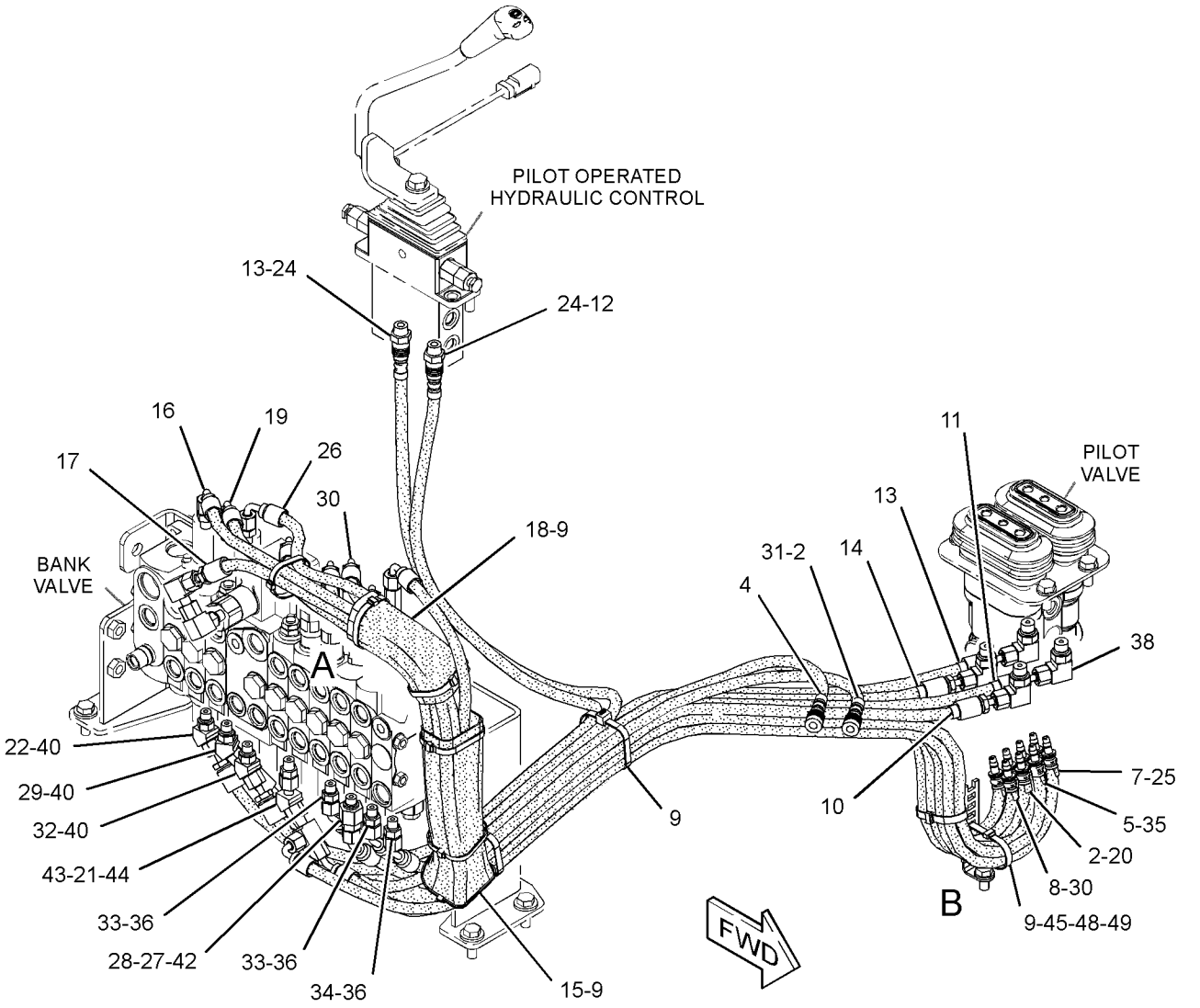

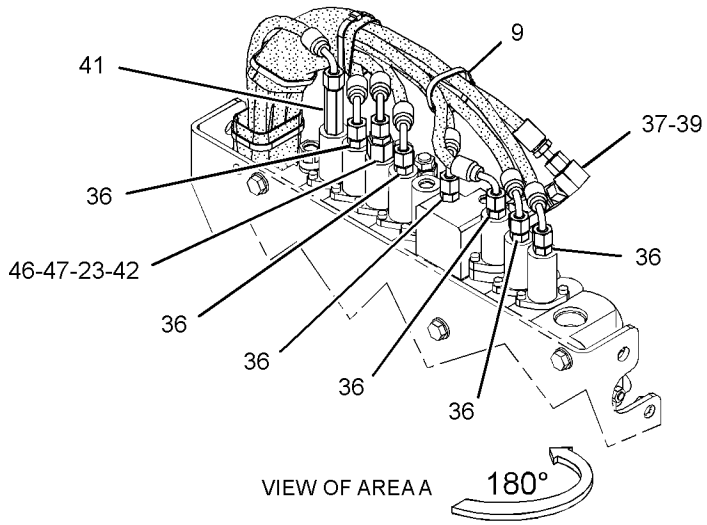

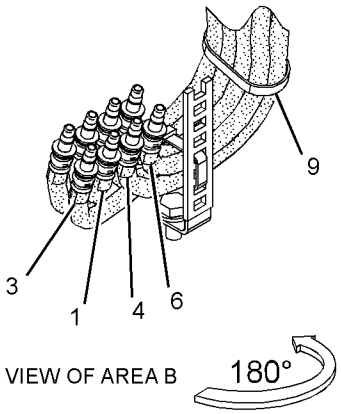

GRAPHIC #1 **<END>** g02885080

379-4737 LINES GP-PILOT–2-WAY

PART OF 379-4724 CONTROL AR-AUXILIARY

AN ATTACHMENT

SMCS-5057, 5059 **i04728073**

NOTE	REF NO	GRAPHIC REF	PART NUMBER	QTY	PART NAME 1 2 3 4 5 6 (PRODUCT LEVEL)	SEE PAGE
	1	2	**4I-9531**	1	BAND-MARKER (RED)	
	2	2	**4I-9532**	2	BAND-MARKER (YELLOW)	
	3	2	**4I-9533**	1	BAND-MARKER (BLUE)	
	4	2	**4I-9534**	2	BAND-MARKER (BROWN)	
	5	2	**4I-9535**	1	BAND-MARKER (ORANGE)	
	6	2	**4I-9536**	1	BAND-MARKER (WHITE)	
	7	2	**4I-9537**	1	BAND-MARKER (GREEN)	
	8	2	**4I-9538**	1	BAND-MARKER (PURPLE)	
	9	2	**7K-1181**	12	STRAP-CABLE	
	10	2	**096-6078**	1	TAPE (PURPLE)	
	11	2	**096-6079**	1	TAPE (WHITE)	
	12	1	**096-6080**	1	TAPE (BLUE)	
	13	1,2	**096-6081**	2	TAPE (ORANGE)	
	14	2	**096-6083**	1	TAPE (GREEN)	
	15	2	**146-5009**	1	RUBBER	
I	16	2	**196-3895**	1	HOSE AS	
I	17	2	**208-0164**	1	HOSE AS	
	18	2	**210-0686**	2	SHEET-RUBBER	
I	19	2	**214-1324**	1	HOSE AS	
	20	2	**239-3781**	1	HOSE AS	
I	21	2	**267-4109**	1	HOSE AS	
	22	2	*268-1601*	1	CONNECTOR AS-ORIFICE	
		2	**3J-7354**	1	SEAL-O-RING	
		2	**4J-5477**	1	SEAL-O-RING	
		2	**112-2628**	1	CONNECTOR	
I	23	2	**280-3035**	1	HOSE AS	
	24	2	**283-2847**	1	VALVE GP-REDUCING (SLOW RETURN)	
I	25	2	**304-0121**	1	HOSE AS	
	26	1	**311-3072**	2	CONNECTOR AS	
	27	1	**326-7184**	1	HOSE AS	
	28	2	*329-4756*	1	CONNECTOR AS	
		2	**3J-1907**	1	SEAL-O-RING	
		2	**4J-5477**	1	SEAL-O-RING	
		2	**329-4757**	1	CONNECTOR	
I	29	2	**377-9071**	1	HOSE AS	
	30	2	**381-2048**	1	HOSE AS	
	31	2	**381-2049**	1	HOSE AS	
	32	1	**381-2050**	1	HOSE AS	
	33	2	**381-2051**	2	HOSE AS	
	34	2	**381-2052**	1	HOSE AS	
I	35	2	**381-2054**	1	HOSE AS	
I	36	2	**381-2055**	1	HOSE AS	
	37	2	*148-8316*	9	CONNECTOR AS	
					(EACH INCLUDES)	
		2	**3J-7354**	1	SEAL-O-RING	
		2	**4J-5477**	1	SEAL-O-RING	
		2	**6V-8647**	1	CONNECTOR	
	38	2	*148-8351*	1	ELBOW AS	
		2	**4J-5477**	1	SEAL-O-RING	
		2	**6V-9849**	1	ELBOW	
	39	2	*148-8368*	4	ELBOW AS	
					(EACH INCLUDES)	
		2	**3J-1907**	1	SEAL-O-RING	
		2	**4J-5477**	1	SEAL-O-RING	
		2	**6V-8627**	1	ELBOW	
	40	2	*148-8369*	1	ELBOW AS	
		2	**3J-7354**	1	SEAL-O-RING	
		2	**4J-5477**	1	SEAL-O-RING	

379-4737 **LINES GP-PILOT (*contd.*)** **i04728073**

NOTE	REF NO	GRAPHIC REF	PART NUMBER	QTY	PART NAME 1 2 3 4 5 6 (PRODUCT LEVEL)	SEE PAGE
		2	**6V-8628**	1	ELBOW	
	41	2	*148-8385*	3	ELBOW AS	
					(EACH INCLUDES)	
		2	**3J-7354**	1	SEAL-O-RING	
		2	**4J-5477**	1	SEAL-O-RING	
		2	**6V-9000**	1	ELBOW	
	42	2	*150-4042*	1	CONNECTOR AS	
		2	**3J-7354**	1	SEAL-O-RING	
		2	**4J-5477**	1	SEAL-O-RING	
		2	**6V-9010**	1	CONNECTOR-PORT	
	43	2	*150-4047*	2	ADAPTER AS	
					(EACH INCLUDES)	
		2	**3J-7354**	1	SEAL-O-RING	
		2	**8T-2353**	1	ADAPTER	
	44	2	*150-5968*	1	TEE AS	
		2	**4J-5477**	2	SEAL-O-RING	
		2	**6V-9835**	1	TEE-SWIVEL	
	45	2	*187-2120*	1	ELBOW AS	
		2	**4J-5477**	1	SEAL-O-RING	
		2	**8C-8408**	1	ELBOW	
	46	2	**277-1873**	1	CLIP	
	47	2	**3J-1907**	1	SEAL-O-RING	
	48	2	**4J-5477**	1	SEAL-O-RING	
	49	2	**8T-4121**	1	WASHER-HARD (11X21X2.5-MM THK)	
M	50	2	**8T-4137**	1	BOLT (M10X1.5X20-MM)	

I - REFER TO HYDRAULIC INFORMATION SYSTEM
M - METRIC PART

379-4737 **LINES GP-PILOT (*contd.*)** **i04728073**

REFER TO ALL ILLUSTRATIONS OF
THIS GROUP FOR AUXILIARY VIEWS

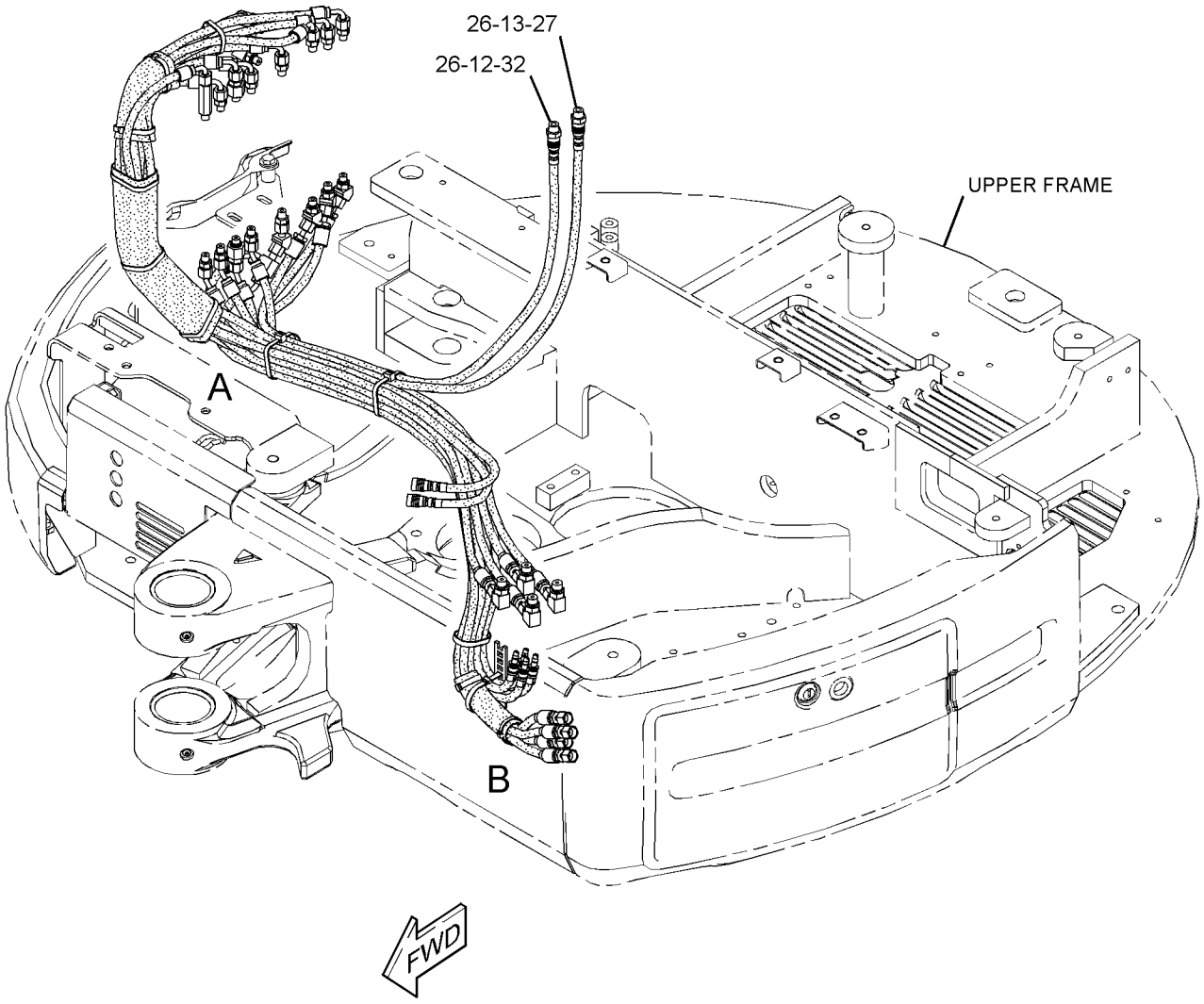

GRAPHIC #1 g02880676

379-4737 **LINES GP-PILOT (*contd.*)** **i04728073**

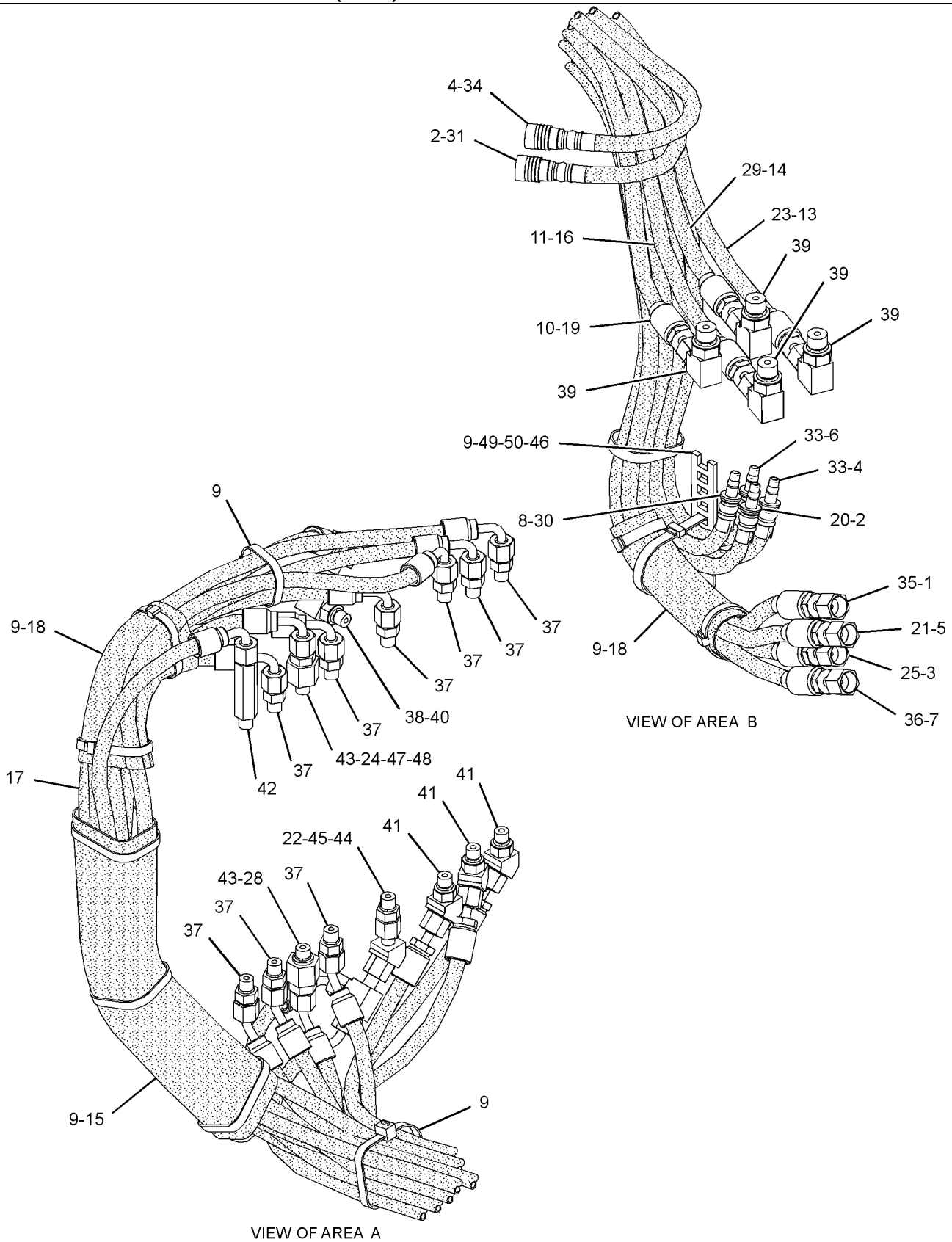

GRAPHIC #2 **<END>** g02880677

380-4661 LINES GP-PILOT–AUXILIARY

PART OF 379-4715 CONTROL AR-AUXILIARY

SMCS-5057, 5059 **i04629842**

NOTE	REF NO	GRAPHIC REF	PART NUMBER	QTY	PART NAME 1 2 3 4 5 6 (PRODUCT LEVEL)	SEE PAGE
	1	1	**7K-1181**	1	STRAP-CABLE	
	2	1	**096-6080**	1	TAPE (BLUE)	
	3	1	**096-6085**	1	TAPE (RED)	
I	4	1	**377-9042**	1	HOSE AS	
I	5	1	**377-9043**	2	HOSE AS	
I	6	1	**381-0559**	1	HOSE AS	
	7	1	*148-8316*	2	CONNECTOR AS	
					(EACH INCLUDES)	
		1	**3J-7354**	1	SEAL-O-RING	
		1	**4J-5477**	1	SEAL-O-RING	
		1	**6V-8647**	1	CONNECTOR	

I - REFER TO HYDRAULIC INFORMATION SYSTEM

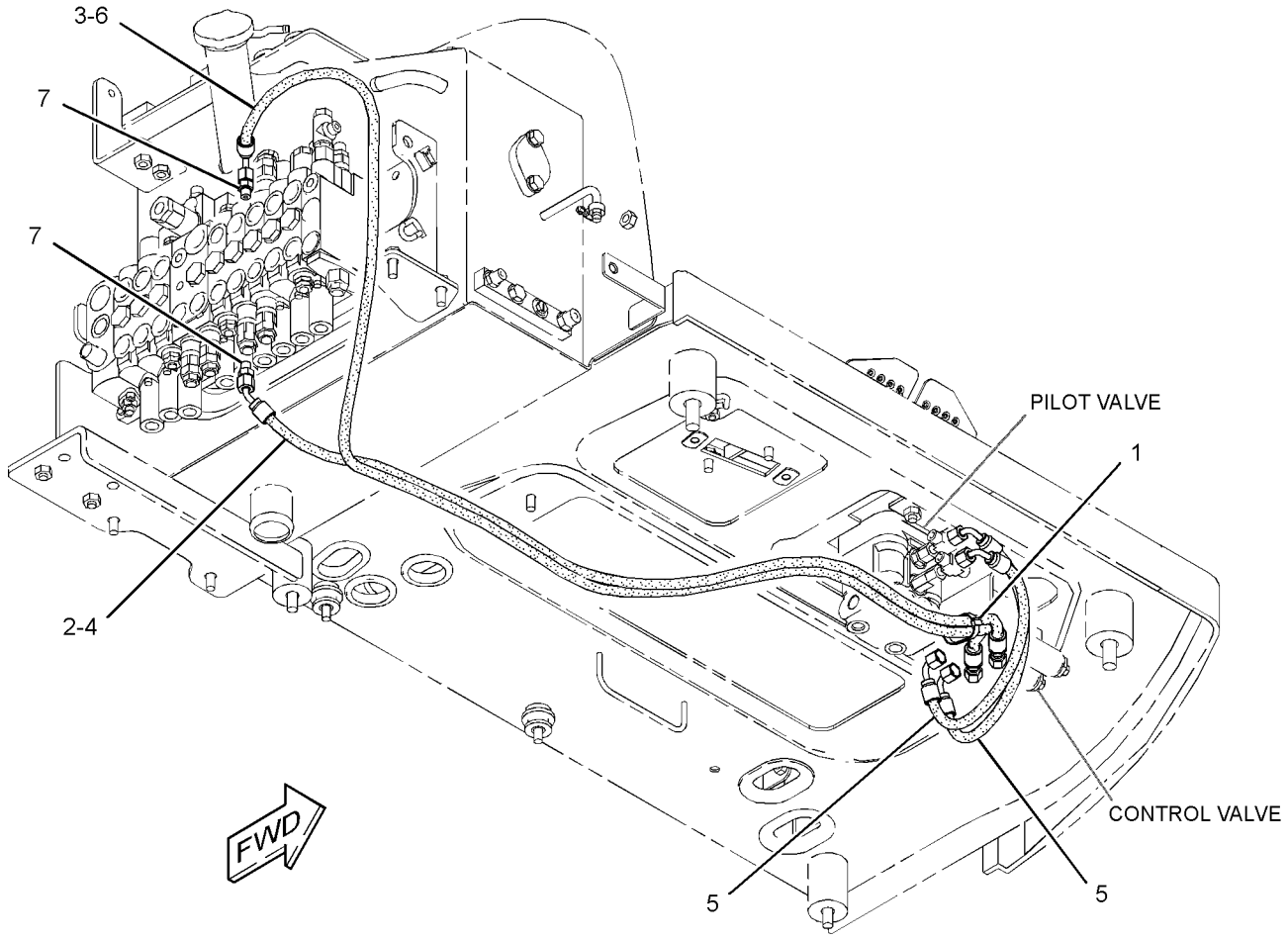

GRAPHIC #1 **<END>** g02801722

385-2796 LINES GP-PILOT—BLADE ANGLE

PART OF 377-8930 BLADE AR-ANGLING
AN ATTACHMENT

SMCS-5057, 5059 **i05033721**

NOTE	REF NO	GRAPHIC REF	PART NUMBER	QTY	PART NAME 1 2 3 4 5 6 (PRODUCT LEVEL)	SEE PAGE
	1	1	**3S-2093**	2	STRAP-CABLE	
	2	1	**7K-1181**	1	STRAP-CABLE	
	3	1	**096-6078**	1	TAPE (PURPLE)	
	4	1	**096-6082**	1	TAPE (YELLOW)	
	5	1	*150-4027*	1	TEE AS	
		1	**3E-2310**	1	TEE	
		1	**3J-1907**	1	SEAL-O-RING	
		1	**6V-8397**	1	SEAL-O-RING	
Y	6	1	**282-9318**	1	VALVE GP-SOLENOID (BLADE)	363
	7	1	**385-2803**	1	BRACKET AS	
I	8	1	**385-2806**	1	HOSE AS	
	9	1	**385-2808**	1	HOSE AS	
	10	1	**385-2809**	1	HOSE AS	
	11	1	**385-2811**	1	HOSE AS	
	12	1	*148-8316*	2	CONNECTOR AS	
					(EACH INCLUDES)	
		1	**3J-7354**	1	SEAL-O-RING	
		1	**4J-5477**	1	SEAL-O-RING	
		1	**6V-8647**	1	CONNECTOR	
	13	1	*148-8325*	1	CONNECTOR AS	
		1	**3J-1907**	1	SEAL-O-RING	
		1	**4J-5477**	1	SEAL-O-RING	
		1	**6V-8641**	1	CONNECTOR	
	14	1	*148-8369*	1	ELBOW AS	
		1	**3J-7354**	1	SEAL-O-RING	
		1	**4J-5477**	1	SEAL-O-RING	
		1	**6V-8628**	1	ELBOW	
	15	1	*148-8378*	1	ELBOW AS	
		1	**3J-1907**	1	SEAL-O-RING	
		1	**6V-8397**	1	SEAL-O-RING	
		1	**6V-8724**	1	ELBOW	
	16	1	*150-4047*	2	ADAPTER AS	
					(EACH INCLUDES)	
		1	**3J-7354**	1	SEAL-O-RING	
		1	**8T-2353**	1	ADAPTER	
	17	1	*165-4931*	1	ELBOW AS	
		1	**3J-1907**	1	SEAL-O-RING	
		1	**6V-8077**	1	ELBOW	
	18	1	*165-7014*	1	TEE AS	
		1	**3J-1907**	1	SEAL-O-RING	
		1	**4J-5477**	1	SEAL-O-RING	
		1	**8C-3309**	1	TEE	
	19	1	*180-9933*	1	ADAPTER AS	
		1	**3J-7354**	1	SEAL-O-RING	
		1	**135-9941**	1	ADAPTER	
	20	1	*183-7263*	2	PLUG AS	
					(EACH INCLUDES)	
		1	**3J-7354**	1	SEAL-O-RING	
		1	**9S-8002**	1	PLUG-O-RING	
	21	1	**311-3072**	3	CONNECTOR AS	
	22	1	**8T-4121**	2	WASHER-HARD (11X21X2.5-MM THK)	
M	23	1	**8T-4195**	2	BOLT (M10X1.5X30-MM)	
M	24	1	**8T-4200**	4	BOLT (M8X1.25X16-MM)	
	25	1	**8T-4224**	4	WASHER-HARD (8.8X16X2-MM THK)	
G	26	1	**160-2243**		SLEEVE-ABRASION (21.7-IN)	
G	26A	1	**160-2243**		SLEEVE-ABRASION (15-IN)	

G - ORDER BY THE INCH
I - REFER TO HYDRAULIC INFORMATION SYSTEM
M - METRIC PART
Y - SEPARATE ILLUSTRATION

385-2796 **LINES GP-PILOT (*contd.*)** **i05033721**

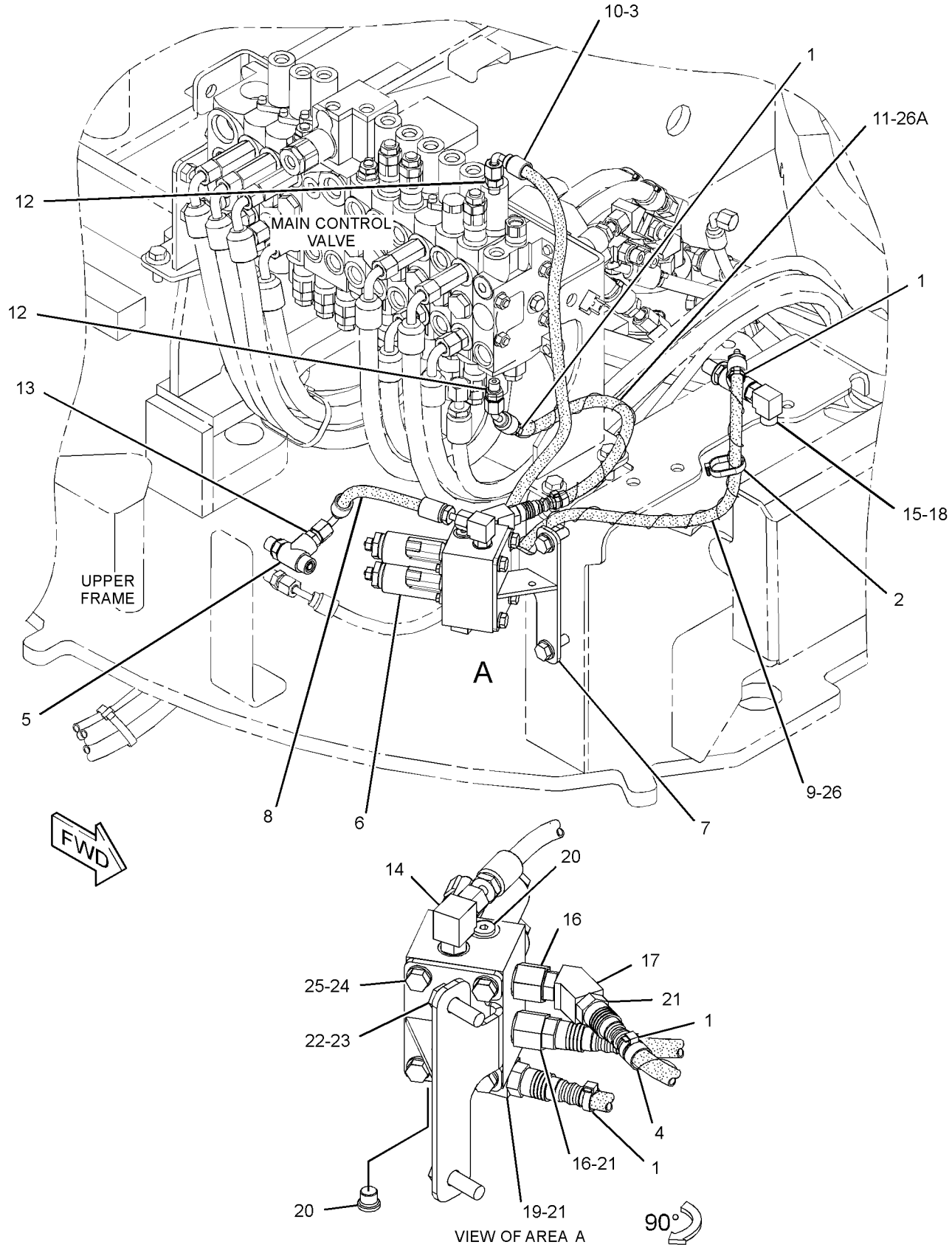

GRAPHIC #1

<END>

g02813837

379-4701 LINES GP-RETURN

PART OF 377-8920 BLADE AR-STRAIGHT

AN ATTACHMENT

SMCS-5057 **i04623148**

NOTE	REF NO	GRAPHIC REF	PART NUMBER	QTY	PART NAME 1 2 3 4 5 6 (PRODUCT LEVEL)	SEE PAGE
	1	1	**3S-2093**	1	STRAP-CABLE	
	2	1	**8C-3451**	1	CAP-DUST	
	3	1	**8K-4739**	1	ADAPTER	
	4	1	**095-1388**	3	CLAMP-HOSE	
	5	1	**095-1390**	2	CLAMP-HOSE	
	6	1	**196-4745**	1	HOSE	
	7	1	**266-7379**	1	STRAP-CABLE	
	8	1	*267-4044*	1	ELBOW AS	
		1	**2M-9780**	1	SEAL-O-RING	
		1	**6V-8397**	1	SEAL-O-RING	
		1	**267-4043**	1	ELBOW	
I	9	1	**381-0589**	1	HOSE AS	
	10	1	**381-0590**	1	TUBE AS	
	11	1	**381-0592**	1	TUBE AS	
	12	1	**095-1701**	1	SEAL-O-RING	
	13	1	*165-4927*	1	CONNECTOR AS	
		1	**2T-2991**	1	CONNECTOR	
		1	**4K-1388**	1	SEAL-O-RING	
		1	**6V-9746**	1	SEAL-O-RING	
	14	1	**2M-9780**	1	SEAL-O-RING	
	15	1	**3J-7354**	1	SEAL-O-RING	
	16	1	**4S-1962**	1	CLIP	
	17	1	**6V-8398**	1	SEAL-O-RING	
	18	1	**6V-9746**	1	SEAL-O-RING	
	19	1	**8C-3446**	1	VALVE-FLUID SAMPLING (COOLANT)	
	20	1	**8T-4121**	3	WASHER-HARD (11X21X2.5-MM THK)	
M	21	1	**8T-4136**	1	BOLT (M10X1.5X25-MM)	
M	22	1	**8T-4195**	2	BOLT (M10X1.5X30-MM)	
E	23	1	**5P-0743**		HOSE (64-CM)	

E - ORDER BY THE CENTIMETER
I - REFER TO HYDRAULIC INFORMATION SYSTEM
M - METRIC PART

379-4701 **LINES GP-RETURN (*contd.*)** **i04623148**

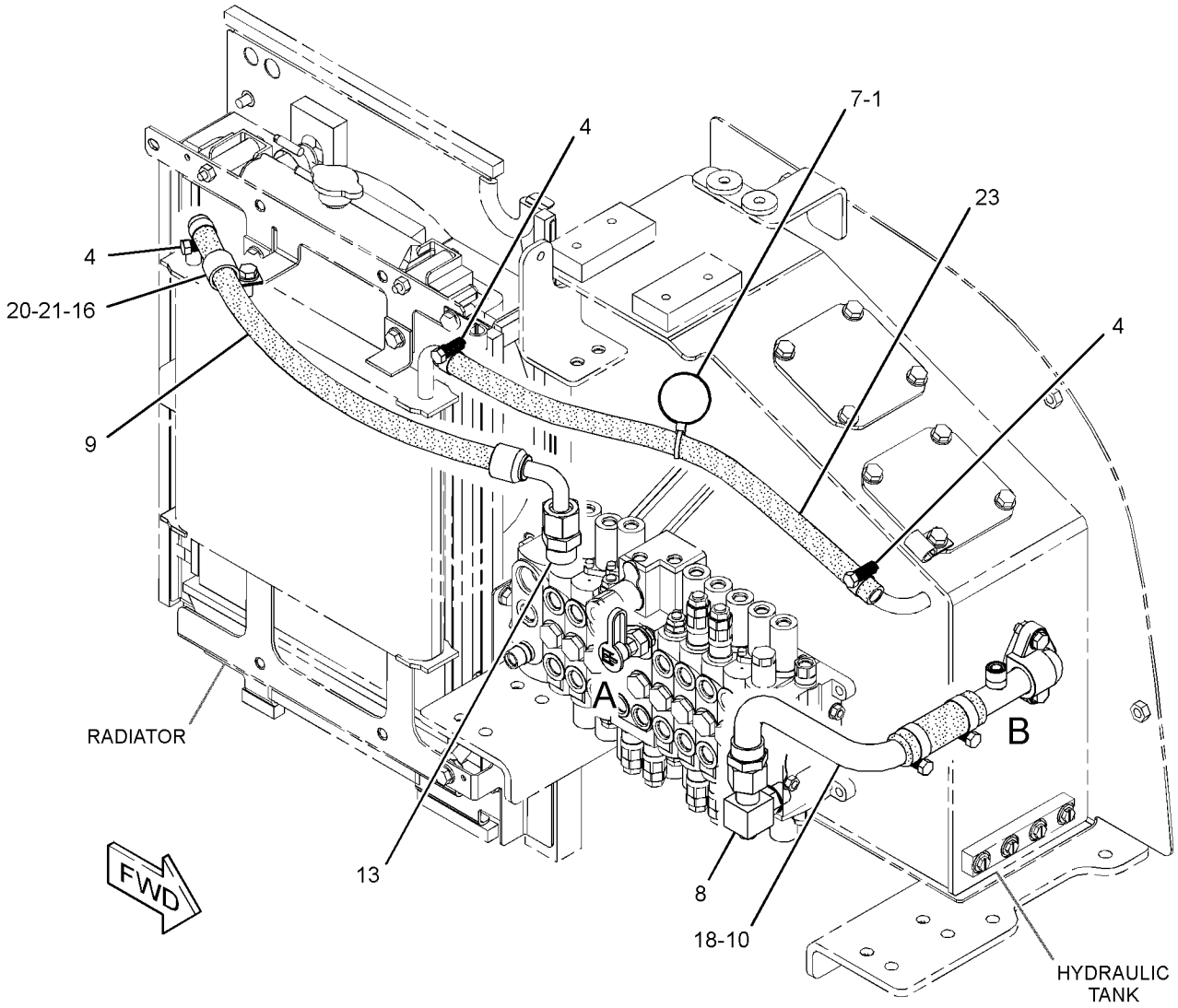

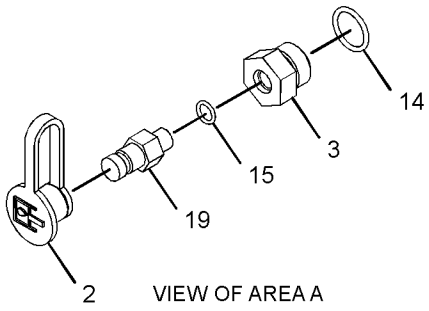

VIEW OF AREA A

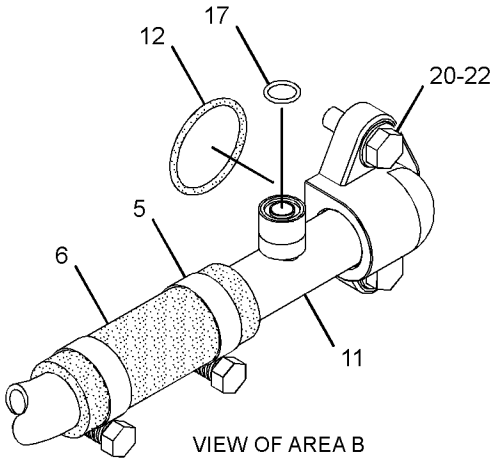

VIEW OF AREA B

GRAPHIC #1 **<END>** g02799678

385-2797 LINES GP-RETURN—BLADE

PART OF 377-8930 BLADE AR-ANGLING

AN ATTACHMENT

SMCS-5057 **i04658615**

NOTE	REF NO	GRAPHIC REF	PART NUMBER	QTY	PART NAME 1 2 3 4 5 6 (PRODUCT LEVEL)	SEE PAGE
	1	1	**3S-2093**	1	STRAP-CABLE	
	2	1	**8C-3451**	1	CAP-DUST	
	3	1	**8K-4739**	1	ADAPTER	
	4	1	**095-1388**	3	CLAMP-HOSE	
	5	1	**095-1390**	2	CLAMP-HOSE	
	6	1	**196-4745**	1	HOSE	
	7	1	**266-7379**	1	STRAP-CABLE	
	8	1	*267-4044*	1	ELBOW AS	
		1	**2M-9780**	1	SEAL-O-RING	
		1	**6V-8397**	1	SEAL-O-RING	
		1	**267-4043**	1	ELBOW	
I	9	1	**381-0589**	1	HOSE AS	
	10	1	**381-0592**	1	TUBE AS	
	11	1	**385-2800**	1	PIPE AS	
	12	1	**095-1701**	1	SEAL-O-RING	
	13	1	*165-4927*	1	CONNECTOR AS	
		1	**2T-2991**	1	CONNECTOR	
		1	**4K-1388**	1	SEAL-O-RING	
		1	**6V-9746**	1	SEAL-O-RING	
	14	1	**2M-9780**	1	SEAL-O-RING	
	15	1	**3J-7354**	1	SEAL-O-RING	
	16	1	**4S-1962**	1	CLIP	
	17	1	**6V-8398**	1	SEAL-O-RING	
	18	1	**6V-9746**	1	SEAL-O-RING	
	19	1	**8C-3446**	1	VALVE-FLUID SAMPLING (COOLANT)	
	20	1	**8T-4121**	3	WASHER-HARD (11X21X2.5-MM THK)	
M	21	1	**8T-4136**	1	BOLT (M10X1.5X25-MM)	
M	22	1	**8T-4195**	2	BOLT (M10X1.5X30-MM)	
E	23	1	**5P-0743**		HOSE (64-CM)	

E - ORDER BY THE CENTIMETER
I - REFER TO HYDRAULIC INFORMATION SYSTEM
M - METRIC PART

385-2797 **LINES GP-RETURN (*contd.*)** **i04658615**

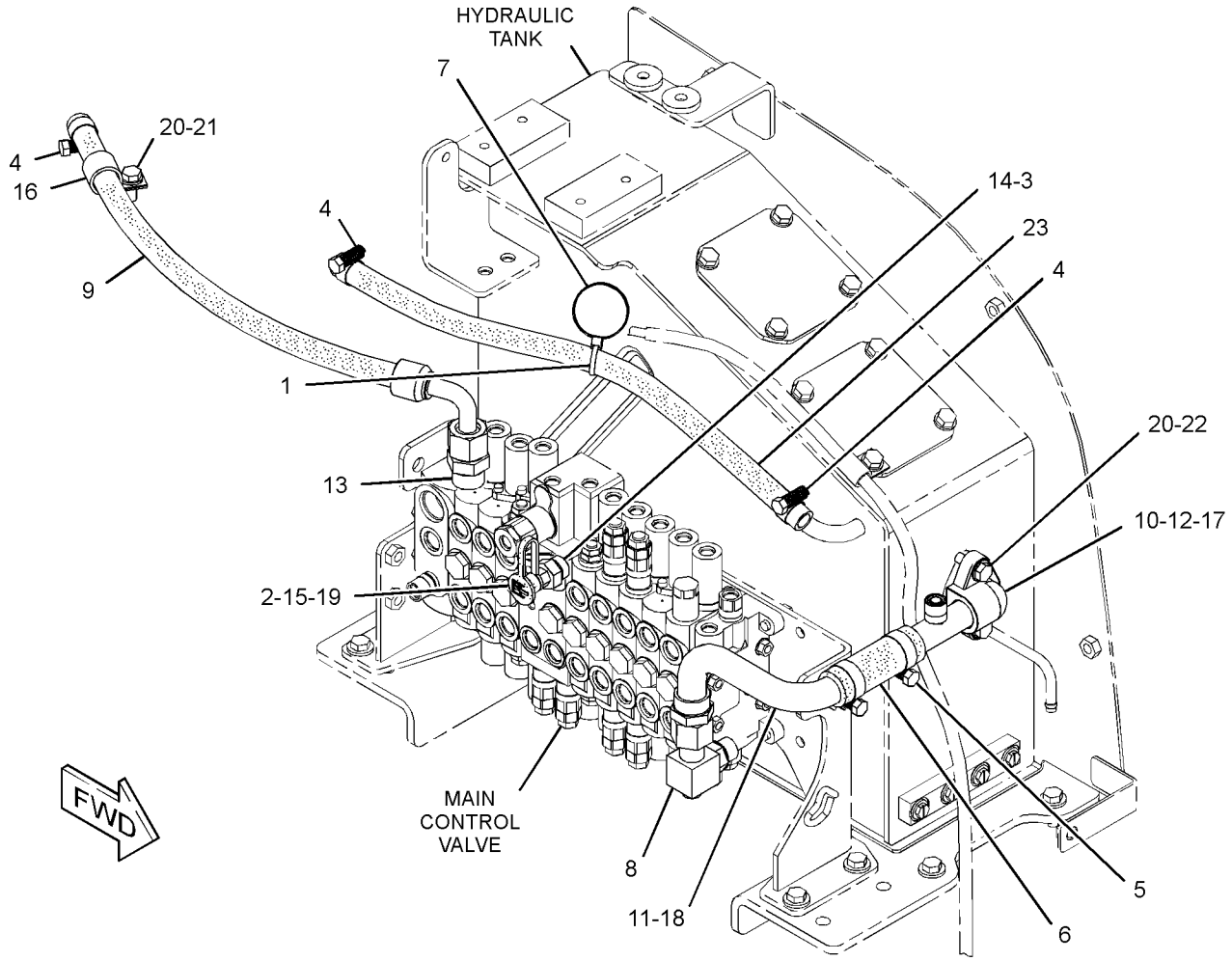

GRAPHIC #1 **<END>** g02801220

421-9099 LINES GP-STICK

PART OF 421-8461 STICK AR

AN ATTACHMENT

SMCS-5057, 5458, 6502 **i05331074**

NOTE	REF NO	GRAPHIC REF	PART NUMBER	QTY	PART NAME 1 2 3 4 5 6 (PRODUCT LEVEL)	SEE PAGE
	1	1	**7I-2673**	1	STRAP-CABLE	
	2	1	**7K-1181**	10	STRAP-CABLE	
	3	1	**096-6079**	1	TAPE (WHITE)	
	4	1	*169-4274*	1	TEE AS	
		1	**3J-7354**	1	SEAL-O-RING	
		1	**4J-5477**	1	SEAL-O-RING	
		1	**8T-3313**	1	TEE-O-RING	
	5	1	**267-4144**	2	TUBE AS	
	6	1	**274-5472**	1	ELBOW	
I	7	1	**292-8330**	1	HOSE AS	
	9	1	**417-1105**	1	VALVE GP-CHECK (PILOT OPERATED)	
	10	1	**422-1353**	1	BRACKET AS	
M		1	**8T-3490**	1	NUT-WELD (M10X1.5-THD)	
M		1	**8T-3612**	2	NUT-WELD (M8X1.25-THD)	
I	11	1	**422-1355**	1	HOSE AS	
I	12	1	**422-1356**	1	HOSE AS	
I	13	1	**422-1357**	1	HOSE AS	
	14	1	**422-1360**	1	BRACKET	
	15	1	**422-1361**	1	GROMMET	
	16	1	*148-8318*	1	CONNECTOR AS	
		1	**3K-0360**	1	SEAL-O-RING	
		1	**6V-8397**	1	SEAL-O-RING	
		1	**6V-8634**	1	CONNECTOR	
	17	1	*148-8336*	1	CONNECTOR AS	
		1	**3J-1907**	1	SEAL-O-RING	
		1	**6V-8397**	1	SEAL-O-RING	
		1	**6V-8636**	1	CONNECTOR	
	18	1	*148-8346*	1	ELBOW AS	
		1	**3K-0360**	1	SEAL-O-RING	
		1	**6V-8398**	1	SEAL-O-RING	
		1	**8T-1686**	1	ELBOW	
	19	1	*148-8368*	1	ELBOW AS	
		1	**3J-1907**	1	SEAL-O-RING	
		1	**4J-5477**	1	SEAL-O-RING	
		1	**6V-8627**	1	ELBOW	
	20	1	*150-4043*	1	CONNECTOR AS	
		1	**3J-1907**	1	SEAL-O-RING	
		1	**6V-8398**	1	SEAL-O-RING	
		1	**6V-9873**	1	CONNECTOR	
	21	1	*150-4052*	1	UNION AS	
		1	**4J-5477**	2	SEAL-O-RING	
		1	**6V-8993**	1	UNION	
	22	1	**2P-1279**	1	LOCKNUT (9/16-18-THD)	
	23	1	**4S-1962**	1	CLIP	
	24	1	**6V-8397**	4	SEAL-O-RING	
	25	1	**8T-4121**	3	WASHER-HARD (11X21X2.5-MM THK)	
M	26	1	**8T-4136**	1	BOLT (M10X1.5X25-MM)	
M	27	1	**8T-4185**	1	BOLT (M10X1.5X50-MM)	
M	28	1	**8T-4196**	1	BOLT (M10X1.5X35-MM)	
	29	1	**8T-4224**	2	WASHER-HARD (8.8X16X2-MM THK)	
M	30	1	**8T-7329**	2	BOLT (M8X1.25X55-MM)	

I - REFER TO HYDRAULIC INFORMATION SYSTEM
M - METRIC PART

421-9099 **LINES GP-STICK (*contd.*)** **i05331074**

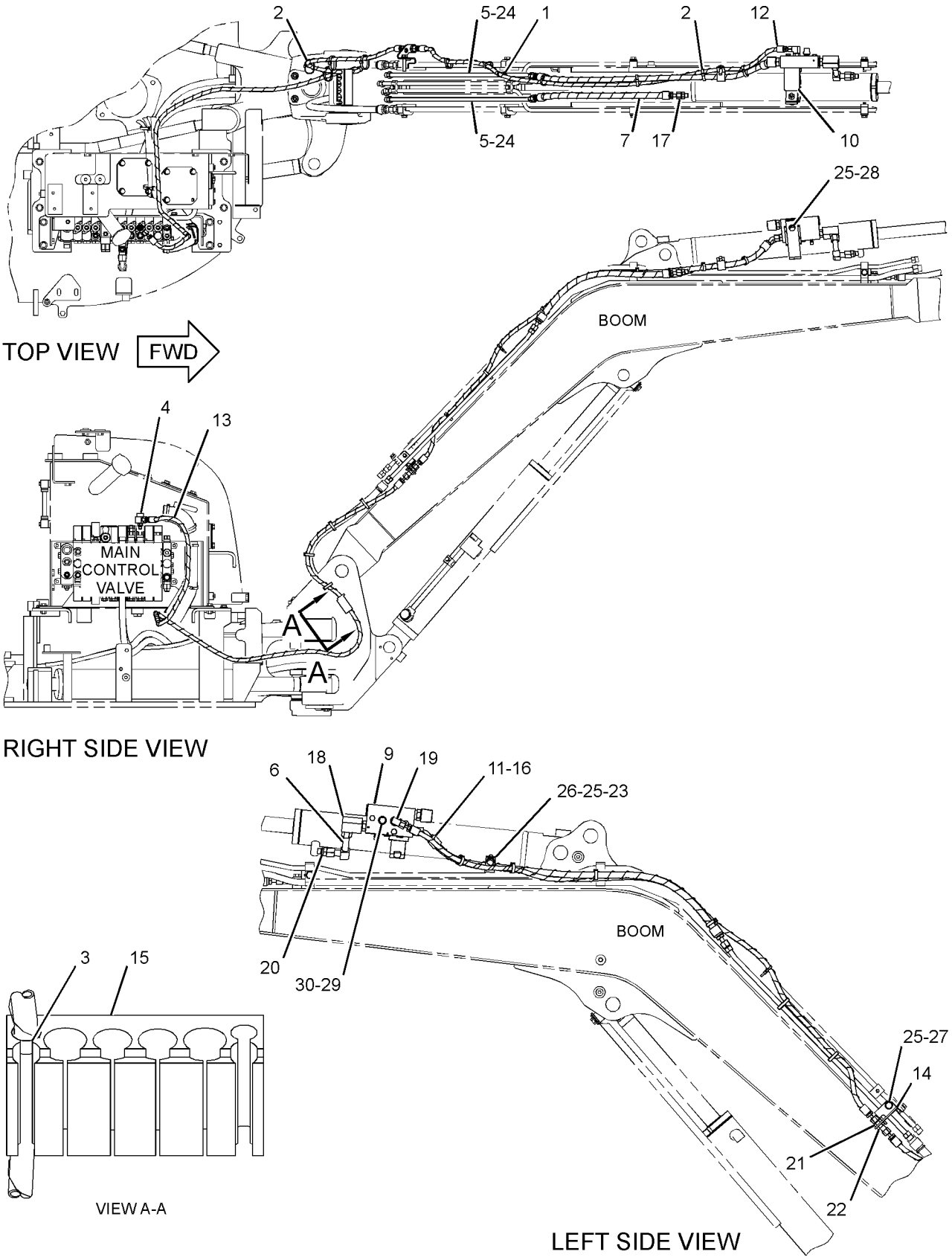

GRAPHIC #1 **<END>** g03379379

379-4704 LINES GP-SWING CYLINDER–BOOM

PART OF 379-4683 CONTROL AR-AUXILIARY
AN ATTACHMENT

SMCS-5057, 5105, 6544 **i04623152**

NOTE	REF NO	GRAPHIC REF	PART NUMBER	QTY	PART NAME 1 2 3 4 5 6 (PRODUCT LEVEL)	SEE PAGE
I	1	1	**381-1545**	1	HOSE AS	
I	2	1	**381-1546**	1	HOSE AS	
	3	1	*148-8336*	1	CONNECTOR AS	
		1	**3J-1907**	1	SEAL-O-RING	
		1	**6V-8397**	1	SEAL-O-RING	
		1	**6V-8636**	1	CONNECTOR	
	4	1	*148-8378*	2	ELBOW AS	
					(EACH INCLUDES)	
		1	**3J-1907**	1	SEAL-O-RING	
		1	**6V-8397**	1	SEAL-O-RING	
		1	**6V-8724**	1	ELBOW	
	5	1	*164-9869*	1	CONNECTOR AS	
		1	**3J-1907**	1	SEAL-O-RING	
		1	**6V-8397**	1	SEAL-O-RING	
		1	**9X-2297**	1	CONNECTOR	

I - REFER TO HYDRAULIC INFORMATION SYSTEM

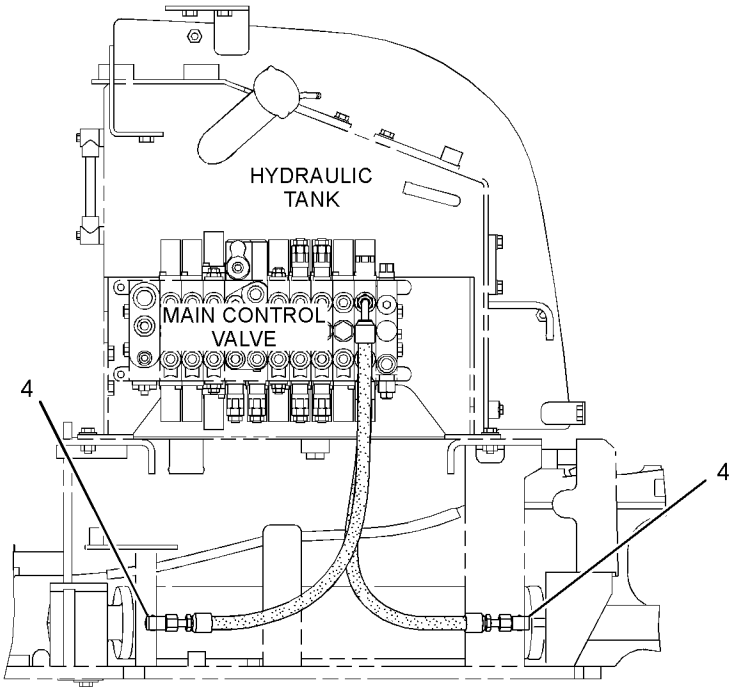

RIGHT SIDE VIEW

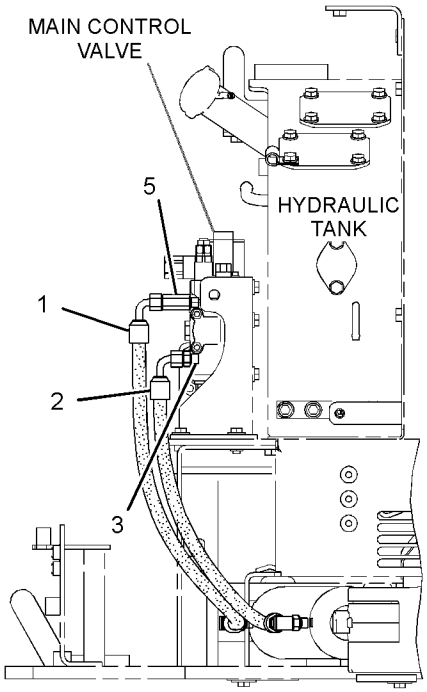

FRONT VIEW

GRAPHIC #1 **<END>** g02798813

379-4735 LINES GP-SWING CYLINDER—2ND AUXILIARY

PART OF 379-4721, 379-4722 CONTROL AR-AUXILIARY
AN ATTACHMENT

SMCS-5057, 5105, 6544 **i05041798**

NOTE	REF NO	GRAPHIC REF	PART NUMBER	QTY	PART NAME 1 2 3 4 5 6 (PRODUCT LEVEL)	SEE PAGE
	1	1	**096-6079**	2	TAPE (WHITE)	
	2	1	*148-8367*	1	ELBOW AS	
		1	**6V-8397**	1	SEAL-O-RING	
		1	**6V-9850**	1	ELBOW	
	3	1	*148-8383*	2	ELBOW AS	
					(EACH INCLUDES)	
		1	**3K-0360**	1	SEAL-O-RING	
		1	**6V-8397**	1	SEAL-O-RING	
		1	**8T-1683**	1	ELBOW	
	4	1	**279-4730**	3	STRAP-CABLE (BLACK)	
	5	1	**372-9897**	1	VALVE GP-CONTROL (SWING BOOM, WORK TOOL)	
J		1	**385-4233**	1	BLOCK	
		1	**385-4234**	1	COIL AS	
J		1	**385-4235**	1	KIT-SEAL	
					(INCLUDES SEALS)	
	6	1	**381-1547**	1	BRACKET AS	
M		1	**8T-3612**	2	NUT-WELD (M8X1.25-THD)	
I	7	1	**417-9823**	1	HOSE AS	
I	8	1	**381-1552**	1	HOSE AS	
I	9	1	**381-1553**	1	HOSE AS	
I	10	1	**381-1555**	1	HOSE AS	
I	11	1	**382-8825**	1	HOSE AS	
I	12	1	**382-8826**	1	HOSE AS	
	13	1	*148-8336*	1	CONNECTOR AS	
		1	**3J-1907**	1	SEAL-O-RING	
		1	**6V-8397**	1	SEAL-O-RING	
		1	**6V-8636**	1	CONNECTOR	
	14	1	*148-8374*	4	ELBOW AS	
					(EACH INCLUDES)	
		1	**3K-0360**	1	SEAL-O-RING	
		1	**6V-8397**	1	SEAL-O-RING	
		1	**6V-8723**	1	ELBOW	
	15	1	*148-8378*	2	ELBOW AS	
					(EACH INCLUDES)	
		1	**3J-1907**	1	SEAL-O-RING	
		1	**6V-8397**	1	SEAL-O-RING	
		1	**6V-8724**	1	ELBOW	
	16	1	*164-9869*	1	CONNECTOR AS	
		1	**3J-1907**	1	SEAL-O-RING	
		1	**6V-8397**	1	SEAL-O-RING	
		1	**9X-2297**	1	CONNECTOR	
M	17	1	**6V-8213**	2	BOLT-SOCKET HEAD (M8X1.25X70-MM)	
	18	1	**8T-4121**	2	WASHER-HARD (11X21X2.5-MM THK)	
M	19	1	**8T-4137**	2	BOLT (M10X1.5X20-MM)	

I - REFER TO HYDRAULIC INFORMATION SYSTEM
J - KIT MARKED J SERVICES PARTS MARKED J
M - METRIC PART

379-4735 **LINES GP-SWING CYLINDER (*contd.*)** **i05041798**

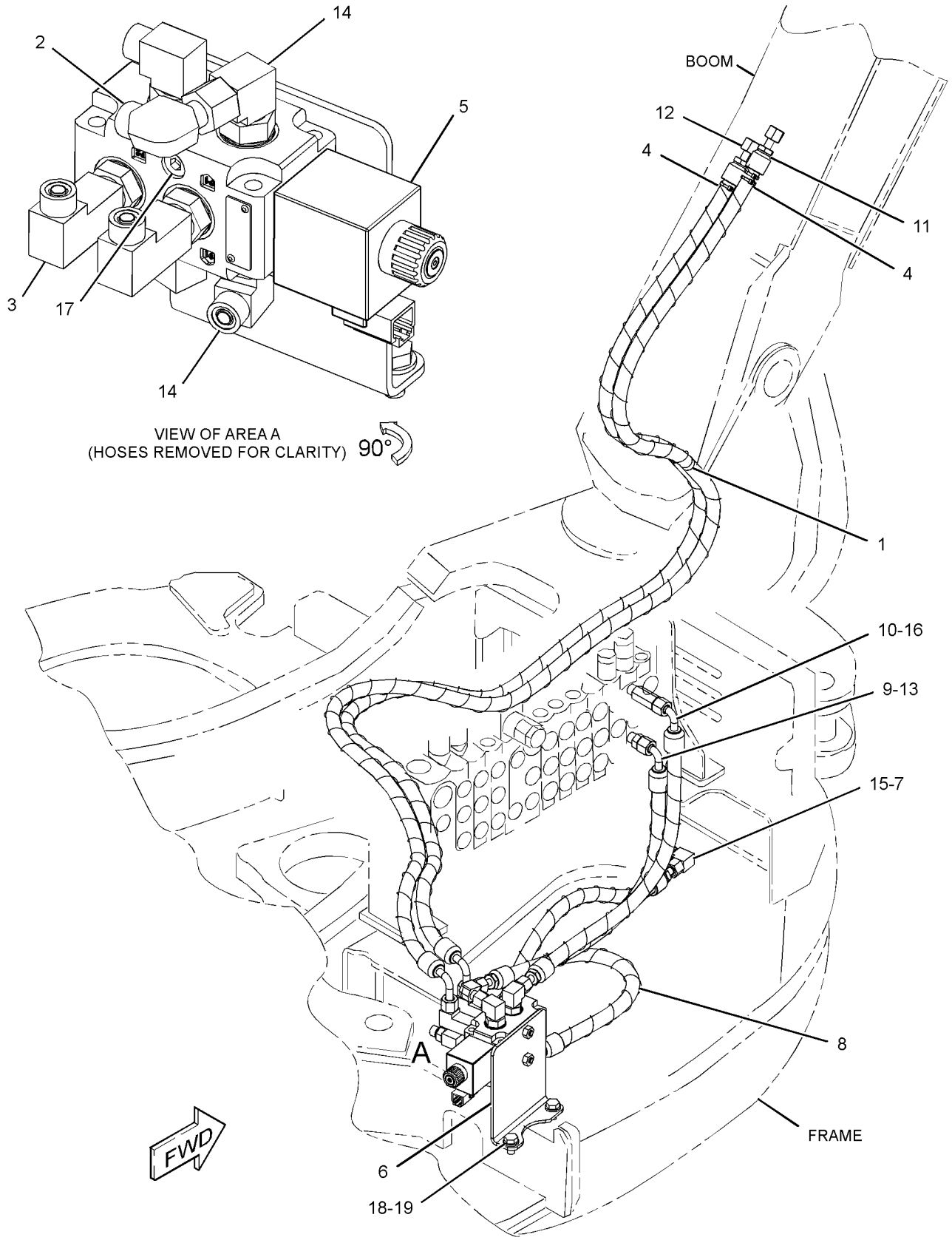

GRAPHIC #1 **<END>** g03312677

379-4702 LINES GP-SWING MOTOR–STANDARD

PART OF 377-8920 BLADE AR-STRAIGHT

AN ATTACHMENT

SMCS-5057, 5058, 5105 **i04623149**

NOTE	REF NO	GRAPHIC REF	PART NUMBER	QTY	PART NAME 1 2 3 4 5 6 (PRODUCT LEVEL)	SEE PAGE
	1	1	**7K-1181**	2	STRAP-CABLE	
	2	1	**096-6084**	1	TAPE (BROWN)	
	3	1	*267-4063*	1	CONNECTOR AS	
		1	**3J-1907**	1	SEAL-O-RING	
		1	**4J-5477**	1	SEAL-O-RING	
		1	**156-8801**	1	CONNECTOR	
	4	1	**279-4730**	1	STRAP-CABLE (BLACK)	
	5	1	**279-4731**	1	STRAP-CABLE (RED)	
	6	1	**279-4732**	1	STRAP-CABLE (YELLOW)	
	7	1	**279-4733**	1	STRAP-CABLE (BLUE)	
	8	1	**279-4734**	1	STRAP-CABLE (BROWN)	
	9	1	**279-4735**	1	STRAP-CABLE (ORANGE)	
	10	1	**279-4736**	1	STRAP-CABLE (WHITE)	
	11	1	**279-4737**	1	STRAP-CABLE (GREEN)	
	12	1	**279-4738**	1	STRAP-CABLE (PURPLE)	
I	13	1	**304-0121**	1	HOSE AS	
I	14	1	**381-0578**	1	HOSE AS	
I	15	1	**381-0579**	1	HOSE AS	
I	16	1	**381-0580**	1	HOSE AS	
I	17	1	**381-0581**	1	HOSE AS	
I	18	1	**381-0582**	1	HOSE AS	
I	19	1	**381-0583**	1	HOSE AS	
I	20	1	**381-0584**	1	HOSE AS	
I	21	1	**381-0585**	1	HOSE AS	
I	22	1	**381-0586**	1	HOSE AS	
I	23	1	**381-0587**	1	HOSE AS	
	24	1	*148-8318*	1	CONNECTOR AS	
		1	**3K-0360**	1	SEAL-O-RING	
		1	**6V-8397**	1	SEAL-O-RING	
		1	**6V-8634**	1	CONNECTOR	
	25	1	*148-8325*	1	CONNECTOR AS	
		1	**3J-1907**	1	SEAL-O-RING	
		1	**4J-5477**	1	SEAL-O-RING	
		1	**6V-8641**	1	CONNECTOR	
	26	1	*148-8336*	5	CONNECTOR AS	
					(EACH INCLUDES)	
		1	**3J-1907**	1	SEAL-O-RING	
		1	**6V-8397**	1	SEAL-O-RING	
		1	**6V-8636**	1	CONNECTOR	
	27	1	*148-8351*	1	ELBOW AS	
		1	**4J-5477**	1	SEAL-O-RING	
		1	**6V-9849**	1	ELBOW	
	28	1	*148-8353*	1	ELBOW AS	
		1	**3J-1907**	1	SEAL-O-RING	
		1	**6V-8397**	1	SEAL-O-RING	
		1	**6V-9001**	1	ELBOW	
	29	1	*148-8363*	3	ELBOW AS	
					(EACH INCLUDES)	
		1	**3K-0360**	1	SEAL-O-RING	
		1	**6V-8397**	1	SEAL-O-RING	
		1	**6V-9876**	1	ELBOW	
	30	1	*148-8367*	2	ELBOW AS	
					(EACH INCLUDES)	
		1	**6V-8397**	1	SEAL-O-RING	
		1	**6V-9850**	1	ELBOW	
	31	1	*148-8369*	1	ELBOW AS	
		1	**3J-7354**	1	SEAL-O-RING	
		1	**4J-5477**	1	SEAL-O-RING	
		1	**6V-8628**	1	ELBOW	

379-4702 **LINES GP-SWING MOTOR (*contd.*)** **i04623149**

NOTE	REF NO	GRAPHIC REF	PART NUMBER	QTY	PART NAME 1 2 3 4 5 6 (PRODUCT LEVEL)	SEE PAGE
	32	1	*148-8371*	1	ELBOW AS	
		1	**6V-8397**	1	SEAL-O-RING	
		1	**8C-8988**	1	ELBOW	
	33	1	*148-8378*	3	ELBOW AS	
					(EACH INCLUDES)	
		1	**3J-1907**	1	SEAL-O-RING	
		1	**6V-8397**	1	SEAL-O-RING	
		1	**6V-8724**	1	ELBOW	
	34	1	*150-3065*	1	ELBOW AS	
		1	**3J-1907**	1	SEAL-O-RING	
		1	**6V-0484**	1	ELBOW	
	35	1	*164-9869*	1	CONNECTOR AS	
		1	**3J-1907**	1	SEAL-O-RING	
		1	**6V-8397**	1	SEAL-O-RING	
		1	**9X-2297**	1	CONNECTOR	
	36	1	**166-3032**	3	CONNECTOR	
	37	1	**3J-1907**	3	SEAL-O-RING	
	38	1	**6V-8397**	3	SEAL-O-RING	
E	39	1	**310-4984**		SLEEVE (24-CM)	

E - ORDER BY THE CENTIMETER
I - REFER TO HYDRAULIC INFORMATION SYSTEM

379-4702 **LINES GP-SWING MOTOR (*contd.*)** **i04623149**

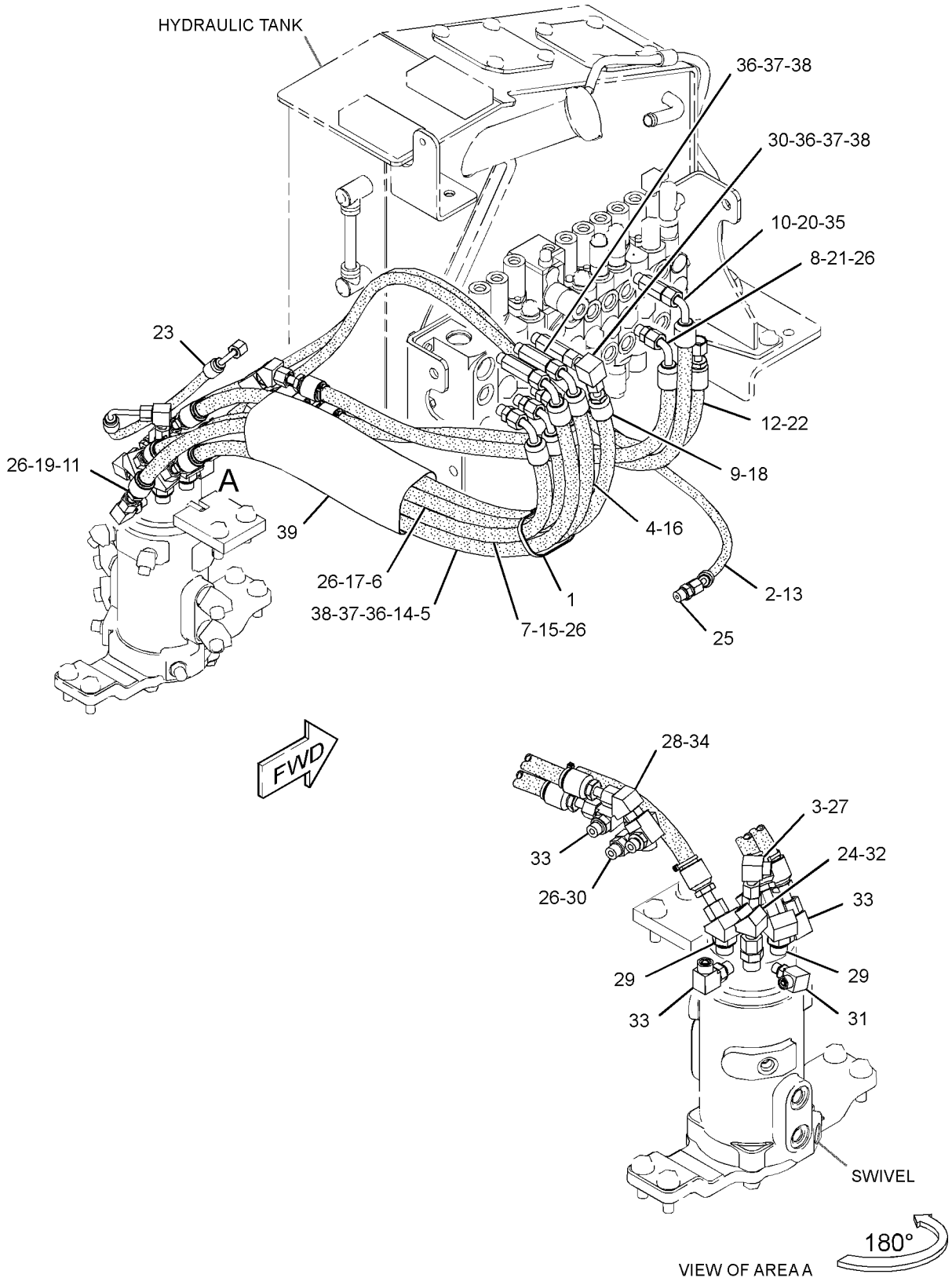

GRAPHIC #1 **<END>** g02799188

385-2795 LINES GP-SWING MOTOR

PART OF 377-8930 BLADE AR-ANGLING
AN ATTACHMENT

SMCS-5057, 5058, 5105 **i04658613**

NOTE	REF NO	GRAPHIC REF	PART NUMBER	QTY	PART NAME 1 2 3 4 5 6 (PRODUCT LEVEL)	SEE PAGE
	1	1	**7K-1181**	3	STRAP-CABLE	
	2	1	**096-6078**	1	TAPE (PURPLE)	
	3	1	**096-6082**	1	TAPE (YELLOW)	
	4	1	**096-6084**	1	TAPE (BROWN)	
	5	1	*267-4048*	1	ELBOW AS	
		1	**3J-1907**	1	SEAL-O-RING	
		1	**4J-5477**	1	SEAL-O-RING	
		1	**267-4047**	1	ELBOW	
I	6	1	**275-9724**	1	HOSE AS	
	7	1	**279-4730**	1	STRAP-CABLE (BLACK)	
	8	1	**279-4731**	1	STRAP-CABLE (RED)	
	9	1	**279-4732**	1	STRAP-CABLE (YELLOW)	
	10	1	**279-4733**	1	STRAP-CABLE (BLUE)	
	11	1	**279-4734**	1	STRAP-CABLE (BROWN)	
	12	1	**279-4735**	1	STRAP-CABLE (ORANGE)	
	13	1	**8L-8413**	1	STRAP-CABLE	
	14	1	**279-4737**	1	STRAP-CABLE (GREEN)	
	15	1	**279-4738**	1	STRAP-CABLE (PURPLE)	
I	16	1	**377-9053**	2	HOSE AS	
I	17	1	**381-0580**	1	HOSE AS	
I	18	1	**381-0581**	1	HOSE AS	
I	19	1	**381-0583**	1	HOSE AS	
I	20	1	**381-0584**	1	HOSE AS	
I	21	1	**381-0585**	1	HOSE AS	
I	22	1	**385-2813**	1	HOSE AS	
I	23	1	**385-2814**	1	HOSE AS	
I	24	1	**385-2815**	1	HOSE AS	
I	25	1	**385-2816**	1	HOSE AS	
I	26	1	**389-8800**	1	HOSE AS	
	27	1	*148-8318*	2	CONNECTOR AS	
					(EACH INCLUDES)	
		1	**3K-0360**	1	SEAL-O-RING	
		1	**6V-8397**	1	SEAL-O-RING	
		1	**6V-8634**	1	CONNECTOR	
	28	1	*148-8325*	1	CONNECTOR AS	
		1	**3J-1907**	1	SEAL-O-RING	
		1	**4J-5477**	1	SEAL-O-RING	
		1	**6V-8641**	1	CONNECTOR	
	29	1	*148-8336*	7	CONNECTOR AS	
					(EACH INCLUDES)	
		1	**3J-1907**	1	SEAL-O-RING	
		1	**6V-8397**	1	SEAL-O-RING	
		1	**6V-8636**	1	CONNECTOR	
	30	1	*148-8353*	2	ELBOW AS	
					(EACH INCLUDES)	
		1	**3J-1907**	1	SEAL-O-RING	
		1	**6V-8397**	1	SEAL-O-RING	
		1	**6V-9001**	1	ELBOW	
	31	1	*148-8367*	1	ELBOW AS	
		1	**6V-8397**	1	SEAL-O-RING	
		1	**6V-9850**	1	ELBOW	
	32	1	*148-8369*	1	ELBOW AS	
		1	**3J-7354**	1	SEAL-O-RING	
		1	**4J-5477**	1	SEAL-O-RING	
		1	**6V-8628**	1	ELBOW	
	33	1	*148-8371*	4	ELBOW AS	
					(EACH INCLUDES)	
		1	**6V-8397**	1	SEAL-O-RING	

385-2795 **LINES GP-SWING MOTOR (*contd.*)** **i04658613**

NOTE	REF NO	GRAPHIC REF	PART NUMBER	QTY	PART NAME 1 2 3 4 5 6 (PRODUCT LEVEL)	SEE PAGE
		1	**8C-8988**	1	ELBOW	
	34	1	*148-8378*	3	ELBOW AS	
					(EACH INCLUDES)	
		1	**3J-1907**	1	SEAL-O-RING	
		1	**6V-8397**	1	SEAL-O-RING	
		1	**6V-8724**	1	ELBOW	
	35	1	*150-3065*	2	ELBOW AS	
					(EACH INCLUDES)	
		1	**3J-1907**	1	SEAL-O-RING	
		1	**6V-0484**	1	ELBOW	
	36	1	*164-5605*	2	CONNECTOR AS	
					(EACH INCLUDES)	
		1	**3K-0360**	1	SEAL-O-RING	
		1	**6V-8397**	1	SEAL-O-RING	
		1	**8T-0076**	1	CONNECTOR	
	37	1	*164-9869*	2	CONNECTOR AS	
					(EACH INCLUDES)	
		1	**3J-1907**	1	SEAL-O-RING	
		1	**6V-8397**	1	SEAL-O-RING	
		1	**9X-2297**	1	CONNECTOR	
	38	1	**166-3032**	3	CONNECTOR	
	39	1	**3J-1907**	3	SEAL-O-RING	
	40	1	**6V-8397**	3	SEAL-O-RING	
E	41	1	**310-4984**		SLEEVE (24-CM)	

E - ORDER BY THE CENTIMETER
I - REFER TO HYDRAULIC INFORMATION SYSTEM

385-2795 **LINES GP-SWING MOTOR (*contd.*)** **i04658613**

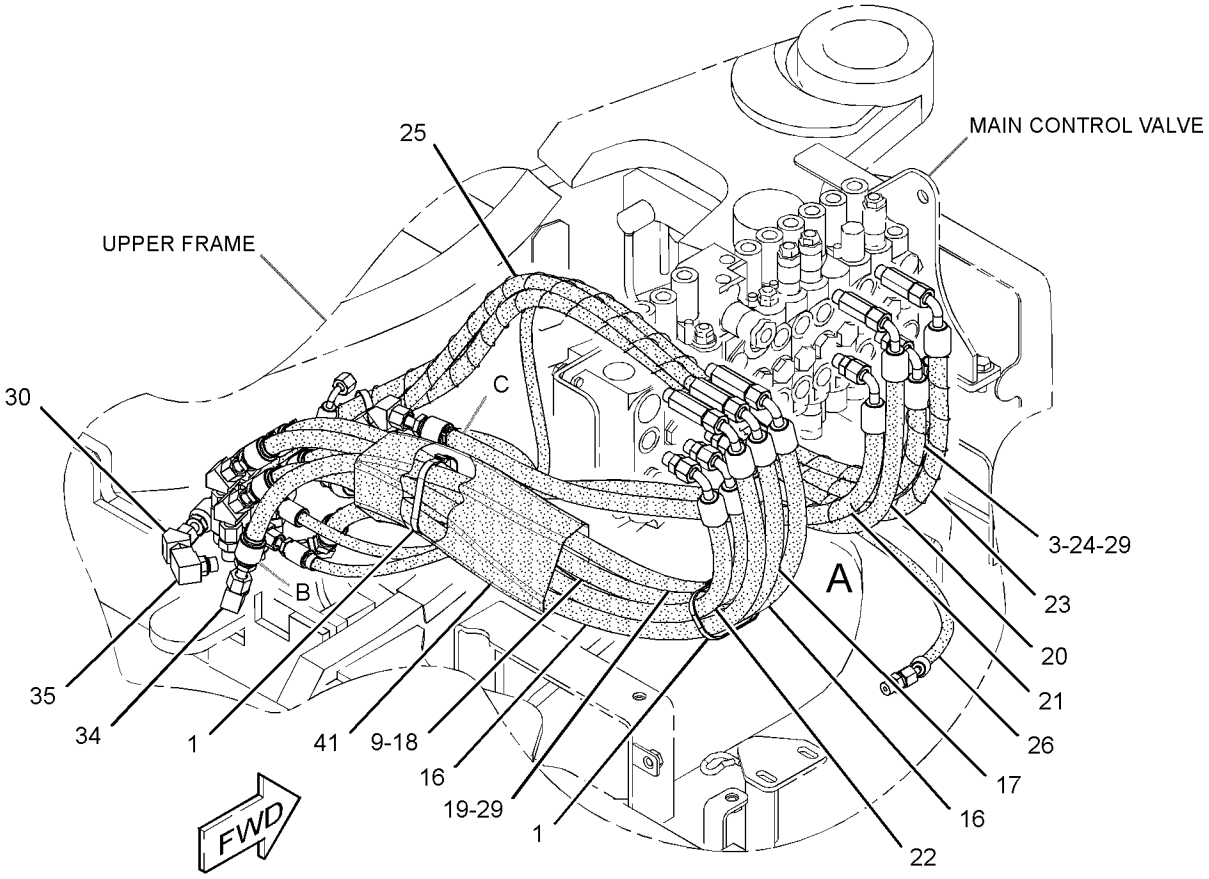

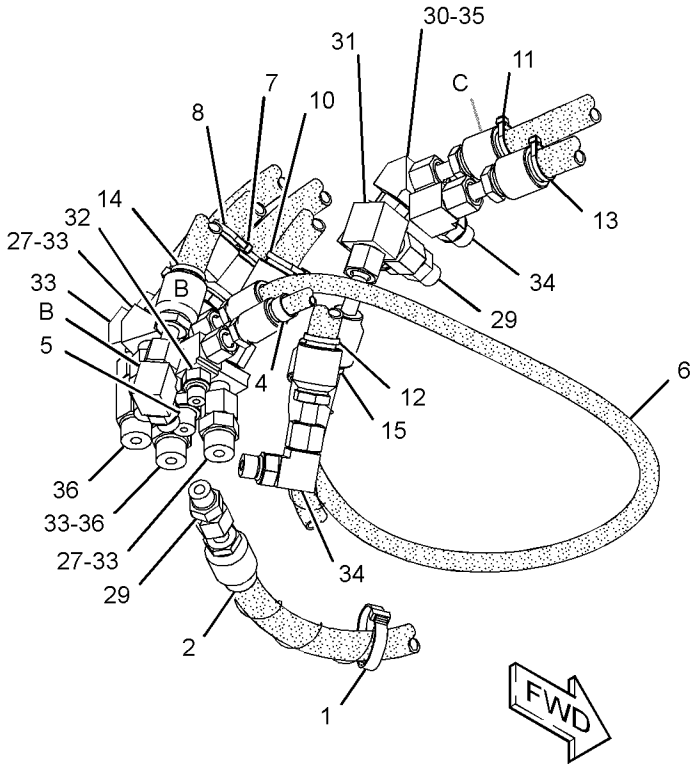

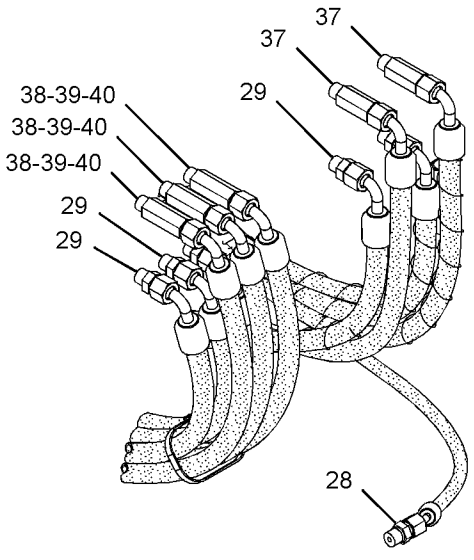

VIEW OF AREA A

GRAPHIC #1 **<END>** g02806078

280-7620 LINES GP-TRAVEL MOTOR

PART OF 377-8930 BLADE AR-ANGLING

AN ATTACHMENT

SMCS-4351 **i05413145**

NOTE	REF NO	GRAPHIC REF	PART NUMBER	QTY	PART NAME 1 2 3 4 5 6 (PRODUCT LEVEL)	SEE PAGE
	1	1	**3S-2093**	2	STRAP-CABLE	
	2	1	**7K-1181**	2	STRAP-CABLE	
	3	1	**213-7638**	1	COVER AS-ACCESS	
Y	4	1	**266-6836**	1	SWIVEL GP	297
	5	1	**267-8100**	1	PLATE	
I	6	1	**283-5350**	2	HOSE AS	
	7	1	**418-9978**	2	HOSE AS	
	8	1	*148-8318*	4	CONNECTOR AS	
					(EACH INCLUDES)	
		1	**3K-0360**	1	SEAL-O-RING	
		1	**6V-8397**	1	SEAL-O-RING	
		1	**6V-8634**	1	CONNECTOR	
	9	1	*148-8325*	2	CONNECTOR AS	
					(EACH INCLUDES)	
		1	**3J-1907**	1	SEAL-O-RING	
		1	**4J-5477**	1	SEAL-O-RING	
		1	**6V-8641**	1	CONNECTOR	
	10	1	*148-8363*	4	ELBOW AS	
					(EACH INCLUDES)	
		1	**3K-0360**	1	SEAL-O-RING	
		1	**6V-8397**	1	SEAL-O-RING	
		1	**6V-9876**	1	ELBOW	
	11	1	*148-8385*	4	ELBOW AS	
					(EACH INCLUDES)	
		1	**3J-7354**	1	SEAL-O-RING	
		1	**4J-5477**	1	SEAL-O-RING	
		1	**6V-9000**	1	ELBOW	
	12	1	*155-3624*	2	PLUG AS	
					(EACH INCLUDES)	
		1	**3J-7354**	1	SEAL-O-RING	
		1	**9S-4182**	1	PLUG-O-RING	
I	13	1	**292-8345**	2	HOSE AS	
I	14	1	**292-8346**	2	HOSE AS	
	15	1	**4J-5477**	2	SEAL-O-RING	
	16	1	**7Y-4528**	2	GROMMET	
M	17	1	**8T-4183**	6	BOLT (M12X1.75X40-MM)	
	18	1	**8T-4223**	10	WASHER-HARD (13.5X25.5X3-MM THK)	
	19	1	**279-4736**	2	STRAP-CABLE (WHITE)	
M	20	1	**8T-4139**	4	BOLT (M12X1.75X30-MM)	

I - REFER TO HYDRAULIC INFORMATION SYSTEM
M - METRIC PART
Y - SEPARATE ILLUSTRATION

280-7620 **LINES GP-TRAVEL MOTOR (*contd.*)** **i05413145**

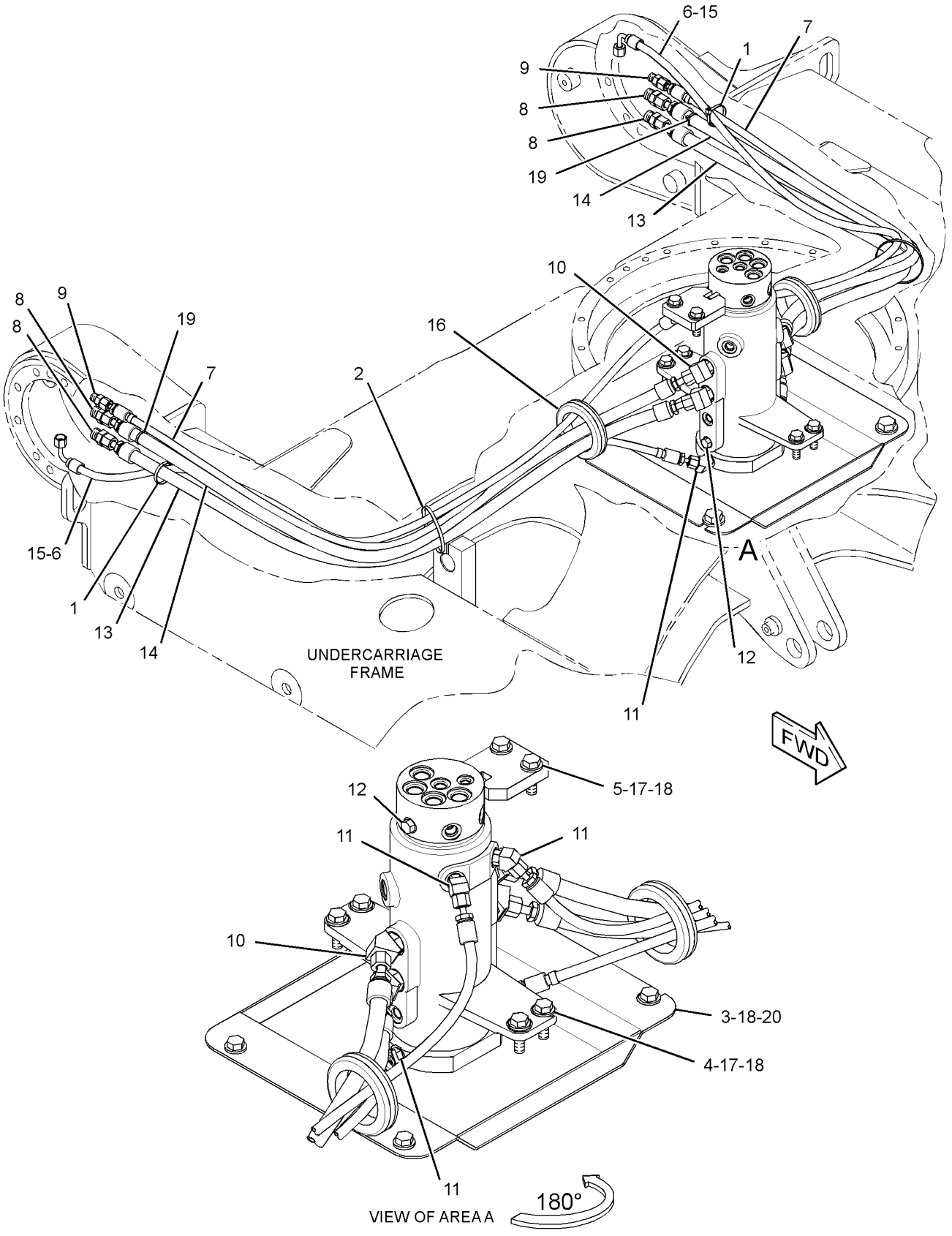

GRAPHIC #1

<END>

g03477357

292-8293 LINES GP-TRAVEL MOTOR

PART OF 377-8920 BLADE AR-STRAIGHT

AN ATTACHMENT

SMCS-4351 **i05221702**

NOTE	REF NO	GRAPHIC REF	PART NUMBER	QTY	PART NAME 1 2 3 4 5 6 (PRODUCT LEVEL)	SEE PAGE
	1	1	**3S-2093**	2	STRAP-CABLE	
	2	1	**7K-1181**	2	STRAP-CABLE	
Y	3	1	**191-7516**	1	SWIVEL GP	295
	4	1	**267-8100**	1	PLATE	
I	5	1	**283-5350**	2	HOSE AS	
	6	1	**382-2560**	2	HOSE AS	
		1	**096-6085**	2	TAPE (RED)	
I		1	**205-2156**	1	HOSE AS	
I	7	1	**292-8345**	2	HOSE AS	
I	8	1	**292-8346**	2	HOSE AS	
	9	1	*148-8318*	4	CONNECTOR AS	
					(EACH INCLUDES)	
		1	**3K-0360**	1	SEAL-O-RING	
		1	**6V-8397**	1	SEAL-O-RING	
		1	**6V-8634**	1	CONNECTOR	
	10	1	*148-8325*	4	CONNECTOR AS	
					(EACH INCLUDES)	
		1	**3J-1907**	1	SEAL-O-RING	
		1	**4J-5477**	1	SEAL-O-RING	
		1	**6V-8641**	1	CONNECTOR	
	11	1	*148-8363*	4	ELBOW AS	
					(EACH INCLUDES)	
		1	**3K-0360**	1	SEAL-O-RING	
		1	**6V-8397**	1	SEAL-O-RING	
		1	**6V-9876**	1	ELBOW	
	12	1	*148-8385*	2	ELBOW AS	
					(EACH INCLUDES)	
		1	**3J-7354**	1	SEAL-O-RING	
		1	**4J-5477**	1	SEAL-O-RING	
		1	**6V-9000**	1	ELBOW	
	13	1	**4J-5477**	2	SEAL-O-RING	
	14	1	**7Y-4528**	2	GROMMET	
M	15	1	**8T-4183**	6	BOLT (M12X1.75X40-MM)	
	16	1	**8T-4223**	6	WASHER-HARD (13.5X25.5X3-MM THK)	
	17	1	**279-4736**	2	STRAP-CABLE (WHITE)	

I - REFER TO HYDRAULIC INFORMATION SYSTEM
M - METRIC PART
Y - SEPARATE ILLUSTRATION

292-8293 **LINES GP-TRAVEL MOTOR (*contd.*)** **i05221702**

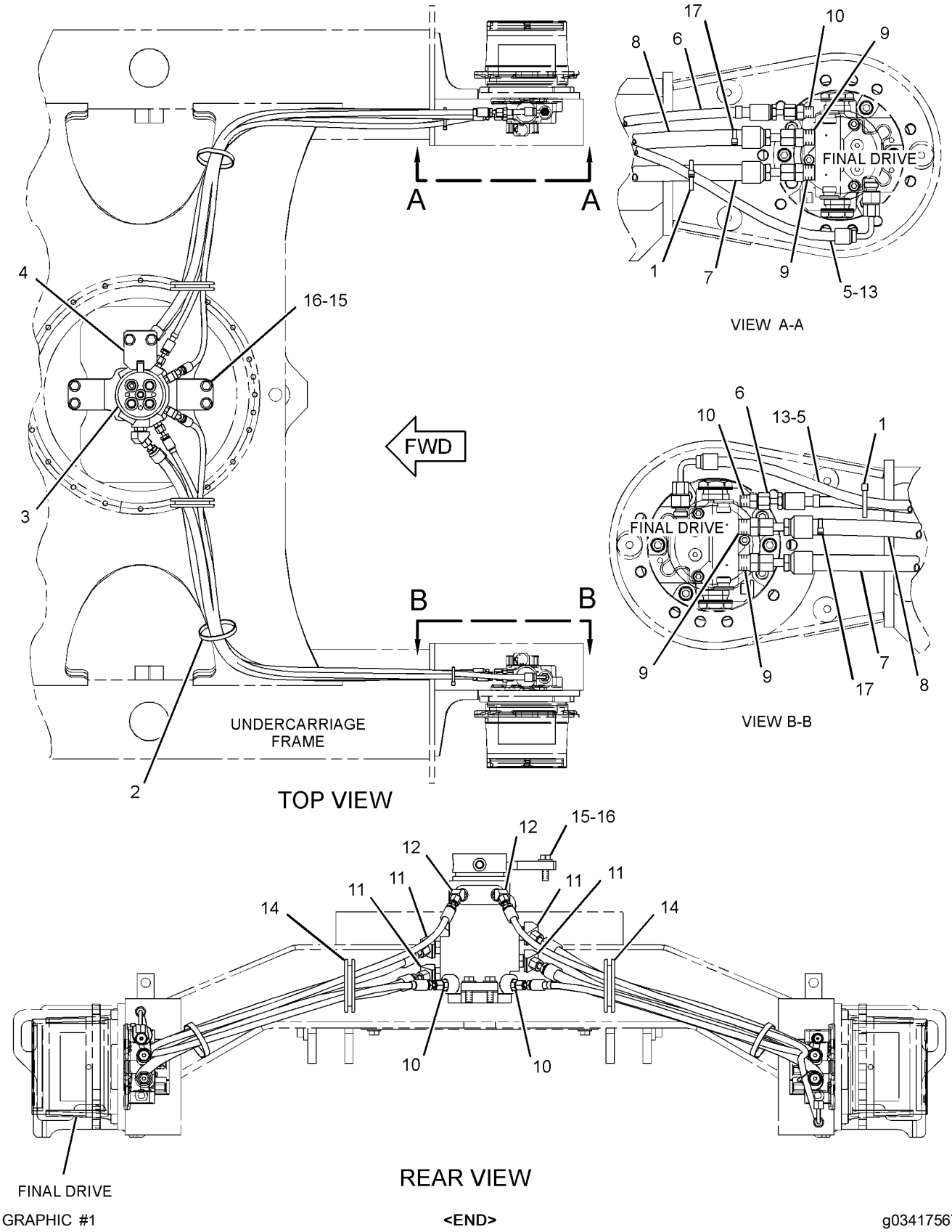

GRAPHIC #1 **<END>** g03417567

267-0424 MANIFOLD & SOLENOID GP-CONTROL–AUXILIARY, BOOM SWING

PART OF 377-8861 VALVE & MTG GP-CONTROL

SMCS-5264, 5479 **i03971110**

NOTE	REF NO	GRAPHIC REF	PART NUMBER	QTY	PART NAME 1 2 3 4 5 6 (PRODUCT LEVEL)	SEE PAGE
M	1	1	**7I-2272**	4	BOLT (M5X0.8X12-MM)	
Y	2	1	**269-2299**	2	VALVE GP-SOLENOID (AUXILIARY, BOOM SWING)	362

M - METRIC PART
Y - SEPARATE ILLUSTRATION

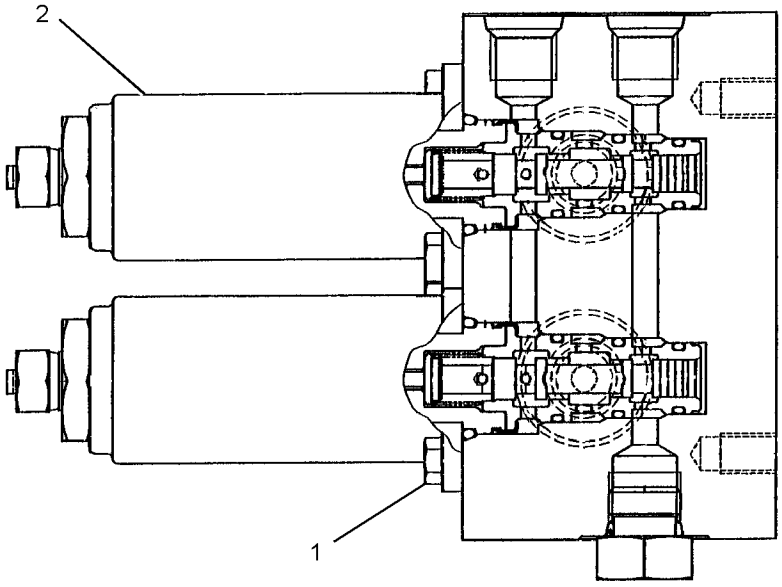

GRAPHIC #1 **<END>** g01222759

274-4199 MANIFOLD GP-CONTROL

PART OF 379-4730 LINES GP-PILOT

SMCS-5264 **i03970909**

NOTE	REF NO	GRAPHIC REF	PART NUMBER	QTY	PART NAME 1 2 3 4 5 6 (PRODUCT LEVEL)	SEE PAGE
	1	1	**169-1169**	1	SHIM	
	2	1	**169-1170**	1	SHIM	
	3	1	**198-8418**	1	PLUNGER	
	4	1	**198-8419**	1	SPRING	
	5	1	**198-8420**	1	PLUG	
	6	1	**7I-7403**	2	SPRING	
	7	1	**169-1172**	1	PLUNGER	
	8	1	**198-8421**	1	SPRING	
	9	1	**9S-8004**	1	PLUG-O-RING	
	10	1	**274-4201**	1	SOLENOID (SPEED SELECT)	
	11	1	**274-4202**	1	SOLENOID (HYDRAULIC LOCKOUT)	
	12	1	**276-3883**	1	COVER	
	13	1	**198-8423**	2	PLUG	
M	14	1	**099-2374**	4	BOLT-SOCKET HEAD (M5X0.8X12-MM)	
M	15	1	**096-4833**	2	BOLT-SOCKET HEAD (M5X0.8X20-MM)	
	16	1	**095-1519**	2	SEAL-O-RING	
	17	1	**095-1578**	1	SEAL-O-RING	
	18	1	**095-1579**	2	SEAL-O-RING	
	19	1	**095-1586**	1	SEAL-O-RING	
	20	1	**3J-1907**	1	SEAL-O-RING	

M - METRIC PART

274-4199 **MANIFOLD GP-CONTROL (*contd.*)** **i03970909**

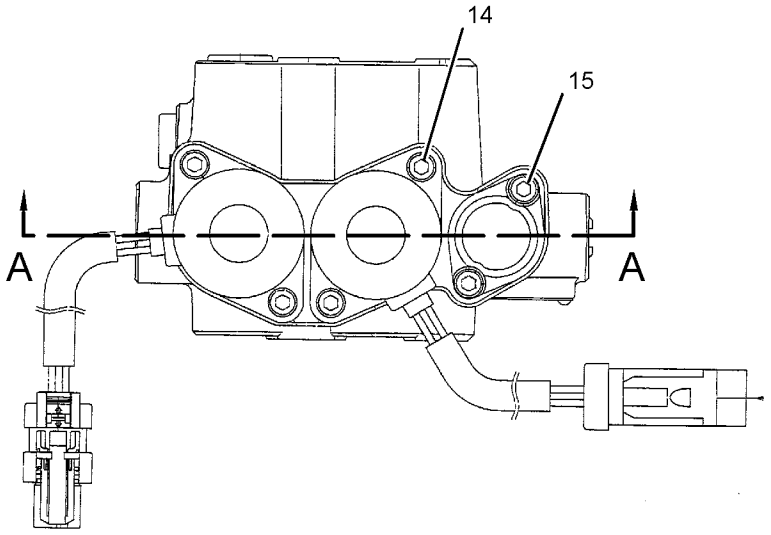

VIEW E-E

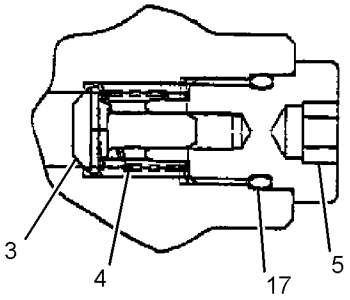

SECTION B-B

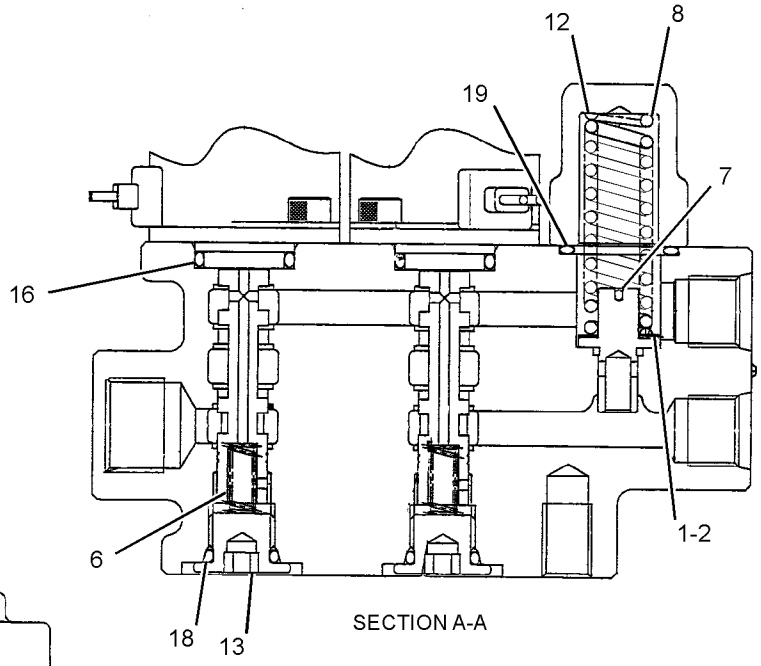

SECTION A-A

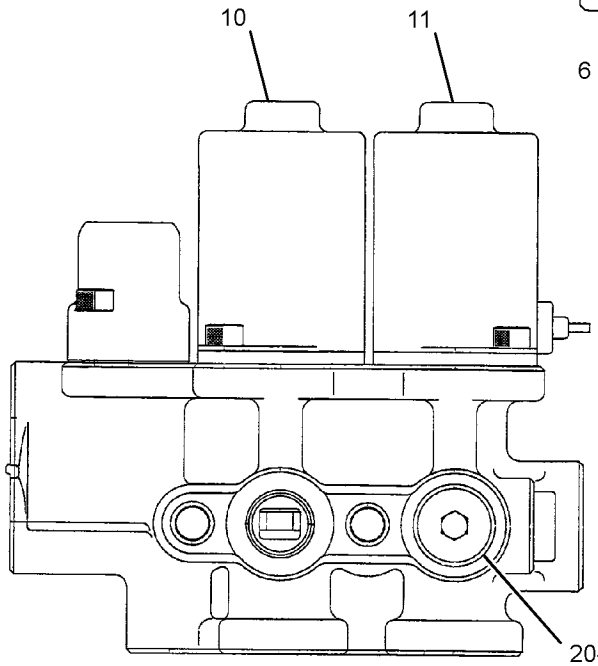

VIEW C-C

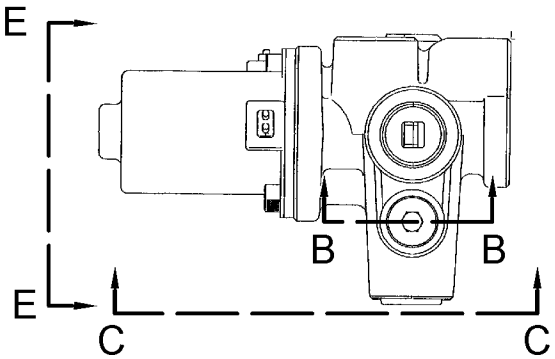

RIGHT SIDE VIEW

GRAPHIC #1 **<END>** g01204402

265-8752 MOTOR & MTG GP-SWING

PART OF 356-0571 POWER TRAIN AR

SMCS-5058 **i04019567**

NOTE	REF NO	GRAPHIC REF	PART NUMBER	QTY	PART NAME 1 2 3 4 5 6 (PRODUCT LEVEL)	SEE PAGE
Y	1	1	**266-6396**	1	DRIVE GP-SWING	206
M	2	1	**8T-4140**	4	BOLT (M16X2X60-MM)	
	3	1	**9X-8257**	4	WASHER (17.5X30X3.5-MM THK)	

M - METRIC PART
Y - SEPARATE ILLUSTRATION

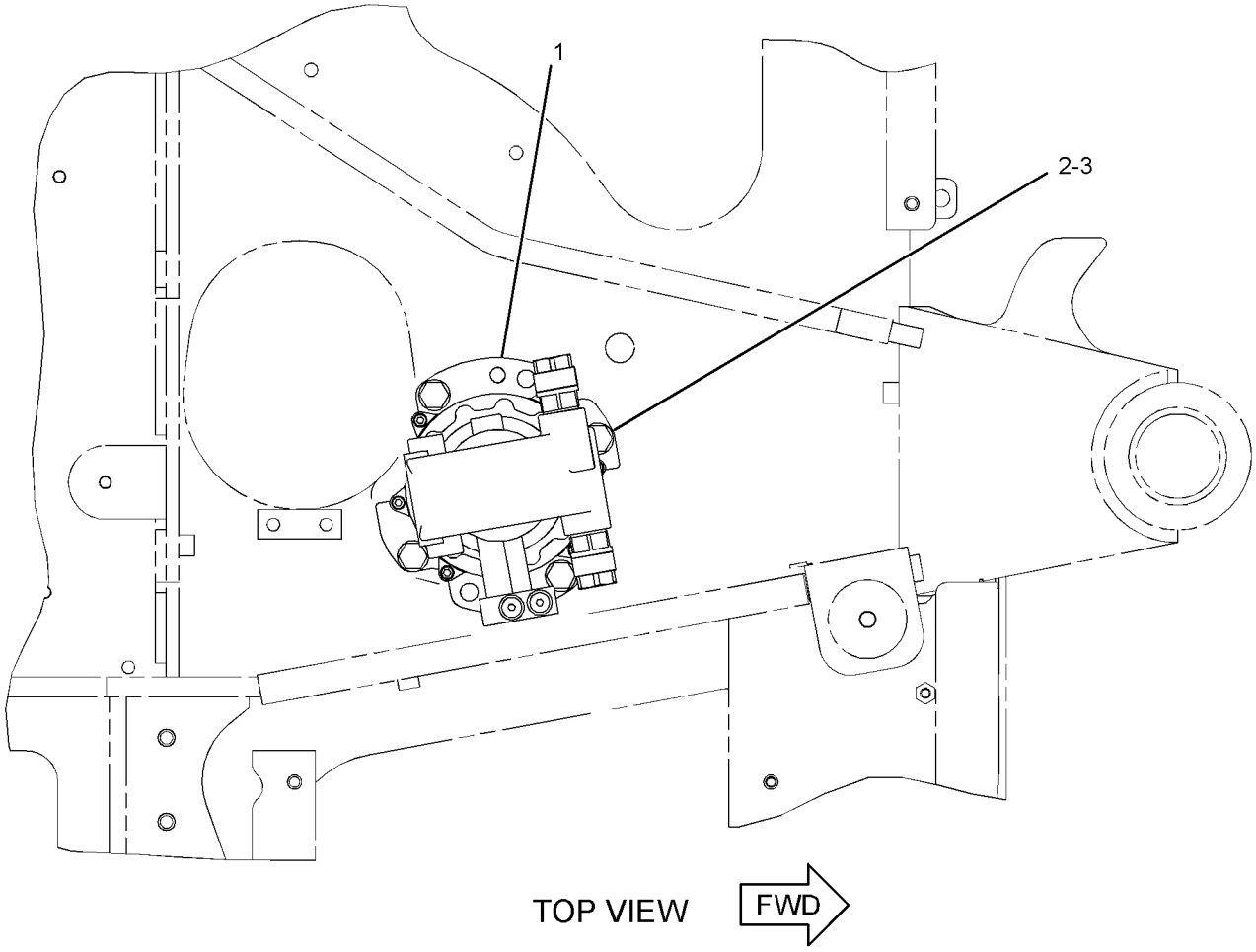

GRAPHIC #1 **<END>** g01234714

281-3052 MOTOR GP-SWING

PART OF 266-6396 DRIVE GP-SWING

SMCS-5058 **i05426594**

NOTE	REF NO	GRAPHIC REF	PART NUMBER	QTY	PART NAME 1 2 3 4 5 6 (PRODUCT LEVEL)	SEE PAGE
	1	1	**153-6087**	1	SCREEN (HYDRAULIC OIL)	
	2	1	**280-2364**	1	BEARING	
	3	1	**6B-5328**	1	BEARING	
	4	1	**8C-3312**	1	RING-RETAINING	
M	5	1	**5A-3604**	12	BOLT-SOCKET HEAD (M8X1.25X25-MM)	
	6	1	**095-0880**	1	PIN	
L	7	1	**280-2365**	1	PIN	
H	8	1	**095-1716**	1	SEAL-O-RING	
H	9	1	**095-1719**	1	SEAL-O-RING	
Y	10	1	**274-9034**	1	VALVE GP-CONTROL (SWING BRAKE)	314
M	11	1	**8T-8442**	4	BOLT-SOCKET HEAD (M6X1X30-MM)	
Y	12	1	**281-3053**	2	VALVE GP-RELIEF	359
J	13	1	**095-1579**	2	SEAL-O-RING	
J	14	1	**280-2367**	1	KIT-PUMP (SWING MOTOR)	
					(ALSO INCLUDES BODY, BEARING, PIN SPRING, CHECK VALVES, SPRINGS & PLUGS)	
H	15	1	**280-2368**	1	KIT-BARREL (SWING MOTOR)	
					(ALSO INCLUDES SHOES, PISTONS, SHOE HOLDER, BARREL HOLDER, PINS, BARREL, RETAINERS, SPRING, VALVE PLATE & RING RETAINER	
L	16	1	**280-2369**	1	KIT-SWASHPLATE (SWING MOTOR)	
	17	1	**280-2405**	3	PIN	

H - KIT MARKED H SERVICES PARTS MARKED H
J - KIT MARKED J SERVICES PARTS MARKED J
L - KIT MARKED L SERVICES PARTS MARKED L
M - METRIC PART
Y - SEPARATE ILLUSTRATION

281-3052 **MOTOR GP-SWING (*contd.*)** **i05426594**

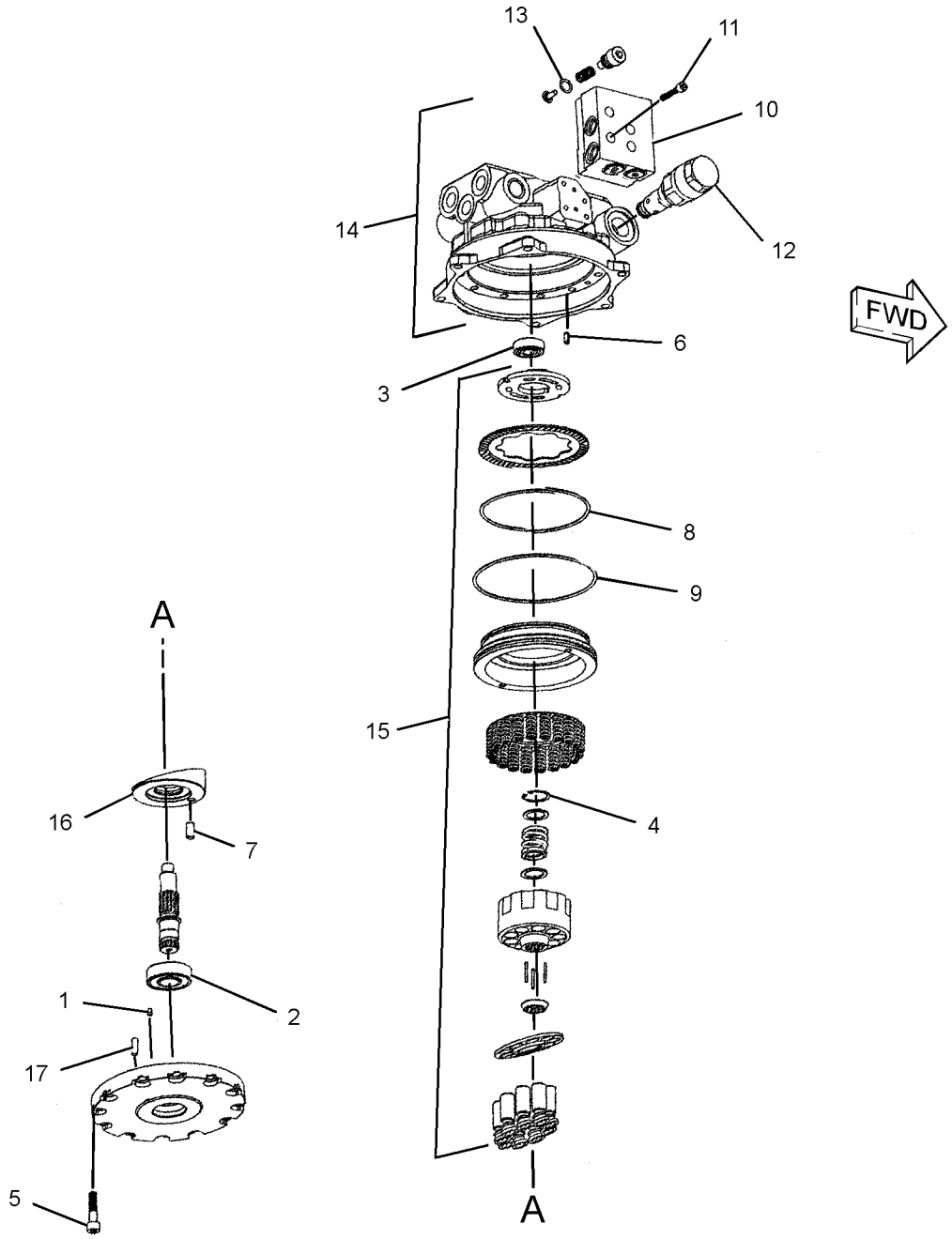

GRAPHIC #1 **<END>** g01235762

280-2355 PLANETARY GP-SWING DRIVE

PART OF 266-6396 DRIVE GP-SWING

SMCS-3301, 5459 **i05426610**

NOTE	REF NO	GRAPHIC REF	PART NUMBER	QTY	PART NAME 1 2 3 4 5 6 (PRODUCT LEVEL)	SEE PAGE
	1	1	**280-2357**	1	GEAR	
	2	1	**280-2358**	1	GEAR	
	3	1	**280-2359**	1	SEAL	
J	4	1	**6V-5587**	4	RING-RETAINING	
M	5	1	**5A-3604**	6	BOLT-SOCKET HEAD (M8X1.25X25-MM)	
	6	1	**280-2360**	1	RING	
	7	1	**280-2361**	1	KIT-PINION	
					(INCLUDES PINION SHAFT, RING SEAL, BEARINGS, BODY, SEAL, COLLARS, GEAR & PINS)	
J	8	1	**280-2362**	1	KIT-CARRIER	
					(ALSO INCLUDES CARRIER, THRUST WASHERS, RINGS, NEEDLES, GEARS & THRUST PLATE)	
	9	1	**280-2363**	1	KIT-CARRIER	
					(ALSO INCLUDES CARRIER, THRUST WASHERS, RINGS, NEEDLES, GEARS & THRUST PLATE)	

J - KIT MARKED J SERVICES PARTS MARKED J
M - METRIC PART

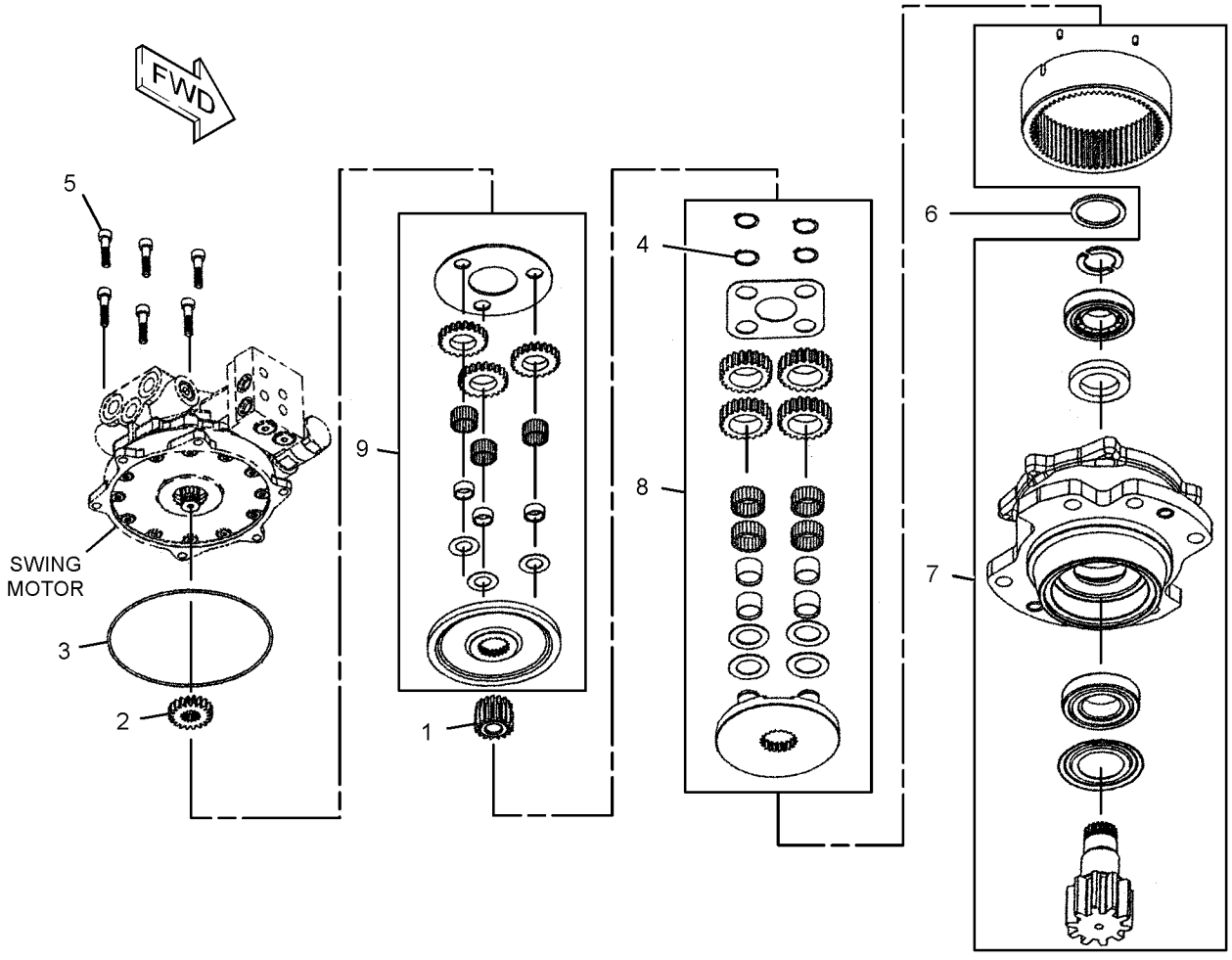

GRAPHIC #1 **<END>** g01222490

376-2012 PUMP & MTG GP-MAIN HYDRAULIC

PART OF 379-4713 HYDRAULIC AR

SMCS-5070 **i04728051**

NOTE	REF NO	GRAPHIC REF	PART NUMBER	QTY	PART NAME 1 2 3 4 5 6 (PRODUCT LEVEL)	SEE PAGE
	1	1	**388-6412**	8	BOLT (M10X1.25X50-MM)	
	2	1	**267-1082**	1	COUPLING-PUMP	
Y	3	1	*374-2025*	1	PUMP GP-PISTON & GEAR	293
	4	1	**380-6357**	1	HOUSING AS-FLYWHEEL	
		1	**387-3788**	2	PIN	
M	5	1	**191-7503**	3	BOLT (M12X1.75X16-MM)	
	6	1	**8T-4121**	7	WASHER-HARD (11X21X2.5-MM THK)	
M	7	1	**8T-4183**	2	BOLT (M12X1.75X40-MM)	
	8	1	**8T-4223**	2	WASHER-HARD (13.5X25.5X3-MM THK)	
	9	1	**9X-2027**	1	WASHER (11X18X2-MM THK)	

M - METRIC PART
Y - SEPARATE ILLUSTRATION

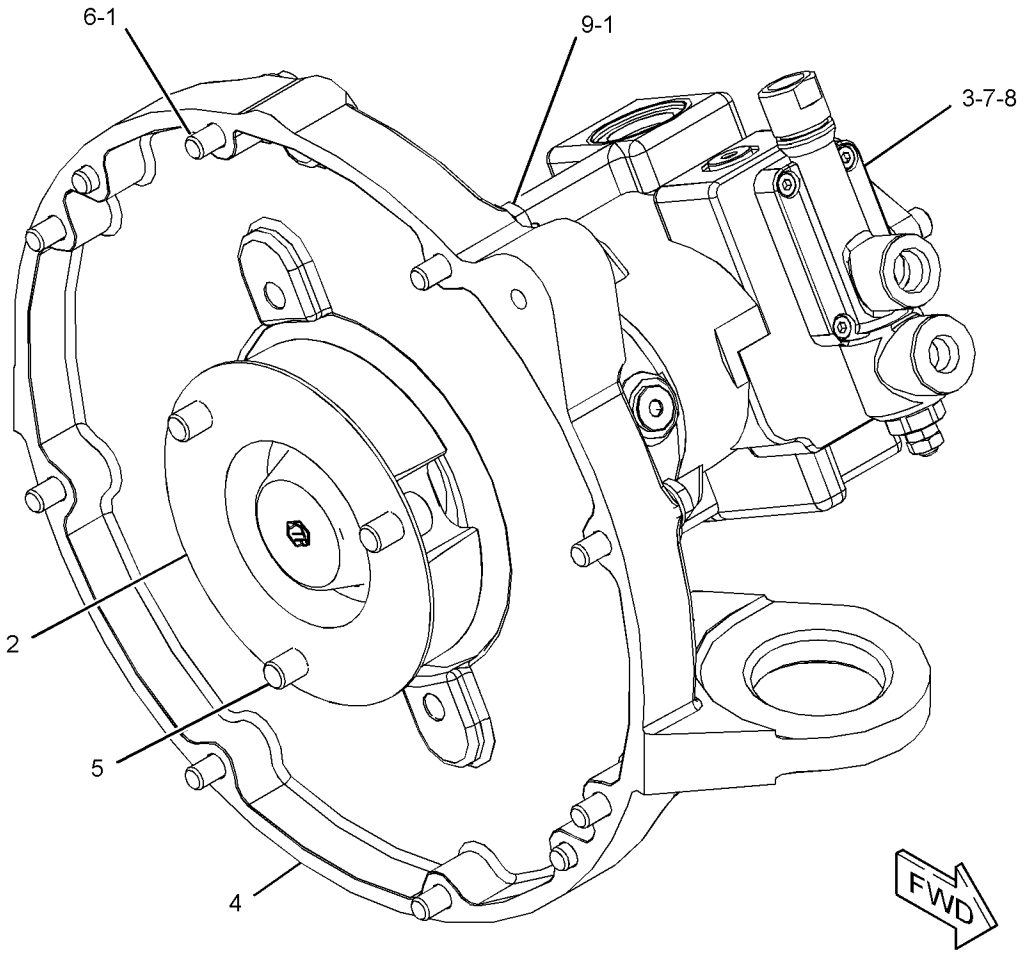

GRAPHIC #1 **<END>** g02856399

374-2025 PUMP GP-PISTON & GEAR—MAIN HYDRAULIC

PART OF 376-2012 PUMP & MTG GP-MAIN HYDRAULIC

SMCS-507G **i04728050**

NOTE	REF NO	GRAPHIC REF	PART NUMBER	QTY	PART NAME 1 2 3 4 5 6 (PRODUCT LEVEL)	SEE PAGE
	1	1	**280-4441**	1	BEARING	
	2	1	**191-3925**	1	BEARING	
	3	1	**279-4684**	1	SEAL	
	4	1	**6V-7723**	1	RING-RETAINING	
	5	1	**280-4442**	1	STOP	
	6	1	**280-4443**	1	SHAFT	
	7	1	**191-3918**	1	WASHER	
	8	1	**191-3920**	1	WASHER	
	9	1	**280-4444**	1	GASKET	
	10	1	**279-4687**	3	PIN	
	11	1	**095-1571**	1	SEAL-O-RING	
	12	1	**390-9455**	2	BUSHING	
	13	1	**139-7355**	2	SCREW	
	14	1	**280-4446**	1	PLATE	
	15	1	**279-4692**	1	STOPPER	
	16	1	**281-3000**	1	PIN	
JL	17	1	**095-1575**	6	SEAL-O-RING	
	18	1	**279-4691**	1	ORIFICE	
	19	1	**280-4448**	1	SPRING	
	20	1	**280-4449**	1	SPRING	
	21	1	**280-4450**	2	SEAT	
	22	1	**279-4698**	1	NUT	
	23	1	**279-4699**	1	PUMP GP-GEAR (PILOT)	
	24	1	**303-4492**	2	BOLT	
	25	1	**8T-4224**	2	WASHER-HARD (8.8X16X2-MM THK)	
M	26	1	**6V-8200**	4	BOLT-SOCKET HEAD (M12X1.75X35-MM)	
	27	1	**279-4706**	3	PLUG	
JL	28	1	**3J-1907**	3	SEAL-O-RING	
M	29	1	**6V-5683**	4	BOLT (M6X1X16-MM)	
	30	1	**279-4693**	1	PIN	
J	31	1	**279-4705**	1	SEAL-O-RING	
J	32	1	**279-4701**	1	SEAL-O-RING	
J	33	1	**279-4703**	1	SEAL-O-RING	
	34	1	**280-4451**	1	PIN	
	35	1	**279-4697**	1	VALVE AS-PUMP (HYDRAULIC)	
					(INCLUDES O-RINGS & PLUG)	
	36	1	**280-4458**	1	KIT-SWASHPLATE	
	37	1	**280-4459**	1	KIT-BARREL	
Y	38	1	**332-1292**	1	VALVE GP-PUMP CONTROL	358
					AVAILABLE REPAIR KIT(S):	
J			**279-4707**	1	KIT-SEAL (MAIN HYDRAULIC PUMP)	
L			**279-4709**	1	KIT-SEAL (MAIN HYDRAULIC PUMP)	
					(ALSO INCLUDES O-RING)	

J - KIT MARKED J SERVICES PARTS MARKED J
L - KIT MARKED L SERVICES PARTS MARKED L
M - METRIC PART
Y - SEPARATE ILLUSTRATION

374-2025 **PUMP GP-PISTON & GEAR (*contd.*)** **i04728050**

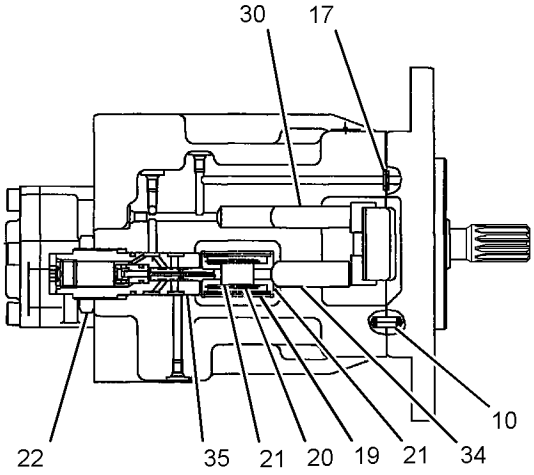

SECTION C-C

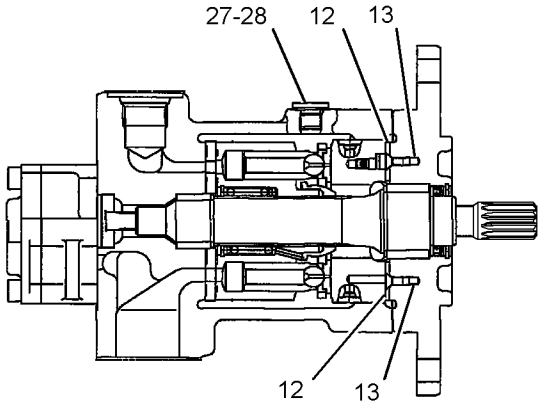

SECTION B-B

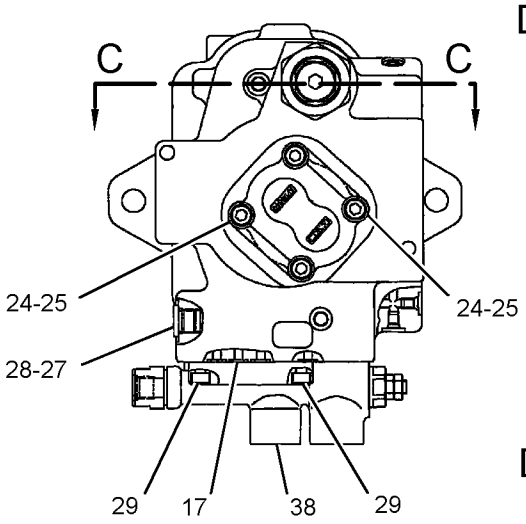

VIEW D-D

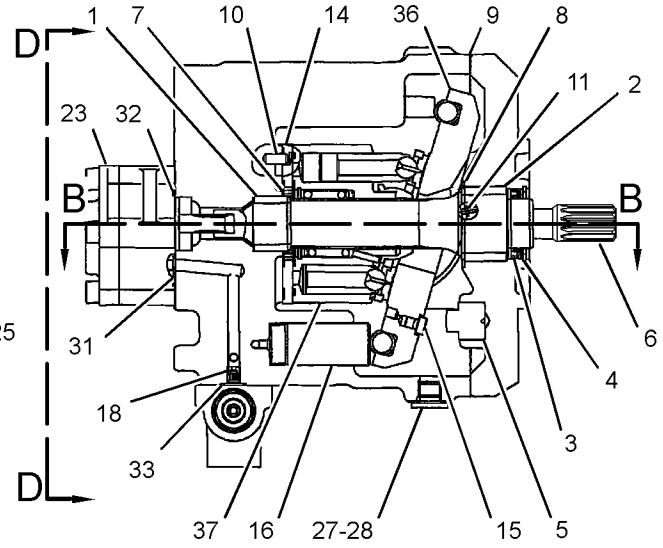

SECTION A-A

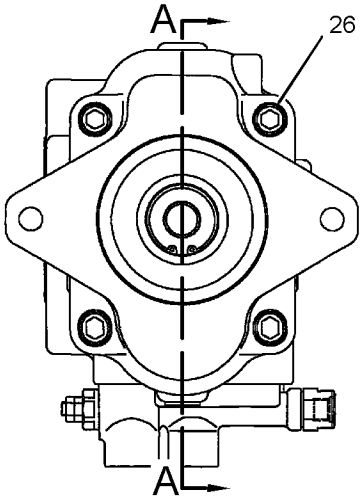

GRAPHIC #1 **<END>** g02890077

191-7516 SWIVEL GP

PART OF 292-8293 LINES GP-TRAVEL MOTOR
AN ATTACHMENT

SMCS-5060 **i02145735**

NOTE	REF NO	GRAPHIC REF	PART NUMBER	QTY	PART NAME 1 2 3 4 5 6 (PRODUCT LEVEL)	SEE PAGE
	1	1	**095-8051**	3	PLUG	
	2	1	**146-4875**	1	SEAL-BACK UP	
	3	1	**146-4877**	1	SEAL-DUST	
	4	1	**169-1134**	1	FLANGE	
	5	1	**169-1135**	1	RING	
	6	1	**193-5330**	7	SEAL AS	
	7	1	**221-0936**	1	SHAFT	
	8	1	**221-0937**	1	HOUSING	
	9	1	**221-0938**	1	PIN	
	10	1	**095-1623**	1	SEAL-O-RING	
	11	1	**095-1710**	1	SEAL-O-RING	
	12	1	**095-1713**	1	SEAL-O-RING	
	13	1	**095-7951**	1	RING-RETAINING	
	14	1	**095-9397**	4	LOCKWASHER	
M	15	1	**8T-4195**	4	BOLT (M10X1.5X30-MM)	

M - METRIC PART

191-7516 **SWIVEL GP (*contd.*)** **i02145735**

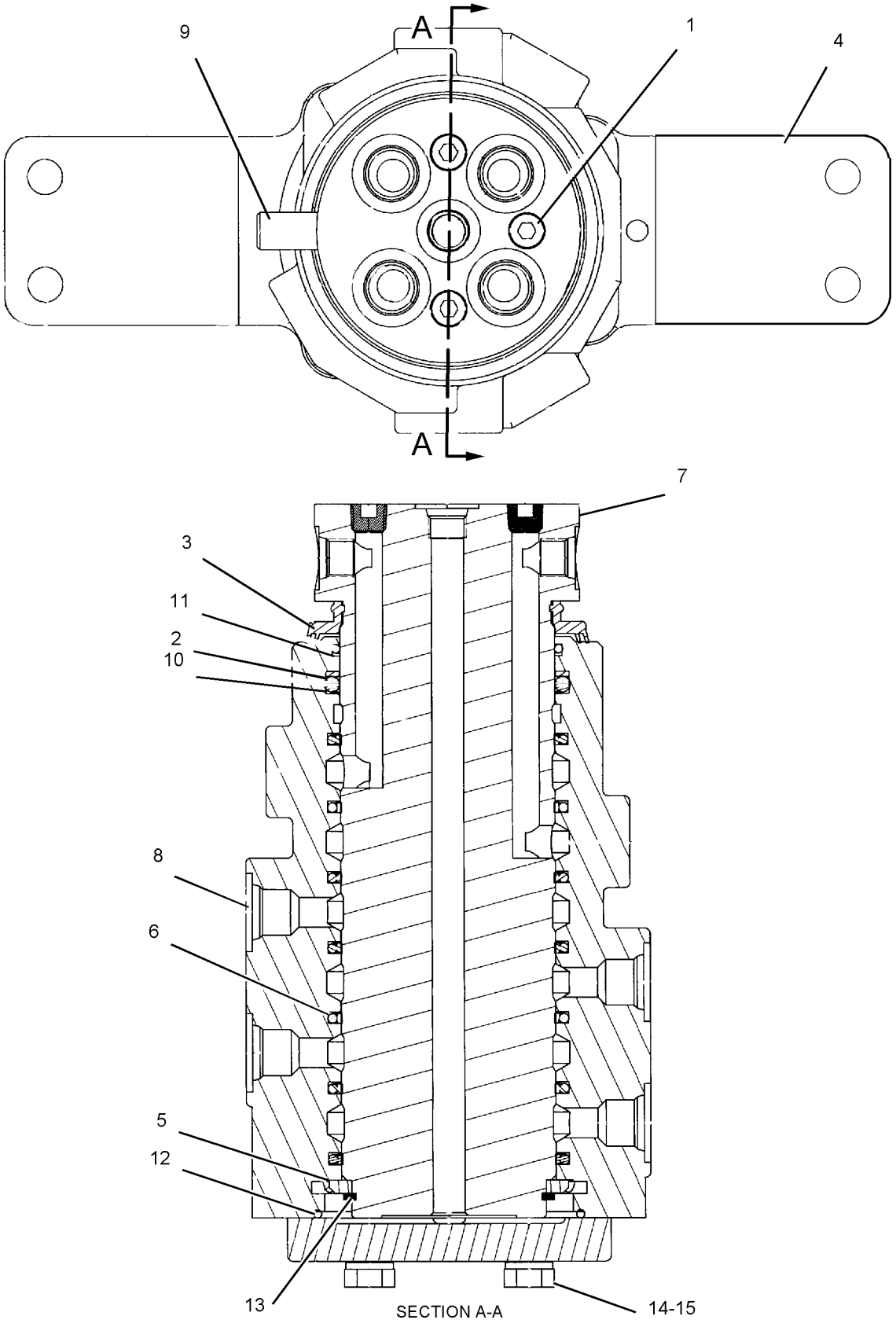

SECTION A-A

GRAPHIC #1

<END>

g01089083

266-6836 SWIVEL GP

PART OF 280-7620 LINES GP-TRAVEL MOTOR
AN ATTACHMENT

SMCS-5060 **i03971153**

NOTE	REF NO	GRAPHIC REF	PART NUMBER	QTY	PART NAME 1 2 3 4 5 6 (PRODUCT LEVEL)	SEE PAGE
	1	1	**274-3344**	1	SHAFT	
	2	1	**274-3346**	1	HOUSING	
	3	1	**294-1868**	1	COVER	
	4	1	**274-3349**	1	SPACER	
	5	1	**169-1136**	1	PIN	
	6	1	**274-3351**	6	SEAL AS	
	7	1	**193-5330**	4	SEAL AS	
	8	1	**095-1623**	1	SEAL-O-RING	
	9	1	**095-1713**	2	SEAL-O-RING	
	10	1	**8T-5376**	1	SEAL-O-RING	
	11	1	**146-4875**	1	SEAL-BACK UP	
	12	1	**146-4877**	1	SEAL-DUST	
	13	1	**095-0929**	1	RING-RETAINING	
M	14	1	**9X-6032**	4	BOLT-SOCKET HEAD (M10X1.5X30-MM)	
	15	1	**095-0966**	5	PLUG	

M - METRIC PART

266-6836 **SWIVEL GP (*contd.*)** **i03971153**

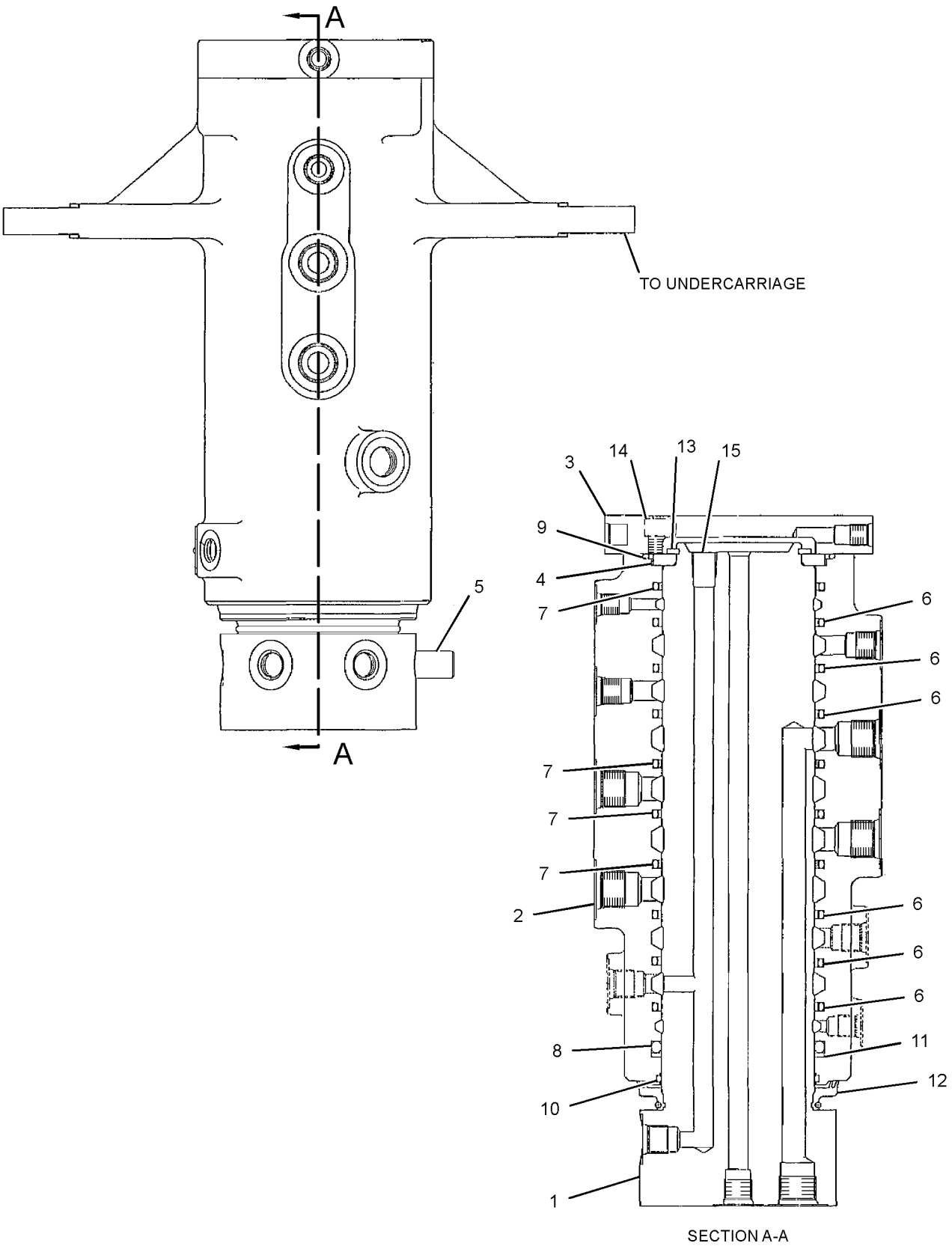

GRAPHIC #1 **<END>** g01367777

367-1050 TANK & FILTER GP-HYDRAULIC

PART OF 367-0936 TANK & MTG GP-HYDRAULIC

SMCS-5056, 5068 **i04629815**

NOTE	REF NO	GRAPHIC REF	PART NUMBER	QTY	PART NAME 1 2 3 4 5 6 (PRODUCT LEVEL)	SEE PAGE
	1	2	**4I-3745**	1	CAP-PRESSURE (HYDRAULIC TANK)	
	2	2	**093-5537**	1	VALVE AS-CHECK (HYDRAULIC TANK)	
	3	2	**225-3697**	1	SPRING	
	4	2	**265-8631**	1	COVER AS	
	5	2	**265-8632**	1	COVER	
	6	2	**265-8677**	1	VALVE AS-PRESSURE (HYDRAULIC OIL)	
	7	2	**285-1951**	1	STRAINER-SUCTION (HYDRAULIC TANK)	
	8	2	**304-7196**	1	FILTER ELEMENT-OIL (HYDRAULIC)	
Y	9	2	**347-6081**	1	GAUGE GP-SIGHT (HYDRAULIC OIL LEVEL)	209
	10	2	**367-1051**	1	TANK AS-HYDRAULIC	
	11	2	**095-1717**	2	SEAL-O-RING	
	12	2	*148-8410*	1	PLUG AS	
		2	**2M-9780**	1	SEAL-O-RING	
		2	**9S-4190**	1	PLUG-O-RING	
	13	2	**6D-3479**	1	CLIP	
	14	2	**8T-4121**	8	WASHER-HARD (11X21X2.5-MM THK)	
M	15	2	**8T-4136**	8	BOLT (M10X1.5X25-MM)	
E	16	2	**7Y-1976**		HOSE-WATER (108-CM)	

E - ORDER BY THE CENTIMETER
M - METRIC PART
Y - SEPARATE ILLUSTRATION

REFER TO ALL ILLUSTRATIONS OF THIS GROUP FOR AUXILIARY VIEWS

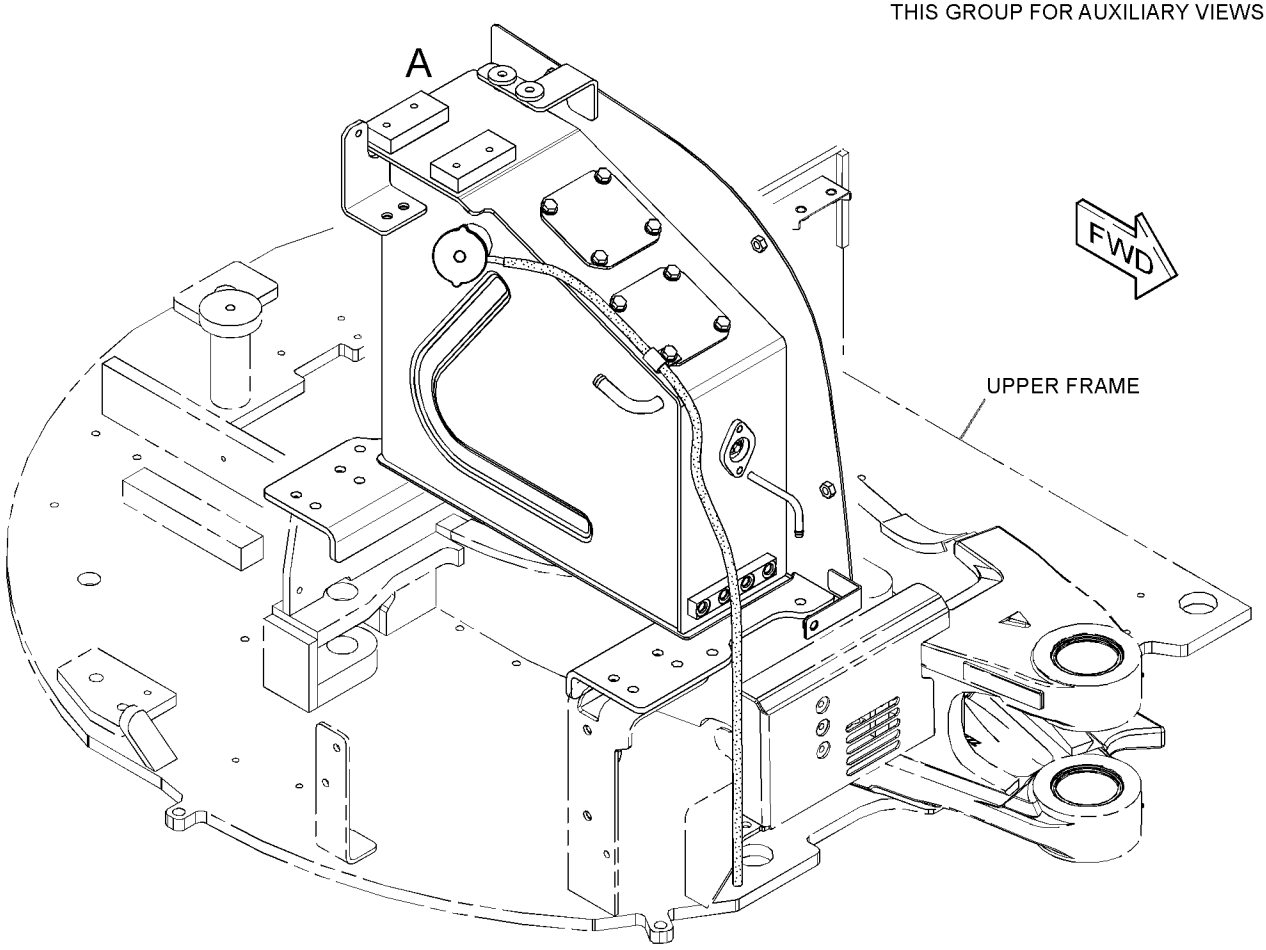

GRAPHIC #1 g02798929

367-1050 **TANK & FILTER GP-HYDRAULIC (*contd.*)** **i04629815**

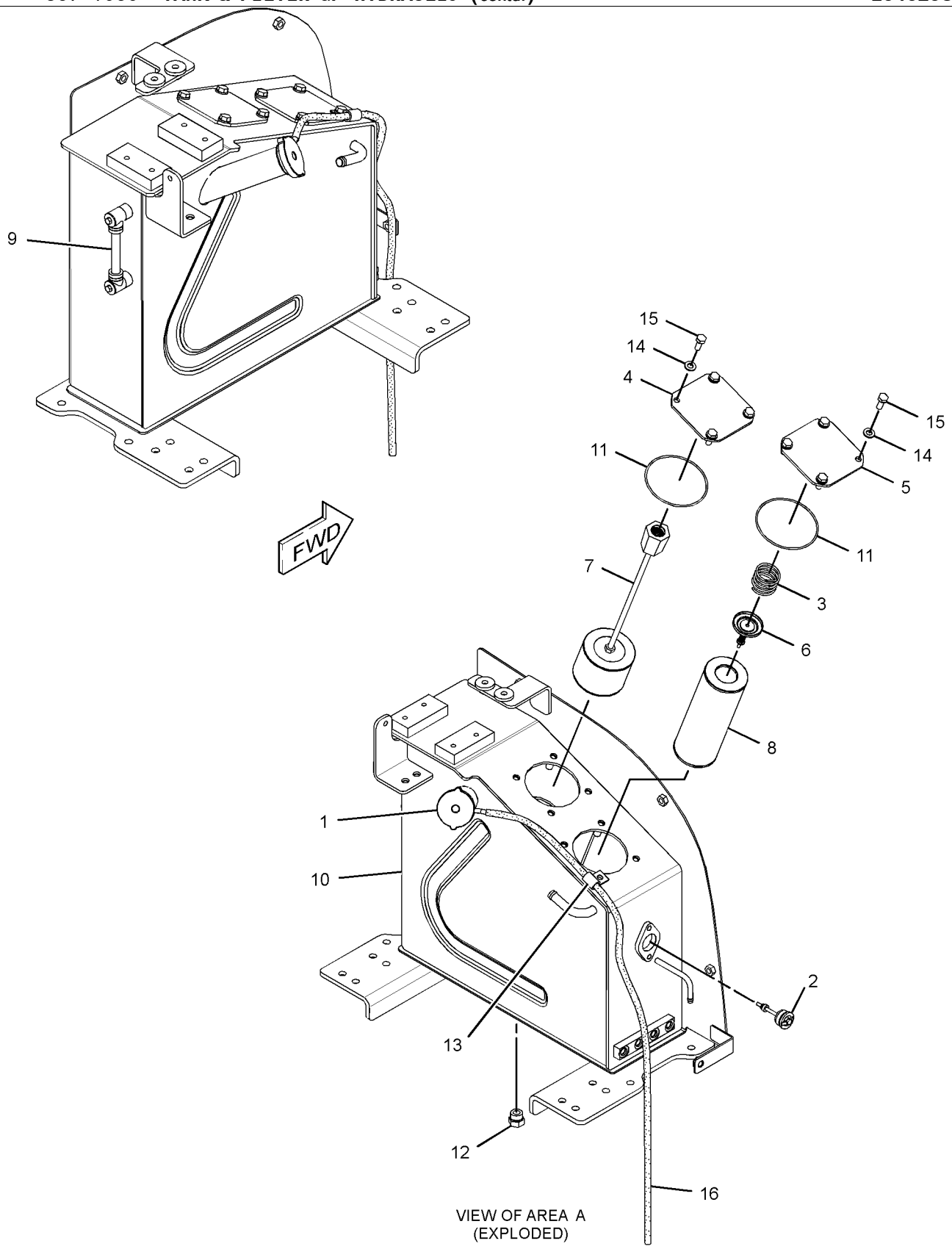

VIEW OF AREA A
(EXPLODED)

GRAPHIC #2 **<END>** g02798931

367-0936 TANK & MTG GP-HYDRAULIC

PART OF 379-4713 HYDRAULIC AR

SMCS-5056 **i04629813**

NOTE	REF NO	GRAPHIC REF	PART NUMBER	QTY	PART NAME 1 2 3 4 5 6 (PRODUCT LEVEL)	SEE PAGE
Y	1	1	*367-1050*	1	TANK & FILTER GP-HYDRAULIC	299
	2	1	**7X-7729**	4	WASHER (11X25X3-MM THK)	
M	3	1	**8T-4195**	4	BOLT (M10X1.5X30-MM)	

M - METRIC PART
Y - SEPARATE ILLUSTRATION

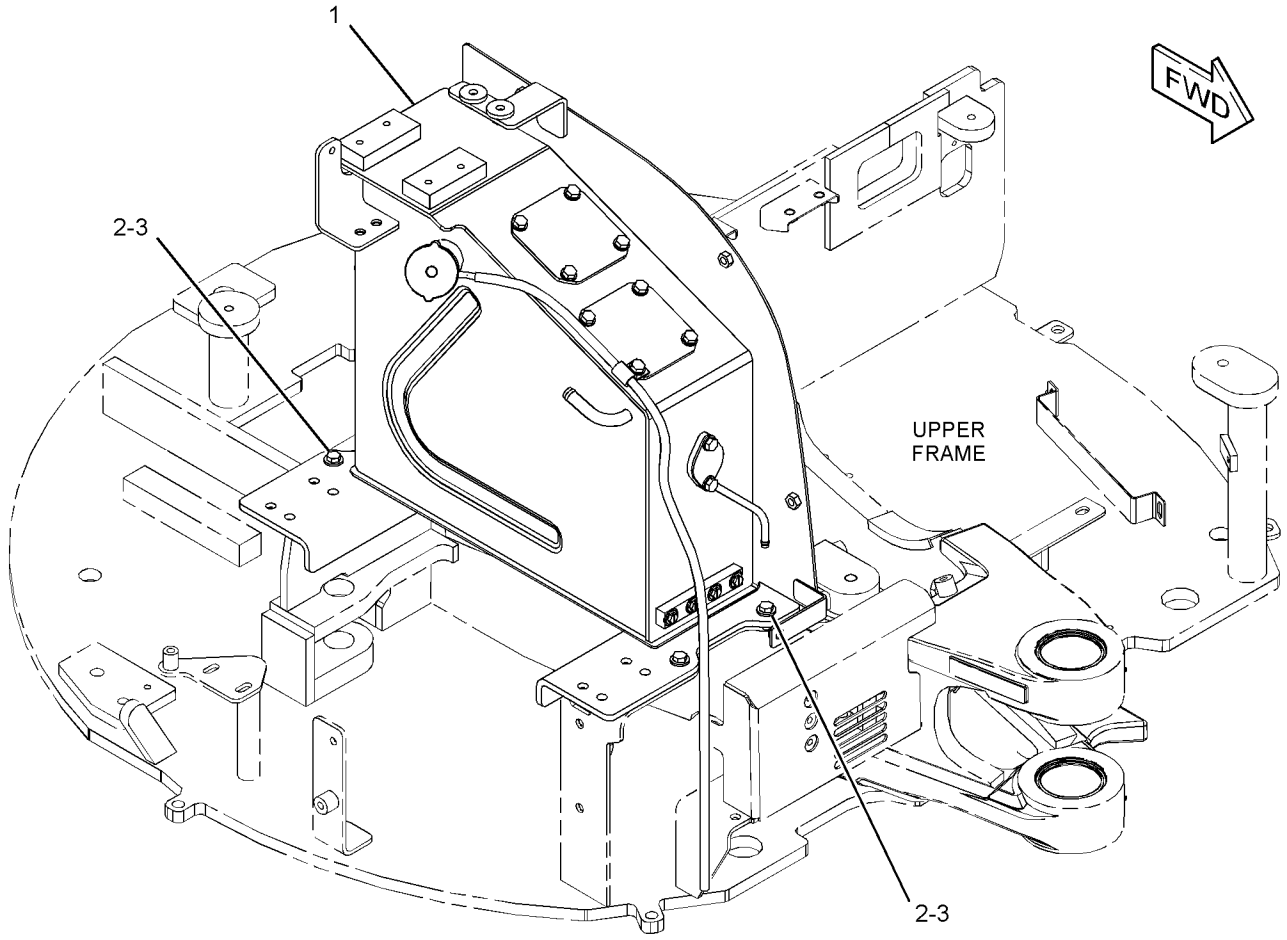

GRAPHIC #1 **<END>** g02798447

421-2717 VALVE & MOUNTING GP–CANOPY

S/N: RKY1466-UP
PART OF 377-8933, 383-5929 CANOPY AR
AN ATTACHMENT

SMCS-5051 **i05023351**

NOTE	REF NO	GRAPHIC REF	PART NUMBER	QTY	PART NAME 1 2 3 4 5 6 (PRODUCT LEVEL)	SEE PAGE
	1	1	**276-9309**	2	FOAM	
	2	1	**417-1093**	1	VALVE GP-PILOT (CANOPY)	
M	3	1	**101-7404**	2	BOLT-SOCKET HEAD (M10X1.5X30-MM)	

M - METRIC PART

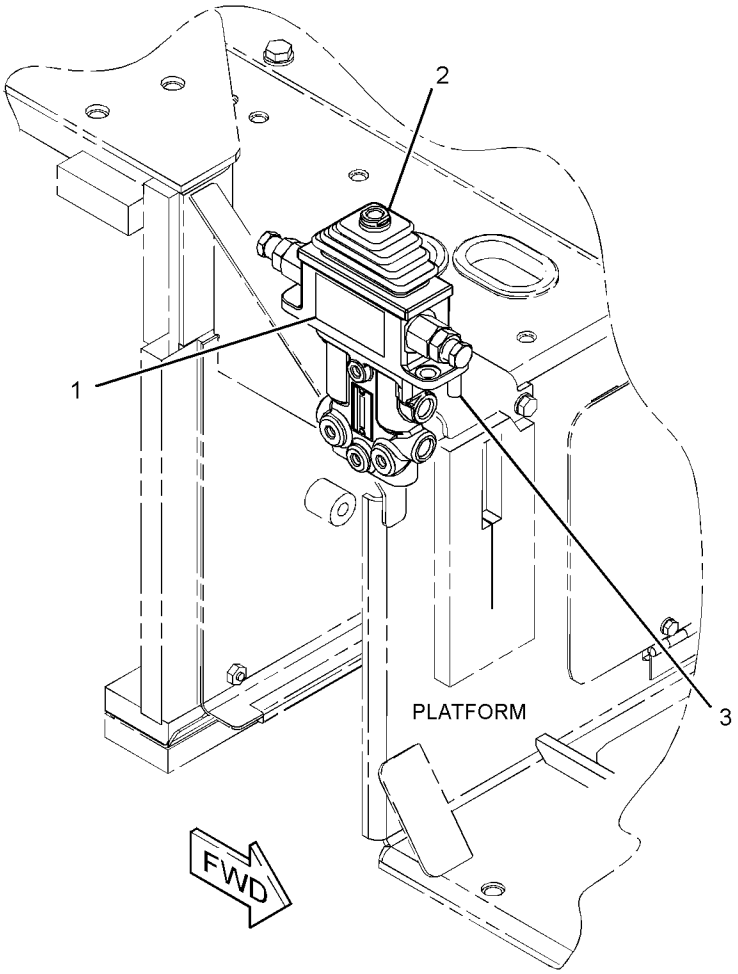

GRAPHIC #1 **<END>** g03201062

379-4734 VALVE & MTG GP-BANK

S/N: RKY1-1378
PART OF 377-8920 BLADE AR-STRAIGHT
AN ATTACHMENT

SMCS-5051, 5057 **i04728070**

NOTE	REF NO	GRAPHIC REF	PART NUMBER	QTY	PART NAME 1 2 3 4 5 6 (PRODUCT LEVEL)	SEE PAGE
Y	1	1	**315-5815**	1	VALVE GP-MAIN CONTROL	341
	2	1	**381-1119**	1	SUPPORT AS	
		1	**7T-1099**	1	LINK	
M		1	**8T-3490**	2	NUT-WELD (M10X1.5-THD)	
	3	1	**7X-7729**	4	WASHER (11X25X3-MM THK)	
	4	1	**8T-4121**	5	WASHER-HARD (11X21X2.5-MM THK)	
M	5	1	**8T-4136**	4	BOLT (M10X1.5X25-MM)	
M	6	1	**8T-4191**	1	BOLT (M10X1.5X16-MM)	
M	7	1	**8T-4195**	4	BOLT (M10X1.5X30-MM)	

M - METRIC PART
Y - SEPARATE ILLUSTRATION

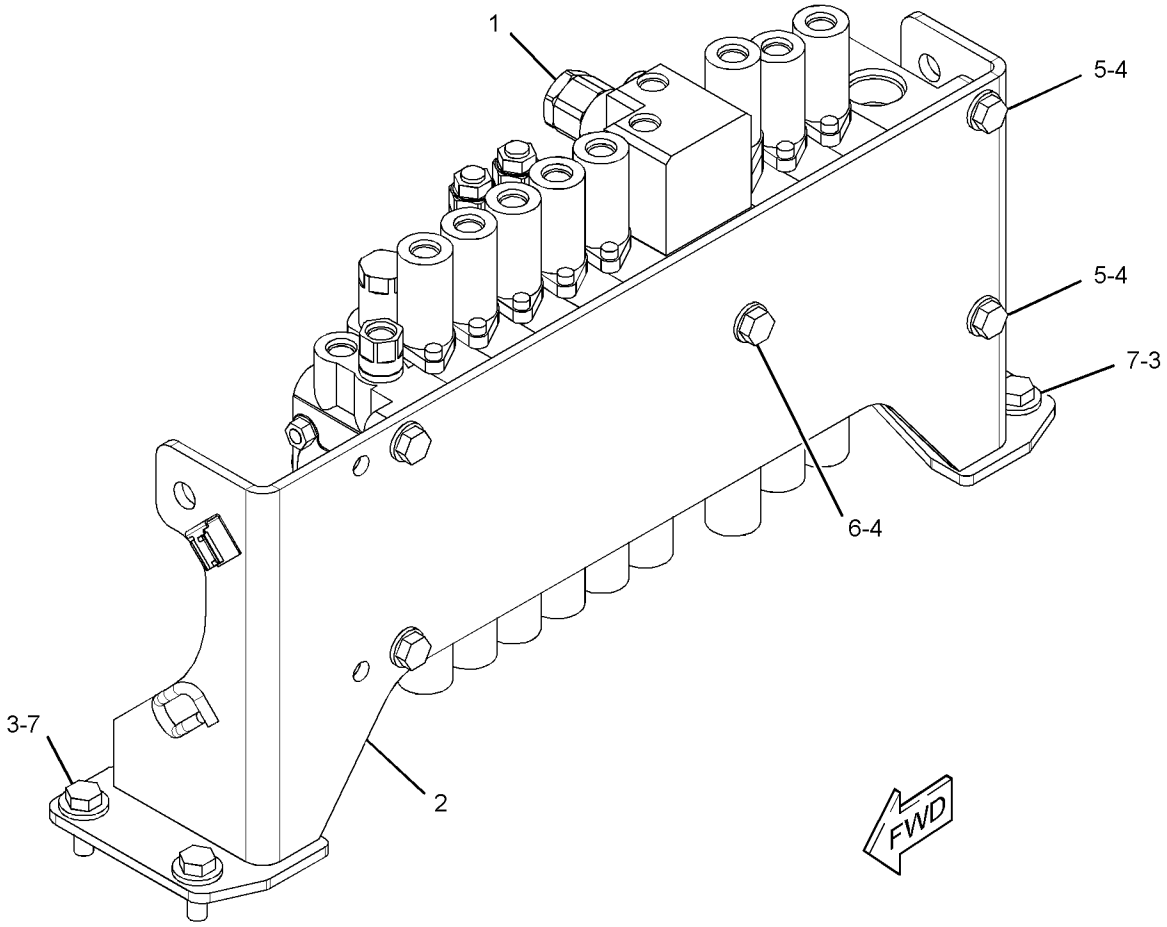

GRAPHIC #1 **<END>** g02856001

379-4734 VALVE & MTG GP-BANK

S/N: RKY1379-UP
PART OF 377-8920 BLADE AR-STRAIGHT
AN ATTACHMENT

SMCS-5051, 5057 **i05393143**

NOTE	REF NO	GRAPHIC REF	PART NUMBER	QTY	PART NAME 1 2 3 4 5 6 (PRODUCT LEVEL)	SEE PAGE
CY	1	1	**417-1065**	1	VALVE GP-MAIN CONTROL (BANK)	345
	2	1	**381-1119**	1	SUPPORT AS	
		1	**7T-1099**	1	LINK	
M		1	**8T-3490**	2	NUT-WELD (M10X1.5-THD)	
	3	1	**7X-7729**	4	WASHER (11X25X3-MM THK)	
	4	1	**8T-4121**	5	WASHER-HARD (11X21X2.5-MM THK)	
M	5	1	**8T-4136**	4	BOLT (M10X1.5X25-MM)	
M	6	1	**8T-4191**	1	BOLT (M10X1.5X16-MM)	
M	7	1	**8T-4195**	4	BOLT (M10X1.5X30-MM)	

C - CHANGE FROM PREVIOUS TYPE
M - METRIC PART
Y - SEPARATE ILLUSTRATION

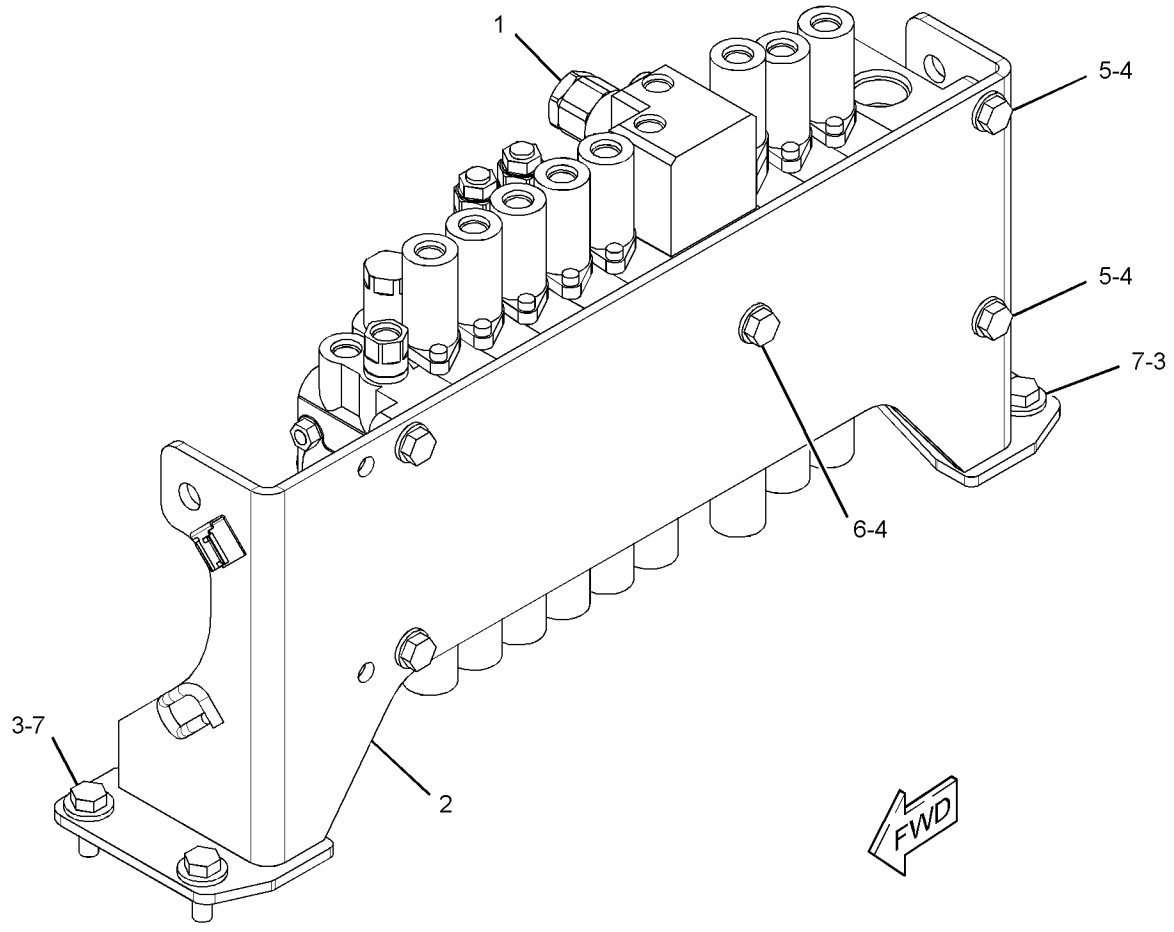

GRAPHIC #1 **<END>** g02856001

377-8861 VALVE & MTG GP-CONTROL—AUXILIARY, BOOM SWING

PART OF 379-4715 CONTROL AR-AUXILIARY

SMCS-5051 **i05437176**

NOTE	REF NO	GRAPHIC REF	PART NUMBER	QTY	PART NAME 1 2 3 4 5 6 (PRODUCT LEVEL)	SEE PAGE
Y	1	1	**267-0424**	2	MANIFOLD & SOLENOID GP-CONTROL (AUXILIARY, BOOM SWING)	285
	2	1	**282-2310**	1	BRACKET AS	
M		1	**8T-3490**	2	NUT-WELD (M10X1.5-THD)	
	3	1	**353-4402**	2	ADAPTER AS	
	4	1	**379-2000**	1	BRACKET AS	
M		1	**8T-3490**	2	NUT-WELD (M10X1.5-THD)	
	5	1	*148-8325*	3	CONNECTOR AS	
					(EACH INCLUDES)	
		1	**3J-1907**	1	SEAL-O-RING	
		1	**4J-5477**	1	SEAL-O-RING	
		1	**6V-8641**	1	CONNECTOR	
	6	1	*148-8351*	1	ELBOW AS	
		1	**4J-5477**	1	SEAL-O-RING	
		1	**6V-9849**	1	ELBOW	
	7	1	*148-8368*	3	ELBOW AS	
					(EACH INCLUDES)	
		1	**3J-1907**	1	SEAL-O-RING	
		1	**4J-5477**	1	SEAL-O-RING	
		1	**6V-8627**	1	ELBOW	
	8	1	**8T-4121**	4	WASHER-HARD (11X21X2.5-MM THK)	
M	9	1	**8T-4137**	4	BOLT (M10X1.5X20-MM)	
M	10	1	**8T-4200**	4	BOLT (M8X1.25X16-MM)	
	11	1	**8T-4224**	4	WASHER-HARD (8.8X16X2-MM THK)	

M - METRIC PART
Y - SEPARATE ILLUSTRATION

377-8861 **VALVE & MTG GP-CONTROL (*contd.*)** **i05437176**

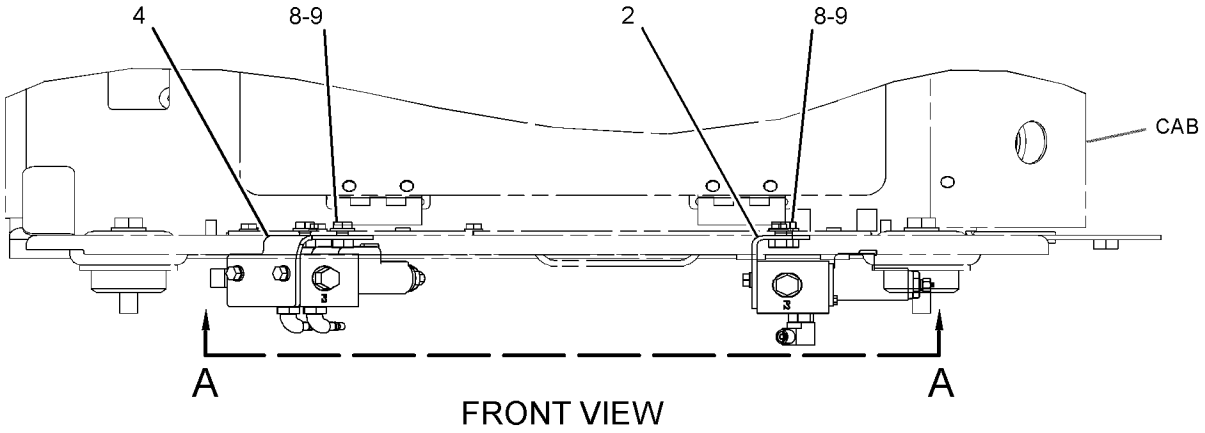

FRONT VIEW

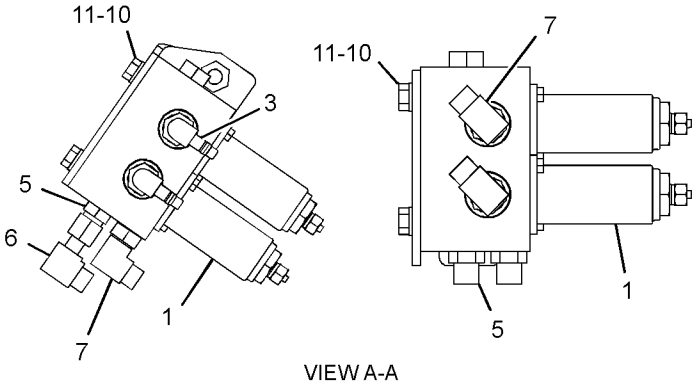

VIEW A-A

GRAPHIC #1 **<END>** g02765398

377-8876 VALVE & MTG GP-CONTROL–2-WAY

PART OF 379-4724 CONTROL AR-AUXILIARY

AN ATTACHMENT

SMCS-5051 **i05437177**

NOTE	REF NO	GRAPHIC REF	PART NUMBER	QTY	PART NAME 1 2 3 4 5 6 (PRODUCT LEVEL)	SEE PAGE
Y	1	1	**372-9898**	1	VALVE GP-SOLENOID (FLOW CONTROL) (2-WAY)	364
	2	1	**378-9748**	1	BRACKET AS	
M		1	**8T-3612**	2	NUT-WELD (M8X1.25-THD)	
	3	1	*148-8325*	2	CONNECTOR AS	
					(EACH INCLUDES)	
		1	**3J-1907**	1	SEAL-O-RING	
		1	**4J-5477**	1	SEAL-O-RING	
		1	**6V-8641**	1	CONNECTOR	
	4	1	*148-8351*	2	ELBOW AS	
					(EACH INCLUDES)	
		1	**4J-5477**	1	SEAL-O-RING	
		1	**6V-9849**	1	ELBOW	
	5	1	*148-8368*	4	ELBOW AS	
					(EACH INCLUDES)	
		1	**3J-1907**	1	SEAL-O-RING	
		1	**4J-5477**	1	SEAL-O-RING	
		1	**6V-8627**	1	ELBOW	
	6	1	*150-3033*	2	ELBOW AS	
					(EACH INCLUDES)	
		1	**3J-1907**	1	SEAL-O-RING	
		1	**4J-5477**	1	SEAL-O-RING	
		1	**8T-0164**	1	ELBOW	
	7	1	*187-2120*	1	ELBOW AS	
		1	**4J-5477**	1	SEAL-O-RING	
		1	**8C-8408**	1	ELBOW	
	8	1	**8T-4121**	2	WASHER-HARD (11X21X2.5-MM THK)	
M	9	1	**8T-4136**	2	BOLT (M10X1.5X25-MM)	
	10	1	**8T-4224**	2	WASHER-HARD (8.8X16X2-MM THK)	
M	11	1	**8T-6870**	2	BOLT (M8X1.25X70-MM)	

M - METRIC PART
Y - SEPARATE ILLUSTRATION

377-8876 **VALVE & MTG GP-CONTROL (*contd.*)** **i05437177**

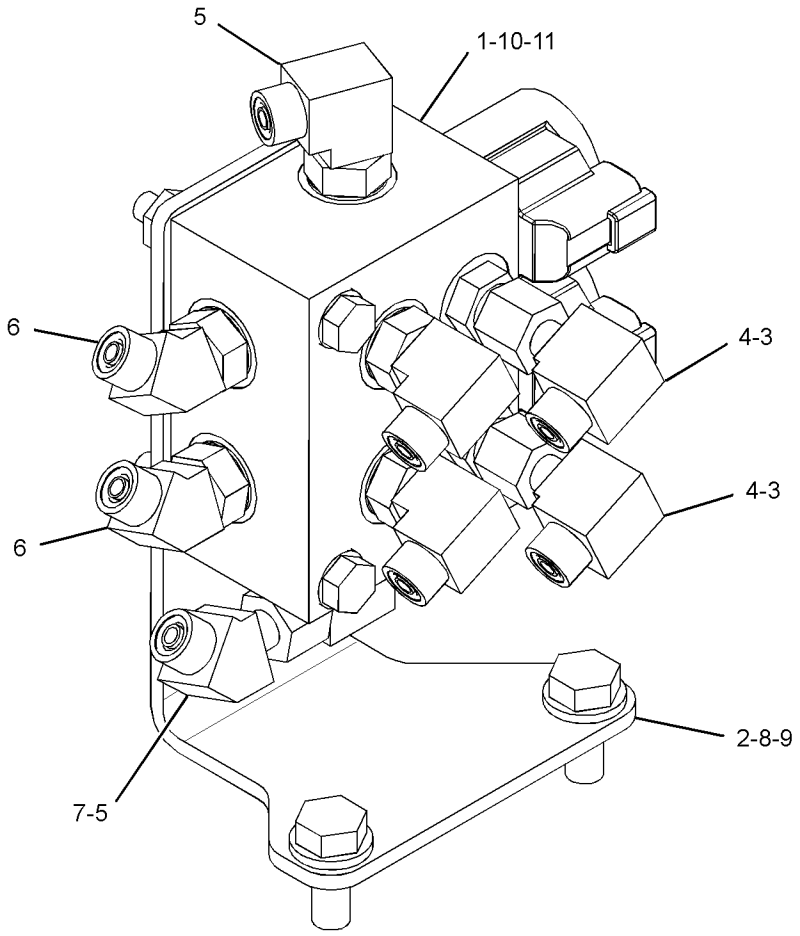

GRAPHIC #1 **<END>** g02767697

391-3188 VALVE & MTG GP-MAIN CONTROL

S/N: RKY1-1378
PART OF 377-8930 BLADE AR-ANGLING
AN ATTACHMENT

SMCS-5051 **i04728129**

NOTE	REF NO	GRAPHIC REF	PART NUMBER	QTY	PART NAME 1 2 3 4 5 6 (PRODUCT LEVEL)	SEE PAGE
Y	1	1	**315-5816**	1	VALVE GP-MAIN CONTROL (ANGLE BLADE)	343
	2	1	**381-1119**	1	SUPPORT AS	
		1	**7T-1099**	1	LINK	
M		1	**8T-3490**	2	NUT-WELD (M10X1.5-THD)	
	3	1	**7X-7729**	4	WASHER (11X25X3-MM THK)	
	4	1	**8T-4121**	5	WASHER-HARD (11X21X2.5-MM THK)	
M	5	1	**8T-4136**	4	BOLT (M10X1.5X25-MM)	
M	6	1	**8T-4191**	1	BOLT (M10X1.5X16-MM)	
M	7	1	**8T-4195**	4	BOLT (M10X1.5X30-MM)	

M - METRIC PART
Y - SEPARATE ILLUSTRATION

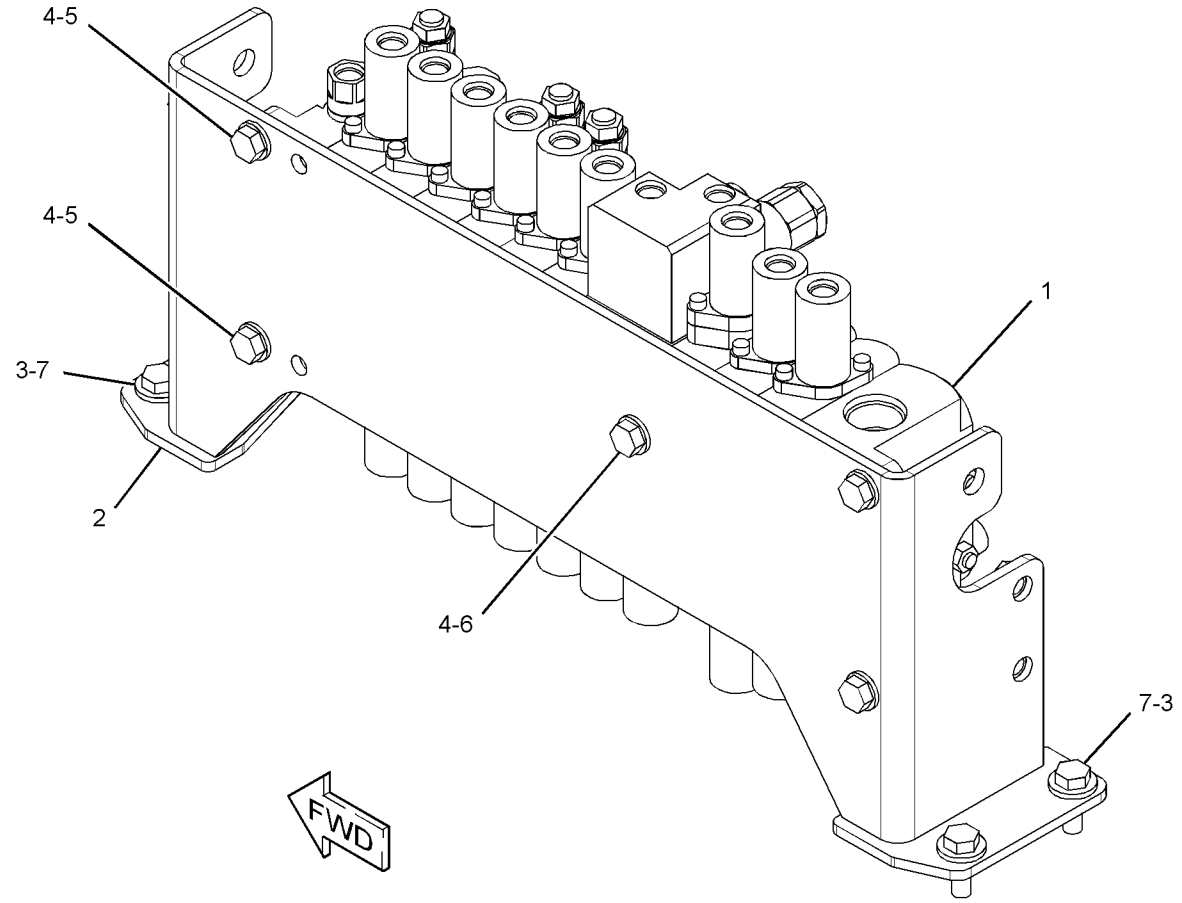

GRAPHIC #1 **<END>** g02855956

356-4545 VALVE & MTG GP-PILOT–TRAVEL

PART OF 377-8934, 377-8935 CONTROL AR-GOVERNOR
AN ATTACHMENT
TYPE 1

SMCS-5059 **i04019552**

NOTE	REF NO	GRAPHIC REF	PART NUMBER	QTY	PART NAME 1 2 3 4 5 6 (PRODUCT LEVEL)	SEE PAGE
Y	1	1	**356-3823**	1	VALVE GP-PILOT (WITH SHUTTLE) (TRAVEL)	352
	2	1	**8T-4121**	4	WASHER-HARD (11X21X2.5-MM THK)	
M	3	1	**8T-4136**	4	BOLT (M10X1.5X25-MM)	

M - METRIC PART
Y - SEPARATE ILLUSTRATION

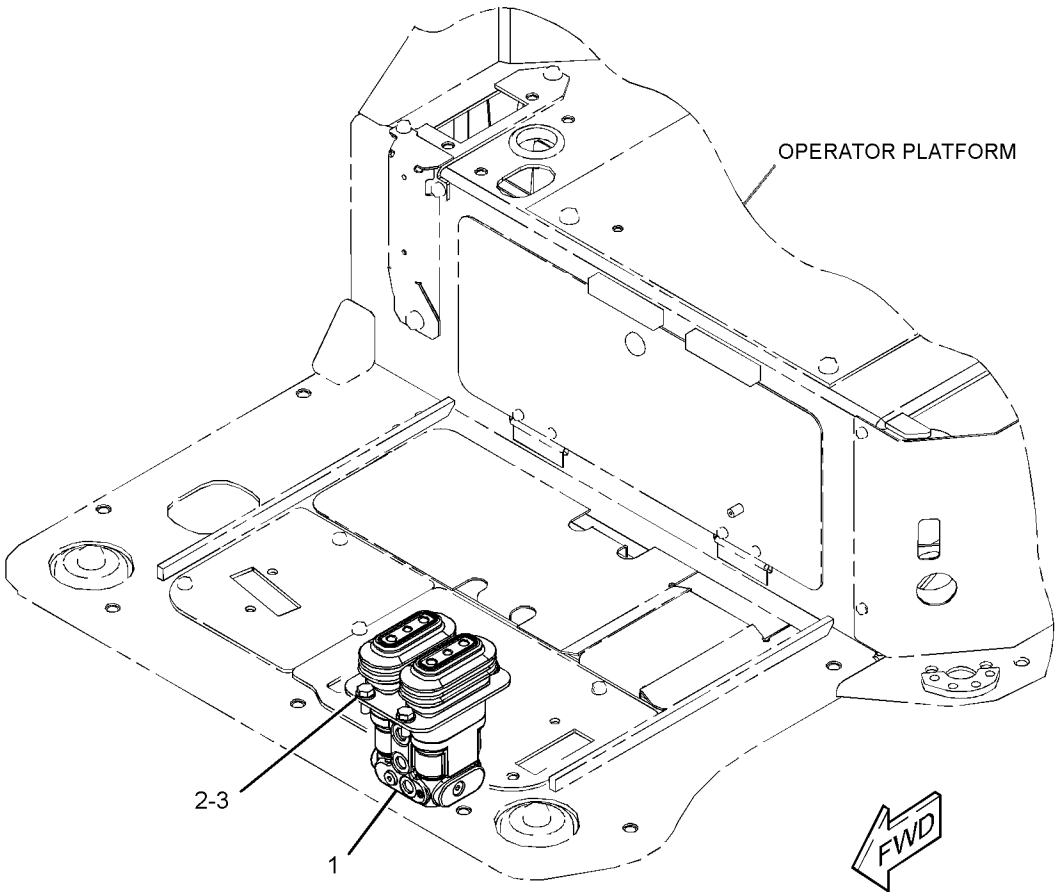

GRAPHIC #1 **<END>** g02204702

356-4545 VALVE & MTG GP-PILOT–TRAVEL

PART OF 377-8934, 377-8935 CONTROL AR-GOVERNOR

AN ATTACHMENT

TYPE 2

SMCS-5059 **i05357679**

NOTE	REF NO	GRAPHIC REF	PART NUMBER	QTY	PART NAME 1 2 3 4 5 6 (PRODUCT LEVEL)	SEE PAGE
CY	1	1	**416-2294**	1	VALVE GP-PILOT (TRAVEL)	356
	2	1	**8T-4121**	4	WASHER-HARD (11X21X2.5-MM THK)	
M	3	1	**8T-4136**	4	BOLT (M10X1.5X25-MM)	

C - CHANGE FROM PREVIOUS TYPE
M - METRIC PART
Y - SEPARATE ILLUSTRATION

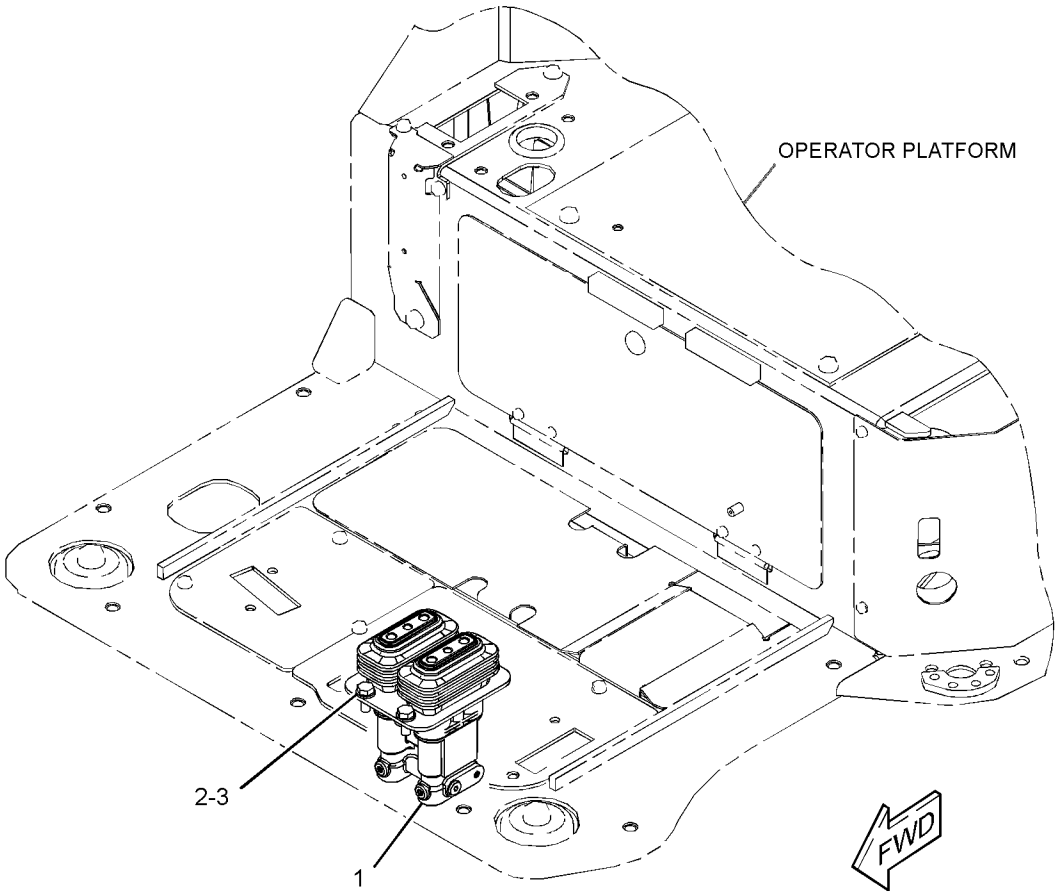

GRAPHIC #1 **<END>** g03401369

421-2718 VALVE & MTG GP-PILOT–CAB

S/N: RKY1466-UP
PART OF 376-6692, 376-6696, 383-5927, 383-5928 CAB AR
AN ATTACHMENT

SMCS-5059 **i05031518**

NOTE	REF NO	GRAPHIC REF	PART NUMBER	QTY	PART NAME 1 2 3 4 5 6 (PRODUCT LEVEL)	SEE PAGE
Y	1	1	**393-7501**	1	VALVE GP-PILOT (BLADE CONTROL)	354
M	2	1	**101-7404**	2	BOLT-SOCKET HEAD (M10X1.5X30-MM)	

M - METRIC PART
Y - SEPARATE ILLUSTRATION

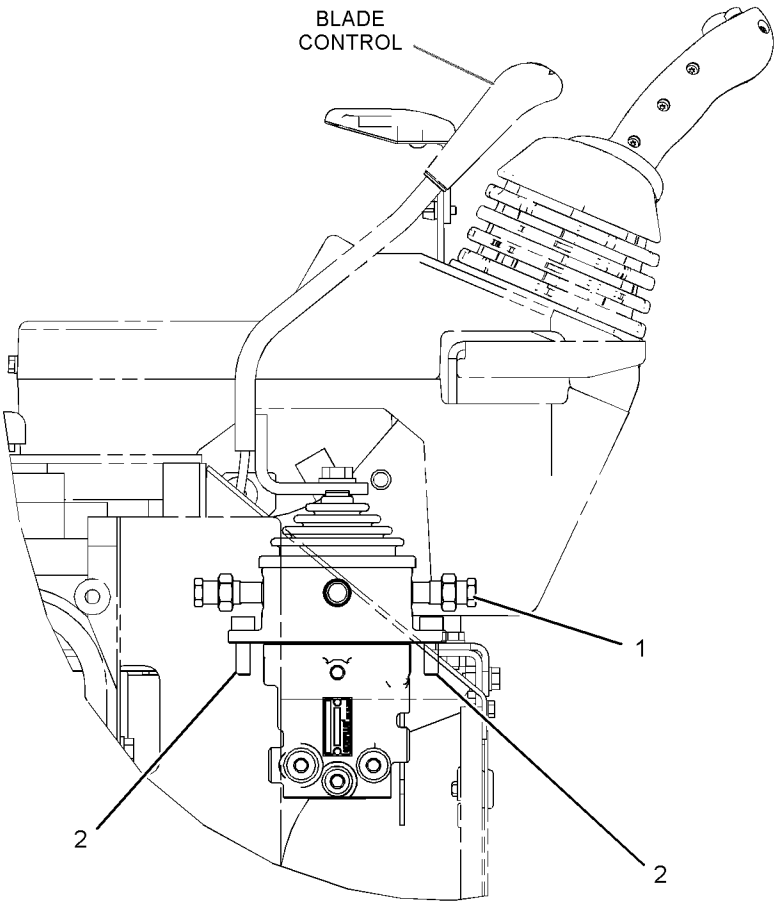

RIGHT SIDE VIEW

GRAPHIC #1 **<END>** g03202979

361-1132 VALVE GP-CHECK–HYDRAULIC CONTROL LOCK

PART OF 361-1125 CYLINDER GP-HYDRAULIC

AN ATTACHMENT

SMCS-5067 **i04404022**

NOTE	REF NO	GRAPHIC REF	PART NUMBER	QTY	PART NAME 1 2 3 4 5 6 (PRODUCT LEVEL)	SEE PAGE
	1	1	**215-3277**	1	SEAL-O-RING	
	2	1	**214-7654**	1	SEAL-O-RING	
		1	**180-8424**	1	SEAL-O-RING	
	3	1	**112-5282**	1	SEAL-O-RING	

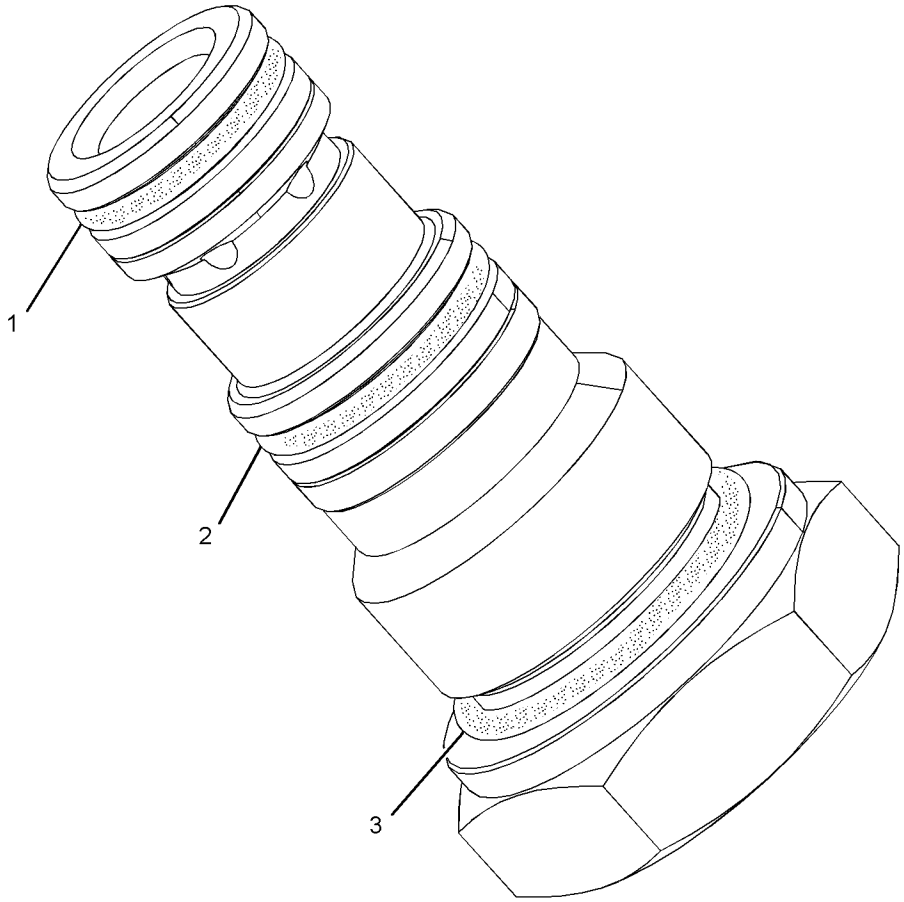

GRAPHIC #1 **<END>** g02598836

274-9034 VALVE GP-CONTROL

PART OF 281-3052 MOTOR GP-SWING

SMCS-5051 **i02503218**

NOTE	REF NO	GRAPHIC REF	PART NUMBER	QTY	PART NAME 1 2 3 4 5 6 (PRODUCT LEVEL)	SEE PAGE
	1	1	**169-1130**	4	PLUG	
	2	1	**095-1579**	4	SEAL-O-RING	
	3	1	**095-1574**	2	SEAL-O-RING	
	4	1	**169-1116**	1	PLUG	
					PARTS SHOWN IN GRAPHIC WITHOUT A REFERENCE NUMBER ARE NOT SERVICED SEPARATELY	

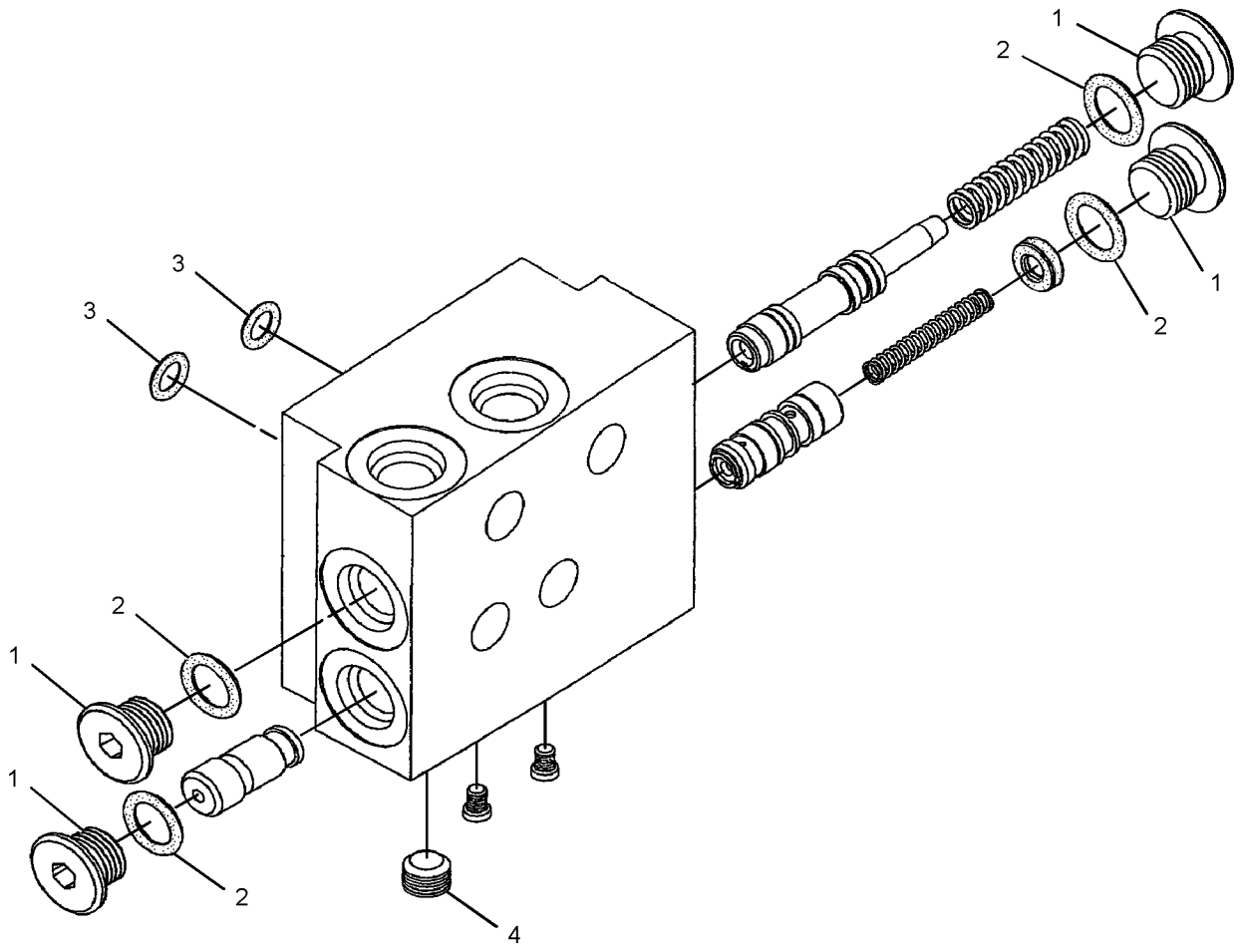

GRAPHIC #1 **<END>** g01252434

281-2326 VALVE GP-CONTROL–INLET

PART OF 315-5815, 315-5816, 417-1065, 417-1072 VALVE GP-MAIN CONTROL
AN ATTACHMENT

SMCS-5051 **i04046739**

NOTE	REF NO	GRAPHIC REF	PART NUMBER	QTY	PART NAME 1 2 3 4 5 6 (PRODUCT LEVEL)	SEE PAGE
	1	1	**281-2952**	1	SPRING	
	2	1	**281-2953**	1	SPACER	
	3	1	**281-2954**	1	SEAL	
	4	1	**281-2955**	1	WASHER	
	5	1	**281-2956**	1	FLANGE	
	6	1	**281-2957**	1	SCREW	
	7	1	**281-2958**	1	NUT	
	8	1	**281-2959**	2	BOLT	
	9	1	**281-2960**	1	SEAL	
	10	1	**150-6355**	1	PLUG	
	11	1	**281-2961**	2	SEAL	
	12	1	**281-2962**	1	ORIFICE	
	13	1	**281-2963**	1	RING	
	14	1	**356-1597**	1	PLUG	
	15	1	**150-6367**	1	SEAL-O-RING	
	16	1	**150-0885**	1	SEAL	
	17	1	**281-2965**	1	RING	

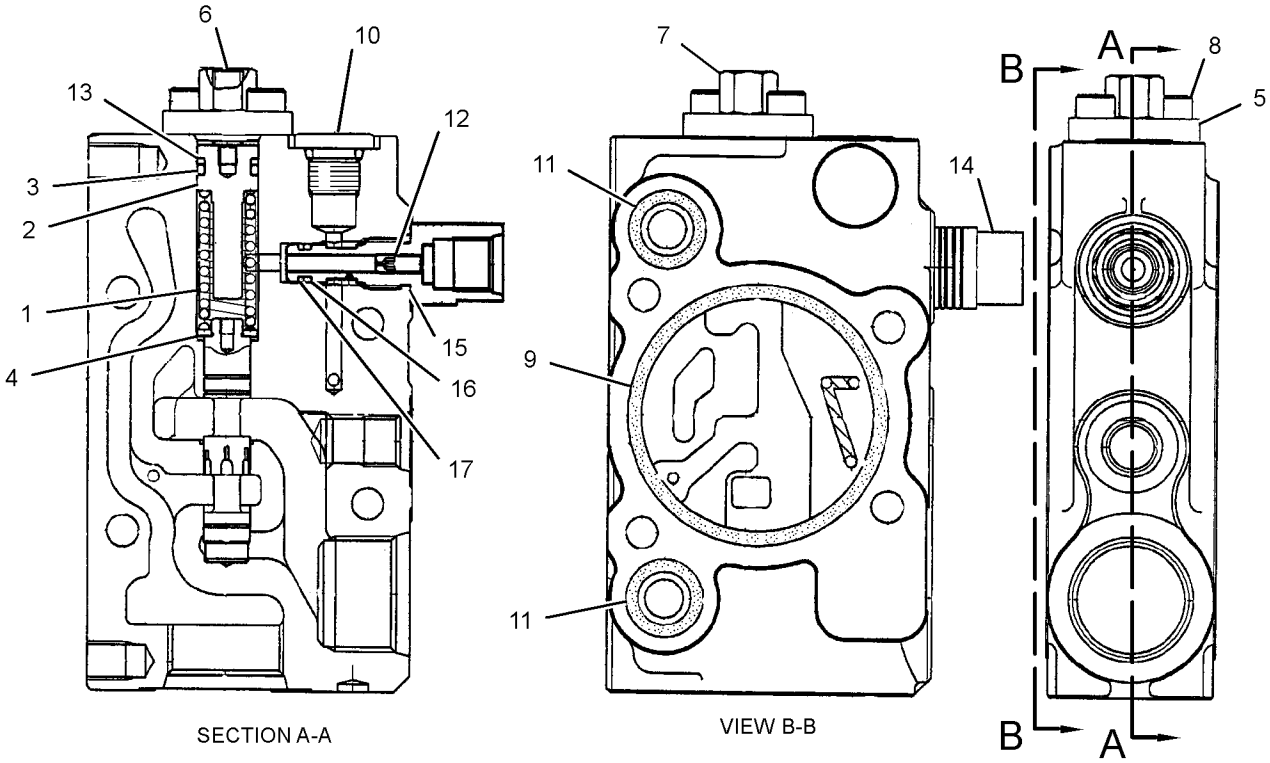

GRAPHIC #1 **<END>** g01222085

281-2332 VALVE GP-CONTROL–BUCKET

PART OF 315-5815, 315-5816, 417-1065, 417-1072 VALVE GP-MAIN CONTROL AN ATTACHMENT

SMCS-5051 **i04023299**

NOTE	REF NO	GRAPHIC REF	PART NUMBER	QTY	PART NAME 1 2 3 4 5 6 (PRODUCT LEVEL)	SEE PAGE
	1	1	**281-2972**	2	SEAT	
	2	1	**281-2973**	2	SPRING	
	3	1	**281-2974**	2	SEAT	
	4	1	**281-2975**	2	CAP	
	5	1	**281-2976**	2	SEAL	
	6	1	**281-2977**	4	BOLT	
	7	1	**281-2978**	1	SPRING	
	8	1	**281-2979**	1	PLUG	
	9	1	**250-8771**	1	SEAL	
	10	1	**281-2960**	1	SEAL	
	11	1	**281-2985**	2	PLUNGER	
	12	1	**281-2986**	2	SPRING	
	13	1	**281-2961**	2	SEAL	
	14	1	**279-4796**	1	PLATE	

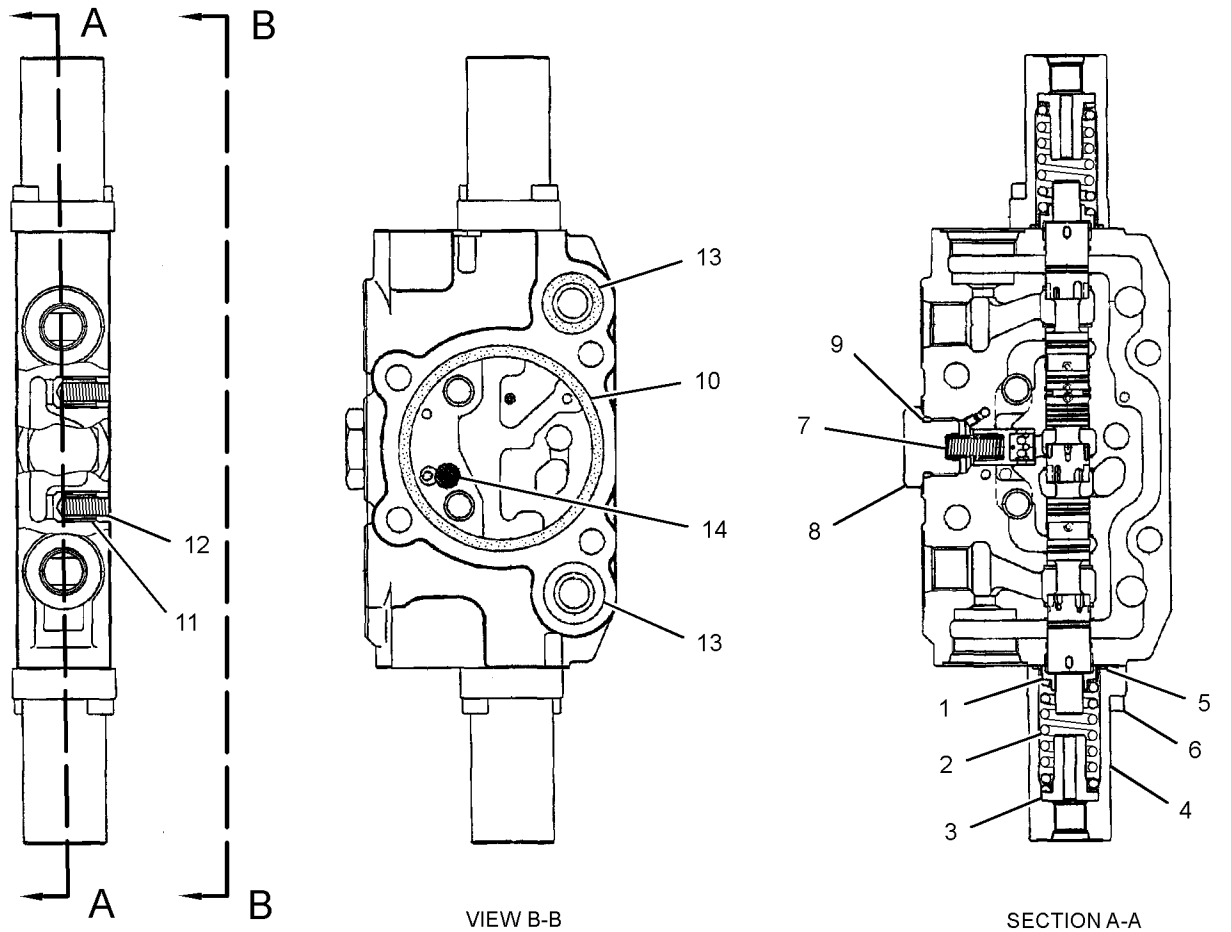

VIEW B-B SECTION A-A

GRAPHIC #1 **<END>** g01223272

281-2334 VALVE GP-CONTROL–SWING

PART OF 315-5815, 315-5816, 417-1065, 417-1072 VALVE GP-MAIN CONTROL AN ATTACHMENT

SMCS-5051 **i04023301**

NOTE	REF NO	GRAPHIC REF	PART NUMBER	QTY	PART NAME 1 2 3 4 5 6 (PRODUCT LEVEL)	SEE PAGE
	1	1	**281-2972**	2	SEAT	
	2	1	**281-2973**	2	SPRING	
	3	1	**281-2974**	2	SEAT	
	4	1	**281-2975**	2	CAP	
	5	1	**281-2976**	2	SEAL	
	6	1	**281-2977**	4	BOLT	
	7	1	**281-2978**	1	SPRING	
	8	1	**281-2979**	1	PLUG	
	9	1	**250-8771**	1	SEAL	
	10	1	**281-2960**	1	SEAL	
	11	1	**281-2985**	2	PLUNGER	
	12	1	**281-2986**	2	SPRING	
	13	1	**281-2961**	2	SEAL	
	14	1	**279-4796**	1	PLATE	

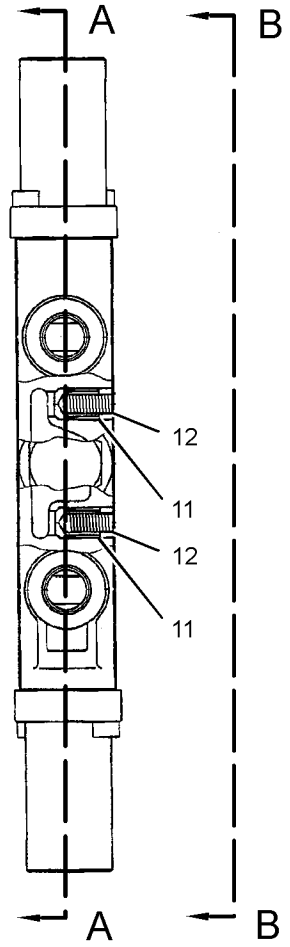

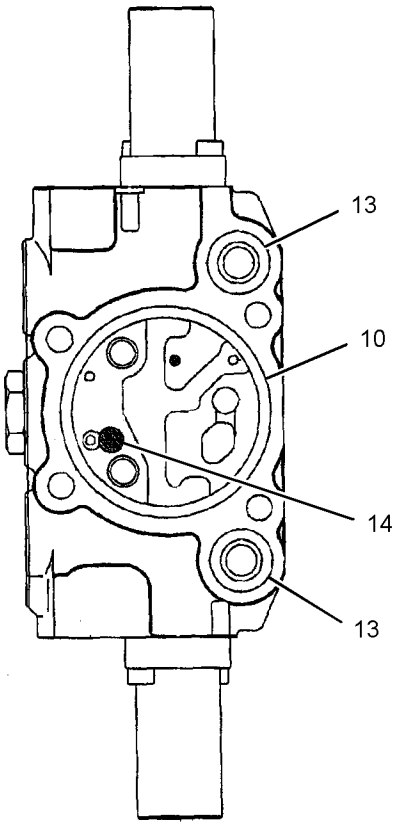

VIEW B-B

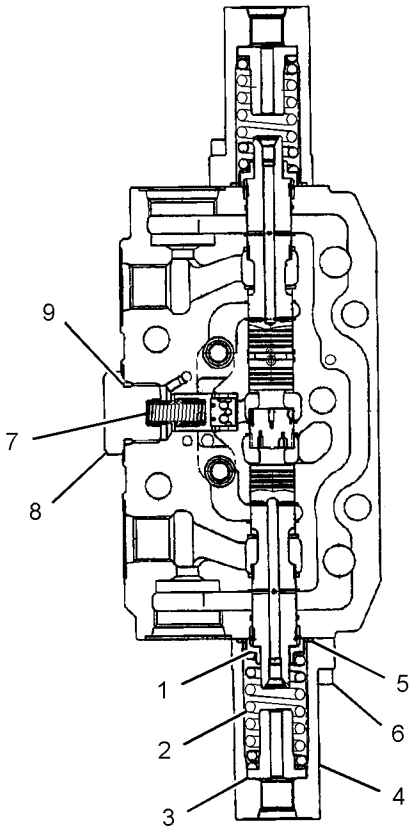

SECTION A-A

GRAPHIC #1

<END>

g01223381

281-2336 VALVE GP-CONTROL–OUTLET

PART OF 315-5815, 315-5816, 417-1065, 417-1072 VALVE GP-MAIN CONTROL
AN ATTACHMENT

SMCS-5051 **i05426621**

NOTE	REF NO	GRAPHIC REF	PART NUMBER	QTY	PART NAME 1 2 3 4 5 6 (PRODUCT LEVEL)	SEE PAGE
	1	1	**279-4810**	1	PLUG AS	
	2	1	**150-6355**	1	PLUG	
	3	1	**279-4786**	1	VALVE GP-RELIEF (OUTLET)	

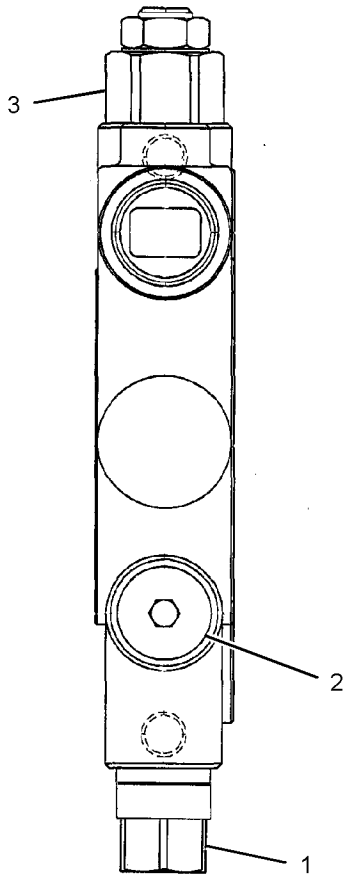

GRAPHIC #1 **<END>** g01222276

326-8530 VALVE GP-CONTROL–ANGLE

PART OF 315-5816, 417-1072 VALVE GP-MAIN CONTROL
AN ATTACHMENT

SMCS-5051 **i04016751**

NOTE	REF NO	GRAPHIC REF	PART NUMBER	QTY	PART NAME 1 2 3 4 5 6 (PRODUCT LEVEL)	SEE PAGE
	1	1	**281-2972**	2	SEAT	
	2	1	**281-2973**	2	SPRING	
	3	1	**281-2974**	2	SEAT	
	4	1	**281-2975**	2	CAP	
	5	1	**281-2976**	2	SEAL	
	6	1	**281-2977**	4	BOLT	
	7	1	**281-2978**	1	SPRING	
	8	1	**281-2979**	1	PLUG	
	9	1	**250-8771**	1	SEAL	
	10	1	**281-2960**	1	SEAL	
	11	1	**281-2985**	2	PLUNGER	
	12	1	**281-2986**	2	SPRING	
	13	1	**281-2961**	2	SEAL	

326-8530 **VALVE GP-CONTROL (*contd.*)** **i04016751**

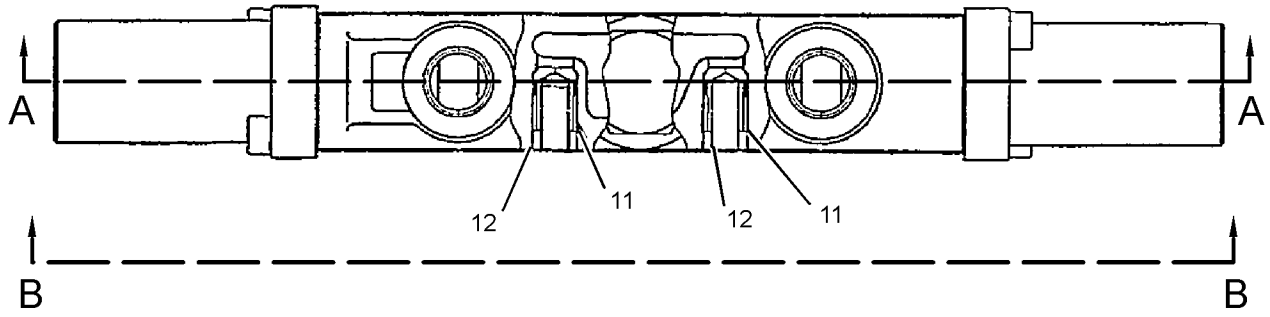

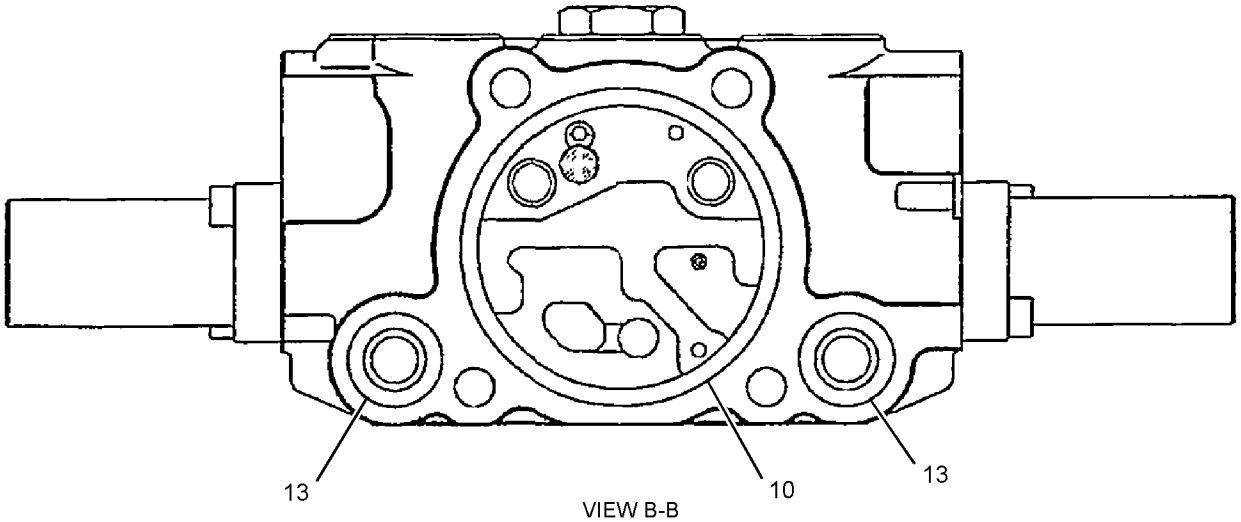

VIEW B-B

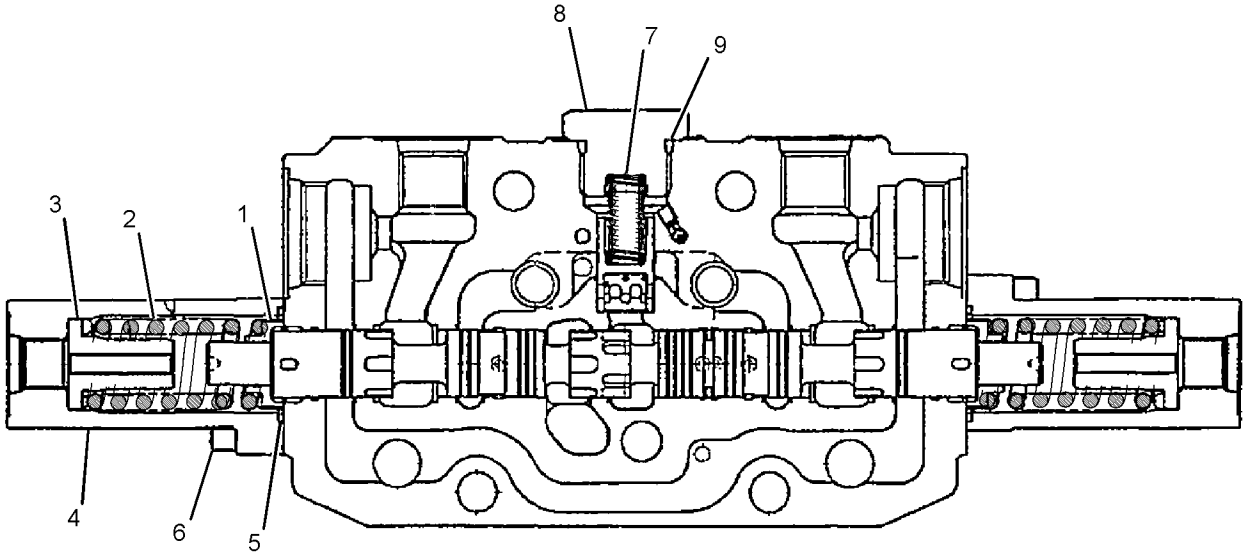

SECTION A-A

GRAPHIC #1 **<END>** g01954780

328-5659 VALVE GP-CONTROL—BOOM SWING

PART OF 315-5816, 417-1072 VALVE GP-MAIN CONTROL

AN ATTACHMENT

SMCS-5051 **i04023302**

NOTE	REF NO	GRAPHIC REF	PART NUMBER	QTY	PART NAME 1 2 3 4 5 6 (PRODUCT LEVEL)	SEE PAGE
	1	1	**281-2972**	2	SEAT	
	2	1	**281-2973**	2	SPRING	
	3	1	**281-2974**	2	SEAT	
	4	1	**281-2975**	2	CAP	
	5	1	**281-2976**	2	SEAL	
	6	1	**281-2977**	4	BOLT	
	7	1	**281-2978**	1	SPRING	
	8	1	**281-2979**	1	PLUG	
	9	1	**250-8771**	1	SEAL	
	10	1	**281-2960**	1	SEAL	
	11	1	**281-2985**	2	PLUNGER	
	12	1	**281-2986**	2	SPRING	
	13	1	**281-2961**	2	SEAL	
	14	1	**279-4796**	1	PLATE	

328-5659 **VALVE GP-CONTROL (*contd.*)** **i04023302**

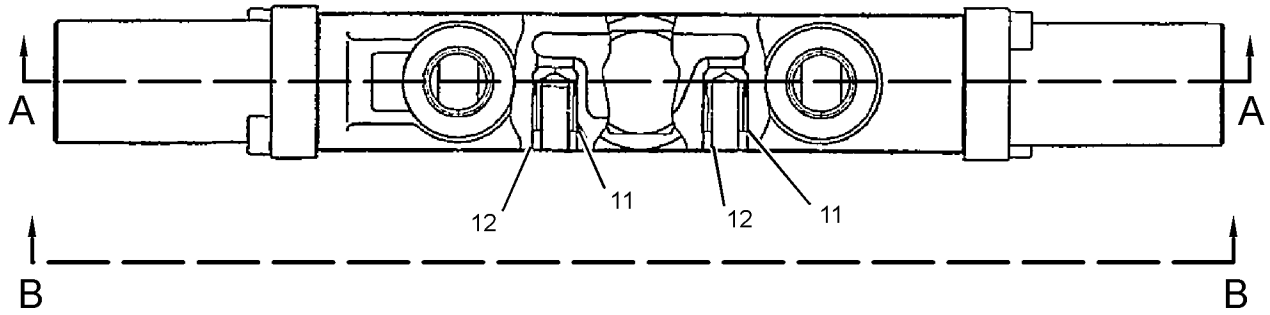

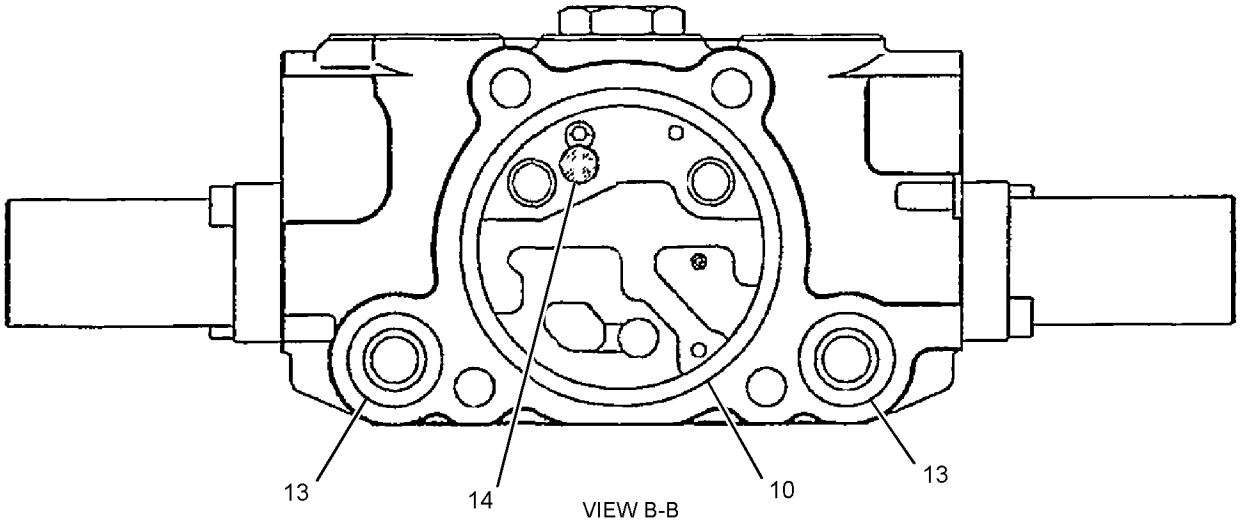

VIEW B-B

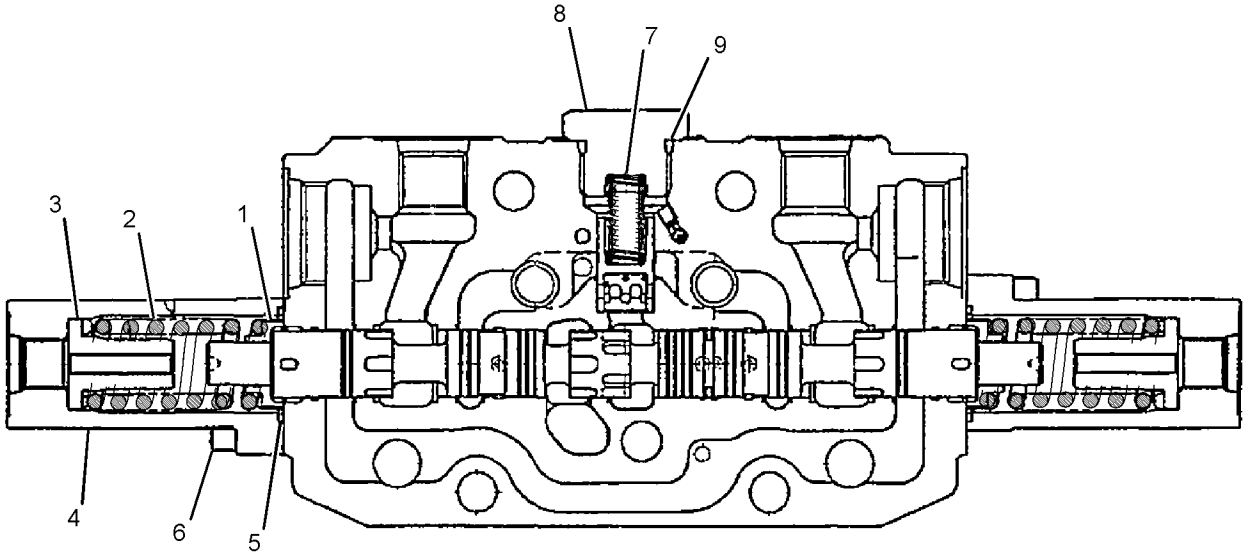

SECTION A-A

GRAPHIC #1 **<END>** g01955013

329-8369 VALVE GP-CONTROL–AUXILIARY

PART OF 315-5815, 315-5816, 417-1065, 417-1072 VALVE GP-MAIN CONTROL AN ATTACHMENT

SMCS-5051 **i04015356**

NOTE	REF NO	GRAPHIC REF	PART NUMBER	QTY	PART NAME 1 2 3 4 5 6 (PRODUCT LEVEL)	SEE PAGE
	1	1	**281-2972**	2	SEAT	
	2	1	**281-2983**	2	SPRING	
	3	1	**281-2974**	2	SEAT	
	4	1	**281-2975**	2	CAP	
	5	1	**281-2976**	2	SEAL	
	6	1	**281-2977**	4	BOLT	
	7	1	**281-2978**	1	SPRING	
	8	1	**281-2979**	1	PLUG	
	9	1	**250-8771**	1	SEAL	
	10	1	**281-2960**	1	SEAL	
	11	1	**281-2985**	2	PLUNGER	
	12	1	**281-2986**	2	SPRING	
	13	1	**281-2961**	2	SEAL	
	14	1	**279-4796**	1	PLATE	

329-8369 **VALVE GP-CONTROL (*contd.*)** **i04015356**

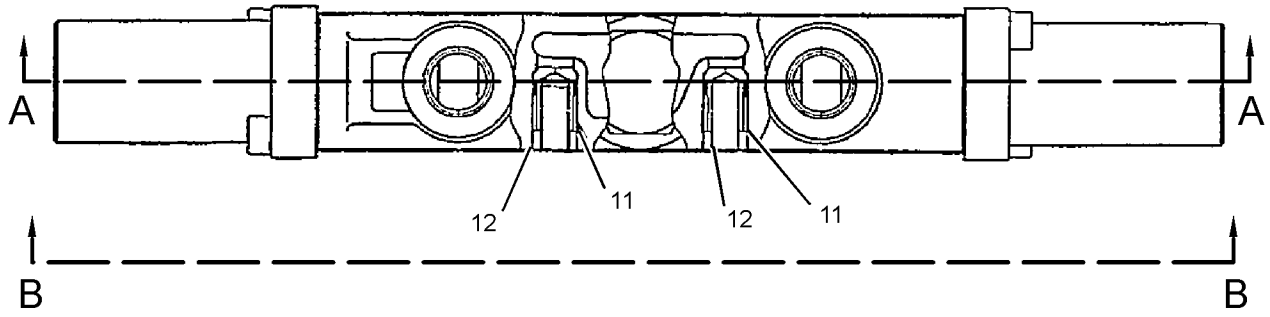

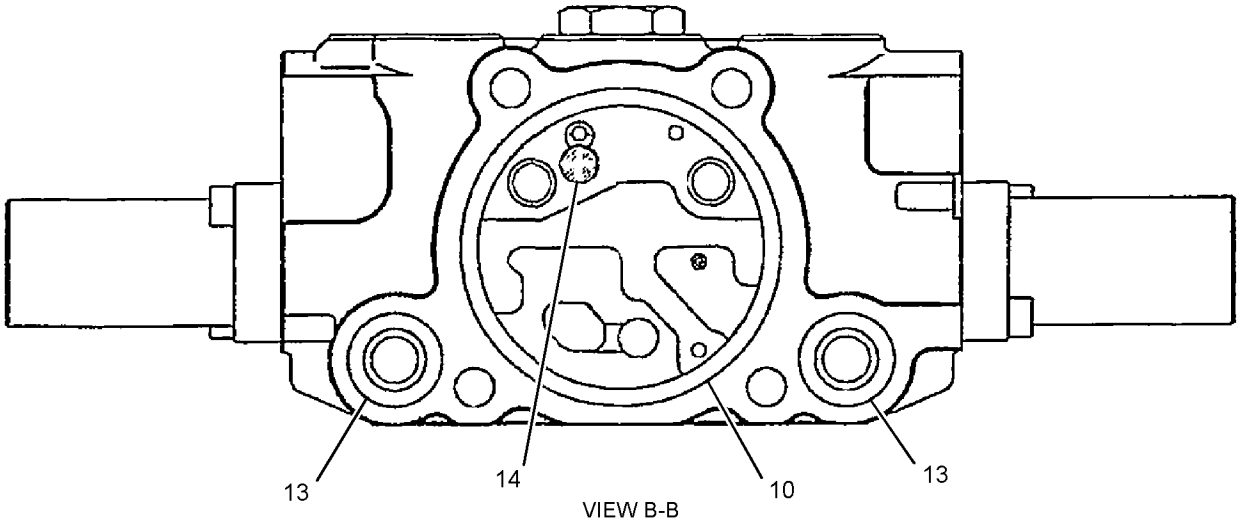

VIEW B-B

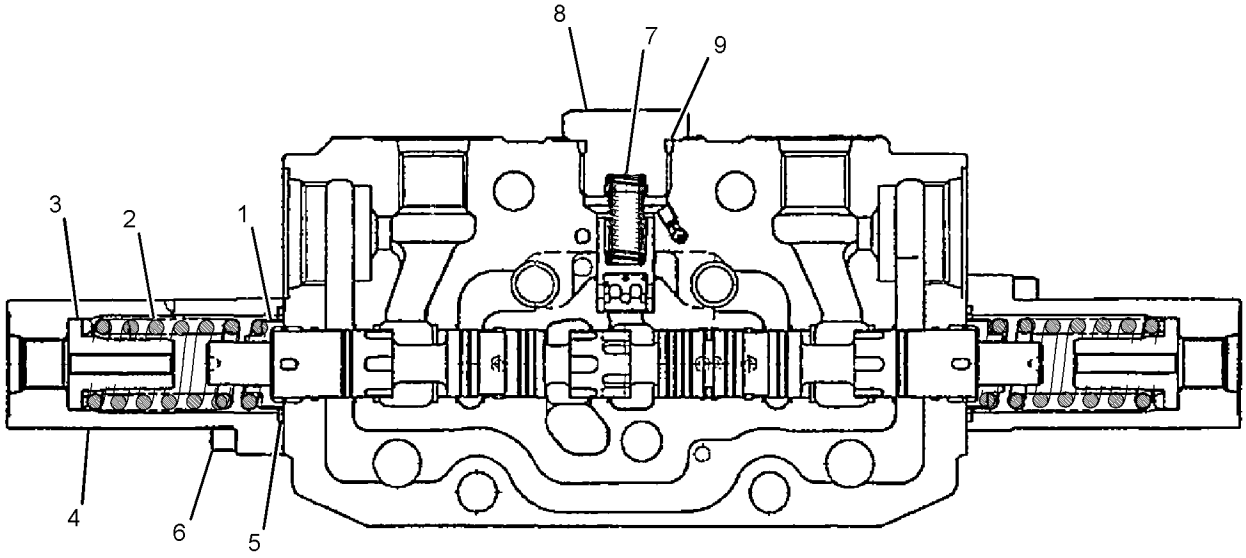

SECTION A-A

GRAPHIC #1 **<END>** g01954685

332-4123 VALVE GP-CONTROL–BOOM SWING

PART OF 315-5815, 417-1065 VALVE GP-MAIN CONTROL
AN ATTACHMENT

SMCS-5051 **i04024674**

NOTE	REF NO	GRAPHIC REF	PART NUMBER	QTY	PART NAME 1 2 3 4 5 6 (PRODUCT LEVEL)	SEE PAGE
	1	1	**281-2972**	2	SEAT	
	2	1	**281-2973**	2	SPRING	
	3	1	**281-2974**	2	SEAT	
	4	1	**281-2975**	2	CAP	
	5	1	**281-2976**	2	SEAL	
	6	1	**281-2977**	4	BOLT	
	7	1	**281-2978**	1	SPRING	
	8	1	**281-2979**	1	PLUG	
	9	1	**250-8771**	1	SEAL	
	10	1	**281-2960**	1	SEAL	
	11	1	**281-2985**	2	PLUNGER	
	12	1	**281-2986**	2	SPRING	
	13	1	**281-2961**	2	SEAL	

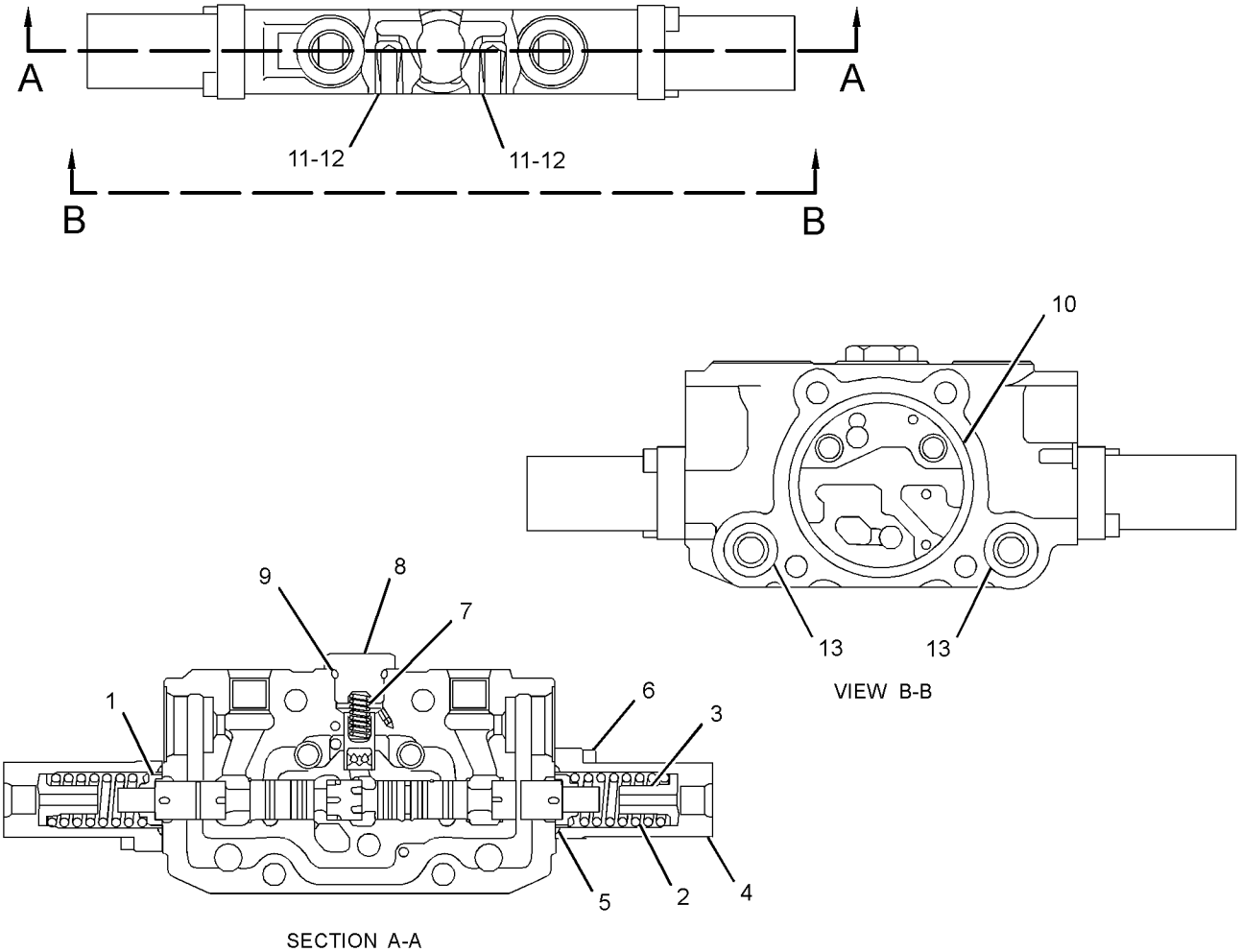

GRAPHIC #1 **<END>** g02209374

357-5889 VALVE GP-CONTROL–BLADE

PART OF 315-5816, 417-1072 VALVE GP-MAIN CONTROL
AN ATTACHMENT

SMCS-5051 **i04016792**

NOTE	REF NO	GRAPHIC REF	PART NUMBER	QTY	PART NAME 1 2 3 4 5 6 (PRODUCT LEVEL)	SEE PAGE
	1	1	**281-2972**	2	SEAT	
	2	1	**281-2983**	1	SPRING	
	3	1	**281-2974**	2	SEAT	
	4	1	**281-2975**	2	CAP	
	5	1	**281-2976**	2	SEAL	
	6	1	**281-2984**	4	BOLT	
	7	1	**281-2978**	1	SPRING	
	8	1	**281-2979**	1	PLUG	
	9	1	**250-8771**	1	SEAL	
	10	1	**281-2960**	1	SEAL	
	11	1	**281-2985**	2	PLUNGER	
	12	1	**281-2986**	2	SPRING	
	13	1	**281-2961**	2	SEAL	
	14	1	**279-4796**	1	PLATE	
	15	1	**281-2987**	2	SPACER	
	16	1	**150-6346**	2	SEAL	
	17	1	**288-9388**	1	SPRING	

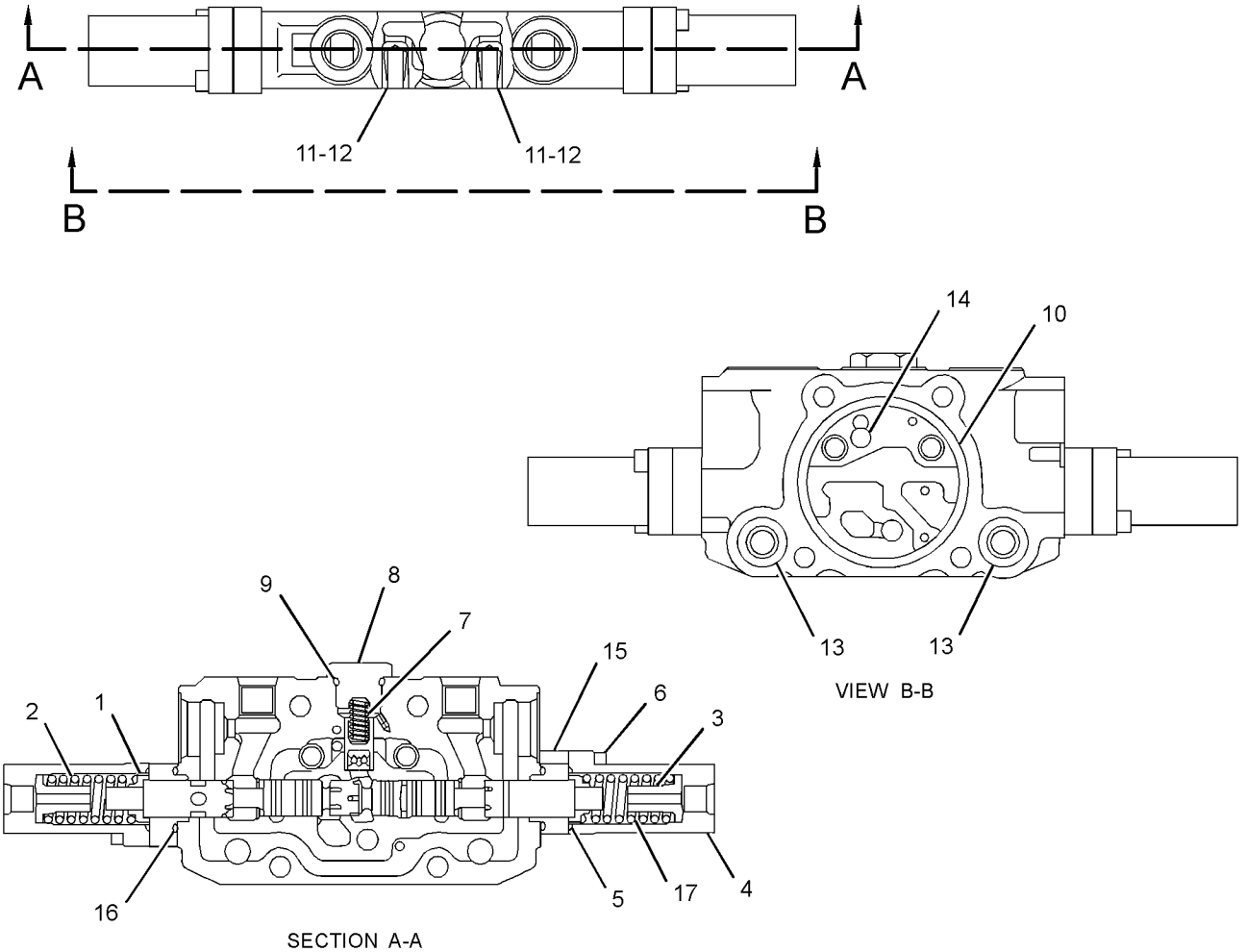

GRAPHIC #1 **<END>** g02196333

357-5890 VALVE GP-CONTROL

PART OF 315-5815, 315-5816, 417-1065, 417-1072 VALVE GP-MAIN CONTROL
AN ATTACHMENT

SMCS-5051 **i04149632**

NOTE	REF NO	GRAPHIC REF	PART NUMBER	QTY	PART NAME 1 2 3 4 5 6 (PRODUCT LEVEL)	SEE PAGE
	1	1	**281-2972**	2	SEAT	
	2	1	**281-2973**	2	SPRING	
	3	1	**281-2974**	2	SEAT	
	4	1	**281-2975**	1	CAP	
	5	1	**281-2976**	2	SEAL	
	6	1	**281-2977**	2	BOLT	
	7	1	**281-2978**	1	SPRING	
	8	1	**281-2979**	1	PLUG	
	9	1	**250-8771**	1	SEAL	
	10	1	**281-2960**	1	SEAL	
	11	1	**281-2985**	2	PLUNGER	
	12	1	**281-2986**	2	SPRING	
	13	1	**281-2961**	2	SEAL	
	14	1	**279-4796**	1	PLATE	
	15	1	**150-6367**	1	SEAL-O-RING	
	16	1	**281-2990**	1	PLUNGER	
	17	1	**281-2991**	1	SPRING	
	18	1	**281-2992**	1	SPACER	
	19	1	**281-2993**	1	RING	
	20	1	**281-2994**	1	VALVE AS	
	21	1	**150-6355**	1	PLUG	
	22	1	**281-2995**	5	BOLT	

REFER TO ALL ILLUSTRATIONS OF
THIS GROUP FOR AUXILIARY VIEWS

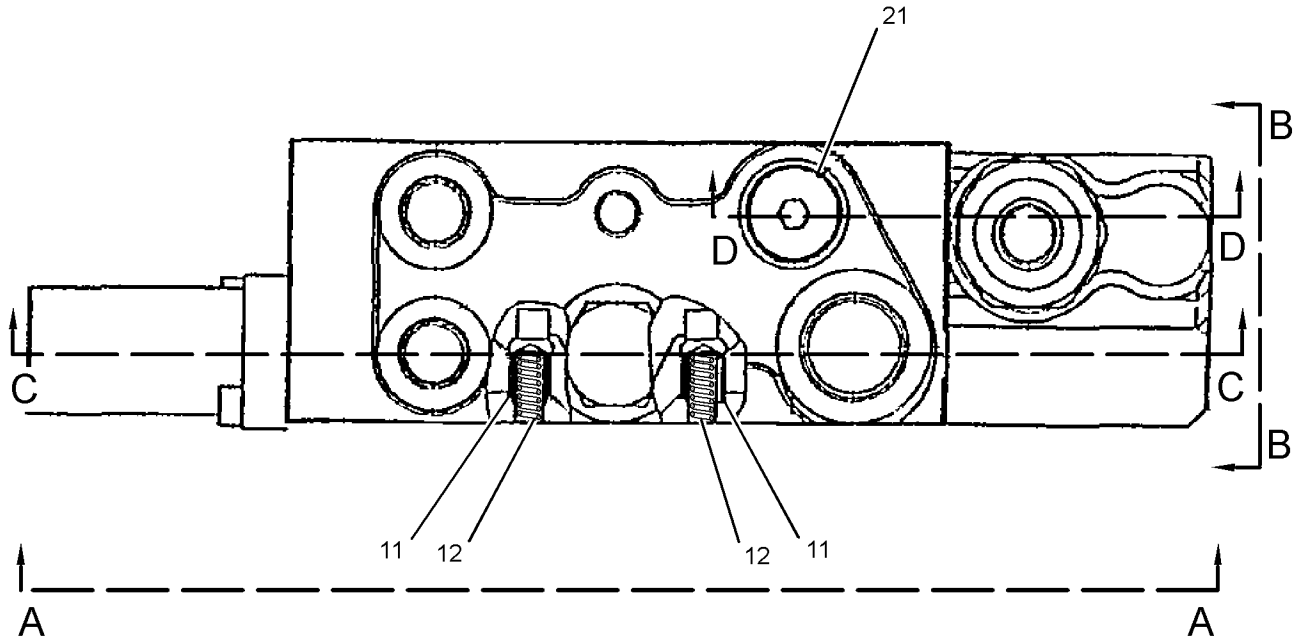

GRAPHIC #1 g01416096

357-5890 **VALVE GP-CONTROL (*contd.*)** **i04149632**

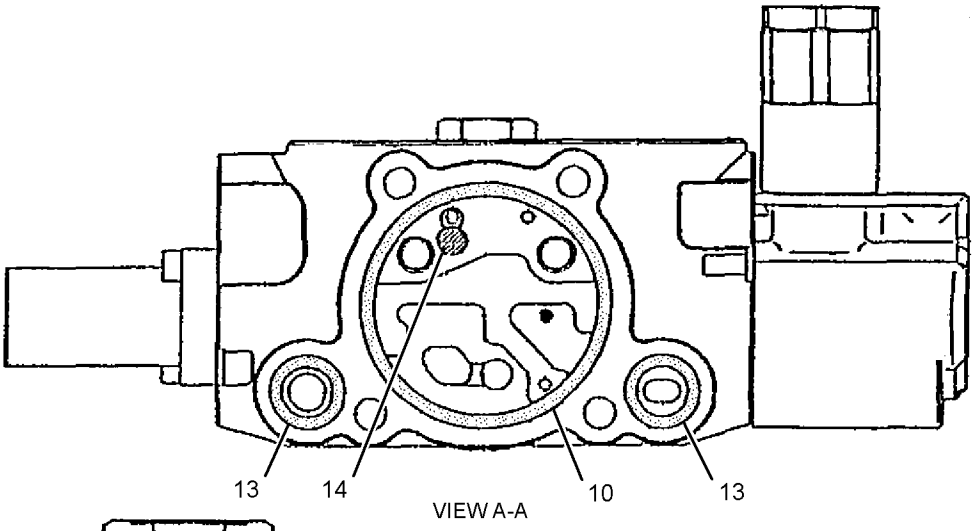

VIEW A-A

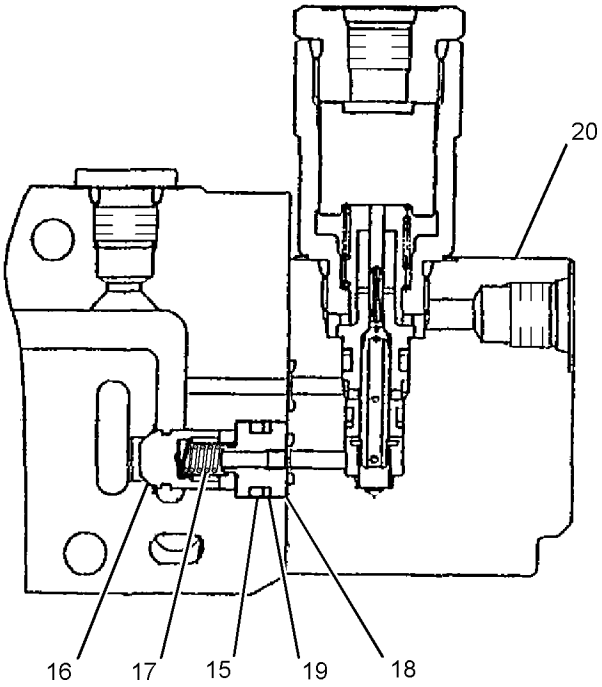

SECTION D-D

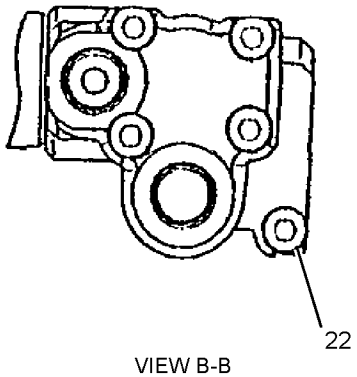

VIEW B-B

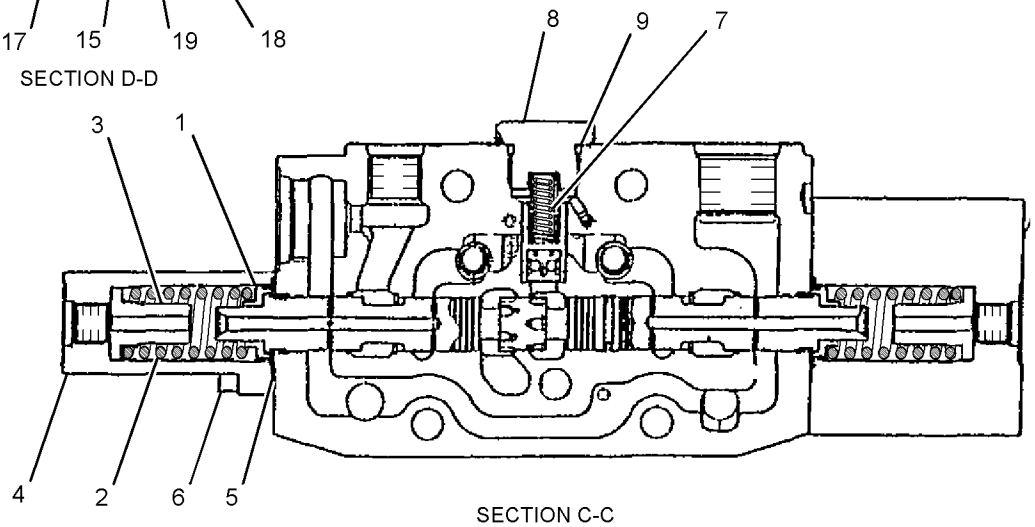

SECTION C-C

GRAPHIC #2 **<END>** g01415559

364-5228 VALVE GP-CONTROL–STICK

PART OF 315-5815, 315-5816, 417-1065, 417-1072 VALVE GP-MAIN CONTROL
AN ATTACHMENT

SMCS-5051 **i05376420**

NOTE	REF NO	GRAPHIC REF	PART NUMBER	QTY	PART NAME 1 2 3 4 5 6 (PRODUCT LEVEL)	SEE PAGE
	1	1	**281-2972**	2	SEAT	
	2	1	**281-2973**	2	SPRING	
	3	1	**281-2974**	2	SEAT	
	4	1	**281-2975**	2	CAP	
	5	1	**281-2976**	2	SEAL	
	6	1	**281-2977**	4	BOLT	
	7	1	**281-2978**	1	SPRING	
	8	1	**281-2979**	1	PLUG	
	9	1	**250-8771**	1	SEAL	
	10	1	**281-2960**	1	SEAL	
	11	1	**281-2961**	2	SEAL	
	12	1	**279-4796**	1	PLATE	
	13	1	**281-2980**	1	ORIFICE	

364-5228 **VALVE GP-CONTROL (*contd.*)** **i05376420**

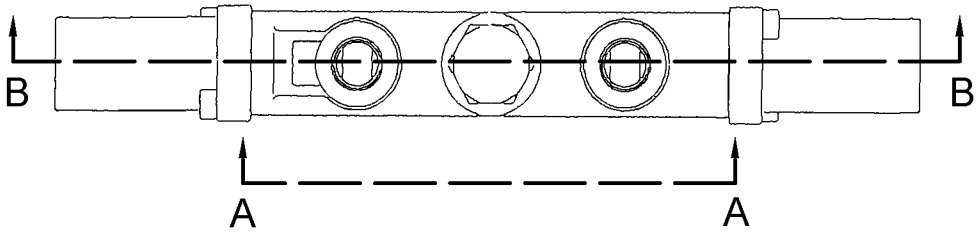

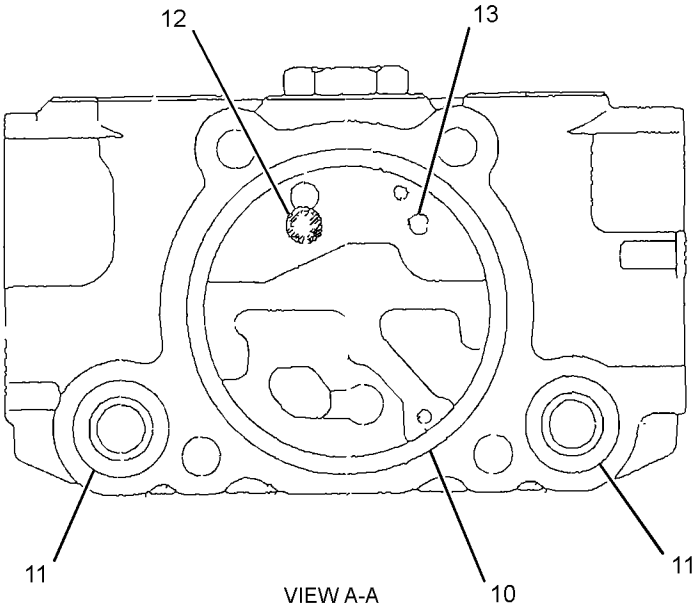

VIEW A-A

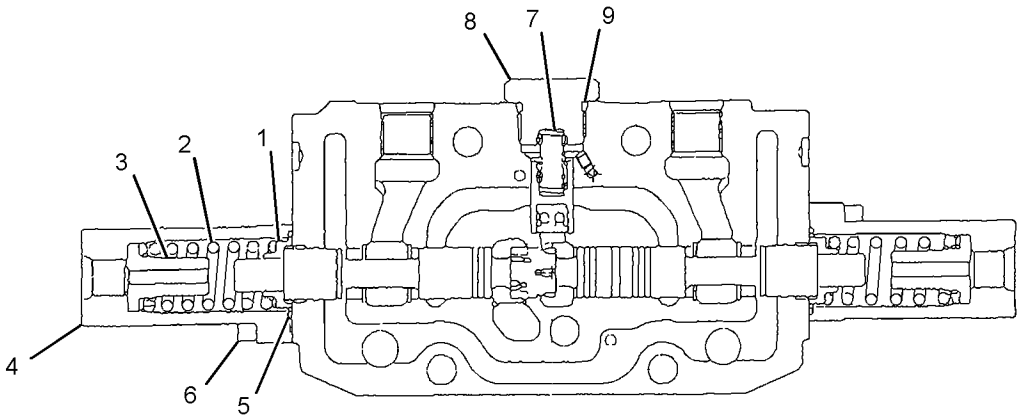

SECTION B-B

GRAPHIC #1 **<END>** g03403207

364-5229 VALVE GP-CONTROL—TRAVEL RIGHT

PART OF 315-5815, 315-5816, 417-1065, 417-1072 VALVE GP-MAIN CONTROL
AN ATTACHMENT

SMCS-5051 **i05376425**

NOTE	REF NO	GRAPHIC REF	PART NUMBER	QTY	PART NAME 1 2 3 4 5 6 (PRODUCT LEVEL)	SEE PAGE
	1	1	**281-2972**	2	SEAT	
	2	1	**281-2973**	2	SPRING	
	3	1	**281-2974**	2	SEAT	
	4	1	**281-2975**	2	CAP	
	5	1	**281-2976**	2	SEAL	
	6	1	**281-2977**	4	BOLT	
	7	1	**281-2978**	1	SPRING	
	8	1	**281-2979**	1	PLUG	
	9	1	**250-8771**	1	SEAL	
	10	1	**281-2960**	1	SEAL	
	11	1	**281-2961**	2	SEAL	
	12	1	**279-4796**	1	PLATE	
	13	1	**281-2980**	1	ORIFICE	

364-5229 **VALVE GP-CONTROL (*contd.*)** **i05376425**

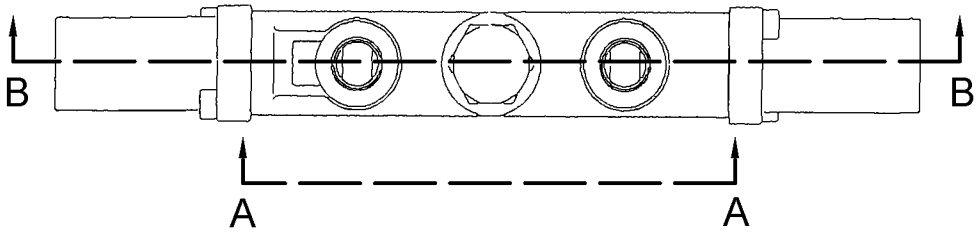

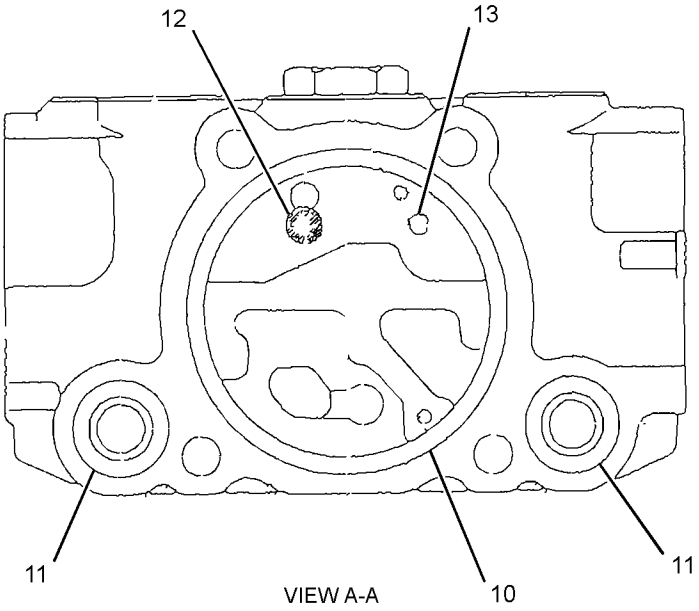

VIEW A-A

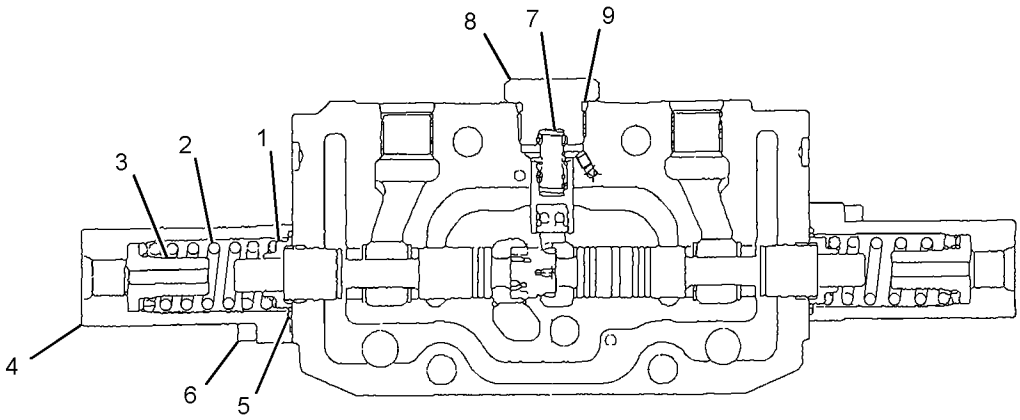

SECTION B-B

GRAPHIC #1 **<END>** g03403708

364-5230 VALVE GP-CONTROL–BLADE

PART OF 315-5815 VALVE GP-MAIN CONTROL

AN ATTACHMENT

TYPE 1

SMCS-5051 **i04149637**

NOTE	REF NO	GRAPHIC REF	PART NUMBER	QTY	PART NAME 1 2 3 4 5 6 (PRODUCT LEVEL)	SEE PAGE
	1	1	**281-2972**	2	SEAT	
	2	1	**281-2983**	1	SPRING	
	3	1	**281-2974**	2	SEAT	
	4	1	**281-2975**	2	CAP	
	5	1	**281-2976**	2	SEAL	
	6	1	**281-2984**	4	BOLT	
	7	1	**281-2978**	1	SPRING	
	8	1	**281-2979**	1	PLUG	
	9	1	**250-8771**	1	SEAL	
	10	1	**281-2960**	1	SEAL	
	11	1	**281-2985**	2	PLUNGER	
	12	1	**281-2986**	2	SPRING	
	13	1	**281-2961**	2	SEAL	
	14	1	**279-4796**	1	PLATE	
	15	1	**281-2987**	2	SPACER	
	16	1	**150-6346**	2	SEAL	
	17	1	**288-9388**	1	SPRING	
	18	1	**364-6111**	1	SPOOL (BLADE)	
	19	1	**360-0047**	1	SPOOL (COMPENSATOR)	

364-5230 **VALVE GP-CONTROL (*contd.*)** **i04149637**

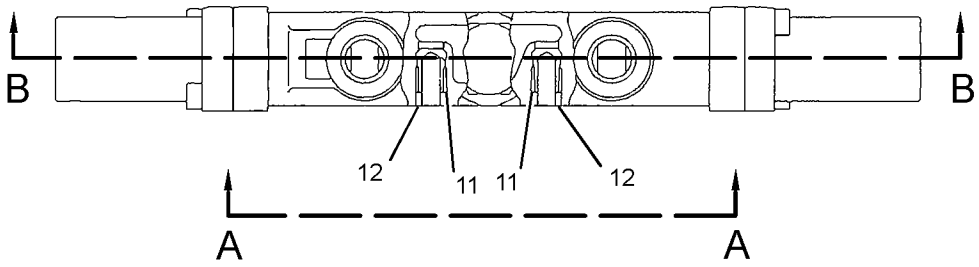

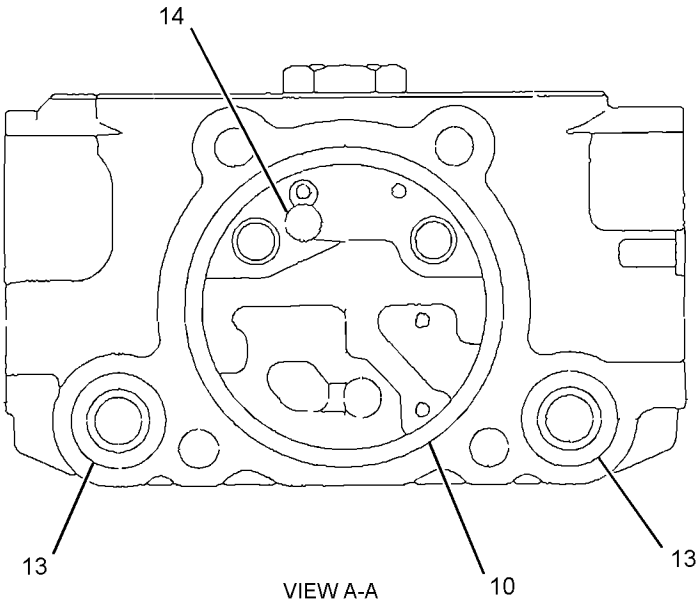

VIEW A-A

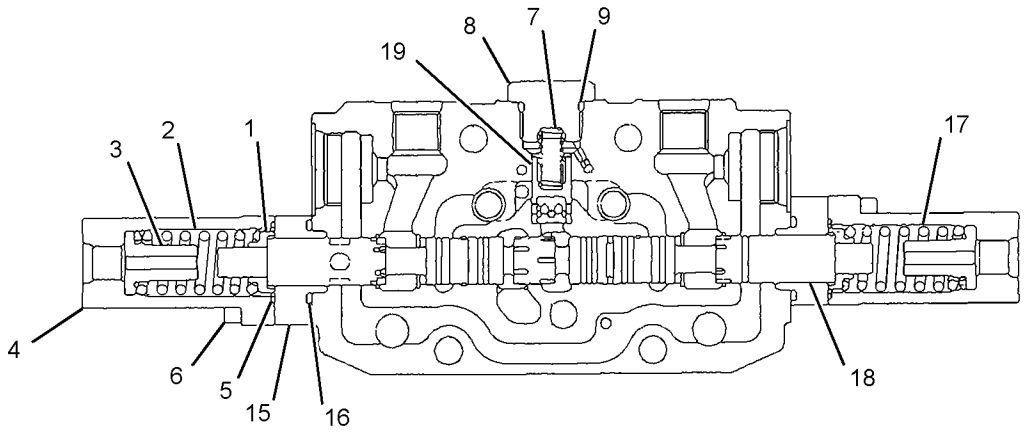

SECTION B-B

GRAPHIC #1 **<END>** g02445617

364-5230 VALVE GP-CONTROL–BLADE

PART OF 315-5815, 417-1065 VALVE GP-MAIN CONTROL
AN ATTACHMENT
TYPE 2

SMCS-5051 **i05053469**

NOTE	REF NO	GRAPHIC REF	PART NUMBER	QTY	PART NAME 1 2 3 4 5 6 (PRODUCT LEVEL)	SEE PAGE
	1	1	**281-2972**	2	SEAT	
	2	1	**281-2983**	1	SPRING	
	3	1	**281-2974**	2	SEAT	
	4	1	**281-2975**	2	CAP	
	5	1	**281-2976**	2	SEAL	
	6	1	**281-2984**	4	BOLT	
	7	1	**281-2978**	1	SPRING	
	8	1	**281-2979**	1	PLUG	
	9	1	**250-8771**	1	SEAL	
	10	1	**281-2960**	1	SEAL	
	11	1	**281-2985**	2	PLUNGER	
	12	1	**281-2986**	2	SPRING	
	13	1	**281-2961**	2	SEAL	
	14	1	**279-4796**	1	PLATE	
	15	1	**281-2987**	2	SPACER	
	16	1	**150-6346**	2	SEAL	
	17	1	**288-9388**	1	SPRING	
	18	1	**360-0047**	1	SPOOL (COMPENSATOR)	

364-5230 **VALVE GP-CONTROL (*contd.*)** **i05053469**

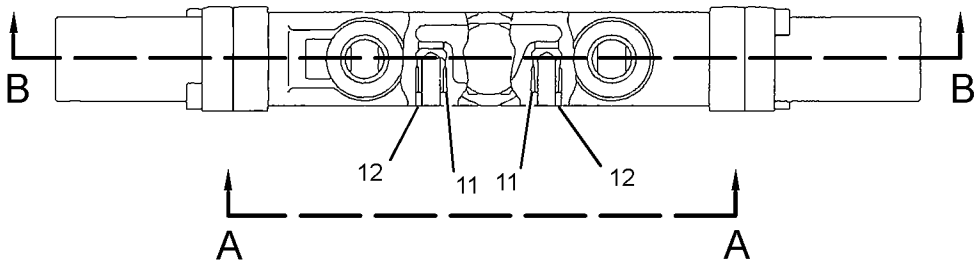

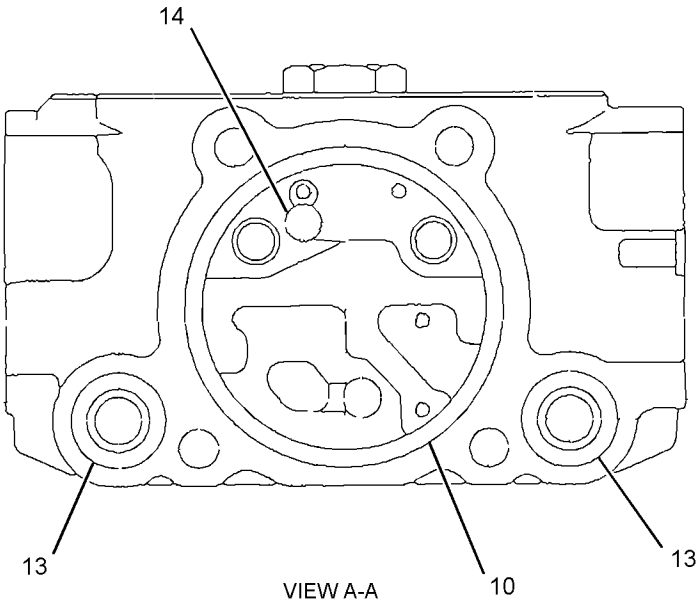

VIEW A-A

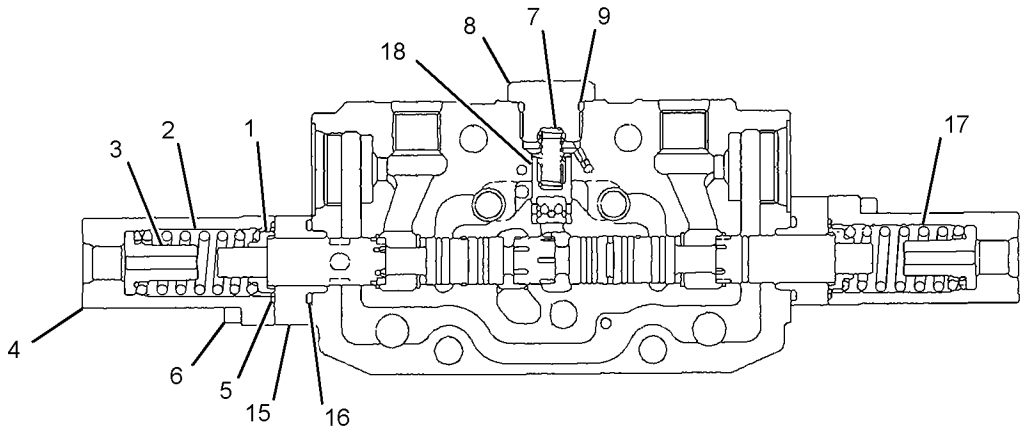

SECTION B-B

GRAPHIC #1 **<END>** g03208476

364-5232 VALVE GP-CONTROL–STICK

PART OF 315-5815, 315-5816 VALVE GP-MAIN CONTROL

AN ATTACHMENT

SMCS-5051 **i04149639**

NOTE	REF NO	GRAPHIC REF	PART NUMBER	QTY	PART NAME 1 2 3 4 5 6 (PRODUCT LEVEL)	SEE PAGE
	1	1	**281-2972**	2	SEAT	
	2	1	**366-9776**	2	SPRING	
	3	1	**281-2974**	2	SEAT	
	4	1	**281-2975**	2	CAP	
	5	1	**281-2976**	2	SEAL	
	6	1	**281-2977**	4	BOLT	
	7	1	**281-2978**	1	SPRING	
	8	1	**281-2979**	1	PLUG	
	9	1	**250-8771**	1	SEAL	
	10	1	**281-2960**	1	SEAL	
	11	1	**281-2985**	2	PLUNGER	
	12	1	**281-2986**	2	SPRING	
	13	1	**281-2961**	2	SEAL	
	14	1	**279-4796**	1	PLATE	
	15	1	**333-9456**	1	SPOOL	

364-5232 **VALVE GP-CONTROL (*contd.*)** **i04149639**

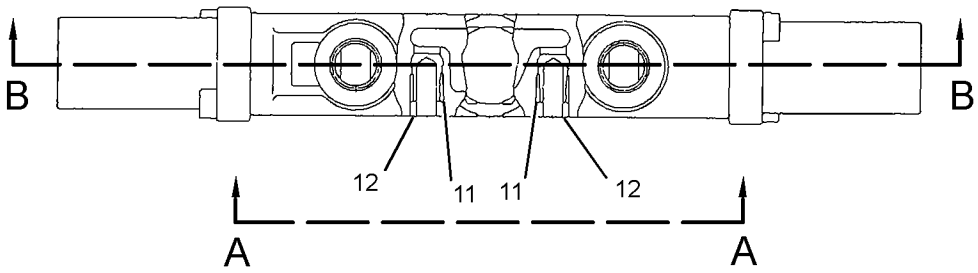

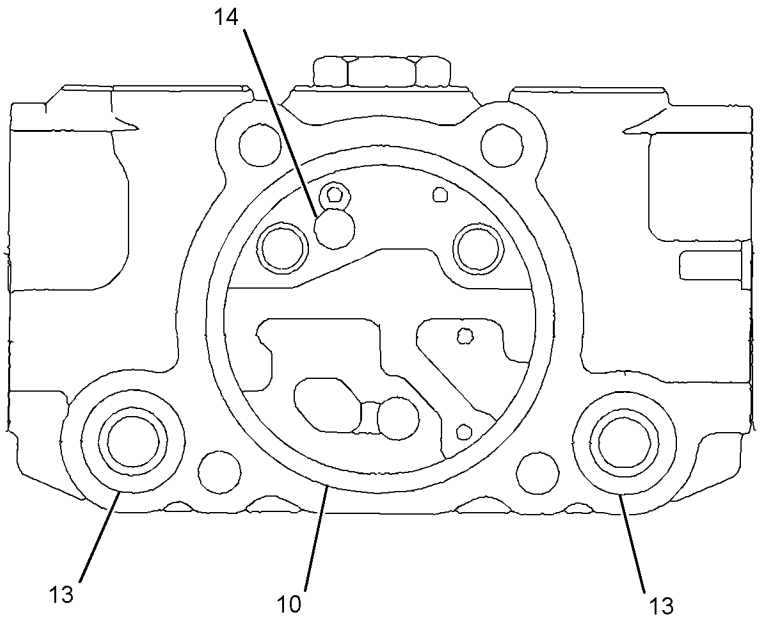

VIEW A-A

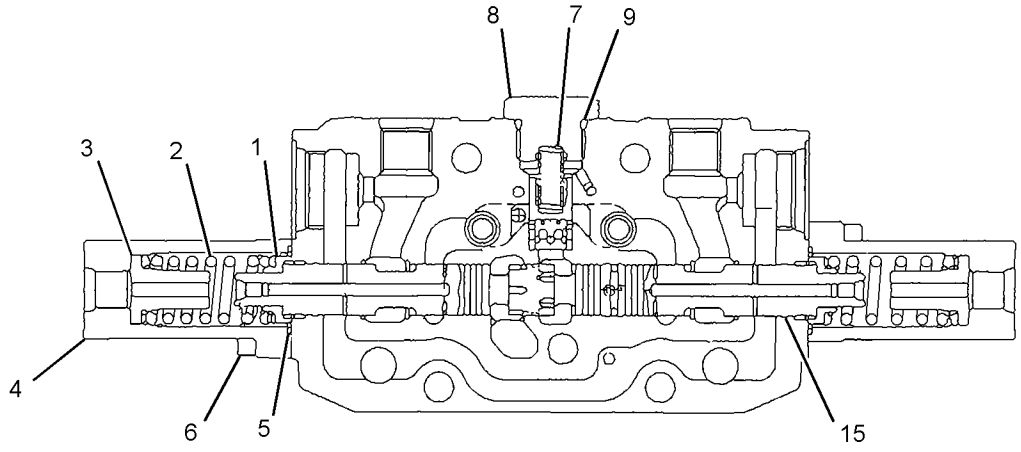

SECTION B-B

GRAPHIC #1 **<END>** g02445419

431-0306 VALVE GP-CONTROL–STICK

S/N: RKY1379-UP

PART OF 417-1065, 417-1072 VALVE GP-MAIN CONTROL

AN ATTACHMENT

SMCS-5051 **i05393244**

NOTE	REF NO	GRAPHIC REF	PART NUMBER	QTY	PART NAME 1 2 3 4 5 6 (PRODUCT LEVEL)	SEE PAGE
	1	1	**281-2972**	2	SEAT	
	2	1	**366-9776**	2	SPRING	
	3	1	**281-2974**	2	SEAT	
	4	1	**281-2975**	2	CAP	
	5	1	**281-2976**	2	SEAL	
	6	1	**281-2977**	4	BOLT	
	7	1	**281-2978**	1	SPRING	
	8	1	**281-2979**	1	PLUG	
	9	1	**250-8771**	1	SEAL	
	10	1	**281-2960**	1	SEAL	
	11	1	**281-2985**	2	PLUNGER	
	12	1	**281-2986**	2	SPRING	
	13	1	**281-2961**	2	SEAL	
	14	1	**279-4796**	1	PLATE	

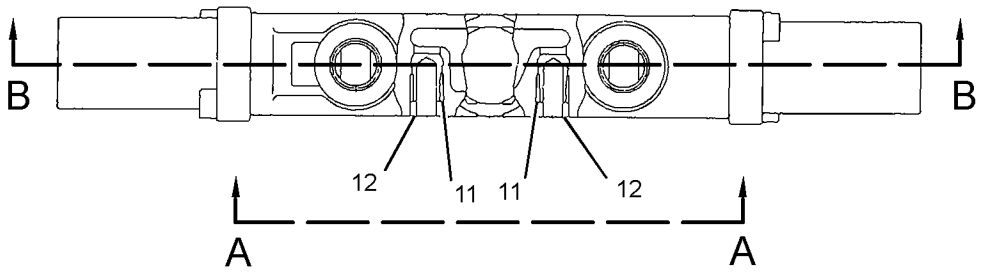

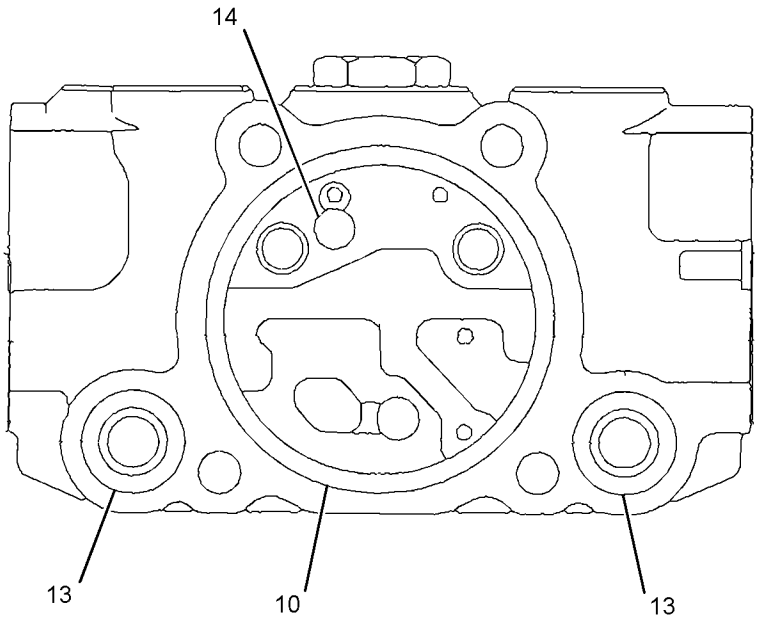

VIEW A-A

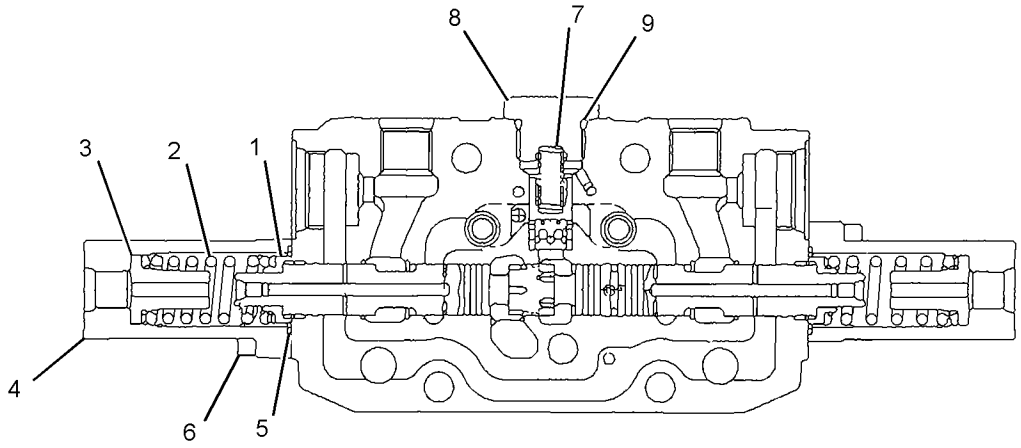

SECTION B-B

GRAPHIC #1 **<END>** g03425251

315-5815 VALVE GP-MAIN CONTROL

S/N: RKY1-1378

PART OF 379-4734 VALVE & MTG GP-BANK

AN ATTACHMENT

SMCS-5051 **i04149630**

NOTE	REF NO	GRAPHIC REF	PART NUMBER	QTY	PART NAME 1 2 3 4 5 6 (PRODUCT LEVEL)	SEE PAGE
	1	1	**200-4856**	8	NUT	
	2	1	**281-2325**	4	ROD	
Y	3	1	**281-2326**	1	VALVE GP-CONTROL (INLET)	315
Y	4	1	**364-5228**	1	VALVE GP-CONTROL (TRAVEL LEFT) (LEFT)	329
Y	5	1	**364-5229**	1	VALVE GP-CONTROL (TRAVEL RIGHT) (RIGHT)	331
Y	6	1	**364-5230**	1	VALVE GP-CONTROL (BLADE)	333
Y	7	1	*357-5890*	1	VALVE GP-CONTROL (BOOM)	327
Y	8	1	**329-8369**	1	VALVE GP-CONTROL (AUXILIARY)	323
Y	9	1	**281-2332**	1	VALVE GP-CONTROL (BUCKET)	316
Y	10	1	**364-5232**	1	VALVE GP-CONTROL (STICK)	337
Y	11	1	**281-2334**	1	VALVE GP-CONTROL (SWING)	317
Y	12	1	**332-4123**	1	VALVE GP-CONTROL (BOOM SWING)	325
Y	13	1	**281-2336**	1	VALVE GP-CONTROL (OUTLET)	318
	14	1	**272-7832**	6	VALVE AS-RELIEF (LINE)	
					(EACH INCLUDES)	
		1	**2M-9780**	1	SEAL-O-RING	
	15	1	**222-2631**	1	VALVE AS-CHECK (SWING)	
	16	1	**185-0555**	5	VALVE AS-MANUAL (SHUTOFF)	
	17	1	**104-8081**	1	PLUG AS	

Y - SEPARATE ILLUSTRATION

315-5815 **VALVE GP-MAIN CONTROL (*contd.*)** **i04149630**

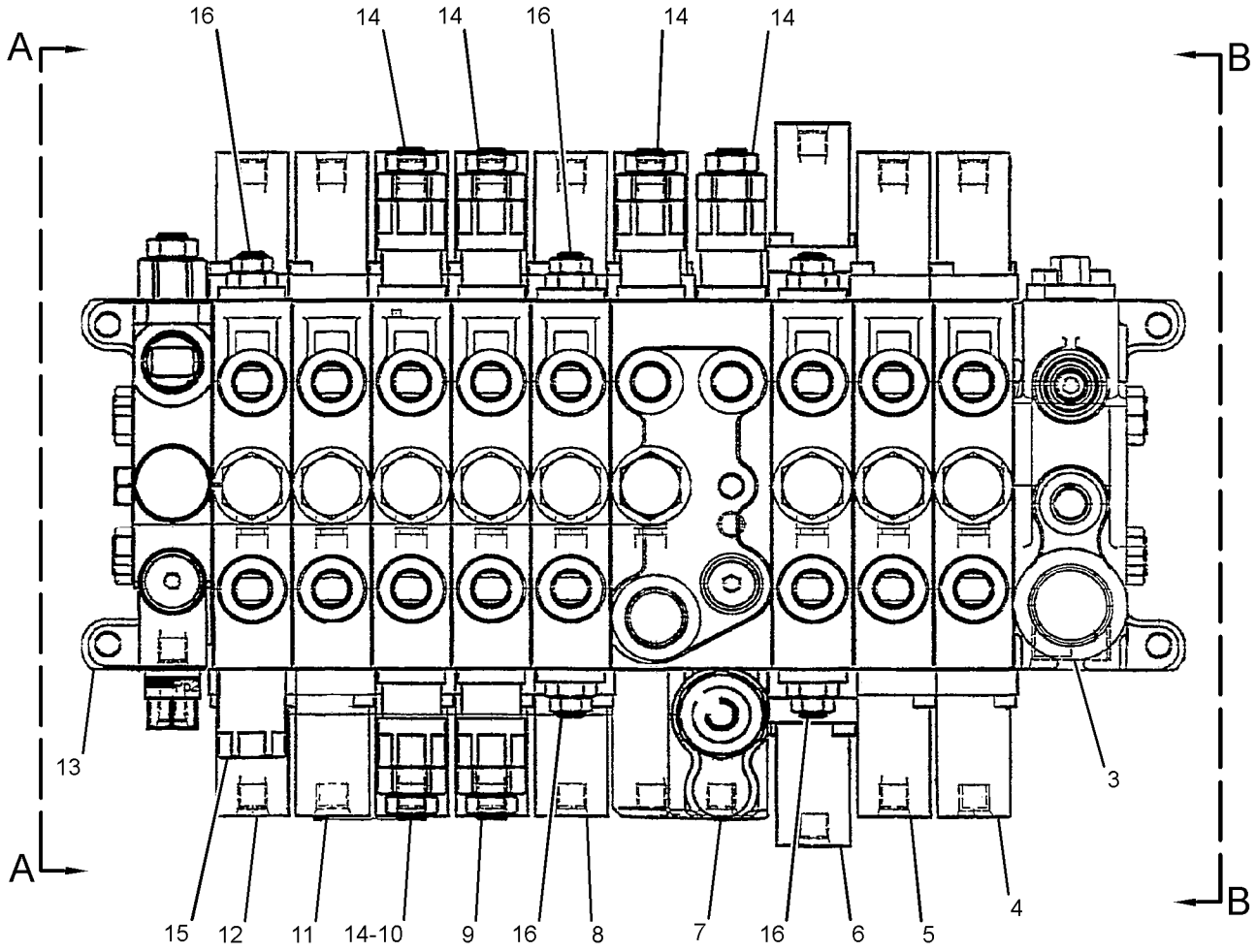

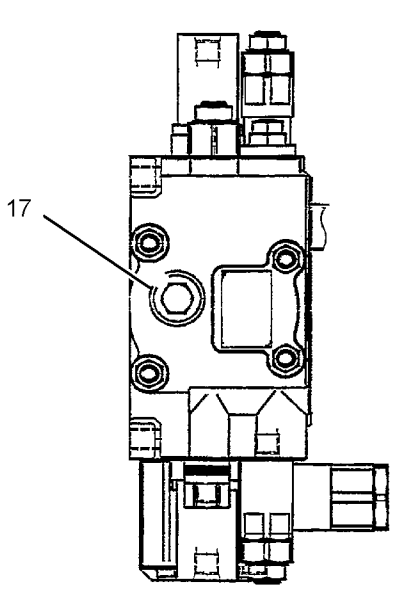

VIEW A-A

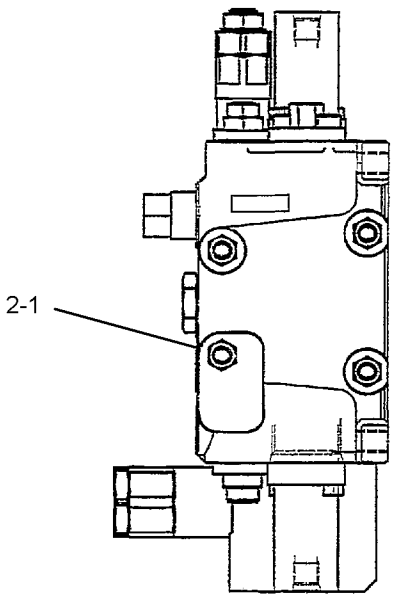

VIEW B-B

GRAPHIC #1 **<END>** g02209313

315-5816 VALVE GP-MAIN CONTROL—ANGLE BLADE

S/N: RKY1-1378

PART OF 391-3188 VALVE & MTG GP-MAIN CONTROL

AN ATTACHMENT

SMCS-5051 **i04149671**

NOTE	REF NO	GRAPHIC REF	PART NUMBER	QTY	PART NAME 1 2 3 4 5 6 (PRODUCT LEVEL)	SEE PAGE
	1	1	**200-4856**	8	NUT	
	2	1	**324-8994**	4	ROD	
Y	3	1	**281-2326**	1	VALVE GP-CONTROL (INLET)	315
Y	4	1	**364-5228**	1	VALVE GP-CONTROL (TRAVEL LEFT)	329
Y	5	1	**364-5229**	1	VALVE GP-CONTROL (TRAVEL RIGHT)	331
Y	6	1	*357-5889*	1	VALVE GP-CONTROL (BLADE)	326
Y	7	1	*357-5890*	1	VALVE GP-CONTROL (BOOM)	327
Y	8	1	**329-8369**	1	VALVE GP-CONTROL (AUXILIARY)	323
Y	9	1	**281-2332**	1	VALVE GP-CONTROL (BUCKET)	316
Y	10	1	**364-5232**	1	VALVE GP-CONTROL (STICK)	337
Y	11	1	**281-2334**	1	VALVE GP-CONTROL (SWING)	317
Y	12	1	**328-5659**	1	VALVE GP-CONTROL (BOOM SWING)	321
Y	13	1	**281-2336**	1	VALVE GP-CONTROL (OUTLET)	318
	14	1	**272-7832**	7	VALVE AS-RELIEF (LINE) (THUMB)	
					(EACH INCLUDES)	
		1	**2M-9780**	1	SEAL-O-RING	
	15	1	**222-2631**	1	VALVE AS-CHECK	
	16	1	**185-0555**	4	VALVE AS-MANUAL (SHUTOFF)	
	17	1	**104-8081**	1	PLUG AS	
Y	18	1	**326-8530**	1	VALVE GP-CONTROL (ANGLE)	319
	19	1	**336-0683**	2	VALVE AS-RELIEF	
					(EACH INCLUDES)	
		1	**2M-9780**	1	SEAL-O-RING	

Y - SEPARATE ILLUSTRATION

315-5816 **VALVE GP-MAIN CONTROL (*contd.*)** **i04149671**

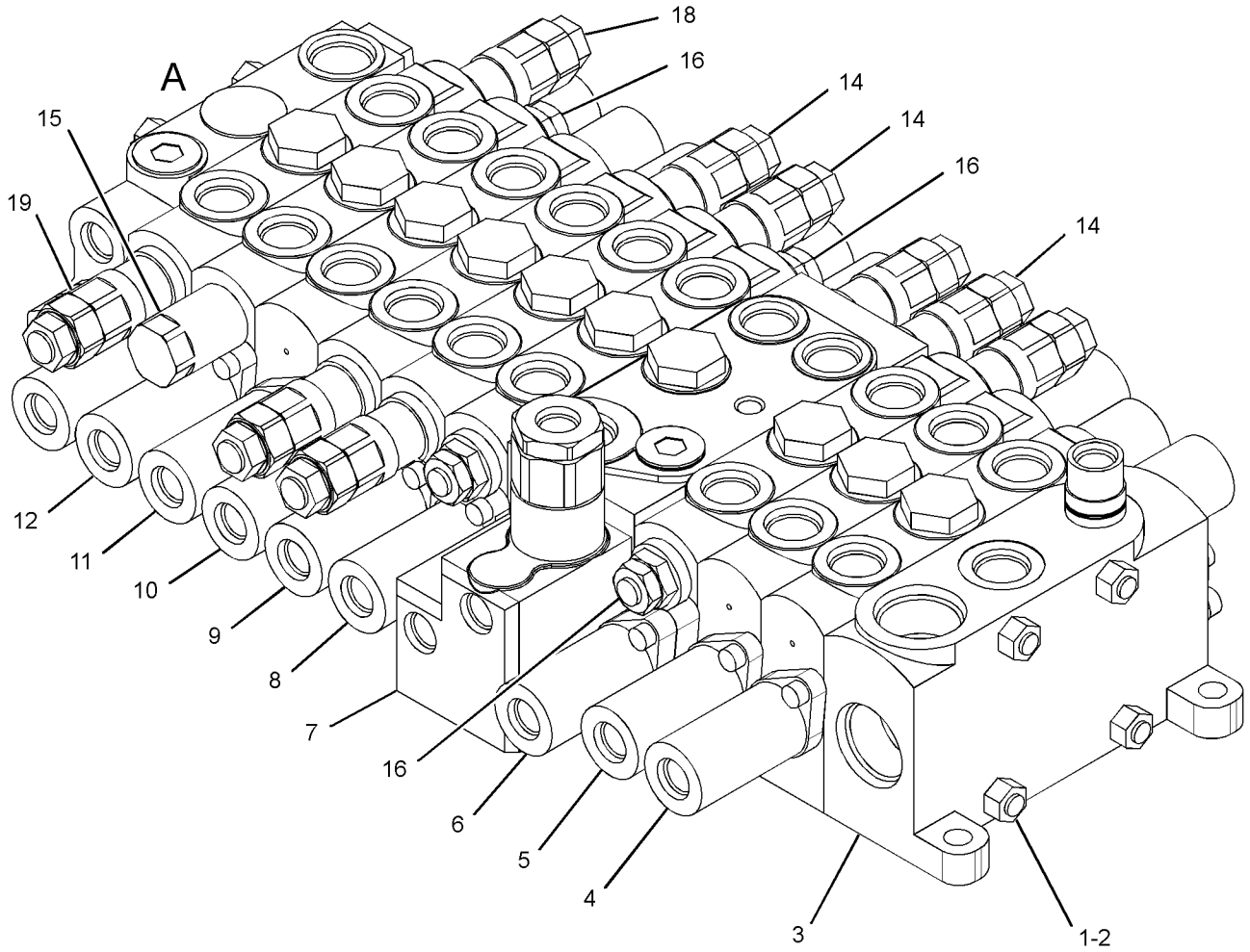

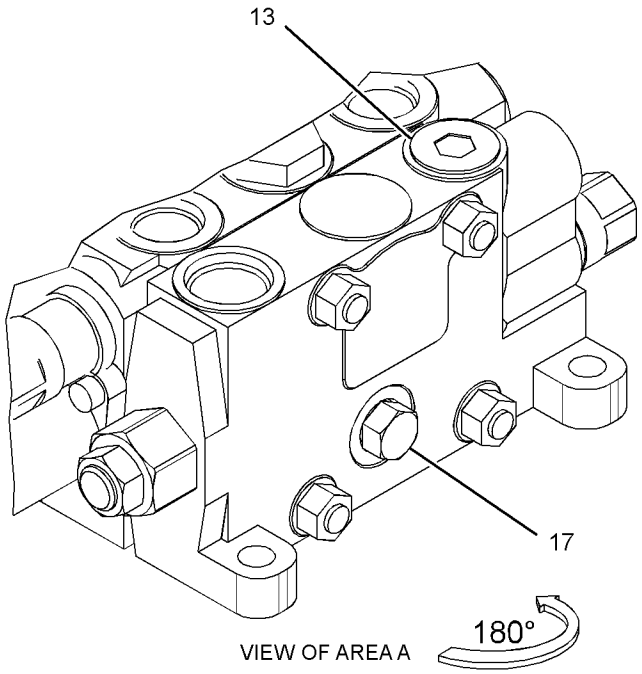

VIEW OF AREA A

GRAPHIC #1

<END>

g01944736

417-1065 VALVE GP-MAIN CONTROL

S/N: RKY1379-UP

PART OF 379-4734 VALVE & MTG GP-BANK

AN ATTACHMENT

SMCS-5051 **i05393158**

NOTE	REF NO	GRAPHIC REF	PART NUMBER	QTY	PART NAME 1 2 3 4 5 6 (PRODUCT LEVEL)	SEE PAGE
	1	1	**200-4856**	8	NUT	
	2	1	**281-2325**	4	ROD	
Y	3	1	**281-2326**	1	VALVE GP-CONTROL (INLET)	315
Y	4	1	**364-5228**	1	VALVE GP-CONTROL (TRAVEL LEFT)	329
Y	5	1	**364-5229**	1	VALVE GP-CONTROL (TRAVEL RIGHT)	331
Y	6	1	**364-5230**	1	VALVE GP-CONTROL (BLADE)	333
Y	7	1	**357-5890**	1	VALVE GP-CONTROL (BOOM)	327
Y	8	1	**329-8369**	1	VALVE GP-CONTROL (AUXILIARY)	323
Y	9	1	**281-2332**	1	VALVE GP-CONTROL (BUCKET)	316
Y	10	1	**431-0306**	1	VALVE GP-CONTROL (STICK)	339
Y	11	1	**281-2334**	1	VALVE GP-CONTROL (SWING)	317
Y	12	1	**332-4123**	1	VALVE GP-CONTROL (BOOM SWING)	325
Y	13	1	**281-2336**	1	VALVE GP-CONTROL (OUTLET)	318
	14	1	**272-7832**	6	VALVE AS-RELIEF (LINE)	
					(EACH INCLUDES)	
		1	**2M-9780**	1	SEAL-O-RING	
	15	1	**222-2631**	1	VALVE AS-CHECK (BOOM SWING)	
	16	1	**185-0555**	5	VALVE AS-MANUAL (SHUTOFF)	
	17	1	**104-8081**	1	PLUG AS	

Y - SEPARATE ILLUSTRATION

417-1065 **VALVE GP-MAIN CONTROL (*contd.*)** **i05393158**

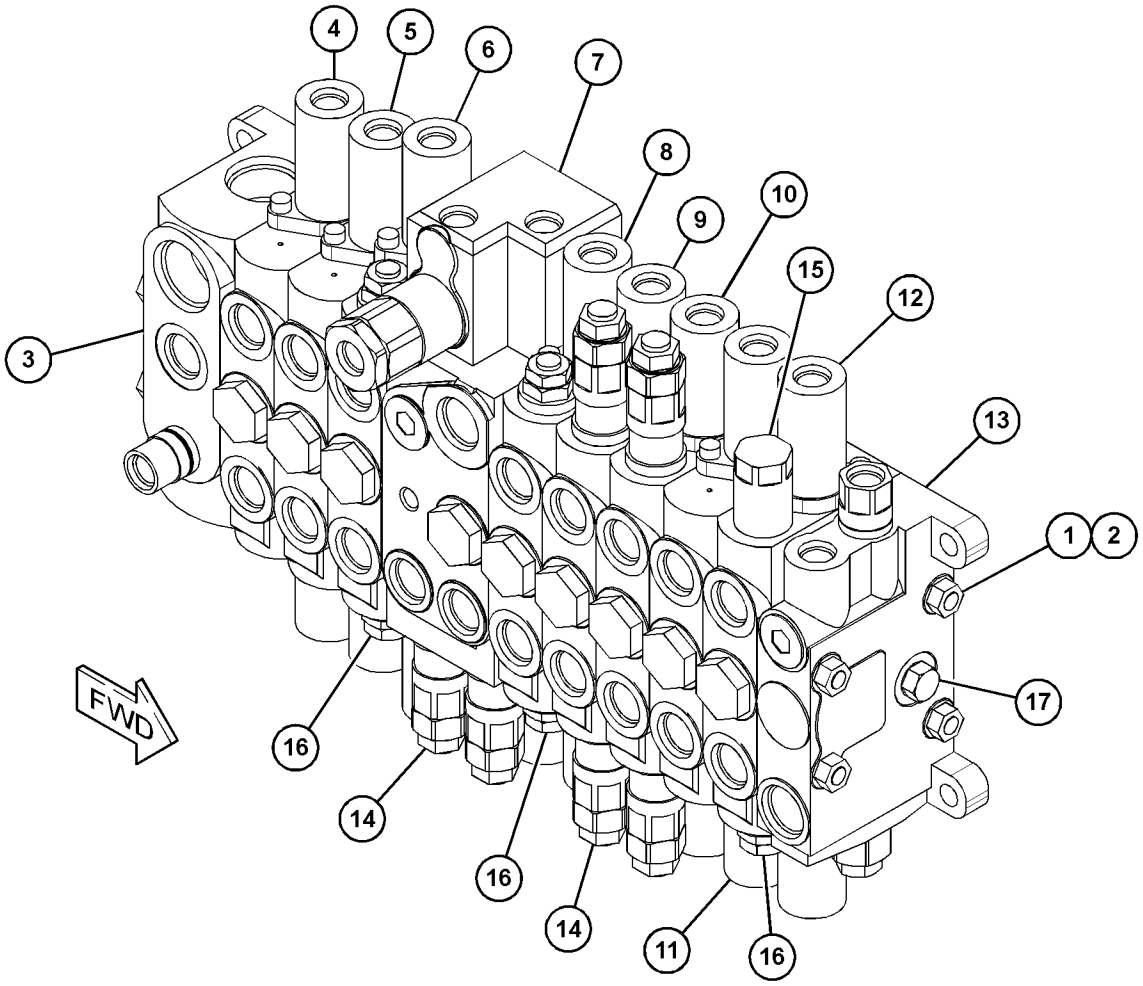

GRAPHIC #1 **<END>** g03439777

417-1072 VALVE GP-MAIN CONTROL–ANGLE BLADE

S/N: RKY1379-UP

AN ATTACHMENT

SMCS-5051 **i05393240**

NOTE	REF NO	GRAPHIC REF	PART NUMBER	QTY	PART NAME 1 2 3 4 5 6 (PRODUCT LEVEL)	SEE PAGE
	1	1	**200-4856**	8	NUT	
	2	1	**324-8994**	4	ROD	
Y	3	1	**281-2326**	1	VALVE GP-CONTROL (INLET)	315
Y	4	1	**364-5228**	1	VALVE GP-CONTROL (TRAVEL LEFT)	329
Y	5	1	**364-5229**	1	VALVE GP-CONTROL (TRAVEL RIGHT)	331
Y	6	1	**357-5889**	1	VALVE GP-CONTROL (BLADE)	326
Y	7	1	**357-5890**	1	VALVE GP-CONTROL (BOOM)	327
Y	8	1	**329-8369**	1	VALVE GP-CONTROL (AUXILIARY)	323
Y	9	1	**281-2332**	1	VALVE GP-CONTROL (BUCKET)	316
Y	10	1	**431-0306**	1	VALVE GP-CONTROL (STICK)	339
Y	11	1	**281-2334**	1	VALVE GP-CONTROL (SWING)	317
Y	12	1	**328-5659**	1	VALVE GP-CONTROL (BOOM SWING)	321
Y	13	1	**281-2336**	1	VALVE GP-CONTROL (OUTLET)	318
	14	1	**272-7832**	7	VALVE AS-RELIEF (LINE)	
					(EACH INCLUDES)	
		1	**2M-9780**	1	SEAL-O-RING	
	15	1	**222-2631**	1	VALVE AS-CHECK (BOOM SWING)	
	16	1	**185-0555**	4	VALVE AS-MANUAL (SHUTOFF)	
	17	1	**104-8081**	1	PLUG AS	
Y	18	1	**326-8530**	1	VALVE GP-CONTROL (ANGLE)	319
	19	1	**336-0683**	2	VALVE AS-RELIEF (ANGLE BLADE)	
					(EACH INCLUDES)	
		1	**2M-9780**	1	SEAL-O-RING	

Y - SEPARATE ILLUSTRATION

417-1072 **VALVE GP-MAIN CONTROL (*contd.*)** **i05393240**

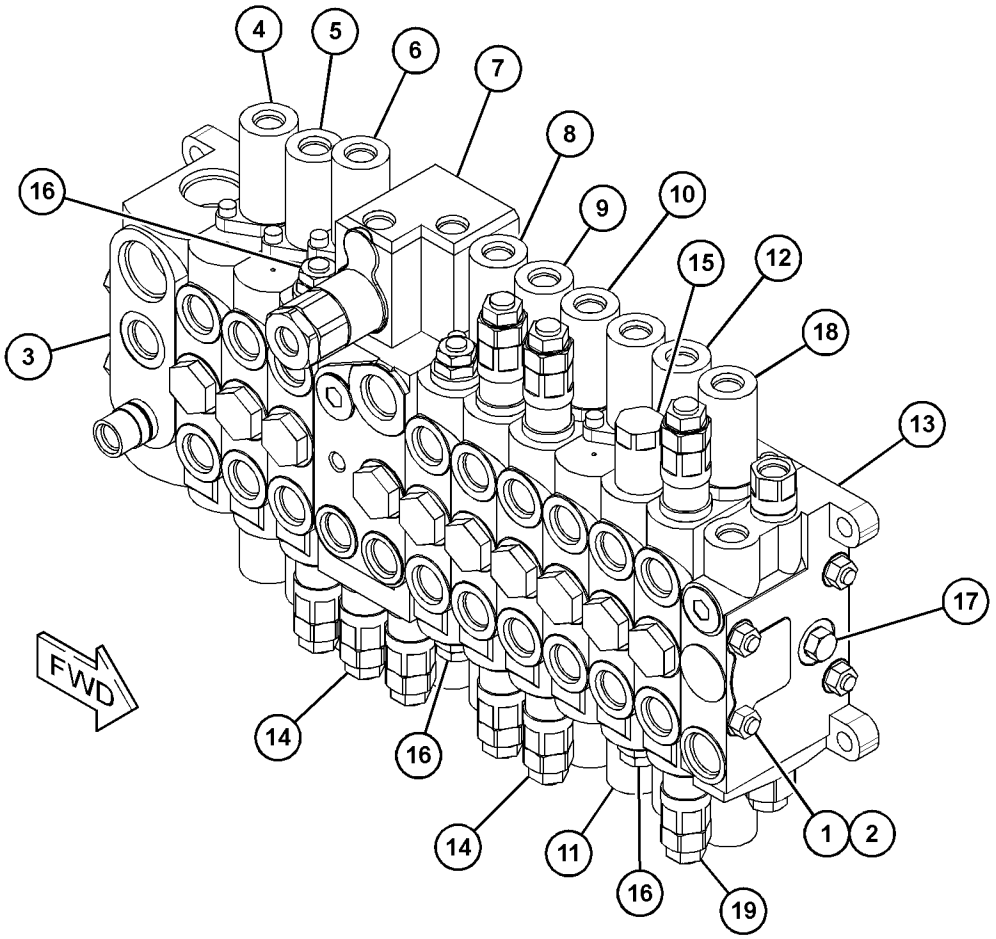

GRAPHIC #1 **<END>** g03437976

267-0420 VALVE GP-PILOT–JOYSTICK

PART OF 376-9494, 376-9495, 379-2010 CONTROL GP-JOYSTICK

AN ATTACHMENT

SMCS-5059, 5465, 5466 **i03966939**

NOTE	REF NO	GRAPHIC REF	PART NUMBER	QTY	PART NAME 1 2 3 4 5 6 (PRODUCT LEVEL)	SEE PAGE
	1	1	**165-9438**	1	PLATE	
	2	1	**096-1628**	4	PLUG	
	3	1	**132-7711**	4	ROD	
	4	1	**094-0876**	4	SEAL	
	5	1	**095-1586**	4	SEAL-O-RING	
	6	1	**251-4408**	4	SEAT	
	7	1	**099-6137**	4	WASHER (6.1X9X0.2-MM THK)	
	8	1	**194-0784**	4	SPRING	
	9	1	**244-8495**	4	SPRING	
	10	1	**4I-6365**	1	JOINT	
	11	1	**165-9431**	1	PLATE	
	12	1	**212-0522**	1	NUT	
	13	1	**171-0087**	1	BELLOWS	

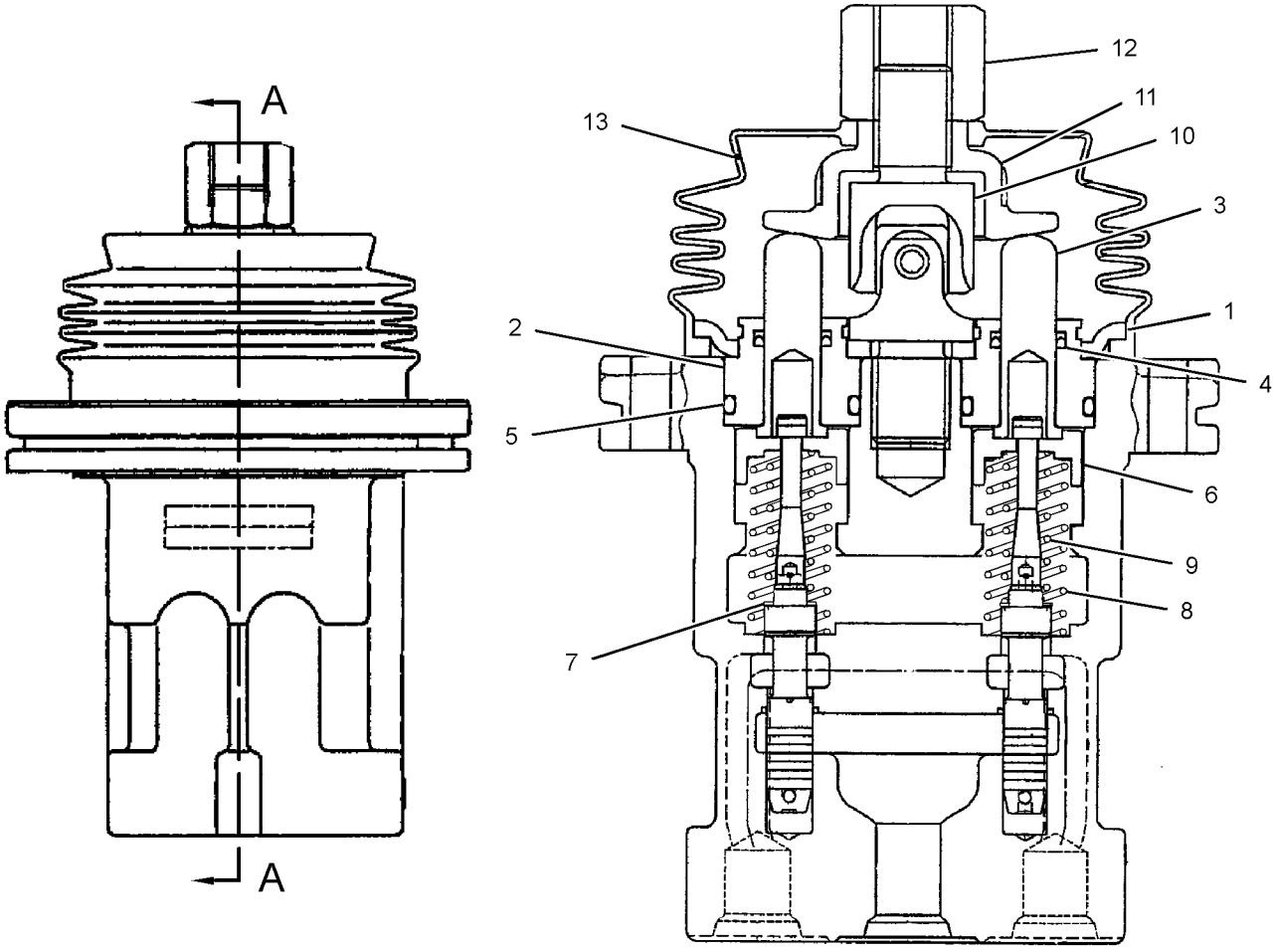

SECTION A-A

GRAPHIC #1 **<END>** g01201633

320-6540 VALVE GP-PILOT—BLADE CONTROL

PART OF 377-5958, 382-0522 CONTROL GP-PILOT OPERATED HYD

AN ATTACHMENT

SMCS-5059, 5465, 5466 **i03971151**

NOTE	REF NO	GRAPHIC REF	PART NUMBER	QTY	PART NAME 1 2 3 4 5 6 (PRODUCT LEVEL)	SEE PAGE
	1	1	**6I-6911**	2	SHIM	
	2	1	**6I-6912**	2	SHIM	
	3	1	**198-7543**	2	GUIDE	
	4	1	**198-8153**	2	SCREW	
	5	1	**198-8154**	2	SPRING	
	6	1	**096-4535**	2	SLEEVE	
	7	1	**099-0361**	2	SHIM	
	8	1	**132-9046**	2	SHIM (0.1-MM THK)	
	9	1	**198-8156**	1	BOOT	
	10	1	**204-1974**	1	PIN	
	11	1	**198-8159**	2	SLEEVE	
	12	1	**198-8160**	1	COLLAR	
	13	1	**198-8161**	2	SPRING	
	14	1	**198-8162**	2	HOLDER	
	15	1	**198-8163**	1	SPRING	
	16	1	**198-8164**	1	SPRING	
	17	1	**326-7782**	1	CAM	
	18	1	**198-8165**	1	BOLT	
M	19	1	**8T-8442**	2	BOLT-SOCKET HEAD (M6X1X30-MM)	
M	20	1	**8T-1158**	2	BOLT-SOCKET HEAD (M8X1.25X20-MM)	
	21	1	**096-4543**	1	BOLT	
M	22	1	**095-1260**	1	SETSCREW-SOCKET (M6X1X6-MM)	
	23	1	**198-8166**	2	WASHER	
	24	1	**198-8167**	2	NUT	
	25	1	**198-8168**	2	BALL	
	26	1	**095-1578**	2	SEAL-O-RING	
	27	1	**095-1585**	2	SEAL-O-RING	
	28	1	**204-1976**	1	LEVER AS	
	29	1	**198-8176**	2	ROD AS	
	30	1	**198-8169**	1	BODY AS	
	31	1	**204-1979**	1	COVER AS	

M - METRIC PART

320-6540 **VALVE GP-PILOT (*contd.*)** **i03971151**

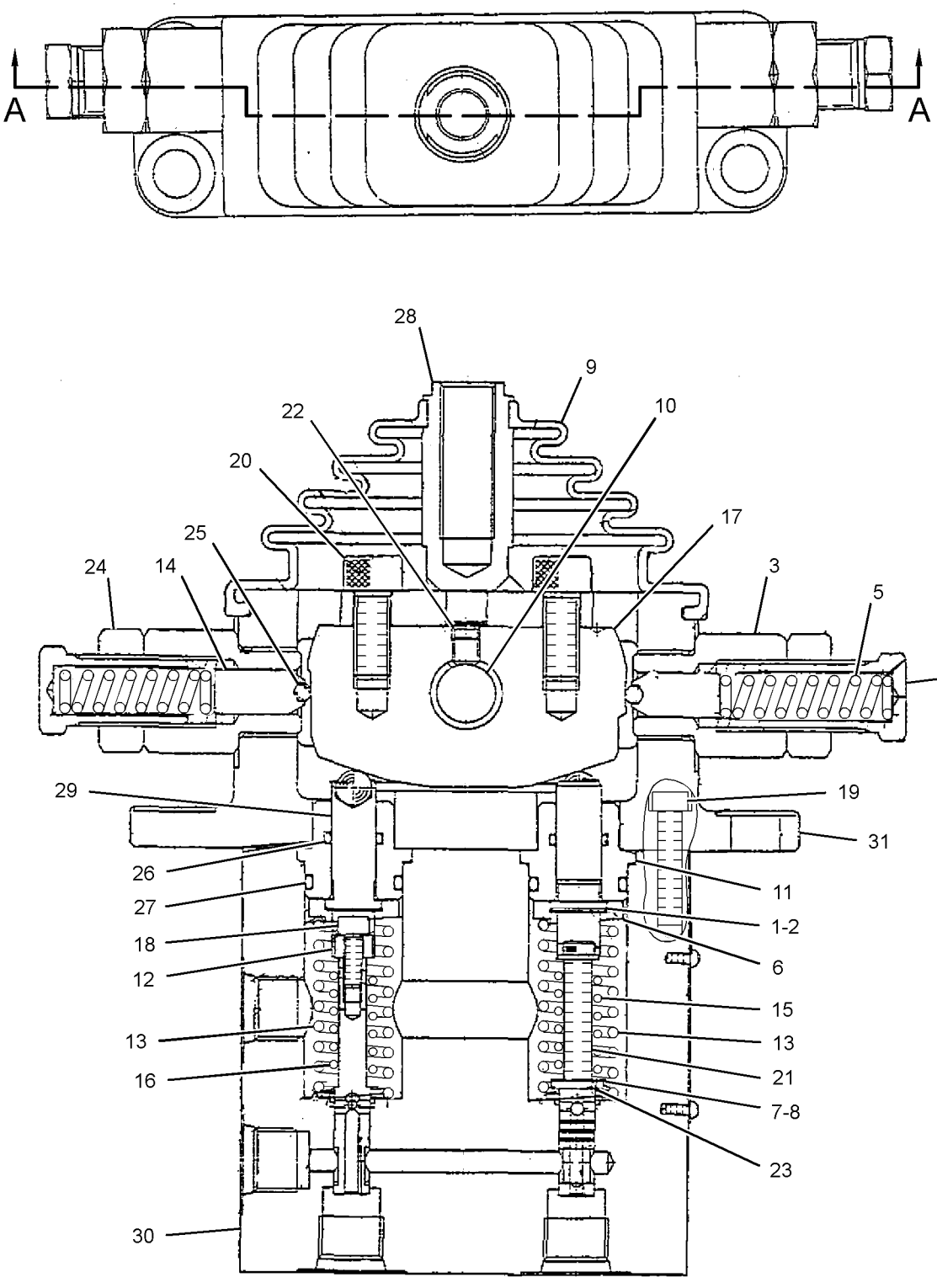

SECTION A-A

GRAPHIC #1 **<END>** g01508855

356-3823 VALVE GP-PILOT–WITH SHUTTLE

PART OF 356-4545 VALVE & MTG GP-PILOT

AN ATTACHMENT

SMCS-5059, 5465, 5466 **i04019553**

NOTE	REF NO	GRAPHIC REF	PART NUMBER	QTY	PART NAME 1 2 3 4 5 6 (PRODUCT LEVEL)	SEE PAGE
	1	1	**8T-6759**	4	PLUG-PIPE	
	2	1	**196-3784**	3	PLUG	
M	3	1	**8T-1158**	2	BOLT-SOCKET HEAD (M8X1.25X20-MM)	
	4	1	**310-0422**	3	SEAT	
	5	1	**310-0421**	3	BUSHING	
	6	1	**3Y-9267**	3	BALL	
	7	1	**165-9463**	2	COVER	
	8	1	**165-9554**	4	PLUG	
	9	1	**119-5388**	4	CAP	
	10	1	**165-9553**	1	COVER	
	11	1	**119-5389**	4	PACKING	
	12	1	**095-1575**	5	SEAL-O-RING	
	13	1	**6V-8400**	4	SEAL-O-RING	
	14	1	**310-0420**	4	SEAL-O-RING	
	15	1	**364-6127**	4	ROD	
	16	1	**099-6137**	4	WASHER (6.1X9X0.2-MM THK)	
	17	1	**119-5391**	4	SEAT	
M	18	1	**8C-6965**	2	BOLT-SOCKET HEAD (M6X1X45-MM)	
	19	1	**296-1942**	4	PISTON	
	20	1	**153-5223**	12	BALL	
M	21	1	**095-0673**	2	BOLT-SOCKET HEAD (M12X1.75X60-MM)	
	22	1	**331-9872**	4	SEAT	
	23	1	**185-0522**	4	SEAT	
	24	1	**364-6126**	4	SPRING	
	25	1	**331-9873**	4	SPRING	
	26	1	**126-1865**	4	SPRING	
	27	1	**126-1866**	4	SPRING	
	28	1	**099-6144**	4	BUSHING-TERMINAL	
	29	1	**099-6145**	2	CAMSHAFT	
	30	1	**364-6125**	2	CAM	
M	31	1	**095-1260**	2	SETSCREW-SOCKET (M6X1X6-MM)	
M	32	1	**087-4710**	4	SETSCREW (M10X21-MM)	
M	33	1	**8T-4133**	4	NUT (M10X1.5-THD)	
	34	1	**147-4131**	2	BOOT-PROTECTION	

M - METRIC PART

356-3823 **VALVE GP-PILOT (*contd.*)** **i04019553**

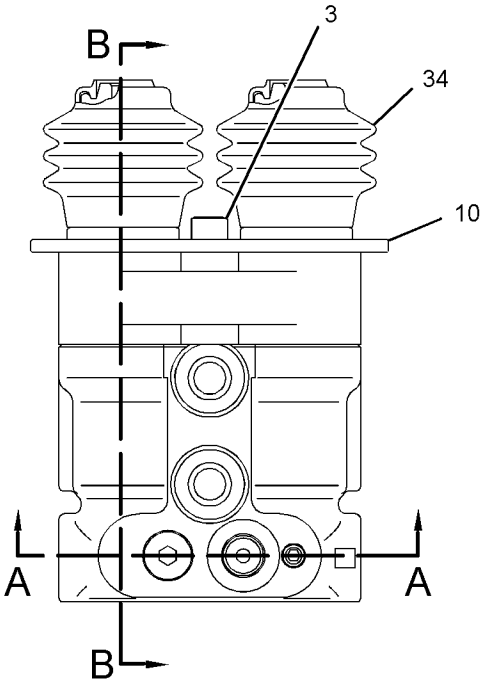

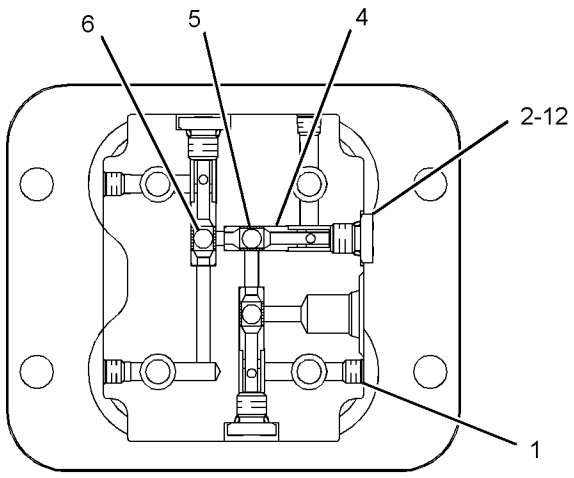

SECTION A-A

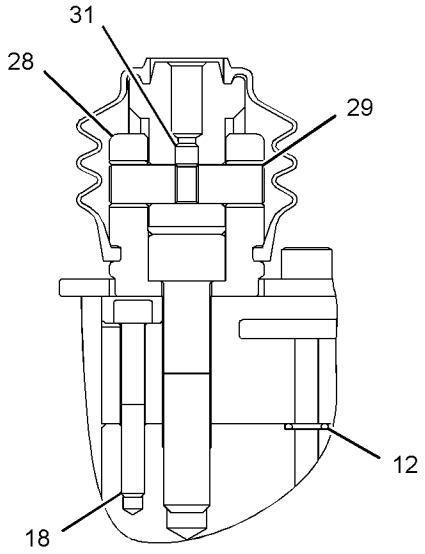

SECTION C-C

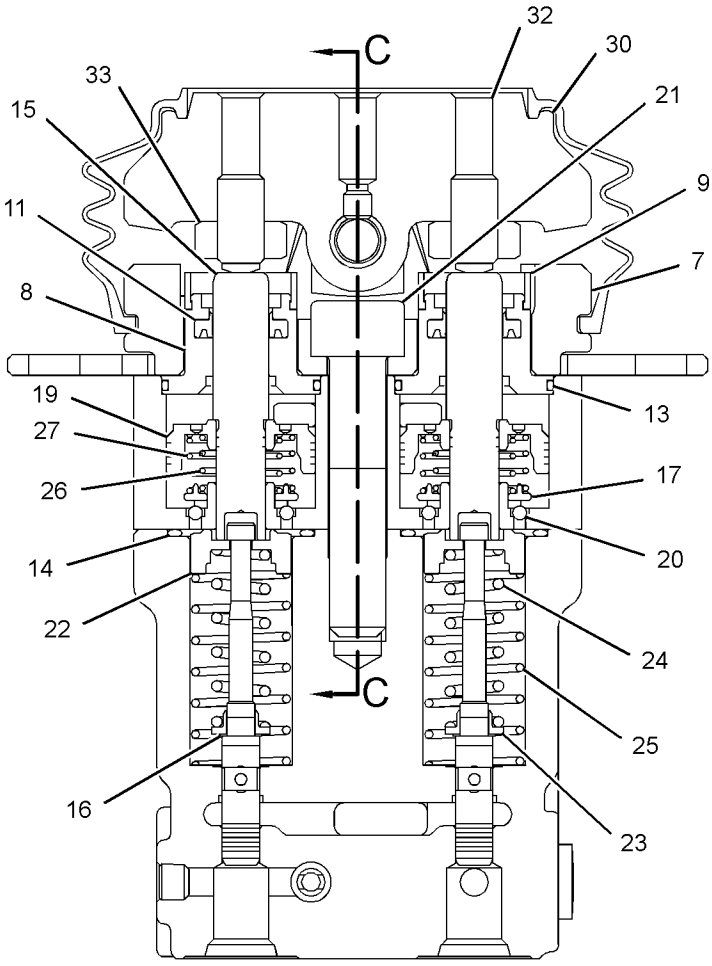

SECTION B-B

GRAPHIC #1 **<END>** g02211279

393-7501 VALVE GP-PILOT—BLADE CONTROL

S/N: RKY1466-UP

PART OF 421-2718 VALVE & MTG GP-PILOT

AN ATTACHMENT

SMCS-5059, 5465, 5466 **i05031519**

NOTE	REF NO	GRAPHIC REF	PART NUMBER	QTY	PART NAME 1 2 3 4 5 6 (PRODUCT LEVEL)	SEE PAGE
	1	1	**6I-6911**	2	SHIM	
	2	1	**6I-6912**	2	SHIM	
	3	1	**198-7543**	2	GUIDE	
	4	1	**198-8153**	2	SCREW	
	5	1	**198-8154**	2	SPRING	
	6	1	**096-4535**	2	SLEEVE	
	7	1	**099-0361**	2	SHIM	
	8	1	**132-9046**	2	SHIM (0.1-MM THK)	
	9	1	**198-8156**	1	BOOT	
	10	1	**204-1974**	1	PIN	
	11	1	**198-8159**	2	SLEEVE	
	12	1	**198-8160**	1	COLLAR	
	13	1	**198-8161**	2	SPRING	
	14	1	**198-8162**	2	HOLDER	
	15	1	**198-8163**	1	SPRING	
	16	1	**198-8164**	1	SPRING	
	17	1	**326-7782**	1	CAM	
	18	1	**198-8165**	1	BOLT	
M	19	1	**8T-8442**	2	BOLT-SOCKET HEAD (M6X1X30-MM)	
M	20	1	**8T-1158**	2	BOLT-SOCKET HEAD (M8X1.25X20-MM)	
	21	1	**096-4543**	1	BOLT	
M	22	1	**095-1260**	1	SETSCREW-SOCKET (M6X1X6-MM)	
	23	1	**198-8166**	2	WASHER	
	24	1	**198-8167**	2	NUT	
	25	1	**198-8168**	2	BALL	
	26	1	**095-1578**	2	SEAL-O-RING	
	27	1	**095-1585**	2	SEAL-O-RING	
	28	1	**204-1976**	1	LEVER AS	
	29	1	**198-8176**	2	ROD AS	
	30	1	**394-5921**	1	BODY	
	31	1	**204-1979**	1	COVER AS	

M - METRIC PART

393-7501 **VALVE GP-PILOT (*contd.*)** **i05031519**

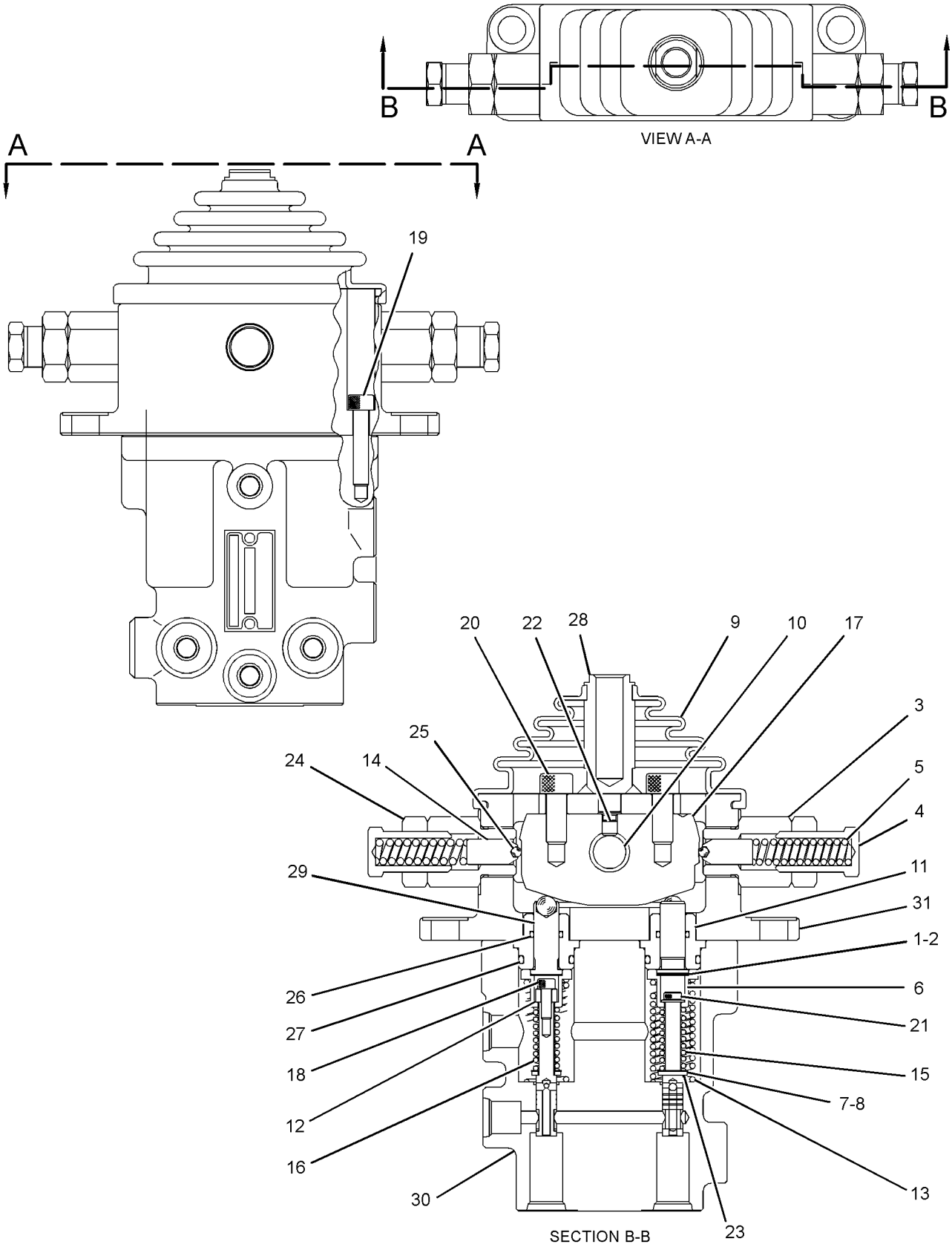

GRAPHIC #1 **<END>** g03202872

416-2294 VALVE GP-PILOT–WITH SHUTTLE

PART OF 356-4545 VALVE & MTG GP-PILOT

AN ATTACHMENT

SMCS-5059, 5465, 5466 **i05365862**

NOTE	REF NO	GRAPHIC REF	PART NUMBER	QTY	PART NAME 1 2 3 4 5 6 (PRODUCT LEVEL)	SEE PAGE
					(NO BREAKDOWN OF SERVICEABLE PARTS AVAILABLE AT TIME OF PUBLICATION)	

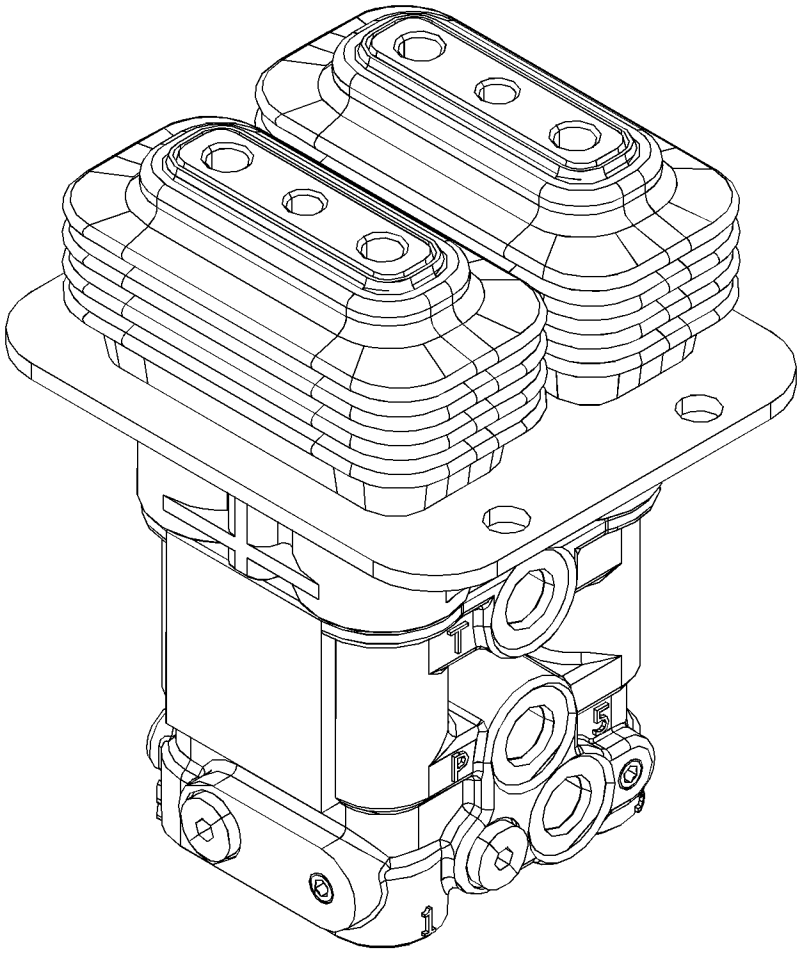

GRAPHIC #1 **<END>** g03401496

279-4712 VALVE GP-PUMP CONTROL

PART OF 332-1292 VALVE GP-PUMP CONTROL

SMCS-5455 **i03970812**

NOTE	REF NO	GRAPHIC REF	PART NUMBER	QTY	PART NAME 1 2 3 4 5 6 (PRODUCT LEVEL)	SEE PAGE
	1	1	**095-1575**	1	SEAL-O-RING	
	2	1	**095-1584**	1	SEAL-O-RING	
	3	1	**3J-1907**	1	SEAL-O-RING	
	4	1	**279-4704**	1	ORIFICE	

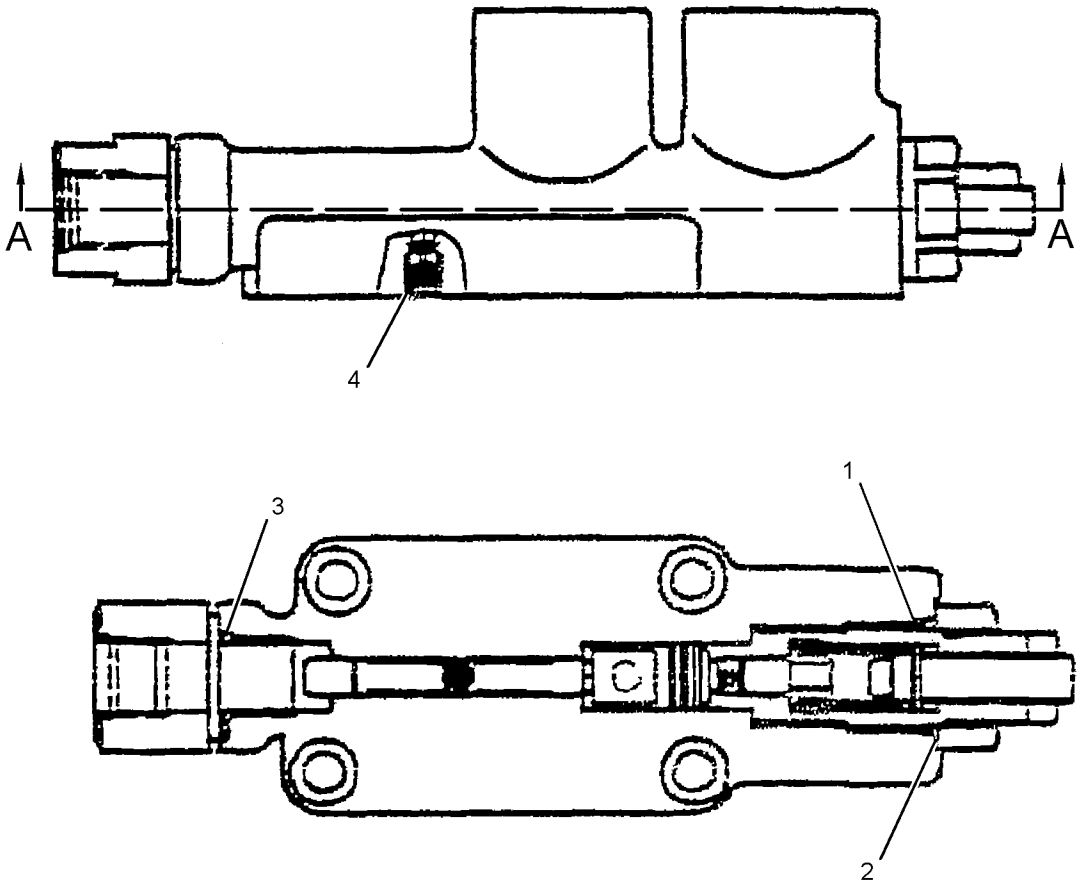

SECTION A-A

GRAPHIC #1 **<END>** g01576158

332-1292 VALVE GP-PUMP CONTROL–303C CR

PART OF 374-2025 PUMP GP-PISTON & GEAR

SMCS-5455 **i04065709**

NOTE	REF NO	GRAPHIC REF	PART NUMBER	QTY	PART NAME 1 2 3 4 5 6 (PRODUCT LEVEL)	SEE PAGE
Y	1	1	**279-4712**	1	VALVE GP-PUMP CONTROL	357
	2	1	**095-1575**	4	SEAL-O-RING	
	3	1	**279-4703**	1	SEAL-O-RING	

Y - SEPARATE ILLUSTRATION

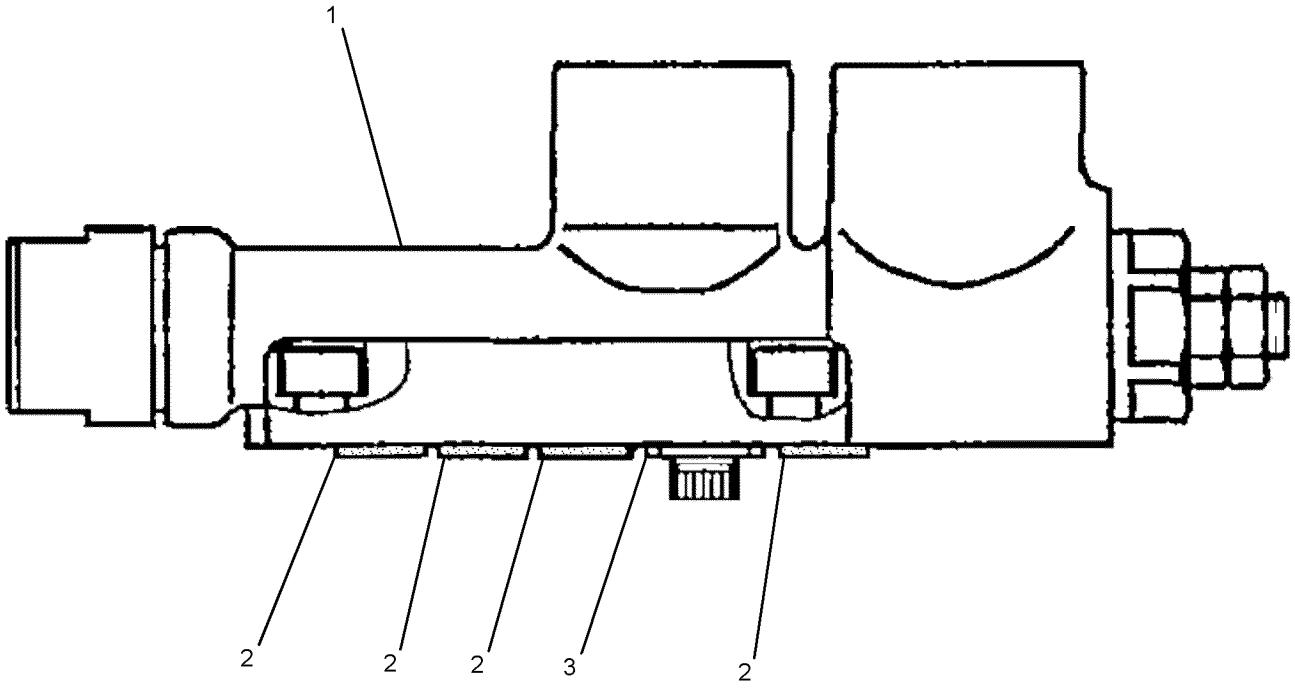

GRAPHIC #1 **<END>** g01623612

281-3053 VALVE GP-RELIEF

PART OF 281-3052 MOTOR GP-SWING

SMCS-5069, 5117 **i04019573**

NOTE	REF NO	GRAPHIC REF	PART NUMBER	QTY	PART NAME 1 2 3 4 5 6 (PRODUCT LEVEL)	SEE PAGE
	1	1	**095-1582**	1	SEAL-O-RING	
	2	1	**095-1585**	1	SEAL-O-RING	
	3	1	**095-1590**	1	SEAL-O-RING	
	4	1	**095-1595**	1	SEAL-O-RING	
	5	1	**095-1781**	2	RING	

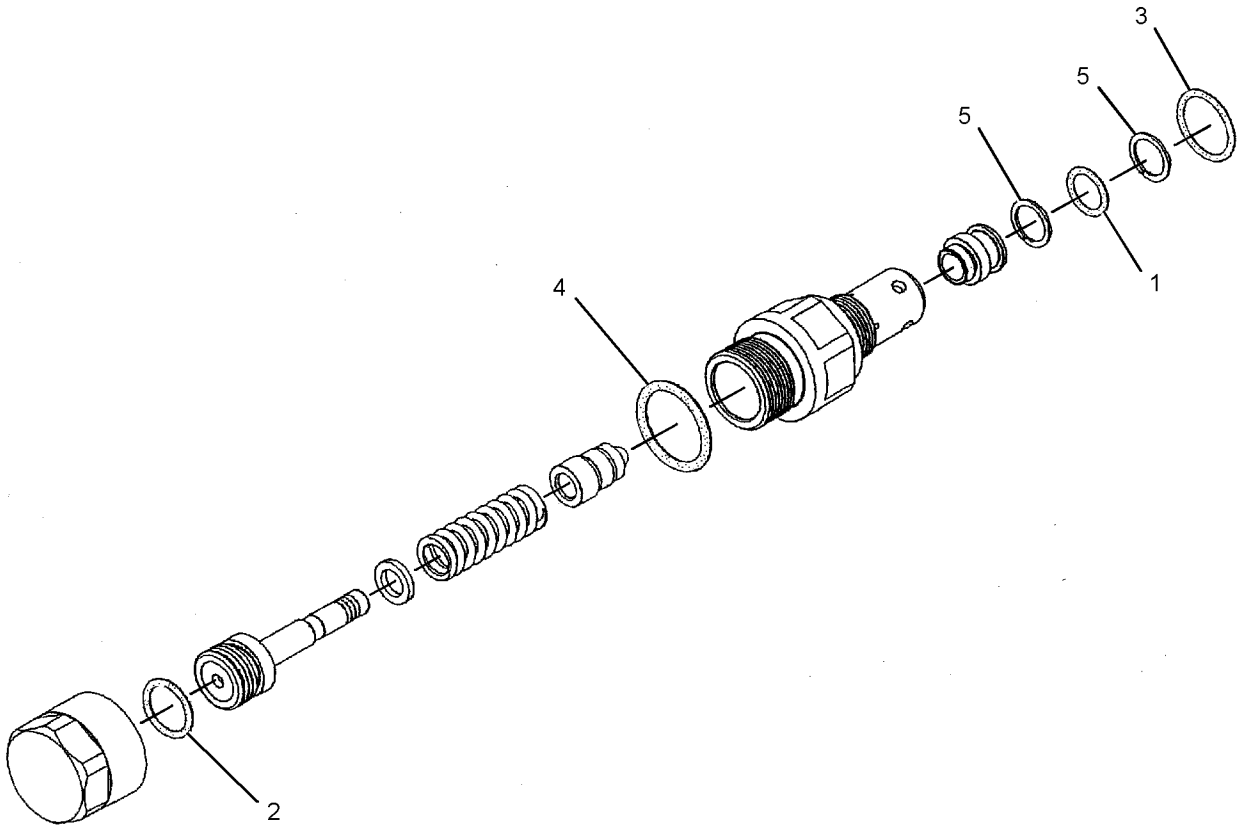

GRAPHIC #1 **<END>** g01235790

288-0848 VALVE GP-RELIEF–THUMB

PART OF 377-8916, 377-8917 STICK AR-HOE
AN ATTACHMENT

SMCS-5069, 5117 **i04764135**

NOTE	REF NO	GRAPHIC REF	PART NUMBER	QTY	PART NAME 1 2 3 4 5 6 (PRODUCT LEVEL)	SEE PAGE
	1	1	**272-7832**	2	VALVE AS-RELIEF (LINE)	
					(EACH INCLUDES)	
		1	**2M-9780**	1	SEAL-O-RING	

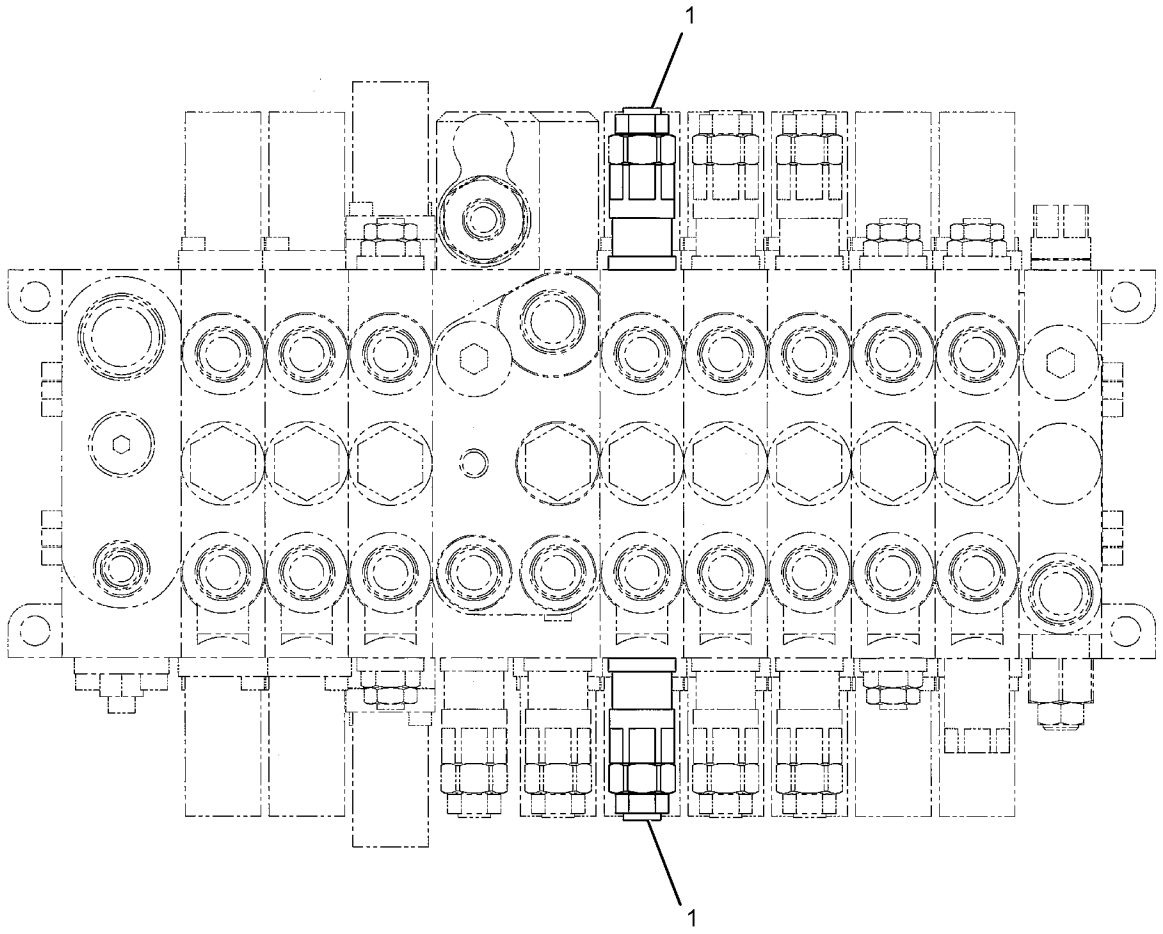

GRAPHIC #1 **<END>** g02861796

169-1181 VALVE GP-SOLENOID

PART OF 282-9318 VALVE GP-SOLENOID

AN ATTACHMENT

SMCS-5479 **i03971129**

NOTE	REF NO	GRAPHIC REF	PART NUMBER	QTY	PART NAME 1 2 3 4 5 6 (PRODUCT LEVEL)	SEE PAGE
	1	1	**095-1750**	1	SEAL-O-RING	
	2	1	**6V-8398**	1	SEAL-O-RING	
	3	1	**095-1751**	1	SEAL-O-RING	
M	4	1	**114-0623**	1	NUT AS (M6X1-THD)	
	5	1	**095-1586**	1	SEAL-O-RING	

M - METRIC PART

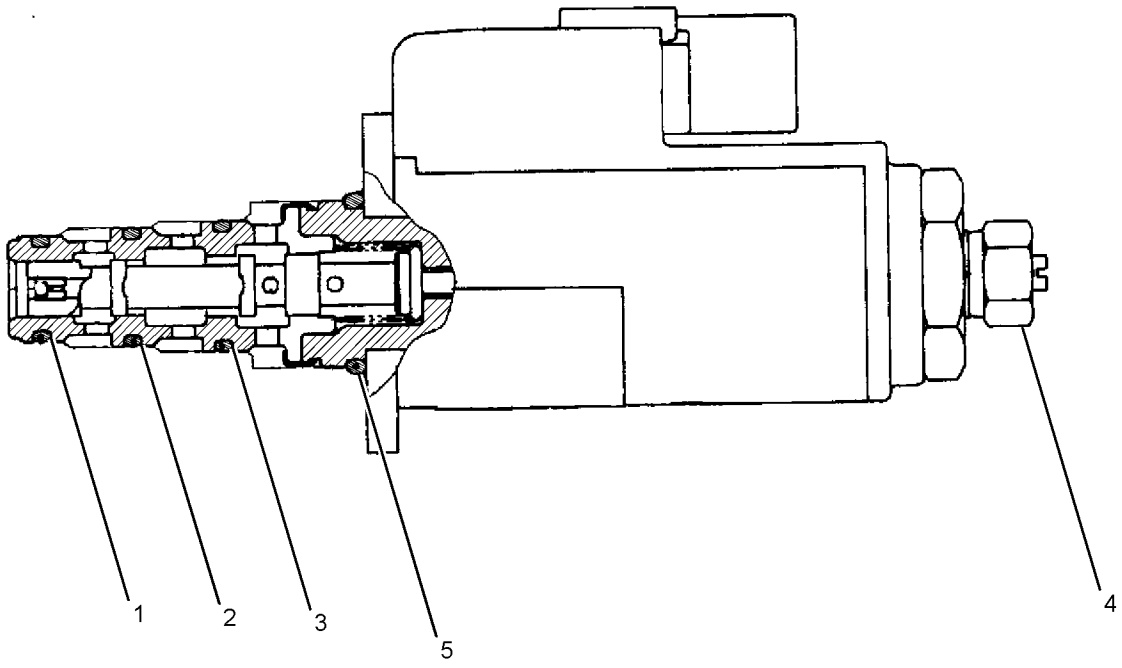

GRAPHIC #1 **<END>** g01369550

269-2299 VALVE GP-SOLENOID

PART OF 267-0424 MANIFOLD & SOLENOID GP-CONTROL

SMCS-5479 **i03971113**

NOTE	REF NO	GRAPHIC REF	PART NUMBER	QTY	PART NAME 1 2 3 4 5 6 (PRODUCT LEVEL)	SEE PAGE
	1	1	**095-1750**	1	SEAL-O-RING	
	2	1	**6V-8398**	1	SEAL-O-RING	
	3	1	**095-1751**	1	SEAL-O-RING	
M	4	1	**114-0623**	1	NUT AS (M6X1-THD)	
	5	1	**095-1586**	1	SEAL-O-RING	

M - METRIC PART

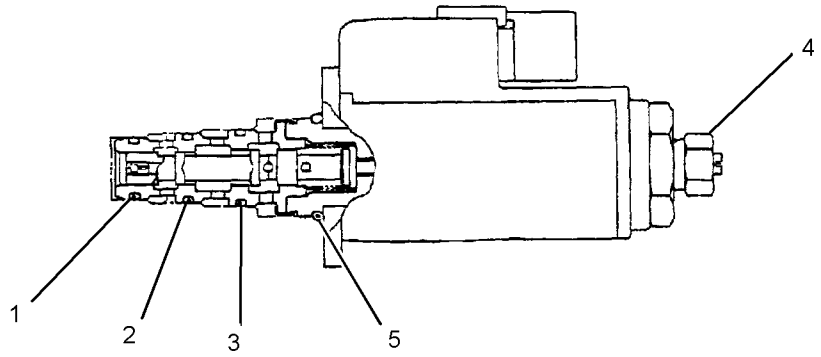

GRAPHIC #1 **<END>** g01210437

282-9318 VALVE GP-SOLENOID

PART OF 385-2796 LINES GP-PILOT
AN ATTACHMENT

SMCS-5479 **i03971128**

NOTE	REF NO	GRAPHIC REF	PART NUMBER	QTY	PART NAME 1 2 3 4 5 6 (PRODUCT LEVEL)	SEE PAGE
Y	1	1	**169-1181**	2	VALVE GP-SOLENOID (BLADE)	361
	2	1	**291-0152**	1	BLOCK	
M	3	1	**8T-0288**	4	BOLT (M5X0.8X12-MM)	

M - METRIC PART
Y - SEPARATE ILLUSTRATION

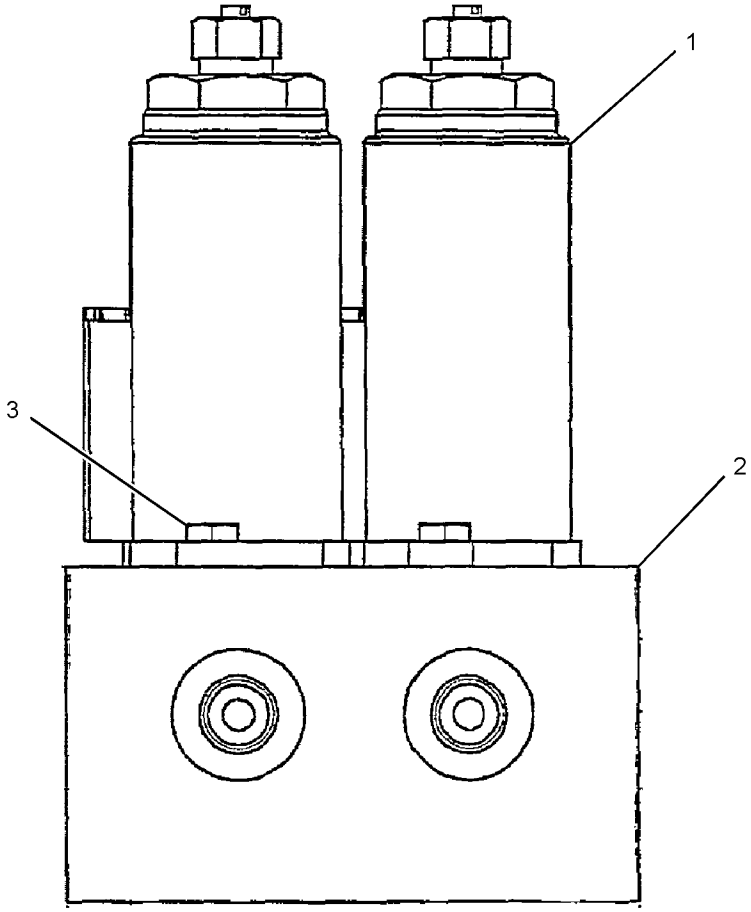

GRAPHIC #1 **<END>** g01359556

372-9898 VALVE GP-SOLENOID

PART OF 377-8876 VALVE & MTG GP-CONTROL

AN ATTACHMENT

SMCS-5479 **i04559358**

NOTE	REF NO	GRAPHIC REF	PART NUMBER	QTY	PART NAME 1 2 3 4 5 6 (PRODUCT LEVEL)	SEE PAGE
	1	1	**274-8039**	2	VALVE GP-SOLENOID (12-VOLT) (FLOW CONTROL)	
					(EACH INCLUDES)	
		1	**274-8034**	1	COIL AS (12-VOLT)	

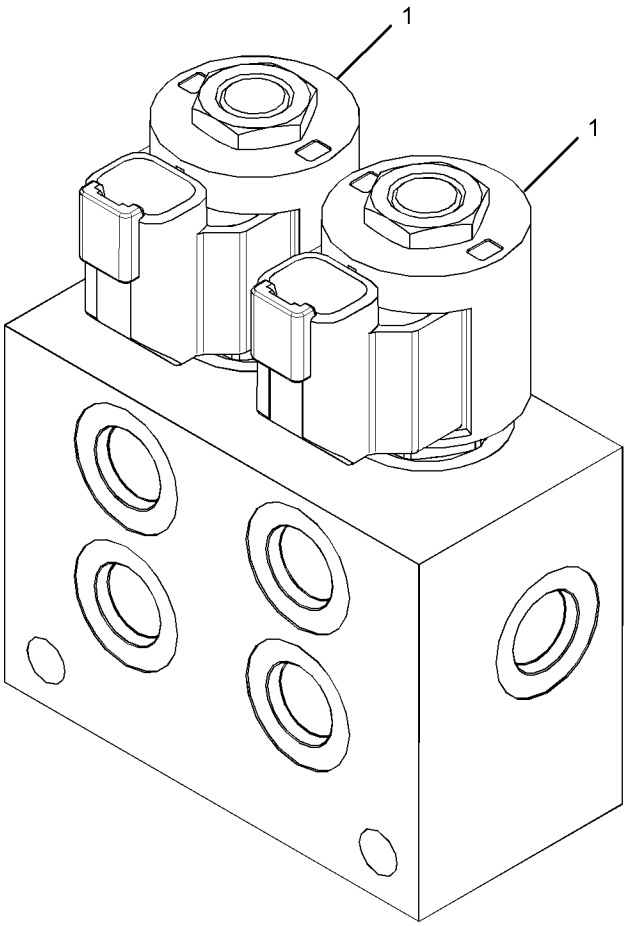

GRAPHIC #1 **<END>** g02765216

358-2091 VALVE GP-SOLENOID & MANIFOLD–QUICK COUPLER

PART OF 384-5013 CONTROL AR-COUPLER, 382-2551 LINES GP-FRONT AN ATTACHMENT

SMCS-5264, 5479 **i05426637**

NOTE	REF NO	GRAPHIC REF	PART NUMBER	QTY	PART NAME 1 2 3 4 5 6 (PRODUCT LEVEL)	SEE PAGE
	1	1	**384-1039**	1	VALVE GP-CHECK (QUICK COUPLER)	
	2	1	**368-1278**	2	VALVE GP-SOLENOID (12-VOLT) (QUICK COUPLER)	
	3	1	**368-1279**	1	VALVE GP-PRESSURE REDUCING (QUICK COUPLER)	
	4	1	**244-1540**	1	PLUG-ORIFICE	
	5	1	**4J-7533**	5	SEAL-O-RING	
	6	1	**9S-4180**	5	PLUG	

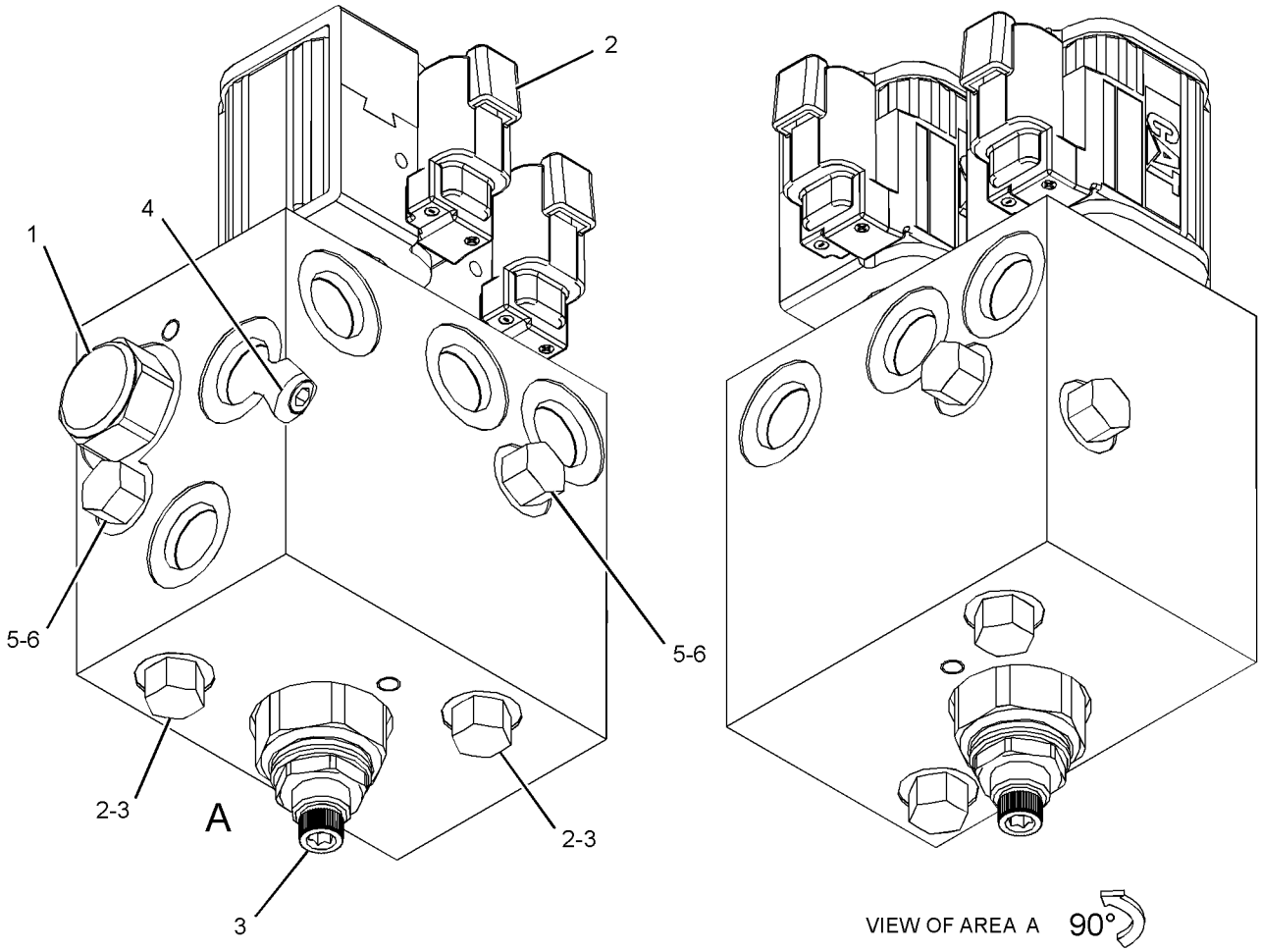

GRAPHIC #1 **<END>** g02879259

376-6680 BOOM AR

PART OF 376-6672 COMMON AR

SMCS-6501 **i04728052**

NOTE	PART NUMBER	QTY	PART NAME 1 2 3 4 5 6 (PRODUCT LEVEL)	SEE PAGE
Y	*381-5006*	1	BOOM GP	367
Y	**284-0420**	1	CYLINDER GP-BOOM	192
Y	**376-0171**	1	CYLINDER GP-SWING BOOM	200
Y	*266-4069*	1	FRAME GP-SWING (BOOM)	142
Y	*270-6501*	1	GUARD GP-CYLINDER (BOOM)	146
Y	*292-5739*	1	LIGHTING GP-FLOOD (BOOM)	92
Y	*380-6303*	1	WIRING GP-LIGHTING (BOOM)	115

Y - SEPARATE ILLUSTRATION

<END>

381-5006 BOOM GP

PART OF 376-6680 BOOM AR

SMCS-6501 **i05376421**

NOTE	REF NO	GRAPHIC REF	PART NUMBER	QTY	PART NAME 1 2 3 4 5 6 (PRODUCT LEVEL)	SEE PAGE
	1	1	**093-1430**	2	SEAL-LIP TYPE	
B	2	1	**175-1794**	2	SHIM (0.5-MM THK)	
B	3	1	**175-1795**	4	SHIM (1-MM THK)	
B	4	1	**176-8464**	1	SHIM (0.5-MM THK)	
B	5	1	**176-8465**	1	SHIM (1-MM THK)	
	6	1	**266-3872**	1	BOSS (M20X1.5-THD)	
	7	1	**266-4104**	1	PIN AS	
	8	1	**266-4106**	1	PIN AS	
	9	1	**422-1381**	1	PLATE AS	
	10	1	**422-1378**	1	PLATE AS	
	11	1	**281-1106**	1	PIN	
	12	1	**381-5008**	1	BOOM & BEARING AS	
	12A	1	**265-8720**	2	BUSHING	
		1	**7T-1099**	1	LINK	
M		1	**9R-2672**	1	BOSS-THREADED (M10X1.5-THD)	
	13	1	**3B-8489**	1	FITTING-GREASE	
	14	1	**6V-8513**	2	WASHER-HARD (11X35X2.5-MM THK)	
M	15	1	**8T-4137**	1	BOLT (M10X1.5X20-MM)	
M	16	1	**127-2170**	4	SCREW-TRUSS HEAD (M8X1.25X20-MM)	
M	17	1	**8T-4196**	1	BOLT (M10X1.5X35-MM)	
	18	1	**8T-4224**	4	WASHER-HARD (8.8X16X2-MM THK)	

B - USE AS REQUIRED
M - METRIC PART

381-5006 **BOOM GP (*contd.*)** **i05376421**

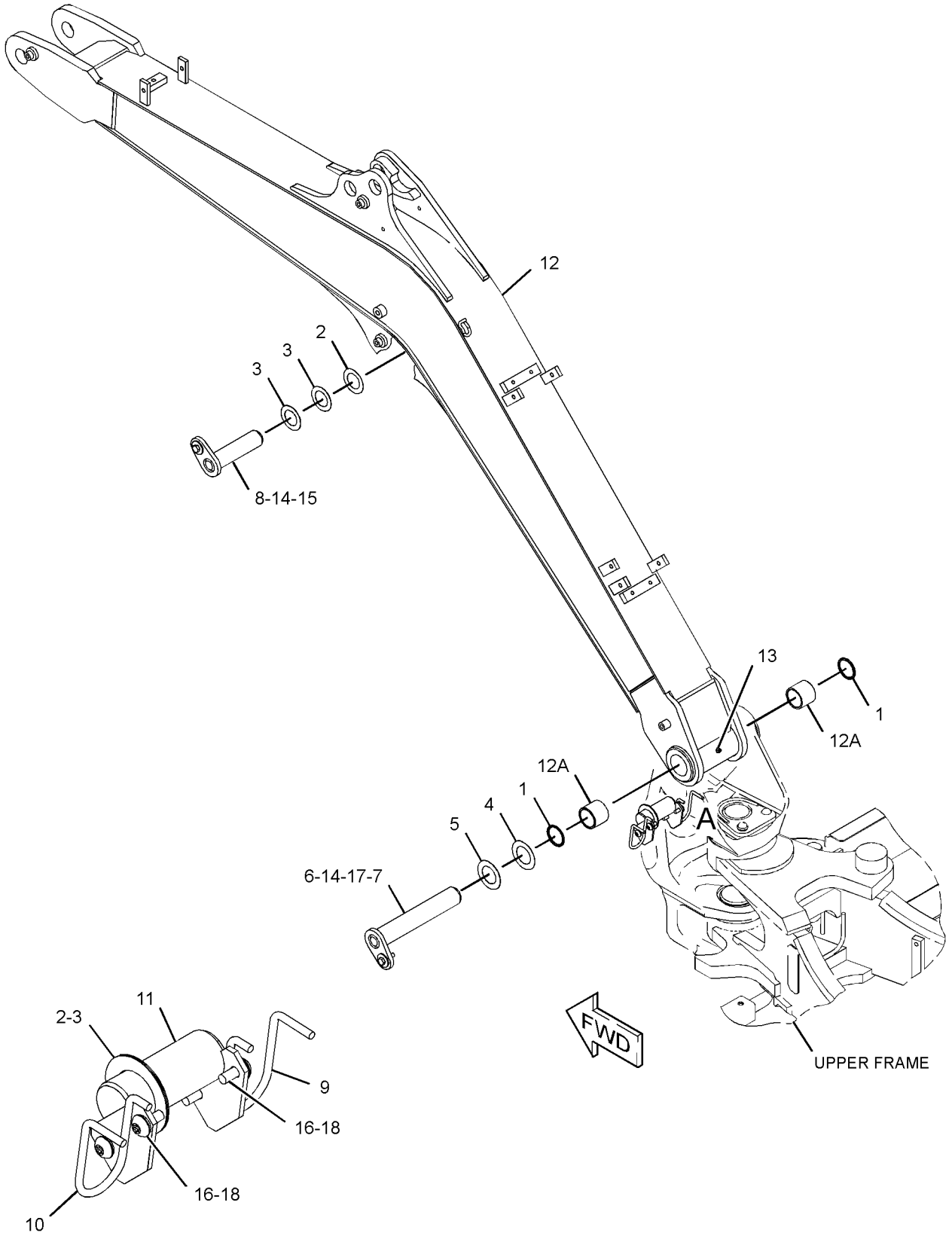

VIEW OF AREA A

GRAPHIC #1 **<END>** g03444756

282-1712 BRACKET GP-MOUNTING–BUCKET

PART OF 279-4325 BUCKET AR-TILTABLE

AN ATTACHMENT

SMCS-6700, 7079 **i05395259**

NOTE	REF NO	GRAPHIC REF	PART NUMBER	QTY	PART NAME 1 2 3 4 5 6 (PRODUCT LEVEL)	SEE PAGE
	1	1	**246-0175**	2	BEARING	
	2	1	**282-1713**	1	BRACKET AS-MOUNTING	

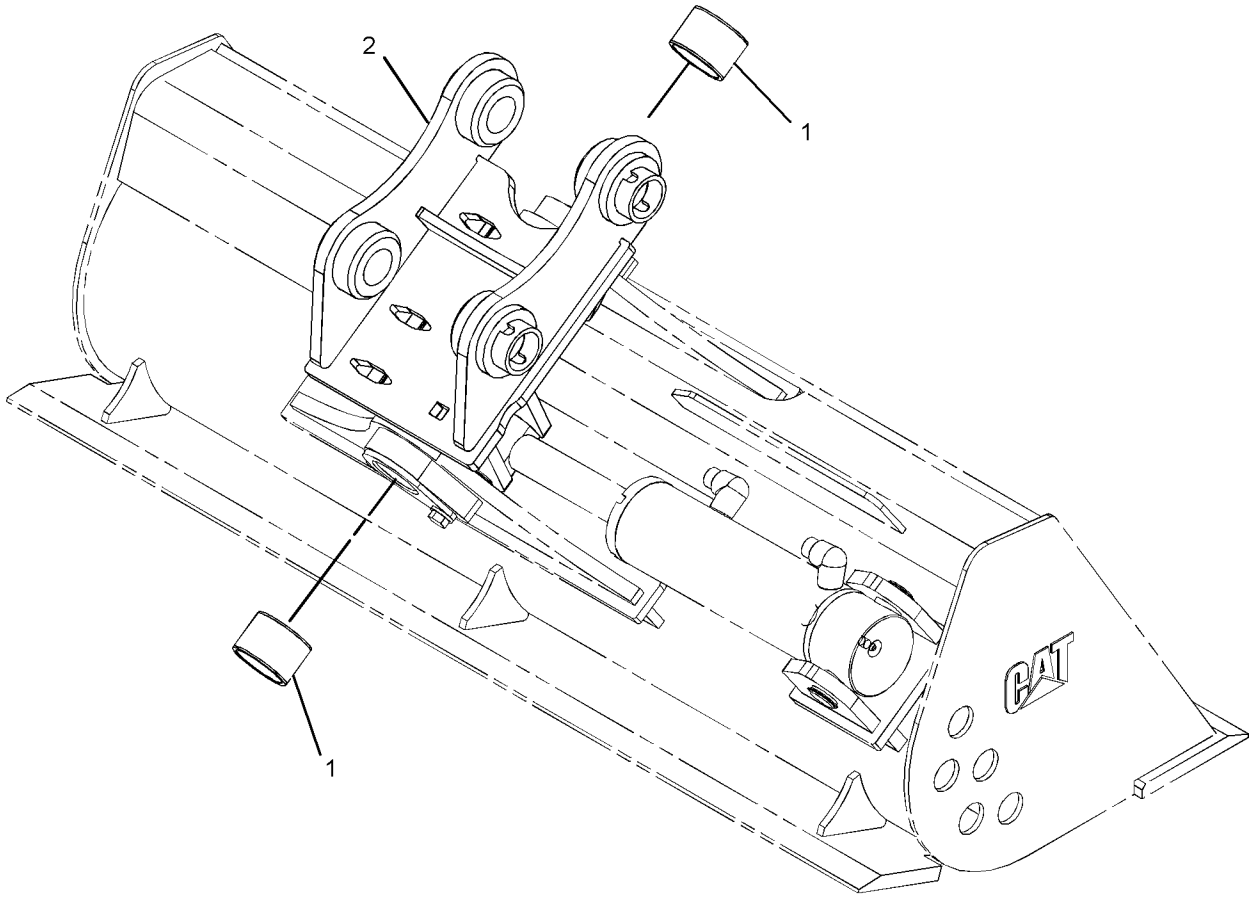

GRAPHIC #1 **<END>** g01243498

377-8918 LINKAGE AR-BUCKET

AN ATTACHMENT

SMCS-6513 **i04764139**

NOTE	PART NUMBER	QTY	PART NAME 1 2 3 4 5 6 (PRODUCT LEVEL)	SEE PAGE
Y	**376-0170**	1	CYLINDER GP-BUCKET	194
Y	*277-4378*	1	LINKAGE GP-BUCKET (WITH LIFTING EYE)	372

Y - SEPARATE ILLUSTRATION

<END>

377-8919 LINKAGE AR-BUCKET—WITH LIFTING EYE

PART OF 383-5899, 383-5900, 383-5901, 383-5902 STICK AR-HOE

AN ATTACHMENT

SMCS-6513 **i04725146**

NOTE	PART NUMBER	QTY	PART NAME 1 2 3 4 5 6 (PRODUCT LEVEL)	SEE PAGE
Y	**376-0170**	1	CYLINDER GP-BUCKET	194
Y	*278-9937*	1	LINKAGE GP-BUCKET (WITH LIFTING EYE)	374

Y - SEPARATE ILLUSTRATION

<END>

418-1566 LINKAGE AR-BUCKET—WITH LIFTING EYE

AN ATTACHMENT

SMCS-6513 **i05210410**

NOTE	PART NUMBER	QTY	PART NAME 1 2 3 4 5 6 (PRODUCT LEVEL)	SEE PAGE
Y	**376-0170**	1	CYLINDER GP-BUCKET	194
Y	*420-1391*	1	LINKAGE GP-BUCKET	376

Y - SEPARATE ILLUSTRATION

<END>

418-1571 LINKAGE AR-BUCKET—WITHOUT LIFTING EYE

AN ATTACHMENT

SMCS-6513 **i05210416**

NOTE	PART NUMBER	QTY	PART NAME 1 2 3 4 5 6 (PRODUCT LEVEL)	SEE PAGE
M	**8T-4172**	2	BOLT (M10X1.5X80-MM)	
	3B-8489	3	FITTING-GREASE	
	277-4382	1	LINK	
	281-0865	1	LINK & BEARING AS	
	093-1429	6	SEAL-LIP TYPE	
	265-8715	2	BUSHING	
	266-4051	2	BUSHING	
	277-4381	1	LINK AS	
M	**8T-4133**	4	NUT (M10X1.5-THD)	
	228-2856	2	PIN AS	
	277-4383	2	PIN AS	
	095-0868	2	PIN-COTTER	
	175-1794	5	SHIM (0.5-MM THK)	
	175-1795	3	SHIM (1-MM THK)	

M - METRIC PART

<END>

418-1572 LINKAGE AR-BUCKET—WITHOUT LIFTING EYE

AN ATTACHMENT

SMCS-6513 **i05210415**

NOTE	PART NUMBER	QTY	PART NAME 1 2 3 4 5 6 (PRODUCT LEVEL)	SEE PAGE
M	**8T-4172**	2	BOLT (M10X1.5X80-MM)	
	3B-8489	3	FITTING-GREASE	
	277-4382	1	LINK	
	278-9938	1	LINK & BEARING AS	
	093-1429	6	SEAL-LIP TYPE	
	265-8715	2	BUSHING	
	266-4051	2	BUSHING	
	277-4381	1	LINK AS	
M	**8T-4133**	4	NUT (M10X1.5-THD)	
	228-2856	2	PIN AS	
	277-4383	2	PIN AS	
	095-0868	2	PIN-COTTER	
	175-1794	5	SHIM (0.5-MM THK)	
	175-1795	3	SHIM (1-MM THK)	

M - METRIC PART

<END>

277-4378 LINKAGE GP-BUCKET

PART OF 377-8918 LINKAGE AR-BUCKET

AN ATTACHMENT

SMCS-6513 **i04019531**

NOTE	REF NO	GRAPHIC REF	PART NUMBER	QTY	PART NAME 1 2 3 4 5 6 (PRODUCT LEVEL)	SEE PAGE
	1	1	**3B-8489**	3	FITTING-GREASE	
B	2	1	**175-1794**	7	SHIM (0.5-MM THK)	
B	3	1	**175-1795**	4	SHIM (1-MM THK)	
	4	1	**228-2856**	2	PIN AS	
	5	1	**266-4064**	1	PIN AS	
	6	1	**277-4381**	1	LINK AS	
	7	1	**277-4382**	1	LINK	
	8	1	**277-4383**	2	PIN AS	
	9	1	**281-0865**	1	LINK & BEARING AS	
		1	**093-1429**	6	SEAL-LIP TYPE	
		1	**265-8715**	2	BUSHING	
		1	**266-4051**	2	BUSHING	
	10	1	**095-0868**	2	PIN-COTTER	
	11	1	**6V-8513**	1	WASHER-HARD (11X35X2.5-MM THK)	
M	12	1	**8T-4133**	4	NUT (M10X1.5-THD)	
M	13	1	**8T-4137**	1	BOLT (M10X1.5X20-MM)	
M	14	1	**8T-4172**	2	BOLT (M10X1.5X80-MM)	

B - USE AS REQUIRED
M - METRIC PART

277-4378 **LINKAGE GP-BUCKET (*contd.*)** **i04019531**

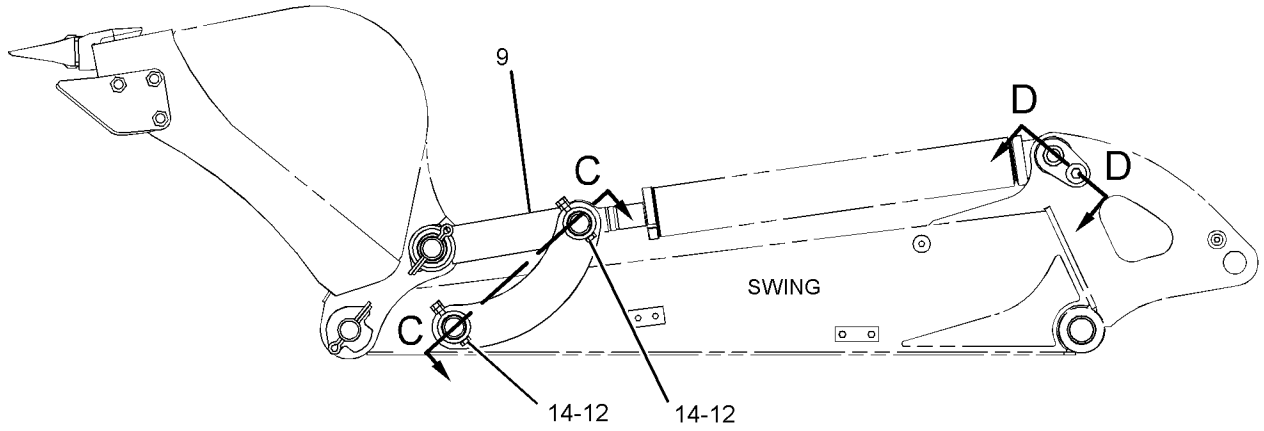

LEFT SIDE VIEW

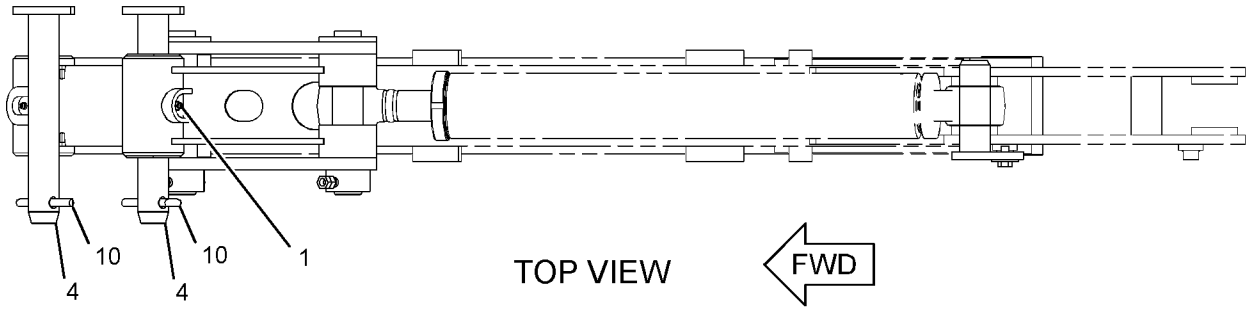

TOP VIEW

FWD

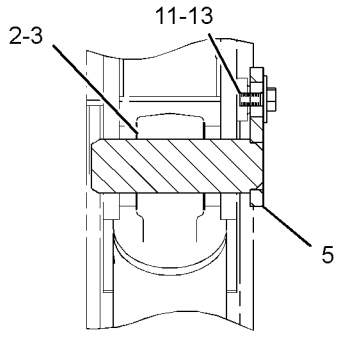

SECTION D-D

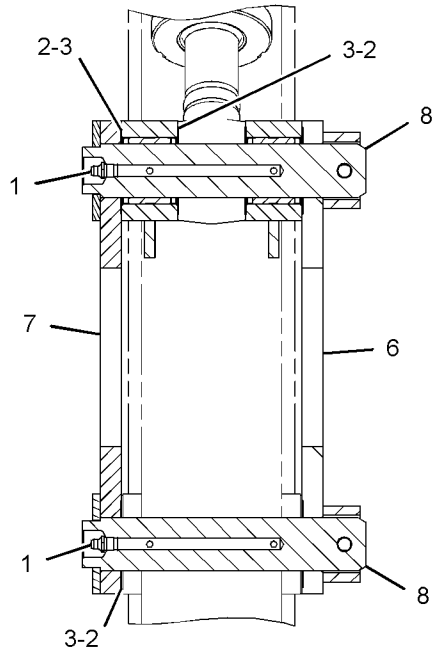

SECTION C-C

GRAPHIC #1 **<END>** g01223179

278-9937 LINKAGE GP-BUCKET—WITH LIFTING EYE

PART OF 377-8919 LINKAGE AR-BUCKET

AN ATTACHMENT

SMCS-6513 **i04006592**

NOTE	REF NO	GRAPHIC REF	PART NUMBER	QTY	PART NAME 1 2 3 4 5 6 (PRODUCT LEVEL)	SEE PAGE
	1	1	**3B-8489**	3	FITTING-GREASE	
	2	1	**175-1794**	7	SHIM (0.5-MM THK)	
	3	1	**175-1795**	4	SHIM (1-MM THK)	
	4	1	**228-2856**	2	PIN AS	
	5	1	**266-4064**	1	PIN AS	
	6	1	**277-4381**	1	LINK AS	
	7	1	**277-4382**	1	LINK	
	8	1	**277-4383**	2	PIN AS	
	9	1	**278-9938**	1	LINK & BEARING AS	
		1	**093-1429**	6	SEAL-LIP TYPE	
		1	**265-8715**	2	BUSHING	
		1	**266-4051**	2	BUSHING	
	10	1	**095-0868**	2	PIN-COTTER	
	11	1	**6V-8513**	1	WASHER-HARD (11X35X2.5-MM THK)	
M	12	1	**8T-4133**	4	NUT (M10X1.5-THD)	
M	13	1	**8T-4137**	1	BOLT (M10X1.5X20-MM)	
M	14	1	**8T-4172**	2	BOLT (M10X1.5X80-MM)	

M - METRIC PART

278-9937 **LINKAGE GP-BUCKET (*contd.*)** **i04006592**

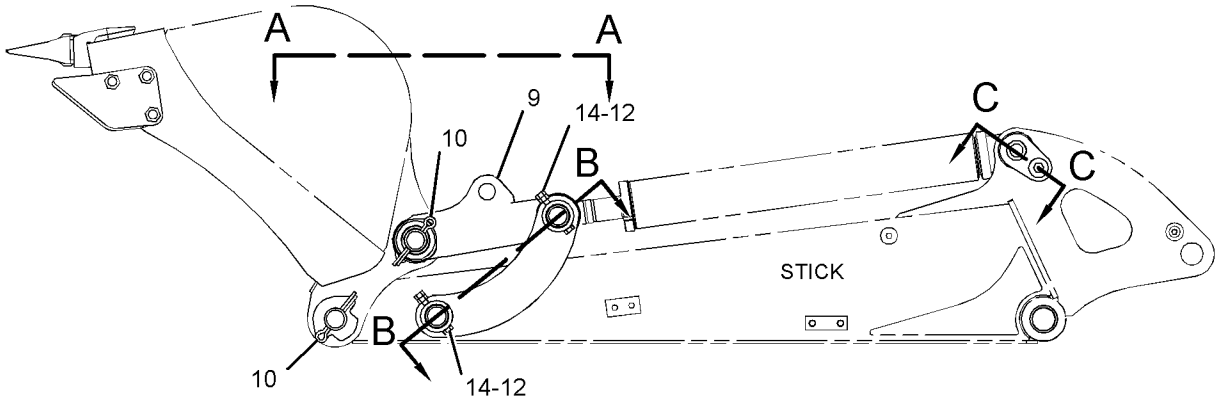

LEFT SIDE VIEW

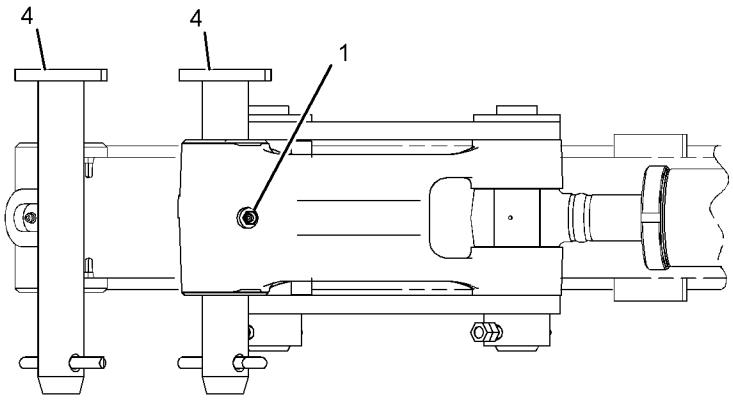

VIEW A-A

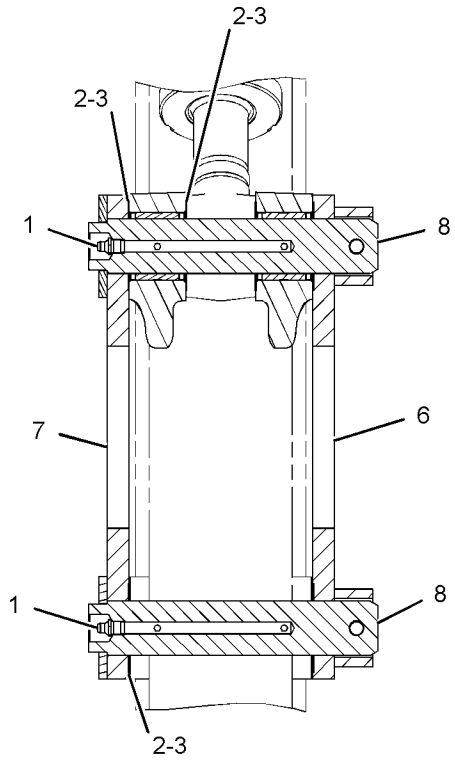

SECTION B-B

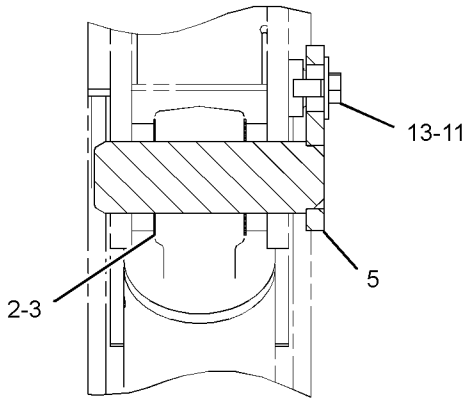

SECTION C-C

GRAPHIC #1 **<END>** g01221404

420-1391 LINKAGE GP-BUCKET

PART OF 418-1566 LINKAGE AR-BUCKET

AN ATTACHMENT

SMCS-6513 **i05210409**

NOTE	REF NO	GRAPHIC REF	PART NUMBER	QTY	PART NAME 1 2 3 4 5 6 (PRODUCT LEVEL)	SEE PAGE
	1	1	**175-1794**	2	SHIM (0.5-MM THK)	
	2	1	**175-1795**	1	SHIM (1-MM THK)	
	3	1	**266-4064**	1	PIN AS	
	4	1	**6V-8513**	1	WASHER-HARD (11X35X2.5-MM THK)	
M	5	1	**8T-4137**	1	BOLT (M10X1.5X20-MM)	

M - METRIC PART

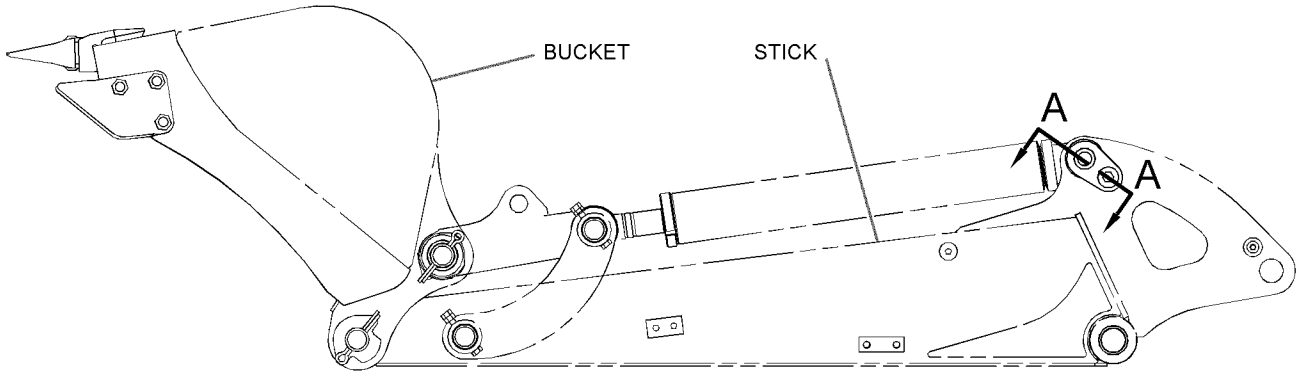

LEFT SIDE VIEW

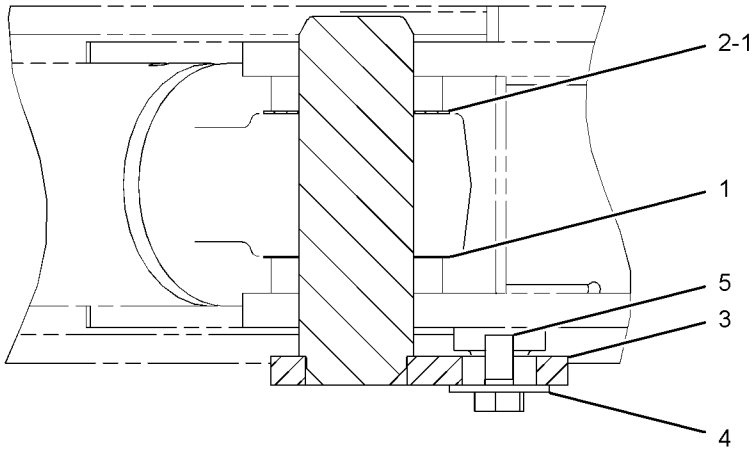

SECTION A-A

GRAPHIC #1 **<END>** g03342159

421-8461 STICK AR

AN ATTACHMENT

SMCS-6502 **i05331071**

NOTE	PART NUMBER	QTY	PART NAME 1 2 3 4 5 6 (PRODUCT LEVEL)	SEE PAGE
Y	**284-0863**	1	CYLINDER GP-STICK	198
Y	*269-4197*	1	FASTENER GP-LINES (STICK)	207
Y	*421-9099*	1	LINES GP-STICK	270

Y - SEPARATE ILLUSTRATION

<END>

377-8916 STICK AR-HOE—STANDARD, THUMB

PART OF 383-5899, 383-5901 STICK AR-HOE

AN ATTACHMENT

SMCS-6502 **i04725144**

NOTE	PART NUMBER	QTY	PART NAME 1 2 3 4 5 6 (PRODUCT LEVEL)	SEE PAGE
Y	*381-5033*	1	STICK GP-HOE (STANDARD, THUMB)	386
Y	*288-0848*	1	VALVE GP-RELIEF (LINE, THUMB)	360

Y - SEPARATE ILLUSTRATION

<END>

377-8917 STICK AR-HOE—LONG, THUMB

PART OF 383-5900, 383-5902 STICK AR-HOE

AN ATTACHMENT

SMCS-6502 **i04725145**

NOTE	PART NUMBER	QTY	PART NAME 1 2 3 4 5 6 (PRODUCT LEVEL)	SEE PAGE
Y	*381-5030*	1	STICK GP-HOE (LONG, THUMB)	384
Y	*288-0848*	1	VALVE GP-RELIEF (LINE, THUMB)	360

Y - SEPARATE ILLUSTRATION

<END>

381-5010 STICK AR-HOE—LONG, HEAVY-DUTY

PART OF 383-5911, 383-5913 STICK AR-HOE

AN ATTACHMENT

SMCS-6502 **i04728086**

NOTE	PART NUMBER	QTY	PART NAME 1 2 3 4 5 6 (PRODUCT LEVEL)	SEE PAGE
Y	*381-5011*	1	STICK GP-HOE	381

Y - SEPARATE ILLUSTRATION

<END>

381-5020 STICK AR-HOE—STANDARD

PART OF 383-5910, 383-5912 STICK AR-HOE

AN ATTACHMENT

SMCS-6502 **i04728088**

NOTE	PART NUMBER	QTY	PART NAME 1 2 3 4 5 6 (PRODUCT LEVEL)	SEE PAGE
Y	*381-5021*	1	STICK GP-HOE	382

Y - SEPARATE ILLUSTRATION

<END>

383-5899 STICK AR-HOE—STANDARD

AN ATTACHMENT

SMCS-6502 **i04728106**

NOTE	PART NUMBER	QTY	PART NAME 1 2 3 4 5 6 (PRODUCT LEVEL)	SEE PAGE
Y	*379-4683*	1	CONTROL AR-AUXILIARY (SWING BOOM)	182
Y	*378-2501*	1	CONTROL AR-HYDRAULIC (STANDARD JOYSTICK)	187
Y	*382-1316*	1	LINES AR-BUCKET	210
Y	*355-5382*	1	LINES GP-AUXILIARY HYDRAULIC (STANDARD STICK)	216
Y	*377-8919*	1	LINKAGE AR-BUCKET (WITH LIFTING EYE)	370
Y	*377-8916*	1	STICK AR-HOE (STANDARD, THUMB)	377

Y - SEPARATE ILLUSTRATION

<END>

383-5900 STICK AR-HOE—LONG

AN ATTACHMENT

SMCS-6502 **i04728107**

NOTE	PART NUMBER	QTY	PART NAME 1 2 3 4 5 6 (PRODUCT LEVEL)	SEE PAGE
Y	*379-4683*	1	CONTROL AR-AUXILIARY (SWING BOOM)	182
Y	*378-2501*	1	CONTROL AR-HYDRAULIC (STANDARD JOYSTICK)	187
Y	*382-1317*	1	LINES AR-BUCKET (LONG STICK)	211
Y	*379-4725*	1	LINES GP-AUXILIARY HYDRAULIC (LONG STICK)	216
Y	*377-8919*	1	LINKAGE AR-BUCKET (WITH LIFTING EYE)	370
Y	*377-8917*	1	STICK AR-HOE (LONG, THUMB)	377

Y - SEPARATE ILLUSTRATION

<END>

383-5901 STICK AR-HOE—2ND AUXILIARY, LONG

AN ATTACHMENT

SMCS-6502 **i04728108**

NOTE	PART NUMBER	QTY	PART NAME 1 2 3 4 5 6 (PRODUCT LEVEL)	SEE PAGE
Y	*379-4721*	1	CONTROL AR-AUXILIARY (2ND AUXILIARY, STANDARD STICK)	182
Y	*378-2500*	1	CONTROL AR-HYDRAULIC (2ND AUXILIARY)	187
Y	*382-1316*	1	LINES AR-BUCKET	210
Y	*355-5382*	1	LINES GP-AUXILIARY HYDRAULIC (STANDARD STICK)	216
Y	*377-8919*	1	LINKAGE AR-BUCKET (WITH LIFTING EYE)	370
Y	*377-8916*	1	STICK AR-HOE (STANDARD, THUMB)	377

Y - SEPARATE ILLUSTRATION

<END>

383-5902 STICK AR-HOE—2ND AUXILIARY, LONG

AN ATTACHMENT

SMCS-6502 **i04728109**

NOTE	PART NUMBER	QTY	PART NAME 1 2 3 4 5 6 (PRODUCT LEVEL)	SEE PAGE
Y	*379-4722*	1	CONTROL AR-AUXILIARY (2ND AUXILIARY, LONG STICK)	183
Y	*378-2500*	1	CONTROL AR-HYDRAULIC (2ND AUXILIARY)	187
Y	*382-1317*	1	LINES AR-BUCKET (LONG STICK)	211
Y	*379-4725*	1	LINES GP-AUXILIARY HYDRAULIC (LONG STICK)	216
Y	*377-8919*	1	LINKAGE AR-BUCKET (WITH LIFTING EYE)	370
Y	*377-8917*	1	STICK AR-HOE (LONG, THUMB)	377

Y - SEPARATE ILLUSTRATION

<END>

383-5910 STICK AR-HOE—STANDARD

AN ATTACHMENT

SMCS-6502 **i04728110**

NOTE	PART NUMBER	QTY	PART NAME 1 2 3 4 5 6 (PRODUCT LEVEL)	SEE PAGE
Y	*379-4683*	1	CONTROL AR-AUXILIARY (SWING BOOM)	182
Y	*378-2501*	1	CONTROL AR-HYDRAULIC (STANDARD JOYSTICK)	187
Y	*382-1316*	1	LINES AR-BUCKET	210
Y	*355-5382*	1	LINES GP-AUXILIARY HYDRAULIC (STANDARD STICK)	216
Y	*381-5020*	1	STICK AR-HOE (STANDARD)	378

Y - SEPARATE ILLUSTRATION

<END>

383-5911 STICK AR-HOE—LONG

AN ATTACHMENT

SMCS-6502 **i04728111**

NOTE	PART NUMBER	QTY	PART NAME 1 2 3 4 5 6 (PRODUCT LEVEL)	SEE PAGE
Y	*379-4683*	1	CONTROL AR-AUXILIARY (SWING BOOM)	182
Y	*378-2501*	1	CONTROL AR-HYDRAULIC (STANDARD JOYSTICK)	187
Y	*382-1317*	1	LINES AR-BUCKET (LONG STICK)	211
Y	*379-4725*	1	LINES GP-AUXILIARY HYDRAULIC (LONG STICK)	216
Y	*381-5010*	1	STICK AR-HOE (LONG, HEAVY-DUTY)	377

Y - SEPARATE ILLUSTRATION

<END>

383-5912 STICK AR-HOE—2ND AUXILIARY, STANDARD

AN ATTACHMENT

SMCS-6502 **i04728112**

NOTE	PART NUMBER	QTY	PART NAME 1 2 3 4 5 6 (PRODUCT LEVEL)	SEE PAGE
Y	*379-4721*	1	CONTROL AR-AUXILIARY (2ND AUXILIARY, STANDARD STICK)	182
Y	*378-2500*	1	CONTROL AR-HYDRAULIC (2ND AUXILIARY)	187
Y	*382-1316*	1	LINES AR-BUCKET	210
Y	*355-5382*	1	LINES GP-AUXILIARY HYDRAULIC (STANDARD STICK)	216
Y	*381-5020*	1	STICK AR-HOE (STANDARD)	378

Y - SEPARATE ILLUSTRATION

<END>

383-5913 STICK AR-HOE—2ND AUXILIARY, LONG

AN ATTACHMENT

SMCS-6502 **i04728113**

NOTE	PART NUMBER	QTY	PART NAME 1 2 3 4 5 6 (PRODUCT LEVEL)	SEE PAGE
Y	*379-4722*	1	CONTROL AR-AUXILIARY (2ND AUXILIARY, LONG STICK)	183
Y	*378-2500*	1	CONTROL AR-HYDRAULIC (2ND AUXILIARY)	187
Y	*382-1317*	1	LINES AR-BUCKET (LONG STICK)	211
Y	*379-4725*	1	LINES GP-AUXILIARY HYDRAULIC (LONG STICK)	216
Y	*381-5010*	1	STICK AR-HOE (LONG, HEAVY-DUTY)	377

Y - SEPARATE ILLUSTRATION

<END>

381-5011 STICK GP-HOE—LONG, HEAVY-DUTY

PART OF 381-5010 STICK AR-HOE

AN ATTACHMENT

SMCS-6502 **i04728087**

NOTE	REF NO	GRAPHIC REF	PART NUMBER	QTY	PART NAME 1 2 3 4 5 6 (PRODUCT LEVEL)	SEE PAGE
	1	1	**093-1429**	6	SEAL-LIP TYPE	
B	2	1	**175-1794**	3	SHIM (0.5-MM THK)	
B	3	1	**175-1795**	3	SHIM (1-MM THK)	
	4	1	**266-4064**	1	PIN AS	
	5	1	**266-4080**	1	PIN AS	
	6	1	**266-4106**	1	PIN AS	
	7	1	**381-5012**	1	STICK & BEARING AS	
	7A	1	**265-8715**	6	BUSHING	
		1	*381-5014*	1	STICK AS-HOE	
		1	**5I-3272**	2	BOSS (M12X1.75X20-MM)	
M		1	**9R-2821**	1	BOSS (M10X1.5X15-MM)	
	8	1	**3B-8489**	2	FITTING-GREASE	
	9	1	**6V-8513**	3	WASHER-HARD (11X35X2.5-MM THK)	
M	10	1	**8T-4137**	3	BOLT (M10X1.5X20-MM)	

B - USE AS REQUIRED
M - METRIC PART

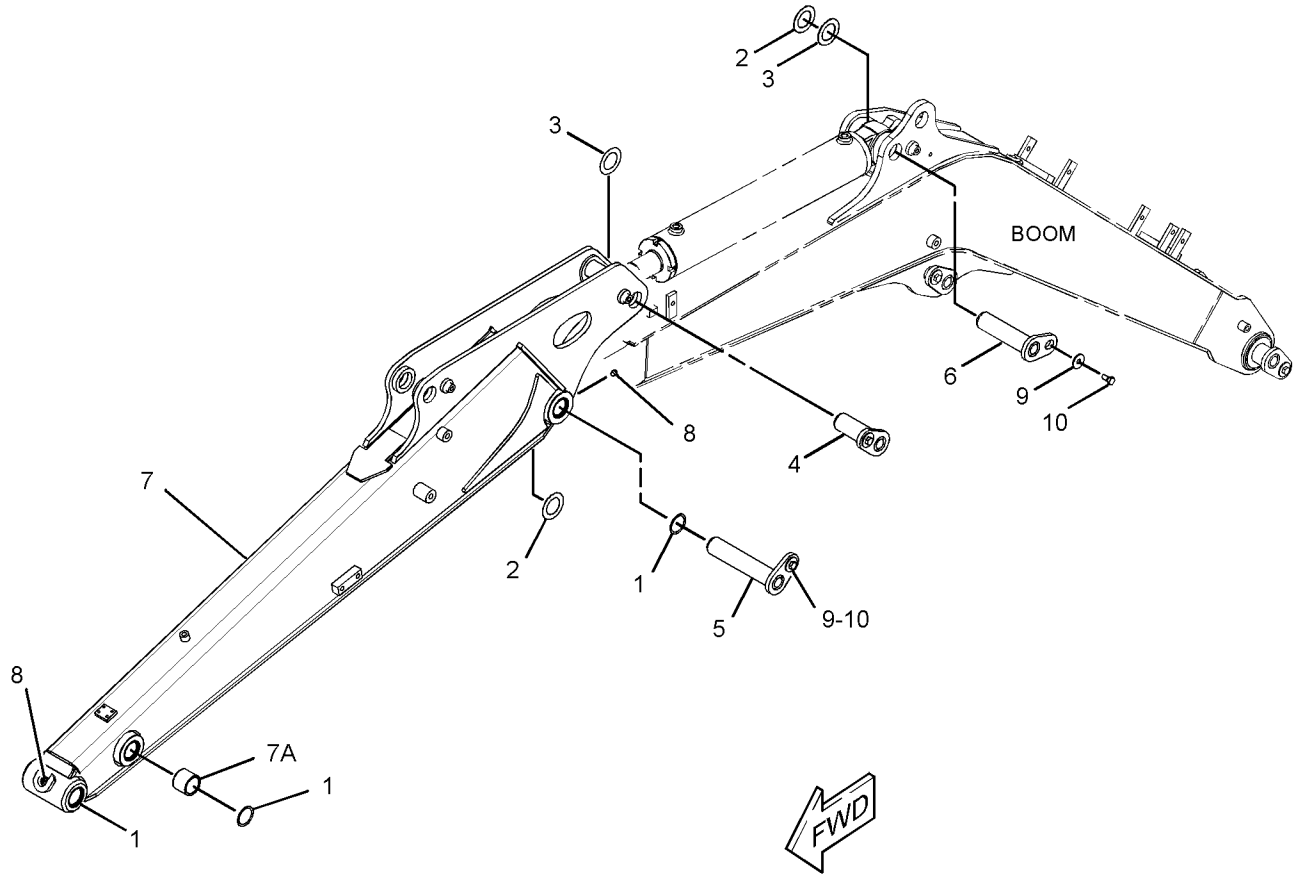

GRAPHIC #1 **<END>** g02834161

381-5021 STICK GP-HOE–STANDARD

PART OF 381-5020 STICK AR-HOE

AN ATTACHMENT

SMCS-6502 **i04728089**

NOTE	REF NO	GRAPHIC REF	PART NUMBER	QTY	PART NAME 1 2 3 4 5 6 (PRODUCT LEVEL)	SEE PAGE
	1	1	**093-1429**	6	SEAL-LIP TYPE	
B	2	1	**175-1794**	3	SHIM (0.5-MM THK)	
B	3	1	**175-1795**	3	SHIM (1-MM THK)	
	4	1	**266-4064**	1	PIN AS	
	5	1	**266-4080**	1	PIN AS	
	6	1	**266-4106**	1	PIN AS	
	7	1	**381-5022**	1	STICK & BEARING AS	
	7A	1	**265-8715**	6	BUSHING	
M		1	**9R-2821**	1	BOSS (M10X1.5X15-MM)	
	8	1	**3B-8489**	2	FITTING-GREASE	
	9	1	**6V-8513**	3	WASHER-HARD (11X35X2.5-MM THK)	
M	10	1	**8T-4137**	3	BOLT (M10X1.5X20-MM)	

B - USE AS REQUIRED
M - METRIC PART

381-5021 **STICK GP-HOE (*contd.*)** **i04728089**

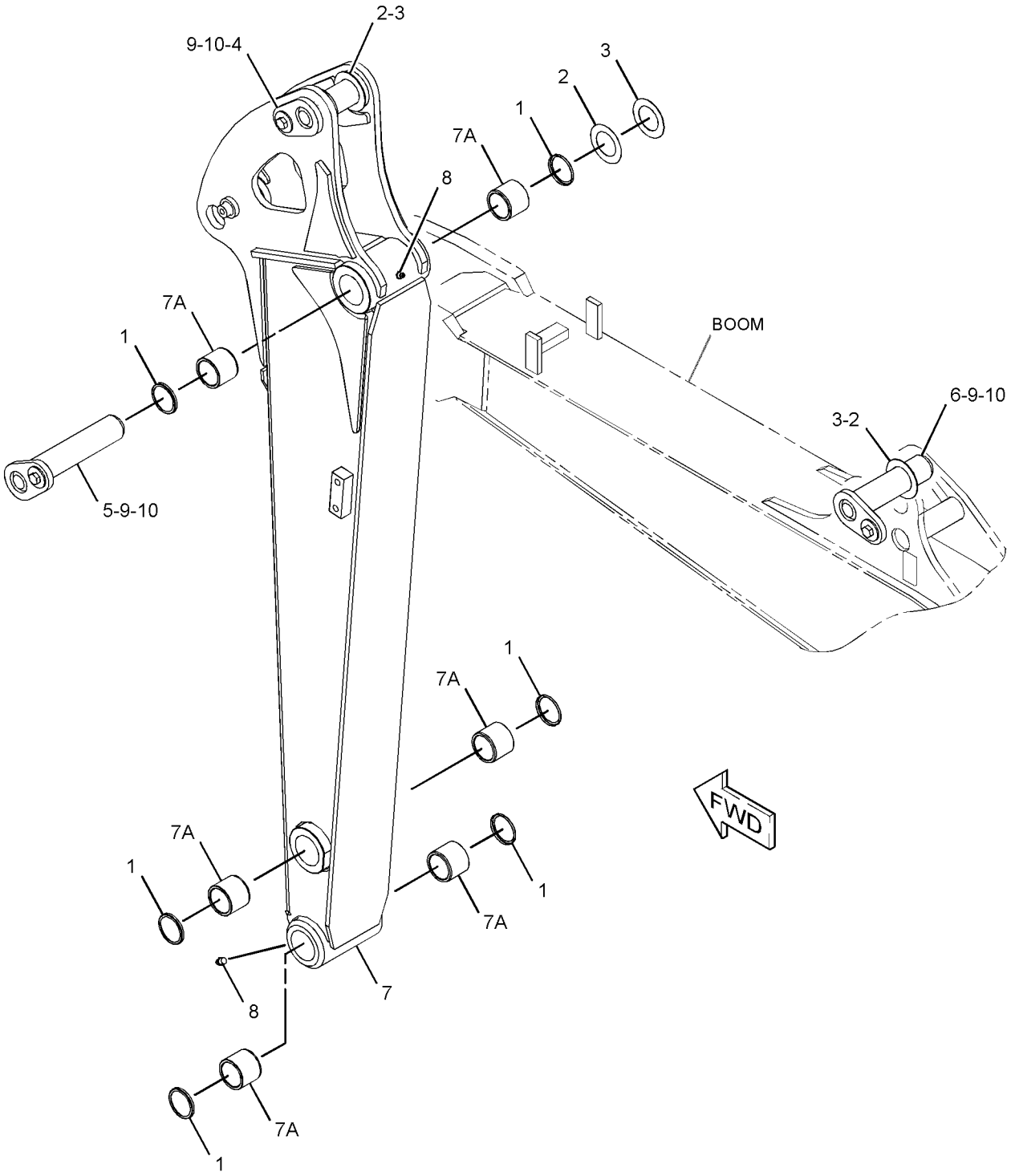

GRAPHIC #1 **<END>** g02856056

381-5030 STICK GP-HOE—LONG, THUMB

PART OF 377-8917 STICK AR-HOE

AN ATTACHMENT

SMCS-6502 **i04728091**

NOTE	REF NO	GRAPHIC REF	PART NUMBER	QTY	PART NAME 1 2 3 4 5 6 (PRODUCT LEVEL)	SEE PAGE
	1	1	**093-1429**	6	SEAL-LIP TYPE	
B	2	1	**175-1794**	3	SHIM (0.5-MM THK)	
B	3	1	**175-1795**	3	SHIM (1-MM THK)	
	4	1	**266-4064**	1	PIN AS	
	5	1	**266-4080**	1	PIN AS	
	6	1	**266-4106**	1	PIN AS	
	7	1	**381-5031**	1	STICK & BEARING AS	
	7A	1	**265-8715**	6	BUSHING	
		1	**5I-3272**	2	BOSS (M12X1.75X20-MM)	
M		1	**9R-2821**	1	BOSS (M10X1.5X15-MM)	
	8	1	**3B-8489**	2	FITTING-GREASE	
	9	1	**6V-8513**	3	WASHER-HARD (11X35X2.5-MM THK)	
M	10	1	**8T-4137**	3	BOLT (M10X1.5X20-MM)	

B - USE AS REQUIRED
M - METRIC PART

381-5030 **STICK GP-HOE (*contd.*)** **i04728091**

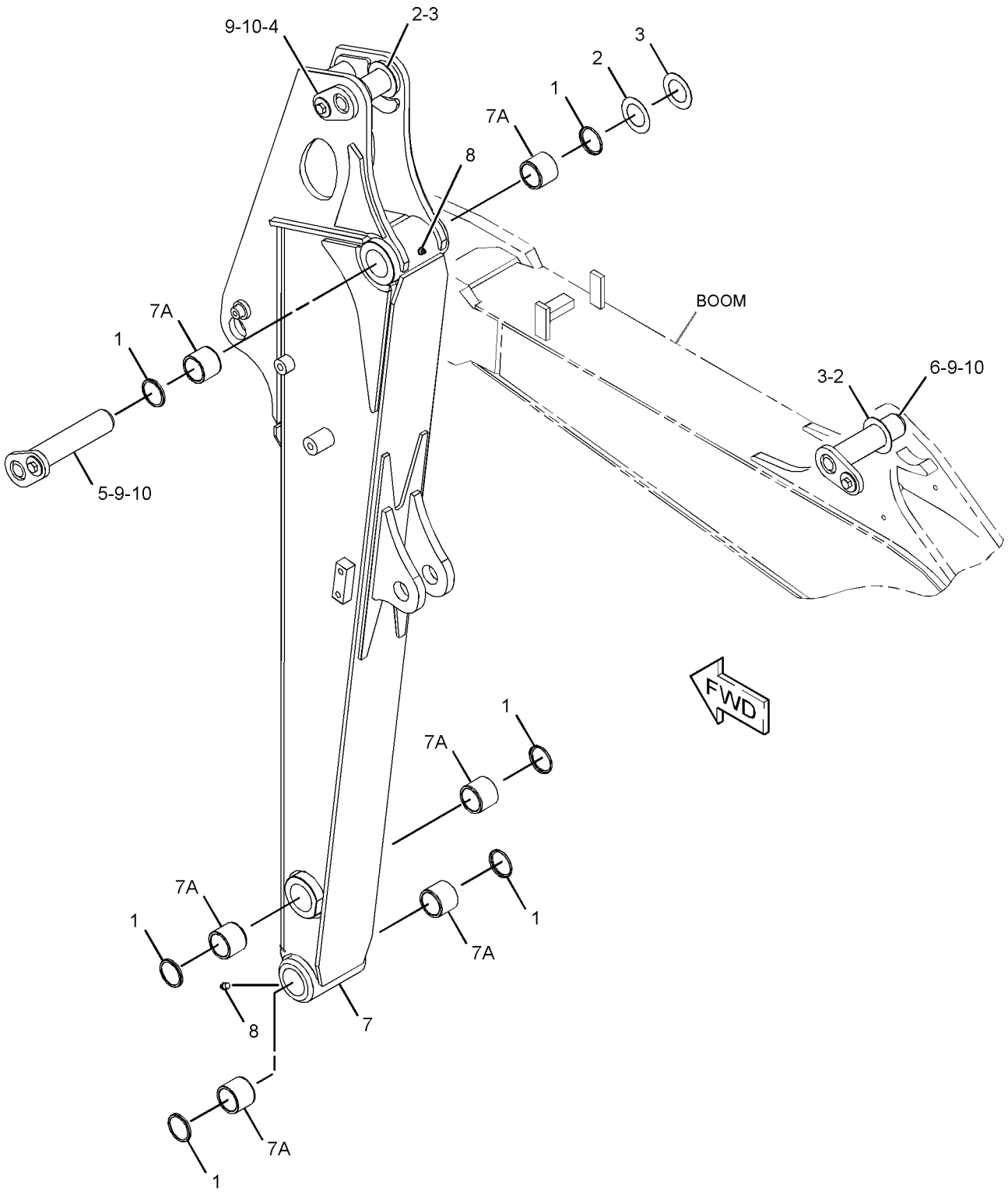

GRAPHIC #1 **<END>** g02856505

381-5033 STICK GP-HOE—STANDARD, THUMB

PART OF 377-8916 STICK AR-HOE

AN ATTACHMENT

SMCS-6502 **i04728094**

NOTE	REF NO	GRAPHIC REF	PART NUMBER	QTY	PART NAME 1 2 3 4 5 6 (PRODUCT LEVEL)	SEE PAGE
	1	1	**093-1429**	6	SEAL-LIP TYPE	
	2	1	**266-4064**	1	PIN AS	
	3	1	**266-4080**	1	PIN AS	
	4	1	**266-4106**	1	PIN AS	
	5	1	**381-5034**	1	STICK & BEARING AS	
	5A	1	**265-8715**	6	BUSHING	
M		1	**9R-2821**	1	BOSS (M10X1.5X15-MM)	
B	6	1	**175-1794**	3	SHIM (0.5-MM THK)	
B	7	1	**175-1795**	3	SHIM (1-MM THK)	
	8	1	**3B-8489**	2	FITTING-GREASE	
	9	1	**6V-8513**	3	WASHER-HARD (11X35X2.5-MM THK)	
M	10	1	**8T-4137**	3	BOLT (M10X1.5X20-MM)	

B - USE AS REQUIRED
M - METRIC PART

381-5033 **STICK GP-HOE (*contd.*)** **i04728094**

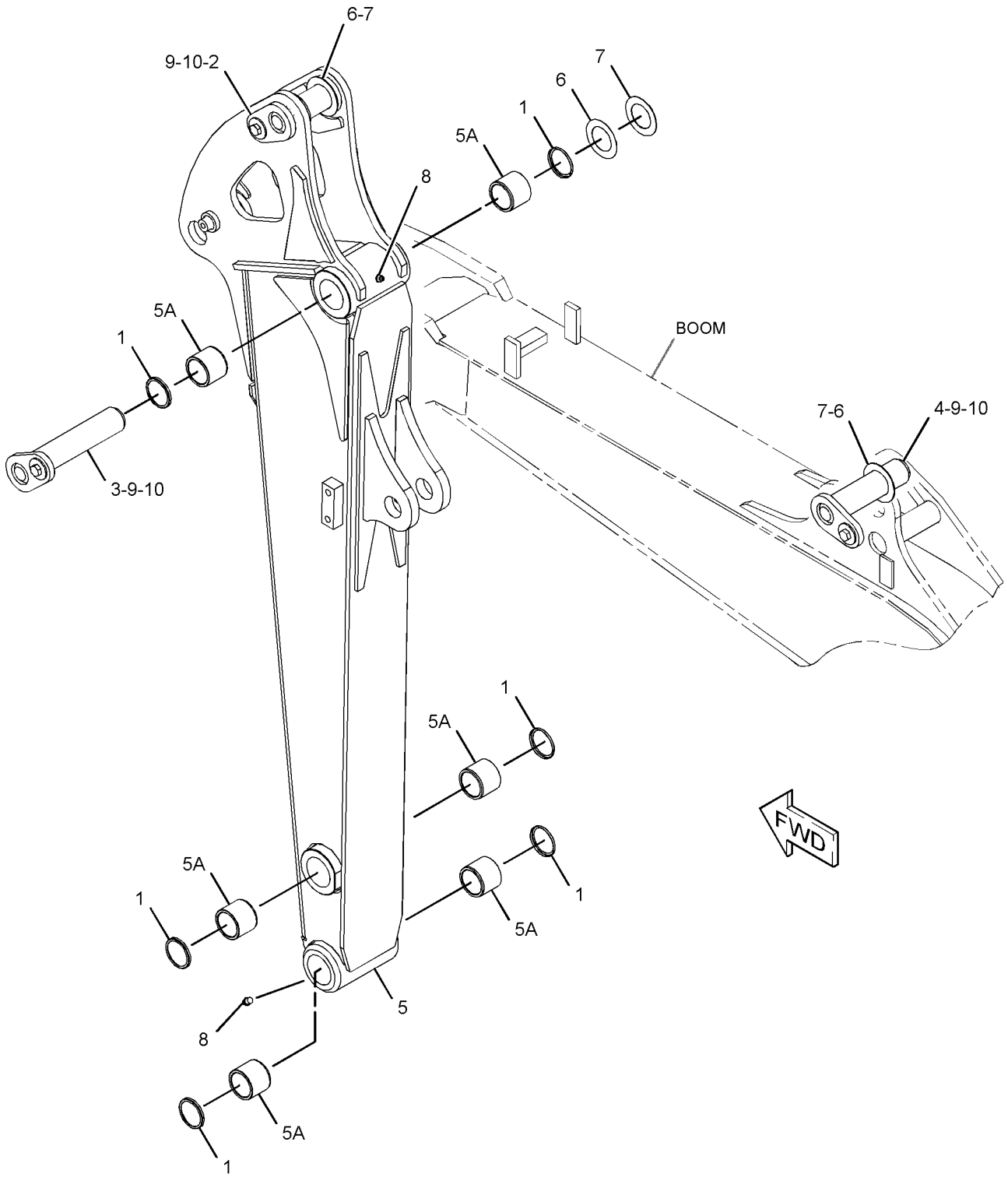

GRAPHIC #1 **<END>** g02856510

281-8699 BLADE & MOUNTING GP—POWER ANGLE

PART OF 377-8930 BLADE AR-ANGLING

AN ATTACHMENT

SMCS-6060, 6151 **i04263776**

NOTE	REF NO	GRAPHIC REF	PART NUMBER	QTY	PART NAME 1 2 3 4 5 6 (PRODUCT LEVEL)	SEE PAGE
B	1	1	**172-1759**	2	SHIM (0.5-MM THK)	
B	2	1	**172-1760**	2	SHIM (1-MM THK)	
	3	1	**218-4681**	2	PIN AS	
	4	1	**260-6314**	2	PIN AS	
	5	1	**266-4763**	1	PIN AS	
	6	1	**266-4765**	1	PIN AS	
CY	7	1	*352-7765*	1	C-FRAME GP-POWER ANGLING	128
CY	8	1	**369-3703**	1	BLADE AS-ANGLING	392
	9	1	**287-0030**	1	PIN AS	
	10	1	**6V-8513**	7	WASHER-HARD (11X35X2.5-MM THK)	
M	11	1	**8T-4137**	7	BOLT (M10X1.5X20-MM)	

B - USE AS REQUIRED
C - CHANGE FROM PREVIOUS TYPE
M - METRIC PART
Y - SEPARATE ILLUSTRATION

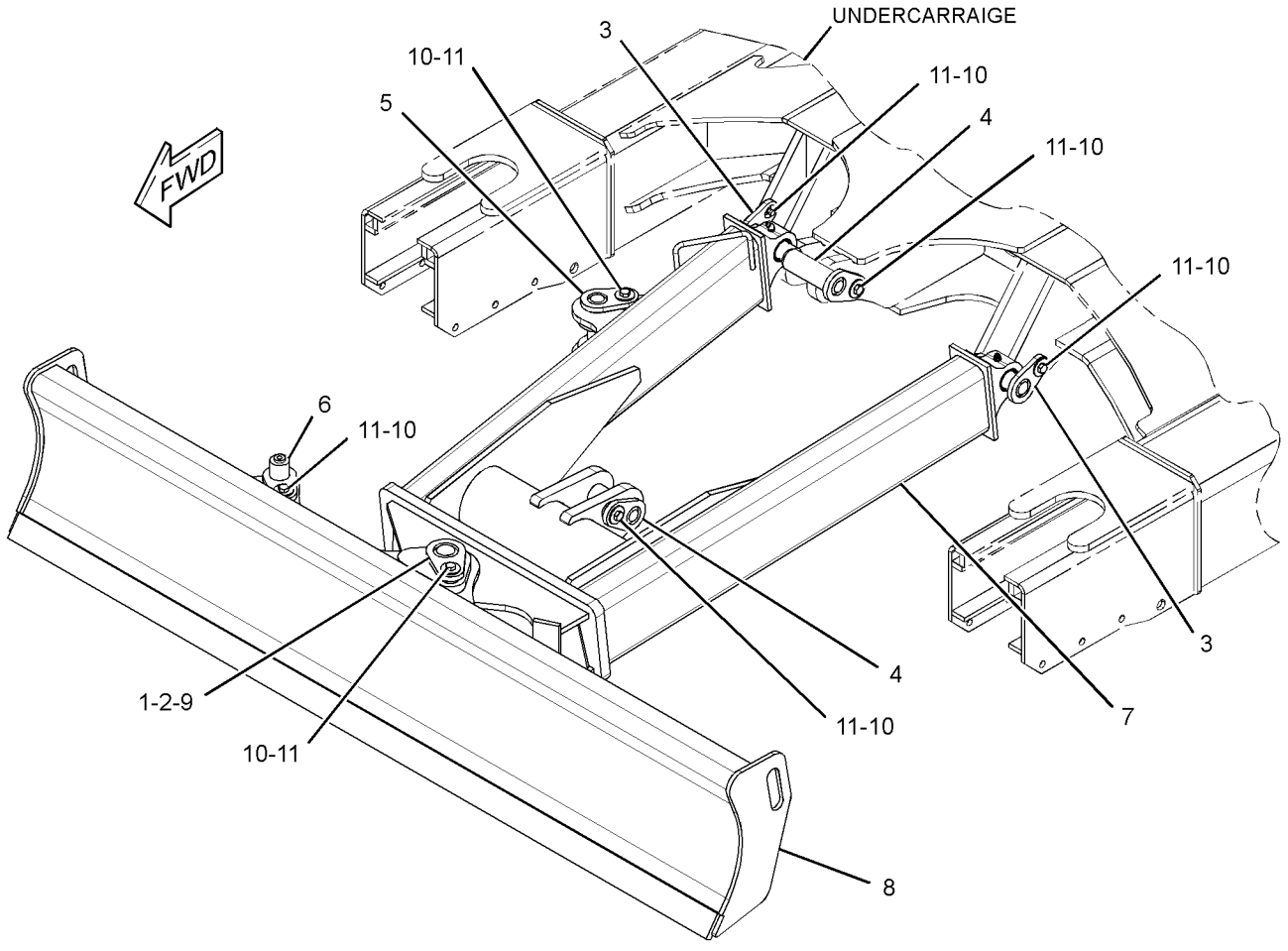

GRAPHIC #1 **<END>** g01365338

376-3979 BLADE & MOUNTING GP

S/N: RKY1-1674
PART OF 377-8920 BLADE AR-STRAIGHT
AN ATTACHMENT

SMCS-6060, 6151 **i04725138**

NOTE	REF NO	GRAPHIC REF	PART NUMBER	QTY	PART NAME 1 2 3 4 5 6 (PRODUCT LEVEL)	SEE PAGE
	1	1	**218-4681**	2	PIN AS	
	2	1	**260-6314**	2	PIN AS	
Y	3	1	*376-3978*	1	BLADE GP-STRAIGHT	393
	4	1	**6V-8513**	4	WASHER-HARD (11X35X2.5-MM THK)	
M	5	1	**8T-4137**	4	BOLT (M10X1.5X20-MM)	

M - METRIC PART
Y - SEPARATE ILLUSTRATION

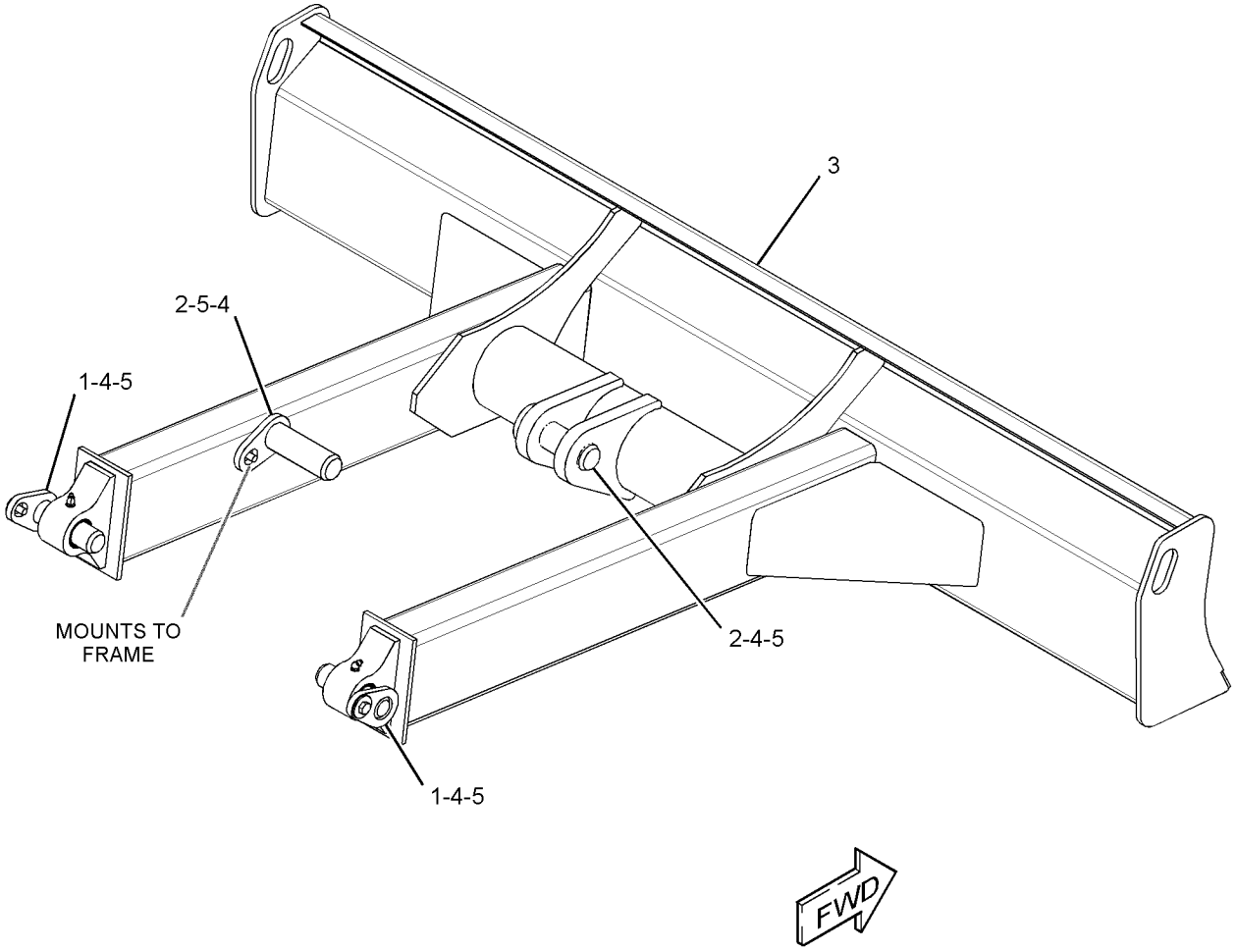

GRAPHIC #1 **<END>** g02852757

376-3979 BLADE & MOUNTING GP

S/N: RKY1675-UP
PART OF 377-8920 BLADE AR-STRAIGHT
AN ATTACHMENT

SMCS-6060, 6151 **i05434160**

NOTE	REF NO	GRAPHIC REF	PART NUMBER	QTY	PART NAME 1 2 3 4 5 6 (PRODUCT LEVEL)	SEE PAGE
	1	1	**218-4681**	2	PIN AS	
	2	1	**260-6314**	2	PIN AS	
CY	3	1	*433-3885*	1	BLADE GP-STRAIGHT	394
	4	1	**6V-8513**	4	WASHER-HARD (11X35X2.5-MM THK)	
M	5	1	**8T-4137**	4	BOLT (M10X1.5X20-MM)	

C - CHANGE FROM PREVIOUS TYPE
M - METRIC PART
Y - SEPARATE ILLUSTRATION

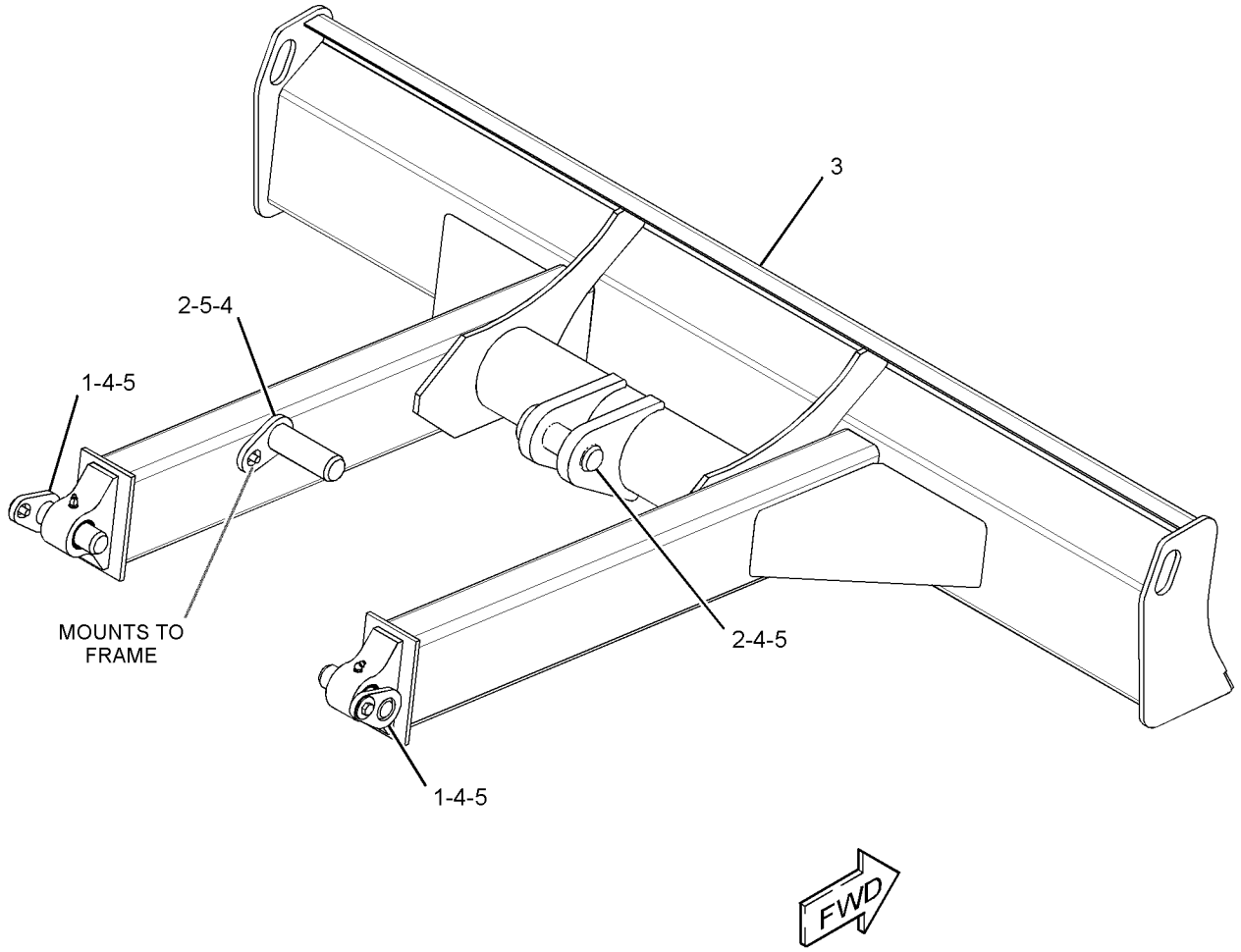

GRAPHIC #1 **<END>** g02852757

377-8930 BLADE AR-ANGLING

AN ATTACHMENT

SMCS-6060, 6701 **i05393120**

NOTE	PART NUMBER	QTY	PART NAME 1 2 3 4 5 6 (PRODUCT LEVEL)	SEE PAGE
Y	*281-8699*	1	BLADE & MOUNTING GP (POWER ANGLE)	388
Y	*382-0522*	1	CONTROL GP-PILOT OPERATED HYD (BLADE)	492
			S/N: RKY1-1465	
Y	*419-1204*	1	CONTROL GP-PILOT OPERATED HYD (BLADE)	493
			S/N: RKY1466-UP	
Y	**266-6979**	1	CYLINDER GP-BLADE (RAISE, LOWER)	188
Y	**286-6384**	1	CYLINDER GP-BLADE (ANGLE)	190
Y	*386-6058*	1	FILM GP (ANGLE BLADE)	553
Y	*290-8287*	1	GUARD GP-CYLINDER (POWER ANGLE)	147
Y	*280-7609*	1	LINES GP-BLADE (ANGLE)	219
Y	*292-8290*	1	LINES GP-BLADE (RAISE, LOWER)	220
Y	*385-2796*	1	LINES GP-PILOT (BLADE ANGLE)	264
Y	*385-2797*	1	LINES GP-RETURN (BLADE)	268
Y	*385-2795*	1	LINES GP-SWING MOTOR	278
Y	*280-7620*	1	LINES GP-TRAVEL MOTOR	281
Y	*385-1277*	1	MOUNTING GP-ELECTRONIC CONTROL	95
Y	*391-3188*	1	VALVE & MTG GP-MAIN CONTROL	309
Y	*383-3163*	1	WIRING GP-CONSOLE (POWER ANGLE)	111

Y - SEPARATE ILLUSTRATION

<END>

377-8920 BLADE AR-STRAIGHT

AN ATTACHMENT

SMCS-6051, 6060 **i05393103**

NOTE	PART NUMBER	QTY	PART NAME 1 2 3 4 5 6 (PRODUCT LEVEL)	SEE PAGE
Y	*376-3979*	1	BLADE & MOUNTING GP	389
Y	*377-5958*	1	CONTROL GP-PILOT OPERATED HYD (BLADE)	489
			S/N: RKY1-1465	
Y	*421-2716*	1	CONTROL GP-PILOT OPERATED HYD (BLADE)	494
			S/N: RKY1466-UP	
Y	**266-6979**	1	CYLINDER GP-BLADE (RAISE, LOWER)	188
Y	*377-9706*	1	FILM GP (STRAIGHT BLADE)	545
Y	*292-8290*	1	LINES GP-BLADE (RAISE, LOWER)	220
Y	*379-4701*	1	LINES GP-RETURN	266
Y	*379-4702*	1	LINES GP-SWING MOTOR	275
Y	*292-8293*	1	LINES GP-TRAVEL MOTOR	283
Y	*377-0325*	1	CONTROL & MTG GP-ELECTRONIC	76
Y	*379-4734*	1	VALVE & MTG GP-BANK	303

Y - SEPARATE ILLUSTRATION

<END>

369-3703 BLADE AS-ANGLING

PART OF 281-8699 BLADE & MOUNTING GP

AN ATTACHMENT

SMCS-6052, 6060 **i04286792**

NOTE	REF NO	GRAPHIC REF	PART NUMBER	QTY	PART NAME 1 2 3 4 5 6 (PRODUCT LEVEL)	SEE PAGE
	1	1	**260-6326**	1	EDGE	

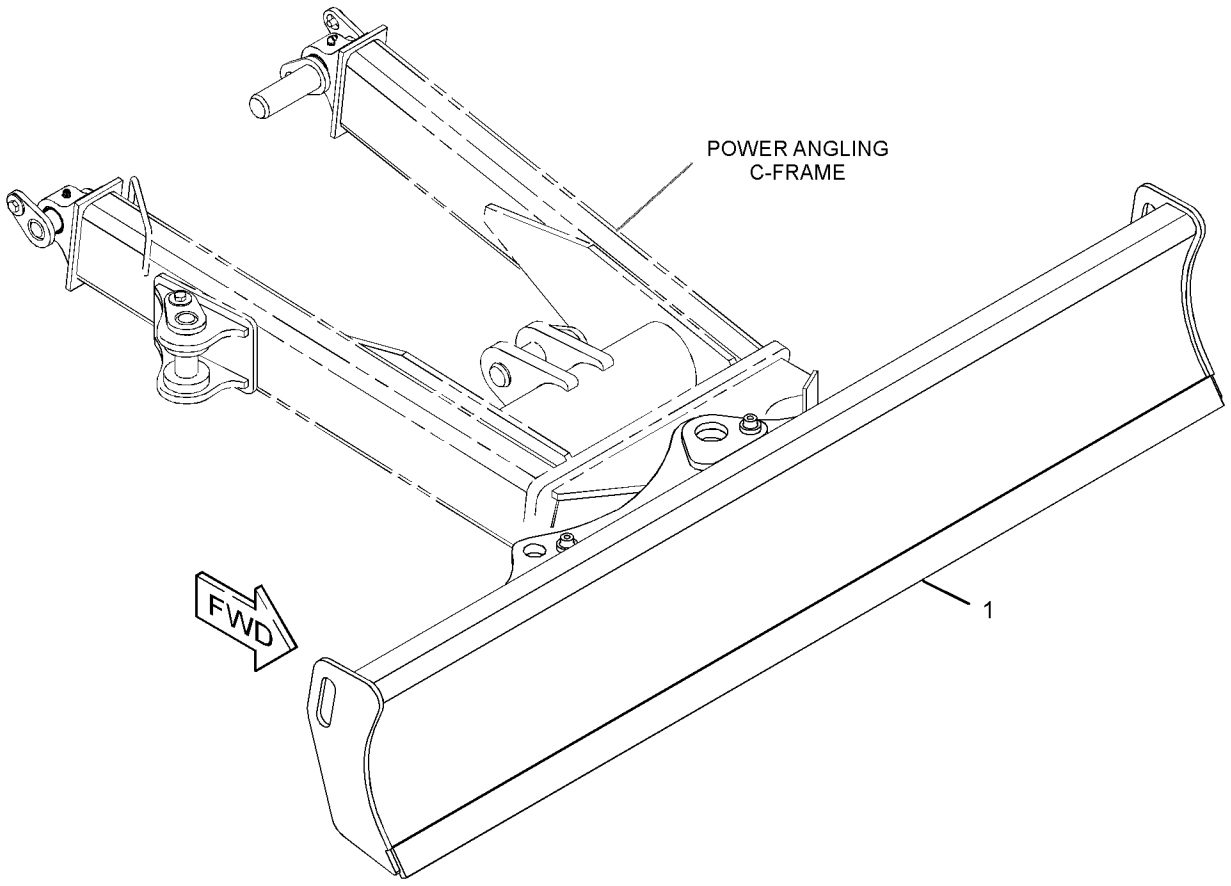

GRAPHIC #1 **<END>** g02892163

376-3978 BLADE GP-STRAIGHT

S/N: RKY1-1674
PART OF 376-3979 BLADE & MOUNTING GP
AN ATTACHMENT

SMCS-6051, 6060

i04725137

NOTE	REF NO	GRAPHIC REF	PART NUMBER	QTY	PART NAME 1 2 3 4 5 6 (PRODUCT LEVEL)	SEE PAGE
	1	1	**140-3734**	4	SEAL-DUST	
	2	1	**376-3977**	1	BLADE & BEARING AS	
	2A	1	**265-8713**	2	BUSHING	
	3	1	**3B-8485**	2	FITTING-GREASE	

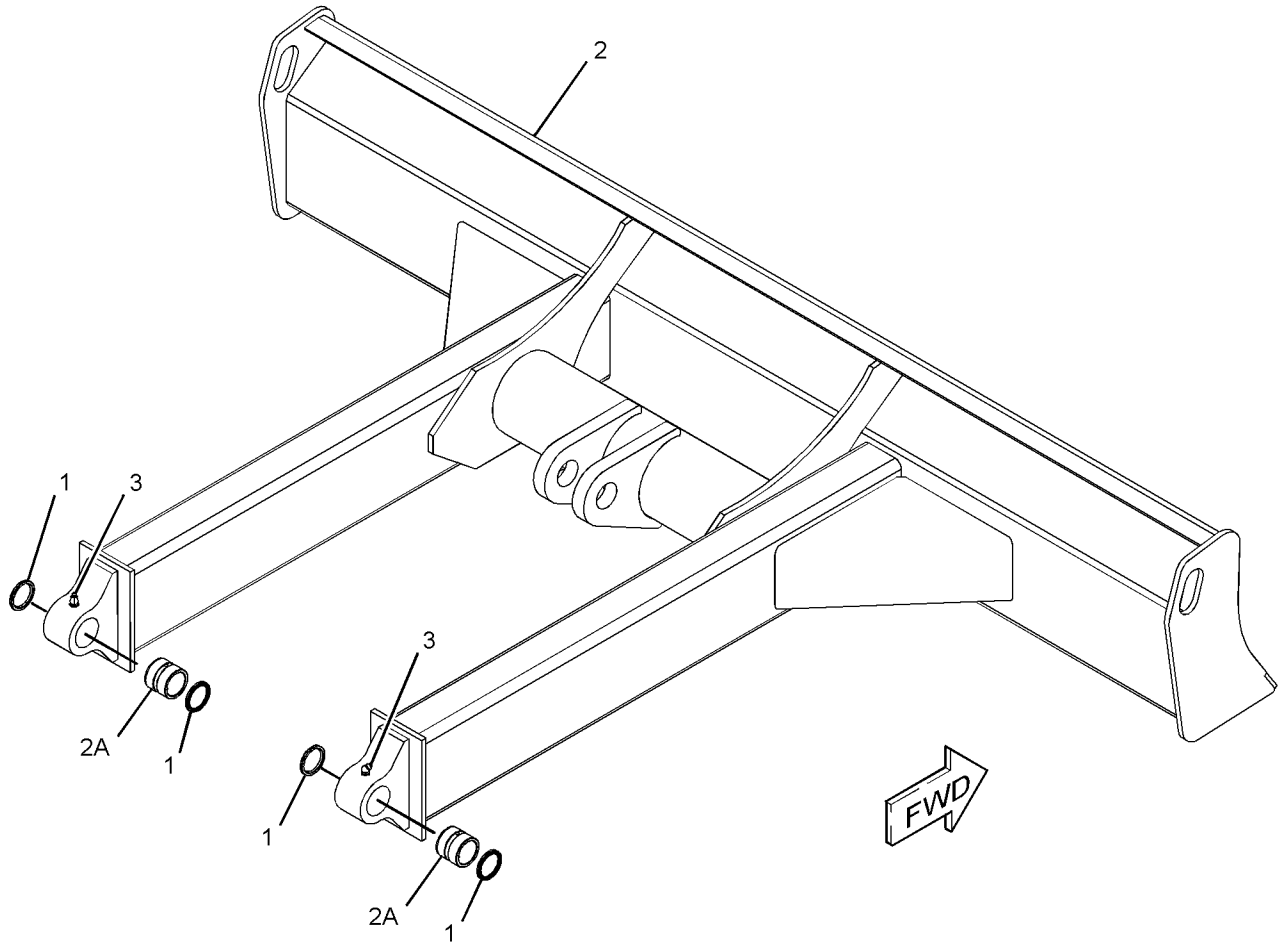

GRAPHIC #1

<END>

g02852800

433-3885 BLADE GP-STRAIGHT

S/N: RKY1675-UP
PART OF 376-3979 BLADE & MOUNTING GP
AN ATTACHMENT

SMCS-6051, 6060

i05434162

NOTE	REF NO	GRAPHIC REF	PART NUMBER	QTY	PART NAME 1 2 3 4 5 6 (PRODUCT LEVEL)	SEE PAGE
	1	1	**140-3734**	4	SEAL-DUST	
	2	1	**433-3886**	1	BLADE & BEARING AS	
	2A	1	**265-8713**	2	BUSHING	
	2B	1	**260-6326**	1	EDGE	
	3	1	**3B-8485**	2	FITTING-GREASE	

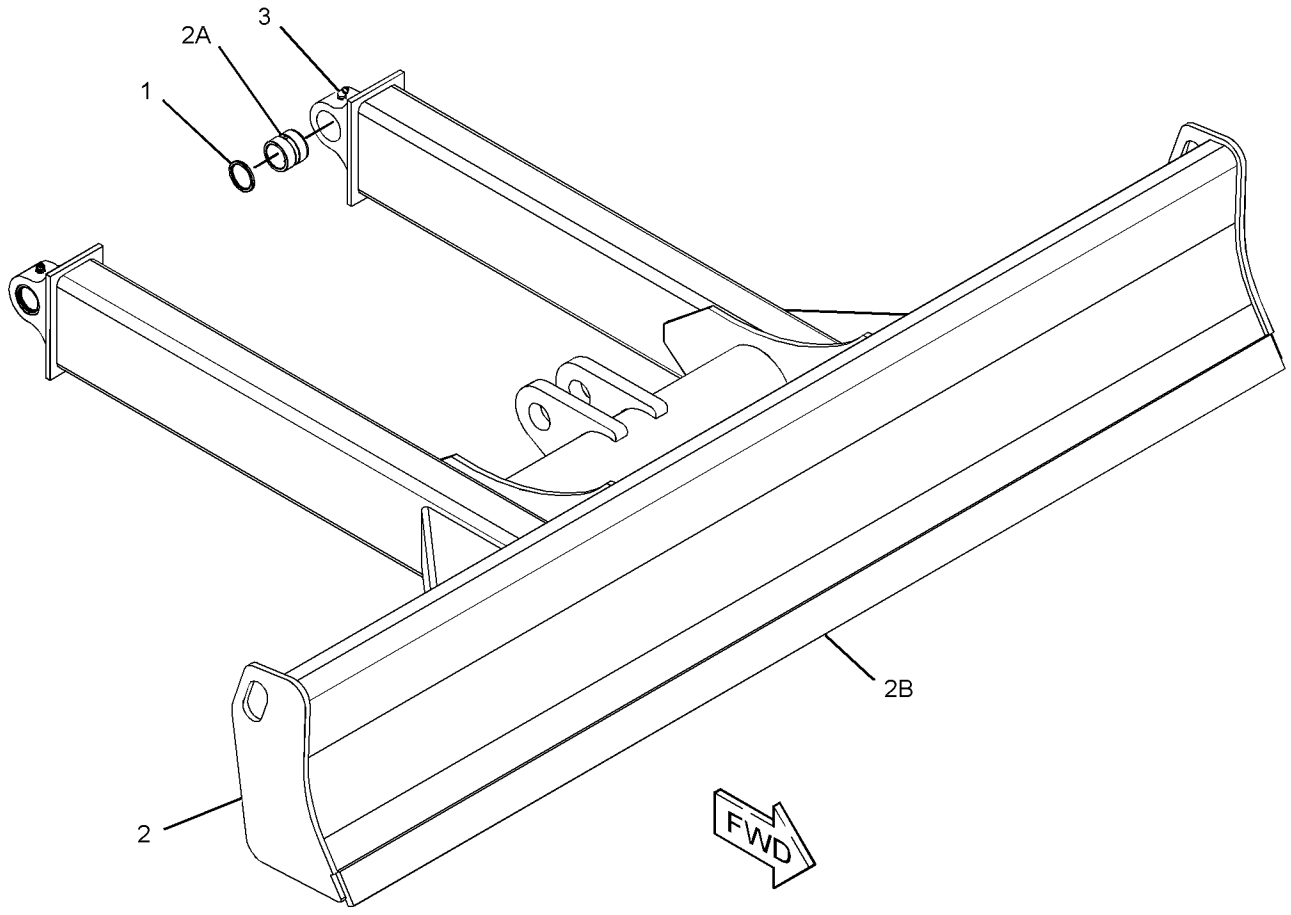

GRAPHIC #1

<END>

g03430396

231-8571 BUCKET AR-GENERAL PURPOSE

460-MM (18-IN) WIDE
AN ATTACHMENT

SMCS-6101, 6803, 6805, 6822 **i05352930**

NOTE	REF NO	GRAPHIC REF	PART NUMBER	QTY	PART NAME 1 2 3 4 5 6 (PRODUCT LEVEL)	SEE PAGE
	1	1	**154-2704**	1	PLATE-INSTRUCTION (BUCKET SPECIFICATIONS)	
	2	1	**168-8389**	4	TACK-FASTENER (METAL)	
	3	1	*233-2885*	3	TOOTH GP	
					(EACH INCLUDES)	
M		1	**8T-4244**	2	NUT (M12X1.75-THD)	
M		1	**145-1893**	2	BOLT (M12X1.75X40-MM)	
		1	**231-3999**	1	TOOTH	
Y	4	1	*233-2905*	1	BUCKET AS-GENERAL PURPOSE (QUICK COUPLER)	401

M - METRIC PART
Y - SEPARATE ILLUSTRATION

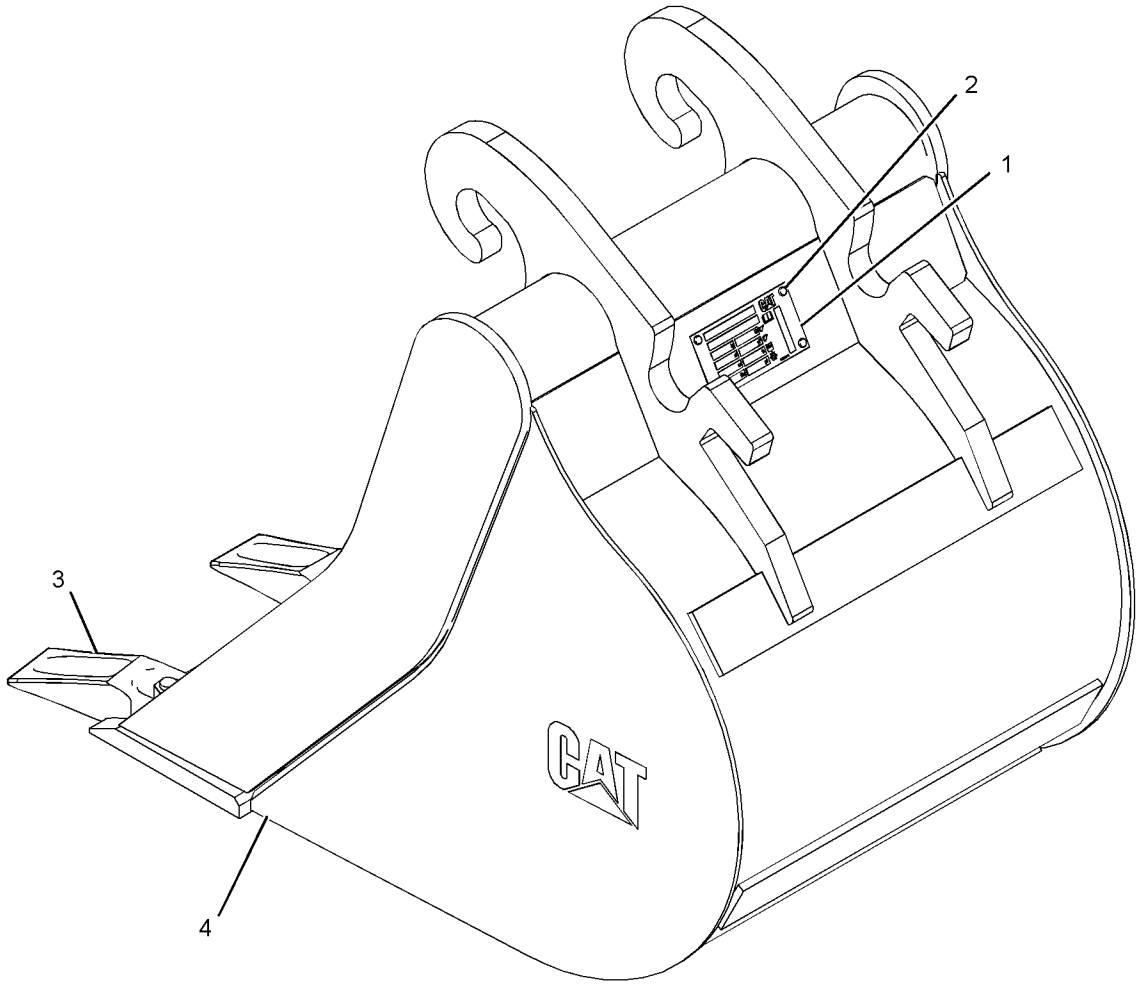

GRAPHIC #1 **<END>** g01194755

279-4325 BUCKET AR-TILTABLE

1200-MM (47.24-IN) WIDE X 0.167-CU M (0.218-CU YD) CAPACITY
AN ATTACHMENT

SMCS-6540 **i05358712**

NOTE	REF NO	GRAPHIC REF	PART NUMBER	QTY	PART NAME 1 2 3 4 5 6 (PRODUCT LEVEL)	SEE PAGE
	1	1	**8T-4223**	1	WASHER-HARD (13.5X25.5X3-MM THK)	
	2	1	**168-8389**	4	TACK-FASTENER (METAL)	
	3	1	**246-0176**	1	PIN AS	
	4	1	**246-0187**	1	PIN	
	5	1	**246-0188**	1	PIN	
Y	6	1	**246-0192**	1	CYLINDER GP-TILT (BUCKET)	202
Y	7	1	*252-6793*	1	LINES GP-BUCKET CYLINDER	230
Y	8	1	*282-1712*	1	BRACKET GP-MOUNTING (BUCKET)	369
	9	1	**3B-8489**	3	FITTING-GREASE	
	10	1	**4M-5285**	4	RING-RETAINING (EXTERNAL)	
M	11	1	**8T-4139**	1	BOLT (M12X1.75X30-MM)	

M - METRIC PART
Y - SEPARATE ILLUSTRATION

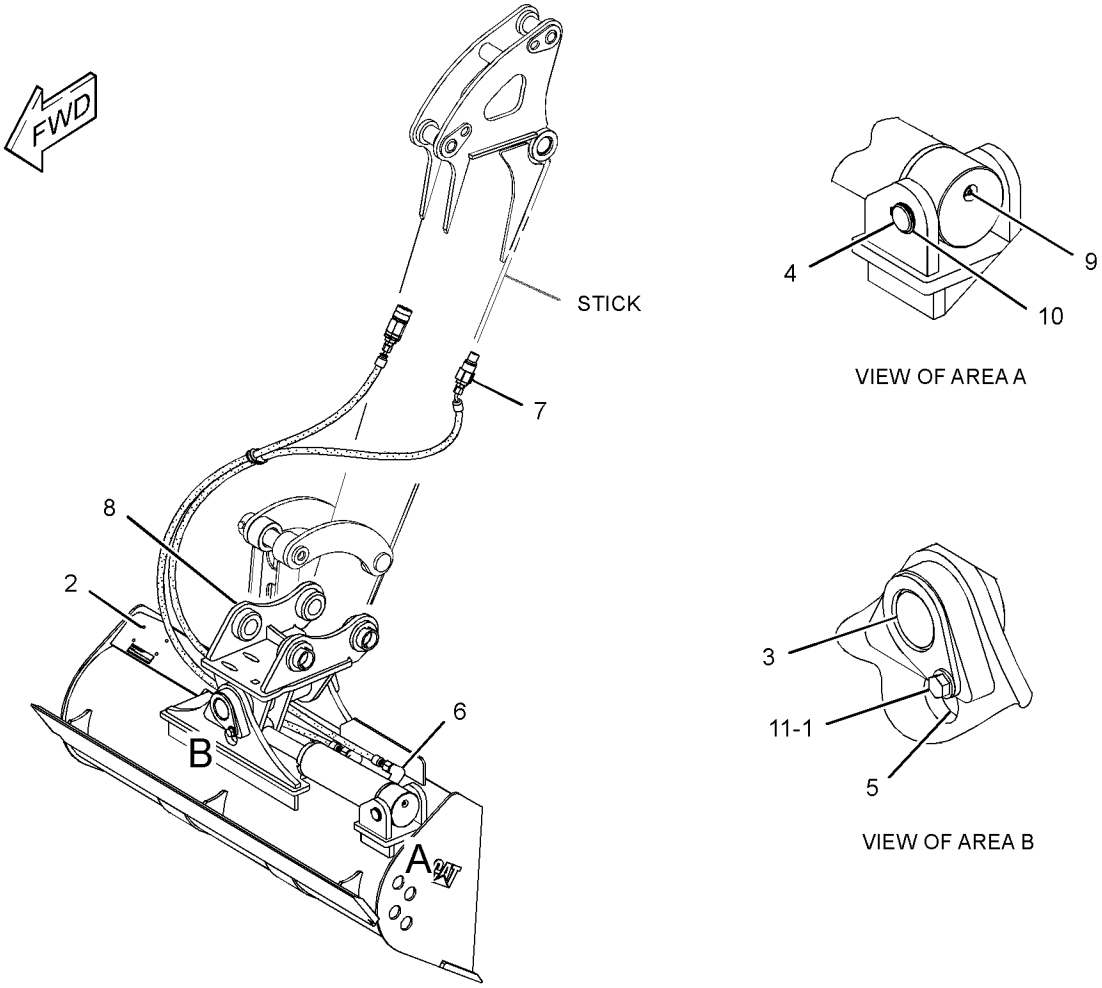

GRAPHIC #1 **<END>** g03062516

247-4112 BUCKET AS-DITCH CLEANING

1200-MM (47.2-IN) WIDE

AN ATTACHMENT

SMCS-6526 **i05353497**

NOTE	REF NO	GRAPHIC REF	PART NUMBER	QTY	PART NAME 1 2 3 4 5 6 (PRODUCT LEVEL)	SEE PAGE
	1	1	**153-7880**	1	EDGE	
	2	1	**154-2704**	1	PLATE-INSTRUCTION (BUCKET SPECIFICATIONS)	
	3	1	**168-8389**	4	TACK-FASTENER (METAL)	

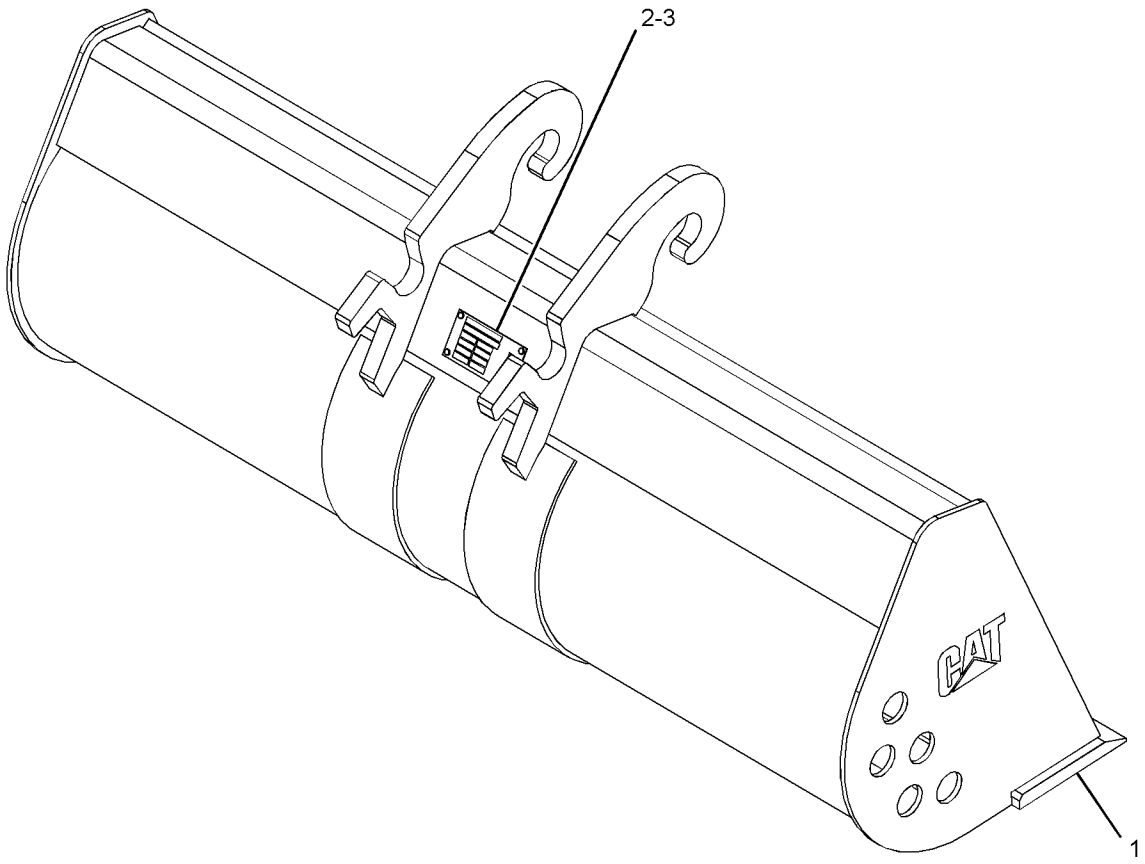

GRAPHIC #1 **<END>** g03401177

279-4322 BUCKET AS-DITCH CLEANING

1000-MM (39.4-IN) WIDE X 0.14-CU M (0.18-CU YD) CAPACITY
AN ATTACHMENT

SMCS-6526 **i05357822**

NOTE	REF NO	GRAPHIC REF	PART NUMBER	QTY	PART NAME 1 2 3 4 5 6 (PRODUCT LEVEL)	SEE PAGE
	1	1	**154-2704**	1	PLATE-INSTRUCTION (BUCKET SPECIFICATIONS)	
	2	1	**168-8389**	4	TACK-FASTENER (METAL)	

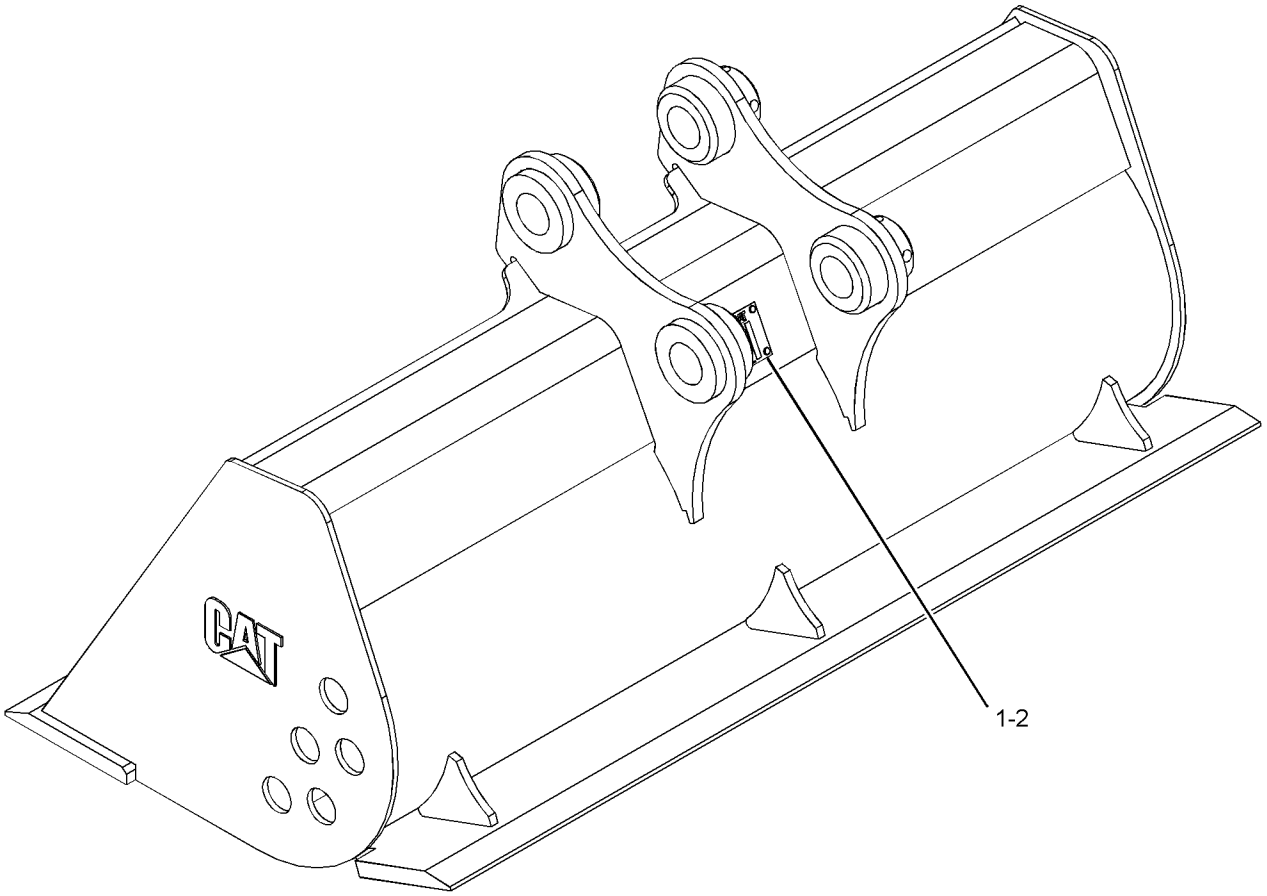

GRAPHIC #1 **<END>** g01224351

279-4323 BUCKET AS-DITCH CLEANING

1200-MM (47.2-IN) WIDE X 0.17-CU M (0.22-CU YD) CAPACITY
AN ATTACHMENT

SMCS-6526 **i05358614**

NOTE	REF NO	GRAPHIC REF	PART NUMBER	QTY	PART NAME 1 2 3 4 5 6 (PRODUCT LEVEL)	SEE PAGE
	1	1	**154-2704**	1	PLATE-INSTRUCTION (BUCKET SPECIFICATIONS)	
	2	1	**168-8389**	4	TACK-FASTENER (METAL)	

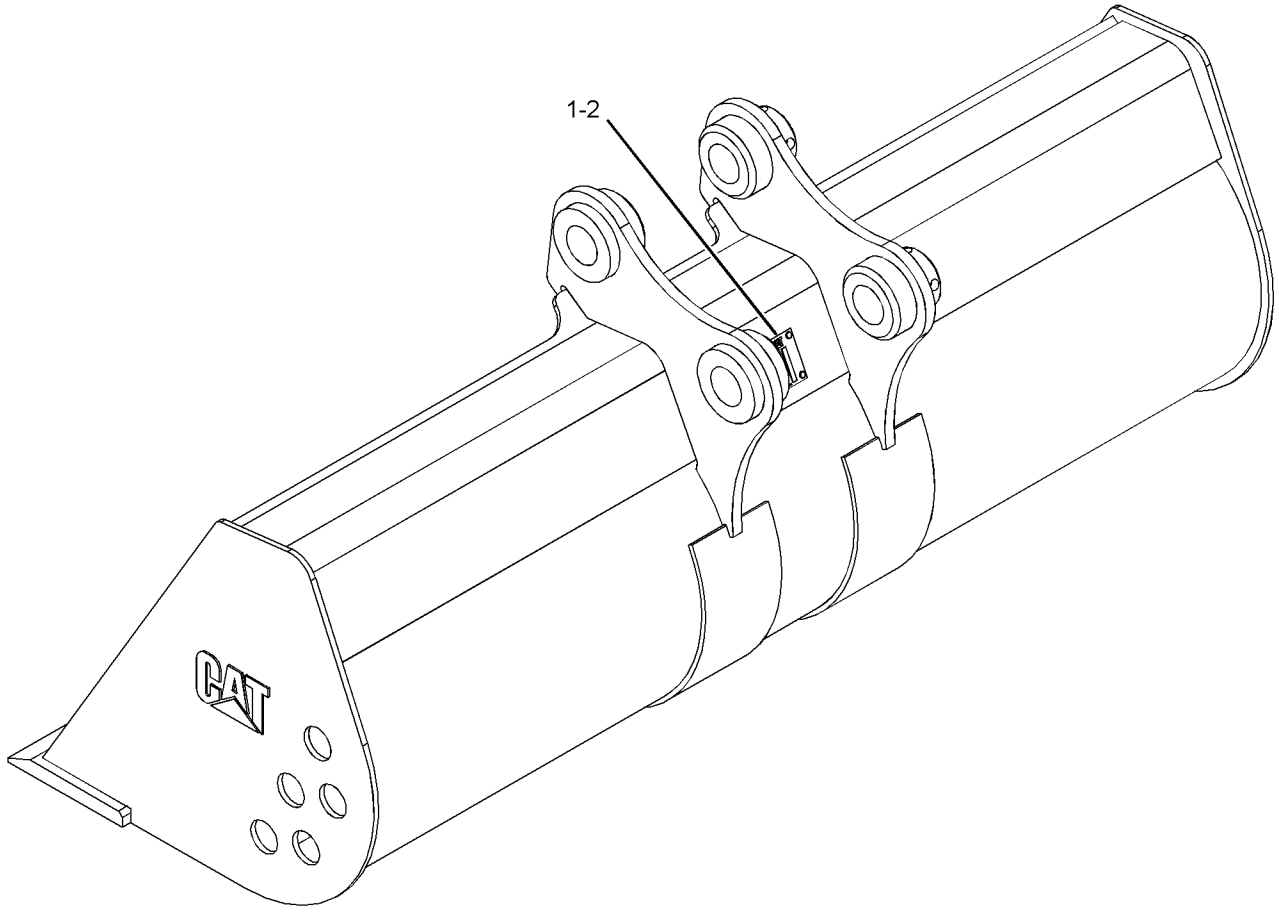

GRAPHIC #1 **<END>** g01224482

282-9315 BUCKET AS-DITCH CLEANING

1400-MM (55.1-IN) X 0.2-CU M (0.3-CU YD) CAPACITY
AN ATTACHMENT

SMCS-6526 **i05368245**

NOTE	REF NO	GRAPHIC REF	PART NUMBER	QTY	PART NAME 1 2 3 4 5 6 (PRODUCT LEVEL)	SEE PAGE
	1	1	**154-2704**	1	PLATE-INSTRUCTION (BUCKET SPECIFICATIONS)	
	2	1	**168-8389**	4	TACK-FASTENER (METAL)	

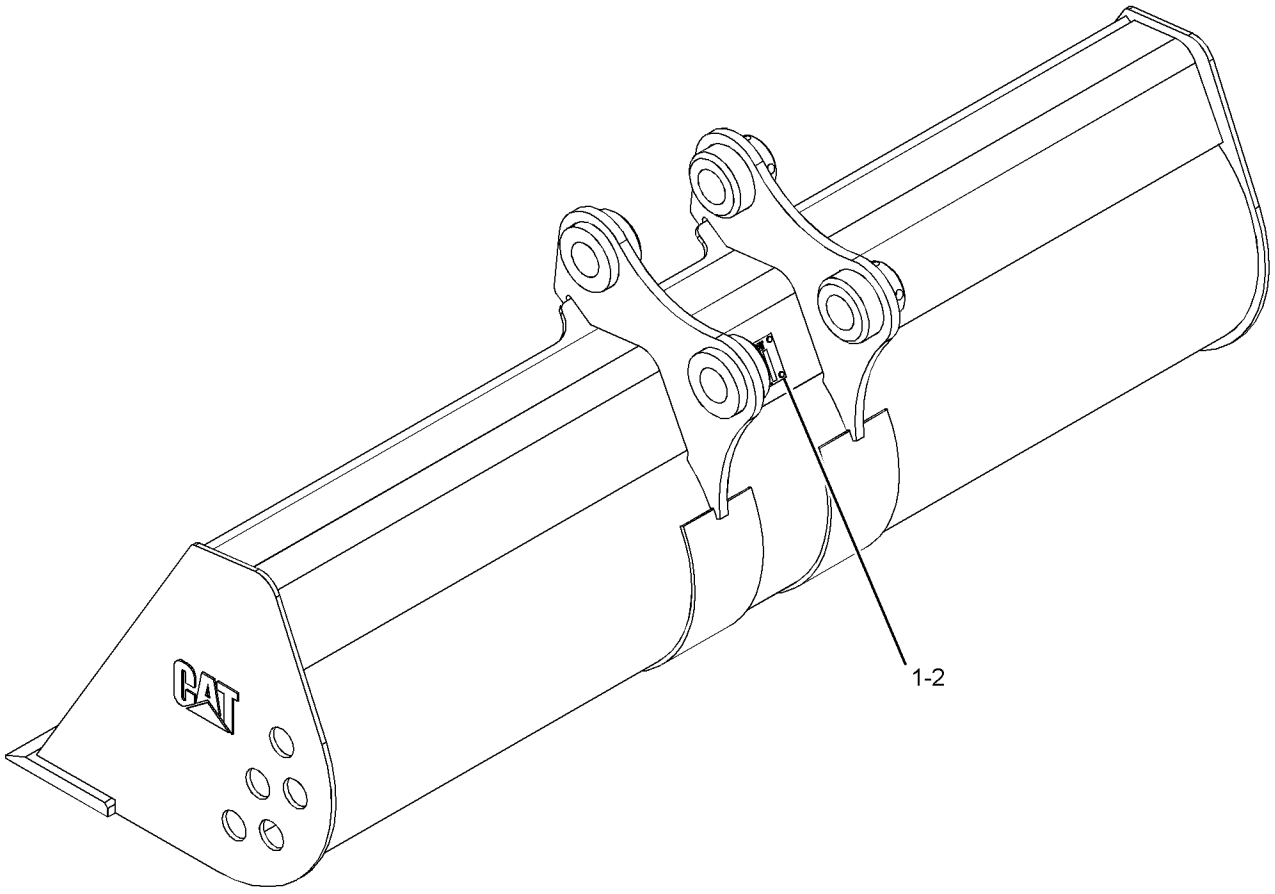

GRAPHIC #1 **<END>** g01224325

233-2905 BUCKET AS-GENERAL PURPOSE

460-MM (18.1-IN) WIDE
PART OF 231-8571 BUCKET AR-GENERAL PURPOSE
AN ATTACHMENT

SMCS-6101, 6803, 6805, 6822

i05368218

NOTE	REF NO	GRAPHIC REF	PART NUMBER	QTY	PART NAME 1 2 3 4 5 6 (PRODUCT LEVEL)	SEE PAGE
	1	1	**233-2877**	1	EDGE	
	2	1	**233-2898**	1	PLATE	
	3	1	**233-2910**	6	PLATE	

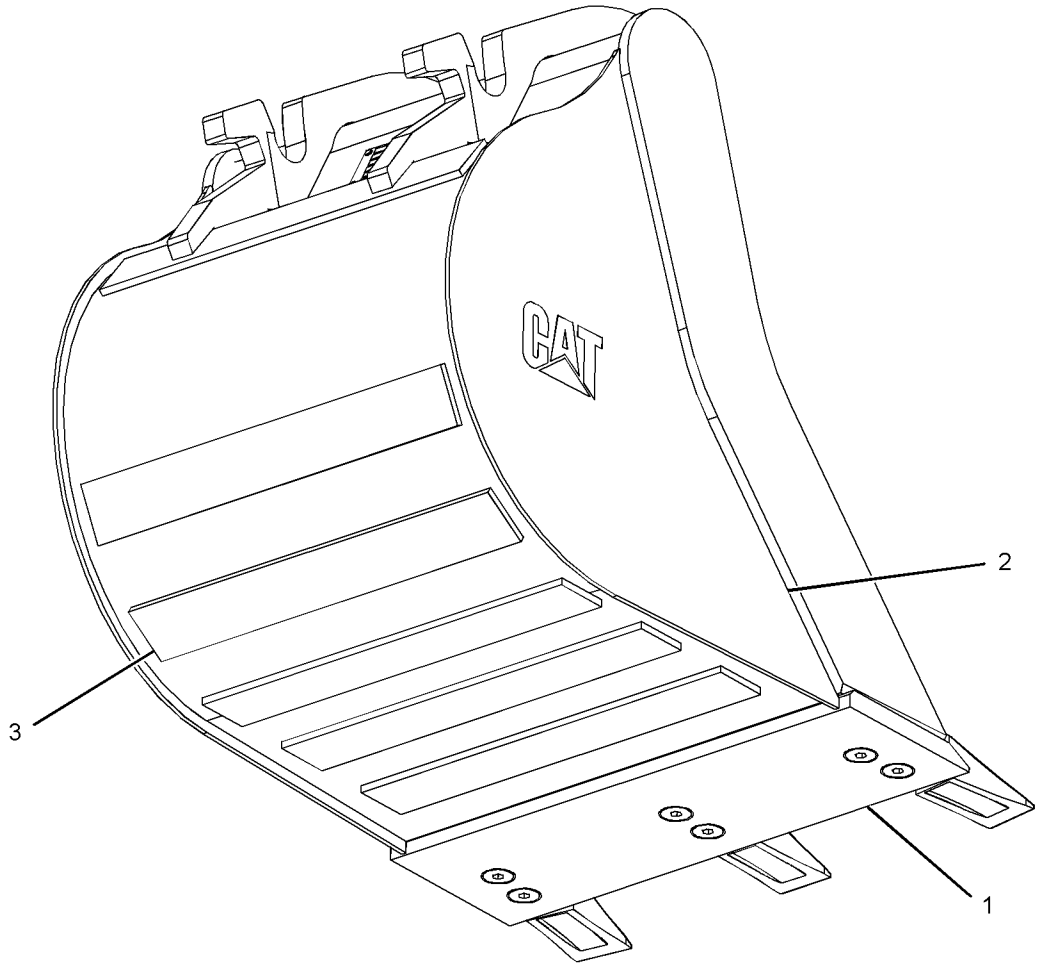

GRAPHIC #1

<END>

g03401083

279-4311 BUCKET AS-GENERAL PURPOSE

300-MM (12-IN) WIDE X 0.05-CU M (0.065-CU YD) CAPACITY
PART OF 279-4312 BUCKET GP-GENERAL PURPOSE
AN ATTACHMENT

SMCS-6101, 6803, 6805, 6822 **i05357680**

NOTE	REF NO	GRAPHIC REF	PART NUMBER	QTY	PART NAME 1 2 3 4 5 6 (PRODUCT LEVEL)	SEE PAGE
	1	1	**174-2141**	1	EDGE	

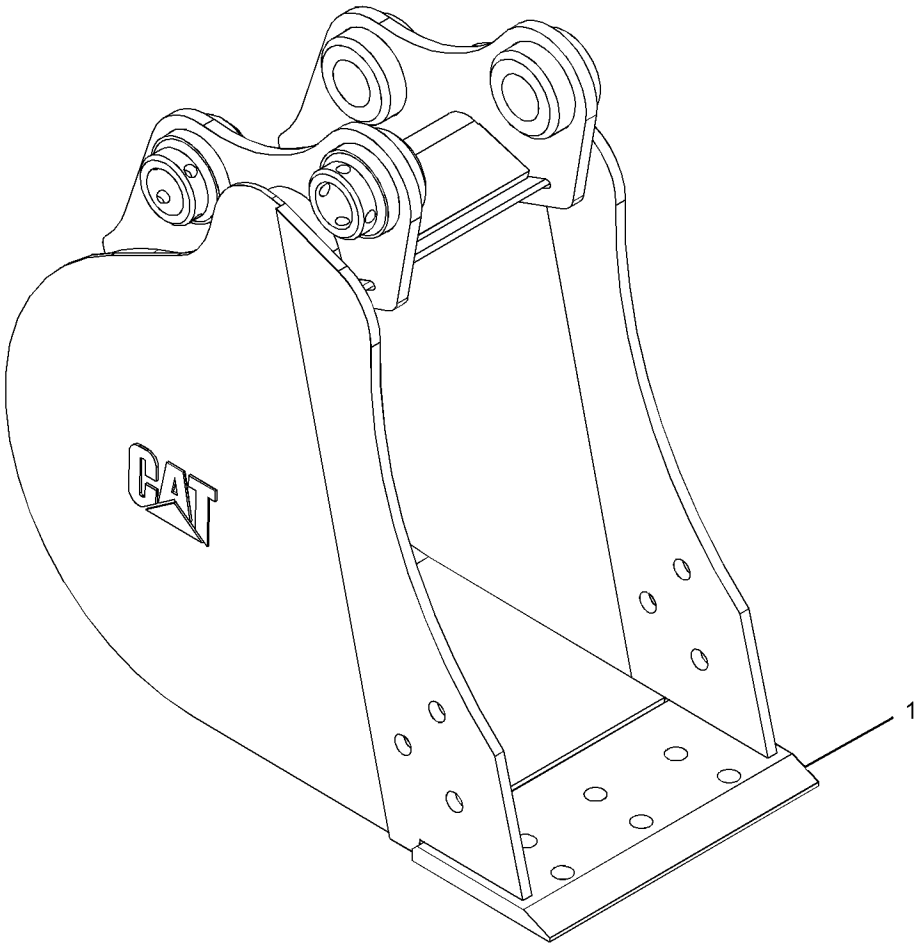

GRAPHIC #1 **<END>** g03404879

281-3815 BUCKET AS-GENERAL PURPOSE

750-MM (30-IN) WIDE X 0.16-CU M (0.209-CU YD) CAPACITY
PART OF 279-4321 BUCKET GP-GENERAL PURPOSE
AN ATTACHMENT

SMCS-6101, 6803, 6805, 6822

i05357752

NOTE	REF NO	GRAPHIC REF	PART NUMBER	QTY	PART NAME 1 2 3 4 5 6 (PRODUCT LEVEL)	SEE PAGE
	1	1	**279-4308**	2	EDGE	
	2	1	**281-3818**	1	EDGE	

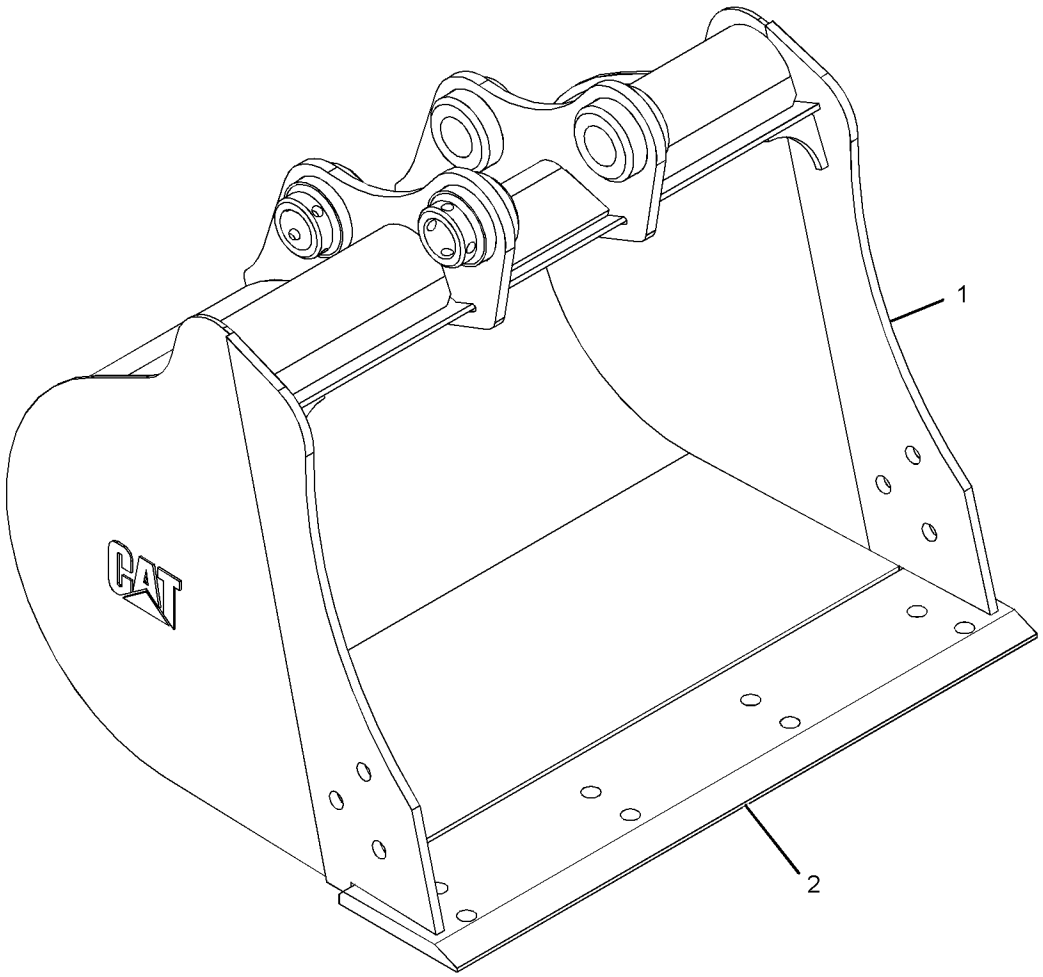

GRAPHIC #1

<END>

g03397759

303-1358 BUCKET AS-HOE

304-MM (12-IN) WIDE X 0.05-CU M (0.06-CU YD) CAPACITY
PART OF 303-1324 BUCKET GP-HOE
AN ATTACHMENT

SMCS-6503 **i05354377**

NOTE	REF NO	GRAPHIC REF	PART NUMBER	QTY	PART NAME 1 2 3 4 5 6 (PRODUCT LEVEL)	SEE PAGE
	1	1	**306-5658**	1	EDGE AS	
	1A	1	**119-3205**	3	ADAPTER-STRAP (TWO)	
	1B	1	**255-3410**	1	EDGE	
	2	1	**303-6249**	1	EDGE-LH	
	3	1	**303-6248**	1	EDGE-RH	

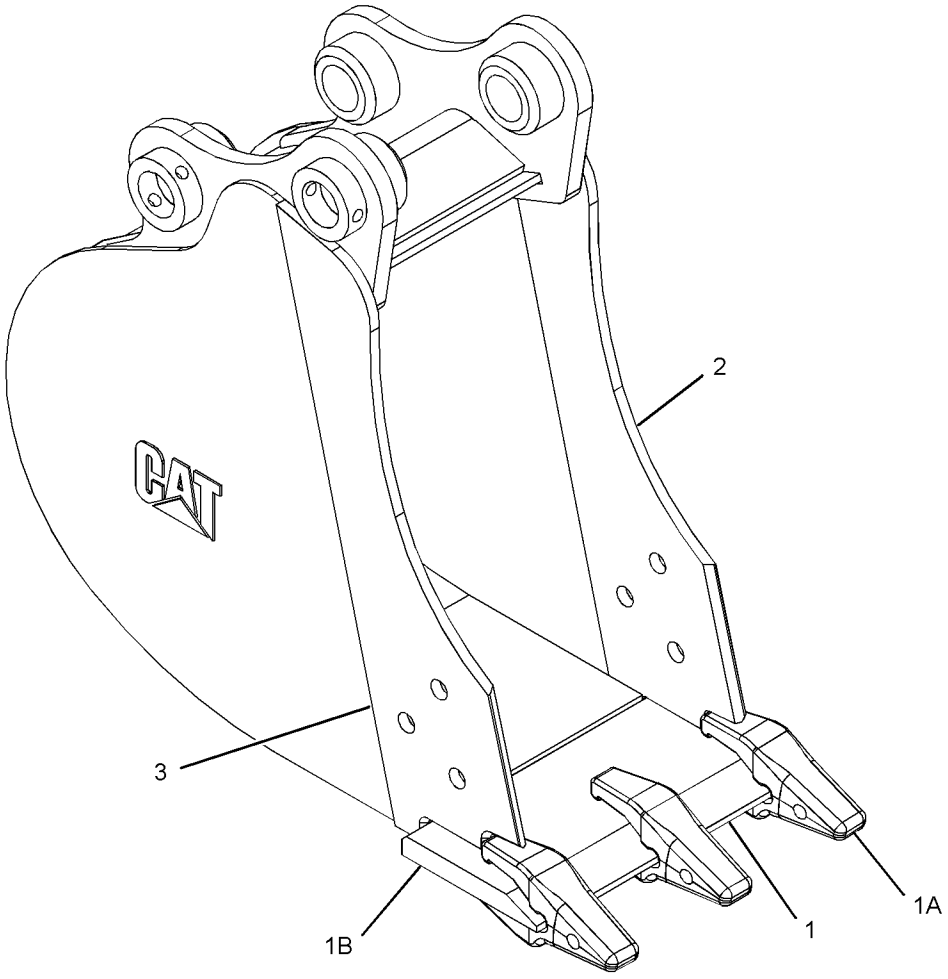

GRAPHIC #1 **<END>** g03397740

303-1359 BUCKET AS-HOE

406-MM (16-IN) WIDE X 0.07-CU M (0.09-CU YD) CAPACITY
PART OF 303-1325 BUCKET GP-HOE
AN ATTACHMENT

SMCS-6503 **i05354386**

NOTE	REF NO	GRAPHIC REF	PART NUMBER	QTY	PART NAME 1 2 3 4 5 6 (PRODUCT LEVEL)	SEE PAGE
	1	1	**290-2943**	1	EDGE AS	
	1A	1	**119-3205**	3	ADAPTER-STRAP (TWO)	
	1B	1	**255-3402**	1	EDGE	
	2	1	**303-6248**	1	EDGE-RH	
	3	1	**303-6249**	1	EDGE-LH	

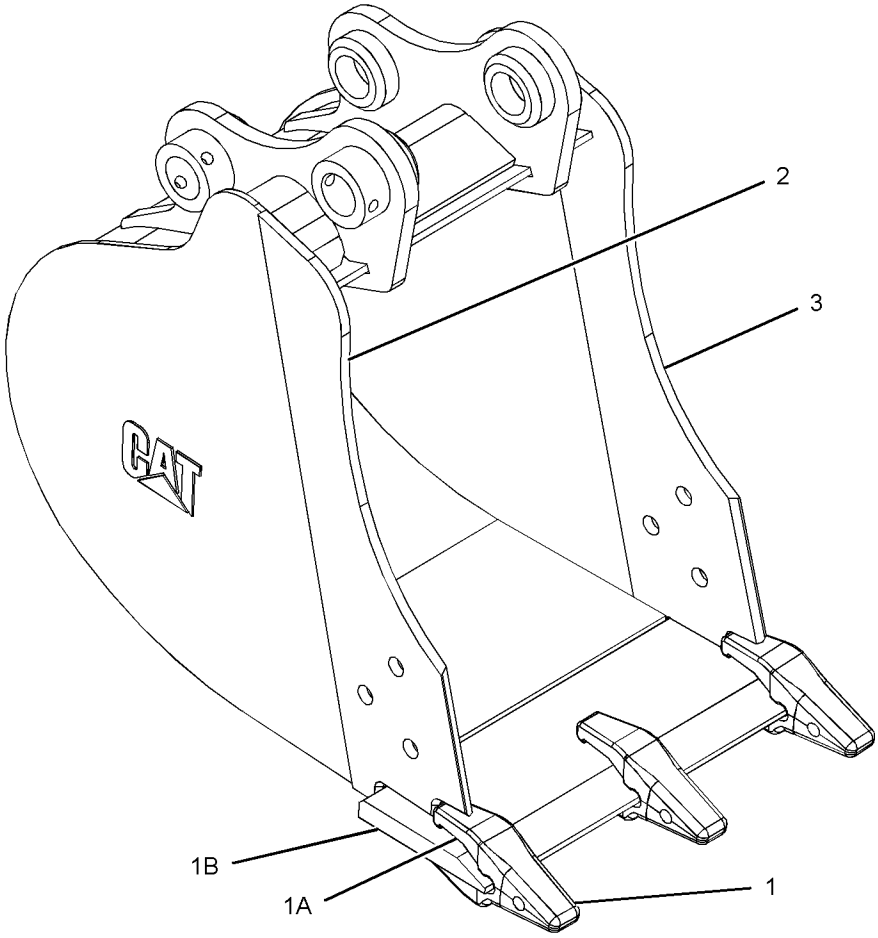

GRAPHIC #1 **<END>** g03396931

303-1360 BUCKET AS-HOE

457-MM (18-IN) WIDE X 0.08-CU M (0.11-CU YD) CAPACITY
PART OF 303-1326 BUCKET GP-HOE
AN ATTACHMENT

SMCS-6503 **i05355792**

NOTE	REF NO	GRAPHIC REF	PART NUMBER	QTY	PART NAME 1 2 3 4 5 6 (PRODUCT LEVEL)	SEE PAGE
	1	1	**290-2944**	1	EDGE AS	
		1	**119-3205**	4	ADAPTER-STRAP (TWO)	
		1	**219-9487**	1	EDGE	
	2	1	**303-6248**	1	EDGE-RH	
	3	1	**303-6249**	1	EDGE-LH	

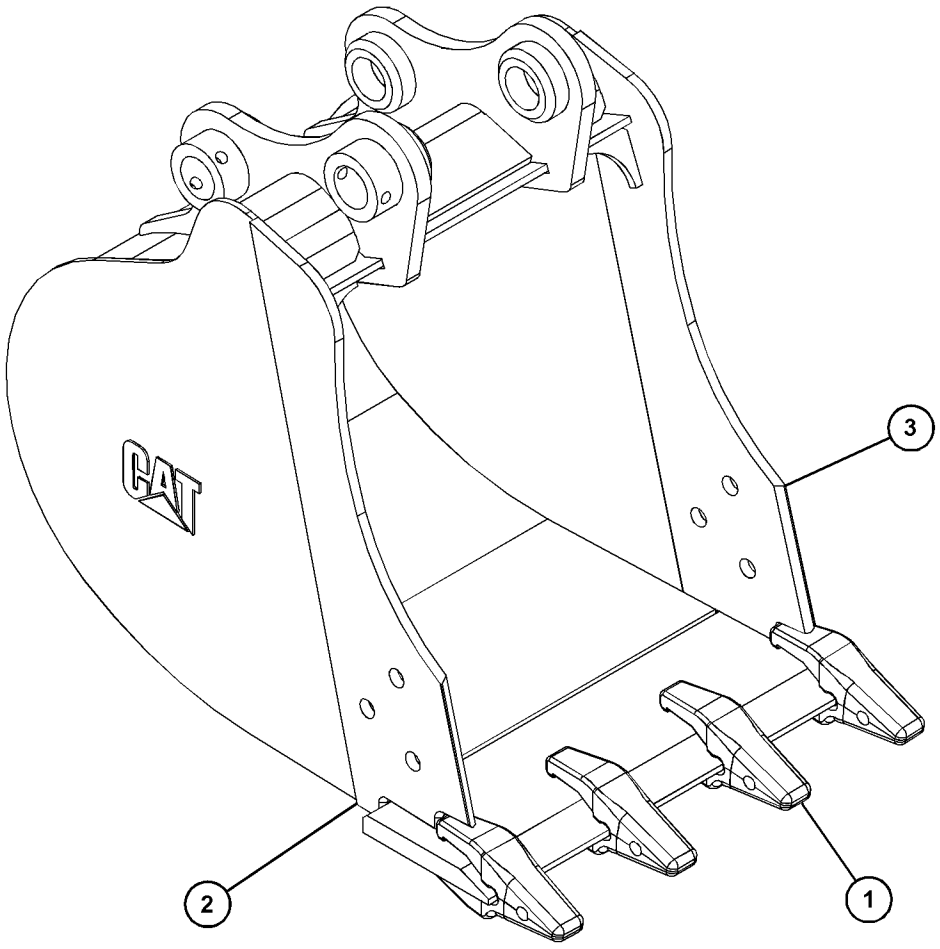

GRAPHIC #1 **<END>** g03397343

303-1362 BUCKET AS-HOE

508-MM (20-IN) WIDE X 0.09-CU M (0.2-CU YD) CAPACITY
PART OF 303-1327 BUCKET GP-HOE
AN ATTACHMENT

SMCS-6503 **i05355794**

NOTE	REF NO	GRAPHIC REF	PART NUMBER	QTY	PART NAME 1 2 3 4 5 6 (PRODUCT LEVEL)	SEE PAGE
	1	1	*290-2945*	1	EDGE AS	
	1A	1	**119-3205**	5	ADAPTER-STRAP (TWO)	
	1B	1	**252-2627**	1	EDGE	
	2	1	**303-6248**	1	EDGE-RH	
	3	1	**303-6249**	1	EDGE-LH	

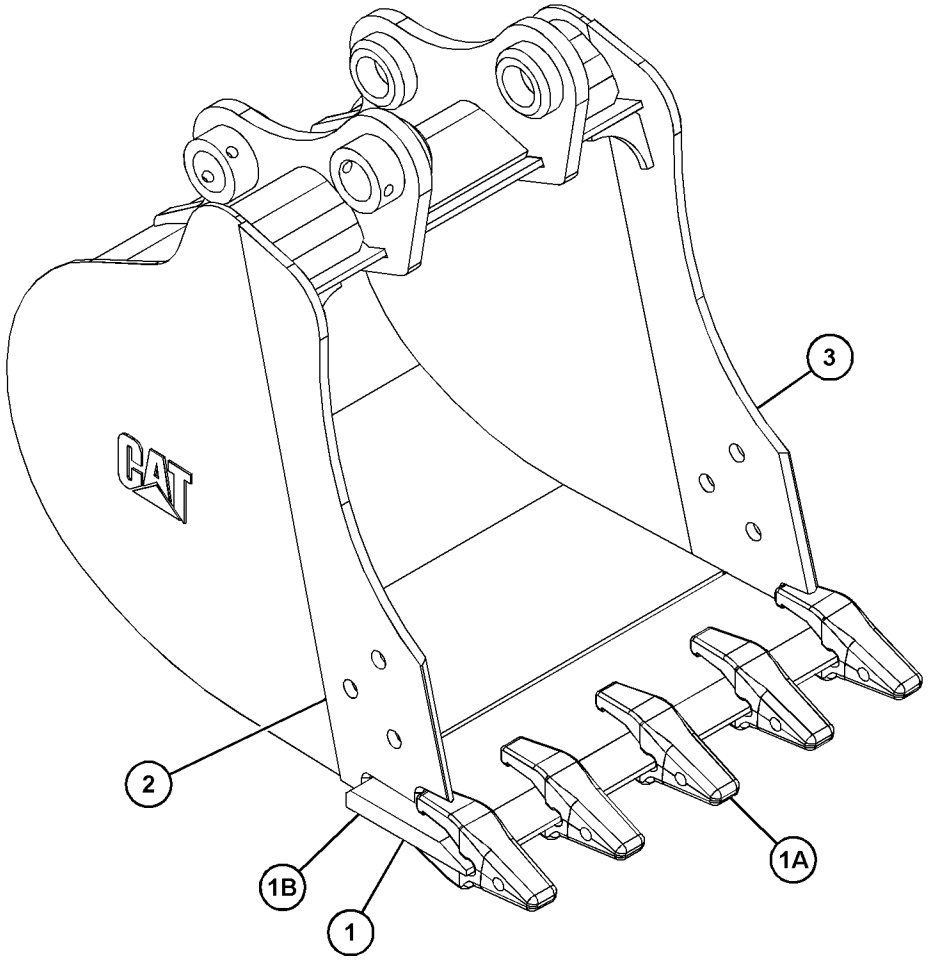

GRAPHIC #1 **<END>** g03402100

303-1363 BUCKET AS-HOE

609-MM (24-IN) WIDE X 0.12-CU M (0.15-CU YD) CAPACITY
PART OF 303-1328 BUCKET GP-HOE
AN ATTACHMENT

SMCS-6503 **i05355893**

NOTE	REF NO	GRAPHIC REF	PART NUMBER	QTY	PART NAME 1 2 3 4 5 6 (PRODUCT LEVEL)	SEE PAGE
	1	1	**290-2946**	1	EDGE AS	
		1	**119-3205**	5	ADAPTER-STRAP (TWO)	
		1	**219-9488**	1	EDGE	
	2	1	**303-6248**	1	EDGE-RH	
	3	1	**303-6249**	1	EDGE-LH	

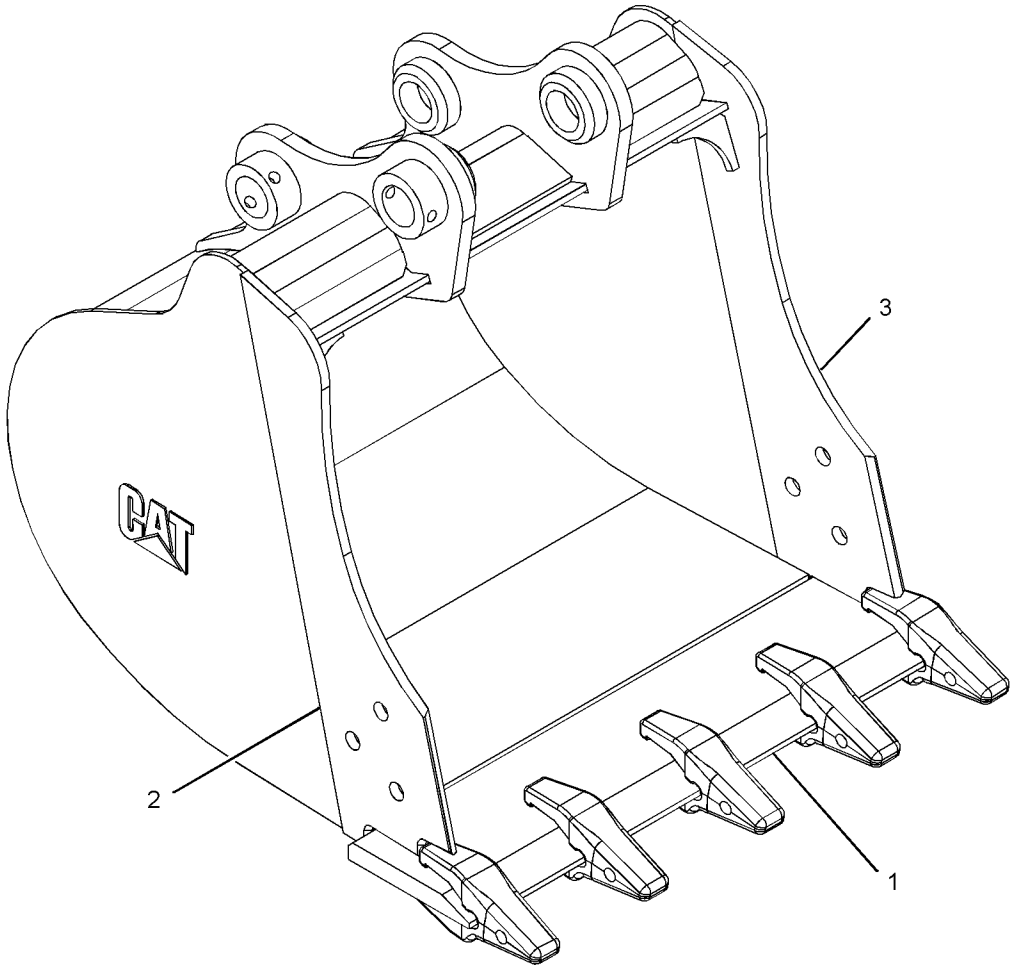

GRAPHIC #1 **<END>** g03397760

303-1364 BUCKET AS-HOE

762-MM (30-IN) WIDE X 0.16-CU M (0.20-CU YD) CAPACITY
PART OF 303-1329 BUCKET GP-HOE
AN ATTACHMENT

SMCS-6503 **i05355777**

NOTE	REF NO	GRAPHIC REF	PART NUMBER	QTY	PART NAME 1 2 3 4 5 6 (PRODUCT LEVEL)	SEE PAGE
	1	1	*303-1308*	1	EDGE AS	
	1A	1	**119-3205**	5	ADAPTER-STRAP (TWO)	
	1B	1	**219-9489**	1	EDGE	
	2	1	**303-6248**	1	EDGE-RH	
	3	1	**303-6249**	1	EDGE-LH	

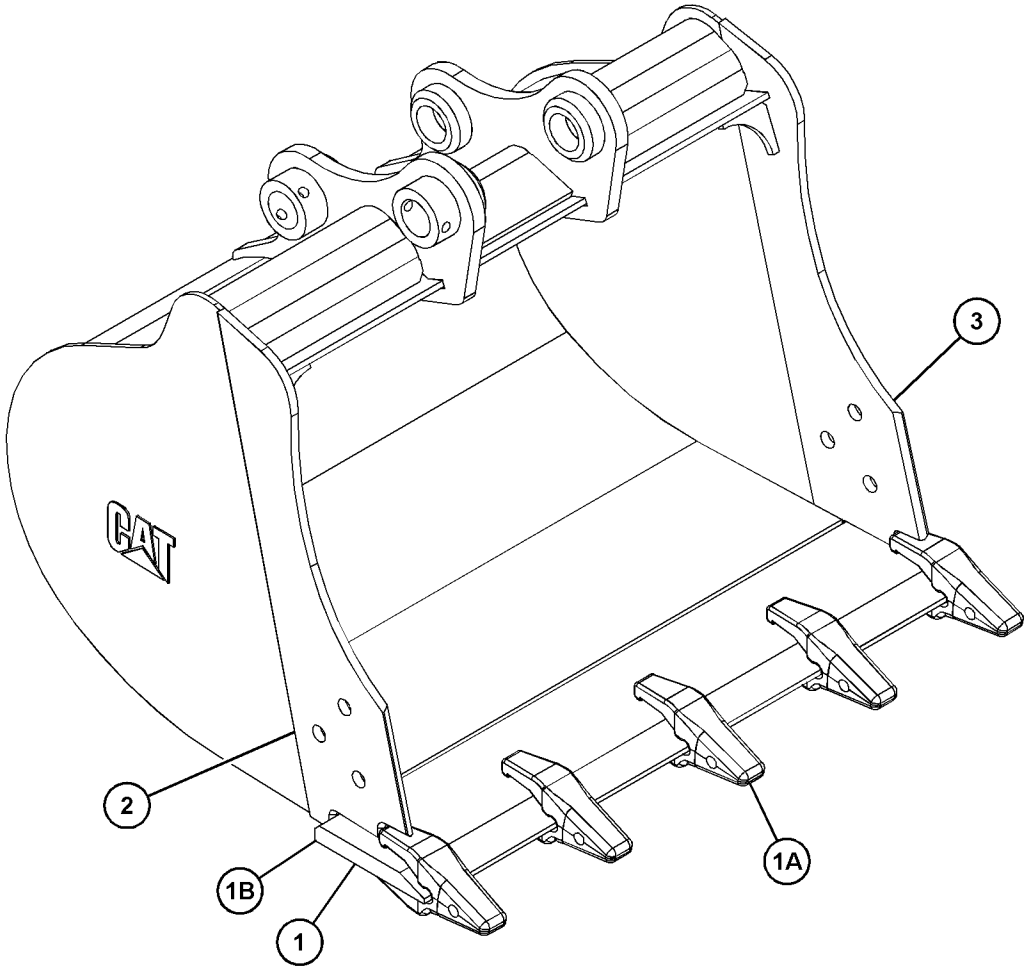

GRAPHIC #1 **<END>** g03403699

386-7523 BUCKET AS-HOE—HEAVY-DUTY

914.4-MM (36-IN) WIDE
PART OF 386-7524 BUCKET GP-HOE
AN ATTACHMENT

SMCS-6503 **i05346199**

NOTE	REF NO	GRAPHIC REF	PART NUMBER	QTY	PART NAME 1 2 3 4 5 6 (PRODUCT LEVEL)	SEE PAGE
	1	1	*303-1309*	1	EDGE AS	
	1A	1	**119-3205**	6	ADAPTER-STRAP (TWO)	
	1B	1	**219-9490**	1	EDGE	
	2	1	**303-6248**	1	EDGE-RH	
	3	1	**303-6249**	1	EDGE-LH	

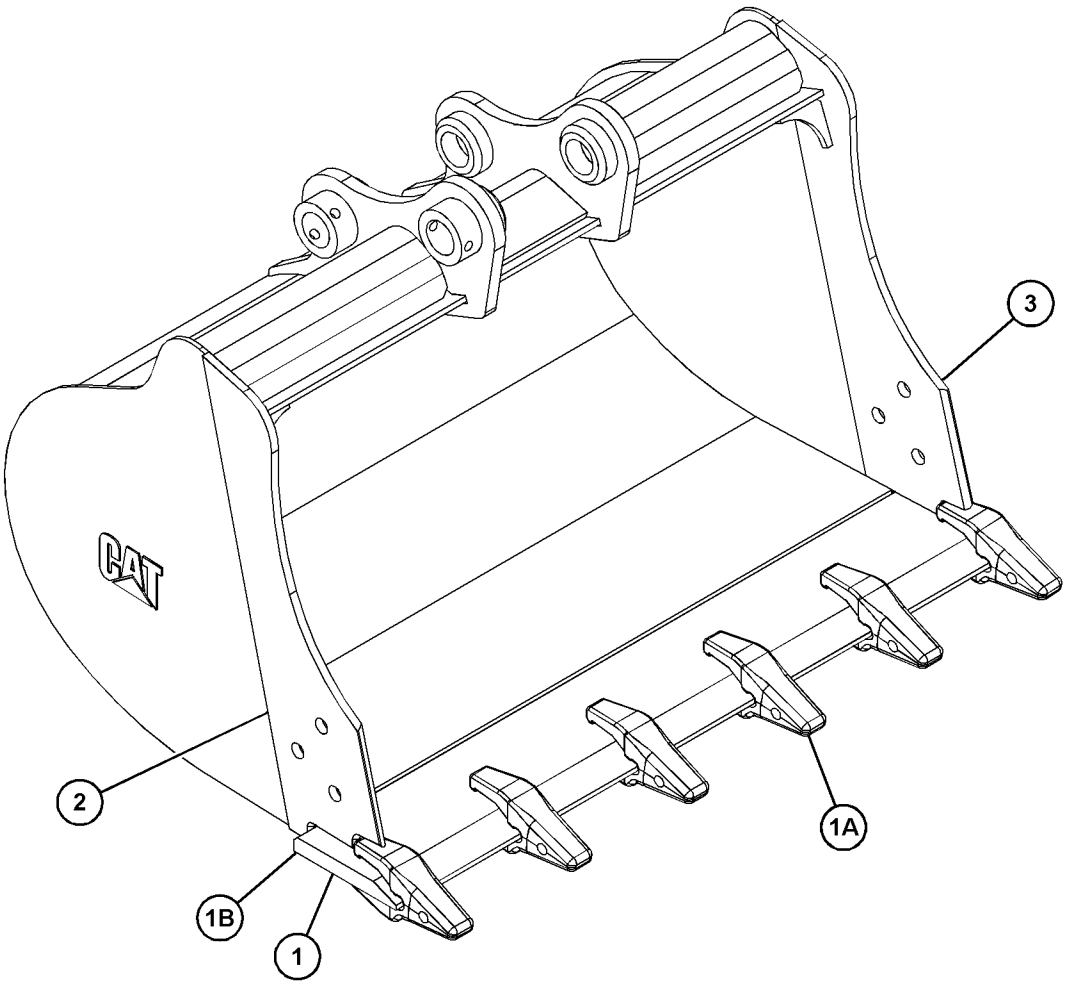

GRAPHIC #1 **<END>** g03403703

187-8812 BUCKET GP-EXCAVATION

300-MM (11.81-IN) WIDE X 60-L CAPACITY
AN ATTACHMENT

SMCS-6523, 6803, 6805, 6822 **i01990415**

NOTE	PART NUMBER	QTY	PART NAME 1 2 3 4 5 6 (PRODUCT LEVEL)	SEE PAGE
M	**145-1893**	6	BOLT (M12X1.75X40-MM)	
M	**8T-4244**	6	NUT (M12X1.75-THD)	
	231-3999	3	TOOTH	

M - METRIC PART

<END>

187-8813 BUCKET GP-EXCAVATION

400-MM (15.75-IN) WIDE X 85-L CAPACITY
AN ATTACHMENT

SMCS-6523, 6803, 6805, 6822 **i01990412**

NOTE	PART NUMBER	QTY	PART NAME 1 2 3 4 5 6 (PRODUCT LEVEL)	SEE PAGE
M	**145-1893**	6	BOLT (M12X1.75X40-MM)	
M	**8T-4244**	6	NUT (M12X1.75-THD)	
	231-3999	3	TOOTH	

M - METRIC PART

<END>

187-8814 BUCKET GP-EXCAVATION

500-MM (19.69-IN) WIDE X 115-L CAPACITY
AN ATTACHMENT

SMCS-6523, 6803, 6805, 6822 **i01990410**

NOTE	PART NUMBER	QTY	PART NAME 1 2 3 4 5 6 (PRODUCT LEVEL)	SEE PAGE
M	**145-1893**	8	BOLT (M12X1.75X40-MM)	
M	**8T-4244**	8	NUT (M12X1.75-THD)	
	231-3999	4	TOOTH	

M - METRIC PART

<END>

187-8815 BUCKET GP-EXCAVATION

600-MM (23.62-IN) WIDE X 145-L CAPACITY
AN ATTACHMENT

SMCS-6523, 6803, 6805, 6822 **i01990391**

NOTE	PART NUMBER	QTY	PART NAME 1 2 3 4 5 6 (PRODUCT LEVEL)	SEE PAGE
M	**145-1893**	8	BOLT (M12X1.75X40-MM)	
M	**8T-4244**	8	NUT (M12X1.75-THD)	
	231-3999	4	TOOTH	

M - METRIC PART

<END>

187-8816 BUCKET GP-EXCAVATION

700-MM (27.56-IN) WIDE X 170-L CAPACITY

AN ATTACHMENT

SMCS-6523, 6803, 6805, 6822 **i01990388**

NOTE	PART NUMBER	QTY	PART NAME 1 2 3 4 5 6 (PRODUCT LEVEL)	SEE PAGE
M	**145-1893**	10	BOLT (M12X1.75X40-MM)	
M	**8T-4244**	10	NUT (M12X1.75-THD)	
	231-3999	5	TOOTH	

M - METRIC PART

<END>

279-4312 BUCKET GP-GENERAL PURPOSE

AN ATTACHMENT

SMCS-6101, 6803, 6805, 6822 **i05357655**

NOTE	REF NO	GRAPHIC REF	PART NUMBER	QTY	PART NAME 1 2 3 4 5 6 (PRODUCT LEVEL)	SEE PAGE
	1	1	*153-7881*	3	TOOTH GP-UNI	
					(EACH INCLUDES)	
M		1	**8T-4778**	2	LOCKNUT (M16X2-THD)	
		1	**135-9390**	1	TOOTH-UNI	
M		1	**159-8839**	2	SCREW-FLAT HEAD (M16X2X60-MM)	
	2	1	**154-2704**	1	PLATE-INSTRUCTION (BUCKET SPECIFICATIONS)	
	3	1	**168-8389**	4	TACK-FASTENER (METAL)	
Y	4	1	*279-4311*	1	BUCKET AS-GENERAL PURPOSE	402

M - METRIC PART
Y - SEPARATE ILLUSTRATION

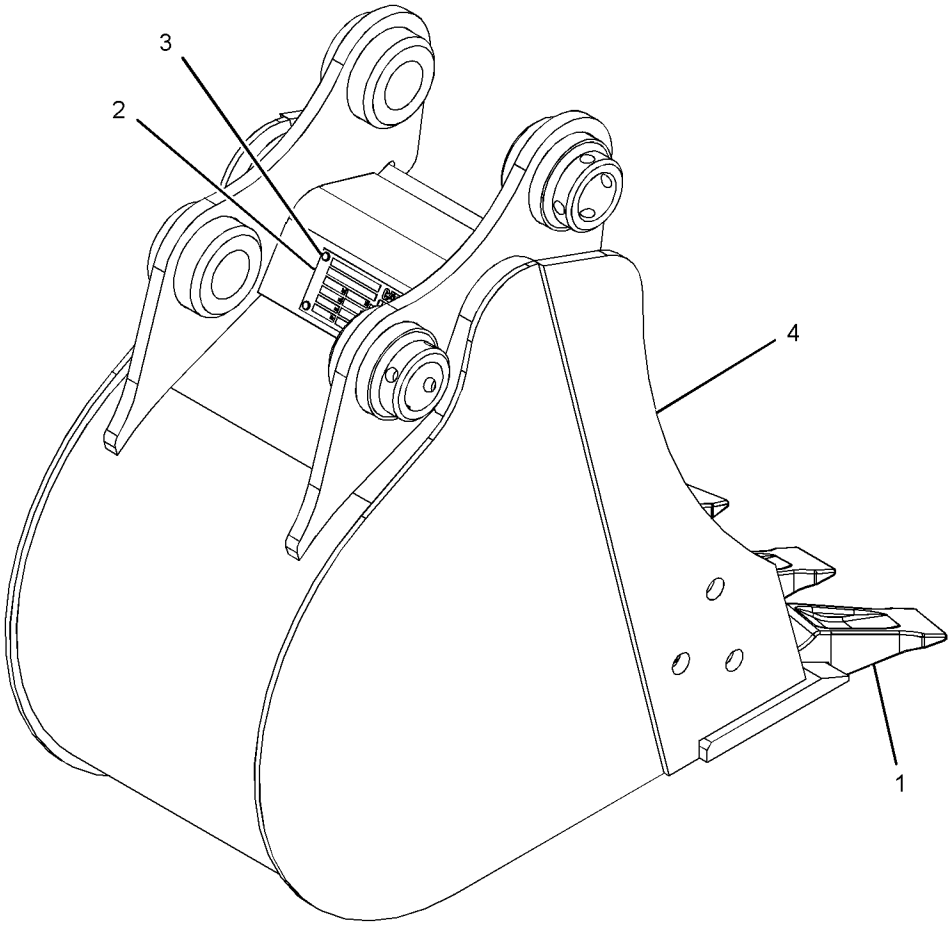

GRAPHIC #1 **<END>** g03393463

279-4313 BUCKET GP-GENERAL PURPOSE

500-MM (19.7-IN) WIDE X 0.09-CU M (0.12-CU YD) CAPACITY
AN ATTACHMENT

SMCS-6101, 6803, 6805, 6822 **i05357693**

NOTE	REF NO	GRAPHIC REF	PART NUMBER	QTY	PART NAME 1 2 3 4 5 6 (PRODUCT LEVEL)	SEE PAGE
	1	1	*153-7881*	4	TOOTH GP-UNI	
					(EACH INCLUDES)	
M		1	**8T-4778**	2	LOCKNUT (M16X2-THD)	
		1	**135-9390**	1	TOOTH-UNI	
M		1	**159-8839**	2	SCREW-FLAT HEAD (M16X2X60-MM)	
	2	1	**154-2704**	1	PLATE-INSTRUCTION (BUCKET SPECIFICATIONS)	
	3	1	**168-8389**	4	TACK-FASTENER (METAL)	

M - METRIC PART

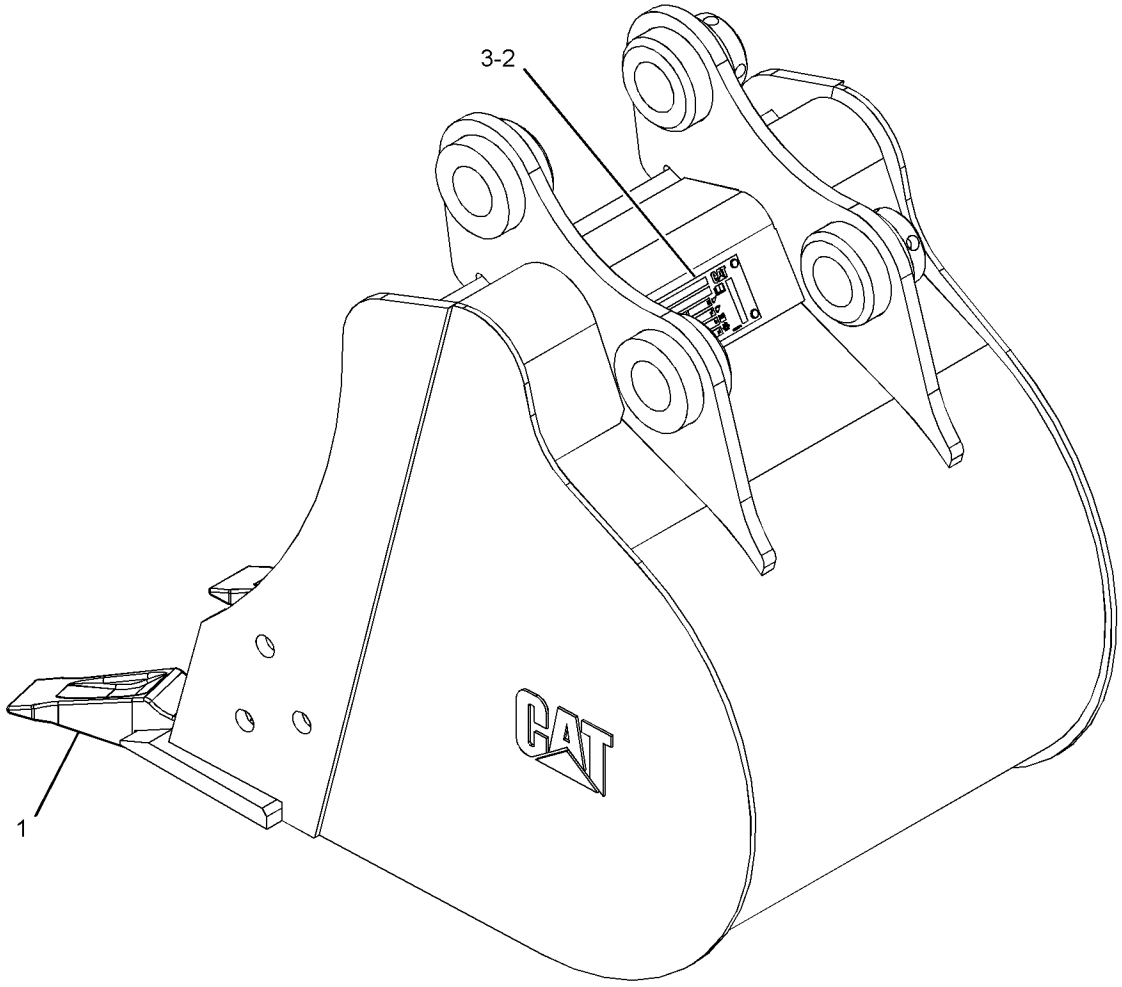

GRAPHIC #1 **<END>** g03408776

279-4320 BUCKET GP-GENERAL PURPOSE

460-MM (18.11-IN) WIDE X 0.084-CU M (0.11-CU YD)CAPACITY
AN ATTACHMENT

SMCS-6101, 6803, 6805, 6822 **i05357710**

NOTE	REF NO	GRAPHIC REF	PART NUMBER	QTY	PART NAME 1 2 3 4 5 6 (PRODUCT LEVEL)	SEE PAGE
	1	1	*153-7881*	3	TOOTH GP-UNI	
					(EACH INCLUDES)	
M		1	**8T-4778**	2	LOCKNUT (M16X2-THD)	
		1	**135-9390**	1	TOOTH-UNI	
M		1	**159-8839**	2	SCREW-FLAT HEAD (M16X2X60-MM)	
	2	1	**154-2704**	1	PLATE-INSTRUCTION (BUCKET SPECIFICATIONS)	
	3	1	**168-8389**	4	TACK-FASTENER (METAL)	

M - METRIC PART

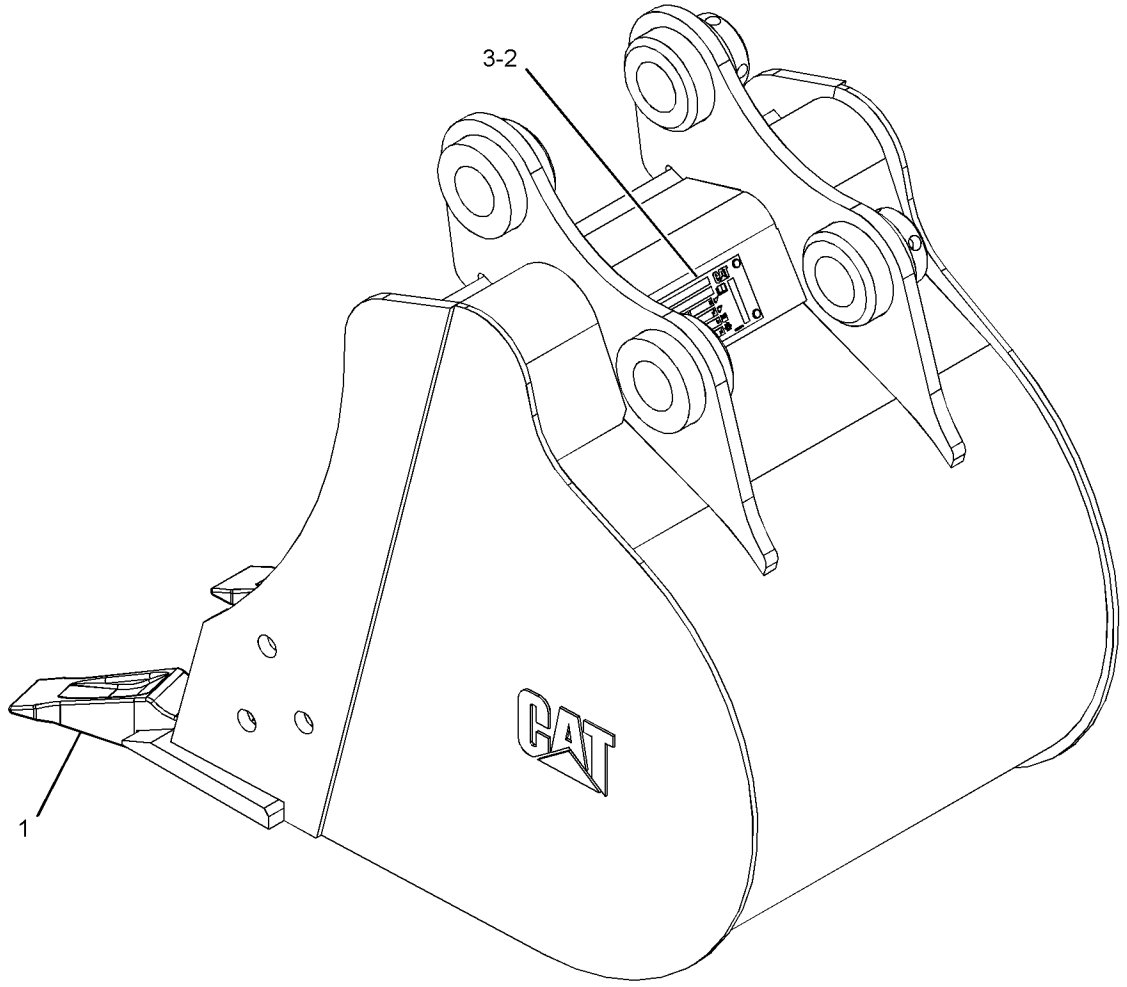

GRAPHIC #1 **<END>** g03408777

279-4321 BUCKET GP-GENERAL PURPOSE

AN ATTACHMENT

SMCS-6101, 6803, 6805, 6822 **i05357726**

NOTE	REF NO	GRAPHIC REF	PART NUMBER	QTY	PART NAME 1 2 3 4 5 6 (PRODUCT LEVEL)	SEE PAGE
	1	1	*153-7881*	4	TOOTH GP-UNI	
					(EACH INCLUDES)	
M		1	**8T-4778**	2	LOCKNUT (M16X2-THD)	
		1	**135-9390**	1	TOOTH-UNI	
M		1	**159-8839**	2	SCREW-FLAT HEAD (M16X2X60-MM)	
	2	1	**154-2704**	1	PLATE-INSTRUCTION (BUCKET SPECIFICATIONS)	
	3	1	**168-8389**	4	TACK-FASTENER (METAL)	
Y	4	1	*281-3815*	1	BUCKET AS-GENERAL PURPOSE	403

M - METRIC PART
Y - SEPARATE ILLUSTRATION

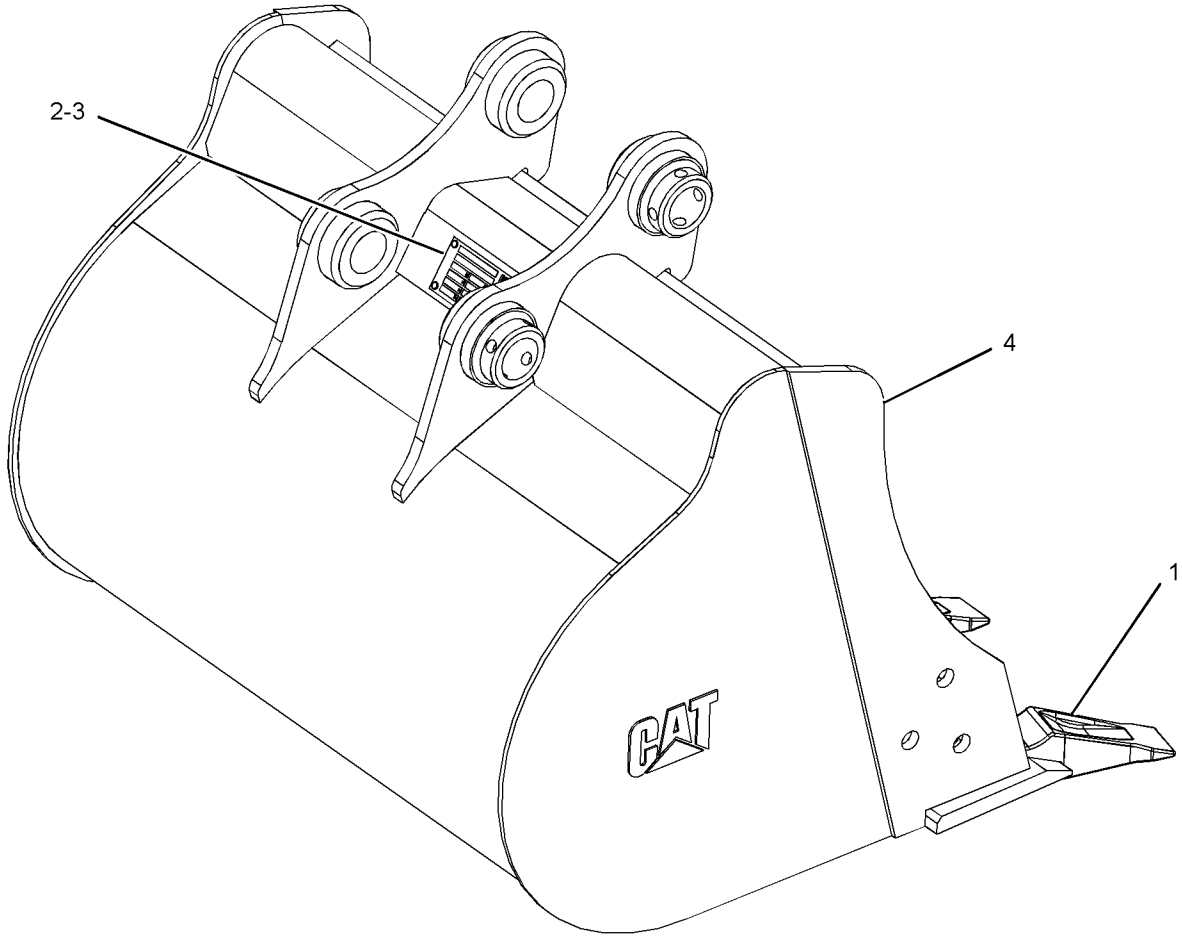

GRAPHIC #1 **<END>** g03397293

281-1551 BUCKET GP-GENERAL PURPOSE

600-MM (23.62-IN) WIDE X 0.113-CU M (0.15-CU YD) CAPACITY

AN ATTACHMENT

SMCS-6101, 6803, 6805, 6822 **i05399075**

NOTE	REF NO	GRAPHIC REF	PART NUMBER	QTY	PART NAME 1 2 3 4 5 6 (PRODUCT LEVEL)	SEE PAGE
	1	1	*153-7881*	4	TOOTH GP-UNI	
					(EACH INCLUDES)	
		1	**135-9390**	1	TOOTH-UNI	
M		1	**159-8839**	2	SCREW-FLAT HEAD (M16X2X60-MM)	
M		1	**8T-4778**	2	LOCKNUT (M16X2-THD)	
	2	1	**154-2704**	1	PLATE-INSTRUCTION (BUCKET SPECIFICATIONS)	
	3	1	**168-8389**	4	TACK-FASTENER (METAL)	

M - METRIC PART

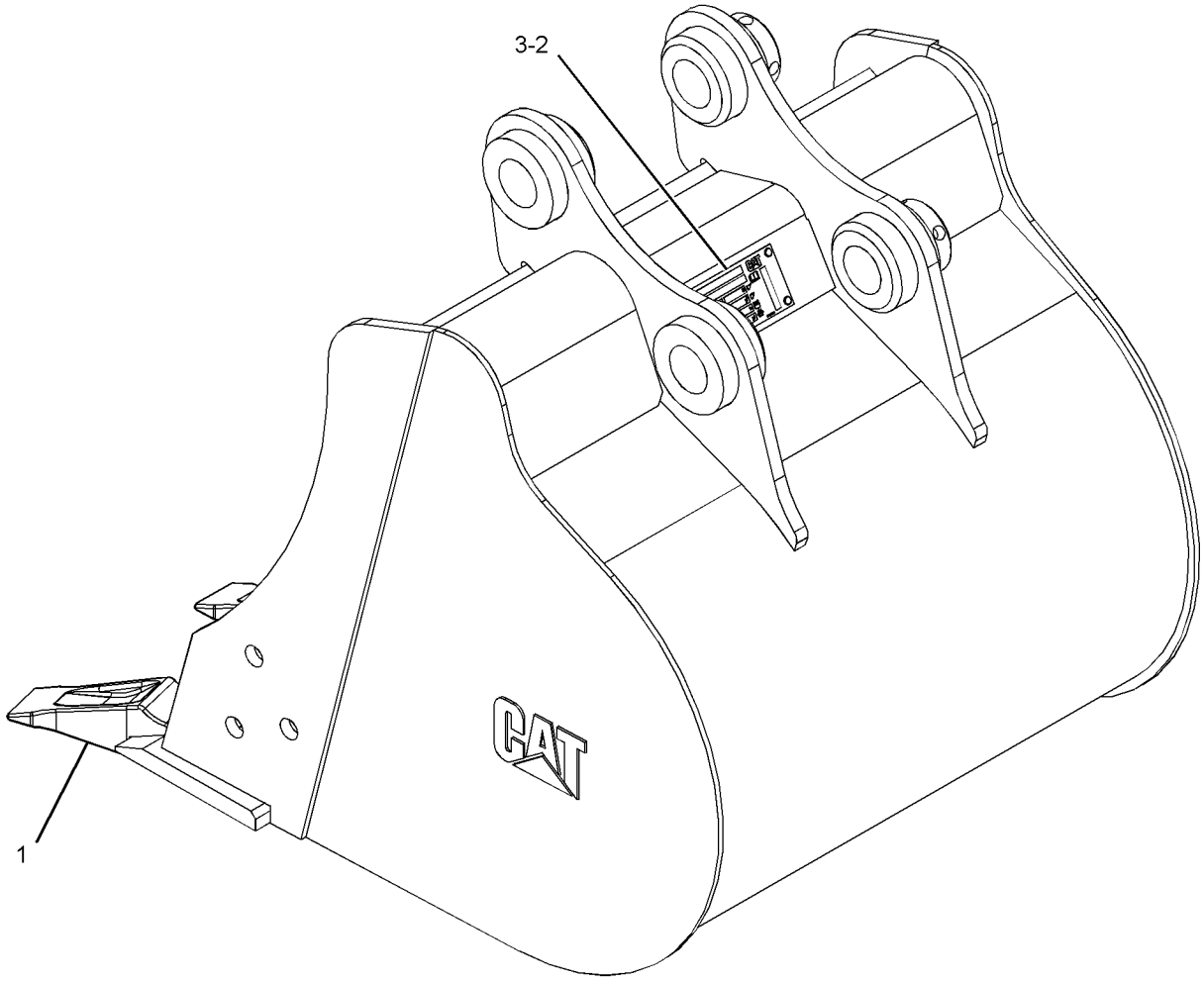

GRAPHIC #1 **<END>** g03411976

281-3824 BUCKET GP-GENERAL PURPOSE

400-MM (16-IN) WIDE X 0.07-CU M (0.09-CU YD) CAPACITY
AN ATTACHMENT

SMCS-6101, 6803, 6805, 6822 **i05399082**

NOTE	REF NO	GRAPHIC REF	PART NUMBER	QTY	PART NAME 1 2 3 4 5 6 (PRODUCT LEVEL)	SEE PAGE
	1	1	*153-7881*	3	TOOTH GP-UNI	
					(EACH INCLUDES)	
		1	**135-9390**	1	TOOTH-UNI	
M		1	**159-8839**	2	SCREW-FLAT HEAD (M16X2X60-MM)	
M		1	**8T-4778**	2	LOCKNUT (M16X2-THD)	
	2	1	**154-2704**	1	PLATE-INSTRUCTION (BUCKET SPECIFICATIONS)	
	3	1	**168-8389**	4	TACK-FASTENER (METAL)	

M - METRIC PART

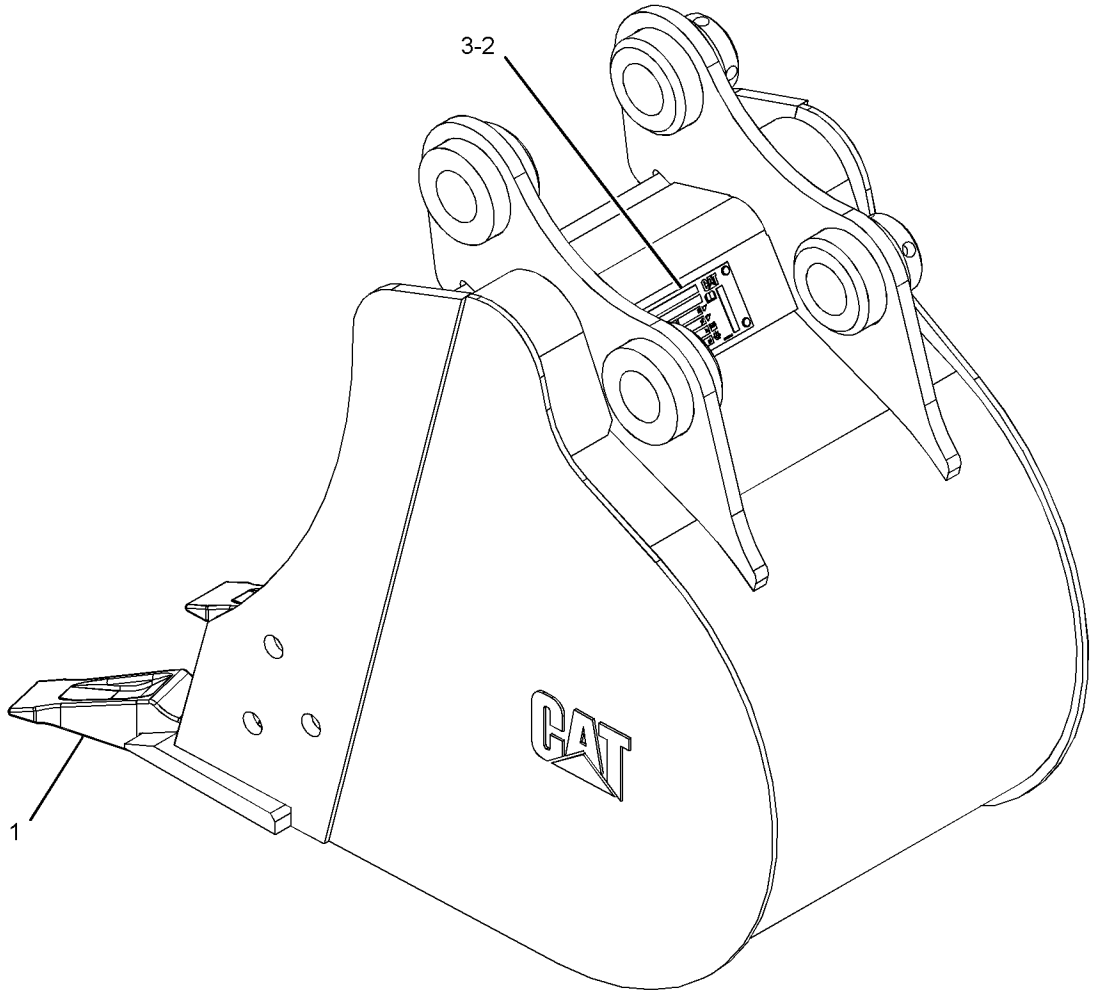

GRAPHIC #1 **<END>** g03411967

303-1324 BUCKET GP-HOE–HEAVY-DUTY
AN ATTACHMENT

SMCS-6503 **i05353915**

NOTE	REF NO	GRAPHIC REF	PART NUMBER	QTY	PART NAME 1 2 3 4 5 6 (PRODUCT LEVEL)	SEE PAGE
	1	1	*3G-6127*	3	TIP GP-LONG	
					(EACH INCLUDES)	
		1	**1U-3202**	1	TIP-LONG	
		1	**8E-6208**	1	PIN	
		1	**8E-6209**	1	RETAINER AS	
	2	1	**154-2704**	1	PLATE-INSTRUCTION (BUCKET SPECIFICATIONS)	
	3	1	**168-8389**	4	TACK-FASTENER (METAL)	
Y	4	1	*303-1358*	1	BUCKET AS-HOE	404

Y - SEPARATE ILLUSTRATION

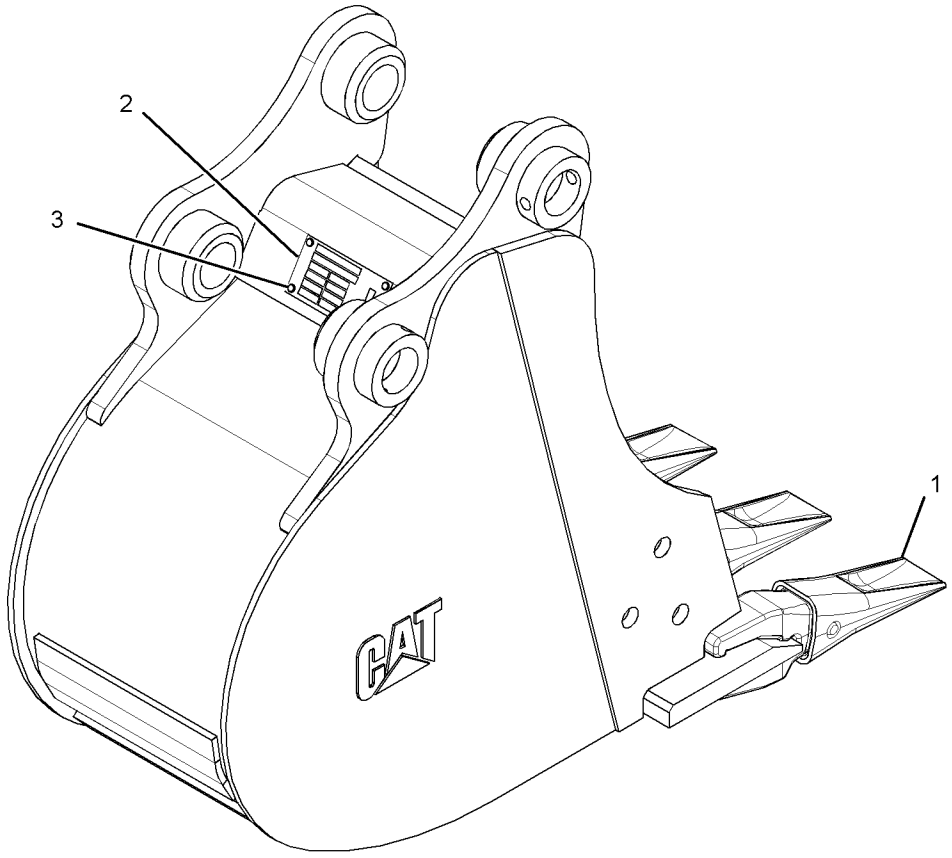

GRAPHIC #1 **<END>** g01425996

303-1325 BUCKET GP-HOE—HEAVY-DUTY
AN ATTACHMENT

SMCS-6503 **i05353916**

NOTE	REF NO	GRAPHIC REF	PART NUMBER	QTY	PART NAME 1 2 3 4 5 6 (PRODUCT LEVEL)	SEE PAGE
	1	1	*3G-6127*	3	TIP GP-LONG	
					(EACH INCLUDES)	
		1	**1U-3202**	1	TIP-LONG	
		1	**8E-6208**	1	PIN	
		1	**8E-6209**	1	RETAINER AS	
	2	1	**154-2704**	1	PLATE-INSTRUCTION (BUCKET SPECIFICATIONS)	
	3	1	**168-8389**	4	TACK-FASTENER (METAL)	
Y	4	1	*303-1359*	1	BUCKET AS-HOE	405

Y - SEPARATE ILLUSTRATION

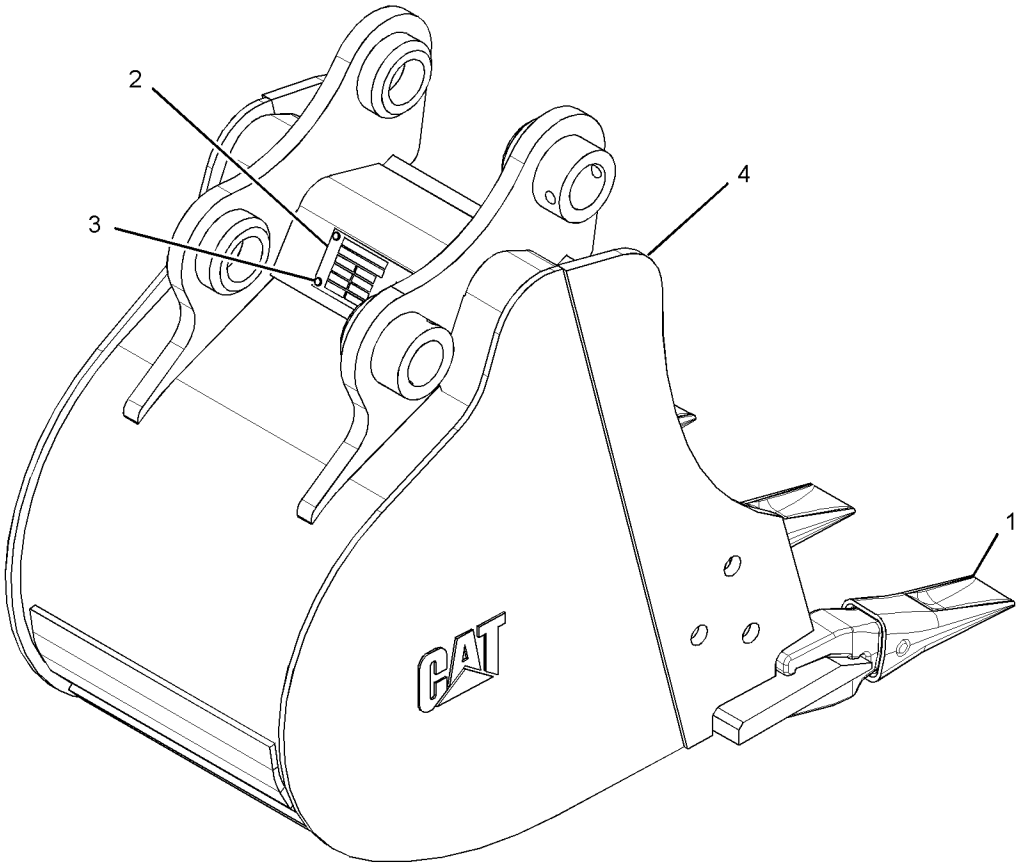

GRAPHIC #1 **<END>** g03397737

303-1326 BUCKET GP-HOE

AN ATTACHMENT

SMCS-6503 **i05353921**

NOTE	REF NO	GRAPHIC REF	PART NUMBER	QTY	PART NAME 1 2 3 4 5 6 (PRODUCT LEVEL)	SEE PAGE
	1	1	*3G-6127*	4	TIP GP-LONG	
					(EACH INCLUDES)	
		1	**1U-3202**	1	TIP-LONG	
		1	**8E-6208**	1	PIN	
		1	**8E-6209**	1	RETAINER AS	
	2	1	**154-2704**	1	PLATE-INSTRUCTION (BUCKET SPECIFICATIONS)	
	3	1	**168-8389**	4	TACK-FASTENER (METAL)	
Y	4	1	*303-1360*	1	BUCKET AS-HOE	406

Y - SEPARATE ILLUSTRATION

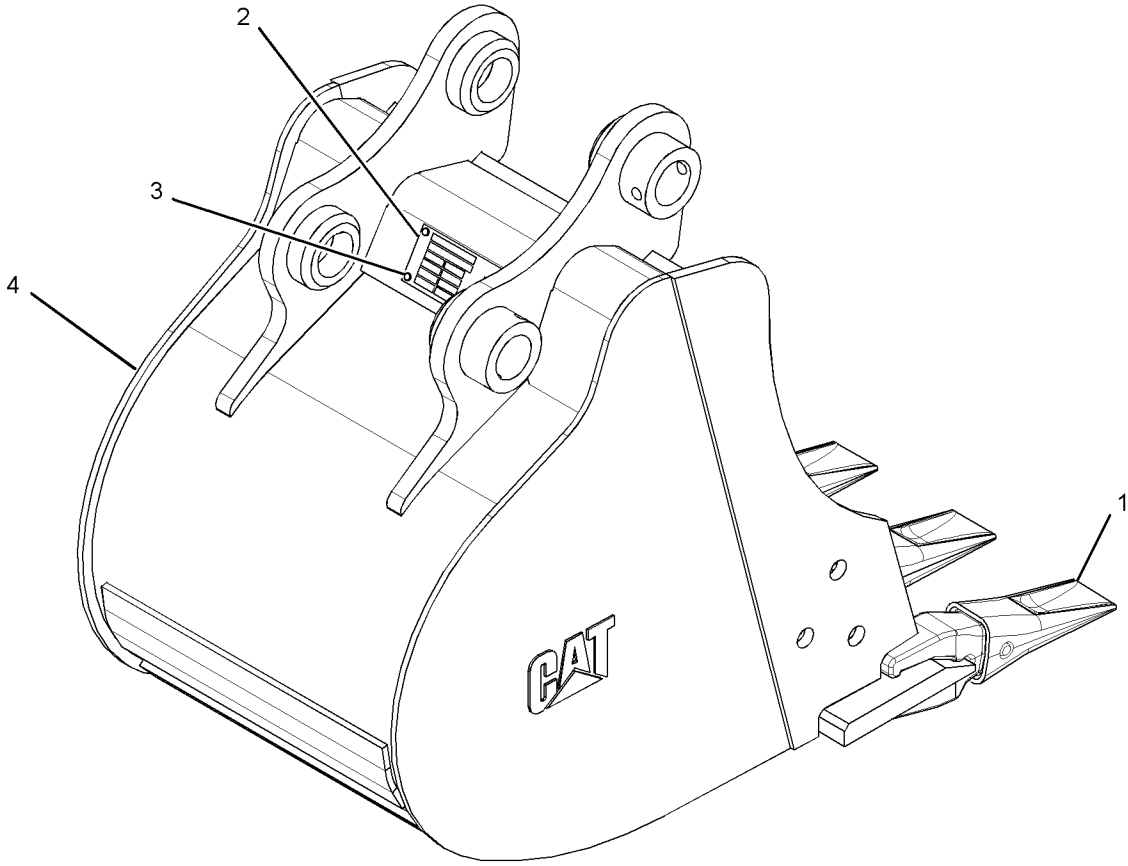

GRAPHIC #1 **<END>** g03403220

303-1327 BUCKET GP-HOE

AN ATTACHMENT

SMCS-6503 **i05353917**

NOTE	REF NO	GRAPHIC REF	PART NUMBER	QTY	PART NAME 1 2 3 4 5 6 (PRODUCT LEVEL)	SEE PAGE
	1	1	*3G-6127*	5	TIP GP-LONG	
					(EACH INCLUDES)	
		1	**1U-3202**	1	TIP-LONG	
		1	**8E-6208**	1	PIN	
		1	**8E-6209**	1	RETAINER AS	
	2	1	**154-2704**	1	PLATE-INSTRUCTION (BUCKET SPECIFICATIONS)	
	3	1	**168-8389**	4	TACK-FASTENER (METAL)	
Y	4	1	*303-1362*	1	BUCKET AS-HOE	407

Y - SEPARATE ILLUSTRATION

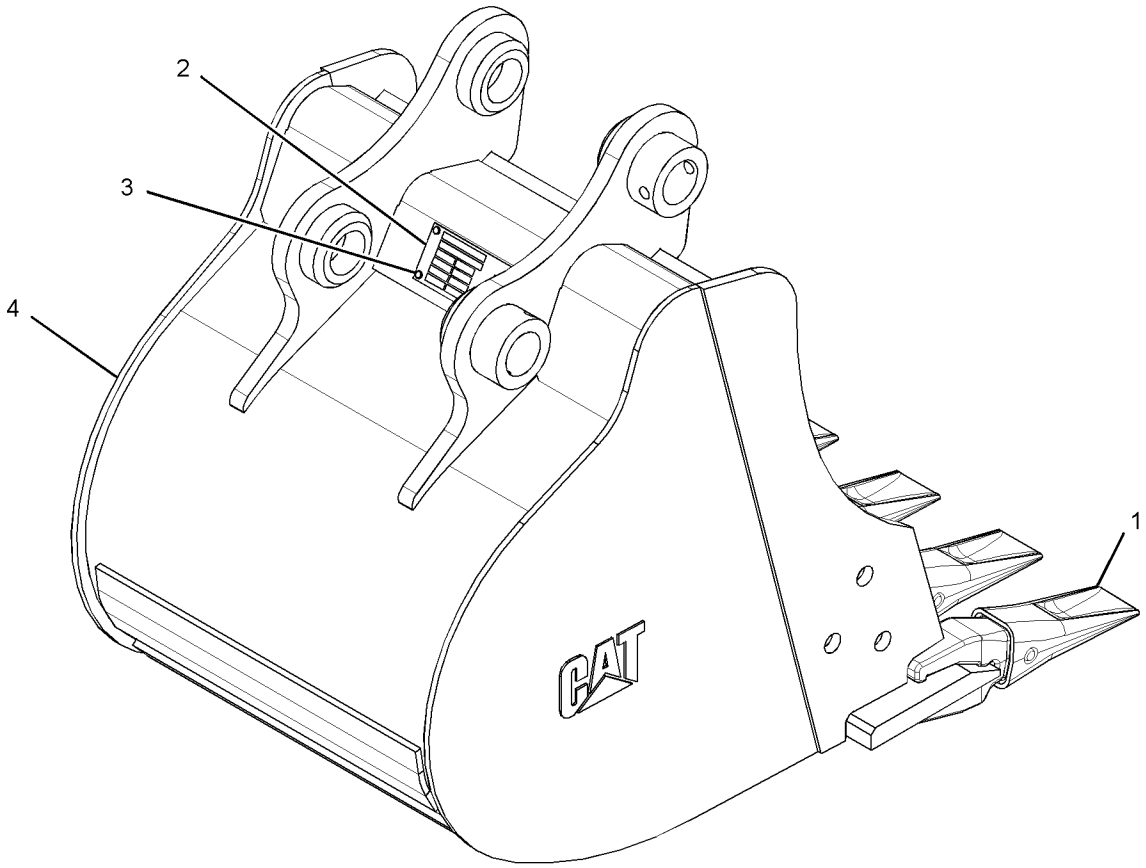

GRAPHIC #1 **<END>** g03403318

303-1328 BUCKET GP-HOE

AN ATTACHMENT

SMCS-6503 **i05353919**

NOTE	REF NO	GRAPHIC REF	PART NUMBER	QTY	PART NAME 1 2 3 4 5 6 (PRODUCT LEVEL)	SEE PAGE
	1	1	*3G-6127*	5	TIP GP-LONG	
					(EACH INCLUDES)	
		1	**1U-3202**	1	TIP-LONG	
		1	**8E-6208**	1	PIN	
		1	**8E-6209**	1	RETAINER AS	
	2	1	**154-2704**	1	PLATE-INSTRUCTION (BUCKET SPECIFICATIONS)	
	3	1	**168-8389**	4	TACK-FASTENER (METAL)	
Y	4	1	*303-1363*	1	BUCKET AS-HOE	408

Y - SEPARATE ILLUSTRATION

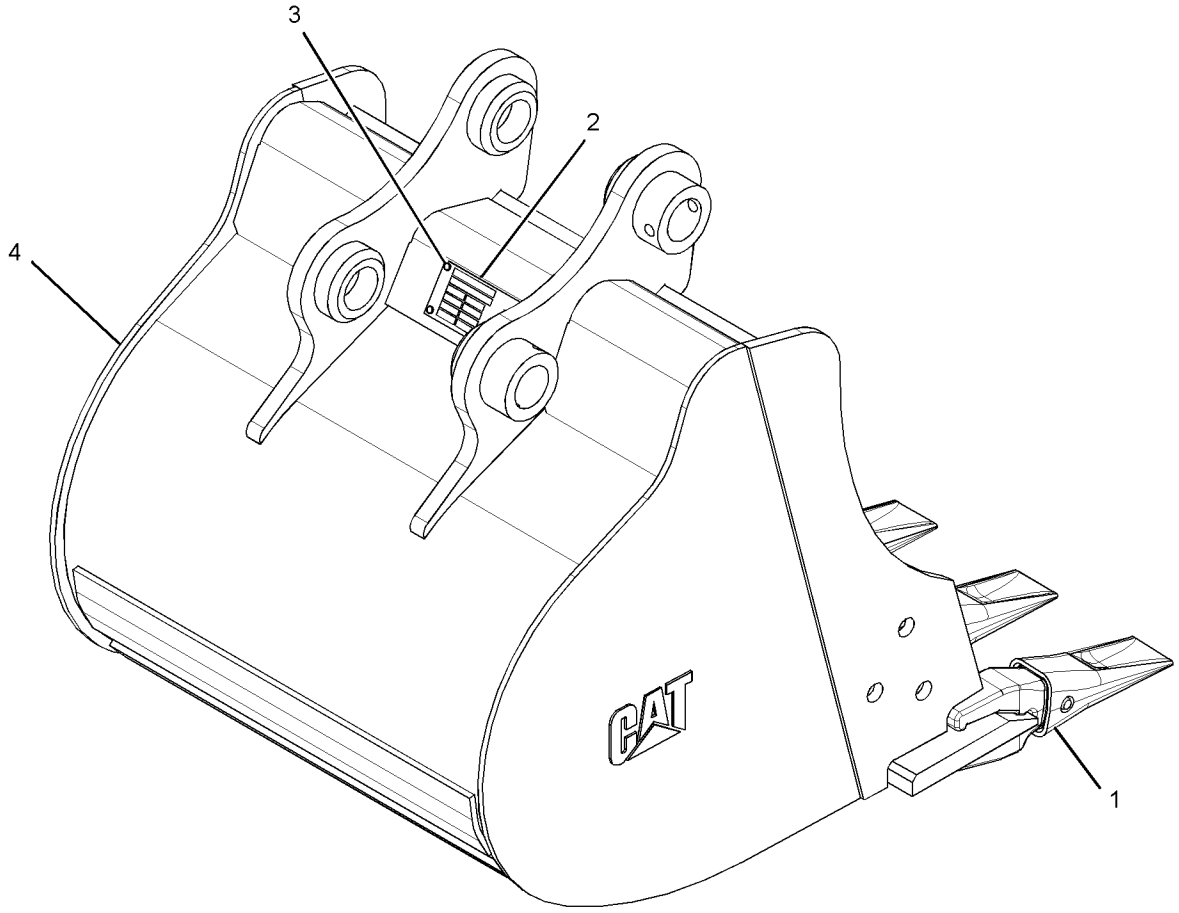

GRAPHIC #1 **<END>** g03403349

303-1329 BUCKET GP-HOE

AN ATTACHMENT

SMCS-6503 **i05353920**

NOTE	REF NO	GRAPHIC REF	PART NUMBER	QTY	PART NAME 1 2 3 4 5 6 (PRODUCT LEVEL)	SEE PAGE
	1	1	*3G-6127*	5	TIP GP-LONG	
					(EACH INCLUDES)	
		1	**1U-3202**	1	TIP-LONG	
		1	**8E-6208**	1	PIN	
		1	**8E-6209**	1	RETAINER AS	
	2	1	**154-2704**	1	PLATE-INSTRUCTION (BUCKET SPECIFICATIONS)	
	3	1	**168-8389**	4	TACK-FASTENER (METAL)	
Y	4	1	*303-1364*	1	BUCKET AS-HOE	409

Y - SEPARATE ILLUSTRATION

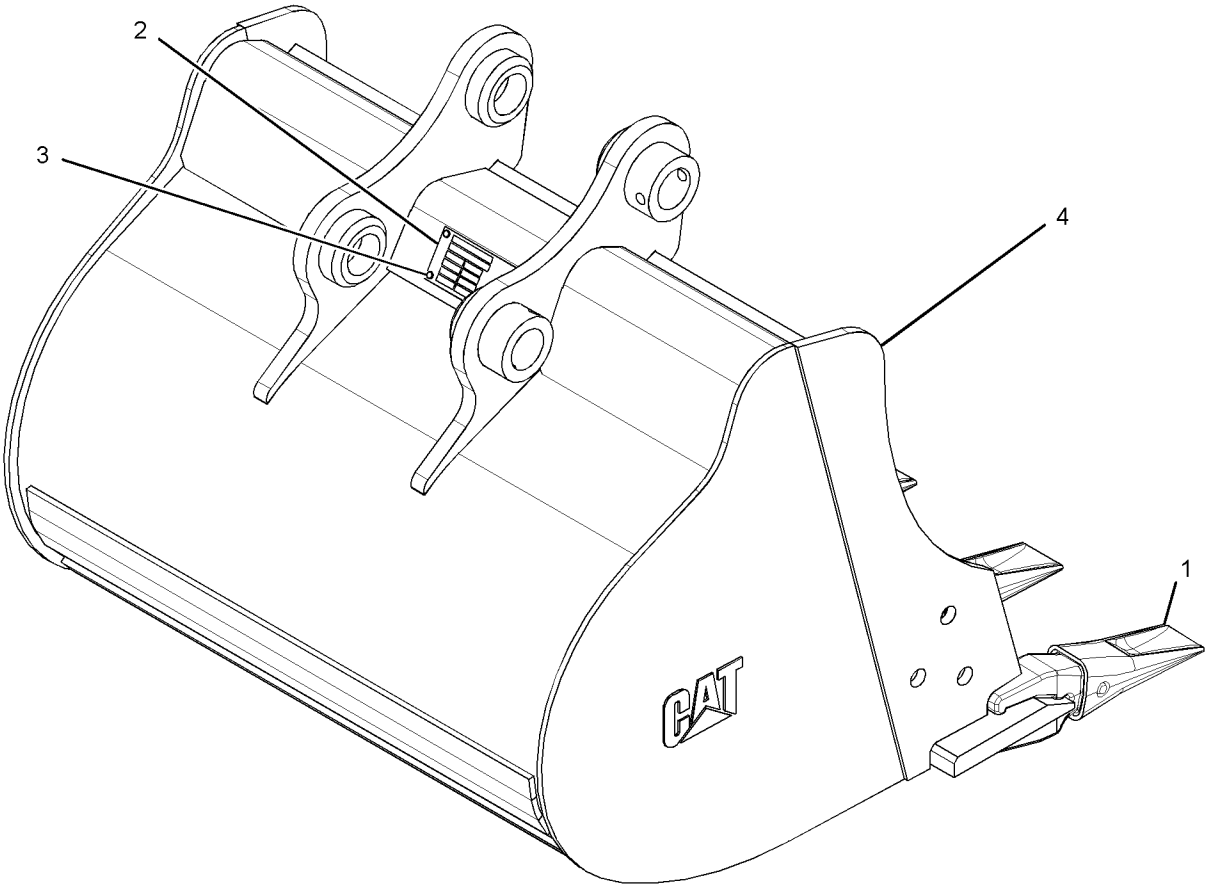

GRAPHIC #1 **<END>** g03403352

386-7524 BUCKET GP-HOE—HEAVY-DUTY
AN ATTACHMENT

SMCS-6503 **i05346192**

NOTE	REF NO	GRAPHIC REF	PART NUMBER	QTY	PART NAME 1 2 3 4 5 6 (PRODUCT LEVEL)	SEE PAGE
	1	1	*3G-6127*	6	TIP GP-LONG	
					(EACH INCLUDES)	
		1	**1U-3202**	1	TIP-LONG	
		1	**8E-6208**	1	PIN	
		1	**8E-6209**	1	RETAINER AS	
	2	1	**154-2704**	1	PLATE-INSTRUCTION (BUCKET SPECIFICATIONS)	
	3	1	**168-8389**	4	TACK-FASTENER (METAL)	
Y	4	1	*386-7523*	1	BUCKET AS-HOE	410

Y - SEPARATE ILLUSTRATION

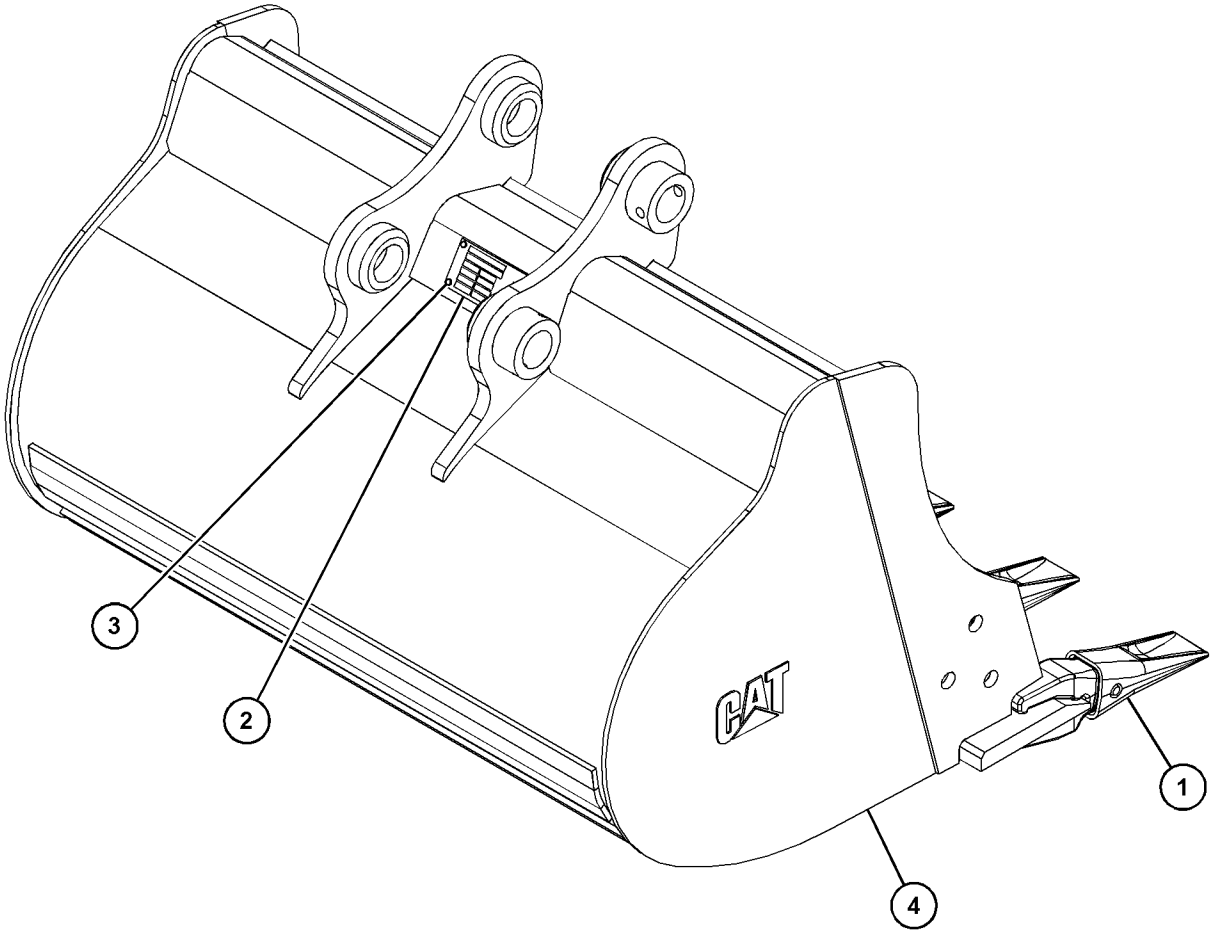

GRAPHIC #1 **<END>** g03403700

361-1094 COUPLER AR-QUICK

AN ATTACHMENT

SMCS-6129 **i04503950**

NOTE	REF NO	GRAPHIC REF	PART NUMBER	QTY	PART NAME 1 2 3 4 5 6 (PRODUCT LEVEL)	SEE PAGE
	1	1	**248-8832**	1	WRENCH	
	2	1	**361-1072**	2	PIN	
Y	3	1	*361-1081*	1	COUPLER GP-QUICK	430
	4	1	**3B-5322**	2	PIN-COTTER	

Y - SEPARATE ILLUSTRATION

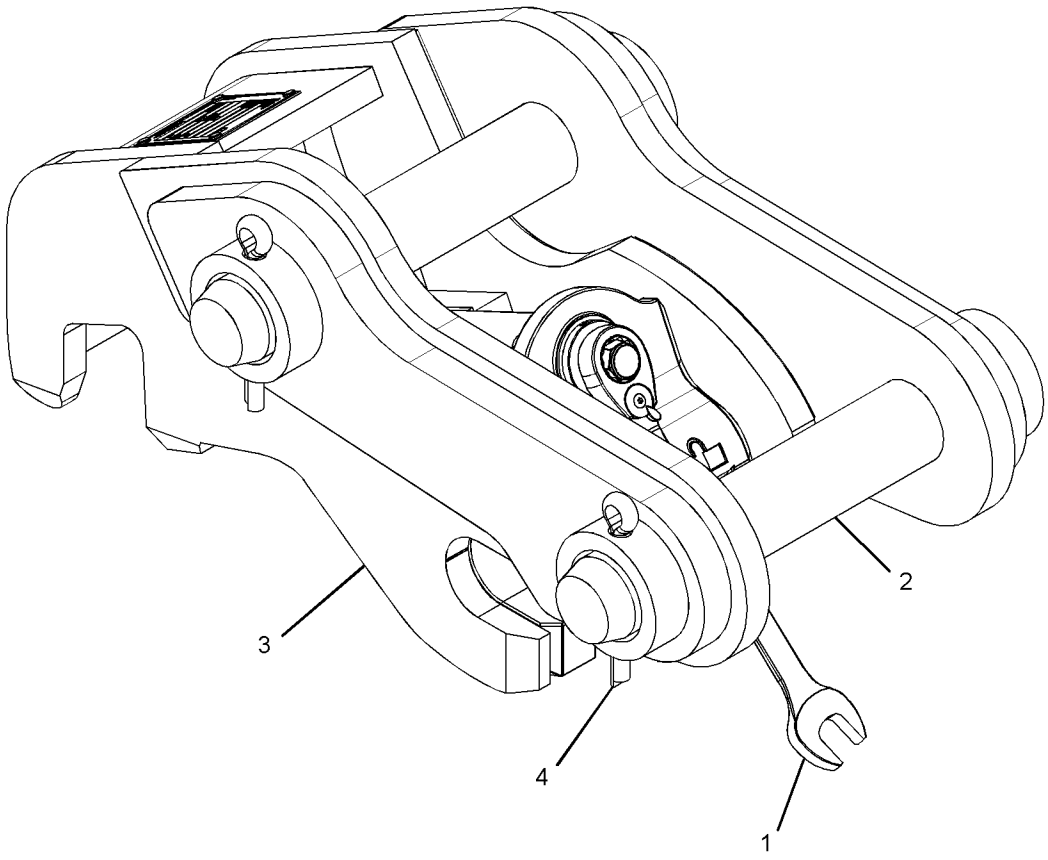

GRAPHIC #1 **<END>** g02705708

361-1095 COUPLER AR-QUICK

FOR USE WITH CONTROL AR-COUPLER, FILM GP
PART OF 441-6279 COUPLER AR-QUICK
AN ATTACHMENT

SMCS-6129 **i05633174**

NOTE	REF NO	GRAPHIC REF	PART NUMBER	QTY	PART NAME 1 2 3 4 5 6 (PRODUCT LEVEL)	SEE PAGE
	1	1	**361-1072**	2	PIN	
Y	2	1	*361-1090*	1	LINES GP-COUPLER	233
Y	3	1	*446-9433*	1	COUPLER GP-QUICK	433
	4	1	**3B-5322**	2	PIN-COTTER	

Y - SEPARATE ILLUSTRATION

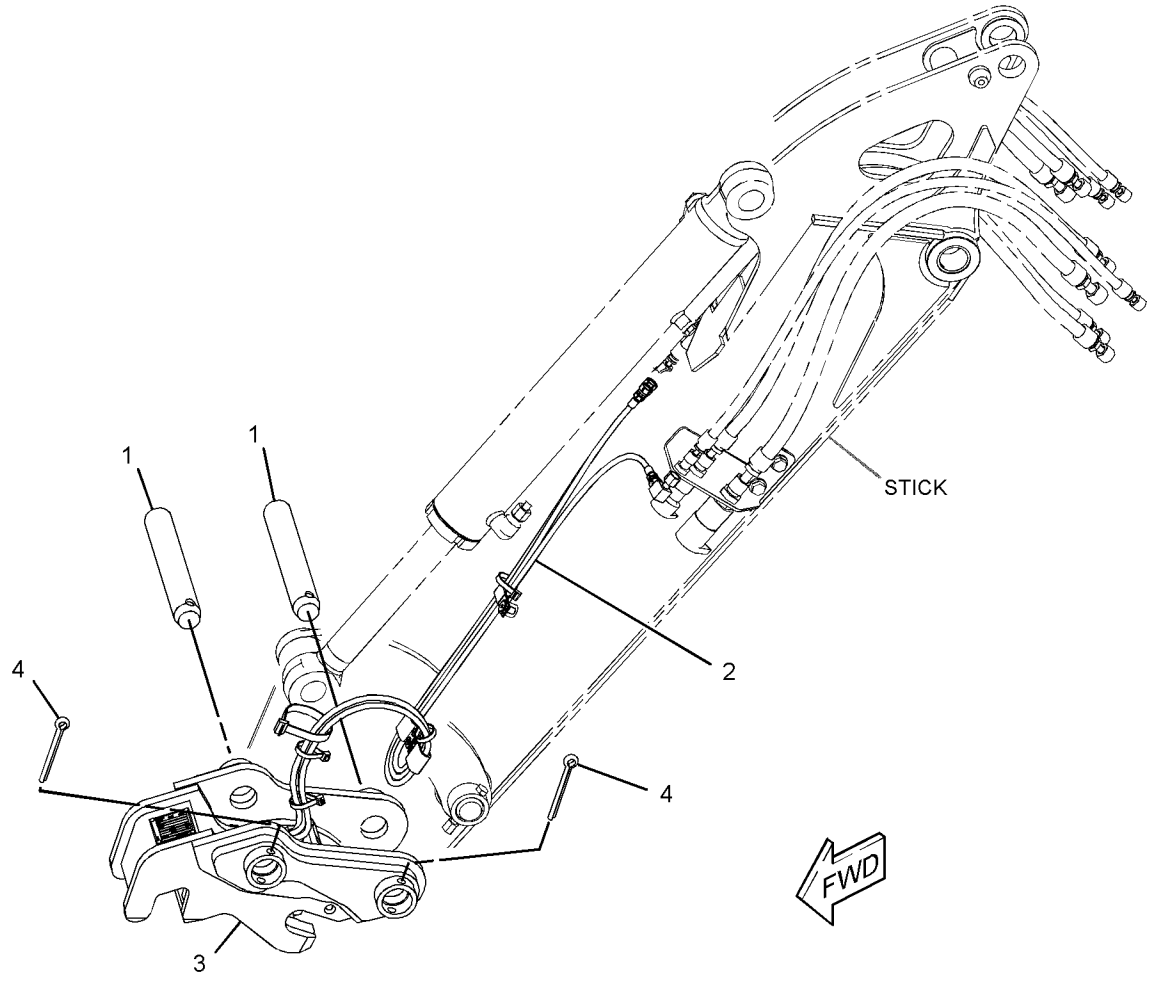

GRAPHIC #1 **<END>** g02919698

441-6279 COUPLER AR-QUICK

AN ATTACHMENT

SMCS-6129 **i05354362**

NOTE	PART NUMBER	QTY	PART NAME 1 2 3 4 5 6 (PRODUCT LEVEL)	SEE PAGE
Y	**361-1095**	1	COUPLER AR-QUICK	427

Y - SEPARATE ILLUSTRATION

<END>

444-7494 COUPLER AR-QUICK

AN ATTACHMENT

SMCS-6129 **i05621442**

NOTE	REF NO	GRAPHIC REF	PART NUMBER	QTY	PART NAME 1 2 3 4 5 6 (PRODUCT LEVEL)	SEE PAGE
	1	1	**3B-5322**	2	PIN-COTTER	
	2	1	**361-1072**	2	PIN	
Y	3	1	*444-7495*	1	COUPLER GP-QUICK	432

Y - SEPARATE ILLUSTRATION

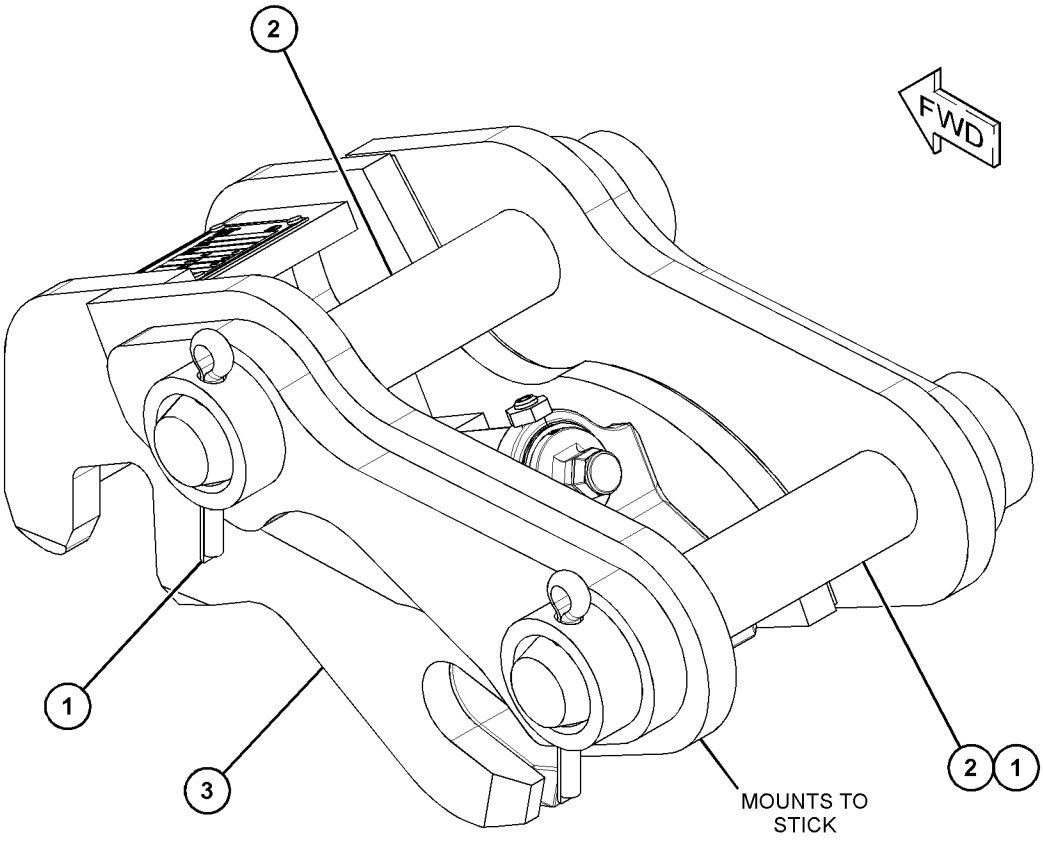

GRAPHIC #1 **<END>** g03584618

361-1081 COUPLER GP-QUICK

PART OF 361-1094 COUPLER AR-QUICK

AN ATTACHMENT

SMCS-6129 **i05363401**

NOTE	REF NO	GRAPHIC REF	PART NUMBER	QTY	PART NAME 1 2 3 4 5 6 (PRODUCT LEVEL)	SEE PAGE
	1	1	**168-8389**	4	TACK-FASTENER (METAL)	
Y	2	1	*361-1083*	1	LOCK GP-QUICK COUPLER	434
	3	1	**361-1088**	1	SHAFT	
	4	1	**9H-3771**	1	FITTING-GREASE	
	5	1	**361-1210**	1	PLATE-IDENTIFICATION (SERIAL NUMBER)	
	6	1	**361-1069**	1	RETAINER-SPRING	
	7	1	**361-1082**	1	COUPLER AS	
	8	1	**361-1087**	1	LOCK GP-MECHANICAL	

Y - SEPARATE ILLUSTRATION

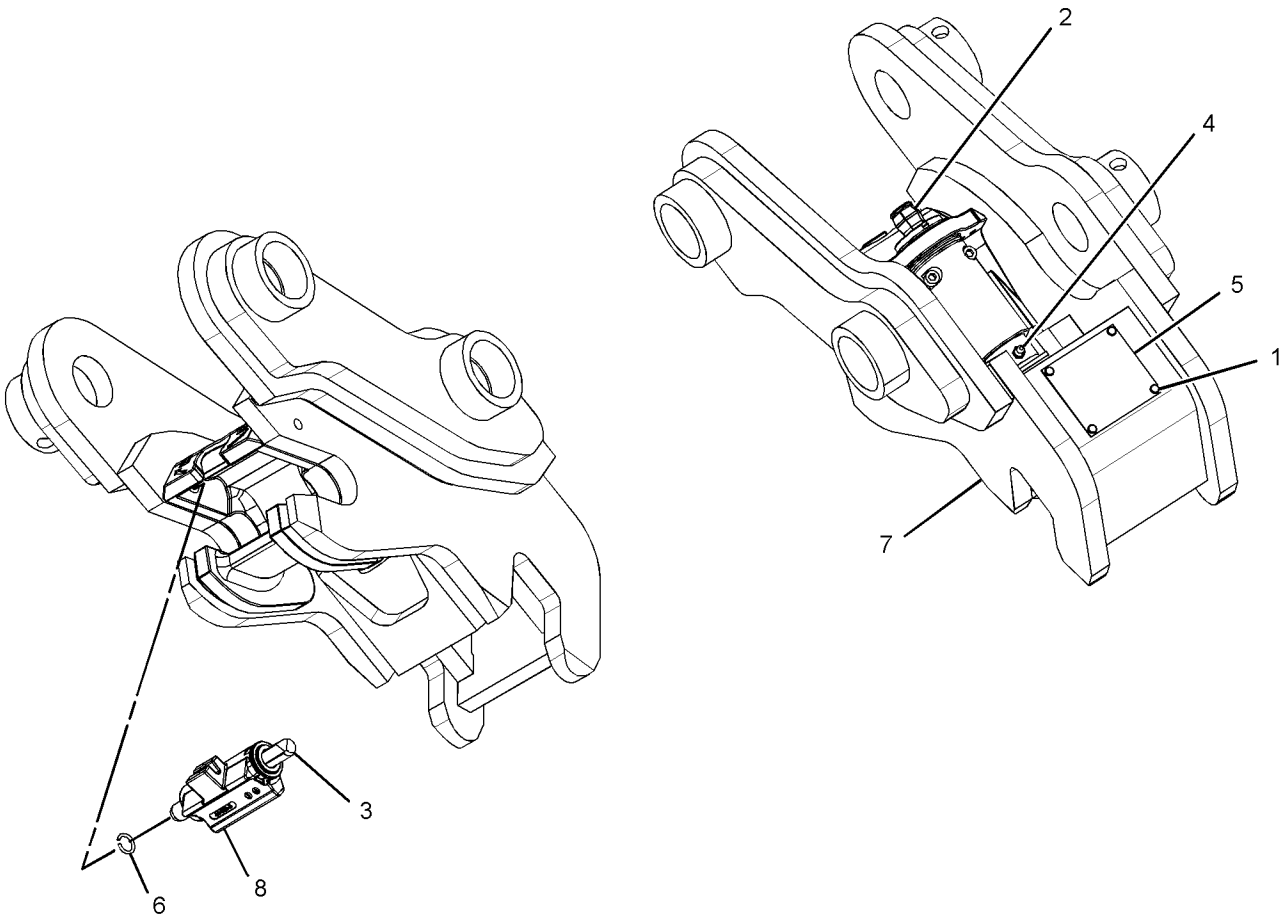

GRAPHIC #1 **<END>** g03403707

361-1121 COUPLER GP-QUICK

PART OF 446-9433 COUPLER GP-QUICK

AN ATTACHMENT

SMCS-6129 **i05411073**

NOTE	REF NO	GRAPHIC REF	PART NUMBER	QTY	PART NAME 1 2 3 4 5 6 (PRODUCT LEVEL)	SEE PAGE
	1	1	**168-8389**	4	TACK-FASTENER (METAL)	
Y	2	1	*361-1123*	1	LOCK GP-QUICK COUPLER	435
	3	1	**361-1209**	1	PLATE-IDENTIFICATION (WORK TOOL)	
	4	1	**9H-3771**	1	FITTING-GREASE	
	5	1	**361-1069**	1	RETAINER-SPRING	
	6	1	**361-1122**	1	COUPLER AS	
	7	1	**361-1157**	1	LOCK GP-MECHANICAL	
	8	1	**361-1134**	1	SHAFT	

Y - SEPARATE ILLUSTRATION

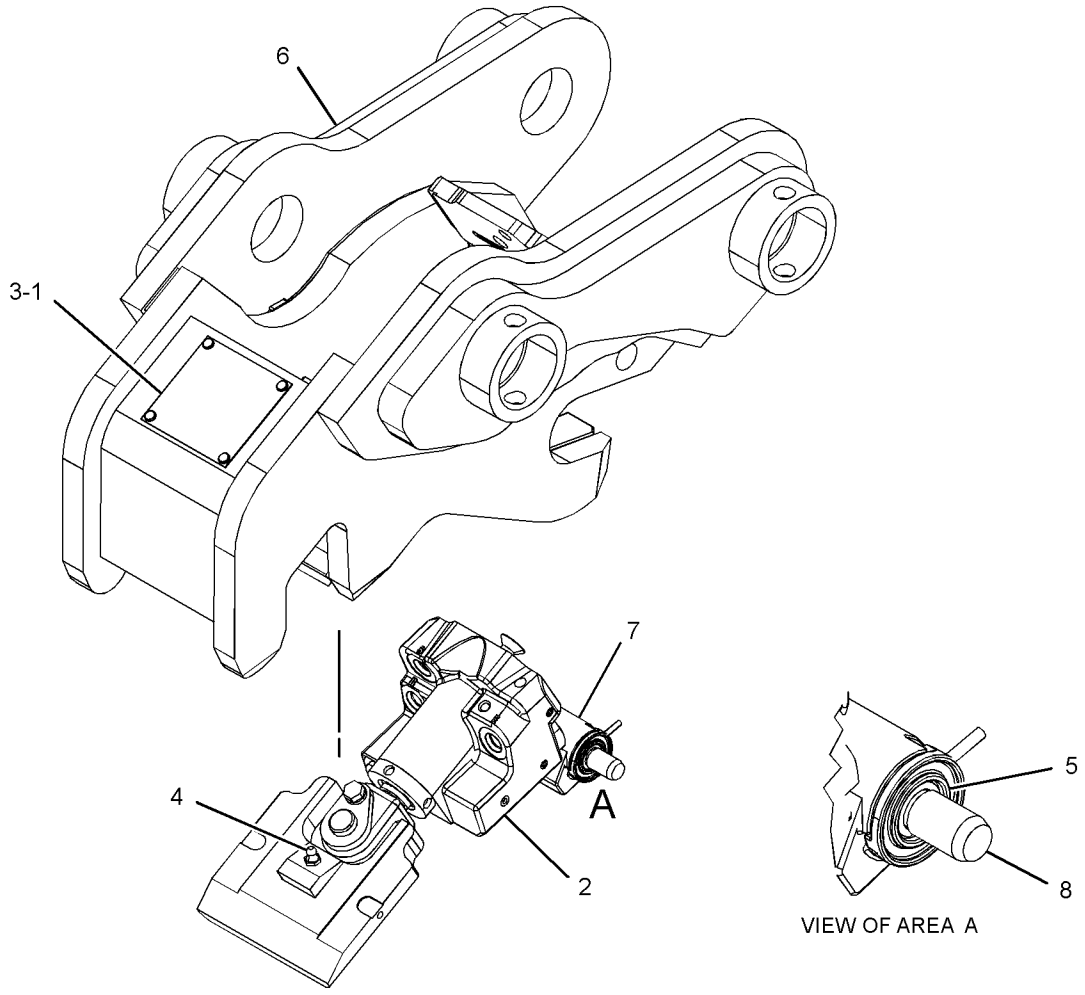

GRAPHIC #1 **<END>** g03418119

444-7495 COUPLER GP-QUICK

PART OF 444-7494 COUPLER AR-QUICK

AN ATTACHMENT

SMCS-6129 **i05621495**

NOTE	REF NO	GRAPHIC REF	PART NUMBER	QTY	PART NAME 1 2 3 4 5 6 (PRODUCT LEVEL)	SEE PAGE
	1	1	**361-1210**	1	PLATE-IDENTIFICATION (SERIAL NUMBER)	
Y	2	1	**444-7513**	1	LOCK GP-QUICK COUPLER	436
	3	1	**168-8389**	4	TACK-FASTENER (METAL)	
	4	1	**9H-3771**	1	FITTING-GREASE	
	5	1	**361-1069**	1	RETAINER-SPRING	
	6	1	**361-1088**	1	SHAFT	
	7	1	**444-7493**	1	COUPLER AS	
	8	1	**444-7509**	1	LOCK AS	
	9	1	**444-7516**	1	LOCK GP-MECHANICAL (QUICK COUPLER)	
M	10	1	**142-0485**	1	NUT (M10X1.5-THD)	

M - METRIC PART
Y - SEPARATE ILLUSTRATION

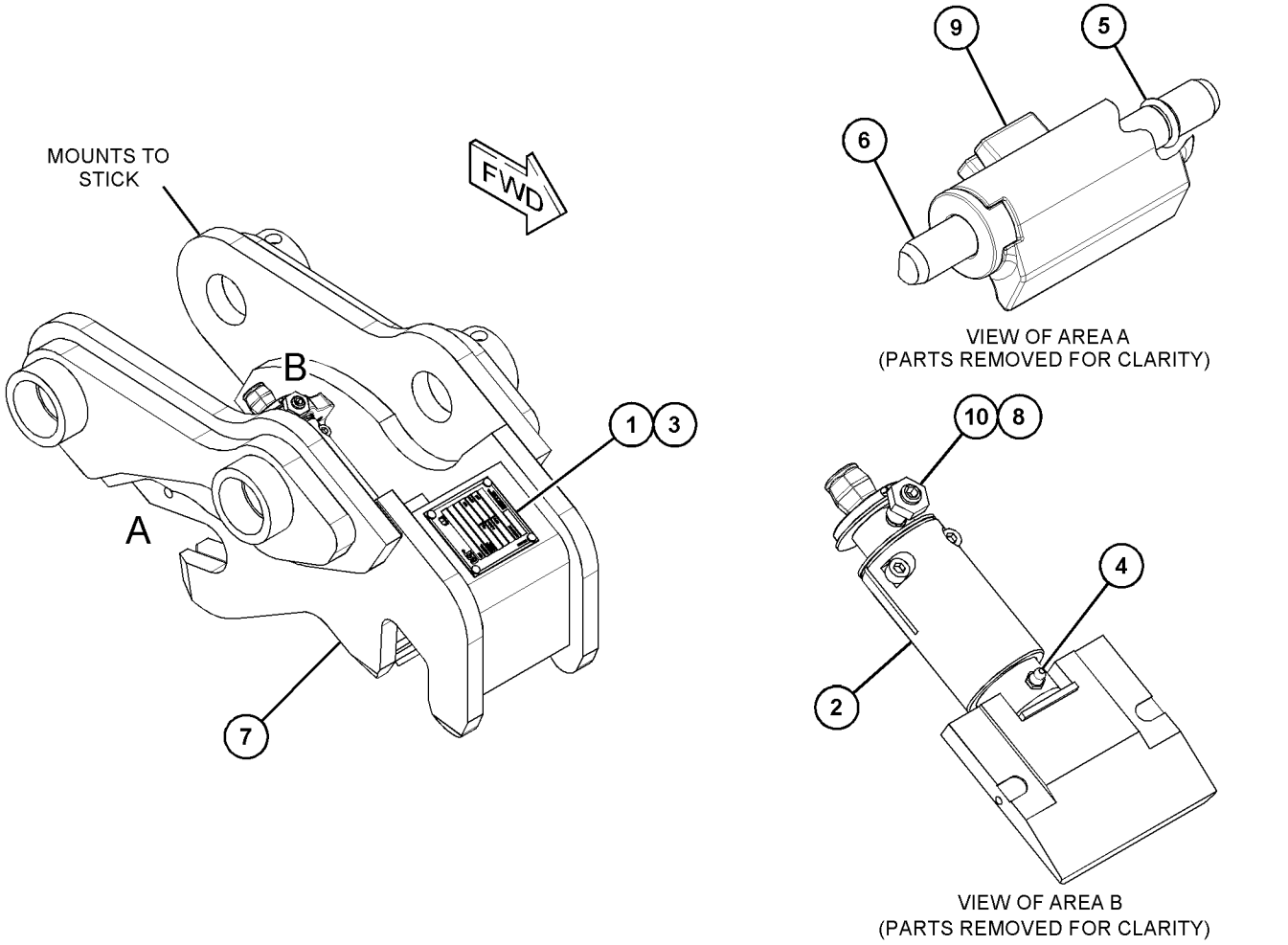

GRAPHIC #1 **<END>** g03583667

446-9433 COUPLER GP-QUICK

PART OF 361-1095 COUPLER AR-QUICK

AN ATTACHMENT

SMCS-6129 **i05633178**

NOTE	REF NO	GRAPHIC REF	PART NUMBER	QTY	PART NAME 1 2 3 4 5 6 (PRODUCT LEVEL)	SEE PAGE
	1	1	**361-1115**	1	HOSE AS	
	2	1	**361-1116**	1	HOSE AS	
	3	1	**361-1117**	1	HOSE AS	
Y	4	1	*361-1121*	1	COUPLER GP-QUICK	431
	5	1	*169-7393*	3	CONNECTOR AS	
					(EACH INCLUDES)	
		1	**3J-7352**	1	CONNECTOR	
		1	**3J-7354**	1	SEAL-O-RING	

Y - SEPARATE ILLUSTRATION

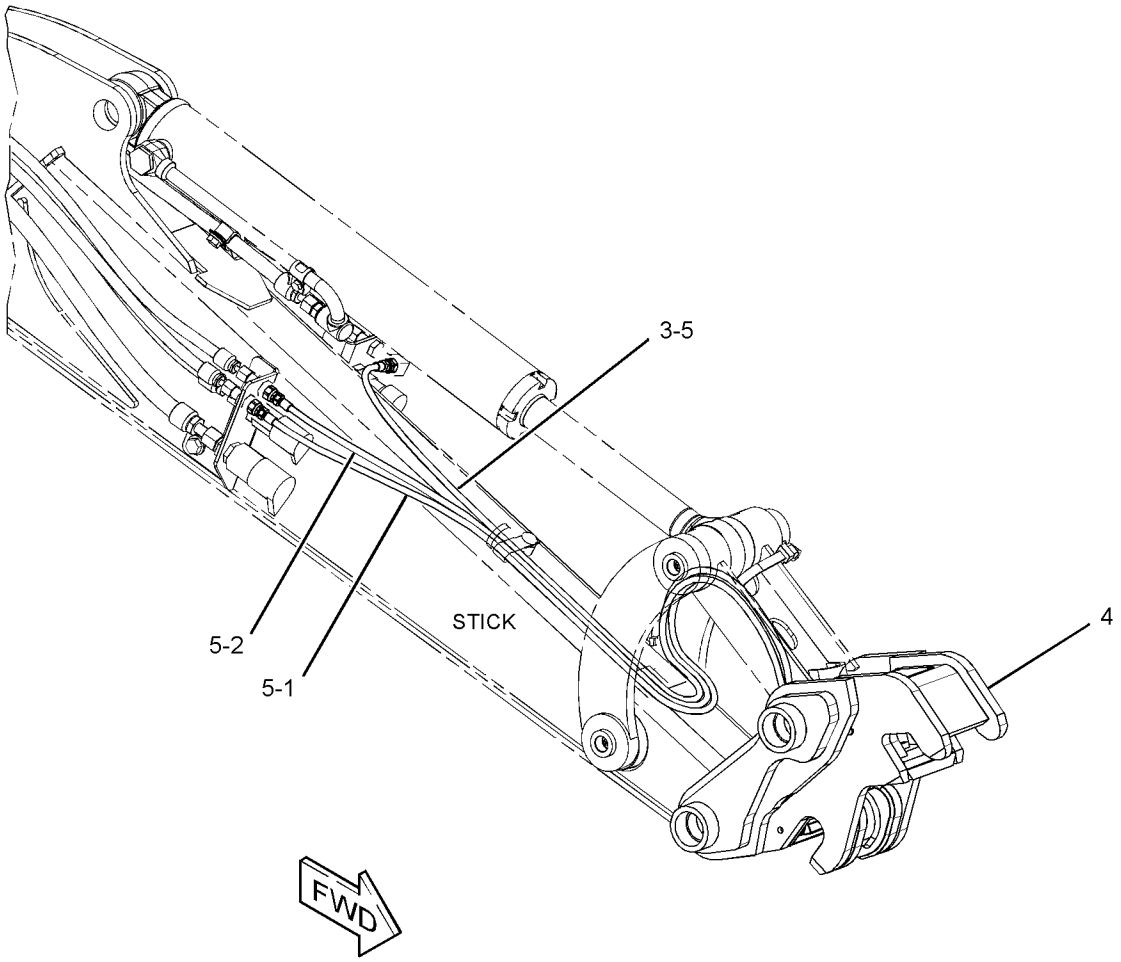

GRAPHIC #1 **<END>** g03582994

361-1083 LOCK GP-QUICK COUPLER

PART OF 361-1081 COUPLER GP-QUICK

AN ATTACHMENT

SMCS-6129 **i04503953**

NOTE	REF NO	GRAPHIC REF	PART NUMBER	QTY	PART NAME 1 2 3 4 5 6 (PRODUCT LEVEL)	SEE PAGE
	1	1	**361-1071**	1	BUSHING	
	2	1	**361-1084**	1	WEDGE AS	
	3	1	**361-1085**	1	SCREW-ADJUSTING	
	4	1	**361-1086**	1	COLLAR-SPLIT	
	5	1	**179-9013**	1	SEAL-O-RING	
	6	1	**7K-0897**	2	WASHER (27.4X44.45X1.47-MM THK)	
M	7	1	**8T-0269**	2	BOLT-SOCKET HEAD (M6X1X20-MM)	

M - METRIC PART

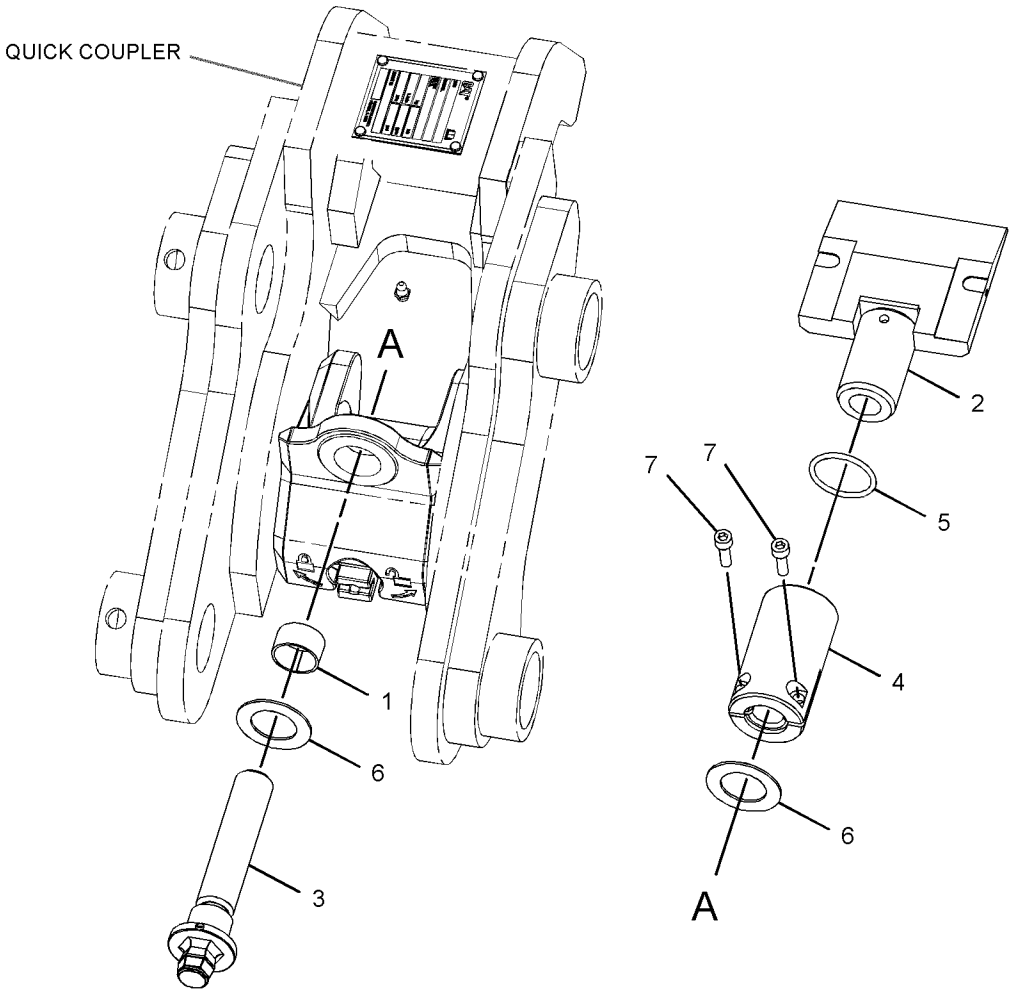

GRAPHIC #1 **<END>** g02706059

361-1123 LOCK GP-QUICK COUPLER

PART OF 361-1121 COUPLER GP-QUICK

AN ATTACHMENT

SMCS-6129 **i04404135**

NOTE	REF NO	GRAPHIC REF	PART NUMBER	QTY	PART NAME 1 2 3 4 5 6 (PRODUCT LEVEL)	SEE PAGE
	1	1	**361-1124**	1	WEDGE AS	
Y	2	1	**361-1125**	1	CYLINDER GP-HYDRAULIC	197
	3	1	**361-1126**	1	PIN AS	
M	4	1	**188-9644**	2	SCREW-FLAT HEAD (M8X1.25X25-MM)	
M	5	1	**5C-9553**	1	BOLT (M6X1X16-MM)	
	6	1	**9X-8256**	1	WASHER (6.6X12X2-MM THK)	

M - METRIC PART
Y - SEPARATE ILLUSTRATION

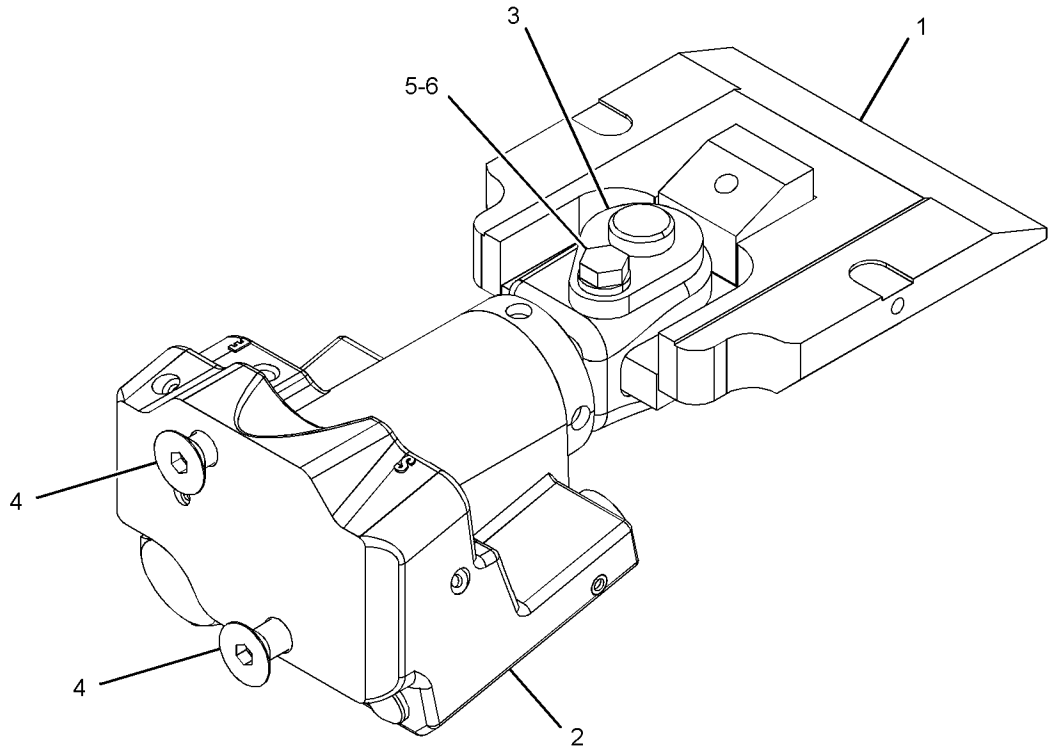

GRAPHIC #1 **<END>** g02913779

444-7513 LOCK GP-QUICK COUPLER

PART OF 444-7495 COUPLER GP-QUICK

AN ATTACHMENT

SMCS-6129 **i05621535**

NOTE	REF NO	GRAPHIC REF	PART NUMBER	QTY	PART NAME 1 2 3 4 5 6 (PRODUCT LEVEL)	SEE PAGE
	1	1	**361-1084**	1	WEDGE AS	
	2	1	**361-1086**	1	COLLAR-SPLIT	
	3	1	**444-7508**	1	BUSHING	
	4	1	**444-7514**	1	SCREW-ADJUSTING	
	5	1	**179-9013**	1	SEAL-O-RING	
	6	1	**7K-0897**	2	WASHER (27.4X44.45X1.47-MM THK)	
M	7	1	**8T-0269**	2	BOLT-SOCKET HEAD (M6X1X20-MM)	

M - METRIC PART

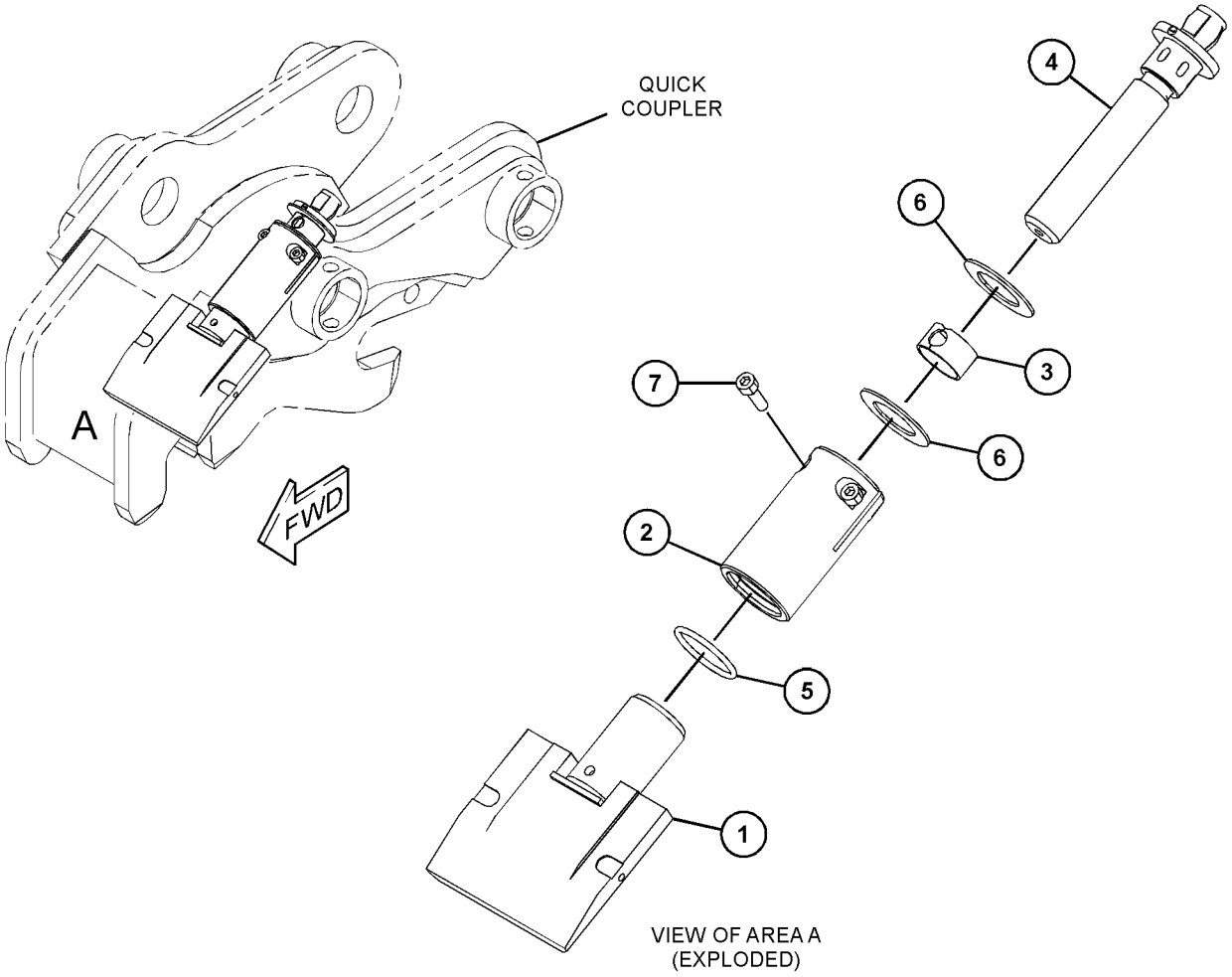

GRAPHIC #1 **<END>** g03579921

154-2638 MOUNTING GP-BUCKET

AN ATTACHMENT

SMCS-6101, 6523 **i02141990**

NOTE	REF NO	GRAPHIC REF	PART NUMBER	QTY	PART NAME 1 2 3 4 5 6 (PRODUCT LEVEL)	SEE PAGE
	1	1	**237-5096**	2	PIN AS	
	2	1	**095-0868**	2	PIN-COTTER	
F			**3B-8489**	2	FITTING-GREASE	

F - NOT SHOWN

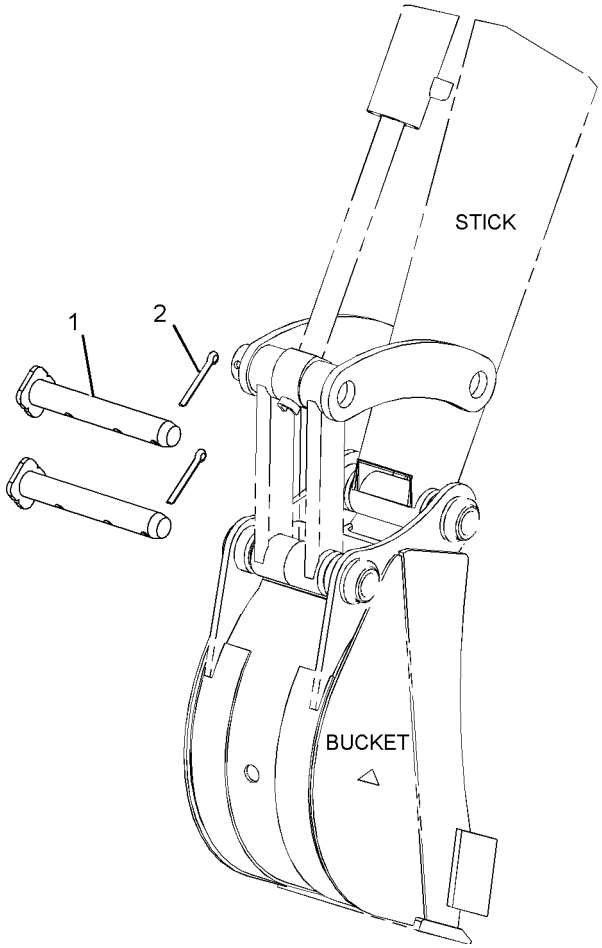

GRAPHIC #1 **<END>** g01088226

220-0858 MOUNTING GP-BUCKET

PART OF 364-1693 MOUNTING GP-BUCKET

AN ATTACHMENT

SMCS-6101, 6523 **i02141989**

NOTE	REF NO	GRAPHIC REF	PART NUMBER	QTY	PART NAME 1 2 3 4 5 6 (PRODUCT LEVEL)	SEE PAGE
	1	1	**228-2856**	2	PIN AS	
	2	1	**095-0868**	2	PIN-COTTER	

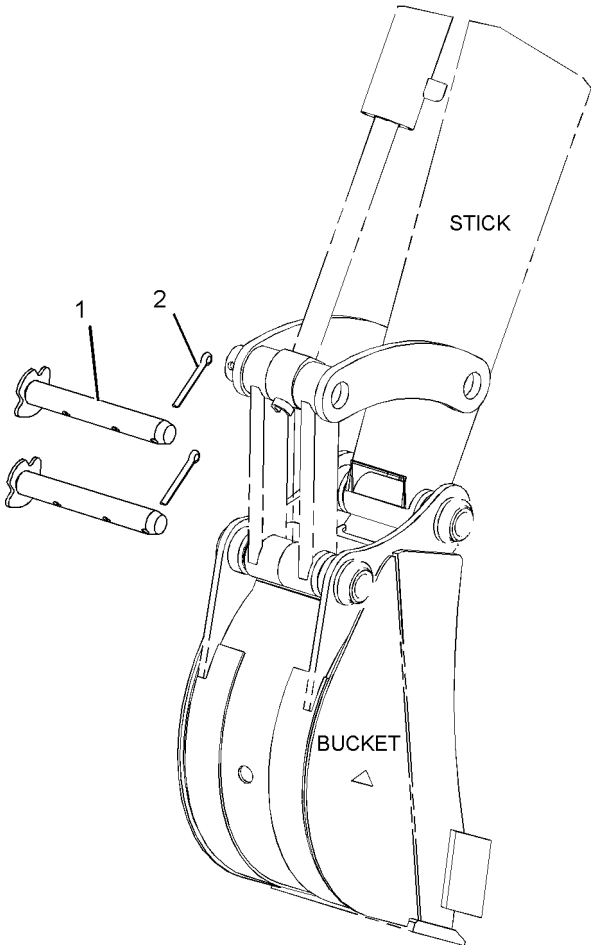

GRAPHIC #1 **<END>** g01087584

364-1693 MOUNTING GP-BUCKET

AN ATTACHMENT

SMCS-6101, 6523 **i04006709**

NOTE	PART NUMBER	QTY	PART NAME 1 2 3 4 5 6 (PRODUCT LEVEL)	SEE PAGE
Y	*220-0858*	1	MOUNTING GP-BUCKET	438

Y - SEPARATE ILLUSTRATION

<END>

309-1917 THUMB GP

AN ATTACHMENT

SMCS-6547 **i05353487**

NOTE	REF NO	GRAPHIC REF	PART NUMBER	QTY	PART NAME 1 2 3 4 5 6 (PRODUCT LEVEL)	SEE PAGE
Y	1	1	**268-8224**	1	CYLINDER GP-HYDRAULIC	196
M	2	1	**8T-4172**	1	BOLT (M10X1.5X80-MM)	
M	3	1	**8T-4133**	2	NUT (M10X1.5-THD)	
	4	1	**309-6024**	1	FRAME AS	
	4A	1	**204-4961**	2	BUSHING	
	4B	1	**161-4130**	2	PLATE-IDENTIFICATION (CAT)	
Y	5	1	*359-6059*	1	LINES GP-CONNECTING (RH)	231
Y	6	1	*369-3693*	1	LINES GP-CONNECTING (LH)	232
	7	1	**162-7120**	4	PIN	
	8	1	**204-4976**	3	SPACER (42X90X5-MM THK)	
	9	1	**267-9485**	2	PIN	
	10	1	**280-8984**	1	PIN	
	11	1	**312-5694**	1	SETSCREW (1/4-20X0.25-IN)	
	12	1	**3B-8489**	2	FITTING-GREASE	
F			**294-0973**	1	TOOL	

F - NOT SHOWN
M - METRIC PART
Y - SEPARATE ILLUSTRATION

309-1917 **THUMB GP (*contd.*)** **i05353487**

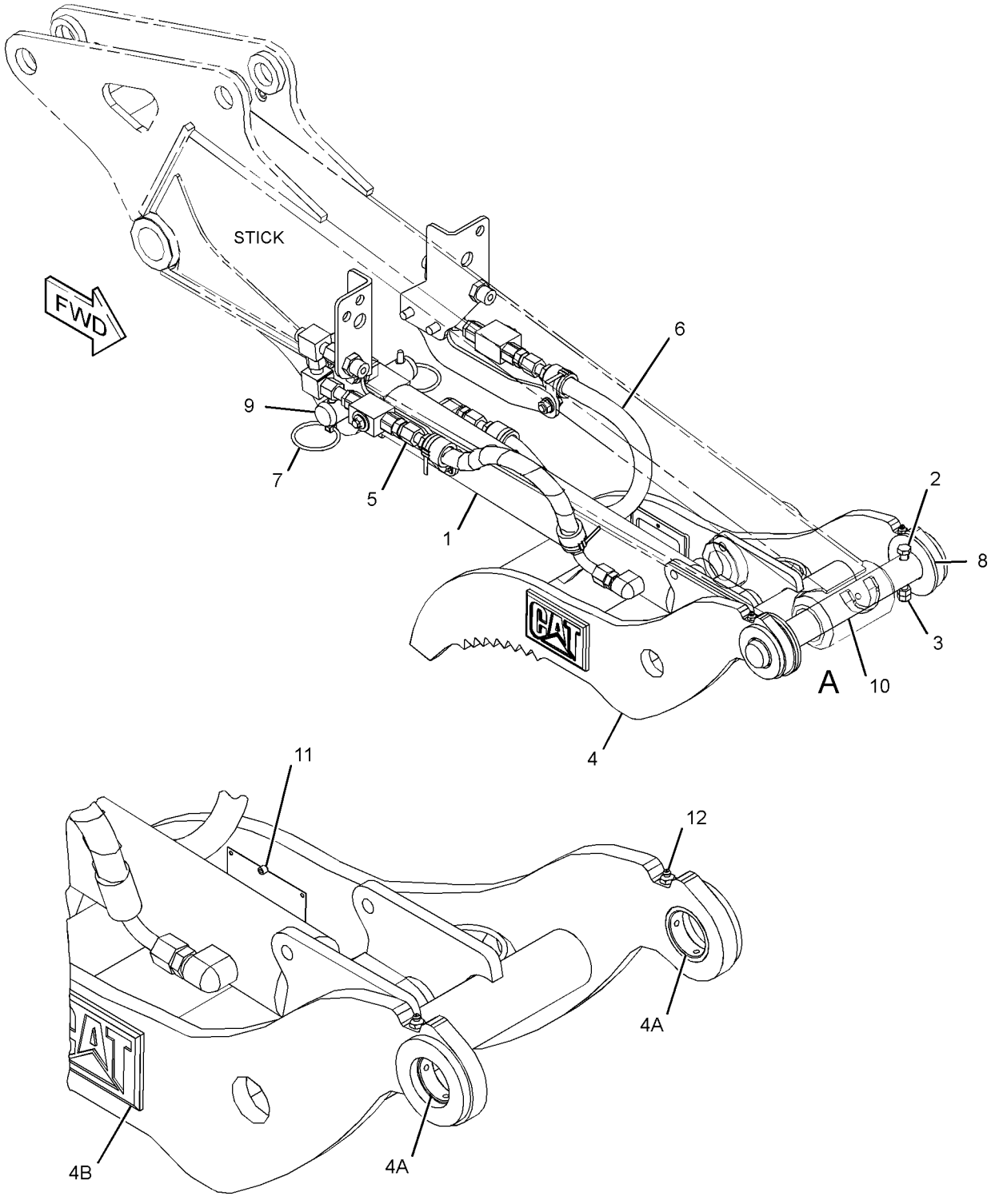

VIEW OF AREA A
(PARTS REMOVED FOR CLARITY)

GRAPHIC #1 **<END>** g03400793

309-1938 THUMB GP

AN ATTACHMENT

SMCS-6547 **i05353488**

NOTE	REF NO	GRAPHIC REF	PART NUMBER	QTY	PART NAME 1 2 3 4 5 6 (PRODUCT LEVEL)	SEE PAGE
	1	1	**204-4976**	3	SPACER (42X90X5-MM THK)	
	2	1	**267-9485**	2	PIN	
Y	3	1	**268-8224**	1	CYLINDER GP-HYDRAULIC	196
M	4	1	**8T-4172**	1	BOLT (M10X1.5X80-MM)	
	5	1	**280-8984**	1	PIN	
M	6	1	**8T-4133**	2	NUT (M10X1.5-THD)	
	7	1	**309-6778**	1	FRAME AS	
	7A	1	**204-4961**	2	BUSHING	
Y	8	1	*359-6059*	1	LINES GP-CONNECTING (RH)	231
Y	9	1	*369-3693*	1	LINES GP-CONNECTING (LH)	232
	10	1	**162-7120**	4	PIN	
	11	1	**312-5694**	1	SETSCREW (1/4-20X0.25-IN)	
	12	1	**3B-8489**	2	FITTING-GREASE	
F			**294-0973**	1	TOOL	

F - NOT SHOWN
M - METRIC PART
Y - SEPARATE ILLUSTRATION

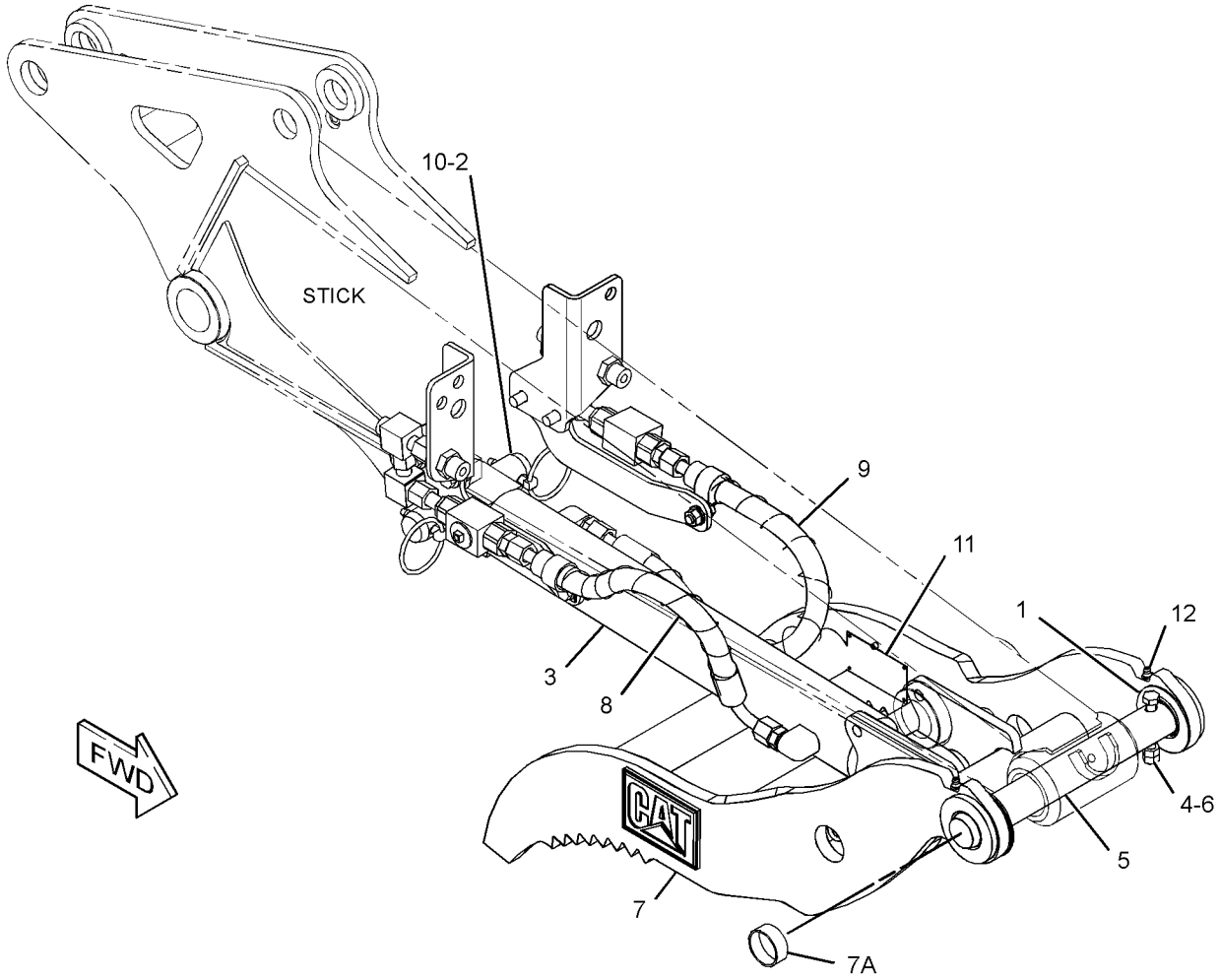

GRAPHIC #1 **<END>** g03407157

282-9307 AIR CONDITIONER & MOUNTING GP

PART OF 377-5876 AIR CONDITIONER GP

AN ATTACHMENT

SMCS-7320 **i05437185**

NOTE	REF NO	GRAPHIC REF	PART NUMBER	QTY	PART NAME 1 2 3 4 5 6 (PRODUCT LEVEL)	SEE PAGE
	1	1	**3S-2093**	1	STRAP-CABLE	
	2	1	**258-6257**	1	TUBE	
Y	3	1	**273-1445**	1	AIR CONDITIONER GP	444
	4	1	**278-7613**	1	PANEL AS-CONTROL (BLOWER, TEMPERATURE)	
	5	1	**278-7614**	1	CABLE AS	
	6	1	**278-7615**	1	CABLE AS	
	7	1	**278-8557**	1	HARNESS AS-HEATER & AIR COND (CAB)	
	8	1	**301-6875**	6	SPACER (10X16X9.5-MM THK)	
	9	1	**095-0912**	1	CLIP	
	10	1	**7X-0579**	6	WASHER-HARD (8.8X25.5X2-MM THK)	
M	11	1	**7Y-3173**	2	SCREW-BUTTON HEAD (M4X0.7X12-MM)	
M	12	1	**8T-4171**	1	BOLT (M6X1X12-MM)	
M	13	1	**8T-4908**	6	BOLT (M8X1.25X25-MM)	
	14	1	**9X-8256**	1	WASHER (6.6X12X2-MM THK)	

M - METRIC PART
Y - SEPARATE ILLUSTRATION

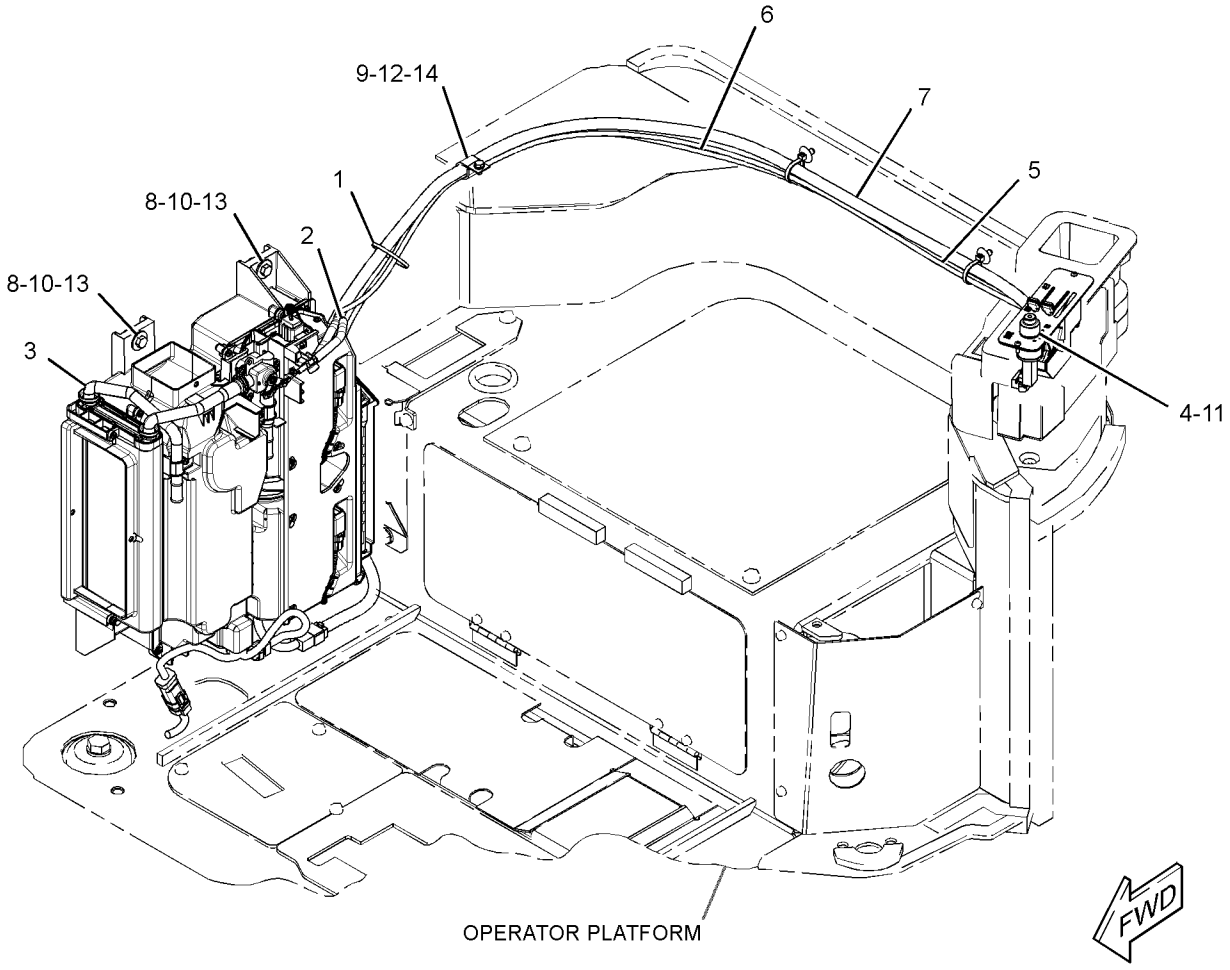

GRAPHIC #1 **<END>** g02168853

273-1445 AIR CONDITIONER GP

PART OF 282-9307 AIR CONDITIONER & MOUNTING GP

AN ATTACHMENT

SMCS-7320 **i03967576**

NOTE	REF NO	GRAPHIC REF	PART NUMBER	QTY	PART NAME 1 2 3 4 5 6 (PRODUCT LEVEL)	SEE PAGE
	1	1	**296-2602**	1	MOTOR AS-BLOWER	
	3	1	**296-2604**	1	FAN	
	6	1	**296-2605**	1	CORE AS-HEATER	
	7	1	**296-2620**	1	RELAY AS (BLOWER MOTOR)	
	9	1	**296-2607**	1	RESISTOR	
	10	1	**296-2608**	1	DOOR AS	
	11	1	**296-2621**	1	HARNESS AS-HEATER & AIR COND	
	13	1	**296-2611**	1	LEVER	
	14	1	**296-2612**	2	CLAMP	
	15	1	**185-8300**	41	SCREW-TAPPING	
	16	1	**296-2615**	2	NUT-FLANGE (M5X0.8-THD)	
	17	1	**296-2616**	2	WASHER	
	18	1	**296-2617**	2	SEAL	
	19	1	**296-2614**	2	LOCK	
	21	1	**336-9693**	1	CASE	
	22	1	**336-9696**	1	CASE-AIR CONDITIONER	
	23	1	**336-9697**	1	CASE-AIR CONDITIONER	
F			**296-2603**	1	FAN	
F			**296-2618**	1	COIL GP-EVAPORATOR	
			296-2622	1	VALVE	
F			**296-2619**	1	SENSOR-TEMPERATURE (REFRIGERANT)	
F			**298-4948**	2	RELAY AS (BLOWER FAN)	
F			**284-5686**	1	FILTER ELEMENT-CAB AIR	
F			**245-7819**	2	CLIP	

F - NOT SHOWN

273-1445 **AIR CONDITIONER GP (*contd.*)** **i03967576**

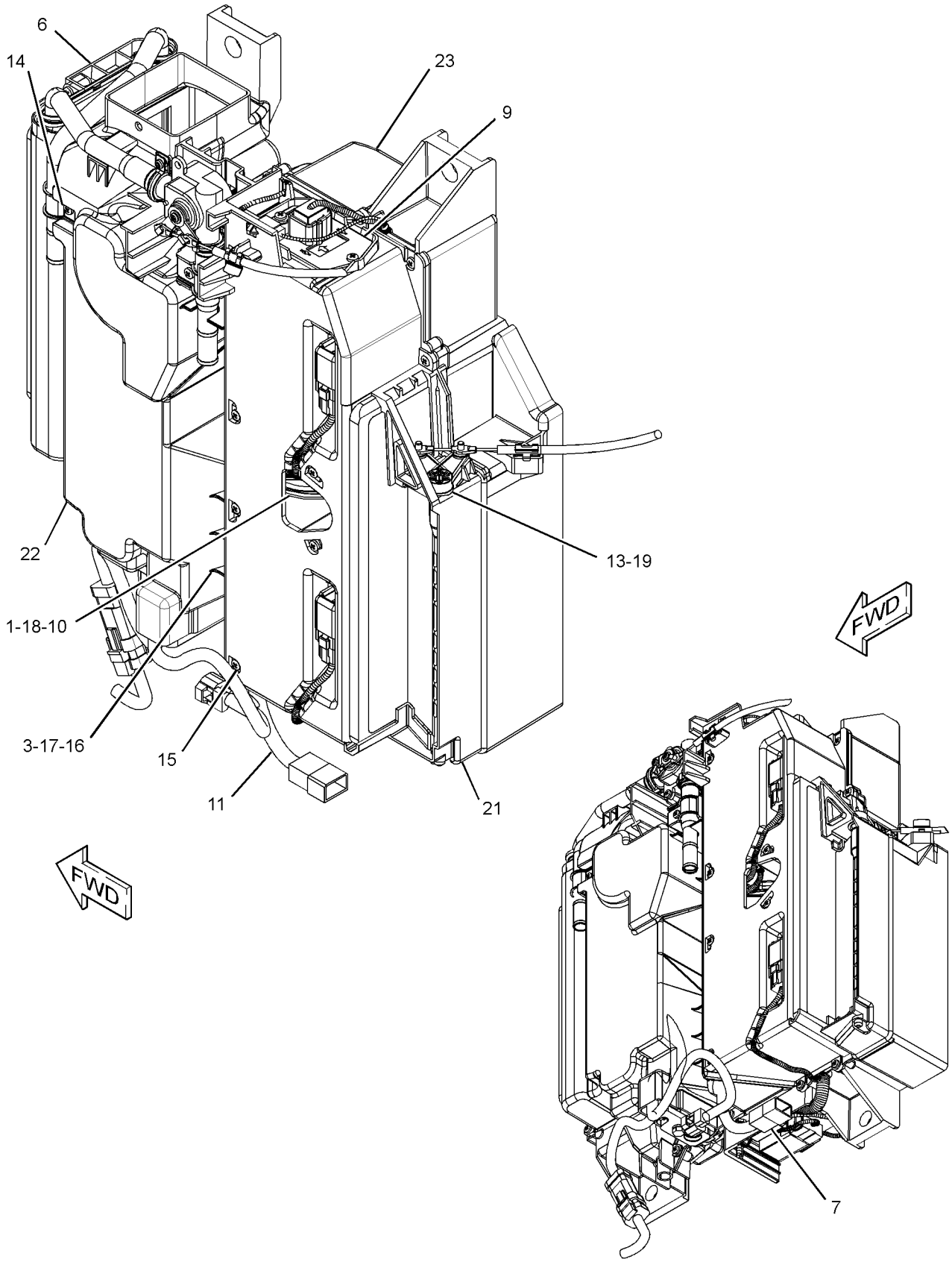

GRAPHIC #1 **<END>** g01945185

377-5876 AIR CONDITIONER GP—WITH AIR DUCT

PART OF 376-6692, 383-5927 CAB AR

AN ATTACHMENT

SMCS-7320 **i04565446**

NOTE	PART NUMBER	QTY	PART NAME 1 2 3 4 5 6 (PRODUCT LEVEL)	SEE PAGE
Y	*282-9307*	1	AIR CONDITIONER & MOUNTING GP	443
Y	*377-5865*	1	DUCT GP-CAB AIR	499

Y - SEPARATE ILLUSTRATION

<END>

376-6692 CAB AR—WITH AIR CONDITIONER

AN ATTACHMENT

SMCS-7301 **i05393129**

NOTE	PART NUMBER	QTY	PART NAME 1 2 3 4 5 6 (PRODUCT LEVEL)	SEE PAGE
Y	*377-5876*	1	AIR CONDITIONER GP (WITH AIR DUCT)	446
Y	*370-5342*	1	BATTERY & WIRING GP (CAB)	69
Y	*377-5107*	1	CAB GP	449
Y	*378-1272*	1	COMPRESSOR GP-REFRIGERANT	474
Y	*380-6389*	1	CONDENSER & MTG GP-REFRIGERANT	475
Y	*367-0950*	1	COVER GP-CAB (TOP)	496
Y	*380-6393*	1	GUARD GP-FAN	19
Y	*379-4711*	1	LINES GP-AIR CONDITIONER	510
Y	*380-6388*	1	MOUNTING GP-ENGINE	24
Y	*377-9714*	1	PLATE & FILM GP (CAB)	567
Y	*379-3625*	1	PLATFORM GP-OPERATOR (CAB)	532
Y	*421-2718*	1	VALVE & MTG GP-PILOT (CAB)	312
			S/N: RKY1466-UP	
Y	*379-3626*	1	WASHER GP-WINDOW	541
Y	*370-5349*	1	WIRING GP-CONSOLE (CAB)	99
Y	*370-5348*	1	WIRING GP-ENGINE (REFRIGERANT COMPRESSOR)	113
	377-5934	1	FLOOR MAT	
	384-5671	1	FLOOR MAT	

Y - SEPARATE ILLUSTRATION

<END>

376-6696 CAB AR—WITH HEATER
AN ATTACHMENT

SMCS-7301 **i05393113**

NOTE	PART NUMBER	QTY	PART NAME 1 2 3 4 5 6 (PRODUCT LEVEL)	SEE PAGE
Y	*370-5342*	1	BATTERY & WIRING GP (CAB)	69
Y	*377-5107*	1	CAB GP	449
Y	*367-0950*	1	COVER GP-CAB (TOP)	496
Y	*377-9715*	1	FILM GP (CAB HEATER)	550
Y	*380-6393*	1	GUARD GP-FAN	19
Y	*378-1293*	1	HEATER AR-CAB	505
Y	*379-4712*	1	LINES GP-HEATER	514
Y	*380-6385*	1	MOUNTING GP-ENGINE	23
Y	*379-3625*	1	PLATFORM GP-OPERATOR (CAB)	532
Y	*421-2718*	1	VALVE & MTG GP-PILOT (CAB)	312
			S/N: RKY1466-UP	
Y	*379-3626*	1	WASHER GP-WINDOW	541
Y	*370-5349*	1	WIRING GP-CONSOLE (CAB)	99
	377-5934	1	FLOOR MAT	
	384-5671	1	FLOOR MAT	

Y - SEPARATE ILLUSTRATION

<END>

383-5927 CAB AR—WITH AIR CONDITIONER
AN ATTACHMENT

SMCS-7301 **i05393127**

NOTE	PART NUMBER	QTY	PART NAME 1 2 3 4 5 6 (PRODUCT LEVEL)	SEE PAGE
Y	*377-5876*	1	AIR CONDITIONER GP (WITH AIR DUCT)	446
Y	*370-5342*	1	BATTERY & WIRING GP (CAB)	69
Y	*389-8690*	1	CAB GP	457
Y	*378-1272*	1	COMPRESSOR GP-REFRIGERANT	474
Y	*380-6389*	1	CONDENSER & MTG GP-REFRIGERANT	475
Y	*367-0950*	1	COVER GP-CAB (TOP)	496
Y	*389-8776*	1	FILM GP (FRONT GUARD)	554
Y	*380-6393*	1	GUARD GP-FAN	19
Y	*379-4711*	1	LINES GP-AIR CONDITIONER	510
Y	*334-1186*	1	MIRROR GP-REAR VIEW (CAB, WITH FRONT GUARD)	521
Y	*380-6388*	1	MOUNTING GP-ENGINE	24
Y	*377-9714*	1	PLATE & FILM GP (CAB)	567
Y	*379-3625*	1	PLATFORM GP-OPERATOR (CAB)	532
Y	*421-2718*	1	VALVE & MTG GP-PILOT	312
			S/N: RKY1466-UP	
Y	*379-3626*	1	WASHER GP-WINDOW	541
Y	*370-5349*	1	WIRING GP-CONSOLE (CAB)	99
Y	*370-5348*	1	WIRING GP-ENGINE (REFRIGERANT COMPRESSOR)	113
	377-5934	1	FLOOR MAT	
	384-5671	1	FLOOR MAT	

Y - SEPARATE ILLUSTRATION

<END>

OPERATOR STATION

383-5928 CAB AR—WITH HEATER

AN ATTACHMENT

SMCS-7301 **i05393134**

NOTE	PART NUMBER	QTY	PART NAME 1 2 3 4 5 6 (PRODUCT LEVEL)	SEE PAGE
Y	*370-5342*	1	BATTERY & WIRING GP (CAB)	69
Y	*389-8690*	1	CAB GP	457
Y	*367-0950*	1	COVER GP-CAB (TOP)	496
Y	*377-9715*	1	FILM GP (CAB HEATER)	550
Y	*389-8776*	1	FILM GP (FRONT GUARD)	554
Y	*380-6393*	1	GUARD GP-FAN	19
Y	*378-1293*	1	HEATER AR-CAB	505
Y	*379-4712*	1	LINES GP-HEATER	514
Y	*334-1186*	1	MIRROR GP-REAR VIEW (CAB, WITH FRONT GUARD)	521
Y	*380-6385*	1	MOUNTING GP-ENGINE	23
Y	*379-3625*	1	PLATFORM GP-OPERATOR (CAB)	532
Y	*421-2718*	1	VALVE & MTG GP-PILOT	312
			S/N: RKY1466-UP	
Y	*379-3626*	1	WASHER GP-WINDOW	541
Y	*370-5349*	1	WIRING GP-CONSOLE (CAB)	99
	377-5934	1	FLOOR MAT	
	384-5671	1	FLOOR MAT	

Y - SEPARATE ILLUSTRATION

<END>

377-5107 CAB GP

S/N: RKY1-1048
PART OF 376-6692, 376-6696 CAB AR
AN ATTACHMENT

SMCS-7301 **i04637990**

NOTE	REF NO	GRAPHIC REF	PART NUMBER	QTY	PART NAME 1 2 3 4 5 6 (PRODUCT LEVEL)	SEE PAGE
	1	1	**178-7539**	1	RECEPTACLE AS (POWER SUPPLY)	
	2	1	**276-9997**	1	SEAL	
	3	1	**282-9679**	5	SEAL	
	4	1	**283-7333**	1	INSULATION	
	5	1	**283-7365**	1	INSULATION	
Y	6	1	**377-5108**	1	CAB GP	455
	7	1	**379-1946**	1	COVER	
	8	1	**379-2026**	1	HOLDER	
	9	1	**379-2027**	1	BRACKET AS	
M		1	**6V-9632**	2	NUT-WELD (M6X1-THD)	
M		1	**9X-2032**	2	NUT-WELD (M4X0.7-THD)	
		1	**379-2028**	1	BRACKET	
	10	1	**387-4695**	1	INSULATION	
M	11	1	**8T-4176**	3	BOLT (M12X1.75X90-MM)	
M	12	1	**8T-4199**	2	BOLT (M8X1.25X12-MM)	
M	13	1	**8T-4200**	2	BOLT (M8X1.25X16-MM)	
	14	1	**8T-4223**	12	WASHER-HARD (13.5X25.5X3-MM THK)	
	15	1	**8T-4224**	4	WASHER-HARD (8.8X16X2-MM THK)	
M	16	1	**8T-4956**	9	BOLT (M12X1.75X35-MM)	
M	17	1	**9X-2042**	2	SCREW-TRUSS HEAD (M6X1X12-MM)	
E	18	1	**7X-7877**		STRIP-EDGING (5-CM EACH)	

E - ORDER BY THE CENTIMETER
M - METRIC PART
Y - SEPARATE ILLUSTRATION

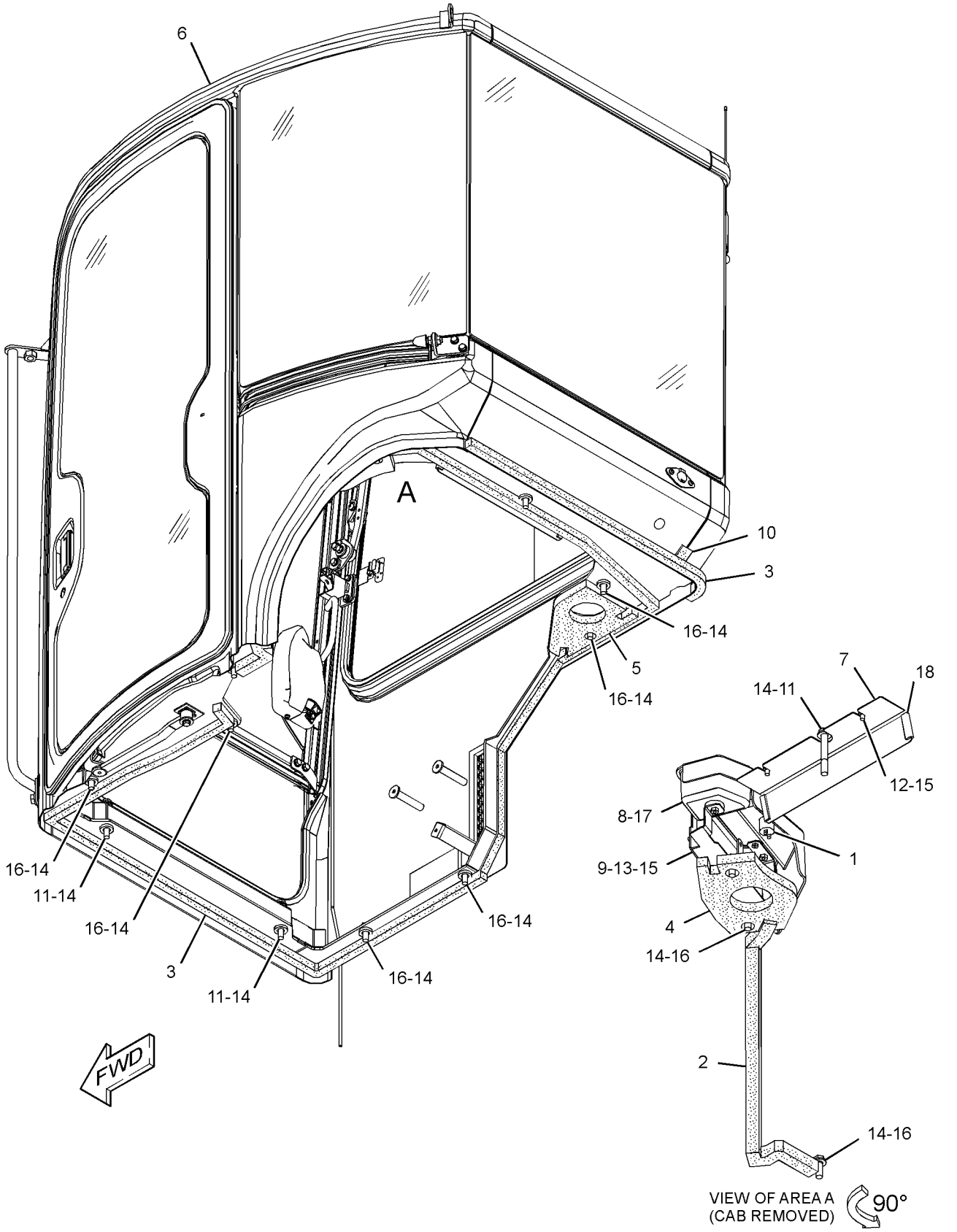

GRAPHIC #1 **<END>** g02794908

OPERATOR STATION

377-5107 CAB GP

S/N: RKY1049-1194
PART OF 376-6692, 376-6696 CAB AR
AN ATTACHMENT

SMCS-7301 **i05355900**

NOTE	REF NO	GRAPHIC REF	PART NUMBER	QTY	PART NAME 1 2 3 4 5 6 (PRODUCT LEVEL)	SEE PAGE
	1	1	**178-7539**	1	RECEPTACLE AS (POWER SUPPLY)	
	2	1	**276-9997**	1	SEAL	
	3	1	**282-9679**	5	SEAL	
	4	1	**283-7333**	1	INSULATION	
	5	1	**283-7365**	1	INSULATION	
CY	6	1	**415-6803**	1	CAB GP	462
	7	1	**379-1946**	1	COVER	
	8	1	**379-2026**	1	HOLDER	
	9	1	**379-2027**	1	BRACKET AS	
M		1	**6V-9632**	2	NUT-WELD (M6X1-THD)	
M		1	**9X-2032**	2	NUT-WELD (M4X0.7-THD)	
		1	**379-2028**	1	BRACKET	
	10	1	**387-4695**	1	INSULATION	
M	11	1	**8T-4176**	3	BOLT (M12X1.75X90-MM)	
M	12	1	**8T-4199**	2	BOLT (M8X1.25X12-MM)	
M	13	1	**8T-4200**	2	BOLT (M8X1.25X16-MM)	
	14	1	**8T-4223**	12	WASHER-HARD (13.5X25.5X3-MM THK)	
	15	1	**8T-4224**	4	WASHER-HARD (8.8X16X2-MM THK)	
M	16	1	**8T-4956**	9	BOLT (M12X1.75X35-MM)	
M	17	1	**9X-2042**	2	SCREW-TRUSS HEAD (M6X1X12-MM)	
E	18	1	**7X-7877**		STRIP-EDGE (5-CM EACH)	

C - CHANGE FROM PREVIOUS TYPE
E - ORDER BY THE CENTIMETER
M - METRIC PART
Y - SEPARATE ILLUSTRATION

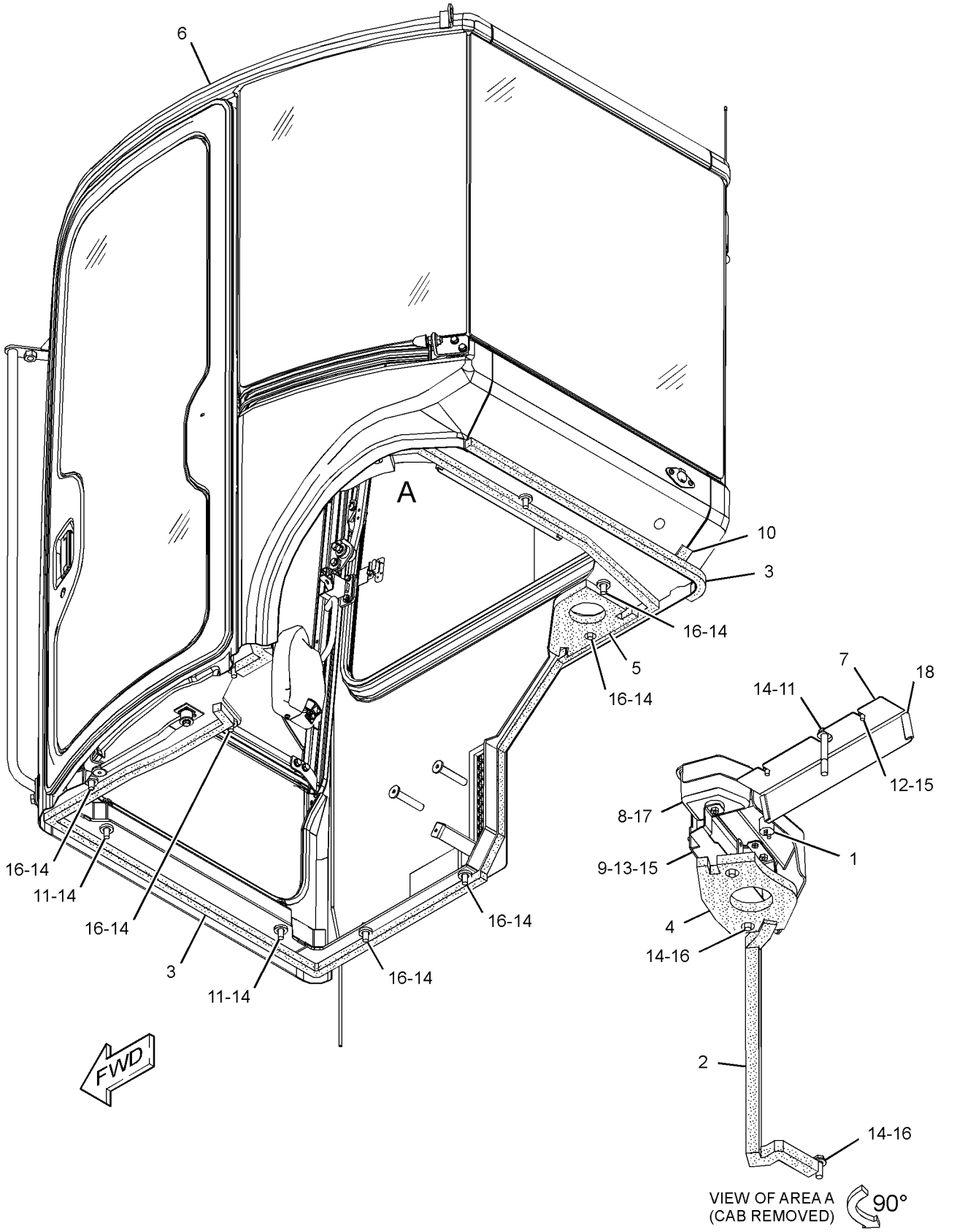

GRAPHIC #1 **<END>** g02794908

377-5107 CAB GP

S/N: RKY1195-UP
PART OF 376-6692, 376-6696 CAB AR
AN ATTACHMENT

SMCS-7301 **i05378256**

NOTE	REF NO	GRAPHIC REF	PART NUMBER	QTY	PART NAME 1 2 3 4 5 6 (PRODUCT LEVEL)	SEE PAGE
	1	1	**178-7539**	1	RECEPTACLE AS (POWER SUPPLY)	
	2	1	**276-9997**	1	SEAL	
	3	1	**282-9679**	5	SEAL	
	4	1	**283-7333**	1	INSULATION	
	5	1	**283-7365**	1	INSULATION	
CY	6	1	**419-1237**	1	CAB GP	469
	7	1	**379-1946**	1	COVER	
	8	1	**379-2026**	1	HOLDER	
	9	1	**379-2027**	1	BRACKET AS	
M		1	**6V-9632**	2	NUT-WELD (M6X1-THD)	
M		1	**9X-2032**	2	NUT-WELD (M4X0.7-THD)	
		1	**379-2028**	1	BRACKET	
	10	1	**387-4695**	1	INSULATION	
M	11	1	**8T-4176**	3	BOLT (M12X1.75X90-MM)	
M	12	1	**8T-4199**	2	BOLT (M8X1.25X12-MM)	
M	13	1	**8T-4200**	2	BOLT (M8X1.25X16-MM)	
	14	1	**8T-4223**	12	WASHER-HARD (13.5X25.5X3-MM THK)	
	15	1	**8T-4224**	4	WASHER-HARD (8.8X16X2-MM THK)	
M	16	1	**8T-4956**	9	BOLT (M12X1.75X35-MM)	
M	17	1	**9X-2042**	2	SCREW-TRUSS HEAD (M6X1X12-MM)	
E	18	1	**7X-7877**		STRIP-EDGE (5-CM EACH)	

C - CHANGE FROM PREVIOUS TYPE
E - ORDER BY THE CENTIMETER
M - METRIC PART
Y - SEPARATE ILLUSTRATION

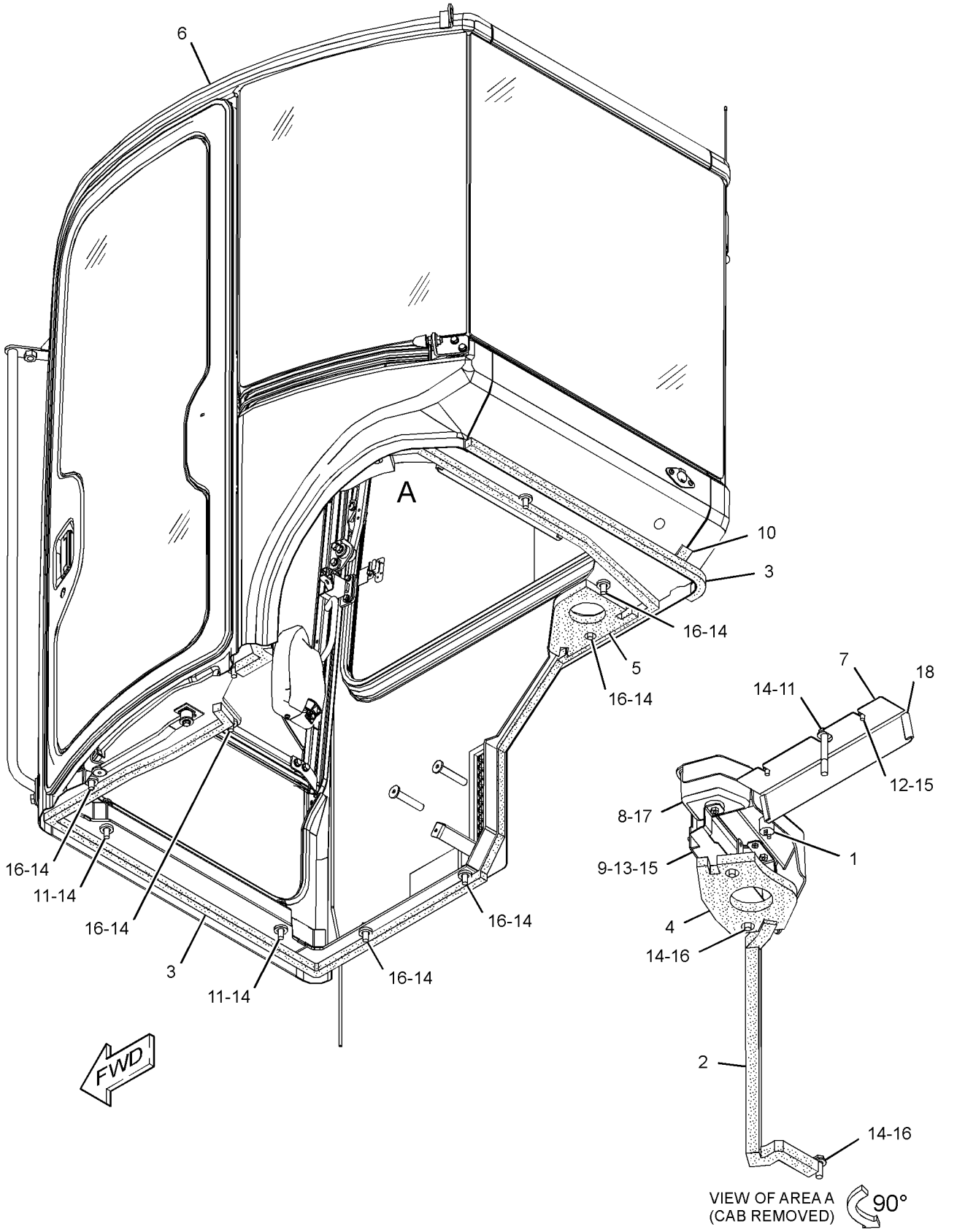

GRAPHIC #1 **<END>** g02794908

OPERATOR STATION

377-5108 CAB GP

S/N: RKY1-1048
PART OF 377-5107, 389-8701 CAB GP
AN ATTACHMENT

SMCS-7301 **i05437187**

NOTE	PART NUMBER	QTY	PART NAME 1 2 3 4 5 6 (PRODUCT LEVEL)	SEE PAGE
Y	*281-1195*	1	DOOR GP-CAB	497
Y	*281-1186*	1	LINK GP-WINDOW	516
Y	*280-0421*	1	WINDOW GP-CAB	542
Y	**281-4451**	1	WINDOW GP-SLIDING	544
	324-5828	1	ANTENNA AS	
	280-8625	1	ARM AS (RH)	
	280-8626	1	ARM AS (LH)	
M	**8T-4137**	1	BOLT (M10X1.5X20-MM)	
	280-0407	10	BOLT	
	280-0408	10	BOLT	
	281-5483	3	BOLT	
	281-5485	2	BOLT	
	281-5487	7	BOLT	
	281-5488	2	BOLT	
	196-1550	1	BRACKET AS	
	127-3947	1	BUMPER	
	280-8603	4	BUSHING	
	379-3627	1	CAB AS	
	380-7148	8	CLIP	
	380-7149	1	COVER AS	
	281-3653	1	CUSHION	
	281-3654	1	CUSHION	
	214-3962	2	DAMPER	
	281-1155	1	GLASS (LH)	
	281-1149	1	GLASS-FRONT (LOWER)	
	281-1154	1	GLASS-REAR	
	281-1164	2	GRILL	
	127-4006	1	GROMMET	
	280-8618	1	HAMMER	
	284-6176	1	HANDLE	
	379-3629	1	HARNESS AS-CAB	
	285-4408	1	HARNESS AS-WIRING (WIPER MOTOR)	
	277-6028	1	HOLDER	
	277-6029	1	HOLDER	
	288-1386	2	HOLDER	
	4I-4270	1	HOLDER-GLASS	
	127-3925	1	HOOK	
	281-3658	1	HOSE	
	281-1159	1	LAMP AS (12-VOLT, 5-WATT)	
	303-9236	1	LAMP (12-VOLT, 5-WATT)	
	379-3630	1	LINER	
	305-5848	1	LINK AS	
	127-3926	1	NOZZLE	
M	**8T-4133**	4	NUT (M10X1.5-THD)	
M	**095-1207**	4	NUT (M12X1.75-THD)	
	281-5497	3	NUT	
	280-8590	1	PLATE	
	280-8611	1	PLATE	
	281-1162	1	PLATE	
	281-9614	1	PLATE	
	285-6278	1	PLATE	
	332-4162	1	PLATE	
	280-8598	1	RAIL	
	281-5479	8	SCREW	
	281-5480	2	SCREW	
	281-5492	4	SCREW	
	281-5508	2	SCREW	
	281-5509	1	SCREW	

377-5108 **CAB GP (*contd.*)** **i05437187**

NOTE	PART NUMBER	QTY	PART NAME 1 2 3 4 5 6 (PRODUCT LEVEL)	SEE PAGE
	282-2725	4	SCREW	
	263-3003	2	SCREW (M6X1X16-MM)	
M	**6V-9672**	2	SCREW-MACHINE (M4X0.7X16-MM)	
M	**8T-6411**	3	SCREW-MACHINE (M6X1X12-MM)	
M	**3E-8020**	2	SCREW-TRUSS HEAD (M6X1X25-MM)	
M	**7Y-5292**	6	SCREW-TRUSS HEAD (SELF-TAPPING)	
M	**9X-2042**	8	SCREW-TRUSS HEAD (M6X1X12-MM)	
M	**9X-2043**	5	SCREW-TRUSS HEAD (M6X1X14-MM)	
	280-8599	1	SEAL	
	281-3651	1	SEAL	
	281-3660	1	SEAL	
	281-3661	1	SEAL	
	281-3662	1	SEAL	
	281-4452	1	SEAL	
	281-4453	1	SEAL	
	284-6179	1	SEAL	
	285-4493	1	SEAL	
	380-7163	2	SHIM (1.6-MM THK)	
	207-1686	1	SOCKET	
	281-1153	10	SPACER	
	203-4455	2	SPEAKER	
	127-3987	2	STOP	
	280-8597	2	STOP	
	281-6196	1	STOP	
	288-1388	1	STOP	
	288-1389	1	STOP	
	214-3956	1	STRAP	
	281-7860	9	STRAP	
	8L-8413	4	STRAP-CABLE	
	196-1479	2	STRIKER	
	280-8595	2	STRIKER	
	280-8604	1	STRIKER	
	280-8605	1	STRIKER	
	280-8607	2	STRIKER	
	127-3927	1	STRIP	
	207-0236	1	TAPE-ADHESIVE	
	214-3968	3	WASHER (8.5X30X3.2-MM THK)	
	214-3969	2	WASHER (16X26X0.5-MM THK)	
	280-8588	1	WASHER (11.5X40X4.5-MM THK)	
	281-5496	4	WASHER	
	281-5507	1	WASHER	
	8T-4223	4	WASHER-HARD (13.5X25.5X3-MM THK)	
	8T-4224	3	WASHER-HARD (8.8X16X2-MM THK)	
	8T-4222	2	WASHER-PLATED (11X32X2.5-MM THK)	
	271-5317	1	WINDOW-ROOF	

M - METRIC PART
Y - SEPARATE ILLUSTRATION

<END>

389-8690 CAB GP

PART OF 383-5927, 383-5928 CAB AR

AN ATTACHMENT

SMCS-7301 **i04633252**

NOTE	REF NO	GRAPHIC REF	PART NUMBER	QTY	PART NAME 1 2 3 4 5 6 (PRODUCT LEVEL)	SEE PAGE
	1	1	**178-7539**	1	RECEPTACLE AS (POWER SUPPLY)	
	2	1	**276-9997**	1	SEAL	
	3	1	**282-9679**	5	SEAL	
	4	1	**283-7333**	1	INSULATION	
	5	1	**283-7365**	1	INSULATION	
Y	6	1	*389-8701*	1	CAB GP	459
	7	1	**379-1946**	1	COVER	
	8	1	**379-2026**	1	HOLDER	
	9	1	**379-2027**	1	BRACKET AS	
M		1	**6V-9632**	2	NUT-WELD (M6X1-THD)	
M		1	**9X-2032**	2	NUT-WELD (M4X0.7-THD)	
		1	**379-2028**	1	BRACKET	
	10	1	**387-4695**	1	INSULATION	
M	11	1	**8T-4176**	3	BOLT (M12X1.75X90-MM)	
M	12	1	**8T-4199**	2	BOLT (M8X1.25X12-MM)	
M	13	1	**8T-4200**	2	BOLT (M8X1.25X16-MM)	
	14	1	**8T-4223**	12	WASHER-HARD (13.5X25.5X3-MM THK)	
	15	1	**8T-4224**	4	WASHER-HARD (8.8X16X2-MM THK)	
M	16	1	**8T-4956**	9	BOLT (M12X1.75X35-MM)	
M	17	1	**9X-2042**	2	SCREW-TRUSS HEAD (M6X1X12-MM)	
E	18	1	**7X-7877**		STRIP-EDGING (10-CM)	

E - ORDER BY THE CENTIMETER
M - METRIC PART
Y - SEPARATE ILLUSTRATION

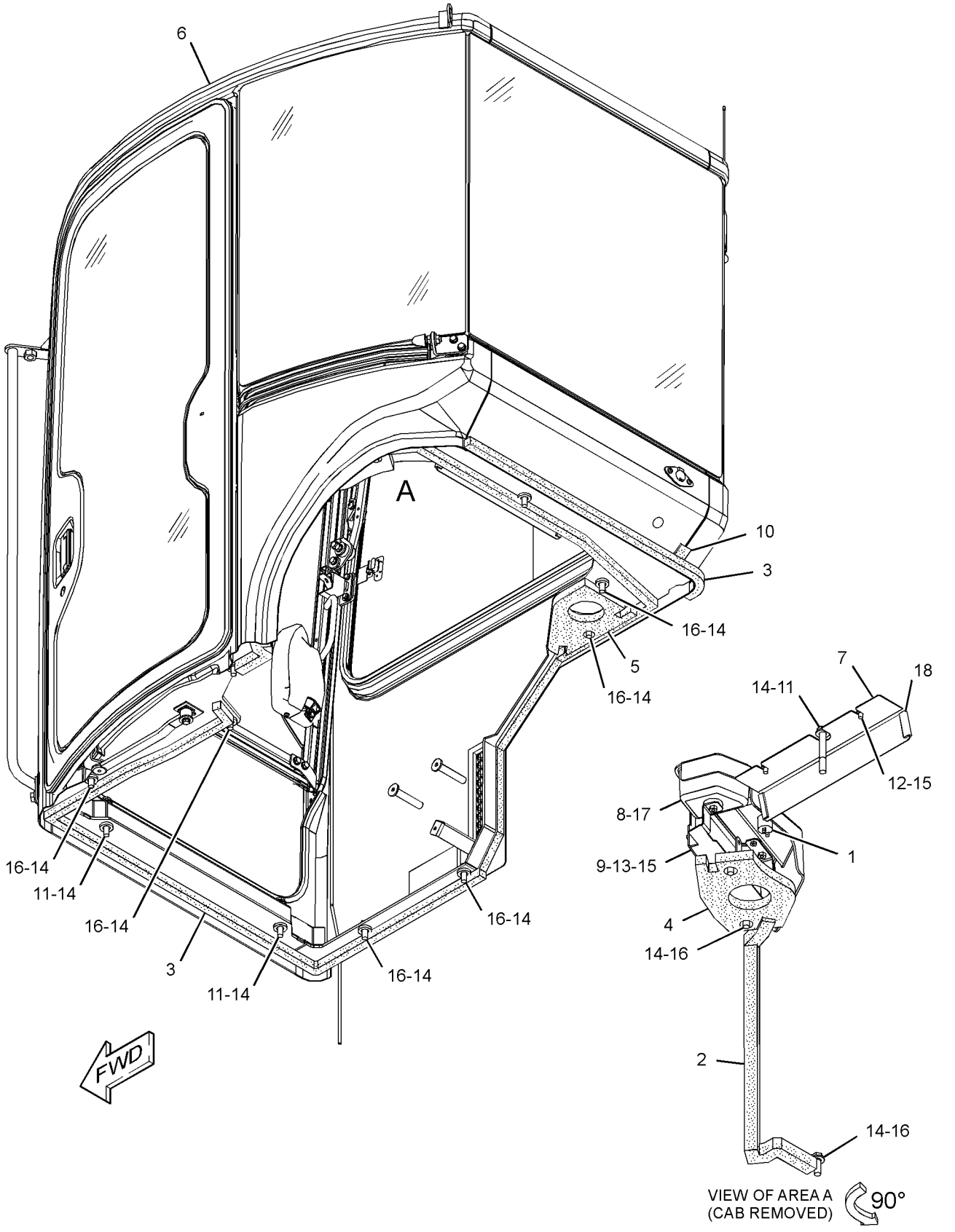

GRAPHIC #1 **<END>** g02794908

389-8701 CAB GP—WITH FRONT GUARD

S/N: RKY1-1048
PART OF 389-8690 CAB GP
AN ATTACHMENT

SMCS-7301 **i04633254**

NOTE	PART NUMBER	QTY	PART NAME 1 2 3 4 5 6 (PRODUCT LEVEL)	SEE PAGE
Y	**377-5108**	1	CAB GP	455
Y	*389-8702*	1	GUARD GP-FRONT (CAB)	148
	281-5487	2	BOLT	
	389-8703	2	BOSS	

Y - SEPARATE ILLUSTRATION

<END>

389-8701 CAB GP—WITH FRONT GUARD

S/N: RKY1049-1194
PART OF 389-8690 CAB GP
AN ATTACHMENT

SMCS-7301 **i05351591**

NOTE	REF NO	GRAPHIC REF	PART NUMBER	QTY	PART NAME 1 2 3 4 5 6 (PRODUCT LEVEL)	SEE PAGE
	1	1	**281-5487**	2	BOLT	
Y	2	1	*389-8702*	1	GUARD GP-FRONT (CAB)	148
CY	3	1	*415-6803*	1	CAB GP	462

C - CHANGE FROM PREVIOUS TYPE
Y - SEPARATE ILLUSTRATION

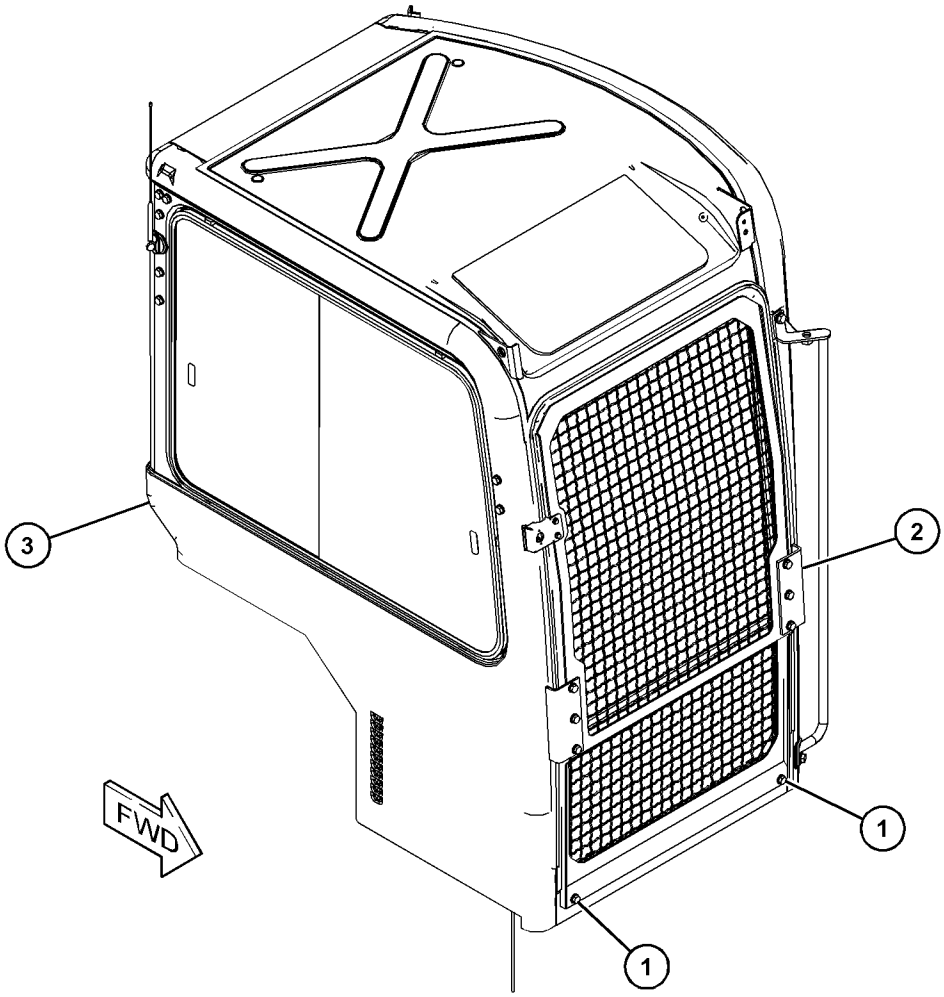

GRAPHIC #1 **<END>** g03397261

389-8701 CAB GP–WITH FRONT GUARD

S/N: RKY1195-UP
PART OF 389-8690 CAB GP
AN ATTACHMENT

SMCS-7301 **i05409771**

NOTE	REF NO	GRAPHIC REF	PART NUMBER	QTY	PART NAME 1 2 3 4 5 6 (PRODUCT LEVEL)	SEE PAGE
CY	1	1	*419-1237*	1	CAB GP	469
Y	2	1	*389-8702*	1	GUARD GP-FRONT (CAB)	148

C - CHANGE FROM PREVIOUS TYPE
Y - SEPARATE ILLUSTRATION

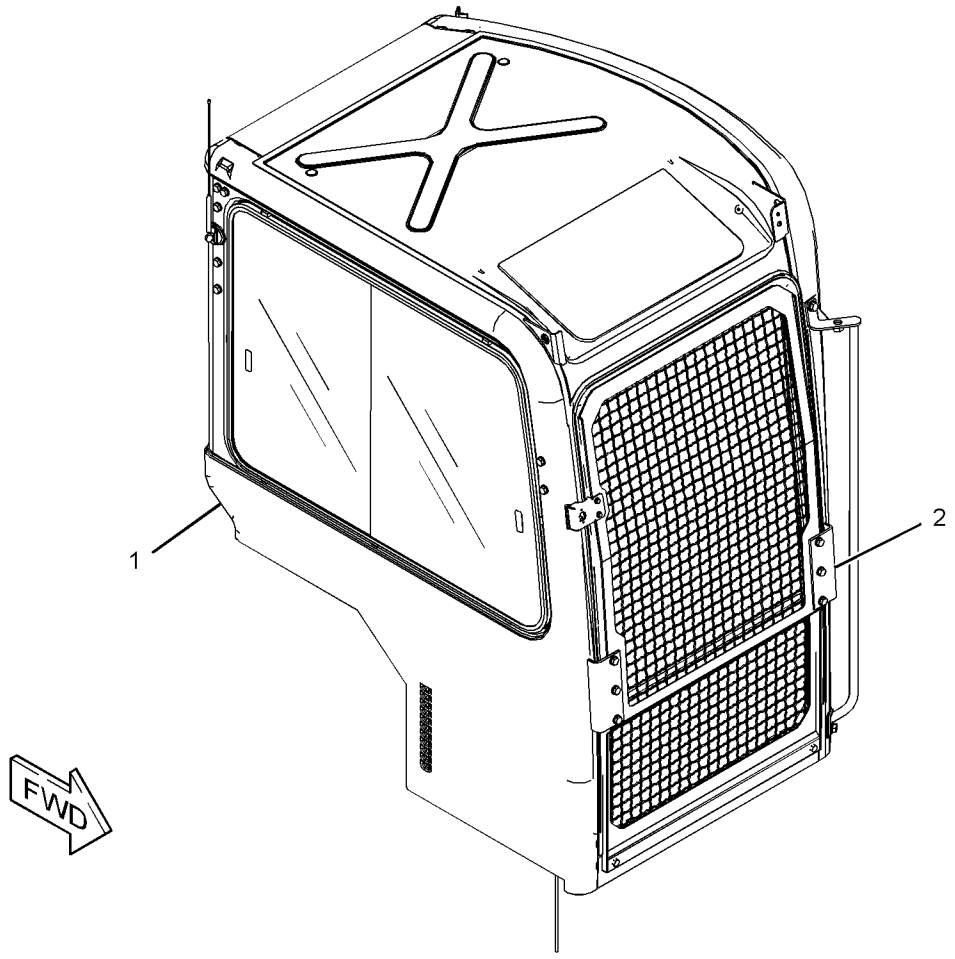

GRAPHIC #1 **<END>** g03417679

OPERATOR STATION

415-6803 CAB GP

S/N: RKY1049-1194
FIELD REPLACEMENT ORDER 419-1237—PAGE: 469
PART OF 377-5107, 389-8701 CAB GP
AN ATTACHMENT

SMCS-7301 **i05437188**

NOTE	REF NO	GRAPHIC REF	PART NUMBER	QTY	PART NAME 1 2 3 4 5 6 (PRODUCT LEVEL)	SEE PAGE
	1	3	**281-9614**	1	PLATE	
Y	2	1	*281-1195*	1	DOOR GP-CAB	497
Y	3	1	*280-0421*	1	WINDOW GP-CAB	542
	4	3	**281-4450**	1	LINK AS	
	5	3	**280-8588**	1	WASHER (11.5X40X4.5-MM THK)	
	6	2,3	**214-3968**	3	WASHER (8.5X30X3.2-MM THK)	
Y	7	3	*281-1186*	1	LINK GP-WINDOW	516
	8	3	**280-8590**	1	PLATE	
	9	3	**127-3947**	1	BUMPER	
M	10	3	**095-1207**	4	NUT (M12X1.75-THD)	
	11	3	**196-1479**	2	STRIKER	
	12	3	**280-8595**	2	STRIKER	
	13	1,3	**280-8597**	2	STOP	
	14	3	**280-8598**	1	RAIL	
	15	3	**280-8599**	1	SEAL	
	16	2	**280-8625**	1	ARM AS (RH)	
	17	3	**280-8626**	1	ARM AS (LH)	
	18	2,3	**214-3969**	4	WASHER (16X26X0.5-MM THK)	
	19	2,3	**214-3962**	2	DAMPER	
	20	2,3	**280-8603**	4	BUSHING	
	21	3	**280-8604**	1	STRIKER	
	22	2	**280-8605**	1	STRIKER	
	23	4	**127-3987**	2	STOP	
	24	2,3	**280-8607**	2	STRIKER	
	25	1	**281-3661**	1	SEAL	
	26	4	**281-3660**	1	SEAL	
	27	1	**281-3662**	1	SEAL	
	28	1	**281-1149**	1	GLASS-FRONT (LOWER)	
	29	1	**288-1386**	2	HOLDER	
	30	1	**281-1150**	2	SEAL	
	31	3	**4I-4270**	1	HOLDER-GLASS	
	32	3	**196-1550**	1	BRACKET AS	
	33	3	**277-6028**	1	HOLDER	
	34	3	**277-6029**	1	HOLDER	
	35	3	**207-0236**	1	TAPE-ADHESIVE	
Y	36	2	**281-4451**	1	WINDOW GP-SLIDING	544
	37	2	**281-4452**	1	SEAL	
	38	2	**281-3651**	1	SEAL	
	39	2	**281-1153**	7	SPACER	
	40	4	**281-1154**	1	GLASS-REAR	
	41	4	**281-3654**	1	CUSHION	
	42	3	**281-1155**	1	GLASS (LH)	
	43	3	**281-3653**	1	CUSHION	
	44	5	**271-5317**	1	WINDOW-ROOF	
	45	5	**281-4453**	1	SEAL	
	47	2	**281-5507**	1	WASHER	
	48	2	**285-4408**	1	HARNESS AS-WIRING (WIPER MOTOR)	
	49	2,3	**281-7860**	10	STRAP	
	51	3	**281-1159**	1	LAMP AS (12-VOLT, 5-WATT)	
		3	**303-9236**	1	LAMP (12-VOLT, 5-WATT)	
	53	2	**281-5508**	2	SCREW	
	56	5	**281-1162**	1	PLATE	
	57	4	**203-4455**	2	SPEAKER	
	58	4	**281-1164**	2	GRILL	
	59	1	**127-3927**	1	STRIP	
	60	1	**127-3926**	1	NOZZLE	

415-6803 **CAB GP (*contd.*)** **i05437188**

NOTE	REF NO	GRAPHIC REF	PART NUMBER	QTY	PART NAME 1 2 3 4 5 6 (PRODUCT LEVEL)	SEE PAGE
	61	1	**281-3658**	1	HOSE	
	62	4	**207-1686**	1	SOCKET	
	63	4	**280-8611**	1	PLATE	
	66	2	**284-6176**	1	HANDLE	
	68	2	**127-3925**	1	HOOK	
	69	3	**280-8618**	1	HAMMER	
	70	3	**281-5509**	1	SCREW	
M	72	3	**9X-2043**	5	SCREW-TRUSS HEAD (M6X1X14-MM)	
M	73	3	**3E-8020**	2	SCREW-TRUSS HEAD (M6X1X25-MM)	
M	74	3	**8T-4137**	1	BOLT (M10X1.5X20-MM)	
	75	4	**281-5479**	8	SCREW	
M	76	3	**6V-9672**	2	SCREW-MACHINE (M4X0.7X16-MM)	
	77	1	**281-5480**	2	SCREW	
M	78	2,4	**8T-6411**	3	SCREW-MACHINE (M6X1X12-MM)	
	80	2,3	**280-0407**	10	BOLT	
	81	3	**281-5485**	2	BOLT	
	82	2,3	**280-0408**	10	BOLT	
	83	2	**281-5487**	7	BOLT	
	84	2	**281-5488**	2	BOLT	
	85	3	**281-5492**	4	SCREW	
M	86	1,2,3	**7Y-5292**	6	SCREW-TRUSS HEAD (SELF-TAPPING)	
	87	3	**281-5496**	4	WASHER	
M	88	1,3,4	**8T-4133**	4	NUT (M10X1.5-THD)	
	89	3	**281-5497**	3	NUT	
	91	3	**8T-4224**	3	WASHER-HARD (8.8X16X2-MM THK)	
	92	3	**8T-4223**	4	WASHER-HARD (13.5X25.5X3-MM THK)	
	93	5	**127-4006**	1	GROMMET	
	96	3	**281-6196**	1	STOP	
	99	5	**214-3956**	1	STRAP	
	100	2	**284-6179**	1	SEAL	
	101	2	**284-6180**	1	SEAL	
	102	2	**285-4493**	1	SEAL	
	103	4	**285-6278**	1	PLATE	
F			**324-5828**	1	ANTENNA AS	
F			**418-1586**	1	CAB AS	
F			**379-3629**	1	HARNESS AS-CAB	
F			**379-3630**	1	LINER	
F			**380-7148**	8	CLIP	
F			**380-7149**	1	COVER AS	
F			**380-7163**	2	SHIM (1.6-MM THK)	
F			**8T-4222**	2	WASHER-PLATED (11X32X2.5-MM THK)	
FM			**9X-2042**	8	SCREW-TRUSS HEAD (M6X1X12-MM)	
F			**281-5483**	3	BOLT	
F			**282-2725**	4	SCREW	
F			**8L-8413**	2	STRAP-CABLE	

F - NOT SHOWN
M - METRIC PART
Y - SEPARATE ILLUSTRATION

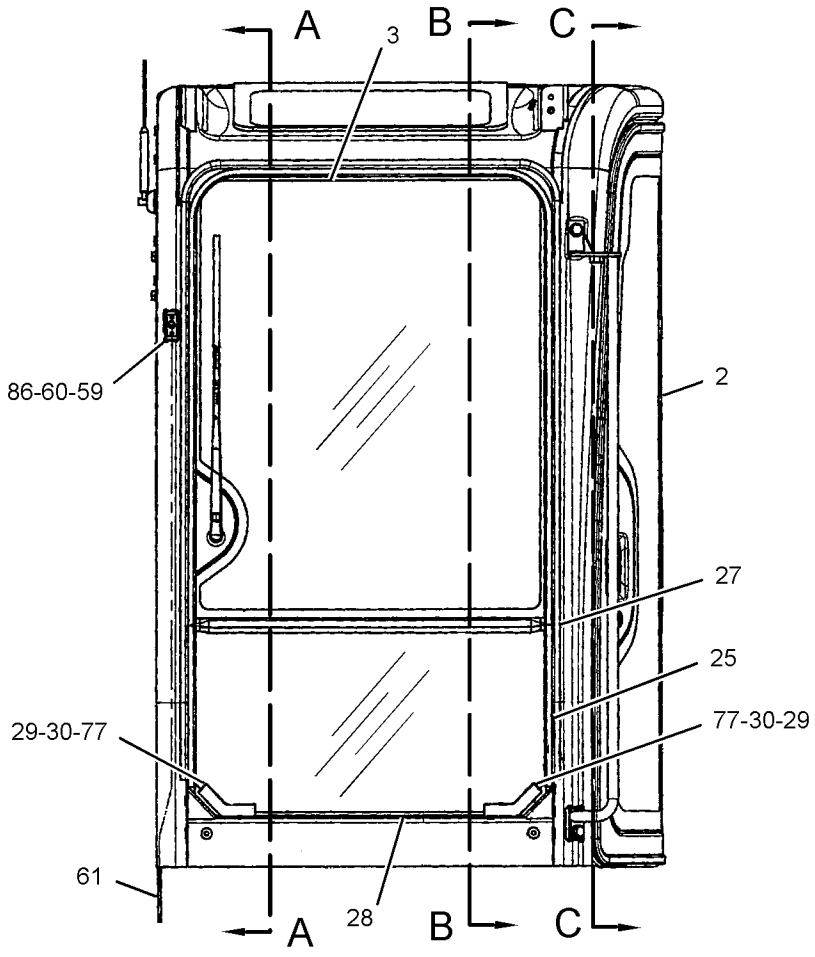

FRONT VIEW

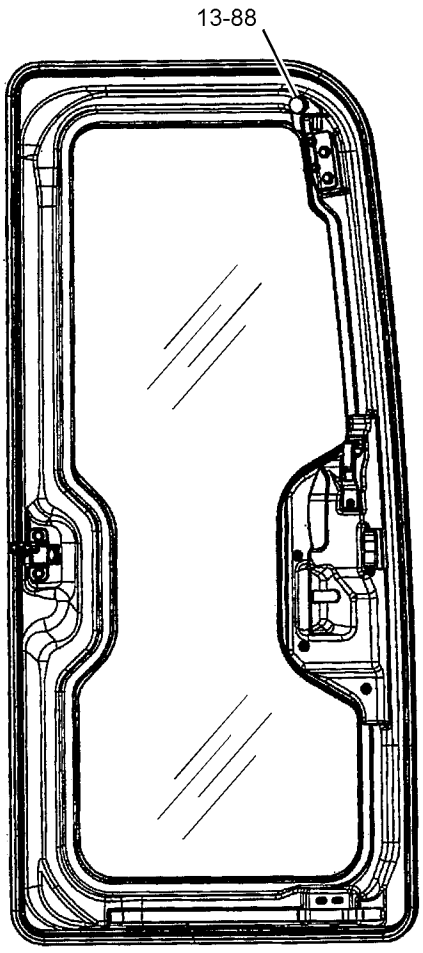

SECTION C-C

REFER TO ALL ILLUSTRATIONS OF
THIS GROUP FOR AUXILIARY VIEWS

GRAPHIC #1 g03401402

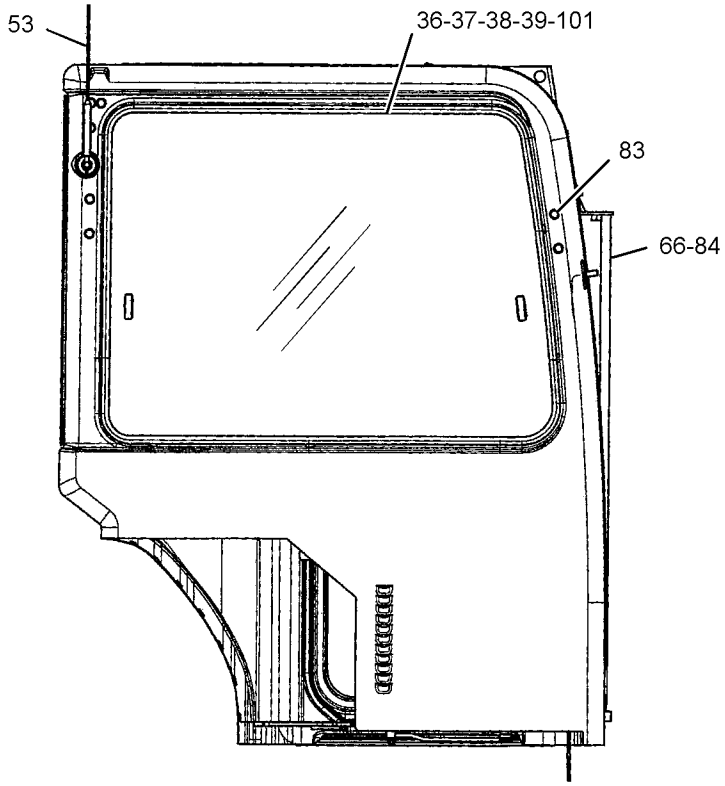

RIGHT SIDE VIEW

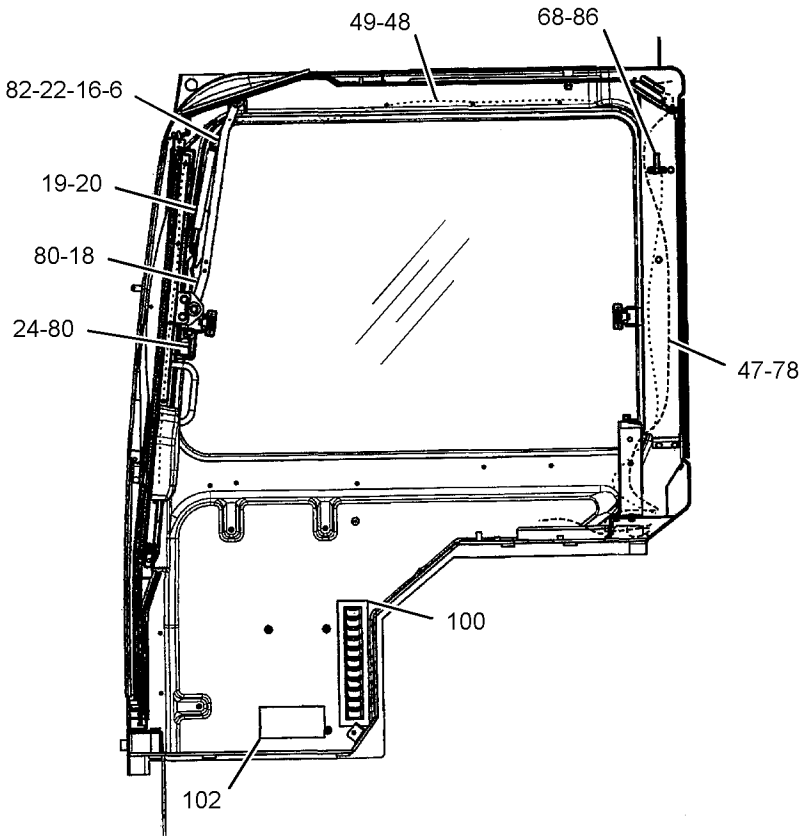

SECTION A-A

GRAPHIC #2 g03401403

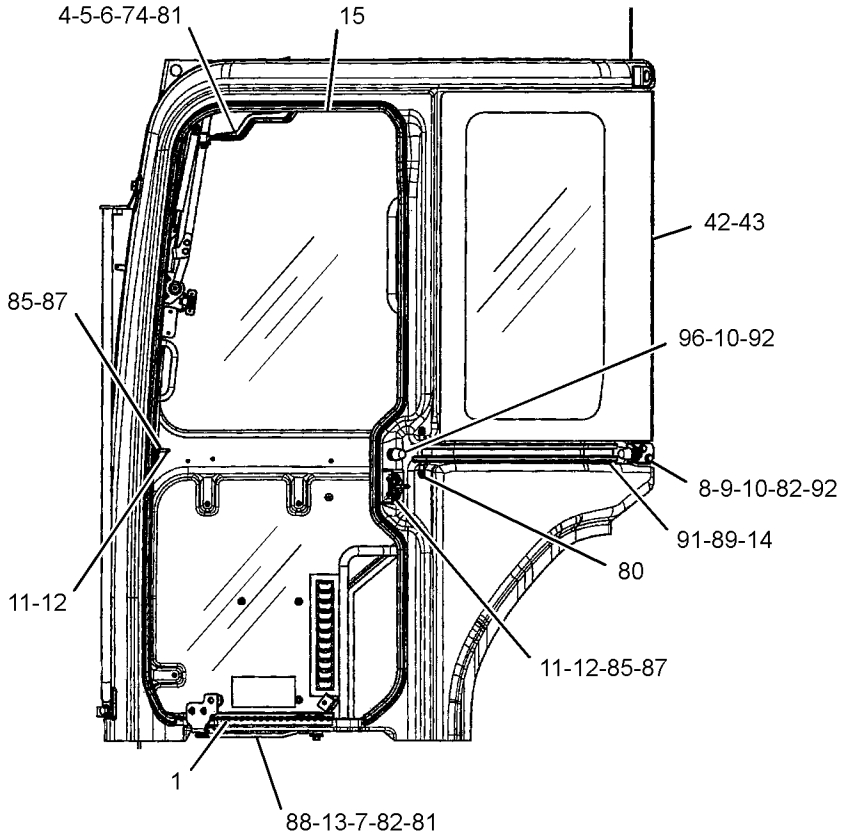

LEFT SIDE VIEW

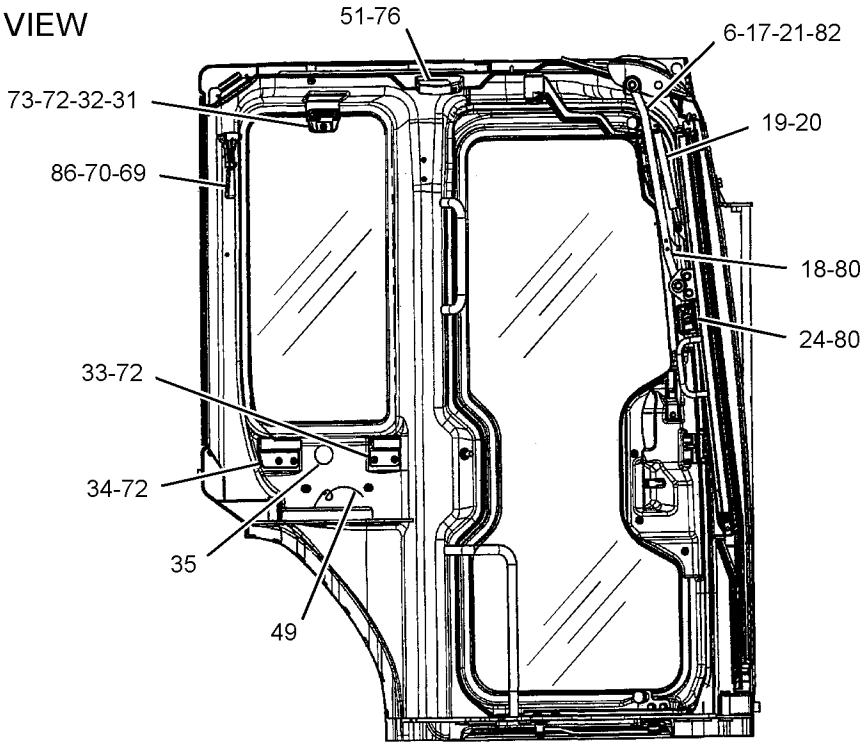

SECTION B-B

GRAPHIC #3 g03401404

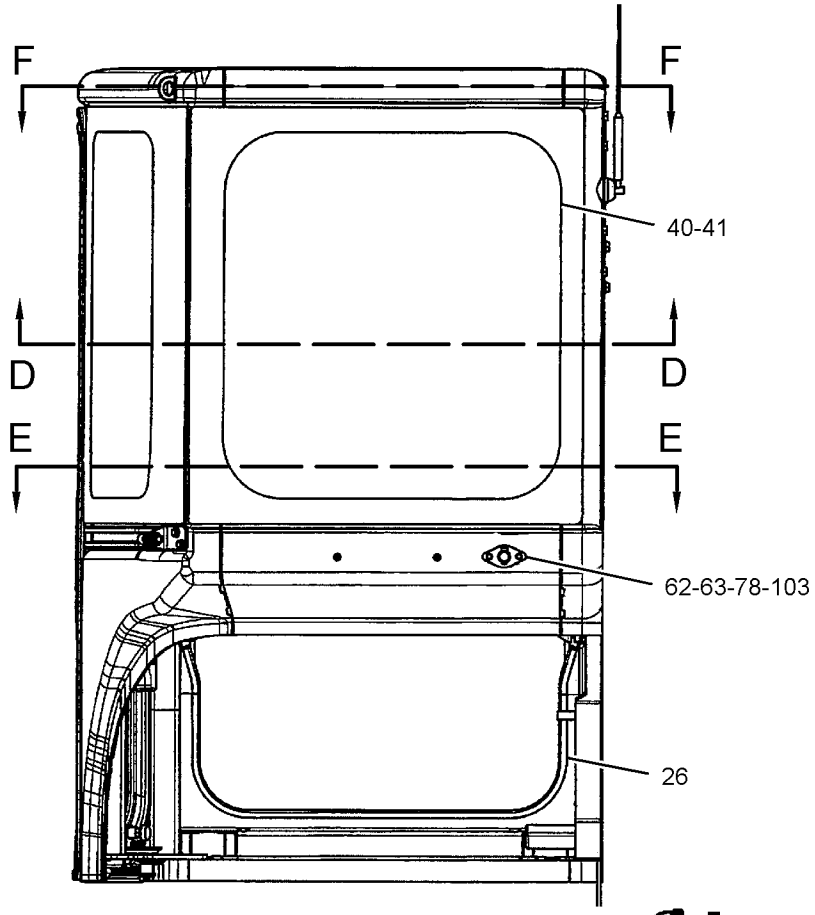

REAR VIEW

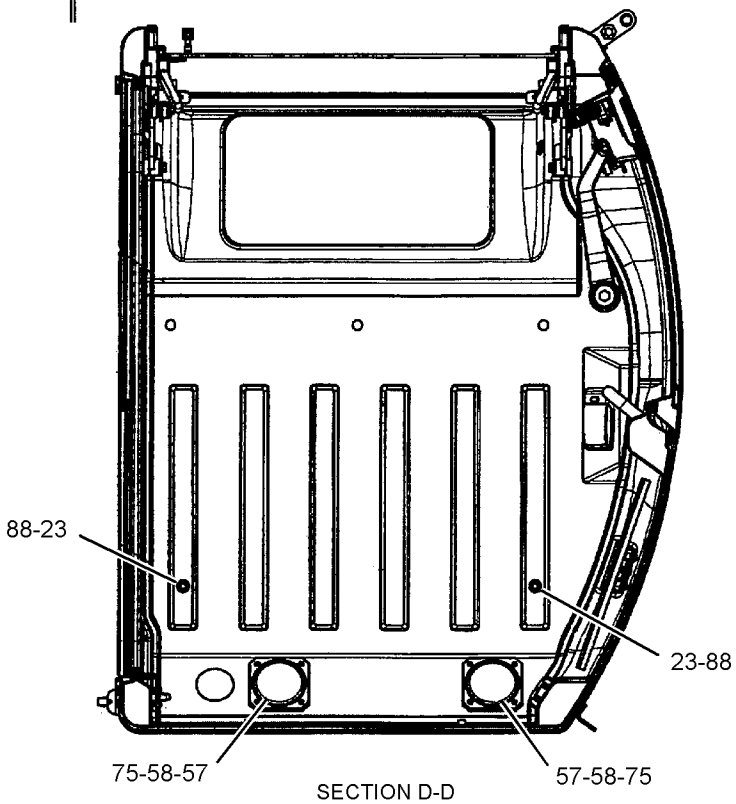

SECTION D-D

REFER TO ALL ILLUSTRATIONS OF
THIS GROUP FOR AUXILIARY VIEWS

GRAPHIC #4

g03401405

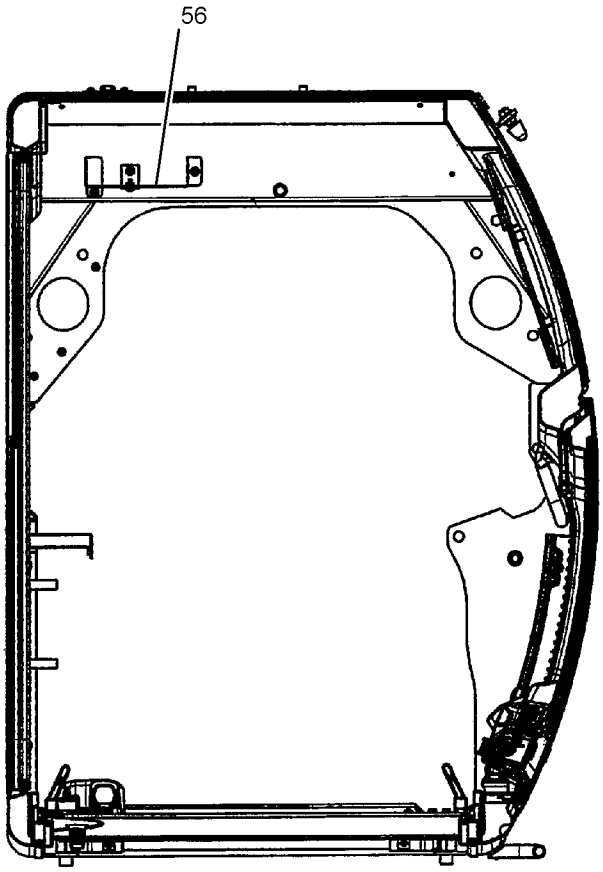

SECTION E-E

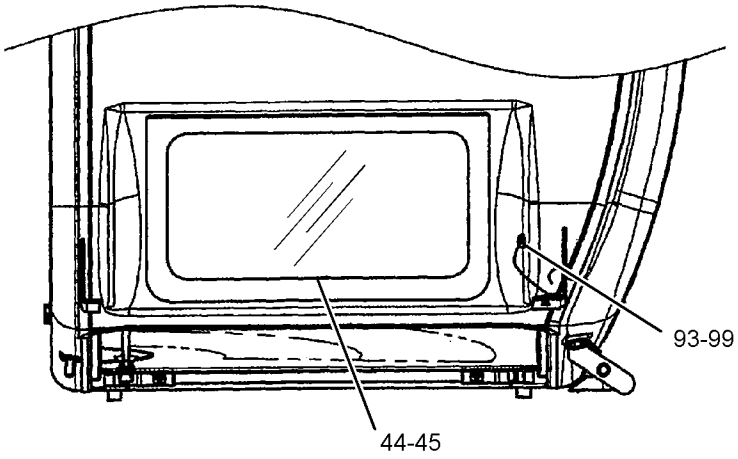

SECTION F-F

GRAPHIC #5 **<END>** g03401406

OPERATOR STATION

419-1237 CAB GP

S/N: RKY1195-UP
FIELD REPLACEMENT FOR 415-6803—PAGE: 462
PART OF 377-5107, 389-8701 CAB GP
AN ATTACHMENT

SMCS-7301 **i05437189**

NOTE	PART NUMBER	QTY	PART NAME 1 2 3 4 5 6 (PRODUCT LEVEL)	SEE PAGE
Y	*281-1195*	1	DOOR GP-CAB	497
Y	*281-1186*	1	LINK GP-WINDOW	516
Y	*280-0421*	1	WINDOW GP-CAB	542
Y	**281-4451**	1	WINDOW GP-SLIDING	544
	324-5828	1	ANTENNA AS	
	280-8625	1	ARM AS (RH)	
	280-8626	1	ARM AS (LH)	
M	**8T-4137**	1	BOLT (M10X1.5X20-MM)	
	280-0407	10	BOLT	
	280-0408	10	BOLT	
	281-5483	3	BOLT	
	281-5485	2	BOLT	
	281-5487	9	BOLT	
	281-5488	2	BOLT	
	196-1550	1	BRACKET AS	
	127-3947	1	BUMPER	
	280-8603	4	BUSHING	
	380-7148	8	CLIP	
	380-7149	1	COVER AS	
	281-3653	1	CUSHION	
	281-3654	1	CUSHION	
	214-3962	2	DAMPER	
	281-1155	1	GLASS (LH)	
	281-1149	1	GLASS-FRONT (LOWER)	
	281-1154	1	GLASS-REAR	
	281-1164	2	GRILL	
	127-4006	1	GROMMET	
	280-8618	1	HAMMER	
	284-6176	1	HANDLE	
	379-3629	1	HARNESS AS-CAB	
	285-4408	1	HARNESS AS-WIRING (WIPER MOTOR)	
	277-6028	1	HOLDER	
	277-6029	1	HOLDER	
	288-1386	2	HOLDER	
	4I-4270	1	HOLDER-GLASS	
	127-3925	1	HOOK	
	281-3658	1	HOSE	
	281-1159	1	LAMP AS (12-VOLT, 5-WATT)	
	303-9236	1	LAMP (12-VOLT, 5-WATT)	
	379-3630	1	LINER	
	305-5848	1	LINK AS	
	276-8684	1	LINK	
	305-5852	2	BUSHING	
	305-5853	2	BUSHING	
	127-3926	1	NOZZLE	
M	**8T-4133**	4	NUT (M10X1.5-THD)	
M	**095-1207**	4	NUT (M12X1.75-THD)	
	281-5497	3	NUT	
	280-8590	1	PLATE	
	280-8611	1	PLATE	
	281-1162	1	PLATE	
	281-9614	1	PLATE	
	285-6278	1	PLATE	
	332-4162	1	PLATE	
	280-8598	1	RAIL	
	281-5479	8	SCREW	
	281-5480	2	SCREW	

419-1237 **CAB GP (*contd.*)** **i05437189**

NOTE	PART NUMBER	QTY	PART NAME 1 2 3 4 5 6 (PRODUCT LEVEL)	SEE PAGE
	281-5492	4	SCREW	
	281-5508	2	SCREW	
	281-5509	1	SCREW	
	282-2725	4	SCREW	
	263-3003	2	SCREW (M6X1X16-MM)	
M	**6V-9672**	2	SCREW-MACHINE (M4X0.7X16-MM)	
M	**8T-6411**	3	SCREW-MACHINE (M6X1X12-MM)	
M	**3E-8020**	2	SCREW-TRUSS HEAD (M6X1X25-MM)	
M	**7Y-5292**	6	SCREW-TRUSS HEAD (SELF-TAPPING)	
M	**9X-2042**	8	SCREW-TRUSS HEAD (M6X1X12-MM)	
M	**9X-2043**	5	SCREW-TRUSS HEAD (M6X1X14-MM)	
	280-8599	1	SEAL	
	281-3651	1	SEAL	
	281-3660	1	SEAL	
	281-3661	1	SEAL	
	281-3662	1	SEAL	
	281-4452	1	SEAL	
	281-4453	1	SEAL	
	284-6179	1	SEAL	
	285-4493	1	SEAL	
	380-7163	2	SHIM (1.6-MM THK)	
	207-1686	1	SOCKET	
	281-1153	10	SPACER	
	203-4455	2	SPEAKER	
	127-3987	2	STOP	
	280-8597	2	STOP	
	281-6196	1	STOP	
	288-1388	1	STOP	
	288-1389	1	STOP	
	214-3956	1	STRAP	
	281-7860	9	STRAP	
	8L-8413	4	STRAP-CABLE	
	196-1479	2	STRIKER	
	280-8595	2	STRIKER	
	280-8604	1	STRIKER	
	280-8605	1	STRIKER	
	280-8607	2	STRIKER	
	127-3927	1	STRIP	
	207-0236	1	TAPE-ADHESIVE	
	214-3968	3	WASHER (8.5X30X3.2-MM THK)	
	214-3969	2	WASHER (16X26X0.5-MM THK)	
	280-8588	1	WASHER (11.5X40X4.5-MM THK)	
	281-5496	4	WASHER	
	281-5507	1	WASHER	
	8T-4223	4	WASHER-HARD (13.5X25.5X3-MM THK)	
	8T-4224	3	WASHER-HARD (8.8X16X2-MM THK)	
	8T-4222	2	WASHER-PLATED (11X32X2.5-MM THK)	
	271-5317	1	WINDOW-ROOF	

M - METRIC PART
Y - SEPARATE ILLUSTRATION

<END>

377-8933 CANOPY AR

AN ATTACHMENT

SMCS-7302 **i05393124**

NOTE	PART NUMBER	QTY	PART NAME 1 2 3 4 5 6 (PRODUCT LEVEL)	SEE PAGE
Y	*370-5345*	1	BATTERY & WIRING GP (CANOPY)	73
Y	*382-0406*	1	CANOPY GP	472
Y	*382-0501*	1	COVER GP-ACCESS	495
Y	*393-1257*	1	FILM GP	555
Y	*380-6386*	1	GUARD GP-FAN	18
Y	*382-0426*	1	HANDRAIL GP (LH)	503
Y	*380-6385*	1	MOUNTING GP-ENGINE	23
Y	*382-0400*	1	PLATFORM GP-OPERATOR	533
Y	*370-5350*	1	WIRING GP-CONSOLE (CANOPY)	105
	419-1254	1	FLOOR MAT	
	387-4694	1	FLOOR MAT	
	420-6337	1	SEAL GP	
	276-9309	1	FOAM	
	415-8595	1	SEAL	
			S/N: RKY1-1465	
Y	**421-2717**	1	VALVE & MOUNTING GP	302
			S/N: RKY1466-UP	

Y - SEPARATE ILLUSTRATION

<END>

383-5929 CANOPY AR—WITH GUARD

AN ATTACHMENT

SMCS-7302 **i05393138**

NOTE	PART NUMBER	QTY	PART NAME 1 2 3 4 5 6 (PRODUCT LEVEL)	SEE PAGE
Y	*370-5345*	1	BATTERY & WIRING GP (CANOPY)	73
Y	*389-8749*	1	CANOPY GP	473
Y	*382-0501*	1	COVER GP-ACCESS	495
Y	*389-8776*	1	FILM GP (FRONT GUARD)	554
Y	*393-1257*	1	FILM GP (CAB HEATER)	555
Y	*380-6386*	1	GUARD GP-FAN	18
Y	*389-8733*	1	GUARD GP-FRONT	149
Y	*382-0426*	1	HANDRAIL GP (LH)	503
Y	*380-6385*	1	MOUNTING GP-ENGINE	23
Y	*382-0400*	1	PLATFORM GP-OPERATOR	533
Y	*370-5350*	1	WIRING GP-CONSOLE (CANOPY)	105
	419-1254	1	FLOOR MAT	
	387-4694	1	FLOOR MAT	
	420-6337	1	SEAL GP	
	276-9309	1	FOAM	
	415-8595	1	SEAL	
			S/N: RKY1-1465	
Y	**421-2717**	1	VALVE & MOUNTING GP	302
			S/N: RKY1466-UP	

Y - SEPARATE ILLUSTRATION

<END>

382-0406 CANOPY GP

PART OF 377-8933 CANOPY AR

AN ATTACHMENT

SMCS-7302 **i05035494**

NOTE	REF NO	GRAPHIC REF	PART NUMBER	QTY	PART NAME 1 2 3 4 5 6 (PRODUCT LEVEL)	SEE PAGE
	1	1	**4H-0407**	2	PLUG-PROTECTION	
	2	1	**332-1810**	4	PLUG	
	3	1	**382-0407**	1	CANOPY AS	
		1	**7T-1099**	10	LINK	
M		1	**8T-3490**	1	NUT-WELD (M10X1.5-THD)	
M		1	**8T-3612**	1	NUT-WELD (M8X1.25-THD)	
M	4	1	**8T-4139**	4	BOLT (M12X1.75X30-MM)	
M	5	1	**8T-4173**	1	BOLT (M16X2X110-MM)	
M	6	1	**8T-4194**	3	BOLT (M12X1.75X50-MM)	
	7	1	**8T-4223**	10	WASHER-HARD (13.5X25.5X3-MM THK)	
M	8	1	**8T-4956**	3	BOLT (M12X1.75X35-MM)	
	9	1	**9X-8257**	1	WASHER (17.5X30X3.5-MM THK)	

M - METRIC PART

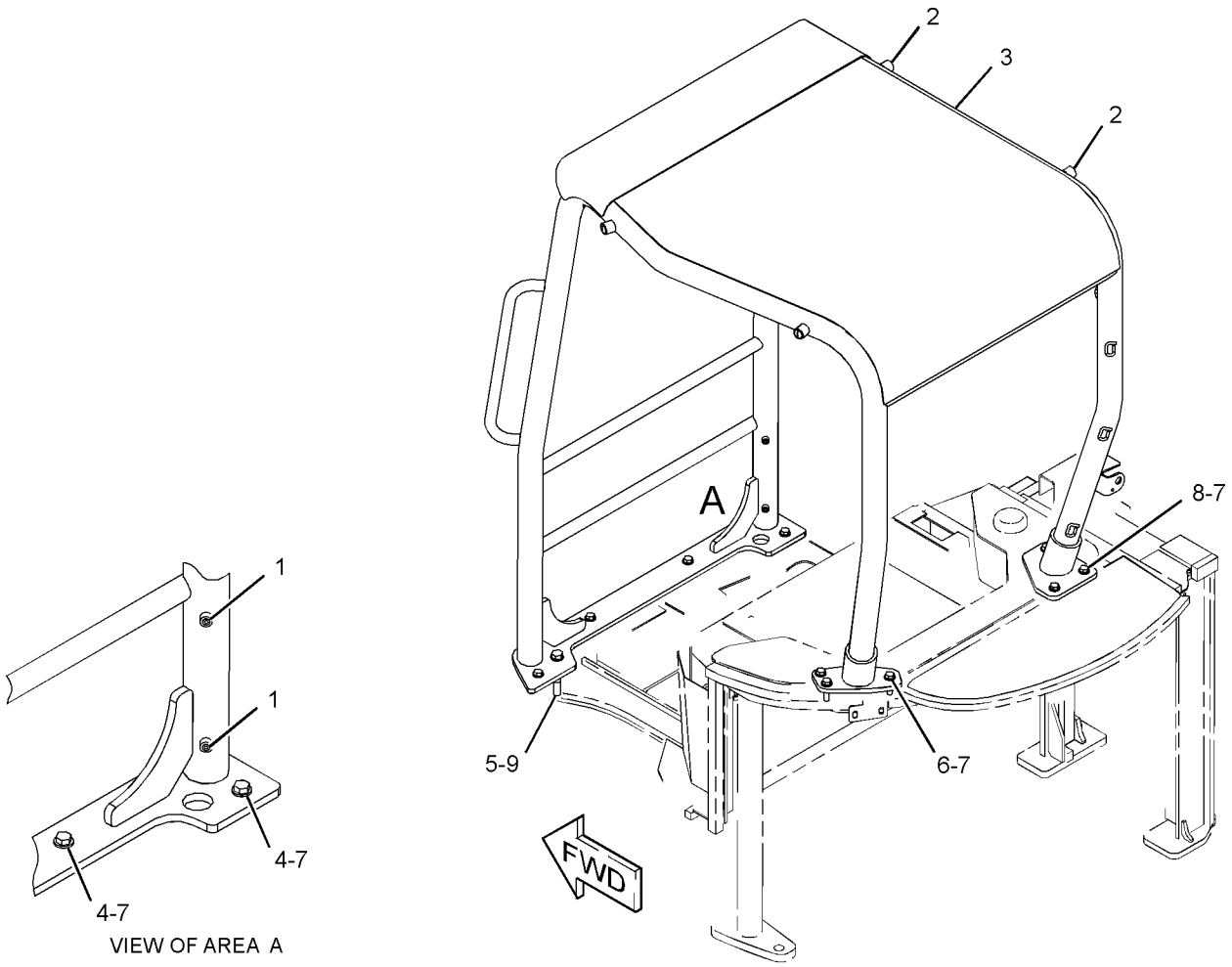

VIEW OF AREA A

GRAPHIC #1 **<END>** g02799173

OPERATOR STATION

389-8749 CANOPY GP

PART OF 383-5929 CANOPY AR

AN ATTACHMENT

SMCS-7302 **i04728122**

NOTE	REF NO	GRAPHIC REF	PART NUMBER	QTY	PART NAME 1 2 3 4 5 6 (PRODUCT LEVEL)	SEE PAGE
	1	1	**4H-0407**	2	PLUG-PROTECTION	
	2	1	**332-1810**	4	PLUG	
	3	1	**389-8737**	1	CANOPY AS	
M		1	**8T-3490**	1	NUT-WELD (M10X1.5-THD)	
M		1	**8T-3612**	1	NUT-WELD (M8X1.25-THD)	
M	4	1	**8T-4139**	4	BOLT (M12X1.75X30-MM)	
M	5	1	**8T-4173**	1	BOLT (M16X2X110-MM)	
M	6	1	**8T-4194**	3	BOLT (M12X1.75X50-MM)	
	7	1	**8T-4223**	10	WASHER-HARD (13.5X25.5X3-MM THK)	
M	8	1	**8T-4956**	3	BOLT (M12X1.75X35-MM)	
	9	1	**9X-8257**	1	WASHER (17.5X30X3.5-MM THK)	

M - METRIC PART

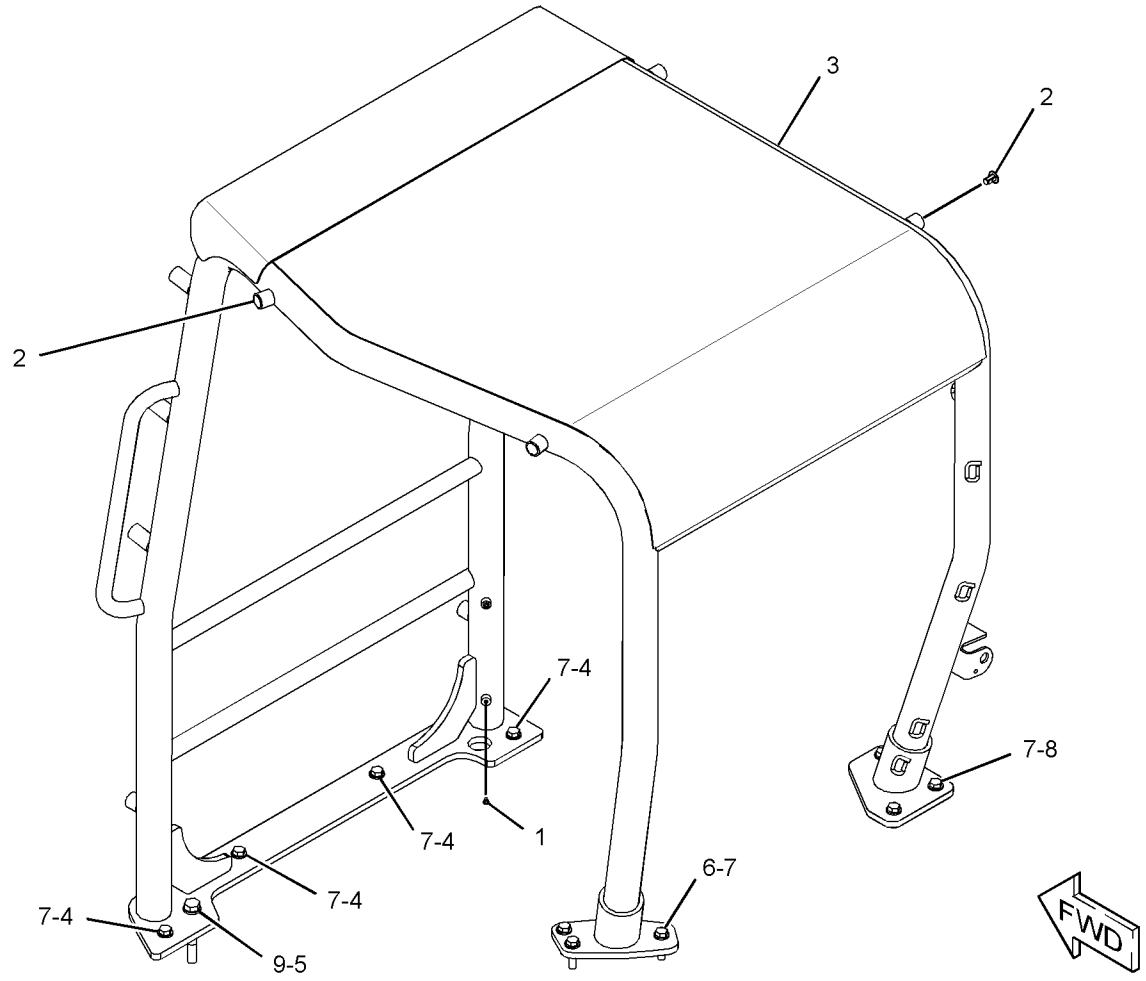

GRAPHIC #1 **<END>** g02858417

378-1272 COMPRESSOR GP-REFRIGERANT

PART OF 376-6692, 383-5927 CAB AR
AN ATTACHMENT

SMCS-1802 **i04565460**

NOTE	REF NO	GRAPHIC REF	PART NUMBER	QTY	PART NAME 1 2 3 4 5 6 (PRODUCT LEVEL)	SEE PAGE
	1	1	**272-7877**	1	PULLEY AS-IDLER	
	2	1	**272-7881**	1	V-BELT (AIR CONDITIONER COMPRESSOR)	
	3	1	**283-4170**	1	COMPRESSOR GP-REFRIGERANT	
	4	1	**304-2819**	1	BOLT (M8X1.25X100-MM)	
	5	1	**5P-4116**	2	WASHER-HARD (8.8X20.5X2-MM THK)	
	6	1	**7N-9070**	1	SPACER	
M	7	1	**7X-2537**	1	BOLT (M8X1.25X35-MM)	
	8	1	**8T-4224**	2	WASHER-HARD (8.8X16X2-MM THK)	
M	9	1	**8T-4908**	2	BOLT (M8X1.25X25-MM)	

M - METRIC PART

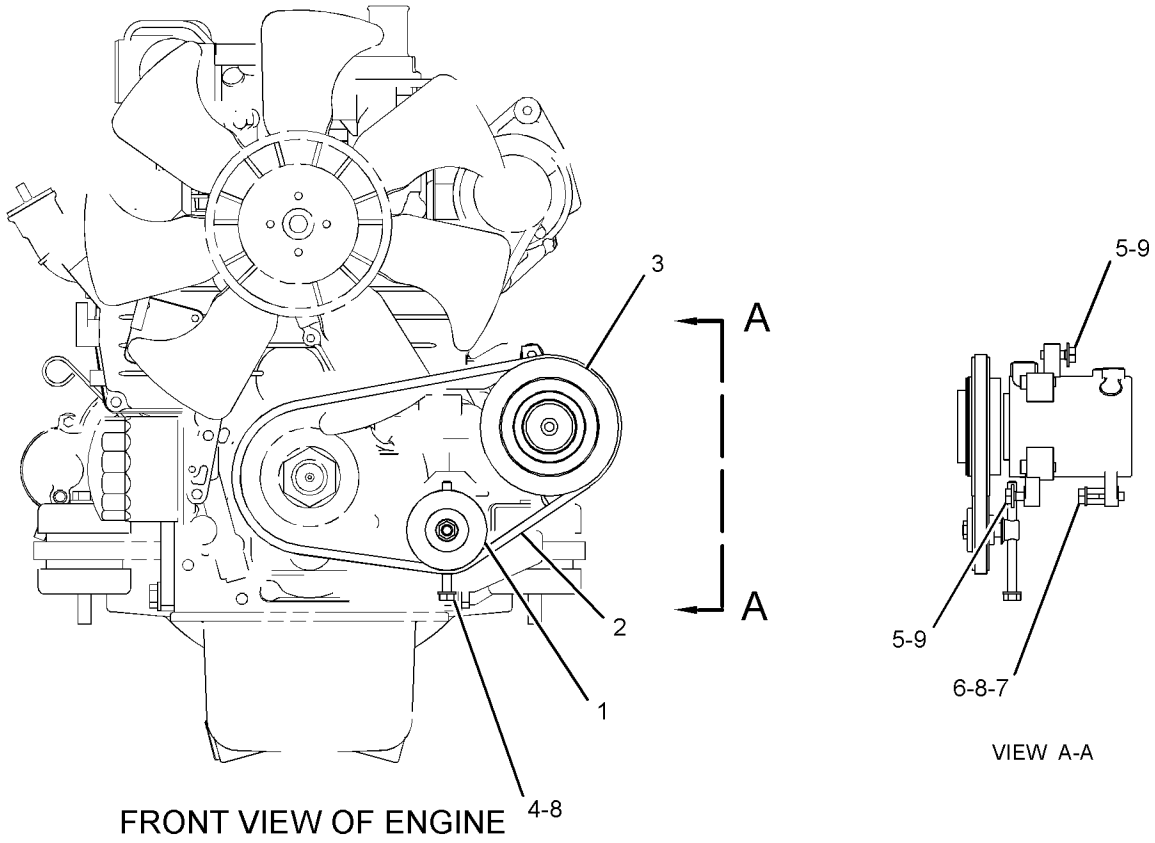

FRONT VIEW OF ENGINE

VIEW A-A

GRAPHIC #1 **<END>** g02784642

380-6389 CONDENSER & MTG GP-REFRIGERANT

PART OF 376-6692, 383-5927 CAB AR
AN ATTACHMENT

SMCS-1805 **i04617856**

NOTE	REF NO	GRAPHIC REF	PART NUMBER	QTY	PART NAME 1 2 3 4 5 6 (PRODUCT LEVEL)	SEE PAGE
M	1	1	**245-7903**	8	BOLT AS	
	2	1	**354-6977**	1	CONDENSER AS-REFRIGERANT	
	3	1	**354-6978**	4	BRACKET	
	4	1	**354-6980**	4	BUSHING	
	5	1	**354-6981**	4	GROMMET	
	6	1	**380-6390**	1	BRACKET AS	
M		1	**6V-9632**	2	NUT-WELD (M6X1-THD)	
M		1	**8T-3612**	2	NUT-WELD (M8X1.25-THD)	
	7	1	**380-6391**	1	BRACKET AS	
M		1	**6V-9632**	2	NUT-WELD (M6X1-THD)	
	8	1	**380-6392**	1	BRACKET AS	
M		1	**8T-3612**	2	NUT-WELD (M8X1.25-THD)	
	9	1	**8T-4121**	4	WASHER-HARD (11X21X2.5-MM THK)	
M	10	1	**8T-4137**	4	BOLT (M10X1.5X20-MM)	
M	11	1	**8T-4189**	2	BOLT (M8X1.25X20-MM)	
	12	1	**8T-4224**	2	WASHER-HARD (8.8X16X2-MM THK)	
M	13	1	**8T-4971**	4	BOLT (M6X1X30-MM)	
	14	1	**9X-6165**	4	WASHER (6.5X22X2.5-MM THK)	

M - METRIC PART

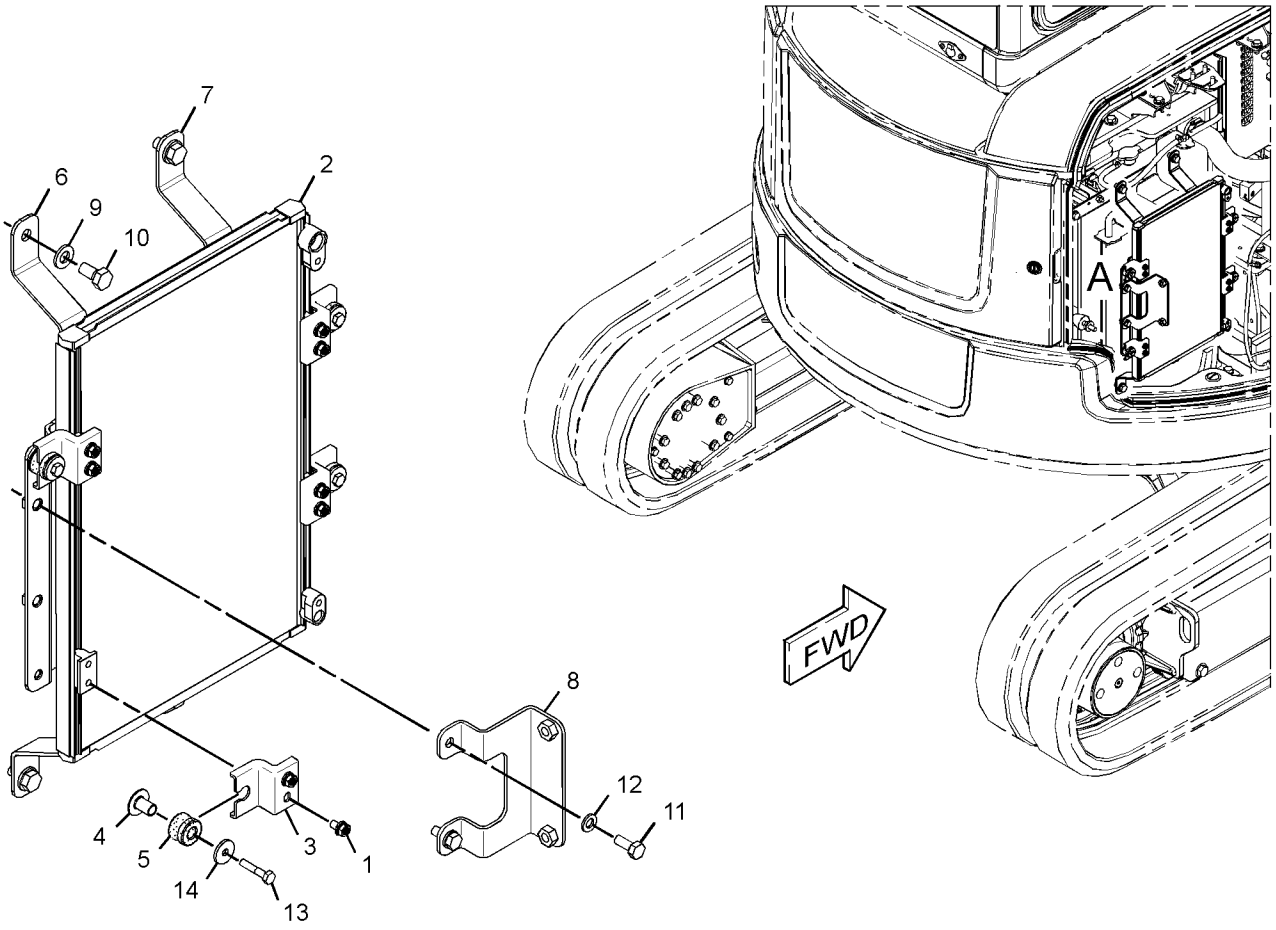

VIEW OF AREA A
(EXPLODED)

GRAPHIC #1 **<END>** g02799496

379-3597 CONSOLE GP-OPERATOR

PART OF 379-3624 OPERATOR AR

SMCS-5258, 7451 **i05033863**

NOTE	REF NO	GRAPHIC REF	PART NUMBER	QTY	PART NAME 1 2 3 4 5 6 (PRODUCT LEVEL)	SEE PAGE
	1	1	**274-8781**	1	BUMPER	
Y	2	1	*379-3598*	1	CONSOLE GP-OPERATOR (RH)	477
Y	3	1	*379-3599*	1	CONSOLE GP-OPERATOR (LH)	478
	4	1	**379-3618**	1	BRACKET AS	
		1	**7T-1099**	2	LINK	
M	5	1	**5C-7261**	1	NUT (M8X1.25-THD)	
	6	1	**8T-4121**	5	WASHER-HARD (11X21X2.5-MM THK)	
M	7	1	**8T-4136**	4	BOLT (M10X1.5X25-MM)	
M	8	1	**8T-4196**	1	BOLT (M10X1.5X35-MM)	
M	9	1	**127-2170**	2	SCREW-TRUSS HEAD (M8X1.25X20-MM)	

M - METRIC PART
Y - SEPARATE ILLUSTRATION

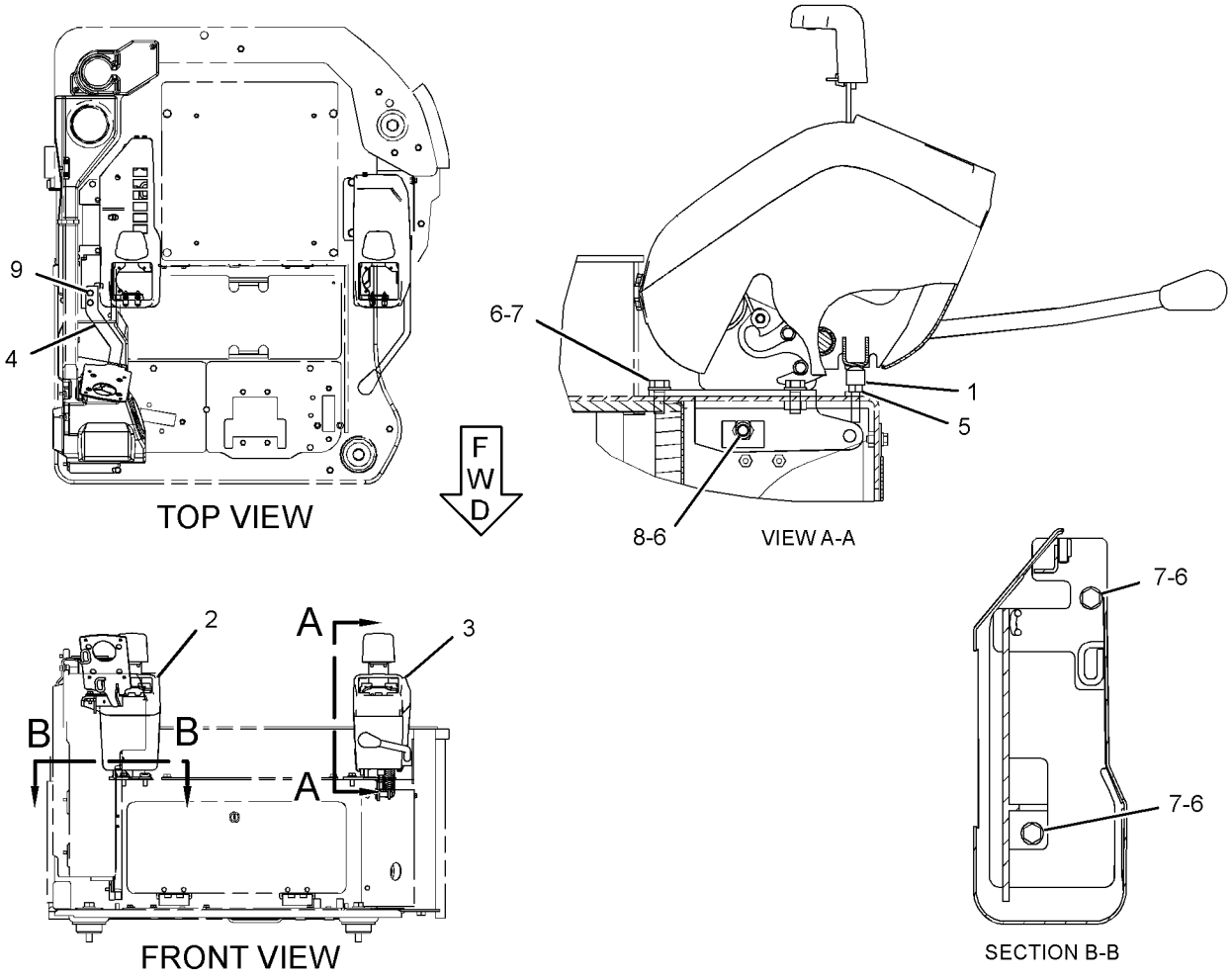

GRAPHIC #1 **<END>** g03315456

379-3598 CONSOLE GP-OPERATOR–RH

PART OF 379-3597 CONSOLE GP-OPERATOR

SMCS-5258, 7451 **i05263283**

NOTE	REF NO	GRAPHIC REF	PART NUMBER	QTY	PART NAME 1 2 3 4 5 6 (PRODUCT LEVEL)	SEE PAGE
	1	1	**222-0668**	2	WASHER (6.5X13X1-MM THK)	
	2	1	**284-0850**	2	SCREW	
	3	1	**379-3600**	1	FRAME AS (RH)	
	4	1	**379-3608**	1	PLATE	
	5	1	**389-8764**	1	ARMREST	
	6	1	**379-3611**	1	COVER-UPPER	
	7	1	**379-3612**	1	COVER-LOWER	
	8	1	**389-8762**	1	PLATE	
M	9	1	**096-4034**	2	BOLT-WING (M6X1X15-MM)	
M	10	1	**1R-5396**	2	BOLT (M6X1X35-MM)	
M	11	1	**5C-9553**	4	BOLT (M6X1X16-MM)	
	12	1	**9X-8256**	6	WASHER (6.6X12X2-MM THK)	

M - METRIC PART

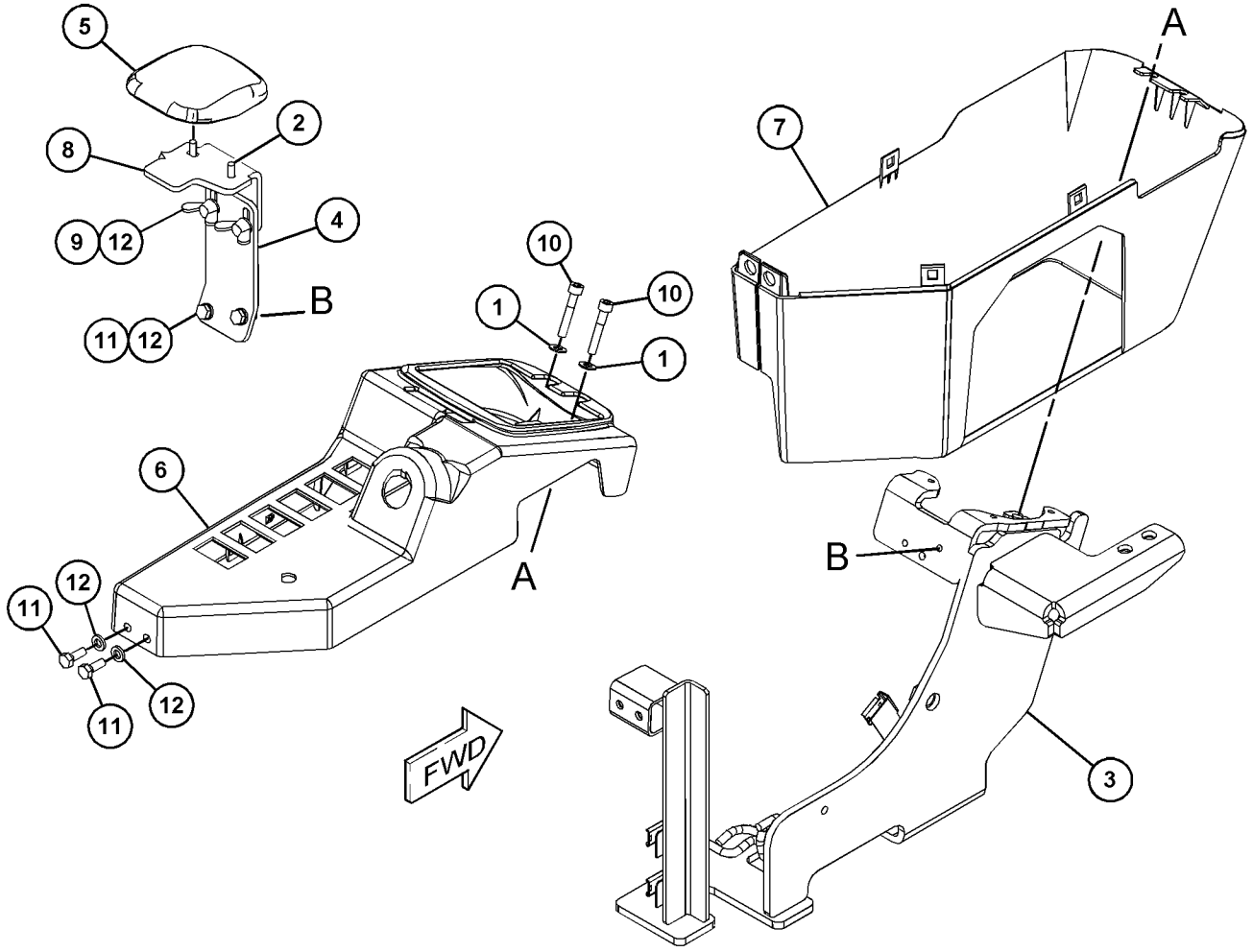

GRAPHIC #1 **<END>** g03403683

OPERATOR STATION

379-3599 CONSOLE GP-OPERATOR–LH

PART OF 379-3597 CONSOLE GP-OPERATOR

SMCS-5258, 7451 **i04589463**

NOTE	REF NO	GRAPHIC REF	PART NUMBER	QTY	PART NAME 1 2 3 4 5 6 (PRODUCT LEVEL)	SEE PAGE
	1	1	**207-0785**	1	LOCKWASHER	
	2	1	**207-0797**	3	BUSHING	
	3	1	**207-0799**	2	BUSHING	
	4	1	**207-0800**	2	BUSHING	
	5	1	**211-7455**	1	KNOB	
	6	1	**222-0668**	2	WASHER (6.5X13X1-MM THK)	
	7	1	**281-8618**	1	PLATE AS	
	8	1	**281-8619**	1	LEVER AS	
	9	1	**281-8630**	1	SPRING	
	10	1	**281-8631**	1	SPRING	
	11	1	**284-0838**	1	BUSHING	
	12	1	**284-0839**	1	CLIP	
	13	1	**284-0840**	1	NUT	
	14	1	**284-0850**	2	SCREW	
	15	1	**327-1749**	2	RING	
	16	1	**379-3608**	1	PLATE	
	17	1	**379-3610**	1	PAD	
	18	1	**379-3613**	1	FRAME AS	
	19	1	**379-3614**	1	COVER-UPPER	
	20	1	**379-3615**	1	COVER-LOWER	
	21	1	**379-3616**	1	SUPPORT AS	
	22	1	**9X-8256**	6	WASHER (6.6X12X2-MM THK)	
M	23	1	**096-4034**	2	BOLT-WING (M6X1X15-MM)	
M	24	1	**1R-5396**	2	BOLT (M6X1X35-MM)	
M	25	1	**5C-9553**	4	BOLT (M6X1X16-MM)	
M	26	1	**8T-4189**	1	BOLT (M8X1.25X20-MM)	
	27	1	**379-3623**	1	PLATE	

M - METRIC PART

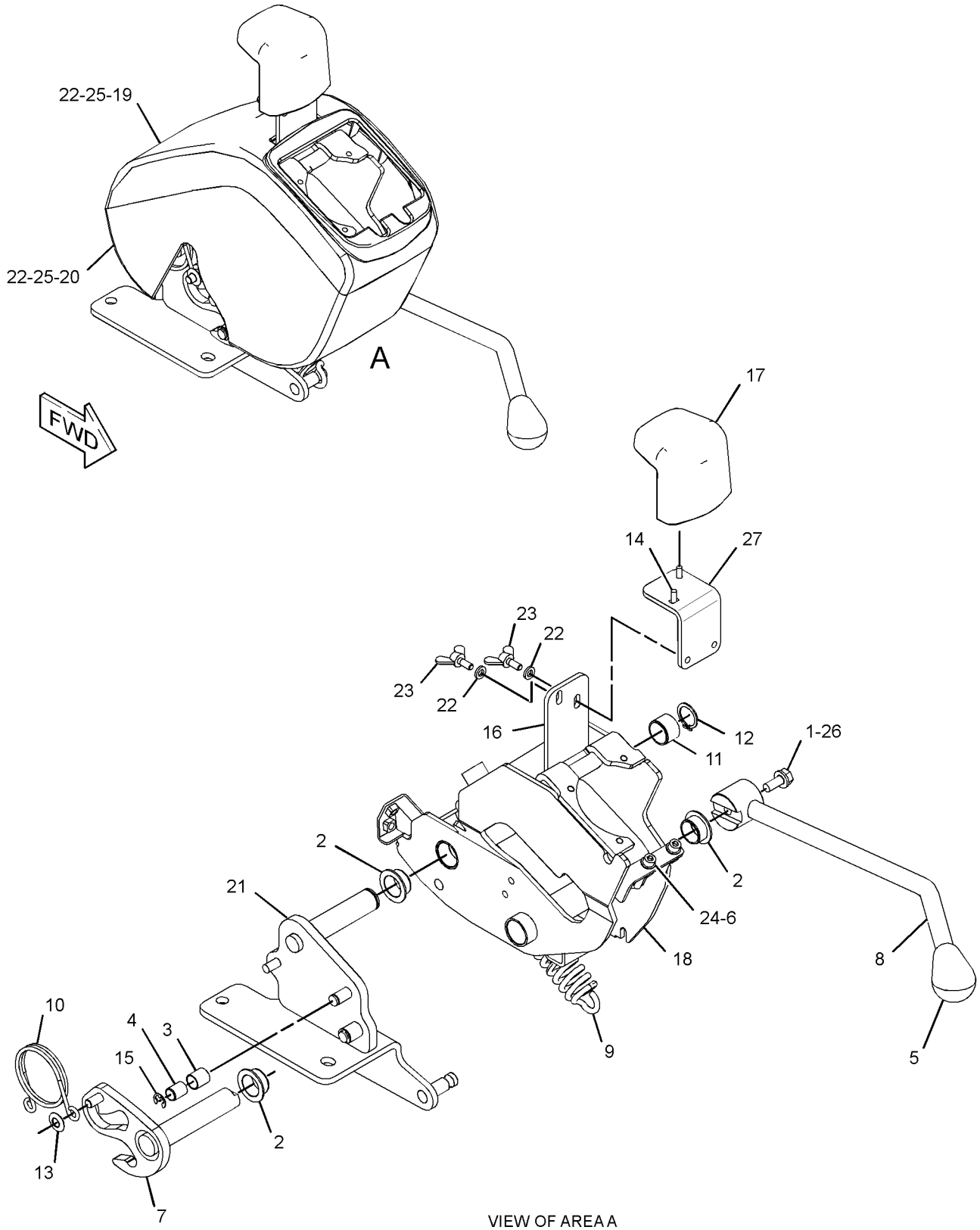

VIEW OF AREA A
(COVERS REMOVED FOR CLARITY)

GRAPHIC #1 **<END>** g02797063

272-0474 CONTROL & MTG GP-PEDAL–TRAVEL

PART OF 355-3393 CONTROL & MTG GP-PEDAL

SMCS-5051, 5063, 5462 **i03965115**

NOTE	REF NO	GRAPHIC REF	PART NUMBER	QTY	PART NAME 1 2 3 4 5 6 (PRODUCT LEVEL)	SEE PAGE
	1	1	**275-0773**	1	PEDAL AS (LH)	
	2	1	**275-0774**	1	PEDAL AS (RH)	
	3	1	**2S-0736**	4	WASHER-HARD (17X27X3.5-MM THK)	
	4	1	**8T-4121**	4	WASHER-HARD (11X21X2.5-MM THK)	
M	5	1	**8T-4137**	4	BOLT (M10X1.5X20-MM)	

M - METRIC PART

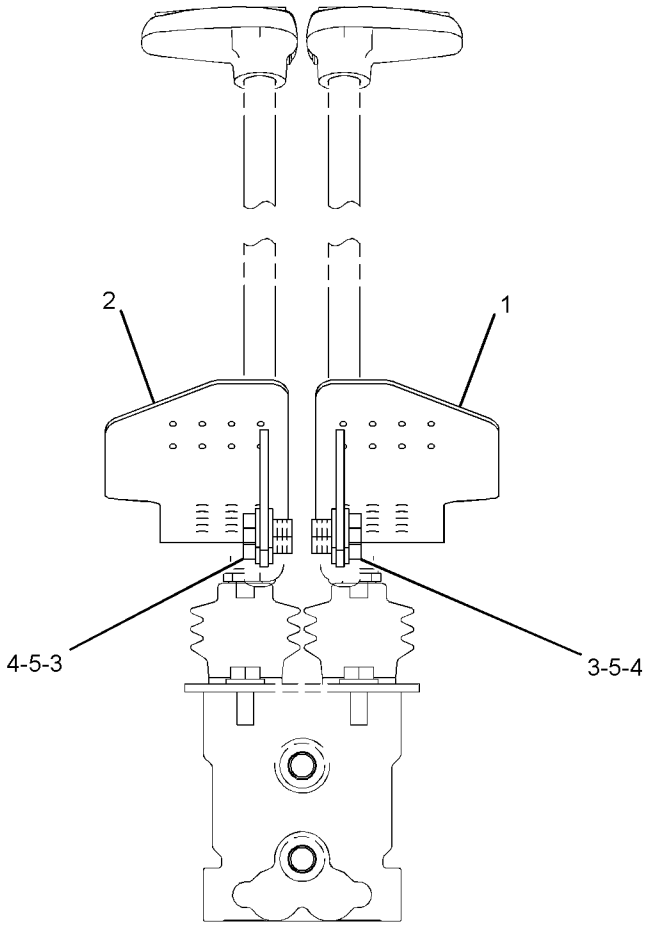

FRONT VIEW

GRAPHIC #1 **<END>** g01367791

355-3393 CONTROL & MTG GP-PEDAL–TRAVEL

PART OF 376-6672 COMMON AR

SMCS-5051, 5063, 5462

i04006630

NOTE	PART NUMBER	QTY	PART NAME 1 2 3 4 5 6 (PRODUCT LEVEL)	SEE PAGE
Y	*272-0474*	1	CONTROL & MTG GP-PEDAL (TRAVEL)	480

Y - SEPARATE ILLUSTRATION

<END>

285-8286 CONTROL GP-HYDRAULIC HAND–TRAVEL

PART OF 379-3624 OPERATOR AR

SMCS-5063, 5462 **i04019583**

NOTE	REF NO	GRAPHIC REF	PART NUMBER	QTY	PART NAME 1 2 3 4 5 6 (PRODUCT LEVEL)	SEE PAGE
	1	1	**142-5546**	2	KNOB	
	2	1	**275-0775**	1	LEVER AS (LH)	
	3	1	**275-0776**	1	LEVER AS (RH)	
M	4	1	**8T-0337**	2	SCREW-MACHINE (M4X0.7X12-MM)	
	5	1	**096-6166**	2	WASHER-HARD (4.5X9X1-MM THK)	
	6	1	**8T-4121**	4	WASHER-HARD (11X21X2.5-MM THK)	
M	7	1	**8T-4191**	4	BOLT (M10X1.5X16-MM)	

M - METRIC PART

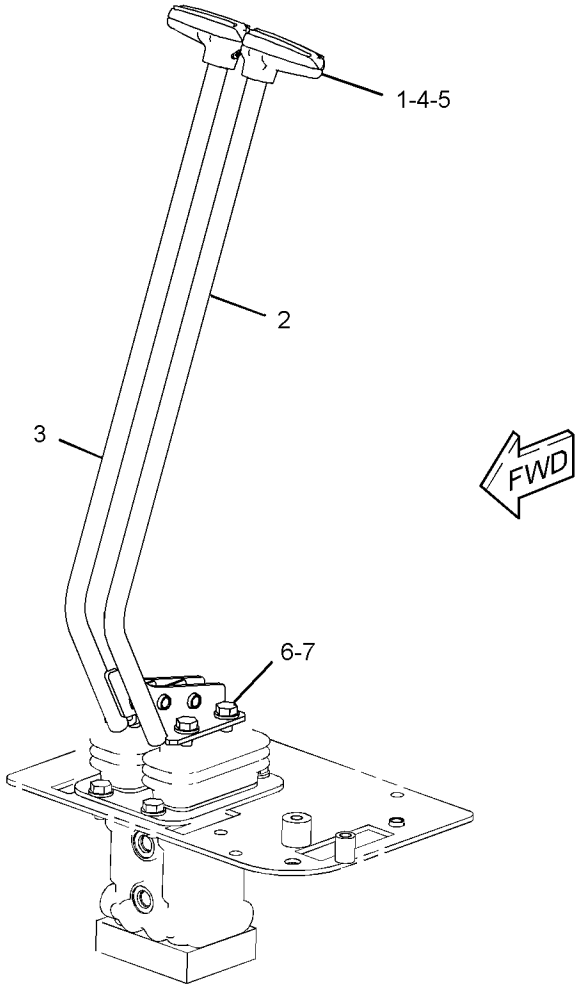

GRAPHIC #1 **<END>** g01240115

376-8851 CONTROL GP-JOYSTICK–LH

PART OF 379-2010 CONTROL GP-JOYSTICK
AN ATTACHMENT

SMCS-5063, 5705, 6107 **i04559360**

NOTE	REF NO	GRAPHIC REF	PART NUMBER	QTY	PART NAME 1 2 3 4 5 6 (PRODUCT LEVEL)	SEE PAGE
	1	1	**376-8852**	1	CONTROL GP-HANDLE (LH)	
		1	**8T-8729**	4	PIN-CONNECTOR (16-GA TO 18-GA)	
		1	**8T-8737**	2	PLUG-SEAL	
		1	**102-8805**	1	KIT-RECEPTACLE (6-PIN)	
					(INCLUDES RECEPTACLE AS & WEDGE)	
	2	1	**376-8853**	1	BOOT	
	3	1	**376-8854**	1	ADAPTER (LH)	

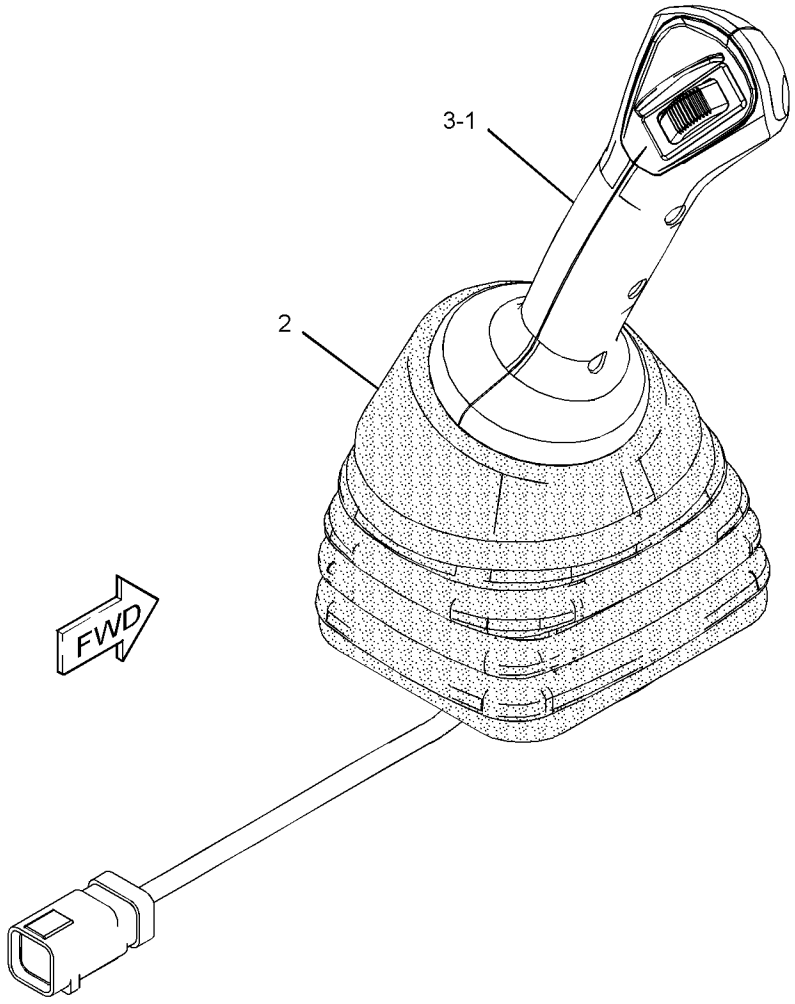

GRAPHIC #1 **<END>** g02767957

376-8855 CONTROL GP-JOYSTICK–LH

PART OF 376-9494 CONTROL GP-JOYSTICK

AN ATTACHMENT

SMCS-5063, 5705, 6107 **i04559361**

NOTE	REF NO	GRAPHIC REF	PART NUMBER	QTY	PART NAME 1 2 3 4 5 6 (PRODUCT LEVEL)	SEE PAGE
	1	1	**376-8856**	1	CONTROL GP-HANDLE (LH)	
		1	**8T-8729**	6	PIN-CONNECTOR (16-GA TO 18-GA)	
		1	**102-8805**	1	KIT-RECEPTACLE (6-PIN)	
					(INCLUDES RECEPTACLE AS & WEDGE)	
	2	1	**376-8853**	1	BOOT	
	3	1	**376-8854**	1	ADAPTER (LH)	

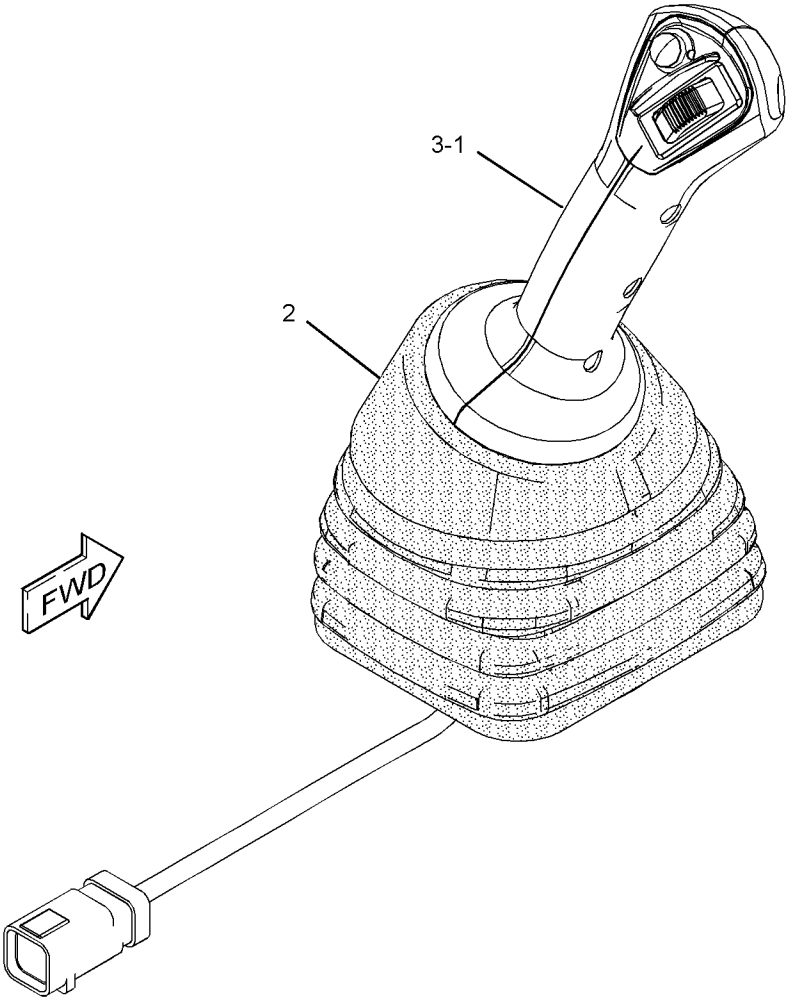

GRAPHIC #1 **<END>** g02768100

376-9483 CONTROL GP-JOYSTICK–RH

PART OF 376-9495 CONTROL GP-JOYSTICK
AN ATTACHMENT

SMCS-5063, 5705, 6107 **i04559362**

NOTE	REF NO	GRAPHIC REF	PART NUMBER	QTY	PART NAME 1 2 3 4 5 6 (PRODUCT LEVEL)	SEE PAGE
	1	1	**376-9484**	1	CONTROL GP-HANDLE (RH)	
		1	**8T-8729**	6	PIN-CONNECTOR (16-GA TO 18-GA)	
		1	**102-8805**	1	KIT-RECEPTACLE (6-PIN)	
					(INCLUDES RECEPTACLE AS & WEDGE)	
	2	1	**376-9485**	1	BOOT	
	3	1	**376-9486**	1	ADAPTER (RH)	

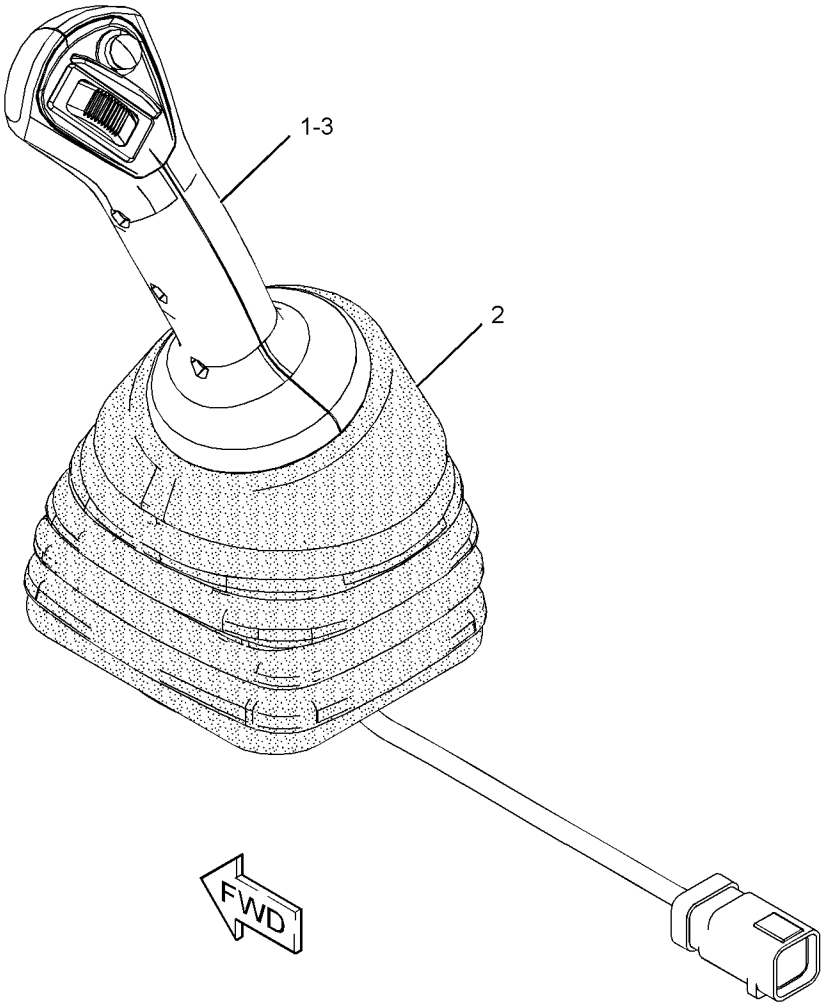

GRAPHIC #1 **<END>** g02768176

376-9494 CONTROL GP-JOYSTICK–LH

PART OF 378-2497 CONTROL GP-PILOT OPERATED HYD

AN ATTACHMENT

SMCS-5063, 5705, 6107 **i04559363**

NOTE	REF NO	GRAPHIC REF	PART NUMBER	QTY	PART NAME 1 2 3 4 5 6 (PRODUCT LEVEL)	SEE PAGE
M	1	1	**096-4876**	1	NUT (M14X2-THD)	
Y	2	1	**267-0420**	1	VALVE GP-PILOT (JOYSTICK)	349
Y	3	1	**376-8855**	1	CONTROL GP-JOYSTICK (LH)	484

M - METRIC PART
Y - SEPARATE ILLUSTRATION

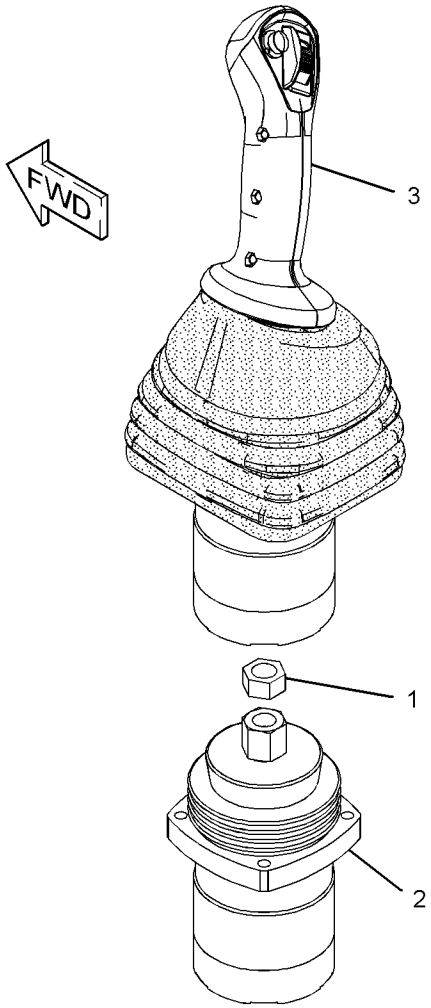

GRAPHIC #1 **<END>** g02768217

376-9495 CONTROL GP-JOYSTICK–RH

PART OF 378-2495, 378-2497 CONTROL GP-PILOT OPERATED HYD AN ATTACHMENT

SMCS-5063, 5705, 6107 **i04559364**

NOTE	REF NO	GRAPHIC REF	PART NUMBER	QTY	PART NAME 1 2 3 4 5 6 (PRODUCT LEVEL)	SEE PAGE
M	1	1	**096-4876**	1	NUT (M14X2-THD)	
Y	2	1	**267-0420**	1	VALVE GP-PILOT (JOYSTICK)	349
Y	3	1	**376-9483**	1	CONTROL GP-JOYSTICK (RH)	485

M - METRIC PART
Y - SEPARATE ILLUSTRATION

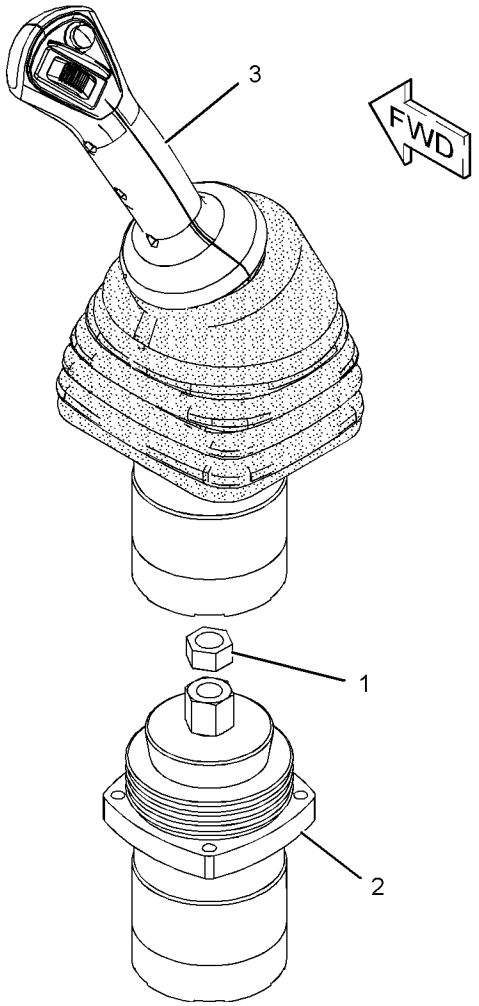

GRAPHIC #1 **<END>** g02768256

379-2010 CONTROL GP-JOYSTICK–LH

PART OF 378-2495 CONTROL GP-PILOT OPERATED HYD

AN ATTACHMENT

SMCS-5063, 5705, 6107 **i04559504**

NOTE	REF NO	GRAPHIC REF	PART NUMBER	QTY	PART NAME 1 2 3 4 5 6 (PRODUCT LEVEL)	SEE PAGE
M	1	1	**096-4876**	1	NUT (M14X2-THD)	
Y	2	1	**267-0420**	1	VALVE GP-PILOT (JOYSTICK)	349
Y	3	1	**376-8851**	1	CONTROL GP-JOYSTICK (LH)	483

M - METRIC PART
Y - SEPARATE ILLUSTRATION

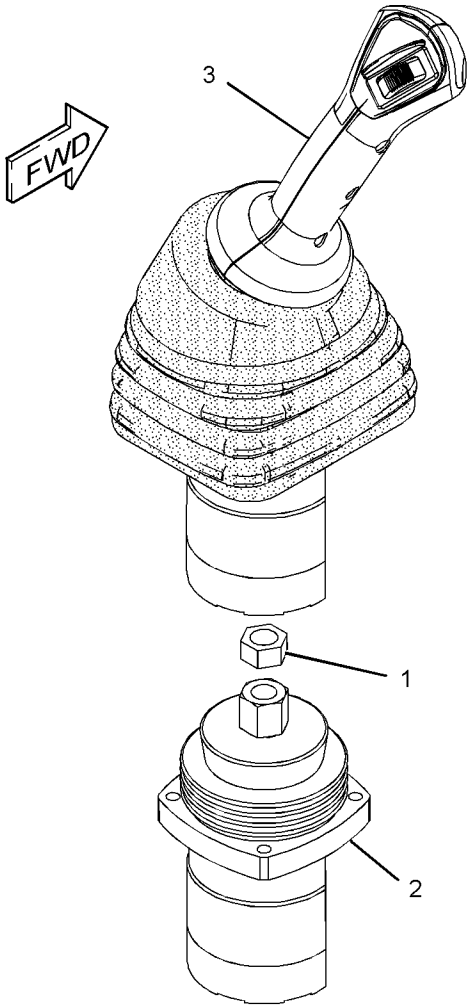

GRAPHIC #1 **<END>** g02768297

377-5958 CONTROL GP-PILOT OPERATED HYD—BLADE

S/N: RKY1-1465
PART OF 377-8920 BLADE AR-STRAIGHT
AN ATTACHMENT

SMCS-5059, 5705 **i04560857**

NOTE	REF NO	GRAPHIC REF	PART NUMBER	QTY	PART NAME 1 2 3 4 5 6 (PRODUCT LEVEL)	SEE PAGE
Y	1	1	**320-6540**	1	VALVE GP-PILOT (BLADE CONTROL)	350
	2	1	**376-8857**	1	LEVER AS	
		1	**102-8802**	1	KIT-RECEPTACLE (2-PIN)	
					(INCLUDES RECEPTACLE AS & WEDGE)	
		1	**376-9493**	1	GROMMET	
M	3	1	**101-7404**	2	BOLT-SOCKET HEAD (M10X1.5X30-MM)	
M	4	1	**8T-4192**	1	BOLT (M12X1.75X25-MM)	
	5	1	**8T-4223**	1	WASHER-HARD (13.5X25.5X3-MM THK)	

M - METRIC PART
Y - SEPARATE ILLUSTRATION

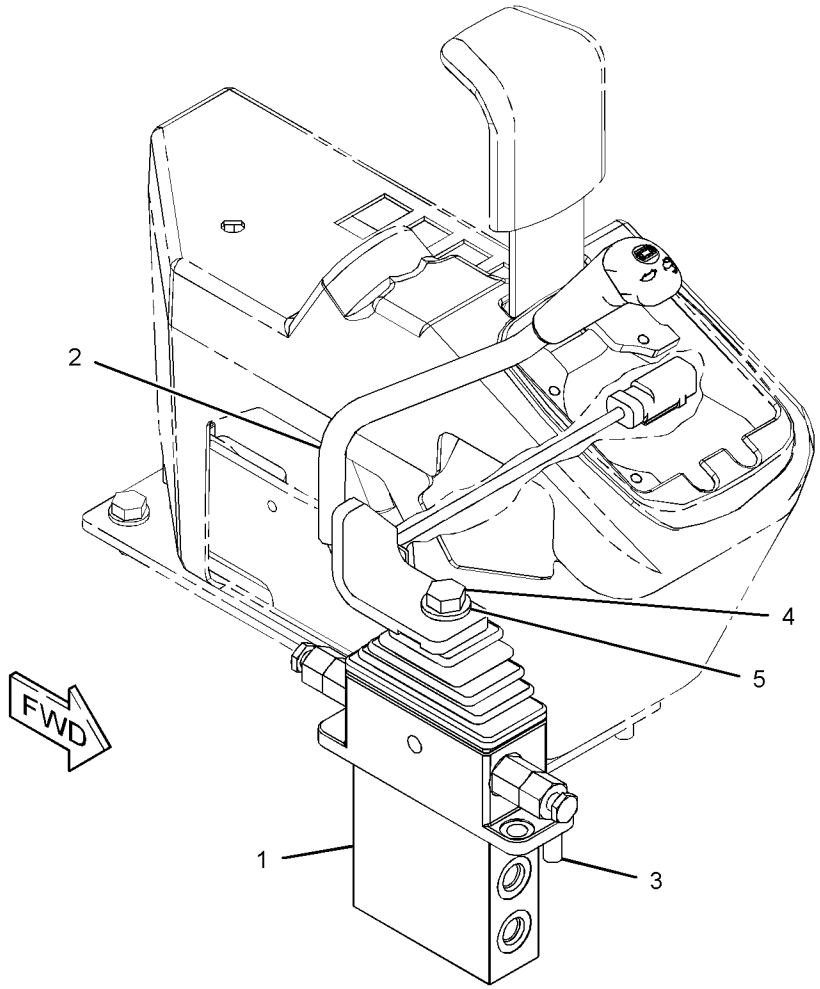

GRAPHIC #1 **<END>** g02767539

378-2495 CONTROL GP-PILOT OPERATED HYD

PART OF 378-2501 CONTROL AR-HYDRAULIC
AN ATTACHMENT

SMCS-5059, 5705 **i04559494**

NOTE	REF NO	GRAPHIC REF	PART NUMBER	QTY	PART NAME 1 2 3 4 5 6 (PRODUCT LEVEL)	SEE PAGE
Y	1	1	*376-9495*	1	CONTROL GP-JOYSTICK (RH)	487
Y	2	1	*379-2010*	1	CONTROL GP-JOYSTICK (LH)	488
M	3	1	**3T-0849**	6	BOLT-SOCKET HEAD (M6X1X25-MM)	

M - METRIC PART
Y - SEPARATE ILLUSTRATION

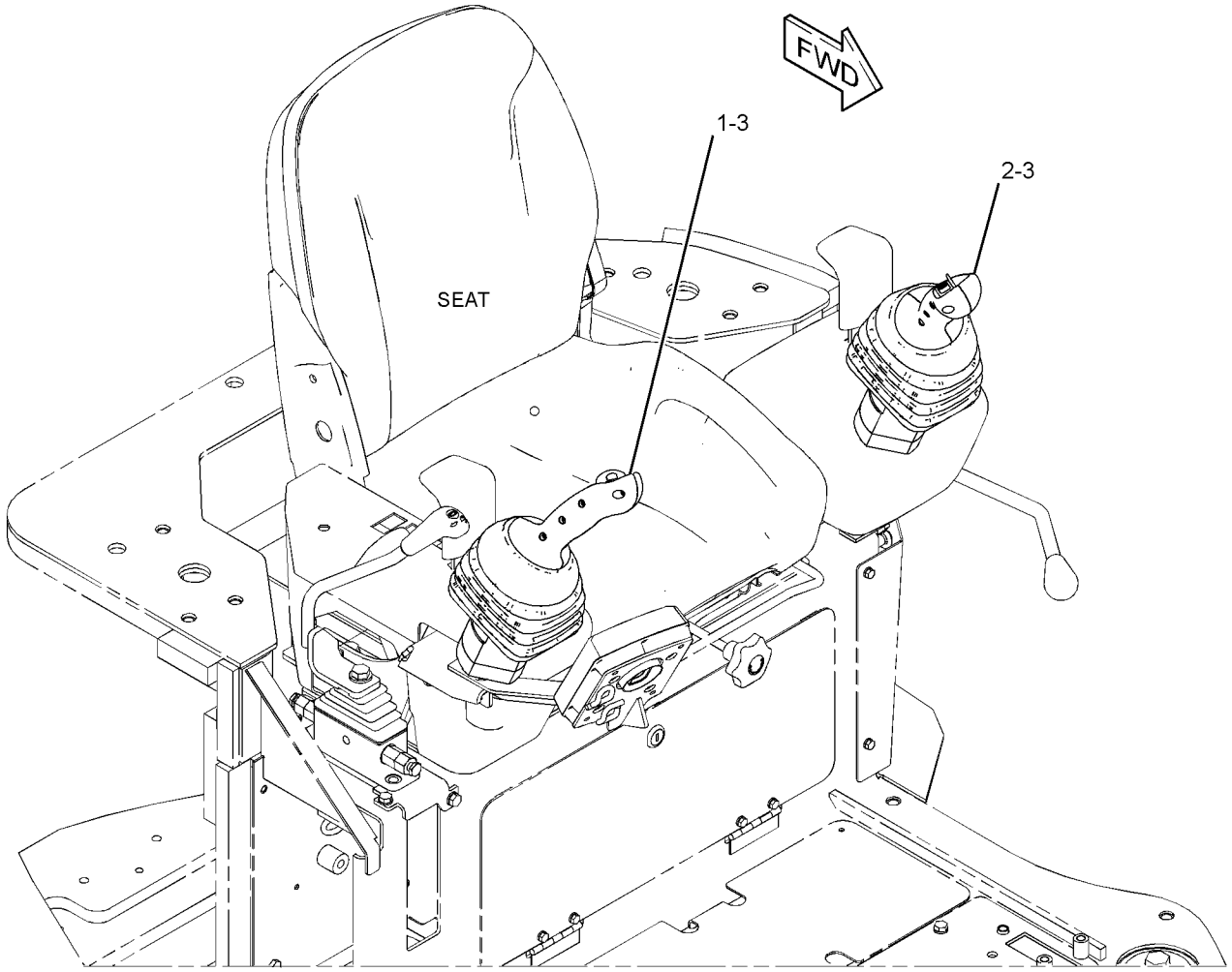

GRAPHIC #1 **<END>** g02765916

378-2497 CONTROL GP-PILOT OPERATED HYD–2ND AUXILIARY

PART OF 378-2500 CONTROL AR-HYDRAULIC

AN ATTACHMENT

SMCS-5059, 5705 **i04559496**

NOTE	REF NO	GRAPHIC REF	PART NUMBER	QTY	PART NAME 1 2 3 4 5 6 (PRODUCT LEVEL)	SEE PAGE
Y	1	1	*376-9494*	1	CONTROL GP-JOYSTICK (LH)	486
Y	2	1	*376-9495*	1	CONTROL GP-JOYSTICK (RH)	487
M	3	1	**3T-0849**	6	BOLT-SOCKET HEAD (M6X1X25-MM)	

M - METRIC PART
Y - SEPARATE ILLUSTRATION

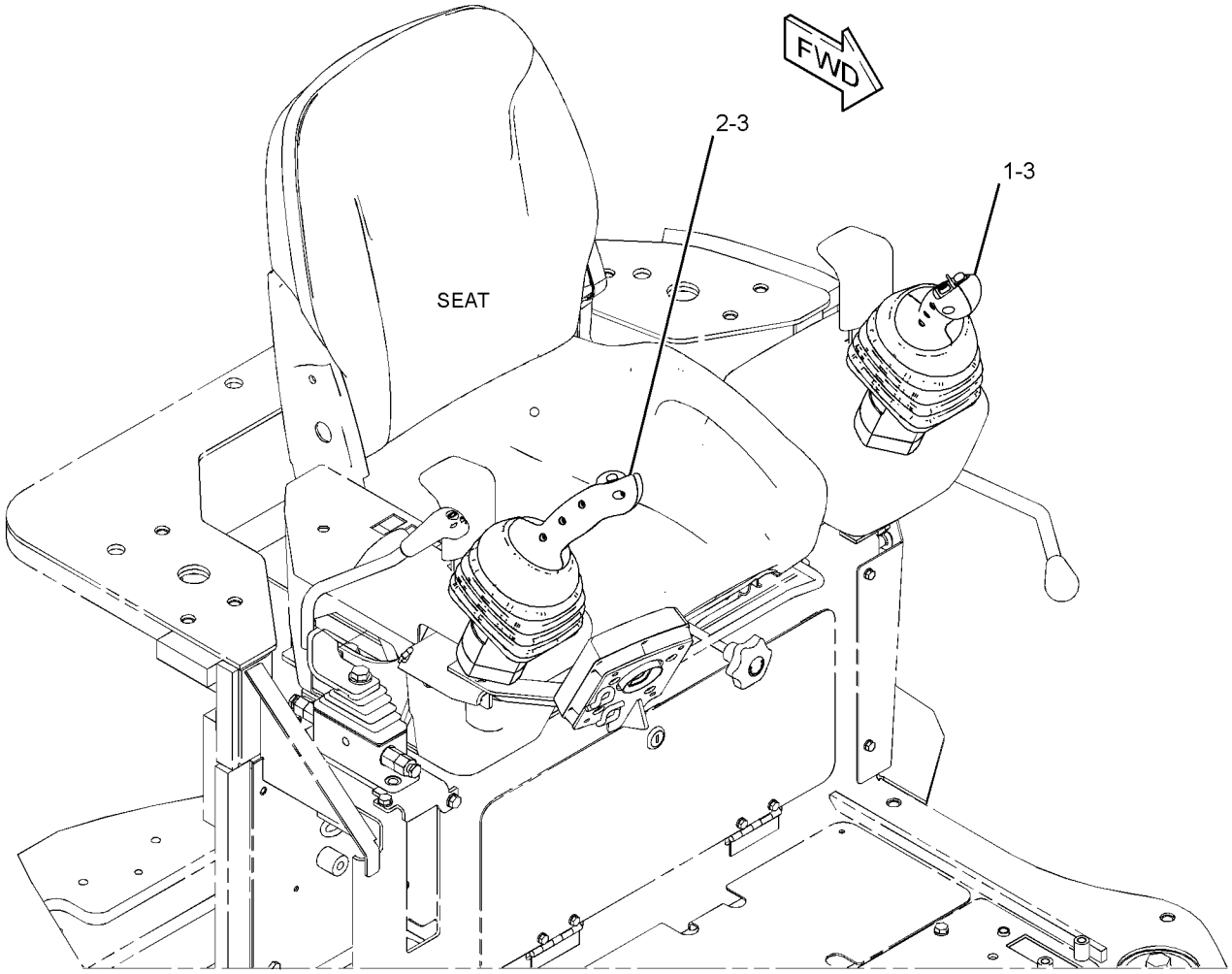

GRAPHIC #1 **<END>** g02765779

382-0522 CONTROL GP-PILOT OPERATED HYD–BLADE

S/N: RKY1-1465
PART OF 377-8930 BLADE AR-ANGLING
AN ATTACHMENT

SMCS-5059, 5705 **i04658611**

NOTE	REF NO	GRAPHIC REF	PART NUMBER	QTY	PART NAME 1 2 3 4 5 6 (PRODUCT LEVEL)	SEE PAGE
Y	1	1	**320-6540**	1	VALVE GP-PILOT (BLADE CONTROL)	350
	2	1	**8T-4223**	1	WASHER-HARD (13.5X25.5X3-MM THK)	
M	3	1	**101-7404**	2	BOLT-SOCKET HEAD (M10X1.5X30-MM)	
M	4	1	**8T-4192**	1	BOLT (M12X1.75X25-MM)	
	5	1	**385-1276**	1	LEVER AS (ANGLE BLADE)	
		1	**102-8802**	1	KIT-RECEPTACLE (2-PIN)	
		1	**102-8804**	1	KIT-RECEPTACLE (4-PIN)	
					(EACH RECEPTACLE KIT INCLUDES RECEPTACLE AS & WEDGE)	
		1	**376-9493**	1	GROMMET	

M - METRIC PART
Y - SEPARATE ILLUSTRATION

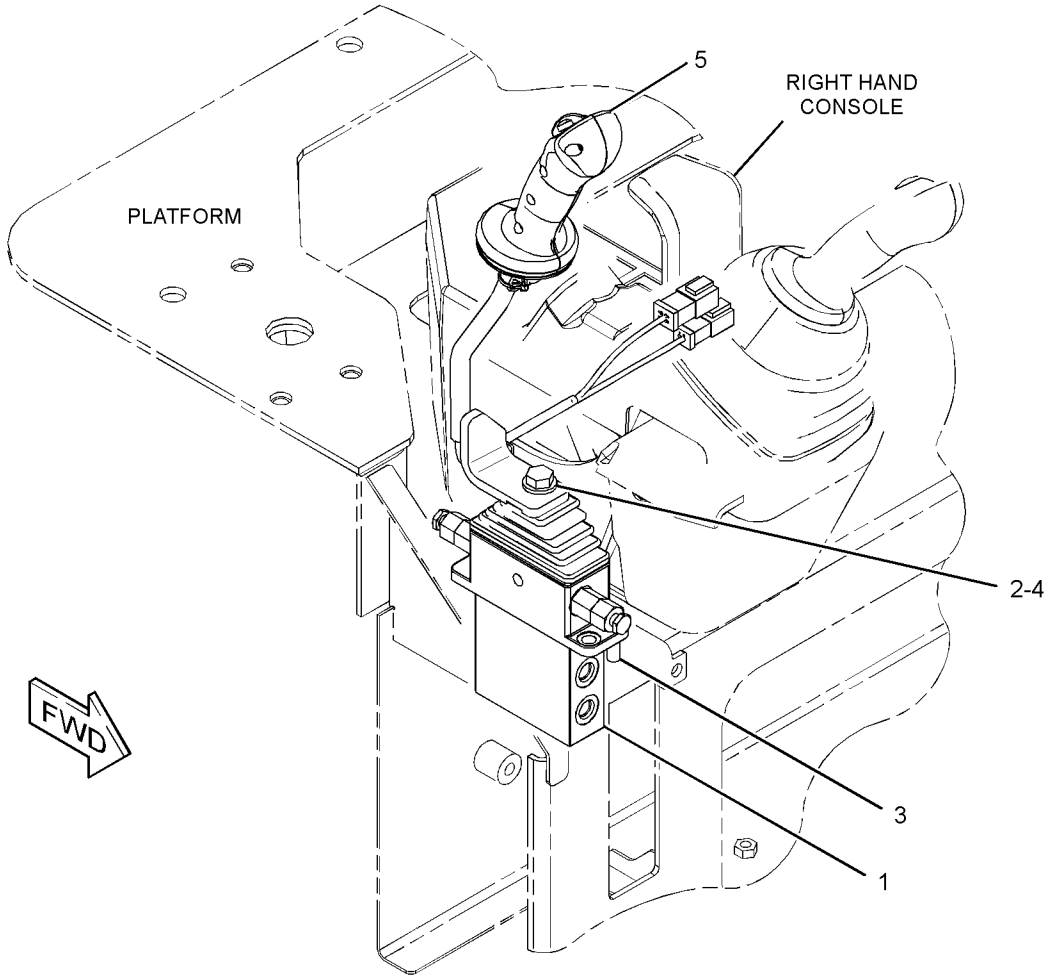

GRAPHIC #1 **<END>** g02808996

419-1204 CONTROL GP-PILOT OPERATED HYD

S/N: RKY1466-UP
PART OF 377-8930 BLADE AR-ANGLING
AN ATTACHMENT

SMCS-5059, 5705 **i05357761**

NOTE	REF NO	GRAPHIC REF	PART NUMBER	QTY	PART NAME 1 2 3 4 5 6 (PRODUCT LEVEL)	SEE PAGE
	1	1	**385-1276**	1	LEVER AS (ANGLE BLADE)	
		1	**102-8802**	1	KIT-RECEPTACLE (2-PIN)	
		1	**102-8804**	1	KIT-RECEPTACLE (4-PIN)	
					(EACH RECEPTACLE KIT INCLUDES RECEPTACE AS & WEDGE)	
M	2	1	**8T-4192**	1	BOLT (M12X1.75X25-MM)	
	3	1	**8T-4223**	1	WASHER-HARD (13.5X25.5X3-MM THK)	

M - METRIC PART

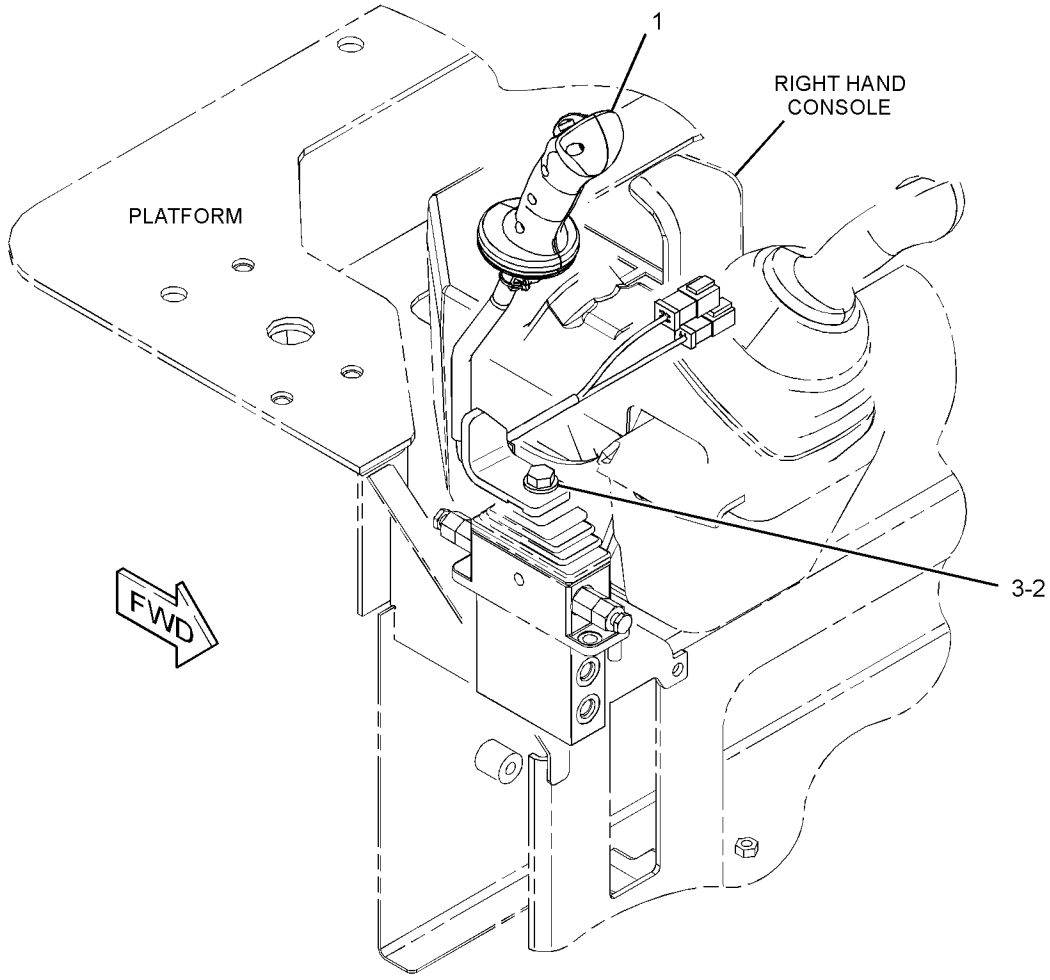

GRAPHIC #1 **<END>** g03404593

421-2716 CONTROL GP-PILOT OPERATED HYD–BLADE

S/N: RKY1466-UP
PART OF 377-8920 BLADE AR-STRAIGHT
AN ATTACHMENT

SMCS-5059, 5705 **i05270706**

NOTE	REF NO	GRAPHIC REF	PART NUMBER	QTY	PART NAME 1 2 3 4 5 6 (PRODUCT LEVEL)	SEE PAGE
	1	1	**376-8857**	1	LEVER AS	
		1	**102-8802**	1	KIT-RECEPTACLE (2-PIN)	
					(INCLUDES RECEPTACLE AS & WEDGE)	
M	2	1	**8T-4192**	1	BOLT (M12X1.75X25-MM)	
	3	1	**8T-4223**	1	WASHER-HARD (13.5X25.5X3-MM THK)	

M - METRIC PART

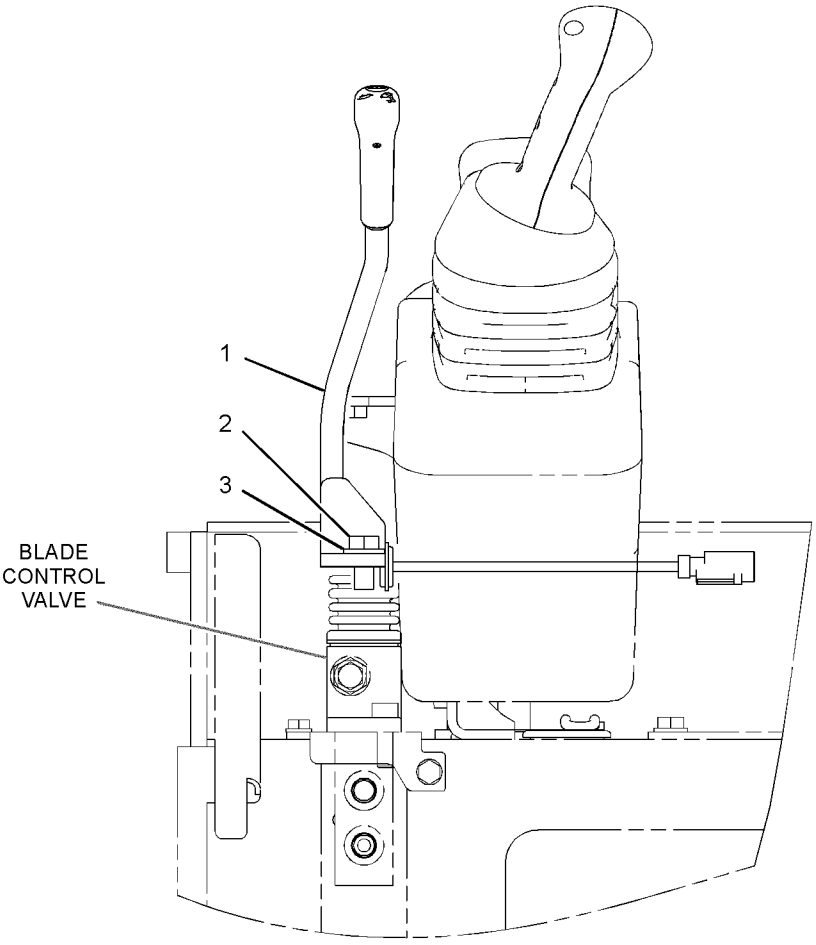

FRONT VIEW

GRAPHIC #1 **<END>** g03411556

382-0501 COVER GP-ACCESS

PART OF 377-8933, 383-5929 CANOPY AR

AN ATTACHMENT

SMCS-726A, 7451 **i04824662**

NOTE	REF NO	GRAPHIC REF	PART NUMBER	QTY	PART NAME 1 2 3 4 5 6 (PRODUCT LEVEL)	SEE PAGE
	1	1	**332-1809**	1	PLUG	
	2	1	*389-8753*	1	COVER AS-ACCESS	
		1	**382-0502**	1	COVER	
		1	**382-0503**	1	SEAL	
		1	**382-6315**	1	SEAL	
	3	1	**8T-4224**	1	WASHER-HARD (8.8X16X2-MM THK)	
	4	1	**382-0543**	1	HOLDER-CUP	
M	5	1	**8T-7547**	1	BOLT (M8X1.25X30-MM)	
	6	1	**8T-4121**	2	WASHER-HARD (11X21X2.5-MM THK)	
M	7	1	**8T-4137**	2	BOLT (M10X1.5X20-MM)	

M - METRIC PART

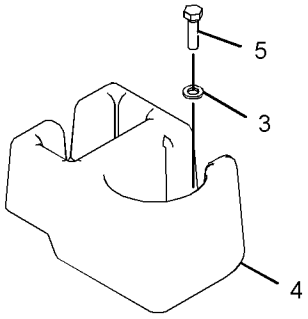

VIEW OF AREA A
(EXPLODE)

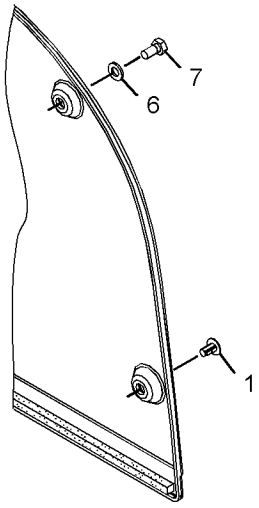

VIEW OF AREA B
(EXPLODE)

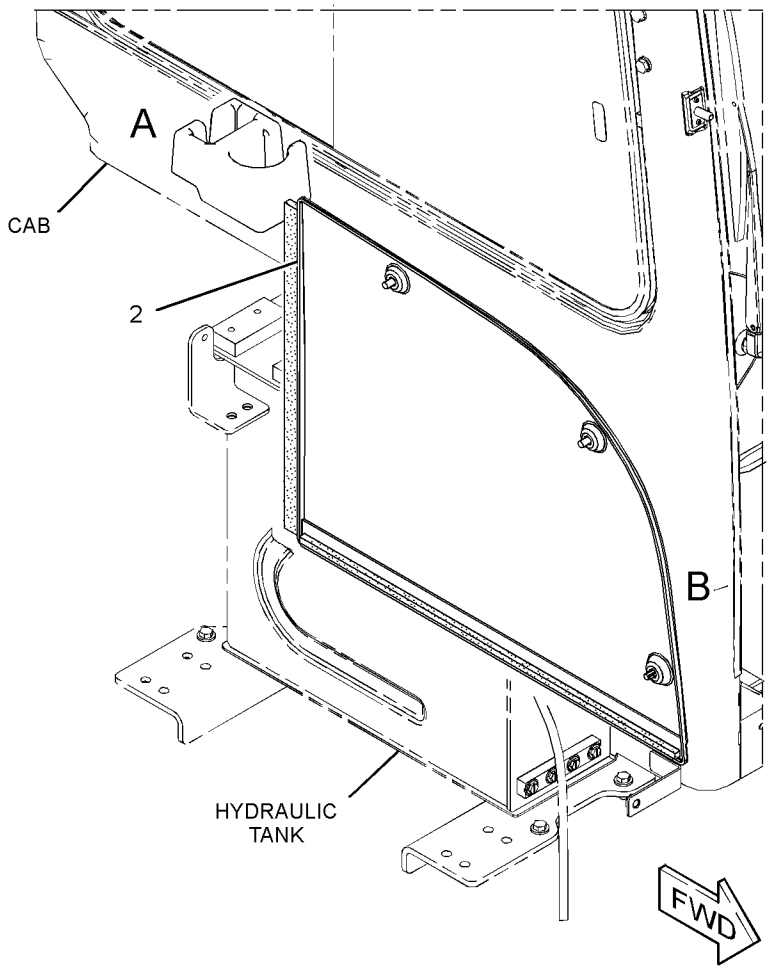

GRAPHIC #1 **<END>** g02959380

367-0950 COVER GP-CAB–TOP

PART OF 376-6692, 376-6696, 383-5927, 383-5928 CAB AR
AN ATTACHMENT

SMCS-7301 **i04617849**

NOTE	REF NO	GRAPHIC REF	PART NUMBER	QTY	PART NAME 1 2 3 4 5 6 (PRODUCT LEVEL)	SEE PAGE
	1	1	**377-7942**	1	COVER AS-TOP	
		1	**377-7944**	1	FOAM	
		1	**379-6417**	1	INSULATION	
	2	1	**7X-7729**	3	WASHER (11X25X3-MM THK)	
M	3	1	**8T-4137**	1	BOLT (M10X1.5X20-MM)	
M	4	1	**8T-4196**	2	BOLT (M10X1.5X35-MM)	

M - METRIC PART

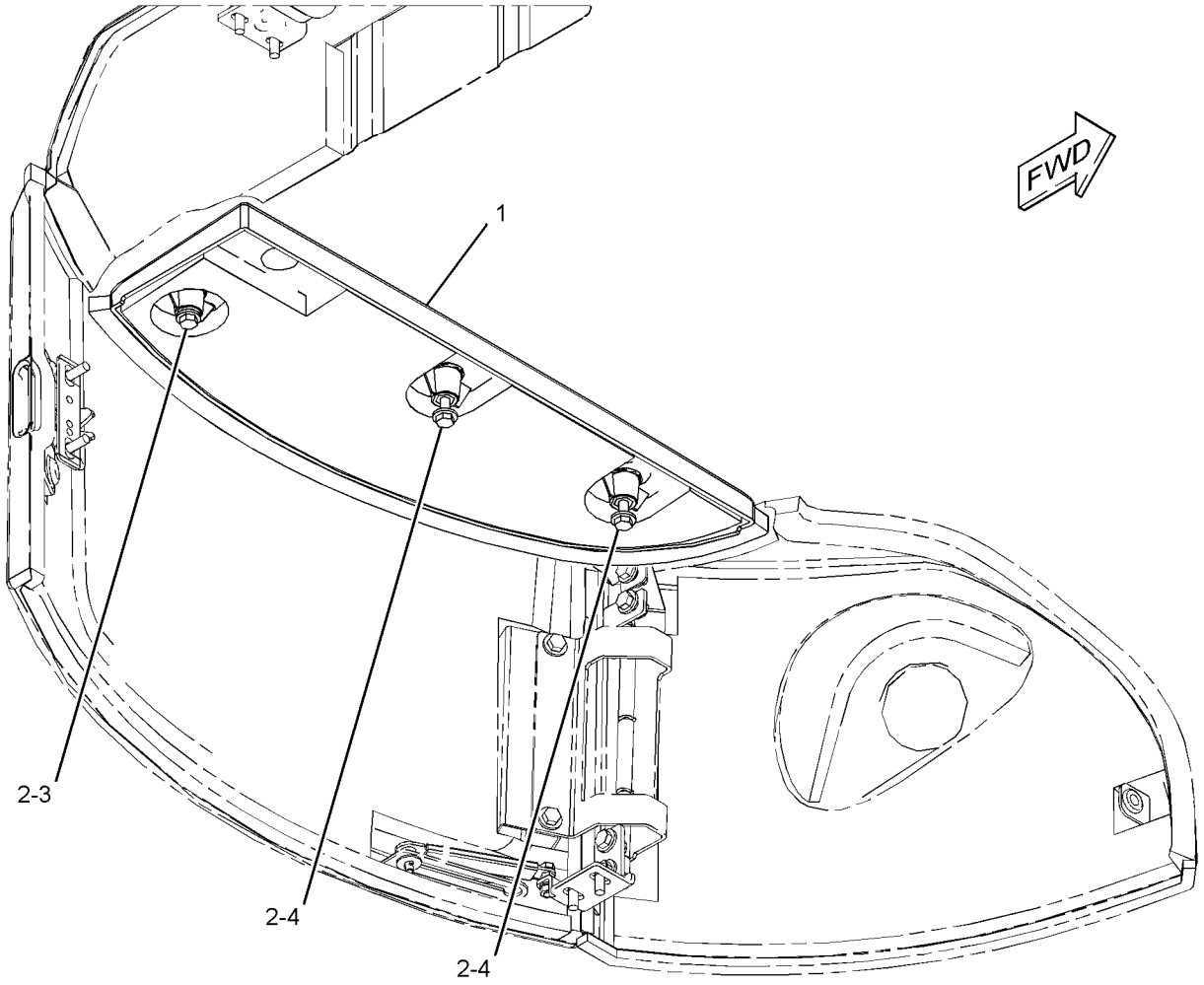

GRAPHIC #1 **<END>** g02789131

281-1195 DOOR GP-CAB

PART OF 377-5108, 415-6803, 419-1237 CAB GP
AN ATTACHMENT

SMCS-7308 **i03965395**

NOTE	REF NO	GRAPHIC REF	PART NUMBER	QTY	PART NAME 1 2 3 4 5 6 (PRODUCT LEVEL)	SEE PAGE
	1	1	**281-1196**	1	DOOR AS-CAB	
	2	1	**280-7544**	1	HANDLE	
M	3	1	**5C-2890**	2	NUT (M6X1-THD)	
	4	1	**196-1441**	1	LOCK AS	
	5	1	**132-7625**	1	LOCK AS	
	6	1	**280-7548**	1	LOCK AS	
M	7	1	**8T-4171**	4	BOLT (M6X1X12-MM)	
	8	1	**277-6030**	1	HANDLE	
	9	1	**281-6262**	2	SCREW (M5X0.8X20-MM)	
	10	1	**277-6031**	1	HANDLE	
	11	1	**281-6263**	2	SCREW (M3X16-MM)	
	12	1	**281-1200**	2	LOCKNUT (M3X0.5-THD)	
	13	1	**293-3116**	1	ROD AS	
M	14	1	**095-0742**	2	SCREW-MACHINE (M6X1X16-MM)	
	15	1	**281-6264**	2	BOLT (M8X16-MM)	
	16	1	**280-7552**	1	COVER	
	17	1	**281-3650**	1	SEAL	
	18	1	**277-6032**	1	COVER	
	19	1	**280-7554**	3	WASHER-CONICAL (6.5X15.8X5.4-MM THK)	
	20	1	**281-6265**	3	SCREW (M6X16-MM)	
	21	1	**281-5481**	1	SCREW (M6X16-MM)	
	22	1	**281-1199**	1	BRACKET-ROLLER	
	23	1	**280-0408**	6	BOLT	
	24	1	**280-7555**	1	BRACKET	
	25	1	**280-7559**	1	BRACKET	
	26	1	**280-7561**	1	GLASS (LH)	
	27	1	**281-3655**	1	CUSHION	
	28	1	**280-7562**	1	SEAL	
	29	1	**280-8624**	1	SEAL	

M - METRIC PART

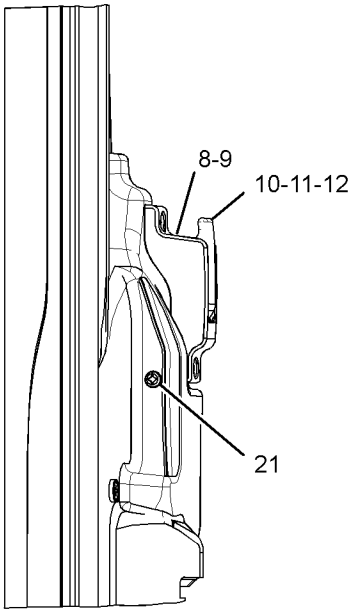

VIEW A-A

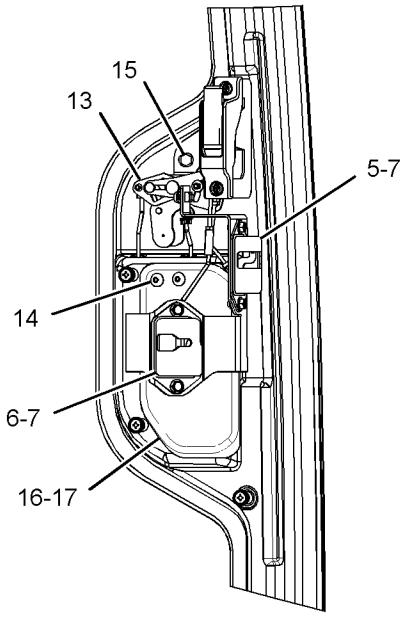

VIEW OF AREA B

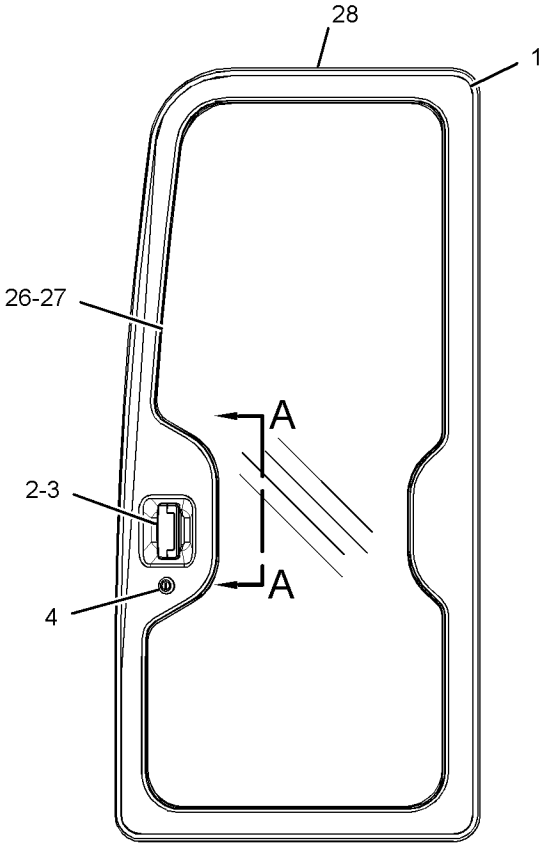

LEFT SIDE VIEW

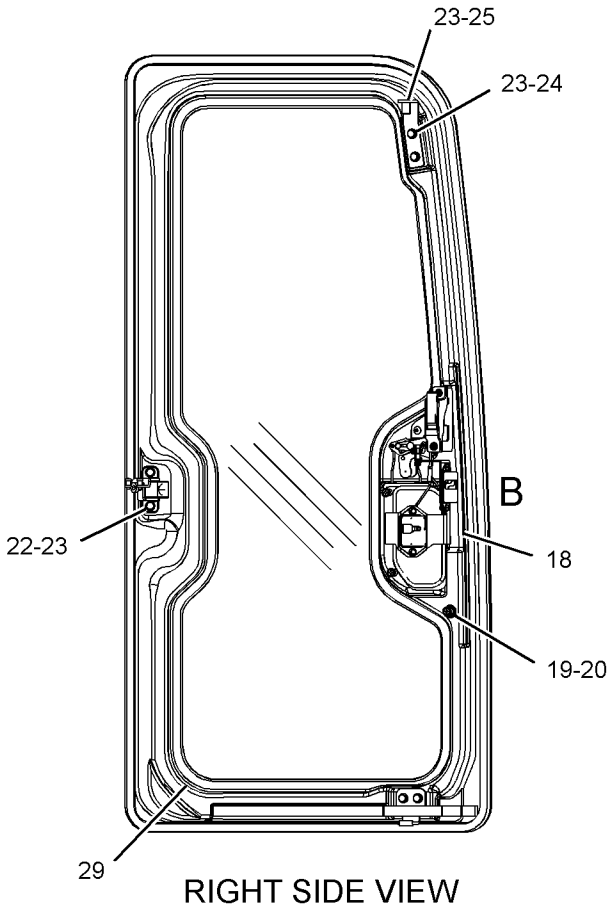

RIGHT SIDE VIEW
(INSIDE CAB)

GRAPHIC #1 **<END>** g01288327

377-5865 DUCT GP-CAB AIR

PART OF 377-5876 AIR CONDITIONER GP

AN ATTACHMENT

SMCS-734D **i04565445**

NOTE	REF NO	GRAPHIC REF	PART NUMBER	QTY	PART NAME 1 2 3 4 5 6 (PRODUCT LEVEL)	SEE PAGE
	1	1	**8Y-6967**	2	LOUVER AS-VENT	
	2	1	**171-4046**	2	LOUVER AS-VENT	
M	3	1	**225-3322**	3	SCREW-TRUSS HEAD (M6X1X10-MM)	
	4	1	**377-5866**	1	DUCT AS-FRONT	
		1	**377-5868**	1	INSULATION	
		1	**377-5869**	1	INSULATION	
	5	1	**377-5870**	1	DUCT AS-REAR	
	6	1	**377-5871**	1	DUCT AS	
		1	**377-5868**	1	INSULATION	
		1	**377-5873**	1	INSULATION	
	7	1	**377-5874**	1	HOLDER-CUP	
	8	1	**377-5875**	1	COVER	
	9	1	**104-2091**	8	SCREW-FLAT HEAD (6-20X0.5-IN)	
M	10	1	**128-2135**	6	SCREW-TRUSS HEAD (M6X1X13-MM)	
M	11	1	**9X-2042**	1	SCREW-TRUSS HEAD (M6X1X12-MM)	
M	12	1	**9X-2044**	2	SCREW-TRUSS HEAD (M6X1X16-MM)	

M - METRIC PART

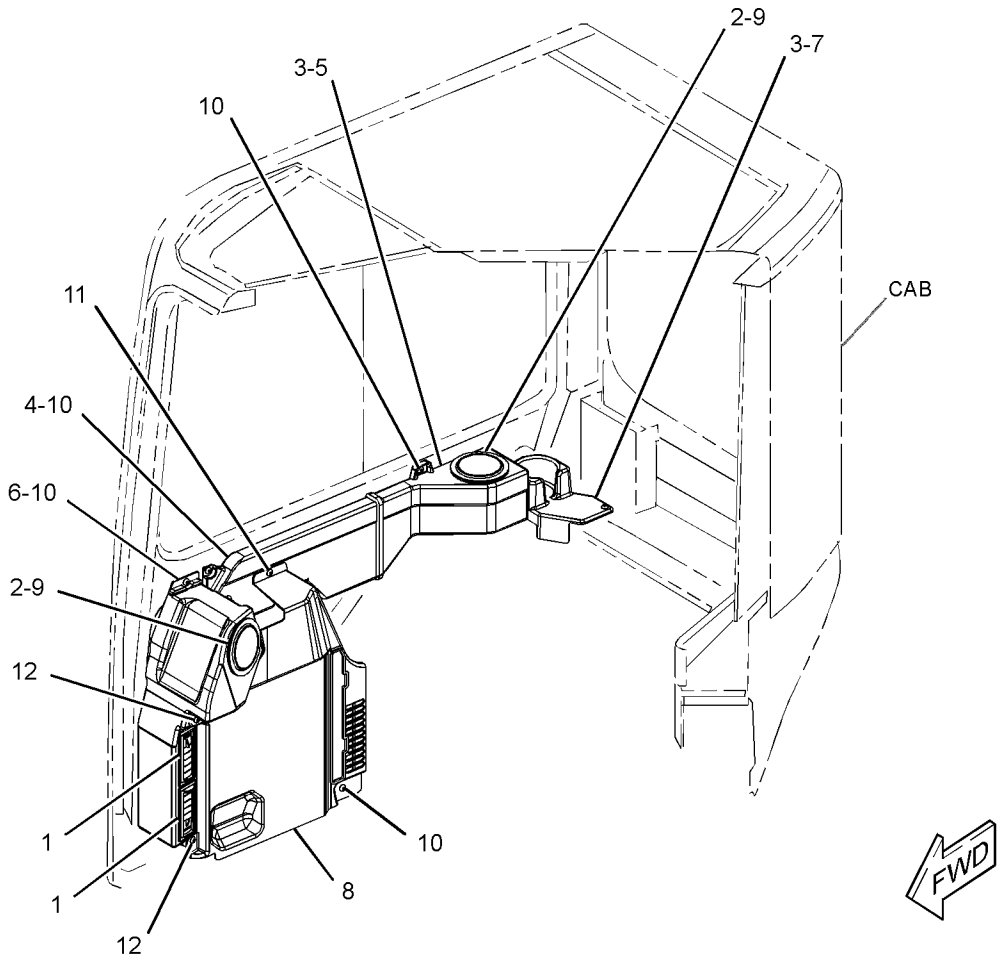

GRAPHIC #1 **<END>** g02784646

378-2493 DUCT GP-CAB AIR

PART OF 378-1293 HEATER AR-CAB

AN ATTACHMENT

SMCS-734D **i04565464**

NOTE	REF NO	GRAPHIC REF	PART NUMBER	QTY	PART NAME 1 2 3 4 5 6 (PRODUCT LEVEL)	SEE PAGE
	1	1	**8Y-6967**	2	LOUVER AS-VENT	
	2	1	**171-4046**	1	LOUVER AS-VENT	
M	3	1	**225-3322**	3	SCREW-TRUSS HEAD (M6X1X10-MM)	
	4	1	**377-5871**	1	DUCT AS	
		1	**377-5868**	1	INSULATION	
		1	**377-5873**	1	INSULATION	
	5	1	**377-5875**	1	COVER	
	6	1	**378-2511**	1	DUCT AS	
		1	**377-5869**	1	INSULATION	
	7	1	**379-2996**	1	HOLDER-CUP	
	8	1	**104-2091**	4	SCREW-FLAT HEAD (6-20X0.5-IN)	
M	9	1	**128-2135**	5	SCREW-TRUSS HEAD (M6X1X13-MM)	
M	10	1	**9X-2042**	1	SCREW-TRUSS HEAD (M6X1X12-MM)	
M	11	1	**9X-2044**	2	SCREW-TRUSS HEAD (M6X1X16-MM)	

M - METRIC PART

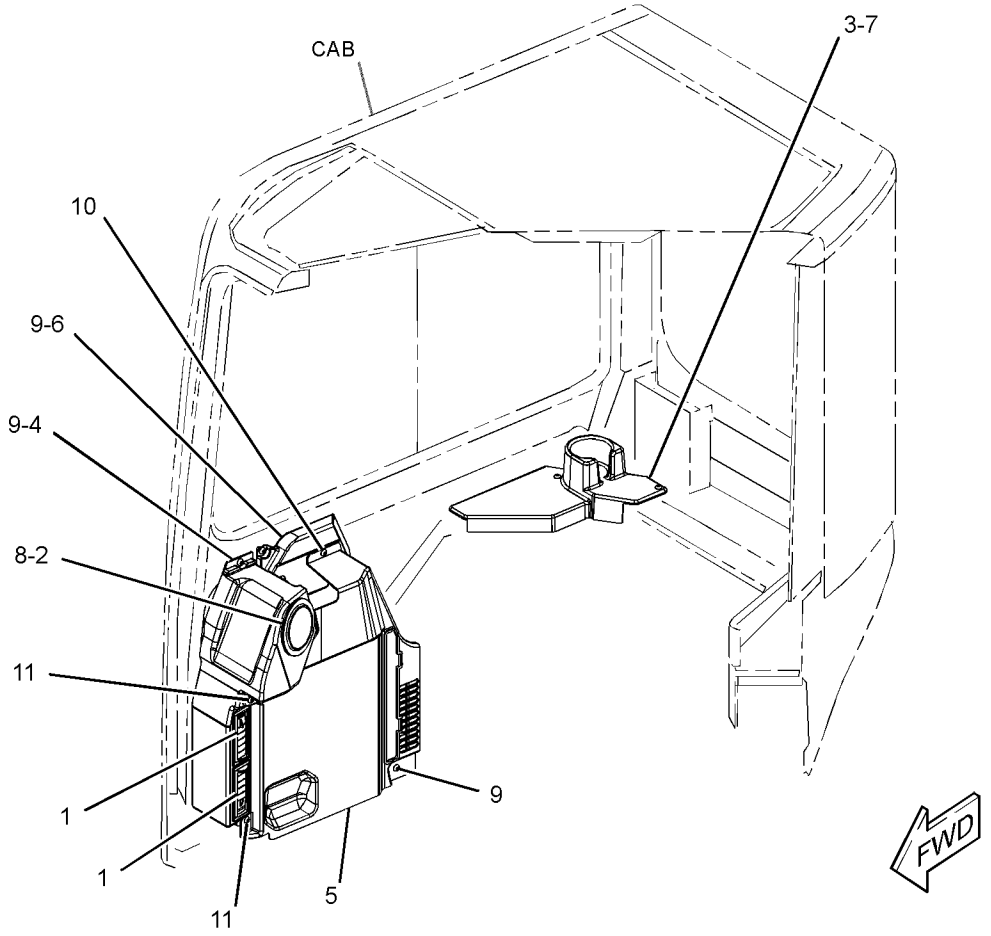

GRAPHIC #1 **<END>** g02784367

417-1289 GUARD GP-VANDALISM

PART OF 419-5871 GUARD GP-VANDALISM

AN ATTACHMENT

SMCS-7315 **i05350312**

NOTE	REF NO	GRAPHIC REF	PART NUMBER	QTY	PART NAME 1 2 3 4 5 6 (PRODUCT LEVEL)	SEE PAGE
	1	1	**246-2641**	1	PADLOCK GP	
		1	**5P-8500**	1	KEY	
	2	1	**417-1267**	1	COVER AS	
		1	**417-1272**	1	INSULATION	
		1	**417-1273**	1	INSULATION	
		1	**417-1274**	2	INSULATION	
	3	1	**9X-8256**	2	WASHER (6.6X12X2-MM THK)	
M	4	1	**5C-9553**	2	BOLT (M6X1X16-MM)	

M - METRIC PART

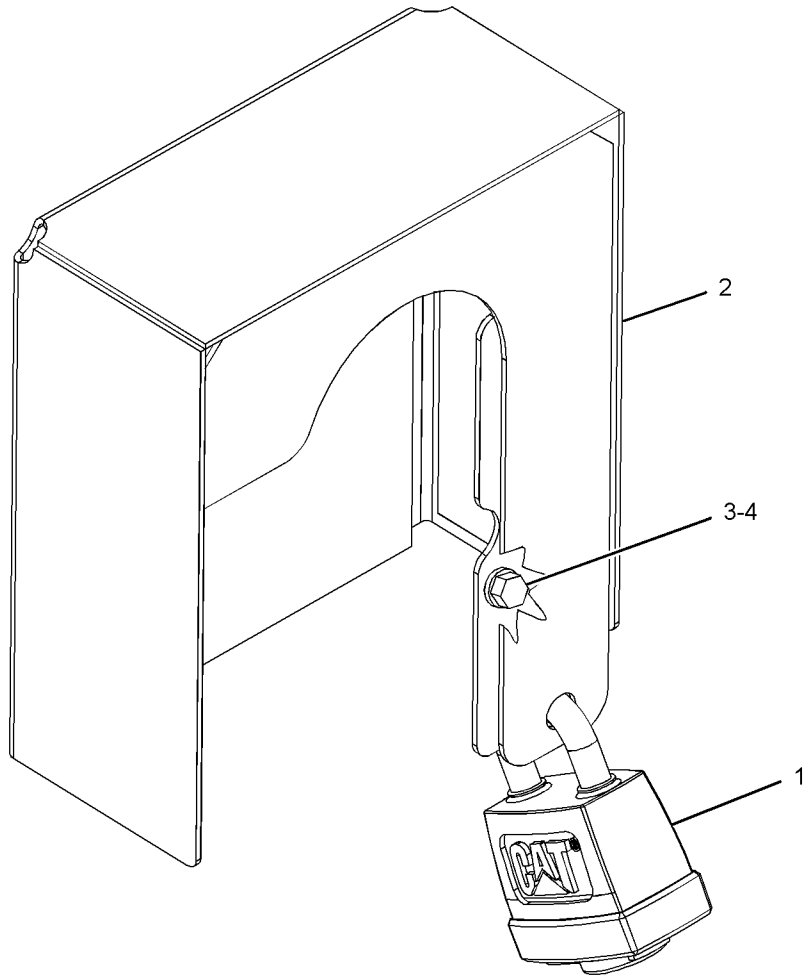

GRAPHIC #1 **<END>** g03397000

OPERATOR STATION

419-5871 GUARD GP-VANDALISM

AN ATTACHMENT

SMCS-7315 **i05350311**

NOTE	PART NUMBER	QTY	PART NAME 1 2 3 4 5 6 (PRODUCT LEVEL)	SEE PAGE
Y	*417-1289*	1	GUARD GP-VANDALISM	501

Y - SEPARATE ILLUSTRATION

<END>

382-0426 HANDRAIL GP

PART OF 377-8933, 383-5929 CANOPY AR
AN ATTACHMENT

SMCS-7256 **i04638094**

NOTE	REF NO	GRAPHIC REF	PART NUMBER	QTY	PART NAME 1 2 3 4 5 6 (PRODUCT LEVEL)	SEE PAGE
	1	1	**382-0427**	1	HANDRAIL AS	
	2	1	**7X-7729**	1	WASHER (11X25X3-MM THK)	
M	3	1	**8T-4137**	1	BOLT (M10X1.5X20-MM)	
M	4	1	**8T-4139**	3	BOLT (M12X1.75X30-MM)	
	5	1	**8T-4223**	3	WASHER-HARD (13.5X25.5X3-MM THK)	

M - METRIC PART

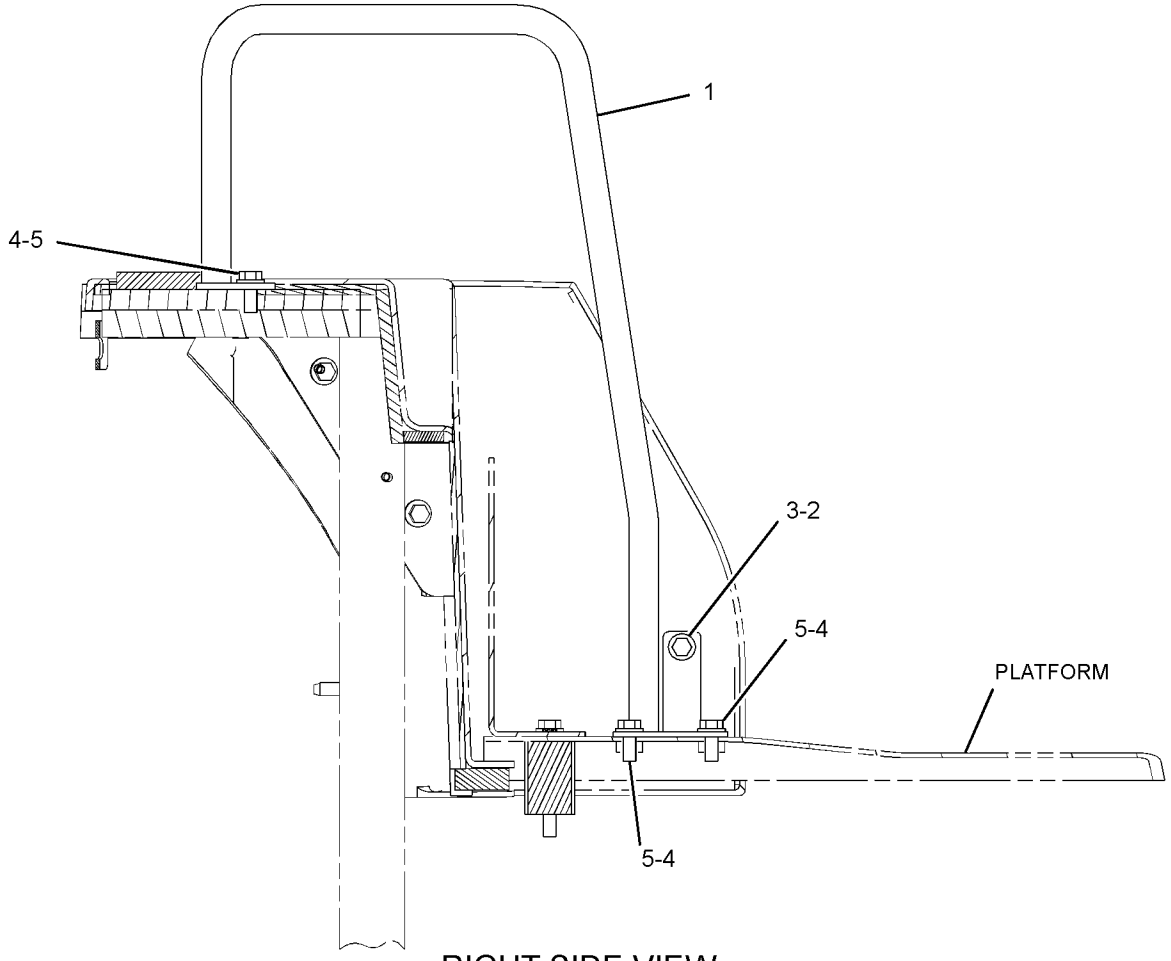

RIGHT SIDE VIEW

GRAPHIC #1 **<END>** g02801724

282-9311 HEATER & MTG GP-CAB

PART OF 378-1293 HEATER AR-CAB

AN ATTACHMENT

SMCS-7304 **i05437186**

NOTE	REF NO	GRAPHIC REF	PART NUMBER	QTY	PART NAME 1 2 3 4 5 6 (PRODUCT LEVEL)	SEE PAGE
	1	1	**3S-2093**	1	STRAP-CABLE	
	2	1	**9X-8256**	1	WASHER (6.6X12X2-MM THK)	
	3	1	**258-6257**	1	TUBE	
Y	4	1	**273-1450**	1	HEATER GP-CAB	506
	5	1	**301-6875**	6	SPACER (10X16X9.5-MM THK)	
	6	1	**278-7614**	1	CABLE AS	
	7	1	**278-8557**	1	HARNESS AS-HEATER & AIR COND (CAB)	
	8	1	**278-8558**	1	PANEL AS-CONTROL (BLOWER, TEMPERATURE)	
	9	1	**095-0912**	1	CLIP	
M	10	1	**7Y-3173**	2	SCREW-BUTTON HEAD (M4X0.7X12-MM)	
M	11	1	**8T-4171**	1	BOLT (M6X1X12-MM)	
	12	1	**7X-0579**	6	WASHER-HARD (8.8X25.5X2-MM THK)	
M	13	1	**8T-4908**	6	BOLT (M8X1.25X25-MM)	
	14	1	**278-7615**	1	CABLE AS	

M - METRIC PART
Y - SEPARATE ILLUSTRATION

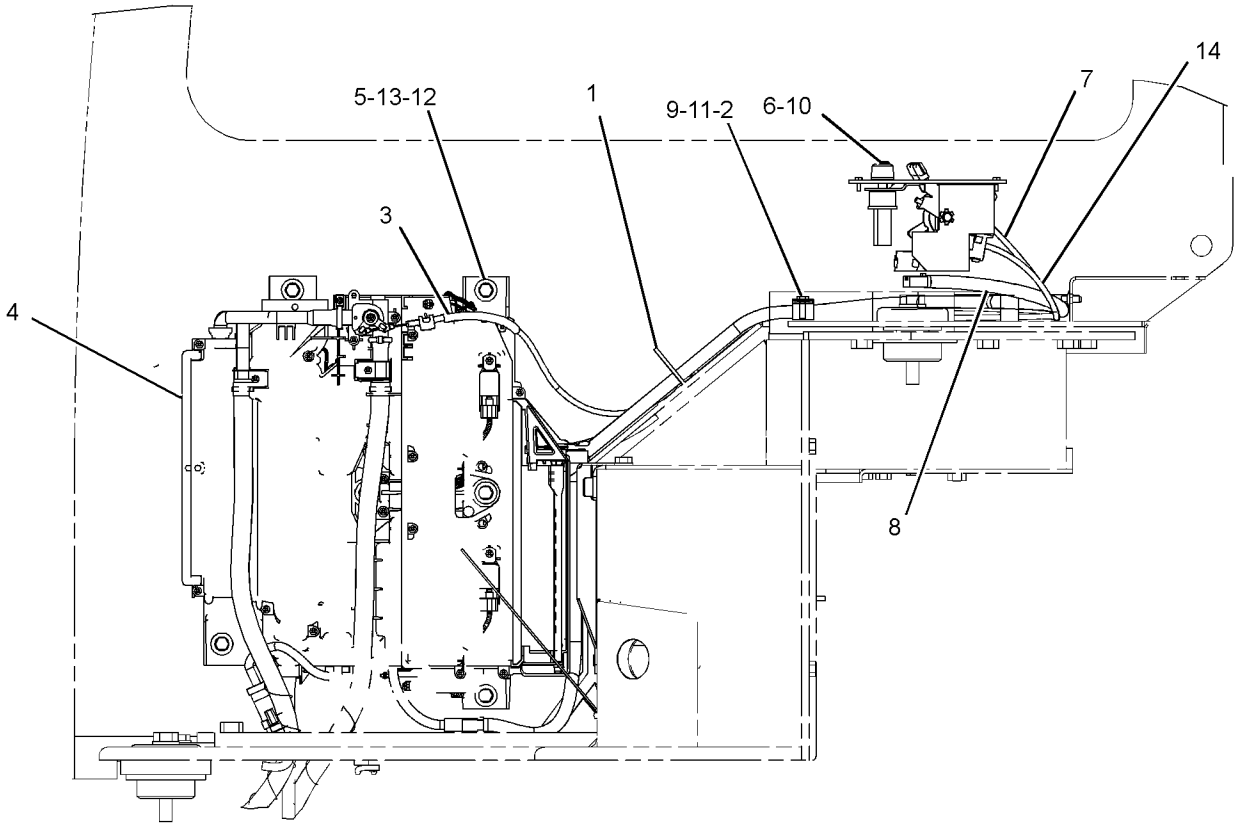

LEFT SIDE VIEW

GRAPHIC #1 **<END>** g02164435

378-1293 HEATER AR-CAB

PART OF 376-6696, 383-5928 CAB AR

AN ATTACHMENT

SMCS-1380, 1408, 7304 **i04565462**

NOTE	PART NUMBER	QTY	PART NAME 1 2 3 4 5 6 (PRODUCT LEVEL)	SEE PAGE
Y	*378-2493*	1	DUCT GP-CAB AIR	500
Y	*282-9311*	1	HEATER & MTG GP-CAB	504

Y - SEPARATE ILLUSTRATION

<END>

273-1450 HEATER GP-CAB

PART OF 282-9311 HEATER & MTG GP-CAB

AN ATTACHMENT

SMCS-7304 **i05437183**

NOTE	REF NO	GRAPHIC REF	PART NUMBER	QTY	PART NAME 1 2 3 4 5 6 (PRODUCT LEVEL)	SEE PAGE
	1	1	**296-2602**	1	MOTOR AS-BLOWER	
	2	1	**296-2603**	1	FAN	
	3	1	**296-2604**	1	FAN	
	4	1	**296-2605**	1	CORE AS-HEATER	
	5	1	**296-2606**	1	RELAY AS (AIR CONDITIONER COMPRESSOR)	
	6	1	**296-2607**	1	RESISTOR	
	7	1	**296-2608**	1	DOOR AS	
	8	1	**296-2609**	1	HARNESS AS-HEATER	
	9	1	**284-5686**	1	FILTER ELEMENT-CAB AIR	
	10	1	**296-2611**	1	LEVER	
	11	1	**296-2612**	2	CLAMP	
	12	1	**185-8300**	40	SCREW-TAPPING	
	13	1	**296-2614**	2	LOCK	
	14	1	**296-2615**	2	NUT-FLANGE (M5X0.8-THD)	
	15	1	**296-2616**	2	WASHER	
	16	1	**296-2617**	2	SEAL	
	17	1	**336-9693**	1	CASE	
	18	1	**336-9694**	1	CASE-HEATER	
	19	1	**336-9695**	1	CASE-HEATER	

273-1450 **HEATER GP-CAB (*contd.*)** **i05437183**

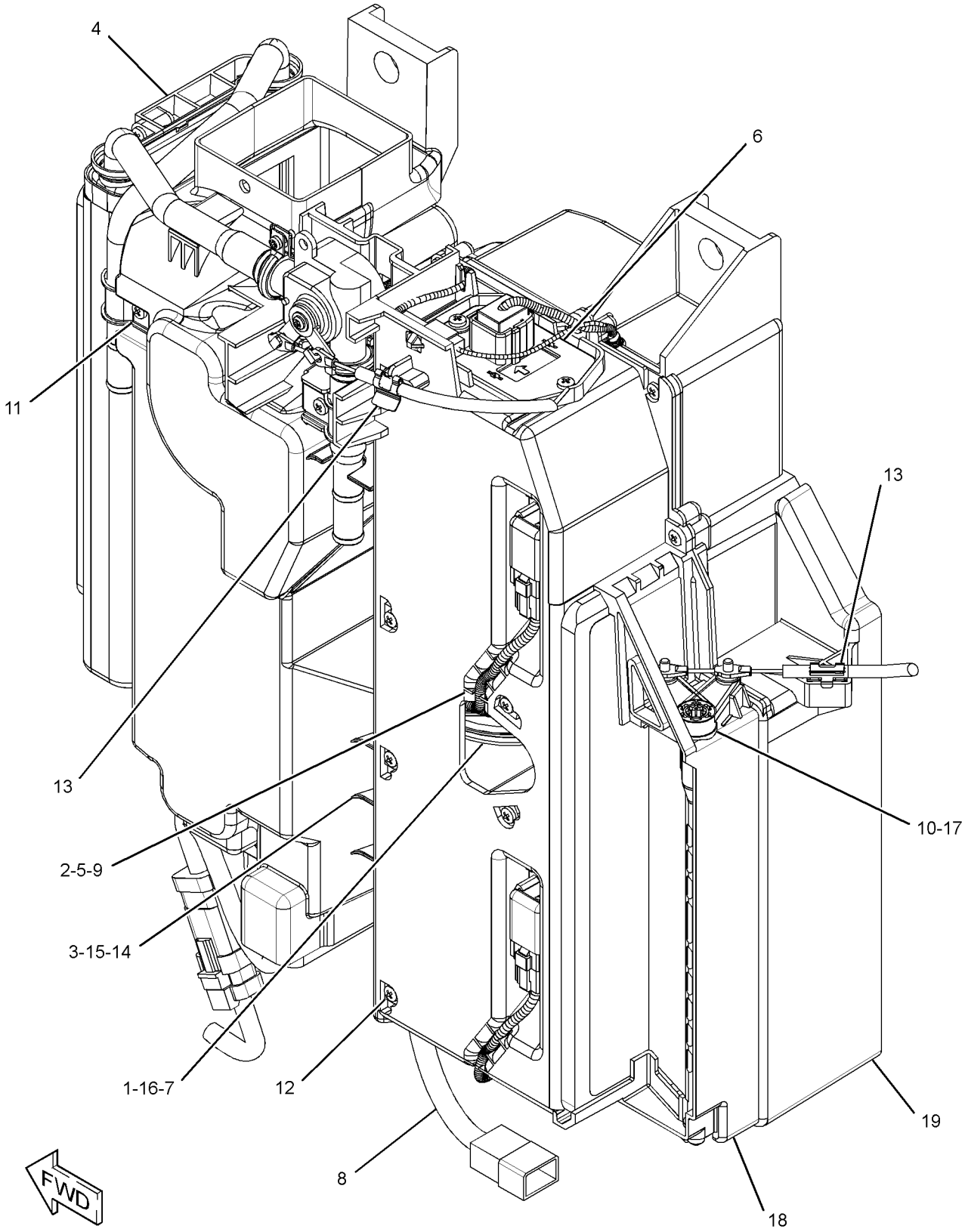

GRAPHIC #1 **<END>** g01945177

266-6835 HORN GP-ELECTRIC

PART OF 376-6676 CHASSIS AR
ALSO AN ATTACHMENT

SMCS-7402 **i03969234**

NOTE	REF NO	GRAPHIC REF	PART NUMBER	QTY	PART NAME 1 2 3 4 5 6 (PRODUCT LEVEL)	SEE PAGE
	1	1	**245-9398**	1	HORN AS (12-VOLT)	
M	2	1	**8T-4200**	1	BOLT (M8X1.25X16-MM)	
	3	1	**8T-4224**	1	WASHER-HARD (8.8X16X2-MM THK)	

M - METRIC PART

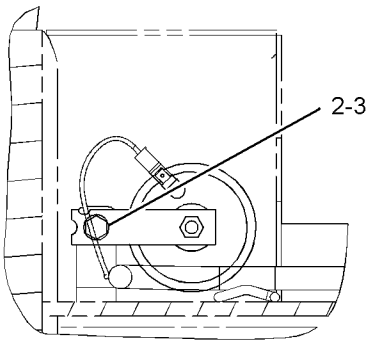

VIEW A-A

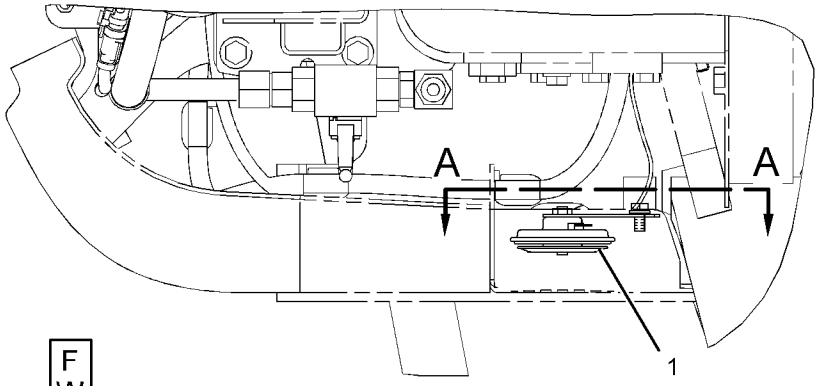

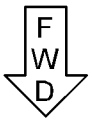

TOP VIEW

GRAPHIC #1 **<END>** g01202053

430-8640 KIT-GUARD—CANOPY

PART OF 430-9229 KIT-GUARD

AN ATTACHMENT

SMCS-7165, 7182, 7310 **i05354413**

NOTE	PART NUMBER	QTY	PART NAME 1 2 3 4 5 6 (PRODUCT LEVEL)	SEE PAGE
M	**8T-4192**	8	BOLT (M12X1.75X25-MM)	
	389-8775	1	FILM-CERTIFICATION (FRONT GUARD, READ OMM)	
	389-9183	1	FILM-WARNING (NO WELD, NO DRILL, READ OMM)	
	389-8734	1	FRAME AS	
	8T-4223	8	WASHER-HARD (13.5X25.5X3-MM THK)	

M - METRIC PART

<END>

430-9229 KIT-GUARD—CANOPY

AN ATTACHMENT

SMCS-7165, 7182, 7310 **i05354412**

NOTE	PART NUMBER	QTY	PART NAME 1 2 3 4 5 6 (PRODUCT LEVEL)	SEE PAGE
Y	**430-8640**	1	KIT-GUARD (CANOPY) (FRONT)	509

Y - SEPARATE ILLUSTRATION

<END>

OPERATOR STATION

379-4711 LINES GP-AIR CONDITIONER

PART OF 376-6692, 383-5927 CAB AR

AN ATTACHMENT

SMCS-1808 **i04617855**

NOTE	REF NO	GRAPHIC REF	PART NUMBER	QTY	PART NAME 1 2 3 4 5 6 (PRODUCT LEVEL)	SEE PAGE
	1	1	**3S-2093**	1	STRAP-CABLE	
	2	1,2	**7K-1181**	8	STRAP-CABLE	
	3	2	**095-1387**	2	CLAMP-HOSE	
	4	2	**130-0252**	1	HOSE-DRAIN	
	5	2	*148-8367*	1	ELBOW AS	
		2	**6V-8397**	1	SEAL-O-RING	
		2	**6V-9850**	1	ELBOW	
	6	2	**176-1902**	1	DRYER-REFRIGERANT (RECEIVER) (AIR CONDITIONER)	
	7	2	**204-1611**	1	STRAP (DUAL)	
	8	2	**235-8891**	1	PLATE	
	9	1	**266-7379**	1	STRAP-CABLE	
	10	2	**277-9073**	1	JOINT	
	11	1	**277-9412**	2	CLIP	
	12	1	**298-0663**	1	CLIP	
	13	1	**377-9081**	1	GROMMET	
	14	1	**380-9997**	1	HOSE AS	
		1	**121-7137**	2	SEAL-O-RING	
		1	**245-7850**	1	CAP	
	15	2	**380-9998**	1	HOSE AS	
	16	1	**380-9999**	1	HOSE AS	
					(EACH HOSE AS INCLUDES)	
		1	**121-7138**	2	SEAL-O-RING	
	17	2	**381-0000**	1	HOSE AS	
		2	**121-7136**	2	SEAL-O-RING	
		2	**245-7850**	1	CAP	
	18	1	**381-0001**	1	HOSE AS	
		1	**121-7136**	1	SEAL-O-RING	
	19	2	**121-7098**	1	BRACKET AS	
M		2	**8T-4138**	2	BOLT (M6X1X20-MM)	
		2	**9X-8256**	2	WASHER (6.6X12X2-MM THK)	
	20	1	**132-5789**	1	CLIP	
	21	2	**226-2560**	1	CONNECTOR	
	22	2	**287-7257**	1	ELBOW	
	23	1	**5P-2369**	1	CLIP	
	24	1	**6D-1641**	2	CLIP	
	25	1	**6D-3479**	1	CLIP	
	26	1	**6V-2235**	1	CLIP	
M	27	2	**6V-7357**	4	BOLT (M6X1X25-MM)	
	28	2	**6V-8397**	1	SEAL-O-RING	
	29	1	**8T-4121**	7	WASHER-HARD (11X21X2.5-MM THK)	
M	30	1	**8T-4136**	1	BOLT (M10X1.5X25-MM)	
M	31	1	**8T-4137**	6	BOLT (M10X1.5X20-MM)	
M	32	2	**8T-4200**	2	BOLT (M8X1.25X16-MM)	
	33	2	**8T-4224**	2	WASHER-HARD (8.8X16X2-MM THK)	
M	34	1	**8T-4971**	3	BOLT (M6X1X30-MM)	
	35	1,2	**9X-8256**	7	WASHER (6.6X12X2-MM THK)	
D	36	1	**8T-3425**		CHANNEL-TRIM (0.2-M)	
E	37	1	**7I-7439**		GUARD (98-CM)	
E	38	1	**7I-1024**		GUARD-HOSE (66-CM)	
E	38A	1	**7I-1024**		GUARD-HOSE (58-CM)	
E	38B	1	**7I-1024**		GUARD-HOSE (50-CM)	
E	38C	1	**7I-1024**		GUARD-HOSE (243-CM)	
E	38D	1	**7I-1024**		GUARD-HOSE (236-CM)	
E	39	1	**9X-2133**		HOSE (329-CM)	
E	39A	1	**9X-2133**		HOSE (332-CM)	
E	40	2	**7X-7898**		TRIM (36-CM)	
	41	1	**096-6079**	3	TAPE (WHITE)	
	42	1	**096-6085**	3	TAPE (RED)	

379-4711 **LINES GP-AIR CONDITIONER (*contd.*)** **i04617855**

NOTE	REF NO	GRAPHIC REF	PART NUMBER	QTY	PART NAME 1 2 3 4 5 6 (PRODUCT LEVEL)	SEE PAGE
D - ORDER BY THE METER						
E - ORDER BY THE CENTIMETER						
M - METRIC PART						

REFER TO ALL ILLUSTRATIONS OF
THIS GROUP FOR AUXILIARY VIEWS

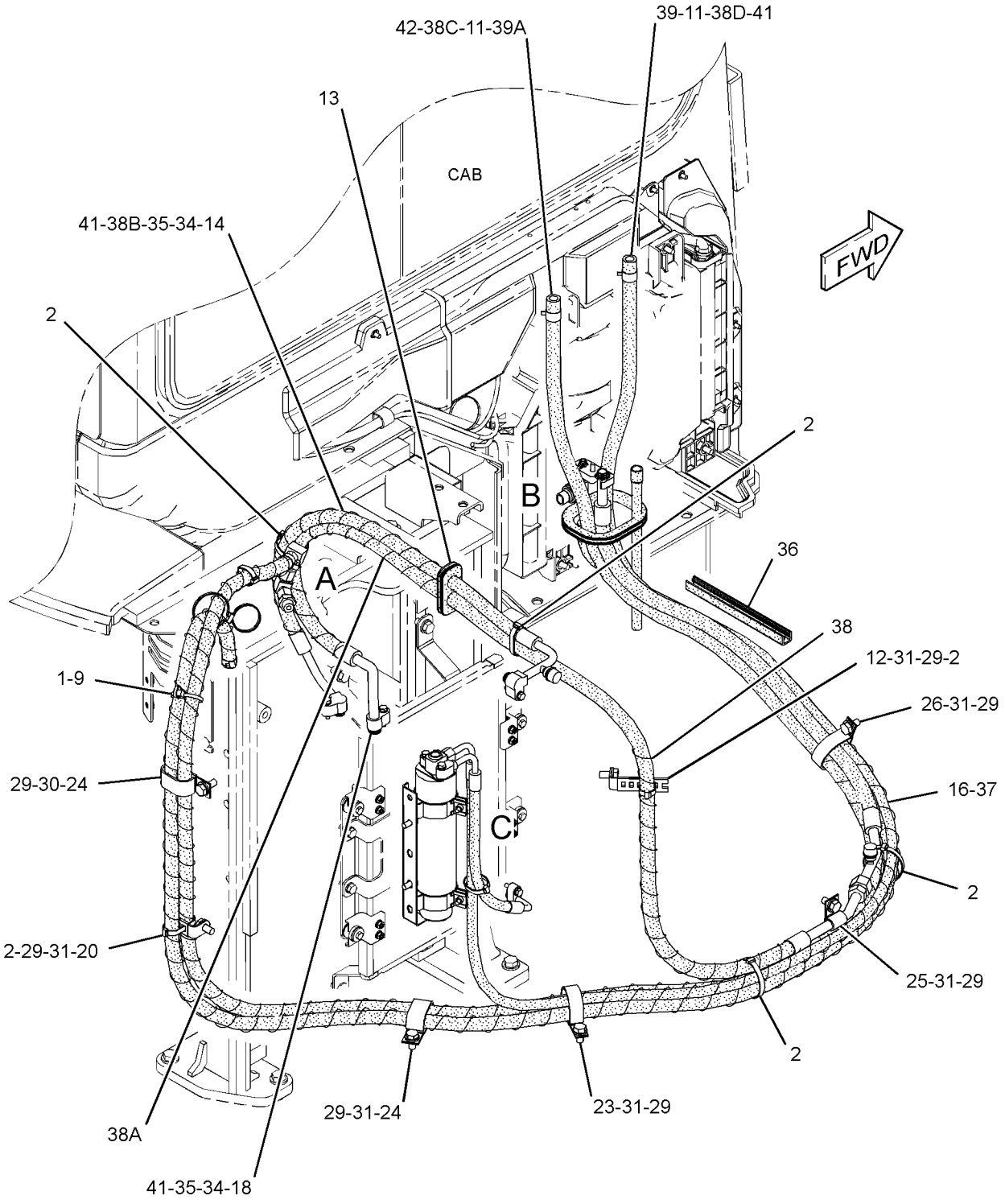

GRAPHIC #1 g02799128

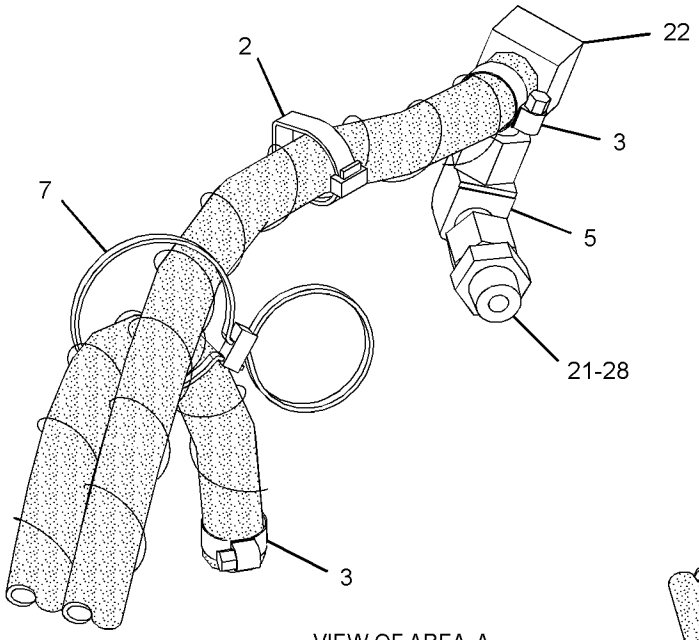

VIEW OF AREA A
(PARTS REMOVED FOR CLARITY)

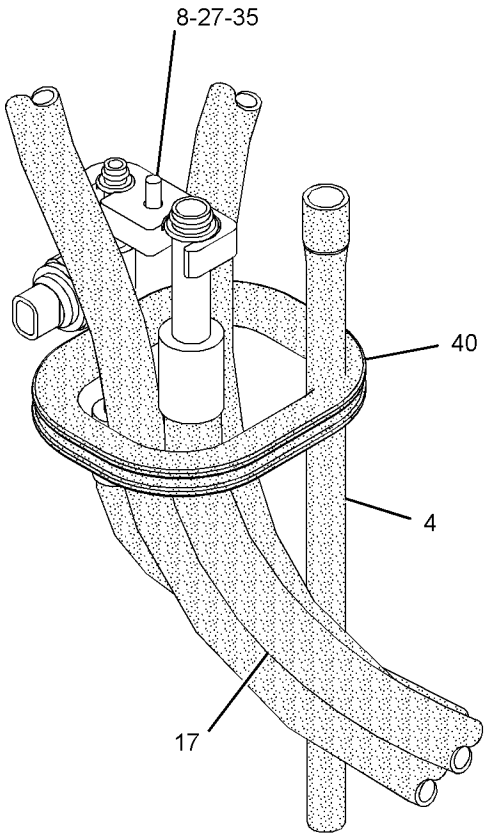

VIEW OF AREA B

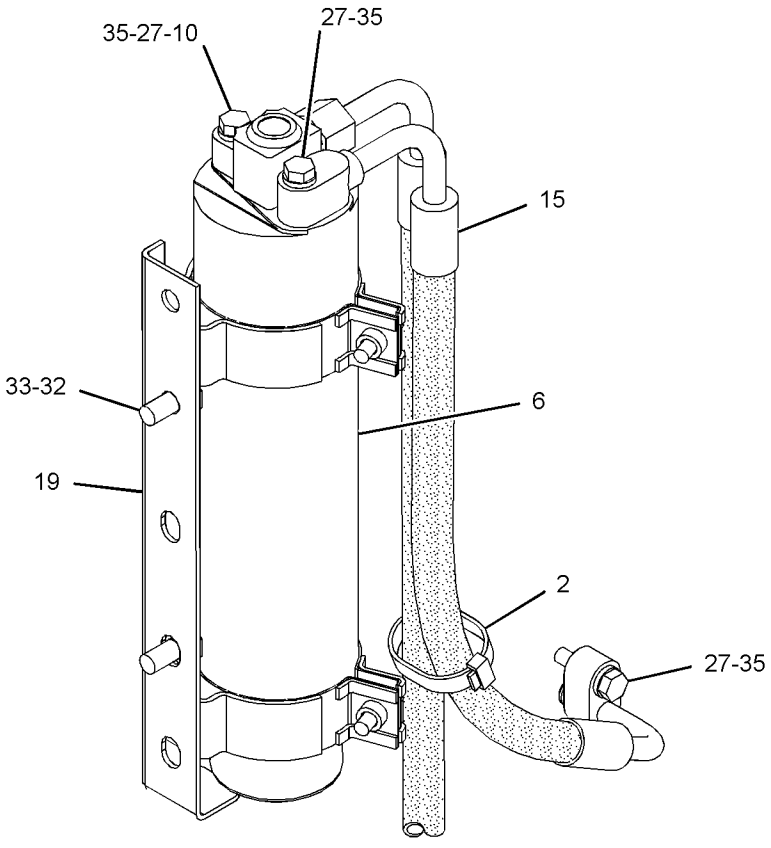

VIEW OF AREA C

GRAPHIC #2 **<END>** g02799129

379-4712 LINES GP-HEATER

PART OF 376-6696, 383-5928 CAB AR

AN ATTACHMENT

SMCS-7304 **i04623156**

NOTE	REF NO	GRAPHIC REF	PART NUMBER	QTY	PART NAME 1 2 3 4 5 6 (PRODUCT LEVEL)	SEE PAGE
	1	1	**3S-2093**	1	STRAP-CABLE	
	2	1	**7K-1181**	4	STRAP-CABLE	
	3	1	**095-1387**	2	CLAMP-HOSE	
	4	1	*148-8367*	1	ELBOW AS	
		1	**6V-8397**	1	SEAL-O-RING	
		1	**6V-9850**	1	ELBOW	
	5	1	**204-1611**	1	STRAP (DUAL)	
	6	1	**266-7379**	1	STRAP-CABLE	
	7	1	**277-9412**	2	CLIP	
	8	1	**379-8770**	1	GROMMET	
	9	1	**132-5789**	1	CLIP	
	10	1	**226-2560**	1	CONNECTOR	
	11	1	**287-7257**	1	ELBOW	
	12	1	**6D-1641**	5	CLIP	
	13	1	**6V-8397**	1	SEAL-O-RING	
	14	1	**8T-4121**	6	WASHER-HARD (11X21X2.5-MM THK)	
M	15	1	**8T-4136**	1	BOLT (M10X1.5X25-MM)	
M	16	1	**8T-4137**	5	BOLT (M10X1.5X20-MM)	
M	17	1	**8T-4200**	1	BOLT (M8X1.25X16-MM)	
	18	1	**8T-4224**	1	WASHER-HARD (8.8X16X2-MM THK)	
D	19	1	**8T-3425**		CHANNEL-TRIM (0.2-M)	
E	20	1	**7I-1024**		GUARD-HOSE (233-CM)	
E	20A	1	**7I-1024**		GUARD-HOSE (244-CM)	
E	21	1	**9X-2133**		HOSE (325-CM)	
E	21A	1	**9X-2133**		HOSE (335-CM)	
E	22	1	**7X-7898**		TRIM (36-CM)	
	23	1	**096-6079**	1	TAPE (WHITE)	
	24	1	**096-6085**	3	TAPE (RED)	

D - ORDER BY THE METER
E - ORDER BY THE CENTIMETER
M - METRIC PART

379-4712 **LINES GP-HEATER (*contd.*)** **i04623156**

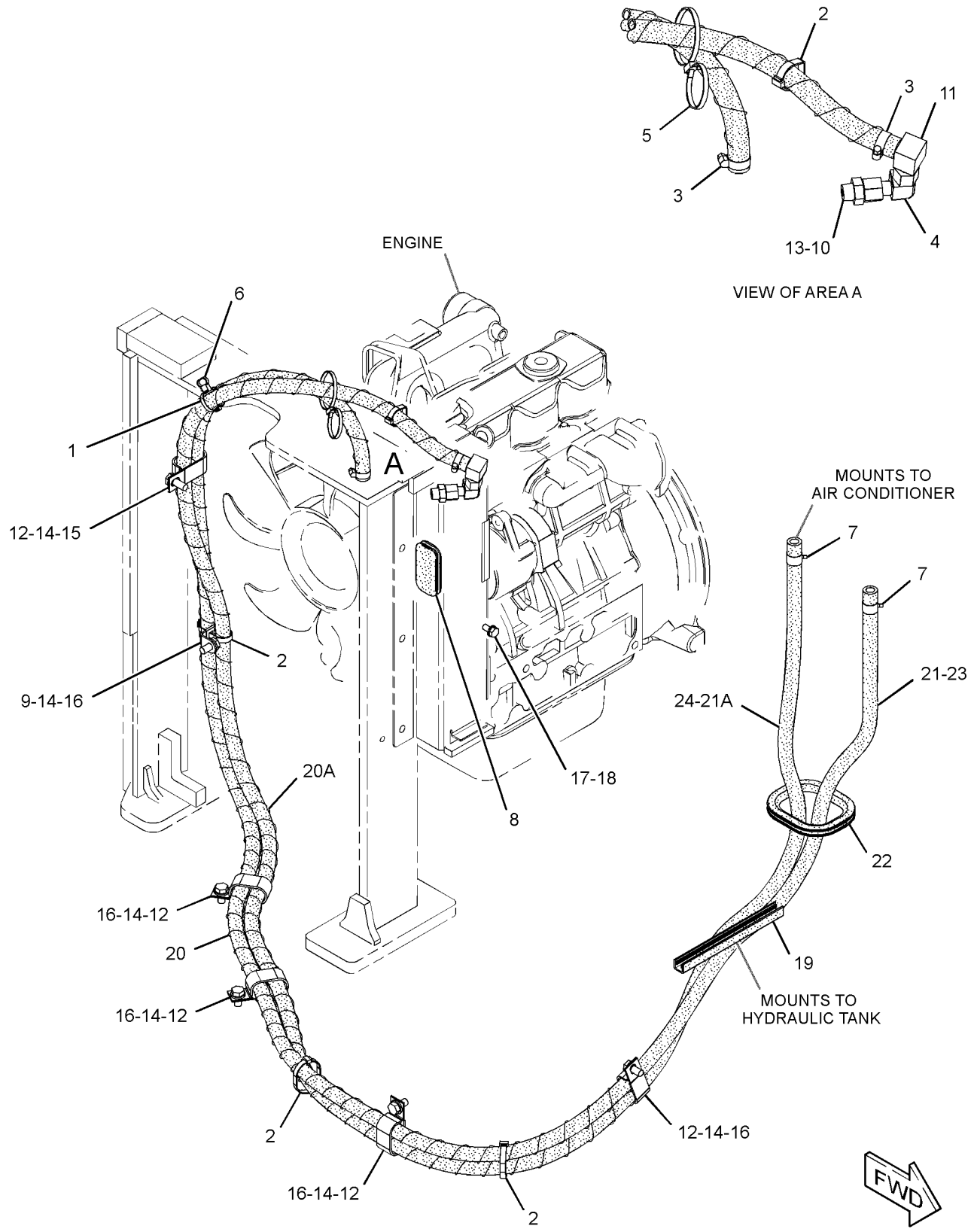

GRAPHIC #1 **<END>** g02799197

281-1186 LINK GP-WINDOW

PART OF 377-5108, 415-6803, 419-1237 CAB GP

AN ATTACHMENT

SMCS-7340 **i03965392**

NOTE	REF NO	GRAPHIC REF	PART NUMBER	QTY	PART NAME 1 2 3 4 5 6 (PRODUCT LEVEL)	SEE PAGE
	1	1	**281-1187**	1	LINK AS-LOWER	
	2	1	**281-1190**	1	BRACKET AS	
	3	1	**281-1193**	1	WASHER	
	4	1	**281-1194**	1	BOSS	
	5	1	**214-3969**	4	WASHER (16X26X0.5-MM THK)	
	6	1	**214-3968**	1	WASHER (8.5X30X3.2-MM THK)	
	7	1	**281-6199**	1	SCREW	
	8	1	**281-5485**	1	BOLT	

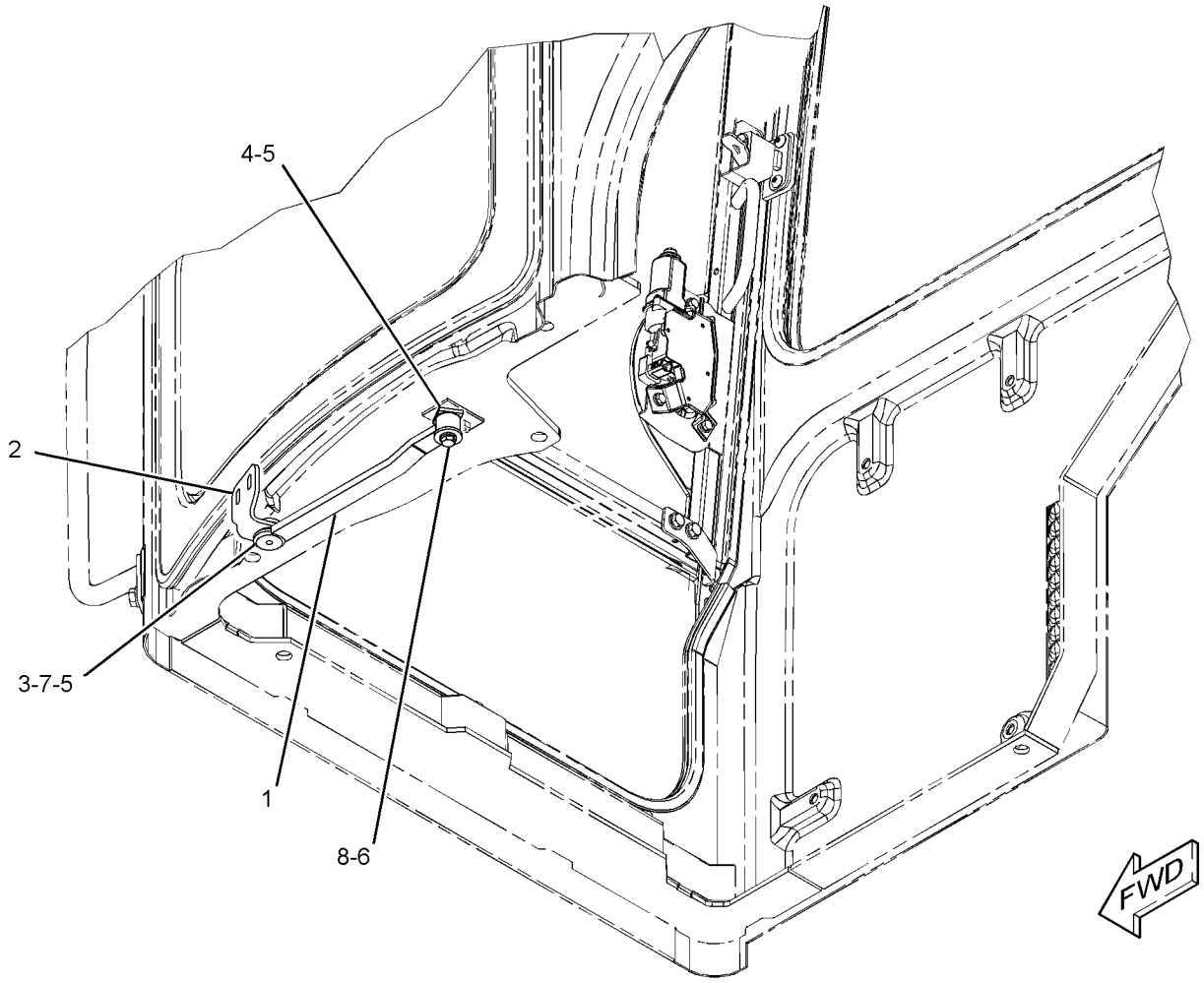

GRAPHIC #1 **<END>** g01213850

267-4371 MIRROR GP-DOWN VIEW—EXTERIOR, REAR, RH

PART OF 355-3420 MIRROR GP-DOWN VIEW
AN ATTACHMENT

SMCS-7319 **i03998800**

NOTE	REF NO	GRAPHIC REF	PART NUMBER	QTY	PART NAME 1 2 3 4 5 6 (PRODUCT LEVEL)	SEE PAGE
	1	1	**342-3327**	1	SUPPORT AS	
	2	1	**4Y-3307**	1	MIRROR-CONVEX	
	3	1	**8T-4121**	3	WASHER-HARD (11X21X2.5-MM THK)	
M	4	1	**8T-4137**	3	BOLT (M10X1.5X20-MM)	

M - METRIC PART

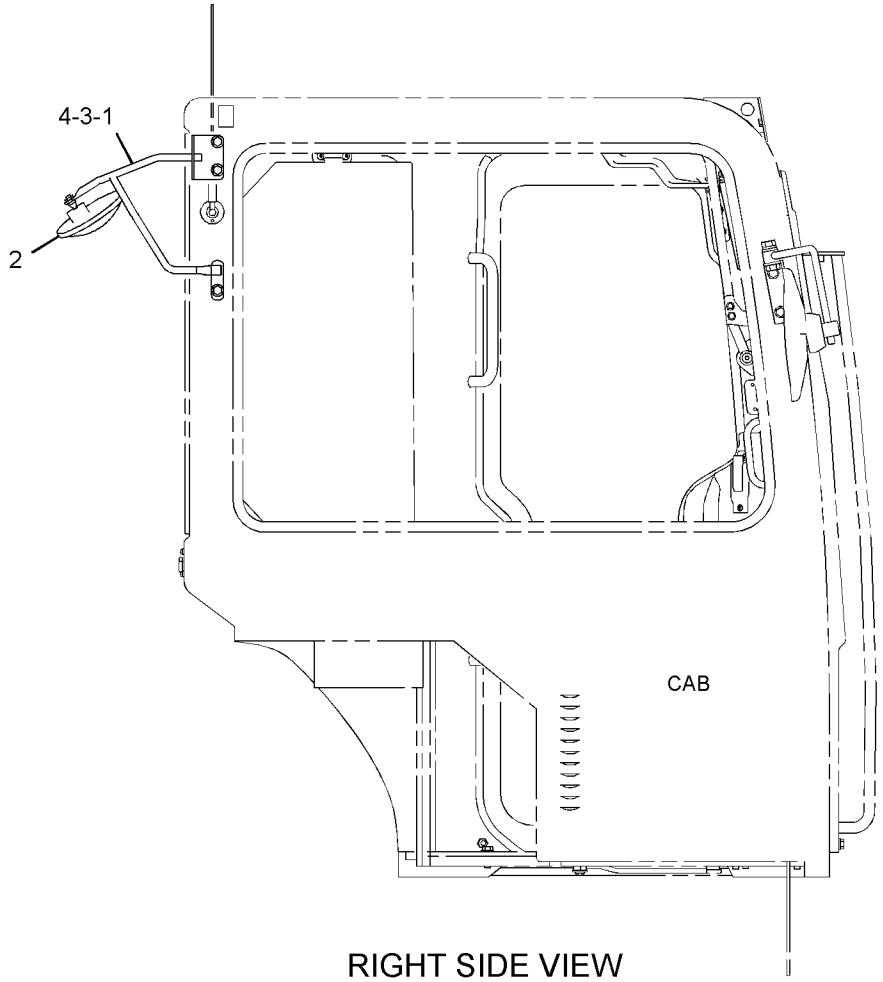

RIGHT SIDE VIEW

GRAPHIC #1 **<END>** g01309124

355-3420 MIRROR GP-DOWN VIEW–CAB

AN ATTACHMENT

SMCS-7319 **i04006680**

NOTE	PART NUMBER	QTY	PART NAME 1 2 3 4 5 6 (PRODUCT LEVEL)	SEE PAGE
Y	*267-4371*	1	MIRROR GP-DOWN VIEW (EXTERIOR, REAR, RH)	517

Y - SEPARATE ILLUSTRATION

<END>

267-4366 MIRROR GP-REAR VIEW—EXTERIOR, LH

PART OF 355-3416 MIRROR GP-REAR VIEW
AN ATTACHMENT

SMCS-7319 **i03965210**

NOTE	REF NO	GRAPHIC REF	PART NUMBER	QTY	PART NAME 1 2 3 4 5 6 (PRODUCT LEVEL)	SEE PAGE
Y	1	1	**286-9482**	1	MOUNTING GP-MIRROR	526
	2	1	**156-6617**	1	MIRROR	
M	3	1	**8T-4779**	1	BOLT (M16X2X35-MM)	
	4	1	**9X-8257**	1	WASHER (17.5X30X3.5-MM THK)	

M - METRIC PART
Y - SEPARATE ILLUSTRATION

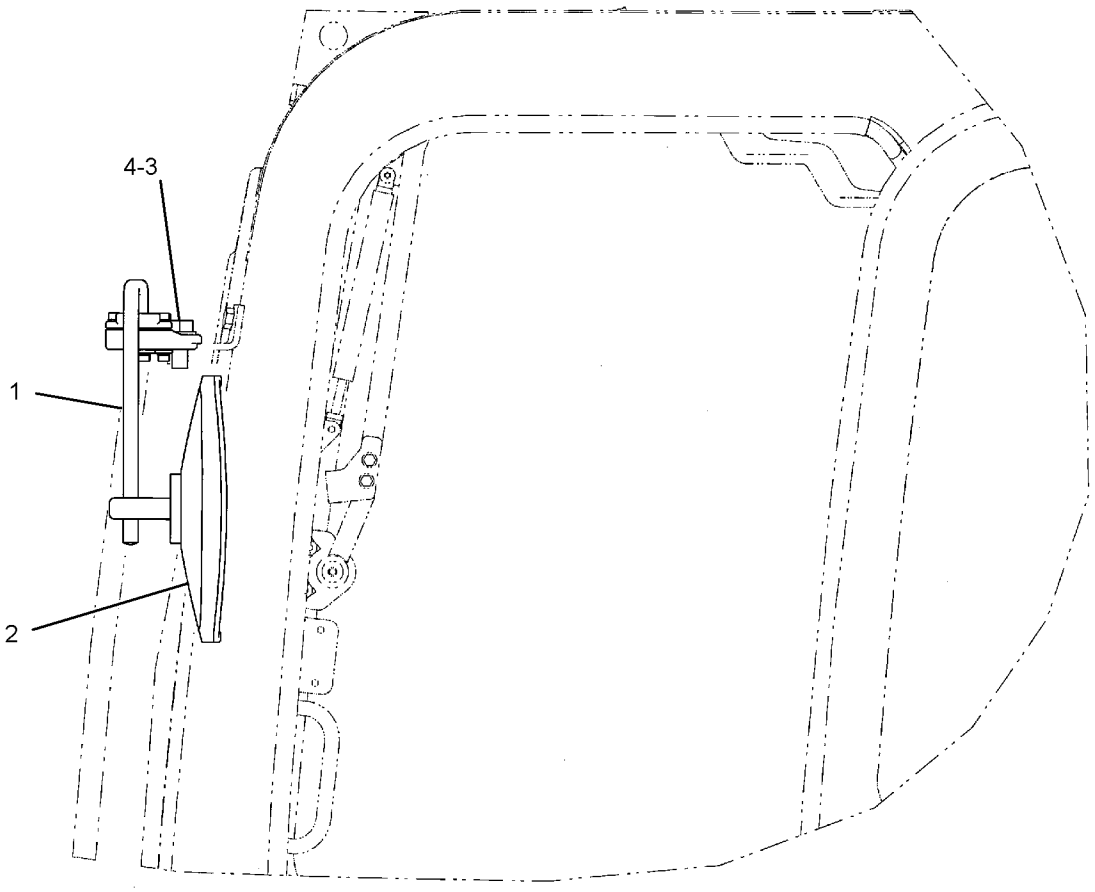

LEFT SIDE VIEW

GRAPHIC #1 **<END>** g01207728

267-4367 MIRROR GP-REAR VIEW—EXTERIOR, RH

PART OF 355-3417 MIRROR GP-REAR VIEW

AN ATTACHMENT

SMCS-7319 **i05437181**

NOTE	REF NO	GRAPHIC REF	PART NUMBER	QTY	PART NAME 1 2 3 4 5 6 (PRODUCT LEVEL)	SEE PAGE
	1	1	**156-6617**	1	MIRROR	
	2	1	**156-6618**	1	SUPPORT AS	
	3	1	**275-6285**	1	BRACKET AS	
M		1	**9X-6269**	1	NUT-WELD (M16X2-THD)	
	4	1	**3B-4510**	1	LOCKWASHER	
	5	1	**8T-4121**	2	WASHER-HARD (11X21X2.5-MM THK)	
M	6	1	**8T-4137**	2	BOLT (M10X1.5X20-MM)	
M	7	1	**8T-4193**	1	BOLT (M16X2X50-MM)	
	8	1	**9X-8257**	1	WASHER (17.5X30X3.5-MM THK)	

M - METRIC PART

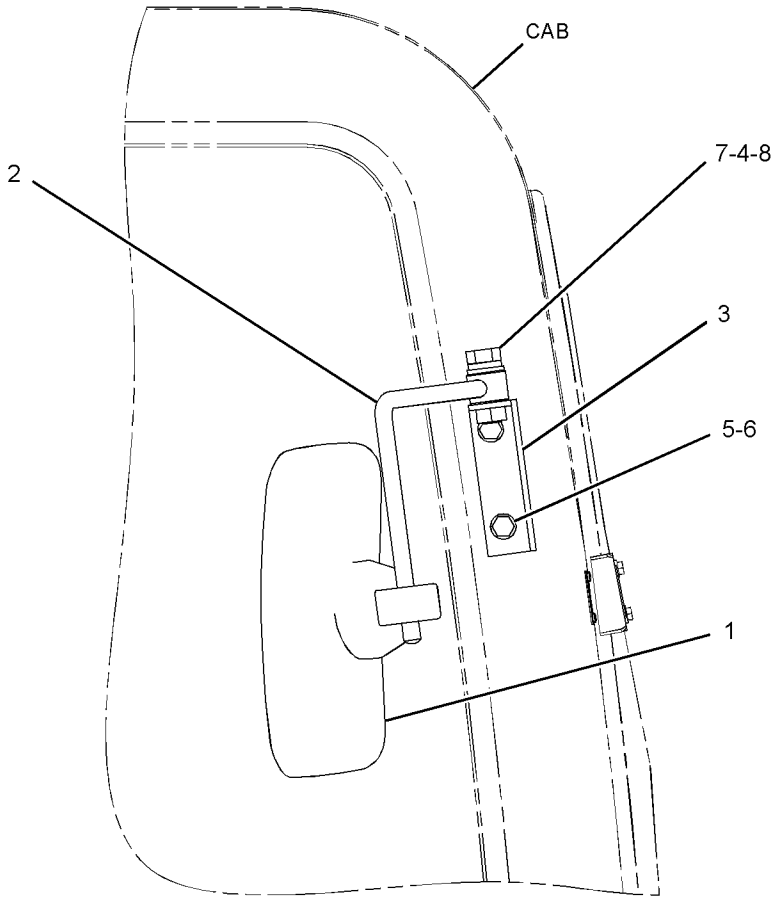

RIGHT SIDE VIEW

GRAPHIC #1 **<END>** g01627690

334-1186 MIRROR GP-REAR VIEW–CAB, WITH FRONT GUARD

PART OF 383-5927, 383-5928 CAB AR

AN ATTACHMENT

SMCS-7319 **i04019526**

NOTE	REF NO	GRAPHIC REF	PART NUMBER	QTY	PART NAME 1 2 3 4 5 6 (PRODUCT LEVEL)	SEE PAGE
	1	1	**156-6617**	1	MIRROR	
	2	1	**156-6618**	1	SUPPORT AS	
	3	1	**275-6285**	1	BRACKET AS	
	4	1	**3B-4510**	1	LOCKWASHER	
	5	1	**8T-4121**	2	WASHER-HARD (11X21X2.5-MM THK)	
M	6	1	**8T-4137**	2	BOLT (M10X1.5X20-MM)	
M	7	1	**8T-4193**	1	BOLT (M16X2X50-MM)	
	8	1	**9X-8257**	1	WASHER (17.5X30X3.5-MM THK)	

M - METRIC PART

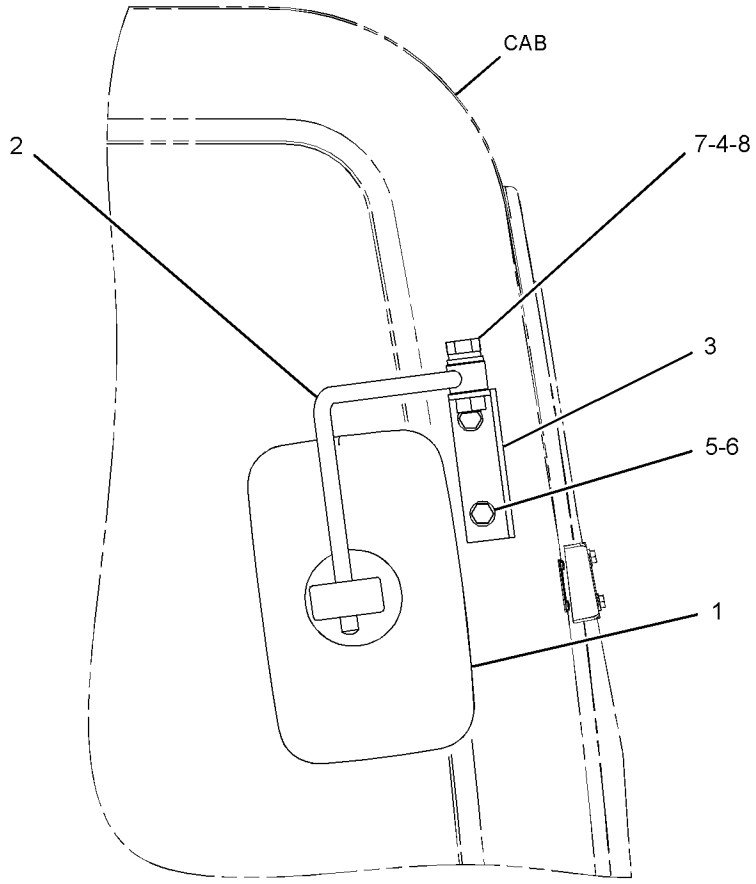

RIGHT SIDE VIEW

GRAPHIC #1 **<END>** g01627682

355-3416 MIRROR GP-REAR VIEW—EXTERIOR, LH

AN ATTACHMENT

SMCS-7319 **i04006632**

NOTE	PART NUMBER	QTY	PART NAME 1 2 3 4 5 6 (PRODUCT LEVEL)	SEE PAGE
Y	*267-4366*	1	MIRROR GP-REAR VIEW (EXTERIOR, LH)	519

Y - SEPARATE ILLUSTRATION

<END>

355-3417 MIRROR GP-REAR VIEW—EXTERIOR, RH

AN ATTACHMENT

SMCS-7319 **i04006650**

NOTE	PART NUMBER	QTY	PART NAME 1 2 3 4 5 6 (PRODUCT LEVEL)	SEE PAGE
Y	*267-4367*	1	MIRROR GP-REAR VIEW (EXTERIOR, RH)	520

Y - SEPARATE ILLUSTRATION

<END>

380-7150 MIRROR GP-REAR VIEW—EXTERIOR, LH

PART OF 382-0509 MIRROR GP-REAR VIEW
AN ATTACHMENT

SMCS-7319 **i04775391**

NOTE	REF NO	GRAPHIC REF	PART NUMBER	QTY	PART NAME 1 2 3 4 5 6 (PRODUCT LEVEL)	SEE PAGE
	1	1	**201-2638**	1	MIRROR AS	
M	2	1	**6V-7357**	1	BOLT (M6X1X25-MM)	
	3	1	**9X-8256**	1	WASHER (6.6X12X2-MM THK)	

M - METRIC PART

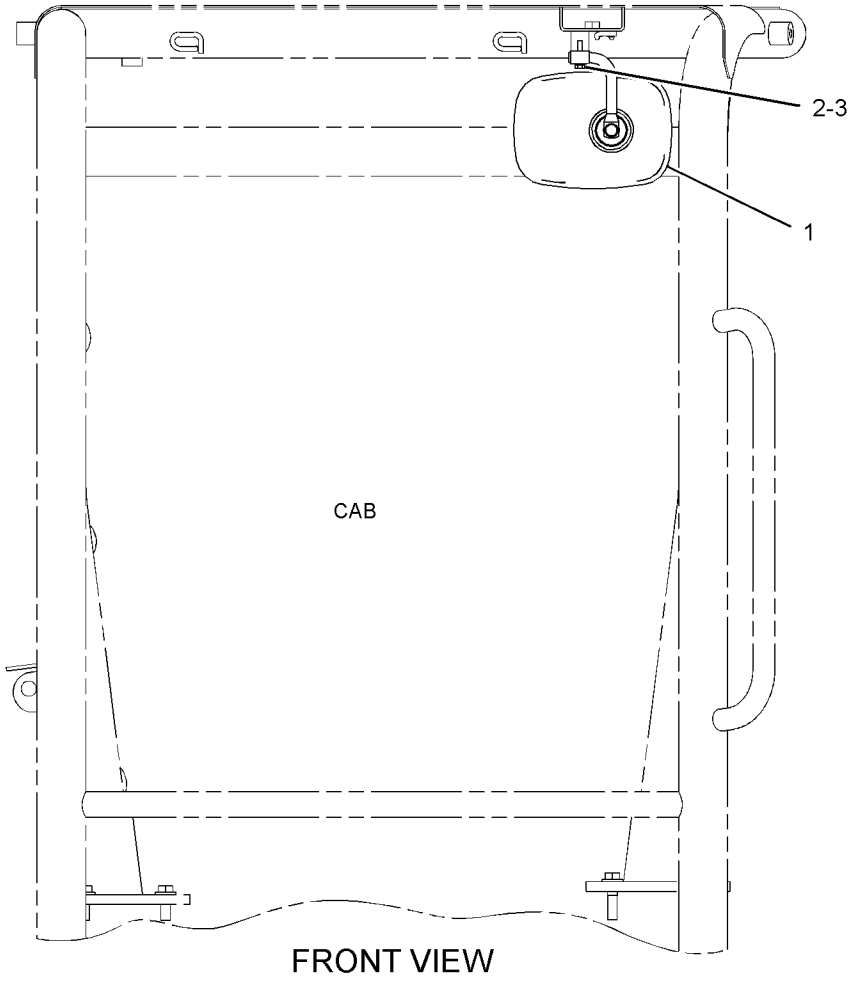

FRONT VIEW

GRAPHIC #1 **<END>** g02801468

380-7151 MIRROR GP-REAR VIEW—EXTERIOR, RH

PART OF 382-0517 MIRROR GP-REAR VIEW

AN ATTACHMENT

SMCS-7319 **i04629188**

NOTE	REF NO	GRAPHIC REF	PART NUMBER	QTY	PART NAME 1 2 3 4 5 6 (PRODUCT LEVEL)	SEE PAGE
	1	1	**281-3998**	1	MIRROR AS (REAR VIEW)	
M	2	1	**6V-7357**	1	BOLT (M6X1X25-MM)	
	3	1	**9X-8256**	1	WASHER (6.6X12X2-MM THK)	

M - METRIC PART

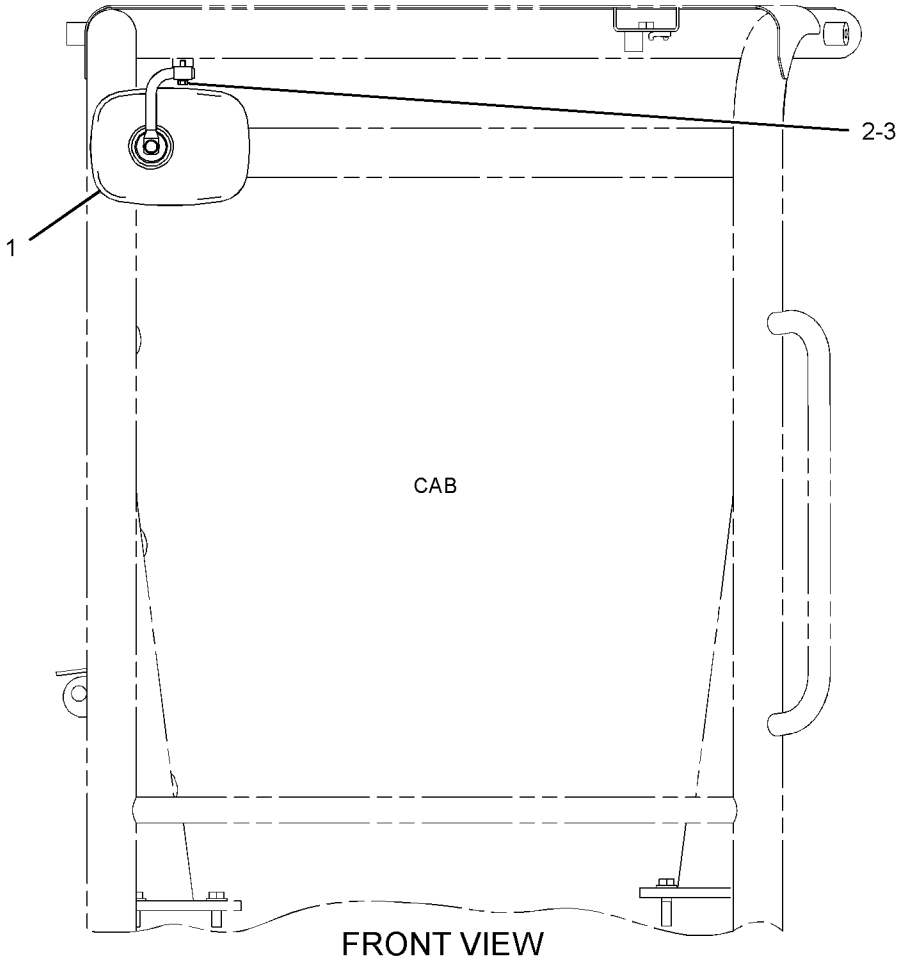

FRONT VIEW

GRAPHIC #1 **<END>** g02798348

382-0509 MIRROR GP-REAR VIEW—LH

AN ATTACHMENT

SMCS-7319 **i04629197**

NOTE	PART NUMBER	QTY	PART NAME 1 2 3 4 5 6 (PRODUCT LEVEL)	SEE PAGE
Y	*380-7150*	1	MIRROR GP-REAR VIEW (LH)	523

Y - SEPARATE ILLUSTRATION

<END>

382-0517 MIRROR GP-REAR VIEW—RH

AN ATTACHMENT

SMCS-7319 **i04629200**

NOTE	PART NUMBER	QTY	PART NAME 1 2 3 4 5 6 (PRODUCT LEVEL)	SEE PAGE
Y	*380-7151*	1	MIRROR GP-REAR VIEW (RH)	524

Y - SEPARATE ILLUSTRATION

<END>

286-9482 MOUNTING GP-MIRROR

PART OF 267-4366 MIRROR GP-REAR VIEW

AN ATTACHMENT

SMCS-7319 **i03965232**

NOTE	REF NO	GRAPHIC REF	PART NUMBER	QTY	PART NAME 1 2 3 4 5 6 (PRODUCT LEVEL)	SEE PAGE
	1	1	**2U-2552**	5	LOCKWASHER	
M	2	1	**6V-5683**	3	BOLT (M6X1X16-MM)	
M	3	1	**9X-6153**	2	BOLT (M6X1X10-MM)	

M - METRIC PART

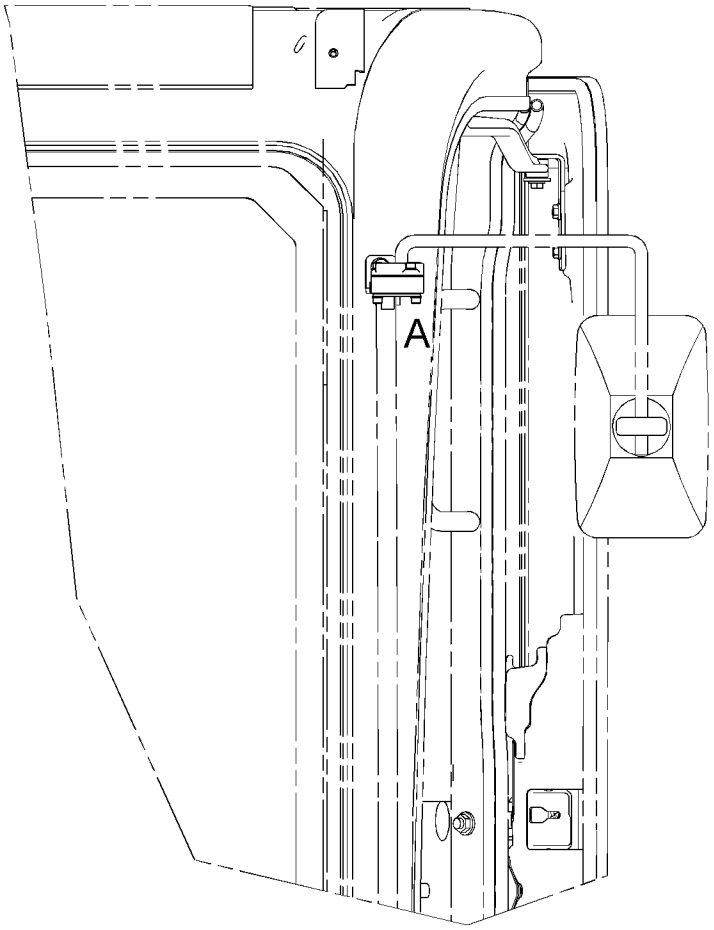

FRONT VIEW

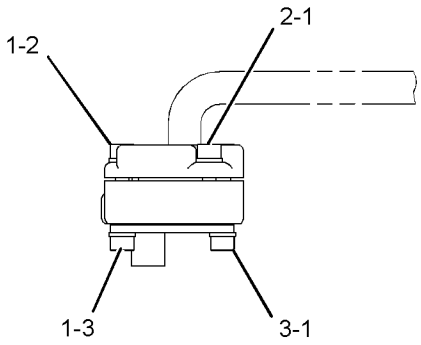

VIEW OF AREA A

GRAPHIC #1 **<END>** g01244242

379-3624 OPERATOR AR

PART OF 376-6676 CHASSIS AR

SMCS-7300, 7301

i04629832

NOTE	PART NUMBER	QTY	PART NAME 1 2 3 4 5 6 (PRODUCT LEVEL)	SEE PAGE
Y	*379-3597*	1	CONSOLE GP-OPERATOR	476
Y	*285-8286*	1	CONTROL GP-HYDRAULIC HAND (TRAVEL)	482

Y - SEPARATE ILLUSTRATION

<END>

OPERATOR STATION

382-0504 PLATFORM GP

PART OF 382-0400 PLATFORM GP-OPERATOR

AN ATTACHMENT

SMCS-7253, 7254 **i04638012**

NOTE	REF NO	GRAPHIC REF	PART NUMBER	QTY	PART NAME 1 2 3 4 5 6 (PRODUCT LEVEL)	SEE PAGE
	1	1	**093-2064**	2	GROMMET	
	2	1	**267-7064**	1	LOCK AS	
	3	1	**382-0505**	1	PLATFORM AS (FLOOR)	
	4	1	**382-0510**	1	PLATFORM AS (SUPPORT)	
	5	1	**382-0544**	1	PLATE AS	
M		1	**8T-3597**	1	NUT-WELD (M12X1.75-THD)	
M		1	**8T-3612**	4	NUT-WELD (M8X1.25-THD)	
	6	1	**382-0546**	1	COVER	
	7	1	**382-0547**	1	PLATE AS	
	8	1	**382-0549**	1	PLATE AS	
M		1	**8T-3490**	4	NUT-WELD (M10X1.5-THD)	
	9	1	**382-2147**	1	COVER AS	
	10	1	**382-2149**	1	COVER	
	11	1	**382-2150**	1	PLATE	
	12	1	**1S-1014**	3	GROMMET	
M	13	1	**5C-9553**	10	BOLT (M6X1X16-MM)	
	14	1	**5P-4115**	1	WASHER-HARD (7.2X19X2-MM THK)	
	15	1	**8T-4121**	8	WASHER-HARD (11X21X2.5-MM THK)	
M	16	1	**8T-4136**	4	BOLT (M10X1.5X25-MM)	
M	17	1	**8T-4137**	4	BOLT (M10X1.5X20-MM)	
M	18	1	**8T-4189**	6	BOLT (M8X1.25X20-MM)	
	19	1	**8T-4224**	6	WASHER-HARD (8.8X16X2-MM THK)	
	20	1	**9X-8256**	9	WASHER (6.6X12X2-MM THK)	
	21	1	**8T-5372**		SEAL (0.05-M EACH)	
	22	1	**7X-7898**		TRIM (27-CM EACH)	

M - METRIC PART

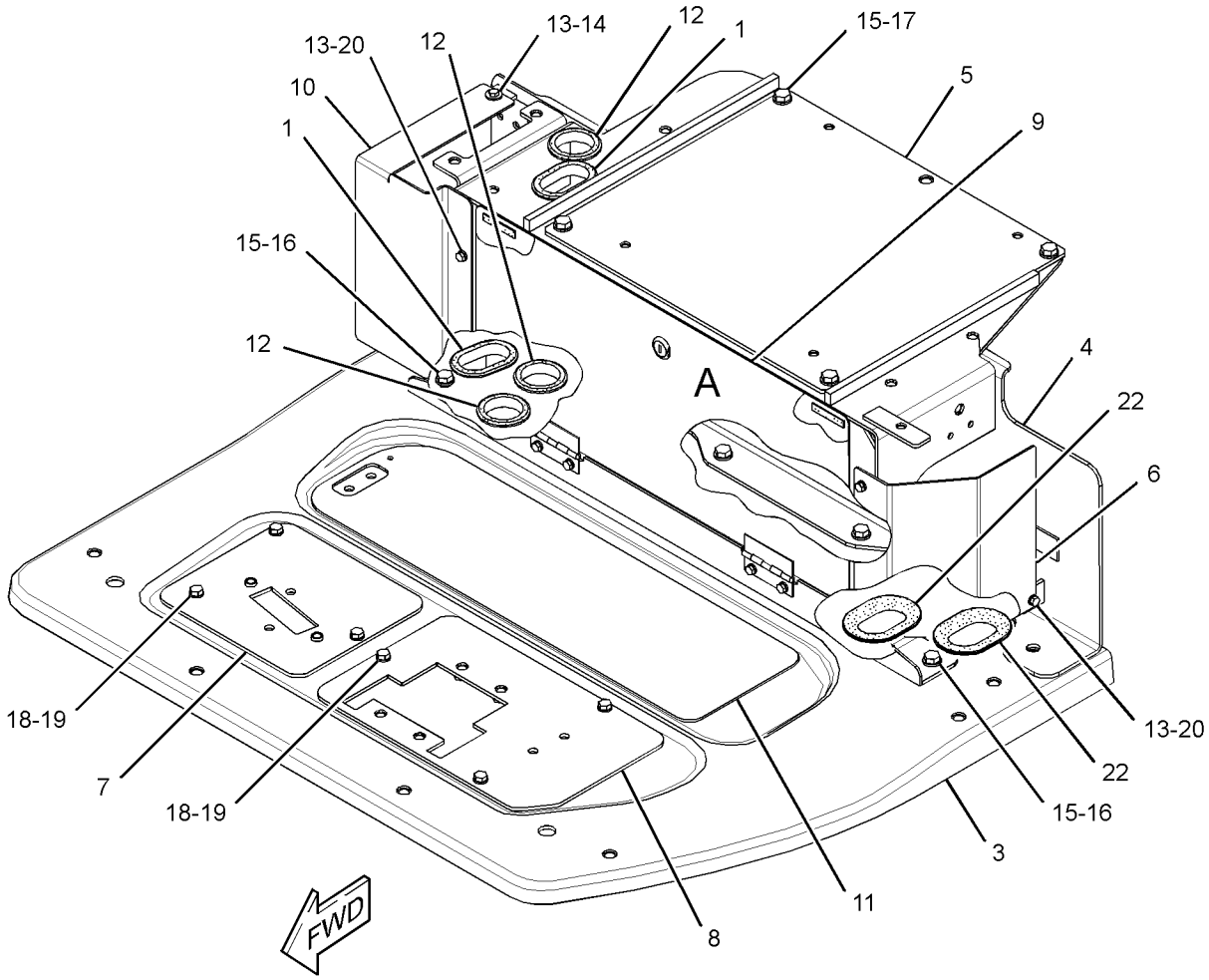

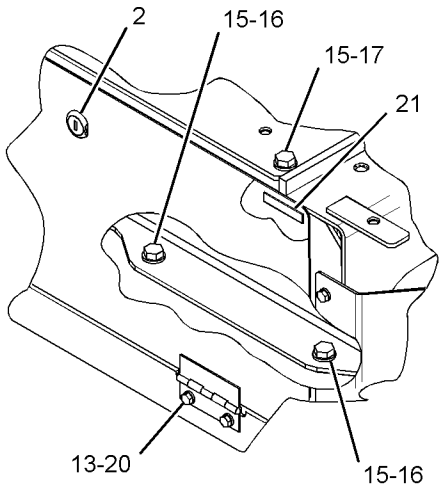

VIEW OF AREA A

GRAPHIC #1 **<END>** g02803619

OPERATOR STATION

378-8139 PLATFORM GP-OPERATOR

PART OF 379-3625 PLATFORM GP-OPERATOR

AN ATTACHMENT

SMCS-7253 **i04635551**

NOTE	REF NO	GRAPHIC REF	PART NUMBER	QTY	PART NAME 1 2 3 4 5 6 (PRODUCT LEVEL)	SEE PAGE
	1	1	**093-2064**	1	GROMMET	
	2	1	**267-7064**	1	LOCK AS	
	3	1	**282-9699**	1	PLATE AS	
	4	1	**283-0274**	1	TAPE	
	5	1	**353-2981**	1	COVER	
	6	1	**358-9162**	1	SEAL	
	7	1	**377-5933**	1	PLATFORM AS	
	8	1	**377-5936**	1	BRACKET AS	
M		1	**8T-3490**	2	NUT-WELD (M10X1.5-THD)	
	9	1	**377-5938**	1	PLATE AS	
	10	1	**377-5942**	1	SEAL	
	11	1	**377-5943**	1	SEAL	
	12	1	**377-5945**	1	INSULATION	
	13	1	**377-5946**	1	INSULATION	
	14	1	**377-5947**	1	INSULATION	
	15	1	**377-5948**	1	INSULATION	
	16	1	**377-5949**	1	INSULATION	
	17	1	**377-5950**	1	SEAL	
	18	1	**377-5951**	1	SEAL	
	19	1	**377-5952**	1	INSULATION	
	20	1	**377-5959**	1	COVER	
	21	1	**378-8140**	1	SEAL	
	22	1	**379-3628**	1	SEAL	
	23	1	**382-6314**	1	SEAL	
	24	1	**382-6347**	1	INSULATION	
	25	1	**384-5670**	1	COVER	
	26	1	**384-5675**	1	SEAL	
	27	1	**384-5676**	1	PLATE AS	
M		1	**8T-3490**	4	NUT-WELD (M10X1.5-THD)	
E	28	1	**7X-7898**		TRIM (27-CM EACH)	
E	29	1	**7X-7877**		STRIP-EDGING (30-CM)	
	30	1	**117-8929**	2	WASHER (6.6X22X2-MM THK)	
	31	1	**1S-1014**	1	GROMMET	
M	32	1	**5C-9553**	7	BOLT (M6X1X16-MM)	
M	33	1	**7X-2619**	2	BOLT (M6X1X10-MM)	
	34	1	**8T-4121**	4	WASHER-HARD (11X21X2.5-MM THK)	
M	35	1	**8T-4136**	4	BOLT (M10X1.5X25-MM)	
M	36	1	**8T-4189**	8	BOLT (M8X1.25X20-MM)	
	37	1	**8T-4224**	8	WASHER-HARD (8.8X16X2-MM THK)	
	38	1	**9X-8256**	7	WASHER (6.6X12X2-MM THK)	
D	39	1	**8T-5372**		SEAL (0.1-M EACH)	
D	40	1	**5P-5969**		SEAL (0.2-M EACH)	
D	40A	1	**5P-5969**		SEAL (0.3-M EACH)	

D - ORDER BY THE METER
E - ORDER BY THE CENTIMETER
M - METRIC PART

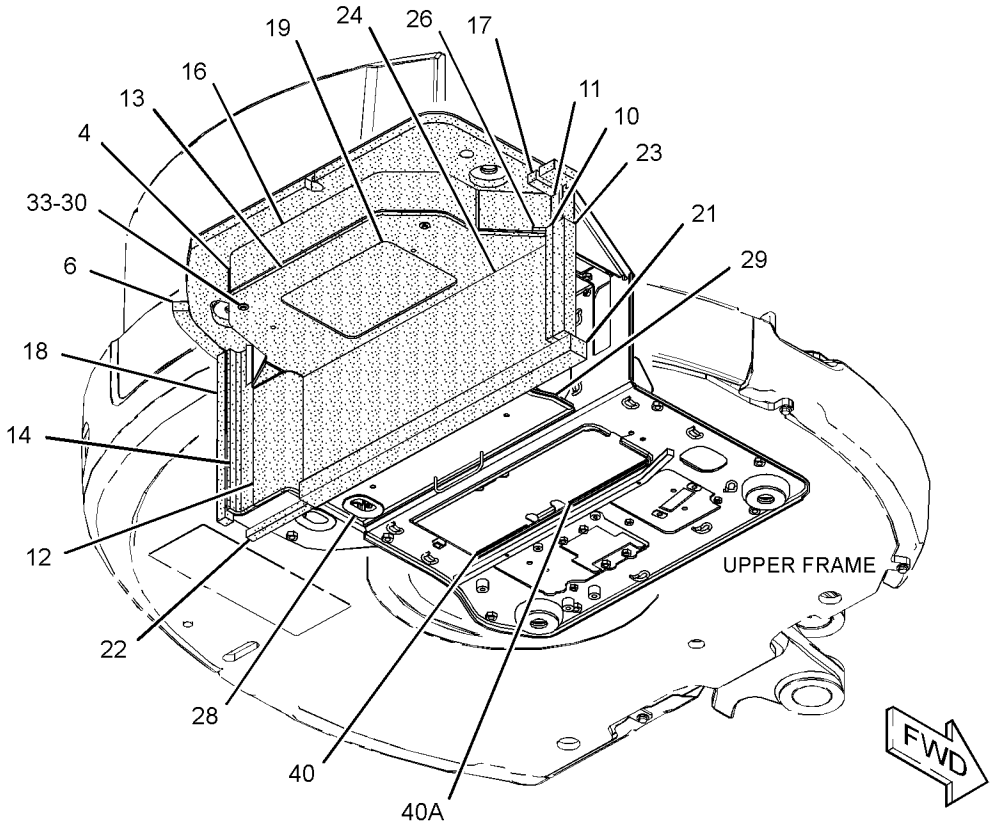

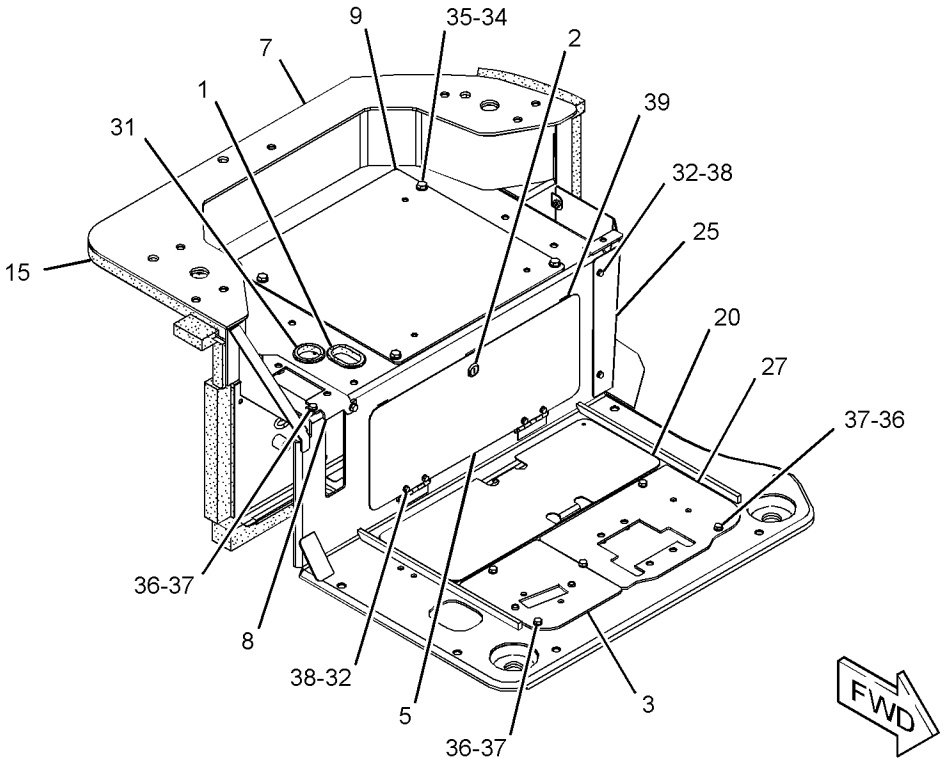

GRAPHIC #1 **<END>** g02806896

379-3625 PLATFORM GP-OPERATOR–CAB

PART OF 376-6692, 376-6696, 383-5927, 383-5928 CAB AR

AN ATTACHMENT

SMCS-7253 **i04617853**

NOTE	REF NO	GRAPHIC REF	PART NUMBER	QTY	PART NAME 1 2 3 4 5 6 (PRODUCT LEVEL)	SEE PAGE
	1	1	**267-5348**	4	MOUNT AS-PLATFORM	
	2	1	**267-5349**	4	MOUNT	
	3	1	**267-5355**	4	STOP	
Y	4	1	*377-5062*	1	FRAME GP-REAR (CAB)	137
Y	5	1	*378-8139*	1	PLATFORM GP-OPERATOR (CAB)	530
M	6	1	**8T-4175**	4	BOLT (M16X2X90-MM)	
	7	1	**9X-8257**	4	WASHER (17.5X30X3.5-MM THK)	

M - METRIC PART
Y - SEPARATE ILLUSTRATION

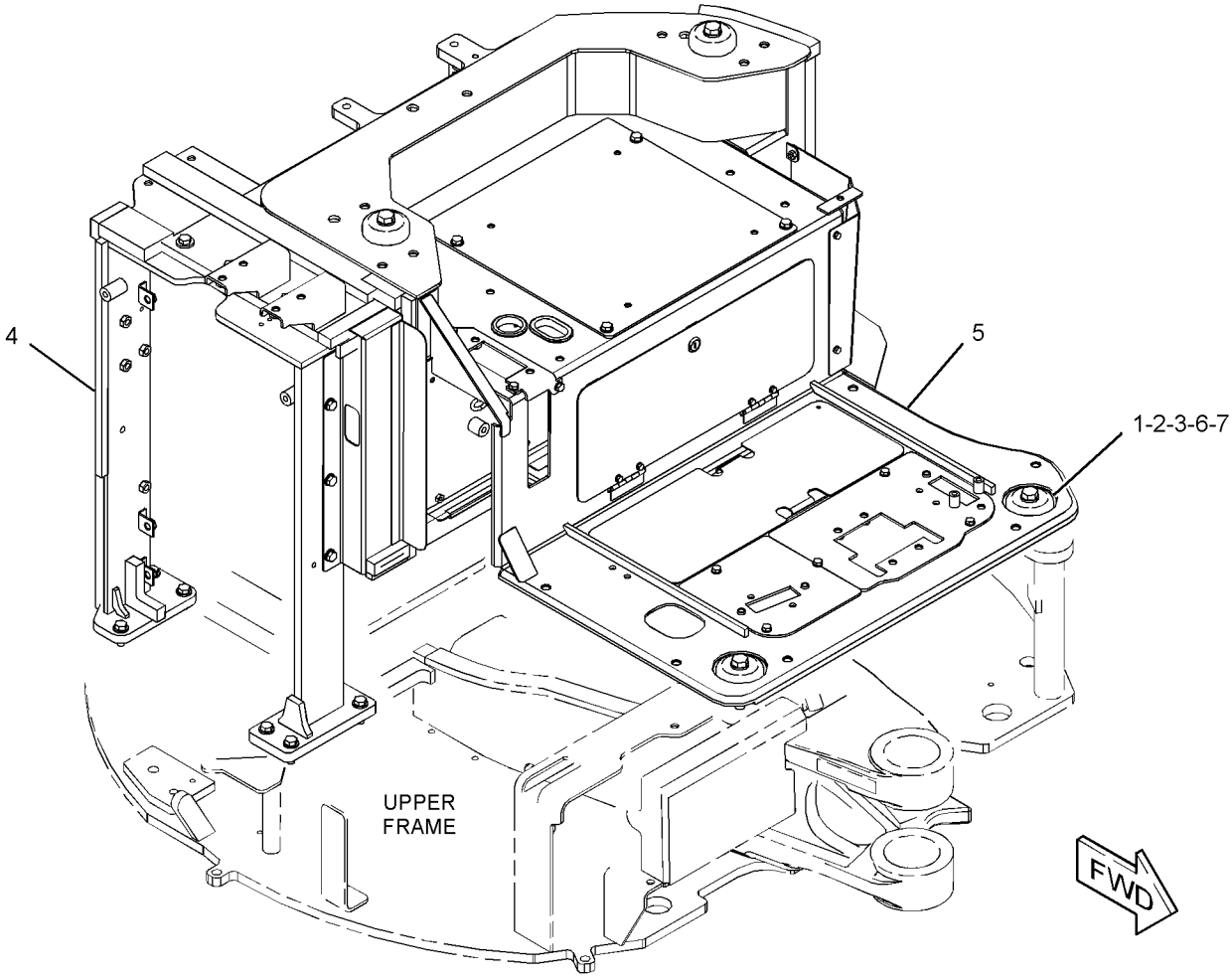

GRAPHIC #1 **<END>** g02798854

382-0400 PLATFORM GP-OPERATOR

PART OF 377-8933, 383-5929 CANOPY AR

AN ATTACHMENT

SMCS-7253 **i04623159**

NOTE	REF NO	GRAPHIC REF	PART NUMBER	QTY	PART NAME 1 2 3 4 5 6 (PRODUCT LEVEL)	SEE PAGE
	1	1	**6N-6984**	2	MOUNT-RUBBER	
Y	2	1	*382-0401*	1	FRAME GP-REAR (CANOPY) (CANOPY)	139
Y	3	1	*382-0504*	1	PLATFORM GP (CANOPY)	528
Y	4	1	*382-2177*	1	COVER GP-SOUND SUPPRESSION	134
M	5	1	**7X-2549**	2	BOLT (M12X1.75X100-MM)	
M	6	1	**7X-2556**	1	BOLT (M16X2X100-MM)	
	7	1	**7X-7729**	3	WASHER (11X25X3-MM THK)	
M	8	1	**8T-4137**	1	BOLT (M10X1.5X20-MM)	
M	9	1	**8T-4139**	1	BOLT (M12X1.75X30-MM)	
M	10	1	**8T-4196**	4	BOLT (M10X1.5X35-MM)	
	11	1	**8T-4223**	3	WASHER-HARD (13.5X25.5X3-MM THK)	
	12	1	**8T-4224**	1	WASHER-HARD (8.8X16X2-MM THK)	
M	13	1	**8T-7547**	1	BOLT (M8X1.25X30-MM)	
	14	1	**9L-8781**	2	WASHER (0.406X1.5X0.188-IN THK)	
	15	1	**9X-8257**	1	WASHER (17.5X30X3.5-MM THK)	

M - METRIC PART
Y - SEPARATE ILLUSTRATION

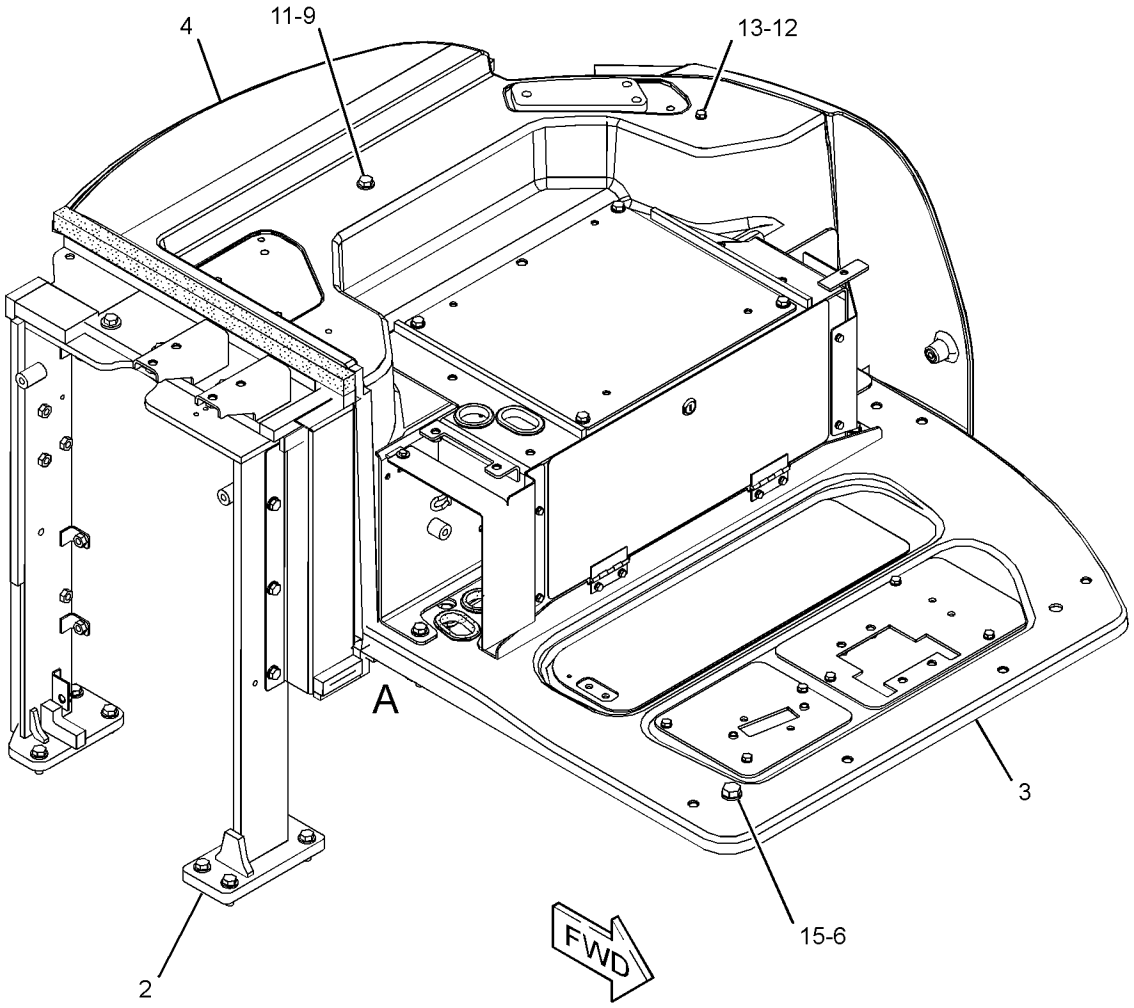

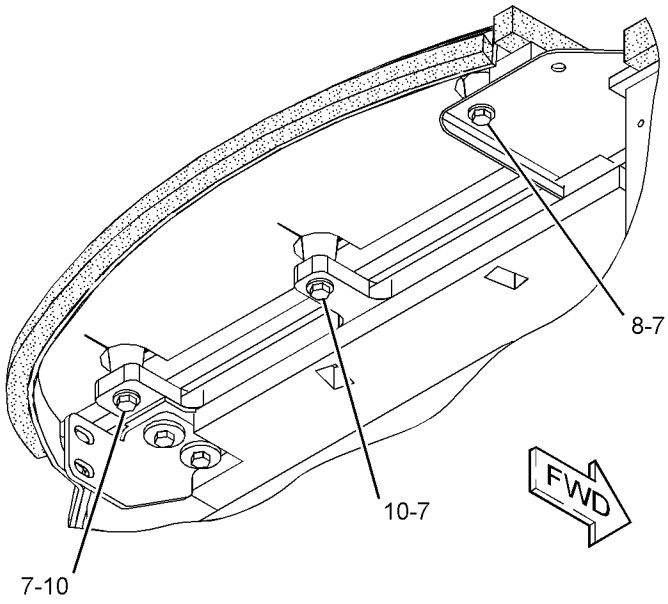

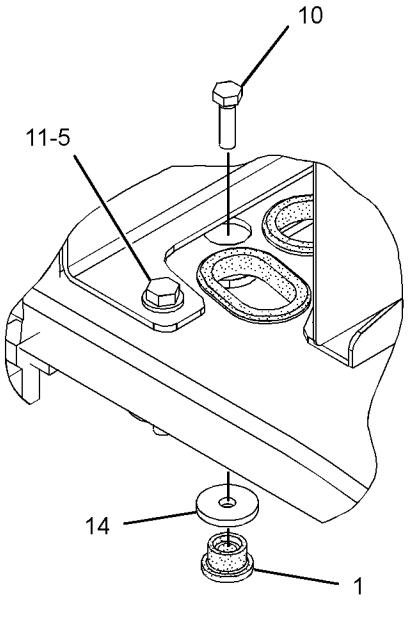

VIEW OF AREA A

GRAPHIC #1

<END>

g02799130

267-1615 SEAT & MOUNTING GP—LOW BACK, SUSPENSION, VINYL

PART OF 357-9061 SEAT GP-SUSPENSION

AN ATTACHMENT

SMCS-7312 **i04241511**

NOTE	REF NO	GRAPHIC REF	PART NUMBER	QTY	PART NAME 1 2 3 4 5 6 (PRODUCT LEVEL)	SEE PAGE
M	1	1	**198-3899**	4	SCREW-BUTTON HEAD (M8X1.25X20-MM)	
	2	1	**285-7836**	1	SEAT GP (VINYL, LOW BACK, TILT)	
		1	**310-1866**	1	KNOB	
		1	**310-1867**	1	PIN	

M - METRIC PART

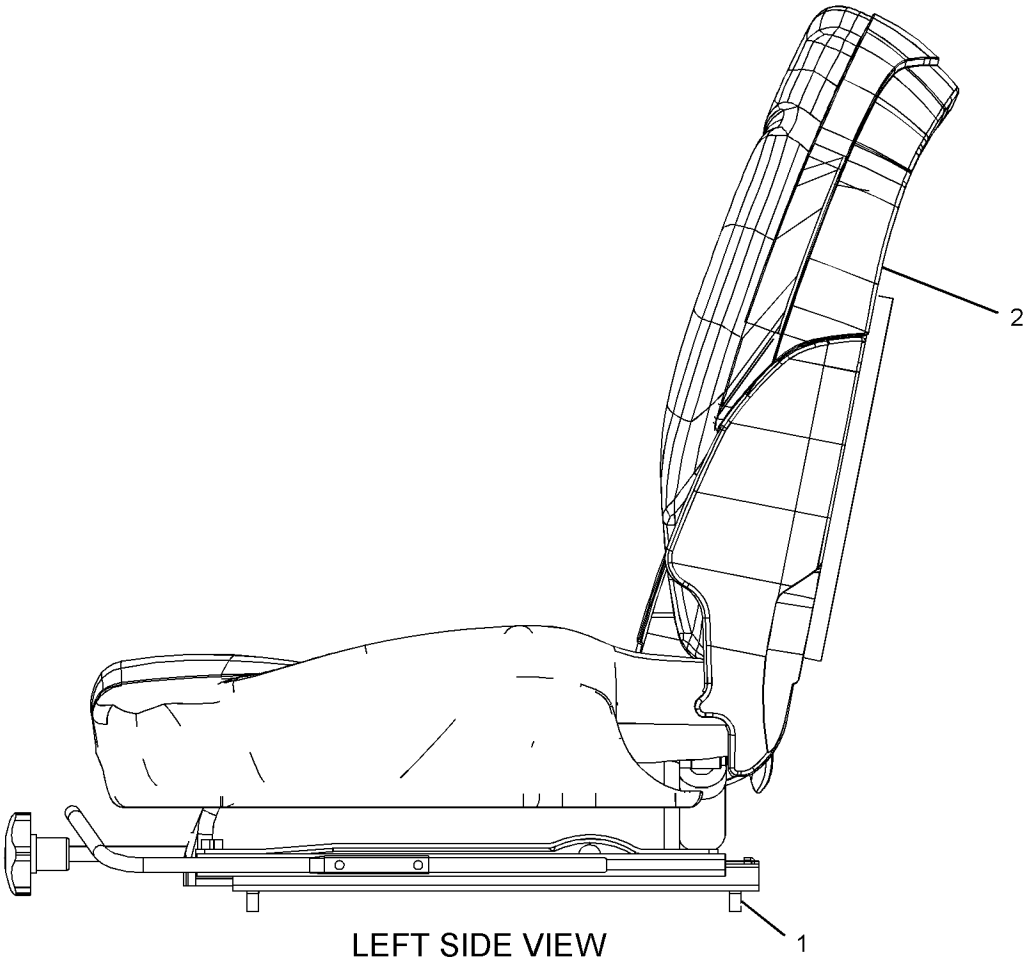

LEFT SIDE VIEW

GRAPHIC #1 **<END>** g01351955

387-4682 SEAT & MOUNTING GP—HIGH BACK, CLOTH, SUSPENSION

AN ATTACHMENT

SMCS-7312 **i04629220**

NOTE	PART NUMBER	QTY	PART NAME 1 2 3 4 5 6 (PRODUCT LEVEL)	SEE PAGE
Y	*384-5673*	1	SEAT GP-SUSPENSION (CLOTH, HIGH BACK)	540

Y - SEPARATE ILLUSTRATION

<END>

378-2498 SEAT BELT GP—RETRACTABLE, 2-IN

AN ATTACHMENT

SMCS-7327 **i04623137**

NOTE	PART NUMBER	QTY	PART NAME 1 2 3 4 5 6 (PRODUCT LEVEL)	SEE PAGE
Y	*378-2506*	1	SEAT BELT GP (RETRACTABLE, 2-IN)	537

Y - SEPARATE ILLUSTRATION

<END>

378-2499 SEAT BELT GP—3-IN

AN ATTACHMENT

SMCS-7327 **i04623138**

NOTE	PART NUMBER	QTY	PART NAME 1 2 3 4 5 6 (PRODUCT LEVEL)	SEE PAGE
Y	*378-2508*	1	SEAT BELT GP (RETRACTABLE, 3-IN)	538

Y - SEPARATE ILLUSTRATION

<END>

378-2506 SEAT BELT GP—RETRACTABLE, 2-IN

PART OF 378-2498 SEAT BELT GP
AN ATTACHMENT

SMCS-7327 **i05047013**

NOTE	REF NO	GRAPHIC REF	PART NUMBER	QTY	PART NAME 1 2 3 4 5 6 (PRODUCT LEVEL)	SEE PAGE
	1	1	**208-7733**	2	BOLT (7/16-20X1.1-IN)	
	2	1	**258-4095**	1	SEAT BELT GP (RETRACTABLE, 51-MM (2-IN))	
		1	**2D-6412**	2	WASHER (7/16X15/16X1/4-IN THK)	
		1	**8S-0934**	2	LOCKNUT-FLANGE (7/16-20-THD)	
		1	**8S-4723**	2	BOLT (7/16-20X1.5-IN)	
		1	**8T-4223**	2	WASHER-HARD (13.5X25.5X3-MM THK)	

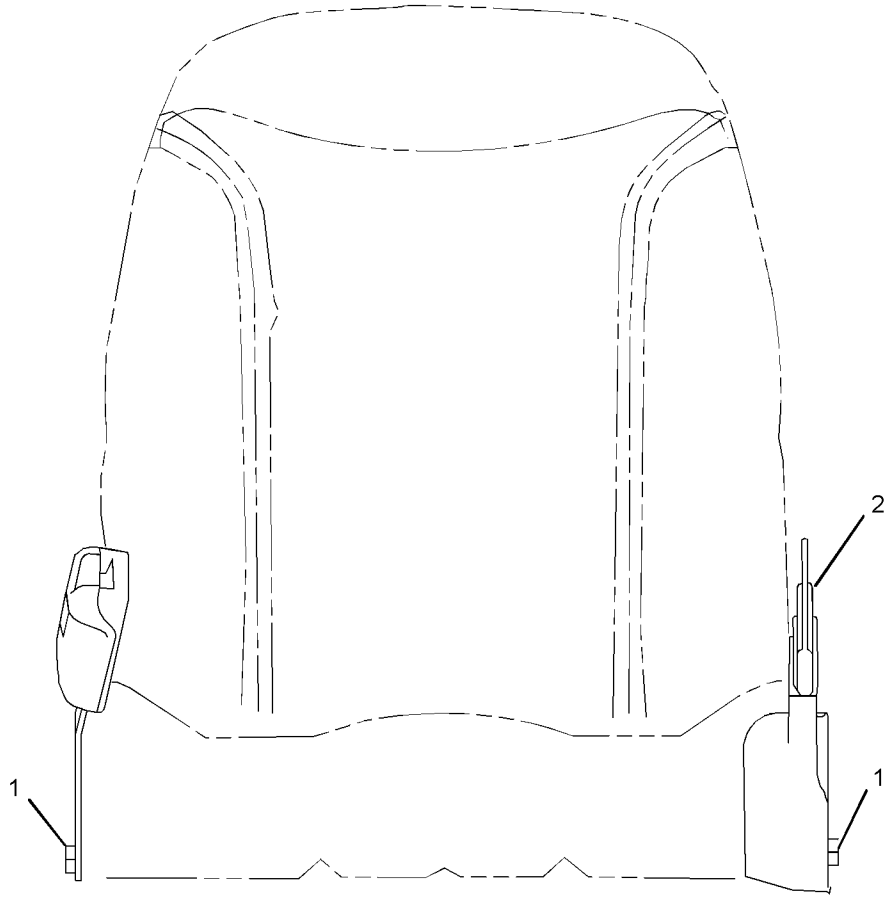

FRONT VIEW

GRAPHIC #1 **<END>** g02782277

378-2508 SEAT BELT GP–RETRACTABLE, 3-IN

PART OF 378-2499 SEAT BELT GP

AN ATTACHMENT

SMCS-7327 **i04559498**

NOTE	REF NO	GRAPHIC REF	PART NUMBER	QTY	PART NAME 1 2 3 4 5 6 (PRODUCT LEVEL)	SEE PAGE
	1	1	**208-7733**	2	BOLT (7/16-20X1.1-IN)	
	2	1	**258-4096**	1	SEAT BELT GP (RETRACTABLE, 76-MM (3-IN))	
		1	**2D-6412**	2	WASHER (7/16X15/16X1/4-IN THK)	
		1	**8S-0934**	2	LOCKNUT-FLANGE (7/16-20-THD)	
		1	**8S-4723**	2	BOLT (7/16-20X1.5-IN)	
		1	**8T-4223**	2	WASHER-HARD (13.5X25.5X3-MM THK)	

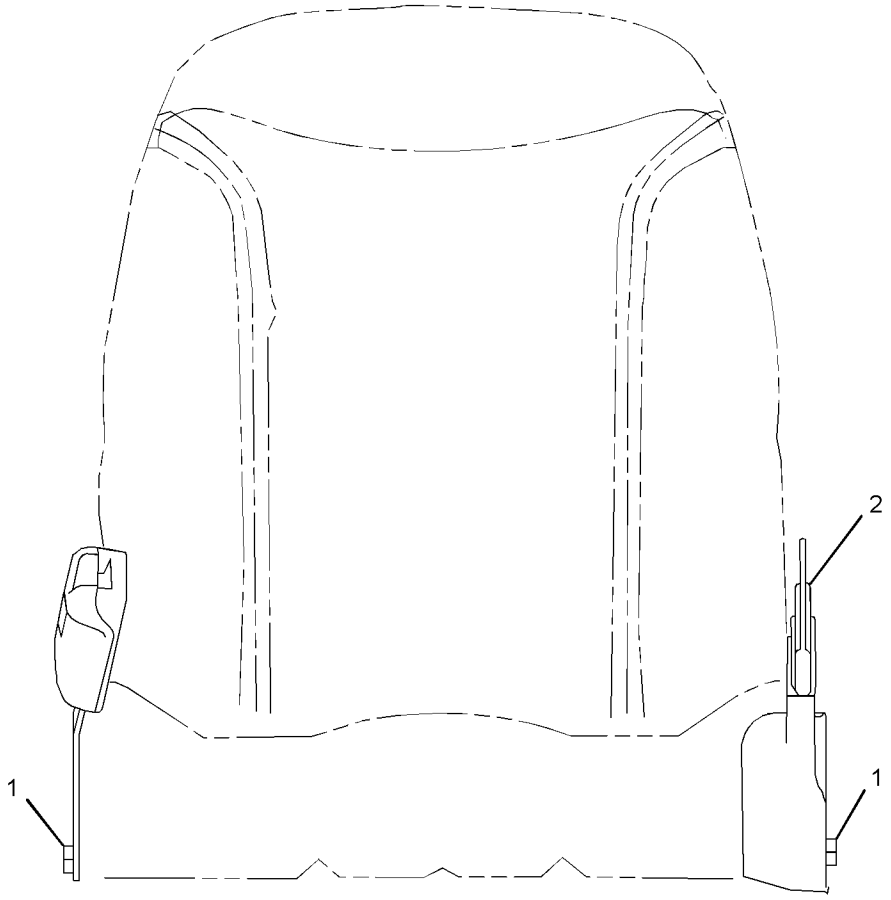

FRONT VIEW

GRAPHIC #1 **<END>** g02782236

357-9061 SEAT GP-SUSPENSION–VINYL

AN ATTACHMENT

SMCS-7312, 7321, 7324, 7336 **i04018290**

NOTE	PART NUMBER	QTY	PART NAME 1 2 3 4 5 6 (PRODUCT LEVEL)	SEE PAGE
Y	*267-1615*	1	SEAT & MOUNTING GP (LOW BACK, SUSPENSION, VINYL)	535

Y - SEPARATE ILLUSTRATION

<END>

384-5673 SEAT GP-SUSPENSION–CLOTH, HIGH BACK

PART OF 387-4682 SEAT & MOUNTING GP

AN ATTACHMENT

SMCS-7312, 7321, 7324, 7336 **i04629219**

NOTE	REF NO	GRAPHIC REF	PART NUMBER	QTY	PART NAME 1 2 3 4 5 6 (PRODUCT LEVEL)	SEE PAGE
M	1	1	**198-3899**	4	SCREW-BUTTON HEAD (M8X1.25X20-MM)	
	2	1	**384-5674**	1	SEAT GP-SUSPENSION (CLOTH, HIGH BACK)	

M - METRIC PART

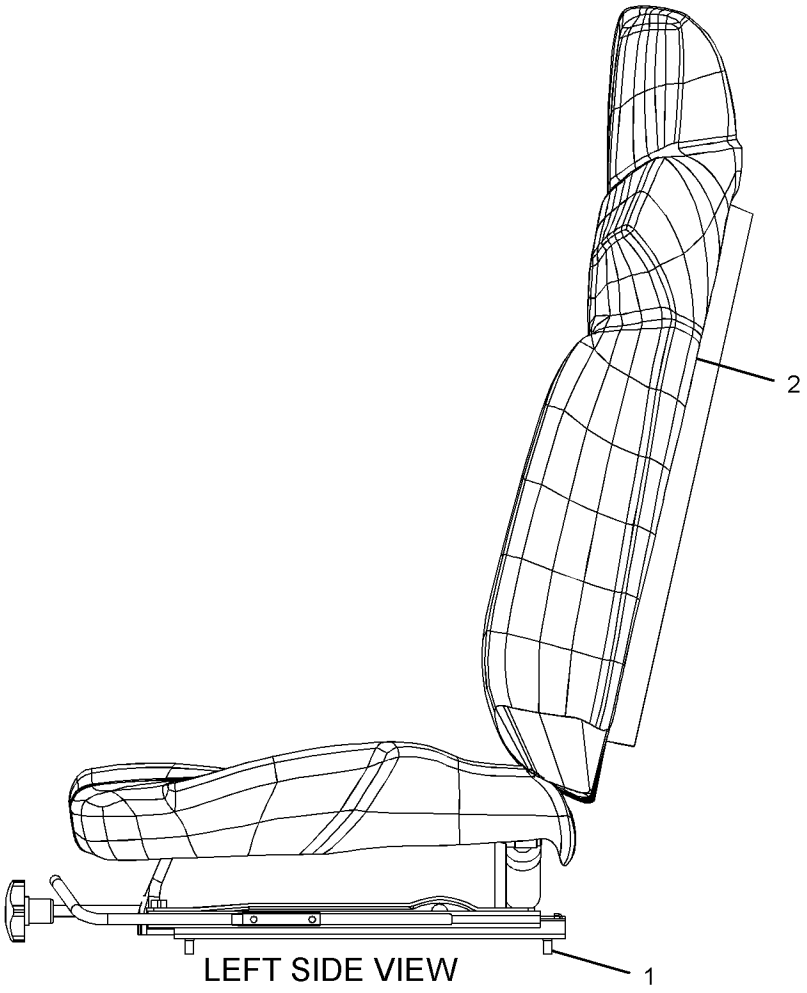

LEFT SIDE VIEW

GRAPHIC #1 **<END>** g01351987

OPERATOR STATION

379-3626 WASHER GP-WINDOW

PART OF 376-6692, 376-6696, 383-5927, 383-5928 CAB AR
AN ATTACHMENT

SMCS-7306 **i04617854**

NOTE	REF NO	GRAPHIC REF	PART NUMBER	QTY	PART NAME 1 2 3 4 5 6 (PRODUCT LEVEL)	SEE PAGE
	1	1	**7I-2673**	10	STRAP-CABLE	
	2	1	**7Y-3474**	1	VALVE AS-CHECK (WINDOW WASHER)	
	3	1	**191-7524**	1	TANK GP-WINDOW WASHER	
M	4	1	**5C-9553**	2	BOLT (M6X1X16-MM)	
	5	1	**9X-8256**	2	WASHER (6.6X12X2-MM THK)	
E	6	1	**144-0195**		HOSE (270-CM)	

E - ORDER BY THE CENTIMETER
M - METRIC PART

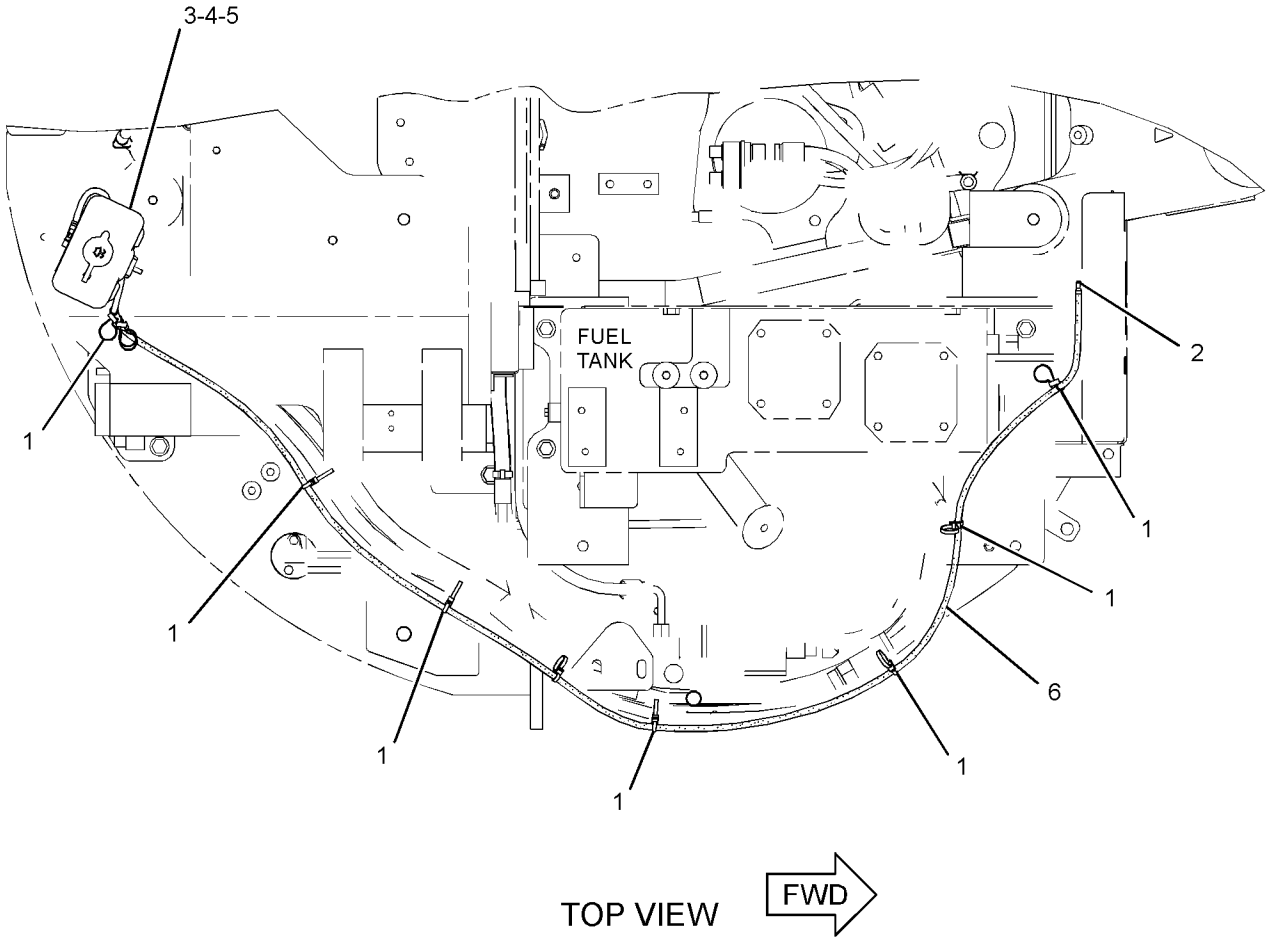

GRAPHIC #1 **<END>** g02798789

280-0421 WINDOW GP-CAB

PART OF 377-5108, 415-6803, 419-1237 CAB GP

AN ATTACHMENT

SMCS-7310 **i04432789**

NOTE	REF NO	GRAPHIC REF	PART NUMBER	QTY	PART NAME 1 2 3 4 5 6 (PRODUCT LEVEL)	SEE PAGE
	1	1	**280-0418**	1	FRAME AS-WINDOW	
	2	1	**288-6841**	1	GLASS-FRONT	
	3	1	**280-0417**	1	SEAL	
	4	1	**280-0416**	1	SEAL	
	5	1	**280-0415**	1	BRACKET AS (RH)	
	6	1	**280-0414**	1	BRACKET AS (LH)	
	7	1	**250-1639**	2	ROLLER	
	8	1	**280-0413**	1	LOCK AS	
	9	1	**280-0412**	1	LOCK AS	
	10	1	**280-0411**	1	PLATE	
	11	1	**275-8629**	1	MOTOR AS-WINDOW WIPER	
	12	1	**275-8630**	1	ARM AS-WIPER	
	13	1	**275-8631**	1	BLADE AS-WIPER (450-MM) (FRONT)	
	14	1	**280-0410**	1	PLATE	
	15	1	**280-0409**	2	SEAL	
	16	1	**280-0408**	4	BOLT	
M	17	1	**5C-7423**	4	SCREW (M6X1X16-MM)	
	18	1	**280-0407**	3	BOLT	
	19	1	**280-0406**	1	NUT	
	20	1	**275-8632**	1	COVER	
	21	1	**280-0419**	1	SCREW	

M - METRIC PART

280-0421 **WINDOW GP-CAB (*contd.*)** **i04432789**

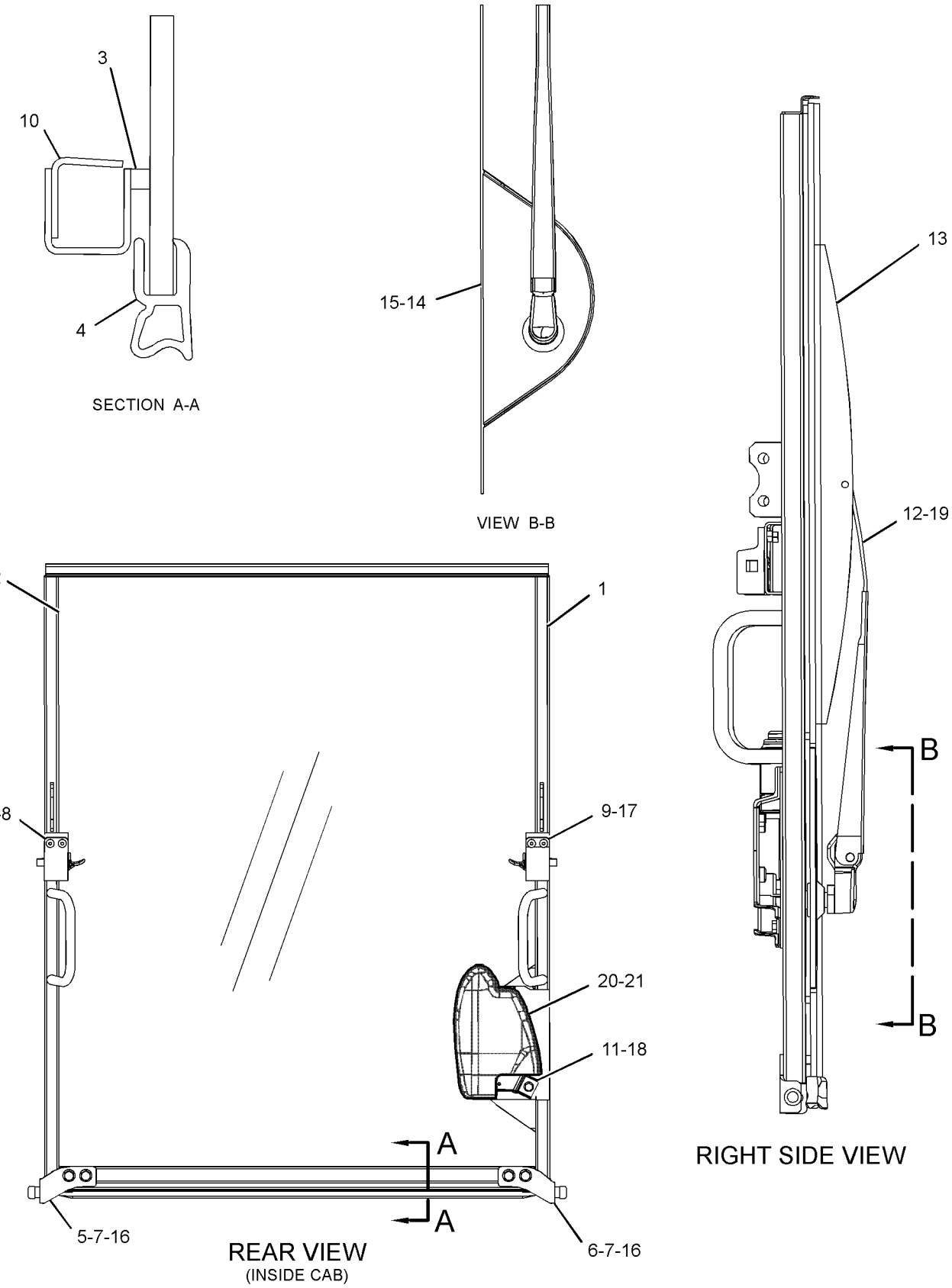

GRAPHIC #1

<END>

g01213831

281-4451 WINDOW GP-SLIDING

PART OF 377-5108, 415-6803, 419-1237 CAB GP

AN ATTACHMENT

SMCS-7310 **i03965398**

NOTE	REF NO	GRAPHIC REF	PART NUMBER	QTY	PART NAME 1 2 3 4 5 6 (PRODUCT LEVEL)	SEE PAGE
	1	1	**304-8800**	2	LOCK AS	
	2	1	**304-8801**	1	PLATE	
	3	1	**304-8802**	1	PLATE	
	4	1	**314-8292**	1	FRAME	
	5	1	**314-8294**	1	GLASS	
	6	1	**314-8295**	1	GLASS	
	7	1	**314-8296**	2	CHANNEL	
	8	1	**314-8298**	1	SEAL	
	9	1	**314-8299**	1	PLATE	
	10	1	**314-8300**	2	SEAL	

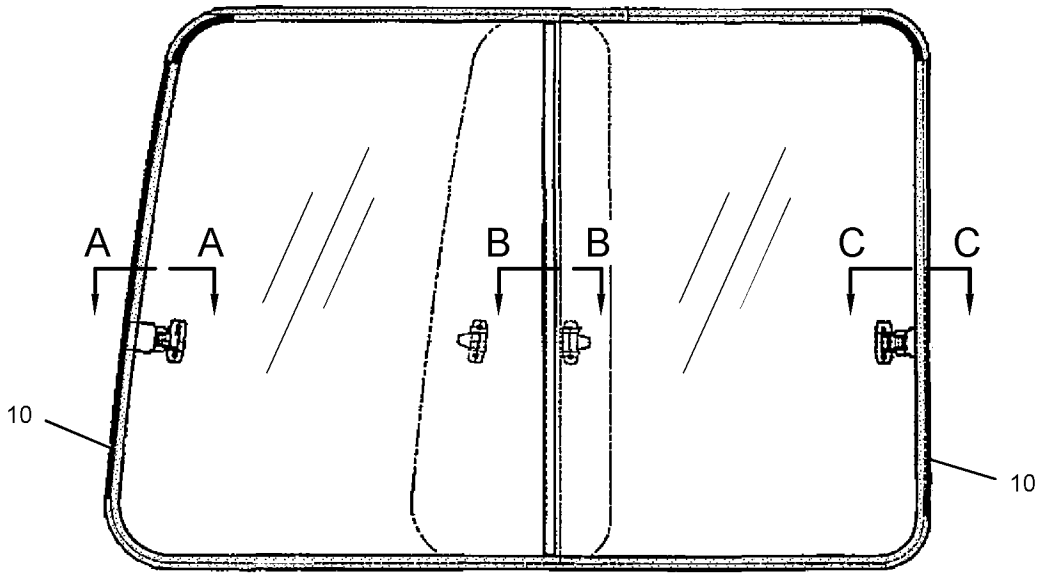

LEFT SIDE VIEW
(INSIDE CAB)

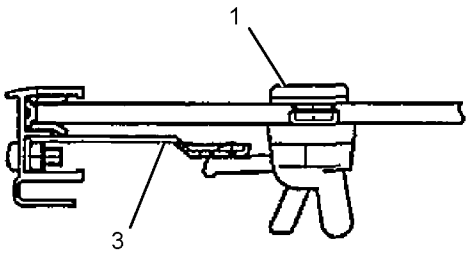

SECTION A-A

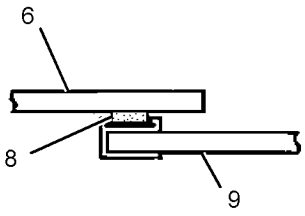

SECTION B-B

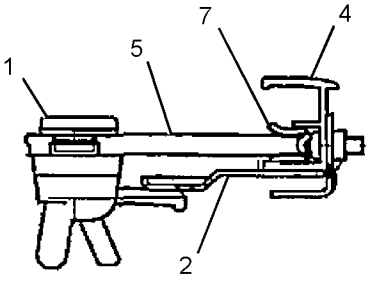

SECTION C-C

GRAPHIC #1 **<END>** g01419058

377-9706 FILM GP–STRAIGHT BLADE

PART OF 377-8920 BLADE AR-STRAIGHT

AN ATTACHMENT

SMCS-7557 **i05101629**

NOTE	REF NO	GRAPHIC REF	PART NUMBER	QTY	PART NAME 1 2 3 4 5 6 (PRODUCT LEVEL)	SEE PAGE
	1	1	**395-3419**	1	FILM-CONTROL (STRAIGHT BLADE)	

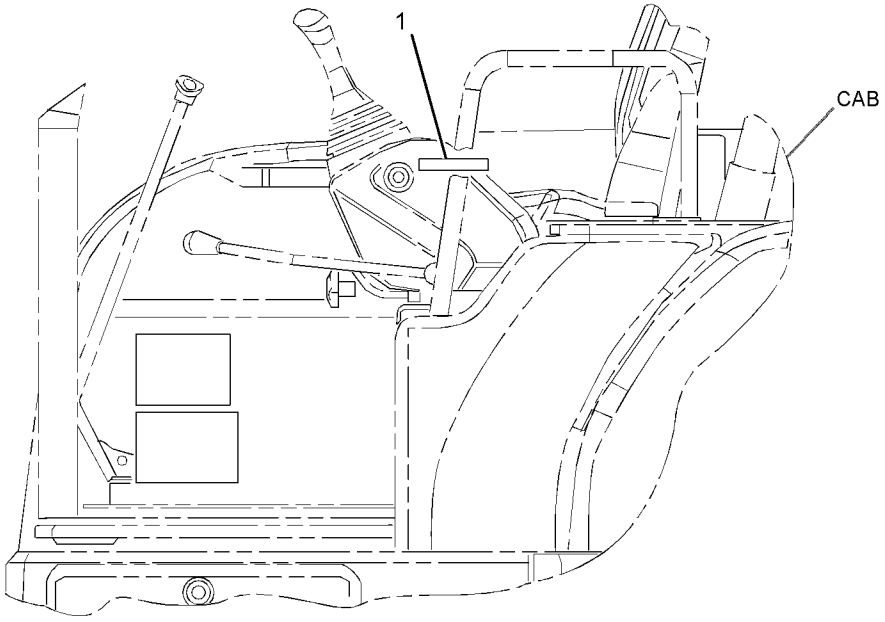

LEFT SIDE VIEW

GRAPHIC #1 **<END>** g02787418

SERVICE EQUIPMENT AND SUPPLIES

377-9707 FILM GP–AUXILIARY

PART OF 379-4715 CONTROL AR-AUXILIARY

SMCS-7557 **i04589439**

NOTE	REF NO	GRAPHIC REF	PART NUMBER	QTY	PART NAME 1 2 3 4 5 6 (PRODUCT LEVEL)	SEE PAGE
	1	1	**377-9728**	1	FILM-INSTRUCTION (OPERATOR CONTROLS, READ OMM)	
	2	1	**377-9729**	1	FILM-INSTRUCTION (AUX BALL VALVE)	

377-9707 **FILM GP (*contd.*)** **i04589439**

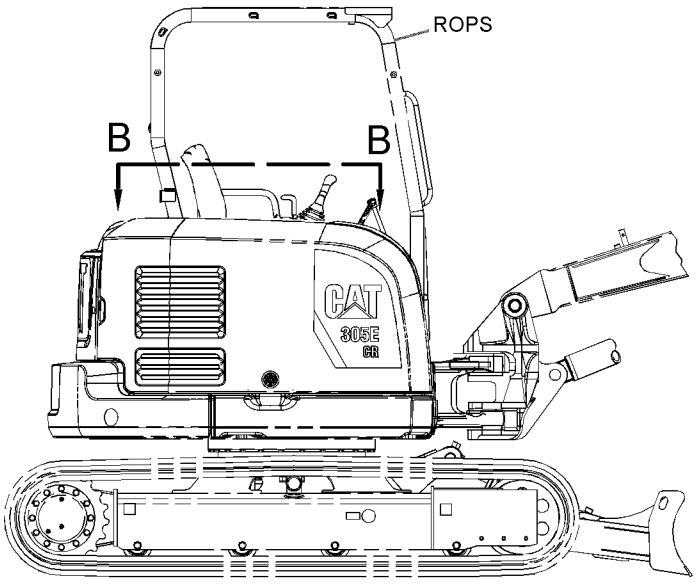

RIGHT SIDE VIEW

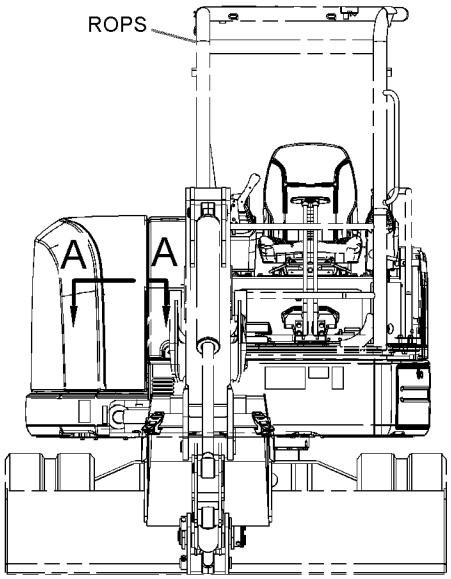

FRONT VIEW

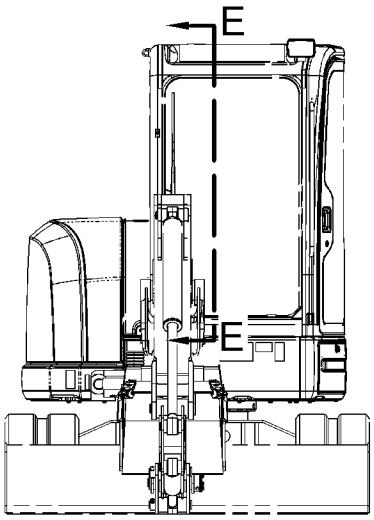

FRONT VIEW
(ALTERNATE VIEW WITH CAB)

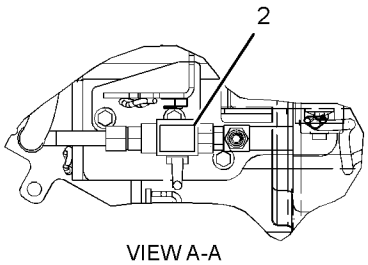

VIEW A-A

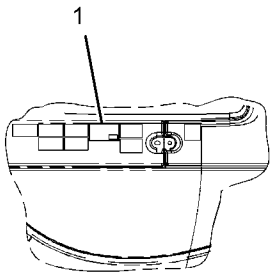

VIEW B-B

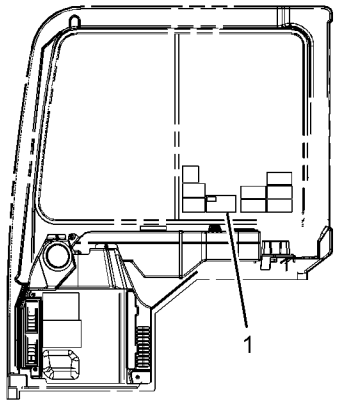

VIEW E-E
(ALTERNATE VIEW WITH CAB)

GRAPHIC #1

<END>

g02768804

377-9708 FILM GP–2ND AUXILIARY

PART OF 379-4721, 379-4722 CONTROL AR-AUXILIARY

AN ATTACHMENT

SMCS-7557 **i04559483**

NOTE	REF NO	GRAPHIC REF	PART NUMBER	QTY	PART NAME 1 2 3 4 5 6 (PRODUCT LEVEL)	SEE PAGE
	1	1	**377-9730**	1	FILM-INSTRUCTION (2ND AUXILIARY)	

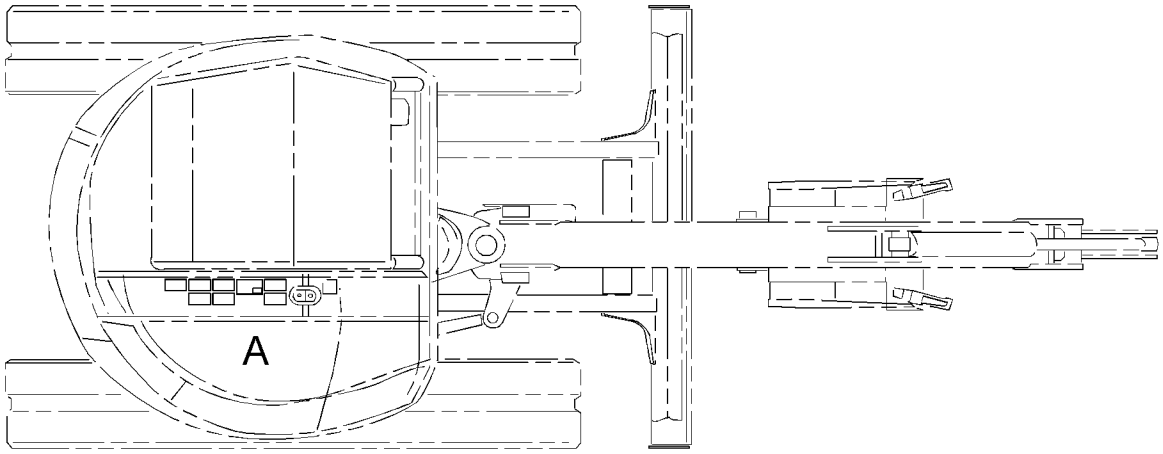

TOP VIEW

FWD

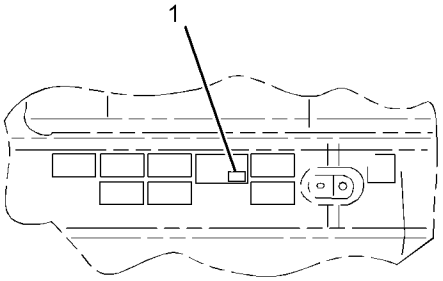

VIEW OF AREA A

GRAPHIC #1 **<END>** g02769777

377-9709 FILM GP–2-WAY

PART OF 379-4724 CONTROL AR-AUXILIARY

AN ATTACHMENT

SMCS-7557 **i04559484**

NOTE	REF NO	GRAPHIC REF	PART NUMBER	QTY	PART NAME 1 2 3 4 5 6 (PRODUCT LEVEL)	SEE PAGE
	1	1	**273-0477**	1	FILM-INSTRUCTION (OPERATOR CONTROLS, READ OMM)	

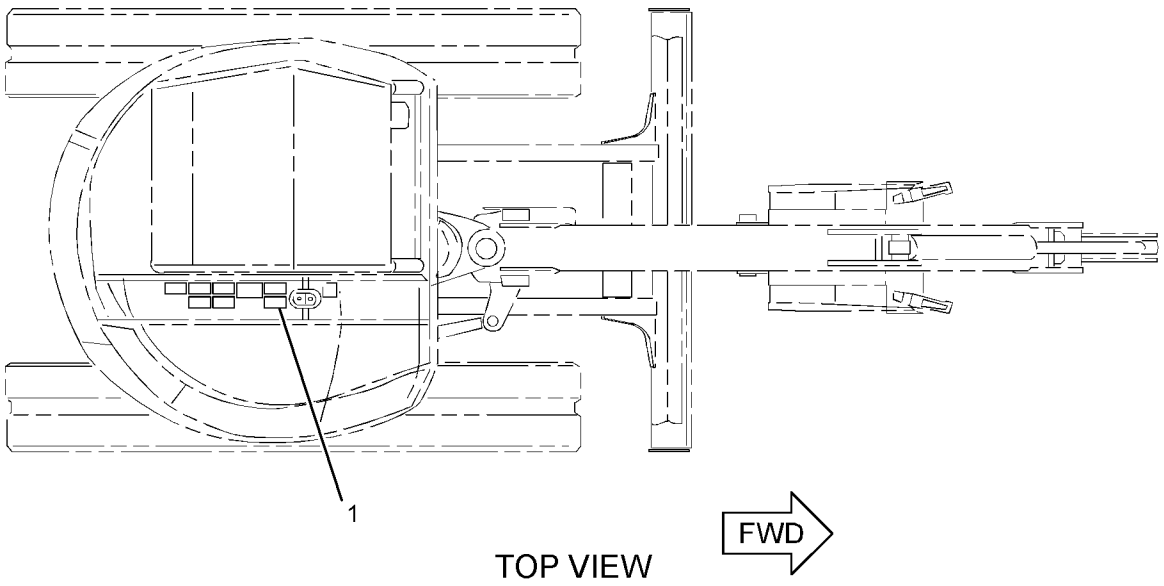

GRAPHIC #1 **<END>** g02769776

377-9715 FILM GP–CAB HEATER

PART OF 376-6696, 383-5928 CAB AR

AN ATTACHMENT

SMCS-7557 **i05356142**

NOTE	REF NO	GRAPHIC REF	PART NUMBER	QTY	PART NAME 1 2 3 4 5 6 (PRODUCT LEVEL)	SEE PAGE
	1	1	**187-9185**	1	FILM-INFORMATION (ALTERNATE EXIT)	
	2	1	**419-8301**	1	FILM-WARNING (ROPS, FOPS, OPS, READ OMM)	

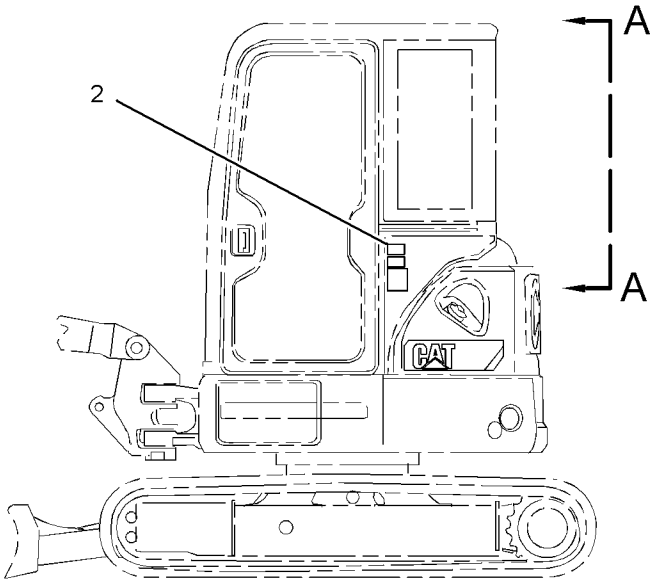

LEFT SIDE VIEW

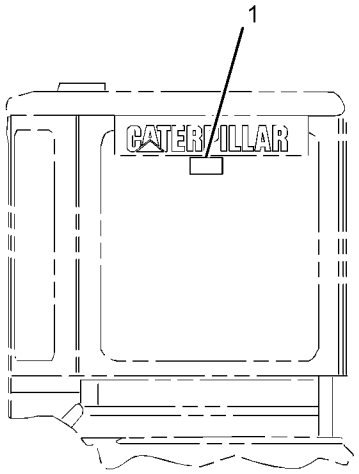

VIEW A-A

GRAPHIC #1 **<END>** g02979699

381-4576 FILM GP–COUPLER

PART OF 381-4578 FILM GP-INTERNATIONAL

AN ATTACHMENT

SMCS-7557 **i04559506**

NOTE	REF NO	GRAPHIC REF	PART NUMBER	QTY	PART NAME 1 2 3 4 5 6 (PRODUCT LEVEL)	SEE PAGE
	1	1	**269-0120**	1	FILM-WARNING (CRUSH HAZARD, READ OMM, INTL)	
	2	1	**269-0121**	1	FILM-WARNING (CRUSH HAZARD, READ OMM, INTL)	

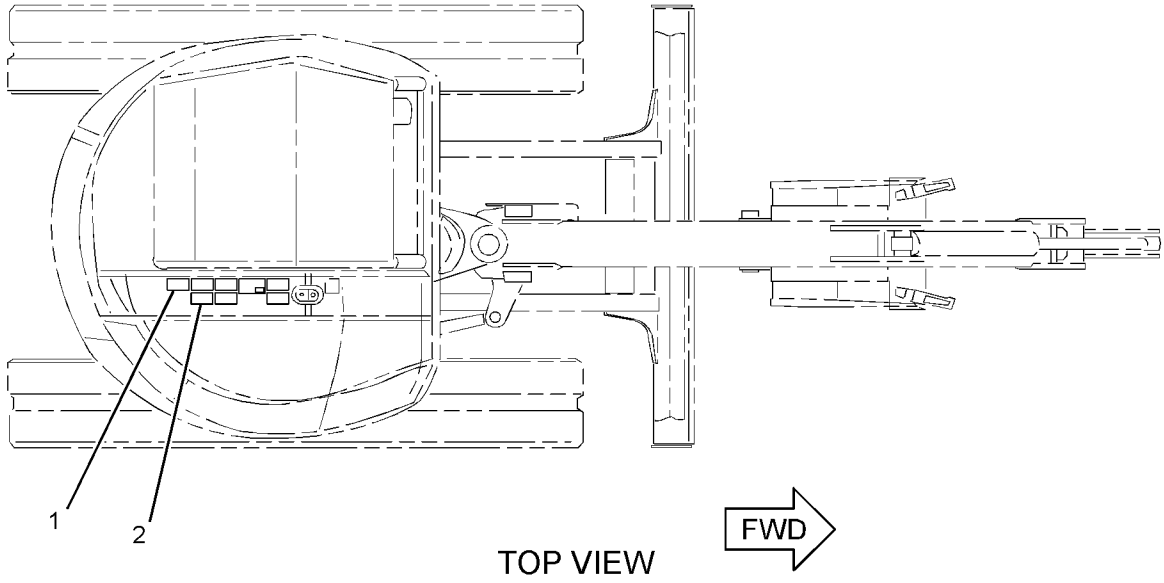

GRAPHIC #1 **<END>** g02770679

382-0560 FILM GP–2-WAY

PART OF 379-4720 LINES AR-BOOM

AN ATTACHMENT

SMCS-7557 **i04689551**

NOTE	REF NO	GRAPHIC REF	PART NUMBER	QTY	PART NAME 1 2 3 4 5 6 (PRODUCT LEVEL)	SEE PAGE
	1	1	**322-4582**	1	FILM-WARNING (TIPPING HAZARD, READ OMM)	

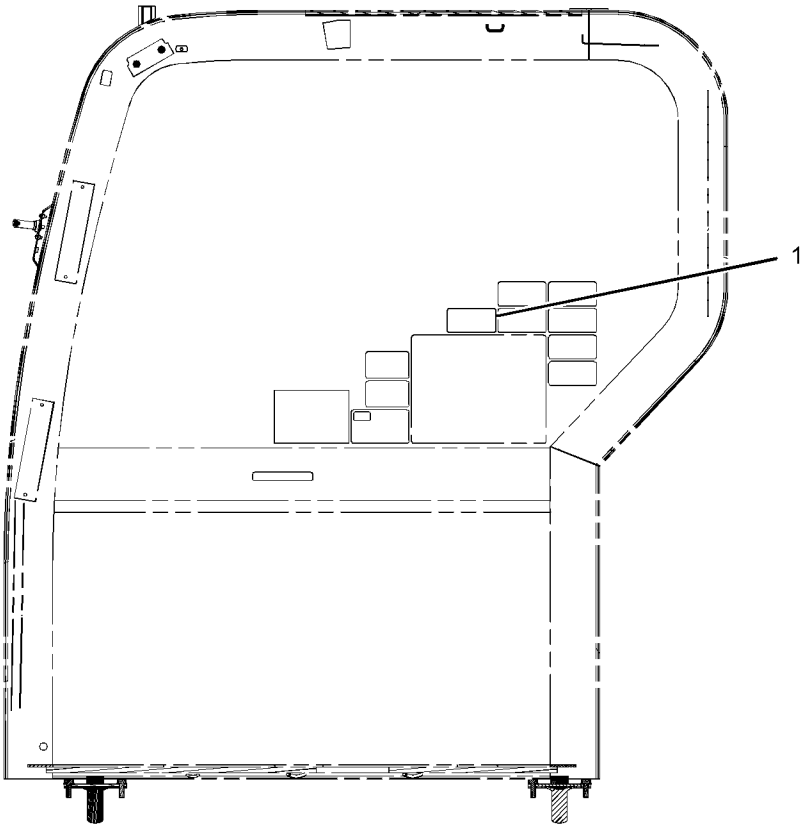

LEFT SIDE VIEW
(INSIDE CAB)

GRAPHIC #1

<END>

g02835296

386-6058 FILM GP–ANGLE BLADE

PART OF 377-8930 BLADE AR-ANGLING

AN ATTACHMENT

SMCS-7557 **i04658616**

NOTE	REF NO	GRAPHIC REF	PART NUMBER	QTY	PART NAME 1 2 3 4 5 6 (PRODUCT LEVEL)	SEE PAGE
	1	1	**386-6073**	1	FILM-INSTRUCTION (BLADE ANGLE)	

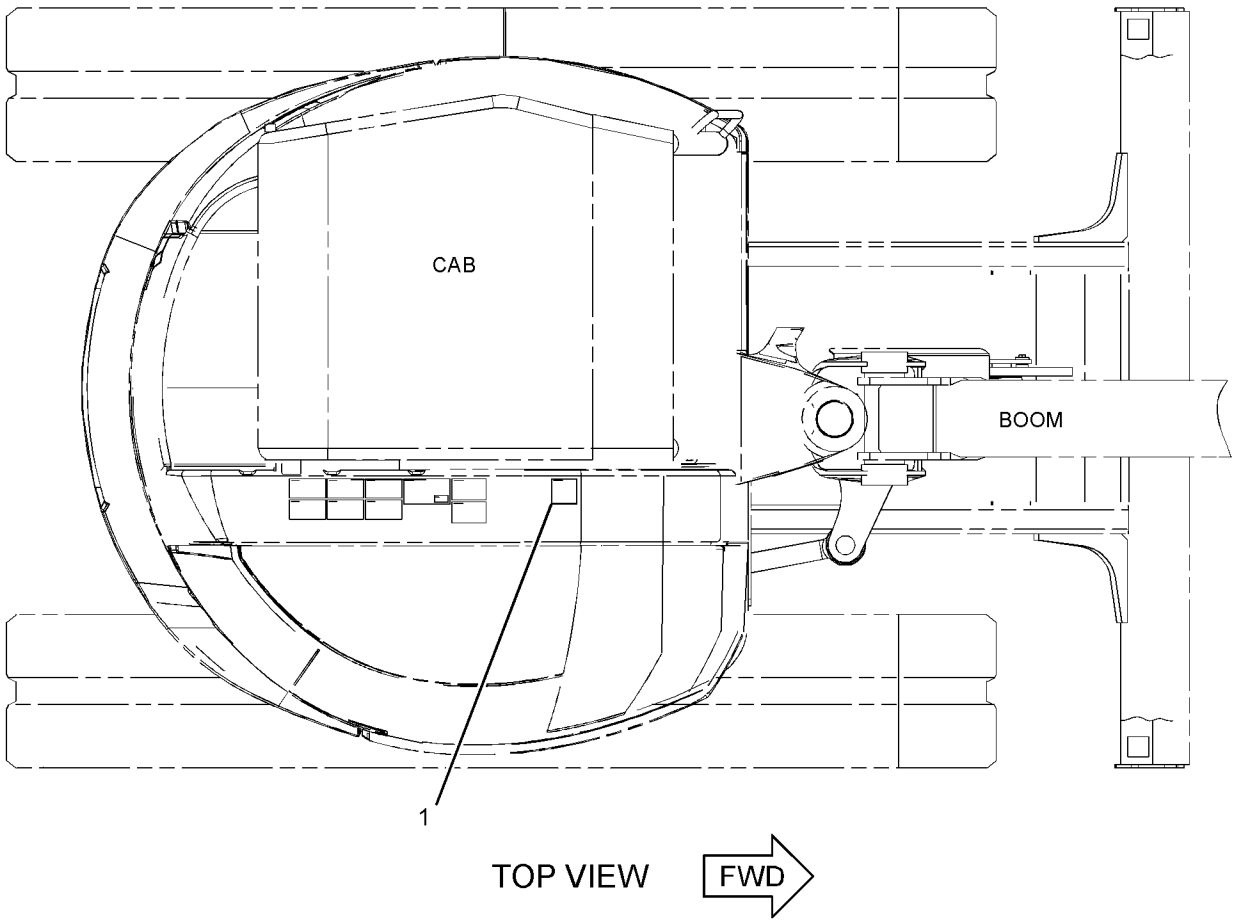

GRAPHIC #1 **<END>** g02798812

389-8776 FILM GP

FRONT GUARD

PART OF 383-5927, 383-5928 CAB AR, 383-5929 CANOPY AR

AN ATTACHMENT

SMCS-7557 **i04689389**

NOTE	REF NO	GRAPHIC REF	PART NUMBER	QTY	PART NAME 1 2 3 4 5 6 (PRODUCT LEVEL)	SEE PAGE
	1	1	**389-8775**	1	FILM-CERTIFICATION (FRONT GUARD, READ OMM)	
	2	1	**389-9183**	1	FILM-WARNING (NO WELD, NO DRILL, READ OMM)	

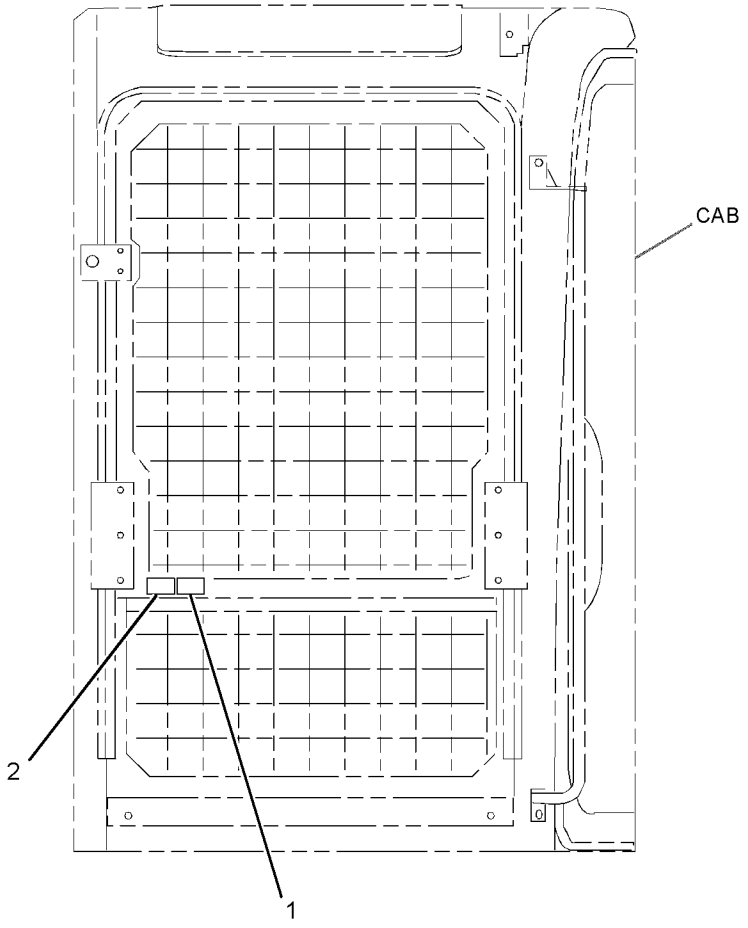

FRONT VIEW

GRAPHIC #1

<END>

g02798968

393-1257 FILM GP–CAB HEATER

PART OF 377-8933, 383-5929 CANOPY AR

AN ATTACHMENT

SMCS-7557 **i05260375**

NOTE	REF NO	GRAPHIC REF	PART NUMBER	QTY	PART NAME 1 2 3 4 5 6 (PRODUCT LEVEL)	SEE PAGE
	1	1	**432-1346**	1	FILM-WARNING (ROPS, FOPS, OPS, READ OMM)	

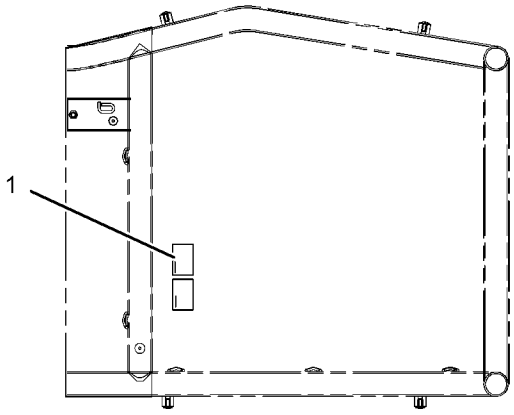

VIEW A-A

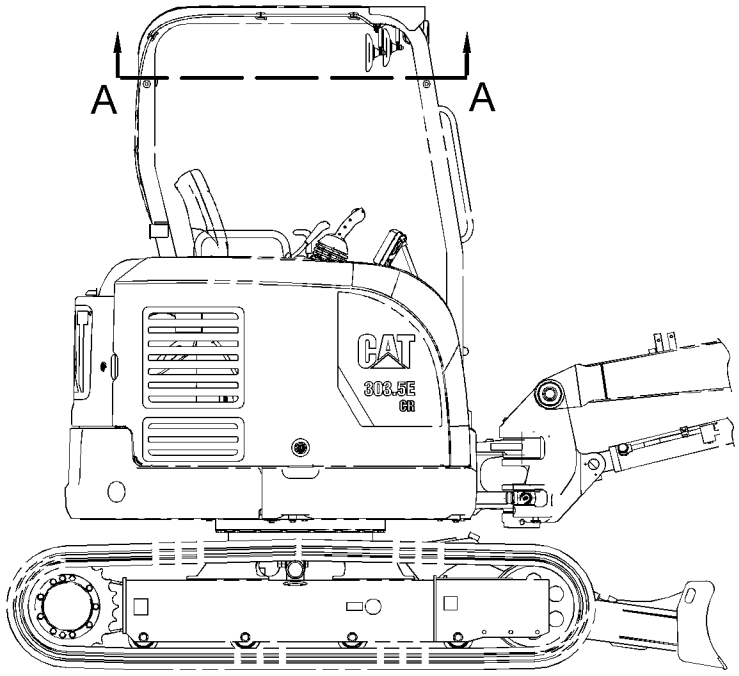

RIGHT SIDE VIEW

GRAPHIC #1 **<END>** g02881182

SERVICE EQUIPMENT AND SUPPLIES

420-1371 FILM GP

AN ATTACHMENT

SMCS-7557 **i05210580**

NOTE	REF NO	GRAPHIC REF	PART NUMBER	QTY	PART NAME 1 2 3 4 5 6 (PRODUCT LEVEL)	SEE PAGE
	1	1	**172-1241**	1	FILM-IDENTIFICATION (LIFT EYE, TIE-DOWN LOCATION)	

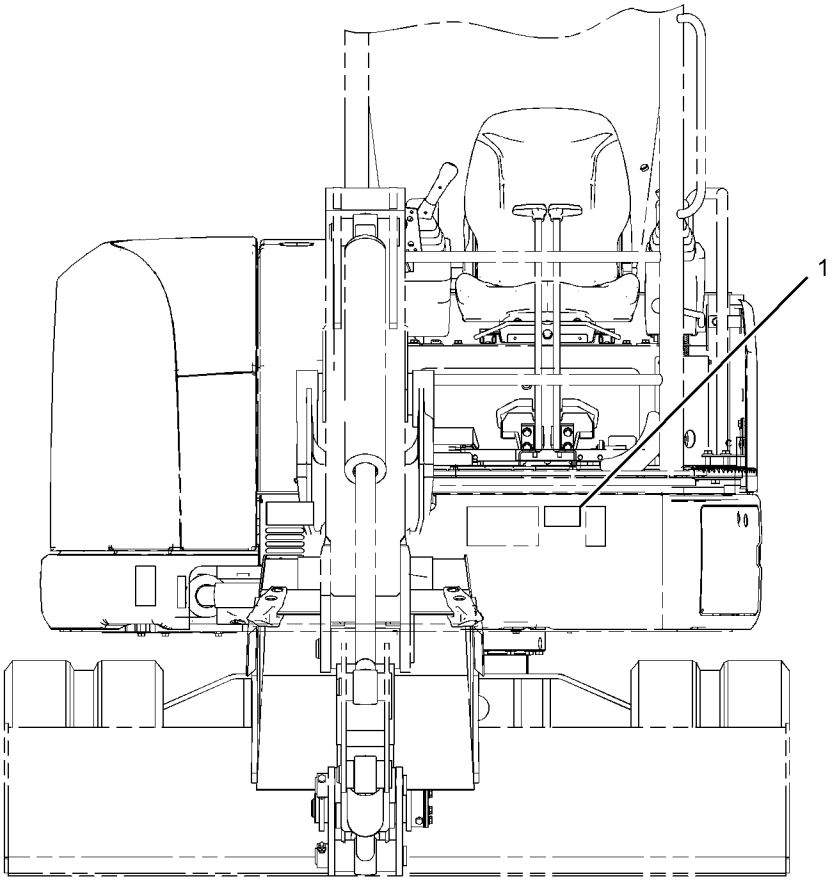

FRONT VIEW

GRAPHIC #1 **<END>** g03335604

377-9710 FILM GP-INTERNATIONAL

AN ATTACHMENT

SMCS-7405, 7557 **i04728491**

NOTE	REF NO	GRAPHIC REF	PART NUMBER	QTY	PART NAME 1 2 3 4 5 6 (PRODUCT LEVEL)	SEE PAGE
	1	2	**8C-4535**	1	FILM-IDENTIFICATION (DIESEL FUEL)	
	2	2	**221-8045**	1	FILM-WARNING (SEAT BELT, INTERNATIONAL)	
	3	2	**224-0554**	1	FILM-WARNING (UNIVERSAL, READ OMM)	
	4	2	**224-8946**	1	FILM-WARNING (NO ETHER SPRAY/AIR INTK, INTL)	
	5	2	**225-0312**	1	FILM-WARNING (JUMP START, READ OMM, INTL)	
	6	1	**228-7316**	1	FILM-WARNING (HOT SURFACE, HANDS CLEAR, INTL)	
	7	1	**228-9254**	1	FILM-WARNING (ELEC HAZARD, READ OMM, INTL)	
	8	1,2	**235-1368**	2	FILM-WARNING (RADIATOR)	
	9	1,2	**239-4991**	2	FILM-WARNING (HIGH PRESSURE CYLINDER)	
	10	2	**254-7563**	2	FILM-WARNING (CRUSH HAZARD, STAY BACK)	
	11	1	**266-5431**	1	FILM-WARNING (CRUSH HAZARD, READ OMM, INTL)	
	12	2	**298-4282**	2	FILM-WARNING (CRUSH HAZARD, STAY BACK, INTL)	
	13	1	**389-8773**	1	FILM-WARNING (CUTTING HAZARD HAND, STAY BACK)	

REFER TO ALL ILLUSTRATIONS OF THIS GROUP FOR AUXILIARY VIEWS

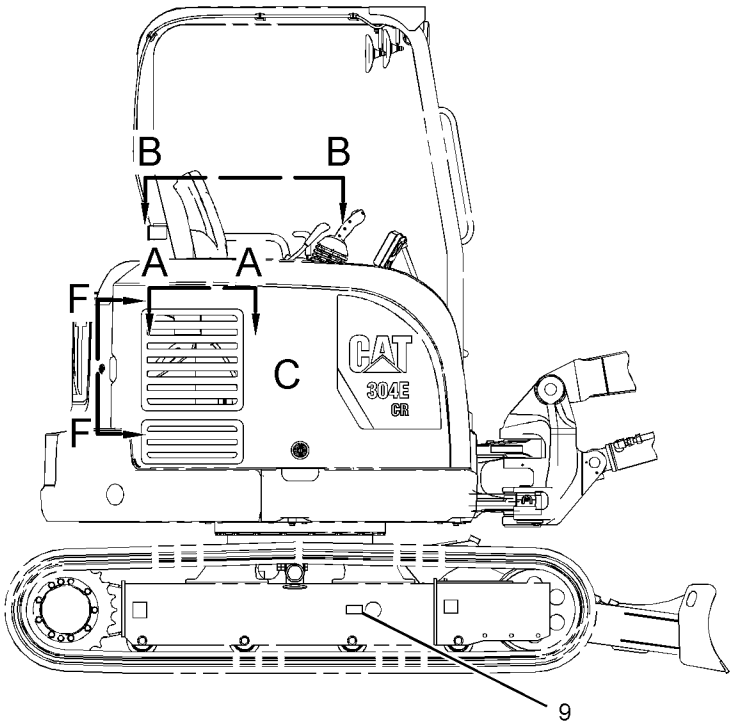

RIGHT SIDE VIEW

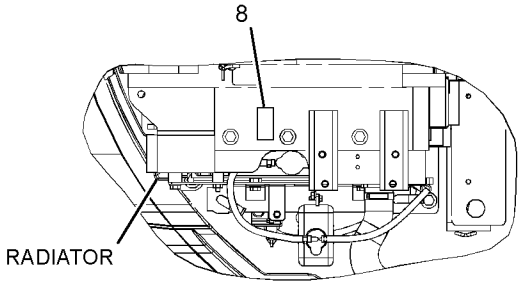

VIEW A-A

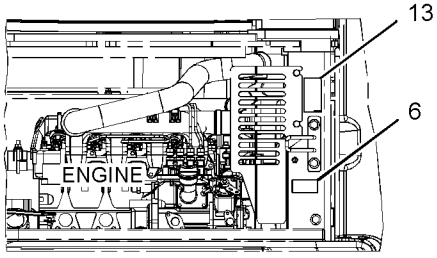

VIEW F-F

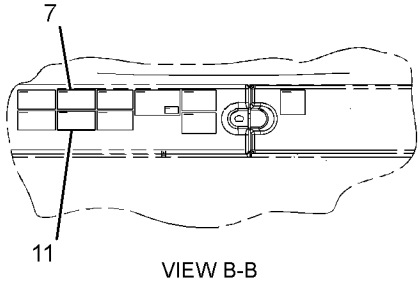

VIEW B-B

GRAPHIC #1 g02845360

377-9710 **FILM GP-INTERNATIONAL (*contd.*)** **i04728491**

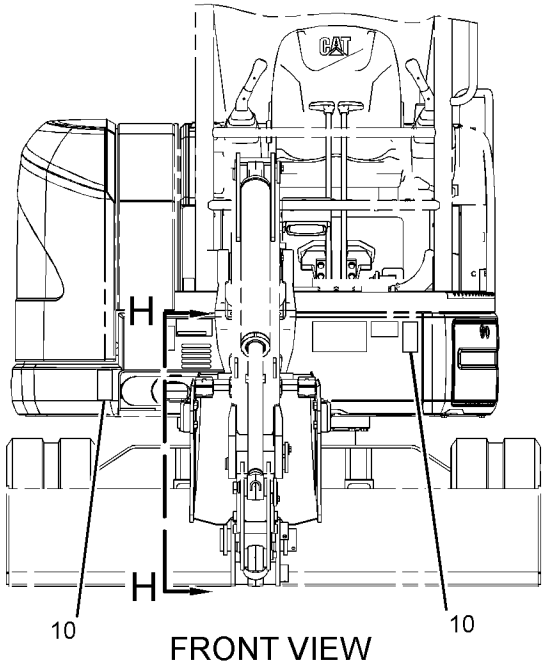

FRONT VIEW

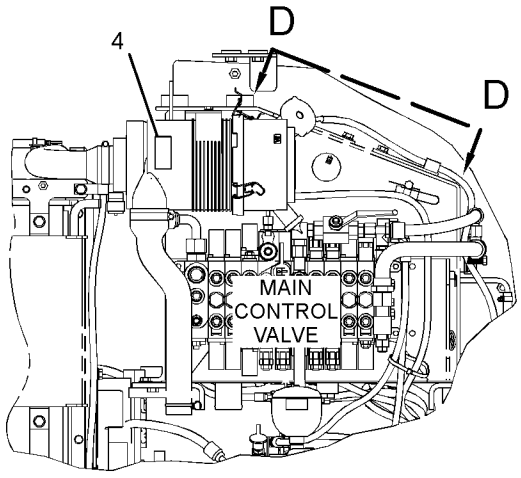

VIEW OF AREA C
(DOOR REMOVED)

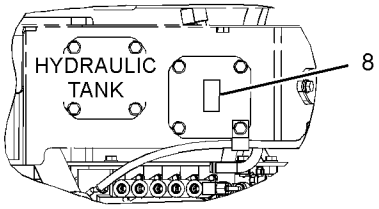

VIEW D-D

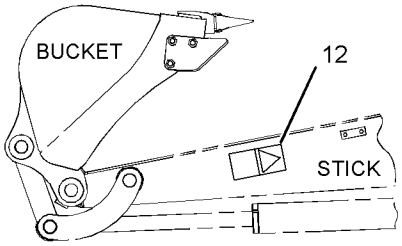

VIEW H-H

LEFT SIDE VIEW

GRAPHIC #2 **<END>** g02845361

381-4578 FILM GP-INTERNATIONAL–COUPLER

AN ATTACHMENT

SMCS-7405, 7557 **i04629189**

NOTE	PART NUMBER	QTY	PART NAME 1 2 3 4 5 6 (PRODUCT LEVEL)	SEE PAGE
Y	*381-4576*	1	FILM GP (COUPLER)	551

Y - SEPARATE ILLUSTRATION

<END>

SERVICE EQUIPMENT AND SUPPLIES

377-9711 FILM GP-U.S.

AN ATTACHMENT

SMCS-7405, 7557 **i04728490**

NOTE	REF NO	GRAPHIC REF	PART NUMBER	QTY	PART NAME 1 2 3 4 5 6 (PRODUCT LEVEL)	SEE PAGE
	1	2	**295-7340**	1	FILM-INSTRUCTION (FUEL, READ OMM)	
	2	2	**224-7717**	1	FILM-WARNING (SEAT BELT, U.S.)	
	3	2	**225-3305**	1	FILM-WARNING (UNIVERSAL, READ OMM)	
	4	2	**224-8945**	1	FILM-WARNING (DO NOT USE ETHER, U.S.)	
	5	2	**225-0313**	1	FILM-WARNING (JUMP START, READ OMM, U.S.)	
	6	1	**228-7315**	1	FILM-WARNING (HOT SURFACE, HANDS CLEAR)	
	7	1	**228-9253**	1	FILM-WARNING (ELECTRICAL HAZARD, U.S.)	
	8	1,2	**235-1365**	2	FILM-WARNING (HOT FLUID UNDER PRESSURE)	
	9	1,2	**239-4990**	2	FILM-WARNING (HIGH PRESSURE CYLINDER)	
	10	2	**255-1203**	2	FILM-WARNING (CRUSH HAZARD, STAY BACK)	
	11	1	**267-4495**	1	FILM-WARNING (CRUSH HAZARD, READ OMM, U.S.)	
	12	2	**313-2048**	2	FILM-WARNING (CRUSH HAZARD, STAY BACK, U.S.)	
	13	1	**389-8774**	1	FILM-WARNING (CUTTING HAZARD HAND, STAY BACK)	

REFER TO ALL ILLUSTRATIONS OF THIS GROUP FOR AUXILIARY VIEWS

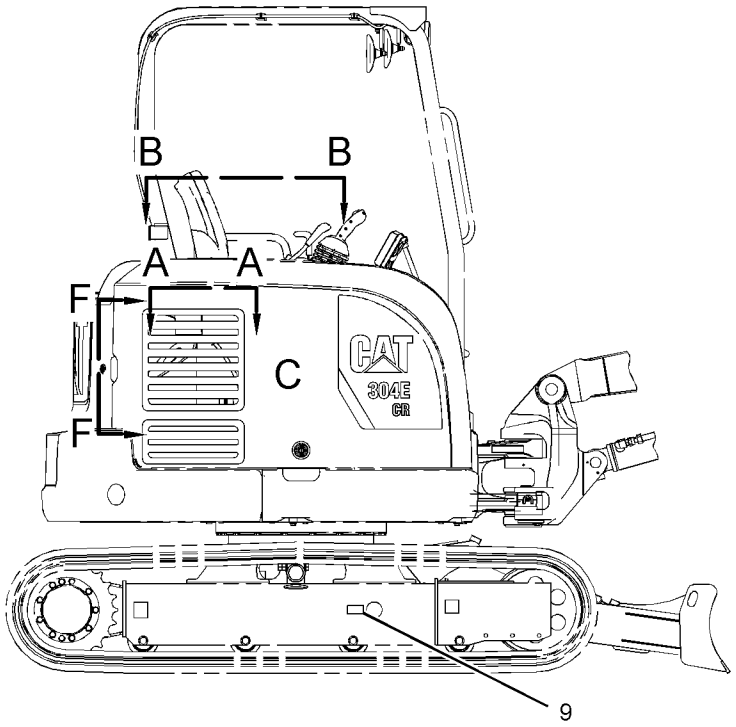

RIGHT SIDE VIEW

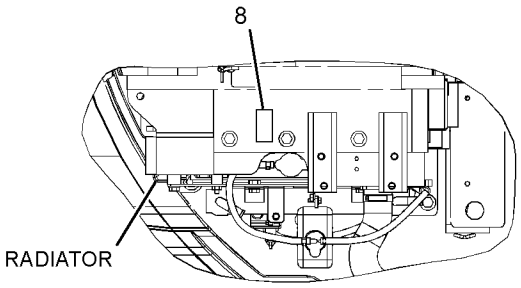

VIEW A-A

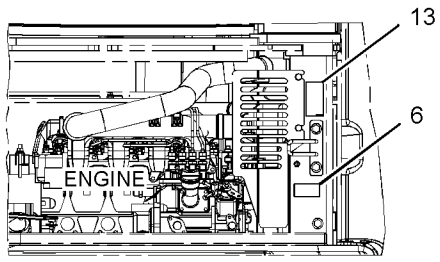

VIEW F-F

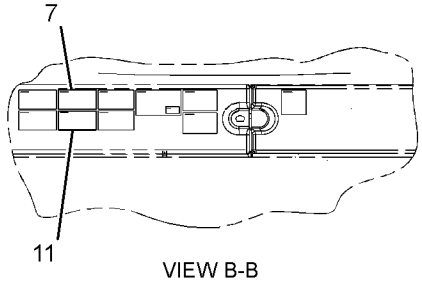

VIEW B-B

GRAPHIC #1 g02845360

377-9711 **FILM GP-U.S. (*contd.*)** **i04728490**

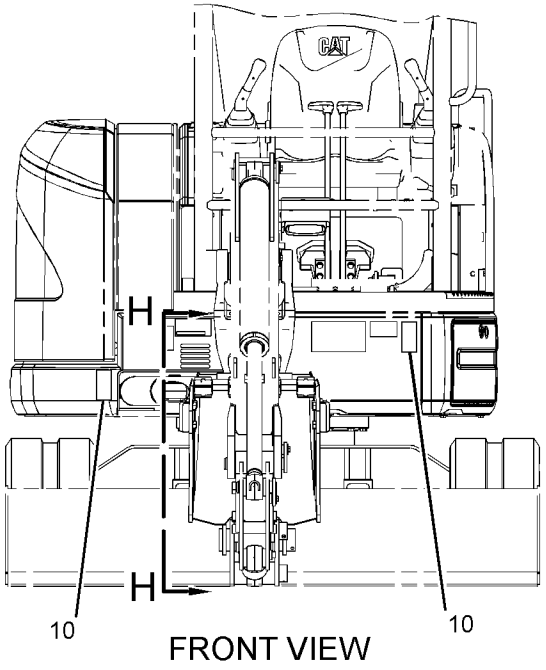

FRONT VIEW

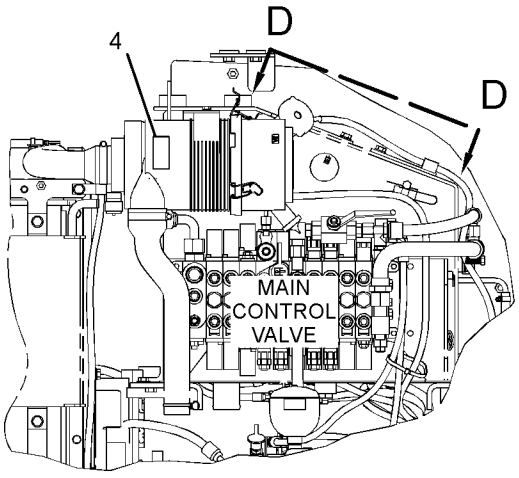

VIEW OF AREA C
(DOOR REMOVED)

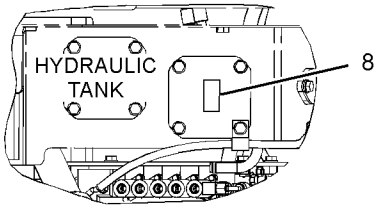

VIEW D-D

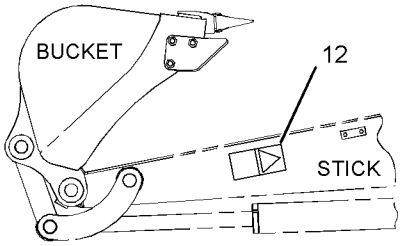

VIEW H-H

LEFT SIDE VIEW

GRAPHIC #2 **<END>** g02845361

381-4577 FILM GP-U.S.—COUPLER

PART OF 381-4579 FILM GP-U.S.

AN ATTACHMENT

SMCS-7405, 7557 **i04559507**

NOTE	REF NO	GRAPHIC REF	PART NUMBER	QTY	PART NAME 1 2 3 4 5 6 (PRODUCT LEVEL)	SEE PAGE
	1	1	**268-4530**	1	FILM-WARNING (CRUSH HAZARD, READ OMM, U.S.)	
	2	1	**268-8872**	1	FILM-WARNING (CRUSH HAZARD, READ OMM, U.S.)	

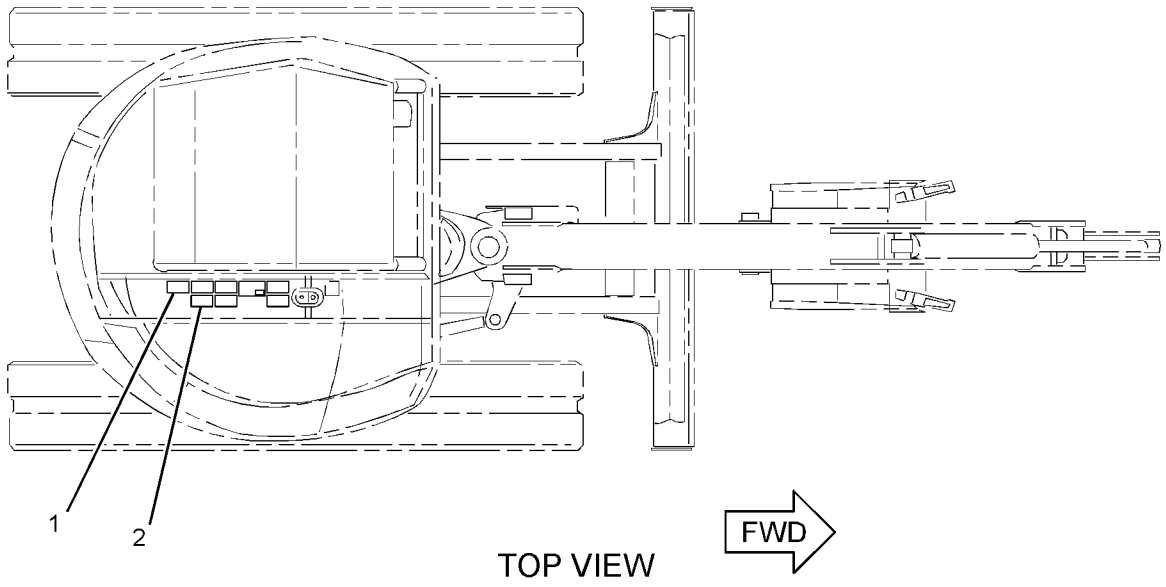

GRAPHIC #1 **<END>** g02770679

381-4579 FILM GP-U.S.—COUPLER

AN ATTACHMENT

SMCS-7405, 7557 **i04629190**

NOTE	PART NUMBER	QTY	PART NAME 1 2 3 4 5 6 (PRODUCT LEVEL)	SEE PAGE
Y	*381-4577*	1	FILM GP-U.S. (COUPLER)	562

Y - SEPARATE ILLUSTRATION

<END>

377-9698 PLATE & FILM GP

PART OF 376-6676 CHASSIS AR

SMCS-7405, 7557, 7563 **i04935888**

NOTE	REF NO	GRAPHIC REF	PART NUMBER	QTY	PART NAME 1 2 3 4 5 6 (PRODUCT LEVEL)	SEE PAGE
	1	1	**7X-3229**	2	FILM-IDENTIFICATION (LIFT EYE, TIE-DOWN LOCATION)	
	2	1,2	**7X-7644**	4	FILM-IDENTIFICATION (TIE-DOWN)	
	3	2	**126-2900**	1	FILM-INSTRUCTION (LEVER LOCK)	
	4	2	**134-7258**	1	FILM-INFORMATION (EXTENDED LIFE COOLANT)	
	5	2	**136-0199**	1	FILM-INSTRUCTION (ENGINE SPEED DIAL)	
	6	1,2	**150-8896**	2	FILM-NOTICE (LIFT EYE LOCATION)	
	7	1	**190-5386**	2	FILM-IDENTIFICATION (ROUND RED REFLECTIVE)	
	8	2	**197-7177**	1	PLATE-CERTIFICATION	
	9	1	**200-5480**	1	FILM-INSTRUCTION (GREASE)	
	10	1	**219-0305**	1	FILM-WARNING (NO WELD, NO DRILL, READ OMM)	
	11	1	**239-6986**	1	PLATE-SERIAL NUMBER (MACHINE)	
	12	1	**273-0469**	1	FILM-INSTRUCTION (OPERATOR CONTROLS)	
	13	1	**273-0471**	1	FILM-WARNING (HIGH PRESSURE, READ MANUAL)	
	14	2	**279-9311**	1	FILM-INSTRUCTION (HYDRAULIC OIL, READ OMM)	
	15	2	**298-2139**	1	FILM-IDENTIFICATION (CAT, LH)	
	16	1	**298-2140**	1	FILM-IDENTIFICATION (CAT, RH)	
	17	2	**334-4603**	1	FILM-INFORMATION (HYDO ADVANCED 10)	
	18	1	**377-9722**	1	FILM-IDENTIFICATION (CAT)	
	19	2	**377-9725**	1	FILM-IDENTIFICATION (FUSE, RELAY PANEL)	
	20	1	**379-7052**	1	FILM-IDENTIFICATION (CAT, 303.5E CR)	
	21	2	**379-7053**	1	FILM-IDENTIFICATION (CAT, 303.5E CR)	
	22	2	**379-7054**	1	FILM-INFORMATION (LIFTING CAPACITIES, READ OMM)	
	23	2	**382-6356**	1	FILM-INFORMATION (LUBRICATION CHART)	

377-9698 **PLATE & FILM GP (*contd.*)** **i04935888**

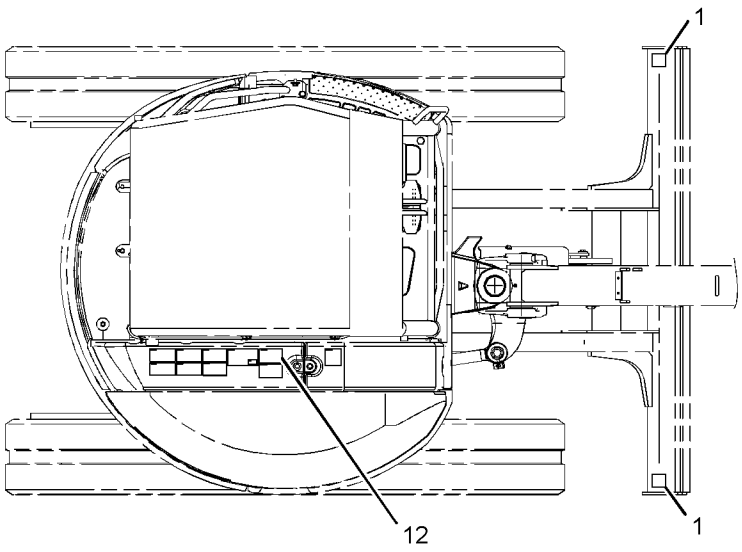

TOP VIEW FWD

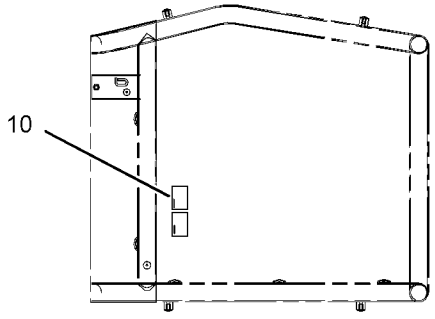

VIEW A-A

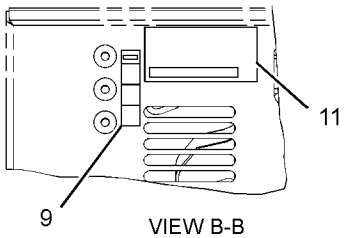

VIEW B-B

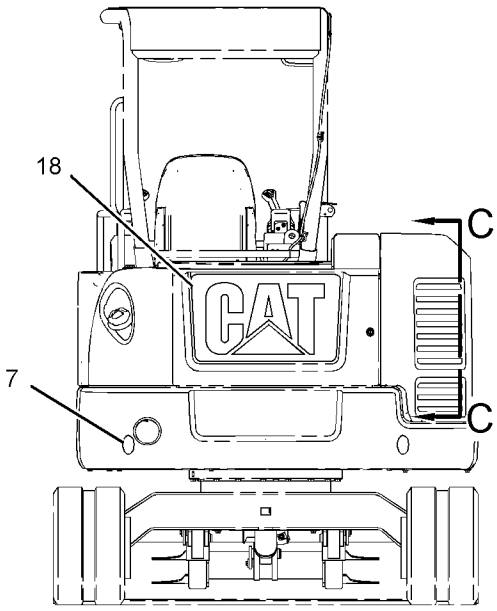

REAR VIEW

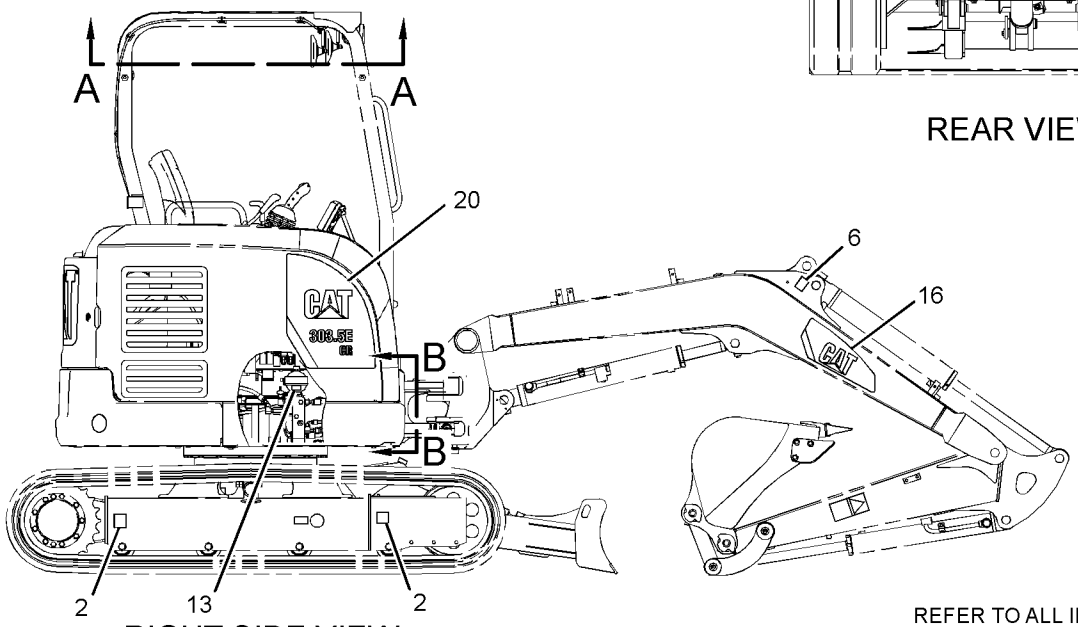

RIGHT SIDE VIEW

REFER TO ALL ILLUSTRATIONS OF THIS GROUP FOR AUXILIARY VIEWS

GRAPHIC #1 g02881138

377-9698 **PLATE & FILM GP (*contd.*)** **i04935888**

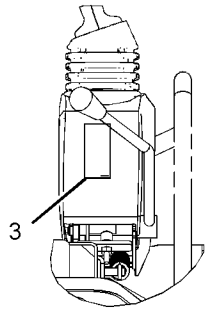

VIEW H-H

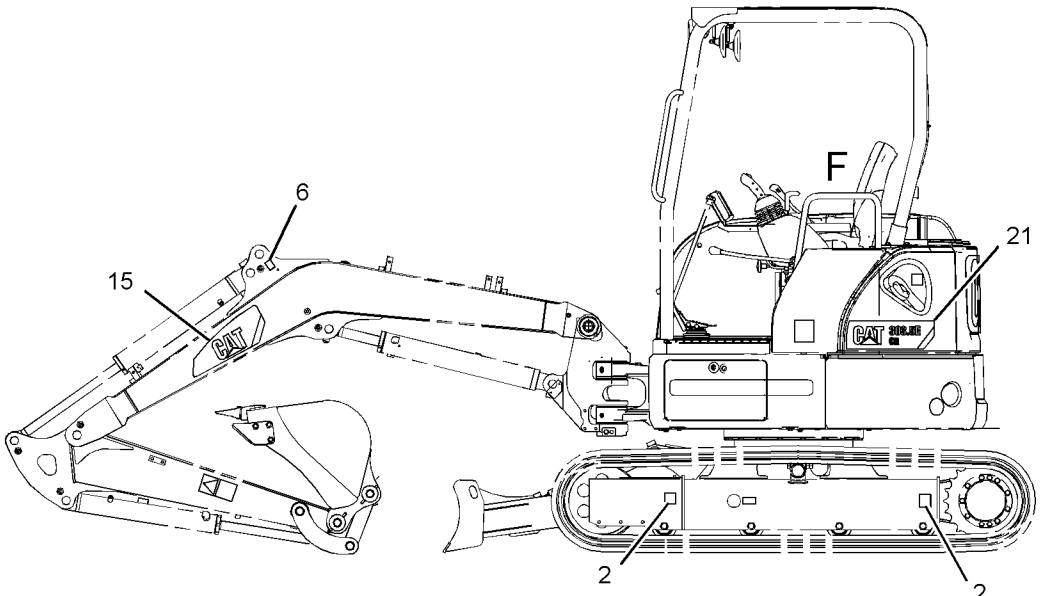

LEFT SIDE VIEW

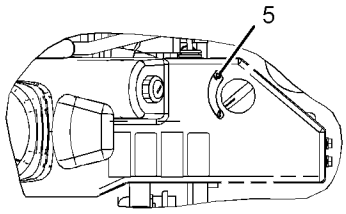

VIEW G-G

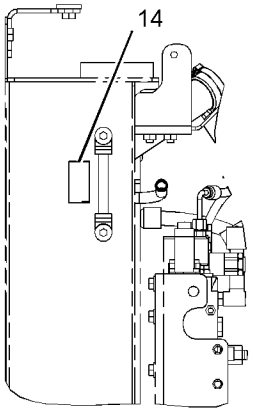

VIEW D-D

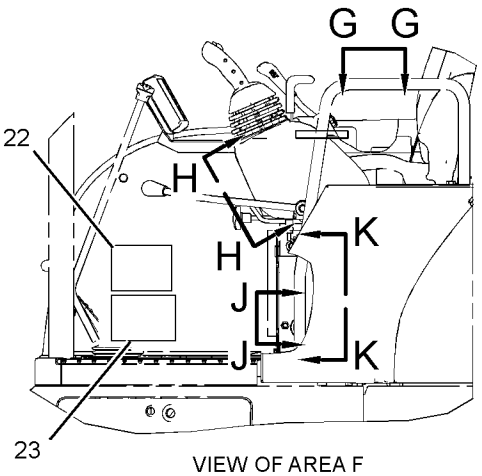

VIEW OF AREA F

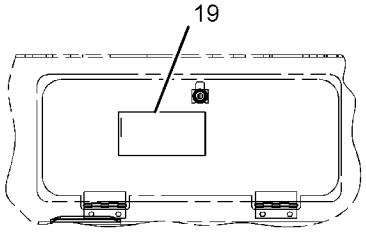

VIEW K-K

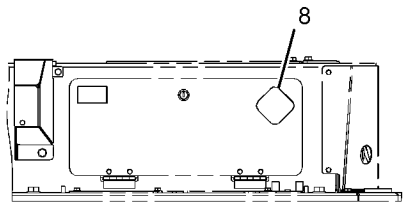

VIEW J-J

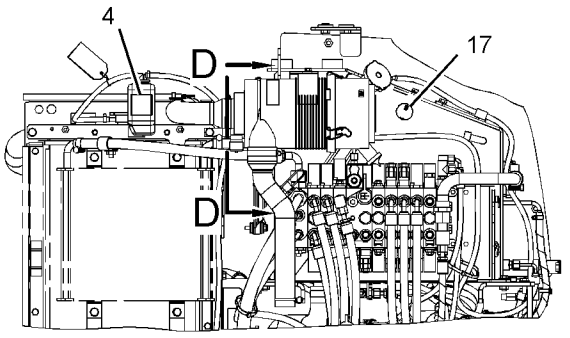

VIEW C-C

GRAPHIC #2 **<END>** g02882855

377-9714 PLATE & FILM GP–CAB

PART OF 376-6692, 383-5927 CAB AR

AN ATTACHMENT

SMCS-7405, 7557, 7563 **i05345468**

NOTE	REF NO	GRAPHIC REF	PART NUMBER	QTY	PART NAME 1 2 3 4 5 6 (PRODUCT LEVEL)	SEE PAGE
	1	1	**187-9185**	1	FILM-INFORMATION (ALTERNATE EXIT)	
	2	1	**303-2668**	1	PLATE-INSTRUCTION (AIR CONDITIONER, READ OMM)	
	3	1	**419-8301**	1	FILM-WARNING (ROPS, FOPS, OPS, READ OMM)	

377-9714 **PLATE & FILM GP (*contd.*)** **i05345468**

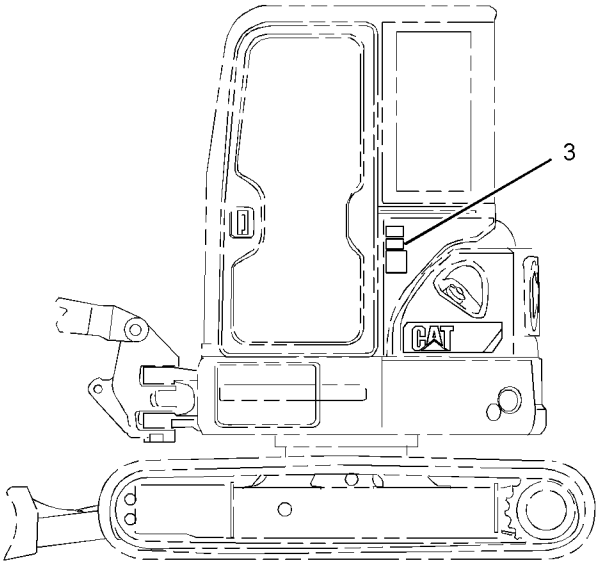

LEFT SIDE VIEW
(WITH CAB)

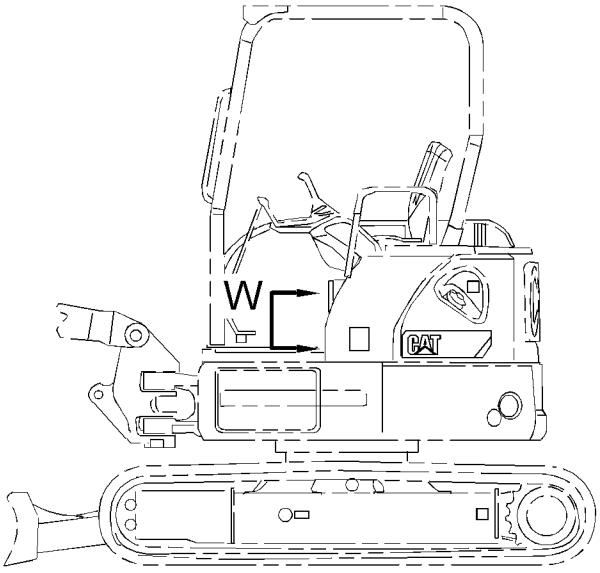

LEFT SIDE VIEW

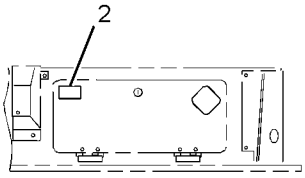

VIEW W

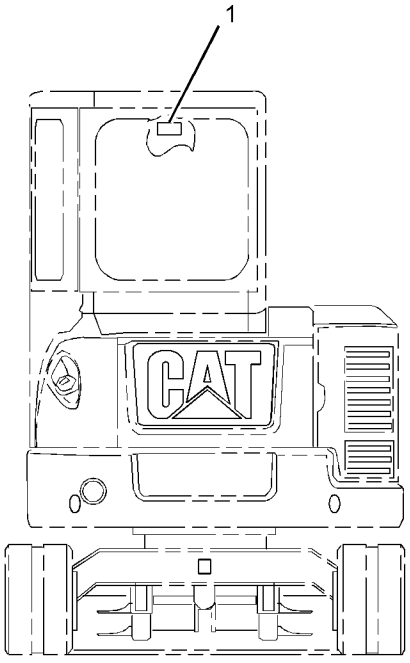

REAR VIEW

GRAPHIC #1 **<END>** g02975419

PART NUMBER INDEX

Part	Page
1	
1H-7339	202
1J-9671	56
1M-6119	69
	73
1M-6120	69
	73
1P-4278	37
	56
	64
1R-5396	477
	478
1R-5468	123
1S-0994	226
	228
	230
1S-1014	528
	530
1S-1150	69
	73
1U-3202	419
	420
	421
	422
	423
	424
	425
2	
2D-6412	537
	538
2J-1020	184
	237
2L-8049	79
	80
2L-8050	69
	73
2L-8075	79
	80
	115
2L-8079	84
	100
	106
2M-3432	70
	74
2M-9780	213
	217
	230
	266
	268
	299
	341
	343
	345
	347
	360
2P-1279	184
	234
	237
	252
	270
2S-0736	480
2T-2991	266
	268
2U-2552	526
3	
3B-4510	520
	521
3B-4605	136
3B-4610	150
3B-4639	164
	166
3B-5322	426
	427
	429
3B-8485	128
	393
	394
3B-8488	128
	188
	190
	192
	194
	198
3B-8489	144
	155
	188
	190
	192
	194
	196
	200
	367
	370
	371
	372
	374
	381
	382
	384
	386
	396
	437
	440
	442
3D-2824	221
	223
	246
3E-2310	264
3E-6600	136
3E-7410	184
	244
3E-8020	456
	463
	470
3E-8299	160
3E-9179	82
	84
	100
	106
3G-6127	419
	420
	421
	422
	423
	424
	425
3J-1907	50
	69
	73
	121
	123
	184
	197
	219
	220
	221
	223
	226
	228
	230
	231
	232
	239
	240
	242
	244
	246
	248
	250
	252
	253
	256
	257
	259
	260
	264
	270
	272
	273
	275
	276
	278
	279
	281
	283
	286
	293
	305
	307
	357
3J-7352	433
3J-7354	221
	223
	252
	253
	256
	257
	259
	260
	263
	264
	266
	268
	270
	275
	278
	281
	283
	433
3K-0360	181
	204
	205
	214
	215
	221
	223
	231
	232
	242
	253
	270
	273
	275
	278
	279
	281
	283
3K-8460	56
3S-2093	37
	44
	50
	56
	66
	69
	73
	79
	80
	82
	84
	87
	91
	92
	94
	99
	100
	103
	105
	106
	109
	111
	113
	114
	115
	117
	118
	155
	184
	252
	264
	266
	268
	281
	283
	443
	504
	510
	514
3S-6049	69
	73
3S-6050	69
	73
3T-0849	490
	491
3T-4693	82
	84
	100
	106
3T-4696	82
	84
	100
	106
3Y-9267	352
4	
4B-2043	66
4B-4863	70
	74
4D-7733	184
4H-0407	472
	473
4I-1536	►175
	178
4I-1539	175
4I-3745	299
4I-4270	455
	462
	469
4I-5862	175
4I-6365	349
4I-8267	176
4I-9531	248
	250

► **PRIMARY REFERENCE**

PART NUMBER INDEX

Part	Page
	256
	259
4I-9532	248
	250
	256
	259
4I-9533	248
	250
	256
	259
4I-9534	248
	250
	256
	259
4I-9535	248
	250
	256
	259
4I-9536	248
	250
	256
	259
4I-9537	248
	250
	256
	259
4I-9538	248
	250
	256
	259
4J-0524	246
4J-5477	184
	221
	223
	230
	233
	234
	237
	244
	246
	248
	250
	252
	253
	256
	257
	259
	260
	263
	264
	270
	275
	278
	281
	283
	305
	307
4J-7533	365
4K-1388	246
	266
	268
4K-8302	115
	117
4M-5285	396
4P-7581	70
	74
	111
	117
	155
4P-8134	70
	74
	87
4S-1962	221
	223
	266
	268
	270
4T-6780	202
4Y-3307	517
4Y-8939	139

5

5A-3604	289
	291
5C-2890	50
	66
	70
	74
	497
5C-7261	5
	43
	70
	74
	132
	150
	152
	476
5C-7423	542
5C-9553	70
	74
	100
	103
	106
	109
	435
	477
	478
	501
	528
	530
	541
5D-1986	196
5I-3272	381
	384
5I-4200	56
5I-8416	►176
	178
5P-0597	246
5P-0743	266
	268
5P-1076	23
	24
	92
	137
	139
	161
5P-1404	230
5P-1475	79
	80
5P-1507	56
	64
5P-2369	510
5P-4115	70
	74
	528
5P-4116	56
	70
	74
	132
	134
	136
	150
	152
	248
	250
	474
5P-4423	155
5P-4571	114
5P-5675	69
	73
5P-5687	37
	137
	139
5P-5969	530
5P-7462	215
5P-7463	215
5P-7483	132
	152
5P-7958	63
5P-8250	202
5P-8500	501
5P-9205	37
5P-9297	234
	237
5P-9299	56

6

6B-1124	170
6B-5328	289
6D-1641	510
	514
6D-3479	299
	510
6E-0122	202
6F-4855	209
6F-6672	209
6F-7037	202
6H-3592	79
	80
6I-1418	76
	95
6I-6911	350
	354
6I-6912	350
	354
6J-1972	202
6J-5733	202
6K-8178	37
	56
6N-6984	137
	139
	533
6V-0484	244
	246
	253
	276
	279
6V-0683	215
6V-0852	246
	253
6V-1249	217
6V-1889	231
	232
6V-2235	510
6V-3668	231
	232
6V-3965	246
	253
6V-5192	123
6V-5587	291
6V-5683	293
	526
6V-5839	47
6V-7238	205
6V-7357	50
	510
	523
	524
6V-7644	170
6V-7723	293
6V-8076	223
6V-8077	264
6V-8200	293
6V-8213	273
6V-8397	214
	215
	218
	219
	220
	221
	223
	226
	228
	239
	240
	246
	252
	253
	264
	266
	268
	270
	272
	273
	275
	276
	278
	279
	281
	283
	510
	514
6V-8398	212
	213
	217
	221
	223
	230
	231
	232
	242
	266
	268
	270
	361
	362
6V-8400	352
6V-8513	142
	367
	372
	374
	376
	381
	382
	384
	386
	388
	389
	390
6V-8627	184
	221
	223
	244
	253
	256
	259
	270
	305
	307
6V-8628	253

► PRIMARY REFERENCE

PART NUMBER INDEX

Part	Page
	256
	260
	264
	275
	278
6V-8633	221
	223
6V-8634	270
	275
	278
	281
	283
6V-8636	220
	221
	223
	226
	228
	239
	240
	246
	253
	270
	272
	273
	275
	278
6V-8639	221
	223
	231
	232
	242
6V-8641	184
	244
	248
	250
	252
	264
	275
	278
	281
	283
	305
	307
6V-8647	252
	256
	259
	263
	264
6V-8723	273
6V-8724	219
	264
	272
	273
	276
	279
6V-8780	221
	223
6V-8993	184
	234
	237
	270
6V-9000	257
	260
	281
	283
6V-9001	219
	220
	246
	275
	278
6V-9004	246
6V-9010	257
	260
6V-9168	214
	215
	252
6V-9169	213
	217
6V-9189	18
	19
6V-9200	253
6V-9492	89
6V-9632	19
	22
	37
	50
	69
	73
	449
	451
	453
	457
	475
6V-9672	456
	463
	470
6V-9746	246
	266
	268
6V-9828	184
	234
	237
6V-9835	253
	257
	260
6V-9837	231
	232
6V-9849	233
	253
	256
	259
	275
	305
	307
6V-9850	253
	273
	275
	278
	510
	514
6V-9851	231
	232
6V-9853	246
6V-9873	231
	232
	242
	270
6V-9876	253
	275
	281
	283

7

Part	Page
7D-7233	248
	250
7I-1024	510
	514
7I-2272	100
	103
	106
	109
	285
7I-2673	56
	270
	541
7I-7403	286
7I-7439	37
	56
	510
7K-0897	434
	436
7K-1181	56
	69
	73
	99
	103
	105
	109
	111
	115
	155
	184
	221
	223
	230
	233
	234
	237
	244
	246
	248
	250
	252
	256
	259
	263
	264
	270
	275
	278
	281
	283
	510
	514
7N-5274	69
	73
7N-9070	474
7S-3916	184
	237
7S-3919	184
	237
7T-1099	50
	303
	304
	309
	367
	472
	476
7T-6799	99
	103
	105
	109
7V-6571	184
	237
7X-0515	169
7X-0579	150
	443
	504
7X-0632	64
	147
7X-0818	76
	95
	208
7X-2459	252
7X-2533	56
7X-2537	207
	208
	474
7X-2549	533
7X-2550	23
	24
7X-2556	533
7X-2563	129
7X-2564	129
7X-2619	530
7X-2621	246
7X-3164	231
	232
7X-3229	564
7X-7644	564
7X-7729	47
	64
	117
	132
	133
	145
	150
	152
	154
	220
	233
	246
	253
	301
	303
	304
	309
	496
	503
	533
7X-7877	449
	451
	453
	457
	530
7X-7898	510
	514
	528
	530
7Y-1976	37
	299
7Y-3173	443
	504
7Y-3474	541
7Y-3951	79
	80
7Y-3952	79
	80
7Y-3962	94
7Y-3963	94
7Y-3964	94
7Y-3965	94
7Y-3966	94
7Y-3967	94
7Y-3993	79
	80
7Y-3995	79
	80
7Y-3996	79
	80
7Y-4528	281
	283
7Y-5292	456
	463
	470
7Y-5458	97
7Y-5464	97
7Y-5556	79
	80
7Y-8763	139

► **PRIMARY REFERENCE**

PART NUMBER INDEX

Part	Page
8	
8C-3309	253
	264
8C-3312	289
8C-3446	266
	268
8C-3451	266
	268
8C-4535	557
8C-6354	81
	83
	99
	105
8C-6959	56
8C-6965	352
8C-7534	217
8C-8408	253
	257
	260
	307
8C-8451	66
8C-8988	276
	279
8E-6208	419
	420
	421
	422
	423
	424
	425
8E-6209	419
	420
	421
	422
	423
	424
	425
8J-2574	202
8K-1433	56
8K-4739	266
	268
8L-8413	69
	73
	242
	278
	456
	463
	470
8M-2773	70
8P-5348	136
8S-0934	537
	538
8S-4723	537
	538
8T-0076	279
8T-0119	204
8T-0151	244
8T-0164	246
	307
8T-0249	242
8T-0269	434
	436
8T-0288	70
	74
	363
8T-0328	70
	74
	100
	103
	106
	109
8T-0337	482
8T-1158	350
	352
	354
8T-1683	273
8T-1686	270
8T-1905	253
8T-2353	253
	257
	260
	264
8T-2888	136
8T-3313	270
8T-3425	510
	514
8T-3490	37
	64
	69
	73
	130
	132
	133
	136
	139
	150
	152
	153
	252
	270
	303
	304
	305
	309
	472
	473
	528
	530
8T-3597	139
	528
8T-3612	5
	37
	69
	73
	136
	270
	273
	307
	472
	473
	475
	528
8T-3647	5
8T-4121	37
	42
	50
	56
	64
	70
	74
	87
	91
	94
	100
	103
	107
	109
	115
	117
	137
	139
	142
	147
	155
	160
	184
	208
	212
	221
	223
	226
	228
	230
	231
	232
	234
	237
	240
	244
	246
	248
	250
	253
	257
	260
	264
	266
	268
	270
	273
	292
	299
	303
	304
	305
	307
	309
	310
	311
	475
	476
	480
	482
	495
	510
	514
	517
	520
	521
	528
	530
8T-4132	169
8T-4133	64
	132
	152
	221
	223
	231
	232
	352
	370
	371
	372
	374
	440
	442
	455
	463
	469
8T-4136	42
	47
	56
	70
	74
	132
	133
	147
	150
	152
	154
	226
	228
	231
	232
	246
	253
	266
	268
	270
	299
	303
	304
	307
	309
	310
	311
	476
	510
	514
	528
	530
8T-4137	37
	50
	56
	64
	70
	74
	91
	94
	100
	103
	107
	109
	115
	117
	137
	139
	142
	145
	146
	147
	150
	155
	160
	164
	166
	184
	220
	221
	223
	230
	244
	246
	253
	257
	260
	273
	305
	367
	372
	374
	376
	381
	382
	384
	386
	388
	389
	390
	455
	463
	469
	475
	480
	495

PART NUMBER INDEX

Part Page

496
503
510
514
517
520
521
528
533
8T-4138 37
50
233
510
8T-4139 160
281
396
472
473
503
533
8T-4140 288
8T-4171 50
70
74
134
443
497
504
8T-4172 370
371
372
374
440
442
8T-4173 169
472
473
8T-4175 532
8T-4176 449
451
453
457
8T-4177 37
8T-4179 213
217
8T-4182 64
208
212
221
223
8T-4183 137
139
157
246
281
283
292
8T-4184 137
139
8T-4185 184
234
237
270
8T-4186 37
133
208
212
240
8T-4189 70
74
94
184
244
475
478
528
530
8T-4191 101
103
107
109
248
250
303
304
309
482
8T-4192 92
149
215
217
489
492
493
494
509
8T-4193 520
521
8T-4194 164
166
472
473
8T-4195 37
133
150
226
228
264
266
268
295
301
303
304
309
8T-4196 70
74
137
139
142
221
223
270
367
476
496
533
8T-4199 248
250
449
451
453
457
8T-4200 37
42
44
56
70
74
101
103
107
109
134
136
248
250
264
305
449
451
453
457
508
510
514
8T-4205 37
8T-4222 37
150
456
463
470
8T-4223 23
24
89
92
125
127
137
139
142
149
157
160
162
164
166
185
213
215
217
231
232
237
246
281
283
292
396
449
451
453
456
457
463
470
472
473
489
492
493
494
503
509
533
537
538
8T-4224 5
18
19
24
37
42
43
44
70
74
76
94
95
101
103
107
109
150
185
207
208
244
248
250
264
270
293
305
307
367
449
451
453
456
457
463
470
474
475
495
508
510
514
528
530
533
8T-4226 64
8T-4244 395
411
412
8T-4648 185
237
8T-4778 413
414
415
416
417
418
8T-4779 519
8T-4821 23
24
8T-4908 5
24
43
443
474
504
8T-4910 161
185
237
8T-4956 125
127
137
139
162
449
451
453
457
472
473
8T-4970 101
103
107
109
8T-4971 475
510
8T-5372 528
530

► **PRIMARY REFERENCE**

PART NUMBER INDEX

Part	Page
8T-5376	297
8T-5439	129
8T-6381	129
8T-6411	456
	463
	470
8T-6466	64
	221
	223
8T-6757	171
8T-6759	352
8T-6870	307
8T-7329	270
8T-7338	169
8T-7547	18
	19
	56
	150
	495
	533
8T-8442	289
	350
	354
8T-8729	79
	80
	81
	83
	85
	86
	99
	103
	105
	109
	115
	184
	483
	484
	485
8T-8730	79
	80
	81
	83
	85
	86
	94
	100
	106
	184
8T-8737	79
	80
	81
	83
	85
	86
	87
	97
	100
	106
	114
	184
	483
8T-8799	70
	74
8T-8874	69
	73
8T-9080	123
8T-9636	79
	80
8X-5804	99
	103
	105
	109
8Y-6967	499
	500

9

Part	Page
9D-7924	64
9F-2167	221
	223
	239
9H-3771	430
	431
	432
9L-8781	137
	139
	533
9M-5617	136
9M-7959	64
9M-8406	70
	74
	115
9N-0869	76
	95
9R-2672	367
9R-2821	37
	381
	382
	384
	386
9S-4180	365
9S-4182	281
9S-4185	204
9S-4190	299
9S-4191	196
	253
9S-8002	264
9S-8004	197
	286
9T-2212	202
9T-4007	202
9W-0844	79
	80
	81
	83
	94
	100
	106
	114
9W-0852	79
	80
	81
	83
	99
	105
	115
	184
9W-1951	81
	83
	100
	106
9W-9615	85
9X-2027	292
9X-2032	70
	74
	449
	451
	453
	457
9X-2042	449
	451
	453
	456
	457
	463
	470
	499
	500
9X-2043	456
	463
	470
9X-2044	100
	103
	106
	109
	499
	500
9X-2133	510
	514
9X-2297	221
	223
	239
	240
	272
	273
	276
	279
9X-3401	50
	79
	80
	81
	83
	97
	99
	105
9X-3402	69
	73
	79
	80
	82
	83
	100
	106
9X-4519	69
	73
9X-6032	297
9X-6153	526
9X-6165	56
	475
9X-6269	520
9X-8256	50
	66
	70
	74
	101
	103
	107
	109
	134
	136
	233
	435
	443
	477
	478
	501
	504
	510
	523
	524
	528
	530
	541
9X-8257	288
	472
	473
	519
	520
	521
	532
	533
9X-8488	89

0

Part	Page
002-0639	155
067-2551	184
086-0299	129
087-4454	176
	►177
087-4456	►178
	181
087-4575	177
087-4576	177
087-4577	177
087-4710	352
093-0083	142
093-1290	212
	221
	223
093-1294	208
093-1429	370
	371
	372
	374
	381
	382
	384
	386
093-1430	367
093-2064	528
	530
093-5537	299
094-0876	349
095-0673	352
095-0736	70
	74
095-0742	100
	103
	106
	109
	497
095-0868	370
	371
	372
	374
	437
	438
095-0880	289
095-0912	443
	504
095-0929	297
095-0966	297
095-1207	455
	462
	469
095-1260	350
	352
	354
095-1387	510
	514
095-1388	266
	268
095-1390	37
	266
	268
095-1392	44
095-1393	44
095-1519	286
095-1571	293
095-1574	123
	314
095-1575	293
	352
	357
	358
095-1578	286

► PRIMARY REFERENCE

PART NUMBER INDEX

Part	Page
	350
	354
095-1579	286
	289
	314
095-1580	123
095-1582	123
	359
095-1584	357
095-1585	350
	354
	359
095-1586	286
	349
	361
	362
095-1590	359
095-1595	164
	166
	359
095-1596	123
095-1604	164
	166
095-1623	295
	297
095-1657	171
095-1676	123
095-1701	266
	268
095-1707	190
	194
095-1708	194
095-1709	188
	192
	198
095-1710	188
	190
	192
	198
	200
	295
095-1711	200
095-1713	295
	297
095-1716	289
095-1717	299
095-1719	289
095-1725	121
095-1750	361
	362
095-1751	361
	362
095-1781	359
095-1794	164
	166
095-7951	295
095-8051	295
095-9397	295
096-1366	252
096-1628	349
096-4034	477
	478
096-4177	41
096-4535	350
	354
096-4543	350
	354
096-4833	286
096-4876	486
	487
	488
096-5028	41
096-5971	121
	123
096-6078	256
	259
	264
	278
096-6079	56
	240
	242
	244
	248
	250
	252
	256
	259
	270
	273
	510
	514
096-6080	256
	259
	263
096-6081	256
	259
096-6082	264
	278
096-6083	256
	259
096-6084	275
	278
096-6085	56
	263
	283
	510
	514
096-6166	89
	482
096-9278	100
	103
	106
	109
099-0361	350
	354
099-2374	286
099-3649	5
099-6137	349
	352
099-6144	352
099-6145	352
099-7197	123
1	
101-7404	302
	312
	489
	492
102-8802	69
	73
	489
	492
	493
	494
102-8803	79
	80
	81
	83
	100
	106
102-8804	492
	493
102-8805	483
	484
	485
103-2529	85
	115
103-2543	101
	103
	107
	109
104-2091	499
	500
104-8081	341
	343
	345
	347
106-0210	97
107-3134	79
	80
107-3135	79
	80
107-3136	79
	80
108-7516	69
	73
109-2356	99
	103
	105
	109
110-6109	99
	103
	105
	109
110-9198	81
	83
	100
	106
111-4837	69
	73
111-7898	81
	83
	99
	105
111-7899	66
	99
	103
	105
	109
112-2628	256
	259
112-5282	313
112-9401	52
112-9604	82
	84
	100
	106
112-9609	81
	83
	99
	105
112-9610	81
	83
	99
	105
112-9611	82
	84
	100
	106
112-9612	82
	84
	100
	106
113-5099	82
	84
	100
	106
113-5100	82
	84
	100
	106
113-8490	81
	83
	99
	105
113-8491	81
	83
	99
	105
113-8492	81
	83
	99
	105
114-0623	361
	362
116-0255	79
	80
116-4157	81
	83
	99
	105
116-4158	81
	83
	99
	105
116-4159	81
	83
	99
	105
116-4160	82
	84
	100
	106
116-4161	82
	84
	100
	106
116-7471	99
	103
	105
	109
117-8929	530
118-8118	52
118-8119	52
119-3205	404
	405
	406
	407
	408
	409
	410
119-3662	79
	80
119-5388	352
119-5389	352
119-5391	352
119-5708	234
	237
119-9880	23
	24
120-4636	164
	166
120-4664	164
	166
121-3709	128
121-4480	52
121-7098	510
121-7136	510
121-7137	510
121-7138	510
122-4401	82
	84

► **PRIMARY REFERENCE**

PART NUMBER INDEX

Part	Page
	100
	106
124-2111	184
124-3548	81
	83
	99
	105
124-9636	81
	83
	99
	105
124-9637	81
	83
	99
	105
125-7874	79
	80
	82
	84
	85
	100
	106
	184
125-7875	79
	80
126-1767	81
	83
	97
	99
	105
126-1768	69
	73
	82
	84
	100
	106
126-1774	81
	83
	99
	105
126-1865	352
126-1866	352
126-2900	564
127-2170	367
	476
127-3925	455
	463
	469
127-3926	455
	462
	469
127-3927	456
	462
	470
127-3947	455
	462
	469
127-3987	456
	462
	470
127-4006	455
	463
	469
127-4839	47
	70
	74
128-2032	81
	83
	99
	105
128-2135	499
	500
128-8614	52
130-0252	510
131-1489	79
	80
132-5789	70
	74
	100
	103
	106
	109
	510
	514
132-7551	70
	74
132-7625	497
132-7711	349
132-9046	350
	354
133-2425	142
134-7113	242
134-7114	242
134-7115	242
134-7258	564
134-8726	41
135-9390	413
	414
	415
	416
	417
	418
135-9941	264
136-0199	564
136-0207	240
139-7325	123
139-7355	293
140-2334	41
140-3201	131
140-3355	37
140-3734	128
	393
	394
140-3750	190
140-4236	37
140-4238	37
140-4741	142
140-4763	37
140-4766	37
140-4780	146
140-4934	190
140-4986	161
140-5169	190
140-9378	66
	99
	103
	105
	109
	119
	120
141-2759	81
	83
	99
	105
142-0485	432
142-5546	482
142-9572	89
	91
	94
143-2343	121
143-2344	121
143-2346	121
143-2358	121
144-0195	541
144-9962	►52
	56
145-1893	395
	411
	412
145-2237	248
	250
146-1086	188
	192
	198
146-3916	188
	192
	198
146-3923	188
	192
	198
146-3957	200
146-3958	200
146-3968	200
146-3969	188
	192
	194
	198
	200
146-4875	295
	297
146-4877	295
	297
146-5009	256
	259
147-1444	81
	83
	99
	105
147-4131	352
148-7925	230
148-8310	244
148-8316	252
	256
	259
	263
	264
148-8318	270
	275
	278
	281
	283
148-8325	184
	244
	248
	250
	252
	264
	275
	278
	281
	283
	305
	307
148-8328	221
	223
148-8336	220
	221
	223
	226
	228
	239
	240
	246
	252
	270
	272
	273
	275
	278
148-8340	221
	223
	242
148-8346	270
148-8351	233
	253
	256
	259
	275
	305
	307
148-8353	219
	220
	246
	275
	278
148-8361	253
148-8363	253
	275
	281
	283
148-8367	253
	273
	275
	278
	510
	514
148-8368	184
	221
	223
	244
	253
	256
	259
	270
	305
	307
148-8369	253
	256
	259
	264
	275
	278
148-8371	276
	278
148-8374	273
148-8378	219
	264
	272
	273
	276
	279
148-8383	273
148-8385	257
	260
	281
	283
148-8392	246
148-8405	56
148-8407	253
148-8410	299
148-8411	204
148-8443	252
149-3516	52
150-0810	121
150-0811	121
150-0812	121
150-0813	121
150-0814	121
150-0815	121
150-0818	121
150-0819	121
150-0826	123
150-0827	123
150-0829	123
150-0832	123
150-0834	123

► PRIMARY REFERENCE

PART NUMBER INDEX

Part	Page
150-0873	123
150-0874	123
150-0881	123
150-0885	315
150-0909	121
150-3033	246
	307
150-3036	253
150-3065	244
	246
	253
	276
	279
150-4027	264
150-4029	221
	223
150-4042	257
	260
150-4043	242
	270
150-4047	253
	257
	260
	264
150-4052	184
	234
	237
	270
150-4086	70
	74
150-5968	253
	257
	260
150-6346	326
	333
	335
150-6355	315
	318
	327
150-6367	315
	327
150-8896	564
151-1975	56
151-4841	230
152-3411	221
	223
152-5717	213
	217
152-5718	213
	217
153-2602	79
	80
	81
	83
	99
	105
153-2631	79
	80
	82
	84
	100
	106
153-2994	213
	217
	230
153-2995	213
	217
	230
153-2996	214
	215
153-2997	214
	215
153-5223	352
153-5656	69
	73
153-6087	289
153-6237	246
153-7880	397
153-7881	413
	414
	415
	416
	417
	418
154-2233	164
	166
154-2235	164
	166
154-2236	164
	166
154-2302	37
154-2638	▶437
154-2704	395
	397
	398
	399
	400
	413
	414
	415
	416
	417
	418
	419
	420
	421
	422
	423
	424
	425
155-0576	76
	95
155-2260	87
155-2270	79
	80
	81
	83
	85
	99
	105
	184
155-2271	86
155-2274	81
	83
	99
	105
155-3624	281
156-1200	52
156-6175	70
	74
156-6617	519
	520
	521
156-6618	520
	521
156-8801	275
156-8845	248
	250
158-4676	168
158-4677	168
158-4678	168
158-4679	168
158-4680	168
158-4681	168
158-4682	168
158-4683	168
158-4684	173
158-7802	99
	103
159-4700	180
159-8049	69
	73
159-8050	69
	73
159-8839	413
	414
	415
	416
	417
	418
159-9322	81
	83
	99
160-2243	264
160-2252	248
	250
161-2539	66
161-2560	214
	215
161-2561	214
	215
161-4130	440
162-7120	440
	442
163-6795	69
	73
	94
	99
	103
	105
	109
	114
163-6838	23
	24
163-7050	213
	217
163-9768	248
	250
163-9772	252
164-5546	184
	244
164-5567	246
164-5605	279
164-9639	230
164-9640	248
	250
164-9869	221
	223
	239
	240
	272
	273
	276
	279
165-2273	205
165-4927	266
	268
165-4931	264
165-7014	253
	264
165-9431	349
165-9438	349
165-9463	352
165-9553	352
165-9554	352
166-1579	233
166-3032	276
	279
167-2186	202
167-2294	202
167-3593	82
	84
	100
	106
168-8389	395
	396
	397
	398
	399
	400
	413
	414
	415
	416
	417
	418
	419
	420
	421
	422
	423
	424
	425
	430
	431
	432
169-1116	314
169-1130	314
169-1134	295
169-1135	295
169-1136	297
169-1169	286
169-1170	286
169-1172	286
169-1181	▶361
	363
169-4274	270
169-7393	433
170-4635	221
170-8794	200
171-0087	349
171-0689	43
	47
171-4046	499
	500
171-6728	242
172-1241	556
172-1759	388
172-1760	388
172-2596	146
174-2141	402
174-3016	79
	80
	81
	83
	100
	106
174-5907	74
175-1794	367
	370
	371
	372
	374
	376
	381
	382
	384
	386
175-1795	367
	370
	371
	372
	374
	376
	381
	382

► **PRIMARY REFERENCE**

PART NUMBER INDEX

Part	Page
	384
	386
175-4721	194
175-4723	190
175-4734	194
176-1902	510
176-8440	23
	24
176-8464	367
176-8465	367
178-7539	449
	451
	453
	457
179-9013	434
	436
180-8424	313
180-9933	264
183-7263	264
185-0522	352
185-0555	341
	343
	345
	347
185-1290	79
	80
185-8300	444
	506
187-2120	253
	257
	260
	307
187-8812	▶411
187-8813	▶411
187-8814	▶411
187-8815	▶411
187-8816	▶412
187-9185	550
	567
188-9644	435
189-3158	113
190-4896	164
	166
190-5236	213
	217
190-5386	564
191-0348	132
	152
	154
191-3918	293
191-3920	293
191-3925	293
191-7503	292
191-7516	283
	▶295
191-7524	541
192-0633	121
	190
192-0638	188
	192
	194
	198
	200
192-1134	121
	123
193-5330	295
	297
194-0784	349
194-2903	204
195-0090	242
195-0601	37
	38
195-8154	147
196-1441	497
196-1479	456
	462
	470
196-1550	455
	462
	469
196-3784	352
196-3895	256
	259
196-4745	266
	268
197-7177	564
198-0852	91
	94
198-3899	535
	540
198-7543	350
	354
198-8153	350
	354
198-8154	350
	354
198-8156	350
	354
198-8159	350
	354
198-8160	350
	354
198-8161	350
	354
198-8162	350
	354
198-8163	350
	354
198-8164	350
	354
198-8165	350
	354
198-8166	350
	354
198-8167	350
	354
198-8168	350
	354
198-8169	350
198-8176	350
	354
198-8418	286
198-8419	286
198-8420	286
198-8421	286
198-8423	286
199-1148	192
	194
199-4803	144

2

Part	Page
200-4856	341
	343
	345
	347
200-5480	564
201-2638	523
202-7174	123
202-7187	123
203-2343	190
203-2344	190
203-4455	456
	462
	470
204-1611	56
	69
	73
	99
	103
	111
	115
	117
	510
	514
204-1974	350
	354
204-1976	350
	354
204-1979	350
	354
204-2281	233
204-4961	440
	442
204-4976	440
	442
205-2156	283
205-6079	155
207-0236	456
	462
	470
207-0785	478
207-0797	478
207-0799	478
207-0800	478
207-1686	114
	456
	463
	470
208-0164	256
	259
208-0616	221
	223
208-7733	537
	538
210-0686	244
	256
	259
210-1304	37
211-7455	478
212-0522	349
212-6073	194
213-7638	281
214-1324	250
	256
	259
214-3956	456
	463
	470
214-3962	455
	462
	469
214-3968	456
	462
	470
	516
214-3969	456
	462
	470
	516
214-7568	196
	246
214-7654	313
214-8827	132
	152
215-3277	313
216-1980	56
216-3247	248
	250
	252
216-7643	188
	192
	194
	198
	200
217-2456	252
218-4681	388
	389
	390
219-0305	564
219-9487	406
219-9488	408
219-9489	409
219-9490	410
220-0858	▶438
	439
221-0936	295
221-0937	295
221-0938	295
221-8045	557
222-0668	477
	478
222-2631	341
	343
	345
	347
224-0554	557
224-7717	560
224-8945	560
224-8946	557
225-0312	557
225-0313	560
225-3305	560
225-3322	499
	500
225-3697	299
225-4950	79
	80
225-5851	161
225-5852	161
226-0294	136
226-0338	136
226-2560	510
	514
226-8202	202
227-8807	▶179
228-2856	370
	371
	372
	374
	438
228-7315	560
228-7316	557
228-9253	560
228-9254	557
230-4009	79
	80
	81
	83
	100
	105
230-4011	69
	73
	79
	80
	81
	83
	94
	100
	106
230-4013	81
	83
	85
	106

PART NUMBER INDEX

Part	Page
	114
230-5008	81
	83
	86
	100
	106
230-5010	79
	80
	81
	83
	100
	106
231-3999	395
	411
	412
231-8571	▶395
232-3543	37
232-6311	79
	80
232-6314	79
	80
232-7405	69
	73
232-7692	164
	166
233-0099	▶89
	92
233-2877	401
233-2885	395
233-2898	401
233-2905	395
	▶401
233-2910	401
233-8447	196
234-8956	171
234-8958	171
234-8959	171
234-8962	171
234-8984	164
	166
235-0354	202
235-1365	560
235-1368	557
235-8891	510
236-3257	209
236-3259	209
237-5096	437
237-6124	188
	192
	198
237-6128	192
237-6129	192
237-6130	192
237-6131	192
237-6134	198
237-6135	188
	198
237-6136	188
	192
	198
237-7078	194
237-7086	188
	194
237-7087	194
237-7088	194
237-7901	190
237-7904	190
237-8377	188
	192
	198
237-8378	200
239-3781	256
	259
239-4990	560
239-4991	557
239-6986	564
240-0454	44
240-2590	252
241-6215	223
243-4505	50
	79
	80
	81
	83
	99
	100
	103
	105
	106
	109
	115
243-4506	81
	85
	106
243-4507	85
	99
	103
	105
	109
	184
243-4508	86
	97
243-4510	79
	80
	81
	83
	100
	106
244-1540	365
244-3712	196
244-8495	349
245-7819	444
245-7850	510
245-7903	475
245-8595	252
245-9398	508
246-0175	369
246-0176	396
246-0187	396
246-0188	396
246-0192	▶202
	396
246-2622	56
246-2641	501
247-4112	▶397
247-5086	37
248-8832	426
249-4175	202
250-1639	542
250-8771	316
	317
	319
	321
	323
	325
	326
	327
	329
	331
	333
	335
	337
	339
251-1391	69
	73
	87
251-2025	230
251-2026	230
251-4408	349
251-9845	194
252-2627	407
252-6793	▶230
	396
254-7563	557
255-1203	560
255-3402	405
255-3410	404
255-3727	252
258-2111	129
258-4095	537
258-4096	538
258-6257	443
	504
260-2659	233
260-6314	388
	389
	390
260-6326	392
	394
260-6342	▶169
	174
260-6348	161
260-6400	168
263-0768	56
263-3003	456
	470
263-9251	▶172
	174
263-9252	172
	▶173
263-9253	▶168
	173
263-9266	▶162
	172
263-9267	162
263-9268	162
264-5370	126
	▶127
264-5371	127
264-7029	69
	73
	79
	80
	81
	83
	94
	100
	106
264-7030	81
	83
	85
	106
	114
264-7031	81
	83
	86
	100
	106
264-7032	79
	80
	81
	83
	100
	106
264-7034	79
	80
	81
	83
	100
	106
265-8405	150
265-8407	150
265-8409	150
265-8463	132
	150
	152
265-8575	64
265-8577	64
265-8578	64
265-8579	64
265-8631	299
265-8632	299
265-8677	299
265-8713	128
	393
	394
265-8715	370
	371
	372
	374
	381
	382
	384
	386
265-8716	188
	192
	194
265-8717	198
	200
265-8720	367
265-8734	▶163
	174
265-8752	126
	▶288
265-8754	▶125
	126
266-1404	99
	103
	105
	109
266-1406	66
266-3872	142
	367
266-4024	146
266-4050	144
266-4051	370
	371
	372
	374
266-4064	372
	374
	376
	381
	382
	384
	386
266-4069	▶142
	366
266-4071	142
266-4078	142
266-4080	381
	382
	384
	386
266-4104	367
266-4106	367
	381
	382
	384
	386
266-4763	388
266-4765	388
266-5431	557
266-6396	▶206
	288
266-6835	1

▶ **PRIMARY REFERENCE**

PART NUMBER INDEX

Part	Page
	▶508
266-6836	281
	▶297
266-6843	▶91
	93
266-6935	69
	73
	99
	103
	105
	109
266-6979	▶188
	391
266-7379	37
	44
	50
	56
	66
	69
	73
	99
	103
	105
	109
	111
	114
	252
	266
	268
	510
	514
266-8792	160
266-8793	169
	▶171
266-8794	169
	▶170
267-0420	▶349
	486
	487
	488
267-0424	▶285
	305
267-1082	292
267-1615	▶535
	539
267-4035	252
267-4036	252
267-4037	248
	250
267-4038	248
	250
267-4041	246
267-4042	246
267-4043	266
	268
267-4044	266
	268
267-4045	252
267-4046	252
267-4047	184
	244
	252
	278
267-4048	184
	244
	252
	278
267-4049	242
267-4050	242
267-4051	248
	250
267-4063	275
267-4093	248
	250
	252
267-4096	248
	250
267-4109	259
267-4144	270
267-4159	214
	215
267-4229	240
267-4279	220
267-4366	▶519
	522
267-4367	▶520
	522
267-4371	▶517
	518
267-4495	560
267-4767	69
	73
267-4768	69
	73
267-4829	164
	166
267-4831	164
	166
267-4832	164
	166
267-4833	164
	166
267-4835	164
	166
267-4836	164
	166
267-5348	532
267-5349	532
267-5355	532
267-7058	99
	103
	105
	109
267-7064	528
	530
267-8100	281
	283
267-9485	440
	442
268-1601	256
	259
268-4530	184
	562
268-8224	▶196
	440
	442
268-8872	184
	562
269-0120	551
269-0121	551
269-2299	285
	▶362
269-3795	182
	▶212
269-4194	▶213
	216
269-4197	▶207
	377
270-2002	23
	24
270-2003	23
	24
270-6501	▶146
	366
270-9557	150
270-9558	150
271-5317	456
	462
	470
271-5889	142
272-0474	▶480
	481
272-6271	79
	80
272-6304	79
	80
272-7832	341
	343
	345
	347
	360
272-7877	474
272-7881	474
273-0469	564
273-0471	564
273-0477	549
273-1445	443
	▶444
273-1450	504
	▶506
274-3344	297
274-3346	297
274-3349	297
274-3351	297
274-4199	252
	▶286
274-4201	286
274-4202	286
274-5381	164
	166
274-5472	270
274-6552	207
	208
274-8034	364
274-8039	364
274-8127	164
274-8128	166
274-8781	476
274-9034	289
	▶314
275-0773	480
275-0774	480
275-0775	482
275-0776	482
275-6285	520
	521
275-6785	81
	83
	99
	105
275-8629	542
275-8630	542
275-8631	542
275-8632	542
275-9724	278
276-3323	148
276-3324	148
276-3883	286
276-8684	469
276-9254	132
	152
276-9257	150
276-9258	150
276-9302	64
276-9309	302
	471
276-9997	449
	451
	453
	457
277-1873	56
	70
	74
	100
	103
	106
	109
	117
	257
	260
277-4196	170
277-4197	170
277-4378	370
	▶372
277-4381	370
	371
	372
	374
277-4382	370
	371
	372
	374
277-4383	370
	371
	372
	374
277-6028	455
	462
	469
277-6029	455
	462
	469
277-6030	497
277-6031	497
277-6032	497
277-9073	510
277-9412	510
	514
278-0797	208
278-0800	221
	223
278-1983	200
278-1985	200
278-1986	200
278-1988	200
278-1990	200
278-2246	196
278-2248	196
278-2254	196
278-2256	196
278-2257	196
278-7613	443
278-7614	443
	504
278-7615	443
	504
278-8557	443
	504
278-8558	504
278-8626	192
278-8633	192
278-8635	192
278-8638	192
278-8641	188
	192
278-9122	198
278-9126	198
278-9127	198
278-9128	198
278-9129	198
278-9130	198
278-9164	194
278-9474	188
278-9475	188
278-9937	370
	▶374

PART NUMBER INDEX

Part	Page
278-9938	371
	374
279-0639	200
279-4308	403
279-4311	▶402
	413
279-4312	▶413
279-4313	▶414
279-4320	▶415
279-4321	▶416
279-4322	▶398
279-4323	▶399
279-4325	▶396
279-4684	293
279-4687	293
279-4691	293
279-4692	293
279-4693	293
279-4697	293
279-4698	293
279-4699	293
279-4701	293
279-4703	293
	358
279-4704	357
279-4705	293
279-4706	121
	123
	293
279-4707	293
279-4709	293
279-4712	▶357
	358
279-4730	273
	275
	278
279-4731	240
	275
	278
279-4732	56
	240
	275
	278
279-4733	240
	275
	278
279-4734	242
	275
	278
279-4735	184
	234
	237
	240
	244
	275
	278
279-4736	275
	281
	283
279-4737	184
	221
	223
	234
	237
	239
	244
	275
	278
279-4738	184
	221
	223
	234
	237
	239
	244
	275
	278
279-4786	318
279-4796	316
	317
	321
	323
	326
	327
	329
	331
	333
	335
	337
	339
279-4810	318
279-7940	198
279-9095	171
279-9311	564
280-0406	542
280-0407	148
	455
	463
	469
	542
280-0408	455
	463
	469
	497
	542
280-0409	542
280-0410	542
280-0411	542
280-0412	542
280-0413	542
280-0414	542
280-0415	542
280-0416	542
280-0417	542
280-0418	542
280-0419	542
280-0421	455
	462
	469
	▶542
280-2313	171
280-2355	206
	▶291
280-2357	291
280-2358	291
280-2359	291
280-2360	291
280-2361	291
280-2362	291
280-2363	291
280-2364	289
280-2365	289
280-2367	289
280-2368	289
280-2369	289
280-2405	289
280-2652	231
	232
280-3035	256
	259
280-3097	▶121
	123
280-3098	121
280-3100	121
280-3101	121
280-3102	121
280-3103	121
280-3104	123
280-3105	123
280-3106	123
280-3107	123
280-3108	123
280-3109	123
280-3110	123
280-3111	123
280-3112	123
280-3116	123
280-3118	123
280-4441	293
280-4442	293
280-4443	293
280-4444	293
280-4446	293
280-4448	293
280-4449	293
280-4450	293
280-4451	293
280-4458	293
280-4459	293
280-7544	497
280-7548	497
280-7552	497
280-7554	497
280-7555	497
280-7559	497
280-7561	497
280-7562	497
280-7609	▶219
	391
280-7620	▶281
	391
280-8588	456
	462
	470
280-8590	455
	462
	469
280-8595	456
	462
	470
280-8597	456
	462
	470
280-8598	455
	462
	469
280-8599	456
	462
	470
280-8603	455
	462
	469
280-8604	456
	462
	470
280-8605	456
	462
	470
280-8607	456
	462
	470
280-8611	455
	463
	469
280-8618	455
	463
	469
280-8624	497
280-8625	455
	462
	469
280-8626	455
	462
	469
280-8984	440
	442
281-0865	370
	372
281-0902	142
281-0923	142
281-0924	142
281-0925	142
281-0926	142
281-0930	142
281-1020	▶157
281-1106	367
281-1149	455
	462
	469
281-1150	462
281-1153	456
	462
	470
281-1154	455
	462
	469
281-1155	455
	462
	469
281-1159	455
	462
	469
281-1162	455
	462
	469
281-1164	455
	462
	469
281-1184	148
281-1185	148
281-1186	455
	462
	469
	▶516
281-1187	516
281-1190	516
281-1193	516
281-1194	516
281-1195	455
	462
	469
	▶497
281-1196	497
281-1199	497
281-1200	497
281-1551	▶417
281-2325	341
	345
281-2326	▶315
	341
	343
	345
	347
281-2332	▶316
	341
	343
	345
	347
281-2334	▶317
	341
	343
	345
	347
281-2336	▶318
	341
	343

▶ **PRIMARY REFERENCE**

PART NUMBER INDEX

Part	Page
	345
	347
281-2952	315
281-2953	315
281-2954	315
281-2955	315
281-2956	315
281-2957	315
281-2958	315
281-2959	315
281-2960	315
	316
	317
	319
	321
	323
	325
	326
	327
	329
	331
	333
	335
	337
	339
281-2961	315
	316
	317
	319
	321
	323
	325
	326
	327
	329
	331
	333
	335
	337
	339
281-2962	315
281-2963	315
281-2965	315
281-2972	316
	317
	319
	321
	323
	325
	326
	327
	329
	331
	333
	335
	337
	339
281-2973	316
	317
	319
	321
	325
	327
	329
	331
281-2974	316
	317
	319
	321
	323
	325
	326
	327
	329
	331
	333
	335
	337
	339
281-2975	316
	317
	319
	321
	323
	325
	326
	327
	329
	331
	333
	335
	337
	339
281-2976	316
	317
	319
	321
	323
	325
	326
	327
	329
	331
	333
	335
	337
	339
281-2977	316
	317
	319
	321
	323
	325
	326
	327
	329
	331
	333
	335
	337
	339
281-2978	316
	317
	319
	321
	323
	325
	326
	327
	329
	331
	333
	335
	337
	339
281-2979	316
	317
	319
	321
	323
	325
	326
	327
	329
	331
	333
	335
	337
	339
281-2980	329
	331
	333
	335
	337
	339
281-2983	323
	326
	333
	335
281-2984	326
	333
	335
281-2985	316
	317
	319
	321
	323
	325
	326
	327
	329
	331
	333
	335
	337
	339
281-2986	316
	317
	319
	321
	323
	325
	326
	327
	333
	335
	337
	339
281-2987	326
	333
	335
281-2990	327
281-2991	327
281-2992	327
281-2993	327
281-2994	327
281-2995	327
281-3000	293
281-3052	206
	▶289
281-3053	289
	▶359
281-3650	497
281-3651	456
	462
	470
281-3653	455
	462
	469
281-3654	455
	462
	469
281-3655	497
281-3658	455
	463
	469
281-3660	456
	462
	470
281-3661	456
	462
	470
281-3662	456
	462
	470
281-3815	▶403
	416
281-3818	403
281-3824	▶418
281-3998	524
281-4450	462
281-4451	455
	462
	469
	▶544
281-4452	456
	462
	470
281-4453	456
	462
	470
281-5479	455
	463
	469
281-5480	455
	463
	469
281-5481	497
281-5483	455
	463
	469
281-5485	455
	463
	469
	516
281-5487	455
	459
	460
	463
	469
281-5488	455
	463
	469
281-5492	455
	463
	470
281-5496	456
	463
	470
281-5497	455
	463
	469
281-5507	456
	462
	470
281-5508	455
	462
	470
281-5509	455
	463
	470
281-6177	148
281-6196	456
	463
	470
281-6199	516
281-6262	497
281-6263	497
281-6264	497
281-6265	497
281-7860	456
	462
	470
281-8618	478
281-8619	478
281-8630	478
281-8631	478
281-8699	▶388
	391
281-9614	455
	462
	469
282-1712	▶369
	396
282-1713	369

PART NUMBER INDEX

Part	Page
282-2151	69
	73
282-2310	305
282-2725	456
	463
	470
282-9307	▶443
	446
282-9311	▶504
	505
282-9315	▶400
282-9318	264
	▶363
282-9320	212
282-9321	212
282-9326	226
	228
282-9327	226
	228
282-9328	218
282-9679	449
	451
	453
	457
282-9699	530
283-0274	530
283-2847	256
	259
283-4170	474
283-5350	281
	283
283-7333	449
	451
	453
	457
283-7365	449
	451
	453
	457
283-9117	190
283-9118	190
283-9119	190
283-9120	190
283-9121	190
283-9122	190
284-0420	▶192
	366
284-0838	478
284-0839	478
284-0840	478
284-0850	477
	478
284-0863	▶198
	377
284-0884	198
284-3880	41
284-5686	444
	506
284-6176	455
	463
	469
284-6179	456
	463
	470
284-6180	463
284-6393	157
285-1951	299
285-4408	455
	462
	469
285-4493	456
	463
	470
285-6278	455
	463
	469
285-7033	47
285-7702	154
285-7703	150
285-7836	535
285-8286	▶482
	527
286-6384	▶190
	391
286-7323	190
286-7324	190
286-9482	519
	▶526
287-0030	388
287-0035	128
287-7257	510
	514
288-0266	252
288-0267	252
288-0848	▶360
	377
288-1386	455
	462
	469
288-1388	456
	470
288-1389	456
	470
288-3462	▶123
	125
288-6841	542
288-6899	123
288-6900	123
288-6901	123
288-8570	221
288-9388	326
	333
	335
290-2943	405
290-2944	406
290-2945	407
290-2946	408
290-8287	▶147
	391
290-8288	147
290-8290	147
290-8293	147
291-0152	363
291-5214	24
292-0153	142
292-5739	▶92
	366
292-5740	92
292-8290	▶220
	391
292-8293	▶283
	391
292-8308	182
	▶214
292-8310	183
	▶215
292-8330	270
292-8335	220
292-8336	220
292-8345	281
	283
292-8346	281
	283
292-8349	213
292-8353	217
292-8364	214
292-8366	215
292-8504	37
293-3116	497
293-9743	252
294-0973	440
	442
294-1868	297
294-3097	142
294-7850	219
294-7851	219
294-7868	188
	198
294-7869	188
	192
	198
295-7340	560
296-0219	150
296-1942	352
296-2602	444
	506
296-2603	444
	506
296-2604	444
	506
296-2605	444
	506
296-2606	506
296-2607	444
	506
296-2608	444
	506
296-2609	506
296-2611	444
	506
296-2612	444
	506
296-2614	444
	506
296-2615	444
	506
296-2616	444
	506
296-2617	444
	506
296-2618	444
296-2619	444
296-2620	444
296-2621	444
296-2622	444
298-0663	50
	56
	69
	73
	94
	510
298-2139	564
298-2140	564
298-4282	557
298-4948	444
298-7736	226
	228
299-3784	43
3	
301-6875	443
	504
301-6892	192
301-6894	192
301-6897	194
303-1308	409
303-1309	410
303-1324	▶419
303-1325	▶420
303-1326	▶421
303-1327	▶422
303-1328	▶423
303-1329	▶424
303-1358	▶404
	419
303-1359	▶405
	420
303-1360	▶406
	421
303-1362	▶407
	422
303-1363	▶408
	423
303-1364	▶409
	424
303-2668	567
303-4492	293
303-6248	404
	405
	406
	407
	408
	409
	410
303-6249	404
	405
	406
	407
	408
	409
	410
303-9236	455
	462
	469
304-0121	259
	275
304-2819	5
	474
304-3524	194
304-3525	192
	194
304-3526	192
	194
304-3527	192
	194
304-7196	299
304-8800	544
304-8801	544
304-8802	544
305-5848	455
	469
305-5852	469
305-5853	469
306-5658	404
306-9039	105
	109
307-8151	221
	223
307-8152	223
307-8153	221
307-8156	221
308-4577	221
	223
309-1917	▶440
309-1938	▶442
309-5679	194
309-5680	194
309-5902	200
309-5903	200
309-6024	440
309-6778	442
310-0420	352
310-0421	352

PART NUMBER INDEX

Part	Page
310-0422	352
310-1866	535
310-1867	535
310-4984	240
	276
	279
310-8780	194
311-1031	200
311-3072	256
	259
	264
311-7937	226
	228
311-8804	69
	73
312-5694	440
	442
313-2048	560
314-4242	248
	250
314-8292	544
314-8294	544
314-8295	544
314-8296	544
314-8298	544
314-8299	544
314-8300	544
315-5815	303
	▶341
315-5816	309
	▶343
315-7663	▶174
317-9220	248
	250
319-4420	▶97
	99
	103
	105
	109
320-3430	256
320-6540	▶350
	489
	492
321-6069	87
322-4582	552
322-8964	99
	103
	105
	109
324-5828	455
	463
	469
324-8994	343
	347
325-4870	253
325-9922	83
326-7184	256
	259
326-7782	350
	354
326-8530	▶319
	343
	347
327-1749	478
328-5659	▶321
	343
	347
329-4756	256
	259
329-4757	256
	259
329-8369	▶323
	341
	343
	345
	347
330-5698	256
331-9872	352
331-9873	352
332-1292	293
	▶358
332-1809	495
332-1810	472
	473
332-4123	▶325
	341
	345
332-4162	455
	469
333-9456	337
334-0257	132
	152
334-1186	447
	448
	▶521
334-4603	564
335-0517	▶180
	181
336-0683	343
	347
336-9693	444
	506
336-9694	506
336-9695	506
336-9696	444
336-9697	444
339-1545	136
339-1548	136
340-2566	81
	83
	100
	106
340-2567	84
	106
341-0449	153
342-3327	517
344-7391	223
346-8085	240
346-8086	240
346-8791	246
346-8792	246
347-6081	▶209
	299
347-6082	209
349-1756	69
	73
349-1812	69
	73
349-2709	248
352-7765	▶128
	388
352-7766	128
353-2981	530
353-4402	305
354-6977	475
354-6978	475
354-6980	475
354-6981	475
355-3393	1
	▶481
355-3411	▶93
355-3416	▶522
355-3417	▶522
355-3420	▶518
355-5382	▶216
	378
	379
356-0571	1
	▶126
356-1597	315
356-3823	310
	▶352
356-4545	49
	▶310
	▶311
356-7138	182
	183
	▶208
356-7139	208
357-5889	▶326
	343
	347
357-5890	▶327
	341
	343
	345
	347
357-9061	▶539
358-2091	184
	244
	▶365
358-9162	530
359-5544	232
359-5545	231
359-5547	232
359-5548	231
359-6059	▶231
	440
	442
360-0047	333
	335
361-1069	430
	431
	432
361-1071	434
361-1072	426
	427
	429
361-1078	197
361-1081	426
	▶430
361-1082	430
361-1083	430
	▶434
361-1084	434
	436
361-1085	434
361-1086	434
	436
361-1087	430
361-1088	430
	432
361-1090	▶233
	427
361-1094	▶426
361-1095	▶427
	428
361-1115	433
361-1116	433
361-1117	433
361-1121	▶431
	433
361-1122	431
361-1123	431
	▶435
361-1124	435
361-1125	▶197
	435
361-1126	435
361-1127	197
361-1128	197
361-1129	197
361-1132	197
	▶313
361-1134	431
361-1156	197
361-1157	431
361-1207	233
361-1208	233
361-1209	431
361-1210	430
	432
361-5148	232
361-5149	231
362-1008	242
362-3225	50
363-5744	146
363-7173	80
363-9173	79
	82
	84
	100
	106
364-1693	▶439
364-3882	99
	103
	105
	109
364-5228	▶329
	341
	343
	345
	347
364-5229	▶331
	341
	343
	345
	347
364-5230	▶333
	▶335
	341
	345
364-5232	▶337
	341
	343
364-6111	333
364-6125	352
364-6126	352
364-6127	352
365-2794	183
	▶234
365-2796	183
	▶237
365-6895	252
365-6912	184
365-6913	234
	237
365-6914	234
	237
365-6915	234
	237
365-6916	234
365-6917	234
365-6918	184
365-6919	184
	234
	237
365-6920	213
	217
365-6921	213
	217
365-6961	237
365-6962	237
366-4622	99
	103
	105

PART NUMBER INDEX

Part	Page
	109
366-9776	337
	339
367-0902	1
	▶129
367-0912	1
	▶133
367-0918	1
	▶150
367-0930	1
	▶64
367-0936	210
	▶301
367-0950	446
	447
	448
	▶496
367-0952	129
367-0962	129
367-0980	133
367-0984	133
	▶136
367-0985	136
367-1050	▶299
	301
367-1051	299
367-1089	64
367-1090	64
367-1092	64
367-1095	64
367-1096	64
367-1097	64
367-1101	129
367-7122	142
368-1278	365
368-1279	365
369-3043	244
369-3693	▶232
	440
	442
369-3699	154
369-3703	388
	▶392
370-4008	56
370-5338	49
	▶66
370-5342	▶69
	446
	447
	448
370-5345	▶73
	471
370-5348	▶113
	446
	447
370-5349	▶99
	▶103
	446
	447
	448
370-5350	▶105
	▶109
	471
370-5351	98
	▶114
370-5352	90
	▶94
370-5353	99
	103
	105
	109
370-5354	99
	103
	105
	109
370-5357	69
	▶79
370-5360	73
	▶80
370-5363	69
	73
370-5366	69
	73
370-5367	69
	73
370-5368	99
370-5369	105
370-5370	114
370-5371	94
370-5372	69
	73
370-5375	69
	73
370-5396	115
371-8268	233
372-9897	273
372-9898	307
	▶364
373-2363	184
374-2025	292
	▶293
375-8117	218
376-0170	▶194
	370
376-0171	▶200
	366
376-2012	210
	▶292
376-3977	393
376-3978	389
	▶393
376-3979	▶389
	▶390
	391
376-6212	1
	▶144
376-6213	144
376-6672	▶1
376-6676	▶1
376-6680	1
	▶366
376-6692	▶446
376-6696	▶447
376-8851	▶483
	488
376-8852	483
376-8853	483
	484
376-8854	483
	484
376-8855	▶484
	486
376-8856	484
376-8857	489
	494
376-8858	100
	103
	106
	109
376-8859	76
376-9480	69
	73
376-9483	▶485
	487
376-9484	485
376-9485	485
376-9486	485
376-9492	50
376-9493	489
	492
376-9494	▶486
	491
376-9495	▶487
	490
	491
377-0325	▶76
	391
377-0326	1
	▶77
377-1150	▶160
	174
377-1151	160
377-5062	▶137
	532
377-5063	137
377-5075	137
	139
377-5085	137
	139
377-5086	137
	139
377-5087	137
	139
377-5088	137
	139
377-5089	137
	139
377-5090	137
	139
377-5091	137
	139
377-5092	137
	139
377-5093	137
	139
377-5094	137
	139
377-5095	137
	139
377-5096	137
	▶156
377-5098	139
	156
377-5100	139
	156
377-5101	139
	156
377-5102	139
	156
377-5103	156
377-5107	446
	447
	▶449
	▶451
	▶453
377-5108	449
	▶455
	459
377-5865	446
	▶499
377-5866	499
377-5868	499
	500
377-5869	499
	500
377-5870	499
377-5871	499
	500
377-5873	499
	500
377-5874	499
377-5875	499
	500
377-5876	▶446
	447
377-5933	530
377-5934	446
	447
	448
377-5936	530
377-5938	530
377-5942	530
377-5943	530
377-5945	530
377-5946	530
377-5947	530
377-5948	530
377-5949	530
377-5950	530
377-5951	530
377-5952	530
377-5958	391
	▶489
377-5959	530
377-6969	32
377-7814	150
377-7862	132
	152
377-7864	150
377-7874	150
377-7881	150
	▶154
377-7882	▶152
	158
377-7883	▶131
	150
377-7885	150
377-7886	▶132
	158
377-7887	▶153
	154
377-7888	▶130
	131
377-7889	152
377-7891	153
377-7892	132
377-7893	130
377-7929	150
377-7930	150
377-7934	153
377-7935	153
377-7936	153
377-7937	130
377-7938	130
377-7939	130
377-7940	150
377-7942	496
377-7944	496
377-8861	182
	▶305
377-8872	187
	▶248
377-8874	183
	▶250
377-8876	183
	▶307
377-8916	▶377
	378
377-8917	▶377
	378
	379
377-8918	▶370
377-8919	▶370
	378

▶ **PRIMARY REFERENCE**

PART NUMBER INDEX

Part	Page
	379
377-8920	▶391
377-8930	▶391
377-8933	▶471
377-8934	▶49
377-8935	▶49
377-9033	252
377-9034	252
377-9042	263
377-9043	263
377-9053	278
377-9064	248
	250
377-9065	248
377-9066	248
	250
377-9068	248
	250
377-9071	256
	259
377-9081	510
377-9698	1
	▶564
377-9706	391
	▶545
377-9707	182
	▶546
377-9708	182
	183
	▶548
377-9709	183
	▶549
377-9710	▶557
377-9711	▶560
377-9714	446
	447
	▶567
377-9715	447
	448
	▶550
377-9722	564
377-9725	564
377-9728	546
377-9729	546
377-9730	548
378-1240	150
378-1265	47
378-1266	47
378-1267	40
378-1272	446
	447
	▶474
378-1293	447
	448
	▶505
378-2137	23
	24
378-2138	24
378-2139	24
378-2140	4
	▶63
378-2141	▶16
	203
378-2493	▶500
	505
378-2495	187
	▶490
378-2497	187
	▶491
378-2498	▶536
378-2499	▶536
378-2500	▶187
	378
	379
	380
378-2501	▶187
	378
	379
378-2506	536
	▶537
378-2508	536
	▶538
378-2511	500
378-7478	▶181
378-7480	▶181
378-8105	144
378-8111	144
378-8113	144
378-8121	144
378-8125	144
378-8129	144
378-8137	137
	139
378-8139	▶530
	532
378-8140	530
378-9508	250
378-9509	250
378-9630	▶87
	88
378-9631	87
378-9748	307
379-0559	252
379-0803	50
379-0817	117
379-0828	79
	80
379-0830	81
	83
	100
	106
379-0855	23
379-0869	40
379-1946	449
	451
	453
	457
379-2000	305
379-2007	69
	73
379-2010	▶488
	490
379-2015	40
379-2026	449
	451
	453
	457
379-2027	449
	451
	453
	457
379-2028	449
	451
	453
	457
379-2996	500
379-3597	▶476
	527
379-3598	476
	▶477
379-3599	476
	▶478
379-3600	477
379-3608	477
	478
379-3610	478
379-3611	477
379-3612	477
379-3613	478
379-3614	478
379-3615	478
379-3616	478
379-3618	476
379-3623	478
379-3624	1
	▶527
379-3625	446
	447
	448
	▶532
379-3626	446
	447
	448
	▶541
379-3627	455
379-3628	530
379-3629	455
	463
	469
379-3630	455
	463
	469
379-4566	248
	250
379-4681	▶210
379-4683	▶182
	378
	379
379-4691	1
	▶155
379-4699	210
	▶239
379-4701	▶266
	391
379-4702	▶275
	391
379-4704	182
	▶272
379-4711	446
	447
	▶510
379-4712	447
	448
	▶514
379-4713	1
	▶210
379-4715	1
	▶182
379-4720	▶210
379-4721	▶182
	378
	379
379-4722	▶183
	379
	380
379-4723	▶187
379-4724	▶183
379-4725	▶216
	378
	379
	380
379-4726	▶203
379-4727	▶203
379-4728	1
	▶56
379-4729	210
	▶246
379-4730	210
	▶252
379-4731	210
	▶240
379-4732	182
	▶242
379-4733	210
	▶221
	▶223
379-4734	▶303
	▶304
	391
379-4735	182
	183
	▶273
379-4736	187
	▶256
379-4737	183
	▶259
379-4738	216
	▶217
379-4739	203
	▶204
379-4740	203
	▶205
379-5264	▶181
379-5265	▶181
379-6412	153
379-6414	130
379-6415	150
379-6416	150
379-6417	496
379-6419	▶158
379-7052	564
379-7053	564
379-7054	564
379-8770	514
380-1776	2
	▶3
380-1777	1
	▶2
380-2456	182
	183
	▶218
380-2485	▶88
380-3496	37
380-4661	182
	▶263
380-5727	▶41
	42
380-6298	50
380-6300	49
	▶50
380-6303	▶115
	366
380-6357	292
380-6363	44
380-6364	4
	▶37
380-6365	37
380-6366	37
380-6367	37
380-6369	37
380-6370	37
380-6371	37
380-6374	37
	144
380-6375	37
380-6376	37
380-6385	▶23
	447
	448
	471
380-6386	▶18
	471
380-6387	18
380-6388	▶24

PART NUMBER INDEX

Part	Page
	446
	447
380-6389	446
	447
	▶475
380-6390	475
380-6391	475
380-6392	475
380-6393	▶19
	446
	447
	448
380-6394	19
380-6597	4
	▶5
380-7148	455
	463
	469
380-7149	455
	463
	469
380-7150	▶523
	525
380-7151	▶524
	525
380-7159	134
380-7160	134
380-7163	456
	463
	470
380-7205	56
380-7210	246
380-7215	246
380-7216	246
380-8799	1
	▶174
380-9952	▶161
	174
380-9992	246
380-9993	246
380-9994	246
380-9996	246
380-9997	510
380-9998	510
380-9999	510
381-0000	510
381-0001	510
381-0002	184
	244
381-0556	252
381-0557	252
381-0559	263
381-0561	242
381-0564	239
381-0565	221
	223
	239
381-0578	275
381-0579	275
381-0580	275
	278
381-0581	275
	278
381-0582	275
381-0583	275
	278
381-0584	275
	278
381-0585	275
	278
381-0586	275
381-0587	275
381-0589	266
	268
381-0590	266
381-0592	266
	268
381-1119	303
	304
	309
381-1122	16
381-1123	16
381-1545	272
381-1546	272
381-1547	273
381-1552	273
381-1553	273
381-1555	273
381-2048	256
	259
381-2049	256
	259
381-2050	256
	259
381-2051	256
	259
381-2052	256
	259
381-2053	184
	244
381-2054	259
381-2055	259
381-4576	▶551
	559
381-4577	▶562
	563
381-4578	▶559
381-4579	▶563
381-4596	152
381-4597	152
381-4598	152
381-5006	366
	▶367
381-5008	367
381-5010	▶377
	379
	380
381-5011	377
	▶381
381-5012	381
381-5014	381
381-5020	▶378
	379
381-5021	378
	▶382
381-5022	382
381-5030	377
	▶384
381-5031	384
381-5033	377
	▶386
381-5034	386
381-5786	5
381-7473	87
381-7474	164
	166
381-9194	252
381-9195	256
381-9232	▶90
381-9235	▶118
	183
381-9236	▶85
	118
	184
381-9239	▶98
382-0400	471
	▶533
382-0401	▶139
	533
382-0402	139
382-0404	139
382-0406	471
	▶472
382-0407	472
382-0426	471
	▶503
382-0427	503
382-0497	▶158
382-0501	471
	▶495
382-0502	495
382-0503	495
382-0504	▶528
	533
382-0505	528
382-0509	▶525
382-0510	528
382-0517	▶525
382-0522	391
	▶492
382-0543	495
382-0544	528
382-0546	528
382-0547	528
382-0549	528
382-0560	210
	▶552
382-1147	200
382-1316	▶210
	378
	379
382-1317	▶211
	378
	379
	380
382-2147	528
382-2149	528
382-2150	528
382-2151	134
382-2152	134
382-2153	134
382-2154	134
382-2155	134
382-2156	134
382-2158	134
382-2159	134
382-2160	134
382-2162	134
382-2163	134
382-2164	134
382-2165	134
382-2166	134
382-2167	134
382-2168	134
382-2169	134
382-2170	134
382-2171	134
382-2172	134
382-2173	134
382-2174	134
382-2175	134
382-2176	134
382-2177	▶134
	533
382-2181	139
382-2543	▶183
382-2544	▶183
382-2547	226
382-2548	226
382-2551	183
	▶244
382-2558	228
382-2559	228
382-2560	283
382-2969	37
382-2970	37
382-3843	▶174
382-3844	174
382-4808	5
382-4810	5
382-4812	5
382-4813	5
382-4815	5
382-5689	130
382-5803	252
382-6314	530
382-6315	495
382-6321	134
382-6347	530
382-6356	564
382-8180	37
382-8802	246
382-8804	246
382-8805	246
382-8806	246
382-8808	246
382-8809	240
382-8810	240
382-8811	240
382-8812	240
382-8814	242
382-8815	242
382-8825	273
382-8826	273
382-9349	63
382-9362	244
382-9363	244
382-9364	244
382-9365	184
	244
383-0133	2
	3
	4
	▶40
383-0134	2
	3
	4
	▶68
383-0141	2
	3
	4
	▶32
383-0144	2
	3
	4
	▶33
383-0154	2
	3
	4
	▶96
383-0161	2
	3
	4
	▶34
383-0162	2
	3
	4
	▶36
383-0163	31
	36
383-0164	53
383-0165	20
383-0167	34
383-0168	53
383-0169	61
383-0170	22

▶ **PRIMARY REFERENCE**

PART NUMBER INDEX

Part	Page
383-0171	6
	8
383-0172	35
383-0173	46
383-0174	11
383-0175	11
	36
383-0176	35
383-0177	61
383-0178	68
383-0179	96
383-0180	17
	29
383-0181	96
383-0182	36
383-0183	53
383-0185	35
383-0186	35
383-0187	32
383-0188	61
383-0189	20
	53
383-0190	20
383-0191	29
383-0192	20
383-0193	20
383-0195	68
383-0196	96
383-0197	22
	35
	36
383-0198	53
	78
383-0199	61
383-0200	78
383-0201	96
383-0202	59
383-0203	7
383-0204	22
383-0205	29
383-0206	53
	68
383-0207	17
	22
	29
	35
	36
	96
383-0208	61
383-0209	53
383-0210	8
383-0211	53
383-0212	60
383-0214	78
383-0216	32
383-0217	7
	31
383-0218	10
383-0219	10
383-0220	10
	20
383-0221	10
383-0222	53
383-0223	53
383-0224	29
383-0225	34
383-0226	48
383-0227	6
	28
383-0228	8
383-0229	10
383-0230	20
383-0231	6
	8
383-0232	48
383-0233	48
383-0234	20
383-0250	2
	3
	4
	►31
383-0252	61
383-0255	29
383-0256	11
383-0257	35
383-0258	22
383-0259	13
383-0260	10
383-0261	10
383-0262	13
383-0263	14
383-0264	14
383-0265	14
383-0266	14
383-0267	29
383-0268	29
383-0269	29
383-0270	6
383-0271	8
383-0272	10
383-0273	34
383-0274	48
383-0275	48
383-0276	53
383-0277	53
383-0278	53
	78
383-0279	35
	45
	61
383-0280	61
383-0281	20
383-0282	55
383-0283	13
383-0284	55
383-0287	61
383-0288	61
383-0292	8
383-0293	34
383-0300	22
383-0302	20
383-0303	10
383-0304	10
383-0305	11
383-0306	29
383-0308	53
383-0309	48
383-0310	29
383-0314	61
383-0315	45
383-0317	53
383-0319	59
383-0320	59
383-0321	7
	31
383-0323	68
383-0330	68
383-0335	35
383-0336	20
383-0337	10
383-0342	69
	73
383-0344	68
383-0345	17
383-0346	45
383-0347	11
383-0355	53
383-0356	35
383-0358	10
383-0360	13
383-0361	13
383-0374	27
383-0375	27
383-0382	7
	20
	46
383-0383	28
383-0385	10
383-0386	11
383-0387	14
383-0391	28
383-0392	8
383-0393	8
383-0396	35
383-0397	27
383-0398	8
383-0399	8
383-0400	8
383-0401	8
383-0402	20
383-0403	34
383-0404	31
383-0406	53
383-0407	53
383-0409	53
383-0412	78
383-0416	53
383-0418	53
383-0419	78
383-0420	17
383-0421	35
383-0423	20
383-0425	35
383-0426	20
383-0427	20
	35
383-0430	11
383-0431	11
383-0432	11
383-0433	36
383-0435	36
383-0437	33
383-0438	20
383-0439	35
383-0440	20
383-0446	11
383-0447	11
383-0451	11
383-0457	11
383-0458	11
383-0464	29
383-0465	6
383-0467	8
383-0468	11
383-0469	8
383-0470	8
383-0472	35
383-0473	13
383-0474	55
383-0475	60
383-0479	27
383-0480	28
383-0481	31
383-0486	20
383-0487	61
383-0489	33
383-0492	20
383-0502	27
383-0503	2
	3
	4
	►20
383-0506	20
383-0508	59
383-0509	59
383-0510	59
383-0512	53
383-0513	53
383-0515	8
383-0519	60
383-0520	53
383-0521	53
383-0524	7
383-0528	27
383-0530	20
383-0531	32
383-0532	11
383-0534	14
383-0535	14
383-0537	60
383-0538	78
383-0544	60
383-0547	48
383-0550	61
383-0551	20
383-0553	11
383-0554	14
383-0555	13
383-0556	29
383-0557	11
383-0558	34
383-0559	55
383-0560	61
383-0562	61
383-0563	7
383-0568	60
383-0571	53
383-0574	7
383-0575	53
383-0576	17
383-0577	61
383-0579	27
383-0583	53
383-0584	53
383-0585	53
383-0586	53
383-0587	8
383-0588	48
383-0589	96
383-0592	68
383-0595	20
383-0598	17
383-0615	210
	►226
383-0616	211
	►228
383-0640	1
	►4
383-0641	4
	►44
383-0642	44
383-0643	4
	►43
383-3158	►86
	111
383-3160	50
383-3163	►111
	391
383-3164	►85
	111
383-3206	194
383-4984	37
383-4985	37
383-5899	►378
383-5900	►378
383-5901	►378

PART NUMBER INDEX

Part	Page
383-5902	▶379
383-5910	▶379
383-5911	▶379
383-5912	▶379
383-5913	▶380
383-5927	▶447
383-5928	▶448
383-5929	▶471
383-6388	144
383-8499	4
	▶42
383-8501	42
383-8502	44
383-8503	44
384-1039	365
384-1056	4
	▶47
384-5013	▶184
384-5670	530
384-5671	446
	447
	448
384-5673	536
	▶540
384-5674	540
384-5675	530
384-5676	530
384-5724	1
	▶145
384-5725	145
385-1276	492
	493
385-1277	▶95
	391
385-2795	▶278
	391
385-2796	▶264
	391
385-2797	▶268
	391
385-2800	268
385-2803	264
385-2806	264
385-2808	264
385-2809	264
385-2811	264
385-2812	252
385-2813	278
385-2814	278
385-2815	278
385-2816	278
385-4233	273
385-4234	273
385-4235	273
386-4561	2
	3
	4
	▶11
386-4564	2
	3
	4
	▶6
386-4566	2
	3
	4
	▶7
386-4570	2
	3
	4
	▶8
386-4588	2
	3
	4
	▶35
386-4592	2
	3
	4
	▶17
386-4635	2
	3
	4
	▶53
386-4637	2
	3
	4
	▶14
386-4638	2
	3
	4
	▶22
386-4639	2
	3
	4
	▶55
386-4640	2
	3
	4
	▶59
386-4641	2
	3
	4
	▶45
386-4642	2
	3
	4
	▶46
386-4643	2
	3
	4
	▶29
386-4644	2
	3
	4
	▶60
386-4645	2
	3
	4
	▶26
386-4646	2
	3
	4
	▶27
386-4647	2
	3
	4
	▶78
386-4648	2
	3
	4
	▶28
386-4650	2
	3
	4
	▶61
386-4787	45
386-4788	45
386-4789	55
386-4790	78
386-4792	28
386-4794	28
386-6058	391
	▶553
386-6073	553
386-6914	▶10
	11
386-6918	26
386-6919	26
386-6920	▶13
	14
386-6921	14
386-6922	14
386-6923	14
386-6924	14
386-6925	14
386-6928	46
386-6930	7
386-6933	7
386-6934	6
386-6936	8
386-6937	17
386-6938	17
386-6939	61
386-6940	61
386-6941	61
386-6942	61
386-6943	61
386-6944	61
386-6945	▶48
	61
386-6946	48
386-6947	61
386-6948	53
386-6950	53
386-6951	53
386-6952	53
386-7523	▶410
	425
386-7524	▶425
387-3788	292
387-4682	▶536
387-4694	471
387-4695	449
	451
	453
	457
387-5260	69
	73
387-6389	▶119
	183
387-6390	▶120
	182
	183
387-9910	32
387-9912	35
388-6412	292
389-0705	68
389-0724	8
389-0725	8
389-0726	8
389-0727	8
389-0728	8
389-0729	8
389-1588	28
389-1591	35
389-1593	7
389-1596	27
389-1597	27
389-1607	27
389-2308	26
389-2309	22
389-8671	134
389-8672	134
389-8673	134
389-8690	447
	448
	▶457
389-8701	457
	▶459
	460
	461
389-8702	▶148
	459
	460
	461
389-8703	459
389-8733	▶149
	471
389-8734	149
	509
389-8737	473
389-8749	471
	▶473
389-8753	495
389-8762	477
389-8764	477
389-8773	557
389-8774	560
389-8775	509
	554
389-8776	447
	448
	471
	▶554
389-8800	278
389-9183	509
	554
390-9455	293
391-3148	158
	▶159
391-3149	159
391-3150	159
391-3151	159
391-3152	159
391-3153	159
391-3154	159
391-3155	159
391-3156	159
391-3157	159
391-3158	159
391-3159	159
391-3160	159
391-3161	159
391-3162	159
391-3163	159
391-3164	159
391-3165	159
391-3166	159
391-3188	▶309
	391
391-7843	47
392-0266	35
392-4756	1
	▶77
392-4768	77
	100
	103
	106
	109
392-7373	163
	▶164
392-7374	163
	▶166
393-1257	471
	▶555
393-7501	312
	▶354
393-7502	8
393-8686	252
394-2887	160
394-5921	354
394-8600	59
395-0080	7
395-0083	46
395-0661	26
395-0662	29
395-3381	14

▶ **PRIMARY REFERENCE**

PART NUMBER INDEX

Part	Page
395-3419	545
397-6699	221
	223
397-6742	221
	223
4	
415-6803	451
	460
	▶462
415-8595	471
416-2294	311
	▶356
416-4255	77
416-6081	▶4
417-1065	304
	▶345
417-1072	▶347
417-1093	302
417-1094	223
417-1105	270
417-1267	501
417-1272	501
417-1273	501
417-1274	501
417-1289	▶501
	502
417-9823	273
418-1566	▶370
418-1571	▶370
418-1572	▶371
418-1586	463
418-9978	281
419-1204	391
	▶493
419-1237	453
	461
	▶469
419-1254	471
419-5871	▶502
419-8301	550
	567
420-1371	▶556
420-1391	370
	▶376
420-6337	471
421-2716	391
	▶494
421-2717	▶302
	471
421-2718	▶312
	446
	447
	448
421-8461	▶377
421-9099	▶270
	377
422-1353	270
422-1355	270
422-1356	270
422-1357	270
422-1360	234
	237
	270
422-1361	244
	270
422-1378	367
422-1381	367
422-2948	▶117
	210
422-2949	▶85
	117
425-7013	▶81
	109
425-7014	▶83
	103
426-0195	223
426-0196	223
430-8640	▶509
430-9229	▶509
431-0306	▶339
	345
	347
431-6151	▶2
432-1346	555
433-3885	390
	▶394
433-3886	394
433-5567	77
441-6279	▶428
444-7493	432
444-7494	▶429
444-7495	429
	▶432
444-7508	436
444-7509	432
444-7513	432
	▶436
444-7514	436
444-7516	432
446-9433	427
	▶433



©2014 Caterpillar
All Rights Reserved

Printed in Japan

CAT, CATERPILLAR, their respective logos, “Caterpillar Yellow”, and the POWER EDGE trade dress as well as corporate and product identity used herein, are trademarks of Caterpillar and may not be used without permission.