SEBP5957-10
September 2013

RUTHZIL TRATOR COMERCIAL DE PEÇAS LTDA 11 97083-6812 ROLANDO CITRANGULO

# Parts Manual

## 303.5E Mini Hydraulic Excavator

RKY1-Up (Machine)

Powered By C1.8 Engine

# Product and Dealer Information

Note: For product identification plate locations, see the section “Product Identification Information” in the Operation and Maintenance Manual.

**Delivery Date:** _____

## Product Information

Model: _____

Product Identification Number: _____

Engine Serial Number: _____

Transmission Serial Number: _____

Generator Serial Number: _____

Attachment Serial Numbers: _____

Attachment Information: _____

Customer Equipment Number: _____

Dealer Equipment Number: _____

## Dealer Information

Name: _____ Branch: _____

Address: _____

_____

_____

| | Dealer Contact | Phone Number | Hours |
|---|---|---|---|
| Sales: | _____ | _____ | _____ |
| Parts: | _____ | _____ | _____ |
| Service: | _____ | _____ | _____ |

# MEMORANDA

# TABLE OF CONTENTS


| NAME | PAGE |
|---|---|
| **GENERAL INFORMATION** | **A4** |
| **REPAIR ALTERNATIVES** | **A7** |
| **SUPPLEMENTAL COOLANT ADDITIVES** | A8 |
| **MAINTENANCE PARTS** | **A9** |
| **INDEX** | **A11** |
| **MACHINE ARRANGEMENT** | **1** |
| CHASSIS AR | 1 |
| COMMON AR | 1 |
| **ENGINE ARRANGEMENT** | **2** |
| ENGINE AR-COMPLETE | 2 |
| ENGINE AR-PRIMARY | 3 |
| INSTALLATION AR-ENGINE | 4 |
| **BASIC ENGINE** | **5** |
| BELT TENSIONER GP | 5 |
| CAMSHAFT GP | 6 |
| COVER GP-VALVE MECHANISM | 7 |
| CRANKSHAFT GP | 8 |
| CYLINDER BLOCK AS | 10 |
| CYLINDER BLOCK GP | 11 |
| CYLINDER HEAD AS | 13 |
| CYLINDER HEAD GP | 14 |
| DRAIN GP-ENGINE OIL | 16 |
| FLYWHEEL GP | 17 |
| GUARD GP-FAN | 18 |
| HOUSING GP-FRONT | 20 |
| LIFTING GP-ENGINE | 22 |
| MOUNTING GP-ENGINE | 23 |
| PAN GP-OIL | 26 |
| PISTON & ROD GP | 27 |
| PULLEY GP-FAN DRIVE | 28 |
| VALVE MECHANISM GP | 29 |
| **LUBRICATION SYSTEM** | **31** |
| FILLER GP-ENGINE OIL | 31 |
| FILTER GP-ENGINE OIL | 32 |
| GAUGE GP-OIL LEVEL (DIPSTICK) | 33 |
| PUMP GP-ENGINE OIL | 34 |
| **COOLING SYSTEM** | **35** |
| LINES GP-WATER | 35 |
| PUMP GP-WATER | 36 |
| RADIATOR & HYD OIL COOLER GP | 37 |
| **AIR INLET AND EXHAUST SYSTEM** | **40** |
| ACCESSORY GP-ENGINE | 40 |
| AIR CLEANER GP | 41 |
| EXTENSION GP-EXHAUST | 43 |
| LINES GP-AIR | 44 |
| MANIFOLD GP-EXHAUST | 45 |
| MANIFOLD GP-INLET | 46 |
| MUFFLER GP | 47 |
| **FUEL SYSTEM** | **48** |
| CAMSHAFT AS | 48 |
| CONTROL AR-GOVERNOR | 49 |
| CONTROL GP-GOVERNOR | 50 |
| FILTER GP-WATER SEP & FUEL | 52 |
| GOVERNOR GP | 53 |
| LINES GP-FUEL | 55 |
| LINES GP-FUEL FILTER | 56 |
| LINES GP-FUEL INJECTION | 59 |
| NOZZLE GP-UNIT INJECTOR | 60 |
| PUMP GP-FUEL INJECTION | 61 |
| SHUTOFF GP-MANUAL | 63 |
| TANK & MTG GP-FUEL | 64 |
| **ELECTRICAL AND STARTING SYSTEM** | 66 |
| ALARM GP-TRAVEL | 66 |
| ALTERNATOR GP-CHARGING | 68 |
| BATTERY & WIRING GP | 69 |
| CONTROL & MTG GP-ELECTRONIC | 76 |
| ELECTRONICS GP-MACHINE | 77 |
| ELECTRONICS GP-MONITOR | 77 |
| GLOW PLUG GP | 78 |
| HARNESS AS-CHASSIS | 79 |
| HARNESS AS-CONSOLE | 81 |
| HARNESS AS-CONTROL | 85 |
| HARNESS AS-QUICK COUPLER | 85 |
| HARNESS AS-SENSOR | 85 |
| HARNESS AS-SOLENOID | 86 |
| HEATER GP-JACKET WATER | 87 |
| LAMP GP-FLOOD | 89 |
| LIGHTING AR-FLOOD | 90 |
| LIGHTING GP-FLOOD | 91 |
| MOUNTING GP-ELECTRONIC CONTROL | 95 |
| STARTING MOTOR GP-ELECTRIC | 96 |
| SWITCH GP-ROTARY | 97 |
| WIRING GP-CAB | 98 |
| WIRING GP-CONSOLE | 99 |
| WIRING GP-ENGINE | 113 |
| WIRING GP-LIGHTING | 114 |
| WIRING GP-OVERLOAD WARNING | 117 |
| WIRING GP-QUICK COUPLER | 118 |
| WIRING GP-RELAY PANEL | 119 |
| **POWER TRAIN** | **121** |
| DRIVE GP-FINAL | 121 |
| MOTOR & MTG GP-TRAVEL | 125 |
| POWER TRAIN AR | 126 |
| SPROCKET GP | 127 |
| **FRAME AND BODY** | **128** |

# TABLE OF CONTENTS


| NAME | PAGE |
|---|---|
| C-FRAME GP-POWER ANGLING | 128 |
| COUNTERWEIGHT & MOUNTING GP | 129 |
| COVER AS. | 130 |
| COVER GP-ACCESS | 131 |
| COVER GP-FENDER | 133 |
| COVER GP-SOUND SUPPRESSION | 134 |
| FENDER GP | 136 |
| FRAME GP-REAR | 137 |
| FRAME GP-SWING | 142 |
| FRAME GP-UPPER | 144 |
| GUARD GP-BOTTOM | 145 |
| GUARD GP-CYLINDER | 146 |
| GUARD GP-FRONT | 148 |
| HOOD & GUARD GP | 150 |
| HOOD AS. | 153 |
| HOOD GP | 154 |
| LINES GP-GREASE | 155 |
| PLATE AS | 156 |
| STOP GP-SWING. | 157 |
| SUPPRESSION AR-SOUND | 158 |
| SUPPRESSION GP-SOUND | 159 |
| **UNDERCARRIAGE** | **160** |
| FRAME GP-UNDERCARRIAGE | 160 |
| GEAR & BEARING GP-SWING | 161 |
| GUARD GP-TRACK GUIDE | 162 |
| IDLER GP-FRONT | 163 |
| LINK AS-TRACK | 168 |
| ROLLER AR-TRACK & CARRIER | 169 |
| ROLLER GP-TRACK CARRIER | 170 |
| ROLLER GP-TRACK-CENTER FLANGE | 171 |
| TRACK GP. | 172 |
| UNDERCARRIAGE AR | 174 |
| **HYDRAULIC SYSTEM** | **175** |
| ACCUMULATOR GP-HYDRAULIC | 175 |
| CONTROL AR-AUXILIARY | 182 |
| CONTROL AR-COUPLER | 183 |
| CONTROL AR-HYDRAULIC. | 187 |
| CONTROL AR-PILOT HYDRAULIC | 187 |
| CYLINDER GP-BLADE | 188 |
| CYLINDER GP-BOOM. | 192 |
| CYLINDER GP-BUCKET. | 194 |
| CYLINDER GP-HYDRAULIC | 196 |
| CYLINDER GP-STICK. | 198 |
| CYLINDER GP-SWING BOOM | 200 |
| CYLINDER GP-TILT. | 202 |
| DRAIN GP-OIL | 203 |
| DRIVE GP-SWING | 206 |
| FASTENER GP-LINES | 207 |
| GAUGE GP-SIGHT | 209 |
| HYDRAULIC AR | 210 |
| LINES AR-BOOM | 210 |
| LINES AR-BUCKET | 210 |
| LINES GP-AUXILIARY HYDRAULIC | 212 |
| LINES GP-BLADE | 219 |
| LINES GP-BOOM CHECK VALVE | 221 |
| LINES GP-BUCKET | 223 |
| LINES GP-BUCKET CYLINDER | 227 |
| LINES GP-CONNECTING. | 228 |
| LINES GP-COUPLER | 230 |
| LINES GP-FRONT | 236 |
| LINES GP-HYDRAULIC PUMP | 243 |
| LINES GP-PILOT | 245 |
| LINES GP-RETURN. | 263 |
| LINES GP-STICK | 267 |
| LINES GP-SWING CYLINDER | 269 |
| LINES GP-SWING MOTOR | 272 |
| LINES GP-TRAVEL MOTOR | 278 |
| MANIFOLD & SOLENOID GP-CONTROL. | 282 |
| MANIFOLD GP-CONTROL | 283 |
| MOTOR & MTG GP-SWING | 285 |
| MOTOR GP-SWING. | 286 |
| PLANETARY GP-SWING DRIVE | 288 |
| PUMP & MTG GP-MAIN HYDRAULIC | 289 |
| PUMP GP-PISTON & GEAR. | 290 |
| SWIVEL GP | 292 |
| TANK & FILTER GP-HYDRAULIC | 296 |
| TANK & MTG GP-HYDRAULIC | 298 |
| VALVE & MOUNTING GP | 299 |
| VALVE & MTG GP-BANK | 300 |
| VALVE & MTG GP-CONTROL | 302 |
| VALVE & MTG GP-MAIN CONTROL. | 306 |
| VALVE & MTG GP-PILOT | 307 |
| VALVE GP-CHECK | 310 |
| VALVE GP-CONTROL. | 311 |
| VALVE GP-MAIN CONTROL. | 338 |
| VALVE GP-PILOT. | 342 |
| VALVE GP-PUMP CONTROL | 350 |
| VALVE GP-RELIEF | 352 |
| VALVE GP-SOLENOID | 354 |
| VALVE GP-SOLENOID & MANIFOLD | 358 |
| **IMPLEMENTS** | **359** |
| BOOM AR | 359 |
| BOOM GP | 360 |
| BRACKET GP-MOUNTING. | 362 |
| LINKAGE AR-BUCKET | 363 |
| LINKAGE GP-BUCKET | 365 |
| STICK AR. | 370 |
| STICK AR-HOE. | 370 |
| STICK GP-HOE. | 374 |
| **WORK TOOLS** | **381** |
| BLADE & MOUNTING GP. | 381 |
| BLADE AR-ANGLING | 384 |
| BLADE AR-STRAIGHT | 384 |

# TABLE OF CONTENTS


| NAME | PAGE |
|---|---|
| BLADE AS-ANGLING | 385 |
| BLADE GP-STRAIGHT | 386 |
| BUCKET AR-GENERAL PURPOSE | 388 |
| BUCKET AR-TILTABLE | 389 |
| BUCKET AS-DITCH CLEANING | 390 |
| BUCKET AS-GENERAL PURPOSE | 394 |
| BUCKET AS-HOE | 397 |
| BUCKET GP-EXCAVATION | 404 |
| BUCKET GP-GENERAL PURPOSE | 406 |
| BUCKET GP-HOE | 412 |
| COUPLER AR-QUICK | 419 |
| COUPLER GP-QUICK | 422 |
| LOCK GP-QUICK COUPLER | 424 |
| MOUNTING GP-BUCKET | 426 |
| THUMB GP | 429 |
| **OPERATOR STATION** | **432** |
| AIR CONDITIONER & MOUNTING GP | 432 |
| AIR CONDITIONER GP | 433 |
| CAB AR | 435 |
| CAB GP | 438 |
| CANOPY AR | 460 |
| CANOPY GP | 461 |
| COMPRESSOR GP-REFRIGERANT | 463 |
| CONDENSER & MTG GP-REFRIGERANT | 464 |
| CONSOLE GP-OPERATOR | 465 |
| CONTROL & MTG GP-PEDAL | 469 |
| CONTROL GP-HYDRAULIC HAND | 471 |
| CONTROL GP-JOYSTICK | 472 |
| CONTROL GP-PILOT OPERATED HYD | 478 |
| COVER GP-ACCESS | 484 |
| COVER GP-CAB | 485 |
| DOOR GP-CAB | 486 |
| DUCT GP-CAB AIR | 488 |
| GUARD GP-VANDALISM | 490 |
| HANDRAIL GP | 492 |
| HEATER & MTG GP-CAB | 493 |
| HEATER AR-CAB | 494 |
| HEATER GP-CAB | 495 |
| HORN GP-ELECTRIC | 497 |
| KIT-GUARD | 498 |
| LINES GP-AIR CONDITIONER | 499 |
| LINES GP-HEATER | 503 |
| LINK GP-WINDOW | 505 |
| MIRROR GP-DOWN VIEW | 506 |
| MIRROR GP-REAR VIEW | 508 |
| MOUNTING GP-MIRROR | 515 |
| OPERATOR AR | 516 |
| PLATFORM GP | 517 |
| PLATFORM GP-OPERATOR | 519 |
| SEAT & MOUNTING GP | 524 |
| SEAT BELT GP | 525 |
| SEAT GP-SUSPENSION | 528 |
| WASHER GP-WINDOW | 530 |
| WINDOW GP-CAB | 531 |
| WINDOW GP-SLIDING | 533 |
| **SERVICE EQUIPMENT AND SUPPLIES** | 534 |
| FILM GP | 534 |
| FILM GP-INTERNATIONAL | 546 |
| FILM GP-U.S. | 549 |
| PLATE & FILM GP | 553 |
| **PART NUMBER INDEX** | **B1** |

# GENERAL INFORMATION

## 1. MACHINE IDENTIFICATION

Cat machines are identified by Product Identification Numbers (PIN). Some components included in a machine may be identified by Serial Numbers (S/N). Typical components that will be serialized include engines, transmissions, bulldozers, and rippers. The machine and engine are further identified by arrangement numbers and in some cases modification numbers. These numbers are shown on the product identification plate(s) and on the master plate in the operator's compartment.

Cat dealers need all of these numbers to determine accurate parts identification.

Effective First Quarter 2001 the Cat Product Identification Number (PIN) changed from 8 to 17 characters. In an effort to provide uniform equipment identification, Caterpillar and other construction equipment manufacturers are moving to comply with the latest version of the product identification numbering standard. Non-road machine PINs are defined by ISO 10261. The new PIN format will apply to all Cat machines and generator sets. The PIN plates and frame marking will display the 17 character PIN. The new format will look like the following:

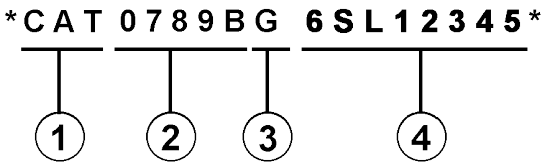


Where:

1. Caterpillar's World Manufacturing Code (characters 1-3)

2. Machine Descriptor (characters 4-8)

3. Check Character (character 9)

4. Machine Indicator Section (MIS) or Product Sequence Number (characters 10-17). These were previously referred to as the Serial Number.

Machines and generator sets produced before First Quarter 2001 will maintain their 8 character PIN format.

Components such as engines, transmissions, axles, etc. and work tools will continue to use an 8 character Serial Number (S/N).

## 2. ORDERING PARTS

**⚠ WARNING**

**When replacement parts are required for this product Caterpillar recommends using Caterpillar replacement parts or parts with equivalent specifications including, but not limited to, physical dimensions, type, strength and material.**

**Failure to heed this warning can lead to premature failures, product damage, personal injury or death.**

Quality Cat replacement parts are available from Cat dealers throughout the world. Their parts inventories are up to date and include all parts normally required to protect your investment in Cat machines. Dealers may offer repair kits or remanufactured parts to allow selection of the most effective repair alternative for a particular situation. When ordering parts, your order should specify the quantity, part number, part name, and the serial number/product identification number of the machine for which the parts are needed.

## 3. PARTS MANUAL ORGANIZATION

Product information in this manual is presented as "information elements" that represent all of the components for the specific model. Engine Arrangement and Seat Group are examples of information elements. The information elements are organized alphabetically by part name and secondarily by part number within each major section of the manual.

## 4. TABLE OF CONTENTS

A table of contents (TOC) is found at the beginning of the manual. The TOC lists each section of the manual with a complete list of all information elements organized as they appear in the manual. Page numbers are provided for quick reference to detailed parts identification illustrations and serviceable consist lists.

## 5. MAINTENANCE PARTS INDEX

The Maintenance Parts Index, located near the beginning of the manual, references most frequently used maintenance part numbers, providing description, quantity, usage and page number. This information is organized alphabetically by part description.

# GENERAL INFORMATION

### 6. INDEX

The index located near the front of the manual is an alphabetical listing of all information elements included in the manual. Page numbers are provided for quick reference to detailed parts identification illustrations and serviceable consist lists.

### 7. PART NUMBER INDEX

A numerical index listing all part numbers and the corresponding page number(s) appears at the back of the manual.

### 8. CAPTIONS

Captions located at the beginning of each information element identify the part number and part name along with additional descriptive information. PIN and S/N information found in each caption should be used to select correct information for a specific machine. Field replacement options, identification of optional attachment components, and where used ("part of") information is also provided.

The first line of a caption is shown in larger type font to indicate the beginning of an information element. Captions for additional pages that may be required to illustrate an information element will be shown in standard type font and will include the term *(contd.)* .

### 9. NON-SERVICED PARTS

In some instances it is necessary to display non-serviced parts that are a link to a lower level serviceable consist lists. These non-serviced part numbers are shown in *italic* type indicating that they are not available.

### 10. PARTS LIST REFERENCE NUMBERS

Numbers shown in the Ref No column correspond to numbers used in the associated graphic(s). An alphabetic suffix may be added to a reference number to identify lower level consist items. Numbers shown in the Graphic Ref column refer to the graphic number identifier displayed in the lower left corner of each illustration. The Graphic Ref number may be used in combination with the item Ref No to determine the correct part number. There may be intentional omission of a Ref No in a consist list as information is updated to reflect the latest serviceable part numbers.

### 11. INDENTED PART NAMES

When a part name is indented in a parts list, it is part of (included in) the group or assembly under which it is indented.

### 12. ILLUSTRATION REFERENCE LETTERS

When necessary, illustrations contain reference letters (A, B, C etc.) that are intended to track lines and harnesses from one point to another. They are also used to show where to reconnect illustrations that have been separated.

### 13. ABBREVIATIONS AND SYMBOLS

**O.D.** – Outside Diameter
**I.D.** – Inside Diameter
**A** – Not Part Of This Group
**B** – Use As Required
**C** – Change From Previous Type
**D** – Order By The Meter
**E** – Order By The Centimeter
**F** – Not Shown
**G** – Order By The Inch
**I** – Refer To Hydraulic Information System
**M** – Metric Part
**R** – Remfg Part May Be Available
**Y** – Separate Illustration
**Z** – Not Serviced Separately

### 14. DESCRIPTION OF TYPE CHANGES

Type - A type is defined as any configuration change that requires an additional Information Element for an Arrangement, Group, or Assembly. If serial number breaks for types are not available, a type # ( Type 1, Type 2, etc.) will be displayed in the caption. These "type" changes are identified with a "C" note (change from previous type) in the Parts List. Only the "types" that apply to this Parts Manual will be included. Additional types may exist causing "C" notes to appear on an Information Element when no other types are shown.

### 15.<END>

This symbol indicates the end of an information element.

### NOTE:

**Continuing improvement and advancement of product design may cause changes to your machine which may not be included in this publication. Whenever a question arises regarding your Cat product or this publication, please consult your Cat dealer for the latest available information.**

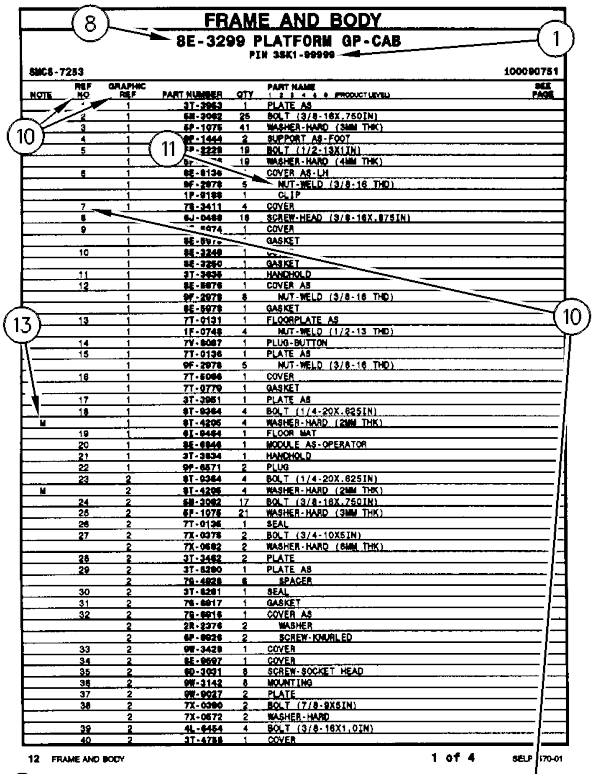

FRAME AND BODY

8E-3299 PLATFORM GP-CAB

PIN 3SK1-99999

SMCS-7253 100090751

| NOTE | REF NO | GRAPHIC REF | PART NUMBER | QTY | PART NAME (1 2 3 4 5 6 PRODUCT LEVEL) | SEE PAGE |
|---|---|---|---|---|---|---|
| | 1 | 1 | 3T-3863 | 1 | PLATE AS | |
| | 2 | 1 | 5H-3062 | 25 | BOLT (3/8-16X.750IN) | |
| | 3 | 1 | 6P-1075 | 41 | WASHER-HARD (3MM THK) | |
| | 4 | 1 | 9P-1444 | 2 | SUPPORT AS-FOOT | |
| | 5 | 1 | 5P-8228 | 19 | BOLT (1/2-13X1IN) | |
| | | 1 | 6P-[illegible] | 19 | WASHER-HARD (4MM THK) | |
| | 6 | 1 | 8E-8134 | 1 | COVER AS-LH | |
| | | 1 | 9F-2978 | 5 | NUT-WELD (3/8-16 THD) | |
| | | 1 | 1P-8188 | 1 | CLIP | |
| | 7 | 1 | 7S-3411 | 4 | COVER | |
| | 8 | | 6J-0488 | 19 | SCREW-HEAD (3/8-16X.875IN) | |
| | 9 | 1 | [illegible]-[illegible]074 | 1 | COVER | |
| | | 1 | 8E-8972 | 1 | GASKET | |
| | 10 | 1 | 8E-3240 | 1 | [illegible] | |
| | | 1 | 8E-3250 | 1 | GASKET | |
| | 11 | 1 | 3T-3636 | 1 | HANDHOLD | |
| | 12 | 1 | 8E-8978 | 1 | COVER AS | |
| | | 1 | 9F-2979 | 8 | NUT-WELD (3/8-16 THD) | |
| | | 1 | 8E-5979 | 1 | GASKET | |
| | 13 | 1 | 7T-0131 | 1 | FLOORPLATE AS | |
| | | 1 | 1F-0748 | 4 | NUT-WELD (1/2-13 THD) | |
| | 14 | 1 | 7V-8087 | 1 | PLUG-BUTTON | |
| | 15 | 1 | 7T-0126 | 1 | PLATE AS | |
| | | 1 | 9F-2978 | 5 | NUT-WELD (3/8-16 THD) | |
| | 16 | 1 | 7T-5086 | 1 | COVER | |
| | | 1 | 7T-0779 | 1 | GASKET | |
| | 17 | 1 | 3T-3861 | 1 | PLATE AS | |
| | 18 | 1 | 9T-0364 | 4 | BOLT (1/4-20X.625IN) | |
| M | | 1 | 9T-4205 | 4 | WASHER-HARD (2MM THK) | |
| | 19 | 1 | 6I-8464 | 1 | FLOOR MAT | |
| | 20 | 1 | 8E-8846 | 1 | MODULE AS-OPERATOR | |
| | 21 | 1 | 3T-3634 | 1 | HANDHOLD | |
| | 22 | 1 | 9F-8571 | 2 | PLUG | |
| | 23 | 2 | 9T-0364 | 4 | BOLT (1/4-20X.625IN) | |
| M | | 2 | 9T-4205 | 4 | WASHER-HARD (2MM THK) | |
| | 24 | 2 | 5H-3062 | 17 | BOLT (3/8-16X.750IN) | |
| | 25 | 2 | 6P-1076 | 21 | WASHER-HARD (3MM THK) | |
| | 26 | 2 | 7T-0126 | 1 | SEAL | |
| | 27 | 2 | 7X-0078 | 2 | BOLT (3/4-10X5IN) | |
| | | 2 | 7X-0662 | 2 | WASHER-HARD (6MM THK) | |
| | 28 | 2 | 3T-3462 | 2 | PLATE | |
| | 29 | 2 | 3T-5290 | 1 | PLATE AS | |
| | | 2 | 7S-4828 | 6 | SPACER | |
| | 30 | 2 | 9T-5291 | 1 | SEAL | |
| | 31 | 2 | 7S-8817 | 1 | GASKET | |
| | 32 | 2 | 7S-8815 | 1 | COVER AS | |
| | | 2 | 2S-2376 | 2 | WASHER | |
| | | 2 | 6P-8629 | 2 | SCREW-KNURLED | |
| | 33 | 2 | 9W-3429 | 1 | COVER | |
| | 34 | 2 | 8E-8697 | 1 | COVER | |
| | 35 | 2 | 8D-2031 | 8 | SCREW-SOCKET HEAD | |
| | 36 | 2 | 9W-3142 | 8 | MOUNTING | |
| | 37 | 2 | 9W-9027 | 2 | PLATE | |
| | 38 | 2 | 7X-0090 | 2 | BOLT (7/8-9X5IN) | |
| | | 2 | 7X-0672 | 2 | WASHER-HARD | |
| | 39 | 2 | 4L-6454 | 4 | BOLT (3/8-16X1.0IN) | |
| | 40 | 2 | 3T-4788 | 1 | COVER | |

12 FRAME AND BODY 1 of 4 SELP 170-01

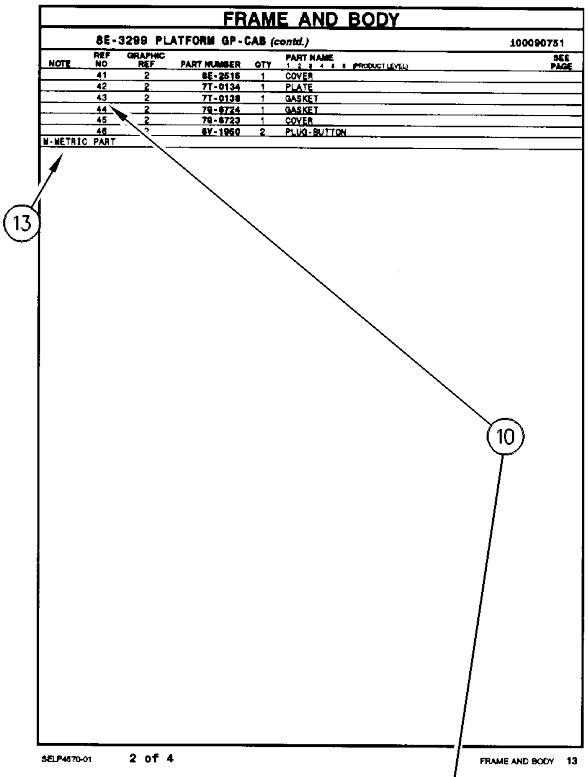

FRAME AND BODY

8E-3299 PLATFORM GP-CAB (contd.) 100090751

| NOTE | REF NO | GRAPHIC REF | PART NUMBER | QTY | PART NAME (1 2 3 4 5 6 PRODUCT LEVEL) | SEE PAGE |
|---|---|---|---|---|---|---|
| | 41 | 2 | 8E-2516 | 1 | COVER | |
| | 42 | 2 | 7T-0134 | 1 | PLATE | |
| | 43 | 2 | 7T-0138 | 1 | GASKET | |
| | 44 | 2 | 7S-8724 | 1 | GASKET | |
| | 45 | 2 | 7S-8723 | 1 | COVER | |
| | 46 | [illegible] | 6V-1960 | 2 | PLUG-BUTTON | |

M-METRIC PART

SELP4570-01 2 of 4 FRAME AND BODY 13

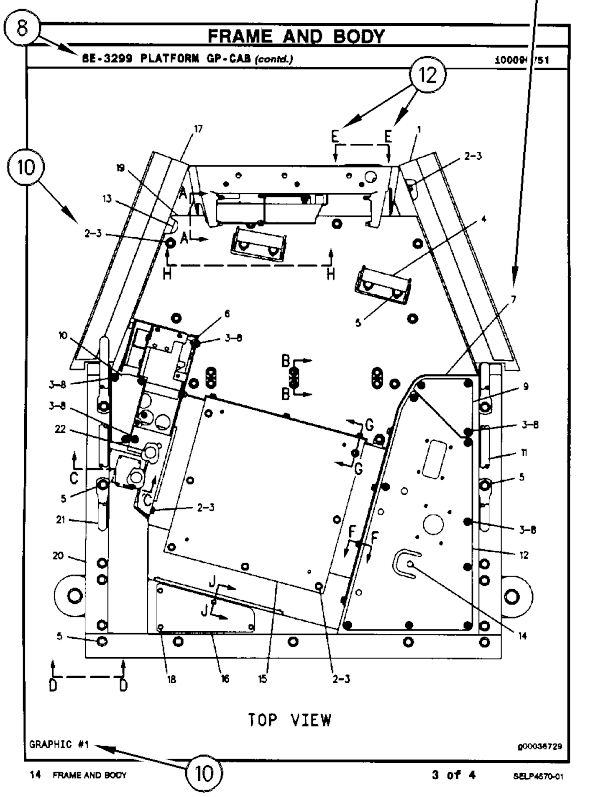

FRAME AND BODY

8E-3299 PLATFORM GP-CAB (contd.) 100090751

TOP VIEW

GRAPHIC #1 g00036729

14 FRAME AND BODY 3 of 4 SELP4570-01

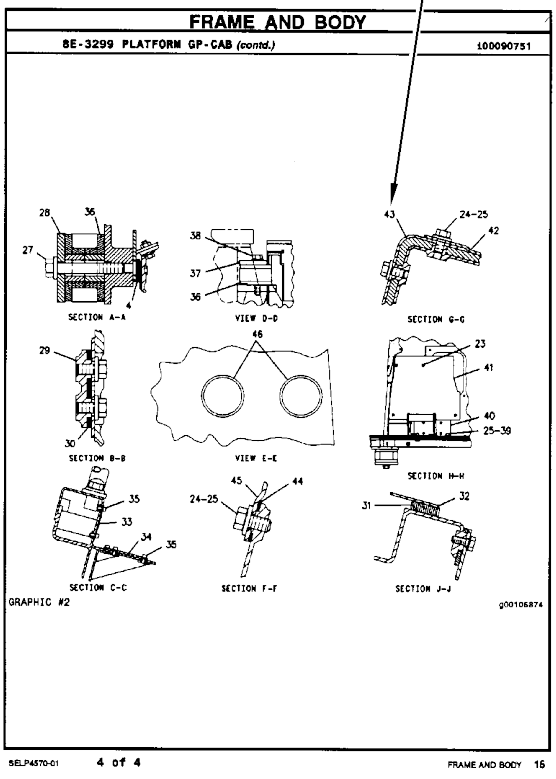

FRAME AND BODY

8E-3299 PLATFORM GP-CAB (contd.) 100090751

SECTION A-A VIEW D-D SECTION G-G

SECTION B-B VIEW E-E SECTION H-H

SECTION C-C SECTION F-F SECTION J-J

GRAPHIC #2 g00106874

SELP4570-01 4 of 4 FRAME AND BODY 15

# REPAIR ALTERNATIVES

## REMANUFACTURED COMPONENTS

As an option when making repairs consider Cat Remanufactured Components. Components that are available through the Cat Remanufactured Program are identified three ways in the parts book:

- with the letter R in the note field of the parts list
- with an R* at the beginning of the first line of the caption
- with an *R at the end of the first line of the caption

Typical components included in the Remanufacturing Program include:

ALTERNATORS
CONNECTING RODS
CRANKSHAFTS - UNDERSIZE
CRANKSHAFTS - UPGRADE TO NEW
CYLINDER HEADS
ELECTRONIC CONTROL MODULES (ECM)
ELECTRONIC SENSORS
FUEL INJECTORS
FUEL NOZZLES
FUEL PUMPS
GOVERNORS
OIL PUMPS
PISTONS
SHORT BLOCKS
STARTERS
TURBOCHARGERS - COMPLETE
TURBOCHARGER CARTRIDGES
WATER PUMPS

Cat Remanufactured engines for many engine arrangements are also available.

# SUPPLEMENTAL COOLANT ADDITIVES

**CUSTOMER BENEFITS:**

Protects against cavitation, foam, erosion, corrosion, and scale buildup in cooling systems.

- Provides measured coolant conditioner.

**DESCRIPTION:**

Additives deplete from the coolant with normal operation. For this reason, Supplemental Coolant Additives (SCA) must be added to all heavy duty coolants at regular intervals. In addition, when not using a fully formulated, pre-charged antifreeze, like Cat DEAC, an initial charge of SCA must be added to the cooling system. The amount of SCA added to the system is dependent on the capacity of the system.

The SCA for initial fill is provided as a liquid. SCA's for maintenance intervals are available in liquid form and as a spin-on element. (No Spin-on available for 3600 Family of Engines)

**NOTE:**

The amount of SCA added at initial fill is not the same as the amount added at maintenance intervals.

The coolant additive elements can be used with any ethylene or propylene glycol type antifreeze which meets ASTM D4985 or ASTM D5345 Specifications.

**NOTE:**

For use with standard heavy duty coolant only, not for use with Extended Life Coolant.

**PARTS NEEDED:**

| Cooling System Capacity | | Liquid SCA at Initial Fill | Liquid SCA at Maintenance* | Spin-on SCA Maintenance Element* |
|---|---|---|---|---|
| Liters | Gallons | | | |
| 22-30 | (6-8) | 3P-2044 (1) | 6V-3542 (1) | 111-2370 (1) |
| 30-38 | (8-10) | 3P-2044 (1)<br>6V-3542 (1) | 111-2372 (1) | 111-2369 (1) |
| 38-49 | (10-13) | 3P-2044 (1)<br>8T-1589 (1) | 111-2372 (1) | 111-2369 (1) |
| 49-64 | (13-17) | 3P-2044 (2) | 8T-1589 (1) | 9N-3368 (1) |
| 64-83 | (17-22) | 3P-2044 (2)<br>8T-1589 (1) | 111-2372 (1)<br>6V-3542 (1) | 111-2371 (1) |
| 83-114 | (22-30) | 3P-2044 (3)<br>8T-1589 (1) | 3P-2044 (1) | 9N-3718 (1) |
| 114-163 | (30-43) | 3P-2044 (5) | 3P-2044 (1)<br>6V-3542 (1) | 111-2371 (2) |
| 163-242 | (43-64) | 3P-2044 (8) | 3P-2044 (2) | 9N-3718 (2) |

** Normal maintenance period is 250 hrs. See your Operation and Maintenance Manual for complete coolant maintenance instructions.*

( ) Indicates quantity required.

# MAINTENANCE PARTS

| DESCRIPTION | PART NUMBER | QTY | WHERE USED | PAGE |
|---|---|---|---|---|
| **AIR INLET AND EXHAUST SYSTEM** | | | | |
| FILTER ELEMENT AS-AIR (PRIMARY) | 134-8726 | 1 | AIR CLEANER GP | 41 |
| FILTER ELEMENT AS-AIR (SECONDARY) | 140-2334 | 1 | AIR CLEANER GP | 41 |
| **BASIC ENGINE** | | | | |
| PLUG (DRAIN, ENGINE OIL) | 386-6918 | 1 | PAN GP-OIL | 26 |
| V-BELT (FAN DRIVE) | 383-0480 | 1 | PULLEY GP-FAN DRIVE | 28 |
| **COOLING SYSTEM** | | | | |
| CAP AS (COOLANT RECOVERY) | 140-4238 | 1 | RADIATOR & HYD OIL COOLER GP | 37 |
| CAP-RADIATOR | 247-5086 | 1 | RADIATOR & HYD OIL COOLER GP | 37 |
| GASKET (THERMOSTAT HOUSING) | 383-0335 | 1 | LINES GP-WATER | 35 |
| GASKET (WATER TEMPERATURE REGULATOR) | 383-0421 | 1 | LINES GP-WATER | 35 |
| REGULATOR AS (WATER TEMPERATURE) | 392-0266 | 1 | LINES GP-WATER | 35 |
| **ELECTRICAL AND STARTING SYSTEM** | | | | |
| BATTERY (12-VOLT, MAINTENANCE FREE) | 153-5656 | 1 | BATTERY & WIRING GP | 69 |
| | | 1 | BATTERY & WIRING GP | 73 |
| FUSE (10-AMPERE) | 113-8490 | 8 | HARNESS AS-CONSOLE | 81 |
| | | 9 | HARNESS AS-CONSOLE | 83 |
| | | 9 | WIRING GP-CONSOLE | 99 |
| | | 8 | WIRING GP-CONSOLE | 105 |
| FUSE (15-AMPERE) | 113-8491 | 4 | HARNESS AS-CONSOLE | 81 |
| | | 4 | HARNESS AS-CONSOLE | 83 |
| | | 4 | WIRING GP-CONSOLE | 99 |
| | | 4 | WIRING GP-CONSOLE | 105 |
| FUSE (20-AMPERE) | 113-8492 | 1 | HARNESS AS-CONSOLE | 81 |
| | | 2 | HARNESS AS-CONSOLE | 83 |
| | | 2 | WIRING GP-CONSOLE | 99 |
| | | 1 | WIRING GP-CONSOLE | 105 |
| FUSE (30-AMPERE) | 124-3548 | 2 | HARNESS AS-CONSOLE | 81 |
| | | 3 | HARNESS AS-CONSOLE | 83 |
| | | 3 | WIRING GP-CONSOLE | 99 |
| | | 2 | WIRING GP-CONSOLE | 105 |
| | 8T-9636 | 1 | HARNESS AS-CHASSIS | 79 |
| | | 1 | HARNESS AS-CHASSIS | 80 |
| FUSE (5-AMPERE) | 141-2759 | 3 | HARNESS AS-CONSOLE | 81 |
| | | 3 | HARNESS AS-CONSOLE | 83 |
| | | 3 | WIRING GP-CONSOLE | 99 |
| | | 3 | WIRING GP-CONSOLE | 105 |
| FUSE (60-AMPERE) | 232-6314 | 1 | HARNESS AS-CHASSIS | 79 |
| | | 1 | HARNESS AS-CHASSIS | 80 |
| | 379-0828 | 2 | HARNESS AS-CHASSIS | 79 |

# MAINTENANCE PARTS

| DESCRIPTION | PART NUMBER | QTY | WHERE USED | PAGE |
|---|---|---|---|---|
| | | 2 | HARNESS AS-CHASSIS | 80 |
| GLOW PLUG | 383-0538 | 3 | GLOW PLUG GP | 78 |
| LAMP (12-VOLT, 55-WATT) | 142-9572 | 1 | LAMP GP-FLOOD | 89 |
| | | 1 | LIGHTING GP-FLOOD | 91 |
| | | 1 | LIGHTING GP-FLOOD | 94 |
| **FUEL SYSTEM** | | | | |
| CAP-FUEL (LOCKABLE, VENTED) | 265-8575 | 1 | TANK & MTG GP-FUEL | 64 |
| FILTER ELEMENT-FUEL (WATER SEPARATOR) | 156-1200 | 1 | FILTER GP-WATER SEP & FUEL | 52 |
| STRAINER-FUEL (TANK) | 265-8579 | 1 | TANK & MTG GP-FUEL | 64 |
| **HYDRAULIC SYSTEM** | | | | |
| CAP AS | 6V-9828 | 3 | CONTROL AR-COUPLER | 184 |
| | | 3 | LINES GP-COUPLER | 234 |
| CAP-PRESSURE (HYDRAULIC TANK) | 4I-3745 | 1 | TANK & FILTER GP-HYDRAULIC | 296 |
| FILTER ELEMENT AS-OIL (HYDRAULIC, PILOT) | 217-2456 | 1 | LINES GP-PILOT | 249 |
| FILTER ELEMENT-OIL (HYDRAULIC) | 304-7196 | 1 | TANK & FILTER GP-HYDRAULIC | 296 |
| STRAINER-SUCTION (HYDRAULIC TANK) | 285-1951 | 1 | TANK & FILTER GP-HYDRAULIC | 296 |
| **LUBRICATION SYSTEM** | | | | |
| FILTER AS-ENGINE OIL | 383-0339 | 1 | FILTER GP-ENGINE OIL | 32 |
| STRAINER-OIL (ENGINE) | 383-0531 | 1 | FILTER GP-ENGINE OIL | 32 |
| **OPERATOR STATION** | | | | |
| BLADE AS-WIPER (450-MM) (FRONT) | 275-8631 | 1 | WINDOW GP-CAB | 531 |
| DRYER-REFRIGERANT (RECEIVER) (AIR CONDITIONER) | 176-1902 | 1 | LINES GP-AIR CONDITIONER | 499 |
| FILTER ELEMENT-CAB AIR | 284-5686 | 1 | AIR CONDITIONER GP | 433 |
| | | 1 | HEATER GP-CAB | 495 |
| LAMP (12-VOLT, 5-WATT) | 303-9236 | 1 | CAB GP | 444 |
| | | 1 | CAB GP | 451 |
| | | 1 | CAB GP | 458 |
| LAMP AS (12-VOLT, 5-WATT) | 281-1159 | 1 | CAB GP | 444 |
| | | 1 | CAB GP | 451 |
| | | 1 | CAB GP | 458 |
| SEAT BELT GP (RETRACTABLE, 2-IN) | 378-2506 | 1 | SEAT BELT GP | 525 |
| SEAT BELT GP (RETRACTABLE, 3-IN) | 378-2508 | 1 | SEAT BELT GP | 525 |
| SEAT BELT GP (RETRACTABLE, 51-MM (2-IN)) | 258-4095 | 1 | SEAT BELT GP | 526 |
| SEAT BELT GP (RETRACTABLE, 76-MM (3-IN)) | 258-4096 | 1 | SEAT BELT GP | 527 |
| V-BELT (AIR CONDITIONER COMPRESSOR) | 272-7881 | 1 | COMPRESSOR GP-REFRIGERANT | 463 |

# INDEX


NAME PAGE

## A

ACCESSORY GP-ENGINE . . . . . 40
ACCUMULATOR GP-HYDRAULIC. . . . . 181
ACCUMULATOR GP-HYDRAULIC–CANADA . . . . 181
ACCUMULATOR GP-HYDRAULIC–CHARGED. . . 175
176
177
178
180
ACCUMULATOR GP-HYDRAULIC–
UNCHARGED . . . . . 179
AIR CLEANER GP . . . . . 41
42
AIR CONDITIONER & MOUNTING GP. . . . . 432
AIR CONDITIONER GP . . . . . 433
AIR CONDITIONER GP–WITH AIR DUCT . . . . . 435
ALARM GP-TRAVEL . . . . . 66
ALTERNATOR GP-CHARGING . . . . . 68

## B

BATTERY (12-VOLT, MAINTENANCE FREE) . . . . 69
73
BATTERY & WIRING GP . . . . . 69
BATTERY & WIRING GP–CANOPY. . . . . 73
BELT TENSIONER GP. . . . . 5
BLADE & MOUNTING GP. . . . . 382
383
BLADE & MOUNTING GP–POWER ANGLE . . . . 381
BLADE AR-ANGLING . . . . . 384
BLADE AR-STRAIGHT . . . . . 384
BLADE AS-ANGLING . . . . . 385
BLADE AS-WIPER (450-MM) (FRONT). . . . . 531
BLADE GP-STRAIGHT . . . . . 386
387
BLOCK GP-HYDRAULIC . . . . . 249
BOOM AR . . . . . 359
BOOM GP . . . . . 360
BRACKET GP-MOUNTING–BUCKET . . . . . 362
BUCKET AR-GENERAL PURPOSE . . . . . 388
BUCKET AR-TILTABLE . . . . . 389
BUCKET AS-DITCH CLEANING . . . . . 390
391
392
393
BUCKET AS-GENERAL PURPOSE . . . . . 394
395
396
BUCKET AS-HOE . . . . . 397
398
399
400
401
402
BUCKET AS-HOE–HEAVY-DUTY . . . . . 403
BUCKET GP-EXCAVATION. . . . . 404
405

NAME PAGE

BUCKET GP-GENERAL PURPOSE . . . . . 406
407
408
409
410
411
BUCKET GP-HOE . . . . . 414
415
416
417
BUCKET GP-HOE–HEAVY-DUTY . . . . . 412
413
418

## C

C-FRAME GP-POWER ANGLING . . . . . 128
CAB AR–WITH AIR CONDITIONER . . . . . 435
436
CAB AR–WITH HEATER . . . . . 436
437
CAB GP . . . . . 438
440
442
444
446
451
458
CAB GP–WITH FRONT GUARD . . . . . 448
449
450
CAMSHAFT AS . . . . . 48
CAMSHAFT GP . . . . . 6
CANOPY AR. . . . . 460
CANOPY AR–WITH GUARD. . . . . 460
CANOPY GP. . . . . 461
462
CAP AS . . . . . 184
234
CAP AS (COOLANT RECOVERY) . . . . . 37
CAP-FUEL (LOCKABLE, VENTED). . . . . 64
CAP-PRESSURE (HYDRAULIC TANK) . . . . . 296
CAP-RADIATOR . . . . . 37
CHASSIS AR. . . . . 1
COIL GP-EVAPORATOR . . . . . 433
COMMON AR . . . . . 1
COMPRESSOR GP-REFRIGERANT . . . . . 463
CONDENSER & MTG GP-REFRIGERANT . . . . . 464
CONSOLE GP-OPERATOR. . . . . 465
CONSOLE GP-OPERATOR–LH . . . . . 467
CONSOLE GP-OPERATOR–RH. . . . . 466
CONTROL & MTG GP-ELECTRONIC . . . . . 76
CONTROL & MTG GP-PEDAL–TRAVEL. . . . . 469
470
CONTROL AR-AUXILIARY. . . . . 182
CONTROL AR-AUXILIARY–2-WAY . . . . . 183
CONTROL AR-AUXILIARY–2ND AUXILIARY, LONG
STICK . . . . . 183
CONTROL AR-AUXILIARY–2ND AUXILIARY,
STANDARD STICK . . . . . 182

# INDEX


NAME PAGE

CONTROL AR-AUXILIARY–SWING BOOM..... 182
CONTROL AR-COUPLER ..... 184
CONTROL AR-COUPLER–LONG STICK..... 183
CONTROL AR-COUPLER–STANDARD STICK .. 183
CONTROL AR-GOVERNOR–AUTOMATIC IDLE .. 49
CONTROL AR-GOVERNOR–AUTOMATIC IDLE, TRAVEL ALARM ..... 49
CONTROL AR-HYDRAULIC–2ND AUXILIARY ... 187
CONTROL AR-HYDRAULIC–STANDARD JOYSTICK ..... 187
CONTROL AR-PILOT HYDRAULIC–STANDARD ..... 187
CONTROL GP-GOVERNOR–AUTOMATIC IDLE..... 50
CONTROL GP-HANDLE (LH)..... 472
473
CONTROL GP-HANDLE (RH)..... 474
CONTROL GP-HYDRAULIC HAND–TRAVEL.... 471
CONTROL GP-JOYSTICK–LH..... 472
473
475
477
CONTROL GP-JOYSTICK–RH ..... 474
476
CONTROL GP-MACHINE (ELECTRONIC CONTROL)..... 76
CONTROL GP-PILOT OPERATED HYD..... 479
482
CONTROL GP-PILOT OPERATED HYD–2ND AUXILIARY..... 480
CONTROL GP-PILOT OPERATED HYD–BLADE..... 478
481
483
CORE AS-HYDRAULIC OIL COOLER..... 37
COUNTERWEIGHT & MOUNTING GP ..... 129
COUPLER AR-QUICK..... 419
420
421
COUPLER GP-QUICK..... 422
423
COVER AS–LH..... 130
COVER GP-ACCESS ..... 484
COVER GP-ACCESS–LH..... 131
COVER GP-ACCESS–RH ..... 132
COVER GP-CAB–TOP ..... 485
COVER GP-FENDER ..... 133
COVER GP-SOUND SUPPRESSION..... 134
COVER GP-VALVE MECHANISM..... 7
CRANKSHAFT GP..... 8
CYLINDER BLOCK AS..... 10
CYLINDER BLOCK GP ..... 11
CYLINDER GP-BLADE–ANGLE ..... 190
CYLINDER GP-BLADE–RAISE, LOWER ..... 188
CYLINDER GP-BOOM ..... 192
CYLINDER GP-BUCKET ..... 194
CYLINDER GP-HYDRAULIC..... 196
197
CYLINDER GP-STICK..... 198
CYLINDER GP-SWING BOOM..... 200
CYLINDER GP-TILT ..... 202

NAME PAGE

CYLINDER HEAD AS..... 13
CYLINDER HEAD GP..... 14


## D


DOOR GP-CAB ..... 486
DRAIN GP-ENGINE OIL–ECOLOGY..... 16
DRAIN GP-OIL–ECOLOGY, HYDRAULIC TANK..... 205
DRAIN GP-OIL–ENGINE, HYDRAULIC TANK ... 203
DRAIN GP-OIL–HYDRAULIC TANK, STANDARD ..... 203
204
DRIVE GP-FINAL..... 121
123
DRIVE GP-SWING..... 206
DRYER-REFRIGERANT (RECEIVER) (AIR CONDITIONER)..... 499
DUCT GP-CAB AIR..... 488
489


## E


ELECTRONICS GP-MACHINE ..... 77
ELECTRONICS GP-MONITOR ..... 77
ENGINE AR-COMPLETE ..... 2
ENGINE AR-PRIMARY ..... 3
4
EXTENSION GP-EXHAUST..... 43


## F


FASTENER GP-LINES ..... 208
FASTENER GP-LINES–STICK ..... 207
FENDER GP–LH ..... 136
FILLER GP-ENGINE OIL ..... 31
FILM GP..... 543
545
FILM GP-INTERNATIONAL ..... 546
FILM GP-INTERNATIONAL–COUPLER ..... 548
FILM GP-U.S..... 549
FILM GP-U.S.–COUPLER..... 551
552
FILM GP–2-WAY ..... 538
541
FILM GP–2ND AUXILIARY ..... 537
FILM GP–ANGLE BLADE ..... 542
FILM GP–AUXILIARY ..... 535
FILM GP–CAB HEATER ..... 539
544
FILM GP–COUPLER ..... 540
FILM GP–STRAIGHT BLADE ..... 534
FILM-IDENTIFICATION (DIESEL FUEL)..... 546
FILM-IDENTIFICATION (LIFT EYE, TIE-DOWN LOCATION) ..... 545
553
FILM-INFORMATION (HYDO ADVANCED 10)... 553
FILM-NOTICE (LIFT EYE LOCATION)..... 553

# INDEX


NAME PAGE

FILM-WARNING (CRUSH HAZARD, READ OMM, U.S.). . . . . 184
FILM-WARNING (HIGH PRESSURE CYLINDER) . . . . . 180
FILM-WARNING (JUMP START, READ OMM, U. S.). . . . . 549
FILM-WARNING (NO WELD, NO DRILL, READ OMM). . . . . 553
FILTER AS-ENGINE OIL . . . . . 32
FILTER ELEMENT AS-AIR (PRIMARY). . . . . 41
FILTER ELEMENT AS-AIR (SECONDARY) . . . . . 41
FILTER ELEMENT AS-OIL (HYDRAULIC, PILOT). . . . . 249
FILTER ELEMENT-CAB AIR. . . . . 433
495
FILTER ELEMENT-FUEL (WATER SEPARATOR) . . . . . 52
FILTER ELEMENT-OIL (HYDRAULIC) . . . . . 296
FILTER GP-ENGINE OIL. . . . . 32
FILTER GP-WATER SEP & FUEL . . . . . 52
FINAL DRIVE GP . . . . . 121
123
FLOOR MAT . . . . . 435
436
437
460
FLYWHEEL GP . . . . . 17
FRAME GP-REAR–CAB . . . . . 137
FRAME GP-REAR–CANOPY. . . . . 139
FRAME GP-SWING. . . . . 142
FRAME GP-UNDERCARRIAGE . . . . . 160
FRAME GP-UPPER. . . . . 144
FUSE (10-AMPERE) . . . . . 81
83
99
105
FUSE (15-AMPERE) . . . . . 81
83
99
105
FUSE (20-AMPERE) . . . . . 81
83
99
105
FUSE (30-AMPERE) . . . . . 79
80
81
83
99
105
FUSE (5-AMPERE) . . . . . 81
83
99
105
FUSE (60-AMPERE) . . . . . 79
80


## G


GASKET (THERMOSTAT HOUSING). . . . . 35
GASKET (WATER TEMPERATURE REGULATOR) . . . . . 35
GAUGE GP-OIL LEVEL (DIPSTICK)–ENGINE. . . . 33
GAUGE GP-SIGHT–HYDRAULIC OIL LEVEL . . . 209
GAUGE-OIL LEVEL (ENGINE) (DIPSTICK) . . . . . 33
GEAR & BEARING GP-SWING. . . . . 161
GLOW PLUG. . . . . 78
GLOW PLUG GP. . . . . 78
GOVERNOR GP. . . . . 53
GUARD GP-BOTTOM. . . . . 145
GUARD GP-CYLINDER–BOOM . . . . . 146
GUARD GP-CYLINDER–POWER ANGLE . . . . . 147
GUARD GP-FAN . . . . . 18
19
GUARD GP-FRONT. . . . . 148
GUARD GP-FRONT–MESH. . . . . 149
GUARD GP-TRACK GUIDE . . . . . 162
GUARD GP-VANDALISM. . . . . 490
491


## H


HANDRAIL GP . . . . . 492
HARNESS AS-CAB . . . . . 444
452
458
HARNESS AS-CHASSIS . . . . . 79
80
HARNESS AS-CONSOLE (CAB). . . . . 99
HARNESS AS-CONSOLE (CANOPY). . . . . 105
HARNESS AS-CONSOLE–CAB . . . . . 83
HARNESS AS-CONSOLE–CANOPY . . . . . 81
HARNESS AS-CONTROL (CAB, CANOPY) . . . . . 111
HARNESS AS-CONTROL–CAB, CANOPY . . . . . 85
HARNESS AS-HEATER . . . . . 495
HARNESS AS-HEATER & AIR COND . . . . . 433
HARNESS AS-HEATER & AIR COND (CAB) . . . 432
493
HARNESS AS-LIGHTING. . . . . 115
HARNESS AS-LIGHTING (CANOPY) . . . . . 94
HARNESS AS-LIGHTING (WARNING BEACON, POWER RECEP) . . . . . 114
HARNESS AS-QUICK COUPLER . . . . . 85
184
HARNESS AS-SENSOR–OVERLOAD. . . . . 85
HARNESS AS-SOLENOID–CAB, CANOPY. . . . . 86
HARNESS AS-WIRING (JACKET WATER HEATER) . . . . . 87
HARNESS AS-WIRING (WIPER MOTOR) . . . . . 444
451
458
HEATER & MTG GP-CAB. . . . . 493
HEATER AR-CAB . . . . . 494
HEATER GP-CAB . . . . . 495
HEATER GP-JACKET WATER. . . . . 87
88
HOOD & GUARD GP. . . . . 150
152
HOOD AS . . . . . 153
HOOD GP . . . . . 154

# INDEX


NAME PAGE

HORN GP-ELECTRIC . . . . . 497
HOUSING GP-FRONT . . . . . 20
HYDRAULIC AR . . . . . 210

## I

IDLER GP-FRONT . . . . . 163
IDLER GP-FRONT–LH . . . . . 164
IDLER GP-FRONT–RH . . . . . 166
INDICATOR-AIR FILTER CHANGE . . . . . 41
INSTALLATION AR-ENGINE . . . . . 4

## K

KIT-GUARD–CANOPY . . . . . 498

## L

LAMP (12-VOLT, 5-WATT) . . . . . 444 451 458
LAMP (12-VOLT, 55-WATT) . . . . . 89 91 94
LAMP AS (12-VOLT, 5-WATT) . . . . . 444 451 458
LAMP GP-FLOOD (12-VOLT) . . . . . 94
LAMP GP-FLOOD (12-VOLT) (CAB) . . . . . 91
LAMP GP-FLOOD–BOOM . . . . . 89
LIFTING GP-ENGINE . . . . . 22
LIGHTING AR-FLOOD–CANOPY . . . . . 90
LIGHTING GP-FLOOD–BOOM . . . . . 92
LIGHTING GP-FLOOD–CAB . . . . . 91 93
LIGHTING GP-FLOOD–CANOPY . . . . . 94
LINES AR-BOOM . . . . . 210
LINES AR-BOOM–CHECK VALVE . . . . . 210
LINES AR-BUCKET . . . . . 210
LINES AR-BUCKET–LONG STICK . . . . . 211
LINES GP-AIR . . . . . 44
LINES GP-AIR CONDITIONER . . . . . 499
LINES GP-AUXILIARY HYDRAULIC–2ND AUXILIARY, BOOM . . . . . 218
LINES GP-AUXILIARY HYDRAULIC–2ND AUXILIARY, LONG STICK . . . . . 215
LINES GP-AUXILIARY HYDRAULIC–2ND AUXILIARY, STANDARD STICK . . . . . 214
LINES GP-AUXILIARY HYDRAULIC–BOOM . . . . . 212
LINES GP-AUXILIARY HYDRAULIC–LONG STICK . . . . . 216 217
LINES GP-AUXILIARY HYDRAULIC–STANDARD STICK . . . . . 213 216
LINES GP-BLADE–ANGLE . . . . . 219
LINES GP-BLADE–RAISE, LOWER . . . . . 220
LINES GP-BOOM CHECK VALVE . . . . . 221
LINES GP-BUCKET CYLINDER . . . . . 227
LINES GP-BUCKET–LONG STICK . . . . . 223 225
LINES GP-CONNECTING–LH . . . . . 229
LINES GP-CONNECTING–RH . . . . . 228
LINES GP-COUPLER . . . . . 230
LINES GP-COUPLER–LONG STICK . . . . . 234
LINES GP-COUPLER–STANDARD STICK . . . . . 231
LINES GP-FRONT . . . . . 237 239
LINES GP-FRONT–BOOM CYLINDER . . . . . 236
LINES GP-FRONT–QUICK COUPLER . . . . . 241
LINES GP-FUEL . . . . . 55
LINES GP-FUEL FILTER . . . . . 56
LINES GP-FUEL INJECTION . . . . . 59
LINES GP-GREASE . . . . . 155
LINES GP-HEATER . . . . . 503
LINES GP-HYDRAULIC PUMP . . . . . 243
LINES GP-PILOT . . . . . 249
LINES GP-PILOT–2-WAY . . . . . 256
LINES GP-PILOT–AUXILIARY . . . . . 260
LINES GP-PILOT–BLADE ANGLE . . . . . 261
LINES GP-PILOT–JOYSTICK . . . . . 245
LINES GP-PILOT–JOYSTICK, 2-WAY . . . . . 247
LINES GP-PILOT–STANDARD . . . . . 253
LINES GP-RETURN . . . . . 263
LINES GP-RETURN–BLADE . . . . . 265
LINES GP-STICK . . . . . 267
LINES GP-SWING CYLINDER–2ND AUXILIARY . . . . . 270
LINES GP-SWING CYLINDER–BOOM . . . . . 269
LINES GP-SWING MOTOR . . . . . 275
LINES GP-SWING MOTOR–STANDARD . . . . . 272
LINES GP-TRAVEL MOTOR . . . . . 278 280
LINES GP-WATER . . . . . 35
LINK AS-TRACK . . . . . 168
LINK GP-WINDOW . . . . . 505
LINKAGE AR-BUCKET . . . . . 363
LINKAGE AR-BUCKET–WITH LIFTING EYE . . . . 363
LINKAGE AR-BUCKET–WITHOUT LIFTING EYE . . . . . 363 364
LINKAGE GP-BUCKET . . . . . 365 369
LINKAGE GP-BUCKET–WITH LIFTING EYE . . . . 367
LOCK GP (FENDER) . . . . . 136
LOCK GP-MECHANICAL . . . . . 422 423
LOCK GP-QUICK COUPLER . . . . . 424 425

## M

MANIFOLD & SOLENOID GP-CONTROL–AUXILIARY, BOOM SWING . . . . . 282
MANIFOLD GP-CONTROL . . . . . 283
MANIFOLD GP-EXHAUST . . . . . 45
MANIFOLD GP-INLET . . . . . 46
MIRROR GP-DOWN VIEW–CAB . . . . . 507

# INDEX


NAME PAGE

MIRROR GP-DOWN VIEW–EXTERIOR, REAR, RH ..... 506
MIRROR GP-REAR VIEW–CAB, WITH FRONT GUARD ..... 510
MIRROR GP-REAR VIEW–EXTERIOR, LH ..... 508 511 512
MIRROR GP-REAR VIEW–EXTERIOR, RH ..... 509 511 513
MIRROR GP-REAR VIEW–LH ..... 514
MIRROR GP-REAR VIEW–RH ..... 514
MONITOR GP-OPERATOR (CAB CONSOLE) ... 100 103 106 109
MOTOR & MTG GP-SWING ..... 285
MOTOR & MTG GP-TRAVEL ..... 125
MOTOR GP-SWING ..... 286
MOUNTING GP-BUCKET ..... 426 427 428
MOUNTING GP-ELECTRONIC CONTROL ..... 95
MOUNTING GP-ENGINE ..... 23 24
MOUNTING GP-MIRROR ..... 515
MUFFLER GP ..... 47

## N

NOZZLE GP-UNIT INJECTOR ..... 60

## O

OPERATOR AR ..... 516

## P

PADLOCK GP ..... 490
PAN GP-OIL–ENGINE ..... 26
PISTON & ROD GP ..... 27
PLANETARY GP-SWING DRIVE ..... 288
PLATE & FILM GP ..... 553
PLATE & FILM GP–CAB ..... 556
PLATE AS ..... 156
PLATFORM GP ..... 517
PLATFORM GP-OPERATOR ..... 519 522
PLATFORM GP-OPERATOR–CAB ..... 521
PLUG (DRAIN, ENGINE OIL) ..... 26
POWER TRAIN AR ..... 126
PULLEY GP-FAN DRIVE ..... 28
PUMP & MTG GP-MAIN HYDRAULIC ..... 289
PUMP GP-ENGINE OIL ..... 34
PUMP GP-FUEL INJECTION ..... 61
PUMP GP-GEAR (PILOT) ..... 290
PUMP GP-PISTON & GEAR–MAIN HYDRAULIC ..... 290
PUMP GP-WATER ..... 36

## R

RADIATOR & HYD OIL COOLER GP ..... 37
REGULATOR AS (WATER TEMPERATURE) ..... 35
RELAY AS (12-VOLT) ..... 99 103 105 109
RELAY AS (12-VOLT) (2ND AUXILIARY) ..... 120
RELAY AS (12-VOLT) (BACKUP ALARM) ..... 66
RELAY AS (12-VOLT) (MAIN) ..... 69 73 109
RELAY AS (12-VOLT) (PATTERN CHANGE) ... 119
RELAY AS (24-VOLT) (ENGINE START) ..... 40
RELAY AS (AIR CONDITIONER COMPRESSOR) ..... 495
RELAY AS (BLOWER FAN) ..... 433
RELAY AS (BLOWER MOTOR) ..... 433
ROLLER AR-TRACK & CARRIER ..... 169
ROLLER GP-TRACK CARRIER ..... 170
ROLLER GP-TRACK-CENTER FLANGE ..... 171

## S

SEAL (FRONT) ..... 11
SEAL (REAR) ..... 11
SEAL GP ..... 460
SEAL GP-DUO-CONE ..... 164 166
SEAL GP-METAL FACE ..... 171
SEAT & MOUNTING GP–HIGH BACK, CLOTH, SUSPENSION ..... 525
SEAT & MOUNTING GP–LOW BACK, SUSPENSION, VINYL ..... 524
SEAT BELT GP (RETRACTABLE, 2-IN) ..... 525
SEAT BELT GP (RETRACTABLE, 3-IN) ..... 525
SEAT BELT GP (RETRACTABLE, 51-MM (2-IN)) ..... 526
SEAT BELT GP (RETRACTABLE, 76-MM (3-IN)) ..... 527
SEAT BELT GP–3-IN ..... 525
SEAT BELT GP–RETRACTABLE, 2-IN ..... 525 526
SEAT BELT GP–RETRACTABLE, 3-IN ..... 527
SEAT GP (VINYL, LOW BACK, TILT) ..... 524
SEAT GP-SUSPENSION (CLOTH, HIGH BACK) ..... 529
SEAT GP-SUSPENSION–CLOTH, HIGH BACK ..... 529
SEAT GP-SUSPENSION–VINYL ..... 528
SENDER (CYLINDER HEAD) ..... 14
SENDER AS-FUEL LEVEL ..... 69 73
SENSOR (THERMOCOUPLE) ..... 69 73
SENSOR-TEMPERATURE (REFRIGERANT) ..... 433

# INDEX


| NAME | PAGE |
|---|---|
| SERVICE GP-MONITOR | 77 |
| SHUTOFF GP-MANUAL–ENGINE | 63 |
| SOFTWARE GP-MACHINE | 77 |
| SOFTWARE GP-MONITOR | 77, 100, 103, 106, 109 |
| SOLENOID (HYDRAULIC LOCKOUT) | 283 |
| SOLENOID (SPEED SELECT) | 283 |
| SOLENOID AS (ENGINE SHUTOFF) | 78 |
| SPRING AS-GAS (LOCKABLE) | 150 |
| SPROCKET GP | 127 |
| STARTING MOTOR GP-ELECTRIC | 96 |
| STICK AR | 370 |
| STICK AR-HOE–2ND AUXILIARY, LONG | 371, 372, 373 |
| STICK AR-HOE–2ND AUXILIARY, STANDARD | 372 |
| STICK AR-HOE–LONG | 371, 372 |
| STICK AR-HOE–LONG, HEAVY-DUTY | 370 |
| STICK AR-HOE–LONG, THUMB | 370 |
| STICK AR-HOE–STANDARD | 371, 372 |
| STICK AR-HOE–STANDARD, THUMB | 370 |
| STICK GP-HOE–LONG, HEAVY-DUTY | 374 |
| STICK GP-HOE–LONG, THUMB | 377 |
| STICK GP-HOE–STANDARD | 375 |
| STICK GP-HOE–STANDARD, THUMB | 379 |
| STOP GP-SWING–BOOM | 157 |
| STRAINER-FUEL (TANK) | 64 |
| STRAINER-OIL (ENGINE) | 32 |
| STRAINER-SUCTION (HYDRAULIC TANK) | 296 |
| SUPPRESSION AR-SOUND | 158 |
| SUPPRESSION AR-SOUND–HIGH AMBIENT | 158 |
| SUPPRESSION GP-SOUND | 159 |
| SWITCH AS (ENGINE SHUTOFF) | 53 |
| SWITCH AS-LIMIT (HYDRAULIC LOCKOUT) | 99, 103, 105, 109 |
| SWITCH AS-PRESSURE (PILOT OIL) | 69, 73 |
| SWITCH AS-PRESSURE (PILOT, TRAVEL) | 50 |
| SWITCH AS-ROCKER (LIGHT) | 99, 103, 105, 109 |
| SWITCH AS-ROCKER (OVERLOAD WARNING) | 117 |
| SWITCH AS-ROCKER (TRAVEL ALARM CANCEL) | 66 |
| SWITCH AS-ROCKER (WINDOW WASHER, WIPER) | 99, 103 |
| SWITCH AS-START (ENGINE) | 99, 103, 105, 109 |
| SWITCH GP-ROTARY (THROTTLE POSITION) | 103 |
| SWITCH GP-ROTARY–THROTTLE POSITION | 97 |
| SWITCH-PRESSURE (OIL, ENGINE) | 32 |
| SWIVEL GP | 292, 294 |


## T


| NAME | PAGE |
|---|---|
| TANK & FILTER GP-HYDRAULIC | 296 |
| TANK & MTG GP-FUEL | 64 |
| TANK & MTG GP-HYDRAULIC | 298 |
| TANK GP-WINDOW WASHER | 530 |
| THUMB GP | 429, 431 |
| TIP GP-LONG | 412, 413, 414, 415, 416, 417, 418 |
| TOOTH GP-UNI | 406, 407, 408, 409, 410, 411 |
| TRACK GP | 174 |
| TRACK GP–DOUBLE GROUSER SHOE | 172 |
| TRACK GP–RUBBER BELT | 174 |
| TRACK GP–STEEL | 173 |


## U


| NAME | PAGE |
|---|---|
| UNDERCARRIAGE AR | 174 |


## V


| NAME | PAGE |
|---|---|
| V-BELT (AIR CONDITIONER COMPRESSOR) | 463 |
| V-BELT (FAN DRIVE) | 28 |
| VALVE & MOUNTING GP–CANOPY | 299 |
| VALVE & MTG GP-BANK | 300, 301 |
| VALVE & MTG GP-CONTROL–2-WAY | 304 |
| VALVE & MTG GP-CONTROL–AUXILIARY, BOOM SWING | 302 |
| VALVE & MTG GP-MAIN CONTROL | 306 |
| VALVE & MTG GP-PILOT–CAB | 309 |
| VALVE & MTG GP-PILOT–TRAVEL | 307, 308 |
| VALVE AS-RELIEF | 340 |
| VALVE AS-RELIEF (LINE) | 338, 353 |
| VALVE AS-RELIEF (LINE) (THUMB) | 340 |
| VALVE GP-CHECK (HYDRAULIC CONTROL LOCK) | 197 |

# INDEX


| NAME | PAGE |
|---|---|
| VALVE GP-CHECK (PILOT OPERATED) | 267 |
| VALVE GP-CHECK (QUICK COUPLER) | 358 |
| VALVE GP-CHECK–HYDRAULIC CONTROL LOCK | 310 |
| VALVE GP-CONTROL | 311, 324 |
| VALVE GP-CONTROL (SWING BOOM, WORK TOOL) | 270 |
| VALVE GP-CONTROL–ANGLE | 316 |
| VALVE GP-CONTROL–AUXILIARY | 320 |
| VALVE GP-CONTROL–BLADE | 323, 330, 332 |
| VALVE GP-CONTROL–BOOM SWING | 318, 322 |
| VALVE GP-CONTROL–BUCKET | 313 |
| VALVE GP-CONTROL–INLET | 312 |
| VALVE GP-CONTROL–OUTLET | 315 |
| VALVE GP-CONTROL–STICK | 326, 334, 336 |
| VALVE GP-CONTROL–SWING | 314 |
| VALVE GP-CONTROL–TRAVEL RIGHT | 328 |
| VALVE GP-LOAD CONTROL | 221 |
| VALVE GP-MAIN CONTROL | 338 |
| VALVE GP-MAIN CONTROL–ANGLE BLADE | 340 |
| VALVE GP-PILOT (CANOPY) | 299 |
| VALVE GP-PILOT–BLADE CONTROL | 343, 347 |
| VALVE GP-PILOT–JOYSTICK | 342 |
| VALVE GP-PILOT–WITH SHUTTLE | 345, 349 |
| VALVE GP-PRESSURE REDUCING (QUICK COUPLER) | 358 |
| VALVE GP-PUMP CONTROL | 350 |
| VALVE GP-PUMP CONTROL–303C CR | 351 |
| VALVE GP-REDUCING (SLOW RETURN) | 253, 256 |
| VALVE GP-RELIEF | 352 |
| VALVE GP-RELIEF (OUTLET) | 315 |
| VALVE GP-RELIEF–THUMB | 353 |
| VALVE GP-SHUTOFF (DRAIN, HYDRAULIC OIL) | 205 |
| VALVE GP-SOLENOID | 354, 355, 356, 357 |
| VALVE GP-SOLENOID (12-VOLT) (FLOW CONTROL) | 357 |
| VALVE GP-SOLENOID (12-VOLT) (QUICK COUPLER) | 358 |
| VALVE GP-SOLENOID (AUXILIARY, BOOM SWING) | 282 |
| VALVE GP-SOLENOID (BLADE) | 261, 356 |
| VALVE GP-SOLENOID (FLOW CONTROL) (2-WAY) | 304 |
| VALVE GP-SOLENOID & MANIFOLD (QUICK COUPLER) | 184 |
| VALVE GP-SOLENOID & MANIFOLD–QUICK COUPLER | 358 |
| VALVE MECHANISM GP | 29 |


## W


| NAME | PAGE |
|---|---|
| WASHER GP-WINDOW | 530 |
| WINDOW GP-CAB | 531 |
| WINDOW GP-SLIDING | 533 |
| WIRING GP-CAB–CANOPY | 98 |
| WIRING GP-CONSOLE–CAB | 99, 103 |
| WIRING GP-CONSOLE–CANOPY | 105, 109 |
| WIRING GP-CONSOLE–POWER ANGLE | 111 |
| WIRING GP-ENGINE–REFRIGERANT COMPRESSOR | 113 |
| WIRING GP-LIGHTING–BOOM | 115 |
| WIRING GP-LIGHTING–WARNING BEACON, POWER RECEP | 114 |
| WIRING GP-OVERLOAD WARNING | 117 |
| WIRING GP-QUICK COUPLER | 118 |
| WIRING GP-RELAY PANEL–2ND AUXILIARY | 120 |
| WIRING GP-RELAY PANEL–PATTERN CHANGE | 119 |

# MEMORANDA

# MACHINE ARRANGEMENT

## *376-6676* CHASSIS AR

**PART OF 376-6672 COMMON AR**

**SMCS-7000** **i04725141**

| NOTE | PART NUMBER | QTY | PART NAME 1 2 3 4 5 6 (PRODUCT LEVEL) | SEE PAGE |
|---|---|---|---|---|
| Y | *367-0902* | 1 | COUNTERWEIGHT & MOUNTING GP | 129 |
| Y | *367-0912* | 1 | COVER GP-FENDER | 133 |
| Y | *376-6212* | 1 | FRAME GP-UPPER | 144 |
| Y | *384-5724* | 1 | GUARD GP-BOTTOM | 145 |
| Y | *367-0918* | 1 | HOOD & GUARD GP | 150 |
| Y | *266-6835* | 1 | HORN GP-ELECTRIC | 497 |
| Y | *379-4728* | 1 | LINES GP-FUEL FILTER | 56 |
| Y | *379-4691* | 1 | LINES GP-GREASE | 155 |
| Y | *379-3624* | 1 | OPERATOR AR | 516 |
| Y | *377-9698* | 1 | PLATE & FILM GP | 553 |
| Y | *367-0930* | 1 | TANK & MTG GP-FUEL | 64 |

Y - SEPARATE ILLUSTRATION

<END>

## *376-6672* COMMON AR

**SMCS-7000** **i05289935**

| NOTE | PART NUMBER | QTY | PART NAME 1 2 3 4 5 6 (PRODUCT LEVEL) | SEE PAGE |
|---|---|---|---|---|
| Y | *376-6680* | 1 | BOOM AR | 359 |
| Y | *376-6676* | 1 | CHASSIS AR | 1 |
| Y | *355-3393* | 1 | CONTROL & MTG GP-PEDAL (TRAVEL) | 470 |
| Y | *379-4715* | 1 | CONTROL AR-AUXILIARY | 182 |
| Y | *392-4756* | 1 | ELECTRONICS GP-MACHINE | 77 |
| Y | *377-0326* | 1 | ELECTRONICS GP-MONITOR | 77 |
| Y | **380-1777** | 1 | ENGINE AR-COMPLETE | 2 |
| | | | S/N: RKY1-1439 | |
| Y | *379-4713* | 1 | HYDRAULIC AR | 210 |
| Y | *383-0640* | 1 | INSTALLATION AR-ENGINE | 4 |
| Y | *356-0571* | 1 | POWER TRAIN AR | 126 |
| Y | *380-8799* | 1 | UNDERCARRIAGE AR | 174 |

Y - SEPARATE ILLUSTRATION

<END>

# ENGINE ARRANGEMENT

## 380-1777 ENGINE AR-COMPLETE

**S/N: RKY1-1439**
**25 BRAKE KW (33 BHP) AT 2400 RPM**
**FIELD REPLACEMENT ORDER 416-6081—PAGE: 4**
**PART OF 376-6672 COMMON AR**

**SMCS-1000** **i04669614**

| NOTE | PART NUMBER | QTY | PART NAME 1 2 3 4 5 6 (PRODUCT LEVEL) | SEE PAGE |
|---|---|---|---|---|
| Y | *383-0133* | 1 | ACCESSORY GP-ENGINE | 40 |
| Y | *383-0134* | 1 | ALTERNATOR GP-CHARGING | 68 |
| Y | *386-4564* | 1 | CAMSHAFT GP | 6 |
| Y | *386-4566* | 1 | COVER GP-VALVE MECHANISM | 7 |
| Y | *386-4570* | 1 | CRANKSHAFT GP | 8 |
| Y | *386-4561* | 1 | CYLINDER BLOCK GP | 11 |
| Y | *386-4637* | 1 | CYLINDER HEAD GP | 14 |
| Y | *383-0250* | 1 | FILLER GP-ENGINE OIL | 31 |
| Y | *383-0141* | 1 | FILTER GP-ENGINE OIL (WITH SWITCH) | 32 |
| Y | *386-4592* | 1 | FLYWHEEL GP | 17 |
| Y | *383-0144* | 1 | GAUGE GP-OIL LEVEL (DIPSTICK) (ENGINE) | 33 |
| Y | *386-4647* | 1 | GLOW PLUG GP | 78 |
| Y | *386-4635* | 1 | GOVERNOR GP | 53 |
| Y | *383-0503* | 1 | HOUSING GP-FRONT | 20 |
| Y | *386-4638* | 1 | LIFTING GP-ENGINE | 22 |
| Y | *386-4639* | 1 | LINES GP-FUEL | 55 |
| Y | *386-4640* | 1 | LINES GP-FUEL INJECTION | 59 |
| Y | *386-4588* | 1 | LINES GP-WATER | 35 |
| Y | *386-4641* | 1 | MANIFOLD GP-EXHAUST | 45 |
| Y | *386-4642* | 1 | MANIFOLD GP-INLET | 46 |
| Y | *386-4644* | 1 | NOZZLE GP-UNIT INJECTOR | 60 |
| Y | *386-4645* | 1 | PAN GP-OIL | 26 |
| Y | *386-4646* | 1 | PISTON & ROD GP | 27 |
| Y | *386-4648* | 1 | PULLEY GP-FAN DRIVE | 28 |
| Y | *383-0161* | 1 | PUMP GP-ENGINE OIL | 34 |
| Y | *386-4650* | 1 | PUMP GP-FUEL INJECTION | 61 |
| Y | *383-0162* | 1 | PUMP GP-WATER | 36 |
| Y | *383-0154* | 1 | STARTING MOTOR GP-ELECTRIC | 96 |
| Y | *386-4643* | 1 | VALVE MECHANISM GP | 29 |

Y - SEPARATE ILLUSTRATION

<END>

# ENGINE ARRANGEMENT

## 392-4127 ENGINE AR-PRIMARY

**25 BRAKE KW (33 BHP) AT 2400 RPM**
**FIELD REPLACEMENT FOR 416-6081—PAGE: 4**
**AN ATTACHMENT**

**SMCS-1000** **i05255777**

| NOTE | PART NUMBER | QTY | PART NAME 1 2 3 4 5 6 (PRODUCT LEVEL) | SEE PAGE |
|---|---|---|---|---|
| Y | *383-0133* | 1 | ACCESSORY GP-ENGINE | 40 |
| Y | *383-0134* | 1 | ALTERNATOR GP-CHARGING | 68 |
| Y | *386-4564* | 1 | CAMSHAFT GP | 6 |
| Y | *386-4566* | 1 | COVER GP-VALVE MECHANISM | 7 |
| Y | *386-4570* | 1 | CRANKSHAFT GP | 8 |
| Y | *386-4561* | 1 | CYLINDER BLOCK GP | 11 |
| Y | *386-4637* | 1 | CYLINDER HEAD GP | 14 |
| Y | *383-0250* | 1 | FILLER GP-ENGINE OIL | 31 |
| Y | *383-0141* | 1 | FILTER GP-ENGINE OIL (WITH SWITCH) | 32 |
| Y | *386-4592* | 1 | FLYWHEEL GP | 17 |
| Y | *383-0144* | 1 | GAUGE GP-OIL LEVEL (DIPSTICK) (ENGINE) | 33 |
| Y | *386-4647* | 1 | GLOW PLUG GP | 78 |
| Y | *386-4635* | 1 | GOVERNOR GP | 53 |
| Y | *383-0503* | 1 | HOUSING GP-FRONT | 20 |
| Y | *386-4638* | 1 | LIFTING GP-ENGINE | 22 |
| Y | *386-4639* | 1 | LINES GP-FUEL | 55 |
| Y | *386-4640* | 1 | LINES GP-FUEL INJECTION | 59 |
| Y | *386-4588* | 1 | LINES GP-WATER | 35 |
| Y | *386-4641* | 1 | MANIFOLD GP-EXHAUST | 45 |
| Y | *386-4642* | 1 | MANIFOLD GP-INLET | 46 |
| Y | *386-4644* | 1 | NOZZLE GP-UNIT INJECTOR | 60 |
| Y | *386-4645* | 1 | PAN GP-OIL (ENGINE) | 26 |
| Y | *386-4646* | 1 | PISTON & ROD GP | 27 |
| Y | *386-4648* | 1 | PULLEY GP-FAN DRIVE | 28 |
| Y | *383-0161* | 1 | PUMP GP-ENGINE OIL | 34 |
| Y | *386-4650* | 1 | PUMP GP-FUEL INJECTION | 61 |
| Y | *383-0162* | 1 | PUMP GP-WATER | 36 |
| Y | *383-0154* | 1 | STARTING MOTOR GP-ELECTRIC | 96 |
| Y | *386-4643* | 1 | VALVE MECHANISM GP | 29 |

Y - SEPARATE ILLUSTRATION

<END>

# ENGINE ARRANGEMENT

## 416-6081 ENGINE AR-PRIMARY

**25 BRAKE KW (34 BHP) AT 2400 RPM**

**FIELD REPLACEMENT FOR 380-1777—PAGE: 2, 392-4127—PAGE: 3**

**SMCS-1000** **i05314040**

| NOTE | PART NUMBER | QTY | PART NAME 1 2 3 4 5 6 (PRODUCT LEVEL) | SEE PAGE |
|---|---|---|---|---|
| Y | *383-0133* | 1 | ACCESSORY GP-ENGINE | 40 |
| Y | *383-0134* | 1 | ALTERNATOR GP-CHARGING | 68 |
| Y | *386-4564* | 1 | CAMSHAFT GP | 6 |
| Y | *386-4566* | 1 | COVER GP-VALVE MECHANISM | 7 |
| Y | *386-4570* | 1 | CRANKSHAFT GP | 8 |
| Y | *386-4561* | 1 | CYLINDER BLOCK GP | 11 |
| Y | *386-4637* | 1 | CYLINDER HEAD GP | 14 |
| Y | *383-0250* | 1 | FILLER GP-ENGINE OIL | 31 |
| Y | *383-0141* | 1 | FILTER GP-ENGINE OIL (WITH SWITCH) | 32 |
| Y | *386-4592* | 1 | FLYWHEEL GP | 17 |
| Y | *383-0144* | 1 | GAUGE GP-OIL LEVEL (DIPSTICK) (ENGINE) | 33 |
| Y | *386-4647* | 1 | GLOW PLUG GP | 78 |
| Y | *386-4635* | 1 | GOVERNOR GP | 53 |
| Y | *383-0503* | 1 | HOUSING GP-FRONT | 20 |
| Y | *386-4638* | 1 | LIFTING GP-ENGINE | 22 |
| Y | *386-4639* | 1 | LINES GP-FUEL | 55 |
| Y | *386-4640* | 1 | LINES GP-FUEL INJECTION | 59 |
| Y | *386-4588* | 1 | LINES GP-WATER | 35 |
| Y | *386-4641* | 1 | MANIFOLD GP-EXHAUST | 45 |
| Y | *386-4642* | 1 | MANIFOLD GP-INLET | 46 |
| Y | *386-4644* | 1 | NOZZLE GP-UNIT INJECTOR | 60 |
| Y | *386-4645* | 1 | PAN GP-OIL (ENGINE) | 26 |
| Y | *386-4646* | 1 | PISTON & ROD GP | 27 |
| Y | *386-4648* | 1 | PULLEY GP-FAN DRIVE | 28 |
| Y | *383-0161* | 1 | PUMP GP-ENGINE OIL | 34 |
| Y | *386-4650* | 1 | PUMP GP-FUEL INJECTION | 61 |
| Y | *383-0162* | 1 | PUMP GP-WATER | 36 |
| Y | *383-0154* | 1 | STARTING MOTOR GP-ELECTRIC | 96 |
| Y | *386-4643* | 1 | VALVE MECHANISM GP | 29 |

Y - SEPARATE ILLUSTRATION

<END>

## *383-0640* INSTALLATION AR-ENGINE

**PART OF 376-6672 COMMON AR**

**SMCS-1000** **i04732215**

| NOTE | PART NUMBER | QTY | PART NAME 1 2 3 4 5 6 (PRODUCT LEVEL) | SEE PAGE |
|---|---|---|---|---|
| Y | *383-8499* | 1 | AIR CLEANER GP | 42 |
| Y | *380-6597* | 1 | BELT TENSIONER GP | 5 |
| Y | *383-0643* | 1 | EXTENSION GP-EXHAUST | 43 |
| Y | *383-0641* | 1 | LINES GP-AIR | 44 |
| Y | *384-1056* | 1 | MUFFLER GP | 47 |
| Y | *380-6364* | 1 | RADIATOR & HYD OIL COOLER GP | 37 |
| Y | *378-2140* | 1 | SHUTOFF GP-MANUAL (FUEL INJECTION PUMP) | 63 |

Y - SEPARATE ILLUSTRATION

<END>

# 380-6597 BELT TENSIONER GP

**PART OF 383-0640 INSTALLATION AR-ENGINE**

**SMCS-1357, 1358, 1397** **i05437155**

| NOTE | REF NO | GRAPHIC REF | PART NUMBER | QTY | PART NAME 1 2 3 4 5 6 (PRODUCT LEVEL) | SEE PAGE |
|---|---|---|---|---|---|---|
| | 1 | 1 | **382-4808** | 1 | BRACKET AS | |
| | | 1 | **381-5786** | 1 | SPACER (9X16X54-MM THK) | |
| | 2 | 1 | **382-4810** | 1 | BRACKET AS | |
| M | | 1 | **8T-3612** | 1 | NUT-WELD (M8X1.25-THD) | |
| | 3 | 1 | **382-4812** | 1 | SPACER (9X22X8.5-MM THK) | |
| | 4 | 1 | **382-4813** | 1 | BRACKET AS | |
| M | | 1 | **8T-3612** | 1 | NUT-WELD (M8X1.25-THD) | |
| | 5 | 1 | **382-4815** | 1 | SLEEVE | |
| M | 6 | 1 | **099-3649** | 1 | BOLT (M8X1.25X40-MM) | |
| | 7 | 1 | **304-2819** | 1 | BOLT (M8X1.25X100-MM) | |
| M | 8 | 1 | **5C-7261** | 1 | NUT (M8X1.25-THD) | |
| M | 9 | 1 | **8T-3647** | 2 | BOLT (M8X1.25X80-MM) | |
| | 10 | 1 | **8T-4224** | 6 | WASHER-HARD (8.8X16X2-MM THK) | |
| M | 11 | 1 | **8T-4908** | 1 | BOLT (M8X1.25X25-MM) | |

M - METRIC PART

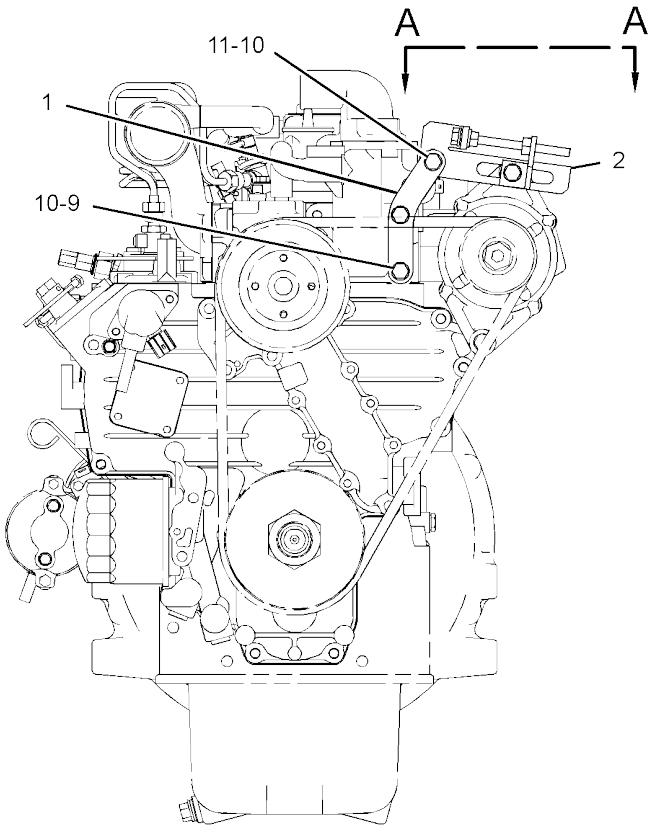


FRONT VIEW OF ENGINE

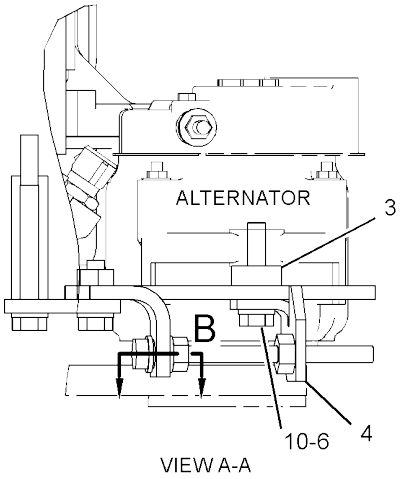


VIEW A-A

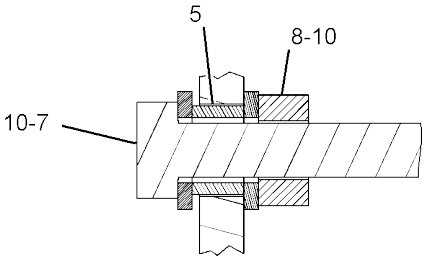


SECTION B

GRAPHIC #1 **<END>** g02769076

# BASIC ENGINE

## *386-4564* CAMSHAFT GP

**S/N: RKY1-1439**

**PART OF 380-1777 ENGINE AR-COMPLETE, 392-4127, 416-6081 ENGINE AR-PRIMARY**

**ALSO AN ATTACHMENT**

**SMCS-1210, 1211, 1212** **i04681109**

| NOTE | REF NO | GRAPHIC REF | PART NUMBER | QTY | PART NAME 1 2 3 4 5 6 (PRODUCT LEVEL) | SEE PAGE |
|---|---|---|---|---|---|---|
| | 1 | 1 | **383-0171** | 2 | BOLT | |
| | 2 | 1 | **386-6934** | 1 | CAMSHAFT AS | |
| | 2A | 1 | **383-0227** | 1 | KEY-FEATHER | |
| | 2B | 1 | **383-0231** | 1 | BALL | |
| | 2C | 1 | **383-0270** | 1 | STOPPER (CAMSHAFT) | |
| | 2D | 1 | **383-0465** | 1 | GEAR-CAMSHAFT (68-TEETH) | |

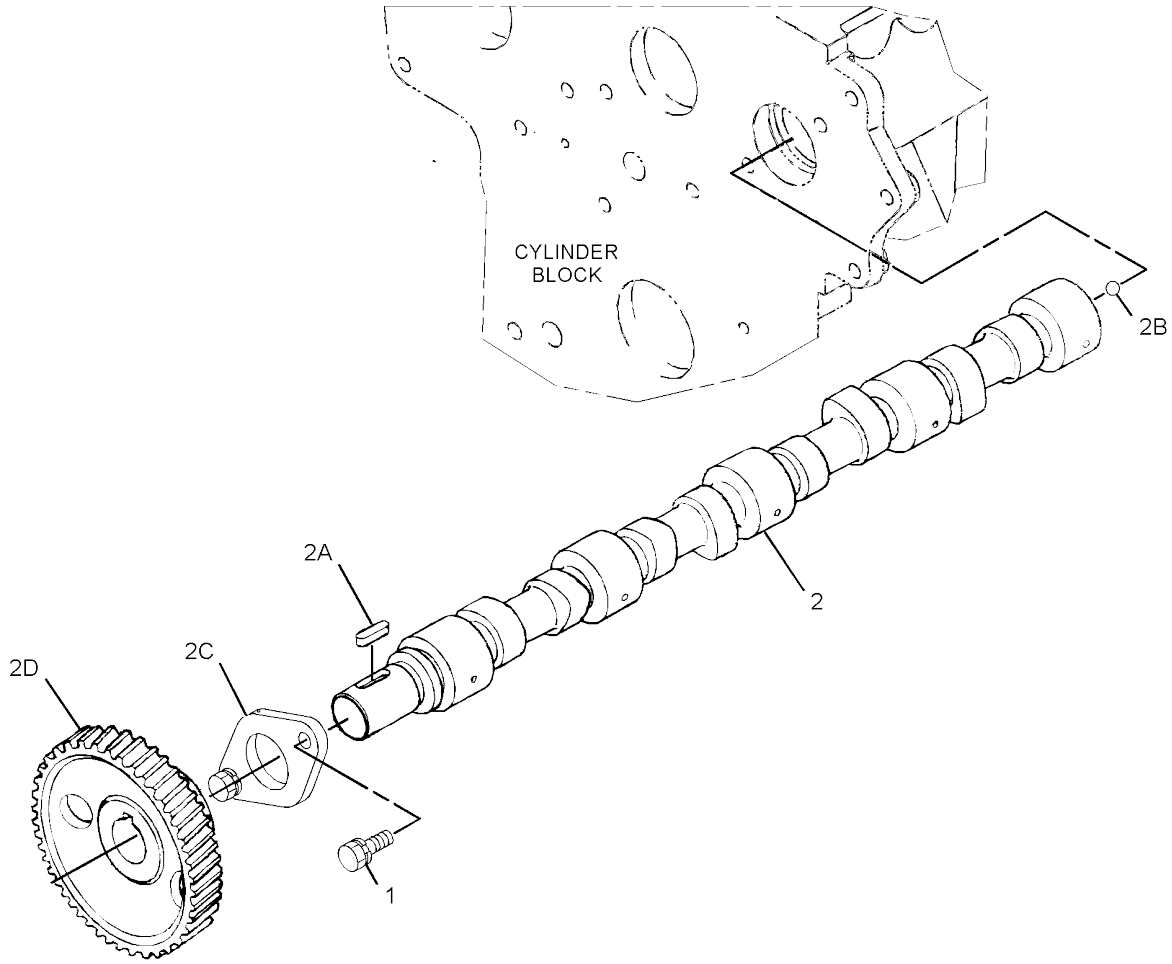


GRAPHIC #1 **<END>** g02789469

# 386-4566 COVER GP-VALVE MECHANISM

**S/N: RKY1-1439**

**PART OF 380-1777 ENGINE AR-COMPLETE, 392-4127, 416-6081 ENGINE AR-PRIMARY**
**ALSO AN ATTACHMENT**

**SMCS-1107, 1120** **i04790563**

| NOTE | REF NO | GRAPHIC REF | PART NUMBER | QTY | PART NAME 1 2 3 4 5 6 (PRODUCT LEVEL) | SEE PAGE |
|---|---|---|---|---|---|---|
| | 1 | 1 | **383-0217** | 1 | SEAL-O-RING | |
| | 2 | 1 | **383-0321** | 1 | PLUG-FILLER (ENGINE OIL) | |
| | 3 | 1 | **386-6930** | 1 | COVER AS-VALVE | |
| | | 1 | **383-0203** | 4 | SCREW | |
| | | 1 | **383-0382** | 1 | PIPE | |
| | | 1 | **383-0524** | 1 | COVER | |
| | | 1 | **383-0563** | 1 | VALVE-BREATHER | |
| | 4 | 1 | **386-6933** | 1 | GASKET | |
| | 5 | 1 | **383-0574** | 8 | BOLT | |
| | 6 | 1 | **395-0080** | 1 | HOSE-BREATHER | |
| | 7 | 1 | **389-1593** | 2 | CLAMP | |

PARTS SHOWN IN GRAPHIC(S) WITHOUT A REFERENCE NUMBER ARE NOT SERVICED SEPARATELY

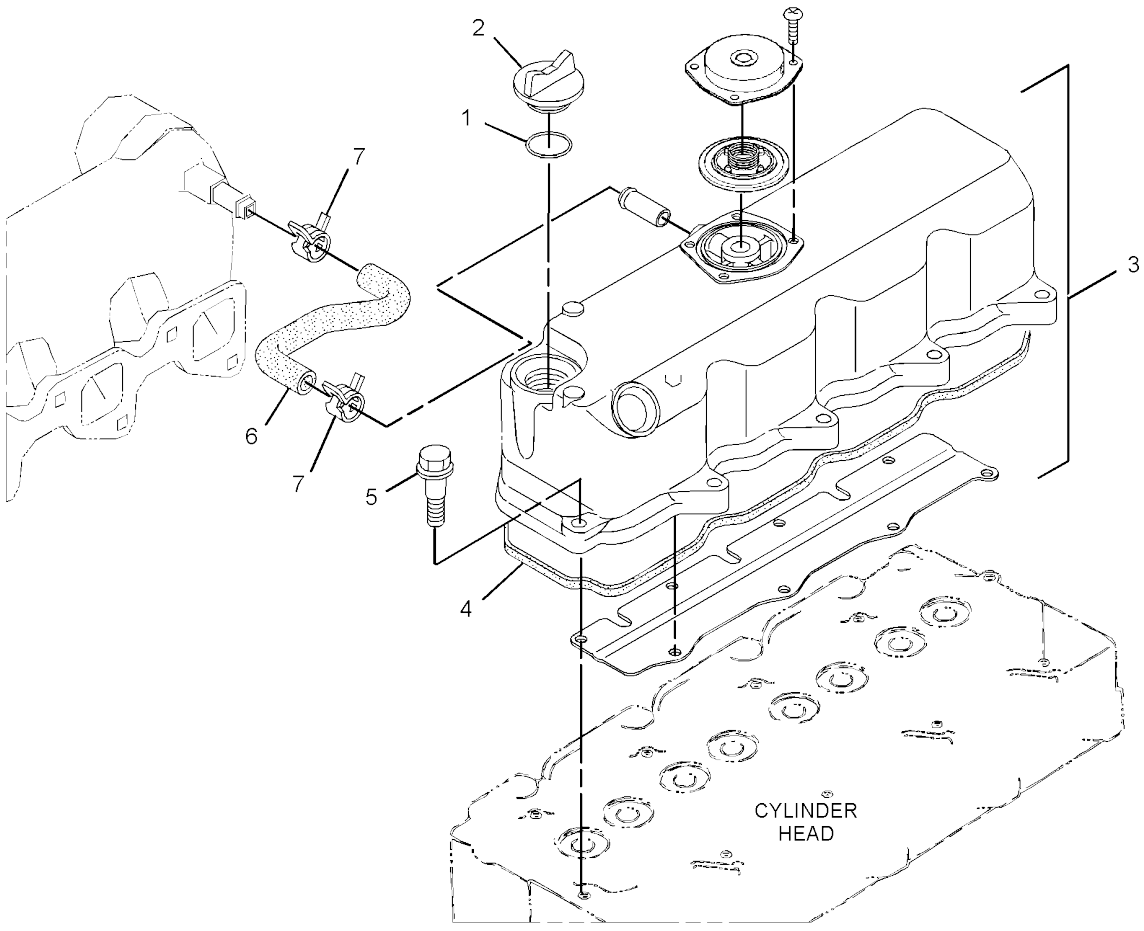


GRAPHIC #1 **<END>** g02906057

# BASIC ENGINE

## *386-4570* CRANKSHAFT GP

**S/N: RKY1-1439**

**PART OF 380-1777 ENGINE AR-COMPLETE, 392-4127, 416-6081 ENGINE AR-PRIMARY**

**ALSO AN ATTACHMENT**

**SMCS-1160, 1161, 1202, 1203, 1204, 1230, 1231, 1232** **i05325177**

| NOTE | REF NO | GRAPHIC REF | PART NUMBER | QTY | PART NAME 1 2 3 4 5 6 (PRODUCT LEVEL) | SEE PAGE |
|---|---|---|---|---|---|---|
| | 1 | 1 | **383-0467** | 1 | BEARING-CRANKSHAFT | |
| | | 1 | **389-0724** | 1 | BEARING-MAIN (0.20-MM UNDERSIZE) | |
| | | 1 | **389-0725** | 1 | BEARING-MAIN (0.40-MM UNDERSIZE) | |
| | 2 | 1 | **383-0469** | 2 | BUSHING | |
| | | 1 | **389-0726** | 2 | BEARING-THRUST (0.20-MM OVERSIZE) | |
| | | 1 | **389-0727** | 2 | BEARING-THRUST (0.40-MM OVERSIZE) | |
| | 3 | 1 | **383-0470** | 2 | BUSHING | |
| | | 1 | **389-0728** | 2 | BEARING-THRUST (0.20 OVERSIZE) | |
| | | 1 | **389-0729** | 2 | BEARING-THRUST (0.40 OVERSIZE) | |
| | 4 | 1 | **383-0392** | 1 | COLLAR-CAMSHAFT | |
| | 5 | 1 | **386-6936** | 1 | CRANKSHAFT AS | |
| | 5A | 1 | **383-0231** | 4 | BALL | |
| | 5B | 1 | **383-0393** | 1 | BEARING-CRANKSHAFT | |
| | 6 | 1 | **383-0515** | 1 | GEAR AS-IDLER (79-TEETH) | |
| | | 1 | **383-0401** | 1 | GEAR-IDLER | |
| | 7 | 1 | **383-0587** | 1 | COLLAR-GEAR CONTROL | |
| | 8 | 1 | **383-0399** | 1 | GEAR-CRANKSHAFT (34-TEETH) | |
| | 9 | 1 | **383-0228** | 1 | KEY-FEATHER | |
| | 10 | 1 | **383-0271** | 1 | NUT | |
| | 11 | 1 | **383-0398** | 1 | PIN-STRAIGHT | |
| | 12 | 1 | **383-0210** | 1 | SEAL-O-RING | |
| | 13 | 1 | **383-0400** | 1 | SHAFT-GEAR | |
| | 14 | 1 | **383-0292** | 1 | SLINGER-OIL | |
| | 15 | 1 | **383-0171** | 3 | BOLT | |
| | 16 | 1 | **393-7502** | 2 | BOLT-FLANGE HEAD | |

*386-4570* **CRANKSHAFT GP (*contd.*)** **i05325177**

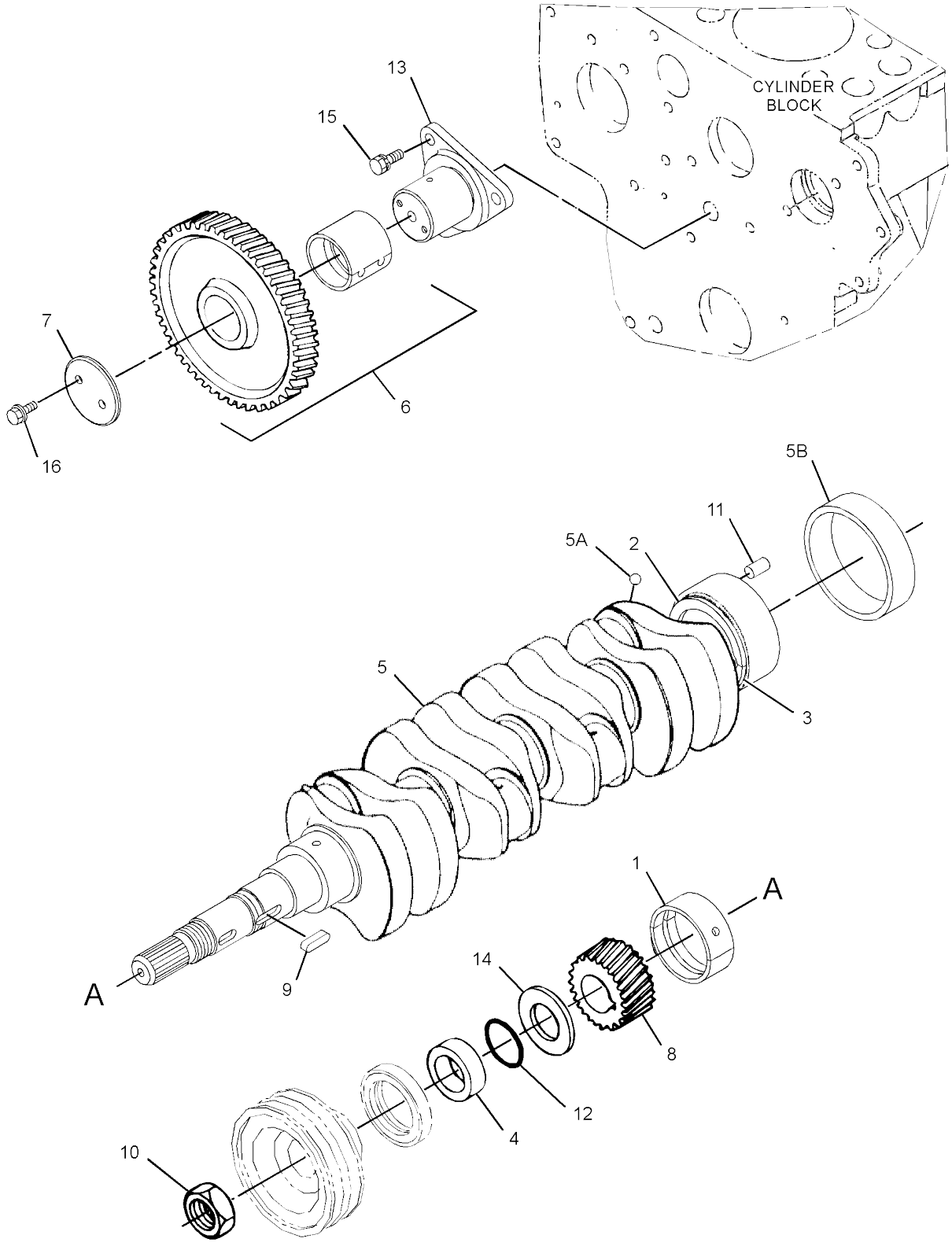


GRAPHIC #1 <END> g02789532

# BASIC ENGINE

## 386-6914 CYLINDER BLOCK AS

**PART OF 386-4561 CYLINDER BLOCK GP**
**ALSO AN ATTACHMENT**

**SMCS-1201** **i04790565**

| NOTE | REF NO | GRAPHIC REF | PART NUMBER | QTY | PART NAME 1 2 3 4 5 6 (PRODUCT LEVEL) | SEE PAGE |
|---|---|---|---|---|---|---|
| | 1 | 1 | **383-0260** | 5 | CAP | |
| | 2 | 1 | **383-0261** | 2 | CAP | |
| | 3 | 1 | **383-0358** | 1 | CAP | |
| | 4 | 1 | **383-0218** | 2 | PIN | |
| | 5 | 1 | **383-0219** | 3 | PIN | |
| | 6 | 1 | **383-0220** | 2 | PIN | |
| | 7 | 1 | **383-0221** | 1 | PIN | |
| | 8 | 1 | **383-0272** | 1 | PIN | |
| | 9 | 1 | **383-0229** | 1 | PLUG | |
| | 10 | 1 | **383-0303** | 5 | PLUG | |
| | 11 | 1 | **383-0304** | 2 | PLUG | |
| | 12 | 1 | **383-0337** | 1 | PLUG | |
| | 13 | 1 | **383-0385** | 3 | PLUG | |

NO GRAPHIC AVAILABLE AT TIME OF PUBLICATION

GRAPHIC #1 **<END>** g01269539

# BASIC ENGINE

## *386-4561* CYLINDER BLOCK GP

**S/N: RKY1-1439**

**PART OF 380-1777 ENGINE AR-COMPLETE, 392-4127, 416-6081 ENGINE AR-PRIMARY**
**ALSO AN ATTACHMENT**

**SMCS-1201** **i04688410**

| NOTE | REF NO | GRAPHIC REF | PART NUMBER | QTY | PART NAME 1 2 3 4 5 6 (PRODUCT LEVEL) | SEE PAGE |
|---|---|---|---|---|---|---|
| Y | 1 | 1 | *386-6914* | 1 | CYLINDER BLOCK AS | 10 |
| | 2 | 1 | *383-0432* | 1 | CASE AS | |
| | 2A | 1 | **383-0447** | 2 | BOLT | |
| | 2B | 1 | **383-0468** | 2 | BEARING | |
| | | 1 | **383-0430** | 2 | BEARING (0.20-MM UNDERSIZE) | |
| | | 1 | **383-0431** | 2 | BEARING (0.40-MM UNDERSIZE) | |
| | 3 | 1 | *383-0457* | 1 | CASE AS | |
| | 3A | 1 | **383-0447** | 2 | BOLT | |
| | 3B | 1 | **383-0468** | 2 | BEARING | |
| | | 1 | **383-0430** | 2 | BEARING (0.20-MM UNDERSIZE) | |
| | | 1 | **383-0431** | 2 | BEARING (0.40-MM UNDERSIZE) | |
| | 4 | 1 | *383-0458* | 1 | CASE AS | |
| | 4A | 1 | **383-0447** | 2 | BOLT | |
| | 4B | 1 | **383-0468** | 2 | BEARING | |
| | | 1 | **383-0430** | 2 | BEARING (0.20-MM UNDERSIZE) | |
| | | 1 | **383-0431** | 2 | BEARING (0.40-MM UNDERSIZE) | |
| | 6 | 1 | **383-0174** | 8 | BOLT | |
| | 7 | 1 | **383-0175** | 8 | BOLT | |
| | 8 | 1 | **383-0305** | 3 | BOLT | |
| | 9 | 1 | **383-0532** | 1 | COVER | |
| | 10 | 1 | **383-0386** | 1 | FITTING | |
| | 11 | 1 | **383-0256** | 1 | GASKET | |
| | 12 | 1 | **383-0446** | 1 | GASKET | |
| | 13 | 1 | **383-0451** | 1 | GASKET | |
| | 15 | 1 | **383-0557** | 1 | PLUG | |
| | 16 | 1 | **383-0347** | 1 | SEAL (REAR) | |
| | 17 | 1 | **383-0553** | 1 | SEAL (FRONT) | |

Y - SEPARATE ILLUSTRATION

*386-4561* **CYLINDER BLOCK GP (*contd.*)** **i04688410**

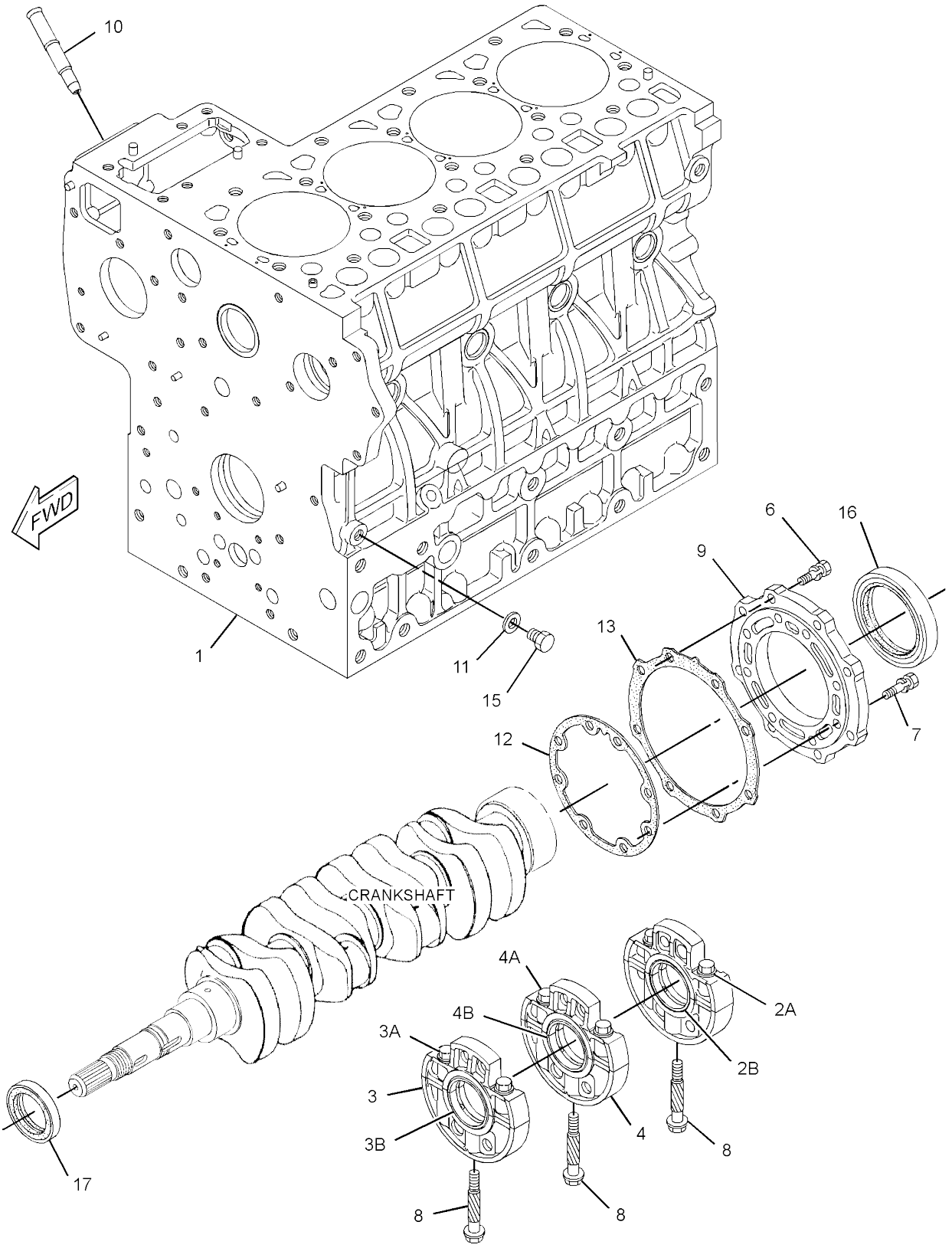


GRAPHIC #1 **<END>** g02798305

# 386-6920 CYLINDER HEAD AS

**PART OF 386-4637 CYLINDER HEAD GP**
**ALSO AN ATTACHMENT**

**SMCS-1100** **i04794764**

| NOTE | PART NUMBER | QTY | PART NAME 1 2 3 4 5 6 (PRODUCT LEVEL) | SEE PAGE |
|---|---|---|---|---|
| | **383-0259** | 9 | CAP | |
| | **383-0262** | 1 | CAP | |
| | **383-0473** | 3 | GUIDE-VALVE (EXHAUST) | |
| | **383-0555** | 3 | GUIDE-VALVE (INLET) | |
| | **383-0283** | 2 | PLUG | |
| | **383-0360** | 3 | SEAT-VALVE (EXHAUST) | |
| | **383-0361** | 3 | SEAT-VALVE (INLET) | |

<END>

# BASIC ENGINE

## *386-4637* CYLINDER HEAD GP

**S/N: RKY1-1439**

**PART OF 380-1777 ENGINE AR-COMPLETE, 392-4127, 416-6081 ENGINE AR-PRIMARY**

**ALSO AN ATTACHMENT**

**SMCS-1100** **i04688511**

| NOTE | REF NO | GRAPHIC REF | PART NUMBER | QTY | PART NAME 1 2 3 4 5 6 (PRODUCT LEVEL) | SEE PAGE |
|---|---|---|---|---|---|---|
| | 1 | 1 | **383-0263** | 6 | SEAL | |
| | 2 | 1 | **383-0264** | 6 | CAP | |
| | 3 | 1 | **383-0265** | 6 | RETAINER | |
| | 4 | 1 | **383-0266** | 12 | COLLAR | |
| | 5 | 1 | **383-0387** | 14 | BOLT | |
| | 6 | 1 | **386-6922** | 1 | GASKET (1.20-MM THK) | |
| | | 1 | **386-6921** | 1 | GASKET (1.15-MM THK) | |
| | | 1 | **386-6923** | 1 | GASKET (1.25-MM THK) | |
| | | 1 | **386-6924** | 1 | GASKET (1.30-MM THK) | |
| | | 1 | **386-6925** | 1 | GASKET (1.35-MM THK) | |
| Y | 7 | 1 | **386-6920** | 1 | CYLINDER HEAD AS | 13 |
| | 8 | 1 | **383-0534** | 3 | VALVE-INLET | |
| | 9 | 1 | **383-0535** | 3 | VALVE-EXHAUST | |
| | 10 | 1 | **383-0554** | 6 | SPRING-VALVE | |
| | 11 | 1 | **383-0596** | 1 | SENDER (CYLINDER HEAD) | |

Y - SEPARATE ILLUSTRATION

*386-4637* **CYLINDER HEAD GP (*contd.*)** **i04688511**

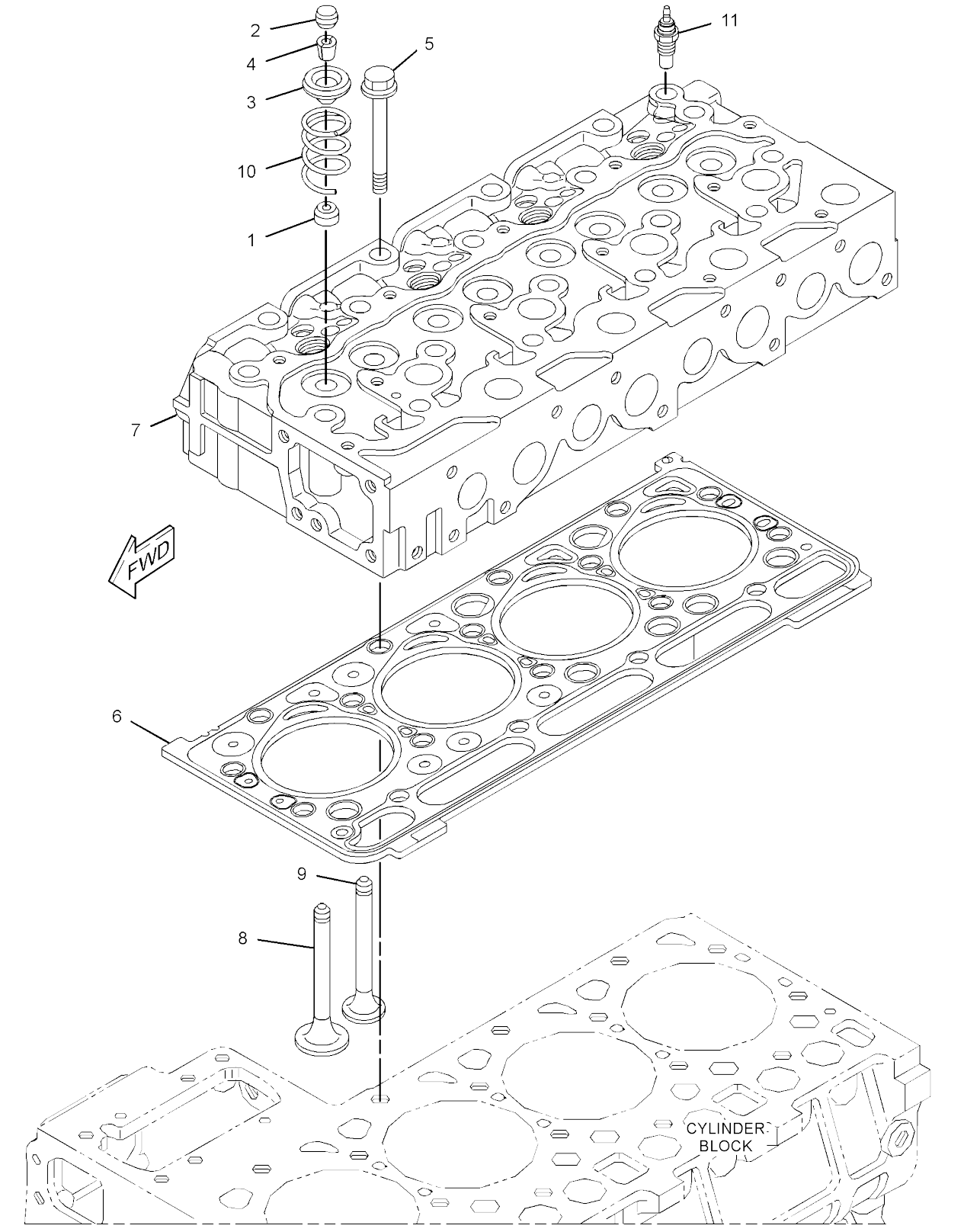


GRAPHIC #1 <END> g02790770

## *378-2141* DRAIN GP-ENGINE OIL–ECOLOGY

**PART OF 379-4727 DRAIN GP-OIL**
**AN ATTACHMENT**

**SMCS-1302** **i04935892**

| NOTE | REF NO | GRAPHIC REF | PART NUMBER | QTY | PART NAME 1 2 3 4 5 6 (PRODUCT LEVEL) | SEE PAGE |
|---|---|---|---|---|---|---|
| | 1 | 1 | **381-1122** | 1 | SHUTOFF AS (ENGINE OIL) | |
| | | 1 | **381-1123** | 1 | GASKET | |

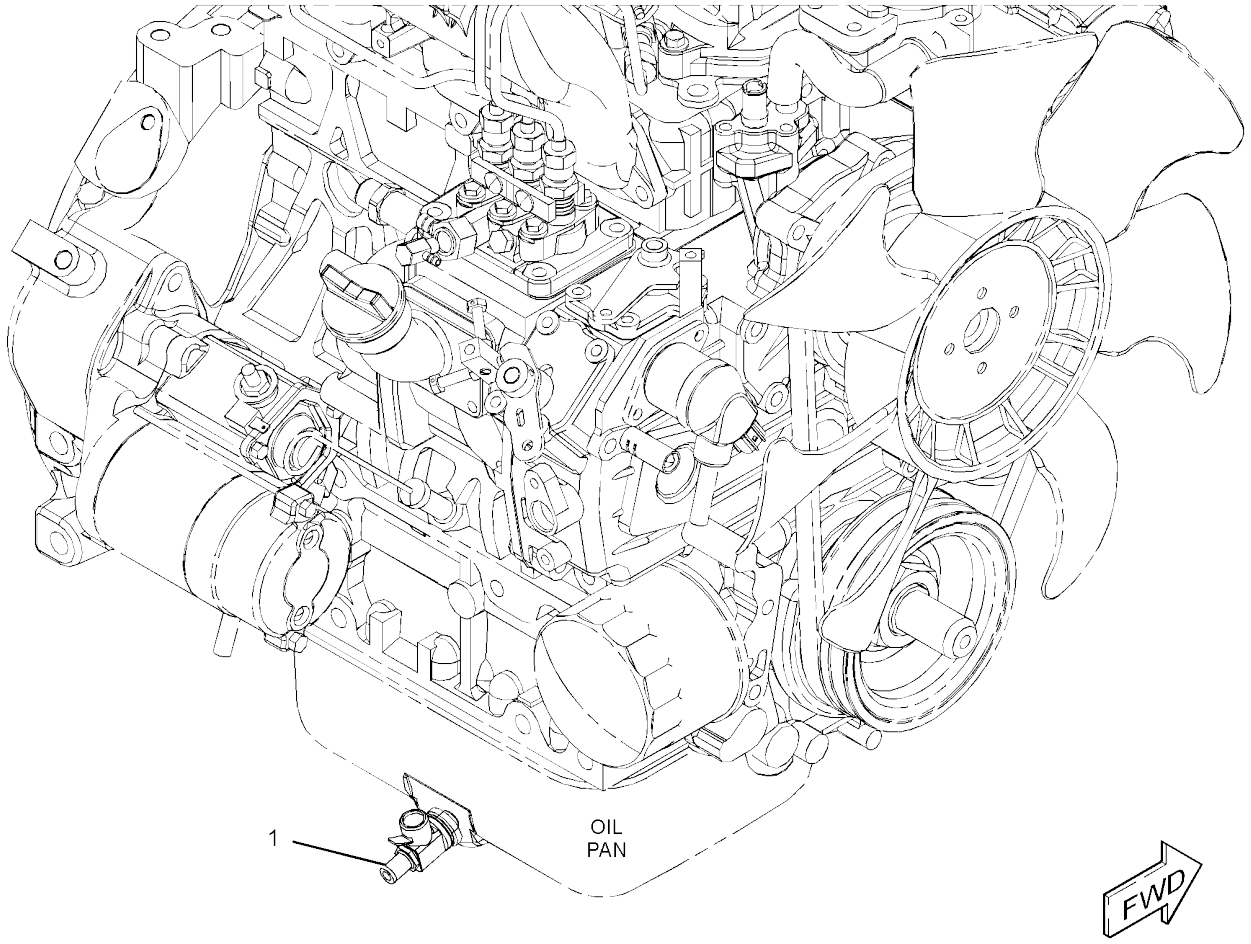


GRAPHIC #1 **<END>** g02765999

# 386-4592 FLYWHEEL GP

**S/N: RKY1-1439**

**PART OF 380-1777 ENGINE AR-COMPLETE, 392-4127, 416-6081 ENGINE AR-PRIMARY**
**ALSO AN ATTACHMENT**

**SMCS-1156, 1157, 1158** **i04794306**

| NOTE | REF NO | GRAPHIC REF | PART NUMBER | QTY | PART NAME 1 2 3 4 5 6 (PRODUCT LEVEL) | SEE PAGE |
|---|---|---|---|---|---|---|
| | 1 | 1 | **383-0180** | 1 | BOLT | |
| | 2 | 1 | **383-0207** | 1 | WASHER | |
| | 3 | 1 | **383-0345** | 11 | BOLT | |
| | 4 | 1 | **383-0576** | 6 | BOLT | |
| | 5 | 1 | **383-0598** | 1 | COVER | |
| | 6 | 1 | **386-6938** | 1 | HOUSING-FLYWHEEL | |
| | 7 | 1 | **386-6937** | 1 | FLYWHEEL AS | |
| | 7A | 1 | **383-0420** | 1 | GEAR-RING | |

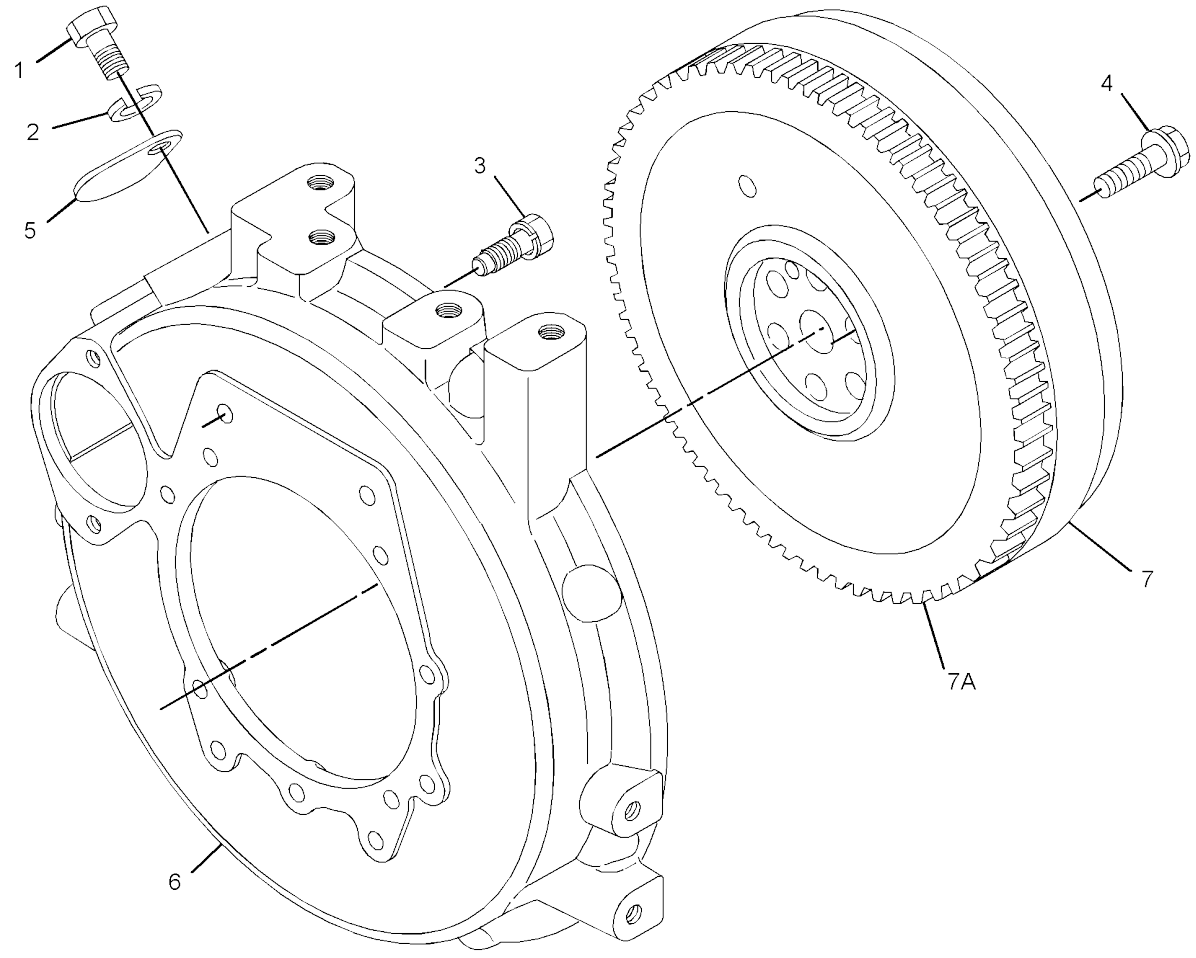


GRAPHIC #1 **<END>** g02790762

# 380-6386 GUARD GP-FAN

**PART OF 377-8933, 383-5929 CANOPY AR**
**AN ATTACHMENT**

**SMCS-1360** **i04623158**

| NOTE | REF NO | GRAPHIC REF | PART NUMBER | QTY | PART NAME 1 2 3 4 5 6 (PRODUCT LEVEL) | SEE PAGE |
|---|---|---|---|---|---|---|
| | 1 | 1 | **380-6387** | 1 | PLATE | |
| M | 2 | 1 | **6V-9189** | 2 | LOCKNUT (M8X1.25-THD) | |
| | 3 | 1 | **8T-4224** | 2 | WASHER-HARD (8.8X16X2-MM THK) | |
| M | 4 | 1 | **8T-7547** | 2 | BOLT (M8X1.25X30-MM) | |

M - METRIC PART

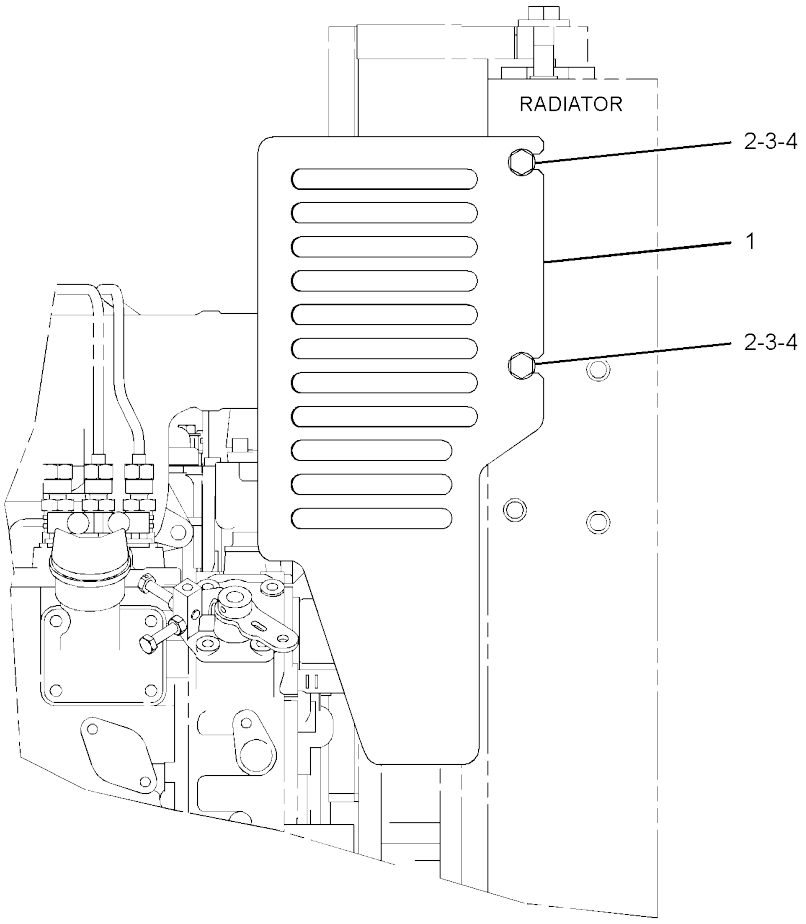


REAR VIEW

GRAPHIC #1 **<END>** g02798488

# *380-6393* GUARD GP-FAN

**PART OF 376-6692, 376-6696, 383-5927, 383-5928 CAB AR**
**AN ATTACHMENT**

**SMCS-1360** **i04617857**

| NOTE | REF NO | GRAPHIC REF | PART NUMBER | QTY | PART NAME 1 2 3 4 5 6 (PRODUCT LEVEL) | SEE PAGE |
|---|---|---|---|---|---|---|
| | 1 | 1 | **380-6394** | 1 | PLATE AS | |
| M | | 1 | **6V-9632** | 2 | NUT-WELD (M6X1-THD) | |
| M | 2 | 1 | **6V-9189** | 2 | LOCKNUT (M8X1.25-THD) | |
| | 3 | 1 | **8T-4224** | 2 | WASHER-HARD (8.8X16X2-MM THK) | |
| M | 4 | 1 | **8T-7547** | 2 | BOLT (M8X1.25X30-MM) | |

M - METRIC PART

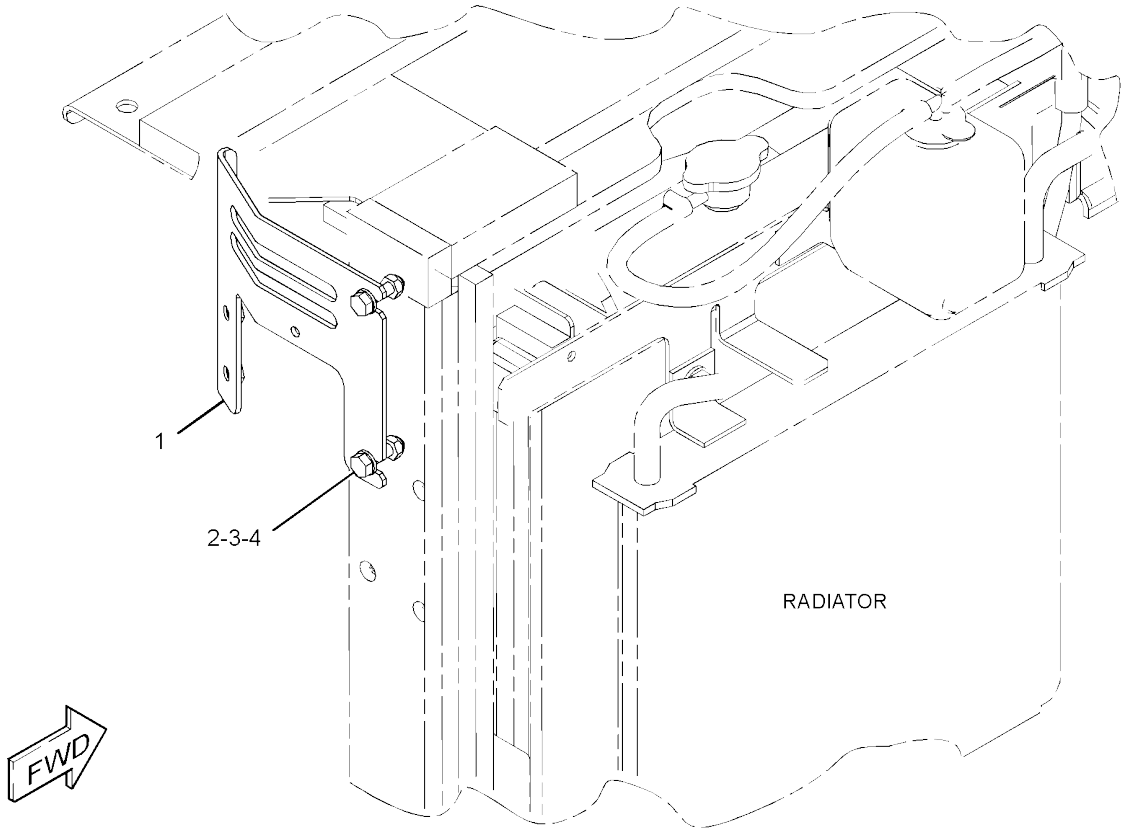


GRAPHIC #1 **<END>** g02801518

# BASIC ENGINE

## *383-0503* HOUSING GP-FRONT

**S/N: RKY1-1439**

**PART OF 380-1777 ENGINE AR-COMPLETE, 392-4127, 416-6081 ENGINE AR-PRIMARY**

**ALSO AN ATTACHMENT**

**SMCS-1151, 1162, 1166, 1206** **i04603486**

| NOTE | REF NO | GRAPHIC REF | PART NUMBER | QTY | PART NAME 1 2 3 4 5 6 (PRODUCT LEVEL) | SEE PAGE |
|---|---|---|---|---|---|---|
| | 1 | 1 | **383-0165** | 3 | BOLT | |
| | 2 | 1 | **383-0189** | 1 | BOLT | |
| | 3 | 1 | **383-0190** | 2 | BOLT | |
| | 4 | 1 | **383-0192** | 1 | BOLT | |
| | 5 | 1 | **383-0193** | 4 | BOLT | |
| | 6 | 1 | **383-0220** | 2 | PIN | |
| | 7 | 1 | **383-0230** | 1 | CAP | |
| | 8 | 1 | **383-0234** | 1 | BALL | |
| | 9 | 1 | **383-0281** | 1 | SPRING | |
| | 10 | 1 | **383-0302** | 1 | GUIDE | |
| | 11 | 1 | **383-0402** | 1 | PIPE | |
| | 12 | 1 | **383-0423** | 1 | GASKET | |
| | 13 | 1 | **383-0426** | 7 | BOLT | |
| | 14 | 1 | **383-0438** | 1 | GASKET | |
| | 15 | 1 | *383-0440* | 1 | FLANGE AS | |
| | 15A | 1 | **383-0427** | 1 | PLUG | |
| | 16 | 1 | **383-0492** | 1 | GASKET | |
| | 17 | 1 | **383-0506** | 1 | COLLAR | |
| | 18 | 1 | **383-0530** | 2 | BOLT | |
| | 19 | 1 | **383-0551** | 1 | HOUSING AS-FRONT | |
| | 19A | 1 | **383-0336** | 2 | PLUG | |
| | 20 | 1 | *383-0595* | 1 | FLANGE AS | |
| | 20A | 1 | **383-0382** | 1 | PIPE | |
| | 20B | 1 | **383-0486** | 1 | PLUG | |

*383-0503* **HOUSING GP-FRONT (*contd.*)** **i04603486**

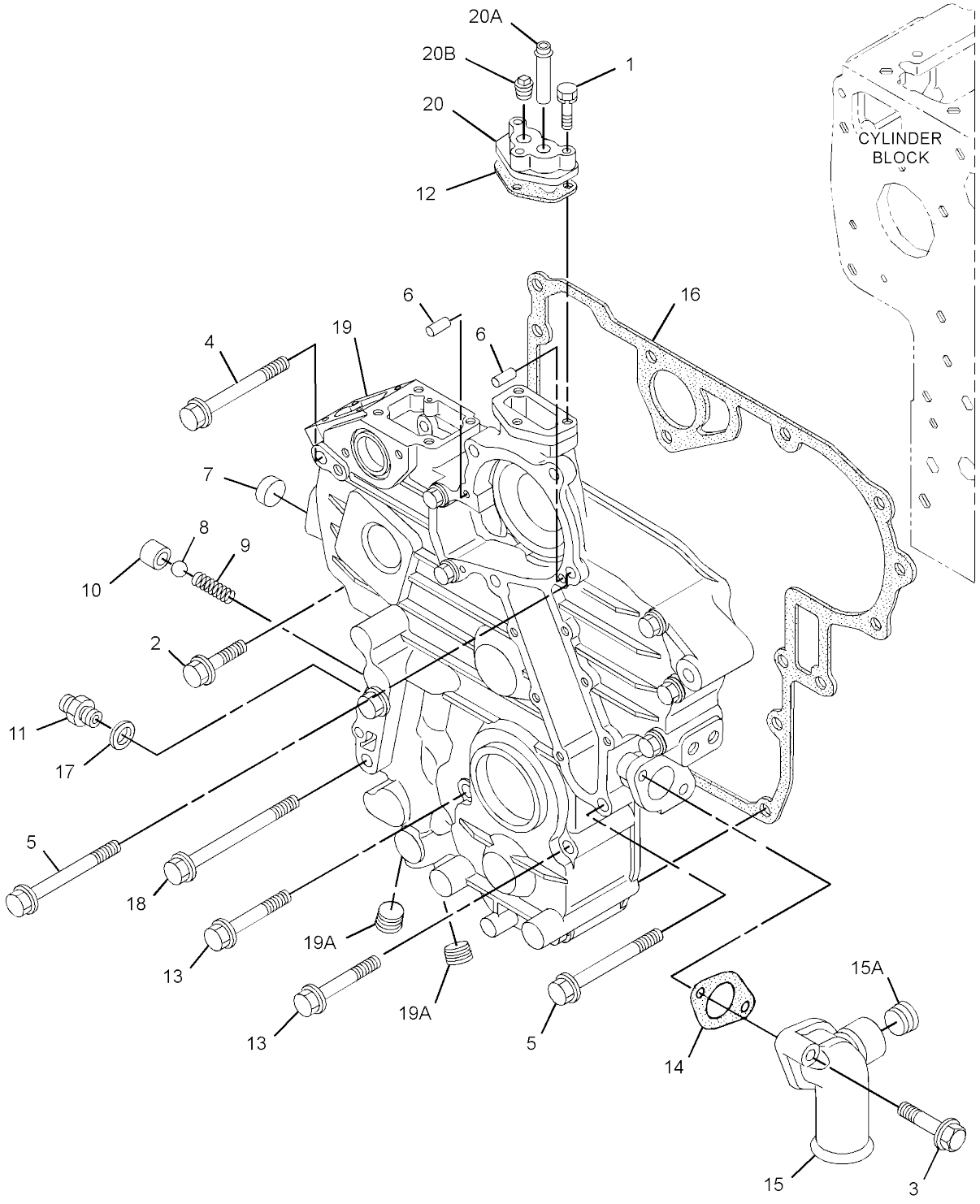


GRAPHIC #1 **<END>** g02791277

# *386-4638* LIFTING GP-ENGINE

**S/N: RKY1-1439**

**PART OF 380-1777 ENGINE AR-COMPLETE, 392-4127, 416-6081 ENGINE AR-PRIMARY**

**ALSO AN ATTACHMENT**

**SMCS-1122** **i04790564**

| NOTE | REF NO | GRAPHIC REF | PART NUMBER | QTY | PART NAME 1 2 3 4 5 6 (PRODUCT LEVEL) | SEE PAGE |
|---|---|---|---|---|---|---|
| | 1 | 1 | **383-0170** | 1 | BOLT | |
| | 2 | 1 | **383-0197** | 1 | NUT | |
| | 3 | 1 | **383-0204** | 1 | WASHER | |
| | 4 | 1 | **383-0207** | 1 | WASHER | |
| | 5 | 1 | **383-0300** | 2 | STUD | |
| | 6 | 1 | **383-0258** | 1 | PLATE | |
| | 7 | 1 | **389-2309** | 1 | PLATE | |
| M | | 1 | **6V-9632** | 1 | NUT-WELD (M6X1-THD) | |

M - METRIC PART

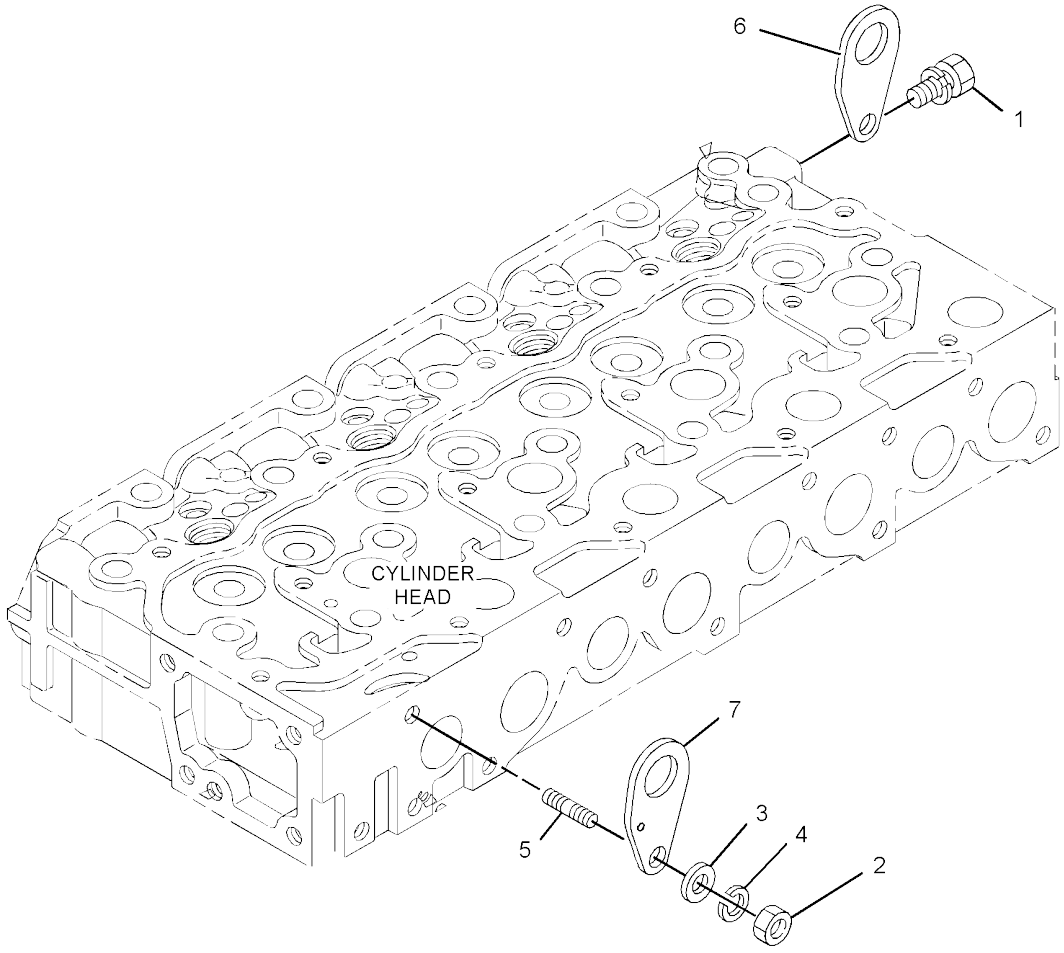


GRAPHIC #1 **<END>** g02906096

# 380-6385 MOUNTING GP-ENGINE

**PART OF 376-6696, 383-5928 CAB AR, 377-8933, 383-5929 CANOPY AR**
**AN ATTACHMENT**

**SMCS-1152, 1153, 1154** **i04728082**

| NOTE | REF NO | GRAPHIC REF | PART NUMBER | QTY | PART NAME 1 2 3 4 5 6 (PRODUCT LEVEL) | SEE PAGE |
|---|---|---|---|---|---|---|
| | 1 | 1 | **119-9880** | 6 | BOLT (M12X1.25X30-MM) | |
| | 2 | 1 | **163-6838** | 4 | STOP | |
| | 3 | 1 | **176-8440** | 2 | STOP | |
| | 4 | 1 | **270-2002** | 4 | MOUNT-RUBBER | |
| | 5 | 1 | **270-2003** | 4 | MOUNT-RUBBER | |
| | 6 | 1 | **378-2137** | 1 | SUPPORT AS | |
| | 7 | 1 | **379-0855** | 1 | SUPPORT AS | |
| | 8 | 1 | **5P-1076** | 2 | WASHER-HARD (13.5X30X4-MM THK) | |
| M | 9 | 1 | **7X-2550** | 4 | BOLT (M12X1.75X110-MM) | |
| | 10 | 1 | **8T-4223** | 8 | WASHER-HARD (13.5X25.5X3-MM THK) | |
| | 11 | 1 | **8T-4821** | 2 | WASHER (13.5X40X3-MM THK) | |

M - METRIC PART

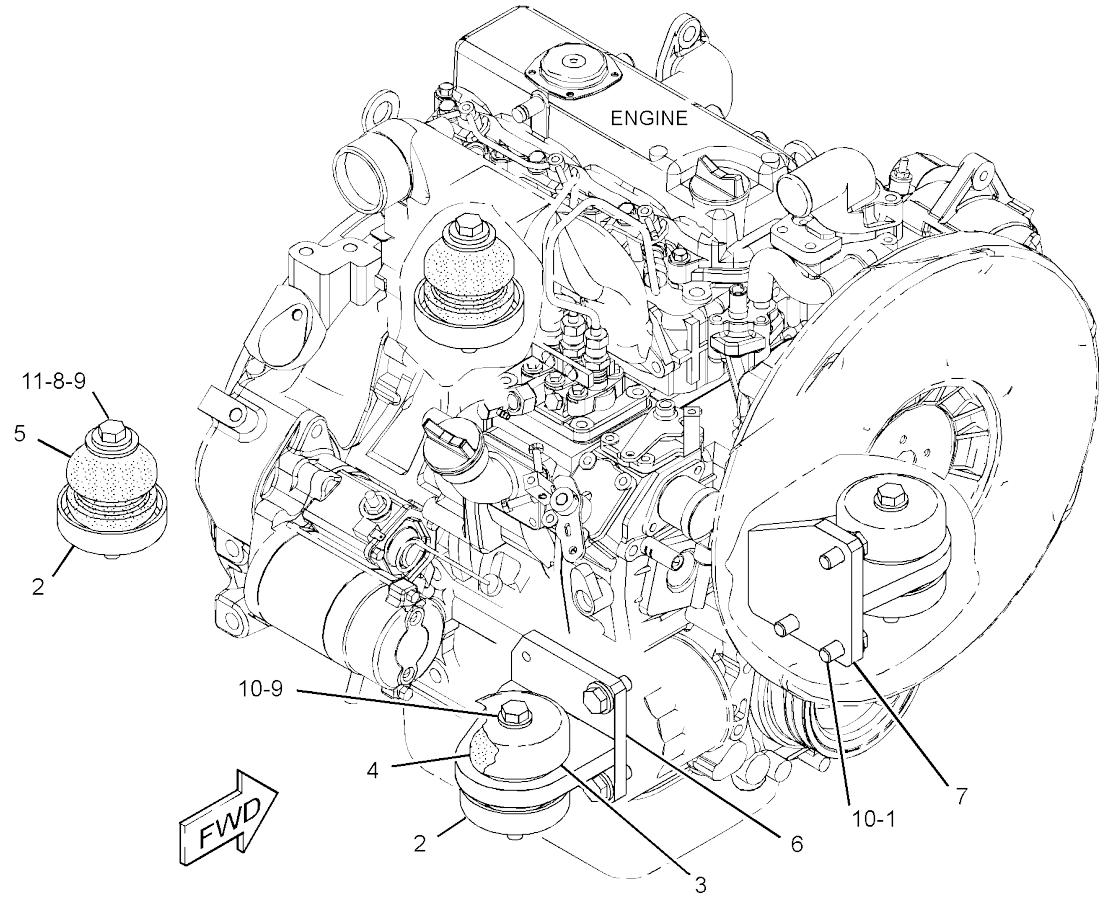


GRAPHIC #1 **<END>** g02881578

# BASIC ENGINE

## *380-6388* MOUNTING GP-ENGINE

**PART OF 376-6692, 383-5927 CAB AR**
**AN ATTACHMENT**

**SMCS-1152, 1153, 1154** **i04728083**

| NOTE | REF NO | GRAPHIC REF | PART NUMBER | QTY | PART NAME 1 2 3 4 5 6 (PRODUCT LEVEL) | SEE PAGE |
|---|---|---|---|---|---|---|
| | 1 | 1 | **119-9880** | 6 | BOLT (M12X1.25X30-MM) | |
| | 2 | 1 | **163-6838** | 4 | STOP | |
| | 3 | 1 | **176-8440** | 1 | STOP | |
| | 4 | 1 | **291-5214** | 1 | STOP | |
| | 5 | 1 | **270-2002** | 4 | MOUNT-RUBBER | |
| | 6 | 1 | **270-2003** | 4 | MOUNT-RUBBER | |
| | 7 | 1 | **378-2137** | 1 | SUPPORT AS | |
| | 8 | 1 | **378-2138** | 1 | SUPPORT AS | |
| | 9 | 1 | **378-2139** | 1 | SUPPORT AS | |
| | 10 | 1 | **5P-1076** | 2 | WASHER-HARD (13.5X30X4-MM THK) | |
| M | 11 | 1 | **7X-2550** | 4 | BOLT (M12X1.75X110-MM) | |
| | 12 | 1 | **8T-4223** | 8 | WASHER-HARD (13.5X25.5X3-MM THK) | |
| | 13 | 1 | **8T-4224** | 2 | WASHER-HARD (8.8X16X2-MM THK) | |
| | 14 | 1 | **8T-4821** | 2 | WASHER (13.5X40X3-MM THK) | |
| M | 15 | 1 | **8T-4908** | 2 | BOLT (M8X1.25X25-MM) | |

M - METRIC PART

*380-6388* **MOUNTING GP-ENGINE (*contd.*)** **i04728083**

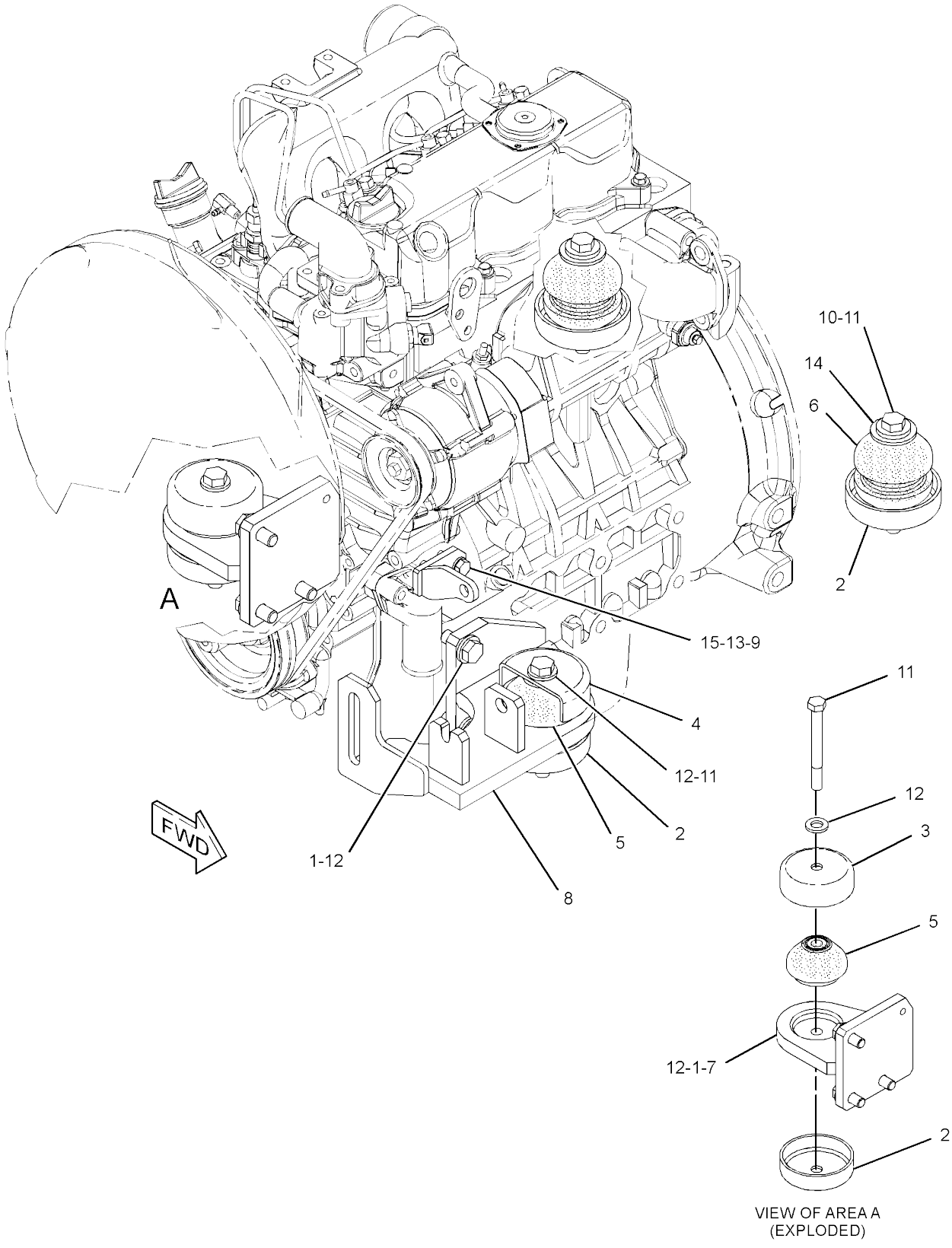


GRAPHIC #1 **<END>** g02871958

# BASIC ENGINE

## *386-4645* PAN GP-OIL–ENGINE

**S/N: RKY1-1439**

**PART OF 380-1777 ENGINE AR-COMPLETE, 392-4127, 416-6081 ENGINE AR-PRIMARY**

**ALSO AN ATTACHMENT**

**SMCS-1302** **i04795186**

| NOTE | REF NO | GRAPHIC REF | PART NUMBER | QTY | PART NAME 1 2 3 4 5 6 (PRODUCT LEVEL) | SEE PAGE |
|---|---|---|---|---|---|---|
| | 1 | 1 | **386-6918** | 1 | PLUG (DRAIN, ENGINE OIL) | |
| | 2 | 1 | **386-6919** | 1 | GASKET | |
| | 3 | 1 | **395-0661** | 1 | PAN AS-OIL (ENGINE) | |
| | 4 | 1 | **389-2308** | 20 | BOLT-FLANGE HEAD | |

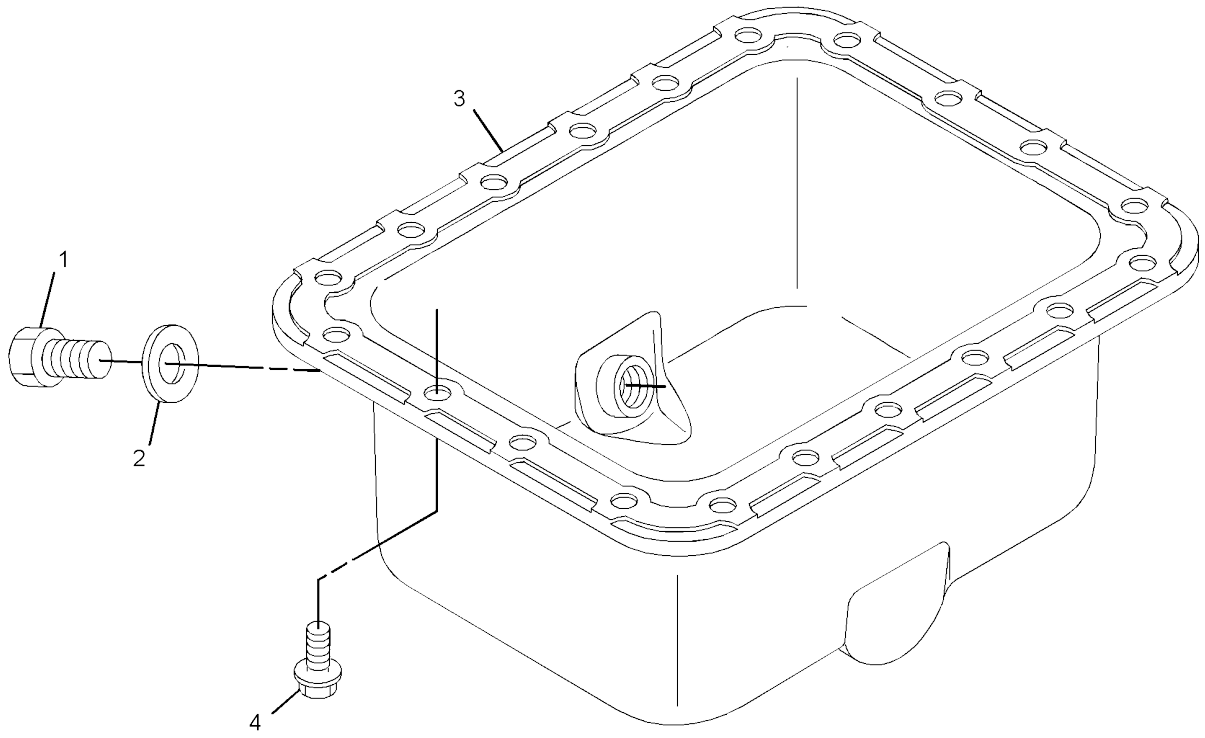


GRAPHIC #1 **<END>** g02913876

# 386-4646 PISTON & ROD GP

**S/N: RKY1-1439**

**PART OF 380-1777 ENGINE AR-COMPLETE, 392-4127, 416-6081 ENGINE AR-PRIMARY**

**ALSO AN ATTACHMENT**

**SMCS-1213, 1214, 1215, 1218, 1219, 1225, 1239** **i04822086**

| NOTE | REF NO | GRAPHIC REF | PART NUMBER | QTY | PART NAME 1 2 3 4 5 6 (PRODUCT LEVEL) | SEE PAGE |
|---|---|---|---|---|---|---|
| | 1 | 1 | **383-0374** | 3 | ROD AS | |
| | | | | | (EACH INCLUDES) | |
| | 1A | 1 | **383-0579** | 2 | BOLT | |
| | 1B | 1 | **389-1607** | 1 | BEARING | |
| | 1C | 1 | **383-0375** | 1 | BEARING-CRANKSHAFT | |
| | 1D | 1 | **389-1596** | 1 | BEARING-CRANKSHAFT (0.20-MM US) | |
| | 1E | 1 | **389-1597** | 1 | BEARING-CRANKSHAFT (0.40-MM US) | |
| | 2 | 1 | **383-0397** | 3 | PIN-PISTON | |
| | 3 | 1 | **383-0479** | 6 | CLIP-PIN | |
| | 4 | 1 | **383-0502** | 3 | RING AS-PISTON | |
| | 5 | 1 | **383-0528** | 3 | PISTON | |

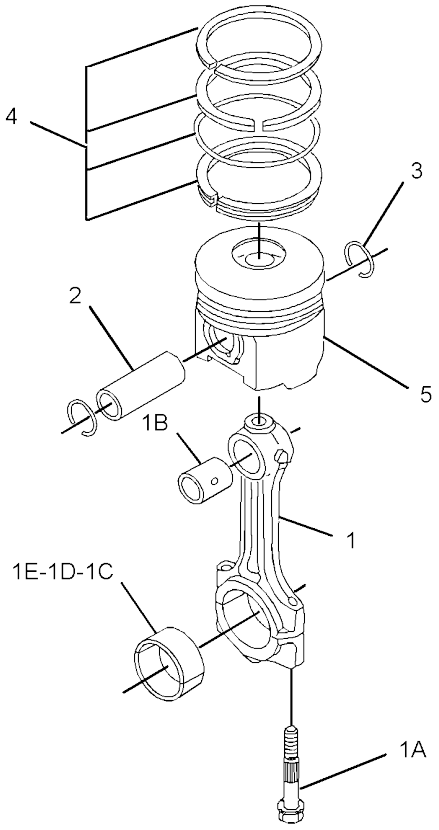


GRAPHIC #1 **<END>** g02906216

# *386-4648* PULLEY GP-FAN DRIVE

**S/N: RKY1-1439**

**PART OF 380-1777 ENGINE AR-COMPLETE, 392-4127, 416-6081 ENGINE AR-PRIMARY**

**ALSO AN ATTACHMENT**

**SMCS-1357, 1359** **i04790217**

| NOTE | REF NO | GRAPHIC REF | PART NUMBER | QTY | PART NAME 1 2 3 4 5 6 (PRODUCT LEVEL) | SEE PAGE |
|---|---|---|---|---|---|---|
| | 1 | 1 | **383-0227** | 1 | KEY-FEATHER | |
| | 2 | 1 | **383-0391** | 1 | FAN-SUCTION | |
| | 3 | 1 | **386-4792** | 4 | BOLT-FLANGE HEAD | |
| | 4 | 1 | **383-0383** | 1 | PULLEY-FAN | |
| | 5 | 1 | **389-1588** | 1 | SPACER-FAN | |
| | 6 | 1 | **386-4794** | 1 | PULLEY-FAN DRIVE | |
| | 7 | 1 | **383-0480** | 1 | V-BELT (FAN DRIVE) | |

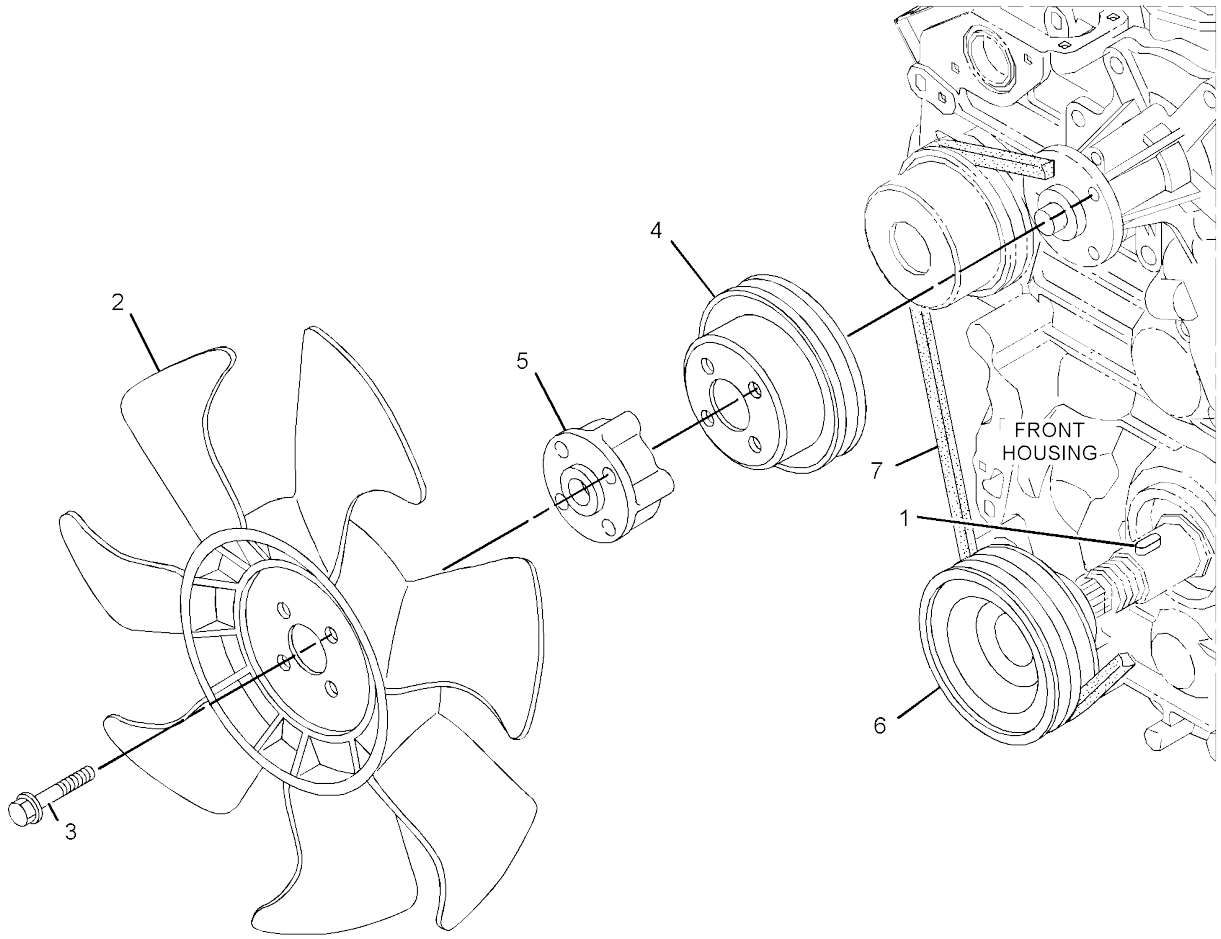


GRAPHIC #1 **<END>** g02792040

# *386-4643* VALVE MECHANISM GP

**S/N: RKY1-1439**

**PART OF 380-1777 ENGINE AR-COMPLETE, 392-4127, 416-6081 ENGINE AR-PRIMARY**
**ALSO AN ATTACHMENT**

**SMCS-1102, 1112, 1121, 1123, 1208, 1209** **i04794762**

| NOTE | REF NO | GRAPHIC REF | PART NUMBER | QTY | PART NAME 1 2 3 4 5 6 (PRODUCT LEVEL) | SEE PAGE |
|---|---|---|---|---|---|---|
| | 1 | 1 | **383-0180** | 2 | BOLT | |
| | 2 | 1 | **383-0191** | 3 | BOLT | |
| | 3 | 1 | **383-0205** | 2 | WASHER | |
| | 4 | 1 | **383-0207** | 2 | WASHER | |
| | 5 | 1 | **383-0224** | 1 | SPRING | |
| | 6 | 1 | **383-0267** | 2 | SPRING | |
| | 7 | 1 | **383-0268** | 3 | BRACKET | |
| | 8 | 1 | **383-0269** | 2 | WASHER | |
| | 9 | 1 | **383-0306** | 6 | TAPPET | |
| | 10 | 1 | **383-0310** | 6 | ARM AS (VALVE MECHANISM) | |
| | | | | | (EACH INCLUDES) | |
| | 10A | 1 | **383-0556** | 1 | SCREW | |
| | 10B | 1 | **383-0255** | 1 | NUT | |
| | 11 | 1 | **395-0662** | 1 | SHAFT | |
| | 12 | 1 | **383-0464** | 6 | PUSHROD | |

*386-4643* **VALVE MECHANISM GP (*contd.*)** **i04794762**

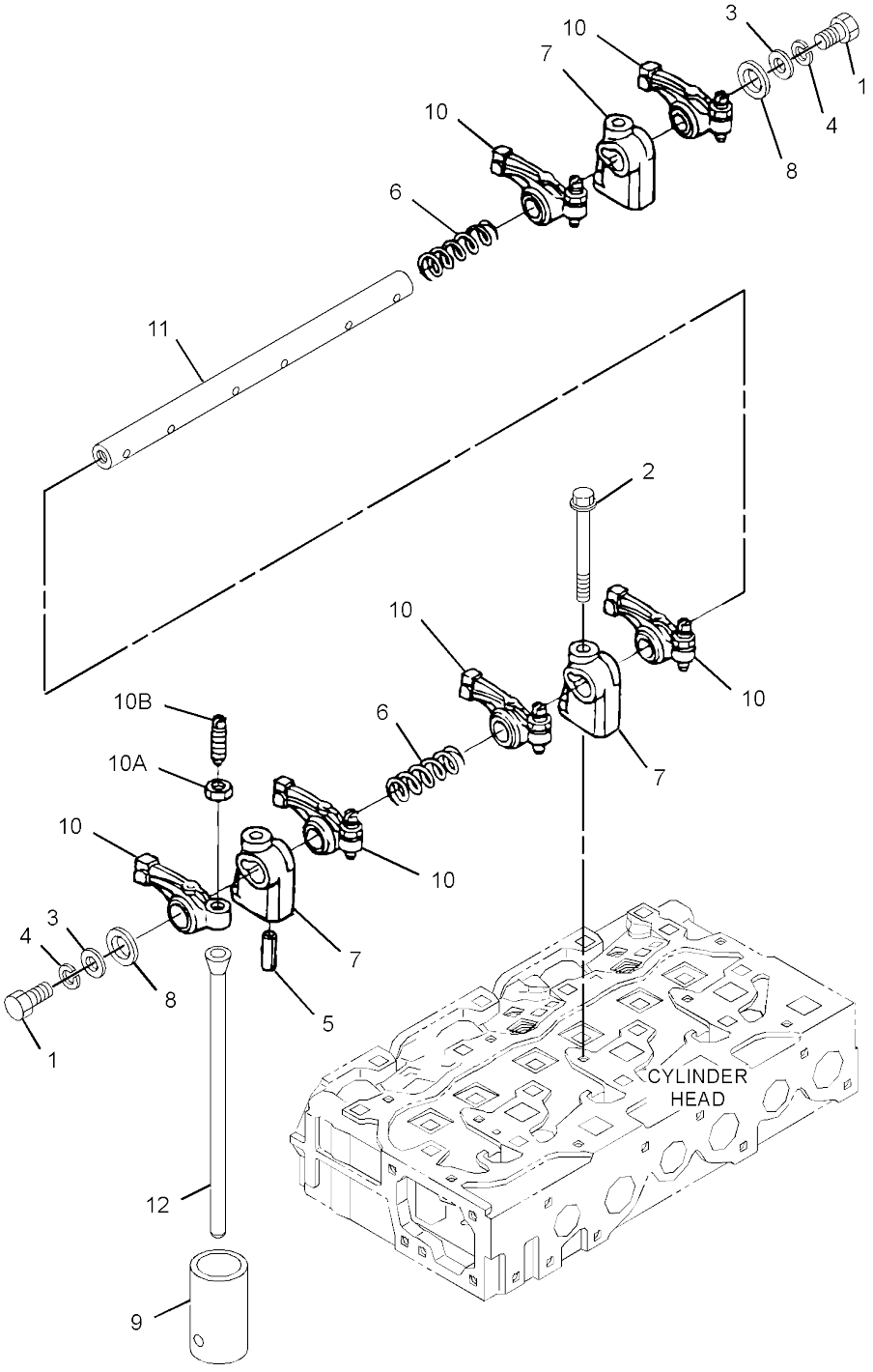


GRAPHIC #1 **<END>** g03248616

# LUBRICATION SYSTEM

## *383-0250* FILLER GP-ENGINE OIL

**S/N: RKY1-1439**

**PART OF 380-1777 ENGINE AR-COMPLETE, 392-4127, 416-6081 ENGINE AR-PRIMARY**

**ALSO AN ATTACHMENT**

**SMCS-1316** **i05006755**

| NOTE | REF NO | GRAPHIC REF | PART NUMBER | QTY | PART NAME 1 2 3 4 5 6 (PRODUCT LEVEL) | SEE PAGE |
|---|---|---|---|---|---|---|
| | 1 | 1 | **383-0163** | 4 | BOLT | |
| | 2 | 1 | **383-0217** | 1 | SEAL-O-RING | |
| | 3 | 1 | **383-0321** | 1 | PLUG-FILLER (ENGINE OIL) | |
| | 4 | 1 | **383-0404** | 1 | GASKET | |
| | 5 | 1 | **383-0481** | 1 | FLANGE | |

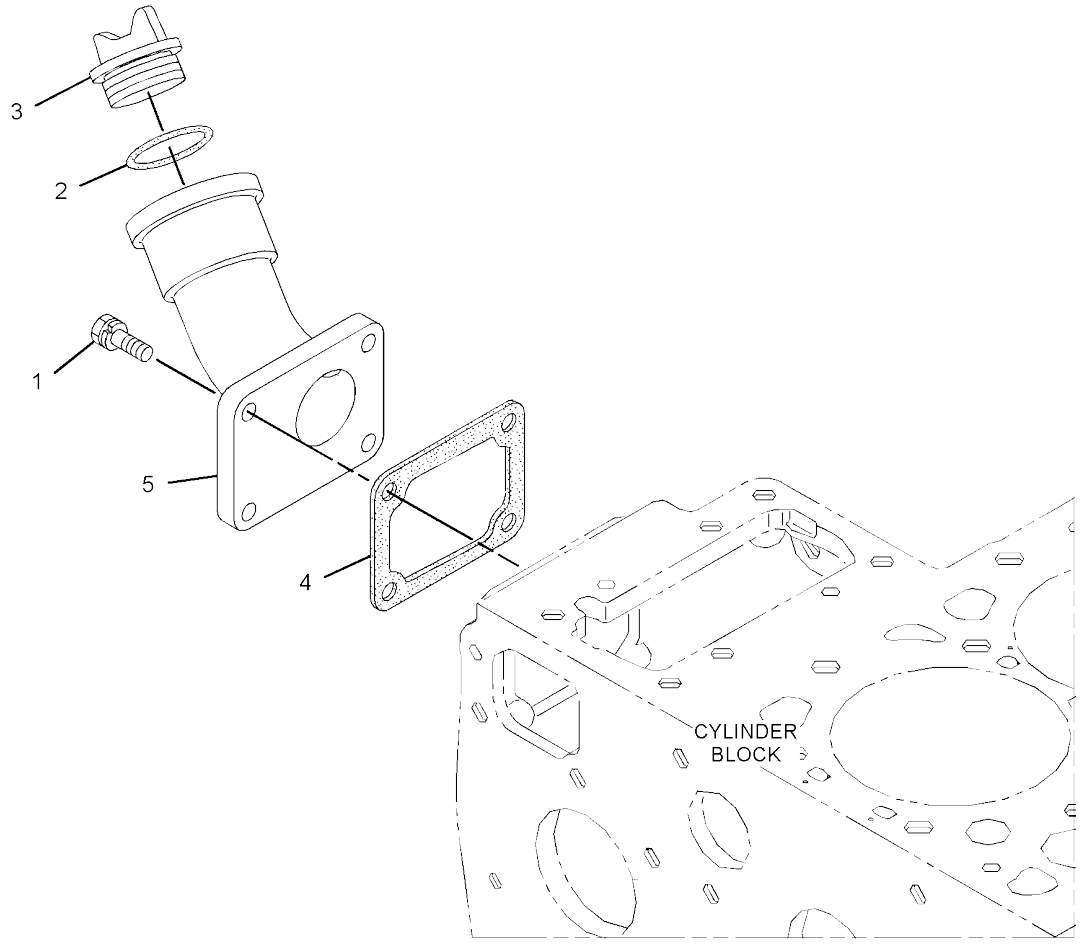


GRAPHIC #1 **<END>** g02790220

# *383-0141* FILTER GP-ENGINE OIL

**S/N: RKY1-1439**

**PART OF 380-1777 ENGINE AR-COMPLETE, 392-4127, 416-6081 ENGINE AR-PRIMARY**

**ALSO AN ATTACHMENT**

**SMCS-1306, 1308, 1318** **i04603458**

| NOTE | REF NO | GRAPHIC REF | PART NUMBER | QTY | PART NAME 1 2 3 4 5 6 (PRODUCT LEVEL) | SEE PAGE |
|---|---|---|---|---|---|---|
| | 1 | 1 | **383-0187** | 1 | BOLT | |
| | 2 | 1 | **383-0216** | 1 | SEAL-O-RING | |
| | 3 | 1 | **383-0339** | 1 | FILTER AS-ENGINE OIL | |
| | 4 | 1 | **383-0531** | 1 | STRAINER-OIL (ENGINE) | |
| | 5 | 1 | **387-9910** | 1 | SWITCH-PRESSURE (OIL, ENGINE) | |

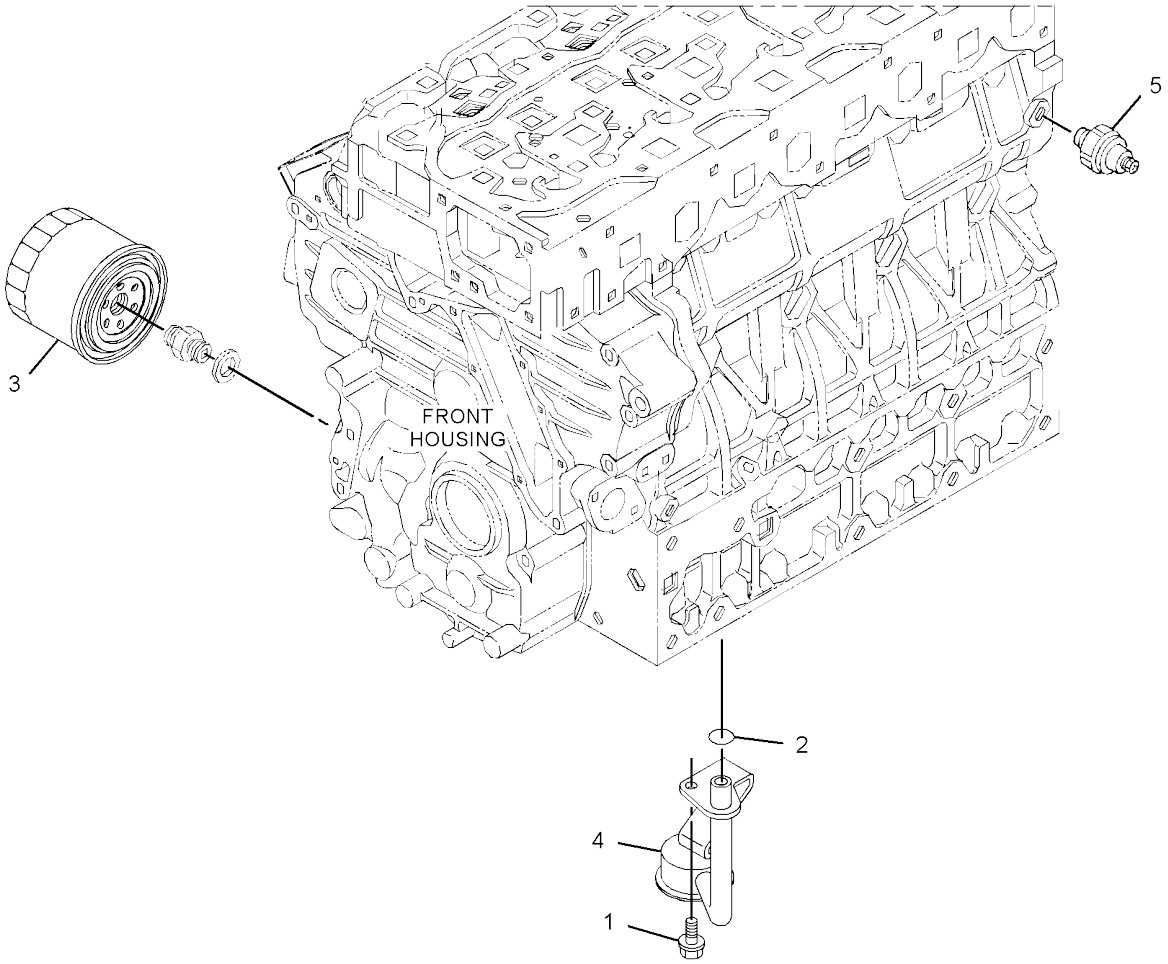


GRAPHIC #1 **<END>** g02791517

# *383-0144* GAUGE GP-OIL LEVEL (DIPSTICK)–ENGINE

**S/N: RKY1-1439**

**PART OF 380-1777 ENGINE AR-COMPLETE, 392-4127, 416-6081 ENGINE AR-PRIMARY**

**ALSO AN ATTACHMENT**

**SMCS-1326** **i04639956**

| NOTE | REF NO | GRAPHIC REF | PART NUMBER | QTY | PART NAME 1 2 3 4 5 6 (PRODUCT LEVEL) | SEE PAGE |
|---|---|---|---|---|---|---|
| | 1 | 1 | **383-0437** | 1 | GAUGE-OIL LEVEL (ENGINE) (DIPSTICK) | |
| | 2 | 1 | **383-0489** | 1 | PLUG | |

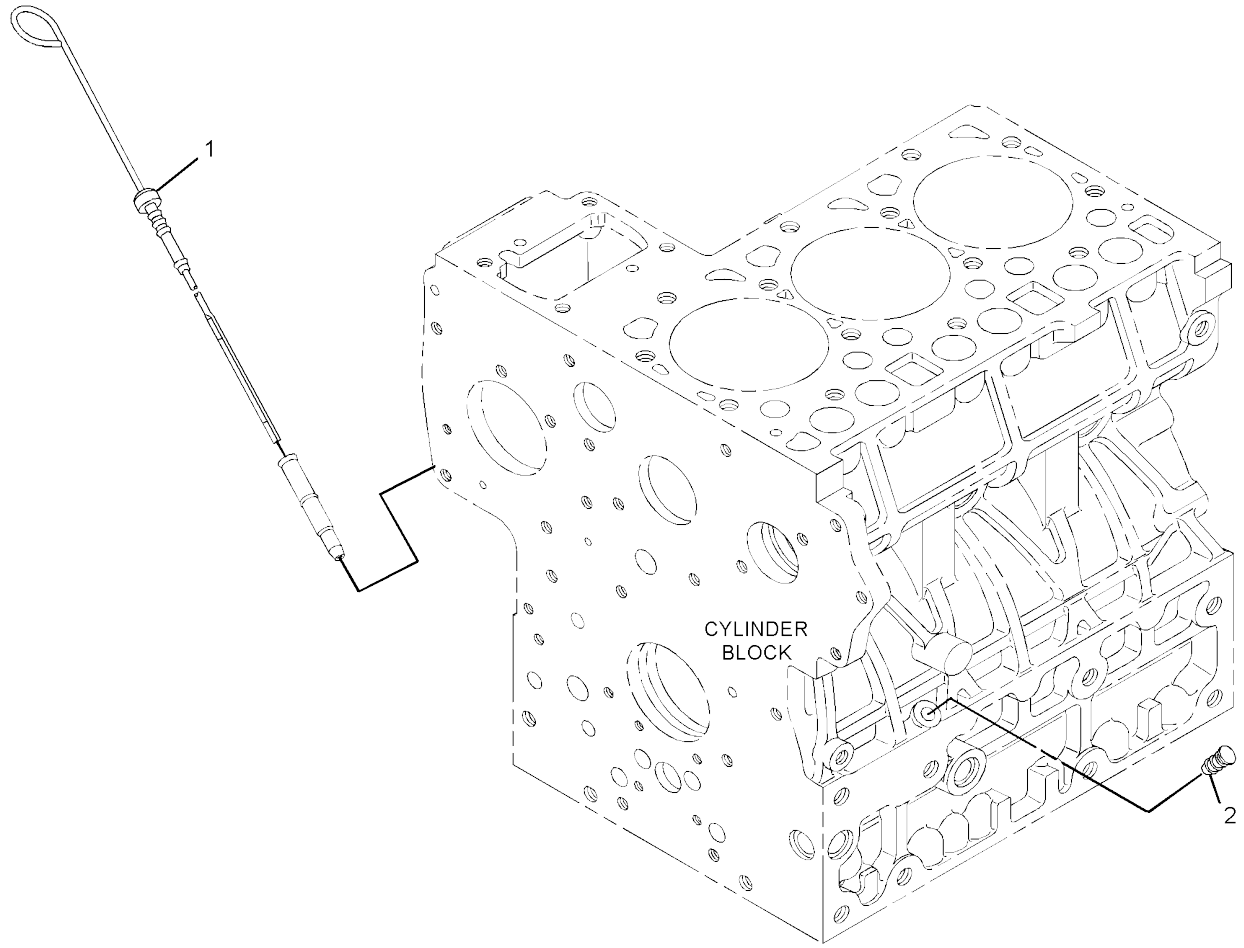


GRAPHIC #1 **<END>** g02790001

# *383-0161* PUMP GP-ENGINE OIL

**S/N: RKY1-1439**

**PART OF 380-1777 ENGINE AR-COMPLETE, 392-4127, 416-6081 ENGINE AR-PRIMARY**

**ALSO AN ATTACHMENT**

**SMCS-1304, 1315** **i05437158**

| NOTE | REF NO | GRAPHIC REF | PART NUMBER | QTY | PART NAME 1 2 3 4 5 6 (PRODUCT LEVEL) | SEE PAGE |
|---|---|---|---|---|---|---|
| | 1 | 1 | **383-0167** | 4 | BOLT | |
| | 2 | 1 | **383-0225** | 1 | KEY-FEATHER | |
| | 3 | 1 | **383-0273** | 1 | NUT | |
| | 4 | 1 | **383-0293** | 1 | PUMP AS-ENGINE OIL | |
| | 5 | 1 | **383-0403** | 1 | GASKET-OIL PUMP | |
| | 6 | 1 | **383-0558** | 1 | GEAR (45-TEETH) | |

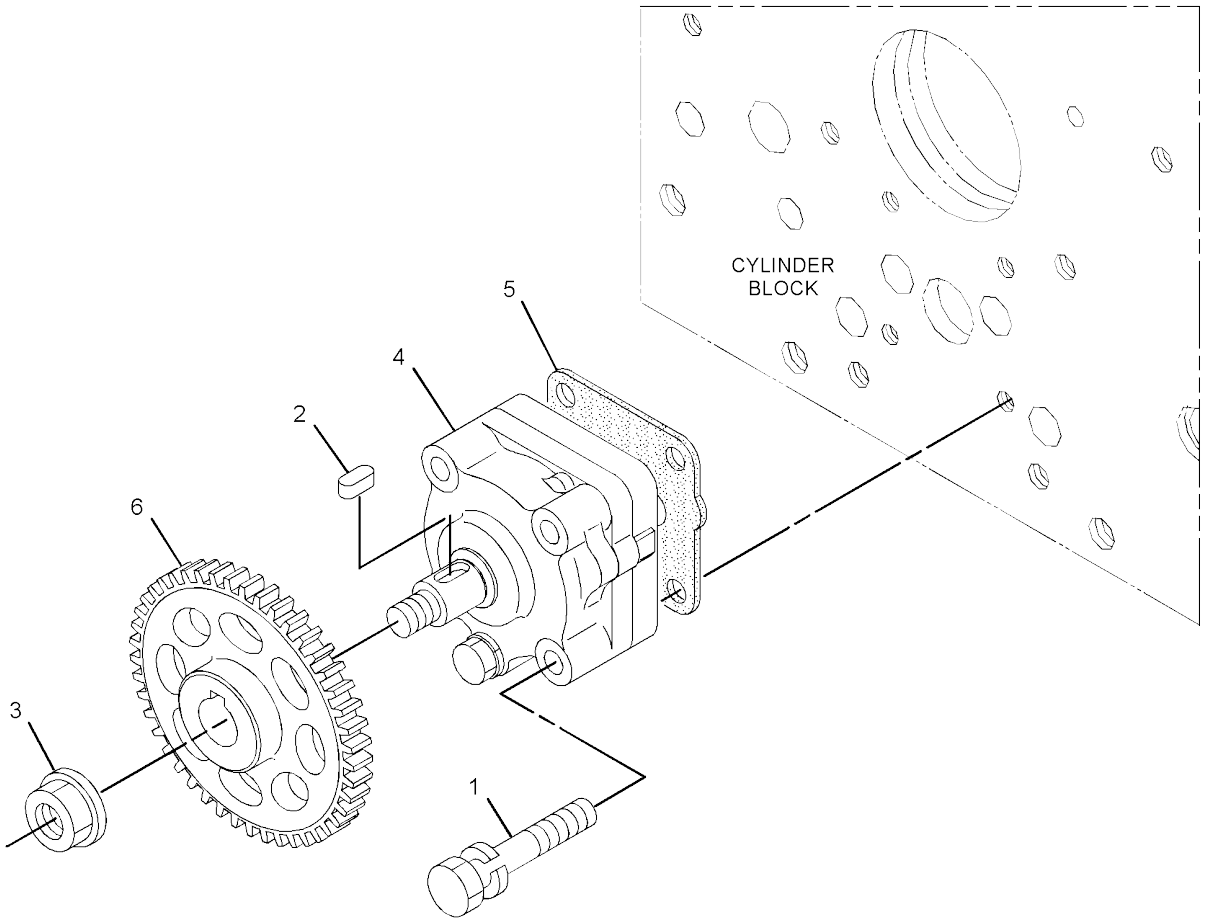


GRAPHIC #1 **<END>** g02790780

# 386-4588 LINES GP-WATER

**S/N: RKY1-1439**

**PART OF 380-1777 ENGINE AR-COMPLETE, 392-4127, 416-6081 ENGINE AR-PRIMARY**
**ALSO AN ATTACHMENT**

**SMCS-1355, 1380, 1393** **i04794311**

| NOTE | REF NO | GRAPHIC REF | PART NUMBER | QTY | PART NAME 1 2 3 4 5 6 (PRODUCT LEVEL) | SEE PAGE |
|---|---|---|---|---|---|---|
| | 1 | 1 | **383-0172** | 2 | BOLT | |
| | 2 | 1 | **383-0176** | 2 | BOLT | |
| | 3 | 1 | **383-0197** | 1 | NUT | |
| | 4 | 1 | **383-0207** | 1 | WASHER | |
| | 5 | 1 | **383-0257** | 1 | CLIP | |
| | 6 | 1 | **383-0279** | 1 | STUD | |
| | 7 | 1 | **383-0335** | 1 | GASKET (THERMOSTAT HOUSING) | |
| | 8 | 1 | **383-0396** | 1 | CLAMP-HOSE | |
| | 9 | 1 | **383-0421** | 1 | GASKET (WATER TEMPERATURE REGULATOR) | |
| | 10 | 1 | **392-0266** | 1 | REGULATOR AS (WATER TEMPERATURE) | |
| | 11 | 1 | **383-0425** | 1 | BOLT | |
| | 12 | 1 | **383-0439** | 1 | FLANGE AS | |
| | 12A | 1 | **383-0185** | 2 | BOLT-FLANGE HEAD | |
| | 12B | 1 | **383-0186** | 1 | BOLT-FLANGE HEAD | |
| | 12C | 1 | **383-0427** | 1 | PLUG | |
| | 13 | 1 | **383-0472** | 1 | HOSE-WATER | |
| | 14 | 1 | **383-0356** | 1 | COVER-THERMOSTAT | |
| | 15 | 1 | **387-9912** | 1 | WASHER | |
| | 16 | 1 | **389-1591** | 1 | ADAPTER | |

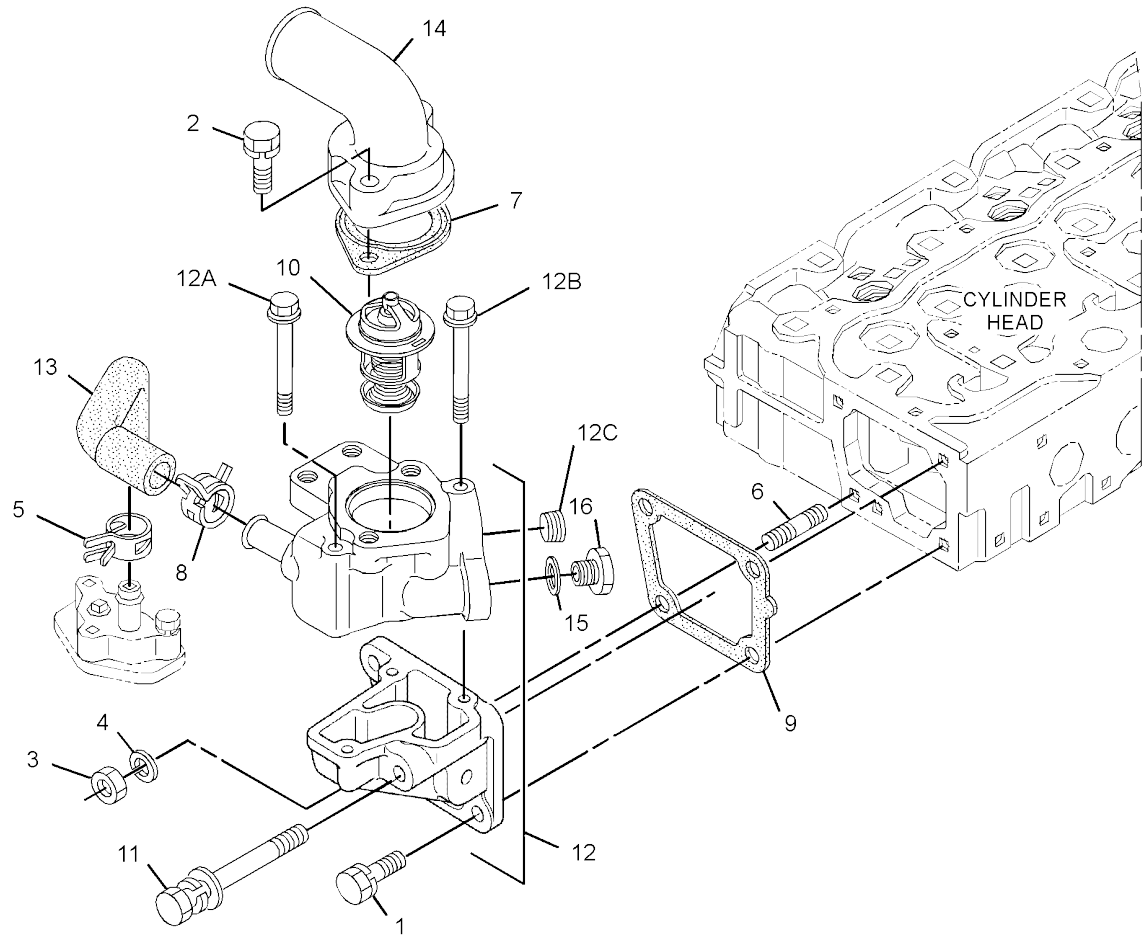


GRAPHIC #1 **<END>** g02921476

# COOLING SYSTEM

## *383-0162* PUMP GP-WATER

**S/N: RKY1-1439**

**PART OF 380-1777 ENGINE AR-COMPLETE, 392-4127, 416-6081 ENGINE AR-PRIMARY**

**ALSO AN ATTACHMENT**

**SMCS-1355, 1361, 1364, 1373, 1384, 1389** **i04603484**

| NOTE | REF NO | GRAPHIC REF | PART NUMBER | QTY | PART NAME 1 2 3 4 5 6 (PRODUCT LEVEL) | SEE PAGE |
|---|---|---|---|---|---|---|
| | 1 | 1 | **383-0163** | 6 | BOLT | |
| | 2 | 1 | **383-0175** | 2 | BOLT | |
| | 3 | 1 | **383-0182** | 1 | STUD | |
| | 4 | 1 | **383-0197** | 1 | NUT | |
| | 5 | 1 | **383-0207** | 1 | WASHER | |
| | 6 | 1 | **383-0433** | 1 | PUMP AS-WATER | |
| | 7 | 1 | **383-0435** | 1 | GASKET-WATER PUMP | |

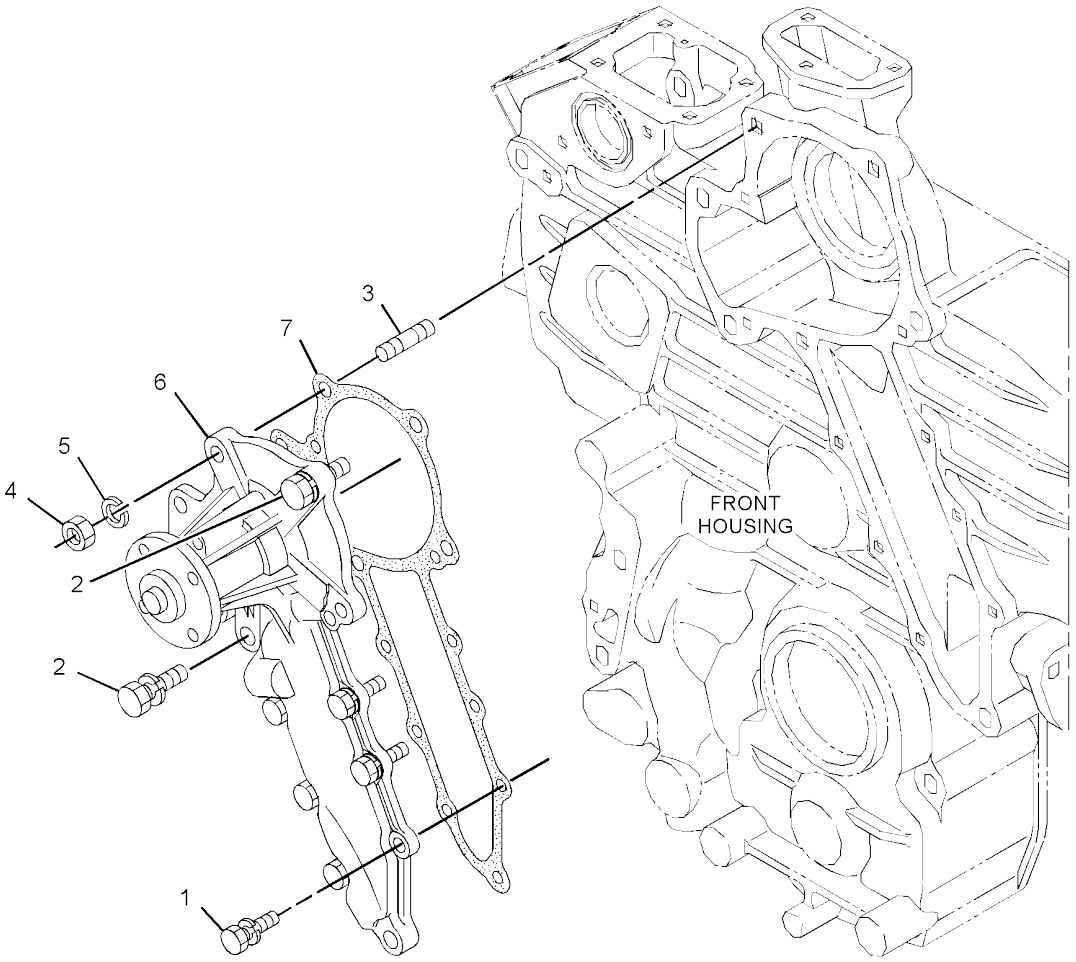


GRAPHIC #1 **<END>** g02792139

# COOLING SYSTEM

## *380-6364* RADIATOR & HYD OIL COOLER GP

**PART OF 383-0640 INSTALLATION AR-ENGINE**

**SMCS-1351, 1353, 1356, 1374, 1382, 1386** **i05204637**

| NOTE | REF NO | GRAPHIC REF | PART NUMBER | QTY | PART NAME 1 2 3 4 5 6 (PRODUCT LEVEL) | SEE PAGE |
|---|---|---|---|---|---|---|
| | 1 | 1 | **3S-2093** | 1 | STRAP-CABLE | |
| | 2 | 1 | **140-3355** | 6 | SPACER (17X28X4.5-MM THK) | |
| | 3 | 1 | **140-4236** | 1 | TANK AS-COOLANT (RECOVERY) | |
| | | 1 | **140-4238** | 1 | CAP AS (COOLANT RECOVERY) | |
| | 4 | 1 | **140-4763** | 1 | CLAMP | |
| | 5 | 1 | **140-4766** | 2 | CLAMP | |
| | 6 | 1 | **232-3543** | 1 | COCK AS | |
| | 7 | 1 | **266-7379** | 1 | STRAP-CABLE | |
| | 8 | 1 | **380-3496** | 1 | CORE AS-HYDRAULIC OIL COOLER | |
| | 9 | 1 | **380-6365** | 1 | HOSE | |
| | 10 | 1 | **380-6366** | 1 | HOSE | |
| | 11 | 1 | **380-6367** | 1 | RADIATOR AS | |
| | | 1 | **247-5086** | 1 | CAP-RADIATOR | |
| | 12 | 1 | **380-6369** | 1 | BRACKET AS | |
| M | | 1 | **6V-9632** | 2 | NUT-WELD (M6X1-THD) | |
| M | | 1 | **8T-3490** | 5 | NUT-WELD (M10X1.5-THD) | |
| M | | 1 | **8T-3612** | 2 | NUT-WELD (M8X1.25-THD) | |
| | 13 | 1 | **380-6370** | 1 | BRACKET AS | |
| M | | 1 | **8T-3490** | 5 | NUT-WELD (M10X1.5-THD) | |
| | | 1 | **154-2302** | 1 | SPACER (11X20X15-MM THK) | |
| | 14 | 1 | **380-6371** | 1 | SHROUD AS | |
| M | | 1 | **8T-3612** | 4 | NUT-WELD (M8X1.25-THD) | |
| M | | 1 | **9R-2821** | 1 | BOSS (M10X1.5X15-MM) | |
| | 16 | 1 | **380-6374** | 1 | FOAM | |
| | 17 | 1 | **380-6375** | 1 | FOAM | |
| | 18 | 1 | **380-6376** | 1 | FOAM | |
| | 19 | 1 | **292-8504** | | TUBE (130-CM) | |
| | 20 | 1 | **382-2969** | 1 | PLATE AS | |
| | 21 | 1 | **382-2970** | 1 | PLATE AS | |
| | 22 | 1 | **382-8180** | 1 | FOAM | |
| | 23 | 1 | **383-4984** | 1 | FOAM | |
| | 24 | 1 | **383-4985** | 1 | FOAM | |
| | 25 | 1 | **095-1390** | 2 | CLAMP-HOSE | |
| | 26 | 1 | **1P-4278** | 4 | CLAMP-HOSE | |
| | 27 | 1 | **210-1304** | 2 | MOUNT-RUBBER | |
| | 28 | 1 | **6K-8178** | 1 | CLIP | |
| | 30 | 1 | **8T-4121** | 12 | WASHER-HARD (11X21X2.5-MM THK) | |
| M | 31 | 1 | **8T-4137** | 15 | BOLT (M10X1.5X20-MM) | |
| M | 32 | 1 | **8T-4138** | 2 | BOLT (M6X1X20-MM) | |
| M | 33 | 1 | **8T-4177** | 2 | BOLT (M8X1.25X90-MM) | |
| M | 34 | 1 | **8T-4186** | 1 | BOLT (M10X1.5X40-MM) | |
| M | 35 | 1 | **8T-4195** | 2 | BOLT (M10X1.5X30-MM) | |
| M | 36 | 1 | **8T-4200** | 2 | BOLT (M8X1.25X16-MM) | |
| | 37 | 1 | **8T-4205** | 2 | WASHER-HARD (7.2X14.5X2-MM THK) | |
| | 38 | 1 | **8T-4222** | 6 | WASHER-PLATED (11X32X2.5-MM THK) | |
| | 39 | 1 | **8T-4224** | 6 | WASHER-HARD (8.8X16X2-MM THK) | |
| E | 40 | 1 | **7I-7439** | | GUARD (6-CM) | |
| E | 41 | 1 | **7Y-1976** | | HOSE-WATER (35-CM) | |
| E | 41A | 1 | **7Y-1976** | | HOSE-WATER (36-CM) | |
| D | 42 | 1 | **5P-9205** | | SEAL (0.2-M) | |
| D | 43 | 1 | **5P-5687** | | SEAL (0.1-M EACH) | |
| D | 43A | 1 | **5P-5687** | | SEAL (0.5-M) | |
| D | 43B | 1 | **5P-5687** | | SEAL (0.2-M) | |
| E | 44 | 1 | **195-0601** | | SEAL (10-CM EACH) | |
| E | 44A | 1 | **195-0601** | | SEAL (4.5-CM) | |
| E | 44B | 1 | **195-0601** | | SEAL (5-CM EACH) | |
| E | 44C | 1 | **195-0601** | | SEAL (42-CM) | |
| E | 44D | 1 | **195-0601** | | SEAL (50-CM EACH) | |

*380-6364* **RADIATOR & HYD OIL COOLER GP (*contd.*)** **i05204637**

| NOTE | REF NO | GRAPHIC REF | PART NUMBER | QTY | PART NAME 1 2 3 4 5 6 (PRODUCT LEVEL) | SEE PAGE |
|---|---|---|---|---|---|---|
| E | 44E | 1 | **195-0601** | | SEAL (13.5-CM EACH) | |
| E | 44F | 1 | **195-0601** | | SEAL (61.5-CM) | |
| E | 44G | 1 | **195-0601** | | SEAL (38.2-CM) | |
| E | 44H | 1 | **195-0601** | | SEAL (2.5-CM) | |
| E | 44I | 1 | **195-0601** | | SEAL (8-CM) | |
| E | 44J | 1 | **195-0601** | | SEAL (56-CM EACH) | |
| E | 44K | 1 | **195-0601** | | SEAL (6-CM EACH) | |

D - ORDER BY THE METER
E - ORDER BY THE CENTIMETER
M - METRIC PART

*380-6364* **RADIATOR & HYD OIL COOLER GP (*contd.*)** **i05204637**

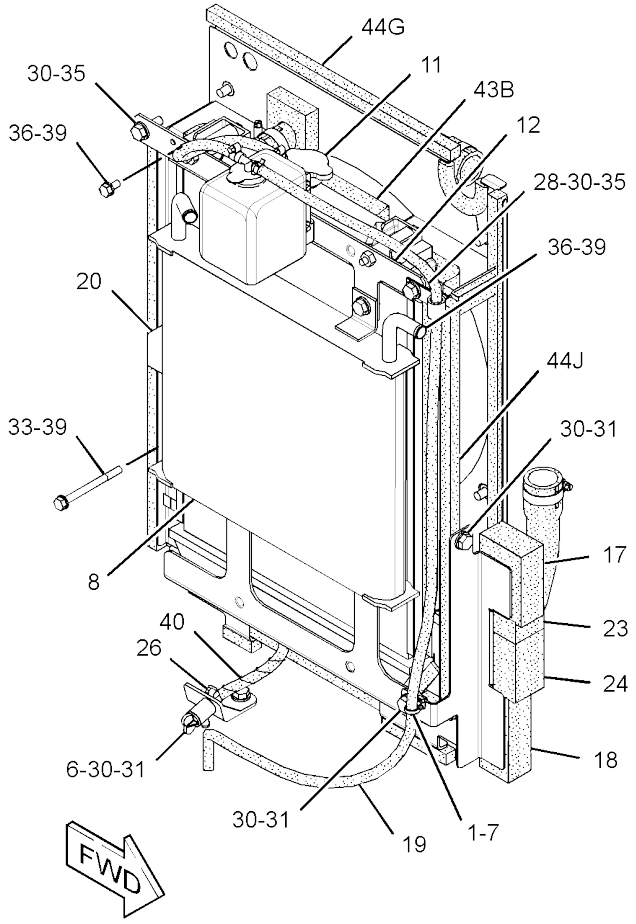


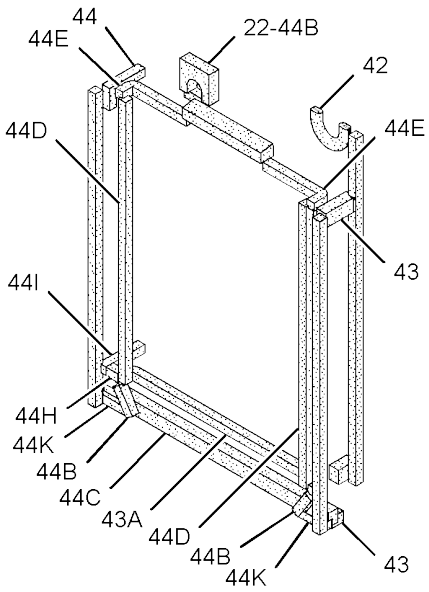


(PARTS REMOVED FOR CLARITY)

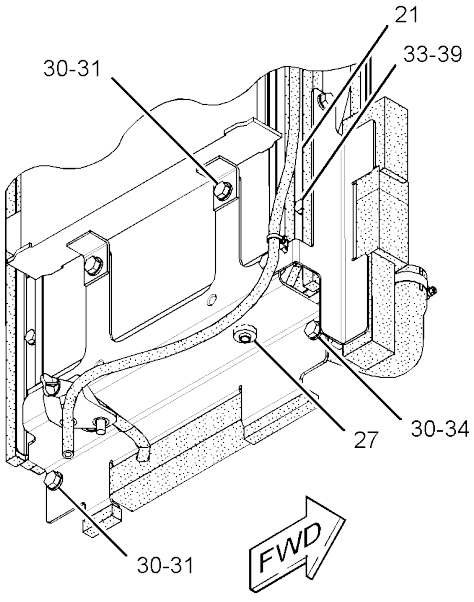


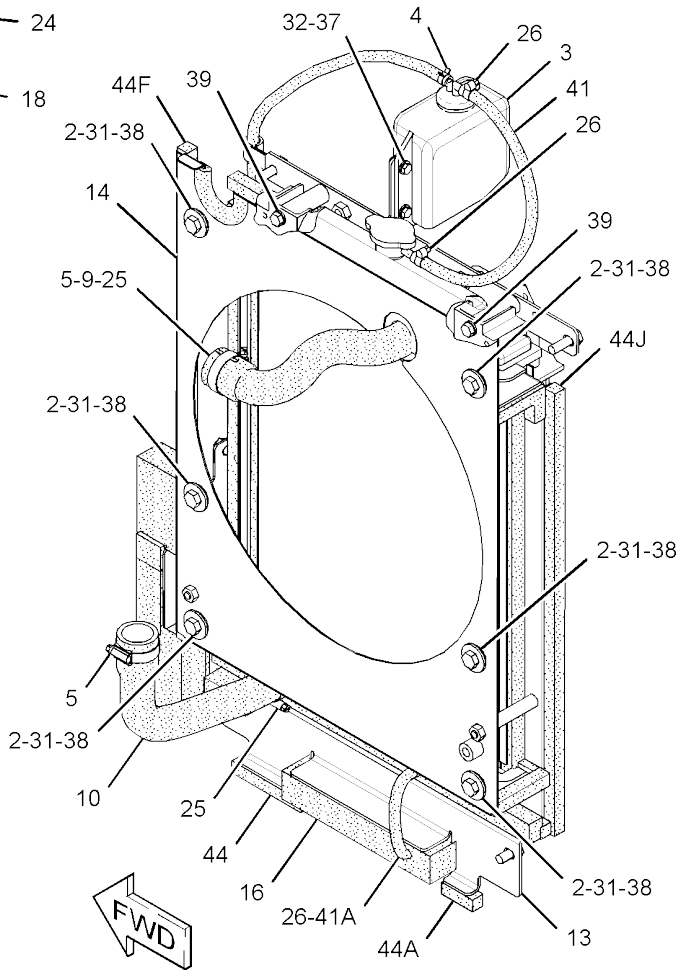


GRAPHIC #1

<END>

g03334270

# AIR INLET AND EXHAUST SYSTEM

## *383-0133* ACCESSORY GP-ENGINE

**S/N: RKY1-1439**

**PART OF 380-1777 ENGINE AR-COMPLETE, 392-4127, 416-6081 ENGINE AR-PRIMARY**

**ALSO AN ATTACHMENT**

**SMCS-1059, 1395** **i04785874**

| NOTE | REF NO | GRAPHIC REF | PART NUMBER | QTY | PART NAME 1 2 3 4 5 6 (PRODUCT LEVEL) | SEE PAGE |
|---|---|---|---|---|---|---|
| | 1 | 1 | **378-1267** | 1 | GASKET | |
| | 2 | 1 | **379-0869** | 1 | CONNECTOR (WATER RETURN) | |
| F | | | **379-2015** | 1 | RELAY AS (24-VOLT) (ENGINE START) | |

F - NOT SHOWN

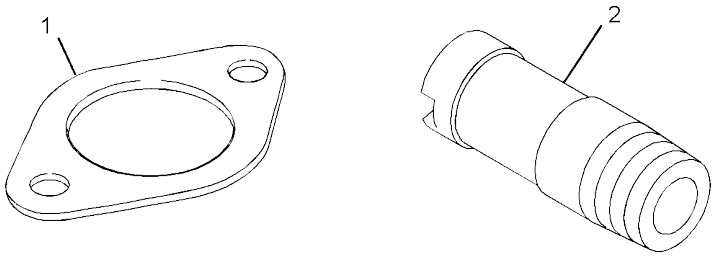


GRAPHIC #1 **<END>** g02789465

# AIR INLET AND EXHAUST SYSTEM

## 380-5727 AIR CLEANER GP

**PART OF 383-8499 AIR CLEANER GP**

**SMCS-1051, 1054** **i04589469**

| NOTE | REF NO | GRAPHIC REF | PART NUMBER | QTY | PART NAME 1 2 3 4 5 6 (PRODUCT LEVEL) | SEE PAGE |
|---|---|---|---|---|---|---|
| | 1 | 1 | **096-4177** | 1 | VALVE-EVACUATION (AIR CLEANER) | |
| | 2 | 1 | **096-5028** | 1 | INDICATOR-AIR FILTER CHANGE | |
| | 3 | 1 | **134-8726** | 1 | FILTER ELEMENT AS-AIR (PRIMARY) | |
| | 4 | 1 | **140-2334** | 1 | FILTER ELEMENT AS-AIR (SECONDARY) | |
| | 5 | 1 | **284-3880** | 1 | CAP-PROTECTIVE | |

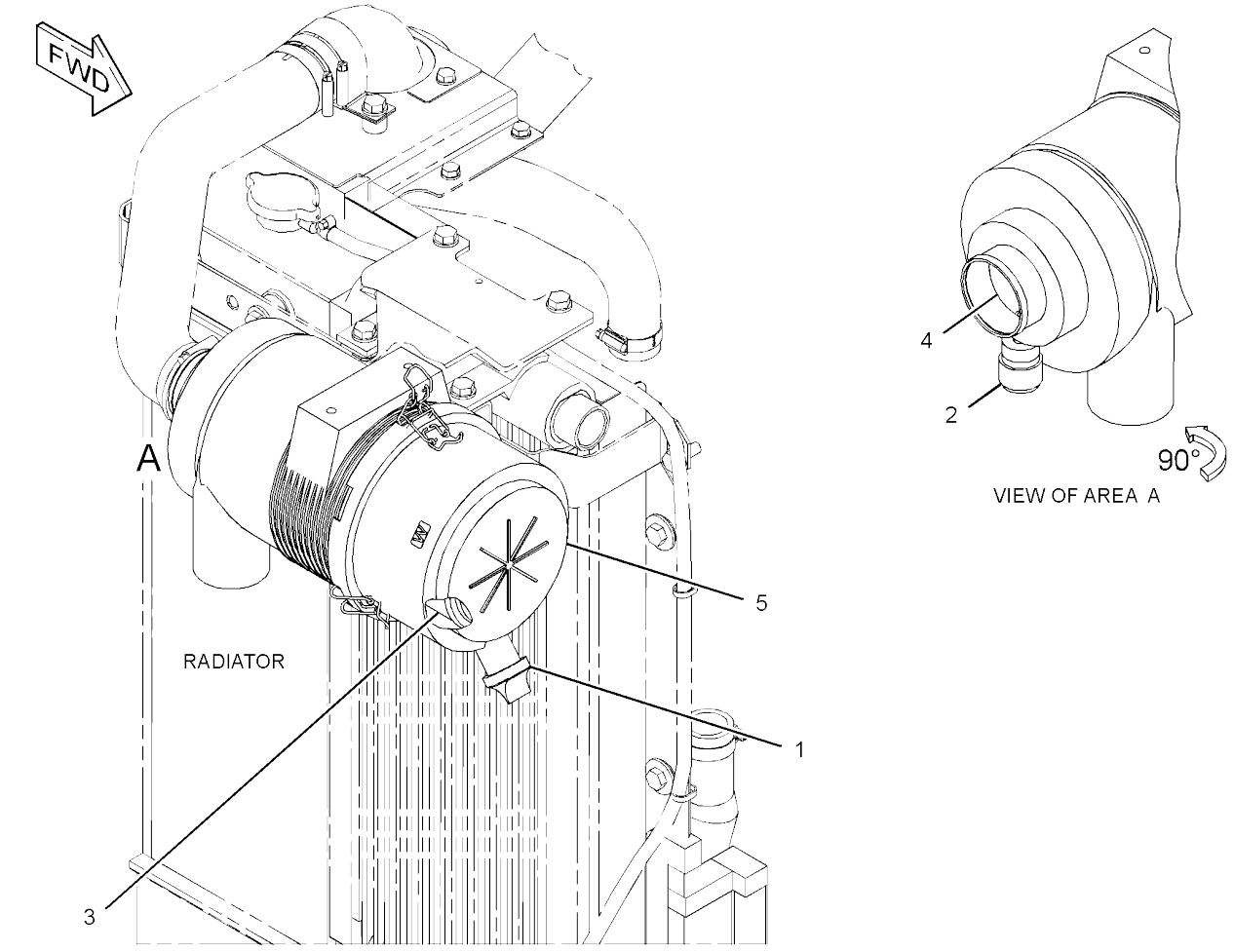


GRAPHIC #1 **<END>** g02764323

# AIR INLET AND EXHAUST SYSTEM

## *383-8499* AIR CLEANER GP

**PART OF 383-0640 INSTALLATION AR-ENGINE**

**SMCS-1051, 1054** **i04629857**

| NOTE | REF NO | GRAPHIC REF | PART NUMBER | QTY | PART NAME 1 2 3 4 5 6 (PRODUCT LEVEL) | SEE PAGE |
|---|---|---|---|---|---|---|
| Y | 1 | 1 | **380-5727** | 1 | AIR CLEANER GP | 41 |
| | 2 | 1 | **383-8501** | 1 | BRACKET | |
| | 3 | 1 | **8T-4121** | 2 | WASHER-HARD (11X21X2.5-MM THK) | |
| M | 4 | 1 | **8T-4136** | 2 | BOLT (M10X1.5X25-MM) | |
| M | 5 | 1 | **8T-4200** | 2 | BOLT (M8X1.25X16-MM) | |
| | 6 | 1 | **8T-4224** | 2 | WASHER-HARD (8.8X16X2-MM THK) | |

M - METRIC PART
Y - SEPARATE ILLUSTRATION

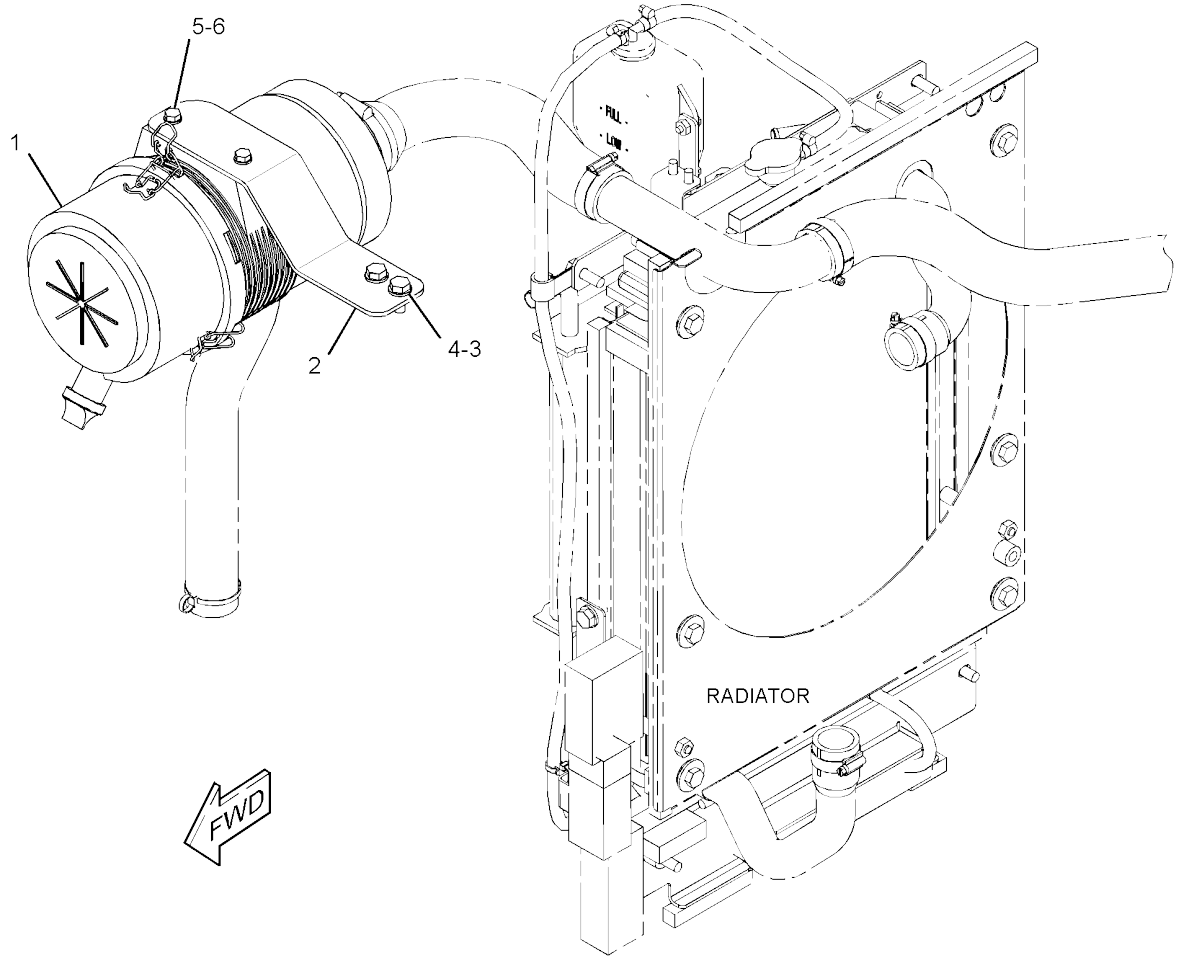


GRAPHIC #1 **<END>** g02789070

# AIR INLET AND EXHAUST SYSTEM

## *383-0643* EXTENSION GP-EXHAUST

**PART OF 383-0640 INSTALLATION AR-ENGINE**

**SMCS-1061** **i04732218**

| NOTE | REF NO | GRAPHIC REF | PART NUMBER | QTY | PART NAME 1 2 3 4 5 6 (PRODUCT LEVEL) | SEE PAGE |
|---|---|---|---|---|---|---|
| | 1 | 1 | **171-0689** | 1 | CLAMP AS-EXHAUST | |
| | 2 | 1 | **299-3784** | 1 | U-BOLT | |
| | 3 | 1 | **8T-4224** | 4 | WASHER-HARD (8.8X16X2-MM THK) | |
| M | 4 | 1 | **8T-4908** | 2 | BOLT (M8X1.25X25-MM) | |
| M | 5 | 1 | **5C-7261** | 4 | NUT (M8X1.25-THD) | |

M - METRIC PART

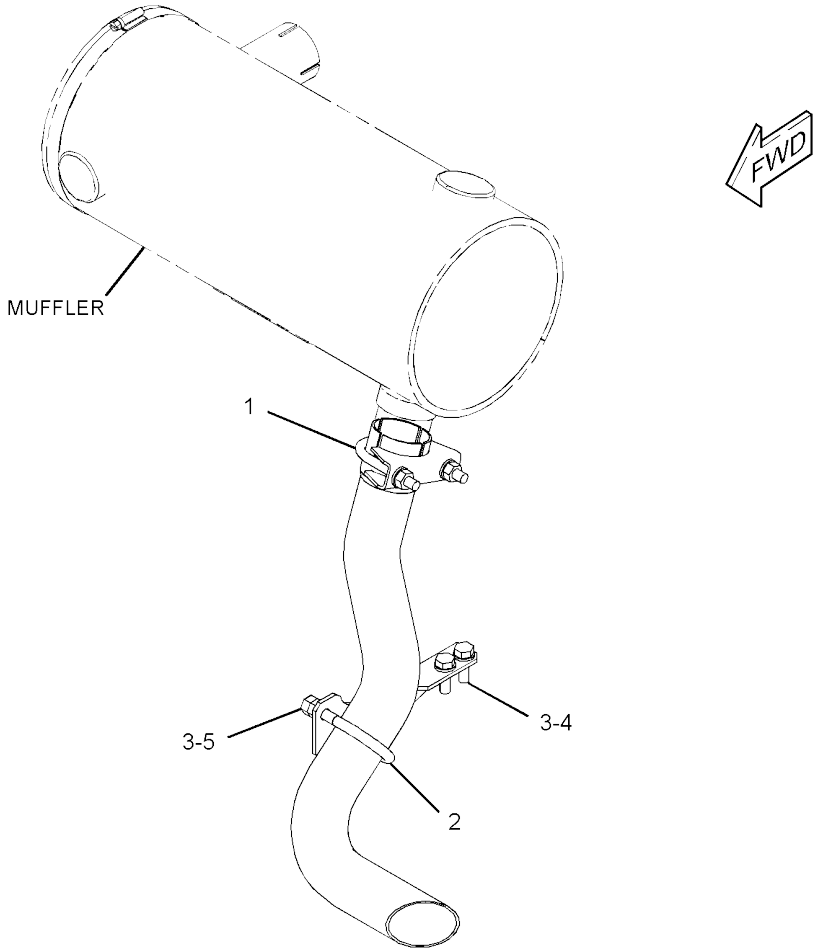


GRAPHIC #1 **<END>** g02853680

# AIR INLET AND EXHAUST SYSTEM

## *383-0641* LINES GP-AIR

**PART OF 383-0640 INSTALLATION AR-ENGINE**

**SMCS-1071** **i04935898**

| NOTE | REF NO | GRAPHIC REF | PART NUMBER | QTY | PART NAME 1 2 3 4 5 6 (PRODUCT LEVEL) | SEE PAGE |
|---|---|---|---|---|---|---|
| | 1 | 1 | **3S-2093** | 1 | STRAP-CABLE | |
| | 2 | 1 | **095-1392** | 1 | CLAMP-HOSE | |
| | 3 | 1 | **095-1393** | 2 | CLAMP-HOSE | |
| | 4 | 1 | **240-0454** | 2 | CLAMP-HOSE | |
| | 5 | 1 | **266-7379** | 1 | STRAP-CABLE | |
| | 6 | 1 | **380-6363** | 1 | TUBE AS | |
| | 7 | 1 | **383-0642** | 1 | HOSE | |
| | 8 | 1 | **383-8502** | 1 | HOSE | |
| | 9 | 1 | **383-8503** | 1 | HOSE | |
| M | 10 | 1 | **8T-4200** | 2 | BOLT (M8X1.25X16-MM) | |
| | 11 | 1 | **8T-4224** | 2 | WASHER-HARD (8.8X16X2-MM THK) | |

M - METRIC PART

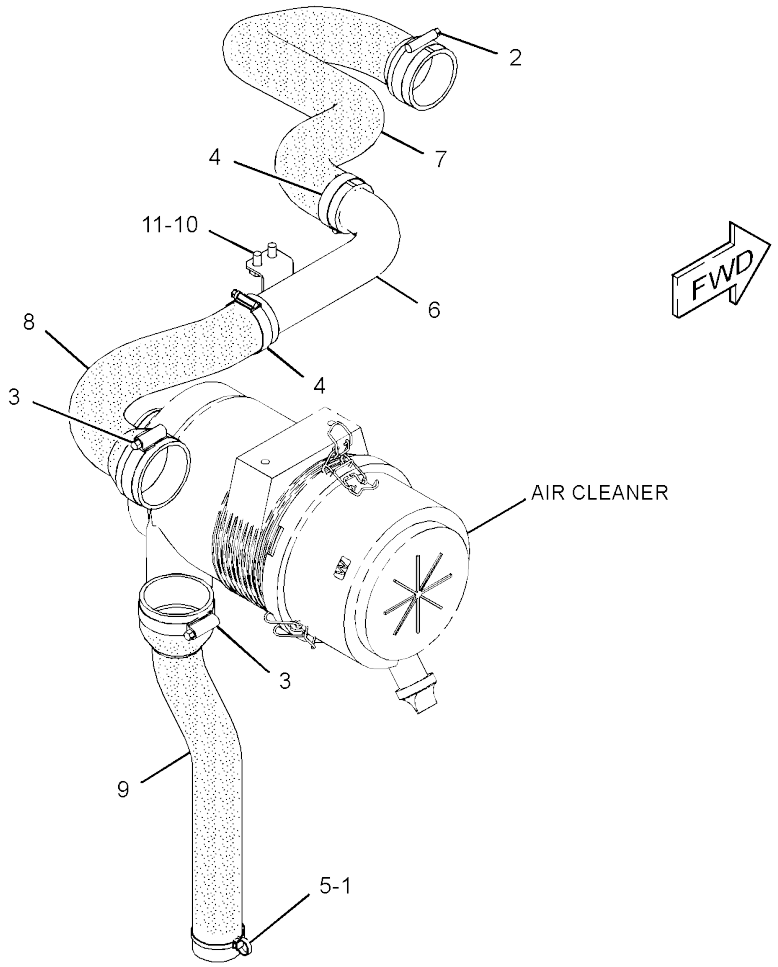


GRAPHIC #1 **<END>** g02853578

# *386-4641* MANIFOLD GP-EXHAUST

**S/N: RKY1-1439**

**PART OF 380-1777 ENGINE AR-COMPLETE, 392-4127, 416-6081 ENGINE AR-PRIMARY**
**ALSO AN ATTACHMENT**

**SMCS-1059** **i04794309**

| NOTE | REF NO | GRAPHIC REF | PART NUMBER | QTY | PART NAME 1 2 3 4 5 6 (PRODUCT LEVEL) | SEE PAGE |
|---|---|---|---|---|---|---|
| | 1 | 1 | **383-0279** | 3 | STUD | |
| | 2 | 1 | **383-0315** | 3 | STUD | |
| | 3 | 1 | **383-0346** | 6 | NUT | |
| | 4 | 1 | **386-4787** | 1 | MANIFOLD-EXHAUST | |
| | 5 | 1 | **386-4788** | 1 | GASKET | |

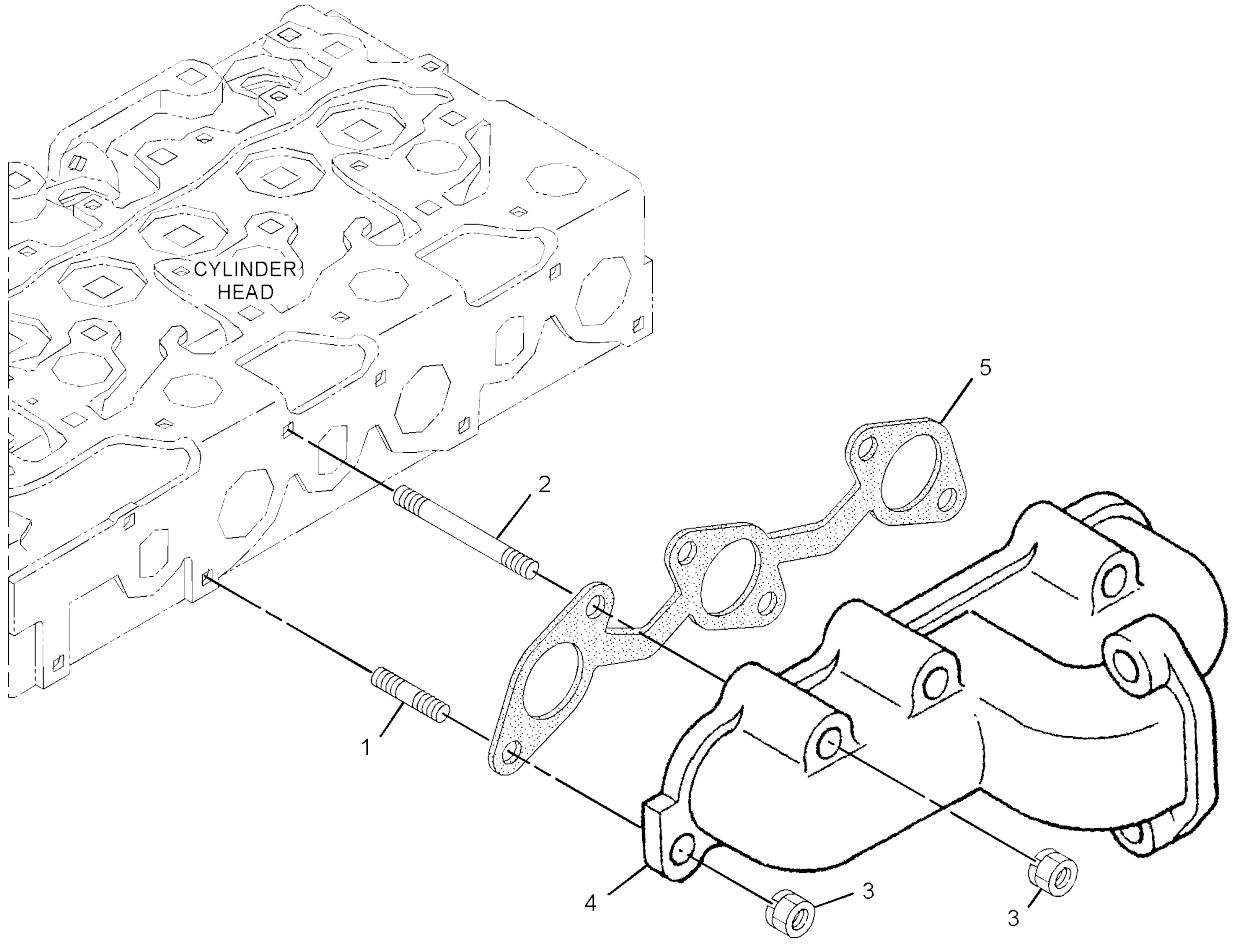


GRAPHIC #1 **<END>** g02921276

# *386-4642* MANIFOLD GP-INLET

**S/N: RKY1-1439**

**PART OF 380-1777 ENGINE AR-COMPLETE, 392-4127, 416-6081 ENGINE AR-PRIMARY**

**ALSO AN ATTACHMENT**

**SMCS-1058** **i04794308**

| NOTE | REF NO | GRAPHIC REF | PART NUMBER | QTY | PART NAME 1 2 3 4 5 6 (PRODUCT LEVEL) | SEE PAGE |
|---|---|---|---|---|---|---|
| | 1 | 1 | **383-0173** | 5 | BOLT | |
| | 2 | 1 | **386-6928** | 1 | GASKET | |
| | 3 | 1 | **395-0083** | 1 | MANIFOLD AS | |
| | 3A | 1 | **383-0382** | 1 | PIPE | |

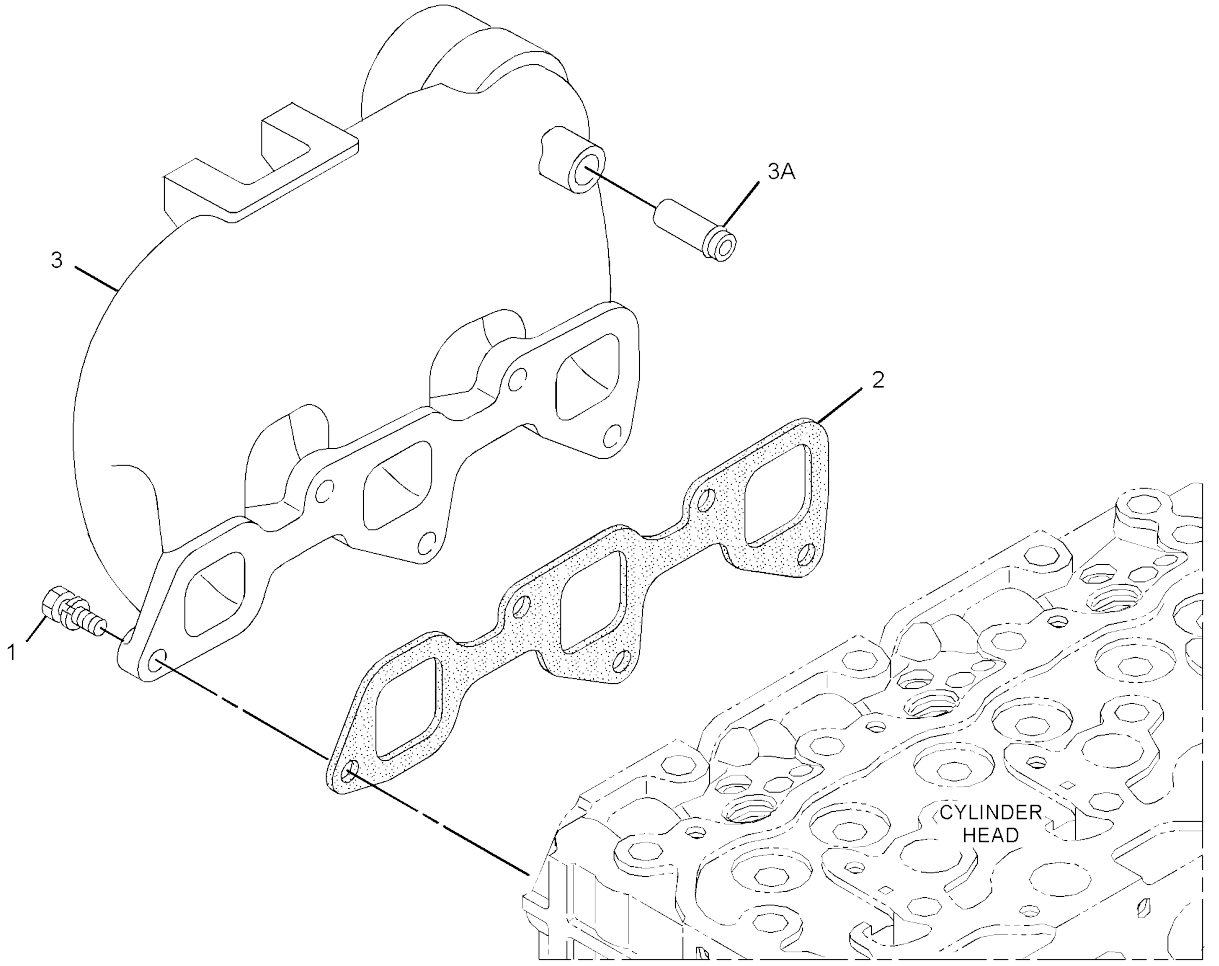


GRAPHIC #1 **<END>** g02921236

## *384-1056* MUFFLER GP

**PART OF 383-0640 INSTALLATION AR-ENGINE**

**SMCS-1062** **i04732219**

| NOTE | REF NO | GRAPHIC REF | PART NUMBER | QTY | PART NAME 1 2 3 4 5 6 (PRODUCT LEVEL) | SEE PAGE |
|---|---|---|---|---|---|---|
| | 1 | 1 | **171-0689** | 1 | CLAMP AS-EXHAUST | |
| | 2 | 1 | **285-7033** | 1 | CLAMP-HOSE | |
| | 3 | 1 | **378-1265** | 1 | MUFFLER AS | |
| | 4 | 1 | **378-1266** | 1 | INSULATOR | |
| | 5 | 1 | **391-7843** | 1 | TUBE AS | |
| M | 6 | 1 | **127-4839** | 2 | BOLT (M10X1.25X25-MM) | |
| | 7 | 1 | **6V-5839** | 2 | WASHER (11X21X2.5-MM THK) | |
| | 8 | 1 | **7X-7729** | 2 | WASHER (11X25X3-MM THK) | |
| M | 9 | 1 | **8T-4136** | 2 | BOLT (M10X1.5X25-MM) | |

M - METRIC PART

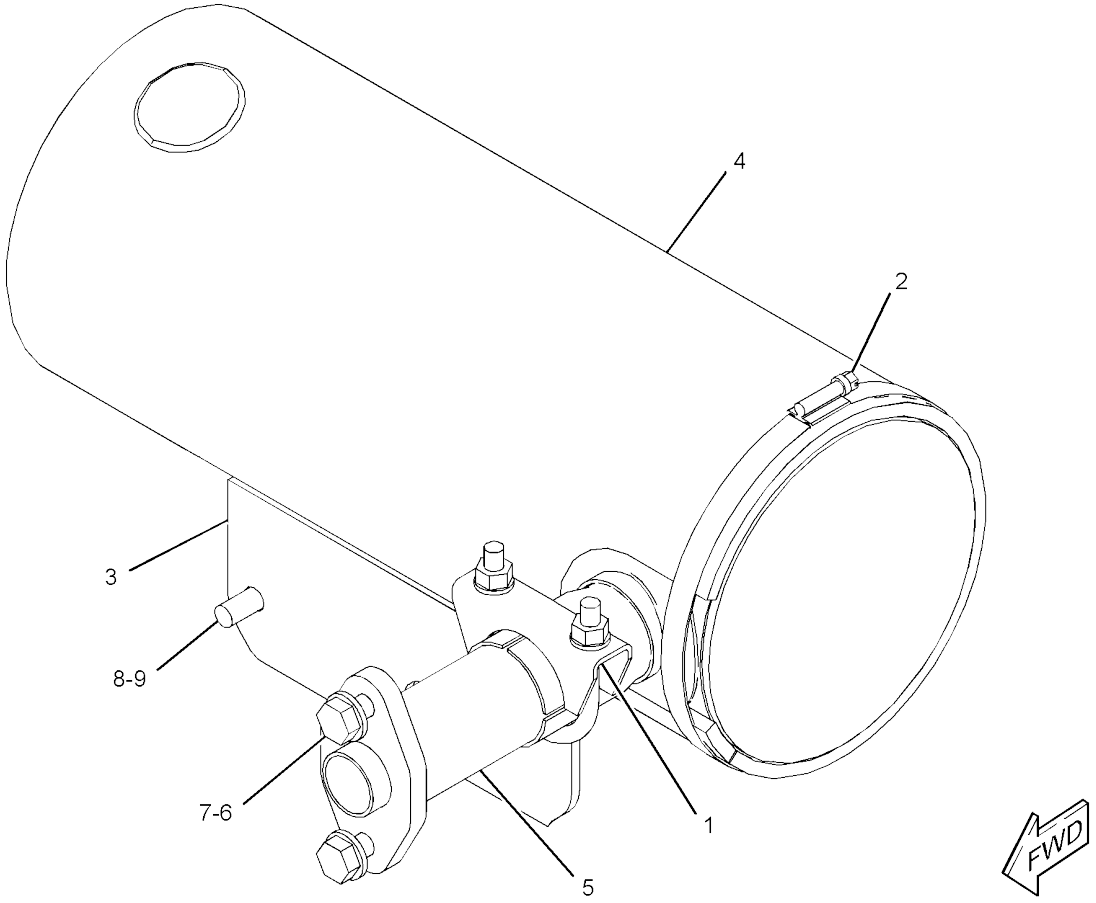


GRAPHIC #1 **<END>** g02852696

# 386-6945 CAMSHAFT AS

**PART OF 386-4650 PUMP GP-FUEL INJECTION**
**ALSO AN ATTACHMENT**

**SMCS-1292** **i04794313**

| NOTE | REF NO | GRAPHIC REF | PART NUMBER | QTY | PART NAME 1 2 3 4 5 6 (PRODUCT LEVEL) | SEE PAGE |
|---|---|---|---|---|---|---|
| | 1 | 1 | **383-0226** | 1 | KEY-FEATHER | |
| | 2 | 1 | **383-0232** | 7 | BALL | |
| | 3 | 1 | **383-0233** | 39 | BALL | |
| | 4 | 1 | **383-0274** | 1 | RING-SNAP | |
| | 5 | 1 | **383-0275** | 1 | RING-SNAP | |
| | 6 | 1 | **383-0309** | 1 | SLEEVE | |
| | 7 | 1 | **383-0547** | 1 | COVER-GOVERNOR | |
| | 8 | 1 | **383-0588** | 1 | BALL BEARING | |
| | 9 | 1 | **386-6946** | 1 | GEAR-PUMP | |

PARTS SHOWN IN GRAPHIC(S) WITHOUT A REFERENCE NUMBER ARE NOT SERVICED SEPARATELY

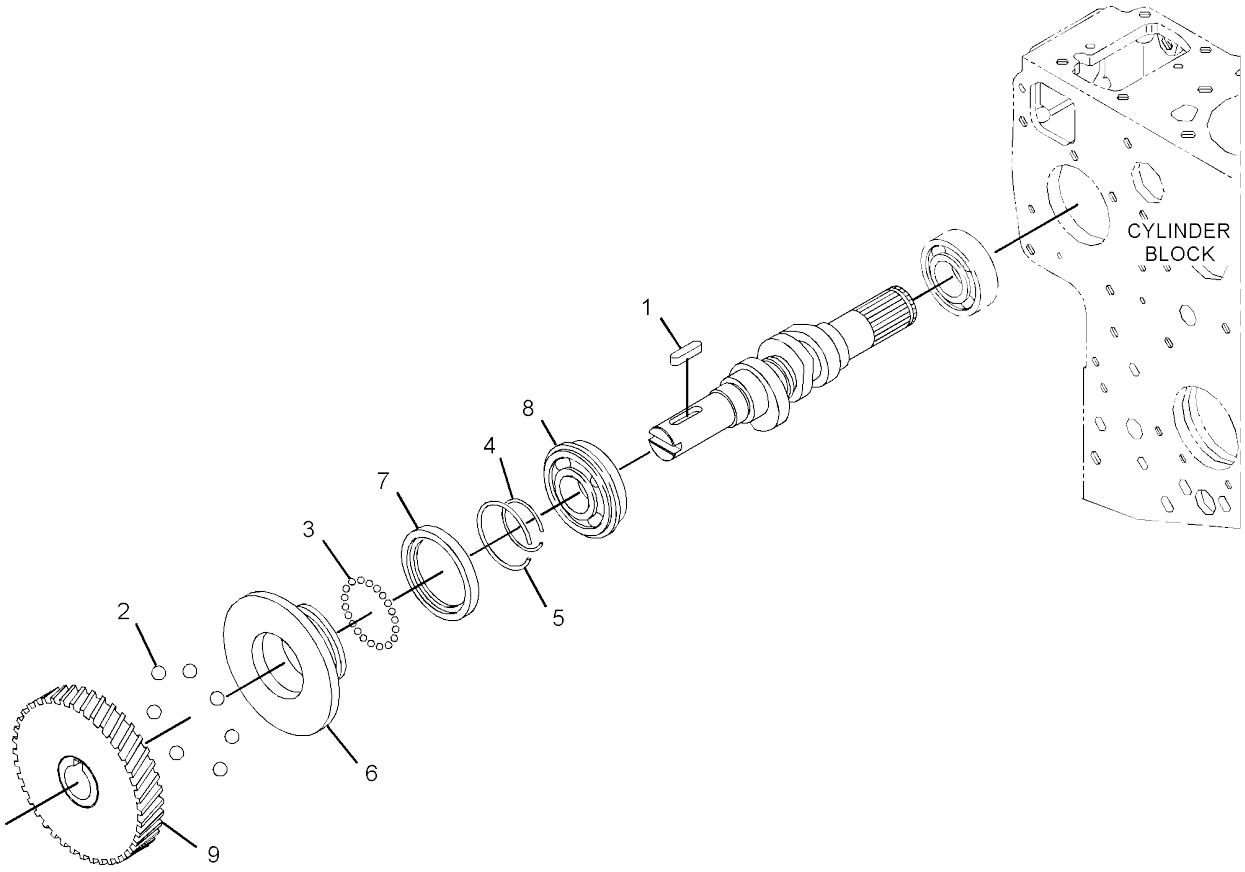


GRAPHIC #1 **<END>** g02923222

## *377-8934* CONTROL AR-GOVERNOR—AUTOMATIC IDLE

**AN ATTACHMENT**

**SMCS-1264, 1265, 1276** **i04728053**

| NOTE | PART NUMBER | QTY | PART NAME 1 2 3 4 5 6 (PRODUCT LEVEL) | SEE PAGE |
|---|---|---|---|---|
| Y | *380-6300* | 1 | CONTROL GP-GOVERNOR | 50 |
| Y | *356-4545* | 1 | VALVE & MTG GP-PILOT (TRAVEL) | 307 |

Y - SEPARATE ILLUSTRATION

<END>

## *377-8935* CONTROL AR-GOVERNOR—AUTOMATIC IDLE, TRAVEL ALARM

**AN ATTACHMENT**

**SMCS-1264, 1265, 1276** **i04728054**

| NOTE | PART NUMBER | QTY | PART NAME 1 2 3 4 5 6 (PRODUCT LEVEL) | SEE PAGE |
|---|---|---|---|---|
| Y | *370-5338* | 1 | ALARM GP-TRAVEL | 66 |
| Y | *380-6300* | 1 | CONTROL GP-GOVERNOR | 50 |
| Y | *356-4545* | 1 | VALVE & MTG GP-PILOT (TRAVEL) | 307 |

Y - SEPARATE ILLUSTRATION

<END>

# *380-6300* CONTROL GP-GOVERNOR–AUTOMATIC IDLE

**PART OF 377-8934, 377-8935 CONTROL AR-GOVERNOR**
**AN ATTACHMENT**

**SMCS-1265, 1276** **i04728080**

| NOTE | REF NO | GRAPHIC REF | PART NUMBER | QTY | PART NAME 1 2 3 4 5 6 (PRODUCT LEVEL) | SEE PAGE |
|---|---|---|---|---|---|---|
| | 1 | 1 | **3S-2093** | 4 | STRAP-CABLE | |
| | 2 | 1 | **266-7379** | 1 | STRAP-CABLE | |
| | 3 | 1 | **298-0663** | 1 | CLIP | |
| | 4 | 1 | **362-3225** | 1 | SWITCH AS-PRESSURE (PILOT, TRAVEL) | |
| | | 1 | **9X-3401** | 2 | PIN-CONNECTOR (16-GA TO 18-GA) | |
| | | 1 | **243-4505** | 1 | RECEPTACLE AS-CONNECTOR (2-PIN) | |
| | 5 | 1 | **376-9492** | 1 | CONTROL AS | |
| | 6 | 1 | **379-0803** | 1 | MOTOR AS-GOVERNOR (12-VOLT) | |
| | 7 | 1 | **380-6298** | 1 | BRACKET AS | |
| M | | 1 | **6V-9632** | 3 | NUT-WELD (M6X1-THD) | |
| | | 1 | **7T-1099** | 1 | LINK | |
| | 8 | 1 | **383-3160** | 1 | BRACKET AS | |
| | | 1 | **7T-1099** | 1 | LINK | |
| | 9 | 1 | **3J-1907** | 1 | SEAL-O-RING | |
| M | 10 | 1 | **5C-2890** | 1 | NUT (M6X1-THD) | |
| M | 11 | 1 | **6V-7357** | 2 | BOLT (M6X1X25-MM) | |
| | 12 | 1 | **8T-4121** | 3 | WASHER-HARD (11X21X2.5-MM THK) | |
| M | 13 | 1 | **8T-4137** | 3 | BOLT (M10X1.5X20-MM) | |
| M | 14 | 1 | **8T-4138** | 3 | BOLT (M6X1X20-MM) | |
| M | 15 | 1 | **8T-4171** | 2 | BOLT (M6X1X12-MM) | |
| | 16 | 1 | **9X-8256** | 9 | WASHER (6.6X12X2-MM THK) | |

M - METRIC PART

*380-6300* **CONTROL GP-GOVERNOR (*contd.*)** **i04728080**

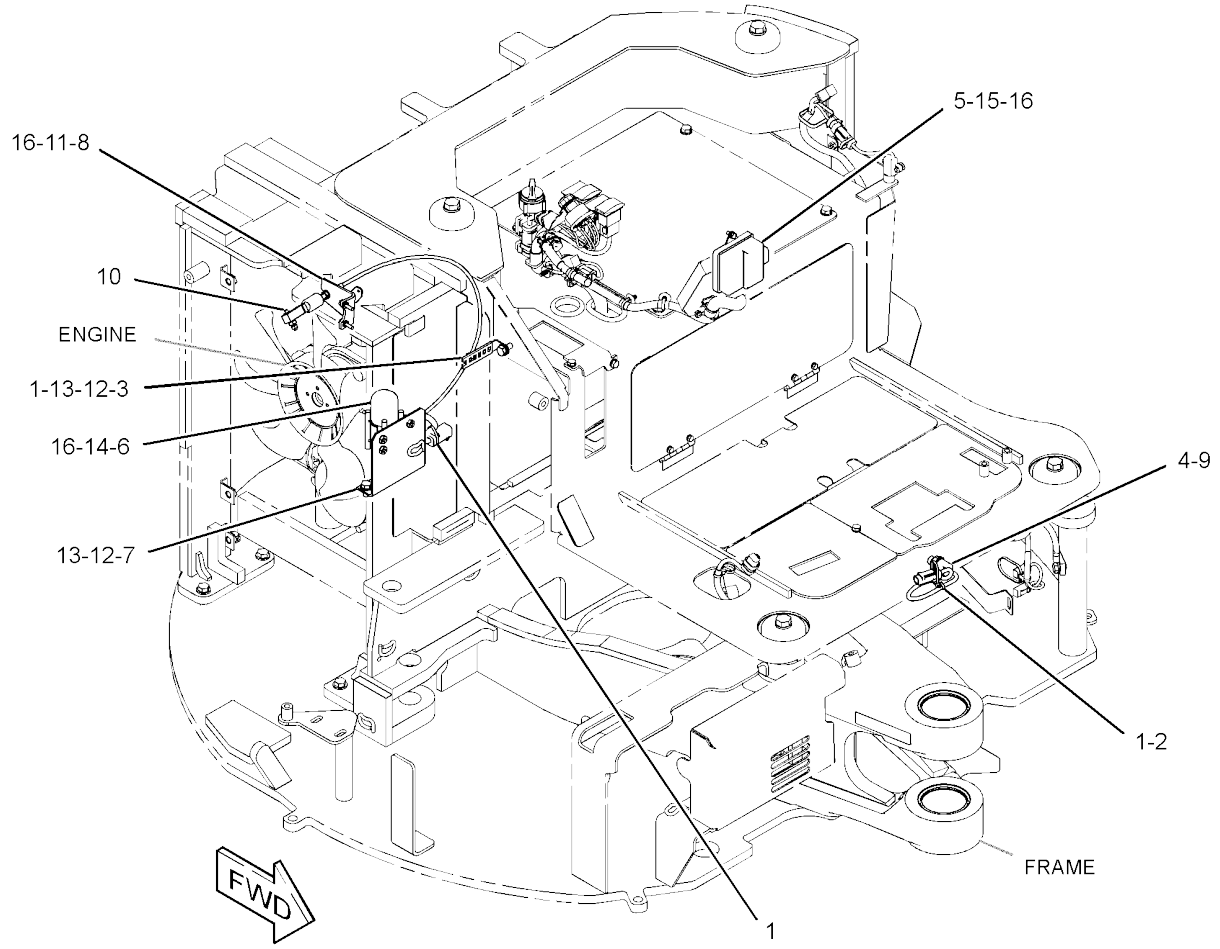


GRAPHIC #1 **<END>** g02885017

# FUEL SYSTEM

## *144-9962* FILTER GP-WATER SEP & FUEL

**PART OF 379-4728 LINES GP-FUEL FILTER**

**SMCS-1261, 1263** **i03998686**

| NOTE | REF NO | GRAPHIC REF | PART NUMBER | QTY | PART NAME 1 2 3 4 5 6 (PRODUCT LEVEL) | SEE PAGE |
|---|---|---|---|---|---|---|
| | 1 | 1 | **156-1200** | 1 | FILTER ELEMENT-FUEL (WATER SEPARATOR) | |
| | 2 | 1 | **149-3516** | 1 | BASE AS | |
| | 3 | 1 | **118-8118** | 1 | RING-RETAINING | |
| | 4 | 1 | **112-9401** | 1 | BOWL AS-WATER COLLECTION | |
| | | 1 | **128-8614** | 1 | KIT-SEAL (WATER SEPARATOR) | |
| | | | | | (INCLUDES SEALS FOR HEADER/ELEMENT, DRAIN VALVE, HEADER/BOWL & BOLT/BOWL) | |
| | 5 | 1 | **118-8119** | 1 | NUT | |
| | | | | | AVAILABLE REPAIR KIT(S): | |
| | | | **121-4480** | 1 | KIT-WATER BASE (WATER SEPARATOR) | |
| | | | | | (INCLUDES CAP NUT, HEADER CAP, CAP SEAL, VOLUME PLUG, VENT PLUG, DUST SEAL, O-RING SEAL & RETAINING RING) | |

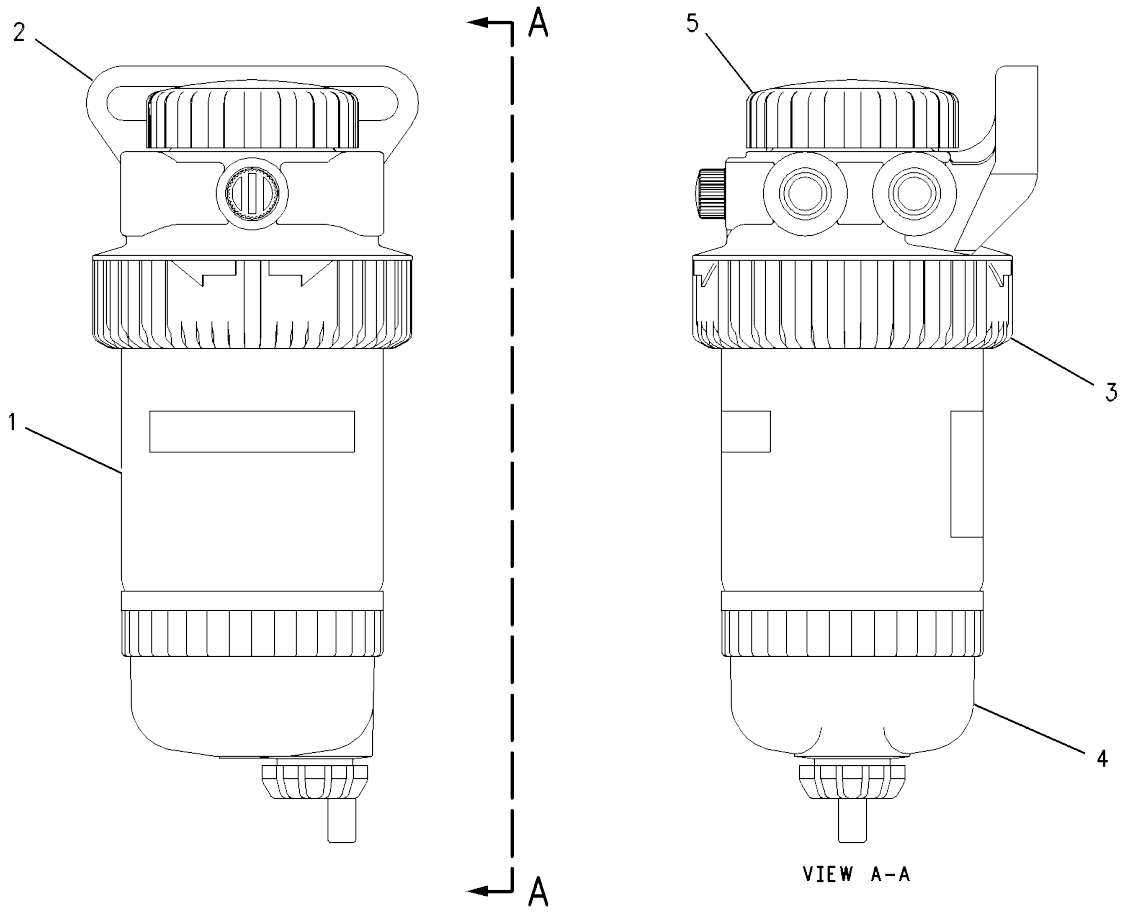


GRAPHIC #1 **<END>** g00430959

# 386-4635 GOVERNOR GP

**S/N: RKY1-1439**

**PART OF 380-1777 ENGINE AR-COMPLETE, 392-4127, 416-6081 ENGINE AR-PRIMARY**
**ALSO AN ATTACHMENT**

**SMCS-1264, 1908** **i05086309**

| NOTE | REF NO | GRAPHIC REF | PART NUMBER | QTY | PART NAME 1 2 3 4 5 6 (PRODUCT LEVEL) | SEE PAGE |
|---|---|---|---|---|---|---|
| | 1 | 1 | **383-0164** | 4 | BOLT | |
| | 2 | 1 | **383-0168** | 1 | BOLT | |
| | 3 | 1 | **383-0189** | 2 | BOLT | |
| | 4 | 1 | **383-0198** | 4 | NUT-FLANGE | |
| | 5 | 1 | **383-0209** | 4 | GASKET | |
| | 6 | 1 | **383-0278** | 4 | STUD | |
| | 7 | 1 | **383-0308** | 2 | GASKET | |
| | 8 | 1 | **383-0317** | 1 | CAP | |
| | 9 | 1 | **383-0406** | 1 | BOLT-ADJUSTMENT | |
| | 11 | 1 | **383-0416** | 2 | GASKET | |
| | 12 | 1 | **386-6951** | 1 | SPRING-GOVERNOR | |
| | 13 | 1 | **386-6952** | 1 | SPRING-GOVERNOR | |
| | 14 | 1 | **383-0512** | 1 | LEVER AS-CONTROL (SPEED CONTROL) | |
| | 14A | 1 | **383-0223** | 1 | PIN-SPRING | |
| | 14B | 1 | **383-0355** | 1 | SEAL-OIL | |
| | 14C | 1 | **383-0407** | 1 | LEVER AS-GOVERNOR | |
| | 14D | 1 | **383-0418** | 1 | SPRING-RETURN | |
| | 14E | 1 | **383-0513** | 1 | LEVER-CONTROL | |
| | 15 | 1 | **383-0521** | 1 | SWITCH AS (ENGINE SHUTOFF) | |
| | 15A | 1 | **383-0211** | 1 | SEAL-O-RING | |
| | 15B | 1 | **383-0520** | 1 | BOLT-ADJUSTMENT | |
| | 15C | 1 | **383-0575** | 1 | NUT-SELF LOCKING | |
| | 16 | 1 | **383-0571** | 1 | CAP | |
| | 17 | 1 | **383-0583** | 1 | SPRING GP-GOVERNOR (LEVER STOP) | |
| | 17A | 1 | **383-0222** | 1 | PIN-SPRING | |
| | 17B | 1 | **383-0418** | 1 | SPRING-RETURN | |
| | 17C | 1 | **383-0584** | 1 | LEVER AS-STOP | |
| | 17D | 1 | **383-0585** | 1 | LEVER-STOP | |
| | 17E | 1 | **383-0586** | 2 | SEAL | |
| | 18 | 1 | **386-6948** | 1 | LEVER AS-FORK | |
| | 18A | 1 | **383-0206** | 1 | LOCKWASHER | |
| | 18B | 1 | **383-0276** | 1 | HOLDER | |
| | 18C | 1 | **383-0277** | 1 | BOLT | |
| | 18D | 1 | **383-0409** | 1 | LEVER | |
| F | | 1 | **386-6950** | 1 | SHAFT-FORK | |
| F | | 1 | **383-0183** | 1 | BOLT | |

F - NOT SHOWN

*386-4635* **GOVERNOR GP (*contd.*)** **i05086309**

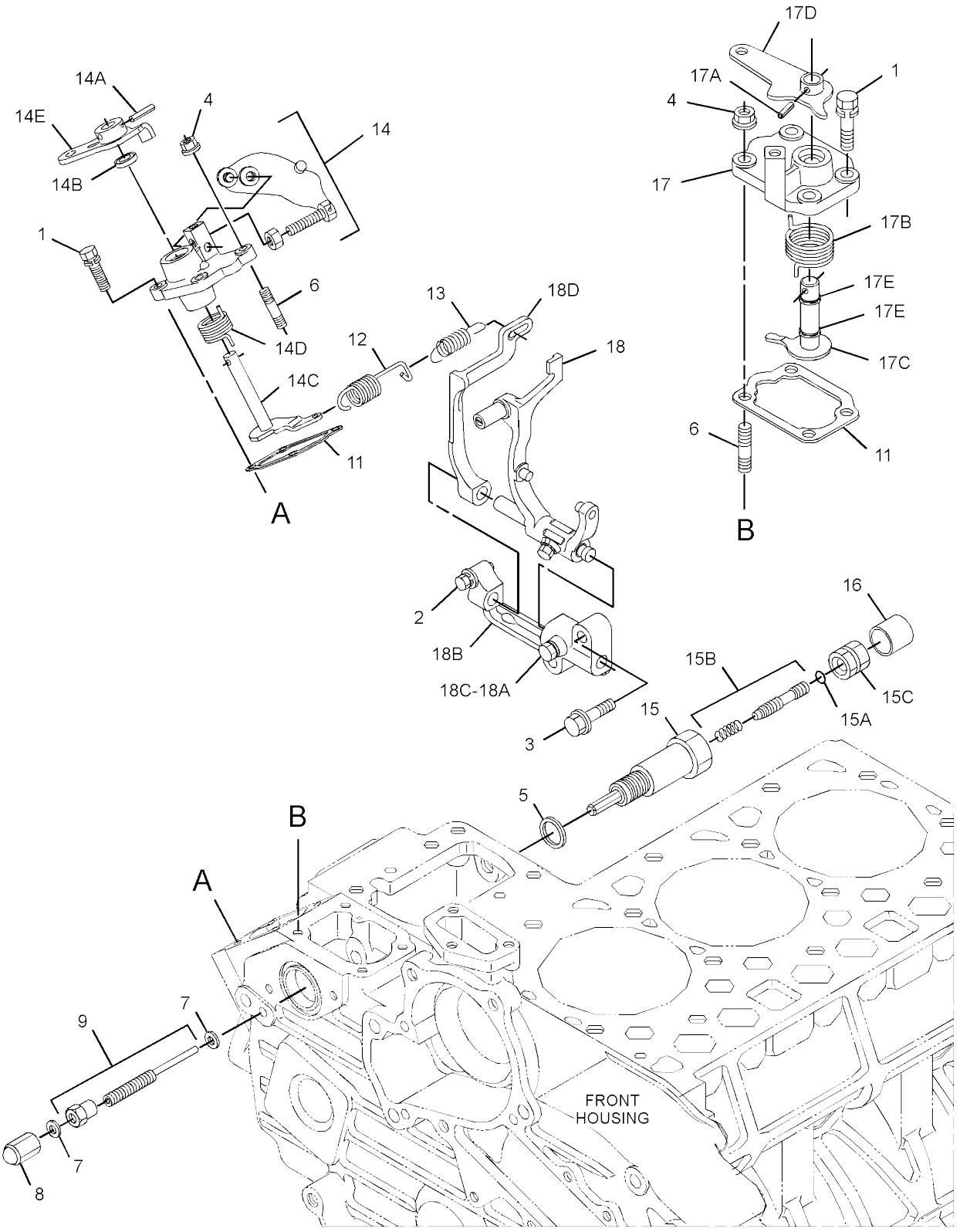


GRAPHIC #1 **<END>** g03252716

# 386-4639 LINES GP-FUEL

**S/N: RKY1-1439**

**PART OF 380-1777 ENGINE AR-COMPLETE, 392-4127, 416-6081 ENGINE AR-PRIMARY**

**ALSO AN ATTACHMENT**

**SMCS-1274** **i04794305**

| NOTE | REF NO | GRAPHIC REF | PART NUMBER | QTY | PART NAME 1 2 3 4 5 6 (PRODUCT LEVEL) | SEE PAGE |
|---|---|---|---|---|---|---|
| | 1 | 1 | **383-0282** | 1 | CLAMP AS | |
| | 2 | 1 | **383-0474** | 3 | BOLT | |
| | 3 | 1 | **383-0559** | 1 | TUBE AS-FUEL | |
| | 3A | 1 | **383-0284** | 2 | CLIP-PIPE | |
| | 4 | 1 | **386-4789** | 1 | PIPE AS | |

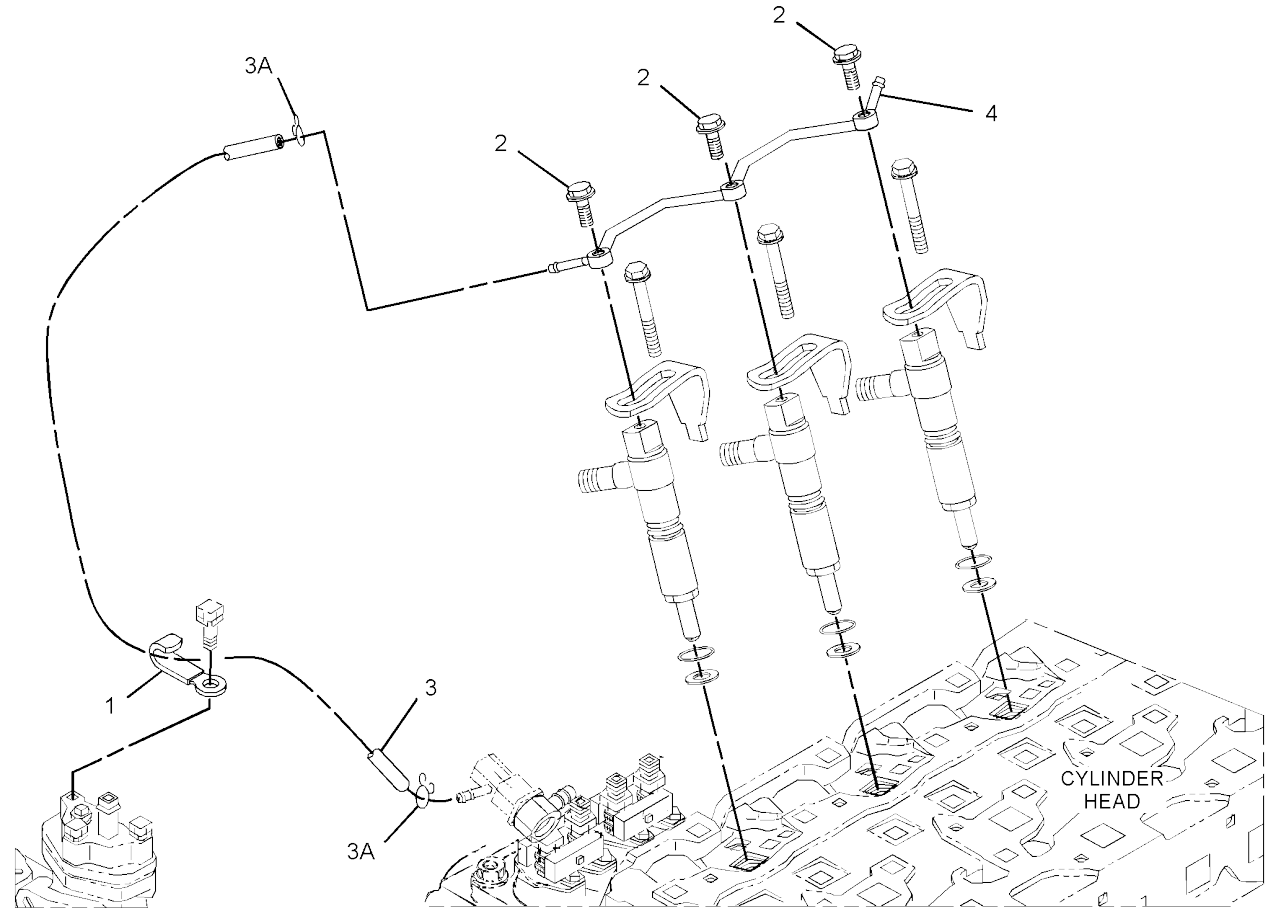


GRAPHIC #1 **<END>** g02906239

# 379-4728 LINES GP-FUEL FILTER

**PART OF 376-6676 CHASSIS AR**

**SMCS-1261, 1274** **i05032791**

| NOTE | REF NO | GRAPHIC REF | PART NUMBER | QTY | PART NAME 1 2 3 4 5 6 (PRODUCT LEVEL) | SEE PAGE |
|---|---|---|---|---|---|---|
| | 1 | 1,2 | **1P-4278** | 8 | CLAMP-HOSE | |
| | 2 | 2 | **3S-2093** | 1 | STRAP-CABLE | |
| | 3 | 2 | **7I-2673** | 2 | STRAP-CABLE | |
| | 4 | 2 | **7K-1181** | 7 | STRAP-CABLE | |
| Y | 5 | 2 | **144-9962** | 1 | FILTER GP-WATER SEP & FUEL | 52 |
| | 6 | 2 | **151-1975** | 1 | CONNECTOR | |
| | 7 | 1 | **216-1980** | 1 | GROMMET | |
| | 8 | 2 | **204-1611** | 1 | STRAP-CABLE (DUAL) | |
| | 9 | 2 | **246-2622** | 1 | ELBOW AS | |
| | 10 | 2 | **266-7379** | 1 | STRAP-CABLE | |
| | 11 | 2 | **279-4732** | 1 | STRAP-CABLE (YELLOW) | |
| | 12 | 2 | **298-0663** | 2 | CLIP | |
| | 13 | 2 | **370-4008** | 1 | PUMP AS-FUEL | |
| | 14 | 2 | **380-7205** | 1 | BRACKET AS | |
| | 15 | 2 | *148-8405* | 2 | PLUG AS | |
| | | | | | (EACH INCLUDES) | |
| | | 2 | **1J-9671** | 1 | SEAL-O-RING | |
| | | 2 | **3K-8460** | 1 | PLUG | |
| | 16 | 2 | **1J-9671** | 1 | SEAL-O-RING | |
| | 17 | 2 | **277-1873** | 1 | CLIP | |
| | 18 | 1,2 | **5P-4116** | 4 | WASHER-HARD (8.8X20.5X2-MM THK) | |
| | 19 | 1 | **5P-9299** | 2 | CLIP | |
| | 20 | 1 | **6K-8178** | 2 | CLIP | |
| M | 21 | 2 | **7X-2533** | 2 | BOLT (M6X1X35-MM) | |
| | 22 | 1 | **8K-1433** | 1 | GROMMET | |
| | 23 | 2 | **8T-4121** | 4 | WASHER-HARD (11X21X2.5-MM THK) | |
| M | 24 | 2 | **8T-4136** | 2 | BOLT (M10X1.5X25-MM) | |
| M | 25 | 2 | **8T-4137** | 2 | BOLT (M10X1.5X20-MM) | |
| M | 26 | 1 | **8T-4200** | 2 | BOLT (M8X1.25X16-MM) | |
| M | 27 | 2 | **8T-7547** | 2 | BOLT (M8X1.25X30-MM) | |
| | 28 | 2 | **9X-6165** | 4 | WASHER (6.5X22X2.5-MM THK) | |
| E | 29 | 1 | **7I-7439** | | GUARD (33-CM) | |
| E | 29A | 2 | **7I-7439** | | GUARD (43-CM) | |
| E | 30 | 1 | **5I-4200** | | GUARD (38-CM) | |
| E | 30A | 2 | **5I-4200** | | GUARD (83-CM) | |
| E | 31 | 2 | **8C-6959** | | HOSE (26-CM) | |
| E | 32 | 1 | **263-0768** | | HOSE (304-CM) | |
| E | 33 | 1 | **5P-1507** | | HOSE (148-CM) | |
| E | 33A | 2 | **5P-1507** | | HOSE (29.5-CM) | |
| E | 33B | 2 | **5P-1507** | | HOSE (162-CM) | |
| | 34 | 2 | **096-6079** | 1 | TAPE (WHITE) | |
| | 35 | 1 | **096-6085** | 1 | TAPE (RED) | |

E - ORDER BY THE CENTIMETER
M - METRIC PART
Y - SEPARATE ILLUSTRATION

379-4728 **LINES GP-FUEL FILTER** (*contd.*) **i05032791**

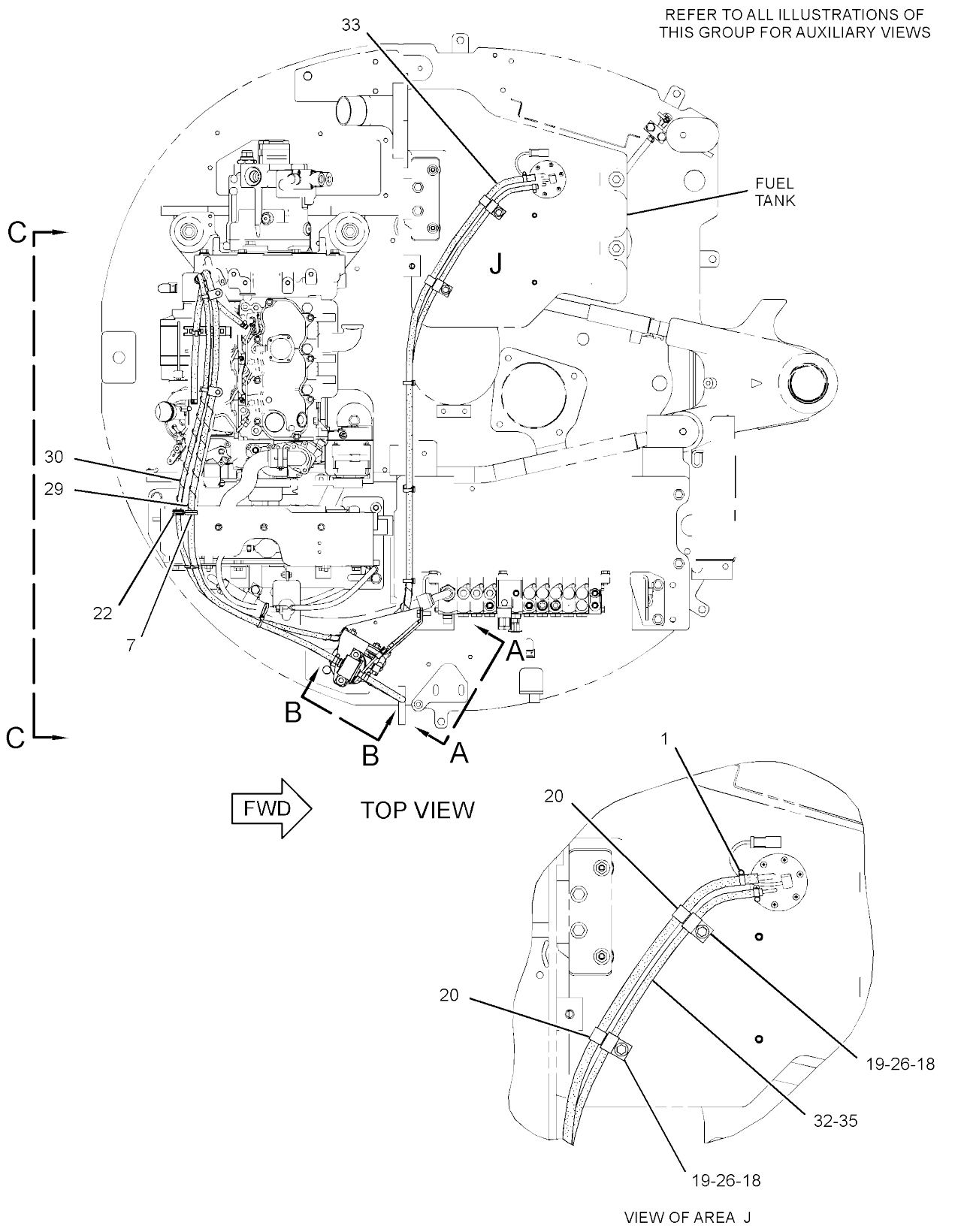


GRAPHIC #1 g03220539

*379-4728* **LINES GP-FUEL FILTER (*contd.*)** **i05032791**

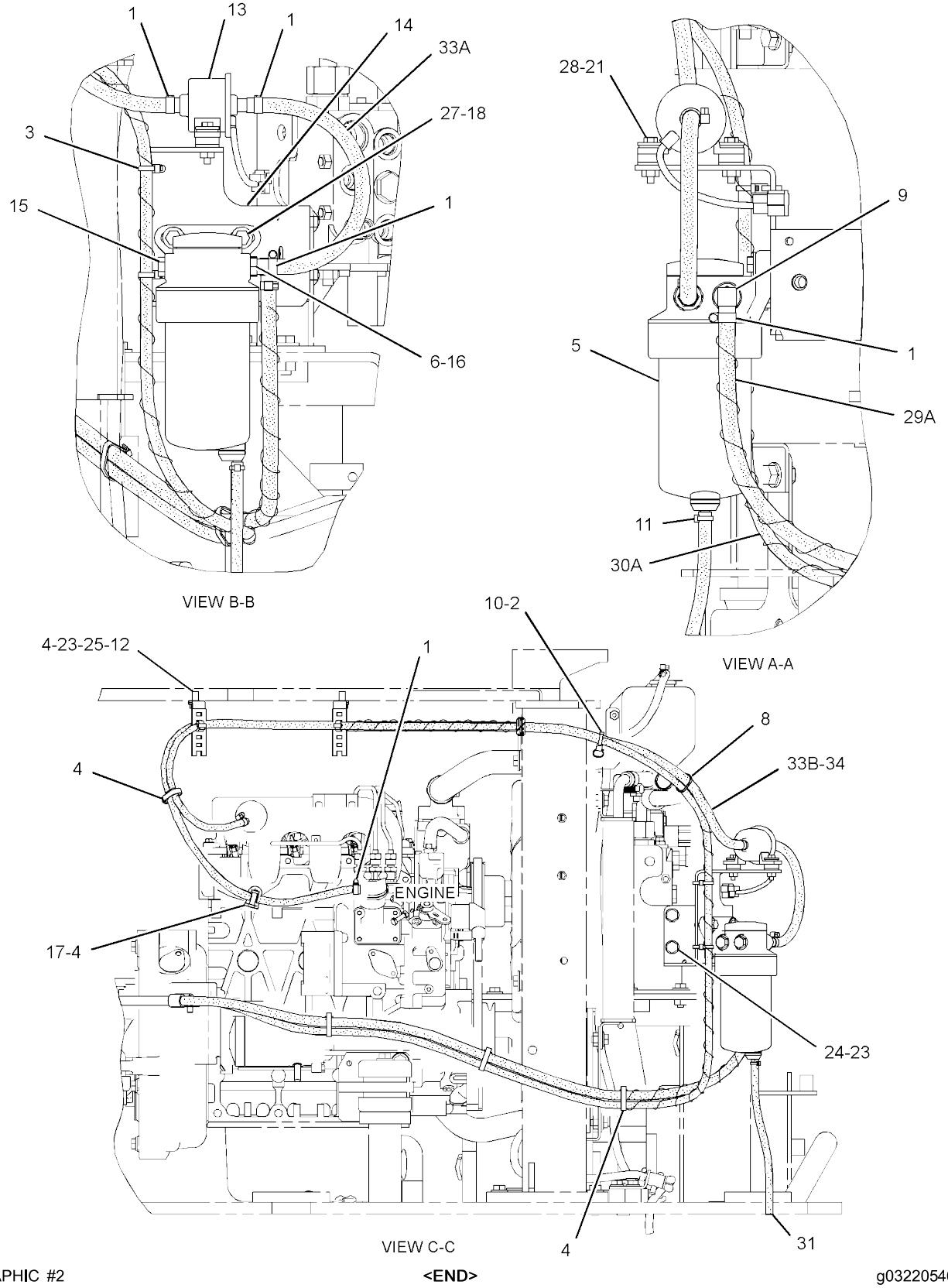


GRAPHIC #2 **<END>** g03220540

# *386-4640* LINES GP-FUEL INJECTION

**S/N: RKY1-1439**

**PART OF 380-1777 ENGINE AR-COMPLETE, 392-4127, 416-6081 ENGINE AR-PRIMARY**
**ALSO AN ATTACHMENT**

**SMCS-1252, 1254** **i04794307**

| NOTE | REF NO | GRAPHIC REF | PART NUMBER | QTY | PART NAME 1 2 3 4 5 6 (PRODUCT LEVEL) | SEE PAGE |
|---|---|---|---|---|---|---|
| | 1 | 1 | **383-0202** | 1 | SCREW | |
| | 2 | 1 | **383-0319** | 1 | CLAMP-PIPE | |
| | 3 | 1 | **383-0320** | 3 | CLAMP-PIPE | |
| | 4 | 1 | **383-0508** | 1 | TUBE | |
| | 5 | 1 | **383-0509** | 1 | TUBE | |
| | 6 | 1 | **383-0510** | 1 | TUBE | |
| | 7 | 1 | **394-8600** | 1 | SCREW | |

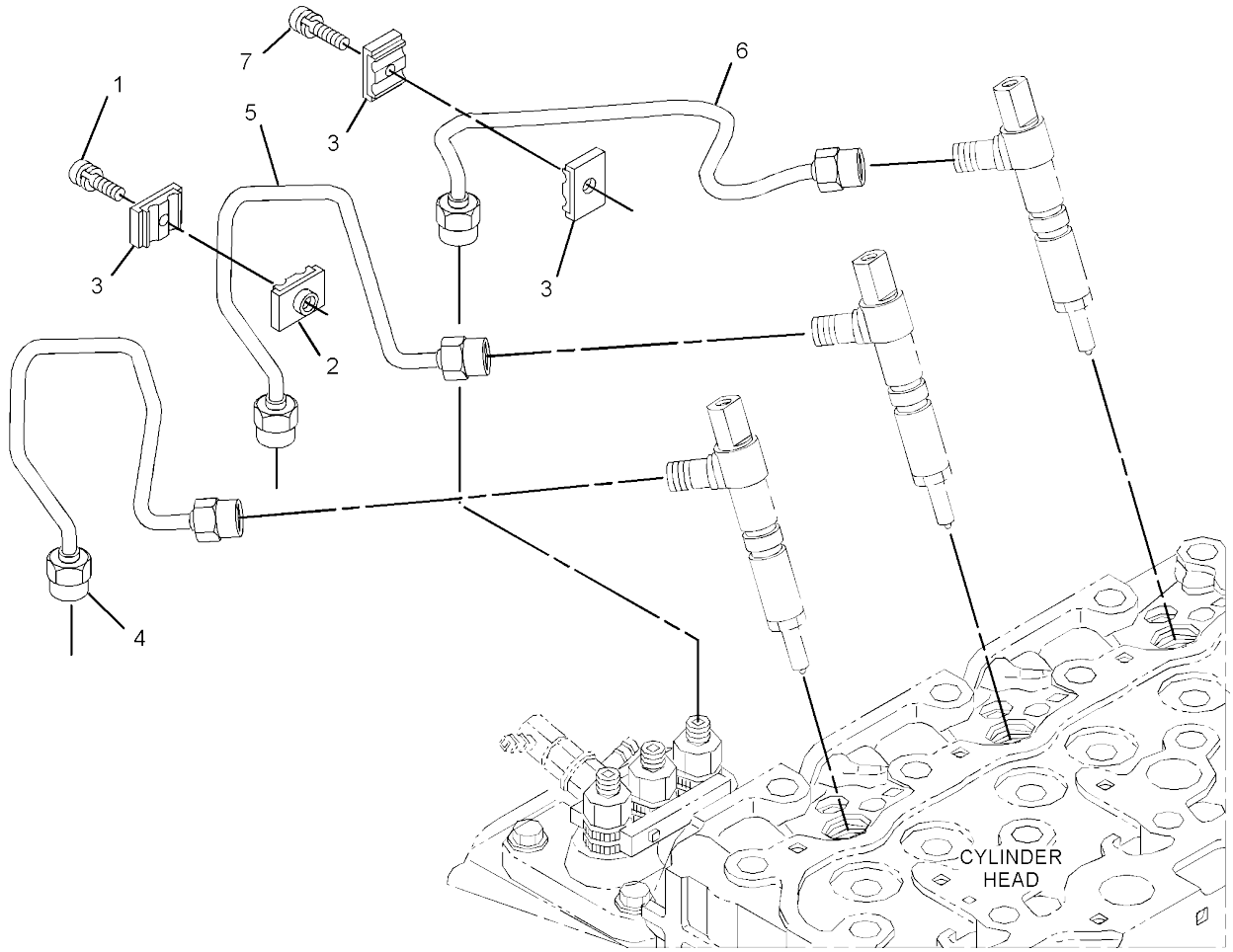


GRAPHIC #1 **<END>** g02921292

# *386-4644* NOZZLE GP-UNIT INJECTOR

**S/N: RKY1-1439**

**PART OF 380-1777 ENGINE AR-COMPLETE, 392-4127, 416-6081 ENGINE AR-PRIMARY**

**ALSO AN ATTACHMENT**

**SMCS-1254, 1290** **i04794304**

| NOTE | REF NO | GRAPHIC REF | PART NUMBER | QTY | PART NAME 1 2 3 4 5 6 (PRODUCT LEVEL) | SEE PAGE |
|---|---|---|---|---|---|---|
| | 1 | 1 | **383-0212** | 3 | SEAL-O-RING | |
| | 2 | 1 | **383-0475** | 3 | GASKET | |
| | 3 | 1 | **383-0519** | 3 | PACKING | |
| | 4 | 1 | **383-0537** | 3 | CLAMP-NOZZLE | |
| | 5 | 1 | **383-0544** | 3 | HOLDER AS (NOZZLE) | |
| | 6 | 1 | **383-0568** | 3 | BOLT | |

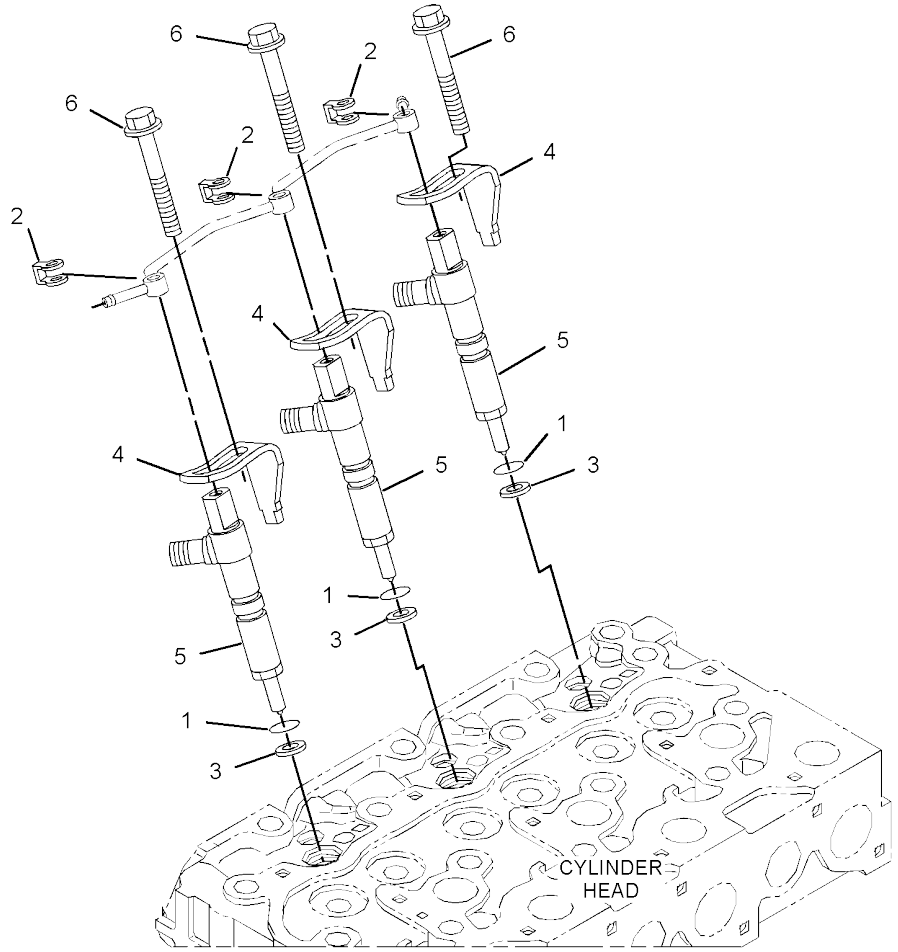


GRAPHIC #1 **<END>** g02921416

# *386-4650* PUMP GP-FUEL INJECTION

**S/N: RKY1-1439**

**PART OF 380-1777 ENGINE AR-COMPLETE, 392-4127, 416-6081 ENGINE AR-PRIMARY**
**ALSO AN ATTACHMENT**

**SMCS-1251, 1290** **i05150731**

| NOTE | REF NO | GRAPHIC REF | PART NUMBER | QTY | PART NAME 1 2 3 4 5 6 (PRODUCT LEVEL) | SEE PAGE |
|---|---|---|---|---|---|---|
| | 1 | 1 | **383-0169** | 2 | BOLT | |
| | 2 | 1 | **383-0177** | 4 | BOLT | |
| | 3 | 1 | **383-0188** | 2 | BOLT | |
| | 4 | 1 | **383-0199** | 2 | NUT-FLANGE | |
| | 5 | 1 | **383-0208** | 1 | RING-SNAP | |
| | 6 | 1 | **383-0279** | 2 | STUD | |
| | 7 | 1 | **383-0280** | 1 | COVER-FUEL | |
| | 8 | 1 | **383-0314** | 1 | ORIFICE AS | |
| B | 9 | 1 | **386-6942** | 1 | SHIM (0.2-MM THK) | |
| B | 10 | 1 | **386-6943** | 1 | SHIM (0.25-MM THK) | |
| B | 11 | 1 | **386-6944** | 1 | SHIM (0.3-MM THK) | |
| | 12 | 1 | **383-0487** | 1 | GASKET | |
| B | 13 | 1 | **386-6940** | 1 | SHIM | |
| | 14 | 1 | **386-6939** | 1 | PUMP AS-FUEL INJECTION (0.35-MM THK) | |
| | 14A | 1 | **383-0287** | 1 | SCREW | |
| | 14B | 1 | **383-0288** | 1 | PACKING | |
| Y | 15 | 1 | **386-6945** | 1 | CAMSHAFT AS (FUEL INJECTION PUMP) | 48 |
| | 16 | 1 | **386-6947** | 1 | COLLAR | |
| | 17 | 1 | **383-0550** | 1 | BALL BEARING | |
| | 18 | 1 | **383-0560** | 1 | BOLT | |
| B | 19 | 1 | **386-6941** | 1 | SHIM (0.175-MM THK) | |
| | 20 | 1 | **383-0562** | 2 | GASKET | |
| | 21 | 1 | **383-0577** | 1 | STOPPER (FUEL) | |
| | 22 | 1 | **383-0252** | 1 | JOINT | |

B - USE AS REQUIRED
Y - SEPARATE ILLUSTRATION

*386-4650* **PUMP GP-FUEL INJECTION (*contd.*)** **i05150731**

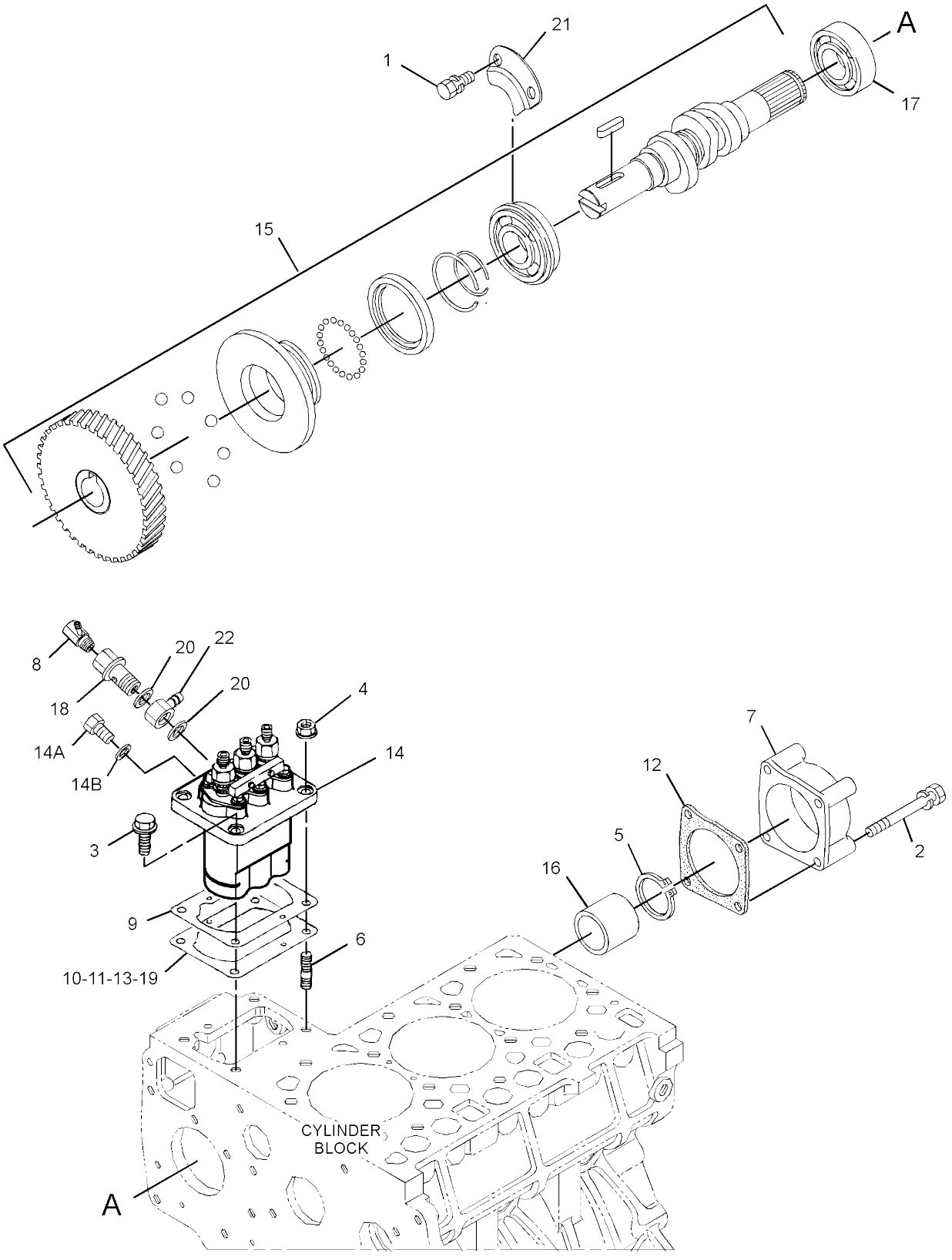


GRAPHIC #1 **<END>** g02923000

# *378-2140* SHUTOFF GP-MANUAL–ENGINE

**PART OF 383-0640 INSTALLATION AR-ENGINE**

**SMCS-1265, 1704, 7418** **i04589460**

| NOTE | REF NO | GRAPHIC REF | PART NUMBER | QTY | PART NAME 1 2 3 4 5 6 (PRODUCT LEVEL) | SEE PAGE |
|---|---|---|---|---|---|---|
| | 1 | 1 | **5P-7958** | 2 | SLEEVE-CABLE SPLICE | |
| | 2 | 1 | **382-9349** | 1 | CABLE-LANYARD | |

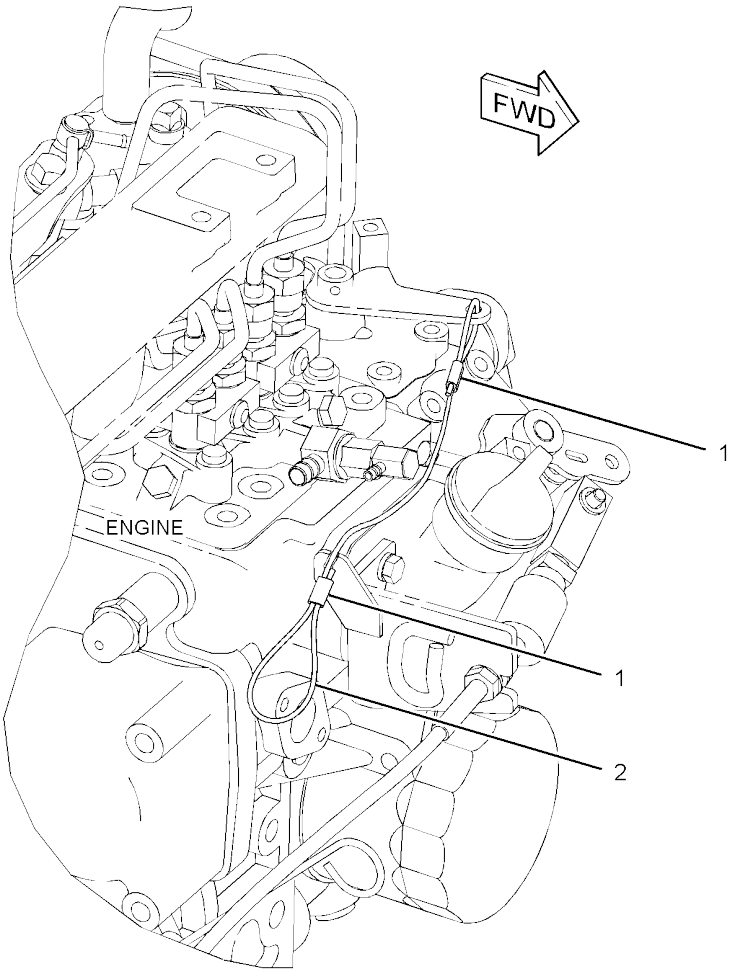


GRAPHIC #1 **<END>** g02766420

# FUEL SYSTEM

## *367-0930* TANK & MTG GP-FUEL

**PART OF 376-6676 CHASSIS AR**

**SMCS-1273** **i04629823**

| NOTE | REF NO | GRAPHIC REF | PART NUMBER | QTY | PART NAME 1 2 3 4 5 6 (PRODUCT LEVEL) | SEE PAGE |
|---|---|---|---|---|---|---|
| | 1 | 1 | **265-8577** | 1 | SEAL | |
| | 2 | 1 | **1P-4278** | 2 | CLAMP-HOSE | |
| | 3 | 1 | **9D-7924** | 2 | MOUNTING | |
| | 4 | 1 | **9M-7959** | 2 | CLAMP-HOSE | |
| | 5 | 1 | **265-8575** | 1 | CAP-FUEL (LOCKABLE, VENTED) | |
| | 6 | 1 | **265-8578** | 2 | MOUNT | |
| | 7 | 1 | **265-8579** | 1 | STRAINER-FUEL (TANK) | |
| | 8 | 1 | **276-9302** | 1 | FILLER AS-FUEL (TANK) | |
| | 9 | 1 | **367-1089** | 1 | PLATE AS | |
| M | | 1 | **8T-3490** | 2 | NUT-WELD (M10X1.5-THD) | |
| | 10 | 1 | **367-1090** | 1 | BLOCK AS | |
| | 11 | 1 | **367-1092** | 1 | VALVE (DRAIN, FUEL TANK) | |
| | 12 | 1 | **367-1095** | 1 | TANK AS-FUEL | |
| | 13 | 1 | **367-1096** | 1 | HOSE | |
| | 14 | 1 | **367-1097** | 1 | FOAM | |
| | 15 | 1 | **7X-0632** | 2 | WASHER-HARD (11X36X6-MM THK) | |
| | 16 | 1 | **7X-7729** | 7 | WASHER (11X25X3-MM THK) | |
| | 17 | 1 | **8T-4121** | 2 | WASHER-HARD (11X21X2.5-MM THK) | |
| M | 18 | 1 | **8T-4133** | 3 | NUT (M10X1.5-THD) | |
| M | 19 | 1 | **8T-4137** | 4 | BOLT (M10X1.5X20-MM) | |
| M | 20 | 1 | **8T-4182** | 2 | BOLT (M10X1.5X45-MM) | |
| | 21 | 1 | **8T-4226** | 2 | WASHER-PLATED (10.5X45X3-MM THK) | |
| M | 22 | 1 | **8T-6466** | 2 | BOLT (M10X1.5X60-MM) | |
| E | 23 | 1 | **5P-1507** | | HOSE (39-CM) | |

E - ORDER BY THE CENTIMETER
M - METRIC PART

*367-0930* **TANK & MTG GP-FUEL (*contd.*)** **i04629823**

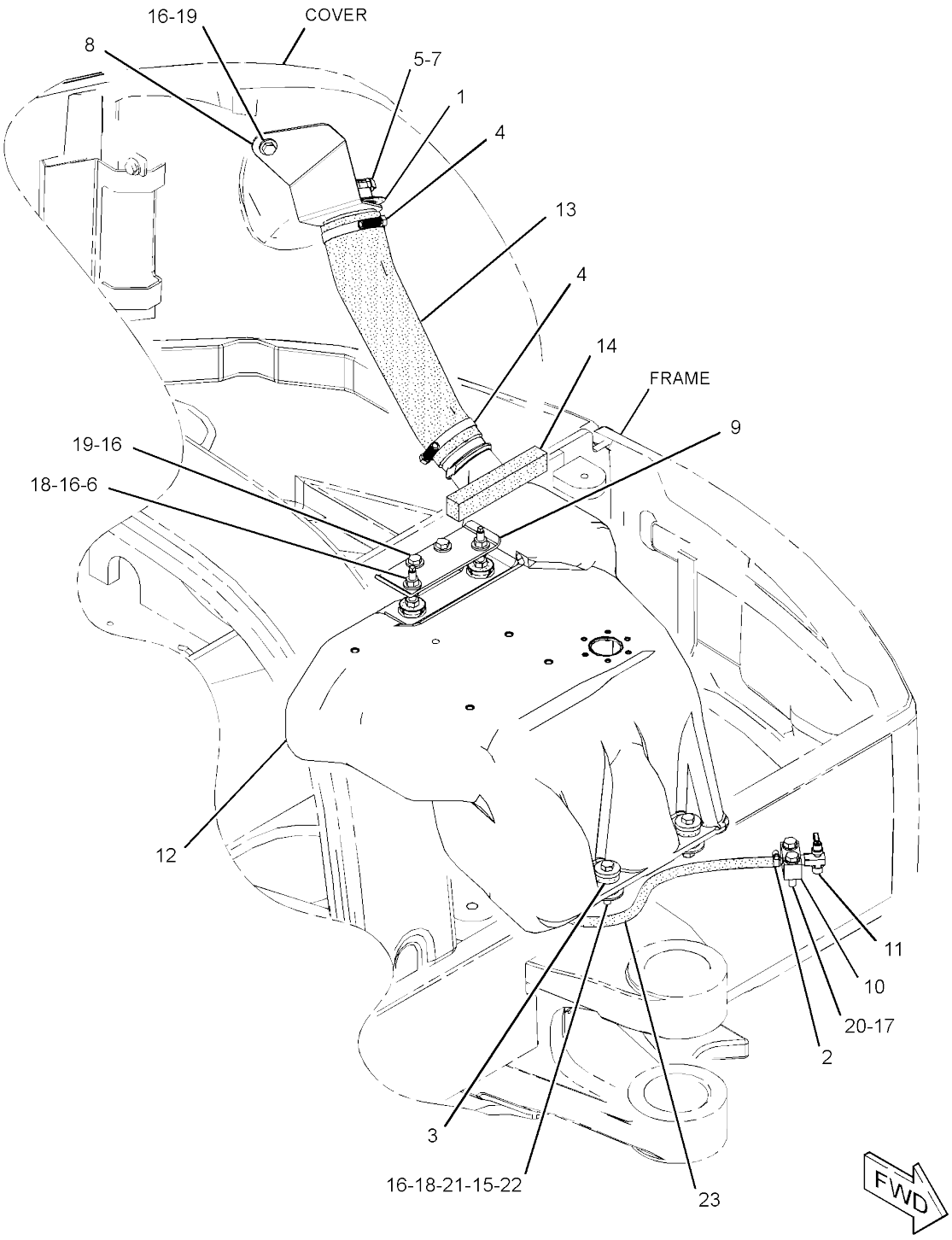


GRAPHIC #1 **<END>** g02802277

# *370-5338* ALARM GP-TRAVEL

**PART OF 377-8935 CONTROL AR-GOVERNOR**

**AN ATTACHMENT**

**SMCS-7429** **i05033594**

| NOTE | REF NO | GRAPHIC REF | PART NUMBER | QTY | PART NAME 1 2 3 4 5 6 (PRODUCT LEVEL) | SEE PAGE |
|---|---|---|---|---|---|---|
| | 1 | 1 | **3S-2093** | 2 | STRAP-CABLE | |
| | 2 | 1 | **140-9378** | 1 | RELAY AS (12-VOLT) (BACKUP ALARM) | |
| | 3 | 1 | **161-2539** | 1 | ALARM AS (BACKUP) | |
| | | 1 | **4B-2043** | 2 | NUT (8-32-THD) | |
| | 4 | 1 | **266-1406** | 1 | SWITCH AS-ROCKER (TRAVEL ALARM CANCEL) | |
| | | 1 | **111-7899** | 1 | GASKET | |
| | 5 | 1 | **266-7379** | 1 | STRAP-CABLE | |
| M | 6 | 1 | **5C-2890** | 2 | NUT (M6X1-THD) | |
| M | 7 | 1 | **8C-8451** | 2 | BOLT (M6X1X40-MM) | |
| | 8 | 1 | **9X-8256** | 4 | WASHER (6.6X12X2-MM THK) | |

M - METRIC PART

*370-5338* **ALARM GP-TRAVEL** (*contd.*) **i05033594**

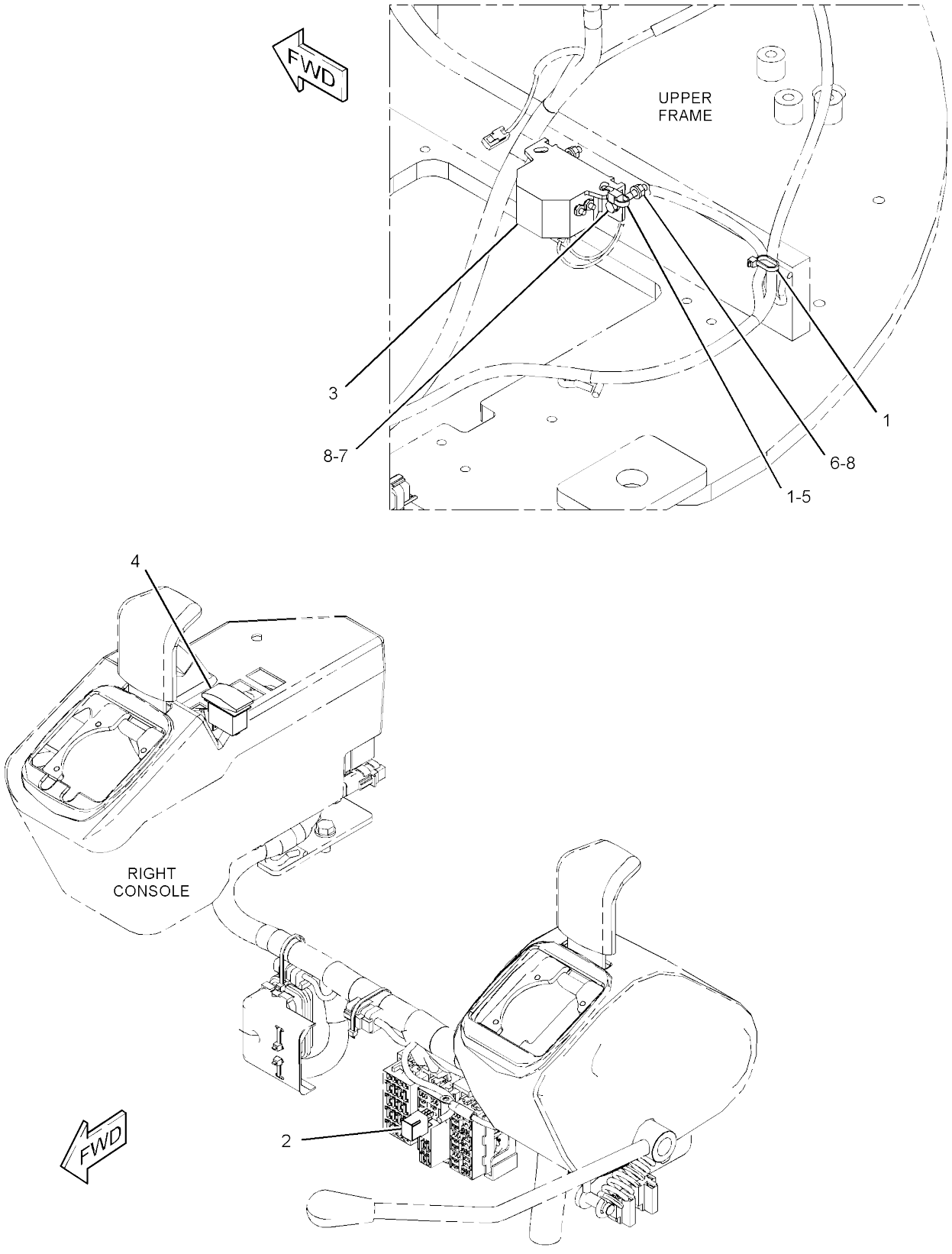


GRAPHIC #1 **<END>** g02801598

# *383-0134* ALTERNATOR GP-CHARGING

**S/N: RKY1-1439**
**12-VOLT, 60-AMPERE**
**PART OF 380-1777 ENGINE AR-COMPLETE, 392-4127, 416-6081 ENGINE AR-PRIMARY**
**ALSO AN ATTACHMENT**

**SMCS-1405** **i05006746**

| NOTE | REF NO | GRAPHIC REF | PART NUMBER | QTY | PART NAME 1 2 3 4 5 6 (PRODUCT LEVEL) | SEE PAGE |
|---|---|---|---|---|---|---|
| | 1 | 1 | **383-0592** | 1 | ALTERNATOR AS (12-VOLT, 60-AMPERE) | |
| | 1A | 1 | **383-0323** | 1 | COLLAR | |
| | 1B | 1 | **383-0330** | 1 | NUT | |
| | 1C | 1 | **383-0344** | 1 | PULLEY-ALTERNATOR | |
| | 2 | 1 | **383-0178** | 1 | BOLT | |
| | 3 | 1 | **389-0705** | 1 | BOLT-FLANGE HEAD | |
| | 4 | 1 | **383-0206** | 1 | LOCKWASHER | |
| | 5 | 1 | **383-0195** | 1 | NUT-HEX | |

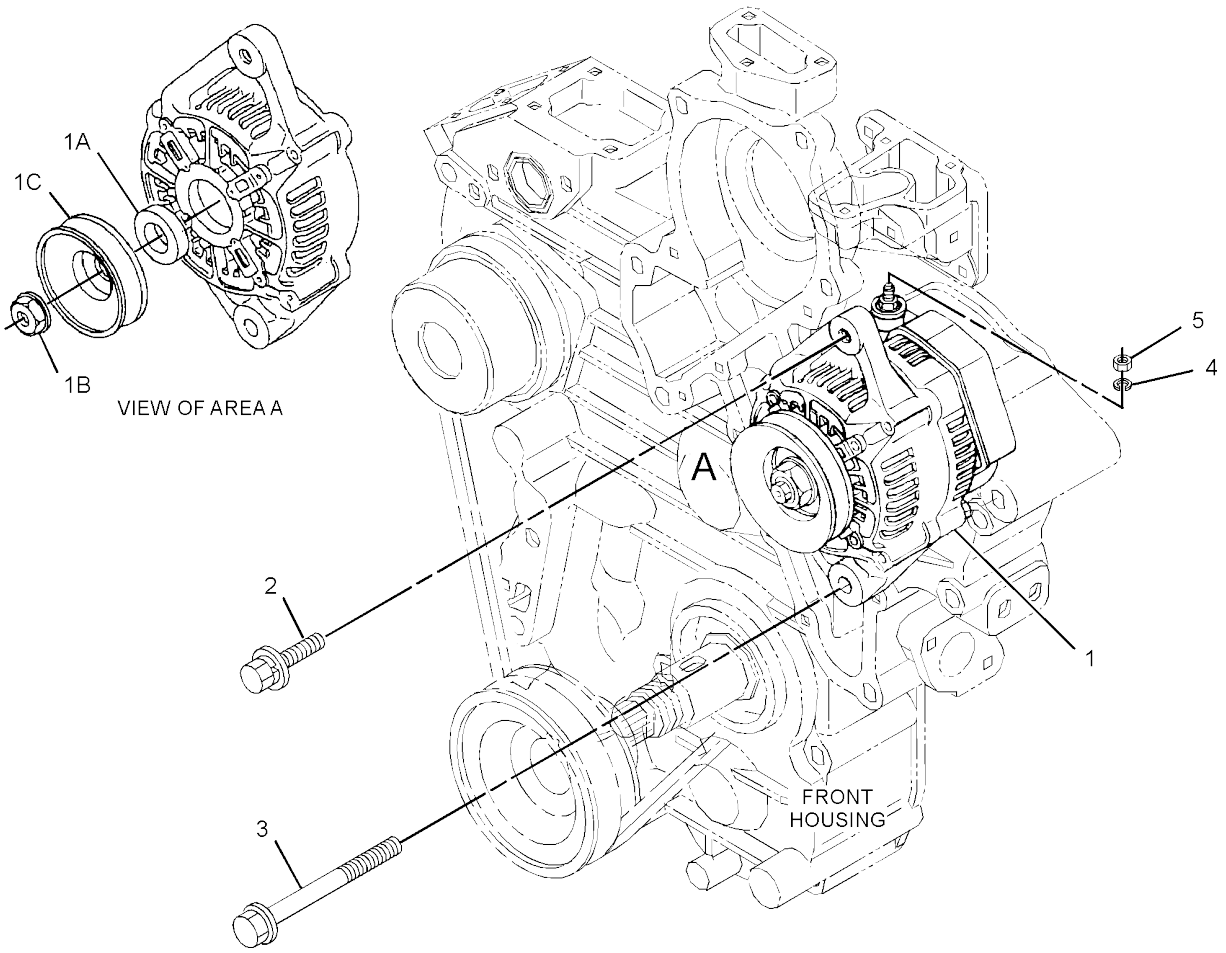


GRAPHIC #1 **<END>** g02788441

# ELECTRICAL AND STARTING SYSTEM

## *370-5342* BATTERY & WIRING GP

**PART OF 376-6692, 376-6696, 383-5927, 383-5928 CAB AR**
**AN ATTACHMENT**

**SMCS-1401, 1402, 1408** **i05032862**

| NOTE | REF NO | GRAPHIC REF | PART NUMBER | QTY | PART NAME 1 2 3 4 5 6 (PRODUCT LEVEL) | SEE PAGE |
|---|---|---|---|---|---|---|
| | 1 | 1 | **1S-1150** | 2 | SPACER (0.391X0.5X0.19-IN THK) | |
| | 2 | 1,2 | **3S-2093** | 37 | STRAP-CABLE | |
| | 3 | 1,2 | **7K-1181** | 7 | STRAP-CABLE | |
| | 4 | 1,2 | **111-4837** | 5 | CLIP | |
| | 5 | 2 | **153-5656** | 1 | BATTERY (12-VOLT, MAINTENANCE FREE) | |
| | 6 | 2 | **163-6795** | 1 | STRAP-CABLE | |
| | 7 | 1,2 | **204-1611** | 5 | STRAP-CABLE (DUAL) | |
| | 8 | 2 | **232-7405** | 1 | BRACKET | |
| | 9 | 2 | **251-1391** | 2 | BOLT (M10X1.25X16-MM) | |
| | 10 | 2 | **266-6935** | 1 | RELAY AS (12-VOLT) (MAIN) | |
| | 11 | 1,2 | **266-7379** | 4 | STRAP-CABLE | |
| | 12 | 2 | **267-4767** | 1 | CLAMP | |
| | 13 | 2 | **267-4768** | 2 | ROD | |
| | 14 | 1 | **282-2151** | 1 | GROMMET | |
| | 15 | 2 | **298-0663** | 1 | CLIP | |
| | 16 | 1 | **349-1812** | 1 | SWITCH AS-PRESSURE (PILOT OIL) | |
| | | 1 | **108-7516** | 1 | FITTING | |
| | | 1 | **3J-1907** | 1 | SEAL-O-RING | |
| | | 1 | *349-1756* | 1 | SWITCH AS-PRESSURE (PILOT OIL) | |
| | | 1 | **230-4011** | 1 | PLUG AS-CONNECTOR (2-PIN) | |
| | | 1 | **264-7029** | 1 | SEAL-CONNECTOR | |
| | | 1 | **9X-3402** | 2 | SOCKET-CONNECTOR (16-GA TO 18-GA) | |
| | | | | | —OR— | |
| | | 1 | **126-1768** | 2 | SOCKET-CONNECTOR (14-GA TO 16-GA) | |
| Y | 17 | 1 | **370-5357** | 1 | HARNESS AS-CHASSIS | 79 |
| | 18 | 1 | **370-5363** | 1 | CABLE AS-BATTERY (POSITIVE) | |
| D | | 1 | **5P-5675** | | WIRE (6-GA, BLACK) (1.1-M) | |
| | | 1 | **9X-4519** | 1 | BOOT (RED) | |
| | | 1 | **8L-8413** | 1 | STRAP-CABLE | |
| E | | 1 | **159-8049** | | CABLE (00-GA, RED) (201-CM) | |
| | | 1 | **2L-8050** | 1 | TERMINAL-RING (6-GA, 1/4-IN SCREW) | |
| | | 1 | **3S-6049** | 1 | TERMINAL AS-BATTERY (POSITIVE) | |
| | | 1 | **1M-6119** | 1 | BOLT (5/16-18X1.375-IN) | |
| | | 1 | **1M-6120** | 1 | NUT (5/16-18-THD) | |
| | 19 | 1 | **370-5366** | 1 | CABLE AS-BATTERY (NEGATIVE) | |
| | | 1 | **1M-6119** | 1 | BOLT (5/16-18X1.375-IN) | |
| E | | 1 | **159-8050** | | CABLE (00-GA, BLACK) (33-CM) | |
| | | 1 | **7N-5274** | 1 | COVER AS-TERMINAL (BLACK) | |
| | | 1 | **8L-8413** | 1 | STRAP-CABLE | |
| | | 1 | **1M-6120** | 1 | NUT (5/16-18-THD) | |
| | | 1 | **311-8804** | 1 | TERMINAL | |
| | | 1 | **3S-6050** | 1 | TERMINAL AS-BATTERY (NEGATIVE) | |
| | | 1 | **1M-6119** | 1 | BOLT (5/16-18X1.375-IN) | |
| | | 1 | **1M-6120** | 1 | NUT (5/16-18-THD) | |
| | 20 | 2 | **370-5367** | 1 | STRAP AS-GROUND | |
| | 21 | 1 | **370-5372** | 1 | GROMMET | |
| | 22 | 1 | **370-5375** | 1 | PLATE | |
| | 23 | 1 | **376-9480** | 1 | SENDER AS-FUEL LEVEL | |
| | | 1 | **102-8802** | 1 | KIT-RECEPTACLE (2-PIN) | |
| | | | | | (INCLUDES RECEPTACLE AS & WEDGE) | |
| | | 1 | **379-2007** | 1 | GASKET | |
| | 24 | 2 | **383-0342** | 1 | SENSOR (THERMOCOUPLE) | |
| | 25 | 2 | **387-5260** | 1 | PLATE AS | |
| M | | 2 | **6V-9632** | 2 | NUT-WELD (M6X1-THD) | |
| M | | 2 | **8T-3490** | 2 | NUT-WELD (M10X1.5-THD) | |
| M | | 2 | **8T-3612** | 3 | NUT-WELD (M8X1.25-THD) | |
| M | | 2 | **8T-8874** | 1 | NUT-WELD (M5X0.8-THD) | |

*370-5342* **BATTERY & WIRING GP (*contd.*)** **i05032862**

| NOTE | REF NO | GRAPHIC REF | PART NUMBER | QTY | PART NAME 1 2 3 4 5 6 (PRODUCT LEVEL) | SEE PAGE |
|---|---|---|---|---|---|---|
| M | | 2 | **9X-2032** | 2 | NUT-WELD (M4X0.7-THD) | |
| M | 26 | 1 | **095-0736** | 6 | SCREW-MACHINE (M5X0.8X10-MM) | |
| M | 27 | 2 | **127-4839** | 2 | BOLT (M10X1.25X25-MM) | |
| | 28 | 2 | **132-5789** | 1 | CLIP | |
| | 29 | 2 | **132-7551** | 1 | SPACER (11X19X6-MM THK) | |
| M | 30 | 2 | **150-4086** | 2 | SCREW (M4X0.7X16-MM) | |
| | 31 | 2 | **156-6175** | 2 | CLIP | |
| | 32 | 2 | **277-1873** | 1 | CLIP | |
| | 33 | 1 | **2M-3432** | 1 | GROMMET | |
| | 34 | 2 | **4B-4863** | 2 | WASHER (4.7X11X1.2-MM THK) | |
| | 35 | 2 | **4P-7581** | 3 | CLIP | |
| | 36 | 2 | **4P-8134** | 2 | CLIP | |
| M | 37 | 2 | **5C-2890** | 5 | NUT (M6X1-THD) | |
| M | 38 | 1 | **5C-7261** | 1 | NUT (M8X1.25-THD) | |
| M | 39 | 2 | **5C-9553** | 1 | BOLT (M6X1X16-MM) | |
| | 40 | 2 | **5P-4115** | 2 | WASHER-HARD (7.2X19X2-MM THK) | |
| | 41 | 2 | **5P-4116** | 1 | WASHER-HARD (8.8X20.5X2-MM THK) | |
| | 42 | 2 | **8M-2773** | 2 | CLIP | |
| M | 43 | 2 | **8T-0288** | 1 | BOLT (M5X0.8X12-MM) | |
| | 44 | 2 | **8T-0328** | 1 | WASHER-HARD (5.5X10X1-MM THK) | |
| | 45 | 1,2 | **8T-4121** | 14 | WASHER-HARD (11X21X2.5-MM THK) | |
| M | 46 | 1 | **8T-4136** | 4 | BOLT (M10X1.5X25-MM) | |
| M | 47 | 1,2 | **8T-4137** | 4 | BOLT (M10X1.5X20-MM) | |
| M | 48 | 2 | **8T-4171** | 2 | BOLT (M6X1X12-MM) | |
| M | 49 | 1 | **8T-4189** | 2 | BOLT (M8X1.25X20-MM) | |
| M | 50 | 2 | **8T-4196** | 2 | BOLT (M10X1.5X35-MM) | |
| M | 51 | 2 | **8T-4200** | 6 | BOLT (M8X1.25X16-MM) | |
| | 52 | 1,2 | **8T-4224** | 8 | WASHER-HARD (8.8X16X2-MM THK) | |
| | 53 | 1,2 | **8T-8799** | 2 | BOOT (RED) | |
| | 54 | 2 | **9M-8406** | 1 | CLIP | |
| | 55 | 2 | **9X-8256** | 4 | WASHER (6.6X12X2-MM THK) | |

D - ORDER BY THE METER
E - ORDER BY THE CENTIMETER
M - METRIC PART
Y - SEPARATE ILLUSTRATION

*370-5342* **BATTERY & WIRING GP (*contd.*)** **i05032862**

REFER TO ALL ILLUSTRATIONS OF
THIS GROUP FOR AUXILIARY VIEWS

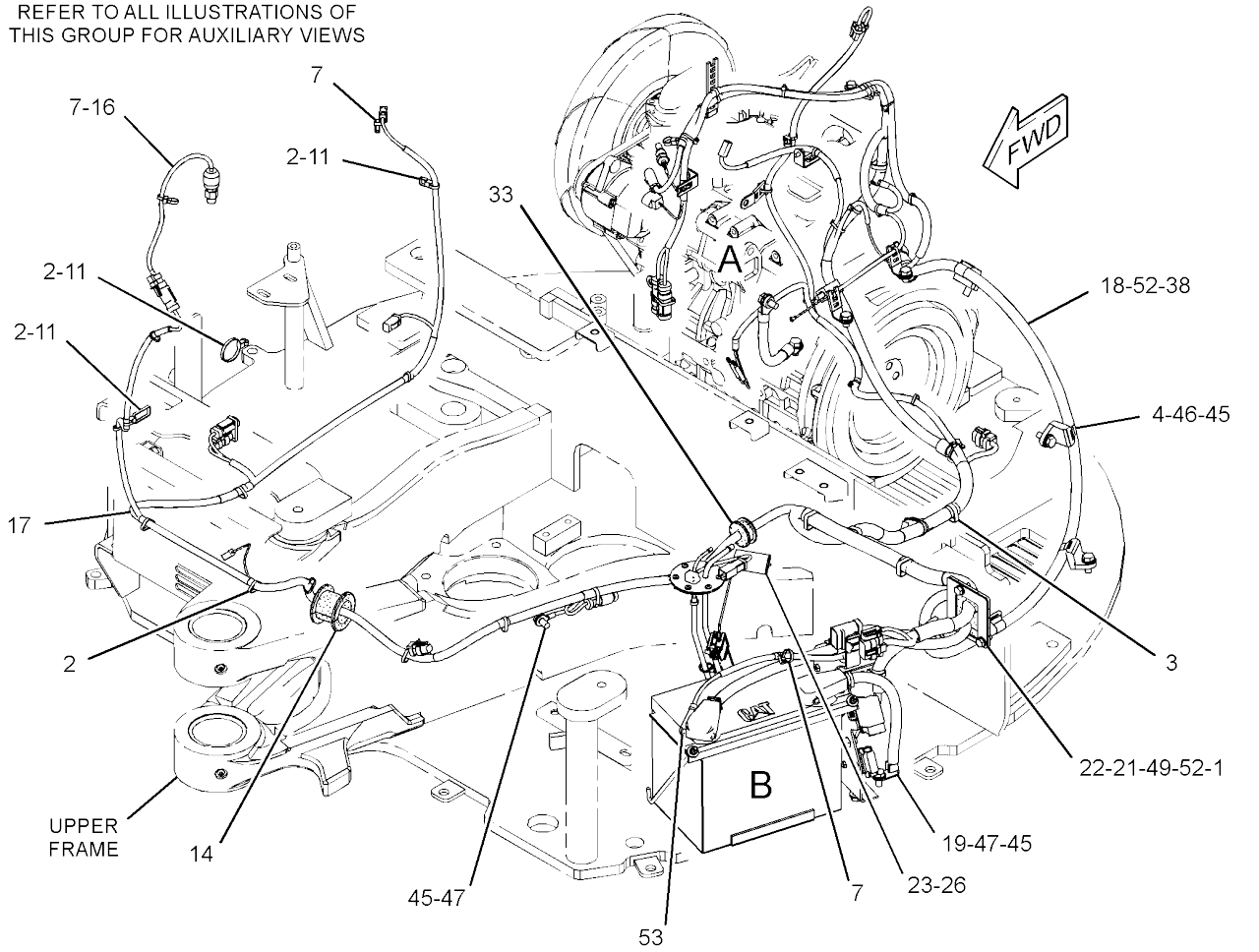


GRAPHIC #1 g03037056

*370-5342* **BATTERY & WIRING GP (*contd.*)** **i05032862**

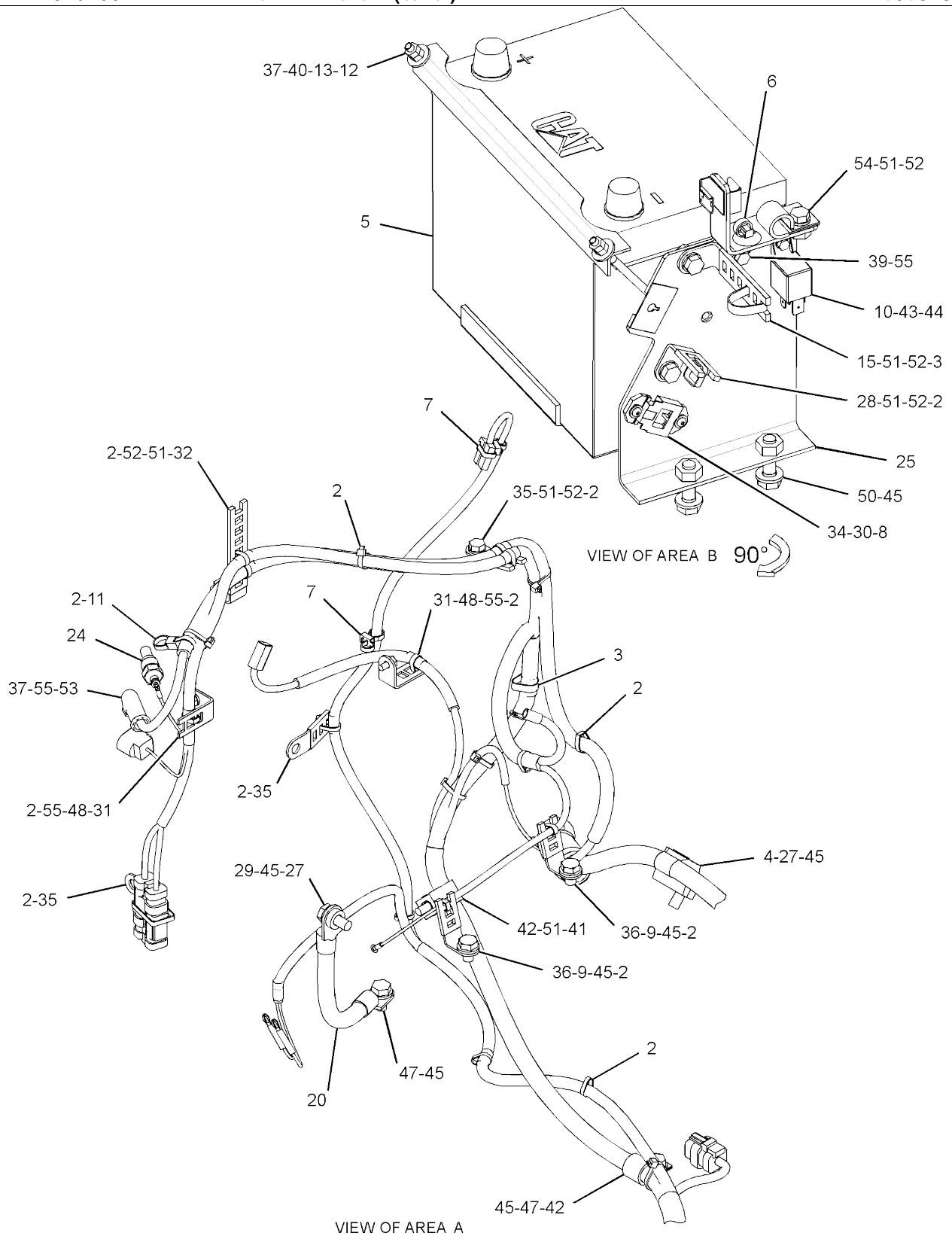


GRAPHIC #2 **<END>** g03037057

# *370-5345* BATTERY & WIRING GP–CANOPY

**PART OF 377-8933, 383-5929 CANOPY AR**
**AN ATTACHMENT**

**SMCS-1401, 1402, 1408** **i04817931**

| NOTE | REF NO | GRAPHIC REF | PART NUMBER | QTY | PART NAME 1 2 3 4 5 6 (PRODUCT LEVEL) | SEE PAGE |
|---|---|---|---|---|---|---|
| | 1 | 1 | **1S-1150** | 2 | SPACER (0.391X0.5X0.19-IN THK) | |
| | 2 | 1 | **3S-2093** | 33 | STRAP-CABLE | |
| | 3 | 1 | **7K-1181** | 7 | STRAP-CABLE | |
| | 4 | 1 | **111-4837** | 5 | CLIP | |
| | 5 | 1 | **153-5656** | 1 | BATTERY (12-VOLT, MAINTENANCE FREE) | |
| | 6 | 1 | **163-6795** | 1 | STRAP-CABLE | |
| | 7 | 1 | **204-1611** | 3 | STRAP-CABLE (DUAL) | |
| | 8 | 1 | **232-7405** | 1 | BRACKET | |
| | 9 | 1 | **251-1391** | 2 | BOLT (M10X1.25X16-MM) | |
| | 10 | 1 | **266-6935** | 1 | RELAY AS (12-VOLT) (MAIN) | |
| | 11 | 1 | **266-7379** | 3 | STRAP-CABLE | |
| | 12 | 1 | **267-4767** | 1 | CLAMP | |
| | 13 | 1 | **267-4768** | 2 | ROD | |
| | 14 | 1 | **282-2151** | 1 | GROMMET | |
| | 15 | 1 | **298-0663** | 1 | CLIP | |
| | 16 | 1 | **349-1812** | 1 | SWITCH AS-PRESSURE (PILOT OIL) | |
| | | 1 | **3J-1907** | 1 | SEAL-O-RING | |
| | | 1 | **108-7516** | 1 | FITTING | |
| | | 1 | *349-1756* | 1 | SWITCH AS-PRESSURE (PILOT OIL) | |
| | | 1 | **9X-3402** | 2 | SOCKET-CONNECTOR (16-GA TO 18-GA) | |
| | | | | | –OR– | |
| | | 1 | **126-1768** | 2 | SOCKET-CONNECTOR (14-GA TO 16-GA) | |
| | | 1 | **230-4011** | 1 | PLUG AS-CONNECTOR (2-PIN) | |
| | | 1 | **264-7029** | 1 | SEAL-CONNECTOR | |
| Y | 17 | 1 | **370-5360** | 1 | HARNESS AS-CHASSIS | 80 |
| | 18 | 1 | **370-5363** | 1 | CABLE AS-BATTERY (POSITIVE) | |
| D | | 1 | **5P-5675** | | WIRE (6-GA, BLACK) (1.1-M) | |
| | | 1 | **9X-4519** | 1 | BOOT (RED) | |
| | | 1 | **8L-8413** | 1 | STRAP-CABLE | |
| E | | 1 | **159-8049** | | CABLE (00-GA, RED) (201-CM) | |
| | | 1 | **2L-8050** | 1 | TERMINAL-RING (6-GA, 1/4-IN SCREW) | |
| | | 1 | **3S-6049** | 1 | TERMINAL AS-BATTERY (POSITIVE) | |
| | | 1 | **1M-6119** | 1 | BOLT (5/16-18X1.375-IN) | |
| | | 1 | **1M-6120** | 1 | NUT (5/16-18-THD) | |
| | 19 | 1 | **370-5366** | 1 | CABLE AS-BATTERY (NEGATIVE) | |
| | | 1 | **3S-6050** | 1 | TERMINAL AS-BATTERY (NEGATIVE) | |
| | | 1 | **1M-6119** | 1 | BOLT (5/16-18X1.375-IN) | |
| | | 1 | **1M-6120** | 1 | NUT (5/16-18-THD) | |
| | | 1 | **1M-6119** | 1 | BOLT (5/16-18X1.375-IN) | |
| | | 1 | **1M-6120** | 1 | NUT (5/16-18-THD) | |
| | | 1 | **7N-5274** | 1 | COVER AS-TERMINAL (BLACK) | |
| | | 1 | **8L-8413** | 1 | STRAP-CABLE | |
| E | | 1 | **159-8050** | | CABLE (00-GA, BLACK) (33-CM) | |
| | | 1 | **311-8804** | 1 | TERMINAL | |
| | 20 | 1 | **370-5367** | 1 | STRAP AS-GROUND | |
| | 21 | 1 | **370-5372** | 1 | GROMMET | |
| | 22 | 1 | **370-5375** | 1 | PLATE | |
| | 23 | 1 | **376-9480** | 1 | SENDER AS-FUEL LEVEL | |
| | | 1 | **102-8802** | 1 | KIT-RECEPTACLE (2-PIN) | |
| | | | | | (INCLUDES RECEPTACLE AS & WEDGE) | |
| | | 1 | **379-2007** | 1 | GASKET | |
| | 24 | 1 | **383-0342** | 1 | SENSOR (THERMOCOUPLE) | |
| | 25 | 1 | **387-5260** | 1 | PLATE AS | |
| M | | 1 | **6V-9632** | 2 | NUT-WELD (M6X1-THD) | |
| M | | 1 | **8T-3490** | 2 | NUT-WELD (M10X1.5-THD) | |
| M | | 1 | **8T-3612** | 3 | NUT-WELD (M8X1.25-THD) | |
| M | | 1 | **8T-8874** | 1 | NUT-WELD (M5X0.8-THD) | |

*370-5345* **BATTERY & WIRING GP (*contd.*)** **i04817931**

| NOTE | REF NO | GRAPHIC REF | PART NUMBER | QTY | PART NAME 1 2 3 4 5 6 (PRODUCT LEVEL) | SEE PAGE |
|---|---|---|---|---|---|---|
| M | | 1 | **9X-2032** | 2 | NUT-WELD (M4X0.7-THD) | |
| M | 26 | 1 | **095-0736** | 6 | SCREW-MACHINE (M5X0.8X10-MM) | |
| M | 27 | 1 | **127-4839** | 2 | BOLT (M10X1.25X25-MM) | |
| | 28 | 1 | **132-5789** | 1 | CLIP | |
| | 29 | 1 | **132-7551** | 1 | SPACER (11X19X6-MM THK) | |
| M | 30 | 1 | **150-4086** | 2 | SCREW (M4X0.7X16-MM) | |
| | 31 | 1 | **156-6175** | 2 | CLIP | |
| | 32 | 1 | **174-5907** | 2 | CLIP | |
| | 33 | 1 | **277-1873** | 1 | CLIP | |
| | 34 | 1 | **2M-3432** | 1 | GROMMET | |
| | 35 | 1 | **4B-4863** | 2 | WASHER (4.7X11X1.2-MM THK) | |
| | 36 | 1 | **4P-7581** | 1 | CLIP | |
| | 37 | 1 | **4P-8134** | 2 | CLIP | |
| M | 38 | 1 | **5C-2890** | 5 | NUT (M6X1-THD) | |
| M | 39 | 1 | **5C-7261** | 1 | NUT (M8X1.25-THD) | |
| M | 40 | 1 | **5C-9553** | 1 | BOLT (M6X1X16-MM) | |
| | 41 | 1 | **5P-4115** | 2 | WASHER-HARD (7.2X19X2-MM THK) | |
| | 42 | 1 | **5P-4116** | 1 | WASHER-HARD (8.8X20.5X2-MM THK) | |
| M | 43 | 1 | **8T-0288** | 1 | BOLT (M5X0.8X12-MM) | |
| | 44 | 1 | **8T-0328** | 1 | WASHER-HARD (5.5X10X1-MM THK) | |
| | 45 | 1 | **8T-4121** | 14 | WASHER-HARD (11X21X2.5-MM THK) | |
| M | 46 | 1 | **8T-4136** | 4 | BOLT (M10X1.5X25-MM) | |
| M | 47 | 1 | **8T-4137** | 4 | BOLT (M10X1.5X20-MM) | |
| M | 48 | 1 | **8T-4171** | 2 | BOLT (M6X1X12-MM) | |
| M | 49 | 1 | **8T-4189** | 2 | BOLT (M8X1.25X20-MM) | |
| M | 50 | 1 | **8T-4196** | 2 | BOLT (M10X1.5X35-MM) | |
| M | 51 | 1 | **8T-4200** | 6 | BOLT (M8X1.25X16-MM) | |
| | 52 | 1 | **8T-4224** | 8 | WASHER-HARD (8.8X16X2-MM THK) | |
| | 53 | 1 | **8T-8799** | 2 | BOOT (RED) | |
| | 54 | 1 | **9M-8406** | 1 | CLIP | |
| | 55 | 1 | **9X-8256** | 4 | WASHER (6.6X12X2-MM THK) | |

D - ORDER BY THE METER
E - ORDER BY THE CENTIMETER
M - METRIC PART
Y - SEPARATE ILLUSTRATION

*370-5345* **BATTERY & WIRING GP (*contd.*)** **i04817931**

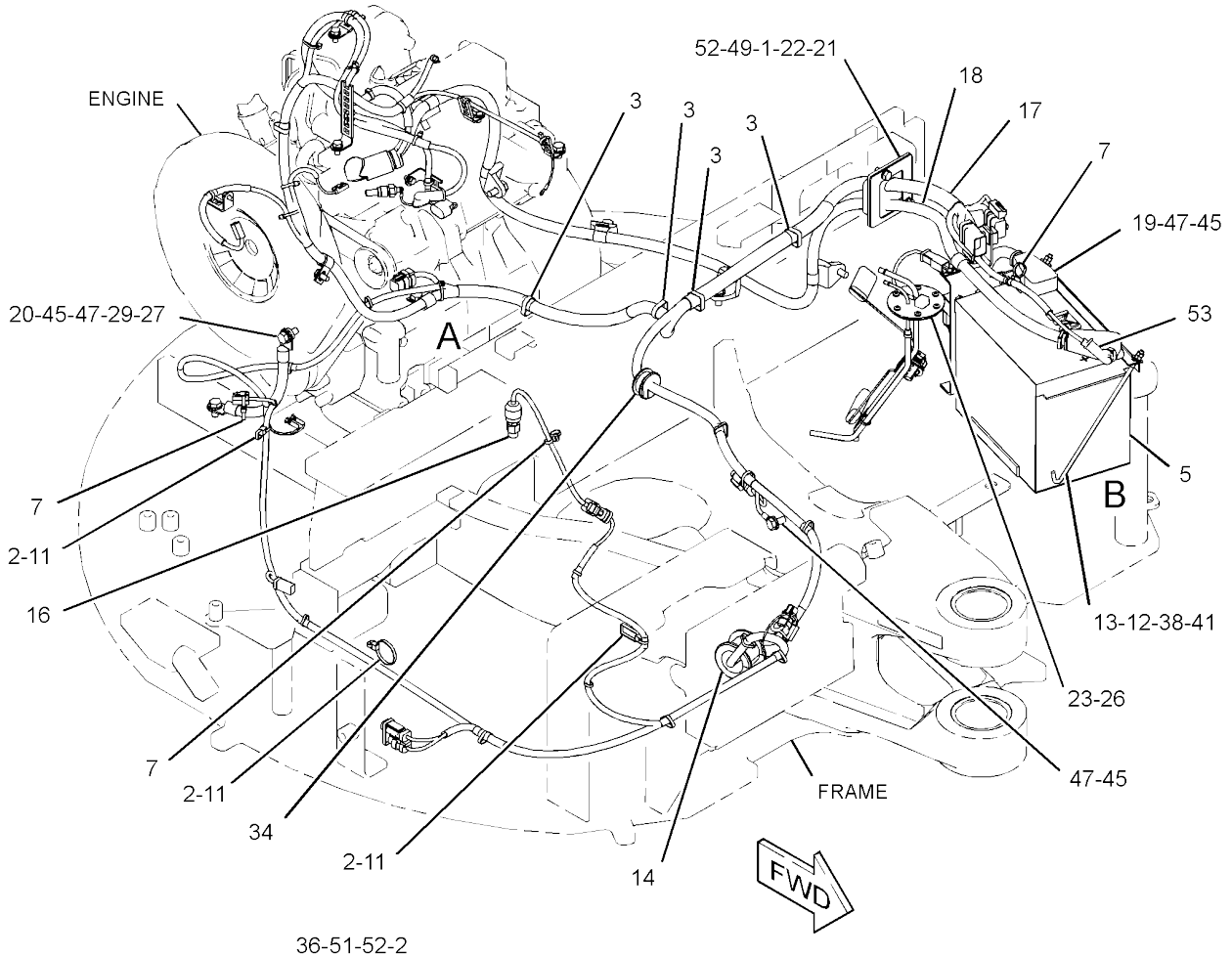


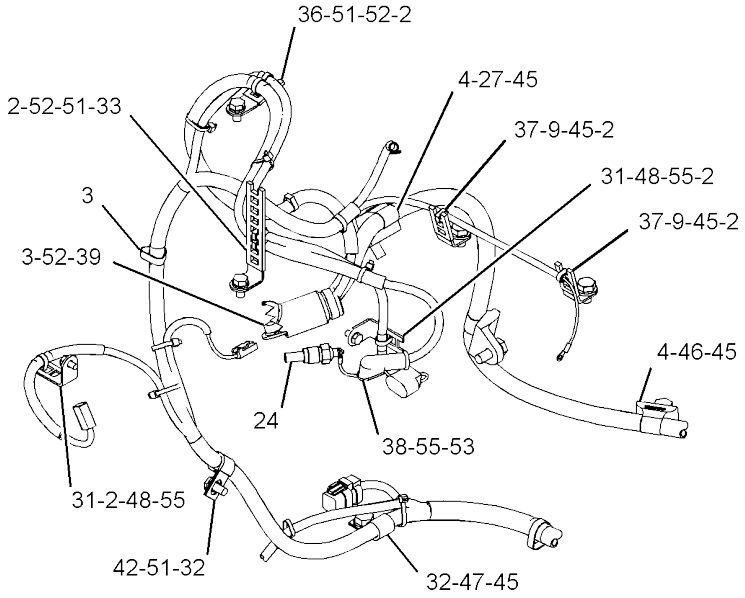


VIEW OF AREA A

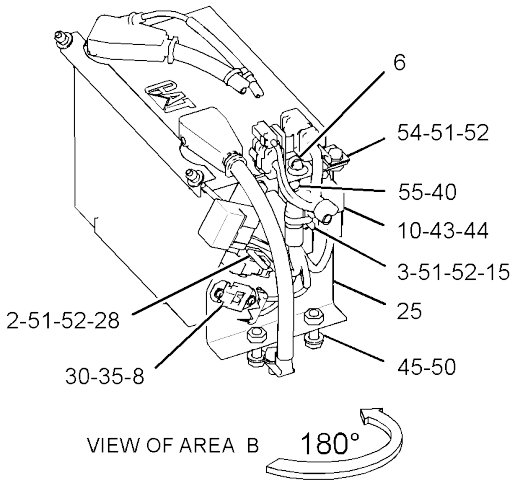


VIEW OF AREA B

GRAPHIC #1 **<END>** g03037656

# *377-0325* CONTROL & MTG GP-ELECTRONIC

**PART OF 377-8920 BLADE AR-STRAIGHT**
**AN ATTACHMENT**

**SMCS-1901, 7490, 7610** **i04560856**

| NOTE | REF NO | GRAPHIC REF | PART NUMBER | QTY | PART NAME 1 2 3 4 5 6 (PRODUCT LEVEL) | SEE PAGE |
|---|---|---|---|---|---|---|
| | 1 | 1 | **6I-1418** | 4 | SPACER (8.2X12.7X28.7-MM THK) | |
| | 2 | 1 | **155-0576** | 8 | MOUNT-ISOLATION | |
| | 3 | 1 | **376-8859** | 1 | CONTROL GP-MACHINE (ELECTRONIC CONTROL) | |
| M | 4 | 1 | **7X-0818** | 4 | BOLT (M8X1.25X45-MM) | |
| | 5 | 1 | **8T-4224** | 1 | WASHER-HARD (8.8X16X2-MM THK) | |
| | 6 | 1 | **9N-0869** | 8 | WASHER-HARD (8.8X25.5X2-MM THK) | |

M - METRIC PART

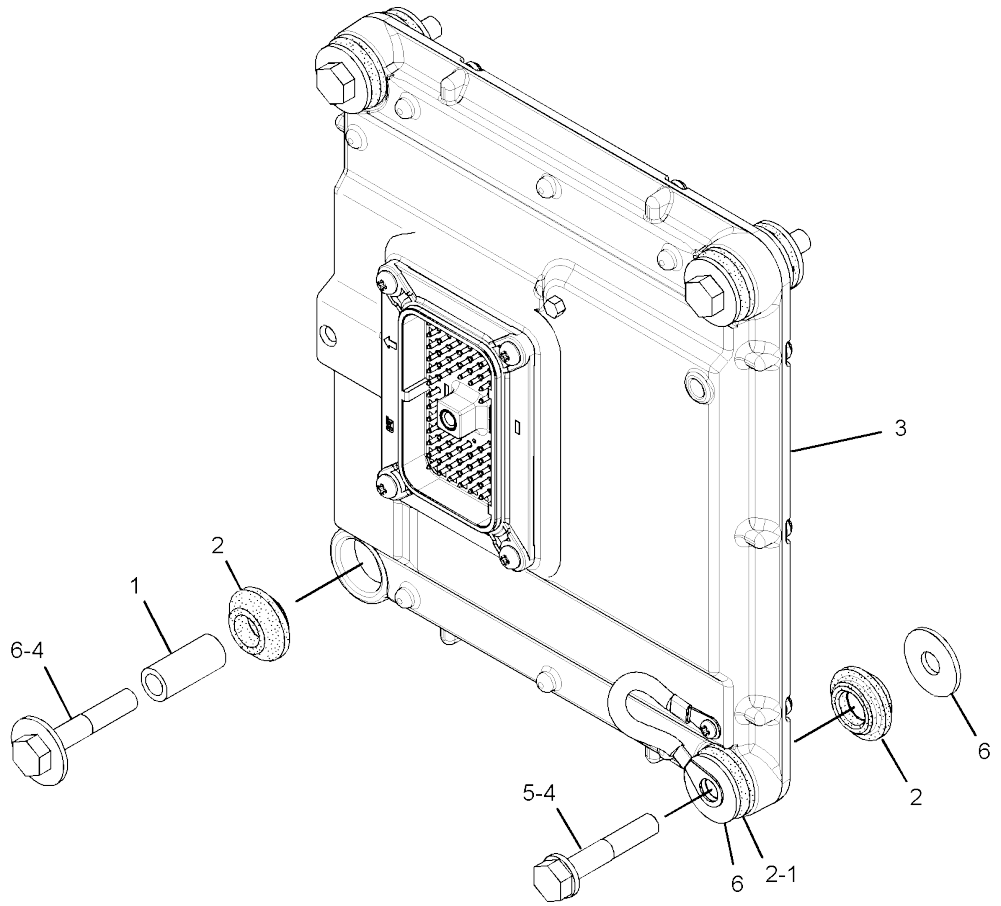


GRAPHIC #1 **<END>** g02766536

## *392-4756* ELECTRONICS GP-MACHINE

**PART OF 376-6672 COMMON AR**

**SMCS-7610, 7620** **i05270710**

| NOTE | PART NUMBER | QTY | PART NAME 1 2 3 4 5 6 (PRODUCT LEVEL) | SEE PAGE |
|---|---|---|---|---|
| | **392-4933** | 1 | SOFTWARE GP-MACHINE | |
| | | | —OR— | |
| | **392-4934** | 1 | SOFTWARE GP-MACHINE | |
| | | | <END> | |

## *377-0326* ELECTRONICS GP-MONITOR

**PART OF 376-6672 COMMON AR**

**SMCS-7490, 7601, 7603, 7610, 7620** **i05221683**

| NOTE | PART NUMBER | QTY | PART NAME 1 2 3 4 5 6 (PRODUCT LEVEL) | SEE PAGE |
|---|---|---|---|---|
| | **392-4768** | 1 | SOFTWARE GP-MONITOR | |
| | | | —OR— | |
| | **416-4255** | 1 | SERVICE GP-MONITOR | |
| | | | (OPTIONAL SERVICE REPLACEMENT)(INCLUDES CONTROL GP & SOFTWARE) | |
| | | | <END> | |

# *386-4647* GLOW PLUG GP

**S/N: RKY1-1439**

**PART OF 380-1777 ENGINE AR-COMPLETE, 392-4127, 416-6081 ENGINE AR-PRIMARY**

**ALSO AN ATTACHMENT**

**SMCS-1412** **i04698932**

| NOTE | REF NO | GRAPHIC REF | PART NUMBER | QTY | PART NAME 1 2 3 4 5 6 (PRODUCT LEVEL) | SEE PAGE |
|---|---|---|---|---|---|---|
| | 1 | 1 | **383-0198** | 2 | NUT-FLANGE | |
| | 2 | 1 | **383-0200** | 3 | NUT-FLANGE | |
| | 3 | 1 | **383-0214** | 1 | SEAL-O-RING | |
| | 4 | 1 | **383-0278** | 2 | STUD | |
| | 5 | 1 | **383-0419** | 1 | SOLENOID AS (ENGINE SHUTOFF) | |
| | 6 | 1 | **383-0538** | 3 | GLOW PLUG | |
| | 7 | 1 | **386-4790** | 1 | WIRE-GLOW PLUG | |
| | 8 | 1 | **383-0412** | 1 | GUIDE AS (FUEL SHUTOFF) | |

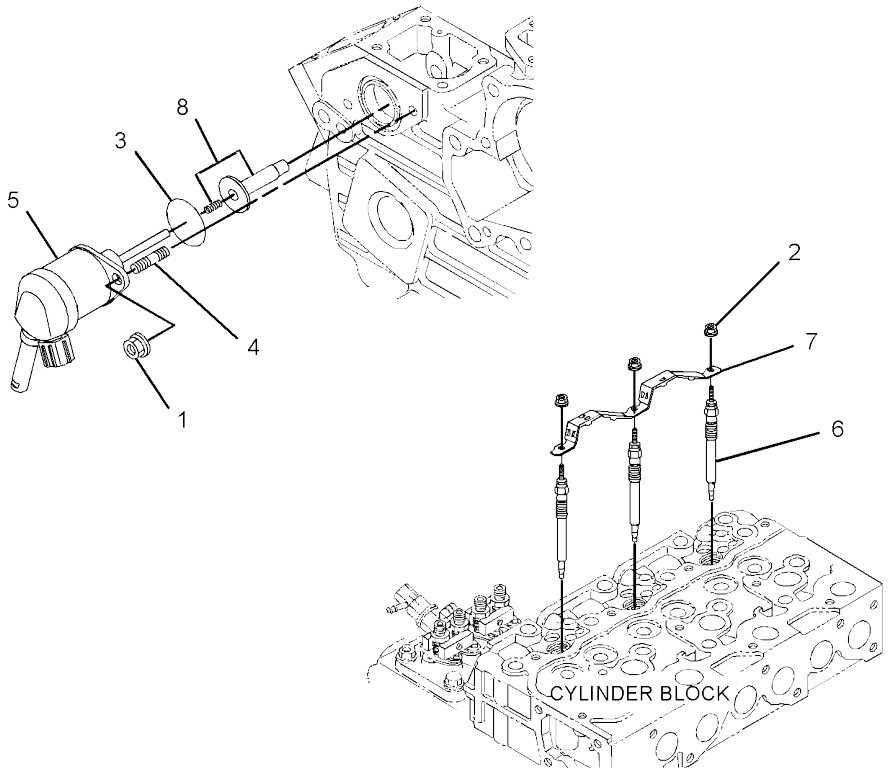


GRAPHIC #1 **<END>** g02906399

# *370-5357* HARNESS AS-CHASSIS

**PART OF 370-5342 BATTERY & WIRING GP**

**AN ATTACHMENT**

**SMCS-1408** **i04916887**

| NOTE | PART NUMBER | QTY | PART NAME 1 2 3 4 5 6 (PRODUCT LEVEL) | SEE PAGE |
|---|---|---|---|---|
| | **7Y-3952** | 3 | PLUG-CONNECTOR (2-PIN) | |
| | **7Y-3995** | 1 | CONNECTOR-PLUG | |
| | **153-2602** | 1 | RECEPTACLE-CONNECTOR (1-PIN) | |
| | **8T-9636** | 1 | FUSE (30-AMPERE) | |
| | **185-1290** | 1 | HOLDER-FUSE | |
| | **232-6314** | 1 | FUSE (60-AMPERE) | |
| | **379-0828** | 2 | FUSE (60-AMPERE) | |
| | **225-4950** | 1 | HOLDER AS-FUSE | |
| | **107-3134** | 1 | HOUSING-CONNECTOR | |
| | **8T-8729** | 10 | PIN-CONNECTOR (16-GA TO 18-GA) | |
| | **9W-0852** | 8 | PIN-CONNECTOR (14-GA TO 16-GA) | |
| | **9X-3401** | 2 | PIN-CONNECTOR (16-GA TO 18-GA) | |
| | **155-2270** | 2 | KIT-CONNECTING PLUG (2-PIN) | |
| | | | (EACH INCLUDES PLUG AS, WEDGE & INTERFACE SEAL) | |
| | **230-4009** | 1 | PLUG AS-CONNECTOR (12-PIN) | |
| | **264-7034** | 1 | SEAL-CONNECTOR | |
| | **230-4011** | 4 | PLUG AS-CONNECTOR (2-PIN) | |
| | | | (EACH INCLUDES) | |
| | **264-7029** | 1 | SEAL-CONNECTOR | |
| | **230-5010** | 1 | PLUG AS-CONNECTOR (6-PIN) | |
| | **264-7032** | 1 | SEAL-CONNECTOR | |
| | **174-3016** | 1 | PLUG AS-CONNECTOR (3-PIN) | |
| | **8T-8737** | 7 | PLUG-SEAL | |
| | **107-3136** | 2 | PLUG-SEAL | |
| | **102-8803** | 1 | KIT-RECEPTACLE (3-PIN) | |
| | | | (INCLUDES RECEPTACLE AS & WEDGE) | |
| | **243-4505** | 4 | RECEPTACLE AS-CONNECTOR (2-PIN) | |
| | **243-4510** | 1 | RECEPTACLE AS-CONNECTOR (12-PIN) | |
| | **8T-8730** | 10 | SOCKET-CONNECTOR (16-GA TO 18-GA) | |
| | **9W-0844** | 14 | SOCKET-CONNECTOR (14-GA TO 16-GA) | |
| | **9X-3402** | 2 | SOCKET-CONNECTOR (16-GA TO 18-GA) | |
| | **3S-2093** | 4 | STRAP-CABLE | |
| | **232-6311** | 2 | TERMINAL | |
| | **363-9173** | 2 | TERMINAL (14-GA TO 18-GA) | |
| | **5P-1475** | 2 | TERMINAL-FORK (14-GA TO 16-GA, NO. 8 SCREW) | |
| | *131-1489* | 1 | TERMINAL AS-RING (6-GA TO 8-GA) | |
| | **6H-3592** | 1 | TERMINAL-RING (6-GA TO 8-GA, 5/16-IN SCREW) | |
| E | **119-3662** | | TUBE-HEAT SHRINK (10.85-MM DIA) (4-CM) | |
| | **2L-8075** | 2 | TERMINAL-RING (14-GA TO 16-GA, NO. 8 SCREW) | |
| | **2L-8049** | 1 | TERMINAL-RING (6-GA, NO. 10 SCREW) | |
| | *272-6304* | 1 | TERMINAL AS | |
| | **272-6271** | 1 | TERMINAL-RING | |
| E | **125-7875** | | TUBE-HEAT SHRINK (7.44-MM DIA) (4-CM) | |
| | **107-3135** | 1 | TERMINAL (16-GA TO 20-GA) | |
| | **7Y-3951** | 4 | TERMINAL-BLADE (14-GA) | |
| | **7Y-3993** | 2 | TERMINAL-BLADE (12-GA) | |
| | **7Y-3996** | 1 | TERMINAL-BLADE (14-GA TO 20-GA) | |
| | **7Y-5556** | 2 | TERMINAL | |
| | **116-0255** | 2 | TERMINAL-BLADE (10-GA TO 20-GA) | |
| | **153-2631** | 1 | TERMINAL (FEMALE) | |
| E | **125-7874** | | TUBE-HEAT SHRINK (5.72-MM DIA) (30-CM) | |

E - ORDER BY THE CENTIMETER

<END>

# *370-5360* HARNESS AS-CHASSIS

**PART OF 370-5345 BATTERY & WIRING GP**

**AN ATTACHMENT**

**SMCS-1408** **i04916889**

| NOTE | PART NUMBER | QTY | PART NAME 1 2 3 4 5 6 (PRODUCT LEVEL) | SEE PAGE |
|---|---|---|---|---|
| | **7Y-3952** | 2 | PLUG-CONNECTOR (2-PIN) | |
| | **7Y-3995** | 1 | CONNECTOR-PLUG | |
| | **153-2602** | 1 | RECEPTACLE-CONNECTOR (1-PIN) | |
| | **8T-9636** | 1 | FUSE (30-AMPERE) | |
| | **185-1290** | 1 | HOLDER-FUSE | |
| | **232-6314** | 1 | FUSE (60-AMPERE) | |
| | **379-0828** | 2 | FUSE (60-AMPERE) | |
| | **225-4950** | 1 | HOLDER AS-FUSE | |
| | **107-3134** | 1 | HOUSING-CONNECTOR | |
| | **8T-8729** | 10 | PIN-CONNECTOR (16-GA TO 18-GA) | |
| | **9W-0852** | 6 | PIN-CONNECTOR (14-GA TO 16-GA) | |
| | **9X-3401** | 2 | PIN-CONNECTOR (16-GA TO 18-GA) | |
| | **155-2270** | 1 | KIT-CONNECTING PLUG (2-PIN) | |
| | | | (INCLUDES PLUG AS, WEDGE & INTERFACE SEAL) | |
| | **230-4009** | 1 | PLUG AS-CONNECTOR (12-PIN) | |
| | **264-7034** | 1 | SEAL-CONNECTOR | |
| | **230-4011** | 2 | PLUG AS-CONNECTOR (2-PIN) | |
| | | | (EACH INCLUDES) | |
| | **264-7029** | 1 | SEAL-CONNECTOR | |
| | **230-5010** | 1 | PLUG AS-CONNECTOR (6-PIN) | |
| | **264-7032** | 1 | SEAL-CONNECTOR | |
| | **174-3016** | 1 | PLUG AS-CONNECTOR (3-PIN) | |
| | **8T-8737** | 5 | PLUG-SEAL | |
| | **107-3136** | 2 | PLUG-SEAL | |
| | **102-8803** | 1 | KIT-RECEPTACLE (3-PIN) | |
| | | | (INCLUDES RECEPTACLE AS & WEDGE) | |
| | **243-4505** | 2 | RECEPTACLE AS-CONNECTOR (2-PIN) | |
| | **243-4510** | 1 | RECEPTACLE AS-CONNECTOR (12-PIN) | |
| | **8T-8730** | 10 | SOCKET-CONNECTOR (16-GA TO 18-GA) | |
| | **9W-0844** | 8 | SOCKET-CONNECTOR (14-GA TO 16-GA) | |
| | **9X-3402** | 2 | SOCKET-CONNECTOR (16-GA TO 18-GA) | |
| | **3S-2093** | 3 | STRAP-CABLE | |
| | **232-6311** | 2 | TERMINAL | |
| | **363-7173** | 2 | TUBE AS | |
| | **5P-1475** | 2 | TERMINAL-FORK (14-GA TO 16-GA, NO. 8 SCREW) | |
| | *131-1489* | 1 | TERMINAL AS-RING (6-GA TO 8-GA) | |
| | **6H-3592** | 1 | TERMINAL-RING (6-GA TO 8-GA, 5/16-IN SCREW) | |
| E | **119-3662** | | TUBE-HEAT SHRINK (10.85-MM DIA) (4-CM) | |
| | **2L-8075** | 2 | TERMINAL-RING (14-GA TO 16-GA, NO. 8 SCREW) | |
| | **2L-8049** | 1 | TERMINAL-RING (6-GA, NO. 10 SCREW) | |
| | *272-6304* | 1 | TERMINAL AS | |
| | **272-6271** | 1 | TERMINAL-RING | |
| E | **125-7875** | | TUBE-HEAT SHRINK (7.44-MM DIA) (4-CM) | |
| | **107-3135** | 1 | TERMINAL (16-GA TO 20-GA) | |
| | **7Y-3951** | 2 | TERMINAL-BLADE (14-GA) | |
| | **7Y-3993** | 2 | TERMINAL-BLADE (12-GA) | |
| | **7Y-3996** | 1 | TERMINAL-BLADE (14-GA TO 20-GA) | |
| | **7Y-5556** | 2 | TERMINAL | |
| | **116-0255** | 2 | TERMINAL-BLADE (10-GA TO 20-GA) | |
| | **153-2631** | 1 | TERMINAL (FEMALE) | |
| E | **125-7874** | | TUBE-HEAT SHRINK (5.72-MM DIA) (25-CM) | |

E - ORDER BY THE CENTIMETER

**<END>**

# 425-7013 HARNESS AS-CONSOLE–CANOPY

**S/N: RKY1442-UP**

**PART OF 370-5350 WIRING GP-CONSOLE**

**AN ATTACHMENT**

**SMCS-1408, 7451** **i05384852**

| NOTE | PART NUMBER | QTY | PART NAME 1 2 3 4 5 6 (PRODUCT LEVEL) | SEE PAGE |
|---|---|---|---|---|
| | **116-4159** | 1 | BASE | |
| | **112-9609** | 1 | BLOCK-MICRORELAY | |
| | **124-9636** | 1 | BLOCK-MINIFUSE | |
| | **116-4157** | 1 | BLOCK-RELAY & FUSE | |
| | **8C-6354** | 1 | CAP-RECEPTACLE (ET CONNECTOR) | |
| | **111-7898** | 3 | CONNECTOR | |
| | **126-1774** | 1 | COVER-CONNECTOR | |
| | **113-8490** | 8 | FUSE (10-AMPERE) | |
| | **113-8491** | 4 | FUSE (15-AMPERE) | |
| | **113-8492** | 1 | FUSE (20-AMPERE) | |
| | **124-3548** | 2 | FUSE (30-AMPERE) | |
| | **141-2759** | 3 | FUSE (5-AMPERE) | |
| | **128-2032** | 6 | LATCH | |
| | **112-9610** | 2 | LOCK-MICRORELAY | |
| | **124-9637** | 1 | LOCK-MINIFUSE | |
| | **116-4158** | 1 | LOCK-RELAY & FUSE | |
| | **8T-8729** | 6 | PIN-CONNECTOR (16-GA TO 18-GA) | |
| | **9W-0852** | 5 | PIN-CONNECTOR (14-GA TO 16-GA) | |
| | **9X-3401** | 8 | PIN-CONNECTOR (16-GA TO 18-GA) | |
| | | | –OR– | |
| | **126-1767** | 8 | PIN-CONNECTOR (14-GA TO 16-GA) | |
| | **147-1444** | 1 | PLUG AS-CONNECTOR (70-PIN) | |
| | **159-9322** | 1 | SEAL-O-RING | |
| | **155-2270** | 8 | KIT-CONNECTING PLUG (2-PIN) | |
| | **155-2274** | 2 | KIT-CONNECTING PLUG (6-PIN) | |
| | | | (EACH PLUG KIT INCLUDES PLUG AS, WEDGE & INTERFACE SEAL) | |
| | **174-3016** | 1 | PLUG AS-CONNECTOR (3-PIN) | |
| | **230-4009** | 1 | PLUG AS-CONNECTOR (12-PIN) | |
| | **264-7034** | 1 | SEAL-CONNECTOR | |
| | **230-4011** | 3 | PLUG AS-CONNECTOR (2-PIN) | |
| | | | (EACH INCLUDES) | |
| | **264-7029** | 1 | SEAL-CONNECTOR | |
| | **230-4013** | 2 | PLUG AS-CONNECTOR (3-PIN) | |
| | | | (EACH INCLUDES) | |
| | **264-7030** | 1 | SEAL-CONNECTOR | |
| | **230-5008** | 2 | PLUG AS-CONNECTOR (4-PIN) | |
| | | | (EACH INCLUDES) | |
| | **264-7031** | 1 | SEAL-CONNECTOR | |
| | **230-5010** | 2 | PLUG AS-CONNECTOR (6-PIN) | |
| | | | (EACH INCLUDES) | |
| | **264-7032** | 1 | SEAL-CONNECTOR | |
| | **275-6785** | 1 | PLUG AS-CONNECTOR | |
| | **379-0830** | 1 | PLUG AS-CONNECTOR | |
| | **8T-8737** | 49 | PLUG-SEAL | |
| | **110-9198** | 5 | PLUG-SEAL | |
| | **340-2566** | 23 | PLUG-SEAL | |
| | **102-8803** | 1 | KIT-RECEPTACLE (3-PIN) | |
| | | | (INCLUDES RECEPTACLE AS & WEDGE) | |
| | **243-4505** | 1 | RECEPTACLE AS-CONNECTOR (2-PIN) | |
| | **243-4506** | 1 | RECEPTACLE AS-CONNECTOR (3-PIN) | |
| | **243-4510** | 1 | RECEPTACLE AS-CONNECTOR (12-PIN) | |
| | **9W-1951** | 1 | RECEPTACLE-CONNECTOR (9-PIN) | |
| | **153-2602** | 3 | RECEPTACLE-CONNECTOR (1-PIN) | |
| | **8T-8730** | 91 | SOCKET-CONNECTOR (16-GA TO 18-GA) | |
| | **9W-0844** | 10 | SOCKET-CONNECTOR (14-GA TO 16-GA) | |

*425-7013* **HARNESS AS-CONSOLE (*contd.*)** **i05384852**

| NOTE | PART NUMBER | QTY | PART NAME 1 2 3 4 5 6 (PRODUCT LEVEL) | SEE PAGE |
|---|---|---|---|---|
| | **9X-3402** | 2 | SOCKET-CONNECTOR (16-GA TO 18-GA) | |
| | | | —OR— | |
| | **126-1768** | 2 | SOCKET-CONNECTOR (14-GA TO 16-GA) | |
| | **167-3593** | 1 | STRAP | |
| | **3S-2093** | 14 | STRAP-CABLE | |
| | **122-4401** | 5 | TERMINAL | |
| | **153-2631** | 3 | TERMINAL (FEMALE) | |
| | **363-9173** | 2 | TERMINAL (14-GA TO 18-GA) | |
| | **3T-4693** | 2 | TERMINAL-RING (8-GA, 7/16-IN SCREW) | |
| | | | —OR— | |
| | **3T-4696** | 2 | TERMINAL-RING (10-GA TO 12-GA, 7/16-IN SCREW) | |
| | **112-9604** | 6 | TERMINAL-BLADE (16-GA TO 18-GA) | |
| | **112-9611** | 19 | TERMINAL-BLADE | |
| | **112-9612** | 20 | TERMINAL-BLADE | |
| | **116-4160** | 3 | TERMINAL-BLADE (12-GA TO 14-GA) | |
| | **116-4161** | 9 | TERMINAL-BLADE (16-GA TO 18-GA) | |
| | **113-5099** | 2 | TERMINAL-BUS | |
| | **113-5100** | 2 | TERMINAL-BUS | |
| | **3E-9179** | 3 | TERMINAL-RECEPTACLE (14-GA TO 18-GA) | |
| E | **125-7874** | | TUBE-HEAT SHRINK (5.72-MM DIA) (110-CM) | |

E - ORDER BY THE CENTIMETER

**<END>**

# 425-7014 HARNESS AS-CONSOLE–CAB

**S/N: RKY1442-UP**

**PART OF 370-5349 WIRING GP-CONSOLE**

**AN ATTACHMENT**

**SMCS-1408, 7451** **i05384849**

| NOTE | PART NUMBER | QTY | PART NAME 1 2 3 4 5 6 (PRODUCT LEVEL) | SEE PAGE |
|---|---|---|---|---|
| | **116-4159** | 1 | BASE | |
| | **112-9609** | 1 | BLOCK-MICRORELAY | |
| | **124-9636** | 1 | BLOCK-MINIFUSE | |
| | **116-4157** | 1 | BLOCK-RELAY & FUSE | |
| | **8C-6354** | 1 | CAP-RECEPTACLE (ET CONNECTOR) | |
| | **111-7898** | 4 | CONNECTOR | |
| | **153-2602** | 3 | RECEPTACLE-CONNECTOR (1-PIN) | |
| | **126-1774** | 1 | COVER-CONNECTOR | |
| | **113-8490** | 9 | FUSE (10-AMPERE) | |
| | **113-8491** | 4 | FUSE (15-AMPERE) | |
| | **113-8492** | 2 | FUSE (20-AMPERE) | |
| | **124-3548** | 3 | FUSE (30-AMPERE) | |
| | **141-2759** | 3 | FUSE (5-AMPERE) | |
| | **128-2032** | 6 | LATCH | |
| | **112-9610** | 2 | LOCK-MICRORELAY | |
| | **124-9637** | 1 | LOCK-MINIFUSE | |
| | **116-4158** | 1 | LOCK-RELAY & FUSE | |
| | **8T-8729** | 8 | PIN-CONNECTOR (16-GA TO 18-GA) | |
| | **9W-0852** | 11 | PIN-CONNECTOR (14-GA TO 16-GA) | |
| | **9X-3401** | 8 | PIN-CONNECTOR (16-GA TO 18-GA) | |
| | **126-1767** | 6 | PIN-CONNECTOR (14-GA TO 16-GA) | |
| | **275-6785** | 1 | PLUG AS-CONNECTOR | |
| | **147-1444** | 1 | PLUG AS-CONNECTOR (70-PIN) | |
| | **159-9322** | 1 | SEAL-O-RING | |
| | **155-2270** | 8 | KIT-CONNECTING PLUG (2-PIN) | |
| | **155-2274** | 2 | KIT-CONNECTING PLUG (6-PIN) | |
| | | | (EACH PLUG KIT INCLUDES PLUG AS,WEDGE & INTERFACE SEAL) | |
| | **230-4009** | 1 | PLUG AS-CONNECTOR (12-PIN) | |
| | **264-7034** | 1 | SEAL-CONNECTOR | |
| | **230-4011** | 3 | PLUG AS-CONNECTOR (2-PIN) | |
| | | | (EACH INCLUDES) | |
| | **264-7029** | 1 | SEAL-CONNECTOR | |
| | **230-4013** | 1 | PLUG AS-CONNECTOR (3-PIN) | |
| | **264-7030** | 1 | SEAL-CONNECTOR | |
| | **230-5008** | 3 | PLUG AS-CONNECTOR (4-PIN) | |
| | | | (EACH INCLUDES) | |
| | **264-7031** | 1 | SEAL-CONNECTOR | |
| | **230-5010** | 2 | PLUG AS-CONNECTOR (6-PIN) | |
| | | | (EACH INCLUDES) | |
| | **264-7032** | 1 | SEAL-CONNECTOR | |
| | **379-0830** | 1 | PLUG AS-CONNECTOR | |
| | **174-3016** | 1 | PLUG AS-CONNECTOR (3-PIN) | |
| | **8T-8737** | 47 | PLUG-SEAL | |
| | **110-9198** | 5 | PLUG-SEAL | |
| | **340-2566** | 23 | PLUG-SEAL | |
| | **102-8803** | 1 | KIT-RECEPTACLE (3-PIN) | |
| | | | (INCLUDES RECEPTACLE AS & WEDGE) | |
| | **243-4505** | 1 | RECEPTACLE AS-CONNECTOR (2-PIN) | |
| | **243-4510** | 2 | RECEPTACLE AS-CONNECTOR (12-PIN) | |
| | **9W-1951** | 1 | RECEPTACLE-CONNECTOR (9-PIN) | |
| | **325-9922** | 2 | SEAL | |
| | **8T-8730** | 92 | SOCKET-CONNECTOR (16-GA TO 18-GA) | |
| | **9W-0844** | 13 | SOCKET-CONNECTOR (14-GA TO 16-GA) | |
| | **9X-3402** | 2 | SOCKET-CONNECTOR (16-GA TO 18-GA) | |
| | | | –OR– | |

*425-7014* **HARNESS AS-CONSOLE (*contd.*)** **i05384849**

| NOTE | PART NUMBER | QTY | PART NAME 1 2 3 4 5 6 (PRODUCT LEVEL) | SEE PAGE |
|---|---|---|---|---|
| | **126-1768** | 2 | SOCKET-CONNECTOR (14-GA TO 16-GA) | |
| | **340-2567** | 11 | WIRE AS | |
| | **167-3593** | 1 | STRAP | |
| | **3S-2093** | 15 | STRAP-CABLE | |
| | **122-4401** | 8 | TERMINAL | |
| | **363-9173** | 4 | TERMINAL (14-GA TO 18-GA) | |
| | **2L-8079** | 1 | TERMINAL-RING (14-GA TO 16-GA, 3/8-IN SCREW) | |
| | **3T-4693** | 2 | TERMINAL-RING (8-GA, 7/16-IN SCREW) | |
| | | | —OR— | |
| | **3T-4696** | 2 | TERMINAL-RING (10-GA TO 12-GA, 7/16-IN SCREW) | |
| | **112-9604** | 6 | TERMINAL-BLADE (16-GA TO 18-GA) | |
| | **112-9611** | 19 | TERMINAL-BLADE | |
| | **112-9612** | 20 | TERMINAL-BLADE | |
| | **116-4160** | 4 | TERMINAL-BLADE (12-GA TO 14-GA) | |
| | **116-4161** | 11 | TERMINAL-BLADE (16-GA TO 18-GA) | |
| | **113-5099** | 2 | TERMINAL-BUS | |
| | **113-5100** | 3 | TERMINAL-BUS | |
| | **153-2631** | 3 | TERMINAL (FEMALE) | |
| | **3E-9179** | 7 | TERMINAL-RECEPTACLE (14-GA TO 18-GA) | |
| E | **125-7874** | | TUBE-HEAT SHRINK (5.72-MM DIA) (120-CM) | |

E - ORDER BY THE CENTIMETER

**<END>**

## *383-3164* HARNESS AS-CONTROL—CAB, CANOPY

**PART OF 383-3163 WIRING GP-CONSOLE**
**AN ATTACHMENT**

**SMCS-1408** **i05046509**

| NOTE | PART NUMBER | QTY | PART NAME 1 2 3 4 5 6 (PRODUCT LEVEL) | SEE PAGE |
|---|---|---|---|---|
| | **155-2270** | 2 | KIT-CONNECTING PLUG (2-PIN) | |
| | | | (EACH INCLUDES PLUG AS, WEDGE & INTERFACE SEAL) | |
| | **8T-8729** | 3 | PIN-CONNECTOR (16-GA TO 18-GA) | |
| | **8T-8737** | 1 | PLUG-SEAL | |
| | **243-4507** | 1 | RECEPTACLE AS-CONNECTOR (4-PIN) | |
| | **8T-8730** | 4 | SOCKET-CONNECTOR (16-GA TO 18-GA) | |
| E | **125-7874** | | TUBE-HEAT SHRINK (5.72-MM DIA) (5-CM) | |

E - ORDER BY THE CENTIMETER

<END>

## 381-9236 HARNESS AS-QUICK COUPLER

**PART OF 381-9235 WIRING GP-QUICK COUPLER**
**AN ATTACHMENT**

**SMCS-1408, 6129** **i05297807**

| NOTE | PART NUMBER | QTY | PART NAME 1 2 3 4 5 6 (PRODUCT LEVEL) | SEE PAGE |
|---|---|---|---|---|
| | **8T-8729** | 2 | PIN-CONNECTOR (16-GA TO 18-GA) | |
| | **9W-9615** | 1 | RING | |
| | **155-2270** | 2 | KIT-CONNECTING PLUG (2-PIN) | |
| | | | (EACH PLUG KIT INCLUDES PLUG AS, WEDGE & INTERFACE SEAL) | |
| | **8T-8737** | 1 | PLUG-SEAL | |
| | **243-4507** | 1 | RECEPTACLE AS-CONNECTOR (4-PIN) | |
| | **8T-8730** | 4 | SOCKET-CONNECTOR (16-GA TO 18-GA) | |
| E | **125-7874** | | TUBE-HEAT SHRINK (5.72-MM DIA) (5-CM) | |

E - ORDER BY THE CENTIMETER

<END>

## 422-2949 HARNESS AS-SENSOR—OVERLOAD

**PART OF 422-2948 WIRING GP-OVERLOAD WARNING**
**AN ATTACHMENT**

**SMCS-1408, 1901** **i05376431**

| NOTE | PART NUMBER | QTY | PART NAME 1 2 3 4 5 6 (PRODUCT LEVEL) | SEE PAGE |
|---|---|---|---|---|
| E | **103-2529** | | HOSE (122-CM) | |
| | **8T-8729** | 3 | PIN-CONNECTOR (16-GA TO 18-GA) | |
| | **230-4013** | 1 | PLUG AS-CONNECTOR (3-PIN) | |
| | **264-7030** | 1 | SEAL-CONNECTOR | |
| | **243-4506** | 1 | RECEPTACLE AS-CONNECTOR (3-PIN) | |
| | **8T-8730** | 3 | SOCKET-CONNECTOR (16-GA TO 18-GA) | |

E - ORDER BY THE CENTIMETER

<END>

## *383-3158* HARNESS AS-SOLENOID–CAB, CANOPY

**PART OF 383-3163 WIRING GP-CONSOLE**

**AN ATTACHMENT**

**SMCS-1408** **i04916635**

| NOTE | PART NUMBER | QTY | PART NAME 1 2 3 4 5 6 (PRODUCT LEVEL) | SEE PAGE |
|---|---|---|---|---|
| | **8T-8729** | 6 | PIN-CONNECTOR (16-GA TO 18-GA) | |
| | **155-2271** | 1 | KIT-CONNECTING PLUG (4-PIN) | |
| | | | (INCLUDES PLUG AS, WEDGE & INTERFACE SEAL) | |
| | **230-5008** | 1 | PLUG AS-CONNECTOR (4-PIN) | |
| | **264-7031** | 1 | SEAL-CONNECTOR | |
| | **8T-8737** | 2 | PLUG-SEAL | |
| | **243-4508** | 1 | RECEPTACLE AS-CONNECTOR (6-PIN) | |
| | **8T-8730** | 6 | SOCKET-CONNECTOR (16-GA TO 18-GA) | |

<END>

# *378-9630* HEATER GP-JACKET WATER

**120-VOLT**

**PART OF 380-2485 HEATER GP-JACKET WATER**

**AN ATTACHMENT**

**SMCS-1383** **i04559503**

| NOTE | REF NO | GRAPHIC REF | PART NUMBER | QTY | PART NAME 1 2 3 4 5 6 (PRODUCT LEVEL) | SEE PAGE |
|---|---|---|---|---|---|---|
| | 1 | 1 | **3S-2093** | 2 | STRAP-CABLE | |
| | 2 | 1 | **251-1391** | 1 | BOLT (M10X1.25X16-MM) | |
| | 3 | 1 | **321-6069** | 1 | CORD AS-HEATER ELEMENT (120-VOLT) | |
| | 4 | 1 | **378-9631** | 1 | HEATER AS | |
| | 5 | 1 | **381-7473** | 1 | HARNESS AS-WIRING (JACKET WATER HEATER) | |
| | | 1 | **8T-8737** | 3 | PLUG-SEAL | |
| | | 1 | **155-2260** | 1 | KIT-CONNECTING PLUG (3-PIN) | |
| | | | | | (INCLUDES PLUG AS, WEDGE & INTERFACE SEAL) | |
| | 6 | 1 | **4P-8134** | 1 | CLIP | |
| | 7 | 1 | **8T-4121** | 1 | WASHER-HARD (11X21X2.5-MM THK) | |

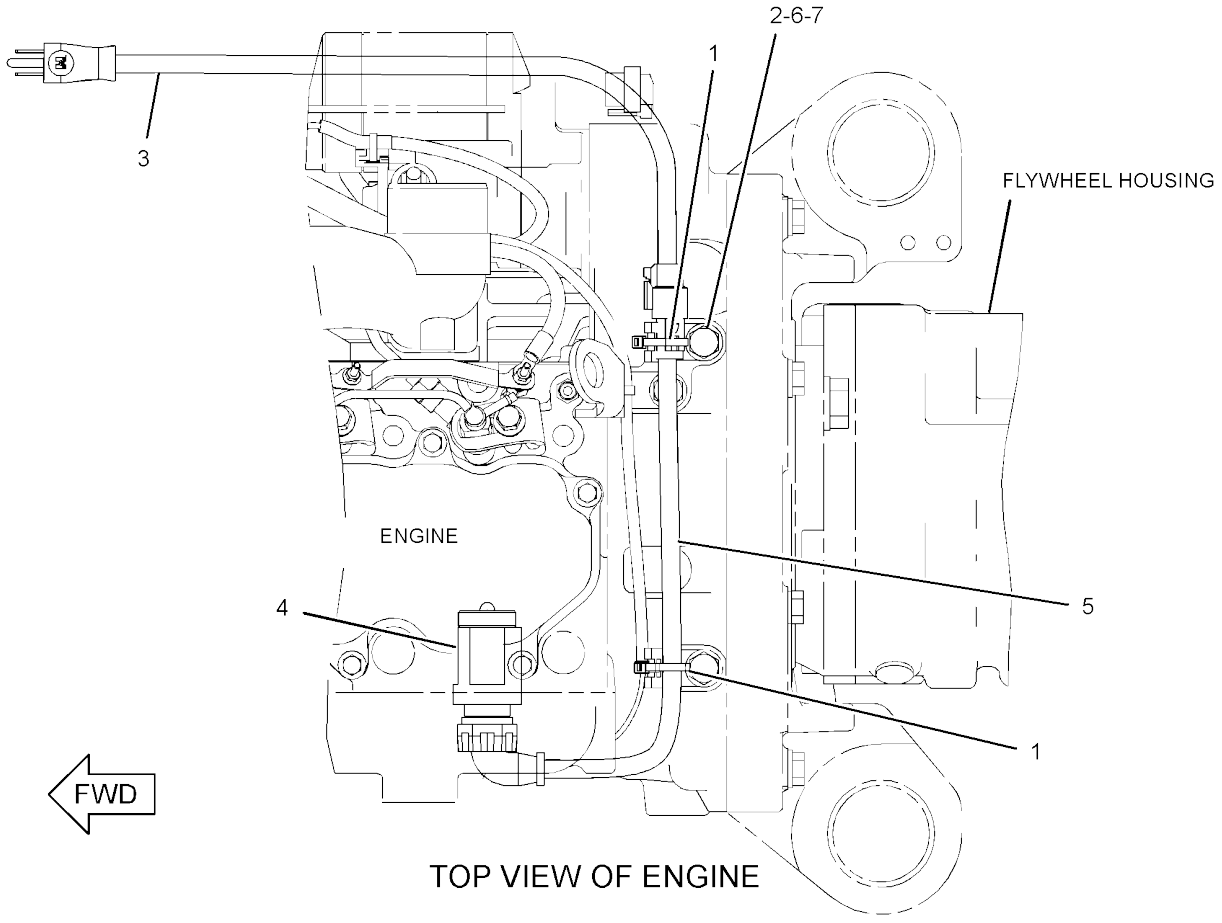


TOP VIEW OF ENGINE

GRAPHIC #1 **<END>** g02776877

## *380-2485* HEATER GP-JACKET WATER

**AN ATTACHMENT**

**SMCS-1383** **i04629186**

| NOTE | PART NUMBER | QTY | PART NAME 1 2 3 4 5 6 (PRODUCT LEVEL) | SEE PAGE |
|---|---|---|---|---|
| Y | *378-9630* | 1 | HEATER GP-JACKET WATER | 87 |

Y - SEPARATE ILLUSTRATION

<END>

# 233-0099 LAMP GP-FLOOD–BOOM

**12-VOLT**

**PART OF 292-5739 LIGHTING GP-FLOOD**

**SMCS-1429, 1434** **i05298542**

| NOTE | REF NO | GRAPHIC REF | PART NUMBER | QTY | PART NAME 1 2 3 4 5 6 (PRODUCT LEVEL) | SEE PAGE |
|---|---|---|---|---|---|---|
| | 1 | 1 | **142-9572** | 1 | LAMP (12-VOLT, 55-WATT) | |
| M | 2 | 1 | **6V-9492** | 2 | SCREW-MACHINE (M4X0.7X25-MM) | |
| | 3 | 1 | **096-6166** | 2 | WASHER-HARD (4.5X9X1-MM THK) | |
| | 4 | 1 | **8T-4223** | 1 | WASHER-HARD (13.5X25.5X3-MM THK) | |
| M | 5 | 1 | **9X-8488** | 1 | NUT-HEX THIN (M12X1.5-THD) | |

M - METRIC PART

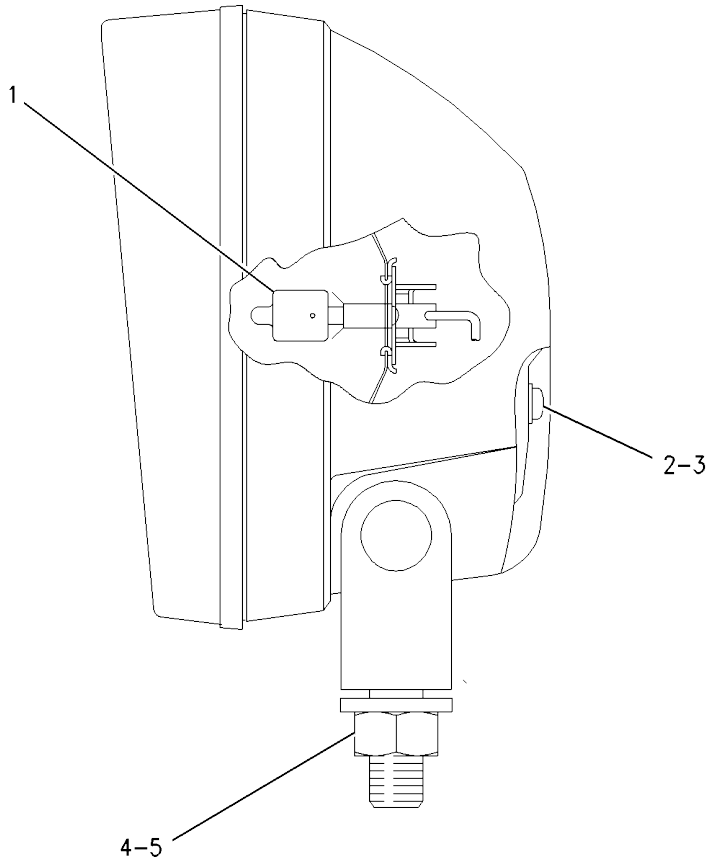


GRAPHIC #1 **<END>** g00861794

## *381-9232* LIGHTING AR-FLOOD–CANOPY

**AN ATTACHMENT**

**SMCS-1434** **i04629194**

| NOTE | PART NUMBER | QTY | PART NAME 1 2 3 4 5 6 (PRODUCT LEVEL) | SEE PAGE |
|---|---|---|---|---|
| Y | *370-5352* | 1 | LIGHTING GP-FLOOD (CANOPY) | 94 |

Y - SEPARATE ILLUSTRATION

<END>

# *266-6843* LIGHTING GP-FLOOD–CAB

**CANNOT BE USED WITH CANOPY**
**PART OF 355-3411 LIGHTING GP-FLOOD**
**AN ATTACHMENT**

**SMCS-1434** **i03964912**

| NOTE | REF NO | GRAPHIC REF | PART NUMBER | QTY | PART NAME 1 2 3 4 5 6 (PRODUCT LEVEL) | SEE PAGE |
|---|---|---|---|---|---|---|
| | 1 | 1 | **198-0852** | 1 | LAMP GP-FLOOD (12-VOLT) (CAB) | |
| | | 1 | **142-9572** | 1 | LAMP (12-VOLT, 55-WATT) | |
| | 2 | 1 | **8T-4121** | 1 | WASHER-HARD (11X21X2.5-MM THK) | |
| M | 3 | 1 | **8T-4137** | 1 | BOLT (M10X1.5X20-MM) | |
| | 4 | 1 | **3S-2093** | 1 | STRAP-CABLE | |

M - METRIC PART

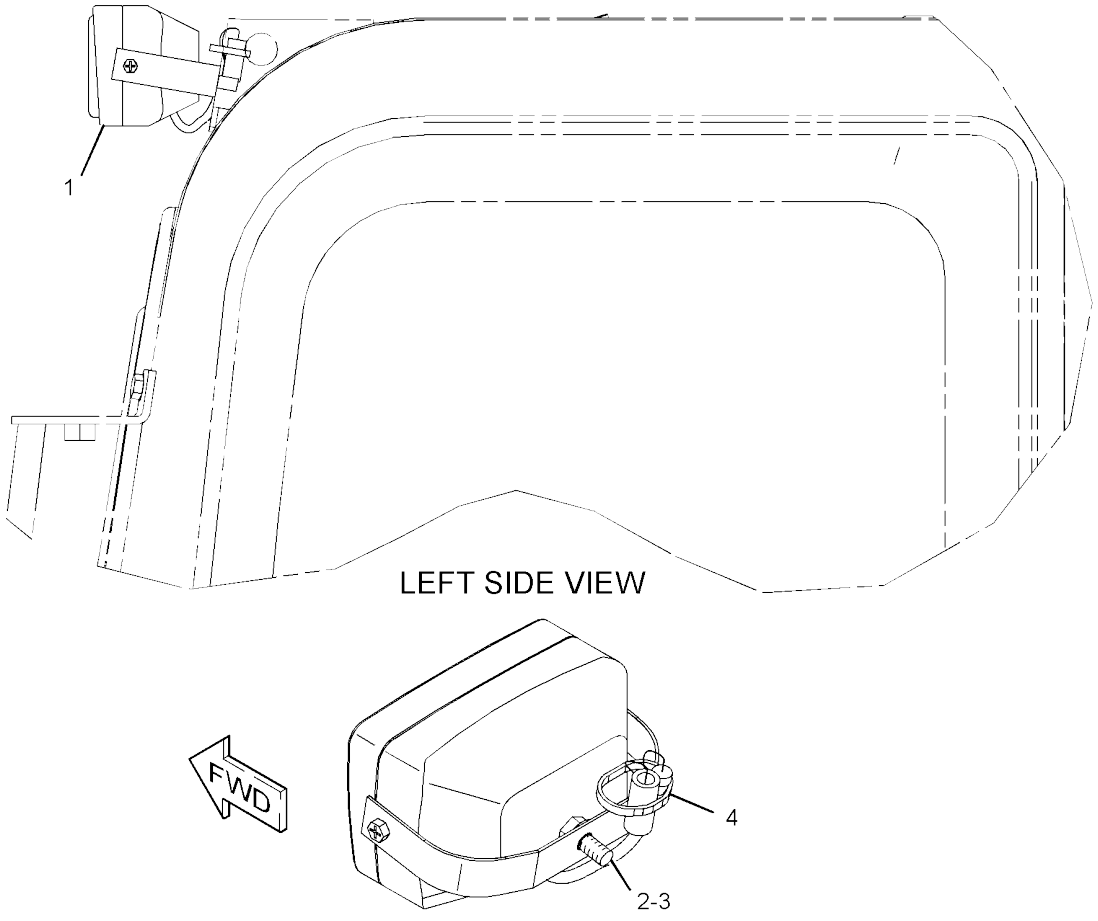


GRAPHIC #1 **<END>** g01205353

# *292-5739* LIGHTING GP-FLOOD–BOOM

**PART OF 376-6680 BOOM AR**

**SMCS-1434** **i03970700**

| NOTE | REF NO | GRAPHIC REF | PART NUMBER | QTY | PART NAME 1 2 3 4 5 6 (PRODUCT LEVEL) | SEE PAGE |
|---|---|---|---|---|---|---|
| | 1 | 1 | **3S-2093** | 1 | STRAP-CABLE | |
| Y | 2 | 1 | **233-0099** | 1 | LAMP GP-FLOOD (12-VOLT) (BOOM) | 89 |
| | 3 | 1 | **292-5740** | 1 | PLATE | |
| | 4 | 1 | **5P-1076** | 1 | WASHER-HARD (13.5X30X4-MM THK) | |
| M | 5 | 1 | **8T-4192** | 1 | BOLT (M12X1.75X25-MM) | |
| | 6 | 1 | **8T-4223** | 1 | WASHER-HARD (13.5X25.5X3-MM THK) | |

M - METRIC PART
Y - SEPARATE ILLUSTRATION

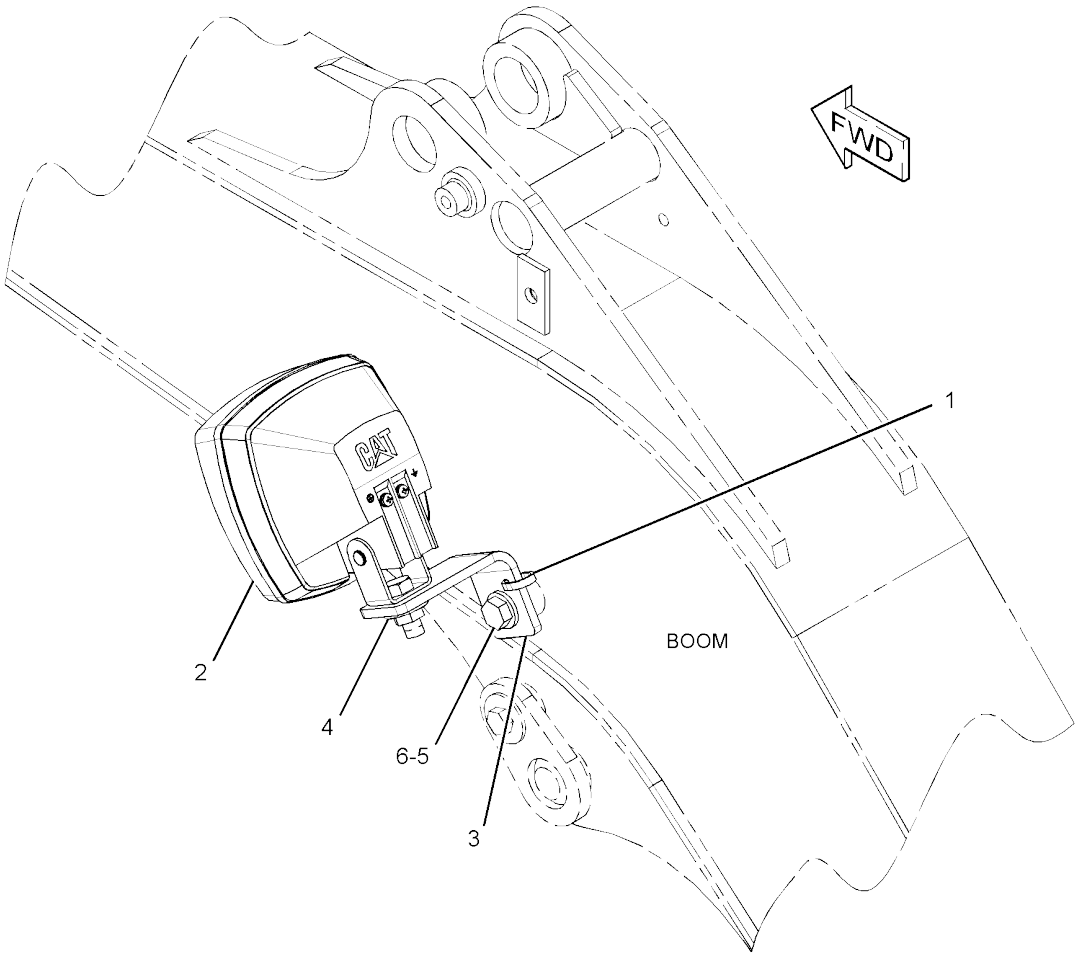


GRAPHIC #1 **<END>** g01311751

## *355-3411* LIGHTING GP-FLOOD–CAB

**AN ATTACHMENT**

**SMCS-1434** **i04006591**

| NOTE | PART NUMBER | QTY | PART NAME 1 2 3 4 5 6 (PRODUCT LEVEL) | SEE PAGE |
|---|---|---|---|---|
| Y | *266-6843* | 1 | LIGHTING GP-FLOOD (CAB) | 91 |

Y - SEPARATE ILLUSTRATION

<END>

# *370-5352* LIGHTING GP-FLOOD—CANOPY

**PART OF 381-9232 LIGHTING AR-FLOOD**
**AN ATTACHMENT**

**SMCS-1434** **i05425787**

| NOTE | REF NO | GRAPHIC REF | PART NUMBER | QTY | PART NAME 1 2 3 4 5 6 (PRODUCT LEVEL) | SEE PAGE |
|---|---|---|---|---|---|---|
| | 1 | 1 | **3S-2093** | 11 | STRAP-CABLE | |
| | 2 | 1 | **163-6795** | 1 | STRAP-CABLE | |
| | 3 | 1 | **198-0852** | 1 | LAMP GP-FLOOD (12-VOLT) | |
| | | 1 | **142-9572** | 1 | LAMP (12-VOLT, 55-WATT) | |
| | 4 | 1 | **298-0663** | 1 | CLIP | |
| | 5 | 1 | **370-5371** | 1 | HARNESS AS-LIGHTING (CANOPY) | |
| | | 1 | **230-4011** | 1 | PLUG AS-CONNECTOR (2-PIN) | |
| | | 1 | **264-7029** | 1 | SEAL-CONNECTOR | |
| | | 1 | **8T-8730** | 1 | SOCKET-CONNECTOR (16-GA TO 18-GA) | |
| | | 1 | **9W-0844** | 1 | SOCKET-CONNECTOR (14-GA TO 16-GA) | |
| | | 1 | *7Y-3966* | 1 | TERMINAL AS | |
| | | 1 | **7Y-3962** | 1 | TERMINAL-BULLET (MALE) | |
| | | 1 | **7Y-3964** | 1 | TUBE (CONNECTOR TERMINAL) | |
| | | 1 | *7Y-3967* | 1 | TERMINAL AS | |
| | | 1 | **7Y-3963** | 1 | TERMINAL-BULLET (FEMALE) | |
| | | 1 | **7Y-3965** | 1 | TUBE (RECEPTACLE TERMINAL) | |
| | 6 | 1 | **8T-4121** | 1 | WASHER-HARD (11X21X2.5-MM THK) | |
| M | 7 | 1 | **8T-4137** | 1 | BOLT (M10X1.5X20-MM) | |
| M | 8 | 1 | **8T-4189** | 1 | BOLT (M8X1.25X20-MM) | |
| | 9 | 1 | **8T-4224** | 1 | WASHER-HARD (8.8X16X2-MM THK) | |

M - METRIC PART

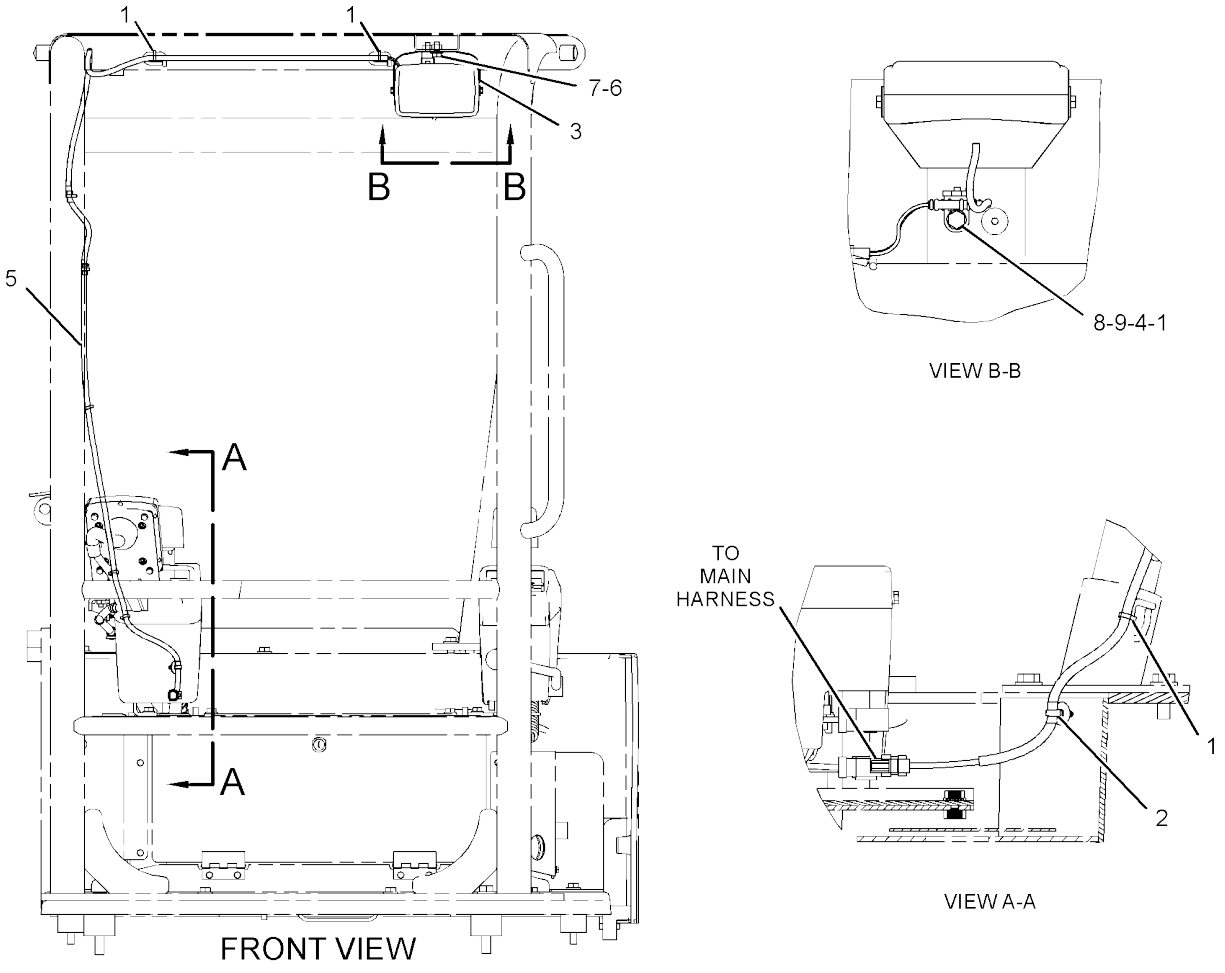


GRAPHIC #1 **<END>** g02791406

# *385-1277* MOUNTING GP-ELECTRONIC CONTROL

**PART OF 377-8930 BLADE AR-ANGLING**
**AN ATTACHMENT**

**SMCS-1901, 7610** **i04728120**

| NOTE | REF NO | GRAPHIC REF | PART NUMBER | QTY | PART NAME 1 2 3 4 5 6 (PRODUCT LEVEL) | SEE PAGE |
|---|---|---|---|---|---|---|
| | 1 | 1 | **6I-1418** | 4 | SPACER (8.2X12.7X28.7-MM THK) | |
| | 2 | 1 | **155-0576** | 8 | MOUNT-ISOLATION | |
| | 3 | 1 | **9N-0869** | 8 | WASHER-HARD (8.8X25.5X2-MM THK) | |
| M | 4 | 1 | **7X-0818** | 4 | BOLT (M8X1.25X45-MM) | |
| | 5 | 1 | **8T-4224** | 1 | WASHER-HARD (8.8X16X2-MM THK) | |

M - METRIC PART

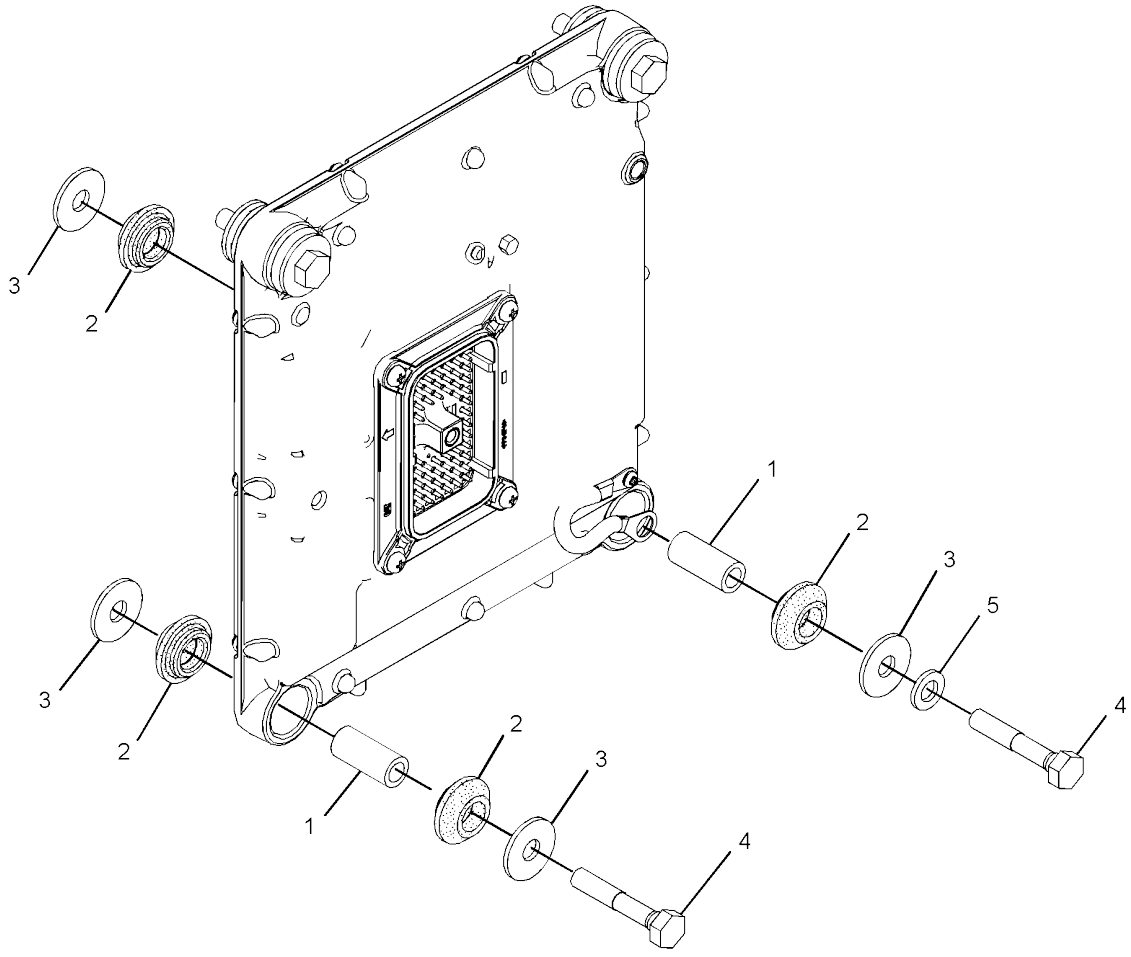


GRAPHIC #1 **<END>** g02853159

# *383-0154* STARTING MOTOR GP-ELECTRIC

**S/N: RKY1-1439**
**12-VOLT**
**PART OF 380-1777 ENGINE AR-COMPLETE, 392-4127, 416-6081 ENGINE AR-PRIMARY**
**ALSO AN ATTACHMENT**

**SMCS-1453** **i04603473**

| NOTE | REF NO | GRAPHIC REF | PART NUMBER | QTY | PART NAME 1 2 3 4 5 6 (PRODUCT LEVEL) | SEE PAGE |
|---|---|---|---|---|---|---|
| | 1 | 1 | **383-0179** | 1 | BOLT | |
| | 2 | 1 | **383-0181** | 1 | STUD | |
| | 3 | 1 | **383-0196** | 1 | NUT-HEX | |
| | 4 | 1 | **383-0201** | 1 | NUT-FLANGE | |
| | 5 | 1 | **383-0207** | 1 | WASHER | |
| | 6 | 1 | **383-0589** | 1 | STARTING MOTOR AS | |

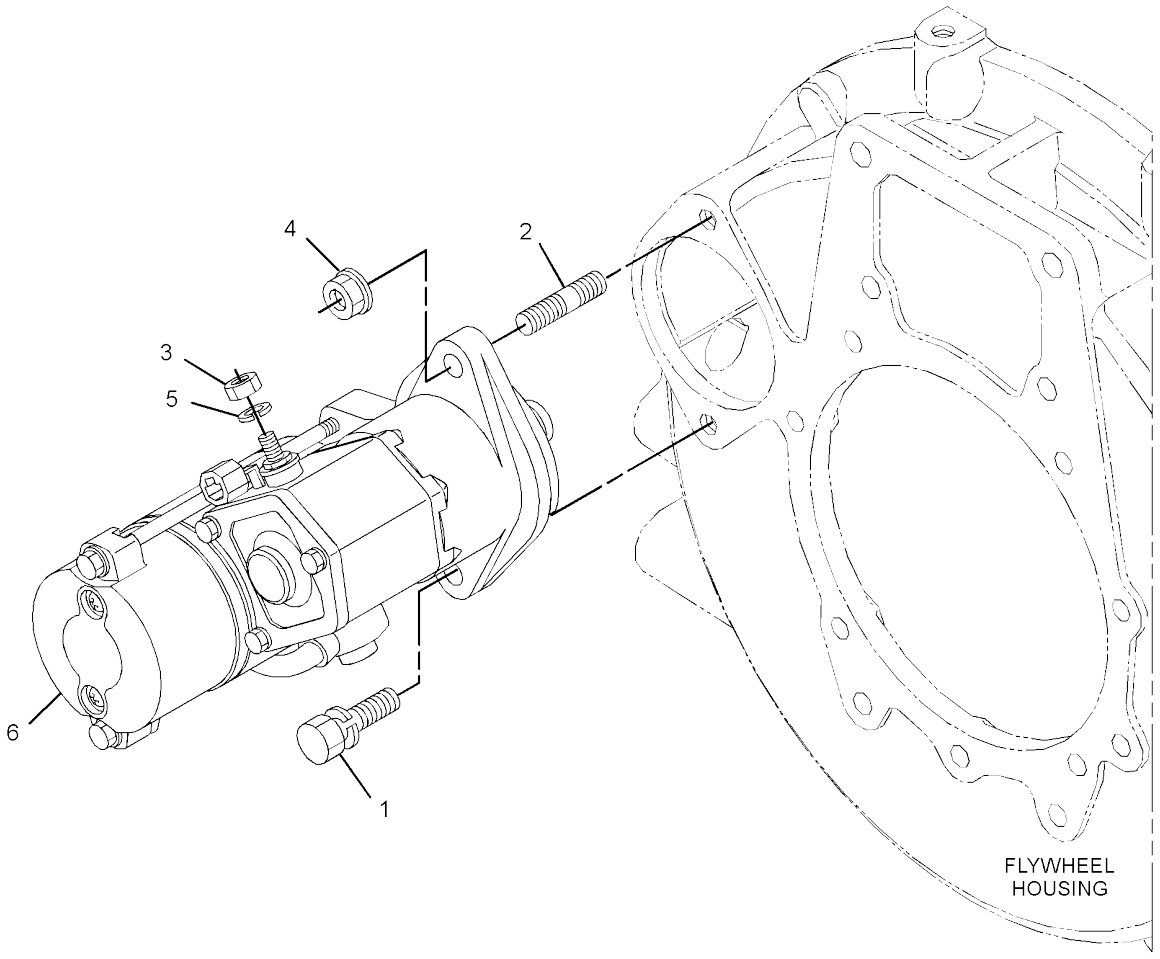


GRAPHIC #1 **<END>** g02791238

# *319-4420* SWITCH GP-ROTARY–THROTTLE POSITION

**PART OF 370-5349, 370-5350 WIRING GP-CONSOLE**
**AN ATTACHMENT**

**SMCS-7332** **i04655678**

| NOTE | REF NO | GRAPHIC REF | PART NUMBER | QTY | PART NAME 1 2 3 4 5 6 (PRODUCT LEVEL) | SEE PAGE |
|---|---|---|---|---|---|---|
| | 1 | 1 | **243-4508** | 1 | RECEPTACLE AS-CONNECTOR (6-PIN) | |
| | 2 | 1 | **9X-3401** | 5 | PIN-CONNECTOR (16-GA TO 18-GA) | |
| | | | | | —OR— | |
| | | 1 | **126-1767** | 5 | PIN-CONNECTOR (14-GA TO 16-GA) | |
| | 3 | 1 | **8T-8737** | 1 | PLUG-SEAL | |
| M | 4 | 1 | **7Y-5458** | 1 | NUT (M12X1-THD) | |
| | 5 | 1 | **7Y-5464** | 1 | WASHER (12.2X15.4X0.5-MM THK) | |
| | 6 | 1 | **106-0210** | 1 | SEAL | |

M - METRIC PART

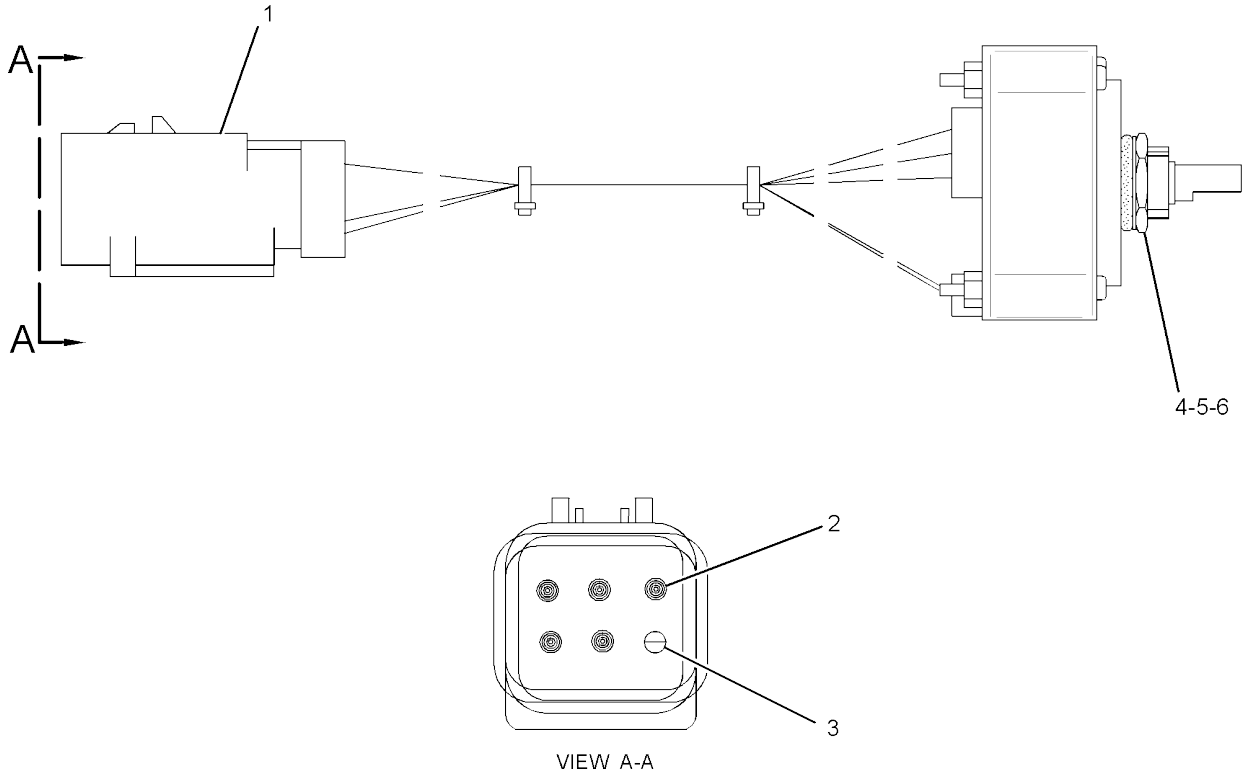


GRAPHIC #1 **<END>** g01588034

# *381-9239* WIRING GP-CAB–CANOPY

**AN ATTACHMENT**

**SMCS-1408, 7301** **i04629196**

| NOTE | PART NUMBER | QTY | PART NAME 1 2 3 4 5 6 (PRODUCT LEVEL) | SEE PAGE |
|---|---|---|---|---|
| Y | *370-5351* | 1 | WIRING GP-LIGHTING | 114 |

Y - SEPARATE ILLUSTRATION

<END>

# 370-5349 WIRING GP-CONSOLE–CAB

**S/N: RKY1-1441**

**PART OF 376-6692, 376-6696, 383-5927, 383-5928 CAB AR**

**AN ATTACHMENT**

**SMCS-1408** **i05209228**

| NOTE | REF NO | GRAPHIC REF | PART NUMBER | QTY | PART NAME 1 2 3 4 5 6 (PRODUCT LEVEL) | SEE PAGE |
|---|---|---|---|---|---|---|
| | 1 | 1 | **3S-2093** | 8 | STRAP-CABLE | |
| | 2 | 1 | **7K-1181** | 22 | STRAP-CABLE | |
| | 3 | 1 | **8X-5804** | 1 | STRAP AS-GROUND | |
| | 4 | 1 | **109-2356** | 4 | PLUG | |
| | 5 | 1 | **110-6109** | 1 | KNOB-CONTROL (FLOW CONTROL SWITCH) | |
| | 6 | 1 | **116-7471** | 1 | PULLER-MINIFUSE | |
| | 7 | 1 | **140-9378** | 6 | RELAY AS (12-VOLT) | |
| | 8 | 1 | **158-7802** | 1 | SWITCH AS-ROCKER (WINDOW WASHER, WIPER) | |
| | | 1 | **111-7899** | 1 | GASKET | |
| | 9 | 1 | **163-6795** | 3 | STRAP-CABLE | |
| | 10 | 1 | **204-1611** | 1 | STRAP-CABLE (DUAL) | |
| | 11 | 1 | **266-1404** | 1 | SWITCH AS-ROCKER (LIGHT) | |
| | | 1 | **111-7899** | 1 | GASKET | |
| | 12 | 1 | **266-6935** | 2 | RELAY AS (12-VOLT) | |
| | 13 | 1 | **266-7379** | 1 | STRAP-CABLE | |
| | 14 | 1 | **267-7058** | 1 | SWITCH AS-LIMIT (HYDRAULIC LOCKOUT) | |
| | | 1 | **8T-8729** | 2 | PIN-CONNECTOR (16-GA TO 18-GA) | |
| | | 1 | **243-4505** | 1 | RECEPTACLE AS-CONNECTOR (2-PIN) | |
| Y | 15 | 1 | **319-4420** | 1 | SWITCH GP-ROTARY (THROTTLE POSITION) | 97 |
| J | 16 | 1 | **322-8964** | 1 | SWITCH AS-START (ENGINE) | |
| | | 1 | **7T-6799** | 1 | NUT-MOUNTING (1-32-THD) | |
| | | 1 | **8T-8729** | 4 | PIN-CONNECTOR (16-GA TO 18-GA) | |
| | | 1 | **243-4507** | 1 | RECEPTACLE AS-CONNECTOR (4-PIN) | |
| | 17 | 1 | **366-4622** | 1 | KIT-SERVICE METER (INCLUDES SERVICE METER & FILM) | |
| | 18 | 1 | **364-3882** | 1 | BUZZER (12-VOLT) | |
| | 19 | 1 | **370-5353** | 1 | BRACKET | |
| | 20 | 1 | **370-5354** | 1 | PLATE AS | |
| | 21 | 1 | **370-5368** | 1 | HARNESS AS-CONSOLE (CAB) | |
| | | 1 | **116-4159** | 1 | BASE | |
| | | 1 | **112-9609** | 1 | BLOCK-MICRORELAY | |
| | | 1 | **124-9636** | 1 | BLOCK-MINIFUSE | |
| | | 1 | **116-4157** | 1 | BLOCK-RELAY & FUSE | |
| | | 1 | **8C-6354** | 1 | CAP-RECEPTACLE (ET CONNECTOR) | |
| | | 1 | **111-7898** | 3 | CONNECTOR | |
| | | 1 | **153-2602** | 3 | RECEPTACLE-CONNECTOR (1-PIN) | |
| | | 1 | **126-1774** | 1 | COVER-CONNECTOR | |
| | | 1 | **113-8490** | 9 | FUSE (10-AMPERE) | |
| | | 1 | **113-8491** | 4 | FUSE (15-AMPERE) | |
| | | 1 | **113-8492** | 2 | FUSE (20-AMPERE) | |
| | | 1 | **124-3548** | 3 | FUSE (30-AMPERE) | |
| | | 1 | **141-2759** | 3 | FUSE (5-AMPERE) | |
| | | 1 | **128-2032** | 6 | LATCH | |
| | | 1 | **112-9610** | 2 | LOCK-MICRORELAY | |
| | | 1 | **124-9637** | 1 | LOCK-MINIFUSE | |
| | | 1 | **116-4158** | 1 | LOCK-RELAY & FUSE | |
| | | 1 | **8T-8729** | 8 | PIN-CONNECTOR (16-GA TO 18-GA) | |
| | | 1 | **9W-0852** | 11 | PIN-CONNECTOR (14-GA TO 16-GA) | |
| | | 1 | **9X-3401** | 8 | PIN-CONNECTOR (16-GA TO 18-GA) | |
| | | | | | -OR- | |
| | | 1 | **126-1767** | 8 | PIN-CONNECTOR (14-GA TO 16-GA) | |
| | | 1 | **275-6785** | 1 | PLUG AS-CONNECTOR | |
| | | 1 | **147-1444** | 1 | PLUG AS-CONNECTOR (70-PIN) | |
| | | 1 | **159-9322** | 1 | SEAL-O-RING | |
| | | 1 | **155-2270** | 8 | KIT-CONNECTING PLUG (2-PIN) | |
| | | 1 | **155-2274** | 2 | KIT-CONNECTING PLUG (6-PIN) | |

*370-5349* **WIRING GP-CONSOLE (*contd.*)** **i05209228**

| NOTE | REF NO | GRAPHIC REF | PART NUMBER | QTY | PART NAME 1 2 3 4 5 6 (PRODUCT LEVEL) | SEE PAGE |
|---|---|---|---|---|---|---|
| | | | | | (EACH PLUG KIT INCLUDES PLUG AS, WEDGE & INTERFACE SEAL) | |
| | | 1 | **230-4009** | 1 | PLUG AS-CONNECTOR (12-PIN) | |
| | | 1 | **264-7034** | 1 | SEAL-CONNECTOR | |
| | | 1 | **230-4011** | 3 | PLUG AS-CONNECTOR (2-PIN) | |
| | | | | | (EACH INCLUDES) | |
| | | 1 | **264-7029** | 1 | SEAL-CONNECTOR | |
| | | 1 | **230-5008** | 3 | PLUG AS-CONNECTOR (4-PIN) | |
| | | | | | (EACH INCLUDES) | |
| | | 1 | **264-7031** | 1 | SEAL-CONNECTOR | |
| | | 1 | **230-5010** | 2 | PLUG AS-CONNECTOR (6-PIN) | |
| | | | | | (EACH INCLUDES) | |
| | | 1 | **264-7032** | 1 | SEAL-CONNECTOR | |
| | | 1 | **379-0830** | 1 | PLUG AS-CONNECTOR | |
| | | 1 | **174-3016** | 1 | PLUG AS-CONNECTOR (3-PIN) | |
| | | 1 | **8T-8737** | 49 | PLUG-SEAL | |
| | | 1 | **110-9198** | 5 | PLUG-SEAL | |
| | | 1 | **340-2566** | 23 | PLUG-SEAL | |
| | | 1 | **102-8803** | 1 | KIT-RECEPTACLE (3-PIN) | |
| | | | | | (INCLUDES RECEPTACLE AS & WEDGE) | |
| | | 1 | **243-4505** | 1 | RECEPTACLE AS-CONNECTOR (2-PIN) | |
| | | 1 | **243-4510** | 2 | RECEPTACLE AS-CONNECTOR (12-PIN) | |
| | | 1 | **9W-1951** | 1 | RECEPTACLE-CONNECTOR (9-PIN) | |
| | | 1 | **8T-8730** | 87 | SOCKET-CONNECTOR (16-GA TO 18-GA) | |
| | | 1 | **9W-0844** | 13 | SOCKET-CONNECTOR (14-GA TO 16-GA) | |
| | | 1 | **9X-3402** | 2 | SOCKET-CONNECTOR (16-GA TO 18-GA) | |
| | | | | | -OR- | |
| | | 1 | **126-1768** | 2 | SOCKET-CONNECTOR (14-GA TO 16-GA) | |
| | | 1 | **167-3593** | 1 | STRAP | |
| | | 1 | **3S-2093** | 13 | STRAP-CABLE | |
| | | 1 | **122-4401** | 5 | TERMINAL | |
| | | 1 | **363-9173** | 4 | TERMINAL (14-GA TO 18-GA) | |
| | | 1 | **2L-8079** | 1 | TERMINAL-RING (14-GA TO 16-GA, 3/8-IN SCREW) | |
| | | | | | —OR— | |
| | | 1 | **3T-4696** | 1 | TERMINAL-RING (10-GA TO 12-GA, 7/16-IN SCREW) | |
| | | 1 | **3T-4693** | 2 | TERMINAL-RING (8-GA, 7/16-IN SCREW) | |
| | | | | | —OR— | |
| | | 1 | **3T-4696** | 2 | TERMINAL-RING (10-GA TO 12-GA, 7/16-IN SCREW) | |
| | | 1 | **112-9604** | 6 | TERMINAL-BLADE (16-GA TO 18-GA) | |
| | | 1 | **112-9611** | 18 | TERMINAL-BLADE | |
| | | 1 | **112-9612** | 20 | TERMINAL-BLADE | |
| | | 1 | **116-4160** | 4 | TERMINAL-BLADE (12-GA TO 14-GA) | |
| | | 1 | **116-4161** | 11 | TERMINAL-BLADE (16-GA TO 18-GA) | |
| | | 1 | **113-5099** | 2 | TERMINAL-BUS | |
| | | 1 | **113-5100** | 3 | TERMINAL-BUS | |
| | | 1 | **153-2631** | 3 | TERMINAL (FEMALE) | |
| | | 1 | **3E-9179** | 7 | TERMINAL-RECEPTACLE (14-GA TO 18-GA) | |
| E | | 1 | **125-7874** | | TUBE-HEAT SHRINK (5.72-MM DIA) (120-CM) | |
| | 22 | 1 | **376-8858** | 1 | MONITOR GP-OPERATOR (CAB CONSOLE) | |
| | | 1 | **392-4768** | 1 | SOFTWARE GP-MONITOR | |
| M | 23 | 1 | **095-0742** | 2 | SCREW-MACHINE (M6X1X16-MM) | |
| M | 24 | 1 | **096-9278** | 3 | SCREW-PAN HEAD | |
| | 25 | 1 | **132-5789** | 2 | CLIP | |
| M | 26 | 1 | **9X-2044** | 2 | SCREW-TRUSS HEAD (M6X1X16-MM) | |
| | 27 | 1 | **277-1873** | 1 | CLIP | |
| M | 28 | 1 | **5C-9553** | 4 | BOLT (M6X1X16-MM) | |
| M | 29 | 1 | **7I-2272** | 2 | BOLT (M5X0.8X12-MM) | |
| | 30 | 1 | **8T-0328** | 2 | WASHER-HARD (5.5X10X1-MM THK) | |
| | 31 | 1 | **8T-4121** | 6 | WASHER-HARD (11X21X2.5-MM THK) | |
| M | 32 | 1 | **8T-4137** | 2 | BOLT (M10X1.5X20-MM) | |

*370-5349* **WIRING GP-CONSOLE (*contd.*)** **i05209228**

| NOTE | REF NO | GRAPHIC REF | PART NUMBER | QTY | PART NAME 1 2 3 4 5 6 (PRODUCT LEVEL) | SEE PAGE |
|---|---|---|---|---|---|---|
| M | 33 | 1 | **8T-4191** | 4 | BOLT (M10X1.5X16-MM) | |
| M | 34 | 1 | **8T-4200** | 2 | BOLT (M8X1.25X16-MM) | |
| | 35 | 1 | **8T-4224** | 2 | WASHER-HARD (8.8X16X2-MM THK) | |
| M | 36 | 1 | **8T-4970** | 1 | BOLT (M6X1X14-MM) | |
| | 37 | 1 | **9X-8256** | 5 | WASHER (6.6X12X2-MM THK) | |
| E | 38 | 1 | **103-2543** | | SEAL (3-CM) | |

E - ORDER BY THE CENTIMETER
J - REQUIRES CORPORATE KEY
M - METRIC PART
Y - SEPARATE ILLUSTRATION

*370-5349* **WIRING GP-CONSOLE (*contd.*)** **i05209228**

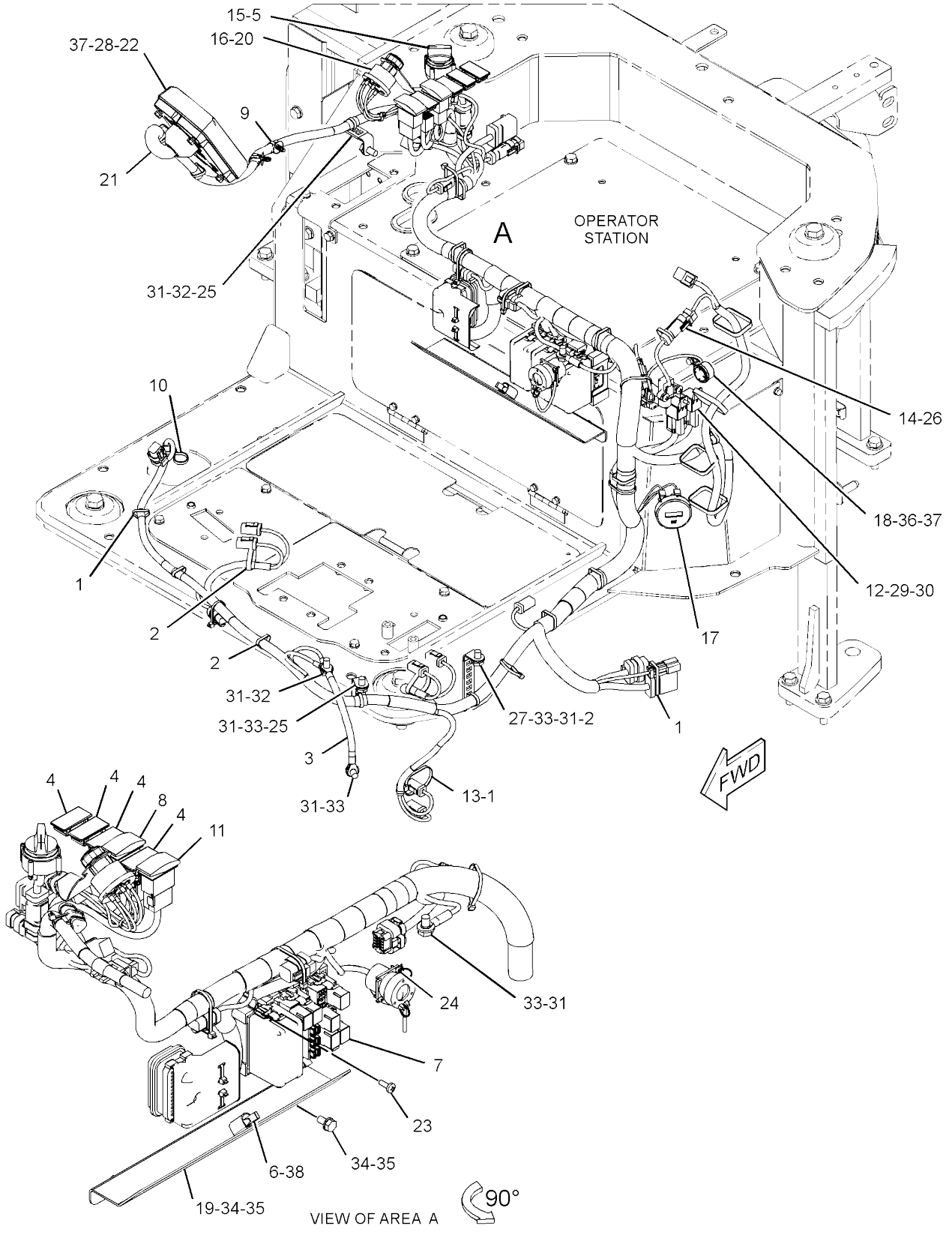


GRAPHIC #1 **<END>** g03404261

# *370-5349* WIRING GP-CONSOLE–CAB

**S/N: RKY1442-UP**

**PART OF 376-6692, 376-6696, 383-5927, 383-5928 CAB AR**

**AN ATTACHMENT**

**SMCS-1408** **i05384839**

| NOTE | REF NO | GRAPHIC REF | PART NUMBER | QTY | PART NAME 1 2 3 4 5 6 (PRODUCT LEVEL) | SEE PAGE |
|---|---|---|---|---|---|---|
| | 1 | 1 | **3S-2093** | 8 | STRAP-CABLE | |
| | 2 | 1 | **7K-1181** | 22 | STRAP-CABLE | |
| | 3 | 1 | **8X-5804** | 1 | STRAP AS-GROUND | |
| | 4 | 1 | **109-2356** | 4 | PLUG | |
| | 5 | 1 | **110-6109** | 1 | KNOB-CONTROL (FLOW CONTROL SWITCH) | |
| | 6 | 1 | **116-7471** | 1 | PULLER-MINIFUSE | |
| | 7 | 1 | **140-9378** | 6 | RELAY AS (12-VOLT) | |
| | 8 | 1 | **158-7802** | 1 | SWITCH AS-ROCKER (WINDOW WASHER, WIPER) | |
| | | 1 | **111-7899** | 1 | GASKET | |
| | 9 | 1 | **163-6795** | 3 | STRAP-CABLE | |
| | 10 | 1 | **204-1611** | 1 | STRAP-CABLE (DUAL) | |
| | 11 | 1 | **266-1404** | 1 | SWITCH AS-ROCKER (LIGHT) | |
| | | 1 | **111-7899** | 1 | GASKET | |
| | 12 | 1 | **266-6935** | 2 | RELAY AS (12-VOLT) | |
| | 13 | 1 | **266-7379** | 1 | STRAP-CABLE | |
| | 14 | 1 | **267-7058** | 1 | SWITCH AS-LIMIT (HYDRAULIC LOCKOUT) | |
| | | 1 | **8T-8729** | 2 | PIN-CONNECTOR (16-GA TO 18-GA) | |
| | | 1 | **243-4505** | 1 | RECEPTACLE AS-CONNECTOR (2-PIN) | |
| Y | 15 | 1 | **319-4420** | 1 | SWITCH GP-ROTARY (THROTTLE POSITION) | 97 |
| J | 16 | 1 | **322-8964** | 1 | SWITCH AS-START (ENGINE) | |
| | | 1 | **7T-6799** | 1 | NUT-MOUNTING (1-32-THD) | |
| | | 1 | **8T-8729** | 4 | PIN-CONNECTOR (16-GA TO 18-GA) | |
| | | 1 | **243-4507** | 1 | RECEPTACLE AS-CONNECTOR (4-PIN) | |
| | 17 | 1 | **366-4622** | 1 | KIT-SERVICE METER (INCLUDES SERVICE METER & FILM) | |
| | 18 | 1 | **364-3882** | 1 | BUZZER (12-VOLT) | |
| | 19 | 1 | **370-5353** | 1 | BRACKET | |
| | 20 | 1 | **370-5354** | 1 | PLATE AS | |
| CY | 21 | 1 | **425-7014** | 1 | HARNESS AS-CONSOLE (CAB) | 83 |
| | 22 | 1 | **376-8858** | 1 | MONITOR GP-OPERATOR (CAB CONSOLE) | |
| | | 1 | **392-4768** | 1 | SOFTWARE GP-MONITOR | |
| M | 23 | 1 | **095-0742** | 2 | SCREW-MACHINE (M6X1X16-MM) | |
| M | 24 | 1 | **096-9278** | 3 | SCREW-PAN HEAD | |
| | 25 | 1 | **132-5789** | 2 | CLIP | |
| M | 26 | 1 | **9X-2044** | 2 | SCREW-TRUSS HEAD (M6X1X16-MM) | |
| | 27 | 1 | **277-1873** | 1 | CLIP | |
| M | 28 | 1 | **5C-9553** | 4 | BOLT (M6X1X16-MM) | |
| M | 29 | 1 | **7I-2272** | 2 | BOLT (M5X0.8X12-MM) | |
| | 30 | 1 | **8T-0328** | 2 | WASHER-HARD (5.5X10X1-MM THK) | |
| | 31 | 1 | **8T-4121** | 6 | WASHER-HARD (11X21X2.5-MM THK) | |
| M | 32 | 1 | **8T-4137** | 2 | BOLT (M10X1.5X20-MM) | |
| M | 33 | 1 | **8T-4191** | 4 | BOLT (M10X1.5X16-MM) | |
| M | 34 | 1 | **8T-4200** | 2 | BOLT (M8X1.25X16-MM) | |
| | 35 | 1 | **8T-4224** | 2 | WASHER-HARD (8.8X16X2-MM THK) | |
| M | 36 | 1 | **8T-4970** | 1 | BOLT (M6X1X14-MM) | |
| | 37 | 1 | **9X-8256** | 5 | WASHER (6.6X12X2-MM THK) | |
| E | 38 | 1 | **103-2543** | | SEAL (3-CM) | |

C - CHANGE FROM PREVIOUS TYPE
E - ORDER BY THE CENTIMETER
J - REQUIRES CORPORATE KEY
M - METRIC PART
Y - SEPARATE ILLUSTRATION

*370-5349* **WIRING GP-CONSOLE (*contd.*)** **i05384839**

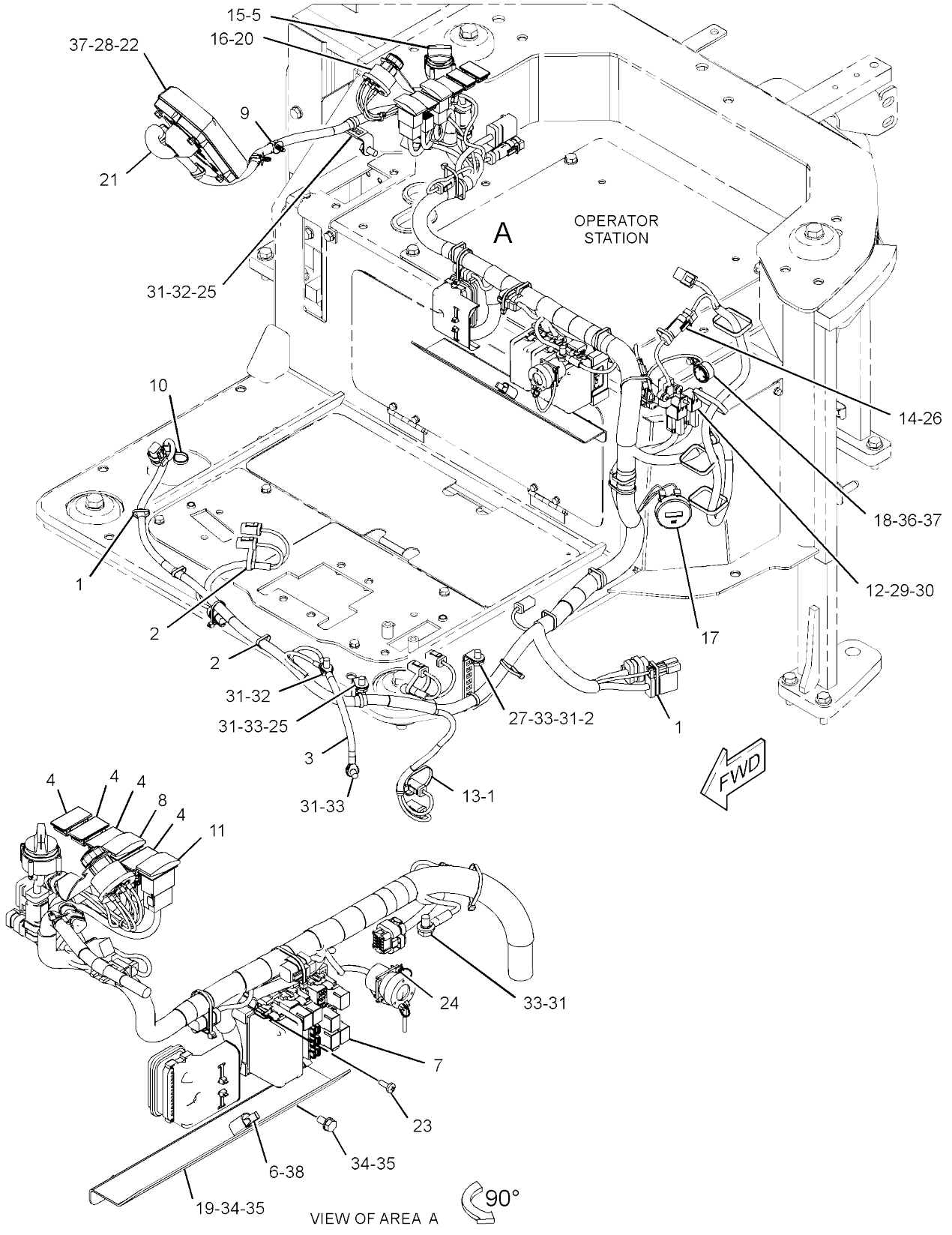


GRAPHIC #1 **<END>** g03404261

# 370-5350 WIRING GP-CONSOLE–CANOPY

**S/N: RKY1-1441**

**PART OF 377-8933, 383-5929 CANOPY AR**

**AN ATTACHMENT**

**SMCS-1408** **i05437152**

| NOTE | REF NO | GRAPHIC REF | PART NUMBER | QTY | PART NAME 1 2 3 4 5 6 (PRODUCT LEVEL) | SEE PAGE |
|---|---|---|---|---|---|---|
| | 1 | 1 | **3S-2093** | 8 | STRAP-CABLE | |
| | 2 | 1 | **7K-1181** | 21 | STRAP-CABLE | |
| | 3 | 1 | **8X-5804** | 1 | STRAP AS-GROUND | |
| | 4 | 1 | **109-2356** | 5 | PLUG | |
| | 5 | 1 | **110-6109** | 1 | KNOB-CONTROL (THROTTLE) | |
| | 6 | 1 | **116-7471** | 1 | PULLER-MINIFUSE | |
| | 7 | 1 | **140-9378** | 6 | RELAY AS (12-VOLT) | |
| | 8 | 1 | **163-6795** | 3 | STRAP-CABLE | |
| | 9 | 1 | **266-1404** | 1 | SWITCH AS-ROCKER (LIGHT) | |
| | | 1 | **111-7899** | 1 | GASKET | |
| | 10 | 1 | **266-6935** | 1 | RELAY AS (12-VOLT) | |
| | 11 | 1 | **266-7379** | 1 | STRAP-CABLE | |
| | 12 | 1 | **267-7058** | 1 | SWITCH AS-LIMIT (HYDRAULIC LOCKOUT) | |
| | | 1 | **8T-8729** | 2 | PIN-CONNECTOR (16-GA TO 18-GA) | |
| | | 1 | **243-4505** | 1 | RECEPTACLE AS-CONNECTOR (2-PIN) | |
| | 13 | 1 | **306-9039** | 1 | COVER AS-PROTECTION | |
| Y | 14 | 1 | **319-4420** | 1 | SWITCH GP-ROTARY (THROTTLE POSITION) | 97 |
| J | 15 | 1 | **322-8964** | 1 | SWITCH AS-START (ENGINE) | |
| | | 1 | **7T-6799** | 1 | NUT-MOUNTING (1-32-THD) | |
| | | 1 | **8T-8729** | 4 | PIN-CONNECTOR (16-GA TO 18-GA) | |
| | | 1 | **243-4507** | 1 | RECEPTACLE AS-CONNECTOR (4-PIN) | |
| | 16 | 1 | **366-4622** | 1 | KIT-SERVICE METER | |
| | | | | | (INCLUDES SERVICE METER & FILM) | |
| | 17 | 1 | **364-3882** | 1 | BUZZER (12-VOLT) | |
| | 18 | 1 | **370-5353** | 1 | BRACKET | |
| | 19 | 1 | **370-5354** | 1 | PLATE AS | |
| | 20 | 1 | **370-5369** | 1 | HARNESS AS-CONSOLE (CANOPY) | |
| | | 1 | **116-4159** | 1 | BASE | |
| | | 1 | **112-9609** | 1 | BLOCK-MICRORELAY | |
| | | 1 | **124-9636** | 1 | BLOCK-MINIFUSE | |
| | | 1 | **116-4157** | 1 | BLOCK-RELAY & FUSE | |
| | | 1 | **8C-6354** | 1 | CAP-RECEPTACLE (ET CONNECTOR) | |
| | | 1 | **111-7898** | 2 | CONNECTOR | |
| | | 1 | **153-2602** | 3 | RECEPTACLE-CONNECTOR (1-PIN) | |
| | | 1 | **126-1774** | 1 | COVER-CONNECTOR | |
| | | 1 | **113-8490** | 8 | FUSE (10-AMPERE) | |
| | | 1 | **113-8491** | 4 | FUSE (15-AMPERE) | |
| | | 1 | **113-8492** | 1 | FUSE (20-AMPERE) | |
| | | 1 | **124-3548** | 2 | FUSE (30-AMPERE) | |
| | | 1 | **141-2759** | 3 | FUSE (5-AMPERE) | |
| | | 1 | **128-2032** | 6 | LATCH | |
| | | 1 | **112-9610** | 2 | LOCK-MICRORELAY | |
| | | 1 | **124-9637** | 1 | LOCK-MINIFUSE | |
| | | 1 | **116-4158** | 1 | LOCK-RELAY & FUSE | |
| | | 1 | **8T-8729** | 6 | PIN-CONNECTOR (16-GA TO 18-GA) | |
| | | 1 | **9W-0852** | 5 | PIN-CONNECTOR (14-GA TO 16-GA) | |
| | | 1 | **9X-3401** | 8 | PIN-CONNECTOR (16-GA TO 18-GA) | |
| | | | | | –OR– | |
| | | 1 | **126-1767** | 8 | PIN-CONNECTOR (14-GA TO 16-GA) | |
| | | 1 | **275-6785** | 1 | PLUG AS-CONNECTOR | |
| | | 1 | **147-1444** | 1 | PLUG AS-CONNECTOR (70-PIN) | |
| | | 1 | **155-2270** | 8 | KIT-CONNECTING PLUG (2-PIN) | |
| | | 1 | **155-2274** | 2 | KIT-CONNECTING PLUG (6-PIN) | |
| | | | | | (EACH PLUG KIT INCLUDES PLUG AS, WEDGE & INTERFACE SEAL) | |
| | | 1 | **230-4009** | 1 | PLUG AS-CONNECTOR (12-PIN) | |

*370-5350* **WIRING GP-CONSOLE (*contd.*)** **i05437152**

| NOTE | REF NO | GRAPHIC REF | PART NUMBER | QTY | PART NAME 1 2 3 4 5 6 (PRODUCT LEVEL) | SEE PAGE |
|---|---|---|---|---|---|---|
| | | 1 | **264-7034** | 1 | SEAL-CONNECTOR | |
| | | 1 | **230-4011** | 3 | PLUG AS-CONNECTOR (2-PIN) | |
| | | | | | (EACH INCLUDES) | |
| | | 1 | **264-7029** | 1 | SEAL-CONNECTOR | |
| | | 1 | **230-4013** | 1 | PLUG AS-CONNECTOR (3-PIN) | |
| | | 1 | **264-7030** | 1 | SEAL-CONNECTOR | |
| | | 1 | **230-5008** | 2 | PLUG AS-CONNECTOR (4-PIN) | |
| | | | | | (EACH INCLUDES) | |
| | | 1 | **264-7031** | 1 | SEAL-CONNECTOR | |
| | | 1 | **230-5010** | 2 | PLUG AS-CONNECTOR (6-PIN) | |
| | | | | | (EACH INCLUDES) | |
| | | 1 | **264-7032** | 1 | SEAL-CONNECTOR | |
| | | 1 | **379-0830** | 1 | PLUG AS-CONNECTOR | |
| | | 1 | **174-3016** | 1 | PLUG AS-CONNECTOR (3-PIN) | |
| | | 1 | **8T-8737** | 51 | PLUG-SEAL | |
| | | 1 | **110-9198** | 5 | PLUG-SEAL | |
| | | 1 | **340-2566** | 23 | PLUG-SEAL | |
| | | 1 | **102-8803** | 1 | KIT-RECEPTACLE (3-PIN) | |
| | | | | | (INCLUDES RECEPTACLE AS & WEDGE) | |
| | | 1 | **243-4505** | 1 | RECEPTACLE AS-CONNECTOR (2-PIN) | |
| | | 1 | **243-4506** | 1 | RECEPTACLE AS-CONNECTOR (3-PIN) | |
| | | 1 | **243-4510** | 1 | RECEPTACLE AS-CONNECTOR (12-PIN) | |
| | | 1 | **9W-1951** | 1 | RECEPTACLE-CONNECTOR (9-PIN) | |
| | | 1 | **8T-8730** | 86 | SOCKET-CONNECTOR (16-GA TO 18-GA) | |
| | | 1 | **9W-0844** | 10 | SOCKET-CONNECTOR (14-GA TO 16-GA) | |
| | | 1 | **9X-3402** | 2 | SOCKET-CONNECTOR (16-GA TO 18-GA) | |
| | | | | | —OR— | |
| | | 1 | **126-1768** | 2 | SOCKET-CONNECTOR (14-GA TO 16-GA) | |
| | | 1 | **340-2567** | 11 | WIRE AS | |
| | | 1 | **167-3593** | 1 | STRAP | |
| | | 1 | **3S-2093** | 12 | STRAP-CABLE | |
| | | 1 | **122-4401** | 2 | TERMINAL | |
| | | 1 | **363-9173** | 2 | TERMINAL (14-GA TO 18-GA) | |
| | | 1 | **2L-8079** | 1 | TERMINAL-RING (14-GA TO 16-GA, 3/8-IN SCREW) | |
| | | | | | —OR— | |
| | | 1 | **3T-4696** | 1 | TERMINAL-RING (10-GA TO 12-GA, 7/16-IN SCREW) | |
| | | 1 | **3T-4693** | 1 | TERMINAL-RING (8-GA, 7/16-IN SCREW) | |
| | | | | | —OR— | |
| | | 1 | **3T-4696** | 1 | TERMINAL-RING (10-GA TO 12-GA, 7/16-IN SCREW) | |
| | | 1 | **112-9604** | 6 | TERMINAL-BLADE (16-GA TO 18-GA) | |
| | | 1 | **112-9611** | 18 | TERMINAL-BLADE | |
| | | 1 | **112-9612** | 20 | TERMINAL-BLADE | |
| | | 1 | **116-4160** | 3 | TERMINAL-BLADE (12-GA TO 14-GA) | |
| | | 1 | **116-4161** | 9 | TERMINAL-BLADE (16-GA TO 18-GA) | |
| | | 1 | **113-5099** | 2 | TERMINAL-BUS | |
| | | 1 | **113-5100** | 2 | TERMINAL-BUS | |
| | | 1 | **153-2631** | 3 | TERMINAL (FEMALE) | |
| | | 1 | **3E-9179** | 3 | TERMINAL-RECEPTACLE (14-GA TO 18-GA) | |
| E | | 1 | **125-7874** | | TUBE-HEAT SHRINK (5.72-MM DIA) (110-CM) | |
| | 21 | 1 | **376-8858** | 1 | MONITOR GP-OPERATOR (CAB CONSOLE) | |
| | | 1 | **392-4768** | 1 | SOFTWARE GP-MONITOR | |
| M | 22 | 1 | **095-0742** | 2 | SCREW-MACHINE (M6X1X16-MM) | |
| M | 23 | 1 | **096-9278** | 3 | SCREW-PAN HEAD | |
| | 24 | 1 | **132-5789** | 2 | CLIP | |
| M | 25 | 1 | **9X-2044** | 2 | SCREW-TRUSS HEAD (M6X1X16-MM) | |
| | 26 | 1 | **277-1873** | 1 | CLIP | |
| M | 27 | 1 | **5C-9553** | 4 | BOLT (M6X1X16-MM) | |
| M | 28 | 1 | **7I-2272** | 1 | BOLT (M5X0.8X12-MM) | |
| | 29 | 1 | **8T-0328** | 1 | WASHER-HARD (5.5X10X1-MM THK) | |

*370-5350* **WIRING GP-CONSOLE (*contd.*)** **i05437152**

| NOTE | REF NO | GRAPHIC REF | PART NUMBER | QTY | PART NAME 1 2 3 4 5 6 (PRODUCT LEVEL) | SEE PAGE |
|---|---|---|---|---|---|---|
| | 30 | 1 | **8T-4121** | 6 | WASHER-HARD (11X21X2.5-MM THK) | |
| M | 31 | 1 | **8T-4137** | 2 | BOLT (M10X1.5X20-MM) | |
| M | 32 | 1 | **8T-4191** | 4 | BOLT (M10X1.5X16-MM) | |
| M | 33 | 1 | **8T-4200** | 2 | BOLT (M8X1.25X16-MM) | |
| | 34 | 1 | **8T-4224** | 2 | WASHER-HARD (8.8X16X2-MM THK) | |
| M | 35 | 1 | **8T-4970** | 1 | BOLT (M6X1X14-MM) | |
| | 36 | 1 | **9X-8256** | 5 | WASHER (6.6X12X2-MM THK) | |
| E | 37 | 1 | **103-2543** | | SEAL (3-CM) | |

E - ORDER BY THE CENTIMETER
J - REQUIRES CORPORATE KEY
M - METRIC PART
Y - SEPARATE ILLUSTRATION

*370-5350* **WIRING GP-CONSOLE (*contd.*)** **i05437152**

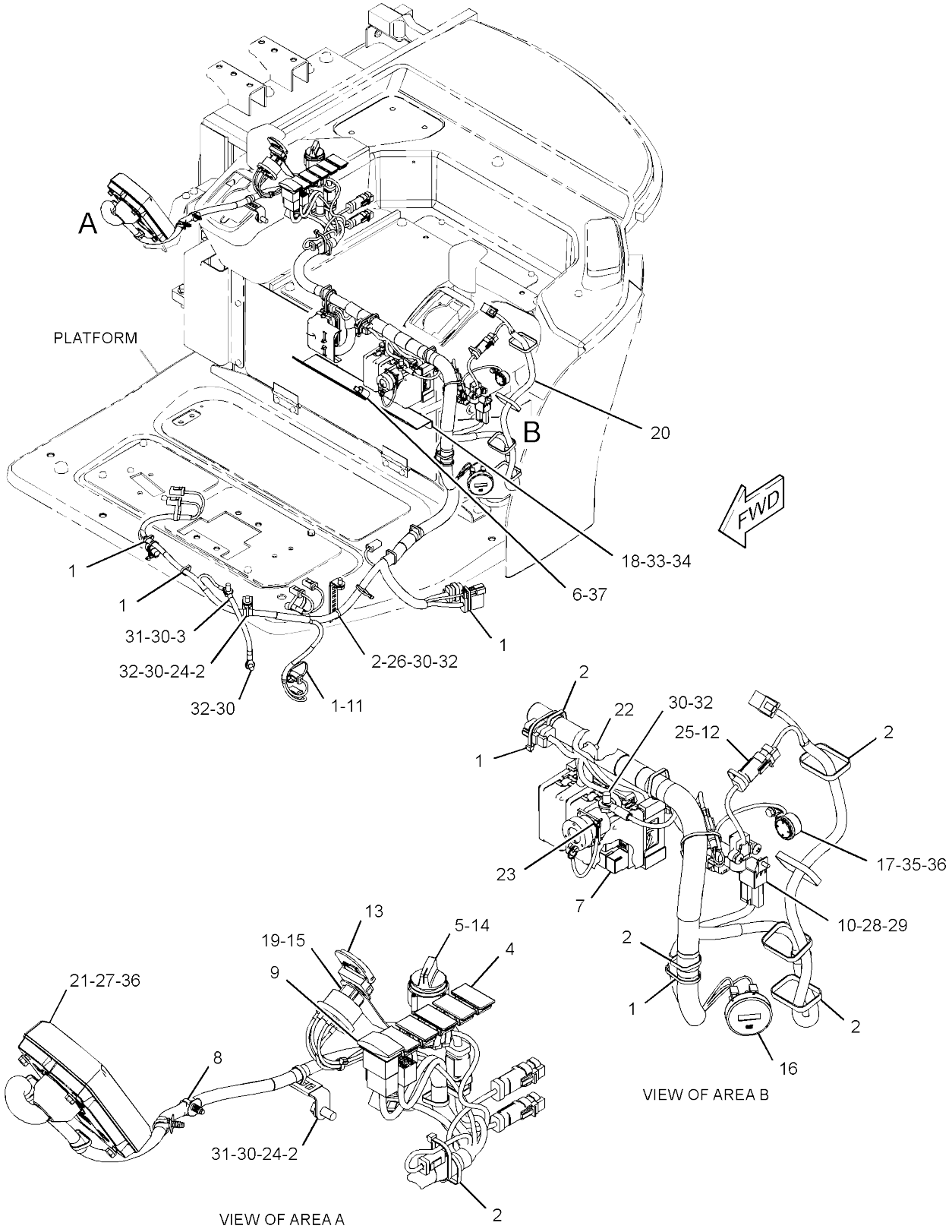


GRAPHIC #1 **<END>** g03404565

# 370-5350 WIRING GP-CONSOLE–CANOPY

**S/N: RKY1442-UP**
**PART OF 377-8933, 383-5929 CANOPY AR**
**AN ATTACHMENT**

**SMCS-1408** **i05437153**

| NOTE | REF NO | GRAPHIC REF | PART NUMBER | QTY | PART NAME 1 2 3 4 5 6 (PRODUCT LEVEL) | SEE PAGE |
|---|---|---|---|---|---|---|
| | 1 | 1 | **3S-2093** | 8 | STRAP-CABLE | |
| | 2 | 1 | **7K-1181** | 21 | STRAP-CABLE | |
| | 3 | 1 | **8X-5804** | 1 | STRAP AS-GROUND | |
| | 4 | 1 | **109-2356** | 5 | PLUG | |
| | 5 | 1 | **110-6109** | 1 | KNOB-CONTROL (THROTTLE) | |
| | 6 | 1 | **116-7471** | 1 | PULLER-MINIFUSE | |
| | 7 | 1 | **140-9378** | 6 | RELAY AS (12-VOLT) | |
| | 8 | 1 | **163-6795** | 3 | STRAP-CABLE | |
| | 9 | 1 | **266-1404** | 1 | SWITCH AS-ROCKER (LIGHT) | |
| | | 1 | **111-7899** | 1 | GASKET | |
| | 10 | 1 | **266-6935** | 1 | RELAY AS (12-VOLT) (MAIN) | |
| | 11 | 1 | **266-7379** | 1 | STRAP-CABLE | |
| | 12 | 1 | **267-7058** | 1 | SWITCH AS-LIMIT (HYDRAULIC LOCKOUT) | |
| | | 1 | **8T-8729** | 2 | PIN-CONNECTOR (16-GA TO 18-GA) | |
| | | 1 | **243-4505** | 1 | RECEPTACLE AS-CONNECTOR (2-PIN) | |
| | 13 | 1 | **306-9039** | 1 | COVER AS-PROTECTION | |
| Y | 14 | 1 | **319-4420** | 1 | SWITCH GP-ROTARY (THROTTLE POSITION) | 97 |
| J | 15 | 1 | **322-8964** | 1 | SWITCH AS-START (ENGINE) | |
| | | 1 | **7T-6799** | 1 | NUT-MOUNTING (1-32-THD) | |
| | | 1 | **8T-8729** | 4 | PIN-CONNECTOR (16-GA TO 18-GA) | |
| | | 1 | **243-4507** | 1 | RECEPTACLE AS-CONNECTOR (4-PIN) | |
| | 16 | 1 | **366-4622** | 1 | KIT-SERVICE METER | |
| | | | | | (INCLUDES SERVICE METER & FILM) | |
| | 17 | 1 | **364-3882** | 1 | BUZZER (12-VOLT) | |
| | 18 | 1 | **370-5353** | 1 | BRACKET | |
| | 19 | 1 | **370-5354** | 1 | PLATE AS | |
| CY | 20 | 1 | **425-7013** | 1 | HARNESS AS-CONSOLE (CANOPY) | 81 |
| | 21 | 1 | **376-8858** | 1 | MONITOR GP-OPERATOR (CAB CONSOLE) | |
| | | 1 | **392-4768** | 1 | SOFTWARE GP-MONITOR | |
| M | 22 | 1 | **095-0742** | 2 | SCREW-MACHINE (M6X1X16-MM) | |
| M | 23 | 1 | **096-9278** | 3 | SCREW-PAN HEAD | |
| | 24 | 1 | **132-5789** | 2 | CLIP | |
| M | 25 | 1 | **9X-2044** | 2 | SCREW-TRUSS HEAD (M6X1X16-MM) | |
| | 26 | 1 | **277-1873** | 1 | CLIP | |
| M | 27 | 1 | **5C-9553** | 4 | BOLT (M6X1X16-MM) | |
| M | 28 | 1 | **7I-2272** | 1 | BOLT (M5X0.8X12-MM) | |
| | 29 | 1 | **8T-0328** | 1 | WASHER-HARD (5.5X10X1-MM THK) | |
| | 30 | 1 | **8T-4121** | 6 | WASHER-HARD (11X21X2.5-MM THK) | |
| M | 31 | 1 | **8T-4137** | 2 | BOLT (M10X1.5X20-MM) | |
| M | 32 | 1 | **8T-4191** | 4 | BOLT (M10X1.5X16-MM) | |
| M | 33 | 1 | **8T-4200** | 2 | BOLT (M8X1.25X16-MM) | |
| | 34 | 1 | **8T-4224** | 2 | WASHER-HARD (8.8X16X2-MM THK) | |
| M | 35 | 1 | **8T-4970** | 1 | BOLT (M6X1X14-MM) | |
| | 36 | 1 | **9X-8256** | 5 | WASHER (6.6X12X2-MM THK) | |
| E | 37 | 1 | **103-2543** | | SEAL (3-CM) | |

C - CHANGE FROM PREVIOUS TYPE
E - ORDER BY THE CENTIMETER
J - REQUIRES CORPORATE KEY
M - METRIC PART
Y - SEPARATE ILLUSTRATION

*370-5350* **WIRING GP-CONSOLE (*contd.*)** **i05437153**

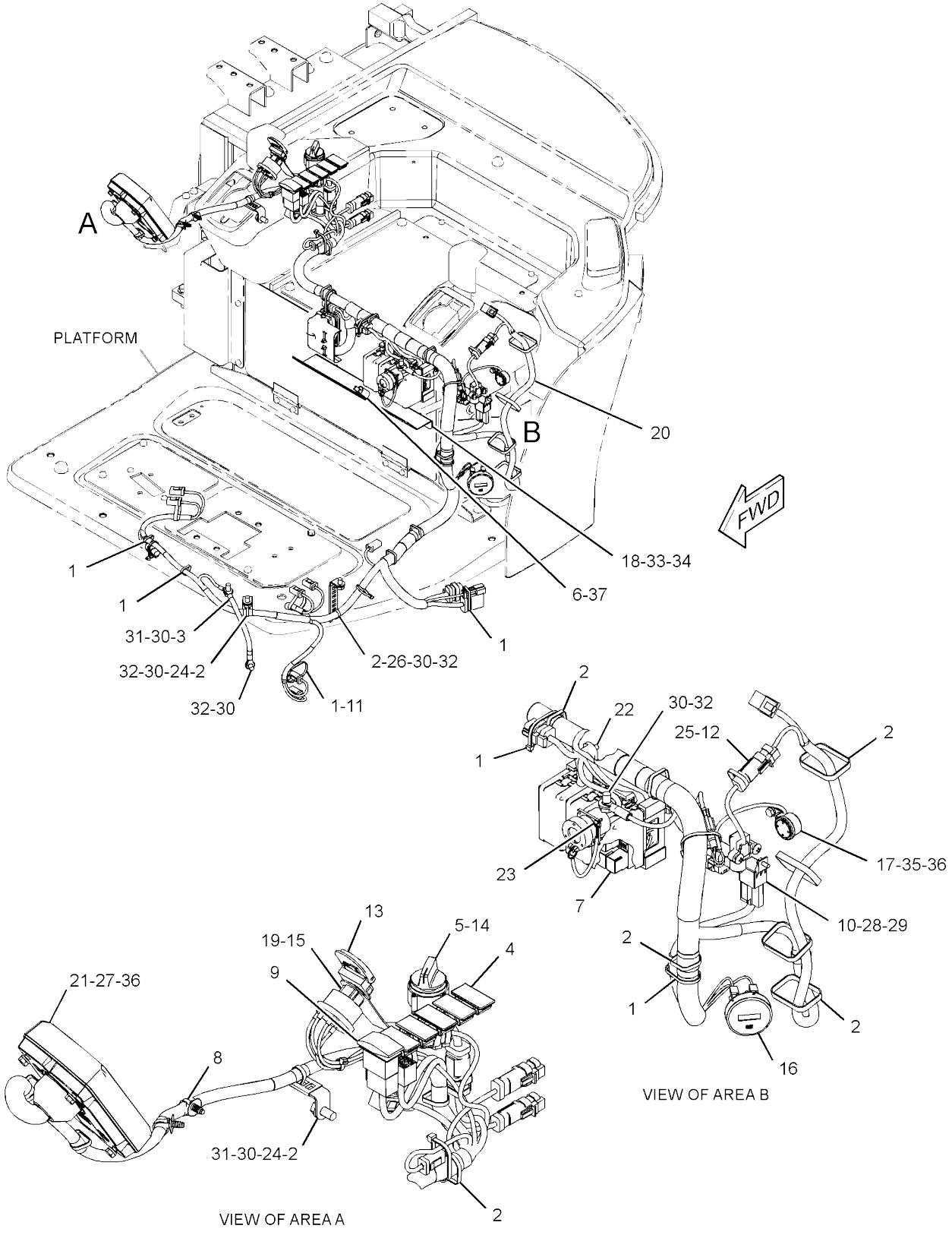


GRAPHIC #1 **<END>** g03404565

# *383-3163* WIRING GP-CONSOLE–POWER ANGLE

**PART OF 377-8930 BLADE AR-ANGLING**
**AN ATTACHMENT**

**SMCS-1408** **i05033720**

| NOTE | REF NO | GRAPHIC REF | PART NUMBER | QTY | PART NAME 1 2 3 4 5 6 (PRODUCT LEVEL) | SEE PAGE |
|---|---|---|---|---|---|---|
| | 1 | 1 | **3S-2093** | 13 | STRAP-CABLE | |
| | 2 | 1 | **7K-1181** | 1 | STRAP-CABLE | |
| | 3 | 1 | **204-1611** | 2 | STRAP-CABLE (DUAL) | |
| | 4 | 1 | **266-7379** | 2 | STRAP-CABLE | |
| Y | 5 | 1 | **383-3158** | 1 | HARNESS AS-SOLENOID (CAB, CANOPY) | 86 |
| Y | 6 | 1 | **383-3164** | 1 | HARNESS AS-CONTROL (CAB, CANOPY) | 85 |
| | 7 | 1 | **4P-7581** | 1 | CLIP | |

Y - SEPARATE ILLUSTRATION

*383-3163* **WIRING GP-CONSOLE (*contd.*)** **i05033720**

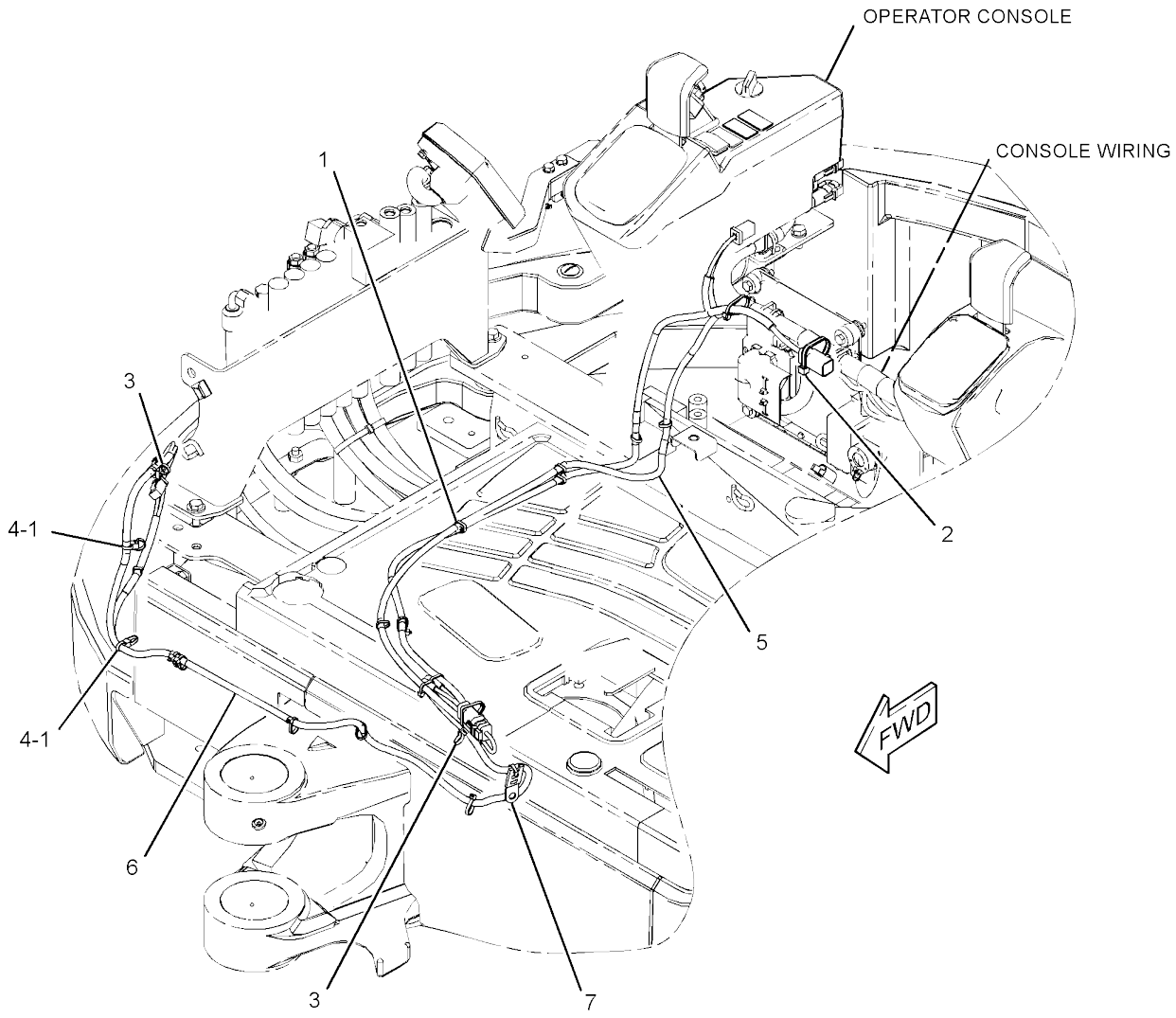


GRAPHIC #1 **<END>** g02799120

## *370-5348* WIRING GP-ENGINE–REFRIGERANT COMPRESSOR

**PART OF 376-6692, 383-5927 CAB AR**
**AN ATTACHMENT**

**SMCS-1408** **i04565437**

| NOTE | REF NO | GRAPHIC REF | PART NUMBER | QTY | PART NAME 1 2 3 4 5 6 (PRODUCT LEVEL) | SEE PAGE |
|---|---|---|---|---|---|---|
| | 1 | 1 | **3S-2093** | 1 | STRAP-CABLE | |
| | 2 | 1 | **189-3158** | 1 | SUPPRESSOR-ARC | |

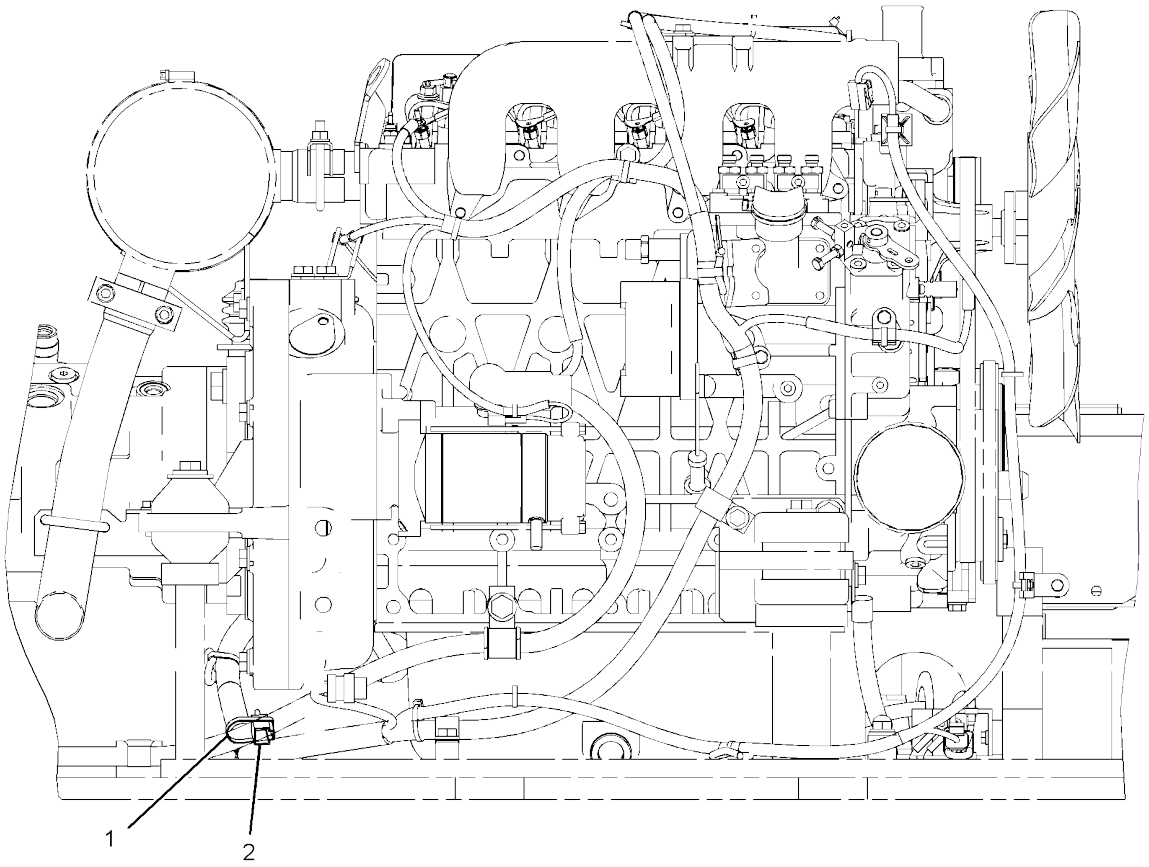


REAR VIEW

GRAPHIC #1 **<END>** g02786039

# *370-5351* WIRING GP-LIGHTING—WARNING BEACON, POWER RECEP

**PART OF 381-9239 WIRING GP-CAB**
**AN ATTACHMENT**

**SMCS-1408, 1429** **i04652870**

| NOTE | REF NO | GRAPHIC REF | PART NUMBER | QTY | PART NAME 1 2 3 4 5 6 (PRODUCT LEVEL) | SEE PAGE |
|---|---|---|---|---|---|---|
| | 1 | 1 | **3S-2093** | 4 | STRAP-CABLE | |
| | 2 | 1 | **163-6795** | 1 | STRAP-CABLE | |
| | 3 | 1 | **207-1686** | 1 | SOCKET | |
| | 4 | 1 | **266-7379** | 1 | STRAP-CABLE | |
| | 5 | 1 | **370-5370** | 1 | HARNESS AS-LIGHTING (WARNING BEACON, POWER RECEP) | |
| | | 1 | **230-4013** | 1 | PLUG AS-CONNECTOR (3-PIN) | |
| | | 1 | **264-7030** | 1 | SEAL-CONNECTOR | |
| | | 1 | **8T-8737** | 1 | PLUG-SEAL | |
| | | 1 | **9W-0844** | 2 | SOCKET-CONNECTOR (14-GA TO 16-GA) | |
| | | 1 | **5P-4571** | 2 | TERMINAL-BLADE (14-GA TO 16-GA) | |

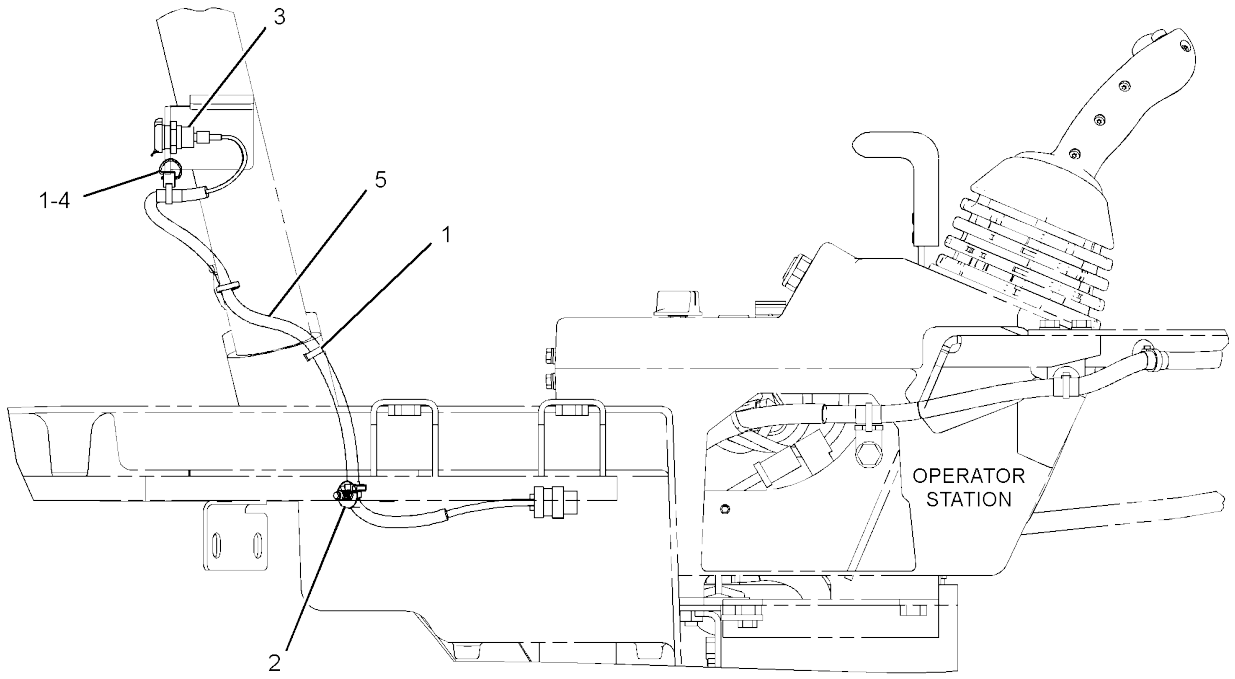


RIGHT SIDE VIEW

GRAPHIC #1 **<END>** g02791495

# *380-6303* WIRING GP-LIGHTING–BOOM

**PART OF 376-6680 BOOM AR**

**SMCS-1408, 1429** **i04728081**

| NOTE | REF NO | GRAPHIC REF | PART NUMBER | QTY | PART NAME 1 2 3 4 5 6 (PRODUCT LEVEL) | SEE PAGE |
|---|---|---|---|---|---|---|
| | 1 | 1 | **3S-2093** | 1 | STRAP-CABLE | |
| | 2 | 1 | **7K-1181** | 2 | STRAP-CABLE | |
| | 3 | 1 | **204-1611** | 3 | STRAP-CABLE (DUAL) | |
| | 4 | 1 | **370-5396** | 1 | HARNESS AS-LIGHTING | |
| E | | 1 | **103-2529** | | HOSE (167-CM) | |
| | | 1 | **9W-0852** | 1 | PIN-CONNECTOR (14-GA TO 16-GA) | |
| | | 1 | **8T-8729** | 1 | PIN-CONNECTOR (16-GA TO 18-GA) | |
| | | 1 | **243-4505** | 1 | RECEPTACLE AS-CONNECTOR (2-PIN) | |
| | | 1 | **2L-8075** | 2 | TERMINAL-RING (14-GA TO 16-GA, NO. 8 SCREW) | |
| | 5 | 1 | **4K-8302** | 1 | CLIP | |
| | 6 | 1 | **8T-4121** | 2 | WASHER-HARD (11X21X2.5-MM THK) | |
| M | 7 | 1 | **8T-4137** | 2 | BOLT (M10X1.5X20-MM) | |
| | 8 | 1 | **9M-8406** | 1 | CLIP | |

E - ORDER BY THE CENTIMETER
M - METRIC PART

*380-6303* **WIRING GP-LIGHTING (*contd.*)** **i04728081**

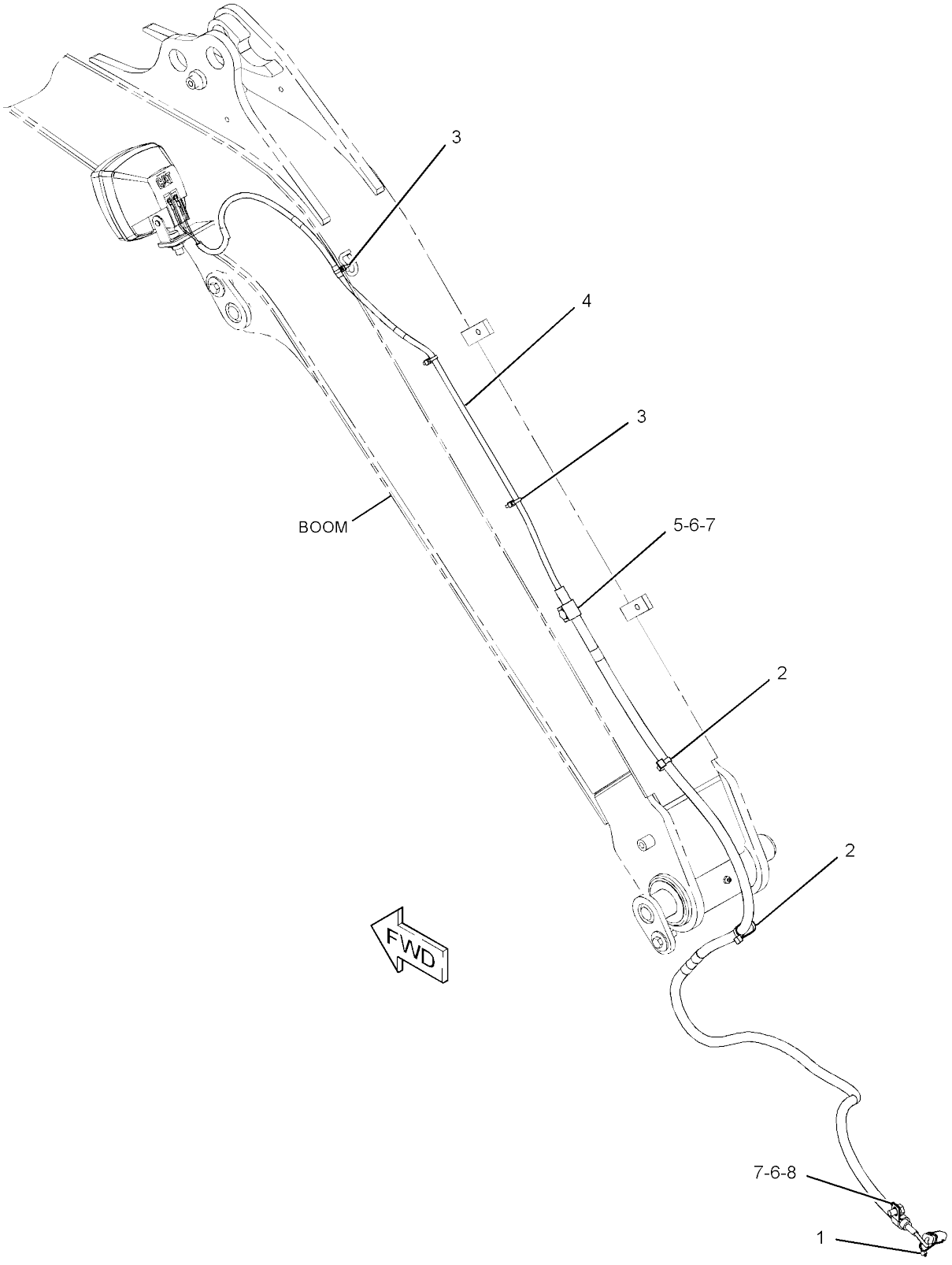


GRAPHIC #1 **<END>** g02858696

# *422-2948* WIRING GP-OVERLOAD WARNING

**PART OF 379-4720 LINES AR-BOOM**
**AN ATTACHMENT**

**SMCS-1408** **i05376430**

| NOTE | REF NO | GRAPHIC REF | PART NUMBER | QTY | PART NAME 1 2 3 4 5 6 (PRODUCT LEVEL) | SEE PAGE |
|---|---|---|---|---|---|---|
| | 1 | 1 | **3S-2093** | 7 | STRAP-CABLE | |
| | 2 | 1 | **204-1611** | 1 | STRAP-CABLE (DUAL) | |
| | 3 | 1 | **379-0817** | 1 | SWITCH AS-ROCKER (OVERLOAD WARNING) | |
| | | 1 | **111-7899** | 1 | GASKET | |
| Y | 4 | 1 | **422-2949** | 1 | HARNESS AS-SENSOR (OVERLOAD) | 85 |
| | 5 | 1 | **277-1873** | 1 | CLIP | |
| | 6 | 1 | **4K-8302** | 1 | CLIP | |
| | 7 | 1 | **4P-7581** | 1 | CLIP | |
| | 8 | 1 | **7X-7729** | 1 | WASHER (11X25X3-MM THK) | |
| | 9 | 1 | **8T-4121** | 1 | WASHER-HARD (11X21X2.5-MM THK) | |
| M | 10 | 1 | **8T-4137** | 2 | BOLT (M10X1.5X20-MM) | |

M - METRIC PART
Y - SEPARATE ILLUSTRATION

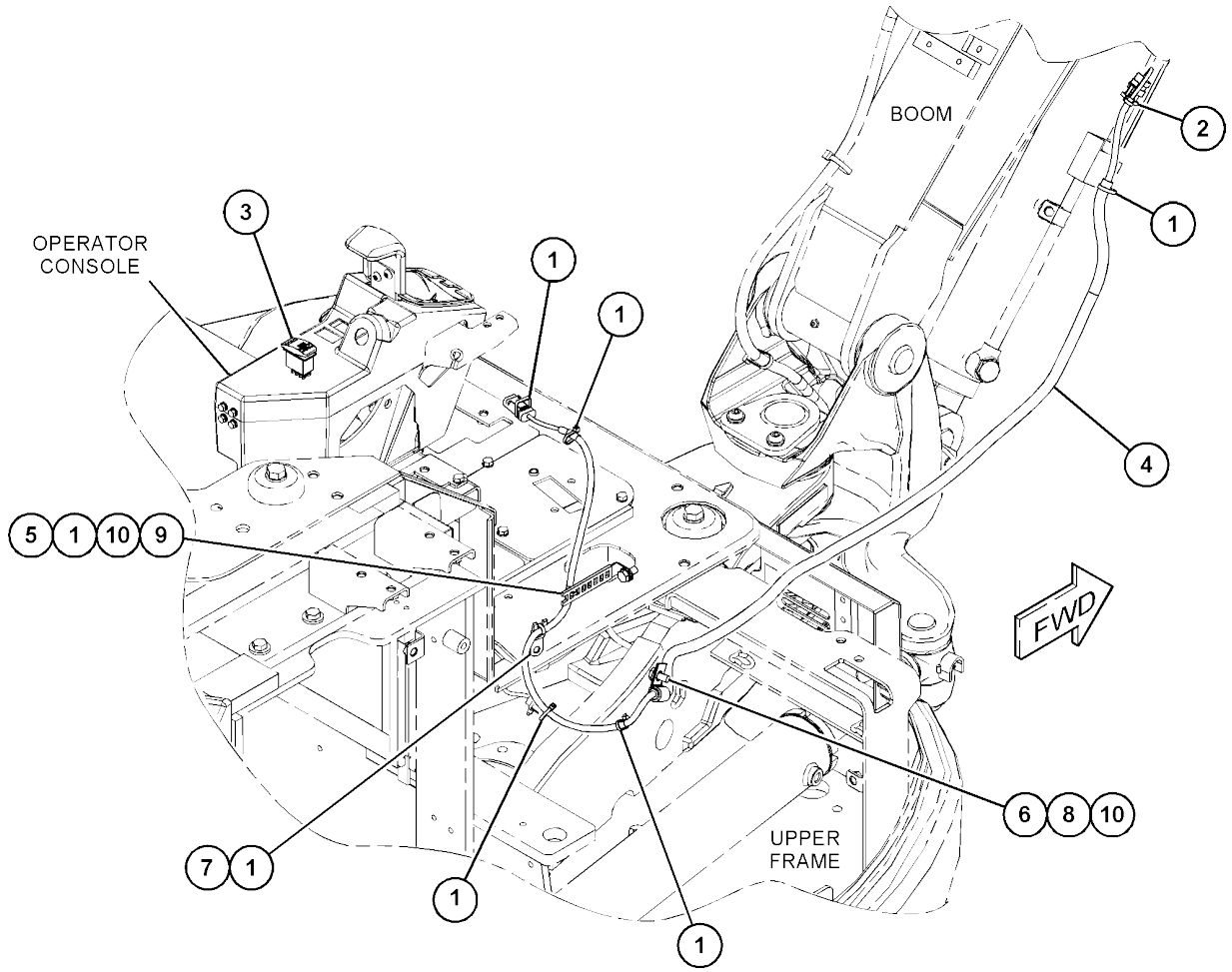


GRAPHIC #1 **<END>** g03405144

# *381-9235* WIRING GP-QUICK COUPLER

**PART OF 382-2543, 382-2544 CONTROL AR-COUPLER**
**AN ATTACHMENT**

**SMCS-1408, 6129** **i05437156**

| NOTE | REF NO | GRAPHIC REF | PART NUMBER | QTY | PART NAME 1 2 3 4 5 6 (PRODUCT LEVEL) | SEE PAGE |
|---|---|---|---|---|---|---|
| | 1 | 1 | **3S-2093** | 6 | STRAP-CABLE | |
| Y | 2 | 1 | **381-9236** | 1 | HARNESS AS-QUICK COUPLER | 85 |

Y - SEPARATE ILLUSTRATION

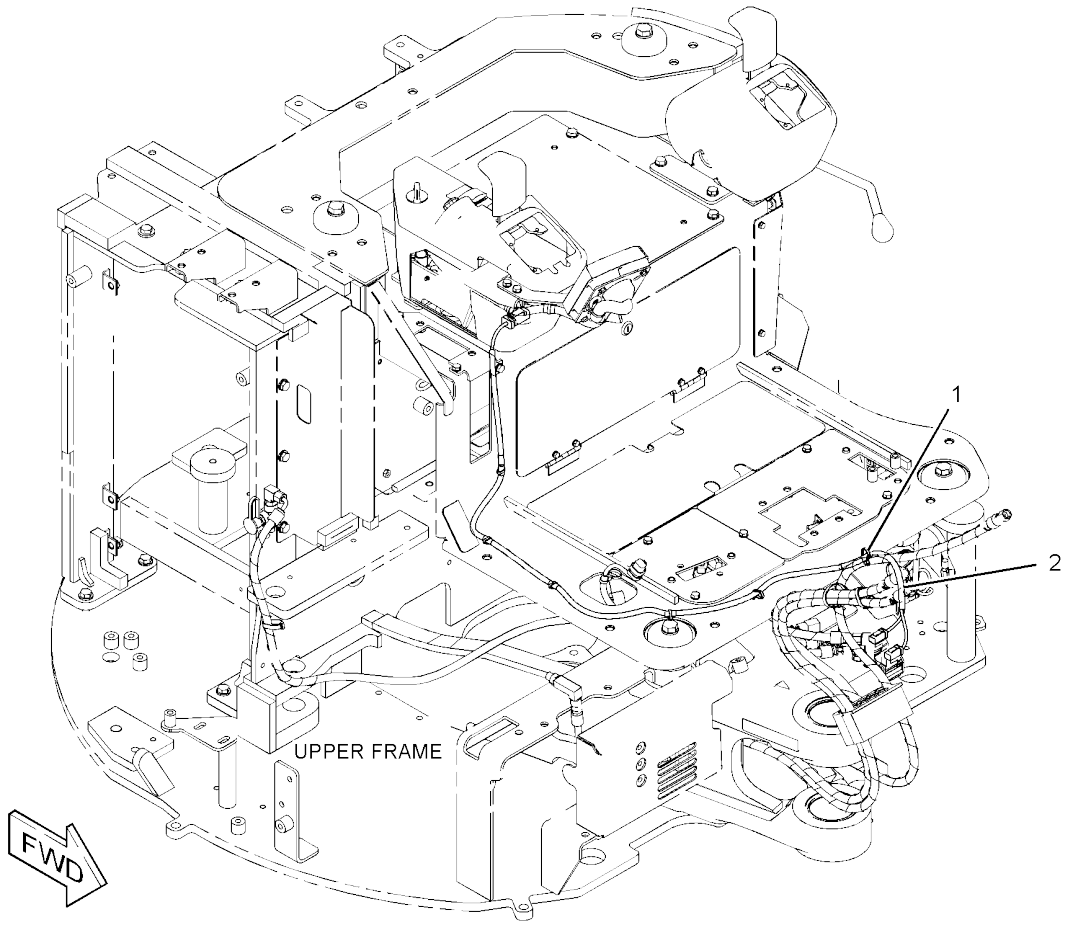


GRAPHIC #1 **<END>** g02777052

# *387-6389* WIRING GP-RELAY PANEL–PATTERN CHANGE

**PART OF 379-4724 CONTROL AR-AUXILIARY**
**AN ATTACHMENT**

**SMCS-1408, 1420, 1422** **i04623163**

| NOTE | REF NO | GRAPHIC REF | PART NUMBER | QTY | PART NAME 1 2 3 4 5 6 (PRODUCT LEVEL) | SEE PAGE |
|---|---|---|---|---|---|---|
| | 1 | 1 | **140-9378** | 1 | RELAY AS (12-VOLT) (PATTERN CHANGE) | |

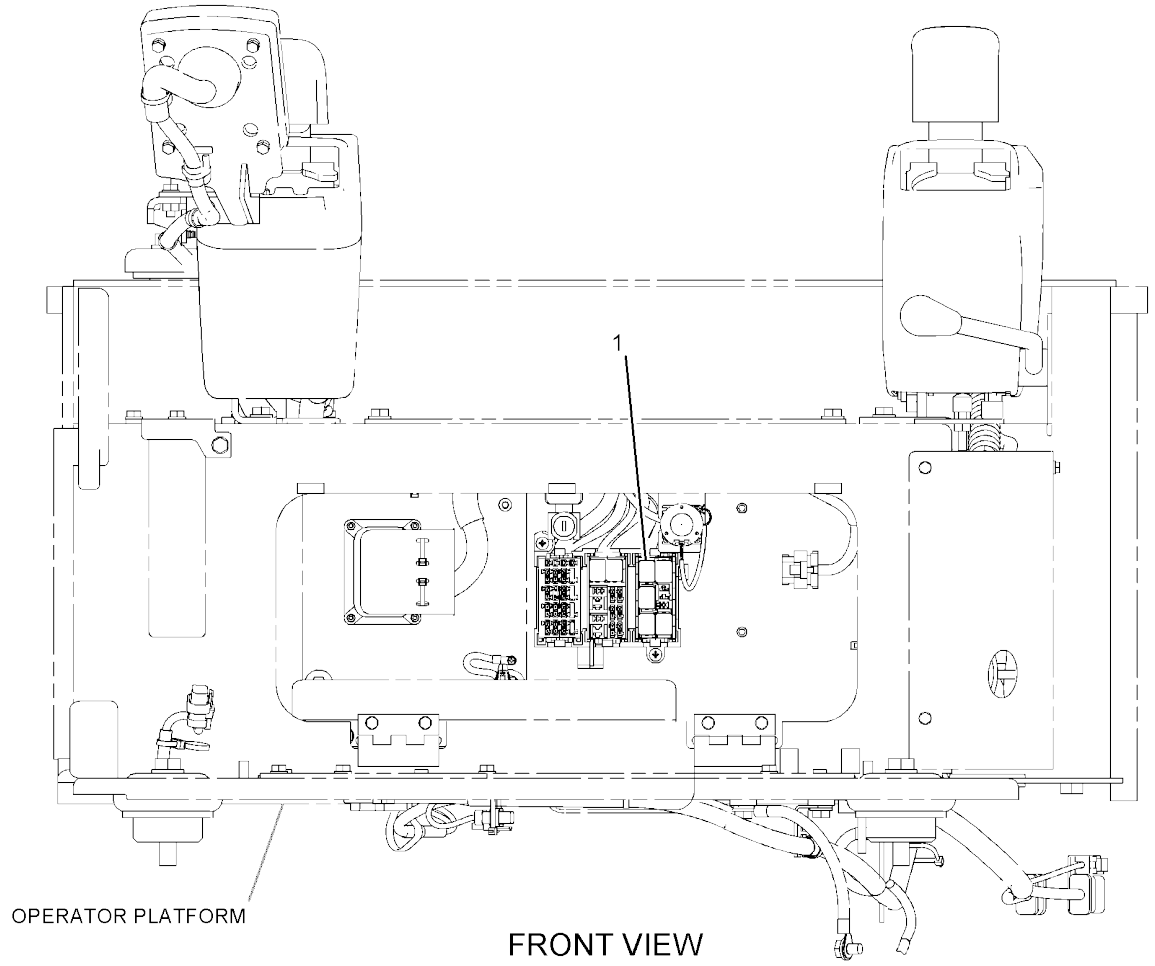


GRAPHIC #1

**<END>**

g02798865

# *387-6390* WIRING GP-RELAY PANEL–2ND AUXILIARY

**PART OF 379-4721, 379-4722 CONTROL AR-AUXILIARY**
**AN ATTACHMENT**

**SMCS-1408, 1420, 1422** **i04623164**

| NOTE | REF NO | GRAPHIC REF | PART NUMBER | QTY | PART NAME 1 2 3 4 5 6 (PRODUCT LEVEL) | SEE PAGE |
|---|---|---|---|---|---|---|
| | 1 | 1 | **140-9378** | 1 | RELAY AS (12-VOLT) (2ND AUXILIARY) | |

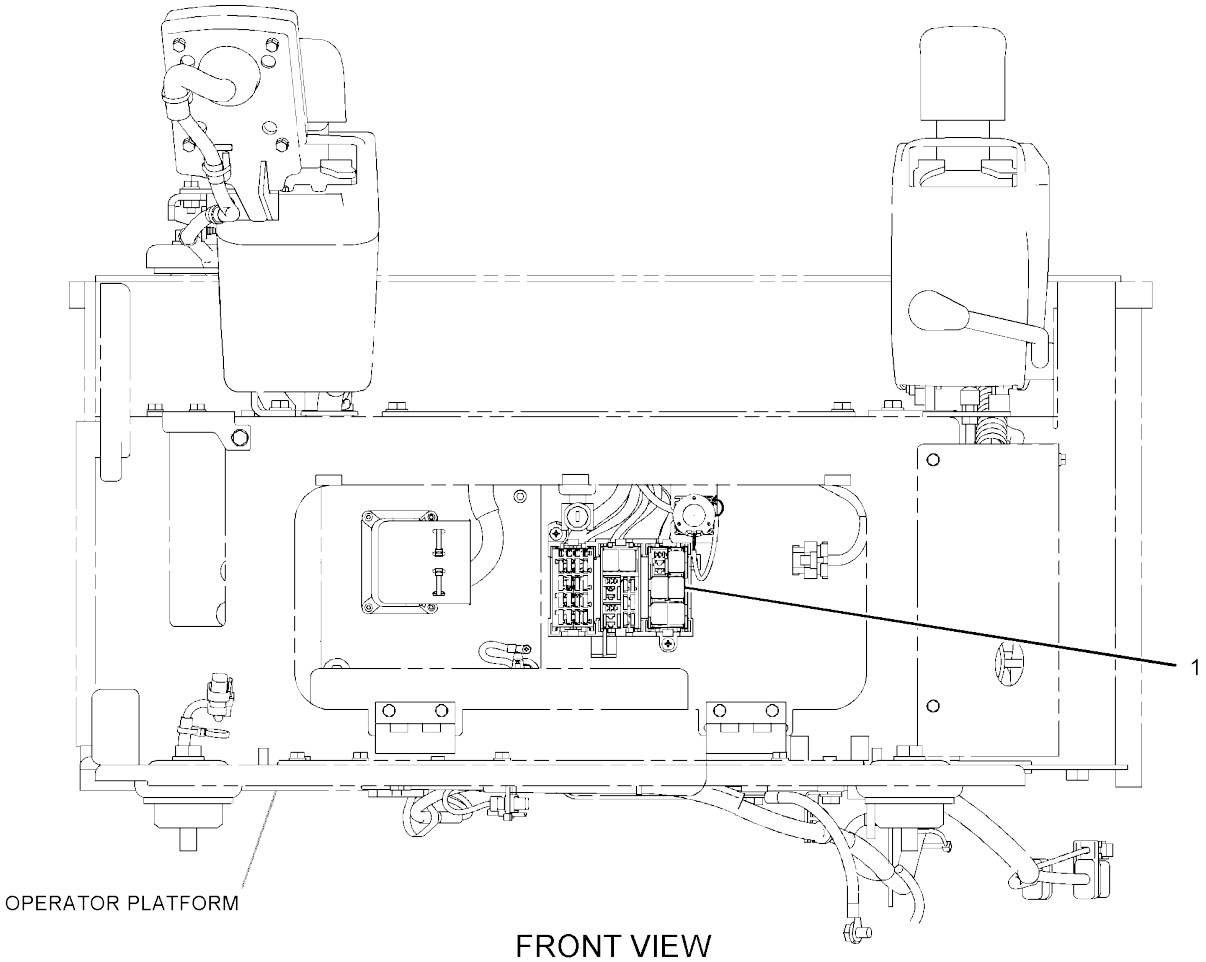


FRONT VIEW

GRAPHIC #1 **<END>** g02798945

# 280-3097 DRIVE GP-FINAL

**PART OF 288-3462 DRIVE GP-FINAL**

**SMCS-4050** **i04019566**

| NOTE | REF NO | GRAPHIC REF | PART NUMBER | QTY | PART NAME 1 2 3 4 5 6 (PRODUCT LEVEL) | SEE PAGE |
|---|---|---|---|---|---|---|
| | 1 | 1 | **192-1134** | 2 | SEAL | |
| | 2 | 1 | **150-0909** | 1 | BEARING | |
| | 3 | 1 | **280-3098** | 1 | NUT | |
| | 4 | 1 | **150-0810** | 2 | PLUG | |
| | 5 | 1 | **192-0633** | 132 | BALL | |
| | 6 | 1 | **096-5971** | 2 | PLUG | |
| | 7 | 1 | **150-0811** | 4 | GEAR | |
| | 8 | 1 | **150-0812** | 4 | BEARING AS-NEEDLE | |
| | 9 | 1 | **150-0813** | 4 | RACE-INNER | |
| | 10 | 1 | **150-0814** | 4 | WASHER | |
| | 11 | 1 | **143-2343** | 1 | PLATE | |
| | 12 | 1 | **143-2344** | 4 | SCREW | |
| | 13 | 1 | **150-0815** | 1 | GEAR | |
| | 14 | 1 | **280-3100** | 1 | HOLDER | |
| | 15 | 1 | **280-3101** | 3 | GEAR | |
| | 16 | 1 | **150-0818** | 3 | BEARING | |
| | 17 | 1 | **150-0819** | 3 | RACE | |
| | 18 | 1 | **280-3102** | 1 | GEAR | |
| | 19 | 1 | **280-3103** | 1 | COVER | |
| | 20 | 1 | **095-1725** | 1 | SEAL-O-RING | |
| | 21 | 1 | **143-2358** | 1 | WIRE | |
| | 22 | 1 | **279-4706** | 3 | PLUG | |
| | 23 | 1 | **3J-1907** | 3 | SEAL-O-RING | |
| | 24 | 1 | **143-2346** | 1 | RING | |

*280-3097* **DRIVE GP-FINAL (*contd.*)** **i04019566**

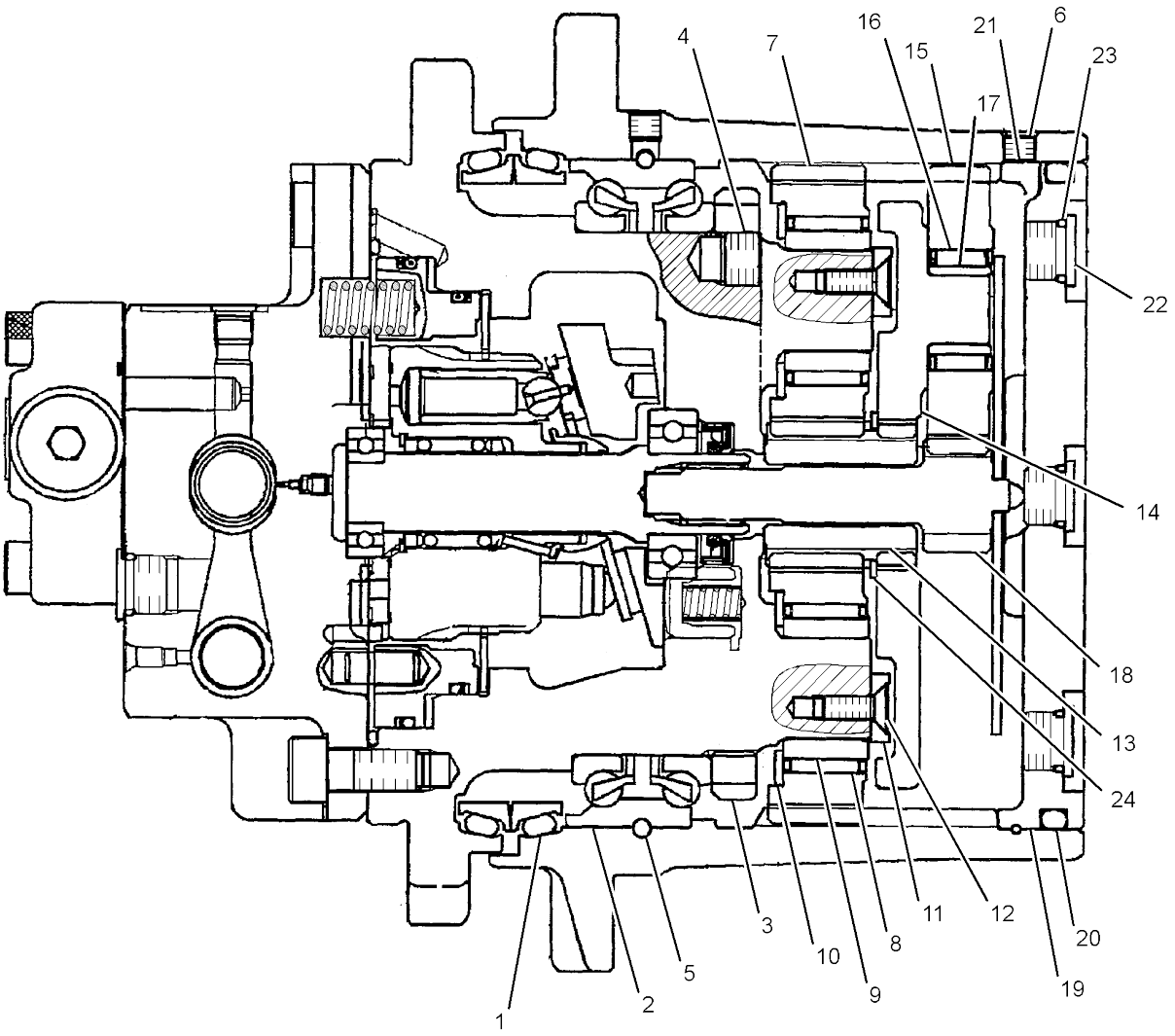


GRAPHIC #1 **<END>** g01387686

# 288-3462 DRIVE GP-FINAL

**PART OF 265-8754 MOTOR & MTG GP-TRAVEL**

**SMCS-4050** **i04046741**

| NOTE | REF NO | GRAPHIC REF | PART NUMBER | QTY | PART NAME 1 2 3 4 5 6 (PRODUCT LEVEL) | SEE PAGE |
|---|---|---|---|---|---|---|
| Y | 1 | 1 | **280-3097** | 1 | DRIVE GP-FINAL | 121 |
| | 2 | 1 | **192-1134** | 2 | SEAL | |
| | 3 | 1 | **279-4706** | 4 | PLUG | |
| | 4 | 1 | **3J-1907** | 4 | SEAL-O-RING | |
| | 5 | 1 | **150-0826** | 1 | SHAFT | |
| | 6 | 1 | **150-0827** | 1 | BEARING | |
| | 7 | 1 | **202-7187** | 1 | SEAL | |
| | 8 | 1 | **280-3104** | 1 | SWASHPLATE | |
| | 9 | 1 | **150-0829** | 2 | BALL | |
| | 10 | 1 | **280-3105** | 2 | PISTON | |
| | 11 | 1 | **280-3106** | 2 | SPRING | |
| | 12 | 1 | **150-0832** | 1 | PLATE | |
| | 13 | 1 | **139-7325** | 1 | PIN | |
| | 14 | 1 | **150-0834** | 1 | BEARING | |
| | 15 | 1 | **095-1676** | 1 | SEAL-O-RING | |
| | 16 | 1 | **095-1574** | 4 | SEAL-O-RING | |
| | 17 | 1 | **150-0873** | 2 | SEAT | |
| | 18 | 1 | **150-0874** | 2 | SPRING | |
| | 19 | 1 | **202-7174** | 2 | CAP | |
| | 20 | 1 | **095-1596** | 2 | SEAL-O-RING | |
| | 21 | 1 | **150-0881** | 8 | ORIFICE | |
| | 22 | 1 | **280-3107** | 1 | SPRING | |
| | 23 | 1 | **099-7197** | 1 | PLUG | |
| | 24 | 1 | **095-1582** | 2 | SEAL-O-RING | |
| | 25 | 1 | **1R-5468** | 3 | PLUG | |
| | 26 | 1 | **280-3108** | 1 | PLUG | |
| M | 27 | 1 | **8T-9080** | 6 | BOLT-SOCKET HEAD (M12X1.75X20-MM) | |
| | 28 | 1 | **280-3109** | 4 | PIN | |
| | 29 | 1 | **096-5971** | 1 | PLUG | |
| | 30 | 1 | **280-3110** | 1 | PISTON | |
| | 31 | 1 | **280-3111** | 1 | DISC | |
| | 32 | 1 | **280-3112** | 8 | SPRING | |
| | 33 | 1 | **288-6900** | 1 | KIT-BLOCK (TRAVEL MOTOR) | |
| | | | | | (INCLUDES O-RING SEALS, BASE PLATE, SPOOLS, SPOOL AS, CHECK VALVE, SPRING & PLUGS) | |
| | 34 | 1 | **280-3116** | 1 | KIT-BARREL (TRAVEL MOTOR) | |
| | | | | | (INCLUDES BARREL, COLLAR, SPRING, WASHER, SNAP RING, PINS, RETAINER HOLDER, RETAINER PLATE & PISTON AS) | |
| | 35 | 1 | **288-6899** | 1 | VALVE AS | |
| M | | 1 | **6V-5192** | 3 | BOLT-SOCKET HEAD (M8X1.25X30-MM) | |
| | | 1 | **095-1580** | 3 | SEAL-O-RING | |
| | | 1 | **095-1582** | 2 | SEAL-O-RING | |
| | 36 | 1 | **288-6901** | 1 | KIT-SEAL (TRAVEL MOTOR) | |
| | | | | | (INCLUDES WIRE, SEALS & O-RING SEALS) | |
| | 37 | 1 | **280-3118** | 1 | KIT-BRAKE (TRAVEL MOTOR) | |
| | | | | | (INCLUDES O-RING SEALS & RINGS) | |

M - METRIC PART
Y - SEPARATE ILLUSTRATION

*288-3462* **DRIVE GP-FINAL (*contd.*)** **i04046741**

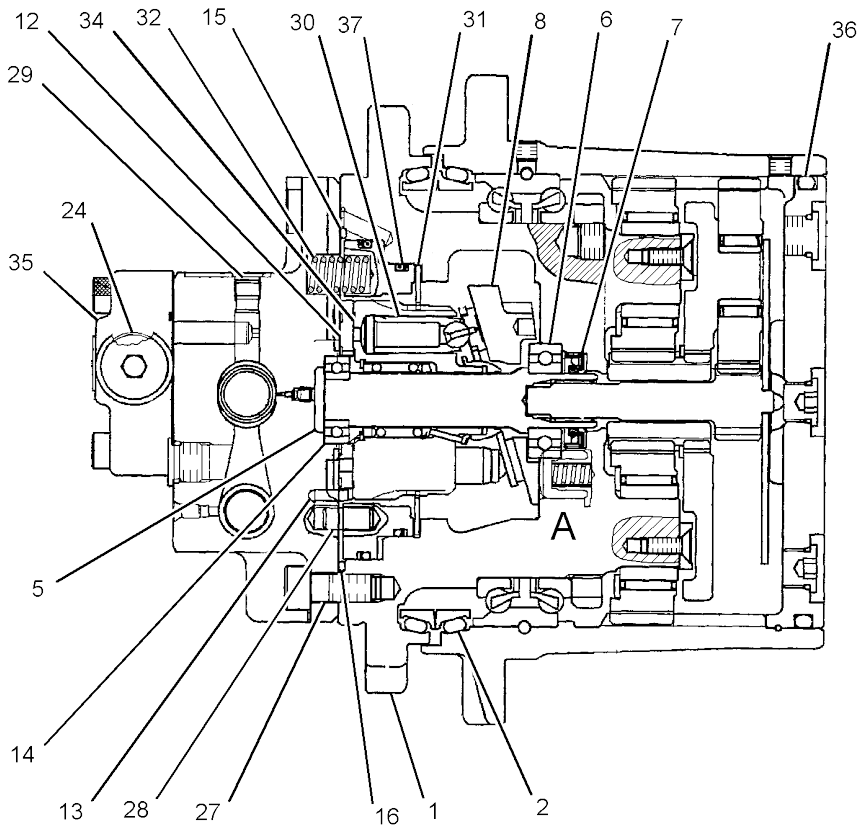


SECTION A-A

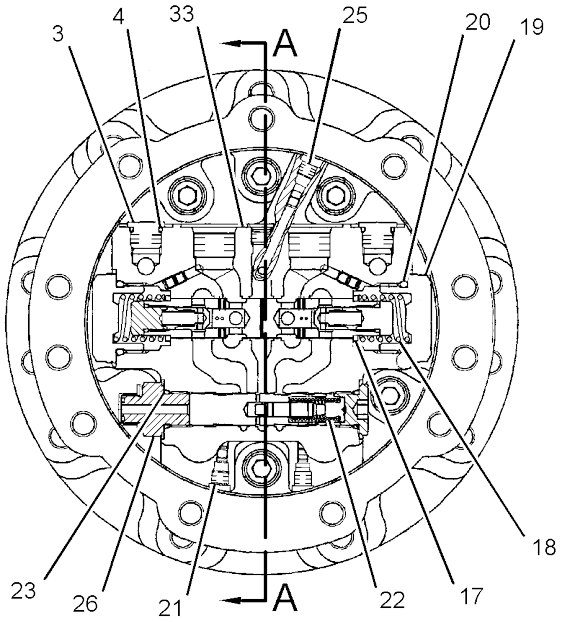


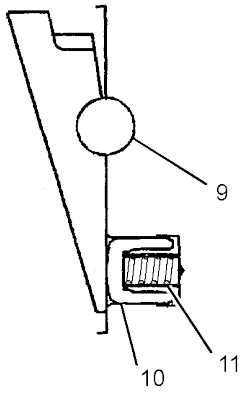


VIEW OF AREA A

GRAPHIC #1 **<END>** g01384526

# 265-8754 MOTOR & MTG GP-TRAVEL

**PART OF 356-0571 POWER TRAIN AR**

**SMCS-4351** **i04023271**

| NOTE | REF NO | GRAPHIC REF | PART NUMBER | QTY | PART NAME 1 2 3 4 5 6 (PRODUCT LEVEL) | SEE PAGE |
|---|---|---|---|---|---|---|
| Y | 1 | 1 | **288-3462** | 2 | DRIVE GP-FINAL | 123 |
| | 2 | 1 | **8T-4223** | 22 | WASHER-HARD (13.5X25.5X3-MM THK) | |
| M | 3 | 1 | **8T-4956** | 22 | BOLT (M12X1.75X35-MM) | |

M - METRIC PART
Y - SEPARATE ILLUSTRATION

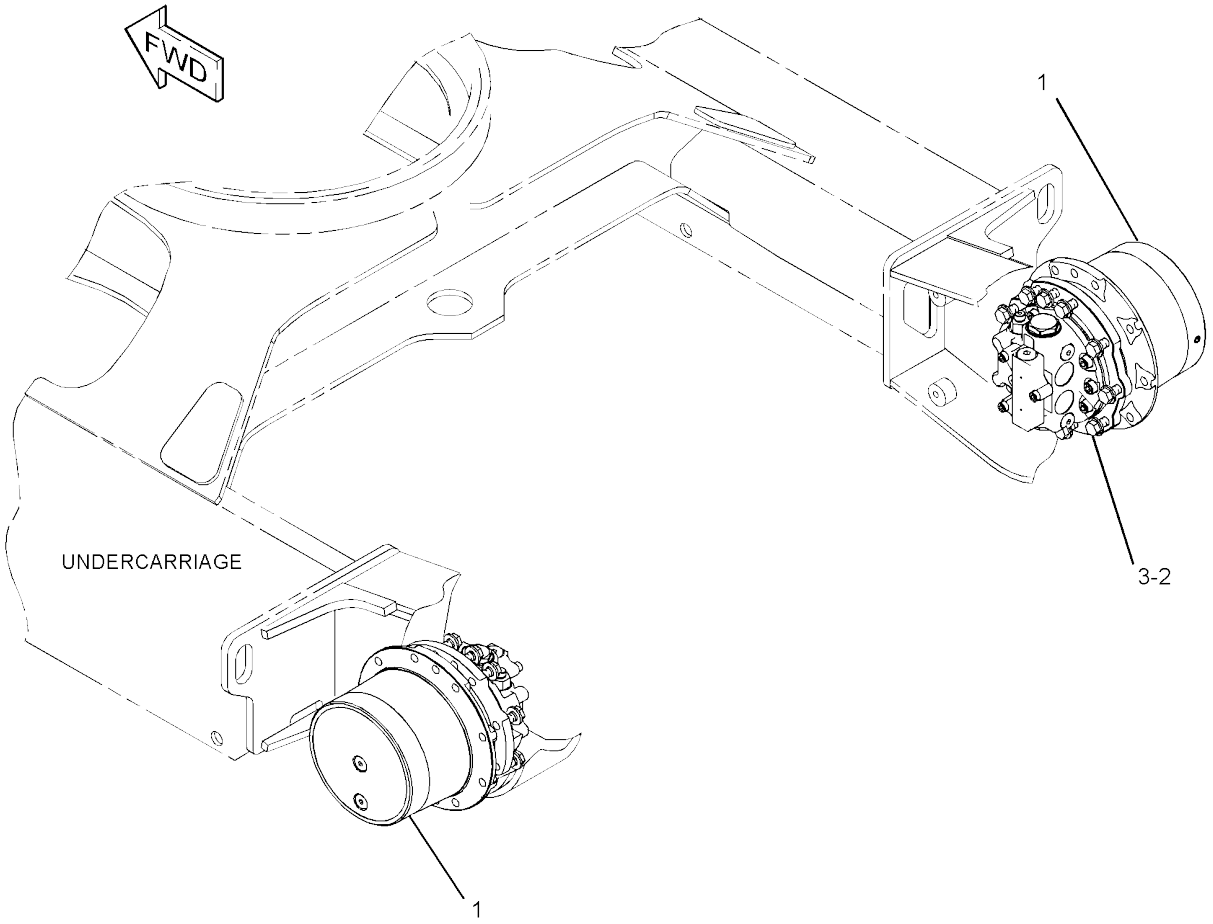


GRAPHIC #1 **<END>** g01319911

# 356-0571 POWER TRAIN AR

**PART OF 376-6672 COMMON AR**

**SMCS-3000, 4000** **i04023275**

| NOTE | PART NUMBER | QTY | PART NAME 1 2 3 4 5 6 (PRODUCT LEVEL) | SEE PAGE |
|---|---|---|---|---|
| Y | *265-8752* | 1 | MOTOR & MTG GP-SWING | 285 |
| Y | *265-8754* | 1 | MOTOR & MTG GP-TRAVEL | 125 |
| Y | *264-5370* | 2 | SPROCKET GP | 127 |

Y - SEPARATE ILLUSTRATION

<END>

# 264-5370 SPROCKET GP

**PART OF 356-0571 POWER TRAIN AR**

**SMCS-4164** **i04019563**

| NOTE | REF NO | GRAPHIC REF | PART NUMBER | QTY | PART NAME 1 2 3 4 5 6 (PRODUCT LEVEL) | SEE PAGE |
|---|---|---|---|---|---|---|
| | 1 | 1 | **264-5371** | 1 | SPROCKET | |
| | 2 | 1 | **8T-4223** | 11 | WASHER-HARD (13.5X25.5X3-MM THK) | |
| M | 3 | 1 | **8T-4956** | 11 | BOLT (M12X1.75X35-MM) | |

M - METRIC PART

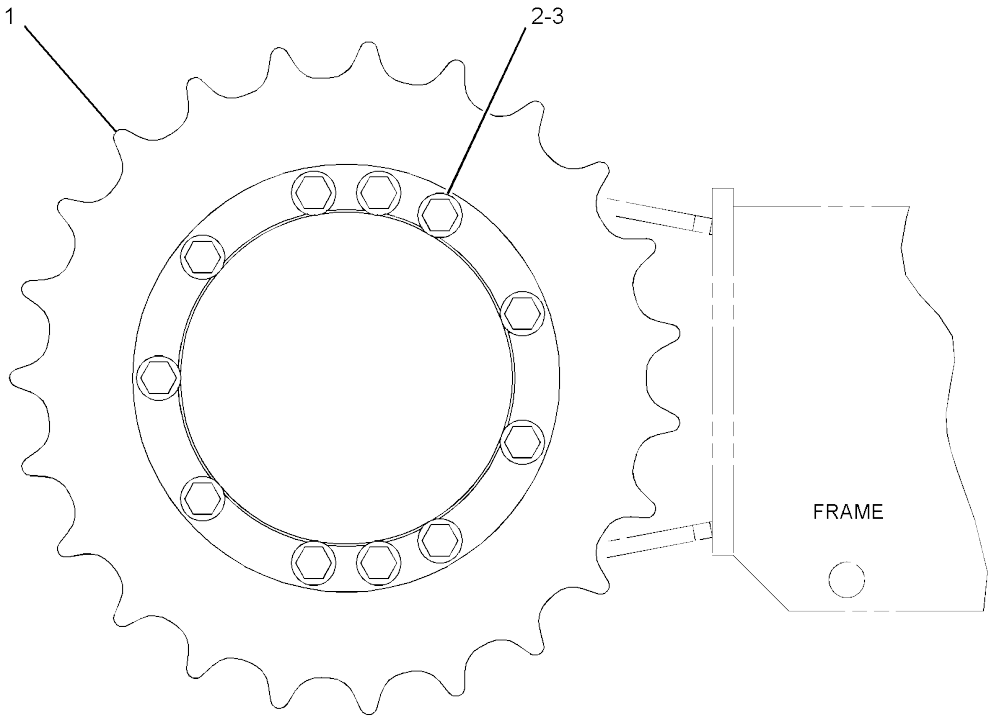


RIGHT SIDE VIEW

GRAPHIC #1 **<END>** g01944766

# 352-7765 C-FRAME GP-POWER ANGLING

**PART OF 281-8699 BLADE & MOUNTING GP**
**AN ATTACHMENT**

**SMCS-6063** **i04016793**

| NOTE | REF NO | GRAPHIC REF | PART NUMBER | QTY | PART NAME 1 2 3 4 5 6 (PRODUCT LEVEL) | SEE PAGE |
|---|---|---|---|---|---|---|
| | 1 | 1 | **121-3709** | 2 | SEAL-LIP TYPE | |
| | 2 | 1 | **140-3734** | 4 | SEAL-DUST | |
| | 3 | 1 | **352-7766** | 1 | FRAME & BEARING AS | |
| | | 1 | **265-8713** | 2 | BUSHING | |
| | | 1 | **287-0035** | 2 | BUSHING | |
| | 4 | 1 | **3B-8485** | 2 | FITTING-GREASE | |
| | 5 | 1 | **3B-8488** | 1 | FITTING-GREASE | |

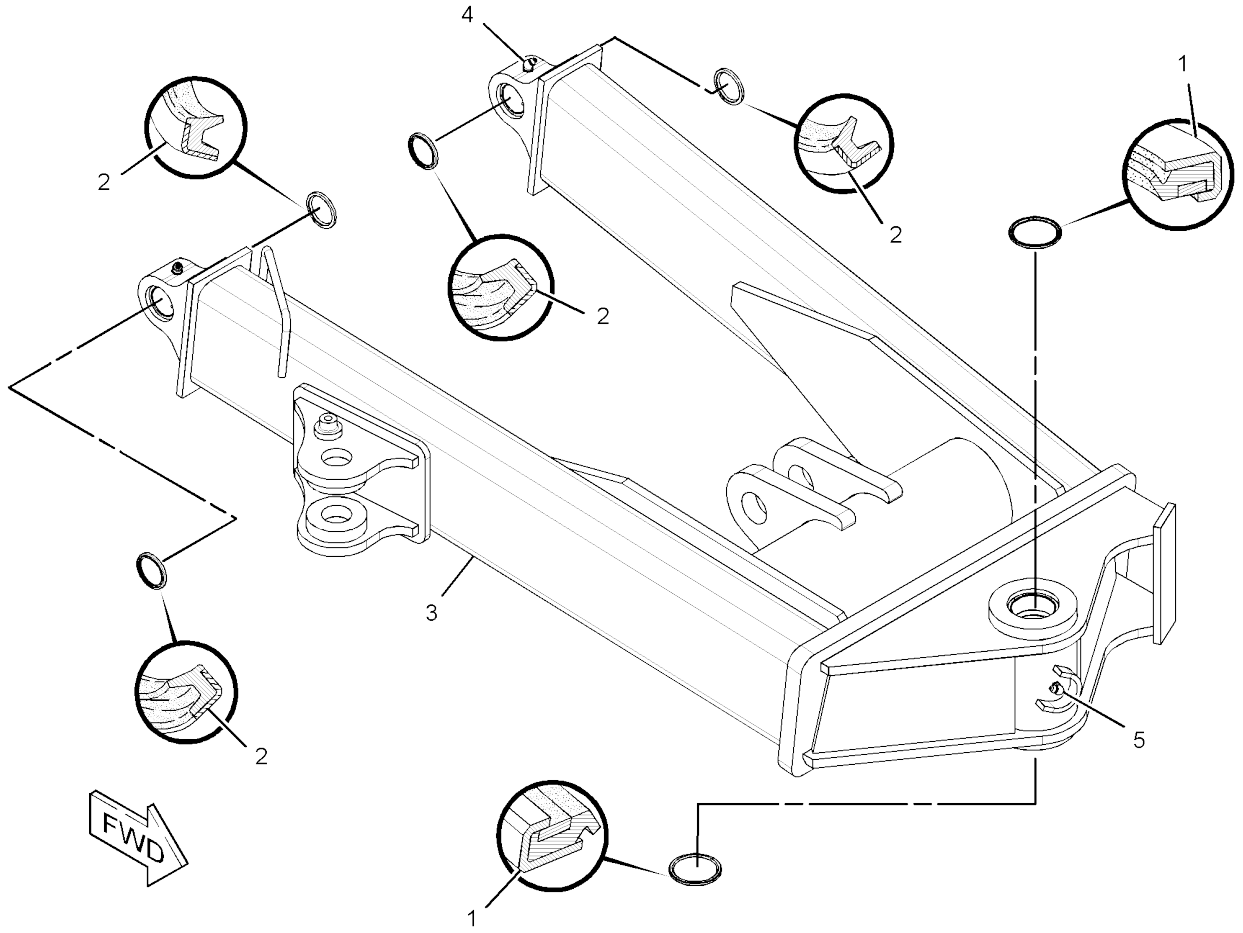


GRAPHIC #1 **<END>** g01365731

# *367-0902* COUNTERWEIGHT & MOUNTING GP

**PART OF 376-6676 CHASSIS AR**

**SMCS-7056** **i04725133**

| NOTE | REF NO | GRAPHIC REF | PART NUMBER | QTY | PART NAME 1 2 3 4 5 6 (PRODUCT LEVEL) | SEE PAGE |
|---|---|---|---|---|---|---|
| | 1 | 1 | **258-2111** | 3 | CAP | |
| | 2 | 1 | *367-0952* | 1 | CONTERWEIGHT AS | |
| | | 1 | **367-0962** | 1 | COUNTERWEIGHT AS | |
| | | 1 | **367-1101** | 1 | FOAM | |
| | 3 | 1 | **086-0299** | 2 | WASHER (22X60X9-MM THK) | |
| M | 4 | 1 | **7X-2563** | 1 | BOLT (M20X2.5X60-MM) | |
| M | 5 | 1 | **7X-2564** | 1 | BOLT (M20X2.5X90-MM) | |
| | 6 | 1 | **8T-5439** | 1 | WASHER-HARD (21.5X45X6-MM THK) | |
| M | 7 | 1 | **8T-6381** | 1 | BOLT (M20X2.5X120-MM) | |

M - METRIC PART

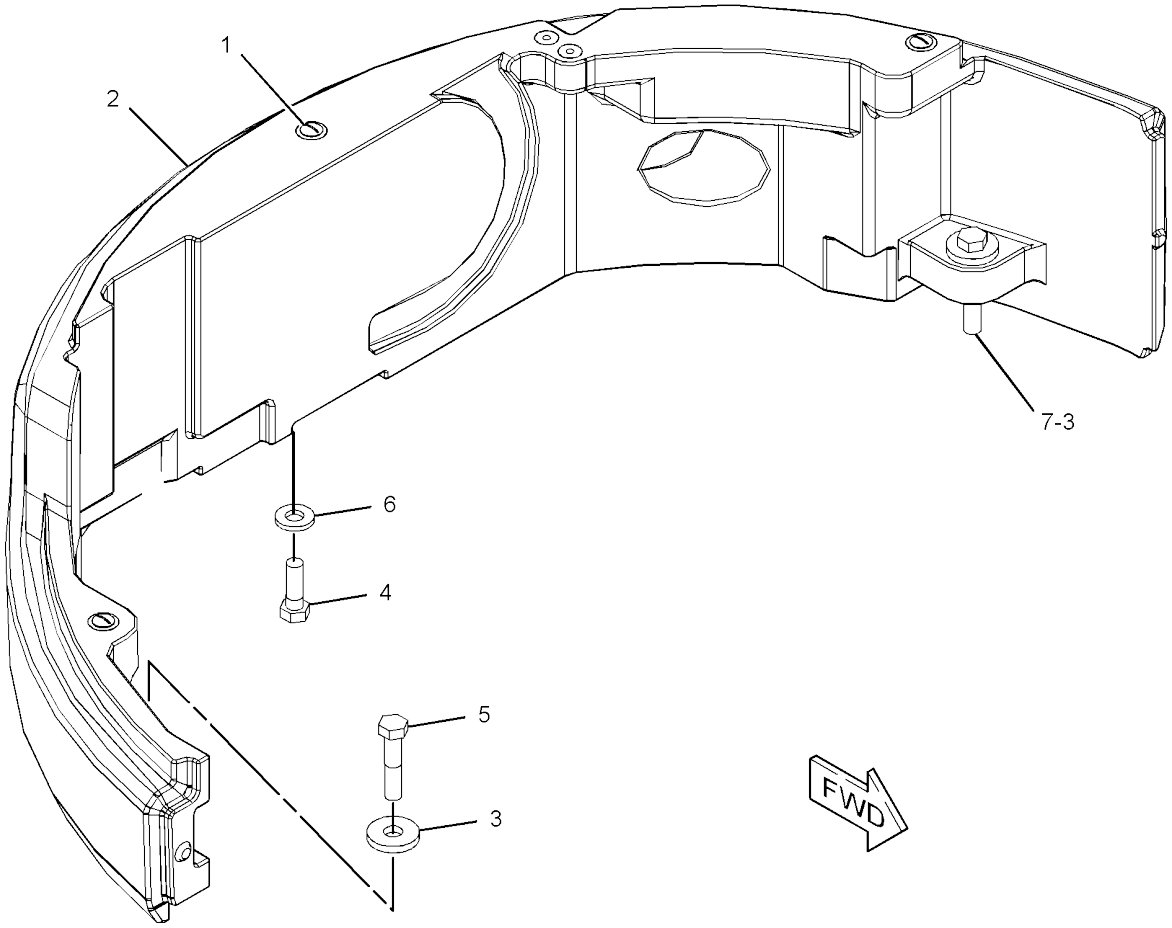


GRAPHIC #1 **<END>** g02852843

# *377-7888* COVER AS–LH

**PART OF 377-7883 COVER GP-ACCESS**

**SMCS-7253** **i04638090**

| NOTE | REF NO | GRAPHIC REF | PART NUMBER | QTY | PART NAME 1 2 3 4 5 6 (PRODUCT LEVEL) | SEE PAGE |
|---|---|---|---|---|---|---|
| | 1 | 1 | *377-7893* | 1 | COVER AS (LH) | |
| M | | 1 | **8T-3490** | 2 | NUT-WELD (M10X1.5-THD) | |
| | 2 | 1 | **377-7937** | 1 | FOAM | |
| | 3 | 1 | **377-7938** | 1 | FOAM | |
| | 4 | 1 | **377-7939** | 1 | FOAM | |
| | 5 | 1 | **379-6414** | 1 | INSULATION | |
| | 6 | 1 | **382-5689** | 1 | INSULATION | |

M - METRIC PART

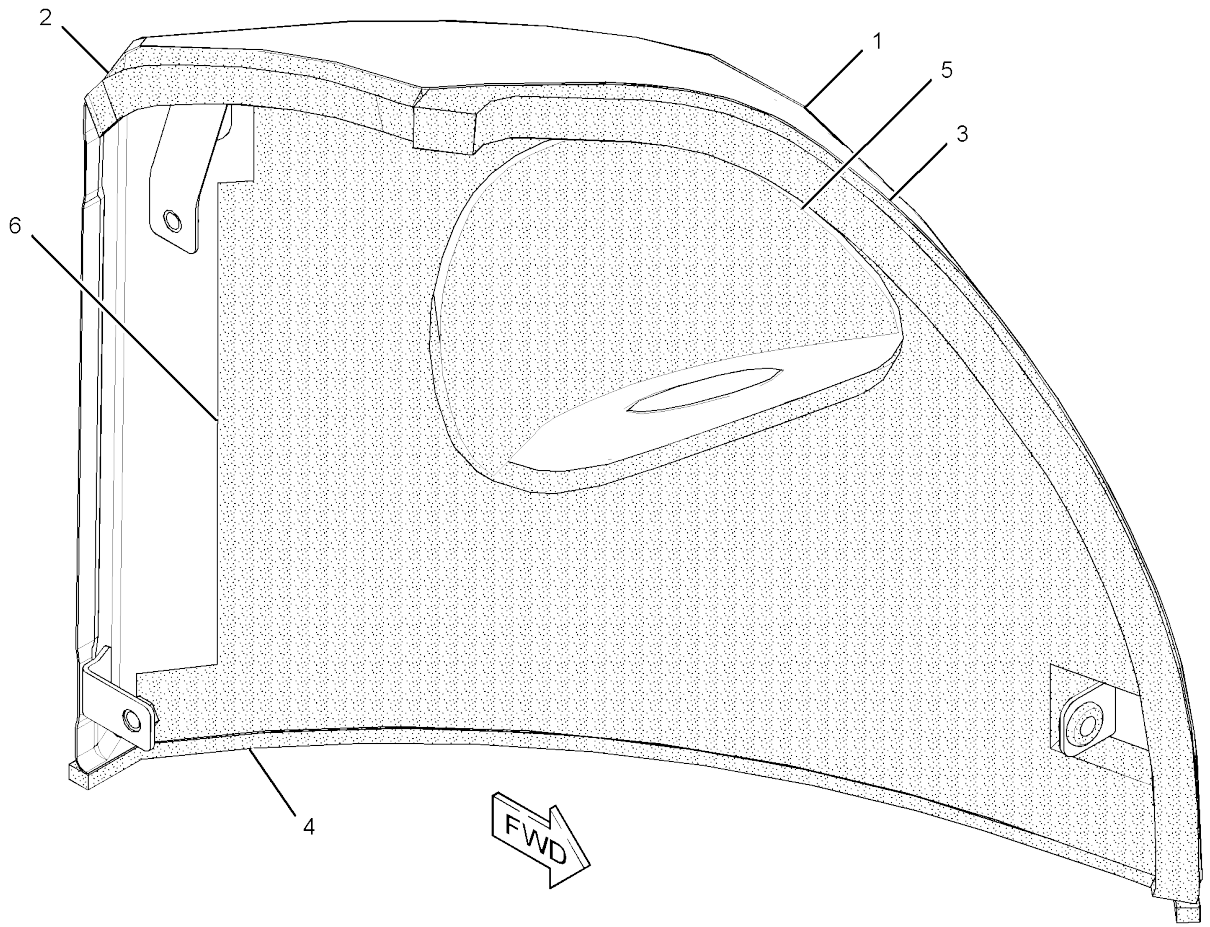


GRAPHIC #1 **<END>** g02801396

# 377-7883 COVER GP-ACCESS-LH

**PART OF 367-0918 HOOD & GUARD GP**

**SMCS-726A** **i04638089**

| NOTE | REF NO | GRAPHIC REF | PART NUMBER | QTY | PART NAME 1 2 3 4 5 6 (PRODUCT LEVEL) | SEE PAGE |
|---|---|---|---|---|---|---|
| Y | 1 | 1 | *377-7888* | 1 | COVER AS (LH) | 130 |
| | 2 | 1 | **140-3201** | 1 | GROMMET | |

Y - SEPARATE ILLUSTRATION

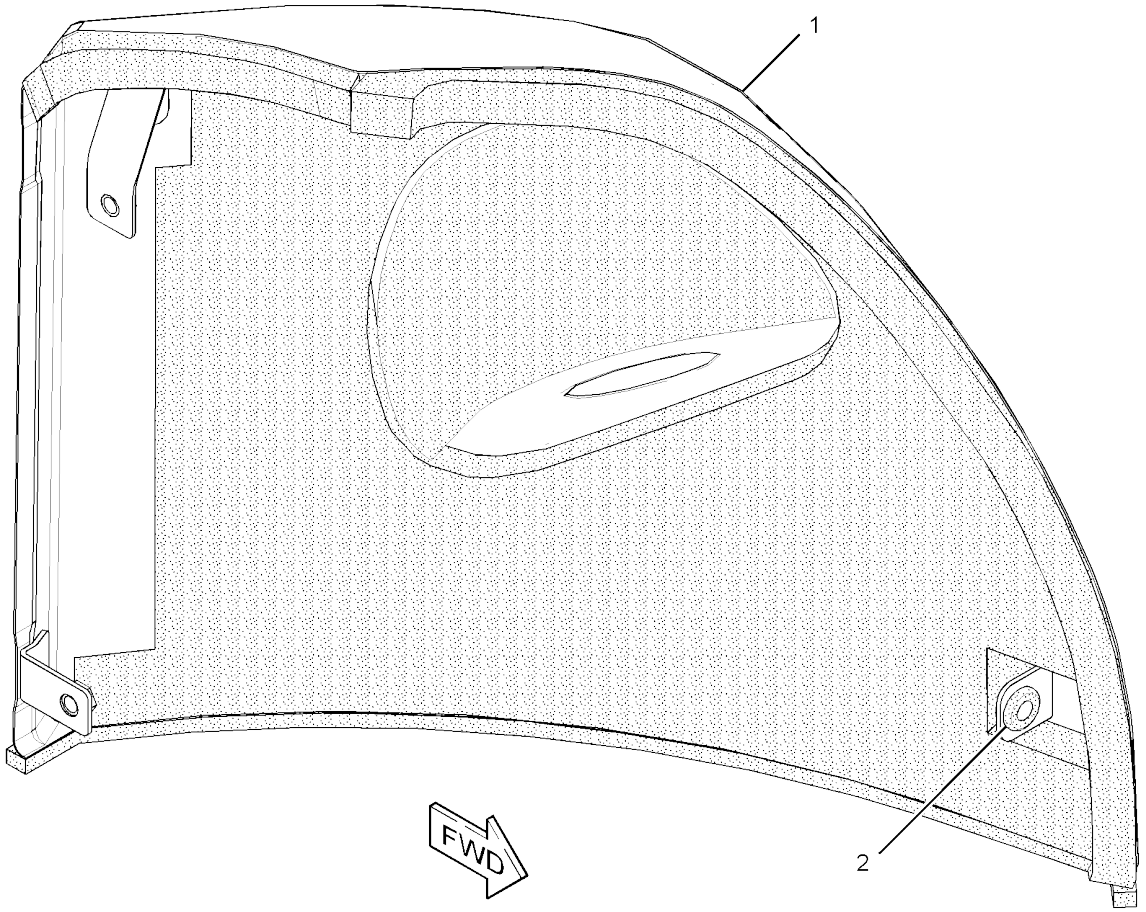


GRAPHIC #1 **<END>** g02801059

# FRAME AND BODY

## 377-7886 COVER GP-ACCESS-RH

**PART OF 379-6419 SUPPRESSION AR-SOUND**
**AN ATTACHMENT**

**SMCS-726A** **i04629109**

| NOTE | REF NO | GRAPHIC REF | PART NUMBER | QTY | PART NAME 1 2 3 4 5 6 (PRODUCT LEVEL) | SEE PAGE |
|---|---|---|---|---|---|---|
| | 1 | 1 | **265-8463** | 1 | STUD-BALL | |
| | 2 | 1 | **276-9254** | 3 | BUMPER | |
| | 3 | 1 | **334-0257** | 2 | BUMPER | |
| | 4 | 1 | **377-7862** | 1 | LATCH AS | |
| | | 1 | **191-0348** | 1 | GROMMET | |
| | 5 | 1 | *377-7892* | 1 | COVER AS (RH) | |
| M | | 1 | **8T-3490** | 10 | NUT-WELD (M10X1.5-THD) | |
| M | 6 | 1 | **5C-7261** | 1 | NUT (M8X1.25-THD) | |
| | 7 | 1 | **5P-4116** | 1 | WASHER-HARD (8.8X20.5X2-MM THK) | |
| | 8 | 1 | **7X-7729** | 4 | WASHER (11X25X3-MM THK) | |
| M | 9 | 1 | **8T-4133** | 2 | NUT (M10X1.5-THD) | |
| M | 10 | 1 | **8T-4136** | 2 | BOLT (M10X1.5X25-MM) | |
| D | 11 | 1 | **5P-7483** | | SEAL (0.5-M) | |
| J | 12 | 1 | **214-8827** | | SEAL (19.7-DM) | |
| J | 12A | 1 | **214-8827** | | SEAL (7.3-DM) | |
| J | 12B | 1 | **214-8827** | | SEAL (8.7-DM) | |

D - ORDER BY THE METER
J - ORDER BY THE DECIMETER
M - METRIC PART

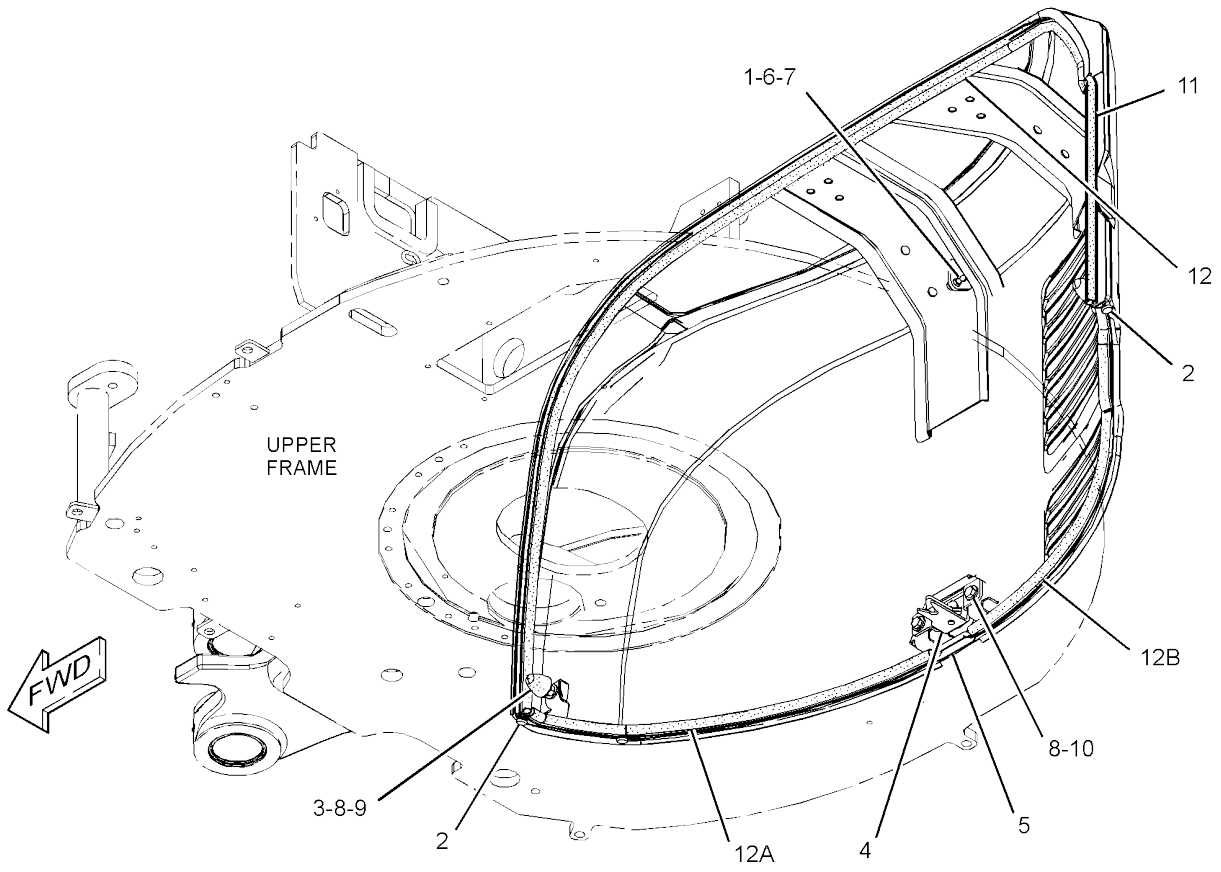


GRAPHIC #1 **<END>** g02799961

# *367-0912* COVER GP-FENDER

**PART OF 376-6676 CHASSIS AR**

**SMCS-7252** **i04629809**

| NOTE | REF NO | GRAPHIC REF | PART NUMBER | QTY | PART NAME 1 2 3 4 5 6 (PRODUCT LEVEL) | SEE PAGE |
|---|---|---|---|---|---|---|
| | 1 | 1 | *367-0980* | 1 | FENDER AS (RH) | |
| M | | 1 | **8T-3490** | 3 | NUT-WELD (M10X1.5-THD) | |
| Y | 2 | 1 | *367-0984* | 1 | FENDER GP (LH) | 136 |
| | 3 | 1 | **7X-7729** | 7 | WASHER (11X25X3-MM THK) | |
| M | 4 | 1 | **8T-4136** | 2 | BOLT (M10X1.5X25-MM) | |
| M | 5 | 1 | **8T-4186** | 2 | BOLT (M10X1.5X40-MM) | |
| M | 6 | 1 | **8T-4195** | 3 | BOLT (M10X1.5X30-MM) | |

M - METRIC PART
Y - SEPARATE ILLUSTRATION

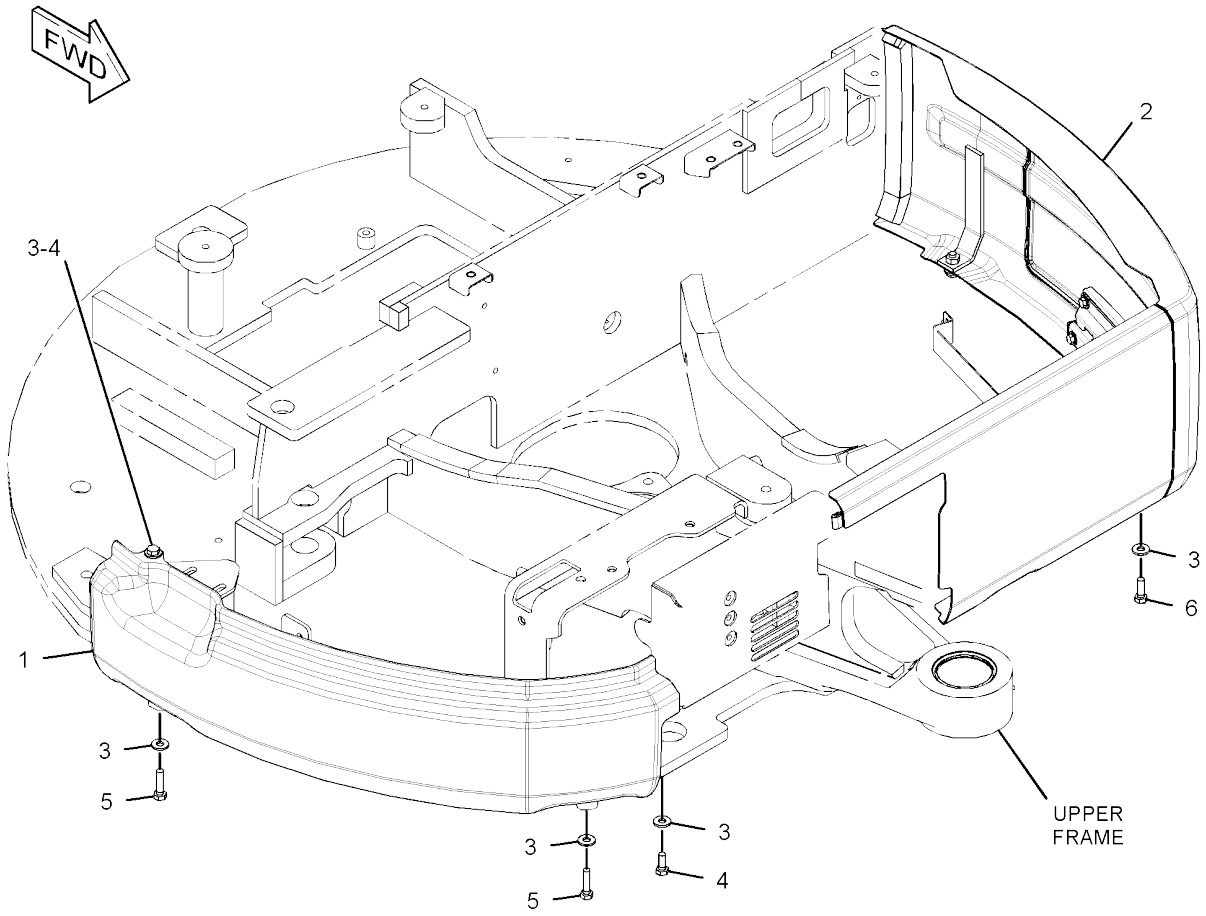


GRAPHIC #1 **<END>** g02798344

# *382-2177* COVER GP-SOUND SUPPRESSION

**PART OF 382-0400 PLATFORM GP-OPERATOR**
**AN ATTACHMENT**

**SMCS-1801, 7251** **i04775403**

| NOTE | REF NO | GRAPHIC REF | PART NUMBER | QTY | PART NAME 1 2 3 4 5 6 (PRODUCT LEVEL) | SEE PAGE |
|---|---|---|---|---|---|---|
| | 1 | 1 | **380-7159** | 1 | COVER AS | |
| | 2 | 1 | **380-7160** | 1 | COVER AS (LH) | |
| | 3 | 1 | **382-2151** | 1 | COVER | |
| | 4 | 1 | **382-2152** | 2 | INSULATION | |
| | 5 | 1 | **382-2153** | 1 | INSULATION | |
| | 6 | 1 | **382-2154** | 1 | INSULATION | |
| | 7 | 1 | **382-2155** | 1 | INSULATION | |
| | 8 | 1 | **382-2156** | 1 | INSULATION | |
| | 9 | 1 | **382-2158** | 1 | INSULATION | |
| | 10 | 1 | **382-2159** | 1 | INSULATION | |
| | 11 | 1 | **382-2160** | 2 | SEAL | |
| | 12 | 1 | **382-2162** | 1 | SEAL | |
| | 13 | 1 | **382-2163** | 1 | INSULATION | |
| | 14 | 1 | **382-2164** | 1 | INSULATION | |
| | 15 | 1 | **382-2165** | 1 | INSULATION | |
| | 16 | 1 | **382-2166** | 1 | SEAL | |
| | 17 | 1 | **382-2167** | 1 | SEAL | |
| | 18 | 1 | **382-2168** | 1 | SEAL | |
| | 19 | 1 | **382-2169** | 1 | SEAL | |
| | 20 | 1 | **382-2170** | 1 | SEAL | |
| | 21 | 1 | **382-2171** | 1 | SEAL | |
| | 22 | 1 | **382-2172** | 1 | SEAL | |
| | 23 | 1 | **382-2173** | 1 | SEAL | |
| | 24 | 1 | **382-2174** | 1 | SEAL | |
| | 25 | 1 | **382-2175** | 1 | SEAL | |
| | 26 | 1 | **382-2176** | 2 | SEAL | |
| | 27 | 1 | **382-6321** | 1 | SEAL | |
| | 28 | 1 | **389-8671** | 1 | INSULATION | |
| | 29 | 1 | **389-8672** | 1 | INSULATION | |
| | 30 | 1 | **389-8673** | 2 | INSULATION | |
| | 31 | 1 | **5P-4116** | 2 | WASHER-HARD (8.8X20.5X2-MM THK) | |
| M | 32 | 1 | **8T-4171** | 4 | BOLT (M6X1X12-MM) | |
| M | 33 | 1 | **8T-4200** | 2 | BOLT (M8X1.25X16-MM) | |
| | 34 | 1 | **9X-8256** | 4 | WASHER (6.6X12X2-MM THK) | |

M - METRIC PART

*382-2177* **COVER GP-SOUND SUPPRESSION (*contd.*)** **i04775403**

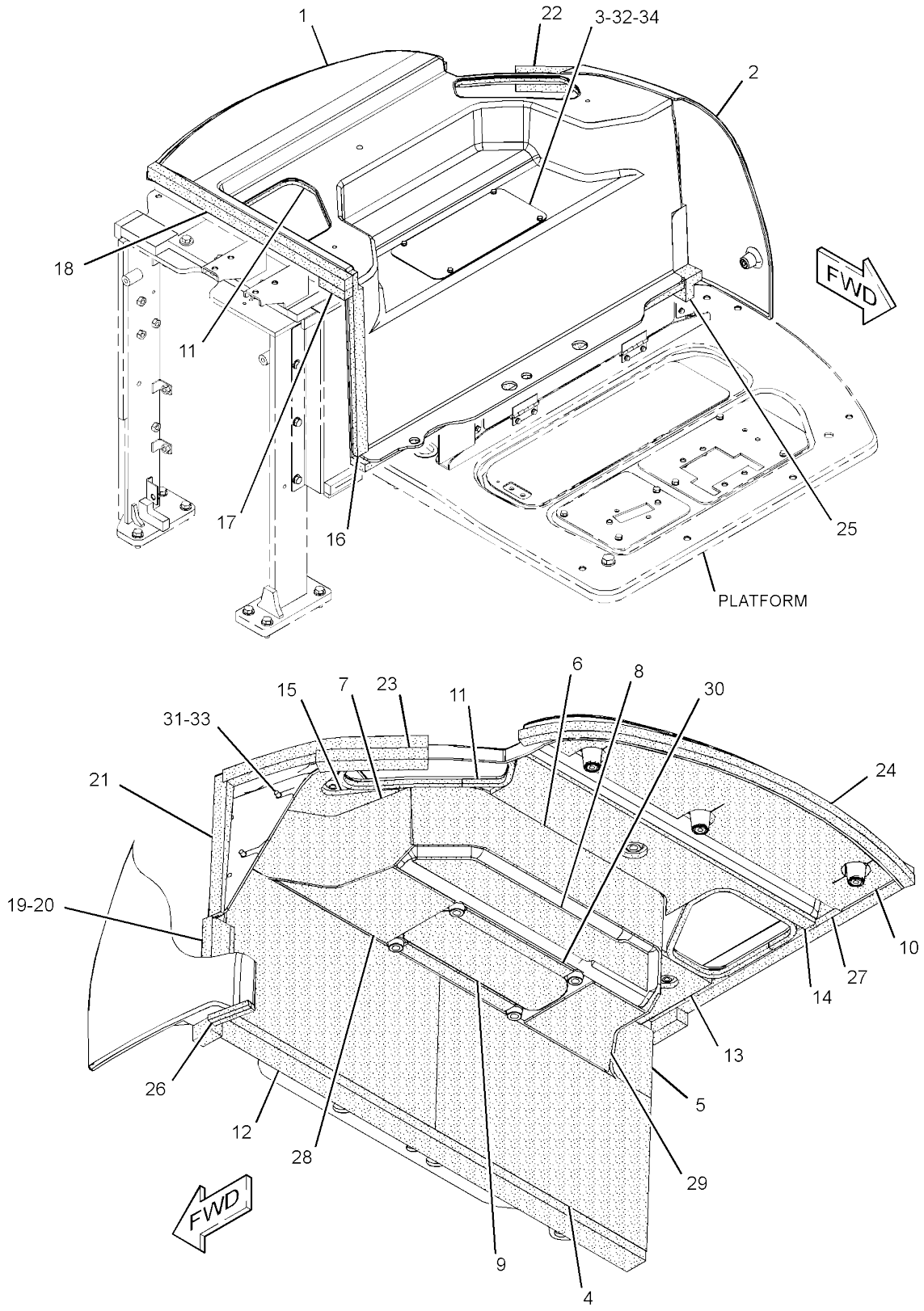


GRAPHIC #1 **<END>** g02800756

# *367-0984* FENDER GP–LH

**PART OF 367-0912 COVER GP-FENDER**

**SMCS-7252** **i04629814**

| NOTE | REF NO | GRAPHIC REF | PART NUMBER | QTY | PART NAME 1 2 3 4 5 6 (PRODUCT LEVEL) | SEE PAGE |
|---|---|---|---|---|---|---|
| | 1 | 1 | *8T-2888* | 1 | LOCK GP (FENDER) | |
| J | | 1 | **226-0294** | 1 | LOCK AS | |
| | | 1 | **226-0338** | 1 | CAM | |
| | 2 | 1 | **339-1545** | 1 | COVER AS-FENDER | |
| M | | 1 | **8T-3612** | 2 | NUT-WELD (M8X1.25-THD) | |
| | 3 | 1 | **339-1548** | 1 | HINGE AS | |
| | | 1 | **3B-4605** | 2 | PIN-COTTER | |
| | | 1 | **9X-8256** | 2 | WASHER (6.6X12X2-MM THK) | |
| | 4 | 1 | **367-0985** | 1 | FENDER AS (LH) | |
| M | | 1 | **8T-3490** | 3 | NUT-WELD (M10X1.5-THD) | |
| M | | 1 | **8T-3612** | 2 | NUT-WELD (M8X1.25-THD) | |
| | 5 | 1 | **5P-4116** | 4 | WASHER-HARD (8.8X20.5X2-MM THK) | |
| | 6 | 1 | **8P-5348** | 1 | GROMMET | |
| M | 7 | 1 | **8T-4200** | 4 | BOLT (M8X1.25X16-MM) | |
| | 8 | 1 | **9M-5617** | 2 | GROMMET | |
| E | 9 | 1 | **3E-6600** | | SEAL (2-CM) | |

E - ORDER BY THE CENTIMETER
J - REQUIRES CORPORATE KEY
M - METRIC PART

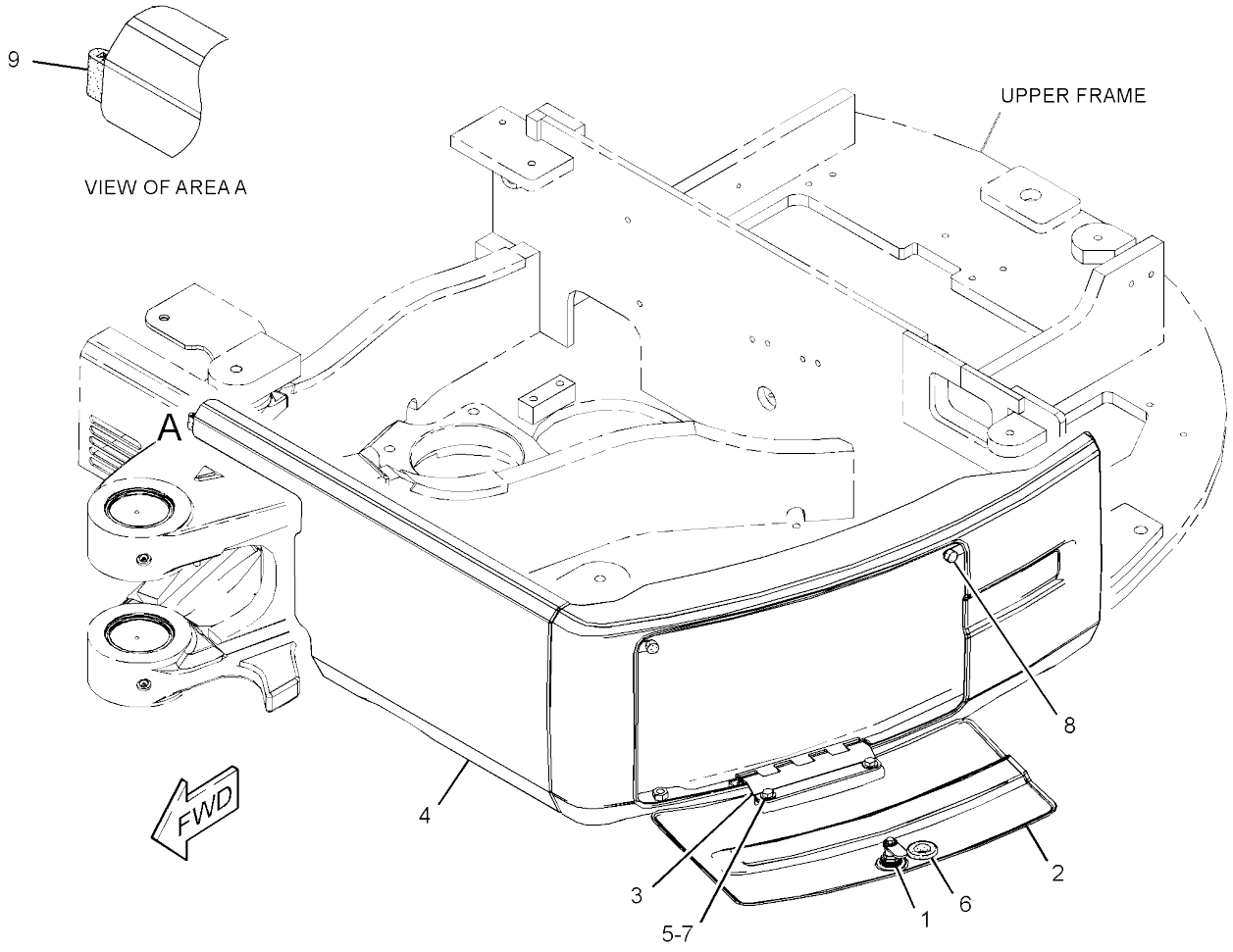


GRAPHIC #1 **<END>** g02798870

## *377-5062* FRAME GP-REAR–CAB

**PART OF 379-3625 PLATFORM GP-OPERATOR**
**AN ATTACHMENT**

**SMCS-7051** **i04617852**

| NOTE | REF NO | GRAPHIC REF | PART NUMBER | QTY | PART NAME 1 2 3 4 5 6 (PRODUCT LEVEL) | SEE PAGE |
|---|---|---|---|---|---|---|
| | 1 | 1 | **6N-6984** | 2 | MOUNT-RUBBER | |
| | 2 | 1 | **377-5063** | 1 | FRAME AS-REAR (LH) | |
| | 3 | 1 | **377-5075** | 1 | FRAME AS-REAR (RH) | |
| | 4 | 1 | **377-5085** | 1 | PLATE | |
| | 5 | 1 | **377-5086** | 1 | INSULATION | |
| | 6 | 1 | **377-5087** | 1 | INSULATION | |
| | 7 | 1 | **377-5088** | 1 | INSULATION | |
| | 8 | 1 | **377-5089** | 1 | FOAM | |
| | 9 | 1 | **377-5090** | 1 | FOAM | |
| | 10 | 1 | **377-5091** | 1 | FOAM | |
| | 11 | 1 | **377-5092** | 1 | FOAM | |
| | 12 | 1 | **377-5093** | 1 | FOAM | |
| | 13 | 1 | **377-5094** | 1 | FOAM | |
| | 14 | 1 | **377-5095** | 1 | FOAM | |
| Y | 15 | 1 | **377-5096** | 1 | PLATE AS | 156 |
| | 16 | 1 | **378-8137** | 1 | FOAM | |
| | 18 | 1 | **5P-1076** | 3 | WASHER-HARD (13.5X30X4-MM THK) | |
| | 19 | 1 | **8T-4121** | 3 | WASHER-HARD (11X21X2.5-MM THK) | |
| M | 20 | 1 | **8T-4137** | 3 | BOLT (M10X1.5X20-MM) | |
| M | 21 | 1 | **8T-4183** | 3 | BOLT (M12X1.75X40-MM) | |
| M | 22 | 1 | **8T-4184** | 5 | BOLT (M12X1.75X45-MM) | |
| M | 23 | 1 | **8T-4196** | 2 | BOLT (M10X1.5X35-MM) | |
| | 24 | 1 | **8T-4223** | 8 | WASHER-HARD (13.5X25.5X3-MM THK) | |
| M | 25 | 1 | **8T-4956** | 3 | BOLT (M12X1.75X35-MM) | |
| | 26 | 1 | **9L-8781** | 2 | WASHER (0.406X1.5X0.188-IN THK) | |
| D | 27 | 1 | **5P-5687** | | SEAL (0.1-M EACH) | |
| D | 27A | 1 | **5P-5687** | | SEAL (0.2-M EACH) | |

D - ORDER BY THE METER
M - METRIC PART
Y - SEPARATE ILLUSTRATION

*377-5062* **FRAME GP-REAR (*contd.*)** **i04617852**

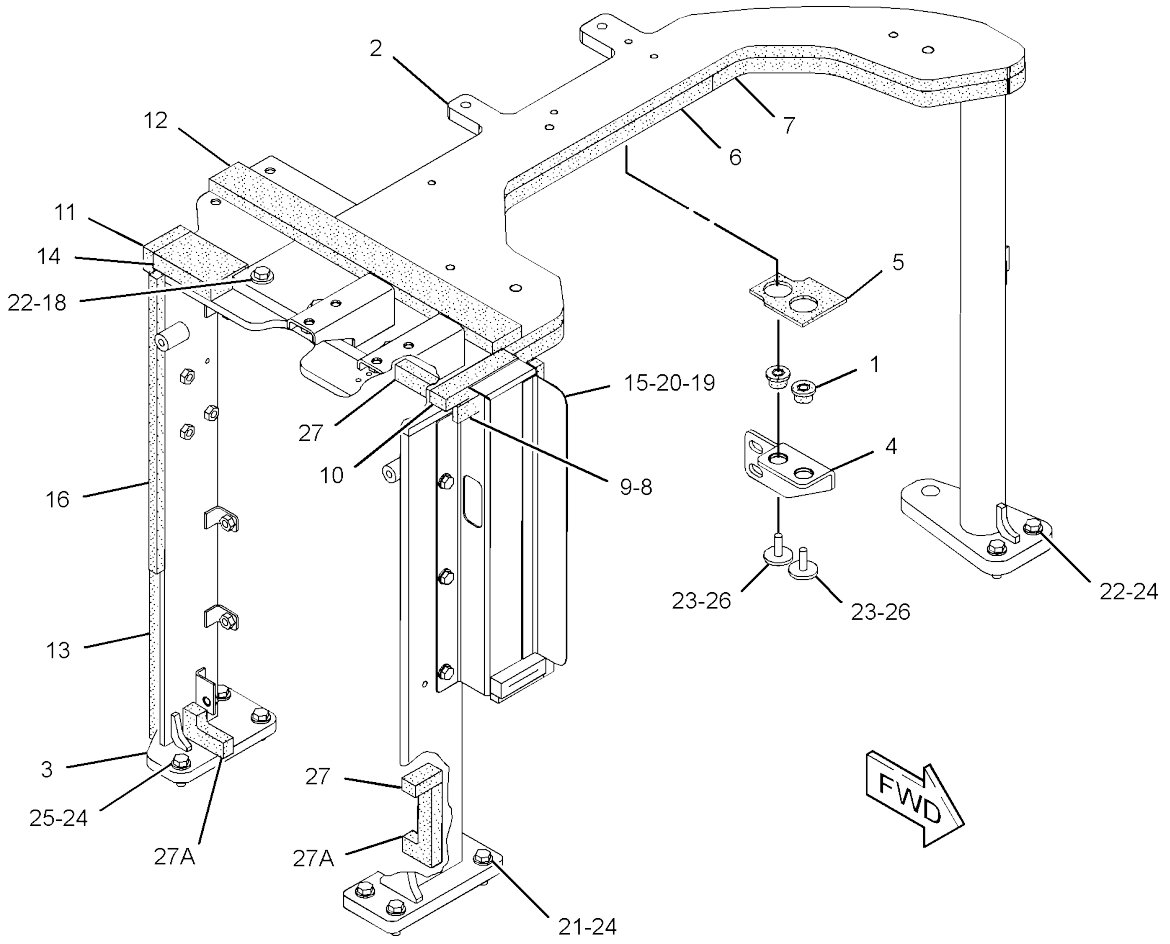


GRAPHIC #1 **<END>** g02811496

# *382-0401* FRAME GP-REAR–CANOPY

**PART OF 382-0400 PLATFORM GP-OPERATOR**
**AN ATTACHMENT**

**SMCS-7051** **i04623160**

| NOTE | REF NO | GRAPHIC REF | PART NUMBER | QTY | PART NAME 1 2 3 4 5 6 (PRODUCT LEVEL) | SEE PAGE |
|---|---|---|---|---|---|---|
| | 1 | 2 | **6N-6984** | 2 | MOUNT-RUBBER | |
| | 2 | 1 | **377-5075** | 1 | FRAME AS-REAR (RH) | |
| | | 1 | **4Y-8939** | 1 | BOSS (M10X1.5X40-MM) | |
| M | | 1 | **7Y-8763** | 1 | BOSS (M10X1.5X25-MM) | |
| M | | 1 | **8T-3490** | 11 | NUT-WELD (M10X1.5-THD) | |
| M | | 1 | **8T-3597** | 3 | NUT-WELD (M12X1.75-THD) | |
| | 3 | 2 | **377-5085** | 1 | PLATE | |
| | 4 | 2 | **377-5086** | 1 | INSULATION | |
| | 5 | 2 | **377-5087** | 1 | INSULATION | |
| | 6 | 2 | **377-5088** | 1 | INSULATION | |
| | 7 | 2 | **377-5089** | 1 | FOAM | |
| | 8 | 1 | **377-5090** | 1 | FOAM | |
| | 9 | 1 | **377-5091** | 1 | FOAM | |
| | 10 | 1 | **377-5092** | 1 | FOAM | |
| | 11 | 1 | **377-5093** | 1 | FOAM | |
| | 12 | 1 | **377-5094** | 1 | FOAM | |
| | 13 | 1 | **377-5095** | 1 | FOAM | |
| | 14 | 1 | **378-8137** | 1 | FOAM | |
| | 15 | 1 | **382-0402** | 1 | FRAME AS-REAR (LH) | |
| M | | 1 | **8T-3490** | 4 | NUT-WELD (M10X1.5-THD) | |
| | 16 | 1 | **382-0404** | 1 | SEAL AS | |
| | | 1 | **377-5098** | 1 | FOAM | |
| | | 1 | **377-5100** | 1 | FOAM | |
| | | 1 | **377-5101** | 1 | FOAM | |
| | | 1 | **377-5102** | 1 | FOAM | |
| | 17 | 2 | **382-2181** | 1 | INSULATION | |
| | 18 | 1 | **5P-1076** | 3 | WASHER-HARD (13.5X30X4-MM THK) | |
| | 19 | 1 | **8T-4121** | 3 | WASHER-HARD (11X21X2.5-MM THK) | |
| M | 20 | 1 | **8T-4137** | 3 | BOLT (M10X1.5X20-MM) | |
| M | 21 | 1 | **8T-4183** | 3 | BOLT (M12X1.75X40-MM) | |
| M | 22 | 1 | **8T-4184** | 5 | BOLT (M12X1.75X45-MM) | |
| M | 23 | 2 | **8T-4196** | 2 | BOLT (M10X1.5X35-MM) | |
| | 24 | 1 | **8T-4223** | 8 | WASHER-HARD (13.5X25.5X3-MM THK) | |
| M | 25 | 1 | **8T-4956** | 3 | BOLT (M12X1.75X35-MM) | |
| | 26 | 2 | **9L-8781** | 2 | WASHER (0.406X1.5X0.188-IN THK) | |
| D | 27 | 1,2 | **5P-5687** | | SEAL (0.1-M EACH) | |
| D | 27A | 2 | **5P-5687** | | SEAL (0.2-M) | |

D - ORDER BY THE METER
M - METRIC PART

*382-0401* **FRAME GP-REAR (*contd.*)** **i04623160**

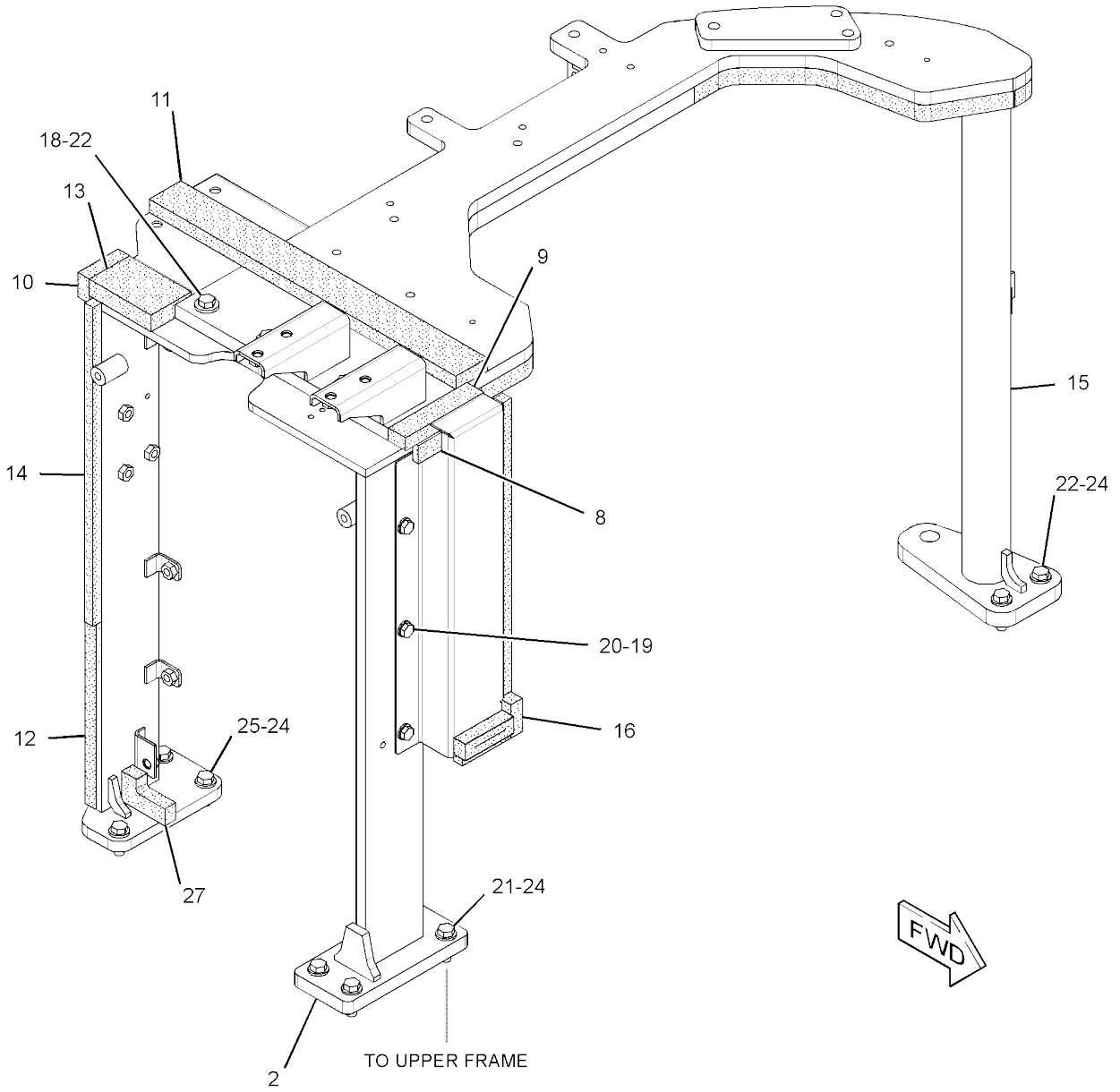


GRAPHIC #1 g02814217

*382-0401* **FRAME GP-REAR (*contd.*)** **i04623160**

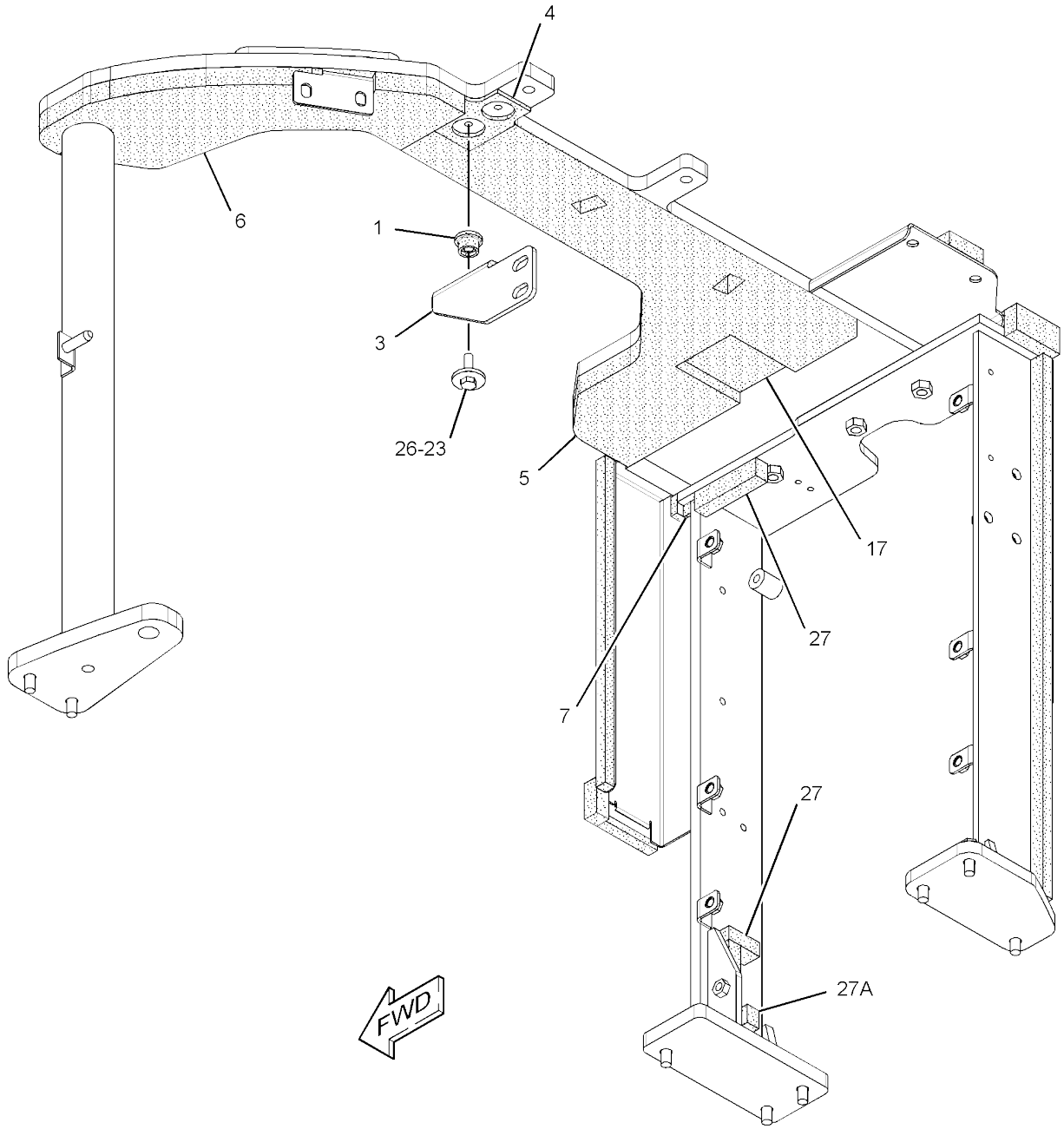


GRAPHIC #2 **<END>** g02814656

# *266-4069* FRAME GP-SWING

**PART OF 376-6680 BOOM AR**

**SMCS-6506** **i04243213**

| NOTE | REF NO | GRAPHIC REF | PART NUMBER | QTY | PART NAME 1 2 3 4 5 6 (PRODUCT LEVEL) | SEE PAGE |
|---|---|---|---|---|---|---|
| B | 1 | 1 | **093-0083** | 2 | SHIM (1-MM THK) | |
| B | 2 | 1 | **133-2425** | 1 | SHIM (0.5-MM THK) | |
| B | 3 | 1 | **140-4741** | 4 | SHIM (1-MM THK) | |
| | 4 | 1 | **266-3872** | 1 | BOSS | |
| | 5 | 1 | **266-4071** | 1 | PIN AS | |
| | 6 | 1 | **266-4078** | 2 | WASHER-THRUST (82X140X3-MM THK) | |
| | 7 | 1 | **271-5889** | 2 | SCREW (M12X1.75X50-MM) | |
| | 8 | 1 | **281-0902** | 1 | PIN AS | |
| | 9 | 1 | **367-7122** | 1 | SUPPORT & BEARING AS | |
| | 9A | 1 | **281-0923** | 1 | BUSHING | |
| | 9B | 1 | **281-0924** | 2 | BUSHING | |
| | 9C | 1 | **281-0925** | 1 | BUSHING | |
| | 10 | 1 | **281-0926** | 2 | BOSS | |
| | 11 | 1 | **294-3097** | 1 | PIN AS | |
| | 12 | 1 | **281-0930** | 1 | PIN | |
| | 13 | 1 | **6V-8513** | 2 | WASHER-HARD (11X35X2.5-MM THK) | |
| | 14 | 1 | **8T-4121** | 1 | WASHER-HARD (11X21X2.5-MM THK) | |
| M | 15 | 1 | **8T-4137** | 2 | BOLT (M10X1.5X20-MM) | |
| M | 16 | 1 | **8T-4196** | 1 | BOLT (M10X1.5X35-MM) | |
| | 17 | 1 | **8T-4223** | 2 | WASHER-HARD (13.5X25.5X3-MM THK) | |
| | 18 | 1 | **292-0153** | 1 | PIN AS | |

B - USE AS REQUIRED
M - METRIC PART

*266-4069* **FRAME GP-SWING (*contd.*)** **i04243213**

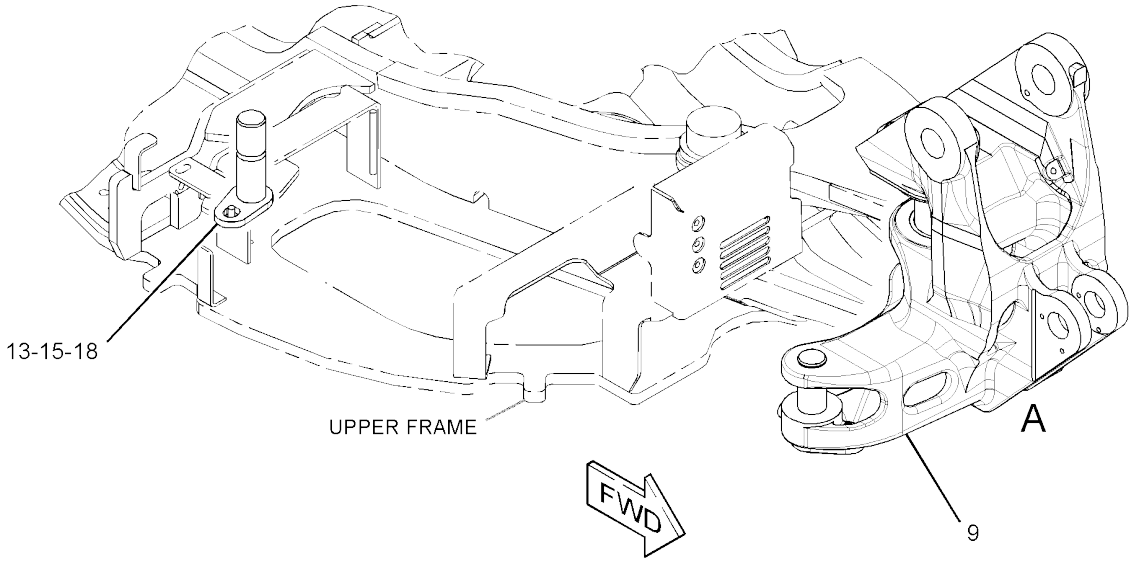


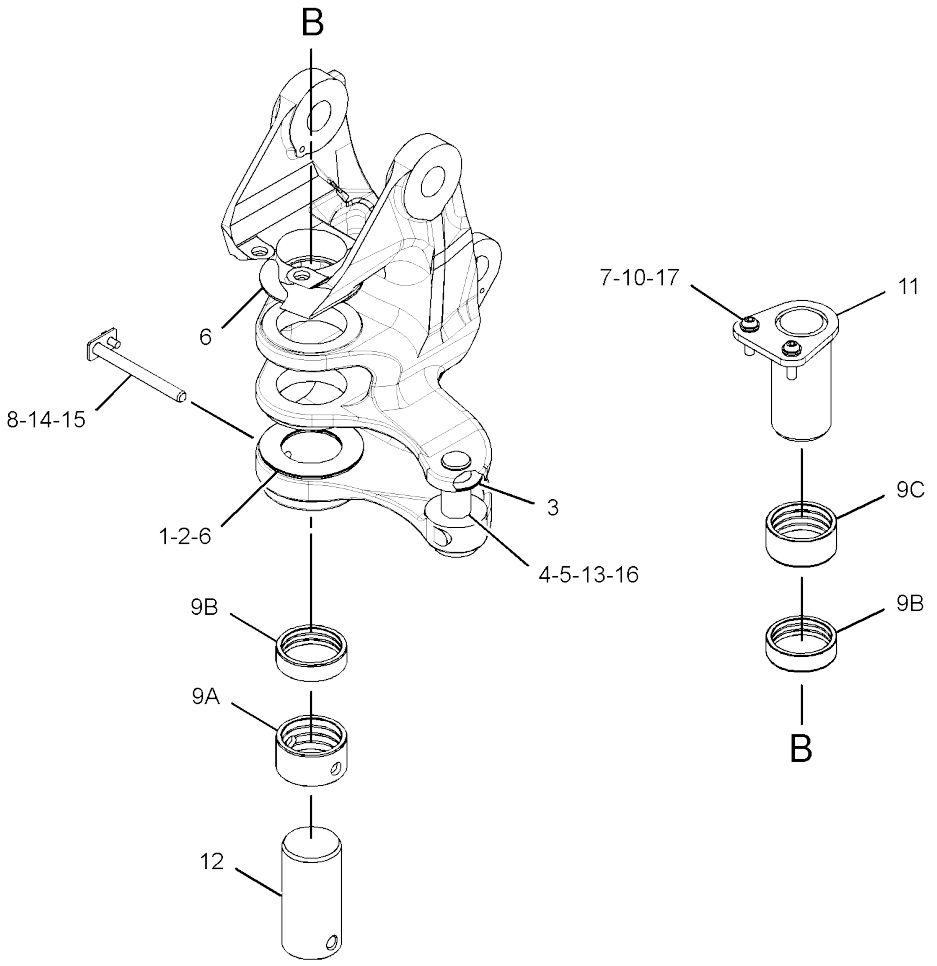


VIEW OF AREA A
(EXPLODED)

GRAPHIC #1

**<END>**

g02220254

# *376-6212* FRAME GP-UPPER

**PART OF 376-6676 CHASSIS AR**

**SMCS-7051** **i04725139**

| NOTE | REF NO | GRAPHIC REF | PART NUMBER | QTY | PART NAME 1 2 3 4 5 6 (PRODUCT LEVEL) | SEE PAGE |
|---|---|---|---|---|---|---|
| | 1 | 1 | **376-6213** | 1 | FRAME AS-UPPER | |
| | 1A | 1 | **199-4803** | 4 | SEAL-LIP TYPE | |
| | 1B | 1 | **266-4050** | 2 | BUSHING | |
| | 2 | 1 | **378-8105** | 1 | SEAL | |
| | 3 | 1 | **378-8111** | 1 | SEAL | |
| | 4 | 1 | **378-8113** | 1 | FOAM | |
| | 5 | 1 | **378-8121** | 1 | FOAM | |
| | 6 | 1 | **378-8125** | 1 | FOAM | |
| | 7 | 1 | **378-8129** | 1 | FOAM | |
| | 8 | 1 | **380-6374** | 1 | FOAM | |
| | 9 | 1 | **383-6388** | 1 | FOAM | |
| | 10 | 1 | **3B-8489** | 2 | FITTING-GREASE | |

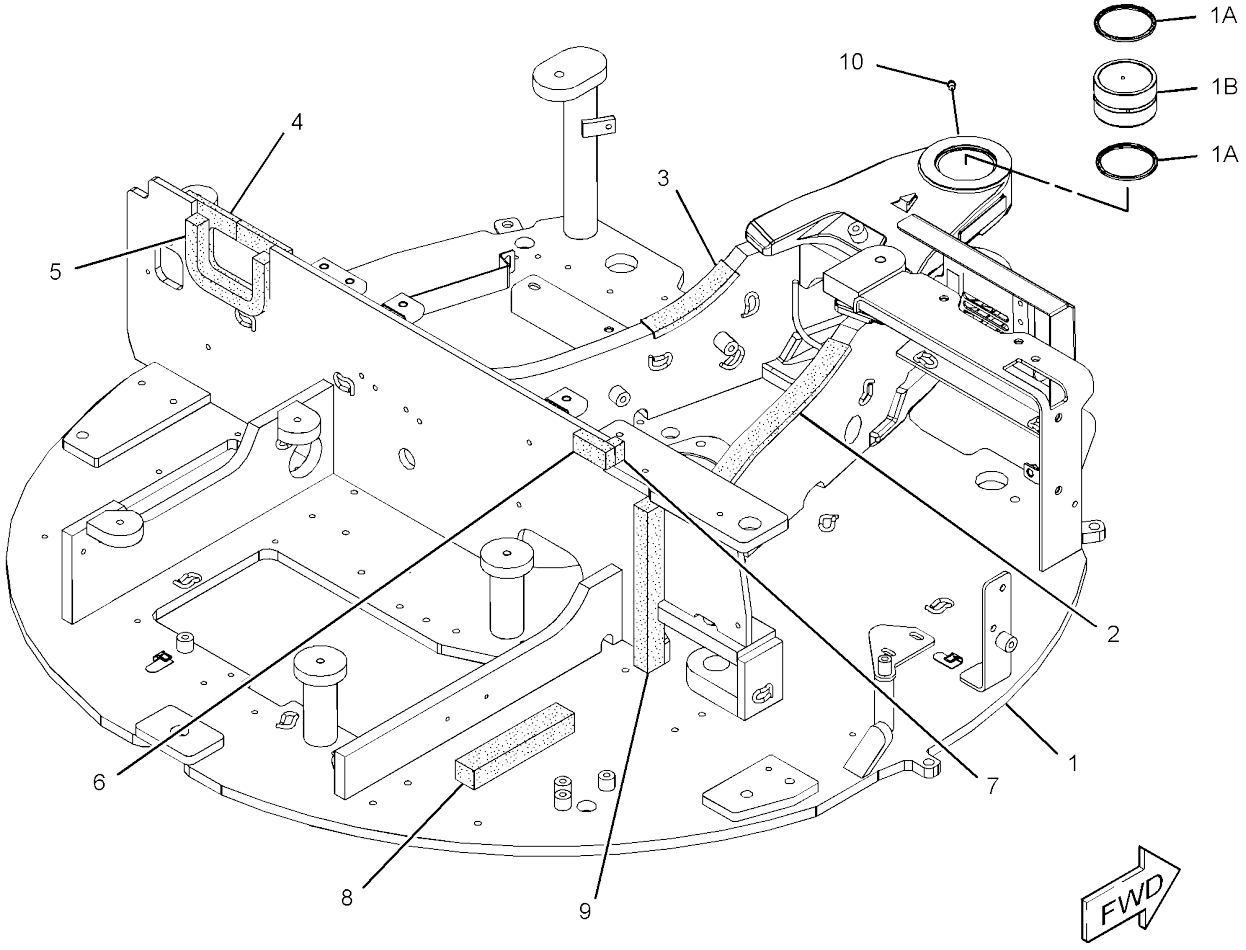


GRAPHIC #1 **<END>** g02866617

# *384-5724* GUARD GP-BOTTOM

**PART OF 376-6676 CHASSIS AR**

**SMCS-7153** **i04728118**

| NOTE | REF NO | GRAPHIC REF | PART NUMBER | QTY | PART NAME 1 2 3 4 5 6 (PRODUCT LEVEL) | SEE PAGE |
|---|---|---|---|---|---|---|
| | 1 | 1 | **384-5725** | 1 | COVER | |
| | 2 | 1 | **7X-7729** | 5 | WASHER (11X25X3-MM THK) | |
| M | 3 | 1 | **8T-4137** | 5 | BOLT (M10X1.5X20-MM) | |

M - METRIC PART

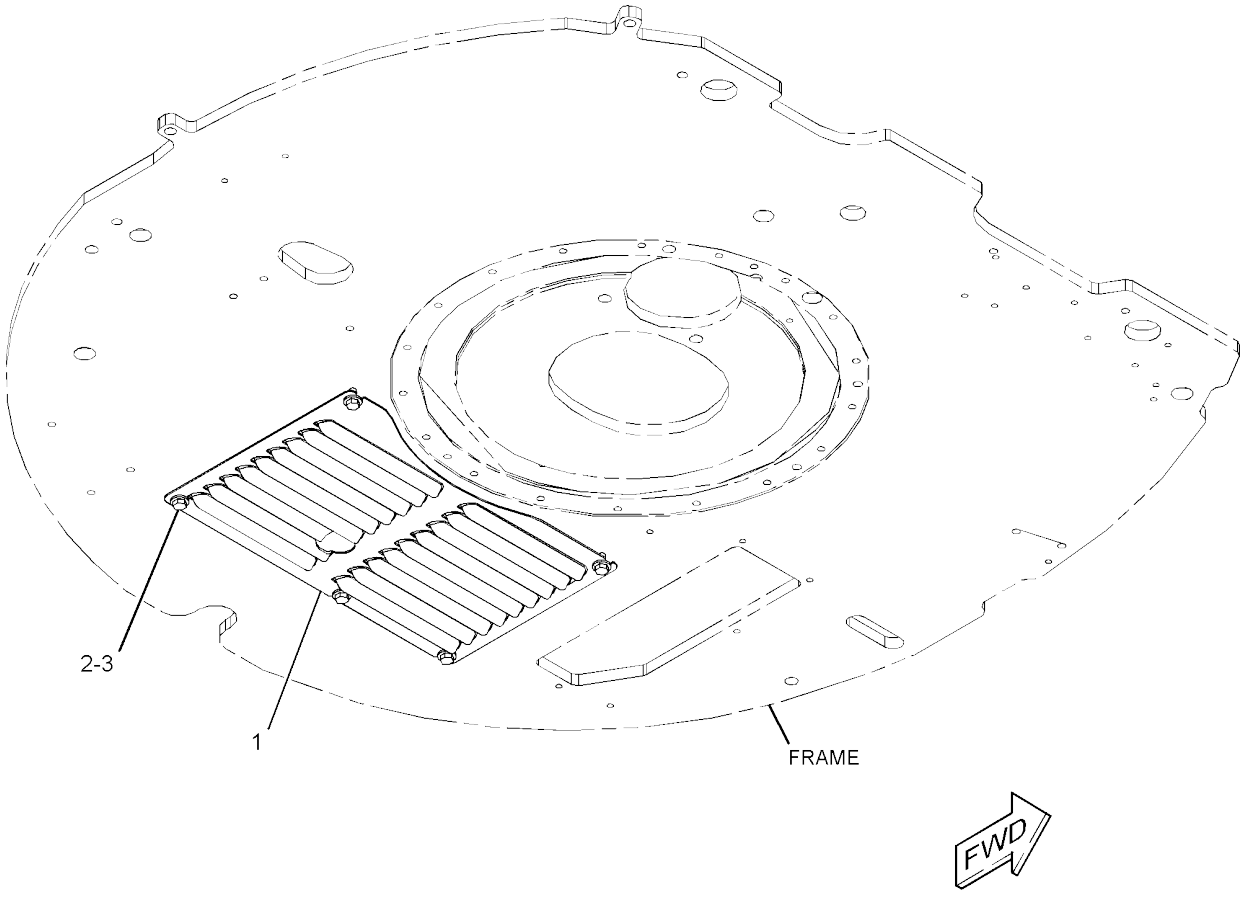


GRAPHIC #1 **<END>** g02852942

# *270-6501* GUARD GP-CYLINDER–BOOM

**PART OF 376-6680 BOOM AR**

**SMCS-7164** **i04046736**

| NOTE | REF NO | GRAPHIC REF | PART NUMBER | QTY | PART NAME 1 2 3 4 5 6 (PRODUCT LEVEL) | SEE PAGE |
|---|---|---|---|---|---|---|
| | 1 | 1 | **140-4780** | 1 | WASHER (10.5X32X3.2-MM THK) | |
| | 2 | 1 | **172-2596** | 2 | TUBE | |
| | 3 | 1 | **266-4024** | 1 | WASHER-SPRING | |
| | 4 | 1 | **363-5744** | 1 | COVER-ROD | |
| M | 5 | 1 | **8T-4137** | 1 | BOLT (M10X1.5X20-MM) | |

M - METRIC PART

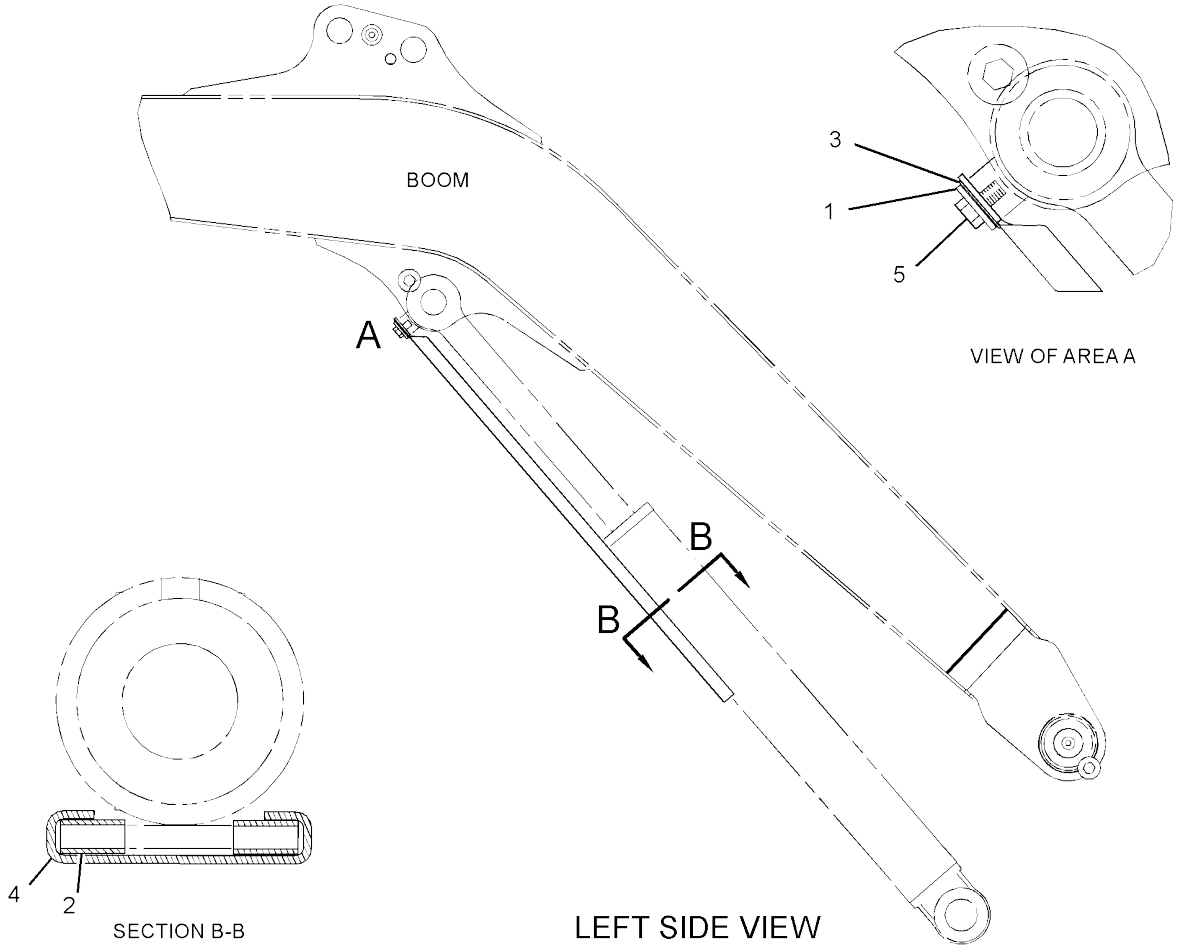


GRAPHIC #1

**<END>**

g01222640

## *290-8287* GUARD GP-CYLINDER—POWER ANGLE

**PART OF 377-8930 BLADE AR-ANGLING**
**AN ATTACHMENT**

**SMCS-7164** **i04015470**

| NOTE | REF NO | GRAPHIC REF | PART NUMBER | QTY | PART NAME 1 2 3 4 5 6 (PRODUCT LEVEL) | SEE PAGE |
|---|---|---|---|---|---|---|
| | 1 | 1 | **195-8154** | 2 | GUIDE | |
| | 2 | 1 | **290-8288** | 1 | COVER AS | |
| | 3 | 1 | **290-8290** | 1 | COVER AS | |
| | 4 | 1 | **290-8293** | 1 | COVER-ROD | |
| | 5 | 1 | **7X-0632** | 1 | WASHER-HARD (11X36X6-MM THK) | |
| | 6 | 1 | **8T-4121** | 6 | WASHER-HARD (11X21X2.5-MM THK) | |
| M | 7 | 1 | **8T-4136** | 4 | BOLT (M10X1.5X25-MM) | |
| M | 8 | 1 | **8T-4137** | 3 | BOLT (M10X1.5X20-MM) | |

M - METRIC PART

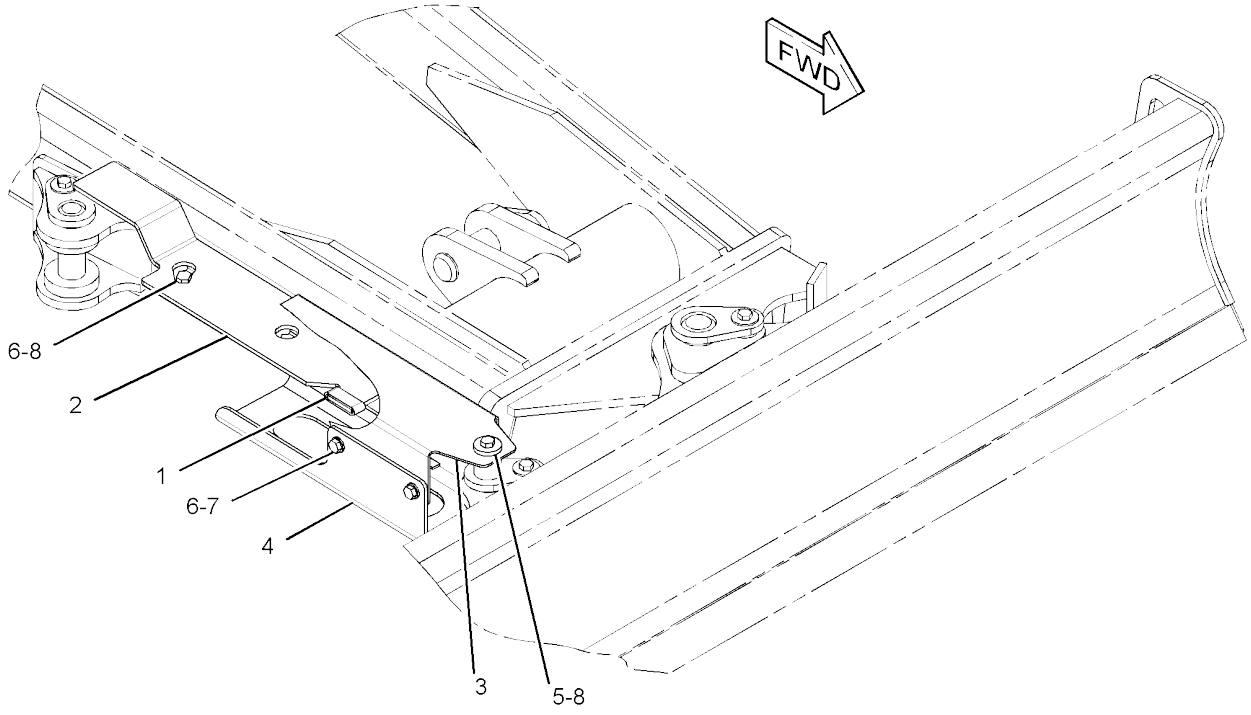


GRAPHIC #1 **<END>** g01359560

# FRAME AND BODY

## *389-8702* GUARD GP-FRONT

**PART OF 389-8701 CAB GP**
**AN ATTACHMENT**

**SMCS-7182** **i04633349**

| NOTE | PART NUMBER | QTY | PART NAME 1 2 3 4 5 6 (PRODUCT LEVEL) | SEE PAGE |
|---|---|---|---|---|
| | **276-3323** | 1 | GUARD AS | |
| | | | | |
| | **280-0407** | 2 | BOLT | |
| | **281-6177** | 6 | BOLT | |
| | **281-1184** | 1 | PLATE | |
| | **281-1185** | 2 | PLATE | |
| | **276-3324** | 1 | SEAL | |

<END>

# *389-8733* GUARD GP-FRONT–MESH

**PART OF 383-5929 CANOPY AR**

**AN ATTACHMENT**

**SMCS-7182** **i04728121**

| NOTE | REF NO | GRAPHIC REF | PART NUMBER | QTY | PART NAME 1 2 3 4 5 6 (PRODUCT LEVEL) | SEE PAGE |
|---|---|---|---|---|---|---|
| | 1 | 1 | **389-8734** | 1 | FRAME AS | |
| M | 2 | 1 | **8T-4192** | 8 | BOLT (M12X1.75X25-MM) | |
| | 3 | 1 | **8T-4223** | 8 | WASHER-HARD (13.5X25.5X3-MM THK) | |

M - METRIC PART

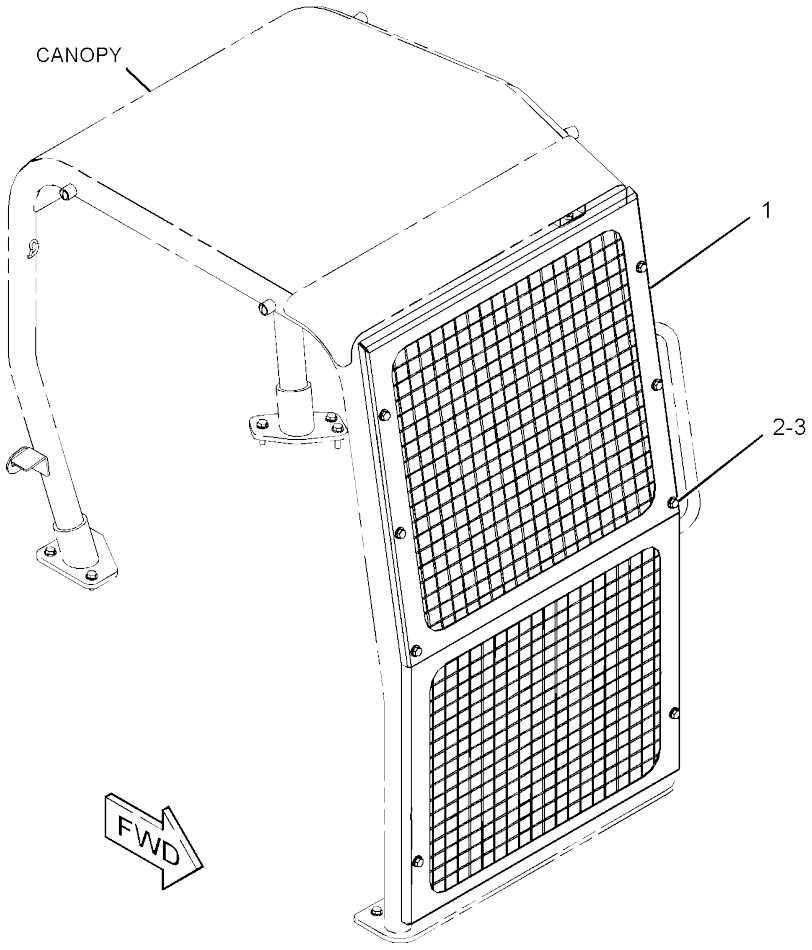


GRAPHIC #1 **<END>** g02853116

# FRAME AND BODY

## *367-0918* HOOD & GUARD GP

**PART OF 376-6676 CHASSIS AR**

**SMCS-7150, 7251** **i04824651**

| NOTE | REF NO | GRAPHIC REF | PART NUMBER | QTY | PART NAME 1 2 3 4 5 6 (PRODUCT LEVEL) | SEE PAGE |
|---|---|---|---|---|---|---|
| | 1 | 1 | **3B-4610** | 1 | PIN-COTTER | |
| | 2 | 1 | **265-8405** | 1 | HINGE AS-HOOD | |
| | 3 | 1 | **265-8407** | 2 | HINGE AS (RH) | |
| | 4 | 1 | **265-8409** | 1 | BRACKET | |
| | 5 | 1 | **265-8463** | 1 | STUD-BALL | |
| B | 6 | 1 | **270-9557** | 2 | SHIM (3-MM THK) | |
| B | 7 | 1 | **270-9558** | 2 | SHIM (1-MM THK) | |
| | 8 | 1 | **276-9257** | 1 | PLATE AS | |
| B | 9 | 1 | **276-9258** | 1 | SHIM (3-MM THK) | |
| | 10 | 1 | **285-7703** | 1 | PLATE AS | |
| | 11 | 1 | **296-0219** | 1 | COVER | |
| | 12 | 1 | **377-7814** | 1 | COVER AS-CENTER | |
| | | 1 | **378-1240** | 1 | INSULATION | |
| | 13 | 1 | **377-7864** | 1 | STRIKER AS | |
| Y | 14 | 1 | **377-7881** | 1 | HOOD GP | 154 |
| Y | 15 | 1 | **377-7883** | 1 | COVER GP-ACCESS (LH) | 131 |
| | 16 | 1 | **377-7885** | 1 | COVER AS-CENTER | |
| M | | 1 | **8T-3490** | 1 | NUT-WELD (M10X1.5-THD) | |
| | | 1 | **377-7940** | 1 | FOAM | |
| | | 1 | **379-6415** | 1 | INSULATION | |
| | | 1 | **379-6416** | 1 | INSULATION | |
| | 17 | 1 | **377-7929** | 1 | SPRING AS-GAS (LOCKABLE) | |
| | 18 | 1 | **377-7930** | 1 | STRIKER AS-HOOD | |
| M | 19 | 1 | **5C-7261** | 3 | NUT (M8X1.25-THD) | |
| | 20 | 1 | **5P-4116** | 1 | WASHER-HARD (8.8X20.5X2-MM THK) | |
| | 21 | 1 | **7X-0579** | 1 | WASHER-HARD (8.8X25.5X2-MM THK) | |
| | 22 | 1 | **377-7874** | 1 | SPACER-RUBBER | |
| | 23 | 1 | **7X-7729** | 29 | WASHER (11X25X3-MM THK) | |
| M | 24 | 1 | **8T-4136** | 20 | BOLT (M10X1.5X25-MM) | |
| M | 25 | 1 | **8T-4137** | 7 | BOLT (M10X1.5X20-MM) | |
| M | 26 | 1 | **8T-4195** | 6 | BOLT (M10X1.5X30-MM) | |
| | 27 | 1 | **8T-4222** | 1 | WASHER-PLATED (11X32X2.5-MM THK) | |
| | 28 | 1 | **8T-4224** | 2 | WASHER-HARD (8.8X16X2-MM THK) | |
| M | 29 | 1 | **8T-7547** | 1 | BOLT (M8X1.25X30-MM) | |

B - USE AS REQUIRED
M - METRIC PART
Y - SEPARATE ILLUSTRATION

*367-0918* **HOOD & GUARD GP (*contd.*)** **i04824651**

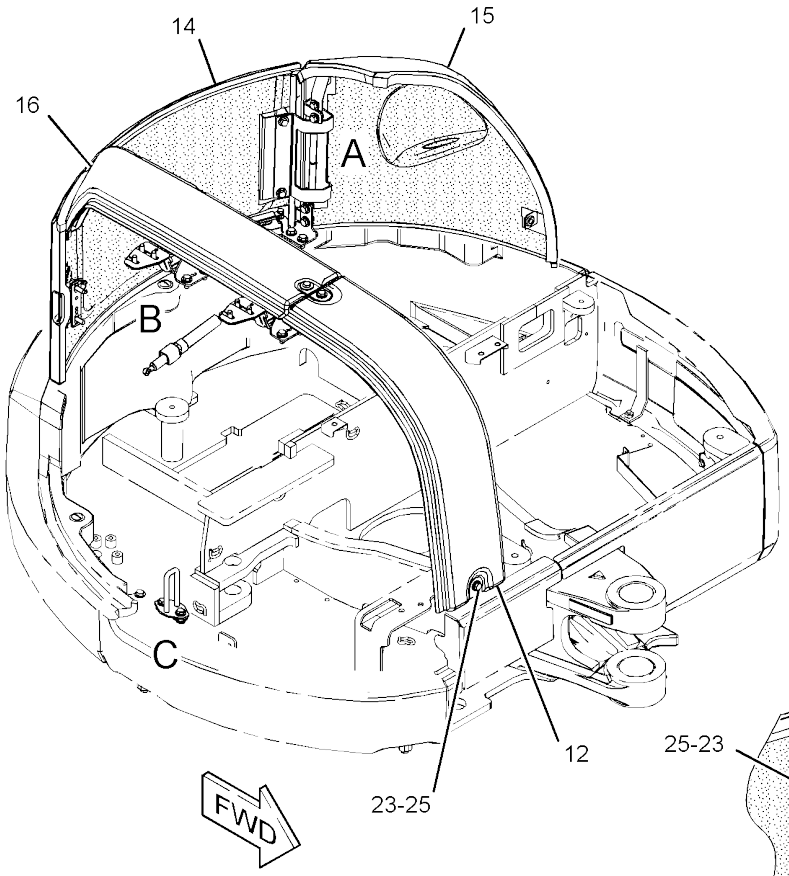


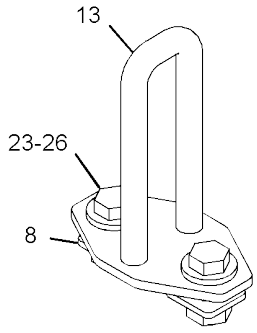


VIEW OF AREA C

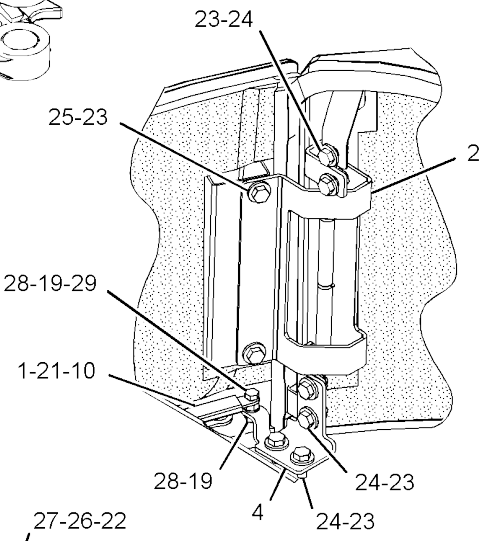


VIEW OF AREA A

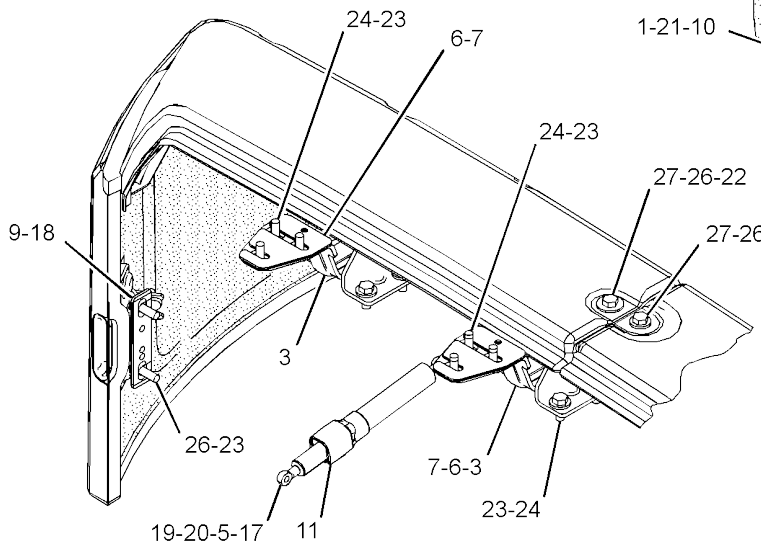


VIEW OF AREA B

GRAPHIC #1 **<END>** g02799259

# 377-7882 HOOD & GUARD GP

**PART OF 382-0497 SUPPRESSION AR-SOUND**
**AN ATTACHMENT**

**SMCS-7150, 7251** **i04629090**

| NOTE | REF NO | GRAPHIC REF | PART NUMBER | QTY | PART NAME 1 2 3 4 5 6 (PRODUCT LEVEL) | SEE PAGE |
|---|---|---|---|---|---|---|
| | 1 | 1 | **265-8463** | 1 | STUD-BALL | |
| | 2 | 1 | **276-9254** | 3 | BUMPER | |
| | 3 | 1 | **334-0257** | 2 | BUMPER | |
| | 4 | 1 | **377-7862** | 1 | LATCH AS | |
| | | 1 | **191-0348** | 1 | GROMMET | |
| | 5 | 1 | **377-7889** | 1 | COVER AS (RH) | |
| M | | 1 | **8T-3490** | 10 | NUT-WELD (M10X1.5-THD) | |
| | | 1 | **381-4596** | 1 | INSULATION | |
| | | 1 | **381-4597** | 1 | INSULATION | |
| | | 1 | **381-4598** | 1 | INSULATION | |
| M | 6 | 1 | **5C-7261** | 1 | NUT (M8X1.25-THD) | |
| | 7 | 1 | **5P-4116** | 1 | WASHER-HARD (8.8X20.5X2-MM THK) | |
| | 8 | 1 | **7X-7729** | 4 | WASHER (11X25X3-MM THK) | |
| M | 9 | 1 | **8T-4133** | 2 | NUT (M10X1.5-THD) | |
| M | 10 | 1 | **8T-4136** | 2 | BOLT (M10X1.5X25-MM) | |
| D | 11 | 1 | **5P-7483** | | SEAL (0.5-M) | |
| J | 12 | 1 | **214-8827** | | SEAL (7.3-DM) | |
| J | 12A | 1 | **214-8827** | | SEAL (8.7-DM) | |
| J | 12B | 1 | **214-8827** | | SEAL (19.7-DM) | |

D - ORDER BY THE METER
J - ORDER BY THE DECIMETER
M - METRIC PART

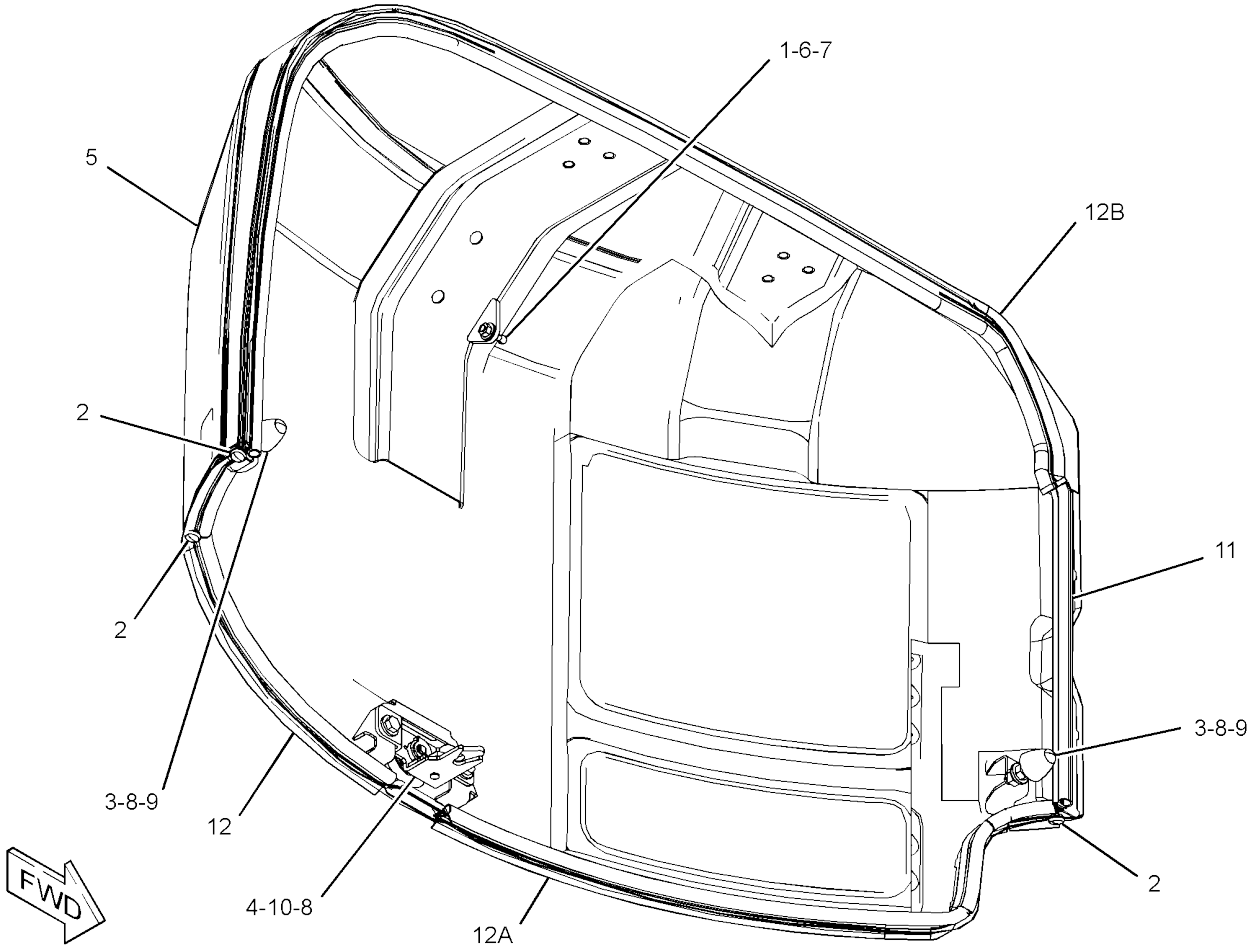


GRAPHIC #1 **<END>** g02798869

# FRAME AND BODY

## *377-7887* HOOD AS

**PART OF 377-7881 HOOD GP**

**SMCS-7251** **i04629829**

| NOTE | REF NO | GRAPHIC REF | PART NUMBER | QTY | PART NAME 1 2 3 4 5 6 (PRODUCT LEVEL) | SEE PAGE |
|---|---|---|---|---|---|---|
| | 1 | 1 | **341-0449** | 1 | FOAM | |
| | 2 | 1 | *377-7891* | 1 | HOOD AS | |
| M | | 1 | **8T-3490** | 4 | NUT-WELD (M10X1.5-THD) | |
| | 3 | 1 | **377-7934** | 1 | FOAM | |
| | 4 | 1 | **377-7935** | 1 | FOAM | |
| | 5 | 1 | **377-7936** | 1 | FOAM | |
| | 6 | 1 | **379-6412** | 1 | INSULATION | |

M - METRIC PART

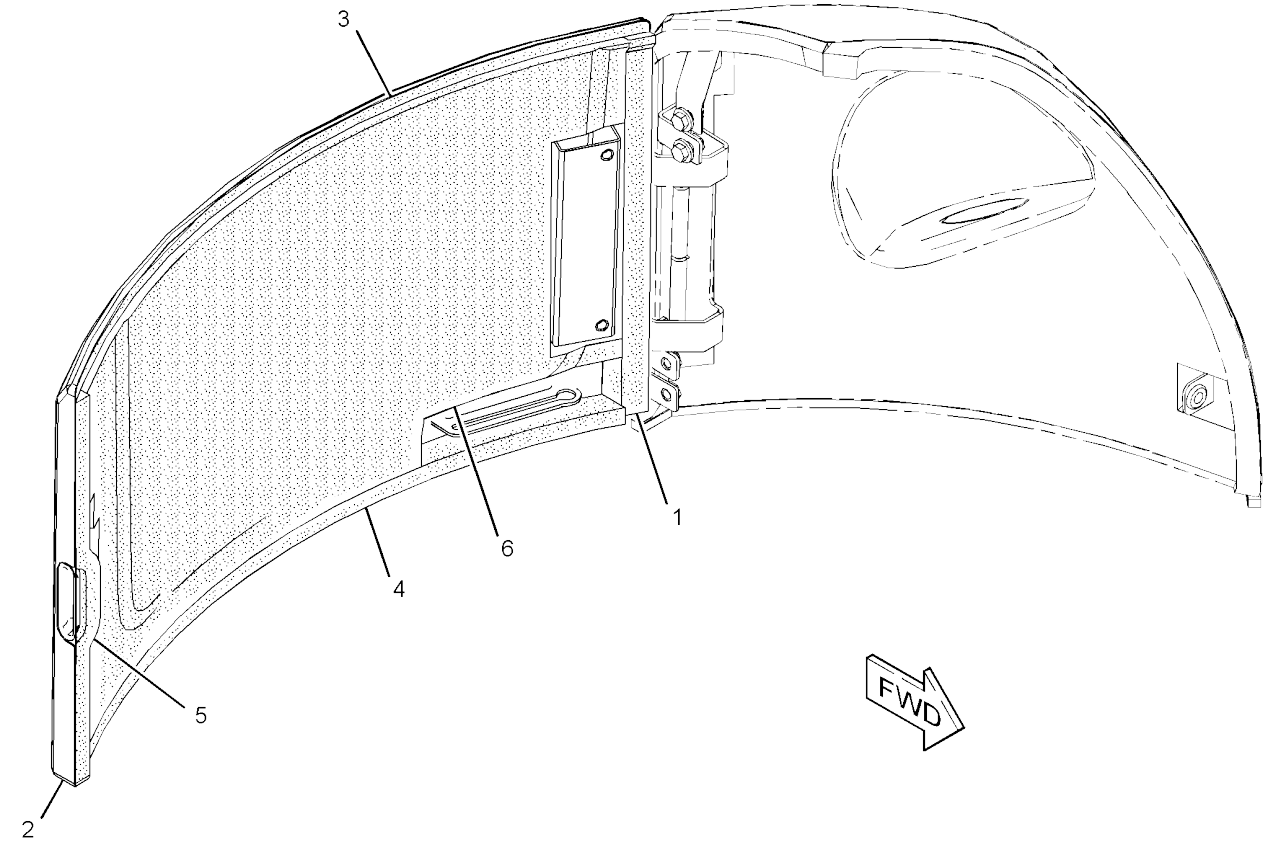


GRAPHIC #1 **<END>** g02798406

# 377-7881 HOOD GP

**PART OF 367-0918 HOOD & GUARD GP**

**SMCS-7251** **i04629828**

| NOTE | REF NO | GRAPHIC REF | PART NUMBER | QTY | PART NAME 1 2 3 4 5 6 (PRODUCT LEVEL) | SEE PAGE |
|---|---|---|---|---|---|---|
| | 1 | 1 | **285-7702** | 1 | COVER-LATCH | |
| | 2 | 1 | **369-3699** | 1 | LATCH AS | |
| | | 1 | **191-0348** | 1 | GROMMET | |
| Y | 3 | 1 | *377-7887* | 1 | HOOD AS | 153 |
| | 4 | 1 | **7X-7729** | 2 | WASHER (11X25X3-MM THK) | |
| M | 5 | 1 | **8T-4136** | 2 | BOLT (M10X1.5X25-MM) | |

M - METRIC PART
Y - SEPARATE ILLUSTRATION

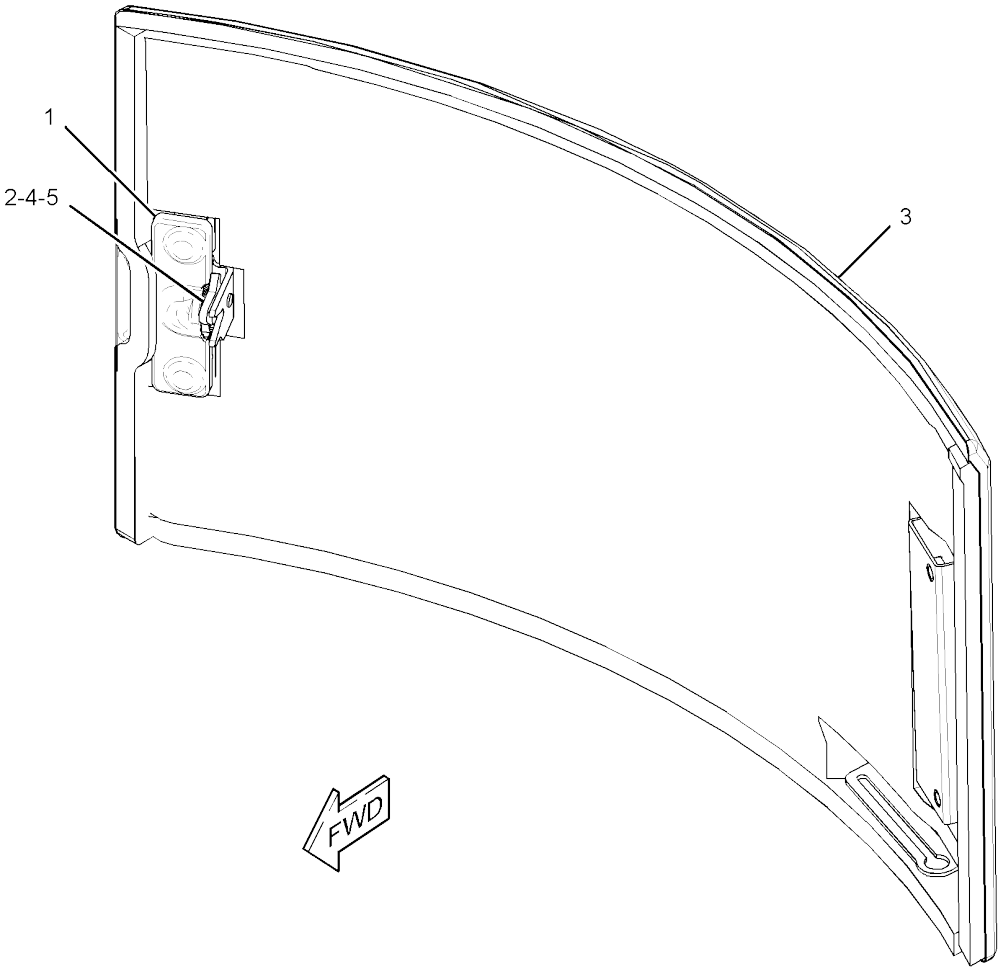


GRAPHIC #1 **<END>** g02800997

# 379-4691 LINES GP-GREASE

**PART OF 376-6676 CHASSIS AR**

**SMCS-7510** **i04629836**

| NOTE | REF NO | GRAPHIC REF | PART NUMBER | QTY | PART NAME 1 2 3 4 5 6 (PRODUCT LEVEL) | SEE PAGE |
|---|---|---|---|---|---|---|
| | 1 | 1 | **3B-8489** | 3 | FITTING-GREASE | |
| | 2 | 1 | **3S-2093** | 1 | STRAP-CABLE | |
| | 3 | 1 | **7K-1181** | 5 | STRAP-CABLE | |
| | 4 | 1 | **002-0639** | 2 | ADAPTER-PIPE | |
| | 5 | 1 | **4P-7581** | 1 | CLIP | |
| | 6 | 1 | **5P-4423** | 6 | ELBOW | |
| | 7 | 1 | **8T-4121** | 1 | WASHER-HARD (11X21X2.5-MM THK) | |
| M | 8 | 1 | **8T-4137** | 1 | BOLT (M10X1.5X20-MM) | |
| L | 9 | 1 | **205-6079** | | TUBE (14.5-DM) | |
| L | 9A | 1 | **205-6079** | | TUBE (8.2-DM) | |
| L | 9B | 1 | **205-6079** | | TUBE (7.6-DM) | |

L - ORDER BY THE DECIMETER
M - METRIC PART

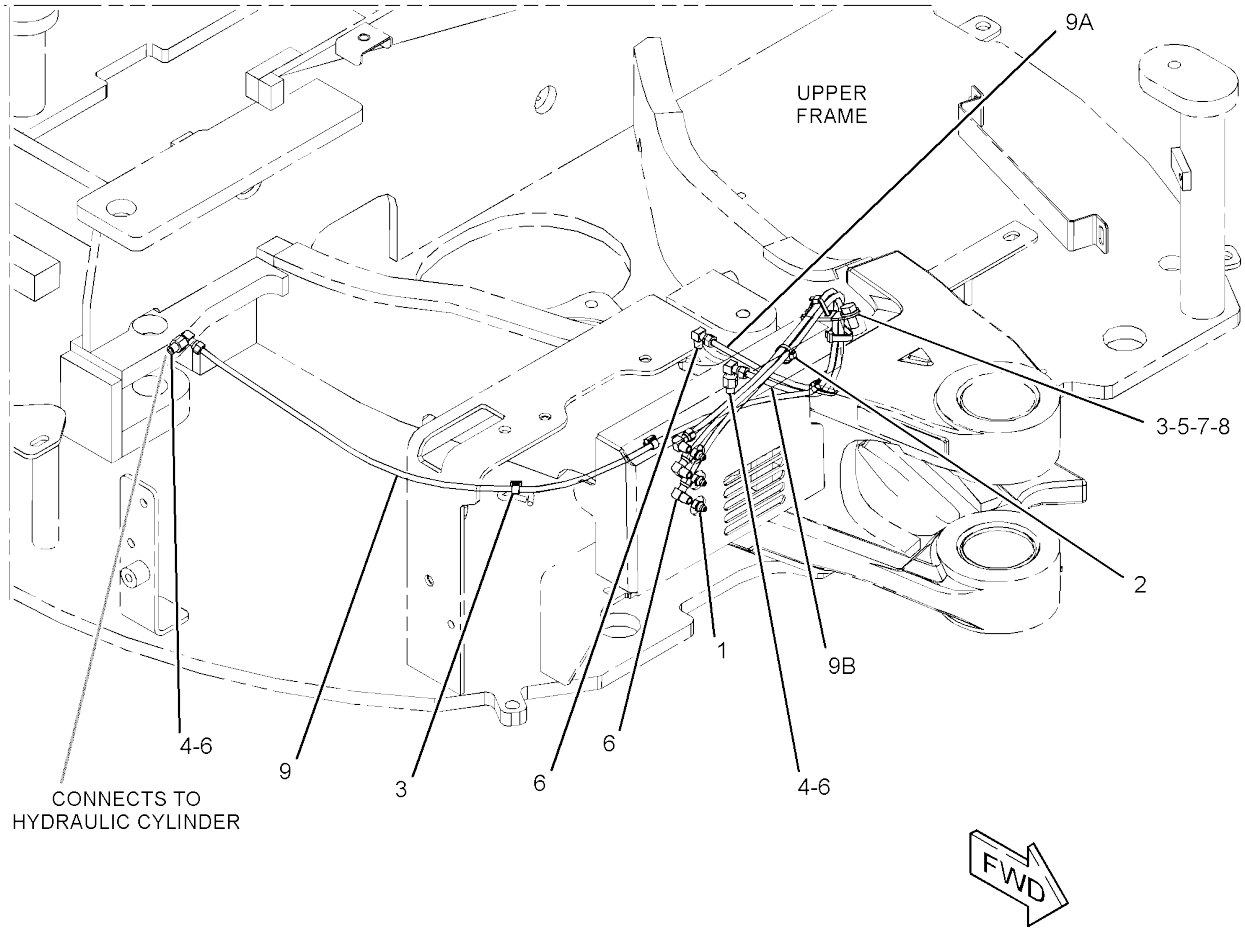


GRAPHIC #1 **<END>** g02798896

# 377-5096 PLATE AS

**PART OF 377-5062 FRAME GP-REAR**
**AN ATTACHMENT**

**SMCS-7262** **i04678649**

| NOTE | REF NO | GRAPHIC REF | PART NUMBER | QTY | PART NAME 1 2 3 4 5 6 (PRODUCT LEVEL) | SEE PAGE |
|---|---|---|---|---|---|---|
| | 1 | 1 | **377-5098** | 1 | FOAM | |
| | 2 | 1 | **377-5100** | 1 | FOAM | |
| | 3 | 1 | **377-5101** | 1 | FOAM | |
| | 4 | 1 | **377-5102** | 1 | FOAM | |
| | 5 | 1 | **377-5103** | 1 | FOAM | |

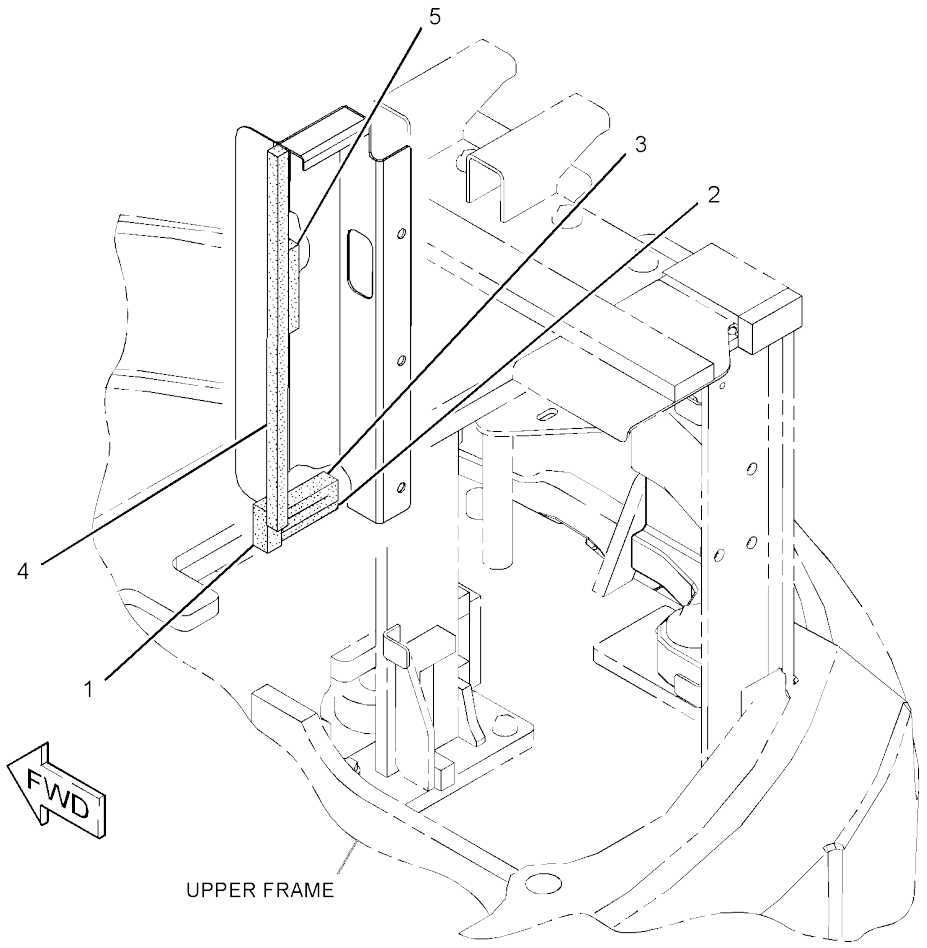


GRAPHIC #1 **<END>** g02799557

# 281-1020 STOP GP-SWING-BOOM

**FIELD INSTALLATION**

**SMCS-6544** **i04019718**

| NOTE | REF NO | GRAPHIC REF | PART NUMBER | QTY | PART NAME 1 2 3 4 5 6 (PRODUCT LEVEL) | SEE PAGE |
|---|---|---|---|---|---|---|
| | 1 | 1 | **284-6393** | 1 | STOP AS | |
| M | 2 | 1 | **8T-4183** | 3 | BOLT (M12X1.75X40-MM) | |
| | 3 | 1 | **8T-4223** | 3 | WASHER-HARD (13.5X25.5X3-MM THK) | |

M - METRIC PART

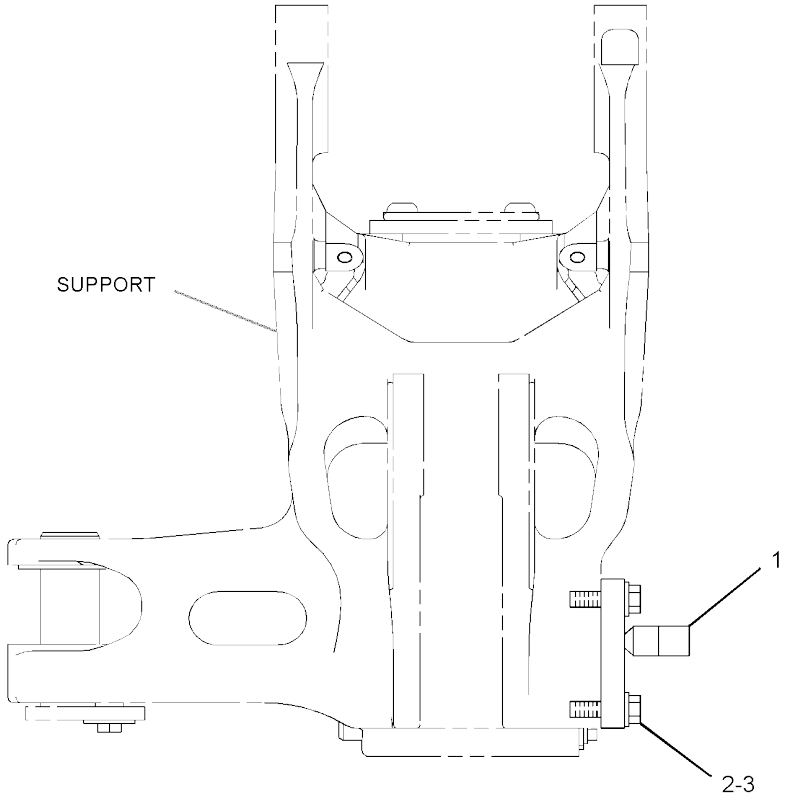


FRONT VIEW

GRAPHIC #1 **<END>** g01223108

## *379-6419* SUPPRESSION AR-SOUND–HIGH AMBIENT

AN ATTACHMENT

**SMCS-1801** **i04629185**

| NOTE | PART NUMBER | QTY | PART NAME 1 2 3 4 5 6 (PRODUCT LEVEL) | SEE PAGE |
|---|---|---|---|---|
| Y | **377-7886** | 1 | COVER GP-ACCESS (RH) | 132 |

Y - SEPARATE ILLUSTRATION

<END>

## *382-0497* SUPPRESSION AR-SOUND

AN ATTACHMENT

**SMCS-1801** **i04728096**

| NOTE | PART NUMBER | QTY | PART NAME 1 2 3 4 5 6 (PRODUCT LEVEL) | SEE PAGE |
|---|---|---|---|---|
| Y | **377-7882** | 1 | HOOD & GUARD GP | 152 |
| Y | *391-3148* | 1 | SUPPRESSION GP-SOUND | 159 |

Y - SEPARATE ILLUSTRATION

<END>

# *391-3148* SUPPRESSION GP-SOUND

**PART OF 382-0497 SUPPRESSION AR-SOUND**
**AN ATTACHMENT**

**SMCS-7076** **i04728123**

| NOTE | REF NO | GRAPHIC REF | PART NUMBER | QTY | PART NAME 1 2 3 4 5 6 (PRODUCT LEVEL) | SEE PAGE |
|---|---|---|---|---|---|---|
| | 1 | 1 | **391-3149** | 1 | INSULATION | |
| | 2 | 1 | **391-3150** | 1 | INSULATION | |
| | 3 | 1 | **391-3151** | 1 | INSULATION | |
| | 4 | 1 | **391-3152** | 1 | INSULATION | |
| | 5 | 1 | **391-3153** | 1 | INSULATION | |
| | 6 | 1 | **391-3154** | 1 | INSULATION | |
| | 7 | 1 | **391-3155** | 1 | INSULATION | |
| | 8 | 1 | **391-3156** | 1 | INSULATION | |
| | 9 | 1 | **391-3157** | 1 | INSULATION | |
| | 10 | 1 | **391-3158** | 1 | INSULATION | |
| | 11 | 1 | **391-3159** | 1 | INSULATION | |
| | 12 | 1 | **391-3160** | 1 | INSULATION | |
| | 13 | 1 | **391-3161** | 1 | INSULATION | |
| | 14 | 1 | **391-3162** | 1 | INSULATION | |
| | 15 | 1 | **391-3163** | 1 | INSULATION | |
| | 16 | 1 | **391-3164** | 1 | INSULATION | |
| | 17 | 1 | **391-3165** | 1 | INSULATION | |
| | 18 | 1 | **391-3166** | 1 | INSULATION | |

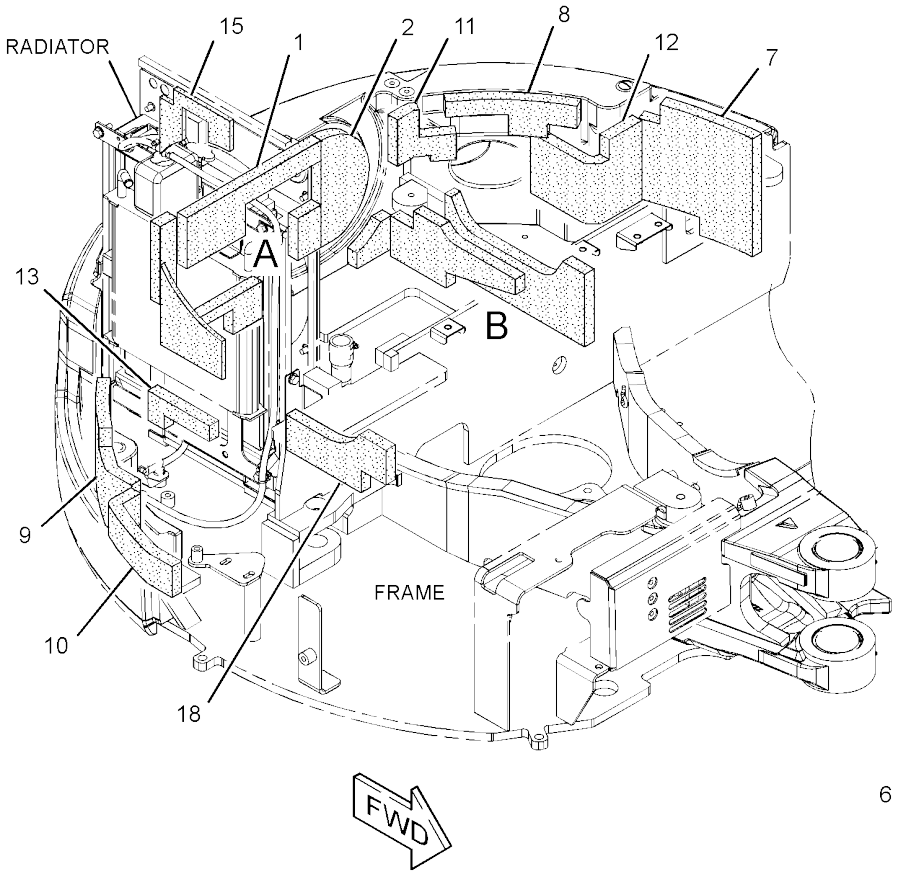


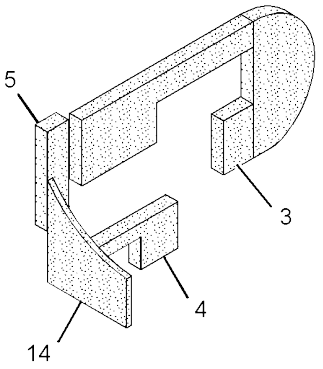


VIEW OF AREA A

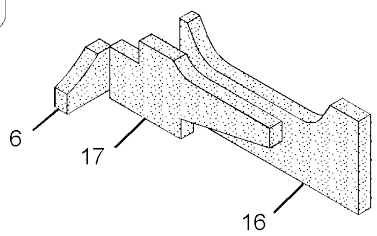


VIEW OF AREA B

GRAPHIC #1 <END> g02883127

# *377-1150* FRAME GP-UNDERCARRIAGE

**PART OF 380-8799 UNDERCARRIAGE AR**

**SMCS-7050** **i04821704**

| NOTE | REF NO | GRAPHIC REF | PART NUMBER | QTY | PART NAME 1 2 3 4 5 6 (PRODUCT LEVEL) | SEE PAGE |
|---|---|---|---|---|---|---|
| | 1 | 1 | **394-2887** | 1 | COVER | |
| | 2 | 1 | **266-8792** | 2 | COVER | |
| | 3 | 1 | **377-1151** | 1 | FRAME AS-UNDERCARRIAGE | |
| | 4 | 1 | **8T-4121** | 6 | WASHER-HARD (11X21X2.5-MM THK) | |
| M | 5 | 1 | **8T-4137** | 6 | BOLT (M10X1.5X20-MM) | |
| M | 6 | 1 | **8T-4139** | 4 | BOLT (M12X1.75X30-MM) | |
| | 7 | 1 | **8T-4223** | 4 | WASHER-HARD (13.5X25.5X3-MM THK) | |
| E | 8 | 1 | **3E-8299** | | SEAL (6-CM EACH) | |
| E | 8A | 1 | **3E-8299** | | SEAL (5.5-CM EACH) | |

E - ORDER BY THE CENTIMETER
M - METRIC PART

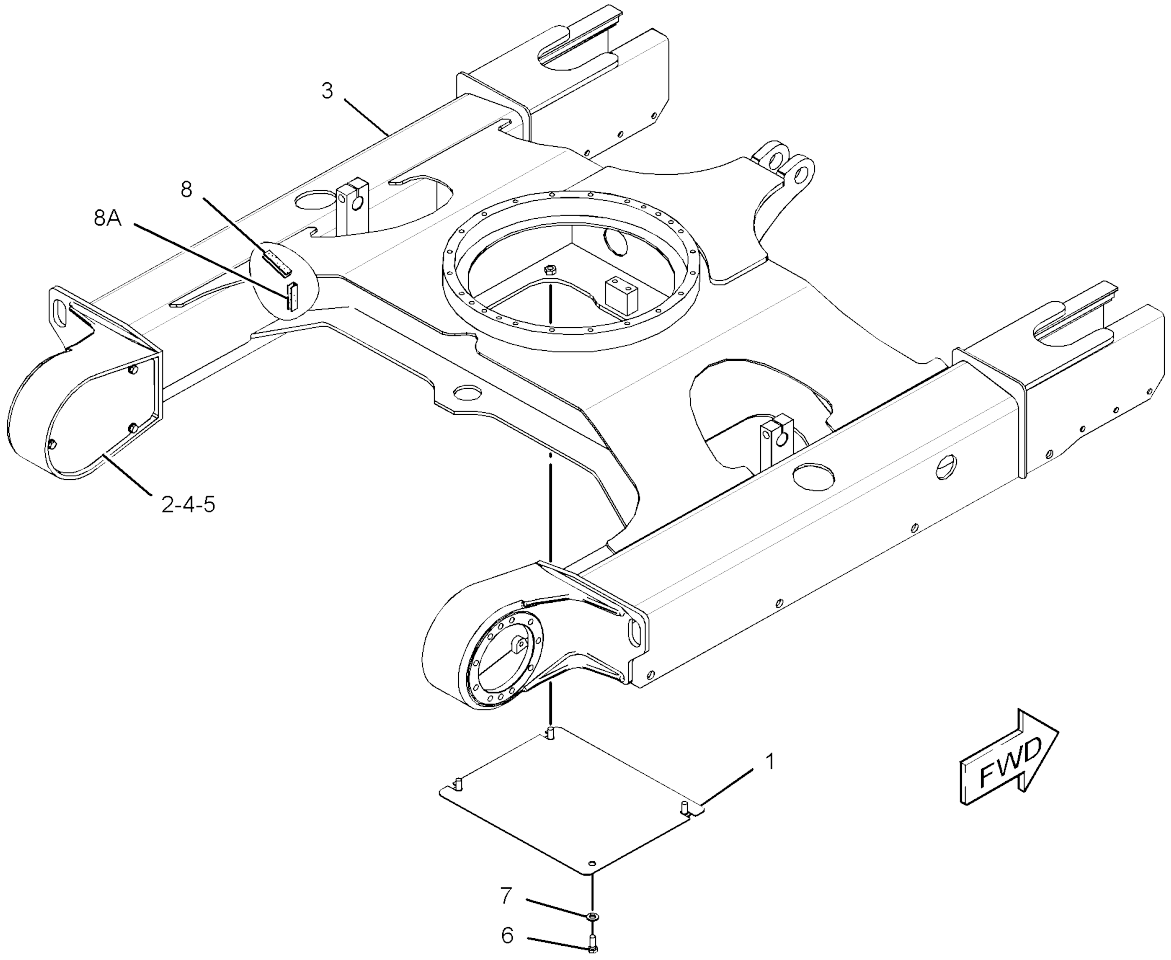


GRAPHIC #1 **<END>** g02866058

# *380-9952* GEAR & BEARING GP-SWING

**PART OF 380-8799 UNDERCARRIAGE AR**

**SMCS-7063** **i04629856**

| NOTE | REF NO | GRAPHIC REF | PART NUMBER | QTY | PART NAME 1 2 3 4 5 6 (PRODUCT LEVEL) | SEE PAGE |
|---|---|---|---|---|---|---|
| | 1 | 1 | **260-6348** | 1 | BEARING AS | |
| E | | 1 | **225-5851** | | SEAL (180-CM) | |
| E | | 1 | **225-5852** | | SEAL (180-CM) | |
| M | 2 | 1 | **8T-4910** | 44 | BOLT (M12X1.75X60-MM) | |
| | 3 | 1 | **140-4986** | 2 | DOWEL | |
| | 4 | 1 | **5P-1076** | 20 | WASHER-HARD (13.5X30X4-MM THK) | |

E - ORDER BY THE CENTIMETER
M - METRIC PART

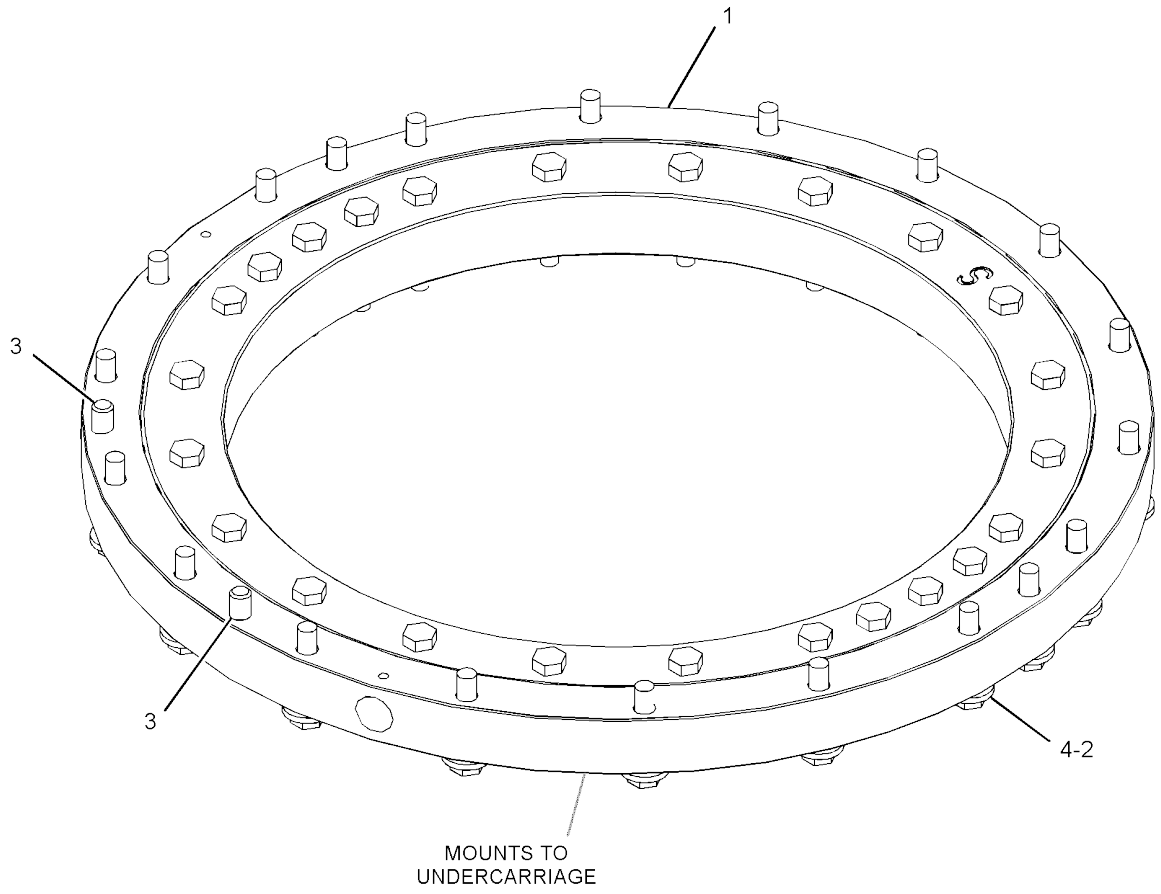


GRAPHIC #1 **<END>** g02798962

# *263-9266* GUARD GP-TRACK GUIDE

**PART OF 263-9251 TRACK GP**
**AN ATTACHMENT**

**SMCS-4177** **i04032493**

| NOTE | REF NO | GRAPHIC REF | PART NUMBER | QTY | PART NAME 1 2 3 4 5 6 (PRODUCT LEVEL) | SEE PAGE |
|---|---|---|---|---|---|---|
| | 1 | 1 | **263-9267** | 1 | GUARD AS-TRACK GUIDE (LH) | |
| | 2 | 1 | **263-9268** | 1 | GUARD AS-TRACK GUIDE (RH) | |
| | 3 | 1 | **8T-4223** | 6 | WASHER-HARD (13.5X25.5X3-MM THK) | |
| M | 4 | 1 | **8T-4956** | 6 | BOLT (M12X1.75X35-MM) | |

M - METRIC PART

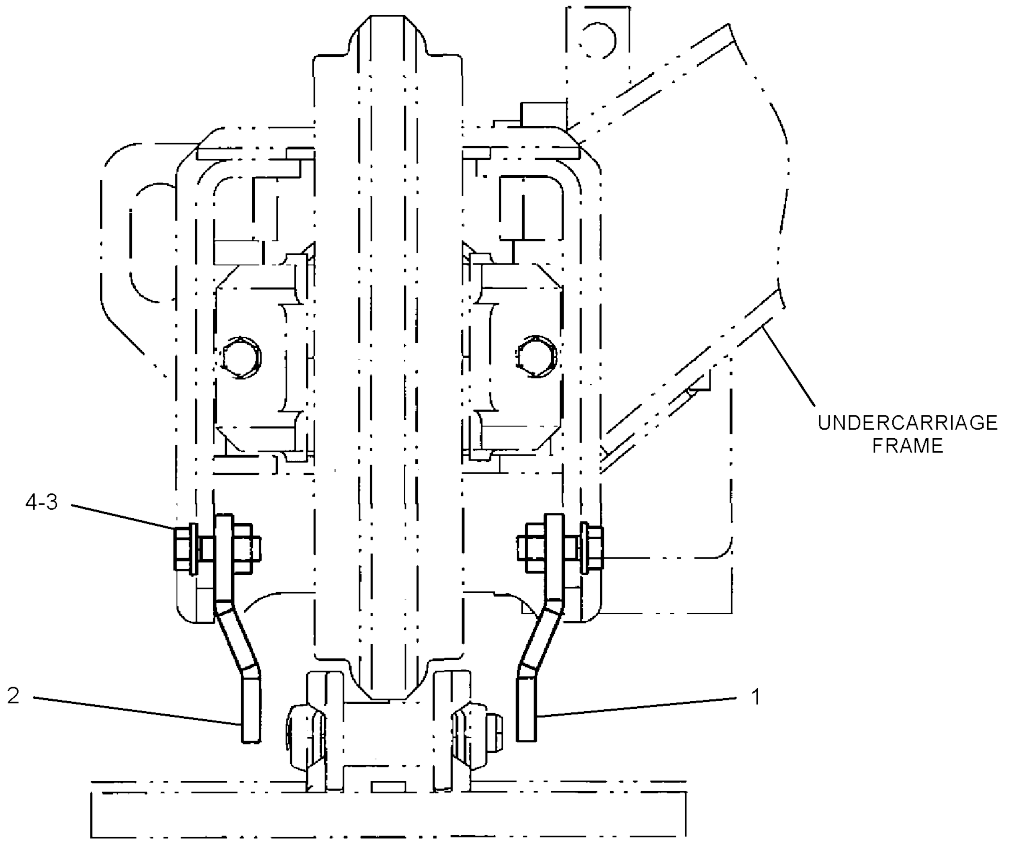


FRONT VIEW

GRAPHIC #1 **<END>** g01223582

# *265-8734* IDLER GP-FRONT

**PART OF 380-8799 UNDERCARRIAGE AR**

**SMCS-4159** **i05357866**

| NOTE | REF NO | GRAPHIC REF | PART NUMBER | QTY | PART NAME 1 2 3 4 5 6 (PRODUCT LEVEL) | SEE PAGE |
|---|---|---|---|---|---|---|
| CY | 1 | 1 | *392-7373* | 1 | IDLER GP-FRONT (LH) | 164 |
| CY | 2 | 1 | *392-7374* | 1 | IDLER GP-FRONT (RH) | 166 |

C - CHANGE FROM PREVIOUS TYPE
Y - SEPARATE ILLUSTRATION

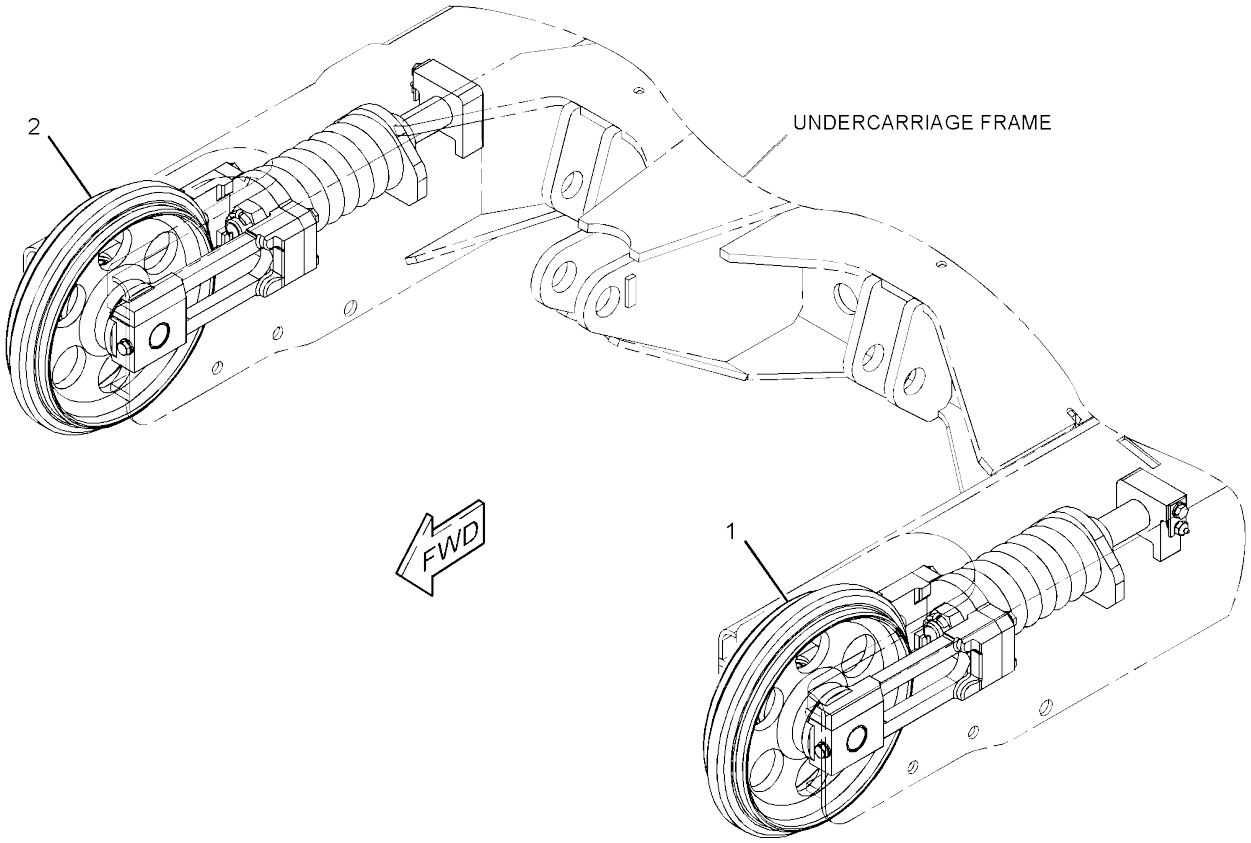


GRAPHIC #1 **<END>** g01220459

# 392-7373 IDLER GP-FRONT–LH

**PART OF 265-8734 IDLER GP-FRONT**

**SMCS-4159** **i05357867**

| NOTE | REF NO | GRAPHIC REF | PART NUMBER | QTY | PART NAME 1 2 3 4 5 6 (PRODUCT LEVEL) | SEE PAGE |
|---|---|---|---|---|---|---|
| | 1 | 1 | **267-4829** | 1 | IDLER & BEARING AS | |
| | 1A | 1 | **154-2233** | 2 | BUSHING | |
| | 2 | 1 | **267-4831** | 1 | SHAFT-TRACK IDLER | |
| | 3 | 1 | **267-4832** | 1 | SUPPORT | |
| | 4 | 1 | **234-8984** | 2 | SEAL GP-DUO-CONE | |
| | 5 | 1 | **095-1595** | 2 | SEAL-O-RING | |
| | 6 | 1 | **154-2235** | 2 | BOLT (M10X1.25X45-MM) | |
| | 7 | 1 | **154-2236** | 3 | WASHER (10.2X22X3.2-MM THK) | |
| | 8 | 1 | **267-4833** | 1 | CYLINDER AS | |
| | 9 | 1 | **095-1604** | 1 | SEAL-O-RING | |
| | 10 | 1 | **095-1794** | 1 | RING-BACKUP | |
| | 11 | 1 | **120-4664** | 1 | SEAL-DUST | |
| | 12 | 1 | **274-8127** | 1 | ROD AS-PISTON (LH) | |
| | 13 | 1 | **232-7692** | 1 | FITTING-GREASE | |
| | 14 | 1 | **274-5381** | 1 | PLATE-LOCK | |
| M | 15 | 1 | **8T-4137** | 1 | BOLT (M10X1.5X20-MM) | |
| | 16 | 1 | **267-4835** | 1 | SPRING | |
| | 17 | 1 | **267-4836** | 1 | PLATE | |
| | 18 | 1 | **120-4636** | 1 | NUT (M30X3-THD) | |
| | 19 | 1 | **3B-4639** | 1 | PIN-COTTER | |
| M | 20 | 1 | **8T-4194** | 4 | BOLT (M12X1.75X50-MM) | |
| | 21 | 1 | **8T-4223** | 4 | WASHER-HARD (13.5X25.5X3-MM THK) | |
| | 22 | 1 | **381-7474** | 1 | SUPPORT | |
| | 23 | 1 | **190-4896** | 1 | PLUG | |

M - METRIC PART

*392-7373* **IDLER GP-FRONT (*contd.*)** **i05357867**

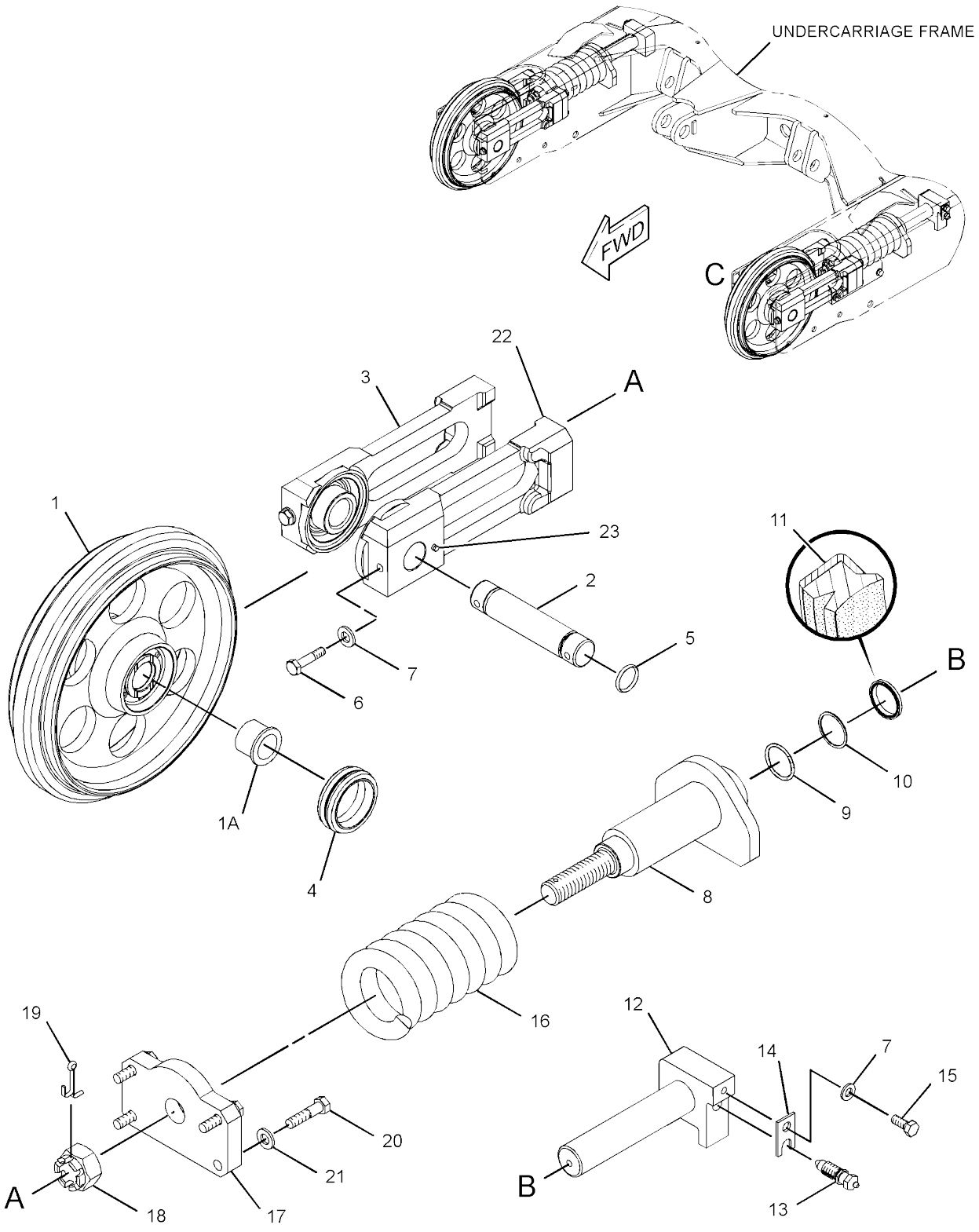


VIEW OF AREA C
(EXPLODED)

GRAPHIC #1 **<END>** g02890516

# 392-7374 IDLER GP-FRONT–RH

**PART OF 265-8734 IDLER GP-FRONT**

**SMCS-4159** **i05357868**

| NOTE | REF NO | GRAPHIC REF | PART NUMBER | QTY | PART NAME 1 2 3 4 5 6 (PRODUCT LEVEL) | SEE PAGE |
|---|---|---|---|---|---|---|
| | 1 | 1 | **267-4829** | 1 | IDLER & BEARING AS | |
| | 1A | 1 | **154-2233** | 2 | BUSHING | |
| | 2 | 1 | **267-4831** | 1 | SHAFT-TRACK IDLER | |
| | 3 | 1 | **267-4832** | 1 | SUPPORT | |
| | 4 | 1 | **234-8984** | 2 | SEAL GP-DUO-CONE | |
| | 5 | 1 | **095-1595** | 2 | SEAL-O-RING | |
| | 6 | 1 | **154-2235** | 2 | BOLT (M10X1.25X45-MM) | |
| | 7 | 1 | **154-2236** | 3 | WASHER (10.2X22X3.2-MM THK) | |
| | 8 | 1 | **267-4833** | 1 | CYLINDER AS | |
| | 9 | 1 | **095-1604** | 1 | SEAL-O-RING | |
| | 10 | 1 | **095-1794** | 1 | RING-BACKUP | |
| | 11 | 1 | **120-4664** | 1 | SEAL-DUST | |
| | 12 | 1 | **274-8128** | 1 | ROD AS-PISTON (RH) | |
| | 13 | 1 | **232-7692** | 1 | FITTING-GREASE | |
| | 14 | 1 | **274-5381** | 1 | PLATE-LOCK | |
| M | 15 | 1 | **8T-4137** | 1 | BOLT (M10X1.5X20-MM) | |
| | 16 | 1 | **267-4835** | 1 | SPRING | |
| | 17 | 1 | **267-4836** | 1 | PLATE | |
| | 18 | 1 | **120-4636** | 1 | NUT (M30X3-THD) | |
| | 19 | 1 | **3B-4639** | 1 | PIN-COTTER | |
| M | 20 | 1 | **8T-4194** | 4 | BOLT (M12X1.75X50-MM) | |
| | 21 | 1 | **8T-4223** | 4 | WASHER-HARD (13.5X25.5X3-MM THK) | |
| | 22 | 1 | **381-7474** | 1 | SUPPORT | |
| | 23 | 1 | **190-4896** | 1 | PLUG | |

M - METRIC PART

*392-7374* **IDLER GP-FRONT (*contd.*)** **i05357868**

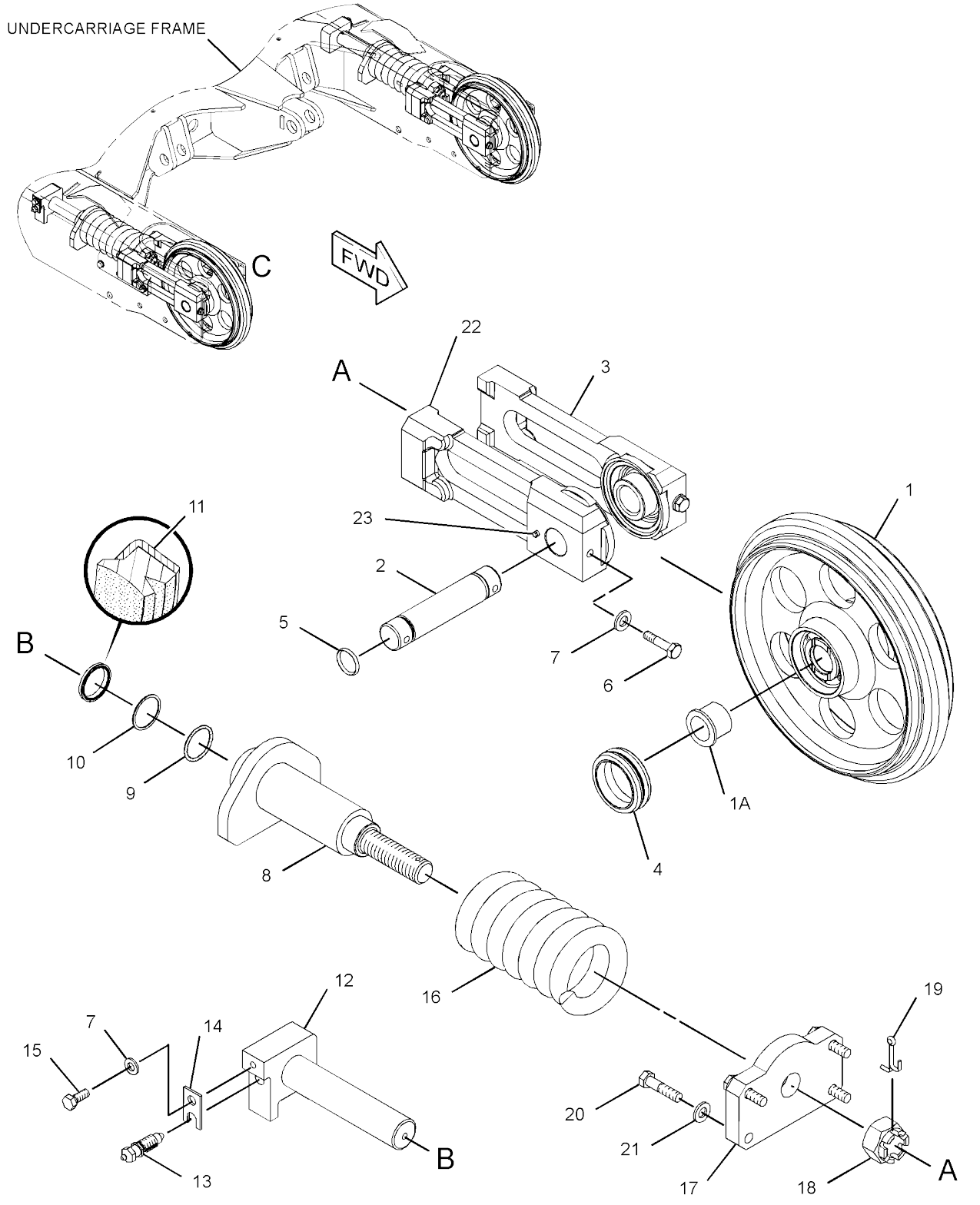


VIEW OF AREA C
(EXPLODED)

GRAPHIC #1 **<END>** g02893624

# 263-9253 LINK AS-TRACK

**PART OF 263-9252 TRACK GP**
**AN ATTACHMENT**

**SMCS-4169, 4171** **i04032492**

| NOTE | REF NO | GRAPHIC REF | PART NUMBER | QTY | PART NAME 1 2 3 4 5 6 (PRODUCT LEVEL) | SEE PAGE |
|---|---|---|---|---|---|---|
| | 1 | 1 | **158-4676** | 45 | LINK-TRACK (RH) | |
| | 2 | 1 | **158-4677** | 45 | LINK-TRACK (LH) | |
| | 3 | 1 | **158-4678** | 1 | LINK-MASTER (RH) | |
| | 4 | 1 | **158-4679** | 1 | LINK-MASTER (LH) | |
| | 5 | 1 | **158-4680** | 45 | BUSHING | |
| | 6 | 1 | **158-4681** | 45 | PIN-TRACK | |
| | 7 | 1 | **158-4682** | 1 | PIN-MASTER | |
| | 8 | 1 | **158-4683** | 1 | PIN | |
| | 9 | 1 | **260-6400** | 1 | BUSHING | |

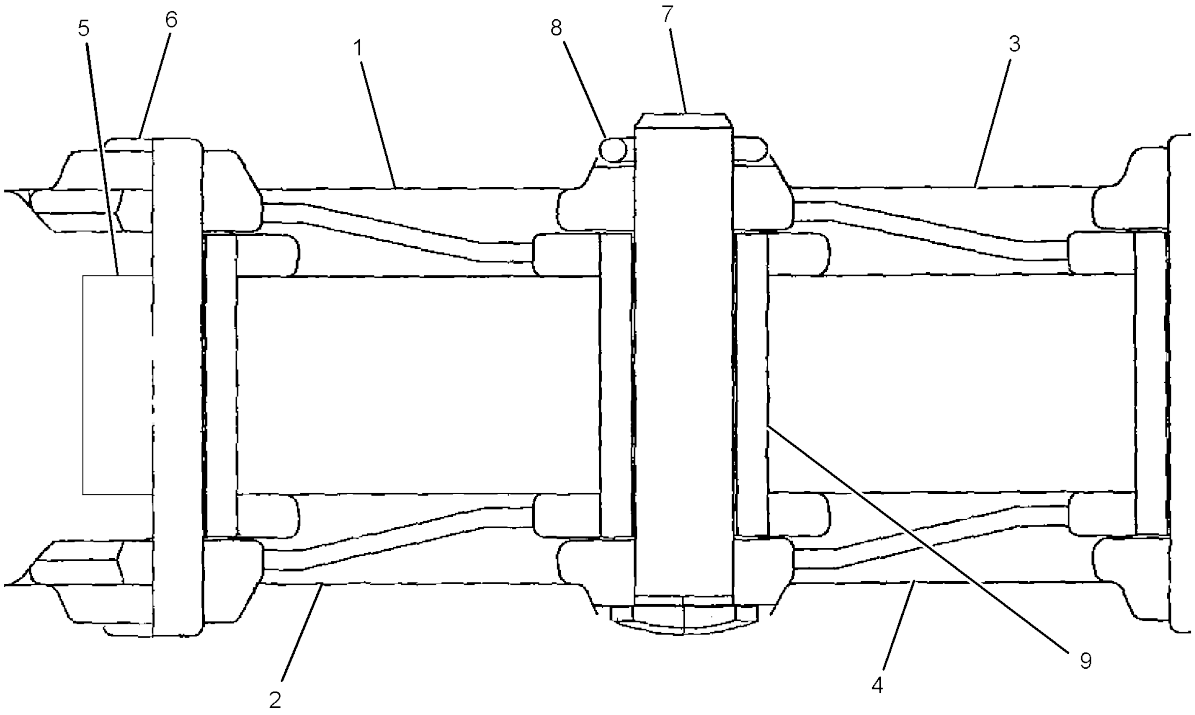


GRAPHIC #1 **<END>** g01221818

# 260-6342 ROLLER AR-TRACK & CARRIER

**PART OF 380-8799 UNDERCARRIAGE AR**

**SMCS-4154, 4180** **i05090830**

| NOTE | REF NO | GRAPHIC REF | PART NUMBER | QTY | PART NAME 1 2 3 4 5 6 (PRODUCT LEVEL) | SEE PAGE |
|---|---|---|---|---|---|---|
| Y | 1 | 1 | **266-8793** | 8 | ROLLER GP-TRACK-CENTER FLANGE | 171 |
| Y | 2 | 1 | **266-8794** | 2 | ROLLER GP-TRACK CARRIER | 170 |
| | 3 | 1 | **7X-0515** | 20 | WASHER-HARD (17X35X5-MM THK) | |
| M | 4 | 1 | **8T-4132** | 4 | NUT (M16X2-THD) | |
| M | 5 | 1 | **8T-4173** | 2 | BOLT (M16X2X110-MM) | |
| M | 6 | 1 | **8T-7338** | 16 | BOLT (M16X2X45-MM) | |

M - METRIC PART
Y - SEPARATE ILLUSTRATION

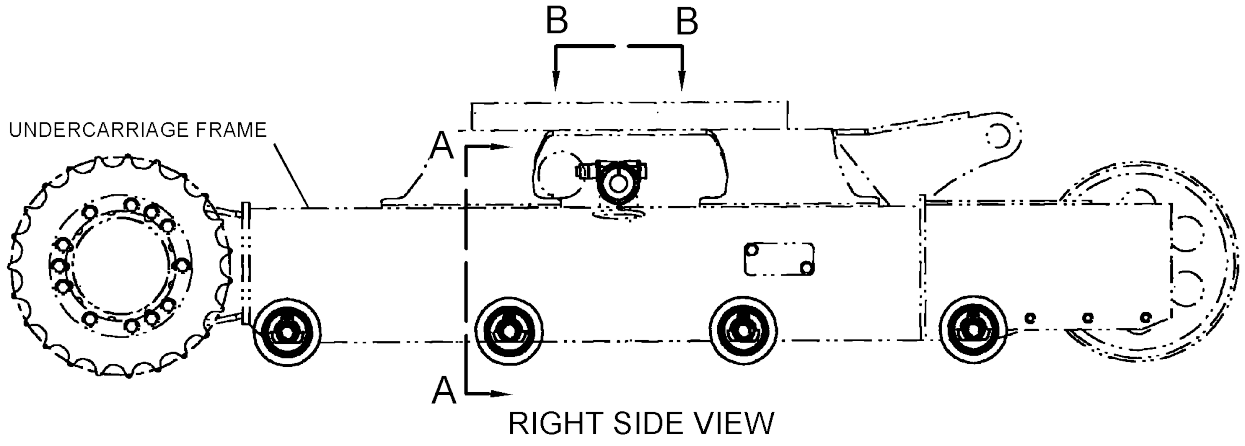


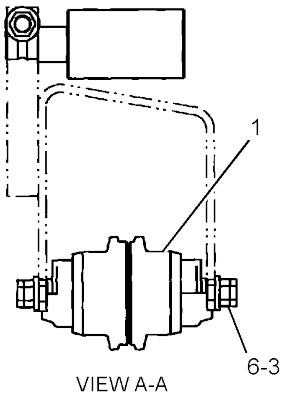


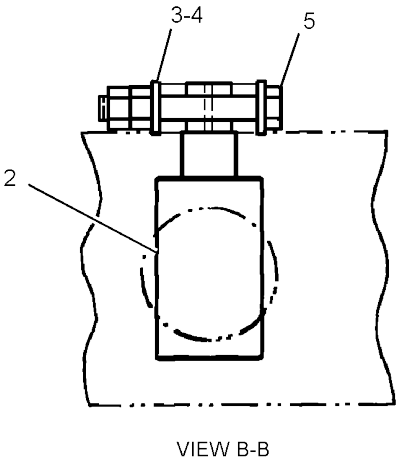


GRAPHIC #1 **<END>** g01220066

# 266-8794 ROLLER GP-TRACK CARRIER

**PART OF 260-6342 ROLLER AR-TRACK & CARRIER**

**SMCS-4154** **i04019612**

| NOTE | REF NO | GRAPHIC REF | PART NUMBER | QTY | PART NAME 1 2 3 4 5 6 (PRODUCT LEVEL) | SEE PAGE |
|---|---|---|---|---|---|---|
| | 1 | 1 | **277-4196** | 1 | SEAL AS | |
| | 2 | 1 | **277-4197** | 1 | CAP AS | |
| | 3 | 1 | **6V-7644** | 1 | RING-RETAINING | |
| | 4 | 1 | **6B-1124** | 2 | BALL BEARING | |

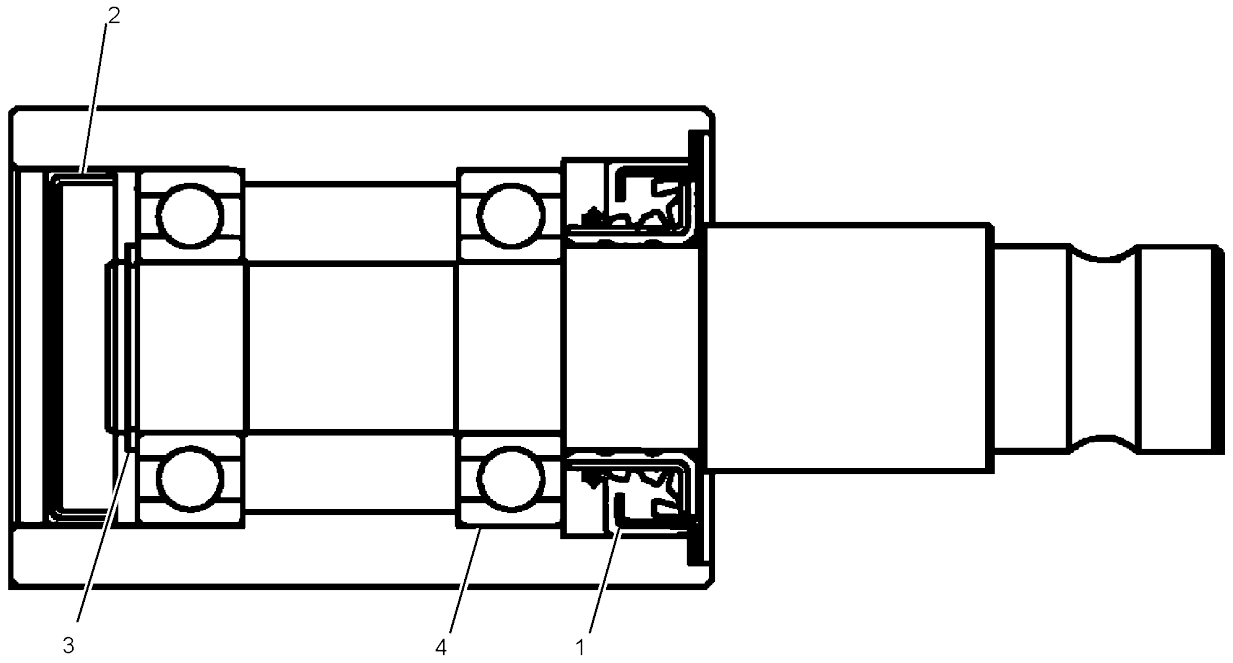


GRAPHIC #1 **<END>** g01220094

# *266-8793* ROLLER GP-TRACK-CENTER FLANGE

**PART OF 260-6342 ROLLER AR-TRACK & CARRIER**

**SMCS-4180** **i04652822**

| NOTE | REF NO | GRAPHIC REF | PART NUMBER | QTY | PART NAME 1 2 3 4 5 6 (PRODUCT LEVEL) | SEE PAGE |
|---|---|---|---|---|---|---|
| | 1 | 1 | **279-9095** | 1 | ROLLER & BEARING AS | |
| | | 1 | **234-8956** | 2 | BUSHING | |
| | 2 | 1 | **234-8958** | 1 | COLLAR-TRACK ROLLER | |
| | 3 | 1 | **280-2313** | 1 | SHAFT AS-TRACK ROLLER | |
| | 4 | 1 | **234-8962** | 1 | RING-RETAINING | |
| | 5 | 1 | **234-8959** | 2 | SEAL GP-METAL FACE | |
| | 6 | 1 | **095-1657** | 1 | SEAL-O-RING | |
| | 7 | 1 | **8T-6757** | 1 | PLUG-PIPE | |

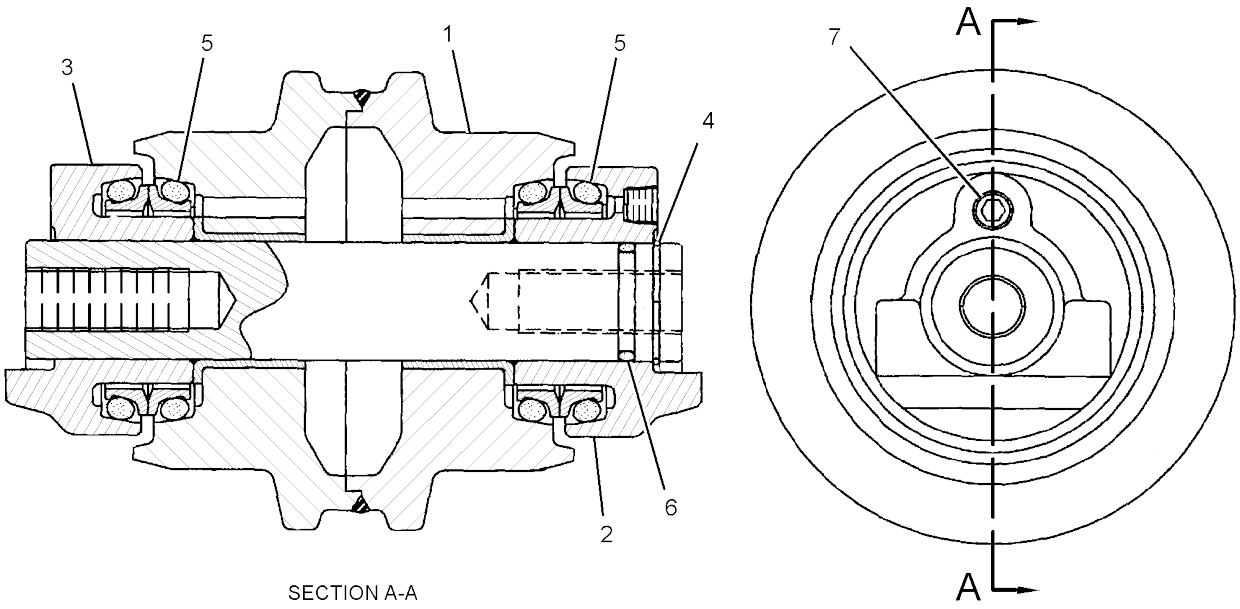


SECTION A-A

GRAPHIC #1 **<END>** g01220065

# *263-9251* TRACK GP–DOUBLE GROUSER SHOE

300-MM (12-IN) WIDE
PART OF 315-7663 TRACK GP
AN ATTACHMENT

SMCS-4170, 4198

i04021991

| NOTE | PART NUMBER | QTY | PART NAME 1 2 3 4 5 6 (PRODUCT LEVEL) | SEE PAGE |
|---|---|---|---|---|
| Y | *263-9266* | 1 | GUARD GP-TRACK GUIDE | 162 |
| Y | **263-9252** | 1 | TRACK GP (STEEL) | 173 |

Y - SEPARATE ILLUSTRATION

<END>

# 263-9252 TRACK GP–STEEL

**PART OF 263-9251 TRACK GP**
**AN ATTACHMENT**

**SMCS-4170, 4198** **i04032491**

| NOTE | REF NO | GRAPHIC REF | PART NUMBER | QTY | PART NAME 1 2 3 4 5 6 (PRODUCT LEVEL) | SEE PAGE |
|---|---|---|---|---|---|---|
| Y | 1 | 1 | **263-9253** | 1 | LINK AS-TRACK | 168 |
| | 2 | 1 | **158-4684** | 46 | SHOE-TRACK | |

Y - SEPARATE ILLUSTRATION

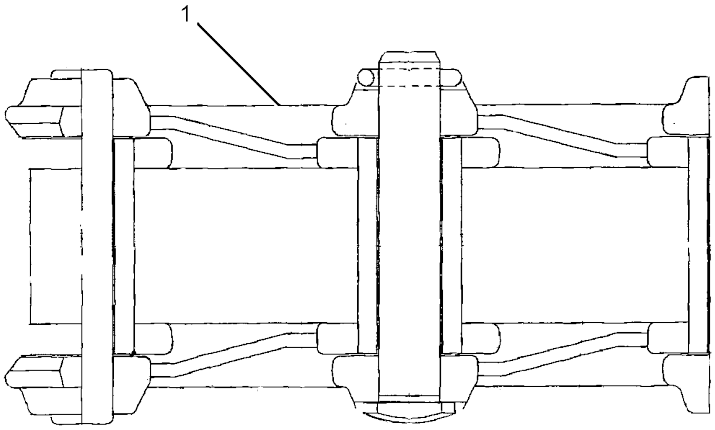


VIEW A-A

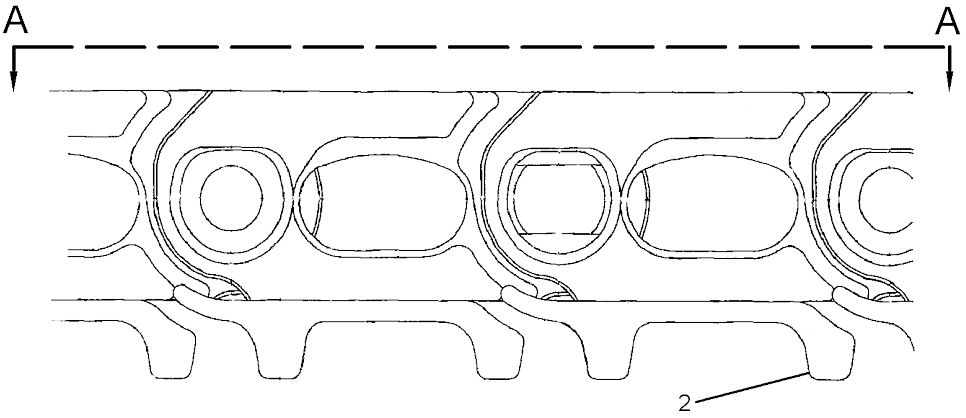


GRAPHIC #1 **<END>** g01221991

# UNDERCARRIAGE

## *315-7663* TRACK GP
**AN ATTACHMENT**

**SMCS-4170, 4198** **i04022375**

| NOTE | PART NUMBER | QTY | PART NAME 1 2 3 4 5 6 (PRODUCT LEVEL) | SEE PAGE |
|---|---|---|---|---|
| Y | *263-9251* | 1 | TRACK GP (STEEL) | 172 |

Y - SEPARATE ILLUSTRATION

<END>

## *382-3843* TRACK GP–RUBBER BELT
**AN ATTACHMENT**

**SMCS-4170, 4198** **i04728103**

| NOTE | PART NUMBER | QTY | PART NAME 1 2 3 4 5 6 (PRODUCT LEVEL) | SEE PAGE |
|---|---|---|---|---|
| | **382-3844** | 1 | TRACK AS (RUBBER BELT) | |

<END>

## *380-8799* UNDERCARRIAGE AR
**PART OF 376-6672 COMMON AR**

**SMCS-4150** **i04732214**

| NOTE | PART NUMBER | QTY | PART NAME 1 2 3 4 5 6 (PRODUCT LEVEL) | SEE PAGE |
|---|---|---|---|---|
| Y | *377-1150* | 1 | FRAME GP-UNDERCARRIAGE | 160 |
| Y | *380-9952* | 1 | GEAR & BEARING GP-SWING | 161 |
| Y | *265-8734* | 1 | IDLER GP-FRONT | 163 |
| Y | *260-6342* | 1 | ROLLER AR-TRACK & CARRIER | 169 |

Y - SEPARATE ILLUSTRATION

<END>

# *4I-1536* ACCUMULATOR GP-HYDRAULIC–CHARGED

**PART OF 087-4456 ACCUMULATOR GP-HYDRAULIC**
**AN ATTACHMENT**

**SMCS-5077** **i01220551**

| NOTE | REF NO | GRAPHIC REF | PART NUMBER | QTY | PART NAME 1 2 3 4 5 6 (PRODUCT LEVEL) | SEE PAGE |
|---|---|---|---|---|---|---|
| | 1 | 1 | **4I-5862** | 1 | CAP | |
| | 2 | 1 | **4I-1539** | 1 | CORE | |

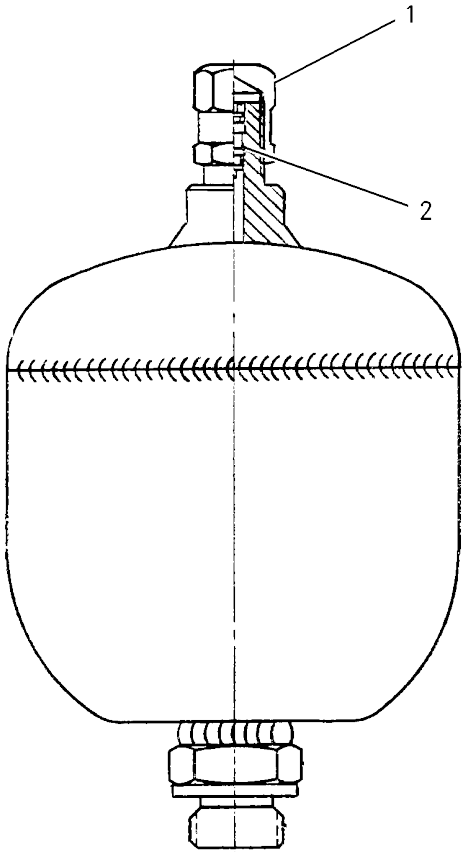


GRAPHIC #1 **<END>** g00654351

# *5I-8416* ACCUMULATOR GP-HYDRAULIC–CHARGED

**PART OF 087-4456 ACCUMULATOR GP-HYDRAULIC**
**AN ATTACHMENT**

**SMCS-5077** **i02062425**

| NOTE | REF NO | GRAPHIC REF | PART NUMBER | QTY | PART NAME 1 2 3 4 5 6 (PRODUCT LEVEL) | SEE PAGE |
|---|---|---|---|---|---|---|
| | 1 | 1 | **4I-8267** | 1 | CAP | |
| Y | 2 | 1 | *087-4454* | 1 | ACCUMULATOR GP-HYDRAULIC (CHARGED) | 177 |

Y - SEPARATE ILLUSTRATION

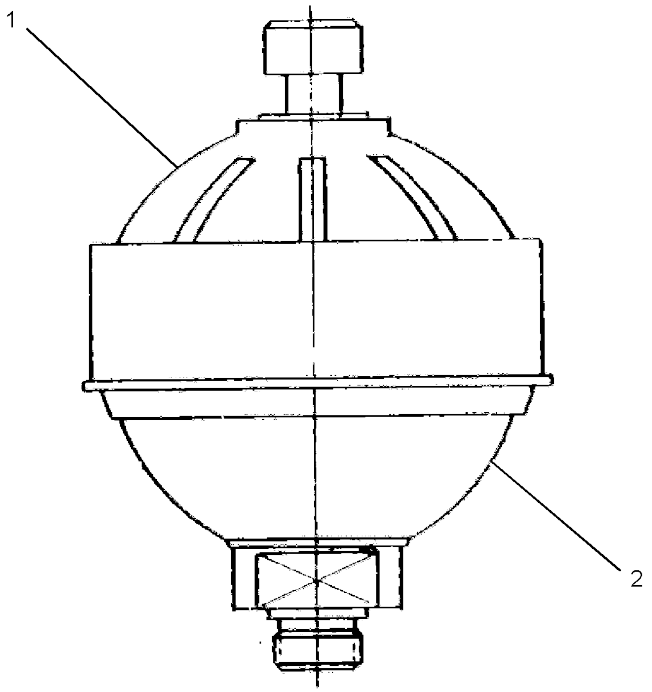


GRAPHIC #1 **<END>** g01056827

# *087-4454* ACCUMULATOR GP-HYDRAULIC–CHARGED

**PART OF 5I-8416 ACCUMULATOR GP-HYDRAULIC**
**AN ATTACHMENT**

**SMCS-5077** **i02062433**

| NOTE | REF NO | GRAPHIC REF | PART NUMBER | QTY | PART NAME 1 2 3 4 5 6 (PRODUCT LEVEL) | SEE PAGE |
|---|---|---|---|---|---|---|
| | 1 | 1 | **087-4575** | 1 | CORE | |
| | 2 | 1 | **087-4576** | 1 | CAP | |
| | 3 | 1 | **087-4577** | 1 | SEAL | |

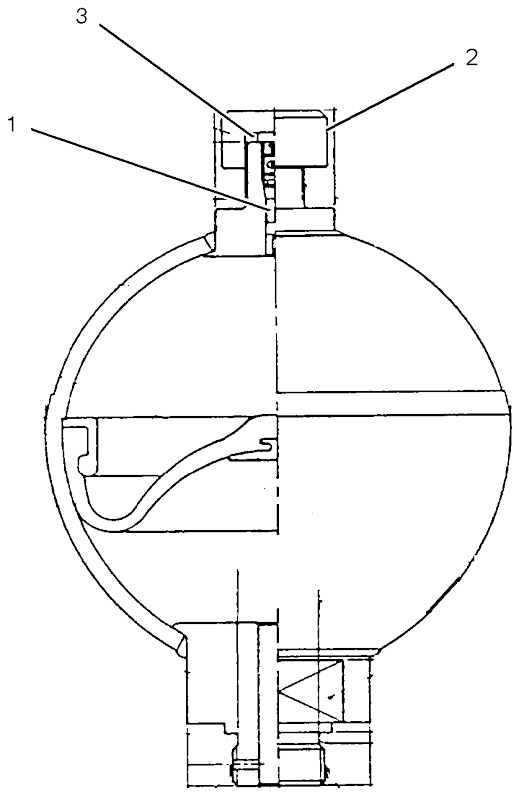


GRAPHIC #1 **<END>** g01056847

# *087-4456* ACCUMULATOR GP-HYDRAULIC–CHARGED

**PART OF 378-7478 ACCUMULATOR GP-HYDRAULIC**
**AN ATTACHMENT**

**SMCS-5077** **i01866518**

| NOTE | PART NUMBER | QTY | PART NAME 1 2 3 4 5 6 (PRODUCT LEVEL) | SEE PAGE |
|---|---|---|---|---|
| Y | *4I-1536* | 1 | ACCUMULATOR GP-HYDRAULIC (CHARGED) | 175 |
| | | | –OR– | |
| Y | *5I-8416* | 1 | ACCUMULATOR GP-HYDRAULIC (CHARGED) | 176 |

Y - SEPARATE ILLUSTRATION

<END>

## *227-8807* ACCUMULATOR GP-HYDRAULIC–UNCHARGED

**FIELD REPLACEMENT FOR 087-4456–PAGE: 178**

**SMCS-5077** **i04644930**

| NOTE | REF NO | GRAPHIC REF | PART NUMBER | QTY | PART NAME 1 2 3 4 5 6 (PRODUCT LEVEL) | SEE PAGE |
|---|---|---|---|---|---|---|
| | | | | | (NO SERVICED PARTS) | |

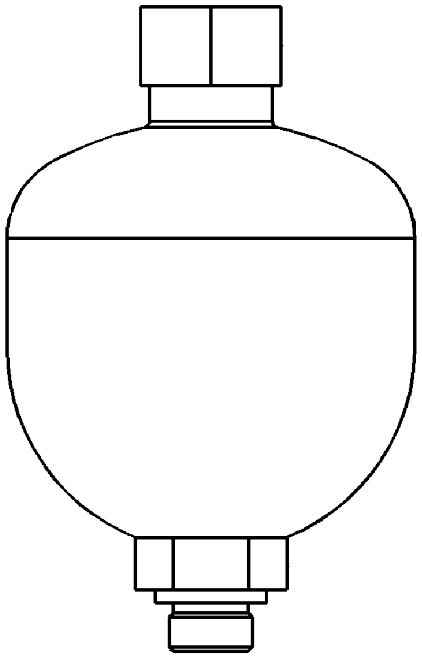

GRAPHIC #1 **<END>** g01423820

# *335-0517* ACCUMULATOR GP-HYDRAULIC–CHARGED

**PART OF 378-7480 ACCUMULATOR GP-HYDRAULIC**
**AN ATTACHMENT**

**SMCS-5077** **i03970912**

| NOTE | REF NO | GRAPHIC REF | PART NUMBER | QTY | PART NAME 1 2 3 4 5 6 (PRODUCT LEVEL) | SEE PAGE |
|---|---|---|---|---|---|---|
| | 1 | 1 | **159-4700** | 1 | FILM-WARNING (HIGH PRESSURE CYLINDER) | |

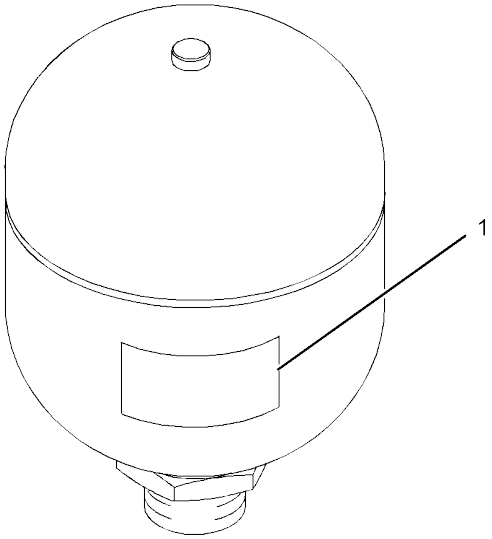


GRAPHIC #1 **<END>** g01135721

# HYDRAULIC SYSTEM

## *378-7478* ACCUMULATOR GP-HYDRAULIC

**CANNOT BE USED WITH 378-7480—PAGE: 181**
**PART OF 379-5264 ACCUMULATOR GP-HYDRAULIC**
**AN ATTACHMENT**

**SMCS-5077** **i04559501**

| NOTE | PART NUMBER | QTY | PART NAME 1 2 3 4 5 6 (PRODUCT LEVEL) | SEE PAGE |
|---|---|---|---|---|
| Y | *087-4456* | 1 | ACCUMULATOR GP-HYDRAULIC (CHARGED) | 178 |
| | **3K-0360** | 1 | SEAL-O-RING | |

Y - SEPARATE ILLUSTRATION

<END>

## *378-7480* ACCUMULATOR GP-HYDRAULIC

**CANNOT BE USED WITH 378-7478—PAGE: 181**
**PART OF 379-5265 ACCUMULATOR GP-HYDRAULIC**
**AN ATTACHMENT**

**SMCS-5077** **i04559502**

| NOTE | PART NUMBER | QTY | PART NAME 1 2 3 4 5 6 (PRODUCT LEVEL) | SEE PAGE |
|---|---|---|---|---|
| Y | *335-0517* | 1 | ACCUMULATOR GP-HYDRAULIC (CHARGED) | 180 |
| | **3K-0360** | 1 | SEAL-O-RING | |

Y - SEPARATE ILLUSTRATION

<END>

## *379-5264* ACCUMULATOR GP-HYDRAULIC

**CANNOT BE USED WITH 379-5265—PAGE: 181**
**AN ATTACHMENT**

**SMCS-5077** **i04629178**

| NOTE | PART NUMBER | QTY | PART NAME 1 2 3 4 5 6 (PRODUCT LEVEL) | SEE PAGE |
|---|---|---|---|---|
| Y | *378-7478* | 1 | ACCUMULATOR GP-HYDRAULIC | 181 |

Y - SEPARATE ILLUSTRATION

<END>

## *379-5265* ACCUMULATOR GP-HYDRAULIC—CANADA

**CANNOT BE USED WITH 379-5264—PAGE: 181**
**AN ATTACHMENT**

**SMCS-5077** **i04629179**

| NOTE | PART NUMBER | QTY | PART NAME 1 2 3 4 5 6 (PRODUCT LEVEL) | SEE PAGE |
|---|---|---|---|---|
| Y | *378-7480* | 1 | ACCUMULATOR GP-HYDRAULIC | 181 |

Y - SEPARATE ILLUSTRATION

<END>

## *379-4683* CONTROL AR-AUXILIARY—SWING BOOM

**PART OF 383-5899, 383-5900, 383-5910, 383-5911 STICK AR-HOE AN ATTACHMENT**

**SMCS-5051** **i04623141**

| NOTE | PART NUMBER | QTY | PART NAME 1 2 3 4 5 6 (PRODUCT LEVEL) | SEE PAGE |
|---|---|---|---|---|
| Y | *379-4704* | 1 | LINES GP-SWING CYLINDER (BOOM) | 269 |

Y - SEPARATE ILLUSTRATION

<END>

## *379-4715* CONTROL AR-AUXILIARY

**PART OF 376-6672 COMMON AR**

**SMCS-5051** **i04732212**

| NOTE | PART NUMBER | QTY | PART NAME 1 2 3 4 5 6 (PRODUCT LEVEL) | SEE PAGE |
|---|---|---|---|---|
| Y | *377-9707* | 1 | FILM GP (AUXILIARY) | 535 |
| Y | *269-3795* | 1 | LINES GP-AUXILIARY HYDRAULIC (BOOM) | 212 |
| Y | *379-4732* | 1 | LINES GP-FRONT | 239 |
| Y | *380-4661* | 1 | LINES GP-PILOT (AUXILIARY) | 260 |
| Y | *377-8861* | 1 | VALVE & MTG GP-CONTROL (AUXILIARY, BOOM SWING) | 302 |

Y - SEPARATE ILLUSTRATION

<END>

## *379-4721* CONTROL AR-AUXILIARY—2ND AUXILIARY, STANDARD STICK

**CANNOT BE USED WITH 379-4683—PAGE: 182, 379-4722—PAGE: 183**

**PART OF 383-5901, 383-5912 STICK AR-HOE AN ATTACHMENT**

**SMCS-5051** **i04728058**

| NOTE | PART NUMBER | QTY | PART NAME 1 2 3 4 5 6 (PRODUCT LEVEL) | SEE PAGE |
|---|---|---|---|---|
| Y | *356-7138* | 1 | FASTENER GP-LINES (BOOM) | 208 |
| Y | *377-9708* | 1 | FILM GP (2ND AUXILIARY) | 537 |
| Y | *292-8308* | 1 | LINES GP-AUXILIARY HYDRAULIC (2ND AUXILIARY, STANDARD STICK) | 214 |
| Y | *380-2456* | 1 | LINES GP-AUXILIARY HYDRAULIC | 218 |
| Y | *379-4735* | 1 | LINES GP-SWING CYLINDER | 270 |
| Y | *387-6390* | 1 | WIRING GP-RELAY PANEL (2ND AUXILIARY) | 120 |

Y - SEPARATE ILLUSTRATION

<END>

## *379-4722* CONTROL AR-AUXILIARY–2ND AUXILIARY, LONG STICK

**CANNOT BE USED WITH 379-4683–PAGE: 182, 379-4721–PAGE: 182**
**PART OF 383-5902, 383-5913 STICK AR-HOE**
**AN ATTACHMENT**

**SMCS-5051** **i04728059**

| NOTE | PART NUMBER | QTY | PART NAME 1 2 3 4 5 6 (PRODUCT LEVEL) | SEE PAGE |
|---|---|---|---|---|
| Y | *356-7138* | 1 | FASTENER GP-LINES (BOOM) | 208 |
| Y | *377-9708* | 1 | FILM GP (2ND AUXILIARY) | 537 |
| Y | *292-8310* | 1 | LINES GP-AUXILIARY HYDRAULIC (2ND AUXILIARY, LONG STICK) | 215 |
| Y | *380-2456* | 1 | LINES GP-AUXILIARY HYDRAULIC | 218 |
| Y | *379-4735* | 1 | LINES GP-SWING CYLINDER | 270 |
| Y | *387-6390* | 1 | WIRING GP-RELAY PANEL (2ND AUXILIARY) | 120 |

Y - SEPARATE ILLUSTRATION

<END>

## *379-4724* CONTROL AR-AUXILIARY–2-WAY

**CANNOT BE USED WITH 379-4723–PAGE: 187**
**AN ATTACHMENT**

**SMCS-5051** **i04728061**

| NOTE | PART NUMBER | QTY | PART NAME 1 2 3 4 5 6 (PRODUCT LEVEL) | SEE PAGE |
|---|---|---|---|---|
| Y | *377-9709* | 1 | FILM GP (2-WAY) | 538 |
| Y | *377-8874* | 1 | LINES GP-PILOT (JOYSTICK, 2-WAY) | 247 |
| Y | *379-4737* | 1 | LINES GP-PILOT | 256 |
| Y | *377-8876* | 1 | VALVE & MTG GP-CONTROL (2-WAY) | 304 |
| Y | *387-6389* | 1 | WIRING GP-RELAY PANEL (PATTERN CHANGE) | 119 |

Y - SEPARATE ILLUSTRATION

<END>

## *382-2543* CONTROL AR-COUPLER–STANDARD STICK

**CANNOT BE USED WITH 382-2544–PAGE: 183**
**AN ATTACHMENT**

**SMCS-6129** **i04728100**

| NOTE | PART NUMBER | QTY | PART NAME 1 2 3 4 5 6 (PRODUCT LEVEL) | SEE PAGE |
|---|---|---|---|---|
| Y | *365-2794* | 1 | LINES GP-COUPLER | 231 |
| Y | *382-2551* | 1 | LINES GP-FRONT (QUICK COUPLER) | 241 |
| Y | *381-9235* | 1 | WIRING GP-QUICK COUPLER | 118 |

Y - SEPARATE ILLUSTRATION

<END>

## *382-2544* CONTROL AR-COUPLER–LONG STICK

**CANNOT BE USED WITH 382-2543–PAGE: 183**
**AN ATTACHMENT**

**SMCS-6129** **i04728101**

| NOTE | PART NUMBER | QTY | PART NAME 1 2 3 4 5 6 (PRODUCT LEVEL) | SEE PAGE |
|---|---|---|---|---|
| Y | *365-2796* | 1 | LINES GP-COUPLER | 234 |
| Y | *382-2551* | 1 | LINES GP-FRONT (QUICK COUPLER) | 241 |
| Y | *381-9235* | 1 | WIRING GP-QUICK COUPLER | 118 |

Y - SEPARATE ILLUSTRATION

<END>

# HYDRAULIC SYSTEM

## *384-5013* CONTROL AR-COUPLER

**AN ATTACHMENT**

**SMCS-6129** **i04782418**

| NOTE | REF NO | GRAPHIC REF | PART NUMBER | QTY | PART NAME 1 2 3 4 5 6 (PRODUCT LEVEL) | SEE PAGE |
|---|---|---|---|---|---|---|
| | 1 | 1 | **7K-1181** | 8 | STRAP-CABLE | |
| | 2 | 1 | *164-5546* | 1 | TEE AS | |
| | | 1 | **3E-7410** | 1 | TEE-O-RING | |
| | | 1 | **3J-1907** | 1 | SEAL-O-RING | |
| | 3 | 1 | *267-4048* | 1 | ELBOW AS | |
| | | 1 | **3J-1907** | 1 | SEAL-O-RING | |
| | | 1 | **4J-5477** | 1 | SEAL-O-RING | |
| | | 1 | **267-4047** | 1 | ELBOW | |
| | 4 | 1 | **268-4530** | 1 | FILM-WARNING (CRUSH HAZARD, READ OMM, U.S.) | |
| | 5 | 1 | **268-8872** | 1 | FILM-WARNING (CRUSH HAZARD, READ OMM, U.S.) | |
| | 6 | 1 | **279-4735** | 3 | STRAP-CABLE (ORANGE) | |
| | 7 | 1 | **279-4737** | 3 | STRAP-CABLE (GREEN) | |
| | 8 | 1 | **279-4738** | 3 | STRAP-CABLE (PURPLE) | |
| Y | 9 | 1 | **358-2091** | 1 | VALVE GP-SOLENOID & MANIFOLD (QUICK COUPLER) | 358 |
| | 10 | 1 | **365-6912** | 1 | GROMMET | |
| | 11 | 1 | **365-6918** | 1 | BRACKET | |
| | 12 | 1 | **365-6919** | 1 | BRACKET | |
| I | 13 | 1 | **373-2363** | 3 | HOSE AS | |
| I | 14 | 1 | **381-0002** | 1 | HOSE AS | |
| | 15 | 1 | **381-2053** | 1 | BRACKET | |
| | 16 | 1 | **381-9236** | 1 | HARNESS AS-QUICK COUPLER | |
| | | 1 | **8T-8729** | 2 | PIN-CONNECTOR (16-GA TO 18-GA) | |
| | | 1 | **9W-0852** | 1 | PIN-CONNECTOR (14-GA TO 16-GA) | |
| | | 1 | **155-2270** | 2 | KIT-CONNECTING PLUG (2-PIN) | |
| | | | | | (EACH INCLUDES PLUG AS, WEDGE & INTERFACE SEAL) | |
| | | 1 | **8T-8737** | 1 | PLUG-SEAL | |
| | | 1 | **243-4507** | 1 | RECEPTACLE AS-CONNECTOR (4-PIN) | |
| | | 1 | **8T-8730** | 4 | SOCKET-CONNECTOR (16-GA TO 18-GA) | |
| E | | 1 | **125-7874** | | TUBE-HEAT SHRINK (5.72-MM DIA) (5-CM) | |
| I | 17 | 1 | **382-9365** | 1 | HOSE AS | |
| | 18 | 1 | **067-2551** | 3 | CLIP | |
| | 19 | 1 | **124-2111** | 6 | COUPLING-PERMANENT | |
| | 20 | 1 | *148-8325* | 4 | CONNECTOR AS | |
| | | | | | (EACH INCLUDES) | |
| | | 1 | **3J-1907** | 1 | SEAL-O-RING | |
| | | 1 | **4J-5477** | 1 | SEAL-O-RING | |
| | | 1 | **6V-8641** | 1 | CONNECTOR | |
| | 21 | 1 | *148-8368* | 2 | ELBOW AS | |
| | | | | | (EACH INCLUDES) | |
| | | 1 | **3J-1907** | 1 | SEAL-O-RING | |
| | | 1 | **4J-5477** | 1 | SEAL-O-RING | |
| | | 1 | **6V-8627** | 1 | ELBOW | |
| | 22 | 1 | *150-4052* | 6 | UNION AS | |
| | | | | | (EACH INCLUDES) | |
| | | 1 | **4J-5477** | 2 | SEAL-O-RING | |
| | | 1 | **6V-8993** | 1 | UNION | |
| | 23 | 1 | **2J-1020** | 2 | SPACER (13.9X21.34X35-MM THK) | |
| | 24 | 1 | **2P-1279** | 6 | LOCKNUT (9/16-18-THD) | |
| | 25 | 1 | **3S-2093** | 6 | STRAP-CABLE | |
| | 26 | 1 | **4D-7733** | 3 | CLIP | |
| | 27 | 1 | **6V-9828** | 3 | CAP AS | |
| | 28 | 1 | **7S-3916** | 3 | CLIP (TAB) | |
| | 29 | 1 | **7S-3919** | 3 | CLIP (SLOT) | |
| | 30 | 1 | **7V-6571** | 3 | GROMMET | |
| | 31 | 1 | **8T-4121** | 10 | WASHER-HARD (11X21X2.5-MM THK) | |
| M | 32 | 1 | **8T-4137** | 2 | BOLT (M10X1.5X20-MM) | |
| M | 33 | 1 | **8T-4185** | 8 | BOLT (M10X1.5X50-MM) | |
| M | 34 | 1 | **8T-4189** | 2 | BOLT (M8X1.25X20-MM) | |

*384-5013* **CONTROL AR-COUPLER (*contd.*)** **i04782418**

| NOTE | REF NO | GRAPHIC REF | PART NUMBER | QTY | PART NAME 1 2 3 4 5 6 (PRODUCT LEVEL) | SEE PAGE |
|---|---|---|---|---|---|---|
| | 35 | 1 | **8T-4223** | 2 | WASHER-HARD (13.5X25.5X3-MM THK) | |
| | 36 | 1 | **8T-4224** | 2 | WASHER-HARD (8.8X16X2-MM THK) | |
| M | 37 | 1 | **8T-4648** | 1 | BOLT (M12X1.75X70-MM) | |
| M | 38 | 1 | **8T-4910** | 1 | BOLT (M12X1.75X60-MM) | |

E - ORDER BY THE CENTIMETER
I - REFER TO HYDRAULIC INFORMATION SYSTEM
M - METRIC PART
Y - SEPARATE ILLUSTRATION

*384-5013* **CONTROL AR-COUPLER (*contd.*)** **i04782418**

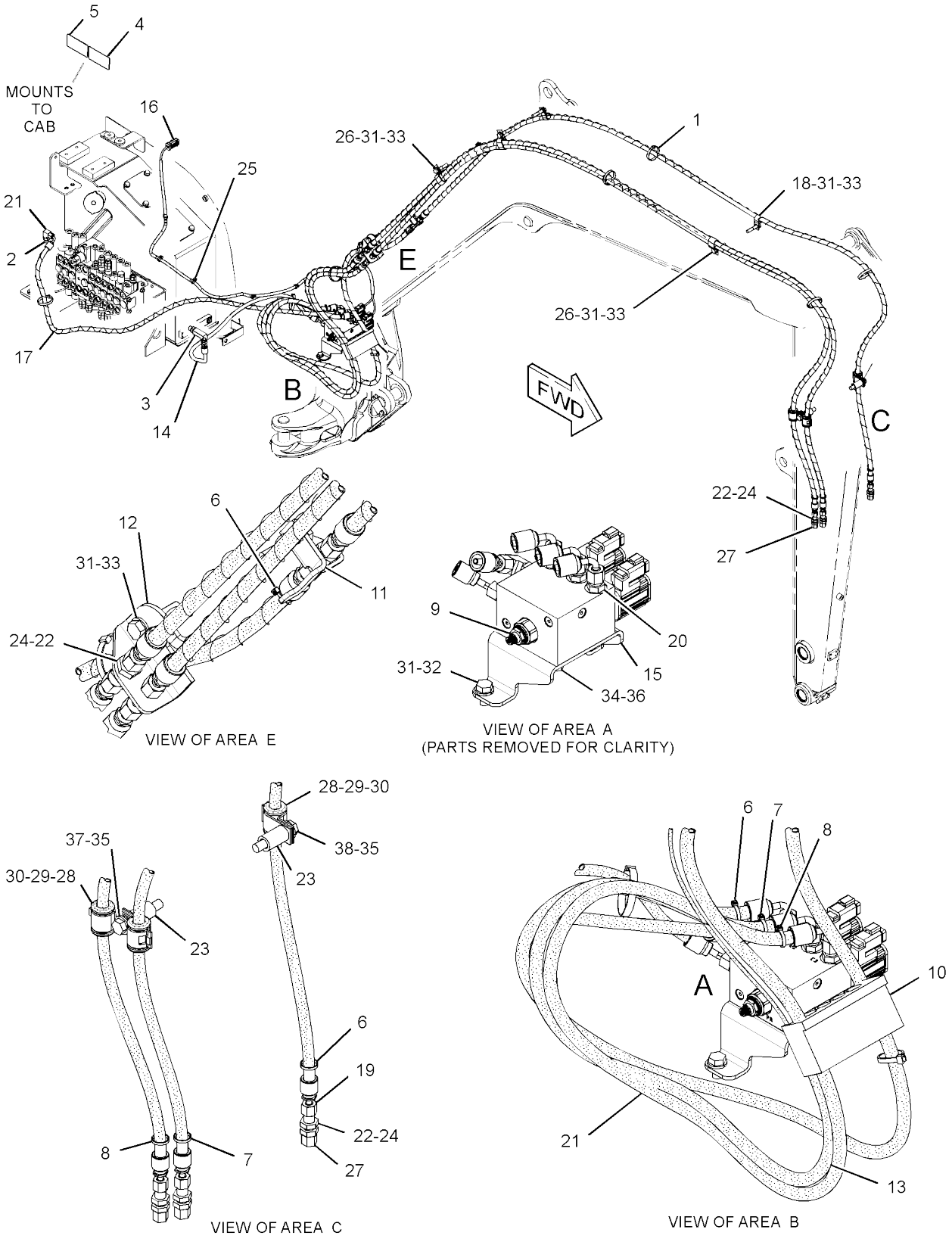


GRAPHIC #1 **<END>** g02904888

## *378-2500* CONTROL AR-HYDRAULIC–2ND AUXILIARY

**PART OF 383-5901, 383-5902, 383-5912, 383-5913 STICK AR-HOE**
**AN ATTACHMENT**

**SMCS-5050, 5051, 5057, 5059, 5705** **i04611686**

| NOTE | PART NUMBER | QTY | PART NAME 1 2 3 4 5 6 (PRODUCT LEVEL) | SEE PAGE |
|---|---|---|---|---|
| Y | *378-2497* | 1 | CONTROL GP-PILOT OPERATED HYD (2ND AUXILIARY) | 480 |

Y - SEPARATE ILLUSTRATION

<END>

## *378-2501* CONTROL AR-HYDRAULIC–STANDARD JOYSTICK

**PART OF 383-5899, 383-5900, 383-5910, 383-5911 STICK AR-HOE**
**AN ATTACHMENT**

**SMCS-5050, 5051, 5057, 5059, 5705** **i04611692**

| NOTE | PART NUMBER | QTY | PART NAME 1 2 3 4 5 6 (PRODUCT LEVEL) | SEE PAGE |
|---|---|---|---|---|
| Y | *378-2495* | 1 | CONTROL GP-PILOT OPERATED HYD | 479 |

Y - SEPARATE ILLUSTRATION

<END>

## *379-4723* CONTROL AR-PILOT HYDRAULIC–STANDARD

**CANNOT BE USED WITH 379-4724–PAGE: 183**
**AN ATTACHMENT**

**SMCS-1329, 5057** **i04728060**

| NOTE | PART NUMBER | QTY | PART NAME 1 2 3 4 5 6 (PRODUCT LEVEL) | SEE PAGE |
|---|---|---|---|---|
| Y | *377-8872* | 1 | LINES GP-PILOT (JOYSTICK) | 245 |
| Y | *379-4736* | 1 | LINES GP-PILOT | 253 |

Y - SEPARATE ILLUSTRATION

<END>

# 266-6979 CYLINDER GP-BLADE–RAISE, LOWER

**PART OF 377-8930 BLADE AR-ANGLING, 377-8920 BLADE AR-STRAIGHT AN ATTACHMENT**

**SMCS-5102, 7164** **i04015134**

| NOTE | REF NO | GRAPHIC REF | PART NUMBER | QTY | PART NAME 1 2 3 4 5 6 (PRODUCT LEVEL) | SEE PAGE |
|---|---|---|---|---|---|---|
| | 1 | 1 | **265-8716** | 2 | BUSHING | |
| | 2 | 1 | **278-9474** | 1 | CYLINDER AS | |
| | 3 | 1 | **278-9475** | 1 | ROD AS | |
| | 4 | 1 | **294-7869** | 1 | HEAD | |
| | 5 | 1 | **237-8377** | 1 | BUSHING | |
| | 6 | 1 | **146-3916** | 1 | RING | |
| | 7 | 1 | **146-1086** | 1 | RING | |
| | 8 | 1 | **095-1709** | 1 | SEAL-O-RING | |
| | 9 | 1 | **237-6124** | 1 | RING | |
| | 10 | 1 | **095-1710** | 1 | SEAL-O-RING | |
| | 11 | 1 | **237-6135** | 1 | PISTON | |
| | 12 | 1 | **146-3923** | 1 | SEAL AS | |
| | 13 | 1 | **237-6136** | 2 | RING | |
| | 14 | 1 | **216-7643** | 1 | SETSCREW (M8X1.25X8-MM) | |
| | 15 | 1 | **146-3969** | 1 | BALL | |
| | 16 | 1 | **192-0638** | 1 | SEAL | |
| | 17 | 1 | **3B-8489** | 1 | FITTING-GREASE | |
| | 18 | 1 | **3B-8488** | 1 | FITTING-GREASE | |
| | | | | | | |
| F | | | **294-7868** | 1 | HEAD AS | |
| F | | | **237-7086** | 1 | PISTON AS | |
| | | | | | AVAILABLE REPAIR KIT(S): | |
| | | | **278-8641** | 1 | KIT-SEAL (BLADE CYLINDER) | |

F - NOT SHOWN

*266-6979* **CYLINDER GP-BLADE (*contd.*)** **i04015134**

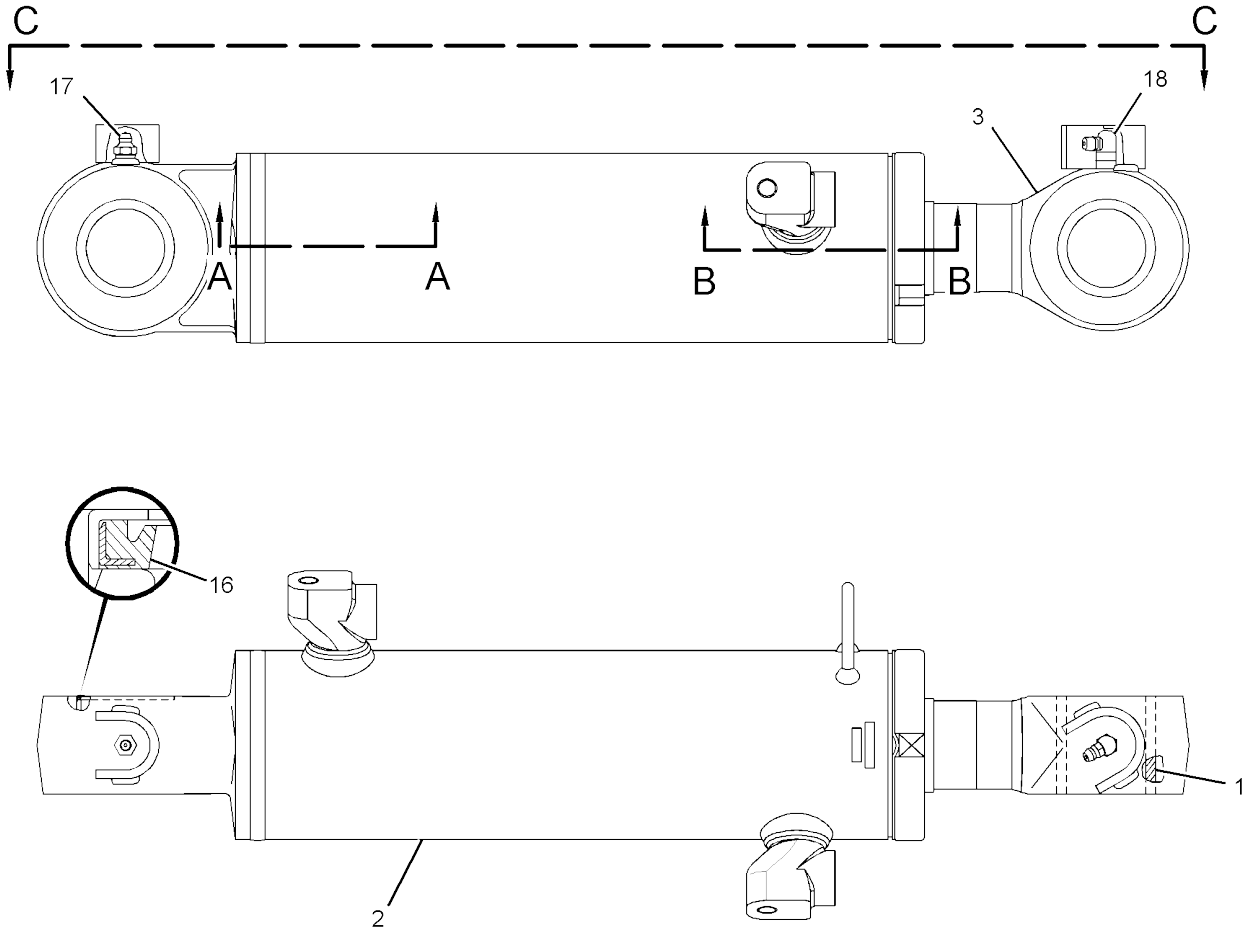


VIEW C-C

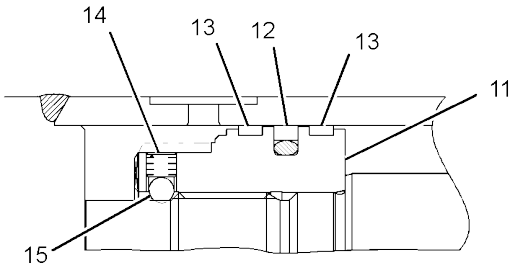


SECTION A-A

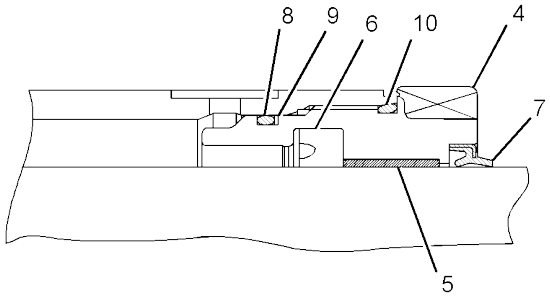


SECTION B-B

GRAPHIC #1 **<END>** g01345811

# 286-6384 CYLINDER GP-BLADE–ANGLE

**PART OF 377-8930 BLADE AR-ANGLING**
**AN ATTACHMENT**

**SMCS-5102, 7164** **i04015469**

| NOTE | REF NO | GRAPHIC REF | PART NUMBER | QTY | PART NAME 1 2 3 4 5 6 (PRODUCT LEVEL) | SEE PAGE |
|---|---|---|---|---|---|---|
| | 1 | 1 | **286-7323** | 1 | CYLINDER AS (BLADE) | |
| | | 1 | **3B-8488** | 1 | FITTING-GREASE | |
| | | 1 | **140-5169** | 1 | BUSHING | |
| | | 1 | **175-4723** | 2 | SEAL | |
| | 2 | 1 | **286-7324** | 1 | ROD AS | |
| | | 1 | **3B-8489** | 1 | FITTING-GREASE | |
| | | 1 | **140-5169** | 1 | BUSHING | |
| | | 1 | **175-4723** | 2 | SEAL | |
| | 3 | 1 | **283-9117** | 1 | HEAD AS (CYLINDER) | |
| | 3A | 1 | **095-1707** | 1 | SEAL-O-RING | |
| | 3B | 1 | **095-1710** | 1 | SEAL-O-RING | |
| | 3C | 1 | **140-4934** | 1 | RING | |
| | 3D | 1 | **203-2343** | 1 | BUSHING | |
| | 3E | 1 | **203-2344** | 1 | RING | |
| | 3F | 1 | **237-7901** | 1 | RING | |
| | 3G | 1 | **283-9118** | 1 | HEAD | |
| | 4 | 1 | **283-9119** | 1 | PISTON AS (CYLINDER) | |
| | 4A | 1 | **140-3750** | 1 | RING AS | |
| | 4B | 1 | **192-0633** | 1 | BALL | |
| | 4C | 1 | **237-7904** | 2 | RING | |
| | 4D | 1 | **283-9120** | 1 | PISTON | |
| | 4E | 1 | **283-9121** | 1 | SCREW (M6X1X6-MM) | |
| | | | | | AVAILABLE REPAIR KIT(S): | |
| | | | **283-9122** | 1 | KIT-SEAL (BLADE) | |
| | | | | | (INCLUDES SEALS & RINGS) | |

*286-6384* **CYLINDER GP-BLADE (*contd.*)** **i04015469**

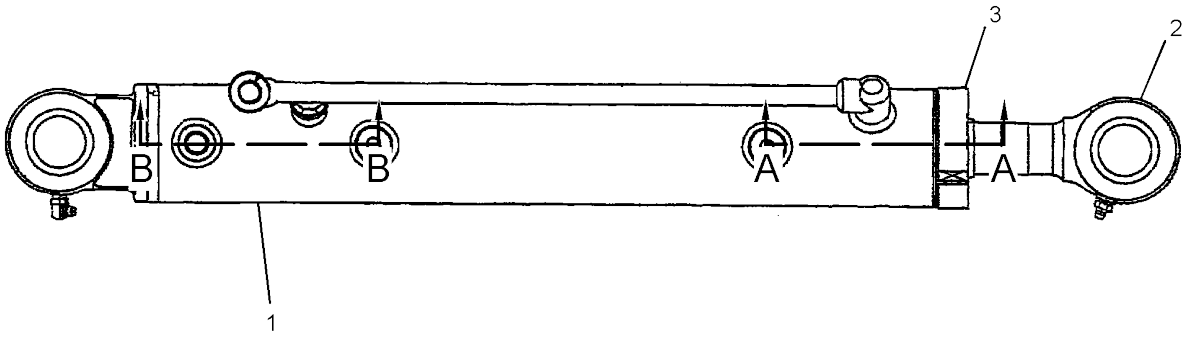


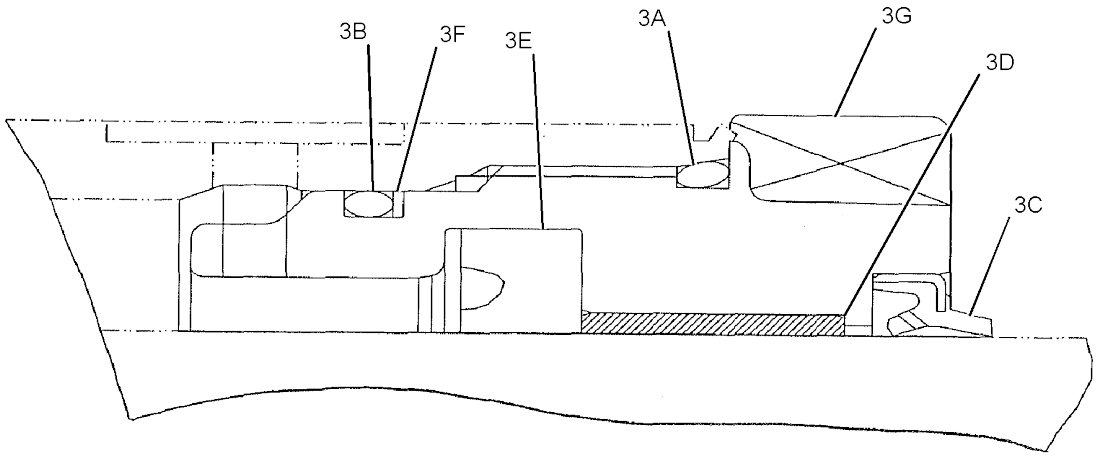


SECTION A-A

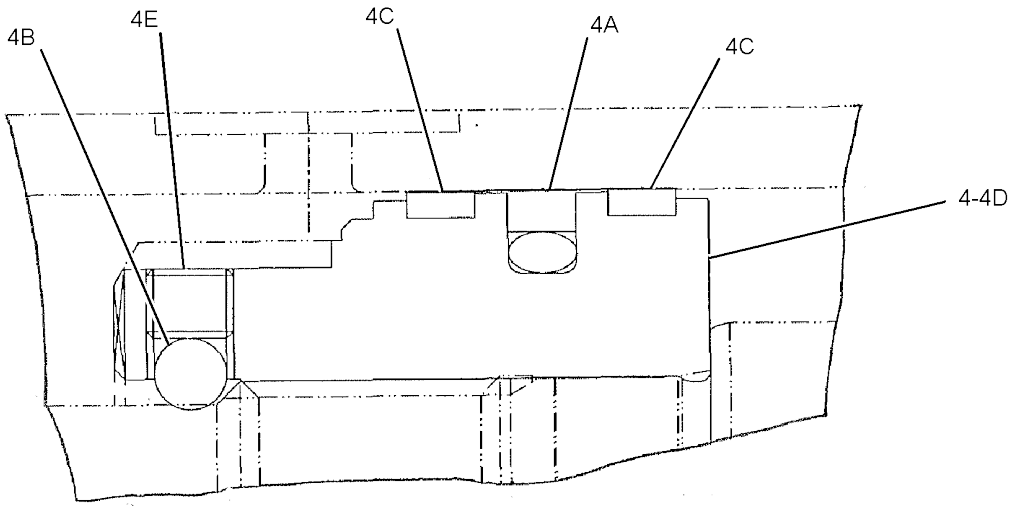


SECTION B-B

GRAPHIC #1 **<END>** g01390873

# 284-0420 CYLINDER GP-BOOM

**PART OF 376-6680 BOOM AR**

**SMCS-5456** **i04022680**

| NOTE | REF NO | GRAPHIC REF | PART NUMBER | QTY | PART NAME 1 2 3 4 5 6 (PRODUCT LEVEL) | SEE PAGE |
|---|---|---|---|---|---|---|
| | 1 | 1 | **265-8716** | 2 | BUSHING | |
| | 2 | 1 | **301-6892** | 1 | CYLINDER AS-HYDRAULIC | |
| | 3 | 1 | **278-8626** | 1 | ROD AS | |
| | 4 | 1 | **294-7869** | 1 | HEAD | |
| | 5 | 1 | **237-8377** | 1 | BUSHING | |
| J | 6 | 1 | **146-3916** | 1 | RING | |
| J | 7 | 1 | **146-1086** | 1 | RING | |
| J | 8 | 1 | **095-1709** | 2 | SEAL-O-RING | |
| J | 9 | 1 | **237-6124** | 1 | RING | |
| J | 10 | 1 | **095-1710** | 1 | SEAL-O-RING | |
| | 11 | 1 | **237-6128** | 1 | HOLDER | |
| | 12 | 1 | **237-6129** | 1 | SPACER (54X63.4X4-MM THK) | |
| | 13 | 1 | **237-6130** | 1 | SEAL | |
| | 14 | 1 | **237-6131** | 1 | COLLAR | |
| J | 15 | 1 | **278-8633** | 1 | RING | |
| | 16 | 1 | **278-8635** | 1 | PISTON | |
| J | 17 | 1 | **146-3923** | 1 | SEAL AS | |
| J | 18 | 1 | **237-6136** | 2 | RING | |
| | 19 | 1 | **216-7643** | 1 | SETSCREW (M8X1.25X8-MM) | |
| | 20 | 1 | **146-3969** | 1 | BALL | |
| | 21 | 1 | **278-8638** | 1 | BEARING | |
| | 22 | 1 | **301-6894** | 1 | TUBE AS | |
| | 23 | 1 | **304-3525** | 1 | PLUG | |
| | 24 | 1 | **304-3526** | 2 | SEAL | |
| | 25 | 1 | **304-3527** | 1 | BOLT | |
| | 26 | 1 | **199-1148** | 1 | HOLDER | |
| | 27 | 1 | **192-0638** | 4 | SEAL | |
| | 28 | 1 | **3B-8489** | 1 | FITTING-GREASE | |
| | 29 | 1 | **3B-8488** | 1 | FITTING-GREASE | |
| | | | | | AVAILABLE REPAIR KIT(S): | |
| J | | | **278-8641** | 1 | KIT-SEAL (BOOM CYLINDER) | |

J - KIT MARKED J INCLUDES PARTS MARKED J

*284-0420* **CYLINDER GP-BOOM (*contd.*)** **i04022680**

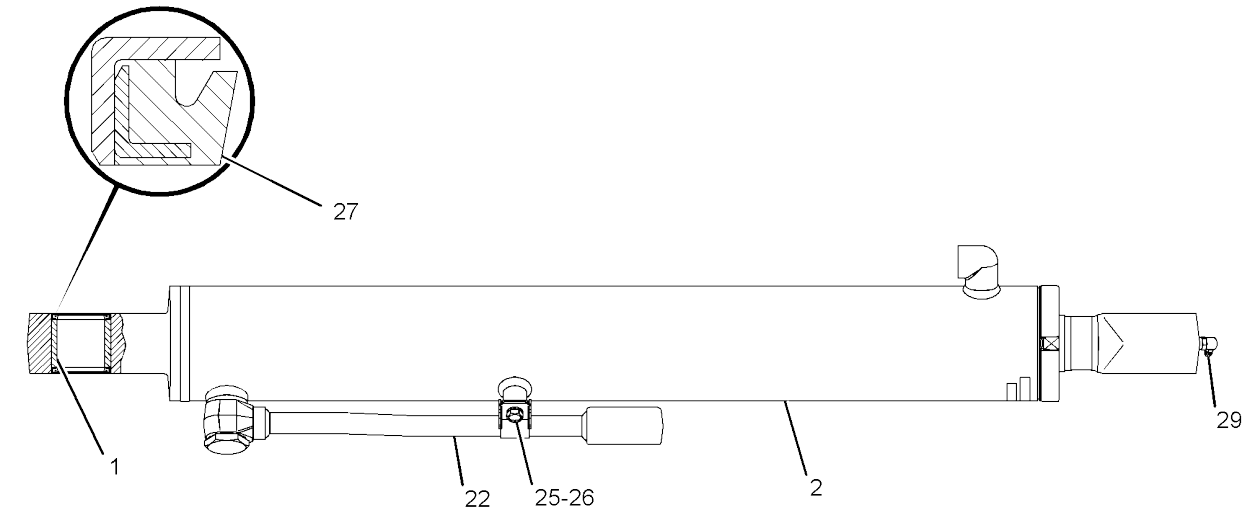


VIEW C-C

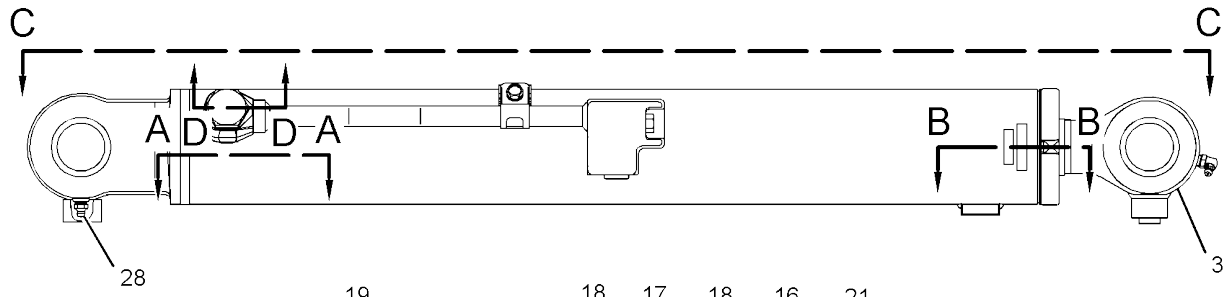


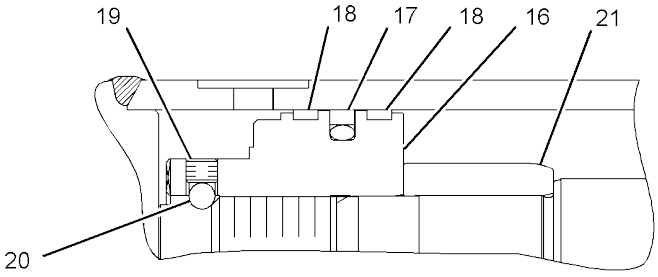


SECTION A-A

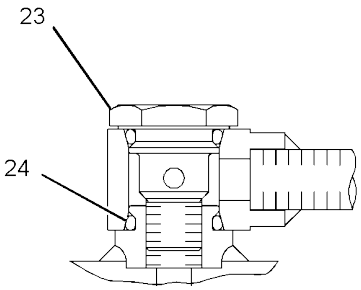


SECTION D-D

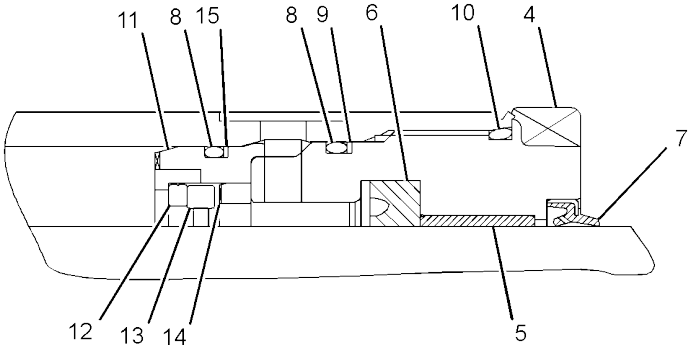


SECTION B-B

GRAPHIC #1 **<END>** g01591159

# 376-0170 CYLINDER GP-BUCKET

**70-MM (2.8-IN) BORE X 497.5-MM (19.6-IN) STROKE**
**PART OF 377-8918, 377-8919, 418-1566 LINKAGE AR-BUCKET**
**AN ATTACHMENT**

**SMCS-5457** **i04725136**

| NOTE | REF NO | GRAPHIC REF | PART NUMBER | QTY | PART NAME 1 2 3 4 5 6 (PRODUCT LEVEL) | SEE PAGE |
|---|---|---|---|---|---|---|
| HJ | 1 | 1 | **265-8716** | 2 | BUSHING | |
| H | 2 | 1 | **383-3206** | 1 | CYLINDER AS-HYDRAULIC | |
| J | 3 | 1 | **278-9164** | 1 | ROD AS | |
| L | 4 | 1 | **309-5680** | 1 | HEAD | |
| L | 5 | 1 | **310-8780** | 1 | BUSHING | |
| LS | 6 | 1 | **212-6073** | 1 | RING | |
| LS | 7 | 1 | **175-4734** | 1 | RING | |
| LS | 8 | 1 | **095-1707** | 1 | SEAL-O-RING | |
| LS | 9 | 1 | **237-7078** | 1 | RING | |
| LS | 10 | 1 | **095-1708** | 1 | SEAL-O-RING | |
| P | 11 | 1 | **237-7087** | 1 | PISTON | |
| PS | 12 | 1 | **175-4721** | 1 | SEAL AS | |
| PS | 13 | 1 | **237-7088** | 2 | RING | |
| P | 14 | 1 | **216-7643** | 1 | SETSCREW (M8X1.25X8-MM) | |
| P | 15 | 1 | **146-3969** | 1 | BALL | |
| HN | 16 | 1 | **301-6897** | 1 | TUBE AS | |
| NT | 17 | 1 | **304-3525** | 1 | PLUG | |
| NT | 18 | 1 | **304-3526** | 2 | SEAL | |
| NT | 19 | 1 | **304-3527** | 1 | BOLT | |
| NT | 20 | 1 | **199-1148** | 1 | HOLDER | |
| | 21 | 1 | **192-0638** | 4 | SEAL | |
| | 22 | 1 | **3B-8489** | 1 | FITTING-GREASE | |
| | 23 | 1 | **3B-8488** | 1 | FITTING-GREASE | |
| | | | | | | |
| FL | | | **309-5679** | 1 | HEAD AS | |
| FP | | | **237-7086** | 1 | PISTON AS | |
| FJT | | | **304-3524** | 1 | PLUG AS | |
| | | | | | AVAILABLE REPAIR KIT(S): | |
| S | | | **251-9845** | 1 | KIT-SEAL (BUCKET CYLINDER) | |

F - NOT SHOWN
H - KIT MARKED H SERVICES PARTS MARKED H
J - KIT MARKED J SERVICES PARTS MARKED J
L - KIT MARKED L SERVICES PARTS MARKED L
N - KIT MARKED N SERVICES PARTS MARKED N
P - KIT MARKED P SERVICES PARTS MARKED P
S - KIT MARKED S SERVICES PARTS MARKED S
T - KIT MARKED T SERVICES PARTS MARKED T

*376-0170* **CYLINDER GP-BUCKET (*contd.*)** **i04725136**

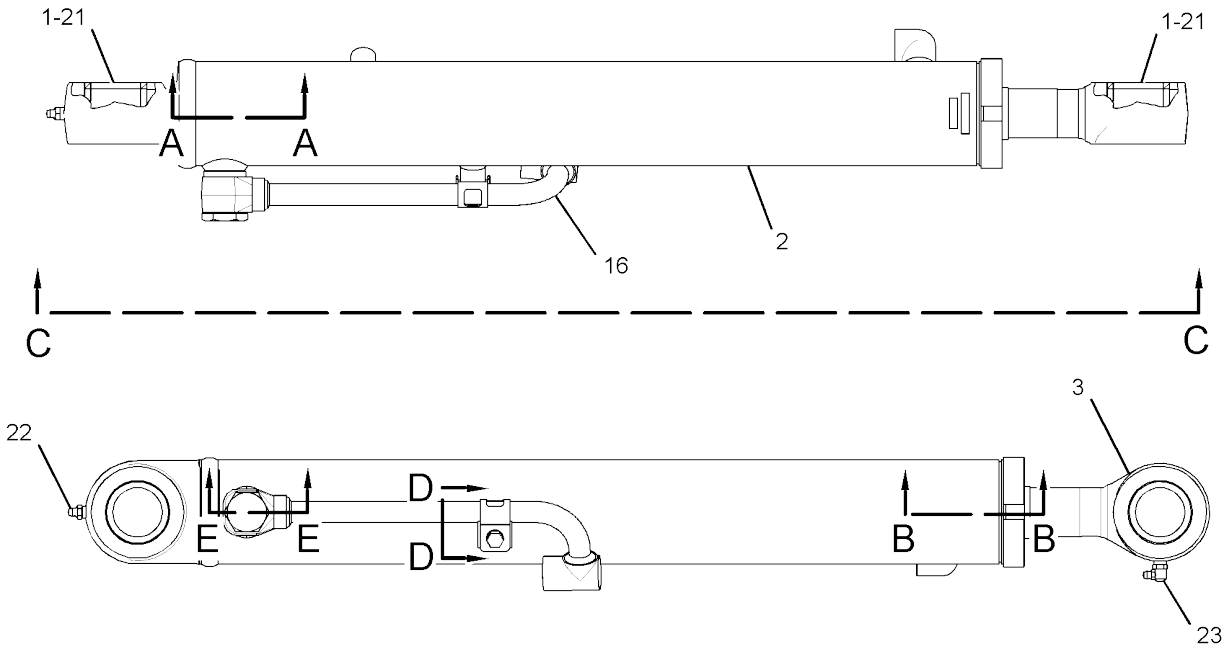


VIEW C-C

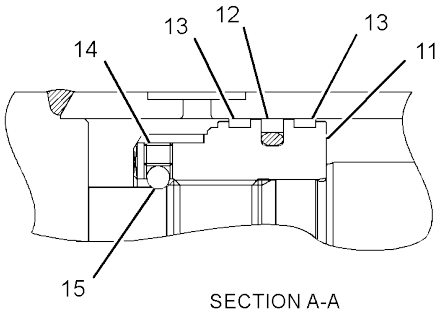


SECTION A-A

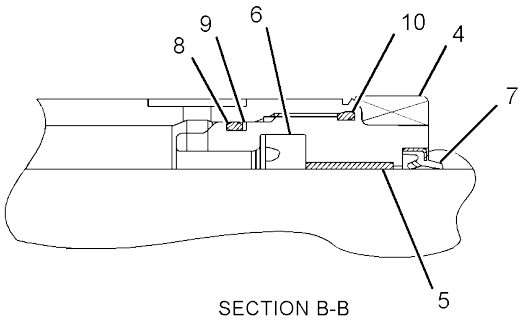


SECTION B-B

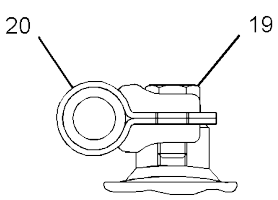


SECTION D-D

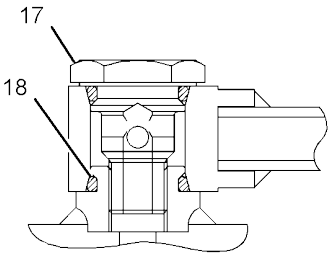


SECTION E-E

GRAPHIC #1 **<END>** g02852457

# 268-8224 CYLINDER GP-HYDRAULIC

**63.5-MM (2.5-IN) BORE X 431.8-MM (17-IN) STROKE**
**PART OF 309-1917, 309-1938 THUMB GP**
**AN ATTACHMENT**

**SMCS-4303, 5105, 5362, 7562** **i05455910**

| NOTE | REF NO | GRAPHIC REF | PART NUMBER | QTY | PART NAME 1 2 3 4 5 6 (PRODUCT LEVEL) | SEE PAGE |
|---|---|---|---|---|---|---|
| | 1 | 1 | **3B-8489** | 2 | FITTING-GREASE | |
| | 2 | 1 | **5D-1986** | 1 | LOCKNUT (7/8-14-THD) | |
| | 3 | 1 | **233-8447** | 2 | BUSHING | |
| | 4 | 1 | *244-3712* | 2 | PLUG AS | |
| | | | | | (EACH INCLUDES) | |
| | | 1 | **9S-4191** | 1 | PLUG-O-RING | |
| | | 1 | **214-7568** | 1 | SEAL-O-RING | |
| | 5 | 1 | **278-2246** | 1 | PISTON | |
| | 6 | 1 | **278-2248** | 1 | BUSHING | |
| | 7 | 1 | **278-2254** | 1 | ROD AS-PISTON | |
| | 8 | 1 | **278-2256** | 1 | SEAL | |
| | | | | | AVAILABLE REPAIR KIT(S): | |
| | | | **278-2257** | 1 | KIT-PACKING (HYDRAULIC CYLINDER) | |

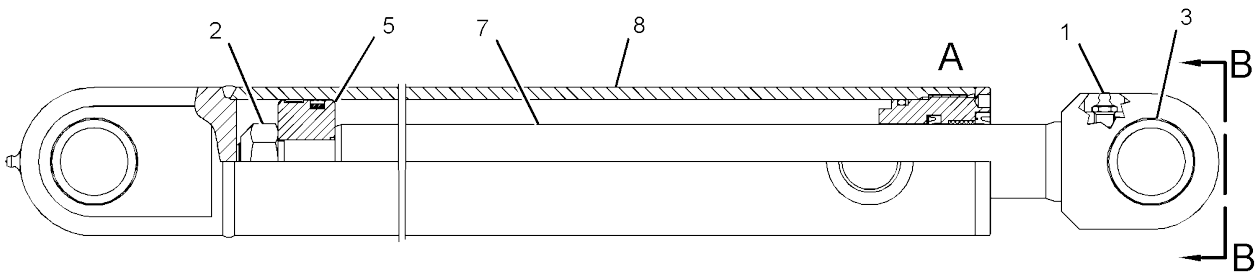


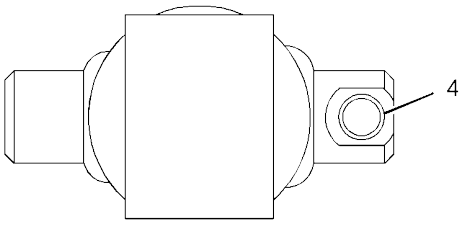


VIEW B-B

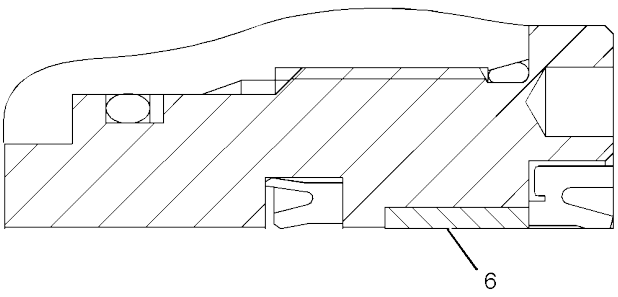


VIEW OF AREA A

GRAPHIC #1 **<END>** g03449736

# 361-1125 CYLINDER GP-HYDRAULIC

**PART OF 361-1123 LOCK GP-QUICK COUPLER**
**AN ATTACHMENT**

**SMCS-4303, 5105, 5362, 7562** **i05372485**

| NOTE | REF NO | GRAPHIC REF | PART NUMBER | QTY | PART NAME 1 2 3 4 5 6 (PRODUCT LEVEL) | SEE PAGE |
|---|---|---|---|---|---|---|
| | 1 | 1 | **361-1078** | 1 | KIT-SEAL (INCLUDES O-RINGS & SEALS) | |
| | 2 | 1 | **361-1127** | 1 | ROD AS | |
| | 3 | 1 | **361-1128** | 1 | SEAL | |
| | 4 | 1 | **361-1129** | 1 | PISTON | |
| | 5 | 1 | **361-1130** | 1 | PISTON | |
| Y | 6 | 1 | **361-1132** | 1 | VALVE GP-CHECK (HYDRAULIC CONTROL LOCK) | 310 |
| | 7 | 1 | **3J-1907** | 1 | SEAL-O-RING | |
| | 8 | 1 | **9S-8004** | 1 | PLUG-O-RING | |

Y - SEPARATE ILLUSTRATION

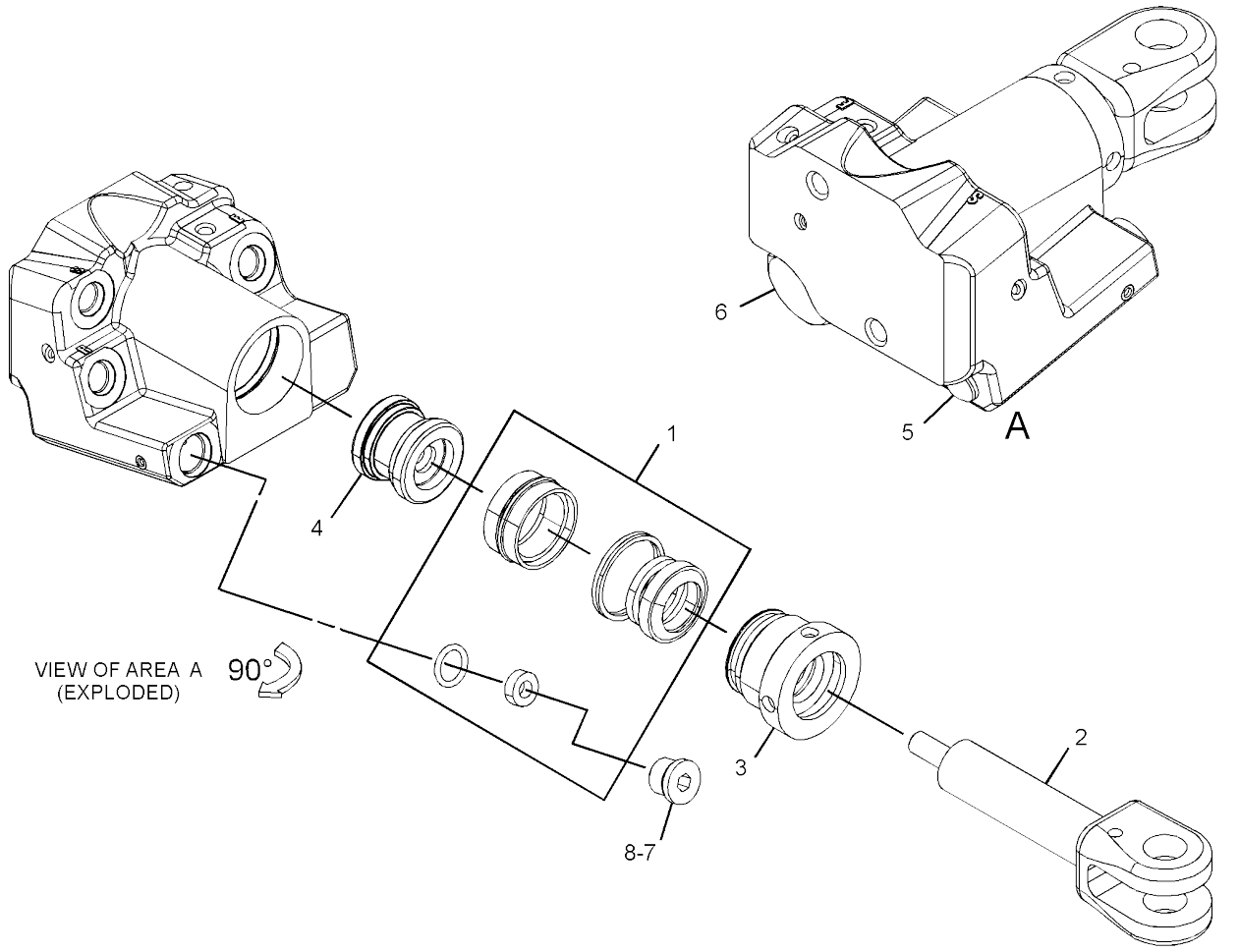


GRAPHIC #1 **<END>** g02913286

# HYDRAULIC SYSTEM

## 284-0863 CYLINDER GP-STICK

**PART OF 421-8461 STICK AR**
**AN ATTACHMENT**

**SMCS-5458** **i04021007**

| NOTE | REF NO | GRAPHIC REF | PART NUMBER | QTY | PART NAME 1 2 3 4 5 6 (PRODUCT LEVEL) | SEE PAGE |
|---|---|---|---|---|---|---|
| | 1 | 1 | **265-8717** | 2 | BUSHING | |
| | 2 | 1 | **284-0884** | 1 | CYLINDER AS-STICK | |
| | 3 | 1 | **278-9122** | 1 | ROD AS | |
| | 4 | 1 | **294-7869** | 1 | HEAD | |
| | 5 | 1 | **237-8377** | 1 | BUSHING | |
| | 6 | 1 | **146-3916** | 1 | RING | |
| | 7 | 1 | **146-1086** | 1 | RING | |
| | 8 | 1 | **095-1709** | 1 | SEAL-O-RING | |
| | 9 | 1 | **237-6124** | 1 | RING | |
| | 10 | 1 | **095-1710** | 1 | SEAL-O-RING | |
| | 11 | 1 | **237-6135** | 1 | PISTON | |
| | 12 | 1 | **146-3923** | 1 | SEAL AS | |
| | 13 | 1 | **237-6136** | 2 | RING | |
| | 14 | 1 | **216-7643** | 1 | SETSCREW (M8X1.25X8-MM) | |
| | 15 | 1 | **146-3969** | 1 | BALL | |
| | 16 | 1 | **278-9127** | 1 | BEARING | |
| | 17 | 1 | **278-9128** | 1 | SEAL | |
| | 18 | 1 | **278-9129** | 2 | STOP | |
| | 19 | 1 | **278-9130** | 1 | RING | |
| | 20 | 1 | **192-0638** | 4 | SEAL | |
| | 21 | 1 | **3B-8488** | 2 | FITTING-GREASE | |
| | | | | | | |
| F | | | **278-9126** | 1 | CUSHION AS | |
| F | | | **294-7868** | 1 | HEAD AS | |
| F | | | **237-6134** | 1 | PISTON AS | |
| | | | | | AVAILABLE REPAIR KIT(S): | |
| | | | **279-7940** | 1 | KIT-SEAL (STICK CYLINDER) | |

F - NOT SHOWN

*284-0863* **CYLINDER GP-STICK (*contd.*)** **i04021007**

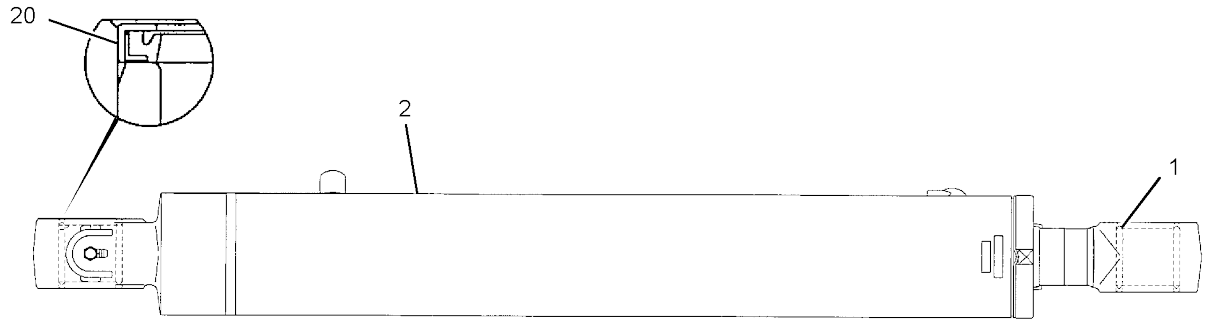


VIEW C-C

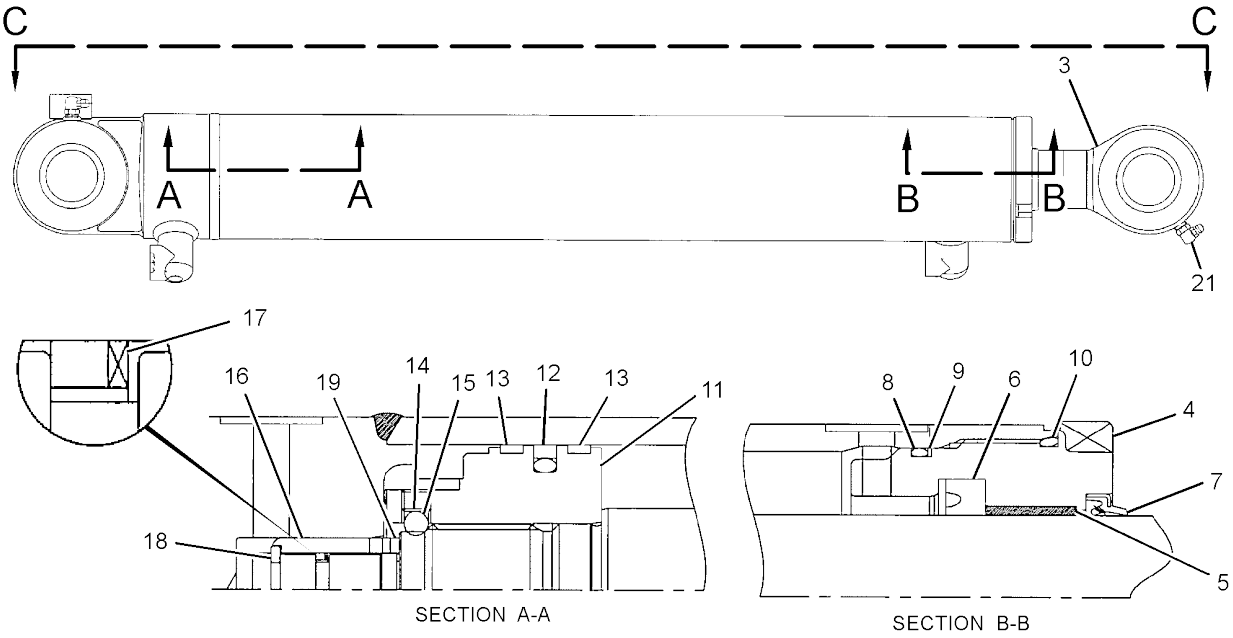


SECTION A-A

SECTION B-B

GRAPHIC #1 **<END>** g01221452

# 376-0171 CYLINDER GP-SWING BOOM

**85-MM (3.3-IN) BORE X 483-MM (19-IN) STROKE**

**PART OF 376-6680 BOOM AR**

**SMCS-5105** **i04775401**

| NOTE | REF NO | GRAPHIC REF | PART NUMBER | QTY | PART NAME 1 2 3 4 5 6 (PRODUCT LEVEL) | SEE PAGE |
|---|---|---|---|---|---|---|
| | 1 | 1 | **265-8717** | 2 | BUSHING | |
| | 2 | 1 | **382-1147** | 1 | CYLINDER AS-SWING BOOM | |
| | 3 | 1 | **278-1983** | 1 | ROD AS | |
| P | 4 | 1 | **309-5902** | 1 | HEAD | |
| P | 5 | 1 | **311-1031** | 1 | BUSHING | |
| JP | 6 | 1 | **146-3957** | 1 | RING | |
| JP | 7 | 1 | **146-3958** | 1 | RING | |
| JP | 8 | 1 | **095-1710** | 1 | SEAL-O-RING | |
| JP | 9 | 1 | **237-8378** | 1 | RING | |
| JP | 10 | 1 | **095-1711** | 1 | SEAL-O-RING | |
| N | 11 | 1 | **278-1985** | 1 | PISTON | |
| JN | 12 | 1 | **146-3968** | 1 | SEAL AS | |
| JN | 13 | 1 | **278-1986** | 2 | RING | |
| N | 14 | 1 | **216-7643** | 1 | SETSCREW (M8X1.25X8-MM) | |
| N | 15 | 1 | **146-3969** | 1 | BALL | |
| | 16 | 1 | **192-0638** | 4 | SEAL | |
| | 17 | 1 | **3B-8489** | 1 | FITTING-GREASE | |
| | | | | | | |
| FP | | | **309-5903** | 1 | HEAD AS-END | |
| | | | **170-8794** | 1 | RING | |
| | | | **278-1990** | 1 | SEAL | |
| FN | | | **278-1988** | 1 | PISTON AS | |
| | | | | | AVAILABLE REPAIR KIT(S): | |
| J | | | **279-0639** | 1 | KIT-SEAL (SWING BOOM CYLINDER) | |

F - NOT SHOWN
J - KIT MARKED J SERVICES PARTS MARKED J
N - KIT MARKED N SERVICES PARTS MARKED N
P - KIT MARKED P SERVICES PARTS MARKED P

*376-0171* **CYLINDER GP-SWING BOOM (*contd.*)** **i04775401**

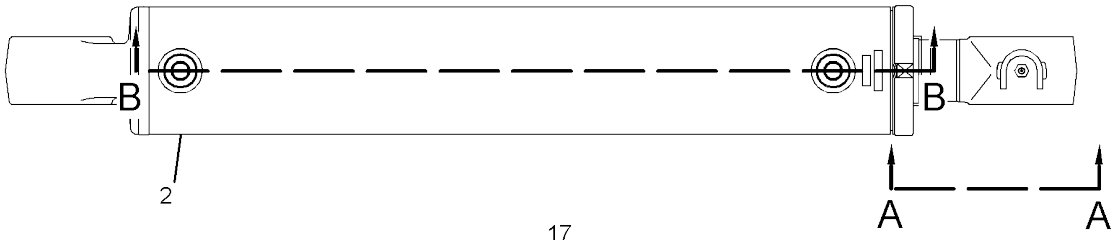


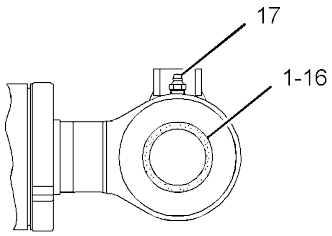


VIEW A-A

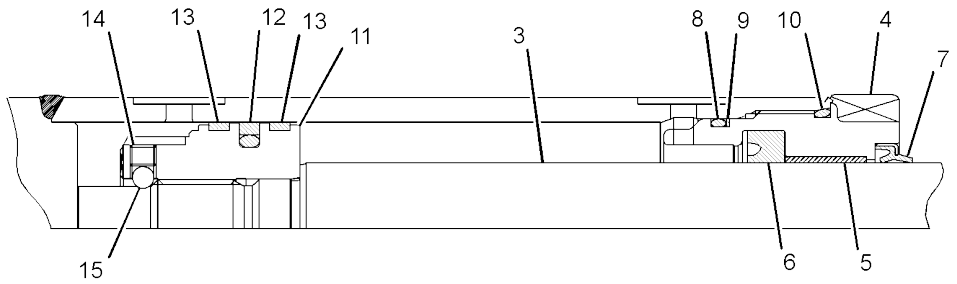


SECTION B-B

GRAPHIC #1 **<END>** g02799208

# *246-0192* CYLINDER GP-TILT

**76.2-MM (3-IN) BORE X 120-MM (4.7-IN) STROKE**
**PART OF 279-4325 BUCKET AR-TILTABLE**
**AN ATTACHMENT**

**SMCS-5104** **i05426576**

| NOTE | REF NO | GRAPHIC REF | PART NUMBER | QTY | PART NAME 1 2 3 4 5 6 (PRODUCT LEVEL) | SEE PAGE |
|---|---|---|---|---|---|---|
| | 1 | 1 | **1H-7339** | 1 | SEAL-O-RING | |
| | 2 | 1 | **6E-0122** | 1 | HEAD | |
| J | 3 | 1 | **6J-1972** | 1 | SEAL AS | |
| J | 4 | 1 | **6J-5733** | 1 | RING-WEAR | |
| | 5 | 1 | **9T-2212** | 1 | PISTON | |
| J | 6 | 1 | **167-2186** | 1 | SEAL AS-BUFFER | |
| J | 7 | 1 | **167-2294** | 1 | SEAL-U-CUP | |
| J | 8 | 1 | **226-8202** | 1 | SEAL-WIPER | |
| | 9 | 1 | **249-4175** | 1 | ROD AS | |
| | 9A | 1 | **9T-4007** | 2 | BEARING | |
| Z | 10 | 1 | | 1 | CYLINDER AS | |
| J | 11 | 1 | **4T-6780** | 1 | RING-WEAR | |
| | 12 | 1 | **5P-8250** | 1 | WASHER (28X49X5-MM THK) | |
| | 13 | 1 | **6F-7037** | 1 | BOLT (1-14X3.25-IN) | |
| J | 14 | 1 | **8J-2574** | 1 | RING-BACKUP | |
| | | | | | AVAILABLE REPAIR KIT(S): | |
| J | | | **235-0354** | | KIT-SEAL (HYDRAULIC CYLINDER) | |
| | | | | | '(ALSO INCLUDES BACKUP RING & O-RING SEAL) | |

J - (KIT MARKED J SERVICES PART(S) MARKED J
Z - NOT SERVICED SEPARATELY

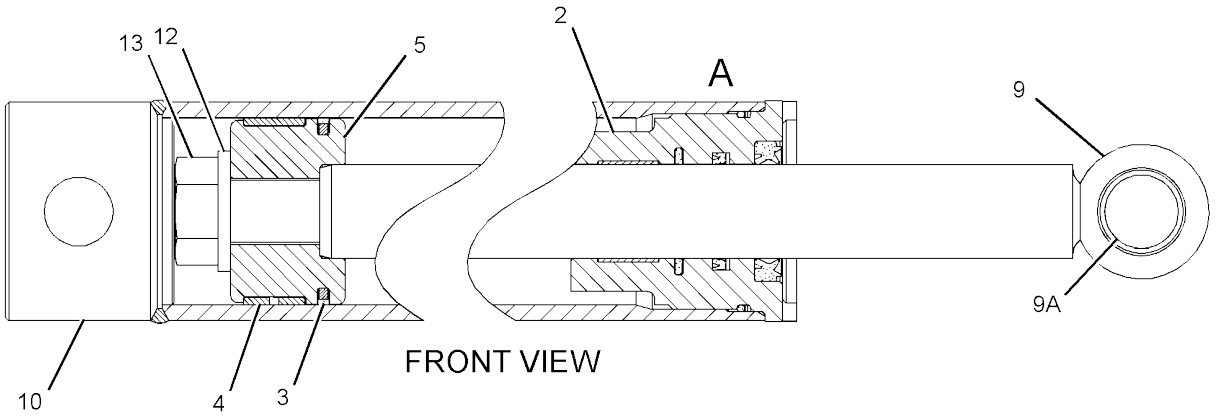


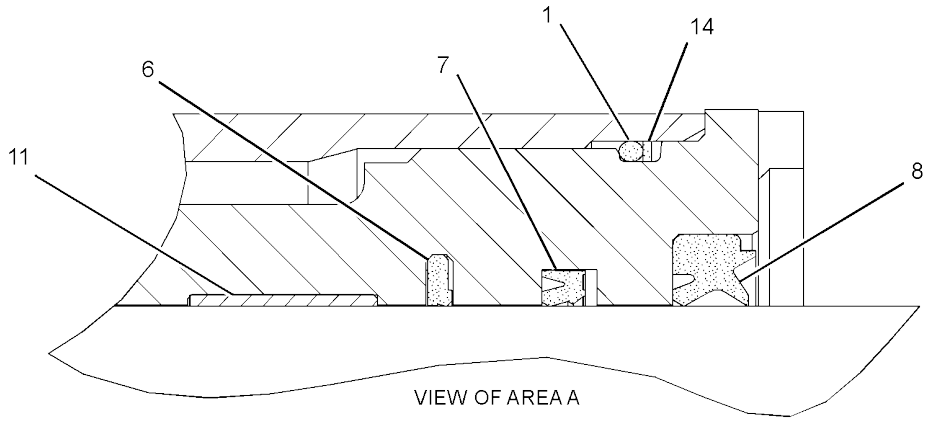


GRAPHIC #1 **<END>** g01158069

## *379-4726* DRAIN GP-OIL—HYDRAULIC TANK, STANDARD

**CANNOT BE USED WITH 379-4724—PAGE: 183**
**AN ATTACHMENT**

**SMCS-5056** **i04728063**

| NOTE | PART NUMBER | QTY | PART NAME 1 2 3 4 5 6 (PRODUCT LEVEL) | SEE PAGE |
|---|---|---|---|---|
| Y | *379-4739* | 1 | DRAIN GP-OIL (HYDRAULIC TANK, STANDARD) | 204 |

Y - SEPARATE ILLUSTRATION

<END>

## *379-4727* DRAIN GP-OIL—ENGINE, HYDRAULIC TANK

**CANNOT BE USED WITH 379-4726—PAGE: 203**
**AN ATTACHMENT**

**SMCS-5056** **i04728064**

| NOTE | PART NUMBER | QTY | PART NAME 1 2 3 4 5 6 (PRODUCT LEVEL) | SEE PAGE |
|---|---|---|---|---|
| Y | *378-2141* | 1 | DRAIN GP-ENGINE OIL (ECOLOGY) | 16 |
| Y | *379-4740* | 1 | DRAIN GP-OIL (ECOLOGY, HYDRAULIC TANK) | 205 |

Y - SEPARATE ILLUSTRATION

<END>

# *379-4739* DRAIN GP-OIL—HYDRAULIC TANK, STANDARD

**PART OF 379-4726 DRAIN GP-OIL**
**AN ATTACHMENT**

**SMCS-5056** **i04728076**

| NOTE | REF NO | GRAPHIC REF | PART NUMBER | QTY | PART NAME 1 2 3 4 5 6 (PRODUCT LEVEL) | SEE PAGE |
|---|---|---|---|---|---|---|
| | 1 | 1 | *148-8411* | 1 | PLUG AS | |
| | | 1 | **3K-0360** | 1 | SEAL-O-RING | |
| | | 1 | **9S-4185** | 1 | PLUG-O-RING | |
| | 2 | 1 | *194-2903* | 1 | ELBOW AS | |
| | | 1 | **3K-0360** | 1 | SEAL-O-RING | |
| | | 1 | **8T-0119** | 1 | ELBOW | |

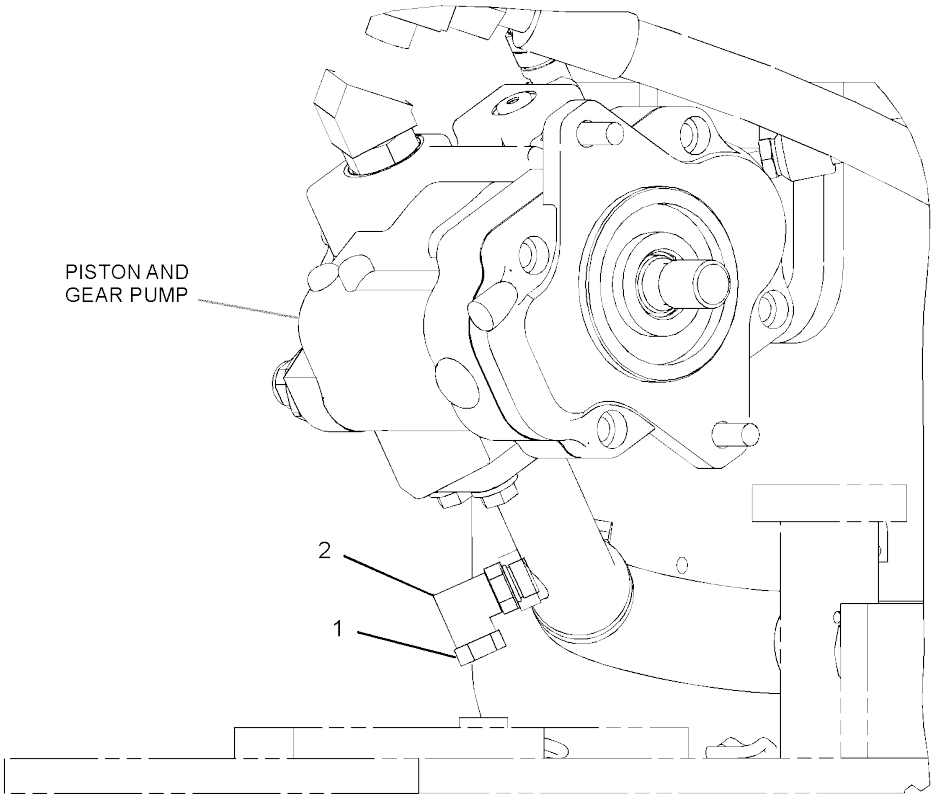


(VIEW FROM RIGHT REAR OF MACHINE)

GRAPHIC #1 **<END>** g02856003

# *379-4740* DRAIN GP-OIL–ECOLOGY, HYDRAULIC TANK

**PART OF 379-4727 DRAIN GP-OIL**
**AN ATTACHMENT**

**SMCS-5056** **i04728077**

| NOTE | REF NO | GRAPHIC REF | PART NUMBER | QTY | PART NAME 1 2 3 4 5 6 (PRODUCT LEVEL) | SEE PAGE |
|---|---|---|---|---|---|---|
| | 1 | 1 | *165-2273* | 1 | VALVE GP-SHUTOFF (DRAIN, HYDRAULIC OIL) | |
| | | 1 | **3K-0360** | 1 | SEAL-O-RING | |
| | | 1 | **6V-7238** | 1 | VALVE-SHUTOFF | |

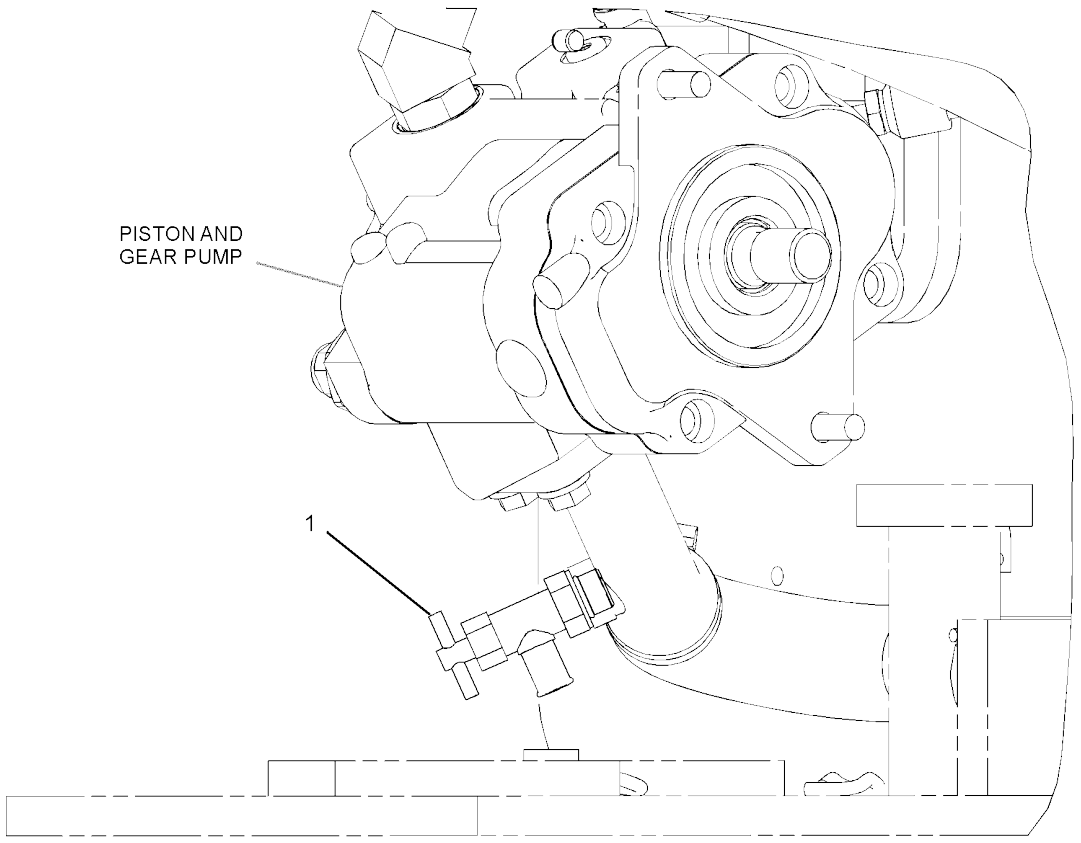


(VIEW FROM RIGHT REAR OF MACHINE)

GRAPHIC #1 **<END>** g02856284

# HYDRAULIC SYSTEM

## 266-6396 DRIVE GP-SWING

**PART OF 265-8752 MOTOR & MTG GP-SWING**

**SMCS-5459** **i04019569**

| NOTE | REF NO | GRAPHIC REF | PART NUMBER | QTY | PART NAME 1 2 3 4 5 6 (PRODUCT LEVEL) | SEE PAGE |
|---|---|---|---|---|---|---|
| Y | 1 | 1 | **280-2355** | 1 | PLANETARY GP-SWING DRIVE | 288 |
| Y | 2 | 1 | **281-3052** | 1 | MOTOR GP-SWING | 286 |

Y - SEPARATE ILLUSTRATION

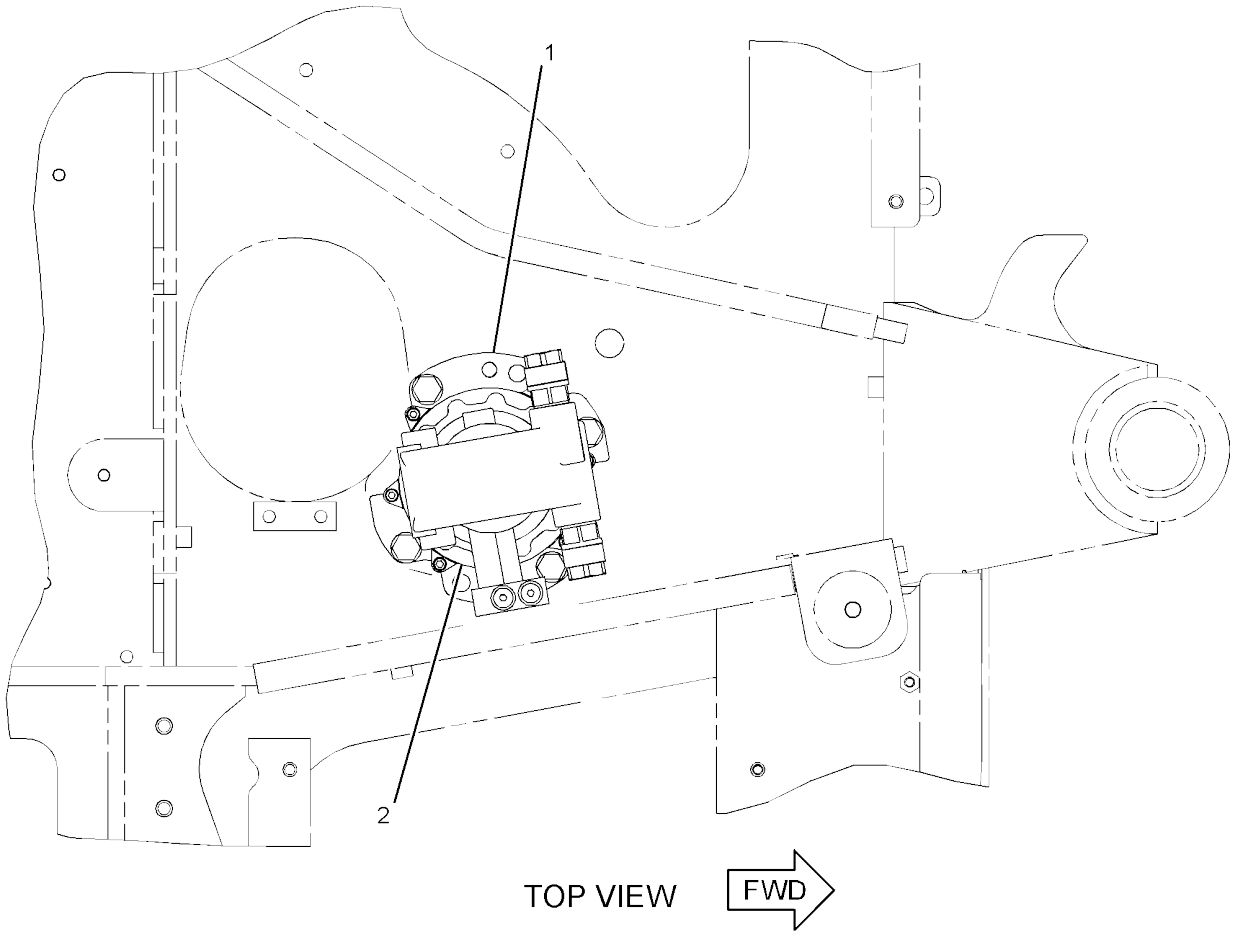


GRAPHIC #1 **<END>** g01235869

# *269-4197* FASTENER GP-LINES–STICK

**PART OF 421-8461 STICK AR**
**AN ATTACHMENT**

**SMCS-5057** **i04021005**

| NOTE | REF NO | GRAPHIC REF | PART NUMBER | QTY | PART NAME 1 2 3 4 5 6 (PRODUCT LEVEL) | SEE PAGE |
|---|---|---|---|---|---|---|
| | 1 | 1 | **274-6552** | 4 | CLAMP | |
| M | 2 | 1 | **7X-2537** | 4 | BOLT (M8X1.25X35-MM) | |
| | 3 | 1 | **8T-4224** | 4 | WASHER-HARD (8.8X16X2-MM THK) | |

M - METRIC PART

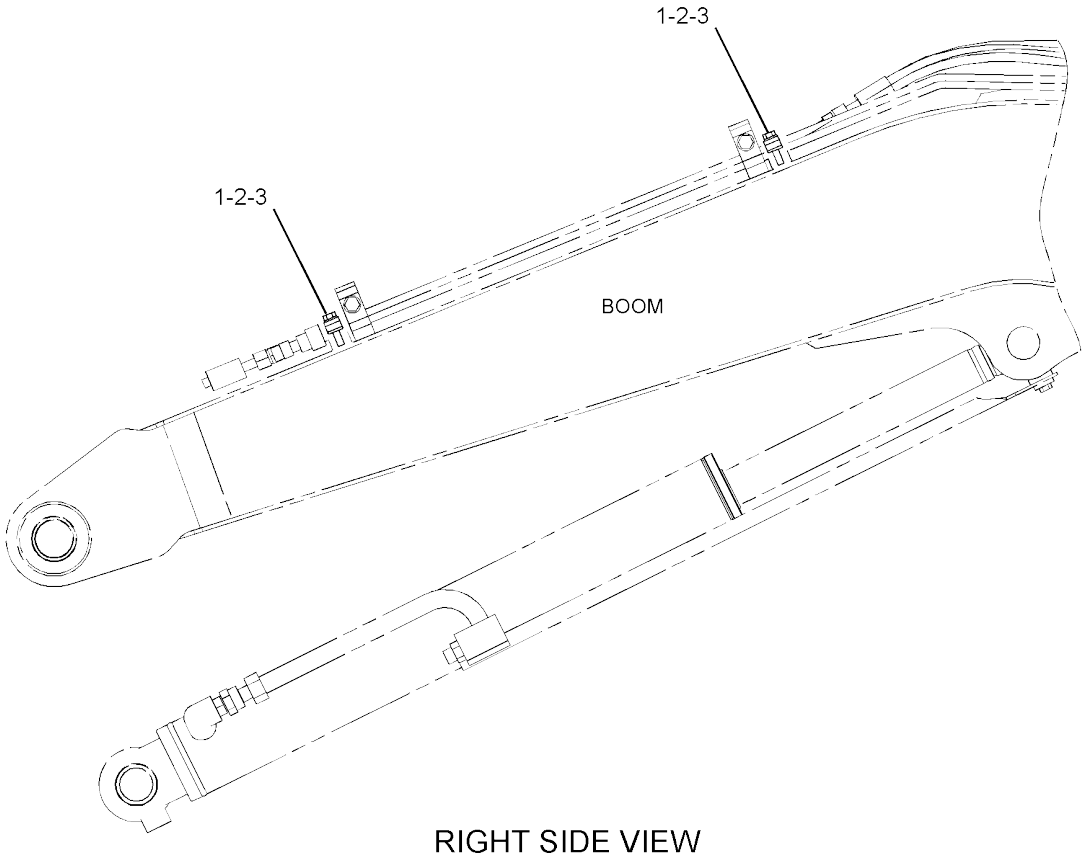


RIGHT SIDE VIEW

GRAPHIC #1 **<END>** g01221262

# *356-7138* FASTENER GP-LINES

**PART OF 379-4721, 379-4722 CONTROL AR-AUXILIARY AN ATTACHMENT**

**SMCS-5057** **i04021064**

| NOTE | REF NO | GRAPHIC REF | PART NUMBER | QTY | PART NAME 1 2 3 4 5 6 (PRODUCT LEVEL) | SEE PAGE |
|---|---|---|---|---|---|---|
| | 1 | 1 | **093-1294** | 4 | CLAMP | |
| | 2 | 1 | **274-6552** | 2 | CLAMP | |
| | 3 | 1 | **278-0797** | 2 | PLATE | |
| | 4 | 1 | **356-7139** | 4 | PLATE | |
| M | 5 | 1 | **7X-0818** | 4 | BOLT (M8X1.25X45-MM) | |
| M | 6 | 1 | **7X-2537** | 2 | BOLT (M8X1.25X35-MM) | |
| | 7 | 1 | **8T-4121** | 4 | WASHER-HARD (11X21X2.5-MM THK) | |
| M | 8 | 1 | **8T-4182** | 2 | BOLT (M10X1.5X45-MM) | |
| M | 9 | 1 | **8T-4186** | 2 | BOLT (M10X1.5X40-MM) | |
| | 10 | 1 | **8T-4224** | 6 | WASHER-HARD (8.8X16X2-MM THK) | |

M - METRIC PART

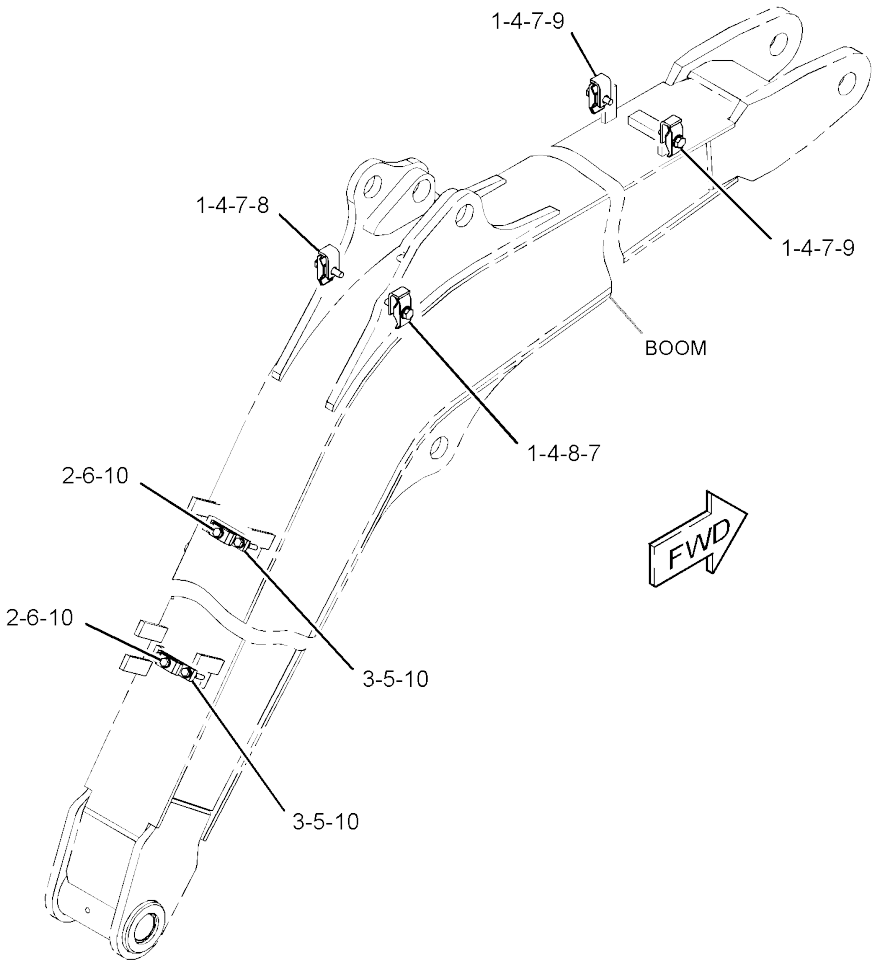


GRAPHIC #1 **<END>** g02210936

# 347-6081 GAUGE GP-SIGHT–HYDRAULIC OIL LEVEL

**PART OF 367-1050 TANK & FILTER GP-HYDRAULIC**

**SMCS-7479** **i04177750**

| NOTE | REF NO | GRAPHIC REF | PART NUMBER | QTY | PART NAME 1 2 3 4 5 6 (PRODUCT LEVEL) | SEE PAGE |
|---|---|---|---|---|---|---|
| | 1 | 1 | **347-6082** | 2 | BLOCK | |
| M | 2 | 1 | **236-3259** | 2 | BOLT-SPECIAL | |
| | 3 | 1 | **236-3257** | 1 | PIPE | |
| | 4 | 1 | **6F-6672** | 4 | SEAL-O-RING | |
| | 5 | 1 | **6F-4855** | 4 | SEAL-O-RING | |

M - METRIC PART

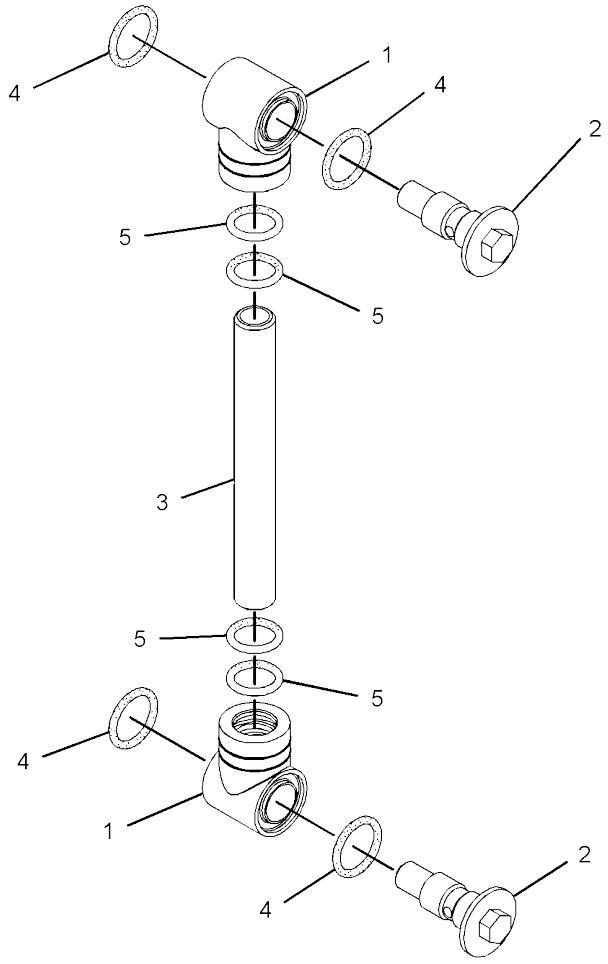


GRAPHIC #1 **<END>** g02270933

# HYDRAULIC SYSTEM

## *379-4713* HYDRAULIC AR

**PART OF 376-6672 COMMON AR**

**SMCS-5050** **i04728056**

| NOTE | PART NUMBER | QTY | PART NAME 1 2 3 4 5 6 (PRODUCT LEVEL) | SEE PAGE |
|---|---|---|---|---|
| Y | *379-4731* | 1 | LINES GP-FRONT | 237 |
| Y | *379-4730* | 1 | LINES GP-PILOT | 249 |
| Y | *379-4729* | 1 | LINES GP-HYDRAULIC PUMP | 243 |
| Y | *376-2012* | 1 | PUMP & MTG GP-MAIN HYDRAULIC | 289 |
| Y | *367-0936* | 1 | TANK & MTG GP-HYDRAULIC | 298 |

Y - SEPARATE ILLUSTRATION

<END>

## *379-4681* LINES AR-BOOM

**AN ATTACHMENT**

**SMCS-5057** **i04611688**

| NOTE | PART NUMBER | QTY | PART NAME 1 2 3 4 5 6 (PRODUCT LEVEL) | SEE PAGE |
|---|---|---|---|---|
| Y | *379-4699* | 1 | LINES GP-FRONT (BOOM CYLINDER) | 236 |

Y - SEPARATE ILLUSTRATION

<END>

## *379-4720* LINES AR-BOOM—CHECK VALVE

**CANNOT BE USED WITH 379-4681—PAGE: 210**

**AN ATTACHMENT**

**SMCS-5057** **i05376429**

| NOTE | PART NUMBER | QTY | PART NAME 1 2 3 4 5 6 (PRODUCT LEVEL) | SEE PAGE |
|---|---|---|---|---|
| Y | *382-0560* | 1 | FILM GP (OVERLOAD WARNING) | 541 |
| Y | *379-4733* | 1 | LINES GP-BOOM CHECK VALVE | 221 |
| Y | *422-2948* | 1 | WIRING GP-OVERLOAD WARNING | 117 |

Y - SEPARATE ILLUSTRATION

<END>

## *382-1316* LINES AR-BUCKET

**CANNOT BE USED WITH 382-1317—PAGE: 211**

**PART OF 383-5899, 383-5901, 383-5910, 383-5912 STICK AR-HOE**

**AN ATTACHMENT**

**SMCS-5057** **i04728098**

| NOTE | PART NUMBER | QTY | PART NAME 1 2 3 4 5 6 (PRODUCT LEVEL) | SEE PAGE |
|---|---|---|---|---|
| Y | *383-0615* | 1 | LINES GP-BUCKET | 223 |

Y - SEPARATE ILLUSTRATION

<END>

# *382-1317* LINES AR-BUCKET–LONG STICK

**CANNOT BE USED WITH 382-1316–PAGE: 210**
**PART OF 383-5900, 383-5902, 383-5911, 383-5913 STICK AR-HOE**
**AN ATTACHMENT**

**SMCS-5057** **i04728099**

| NOTE | PART NUMBER | QTY | PART NAME 1 2 3 4 5 6 (PRODUCT LEVEL) | SEE PAGE |
|---|---|---|---|---|
| Y | *383-0616* | 1 | LINES GP-BUCKET | 225 |

Y - SEPARATE ILLUSTRATION

<END>

# *269-3795* LINES GP-AUXILIARY HYDRAULIC–BOOM

**PART OF 379-4715 CONTROL AR-AUXILIARY**

**SMCS-5057** **i05032861**

| NOTE | REF NO | GRAPHIC REF | PART NUMBER | QTY | PART NAME 1 2 3 4 5 6 (PRODUCT LEVEL) | SEE PAGE |
|---|---|---|---|---|---|---|
| | 1 | 1 | **093-1290** | 8 | CLAMP | |
| | 2 | 1 | **282-9320** | 1 | TUBE AS | |
| | 3 | 1 | **282-9321** | 1 | TUBE AS | |
| | 4 | 1 | **6V-8398** | 4 | SEAL-O-RING | |
| | 5 | 1 | **8T-4121** | 8 | WASHER-HARD (11X21X2.5-MM THK) | |
| M | 6 | 1 | **8T-4182** | 4 | BOLT (M10X1.5X45-MM) | |
| M | 7 | 1 | **8T-4186** | 4 | BOLT (M10X1.5X40-MM) | |

M - METRIC PART

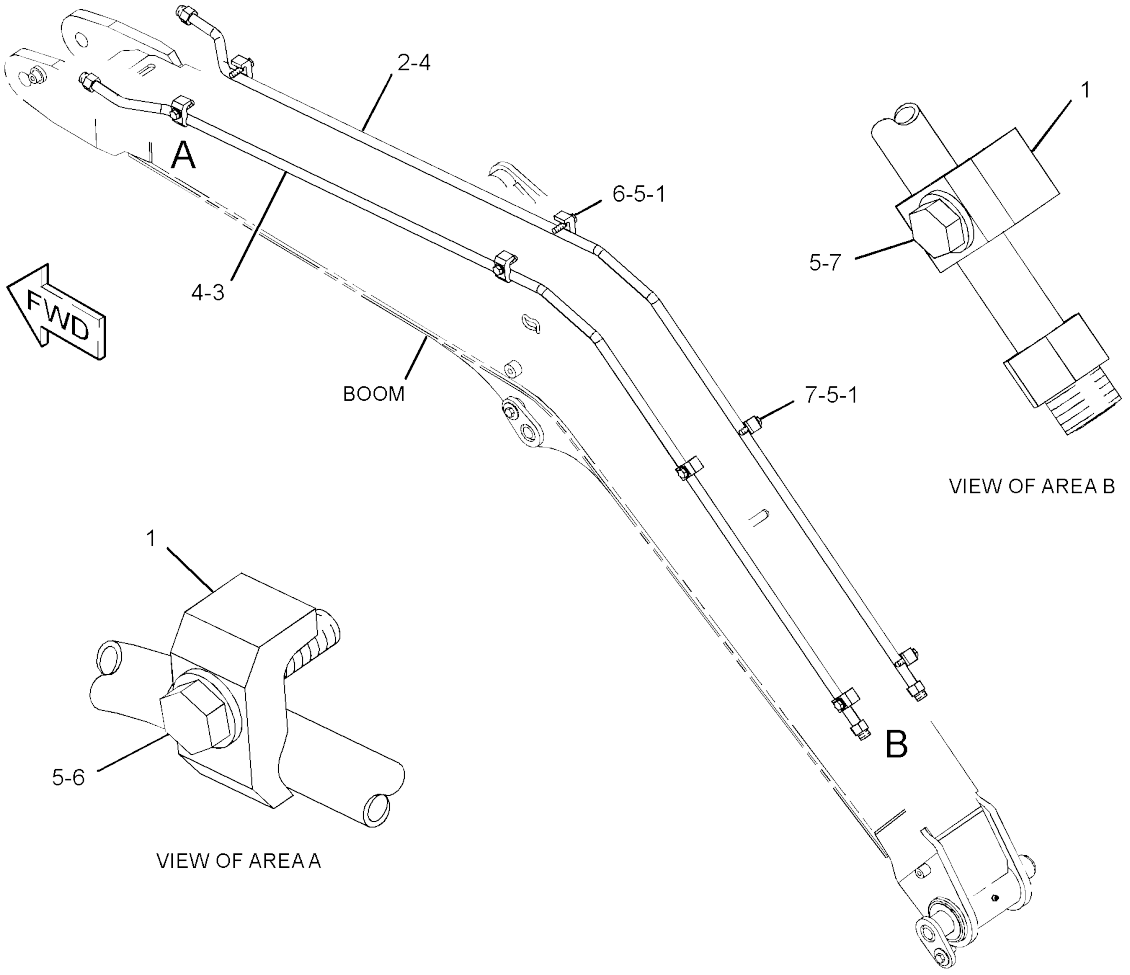


GRAPHIC #1 **<END>** g01221962

# 269-4194 LINES GP-AUXILIARY HYDRAULIC–STANDARD STICK

**PART OF 355-5382 LINES GP-AUXILIARY HYDRAULIC**
**AN ATTACHMENT**

**SMCS-5057** **i05218200**

| NOTE | REF NO | GRAPHIC REF | PART NUMBER | QTY | PART NAME 1 2 3 4 5 6 (PRODUCT LEVEL) | SEE PAGE |
|---|---|---|---|---|---|---|
| | 1 | 1 | **152-5717** | 1 | CAP-DUST | |
| | 2 | 1 | **152-5718** | 1 | CAP-DUST | |
| | 3 | 1 | **153-2994** | 1 | COUPLING (FEMALE) | |
| | 4 | 1 | **153-2995** | 1 | COUPLING (MALE) | |
| | 5 | 1 | *190-5236* | 2 | UNION AS | |
| | | 1 | **2M-9780** | 1 | SEAL-O-RING | |
| | | 1 | **6V-8398** | 1 | SEAL-O-RING | |
| | | 1 | **163-7050** | 1 | CONNECTOR | |
| I | 6 | 1 | **292-8349** | 2 | HOSE AS | |
| | 7 | 1 | **365-6920** | 1 | BRACKET | |
| | 8 | 1 | **365-6921** | 1 | BRACKET | |
| | 9 | 1 | **6V-9169** | 2 | NUT (13/16-16-THD) | |
| M | 10 | 1 | **8T-4179** | 4 | BOLT (M12X1.75X20-MM) | |
| | 11 | 1 | **8T-4223** | 4 | WASHER-HARD (13.5X25.5X3-MM THK) | |

I - REFER TO HYDRAULIC INFORMATION SYSTEM
M - METRIC PART

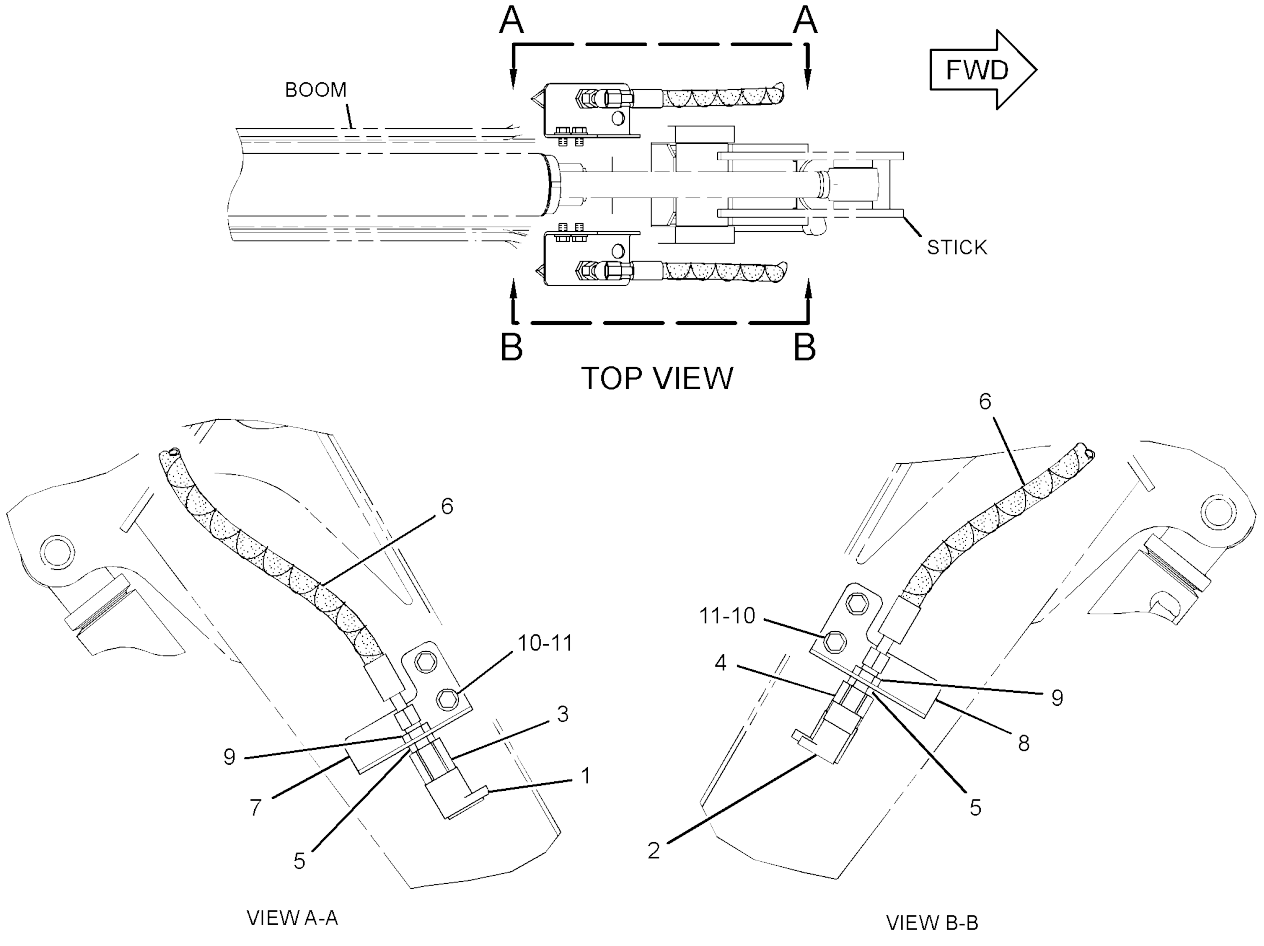


GRAPHIC #1 **<END>** g01223416

# *292-8308* LINES GP-AUXILIARY HYDRAULIC—2ND AUXILIARY, STANDARD STICK

**PART OF 379-4721 CONTROL AR-AUXILIARY**
**AN ATTACHMENT**

**SMCS-5057** **i04021057**

| NOTE | REF NO | GRAPHIC REF | PART NUMBER | QTY | PART NAME 1 2 3 4 5 6 (PRODUCT LEVEL) | SEE PAGE |
|---|---|---|---|---|---|---|
| | 1 | 1 | **153-2996** | 1 | FITTING AS (QUICK DISCONNECT, MALE) | |
| | 2 | 1 | **153-2997** | 1 | FITTING AS (QUICK DISCONNECT, FEMALE) | |
| | 3 | 1 | **161-2560** | 1 | CAP-DUST | |
| | 4 | 1 | **161-2561** | 1 | CAP-DUST | |
| | 5 | 1 | **267-4159** | 2 | CONNECTOR-BULKHEAD | |
| I | 6 | 1 | **292-8364** | 2 | HOSE AS | |
| | 7 | 1 | **3K-0360** | 2 | SEAL-O-RING | |
| | 8 | 1 | **6V-8397** | 2 | SEAL-O-RING | |
| | 9 | 1 | **6V-9168** | 2 | NUT (11/16-16-THD) | |

I - REFER TO HYDRAULIC INFORMATION SYSTEM

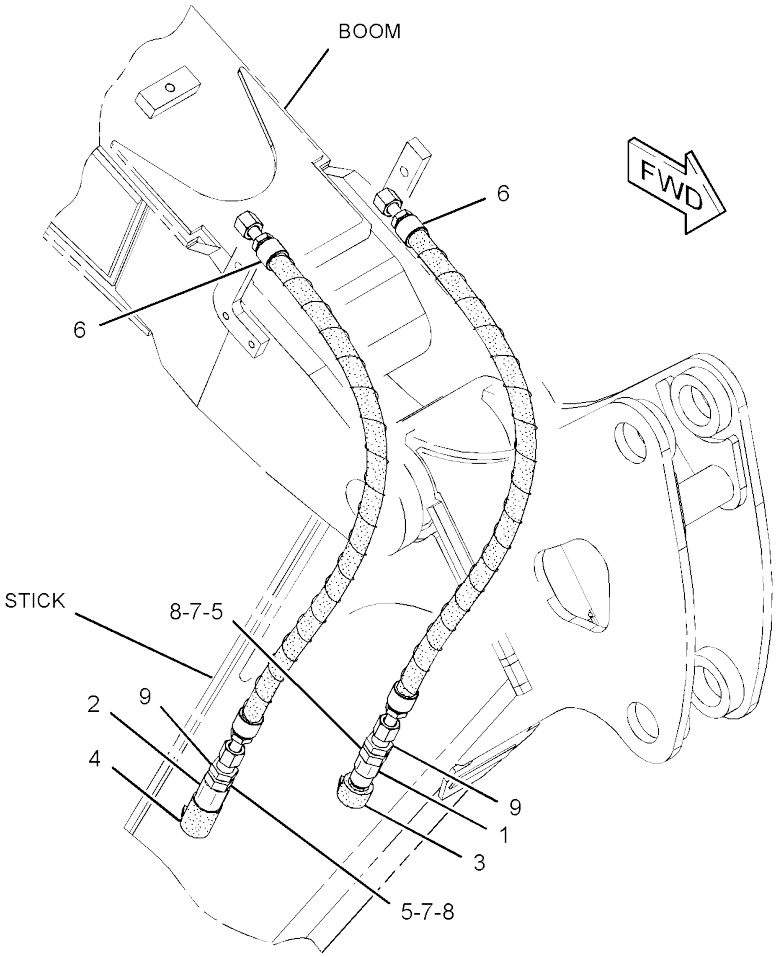


GRAPHIC #1 **<END>** g01311788

# *292-8310* LINES GP-AUXILIARY HYDRAULIC–2ND AUXILIARY, LONG STICK

**PART OF 379-4722 CONTROL AR-AUXILIARY AN ATTACHMENT**

**SMCS-5057** **i04021075**

| NOTE | REF NO | GRAPHIC REF | PART NUMBER | QTY | PART NAME 1 2 3 4 5 6 (PRODUCT LEVEL) | SEE PAGE |
|---|---|---|---|---|---|---|
| | 1 | 1 | **153-2996** | 1 | FITTING AS (QUICK DISCONNECT, MALE) | |
| | 2 | 1 | **153-2997** | 1 | FITTING AS (QUICK DISCONNECT, FEMALE) | |
| | 3 | 1 | **161-2560** | 1 | CAP-DUST | |
| | 4 | 1 | **161-2561** | 1 | CAP-DUST | |
| | 5 | 1 | **267-4159** | 2 | CONNECTOR-BULKHEAD | |
| | 6 | 1 | **292-8366** | 2 | HOSE AS | |
| | 7 | 1 | **3K-0360** | 2 | SEAL-O-RING | |
| | 8 | 1 | **5P-7462** | 2 | CLIP (SLOT) | |
| | 9 | 1 | **5P-7463** | 2 | CLIP (TAB) | |
| | 10 | 1 | **6V-0683** | 2 | GROMMET | |
| | 11 | 1 | **6V-8397** | 2 | SEAL-O-RING | |
| | 12 | 1 | **6V-9168** | 2 | NUT (11/16-16-THD) | |
| M | 13 | 1 | **8T-4192** | 2 | BOLT (M12X1.75X25-MM) | |
| | 14 | 1 | **8T-4223** | 2 | WASHER-HARD (13.5X25.5X3-MM THK) | |

M - METRIC PART

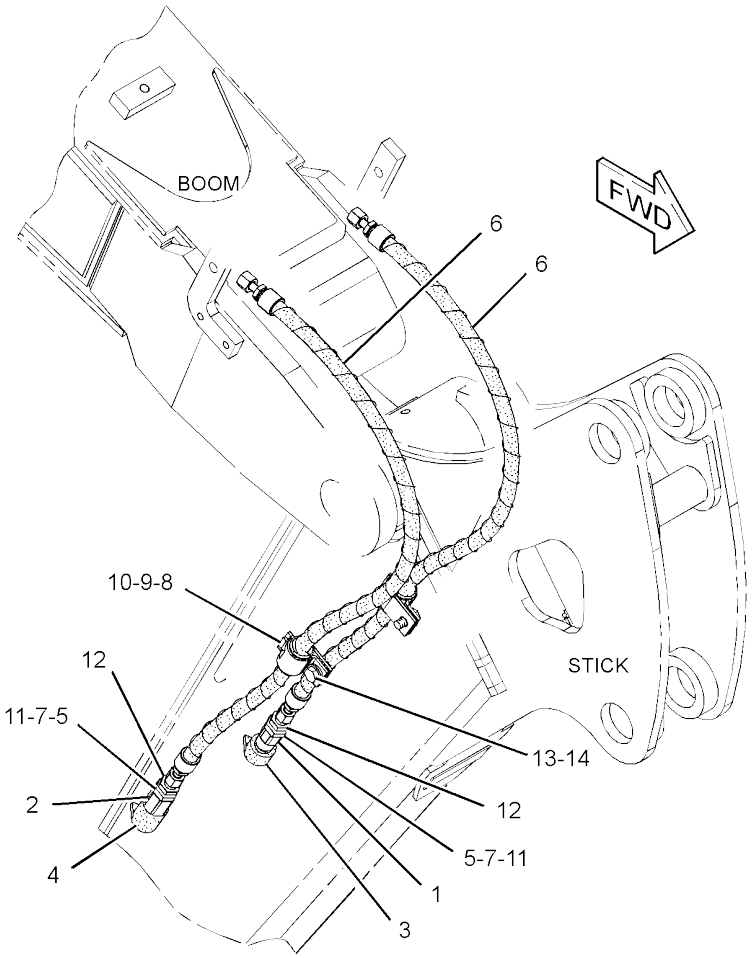


GRAPHIC #1 **<END>** g01320665

## *355-5382* LINES GP-AUXILIARY HYDRAULIC—STANDARD STICK

**PART OF 383-5899, 383-5901, 383-5910, 383-5912 STICK AR-HOE**
**AN ATTACHMENT**

**SMCS-5057** **i04020994**

| NOTE | PART NUMBER | QTY | PART NAME 1 2 3 4 5 6 (PRODUCT LEVEL) | SEE PAGE |
|---|---|---|---|---|
| Y | *269-4194* | 1 | LINES GP-AUXILIARY HYDRAULIC (STANDARD STICK) | 213 |

Y - SEPARATE ILLUSTRATION

<END>

## *379-4725* LINES GP-AUXILIARY HYDRAULIC—LONG STICK

**CANNOT BE USED WITH 355-5382—PAGE: 216**
**PART OF 383-5900, 383-5902, 383-5911, 383-5913 STICK AR-HOE**
**AN ATTACHMENT**

**SMCS-5057** **i04728062**

| NOTE | PART NUMBER | QTY | PART NAME 1 2 3 4 5 6 (PRODUCT LEVEL) | SEE PAGE |
|---|---|---|---|---|
| Y | *379-4738* | 1 | LINES GP-AUXILIARY HYDRAULIC | 217 |

Y - SEPARATE ILLUSTRATION

<END>

# 379-4738 LINES GP-AUXILIARY HYDRAULIC—LONG STICK

**PART OF 379-4725 LINES GP-AUXILIARY HYDRAULIC**
**AN ATTACHMENT**

**SMCS-5057** **i04728075**

| NOTE | REF NO | GRAPHIC REF | PART NUMBER | QTY | PART NAME 1 2 3 4 5 6 (PRODUCT LEVEL) | SEE PAGE |
|---|---|---|---|---|---|---|
| | 1 | 1 | **152-5717** | 1 | CAP-DUST | |
| | 2 | 1 | **152-5718** | 1 | CAP-DUST | |
| | 3 | 1 | **153-2994** | 1 | COUPLING (FEMALE) | |
| | 4 | 1 | **153-2995** | 1 | COUPLING (MALE) | |
| | 5 | 1 | *190-5236* | 2 | UNION AS | |
| | | | | | (EACH INCLUDES) | |
| | | 1 | **2M-9780** | 1 | SEAL-O-RING | |
| | | 1 | **6V-8398** | 1 | SEAL-O-RING | |
| | | 1 | **163-7050** | 1 | CONNECTOR | |
| I | 6 | 1 | **292-8353** | 2 | HOSE AS | |
| | 7 | 1 | **365-6920** | 1 | BRACKET | |
| | 8 | 1 | **365-6921** | 1 | BRACKET | |
| | 9 | 1 | **6V-1249** | 2 | GROMMET (22-MM ID) | |
| | 10 | 1 | **6V-9169** | 2 | NUT (13/16-16-THD) | |
| | 11 | 1 | **8C-7534** | 2 | CLIP | |
| M | 12 | 1 | **8T-4179** | 4 | BOLT (M12X1.75X20-MM) | |
| M | 13 | 1 | **8T-4192** | 2 | BOLT (M12X1.75X25-MM) | |
| | 14 | 1 | **8T-4223** | 6 | WASHER-HARD (13.5X25.5X3-MM THK) | |

I - REFER TO HYDRAULIC INFORMATION SYSTEM
M - METRIC PART

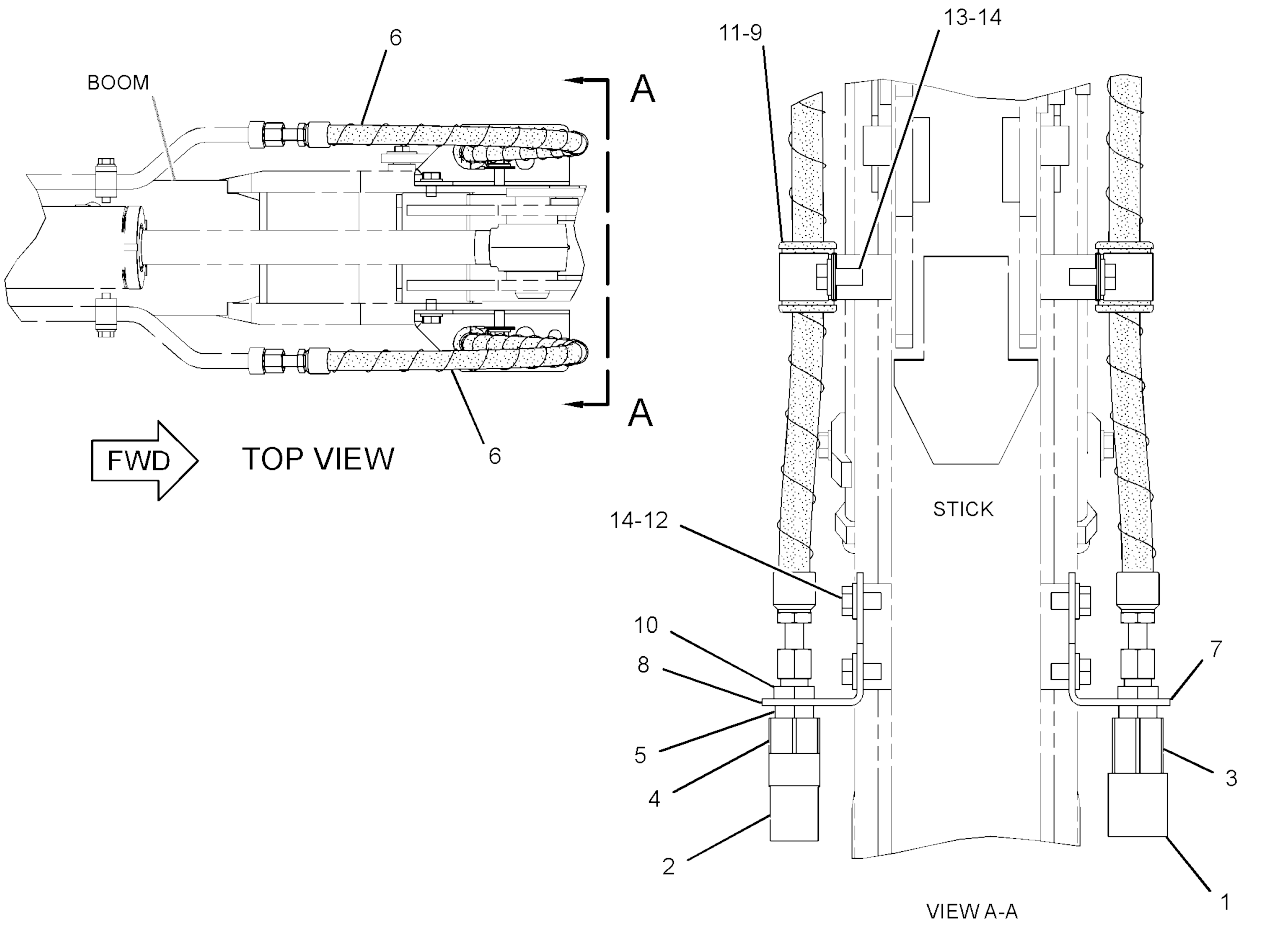


GRAPHIC #1 **<END>** g02858641

# *380-2456* LINES GP-AUXILIARY HYDRAULIC–2ND AUXILIARY, BOOM

**PART OF 379-4721, 379-4722 CONTROL AR-AUXILIARY AN ATTACHMENT**

**SMCS-5057** **i04728079**

| NOTE | REF NO | GRAPHIC REF | PART NUMBER | QTY | PART NAME 1 2 3 4 5 6 (PRODUCT LEVEL) | SEE PAGE |
|---|---|---|---|---|---|---|
| | 1 | 1 | **282-9328** | 1 | TUBE AS | |
| | 2 | 1 | **375-8117** | 1 | TUBE AS | |
| | 3 | 1 | **6V-8397** | 4 | SEAL-O-RING | |

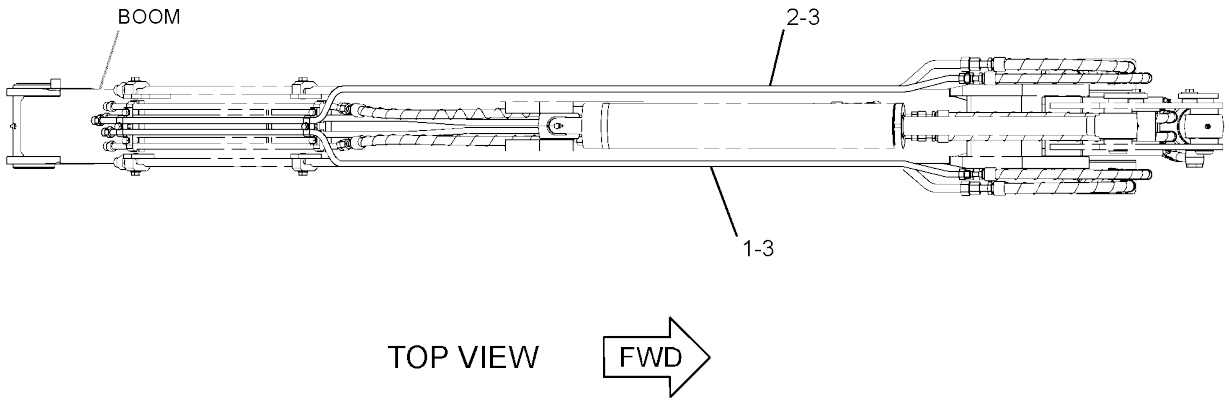


GRAPHIC #1 **<END>** g02858556

# *280-7609* LINES GP-BLADE–ANGLE

**PART OF 377-8930 BLADE AR-ANGLING**
**AN ATTACHMENT**

**SMCS-5057** **i04015432**

| NOTE | REF NO | GRAPHIC REF | PART NUMBER | QTY | PART NAME 1 2 3 4 5 6 (PRODUCT LEVEL) | SEE PAGE |
|---|---|---|---|---|---|---|
| | 1 | 1 | *148-8353* | 1 | ELBOW AS | |
| | | 1 | **3J-1907** | 1 | SEAL-O-RING | |
| | | 1 | **6V-8397** | 1 | SEAL-O-RING | |
| | | 1 | **6V-9001** | 1 | ELBOW | |
| | 2 | 1 | *148-8378* | 3 | ELBOW AS | |
| | | | | | (EACH INCLUDES) | |
| | | 1 | **3J-1907** | 1 | SEAL-O-RING | |
| | | 1 | **6V-8397** | 1 | SEAL-O-RING | |
| | | 1 | **6V-8724** | 1 | ELBOW | |
| I | 3 | 1 | **294-7850** | 1 | HOSE AS | |
| I | 4 | 1 | **294-7851** | 1 | HOSE AS | |

I - REFER TO HYDRAULIC INFORMATION SYSTEM

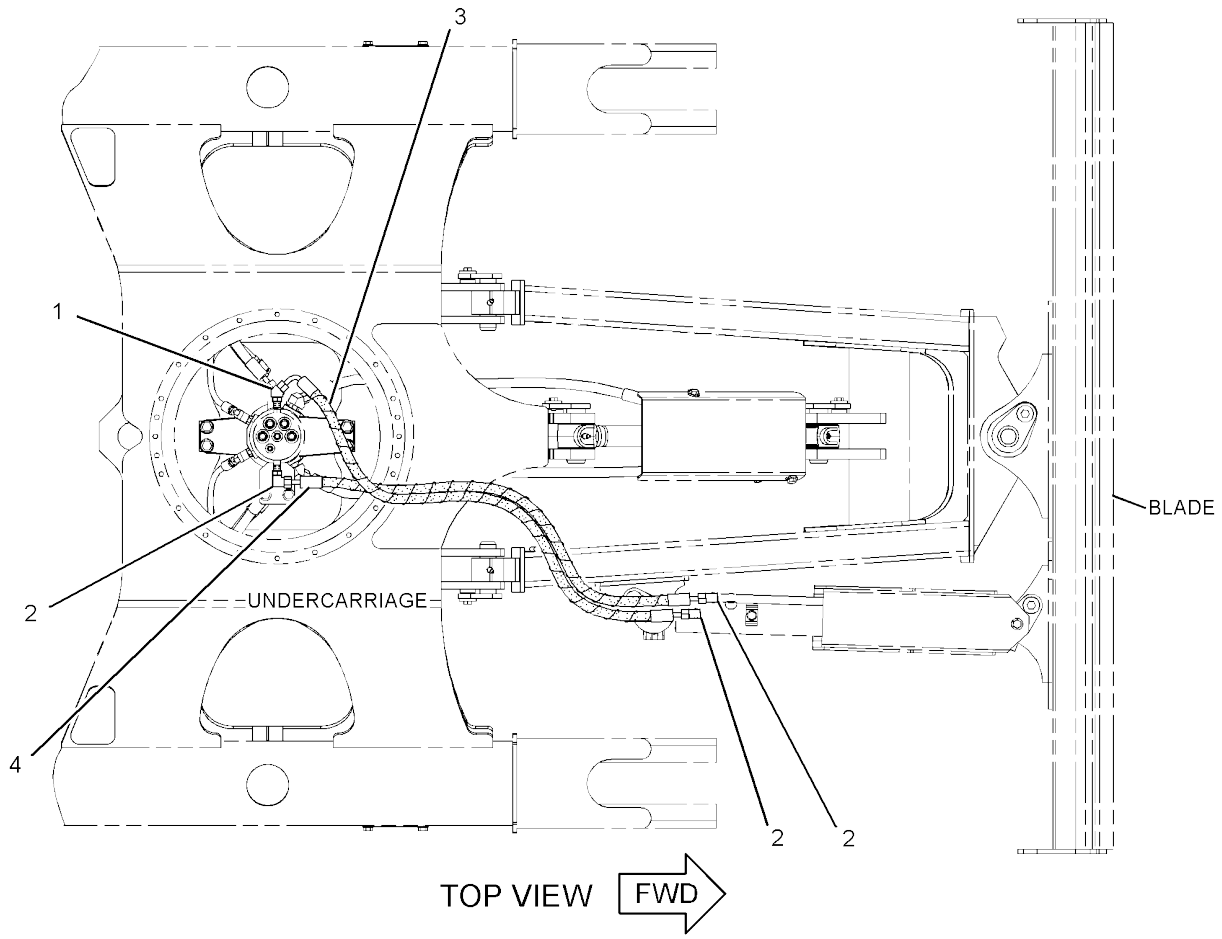


GRAPHIC #1 **<END>** g01354626

# *292-8290* LINES GP-BLADE–RAISE, LOWER

**PART OF 377-8930 BLADE AR-ANGLING, 377-8920 BLADE AR-STRAIGHT AN ATTACHMENT**

**SMCS-5057** **i04015471**

| NOTE | REF NO | GRAPHIC REF | PART NUMBER | QTY | PART NAME 1 2 3 4 5 6 (PRODUCT LEVEL) | SEE PAGE |
|---|---|---|---|---|---|---|
| | 1 | 1 | **267-4279** | 1 | COVER | |
| I | 2 | 1 | **292-8335** | 1 | HOSE AS | |
| I | 3 | 1 | **292-8336** | 1 | HOSE AS | |
| | 4 | 1 | *148-8336* | 1 | CONNECTOR AS | |
| | | 1 | **3J-1907** | 1 | SEAL-O-RING | |
| | | 1 | **6V-8397** | 1 | SEAL-O-RING | |
| | | 1 | **6V-8636** | 1 | CONNECTOR | |
| | 5 | 1 | *148-8353* | 3 | ELBOW AS | |
| | | | | | (EACH INCLUDES) | |
| | | 1 | **3J-1907** | 1 | SEAL-O-RING | |
| | | 1 | **6V-8397** | 1 | SEAL-O-RING | |
| | | 1 | **6V-9001** | 1 | ELBOW | |
| | 6 | 1 | **7X-7729** | 2 | WASHER (11X25X3-MM THK) | |
| M | 7 | 1 | **8T-4137** | 2 | BOLT (M10X1.5X20-MM) | |

I - REFER TO HYDRAULIC INFORMATION SYSTEM
M - METRIC PART

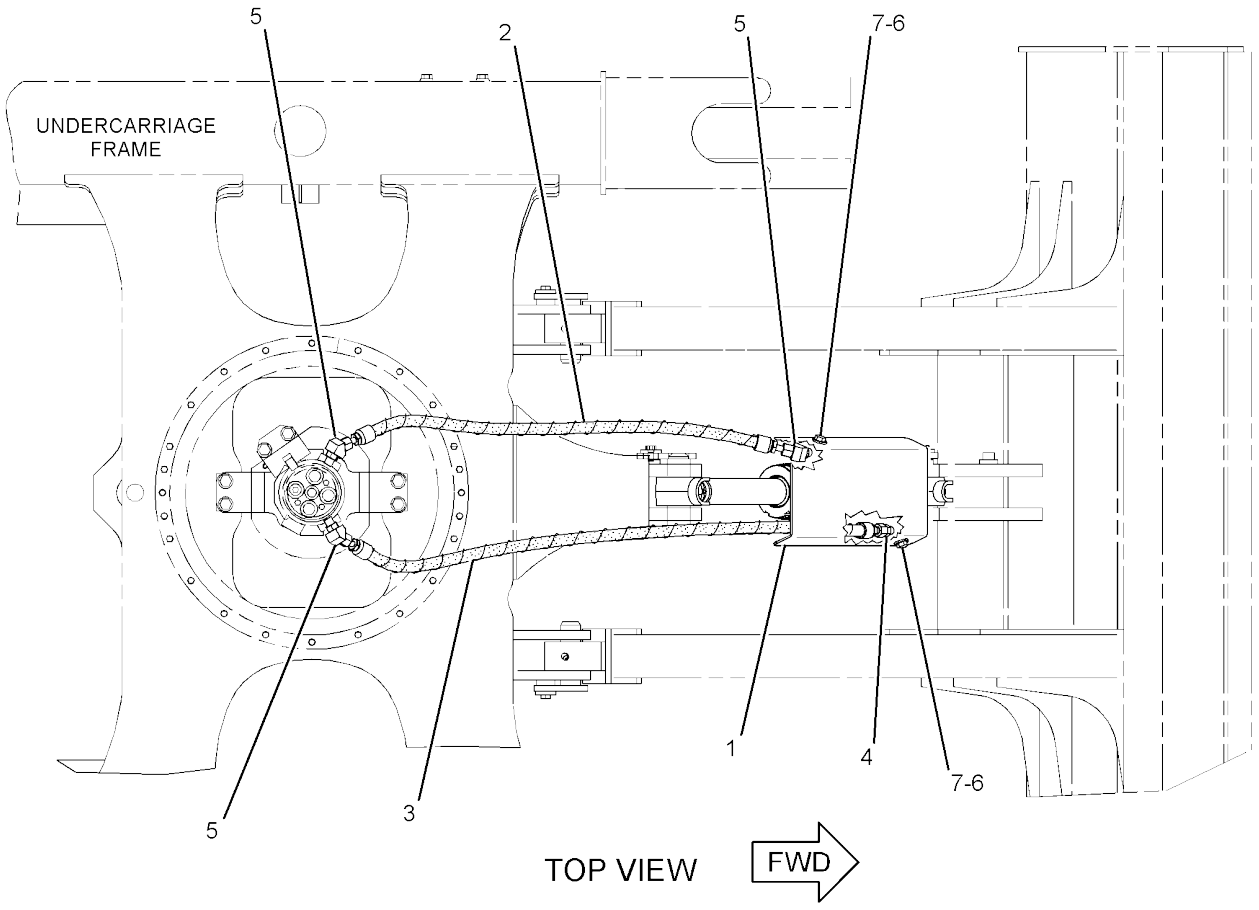


GRAPHIC #1 **<END>** g01348156

# *379-4733* LINES GP-BOOM CHECK VALVE

**S/N: RKY1-1509**
**PART OF 379-4720 LINES AR-BOOM**
**AN ATTACHMENT**

**SMCS-5057, 5453** **i05223454**

| NOTE | REF NO | GRAPHIC REF | PART NUMBER | QTY | PART NAME 1 2 3 4 5 6 (PRODUCT LEVEL) | SEE PAGE |
|---|---|---|---|---|---|---|
| | 1 | 1 | **7K-1181** | 4 | STRAP-CABLE | |
| | 2 | 1 | **9F-2167** | 1 | SCREW-PURGE (3/8-24X1.164-IN) | |
| | 3 | 1 | **093-1290** | 1 | CLAMP | |
| | 4 | 1 | **278-0800** | 1 | TUBE AS | |
| | 5 | 1 | **279-4737** | 1 | STRAP-CABLE (GREEN) | |
| | 6 | 1 | **279-4738** | 1 | STRAP-CABLE (PURPLE) | |
| J | 7 | 1 | **288-8570** | 1 | VALVE GP-LOAD CONTROL | |
| | 8 | 1 | **307-8151** | 1 | PLATE AS | |
| | 10 | 1 | **307-8153** | 2 | SUPPORT AS | |
| | 11 | 1 | **307-8156** | 1 | TUBE AS | |
| | 12 | 1 | **308-4577** | 1 | SUPPORT AS | |
| I | 13 | 1 | **397-6699** | 1 | HOSE AS | |
| I | 14 | 1 | **381-0565** | 1 | HOSE AS | |
| I | 15 | 1 | **397-6742** | 1 | HOSE AS | |
| | 16 | 1 | *148-8328* | 1 | CONNECTOR AS | |
| | | 1 | **3D-2824** | 1 | SEAL-O-RING | |
| | | 1 | **6V-8398** | 1 | SEAL-O-RING | |
| | | 1 | **6V-8633** | 1 | CONNECTOR | |
| | 17 | 1 | *148-8336* | 2 | CONNECTOR AS | |
| | | | | | (EACH INCLUDES) | |
| | | 1 | **3J-1907** | 1 | SEAL-O-RING | |
| | | 1 | **6V-8397** | 1 | SEAL-O-RING | |
| | | 1 | **6V-8636** | 1 | CONNECTOR | |
| | 18 | 1 | *148-8340* | 1 | CONNECTOR AS | |
| | | 1 | **3K-0360** | 1 | SEAL-O-RING | |
| | | 1 | **6V-8398** | 1 | SEAL-O-RING | |
| | | 1 | **6V-8639** | 1 | CONNECTOR | |
| | 19 | 1 | *148-8368* | 1 | ELBOW AS | |
| | | 1 | **3J-1907** | 1 | SEAL-O-RING | |
| | | 1 | **4J-5477** | 1 | SEAL-O-RING | |
| | | 1 | **6V-8627** | 1 | ELBOW | |
| | 20 | 1 | *150-4029* | 1 | TEE AS | |
| | | 1 | **3J-7354** | 1 | SEAL-O-RING | |
| | | 1 | **4J-5477** | 2 | SEAL-O-RING | |
| | | 1 | **6V-8780** | 1 | TEE-FACE SEAL | |
| | 21 | 1 | **152-3411** | 1 | ELBOW | |
| | 22 | 1 | *164-9869* | 1 | CONNECTOR AS | |
| | | 1 | **3J-1907** | 1 | SEAL-O-RING | |
| | | 1 | **6V-8397** | 1 | SEAL-O-RING | |
| | | 1 | **9X-2297** | 1 | CONNECTOR | |
| | 23 | 1 | **208-0616** | 1 | TEE | |
| | 24 | 1 | **3D-2824** | 1 | SEAL-O-RING | |
| | 25 | 1 | **4S-1962** | 1 | CLIP | |
| | 26 | 1 | **6V-8397** | 2 | SEAL-O-RING | |
| | 27 | 1 | **8T-4121** | 10 | WASHER-HARD (11X21X2.5-MM THK) | |
| M | 28 | 1 | **8T-4133** | 2 | NUT (M10X1.5-THD) | |
| M | 29 | 1 | **8T-4137** | 3 | BOLT (M10X1.5X20-MM) | |
| M | 30 | 1 | **8T-4182** | 1 | BOLT (M10X1.5X45-MM) | |
| M | 31 | 1 | **8T-4196** | 2 | BOLT (M10X1.5X35-MM) | |
| M | 32 | 1 | **8T-6466** | 2 | BOLT (M10X1.5X60-MM) | |
| | | | | | AVAILABLE REPAIR KIT(S): | |
| J | | | **170-4635** | 1 | KIT-SEAL (LOAD CONTROL VALVE) | |

I - REFER TO HYDRAULIC INFORMATION SYSTEM
J - KIT MARKED J SERVICES PARTS MARKED J
M - METRIC PART

*379-4733* **LINES GP-BOOM CHECK VALVE (*contd.*)** **i05223454**

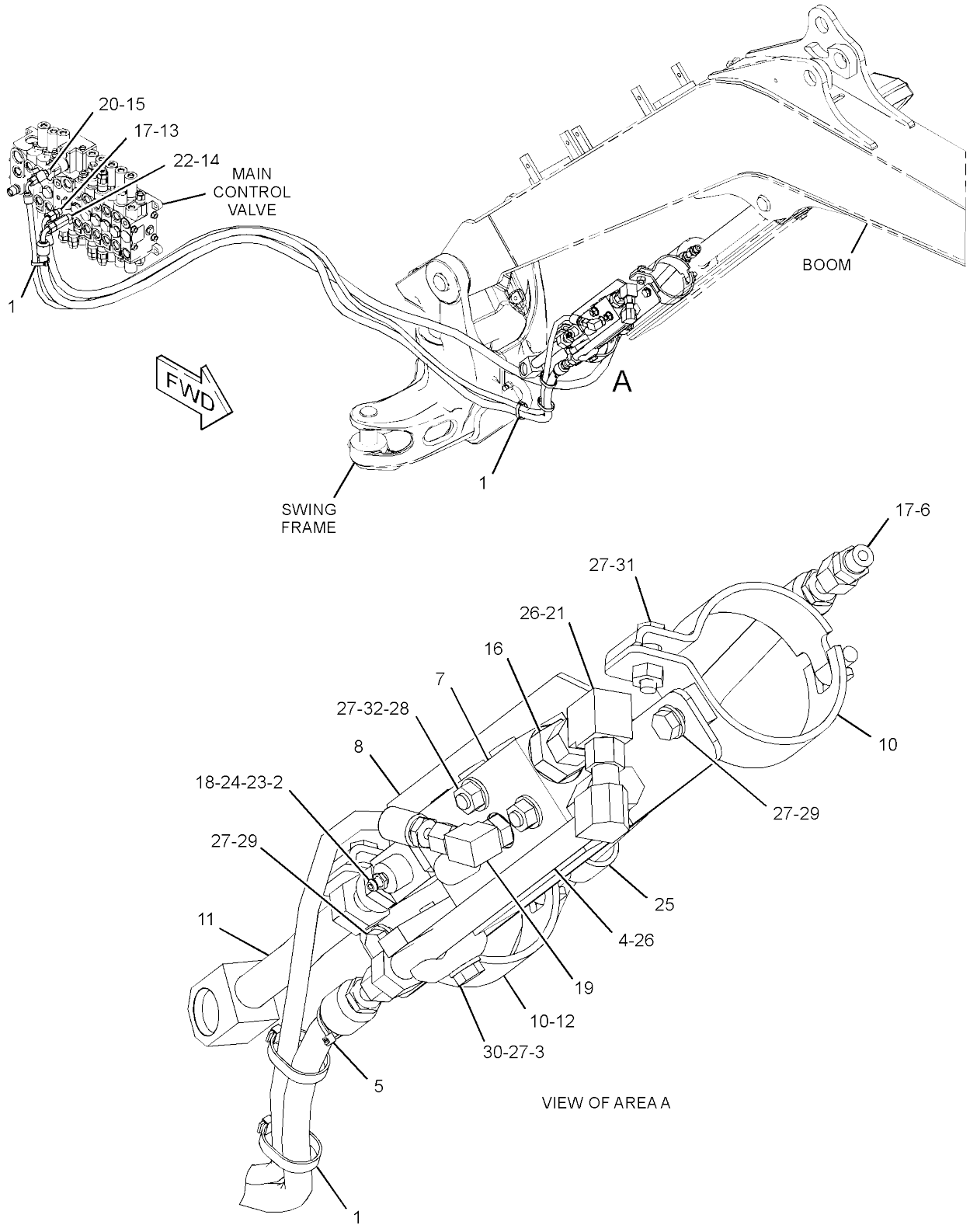


GRAPHIC #1 **<END>** g03426919

# *383-0615* LINES GP-BUCKET–LONG STICK

**PART OF 382-1316 LINES AR-BUCKET**

**AN ATTACHMENT**

**SMCS-5057** **i04728104**

| NOTE | REF NO | GRAPHIC REF | PART NUMBER | QTY | PART NAME 1 2 3 4 5 6 (PRODUCT LEVEL) | SEE PAGE |
|---|---|---|---|---|---|---|
| | 1 | 1 | **282-9326** | 1 | TUBE AS | |
| | 2 | 1 | **282-9327** | 1 | TUBE AS | |
| | 3 | 1 | **311-7937** | 1 | CLIP | |
| I | 4 | 1 | **382-2547** | 1 | HOSE AS | |
| I | 5 | 1 | **382-2548** | 1 | HOSE AS | |
| | 6 | 1 | *148-8336* | 2 | CONNECTOR AS | |
| | | | | | (EACH INCLUDES) | |
| | | 1 | **3J-1907** | 1 | SEAL-O-RING | |
| | | 1 | **6V-8397** | 1 | SEAL-O-RING | |
| | | 1 | **6V-8636** | 1 | CONNECTOR | |
| | 7 | 1 | **1S-0994** | 1 | CLIP | |
| | 8 | 1 | **298-7736** | 1 | COLLAR | |
| | 9 | 1 | **6V-8397** | 4 | SEAL-O-RING | |
| | 10 | 1 | **8T-4121** | 2 | WASHER-HARD (11X21X2.5-MM THK) | |
| M | 11 | 1 | **8T-4136** | 1 | BOLT (M10X1.5X25-MM) | |
| M | 12 | 1 | **8T-4195** | 1 | BOLT (M10X1.5X30-MM) | |

I - REFER TO HYDRAULIC INFORMATION SYSTEM
M - METRIC PART

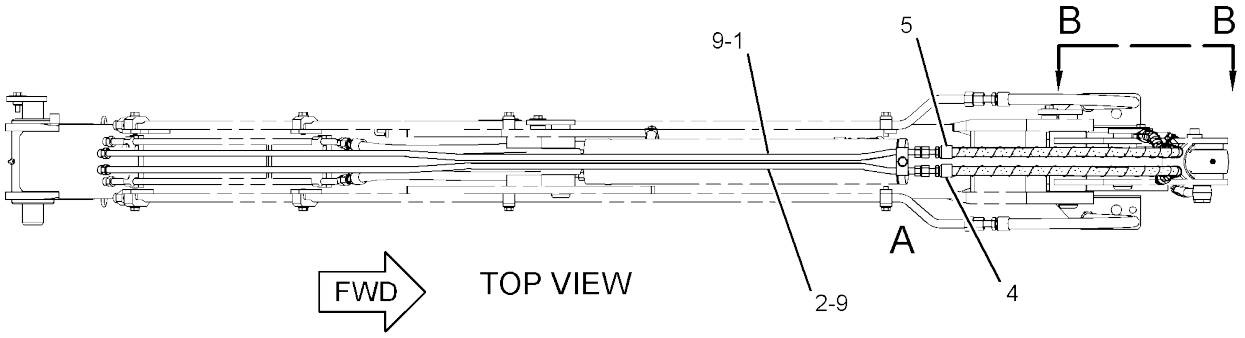


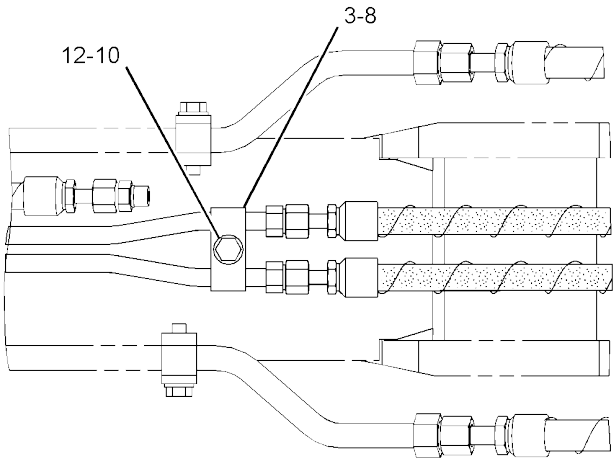


VIEW OF AREA A

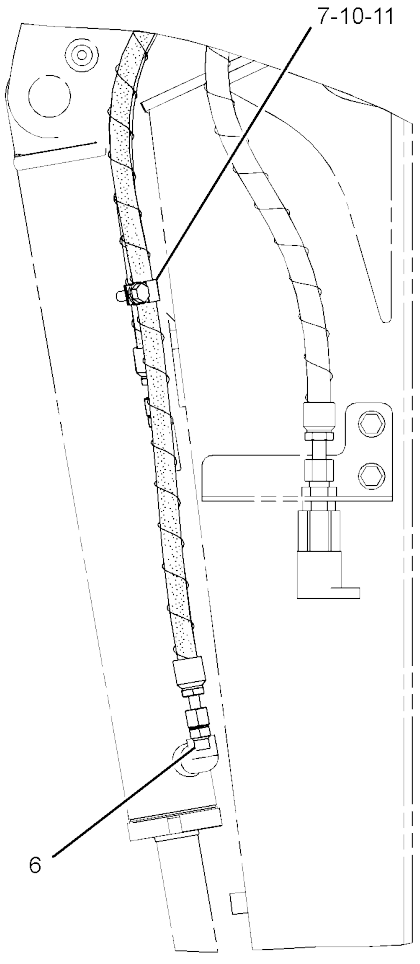


VIEW B-B

GRAPHIC #1 **<END>** g02857599

# *383-0616* LINES GP-BUCKET–LONG STICK

**PART OF 382-1317 LINES AR-BUCKET**

**AN ATTACHMENT**

**SMCS-5057** **i04728105**

| NOTE | REF NO | GRAPHIC REF | PART NUMBER | QTY | PART NAME 1 2 3 4 5 6 (PRODUCT LEVEL) | SEE PAGE |
|---|---|---|---|---|---|---|
| | 1 | 1 | **282-9326** | 1 | TUBE AS | |
| | 2 | 1 | **282-9327** | 1 | TUBE AS | |
| | 3 | 1 | **311-7937** | 1 | CLIP | |
| I | 4 | 1 | **382-2558** | 1 | HOSE AS | |
| I | 5 | 1 | **382-2559** | 1 | HOSE AS | |
| | 6 | 1 | *148-8336* | 2 | CONNECTOR AS | |
| | | | | | (EACH INCLUDES) | |
| | | 1 | **3J-1907** | 1 | SEAL-O-RING | |
| | | 1 | **6V-8397** | 1 | SEAL-O-RING | |
| | | 1 | **6V-8636** | 1 | CONNECTOR | |
| | 7 | 1 | **1S-0994** | 1 | CLIP | |
| | 8 | 1 | **298-7736** | 1 | COLLAR | |
| | 9 | 1 | **6V-8397** | 4 | SEAL-O-RING | |
| | 10 | 1 | **8T-4121** | 2 | WASHER-HARD (11X21X2.5-MM THK) | |
| M | 11 | 1 | **8T-4136** | 1 | BOLT (M10X1.5X25-MM) | |
| M | 12 | 1 | **8T-4195** | 1 | BOLT (M10X1.5X30-MM) | |

I - REFER TO HYDRAULIC INFORMATION SYSTEM
M - METRIC PART

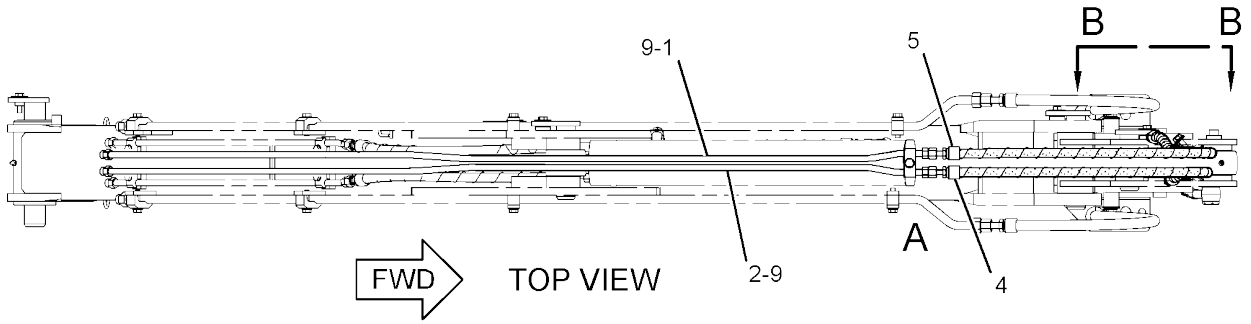


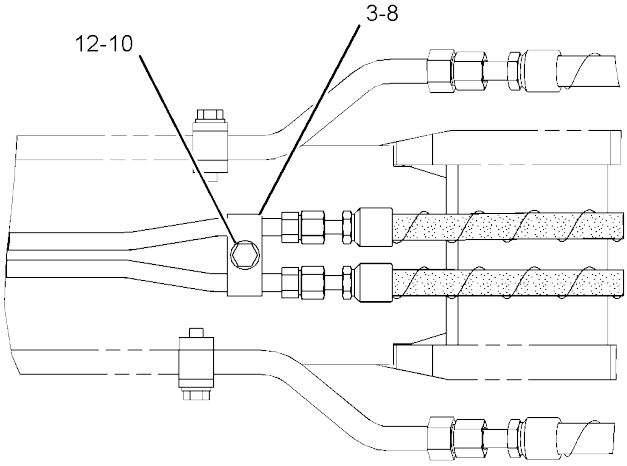


VIEW OF AREA A

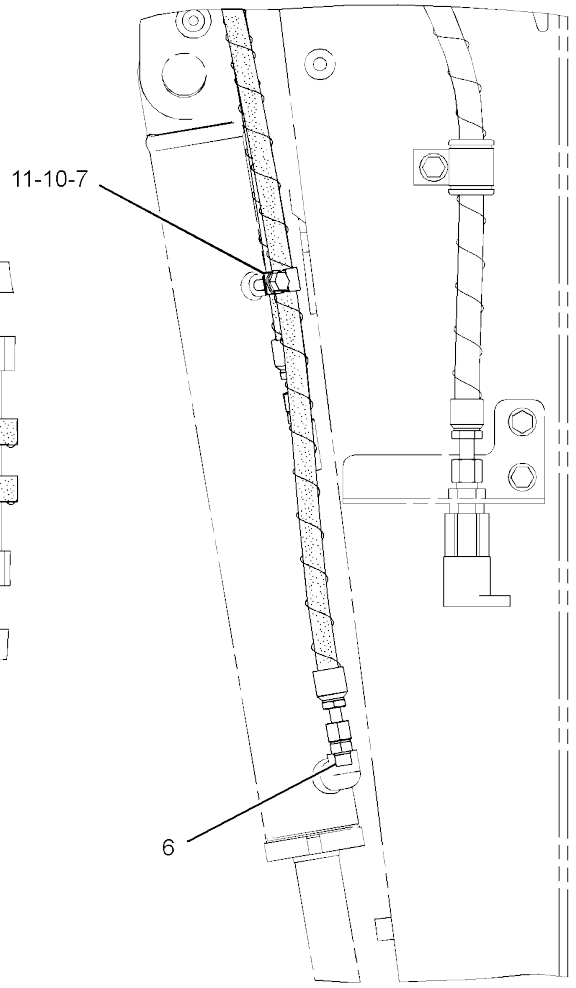


VIEW B-B

GRAPHIC #1 **<END>** g02856516

# *252-6793* LINES GP-BUCKET CYLINDER

**PART OF 279-4325 BUCKET AR-TILTABLE**
**AN ATTACHMENT**

**SMCS-5057, 5457** **i02595096**

| NOTE | REF NO | GRAPHIC REF | PART NUMBER | QTY | PART NAME 1 2 3 4 5 6 (PRODUCT LEVEL) | SEE PAGE |
|---|---|---|---|---|---|---|
| | 1 | 1 | **5P-1404** | 2 | ADAPTER | |
| | 2 | 1 | **7K-1181** | 1 | STRAP-CABLE | |
| | 3 | 1 | **151-4841** | 1 | BLOCK | |
| | 4 | 1 | **153-2995** | 1 | COUPLING (MALE) | |
| | 5 | 1 | *164-9639* | 2 | CONNECTOR AS | |
| | | | | | (EACH INCLUDES) | |
| | | 1 | **3J-1907** | 1 | SEAL-O-RING | |
| | | 1 | **4J-5477** | 1 | SEAL-O-RING | |
| | | 1 | **148-7925** | 1 | CONNECTOR | |
| I | 6 | 1 | **251-2025** | 1 | HOSE AS | |
| I | 7 | 1 | **251-2026** | 1 | HOSE AS | |
| | 8 | 1 | **153-2994** | 1 | COUPLING (FEMALE) | |
| | 9 | 1 | **1S-0994** | 2 | CLIP | |
| | 10 | 1 | **2M-9780** | 2 | SEAL-O-RING | |
| | 11 | 1 | **6V-8398** | 2 | SEAL-O-RING | |
| | 12 | 1 | **8T-4121** | 1 | WASHER-HARD (11X21X2.5-MM THK) | |
| M | 13 | 1 | **8T-4137** | 1 | BOLT (M10X1.5X20-MM) | |

I - REFER TO HYDRAULIC INFORMATION SYSTEM
M - METRIC PART

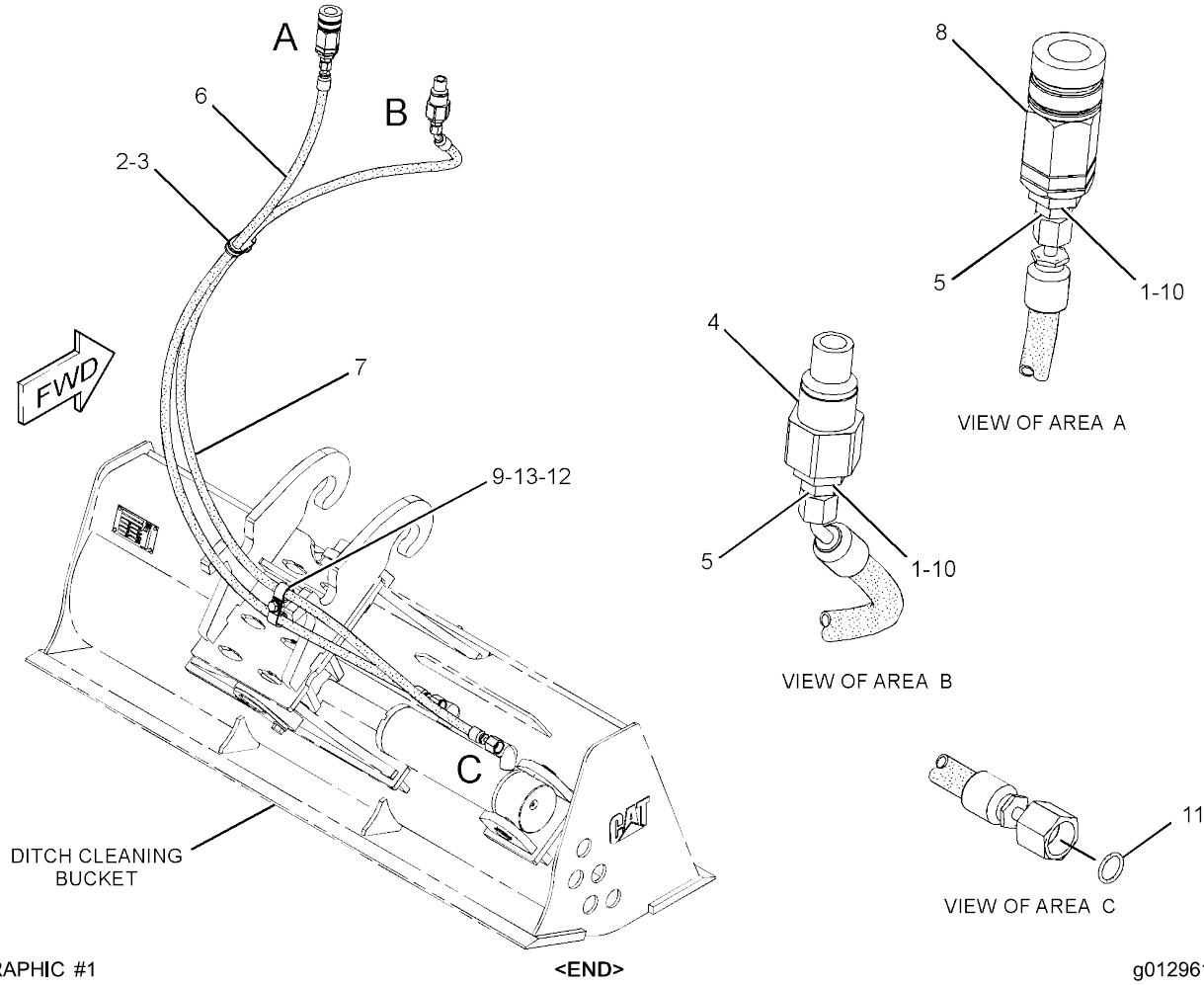


GRAPHIC #1 **<END>** g01296148

# *359-6059* LINES GP-CONNECTING—RH

**PART OF 309-1917, 309-1938 THUMB GP**
**AN ATTACHMENT**

**SMCS-5057** **i05426582**

| NOTE | REF NO | GRAPHIC REF | PART NUMBER | QTY | PART NAME 1 2 3 4 5 6 (PRODUCT LEVEL) | SEE PAGE |
|---|---|---|---|---|---|---|
| | 1 | 1 | **280-2652** | 1 | VALVE-BALL (HYDRAULIC OIL) | |
| | 2 | 1 | **359-5545** | 1 | BRACKET | |
| | 3 | 1 | **359-5548** | 1 | BRACKET | |
| I | 4 | 1 | **361-5149** | 1 | HOSE AS | |
| | 5 | 1 | **3J-1907** | 1 | SEAL-O-RING | |
| | 6 | 1 | **3K-0360** | 2 | SEAL-O-RING | |
| | 7 | 1 | **6V-1889** | 1 | CLIP | |
| M | 8 | 1 | **6V-3668** | 2 | BOLT (M12X1.75X30-MM) | |
| | 9 | 1 | **6V-8398** | 5 | SEAL-O-RING | |
| | 10 | 1 | **6V-8639** | 1 | CONNECTOR | |
| | 11 | 1 | **6V-9837** | 1 | TEE-SWIVEL | |
| | 12 | 1 | **6V-9851** | 1 | ELBOW | |
| | 13 | 1 | **6V-9873** | 1 | CONNECTOR | |
| | 14 | 1 | **7X-3164** | 1 | ADAPTER-SWIVEL | |
| | 15 | 1 | **8T-4121** | 2 | WASHER-HARD (11X21X2.5-MM THK) | |
| M | 16 | 1 | **8T-4133** | 1 | NUT (M10X1.5-THD) | |
| M | 17 | 1 | **8T-4136** | 1 | BOLT (M10X1.5X25-MM) | |
| | 18 | 1 | **8T-4223** | 2 | WASHER-HARD (13.5X25.5X3-MM THK) | |

I - REFER TO HYDRAULIC INFORMATION SYSTEM
M - METRIC PART

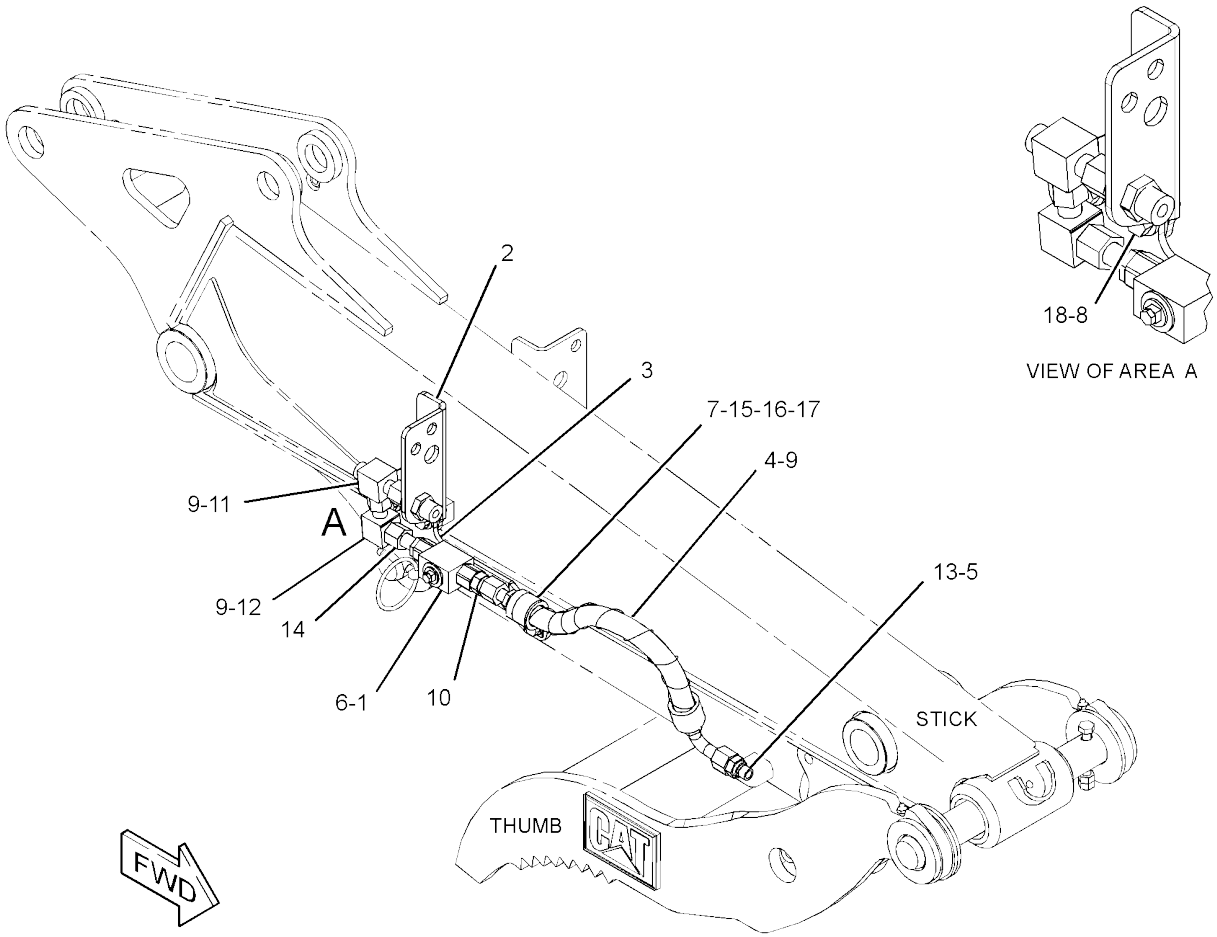


GRAPHIC #1 **<END>** g03401074

# HYDRAULIC SYSTEM

## *369-3693* LINES GP-CONNECTING–LH

**PART OF 309-1917, 309-1938 THUMB GP**
**AN ATTACHMENT**

**SMCS-5057** **i05426587**

| NOTE | REF NO | GRAPHIC REF | PART NUMBER | QTY | PART NAME 1 2 3 4 5 6 (PRODUCT LEVEL) | SEE PAGE |
|---|---|---|---|---|---|---|
| | 1 | 1 | **280-2652** | 1 | VALVE-BALL (HYDRAULIC OIL) | |
| | 2 | 1 | **359-5544** | 1 | BRACKET | |
| | 3 | 1 | **359-5547** | 1 | BRACKET | |
| I | 4 | 1 | **361-5148** | 1 | HOSE AS | |
| | 5 | 1 | **3J-1907** | 1 | SEAL-O-RING | |
| | 6 | 1 | **3K-0360** | 2 | SEAL-O-RING | |
| | 7 | 1 | **6V-1889** | 1 | CLIP | |
| M | 8 | 1 | **6V-3668** | 2 | BOLT (M12X1.75X30-MM) | |
| | 9 | 1 | **6V-8398** | 5 | SEAL-O-RING | |
| | 10 | 1 | **6V-8639** | 1 | CONNECTOR | |
| | 11 | 1 | **6V-9837** | 1 | TEE-SWIVEL | |
| | 12 | 1 | **6V-9851** | 1 | ELBOW | |
| | 13 | 1 | **6V-9873** | 1 | CONNECTOR | |
| | 14 | 1 | **7X-3164** | 1 | ADAPTER-SWIVEL | |
| | 15 | 1 | **8T-4121** | 2 | WASHER-HARD (11X21X2.5-MM THK) | |
| M | 16 | 1 | **8T-4133** | 1 | NUT (M10X1.5-THD) | |
| M | 17 | 1 | **8T-4136** | 1 | BOLT (M10X1.5X25-MM) | |
| | 18 | 1 | **8T-4223** | 2 | WASHER-HARD (13.5X25.5X3-MM THK) | |

I - REFER TO HYDRAULIC INFORMATION SYSTEM
M - METRIC PART

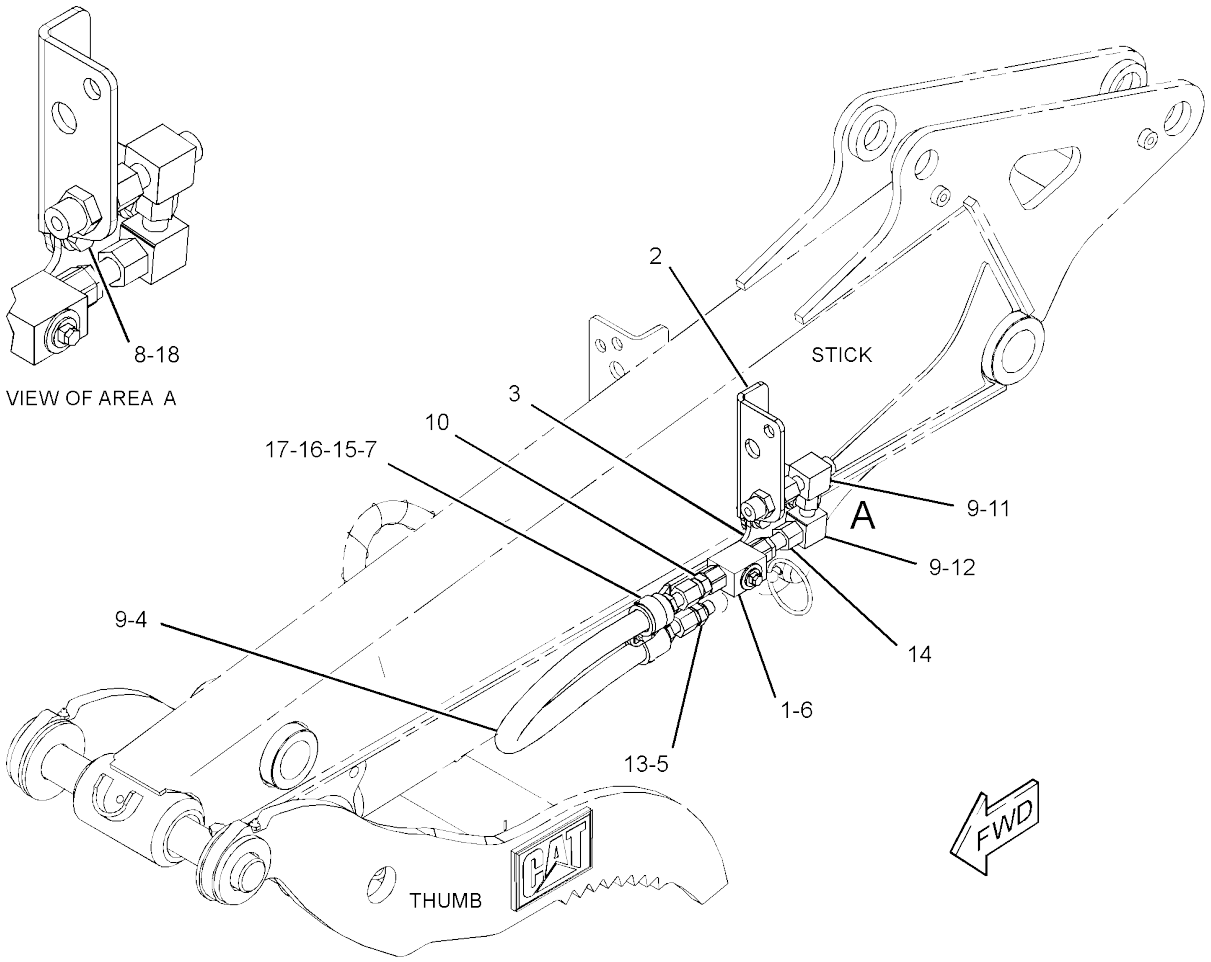


GRAPHIC #1 **<END>** g03401117

# 361-1090 LINES GP-COUPLER

**PART OF 361-1095 COUPLER AR-QUICK**
**AN ATTACHMENT**

**SMCS-5057, 5133** **i04404126**

| NOTE | REF NO | GRAPHIC REF | PART NUMBER | QTY | PART NAME 1 2 3 4 5 6 (PRODUCT LEVEL) | SEE PAGE |
|---|---|---|---|---|---|---|
| | 1 | 1 | **7K-1181** | 4 | STRAP-CABLE | |
| | 2 | 1 | **166-1579** | 1 | CLIP | |
| | 3 | 1 | **204-2281** | 1 | STRAP-CABLE | |
| | 4 | 1 | **260-2659** | 1 | BOLT | |
| | 5 | 1 | **361-1115** | 1 | HOSE AS | |
| | 6 | 1 | **361-1116** | 1 | HOSE AS | |
| | 7 | 1 | **361-1117** | 1 | HOSE AS | |
| | 8 | 1 | **361-1207** | 1 | STRAP-CABLE | |
| | 9 | 1 | **361-1208** | 2 | CLIP-HOSE | |
| | 10 | 1 | **371-8268** | 4 | SCREW-SOCKET HEAD (M6X1X10-MM) | |
| | 11 | 1 | *148-8351* | 1 | ELBOW AS | |
| | | 1 | **4J-5477** | 1 | SEAL-O-RING | |
| | | 1 | **6V-9849** | 1 | ELBOW | |
| | 12 | 1 | *169-7393* | 3 | CONNECTOR AS | |
| | | | | | (EACH INCLUDES) | |
| | | 1 | **3J-7352** | 1 | CONNECTOR | |
| | | 1 | **3J-7354** | 1 | SEAL-O-RING | |
| | 13 | 1 | **8T-4121** | 1 | WASHER-HARD (11X21X2.5-MM THK) | |
| M | 14 | 1 | **8T-4138** | 1 | BOLT (M6X1X20-MM) | |
| | 15 | 1 | **9X-8256** | 1 | WASHER (6.6X12X2-MM THK) | |

M - METRIC PART

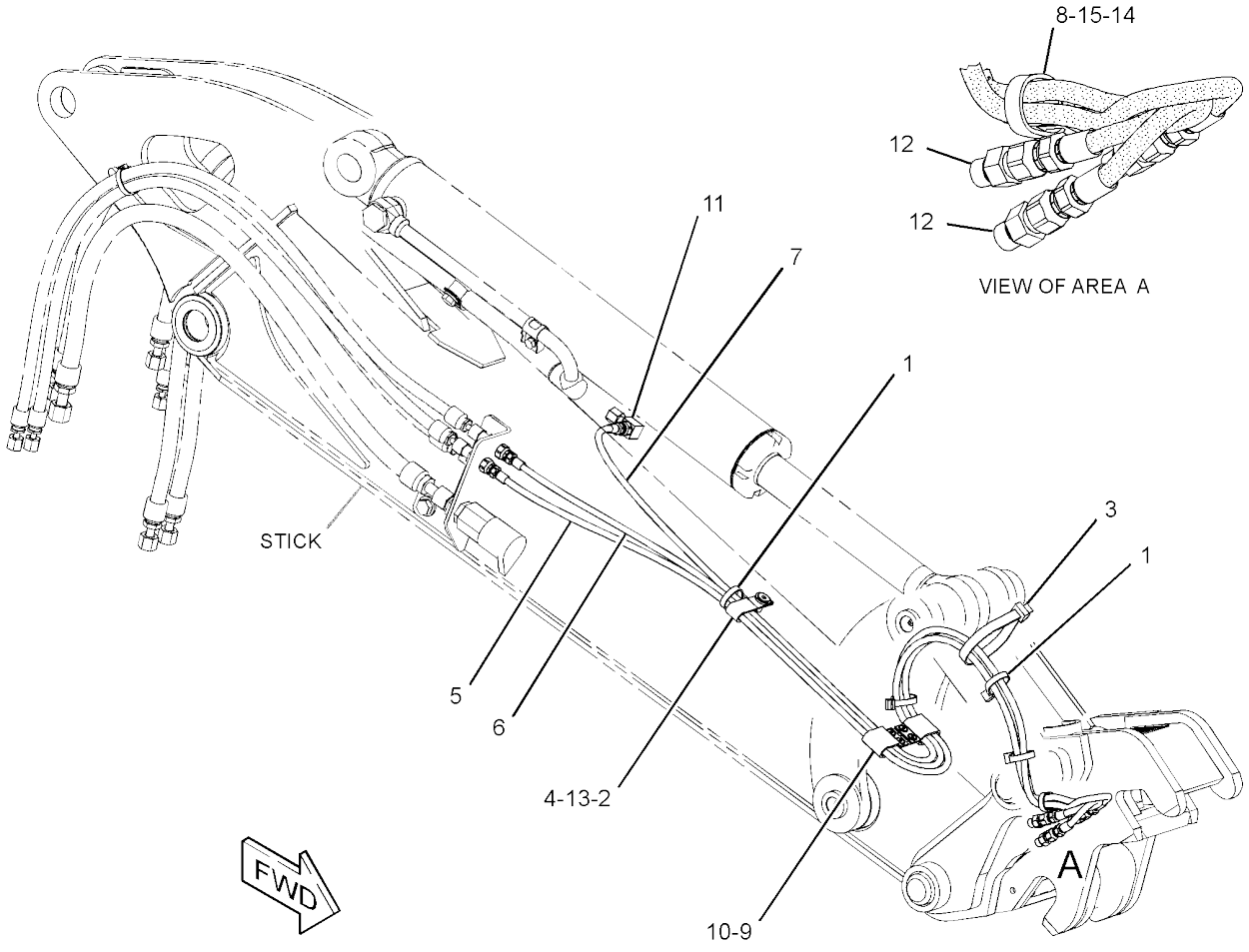


GRAPHIC #1 **<END>** g02913116

# *365-2794* LINES GP-COUPLER—STANDARD STICK

**PART OF 382-2543 CONTROL AR-COUPLER**
**AN ATTACHMENT**

**SMCS-5057, 5133** **i05371536**

| NOTE | REF NO | GRAPHIC REF | PART NUMBER | QTY | PART NAME 1 2 3 4 5 6 (PRODUCT LEVEL) | SEE PAGE |
|---|---|---|---|---|---|---|
| | 1 | 1 | **7K-1181** | 2 | STRAP-CABLE | |
| | 2 | 1 | **279-4735** | 1 | STRAP-CABLE (ORANGE) | |
| | 3 | 1 | **279-4737** | 1 | STRAP-CABLE (GREEN) | |
| | 4 | 1 | **279-4738** | 1 | STRAP-CABLE (PURPLE) | |
| | 5 | 1 | **365-6913** | 1 | TUBE AS | |
| | 6 | 1 | **365-6914** | 1 | TUBE AS | |
| | 7 | 1 | **365-6915** | 1 | TUBE AS | |
| I | 8 | 1 | **365-6916** | 1 | HOSE AS | |
| I | 9 | 1 | **365-6917** | 2 | HOSE AS | |
| | 10 | 1 | **422-1360** | 1 | BRACKET | |
| | 11 | 1 | **365-6919** | 1 | BRACKET | |
| | 12 | 2 | **119-5708** | 1 | CLIP | |
| | 13 | 1 | *150-4052* | 3 | UNION AS | |
| | | | | | (EACH INCLUDES) | |
| | | 1 | **4J-5477** | 2 | SEAL-O-RING | |
| | | 1 | **6V-8993** | 1 | UNION | |
| | 14 | 1 | **2P-1279** | 6 | LOCKNUT (9/16-18-THD) | |
| | 15 | 1 | **4J-5477** | 6 | SEAL-O-RING | |
| | 16 | 2 | **5P-9297** | 8 | CLIP | |
| | 17 | 1 | **6V-9828** | 3 | CAP AS | |
| | 18 | 1,2 | **8T-4121** | 8 | WASHER-HARD (11X21X2.5-MM THK) | |
| M | 19 | 1,2 | **8T-4185** | 8 | BOLT (M10X1.5X50-MM) | |

I - REFER TO HYDRAULIC INFORMATION SYSTEM
M - METRIC PART

REFER TO ALL ILLUSTRATIONS OF THIS GROUP FOR AUXILIARY VIEWS

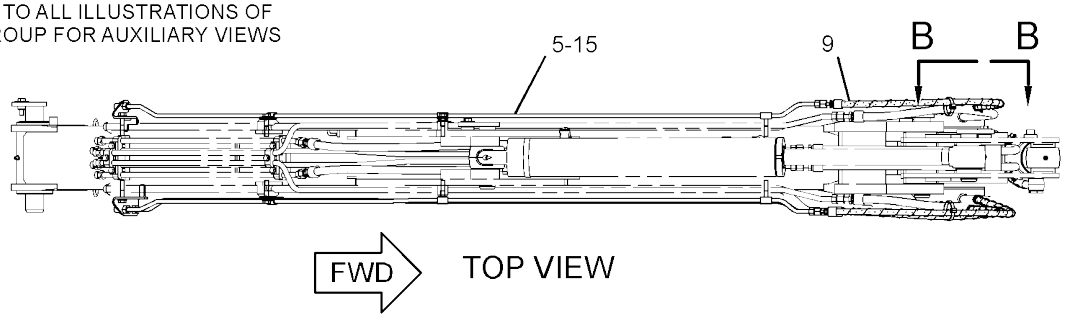


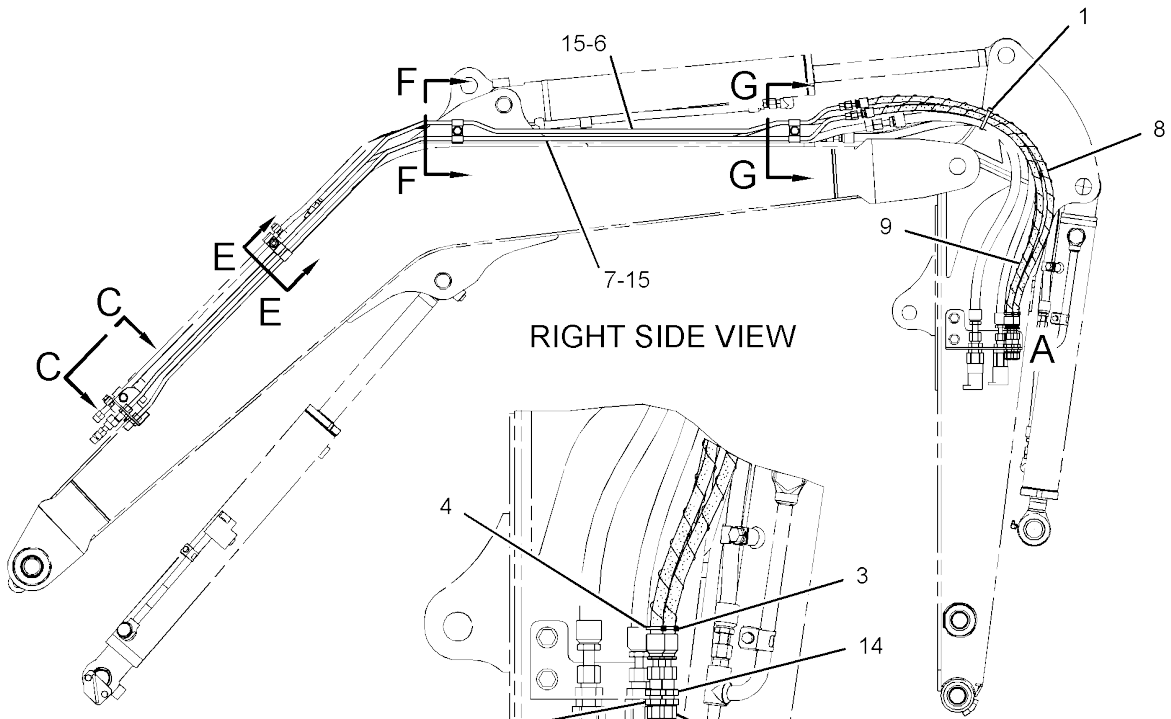





VIEW OF AREA A

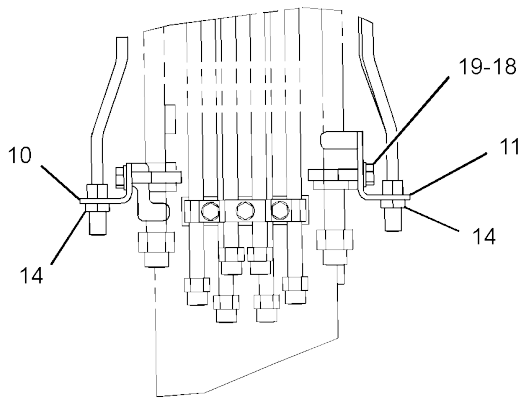


VIEW C-C

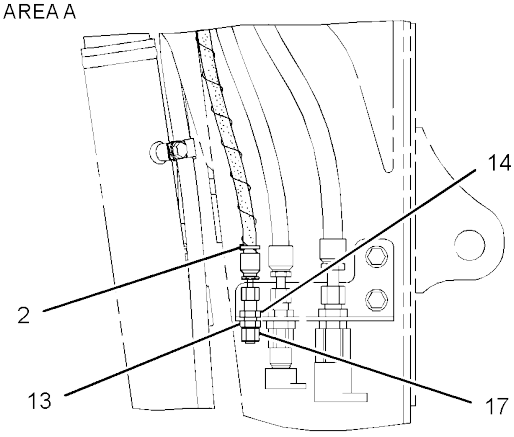


VIEW B-B

GRAPHIC #1 g02860176

*365-2794* **LINES GP-COUPLER (*contd.*)** **i05371536**

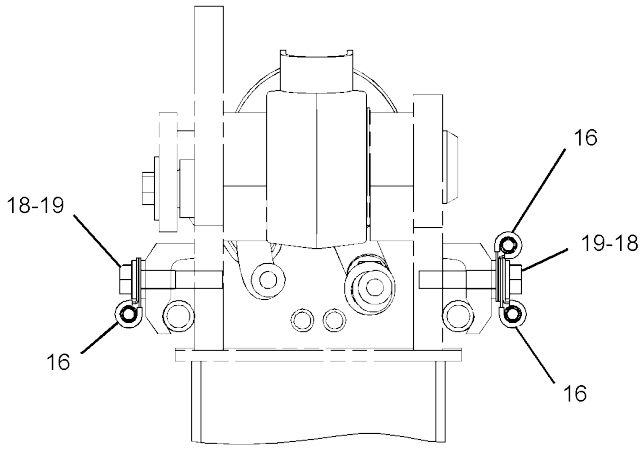


SECTION F-F
(WITHOUT 2ND AUXILIARY TUBE)

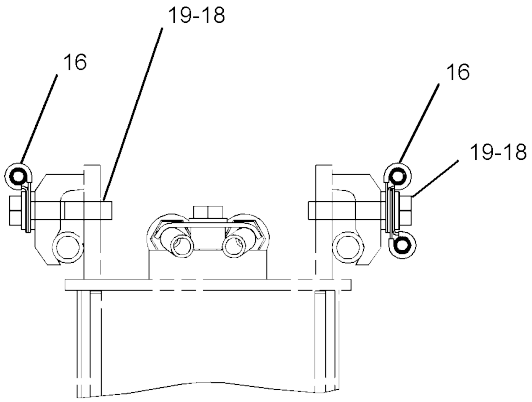


SECTION G-G
(WITHOUT 2ND AUXILIARY TUBE)

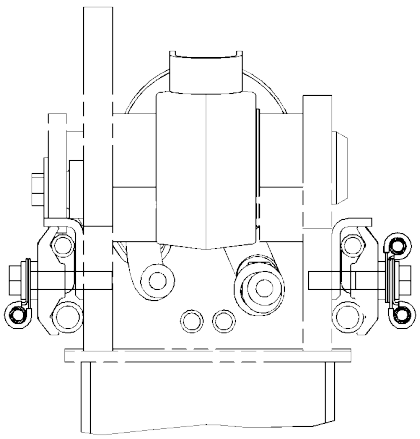

SECTION F-F
(WITH 2ND AUXILIARY TUBE)

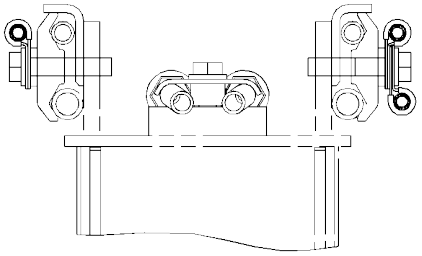

SECTION G-G
(WITH 2ND AUXILIARY TUBE)

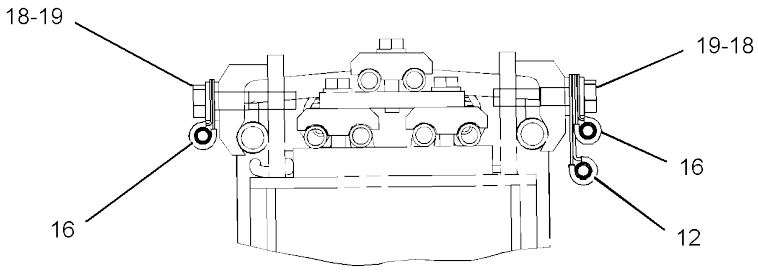


SECTION E-E

GRAPHIC #2 **<END>** g02861178

# HYDRAULIC SYSTEM

## *365-2796* LINES GP-COUPLER–LONG STICK

**PART OF 382-2544 CONTROL AR-COUPLER**
**AN ATTACHMENT**

**SMCS-5057, 5133** **i05371535**

| NOTE | REF NO | GRAPHIC REF | PART NUMBER | QTY | PART NAME 1 2 3 4 5 6 (PRODUCT LEVEL) | SEE PAGE |
|---|---|---|---|---|---|---|
| | 1 | 1 | **7K-1181** | 2 | STRAP-CABLE | |
| | 2 | 1 | **279-4735** | 1 | STRAP-CABLE (ORANGE) | |
| | 3 | 1 | **279-4737** | 1 | STRAP-CABLE (GREEN) | |
| | 4 | 1 | **279-4738** | 1 | STRAP-CABLE (PURPLE) | |
| | 5 | 1 | **365-6913** | 1 | TUBE AS | |
| | 6 | 1 | **365-6914** | 1 | TUBE AS | |
| | 7 | 1 | **365-6915** | 1 | TUBE AS | |
| | 8 | 1 | **422-1360** | 1 | BRACKET | |
| | 9 | 1 | **365-6919** | 1 | BRACKET | |
| I | 10 | 1 | **365-6961** | 1 | HOSE AS | |
| I | 11 | 1 | **365-6962** | 2 | HOSE AS | |
| | 12 | 1 | **119-5708** | 1 | CLIP | |
| | 13 | 1 | *150-4052* | 3 | UNION AS | |
| | | | | | (EACH INCLUDES) | |
| | | 1 | **4J-5477** | 2 | SEAL-O-RING | |
| | | 1 | **6V-8993** | 1 | UNION | |
| | 14 | 1 | **2J-1020** | 2 | SPACER (13.9X21.34X35-MM THK) | |
| | 15 | 1 | **2P-1279** | 6 | LOCKNUT (9/16-18-THD) | |
| | 16 | 1 | **4J-5477** | 6 | SEAL-O-RING | |
| | 17 | 1 | **5P-9297** | 8 | CLIP | |
| | 18 | 1 | **6V-9828** | 3 | CAP AS | |
| | 19 | 1 | **7S-3916** | 3 | CLIP (TAB) | |
| | 20 | 1 | **7S-3919** | 3 | CLIP (SLOT) | |
| | 21 | 1 | **7V-6571** | 3 | GROMMET | |
| | 22 | 1 | **8T-4121** | 8 | WASHER-HARD (11X21X2.5-MM THK) | |
| M | 23 | 1 | **8T-4185** | 8 | BOLT (M10X1.5X50-MM) | |
| | 24 | 1 | **8T-4223** | 2 | WASHER-HARD (13.5X25.5X3-MM THK) | |
| BM | 25 | 1 | **8T-4648** | 2 | BOLT (M12X1.75X70-MM) | |
| BM | 26 | 1 | **8T-4910** | 2 | BOLT (M12X1.75X60-MM) | |

B - USE AS REQUIRED
I - REFER TO HYDRAULIC INFORMATION SYSTEM
M - METRIC PART

*365-2796* **LINES GP-COUPLER (*contd.*)** **i05371535**

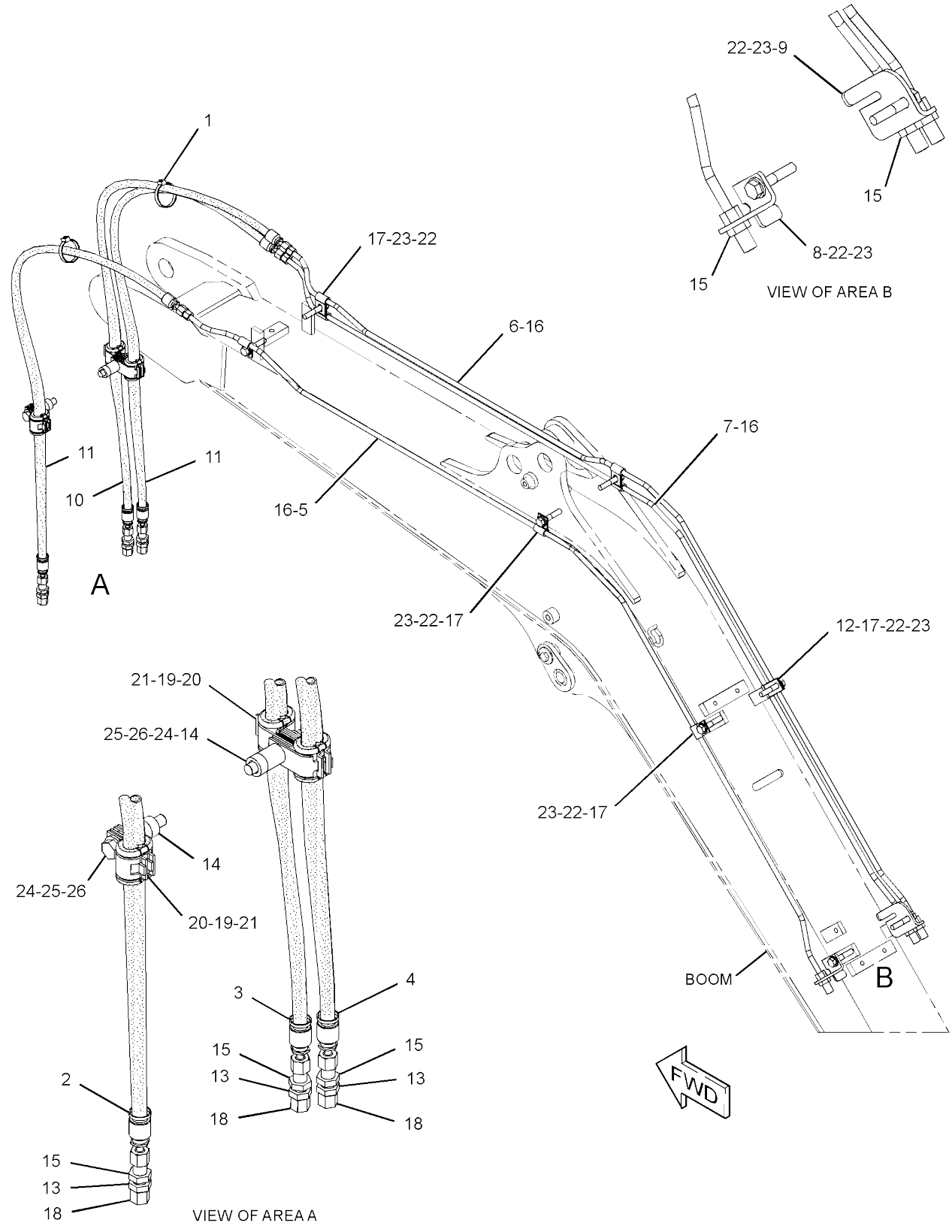


GRAPHIC #1

<END>

g02864479

# *379-4699* LINES GP-FRONT–BOOM CYLINDER

**PART OF 379-4681 LINES AR-BOOM**
**AN ATTACHMENT**

**SMCS-5057** **i04611689**

| NOTE | REF NO | GRAPHIC REF | PART NUMBER | QTY | PART NAME 1 2 3 4 5 6 (PRODUCT LEVEL) | SEE PAGE |
|---|---|---|---|---|---|---|
| | 1 | 1 | **9F-2167** | 1 | SCREW-PURGE (3/8-24X1.164-IN) | |
| | 2 | 1 | **279-4737** | 1 | STRAP-CABLE (GREEN) | |
| | 3 | 1 | **279-4738** | 1 | STRAP-CABLE (PURPLE) | |
| I | 4 | 1 | **381-0564** | 1 | HOSE AS | |
| I | 5 | 1 | **381-0565** | 1 | HOSE AS | |
| | 6 | 1 | *148-8336* | 3 | CONNECTOR AS | |
| | | | | | (EACH INCLUDES) | |
| | | 1 | **3J-1907** | 1 | SEAL-O-RING | |
| | | 1 | **6V-8397** | 1 | SEAL-O-RING | |
| | | 1 | **6V-8636** | 1 | CONNECTOR | |
| | 7 | 1 | *164-9869* | 1 | CONNECTOR AS | |
| | | 1 | **3J-1907** | 1 | SEAL-O-RING | |
| | | 1 | **6V-8397** | 1 | SEAL-O-RING | |
| | | 1 | **9X-2297** | 1 | CONNECTOR | |

I - REFER TO HYDRAULIC INFORMATION SYSTEM

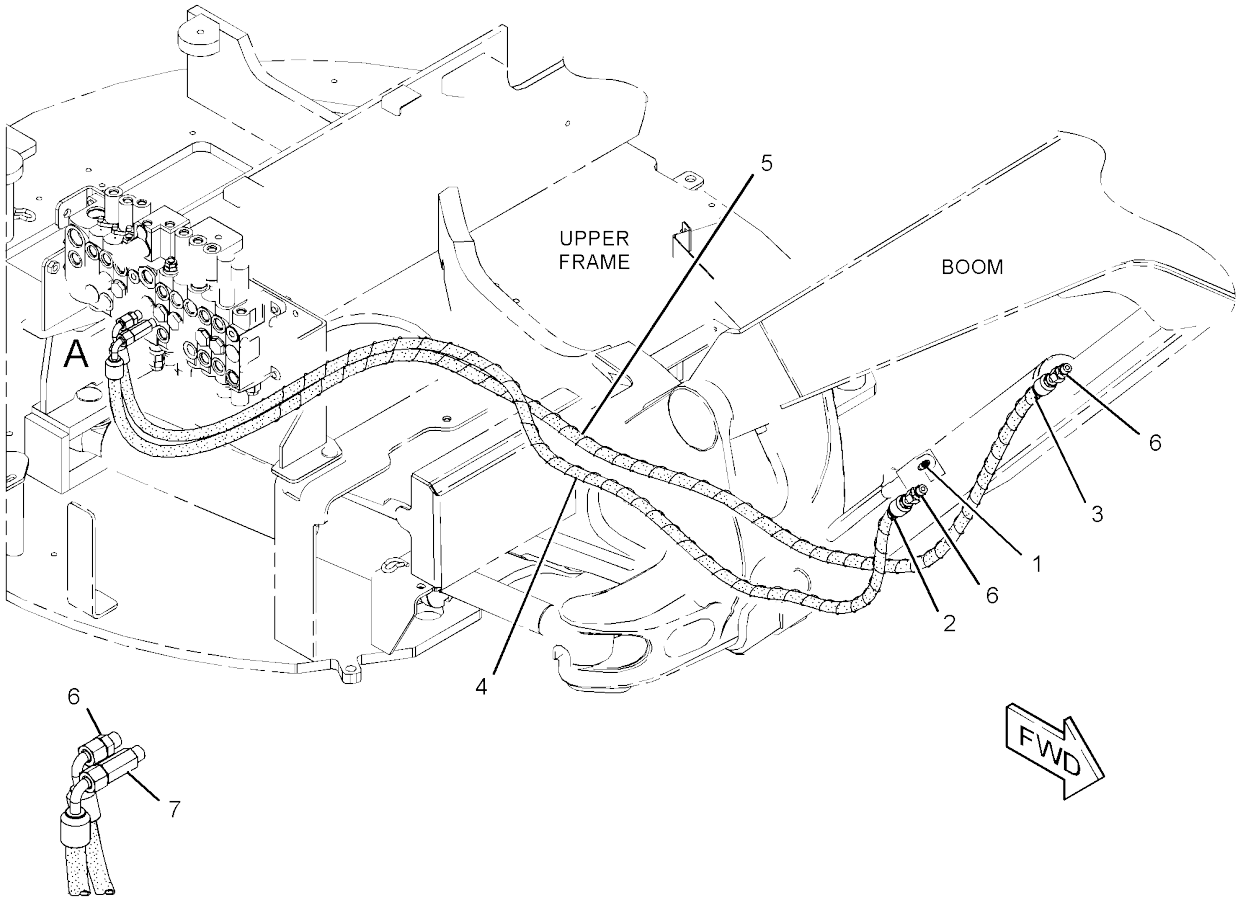





VIEW OF AREA A

GRAPHIC #1 **<END>** g02798919

# *379-4731* LINES GP-FRONT

**PART OF 379-4713 HYDRAULIC AR**

**SMCS-5057** **i04728068**

| NOTE | REF NO | GRAPHIC REF | PART NUMBER | QTY | PART NAME 1 2 3 4 5 6 (PRODUCT LEVEL) | SEE PAGE |
|---|---|---|---|---|---|---|
| | 1 | 1 | **096-6079** | 4 | TAPE (WHITE) | |
| | 2 | 1 | **136-0207** | 2 | STRAP-CABLE | |
| | 3 | 1 | **267-4229** | 1 | PLATE | |
| | 4 | 1 | **279-4731** | 1 | STRAP-CABLE (RED) | |
| | 5 | 1 | **279-4732** | 1 | STRAP-CABLE (YELLOW) | |
| | 6 | 1 | **279-4733** | 1 | STRAP-CABLE (BLUE) | |
| | 7 | 1 | **279-4735** | 1 | STRAP-CABLE (ORANGE) | |
| | 8 | 1 | **346-8085** | 1 | GROMMET | |
| | 9 | 1 | **346-8086** | 1 | GROMMET | |
| I | 10 | 1 | **382-8809** | 1 | HOSE AS | |
| I | 11 | 1 | **382-8810** | 1 | HOSE AS | |
| I | 12 | 1 | **382-8811** | 1 | HOSE AS | |
| I | 13 | 1 | **382-8812** | 1 | HOSE AS | |
| | 14 | 1 | *148-8336* | 2 | CONNECTOR AS | |
| | | | | | (EACH INCLUDES) | |
| | | 1 | **3J-1907** | 1 | SEAL-O-RING | |
| | | 1 | **6V-8397** | 1 | SEAL-O-RING | |
| | | 1 | **6V-8636** | 1 | CONNECTOR | |
| | 15 | 1 | *164-9869* | 2 | CONNECTOR AS | |
| | | | | | (EACH INCLUDES) | |
| | | 1 | **3J-1907** | 1 | SEAL-O-RING | |
| | | 1 | **6V-8397** | 1 | SEAL-O-RING | |
| | | 1 | **9X-2297** | 1 | CONNECTOR | |
| | 16 | 1 | **8T-4121** | 2 | WASHER-HARD (11X21X2.5-MM THK) | |
| M | 17 | 1 | **8T-4186** | 2 | BOLT (M10X1.5X40-MM) | |
| E | 18 | 1 | **310-4984** | | SLEEVE (20-CM) | |
| E | 18A | 1 | **310-4984** | | SLEEVE (30-CM) | |

E - ORDER BY THE CENTIMETER
I - REFER TO HYDRAULIC INFORMATION SYSTEM
M - METRIC PART

*379-4731* **LINES GP-FRONT (*contd.*)** **i04728068**

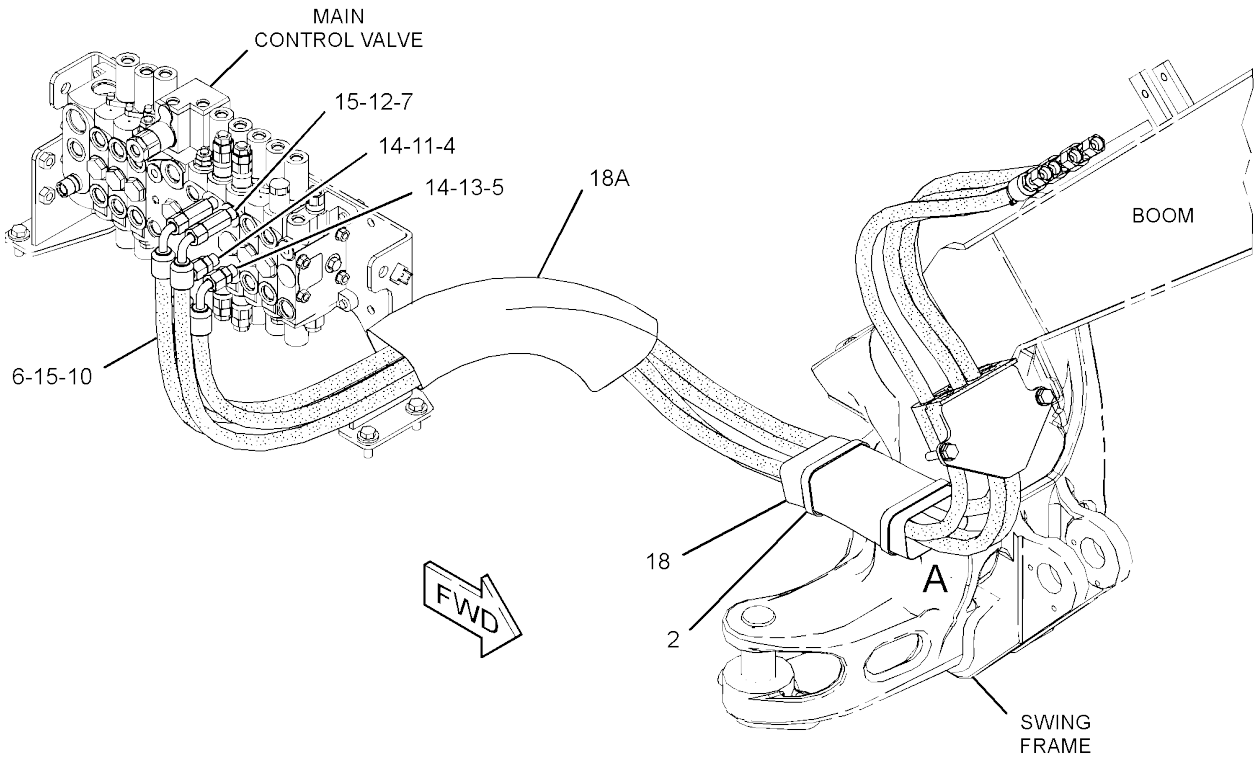


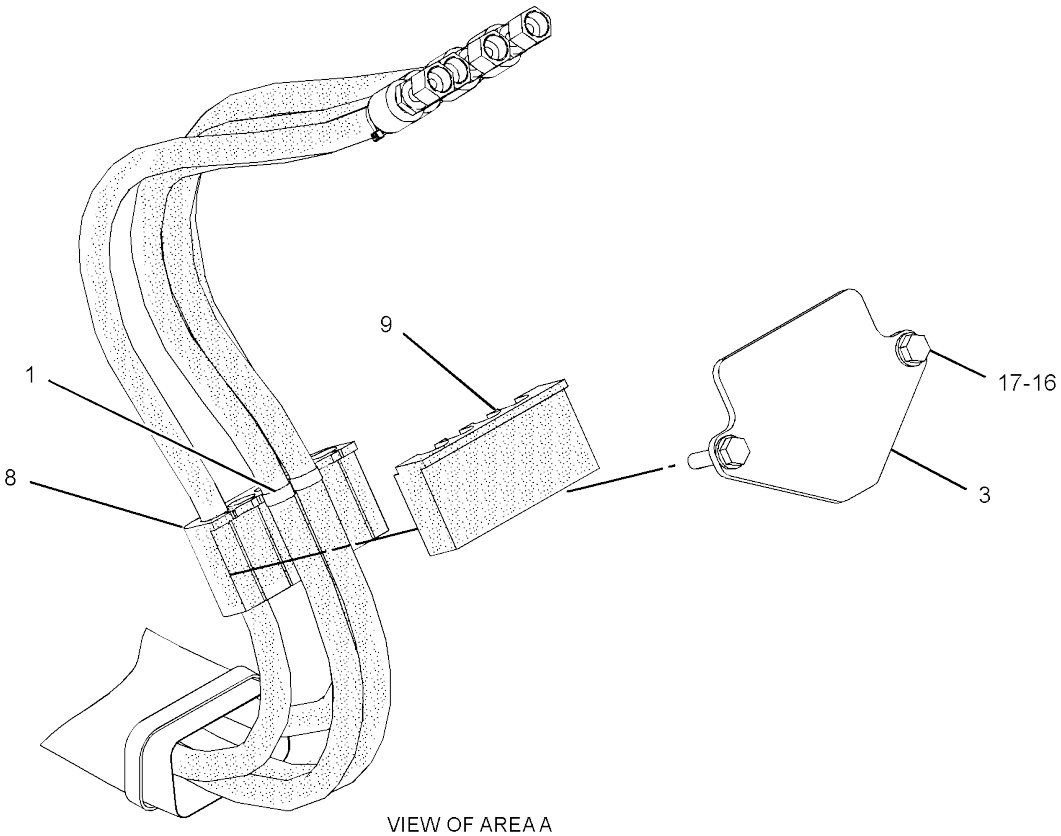


VIEW OF AREA A
(EXPLODED)

GRAPHIC #1 **<END>** g02861536

# HYDRAULIC SYSTEM

## *379-4732* LINES GP-FRONT

**PART OF 379-4715 CONTROL AR-AUXILIARY**

**SMCS-5057** **i04732213**

| NOTE | REF NO | GRAPHIC REF | PART NUMBER | QTY | PART NAME 1 2 3 4 5 6 (PRODUCT LEVEL) | SEE PAGE |
|---|---|---|---|---|---|---|
| | 1 | 1 | **096-6079** | 2 | TAPE (WHITE) | |
| | 2 | 1 | *267-4050* | 1 | TEE AS | |
| | | 1 | **3J-1907** | 1 | SEAL-O-RING | |
| | | 1 | **6V-8398** | 2 | SEAL-O-RING | |
| | | 1 | **267-4049** | 1 | TEE | |
| | 3 | 1 | **279-4734** | 1 | STRAP-CABLE (BROWN) | |
| | 4 | 1 | **8L-8413** | 1 | STRAP-CABLE | |
| | 5 | 1 | **362-1008** | 1 | VALVE AS-BALL (1-WAY, 2-WAY FLOW) | |
| | | 1 | **134-7113** | 1 | HANDLE | |
| M | | 1 | **134-7114** | 1 | BOLT-SPECIAL | |
| | | 1 | **134-7115** | 1 | PLATE | |
| | | 1 | **195-0090** | 1 | PLATE-DETENT | |
| I | 6 | 1 | **381-0561** | 1 | HOSE AS | |
| I | 7 | 1 | **382-8814** | 1 | HOSE AS | |
| I | 8 | 1 | **382-8815** | 1 | HOSE AS | |
| | 9 | 1 | *148-8340* | 1 | CONNECTOR AS | |
| | | 1 | **3K-0360** | 1 | SEAL-O-RING | |
| | | 1 | **6V-8398** | 1 | SEAL-O-RING | |
| | | 1 | **6V-8639** | 1 | CONNECTOR | |
| | 10 | 1 | *150-4043* | 1 | CONNECTOR AS | |
| | | 1 | **3J-1907** | 1 | SEAL-O-RING | |
| | | 1 | **6V-8398** | 1 | SEAL-O-RING | |
| | | 1 | **6V-9873** | 1 | CONNECTOR | |
| | 11 | 1 | *171-6728* | 1 | ELBOW AS | |
| | | 1 | **3K-0360** | 1 | SEAL-O-RING | |
| | | 1 | **8T-0249** | 1 | ELBOW | |

I - REFER TO HYDRAULIC INFORMATION SYSTEM
M - METRIC PART

*379-4732* **LINES GP-FRONT (*contd.*)** **i04732213**

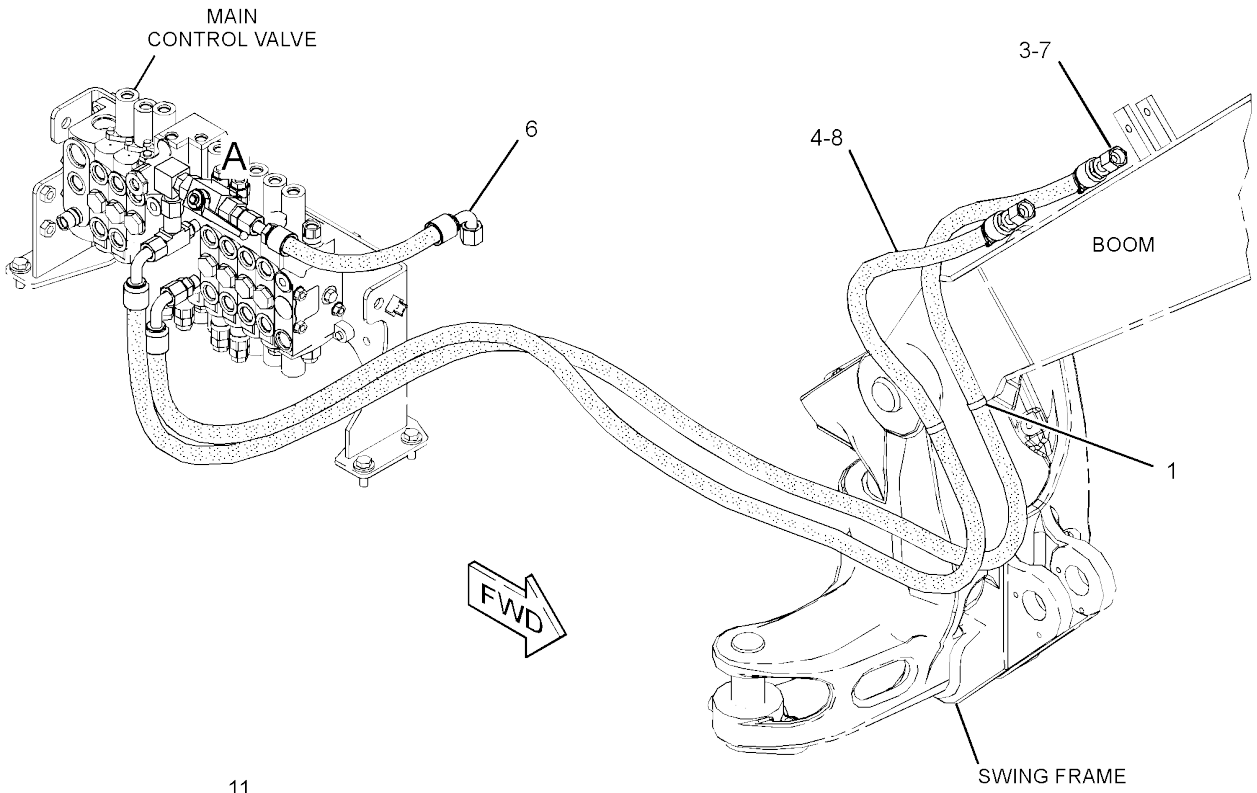


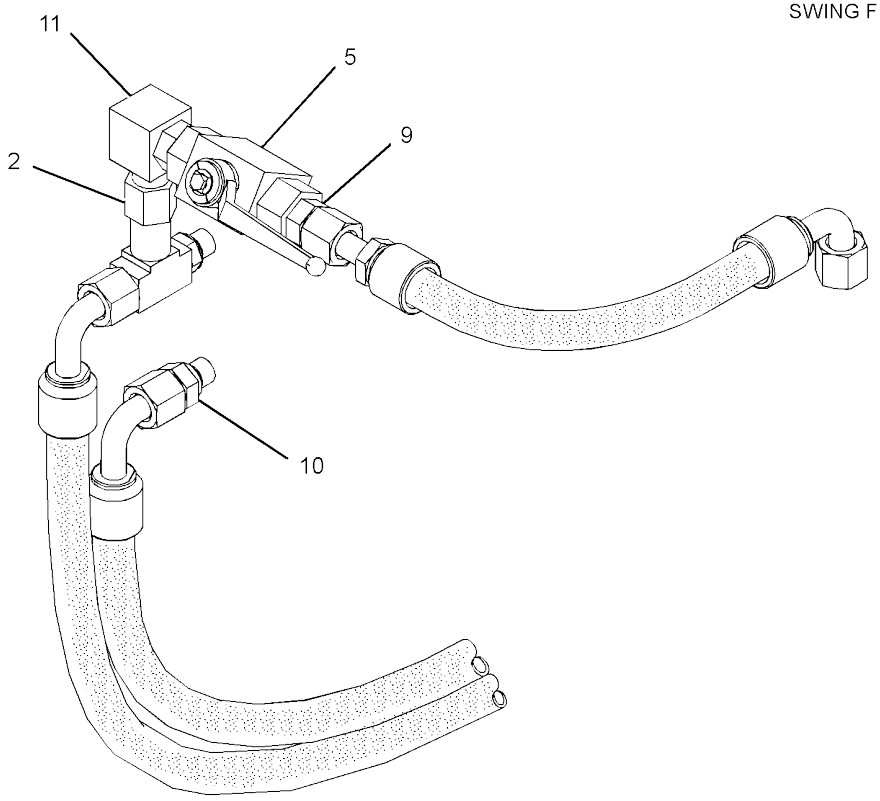


VIEW OF AREA A

GRAPHIC #1 **<END>** g02862657

# HYDRAULIC SYSTEM

## *382-2551* LINES GP-FRONT–QUICK COUPLER

**PART OF 382-2543, 382-2544 CONTROL AR-COUPLER**
**AN ATTACHMENT**

**SMCS-5057** **i05371533**

| NOTE | REF NO | GRAPHIC REF | PART NUMBER | QTY | PART NAME 1 2 3 4 5 6 (PRODUCT LEVEL) | SEE PAGE |
|---|---|---|---|---|---|---|
| | 1 | 1 | **7K-1181** | 5 | STRAP-CABLE | |
| | 2 | 1 | **096-6079** | 3 | TAPE (WHITE) | |
| | 3 | 1 | *164-5546* | 1 | TEE AS | |
| | | 1 | **3E-7410** | 1 | TEE-O-RING | |
| | | 1 | **3J-1907** | 1 | SEAL-O-RING | |
| | 4 | 1 | **210-0686** | 1 | SHEET-RUBBER | |
| | 5 | 1 | *267-4048* | 2 | ELBOW AS | |
| | | | | | (EACH INCLUDES) | |
| | | 1 | **3J-1907** | 1 | SEAL-O-RING | |
| | | 1 | **4J-5477** | 1 | SEAL-O-RING | |
| | | 1 | **267-4047** | 1 | ELBOW | |
| | 6 | 1 | **279-4735** | 2 | STRAP-CABLE (ORANGE) | |
| | 7 | 1 | **279-4737** | 2 | STRAP-CABLE (GREEN) | |
| | 8 | 1 | **279-4738** | 2 | STRAP-CABLE (PURPLE) | |
| Y | 9 | 1 | **358-2091** | 1 | VALVE GP-SOLENOID & MANIFOLD (QUICK COUPLER) | 358 |
| | 10 | 1 | **369-3043** | 1 | GROMMET | |
| | 11 | 1 | **422-1361** | 1 | GROMMET | |
| I | 12 | 1 | **381-0002** | 1 | HOSE AS | |
| | 13 | 1 | **381-2053** | 1 | BRACKET | |
| I | 14 | 1 | **382-9362** | 1 | HOSE AS | |
| I | 15 | 1 | **382-9363** | 1 | HOSE AS | |
| I | 16 | 1 | **382-9364** | 1 | HOSE AS | |
| I | 17 | 1 | **382-9365** | 1 | HOSE AS | |
| | 18 | 1 | *148-8310* | 1 | ADAPTER AS | |
| | | 1 | **3J-1907** | 1 | SEAL-O-RING | |
| | | 1 | **8T-0151** | 1 | ADAPTER | |
| | 19 | 1 | *148-8325* | 1 | CONNECTOR AS | |
| | | 1 | **3J-1907** | 1 | SEAL-O-RING | |
| | | 1 | **4J-5477** | 1 | SEAL-O-RING | |
| | | 1 | **6V-8641** | 1 | CONNECTOR | |
| | 20 | 1 | *148-8368* | 4 | ELBOW AS | |
| | | | | | (EACH INCLUDES) | |
| | | 1 | **3J-1907** | 1 | SEAL-O-RING | |
| | | 1 | **4J-5477** | 1 | SEAL-O-RING | |
| | | 1 | **6V-8627** | 1 | ELBOW | |
| | 21 | 1 | *150-3065* | 1 | ELBOW AS | |
| | | 1 | **3J-1907** | 1 | SEAL-O-RING | |
| | | 1 | **6V-0484** | 1 | ELBOW | |
| | 22 | 1 | **8T-4121** | 2 | WASHER-HARD (11X21X2.5-MM THK) | |
| M | 23 | 1 | **8T-4137** | 2 | BOLT (M10X1.5X20-MM) | |
| M | 24 | 1 | **8T-4189** | 2 | BOLT (M8X1.25X20-MM) | |
| | 25 | 1 | **8T-4224** | 2 | WASHER-HARD (8.8X16X2-MM THK) | |

I - REFER TO HYDRAULIC INFORMATION SYSTEM
M - METRIC PART
Y - SEPARATE ILLUSTRATION

*382-2551* **LINES GP-FRONT (*contd.*)** **i05371533**

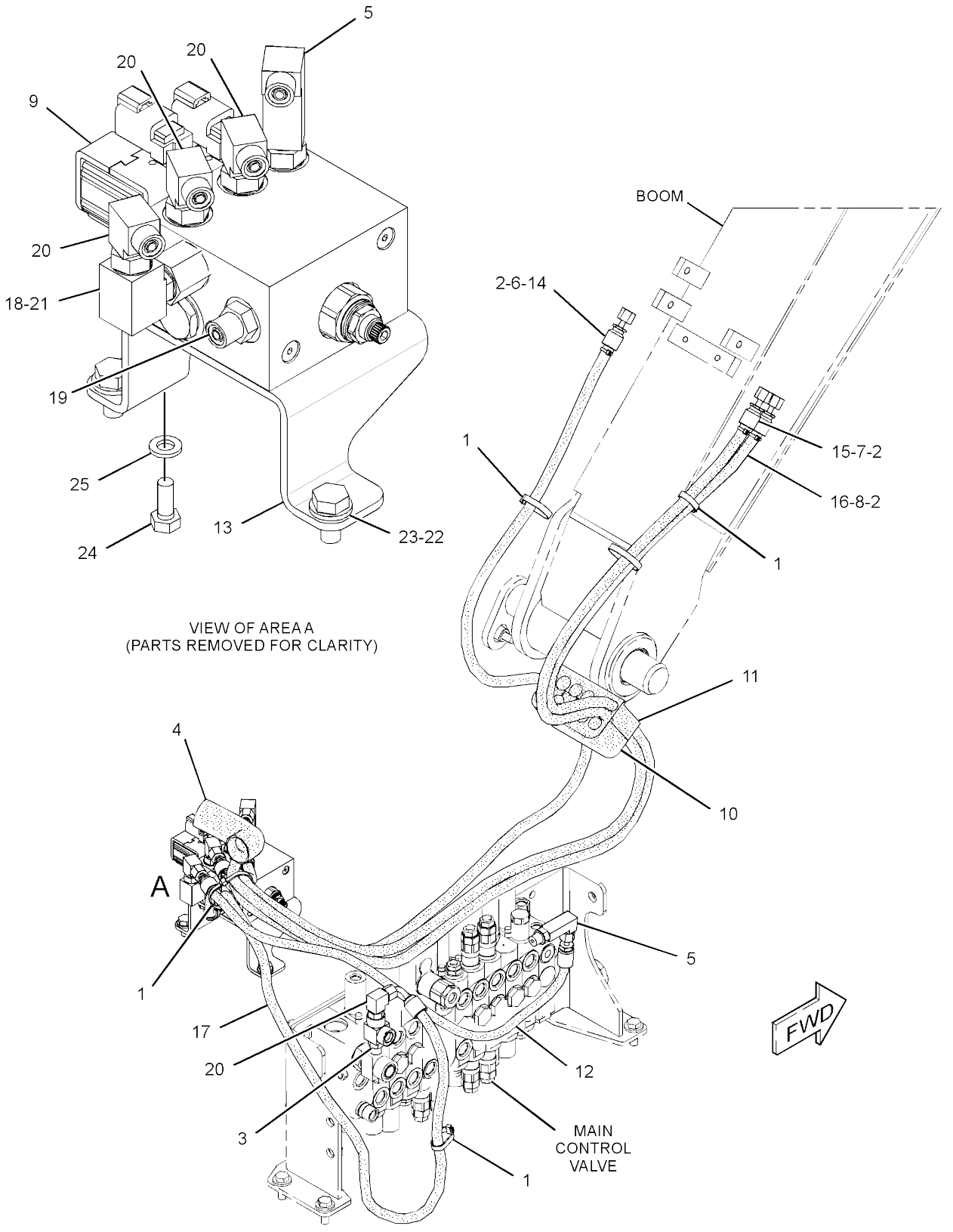


GRAPHIC #1 **<END>** g02872245

# HYDRAULIC SYSTEM

## *379-4729* LINES GP-HYDRAULIC PUMP

**PART OF 379-4713 HYDRAULIC AR**

**SMCS-5057** **i04728066**

| NOTE | REF NO | GRAPHIC REF | PART NUMBER | QTY | PART NAME 1 2 3 4 5 6 (PRODUCT LEVEL) | SEE PAGE |
|---|---|---|---|---|---|---|
| | 1 | 1 | **5P-0597** | 4 | CLAMP-HOSE | |
| | 2 | 1 | **7K-1181** | 2 | STRAP-CABLE | |
| | 3 | 1 | *267-4042* | 1 | CONNECTOR AS | |
| | | 1 | **3J-1907** | 1 | SEAL-O-RING | |
| | | 1 | **4J-5477** | 1 | SEAL-O-RING | |
| | | 1 | **267-4041** | 1 | CONNECTOR | |
| | 4 | 1 | *346-8792* | 1 | TEE AS | |
| | | 1 | **4K-1388** | 1 | SEAL-O-RING | |
| | | 1 | **6V-9746** | 1 | SEAL-O-RING | |
| | | 1 | **346-8791** | 1 | TEE | |
| | 5 | 1 | **380-7210** | 1 | TUBE AS | |
| | 6 | 1 | **380-7215** | 1 | PLATE | |
| | 7 | 1 | **380-7216** | 2 | PLATE | |
| | 8 | 1 | **380-9992** | 1 | GROMMET | |
| | 9 | 1 | **380-9993** | 2 | GROMMET | |
| | 10 | 1 | **380-9994** | 1 | HOSE | |
| | 11 | 1 | **380-9996** | 1 | INSULATION | |
| I | 12 | 1 | **382-8802** | 1 | HOSE AS | |
| I | 13 | 1 | **382-8804** | 1 | HOSE AS | |
| I | 14 | 1 | **382-8805** | 1 | HOSE AS | |
| | 15 | 1 | **382-8806** | 1 | TUBE AS | |
| | 16 | 1 | **382-8808** | 1 | HOSE | |
| | 17 | 1 | *148-8336* | 1 | CONNECTOR AS | |
| | | 1 | **3J-1907** | 1 | SEAL-O-RING | |
| | | 1 | **6V-8397** | 1 | SEAL-O-RING | |
| | | 1 | **6V-8636** | 1 | CONNECTOR | |
| | 18 | 1 | *148-8353* | 1 | ELBOW AS | |
| | | 1 | **3J-1907** | 1 | SEAL-O-RING | |
| | | 1 | **6V-8397** | 1 | SEAL-O-RING | |
| | | 1 | **6V-9001** | 1 | ELBOW | |
| | 19 | 1 | *148-8392* | 1 | ELBOW AS | |
| | | 1 | **6V-9746** | 1 | SEAL-O-RING | |
| | | 1 | **6V-9853** | 1 | ELBOW | |
| | 20 | 1 | *150-3033* | 1 | ELBOW AS | |
| | | 1 | **3J-1907** | 1 | SEAL-O-RING | |
| | | 1 | **4J-5477** | 1 | SEAL-O-RING | |
| | | 1 | **8T-0164** | 1 | ELBOW | |
| | 21 | 1 | *150-3065* | 1 | ELBOW AS | |
| | | 1 | **3J-1907** | 1 | SEAL-O-RING | |
| | | 1 | **6V-0484** | 1 | ELBOW | |
| | 22 | 1 | *153-6237* | 1 | ELBOW AS | |
| | | 1 | **3D-2824** | 1 | SEAL-O-RING | |
| | | 1 | **6V-9004** | 1 | ELBOW | |
| | | 1 | **6V-9746** | 1 | SEAL-O-RING | |
| | 23 | 1 | *164-5567* | 1 | COUPLER AS-QUICK DISCONNECT (MALE) | |
| | | 1 | **6V-3965** | 1 | FITTING (QUICK DISCONNECT) | |
| | | 1 | **214-7568** | 1 | SEAL-O-RING | |
| | 24 | 1 | **4J-0524** | 1 | SEAL-O-RING | |
| | 25 | 1 | **6V-0852** | 1 | CAP-DUST | |
| M | 26 | 1 | **7X-2621** | 2 | BOLT (M10X1.5X12-MM) | |
| | 27 | 1 | **7X-7729** | 2 | WASHER (11X25X3-MM THK) | |
| | 28 | 1 | **8T-4121** | 6 | WASHER-HARD (11X21X2.5-MM THK) | |
| M | 29 | 1 | **8T-4136** | 2 | BOLT (M10X1.5X25-MM) | |
| M | 30 | 1 | **8T-4137** | 6 | BOLT (M10X1.5X20-MM) | |
| M | 31 | 1 | **8T-4183** | 4 | BOLT (M12X1.75X40-MM) | |
| | 32 | 1 | **8T-4223** | 4 | WASHER-HARD (13.5X25.5X3-MM THK) | |

I - REFER TO HYDRAULIC INFORMATION SYSTEM
M - METRIC PART

*379-4729* **LINES GP-HYDRAULIC PUMP (*contd.*)** **i04728066**

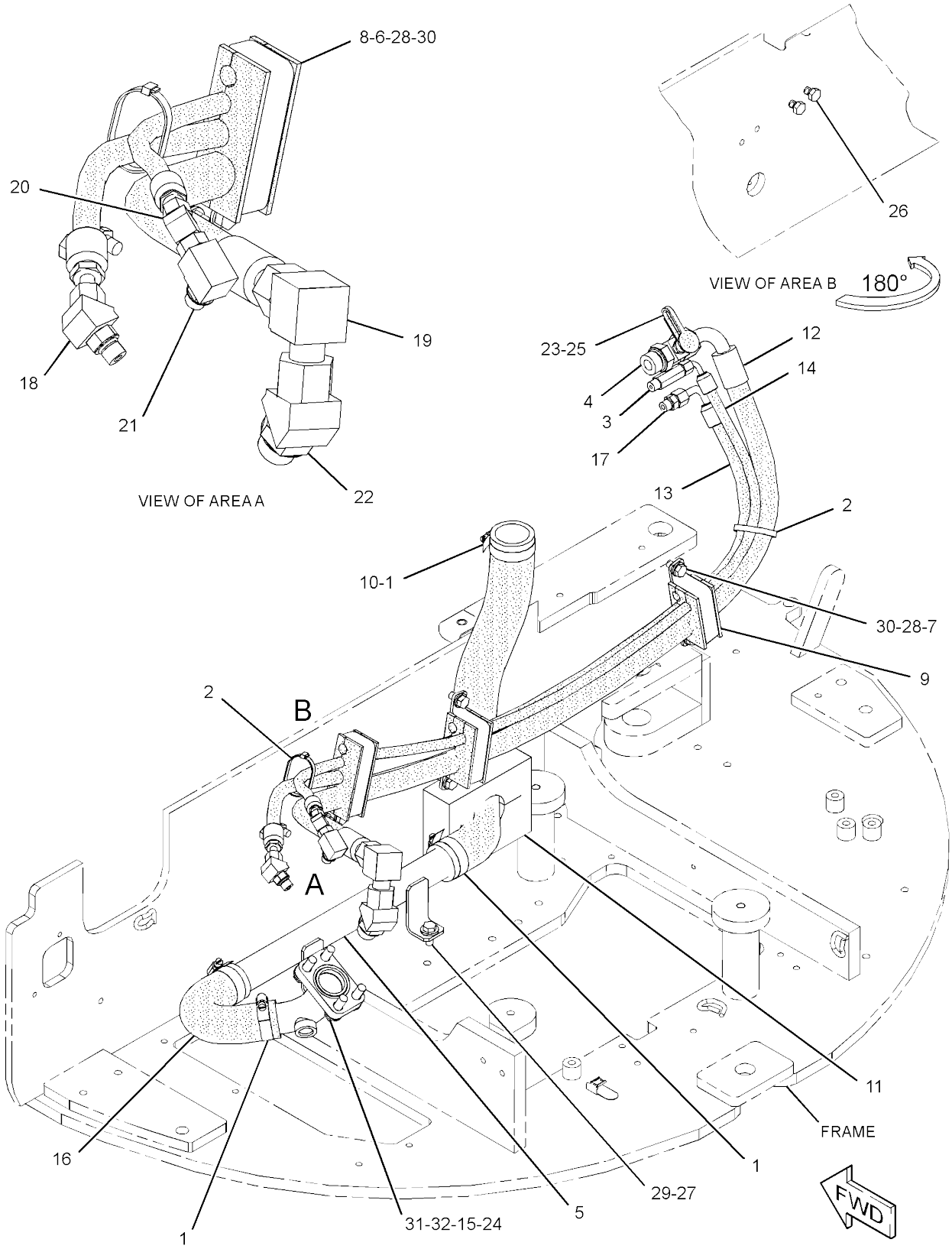


GRAPHIC #1 **<END>** g02867550

# *377-8872* LINES GP-PILOT–JOYSTICK

**PART OF 379-4723 CONTROL AR-PILOT HYDRAULIC**
**AN ATTACHMENT**

**SMCS-5057, 5059** **i04707629**

| NOTE | REF NO | GRAPHIC REF | PART NUMBER | QTY | PART NAME 1 2 3 4 5 6 (PRODUCT LEVEL) | SEE PAGE |
|---|---|---|---|---|---|---|
| | 1 | 1 | **4I-9531** | 2 | BAND-MARKER (RED) | |
| | 2 | 1 | **4I-9532** | 2 | BAND-MARKER (YELLOW) | |
| | 3 | 1 | **4I-9533** | 2 | BAND-MARKER (BLUE) | |
| | 4 | 1 | **4I-9534** | 2 | BAND-MARKER (BROWN) | |
| | 5 | 1 | **4I-9535** | 2 | BAND-MARKER (ORANGE) | |
| | 6 | 1 | **4I-9536** | 2 | BAND-MARKER (WHITE) | |
| | 7 | 1 | **4I-9537** | 2 | BAND-MARKER (GREEN) | |
| | 8 | 1 | **4I-9538** | 2 | BAND-MARKER (PURPLE) | |
| | 9 | 1 | **7K-1181** | 5 | STRAP-CABLE | |
| | 10 | 1 | **096-6079** | 4 | TAPE (WHITE) | |
| I | 11 | 1 | **163-9768** | 2 | HOSE AS | |
| | 12 | 1 | *164-9640* | 1 | CONNECTOR AS | |
| | | 1 | **3J-1907** | 1 | SEAL-O-RING | |
| | | 1 | **4J-5477** | 1 | SEAL-O-RING | |
| | | 1 | **145-2237** | 1 | CONNECTOR | |
| | 13 | 1 | *267-4038* | 1 | CONNECTOR AS | |
| | | 1 | **3J-1907** | 1 | SEAL-O-RING | |
| | | 1 | **4J-5477** | 1 | SEAL-O-RING | |
| | | 1 | **267-4037** | 1 | CONNECTOR-FILTER | |
| | 14 | 1 | *267-4051* | 1 | CONNECTOR AS | |
| | | 1 | **3J-1907** | 1 | SEAL-O-RING | |
| | | 1 | **4J-5477** | 1 | SEAL-O-RING | |
| | | 1 | **156-8845** | 1 | CONNECTOR | |
| | 15 | 1 | *267-4093* | 1 | CONNECTOR AS | |
| | | 1 | **3J-1907** | 1 | SEAL-O-RING | |
| | | 1 | **4J-5477** | 1 | SEAL-O-RING | |
| | | 1 | **216-3247** | 1 | CONNECTOR | |
| I | 16 | 1 | **267-4096** | 2 | HOSE AS | |
| | 17 | 1 | **314-4242** | 1 | HOSE AS | |
| | 18 | 1 | **317-9220** | 2 | HOSE AS | |
| | 19 | 1 | **349-2709** | 2 | HOSE AS | |
| | 20 | 1 | **377-9064** | 1 | HOSE AS | |
| | 21 | 1 | **377-9065** | 2 | HOSE AS | |
| | 22 | 1 | **377-9066** | 1 | PLATE | |
| | 23 | 1 | **377-9068** | 1 | SHEET-RUBBER | |
| | 24 | 1 | *148-8325* | 8 | CONNECTOR AS | |
| | | | | | (EACH INCLUDES) | |
| | | 1 | **3J-1907** | 1 | SEAL-O-RING | |
| | | 1 | **4J-5477** | 1 | SEAL-O-RING | |
| | | 1 | **6V-8641** | 1 | CONNECTOR | |
| | 25 | 1 | **5P-4116** | 3 | WASHER-HARD (8.8X20.5X2-MM THK) | |
| | 26 | 1 | **7D-7233** | 4 | CLIP | |
| | 27 | 1 | **8T-4121** | 1 | WASHER-HARD (11X21X2.5-MM THK) | |
| M | 28 | 1 | **8T-4191** | 1 | BOLT (M10X1.5X16-MM) | |
| M | 29 | 1 | **8T-4199** | 2 | BOLT (M8X1.25X12-MM) | |
| M | 30 | 1 | **8T-4200** | 3 | BOLT (M8X1.25X16-MM) | |
| | 31 | 1 | **8T-4224** | 2 | WASHER-HARD (8.8X16X2-MM THK) | |
| G | 32 | 1 | **160-2252** | | SLEEVE-ABRASION (14.6-IN) | |
| G | 32A | 1 | **160-2252** | | SLEEVE-ABRASION (21.5-IN) | |
| E | 33 | 1 | **379-4566** | | SLEEVE (10-CM) | |

E - ORDER BY THE CENTIMETER
G - ORDER BY THE INCH
I - REFER TO HYDRAULIC INFORMATION SYSTEM
M - METRIC PART

*377-8872* **LINES GP-PILOT (*contd.*)** **i04707629**

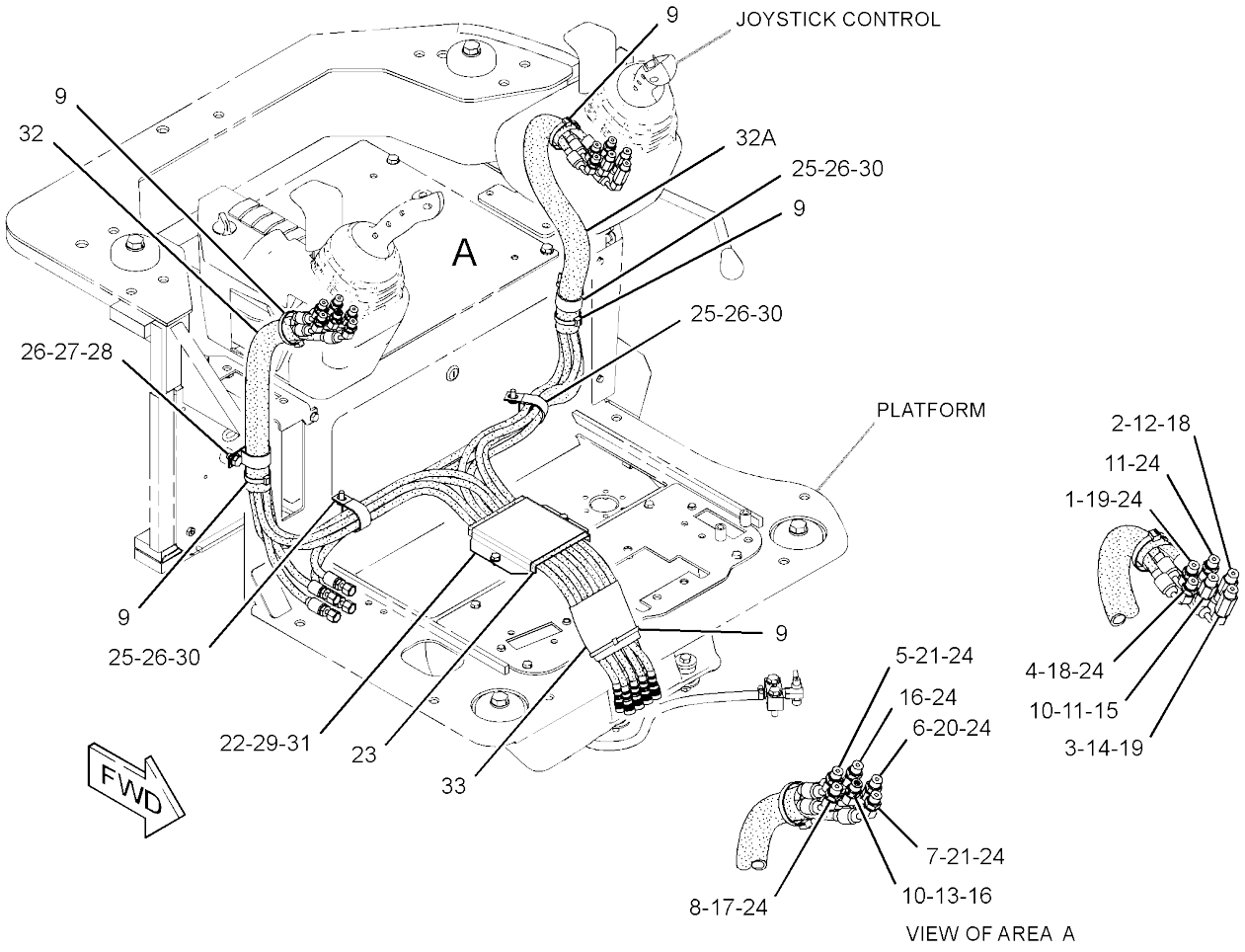


GRAPHIC #1 **<END>** g02808836

# *377-8874* LINES GP-PILOT–JOYSTICK, 2-WAY

**PART OF 379-4724 CONTROL AR-AUXILIARY**
**AN ATTACHMENT**

**SMCS-5057, 5059** **i04559392**

| NOTE | REF NO | GRAPHIC REF | PART NUMBER | QTY | PART NAME 1 2 3 4 5 6 (PRODUCT LEVEL) | SEE PAGE |
|---|---|---|---|---|---|---|
| | 1 | 1 | **4I-9531** | 2 | BAND-MARKER (RED) | |
| | 2 | 1 | **4I-9532** | 2 | BAND-MARKER (YELLOW) | |
| | 3 | 1 | **4I-9533** | 2 | BAND-MARKER (BLUE) | |
| | 4 | 1 | **4I-9534** | 2 | BAND-MARKER (BROWN) | |
| | 5 | 1 | **4I-9535** | 2 | BAND-MARKER (ORANGE) | |
| | 6 | 1 | **4I-9536** | 2 | BAND-MARKER (WHITE) | |
| | 7 | 1 | **4I-9537** | 2 | BAND-MARKER (GREEN) | |
| | 8 | 1 | **4I-9538** | 2 | BAND-MARKER (PURPLE) | |
| | 9 | 1 | **7K-1181** | 4 | STRAP-CABLE | |
| | 10 | 1 | **096-6079** | 4 | TAPE (WHITE) | |
| I | 11 | 1 | **163-9768** | 2 | HOSE AS | |
| | 12 | 1 | *164-9640* | 1 | CONNECTOR AS | |
| | | 1 | **3J-1907** | 1 | SEAL-O-RING | |
| | | 1 | **4J-5477** | 1 | SEAL-O-RING | |
| | | 1 | **145-2237** | 1 | CONNECTOR | |
| I | 13 | 1 | **214-1324** | 1 | HOSE AS | |
| | 14 | 1 | *267-4038* | 1 | CONNECTOR AS | |
| | | 1 | **3J-1907** | 1 | SEAL-O-RING | |
| | | 1 | **4J-5477** | 1 | SEAL-O-RING | |
| | | 1 | **267-4037** | 1 | CONNECTOR-FILTER | |
| | 15 | 1 | *267-4051* | 1 | CONNECTOR AS | |
| | | 1 | **3J-1907** | 1 | SEAL-O-RING | |
| | | 1 | **4J-5477** | 1 | SEAL-O-RING | |
| | | 1 | **156-8845** | 1 | CONNECTOR | |
| | 16 | 1 | *267-4093* | 1 | CONNECTOR AS | |
| | | 1 | **3J-1907** | 1 | SEAL-O-RING | |
| | | 1 | **4J-5477** | 1 | SEAL-O-RING | |
| | | 1 | **216-3247** | 1 | CONNECTOR | |
| I | 17 | 1 | **267-4096** | 2 | HOSE AS | |
| | 18 | 1 | **314-4242** | 1 | HOSE AS | |
| | 19 | 1 | **317-9220** | 2 | HOSE AS | |
| | 20 | 1 | **377-9064** | 1 | HOSE AS | |
| | 21 | 1 | **377-9066** | 1 | PLATE | |
| | 22 | 1 | **377-9068** | 1 | SHEET-RUBBER | |
| I | 23 | 1 | **378-9508** | 1 | HOSE AS | |
| I | 24 | 1 | **378-9509** | 2 | HOSE AS | |
| | 25 | 1 | *148-8325* | 8 | CONNECTOR AS | |
| | | | | | (EACH INCLUDES) | |
| | | 1 | **3J-1907** | 1 | SEAL-O-RING | |
| | | 1 | **4J-5477** | 1 | SEAL-O-RING | |
| | | 1 | **6V-8641** | 1 | CONNECTOR | |
| | 26 | 1 | **5P-4116** | 3 | WASHER-HARD (8.8X20.5X2-MM THK) | |
| | 27 | 1 | **7D-7233** | 4 | CLIP | |
| | 28 | 1 | **8T-4121** | 1 | WASHER-HARD (11X21X2.5-MM THK) | |
| M | 29 | 1 | **8T-4191** | 1 | BOLT (M10X1.5X16-MM) | |
| M | 30 | 1 | **8T-4199** | 2 | BOLT (M8X1.25X12-MM) | |
| M | 31 | 1 | **8T-4200** | 3 | BOLT (M8X1.25X16-MM) | |
| | 32 | 1 | **8T-4224** | 2 | WASHER-HARD (8.8X16X2-MM THK) | |
| G | 33 | 1 | **160-2252** | | SLEEVE-ABRASION (14.6-IN) | |
| G | 33A | 1 | **160-2252** | | SLEEVE-ABRASION (21.5-IN) | |
| E | 34 | 1 | **379-4566** | | SLEEVE (10-CM) | |

E - ORDER BY THE CENTIMETER
G - ORDER BY THE INCH
I - REFER TO HYDRAULIC INFORMATION SYSTEM
M - METRIC PART

*377-8874* **LINES GP-PILOT (*contd.*)** **i04559392**

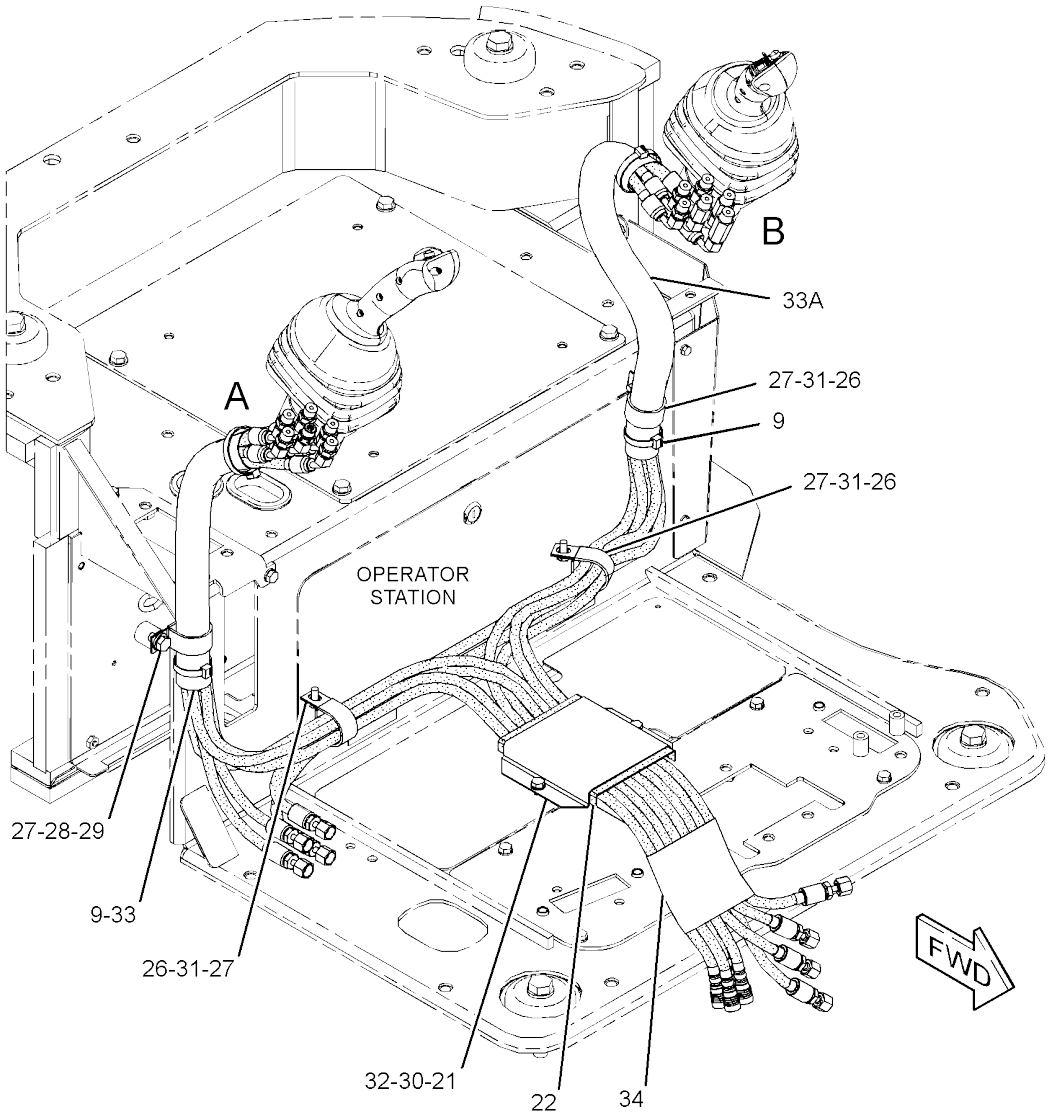


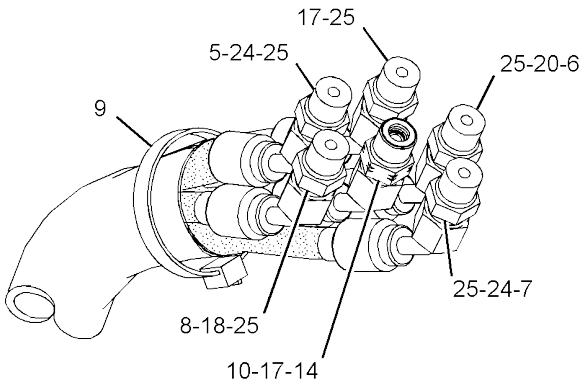


VIEW OF AREA A

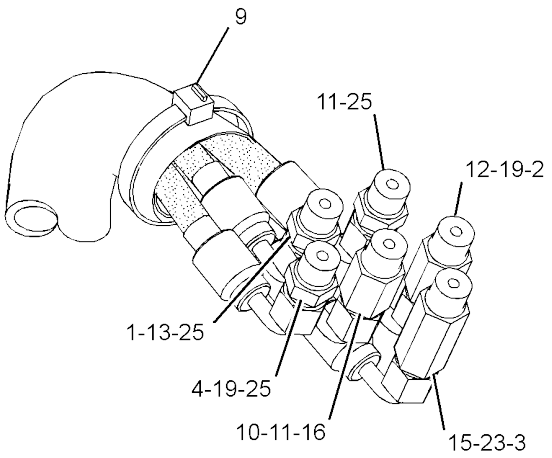


VIEW OF AREA B

GRAPHIC #1 **<END>** g02777576

# HYDRAULIC SYSTEM

## *379-4730* LINES GP-PILOT

**PART OF 379-4713 HYDRAULIC AR**

**SMCS-5057, 5059** **i04728067**

| NOTE | REF NO | GRAPHIC REF | PART NUMBER | QTY | PART NAME 1 2 3 4 5 6 (PRODUCT LEVEL) | SEE PAGE |
|---|---|---|---|---|---|---|
| | 1 | 1 | **3S-2093** | 1 | STRAP-CABLE | |
| | 2 | 1,2 | **7K-1181** | 7 | STRAP-CABLE | |
| | 3 | 2 | **096-1366** | 1 | CLAMP-HOSE | |
| | 4 | 1,2 | **096-6079** | 2 | TAPE (WHITE) | |
| | 5 | 1 | *148-8443* | 1 | TEE AS | |
| | | 1 | **3J-1907** | 1 | SEAL-O-RING | |
| | | 1 | **6V-8397** | 1 | SEAL-O-RING | |
| | | 1 | **7X-2459** | 1 | TEE-O-RING | |
| I | 6 | 1 | **163-9772** | 1 | HOSE AS | |
| I | 7 | 2 | **174-7287** | 2 | HOSE AS | |
| I | 8 | 2 | **208-0156** | 1 | HOSE AS | |
| | 9 | 2 | **217-2456** | 1 | FILTER ELEMENT AS-OIL (HYDRAULIC, PILOT) | |
| | | 2 | **3J-1907** | 1 | SEAL-O-RING | |
| I | 10 | 2 | **240-2590** | 1 | HOSE AS | |
| | 11 | 1 | **245-8595** | 1 | SHEET-RUBBER | |
| I | 12 | 1 | **255-3727** | 2 | HOSE AS | |
| | 13 | 1 | **266-7379** | 1 | STRAP-CABLE | |
| | 14 | 1 | *267-4036* | 2 | UNION AS-CROSS | |
| | | | | | (EACH INCLUDES) | |
| | | 1 | **4J-5477** | 3 | SEAL-O-RING | |
| | | 1 | **267-4035** | 1 | FITTING-CROSS | |
| | 15 | 1 | *267-4046* | 1 | ELBOW AS | |
| | | 1 | **3J-7354** | 1 | SEAL-O-RING | |
| | | 1 | **4J-5477** | 1 | SEAL-O-RING | |
| | | 1 | **267-4045** | 1 | ELBOW | |
| | 16 | 2 | *267-4048* | 1 | ELBOW AS | |
| | | 2 | **3J-1907** | 1 | SEAL-O-RING | |
| | | 2 | **4J-5477** | 1 | SEAL-O-RING | |
| | | 2 | **267-4047** | 1 | ELBOW | |
| | 17 | 1 | *267-4093* | 1 | CONNECTOR AS | |
| | | 1 | **3J-1907** | 1 | SEAL-O-RING | |
| | | 1 | **4J-5477** | 1 | SEAL-O-RING | |
| | | 1 | **216-3247** | 1 | CONNECTOR | |
| Y | 18 | 2 | **274-4199** | 1 | MANIFOLD GP-CONTROL | 283 |
| | 19 | 1 | *288-0266* | 1 | ELBOW AS | |
| | | 1 | **4J-5477** | 1 | SEAL-O-RING | |
| | | 1 | **288-0267** | 1 | ELBOW | |
| I | 20 | 1 | **365-6895** | 2 | HOSE AS | |
| | 21 | 2 | *377-9033* | 1 | BLOCK GP-HYDRAULIC | |
| | | 2 | **2P-1279** | 2 | LOCKNUT (9/16-18-THD) | |
| | | 2 | **6V-9168** | 2 | NUT (11/16-16-THD) | |
| | | 2 | **293-9743** | 2 | MANIFOLD | |
| | | 2 | **377-9034** | 1 | BRACKET AS | |
| M | | 2 | **8T-3490** | 2 | NUT-WELD (M10X1.5-THD) | |
| I | 22 | 2 | **381-0556** | 1 | HOSE AS | |
| I | 23 | 2 | **381-0557** | 1 | HOSE AS | |
| I | 24 | 2 | **381-9193** | 1 | HOSE AS | |
| I | 25 | 1 | **381-9194** | 1 | HOSE AS | |
| I | 26 | 1 | **382-5803** | 1 | HOSE AS | |
| I | 27 | 1 | **385-2812** | 1 | HOSE AS | |
| | 28 | 2 | *148-8316* | 1 | CONNECTOR AS | |
| | | 2 | **3J-7354** | 1 | SEAL-O-RING | |
| | | 2 | **4J-5477** | 1 | SEAL-O-RING | |
| | | 2 | **6V-8647** | 1 | CONNECTOR | |
| | 29 | 1,2 | *148-8325* | 4 | CONNECTOR AS | |
| | | | | | (EACH INCLUDES) | |
| | | 1,2 | **3J-1907** | 1 | SEAL-O-RING | |
| | | 1,2 | **4J-5477** | 1 | SEAL-O-RING | |
| | | 1,2 | **6V-8641** | 1 | CONNECTOR | |
| | 30 | 2 | *148-8336* | 3 | CONNECTOR AS | |

*379-4730* **LINES GP-PILOT (*contd.*)** **i04728067**

| NOTE | REF NO | GRAPHIC REF | PART NUMBER | QTY | PART NAME 1 2 3 4 5 6 (PRODUCT LEVEL) | SEE PAGE |
|---|---|---|---|---|---|---|
| | | | | | (EACH INCLUDES) | |
| | | 2 | **3J-1907** | 1 | SEAL-O-RING | |
| | | 2 | **6V-8397** | 1 | SEAL-O-RING | |
| | | 2 | **6V-8636** | 1 | CONNECTOR | |
| | 31 | 1 | *148-8351* | 2 | ELBOW AS | |
| | | | | | (EACH INCLUDES) | |
| | | 1 | **4J-5477** | 1 | SEAL-O-RING | |
| | | 1 | **6V-9849** | 1 | ELBOW | |
| | 32 | 2 | *148-8361* | 1 | ELBOW AS | |
| | | 2 | **3J-7354** | 1 | SEAL-O-RING | |
| | | 2 | **6V-8397** | 1 | SEAL-O-RING | |
| | | 2 | **6V-9200** | 1 | ELBOW | |
| | 33 | 1 | *148-8363* | 1 | ELBOW AS | |
| | | 1 | **3K-0360** | 1 | SEAL-O-RING | |
| | | 1 | **6V-8397** | 1 | SEAL-O-RING | |
| | | 1 | **6V-9876** | 1 | ELBOW | |
| | 34 | 2 | *148-8367* | 1 | ELBOW AS | |
| | | 2 | **6V-8397** | 1 | SEAL-O-RING | |
| | | 2 | **6V-9850** | 1 | ELBOW | |
| | 35 | 2 | *148-8368* | 2 | ELBOW AS | |
| | | | | | (EACH INCLUDES) | |
| | | 2 | **3J-1907** | 1 | SEAL-O-RING | |
| | | 2 | **4J-5477** | 1 | SEAL-O-RING | |
| | | 2 | **6V-8627** | 1 | ELBOW | |
| | 36 | 1 | *148-8369* | 1 | ELBOW AS | |
| | | 1 | **3J-7354** | 1 | SEAL-O-RING | |
| | | 1 | **4J-5477** | 1 | SEAL-O-RING | |
| | | 1 | **6V-8628** | 1 | ELBOW | |
| | 37 | 2 | *148-8407* | 1 | PLUG AS | |
| | | 2 | **3J-1907** | 1 | SEAL-O-RING | |
| | | 2 | **9S-4191** | 1 | PLUG-O-RING | |
| | 38 | 2 | *150-3036* | 1 | ELBOW AS | |
| | | 2 | **3J-1907** | 1 | SEAL-O-RING | |
| | | 2 | **6V-8397** | 1 | SEAL-O-RING | |
| | | 2 | **8T-1905** | 1 | ELBOW | |
| | 39 | 2 | *150-3065* | 1 | ELBOW AS | |
| | | 2 | **3J-1907** | 1 | SEAL-O-RING | |
| | | 2 | **6V-0484** | 1 | ELBOW | |
| | 40 | 1 | *150-4047* | 1 | ADAPTER AS | |
| | | 1 | **3J-7354** | 1 | SEAL-O-RING | |
| | | 1 | **8T-2353** | 1 | ADAPTER | |
| | 41 | 2 | *150-5968* | 1 | TEE AS | |
| | | 2 | **4J-5477** | 2 | SEAL-O-RING | |
| | | 2 | **6V-9835** | 1 | TEE-SWIVEL | |
| | 42 | 1 | *165-7014* | 1 | TEE AS | |
| | | 1 | **3J-1907** | 1 | SEAL-O-RING | |
| | | 1 | **4J-5477** | 1 | SEAL-O-RING | |
| | | 1 | **8C-3309** | 1 | TEE | |
| | 43 | 2 | *187-2120* | 1 | ELBOW AS | |
| | | 2 | **4J-5477** | 1 | SEAL-O-RING | |
| | | 2 | **8C-8408** | 1 | ELBOW | |
| | 44 | 2 | **3J-1907** | 1 | SEAL-O-RING | |
| | 45 | 2 | **4J-5477** | 8 | SEAL-O-RING | |
| | 46 | 2 | **6V-0852** | 1 | CAP-DUST | |
| | 47 | 2 | **6V-3965** | 1 | FITTING (QUICK DISCONNECT) | |
| | 48 | 2 | **6V-8397** | 2 | SEAL-O-RING | |
| | 49 | 2 | **7X-7729** | 2 | WASHER (11X25X3-MM THK) | |
| | 50 | 2 | **8T-4121** | 2 | WASHER-HARD (11X21X2.5-MM THK) | |
| M | 51 | 2 | **8T-4136** | 2 | BOLT (M10X1.5X25-MM) | |
| M | 52 | 2 | **8T-4137** | 2 | BOLT (M10X1.5X20-MM) | |

I - REFER TO HYDRAULIC INFORMATION SYSTEM
M - METRIC PART
Y - SEPARATE ILLUSTRATION

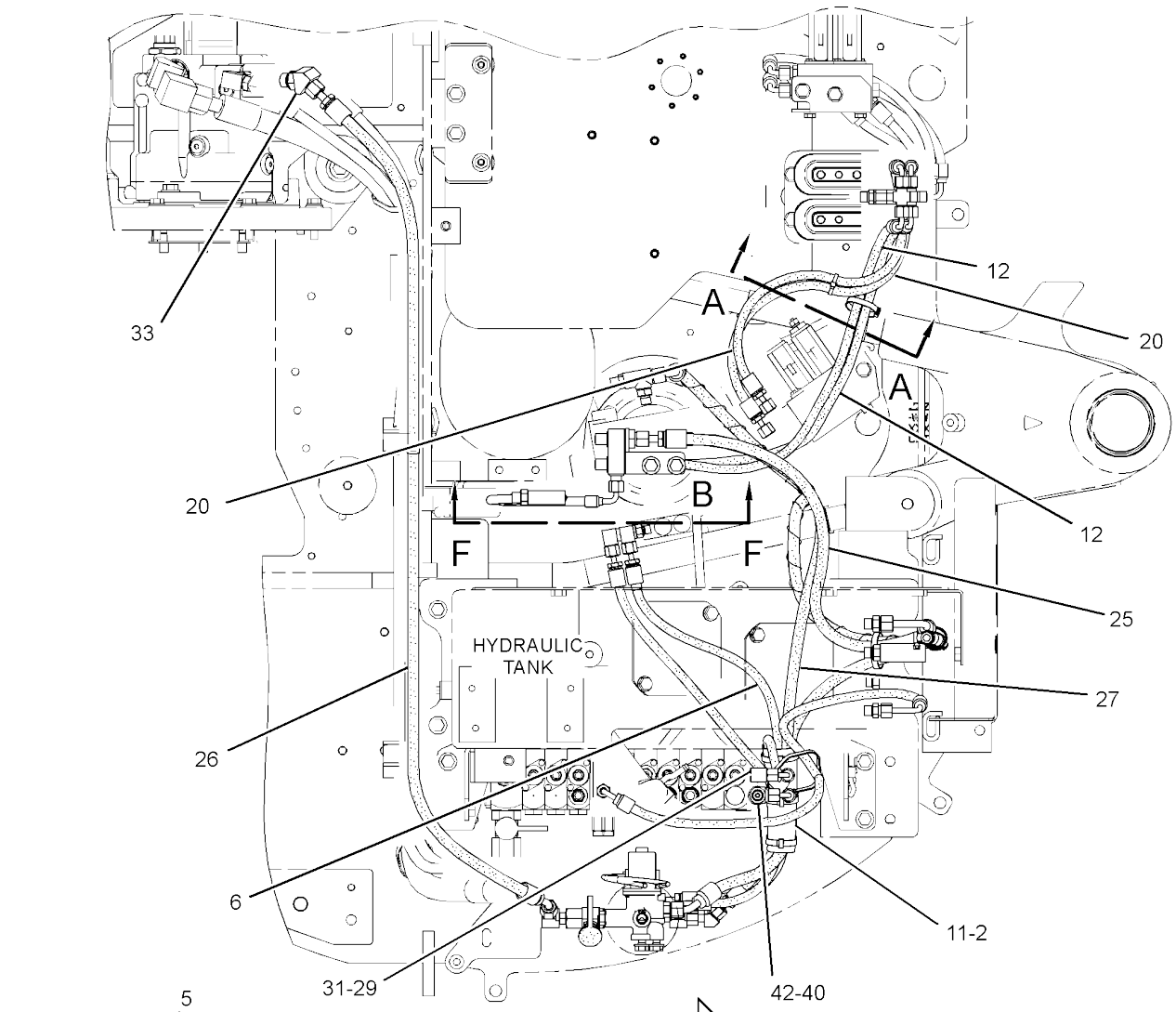


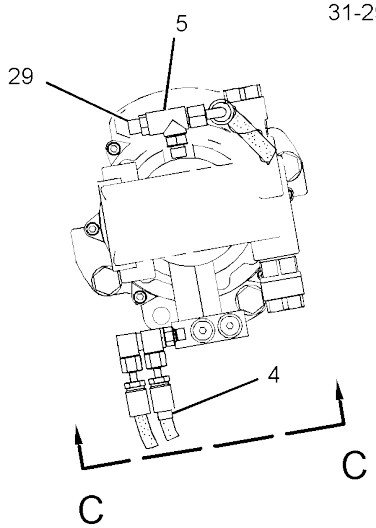


VIEW OF AREA B
(PARTS REMOVED FOR CLARITY)

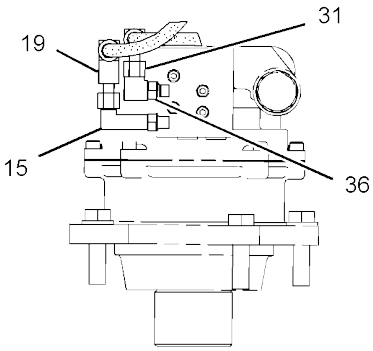


VIEW C-C

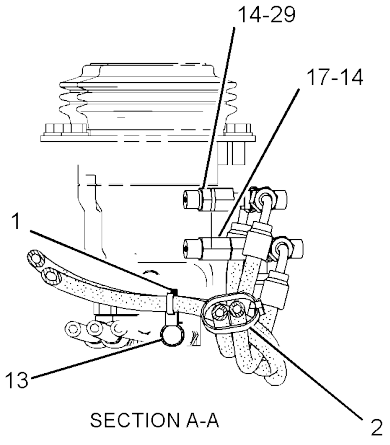


SECTION A-A

REFER TO ALL ILLUSTRATIONS OF THIS GROUP FOR AUXILIARY VIEWS

GRAPHIC #1

g02881499

*379-4730* **LINES GP-PILOT (*contd.*)** **i04728067**

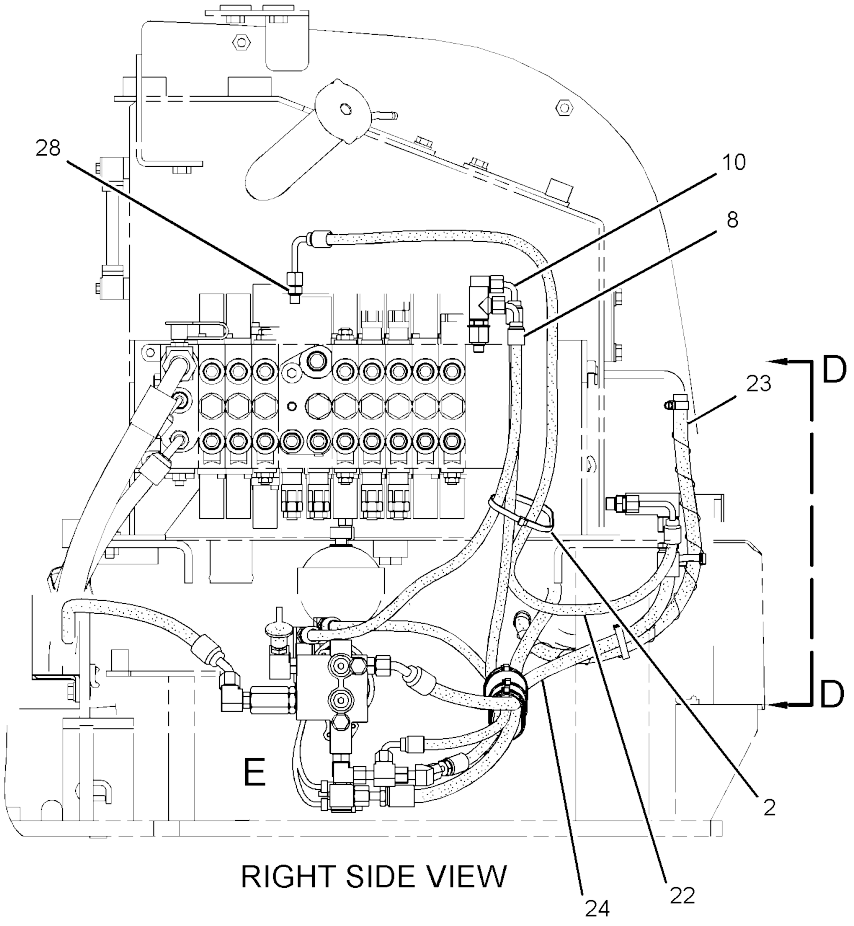


RIGHT SIDE VIEW

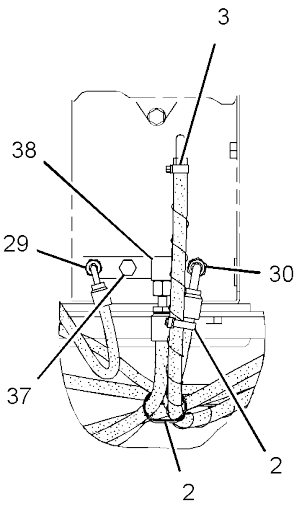


VIEW D-D

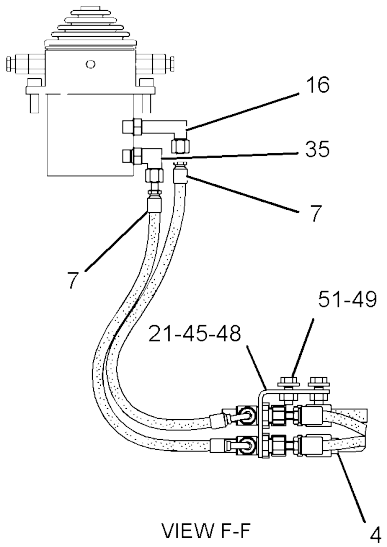


VIEW F-F

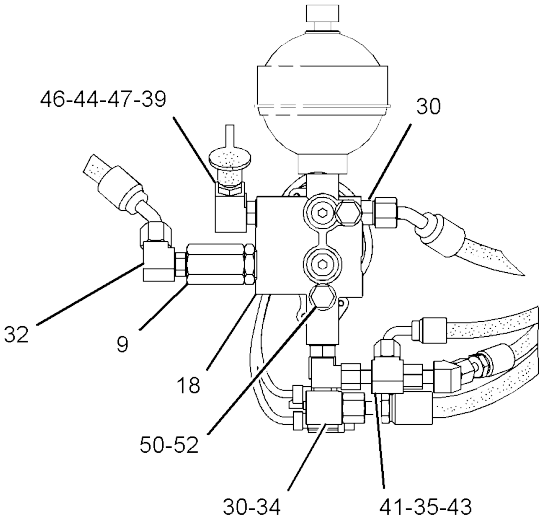


VIEW OF AREA E
(PARTS REMOVED FOR CLARITY)

GRAPHIC #2 **<END>** g02880578

# *379-4736* LINES GP-PILOT–STANDARD

**PART OF 379-4723 CONTROL AR-PILOT HYDRAULIC**
**AN ATTACHMENT**

**SMCS-5057, 5059** **i04728072**

| NOTE | REF NO | GRAPHIC REF | PART NUMBER | QTY | PART NAME 1 2 3 4 5 6 (PRODUCT LEVEL) | SEE PAGE |
|---|---|---|---|---|---|---|
| | 1 | 1 | **4I-9531** | 1 | BAND-MARKER (RED) | |
| | 2 | 1 | **4I-9532** | 2 | BAND-MARKER (YELLOW) | |
| | 3 | 1 | **4I-9533** | 1 | BAND-MARKER (BLUE) | |
| | 4 | 1 | **4I-9534** | 2 | BAND-MARKER (BROWN) | |
| | 5 | 1 | **4I-9535** | 1 | BAND-MARKER (ORANGE) | |
| | 6 | 1 | **4I-9536** | 1 | BAND-MARKER (WHITE) | |
| | 7 | 1 | **4I-9537** | 1 | BAND-MARKER (GREEN) | |
| | 8 | 1 | **4I-9538** | 1 | BAND-MARKER (PURPLE) | |
| | 9 | 1 | **7K-1181** | 10 | STRAP-CABLE | |
| | 10 | 1 | **096-6078** | 1 | TAPE (PURPLE) | |
| | 11 | 1 | **096-6079** | 1 | TAPE (WHITE) | |
| | 12 | 1 | **096-6080** | 1 | TAPE (BLUE) | |
| | 13 | 1 | **096-6081** | 2 | TAPE (ORANGE) | |
| | 14 | 1 | **096-6083** | 1 | TAPE (GREEN) | |
| | 15 | 1 | **146-5009** | 1 | RUBBER | |
| I | 16 | 1 | **196-3895** | 1 | HOSE AS | |
| I | 17 | 1 | **208-0164** | 1 | HOSE AS | |
| | 18 | 1 | **210-0686** | 1 | SHEET-RUBBER | |
| I | 19 | 1 | **214-1324** | 1 | HOSE AS | |
| | 20 | 1 | **239-3781** | 1 | HOSE AS | |
| | 21 | 1 | *268-1601* | 1 | CONNECTOR AS-ORIFICE | |
| | | 1 | **3J-7354** | 1 | SEAL-O-RING | |
| | | 1 | **4J-5477** | 1 | SEAL-O-RING | |
| | | 1 | **112-2628** | 1 | CONNECTOR | |
| I | 22 | 1 | **280-3035** | 1 | HOSE AS | |
| | 23 | 1 | **283-2847** | 1 | VALVE GP-REDUCING (SLOW RETURN) | |
| | 24 | 1 | **311-3072** | 2 | CONNECTOR AS | |
| | 25 | 1 | **320-3430** | 1 | HOSE AS | |
| | 26 | 1 | **326-7184** | 1 | HOSE AS | |
| | 27 | 1 | *329-4756* | 1 | CONNECTOR AS | |
| | | 1 | **3J-1907** | 1 | SEAL-O-RING | |
| | | 1 | **4J-5477** | 1 | SEAL-O-RING | |
| | | 1 | **329-4757** | 1 | CONNECTOR | |
| | 28 | 1 | **330-5698** | 1 | HOSE AS | |
| I | 29 | 1 | **377-9071** | 1 | HOSE AS | |
| | 30 | 1 | **381-2048** | 2 | HOSE AS | |
| | 31 | 1 | **381-2049** | 1 | HOSE AS | |
| | 32 | 1 | **381-2050** | 1 | HOSE AS | |
| | 33 | 1 | **381-2051** | 2 | HOSE AS | |
| | 34 | 1 | **381-2052** | 1 | HOSE AS | |
| | 35 | 1 | **381-9195** | 1 | HOSE AS | |
| | 36 | 1 | *148-8316* | 9 | CONNECTOR AS | |
| | | | | | (EACH INCLUDES) | |
| | | 1 | **3J-7354** | 1 | SEAL-O-RING | |
| | | 1 | **4J-5477** | 1 | SEAL-O-RING | |
| | | 1 | **6V-8647** | 1 | CONNECTOR | |
| | 37 | 1 | *148-8351* | 1 | ELBOW AS | |
| | | 1 | **4J-5477** | 1 | SEAL-O-RING | |
| | | 1 | **6V-9849** | 1 | ELBOW | |
| | 38 | 1 | *148-8368* | 4 | ELBOW AS | |
| | | | | | (EACH INCLUDES) | |
| | | 1 | **3J-1907** | 1 | SEAL-O-RING | |
| | | 1 | **4J-5477** | 1 | SEAL-O-RING | |
| | | 1 | **6V-8627** | 1 | ELBOW | |
| | 39 | 1 | *148-8369* | 1 | ELBOW AS | |
| | | 1 | **3J-7354** | 1 | SEAL-O-RING | |
| | | 1 | **4J-5477** | 1 | SEAL-O-RING | |
| | | 1 | **6V-8628** | 1 | ELBOW | |

*379-4736* **LINES GP-PILOT (*contd.*)** **i04728072**

| NOTE | REF NO | GRAPHIC REF | PART NUMBER | QTY | PART NAME 1 2 3 4 5 6 (PRODUCT LEVEL) | SEE PAGE |
|---|---|---|---|---|---|---|
| | 40 | 1 | *148-8385* | 3 | ELBOW AS | |
| | | | | | (EACH INCLUDES) | |
| | | 1 | **3J-7354** | 1 | SEAL-O-RING | |
| | | 1 | **4J-5477** | 1 | SEAL-O-RING | |
| | | 1 | **6V-9000** | 1 | ELBOW | |
| | 41 | 1 | *150-4042* | 1 | CONNECTOR AS | |
| | | 1 | **3J-7354** | 1 | SEAL-O-RING | |
| | | 1 | **4J-5477** | 1 | SEAL-O-RING | |
| | | 1 | **6V-9010** | 1 | CONNECTOR-PORT | |
| | 42 | 1 | *150-4047* | 2 | ADAPTER AS | |
| | | | | | (EACH INCLUDES) | |
| | | 1 | **3J-7354** | 1 | SEAL-O-RING | |
| | | 1 | **8T-2353** | 1 | ADAPTER | |
| | 43 | 1 | *150-5968* | 1 | TEE AS | |
| | | 1 | **4J-5477** | 2 | SEAL-O-RING | |
| | | 1 | **6V-9835** | 1 | TEE-SWIVEL | |
| | 44 | 1 | *187-2120* | 1 | ELBOW AS | |
| | | 1 | **4J-5477** | 1 | SEAL-O-RING | |
| | | 1 | **8C-8408** | 1 | ELBOW | |
| | 45 | 1 | **277-1873** | 1 | CLIP | |
| | 46 | 1 | **3J-1907** | 1 | SEAL-O-RING | |
| | 47 | 1 | **4J-5477** | 1 | SEAL-O-RING | |
| | 48 | 1 | **8T-4121** | 1 | WASHER-HARD (11X21X2.5-MM THK) | |
| M | 49 | 1 | **8T-4137** | 1 | BOLT (M10X1.5X20-MM) | |

I - REFER TO HYDRAULIC INFORMATION SYSTEM
M - METRIC PART

*379-4736* **LINES GP-PILOT (*contd.*)** **i04728072**

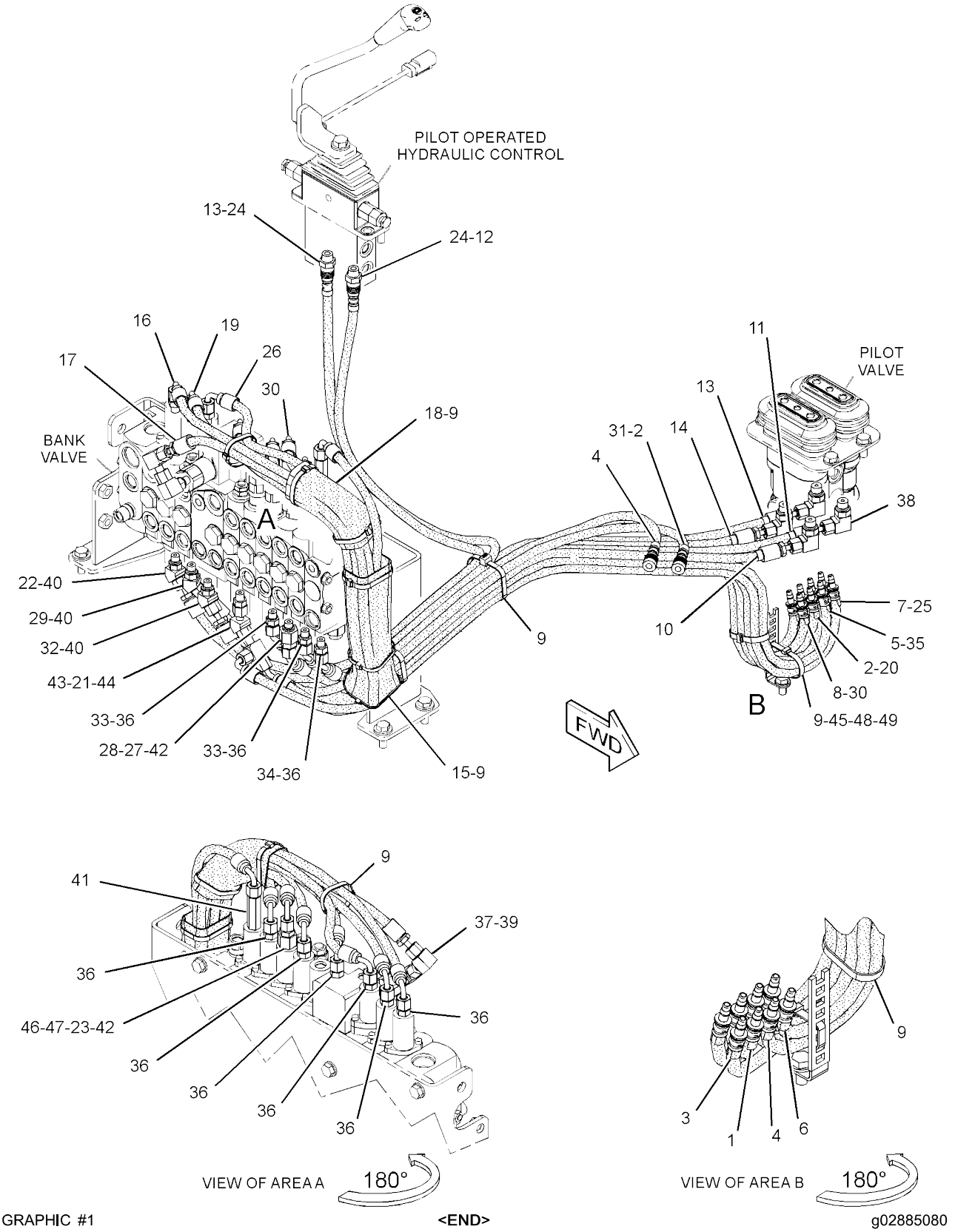


GRAPHIC #1 **<END>** g02885080

# HYDRAULIC SYSTEM

## *379-4737* LINES GP-PILOT–2-WAY

**PART OF 379-4724 CONTROL AR-AUXILIARY**
**AN ATTACHMENT**

**SMCS-5057, 5059** **i04728073**

| NOTE | REF NO | GRAPHIC REF | PART NUMBER | QTY | PART NAME 1 2 3 4 5 6 (PRODUCT LEVEL) | SEE PAGE |
|---|---|---|---|---|---|---|
| | 1 | 2 | **4I-9531** | 1 | BAND-MARKER (RED) | |
| | 2 | 2 | **4I-9532** | 2 | BAND-MARKER (YELLOW) | |
| | 3 | 2 | **4I-9533** | 1 | BAND-MARKER (BLUE) | |
| | 4 | 2 | **4I-9534** | 2 | BAND-MARKER (BROWN) | |
| | 5 | 2 | **4I-9535** | 1 | BAND-MARKER (ORANGE) | |
| | 6 | 2 | **4I-9536** | 1 | BAND-MARKER (WHITE) | |
| | 7 | 2 | **4I-9537** | 1 | BAND-MARKER (GREEN) | |
| | 8 | 2 | **4I-9538** | 1 | BAND-MARKER (PURPLE) | |
| | 9 | 2 | **7K-1181** | 12 | STRAP-CABLE | |
| | 10 | 2 | **096-6078** | 1 | TAPE (PURPLE) | |
| | 11 | 2 | **096-6079** | 1 | TAPE (WHITE) | |
| | 12 | 1 | **096-6080** | 1 | TAPE (BLUE) | |
| | 13 | 1,2 | **096-6081** | 2 | TAPE (ORANGE) | |
| | 14 | 2 | **096-6083** | 1 | TAPE (GREEN) | |
| | 15 | 2 | **146-5009** | 1 | RUBBER | |
| I | 16 | 2 | **196-3895** | 1 | HOSE AS | |
| I | 17 | 2 | **208-0164** | 1 | HOSE AS | |
| | 18 | 2 | **210-0686** | 2 | SHEET-RUBBER | |
| I | 19 | 2 | **214-1324** | 1 | HOSE AS | |
| | 20 | 2 | **239-3781** | 1 | HOSE AS | |
| I | 21 | 2 | **267-4109** | 1 | HOSE AS | |
| | 22 | 2 | *268-1601* | 1 | CONNECTOR AS-ORIFICE | |
| | | 2 | **3J-7354** | 1 | SEAL-O-RING | |
| | | 2 | **4J-5477** | 1 | SEAL-O-RING | |
| | | 2 | **112-2628** | 1 | CONNECTOR | |
| I | 23 | 2 | **280-3035** | 1 | HOSE AS | |
| | 24 | 2 | **283-2847** | 1 | VALVE GP-REDUCING (SLOW RETURN) | |
| I | 25 | 2 | **304-0121** | 1 | HOSE AS | |
| | 26 | 1 | **311-3072** | 2 | CONNECTOR AS | |
| | 27 | 1 | **326-7184** | 1 | HOSE AS | |
| | 28 | 2 | *329-4756* | 1 | CONNECTOR AS | |
| | | 2 | **3J-1907** | 1 | SEAL-O-RING | |
| | | 2 | **4J-5477** | 1 | SEAL-O-RING | |
| | | 2 | **329-4757** | 1 | CONNECTOR | |
| I | 29 | 2 | **377-9071** | 1 | HOSE AS | |
| | 30 | 2 | **381-2048** | 1 | HOSE AS | |
| | 31 | 2 | **381-2049** | 1 | HOSE AS | |
| | 32 | 1 | **381-2050** | 1 | HOSE AS | |
| | 33 | 2 | **381-2051** | 2 | HOSE AS | |
| | 34 | 2 | **381-2052** | 1 | HOSE AS | |
| I | 35 | 2 | **381-2054** | 1 | HOSE AS | |
| I | 36 | 2 | **381-2055** | 1 | HOSE AS | |
| | 37 | 2 | *148-8316* | 9 | CONNECTOR AS | |
| | | | | | (EACH INCLUDES) | |
| | | 2 | **3J-7354** | 1 | SEAL-O-RING | |
| | | 2 | **4J-5477** | 1 | SEAL-O-RING | |
| | | 2 | **6V-8647** | 1 | CONNECTOR | |
| | 38 | 2 | *148-8351* | 1 | ELBOW AS | |
| | | 2 | **4J-5477** | 1 | SEAL-O-RING | |
| | | 2 | **6V-9849** | 1 | ELBOW | |
| | 39 | 2 | *148-8368* | 4 | ELBOW AS | |
| | | | | | (EACH INCLUDES) | |
| | | 2 | **3J-1907** | 1 | SEAL-O-RING | |
| | | 2 | **4J-5477** | 1 | SEAL-O-RING | |
| | | 2 | **6V-8627** | 1 | ELBOW | |
| | 40 | 2 | *148-8369* | 1 | ELBOW AS | |
| | | 2 | **3J-7354** | 1 | SEAL-O-RING | |
| | | 2 | **4J-5477** | 1 | SEAL-O-RING | |

*379-4737* **LINES GP-PILOT (*contd.*)** **i04728073**

| NOTE | REF NO | GRAPHIC REF | PART NUMBER | QTY | PART NAME 1 2 3 4 5 6 (PRODUCT LEVEL) | SEE PAGE |
|---|---|---|---|---|---|---|
| | | 2 | **6V-8628** | 1 | ELBOW | |
| | 41 | 2 | *148-8385* | 3 | ELBOW AS | |
| | | | | | (EACH INCLUDES) | |
| | | 2 | **3J-7354** | 1 | SEAL-O-RING | |
| | | 2 | **4J-5477** | 1 | SEAL-O-RING | |
| | | 2 | **6V-9000** | 1 | ELBOW | |
| | 42 | 2 | *150-4042* | 1 | CONNECTOR AS | |
| | | 2 | **3J-7354** | 1 | SEAL-O-RING | |
| | | 2 | **4J-5477** | 1 | SEAL-O-RING | |
| | | 2 | **6V-9010** | 1 | CONNECTOR-PORT | |
| | 43 | 2 | *150-4047* | 2 | ADAPTER AS | |
| | | | | | (EACH INCLUDES) | |
| | | 2 | **3J-7354** | 1 | SEAL-O-RING | |
| | | 2 | **8T-2353** | 1 | ADAPTER | |
| | 44 | 2 | *150-5968* | 1 | TEE AS | |
| | | 2 | **4J-5477** | 2 | SEAL-O-RING | |
| | | 2 | **6V-9835** | 1 | TEE-SWIVEL | |
| | 45 | 2 | *187-2120* | 1 | ELBOW AS | |
| | | 2 | **4J-5477** | 1 | SEAL-O-RING | |
| | | 2 | **8C-8408** | 1 | ELBOW | |
| | 46 | 2 | **277-1873** | 1 | CLIP | |
| | 47 | 2 | **3J-1907** | 1 | SEAL-O-RING | |
| | 48 | 2 | **4J-5477** | 1 | SEAL-O-RING | |
| | 49 | 2 | **8T-4121** | 1 | WASHER-HARD (11X21X2.5-MM THK) | |
| M | 50 | 2 | **8T-4137** | 1 | BOLT (M10X1.5X20-MM) | |

I - REFER TO HYDRAULIC INFORMATION SYSTEM
M - METRIC PART

REFER TO ALL ILLUSTRATIONS OF
THIS GROUP FOR AUXILIARY VIEWS

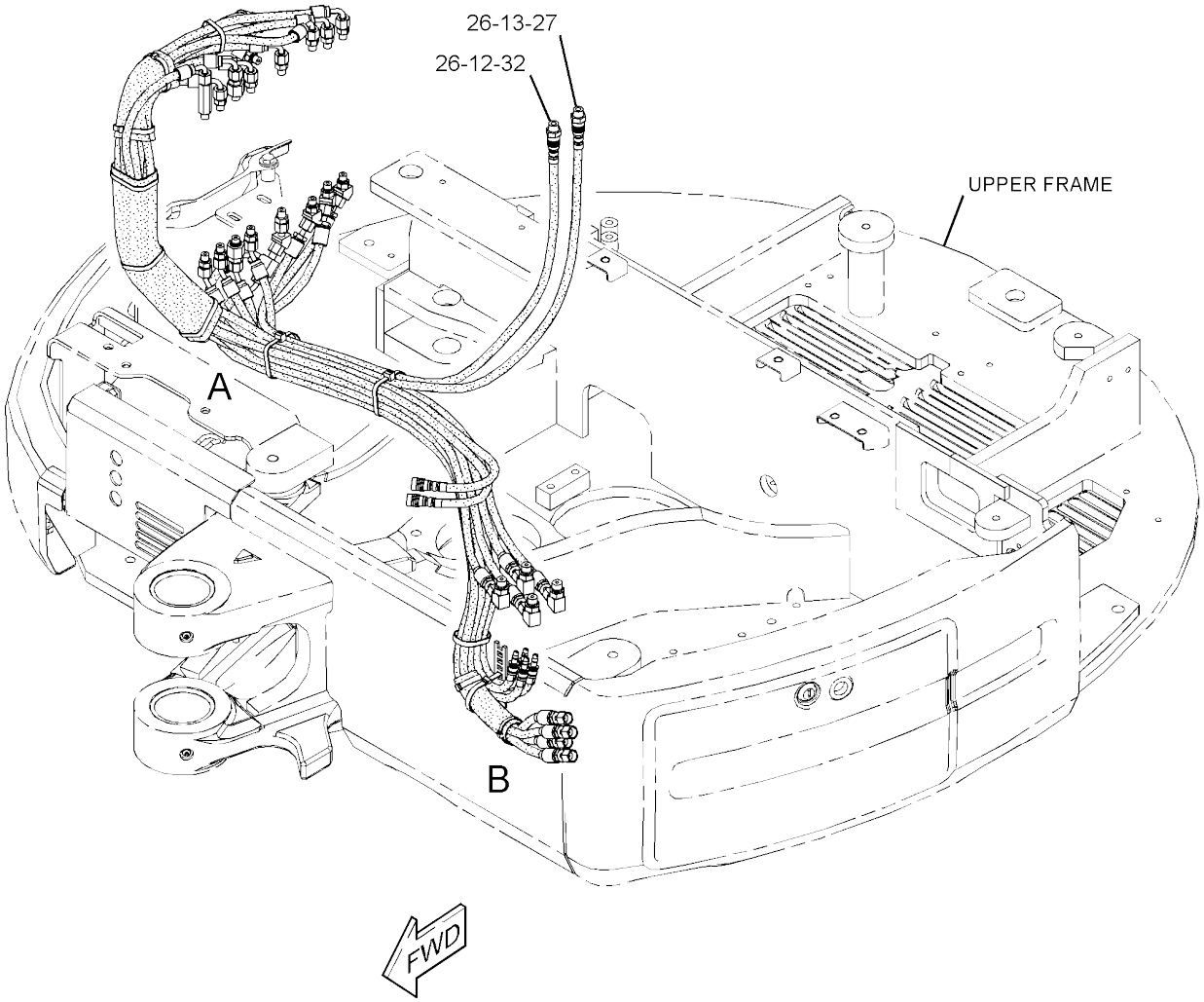


GRAPHIC #1 g02880676

*379-4737* **LINES GP-PILOT (*contd.*)** **i04728073**

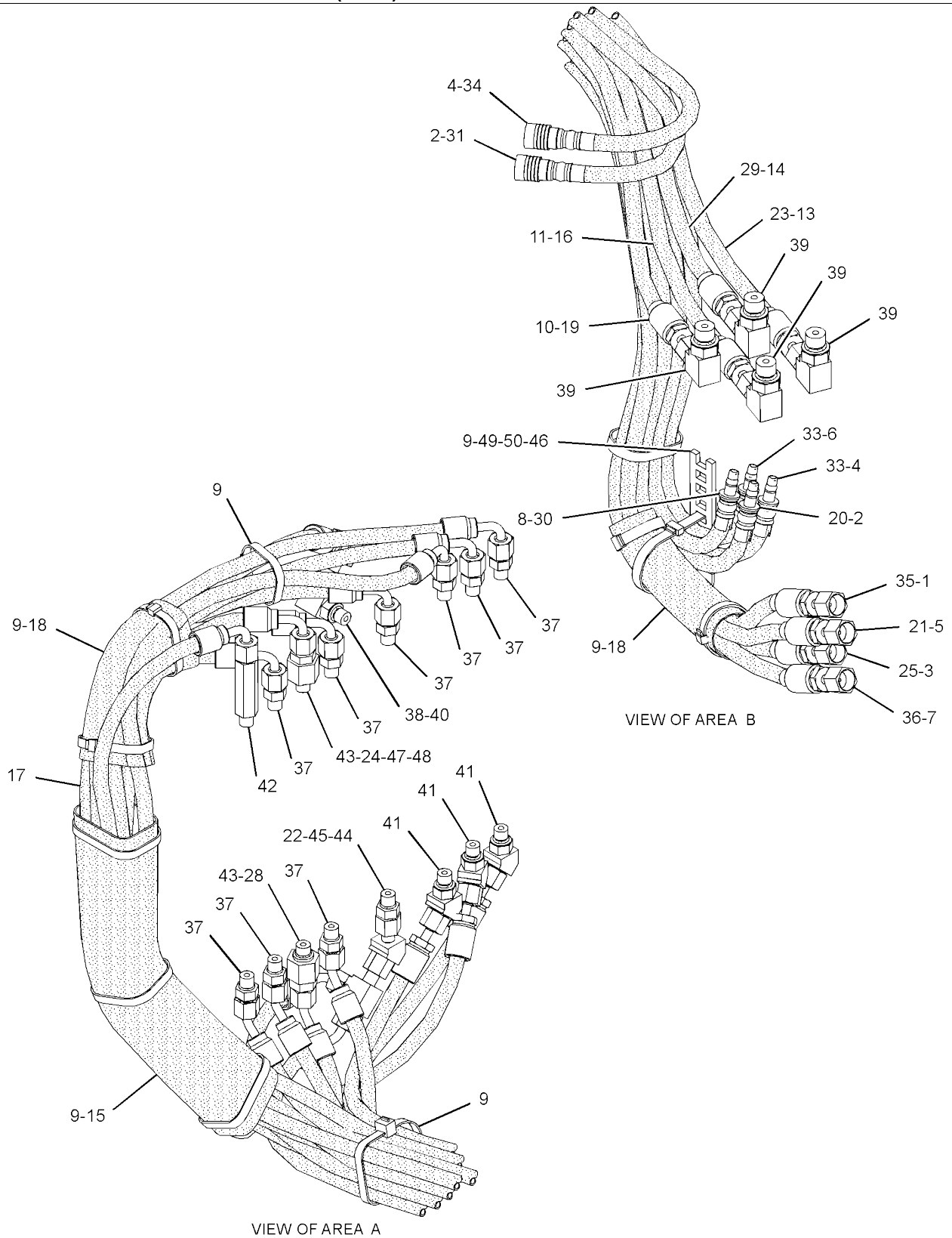


GRAPHIC #2 **<END>** g02880677

# HYDRAULIC SYSTEM

## *380-4661* LINES GP-PILOT–AUXILIARY

**PART OF 379-4715 CONTROL AR-AUXILIARY**

**SMCS-5057, 5059** **i04629842**

| NOTE | REF NO | GRAPHIC REF | PART NUMBER | QTY | PART NAME 1 2 3 4 5 6 (PRODUCT LEVEL) | SEE PAGE |
|---|---|---|---|---|---|---|
| | 1 | 1 | **7K-1181** | 1 | STRAP-CABLE | |
| | 2 | 1 | **096-6080** | 1 | TAPE (BLUE) | |
| | 3 | 1 | **096-6085** | 1 | TAPE (RED) | |
| I | 4 | 1 | **377-9042** | 1 | HOSE AS | |
| I | 5 | 1 | **377-9043** | 2 | HOSE AS | |
| I | 6 | 1 | **381-0559** | 1 | HOSE AS | |
| | 7 | 1 | *148-8316* | 2 | CONNECTOR AS | |
| | | | | | (EACH INCLUDES) | |
| | | 1 | **3J-7354** | 1 | SEAL-O-RING | |
| | | 1 | **4J-5477** | 1 | SEAL-O-RING | |
| | | 1 | **6V-8647** | 1 | CONNECTOR | |

I - REFER TO HYDRAULIC INFORMATION SYSTEM

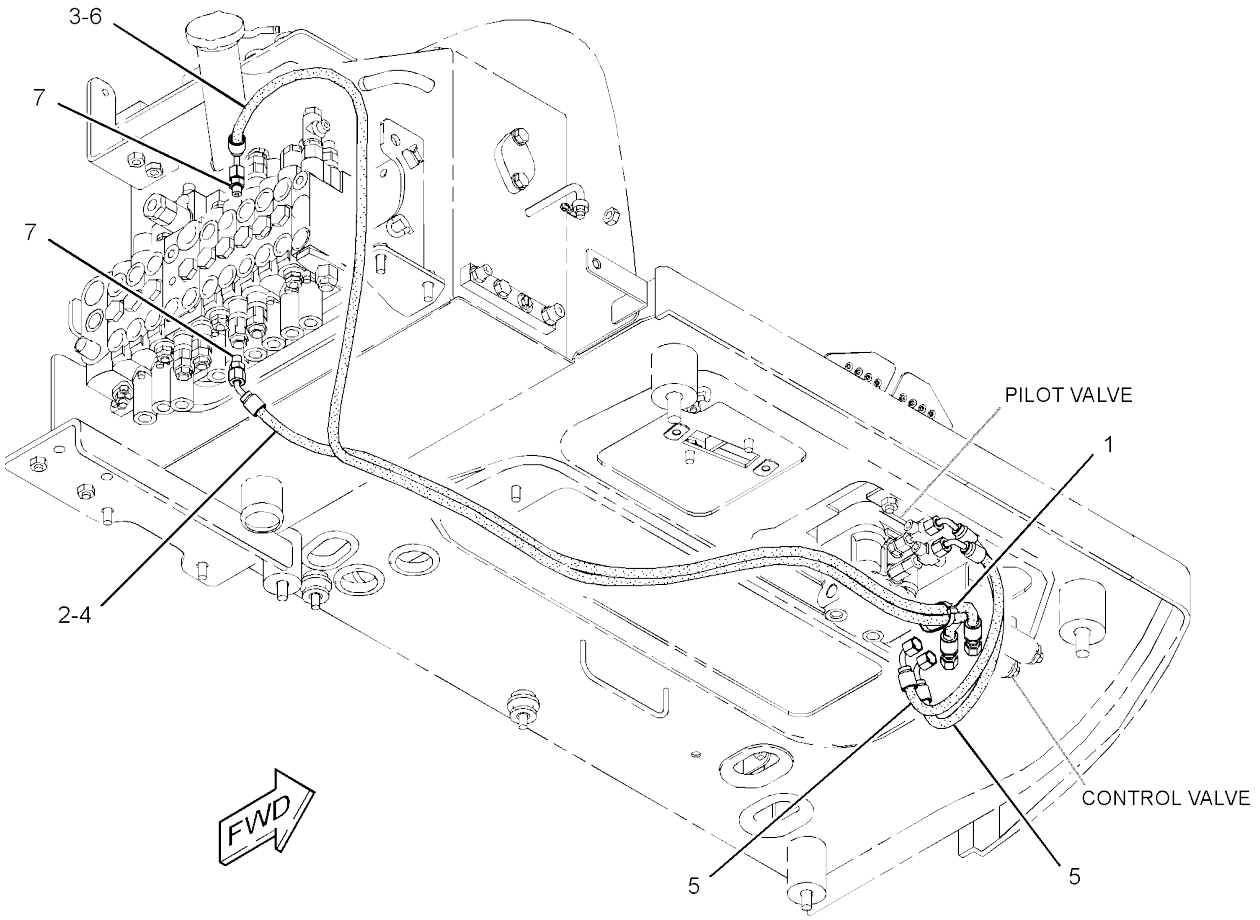


GRAPHIC #1 **<END>** g02801722

# *385-2796* LINES GP-PILOT–BLADE ANGLE

**PART OF 377-8930 BLADE AR-ANGLING**
**AN ATTACHMENT**

**SMCS-5057, 5059** **i05033721**

| NOTE | REF NO | GRAPHIC REF | PART NUMBER | QTY | PART NAME 1 2 3 4 5 6 (PRODUCT LEVEL) | SEE PAGE |
|---|---|---|---|---|---|---|
| | 1 | 1 | **3S-2093** | 2 | STRAP-CABLE | |
| | 2 | 1 | **7K-1181** | 1 | STRAP-CABLE | |
| | 3 | 1 | **096-6078** | 1 | TAPE (PURPLE) | |
| | 4 | 1 | **096-6082** | 1 | TAPE (YELLOW) | |
| | 5 | 1 | *150-4027* | 1 | TEE AS | |
| | | 1 | **3E-2310** | 1 | TEE | |
| | | 1 | **3J-1907** | 1 | SEAL-O-RING | |
| | | 1 | **6V-8397** | 1 | SEAL-O-RING | |
| Y | 6 | 1 | **282-9318** | 1 | VALVE GP-SOLENOID (BLADE) | 356 |
| | 7 | 1 | **385-2803** | 1 | BRACKET AS | |
| I | 8 | 1 | **385-2806** | 1 | HOSE AS | |
| | 9 | 1 | **385-2808** | 1 | HOSE AS | |
| | 10 | 1 | **385-2809** | 1 | HOSE AS | |
| | 11 | 1 | **385-2811** | 1 | HOSE AS | |
| | 12 | 1 | *148-8316* | 2 | CONNECTOR AS | |
| | | | | | (EACH INCLUDES) | |
| | | 1 | **3J-7354** | 1 | SEAL-O-RING | |
| | | 1 | **4J-5477** | 1 | SEAL-O-RING | |
| | | 1 | **6V-8647** | 1 | CONNECTOR | |
| | 13 | 1 | *148-8325* | 1 | CONNECTOR AS | |
| | | 1 | **3J-1907** | 1 | SEAL-O-RING | |
| | | 1 | **4J-5477** | 1 | SEAL-O-RING | |
| | | 1 | **6V-8641** | 1 | CONNECTOR | |
| | 14 | 1 | *148-8369* | 1 | ELBOW AS | |
| | | 1 | **3J-7354** | 1 | SEAL-O-RING | |
| | | 1 | **4J-5477** | 1 | SEAL-O-RING | |
| | | 1 | **6V-8628** | 1 | ELBOW | |
| | 15 | 1 | *148-8378* | 1 | ELBOW AS | |
| | | 1 | **3J-1907** | 1 | SEAL-O-RING | |
| | | 1 | **6V-8397** | 1 | SEAL-O-RING | |
| | | 1 | **6V-8724** | 1 | ELBOW | |
| | 16 | 1 | *150-4047* | 2 | ADAPTER AS | |
| | | | | | (EACH INCLUDES) | |
| | | 1 | **3J-7354** | 1 | SEAL-O-RING | |
| | | 1 | **8T-2353** | 1 | ADAPTER | |
| | 17 | 1 | *165-4931* | 1 | ELBOW AS | |
| | | 1 | **3J-1907** | 1 | SEAL-O-RING | |
| | | 1 | **6V-8077** | 1 | ELBOW | |
| | 18 | 1 | *165-7014* | 1 | TEE AS | |
| | | 1 | **3J-1907** | 1 | SEAL-O-RING | |
| | | 1 | **4J-5477** | 1 | SEAL-O-RING | |
| | | 1 | **8C-3309** | 1 | TEE | |
| | 19 | 1 | *180-9933* | 1 | ADAPTER AS | |
| | | 1 | **3J-7354** | 1 | SEAL-O-RING | |
| | | 1 | **135-9941** | 1 | ADAPTER | |
| | 20 | 1 | *183-7263* | 2 | PLUG AS | |
| | | | | | (EACH INCLUDES) | |
| | | 1 | **3J-7354** | 1 | SEAL-O-RING | |
| | | 1 | **9S-8002** | 1 | PLUG-O-RING | |
| | 21 | 1 | **311-3072** | 3 | CONNECTOR AS | |
| | 22 | 1 | **8T-4121** | 2 | WASHER-HARD (11X21X2.5-MM THK) | |
| M | 23 | 1 | **8T-4195** | 2 | BOLT (M10X1.5X30-MM) | |
| M | 24 | 1 | **8T-4200** | 4 | BOLT (M8X1.25X16-MM) | |
| | 25 | 1 | **8T-4224** | 4 | WASHER-HARD (8.8X16X2-MM THK) | |
| G | 26 | 1 | **160-2243** | | SLEEVE-ABRASION (21.7-IN) | |
| G | 26A | 1 | **160-2243** | | SLEEVE-ABRASION (15-IN) | |

G - ORDER BY THE INCH
I - REFER TO HYDRAULIC INFORMATION SYSTEM
M - METRIC PART
Y - SEPARATE ILLUSTRATION

*385-2796* **LINES GP-PILOT (*contd.*)** **i05033721**

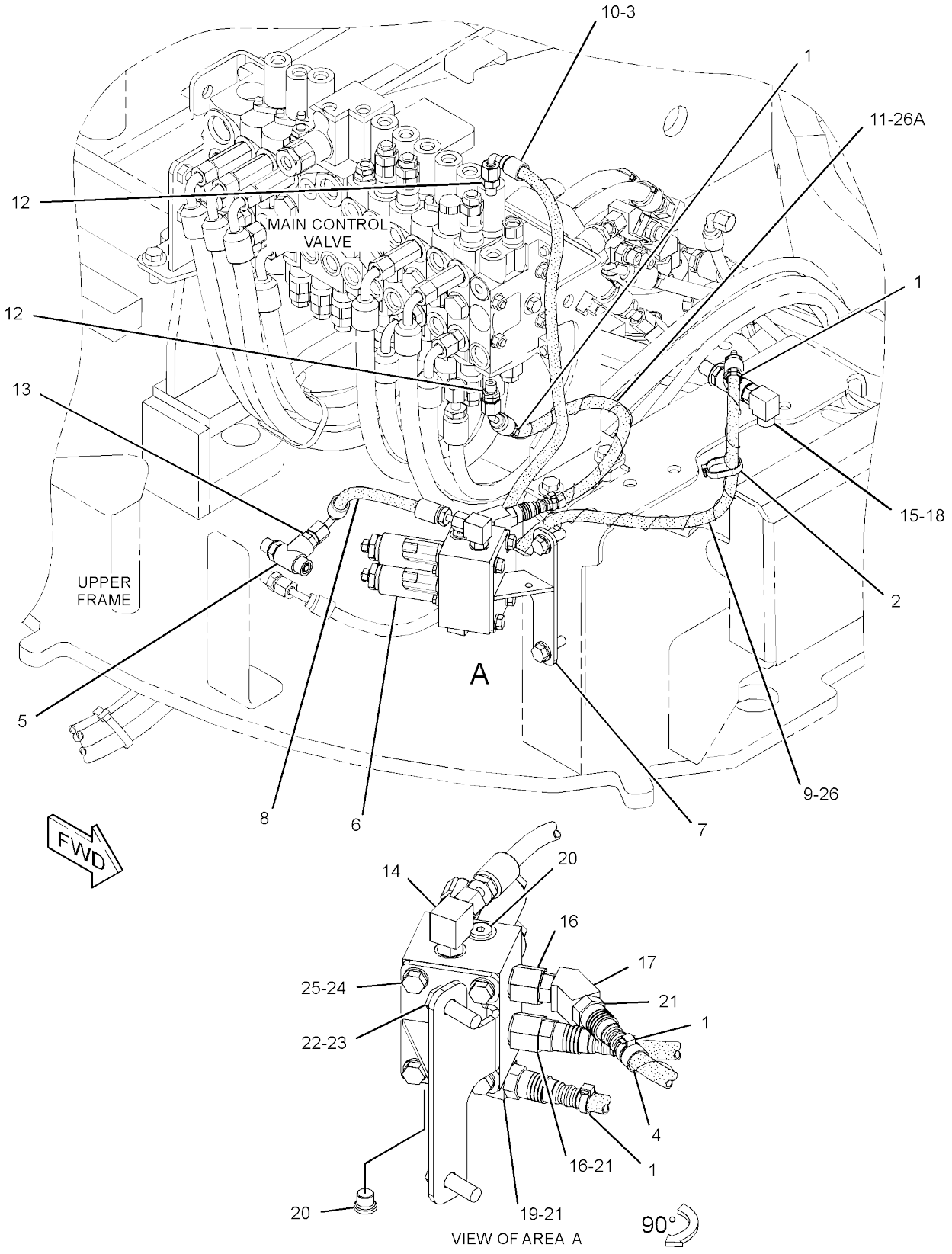


GRAPHIC #1 **<END>** g02813837

# HYDRAULIC SYSTEM

## *379-4701* LINES GP-RETURN

**PART OF 377-8920 BLADE AR-STRAIGHT**
**AN ATTACHMENT**

**SMCS-5057** **i04623148**

| NOTE | REF NO | GRAPHIC REF | PART NUMBER | QTY | PART NAME 1 2 3 4 5 6 (PRODUCT LEVEL) | SEE PAGE |
|---|---|---|---|---|---|---|
| | 1 | 1 | **3S-2093** | 1 | STRAP-CABLE | |
| | 2 | 1 | **8C-3451** | 1 | CAP-DUST | |
| | 3 | 1 | **8K-4739** | 1 | ADAPTER | |
| | 4 | 1 | **095-1388** | 3 | CLAMP-HOSE | |
| | 5 | 1 | **095-1390** | 2 | CLAMP-HOSE | |
| | 6 | 1 | **196-4745** | 1 | HOSE | |
| | 7 | 1 | **266-7379** | 1 | STRAP-CABLE | |
| | 8 | 1 | *267-4044* | 1 | ELBOW AS | |
| | | 1 | **2M-9780** | 1 | SEAL-O-RING | |
| | | 1 | **6V-8397** | 1 | SEAL-O-RING | |
| | | 1 | **267-4043** | 1 | ELBOW | |
| I | 9 | 1 | **381-0589** | 1 | HOSE AS | |
| | 10 | 1 | **381-0590** | 1 | TUBE AS | |
| | 11 | 1 | **381-0592** | 1 | TUBE AS | |
| | 12 | 1 | **095-1701** | 1 | SEAL-O-RING | |
| | 13 | 1 | *165-4927* | 1 | CONNECTOR AS | |
| | | 1 | **2T-2991** | 1 | CONNECTOR | |
| | | 1 | **4K-1388** | 1 | SEAL-O-RING | |
| | | 1 | **6V-9746** | 1 | SEAL-O-RING | |
| | 14 | 1 | **2M-9780** | 1 | SEAL-O-RING | |
| | 15 | 1 | **3J-7354** | 1 | SEAL-O-RING | |
| | 16 | 1 | **4S-1962** | 1 | CLIP | |
| | 17 | 1 | **6V-8398** | 1 | SEAL-O-RING | |
| | 18 | 1 | **6V-9746** | 1 | SEAL-O-RING | |
| | 19 | 1 | **8C-3446** | 1 | VALVE-FLUID SAMPLING (COOLANT) | |
| | 20 | 1 | **8T-4121** | 3 | WASHER-HARD (11X21X2.5-MM THK) | |
| M | 21 | 1 | **8T-4136** | 1 | BOLT (M10X1.5X25-MM) | |
| M | 22 | 1 | **8T-4195** | 2 | BOLT (M10X1.5X30-MM) | |
| E | 23 | 1 | **5P-0743** | | HOSE (64-CM) | |

E - ORDER BY THE CENTIMETER
I - REFER TO HYDRAULIC INFORMATION SYSTEM
M - METRIC PART

*379-4701* **LINES GP-RETURN (*contd.*)** **i04623148**

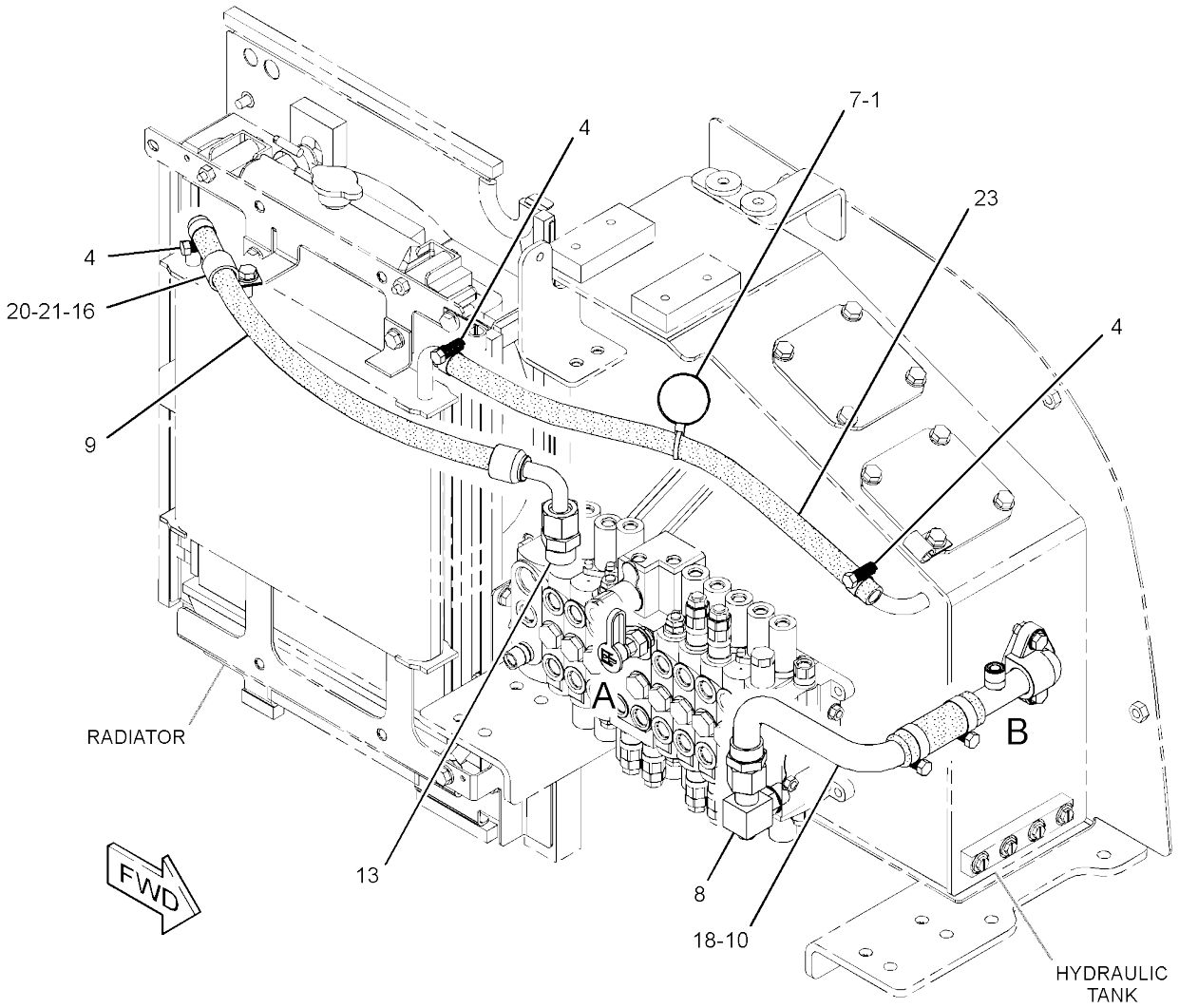


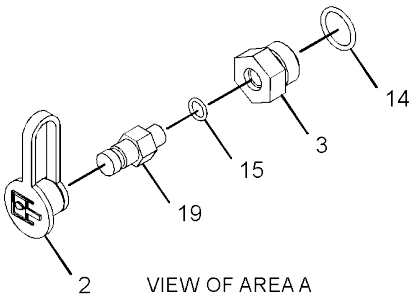


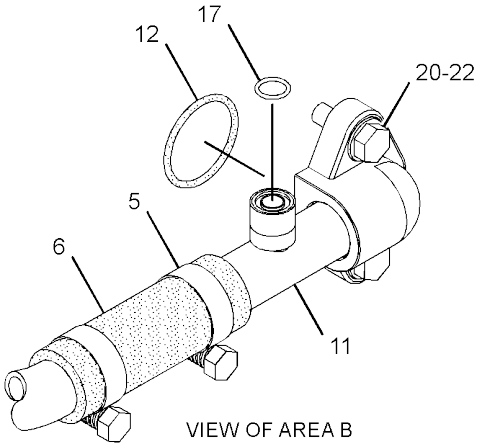


GRAPHIC #1 **<END>** g02799678

# *385-2797* LINES GP-RETURN—BLADE

**PART OF 377-8930 BLADE AR-ANGLING**
**AN ATTACHMENT**

**SMCS-5057** **i04658615**

| NOTE | REF NO | GRAPHIC REF | PART NUMBER | QTY | PART NAME 1 2 3 4 5 6 (PRODUCT LEVEL) | SEE PAGE |
|---|---|---|---|---|---|---|
| | 1 | 1 | **3S-2093** | 1 | STRAP-CABLE | |
| | 2 | 1 | **8C-3451** | 1 | CAP-DUST | |
| | 3 | 1 | **8K-4739** | 1 | ADAPTER | |
| | 4 | 1 | **095-1388** | 3 | CLAMP-HOSE | |
| | 5 | 1 | **095-1390** | 2 | CLAMP-HOSE | |
| | 6 | 1 | **196-4745** | 1 | HOSE | |
| | 7 | 1 | **266-7379** | 1 | STRAP-CABLE | |
| | 8 | 1 | *267-4044* | 1 | ELBOW AS | |
| | | 1 | **2M-9780** | 1 | SEAL-O-RING | |
| | | 1 | **6V-8397** | 1 | SEAL-O-RING | |
| | | 1 | **267-4043** | 1 | ELBOW | |
| I | 9 | 1 | **381-0589** | 1 | HOSE AS | |
| | 10 | 1 | **381-0592** | 1 | TUBE AS | |
| | 11 | 1 | **385-2800** | 1 | PIPE AS | |
| | 12 | 1 | **095-1701** | 1 | SEAL-O-RING | |
| | 13 | 1 | *165-4927* | 1 | CONNECTOR AS | |
| | | 1 | **2T-2991** | 1 | CONNECTOR | |
| | | 1 | **4K-1388** | 1 | SEAL-O-RING | |
| | | 1 | **6V-9746** | 1 | SEAL-O-RING | |
| | 14 | 1 | **2M-9780** | 1 | SEAL-O-RING | |
| | 15 | 1 | **3J-7354** | 1 | SEAL-O-RING | |
| | 16 | 1 | **4S-1962** | 1 | CLIP | |
| | 17 | 1 | **6V-8398** | 1 | SEAL-O-RING | |
| | 18 | 1 | **6V-9746** | 1 | SEAL-O-RING | |
| | 19 | 1 | **8C-3446** | 1 | VALVE-FLUID SAMPLING (COOLANT) | |
| | 20 | 1 | **8T-4121** | 3 | WASHER-HARD (11X21X2.5-MM THK) | |
| M | 21 | 1 | **8T-4136** | 1 | BOLT (M10X1.5X25-MM) | |
| M | 22 | 1 | **8T-4195** | 2 | BOLT (M10X1.5X30-MM) | |
| E | 23 | 1 | **5P-0743** | | HOSE (64-CM) | |

E - ORDER BY THE CENTIMETER
I - REFER TO HYDRAULIC INFORMATION SYSTEM
M - METRIC PART

*385-2797* **LINES GP-RETURN (*contd.*)** **i04658615**

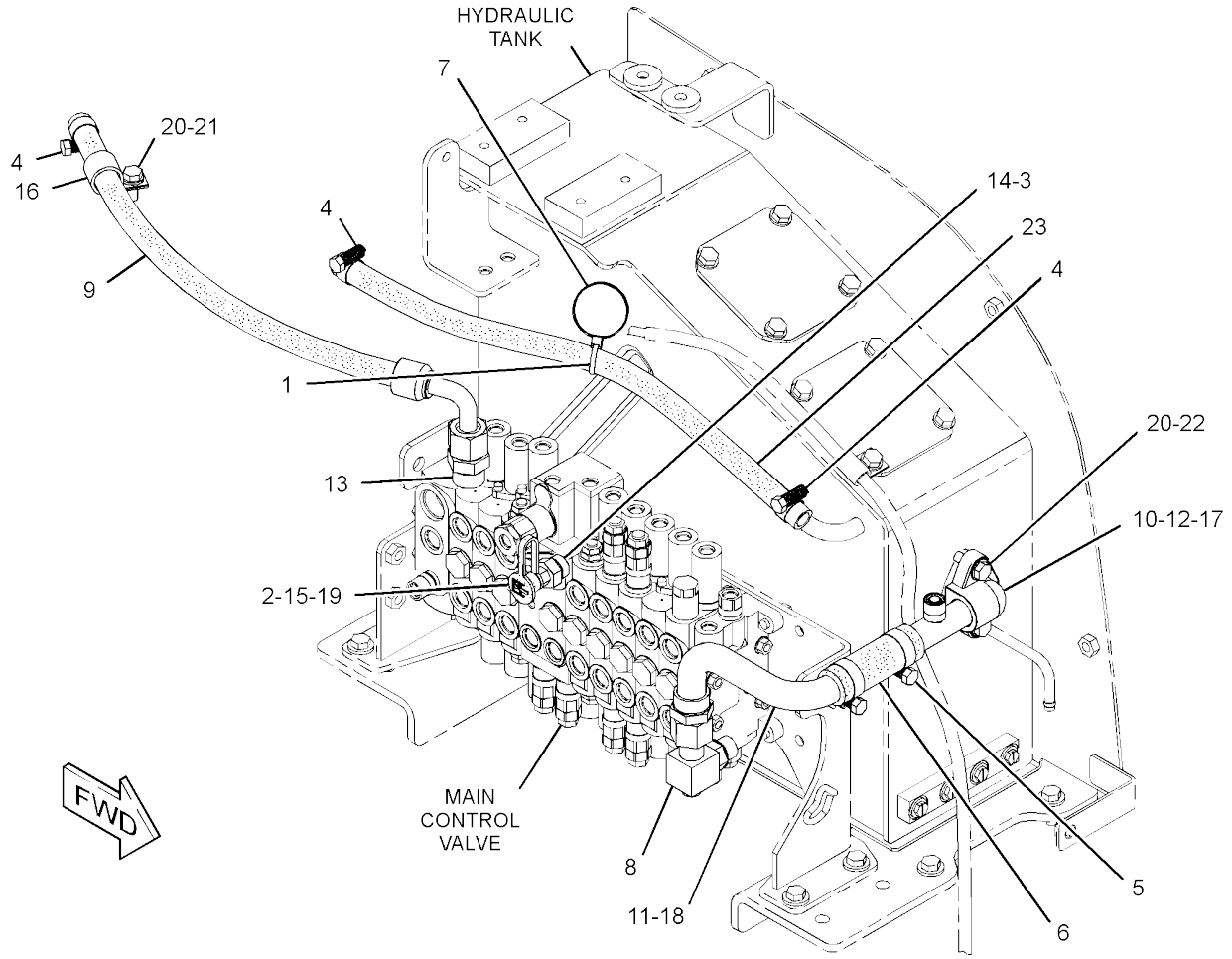


GRAPHIC #1 **<END>** g02801220

# *421-9099* LINES GP-STICK

**PART OF 421-8461 STICK AR**
**AN ATTACHMENT**

**SMCS-5057, 5458, 6502** **i05331074**

| NOTE | REF NO | GRAPHIC REF | PART NUMBER | QTY | PART NAME 1 2 3 4 5 6 (PRODUCT LEVEL) | SEE PAGE |
|---|---|---|---|---|---|---|
| | 1 | 1 | **7I-2673** | 1 | STRAP-CABLE | |
| | 2 | 1 | **7K-1181** | 10 | STRAP-CABLE | |
| | 3 | 1 | **096-6079** | 1 | TAPE (WHITE) | |
| | 4 | 1 | *169-4274* | 1 | TEE AS | |
| | | 1 | **3J-7354** | 1 | SEAL-O-RING | |
| | | 1 | **4J-5477** | 1 | SEAL-O-RING | |
| | | 1 | **8T-3313** | 1 | TEE-O-RING | |
| | 5 | 1 | **267-4144** | 2 | TUBE AS | |
| | 6 | 1 | **274-5472** | 1 | ELBOW | |
| I | 7 | 1 | **292-8330** | 1 | HOSE AS | |
| | 9 | 1 | **417-1105** | 1 | VALVE GP-CHECK (PILOT OPERATED) | |
| | 10 | 1 | **422-1353** | 1 | BRACKET AS | |
| M | | 1 | **8T-3490** | 1 | NUT-WELD (M10X1.5-THD) | |
| M | | 1 | **8T-3612** | 2 | NUT-WELD (M8X1.25-THD) | |
| I | 11 | 1 | **422-1355** | 1 | HOSE AS | |
| I | 12 | 1 | **422-1356** | 1 | HOSE AS | |
| I | 13 | 1 | **422-1357** | 1 | HOSE AS | |
| | 14 | 1 | **422-1360** | 1 | BRACKET | |
| | 15 | 1 | **422-1361** | 1 | GROMMET | |
| | 16 | 1 | *148-8318* | 1 | CONNECTOR AS | |
| | | 1 | **3K-0360** | 1 | SEAL-O-RING | |
| | | 1 | **6V-8397** | 1 | SEAL-O-RING | |
| | | 1 | **6V-8634** | 1 | CONNECTOR | |
| | 17 | 1 | *148-8336* | 1 | CONNECTOR AS | |
| | | 1 | **3J-1907** | 1 | SEAL-O-RING | |
| | | 1 | **6V-8397** | 1 | SEAL-O-RING | |
| | | 1 | **6V-8636** | 1 | CONNECTOR | |
| | 18 | 1 | *148-8346* | 1 | ELBOW AS | |
| | | 1 | **3K-0360** | 1 | SEAL-O-RING | |
| | | 1 | **6V-8398** | 1 | SEAL-O-RING | |
| | | 1 | **8T-1686** | 1 | ELBOW | |
| | 19 | 1 | *148-8368* | 1 | ELBOW AS | |
| | | 1 | **3J-1907** | 1 | SEAL-O-RING | |
| | | 1 | **4J-5477** | 1 | SEAL-O-RING | |
| | | 1 | **6V-8627** | 1 | ELBOW | |
| | 20 | 1 | *150-4043* | 1 | CONNECTOR AS | |
| | | 1 | **3J-1907** | 1 | SEAL-O-RING | |
| | | 1 | **6V-8398** | 1 | SEAL-O-RING | |
| | | 1 | **6V-9873** | 1 | CONNECTOR | |
| | 21 | 1 | *150-4052* | 1 | UNION AS | |
| | | 1 | **4J-5477** | 2 | SEAL-O-RING | |
| | | 1 | **6V-8993** | 1 | UNION | |
| | 22 | 1 | **2P-1279** | 1 | LOCKNUT (9/16-18-THD) | |
| | 23 | 1 | **4S-1962** | 1 | CLIP | |
| | 24 | 1 | **6V-8397** | 4 | SEAL-O-RING | |
| | 25 | 1 | **8T-4121** | 3 | WASHER-HARD (11X21X2.5-MM THK) | |
| M | 26 | 1 | **8T-4136** | 1 | BOLT (M10X1.5X25-MM) | |
| M | 27 | 1 | **8T-4185** | 1 | BOLT (M10X1.5X50-MM) | |
| M | 28 | 1 | **8T-4196** | 1 | BOLT (M10X1.5X35-MM) | |
| | 29 | 1 | **8T-4224** | 2 | WASHER-HARD (8.8X16X2-MM THK) | |
| M | 30 | 1 | **8T-7329** | 2 | BOLT (M8X1.25X55-MM) | |

I - REFER TO HYDRAULIC INFORMATION SYSTEM
M - METRIC PART

*421-9099* **LINES GP-STICK (*contd.*)** **i05331074**

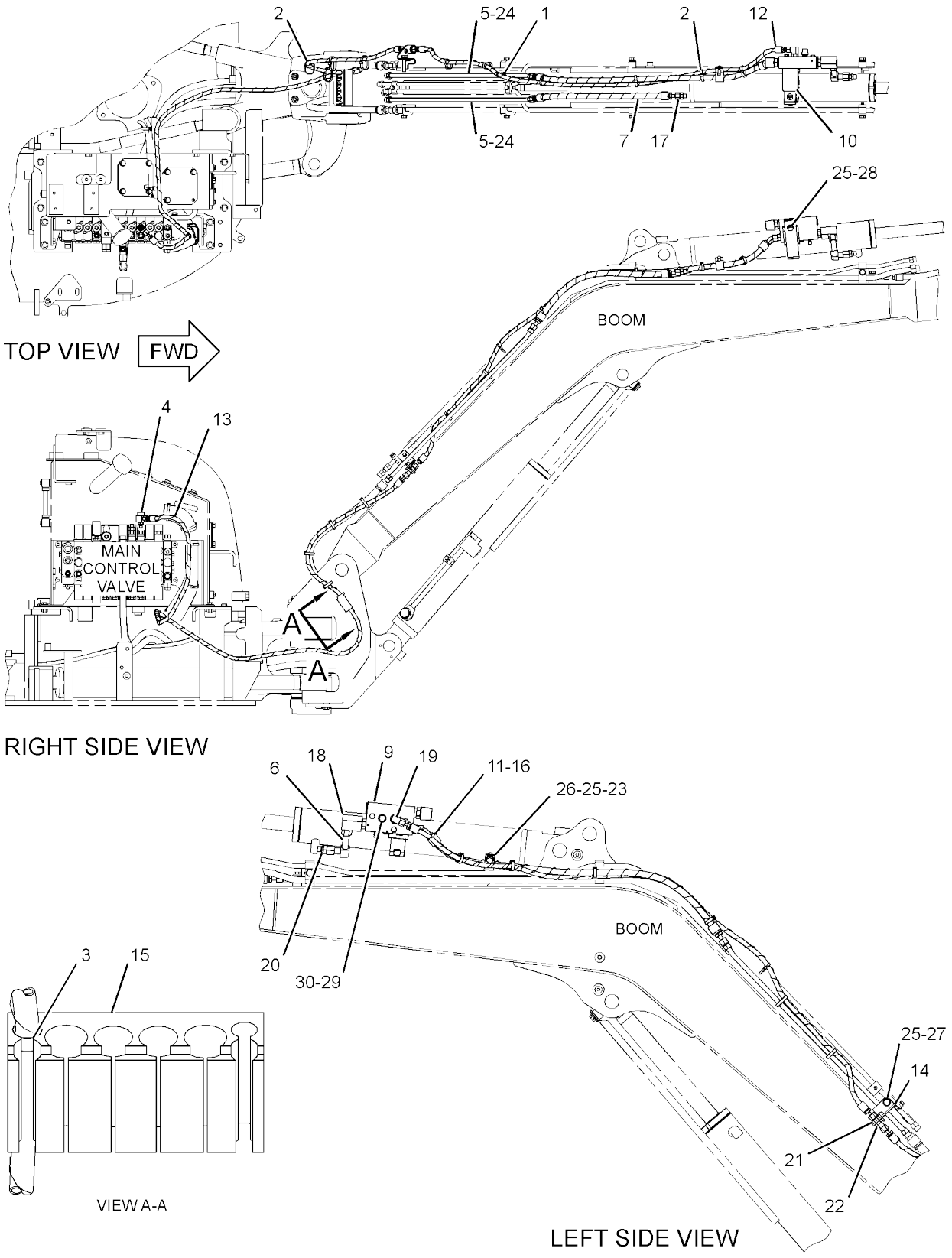


GRAPHIC #1 **<END>** g03379379

# *379-4704* LINES GP-SWING CYLINDER–BOOM

**PART OF 379-4683 CONTROL AR-AUXILIARY**
**AN ATTACHMENT**

**SMCS-5057, 5105, 6544** **i04623152**

| NOTE | REF NO | GRAPHIC REF | PART NUMBER | QTY | PART NAME 1 2 3 4 5 6 (PRODUCT LEVEL) | SEE PAGE |
|---|---|---|---|---|---|---|
| I | 1 | 1 | **381-1545** | 1 | HOSE AS | |
| I | 2 | 1 | **381-1546** | 1 | HOSE AS | |
| | 3 | 1 | *148-8336* | 1 | CONNECTOR AS | |
| | | 1 | **3J-1907** | 1 | SEAL-O-RING | |
| | | 1 | **6V-8397** | 1 | SEAL-O-RING | |
| | | 1 | **6V-8636** | 1 | CONNECTOR | |
| | 4 | 1 | *148-8378* | 2 | ELBOW AS | |
| | | | | | (EACH INCLUDES) | |
| | | 1 | **3J-1907** | 1 | SEAL-O-RING | |
| | | 1 | **6V-8397** | 1 | SEAL-O-RING | |
| | | 1 | **6V-8724** | 1 | ELBOW | |
| | 5 | 1 | *164-9869* | 1 | CONNECTOR AS | |
| | | 1 | **3J-1907** | 1 | SEAL-O-RING | |
| | | 1 | **6V-8397** | 1 | SEAL-O-RING | |
| | | 1 | **9X-2297** | 1 | CONNECTOR | |

I - REFER TO HYDRAULIC INFORMATION SYSTEM

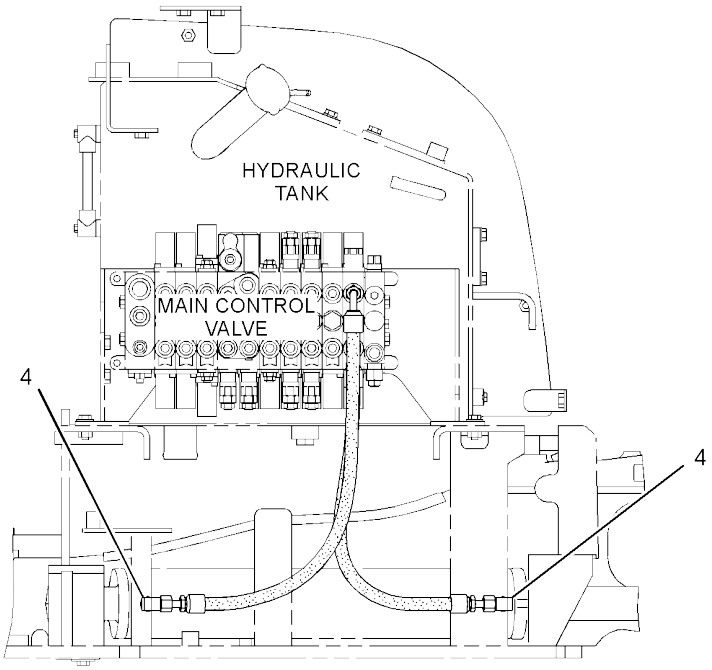


RIGHT SIDE VIEW

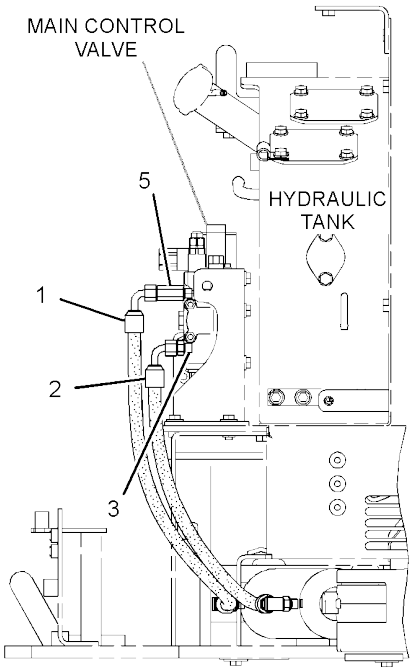


FRONT VIEW

GRAPHIC #1 **<END>** g02798813

# HYDRAULIC SYSTEM

## *379-4735* LINES GP-SWING CYLINDER–2ND AUXILIARY

**PART OF 379-4721, 379-4722 CONTROL AR-AUXILIARY**
**AN ATTACHMENT**

**SMCS-5057, 5105, 6544** **i05041798**

| NOTE | REF NO | GRAPHIC REF | PART NUMBER | QTY | PART NAME 1 2 3 4 5 6 (PRODUCT LEVEL) | SEE PAGE |
|---|---|---|---|---|---|---|
| | 1 | 1 | **096-6079** | 2 | TAPE (WHITE) | |
| | 2 | 1 | *148-8367* | 1 | ELBOW AS | |
| | | 1 | **6V-8397** | 1 | SEAL-O-RING | |
| | | 1 | **6V-9850** | 1 | ELBOW | |
| | 3 | 1 | *148-8383* | 2 | ELBOW AS | |
| | | | | | (EACH INCLUDES) | |
| | | 1 | **3K-0360** | 1 | SEAL-O-RING | |
| | | 1 | **6V-8397** | 1 | SEAL-O-RING | |
| | | 1 | **8T-1683** | 1 | ELBOW | |
| | 4 | 1 | **279-4730** | 3 | STRAP-CABLE (BLACK) | |
| | 5 | 1 | **372-9897** | 1 | VALVE GP-CONTROL (SWING BOOM, WORK TOOL) | |
| J | | 1 | **385-4233** | 1 | BLOCK | |
| | | 1 | **385-4234** | 1 | COIL AS | |
| J | | 1 | **385-4235** | 1 | KIT-SEAL | |
| | | | | | (INCLUDES SEALS) | |
| | 6 | 1 | **381-1547** | 1 | BRACKET AS | |
| M | | 1 | **8T-3612** | 2 | NUT-WELD (M8X1.25-THD) | |
| I | 7 | 1 | **417-9823** | 1 | HOSE AS | |
| I | 8 | 1 | **381-1552** | 1 | HOSE AS | |
| I | 9 | 1 | **381-1553** | 1 | HOSE AS | |
| I | 10 | 1 | **381-1555** | 1 | HOSE AS | |
| I | 11 | 1 | **382-8825** | 1 | HOSE AS | |
| I | 12 | 1 | **382-8826** | 1 | HOSE AS | |
| | 13 | 1 | *148-8336* | 1 | CONNECTOR AS | |
| | | 1 | **3J-1907** | 1 | SEAL-O-RING | |
| | | 1 | **6V-8397** | 1 | SEAL-O-RING | |
| | | 1 | **6V-8636** | 1 | CONNECTOR | |
| | 14 | 1 | *148-8374* | 4 | ELBOW AS | |
| | | | | | (EACH INCLUDES) | |
| | | 1 | **3K-0360** | 1 | SEAL-O-RING | |
| | | 1 | **6V-8397** | 1 | SEAL-O-RING | |
| | | 1 | **6V-8723** | 1 | ELBOW | |
| | 15 | 1 | *148-8378* | 2 | ELBOW AS | |
| | | | | | (EACH INCLUDES) | |
| | | 1 | **3J-1907** | 1 | SEAL-O-RING | |
| | | 1 | **6V-8397** | 1 | SEAL-O-RING | |
| | | 1 | **6V-8724** | 1 | ELBOW | |
| | 16 | 1 | *164-9869* | 1 | CONNECTOR AS | |
| | | 1 | **3J-1907** | 1 | SEAL-O-RING | |
| | | 1 | **6V-8397** | 1 | SEAL-O-RING | |
| | | 1 | **9X-2297** | 1 | CONNECTOR | |
| M | 17 | 1 | **6V-8213** | 2 | BOLT-SOCKET HEAD (M8X1.25X70-MM) | |
| | 18 | 1 | **8T-4121** | 2 | WASHER-HARD (11X21X2.5-MM THK) | |
| M | 19 | 1 | **8T-4137** | 2 | BOLT (M10X1.5X20-MM) | |

I - REFER TO HYDRAULIC INFORMATION SYSTEM
J - KIT MARKED J SERVICES PARTS MARKED J
M - METRIC PART

*379-4735* **LINES GP-SWING CYLINDER (*contd.*)** **i05041798**

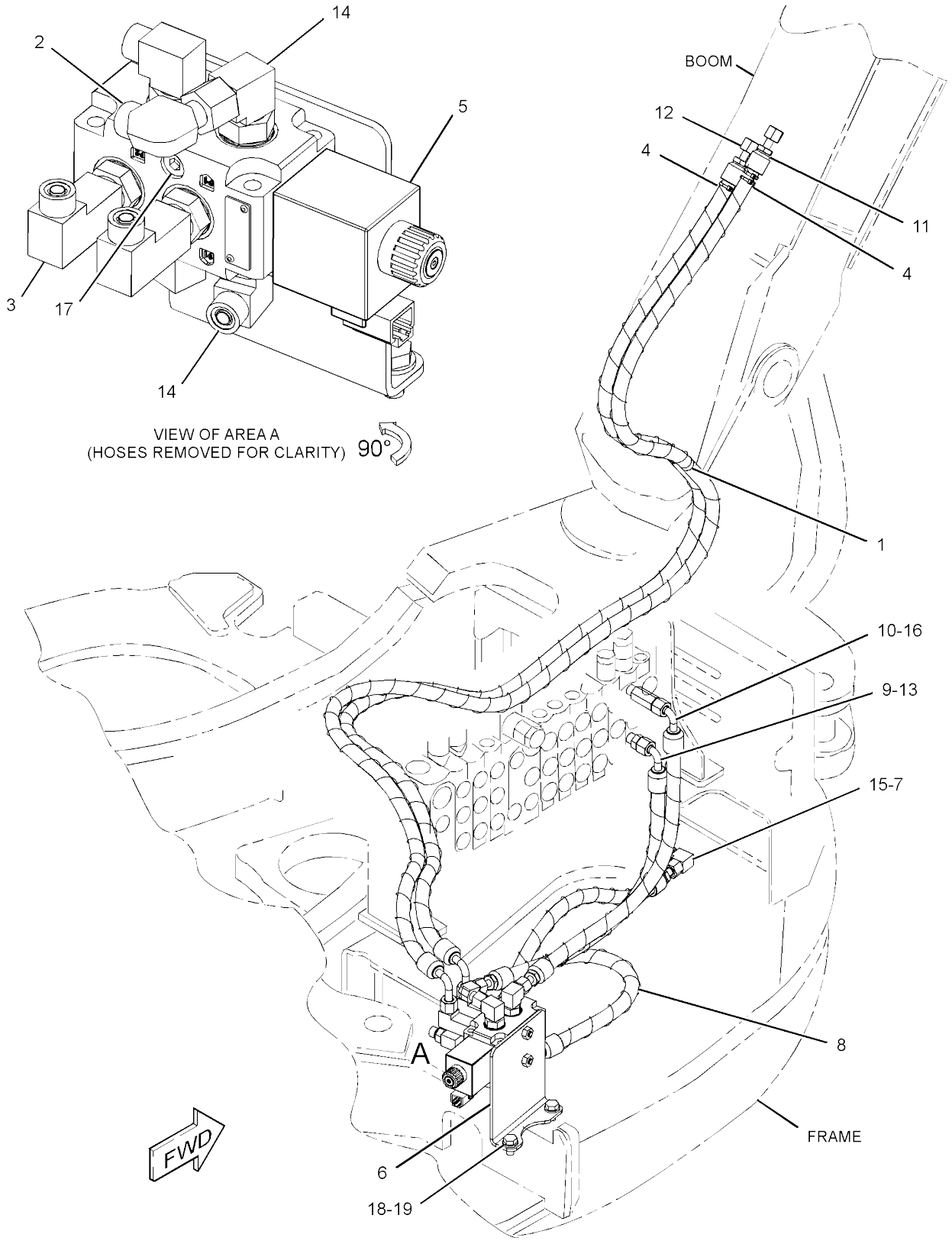


GRAPHIC #1 **<END>** g03312677

# HYDRAULIC SYSTEM

## *379-4702* LINES GP-SWING MOTOR–STANDARD

**PART OF 377-8920 BLADE AR-STRAIGHT**
**AN ATTACHMENT**

**SMCS-5057, 5058, 5105** **i04623149**

| NOTE | REF NO | GRAPHIC REF | PART NUMBER | QTY | PART NAME 1 2 3 4 5 6 (PRODUCT LEVEL) | SEE PAGE |
|---|---|---|---|---|---|---|
| | 1 | 1 | **7K-1181** | 2 | STRAP-CABLE | |
| | 2 | 1 | **096-6084** | 1 | TAPE (BROWN) | |
| | 3 | 1 | *267-4063* | 1 | CONNECTOR AS | |
| | | 1 | **3J-1907** | 1 | SEAL-O-RING | |
| | | 1 | **4J-5477** | 1 | SEAL-O-RING | |
| | | 1 | **156-8801** | 1 | CONNECTOR | |
| | 4 | 1 | **279-4730** | 1 | STRAP-CABLE (BLACK) | |
| | 5 | 1 | **279-4731** | 1 | STRAP-CABLE (RED) | |
| | 6 | 1 | **279-4732** | 1 | STRAP-CABLE (YELLOW) | |
| | 7 | 1 | **279-4733** | 1 | STRAP-CABLE (BLUE) | |
| | 8 | 1 | **279-4734** | 1 | STRAP-CABLE (BROWN) | |
| | 9 | 1 | **279-4735** | 1 | STRAP-CABLE (ORANGE) | |
| | 10 | 1 | **279-4736** | 1 | STRAP-CABLE (WHITE) | |
| | 11 | 1 | **279-4737** | 1 | STRAP-CABLE (GREEN) | |
| | 12 | 1 | **279-4738** | 1 | STRAP-CABLE (PURPLE) | |
| I | 13 | 1 | **304-0121** | 1 | HOSE AS | |
| I | 14 | 1 | **381-0578** | 1 | HOSE AS | |
| I | 15 | 1 | **381-0579** | 1 | HOSE AS | |
| I | 16 | 1 | **381-0580** | 1 | HOSE AS | |
| I | 17 | 1 | **381-0581** | 1 | HOSE AS | |
| I | 18 | 1 | **381-0582** | 1 | HOSE AS | |
| I | 19 | 1 | **381-0583** | 1 | HOSE AS | |
| I | 20 | 1 | **381-0584** | 1 | HOSE AS | |
| I | 21 | 1 | **381-0585** | 1 | HOSE AS | |
| I | 22 | 1 | **381-0586** | 1 | HOSE AS | |
| I | 23 | 1 | **381-0587** | 1 | HOSE AS | |
| | 24 | 1 | *148-8318* | 1 | CONNECTOR AS | |
| | | 1 | **3K-0360** | 1 | SEAL-O-RING | |
| | | 1 | **6V-8397** | 1 | SEAL-O-RING | |
| | | 1 | **6V-8634** | 1 | CONNECTOR | |
| | 25 | 1 | *148-8325* | 1 | CONNECTOR AS | |
| | | 1 | **3J-1907** | 1 | SEAL-O-RING | |
| | | 1 | **4J-5477** | 1 | SEAL-O-RING | |
| | | 1 | **6V-8641** | 1 | CONNECTOR | |
| | 26 | 1 | *148-8336* | 5 | CONNECTOR AS | |
| | | | | | (EACH INCLUDES) | |
| | | 1 | **3J-1907** | 1 | SEAL-O-RING | |
| | | 1 | **6V-8397** | 1 | SEAL-O-RING | |
| | | 1 | **6V-8636** | 1 | CONNECTOR | |
| | 27 | 1 | *148-8351* | 1 | ELBOW AS | |
| | | 1 | **4J-5477** | 1 | SEAL-O-RING | |
| | | 1 | **6V-9849** | 1 | ELBOW | |
| | 28 | 1 | *148-8353* | 1 | ELBOW AS | |
| | | 1 | **3J-1907** | 1 | SEAL-O-RING | |
| | | 1 | **6V-8397** | 1 | SEAL-O-RING | |
| | | 1 | **6V-9001** | 1 | ELBOW | |
| | 29 | 1 | *148-8363* | 3 | ELBOW AS | |
| | | | | | (EACH INCLUDES) | |
| | | 1 | **3K-0360** | 1 | SEAL-O-RING | |
| | | 1 | **6V-8397** | 1 | SEAL-O-RING | |
| | | 1 | **6V-9876** | 1 | ELBOW | |
| | 30 | 1 | *148-8367* | 2 | ELBOW AS | |
| | | | | | (EACH INCLUDES) | |
| | | 1 | **6V-8397** | 1 | SEAL-O-RING | |
| | | 1 | **6V-9850** | 1 | ELBOW | |
| | 31 | 1 | *148-8369* | 1 | ELBOW AS | |
| | | 1 | **3J-7354** | 1 | SEAL-O-RING | |
| | | 1 | **4J-5477** | 1 | SEAL-O-RING | |
| | | 1 | **6V-8628** | 1 | ELBOW | |

*379-4702* **LINES GP-SWING MOTOR (*contd.*)** **i04623149**

| NOTE | REF NO | GRAPHIC REF | PART NUMBER | QTY | PART NAME 1 2 3 4 5 6 (PRODUCT LEVEL) | SEE PAGE |
|---|---|---|---|---|---|---|
| | 32 | 1 | *148-8371* | 1 | ELBOW AS | |
| | | 1 | **6V-8397** | 1 | SEAL-O-RING | |
| | | 1 | **8C-8988** | 1 | ELBOW | |
| | 33 | 1 | *148-8378* | 3 | ELBOW AS | |
| | | | | | (EACH INCLUDES) | |
| | | 1 | **3J-1907** | 1 | SEAL-O-RING | |
| | | 1 | **6V-8397** | 1 | SEAL-O-RING | |
| | | 1 | **6V-8724** | 1 | ELBOW | |
| | 34 | 1 | *150-3065* | 1 | ELBOW AS | |
| | | 1 | **3J-1907** | 1 | SEAL-O-RING | |
| | | 1 | **6V-0484** | 1 | ELBOW | |
| | 35 | 1 | *164-9869* | 1 | CONNECTOR AS | |
| | | 1 | **3J-1907** | 1 | SEAL-O-RING | |
| | | 1 | **6V-8397** | 1 | SEAL-O-RING | |
| | | 1 | **9X-2297** | 1 | CONNECTOR | |
| | 36 | 1 | **166-3032** | 3 | CONNECTOR | |
| | 37 | 1 | **3J-1907** | 3 | SEAL-O-RING | |
| | 38 | 1 | **6V-8397** | 3 | SEAL-O-RING | |
| E | 39 | 1 | **310-4984** | | SLEEVE (24-CM) | |

E - ORDER BY THE CENTIMETER
I - REFER TO HYDRAULIC INFORMATION SYSTEM

*379-4702* **LINES GP-SWING MOTOR (*contd.*)** **i04623149**

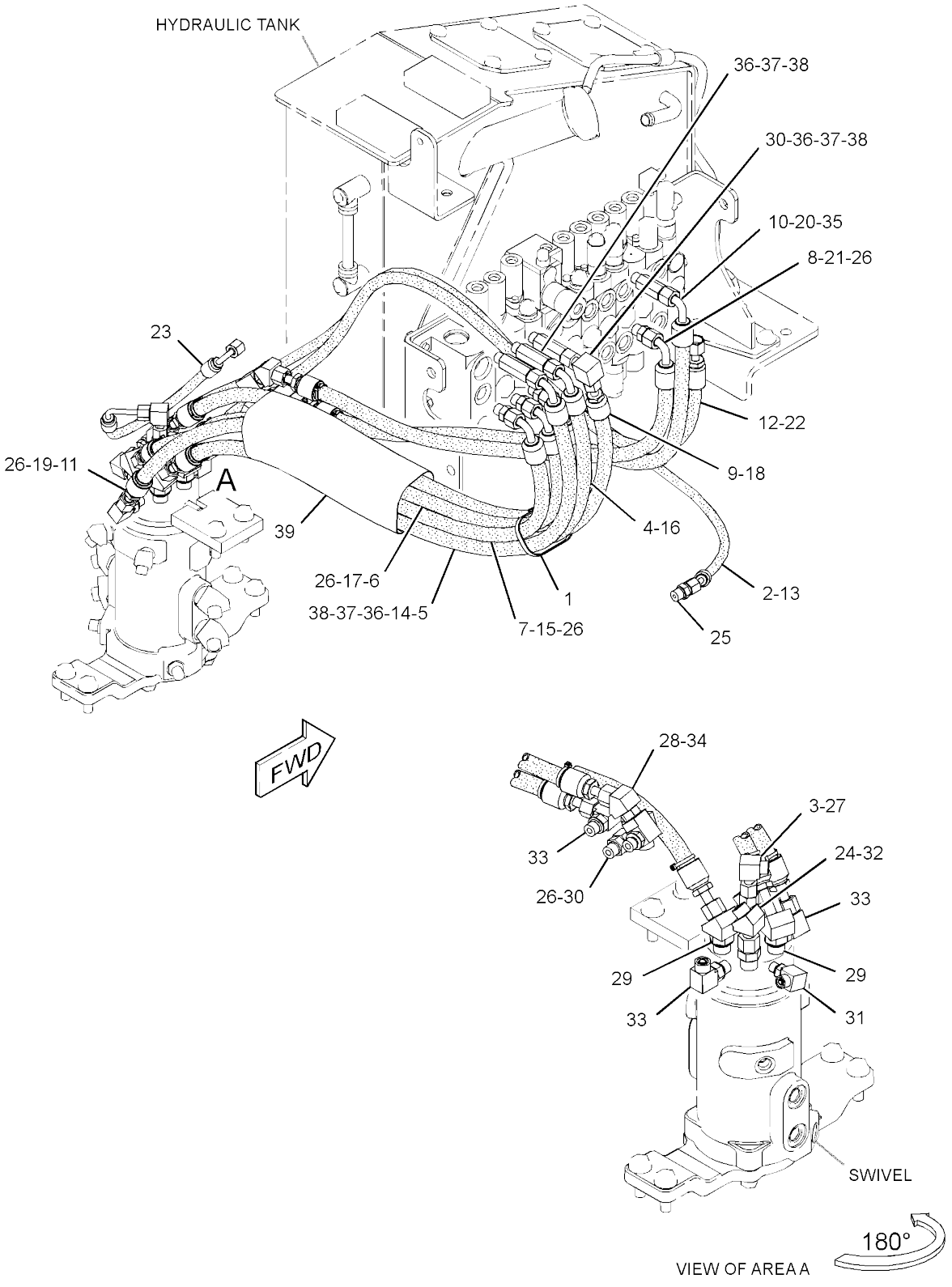


GRAPHIC #1 **<END>** g02799188

# HYDRAULIC SYSTEM

## *385-2795* LINES GP-SWING MOTOR

**PART OF 377-8930 BLADE AR-ANGLING**
**AN ATTACHMENT**

**SMCS-5057, 5058, 5105** **i04658613**

| NOTE | REF NO | GRAPHIC REF | PART NUMBER | QTY | PART NAME 1 2 3 4 5 6 (PRODUCT LEVEL) | SEE PAGE |
|---|---|---|---|---|---|---|
| | 1 | 1 | **7K-1181** | 3 | STRAP-CABLE | |
| | 2 | 1 | **096-6078** | 1 | TAPE (PURPLE) | |
| | 3 | 1 | **096-6082** | 1 | TAPE (YELLOW) | |
| | 4 | 1 | **096-6084** | 1 | TAPE (BROWN) | |
| | 5 | 1 | *267-4048* | 1 | ELBOW AS | |
| | | 1 | **3J-1907** | 1 | SEAL-O-RING | |
| | | 1 | **4J-5477** | 1 | SEAL-O-RING | |
| | | 1 | **267-4047** | 1 | ELBOW | |
| I | 6 | 1 | **275-9724** | 1 | HOSE AS | |
| | 7 | 1 | **279-4730** | 1 | STRAP-CABLE (BLACK) | |
| | 8 | 1 | **279-4731** | 1 | STRAP-CABLE (RED) | |
| | 9 | 1 | **279-4732** | 1 | STRAP-CABLE (YELLOW) | |
| | 10 | 1 | **279-4733** | 1 | STRAP-CABLE (BLUE) | |
| | 11 | 1 | **279-4734** | 1 | STRAP-CABLE (BROWN) | |
| | 12 | 1 | **279-4735** | 1 | STRAP-CABLE (ORANGE) | |
| | 13 | 1 | **8L-8413** | 1 | STRAP-CABLE | |
| | 14 | 1 | **279-4737** | 1 | STRAP-CABLE (GREEN) | |
| | 15 | 1 | **279-4738** | 1 | STRAP-CABLE (PURPLE) | |
| I | 16 | 1 | **377-9053** | 2 | HOSE AS | |
| I | 17 | 1 | **381-0580** | 1 | HOSE AS | |
| I | 18 | 1 | **381-0581** | 1 | HOSE AS | |
| I | 19 | 1 | **381-0583** | 1 | HOSE AS | |
| I | 20 | 1 | **381-0584** | 1 | HOSE AS | |
| I | 21 | 1 | **381-0585** | 1 | HOSE AS | |
| I | 22 | 1 | **385-2813** | 1 | HOSE AS | |
| I | 23 | 1 | **385-2814** | 1 | HOSE AS | |
| I | 24 | 1 | **385-2815** | 1 | HOSE AS | |
| I | 25 | 1 | **385-2816** | 1 | HOSE AS | |
| I | 26 | 1 | **389-8800** | 1 | HOSE AS | |
| | 27 | 1 | *148-8318* | 2 | CONNECTOR AS | |
| | | | | | (EACH INCLUDES) | |
| | | 1 | **3K-0360** | 1 | SEAL-O-RING | |
| | | 1 | **6V-8397** | 1 | SEAL-O-RING | |
| | | 1 | **6V-8634** | 1 | CONNECTOR | |
| | 28 | 1 | *148-8325* | 1 | CONNECTOR AS | |
| | | 1 | **3J-1907** | 1 | SEAL-O-RING | |
| | | 1 | **4J-5477** | 1 | SEAL-O-RING | |
| | | 1 | **6V-8641** | 1 | CONNECTOR | |
| | 29 | 1 | *148-8336* | 7 | CONNECTOR AS | |
| | | | | | (EACH INCLUDES) | |
| | | 1 | **3J-1907** | 1 | SEAL-O-RING | |
| | | 1 | **6V-8397** | 1 | SEAL-O-RING | |
| | | 1 | **6V-8636** | 1 | CONNECTOR | |
| | 30 | 1 | *148-8353* | 2 | ELBOW AS | |
| | | | | | (EACH INCLUDES) | |
| | | 1 | **3J-1907** | 1 | SEAL-O-RING | |
| | | 1 | **6V-8397** | 1 | SEAL-O-RING | |
| | | 1 | **6V-9001** | 1 | ELBOW | |
| | 31 | 1 | *148-8367* | 1 | ELBOW AS | |
| | | 1 | **6V-8397** | 1 | SEAL-O-RING | |
| | | 1 | **6V-9850** | 1 | ELBOW | |
| | 32 | 1 | *148-8369* | 1 | ELBOW AS | |
| | | 1 | **3J-7354** | 1 | SEAL-O-RING | |
| | | 1 | **4J-5477** | 1 | SEAL-O-RING | |
| | | 1 | **6V-8628** | 1 | ELBOW | |
| | 33 | 1 | *148-8371* | 4 | ELBOW AS | |
| | | | | | (EACH INCLUDES) | |
| | | 1 | **6V-8397** | 1 | SEAL-O-RING | |

*385-2795* **LINES GP-SWING MOTOR (*contd.*)** **i04658613**

| NOTE | REF NO | GRAPHIC REF | PART NUMBER | QTY | PART NAME 1 2 3 4 5 6 (PRODUCT LEVEL) | SEE PAGE |
|---|---|---|---|---|---|---|
| | | 1 | **8C-8988** | 1 | ELBOW | |
| | 34 | 1 | *148-8378* | 3 | ELBOW AS | |
| | | | | | (EACH INCLUDES) | |
| | | 1 | **3J-1907** | 1 | SEAL-O-RING | |
| | | 1 | **6V-8397** | 1 | SEAL-O-RING | |
| | | 1 | **6V-8724** | 1 | ELBOW | |
| | 35 | 1 | *150-3065* | 2 | ELBOW AS | |
| | | | | | (EACH INCLUDES) | |
| | | 1 | **3J-1907** | 1 | SEAL-O-RING | |
| | | 1 | **6V-0484** | 1 | ELBOW | |
| | 36 | 1 | *164-5605* | 2 | CONNECTOR AS | |
| | | | | | (EACH INCLUDES) | |
| | | 1 | **3K-0360** | 1 | SEAL-O-RING | |
| | | 1 | **6V-8397** | 1 | SEAL-O-RING | |
| | | 1 | **8T-0076** | 1 | CONNECTOR | |
| | 37 | 1 | *164-9869* | 2 | CONNECTOR AS | |
| | | | | | (EACH INCLUDES) | |
| | | 1 | **3J-1907** | 1 | SEAL-O-RING | |
| | | 1 | **6V-8397** | 1 | SEAL-O-RING | |
| | | 1 | **9X-2297** | 1 | CONNECTOR | |
| | 38 | 1 | **166-3032** | 3 | CONNECTOR | |
| | 39 | 1 | **3J-1907** | 3 | SEAL-O-RING | |
| | 40 | 1 | **6V-8397** | 3 | SEAL-O-RING | |
| E | 41 | 1 | **310-4984** | | SLEEVE (24-CM) | |

E - ORDER BY THE CENTIMETER
I - REFER TO HYDRAULIC INFORMATION SYSTEM

*385-2795* **LINES GP-SWING MOTOR (*contd.*)** **i04658613**

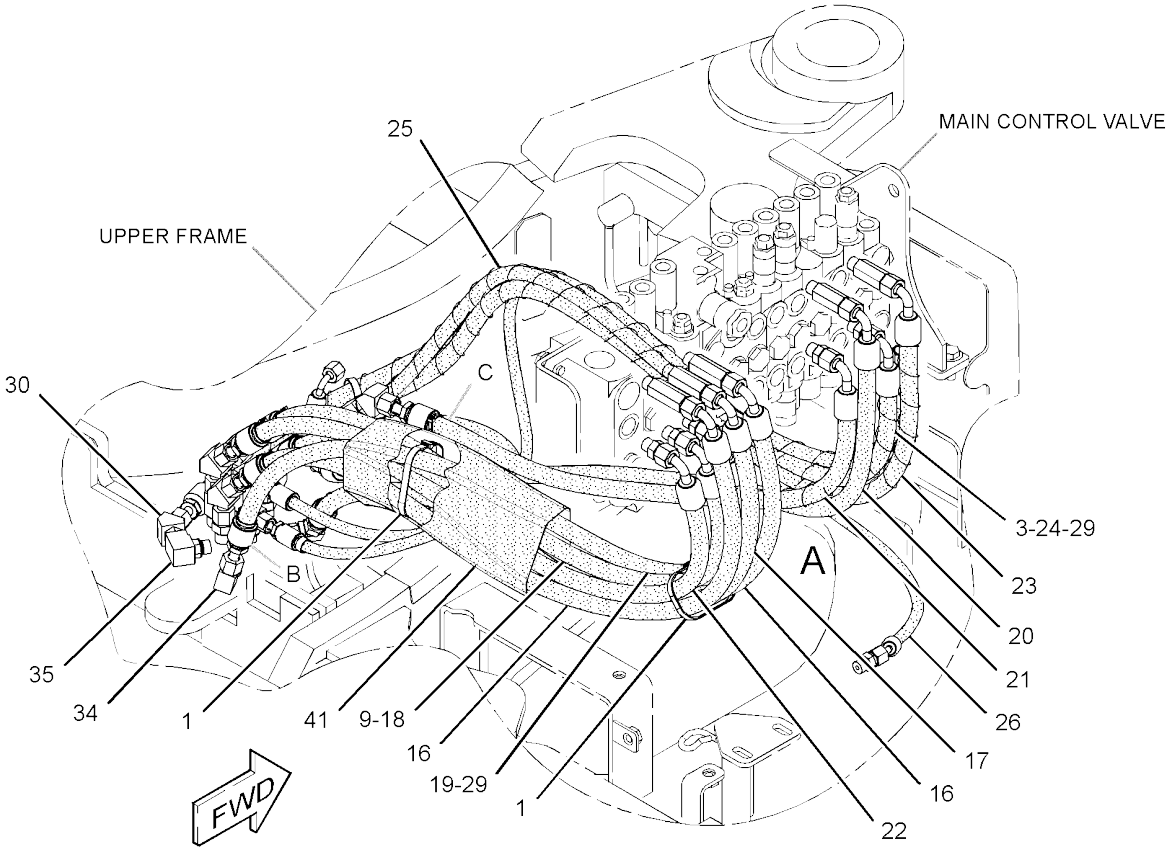


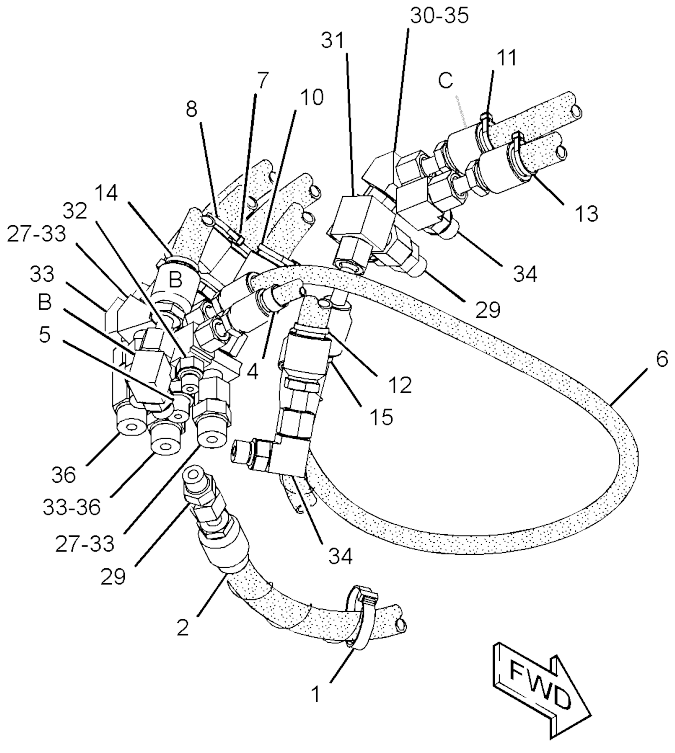


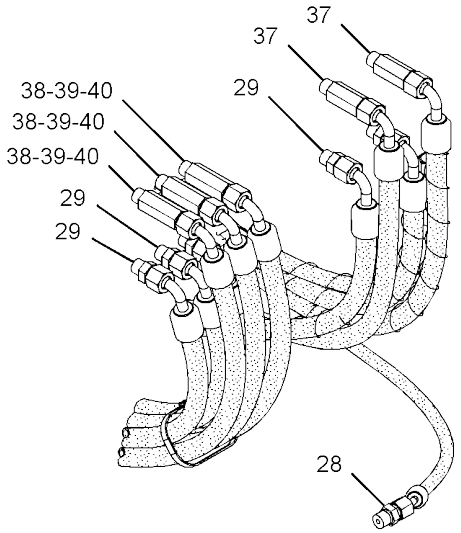


VIEW OF AREA A

GRAPHIC #1 **<END>** g02806078

# HYDRAULIC SYSTEM

## *280-7620* LINES GP-TRAVEL MOTOR

**PART OF 377-8930 BLADE AR-ANGLING**
**AN ATTACHMENT**

**SMCS-4351** **i04764137**

| NOTE | REF NO | GRAPHIC REF | PART NUMBER | QTY | PART NAME 1 2 3 4 5 6 (PRODUCT LEVEL) | SEE PAGE |
|---|---|---|---|---|---|---|
| | 1 | 1 | **3S-2093** | 2 | STRAP-CABLE | |
| | 2 | 1 | **7K-1181** | 2 | STRAP-CABLE | |
| | 3 | 1 | **213-7638** | 1 | COVER AS-ACCESS | |
| Y | 4 | 1 | **266-6836** | 1 | SWIVEL GP | 294 |
| | 5 | 1 | **267-8100** | 1 | PLATE | |
| I | 6 | 1 | **283-5350** | 2 | HOSE AS | |
| | 7 | 1 | **283-5352** | 2 | HOSE AS | |
| | 8 | 1 | *148-8318* | 4 | CONNECTOR AS | |
| | | | | | (EACH INCLUDES) | |
| | | 1 | **3K-0360** | 1 | SEAL-O-RING | |
| | | 1 | **6V-8397** | 1 | SEAL-O-RING | |
| | | 1 | **6V-8634** | 1 | CONNECTOR | |
| | 9 | 1 | *148-8325* | 2 | CONNECTOR AS | |
| | | | | | (EACH INCLUDES) | |
| | | 1 | **3J-1907** | 1 | SEAL-O-RING | |
| | | 1 | **4J-5477** | 1 | SEAL-O-RING | |
| | | 1 | **6V-8641** | 1 | CONNECTOR | |
| | 10 | 1 | *148-8363* | 4 | ELBOW AS | |
| | | | | | (EACH INCLUDES) | |
| | | 1 | **3K-0360** | 1 | SEAL-O-RING | |
| | | 1 | **6V-8397** | 1 | SEAL-O-RING | |
| | | 1 | **6V-9876** | 1 | ELBOW | |
| | 11 | 1 | *148-8385* | 4 | ELBOW AS | |
| | | | | | (EACH INCLUDES) | |
| | | 1 | **3J-7354** | 1 | SEAL-O-RING | |
| | | 1 | **4J-5477** | 1 | SEAL-O-RING | |
| | | 1 | **6V-9000** | 1 | ELBOW | |
| | 12 | 1 | *155-3624* | 2 | PLUG AS | |
| | | | | | (EACH INCLUDES) | |
| | | 1 | **3J-7354** | 1 | SEAL-O-RING | |
| | | 1 | **9S-4182** | 1 | PLUG-O-RING | |
| I | 13 | 1 | **292-8345** | 2 | HOSE AS | |
| I | 14 | 1 | **292-8346** | 2 | HOSE AS | |
| | 15 | 1 | **4J-5477** | 2 | SEAL-O-RING | |
| | 16 | 1 | **7Y-4528** | 2 | GROMMET | |
| M | 17 | 1 | **8T-4183** | 6 | BOLT (M12X1.75X40-MM) | |
| | 18 | 1 | **8T-4223** | 6 | WASHER-HARD (13.5X25.5X3-MM THK) | |
| | 19 | 1 | **279-4736** | 2 | STRAP-CABLE (WHITE) | |

I - REFER TO HYDRAULIC INFORMATION SYSTEM
M - METRIC PART
Y - SEPARATE ILLUSTRATION

*280-7620* **LINES GP-TRAVEL MOTOR (*contd.*)** **i04764137**

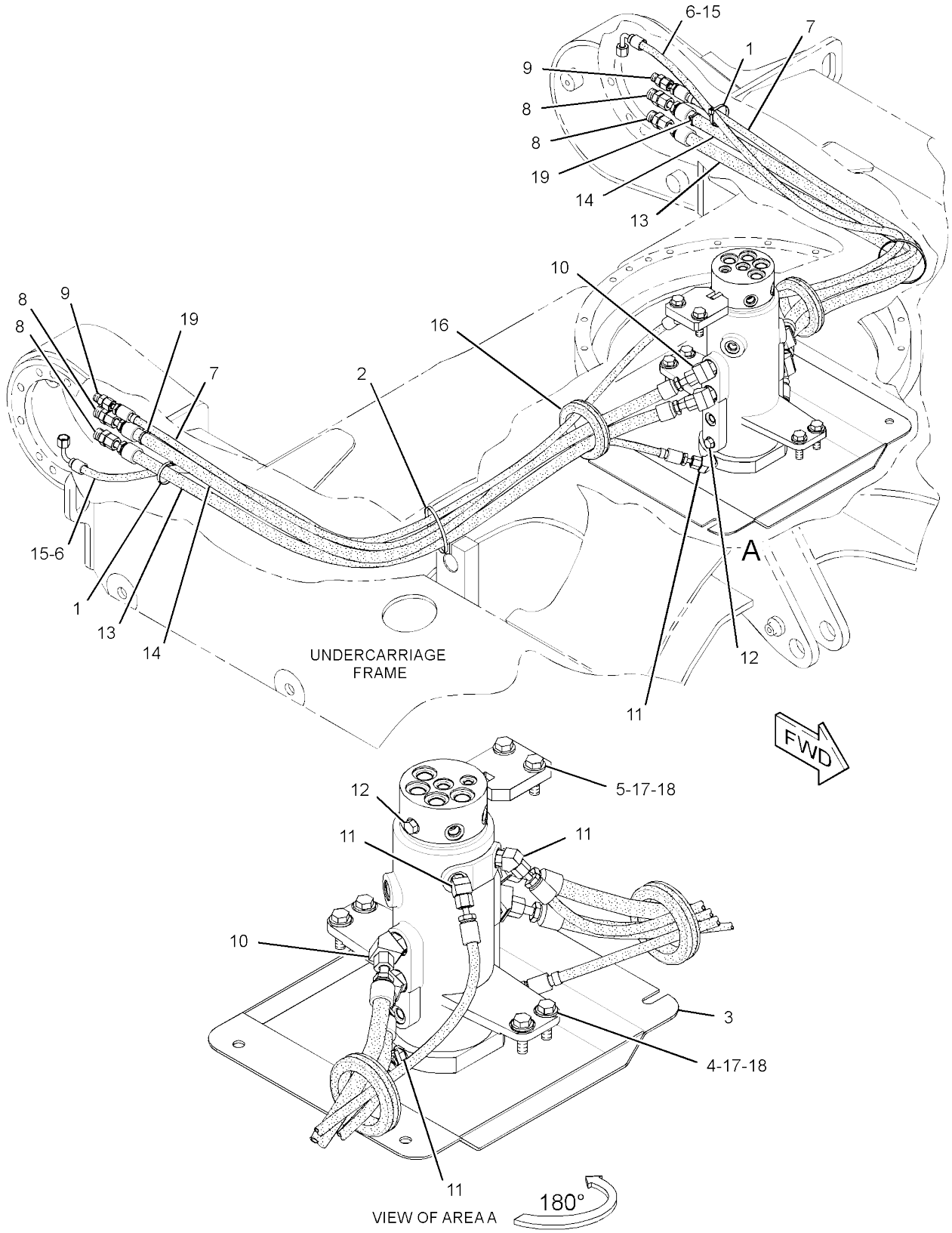


GRAPHIC #1 **<END>** g02866476

# HYDRAULIC SYSTEM

## *292-8293* LINES GP-TRAVEL MOTOR

**PART OF 377-8920 BLADE AR-STRAIGHT**
**AN ATTACHMENT**

**SMCS-4351** **i05221702**

| NOTE | REF NO | GRAPHIC REF | PART NUMBER | QTY | PART NAME 1 2 3 4 5 6 (PRODUCT LEVEL) | SEE PAGE |
|---|---|---|---|---|---|---|
| | 1 | 1 | **3S-2093** | 2 | STRAP-CABLE | |
| | 2 | 1 | **7K-1181** | 2 | STRAP-CABLE | |
| Y | 3 | 1 | **191-7516** | 1 | SWIVEL GP | 292 |
| | 4 | 1 | **267-8100** | 1 | PLATE | |
| I | 5 | 1 | **283-5350** | 2 | HOSE AS | |
| | 6 | 1 | **382-2560** | 2 | HOSE AS | |
| | | 1 | **096-6085** | 2 | TAPE (RED) | |
| I | | 1 | **205-2156** | 1 | HOSE AS | |
| I | 7 | 1 | **292-8345** | 2 | HOSE AS | |
| I | 8 | 1 | **292-8346** | 2 | HOSE AS | |
| | 9 | 1 | *148-8318* | 4 | CONNECTOR AS | |
| | | | | | (EACH INCLUDES) | |
| | | 1 | **3K-0360** | 1 | SEAL-O-RING | |
| | | 1 | **6V-8397** | 1 | SEAL-O-RING | |
| | | 1 | **6V-8634** | 1 | CONNECTOR | |
| | 10 | 1 | *148-8325* | 4 | CONNECTOR AS | |
| | | | | | (EACH INCLUDES) | |
| | | 1 | **3J-1907** | 1 | SEAL-O-RING | |
| | | 1 | **4J-5477** | 1 | SEAL-O-RING | |
| | | 1 | **6V-8641** | 1 | CONNECTOR | |
| | 11 | 1 | *148-8363* | 4 | ELBOW AS | |
| | | | | | (EACH INCLUDES) | |
| | | 1 | **3K-0360** | 1 | SEAL-O-RING | |
| | | 1 | **6V-8397** | 1 | SEAL-O-RING | |
| | | 1 | **6V-9876** | 1 | ELBOW | |
| | 12 | 1 | *148-8385* | 2 | ELBOW AS | |
| | | | | | (EACH INCLUDES) | |
| | | 1 | **3J-7354** | 1 | SEAL-O-RING | |
| | | 1 | **4J-5477** | 1 | SEAL-O-RING | |
| | | 1 | **6V-9000** | 1 | ELBOW | |
| | 13 | 1 | **4J-5477** | 2 | SEAL-O-RING | |
| | 14 | 1 | **7Y-4528** | 2 | GROMMET | |
| M | 15 | 1 | **8T-4183** | 6 | BOLT (M12X1.75X40-MM) | |
| | 16 | 1 | **8T-4223** | 6 | WASHER-HARD (13.5X25.5X3-MM THK) | |
| | 17 | 1 | **279-4736** | 2 | STRAP-CABLE (WHITE) | |

I - REFER TO HYDRAULIC INFORMATION SYSTEM
M - METRIC PART
Y - SEPARATE ILLUSTRATION

*292-8293* **LINES GP-TRAVEL MOTOR (*contd.*)** **i05221702**

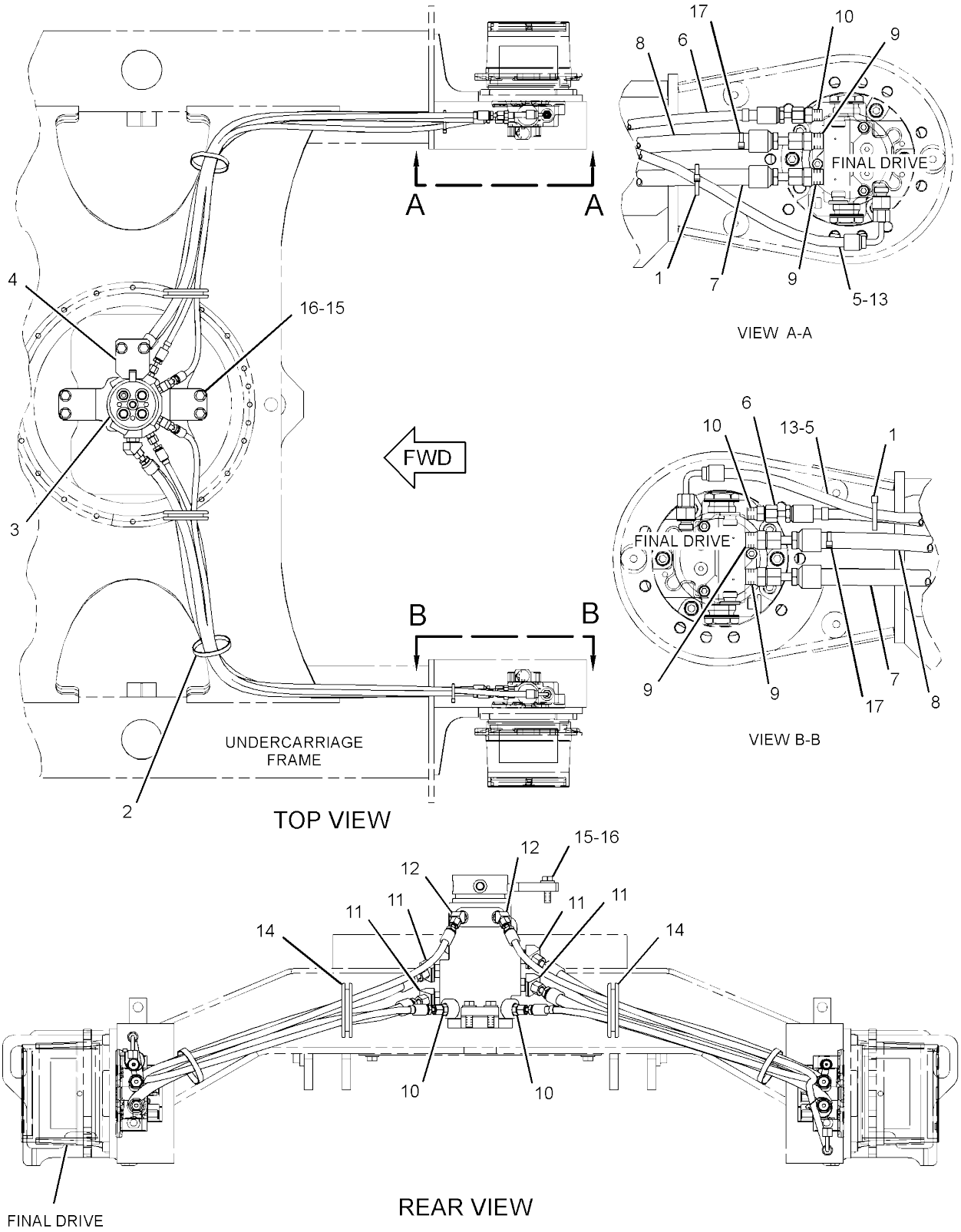


GRAPHIC #1

<END>

g03417567

# 267-0424 MANIFOLD & SOLENOID GP-CONTROL–AUXILIARY, BOOM SWING

**PART OF 377-8861 VALVE & MTG GP-CONTROL**

**SMCS-5264, 5479** **i03971110**

| NOTE | REF NO | GRAPHIC REF | PART NUMBER | QTY | PART NAME 1 2 3 4 5 6 (PRODUCT LEVEL) | SEE PAGE |
|---|---|---|---|---|---|---|
| M | 1 | 1 | **7I-2272** | 4 | BOLT (M5X0.8X12-MM) | |
| Y | 2 | 1 | **269-2299** | 2 | VALVE GP-SOLENOID (AUXILIARY, BOOM SWING) | 355 |

M - METRIC PART
Y - SEPARATE ILLUSTRATION

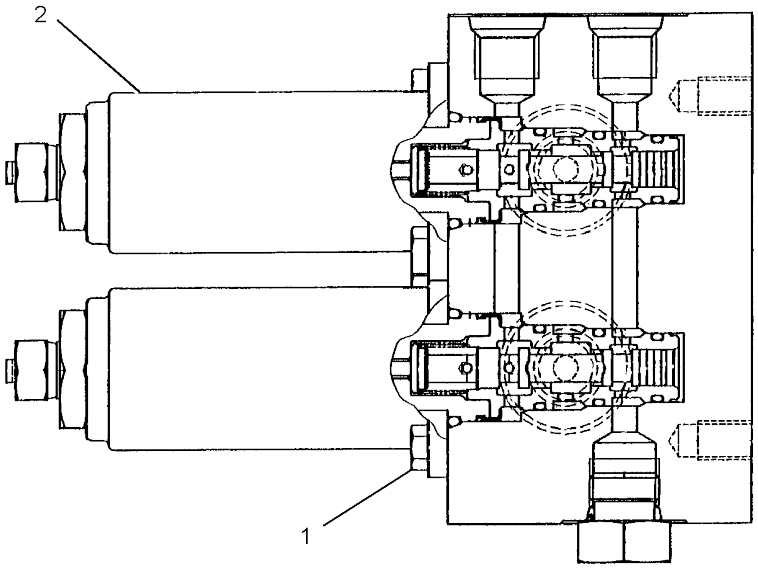


GRAPHIC #1 **<END>** g01222759

# 274-4199 MANIFOLD GP-CONTROL

**PART OF 379-4730 LINES GP-PILOT**

**SMCS-5264** **i03970909**

| NOTE | REF NO | GRAPHIC REF | PART NUMBER | QTY | PART NAME 1 2 3 4 5 6 (PRODUCT LEVEL) | SEE PAGE |
|---|---|---|---|---|---|---|
| | 1 | 1 | **169-1169** | 1 | SHIM | |
| | 2 | 1 | **169-1170** | 1 | SHIM | |
| | 3 | 1 | **198-8418** | 1 | PLUNGER | |
| | 4 | 1 | **198-8419** | 1 | SPRING | |
| | 5 | 1 | **198-8420** | 1 | PLUG | |
| | 6 | 1 | **7I-7403** | 2 | SPRING | |
| | 7 | 1 | **169-1172** | 1 | PLUNGER | |
| | 8 | 1 | **198-8421** | 1 | SPRING | |
| | 9 | 1 | **9S-8004** | 1 | PLUG-O-RING | |
| | 10 | 1 | **274-4201** | 1 | SOLENOID (SPEED SELECT) | |
| | 11 | 1 | **274-4202** | 1 | SOLENOID (HYDRAULIC LOCKOUT) | |
| | 12 | 1 | **276-3883** | 1 | COVER | |
| | 13 | 1 | **198-8423** | 2 | PLUG | |
| M | 14 | 1 | **099-2374** | 4 | BOLT-SOCKET HEAD (M5X0.8X12-MM) | |
| M | 15 | 1 | **096-4833** | 2 | BOLT-SOCKET HEAD (M5X0.8X20-MM) | |
| | 16 | 1 | **095-1519** | 2 | SEAL-O-RING | |
| | 17 | 1 | **095-1578** | 1 | SEAL-O-RING | |
| | 18 | 1 | **095-1579** | 2 | SEAL-O-RING | |
| | 19 | 1 | **095-1586** | 1 | SEAL-O-RING | |
| | 20 | 1 | **3J-1907** | 1 | SEAL-O-RING | |

M - METRIC PART

*274-4199* **MANIFOLD GP-CONTROL (*contd.*)** **i03970909**

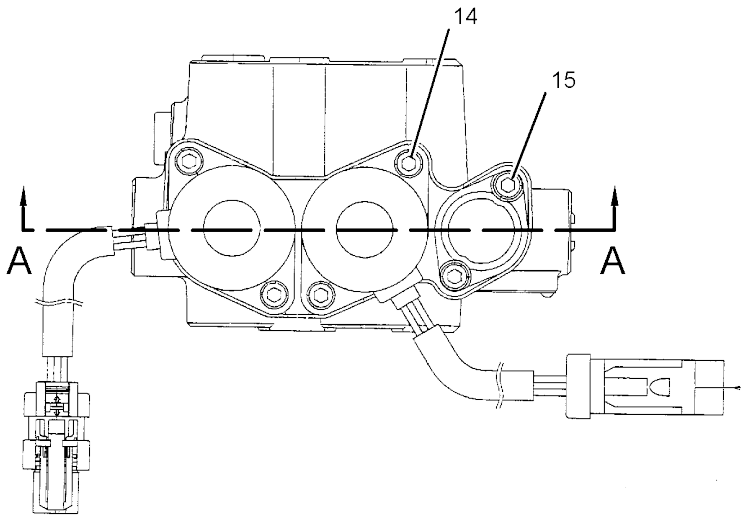


VIEW E-E

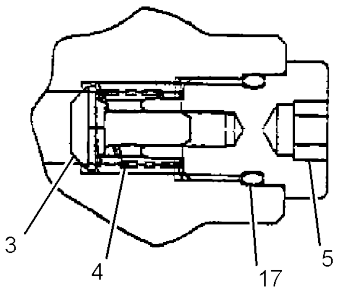


SECTION B-B

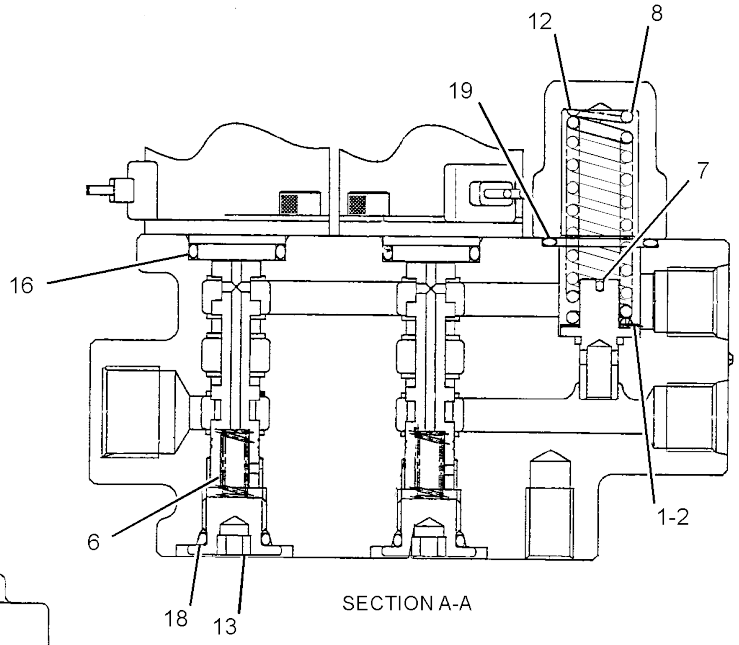


SECTION A-A

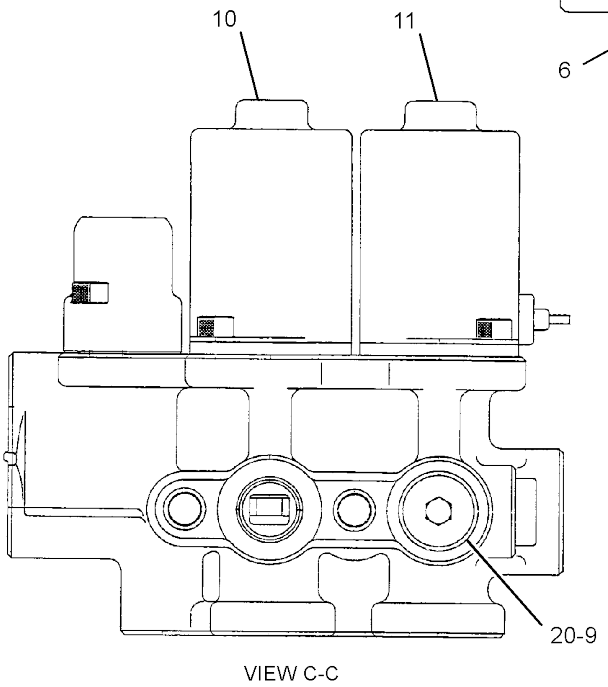


VIEW C-C

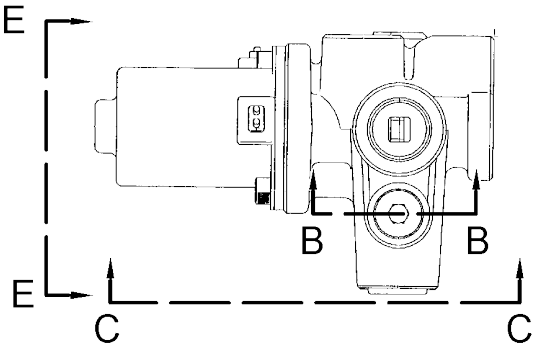


RIGHT SIDE VIEW

GRAPHIC #1 **<END>** g01204402

# *265-8752* MOTOR & MTG GP-SWING

**PART OF 356-0571 POWER TRAIN AR**

**SMCS-5058** **i04019567**

| NOTE | REF NO | GRAPHIC REF | PART NUMBER | QTY | PART NAME 1 2 3 4 5 6 (PRODUCT LEVEL) | SEE PAGE |
|---|---|---|---|---|---|---|
| Y | 1 | 1 | **266-6396** | 1 | DRIVE GP-SWING | 206 |
| M | 2 | 1 | **8T-4140** | 4 | BOLT (M16X2X60-MM) | |
| | 3 | 1 | **9X-8257** | 4 | WASHER (17.5X30X3.5-MM THK) | |

M - METRIC PART
Y - SEPARATE ILLUSTRATION

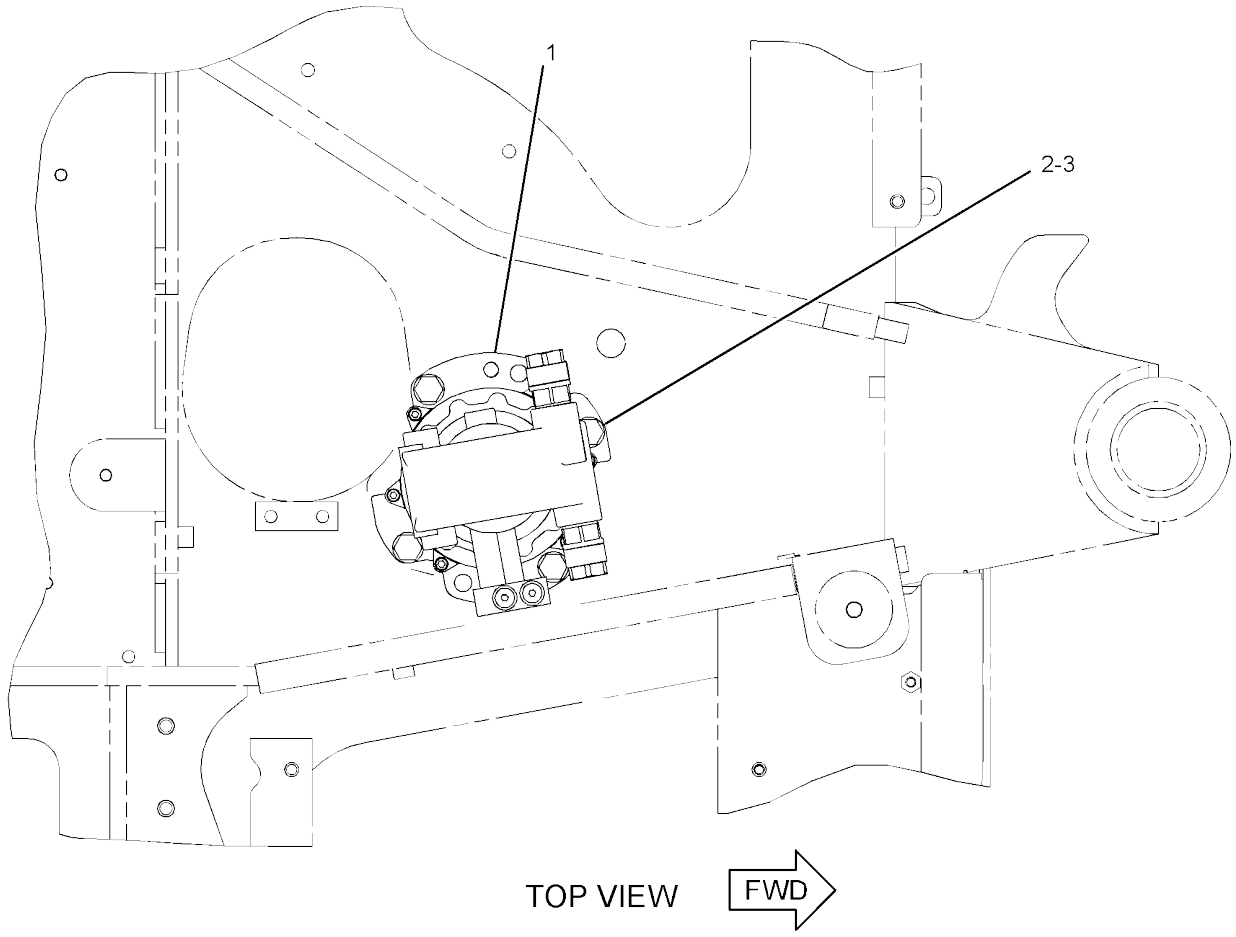


GRAPHIC #1 **<END>** g01234714

# 281-3052 MOTOR GP-SWING

**PART OF 266-6396 DRIVE GP-SWING**

**SMCS-5058** **i05426594**

| NOTE | REF NO | GRAPHIC REF | PART NUMBER | QTY | PART NAME 1 2 3 4 5 6 (PRODUCT LEVEL) | SEE PAGE |
|---|---|---|---|---|---|---|
| | 1 | 1 | **153-6087** | 1 | SCREEN (HYDRAULIC OIL) | |
| | 2 | 1 | **280-2364** | 1 | BEARING | |
| | 3 | 1 | **6B-5328** | 1 | BEARING | |
| | 4 | 1 | **8C-3312** | 1 | RING-RETAINING | |
| M | 5 | 1 | **5A-3604** | 12 | BOLT-SOCKET HEAD (M8X1.25X25-MM) | |
| | 6 | 1 | **095-0880** | 1 | PIN | |
| L | 7 | 1 | **280-2365** | 1 | PIN | |
| H | 8 | 1 | **095-1716** | 1 | SEAL-O-RING | |
| H | 9 | 1 | **095-1719** | 1 | SEAL-O-RING | |
| Y | 10 | 1 | **274-9034** | 1 | VALVE GP-CONTROL (SWING BRAKE) | 311 |
| M | 11 | 1 | **8T-8442** | 4 | BOLT-SOCKET HEAD (M6X1X30-MM) | |
| Y | 12 | 1 | **281-3053** | 2 | VALVE GP-RELIEF | 352 |
| J | 13 | 1 | **095-1579** | 2 | SEAL-O-RING | |
| J | 14 | 1 | **280-2367** | 1 | KIT-PUMP (SWING MOTOR) | |
| | | | | | (ALSO INCLUDES BODY, BEARING, PIN SPRING, CHECK VALVES, SPRINGS & PLUGS) | |
| H | 15 | 1 | **280-2368** | 1 | KIT-BARREL (SWING MOTOR) | |
| | | | | | (ALSO INCLUDES SHOES, PISTONS, SHOE HOLDER, BARREL HOLDER, PINS, BARREL, RETAINERS, SPRING, VALVE PLATE & RING RETAINER | |
| L | 16 | 1 | **280-2369** | 1 | KIT-SWASHPLATE (SWING MOTOR) | |
| | 17 | 1 | **280-2405** | 3 | PIN | |

H - KIT MARKED H SERVICES PARTS MARKED H
J - KIT MARKED J SERVICES PARTS MARKED J
L - KIT MARKED L SERVICES PARTS MARKED L
M - METRIC PART
Y - SEPARATE ILLUSTRATION

*281-3052* **MOTOR GP-SWING (*contd.*)** **i05426594**

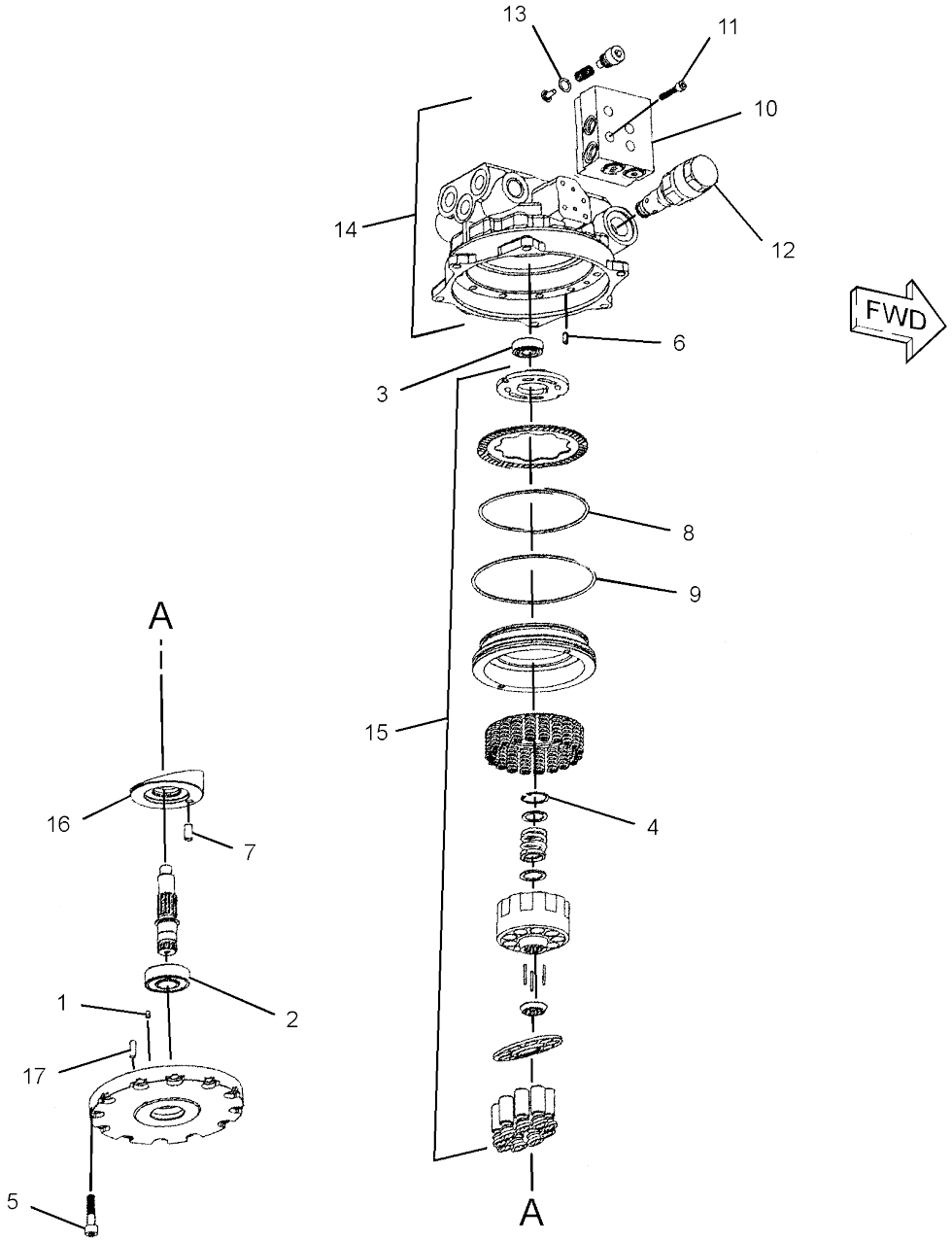


GRAPHIC #1 <END> g01235762

# 280-2355 PLANETARY GP-SWING DRIVE

**PART OF 266-6396 DRIVE GP-SWING**

**SMCS-3301, 5459** **i05426610**

| NOTE | REF NO | GRAPHIC REF | PART NUMBER | QTY | PART NAME 1 2 3 4 5 6 (PRODUCT LEVEL) | SEE PAGE |
|---|---|---|---|---|---|---|
| | 1 | 1 | **280-2357** | 1 | GEAR | |
| | 2 | 1 | **280-2358** | 1 | GEAR | |
| | 3 | 1 | **280-2359** | 1 | SEAL | |
| J | 4 | 1 | **6V-5587** | 4 | RING-RETAINING | |
| M | 5 | 1 | **5A-3604** | 6 | BOLT-SOCKET HEAD (M8X1.25X25-MM) | |
| | 6 | 1 | **280-2360** | 1 | RING | |
| | 7 | 1 | **280-2361** | 1 | KIT-PINION | |
| | | | | | (INCLUDES PINION SHAFT, RING SEAL, BEARINGS, BODY, SEAL, COLLARS, GEAR & PINS) | |
| J | 8 | 1 | **280-2362** | 1 | KIT-CARRIER | |
| | | | | | (ALSO INCLUDES CARRIER, THRUST WASHERS, RINGS, NEEDLES, GEARS & THRUST PLATE) | |
| | 9 | 1 | **280-2363** | 1 | KIT-CARRIER | |
| | | | | | (ALSO INCLUDES CARRIER, THRUST WASHERS, RINGS, NEEDLES, GEARS & THRUST PLATE) | |

J - KIT MARKED J SERVICES PARTS MARKED J
M - METRIC PART

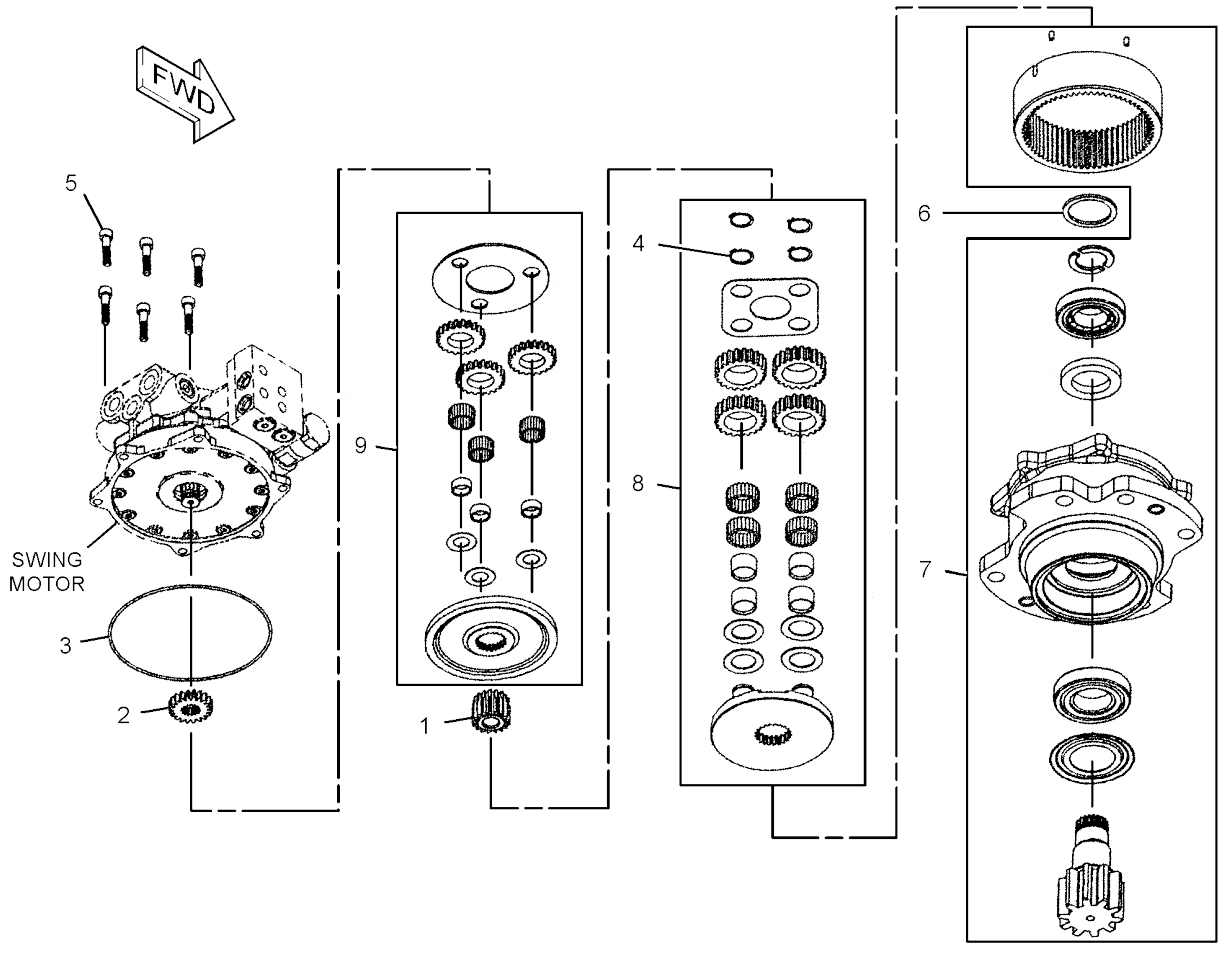


GRAPHIC #1 <END> g01222490

# *376-2012* PUMP & MTG GP-MAIN HYDRAULIC

**PART OF 379-4713 HYDRAULIC AR**

**SMCS-5070** **i04728051**

| NOTE | REF NO | GRAPHIC REF | PART NUMBER | QTY | PART NAME 1 2 3 4 5 6 (PRODUCT LEVEL) | SEE PAGE |
|---|---|---|---|---|---|---|
| | 1 | 1 | **388-6412** | 8 | BOLT (M10X1.25X50-MM) | |
| | 2 | 1 | **267-1082** | 1 | COUPLING-PUMP | |
| Y | 3 | 1 | *374-2025* | 1 | PUMP GP-PISTON & GEAR | 290 |
| | 4 | 1 | **380-6357** | 1 | HOUSING AS-FLYWHEEL | |
| | | 1 | **387-3788** | 2 | PIN | |
| M | 5 | 1 | **191-7503** | 3 | BOLT (M12X1.75X16-MM) | |
| | 6 | 1 | **8T-4121** | 7 | WASHER-HARD (11X21X2.5-MM THK) | |
| M | 7 | 1 | **8T-4183** | 2 | BOLT (M12X1.75X40-MM) | |
| | 8 | 1 | **8T-4223** | 2 | WASHER-HARD (13.5X25.5X3-MM THK) | |
| | 9 | 1 | **9X-2027** | 1 | WASHER (11X18X2-MM THK) | |

M - METRIC PART
Y - SEPARATE ILLUSTRATION

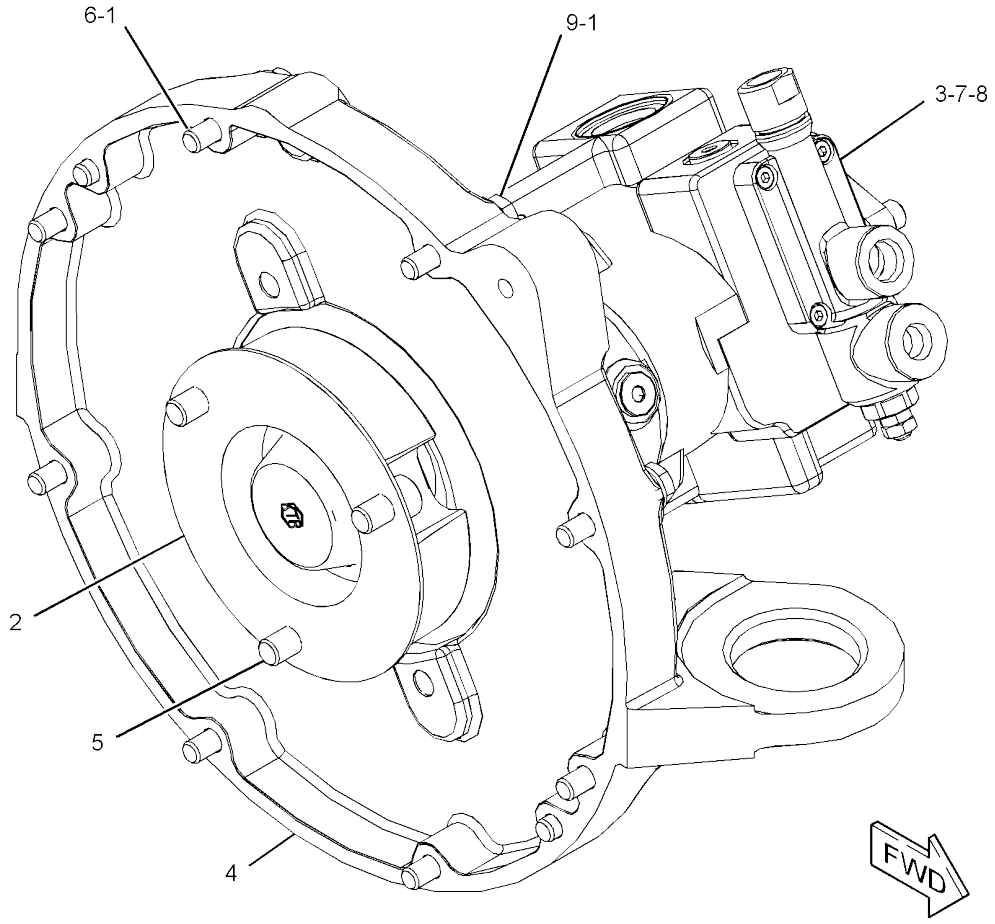


GRAPHIC #1 **<END>** g02856399

## *374-2025* PUMP GP-PISTON & GEAR–MAIN HYDRAULIC

**PART OF 376-2012 PUMP & MTG GP-MAIN HYDRAULIC**

**SMCS-507G** **i04728050**

| NOTE | REF NO | GRAPHIC REF | PART NUMBER | QTY | PART NAME 1 2 3 4 5 6 (PRODUCT LEVEL) | SEE PAGE |
|---|---|---|---|---|---|---|
| | 1 | 1 | **280-4441** | 1 | BEARING | |
| | 2 | 1 | **191-3925** | 1 | BEARING | |
| | 3 | 1 | **279-4684** | 1 | SEAL | |
| | 4 | 1 | **6V-7723** | 1 | RING-RETAINING | |
| | 5 | 1 | **280-4442** | 1 | STOP | |
| | 6 | 1 | **280-4443** | 1 | SHAFT | |
| | 7 | 1 | **191-3918** | 1 | WASHER | |
| | 8 | 1 | **191-3920** | 1 | WASHER | |
| | 9 | 1 | **280-4444** | 1 | GASKET | |
| | 10 | 1 | **279-4687** | 3 | PIN | |
| | 11 | 1 | **095-1571** | 1 | SEAL-O-RING | |
| | 12 | 1 | **390-9455** | 2 | BUSHING | |
| | 13 | 1 | **139-7355** | 2 | SCREW | |
| | 14 | 1 | **280-4446** | 1 | PLATE | |
| | 15 | 1 | **279-4692** | 1 | STOPPER | |
| | 16 | 1 | **281-3000** | 1 | PIN | |
| JL | 17 | 1 | **095-1575** | 6 | SEAL-O-RING | |
| | 18 | 1 | **279-4691** | 1 | ORIFICE | |
| | 19 | 1 | **280-4448** | 1 | SPRING | |
| | 20 | 1 | **280-4449** | 1 | SPRING | |
| | 21 | 1 | **280-4450** | 2 | SEAT | |
| | 22 | 1 | **279-4698** | 1 | NUT | |
| | 23 | 1 | **279-4699** | 1 | PUMP GP-GEAR (PILOT) | |
| | 24 | 1 | **303-4492** | 2 | BOLT | |
| | 25 | 1 | **8T-4224** | 2 | WASHER-HARD (8.8X16X2-MM THK) | |
| M | 26 | 1 | **6V-8200** | 4 | BOLT-SOCKET HEAD (M12X1.75X35-MM) | |
| | 27 | 1 | **279-4706** | 3 | PLUG | |
| JL | 28 | 1 | **3J-1907** | 3 | SEAL-O-RING | |
| M | 29 | 1 | **6V-5683** | 4 | BOLT (M6X1X16-MM) | |
| | 30 | 1 | **279-4693** | 1 | PIN | |
| J | 31 | 1 | **279-4705** | 1 | SEAL-O-RING | |
| J | 32 | 1 | **279-4701** | 1 | SEAL-O-RING | |
| J | 33 | 1 | **279-4703** | 1 | SEAL-O-RING | |
| | 34 | 1 | **280-4451** | 1 | PIN | |
| | 35 | 1 | **279-4697** | 1 | VALVE AS-PUMP (HYDRAULIC) | |
| | | | | | (INCLUDES O-RINGS & PLUG) | |
| | 36 | 1 | **280-4458** | 1 | KIT-SWASHPLATE | |
| | 37 | 1 | **280-4459** | 1 | KIT-BARREL | |
| Y | 38 | 1 | **332-1292** | 1 | VALVE GP-PUMP CONTROL | 351 |
| | | | | | AVAILABLE REPAIR KIT(S): | |
| J | | | **279-4707** | 1 | KIT-SEAL (MAIN HYDRAULIC PUMP) | |
| L | | | **279-4709** | 1 | KIT-SEAL (MAIN HYDRAULIC PUMP) | |
| | | | | | (ALSO INCLUDES O-RING) | |

J - KIT MARKED J SERVICES PARTS MARKED J
L - KIT MARKED L SERVICES PARTS MARKED L
M - METRIC PART
Y - SEPARATE ILLUSTRATION

*374-2025* **PUMP GP-PISTON & GEAR (*contd.*)** **i04728050**

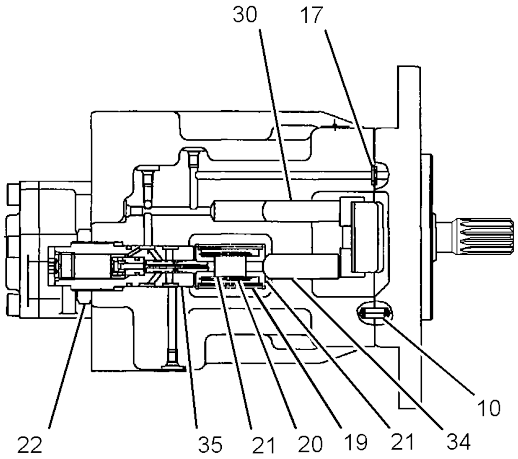


SECTION C-C

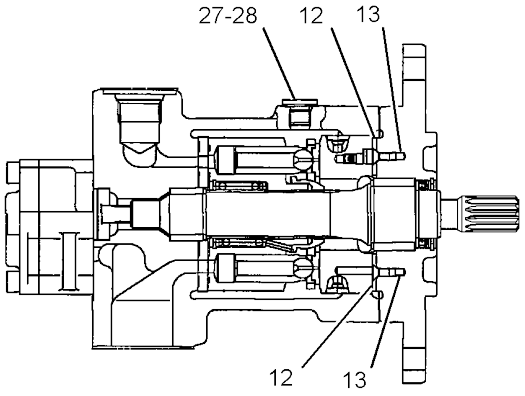


SECTION B-B

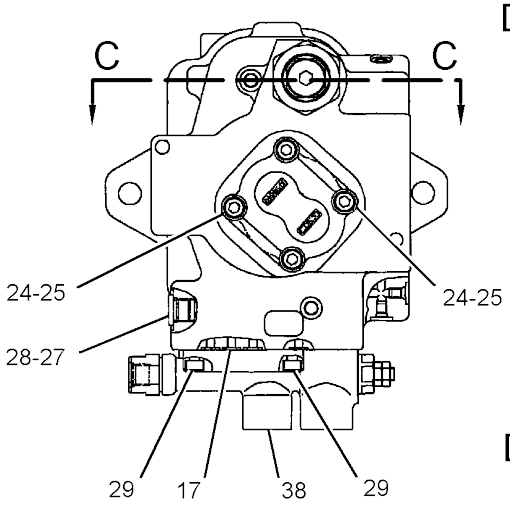


VIEW D-D

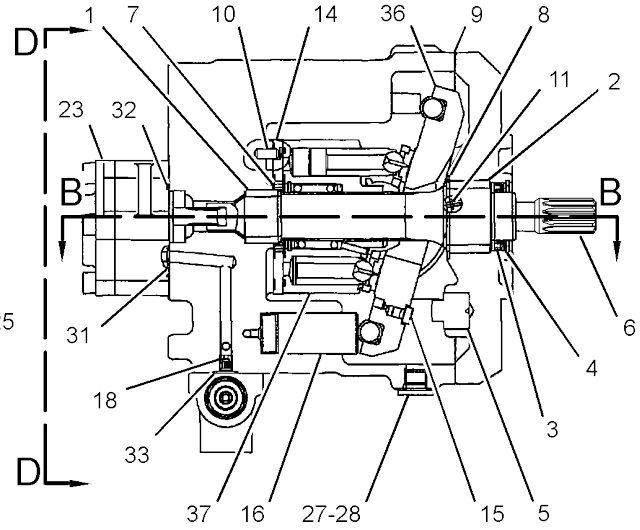


SECTION A-A

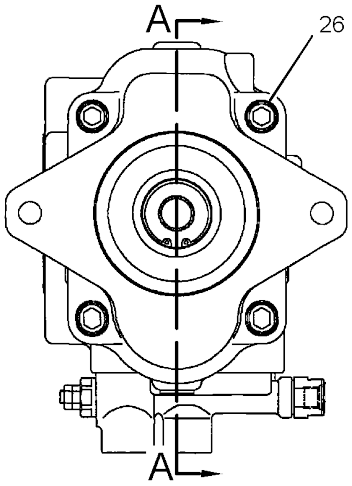


GRAPHIC #1 **<END>** g02890077

# HYDRAULIC SYSTEM

## *191-7516* SWIVEL GP

**PART OF 292-8293 LINES GP-TRAVEL MOTOR**

**AN ATTACHMENT**

**SMCS-5060** **i02145735**

| NOTE | REF NO | GRAPHIC REF | PART NUMBER | QTY | PART NAME 1 2 3 4 5 6 (PRODUCT LEVEL) | SEE PAGE |
|---|---|---|---|---|---|---|
| | 1 | 1 | **095-8051** | 3 | PLUG | |
| | 2 | 1 | **146-4875** | 1 | SEAL-BACK UP | |
| | 3 | 1 | **146-4877** | 1 | SEAL-DUST | |
| | 4 | 1 | **169-1134** | 1 | FLANGE | |
| | 5 | 1 | **169-1135** | 1 | RING | |
| | 6 | 1 | **193-5330** | 7 | SEAL AS | |
| | 7 | 1 | **221-0936** | 1 | SHAFT | |
| | 8 | 1 | **221-0937** | 1 | HOUSING | |
| | 9 | 1 | **221-0938** | 1 | PIN | |
| | 10 | 1 | **095-1623** | 1 | SEAL-O-RING | |
| | 11 | 1 | **095-1710** | 1 | SEAL-O-RING | |
| | 12 | 1 | **095-1713** | 1 | SEAL-O-RING | |
| | 13 | 1 | **095-7951** | 1 | RING-RETAINING | |
| | 14 | 1 | **095-9397** | 4 | LOCKWASHER | |
| M | 15 | 1 | **8T-4195** | 4 | BOLT (M10X1.5X30-MM) | |

M - METRIC PART

*191-7516* **SWIVEL GP (*contd.*)** **i02145735**

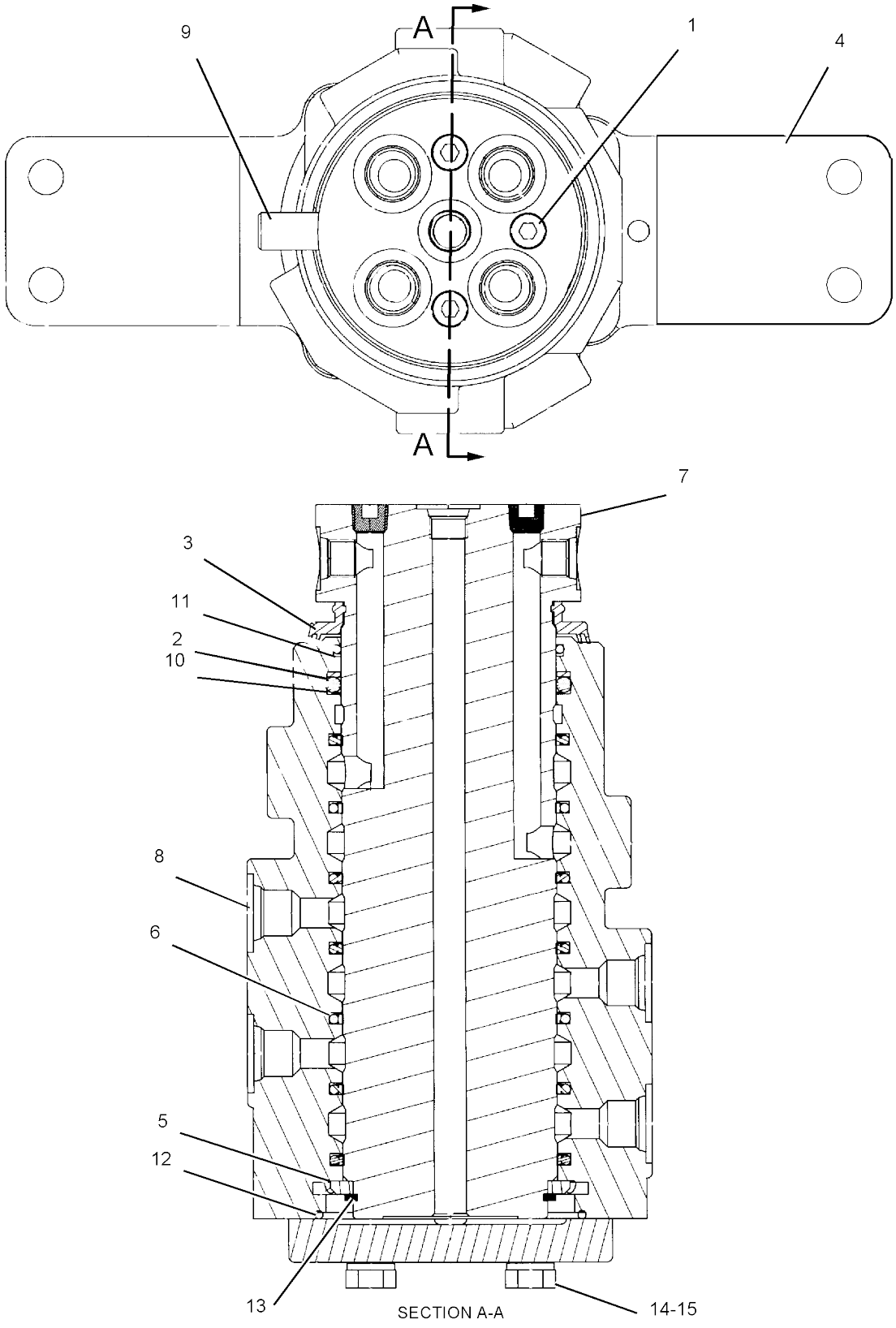


GRAPHIC #1

**<END>**

g01089083

# HYDRAULIC SYSTEM

## *266-6836* SWIVEL GP

**PART OF 280-7620 LINES GP-TRAVEL MOTOR**

**AN ATTACHMENT**

**SMCS-5060** **i03971153**

| NOTE | REF NO | GRAPHIC REF | PART NUMBER | QTY | PART NAME 1 2 3 4 5 6 (PRODUCT LEVEL) | SEE PAGE |
|---|---|---|---|---|---|---|
| | 1 | 1 | **274-3344** | 1 | SHAFT | |
| | 2 | 1 | **274-3346** | 1 | HOUSING | |
| | 3 | 1 | **294-1868** | 1 | COVER | |
| | 4 | 1 | **274-3349** | 1 | SPACER | |
| | 5 | 1 | **169-1136** | 1 | PIN | |
| | 6 | 1 | **274-3351** | 6 | SEAL AS | |
| | 7 | 1 | **193-5330** | 4 | SEAL AS | |
| | 8 | 1 | **095-1623** | 1 | SEAL-O-RING | |
| | 9 | 1 | **095-1713** | 2 | SEAL-O-RING | |
| | 10 | 1 | **8T-5376** | 1 | SEAL-O-RING | |
| | 11 | 1 | **146-4875** | 1 | SEAL-BACK UP | |
| | 12 | 1 | **146-4877** | 1 | SEAL-DUST | |
| | 13 | 1 | **095-0929** | 1 | RING-RETAINING | |
| M | 14 | 1 | **9X-6032** | 4 | BOLT-SOCKET HEAD (M10X1.5X30-MM) | |
| | 15 | 1 | **095-0966** | 5 | PLUG | |

M - METRIC PART

*266-6836* **SWIVEL GP (*contd.*)** **i03971153**

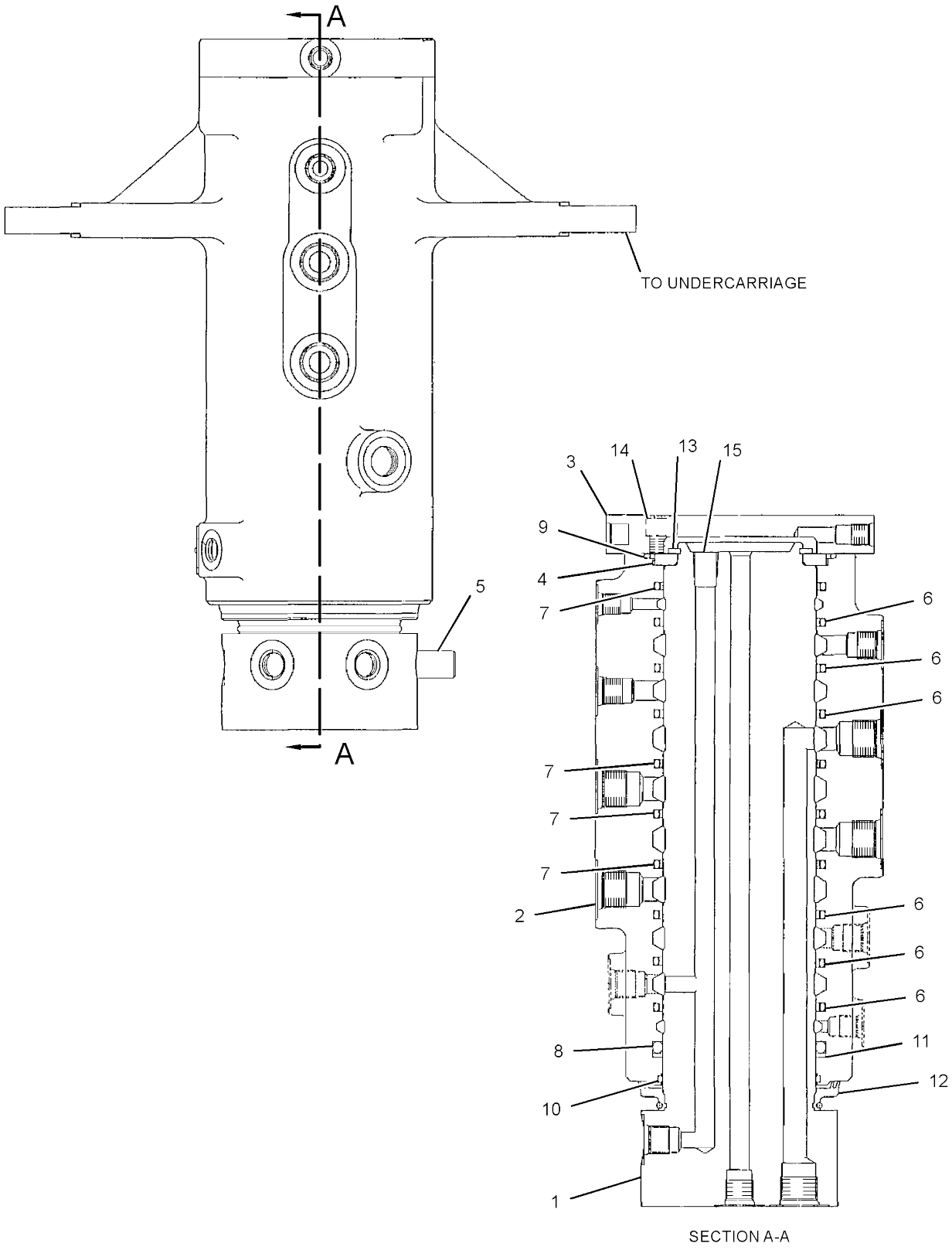


GRAPHIC #1 **<END>** g01367777

# HYDRAULIC SYSTEM

## *367-1050* TANK & FILTER GP-HYDRAULIC

**PART OF 367-0936 TANK & MTG GP-HYDRAULIC**

**SMCS-5056, 5068** **i04629815**

| NOTE | REF NO | GRAPHIC REF | PART NUMBER | QTY | PART NAME 1 2 3 4 5 6 (PRODUCT LEVEL) | SEE PAGE |
|---|---|---|---|---|---|---|
| | 1 | 2 | **4I-3745** | 1 | CAP-PRESSURE (HYDRAULIC TANK) | |
| | 2 | 2 | **093-5537** | 1 | VALVE AS-CHECK (HYDRAULIC TANK) | |
| | 3 | 2 | **225-3697** | 1 | SPRING | |
| | 4 | 2 | **265-8631** | 1 | COVER AS | |
| | 5 | 2 | **265-8632** | 1 | COVER | |
| | 6 | 2 | **265-8677** | 1 | VALVE AS-PRESSURE (HYDRAULIC OIL) | |
| | 7 | 2 | **285-1951** | 1 | STRAINER-SUCTION (HYDRAULIC TANK) | |
| | 8 | 2 | **304-7196** | 1 | FILTER ELEMENT-OIL (HYDRAULIC) | |
| Y | 9 | 2 | **347-6081** | 1 | GAUGE GP-SIGHT (HYDRAULIC OIL LEVEL) | 209 |
| | 10 | 2 | **367-1051** | 1 | TANK AS-HYDRAULIC | |
| | 11 | 2 | **095-1717** | 2 | SEAL-O-RING | |
| | 12 | 2 | *148-8410* | 1 | PLUG AS | |
| | | 2 | **2M-9780** | 1 | SEAL-O-RING | |
| | | 2 | **9S-4190** | 1 | PLUG-O-RING | |
| | 13 | 2 | **6D-3479** | 1 | CLIP | |
| | 14 | 2 | **8T-4121** | 8 | WASHER-HARD (11X21X2.5-MM THK) | |
| M | 15 | 2 | **8T-4136** | 8 | BOLT (M10X1.5X25-MM) | |
| E | 16 | 2 | **7Y-1976** | | HOSE-WATER (108-CM) | |

E - ORDER BY THE CENTIMETER
M - METRIC PART
Y - SEPARATE ILLUSTRATION

REFER TO ALL ILLUSTRATIONS OF THIS GROUP FOR AUXILIARY VIEWS

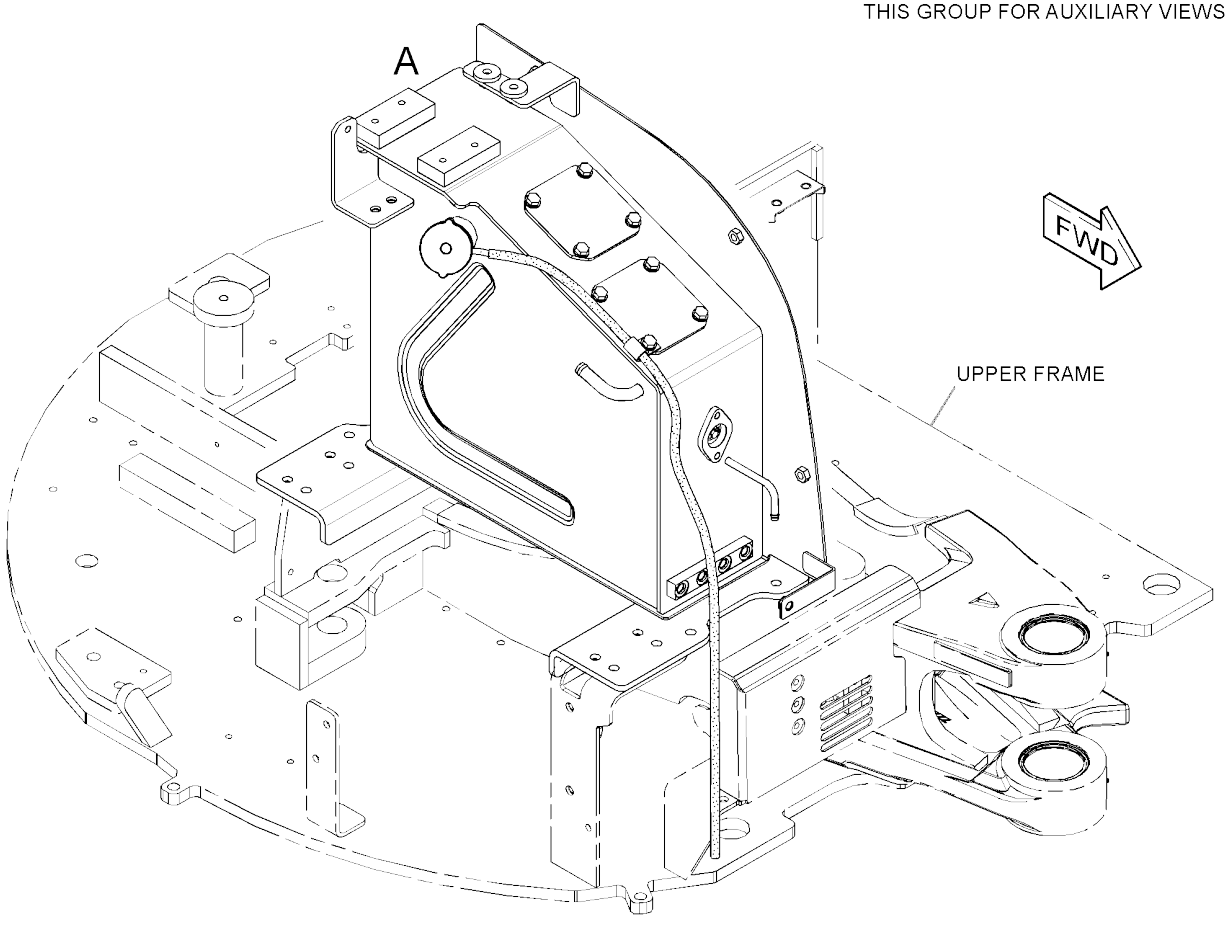


GRAPHIC #1 g02798929

*367-1050* **TANK & FILTER GP-HYDRAULIC (*contd.*)** **i04629815**

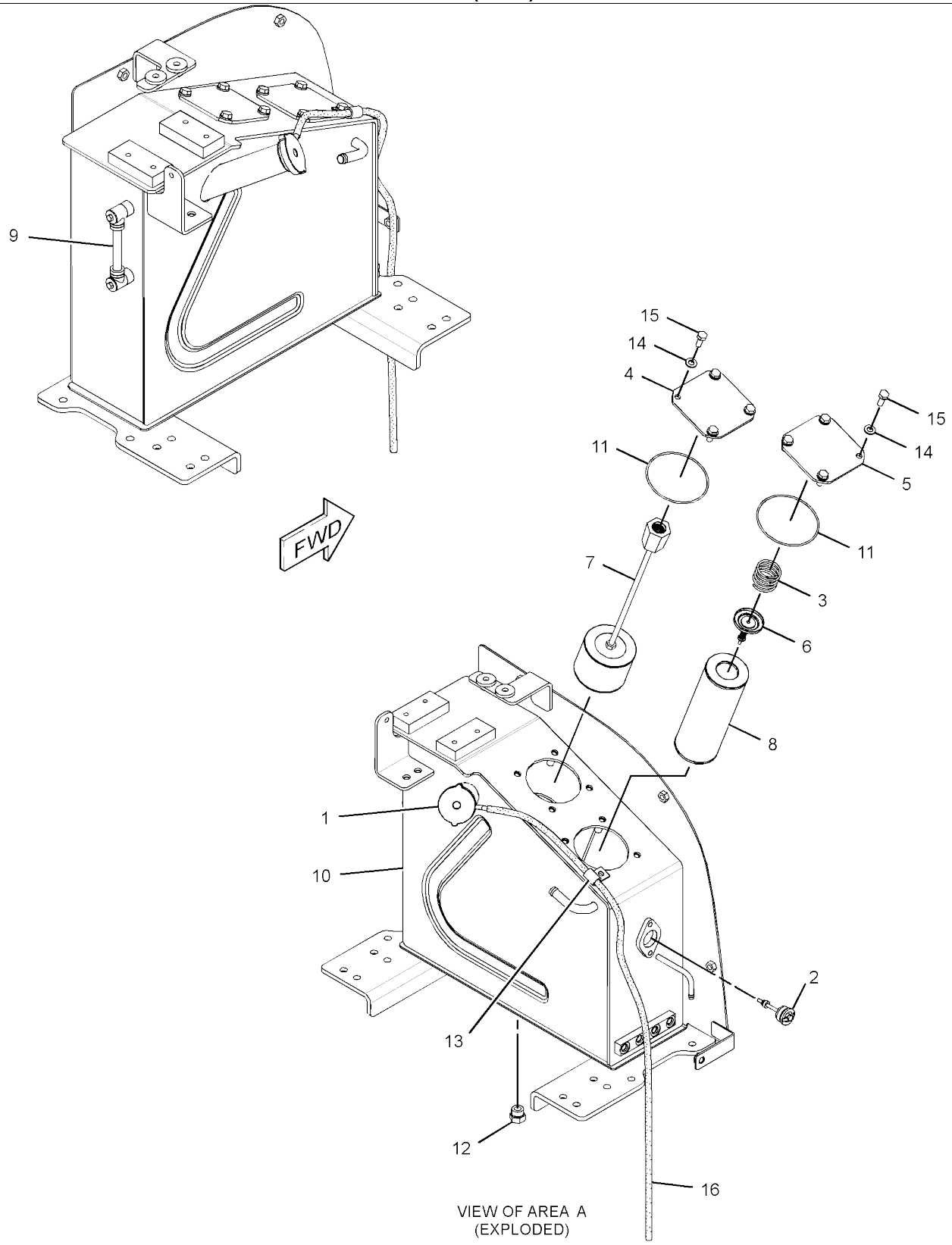


GRAPHIC #2

**<END>**

g02798931

# HYDRAULIC SYSTEM

## *367-0936* TANK & MTG GP-HYDRAULIC

**PART OF 379-4713 HYDRAULIC AR**

**SMCS-5056** **i04629813**

| NOTE | REF NO | GRAPHIC REF | PART NUMBER | QTY | PART NAME 1 2 3 4 5 6 (PRODUCT LEVEL) | SEE PAGE |
|---|---|---|---|---|---|---|
| Y | 1 | 1 | *367-1050* | 1 | TANK & FILTER GP-HYDRAULIC | 296 |
| | 2 | 1 | **7X-7729** | 4 | WASHER (11X25X3-MM THK) | |
| M | 3 | 1 | **8T-4195** | 4 | BOLT (M10X1.5X30-MM) | |

M - METRIC PART
Y - SEPARATE ILLUSTRATION

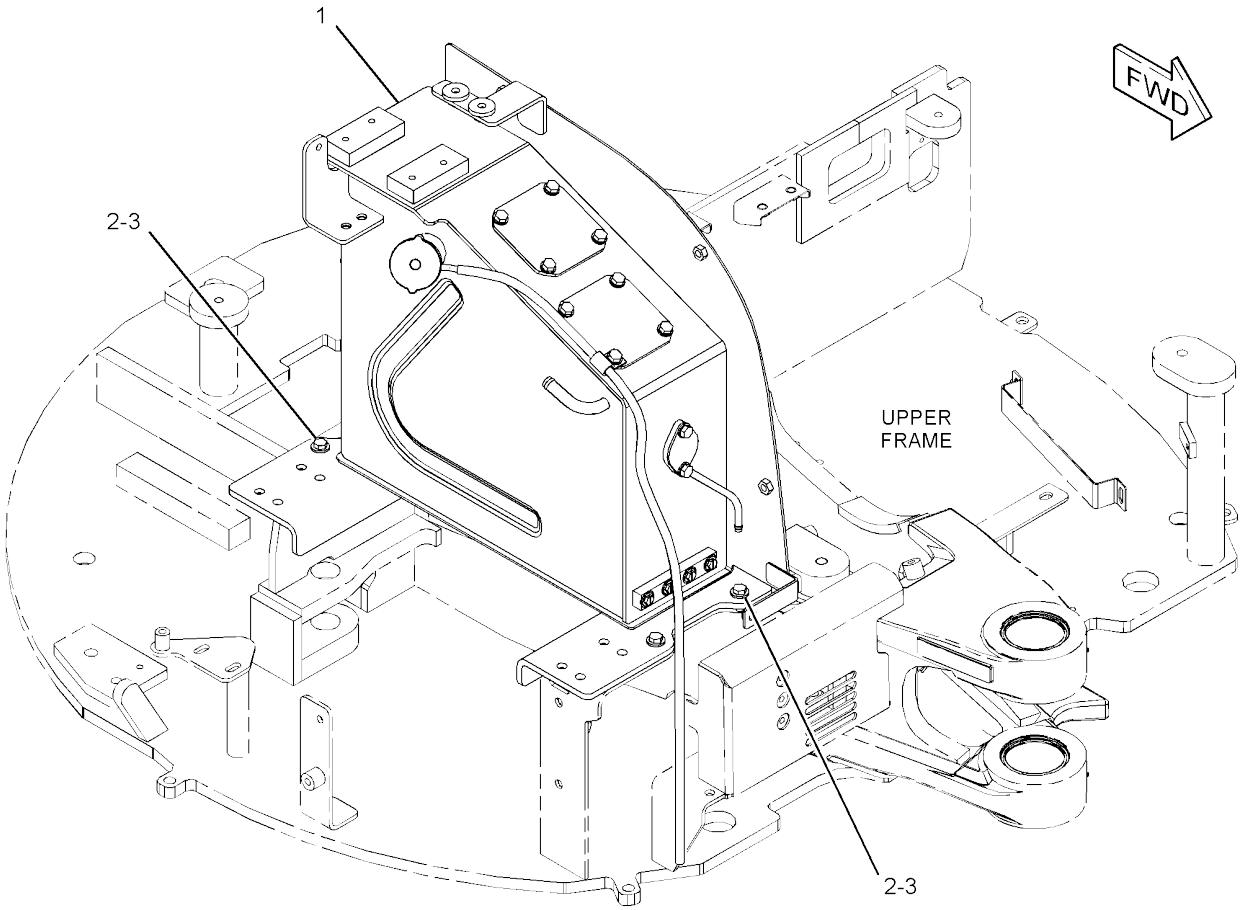


GRAPHIC #1 **<END>** g02798447

# *421-2717* VALVE & MOUNTING GP–CANOPY

**S/N: RKY1466-UP**
**PART OF 377-8933, 383-5929 CANOPY AR**
**AN ATTACHMENT**

**SMCS-5051** **i05023351**

| NOTE | REF NO | GRAPHIC REF | PART NUMBER | QTY | PART NAME 1 2 3 4 5 6 (PRODUCT LEVEL) | SEE PAGE |
|---|---|---|---|---|---|---|
| | 1 | 1 | **276-9309** | 2 | FOAM | |
| | 2 | 1 | **417-1093** | 1 | VALVE GP-PILOT (CANOPY) | |
| M | 3 | 1 | **101-7404** | 2 | BOLT-SOCKET HEAD (M10X1.5X30-MM) | |

M - METRIC PART

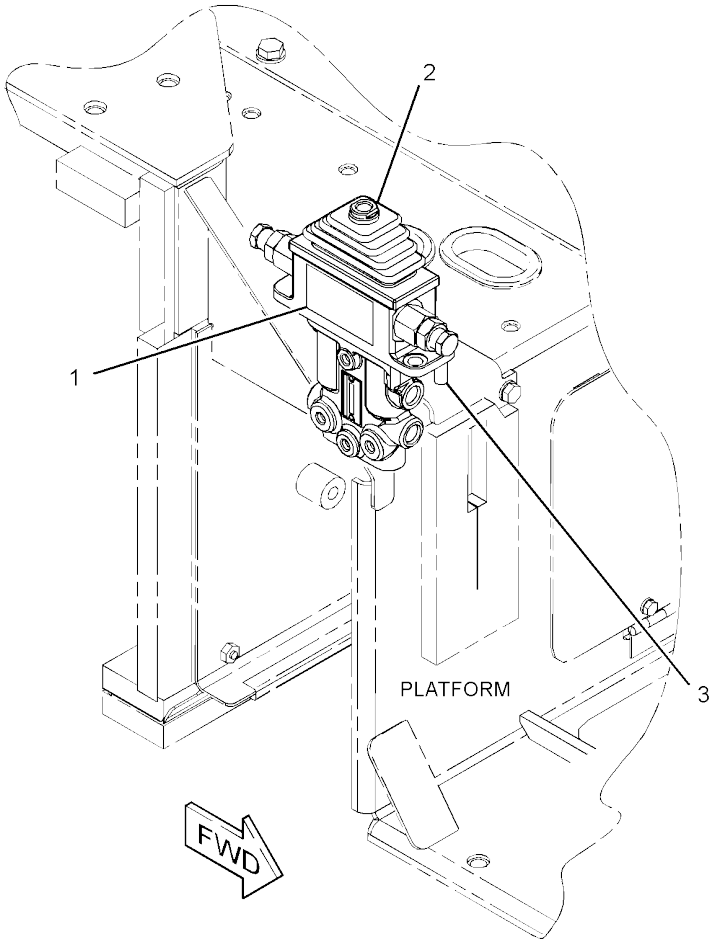


GRAPHIC #1 **<END>** g03201062

# HYDRAULIC SYSTEM

## *379-4734* VALVE & MTG GP-BANK

**S/N: RKY1-1378**

**PART OF 377-8920 BLADE AR-STRAIGHT**

**AN ATTACHMENT**

**SMCS-5051, 5057** **i04728070**

| NOTE | REF NO | GRAPHIC REF | PART NUMBER | QTY | PART NAME 1 2 3 4 5 6 (PRODUCT LEVEL) | SEE PAGE |
|---|---|---|---|---|---|---|
| Y | 1 | 1 | **315-5815** | 1 | VALVE GP-MAIN CONTROL | 338 |
| | 2 | 1 | **381-1119** | 1 | SUPPORT AS | |
| | | 1 | **7T-1099** | 1 | LINK | |
| M | | 1 | **8T-3490** | 2 | NUT-WELD (M10X1.5-THD) | |
| | 3 | 1 | **7X-7729** | 4 | WASHER (11X25X3-MM THK) | |
| | 4 | 1 | **8T-4121** | 5 | WASHER-HARD (11X21X2.5-MM THK) | |
| M | 5 | 1 | **8T-4136** | 4 | BOLT (M10X1.5X25-MM) | |
| M | 6 | 1 | **8T-4191** | 1 | BOLT (M10X1.5X16-MM) | |
| M | 7 | 1 | **8T-4195** | 4 | BOLT (M10X1.5X30-MM) | |

M - METRIC PART
Y - SEPARATE ILLUSTRATION

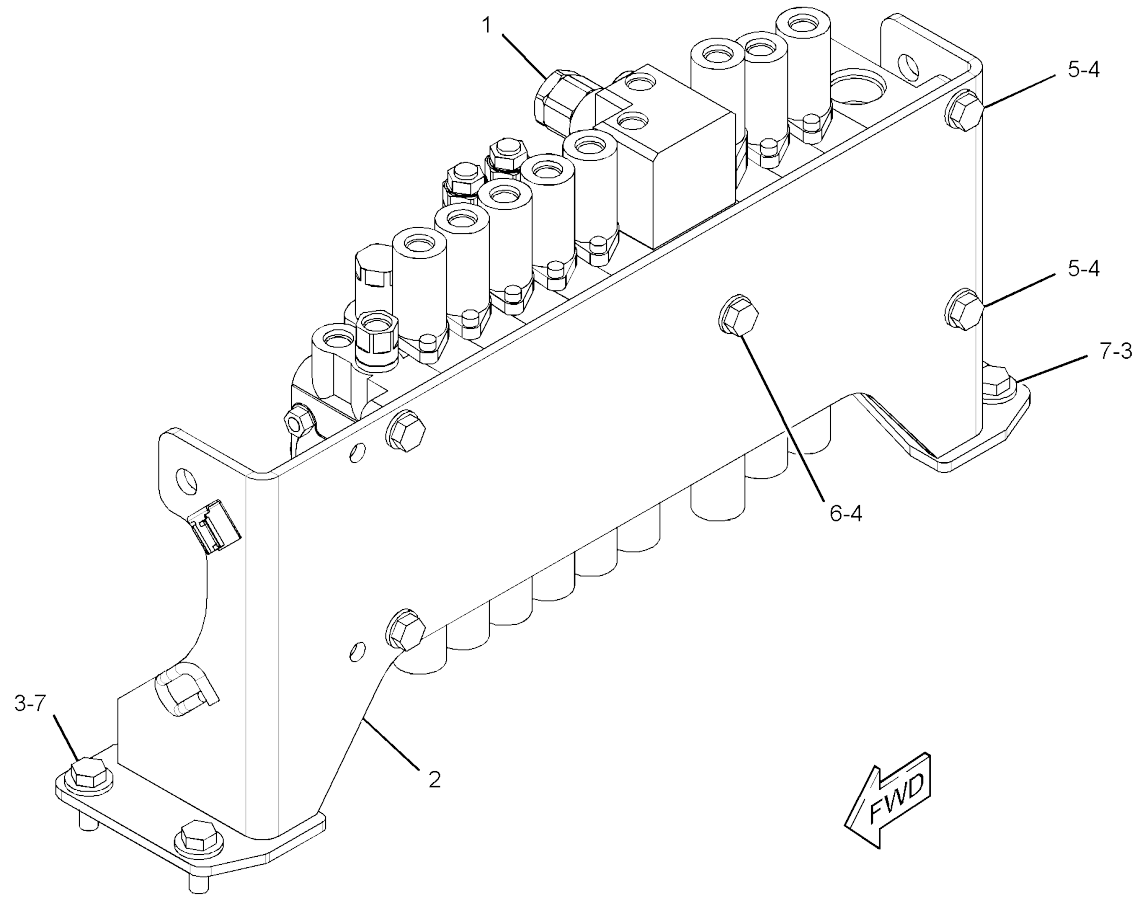


GRAPHIC #1 **<END>** g02856001

# *379-4734* VALVE & MTG GP-BANK

**S/N: RKY1379-UP**
**PART OF 377-8920 BLADE AR-STRAIGHT**
**AN ATTACHMENT**

**SMCS-5051, 5057** **i05393143**

| NOTE | REF NO | GRAPHIC REF | PART NUMBER | QTY | PART NAME 1 2 3 4 5 6 (PRODUCT LEVEL) | SEE PAGE |
|---|---|---|---|---|---|---|
| CY | 1 | 1 | **417-1065** | 1 | VALVE GP-MAIN CONTROL (BANK) | |
| | 2 | 1 | **381-1119** | 1 | SUPPORT AS | |
| | | 1 | **7T-1099** | 1 | LINK | |
| M | | 1 | **8T-3490** | 2 | NUT-WELD (M10X1.5-THD) | |
| | 3 | 1 | **7X-7729** | 4 | WASHER (11X25X3-MM THK) | |
| | 4 | 1 | **8T-4121** | 5 | WASHER-HARD (11X21X2.5-MM THK) | |
| M | 5 | 1 | **8T-4136** | 4 | BOLT (M10X1.5X25-MM) | |
| M | 6 | 1 | **8T-4191** | 1 | BOLT (M10X1.5X16-MM) | |
| M | 7 | 1 | **8T-4195** | 4 | BOLT (M10X1.5X30-MM) | |

C - CHANGE FROM PREVIOUS TYPE
M - METRIC PART
Y - SEPARATE ILLUSTRATION

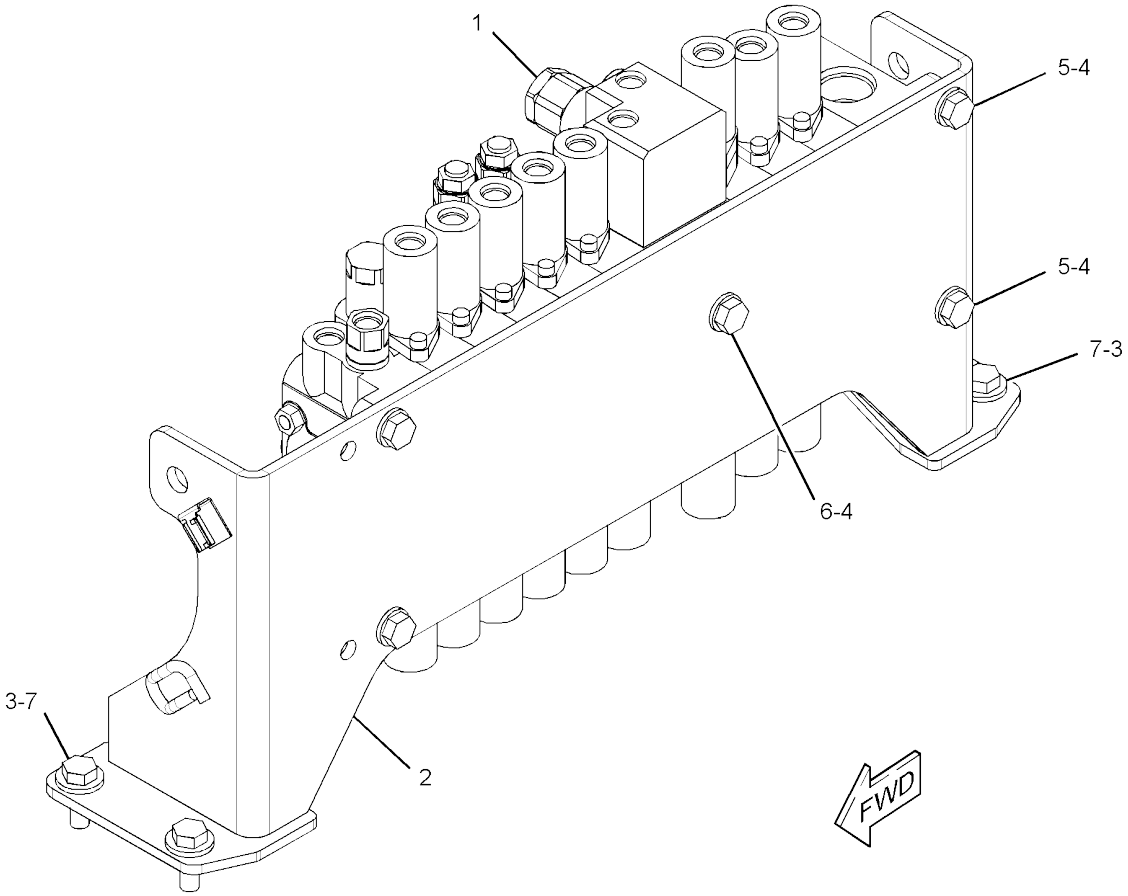


GRAPHIC #1 **<END>** g02856001

# *377-8861* VALVE & MTG GP-CONTROL–AUXILIARY, BOOM SWING

**PART OF 379-4715 CONTROL AR-AUXILIARY**

**SMCS-5051** **i05437176**

| NOTE | REF NO | GRAPHIC REF | PART NUMBER | QTY | PART NAME 1 2 3 4 5 6 (PRODUCT LEVEL) | SEE PAGE |
|---|---|---|---|---|---|---|
| Y | 1 | 1 | **267-0424** | 2 | MANIFOLD & SOLENOID GP-CONTROL (AUXILIARY, BOOM SWING) | 282 |
| | 2 | 1 | **282-2310** | 1 | BRACKET AS | |
| M | | 1 | **8T-3490** | 2 | NUT-WELD (M10X1.5-THD) | |
| | 3 | 1 | **353-4402** | 2 | ADAPTER AS | |
| | 4 | 1 | **379-2000** | 1 | BRACKET AS | |
| M | | 1 | **8T-3490** | 2 | NUT-WELD (M10X1.5-THD) | |
| | 5 | 1 | *148-8325* | 3 | CONNECTOR AS | |
| | | | | | (EACH INCLUDES) | |
| | | 1 | **3J-1907** | 1 | SEAL-O-RING | |
| | | 1 | **4J-5477** | 1 | SEAL-O-RING | |
| | | 1 | **6V-8641** | 1 | CONNECTOR | |
| | 6 | 1 | *148-8351* | 1 | ELBOW AS | |
| | | 1 | **4J-5477** | 1 | SEAL-O-RING | |
| | | 1 | **6V-9849** | 1 | ELBOW | |
| | 7 | 1 | *148-8368* | 3 | ELBOW AS | |
| | | | | | (EACH INCLUDES) | |
| | | 1 | **3J-1907** | 1 | SEAL-O-RING | |
| | | 1 | **4J-5477** | 1 | SEAL-O-RING | |
| | | 1 | **6V-8627** | 1 | ELBOW | |
| | 8 | 1 | **8T-4121** | 4 | WASHER-HARD (11X21X2.5-MM THK) | |
| M | 9 | 1 | **8T-4137** | 4 | BOLT (M10X1.5X20-MM) | |
| M | 10 | 1 | **8T-4200** | 4 | BOLT (M8X1.25X16-MM) | |
| | 11 | 1 | **8T-4224** | 4 | WASHER-HARD (8.8X16X2-MM THK) | |

M - METRIC PART
Y - SEPARATE ILLUSTRATION

*377-8861* **VALVE & MTG GP-CONTROL (*contd.*)** **i05437176**

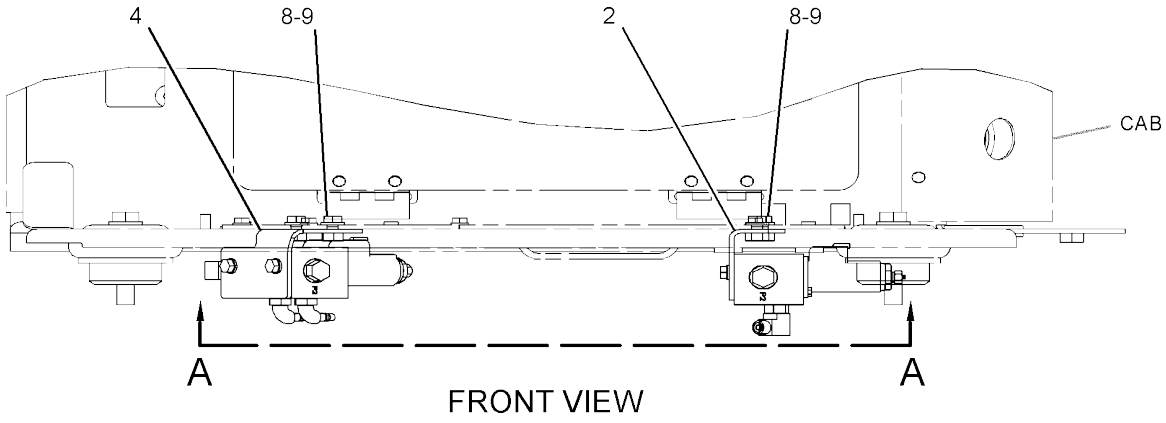


FRONT VIEW

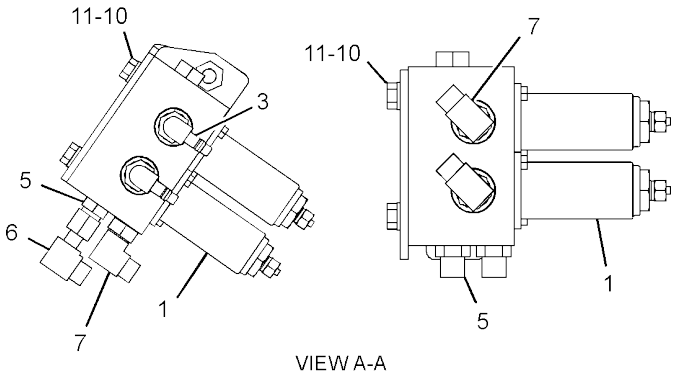


VIEW A-A

GRAPHIC #1 **<END>** g02765398

# HYDRAULIC SYSTEM

## *377-8876* VALVE & MTG GP-CONTROL–2-WAY

**PART OF 379-4724 CONTROL AR-AUXILIARY**
**AN ATTACHMENT**

**SMCS-5051** **i05437177**

| NOTE | REF NO | GRAPHIC REF | PART NUMBER | QTY | PART NAME 1 2 3 4 5 6 (PRODUCT LEVEL) | SEE PAGE |
|---|---|---|---|---|---|---|
| Y | 1 | 1 | **372-9898** | 1 | VALVE GP-SOLENOID (FLOW CONTROL) (2-WAY) | 357 |
| | 2 | 1 | **378-9748** | 1 | BRACKET AS | |
| M | | 1 | **8T-3612** | 2 | NUT-WELD (M8X1.25-THD) | |
| | 3 | 1 | *148-8325* | 2 | CONNECTOR AS | |
| | | | | | (EACH INCLUDES) | |
| | | 1 | **3J-1907** | 1 | SEAL-O-RING | |
| | | 1 | **4J-5477** | 1 | SEAL-O-RING | |
| | | 1 | **6V-8641** | 1 | CONNECTOR | |
| | 4 | 1 | *148-8351* | 2 | ELBOW AS | |
| | | | | | (EACH INCLUDES) | |
| | | 1 | **4J-5477** | 1 | SEAL-O-RING | |
| | | 1 | **6V-9849** | 1 | ELBOW | |
| | 5 | 1 | *148-8368* | 4 | ELBOW AS | |
| | | | | | (EACH INCLUDES) | |
| | | 1 | **3J-1907** | 1 | SEAL-O-RING | |
| | | 1 | **4J-5477** | 1 | SEAL-O-RING | |
| | | 1 | **6V-8627** | 1 | ELBOW | |
| | 6 | 1 | *150-3033* | 2 | ELBOW AS | |
| | | | | | (EACH INCLUDES) | |
| | | 1 | **3J-1907** | 1 | SEAL-O-RING | |
| | | 1 | **4J-5477** | 1 | SEAL-O-RING | |
| | | 1 | **8T-0164** | 1 | ELBOW | |
| | 7 | 1 | *187-2120* | 1 | ELBOW AS | |
| | | 1 | **4J-5477** | 1 | SEAL-O-RING | |
| | | 1 | **8C-8408** | 1 | ELBOW | |
| | 8 | 1 | **8T-4121** | 2 | WASHER-HARD (11X21X2.5-MM THK) | |
| M | 9 | 1 | **8T-4136** | 2 | BOLT (M10X1.5X25-MM) | |
| | 10 | 1 | **8T-4224** | 2 | WASHER-HARD (8.8X16X2-MM THK) | |
| M | 11 | 1 | **8T-6870** | 2 | BOLT (M8X1.25X70-MM) | |

M - METRIC PART
Y - SEPARATE ILLUSTRATION

*377-8876* **VALVE & MTG GP-CONTROL (*contd.*)** **i05437177**

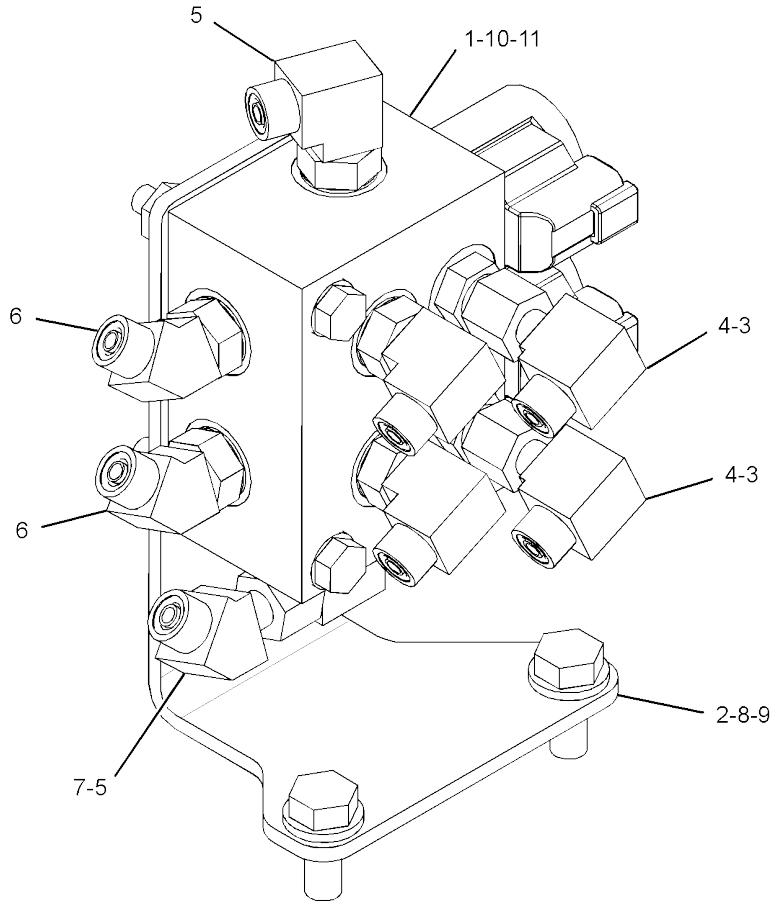


GRAPHIC #1 **<END>** g02767697

# *391-3188* VALVE & MTG GP-MAIN CONTROL

**S/N: RKY1-1378**
**PART OF 377-8930 BLADE AR-ANGLING**
**AN ATTACHMENT**

**SMCS-5051** **i04728129**

| NOTE | REF NO | GRAPHIC REF | PART NUMBER | QTY | PART NAME 1 2 3 4 5 6 (PRODUCT LEVEL) | SEE PAGE |
|---|---|---|---|---|---|---|
| Y | 1 | 1 | **315-5816** | 1 | VALVE GP-MAIN CONTROL (ANGLE BLADE) | 340 |
| | 2 | 1 | **381-1119** | 1 | SUPPORT AS | |
| | | 1 | **7T-1099** | 1 | LINK | |
| M | | 1 | **8T-3490** | 2 | NUT-WELD (M10X1.5-THD) | |
| | 3 | 1 | **7X-7729** | 4 | WASHER (11X25X3-MM THK) | |
| | 4 | 1 | **8T-4121** | 5 | WASHER-HARD (11X21X2.5-MM THK) | |
| M | 5 | 1 | **8T-4136** | 4 | BOLT (M10X1.5X25-MM) | |
| M | 6 | 1 | **8T-4191** | 1 | BOLT (M10X1.5X16-MM) | |
| M | 7 | 1 | **8T-4195** | 4 | BOLT (M10X1.5X30-MM) | |

M - METRIC PART
Y - SEPARATE ILLUSTRATION

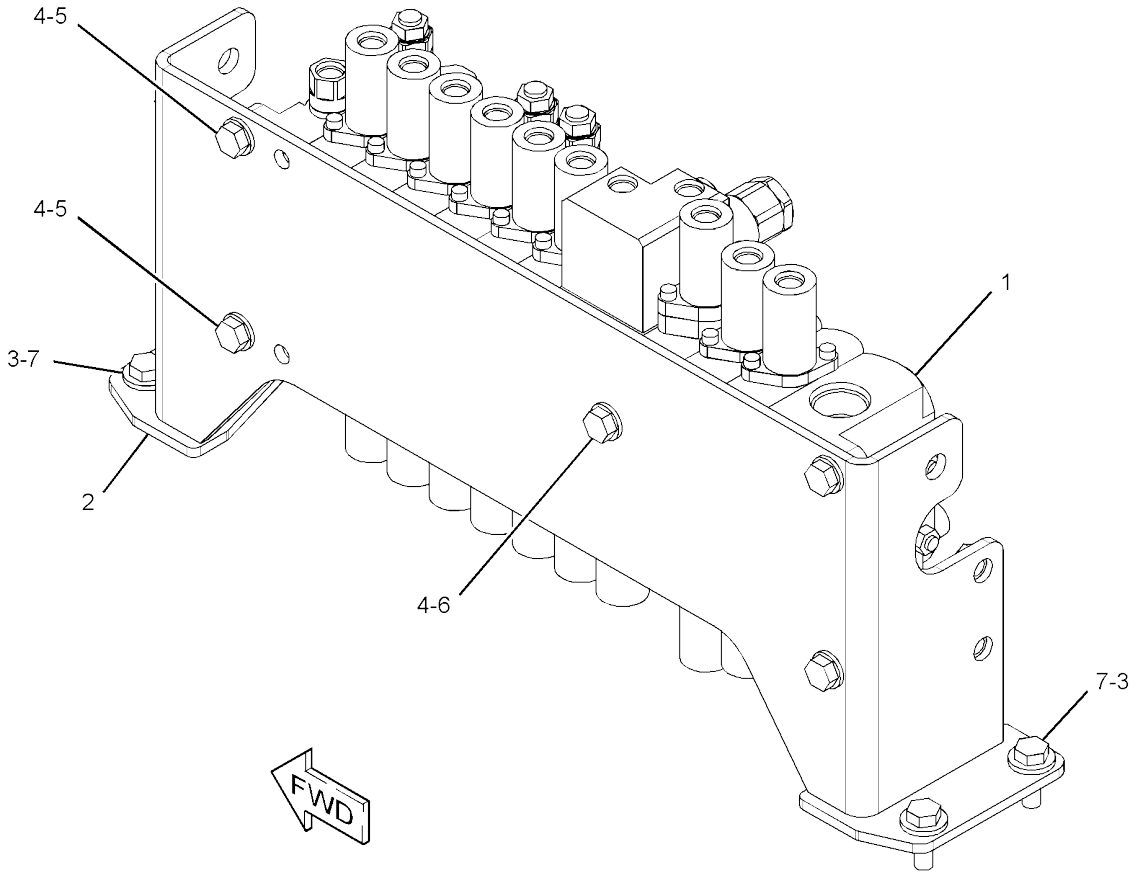


GRAPHIC #1 **<END>** g02855956

# *356-4545* VALVE & MTG GP-PILOT–TRAVEL

**PART OF 377-8934, 377-8935 CONTROL AR-GOVERNOR**
**AN ATTACHMENT**
**TYPE 1**

**SMCS-5059** **i04019552**

| NOTE | REF NO | GRAPHIC REF | PART NUMBER | QTY | PART NAME 1 2 3 4 5 6 (PRODUCT LEVEL) | SEE PAGE |
|---|---|---|---|---|---|---|
| Y | 1 | 1 | **356-3823** | 1 | VALVE GP-PILOT (WITH SHUTTLE) (TRAVEL) | 345 |
| | 2 | 1 | **8T-4121** | 4 | WASHER-HARD (11X21X2.5-MM THK) | |
| M | 3 | 1 | **8T-4136** | 4 | BOLT (M10X1.5X25-MM) | |

M - METRIC PART
Y - SEPARATE ILLUSTRATION

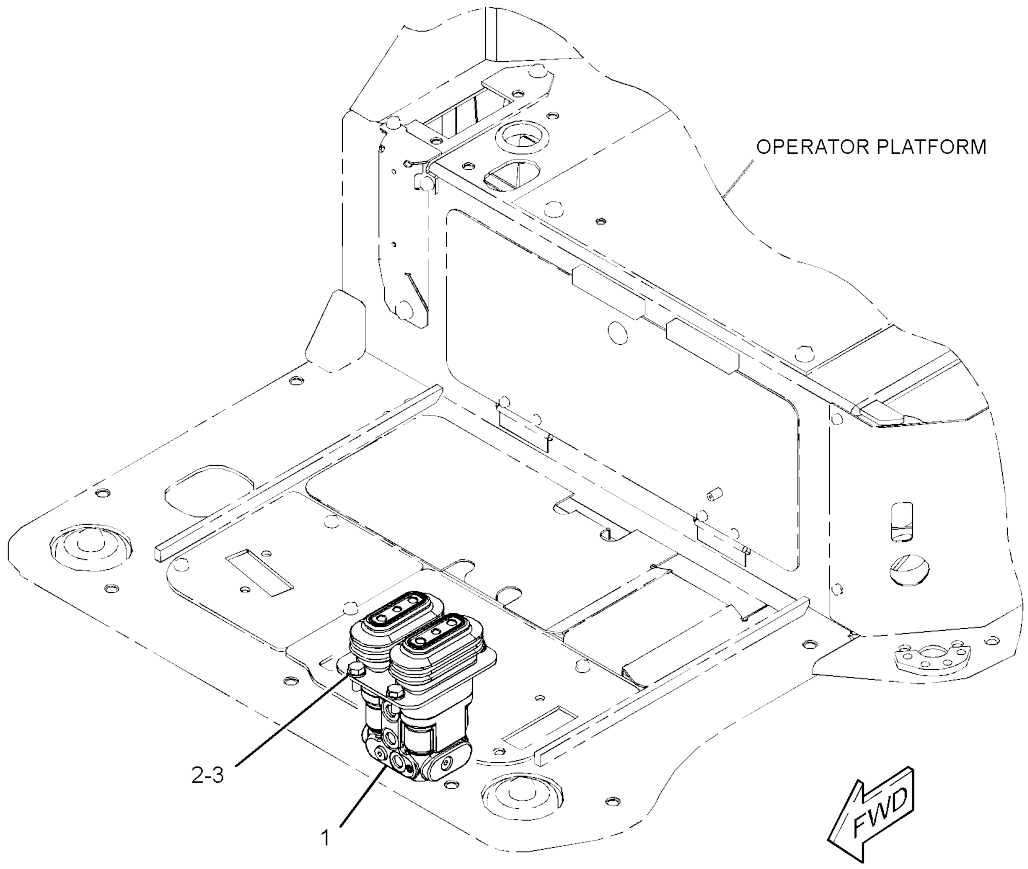


GRAPHIC #1 **<END>** g02204702

# *356-4545* VALVE & MTG GP-PILOT–TRAVEL

**PART OF 377-8934, 377-8935 CONTROL AR-GOVERNOR**
**AN ATTACHMENT**
**TYPE 2**

**SMCS-5059** **i05357679**

| NOTE | REF NO | GRAPHIC REF | PART NUMBER | QTY | PART NAME 1 2 3 4 5 6 (PRODUCT LEVEL) | SEE PAGE |
|---|---|---|---|---|---|---|
| CY | 1 | 1 | **416-2294** | 1 | VALVE GP-PILOT (TRAVEL) | 349 |
| | 2 | 1 | **8T-4121** | 4 | WASHER-HARD (11X21X2.5-MM THK) | |
| M | 3 | 1 | **8T-4136** | 4 | BOLT (M10X1.5X25-MM) | |

C - CHANGE FROM PREVIOUS TYPE
M - METRIC PART
Y - SEPARATE ILLUSTRATION

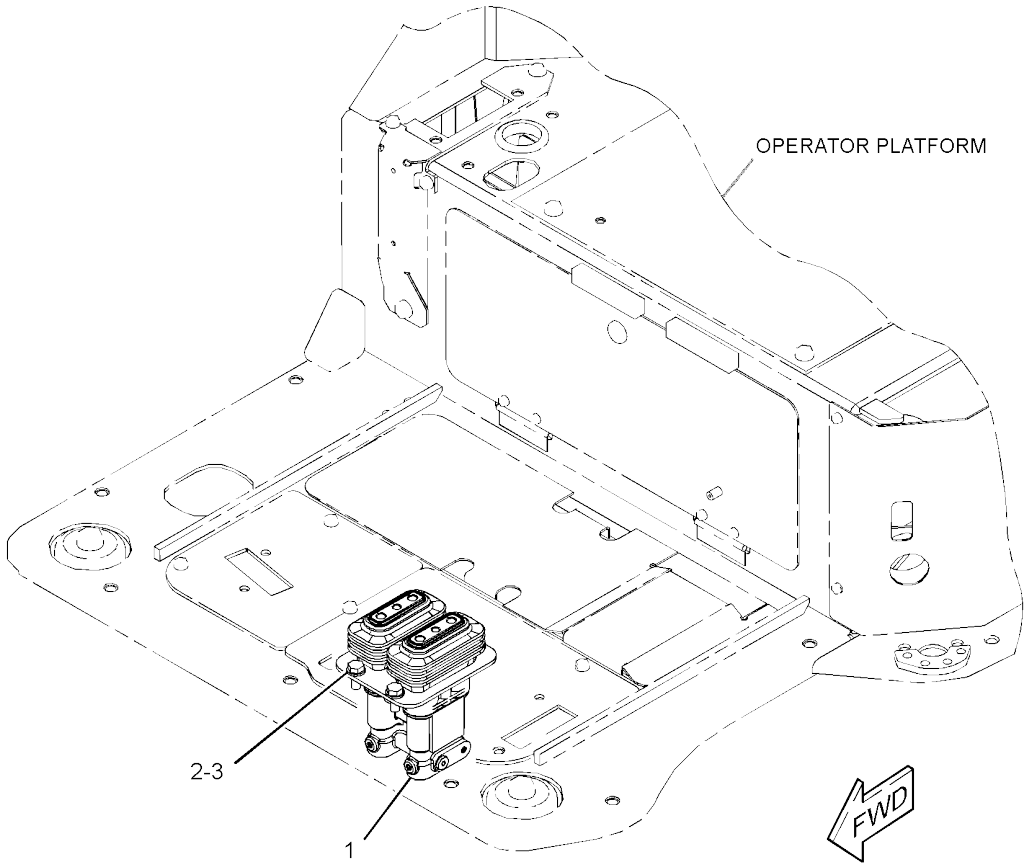


GRAPHIC #1 **<END>** g03401369

# *421-2718* VALVE & MTG GP-PILOT–CAB

**S/N: RKY1466-UP**

**PART OF 376-6692, 376-6696, 383-5927, 383-5928 CAB AR**

**AN ATTACHMENT**

**SMCS-5059** **i05031518**

| NOTE | REF NO | GRAPHIC REF | PART NUMBER | QTY | PART NAME 1 2 3 4 5 6 (PRODUCT LEVEL) | SEE PAGE |
|---|---|---|---|---|---|---|
| Y | 1 | 1 | **393-7501** | 1 | VALVE GP-PILOT (BLADE CONTROL) | 347 |
| M | 2 | 1 | **101-7404** | 2 | BOLT-SOCKET HEAD (M10X1.5X30-MM) | |

M - METRIC PART
Y - SEPARATE ILLUSTRATION

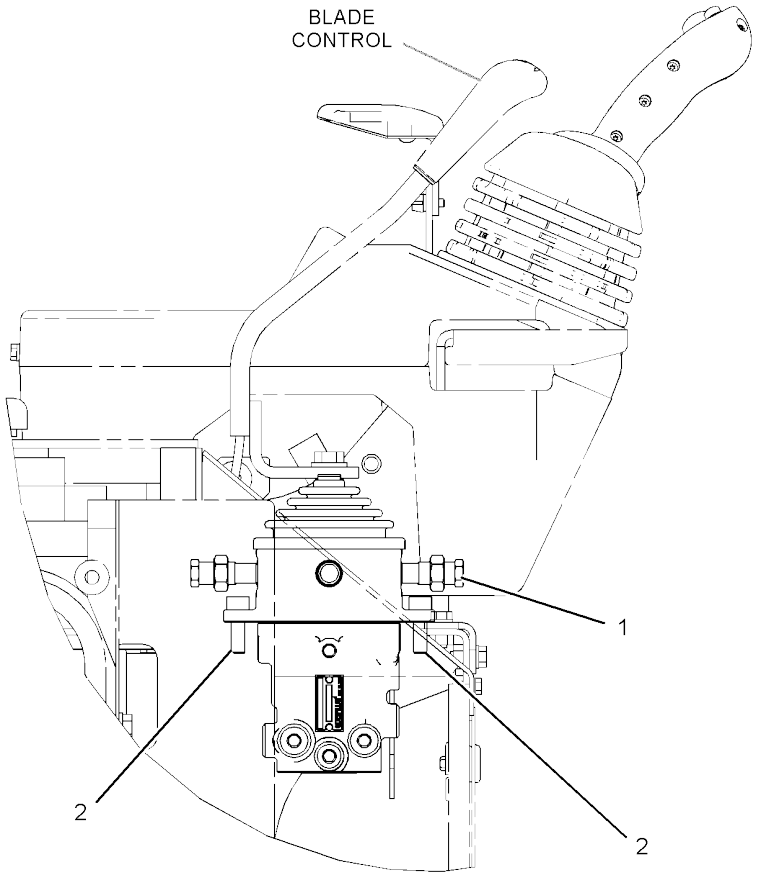


RIGHT SIDE VIEW

GRAPHIC #1 **<END>** g03202979

# 361-1132 VALVE GP-CHECK–HYDRAULIC CONTROL LOCK

**PART OF 361-1125 CYLINDER GP-HYDRAULIC**
**AN ATTACHMENT**

**SMCS-5067** **i04404022**

| NOTE | REF NO | GRAPHIC REF | PART NUMBER | QTY | PART NAME 1 2 3 4 5 6 (PRODUCT LEVEL) | SEE PAGE |
|---|---|---|---|---|---|---|
| | 1 | 1 | **215-3277** | 1 | SEAL-O-RING | |
| | 2 | 1 | **214-7654** | 1 | SEAL-O-RING | |
| | | 1 | **180-8424** | 1 | SEAL-O-RING | |
| | 3 | 1 | **112-5282** | 1 | SEAL-O-RING | |

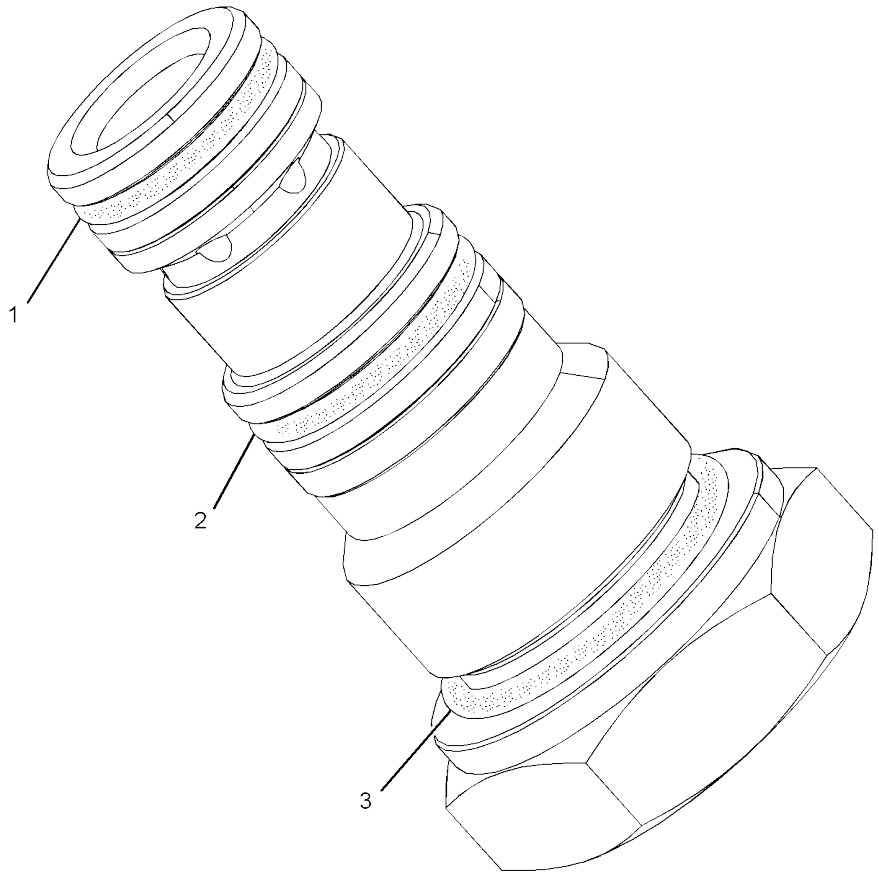


GRAPHIC #1 **<END>** g02598836

# 274-9034 VALVE GP-CONTROL

**PART OF 281-3052 MOTOR GP-SWING**

**SMCS-5051** **i02503218**

| NOTE | REF NO | GRAPHIC REF | PART NUMBER | QTY | PART NAME 1 2 3 4 5 6 (PRODUCT LEVEL) | SEE PAGE |
|---|---|---|---|---|---|---|
| | 1 | 1 | **169-1130** | 4 | PLUG | |
| | 2 | 1 | **095-1579** | 4 | SEAL-O-RING | |
| | 3 | 1 | **095-1574** | 2 | SEAL-O-RING | |
| | 4 | 1 | **169-1116** | 1 | PLUG | |

PARTS SHOWN IN GRAPHIC WITHOUT A REFERENCE NUMBER ARE NOT SERVICED SEPARATELY

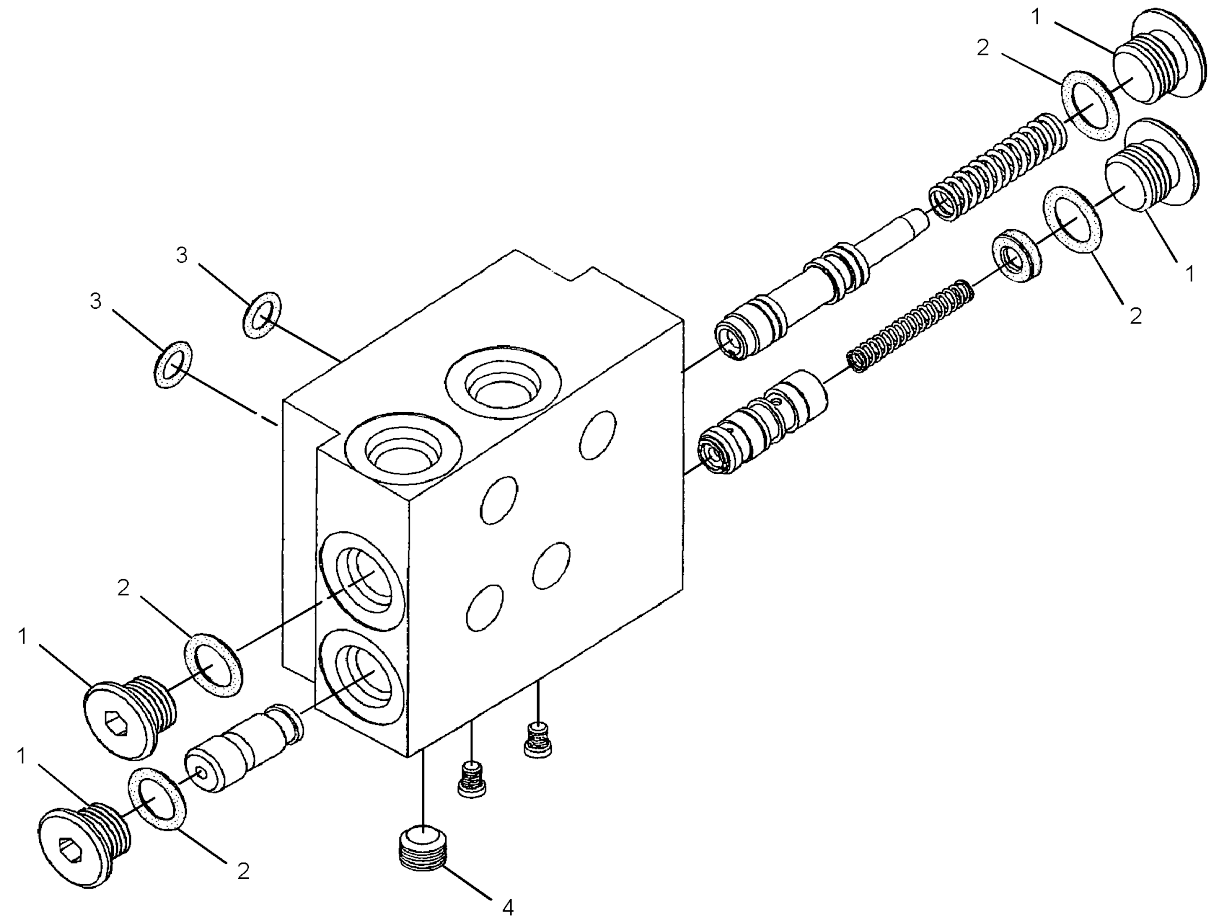


GRAPHIC #1 **<END>** g01252434

# 281-2326 VALVE GP-CONTROL–INLET

**PART OF 315-5815, 315-5816 VALVE GP-MAIN CONTROL**
**AN ATTACHMENT**

**SMCS-5051** **i04046739**

| NOTE | REF NO | GRAPHIC REF | PART NUMBER | QTY | PART NAME 1 2 3 4 5 6 (PRODUCT LEVEL) | SEE PAGE |
|---|---|---|---|---|---|---|
| | 1 | 1 | **281-2952** | 1 | SPRING | |
| | 2 | 1 | **281-2953** | 1 | SPACER | |
| | 3 | 1 | **281-2954** | 1 | SEAL | |
| | 4 | 1 | **281-2955** | 1 | WASHER | |
| | 5 | 1 | **281-2956** | 1 | FLANGE | |
| | 6 | 1 | **281-2957** | 1 | SCREW | |
| | 7 | 1 | **281-2958** | 1 | NUT | |
| | 8 | 1 | **281-2959** | 2 | BOLT | |
| | 9 | 1 | **281-2960** | 1 | SEAL | |
| | 10 | 1 | **150-6355** | 1 | PLUG | |
| | 11 | 1 | **281-2961** | 2 | SEAL | |
| | 12 | 1 | **281-2962** | 1 | ORIFICE | |
| | 13 | 1 | **281-2963** | 1 | RING | |
| | 14 | 1 | **356-1597** | 1 | PLUG | |
| | 15 | 1 | **150-6367** | 1 | SEAL-O-RING | |
| | 16 | 1 | **150-0885** | 1 | SEAL | |
| | 17 | 1 | **281-2965** | 1 | RING | |

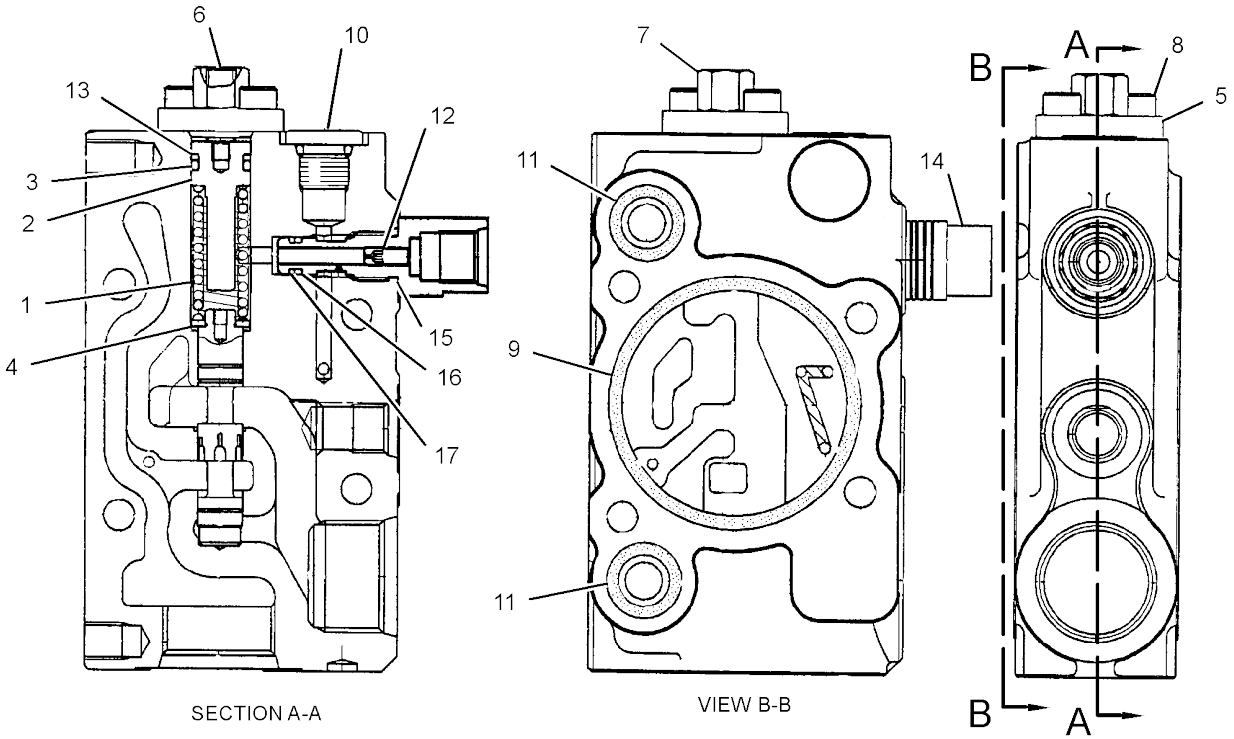


GRAPHIC #1 **<END>** g01222085

# 281-2332 VALVE GP-CONTROL–BUCKET

**PART OF 315-5815, 315-5816 VALVE GP-MAIN CONTROL**
**AN ATTACHMENT**

**SMCS-5051** **i04023299**

| NOTE | REF NO | GRAPHIC REF | PART NUMBER | QTY | PART NAME 1 2 3 4 5 6 (PRODUCT LEVEL) | SEE PAGE |
|---|---|---|---|---|---|---|
| | 1 | 1 | **281-2972** | 2 | SEAT | |
| | 2 | 1 | **281-2973** | 2 | SPRING | |
| | 3 | 1 | **281-2974** | 2 | SEAT | |
| | 4 | 1 | **281-2975** | 2 | CAP | |
| | 5 | 1 | **281-2976** | 2 | SEAL | |
| | 6 | 1 | **281-2977** | 4 | BOLT | |
| | 7 | 1 | **281-2978** | 1 | SPRING | |
| | 8 | 1 | **281-2979** | 1 | PLUG | |
| | 9 | 1 | **250-8771** | 1 | SEAL | |
| | 10 | 1 | **281-2960** | 1 | SEAL | |
| | 11 | 1 | **281-2985** | 2 | PLUNGER | |
| | 12 | 1 | **281-2986** | 2 | SPRING | |
| | 13 | 1 | **281-2961** | 2 | SEAL | |
| | 14 | 1 | **279-4796** | 1 | PLATE | |

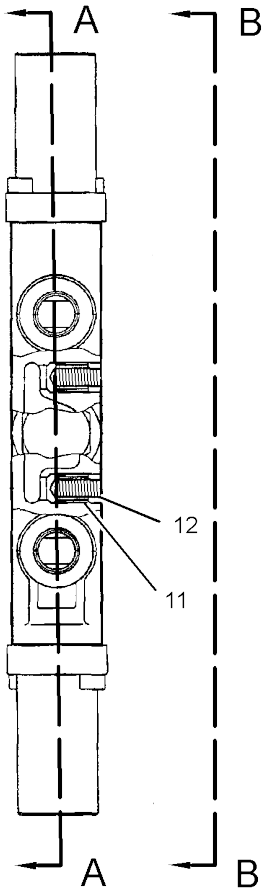


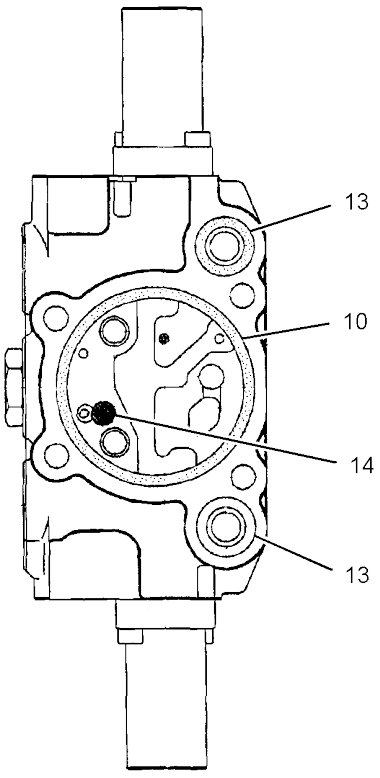


VIEW B-B

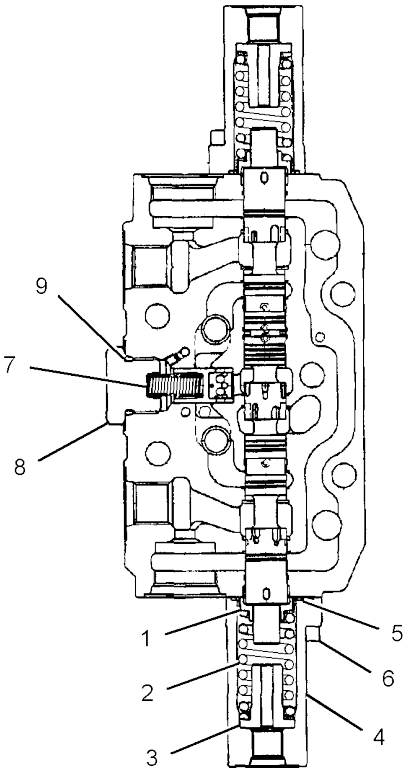


SECTION A-A

GRAPHIC #1

**<END>**

g01223272

# 281-2334 VALVE GP-CONTROL–SWING

**PART OF 315-5815, 315-5816 VALVE GP-MAIN CONTROL**
**AN ATTACHMENT**

**SMCS-5051** **i04023301**

| NOTE | REF NO | GRAPHIC REF | PART NUMBER | QTY | PART NAME 1 2 3 4 5 6 (PRODUCT LEVEL) | SEE PAGE |
|---|---|---|---|---|---|---|
| | 1 | 1 | **281-2972** | 2 | SEAT | |
| | 2 | 1 | **281-2973** | 2 | SPRING | |
| | 3 | 1 | **281-2974** | 2 | SEAT | |
| | 4 | 1 | **281-2975** | 2 | CAP | |
| | 5 | 1 | **281-2976** | 2 | SEAL | |
| | 6 | 1 | **281-2977** | 4 | BOLT | |
| | 7 | 1 | **281-2978** | 1 | SPRING | |
| | 8 | 1 | **281-2979** | 1 | PLUG | |
| | 9 | 1 | **250-8771** | 1 | SEAL | |
| | 10 | 1 | **281-2960** | 1 | SEAL | |
| | 11 | 1 | **281-2985** | 2 | PLUNGER | |
| | 12 | 1 | **281-2986** | 2 | SPRING | |
| | 13 | 1 | **281-2961** | 2 | SEAL | |
| | 14 | 1 | **279-4796** | 1 | PLATE | |

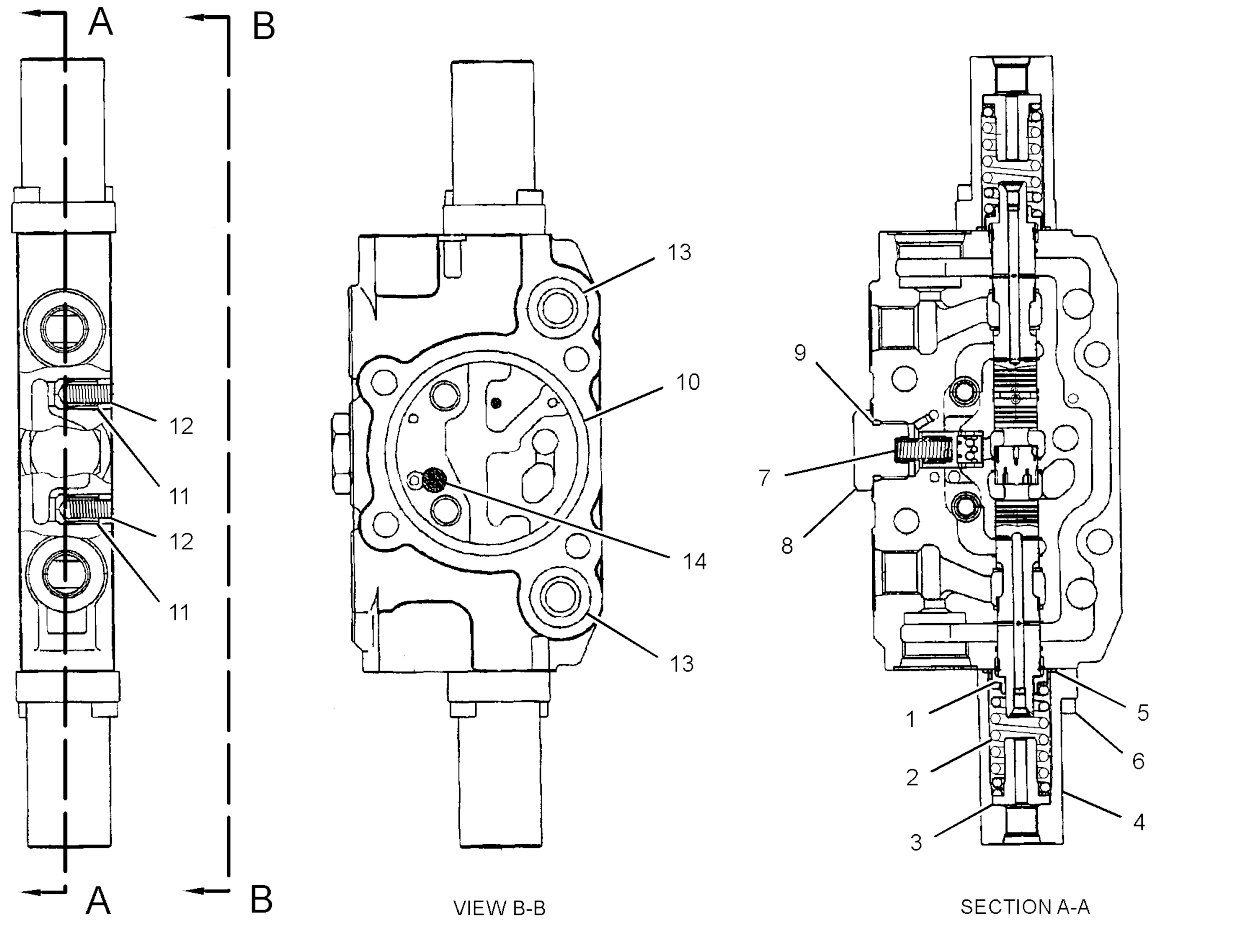


GRAPHIC #1 **<END>** g01223381

# 281-2336 VALVE GP-CONTROL–OUTLET

**PART OF 315-5815, 315-5816 VALVE GP-MAIN CONTROL**
**AN ATTACHMENT**

**SMCS-5051** **i05426621**

| NOTE | REF NO | GRAPHIC REF | PART NUMBER | QTY | PART NAME 1 2 3 4 5 6 (PRODUCT LEVEL) | SEE PAGE |
|---|---|---|---|---|---|---|
| | 1 | 1 | **279-4810** | 1 | PLUG AS | |
| | 2 | 1 | **150-6355** | 1 | PLUG | |
| | 3 | 1 | **279-4786** | 1 | VALVE GP-RELIEF (OUTLET) | |

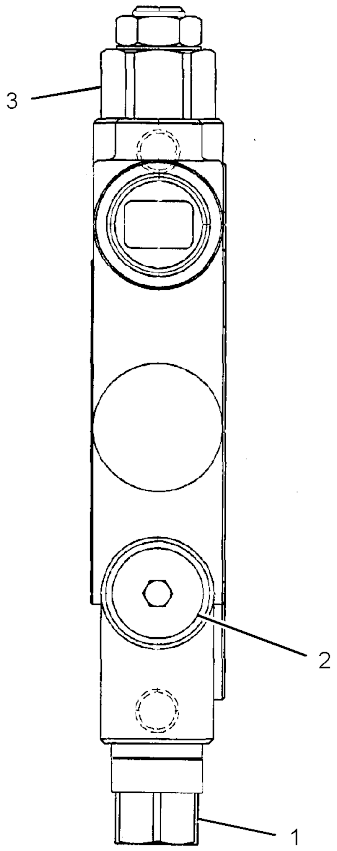


GRAPHIC #1 **<END>** g01222276

# 326-8530 VALVE GP-CONTROL–ANGLE

**PART OF 315-5816 VALVE GP-MAIN CONTROL**

**AN ATTACHMENT**

**SMCS-5051** **i04016751**

| NOTE | REF NO | GRAPHIC REF | PART NUMBER | QTY | PART NAME 1 2 3 4 5 6 (PRODUCT LEVEL) | SEE PAGE |
|---|---|---|---|---|---|---|
| | 1 | 1 | **281-2972** | 2 | SEAT | |
| | 2 | 1 | **281-2973** | 2 | SPRING | |
| | 3 | 1 | **281-2974** | 2 | SEAT | |
| | 4 | 1 | **281-2975** | 2 | CAP | |
| | 5 | 1 | **281-2976** | 2 | SEAL | |
| | 6 | 1 | **281-2977** | 4 | BOLT | |
| | 7 | 1 | **281-2978** | 1 | SPRING | |
| | 8 | 1 | **281-2979** | 1 | PLUG | |
| | 9 | 1 | **250-8771** | 1 | SEAL | |
| | 10 | 1 | **281-2960** | 1 | SEAL | |
| | 11 | 1 | **281-2985** | 2 | PLUNGER | |
| | 12 | 1 | **281-2986** | 2 | SPRING | |
| | 13 | 1 | **281-2961** | 2 | SEAL | |

*326-8530* **VALVE GP-CONTROL (*contd.*)** **i04016751**

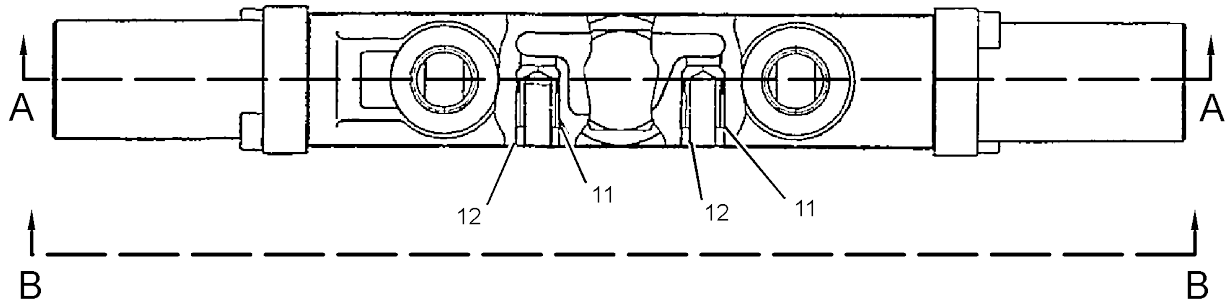


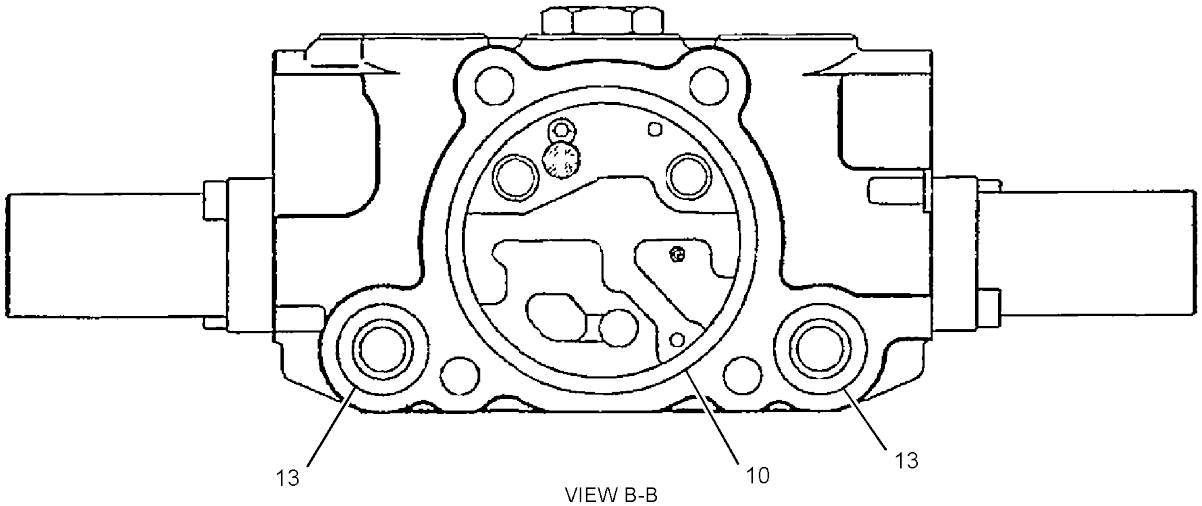


VIEW B-B

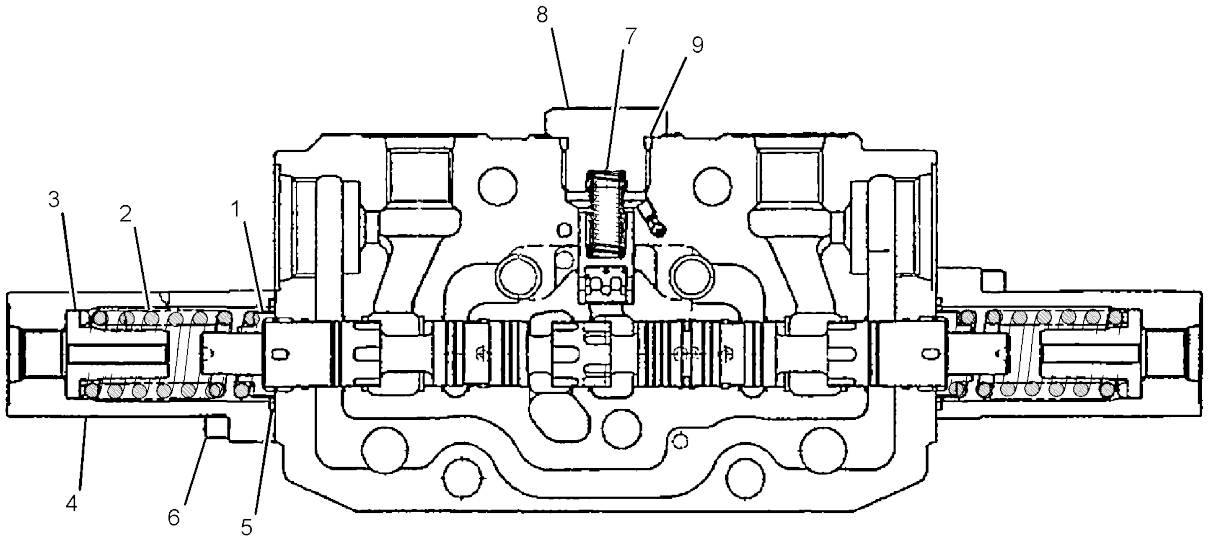


SECTION A-A

GRAPHIC #1 **<END>** g01954780

# 328-5659 VALVE GP-CONTROL–BOOM SWING

**PART OF 315-5816 VALVE GP-MAIN CONTROL**

**AN ATTACHMENT**

**SMCS-5051** **i04023302**

| NOTE | REF NO | GRAPHIC REF | PART NUMBER | QTY | PART NAME 1 2 3 4 5 6 (PRODUCT LEVEL) | SEE PAGE |
|---|---|---|---|---|---|---|
| | 1 | 1 | **281-2972** | 2 | SEAT | |
| | 2 | 1 | **281-2973** | 2 | SPRING | |
| | 3 | 1 | **281-2974** | 2 | SEAT | |
| | 4 | 1 | **281-2975** | 2 | CAP | |
| | 5 | 1 | **281-2976** | 2 | SEAL | |
| | 6 | 1 | **281-2977** | 4 | BOLT | |
| | 7 | 1 | **281-2978** | 1 | SPRING | |
| | 8 | 1 | **281-2979** | 1 | PLUG | |
| | 9 | 1 | **250-8771** | 1 | SEAL | |
| | 10 | 1 | **281-2960** | 1 | SEAL | |
| | 11 | 1 | **281-2985** | 2 | PLUNGER | |
| | 12 | 1 | **281-2986** | 2 | SPRING | |
| | 13 | 1 | **281-2961** | 2 | SEAL | |
| | 14 | 1 | **279-4796** | 1 | PLATE | |

*328-5659* **VALVE GP-CONTROL (*contd.*)** **i04023302**

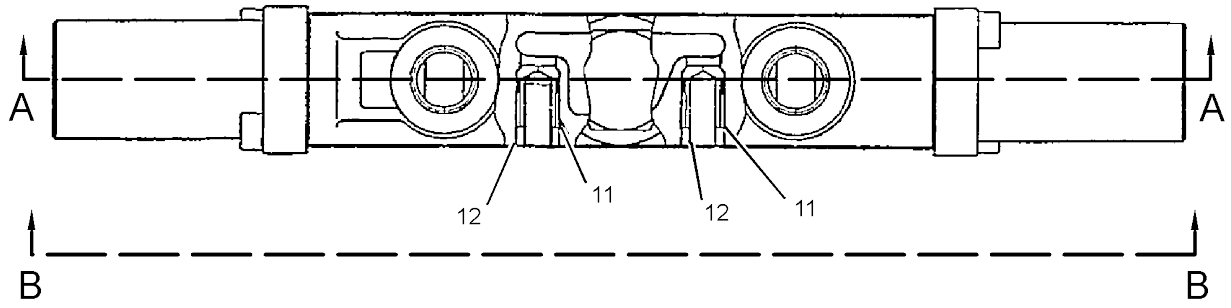


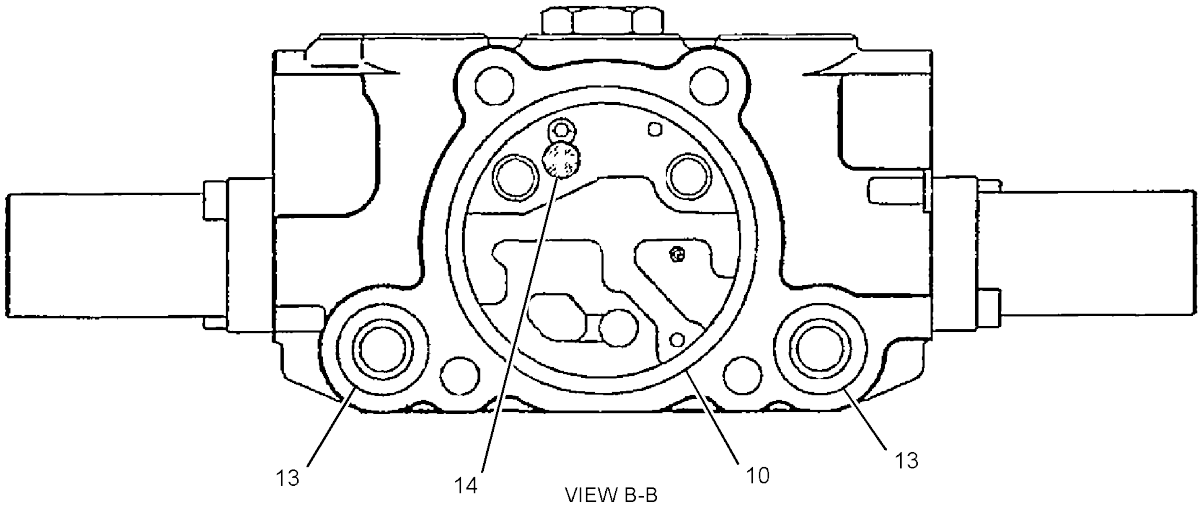


VIEW B-B

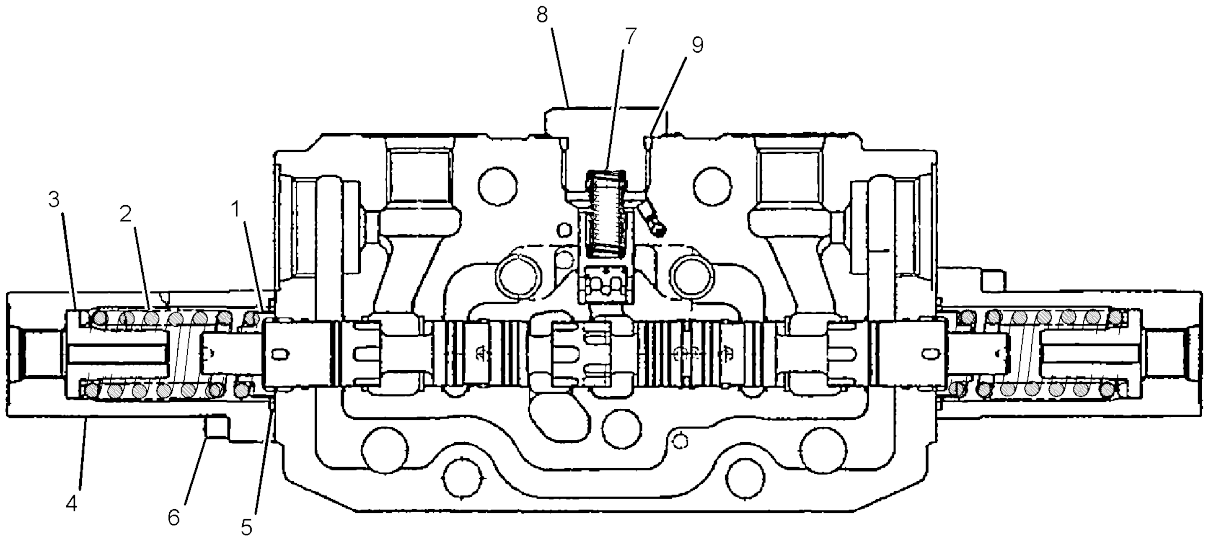


SECTION A-A

GRAPHIC #1 **<END>** g01955013

# HYDRAULIC SYSTEM

## 329-8369 VALVE GP-CONTROL–AUXILIARY

**PART OF 315-5815, 315-5816 VALVE GP-MAIN CONTROL**
**AN ATTACHMENT**

**SMCS-5051** **i04015356**

| NOTE | REF NO | GRAPHIC REF | PART NUMBER | QTY | PART NAME 1 2 3 4 5 6 (PRODUCT LEVEL) | SEE PAGE |
|---|---|---|---|---|---|---|
| | 1 | 1 | **281-2972** | 2 | SEAT | |
| | 2 | 1 | **281-2983** | 2 | SPRING | |
| | 3 | 1 | **281-2974** | 2 | SEAT | |
| | 4 | 1 | **281-2975** | 2 | CAP | |
| | 5 | 1 | **281-2976** | 2 | SEAL | |
| | 6 | 1 | **281-2977** | 4 | BOLT | |
| | 7 | 1 | **281-2978** | 1 | SPRING | |
| | 8 | 1 | **281-2979** | 1 | PLUG | |
| | 9 | 1 | **250-8771** | 1 | SEAL | |
| | 10 | 1 | **281-2960** | 1 | SEAL | |
| | 11 | 1 | **281-2985** | 2 | PLUNGER | |
| | 12 | 1 | **281-2986** | 2 | SPRING | |
| | 13 | 1 | **281-2961** | 2 | SEAL | |
| | 14 | 1 | **279-4796** | 1 | PLATE | |

*329-8369* **VALVE GP-CONTROL (*contd.*)** **i04015356**

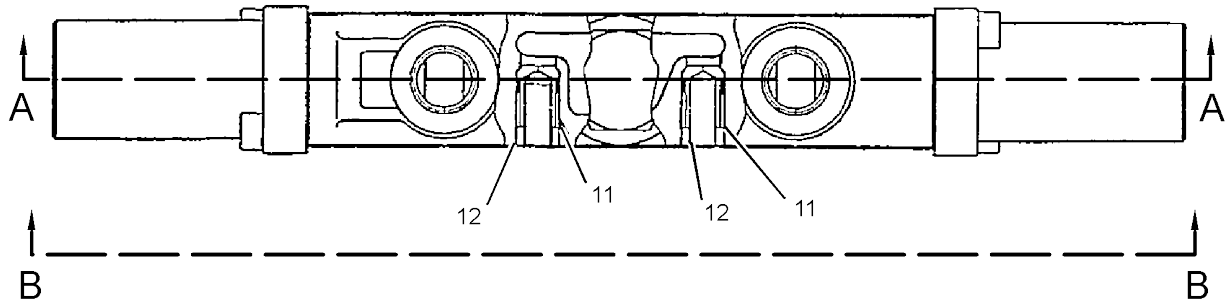


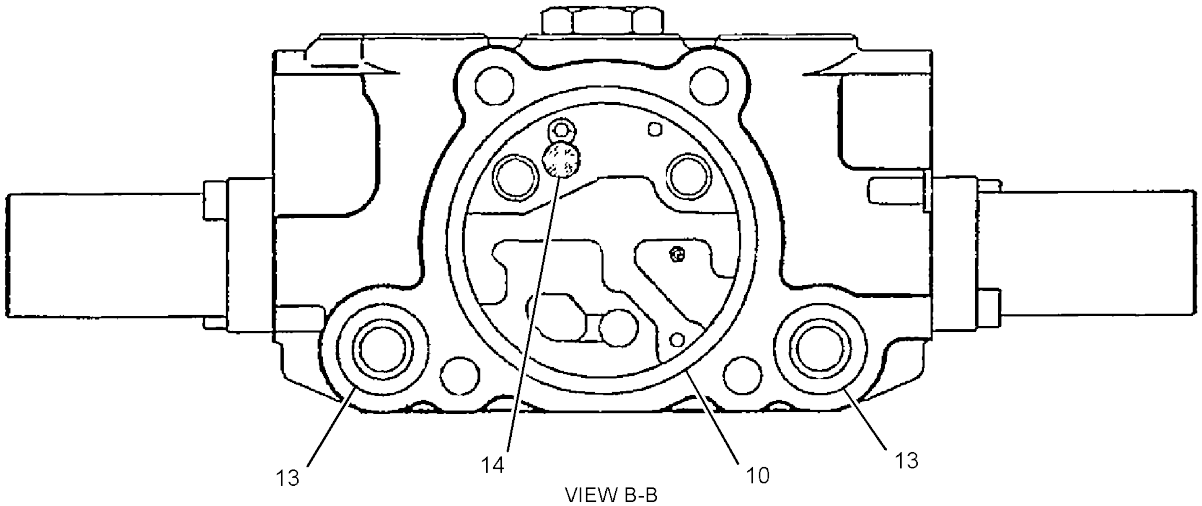


VIEW B-B

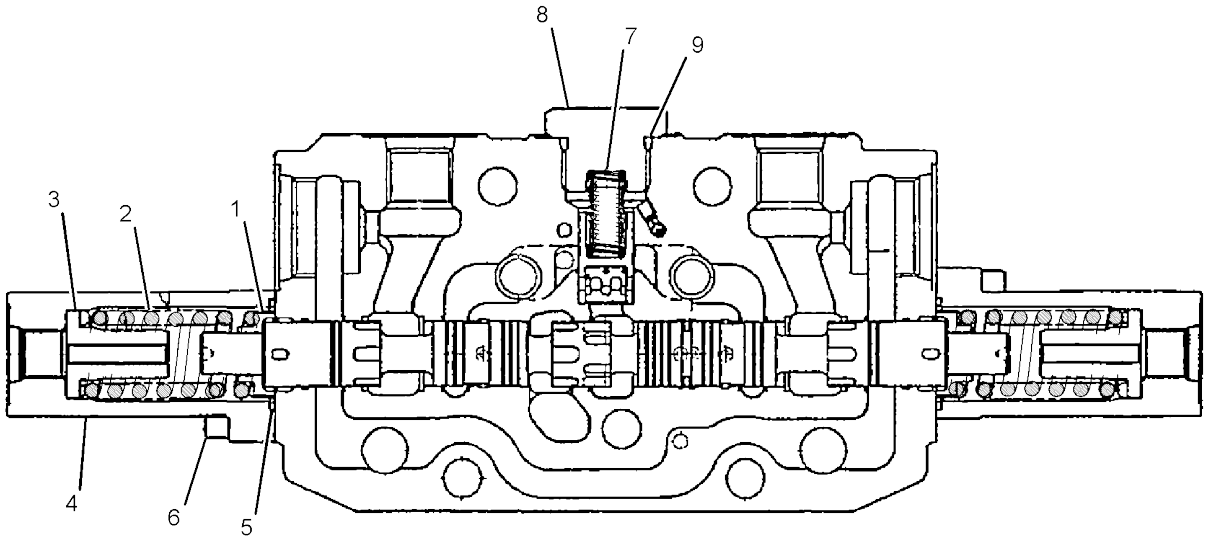


SECTION A-A

GRAPHIC #1 **<END>** g01954685

# *332-4123* VALVE GP-CONTROL–BOOM SWING

**PART OF 315-5815 VALVE GP-MAIN CONTROL**
**AN ATTACHMENT**

**SMCS-5051** **i04024674**

| NOTE | REF NO | GRAPHIC REF | PART NUMBER | QTY | PART NAME 1 2 3 4 5 6 (PRODUCT LEVEL) | SEE PAGE |
|---|---|---|---|---|---|---|
| | 1 | 1 | **281-2972** | 2 | SEAT | |
| | 2 | 1 | **281-2973** | 2 | SPRING | |
| | 3 | 1 | **281-2974** | 2 | SEAT | |
| | 4 | 1 | **281-2975** | 2 | CAP | |
| | 5 | 1 | **281-2976** | 2 | SEAL | |
| | 6 | 1 | **281-2977** | 4 | BOLT | |
| | 7 | 1 | **281-2978** | 1 | SPRING | |
| | 8 | 1 | **281-2979** | 1 | PLUG | |
| | 9 | 1 | **250-8771** | 1 | SEAL | |
| | 10 | 1 | **281-2960** | 1 | SEAL | |
| | 11 | 1 | **281-2985** | 2 | PLUNGER | |
| | 12 | 1 | **281-2986** | 2 | SPRING | |
| | 13 | 1 | **281-2961** | 2 | SEAL | |

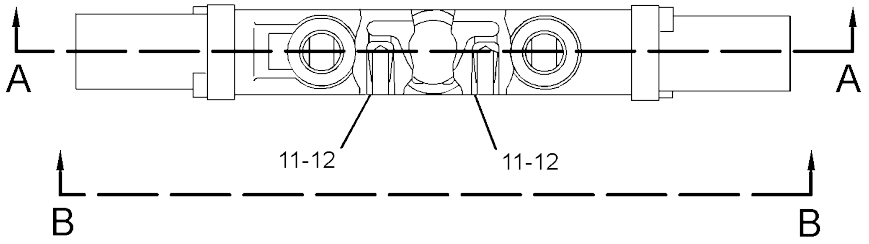


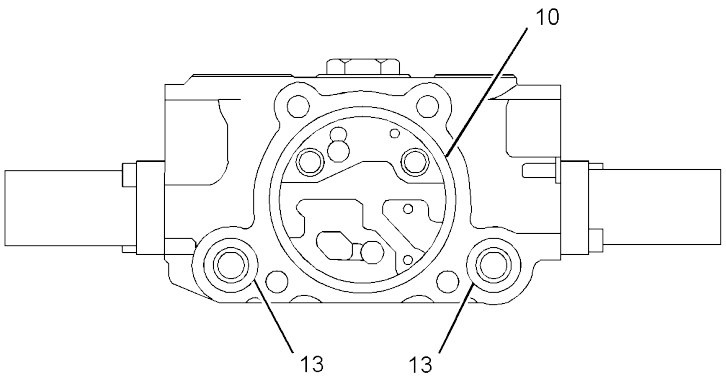


VIEW B-B

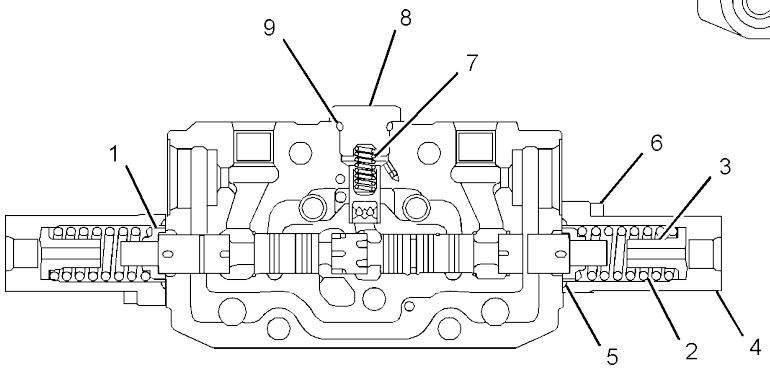


SECTION A-A

GRAPHIC #1 **<END>** g02209374

# *357-5889* VALVE GP-CONTROL–BLADE

**PART OF 315-5816 VALVE GP-MAIN CONTROL**
**AN ATTACHMENT**

**SMCS-5051** **i04016792**

| NOTE | REF NO | GRAPHIC REF | PART NUMBER | QTY | PART NAME 1 2 3 4 5 6 (PRODUCT LEVEL) | SEE PAGE |
|---|---|---|---|---|---|---|
| | 1 | 1 | **281-2972** | 2 | SEAT | |
| | 2 | 1 | **281-2983** | 1 | SPRING | |
| | 3 | 1 | **281-2974** | 2 | SEAT | |
| | 4 | 1 | **281-2975** | 2 | CAP | |
| | 5 | 1 | **281-2976** | 2 | SEAL | |
| | 6 | 1 | **281-2984** | 4 | BOLT | |
| | 7 | 1 | **281-2978** | 1 | SPRING | |
| | 8 | 1 | **281-2979** | 1 | PLUG | |
| | 9 | 1 | **250-8771** | 1 | SEAL | |
| | 10 | 1 | **281-2960** | 1 | SEAL | |
| | 11 | 1 | **281-2985** | 2 | PLUNGER | |
| | 12 | 1 | **281-2986** | 2 | SPRING | |
| | 13 | 1 | **281-2961** | 2 | SEAL | |
| | 14 | 1 | **279-4796** | 1 | PLATE | |
| | 15 | 1 | **281-2987** | 2 | SPACER | |
| | 16 | 1 | **150-6346** | 2 | SEAL | |
| | 17 | 1 | **288-9388** | 1 | SPRING | |

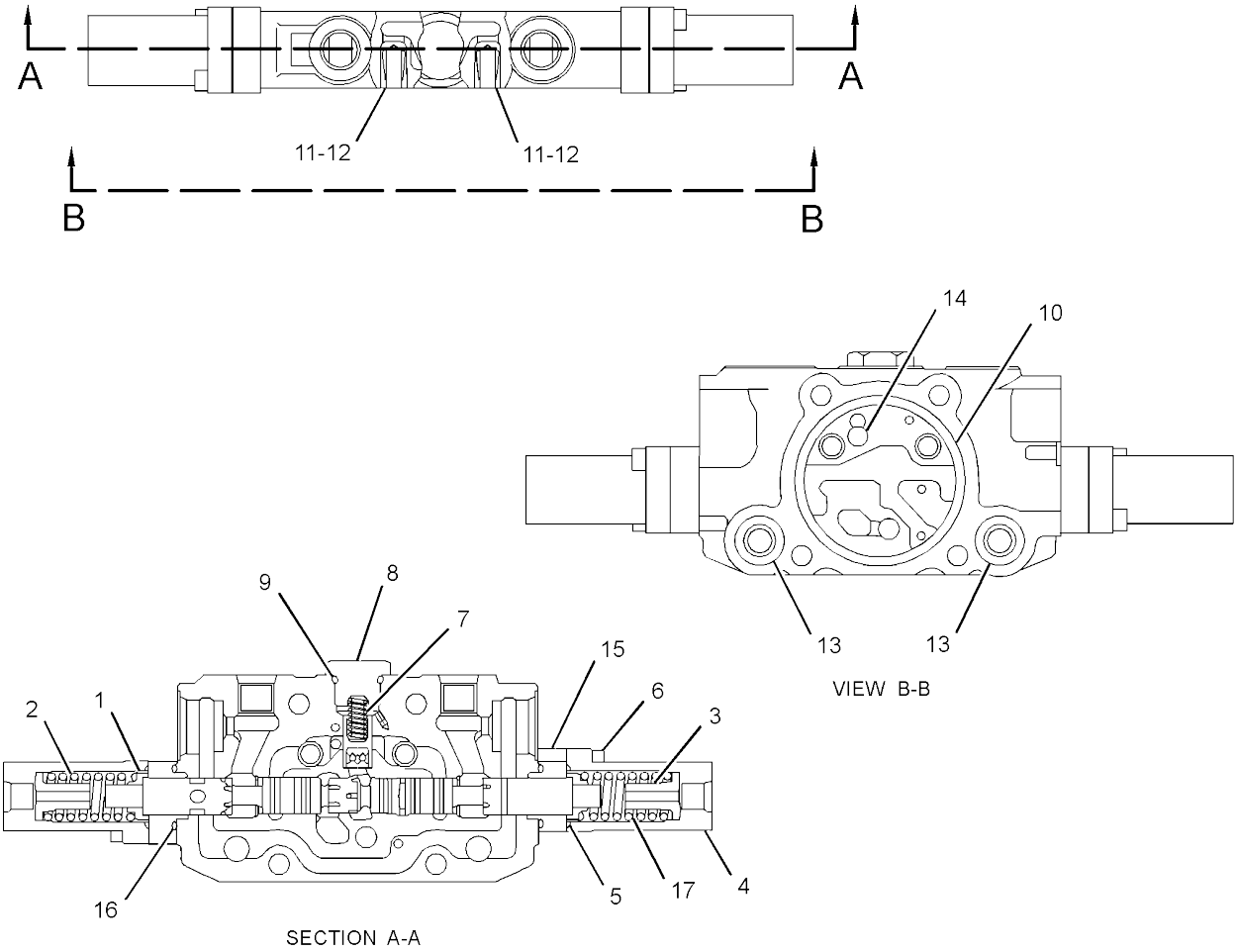


GRAPHIC #1 **<END>** g02196333

# HYDRAULIC SYSTEM

## *357-5890* VALVE GP-CONTROL

**PART OF 315-5815, 315-5816 VALVE GP-MAIN CONTROL**
**AN ATTACHMENT**

**SMCS-5051** **i04149632**

| NOTE | REF NO | GRAPHIC REF | PART NUMBER | QTY | PART NAME 1 2 3 4 5 6 (PRODUCT LEVEL) | SEE PAGE |
|---|---|---|---|---|---|---|
| | 1 | 1 | **281-2972** | 2 | SEAT | |
| | 2 | 1 | **281-2973** | 2 | SPRING | |
| | 3 | 1 | **281-2974** | 2 | SEAT | |
| | 4 | 1 | **281-2975** | 1 | CAP | |
| | 5 | 1 | **281-2976** | 2 | SEAL | |
| | 6 | 1 | **281-2977** | 2 | BOLT | |
| | 7 | 1 | **281-2978** | 1 | SPRING | |
| | 8 | 1 | **281-2979** | 1 | PLUG | |
| | 9 | 1 | **250-8771** | 1 | SEAL | |
| | 10 | 1 | **281-2960** | 1 | SEAL | |
| | 11 | 1 | **281-2985** | 2 | PLUNGER | |
| | 12 | 1 | **281-2986** | 2 | SPRING | |
| | 13 | 1 | **281-2961** | 2 | SEAL | |
| | 14 | 1 | **279-4796** | 1 | PLATE | |
| | 15 | 1 | **150-6367** | 1 | SEAL-O-RING | |
| | 16 | 1 | **281-2990** | 1 | PLUNGER | |
| | 17 | 1 | **281-2991** | 1 | SPRING | |
| | 18 | 1 | **281-2992** | 1 | SPACER | |
| | 19 | 1 | **281-2993** | 1 | RING | |
| | 20 | 1 | **281-2994** | 1 | VALVE AS | |
| | 21 | 1 | **150-6355** | 1 | PLUG | |
| | 22 | 1 | **281-2995** | 5 | BOLT | |

REFER TO ALL ILLUSTRATIONS OF
THIS GROUP FOR AUXILIARY VIEWS

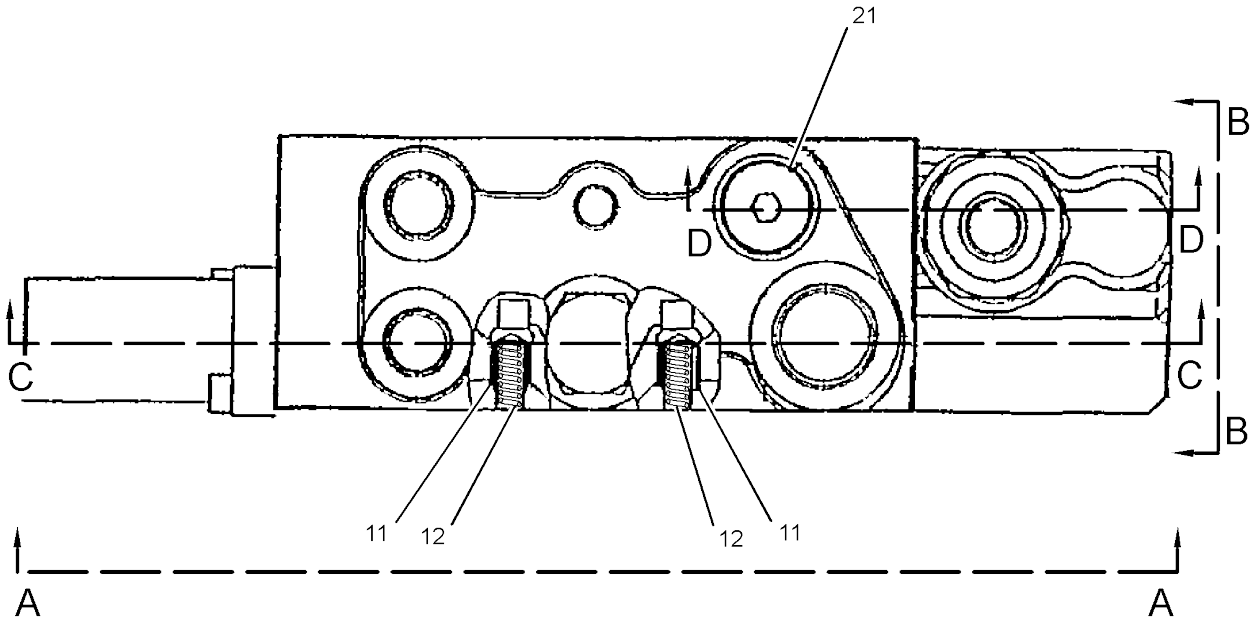


GRAPHIC #1 g01416096

*357-5890* **VALVE GP-CONTROL (*contd.*)** **i04149632**

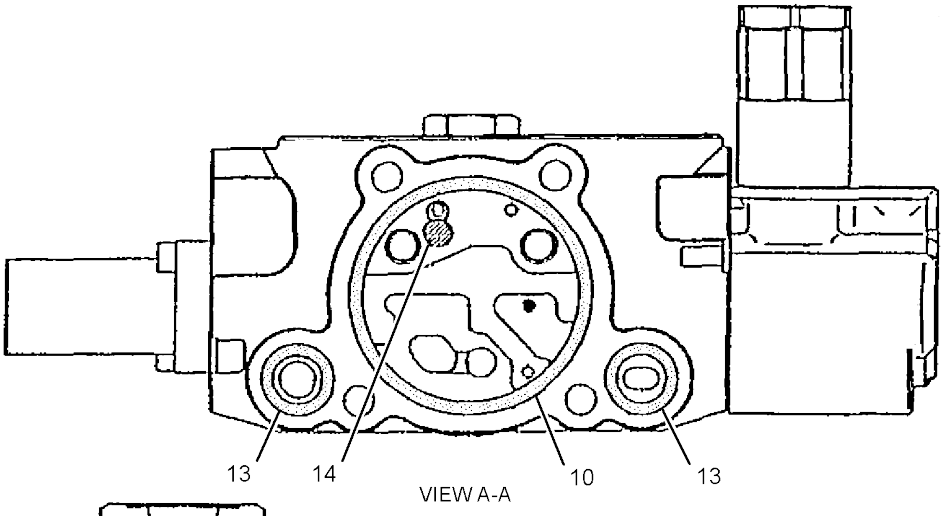


VIEW A-A

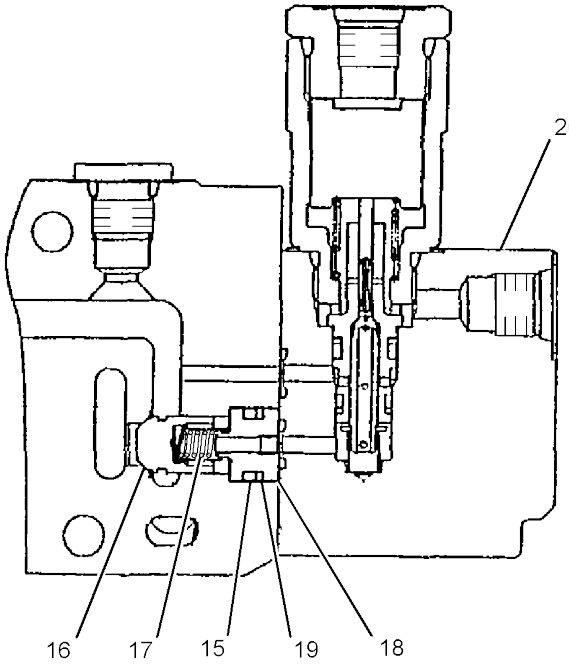


SECTION D-D

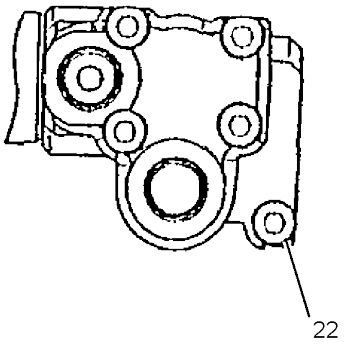


VIEW B-B

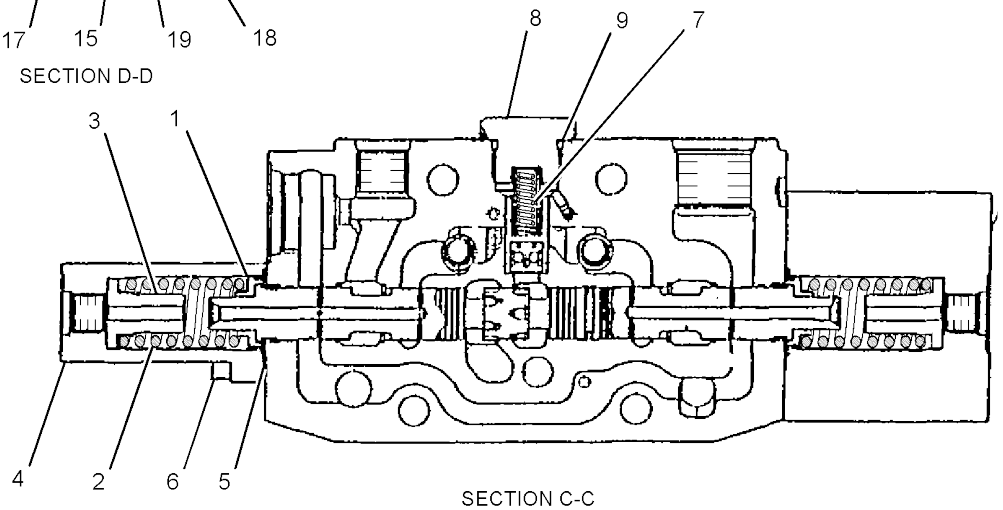


SECTION C-C

GRAPHIC #2 **<END>** g01415559

# 364-5228 VALVE GP-CONTROL–STICK

**PART OF 315-5815, 315-5816 VALVE GP-MAIN CONTROL**
**AN ATTACHMENT**

**SMCS-5051** **i05376420**

| NOTE | REF NO | GRAPHIC REF | PART NUMBER | QTY | PART NAME 1 2 3 4 5 6 (PRODUCT LEVEL) | SEE PAGE |
|---|---|---|---|---|---|---|
| | 1 | 1 | **281-2972** | 2 | SEAT | |
| | 2 | 1 | **281-2973** | 2 | SPRING | |
| | 3 | 1 | **281-2974** | 2 | SEAT | |
| | 4 | 1 | **281-2975** | 2 | CAP | |
| | 5 | 1 | **281-2976** | 2 | SEAL | |
| | 6 | 1 | **281-2977** | 4 | BOLT | |
| | 7 | 1 | **281-2978** | 1 | SPRING | |
| | 8 | 1 | **281-2979** | 1 | PLUG | |
| | 9 | 1 | **250-8771** | 1 | SEAL | |
| | 10 | 1 | **281-2960** | 1 | SEAL | |
| | 11 | 1 | **281-2961** | 2 | SEAL | |
| | 12 | 1 | **279-4796** | 1 | PLATE | |
| | 13 | 1 | **281-2980** | 1 | ORIFICE | |

*364-5228* **VALVE GP-CONTROL (*contd.*)** **i05376420**

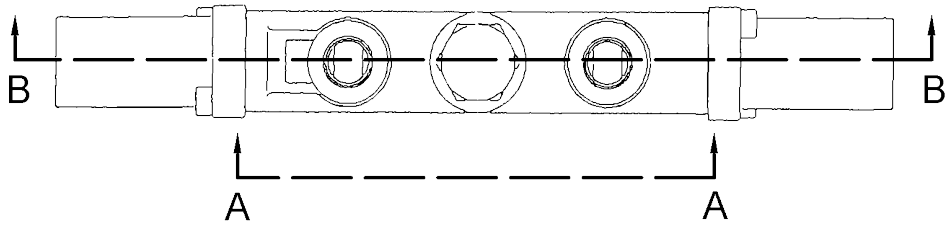


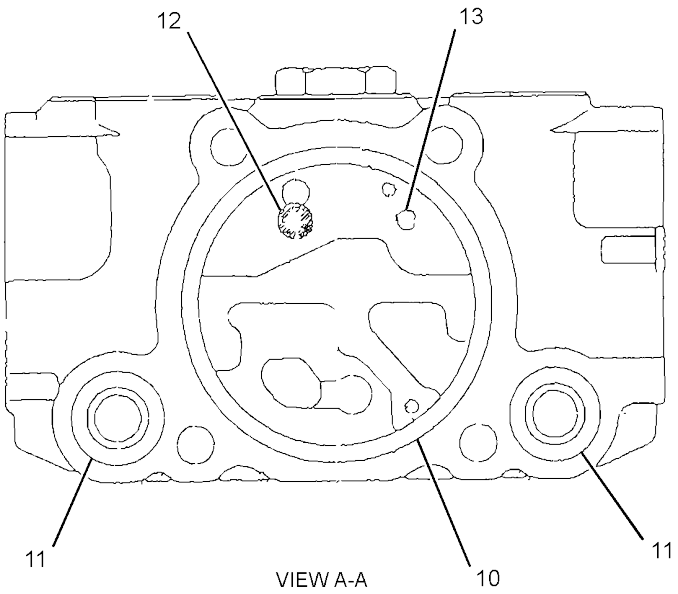


VIEW A-A

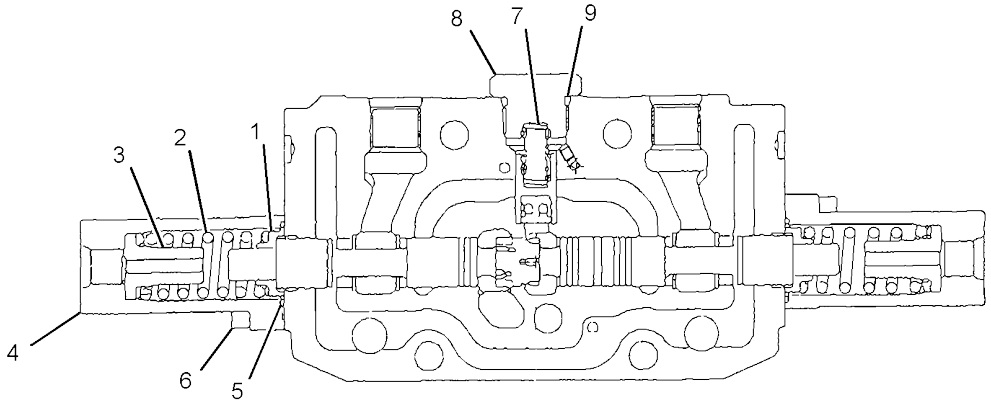


SECTION B-B

GRAPHIC #1 **<END>** g03403207

# 364-5229 VALVE GP-CONTROL–TRAVEL RIGHT

**PART OF 315-5815, 315-5816 VALVE GP-MAIN CONTROL**

**AN ATTACHMENT**

**SMCS-5051** **i05376425**

| NOTE | REF NO | GRAPHIC REF | PART NUMBER | QTY | PART NAME 1 2 3 4 5 6 (PRODUCT LEVEL) | SEE PAGE |
|---|---|---|---|---|---|---|
| | 1 | 1 | **281-2972** | 2 | SEAT | |
| | 2 | 1 | **281-2973** | 2 | SPRING | |
| | 3 | 1 | **281-2974** | 2 | SEAT | |
| | 4 | 1 | **281-2975** | 2 | CAP | |
| | 5 | 1 | **281-2976** | 2 | SEAL | |
| | 6 | 1 | **281-2977** | 4 | BOLT | |
| | 7 | 1 | **281-2978** | 1 | SPRING | |
| | 8 | 1 | **281-2979** | 1 | PLUG | |
| | 9 | 1 | **250-8771** | 1 | SEAL | |
| | 10 | 1 | **281-2960** | 1 | SEAL | |
| | 11 | 1 | **281-2961** | 2 | SEAL | |
| | 12 | 1 | **279-4796** | 1 | PLATE | |
| | 13 | 1 | **281-2980** | 1 | ORIFICE | |

*364-5229* **VALVE GP-CONTROL (*contd.*)** **i05376425**

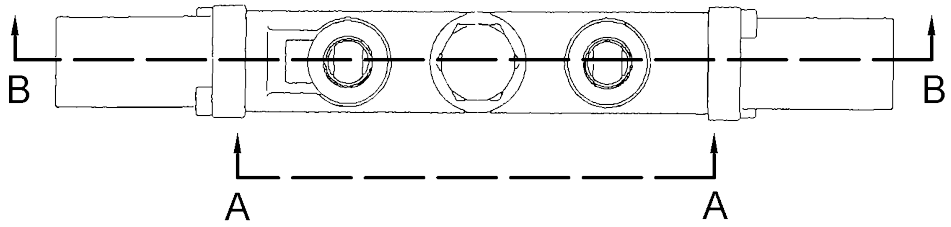


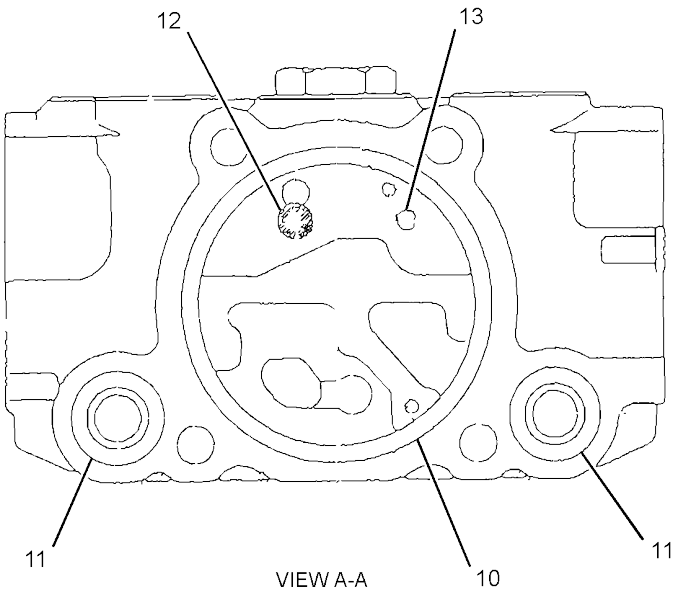


VIEW A-A

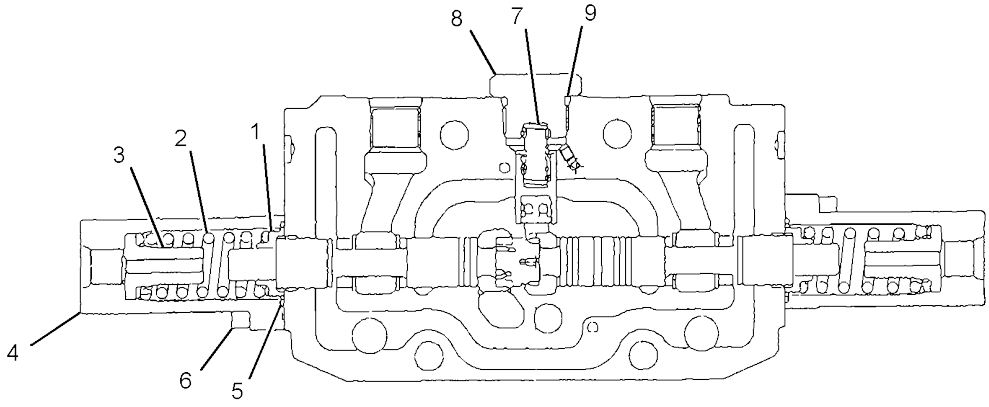


SECTION B-B

GRAPHIC #1 **<END>** g03403708

# HYDRAULIC SYSTEM

## 364-5230 VALVE GP-CONTROL–BLADE

**PART OF 315-5815 VALVE GP-MAIN CONTROL**
**AN ATTACHMENT**
**TYPE 1**

**SMCS-5051** **i04149637**

| NOTE | REF NO | GRAPHIC REF | PART NUMBER | QTY | PART NAME 1 2 3 4 5 6 (PRODUCT LEVEL) | SEE PAGE |
|---|---|---|---|---|---|---|
| | 1 | 1 | **281-2972** | 2 | SEAT | |
| | 2 | 1 | **281-2983** | 1 | SPRING | |
| | 3 | 1 | **281-2974** | 2 | SEAT | |
| | 4 | 1 | **281-2975** | 2 | CAP | |
| | 5 | 1 | **281-2976** | 2 | SEAL | |
| | 6 | 1 | **281-2984** | 4 | BOLT | |
| | 7 | 1 | **281-2978** | 1 | SPRING | |
| | 8 | 1 | **281-2979** | 1 | PLUG | |
| | 9 | 1 | **250-8771** | 1 | SEAL | |
| | 10 | 1 | **281-2960** | 1 | SEAL | |
| | 11 | 1 | **281-2985** | 2 | PLUNGER | |
| | 12 | 1 | **281-2986** | 2 | SPRING | |
| | 13 | 1 | **281-2961** | 2 | SEAL | |
| | 14 | 1 | **279-4796** | 1 | PLATE | |
| | 15 | 1 | **281-2987** | 2 | SPACER | |
| | 16 | 1 | **150-6346** | 2 | SEAL | |
| | 17 | 1 | **288-9388** | 1 | SPRING | |
| | 18 | 1 | **364-6111** | 1 | SPOOL (BLADE) | |
| | 19 | 1 | **360-0047** | 1 | SPOOL (COMPENSATOR) | |

*364-5230* **VALVE GP-CONTROL (*contd.*)** **i04149637**

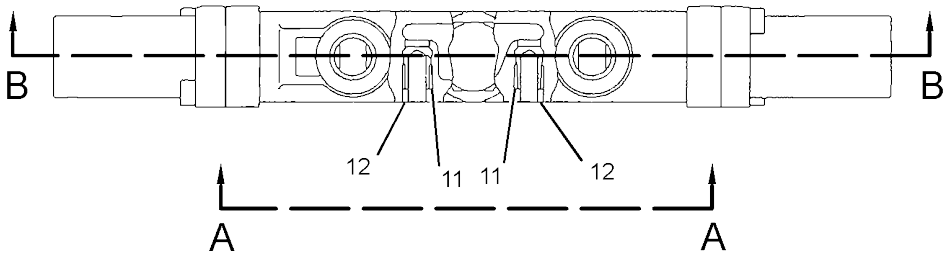


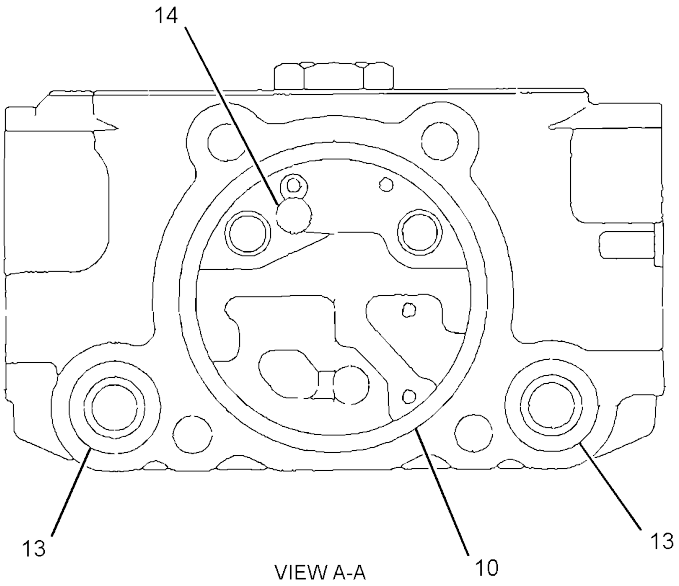


VIEW A-A

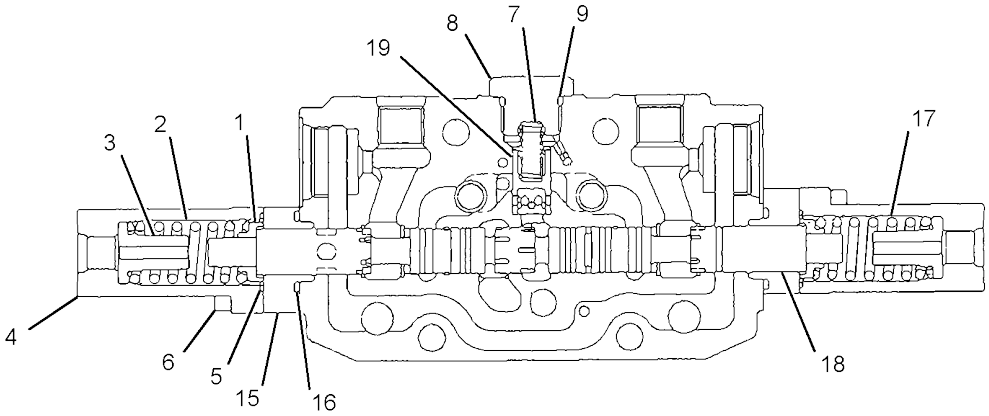


SECTION B-B

GRAPHIC #1 **<END>** g02445617

# HYDRAULIC SYSTEM

## 364-5230 VALVE GP-CONTROL–BLADE

**PART OF 315-5815 VALVE GP-MAIN CONTROL**
**AN ATTACHMENT**
**TYPE 2**

**SMCS-5051** **i05053469**

| NOTE | REF NO | GRAPHIC REF | PART NUMBER | QTY | PART NAME 1 2 3 4 5 6 (PRODUCT LEVEL) | SEE PAGE |
|---|---|---|---|---|---|---|
| | 1 | 1 | **281-2972** | 2 | SEAT | |
| | 2 | 1 | **281-2983** | 1 | SPRING | |
| | 3 | 1 | **281-2974** | 2 | SEAT | |
| | 4 | 1 | **281-2975** | 2 | CAP | |
| | 5 | 1 | **281-2976** | 2 | SEAL | |
| | 6 | 1 | **281-2984** | 4 | BOLT | |
| | 7 | 1 | **281-2978** | 1 | SPRING | |
| | 8 | 1 | **281-2979** | 1 | PLUG | |
| | 9 | 1 | **250-8771** | 1 | SEAL | |
| | 10 | 1 | **281-2960** | 1 | SEAL | |
| | 11 | 1 | **281-2985** | 2 | PLUNGER | |
| | 12 | 1 | **281-2986** | 2 | SPRING | |
| | 13 | 1 | **281-2961** | 2 | SEAL | |
| | 14 | 1 | **279-4796** | 1 | PLATE | |
| | 15 | 1 | **281-2987** | 2 | SPACER | |
| | 16 | 1 | **150-6346** | 2 | SEAL | |
| | 17 | 1 | **288-9388** | 1 | SPRING | |
| | 18 | 1 | **360-0047** | 1 | SPOOL (COMPENSATOR) | |

*364-5230* **VALVE GP-CONTROL (*contd.*)** **i05053469**

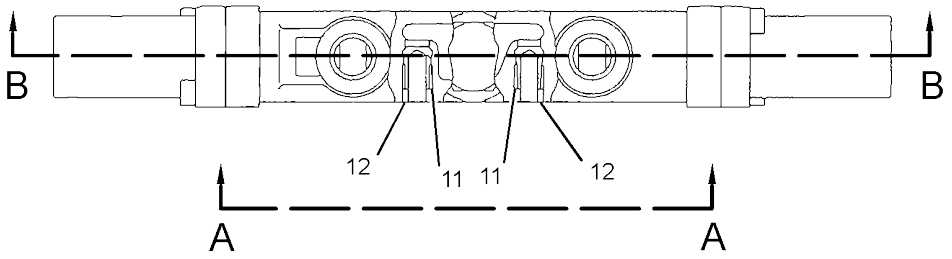


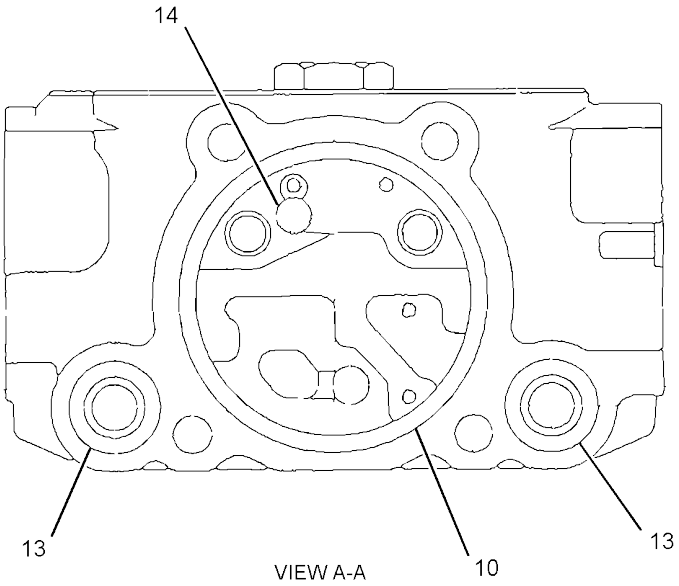


VIEW A-A

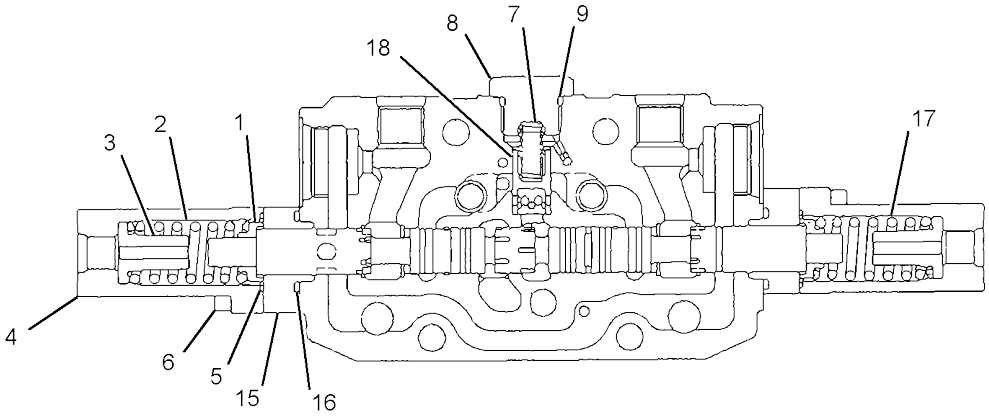


SECTION B-B

GRAPHIC #1 **<END>** g03208476

# 364-5232 VALVE GP-CONTROL–STICK

**PART OF 315-5815, 315-5816 VALVE GP-MAIN CONTROL**
**AN ATTACHMENT**

**SMCS-5051** **i04149639**

| NOTE | REF NO | GRAPHIC REF | PART NUMBER | QTY | PART NAME 1 2 3 4 5 6 (PRODUCT LEVEL) | SEE PAGE |
|---|---|---|---|---|---|---|
| | 1 | 1 | **281-2972** | 2 | SEAT | |
| | 2 | 1 | **366-9776** | 2 | SPRING | |
| | 3 | 1 | **281-2974** | 2 | SEAT | |
| | 4 | 1 | **281-2975** | 2 | CAP | |
| | 5 | 1 | **281-2976** | 2 | SEAL | |
| | 6 | 1 | **281-2977** | 4 | BOLT | |
| | 7 | 1 | **281-2978** | 1 | SPRING | |
| | 8 | 1 | **281-2979** | 1 | PLUG | |
| | 9 | 1 | **250-8771** | 1 | SEAL | |
| | 10 | 1 | **281-2960** | 1 | SEAL | |
| | 11 | 1 | **281-2985** | 2 | PLUNGER | |
| | 12 | 1 | **281-2986** | 2 | SPRING | |
| | 13 | 1 | **281-2961** | 2 | SEAL | |
| | 14 | 1 | **279-4796** | 1 | PLATE | |
| | 15 | 1 | **333-9456** | 1 | SPOOL | |

*364-5232* **VALVE GP-CONTROL (*contd.*)** **i04149639**

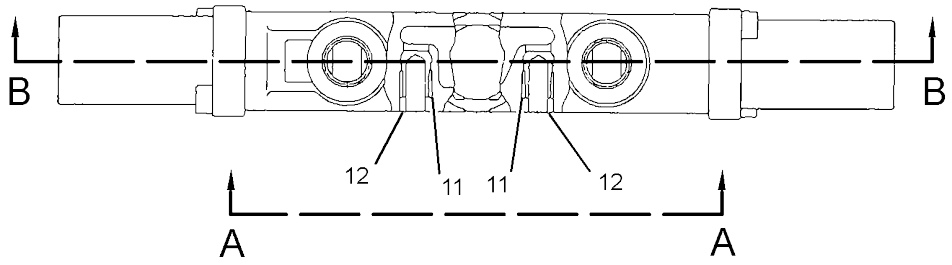


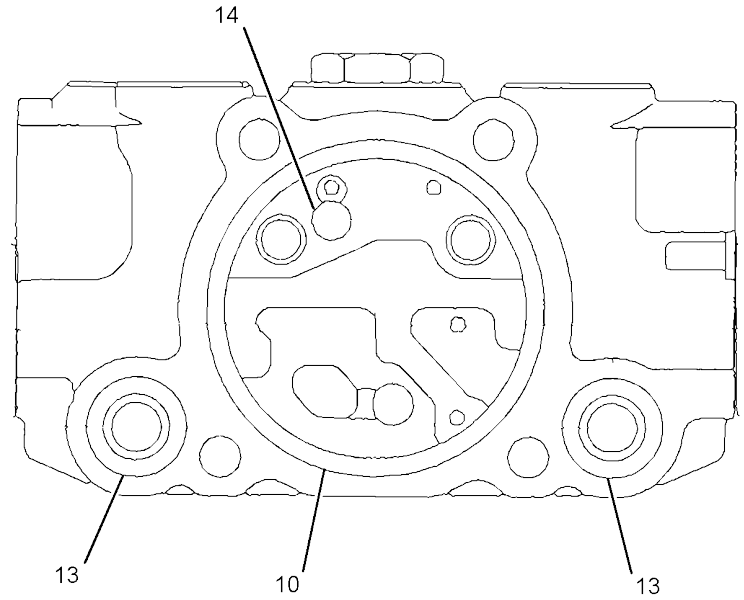


VIEW A-A

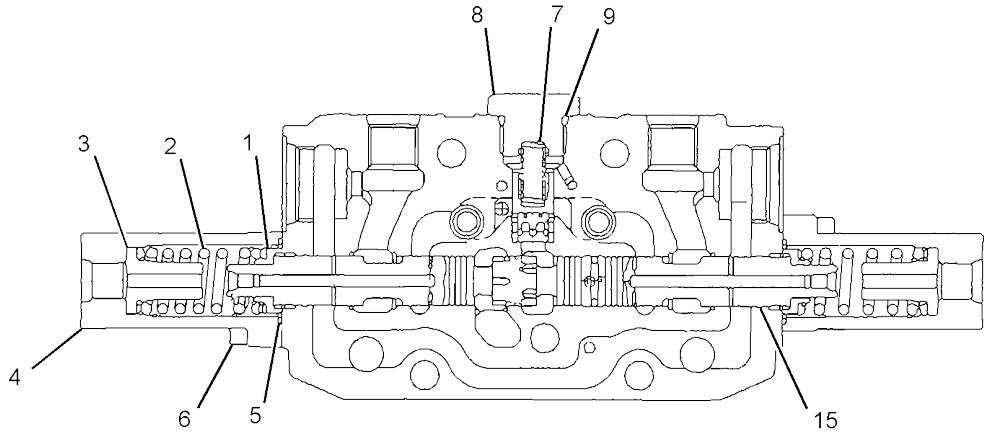


SECTION B-B

GRAPHIC #1 **<END>** g02445419

# HYDRAULIC SYSTEM

## 431-0306 VALVE GP-CONTROL–STICK

**S/N: RKY1379-UP**

**AN ATTACHMENT**

**SMCS-5051** **i05393244**

| NOTE | REF NO | GRAPHIC REF | PART NUMBER | QTY | PART NAME 1 2 3 4 5 6 (PRODUCT LEVEL) | SEE PAGE |
|---|---|---|---|---|---|---|
| | 1 | 1 | **281-2972** | 2 | SEAT | |
| | 2 | 1 | **366-9776** | 2 | SPRING | |
| | 3 | 1 | **281-2974** | 2 | SEAT | |
| | 4 | 1 | **281-2975** | 2 | CAP | |
| | 5 | 1 | **281-2976** | 2 | SEAL | |
| | 6 | 1 | **281-2977** | 4 | BOLT | |
| | 7 | 1 | **281-2978** | 1 | SPRING | |
| | 8 | 1 | **281-2979** | 1 | PLUG | |
| | 9 | 1 | **250-8771** | 1 | SEAL | |
| | 10 | 1 | **281-2960** | 1 | SEAL | |
| | 11 | 1 | **281-2985** | 2 | PLUNGER | |
| | 12 | 1 | **281-2986** | 2 | SPRING | |
| | 13 | 1 | **281-2961** | 2 | SEAL | |
| | 14 | 1 | **279-4796** | 1 | PLATE | |

*431-0306* **VALVE GP-CONTROL (*contd.*)** **i05393244**

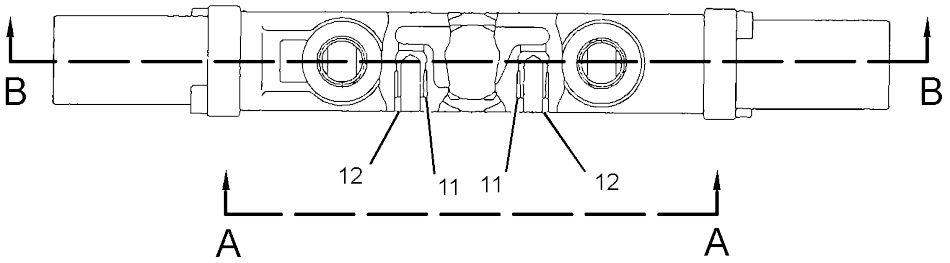


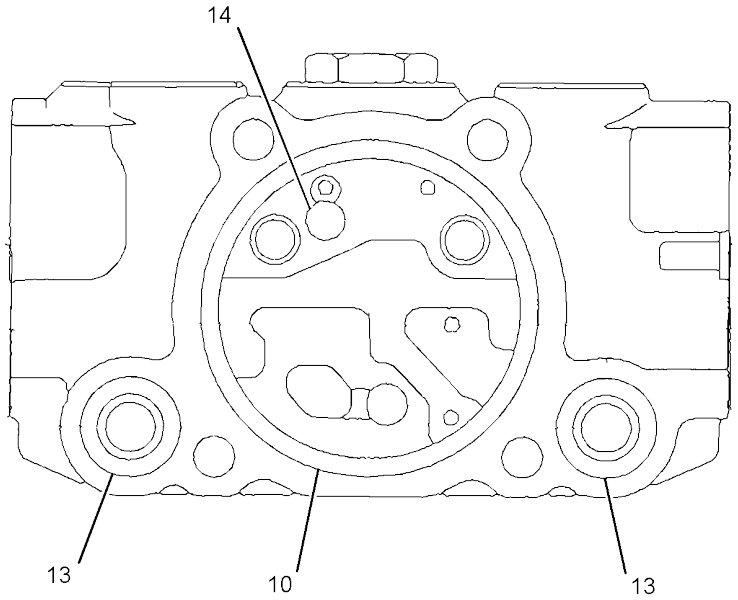


VIEW A-A

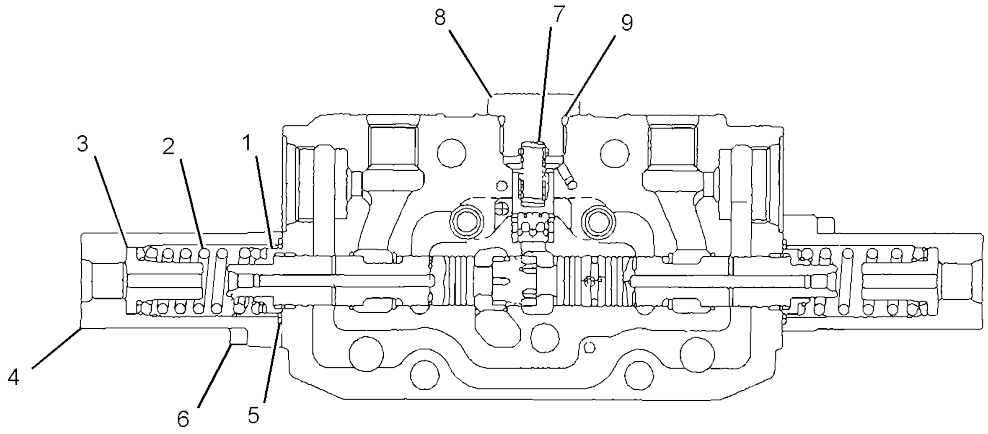


SECTION B-B

GRAPHIC #1 **<END>** g03425251

# 315-5815 VALVE GP-MAIN CONTROL

**S/N: RKY1-1378**
**PART OF 379-4734 VALVE & MTG GP-BANK**
**AN ATTACHMENT**

**SMCS-5051** **i04149630**

| NOTE | REF NO | GRAPHIC REF | PART NUMBER | QTY | PART NAME 1 2 3 4 5 6 (PRODUCT LEVEL) | SEE PAGE |
|---|---|---|---|---|---|---|
| | 1 | 1 | **200-4856** | 8 | NUT | |
| | 2 | 1 | **281-2325** | 4 | ROD | |
| Y | 3 | 1 | **281-2326** | 1 | VALVE GP-CONTROL (INLET) | 312 |
| Y | 4 | 1 | **364-5228** | 1 | VALVE GP-CONTROL (TRAVEL LEFT) (LEFT) | 326 |
| Y | 5 | 1 | **364-5229** | 1 | VALVE GP-CONTROL (TRAVEL RIGHT) (RIGHT) | 328 |
| Y | 6 | 1 | **364-5230** | 1 | VALVE GP-CONTROL (BLADE) | 330 |
| Y | 7 | 1 | *357-5890* | 1 | VALVE GP-CONTROL (BOOM) | 324 |
| Y | 8 | 1 | **329-8369** | 1 | VALVE GP-CONTROL (AUXILIARY) | 320 |
| Y | 9 | 1 | **281-2332** | 1 | VALVE GP-CONTROL (BUCKET) | 313 |
| Y | 10 | 1 | **364-5232** | 1 | VALVE GP-CONTROL (STICK) | 334 |
| Y | 11 | 1 | **281-2334** | 1 | VALVE GP-CONTROL (SWING) | 314 |
| Y | 12 | 1 | **332-4123** | 1 | VALVE GP-CONTROL (BOOM SWING) | 322 |
| Y | 13 | 1 | **281-2336** | 1 | VALVE GP-CONTROL (OUTLET) | 315 |
| | 14 | 1 | **272-7832** | 6 | VALVE AS-RELIEF (LINE) | |
| | | | | | (EACH INCLUDES) | |
| | | 1 | **2M-9780** | 1 | SEAL-O-RING | |
| | 15 | 1 | **222-2631** | 1 | VALVE AS-CHECK (SWING) | |
| | 16 | 1 | **185-0555** | 5 | VALVE AS-MANUAL (SHUTOFF) | |
| | 17 | 1 | **104-8081** | 1 | PLUG AS | |

Y - SEPARATE ILLUSTRATION

*315-5815* **VALVE GP-MAIN CONTROL (*contd.*)** **i04149630**

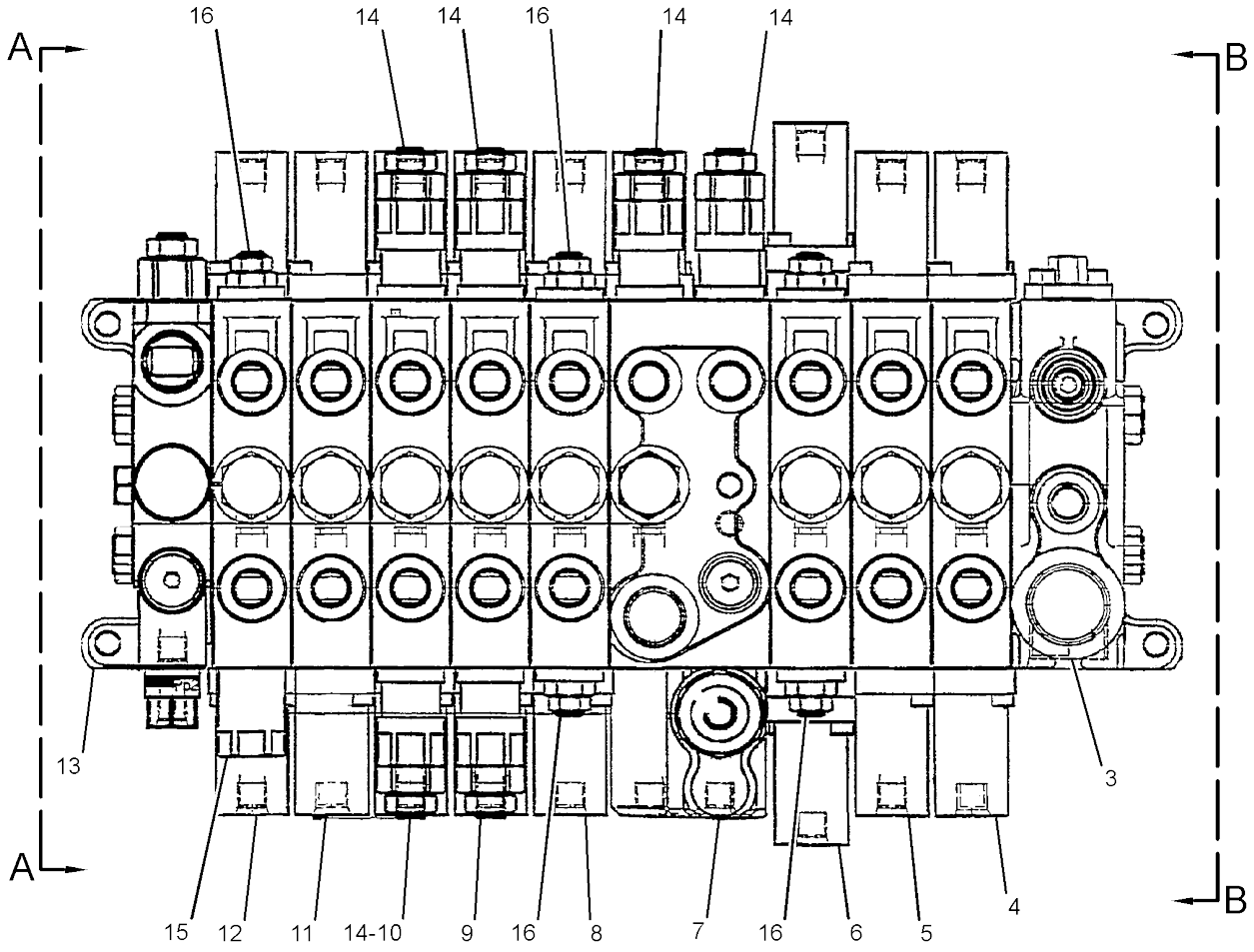


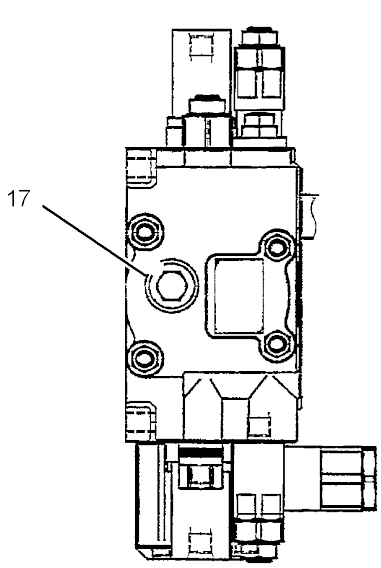


VIEW A-A

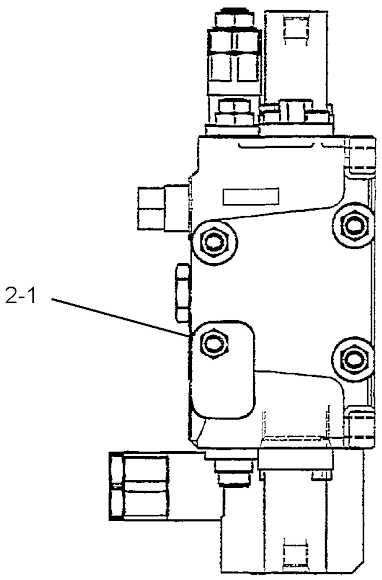


VIEW B-B

GRAPHIC #1 **<END>** g02209313

# 315-5816 VALVE GP-MAIN CONTROL–ANGLE BLADE

**S/N: RKY1-1378**

**PART OF 391-3188 VALVE & MTG GP-MAIN CONTROL**

**AN ATTACHMENT**

**SMCS-5051** **i04149671**

| NOTE | REF NO | GRAPHIC REF | PART NUMBER | QTY | PART NAME 1 2 3 4 5 6 (PRODUCT LEVEL) | SEE PAGE |
|---|---|---|---|---|---|---|
| | 1 | 1 | **200-4856** | 8 | NUT | |
| | 2 | 1 | **324-8994** | 4 | ROD | |
| Y | 3 | 1 | **281-2326** | 1 | VALVE GP-CONTROL (INLET) | 312 |
| Y | 4 | 1 | **364-5228** | 1 | VALVE GP-CONTROL (TRAVEL LEFT) | 326 |
| Y | 5 | 1 | **364-5229** | 1 | VALVE GP-CONTROL (TRAVEL RIGHT) | 328 |
| Y | 6 | 1 | *357-5889* | 1 | VALVE GP-CONTROL (BLADE) | 323 |
| Y | 7 | 1 | *357-5890* | 1 | VALVE GP-CONTROL (BOOM) | 324 |
| Y | 8 | 1 | **329-8369** | 1 | VALVE GP-CONTROL (AUXILIARY) | 320 |
| Y | 9 | 1 | **281-2332** | 1 | VALVE GP-CONTROL (BUCKET) | 313 |
| Y | 10 | 1 | **364-5232** | 1 | VALVE GP-CONTROL (STICK) | 334 |
| Y | 11 | 1 | **281-2334** | 1 | VALVE GP-CONTROL (SWING) | 314 |
| Y | 12 | 1 | **328-5659** | 1 | VALVE GP-CONTROL (BOOM SWING) | 318 |
| Y | 13 | 1 | **281-2336** | 1 | VALVE GP-CONTROL (OUTLET) | 315 |
| | 14 | 1 | **272-7832** | 7 | VALVE AS-RELIEF (LINE) (THUMB) | |
| | | | | | (EACH INCLUDES) | |
| | | 1 | **2M-9780** | 1 | SEAL-O-RING | |
| | 15 | 1 | **222-2631** | 1 | VALVE AS-CHECK | |
| | 16 | 1 | **185-0555** | 4 | VALVE AS-MANUAL (SHUTOFF) | |
| | 17 | 1 | **104-8081** | 1 | PLUG AS | |
| Y | 18 | 1 | **326-8530** | 1 | VALVE GP-CONTROL (ANGLE) | 316 |
| | 19 | 1 | **336-0683** | 2 | VALVE AS-RELIEF | |
| | | | | | (EACH INCLUDES) | |
| | | 1 | **2M-9780** | 1 | SEAL-O-RING | |

Y - SEPARATE ILLUSTRATION

*315-5816* **VALVE GP-MAIN CONTROL (*contd.*)** **i04149671**

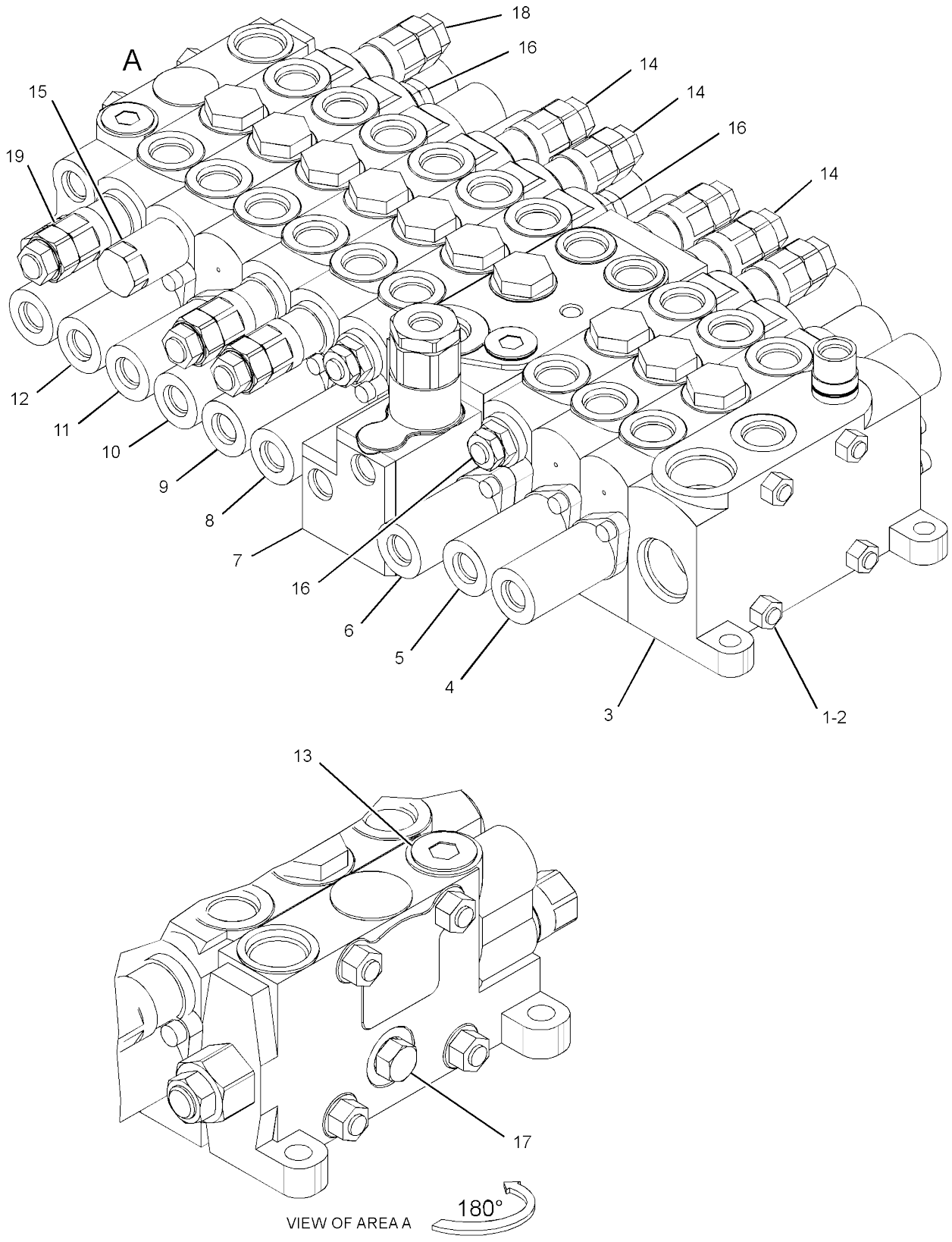


GRAPHIC #1 **<END>** g01944736

# 267-0420 VALVE GP-PILOT–JOYSTICK

**PART OF 376-9494, 376-9495, 379-2010 CONTROL GP-JOYSTICK**
**AN ATTACHMENT**

**SMCS-5059, 5465, 5466** **i03966939**

| NOTE | REF NO | GRAPHIC REF | PART NUMBER | QTY | PART NAME 1 2 3 4 5 6 (PRODUCT LEVEL) | SEE PAGE |
|---|---|---|---|---|---|---|
| | 1 | 1 | **165-9438** | 1 | PLATE | |
| | 2 | 1 | **096-1628** | 4 | PLUG | |
| | 3 | 1 | **132-7711** | 4 | ROD | |
| | 4 | 1 | **094-0876** | 4 | SEAL | |
| | 5 | 1 | **095-1586** | 4 | SEAL-O-RING | |
| | 6 | 1 | **251-4408** | 4 | SEAT | |
| | 7 | 1 | **099-6137** | 4 | WASHER (6.1X9X0.2-MM THK) | |
| | 8 | 1 | **194-0784** | 4 | SPRING | |
| | 9 | 1 | **244-8495** | 4 | SPRING | |
| | 10 | 1 | **4I-6365** | 1 | JOINT | |
| | 11 | 1 | **165-9431** | 1 | PLATE | |
| | 12 | 1 | **212-0522** | 1 | NUT | |
| | 13 | 1 | **171-0087** | 1 | BELLOWS | |

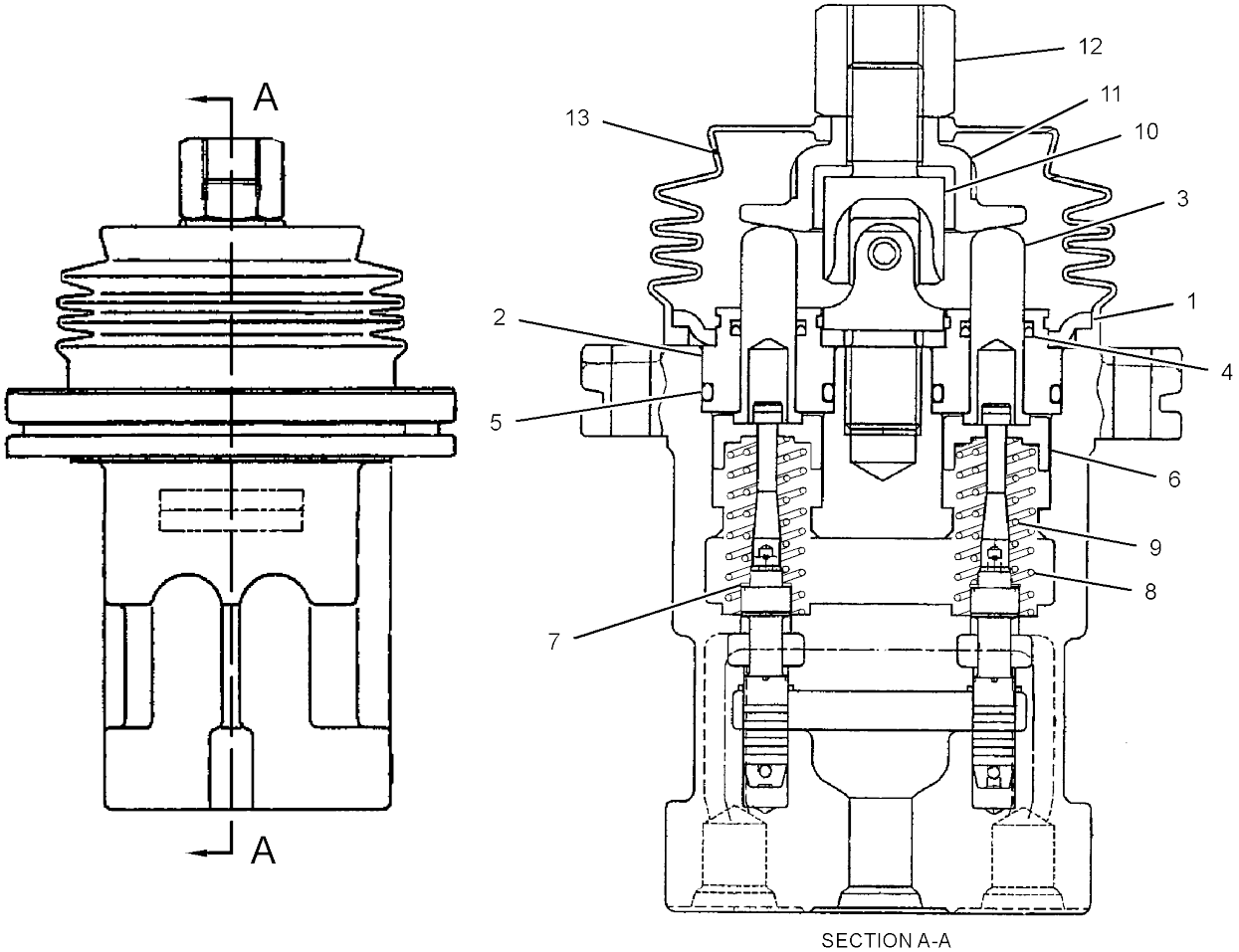


SECTION A-A

GRAPHIC #1 **<END>** g01201633

# 320-6540 VALVE GP-PILOT–BLADE CONTROL

**PART OF 377-5958, 382-0522 CONTROL GP-PILOT OPERATED HYD AN ATTACHMENT**

**SMCS-5059, 5465, 5466** **i03971151**

| NOTE | REF NO | GRAPHIC REF | PART NUMBER | QTY | PART NAME 1 2 3 4 5 6 (PRODUCT LEVEL) | SEE PAGE |
|---|---|---|---|---|---|---|
| | 1 | 1 | **6I-6911** | 2 | SHIM | |
| | 2 | 1 | **6I-6912** | 2 | SHIM | |
| | 3 | 1 | **198-7543** | 2 | GUIDE | |
| | 4 | 1 | **198-8153** | 2 | SCREW | |
| | 5 | 1 | **198-8154** | 2 | SPRING | |
| | 6 | 1 | **096-4535** | 2 | SLEEVE | |
| | 7 | 1 | **099-0361** | 2 | SHIM | |
| | 8 | 1 | **132-9046** | 2 | SHIM (0.1-MM THK) | |
| | 9 | 1 | **198-8156** | 1 | BOOT | |
| | 10 | 1 | **204-1974** | 1 | PIN | |
| | 11 | 1 | **198-8159** | 2 | SLEEVE | |
| | 12 | 1 | **198-8160** | 1 | COLLAR | |
| | 13 | 1 | **198-8161** | 2 | SPRING | |
| | 14 | 1 | **198-8162** | 2 | HOLDER | |
| | 15 | 1 | **198-8163** | 1 | SPRING | |
| | 16 | 1 | **198-8164** | 1 | SPRING | |
| | 17 | 1 | **326-7782** | 1 | CAM | |
| | 18 | 1 | **198-8165** | 1 | BOLT | |
| M | 19 | 1 | **8T-8442** | 2 | BOLT-SOCKET HEAD (M6X1X30-MM) | |
| M | 20 | 1 | **8T-1158** | 2 | BOLT-SOCKET HEAD (M8X1.25X20-MM) | |
| | 21 | 1 | **096-4543** | 1 | BOLT | |
| M | 22 | 1 | **095-1260** | 1 | SETSCREW-SOCKET (M6X1X6-MM) | |
| | 23 | 1 | **198-8166** | 2 | WASHER | |
| | 24 | 1 | **198-8167** | 2 | NUT | |
| | 25 | 1 | **198-8168** | 2 | BALL | |
| | 26 | 1 | **095-1578** | 2 | SEAL-O-RING | |
| | 27 | 1 | **095-1585** | 2 | SEAL-O-RING | |
| | 28 | 1 | **204-1976** | 1 | LEVER AS | |
| | 29 | 1 | **198-8176** | 2 | ROD AS | |
| | 30 | 1 | **198-8169** | 1 | BODY AS | |
| | 31 | 1 | **204-1979** | 1 | COVER AS | |

M - METRIC PART

*320-6540* **VALVE GP-PILOT (*contd.*)** **i03971151**

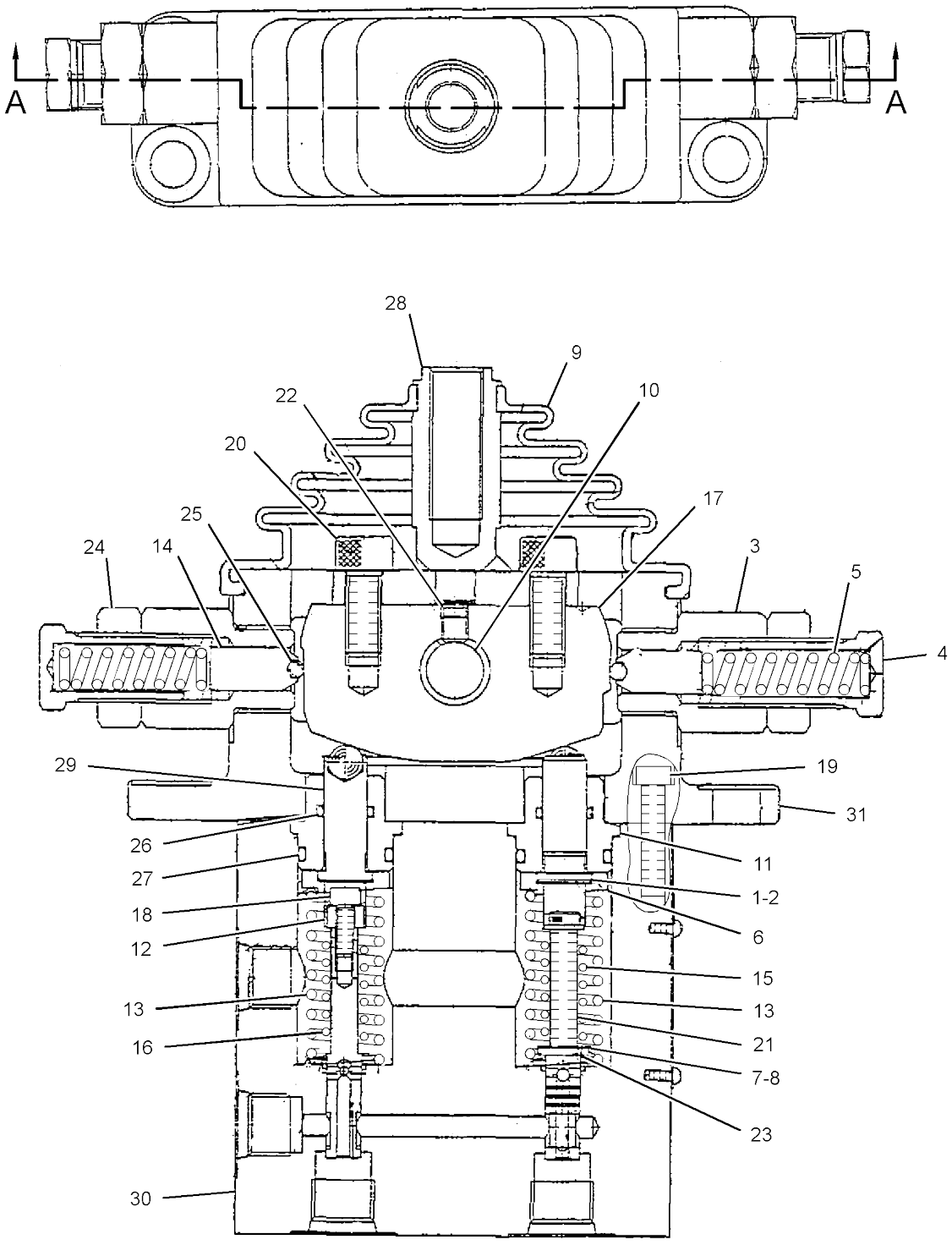


SECTION A-A

GRAPHIC #1 **<END>** g01508855

# *356-3823* VALVE GP-PILOT—WITH SHUTTLE

**PART OF 356-4545 VALVE & MTG GP-PILOT**
**AN ATTACHMENT**

**SMCS-5059, 5465, 5466** **i04019553**

| NOTE | REF NO | GRAPHIC REF | PART NUMBER | QTY | PART NAME 1 2 3 4 5 6 (PRODUCT LEVEL) | SEE PAGE |
|---|---|---|---|---|---|---|
| | 1 | 1 | **8T-6759** | 4 | PLUG-PIPE | |
| | 2 | 1 | **196-3784** | 3 | PLUG | |
| M | 3 | 1 | **8T-1158** | 2 | BOLT-SOCKET HEAD (M8X1.25X20-MM) | |
| | 4 | 1 | **310-0422** | 3 | SEAT | |
| | 5 | 1 | **310-0421** | 3 | BUSHING | |
| | 6 | 1 | **3Y-9267** | 3 | BALL | |
| | 7 | 1 | **165-9463** | 2 | COVER | |
| | 8 | 1 | **165-9554** | 4 | PLUG | |
| | 9 | 1 | **119-5388** | 4 | CAP | |
| | 10 | 1 | **165-9553** | 1 | COVER | |
| | 11 | 1 | **119-5389** | 4 | PACKING | |
| | 12 | 1 | **095-1575** | 5 | SEAL-O-RING | |
| | 13 | 1 | **6V-8400** | 4 | SEAL-O-RING | |
| | 14 | 1 | **310-0420** | 4 | SEAL-O-RING | |
| | 15 | 1 | **364-6127** | 4 | ROD | |
| | 16 | 1 | **099-6137** | 4 | WASHER (6.1X9X0.2-MM THK) | |
| | 17 | 1 | **119-5391** | 4 | SEAT | |
| M | 18 | 1 | **8C-6965** | 2 | BOLT-SOCKET HEAD (M6X1X45-MM) | |
| | 19 | 1 | **296-1942** | 4 | PISTON | |
| | 20 | 1 | **153-5223** | 12 | BALL | |
| M | 21 | 1 | **095-0673** | 2 | BOLT-SOCKET HEAD (M12X1.75X60-MM) | |
| | 22 | 1 | **331-9872** | 4 | SEAT | |
| | 23 | 1 | **185-0522** | 4 | SEAT | |
| | 24 | 1 | **364-6126** | 4 | SPRING | |
| | 25 | 1 | **331-9873** | 4 | SPRING | |
| | 26 | 1 | **126-1865** | 4 | SPRING | |
| | 27 | 1 | **126-1866** | 4 | SPRING | |
| | 28 | 1 | **099-6144** | 4 | BUSHING-TERMINAL | |
| | 29 | 1 | **099-6145** | 2 | CAMSHAFT | |
| | 30 | 1 | **364-6125** | 2 | CAM | |
| M | 31 | 1 | **095-1260** | 2 | SETSCREW-SOCKET (M6X1X6-MM) | |
| M | 32 | 1 | **087-4710** | 4 | SETSCREW (M10X21-MM) | |
| M | 33 | 1 | **8T-4133** | 4 | NUT (M10X1.5-THD) | |
| | 34 | 1 | **147-4131** | 2 | BOOT-PROTECTION | |

M - METRIC PART

*356-3823* **VALVE GP-PILOT (*contd.*)** **i04019553**

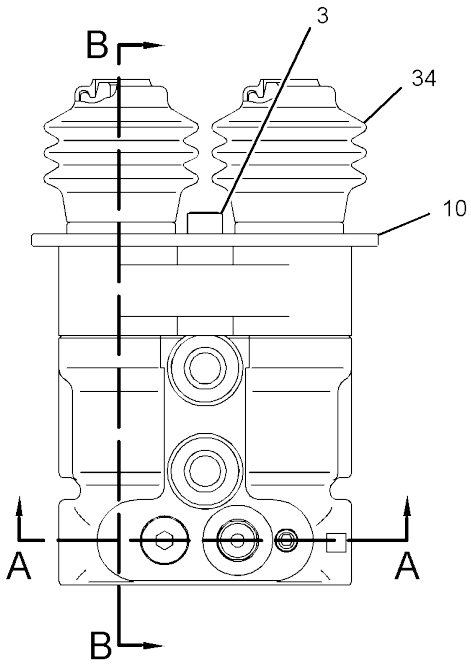


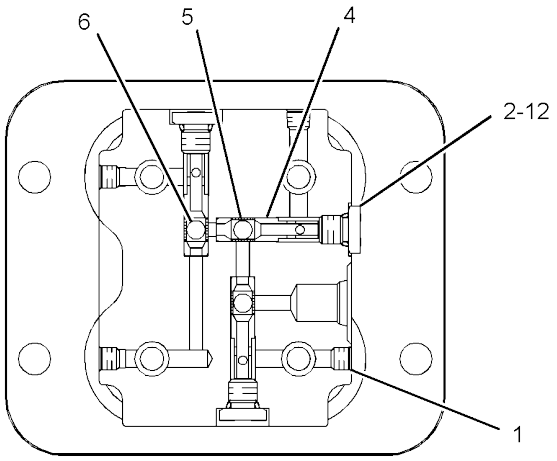


SECTION A-A

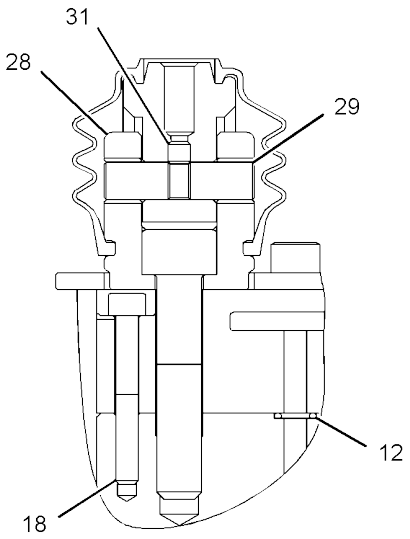


SECTION C-C

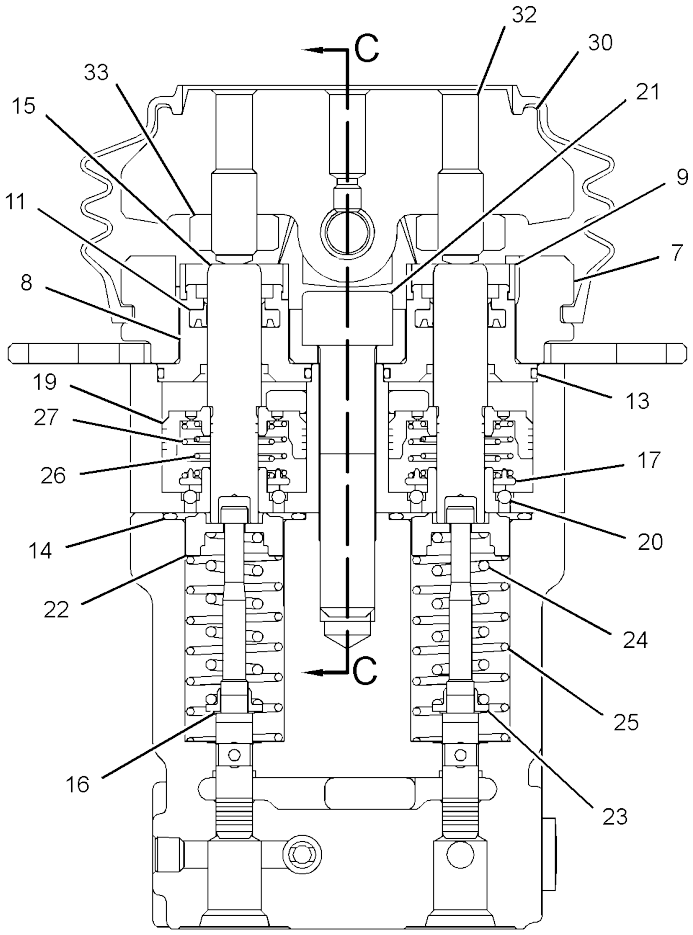


SECTION B-B

GRAPHIC #1 **<END>** g02211279

# *393-7501* VALVE GP-PILOT–BLADE CONTROL

**S/N: RKY1466-UP**

**PART OF 421-2718 VALVE & MTG GP-PILOT**

**AN ATTACHMENT**

**SMCS-5059, 5465, 5466** **i05031519**

| NOTE | REF NO | GRAPHIC REF | PART NUMBER | QTY | PART NAME 1 2 3 4 5 6 (PRODUCT LEVEL) | SEE PAGE |
|---|---|---|---|---|---|---|
| | 1 | 1 | **6I-6911** | 2 | SHIM | |
| | 2 | 1 | **6I-6912** | 2 | SHIM | |
| | 3 | 1 | **198-7543** | 2 | GUIDE | |
| | 4 | 1 | **198-8153** | 2 | SCREW | |
| | 5 | 1 | **198-8154** | 2 | SPRING | |
| | 6 | 1 | **096-4535** | 2 | SLEEVE | |
| | 7 | 1 | **099-0361** | 2 | SHIM | |
| | 8 | 1 | **132-9046** | 2 | SHIM (0.1-MM THK) | |
| | 9 | 1 | **198-8156** | 1 | BOOT | |
| | 10 | 1 | **204-1974** | 1 | PIN | |
| | 11 | 1 | **198-8159** | 2 | SLEEVE | |
| | 12 | 1 | **198-8160** | 1 | COLLAR | |
| | 13 | 1 | **198-8161** | 2 | SPRING | |
| | 14 | 1 | **198-8162** | 2 | HOLDER | |
| | 15 | 1 | **198-8163** | 1 | SPRING | |
| | 16 | 1 | **198-8164** | 1 | SPRING | |
| | 17 | 1 | **326-7782** | 1 | CAM | |
| | 18 | 1 | **198-8165** | 1 | BOLT | |
| M | 19 | 1 | **8T-8442** | 2 | BOLT-SOCKET HEAD (M6X1X30-MM) | |
| M | 20 | 1 | **8T-1158** | 2 | BOLT-SOCKET HEAD (M8X1.25X20-MM) | |
| | 21 | 1 | **096-4543** | 1 | BOLT | |
| M | 22 | 1 | **095-1260** | 1 | SETSCREW-SOCKET (M6X1X6-MM) | |
| | 23 | 1 | **198-8166** | 2 | WASHER | |
| | 24 | 1 | **198-8167** | 2 | NUT | |
| | 25 | 1 | **198-8168** | 2 | BALL | |
| | 26 | 1 | **095-1578** | 2 | SEAL-O-RING | |
| | 27 | 1 | **095-1585** | 2 | SEAL-O-RING | |
| | 28 | 1 | **204-1976** | 1 | LEVER AS | |
| | 29 | 1 | **198-8176** | 2 | ROD AS | |
| | 30 | 1 | **394-5921** | 1 | BODY | |
| | 31 | 1 | **204-1979** | 1 | COVER AS | |

M - METRIC PART

*393-7501* **VALVE GP-PILOT (*contd.*)** **i05031519**

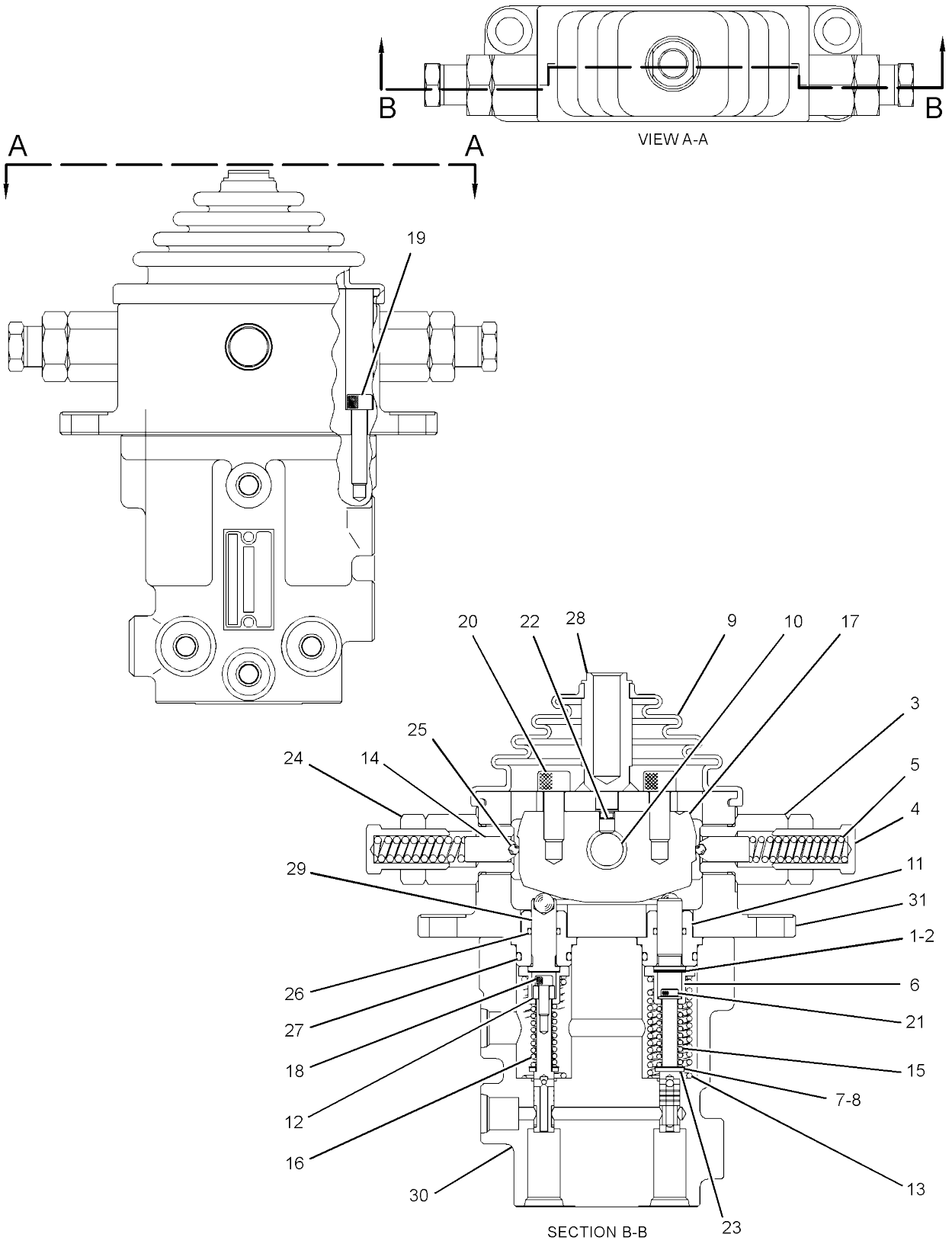


GRAPHIC #1 **<END>** g03202872

# 416-2294 VALVE GP-PILOT–WITH SHUTTLE

**PART OF 356-4545 VALVE & MTG GP-PILOT**
**AN ATTACHMENT**

**SMCS-5059, 5465, 5466** **i05365862**

| NOTE | REF NO | GRAPHIC REF | PART NUMBER | QTY | PART NAME 1 2 3 4 5 6 (PRODUCT LEVEL) | SEE PAGE |
|---|---|---|---|---|---|---|
| | | | | | (NO BREAKDOWN OF SERVICEABLE PARTS AVAILABLE AT TIME OF PUBLICATION) | |

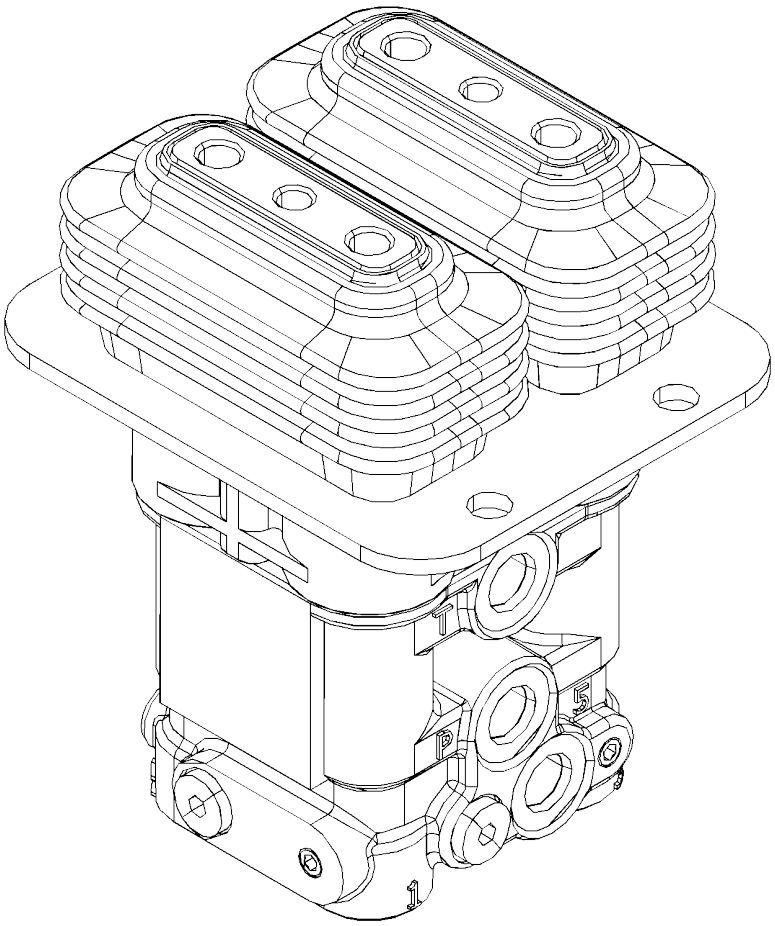


GRAPHIC #1 **<END>** g03401496

# 279-4712 VALVE GP-PUMP CONTROL

**PART OF 332-1292 VALVE GP-PUMP CONTROL**

**SMCS-5455** **i03970812**

| NOTE | REF NO | GRAPHIC REF | PART NUMBER | QTY | PART NAME 1 2 3 4 5 6 (PRODUCT LEVEL) | SEE PAGE |
|---|---|---|---|---|---|---|
| | 1 | 1 | **095-1575** | 1 | SEAL-O-RING | |
| | 2 | 1 | **095-1584** | 1 | SEAL-O-RING | |
| | 3 | 1 | **3J-1907** | 1 | SEAL-O-RING | |
| | 4 | 1 | **279-4704** | 1 | ORIFICE | |

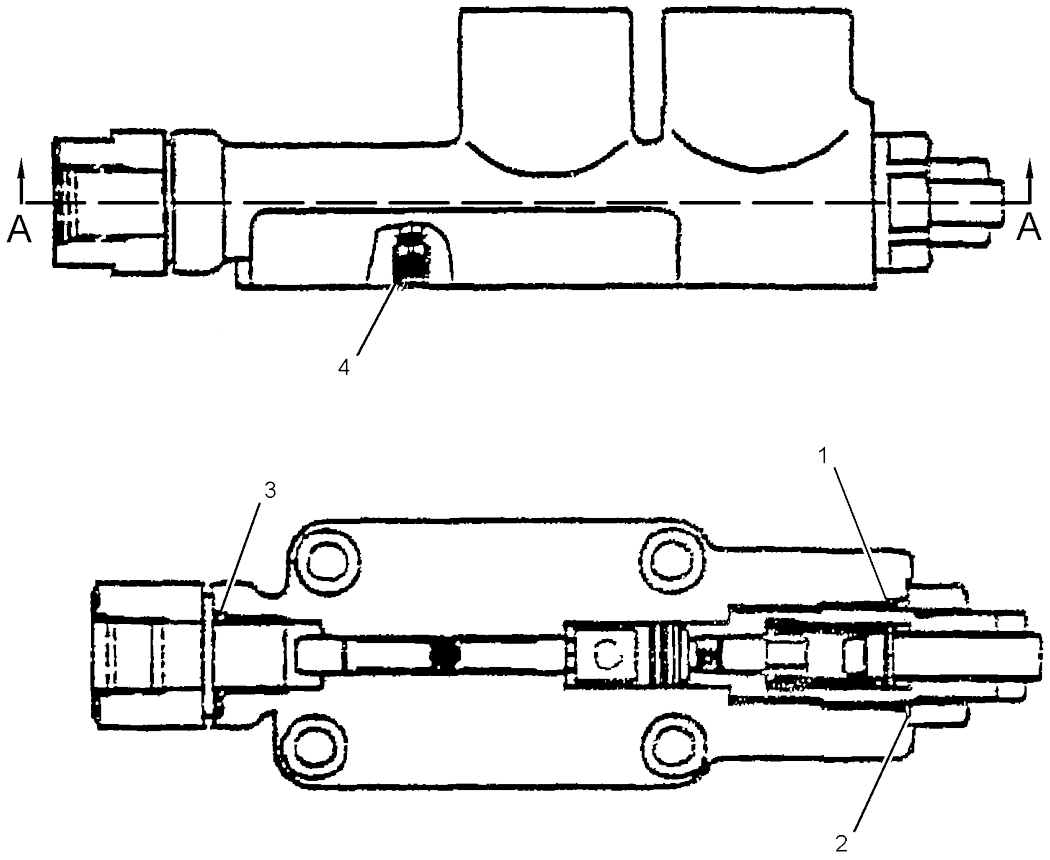


SECTION A-A

GRAPHIC #1 **<END>** g01576158

# 332-1292 VALVE GP-PUMP CONTROL–303C CR

**PART OF 374-2025 PUMP GP-PISTON & GEAR**

**SMCS-5455** **i04065709**

| NOTE | REF NO | GRAPHIC REF | PART NUMBER | QTY | PART NAME 1 2 3 4 5 6 (PRODUCT LEVEL) | SEE PAGE |
|---|---|---|---|---|---|---|
| Y | 1 | 1 | **279-4712** | 1 | VALVE GP-PUMP CONTROL | 350 |
| | 2 | 1 | **095-1575** | 4 | SEAL-O-RING | |
| | 3 | 1 | **279-4703** | 1 | SEAL-O-RING | |

Y - SEPARATE ILLUSTRATION

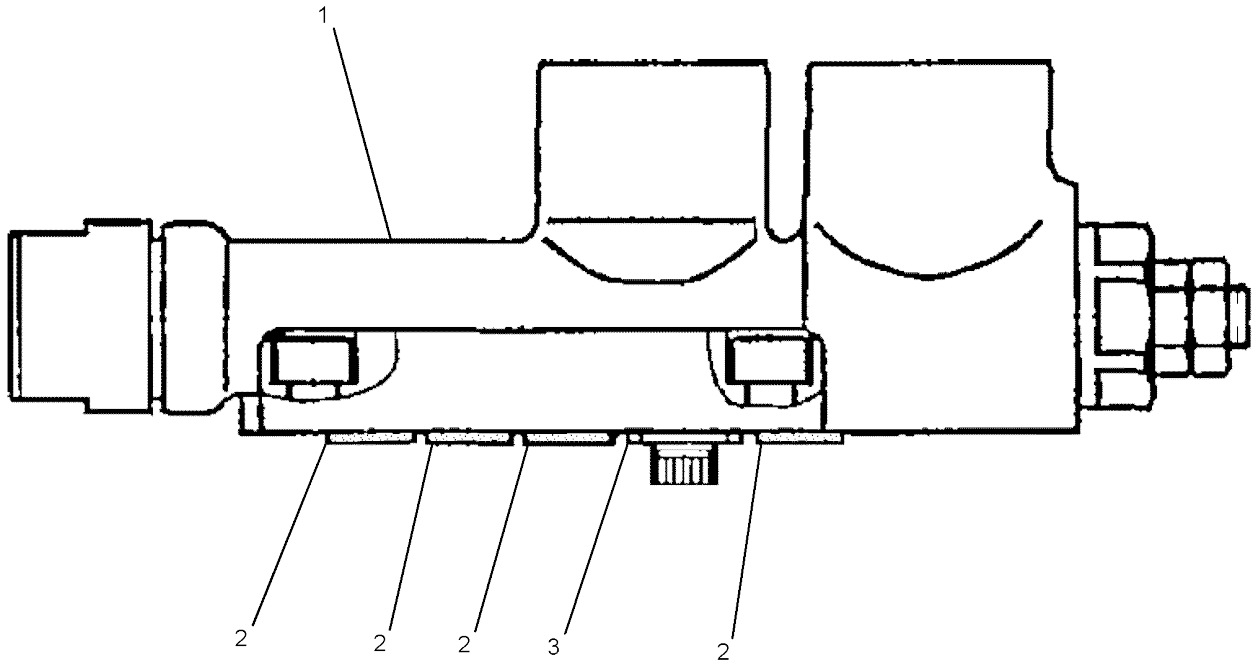


GRAPHIC #1 **<END>** g01623612

# HYDRAULIC SYSTEM

## 281-3053 VALVE GP-RELIEF

**PART OF 281-3052 MOTOR GP-SWING**

**SMCS-5069, 5117** **i04019573**

| NOTE | REF NO | GRAPHIC REF | PART NUMBER | QTY | PART NAME 1 2 3 4 5 6 (PRODUCT LEVEL) | SEE PAGE |
|---|---|---|---|---|---|---|
| | 1 | 1 | **095-1582** | 1 | SEAL-O-RING | |
| | 2 | 1 | **095-1585** | 1 | SEAL-O-RING | |
| | 3 | 1 | **095-1590** | 1 | SEAL-O-RING | |
| | 4 | 1 | **095-1595** | 1 | SEAL-O-RING | |
| | 5 | 1 | **095-1781** | 2 | RING | |

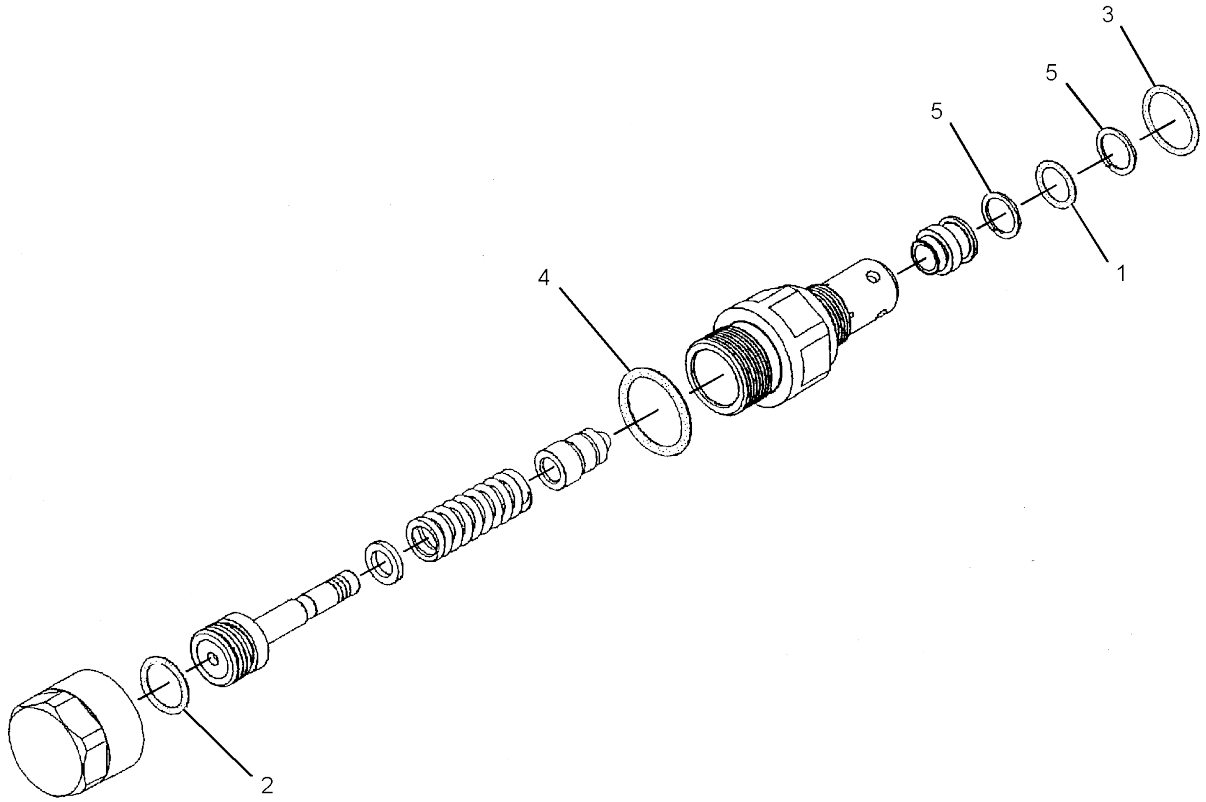


GRAPHIC #1 **<END>** g01235790

# *288-0848* VALVE GP-RELIEF–THUMB

**PART OF 377-8916, 377-8917 STICK AR-HOE**
**AN ATTACHMENT**

**SMCS-5069, 5117** **i04764135**

| NOTE | REF NO | GRAPHIC REF | PART NUMBER | QTY | PART NAME 1 2 3 4 5 6 (PRODUCT LEVEL) | SEE PAGE |
|---|---|---|---|---|---|---|
| | 1 | 1 | **272-7832** | 2 | VALVE AS-RELIEF (LINE) | |
| | | | | | (EACH INCLUDES) | |
| | | 1 | **2M-9780** | 1 | SEAL-O-RING | |

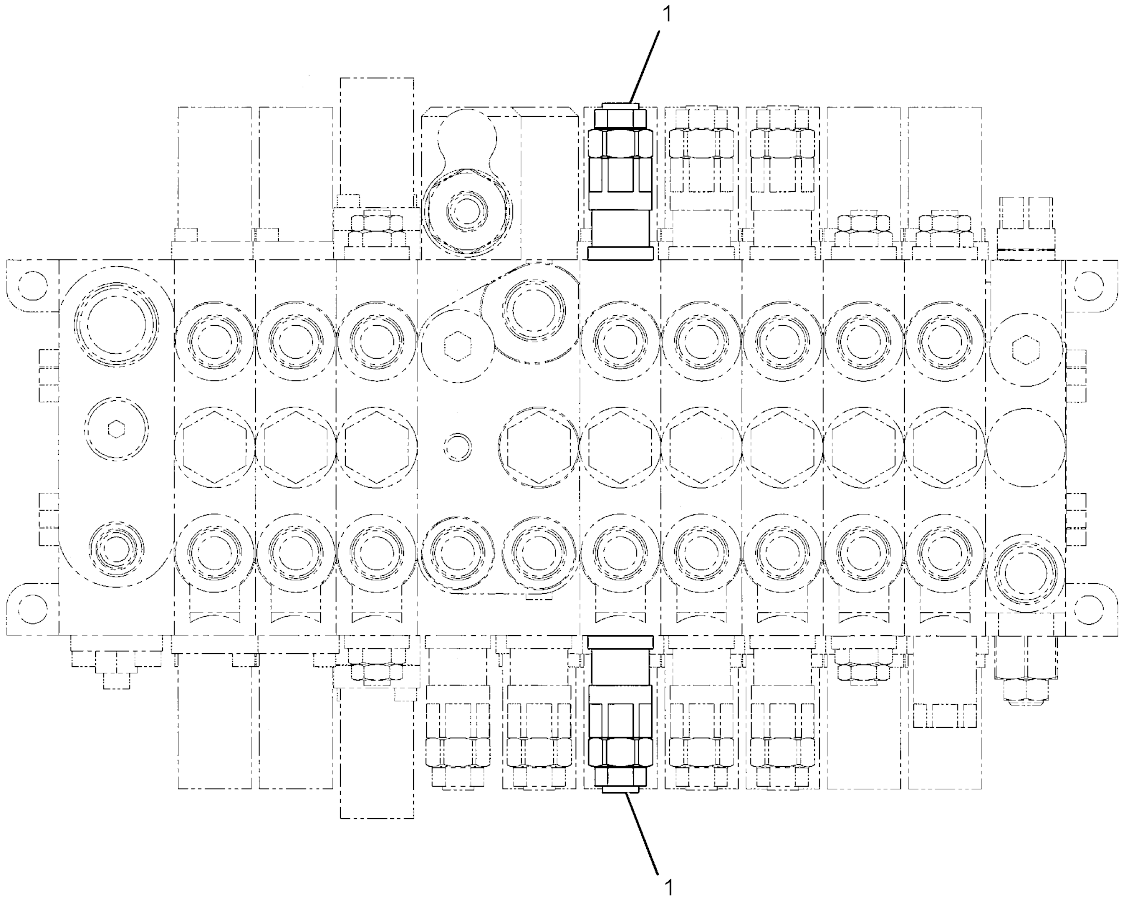


GRAPHIC #1 **<END>** g02861796

# *169-1181* VALVE GP-SOLENOID

**PART OF 282-9318 VALVE GP-SOLENOID**
**AN ATTACHMENT**

**SMCS-5479** **i03971129**

| NOTE | REF NO | GRAPHIC REF | PART NUMBER | QTY | PART NAME 1 2 3 4 5 6 (PRODUCT LEVEL) | SEE PAGE |
|---|---|---|---|---|---|---|
| | 1 | 1 | **095-1750** | 1 | SEAL-O-RING | |
| | 2 | 1 | **6V-8398** | 1 | SEAL-O-RING | |
| | 3 | 1 | **095-1751** | 1 | SEAL-O-RING | |
| M | 4 | 1 | **114-0623** | 1 | NUT AS (M6X1-THD) | |
| | 5 | 1 | **095-1586** | 1 | SEAL-O-RING | |

M - METRIC PART

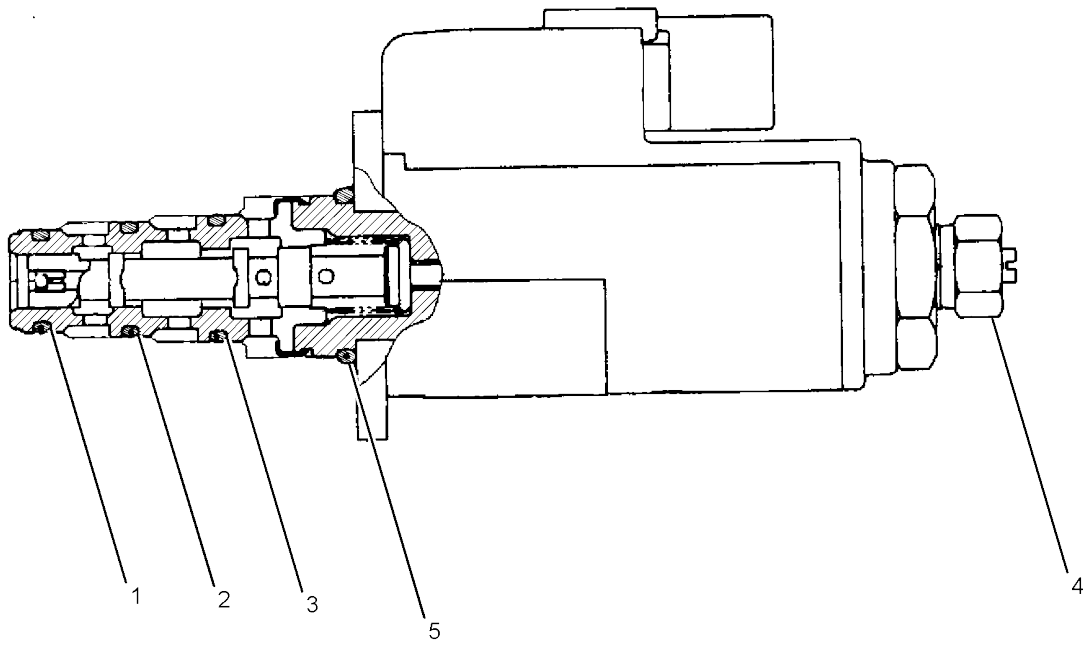


GRAPHIC #1 **<END>** g01369550

# 269-2299 VALVE GP-SOLENOID

**PART OF 267-0424 MANIFOLD & SOLENOID GP-CONTROL**

**SMCS-5479** **i03971113**

| NOTE | REF NO | GRAPHIC REF | PART NUMBER | QTY | PART NAME 1 2 3 4 5 6 (PRODUCT LEVEL) | SEE PAGE |
|---|---|---|---|---|---|---|
| | 1 | 1 | **095-1750** | 1 | SEAL-O-RING | |
| | 2 | 1 | **6V-8398** | 1 | SEAL-O-RING | |
| | 3 | 1 | **095-1751** | 1 | SEAL-O-RING | |
| M | 4 | 1 | **114-0623** | 1 | NUT AS (M6X1-THD) | |
| | 5 | 1 | **095-1586** | 1 | SEAL-O-RING | |

M - METRIC PART

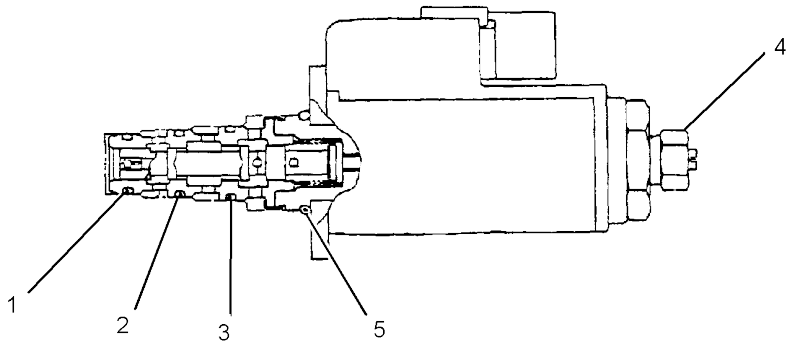


GRAPHIC #1 **<END>** g01210437

# HYDRAULIC SYSTEM

## 282-9318 VALVE GP-SOLENOID

**PART OF 385-2796 LINES GP-PILOT**
**AN ATTACHMENT**

**SMCS-5479** **i03971128**

| NOTE | REF NO | GRAPHIC REF | PART NUMBER | QTY | PART NAME 1 2 3 4 5 6 (PRODUCT LEVEL) | SEE PAGE |
|---|---|---|---|---|---|---|
| Y | 1 | 1 | **169-1181** | 2 | VALVE GP-SOLENOID (BLADE) | 354 |
| | 2 | 1 | **291-0152** | 1 | BLOCK | |
| M | 3 | 1 | **8T-0288** | 4 | BOLT (M5X0.8X12-MM) | |

M - METRIC PART
Y - SEPARATE ILLUSTRATION

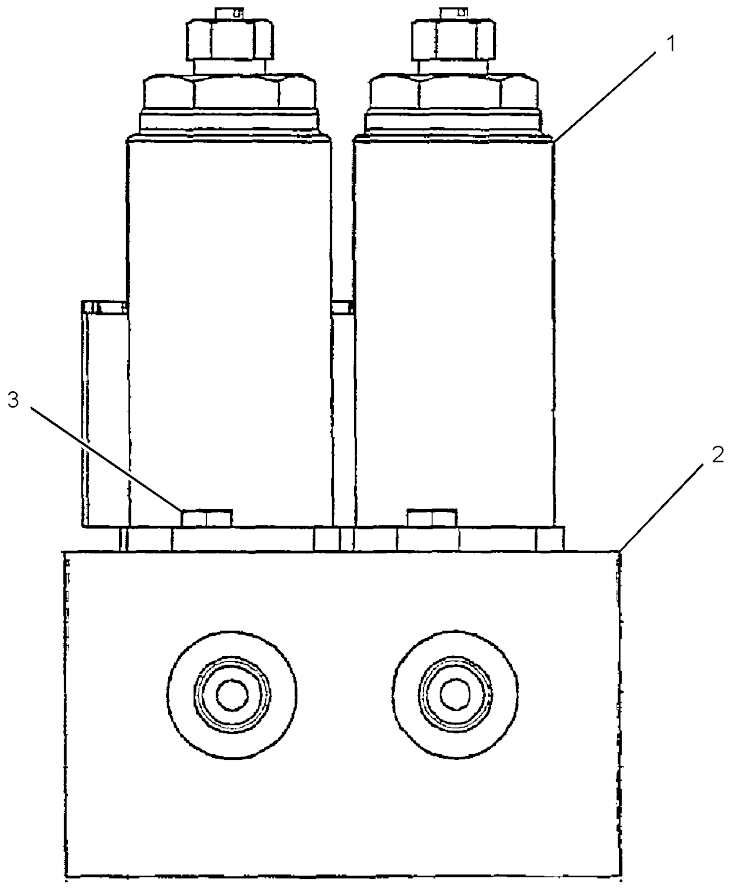


GRAPHIC #1 **<END>** g01359556

# 372-9898 VALVE GP-SOLENOID

**PART OF 377-8876 VALVE & MTG GP-CONTROL**
**AN ATTACHMENT**

**SMCS-5479** **i04559358**

| NOTE | REF NO | GRAPHIC REF | PART NUMBER | QTY | PART NAME 1 2 3 4 5 6 (PRODUCT LEVEL) | SEE PAGE |
|---|---|---|---|---|---|---|
| | 1 | 1 | **274-8039** | 2 | VALVE GP-SOLENOID (12-VOLT) (FLOW CONTROL) | |
| | | | | | (EACH INCLUDES) | |
| | | 1 | **274-8034** | 1 | COIL AS (12-VOLT) | |

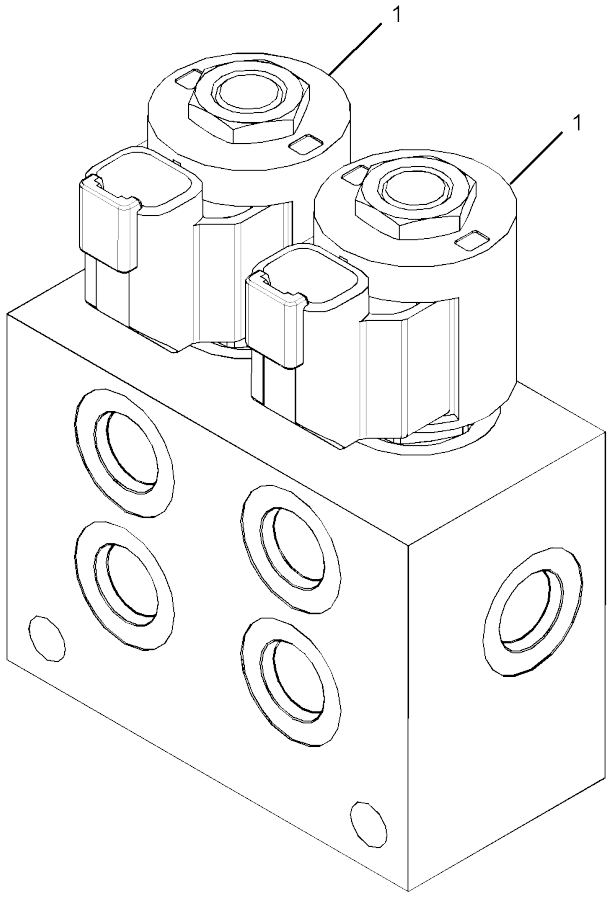


GRAPHIC #1 **<END>** g02765216

# 358-2091 VALVE GP-SOLENOID & MANIFOLD–QUICK COUPLER

**PART OF 384-5013 CONTROL AR-COUPLER, 382-2551 LINES GP-FRONT**
**AN ATTACHMENT**

**SMCS-5264, 5479** **i05426637**

| NOTE | REF NO | GRAPHIC REF | PART NUMBER | QTY | PART NAME 1 2 3 4 5 6 (PRODUCT LEVEL) | SEE PAGE |
|---|---|---|---|---|---|---|
| | 1 | 1 | **384-1039** | 1 | VALVE GP-CHECK (QUICK COUPLER) | |
| | 2 | 1 | **368-1278** | 2 | VALVE GP-SOLENOID (12-VOLT) (QUICK COUPLER) | |
| | 3 | 1 | **368-1279** | 1 | VALVE GP-PRESSURE REDUCING (QUICK COUPLER) | |
| | 4 | 1 | **244-1540** | 1 | PLUG-ORIFICE | |
| | 5 | 1 | **4J-7533** | 5 | SEAL-O-RING | |
| | 6 | 1 | **9S-4180** | 5 | PLUG | |

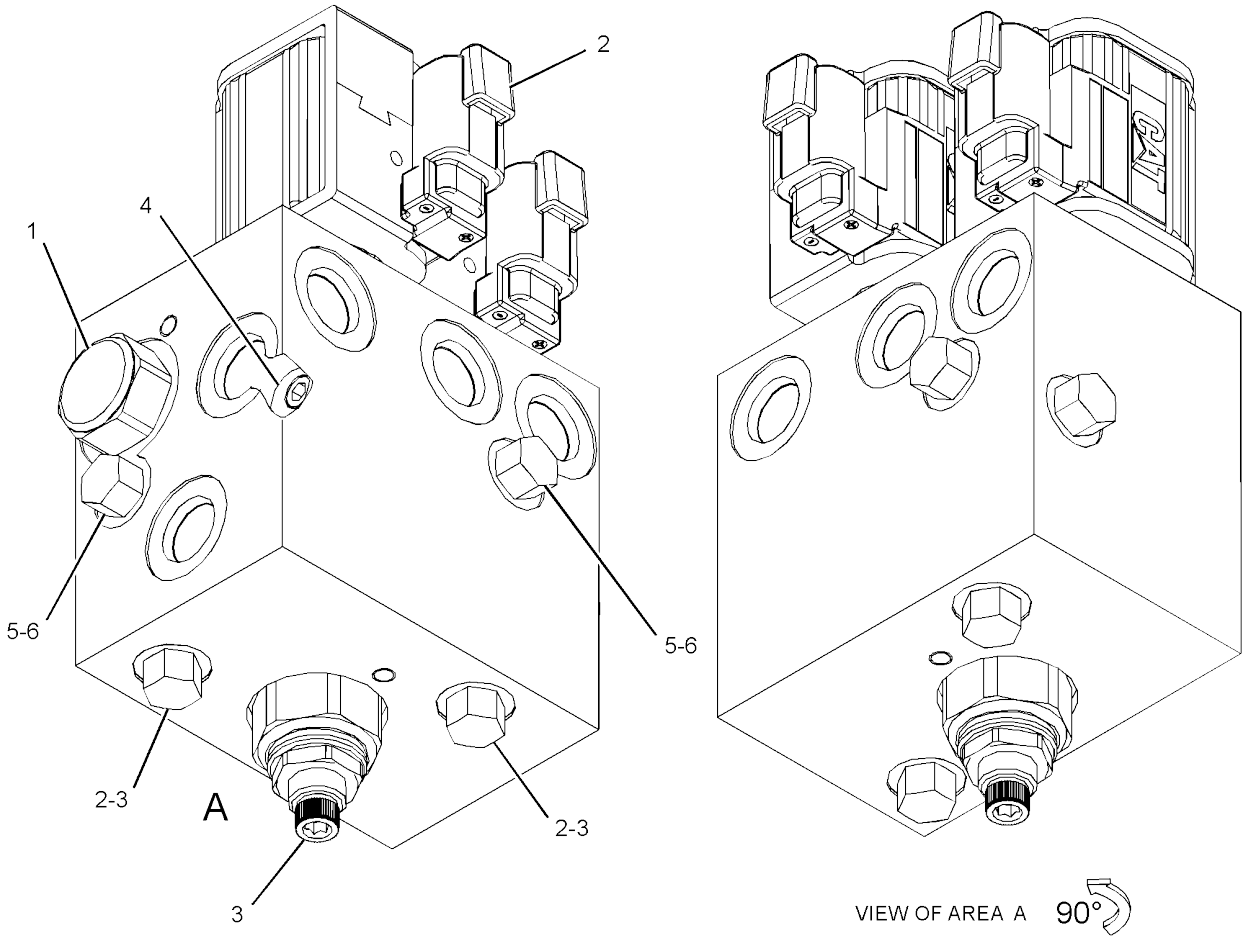


GRAPHIC #1 **<END>** g02879259

# *376-6680* BOOM AR

**PART OF 376-6672 COMMON AR**

**SMCS-6501** **i04728052**

| NOTE | PART NUMBER | QTY | PART NAME 1 2 3 4 5 6 (PRODUCT LEVEL) | SEE PAGE |
|---|---|---|---|---|
| Y | *381-5006* | 1 | BOOM GP | 360 |
| Y | **284-0420** | 1 | CYLINDER GP-BOOM | 192 |
| Y | **376-0171** | 1 | CYLINDER GP-SWING BOOM | 200 |
| Y | *266-4069* | 1 | FRAME GP-SWING (BOOM) | 142 |
| Y | *270-6501* | 1 | GUARD GP-CYLINDER (BOOM) | 146 |
| Y | *292-5739* | 1 | LIGHTING GP-FLOOD (BOOM) | 92 |
| Y | *380-6303* | 1 | WIRING GP-LIGHTING (BOOM) | 115 |

Y - SEPARATE ILLUSTRATION

<END>

# IMPLEMENTS

## *381-5006* BOOM GP

**PART OF 376-6680 BOOM AR**

**SMCS-6501** **i04728084**

| NOTE | REF NO | GRAPHIC REF | PART NUMBER | QTY | PART NAME 1 2 3 4 5 6 (PRODUCT LEVEL) | SEE PAGE |
|---|---|---|---|---|---|---|
| | 1 | 1 | **093-1430** | 2 | SEAL-LIP TYPE | |
| B | 2 | 1 | **175-1794** | 2 | SHIM (0.5-MM THK) | |
| B | 3 | 1 | **175-1795** | 4 | SHIM (1-MM THK) | |
| B | 4 | 1 | **176-8464** | 1 | SHIM (0.5-MM THK) | |
| B | 5 | 1 | **176-8465** | 1 | SHIM (1-MM THK) | |
| | 6 | 1 | **266-3872** | 1 | BOSS (M20X1.5-THD) | |
| | 7 | 1 | **266-4104** | 1 | PIN AS | |
| | 8 | 1 | **266-4106** | 1 | PIN AS | |
| | 9 | 1 | **266-4109** | 1 | PLATE AS | |
| | 10 | 1 | **281-1019** | 1 | PLATE AS | |
| | 11 | 1 | **281-1106** | 1 | PIN | |
| | 12 | 1 | **381-5008** | 1 | BOOM & BEARING AS | |
| | 12A | 1 | **265-8720** | 2 | BUSHING | |
| | | 1 | **7T-1099** | 1 | LINK | |
| M | | 1 | **9R-2672** | 1 | BOSS-THREADED (M10X1.5-THD) | |
| | 13 | 1 | **3B-8489** | 1 | FITTING-GREASE | |
| | 14 | 1 | **6V-8513** | 2 | WASHER-HARD (11X35X2.5-MM THK) | |
| M | 15 | 1 | **8T-4137** | 1 | BOLT (M10X1.5X20-MM) | |
| M | 16 | 1 | **8T-4189** | 4 | BOLT (M8X1.25X20-MM) | |
| M | 17 | 1 | **8T-4196** | 1 | BOLT (M10X1.5X35-MM) | |
| | 18 | 1 | **8T-4224** | 4 | WASHER-HARD (8.8X16X2-MM THK) | |

B - USE AS REQUIRED
M - METRIC PART

*381-5006* **BOOM GP** (*contd.*) **i04728084**

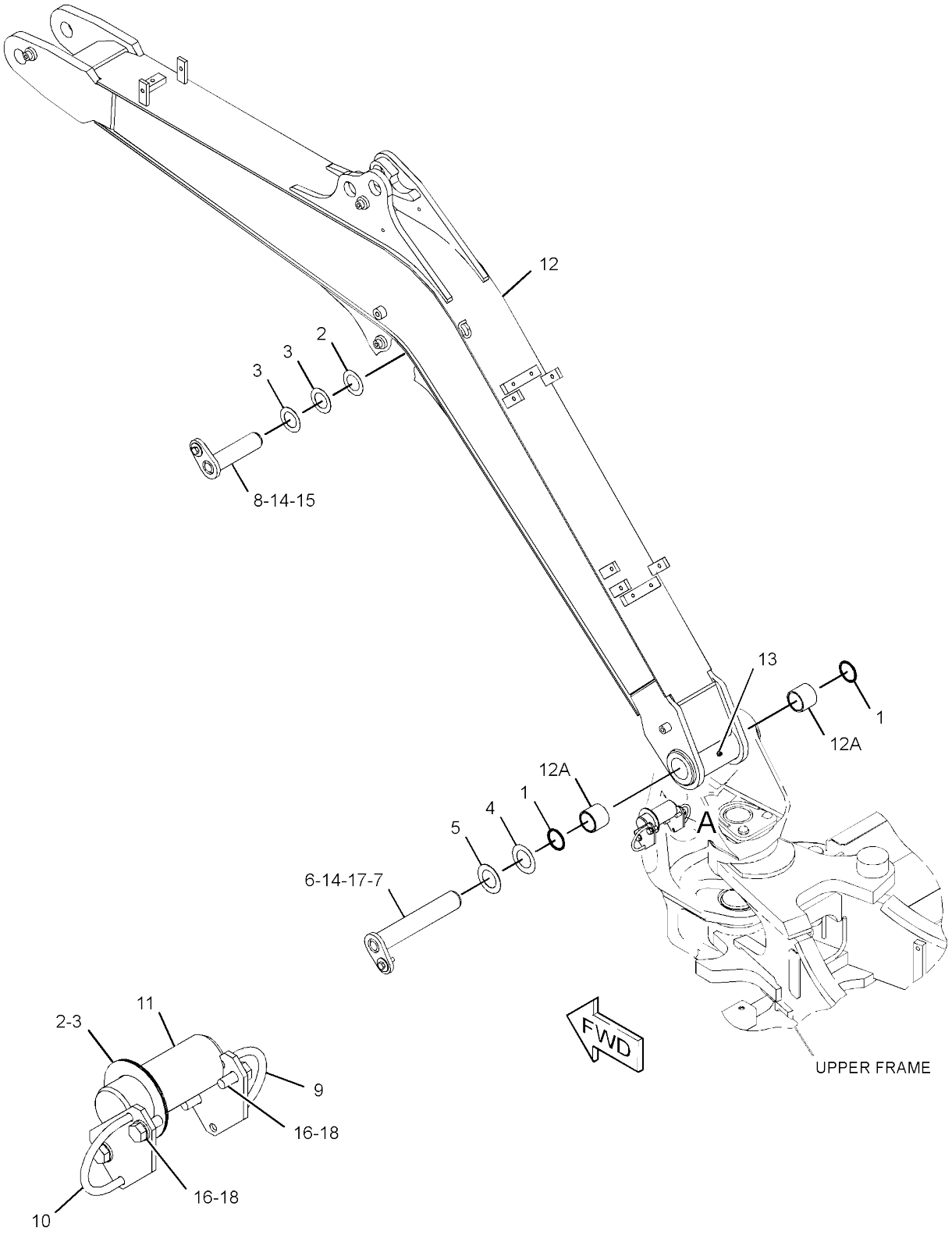


VIEW OF AREA A

GRAPHIC #1 **<END>** g02856217

# *282-1712* BRACKET GP-MOUNTING–BUCKET

**PART OF 279-4325 BUCKET AR-TILTABLE**
**AN ATTACHMENT**

**SMCS-6700, 7079** **i05395259**

| NOTE | REF NO | GRAPHIC REF | PART NUMBER | QTY | PART NAME 1 2 3 4 5 6 (PRODUCT LEVEL) | SEE PAGE |
|---|---|---|---|---|---|---|
| | 1 | 1 | **246-0175** | 2 | BEARING | |
| | 2 | 1 | **282-1713** | 1 | BRACKET AS-MOUNTING | |

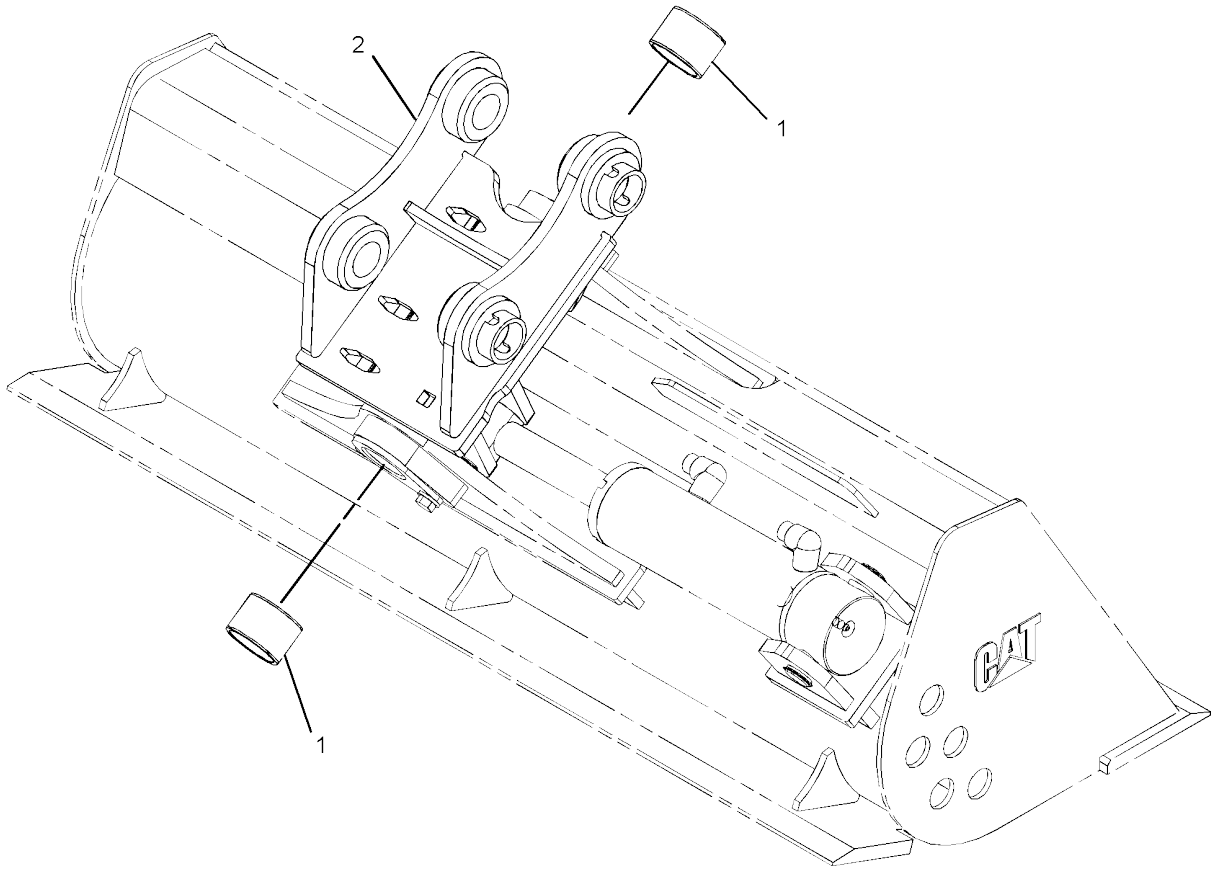


GRAPHIC #1 **<END>** g01243498

# IMPLEMENTS

## *377-8918* LINKAGE AR-BUCKET

**AN ATTACHMENT**

**SMCS-6513** **i04764139**

| NOTE | PART NUMBER | QTY | PART NAME 1 2 3 4 5 6 (PRODUCT LEVEL) | SEE PAGE |
|---|---|---|---|---|
| Y | **376-0170** | 1 | CYLINDER GP-BUCKET | 194 |
| Y | *277-4378* | 1 | LINKAGE GP-BUCKET (WITH LIFTING EYE) | 365 |

Y - SEPARATE ILLUSTRATION

<END>

## *377-8919* LINKAGE AR-BUCKET—WITH LIFTING EYE

**PART OF 383-5899, 383-5900, 383-5901, 383-5902 STICK AR-HOE**

**AN ATTACHMENT**

**SMCS-6513** **i04725146**

| NOTE | PART NUMBER | QTY | PART NAME 1 2 3 4 5 6 (PRODUCT LEVEL) | SEE PAGE |
|---|---|---|---|---|
| Y | **376-0170** | 1 | CYLINDER GP-BUCKET | 194 |
| Y | *278-9937* | 1 | LINKAGE GP-BUCKET (WITH LIFTING EYE) | 367 |

Y - SEPARATE ILLUSTRATION

<END>

## *418-1566* LINKAGE AR-BUCKET—WITH LIFTING EYE

**AN ATTACHMENT**

**SMCS-6513** **i05210410**

| NOTE | PART NUMBER | QTY | PART NAME 1 2 3 4 5 6 (PRODUCT LEVEL) | SEE PAGE |
|---|---|---|---|---|
| Y | **376-0170** | 1 | CYLINDER GP-BUCKET | 194 |
| Y | *420-1391* | 1 | LINKAGE GP-BUCKET | 369 |

Y - SEPARATE ILLUSTRATION

<END>

## *418-1571* LINKAGE AR-BUCKET—WITHOUT LIFTING EYE

**AN ATTACHMENT**

**SMCS-6513** **i05210416**

| NOTE | PART NUMBER | QTY | PART NAME 1 2 3 4 5 6 (PRODUCT LEVEL) | SEE PAGE |
|---|---|---|---|---|
| M | **8T-4172** | 2 | BOLT (M10X1.5X80-MM) | |
| | **3B-8489** | 3 | FITTING-GREASE | |
| | **277-4382** | 1 | LINK | |
| | **281-0865** | 1 | LINK & BEARING AS | |
| | **093-1429** | 6 | SEAL-LIP TYPE | |
| | **265-8715** | 2 | BUSHING | |
| | **266-4051** | 2 | BUSHING | |
| | **277-4381** | 1 | LINK AS | |
| M | **8T-4133** | 4 | NUT (M10X1.5-THD) | |
| | **228-2856** | 2 | PIN AS | |
| | **277-4383** | 2 | PIN AS | |
| | **095-0868** | 2 | PIN-COTTER | |
| | **175-1794** | 5 | SHIM (0.5-MM THK) | |
| | **175-1795** | 3 | SHIM (1-MM THK) | |

M - METRIC PART

<END>

# 418-1572 LINKAGE AR-BUCKET–WITHOUT LIFTING EYE

**AN ATTACHMENT**

**SMCS-6513** **i05210415**

| NOTE | PART NUMBER | QTY | PART NAME 1 2 3 4 5 6 (PRODUCT LEVEL) | SEE PAGE |
|---|---|---|---|---|
| M | **8T-4172** | 2 | BOLT (M10X1.5X80-MM) | |
| | **3B-8489** | 3 | FITTING-GREASE | |
| | **277-4382** | 1 | LINK | |
| | **278-9938** | 1 | LINK & BEARING AS | |
| | **093-1429** | 6 | SEAL-LIP TYPE | |
| | **265-8715** | 2 | BUSHING | |
| | **266-4051** | 2 | BUSHING | |
| | **277-4381** | 1 | LINK AS | |
| M | **8T-4133** | 4 | NUT (M10X1.5-THD) | |
| | **228-2856** | 2 | PIN AS | |
| | **277-4383** | 2 | PIN AS | |
| | **095-0868** | 2 | PIN-COTTER | |
| | **175-1794** | 5 | SHIM (0.5-MM THK) | |
| | **175-1795** | 3 | SHIM (1-MM THK) | |

M - METRIC PART

<END>

# *277-4378* LINKAGE GP-BUCKET

**PART OF 377-8918 LINKAGE AR-BUCKET**
**AN ATTACHMENT**

**SMCS-6513** **i04019531**

| NOTE | REF NO | GRAPHIC REF | PART NUMBER | QTY | PART NAME 1 2 3 4 5 6 (PRODUCT LEVEL) | SEE PAGE |
|---|---|---|---|---|---|---|
| | 1 | 1 | **3B-8489** | 3 | FITTING-GREASE | |
| B | 2 | 1 | **175-1794** | 7 | SHIM (0.5-MM THK) | |
| B | 3 | 1 | **175-1795** | 4 | SHIM (1-MM THK) | |
| | 4 | 1 | **228-2856** | 2 | PIN AS | |
| | 5 | 1 | **266-4064** | 1 | PIN AS | |
| | 6 | 1 | **277-4381** | 1 | LINK AS | |
| | 7 | 1 | **277-4382** | 1 | LINK | |
| | 8 | 1 | **277-4383** | 2 | PIN AS | |
| | 9 | 1 | **281-0865** | 1 | LINK & BEARING AS | |
| | | 1 | **093-1429** | 6 | SEAL-LIP TYPE | |
| | | 1 | **265-8715** | 2 | BUSHING | |
| | | 1 | **266-4051** | 2 | BUSHING | |
| | 10 | 1 | **095-0868** | 2 | PIN-COTTER | |
| | 11 | 1 | **6V-8513** | 1 | WASHER-HARD (11X35X2.5-MM THK) | |
| M | 12 | 1 | **8T-4133** | 4 | NUT (M10X1.5-THD) | |
| M | 13 | 1 | **8T-4137** | 1 | BOLT (M10X1.5X20-MM) | |
| M | 14 | 1 | **8T-4172** | 2 | BOLT (M10X1.5X80-MM) | |

B - USE AS REQUIRED
M - METRIC PART

*277-4378* **LINKAGE GP-BUCKET (*contd.*)** **i04019531**

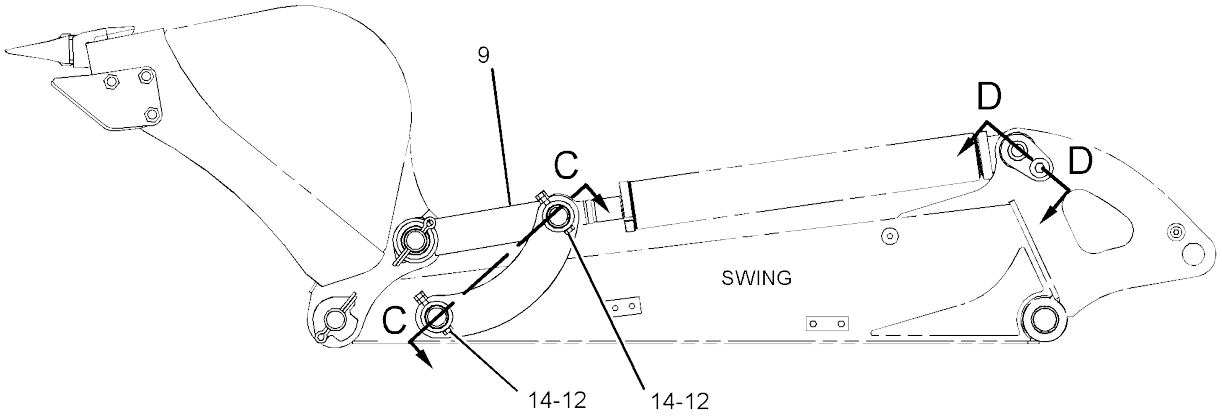


LEFT SIDE VIEW

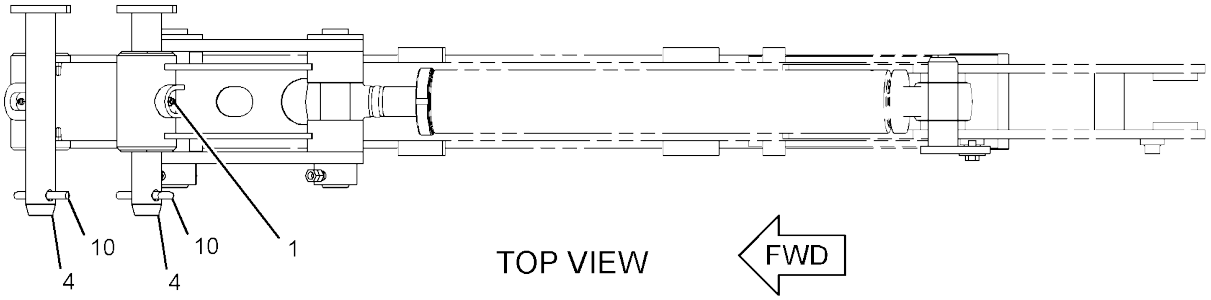


TOP VIEW

FWD

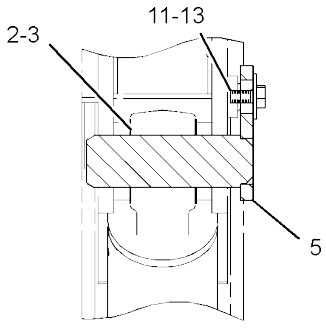


SECTION D-D

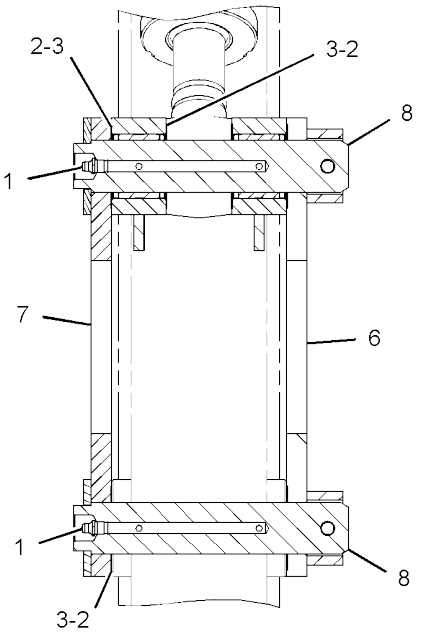


SECTION C-C

GRAPHIC #1 **<END>** g01223179

# 278-9937 LINKAGE GP-BUCKET—WITH LIFTING EYE

**PART OF 377-8919 LINKAGE AR-BUCKET**

**AN ATTACHMENT**

**SMCS-6513** **i04006592**

| NOTE | REF NO | GRAPHIC REF | PART NUMBER | QTY | PART NAME 1 2 3 4 5 6 (PRODUCT LEVEL) | SEE PAGE |
|---|---|---|---|---|---|---|
| | 1 | 1 | **3B-8489** | 3 | FITTING-GREASE | |
| | 2 | 1 | **175-1794** | 7 | SHIM (0.5-MM THK) | |
| | 3 | 1 | **175-1795** | 4 | SHIM (1-MM THK) | |
| | 4 | 1 | **228-2856** | 2 | PIN AS | |
| | 5 | 1 | **266-4064** | 1 | PIN AS | |
| | 6 | 1 | **277-4381** | 1 | LINK AS | |
| | 7 | 1 | **277-4382** | 1 | LINK | |
| | 8 | 1 | **277-4383** | 2 | PIN AS | |
| | 9 | 1 | **278-9938** | 1 | LINK & BEARING AS | |
| | | 1 | **093-1429** | 6 | SEAL-LIP TYPE | |
| | | 1 | **265-8715** | 2 | BUSHING | |
| | | 1 | **266-4051** | 2 | BUSHING | |
| | 10 | 1 | **095-0868** | 2 | PIN-COTTER | |
| | 11 | 1 | **6V-8513** | 1 | WASHER-HARD (11X35X2.5-MM THK) | |
| M | 12 | 1 | **8T-4133** | 4 | NUT (M10X1.5-THD) | |
| M | 13 | 1 | **8T-4137** | 1 | BOLT (M10X1.5X20-MM) | |
| M | 14 | 1 | **8T-4172** | 2 | BOLT (M10X1.5X80-MM) | |

M - METRIC PART

278-9937 **LINKAGE GP-BUCKET (*contd.*)** **i04006592**

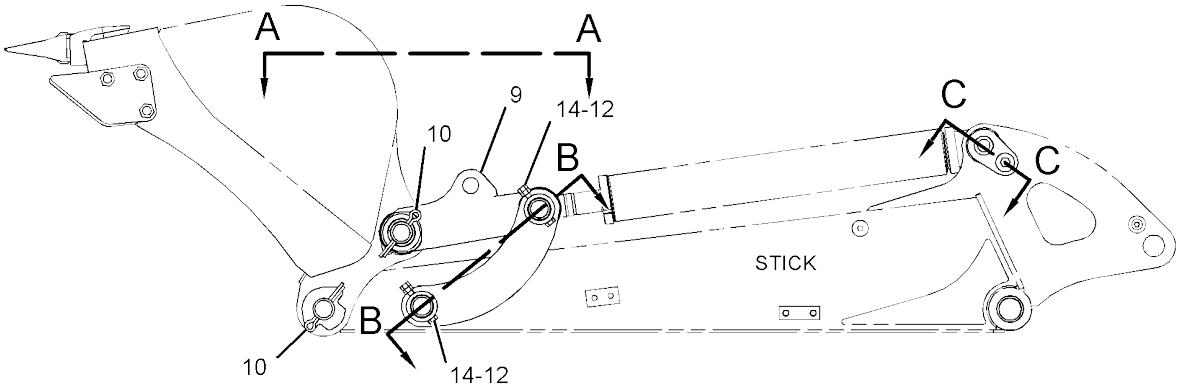


LEFT SIDE VIEW

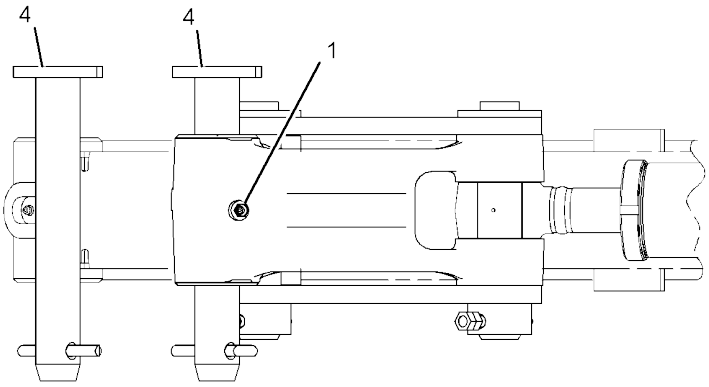


VIEW A-A

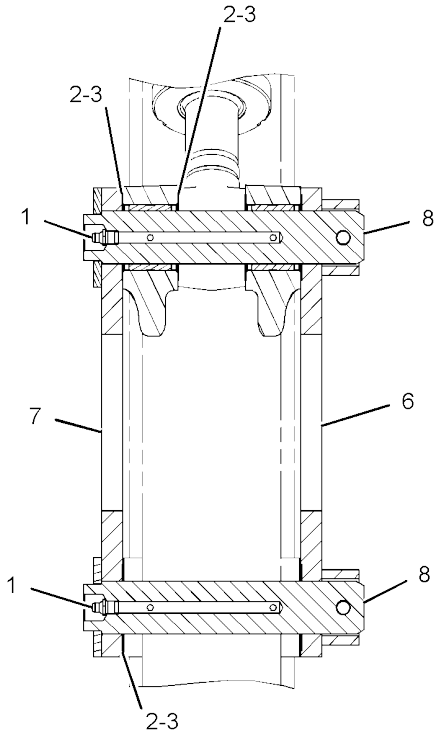


SECTION B-B

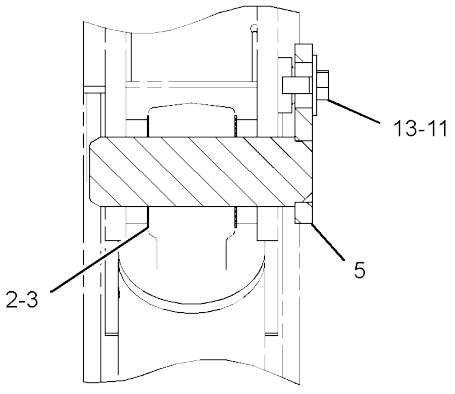


SECTION C-C

GRAPHIC #1 **<END>** g01221404

# *420-1391* LINKAGE GP-BUCKET

**PART OF 418-1566 LINKAGE AR-BUCKET**
**AN ATTACHMENT**

**SMCS-6513** **i05210409**

| NOTE | REF NO | GRAPHIC REF | PART NUMBER | QTY | PART NAME 1 2 3 4 5 6 (PRODUCT LEVEL) | SEE PAGE |
|---|---|---|---|---|---|---|
| | 1 | 1 | **175-1794** | 2 | SHIM (0.5-MM THK) | |
| | 2 | 1 | **175-1795** | 1 | SHIM (1-MM THK) | |
| | 3 | 1 | **266-4064** | 1 | PIN AS | |
| | 4 | 1 | **6V-8513** | 1 | WASHER-HARD (11X35X2.5-MM THK) | |
| M | 5 | 1 | **8T-4137** | 1 | BOLT (M10X1.5X20-MM) | |

M - METRIC PART

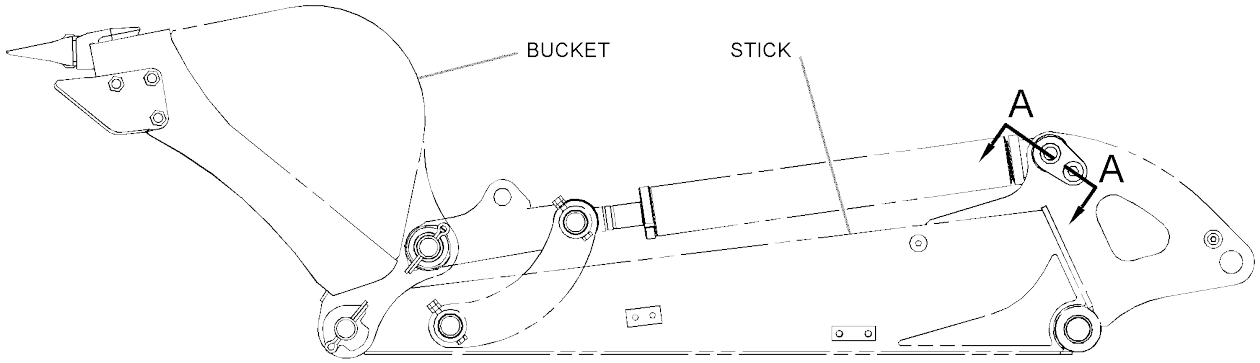


LEFT SIDE VIEW

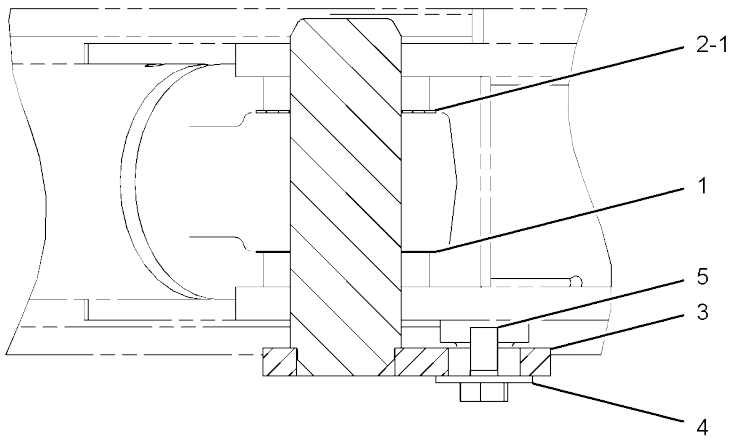


SECTION A-A

GRAPHIC #1 **<END>** g03342159

# IMPLEMENTS

## *421-8461* STICK AR

**AN ATTACHMENT**

**SMCS-6502** **i05331071**

| NOTE | PART NUMBER | QTY | PART NAME 1 2 3 4 5 6 (PRODUCT LEVEL) | SEE PAGE |
|---|---|---|---|---|
| Y | **284-0863** | 1 | CYLINDER GP-STICK | 198 |
| Y | *269-4197* | 1 | FASTENER GP-LINES (STICK) | 207 |
| Y | *421-9099* | 1 | LINES GP-STICK | 267 |

Y - SEPARATE ILLUSTRATION

<END>

## *377-8916* STICK AR-HOE—STANDARD, THUMB

**PART OF 383-5899, 383-5901 STICK AR-HOE**

**AN ATTACHMENT**

**SMCS-6502** **i04725144**

| NOTE | PART NUMBER | QTY | PART NAME 1 2 3 4 5 6 (PRODUCT LEVEL) | SEE PAGE |
|---|---|---|---|---|
| Y | *381-5033* | 1 | STICK GP-HOE (STANDARD, THUMB) | 379 |
| Y | *288-0848* | 1 | VALVE GP-RELIEF (LINE, THUMB) | 353 |

Y - SEPARATE ILLUSTRATION

<END>

## *377-8917* STICK AR-HOE—LONG, THUMB

**PART OF 383-5900, 383-5902 STICK AR-HOE**

**AN ATTACHMENT**

**SMCS-6502** **i04725145**

| NOTE | PART NUMBER | QTY | PART NAME 1 2 3 4 5 6 (PRODUCT LEVEL) | SEE PAGE |
|---|---|---|---|---|
| Y | *381-5030* | 1 | STICK GP-HOE (LONG, THUMB) | 377 |
| Y | *288-0848* | 1 | VALVE GP-RELIEF (LINE, THUMB) | 353 |

Y - SEPARATE ILLUSTRATION

<END>

## *381-5010* STICK AR-HOE—LONG, HEAVY-DUTY

**PART OF 383-5911, 383-5913 STICK AR-HOE**

**AN ATTACHMENT**

**SMCS-6502** **i04728086**

| NOTE | PART NUMBER | QTY | PART NAME 1 2 3 4 5 6 (PRODUCT LEVEL) | SEE PAGE |
|---|---|---|---|---|
| Y | *381-5011* | 1 | STICK GP-HOE | 374 |

Y - SEPARATE ILLUSTRATION

<END>

# IMPLEMENTS

## *381-5020* STICK AR-HOE—STANDARD

**PART OF 383-5910, 383-5912 STICK AR-HOE**

**AN ATTACHMENT**

**SMCS-6502** **i04728088**

| NOTE | PART NUMBER | QTY | PART NAME 1 2 3 4 5 6 (PRODUCT LEVEL) | SEE PAGE |
|---|---|---|---|---|
| Y | *381-5021* | 1 | STICK GP-HOE | 375 |

Y - SEPARATE ILLUSTRATION

<END>

## *383-5899* STICK AR-HOE—STANDARD

**AN ATTACHMENT**

**SMCS-6502** **i04728106**

| NOTE | PART NUMBER | QTY | PART NAME 1 2 3 4 5 6 (PRODUCT LEVEL) | SEE PAGE |
|---|---|---|---|---|
| Y | *379-4683* | 1 | CONTROL AR-AUXILIARY (SWING BOOM) | 182 |
| Y | *378-2501* | 1 | CONTROL AR-HYDRAULIC (STANDARD JOYSTICK) | 187 |
| Y | *382-1316* | 1 | LINES AR-BUCKET | 210 |
| Y | *355-5382* | 1 | LINES GP-AUXILIARY HYDRAULIC (STANDARD STICK) | 216 |
| Y | *377-8919* | 1 | LINKAGE AR-BUCKET (WITH LIFTING EYE) | 363 |
| Y | *377-8916* | 1 | STICK AR-HOE (STANDARD, THUMB) | 370 |

Y - SEPARATE ILLUSTRATION

<END>

## *383-5900* STICK AR-HOE—LONG

**AN ATTACHMENT**

**SMCS-6502** **i04728107**

| NOTE | PART NUMBER | QTY | PART NAME 1 2 3 4 5 6 (PRODUCT LEVEL) | SEE PAGE |
|---|---|---|---|---|
| Y | *379-4683* | 1 | CONTROL AR-AUXILIARY (SWING BOOM) | 182 |
| Y | *378-2501* | 1 | CONTROL AR-HYDRAULIC (STANDARD JOYSTICK) | 187 |
| Y | *382-1317* | 1 | LINES AR-BUCKET (LONG STICK) | 211 |
| Y | *379-4725* | 1 | LINES GP-AUXILIARY HYDRAULIC (LONG STICK) | 216 |
| Y | *377-8919* | 1 | LINKAGE AR-BUCKET (WITH LIFTING EYE) | 363 |
| Y | *377-8917* | 1 | STICK AR-HOE (LONG, THUMB) | 370 |

Y - SEPARATE ILLUSTRATION

<END>

## *383-5901* STICK AR-HOE—2ND AUXILIARY, LONG

**AN ATTACHMENT**

**SMCS-6502** **i04728108**

| NOTE | PART NUMBER | QTY | PART NAME 1 2 3 4 5 6 (PRODUCT LEVEL) | SEE PAGE |
|---|---|---|---|---|
| Y | *379-4721* | 1 | CONTROL AR-AUXILIARY (2ND AUXILIARY, STANDARD STICK) | 182 |
| Y | *378-2500* | 1 | CONTROL AR-HYDRAULIC (2ND AUXILIARY) | 187 |
| Y | *382-1316* | 1 | LINES AR-BUCKET | 210 |
| Y | *355-5382* | 1 | LINES GP-AUXILIARY HYDRAULIC (STANDARD STICK) | 216 |
| Y | *377-8919* | 1 | LINKAGE AR-BUCKET (WITH LIFTING EYE) | 363 |
| Y | *377-8916* | 1 | STICK AR-HOE (STANDARD, THUMB) | 370 |

Y - SEPARATE ILLUSTRATION

<END>

# IMPLEMENTS

## *383-5902* STICK AR-HOE—2ND AUXILIARY, LONG

**AN ATTACHMENT**

**SMCS-6502** **i04728109**

| NOTE | PART NUMBER | QTY | PART NAME 1 2 3 4 5 6 (PRODUCT LEVEL) | SEE PAGE |
|---|---|---|---|---|
| Y | *379-4722* | 1 | CONTROL AR-AUXILIARY (2ND AUXILIARY, LONG STICK) | 183 |
| Y | *378-2500* | 1 | CONTROL AR-HYDRAULIC (2ND AUXILIARY) | 187 |
| Y | *382-1317* | 1 | LINES AR-BUCKET (LONG STICK) | 211 |
| Y | *379-4725* | 1 | LINES GP-AUXILIARY HYDRAULIC (LONG STICK) | 216 |
| Y | *377-8919* | 1 | LINKAGE AR-BUCKET (WITH LIFTING EYE) | 363 |
| Y | *377-8917* | 1 | STICK AR-HOE (LONG, THUMB) | 370 |

Y - SEPARATE ILLUSTRATION

<END>

## *383-5910* STICK AR-HOE—STANDARD

**AN ATTACHMENT**

**SMCS-6502** **i04728110**

| NOTE | PART NUMBER | QTY | PART NAME 1 2 3 4 5 6 (PRODUCT LEVEL) | SEE PAGE |
|---|---|---|---|---|
| Y | *379-4683* | 1 | CONTROL AR-AUXILIARY (SWING BOOM) | 182 |
| Y | *378-2501* | 1 | CONTROL AR-HYDRAULIC (STANDARD JOYSTICK) | 187 |
| Y | *382-1316* | 1 | LINES AR-BUCKET | 210 |
| Y | *355-5382* | 1 | LINES GP-AUXILIARY HYDRAULIC (STANDARD STICK) | 216 |
| Y | *381-5020* | 1 | STICK AR-HOE (STANDARD) | 371 |

Y - SEPARATE ILLUSTRATION

<END>

## *383-5911* STICK AR-HOE—LONG

**AN ATTACHMENT**

**SMCS-6502** **i04728111**

| NOTE | PART NUMBER | QTY | PART NAME 1 2 3 4 5 6 (PRODUCT LEVEL) | SEE PAGE |
|---|---|---|---|---|
| Y | *379-4683* | 1 | CONTROL AR-AUXILIARY (SWING BOOM) | 182 |
| Y | *378-2501* | 1 | CONTROL AR-HYDRAULIC (STANDARD JOYSTICK) | 187 |
| Y | *382-1317* | 1 | LINES AR-BUCKET (LONG STICK) | 211 |
| Y | *379-4725* | 1 | LINES GP-AUXILIARY HYDRAULIC (LONG STICK) | 216 |
| Y | *381-5010* | 1 | STICK AR-HOE (LONG, HEAVY-DUTY) | 370 |

Y - SEPARATE ILLUSTRATION

<END>

## *383-5912* STICK AR-HOE—2ND AUXILIARY, STANDARD

**AN ATTACHMENT**

**SMCS-6502** **i04728112**

| NOTE | PART NUMBER | QTY | PART NAME 1 2 3 4 5 6 (PRODUCT LEVEL) | SEE PAGE |
|---|---|---|---|---|
| Y | *379-4721* | 1 | CONTROL AR-AUXILIARY (2ND AUXILIARY, STANDARD STICK) | 182 |
| Y | *378-2500* | 1 | CONTROL AR-HYDRAULIC (2ND AUXILIARY) | 187 |
| Y | *382-1316* | 1 | LINES AR-BUCKET | 210 |
| Y | *355-5382* | 1 | LINES GP-AUXILIARY HYDRAULIC (STANDARD STICK) | 216 |
| Y | *381-5020* | 1 | STICK AR-HOE (STANDARD) | 371 |

Y - SEPARATE ILLUSTRATION

<END>

# *383-5913* STICK AR-HOE–2ND AUXILIARY, LONG

**AN ATTACHMENT**

**SMCS-6502** **i04728113**

| NOTE | PART NUMBER | QTY | PART NAME 1 2 3 4 5 6 (PRODUCT LEVEL) | SEE PAGE |
|---|---|---|---|---|
| Y | *379-4722* | 1 | CONTROL AR-AUXILIARY (2ND AUXILIARY, LONG STICK) | 183 |
| Y | *378-2500* | 1 | CONTROL AR-HYDRAULIC (2ND AUXILIARY) | 187 |
| Y | *382-1317* | 1 | LINES AR-BUCKET (LONG STICK) | 211 |
| Y | *379-4725* | 1 | LINES GP-AUXILIARY HYDRAULIC (LONG STICK) | 216 |
| Y | *381-5010* | 1 | STICK AR-HOE (LONG, HEAVY-DUTY) | 370 |

Y - SEPARATE ILLUSTRATION

<END>

# *381-5011* STICK GP-HOE–LONG, HEAVY-DUTY

**PART OF 381-5010 STICK AR-HOE**
**AN ATTACHMENT**

**SMCS-6502** **i04728087**

| NOTE | REF NO | GRAPHIC REF | PART NUMBER | QTY | PART NAME 1 2 3 4 5 6 (PRODUCT LEVEL) | SEE PAGE |
|---|---|---|---|---|---|---|
| | 1 | 1 | **093-1429** | 6 | SEAL-LIP TYPE | |
| B | 2 | 1 | **175-1794** | 3 | SHIM (0.5-MM THK) | |
| B | 3 | 1 | **175-1795** | 3 | SHIM (1-MM THK) | |
| | 4 | 1 | **266-4064** | 1 | PIN AS | |
| | 5 | 1 | **266-4080** | 1 | PIN AS | |
| | 6 | 1 | **266-4106** | 1 | PIN AS | |
| | 7 | 1 | **381-5012** | 1 | STICK & BEARING AS | |
| | 7A | 1 | **265-8715** | 6 | BUSHING | |
| | | 1 | *381-5014* | 1 | STICK AS-HOE | |
| | | 1 | **5I-3272** | 2 | BOSS (M12X1.75X20-MM) | |
| M | | 1 | **9R-2821** | 1 | BOSS (M10X1.5X15-MM) | |
| | 8 | 1 | **3B-8489** | 2 | FITTING-GREASE | |
| | 9 | 1 | **6V-8513** | 3 | WASHER-HARD (11X35X2.5-MM THK) | |
| M | 10 | 1 | **8T-4137** | 3 | BOLT (M10X1.5X20-MM) | |

B - USE AS REQUIRED
M - METRIC PART

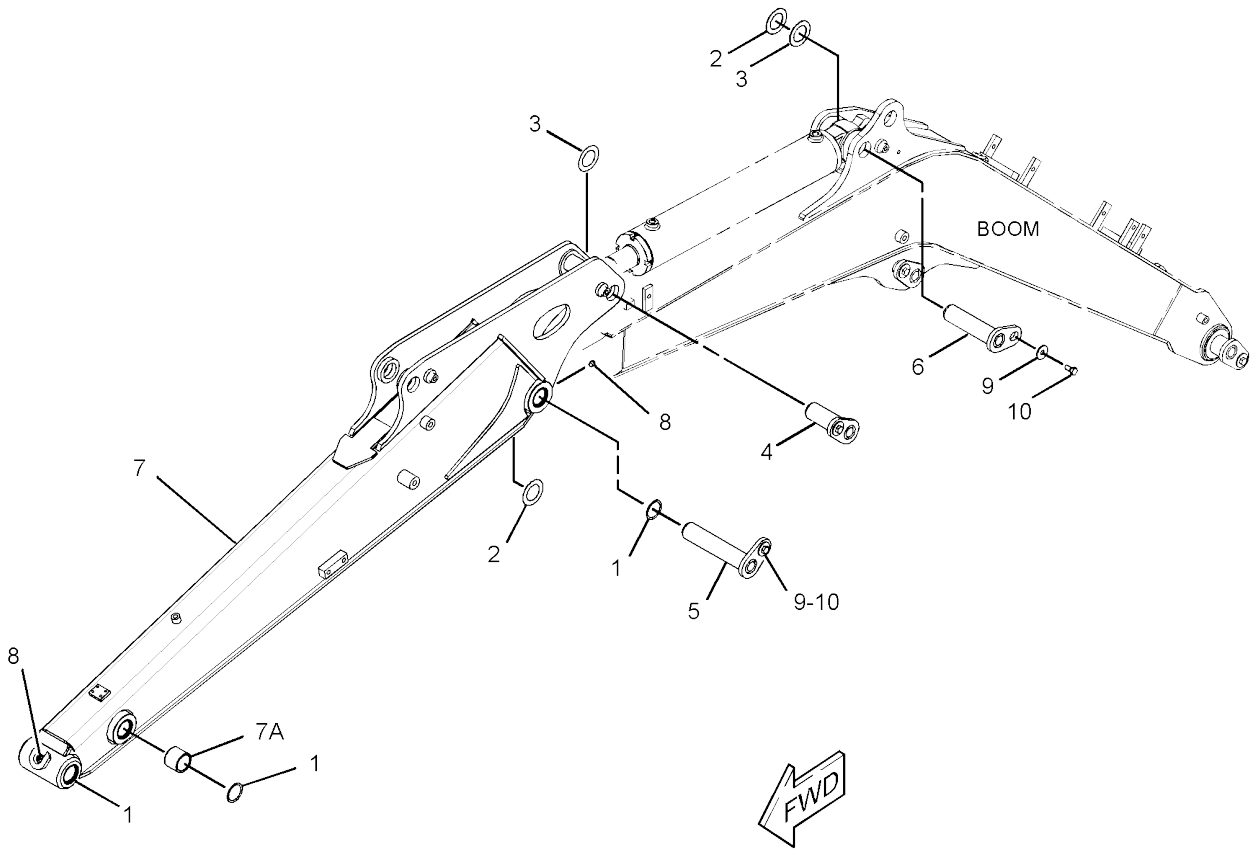


GRAPHIC #1 **<END>** g02834161

# 381-5021 STICK GP-HOE–STANDARD

**PART OF 381-5020 STICK AR-HOE**

**AN ATTACHMENT**

**SMCS-6502** **i04728089**

| NOTE | REF NO | GRAPHIC REF | PART NUMBER | QTY | PART NAME 1 2 3 4 5 6 (PRODUCT LEVEL) | SEE PAGE |
|---|---|---|---|---|---|---|
| | 1 | 1 | **093-1429** | 6 | SEAL-LIP TYPE | |
| B | 2 | 1 | **175-1794** | 3 | SHIM (0.5-MM THK) | |
| B | 3 | 1 | **175-1795** | 3 | SHIM (1-MM THK) | |
| | 4 | 1 | **266-4064** | 1 | PIN AS | |
| | 5 | 1 | **266-4080** | 1 | PIN AS | |
| | 6 | 1 | **266-4106** | 1 | PIN AS | |
| | 7 | 1 | **381-5022** | 1 | STICK & BEARING AS | |
| | 7A | 1 | **265-8715** | 6 | BUSHING | |
| M | | 1 | **9R-2821** | 1 | BOSS (M10X1.5X15-MM) | |
| | 8 | 1 | **3B-8489** | 2 | FITTING-GREASE | |
| | 9 | 1 | **6V-8513** | 3 | WASHER-HARD (11X35X2.5-MM THK) | |
| M | 10 | 1 | **8T-4137** | 3 | BOLT (M10X1.5X20-MM) | |

B - USE AS REQUIRED
M - METRIC PART

*381-5021* **STICK GP-HOE (*contd.*)** **i04728089**

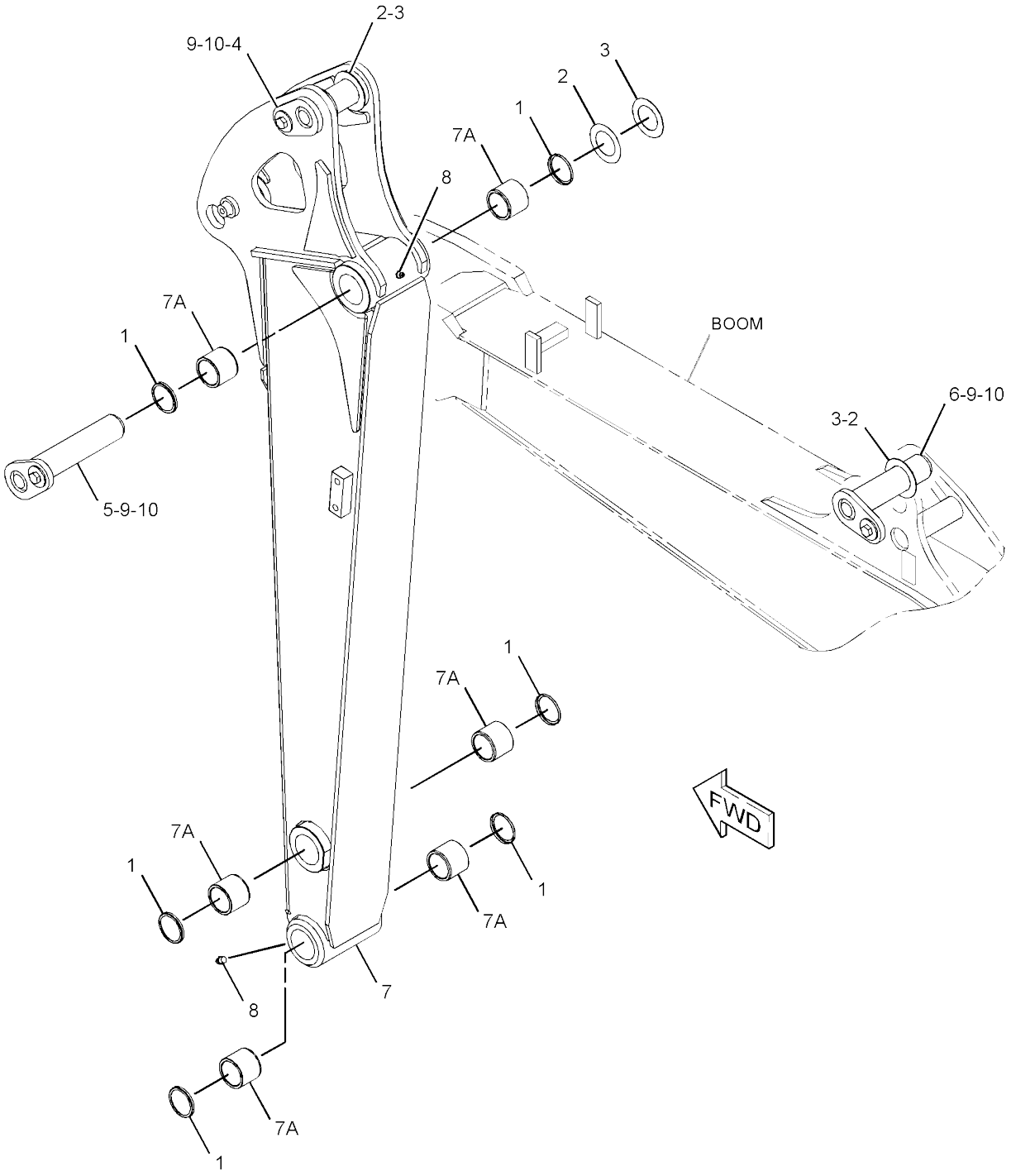


GRAPHIC #1 **<END>** g02856056

# *381-5030* STICK GP-HOE—LONG, THUMB

**PART OF 377-8917 STICK AR-HOE**
**AN ATTACHMENT**

**SMCS-6502** **i04728091**

| NOTE | REF NO | GRAPHIC REF | PART NUMBER | QTY | PART NAME 1 2 3 4 5 6 (PRODUCT LEVEL) | SEE PAGE |
|---|---|---|---|---|---|---|
| | 1 | 1 | **093-1429** | 6 | SEAL-LIP TYPE | |
| B | 2 | 1 | **175-1794** | 3 | SHIM (0.5-MM THK) | |
| B | 3 | 1 | **175-1795** | 3 | SHIM (1-MM THK) | |
| | 4 | 1 | **266-4064** | 1 | PIN AS | |
| | 5 | 1 | **266-4080** | 1 | PIN AS | |
| | 6 | 1 | **266-4106** | 1 | PIN AS | |
| | 7 | 1 | **381-5031** | 1 | STICK & BEARING AS | |
| | 7A | 1 | **265-8715** | 6 | BUSHING | |
| | | 1 | **5I-3272** | 2 | BOSS (M12X1.75X20-MM) | |
| M | | 1 | **9R-2821** | 1 | BOSS (M10X1.5X15-MM) | |
| | 8 | 1 | **3B-8489** | 2 | FITTING-GREASE | |
| | 9 | 1 | **6V-8513** | 3 | WASHER-HARD (11X35X2.5-MM THK) | |
| M | 10 | 1 | **8T-4137** | 3 | BOLT (M10X1.5X20-MM) | |

B - USE AS REQUIRED
M - METRIC PART

*381-5030* **STICK GP-HOE (*contd.*)** **i04728091**

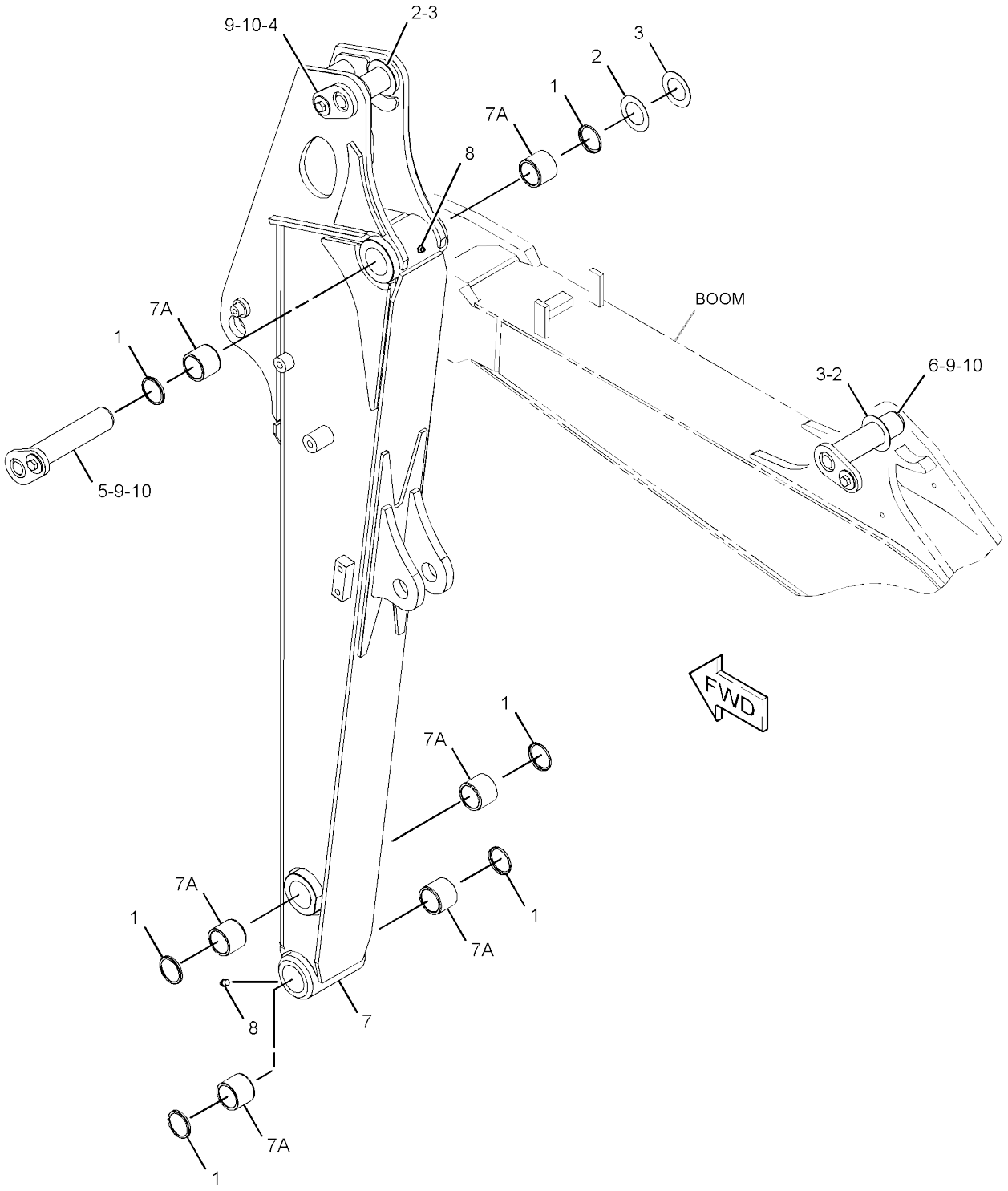


GRAPHIC #1 **<END>** g02856505

# *381-5033* STICK GP-HOE–STANDARD, THUMB

**PART OF 377-8916 STICK AR-HOE**

**AN ATTACHMENT**

**SMCS-6502** **i04728094**

| NOTE | REF NO | GRAPHIC REF | PART NUMBER | QTY | PART NAME 1 2 3 4 5 6 (PRODUCT LEVEL) | SEE PAGE |
|---|---|---|---|---|---|---|
| | 1 | 1 | **093-1429** | 6 | SEAL-LIP TYPE | |
| | 2 | 1 | **266-4064** | 1 | PIN AS | |
| | 3 | 1 | **266-4080** | 1 | PIN AS | |
| | 4 | 1 | **266-4106** | 1 | PIN AS | |
| | 5 | 1 | **381-5034** | 1 | STICK & BEARING AS | |
| | 5A | 1 | **265-8715** | 6 | BUSHING | |
| M | | 1 | **9R-2821** | 1 | BOSS (M10X1.5X15-MM) | |
| B | 6 | 1 | **175-1794** | 3 | SHIM (0.5-MM THK) | |
| B | 7 | 1 | **175-1795** | 3 | SHIM (1-MM THK) | |
| | 8 | 1 | **3B-8489** | 2 | FITTING-GREASE | |
| | 9 | 1 | **6V-8513** | 3 | WASHER-HARD (11X35X2.5-MM THK) | |
| M | 10 | 1 | **8T-4137** | 3 | BOLT (M10X1.5X20-MM) | |

B - USE AS REQUIRED
M - METRIC PART

*381-5033* **STICK GP-HOE (*contd.*)** **i04728094**

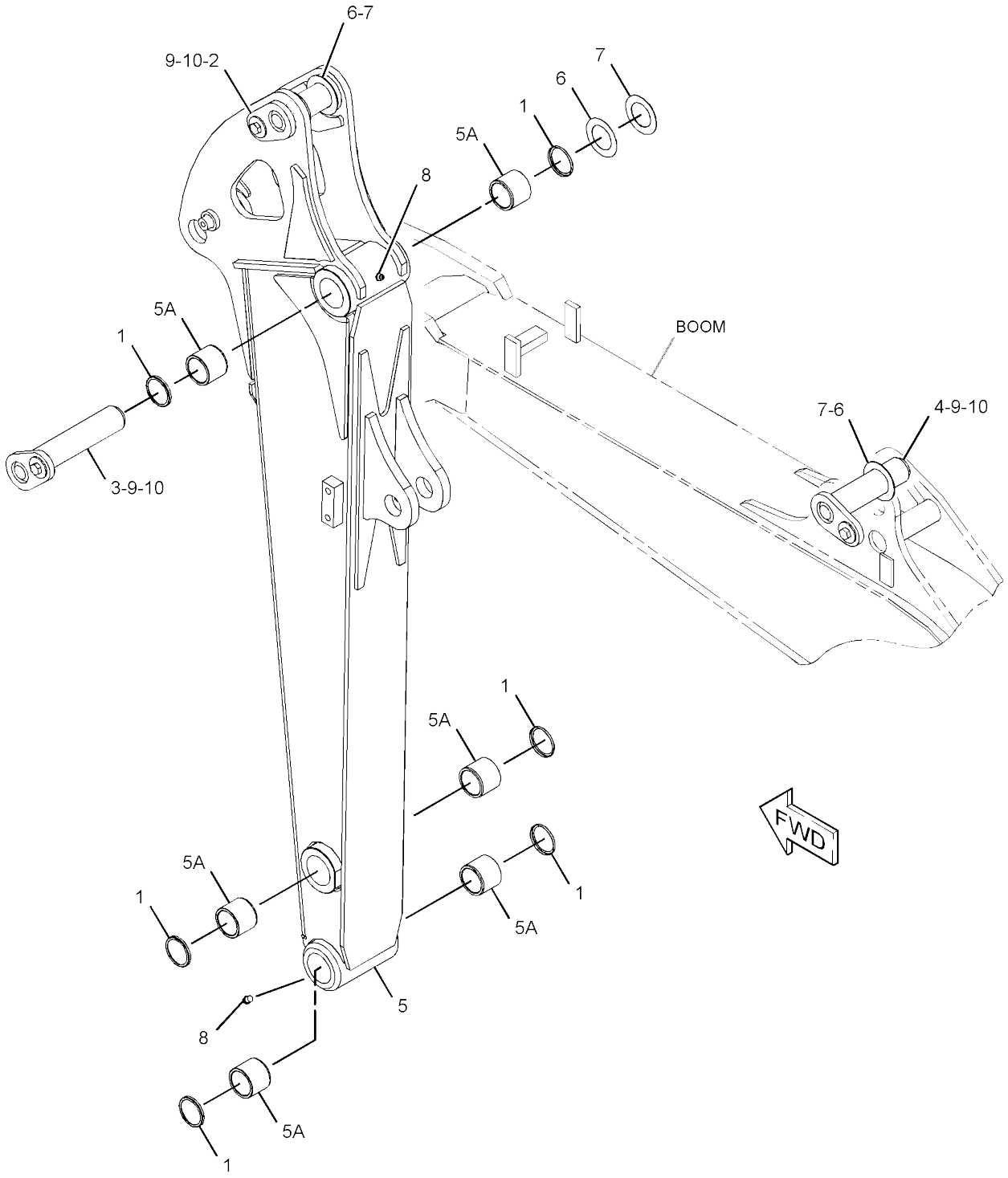


GRAPHIC #1 **<END>** g02856510

# 281-8699 BLADE & MOUNTING GP–POWER ANGLE

**PART OF 377-8930 BLADE AR-ANGLING**
**AN ATTACHMENT**

**SMCS-6060, 6151** **i04263776**

| NOTE | REF NO | GRAPHIC REF | PART NUMBER | QTY | PART NAME 1 2 3 4 5 6 (PRODUCT LEVEL) | SEE PAGE |
|---|---|---|---|---|---|---|
| B | 1 | 1 | **172-1759** | 2 | SHIM (0.5-MM THK) | |
| B | 2 | 1 | **172-1760** | 2 | SHIM (1-MM THK) | |
| | 3 | 1 | **218-4681** | 2 | PIN AS | |
| | 4 | 1 | **260-6314** | 2 | PIN AS | |
| | 5 | 1 | **266-4763** | 1 | PIN AS | |
| | 6 | 1 | **266-4765** | 1 | PIN AS | |
| CY | 7 | 1 | *352-7765* | 1 | C-FRAME GP-POWER ANGLING | 128 |
| CY | 8 | 1 | **369-3703** | 1 | BLADE AS-ANGLING | 385 |
| | 9 | 1 | **287-0030** | 1 | PIN AS | |
| | 10 | 1 | **6V-8513** | 7 | WASHER-HARD (11X35X2.5-MM THK) | |
| M | 11 | 1 | **8T-4137** | 7 | BOLT (M10X1.5X20-MM) | |

B - USE AS REQUIRED
C - CHANGE FROM PREVIOUS TYPE
M - METRIC PART
Y - SEPARATE ILLUSTRATION

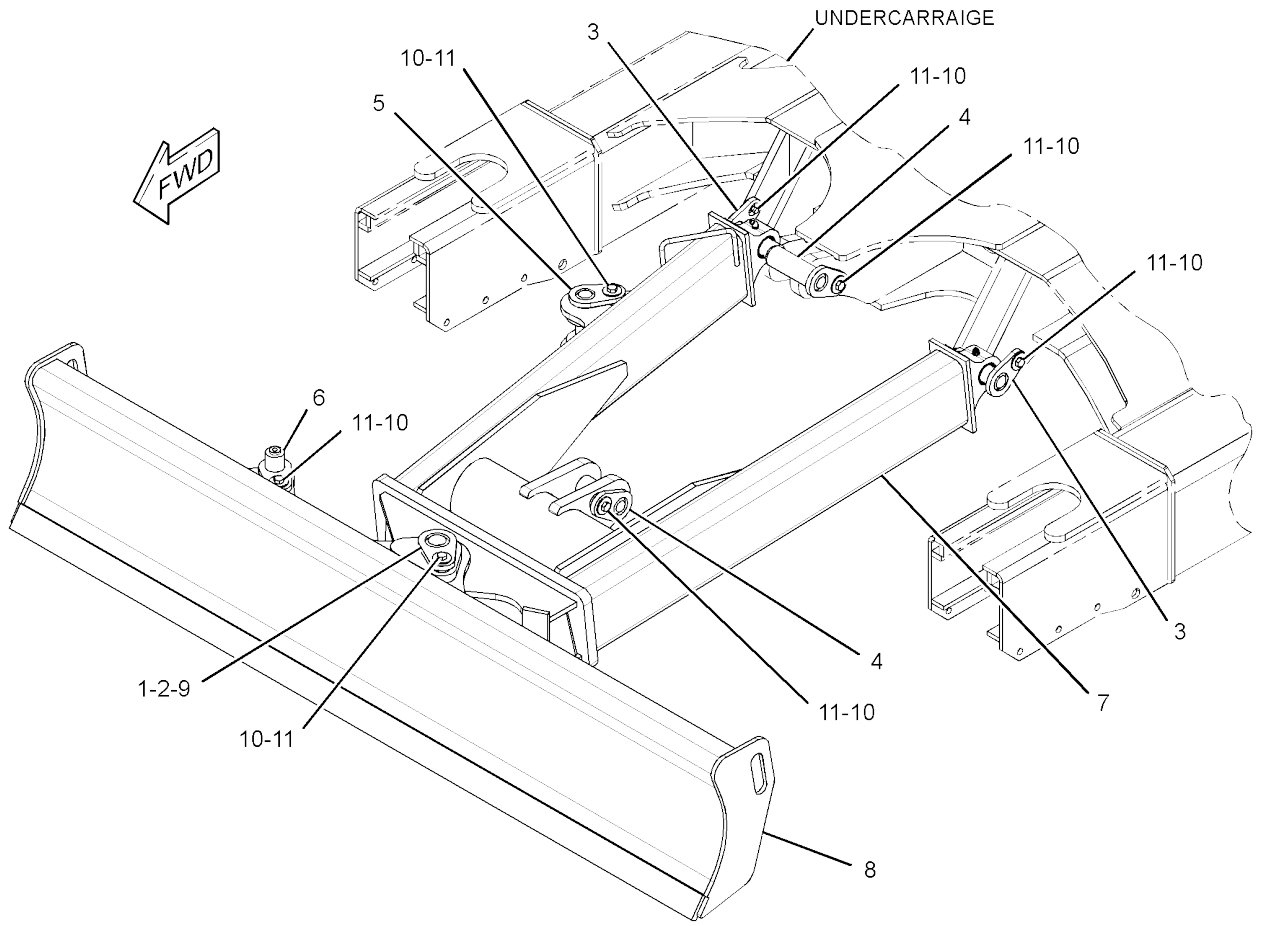


GRAPHIC #1 **<END>** g01365338

# *376-3979* BLADE & MOUNTING GP

**S/N: RKY1-1674**
**PART OF 377-8920 BLADE AR-STRAIGHT**
**AN ATTACHMENT**

**SMCS-6060, 6151** **i04725138**

| NOTE | REF NO | GRAPHIC REF | PART NUMBER | QTY | PART NAME 1 2 3 4 5 6 (PRODUCT LEVEL) | SEE PAGE |
|---|---|---|---|---|---|---|
| | 1 | 1 | **218-4681** | 2 | PIN AS | |
| | 2 | 1 | **260-6314** | 2 | PIN AS | |
| Y | 3 | 1 | *376-3978* | 1 | BLADE GP-STRAIGHT | 386 |
| | 4 | 1 | **6V-8513** | 4 | WASHER-HARD (11X35X2.5-MM THK) | |
| M | 5 | 1 | **8T-4137** | 4 | BOLT (M10X1.5X20-MM) | |

M - METRIC PART
Y - SEPARATE ILLUSTRATION

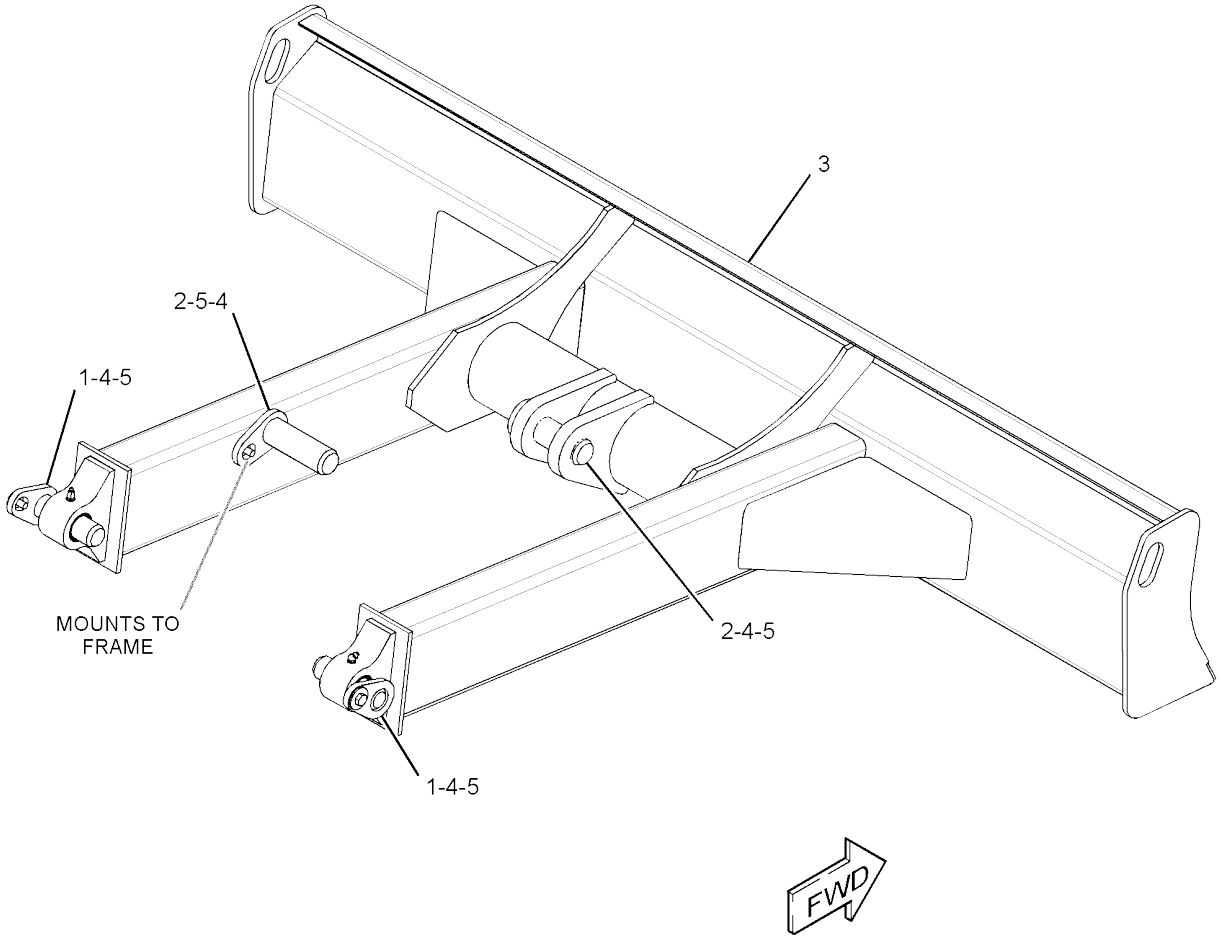


GRAPHIC #1 **<END>** g02852757

# *376-3979* BLADE & MOUNTING GP

**S/N: RKY1675-UP**
**PART OF 377-8920 BLADE AR-STRAIGHT**
**AN ATTACHMENT**

**SMCS-6060, 6151** **i05434160**

| NOTE | REF NO | GRAPHIC REF | PART NUMBER | QTY | PART NAME 1 2 3 4 5 6 (PRODUCT LEVEL) | SEE PAGE |
|---|---|---|---|---|---|---|
| | 1 | 1 | **218-4681** | 2 | PIN AS | |
| | 2 | 1 | **260-6314** | 2 | PIN AS | |
| CY | 3 | 1 | *433-3885* | 1 | BLADE GP-STRAIGHT | 387 |
| | 4 | 1 | **6V-8513** | 4 | WASHER-HARD (11X35X2.5-MM THK) | |
| M | 5 | 1 | **8T-4137** | 4 | BOLT (M10X1.5X20-MM) | |

C - CHANGE FROM PREVIOUS TYPE
M - METRIC PART
Y - SEPARATE ILLUSTRATION

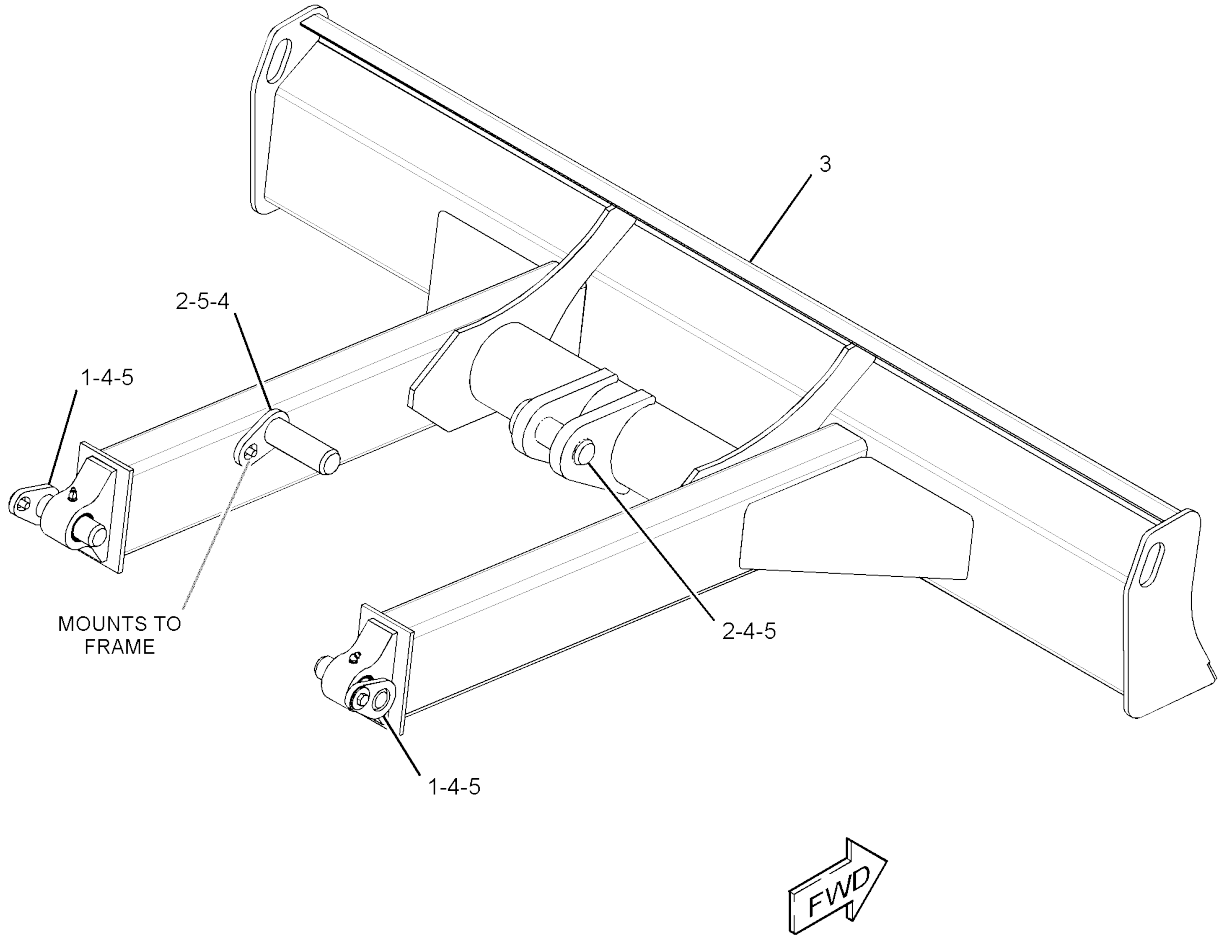


GRAPHIC #1 **<END>** g02852757

# WORK TOOLS

## *377-8930* BLADE AR-ANGLING

**AN ATTACHMENT**

**SMCS-6060, 6701** **i05393120**

| NOTE | PART NUMBER | QTY | PART NAME 1 2 3 4 5 6 (PRODUCT LEVEL) | SEE PAGE |
|---|---|---|---|---|
| Y | *281-8699* | 1 | BLADE & MOUNTING GP (POWER ANGLE) | 381 |
| Y | *382-0522* | 1 | CONTROL GP-PILOT OPERATED HYD (BLADE) | 481 |
| | | | S/N: RKY1-1465 | |
| Y | *419-1204* | 1 | CONTROL GP-PILOT OPERATED HYD (BLADE) | 482 |
| | | | S/N: RKY1466-UP | |
| Y | **266-6979** | 1 | CYLINDER GP-BLADE (RAISE, LOWER) | 188 |
| Y | **286-6384** | 1 | CYLINDER GP-BLADE (ANGLE) | 190 |
| Y | *386-6058* | 1 | FILM GP (ANGLE BLADE) | 542 |
| Y | *290-8287* | 1 | GUARD GP-CYLINDER (POWER ANGLE) | 147 |
| Y | *280-7609* | 1 | LINES GP-BLADE (ANGLE) | 219 |
| Y | *292-8290* | 1 | LINES GP-BLADE (RAISE, LOWER) | 220 |
| Y | *385-2796* | 1 | LINES GP-PILOT (BLADE ANGLE) | 261 |
| Y | *385-2797* | 1 | LINES GP-RETURN (BLADE) | 265 |
| Y | *385-2795* | 1 | LINES GP-SWING MOTOR | 275 |
| Y | *280-7620* | 1 | LINES GP-TRAVEL MOTOR | 278 |
| Y | *385-1277* | 1 | MOUNTING GP-ELECTRONIC CONTROL | 95 |
| Y | *391-3188* | 1 | VALVE & MTG GP-MAIN CONTROL | 306 |
| Y | *383-3163* | 1 | WIRING GP-CONSOLE (POWER ANGLE) | 111 |

Y - SEPARATE ILLUSTRATION

<END>

## *377-8920* BLADE AR-STRAIGHT

**AN ATTACHMENT**

**SMCS-6051, 6060** **i05393103**

| NOTE | PART NUMBER | QTY | PART NAME 1 2 3 4 5 6 (PRODUCT LEVEL) | SEE PAGE |
|---|---|---|---|---|
| Y | *376-3979* | 1 | BLADE & MOUNTING GP | 382 |
| Y | *377-5958* | 1 | CONTROL GP-PILOT OPERATED HYD (BLADE) | 478 |
| | | | S/N: RKY1-1465 | |
| Y | *421-2716* | 1 | CONTROL GP-PILOT OPERATED HYD (BLADE) | 483 |
| | | | S/N: RKY1466-UP | |
| Y | **266-6979** | 1 | CYLINDER GP-BLADE (RAISE, LOWER) | 188 |
| Y | *377-9706* | 1 | FILM GP (STRAIGHT BLADE) | 534 |
| Y | *292-8290* | 1 | LINES GP-BLADE (RAISE, LOWER) | 220 |
| Y | *379-4701* | 1 | LINES GP-RETURN | 263 |
| Y | *379-4702* | 1 | LINES GP-SWING MOTOR | 272 |
| Y | *292-8293* | 1 | LINES GP-TRAVEL MOTOR | 280 |
| Y | *377-0325* | 1 | CONTROL & MTG GP-ELECTRONIC | 76 |
| Y | *379-4734* | 1 | VALVE & MTG GP-BANK | 300 |

Y - SEPARATE ILLUSTRATION

<END>

# WORK TOOLS

## *369-3703* BLADE AS-ANGLING

**PART OF 281-8699 BLADE & MOUNTING GP**

**AN ATTACHMENT**

**SMCS-6052, 6060** **i04286792**

| NOTE | REF NO | GRAPHIC REF | PART NUMBER | QTY | PART NAME 1 2 3 4 5 6 (PRODUCT LEVEL) | SEE PAGE |
|---|---|---|---|---|---|---|
| | 1 | 1 | **260-6326** | 1 | EDGE | |

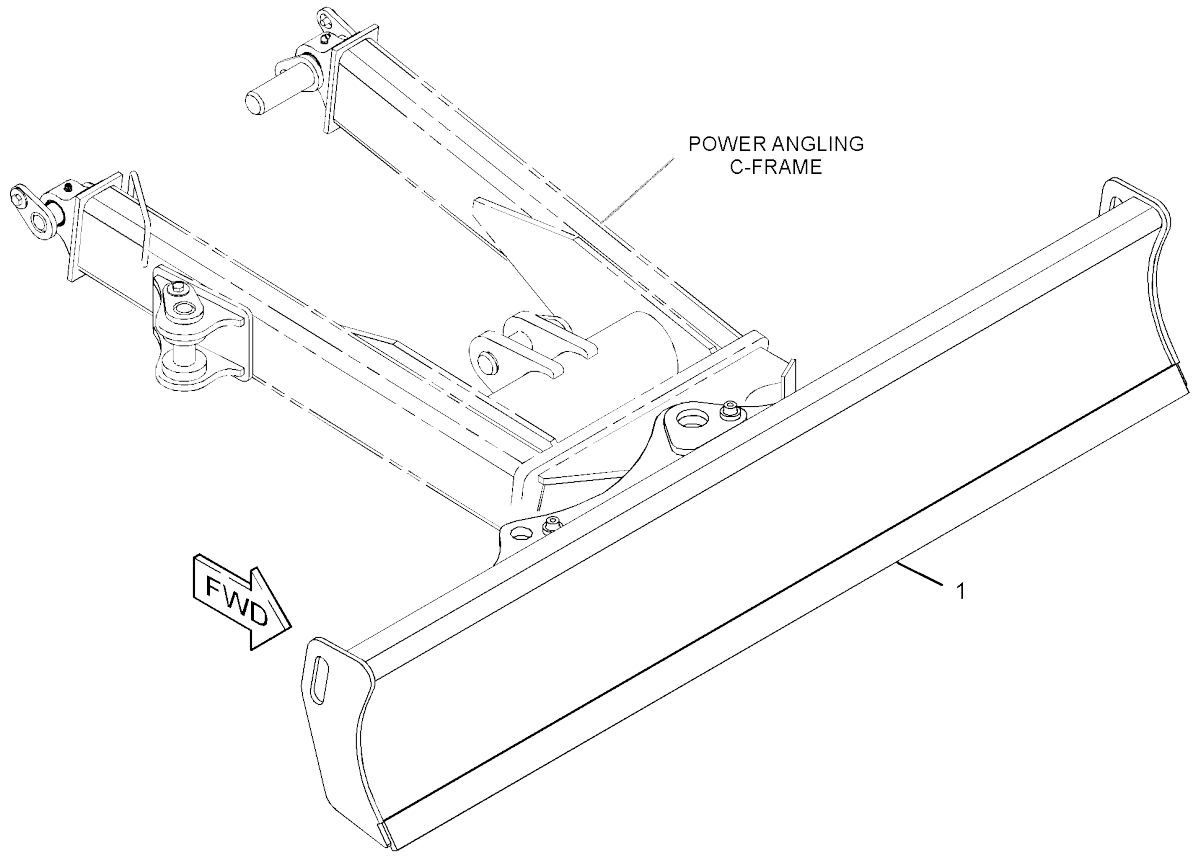


GRAPHIC #1 **<END>** g02892163

# *376-3978* BLADE GP-STRAIGHT

**S/N: RKY1-1674**
**PART OF 376-3979 BLADE & MOUNTING GP**
**AN ATTACHMENT**

**SMCS-6051, 6060** **i04725137**

| NOTE | REF NO | GRAPHIC REF | PART NUMBER | QTY | PART NAME 1 2 3 4 5 6 (PRODUCT LEVEL) | SEE PAGE |
|---|---|---|---|---|---|---|
| | 1 | 1 | **140-3734** | 4 | SEAL-DUST | |
| | 2 | 1 | **376-3977** | 1 | BLADE & BEARING AS | |
| | 2A | 1 | **265-8713** | 2 | BUSHING | |
| | 3 | 1 | **3B-8485** | 2 | FITTING-GREASE | |

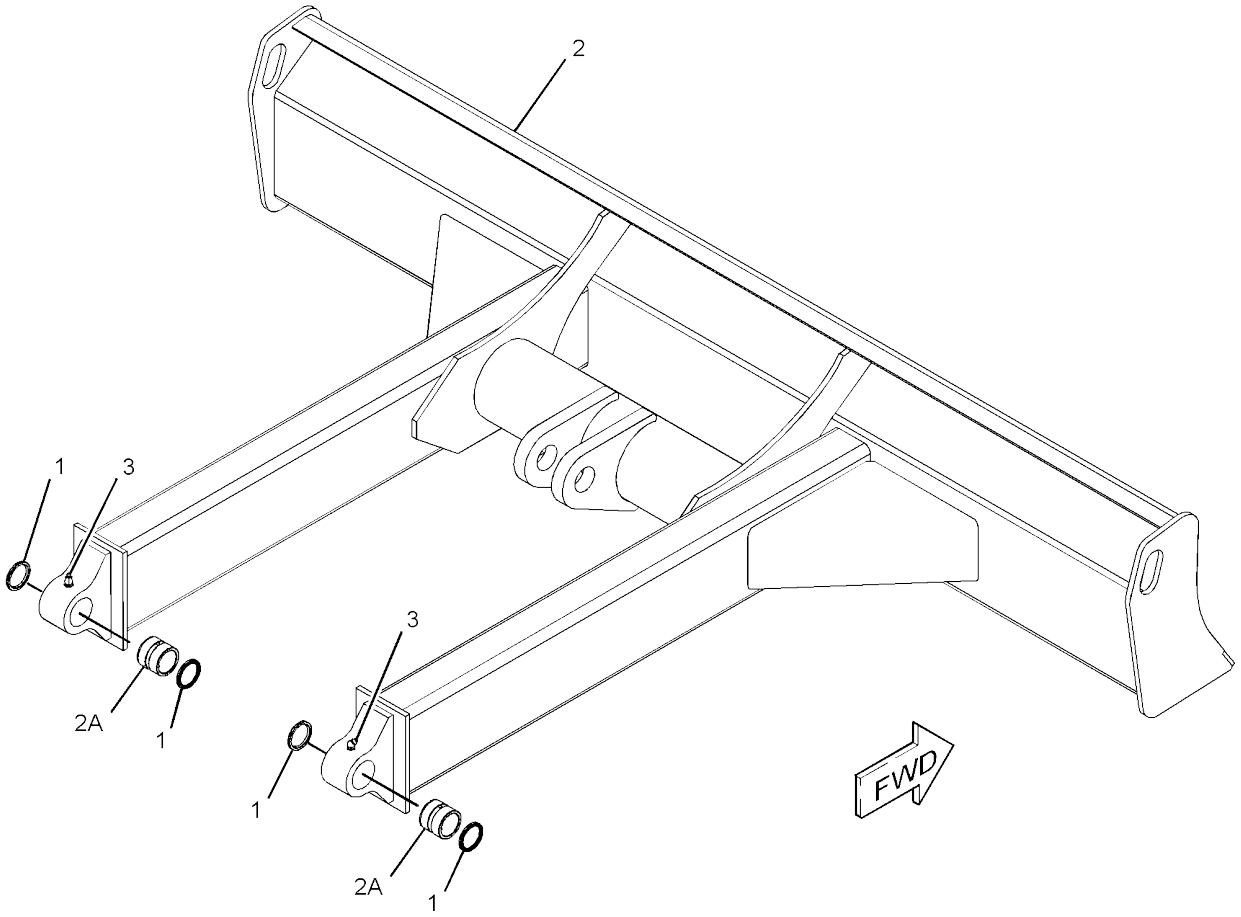


GRAPHIC #1 **<END>** g02852800

# *433-3885* BLADE GP-STRAIGHT

**S/N: RKY1675-UP**
**PART OF 376-3979 BLADE & MOUNTING GP**
**AN ATTACHMENT**

**SMCS-6051, 6060** **i05434162**

| NOTE | REF NO | GRAPHIC REF | PART NUMBER | QTY | PART NAME 1 2 3 4 5 6 (PRODUCT LEVEL) | SEE PAGE |
|---|---|---|---|---|---|---|
| | 1 | 1 | **140-3734** | 4 | SEAL-DUST | |
| | 2 | 1 | **433-3886** | 1 | BLADE & BEARING AS | |
| | 2A | 1 | **265-8713** | 2 | BUSHING | |
| | 2B | 1 | **260-6326** | 1 | EDGE | |
| | 3 | 1 | **3B-8485** | 2 | FITTING-GREASE | |

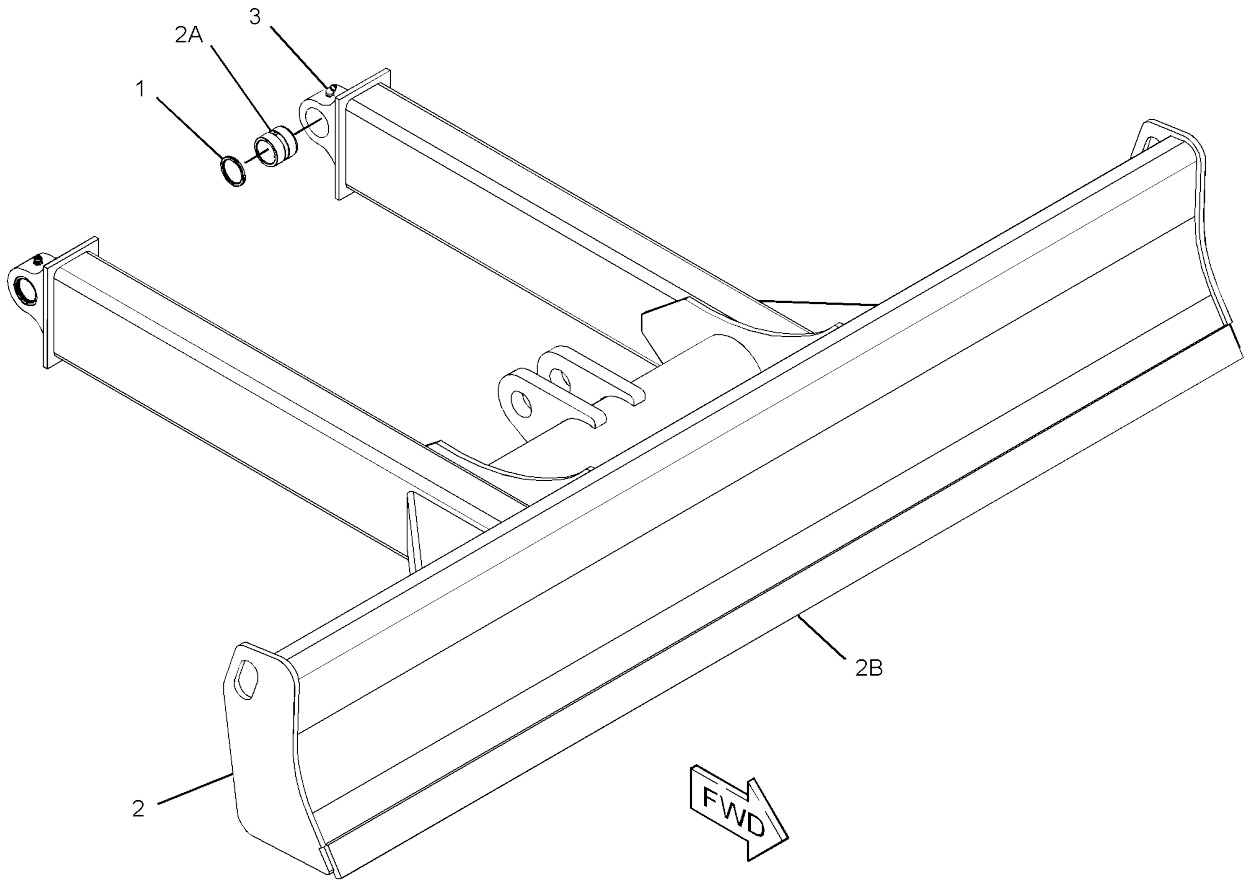


GRAPHIC #1 **<END>** g03430396

# *231-8571* BUCKET AR-GENERAL PURPOSE

**460-MM (18-IN) WIDE**
**AN ATTACHMENT**

**SMCS-6101, 6803, 6805, 6822** **i05352930**

| NOTE | REF NO | GRAPHIC REF | PART NUMBER | QTY | PART NAME 1 2 3 4 5 6 (PRODUCT LEVEL) | SEE PAGE |
|---|---|---|---|---|---|---|
| | 1 | 1 | **154-2704** | 1 | PLATE-INSTRUCTION (BUCKET SPECIFICATIONS) | |
| | 2 | 1 | **168-8389** | 4 | TACK-FASTENER (METAL) | |
| | 3 | 1 | *233-2885* | 3 | TOOTH GP | |
| | | | | | (EACH INCLUDES) | |
| M | | 1 | **8T-4244** | 2 | NUT (M12X1.75-THD) | |
| M | | 1 | **145-1893** | 2 | BOLT (M12X1.75X40-MM) | |
| | | 1 | **231-3999** | 1 | TOOTH | |
| Y | 4 | 1 | *233-2905* | 1 | BUCKET AS-GENERAL PURPOSE (QUICK COUPLER) | 394 |

M - METRIC PART
Y - SEPARATE ILLUSTRATION

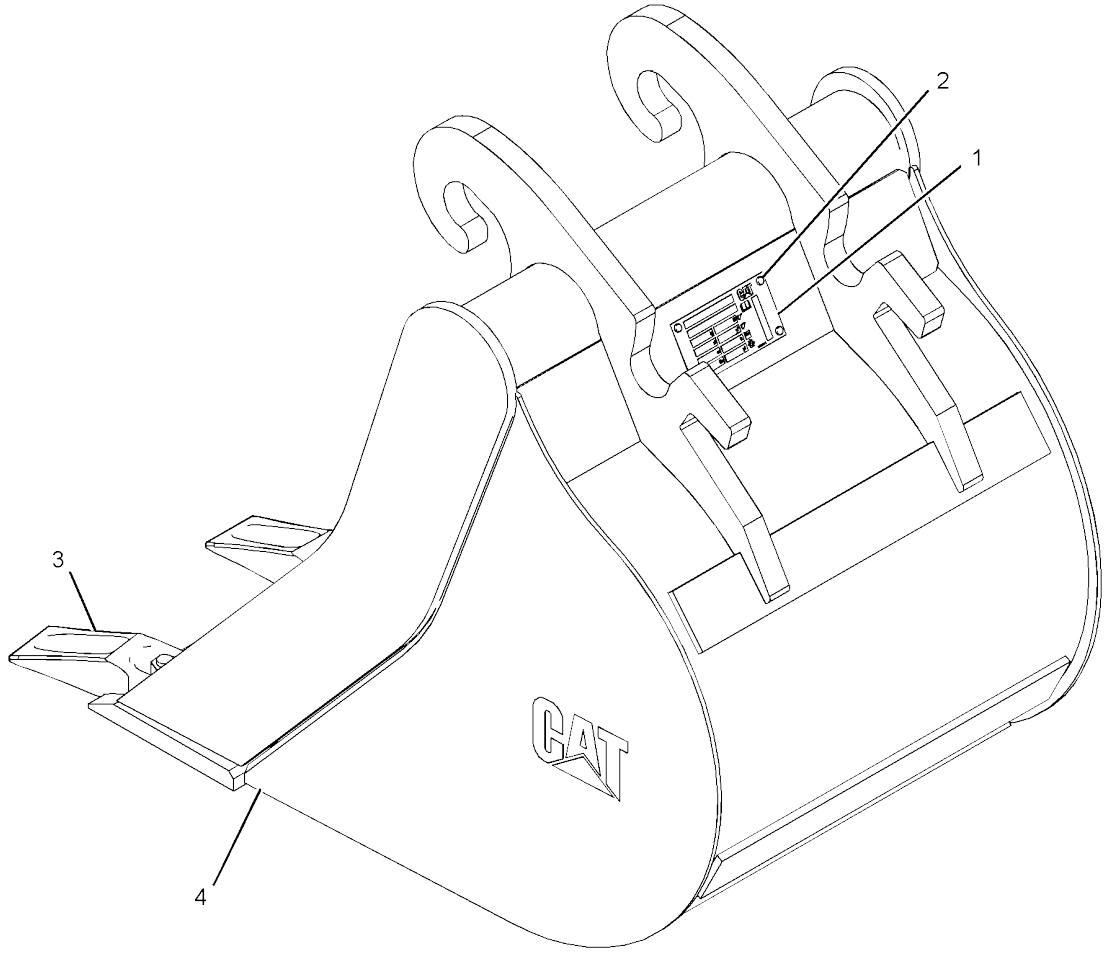


GRAPHIC #1 **<END>** g01194755

# WORK TOOLS

## 279-4325 BUCKET AR-TILTABLE

**1200-MM (47.24-IN) WIDE X 0.167-CU M (0.218-CU YD) CAPACITY**
**AN ATTACHMENT**

**SMCS-6540** **i05358712**

| NOTE | REF NO | GRAPHIC REF | PART NUMBER | QTY | PART NAME 1 2 3 4 5 6 (PRODUCT LEVEL) | SEE PAGE |
|---|---|---|---|---|---|---|
| | 1 | 1 | **8T-4223** | 1 | WASHER-HARD (13.5X25.5X3-MM THK) | |
| | 2 | 1 | **168-8389** | 4 | TACK-FASTENER (METAL) | |
| | 3 | 1 | **246-0176** | 1 | PIN AS | |
| | 4 | 1 | **246-0187** | 1 | PIN | |
| | 5 | 1 | **246-0188** | 1 | PIN | |
| Y | 6 | 1 | **246-0192** | 1 | CYLINDER GP-TILT (BUCKET) | 202 |
| Y | 7 | 1 | *252-6793* | 1 | LINES GP-BUCKET CYLINDER | 227 |
| Y | 8 | 1 | *282-1712* | 1 | BRACKET GP-MOUNTING (BUCKET) | 362 |
| | 9 | 1 | **3B-8489** | 3 | FITTING-GREASE | |
| | 10 | 1 | **4M-5285** | 4 | RING-RETAINING (EXTERNAL) | |
| M | 11 | 1 | **8T-4139** | 1 | BOLT (M12X1.75X30-MM) | |

M - METRIC PART
Y - SEPARATE ILLUSTRATION

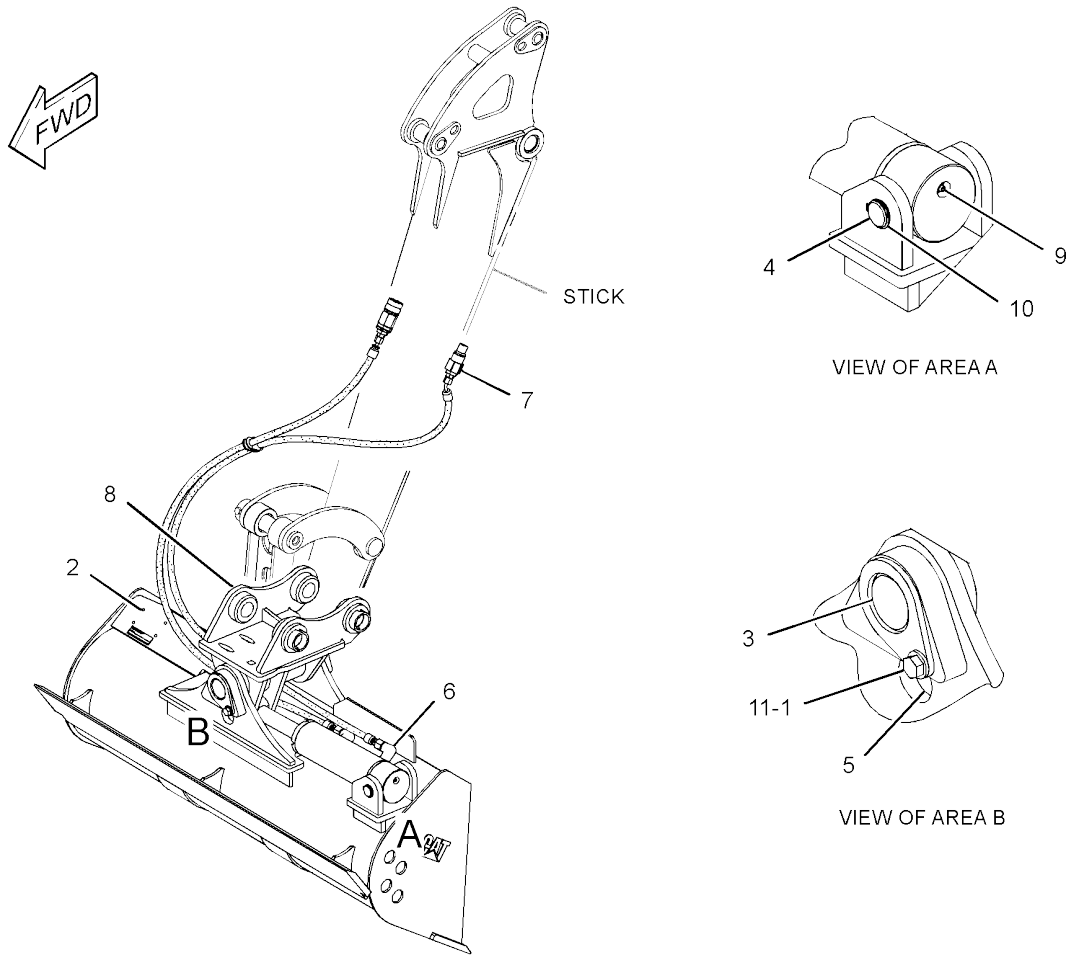


GRAPHIC #1 **<END>** g03062516

# 247-4112 BUCKET AS-DITCH CLEANING

**1200-MM (47.2-IN) WIDE**
**AN ATTACHMENT**

**SMCS-6526** **i05353497**

| NOTE | REF NO | GRAPHIC REF | PART NUMBER | QTY | PART NAME 1 2 3 4 5 6 (PRODUCT LEVEL) | SEE PAGE |
|---|---|---|---|---|---|---|
| | 1 | 1 | **153-7880** | 1 | EDGE | |
| | 2 | 1 | **154-2704** | 1 | PLATE-INSTRUCTION (BUCKET SPECIFICATIONS) | |
| | 3 | 1 | **168-8389** | 4 | TACK-FASTENER (METAL) | |

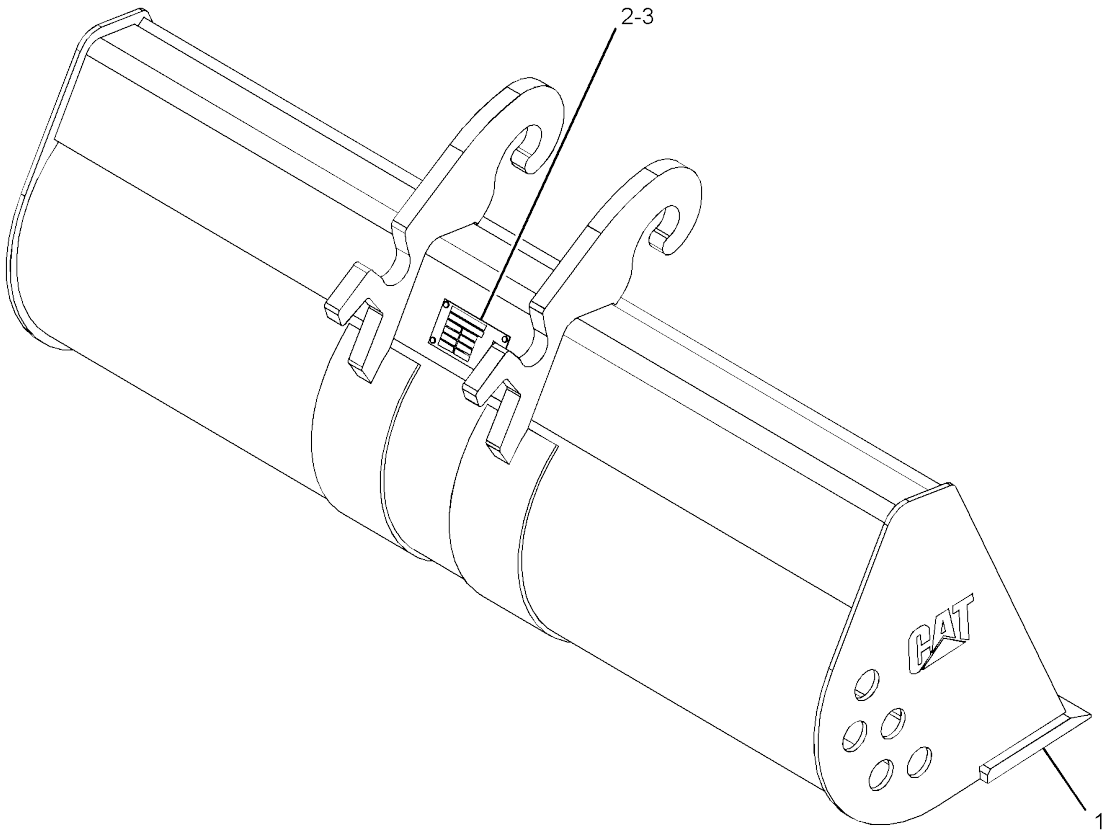


GRAPHIC #1 **<END>** g03401177

# 279-4322 BUCKET AS-DITCH CLEANING

**1000-MM (39.4-IN) WIDE X 0.14-CU M (0.18-CU YD) CAPACITY**
**AN ATTACHMENT**

**SMCS-6526** **i05357822**

| NOTE | REF NO | GRAPHIC REF | PART NUMBER | QTY | PART NAME 1 2 3 4 5 6 (PRODUCT LEVEL) | SEE PAGE |
|---|---|---|---|---|---|---|
| | 1 | 1 | **154-2704** | 1 | PLATE-INSTRUCTION (BUCKET SPECIFICATIONS) | |
| | 2 | 1 | **168-8389** | 4 | TACK-FASTENER (METAL) | |

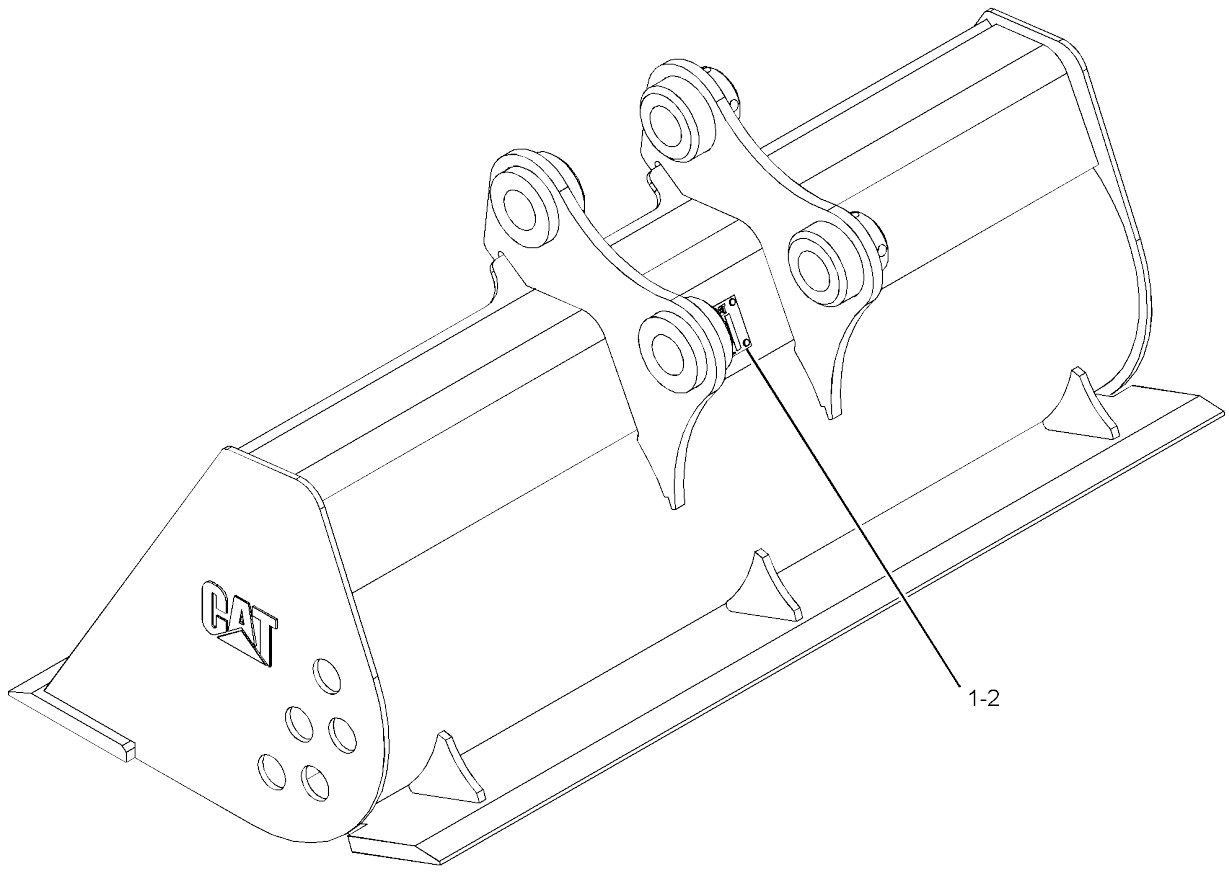


GRAPHIC #1 **<END>** g01224351

# 279-4323 BUCKET AS-DITCH CLEANING

**1200-MM (47.2-IN) WIDE X 0.17-CU M (0.22-CU YD) CAPACITY**
**AN ATTACHMENT**

**SMCS-6526** **i05358614**

| NOTE | REF NO | GRAPHIC REF | PART NUMBER | QTY | PART NAME 1 2 3 4 5 6 (PRODUCT LEVEL) | SEE PAGE |
|---|---|---|---|---|---|---|
| | 1 | 1 | **154-2704** | 1 | PLATE-INSTRUCTION (BUCKET SPECIFICATIONS) | |
| | 2 | 1 | **168-8389** | 4 | TACK-FASTENER (METAL) | |

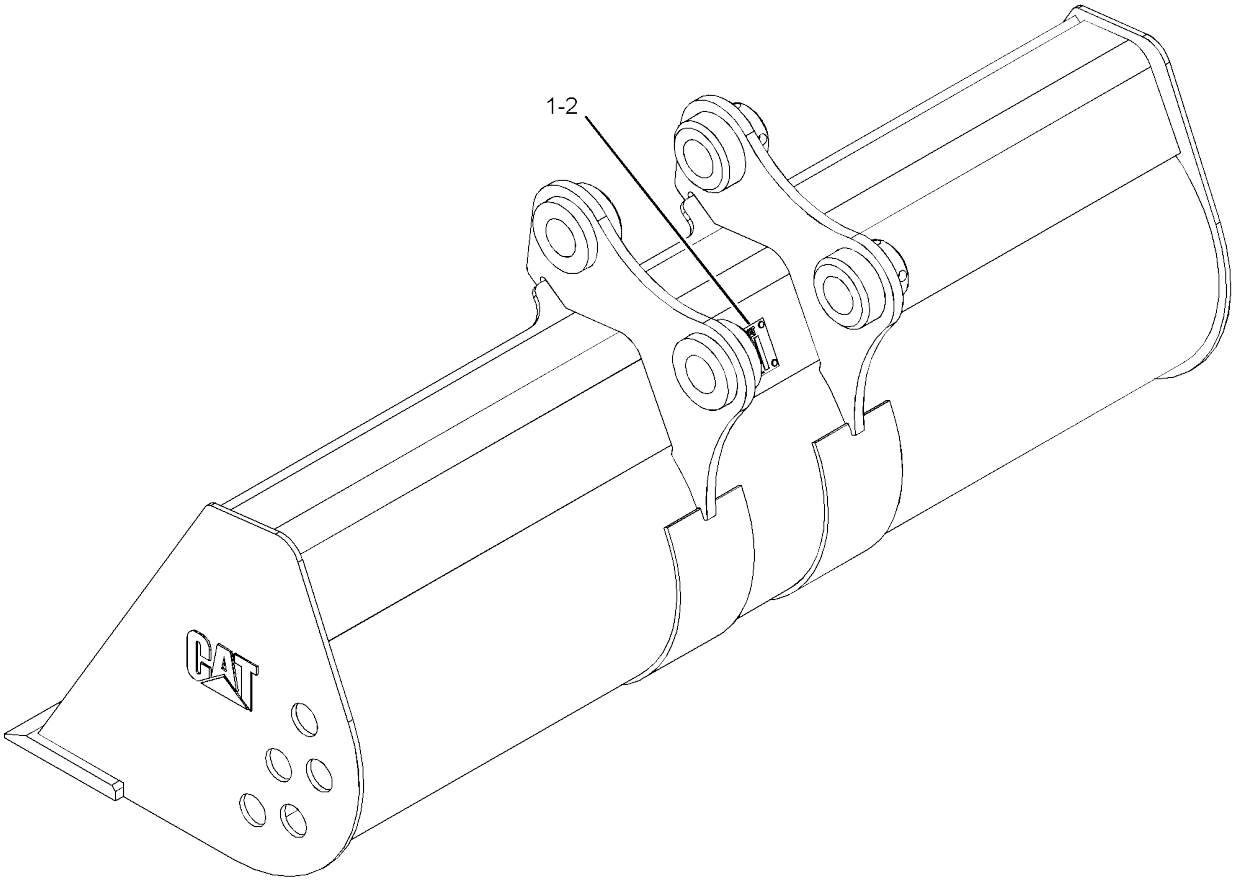


GRAPHIC #1 **<END>** g01224482

# *282-9315* BUCKET AS-DITCH CLEANING

**1400-MM (55.1-IN) X 0.2-CU M (0.3-CU YD) CAPACITY**
**AN ATTACHMENT**

**SMCS-6526** **i05368245**

| NOTE | REF NO | GRAPHIC REF | PART NUMBER | QTY | PART NAME 1 2 3 4 5 6 (PRODUCT LEVEL) | SEE PAGE |
|---|---|---|---|---|---|---|
| | 1 | 1 | **154-2704** | 1 | PLATE-INSTRUCTION (BUCKET SPECIFICATIONS) | |
| | 2 | 1 | **168-8389** | 4 | TACK-FASTENER (METAL) | |

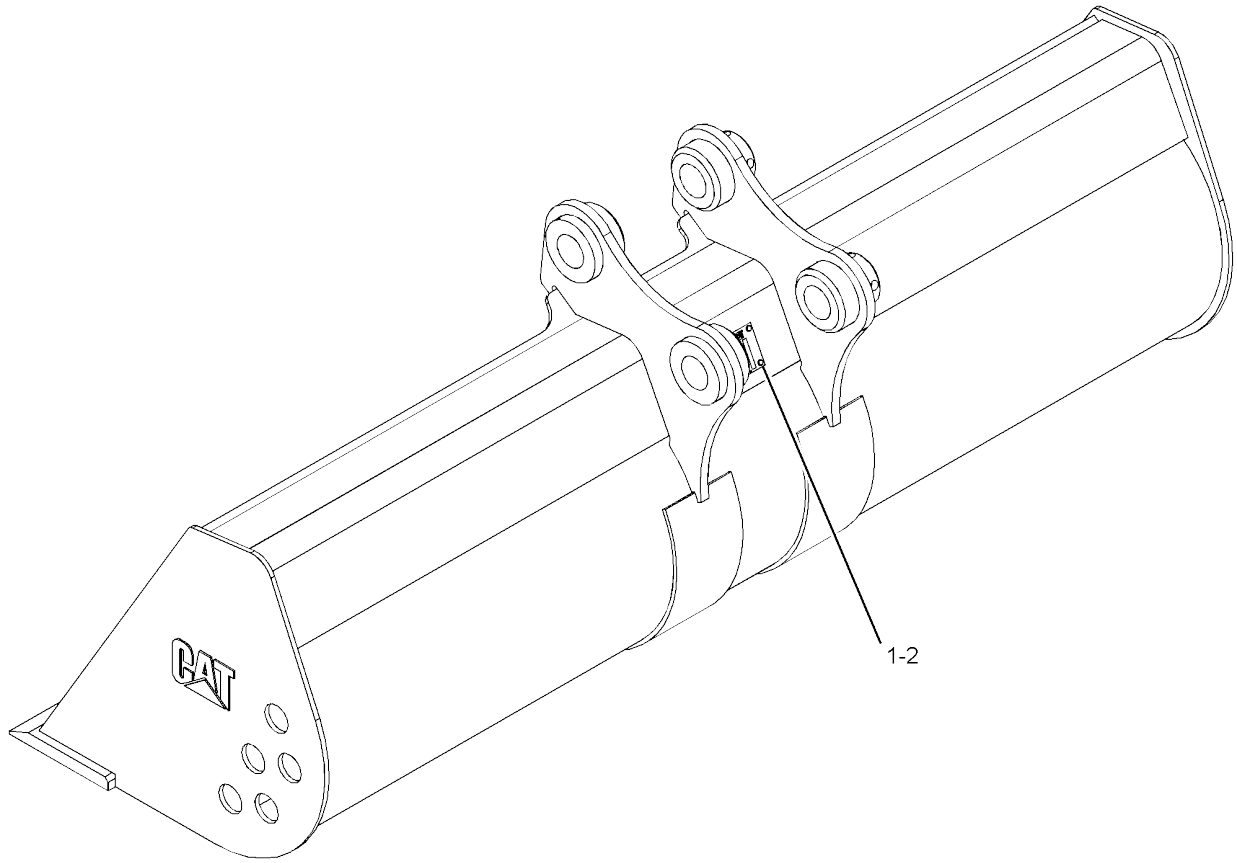


GRAPHIC #1 **<END>** g01224325

# *233-2905* BUCKET AS-GENERAL PURPOSE

**460-MM (18.1-IN) WIDE**
**PART OF 231-8571 BUCKET AR-GENERAL PURPOSE**
**AN ATTACHMENT**

**SMCS-6101, 6803, 6805, 6822** **i05368218**

| NOTE | REF NO | GRAPHIC REF | PART NUMBER | QTY | PART NAME 1 2 3 4 5 6 (PRODUCT LEVEL) | SEE PAGE |
|---|---|---|---|---|---|---|
| | 1 | 1 | **233-2877** | 1 | EDGE | |
| | 2 | 1 | **233-2898** | 1 | PLATE | |
| | 3 | 1 | **233-2910** | 6 | PLATE | |

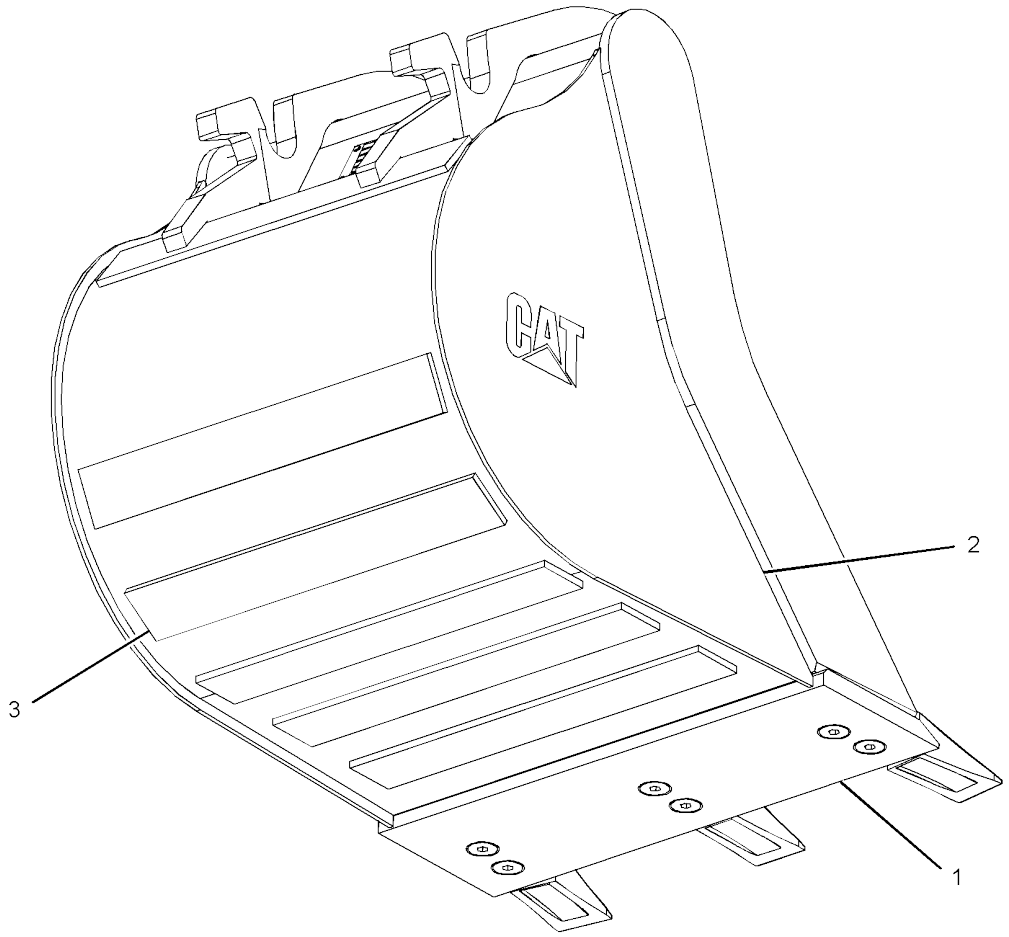


GRAPHIC #1 **<END>** g03401083

# *279-4311* BUCKET AS-GENERAL PURPOSE

**300-MM (12-IN) WIDE X 0.05-CU M (0.065-CU YD) CAPACITY**
**PART OF 279-4312 BUCKET GP-GENERAL PURPOSE**
**AN ATTACHMENT**

**SMCS-6101, 6803, 6805, 6822** **i05357680**

| NOTE | REF NO | GRAPHIC REF | PART NUMBER | QTY | PART NAME 1 2 3 4 5 6 (PRODUCT LEVEL) | SEE PAGE |
|---|---|---|---|---|---|---|
| | 1 | 1 | **174-2141** | 1 | EDGE | |

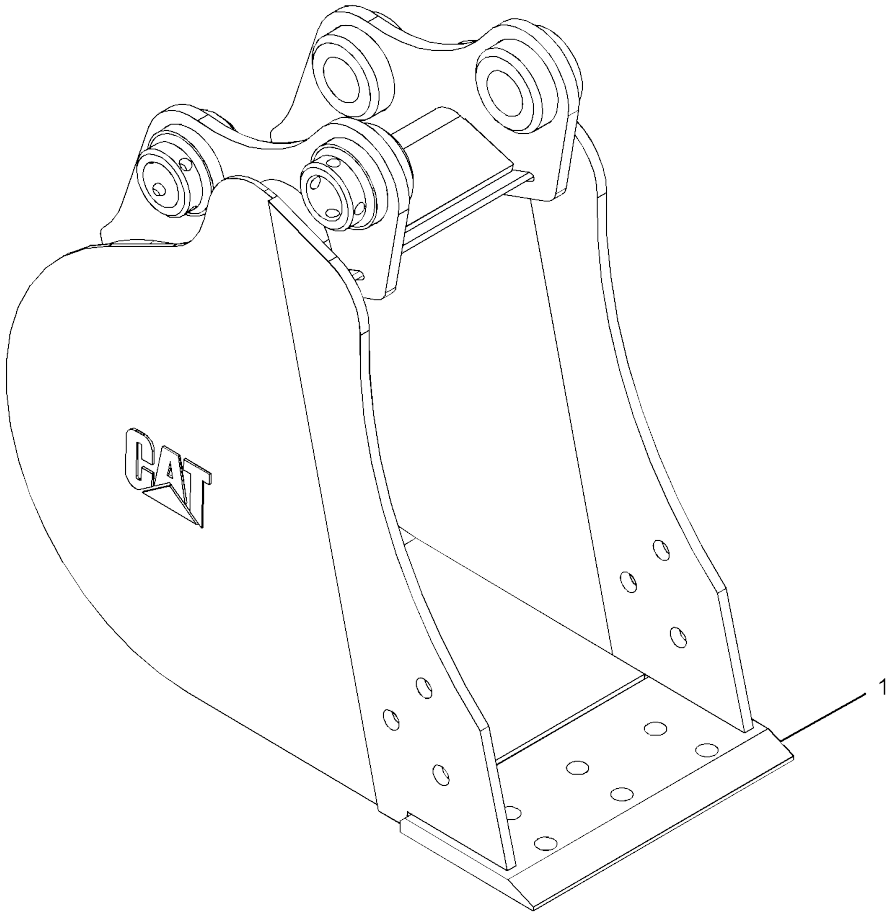


GRAPHIC #1 **<END>** g03404879

# *281-3815* BUCKET AS-GENERAL PURPOSE

**750-MM (30-IN) WIDE X 0.16-CU M (0.209-CU YD) CAPACITY**
**PART OF 279-4321 BUCKET GP-GENERAL PURPOSE**
**AN ATTACHMENT**

**SMCS-6101, 6803, 6805, 6822** **i05357752**

| NOTE | REF NO | GRAPHIC REF | PART NUMBER | QTY | PART NAME 1 2 3 4 5 6 (PRODUCT LEVEL) | SEE PAGE |
|---|---|---|---|---|---|---|
| | 1 | 1 | **279-4308** | 2 | EDGE | |
| | 2 | 1 | **281-3818** | 1 | EDGE | |

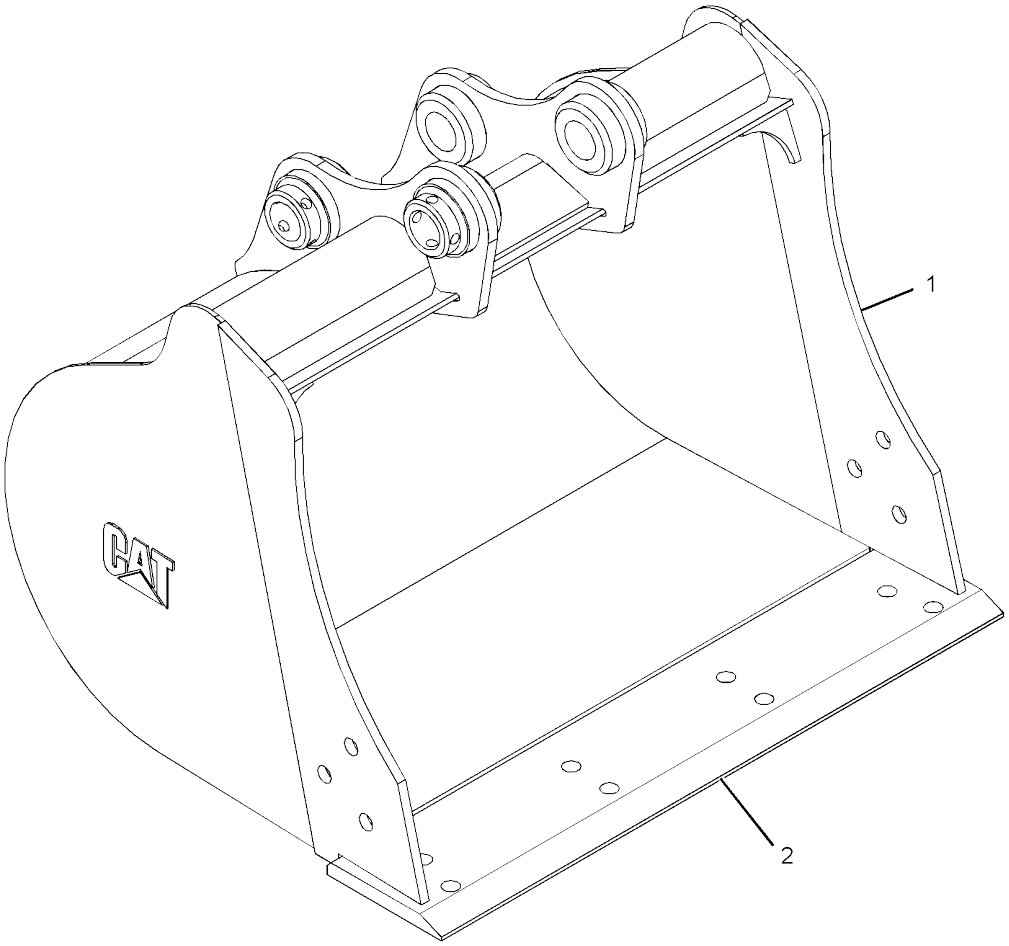


GRAPHIC #1 **<END>** g03397759

# *303-1358* BUCKET AS-HOE

**304-MM (12-IN) WIDE X 0.05-CU M (0.06-CU YD) CAPACITY**
**PART OF 303-1324 BUCKET GP-HOE**
**AN ATTACHMENT**

**SMCS-6503** **i05354377**

| NOTE | REF NO | GRAPHIC REF | PART NUMBER | QTY | PART NAME 1 2 3 4 5 6 (PRODUCT LEVEL) | SEE PAGE |
|---|---|---|---|---|---|---|
| | 1 | 1 | **306-5658** | 1 | EDGE AS | |
| | 1A | 1 | **119-3205** | 3 | ADAPTER-STRAP (TWO) | |
| | 1B | 1 | **255-3410** | 1 | EDGE | |
| | 2 | 1 | **303-6249** | 1 | EDGE-LH | |
| | 3 | 1 | **303-6248** | 1 | EDGE-RH | |

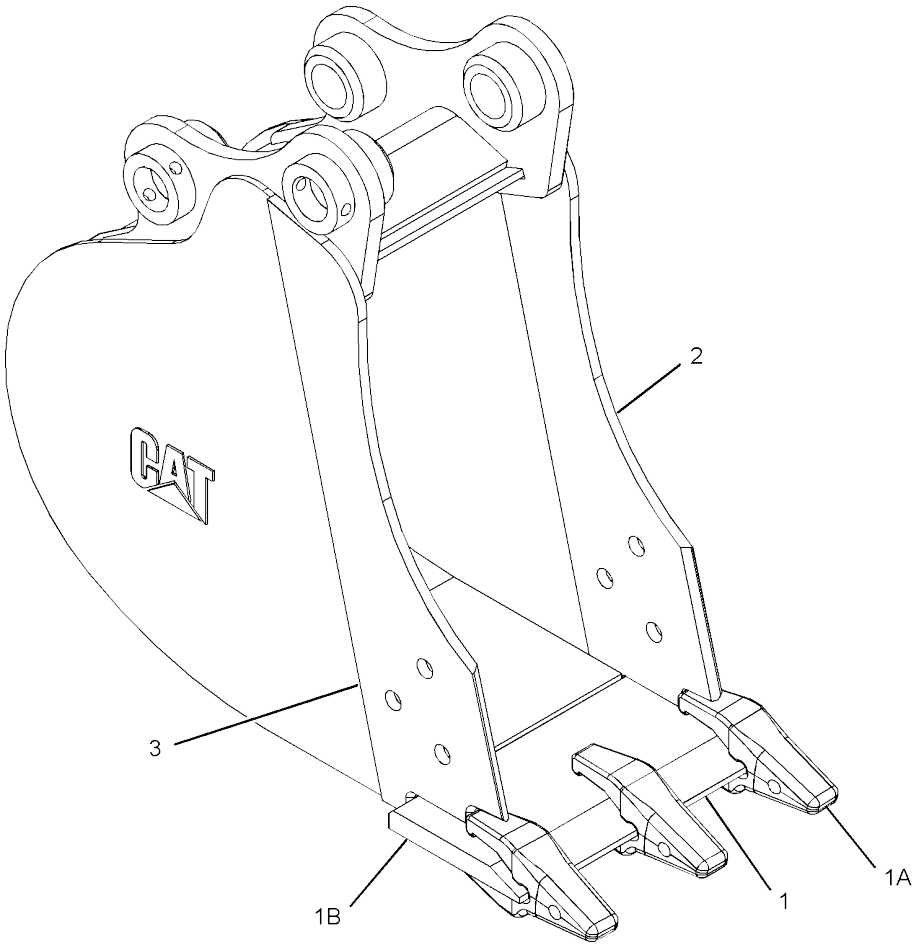


GRAPHIC #1 **<END>** g03397740

# *303-1359* BUCKET AS-HOE

**406-MM (16-IN) WIDE X 0.07-CU M (0.09-CU YD) CAPACITY**
**PART OF 303-1325 BUCKET GP-HOE**
**AN ATTACHMENT**

**SMCS-6503** **i05354386**

| NOTE | REF NO | GRAPHIC REF | PART NUMBER | QTY | PART NAME 1 2 3 4 5 6 (PRODUCT LEVEL) | SEE PAGE |
|---|---|---|---|---|---|---|
| | 1 | 1 | **290-2943** | 1 | EDGE AS | |
| | 1A | 1 | **119-3205** | 3 | ADAPTER-STRAP (TWO) | |
| | 1B | 1 | **255-3402** | 1 | EDGE | |
| | 2 | 1 | **303-6248** | 1 | EDGE-RH | |
| | 3 | 1 | **303-6249** | 1 | EDGE-LH | |

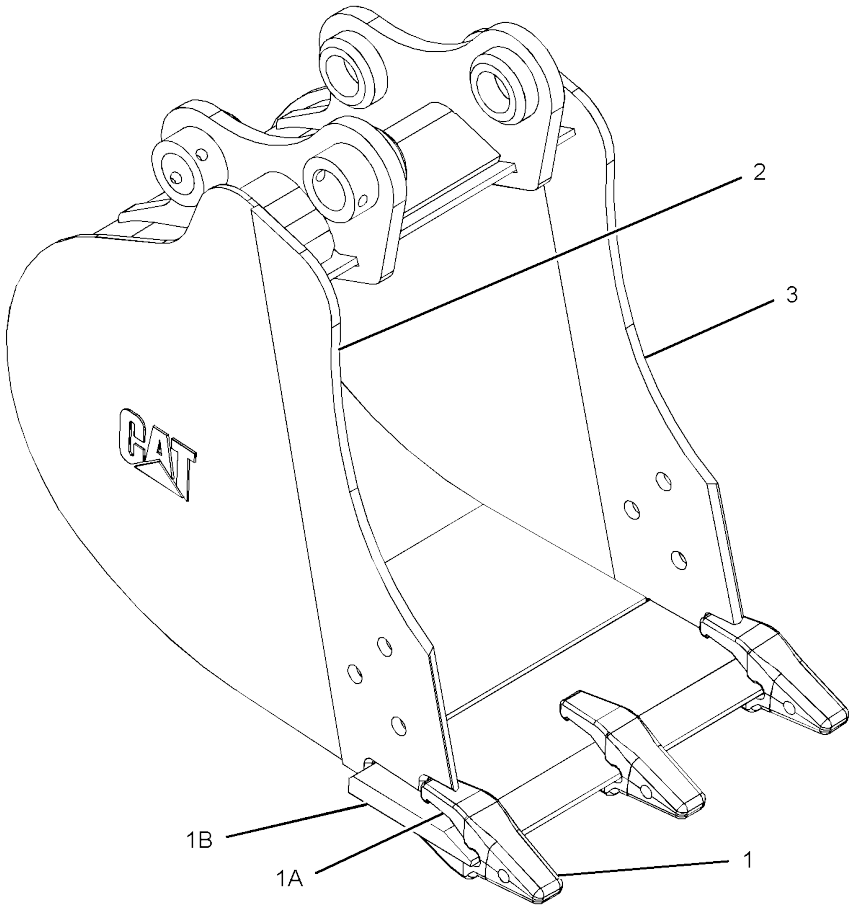


GRAPHIC #1 **<END>** g03396931

# WORK TOOLS

## *303-1360* BUCKET AS-HOE

**457-MM (18-IN) WIDE X 0.08-CU M (0.11-CU YD) CAPACITY**
**PART OF 303-1326 BUCKET GP-HOE**
**AN ATTACHMENT**

**SMCS-6503** **i05355792**

| NOTE | REF NO | GRAPHIC REF | PART NUMBER | QTY | PART NAME 1 2 3 4 5 6 (PRODUCT LEVEL) | SEE PAGE |
|---|---|---|---|---|---|---|
| | 1 | 1 | **290-2944** | 1 | EDGE AS | |
| | | 1 | **119-3205** | 4 | ADAPTER-STRAP (TWO) | |
| | | 1 | **219-9487** | 1 | EDGE | |
| | 2 | 1 | **303-6248** | 1 | EDGE-RH | |
| | 3 | 1 | **303-6249** | 1 | EDGE-LH | |

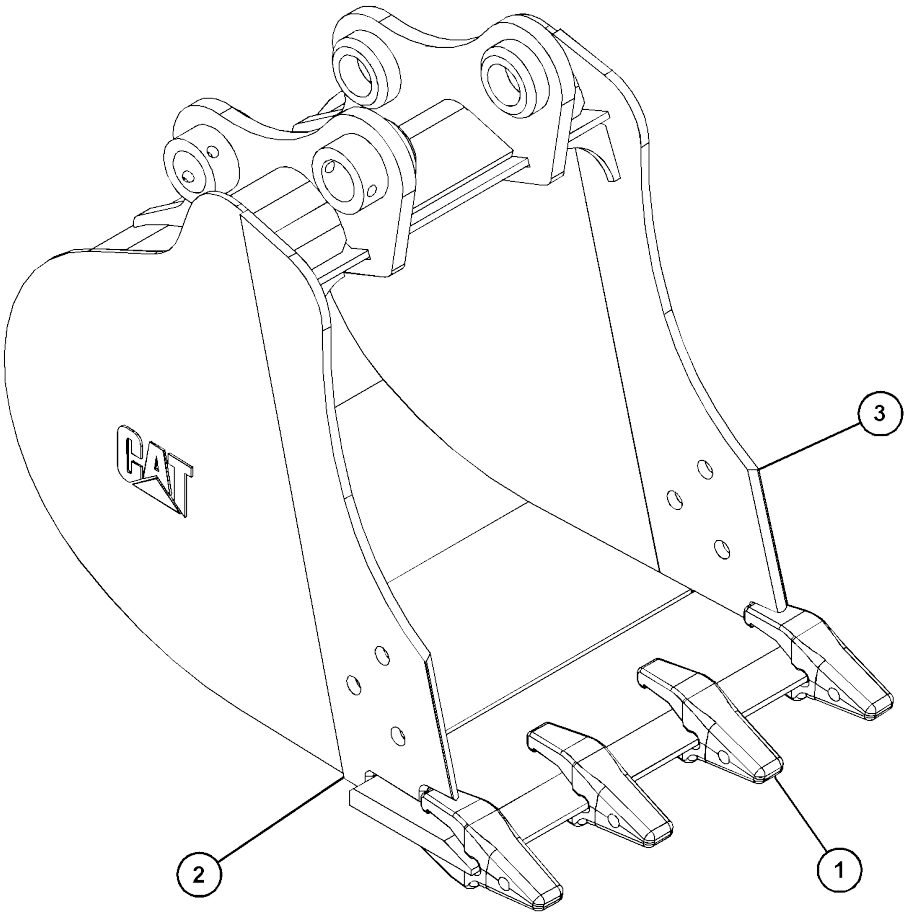


GRAPHIC #1 **<END>** g03397343

# WORK TOOLS

## *303-1362* BUCKET AS-HOE

**508-MM (20-IN) WIDE X 0.09-CU M (0.2-CU YD) CAPACITY**
**PART OF 303-1327 BUCKET GP-HOE**
**AN ATTACHMENT**

**SMCS-6503** **i05355794**

| NOTE | REF NO | GRAPHIC REF | PART NUMBER | QTY | PART NAME 1 2 3 4 5 6 (PRODUCT LEVEL) | SEE PAGE |
|---|---|---|---|---|---|---|
| | 1 | 1 | *290-2945* | 1 | EDGE AS | |
| | 1A | 1 | **119-3205** | 5 | ADAPTER-STRAP (TWO) | |
| | 1B | 1 | **252-2627** | 1 | EDGE | |
| | 2 | 1 | **303-6248** | 1 | EDGE-RH | |
| | 3 | 1 | **303-6249** | 1 | EDGE-LH | |

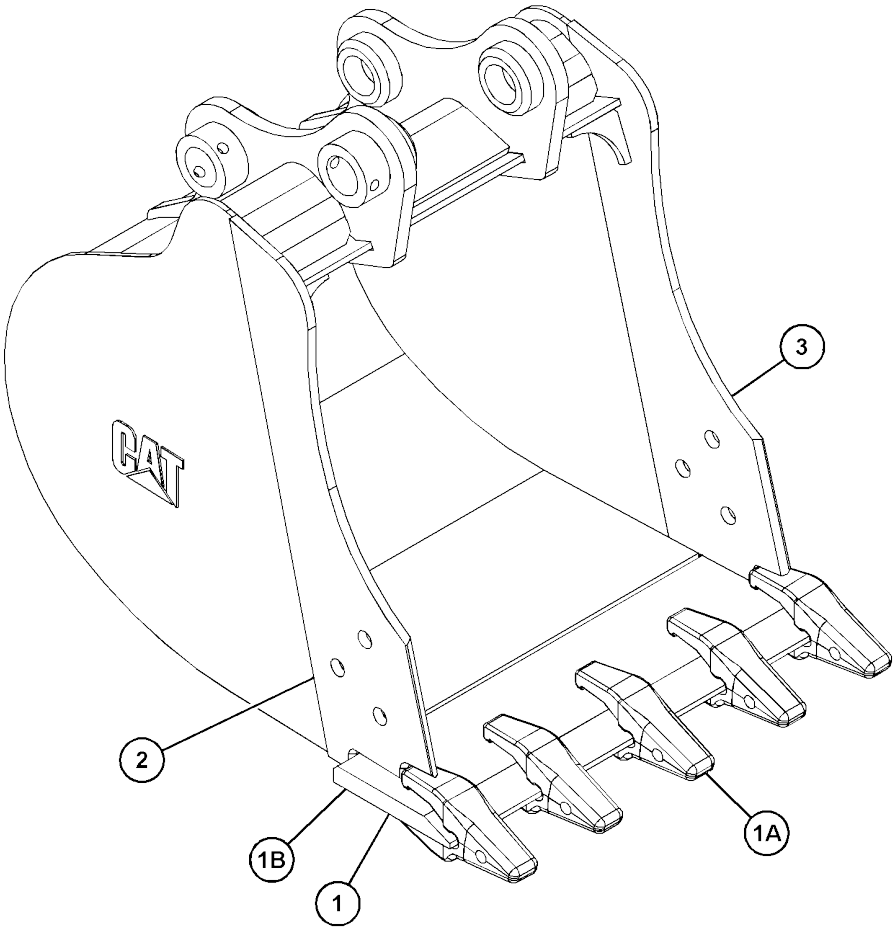


GRAPHIC #1 **<END>** g03402100

# WORK TOOLS

## *303-1363* BUCKET AS-HOE

**609-MM (24-IN) WIDE X 0.12-CU M (0.15-CU YD) CAPACITY**
**PART OF 303-1328 BUCKET GP-HOE**
**AN ATTACHMENT**

**SMCS-6503** **i05355893**

| NOTE | REF NO | GRAPHIC REF | PART NUMBER | QTY | PART NAME 1 2 3 4 5 6 (PRODUCT LEVEL) | SEE PAGE |
|---|---|---|---|---|---|---|
| | 1 | 1 | **290-2946** | 1 | EDGE AS | |
| | | 1 | **119-3205** | 5 | ADAPTER-STRAP (TWO) | |
| | | 1 | **219-9488** | 1 | EDGE | |
| | 2 | 1 | **303-6248** | 1 | EDGE-RH | |
| | 3 | 1 | **303-6249** | 1 | EDGE-LH | |

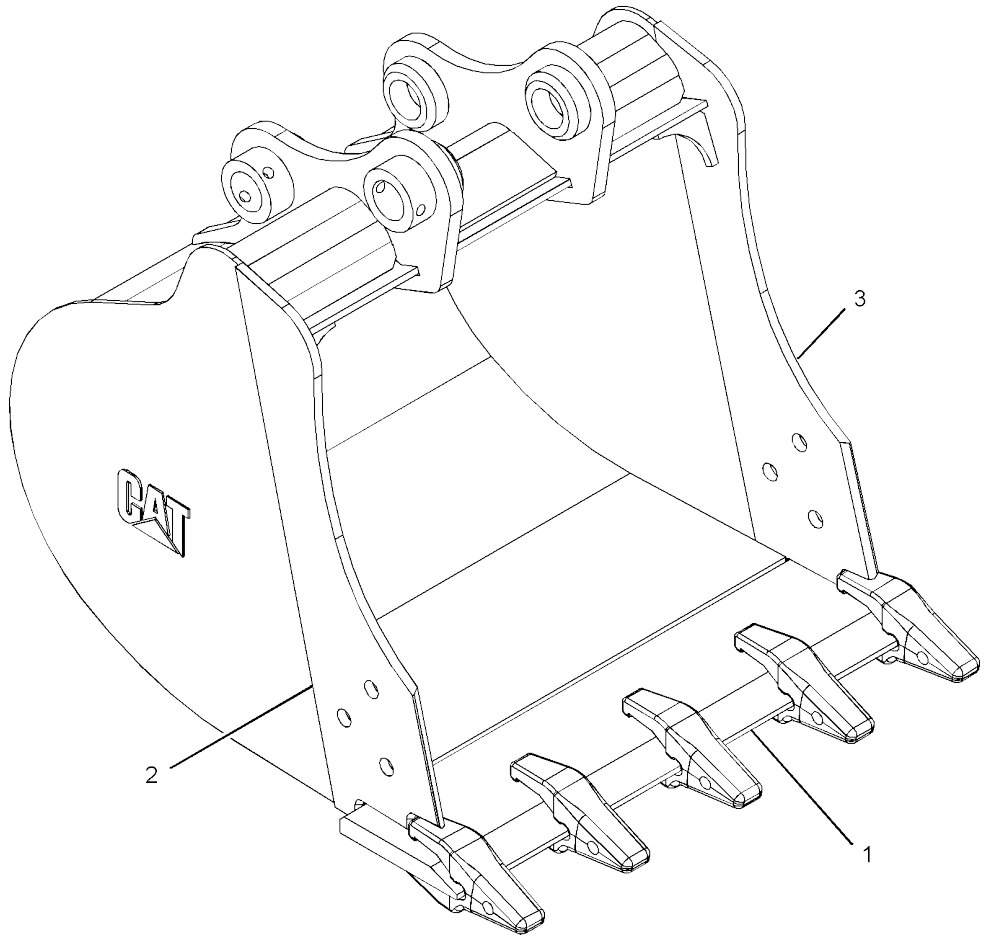


GRAPHIC #1 **<END>** g03397760

# WORK TOOLS

## *303-1364* BUCKET AS-HOE

**762-MM (30-IN) WIDE X 0.16-CU M (0.20-CU YD) CAPACITY**
**PART OF 303-1329 BUCKET GP-HOE**
**AN ATTACHMENT**

**SMCS-6503** **i05355777**

| NOTE | REF NO | GRAPHIC REF | PART NUMBER | QTY | PART NAME 1 2 3 4 5 6 (PRODUCT LEVEL) | SEE PAGE |
|---|---|---|---|---|---|---|
| | 1 | 1 | *303-1308* | 1 | EDGE AS | |
| | 1A | 1 | **119-3205** | 5 | ADAPTER-STRAP (TWO) | |
| | 1B | 1 | **219-9489** | 1 | EDGE | |
| | 2 | 1 | **303-6248** | 1 | EDGE-RH | |
| | 3 | 1 | **303-6249** | 1 | EDGE-LH | |

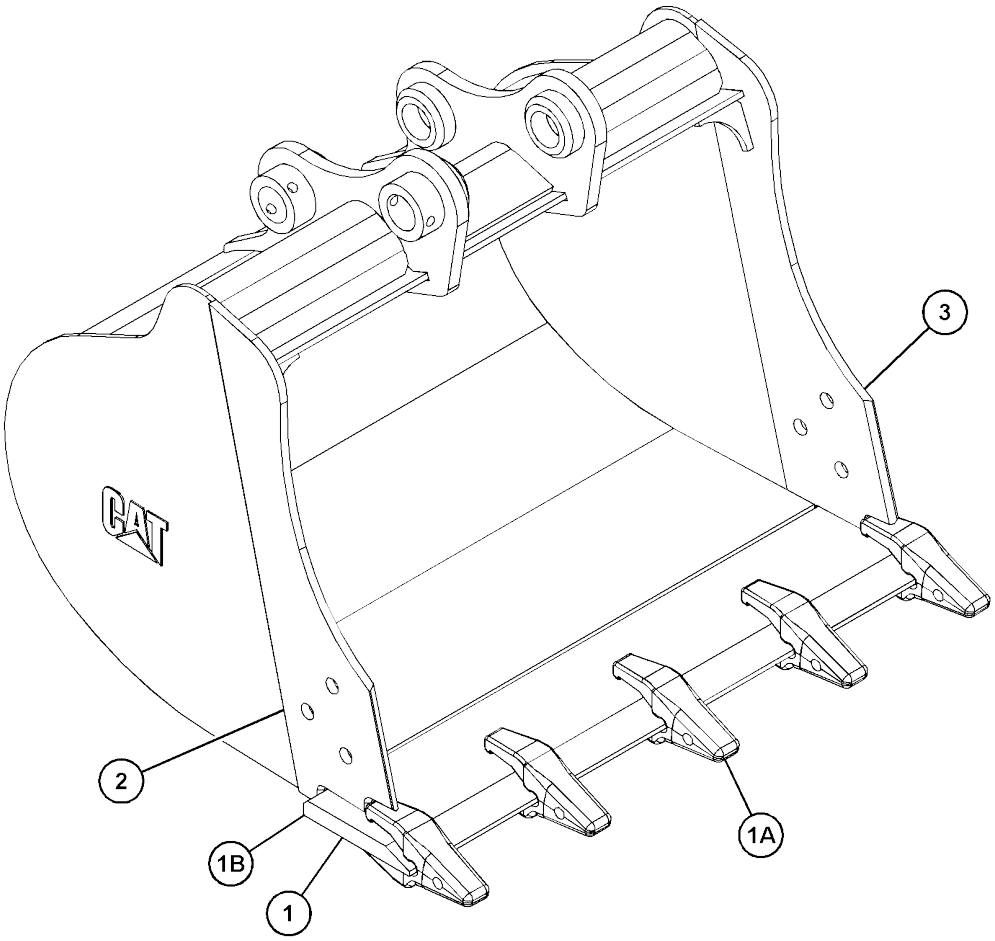


GRAPHIC #1 **<END>** g03403699

# WORK TOOLS

## *386-7523* BUCKET AS-HOE–HEAVY-DUTY

**914.4-MM (36-IN) WIDE**
**PART OF 386-7524 BUCKET GP-HOE**
**AN ATTACHMENT**

**SMCS-6503** **i05346199**

| NOTE | REF NO | GRAPHIC REF | PART NUMBER | QTY | PART NAME 1 2 3 4 5 6 (PRODUCT LEVEL) | SEE PAGE |
|---|---|---|---|---|---|---|
| | 1 | 1 | *303-1309* | 1 | EDGE AS | |
| | 1A | 1 | **119-3205** | 6 | ADAPTER-STRAP (TWO) | |
| | 1B | 1 | **219-9490** | 1 | EDGE | |
| | 2 | 1 | **303-6248** | 1 | EDGE-RH | |
| | 3 | 1 | **303-6249** | 1 | EDGE-LH | |

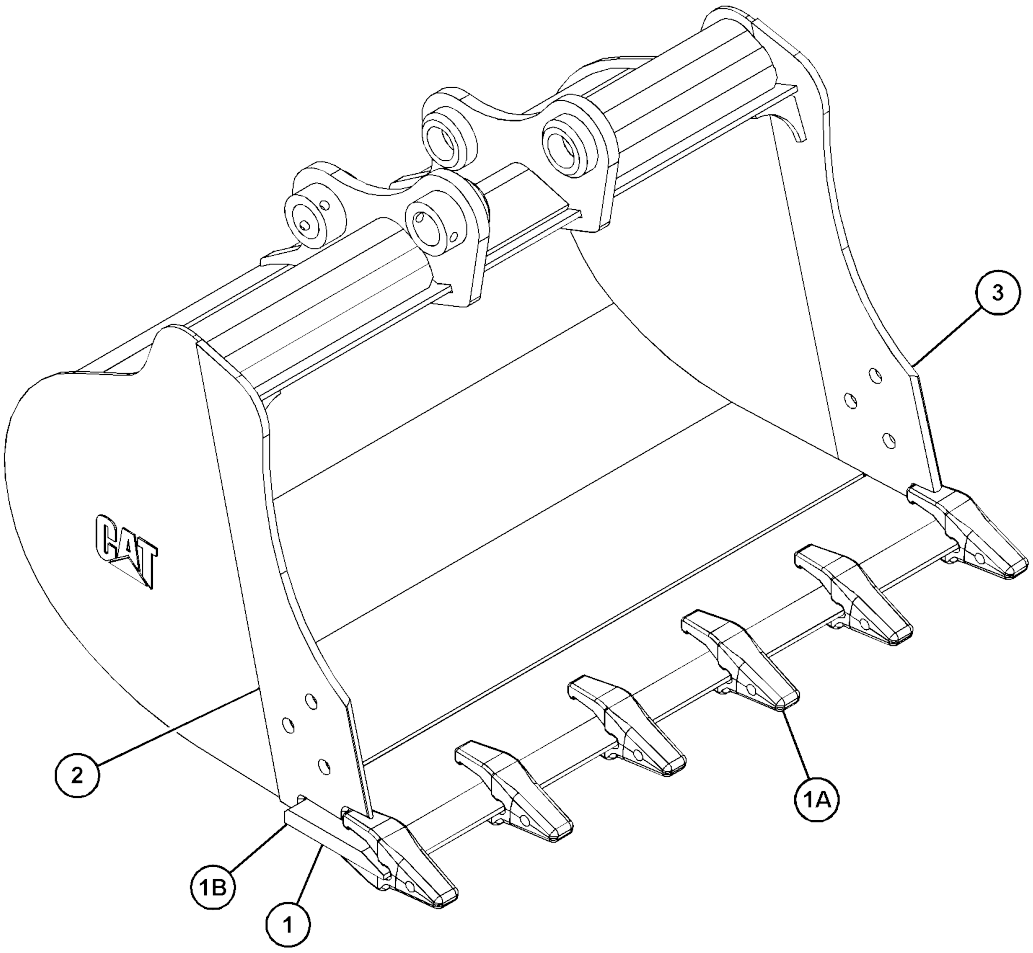


GRAPHIC #1 **<END>** g03403703

# WORK TOOLS

## *187-8812* BUCKET GP-EXCAVATION

**300-MM (11.81-IN) WIDE X 60-L CAPACITY**
**AN ATTACHMENT**

**SMCS-6523, 6803, 6805, 6822** **i01990415**

| NOTE | PART NUMBER | QTY | PART NAME 1 2 3 4 5 6 (PRODUCT LEVEL) | SEE PAGE |
|---|---|---|---|---|
| M | **145-1893** | 6 | BOLT (M12X1.75X40-MM) | |
| M | **8T-4244** | 6 | NUT (M12X1.75-THD) | |
| | **231-3999** | 3 | TOOTH | |

M - METRIC PART

<END>

## *187-8813* BUCKET GP-EXCAVATION

**400-MM (15.75-IN) WIDE X 85-L CAPACITY**
**AN ATTACHMENT**

**SMCS-6523, 6803, 6805, 6822** **i01990412**

| NOTE | PART NUMBER | QTY | PART NAME 1 2 3 4 5 6 (PRODUCT LEVEL) | SEE PAGE |
|---|---|---|---|---|
| M | **145-1893** | 6 | BOLT (M12X1.75X40-MM) | |
| M | **8T-4244** | 6 | NUT (M12X1.75-THD) | |
| | **231-3999** | 3 | TOOTH | |

M - METRIC PART

<END>

## *187-8814* BUCKET GP-EXCAVATION

**500-MM (19.69-IN) WIDE X 115-L CAPACITY**
**AN ATTACHMENT**

**SMCS-6523, 6803, 6805, 6822** **i01990410**

| NOTE | PART NUMBER | QTY | PART NAME 1 2 3 4 5 6 (PRODUCT LEVEL) | SEE PAGE |
|---|---|---|---|---|
| M | **145-1893** | 8 | BOLT (M12X1.75X40-MM) | |
| M | **8T-4244** | 8 | NUT (M12X1.75-THD) | |
| | **231-3999** | 4 | TOOTH | |

M - METRIC PART

<END>

## *187-8815* BUCKET GP-EXCAVATION

**600-MM (23.62-IN) WIDE X 145-L CAPACITY**
**AN ATTACHMENT**

**SMCS-6523, 6803, 6805, 6822** **i01990391**

| NOTE | PART NUMBER | QTY | PART NAME 1 2 3 4 5 6 (PRODUCT LEVEL) | SEE PAGE |
|---|---|---|---|---|
| M | **145-1893** | 8 | BOLT (M12X1.75X40-MM) | |
| M | **8T-4244** | 8 | NUT (M12X1.75-THD) | |
| | **231-3999** | 4 | TOOTH | |

M - METRIC PART

<END>

# *187-8816* BUCKET GP-EXCAVATION

**700-MM (27.56-IN) WIDE X 170-L CAPACITY**

**AN ATTACHMENT**

**SMCS-6523, 6803, 6805, 6822** **i01990388**

| NOTE | PART NUMBER | QTY | PART NAME 1 2 3 4 5 6 (PRODUCT LEVEL) | SEE PAGE |
|---|---|---|---|---|
| M | **145-1893** | 10 | BOLT (M12X1.75X40-MM) | |
| M | **8T-4244** | 10 | NUT (M12X1.75-THD) | |
| | **231-3999** | 5 | TOOTH | |

M - METRIC PART

<END>

# WORK TOOLS

## *279-4312* BUCKET GP-GENERAL PURPOSE

**AN ATTACHMENT**

**SMCS-6101, 6803, 6805, 6822** **i05357655**

| NOTE | REF NO | GRAPHIC REF | PART NUMBER | QTY | PART NAME 1 2 3 4 5 6 (PRODUCT LEVEL) | SEE PAGE |
|---|---|---|---|---|---|---|
| | 1 | 1 | *153-7881* | 3 | TOOTH GP-UNI | |
| | | | | | (EACH INCLUDES) | |
| M | | 1 | **8T-4778** | 2 | LOCKNUT (M16X2-THD) | |
| | | 1 | **135-9390** | 1 | TOOTH-UNI | |
| M | | 1 | **159-8839** | 2 | SCREW-FLAT HEAD (M16X2X60-MM) | |
| | 2 | 1 | **154-2704** | 1 | PLATE-INSTRUCTION (BUCKET SPECIFICATIONS) | |
| | 3 | 1 | **168-8389** | 4 | TACK-FASTENER (METAL) | |
| Y | 4 | 1 | *279-4311* | 1 | BUCKET AS-GENERAL PURPOSE | 395 |

M - METRIC PART
Y - SEPARATE ILLUSTRATION

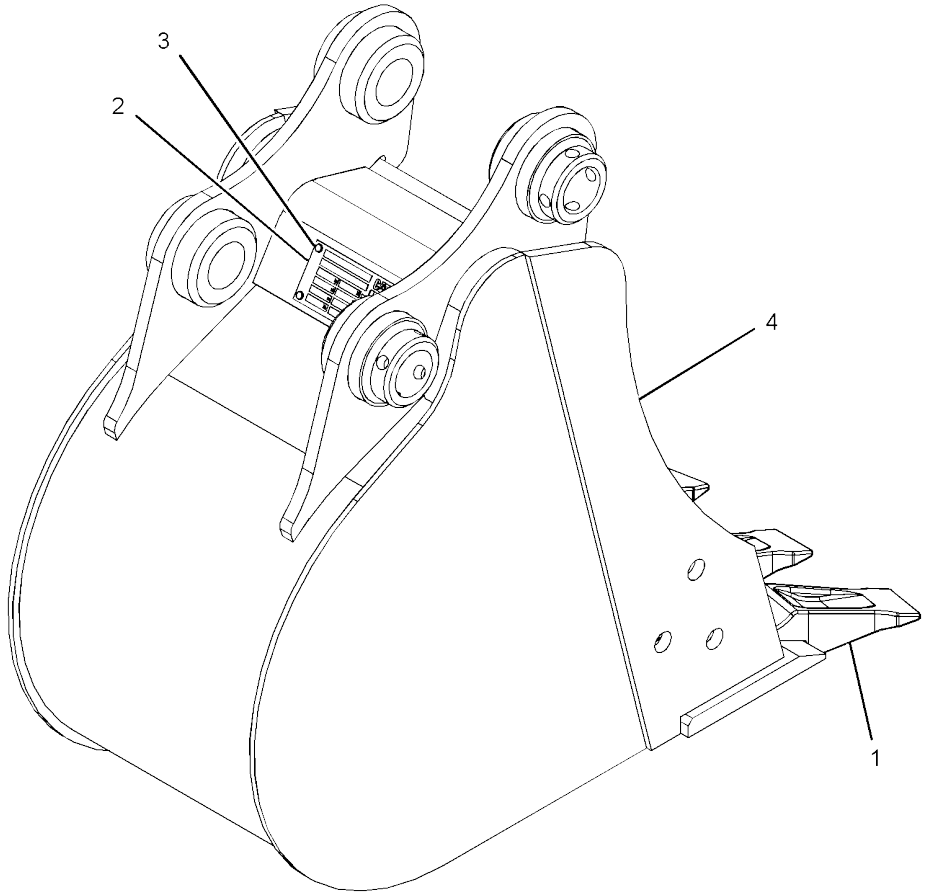


GRAPHIC #1 **<END>** g03393463

# 279-4313 BUCKET GP-GENERAL PURPOSE

**500-MM (19.7-IN) WIDE X 0.09-CU M (0.12-CU YD) CAPACITY**
**AN ATTACHMENT**

**SMCS-6101, 6803, 6805, 6822** **i05357693**

| NOTE | REF NO | GRAPHIC REF | PART NUMBER | QTY | PART NAME 1 2 3 4 5 6 (PRODUCT LEVEL) | SEE PAGE |
|---|---|---|---|---|---|---|
| | 1 | 1 | *153-7881* | 4 | TOOTH GP-UNI | |
| | | | | | (EACH INCLUDES) | |
| M | | 1 | **8T-4778** | 2 | LOCKNUT (M16X2-THD) | |
| | | 1 | **135-9390** | 1 | TOOTH-UNI | |
| M | | 1 | **159-8839** | 2 | SCREW-FLAT HEAD (M16X2X60-MM) | |
| | 2 | 1 | **154-2704** | 1 | PLATE-INSTRUCTION (BUCKET SPECIFICATIONS) | |
| | 3 | 1 | **168-8389** | 4 | TACK-FASTENER (METAL) | |

M - METRIC PART

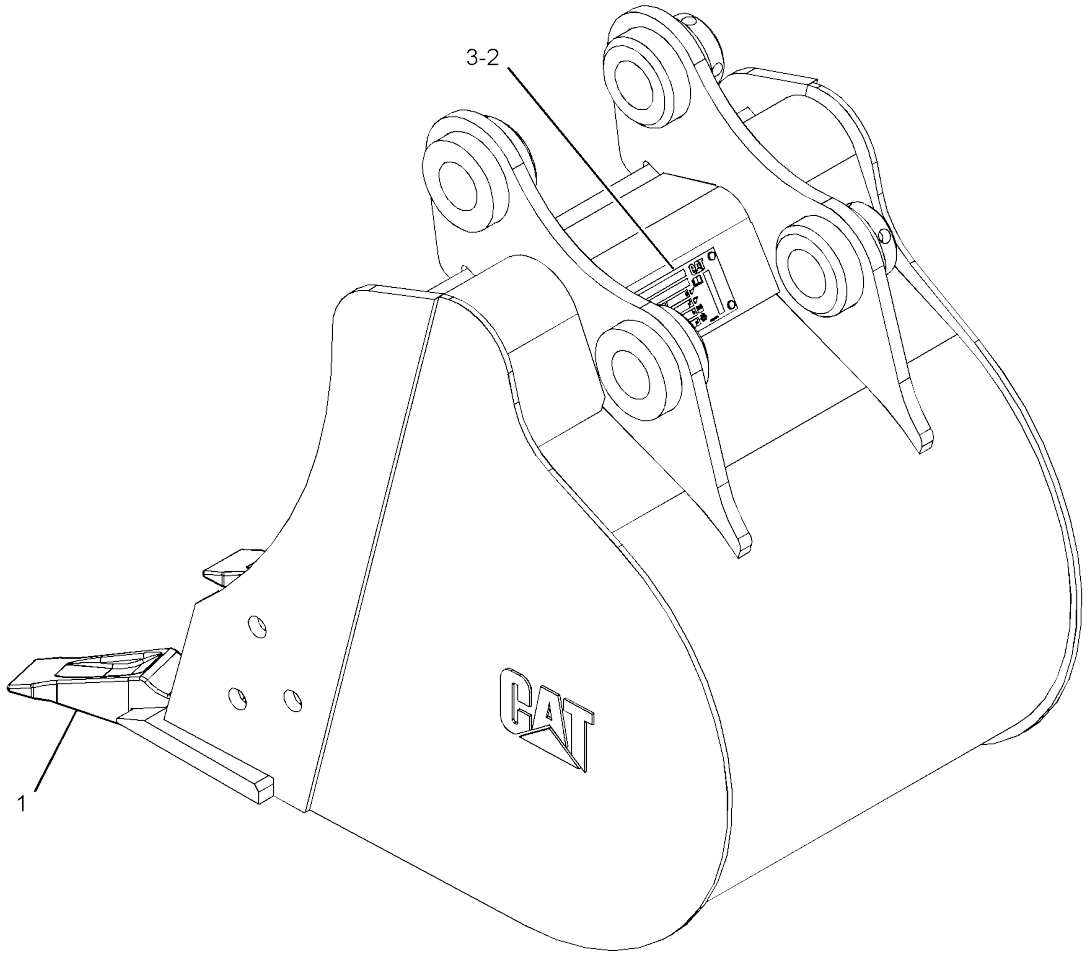


GRAPHIC #1 **<END>** g03408776

# 279-4320 BUCKET GP-GENERAL PURPOSE

**460-MM (18.11-IN) WIDE X 0.084-CU M (0.11-CU YD)CAPACITY**
**AN ATTACHMENT**

**SMCS-6101, 6803, 6805, 6822** **i05357710**

| NOTE | REF NO | GRAPHIC REF | PART NUMBER | QTY | PART NAME 1 2 3 4 5 6 (PRODUCT LEVEL) | SEE PAGE |
|---|---|---|---|---|---|---|
| | 1 | 1 | *153-7881* | 3 | TOOTH GP-UNI | |
| | | | | | (EACH INCLUDES) | |
| M | | 1 | **8T-4778** | 2 | LOCKNUT (M16X2-THD) | |
| | | 1 | **135-9390** | 1 | TOOTH-UNI | |
| M | | 1 | **159-8839** | 2 | SCREW-FLAT HEAD (M16X2X60-MM) | |
| | 2 | 1 | **154-2704** | 1 | PLATE-INSTRUCTION (BUCKET SPECIFICATIONS) | |
| | 3 | 1 | **168-8389** | 4 | TACK-FASTENER (METAL) | |

M - METRIC PART

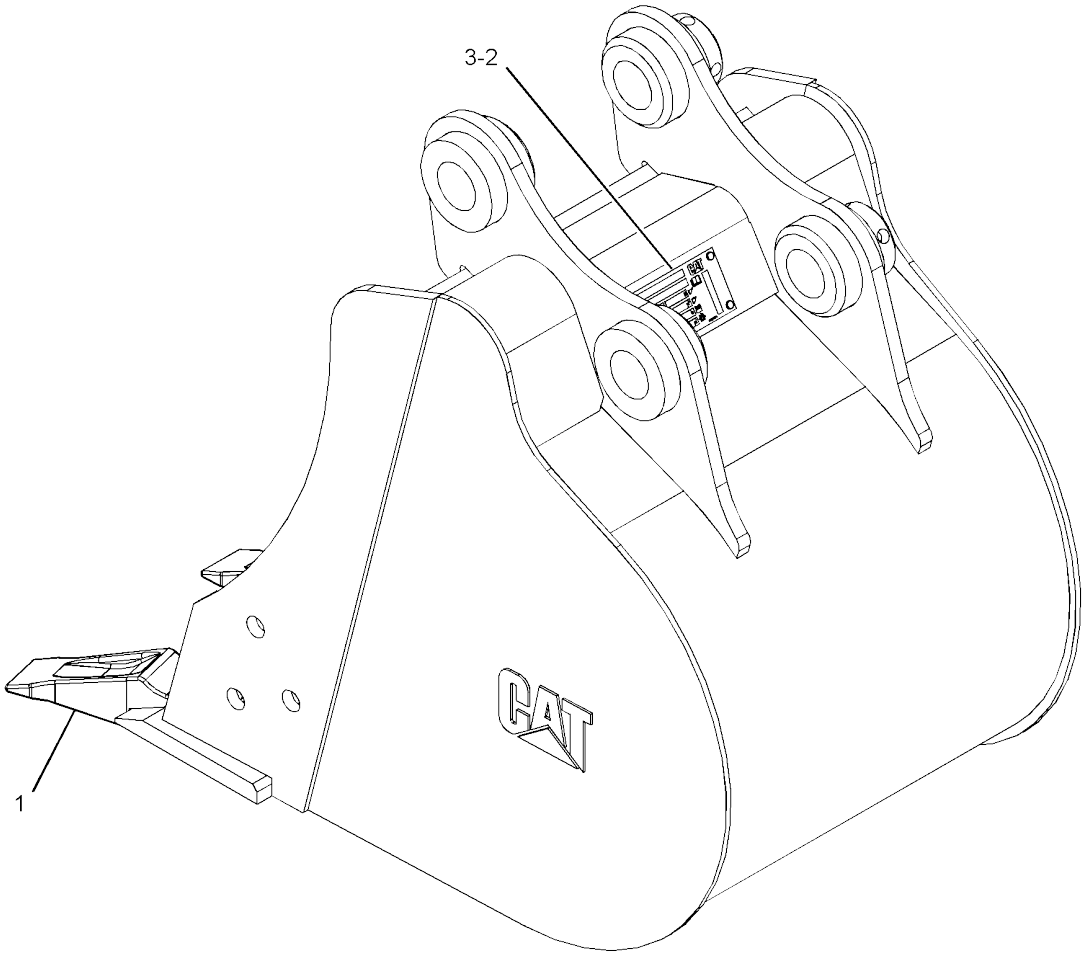


GRAPHIC #1 **<END>** g03408777

# WORK TOOLS

## 279-4321 BUCKET GP-GENERAL PURPOSE

**AN ATTACHMENT**

**SMCS-6101, 6803, 6805, 6822** **i05357726**

| NOTE | REF NO | GRAPHIC REF | PART NUMBER | QTY | PART NAME 1 2 3 4 5 6 (PRODUCT LEVEL) | SEE PAGE |
|---|---|---|---|---|---|---|
| | 1 | 1 | *153-7881* | 4 | TOOTH GP-UNI | |
| | | | | | (EACH INCLUDES) | |
| M | | 1 | **8T-4778** | 2 | LOCKNUT (M16X2-THD) | |
| | | 1 | **135-9390** | 1 | TOOTH-UNI | |
| M | | 1 | **159-8839** | 2 | SCREW-FLAT HEAD (M16X2X60-MM) | |
| | 2 | 1 | **154-2704** | 1 | PLATE-INSTRUCTION (BUCKET SPECIFICATIONS) | |
| | 3 | 1 | **168-8389** | 4 | TACK-FASTENER (METAL) | |
| Y | 4 | 1 | *281-3815* | 1 | BUCKET AS-GENERAL PURPOSE | 396 |

M - METRIC PART
Y - SEPARATE ILLUSTRATION

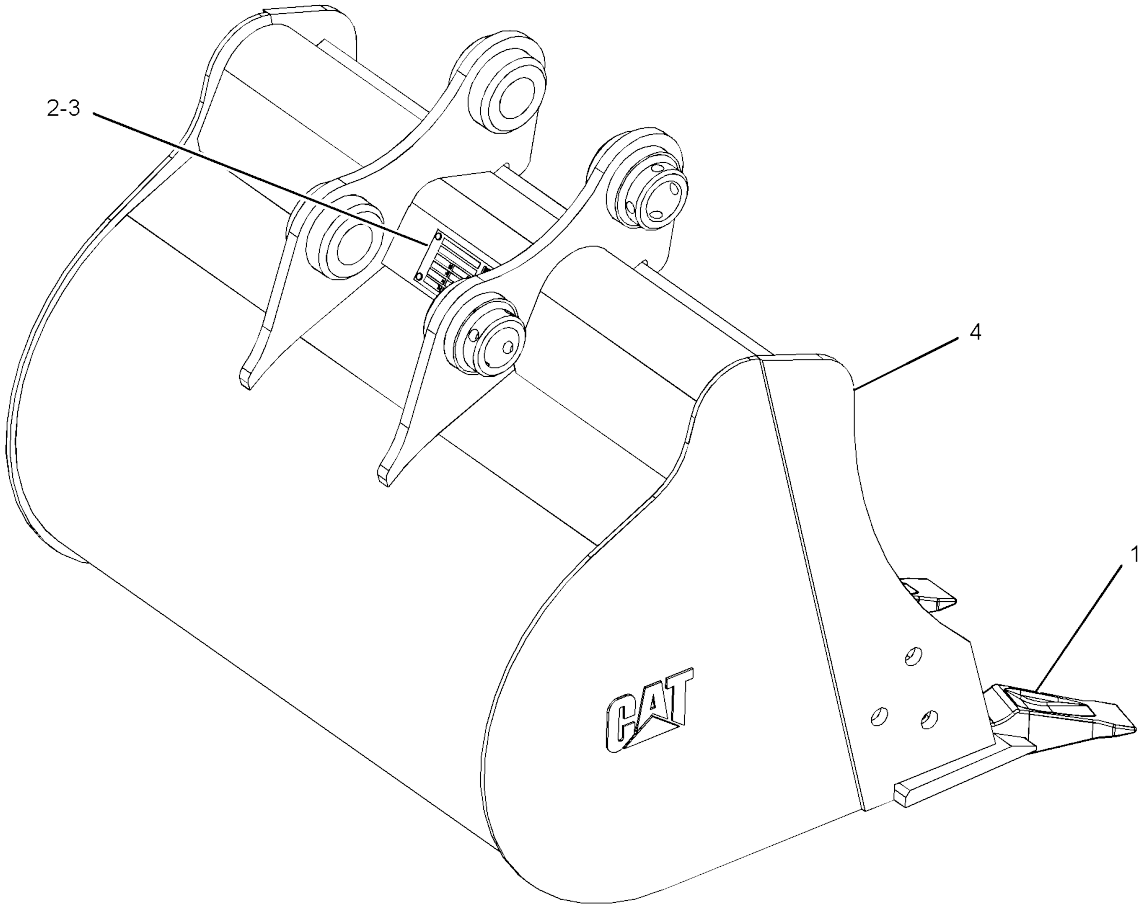


GRAPHIC #1 **<END>** g03397293

# 281-1551 BUCKET GP-GENERAL PURPOSE

**600-MM (23.62-IN) WIDE X 0.113-CU M (0.15-CU YD) CAPACITY**
**AN ATTACHMENT**

**SMCS-6101, 6803, 6805, 6822** **i05399075**

| NOTE | REF NO | GRAPHIC REF | PART NUMBER | QTY | PART NAME 1 2 3 4 5 6 (PRODUCT LEVEL) | SEE PAGE |
|---|---|---|---|---|---|---|
| | 1 | 1 | *153-7881* | 4 | TOOTH GP-UNI | |
| | | | | | (EACH INCLUDES) | |
| | | 1 | **135-9390** | 1 | TOOTH-UNI | |
| M | | 1 | **159-8839** | 2 | SCREW-FLAT HEAD (M16X2X60-MM) | |
| M | | 1 | **8T-4778** | 2 | LOCKNUT (M16X2-THD) | |
| | 2 | 1 | **154-2704** | 1 | PLATE-INSTRUCTION (BUCKET SPECIFICATIONS) | |
| | 3 | 1 | **168-8389** | 4 | TACK-FASTENER (METAL) | |

M - METRIC PART

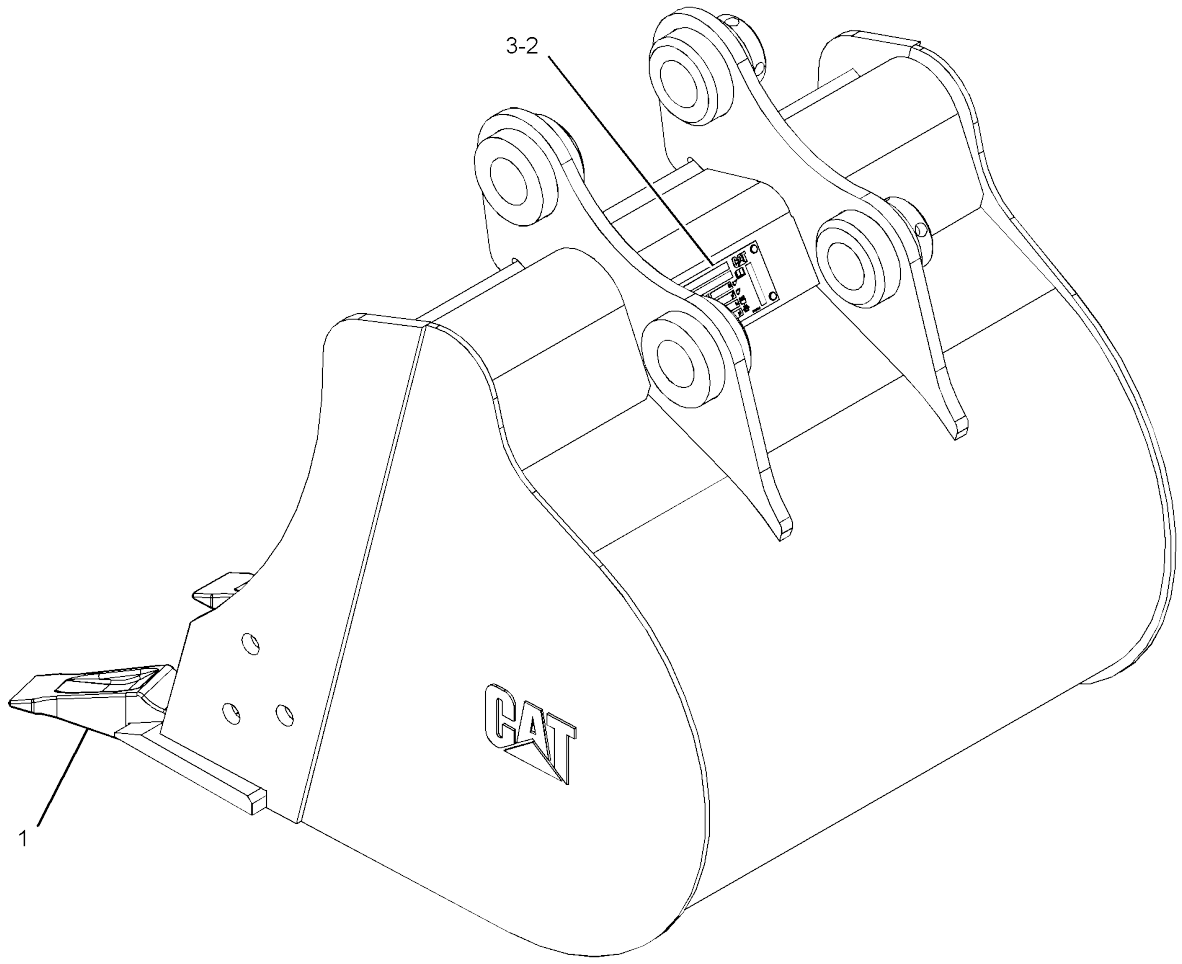


GRAPHIC #1 **<END>** g03411976

# *281-3824* BUCKET GP-GENERAL PURPOSE

**400-MM (16-IN) WIDE X 0.07-CU M (0.09-CU YD) CAPACITY**
**AN ATTACHMENT**

**SMCS-6101, 6803, 6805, 6822** **i05399082**

| NOTE | REF NO | GRAPHIC REF | PART NUMBER | QTY | PART NAME 1 2 3 4 5 6 (PRODUCT LEVEL) | SEE PAGE |
|---|---|---|---|---|---|---|
| | 1 | 1 | *153-7881* | 3 | TOOTH GP-UNI | |
| | | | | | (EACH INCLUDES) | |
| | | 1 | **135-9390** | 1 | TOOTH-UNI | |
| M | | 1 | **159-8839** | 2 | SCREW-FLAT HEAD (M16X2X60-MM) | |
| M | | 1 | **8T-4778** | 2 | LOCKNUT (M16X2-THD) | |
| | 2 | 1 | **154-2704** | 1 | PLATE-INSTRUCTION (BUCKET SPECIFICATIONS) | |
| | 3 | 1 | **168-8389** | 4 | TACK-FASTENER (METAL) | |

M - METRIC PART

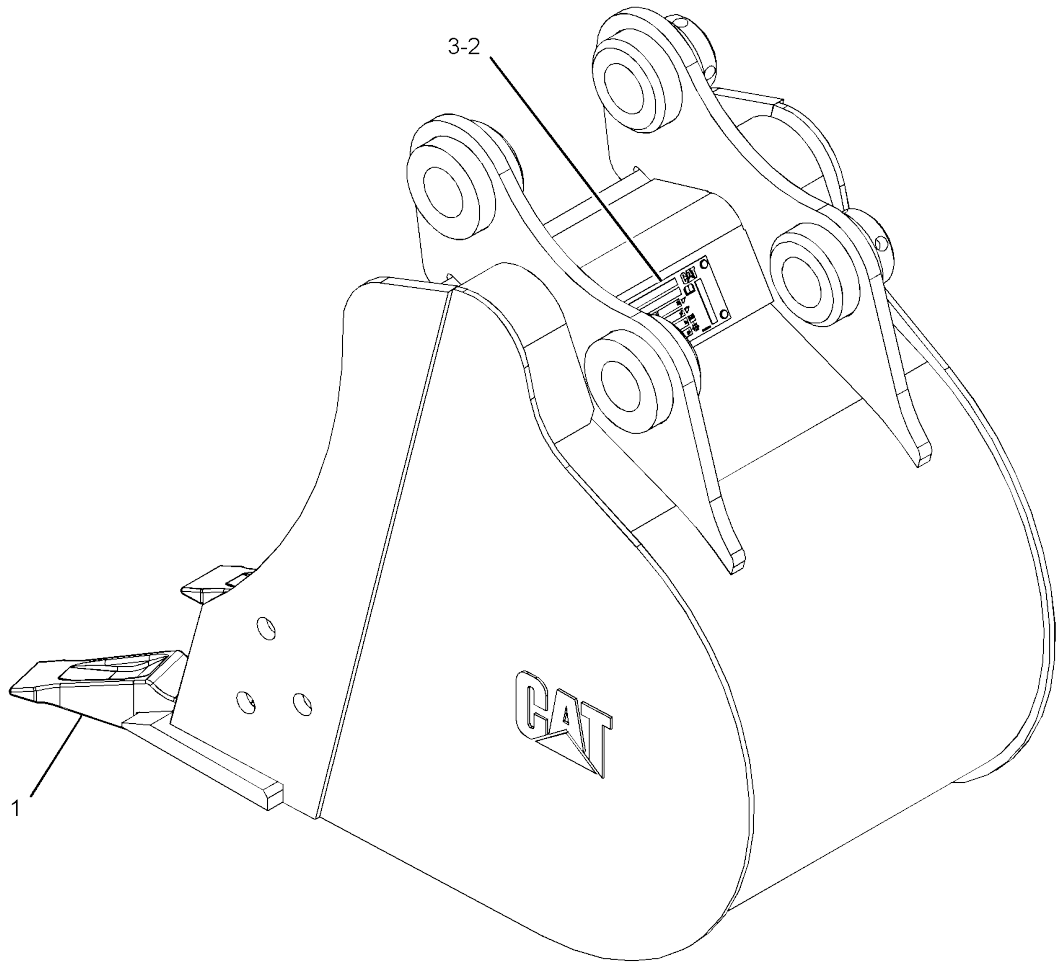


GRAPHIC #1 **<END>** g03411967

# WORK TOOLS

## *303-1324* BUCKET GP-HOE–HEAVY-DUTY
**AN ATTACHMENT**

**SMCS-6503** **i05353915**

| NOTE | REF NO | GRAPHIC REF | PART NUMBER | QTY | PART NAME 1 2 3 4 5 6 (PRODUCT LEVEL) | SEE PAGE |
|---|---|---|---|---|---|---|
| | 1 | 1 | *3G-6127* | 3 | TIP GP-LONG | |
| | | | | | (EACH INCLUDES) | |
| | | 1 | **1U-3202** | 1 | TIP-LONG | |
| | | 1 | **8E-6208** | 1 | PIN | |
| | | 1 | **8E-6209** | 1 | RETAINER AS | |
| | 2 | 1 | **154-2704** | 1 | PLATE-INSTRUCTION (BUCKET SPECIFICATIONS) | |
| | 3 | 1 | **168-8389** | 4 | TACK-FASTENER (METAL) | |
| Y | 4 | 1 | *303-1358* | 1 | BUCKET AS-HOE | 397 |

Y - SEPARATE ILLUSTRATION

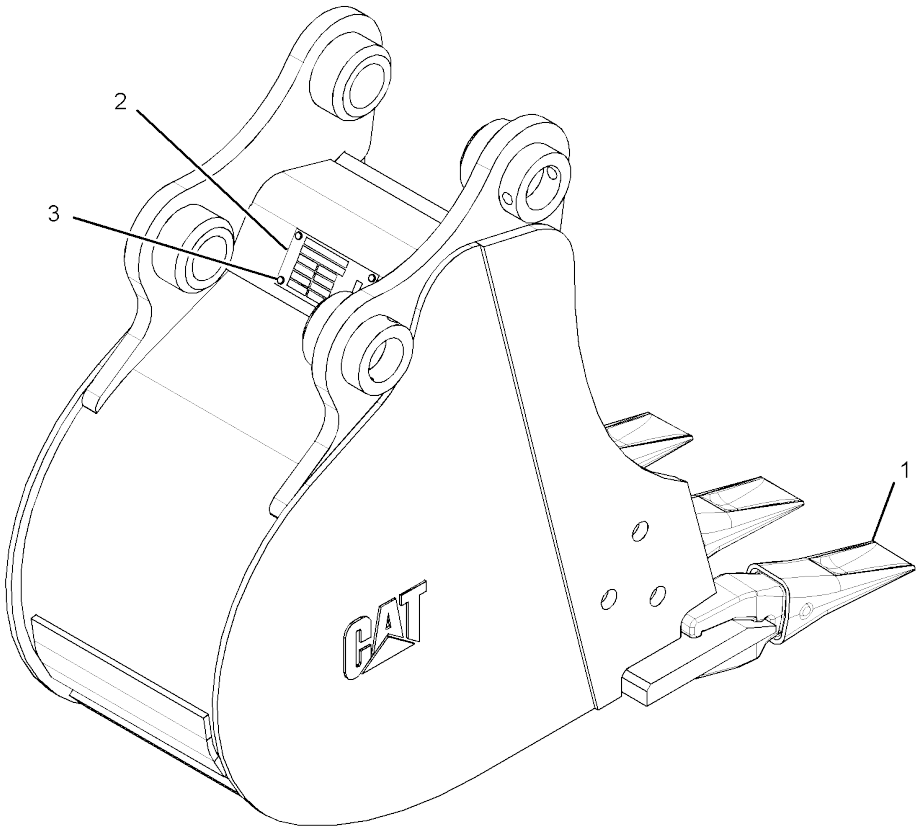


GRAPHIC #1 **<END>** g01425996

# WORK TOOLS

## *303-1325* BUCKET GP-HOE–HEAVY-DUTY
**AN ATTACHMENT**

**SMCS-6503** **i05353916**

| NOTE | REF NO | GRAPHIC REF | PART NUMBER | QTY | PART NAME 1 2 3 4 5 6 (PRODUCT LEVEL) | SEE PAGE |
|---|---|---|---|---|---|---|
| | 1 | 1 | *3G-6127* | 3 | TIP GP-LONG | |
| | | | | | (EACH INCLUDES) | |
| | | 1 | **1U-3202** | 1 | TIP-LONG | |
| | | 1 | **8E-6208** | 1 | PIN | |
| | | 1 | **8E-6209** | 1 | RETAINER AS | |
| | 2 | 1 | **154-2704** | 1 | PLATE-INSTRUCTION (BUCKET SPECIFICATIONS) | |
| | 3 | 1 | **168-8389** | 4 | TACK-FASTENER (METAL) | |
| Y | 4 | 1 | *303-1359* | 1 | BUCKET AS-HOE | 398 |

Y - SEPARATE ILLUSTRATION

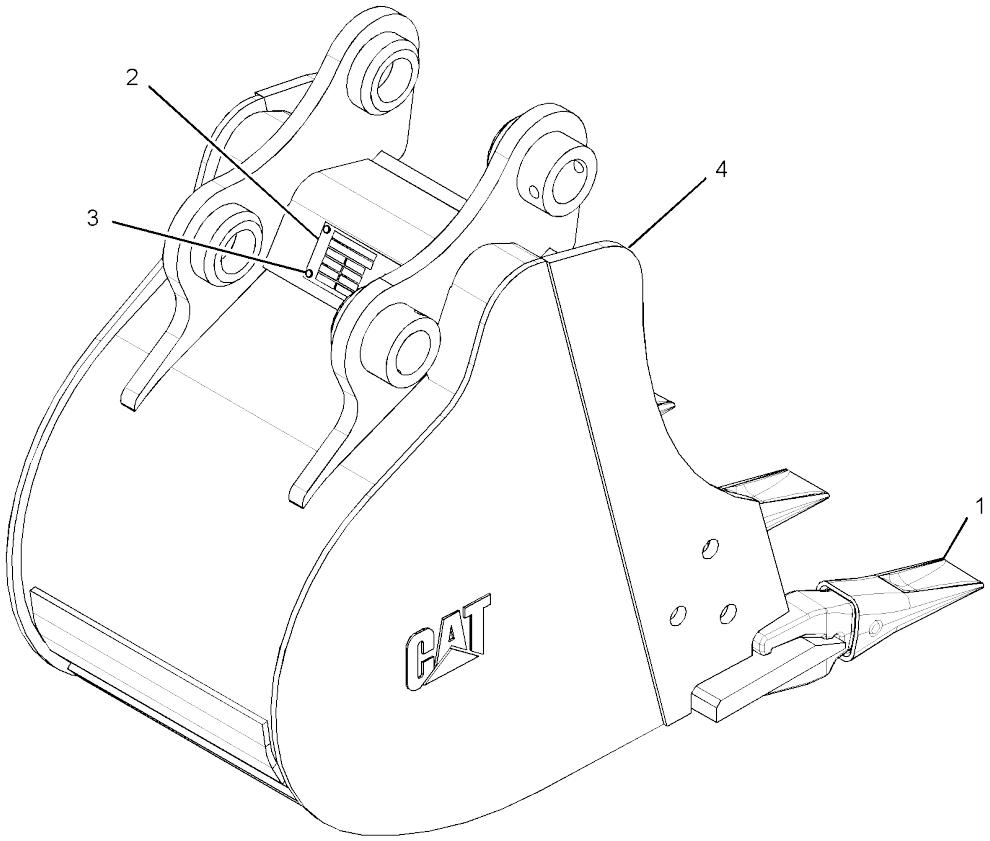


GRAPHIC #1 **<END>** g03397737

# *303-1326* BUCKET GP-HOE

**AN ATTACHMENT**

**SMCS-6503** **i05353921**

| NOTE | REF NO | GRAPHIC REF | PART NUMBER | QTY | PART NAME 1 2 3 4 5 6 (PRODUCT LEVEL) | SEE PAGE |
|---|---|---|---|---|---|---|
| | 1 | 1 | *3G-6127* | 4 | TIP GP-LONG | |
| | | | | | (EACH INCLUDES) | |
| | | 1 | **1U-3202** | 1 | TIP-LONG | |
| | | 1 | **8E-6208** | 1 | PIN | |
| | | 1 | **8E-6209** | 1 | RETAINER AS | |
| | 2 | 1 | **154-2704** | 1 | PLATE-INSTRUCTION (BUCKET SPECIFICATIONS) | |
| | 3 | 1 | **168-8389** | 4 | TACK-FASTENER (METAL) | |
| Y | 4 | 1 | *303-1360* | 1 | BUCKET AS-HOE | 399 |

Y - SEPARATE ILLUSTRATION

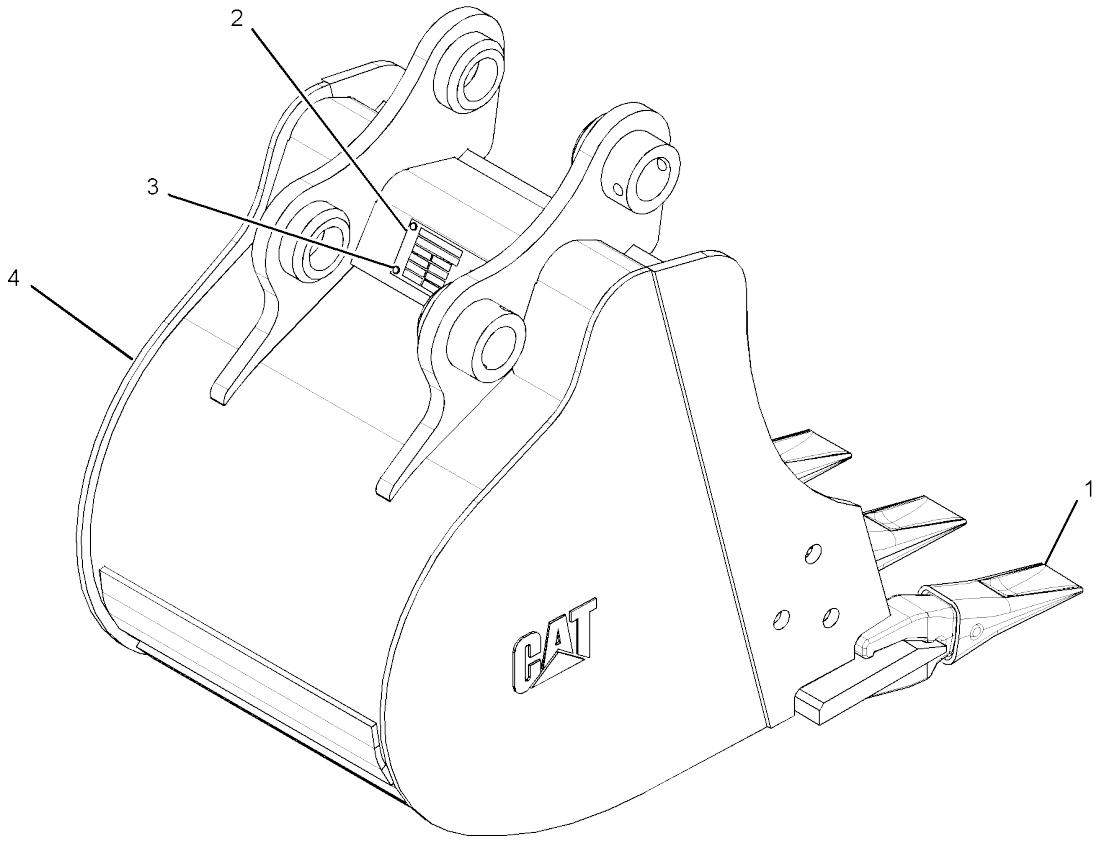


GRAPHIC #1 **<END>** g03403220

# WORK TOOLS

## *303-1327* BUCKET GP-HOE

**AN ATTACHMENT**

**SMCS-6503** **i05353917**

| NOTE | REF NO | GRAPHIC REF | PART NUMBER | QTY | PART NAME 1 2 3 4 5 6 (PRODUCT LEVEL) | SEE PAGE |
|---|---|---|---|---|---|---|
| | 1 | 1 | *3G-6127* | 5 | TIP GP-LONG | |
| | | | | | (EACH INCLUDES) | |
| | | 1 | **1U-3202** | 1 | TIP-LONG | |
| | | 1 | **8E-6208** | 1 | PIN | |
| | | 1 | **8E-6209** | 1 | RETAINER AS | |
| | 2 | 1 | **154-2704** | 1 | PLATE-INSTRUCTION (BUCKET SPECIFICATIONS) | |
| | 3 | 1 | **168-8389** | 4 | TACK-FASTENER (METAL) | |
| Y | 4 | 1 | *303-1362* | 1 | BUCKET AS-HOE | 400 |

Y - SEPARATE ILLUSTRATION

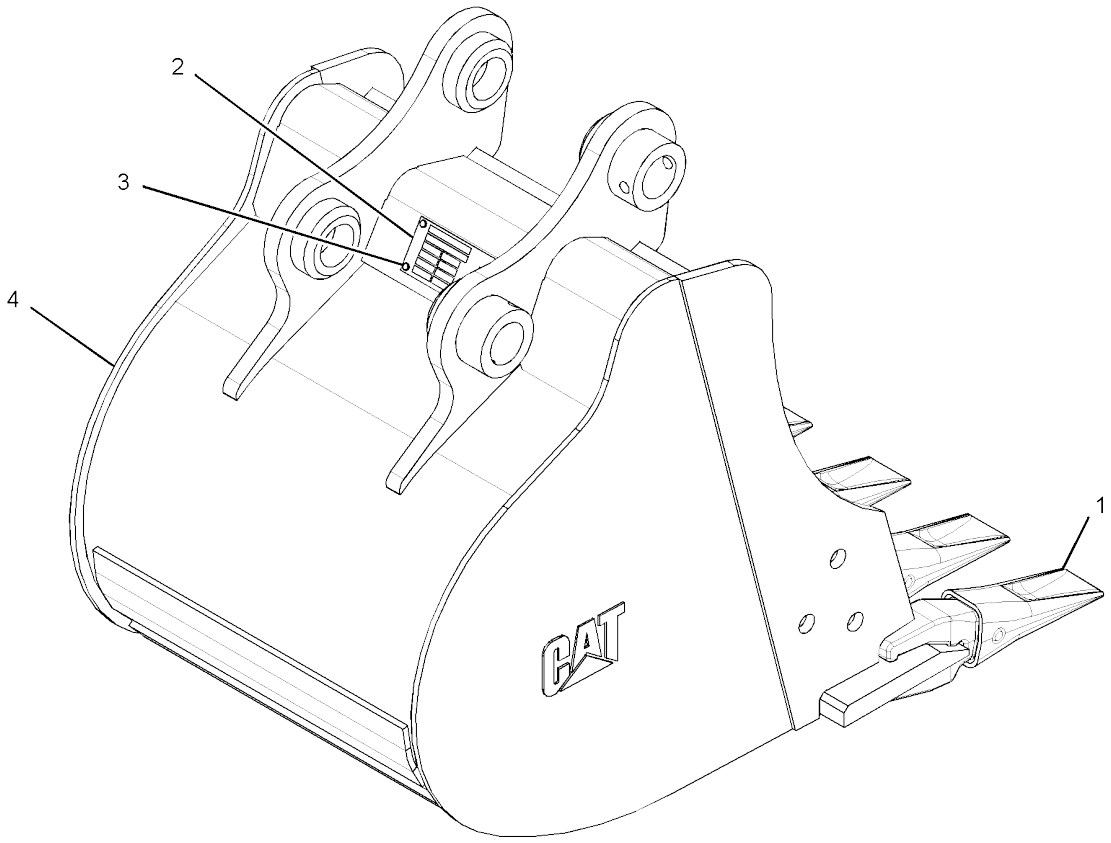


GRAPHIC #1 **<END>** g03403318

# *303-1328* BUCKET GP-HOE

**AN ATTACHMENT**

**SMCS-6503** **i05353919**

| NOTE | REF NO | GRAPHIC REF | PART NUMBER | QTY | PART NAME 1 2 3 4 5 6 (PRODUCT LEVEL) | SEE PAGE |
|---|---|---|---|---|---|---|
| | 1 | 1 | *3G-6127* | 5 | TIP GP-LONG | |
| | | | | | (EACH INCLUDES) | |
| | | 1 | **1U-3202** | 1 | TIP-LONG | |
| | | 1 | **8E-6208** | 1 | PIN | |
| | | 1 | **8E-6209** | 1 | RETAINER AS | |
| | 2 | 1 | **154-2704** | 1 | PLATE-INSTRUCTION (BUCKET SPECIFICATIONS) | |
| | 3 | 1 | **168-8389** | 4 | TACK-FASTENER (METAL) | |
| Y | 4 | 1 | *303-1363* | 1 | BUCKET AS-HOE | 401 |

Y - SEPARATE ILLUSTRATION

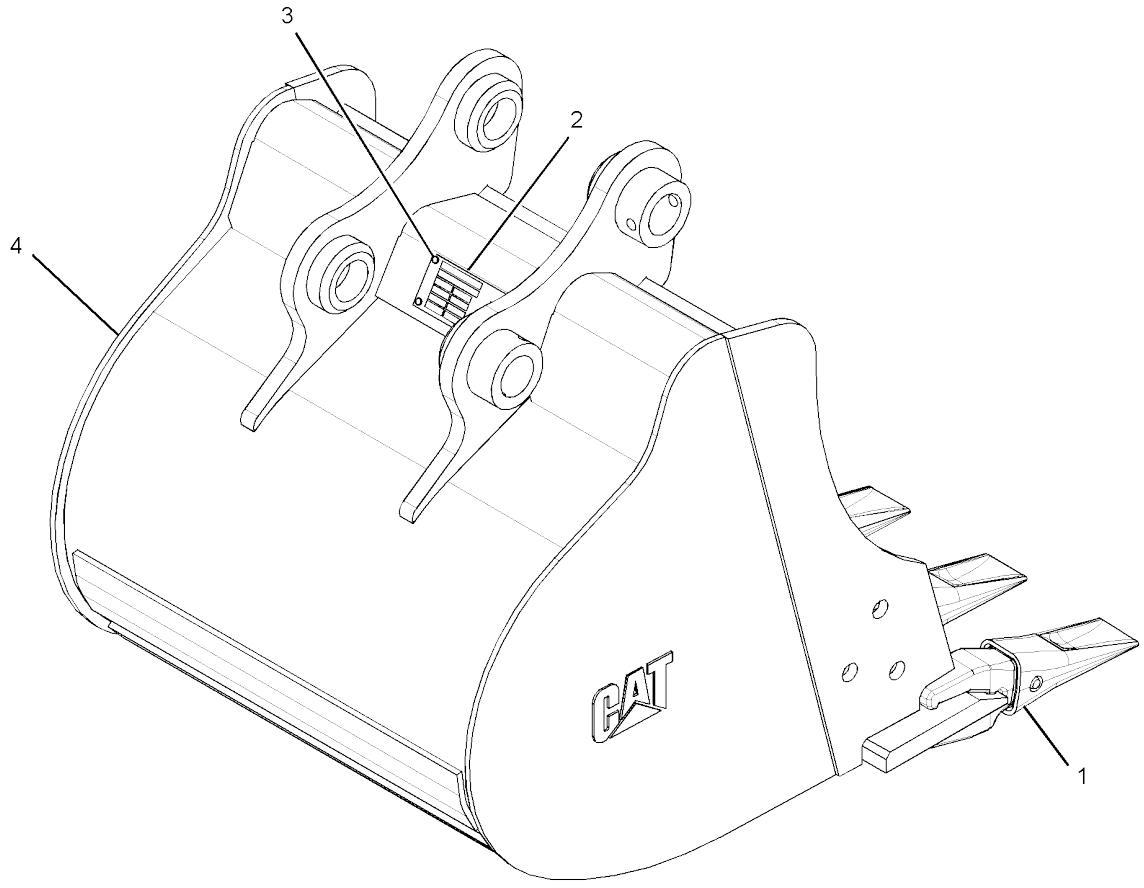


GRAPHIC #1 **<END>** g03403349

# WORK TOOLS

## *303-1329* BUCKET GP-HOE

**AN ATTACHMENT**

**SMCS-6503** **i05353920**

| NOTE | REF NO | GRAPHIC REF | PART NUMBER | QTY | PART NAME 1 2 3 4 5 6 (PRODUCT LEVEL) | SEE PAGE |
|---|---|---|---|---|---|---|
| | 1 | 1 | *3G-6127* | 5 | TIP GP-LONG | |
| | | | | | (EACH INCLUDES) | |
| | | 1 | **1U-3202** | 1 | TIP-LONG | |
| | | 1 | **8E-6208** | 1 | PIN | |
| | | 1 | **8E-6209** | 1 | RETAINER AS | |
| | 2 | 1 | **154-2704** | 1 | PLATE-INSTRUCTION (BUCKET SPECIFICATIONS) | |
| | 3 | 1 | **168-8389** | 4 | TACK-FASTENER (METAL) | |
| Y | 4 | 1 | *303-1364* | 1 | BUCKET AS-HOE | 402 |

Y - SEPARATE ILLUSTRATION

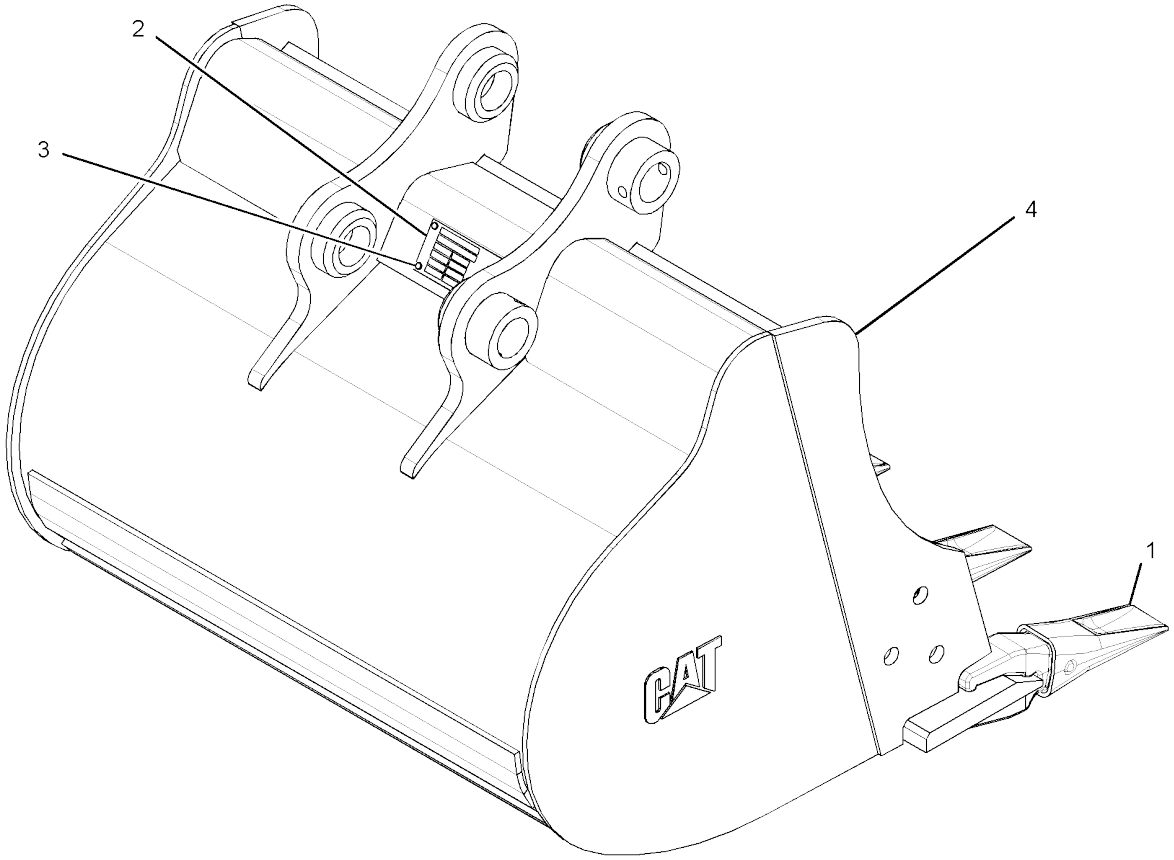


GRAPHIC #1 **<END>** g03403352

# *386-7524* BUCKET GP-HOE–HEAVY-DUTY
## AN ATTACHMENT

**SMCS-6503** **i05346192**

| NOTE | REF NO | GRAPHIC REF | PART NUMBER | QTY | PART NAME 1 2 3 4 5 6 (PRODUCT LEVEL) | SEE PAGE |
|---|---|---|---|---|---|---|
| | 1 | 1 | *3G-6127* | 6 | TIP GP-LONG | |
| | | | | | (EACH INCLUDES) | |
| | | 1 | **1U-3202** | 1 | TIP-LONG | |
| | | 1 | **8E-6208** | 1 | PIN | |
| | | 1 | **8E-6209** | 1 | RETAINER AS | |
| | 2 | 1 | **154-2704** | 1 | PLATE-INSTRUCTION (BUCKET SPECIFICATIONS) | |
| | 3 | 1 | **168-8389** | 4 | TACK-FASTENER (METAL) | |
| Y | 4 | 1 | *386-7523* | 1 | BUCKET AS-HOE | 403 |

Y - SEPARATE ILLUSTRATION

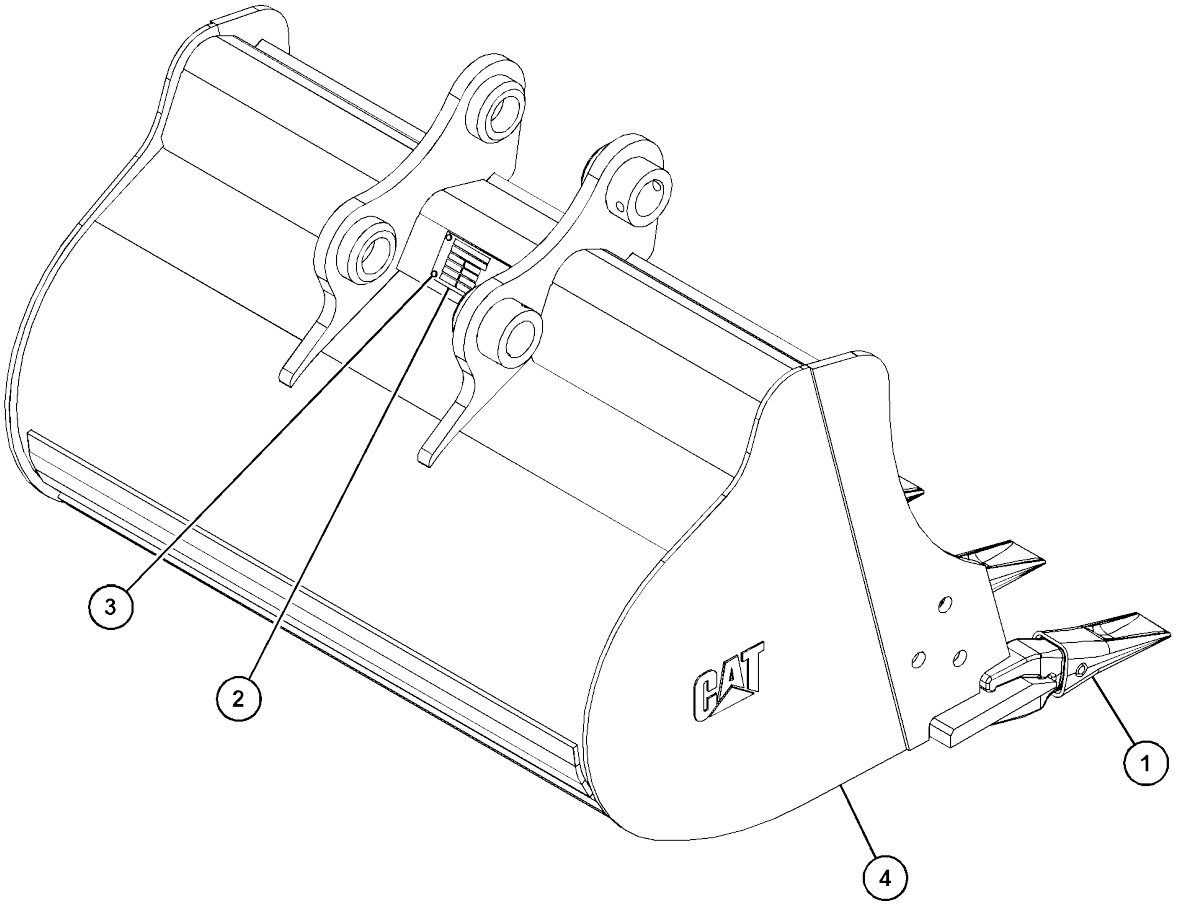


GRAPHIC #1 **<END>** g03403700

# 361-1094 COUPLER AR-QUICK

**AN ATTACHMENT**

**SMCS-6129** **i04503950**

| NOTE | REF NO | GRAPHIC REF | PART NUMBER | QTY | PART NAME 1 2 3 4 5 6 (PRODUCT LEVEL) | SEE PAGE |
|---|---|---|---|---|---|---|
| | 1 | 1 | **248-8832** | 1 | WRENCH | |
| | 2 | 1 | **361-1072** | 2 | PIN | |
| Y | 3 | 1 | *361-1081* | 1 | COUPLER GP-QUICK | 422 |
| | 4 | 1 | **3B-5322** | 2 | PIN-COTTER | |

Y - SEPARATE ILLUSTRATION

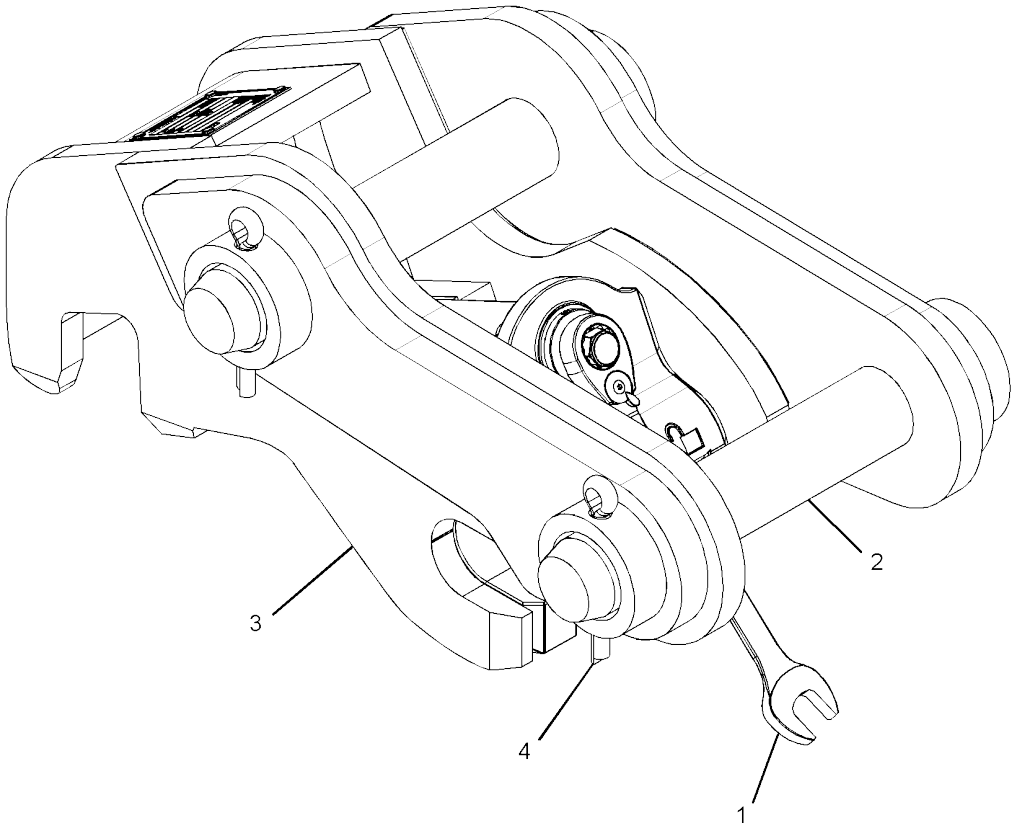


GRAPHIC #1 **<END>** g02705708

# 361-1095 COUPLER AR-QUICK

**FOR USE WITH CONTROL AR-COUPLER, FILM GP**
**PART OF 441-6279 COUPLER AR-QUICK**
**AN ATTACHMENT**

**SMCS-6129** **i04404113**

| NOTE | REF NO | GRAPHIC REF | PART NUMBER | QTY | PART NAME 1 2 3 4 5 6 (PRODUCT LEVEL) | SEE PAGE |
|---|---|---|---|---|---|---|
| | 1 | 1 | **361-1072** | 2 | PIN | |
| Y | 2 | 1 | *361-1090* | 1 | LINES GP-COUPLER | 230 |
| Y | 3 | 1 | *361-1121* | 1 | COUPLER GP-QUICK | 423 |
| | 4 | 1 | **3B-5322** | 2 | PIN-COTTER | |

Y - SEPARATE ILLUSTRATION

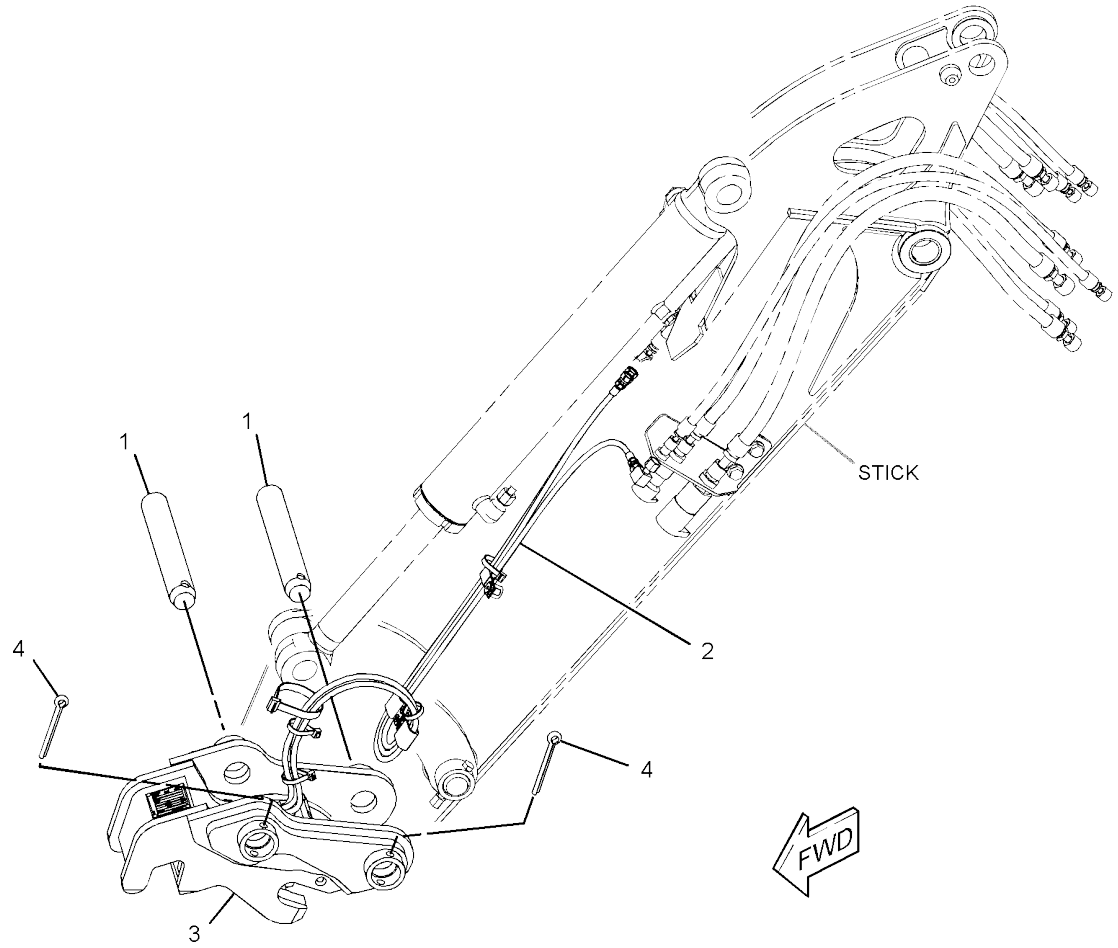


GRAPHIC #1 **<END>** g02919698

# WORK TOOLS

## *441-6279* COUPLER AR-QUICK

**AN ATTACHMENT**

**SMCS-6129** **i05354362**

| NOTE | PART NUMBER | QTY | PART NAME 1 2 3 4 5 6 (PRODUCT LEVEL) | SEE PAGE |
|---|---|---|---|---|
| Y | **361-1095** | 1 | COUPLER AR-QUICK | 420 |

Y - SEPARATE ILLUSTRATION

<END>

# *361-1081* COUPLER GP-QUICK

**PART OF 361-1094 COUPLER AR-QUICK**

**AN ATTACHMENT**

**SMCS-6129** **i05363401**

| NOTE | REF NO | GRAPHIC REF | PART NUMBER | QTY | PART NAME 1 2 3 4 5 6 (PRODUCT LEVEL) | SEE PAGE |
|---|---|---|---|---|---|---|
| | 1 | 1 | **168-8389** | 4 | TACK-FASTENER (METAL) | |
| Y | 2 | 1 | *361-1083* | 1 | LOCK GP-QUICK COUPLER | 424 |
| | 3 | 1 | **361-1088** | 1 | SHAFT | |
| | 4 | 1 | **9H-3771** | 1 | FITTING-GREASE | |
| | 5 | 1 | **361-1210** | 1 | PLATE-IDENTIFICATION (SERIAL NUMBER) | |
| | 6 | 1 | **361-1069** | 1 | RETAINER-SPRING | |
| | 7 | 1 | **361-1082** | 1 | COUPLER AS | |
| | 8 | 1 | **361-1087** | 1 | LOCK GP-MECHANICAL | |

Y - SEPARATE ILLUSTRATION

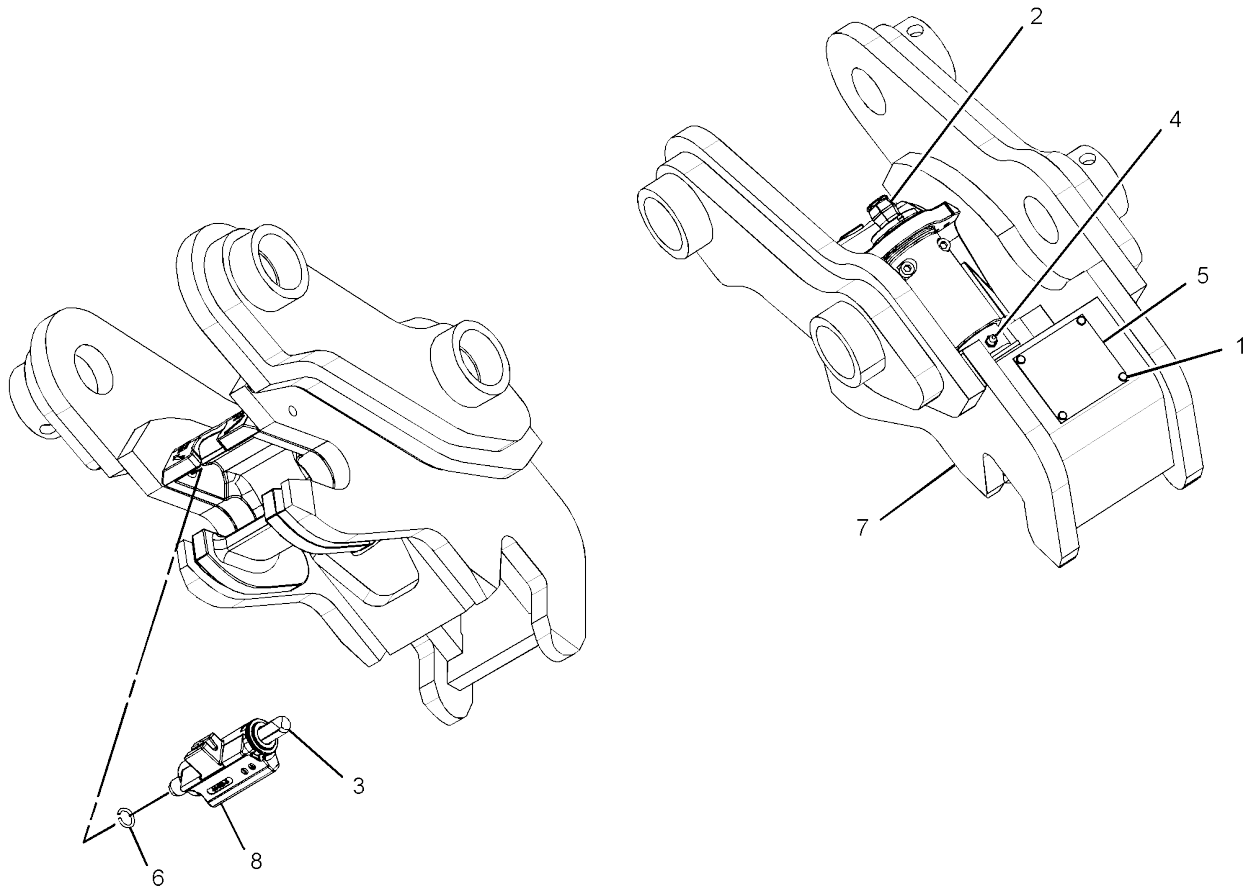


GRAPHIC #1 **<END>** g03403707

# WORK TOOLS

## *361-1121* COUPLER GP-QUICK

**PART OF 361-1095 COUPLER AR-QUICK**
**AN ATTACHMENT**

**SMCS-6129** **i05411073**

| NOTE | REF NO | GRAPHIC REF | PART NUMBER | QTY | PART NAME 1 2 3 4 5 6 (PRODUCT LEVEL) | SEE PAGE |
|---|---|---|---|---|---|---|
| | 1 | 1 | **168-8389** | 4 | TACK-FASTENER (METAL) | |
| Y | 2 | 1 | *361-1123* | 1 | LOCK GP-QUICK COUPLER | 425 |
| | 3 | 1 | **361-1209** | 1 | PLATE-IDENTIFICATION (WORK TOOL) | |
| | 4 | 1 | **9H-3771** | 1 | FITTING-GREASE | |
| | 5 | 1 | **361-1069** | 1 | RETAINER-SPRING | |
| | 6 | 1 | **361-1122** | 1 | COUPLER AS | |
| | 7 | 1 | **361-1157** | 1 | LOCK GP-MECHANICAL | |
| | 8 | 1 | **361-1134** | 1 | SHAFT | |

Y - SEPARATE ILLUSTRATION

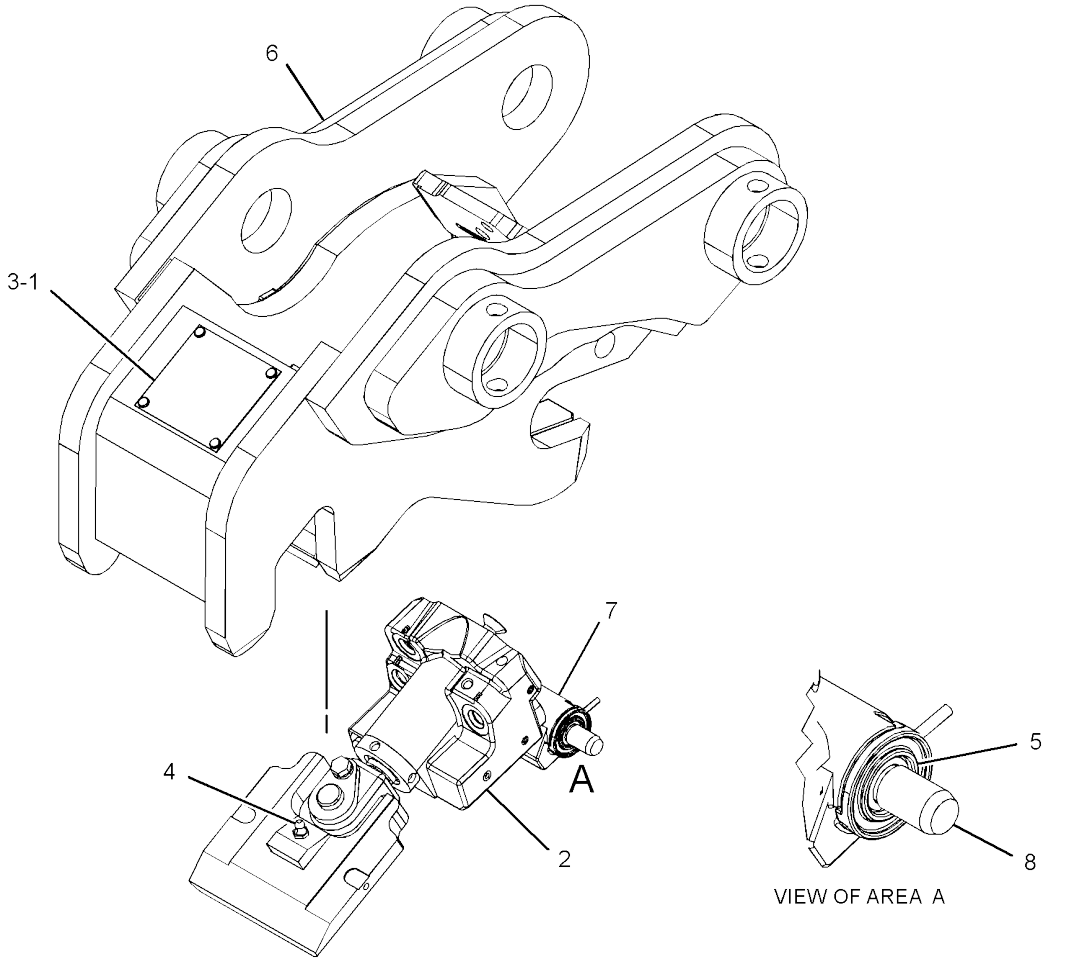


GRAPHIC #1 **<END>** g03418119

# *361-1083* LOCK GP-QUICK COUPLER

**PART OF 361-1081 COUPLER GP-QUICK**
**AN ATTACHMENT**

**SMCS-6129** **i04503953**

| NOTE | REF NO | GRAPHIC REF | PART NUMBER | QTY | PART NAME 1 2 3 4 5 6 (PRODUCT LEVEL) | SEE PAGE |
|---|---|---|---|---|---|---|
| | 1 | 1 | **361-1071** | 1 | BUSHING | |
| | 2 | 1 | **361-1084** | 1 | WEDGE AS | |
| | 3 | 1 | **361-1085** | 1 | SCREW-ADJUSTING | |
| | 4 | 1 | **361-1086** | 1 | COLLAR-SPLIT | |
| | 5 | 1 | **179-9013** | 1 | SEAL-O-RING | |
| | 6 | 1 | **7K-0897** | 2 | WASHER (27.4X44.45X1.47-MM THK) | |
| M | 7 | 1 | **8T-0269** | 2 | BOLT-SOCKET HEAD (M6X1X20-MM) | |

M - METRIC PART

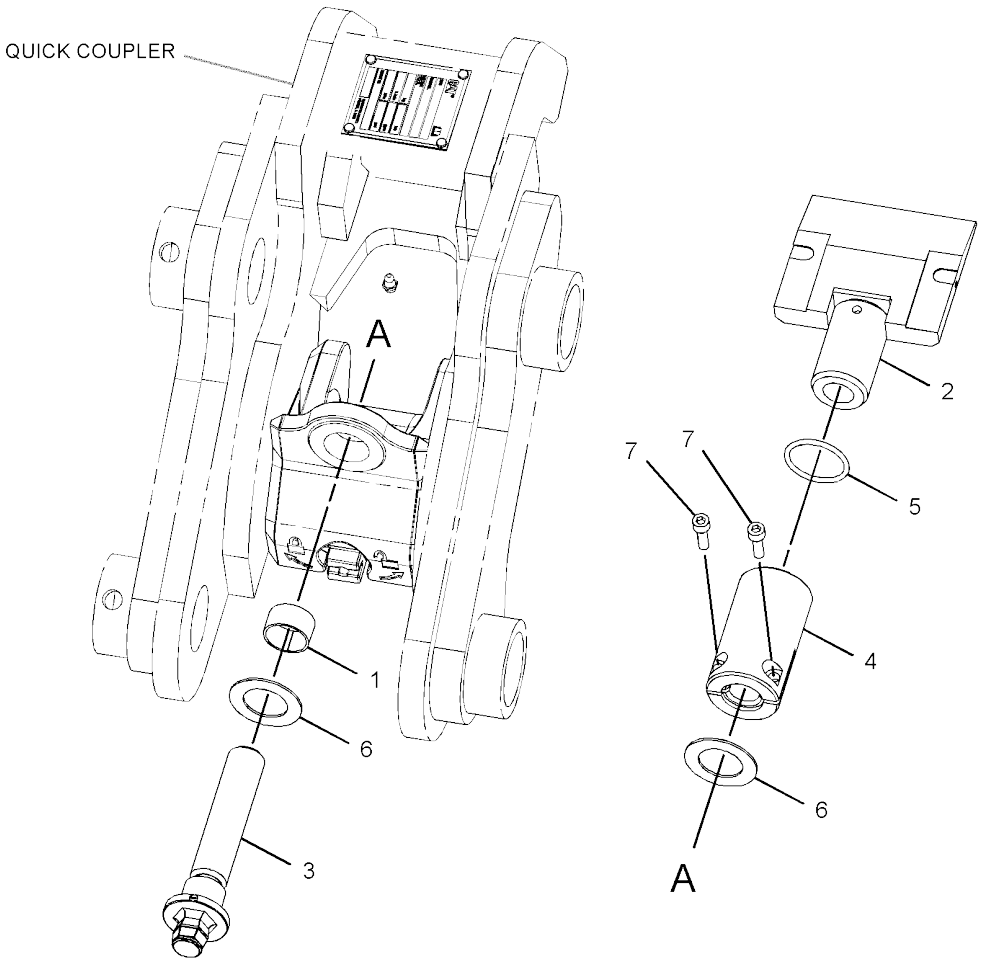


GRAPHIC #1 **<END>** g02706059

# *361-1123* LOCK GP-QUICK COUPLER

**PART OF 361-1121 COUPLER GP-QUICK**
**AN ATTACHMENT**

**SMCS-6129** **i04404135**

| NOTE | REF NO | GRAPHIC REF | PART NUMBER | QTY | PART NAME 1 2 3 4 5 6 (PRODUCT LEVEL) | SEE PAGE |
|---|---|---|---|---|---|---|
| | 1 | 1 | **361-1124** | 1 | WEDGE AS | |
| Y | 2 | 1 | **361-1125** | 1 | CYLINDER GP-HYDRAULIC | 197 |
| | 3 | 1 | **361-1126** | 1 | PIN AS | |
| M | 4 | 1 | **188-9644** | 2 | SCREW-FLAT HEAD (M8X1.25X25-MM) | |
| M | 5 | 1 | **5C-9553** | 1 | BOLT (M6X1X16-MM) | |
| | 6 | 1 | **9X-8256** | 1 | WASHER (6.6X12X2-MM THK) | |

M - METRIC PART
Y - SEPARATE ILLUSTRATION

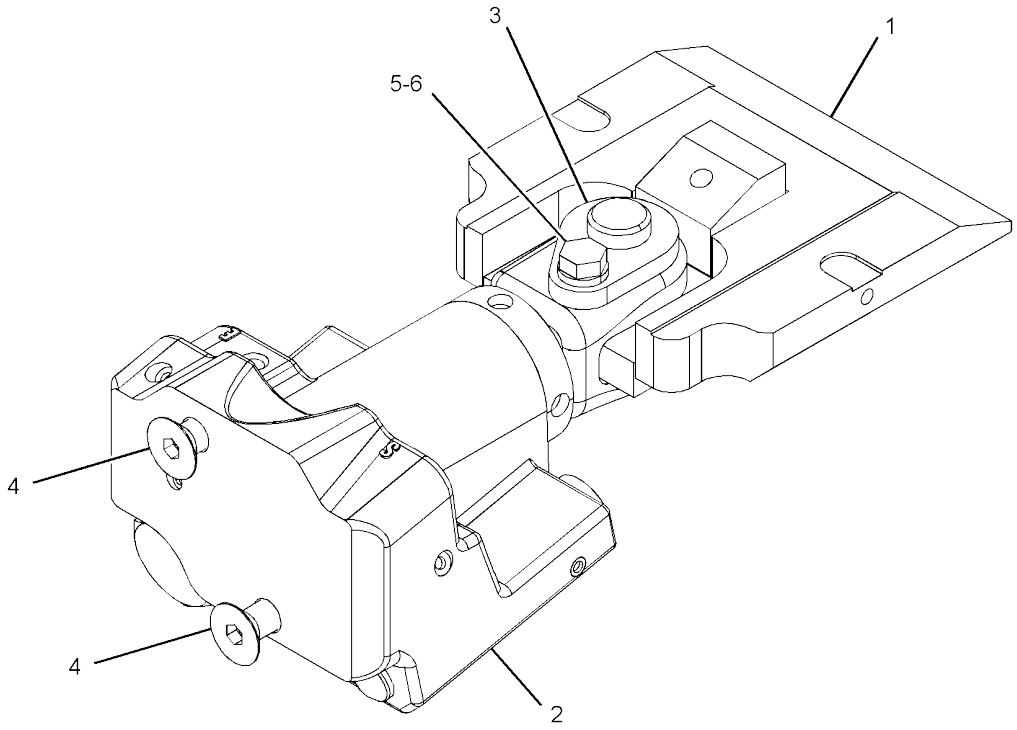


GRAPHIC #1 **<END>** g02913779

# WORK TOOLS

## *154-2638* MOUNTING GP-BUCKET

**AN ATTACHMENT**

**SMCS-6101, 6523** **i02141990**

| NOTE | REF NO | GRAPHIC REF | PART NUMBER | QTY | PART NAME 1 2 3 4 5 6 (PRODUCT LEVEL) | SEE PAGE |
|---|---|---|---|---|---|---|
| | 1 | 1 | **237-5096** | 2 | PIN AS | |
| | 2 | 1 | **095-0868** | 2 | PIN-COTTER | |
| | | | | | | |
| F | | | **3B-8489** | 2 | FITTING-GREASE | |

F - NOT SHOWN

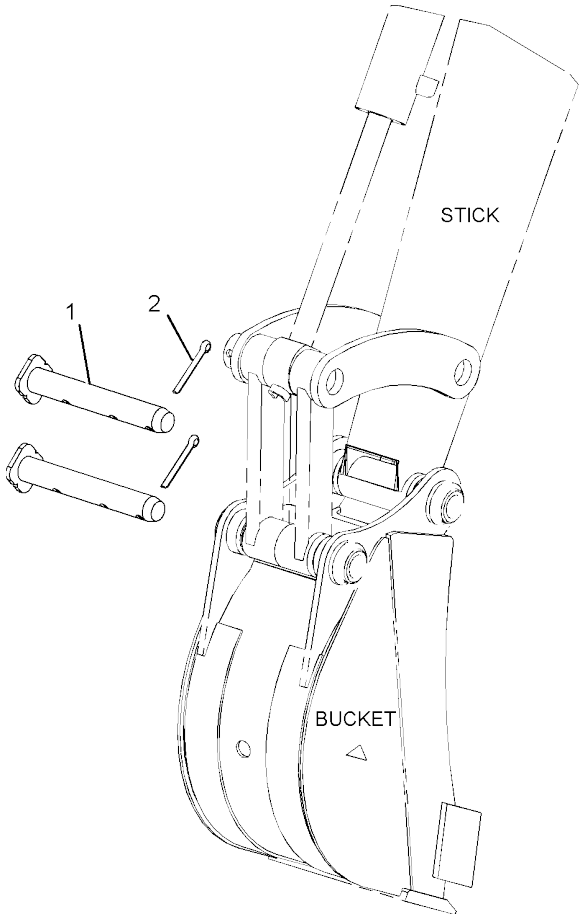


GRAPHIC #1 **<END>** g01088226

# *220-0858* MOUNTING GP-BUCKET

**PART OF 364-1693 MOUNTING GP-BUCKET**
**AN ATTACHMENT**

**SMCS-6101, 6523** **i02141989**

| NOTE | REF NO | GRAPHIC REF | PART NUMBER | QTY | PART NAME 1 2 3 4 5 6 (PRODUCT LEVEL) | SEE PAGE |
|---|---|---|---|---|---|---|
| | 1 | 1 | **228-2856** | 2 | PIN AS | |
| | 2 | 1 | **095-0868** | 2 | PIN-COTTER | |

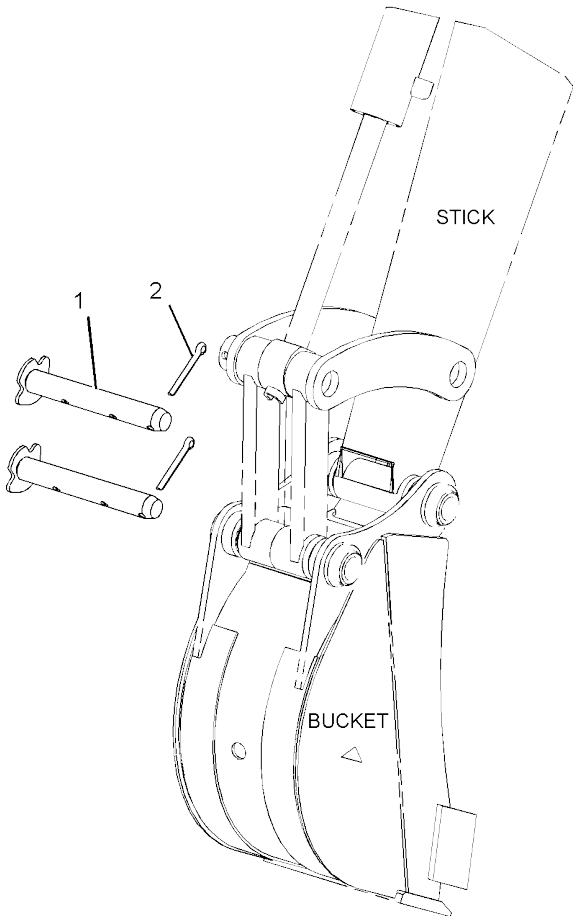


GRAPHIC #1 **<END>** g01087584

# WORK TOOLS

## *364-1693* MOUNTING GP-BUCKET

**AN ATTACHMENT**

**SMCS-6101, 6523** **i04006709**

| NOTE | PART NUMBER | QTY | PART NAME 1 2 3 4 5 6 (PRODUCT LEVEL) | SEE PAGE |
|---|---|---|---|---|
| Y | *220-0858* | 1 | MOUNTING GP-BUCKET | 427 |

Y - SEPARATE ILLUSTRATION

<END>

# WORK TOOLS

## 309-1917 THUMB GP

**AN ATTACHMENT**

**SMCS-6547** **i05353487**

| NOTE | REF NO | GRAPHIC REF | PART NUMBER | QTY | PART NAME 1 2 3 4 5 6 (PRODUCT LEVEL) | SEE PAGE |
|---|---|---|---|---|---|---|
| Y | 1 | 1 | **268-8224** | 1 | CYLINDER GP-HYDRAULIC | 196 |
| M | 2 | 1 | **8T-4172** | 1 | BOLT (M10X1.5X80-MM) | |
| M | 3 | 1 | **8T-4133** | 2 | NUT (M10X1.5-THD) | |
| | 4 | 1 | **309-6024** | 1 | FRAME AS | |
| | 4A | 1 | **204-4961** | 2 | BUSHING | |
| | 4B | 1 | **161-4130** | 2 | PLATE-IDENTIFICATION (CAT) | |
| Y | 5 | 1 | *359-6059* | 1 | LINES GP-CONNECTING (RH) | 228 |
| Y | 6 | 1 | *369-3693* | 1 | LINES GP-CONNECTING (LH) | 229 |
| | 7 | 1 | **162-7120** | 4 | PIN | |
| | 8 | 1 | **204-4976** | 3 | SPACER (42X90X5-MM THK) | |
| | 9 | 1 | **267-9485** | 2 | PIN | |
| | 10 | 1 | **280-8984** | 1 | PIN | |
| | 11 | 1 | **312-5694** | 1 | SETSCREW (1/4-20X0.25-IN) | |
| | 12 | 1 | **3B-8489** | 2 | FITTING-GREASE | |
| | | | | | | |
| F | | | **294-0973** | 1 | TOOL | |

F - NOT SHOWN
M - METRIC PART
Y - SEPARATE ILLUSTRATION

*309-1917* **THUMB GP (*contd.*)** **i05353487**

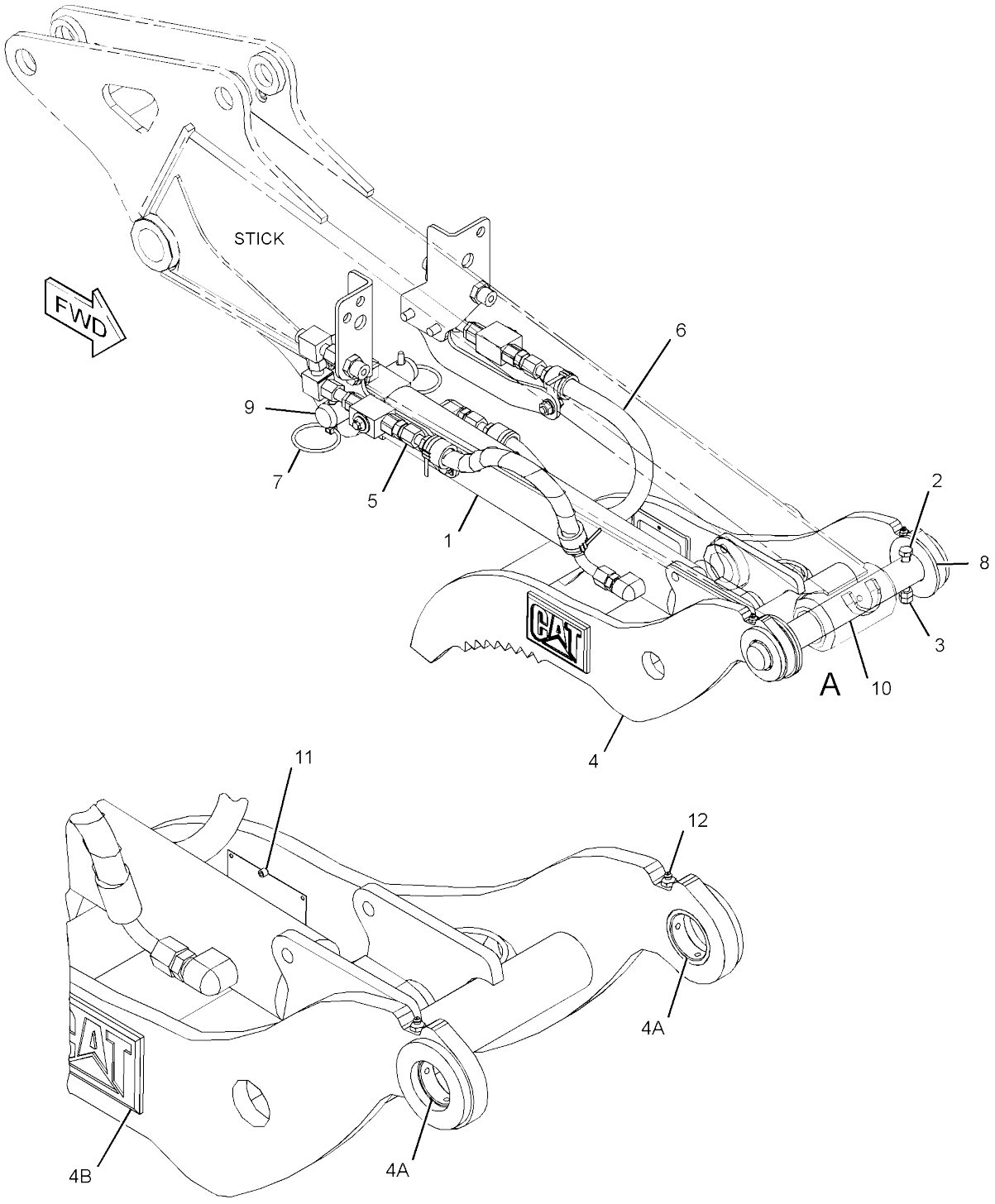


VIEW OF AREA A
(PARTS REMOVED FOR CLARITY)

GRAPHIC #1 **<END>** g03400793

# WORK TOOLS

## 309-1938 THUMB GP

**AN ATTACHMENT**

**SMCS-6547** **i05353488**

| NOTE | REF NO | GRAPHIC REF | PART NUMBER | QTY | PART NAME 1 2 3 4 5 6 (PRODUCT LEVEL) | SEE PAGE |
|---|---|---|---|---|---|---|
| | 1 | 1 | **204-4976** | 3 | SPACER (42X90X5-MM THK) | |
| | 2 | 1 | **267-9485** | 2 | PIN | |
| Y | 3 | 1 | **268-8224** | 1 | CYLINDER GP-HYDRAULIC | 196 |
| M | 4 | 1 | **8T-4172** | 1 | BOLT (M10X1.5X80-MM) | |
| | 5 | 1 | **280-8984** | 1 | PIN | |
| M | 6 | 1 | **8T-4133** | 2 | NUT (M10X1.5-THD) | |
| | 7 | 1 | **309-6778** | 1 | FRAME AS | |
| | 7A | 1 | **204-4961** | 2 | BUSHING | |
| Y | 8 | 1 | *359-6059* | 1 | LINES GP-CONNECTING (RH) | 228 |
| Y | 9 | 1 | *369-3693* | 1 | LINES GP-CONNECTING (LH) | 229 |
| | 10 | 1 | **162-7120** | 4 | PIN | |
| | 11 | 1 | **312-5694** | 1 | SETSCREW (1/4-20X0.25-IN) | |
| | 12 | 1 | **3B-8489** | 2 | FITTING-GREASE | |
| | | | | | | |
| F | | | **294-0973** | 1 | TOOL | |

F - NOT SHOWN
M - METRIC PART
Y - SEPARATE ILLUSTRATION

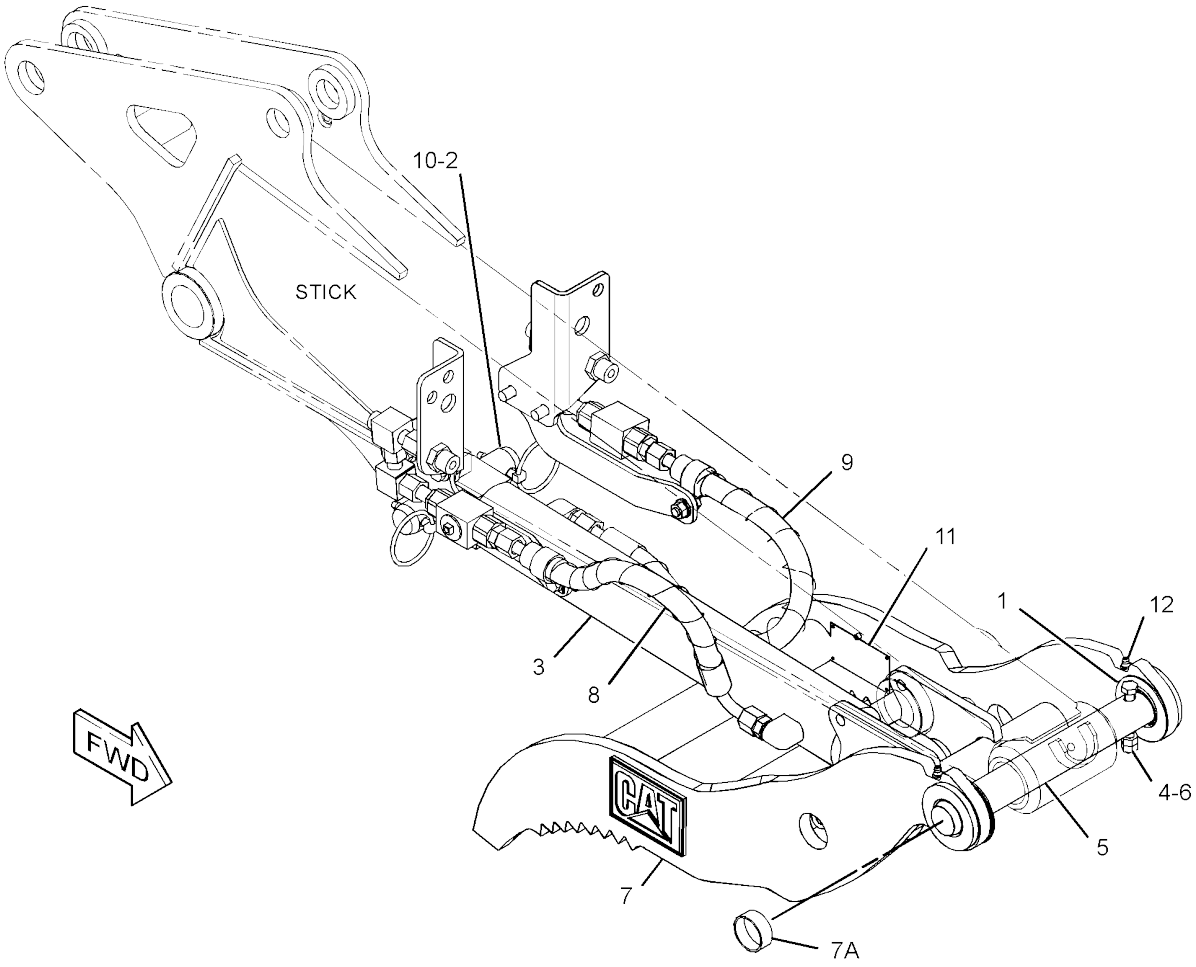


GRAPHIC #1 **<END>** g03407157

# OPERATOR STATION

## *282-9307* AIR CONDITIONER & MOUNTING GP

**PART OF 377-5876 AIR CONDITIONER GP**
**AN ATTACHMENT**

**SMCS-7320** **i05437185**

| NOTE | REF NO | GRAPHIC REF | PART NUMBER | QTY | PART NAME 1 2 3 4 5 6 (PRODUCT LEVEL) | SEE PAGE |
|---|---|---|---|---|---|---|
| | 1 | 1 | **3S-2093** | 1 | STRAP-CABLE | |
| | 2 | 1 | **258-6257** | 1 | TUBE | |
| Y | 3 | 1 | **273-1445** | 1 | AIR CONDITIONER GP | 433 |
| | 4 | 1 | **278-7613** | 1 | PANEL AS-CONTROL (BLOWER, TEMPERATURE) | |
| | 5 | 1 | **278-7614** | 1 | CABLE AS | |
| | 6 | 1 | **278-7615** | 1 | CABLE AS | |
| | 7 | 1 | **278-8557** | 1 | HARNESS AS-HEATER & AIR COND (CAB) | |
| | 8 | 1 | **301-6875** | 6 | SPACER (10X16X9.5-MM THK) | |
| | 9 | 1 | **095-0912** | 1 | CLIP | |
| | 10 | 1 | **7X-0579** | 6 | WASHER-HARD (8.8X25.5X2-MM THK) | |
| M | 11 | 1 | **7Y-3173** | 2 | SCREW-BUTTON HEAD (M4X0.7X12-MM) | |
| M | 12 | 1 | **8T-4171** | 1 | BOLT (M6X1X12-MM) | |
| M | 13 | 1 | **8T-4908** | 6 | BOLT (M8X1.25X25-MM) | |
| | 14 | 1 | **9X-8256** | 1 | WASHER (6.6X12X2-MM THK) | |

M - METRIC PART
Y - SEPARATE ILLUSTRATION

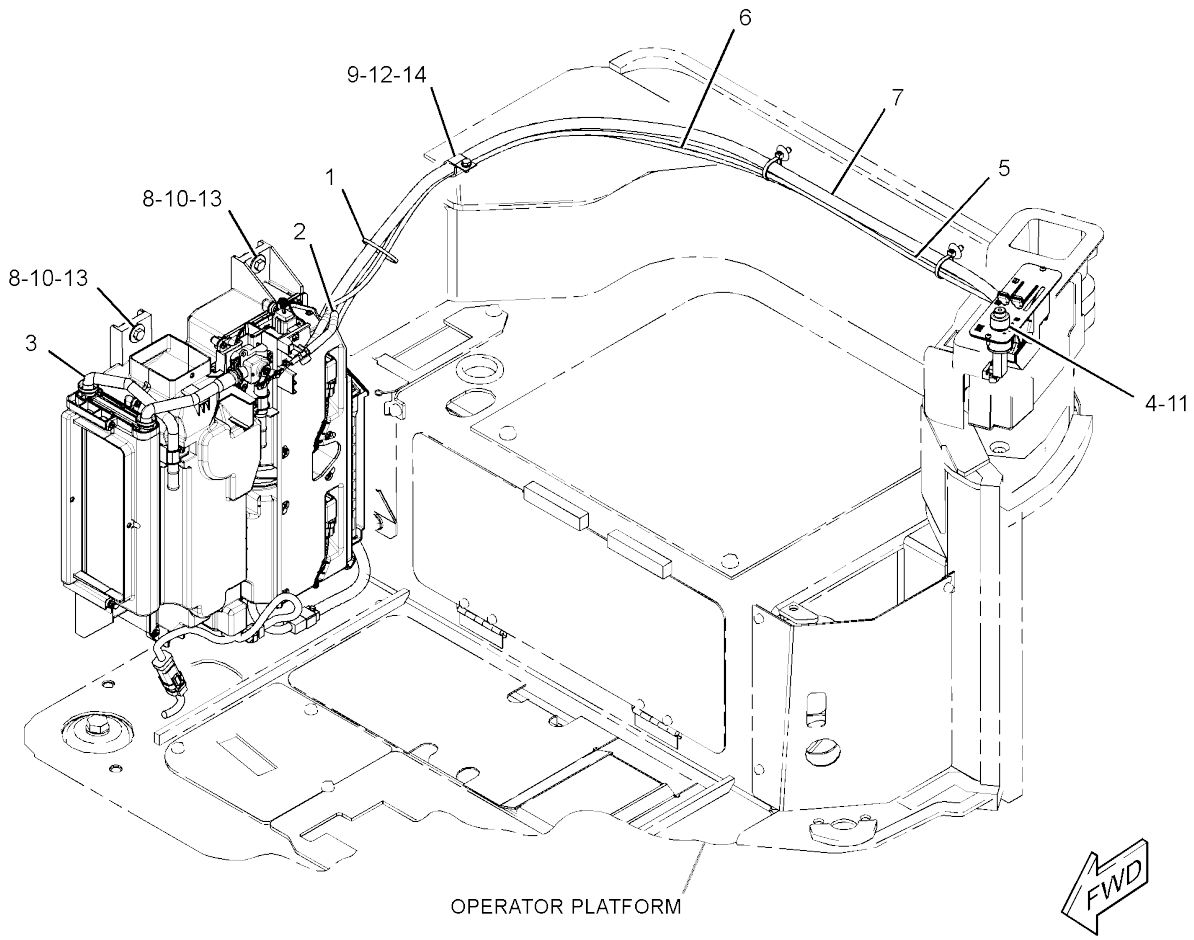


GRAPHIC #1 **<END>** g02168853

# 273-1445 AIR CONDITIONER GP

**PART OF 282-9307 AIR CONDITIONER & MOUNTING GP**

**AN ATTACHMENT**

**SMCS-7320** **i03967576**

| NOTE | REF NO | GRAPHIC REF | PART NUMBER | QTY | PART NAME 1 2 3 4 5 6 (PRODUCT LEVEL) | SEE PAGE |
|---|---|---|---|---|---|---|
| | 1 | 1 | **296-2602** | 1 | MOTOR AS-BLOWER | |
| | 3 | 1 | **296-2604** | 1 | FAN | |
| | 6 | 1 | **296-2605** | 1 | CORE AS-HEATER | |
| | 7 | 1 | **296-2620** | 1 | RELAY AS (BLOWER MOTOR) | |
| | 9 | 1 | **296-2607** | 1 | RESISTOR | |
| | 10 | 1 | **296-2608** | 1 | DOOR AS | |
| | 11 | 1 | **296-2621** | 1 | HARNESS AS-HEATER & AIR COND | |
| | 13 | 1 | **296-2611** | 1 | LEVER | |
| | 14 | 1 | **296-2612** | 2 | CLAMP | |
| | 15 | 1 | **185-8300** | 41 | SCREW-TAPPING | |
| | 16 | 1 | **296-2615** | 2 | NUT-FLANGE (M5X0.8-THD) | |
| | 17 | 1 | **296-2616** | 2 | WASHER | |
| | 18 | 1 | **296-2617** | 2 | SEAL | |
| | 19 | 1 | **296-2614** | 2 | LOCK | |
| | 21 | 1 | **336-9693** | 1 | CASE | |
| | 22 | 1 | **336-9696** | 1 | CASE-AIR CONDITIONER | |
| | 23 | 1 | **336-9697** | 1 | CASE-AIR CONDITIONER | |
| | | | | | | |
| F | | | **296-2603** | 1 | FAN | |
| F | | | **296-2618** | 1 | COIL GP-EVAPORATOR | |
| | | | **296-2622** | 1 | VALVE | |
| F | | | **296-2619** | 1 | SENSOR-TEMPERATURE (REFRIGERANT) | |
| F | | | **298-4948** | 2 | RELAY AS (BLOWER FAN) | |
| F | | | **284-5686** | 1 | FILTER ELEMENT-CAB AIR | |
| F | | | **245-7819** | 2 | CLIP | |

F - NOT SHOWN

*273-1445* **AIR CONDITIONER GP (*contd.*)** **i03967576**

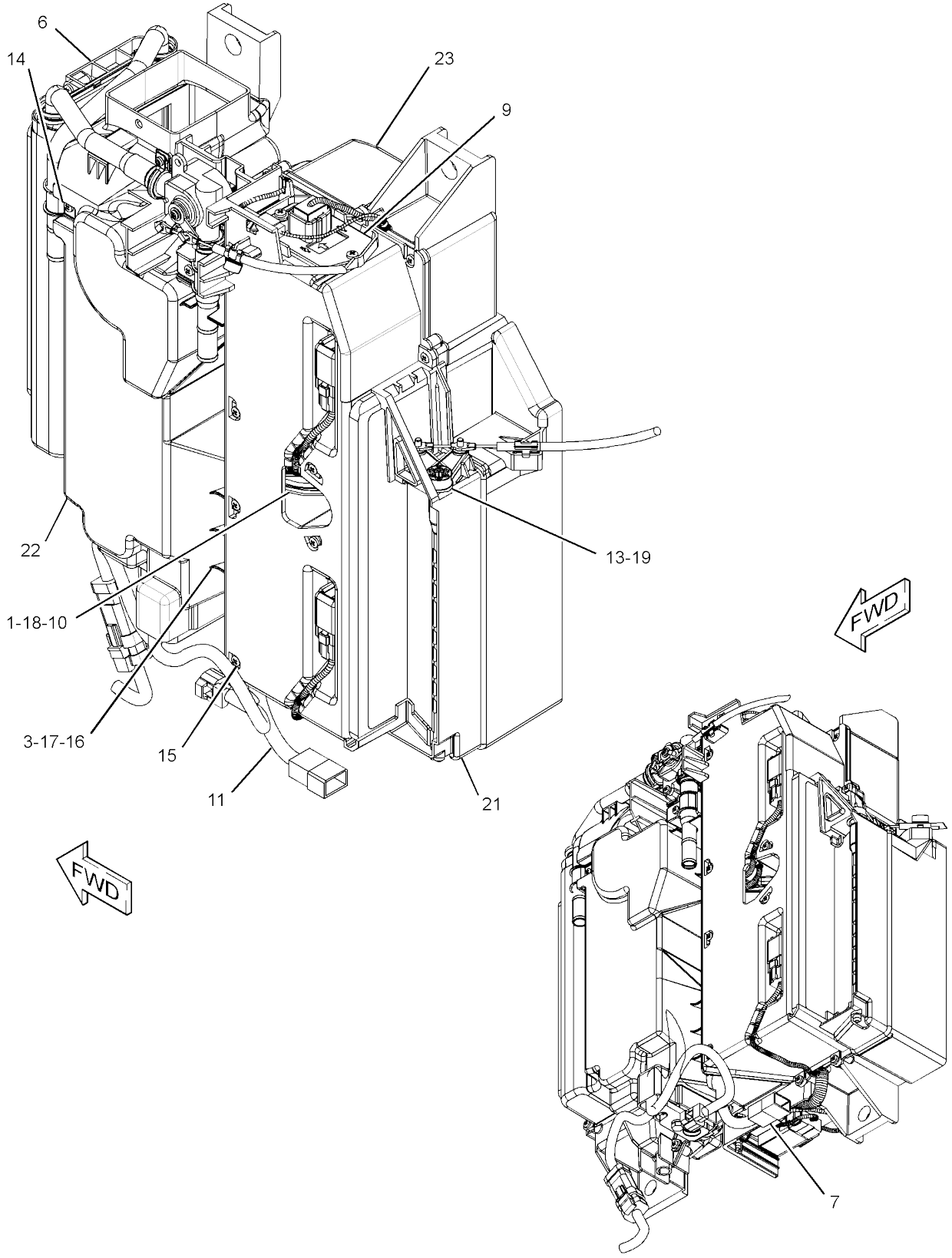


GRAPHIC #1 **<END>** g01945185

# OPERATOR STATION

## *377-5876* AIR CONDITIONER GP—WITH AIR DUCT

**PART OF 376-6692, 383-5927 CAB AR**

**AN ATTACHMENT**

**SMCS-7320** **i04565446**

| NOTE | PART NUMBER | QTY | PART NAME 1 2 3 4 5 6 (PRODUCT LEVEL) | SEE PAGE |
|---|---|---|---|---|
| Y | *282-9307* | 1 | AIR CONDITIONER & MOUNTING GP | 432 |
| Y | *377-5865* | 1 | DUCT GP-CAB AIR | 488 |

Y - SEPARATE ILLUSTRATION

<END>

## *376-6692* CAB AR—WITH AIR CONDITIONER

**AN ATTACHMENT**

**SMCS-7301** **i05393129**

| NOTE | PART NUMBER | QTY | PART NAME 1 2 3 4 5 6 (PRODUCT LEVEL) | SEE PAGE |
|---|---|---|---|---|
| Y | *377-5876* | 1 | AIR CONDITIONER GP (WITH AIR DUCT) | 435 |
| Y | *370-5342* | 1 | BATTERY & WIRING GP (CAB) | 69 |
| Y | *377-5107* | 1 | CAB GP | 438 |
| Y | *378-1272* | 1 | COMPRESSOR GP-REFRIGERANT | 463 |
| Y | *380-6389* | 1 | CONDENSER & MTG GP-REFRIGERANT | 464 |
| Y | *367-0950* | 1 | COVER GP-CAB (TOP) | 485 |
| Y | *380-6393* | 1 | GUARD GP-FAN | 19 |
| Y | *379-4711* | 1 | LINES GP-AIR CONDITIONER | 499 |
| Y | *380-6388* | 1 | MOUNTING GP-ENGINE | 24 |
| Y | *377-9714* | 1 | PLATE & FILM GP (CAB) | 556 |
| Y | *379-3625* | 1 | PLATFORM GP-OPERATOR (CAB) | 521 |
| Y | *421-2718* | 1 | VALVE & MTG GP-PILOT (CAB) | 309 |
| | | | S/N: RKY1466-UP | |
| Y | *379-3626* | 1 | WASHER GP-WINDOW | 530 |
| Y | *370-5349* | 1 | WIRING GP-CONSOLE (CAB) | 99 |
| Y | *370-5348* | 1 | WIRING GP-ENGINE (REFRIGERANT COMPRESSOR) | 113 |
| | **377-5934** | 1 | FLOOR MAT | |
| | **384-5671** | 1 | FLOOR MAT | |

Y - SEPARATE ILLUSTRATION

<END>

# OPERATOR STATION

## *376-6696* CAB AR—WITH HEATER

**AN ATTACHMENT**

**SMCS-7301** **i05393113**

| NOTE | PART NUMBER | QTY | PART NAME 1 2 3 4 5 6 (PRODUCT LEVEL) | SEE PAGE |
|---|---|---|---|---|
| Y | *370-5342* | 1 | BATTERY & WIRING GP (CAB) | 69 |
| Y | *377-5107* | 1 | CAB GP | 438 |
| Y | *367-0950* | 1 | COVER GP-CAB (TOP) | 485 |
| Y | *377-9715* | 1 | FILM GP (CAB HEATER) | 539 |
| Y | *380-6393* | 1 | GUARD GP-FAN | 19 |
| Y | *378-1293* | 1 | HEATER AR-CAB | 494 |
| Y | *379-4712* | 1 | LINES GP-HEATER | 503 |
| Y | *380-6385* | 1 | MOUNTING GP-ENGINE | 23 |
| Y | *379-3625* | 1 | PLATFORM GP-OPERATOR (CAB) | 521 |
| Y | *421-2718* | 1 | VALVE & MTG GP-PILOT (CAB) | 309 |
| | | | S/N: RKY1466-UP | |
| Y | *379-3626* | 1 | WASHER GP-WINDOW | 530 |
| Y | *370-5349* | 1 | WIRING GP-CONSOLE (CAB) | 99 |
| | **377-5934** | 1 | FLOOR MAT | |
| | **384-5671** | 1 | FLOOR MAT | |

Y - SEPARATE ILLUSTRATION

<END>

## *383-5927* CAB AR—WITH AIR CONDITIONER

**AN ATTACHMENT**

**SMCS-7301** **i05393127**

| NOTE | PART NUMBER | QTY | PART NAME 1 2 3 4 5 6 (PRODUCT LEVEL) | SEE PAGE |
|---|---|---|---|---|
| Y | *377-5876* | 1 | AIR CONDITIONER GP (WITH AIR DUCT) | 435 |
| Y | *370-5342* | 1 | BATTERY & WIRING GP (CAB) | 69 |
| Y | *389-8690* | 1 | CAB GP | 446 |
| Y | *378-1272* | 1 | COMPRESSOR GP-REFRIGERANT | 463 |
| Y | *380-6389* | 1 | CONDENSER & MTG GP-REFRIGERANT | 464 |
| Y | *367-0950* | 1 | COVER GP-CAB (TOP) | 485 |
| Y | *389-8776* | 1 | FILM GP (FRONT GUARD) | 543 |
| Y | *380-6393* | 1 | GUARD GP-FAN | 19 |
| Y | *379-4711* | 1 | LINES GP-AIR CONDITIONER | 499 |
| Y | *334-1186* | 1 | MIRROR GP-REAR VIEW (CAB, WITH FRONT GUARD) | 510 |
| Y | *380-6388* | 1 | MOUNTING GP-ENGINE | 24 |
| Y | *377-9714* | 1 | PLATE & FILM GP (CAB) | 556 |
| Y | *379-3625* | 1 | PLATFORM GP-OPERATOR (CAB) | 521 |
| Y | *421-2718* | 1 | VALVE & MTG GP-PILOT | 309 |
| | | | S/N: RKY1466-UP | |
| Y | *379-3626* | 1 | WASHER GP-WINDOW | 530 |
| Y | *370-5349* | 1 | WIRING GP-CONSOLE (CAB) | 99 |
| Y | *370-5348* | 1 | WIRING GP-ENGINE (REFRIGERANT COMPRESSOR) | 113 |
| | **377-5934** | 1 | FLOOR MAT | |
| | **384-5671** | 1 | FLOOR MAT | |

Y - SEPARATE ILLUSTRATION

<END>

# OPERATOR STATION

## *383-5928* CAB AR–WITH HEATER

**AN ATTACHMENT**

**SMCS-7301** **i05393134**

| NOTE | PART NUMBER | QTY | PART NAME 1 2 3 4 5 6 (PRODUCT LEVEL) | SEE PAGE |
|---|---|---|---|---|
| Y | *370-5342* | 1 | BATTERY & WIRING GP (CAB) | 69 |
| Y | *389-8690* | 1 | CAB GP | 446 |
| Y | *367-0950* | 1 | COVER GP-CAB (TOP) | 485 |
| Y | *377-9715* | 1 | FILM GP (CAB HEATER) | 539 |
| Y | *389-8776* | 1 | FILM GP (FRONT GUARD) | 543 |
| Y | *380-6393* | 1 | GUARD GP-FAN | 19 |
| Y | *378-1293* | 1 | HEATER AR-CAB | 494 |
| Y | *379-4712* | 1 | LINES GP-HEATER | 503 |
| Y | *334-1186* | 1 | MIRROR GP-REAR VIEW (CAB, WITH FRONT GUARD) | 510 |
| Y | *380-6385* | 1 | MOUNTING GP-ENGINE | 23 |
| Y | *379-3625* | 1 | PLATFORM GP-OPERATOR (CAB) | 521 |
| Y | *421-2718* | 1 | VALVE & MTG GP-PILOT | 309 |
| | | | S/N: RKY1466-UP | |
| Y | *379-3626* | 1 | WASHER GP-WINDOW | 530 |
| Y | *370-5349* | 1 | WIRING GP-CONSOLE (CAB) | 99 |
| | **377-5934** | 1 | FLOOR MAT | |
| | **384-5671** | 1 | FLOOR MAT | |

Y - SEPARATE ILLUSTRATION

<END>

# OPERATOR STATION

## *377-5107* CAB GP

**S/N: RKY1-1048**
**PART OF 376-6692, 376-6696 CAB AR**
**AN ATTACHMENT**

**SMCS-7301** **i04637990**

| NOTE | REF NO | GRAPHIC REF | PART NUMBER | QTY | PART NAME 1 2 3 4 5 6 (PRODUCT LEVEL) | SEE PAGE |
|---|---|---|---|---|---|---|
| | 1 | 1 | **178-7539** | 1 | RECEPTACLE AS (POWER SUPPLY) | |
| | 2 | 1 | **276-9997** | 1 | SEAL | |
| | 3 | 1 | **282-9679** | 5 | SEAL | |
| | 4 | 1 | **283-7333** | 1 | INSULATION | |
| | 5 | 1 | **283-7365** | 1 | INSULATION | |
| Y | 6 | 1 | **377-5108** | 1 | CAB GP | 444 |
| | 7 | 1 | **379-1946** | 1 | COVER | |
| | 8 | 1 | **379-2026** | 1 | HOLDER | |
| | 9 | 1 | **379-2027** | 1 | BRACKET AS | |
| M | | 1 | **6V-9632** | 2 | NUT-WELD (M6X1-THD) | |
| M | | 1 | **9X-2032** | 2 | NUT-WELD (M4X0.7-THD) | |
| | | 1 | **379-2028** | 1 | BRACKET | |
| | 10 | 1 | **387-4695** | 1 | INSULATION | |
| M | 11 | 1 | **8T-4176** | 3 | BOLT (M12X1.75X90-MM) | |
| M | 12 | 1 | **8T-4199** | 2 | BOLT (M8X1.25X12-MM) | |
| M | 13 | 1 | **8T-4200** | 2 | BOLT (M8X1.25X16-MM) | |
| | 14 | 1 | **8T-4223** | 12 | WASHER-HARD (13.5X25.5X3-MM THK) | |
| | 15 | 1 | **8T-4224** | 4 | WASHER-HARD (8.8X16X2-MM THK) | |
| M | 16 | 1 | **8T-4956** | 9 | BOLT (M12X1.75X35-MM) | |
| M | 17 | 1 | **9X-2042** | 2 | SCREW-TRUSS HEAD (M6X1X12-MM) | |
| E | 18 | 1 | **7X-7877** | | STRIP-EDGING (5-CM EACH) | |

E - ORDER BY THE CENTIMETER
M - METRIC PART
Y - SEPARATE ILLUSTRATION

*377-5107* **CAB GP** (*contd.*) **i04637990**

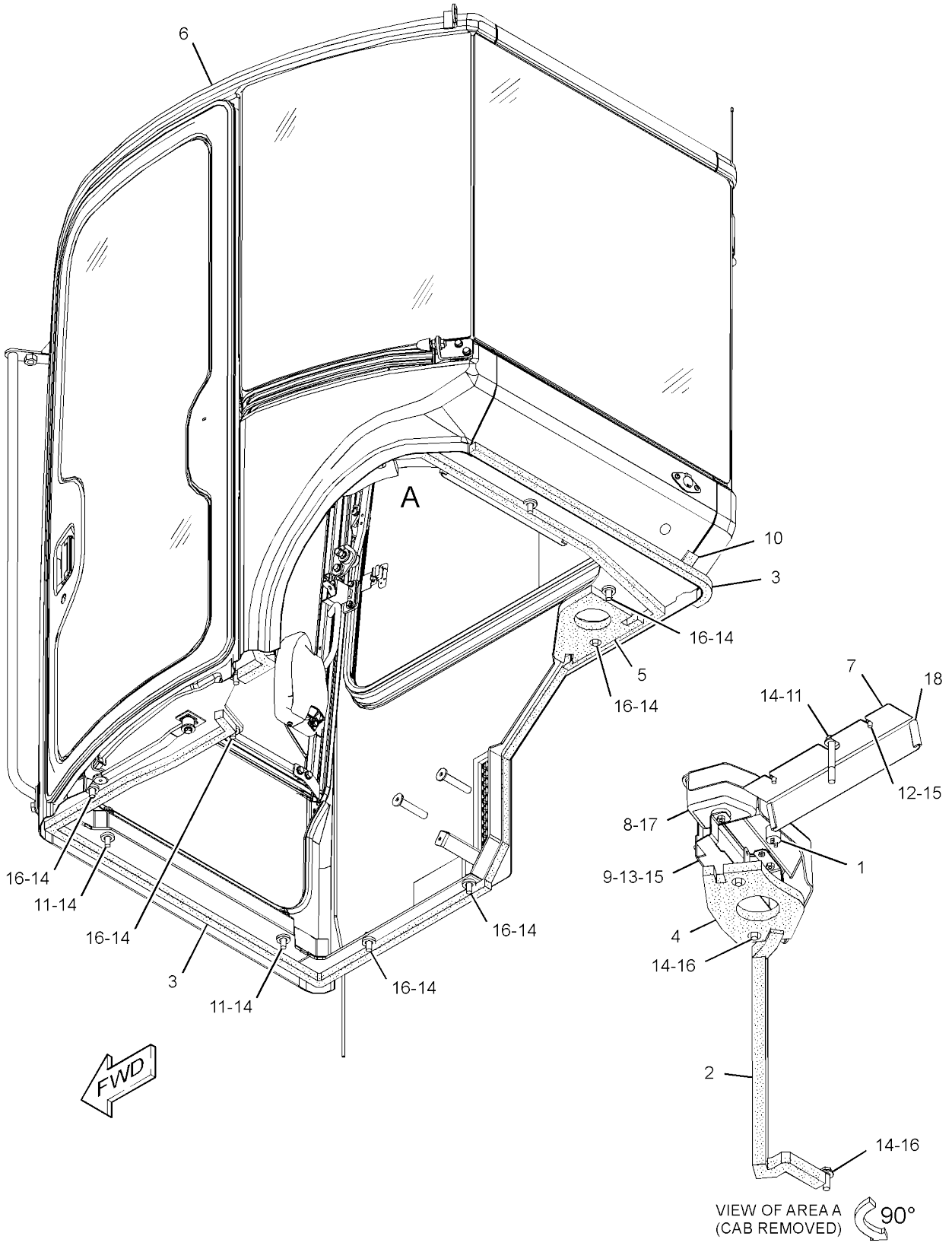


GRAPHIC #1 **<END>** g02794908

# OPERATOR STATION

## *377-5107* CAB GP

**S/N: RKY1049-1194**
**PART OF 376-6692, 376-6696 CAB AR**
**AN ATTACHMENT**

**SMCS-7301** **i05355900**

| NOTE | REF NO | GRAPHIC REF | PART NUMBER | QTY | PART NAME 1 2 3 4 5 6 (PRODUCT LEVEL) | SEE PAGE |
|---|---|---|---|---|---|---|
| | 1 | 1 | **178-7539** | 1 | RECEPTACLE AS (POWER SUPPLY) | |
| | 2 | 1 | **276-9997** | 1 | SEAL | |
| | 3 | 1 | **282-9679** | 5 | SEAL | |
| | 4 | 1 | **283-7333** | 1 | INSULATION | |
| | 5 | 1 | **283-7365** | 1 | INSULATION | |
| CY | 6 | 1 | **415-6803** | 1 | CAB GP | 451 |
| | 7 | 1 | **379-1946** | 1 | COVER | |
| | 8 | 1 | **379-2026** | 1 | HOLDER | |
| | 9 | 1 | **379-2027** | 1 | BRACKET AS | |
| M | | 1 | **6V-9632** | 2 | NUT-WELD (M6X1-THD) | |
| M | | 1 | **9X-2032** | 2 | NUT-WELD (M4X0.7-THD) | |
| | | 1 | **379-2028** | 1 | BRACKET | |
| | 10 | 1 | **387-4695** | 1 | INSULATION | |
| M | 11 | 1 | **8T-4176** | 3 | BOLT (M12X1.75X90-MM) | |
| M | 12 | 1 | **8T-4199** | 2 | BOLT (M8X1.25X12-MM) | |
| M | 13 | 1 | **8T-4200** | 2 | BOLT (M8X1.25X16-MM) | |
| | 14 | 1 | **8T-4223** | 12 | WASHER-HARD (13.5X25.5X3-MM THK) | |
| | 15 | 1 | **8T-4224** | 4 | WASHER-HARD (8.8X16X2-MM THK) | |
| M | 16 | 1 | **8T-4956** | 9 | BOLT (M12X1.75X35-MM) | |
| M | 17 | 1 | **9X-2042** | 2 | SCREW-TRUSS HEAD (M6X1X12-MM) | |
| E | 18 | 1 | **7X-7877** | | STRIP-EDGE (5-CM EACH) | |

C - CHANGE FROM PREVIOUS TYPE
E - ORDER BY THE CENTIMETER
M - METRIC PART
Y - SEPARATE ILLUSTRATION

*377-5107* **CAB GP** (*contd.*) **i05355900**

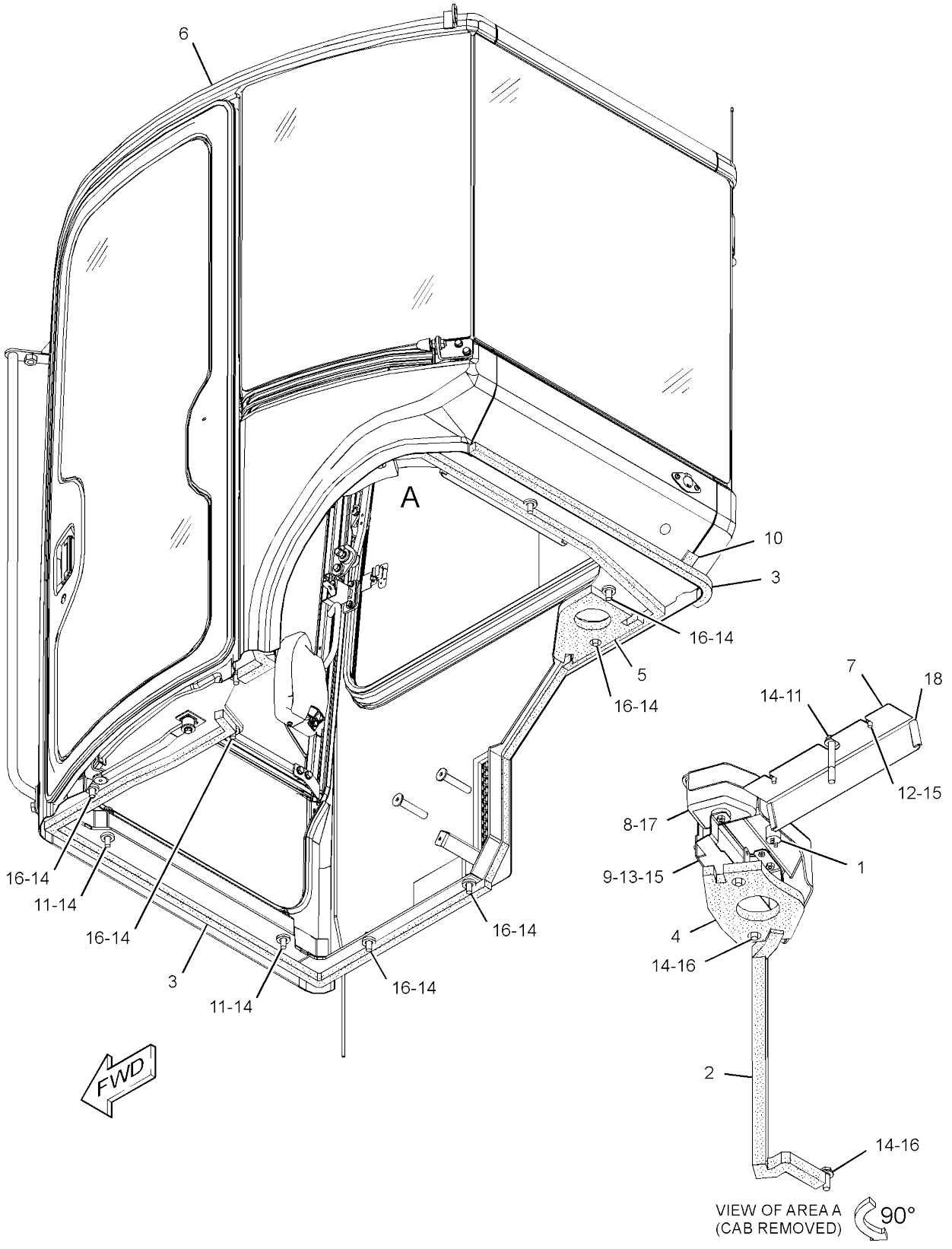


GRAPHIC #1 **<END>** g02794908

# OPERATOR STATION

## *377-5107* CAB GP

**S/N: RKY1195-UP**
**PART OF 376-6692, 376-6696 CAB AR**
**AN ATTACHMENT**

**SMCS-7301** **i05378256**

| NOTE | REF NO | GRAPHIC REF | PART NUMBER | QTY | PART NAME 1 2 3 4 5 6 (PRODUCT LEVEL) | SEE PAGE |
|---|---|---|---|---|---|---|
| | 1 | 1 | **178-7539** | 1 | RECEPTACLE AS (POWER SUPPLY) | |
| | 2 | 1 | **276-9997** | 1 | SEAL | |
| | 3 | 1 | **282-9679** | 5 | SEAL | |
| | 4 | 1 | **283-7333** | 1 | INSULATION | |
| | 5 | 1 | **283-7365** | 1 | INSULATION | |
| CY | 6 | 1 | **419-1237** | 1 | CAB GP | 458 |
| | 7 | 1 | **379-1946** | 1 | COVER | |
| | 8 | 1 | **379-2026** | 1 | HOLDER | |
| | 9 | 1 | **379-2027** | 1 | BRACKET AS | |
| M | | 1 | **6V-9632** | 2 | NUT-WELD (M6X1-THD) | |
| M | | 1 | **9X-2032** | 2 | NUT-WELD (M4X0.7-THD) | |
| | | 1 | **379-2028** | 1 | BRACKET | |
| | 10 | 1 | **387-4695** | 1 | INSULATION | |
| M | 11 | 1 | **8T-4176** | 3 | BOLT (M12X1.75X90-MM) | |
| M | 12 | 1 | **8T-4199** | 2 | BOLT (M8X1.25X12-MM) | |
| M | 13 | 1 | **8T-4200** | 2 | BOLT (M8X1.25X16-MM) | |
| | 14 | 1 | **8T-4223** | 12 | WASHER-HARD (13.5X25.5X3-MM THK) | |
| | 15 | 1 | **8T-4224** | 4 | WASHER-HARD (8.8X16X2-MM THK) | |
| M | 16 | 1 | **8T-4956** | 9 | BOLT (M12X1.75X35-MM) | |
| M | 17 | 1 | **9X-2042** | 2 | SCREW-TRUSS HEAD (M6X1X12-MM) | |
| E | 18 | 1 | **7X-7877** | | STRIP-EDGE (5-CM EACH) | |

C - CHANGE FROM PREVIOUS TYPE
E - ORDER BY THE CENTIMETER
M - METRIC PART
Y - SEPARATE ILLUSTRATION

*377-5107* **CAB GP** (*contd.*) **i05378256**

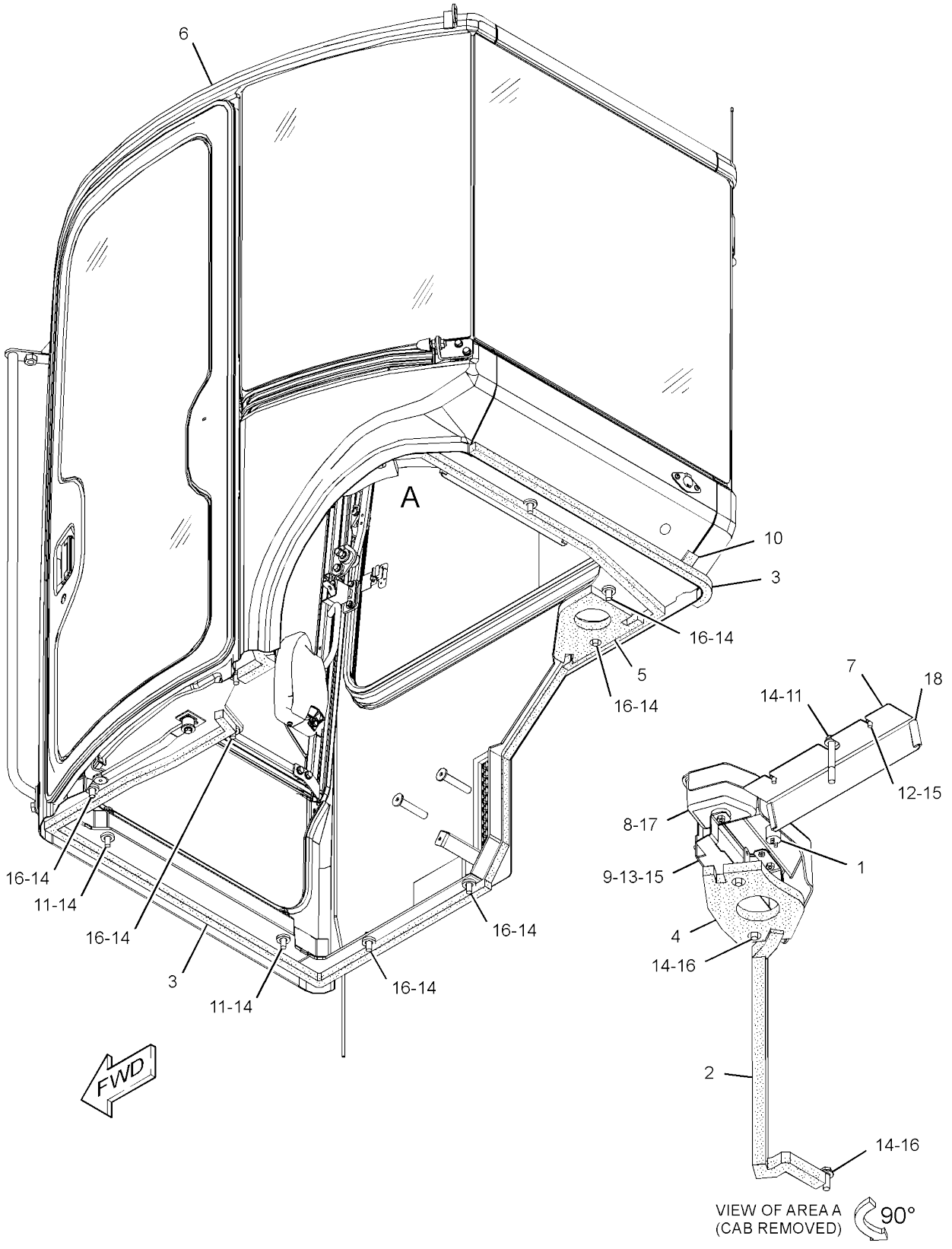


GRAPHIC #1 **<END>** g02794908

# OPERATOR STATION

## 377-5108 CAB GP

**S/N: RKY1-1048**
**PART OF 377-5107, 389-8701 CAB GP**
**AN ATTACHMENT**

**SMCS-7301** **i05437187**

| NOTE | PART NUMBER | QTY | PART NAME 1 2 3 4 5 6 (PRODUCT LEVEL) | SEE PAGE |
|---|---|---|---|---|
| Y | *281-1195* | 1 | DOOR GP-CAB | 486 |
| Y | *281-1186* | 1 | LINK GP-WINDOW | 505 |
| Y | *280-0421* | 1 | WINDOW GP-CAB | 531 |
| Y | **281-4451** | 1 | WINDOW GP-SLIDING | 533 |
| | **324-5828** | 1 | ANTENNA AS | |
| | **280-8625** | 1 | ARM AS (RH) | |
| | **280-8626** | 1 | ARM AS (LH) | |
| M | **8T-4137** | 1 | BOLT (M10X1.5X20-MM) | |
| | **280-0407** | 10 | BOLT | |
| | **280-0408** | 10 | BOLT | |
| | **281-5483** | 3 | BOLT | |
| | **281-5485** | 2 | BOLT | |
| | **281-5487** | 7 | BOLT | |
| | **281-5488** | 2 | BOLT | |
| | **196-1550** | 1 | BRACKET AS | |
| | **127-3947** | 1 | BUMPER | |
| | **280-8603** | 4 | BUSHING | |
| | **379-3627** | 1 | CAB AS | |
| | **380-7148** | 8 | CLIP | |
| | **380-7149** | 1 | COVER AS | |
| | **281-3653** | 1 | CUSHION | |
| | **281-3654** | 1 | CUSHION | |
| | **214-3962** | 2 | DAMPER | |
| | **281-1155** | 1 | GLASS (LH) | |
| | **281-1149** | 1 | GLASS-FRONT (LOWER) | |
| | **281-1154** | 1 | GLASS-REAR | |
| | **281-1164** | 2 | GRILL | |
| | **127-4006** | 1 | GROMMET | |
| | **280-8618** | 1 | HAMMER | |
| | **284-6176** | 1 | HANDLE | |
| | **379-3629** | 1 | HARNESS AS-CAB | |
| | **285-4408** | 1 | HARNESS AS-WIRING (WIPER MOTOR) | |
| | **277-6028** | 1 | HOLDER | |
| | **277-6029** | 1 | HOLDER | |
| | **288-1386** | 2 | HOLDER | |
| | **4I-4270** | 1 | HOLDER-GLASS | |
| | **127-3925** | 1 | HOOK | |
| | **281-3658** | 1 | HOSE | |
| | **281-1159** | 1 | LAMP AS (12-VOLT, 5-WATT) | |
| | **303-9236** | 1 | LAMP (12-VOLT, 5-WATT) | |
| | **379-3630** | 1 | LINER | |
| | **305-5848** | 1 | LINK AS | |
| | **127-3926** | 1 | NOZZLE | |
| M | **8T-4133** | 4 | NUT (M10X1.5-THD) | |
| M | **095-1207** | 4 | NUT (M12X1.75-THD) | |
| | **281-5497** | 3 | NUT | |
| | **280-8590** | 1 | PLATE | |
| | **280-8611** | 1 | PLATE | |
| | **281-1162** | 1 | PLATE | |
| | **281-9614** | 1 | PLATE | |
| | **285-6278** | 1 | PLATE | |
| | **332-4162** | 1 | PLATE | |
| | **280-8598** | 1 | RAIL | |
| | **281-5479** | 8 | SCREW | |
| | **281-5480** | 2 | SCREW | |
| | **281-5492** | 4 | SCREW | |
| | **281-5508** | 2 | SCREW | |
| | **281-5509** | 1 | SCREW | |

*377-5108* **CAB GP (*contd.*)** **i05437187**

| NOTE | PART NUMBER | QTY | PART NAME 1 2 3 4 5 6 (PRODUCT LEVEL) | SEE PAGE |
|---|---|---|---|---|
| | **282-2725** | 4 | SCREW | |
| | **263-3003** | 2 | SCREW (M6X1X16-MM) | |
| M | **6V-9672** | 2 | SCREW-MACHINE (M4X0.7X16-MM) | |
| M | **8T-6411** | 3 | SCREW-MACHINE (M6X1X12-MM) | |
| M | **3E-8020** | 2 | SCREW-TRUSS HEAD (M6X1X25-MM) | |
| M | **7Y-5292** | 6 | SCREW-TRUSS HEAD (SELF-TAPPING) | |
| M | **9X-2042** | 8 | SCREW-TRUSS HEAD (M6X1X12-MM) | |
| M | **9X-2043** | 5 | SCREW-TRUSS HEAD (M6X1X14-MM) | |
| | **280-8599** | 1 | SEAL | |
| | **281-3651** | 1 | SEAL | |
| | **281-3660** | 1 | SEAL | |
| | **281-3661** | 1 | SEAL | |
| | **281-3662** | 1 | SEAL | |
| | **281-4452** | 1 | SEAL | |
| | **281-4453** | 1 | SEAL | |
| | **284-6179** | 1 | SEAL | |
| | **285-4493** | 1 | SEAL | |
| | **380-7163** | 2 | SHIM (1.6-MM THK) | |
| | **207-1686** | 1 | SOCKET | |
| | **281-1153** | 10 | SPACER | |
| | **203-4455** | 2 | SPEAKER | |
| | **127-3987** | 2 | STOP | |
| | **280-8597** | 2 | STOP | |
| | **281-6196** | 1 | STOP | |
| | **288-1388** | 1 | STOP | |
| | **288-1389** | 1 | STOP | |
| | **214-3956** | 1 | STRAP | |
| | **281-7860** | 9 | STRAP | |
| | **8L-8413** | 4 | STRAP-CABLE | |
| | **196-1479** | 2 | STRIKER | |
| | **280-8595** | 2 | STRIKER | |
| | **280-8604** | 1 | STRIKER | |
| | **280-8605** | 1 | STRIKER | |
| | **280-8607** | 2 | STRIKER | |
| | **127-3927** | 1 | STRIP | |
| | **207-0236** | 1 | TAPE-ADHESIVE | |
| | **214-3968** | 3 | WASHER (8.5X30X3.2-MM THK) | |
| | **214-3969** | 2 | WASHER (16X26X0.5-MM THK) | |
| | **280-8588** | 1 | WASHER (11.5X40X4.5-MM THK) | |
| | **281-5496** | 4 | WASHER | |
| | **281-5507** | 1 | WASHER | |
| | **8T-4223** | 4 | WASHER-HARD (13.5X25.5X3-MM THK) | |
| | **8T-4224** | 3 | WASHER-HARD (8.8X16X2-MM THK) | |
| | **8T-4222** | 2 | WASHER-PLATED (11X32X2.5-MM THK) | |
| | **271-5317** | 1 | WINDOW-ROOF | |

M - METRIC PART
Y - SEPARATE ILLUSTRATION

**<END>**

# OPERATOR STATION

## *389-8690* CAB GP

**PART OF 383-5927, 383-5928 CAB AR**

**AN ATTACHMENT**

**SMCS-7301** **i04633252**

| NOTE | REF NO | GRAPHIC REF | PART NUMBER | QTY | PART NAME 1 2 3 4 5 6 (PRODUCT LEVEL) | SEE PAGE |
|---|---|---|---|---|---|---|
| | 1 | 1 | **178-7539** | 1 | RECEPTACLE AS (POWER SUPPLY) | |
| | 2 | 1 | **276-9997** | 1 | SEAL | |
| | 3 | 1 | **282-9679** | 5 | SEAL | |
| | 4 | 1 | **283-7333** | 1 | INSULATION | |
| | 5 | 1 | **283-7365** | 1 | INSULATION | |
| Y | 6 | 1 | *389-8701* | 1 | CAB GP | 448 |
| | 7 | 1 | **379-1946** | 1 | COVER | |
| | 8 | 1 | **379-2026** | 1 | HOLDER | |
| | 9 | 1 | **379-2027** | 1 | BRACKET AS | |
| M | | 1 | **6V-9632** | 2 | NUT-WELD (M6X1-THD) | |
| M | | 1 | **9X-2032** | 2 | NUT-WELD (M4X0.7-THD) | |
| | | 1 | **379-2028** | 1 | BRACKET | |
| | 10 | 1 | **387-4695** | 1 | INSULATION | |
| M | 11 | 1 | **8T-4176** | 3 | BOLT (M12X1.75X90-MM) | |
| M | 12 | 1 | **8T-4199** | 2 | BOLT (M8X1.25X12-MM) | |
| M | 13 | 1 | **8T-4200** | 2 | BOLT (M8X1.25X16-MM) | |
| | 14 | 1 | **8T-4223** | 12 | WASHER-HARD (13.5X25.5X3-MM THK) | |
| | 15 | 1 | **8T-4224** | 4 | WASHER-HARD (8.8X16X2-MM THK) | |
| M | 16 | 1 | **8T-4956** | 9 | BOLT (M12X1.75X35-MM) | |
| M | 17 | 1 | **9X-2042** | 2 | SCREW-TRUSS HEAD (M6X1X12-MM) | |
| E | 18 | 1 | **7X-7877** | | STRIP-EDGING (10-CM) | |

E - ORDER BY THE CENTIMETER
M - METRIC PART
Y - SEPARATE ILLUSTRATION

*389-8690* **CAB GP** (*contd.*) **i04633252**

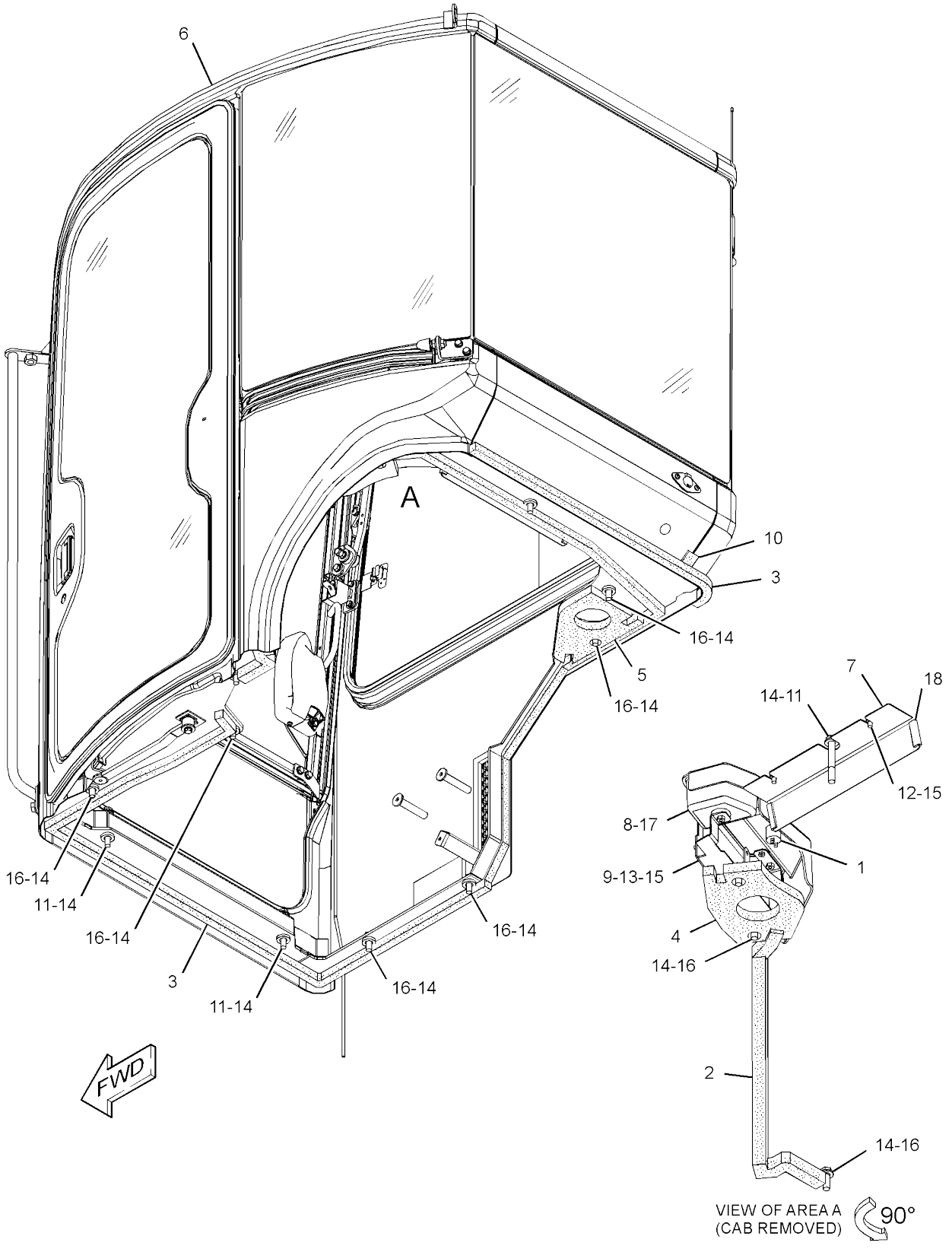


GRAPHIC #1 **<END>** g02794908

# OPERATOR STATION

## *389-8701* CAB GP—WITH FRONT GUARD

**S/N: RKY1-1048**
**PART OF 389-8690 CAB GP**
**AN ATTACHMENT**

**SMCS-7301** **i04633254**

| NOTE | PART NUMBER | QTY | PART NAME 1 2 3 4 5 6 (PRODUCT LEVEL) | SEE PAGE |
|---|---|---|---|---|
| Y | **377-5108** | 1 | CAB GP | 444 |
| Y | *389-8702* | 1 | GUARD GP-FRONT (CAB) | 148 |
| | | | | |
| | **281-5487** | 2 | BOLT | |
| | **389-8703** | 2 | BOSS | |

Y - SEPARATE ILLUSTRATION

<END>

# OPERATOR STATION

## *389-8701* CAB GP–WITH FRONT GUARD

**S/N: RKY1049-1194**
**PART OF 389-8690 CAB GP**
**AN ATTACHMENT**

**SMCS-7301** **i05351591**

| NOTE | REF NO | GRAPHIC REF | PART NUMBER | QTY | PART NAME 1 2 3 4 5 6 (PRODUCT LEVEL) | SEE PAGE |
|---|---|---|---|---|---|---|
| | 1 | 1 | **281-5487** | 2 | BOLT | |
| Y | 2 | 1 | *389-8702* | 1 | GUARD GP-FRONT (CAB) | 148 |
| CY | 3 | 1 | *415-6803* | 1 | CAB GP | 451 |

C - CHANGE FROM PREVIOUS TYPE
Y - SEPARATE ILLUSTRATION

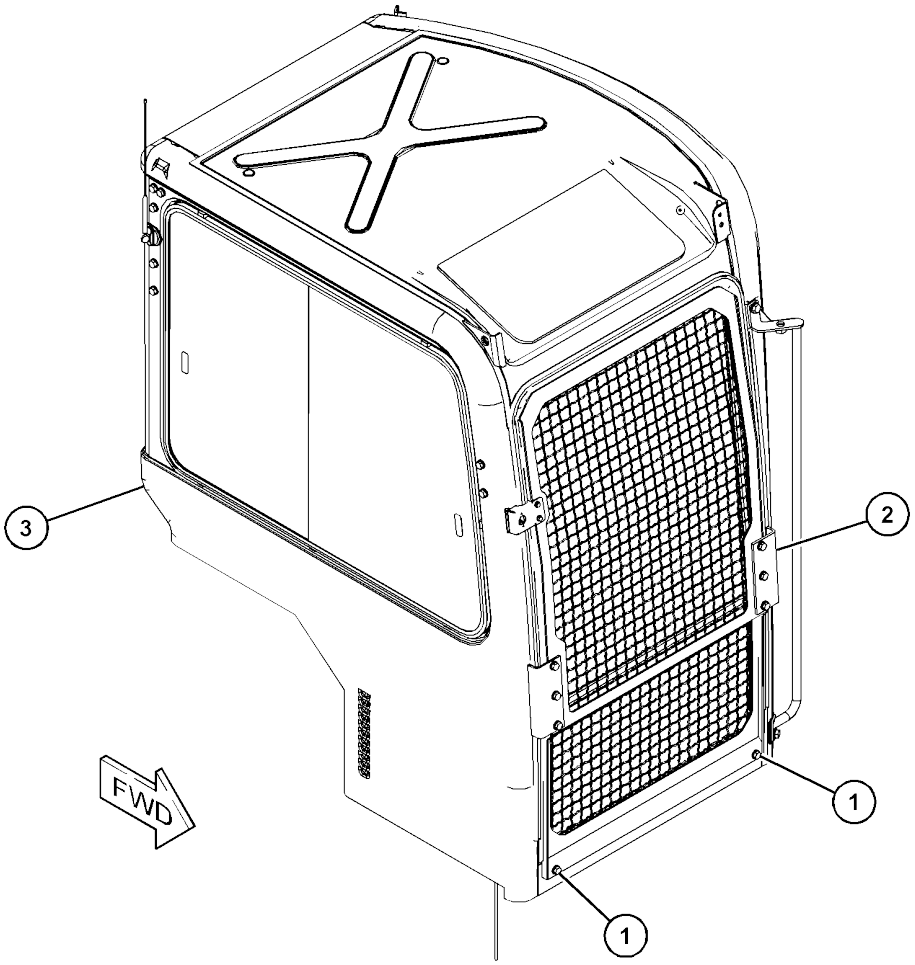


GRAPHIC #1 **<END>** g03397261

# OPERATOR STATION

## *389-8701* CAB GP—WITH FRONT GUARD

**S/N: RKY1195-UP**
**PART OF 389-8690 CAB GP**
**AN ATTACHMENT**

**SMCS-7301** **i05409771**

| NOTE | REF NO | GRAPHIC REF | PART NUMBER | QTY | PART NAME 1 2 3 4 5 6 (PRODUCT LEVEL) | SEE PAGE |
|---|---|---|---|---|---|---|
| CY | 1 | 1 | *419-1237* | 1 | CAB GP | 458 |
| Y | 2 | 1 | *389-8702* | 1 | GUARD GP-FRONT (CAB) | 148 |

C - CHANGE FROM PREVIOUS TYPE
Y - SEPARATE ILLUSTRATION

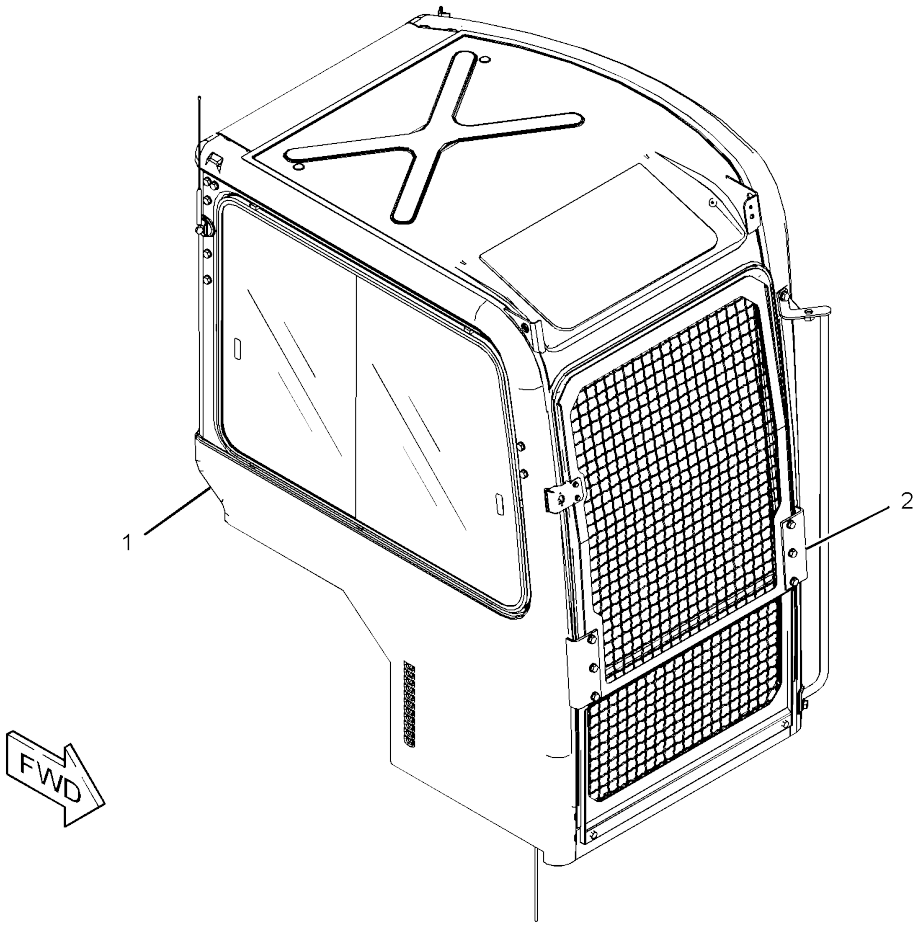


GRAPHIC #1 **<END>** g03417679

# OPERATOR STATION

## *415-6803* CAB GP

**S/N: RKY1049-1194**
**FIELD REPLACEMENT ORDER 419-1237—PAGE: 458**
**PART OF 377-5107, 389-8701 CAB GP**
**AN ATTACHMENT**

**SMCS-7301** **i05437188**

| NOTE | REF NO | GRAPHIC REF | PART NUMBER | QTY | PART NAME 1 2 3 4 5 6 (PRODUCT LEVEL) | SEE PAGE |
|---|---|---|---|---|---|---|
| | 1 | 3 | **281-9614** | 1 | PLATE | |
| Y | 2 | 1 | *281-1195* | 1 | DOOR GP-CAB | 486 |
| Y | 3 | 1 | *280-0421* | 1 | WINDOW GP-CAB | 531 |
| | 4 | 3 | **281-4450** | 1 | LINK AS | |
| | 5 | 3 | **280-8588** | 1 | WASHER (11.5X40X4.5-MM THK) | |
| | 6 | 2,3 | **214-3968** | 3 | WASHER (8.5X30X3.2-MM THK) | |
| Y | 7 | 3 | *281-1186* | 1 | LINK GP-WINDOW | 505 |
| | 8 | 3 | **280-8590** | 1 | PLATE | |
| | 9 | 3 | **127-3947** | 1 | BUMPER | |
| M | 10 | 3 | **095-1207** | 4 | NUT (M12X1.75-THD) | |
| | 11 | 3 | **196-1479** | 2 | STRIKER | |
| | 12 | 3 | **280-8595** | 2 | STRIKER | |
| | 13 | 1,3 | **280-8597** | 2 | STOP | |
| | 14 | 3 | **280-8598** | 1 | RAIL | |
| | 15 | 3 | **280-8599** | 1 | SEAL | |
| | 16 | 2 | **280-8625** | 1 | ARM AS (RH) | |
| | 17 | 3 | **280-8626** | 1 | ARM AS (LH) | |
| | 18 | 2,3 | **214-3969** | 4 | WASHER (16X26X0.5-MM THK) | |
| | 19 | 2,3 | **214-3962** | 2 | DAMPER | |
| | 20 | 2,3 | **280-8603** | 4 | BUSHING | |
| | 21 | 3 | **280-8604** | 1 | STRIKER | |
| | 22 | 2 | **280-8605** | 1 | STRIKER | |
| | 23 | 4 | **127-3987** | 2 | STOP | |
| | 24 | 2,3 | **280-8607** | 2 | STRIKER | |
| | 25 | 1 | **281-3661** | 1 | SEAL | |
| | 26 | 4 | **281-3660** | 1 | SEAL | |
| | 27 | 1 | **281-3662** | 1 | SEAL | |
| | 28 | 1 | **281-1149** | 1 | GLASS-FRONT (LOWER) | |
| | 29 | 1 | **288-1386** | 2 | HOLDER | |
| | 30 | 1 | **281-1150** | 2 | SEAL | |
| | 31 | 3 | **4I-4270** | 1 | HOLDER-GLASS | |
| | 32 | 3 | **196-1550** | 1 | BRACKET AS | |
| | 33 | 3 | **277-6028** | 1 | HOLDER | |
| | 34 | 3 | **277-6029** | 1 | HOLDER | |
| | 35 | 3 | **207-0236** | 1 | TAPE-ADHESIVE | |
| Y | 36 | 2 | **281-4451** | 1 | WINDOW GP-SLIDING | 533 |
| | 37 | 2 | **281-4452** | 1 | SEAL | |
| | 38 | 2 | **281-3651** | 1 | SEAL | |
| | 39 | 2 | **281-1153** | 7 | SPACER | |
| | 40 | 4 | **281-1154** | 1 | GLASS-REAR | |
| | 41 | 4 | **281-3654** | 1 | CUSHION | |
| | 42 | 3 | **281-1155** | 1 | GLASS (LH) | |
| | 43 | 3 | **281-3653** | 1 | CUSHION | |
| | 44 | 5 | **271-5317** | 1 | WINDOW-ROOF | |
| | 45 | 5 | **281-4453** | 1 | SEAL | |
| | 47 | 2 | **281-5507** | 1 | WASHER | |
| | 48 | 2 | **285-4408** | 1 | HARNESS AS-WIRING (WIPER MOTOR) | |
| | 49 | 2,3 | **281-7860** | 10 | STRAP | |
| | 51 | 3 | **281-1159** | 1 | LAMP AS (12-VOLT, 5-WATT) | |
| | | 3 | **303-9236** | 1 | LAMP (12-VOLT, 5-WATT) | |
| | 53 | 2 | **281-5508** | 2 | SCREW | |
| | 56 | 5 | **281-1162** | 1 | PLATE | |
| | 57 | 4 | **203-4455** | 2 | SPEAKER | |
| | 58 | 4 | **281-1164** | 2 | GRILL | |
| | 59 | 1 | **127-3927** | 1 | STRIP | |
| | 60 | 1 | **127-3926** | 1 | NOZZLE | |

# OPERATOR STATION

*415-6803* **CAB GP (*contd.*)** **i05437188**

| NOTE | REF NO | GRAPHIC REF | PART NUMBER | QTY | PART NAME 1 2 3 4 5 6 (PRODUCT LEVEL) | SEE PAGE |
|---|---|---|---|---|---|---|
| | 61 | 1 | **281-3658** | 1 | HOSE | |
| | 62 | 4 | **207-1686** | 1 | SOCKET | |
| | 63 | 4 | **280-8611** | 1 | PLATE | |
| | 66 | 2 | **284-6176** | 1 | HANDLE | |
| | 68 | 2 | **127-3925** | 1 | HOOK | |
| | 69 | 3 | **280-8618** | 1 | HAMMER | |
| | 70 | 3 | **281-5509** | 1 | SCREW | |
| M | 72 | 3 | **9X-2043** | 5 | SCREW-TRUSS HEAD (M6X1X14-MM) | |
| M | 73 | 3 | **3E-8020** | 2 | SCREW-TRUSS HEAD (M6X1X25-MM) | |
| M | 74 | 3 | **8T-4137** | 1 | BOLT (M10X1.5X20-MM) | |
| | 75 | 4 | **281-5479** | 8 | SCREW | |
| M | 76 | 3 | **6V-9672** | 2 | SCREW-MACHINE (M4X0.7X16-MM) | |
| | 77 | 1 | **281-5480** | 2 | SCREW | |
| M | 78 | 2,4 | **8T-6411** | 3 | SCREW-MACHINE (M6X1X12-MM) | |
| | 80 | 2,3 | **280-0407** | 10 | BOLT | |
| | 81 | 3 | **281-5485** | 2 | BOLT | |
| | 82 | 2,3 | **280-0408** | 10 | BOLT | |
| | 83 | 2 | **281-5487** | 7 | BOLT | |
| | 84 | 2 | **281-5488** | 2 | BOLT | |
| | 85 | 3 | **281-5492** | 4 | SCREW | |
| M | 86 | 1,2,3 | **7Y-5292** | 6 | SCREW-TRUSS HEAD (SELF-TAPPING) | |
| | 87 | 3 | **281-5496** | 4 | WASHER | |
| M | 88 | 1,3,4 | **8T-4133** | 4 | NUT (M10X1.5-THD) | |
| | 89 | 3 | **281-5497** | 3 | NUT | |
| | 91 | 3 | **8T-4224** | 3 | WASHER-HARD (8.8X16X2-MM THK) | |
| | 92 | 3 | **8T-4223** | 4 | WASHER-HARD (13.5X25.5X3-MM THK) | |
| | 93 | 5 | **127-4006** | 1 | GROMMET | |
| | 96 | 3 | **281-6196** | 1 | STOP | |
| | 99 | 5 | **214-3956** | 1 | STRAP | |
| | 100 | 2 | **284-6179** | 1 | SEAL | |
| | 101 | 2 | **284-6180** | 1 | SEAL | |
| | 102 | 2 | **285-4493** | 1 | SEAL | |
| | 103 | 4 | **285-6278** | 1 | PLATE | |
| | | | | | | |
| F | | | **324-5828** | 1 | ANTENNA AS | |
| F | | | **418-1586** | 1 | CAB AS | |
| F | | | **379-3629** | 1 | HARNESS AS-CAB | |
| F | | | **379-3630** | 1 | LINER | |
| F | | | **380-7148** | 8 | CLIP | |
| F | | | **380-7149** | 1 | COVER AS | |
| F | | | **380-7163** | 2 | SHIM (1.6-MM THK) | |
| F | | | **8T-4222** | 2 | WASHER-PLATED (11X32X2.5-MM THK) | |
| FM | | | **9X-2042** | 8 | SCREW-TRUSS HEAD (M6X1X12-MM) | |
| F | | | **281-5483** | 3 | BOLT | |
| F | | | **282-2725** | 4 | SCREW | |
| F | | | **8L-8413** | 2 | STRAP-CABLE | |

F - NOT SHOWN
M - METRIC PART
Y - SEPARATE ILLUSTRATION

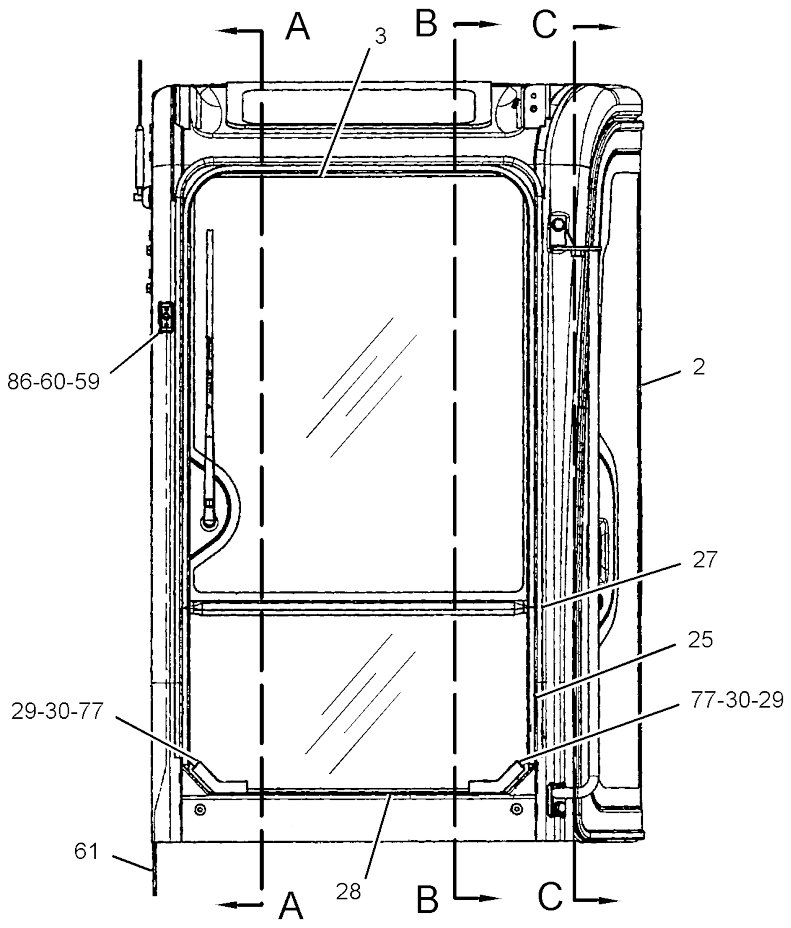


FRONT VIEW

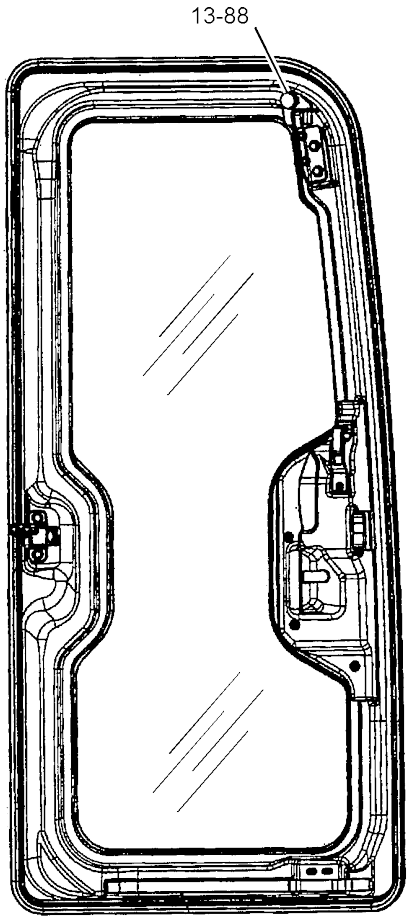


SECTION C-C

REFER TO ALL ILLUSTRATIONS OF
THIS GROUP FOR AUXILIARY VIEWS

GRAPHIC #1 g03401402

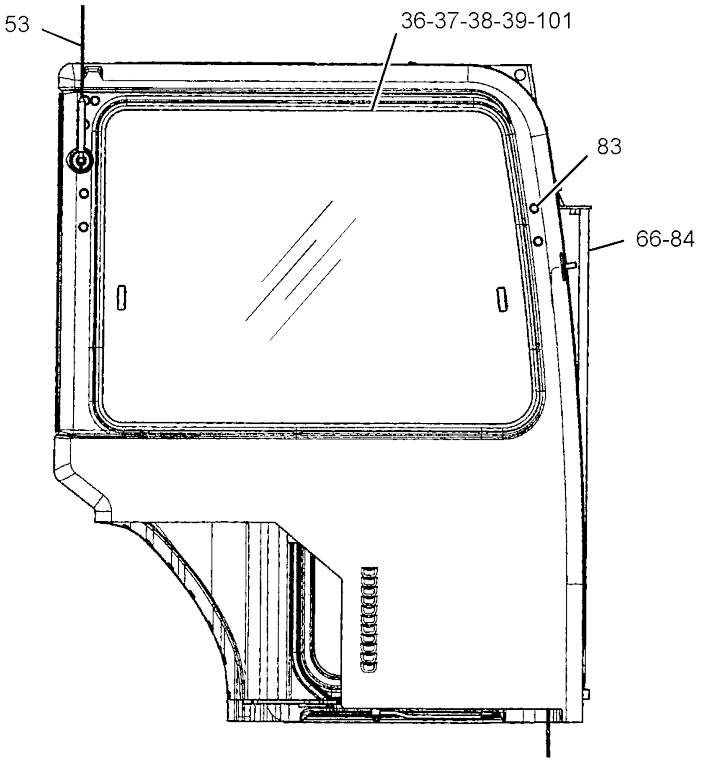


RIGHT SIDE VIEW

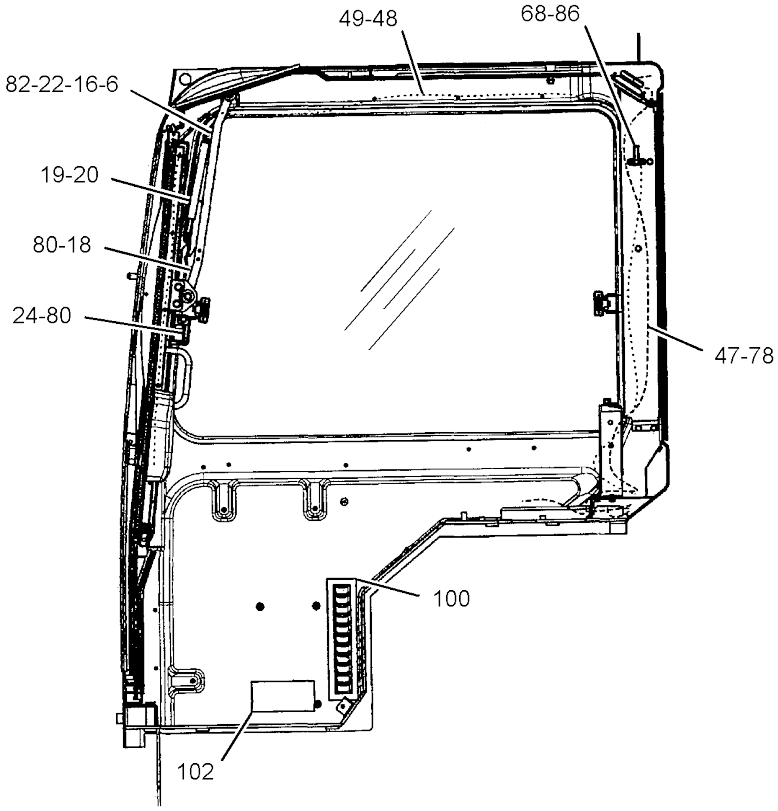


SECTION A-A

GRAPHIC #2 g03401403

*415-6803* **CAB GP** (*contd.*) **i05437188**

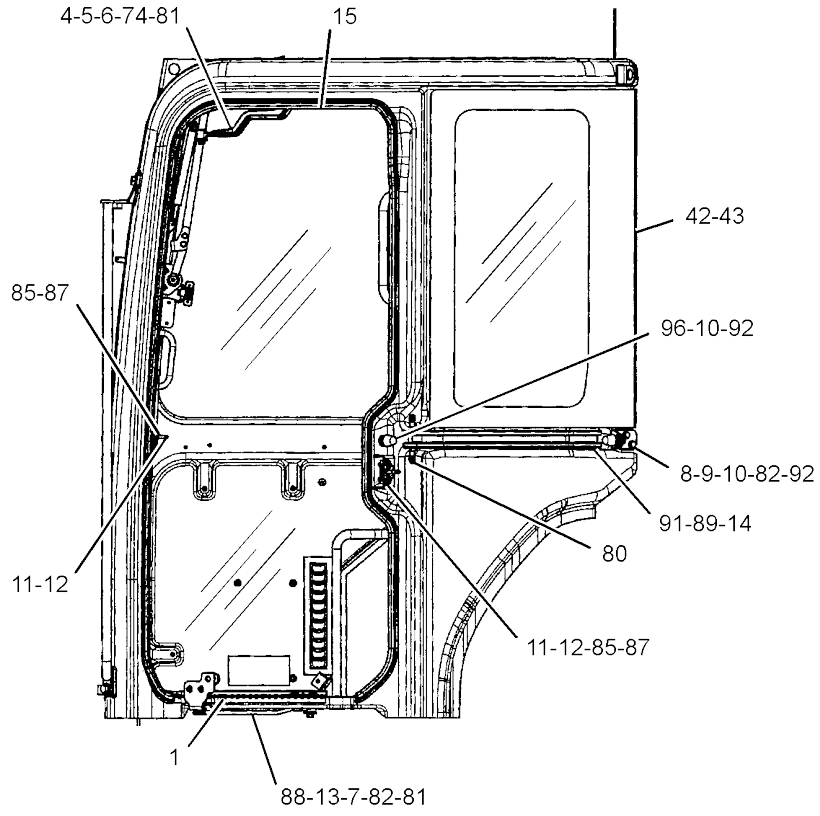


LEFT SIDE VIEW

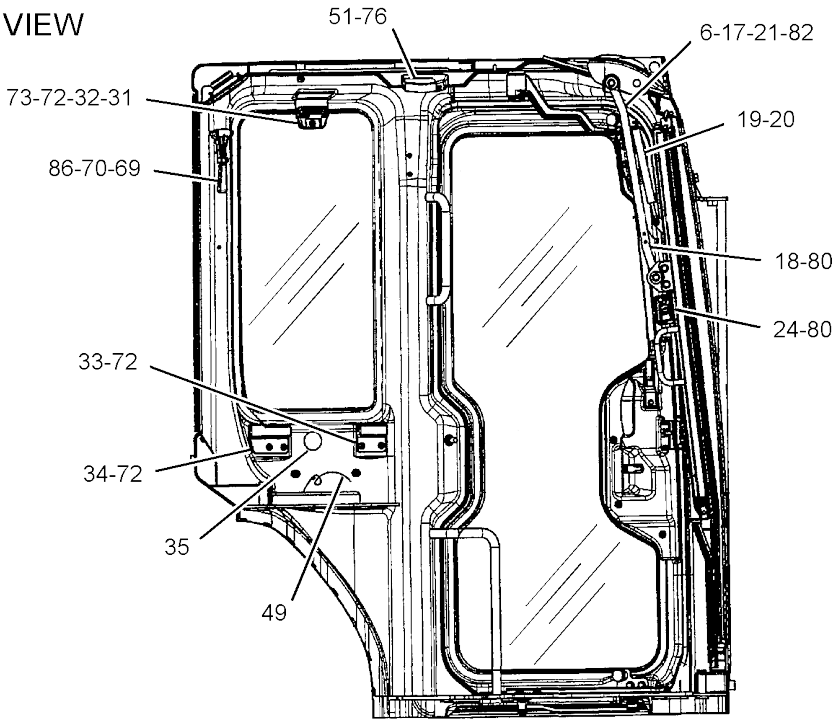


SECTION B-B

GRAPHIC #3 g03401404

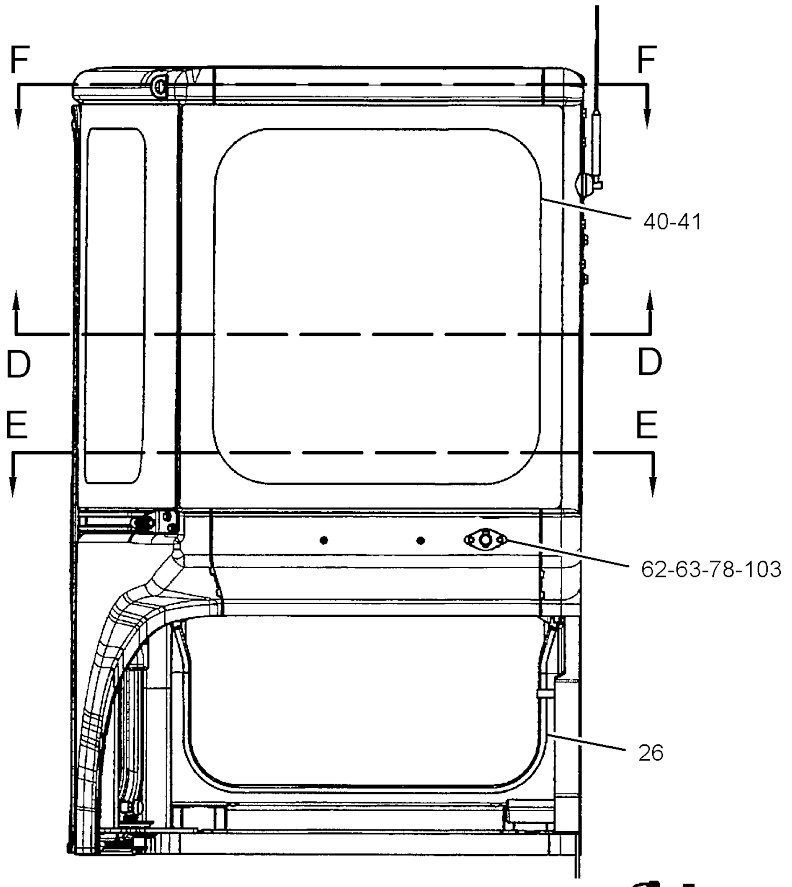


REAR VIEW

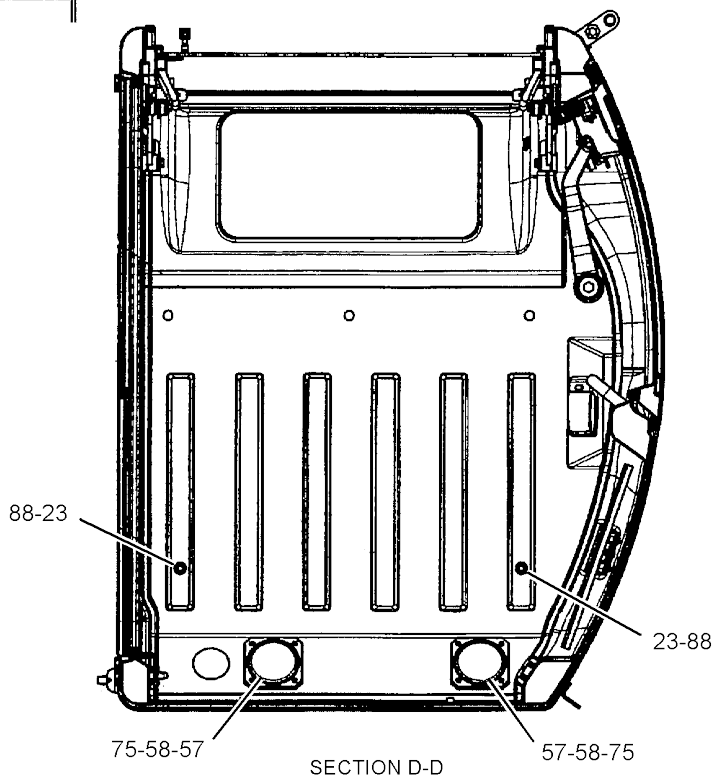


SECTION D-D

REFER TO ALL ILLUSTRATIONS OF THIS GROUP FOR AUXILIARY VIEWS

GRAPHIC #4 g03401405

*415-6803* **CAB GP** (*contd.*) **i05437188**

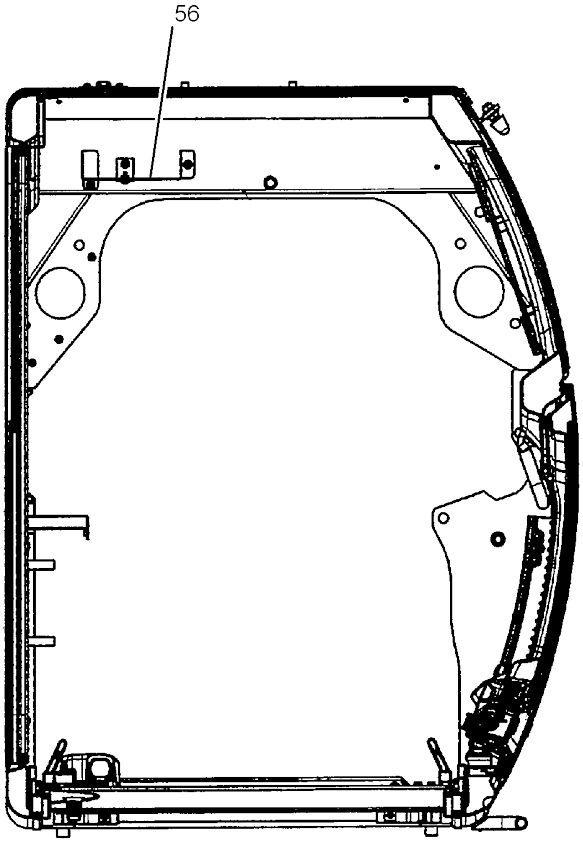


SECTION E-E

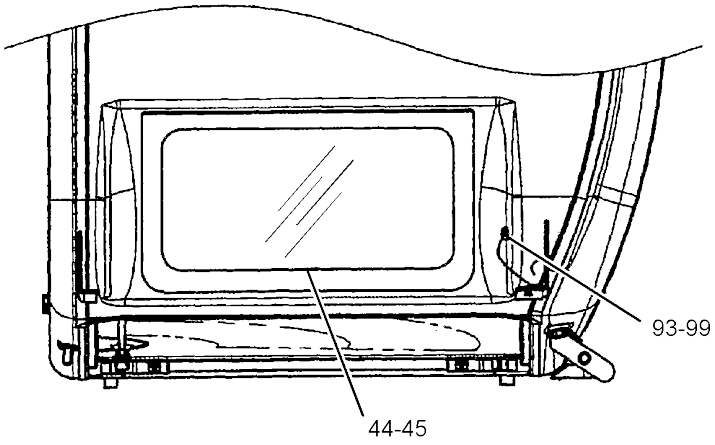


SECTION F-F

GRAPHIC #5 **<END>** g03401406

# OPERATOR STATION

## 419-1237 CAB GP

**S/N: RKY1195-UP**
**FIELD REPLACEMENT FOR 415-6803—PAGE: 451**
**PART OF 377-5107, 389-8701 CAB GP**
**AN ATTACHMENT**

**SMCS-7301** **i05437189**

| NOTE | PART NUMBER | QTY | PART NAME 1 2 3 4 5 6 (PRODUCT LEVEL) | SEE PAGE |
|---|---|---|---|---|
| Y | *281-1195* | 1 | DOOR GP-CAB | 486 |
| Y | *281-1186* | 1 | LINK GP-WINDOW | 505 |
| Y | *280-0421* | 1 | WINDOW GP-CAB | 531 |
| Y | **281-4451** | 1 | WINDOW GP-SLIDING | 533 |
| | **324-5828** | 1 | ANTENNA AS | |
| | **280-8625** | 1 | ARM AS (RH) | |
| | **280-8626** | 1 | ARM AS (LH) | |
| M | **8T-4137** | 1 | BOLT (M10X1.5X20-MM) | |
| | **280-0407** | 10 | BOLT | |
| | **280-0408** | 10 | BOLT | |
| | **281-5483** | 3 | BOLT | |
| | **281-5485** | 2 | BOLT | |
| | **281-5487** | 9 | BOLT | |
| | **281-5488** | 2 | BOLT | |
| | **196-1550** | 1 | BRACKET AS | |
| | **127-3947** | 1 | BUMPER | |
| | **280-8603** | 4 | BUSHING | |
| | **380-7148** | 8 | CLIP | |
| | **380-7149** | 1 | COVER AS | |
| | **281-3653** | 1 | CUSHION | |
| | **281-3654** | 1 | CUSHION | |
| | **214-3962** | 2 | DAMPER | |
| | **281-1155** | 1 | GLASS (LH) | |
| | **281-1149** | 1 | GLASS-FRONT (LOWER) | |
| | **281-1154** | 1 | GLASS-REAR | |
| | **281-1164** | 2 | GRILL | |
| | **127-4006** | 1 | GROMMET | |
| | **280-8618** | 1 | HAMMER | |
| | **284-6176** | 1 | HANDLE | |
| | **379-3629** | 1 | HARNESS AS-CAB | |
| | **285-4408** | 1 | HARNESS AS-WIRING (WIPER MOTOR) | |
| | **277-6028** | 1 | HOLDER | |
| | **277-6029** | 1 | HOLDER | |
| | **288-1386** | 2 | HOLDER | |
| | **4I-4270** | 1 | HOLDER-GLASS | |
| | **127-3925** | 1 | HOOK | |
| | **281-3658** | 1 | HOSE | |
| | **281-1159** | 1 | LAMP AS (12-VOLT, 5-WATT) | |
| | **303-9236** | 1 | LAMP (12-VOLT, 5-WATT) | |
| | **379-3630** | 1 | LINER | |
| | **305-5848** | 1 | LINK AS | |
| | **276-8684** | 1 | LINK | |
| | **305-5852** | 2 | BUSHING | |
| | **305-5853** | 2 | BUSHING | |
| | **127-3926** | 1 | NOZZLE | |
| M | **8T-4133** | 4 | NUT (M10X1.5-THD) | |
| M | **095-1207** | 4 | NUT (M12X1.75-THD) | |
| | **281-5497** | 3 | NUT | |
| | **280-8590** | 1 | PLATE | |
| | **280-8611** | 1 | PLATE | |
| | **281-1162** | 1 | PLATE | |
| | **281-9614** | 1 | PLATE | |
| | **285-6278** | 1 | PLATE | |
| | **332-4162** | 1 | PLATE | |
| | **280-8598** | 1 | RAIL | |
| | **281-5479** | 8 | SCREW | |
| | **281-5480** | 2 | SCREW | |

*419-1237* **CAB GP (*contd.*)** **i05437189**

| NOTE | PART NUMBER | QTY | PART NAME 1 2 3 4 5 6 (PRODUCT LEVEL) | SEE PAGE |
|---|---|---|---|---|
| | **281-5492** | 4 | SCREW | |
| | **281-5508** | 2 | SCREW | |
| | **281-5509** | 1 | SCREW | |
| | **282-2725** | 4 | SCREW | |
| | **263-3003** | 2 | SCREW (M6X1X16-MM) | |
| M | **6V-9672** | 2 | SCREW-MACHINE (M4X0.7X16-MM) | |
| M | **8T-6411** | 3 | SCREW-MACHINE (M6X1X12-MM) | |
| M | **3E-8020** | 2 | SCREW-TRUSS HEAD (M6X1X25-MM) | |
| M | **7Y-5292** | 6 | SCREW-TRUSS HEAD (SELF-TAPPING) | |
| M | **9X-2042** | 8 | SCREW-TRUSS HEAD (M6X1X12-MM) | |
| M | **9X-2043** | 5 | SCREW-TRUSS HEAD (M6X1X14-MM) | |
| | **280-8599** | 1 | SEAL | |
| | **281-3651** | 1 | SEAL | |
| | **281-3660** | 1 | SEAL | |
| | **281-3661** | 1 | SEAL | |
| | **281-3662** | 1 | SEAL | |
| | **281-4452** | 1 | SEAL | |
| | **281-4453** | 1 | SEAL | |
| | **284-6179** | 1 | SEAL | |
| | **285-4493** | 1 | SEAL | |
| | **380-7163** | 2 | SHIM (1.6-MM THK) | |
| | **207-1686** | 1 | SOCKET | |
| | **281-1153** | 10 | SPACER | |
| | **203-4455** | 2 | SPEAKER | |
| | **127-3987** | 2 | STOP | |
| | **280-8597** | 2 | STOP | |
| | **281-6196** | 1 | STOP | |
| | **288-1388** | 1 | STOP | |
| | **288-1389** | 1 | STOP | |
| | **214-3956** | 1 | STRAP | |
| | **281-7860** | 9 | STRAP | |
| | **8L-8413** | 4 | STRAP-CABLE | |
| | **196-1479** | 2 | STRIKER | |
| | **280-8595** | 2 | STRIKER | |
| | **280-8604** | 1 | STRIKER | |
| | **280-8605** | 1 | STRIKER | |
| | **280-8607** | 2 | STRIKER | |
| | **127-3927** | 1 | STRIP | |
| | **207-0236** | 1 | TAPE-ADHESIVE | |
| | **214-3968** | 3 | WASHER (8.5X30X3.2-MM THK) | |
| | **214-3969** | 2 | WASHER (16X26X0.5-MM THK) | |
| | **280-8588** | 1 | WASHER (11.5X40X4.5-MM THK) | |
| | **281-5496** | 4 | WASHER | |
| | **281-5507** | 1 | WASHER | |
| | **8T-4223** | 4 | WASHER-HARD (13.5X25.5X3-MM THK) | |
| | **8T-4224** | 3 | WASHER-HARD (8.8X16X2-MM THK) | |
| | **8T-4222** | 2 | WASHER-PLATED (11X32X2.5-MM THK) | |
| | **271-5317** | 1 | WINDOW-ROOF | |

M - METRIC PART
Y - SEPARATE ILLUSTRATION

**<END>**

# OPERATOR STATION

## *377-8933* CANOPY AR

**AN ATTACHMENT**

**SMCS-7302** **i05393124**

| NOTE | PART NUMBER | QTY | PART NAME 1 2 3 4 5 6 (PRODUCT LEVEL) | SEE PAGE |
|---|---|---|---|---|
| Y | *370-5345* | 1 | BATTERY & WIRING GP (CANOPY) | 73 |
| Y | *382-0406* | 1 | CANOPY GP | 461 |
| Y | *382-0501* | 1 | COVER GP-ACCESS | 484 |
| Y | *393-1257* | 1 | FILM GP | 544 |
| Y | *380-6386* | 1 | GUARD GP-FAN | 18 |
| Y | *382-0426* | 1 | HANDRAIL GP (LH) | 492 |
| Y | *380-6385* | 1 | MOUNTING GP-ENGINE | 23 |
| Y | *382-0400* | 1 | PLATFORM GP-OPERATOR | 522 |
| Y | *370-5350* | 1 | WIRING GP-CONSOLE (CANOPY) | 105 |
| | **419-1254** | 1 | FLOOR MAT | |
| | **387-4694** | 1 | FLOOR MAT | |
| | *420-6337* | 1 | SEAL GP | |
| | **276-9309** | 1 | FOAM | |
| | **415-8595** | 1 | SEAL | |
| | | | S/N: RKY1-1465 | |
| Y | **421-2717** | 1 | VALVE & MOUNTING GP | 299 |
| | | | S/N: RKY1466-UP | |

Y - SEPARATE ILLUSTRATION

<END>

## *383-5929* CANOPY AR—WITH GUARD

**AN ATTACHMENT**

**SMCS-7302** **i05393138**

| NOTE | PART NUMBER | QTY | PART NAME 1 2 3 4 5 6 (PRODUCT LEVEL) | SEE PAGE |
|---|---|---|---|---|
| Y | *370-5345* | 1 | BATTERY & WIRING GP (CANOPY) | 73 |
| Y | *389-8749* | 1 | CANOPY GP | 462 |
| Y | *382-0501* | 1 | COVER GP-ACCESS | 484 |
| Y | *389-8776* | 1 | FILM GP (FRONT GUARD) | 543 |
| Y | *393-1257* | 1 | FILM GP (CAB HEATER) | 544 |
| Y | *380-6386* | 1 | GUARD GP-FAN | 18 |
| Y | *389-8733* | 1 | GUARD GP-FRONT | 149 |
| Y | *382-0426* | 1 | HANDRAIL GP (LH) | 492 |
| Y | *380-6385* | 1 | MOUNTING GP-ENGINE | 23 |
| Y | *382-0400* | 1 | PLATFORM GP-OPERATOR | 522 |
| Y | *370-5350* | 1 | WIRING GP-CONSOLE (CANOPY) | 105 |
| | **419-1254** | 1 | FLOOR MAT | |
| | **387-4694** | 1 | FLOOR MAT | |
| | *420-6337* | 1 | SEAL GP | |
| | **276-9309** | 1 | FOAM | |
| | **415-8595** | 1 | SEAL | |
| | | | S/N: RKY1-1465 | |
| Y | **421-2717** | 1 | VALVE & MOUNTING GP | 299 |
| | | | S/N: RKY1466-UP | |

Y - SEPARATE ILLUSTRATION

<END>

# OPERATOR STATION

## *382-0406* CANOPY GP

**PART OF 377-8933 CANOPY AR**

**AN ATTACHMENT**

**SMCS-7302** **i05035494**

| NOTE | REF NO | GRAPHIC REF | PART NUMBER | QTY | PART NAME 1 2 3 4 5 6 (PRODUCT LEVEL) | SEE PAGE |
|---|---|---|---|---|---|---|
| | 1 | 1 | **4H-0407** | 2 | PLUG-PROTECTION | |
| | 2 | 1 | **332-1810** | 4 | PLUG | |
| | 3 | 1 | **382-0407** | 1 | CANOPY AS | |
| | | 1 | **7T-1099** | 10 | LINK | |
| M | | 1 | **8T-3490** | 1 | NUT-WELD (M10X1.5-THD) | |
| M | | 1 | **8T-3612** | 1 | NUT-WELD (M8X1.25-THD) | |
| M | 4 | 1 | **8T-4139** | 4 | BOLT (M12X1.75X30-MM) | |
| M | 5 | 1 | **8T-4173** | 1 | BOLT (M16X2X110-MM) | |
| M | 6 | 1 | **8T-4194** | 3 | BOLT (M12X1.75X50-MM) | |
| | 7 | 1 | **8T-4223** | 10 | WASHER-HARD (13.5X25.5X3-MM THK) | |
| M | 8 | 1 | **8T-4956** | 3 | BOLT (M12X1.75X35-MM) | |
| | 9 | 1 | **9X-8257** | 1 | WASHER (17.5X30X3.5-MM THK) | |

M - METRIC PART

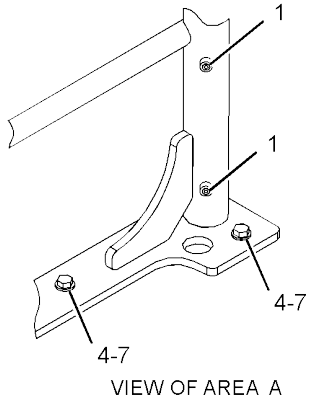


VIEW OF AREA A

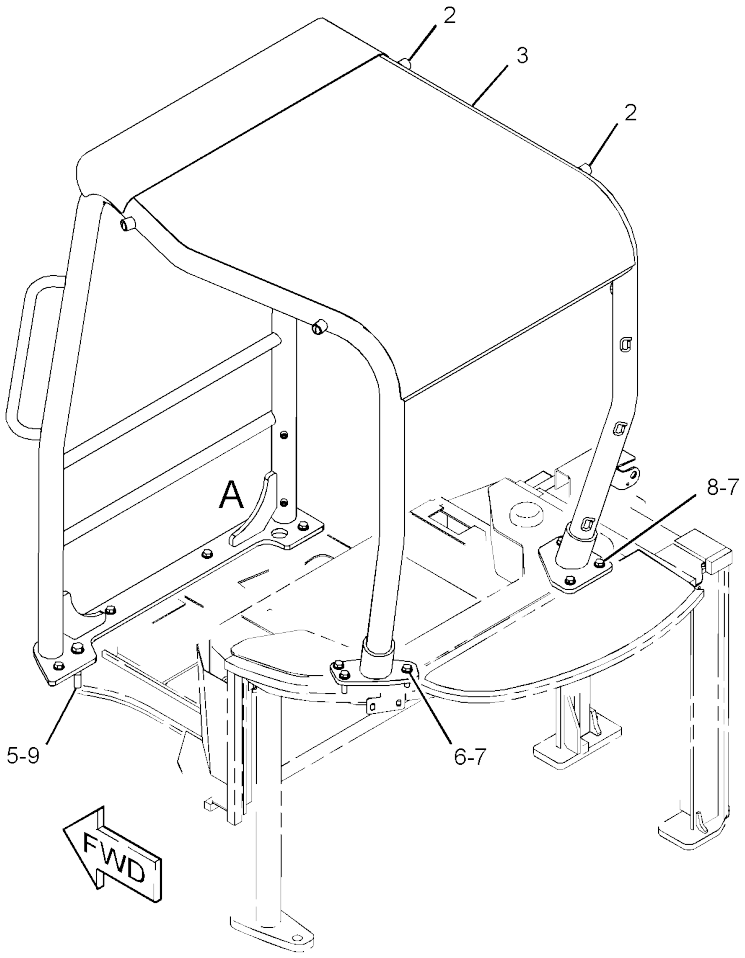


GRAPHIC #1 **<END>** g02799173

# OPERATOR STATION

## *389-8749* CANOPY GP

**PART OF 383-5929 CANOPY AR**

**AN ATTACHMENT**

**SMCS-7302** **i04728122**

| NOTE | REF NO | GRAPHIC REF | PART NUMBER | QTY | PART NAME 1 2 3 4 5 6 (PRODUCT LEVEL) | SEE PAGE |
|---|---|---|---|---|---|---|
| | 1 | 1 | **4H-0407** | 2 | PLUG-PROTECTION | |
| | 2 | 1 | **332-1810** | 4 | PLUG | |
| | 3 | 1 | **389-8737** | 1 | CANOPY AS | |
| M | | 1 | **8T-3490** | 1 | NUT-WELD (M10X1.5-THD) | |
| M | | 1 | **8T-3612** | 1 | NUT-WELD (M8X1.25-THD) | |
| M | 4 | 1 | **8T-4139** | 4 | BOLT (M12X1.75X30-MM) | |
| M | 5 | 1 | **8T-4173** | 1 | BOLT (M16X2X110-MM) | |
| M | 6 | 1 | **8T-4194** | 3 | BOLT (M12X1.75X50-MM) | |
| | 7 | 1 | **8T-4223** | 10 | WASHER-HARD (13.5X25.5X3-MM THK) | |
| M | 8 | 1 | **8T-4956** | 3 | BOLT (M12X1.75X35-MM) | |
| | 9 | 1 | **9X-8257** | 1 | WASHER (17.5X30X3.5-MM THK) | |

M - METRIC PART

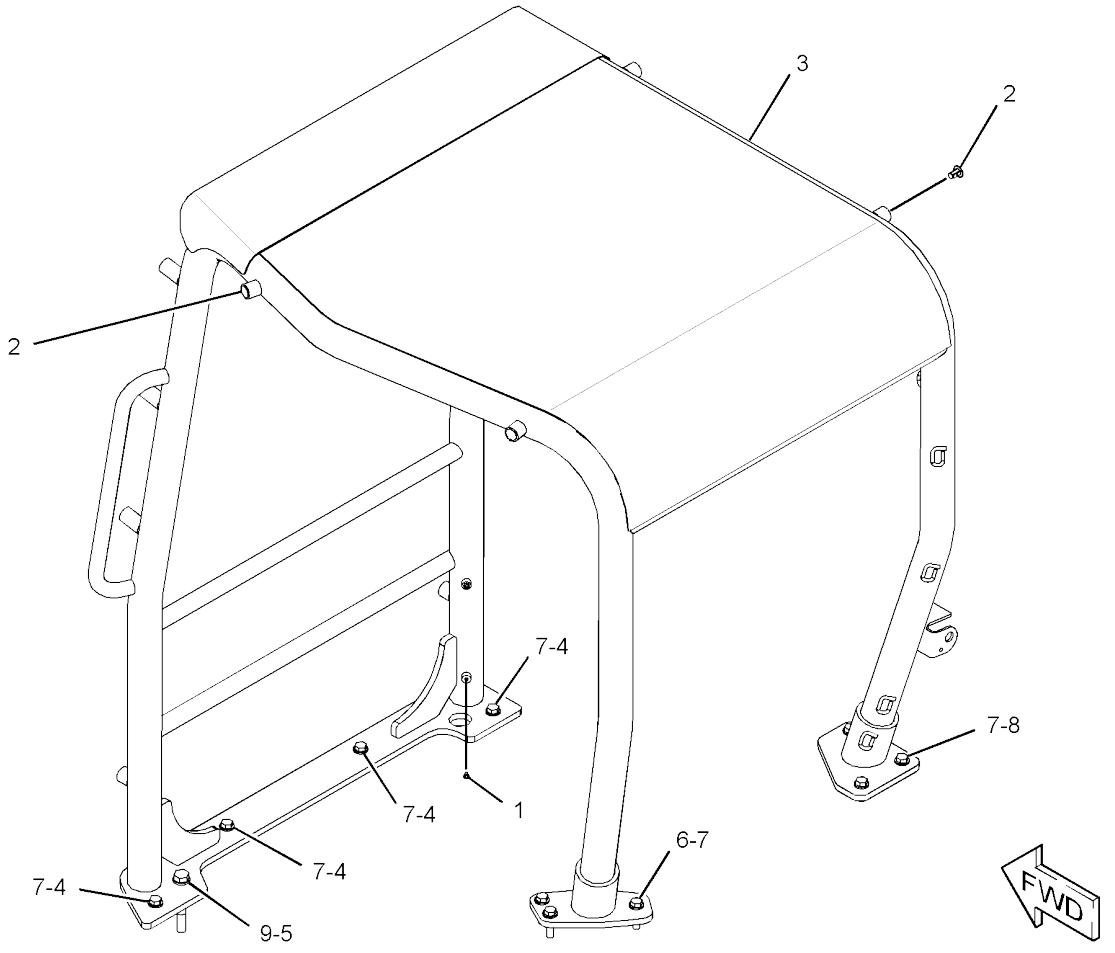


GRAPHIC #1 **<END>** g02858417

# *378-1272* COMPRESSOR GP-REFRIGERANT

**PART OF 376-6692, 383-5927 CAB AR**
**AN ATTACHMENT**

**SMCS-1802** **i04565460**

| NOTE | REF NO | GRAPHIC REF | PART NUMBER | QTY | PART NAME 1 2 3 4 5 6 (PRODUCT LEVEL) | SEE PAGE |
|---|---|---|---|---|---|---|
| | 1 | 1 | **272-7877** | 1 | PULLEY AS-IDLER | |
| | 2 | 1 | **272-7881** | 1 | V-BELT (AIR CONDITIONER COMPRESSOR) | |
| | 3 | 1 | **283-4170** | 1 | COMPRESSOR GP-REFRIGERANT | |
| | 4 | 1 | **304-2819** | 1 | BOLT (M8X1.25X100-MM) | |
| | 5 | 1 | **5P-4116** | 2 | WASHER-HARD (8.8X20.5X2-MM THK) | |
| | 6 | 1 | **7N-9070** | 1 | SPACER | |
| M | 7 | 1 | **7X-2537** | 1 | BOLT (M8X1.25X35-MM) | |
| | 8 | 1 | **8T-4224** | 2 | WASHER-HARD (8.8X16X2-MM THK) | |
| M | 9 | 1 | **8T-4908** | 2 | BOLT (M8X1.25X25-MM) | |

M - METRIC PART

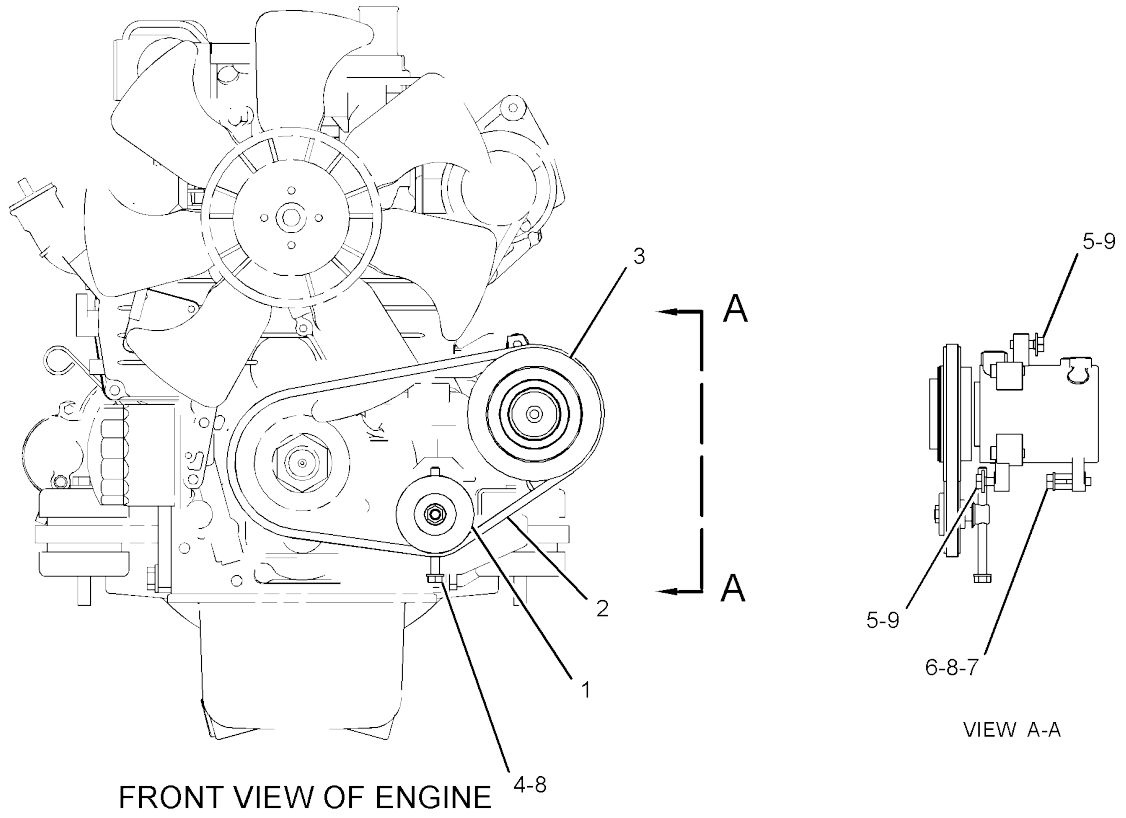


FRONT VIEW OF ENGINE

GRAPHIC #1 **<END>** g02784642

# OPERATOR STATION

## *380-6389* CONDENSER & MTG GP-REFRIGERANT

**PART OF 376-6692, 383-5927 CAB AR**
**AN ATTACHMENT**

**SMCS-1805** **i04617856**

| NOTE | REF NO | GRAPHIC REF | PART NUMBER | QTY | PART NAME 1 2 3 4 5 6 (PRODUCT LEVEL) | SEE PAGE |
|---|---|---|---|---|---|---|
| M | 1 | 1 | **245-7903** | 8 | BOLT AS | |
| | 2 | 1 | **354-6977** | 1 | CONDENSER AS-REFRIGERANT | |
| | 3 | 1 | **354-6978** | 4 | BRACKET | |
| | 4 | 1 | **354-6980** | 4 | BUSHING | |
| | 5 | 1 | **354-6981** | 4 | GROMMET | |
| | 6 | 1 | **380-6390** | 1 | BRACKET AS | |
| M | | 1 | **6V-9632** | 2 | NUT-WELD (M6X1-THD) | |
| M | | 1 | **8T-3612** | 2 | NUT-WELD (M8X1.25-THD) | |
| | 7 | 1 | **380-6391** | 1 | BRACKET AS | |
| M | | 1 | **6V-9632** | 2 | NUT-WELD (M6X1-THD) | |
| | 8 | 1 | **380-6392** | 1 | BRACKET AS | |
| M | | 1 | **8T-3612** | 2 | NUT-WELD (M8X1.25-THD) | |
| | 9 | 1 | **8T-4121** | 4 | WASHER-HARD (11X21X2.5-MM THK) | |
| M | 10 | 1 | **8T-4137** | 4 | BOLT (M10X1.5X20-MM) | |
| M | 11 | 1 | **8T-4189** | 2 | BOLT (M8X1.25X20-MM) | |
| | 12 | 1 | **8T-4224** | 2 | WASHER-HARD (8.8X16X2-MM THK) | |
| M | 13 | 1 | **8T-4971** | 4 | BOLT (M6X1X30-MM) | |
| | 14 | 1 | **9X-6165** | 4 | WASHER (6.5X22X2.5-MM THK) | |

M - METRIC PART

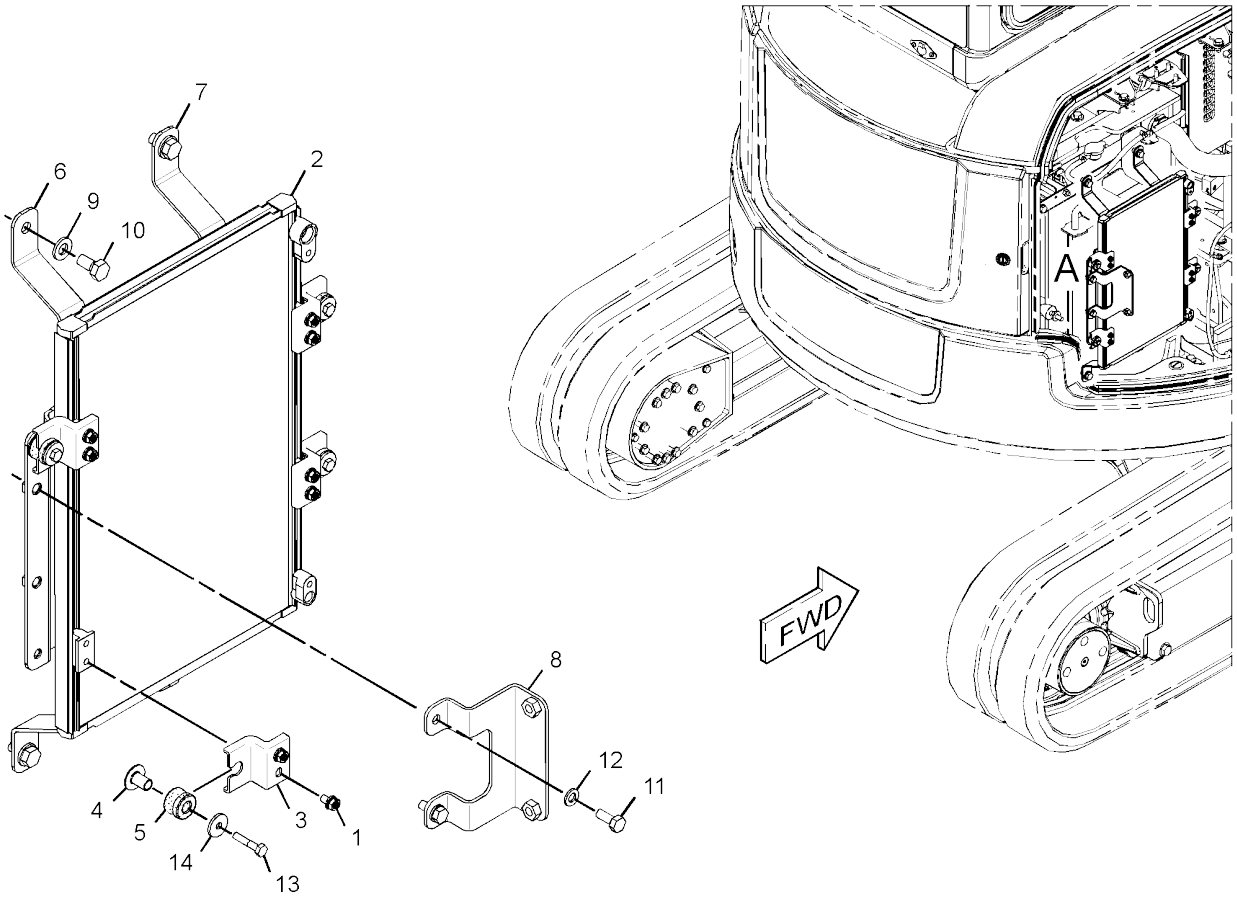


VIEW OF AREA A
(EXPLODED)

GRAPHIC #1 **<END>** g02799496

# OPERATOR STATION

## *379-3597* CONSOLE GP-OPERATOR

**PART OF 379-3624 OPERATOR AR**

**SMCS-5258, 7451** **i05033863**

| NOTE | REF NO | GRAPHIC REF | PART NUMBER | QTY | PART NAME 1 2 3 4 5 6 (PRODUCT LEVEL) | SEE PAGE |
|---|---|---|---|---|---|---|
| | 1 | 1 | **274-8781** | 1 | BUMPER | |
| Y | 2 | 1 | *379-3598* | 1 | CONSOLE GP-OPERATOR (RH) | 466 |
| Y | 3 | 1 | *379-3599* | 1 | CONSOLE GP-OPERATOR (LH) | 467 |
| | 4 | 1 | **379-3618** | 1 | BRACKET AS | |
| | | 1 | **7T-1099** | 2 | LINK | |
| M | 5 | 1 | **5C-7261** | 1 | NUT (M8X1.25-THD) | |
| | 6 | 1 | **8T-4121** | 5 | WASHER-HARD (11X21X2.5-MM THK) | |
| M | 7 | 1 | **8T-4136** | 4 | BOLT (M10X1.5X25-MM) | |
| M | 8 | 1 | **8T-4196** | 1 | BOLT (M10X1.5X35-MM) | |
| M | 9 | 1 | **127-2170** | 2 | SCREW-TRUSS HEAD (M8X1.25X20-MM) | |

M - METRIC PART
Y - SEPARATE ILLUSTRATION

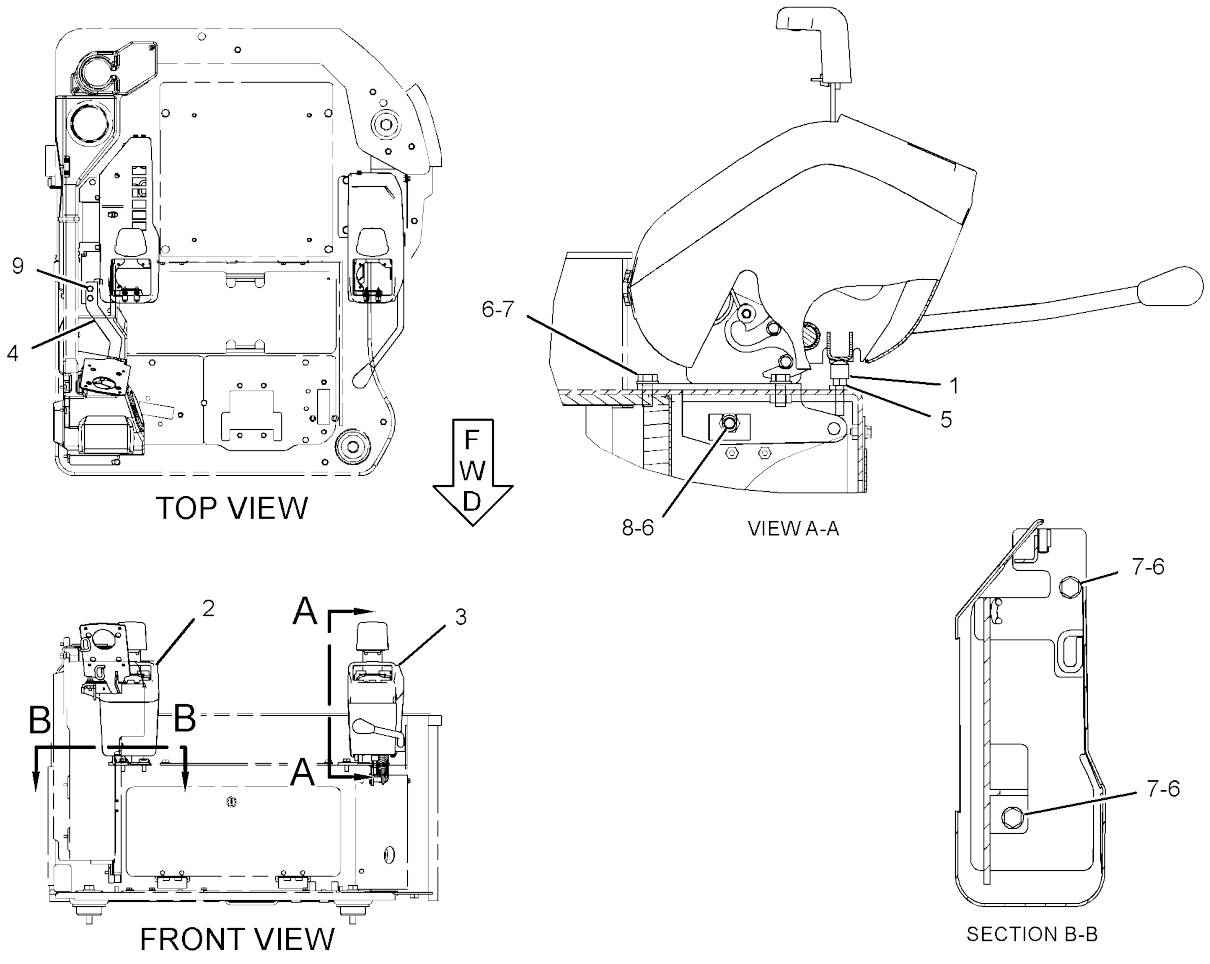


GRAPHIC #1 **<END>** g03315456

# OPERATOR STATION

## *379-3598* CONSOLE GP-OPERATOR-RH

**PART OF 379-3597 CONSOLE GP-OPERATOR**

**SMCS-5258, 7451** **i05263283**

| NOTE | REF NO | GRAPHIC REF | PART NUMBER | QTY | PART NAME 1 2 3 4 5 6 (PRODUCT LEVEL) | SEE PAGE |
|---|---|---|---|---|---|---|
| | 1 | 1 | **222-0668** | 2 | WASHER (6.5X13X1-MM THK) | |
| | 2 | 1 | **284-0850** | 2 | SCREW | |
| | 3 | 1 | **379-3600** | 1 | FRAME AS (RH) | |
| | 4 | 1 | **379-3608** | 1 | PLATE | |
| | 5 | 1 | **389-8764** | 1 | ARMREST | |
| | 6 | 1 | **379-3611** | 1 | COVER-UPPER | |
| | 7 | 1 | **379-3612** | 1 | COVER-LOWER | |
| | 8 | 1 | **389-8762** | 1 | PLATE | |
| M | 9 | 1 | **096-4034** | 2 | BOLT-WING (M6X1X15-MM) | |
| M | 10 | 1 | **1R-5396** | 2 | BOLT (M6X1X35-MM) | |
| M | 11 | 1 | **5C-9553** | 4 | BOLT (M6X1X16-MM) | |
| | 12 | 1 | **9X-8256** | 6 | WASHER (6.6X12X2-MM THK) | |

M - METRIC PART

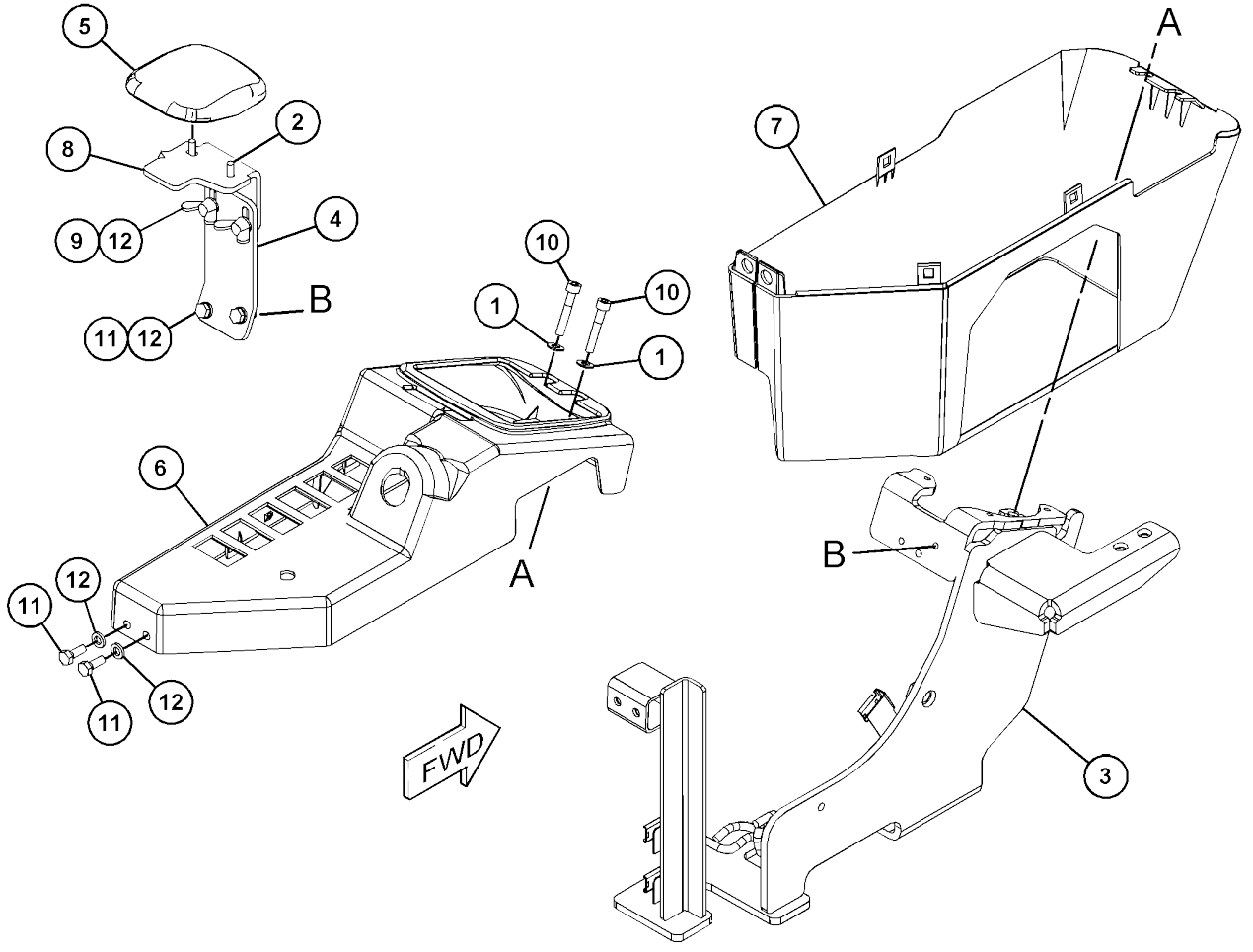


GRAPHIC #1 **<END>** g03403683

# OPERATOR STATION

## *379-3599* CONSOLE GP-OPERATOR–LH

**PART OF 379-3597 CONSOLE GP-OPERATOR**

**SMCS-5258, 7451** **i04589463**

| NOTE | REF NO | GRAPHIC REF | PART NUMBER | QTY | PART NAME 1 2 3 4 5 6 (PRODUCT LEVEL) | SEE PAGE |
|---|---|---|---|---|---|---|
| | 1 | 1 | **207-0785** | 1 | LOCKWASHER | |
| | 2 | 1 | **207-0797** | 3 | BUSHING | |
| | 3 | 1 | **207-0799** | 2 | BUSHING | |
| | 4 | 1 | **207-0800** | 2 | BUSHING | |
| | 5 | 1 | **211-7455** | 1 | KNOB | |
| | 6 | 1 | **222-0668** | 2 | WASHER (6.5X13X1-MM THK) | |
| | 7 | 1 | **281-8618** | 1 | PLATE AS | |
| | 8 | 1 | **281-8619** | 1 | LEVER AS | |
| | 9 | 1 | **281-8630** | 1 | SPRING | |
| | 10 | 1 | **281-8631** | 1 | SPRING | |
| | 11 | 1 | **284-0838** | 1 | BUSHING | |
| | 12 | 1 | **284-0839** | 1 | CLIP | |
| | 13 | 1 | **284-0840** | 1 | NUT | |
| | 14 | 1 | **284-0850** | 2 | SCREW | |
| | 15 | 1 | **327-1749** | 2 | RING | |
| | 16 | 1 | **379-3608** | 1 | PLATE | |
| | 17 | 1 | **379-3610** | 1 | PAD | |
| | 18 | 1 | **379-3613** | 1 | FRAME AS | |
| | 19 | 1 | **379-3614** | 1 | COVER-UPPER | |
| | 20 | 1 | **379-3615** | 1 | COVER-LOWER | |
| | 21 | 1 | **379-3616** | 1 | SUPPORT AS | |
| | 22 | 1 | **9X-8256** | 6 | WASHER (6.6X12X2-MM THK) | |
| M | 23 | 1 | **096-4034** | 2 | BOLT-WING (M6X1X15-MM) | |
| M | 24 | 1 | **1R-5396** | 2 | BOLT (M6X1X35-MM) | |
| M | 25 | 1 | **5C-9553** | 4 | BOLT (M6X1X16-MM) | |
| M | 26 | 1 | **8T-4189** | 1 | BOLT (M8X1.25X20-MM) | |
| | 27 | 1 | **379-3623** | 1 | PLATE | |

M - METRIC PART

*379-3599* **CONSOLE GP-OPERATOR (*contd.*)** **i04589463**

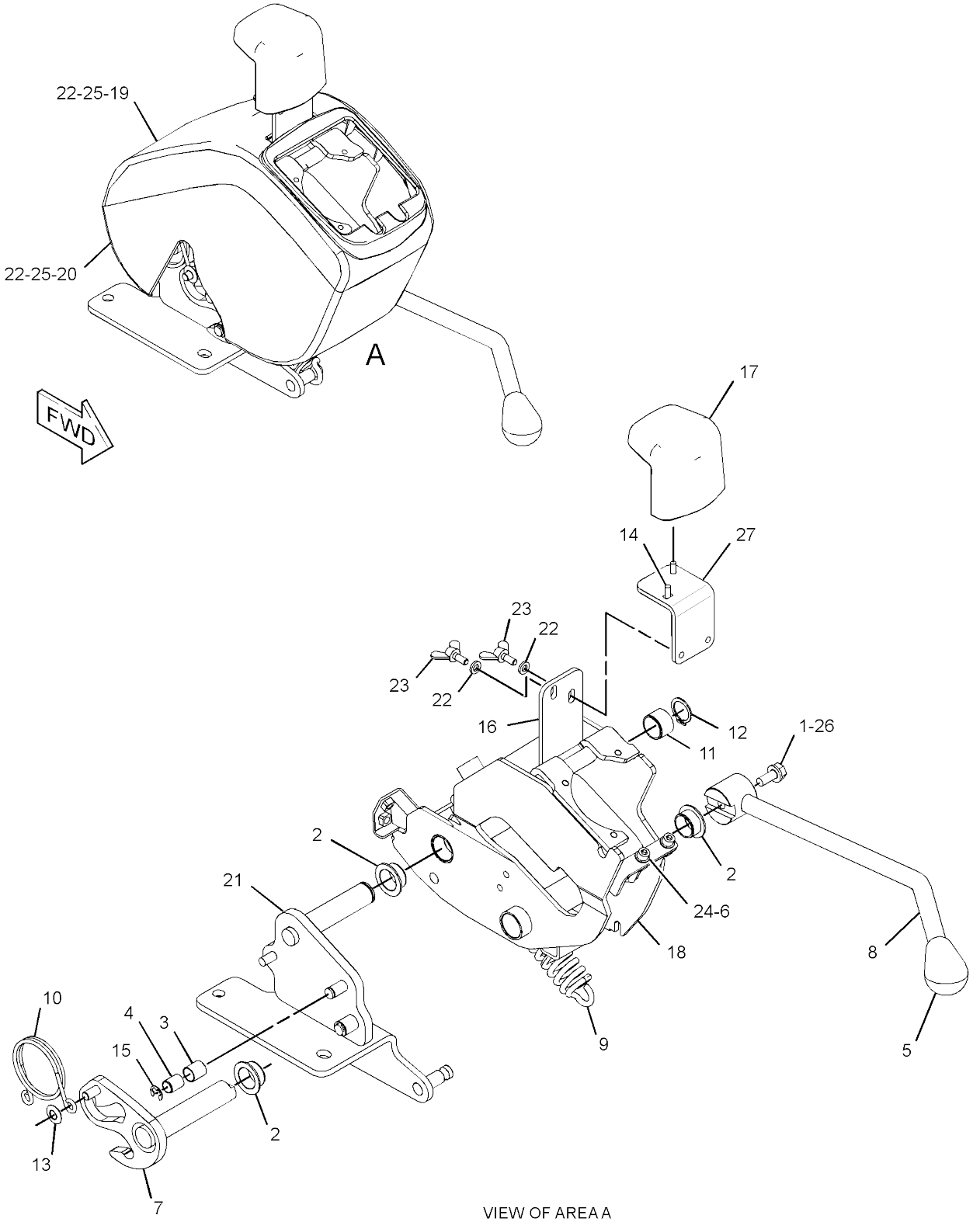


VIEW OF AREA A
(COVERS REMOVED FOR CLARITY)

GRAPHIC #1 **<END>** g02797063

# OPERATOR STATION

## *272-0474* CONTROL & MTG GP-PEDAL–TRAVEL

**PART OF 355-3393 CONTROL & MTG GP-PEDAL**

**SMCS-5051, 5063, 5462** **i03965115**

| NOTE | REF NO | GRAPHIC REF | PART NUMBER | QTY | PART NAME 1 2 3 4 5 6 (PRODUCT LEVEL) | SEE PAGE |
|---|---|---|---|---|---|---|
| | 1 | 1 | **275-0773** | 1 | PEDAL AS (LH) | |
| | 2 | 1 | **275-0774** | 1 | PEDAL AS (RH) | |
| | 3 | 1 | **2S-0736** | 4 | WASHER-HARD (17X27X3.5-MM THK) | |
| | 4 | 1 | **8T-4121** | 4 | WASHER-HARD (11X21X2.5-MM THK) | |
| M | 5 | 1 | **8T-4137** | 4 | BOLT (M10X1.5X20-MM) | |

M - METRIC PART

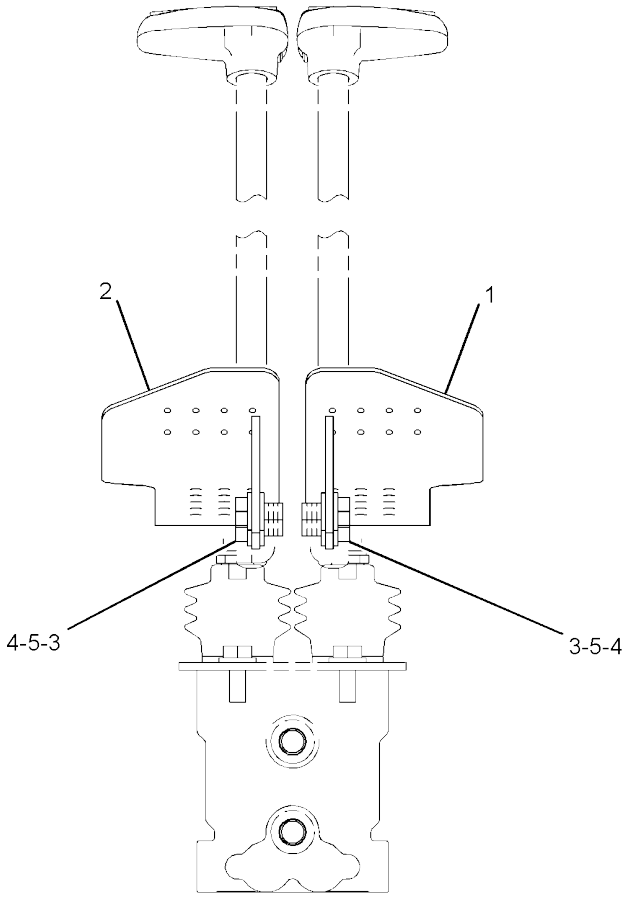


FRONT VIEW

GRAPHIC #1 **<END>** g01367791

# OPERATOR STATION

## *355-3393* CONTROL & MTG GP-PEDAL–TRAVEL

**PART OF 376-6672 COMMON AR**

**SMCS-5051, 5063, 5462** **i04006630**

| NOTE | PART NUMBER | QTY | PART NAME 1 2 3 4 5 6 (PRODUCT LEVEL) | SEE PAGE |
|---|---|---|---|---|
| Y | *272-0474* | 1 | CONTROL & MTG GP-PEDAL (TRAVEL) | 469 |

Y - SEPARATE ILLUSTRATION

<END>

# OPERATOR STATION

## *285-8286* CONTROL GP-HYDRAULIC HAND–TRAVEL

**PART OF 379-3624 OPERATOR AR**

**SMCS-5063, 5462** **i04019583**

| NOTE | REF NO | GRAPHIC REF | PART NUMBER | QTY | PART NAME 1 2 3 4 5 6 (PRODUCT LEVEL) | SEE PAGE |
|---|---|---|---|---|---|---|
| | 1 | 1 | **142-5546** | 2 | KNOB | |
| | 2 | 1 | **275-0775** | 1 | LEVER AS (LH) | |
| | 3 | 1 | **275-0776** | 1 | LEVER AS (RH) | |
| M | 4 | 1 | **8T-0337** | 2 | SCREW-MACHINE (M4X0.7X12-MM) | |
| | 5 | 1 | **096-6166** | 2 | WASHER-HARD (4.5X9X1-MM THK) | |
| | 6 | 1 | **8T-4121** | 4 | WASHER-HARD (11X21X2.5-MM THK) | |
| M | 7 | 1 | **8T-4191** | 4 | BOLT (M10X1.5X16-MM) | |

M - METRIC PART

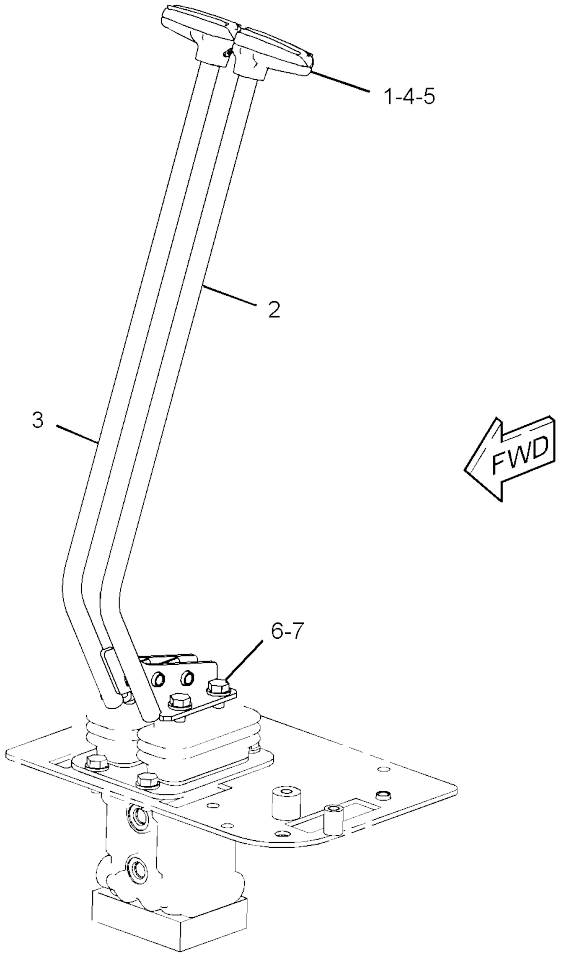


GRAPHIC #1 **<END>** g01240115

# OPERATOR STATION

## 376-8851 CONTROL GP-JOYSTICK-LH

**PART OF 379-2010 CONTROL GP-JOYSTICK**
**AN ATTACHMENT**

**SMCS-5063, 5705, 6107** **i04559360**

| NOTE | REF NO | GRAPHIC REF | PART NUMBER | QTY | PART NAME 1 2 3 4 5 6 (PRODUCT LEVEL) | SEE PAGE |
|---|---|---|---|---|---|---|
| | 1 | 1 | **376-8852** | 1 | CONTROL GP-HANDLE (LH) | |
| | | 1 | **8T-8729** | 4 | PIN-CONNECTOR (16-GA TO 18-GA) | |
| | | 1 | **8T-8737** | 2 | PLUG-SEAL | |
| | | 1 | **102-8805** | 1 | KIT-RECEPTACLE (6-PIN) | |
| | | | | | (INCLUDES RECEPTACLE AS & WEDGE) | |
| | 2 | 1 | **376-8853** | 1 | BOOT | |
| | 3 | 1 | **376-8854** | 1 | ADAPTER (LH) | |

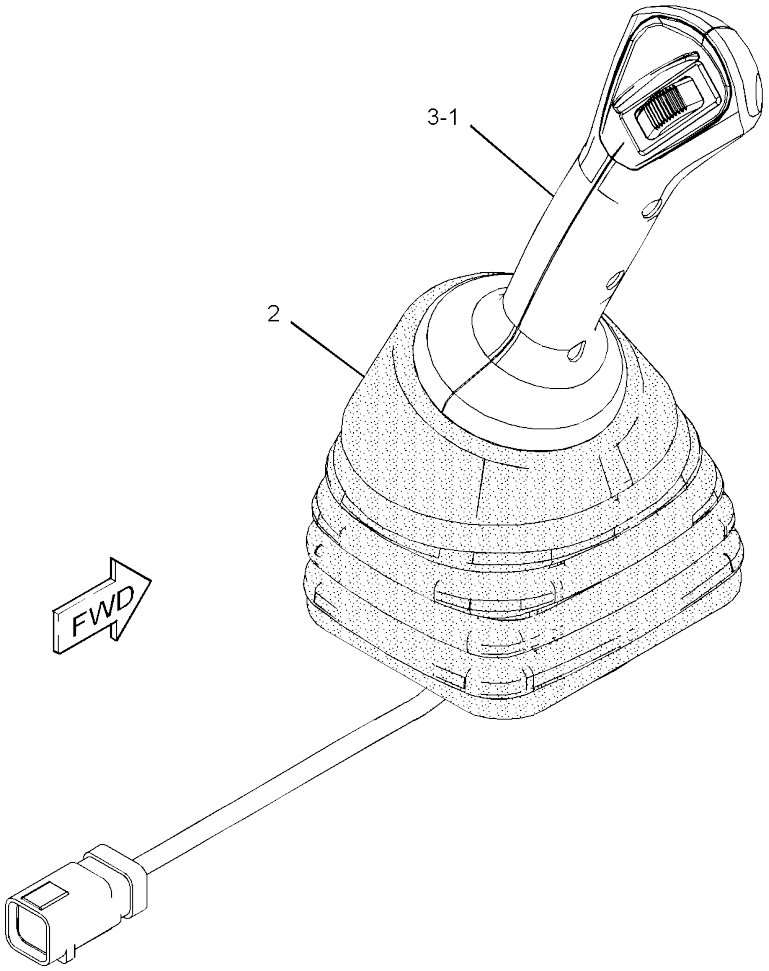


GRAPHIC #1 **<END>** g02767957

# OPERATOR STATION

## 376-8855 CONTROL GP-JOYSTICK–LH

**PART OF 376-9494 CONTROL GP-JOYSTICK**
**AN ATTACHMENT**

**SMCS-5063, 5705, 6107** **i04559361**

| NOTE | REF NO | GRAPHIC REF | PART NUMBER | QTY | PART NAME 1 2 3 4 5 6 (PRODUCT LEVEL) | SEE PAGE |
|---|---|---|---|---|---|---|
| | 1 | 1 | **376-8856** | 1 | CONTROL GP-HANDLE (LH) | |
| | | 1 | **8T-8729** | 6 | PIN-CONNECTOR (16-GA TO 18-GA) | |
| | | 1 | **102-8805** | 1 | KIT-RECEPTACLE (6-PIN) | |
| | | | | | (INCLUDES RECEPTACLE AS & WEDGE) | |
| | 2 | 1 | **376-8853** | 1 | BOOT | |
| | 3 | 1 | **376-8854** | 1 | ADAPTER (LH) | |

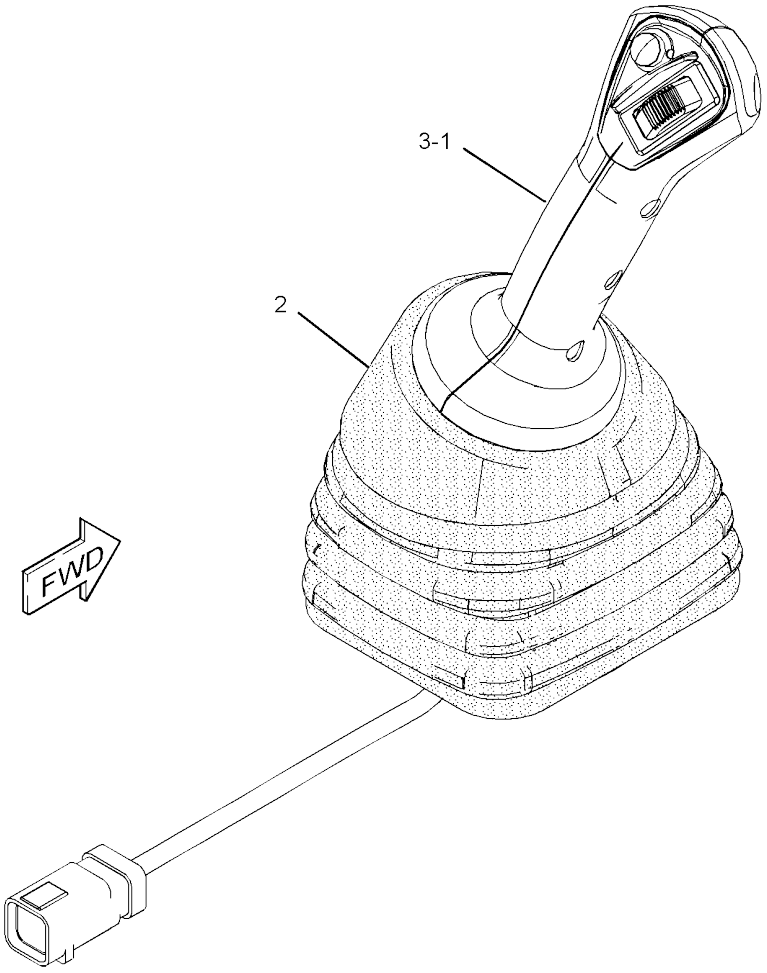


GRAPHIC #1 **<END>** g02768100

# OPERATOR STATION

## 376-9483 CONTROL GP-JOYSTICK-RH

**PART OF 376-9495 CONTROL GP-JOYSTICK**
**AN ATTACHMENT**

**SMCS-5063, 5705, 6107** **i04559362**

| NOTE | REF NO | GRAPHIC REF | PART NUMBER | QTY | PART NAME 1 2 3 4 5 6 (PRODUCT LEVEL) | SEE PAGE |
|---|---|---|---|---|---|---|
| | 1 | 1 | **376-9484** | 1 | CONTROL GP-HANDLE (RH) | |
| | | 1 | **8T-8729** | 6 | PIN-CONNECTOR (16-GA TO 18-GA) | |
| | | 1 | **102-8805** | 1 | KIT-RECEPTACLE (6-PIN) | |
| | | | | | (INCLUDES RECEPTACLE AS & WEDGE) | |
| | 2 | 1 | **376-9485** | 1 | BOOT | |
| | 3 | 1 | **376-9486** | 1 | ADAPTER (RH) | |

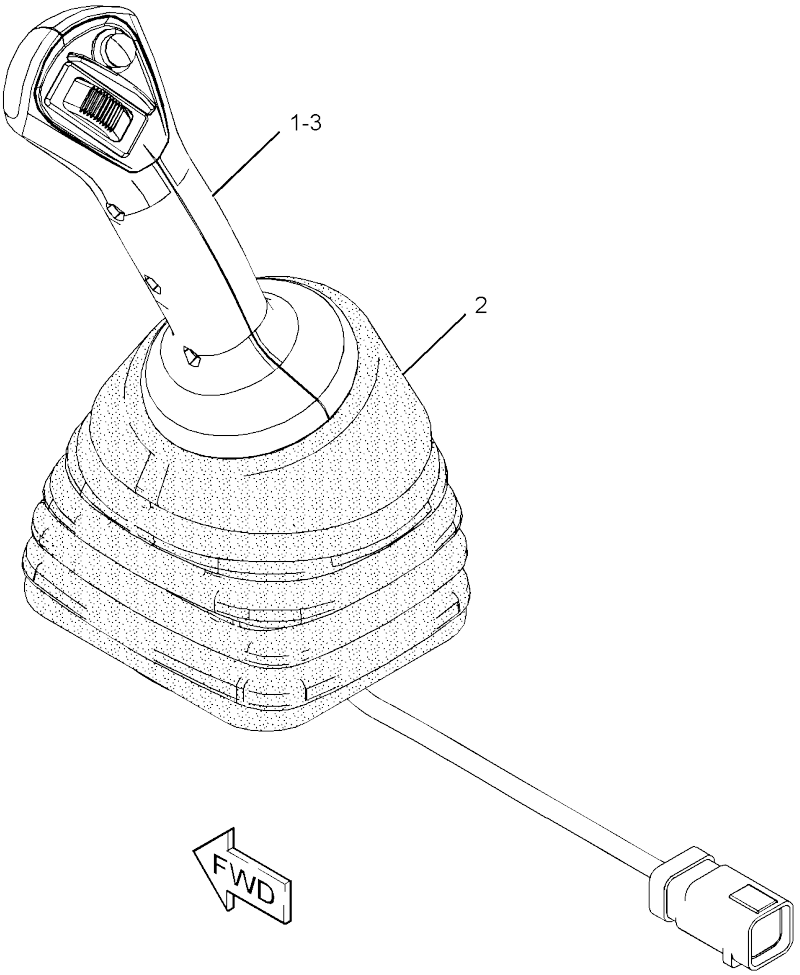


GRAPHIC #1 **<END>** g02768176

# OPERATOR STATION

## *376-9494* CONTROL GP-JOYSTICK–LH

**PART OF 378-2497 CONTROL GP-PILOT OPERATED HYD**
**AN ATTACHMENT**

**SMCS-5063, 5705, 6107** **i04559363**

| NOTE | REF NO | GRAPHIC REF | PART NUMBER | QTY | PART NAME 1 2 3 4 5 6 (PRODUCT LEVEL) | SEE PAGE |
|---|---|---|---|---|---|---|
| M | 1 | 1 | **096-4876** | 1 | NUT (M14X2-THD) | |
| Y | 2 | 1 | **267-0420** | 1 | VALVE GP-PILOT (JOYSTICK) | 342 |
| Y | 3 | 1 | **376-8855** | 1 | CONTROL GP-JOYSTICK (LH) | 473 |

M - METRIC PART
Y - SEPARATE ILLUSTRATION

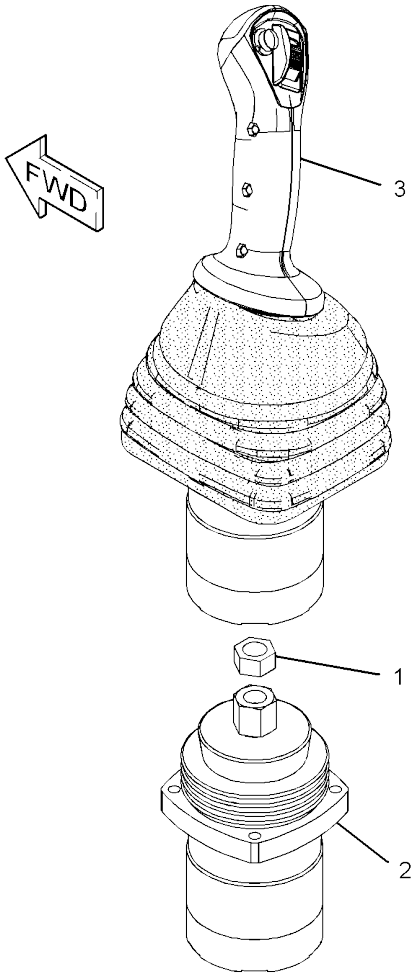


GRAPHIC #1 **<END>** g02768217

# OPERATOR STATION

## *376-9495* CONTROL GP-JOYSTICK–RH

**PART OF 378-2495, 378-2497 CONTROL GP-PILOT OPERATED HYD AN ATTACHMENT**

**SMCS-5063, 5705, 6107** **i04559364**

| NOTE | REF NO | GRAPHIC REF | PART NUMBER | QTY | PART NAME 1 2 3 4 5 6 (PRODUCT LEVEL) | SEE PAGE |
|---|---|---|---|---|---|---|
| M | 1 | 1 | **096-4876** | 1 | NUT (M14X2-THD) | |
| Y | 2 | 1 | **267-0420** | 1 | VALVE GP-PILOT (JOYSTICK) | 342 |
| Y | 3 | 1 | **376-9483** | 1 | CONTROL GP-JOYSTICK (RH) | 474 |

M - METRIC PART
Y - SEPARATE ILLUSTRATION

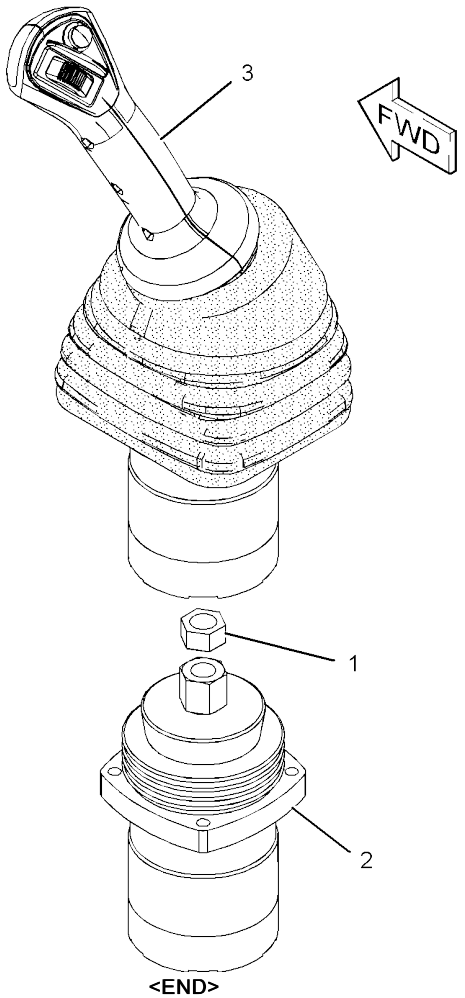


GRAPHIC #1 **<END>** g02768256

# *379-2010* CONTROL GP-JOYSTICK–LH

**PART OF 378-2495 CONTROL GP-PILOT OPERATED HYD**
**AN ATTACHMENT**

**SMCS-5063, 5705, 6107** **i04559504**

| NOTE | REF NO | GRAPHIC REF | PART NUMBER | QTY | PART NAME 1 2 3 4 5 6 (PRODUCT LEVEL) | SEE PAGE |
|---|---|---|---|---|---|---|
| M | 1 | 1 | **096-4876** | 1 | NUT (M14X2-THD) | |
| Y | 2 | 1 | **267-0420** | 1 | VALVE GP-PILOT (JOYSTICK) | 342 |
| Y | 3 | 1 | **376-8851** | 1 | CONTROL GP-JOYSTICK (LH) | 472 |

M - METRIC PART
Y - SEPARATE ILLUSTRATION

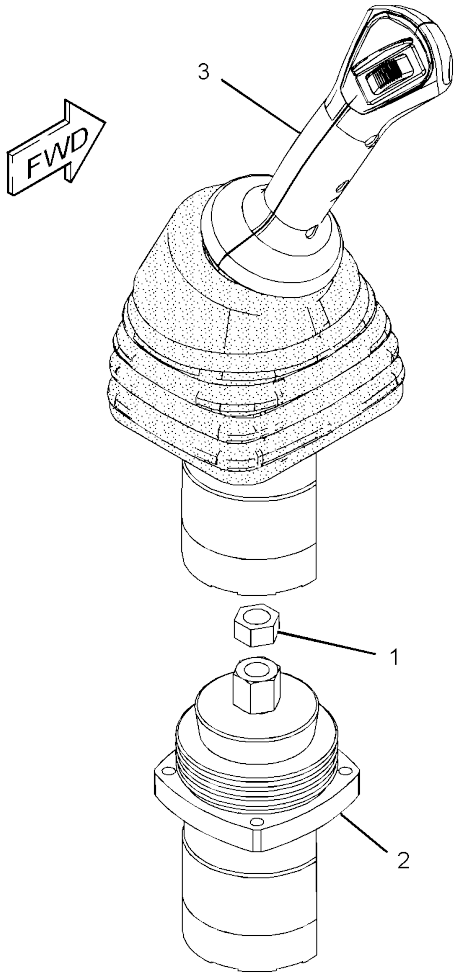


GRAPHIC #1 **<END>** g02768297

# OPERATOR STATION

## *377-5958* CONTROL GP-PILOT OPERATED HYD–BLADE

**S/N: RKY1-1465**
**PART OF 377-8920 BLADE AR-STRAIGHT**
**AN ATTACHMENT**

**SMCS-5059, 5705** **i04560857**

| NOTE | REF NO | GRAPHIC REF | PART NUMBER | QTY | PART NAME 1 2 3 4 5 6 (PRODUCT LEVEL) | SEE PAGE |
|---|---|---|---|---|---|---|
| Y | 1 | 1 | **320-6540** | 1 | VALVE GP-PILOT (BLADE CONTROL) | 343 |
| | 2 | 1 | **376-8857** | 1 | LEVER AS | |
| | | 1 | **102-8802** | 1 | KIT-RECEPTACLE (2-PIN) | |
| | | | | | (INCLUDES RECEPTACLE AS & WEDGE) | |
| | | 1 | **376-9493** | 1 | GROMMET | |
| M | 3 | 1 | **101-7404** | 2 | BOLT-SOCKET HEAD (M10X1.5X30-MM) | |
| M | 4 | 1 | **8T-4192** | 1 | BOLT (M12X1.75X25-MM) | |
| | 5 | 1 | **8T-4223** | 1 | WASHER-HARD (13.5X25.5X3-MM THK) | |

M - METRIC PART
Y - SEPARATE ILLUSTRATION

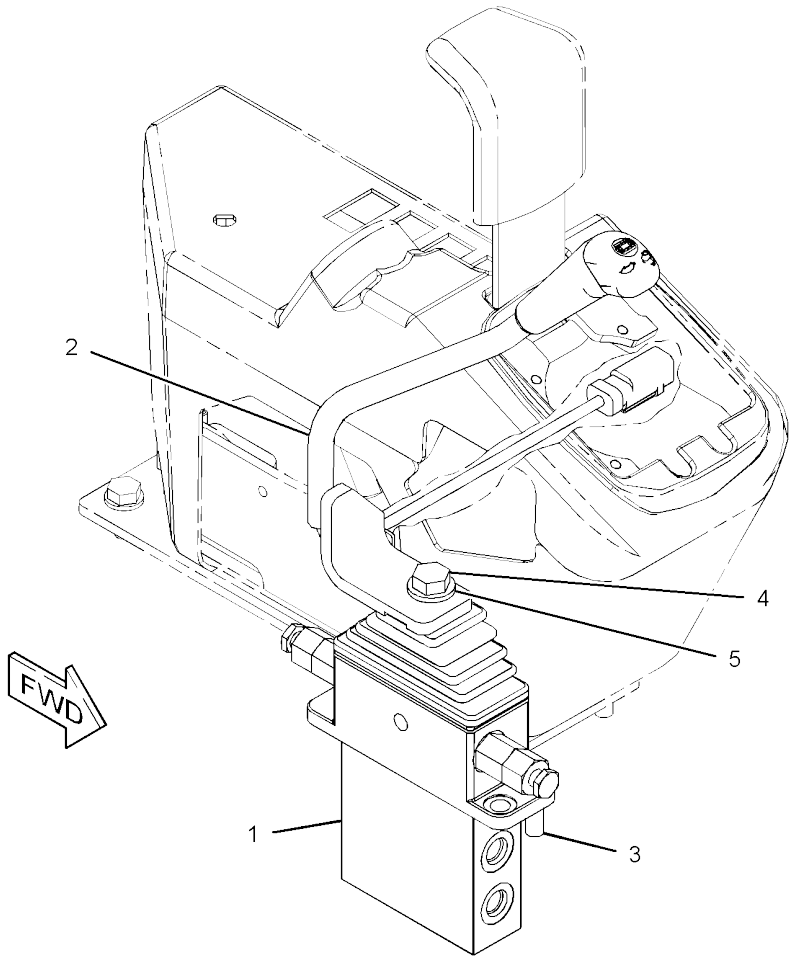


GRAPHIC #1 **<END>** g02767539

# OPERATOR STATION

## *378-2495* CONTROL GP-PILOT OPERATED HYD

**PART OF 378-2501 CONTROL AR-HYDRAULIC**
**AN ATTACHMENT**

**SMCS-5059, 5705** **i04559494**

| NOTE | REF NO | GRAPHIC REF | PART NUMBER | QTY | PART NAME 1 2 3 4 5 6 (PRODUCT LEVEL) | SEE PAGE |
|---|---|---|---|---|---|---|
| Y | 1 | 1 | *376-9495* | 1 | CONTROL GP-JOYSTICK (RH) | 476 |
| Y | 2 | 1 | *379-2010* | 1 | CONTROL GP-JOYSTICK (LH) | 477 |
| M | 3 | 1 | **3T-0849** | 6 | BOLT-SOCKET HEAD (M6X1X25-MM) | |

M - METRIC PART
Y - SEPARATE ILLUSTRATION

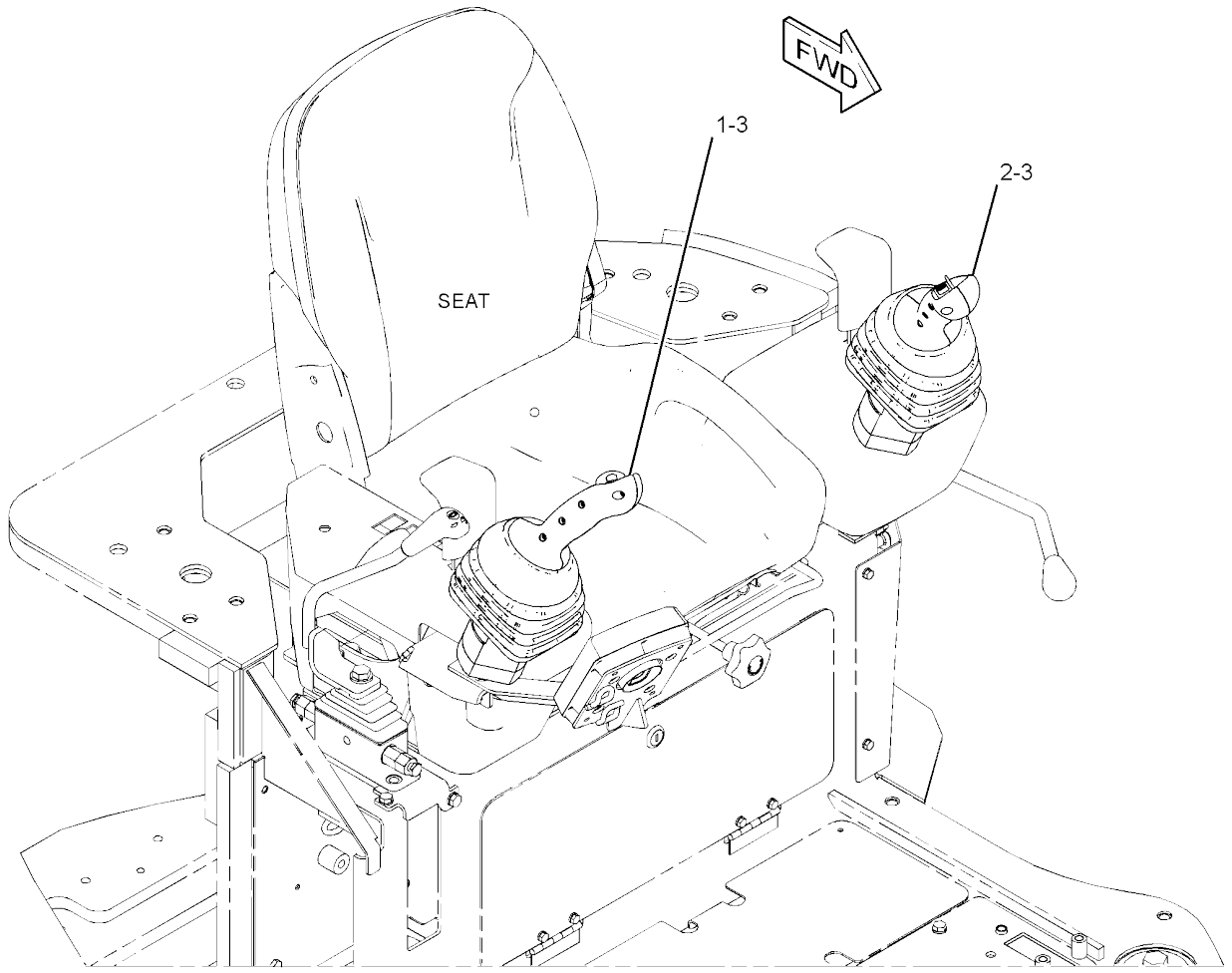


GRAPHIC #1 **<END>** g02765916

# OPERATOR STATION

## *378-2497* CONTROL GP-PILOT OPERATED HYD–2ND AUXILIARY

**PART OF 378-2500 CONTROL AR-HYDRAULIC**
**AN ATTACHMENT**

**SMCS-5059, 5705** **i04559496**

| NOTE | REF NO | GRAPHIC REF | PART NUMBER | QTY | PART NAME 1 2 3 4 5 6 (PRODUCT LEVEL) | SEE PAGE |
|---|---|---|---|---|---|---|
| Y | 1 | 1 | *376-9494* | 1 | CONTROL GP-JOYSTICK (LH) | 475 |
| Y | 2 | 1 | *376-9495* | 1 | CONTROL GP-JOYSTICK (RH) | 476 |
| M | 3 | 1 | **3T-0849** | 6 | BOLT-SOCKET HEAD (M6X1X25-MM) | |

M - METRIC PART
Y - SEPARATE ILLUSTRATION

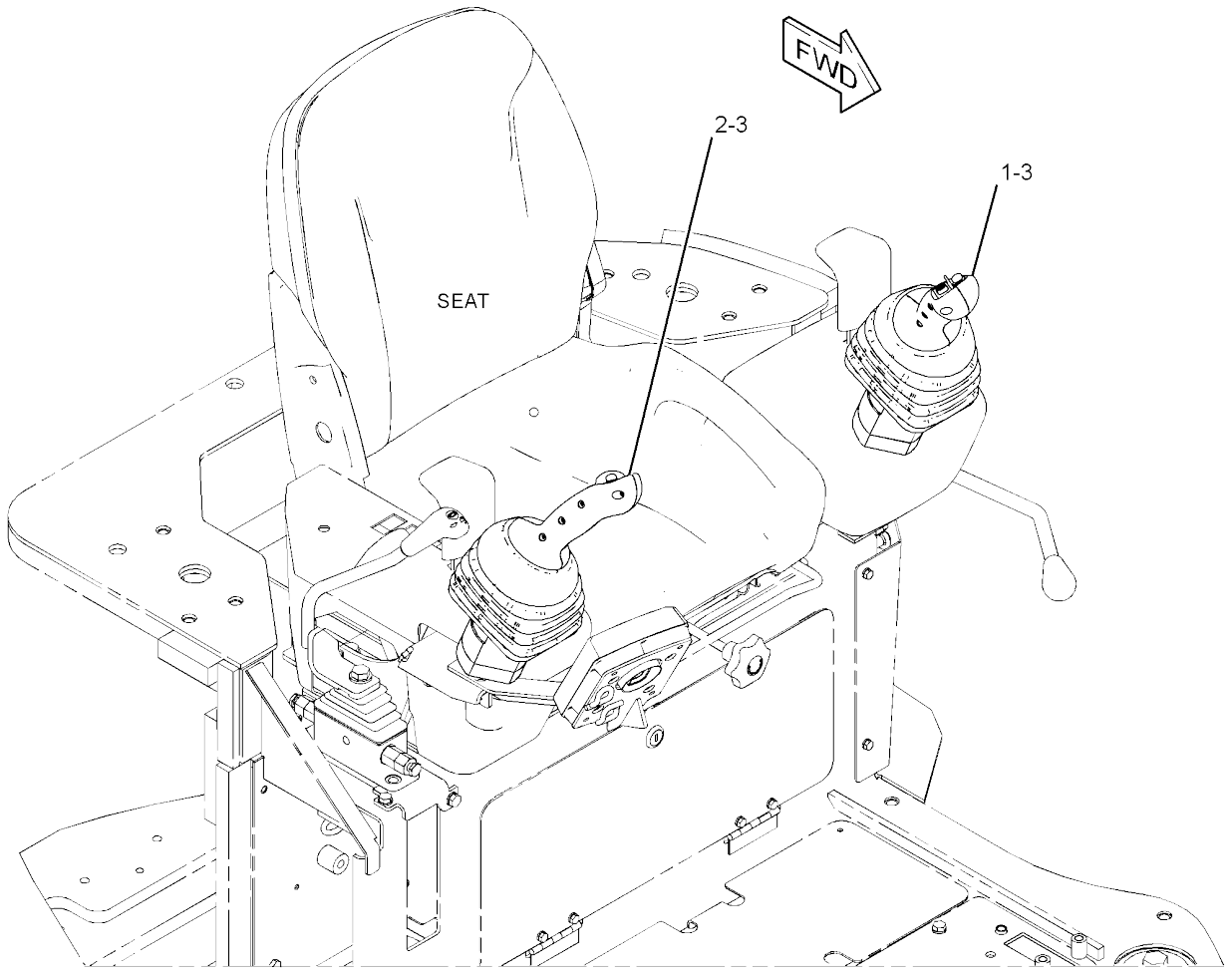


GRAPHIC #1 **<END>** g02765779

# *382-0522* CONTROL GP-PILOT OPERATED HYD–BLADE

**S/N: RKY1-1465**
**PART OF 377-8930 BLADE AR-ANGLING**
**AN ATTACHMENT**

**SMCS-5059, 5705** **i04658611**

| NOTE | REF NO | GRAPHIC REF | PART NUMBER | QTY | PART NAME 1 2 3 4 5 6 (PRODUCT LEVEL) | SEE PAGE |
|---|---|---|---|---|---|---|
| Y | 1 | 1 | **320-6540** | 1 | VALVE GP-PILOT (BLADE CONTROL) | 343 |
| | 2 | 1 | **8T-4223** | 1 | WASHER-HARD (13.5X25.5X3-MM THK) | |
| M | 3 | 1 | **101-7404** | 2 | BOLT-SOCKET HEAD (M10X1.5X30-MM) | |
| M | 4 | 1 | **8T-4192** | 1 | BOLT (M12X1.75X25-MM) | |
| | 5 | 1 | **385-1276** | 1 | LEVER AS (ANGLE BLADE) | |
| | | 1 | **102-8802** | 1 | KIT-RECEPTACLE (2-PIN) | |
| | | 1 | **102-8804** | 1 | KIT-RECEPTACLE (4-PIN) (EACH RECEPTACLE KIT INCLUDES RECEPTACLE AS & WEDGE) | |
| | | 1 | **376-9493** | 1 | GROMMET | |

M - METRIC PART
Y - SEPARATE ILLUSTRATION

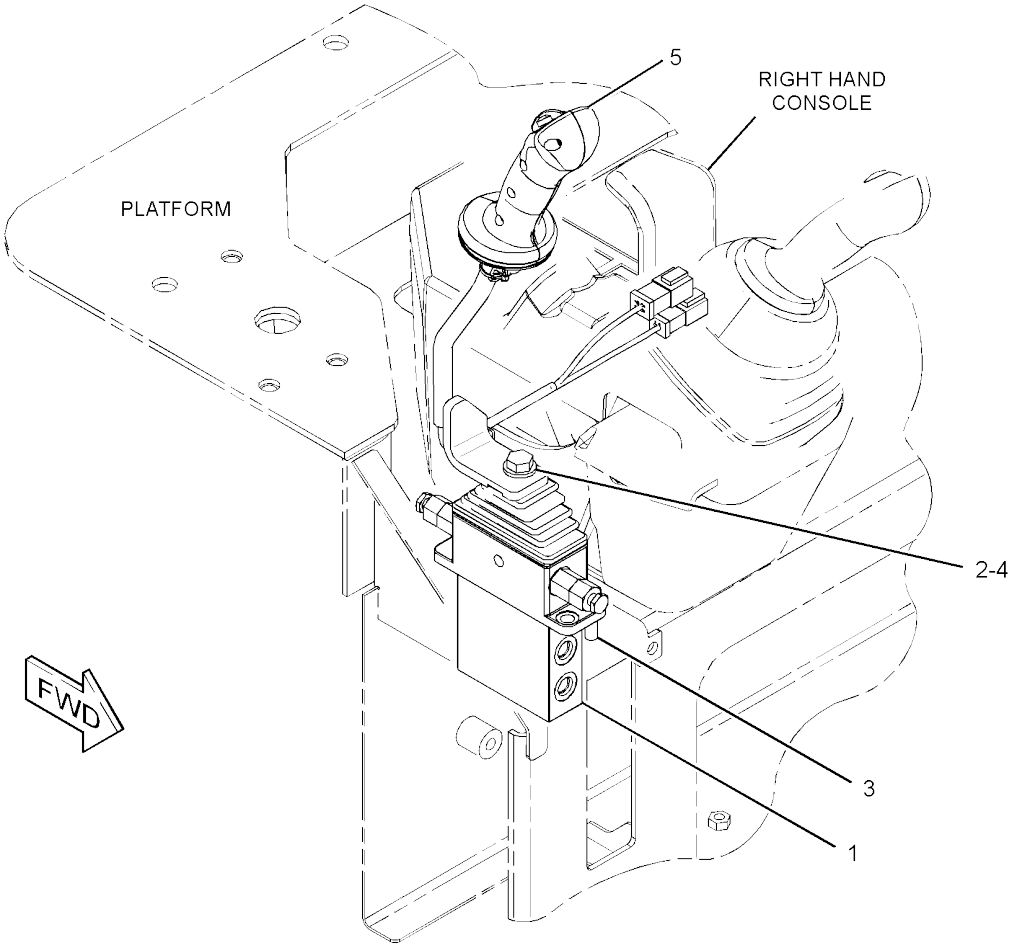


GRAPHIC #1 **<END>** g02808996

# *419-1204* CONTROL GP-PILOT OPERATED HYD

**S/N: RKY1466-UP**
**PART OF 377-8930 BLADE AR-ANGLING**
**AN ATTACHMENT**

**SMCS-5059, 5705** **i05357761**

| NOTE | REF NO | GRAPHIC REF | PART NUMBER | QTY | PART NAME 1 2 3 4 5 6 (PRODUCT LEVEL) | SEE PAGE |
|---|---|---|---|---|---|---|
| | 1 | 1 | **385-1276** | 1 | LEVER AS (ANGLE BLADE) | |
| | | 1 | **102-8802** | 1 | KIT-RECEPTACLE (2-PIN) | |
| | | 1 | **102-8804** | 1 | KIT-RECEPTACLE (4-PIN) | |
| | | | | | (EACH RECEPTACLE KIT INCLUDES RECEPTACE AS & WEDGE) | |
| M | 2 | 1 | **8T-4192** | 1 | BOLT (M12X1.75X25-MM) | |
| | 3 | 1 | **8T-4223** | 1 | WASHER-HARD (13.5X25.5X3-MM THK) | |

M - METRIC PART

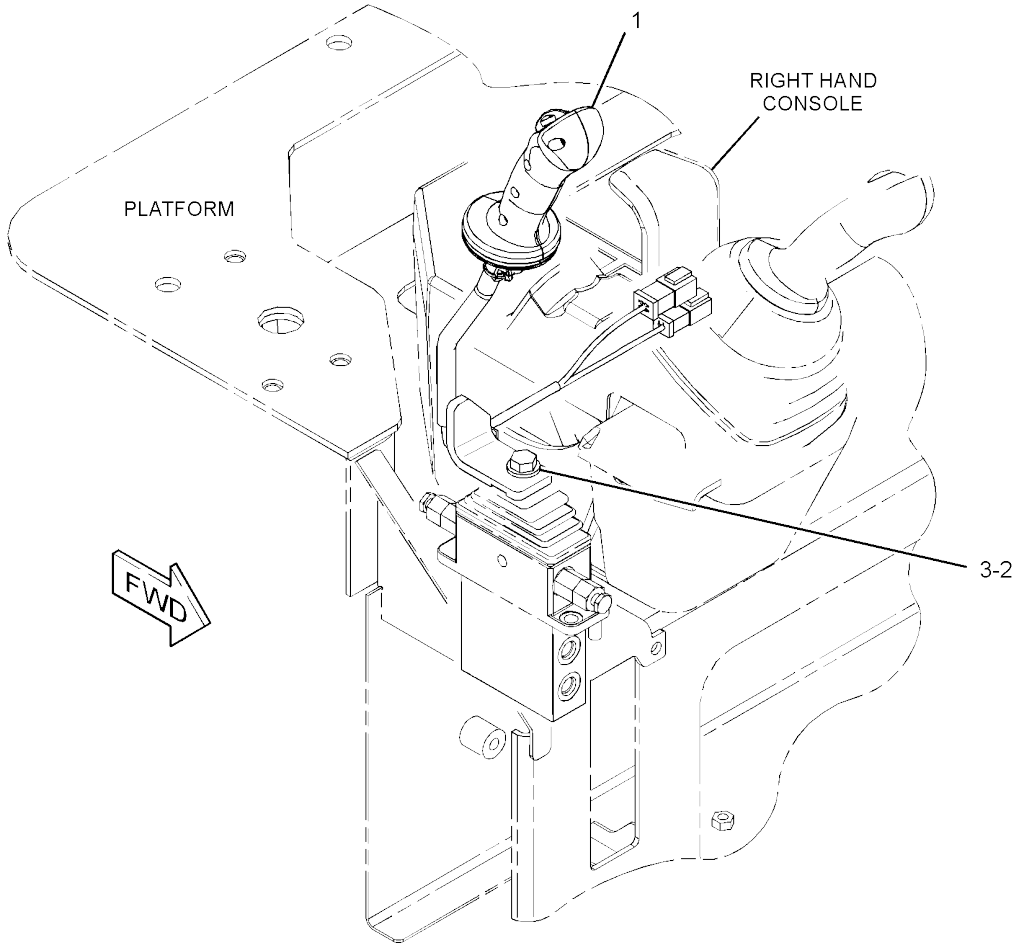


GRAPHIC #1 **<END>** g03404593

# *421-2716* CONTROL GP-PILOT OPERATED HYD–BLADE

**S/N: RKY1466-UP**
**PART OF 377-8920 BLADE AR-STRAIGHT**
**AN ATTACHMENT**

**SMCS-5059, 5705** **i05270706**

| NOTE | REF NO | GRAPHIC REF | PART NUMBER | QTY | PART NAME 1 2 3 4 5 6 (PRODUCT LEVEL) | SEE PAGE |
|---|---|---|---|---|---|---|
| | 1 | 1 | **376-8857** | 1 | LEVER AS | |
| | | 1 | **102-8802** | 1 | KIT-RECEPTACLE (2-PIN) | |
| | | | | | (INCLUDES RECEPTACLE AS & WEDGE) | |
| M | 2 | 1 | **8T-4192** | 1 | BOLT (M12X1.75X25-MM) | |
| | 3 | 1 | **8T-4223** | 1 | WASHER-HARD (13.5X25.5X3-MM THK) | |

M - METRIC PART

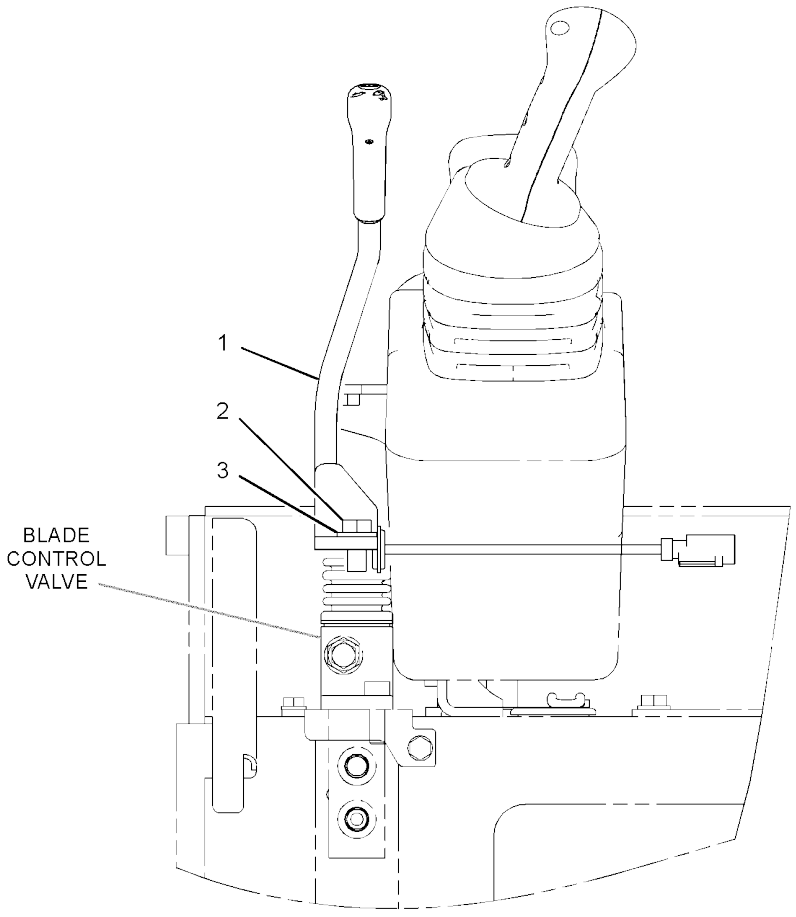


FRONT VIEW

GRAPHIC #1 **<END>** g03411556

# OPERATOR STATION

## *382-0501* COVER GP-ACCESS

**PART OF 377-8933, 383-5929 CANOPY AR**
**AN ATTACHMENT**

**SMCS-726A, 7451** **i04824662**

| NOTE | REF NO | GRAPHIC REF | PART NUMBER | QTY | PART NAME 1 2 3 4 5 6 (PRODUCT LEVEL) | SEE PAGE |
|---|---|---|---|---|---|---|
| | 1 | 1 | **332-1809** | 1 | PLUG | |
| | 2 | 1 | *389-8753* | 1 | COVER AS-ACCESS | |
| | | 1 | **382-0502** | 1 | COVER | |
| | | 1 | **382-0503** | 1 | SEAL | |
| | | 1 | **382-6315** | 1 | SEAL | |
| | 3 | 1 | **8T-4224** | 1 | WASHER-HARD (8.8X16X2-MM THK) | |
| | 4 | 1 | **382-0543** | 1 | HOLDER-CUP | |
| M | 5 | 1 | **8T-7547** | 1 | BOLT (M8X1.25X30-MM) | |
| | 6 | 1 | **8T-4121** | 2 | WASHER-HARD (11X21X2.5-MM THK) | |
| M | 7 | 1 | **8T-4137** | 2 | BOLT (M10X1.5X20-MM) | |

M - METRIC PART

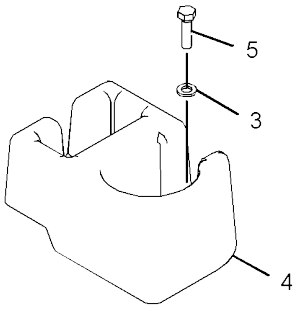


VIEW OF AREA A
(EXPLODE)

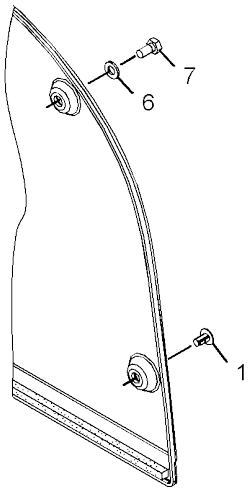


VIEW OF AREA B
(EXPLODE)

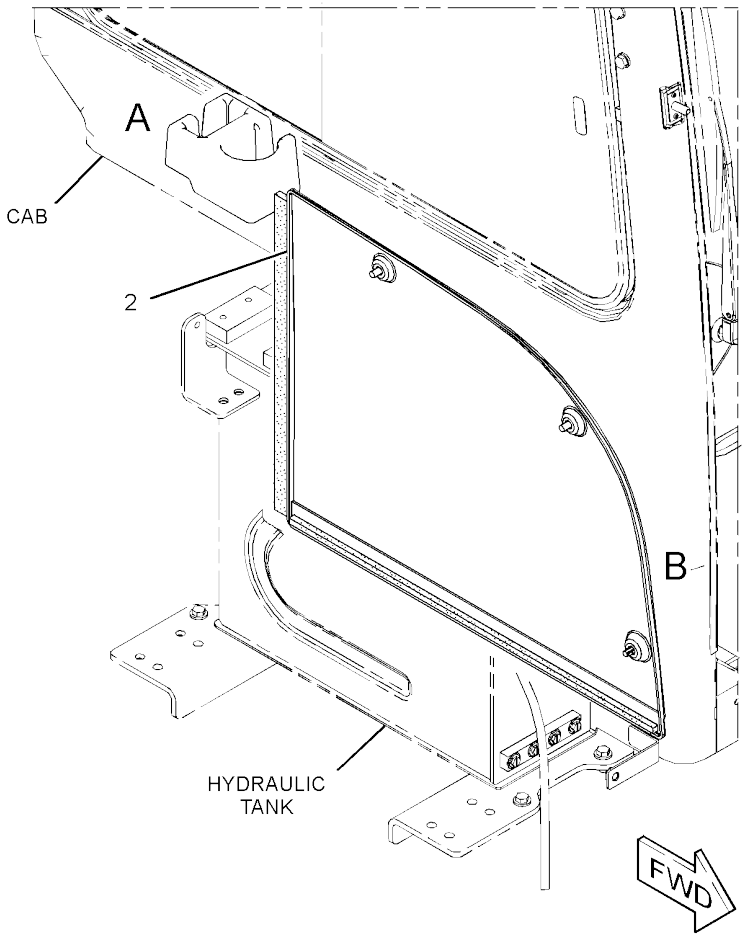


GRAPHIC #1

**<END>**

g02959380

## *367-0950* COVER GP-CAB–TOP

**PART OF 376-6692, 376-6696, 383-5927, 383-5928 CAB AR**
**AN ATTACHMENT**

**SMCS-7301** **i04617849**

| NOTE | REF NO | GRAPHIC REF | PART NUMBER | QTY | PART NAME 1 2 3 4 5 6 (PRODUCT LEVEL) | SEE PAGE |
|---|---|---|---|---|---|---|
| | 1 | 1 | **377-7942** | 1 | COVER AS-TOP | |
| | | 1 | **377-7944** | 1 | FOAM | |
| | | 1 | **379-6417** | 1 | INSULATION | |
| | 2 | 1 | **7X-7729** | 3 | WASHER (11X25X3-MM THK) | |
| M | 3 | 1 | **8T-4137** | 1 | BOLT (M10X1.5X20-MM) | |
| M | 4 | 1 | **8T-4196** | 2 | BOLT (M10X1.5X35-MM) | |

M - METRIC PART

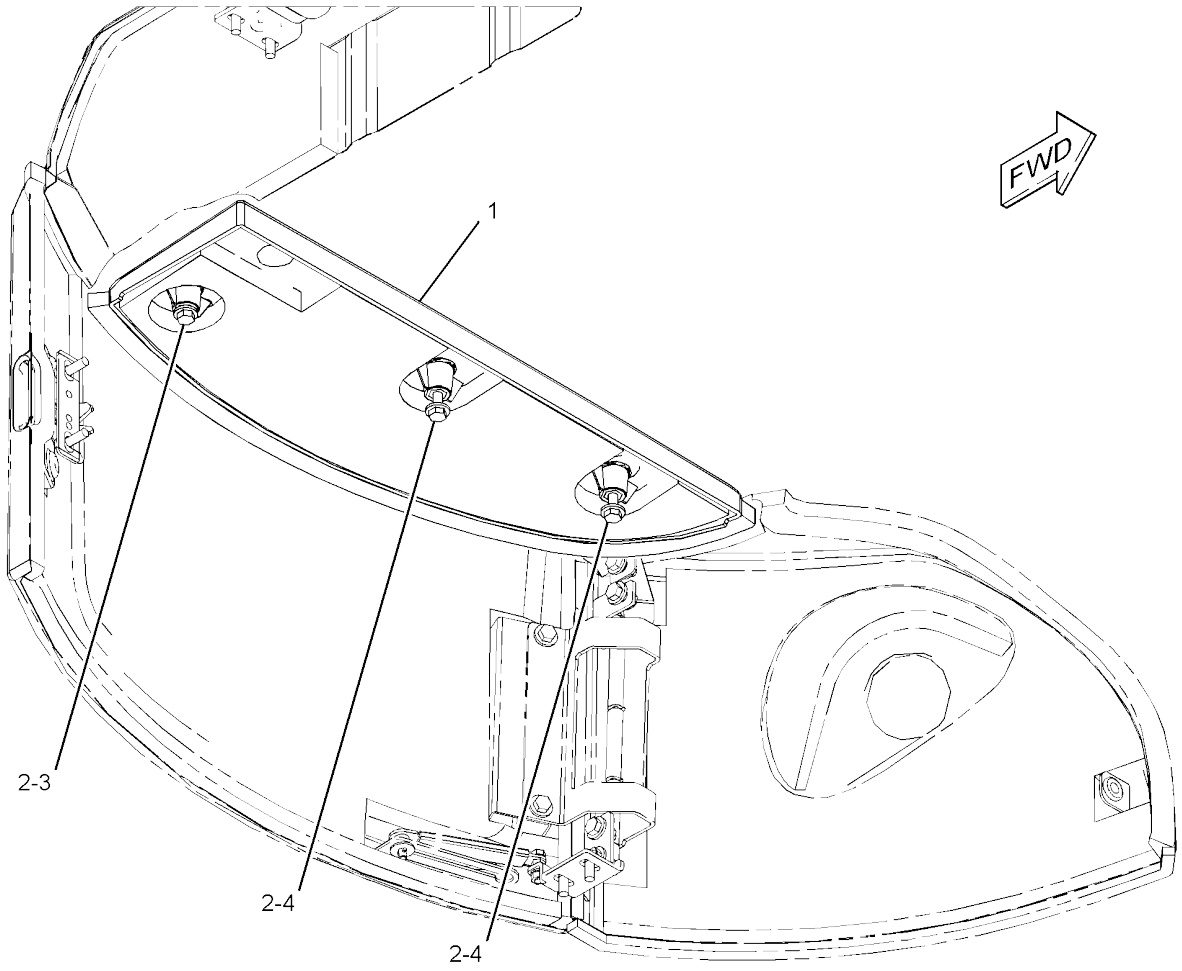


GRAPHIC #1 **<END>** g02789131

# OPERATOR STATION

## *281-1195* DOOR GP-CAB

**PART OF 377-5108, 415-6803, 419-1237 CAB GP**
**AN ATTACHMENT**

**SMCS-7308** **i03965395**

| NOTE | REF NO | GRAPHIC REF | PART NUMBER | QTY | PART NAME 1 2 3 4 5 6 (PRODUCT LEVEL) | SEE PAGE |
|---|---|---|---|---|---|---|
| | 1 | 1 | **281-1196** | 1 | DOOR AS-CAB | |
| | 2 | 1 | **280-7544** | 1 | HANDLE | |
| M | 3 | 1 | **5C-2890** | 2 | NUT (M6X1-THD) | |
| | 4 | 1 | **196-1441** | 1 | LOCK AS | |
| | 5 | 1 | **132-7625** | 1 | LOCK AS | |
| | 6 | 1 | **280-7548** | 1 | LOCK AS | |
| M | 7 | 1 | **8T-4171** | 4 | BOLT (M6X1X12-MM) | |
| | 8 | 1 | **277-6030** | 1 | HANDLE | |
| | 9 | 1 | **281-6262** | 2 | SCREW (M5X0.8X20-MM) | |
| | 10 | 1 | **277-6031** | 1 | HANDLE | |
| | 11 | 1 | **281-6263** | 2 | SCREW (M3X16-MM) | |
| | 12 | 1 | **281-1200** | 2 | LOCKNUT (M3X0.5-THD) | |
| | 13 | 1 | **293-3116** | 1 | ROD AS | |
| M | 14 | 1 | **095-0742** | 2 | SCREW-MACHINE (M6X1X16-MM) | |
| | 15 | 1 | **281-6264** | 2 | BOLT (M8X16-MM) | |
| | 16 | 1 | **280-7552** | 1 | COVER | |
| | 17 | 1 | **281-3650** | 1 | SEAL | |
| | 18 | 1 | **277-6032** | 1 | COVER | |
| | 19 | 1 | **280-7554** | 3 | WASHER-CONICAL (6.5X15.8X5.4-MM THK) | |
| | 20 | 1 | **281-6265** | 3 | SCREW (M6X16-MM) | |
| | 21 | 1 | **281-5481** | 1 | SCREW (M6X16-MM) | |
| | 22 | 1 | **281-1199** | 1 | BRACKET-ROLLER | |
| | 23 | 1 | **280-0408** | 6 | BOLT | |
| | 24 | 1 | **280-7555** | 1 | BRACKET | |
| | 25 | 1 | **280-7559** | 1 | BRACKET | |
| | 26 | 1 | **280-7561** | 1 | GLASS (LH) | |
| | 27 | 1 | **281-3655** | 1 | CUSHION | |
| | 28 | 1 | **280-7562** | 1 | SEAL | |
| | 29 | 1 | **280-8624** | 1 | SEAL | |

M - METRIC PART

*281-1195* **DOOR GP-CAB (*contd.*)** **i03965395**

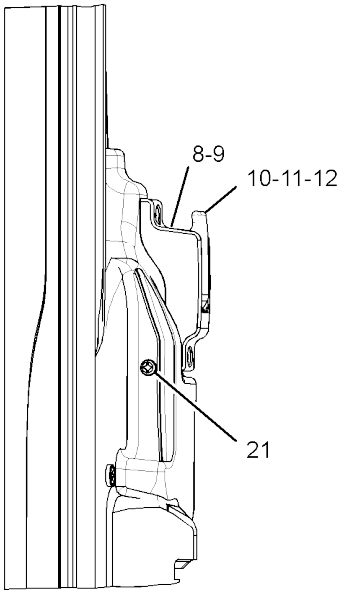


VIEW A-A

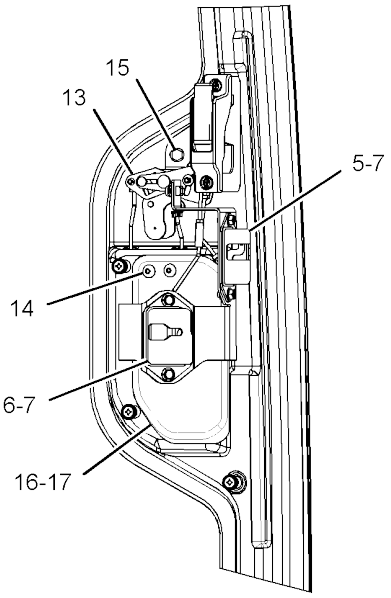


VIEW OF AREA B

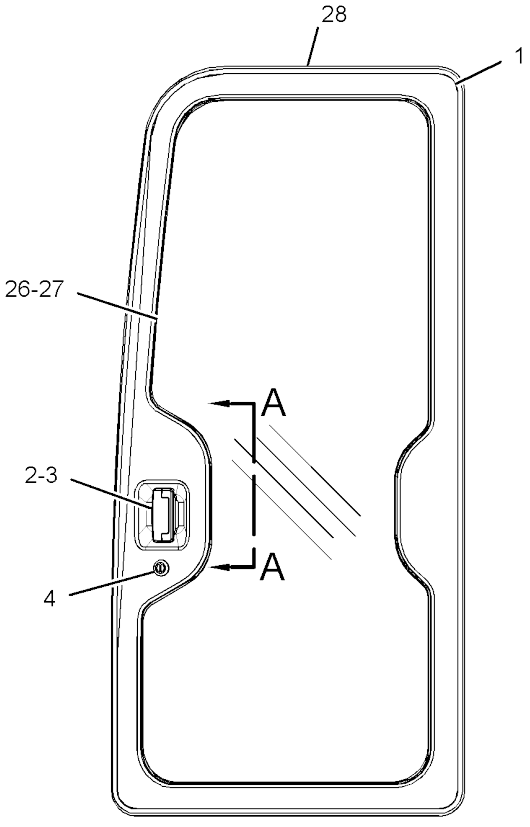


LEFT SIDE VIEW

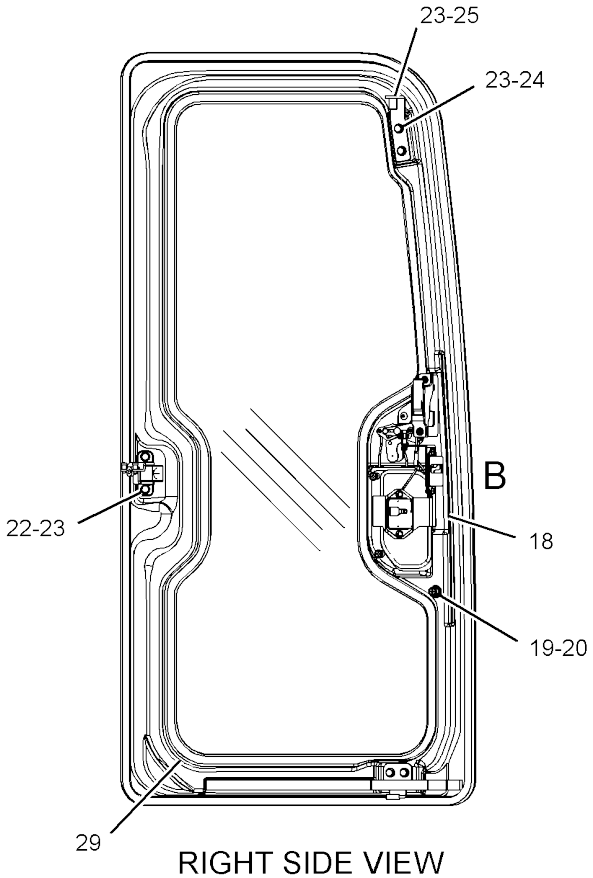


RIGHT SIDE VIEW
(INSIDE CAB)

GRAPHIC #1 **<END>** g01288327

# OPERATOR STATION

## *377-5865* DUCT GP-CAB AIR

**PART OF 377-5876 AIR CONDITIONER GP**
**AN ATTACHMENT**

**SMCS-734D** **i04565445**

| NOTE | REF NO | GRAPHIC REF | PART NUMBER | QTY | PART NAME 1 2 3 4 5 6 (PRODUCT LEVEL) | SEE PAGE |
|---|---|---|---|---|---|---|
| | 1 | 1 | **8Y-6967** | 2 | LOUVER AS-VENT | |
| | 2 | 1 | **171-4046** | 2 | LOUVER AS | |
| M | 3 | 1 | **225-3322** | 3 | SCREW-TRUSS HEAD (M6X1X10-MM) | |
| | 4 | 1 | **377-5866** | 1 | DUCT AS-FRONT | |
| | | 1 | **377-5868** | 1 | INSULATION | |
| | | 1 | **377-5869** | 1 | INSULATION | |
| | 5 | 1 | **377-5870** | 1 | DUCT AS-REAR | |
| | 6 | 1 | **377-5871** | 1 | DUCT AS | |
| | | 1 | **377-5868** | 1 | INSULATION | |
| | | 1 | **377-5873** | 1 | INSULATION | |
| | 7 | 1 | **377-5874** | 1 | HOLDER-CUP | |
| | 8 | 1 | **377-5875** | 1 | COVER | |
| | 9 | 1 | **104-2091** | 8 | SCREW-FLAT HEAD (6-20X0.5-IN) | |
| M | 10 | 1 | **128-2135** | 6 | SCREW-TRUSS HEAD (M6X1X13-MM) | |
| M | 11 | 1 | **9X-2042** | 1 | SCREW-TRUSS HEAD (M6X1X12-MM) | |
| M | 12 | 1 | **9X-2044** | 2 | SCREW-TRUSS HEAD (M6X1X16-MM) | |

M - METRIC PART

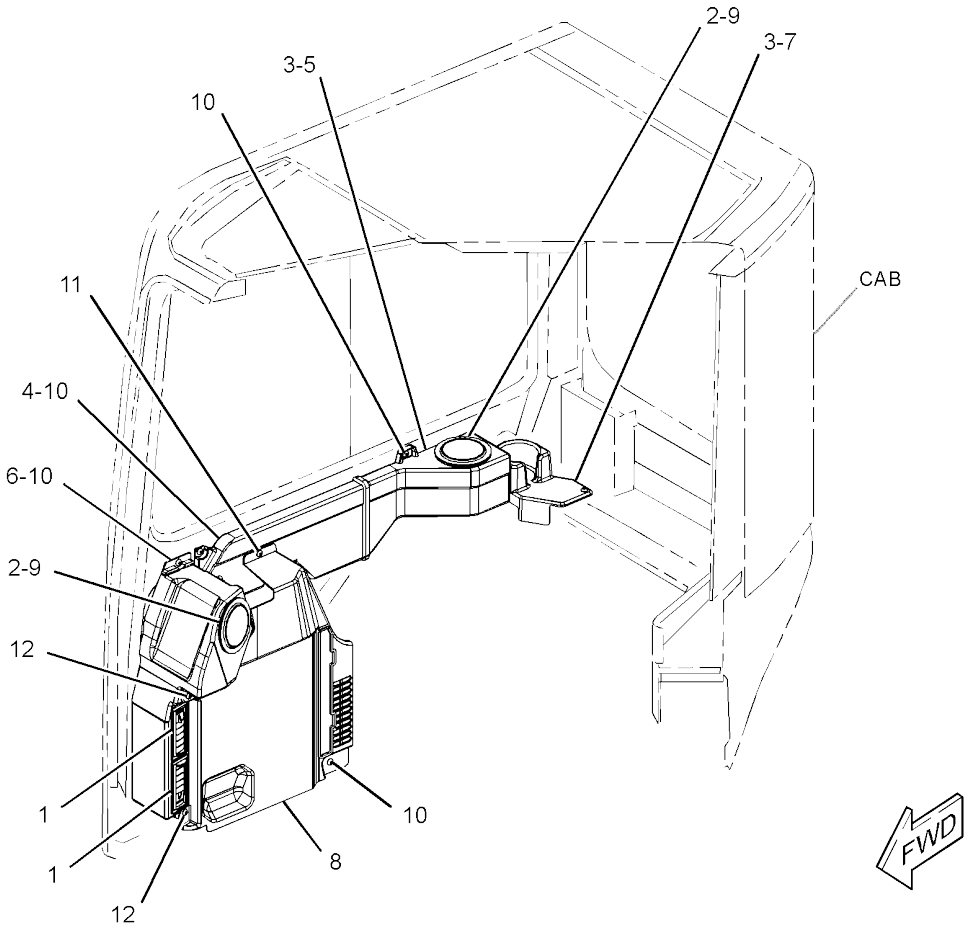


GRAPHIC #1 **<END>** g02784646

# OPERATOR STATION

## *378-2493* DUCT GP-CAB AIR

**PART OF 378-1293 HEATER AR-CAB**
**AN ATTACHMENT**

**SMCS-734D** **i04565464**

| NOTE | REF NO | GRAPHIC REF | PART NUMBER | QTY | PART NAME 1 2 3 4 5 6 (PRODUCT LEVEL) | SEE PAGE |
|---|---|---|---|---|---|---|
| | 1 | 1 | **8Y-6967** | 2 | LOUVER AS-VENT | |
| | 2 | 1 | **171-4046** | 1 | LOUVER AS | |
| M | 3 | 1 | **225-3322** | 3 | SCREW-TRUSS HEAD (M6X1X10-MM) | |
| | 4 | 1 | **377-5871** | 1 | DUCT AS | |
| | | 1 | **377-5868** | 1 | INSULATION | |
| | | 1 | **377-5873** | 1 | INSULATION | |
| | 5 | 1 | **377-5875** | 1 | COVER | |
| | 6 | 1 | **378-2511** | 1 | DUCT AS | |
| | | 1 | **377-5869** | 1 | INSULATION | |
| | 7 | 1 | **379-2996** | 1 | HOLDER-CUP | |
| | 8 | 1 | **104-2091** | 4 | SCREW-FLAT HEAD (6-20X0.5-IN) | |
| M | 9 | 1 | **128-2135** | 5 | SCREW-TRUSS HEAD (M6X1X13-MM) | |
| M | 10 | 1 | **9X-2042** | 1 | SCREW-TRUSS HEAD (M6X1X12-MM) | |
| M | 11 | 1 | **9X-2044** | 2 | SCREW-TRUSS HEAD (M6X1X16-MM) | |

M - METRIC PART

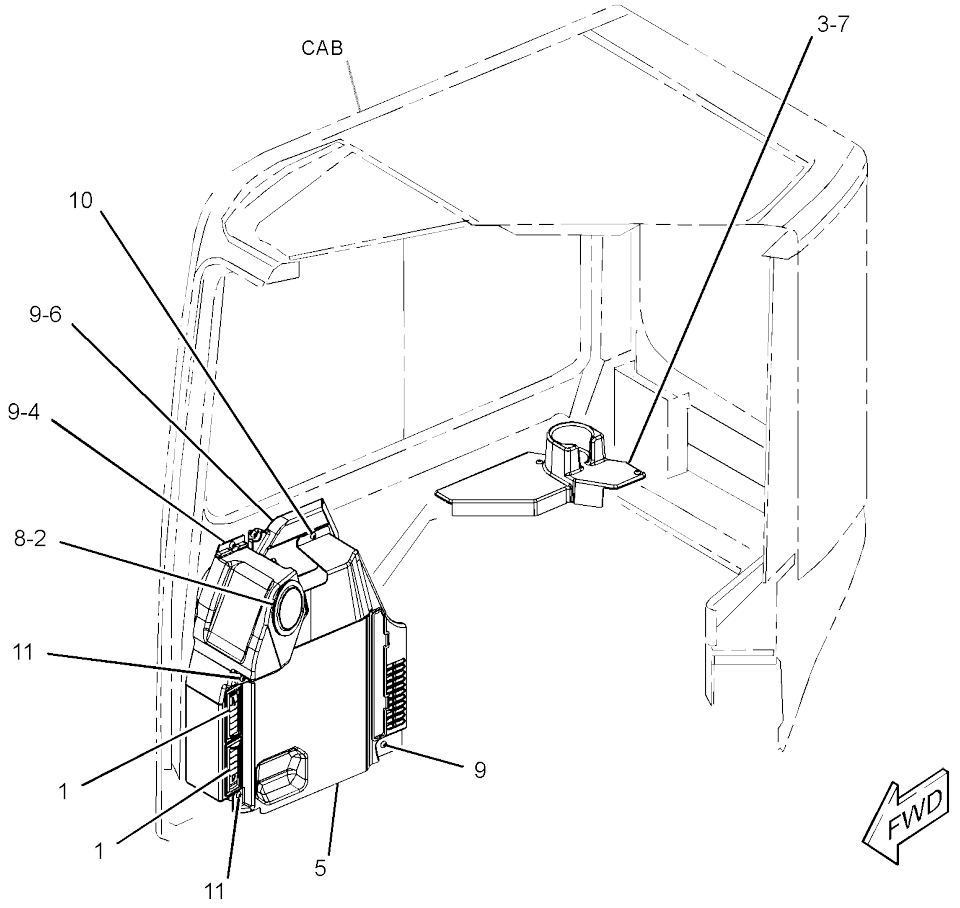


GRAPHIC #1 **<END>** g02784367

# OPERATOR STATION

## *417-1289* GUARD GP-VANDALISM

**PART OF 419-5871 GUARD GP-VANDALISM**
**AN ATTACHMENT**

**SMCS-7315** **i05350312**

| NOTE | REF NO | GRAPHIC REF | PART NUMBER | QTY | PART NAME 1 2 3 4 5 6 (PRODUCT LEVEL) | SEE PAGE |
|---|---|---|---|---|---|---|
| | 1 | 1 | **246-2641** | 1 | PADLOCK GP | |
| | | 1 | **5P-8500** | 1 | KEY | |
| | 2 | 1 | **417-1267** | 1 | COVER AS | |
| | | 1 | **417-1272** | 1 | INSULATION | |
| | | 1 | **417-1273** | 1 | INSULATION | |
| | | 1 | **417-1274** | 2 | INSULATION | |
| | 3 | 1 | **9X-8256** | 2 | WASHER (6.6X12X2-MM THK) | |
| M | 4 | 1 | **5C-9553** | 2 | BOLT (M6X1X16-MM) | |

M - METRIC PART

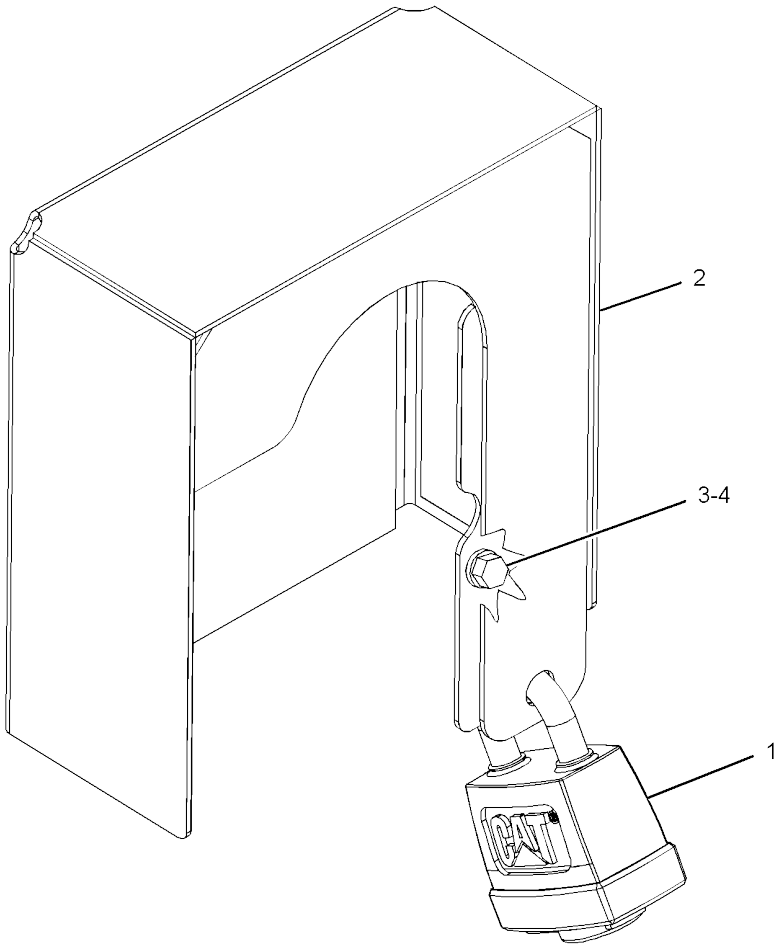


GRAPHIC #1 **<END>** g03397000

# *419-5871* GUARD GP-VANDALISM

**AN ATTACHMENT**

**SMCS-7315** **i05350311**

| NOTE | PART NUMBER | QTY | PART NAME 1 2 3 4 5 6 (PRODUCT LEVEL) | SEE PAGE |
|---|---|---|---|---|
| Y | *417-1289* | 1 | GUARD GP-VANDALISM | 490 |

Y - SEPARATE ILLUSTRATION

<END>

# OPERATOR STATION

## *382-0426* HANDRAIL GP

**PART OF 377-8933, 383-5929 CANOPY AR**
**AN ATTACHMENT**

**SMCS-7256** **i04638094**

| NOTE | REF NO | GRAPHIC REF | PART NUMBER | QTY | PART NAME 1 2 3 4 5 6 (PRODUCT LEVEL) | SEE PAGE |
|---|---|---|---|---|---|---|
| | 1 | 1 | **382-0427** | 1 | HANDRAIL AS | |
| | 2 | 1 | **7X-7729** | 1 | WASHER (11X25X3-MM THK) | |
| M | 3 | 1 | **8T-4137** | 1 | BOLT (M10X1.5X20-MM) | |
| M | 4 | 1 | **8T-4139** | 3 | BOLT (M12X1.75X30-MM) | |
| | 5 | 1 | **8T-4223** | 3 | WASHER-HARD (13.5X25.5X3-MM THK) | |

M - METRIC PART

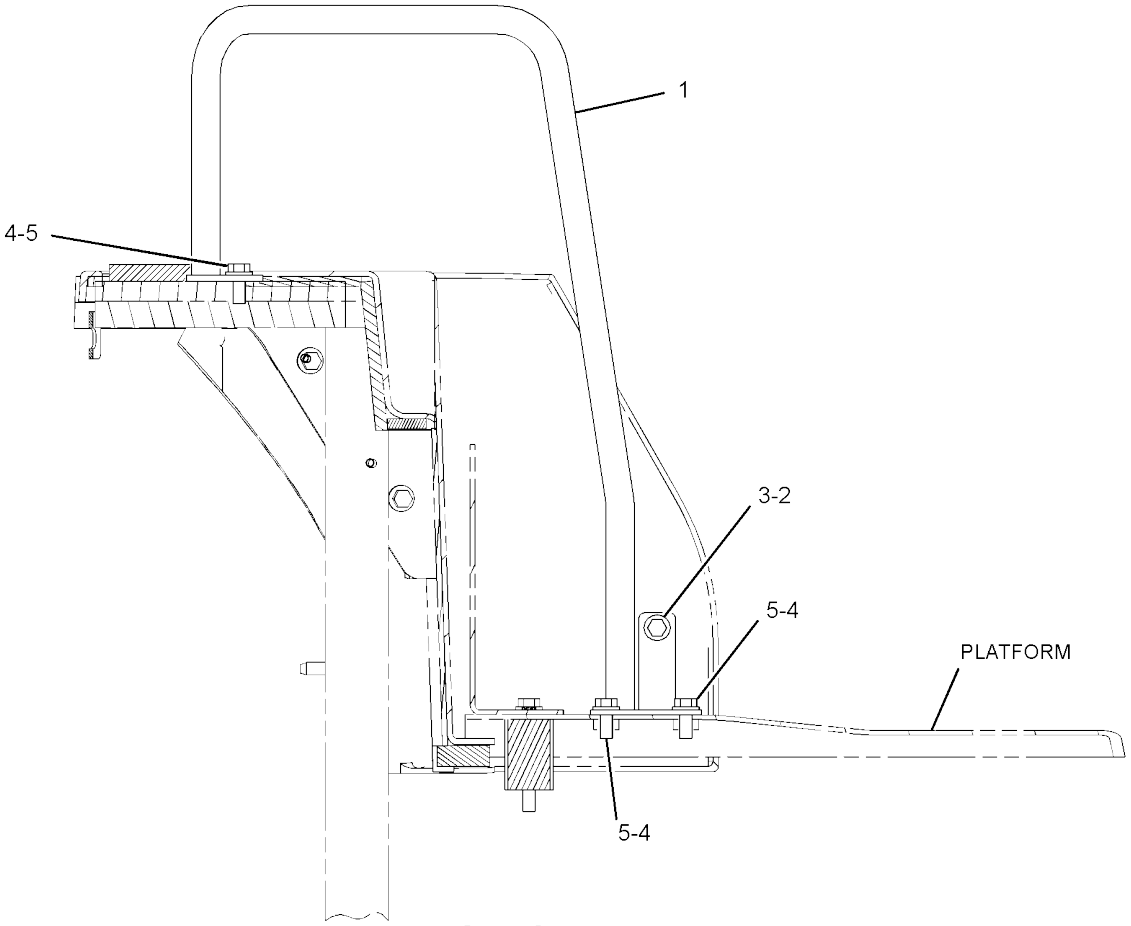


RIGHT SIDE VIEW

GRAPHIC #1 **<END>** g02801724

# OPERATOR STATION

## *282-9311* HEATER & MTG GP-CAB

**PART OF 378-1293 HEATER AR-CAB**
**AN ATTACHMENT**

**SMCS-7304** **i05437186**

| NOTE | REF NO | GRAPHIC REF | PART NUMBER | QTY | PART NAME 1 2 3 4 5 6 (PRODUCT LEVEL) | SEE PAGE |
|---|---|---|---|---|---|---|
| | 1 | 1 | **3S-2093** | 1 | STRAP-CABLE | |
| | 2 | 1 | **9X-8256** | 1 | WASHER (6.6X12X2-MM THK) | |
| | 3 | 1 | **258-6257** | 1 | TUBE | |
| Y | 4 | 1 | **273-1450** | 1 | HEATER GP-CAB | 495 |
| | 5 | 1 | **301-6875** | 6 | SPACER (10X16X9.5-MM THK) | |
| | 6 | 1 | **278-7614** | 1 | CABLE AS | |
| | 7 | 1 | **278-8557** | 1 | HARNESS AS-HEATER & AIR COND (CAB) | |
| | 8 | 1 | **278-8558** | 1 | PANEL AS-CONTROL (BLOWER, TEMPERATURE) | |
| | 9 | 1 | **095-0912** | 1 | CLIP | |
| M | 10 | 1 | **7Y-3173** | 2 | SCREW-BUTTON HEAD (M4X0.7X12-MM) | |
| M | 11 | 1 | **8T-4171** | 1 | BOLT (M6X1X12-MM) | |
| | 12 | 1 | **7X-0579** | 6 | WASHER-HARD (8.8X25.5X2-MM THK) | |
| M | 13 | 1 | **8T-4908** | 6 | BOLT (M8X1.25X25-MM) | |
| | 14 | 1 | **278-7615** | 1 | CABLE AS | |

M - METRIC PART
Y - SEPARATE ILLUSTRATION

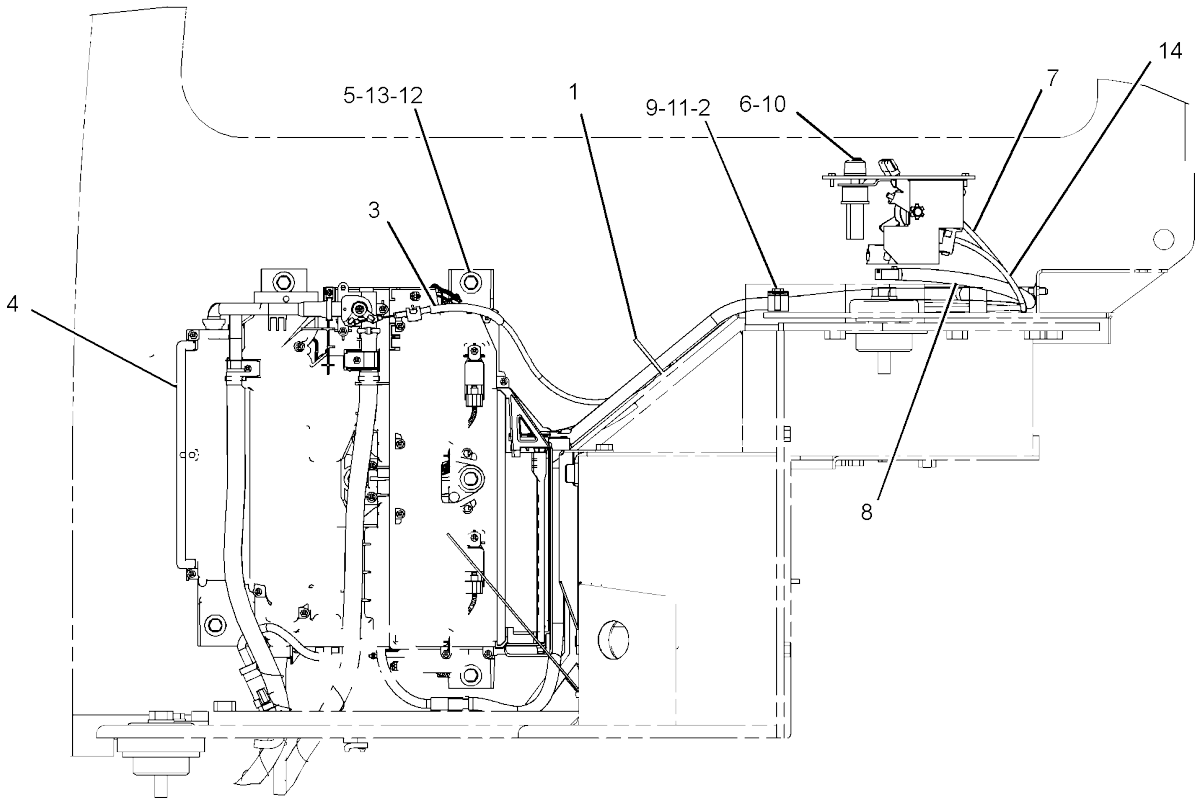


LEFT SIDE VIEW

GRAPHIC #1 **<END>** g02164435

# OPERATOR STATION

## *378-1293* HEATER AR-CAB

**PART OF 376-6696, 383-5928 CAB AR**
**AN ATTACHMENT**

**SMCS-1380, 1408, 7304** **i04565462**

| NOTE | PART NUMBER | QTY | PART NAME 1 2 3 4 5 6 (PRODUCT LEVEL) | SEE PAGE |
|---|---|---|---|---|
| Y | *378-2493* | 1 | DUCT GP-CAB AIR | 489 |
| Y | *282-9311* | 1 | HEATER & MTG GP-CAB | 493 |

Y - SEPARATE ILLUSTRATION

<END>

# OPERATOR STATION

## 273-1450 HEATER GP-CAB

**PART OF 282-9311 HEATER & MTG GP-CAB**

**AN ATTACHMENT**

**SMCS-7304** **i05437183**

| NOTE | REF NO | GRAPHIC REF | PART NUMBER | QTY | PART NAME 1 2 3 4 5 6 (PRODUCT LEVEL) | SEE PAGE |
|---|---|---|---|---|---|---|
| | 1 | 1 | **296-2602** | 1 | MOTOR AS-BLOWER | |
| | 2 | 1 | **296-2603** | 1 | FAN | |
| | 3 | 1 | **296-2604** | 1 | FAN | |
| | 4 | 1 | **296-2605** | 1 | CORE AS-HEATER | |
| | 5 | 1 | **296-2606** | 1 | RELAY AS (AIR CONDITIONER COMPRESSOR) | |
| | 6 | 1 | **296-2607** | 1 | RESISTOR | |
| | 7 | 1 | **296-2608** | 1 | DOOR AS | |
| | 8 | 1 | **296-2609** | 1 | HARNESS AS-HEATER | |
| | 9 | 1 | **284-5686** | 1 | FILTER ELEMENT-CAB AIR | |
| | 10 | 1 | **296-2611** | 1 | LEVER | |
| | 11 | 1 | **296-2612** | 2 | CLAMP | |
| | 12 | 1 | **185-8300** | 40 | SCREW-TAPPING | |
| | 13 | 1 | **296-2614** | 2 | LOCK | |
| | 14 | 1 | **296-2615** | 2 | NUT-FLANGE (M5X0.8-THD) | |
| | 15 | 1 | **296-2616** | 2 | WASHER | |
| | 16 | 1 | **296-2617** | 2 | SEAL | |
| | 17 | 1 | **336-9693** | 1 | CASE | |
| | 18 | 1 | **336-9694** | 1 | CASE-HEATER | |
| | 19 | 1 | **336-9695** | 1 | CASE-HEATER | |

*273-1450* **HEATER GP-CAB (*contd.*)** **i05437183**

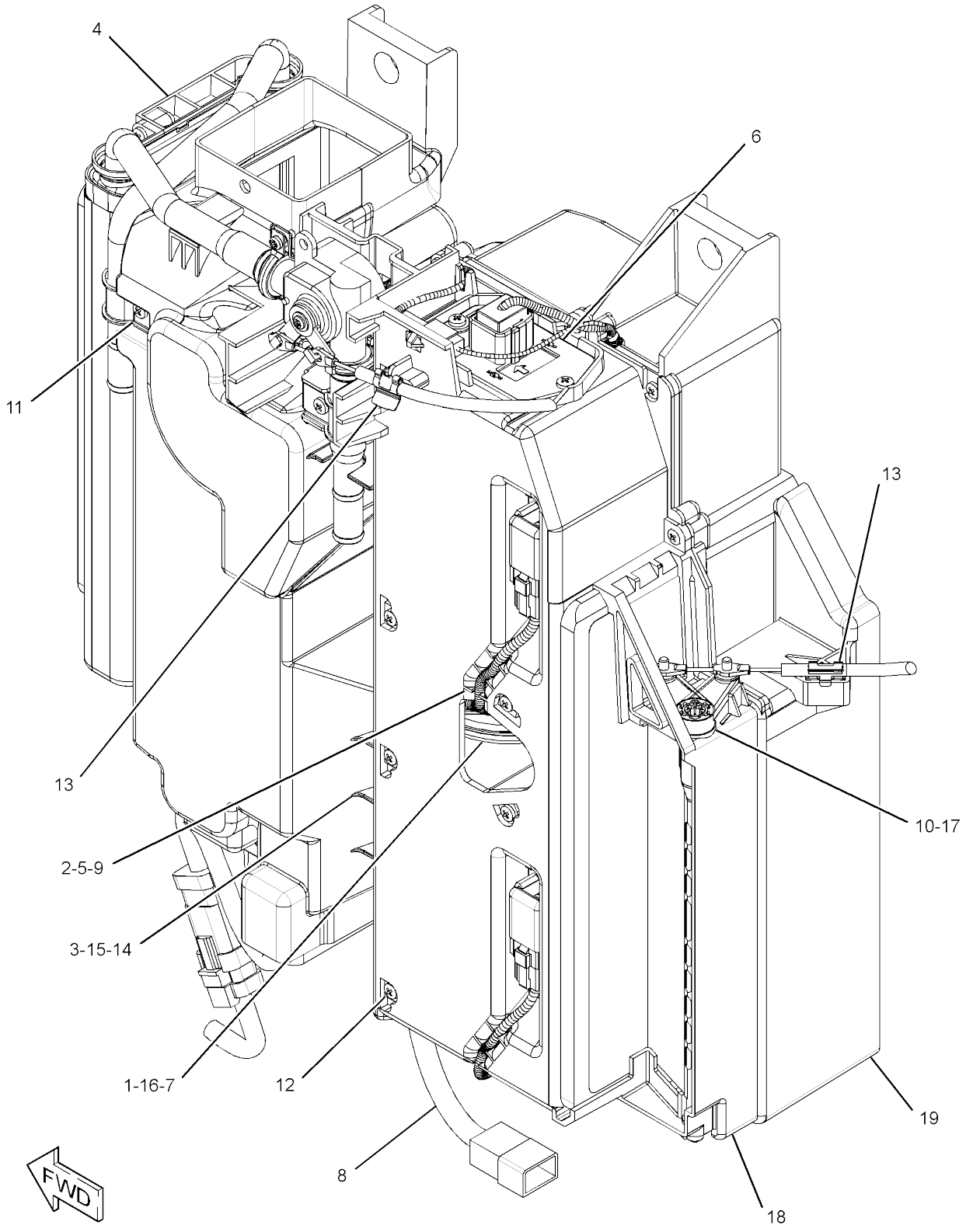


GRAPHIC #1 **<END>** g01945177

# OPERATOR STATION

## *266-6835* HORN GP-ELECTRIC

**PART OF 376-6676 CHASSIS AR**
**ALSO AN ATTACHMENT**

**SMCS-7402** **i03969234**

| NOTE | REF NO | GRAPHIC REF | PART NUMBER | QTY | PART NAME 1 2 3 4 5 6 (PRODUCT LEVEL) | SEE PAGE |
|---|---|---|---|---|---|---|
| | 1 | 1 | **245-9398** | 1 | HORN AS (12-VOLT) | |
| M | 2 | 1 | **8T-4200** | 1 | BOLT (M8X1.25X16-MM) | |
| | 3 | 1 | **8T-4224** | 1 | WASHER-HARD (8.8X16X2-MM THK) | |

M - METRIC PART

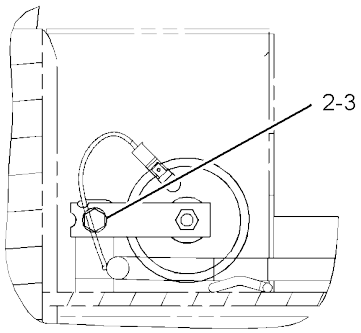


VIEW A-A

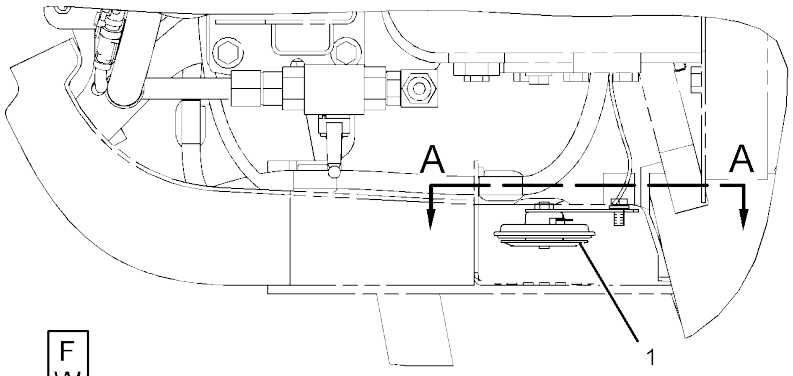


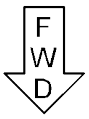


TOP VIEW

GRAPHIC #1 **<END>** g01202053

# OPERATOR STATION

## *430-8640* KIT-GUARD–CANOPY

**PART OF 430-9229 KIT-GUARD**

**AN ATTACHMENT**

**SMCS-7165, 7182, 7310** **i05354413**

| NOTE | PART NUMBER | QTY | PART NAME 1 2 3 4 5 6 (PRODUCT LEVEL) | SEE PAGE |
|---|---|---|---|---|
| M | **8T-4192** | 8 | BOLT (M12X1.75X25-MM) | |
| | **389-8775** | 1 | FILM-CERTIFICATION (FRONT GUARD, READ OMM) | |
| | **389-9183** | 1 | FILM-WARNING (NO WELD, NO DRILL, READ OMM) | |
| | **389-8734** | 1 | FRAME AS | |
| | **8T-4223** | 8 | WASHER-HARD (13.5X25.5X3-MM THK) | |

M - METRIC PART

<END>

## *430-9229* KIT-GUARD–CANOPY

**AN ATTACHMENT**

**SMCS-7165, 7182, 7310** **i05354412**

| NOTE | PART NUMBER | QTY | PART NAME 1 2 3 4 5 6 (PRODUCT LEVEL) | SEE PAGE |
|---|---|---|---|---|
| Y | **430-8640** | 1 | KIT-GUARD (CANOPY) (FRONT) | 498 |

Y - SEPARATE ILLUSTRATION

<END>

# OPERATOR STATION

## *379-4711* LINES GP-AIR CONDITIONER

**PART OF 376-6692, 383-5927 CAB AR**
**AN ATTACHMENT**

**SMCS-1808** **i04617855**

| NOTE | REF NO | GRAPHIC REF | PART NUMBER | QTY | PART NAME 1 2 3 4 5 6 (PRODUCT LEVEL) | SEE PAGE |
|---|---|---|---|---|---|---|
| | 1 | 1 | **3S-2093** | 1 | STRAP-CABLE | |
| | 2 | 1,2 | **7K-1181** | 8 | STRAP-CABLE | |
| | 3 | 2 | **095-1387** | 2 | CLAMP-HOSE | |
| | 4 | 2 | **130-0252** | 1 | HOSE-DRAIN | |
| | 5 | 2 | *148-8367* | 1 | ELBOW AS | |
| | | 2 | **6V-8397** | 1 | SEAL-O-RING | |
| | | 2 | **6V-9850** | 1 | ELBOW | |
| | 6 | 2 | **176-1902** | 1 | DRYER-REFRIGERANT (RECEIVER) (AIR CONDITIONER) | |
| | 7 | 2 | **204-1611** | 1 | STRAP-CABLE (DUAL) | |
| | 8 | 2 | **235-8891** | 1 | PLATE | |
| | 9 | 1 | **266-7379** | 1 | STRAP-CABLE | |
| | 10 | 2 | **277-9073** | 1 | JOINT | |
| | 11 | 1 | **277-9412** | 2 | CLIP | |
| | 12 | 1 | **298-0663** | 1 | CLIP | |
| | 13 | 1 | **377-9081** | 1 | GROMMET | |
| | 14 | 1 | **380-9997** | 1 | HOSE AS | |
| | | 1 | **121-7137** | 2 | SEAL-O-RING | |
| | | 1 | **245-7850** | 1 | CAP | |
| | 15 | 2 | **380-9998** | 1 | HOSE AS | |
| | 16 | 1 | **380-9999** | 1 | HOSE AS | |
| | | | | | (EACH HOSE AS INCLUDES) | |
| | | 1 | **121-7138** | 2 | SEAL-O-RING | |
| | 17 | 2 | **381-0000** | 1 | HOSE AS | |
| | | 2 | **121-7136** | 2 | SEAL-O-RING | |
| | | 2 | **245-7850** | 1 | CAP | |
| | 18 | 1 | **381-0001** | 1 | HOSE AS | |
| | | 1 | **121-7136** | 1 | SEAL-O-RING | |
| | 19 | 2 | **121-7098** | 1 | BRACKET AS | |
| M | | 2 | **8T-4138** | 2 | BOLT (M6X1X20-MM) | |
| | | 2 | **9X-8256** | 2 | WASHER (6.6X12X2-MM THK) | |
| | 20 | 1 | **132-5789** | 1 | CLIP | |
| | 21 | 2 | **226-2560** | 1 | CONNECTOR | |
| | 22 | 2 | **287-7257** | 1 | ELBOW | |
| | 23 | 1 | **5P-2369** | 1 | CLIP | |
| | 24 | 1 | **6D-1641** | 2 | CLIP | |
| | 25 | 1 | **6D-3479** | 1 | CLIP | |
| | 26 | 1 | **6V-2235** | 1 | CLIP | |
| M | 27 | 2 | **6V-7357** | 4 | BOLT (M6X1X25-MM) | |
| | 28 | 2 | **6V-8397** | 1 | SEAL-O-RING | |
| | 29 | 1 | **8T-4121** | 7 | WASHER-HARD (11X21X2.5-MM THK) | |
| M | 30 | 1 | **8T-4136** | 1 | BOLT (M10X1.5X25-MM) | |
| M | 31 | 1 | **8T-4137** | 6 | BOLT (M10X1.5X20-MM) | |
| M | 32 | 2 | **8T-4200** | 2 | BOLT (M8X1.25X16-MM) | |
| | 33 | 2 | **8T-4224** | 2 | WASHER-HARD (8.8X16X2-MM THK) | |
| M | 34 | 1 | **8T-4971** | 3 | BOLT (M6X1X30-MM) | |
| | 35 | 1,2 | **9X-8256** | 7 | WASHER (6.6X12X2-MM THK) | |
| D | 36 | 1 | **8T-3425** | | CHANNEL-TRIM (0.2-M) | |
| E | 37 | 1 | **7I-7439** | | GUARD (98-CM) | |
| E | 38 | 1 | **7I-1024** | | GUARD-HOSE (66-CM) | |
| E | 38A | 1 | **7I-1024** | | GUARD-HOSE (58-CM) | |
| E | 38B | 1 | **7I-1024** | | GUARD-HOSE (50-CM) | |
| E | 38C | 1 | **7I-1024** | | GUARD-HOSE (243-CM) | |
| E | 38D | 1 | **7I-1024** | | GUARD-HOSE (236-CM) | |
| E | 39 | 1 | **9X-2133** | | HOSE (329-CM) | |
| E | 39A | 1 | **9X-2133** | | HOSE (332-CM) | |
| E | 40 | 2 | **7X-7898** | | TRIM (36-CM) | |
| | 41 | 1 | **096-6079** | 3 | TAPE (WHITE) | |
| | 42 | 1 | **096-6085** | 3 | TAPE (RED) | |

*379-4711* **LINES GP-AIR CONDITIONER (*contd.*)** **i04617855**

| NOTE | REF NO | GRAPHIC REF | PART NUMBER | QTY | PART NAME 1 2 3 4 5 6 (PRODUCT LEVEL) | SEE PAGE |
|---|---|---|---|---|---|---|

D - ORDER BY THE METER
E - ORDER BY THE CENTIMETER
M - METRIC PART

*379-4711* **LINES GP-AIR CONDITIONER (*contd.*)** **i04617855**

REFER TO ALL ILLUSTRATIONS OF
THIS GROUP FOR AUXILIARY VIEWS

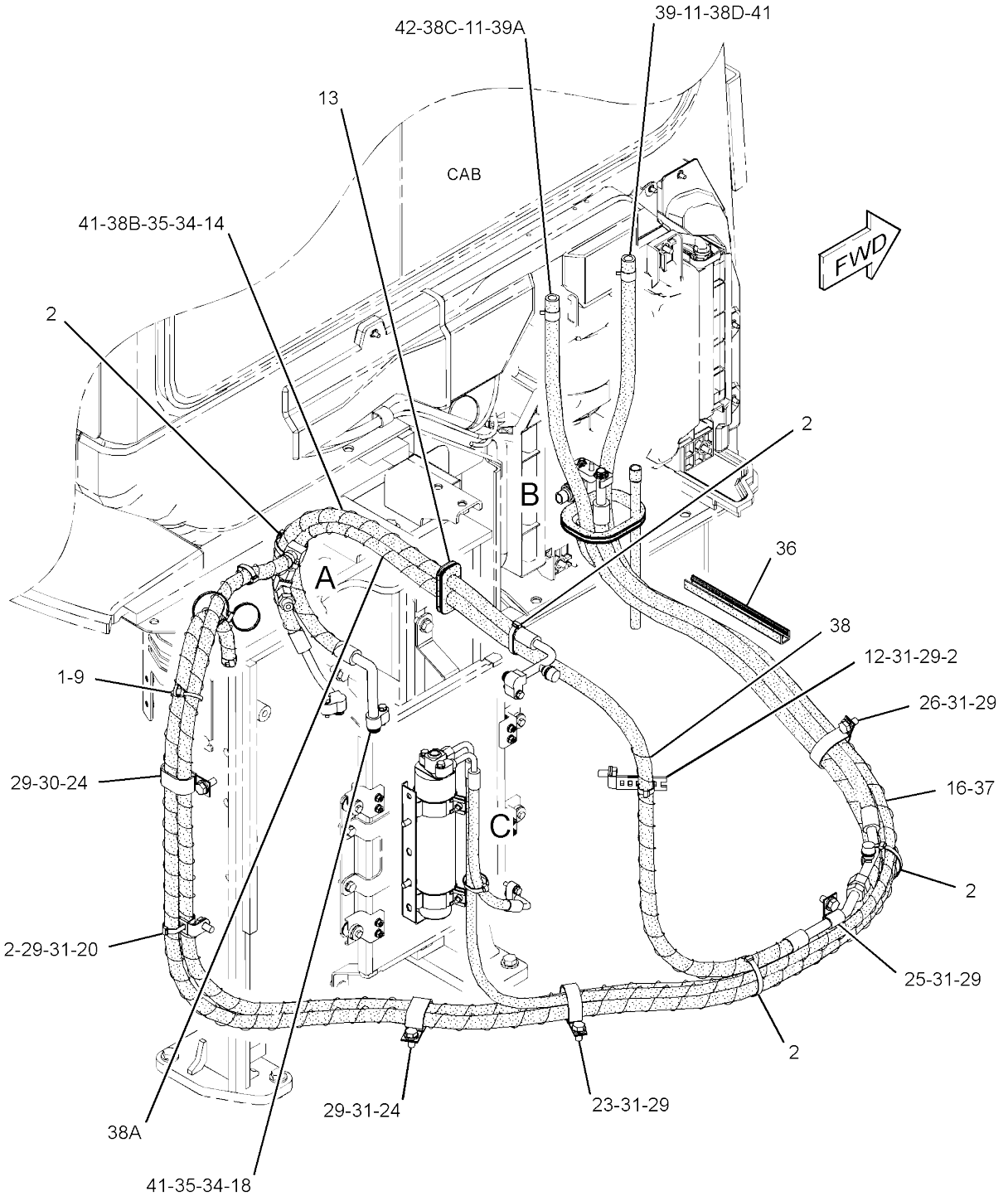


GRAPHIC #1 g02799128

*379-4711* **LINES GP-AIR CONDITIONER (*contd.*)** **i04617855**

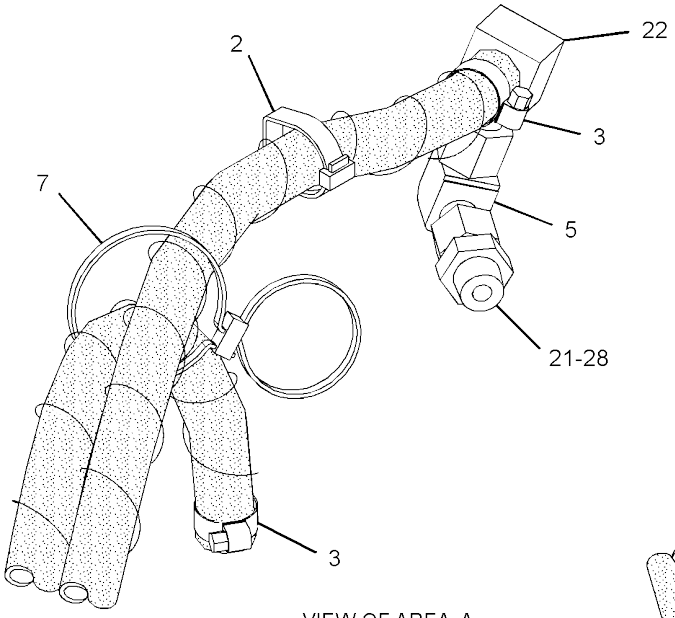


VIEW OF AREA A
(PARTS REMOVED FOR CLARITY)

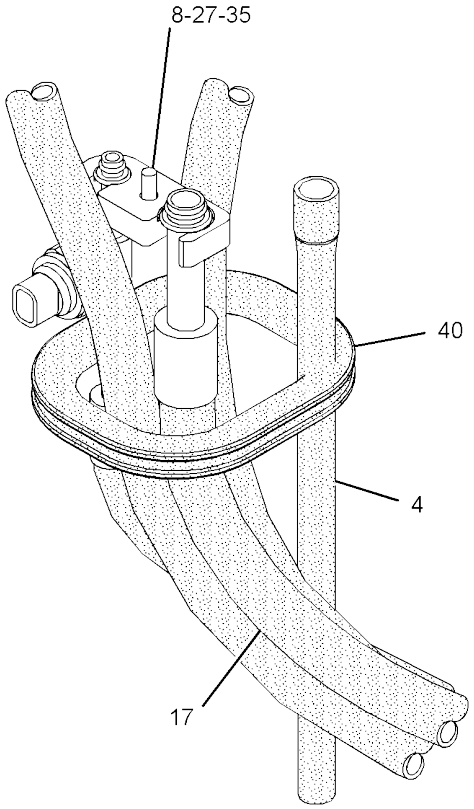


VIEW OF AREA B

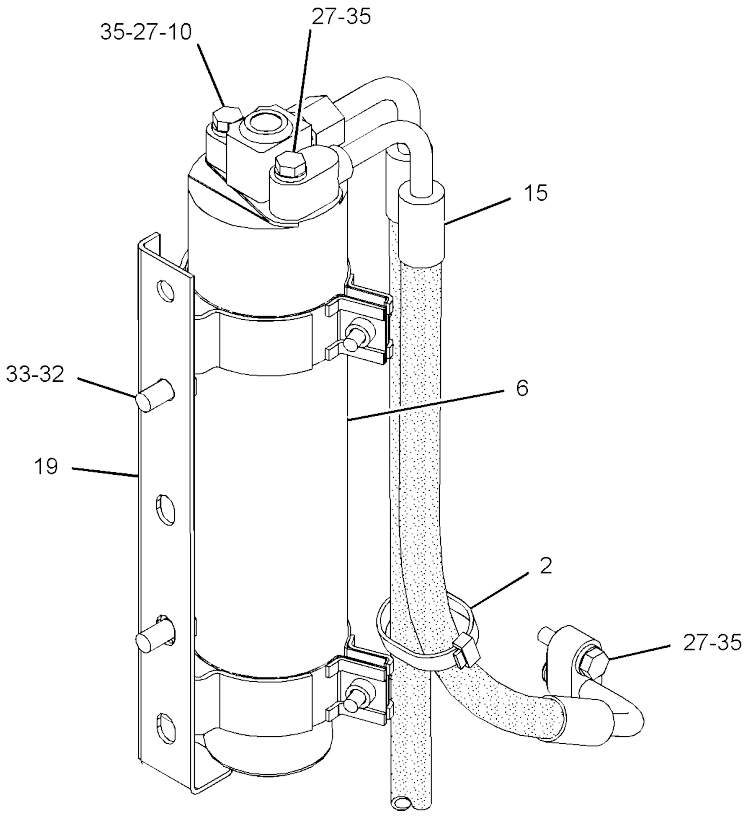


VIEW OF AREA C

GRAPHIC #2 **<END>** g02799129

# OPERATOR STATION

## *379-4712* LINES GP-HEATER

**PART OF 376-6696, 383-5928 CAB AR**
**AN ATTACHMENT**

**SMCS-7304** **i04623156**

| NOTE | REF NO | GRAPHIC REF | PART NUMBER | QTY | PART NAME 1 2 3 4 5 6 (PRODUCT LEVEL) | SEE PAGE |
|---|---|---|---|---|---|---|
| | 1 | 1 | **3S-2093** | 1 | STRAP-CABLE | |
| | 2 | 1 | **7K-1181** | 4 | STRAP-CABLE | |
| | 3 | 1 | **095-1387** | 2 | CLAMP-HOSE | |
| | 4 | 1 | *148-8367* | 1 | ELBOW AS | |
| | | 1 | **6V-8397** | 1 | SEAL-O-RING | |
| | | 1 | **6V-9850** | 1 | ELBOW | |
| | 5 | 1 | **204-1611** | 1 | STRAP-CABLE (DUAL) | |
| | 6 | 1 | **266-7379** | 1 | STRAP-CABLE | |
| | 7 | 1 | **277-9412** | 2 | CLIP | |
| | 8 | 1 | **379-8770** | 1 | GROMMET | |
| | 9 | 1 | **132-5789** | 1 | CLIP | |
| | 10 | 1 | **226-2560** | 1 | CONNECTOR | |
| | 11 | 1 | **287-7257** | 1 | ELBOW | |
| | 12 | 1 | **6D-1641** | 5 | CLIP | |
| | 13 | 1 | **6V-8397** | 1 | SEAL-O-RING | |
| | 14 | 1 | **8T-4121** | 6 | WASHER-HARD (11X21X2.5-MM THK) | |
| M | 15 | 1 | **8T-4136** | 1 | BOLT (M10X1.5X25-MM) | |
| M | 16 | 1 | **8T-4137** | 5 | BOLT (M10X1.5X20-MM) | |
| M | 17 | 1 | **8T-4200** | 1 | BOLT (M8X1.25X16-MM) | |
| | 18 | 1 | **8T-4224** | 1 | WASHER-HARD (8.8X16X2-MM THK) | |
| D | 19 | 1 | **8T-3425** | | CHANNEL-TRIM (0.2-M) | |
| E | 20 | 1 | **7I-1024** | | GUARD-HOSE (233-CM) | |
| E | 20A | 1 | **7I-1024** | | GUARD-HOSE (244-CM) | |
| E | 21 | 1 | **9X-2133** | | HOSE (325-CM) | |
| E | 21A | 1 | **9X-2133** | | HOSE (335-CM) | |
| E | 22 | 1 | **7X-7898** | | TRIM (36-CM) | |
| | 23 | 1 | **096-6079** | 1 | TAPE (WHITE) | |
| | 24 | 1 | **096-6085** | 3 | TAPE (RED) | |

D - ORDER BY THE METER
E - ORDER BY THE CENTIMETER
M - METRIC PART

*379-4712* **LINES GP-HEATER (*contd.*)** **i04623156**

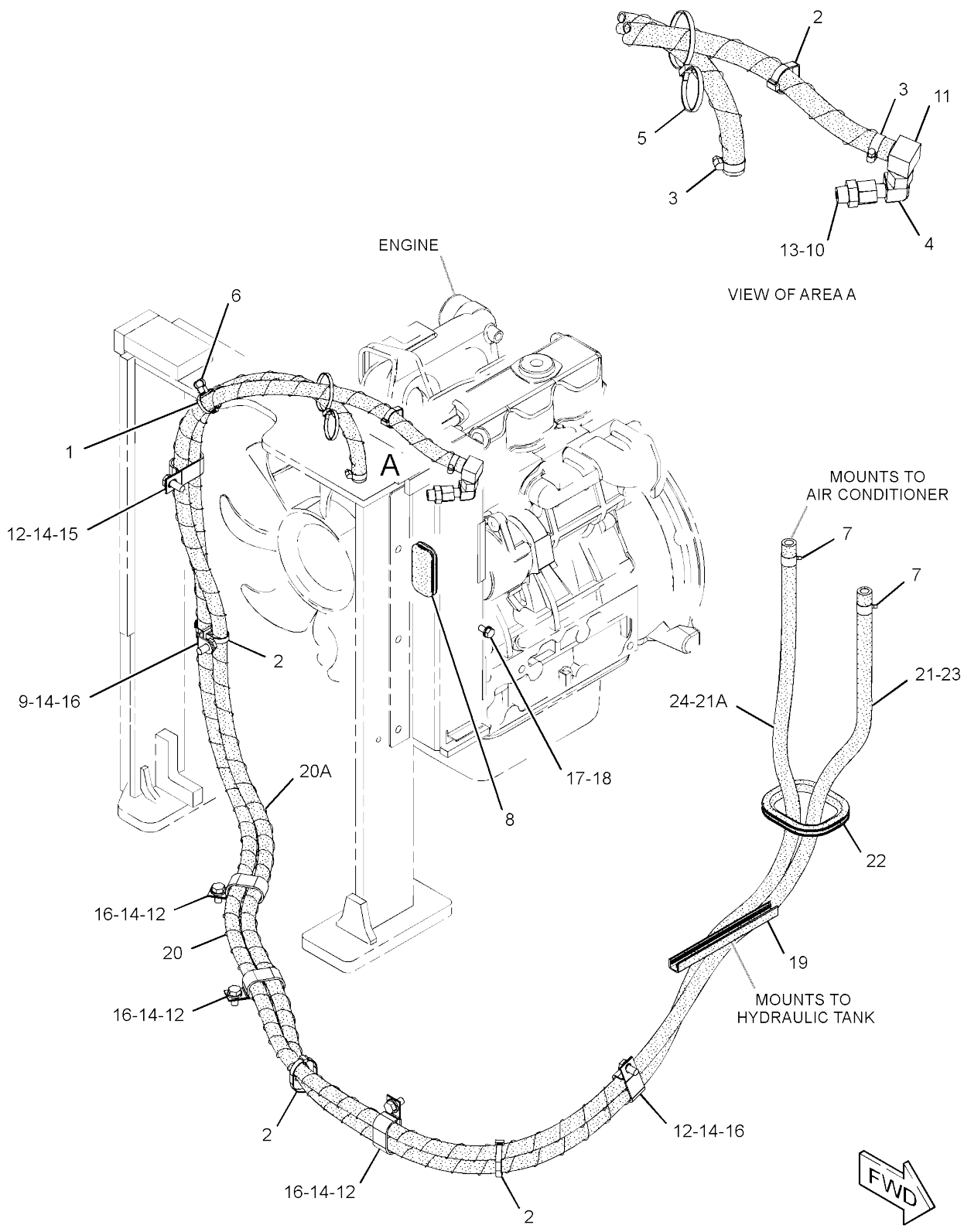


GRAPHIC #1 **<END>** g02799197

# OPERATOR STATION

## *281-1186* LINK GP-WINDOW

**PART OF 377-5108, 415-6803, 419-1237 CAB GP**
**AN ATTACHMENT**

**SMCS-7340** **i03965392**

| NOTE | REF NO | GRAPHIC REF | PART NUMBER | QTY | PART NAME 1 2 3 4 5 6 (PRODUCT LEVEL) | SEE PAGE |
|---|---|---|---|---|---|---|
| | 1 | 1 | **281-1187** | 1 | LINK AS-LOWER | |
| | 2 | 1 | **281-1190** | 1 | BRACKET AS | |
| | 3 | 1 | **281-1193** | 1 | WASHER | |
| | 4 | 1 | **281-1194** | 1 | BOSS | |
| | 5 | 1 | **214-3969** | 4 | WASHER (16X26X0.5-MM THK) | |
| | 6 | 1 | **214-3968** | 1 | WASHER (8.5X30X3.2-MM THK) | |
| | 7 | 1 | **281-6199** | 1 | SCREW | |
| | 8 | 1 | **281-5485** | 1 | BOLT | |

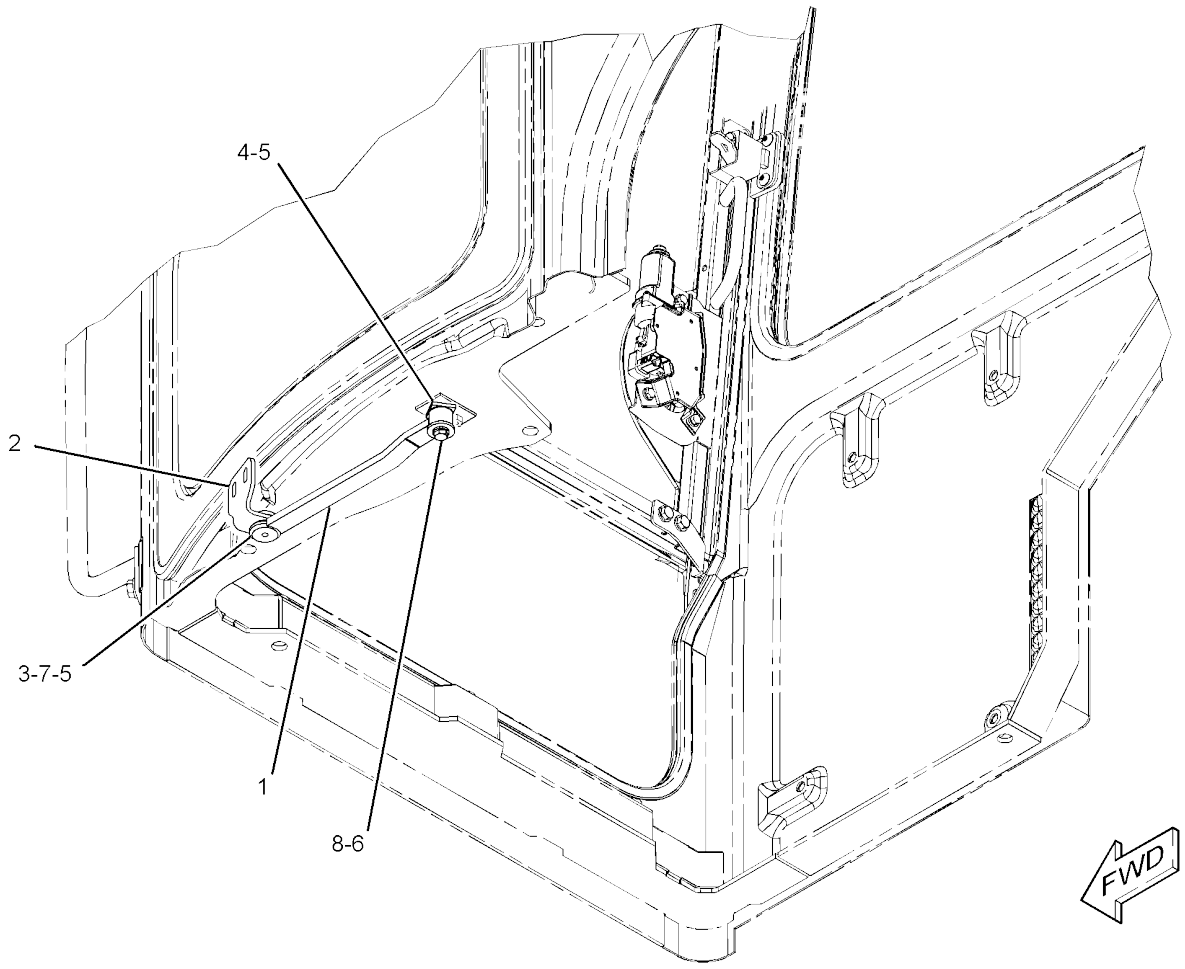


GRAPHIC #1 **<END>** g01213850

# OPERATOR STATION

## *267-4371* MIRROR GP-DOWN VIEW–EXTERIOR, REAR, RH

**PART OF 355-3420 MIRROR GP-DOWN VIEW**
**AN ATTACHMENT**

**SMCS-7319** **i03998800**

| NOTE | REF NO | GRAPHIC REF | PART NUMBER | QTY | PART NAME 1 2 3 4 5 6 (PRODUCT LEVEL) | SEE PAGE |
|---|---|---|---|---|---|---|
| | 1 | 1 | **342-3327** | 1 | SUPPORT AS | |
| | 2 | 1 | **4Y-3307** | 1 | MIRROR-CONVEX | |
| | 3 | 1 | **8T-4121** | 3 | WASHER-HARD (11X21X2.5-MM THK) | |
| M | 4 | 1 | **8T-4137** | 3 | BOLT (M10X1.5X20-MM) | |

M - METRIC PART

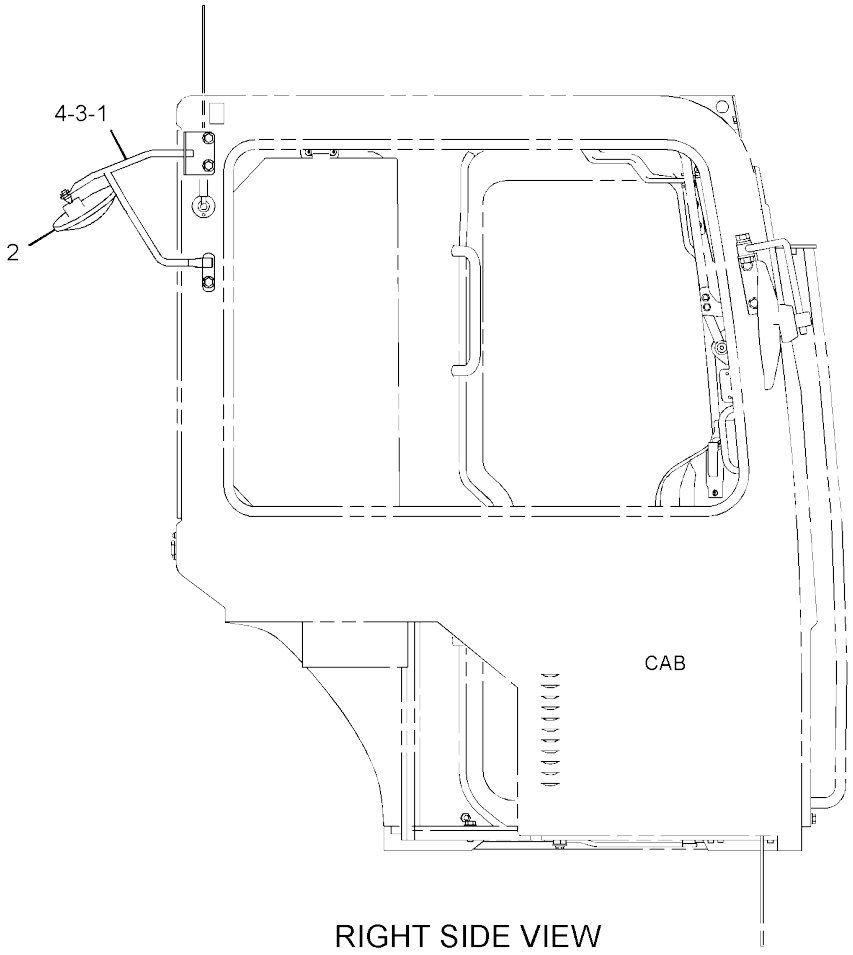


RIGHT SIDE VIEW

GRAPHIC #1 **<END>** g01309124

# *355-3420* MIRROR GP-DOWN VIEW–CAB

**AN ATTACHMENT**

**SMCS-7319** **i04006680**

| NOTE | PART NUMBER | QTY | PART NAME 1 2 3 4 5 6 (PRODUCT LEVEL) | SEE PAGE |
|---|---|---|---|---|
| Y | *267-4371* | 1 | MIRROR GP-DOWN VIEW (EXTERIOR, REAR, RH) | 506 |

Y - SEPARATE ILLUSTRATION

<END>

# *267-4366* MIRROR GP-REAR VIEW–EXTERIOR, LH

**PART OF 355-3416 MIRROR GP-REAR VIEW**
**AN ATTACHMENT**

**SMCS-7319** **i03965210**

| NOTE | REF NO | GRAPHIC REF | PART NUMBER | QTY | PART NAME 1 2 3 4 5 6 (PRODUCT LEVEL) | SEE PAGE |
|---|---|---|---|---|---|---|
| Y | 1 | 1 | **286-9482** | 1 | MOUNTING GP-MIRROR | 515 |
| | 2 | 1 | **156-6617** | 1 | MIRROR | |
| M | 3 | 1 | **8T-4779** | 1 | BOLT (M16X2X35-MM) | |
| | 4 | 1 | **9X-8257** | 1 | WASHER (17.5X30X3.5-MM THK) | |

M - METRIC PART
Y - SEPARATE ILLUSTRATION

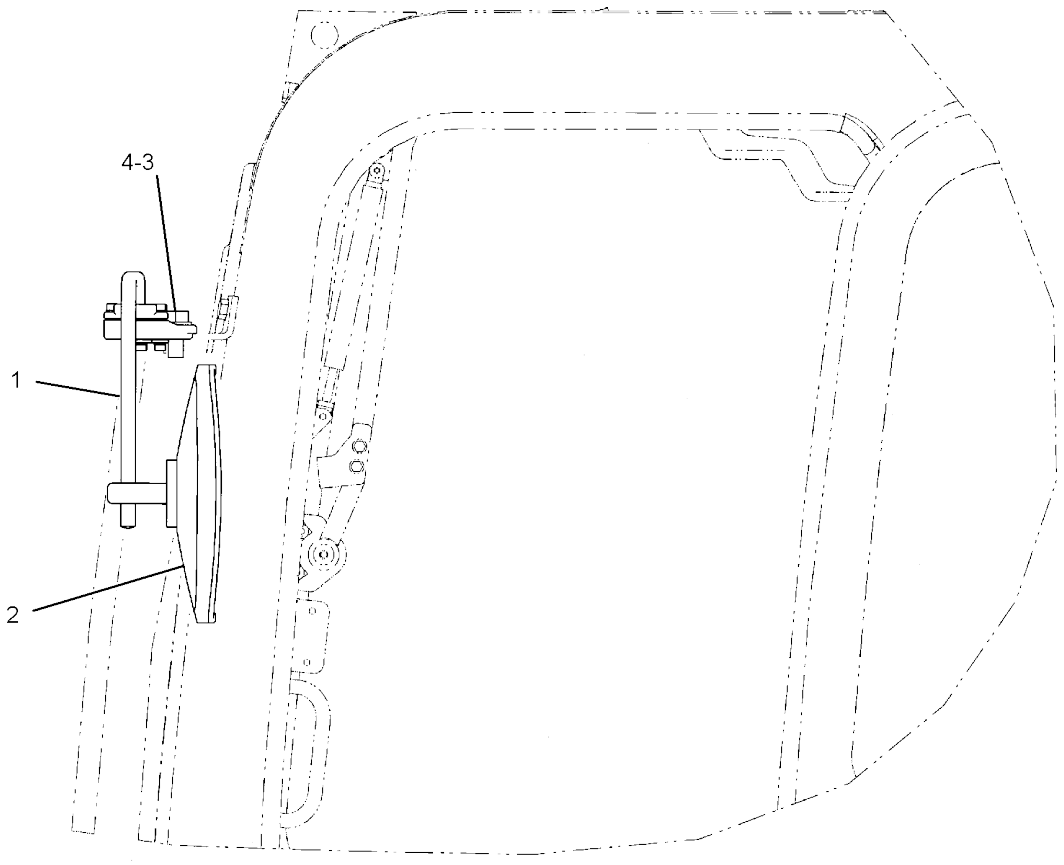


LEFT SIDE VIEW

GRAPHIC #1 **<END>** g01207728

# 267-4367 MIRROR GP-REAR VIEW–EXTERIOR, RH

**PART OF 355-3417 MIRROR GP-REAR VIEW**
**AN ATTACHMENT**

**SMCS-7319** **i05437181**

| NOTE | REF NO | GRAPHIC REF | PART NUMBER | QTY | PART NAME 1 2 3 4 5 6 (PRODUCT LEVEL) | SEE PAGE |
|---|---|---|---|---|---|---|
| | 1 | 1 | **156-6617** | 1 | MIRROR | |
| | 2 | 1 | **156-6618** | 1 | SUPPORT AS | |
| | 3 | 1 | **275-6285** | 1 | BRACKET AS | |
| M | | 1 | **9X-6269** | 1 | NUT-WELD (M16X2-THD) | |
| | 4 | 1 | **3B-4510** | 1 | LOCKWASHER | |
| | 5 | 1 | **8T-4121** | 2 | WASHER-HARD (11X21X2.5-MM THK) | |
| M | 6 | 1 | **8T-4137** | 2 | BOLT (M10X1.5X20-MM) | |
| M | 7 | 1 | **8T-4193** | 1 | BOLT (M16X2X50-MM) | |
| | 8 | 1 | **9X-8257** | 1 | WASHER (17.5X30X3.5-MM THK) | |

M - METRIC PART

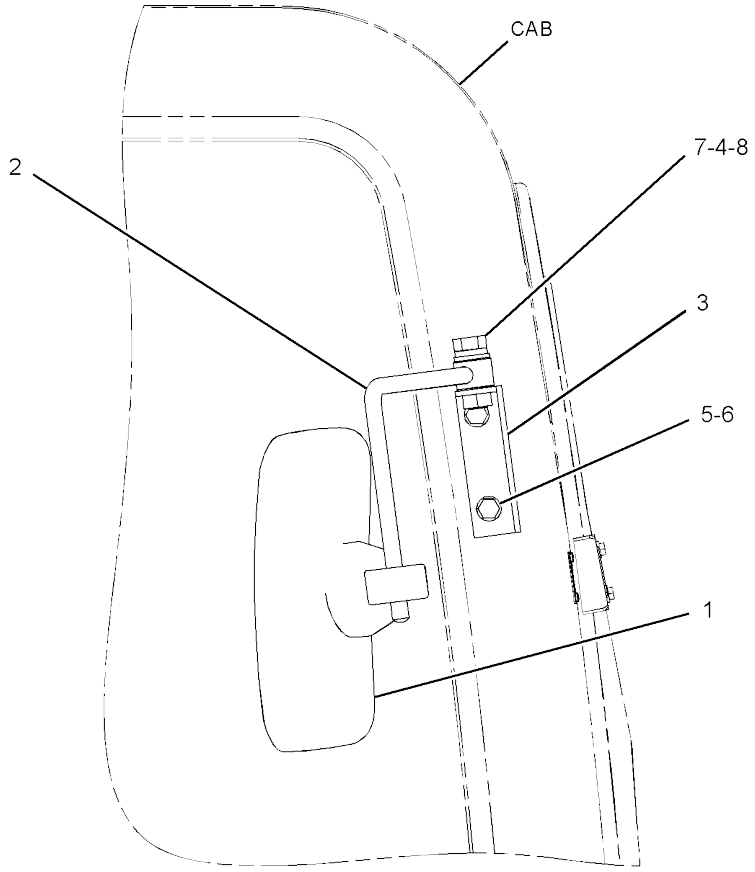


RIGHT SIDE VIEW

GRAPHIC #1 **<END>** g01627690

# OPERATOR STATION

## *334-1186* MIRROR GP-REAR VIEW–CAB, WITH FRONT GUARD

**PART OF 383-5927, 383-5928 CAB AR**
**AN ATTACHMENT**

**SMCS-7319** **i04019526**

| NOTE | REF NO | GRAPHIC REF | PART NUMBER | QTY | PART NAME 1 2 3 4 5 6 (PRODUCT LEVEL) | SEE PAGE |
|---|---|---|---|---|---|---|
| | 1 | 1 | **156-6617** | 1 | MIRROR | |
| | 2 | 1 | **156-6618** | 1 | SUPPORT AS | |
| | 3 | 1 | **275-6285** | 1 | BRACKET AS | |
| | 4 | 1 | **3B-4510** | 1 | LOCKWASHER | |
| | 5 | 1 | **8T-4121** | 2 | WASHER-HARD (11X21X2.5-MM THK) | |
| M | 6 | 1 | **8T-4137** | 2 | BOLT (M10X1.5X20-MM) | |
| M | 7 | 1 | **8T-4193** | 1 | BOLT (M16X2X50-MM) | |
| | 8 | 1 | **9X-8257** | 1 | WASHER (17.5X30X3.5-MM THK) | |

M - METRIC PART

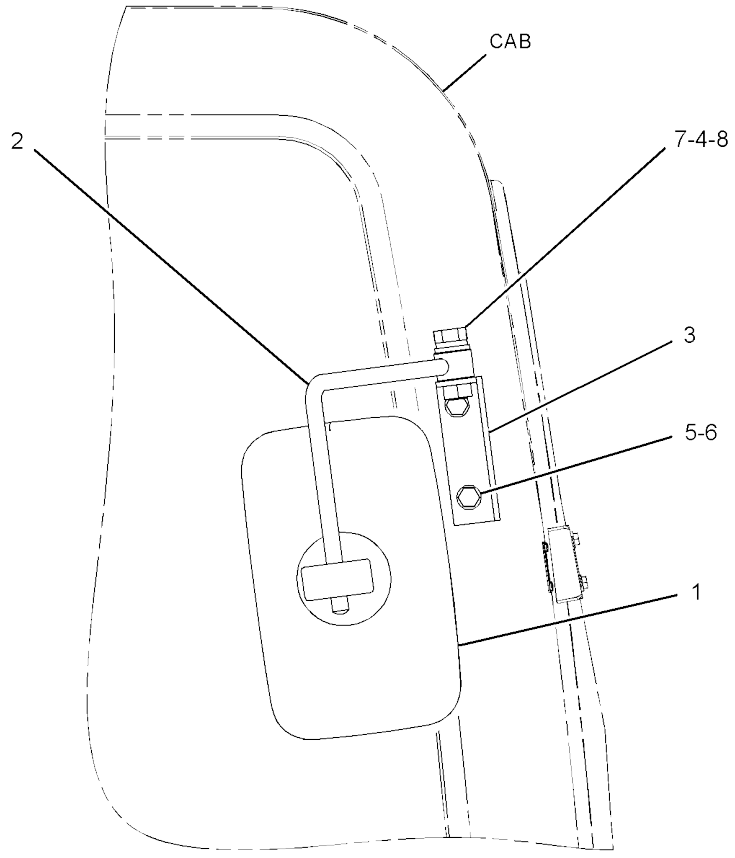


RIGHT SIDE VIEW

GRAPHIC #1 **<END>** g01627682

## *355-3416* MIRROR GP-REAR VIEW–EXTERIOR, LH

**AN ATTACHMENT**

**SMCS-7319** **i04006632**

| NOTE | PART NUMBER | QTY | PART NAME 1 2 3 4 5 6 (PRODUCT LEVEL) | SEE PAGE |
|---|---|---|---|---|
| Y | *267-4366* | 1 | MIRROR GP-REAR VIEW (EXTERIOR, LH) | 508 |

Y - SEPARATE ILLUSTRATION

<END>

## *355-3417* MIRROR GP-REAR VIEW–EXTERIOR, RH

**AN ATTACHMENT**

**SMCS-7319** **i04006650**

| NOTE | PART NUMBER | QTY | PART NAME 1 2 3 4 5 6 (PRODUCT LEVEL) | SEE PAGE |
|---|---|---|---|---|
| Y | *267-4367* | 1 | MIRROR GP-REAR VIEW (EXTERIOR, RH) | 509 |

Y - SEPARATE ILLUSTRATION

<END>

# *380-7150* MIRROR GP-REAR VIEW–EXTERIOR, LH

**PART OF 382-0509 MIRROR GP-REAR VIEW**
**AN ATTACHMENT**

**SMCS-7319** **i04775391**

| NOTE | REF NO | GRAPHIC REF | PART NUMBER | QTY | PART NAME 1 2 3 4 5 6 (PRODUCT LEVEL) | SEE PAGE |
|---|---|---|---|---|---|---|
| | 1 | 1 | **201-2638** | 1 | MIRROR AS | |
| M | 2 | 1 | **6V-7357** | 1 | BOLT (M6X1X25-MM) | |
| | 3 | 1 | **9X-8256** | 1 | WASHER (6.6X12X2-MM THK) | |

M - METRIC PART

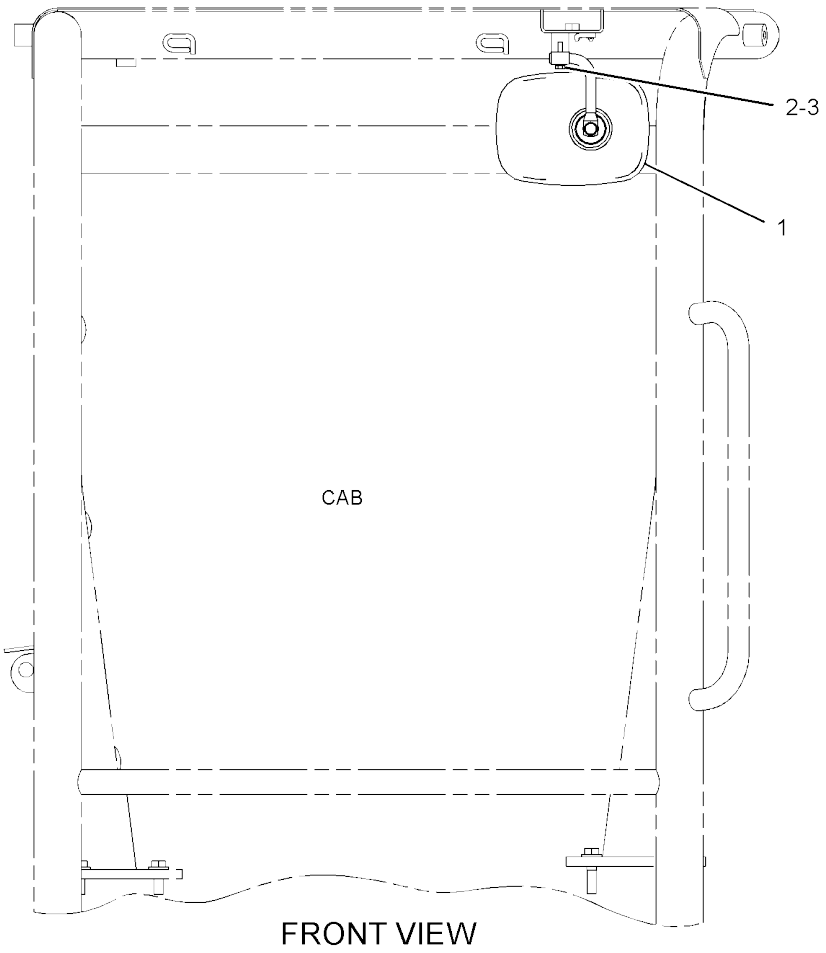


FRONT VIEW

GRAPHIC #1 **<END>** g02801468

# *380-7151* MIRROR GP-REAR VIEW–EXTERIOR, RH

**PART OF 382-0517 MIRROR GP-REAR VIEW**
**AN ATTACHMENT**

**SMCS-7319** **i04629188**

| NOTE | REF NO | GRAPHIC REF | PART NUMBER | QTY | PART NAME 1 2 3 4 5 6 (PRODUCT LEVEL) | SEE PAGE |
|---|---|---|---|---|---|---|
| | 1 | 1 | **281-3998** | 1 | MIRROR AS (REAR VIEW) | |
| M | 2 | 1 | **6V-7357** | 1 | BOLT (M6X1X25-MM) | |
| | 3 | 1 | **9X-8256** | 1 | WASHER (6.6X12X2-MM THK) | |

M - METRIC PART

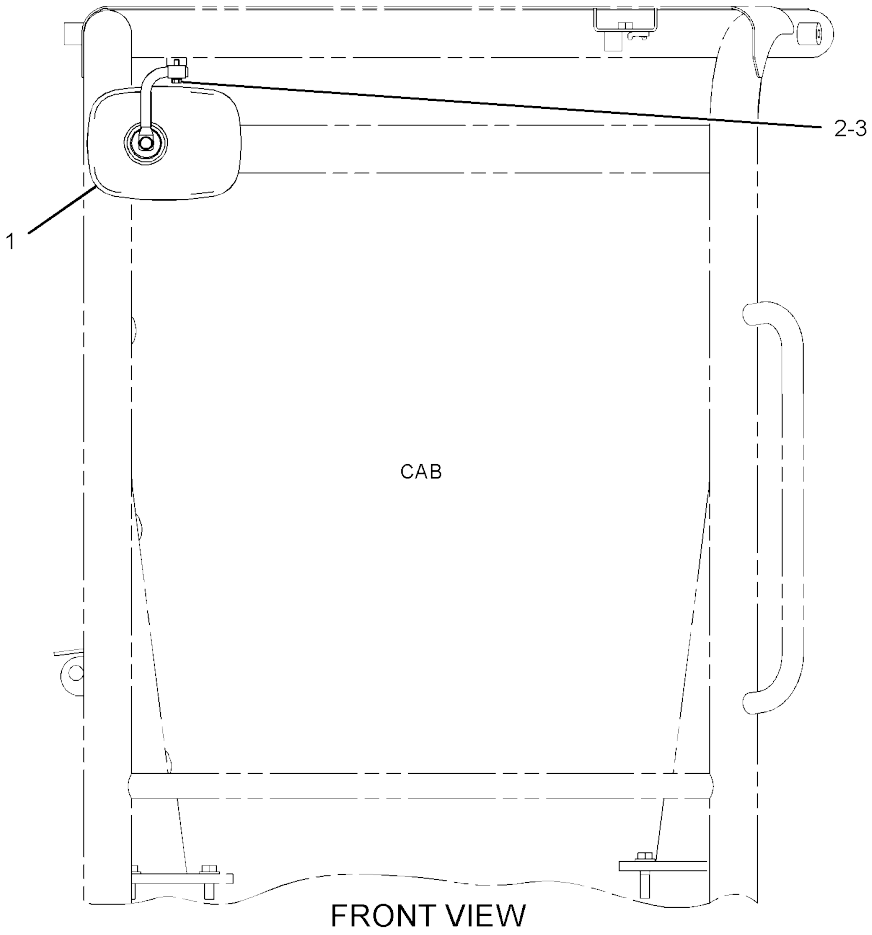


GRAPHIC #1 **<END>** g02798348

# OPERATOR STATION

## *382-0509* MIRROR GP-REAR VIEW–LH

**AN ATTACHMENT**

**SMCS-7319** **i04629197**

| NOTE | PART NUMBER | QTY | PART NAME 1 2 3 4 5 6 (PRODUCT LEVEL) | SEE PAGE |
|---|---|---|---|---|
| Y | *380-7150* | 1 | MIRROR GP-REAR VIEW (LH) | 512 |

Y - SEPARATE ILLUSTRATION

<END>

## *382-0517* MIRROR GP-REAR VIEW–RH

**AN ATTACHMENT**

**SMCS-7319** **i04629200**

| NOTE | PART NUMBER | QTY | PART NAME 1 2 3 4 5 6 (PRODUCT LEVEL) | SEE PAGE |
|---|---|---|---|---|
| Y | *380-7151* | 1 | MIRROR GP-REAR VIEW (RH) | 513 |

Y - SEPARATE ILLUSTRATION

<END>

# OPERATOR STATION

## 286-9482 MOUNTING GP-MIRROR

**PART OF 267-4366 MIRROR GP-REAR VIEW**
**AN ATTACHMENT**

**SMCS-7319** **i03965232**

| NOTE | REF NO | GRAPHIC REF | PART NUMBER | QTY | PART NAME 1 2 3 4 5 6 (PRODUCT LEVEL) | SEE PAGE |
|---|---|---|---|---|---|---|
| | 1 | 1 | **2U-2552** | 5 | LOCKWASHER | |
| M | 2 | 1 | **6V-5683** | 3 | BOLT (M6X1X16-MM) | |
| M | 3 | 1 | **9X-6153** | 2 | BOLT (M6X1X10-MM) | |

M - METRIC PART

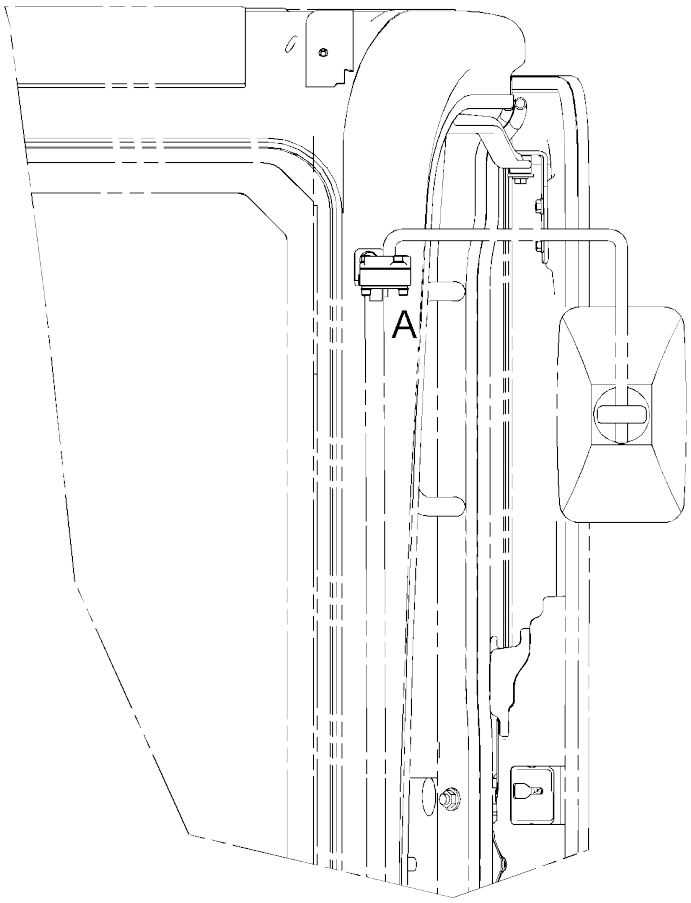


FRONT VIEW

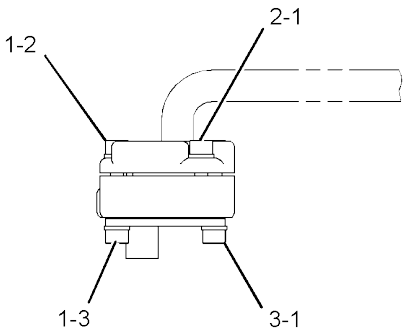


VIEW OF AREA A

GRAPHIC #1 **<END>** g01244242

# OPERATOR STATION

## *379-3624* OPERATOR AR

**PART OF 376-6676 CHASSIS AR**

**SMCS-7300, 7301** **i04629832**

| NOTE | PART NUMBER | QTY | PART NAME 1 2 3 4 5 6 (PRODUCT LEVEL) | SEE PAGE |
|---|---|---|---|---|
| Y | *379-3597* | 1 | CONSOLE GP-OPERATOR | 465 |
| Y | *285-8286* | 1 | CONTROL GP-HYDRAULIC HAND (TRAVEL) | 471 |

Y - SEPARATE ILLUSTRATION

<END>

# OPERATOR STATION

## *382-0504* PLATFORM GP

**PART OF 382-0400 PLATFORM GP-OPERATOR**
**AN ATTACHMENT**

**SMCS-7253, 7254** **i04638012**

| NOTE | REF NO | GRAPHIC REF | PART NUMBER | QTY | PART NAME 1 2 3 4 5 6 (PRODUCT LEVEL) | SEE PAGE |
|---|---|---|---|---|---|---|
| | 1 | 1 | **093-2064** | 2 | GROMMET | |
| | 2 | 1 | **267-7064** | 1 | LOCK AS | |
| | 3 | 1 | **382-0505** | 1 | PLATFORM AS (FLOOR) | |
| | 4 | 1 | **382-0510** | 1 | PLATFORM AS (SUPPORT) | |
| | 5 | 1 | **382-0544** | 1 | PLATE AS | |
| M | | 1 | **8T-3597** | 1 | NUT-WELD (M12X1.75-THD) | |
| M | | 1 | **8T-3612** | 4 | NUT-WELD (M8X1.25-THD) | |
| | 6 | 1 | **382-0546** | 1 | COVER | |
| | 7 | 1 | **382-0547** | 1 | PLATE AS | |
| | 8 | 1 | **382-0549** | 1 | PLATE AS | |
| M | | 1 | **8T-3490** | 4 | NUT-WELD (M10X1.5-THD) | |
| | 9 | 1 | **382-2147** | 1 | COVER AS | |
| | 10 | 1 | **382-2149** | 1 | COVER | |
| | 11 | 1 | **382-2150** | 1 | PLATE | |
| | 12 | 1 | **1S-1014** | 3 | GROMMET | |
| M | 13 | 1 | **5C-9553** | 10 | BOLT (M6X1X16-MM) | |
| | 14 | 1 | **5P-4115** | 1 | WASHER-HARD (7.2X19X2-MM THK) | |
| | 15 | 1 | **8T-4121** | 8 | WASHER-HARD (11X21X2.5-MM THK) | |
| M | 16 | 1 | **8T-4136** | 4 | BOLT (M10X1.5X25-MM) | |
| M | 17 | 1 | **8T-4137** | 4 | BOLT (M10X1.5X20-MM) | |
| M | 18 | 1 | **8T-4189** | 6 | BOLT (M8X1.25X20-MM) | |
| | 19 | 1 | **8T-4224** | 6 | WASHER-HARD (8.8X16X2-MM THK) | |
| | 20 | 1 | **9X-8256** | 9 | WASHER (6.6X12X2-MM THK) | |
| | 21 | 1 | **8T-5372** | | SEAL (0.05-M EACH) | |
| | 22 | 1 | **7X-7898** | | TRIM (27-CM EACH) | |

M - METRIC PART

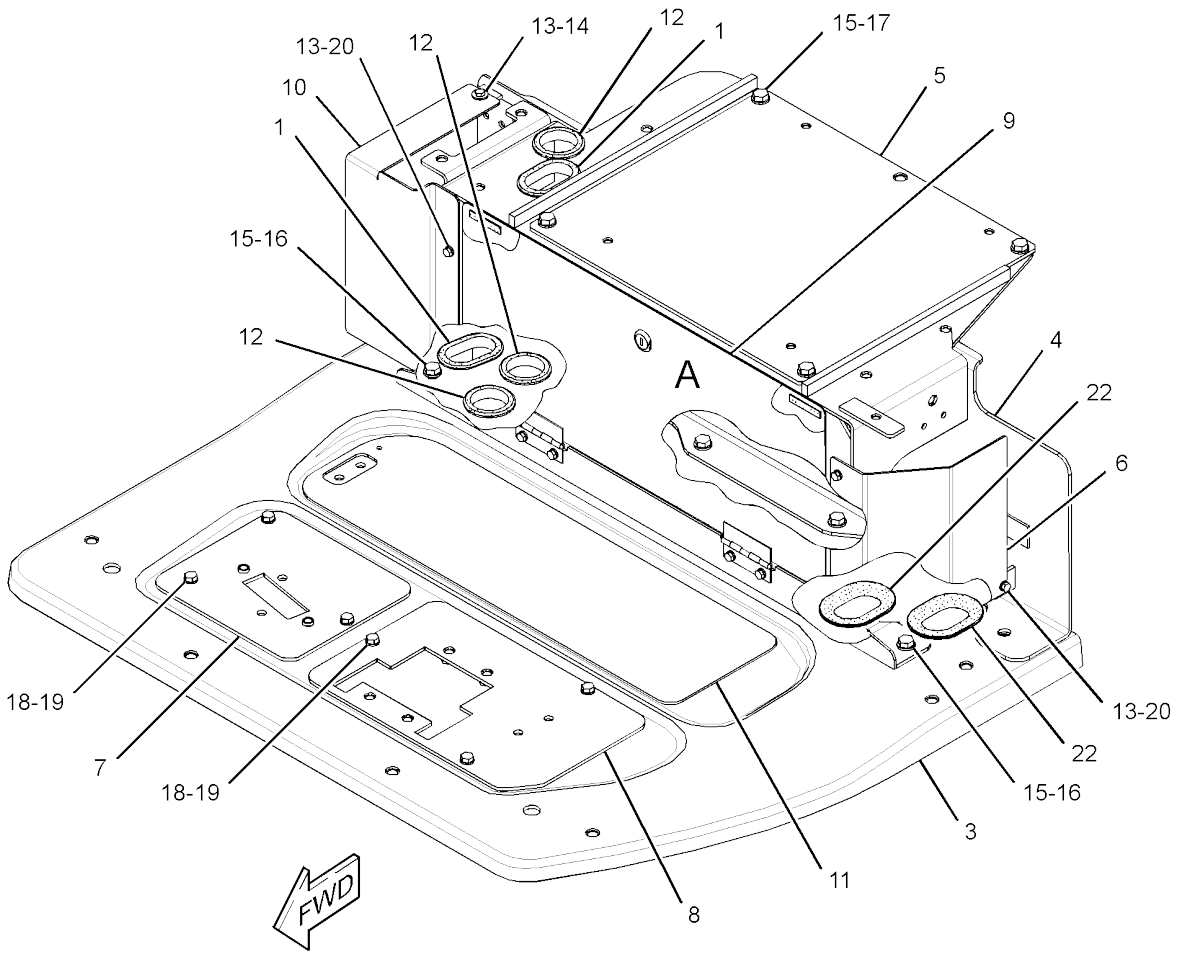


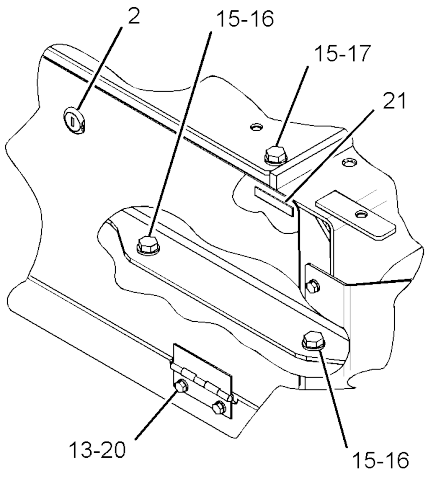


VIEW OF AREA A

GRAPHIC #1 **<END>** g02803619

# OPERATOR STATION

## *378-8139* PLATFORM GP-OPERATOR

**PART OF 379-3625 PLATFORM GP-OPERATOR**
**AN ATTACHMENT**

**SMCS-7253** **i04635551**

| NOTE | REF NO | GRAPHIC REF | PART NUMBER | QTY | PART NAME 1 2 3 4 5 6 (PRODUCT LEVEL) | SEE PAGE |
|---|---|---|---|---|---|---|
| | 1 | 1 | **093-2064** | 1 | GROMMET | |
| | 2 | 1 | **267-7064** | 1 | LOCK AS | |
| | 3 | 1 | **282-9699** | 1 | PLATE AS | |
| | 4 | 1 | **283-0274** | 1 | TAPE | |
| | 5 | 1 | **353-2981** | 1 | COVER | |
| | 6 | 1 | **358-9162** | 1 | SEAL | |
| | 7 | 1 | **377-5933** | 1 | PLATFORM AS | |
| | 8 | 1 | **377-5936** | 1 | BRACKET AS | |
| M | | 1 | **8T-3490** | 2 | NUT-WELD (M10X1.5-THD) | |
| | 9 | 1 | **377-5938** | 1 | PLATE AS | |
| | 10 | 1 | **377-5942** | 1 | SEAL | |
| | 11 | 1 | **377-5943** | 1 | SEAL | |
| | 12 | 1 | **377-5945** | 1 | INSULATION | |
| | 13 | 1 | **377-5946** | 1 | INSULATION | |
| | 14 | 1 | **377-5947** | 1 | INSULATION | |
| | 15 | 1 | **377-5948** | 1 | INSULATION | |
| | 16 | 1 | **377-5949** | 1 | INSULATION | |
| | 17 | 1 | **377-5950** | 1 | SEAL | |
| | 18 | 1 | **377-5951** | 1 | SEAL | |
| | 19 | 1 | **377-5952** | 1 | INSULATION | |
| | 20 | 1 | **377-5959** | 1 | COVER | |
| | 21 | 1 | **378-8140** | 1 | SEAL | |
| | 22 | 1 | **379-3628** | 1 | SEAL | |
| | 23 | 1 | **382-6314** | 1 | SEAL | |
| | 24 | 1 | **382-6347** | 1 | INSULATION | |
| | 25 | 1 | **384-5670** | 1 | COVER | |
| | 26 | 1 | **384-5675** | 1 | SEAL | |
| | 27 | 1 | **384-5676** | 1 | PLATE AS | |
| M | | 1 | **8T-3490** | 4 | NUT-WELD (M10X1.5-THD) | |
| E | 28 | 1 | **7X-7898** | | TRIM (27-CM EACH) | |
| E | 29 | 1 | **7X-7877** | | STRIP-EDGING (30-CM) | |
| | 30 | 1 | **117-8929** | 2 | WASHER (6.6X22X2-MM THK) | |
| | 31 | 1 | **1S-1014** | 1 | GROMMET | |
| M | 32 | 1 | **5C-9553** | 7 | BOLT (M6X1X16-MM) | |
| M | 33 | 1 | **7X-2619** | 2 | BOLT (M6X1X10-MM) | |
| | 34 | 1 | **8T-4121** | 4 | WASHER-HARD (11X21X2.5-MM THK) | |
| M | 35 | 1 | **8T-4136** | 4 | BOLT (M10X1.5X25-MM) | |
| M | 36 | 1 | **8T-4189** | 8 | BOLT (M8X1.25X20-MM) | |
| | 37 | 1 | **8T-4224** | 8 | WASHER-HARD (8.8X16X2-MM THK) | |
| | 38 | 1 | **9X-8256** | 7 | WASHER (6.6X12X2-MM THK) | |
| D | 39 | 1 | **8T-5372** | | SEAL (0.1-M EACH) | |
| D | 40 | 1 | **5P-5969** | | SEAL (0.2-M EACH) | |
| D | 40A | 1 | **5P-5969** | | SEAL (0.3-M EACH) | |

D - ORDER BY THE METER
E - ORDER BY THE CENTIMETER
M - METRIC PART

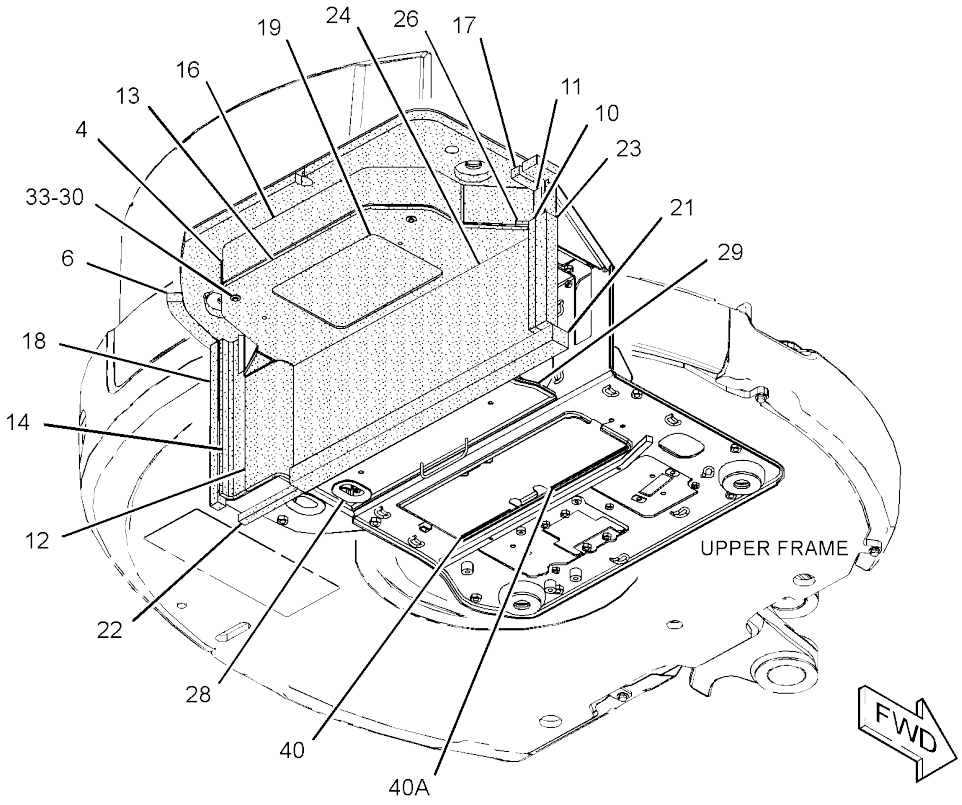


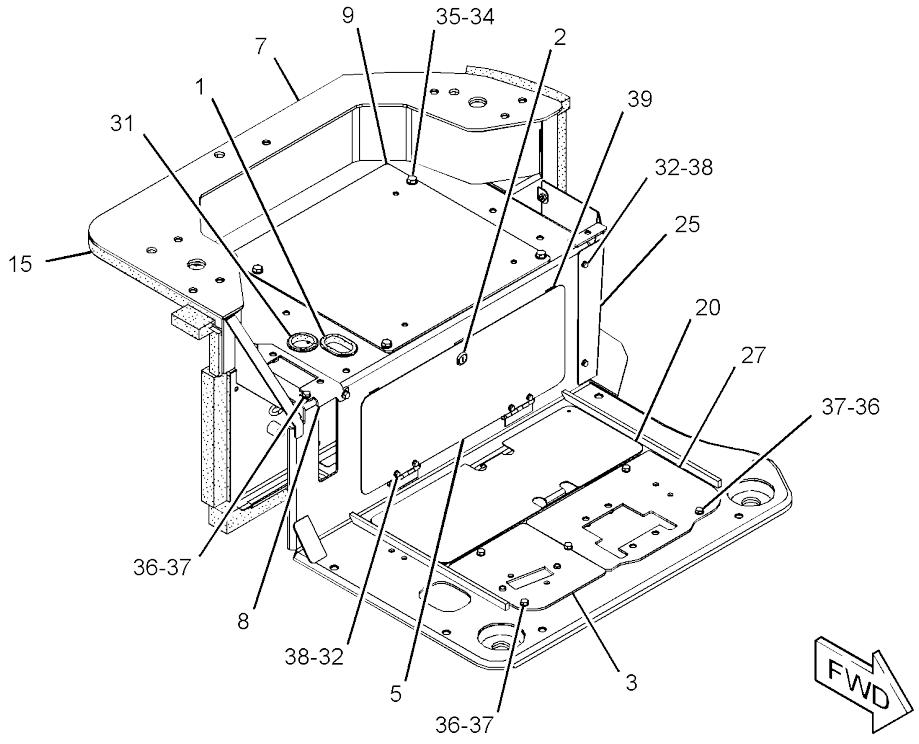


GRAPHIC #1 **<END>** g02806896

# OPERATOR STATION

## *379-3625* PLATFORM GP-OPERATOR–CAB

**PART OF 376-6692, 376-6696, 383-5927, 383-5928 CAB AR**
**AN ATTACHMENT**

**SMCS-7253** **i04617853**

| NOTE | REF NO | GRAPHIC REF | PART NUMBER | QTY | PART NAME 1 2 3 4 5 6 (PRODUCT LEVEL) | SEE PAGE |
|---|---|---|---|---|---|---|
| | 1 | 1 | **267-5348** | 4 | MOUNT AS-PLATFORM | |
| | 2 | 1 | **267-5349** | 4 | MOUNT | |
| | 3 | 1 | **267-5355** | 4 | STOP | |
| Y | 4 | 1 | *377-5062* | 1 | FRAME GP-REAR (CAB) | 137 |
| Y | 5 | 1 | *378-8139* | 1 | PLATFORM GP-OPERATOR (CAB) | 519 |
| M | 6 | 1 | **8T-4175** | 4 | BOLT (M16X2X90-MM) | |
| | 7 | 1 | **9X-8257** | 4 | WASHER (17.5X30X3.5-MM THK) | |

M - METRIC PART
Y - SEPARATE ILLUSTRATION

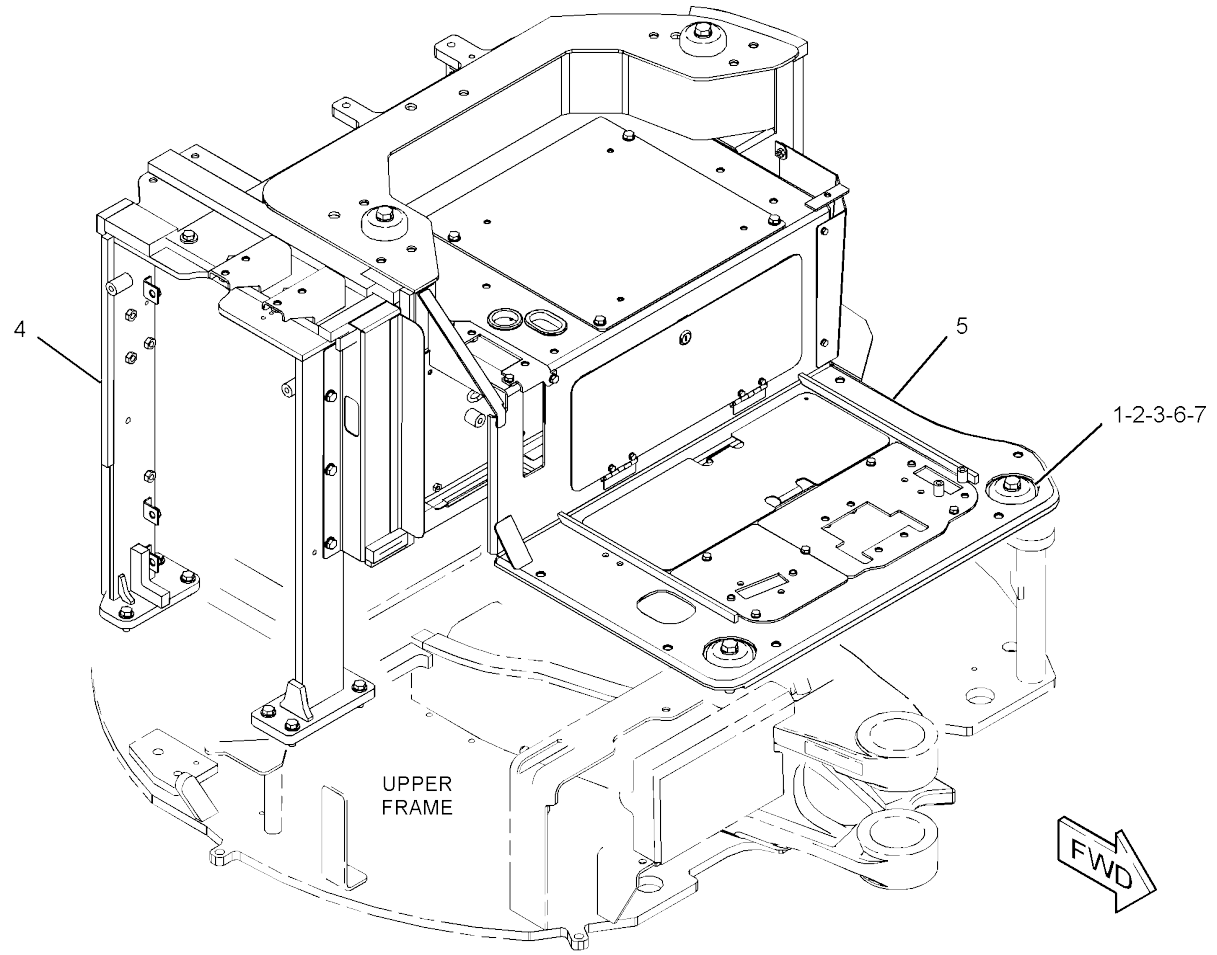


GRAPHIC #1 **<END>** g02798854

# OPERATOR STATION

## *382-0400* PLATFORM GP-OPERATOR

**PART OF 377-8933, 383-5929 CANOPY AR**
**AN ATTACHMENT**

**SMCS-7253** **i04623159**

| NOTE | REF NO | GRAPHIC REF | PART NUMBER | QTY | PART NAME 1 2 3 4 5 6 (PRODUCT LEVEL) | SEE PAGE |
|---|---|---|---|---|---|---|
| | 1 | 1 | **6N-6984** | 2 | MOUNT-RUBBER | |
| Y | 2 | 1 | *382-0401* | 1 | FRAME GP-REAR (CANOPY) (CANOPY) | 139 |
| Y | 3 | 1 | *382-0504* | 1 | PLATFORM GP (CANOPY) | 517 |
| Y | 4 | 1 | *382-2177* | 1 | COVER GP-SOUND SUPPRESSION | 134 |
| M | 5 | 1 | **7X-2549** | 2 | BOLT (M12X1.75X100-MM) | |
| M | 6 | 1 | **7X-2556** | 1 | BOLT (M16X2X100-MM) | |
| | 7 | 1 | **7X-7729** | 3 | WASHER (11X25X3-MM THK) | |
| M | 8 | 1 | **8T-4137** | 1 | BOLT (M10X1.5X20-MM) | |
| M | 9 | 1 | **8T-4139** | 1 | BOLT (M12X1.75X30-MM) | |
| M | 10 | 1 | **8T-4196** | 4 | BOLT (M10X1.5X35-MM) | |
| | 11 | 1 | **8T-4223** | 3 | WASHER-HARD (13.5X25.5X3-MM THK) | |
| | 12 | 1 | **8T-4224** | 1 | WASHER-HARD (8.8X16X2-MM THK) | |
| M | 13 | 1 | **8T-7547** | 1 | BOLT (M8X1.25X30-MM) | |
| | 14 | 1 | **9L-8781** | 2 | WASHER (0.406X1.5X0.188-IN THK) | |
| | 15 | 1 | **9X-8257** | 1 | WASHER (17.5X30X3.5-MM THK) | |

M - METRIC PART
Y - SEPARATE ILLUSTRATION

*382-0400* **PLATFORM GP-OPERATOR (*contd.*)** **i04623159**

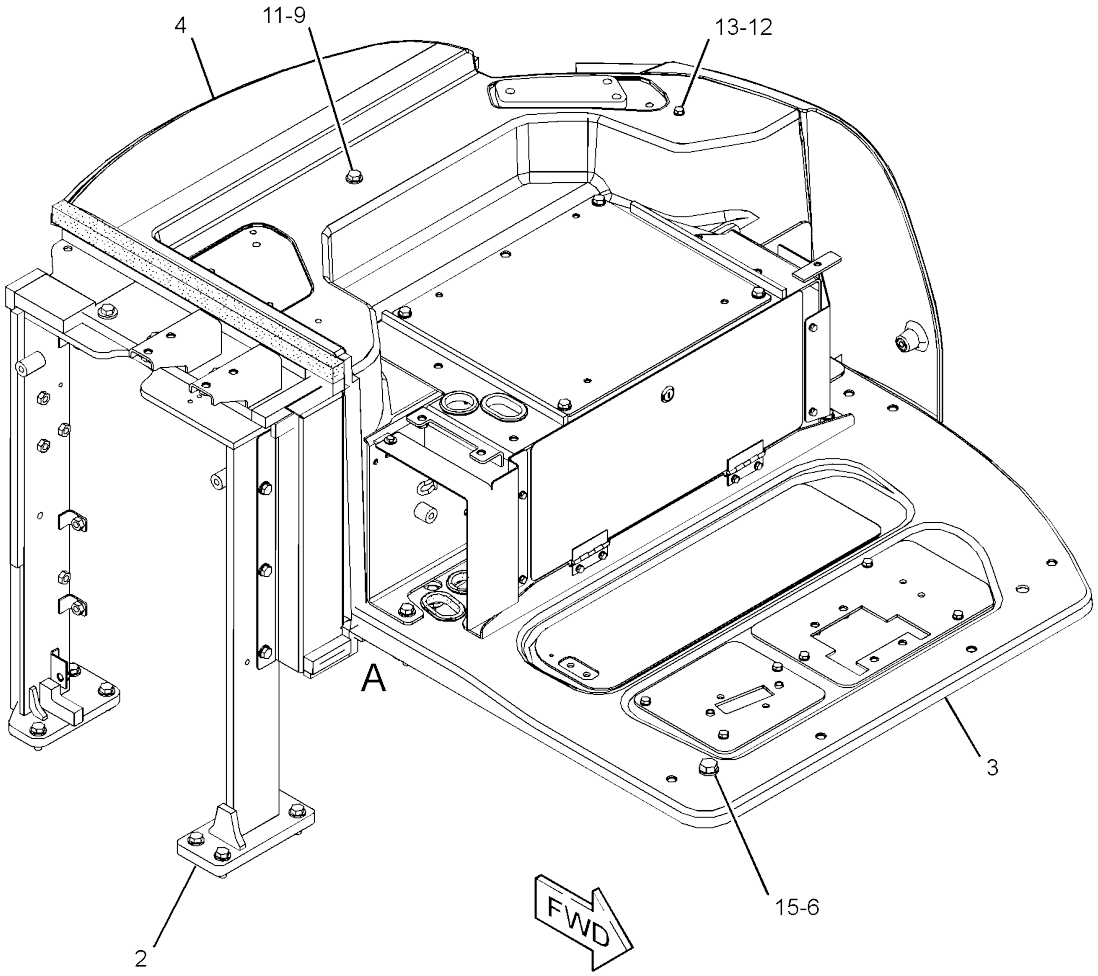


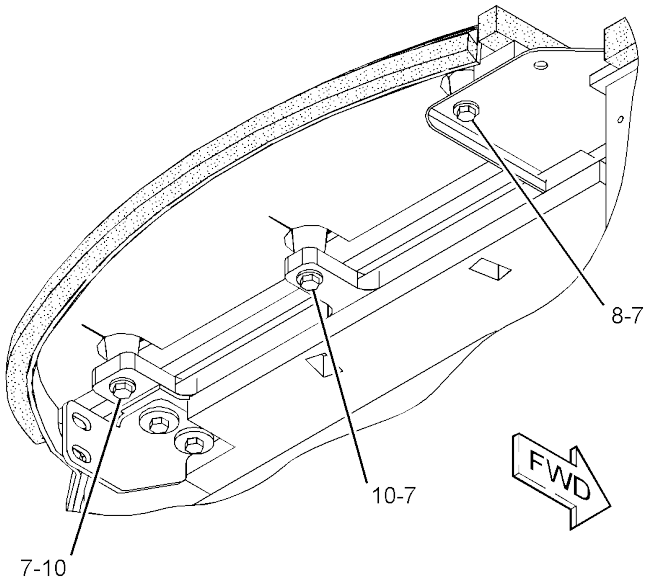


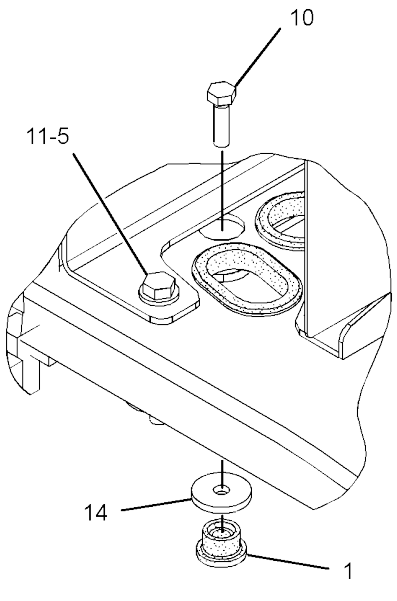


VIEW OF AREA A

GRAPHIC #1

<END>

g02799130

# OPERATOR STATION

## *267-1615* SEAT & MOUNTING GP–LOW BACK, SUSPENSION, VINYL

**PART OF 357-9061 SEAT GP-SUSPENSION**

**AN ATTACHMENT**

**SMCS-7312** **i04241511**

| NOTE | REF NO | GRAPHIC REF | PART NUMBER | QTY | PART NAME 1 2 3 4 5 6 (PRODUCT LEVEL) | SEE PAGE |
|---|---|---|---|---|---|---|
| M | 1 | 1 | **198-3899** | 4 | SCREW-BUTTON HEAD (M8X1.25X20-MM) | |
| | 2 | 1 | **285-7836** | 1 | SEAT GP (VINYL, LOW BACK, TILT) | |
| | | 1 | **310-1866** | 1 | KNOB | |
| | | 1 | **310-1867** | 1 | PIN | |

M - METRIC PART

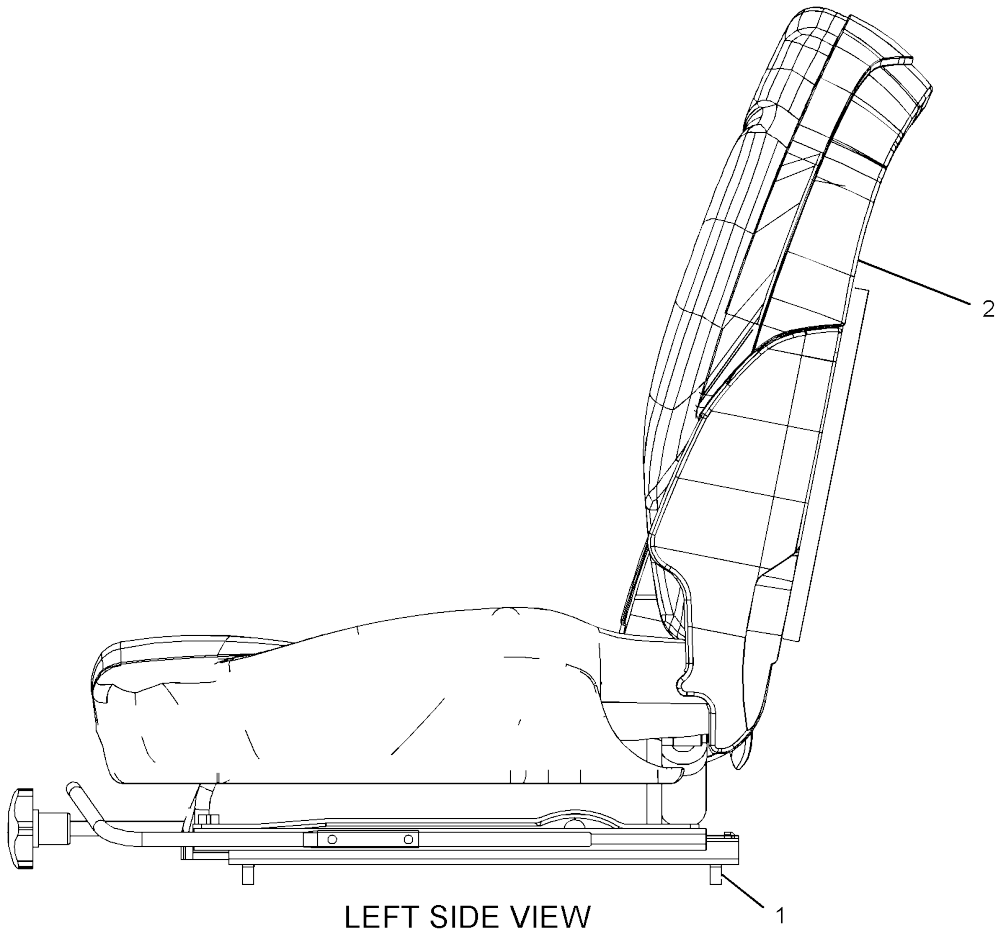


LEFT SIDE VIEW

GRAPHIC #1 **<END>** g01351955

# OPERATOR STATION

## *387-4682* SEAT & MOUNTING GP—HIGH BACK, CLOTH, SUSPENSION

**AN ATTACHMENT**

**SMCS-7312** **i04629220**

| NOTE | PART NUMBER | QTY | PART NAME 1 2 3 4 5 6 (PRODUCT LEVEL) | SEE PAGE |
|---|---|---|---|---|
| Y | *384-5673* | 1 | SEAT GP-SUSPENSION (CLOTH, HIGH BACK) | 529 |

Y - SEPARATE ILLUSTRATION

<END>

## *378-2498* SEAT BELT GP—RETRACTABLE, 2-IN

**AN ATTACHMENT**

**SMCS-7327** **i04623137**

| NOTE | PART NUMBER | QTY | PART NAME 1 2 3 4 5 6 (PRODUCT LEVEL) | SEE PAGE |
|---|---|---|---|---|
| Y | *378-2506* | 1 | SEAT BELT GP (RETRACTABLE, 2-IN) | 526 |

Y - SEPARATE ILLUSTRATION

<END>

## *378-2499* SEAT BELT GP—3-IN

**AN ATTACHMENT**

**SMCS-7327** **i04623138**

| NOTE | PART NUMBER | QTY | PART NAME 1 2 3 4 5 6 (PRODUCT LEVEL) | SEE PAGE |
|---|---|---|---|---|
| Y | *378-2508* | 1 | SEAT BELT GP (RETRACTABLE, 3-IN) | 527 |

Y - SEPARATE ILLUSTRATION

<END>

# OPERATOR STATION

## *378-2506* SEAT BELT GP–RETRACTABLE, 2-IN

**PART OF 378-2498 SEAT BELT GP**
**AN ATTACHMENT**

**SMCS-7327** **i05047013**

| NOTE | REF NO | GRAPHIC REF | PART NUMBER | QTY | PART NAME 1 2 3 4 5 6 (PRODUCT LEVEL) | SEE PAGE |
|---|---|---|---|---|---|---|
| | 1 | 1 | **208-7733** | 2 | BOLT (7/16-20X1.1-IN) | |
| | 2 | 1 | **258-4095** | 1 | SEAT BELT GP (RETRACTABLE, 51-MM (2-IN)) | |
| | | 1 | **2D-6412** | 2 | WASHER (7/16X15/16X1/4-IN THK) | |
| | | 1 | **8S-0934** | 2 | LOCKNUT-FLANGE (7/16-20-THD) | |
| | | 1 | **8S-4723** | 2 | BOLT (7/16-20X1.5-IN) | |
| | | 1 | **8T-4223** | 2 | WASHER-HARD (13.5X25.5X3-MM THK) | |

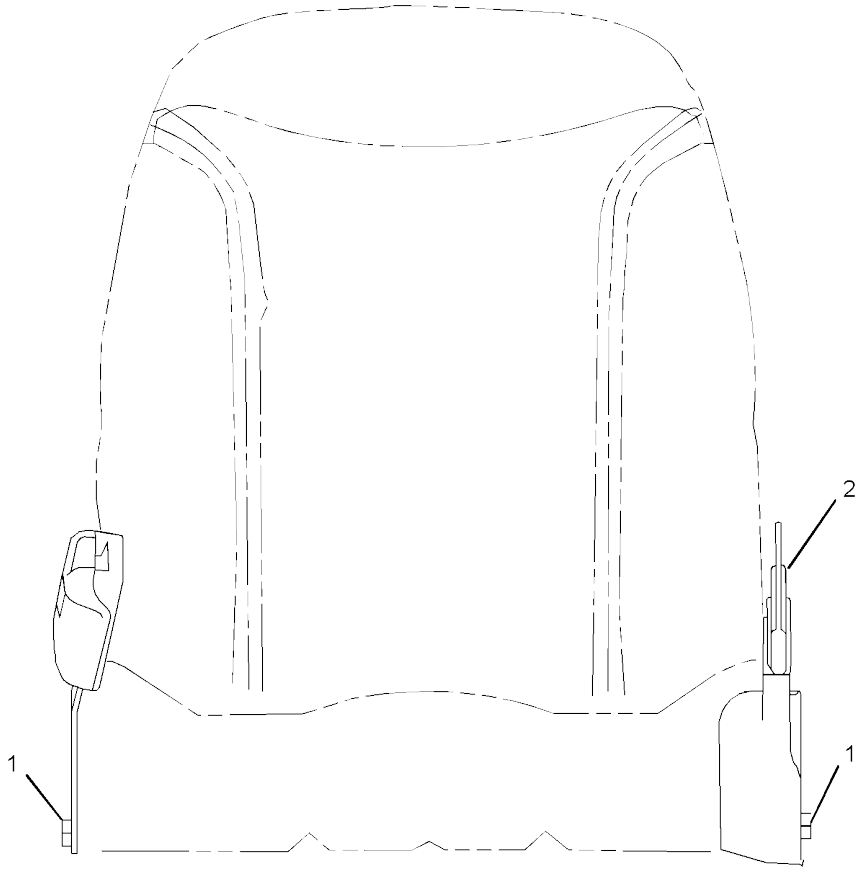


FRONT VIEW

GRAPHIC #1 **<END>** g02782277

## *378-2508* SEAT BELT GP–RETRACTABLE, 3-IN

**PART OF 378-2499 SEAT BELT GP**
**AN ATTACHMENT**

**SMCS-7327** **i04559498**

| NOTE | REF NO | GRAPHIC REF | PART NUMBER | QTY | PART NAME 1 2 3 4 5 6 (PRODUCT LEVEL) | SEE PAGE |
|---|---|---|---|---|---|---|
| | 1 | 1 | **208-7733** | 2 | BOLT (7/16-20X1.1-IN) | |
| | 2 | 1 | **258-4096** | 1 | SEAT BELT GP (RETRACTABLE, 76-MM (3-IN)) | |
| | | 1 | **2D-6412** | 2 | WASHER (7/16X15/16X1/4-IN THK) | |
| | | 1 | **8S-0934** | 2 | LOCKNUT-FLANGE (7/16-20-THD) | |
| | | 1 | **8S-4723** | 2 | BOLT (7/16-20X1.5-IN) | |
| | | 1 | **8T-4223** | 2 | WASHER-HARD (13.5X25.5X3-MM THK) | |

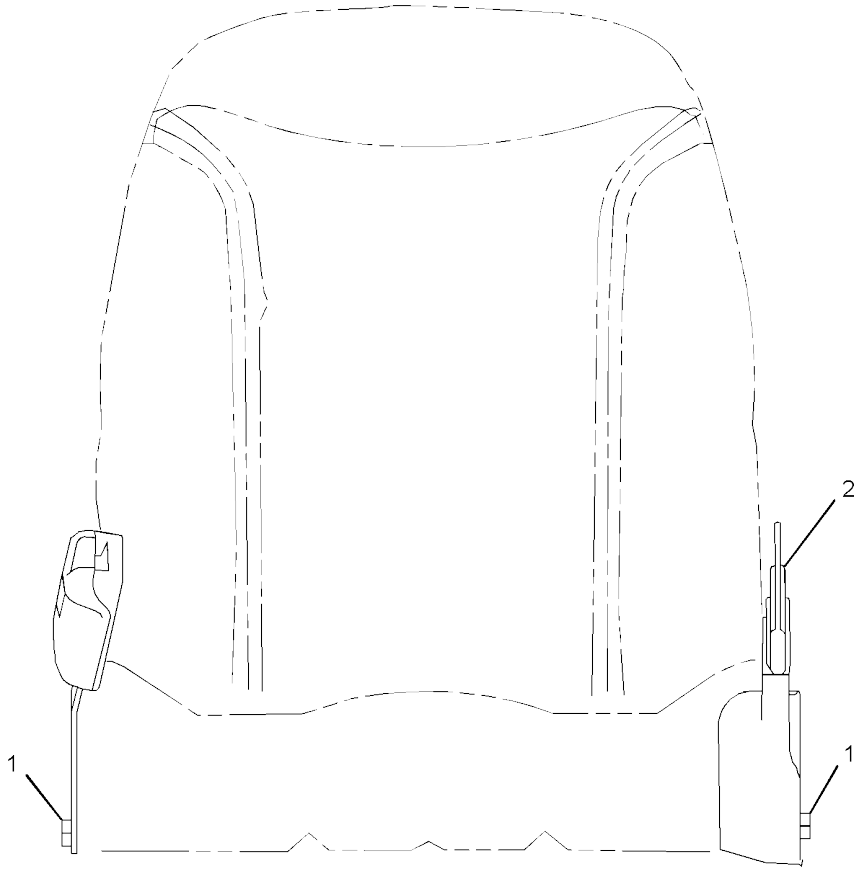


FRONT VIEW

GRAPHIC #1 **<END>** g02782236

# OPERATOR STATION

## *357-9061* SEAT GP-SUSPENSION–VINYL

**AN ATTACHMENT**

**SMCS-7312, 7321, 7324, 7336** **i04018290**

| NOTE | PART NUMBER | QTY | PART NAME 1 2 3 4 5 6 (PRODUCT LEVEL) | SEE PAGE |
|---|---|---|---|---|
| Y | *267-1615* | 1 | SEAT & MOUNTING GP (LOW BACK, SUSPENSION, VINYL) | 524 |

Y - SEPARATE ILLUSTRATION

<END>

## *384-5673* SEAT GP-SUSPENSION–CLOTH, HIGH BACK

**PART OF 387-4682 SEAT & MOUNTING GP**

**AN ATTACHMENT**

**SMCS-7312, 7321, 7324, 7336** **i04629219**

| NOTE | REF NO | GRAPHIC REF | PART NUMBER | QTY | PART NAME 1 2 3 4 5 6 (PRODUCT LEVEL) | SEE PAGE |
|---|---|---|---|---|---|---|
| M | 1 | 1 | **198-3899** | 4 | SCREW-BUTTON HEAD (M8X1.25X20-MM) | |
| | 2 | 1 | **384-5674** | 1 | SEAT GP-SUSPENSION (CLOTH, HIGH BACK) | |

M - METRIC PART

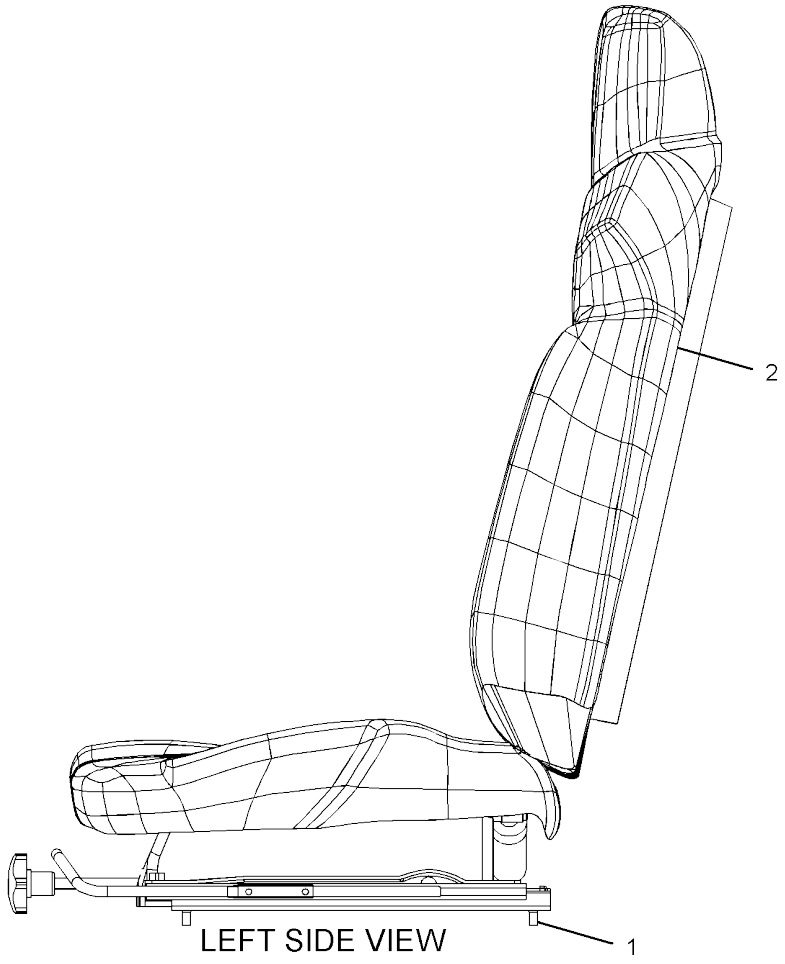


LEFT SIDE VIEW

GRAPHIC #1 **<END>** g01351987

# OPERATOR STATION

## *379-3626* WASHER GP-WINDOW

**PART OF 376-6692, 376-6696, 383-5927, 383-5928 CAB AR**
**AN ATTACHMENT**

**SMCS-7306** **i04617854**

| NOTE | REF NO | GRAPHIC REF | PART NUMBER | QTY | PART NAME 1 2 3 4 5 6 (PRODUCT LEVEL) | SEE PAGE |
|---|---|---|---|---|---|---|
| | 1 | 1 | **7I-2673** | 10 | STRAP-CABLE | |
| | 2 | 1 | **7Y-3474** | 1 | VALVE AS-CHECK (WINDOW WASHER) | |
| | 3 | 1 | **191-7524** | 1 | TANK GP-WINDOW WASHER | |
| M | 4 | 1 | **5C-9553** | 2 | BOLT (M6X1X16-MM) | |
| | 5 | 1 | **9X-8256** | 2 | WASHER (6.6X12X2-MM THK) | |
| E | 6 | 1 | **144-0195** | | HOSE (270-CM) | |

E - ORDER BY THE CENTIMETER
M - METRIC PART

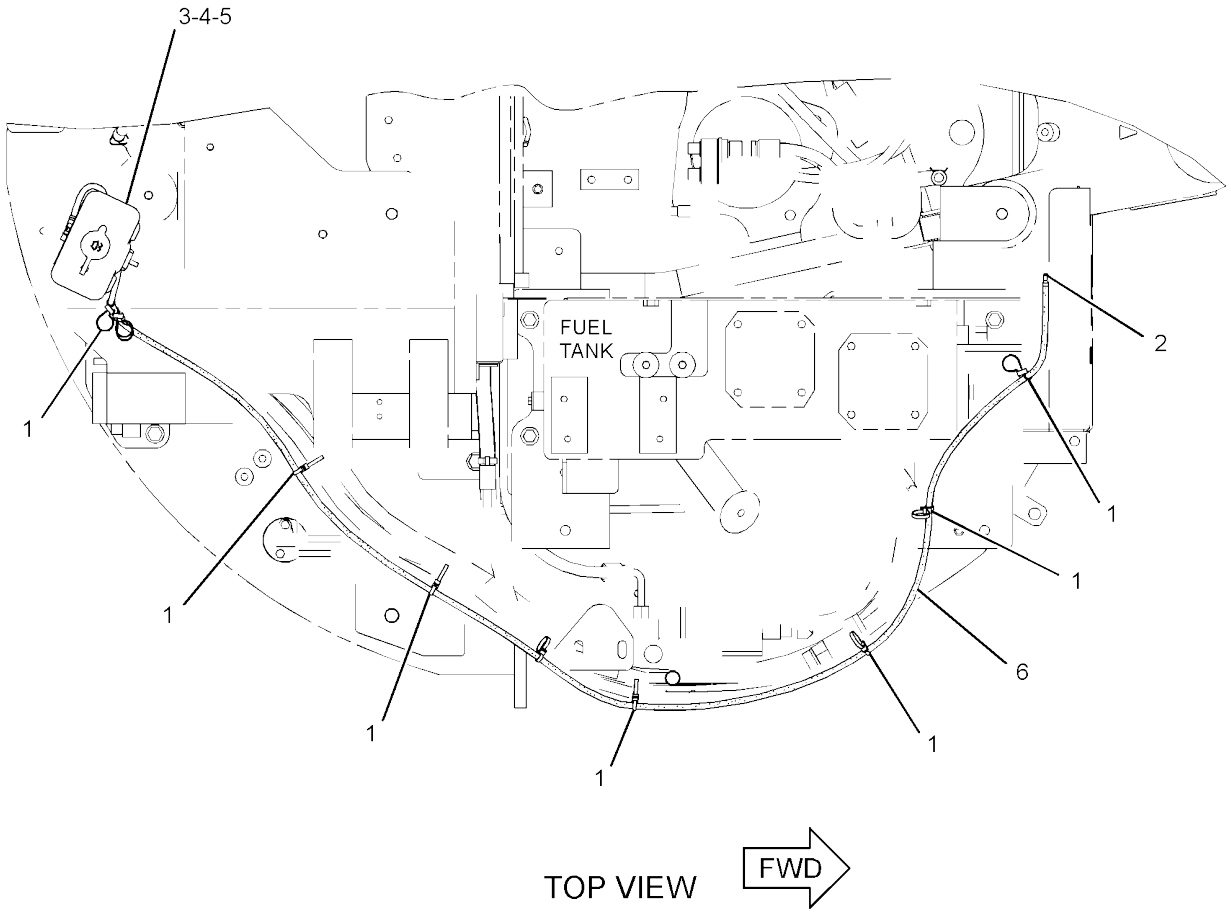


GRAPHIC #1 **<END>** g02798789

# 280-0421 WINDOW GP-CAB

**PART OF 377-5108, 415-6803, 419-1237 CAB GP**

**AN ATTACHMENT**

**SMCS-7310** **i04432789**

| NOTE | REF NO | GRAPHIC REF | PART NUMBER | QTY | PART NAME 1 2 3 4 5 6 (PRODUCT LEVEL) | SEE PAGE |
|---|---|---|---|---|---|---|
| | 1 | 1 | **280-0418** | 1 | FRAME AS-WINDOW | |
| | 2 | 1 | **288-6841** | 1 | GLASS-FRONT | |
| | 3 | 1 | **280-0417** | 1 | SEAL | |
| | 4 | 1 | **280-0416** | 1 | SEAL | |
| | 5 | 1 | **280-0415** | 1 | BRACKET AS (RH) | |
| | 6 | 1 | **280-0414** | 1 | BRACKET AS (LH) | |
| | 7 | 1 | **250-1639** | 2 | ROLLER | |
| | 8 | 1 | **280-0413** | 1 | LOCK AS | |
| | 9 | 1 | **280-0412** | 1 | LOCK AS | |
| | 10 | 1 | **280-0411** | 1 | PLATE | |
| | 11 | 1 | **275-8629** | 1 | MOTOR AS-WINDOW WIPER | |
| | 12 | 1 | **275-8630** | 1 | ARM AS-WIPER | |
| | 13 | 1 | **275-8631** | 1 | BLADE AS-WIPER (450-MM) (FRONT) | |
| | 14 | 1 | **280-0410** | 1 | PLATE | |
| | 15 | 1 | **280-0409** | 2 | SEAL | |
| | 16 | 1 | **280-0408** | 4 | BOLT | |
| M | 17 | 1 | **5C-7423** | 4 | SCREW (M6X1X16-MM) | |
| | 18 | 1 | **280-0407** | 3 | BOLT | |
| | 19 | 1 | **280-0406** | 1 | NUT | |
| | 20 | 1 | **275-8632** | 1 | COVER | |
| | 21 | 1 | **280-0419** | 1 | SCREW | |

M - METRIC PART

*280-0421* **WINDOW GP-CAB (*contd.*)** **i04432789**

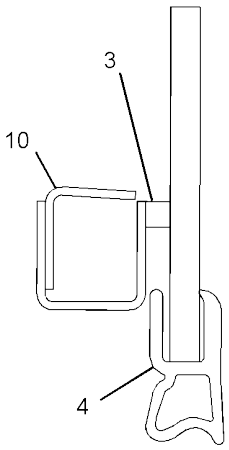


SECTION A-A

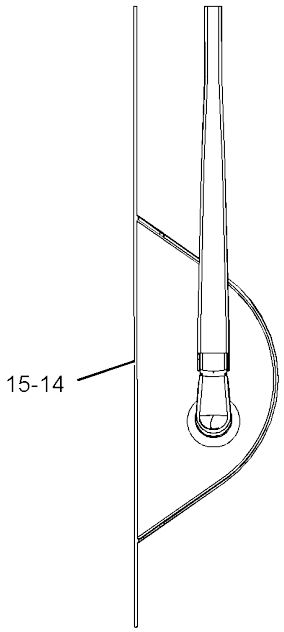


VIEW B-B

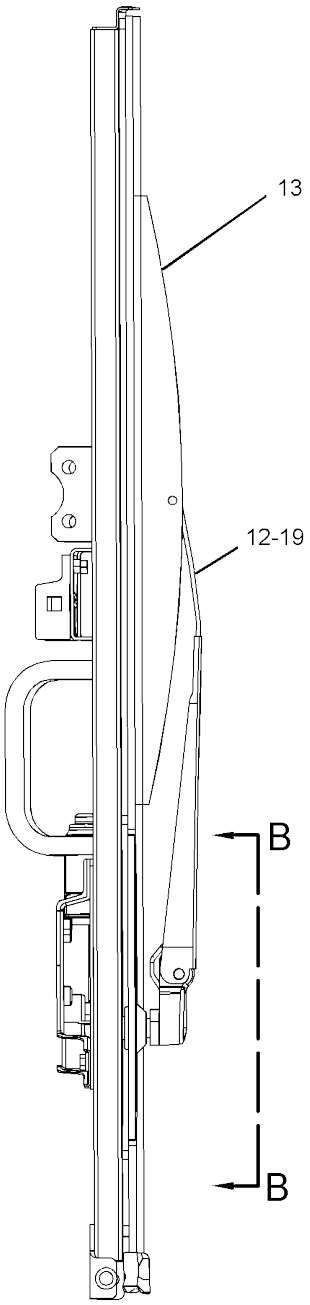


RIGHT SIDE VIEW

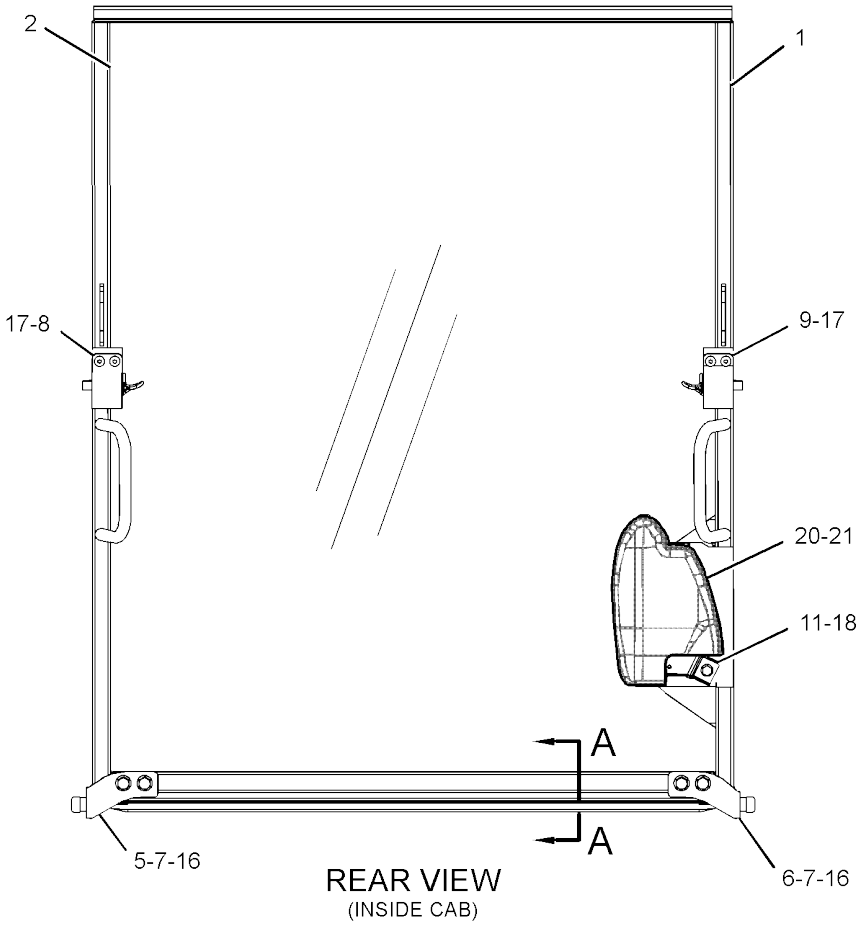


REAR VIEW
(INSIDE CAB)

GRAPHIC #1 **<END>** g01213831

# *281-4451* WINDOW GP-SLIDING

**PART OF 377-5108, 415-6803, 419-1237 CAB GP**
**AN ATTACHMENT**

**SMCS-7310** **i03965398**

| NOTE | REF NO | GRAPHIC REF | PART NUMBER | QTY | PART NAME 1 2 3 4 5 6 (PRODUCT LEVEL) | SEE PAGE |
|---|---|---|---|---|---|---|
| | 1 | 1 | **304-8800** | 2 | LOCK AS | |
| | 2 | 1 | **304-8801** | 1 | PLATE | |
| | 3 | 1 | **304-8802** | 1 | PLATE | |
| | 4 | 1 | **314-8292** | 1 | FRAME | |
| | 5 | 1 | **314-8294** | 1 | GLASS | |
| | 6 | 1 | **314-8295** | 1 | GLASS | |
| | 7 | 1 | **314-8296** | 2 | CHANNEL | |
| | 8 | 1 | **314-8298** | 1 | SEAL | |
| | 9 | 1 | **314-8299** | 1 | PLATE | |
| | 10 | 1 | **314-8300** | 2 | SEAL | |

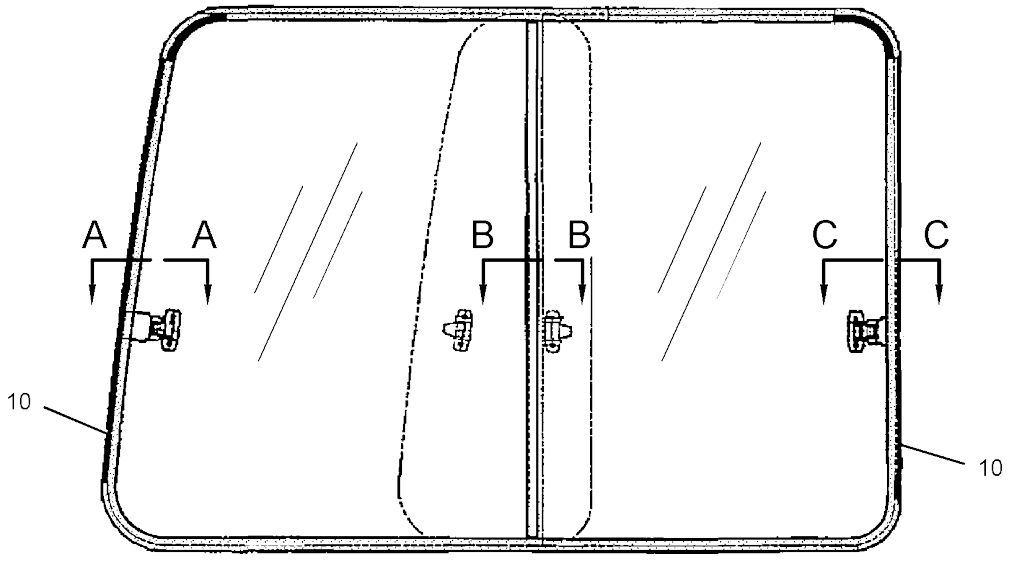


LEFT SIDE VIEW
(INSIDE CAB)

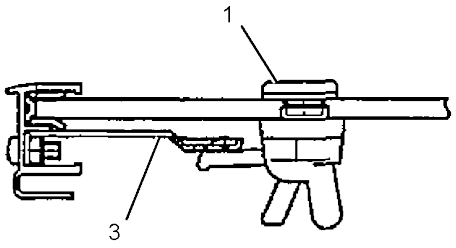


SECTION A-A

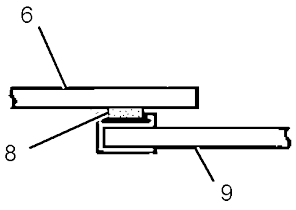


SECTION B-B

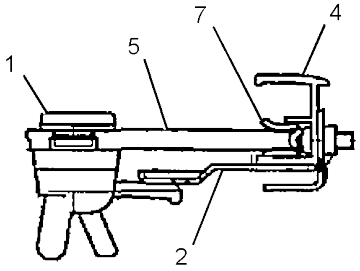


SECTION C-C

GRAPHIC #1

**<END>**

g01419058

# SERVICE EQUIPMENT AND SUPPLIES

## *377-9706* FILM GP–STRAIGHT BLADE

**PART OF 377-8920 BLADE AR-STRAIGHT**

**AN ATTACHMENT**

**SMCS-7557** **i05101629**

| NOTE | REF NO | GRAPHIC REF | PART NUMBER | QTY | PART NAME 1 2 3 4 5 6 (PRODUCT LEVEL) | SEE PAGE |
|---|---|---|---|---|---|---|
| | 1 | 1 | **395-3419** | 1 | FILM-CONTROL (STRAIGHT BLADE) | |

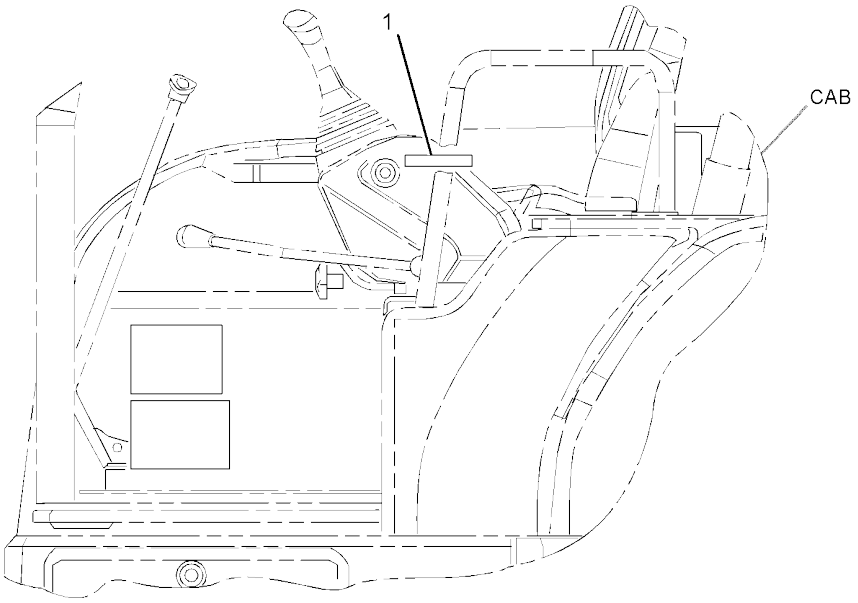


LEFT SIDE VIEW

GRAPHIC #1 **<END>** g02787418

# SERVICE EQUIPMENT AND SUPPLIES

## *377-9707* FILM GP–AUXILIARY

**PART OF 379-4715 CONTROL AR-AUXILIARY**

**SMCS-7557** **i04589439**

| NOTE | REF NO | GRAPHIC REF | PART NUMBER | QTY | PART NAME 1 2 3 4 5 6 (PRODUCT LEVEL) | SEE PAGE |
|---|---|---|---|---|---|---|
| | 1 | 1 | **377-9728** | 1 | FILM-INSTRUCTION (OPERATOR CONTROLS, READ OMM) | |
| | 2 | 1 | **377-9729** | 1 | FILM-INSTRUCTION (AUX BALL VALVE) | |

*377-9707* **FILM GP (*contd.*)** **i04589439**

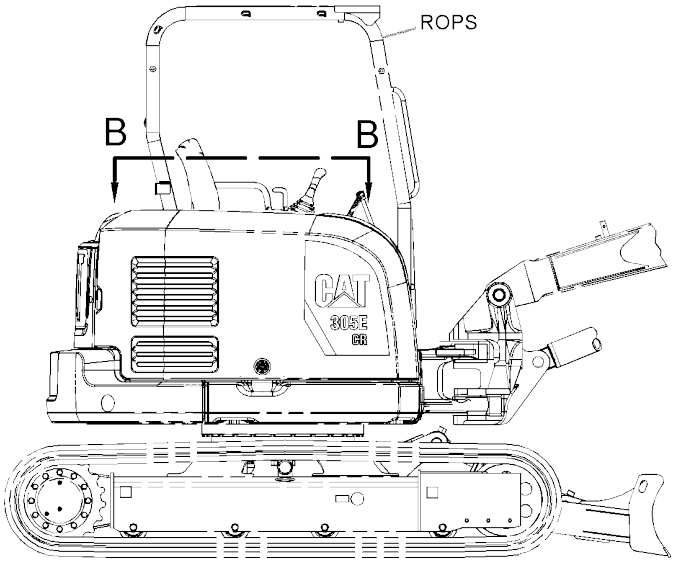


RIGHT SIDE VIEW

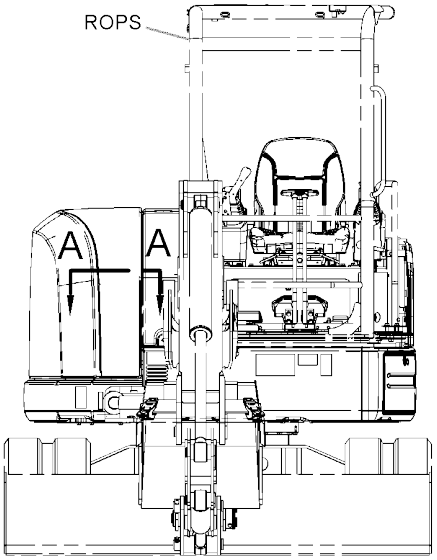


FRONT VIEW

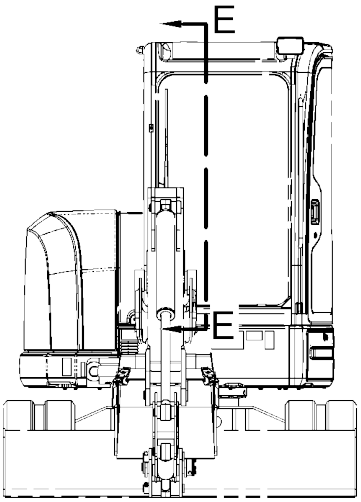


FRONT VIEW
(ALTERNATE VIEW WITH CAB)

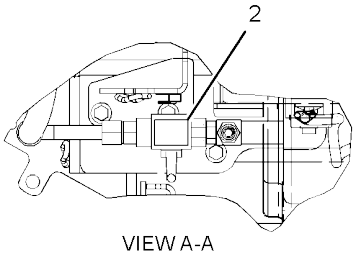


VIEW A-A

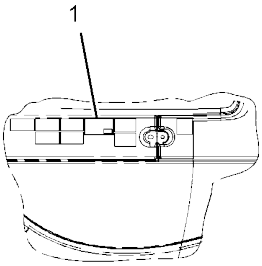


VIEW B-B

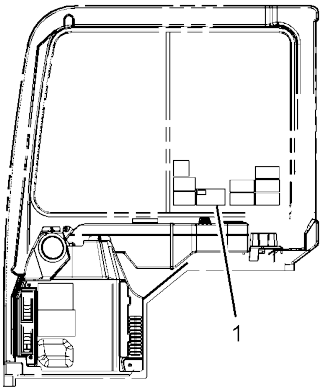


VIEW E-E
(ALTERNATE VIEW WITH CAB)

GRAPHIC #1

**<END>**

g02768804

# *377-9708* FILM GP–2ND AUXILIARY

**PART OF 379-4721, 379-4722 CONTROL AR-AUXILIARY**

**AN ATTACHMENT**

**SMCS-7557** **i04559483**

| NOTE | REF NO | GRAPHIC REF | PART NUMBER | QTY | PART NAME 1 2 3 4 5 6 (PRODUCT LEVEL) | SEE PAGE |
|---|---|---|---|---|---|---|
| | 1 | 1 | **377-9730** | 1 | FILM-INSTRUCTION (2ND AUXILIARY) | |

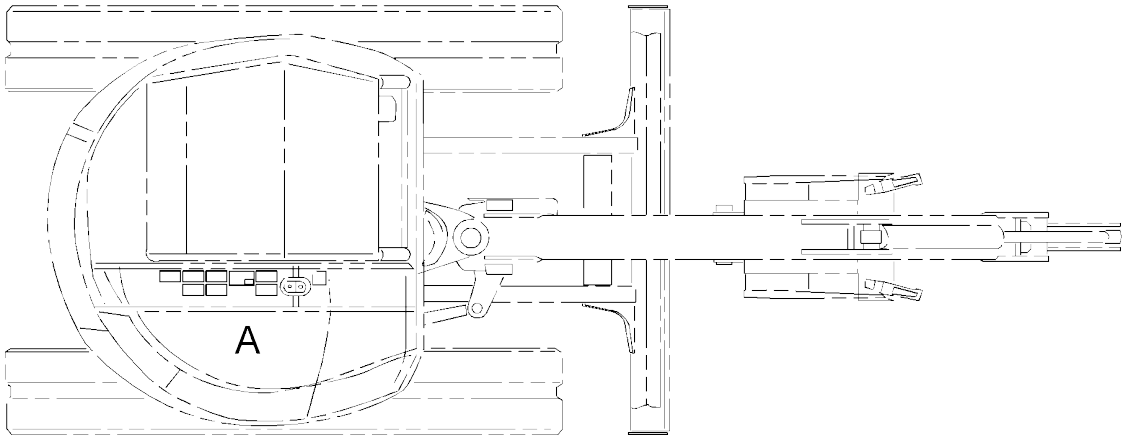


TOP VIEW

FWD

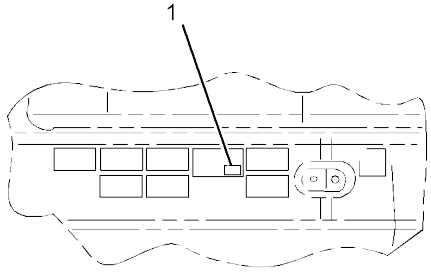


VIEW OF AREA A

GRAPHIC #1 **<END>** g02769777

# SERVICE EQUIPMENT AND SUPPLIES

## *377-9709* FILM GP–2-WAY

**PART OF 379-4724 CONTROL AR-AUXILIARY**

**AN ATTACHMENT**

**SMCS-7557** **i04559484**

| NOTE | REF NO | GRAPHIC REF | PART NUMBER | QTY | PART NAME 1 2 3 4 5 6 (PRODUCT LEVEL) | SEE PAGE |
|---|---|---|---|---|---|---|
| | 1 | 1 | **273-0477** | 1 | FILM-INSTRUCTION (OPERATOR CONTROLS, READ OMM) | |

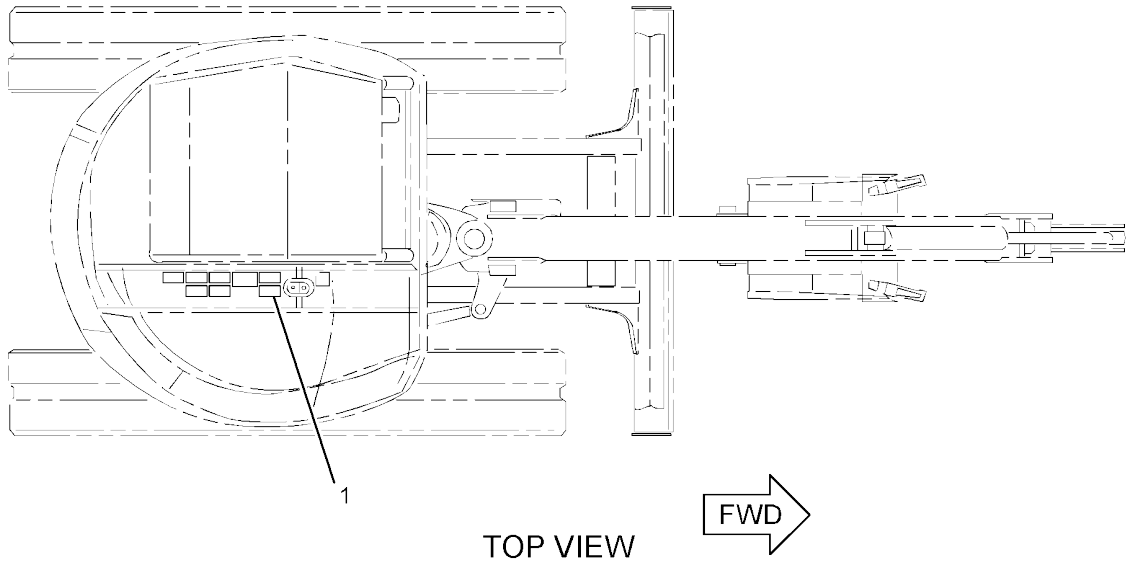


TOP VIEW

GRAPHIC #1 **<END>** g02769776

## *377-9715* FILM GP–CAB HEATER

**PART OF 376-6696, 383-5928 CAB AR**
**AN ATTACHMENT**

**SMCS-7557** **i05356142**

| NOTE | REF NO | GRAPHIC REF | PART NUMBER | QTY | PART NAME 1 2 3 4 5 6 (PRODUCT LEVEL) | SEE PAGE |
|---|---|---|---|---|---|---|
| | 1 | 1 | **187-9185** | 1 | FILM-INFORMATION (ALTERNATE EXIT) | |
| | 2 | 1 | **419-8301** | 1 | FILM-WARNING (ROPS, FOPS, OPS, READ OMM) | |

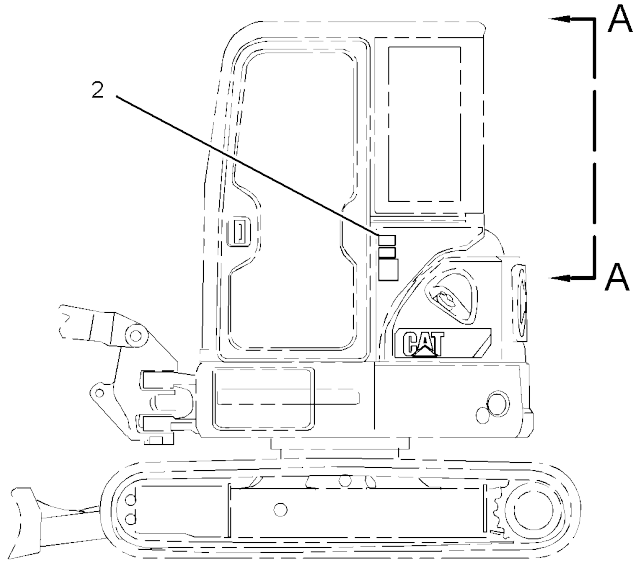


LEFT SIDE VIEW

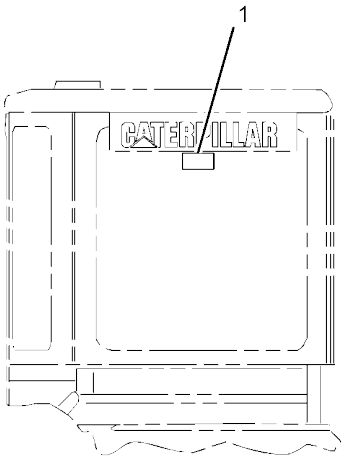


VIEW A-A

GRAPHIC #1 **<END>** g02979699

# *381-4576* FILM GP–COUPLER

**PART OF 381-4578 FILM GP-INTERNATIONAL**

**AN ATTACHMENT**

**SMCS-7557** **i04559506**

| NOTE | REF NO | GRAPHIC REF | PART NUMBER | QTY | PART NAME 1 2 3 4 5 6 (PRODUCT LEVEL) | SEE PAGE |
|---|---|---|---|---|---|---|
| | 1 | 1 | **269-0120** | 1 | FILM-WARNING (CRUSH HAZARD, READ OMM, INTL) | |
| | 2 | 1 | **269-0121** | 1 | FILM-WARNING (CRUSH HAZARD, READ OMM, INTL) | |

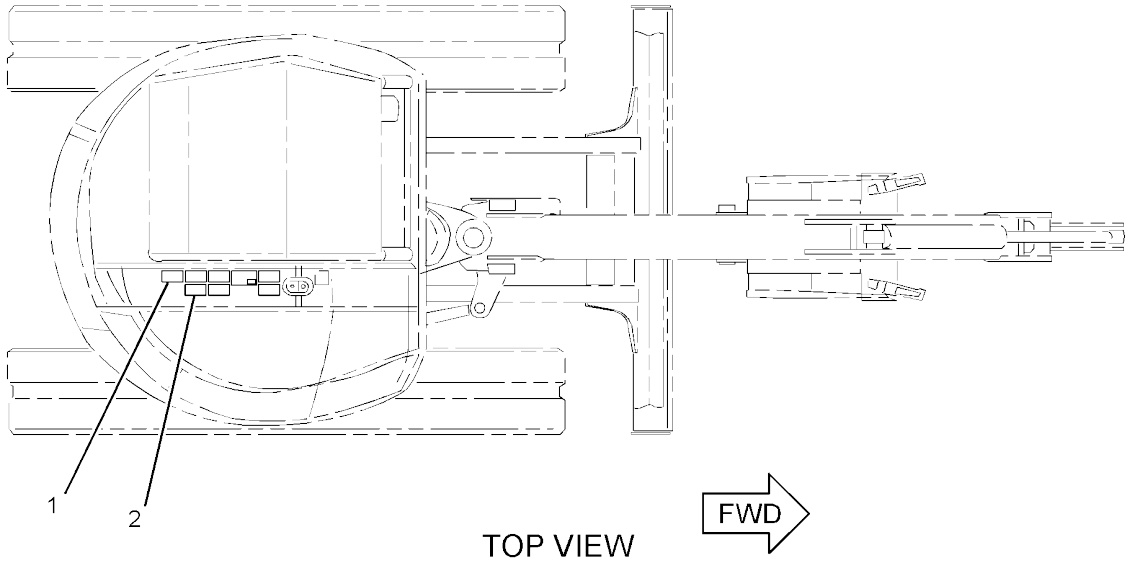


GRAPHIC #1 **<END>** g02770679

# *382-0560* FILM GP–2-WAY

**PART OF 379-4720 LINES AR-BOOM**

**AN ATTACHMENT**

**SMCS-7557** **i04689551**

| NOTE | REF NO | GRAPHIC REF | PART NUMBER | QTY | PART NAME 1 2 3 4 5 6 (PRODUCT LEVEL) | SEE PAGE |
|---|---|---|---|---|---|---|
| | 1 | 1 | **322-4582** | 1 | FILM-WARNING (TIPPING HAZARD, READ OMM) | |

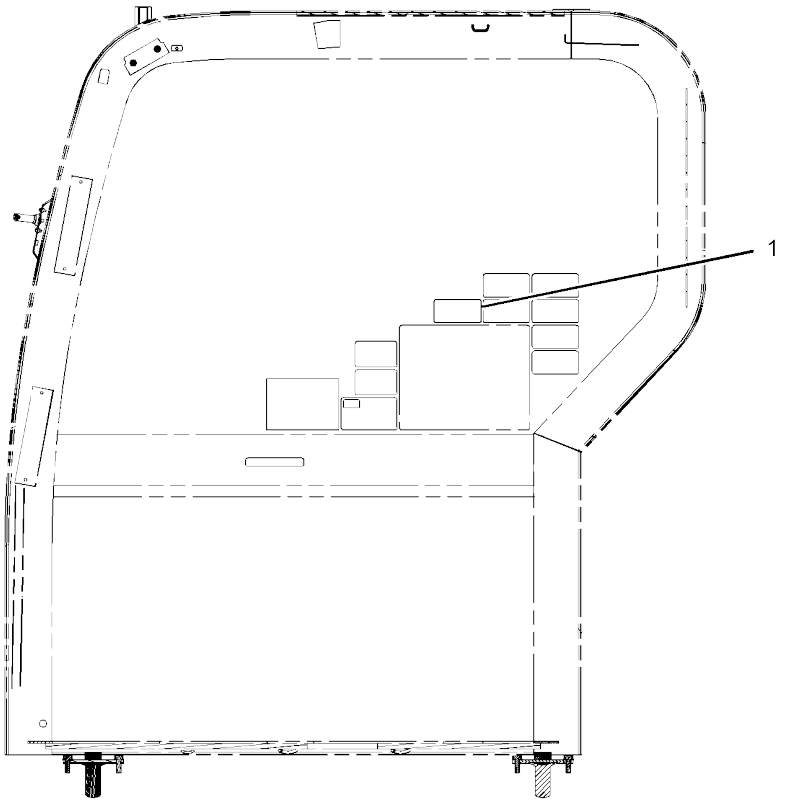


LEFT SIDE VIEW
(INSIDE CAB)

GRAPHIC #1 **<END>** g02835296

# *386-6058* FILM GP–ANGLE BLADE

**PART OF 377-8930 BLADE AR-ANGLING**
**AN ATTACHMENT**

**SMCS-7557** **i04658616**

| NOTE | REF NO | GRAPHIC REF | PART NUMBER | QTY | PART NAME 1 2 3 4 5 6 (PRODUCT LEVEL) | SEE PAGE |
|---|---|---|---|---|---|---|
| | 1 | 1 | **386-6073** | 1 | FILM-INSTRUCTION (BLADE ANGLE) | |

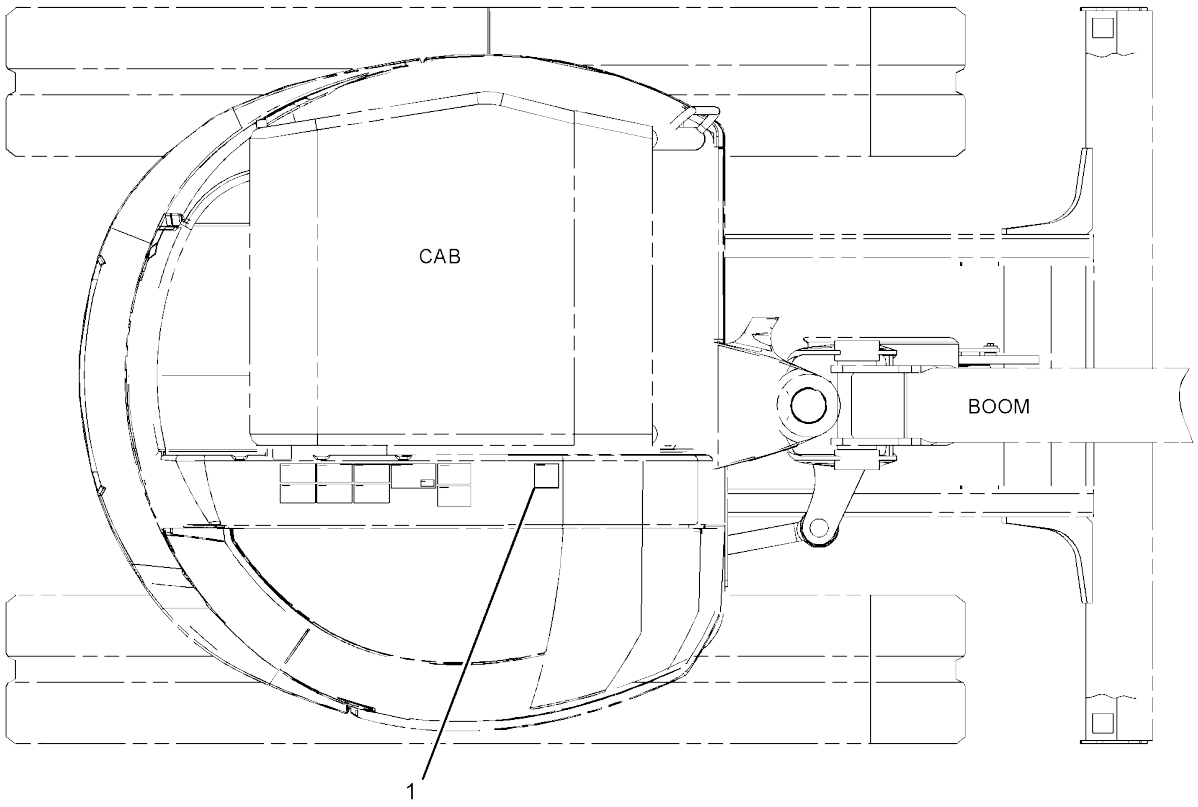


GRAPHIC #1 **<END>** g02798812

# *389-8776* FILM GP

**FRONT GUARD**

**PART OF 383-5927, 383-5928 CAB AR, 383-5929 CANOPY AR**

**AN ATTACHMENT**

**SMCS-7557** **i04689389**

| NOTE | REF NO | GRAPHIC REF | PART NUMBER | QTY | PART NAME 1 2 3 4 5 6 (PRODUCT LEVEL) | SEE PAGE |
|---|---|---|---|---|---|---|
| | 1 | 1 | **389-8775** | 1 | FILM-CERTIFICATION (FRONT GUARD, READ OMM) | |
| | 2 | 1 | **389-9183** | 1 | FILM-WARNING (NO WELD, NO DRILL, READ OMM) | |

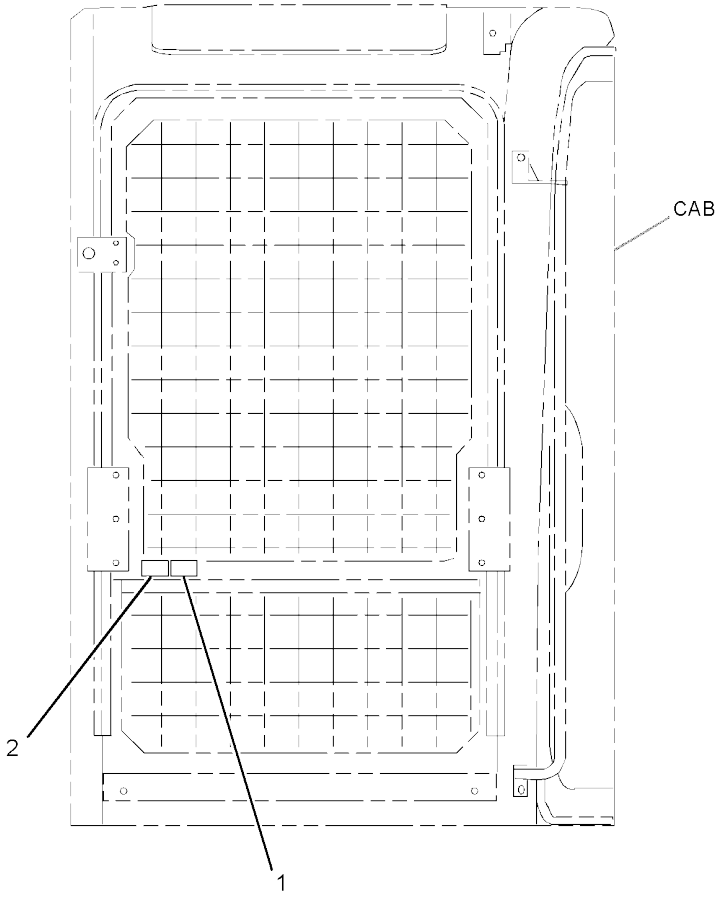


FRONT VIEW

GRAPHIC #1 **<END>** g02798968

# SERVICE EQUIPMENT AND SUPPLIES

## *393-1257* FILM GP–CAB HEATER

**PART OF 377-8933, 383-5929 CANOPY AR**
**AN ATTACHMENT**

**SMCS-7557** **i05260375**

| NOTE | REF NO | GRAPHIC REF | PART NUMBER | QTY | PART NAME 1 2 3 4 5 6 (PRODUCT LEVEL) | SEE PAGE |
|---|---|---|---|---|---|---|
| | 1 | 1 | **432-1346** | 1 | FILM-WARNING (ROPS, FOPS, OPS, READ OMM) | |

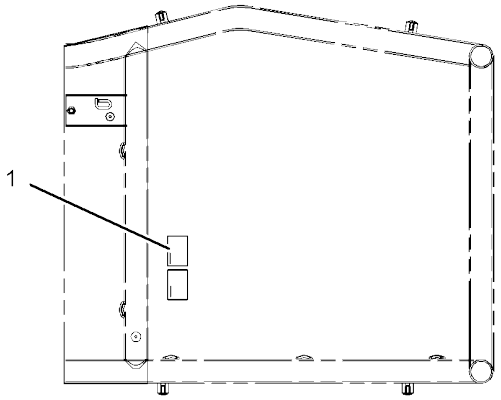


VIEW A-A

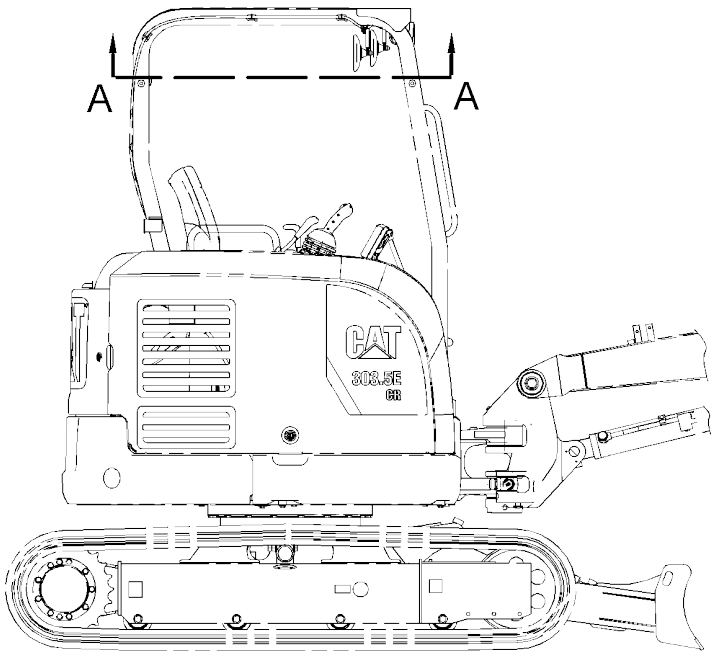


RIGHT SIDE VIEW

GRAPHIC #1 **<END>** g02881182

# SERVICE EQUIPMENT AND SUPPLIES

## *420-1371* FILM GP

**AN ATTACHMENT**

**SMCS-7557** **i05210580**

| NOTE | REF NO | GRAPHIC REF | PART NUMBER | QTY | PART NAME 1 2 3 4 5 6 (PRODUCT LEVEL) | SEE PAGE |
|---|---|---|---|---|---|---|
| | 1 | 1 | **172-1241** | 1 | FILM-IDENTIFICATION (LIFT EYE, TIE-DOWN LOCATION) | |

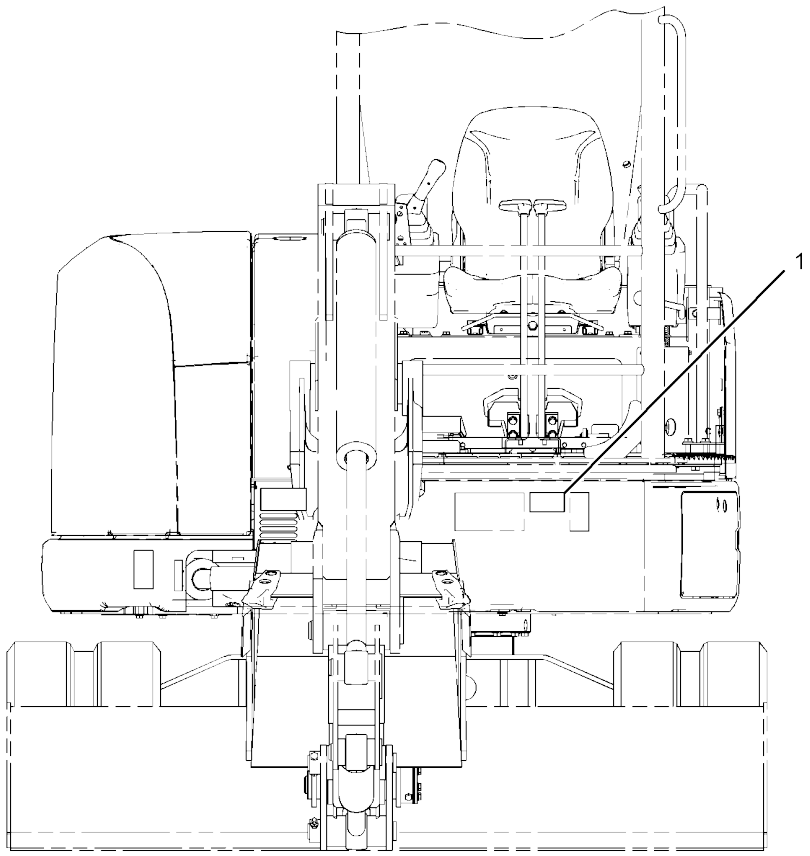


FRONT VIEW

GRAPHIC #1 **<END>** g03335604

# SERVICE EQUIPMENT AND SUPPLIES

## *377-9710* FILM GP-INTERNATIONAL

**AN ATTACHMENT**

**SMCS-7405, 7557** **i04728491**

| NOTE | REF NO | GRAPHIC REF | PART NUMBER | QTY | PART NAME 1 2 3 4 5 6 (PRODUCT LEVEL) | SEE PAGE |
|---|---|---|---|---|---|---|
| | 1 | 2 | **8C-4535** | 1 | FILM-IDENTIFICATION (DIESEL FUEL) | |
| | 2 | 2 | **221-8045** | 1 | FILM-WARNING (SEAT BELT, INTERNATIONAL) | |
| | 3 | 2 | **224-0554** | 1 | FILM-WARNING (UNIVERSAL, READ OMM) | |
| | 4 | 2 | **224-8946** | 1 | FILM-WARNING (NO ETHER SPRAY/AIR INTK, INTL) | |
| | 5 | 2 | **225-0312** | 1 | FILM-WARNING (JUMP START, READ OMM, INTL) | |
| | 6 | 1 | **228-7316** | 1 | FILM-WARNING (HOT SURFACE, HANDS CLEAR, INTL) | |
| | 7 | 1 | **228-9254** | 1 | FILM-WARNING (ELEC HAZARD, READ OMM, INTL) | |
| | 8 | 1,2 | **235-1368** | 2 | FILM-WARNING (RADIATOR) | |
| | 9 | 1,2 | **239-4991** | 2 | FILM-WARNING (HIGH PRESSURE CYLINDER) | |
| | 10 | 2 | **254-7563** | 2 | FILM-WARNING (CRUSH HAZARD, STAY BACK) | |
| | 11 | 1 | **266-5431** | 1 | FILM-WARNING (CRUSH HAZARD, READ OMM, INTL) | |
| | 12 | 2 | **298-4282** | 2 | FILM-WARNING (CRUSH HAZARD, STAY BACK, INTL) | |
| | 13 | 1 | **389-8773** | 1 | FILM-WARNING (CUTTING HAZARD HAND, STAY BACK) | |

REFER TO ALL ILLUSTRATIONS OF THIS GROUP FOR AUXILIARY VIEWS

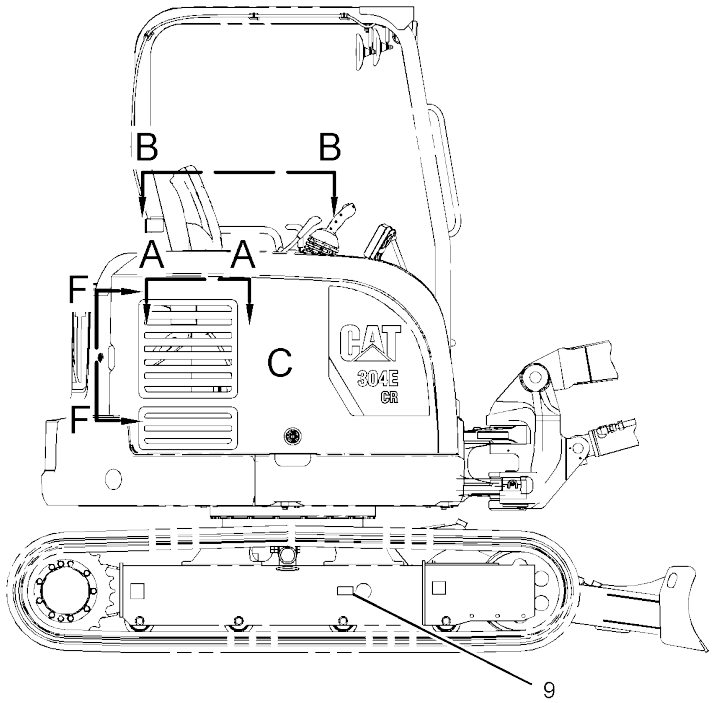


RIGHT SIDE VIEW

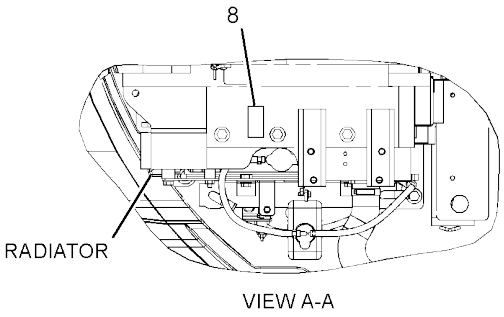


VIEW A-A

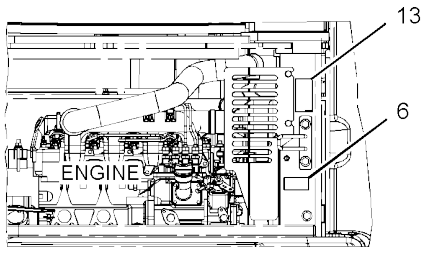


VIEW F-F

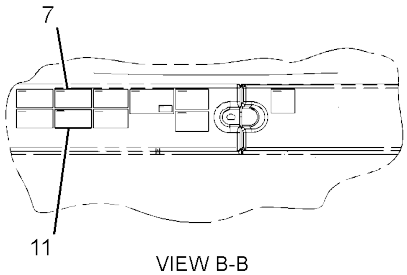


VIEW B-B

GRAPHIC #1 g02845360

*377-9710* **FILM GP-INTERNATIONAL (*contd.*)** **i04728491**

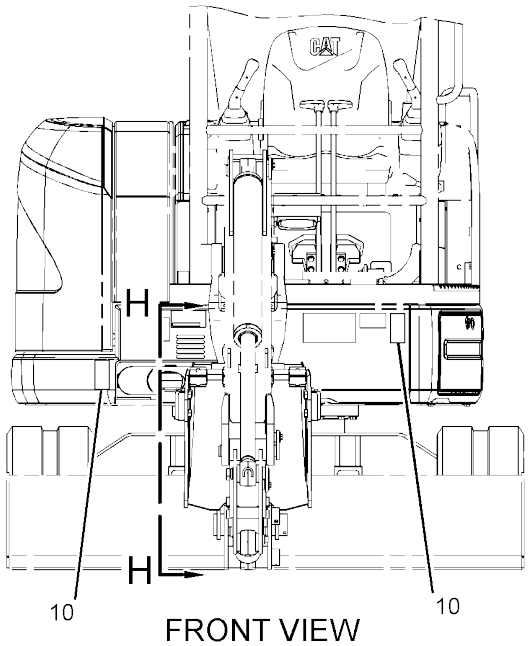


FRONT VIEW

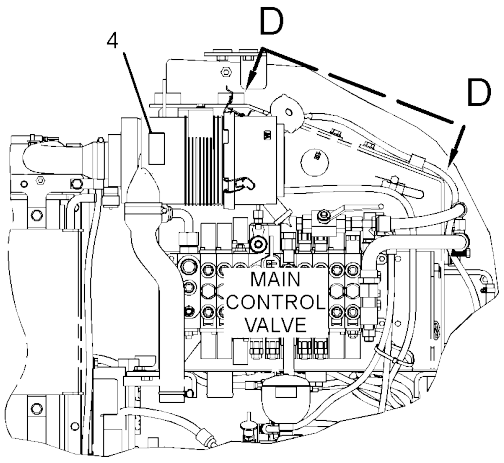


VIEW OF AREA C
(DOOR REMOVED)

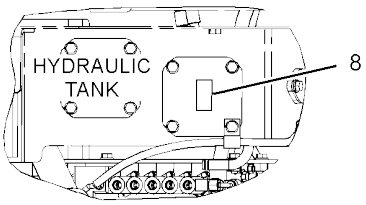


VIEW D-D

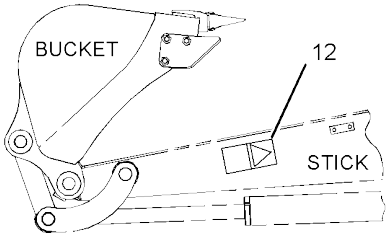


VIEW H-H




LEFT SIDE VIEW

GRAPHIC #2 **<END>** g02845361

# SERVICE EQUIPMENT AND SUPPLIES

## *381-4578* FILM GP-INTERNATIONAL–COUPLER

**AN ATTACHMENT**

**SMCS-7405, 7557** **i04629189**

| NOTE | PART NUMBER | QTY | PART NAME 1 2 3 4 5 6 (PRODUCT LEVEL) | SEE PAGE |
|---|---|---|---|---|
| Y | *381-4576* | 1 | FILM GP (COUPLER) | 540 |

Y - SEPARATE ILLUSTRATION

<END>

# SERVICE EQUIPMENT AND SUPPLIES

## *377-9711* FILM GP-U.S.

**AN ATTACHMENT**

**SMCS-7405, 7557** **i04728490**

| NOTE | REF NO | GRAPHIC REF | PART NUMBER | QTY | PART NAME 1 2 3 4 5 6 (PRODUCT LEVEL) | SEE PAGE |
|---|---|---|---|---|---|---|
| | 1 | 2 | **295-7340** | 1 | FILM-INSTRUCTION (FUEL, READ OMM) | |
| | 2 | 2 | **224-7717** | 1 | FILM-WARNING (SEAT BELT, U.S.) | |
| | 3 | 2 | **225-3305** | 1 | FILM-WARNING (UNIVERSAL, READ OMM) | |
| | 4 | 2 | **224-8945** | 1 | FILM-WARNING (DO NOT USE ETHER, U.S.) | |
| | 5 | 2 | **225-0313** | 1 | FILM-WARNING (JUMP START, READ OMM, U.S.) | |
| | 6 | 1 | **228-7315** | 1 | FILM-WARNING (HOT SURFACE, HANDS CLEAR) | |
| | 7 | 1 | **228-9253** | 1 | FILM-WARNING (ELECTRICAL HAZARD, U.S.) | |
| | 8 | 1,2 | **235-1365** | 2 | FILM-WARNING (HOT FLUID UNDER PRESSURE) | |
| | 9 | 1,2 | **239-4990** | 2 | FILM-WARNING (HIGH PRESSURE CYLINDER) | |
| | 10 | 2 | **255-1203** | 2 | FILM-WARNING (CRUSH HAZARD, STAY BACK) | |
| | 11 | 1 | **267-4495** | 1 | FILM-WARNING (CRUSH HAZARD, READ OMM, U.S.) | |
| | 12 | 2 | **313-2048** | 2 | FILM-WARNING (CRUSH HAZARD, STAY BACK, U.S.) | |
| | 13 | 1 | **389-8774** | 1 | FILM-WARNING (CUTTING HAZARD HAND, STAY BACK) | |

REFER TO ALL ILLUSTRATIONS OF THIS GROUP FOR AUXILIARY VIEWS

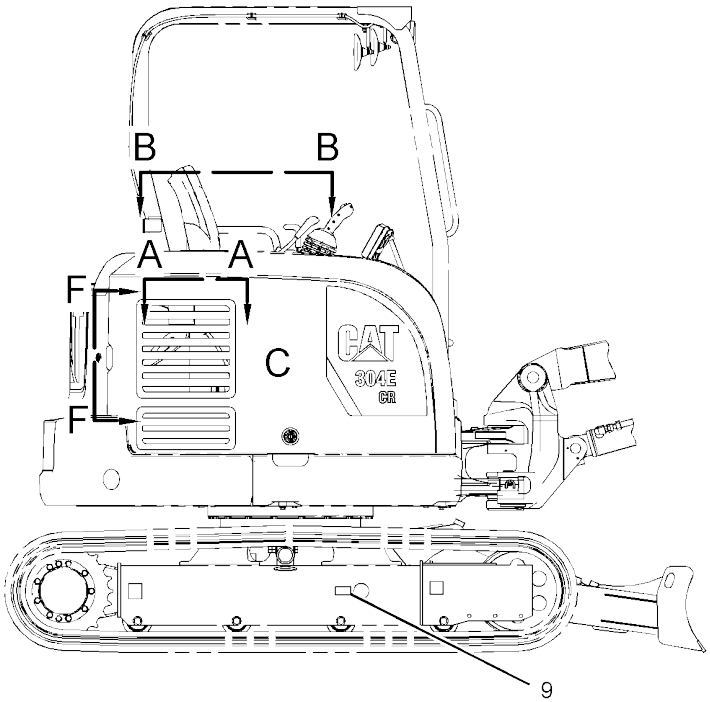


RIGHT SIDE VIEW

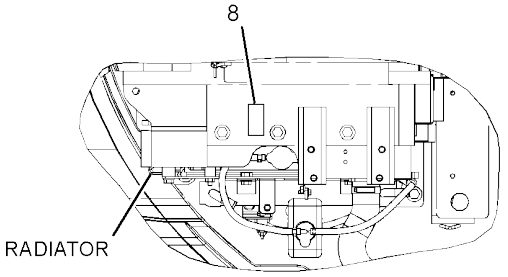


VIEW A-A

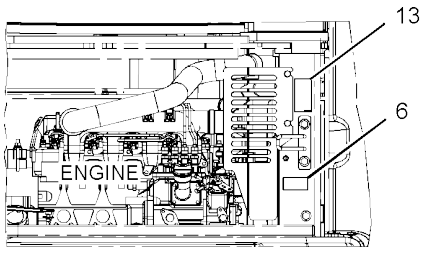


VIEW F-F

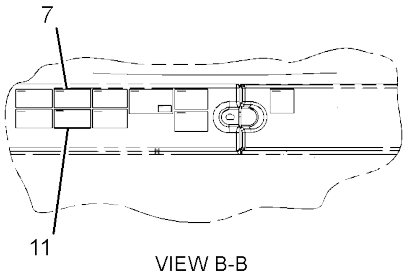


VIEW B-B

GRAPHIC #1 g02845360

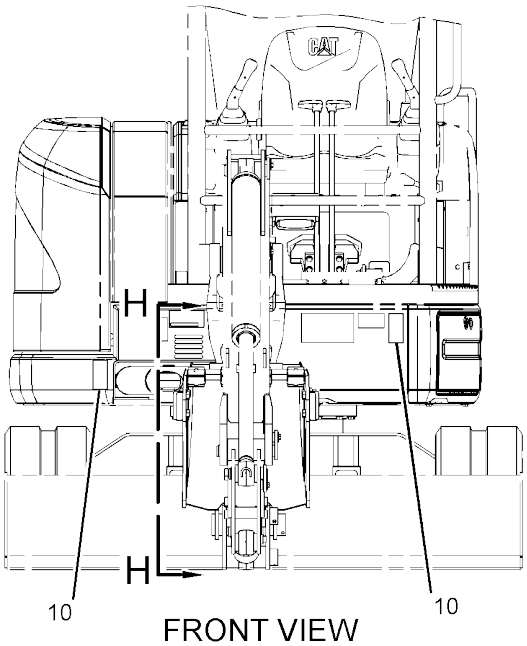


FRONT VIEW

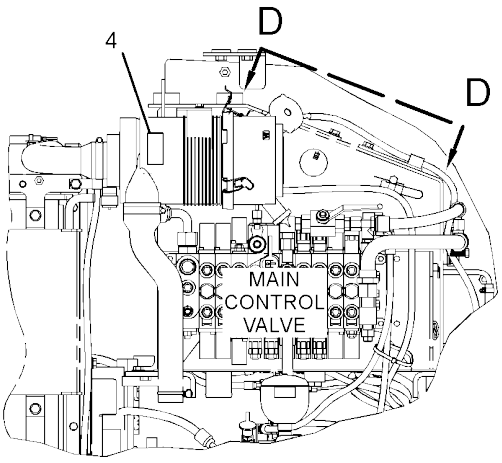


VIEW OF AREA C
(DOOR REMOVED)

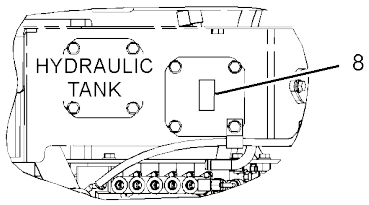


VIEW D-D

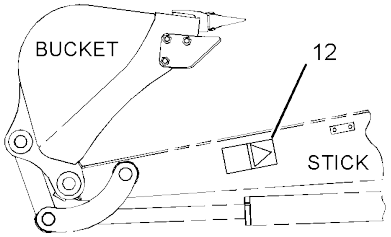


VIEW H-H




LEFT SIDE VIEW

GRAPHIC #2 **<END>** g02845361

# SERVICE EQUIPMENT AND SUPPLIES

## *381-4577* FILM GP-U.S.–COUPLER

**PART OF 381-4579 FILM GP-U.S.**
**AN ATTACHMENT**

**SMCS-7405, 7557** **i04559507**

| NOTE | REF NO | GRAPHIC REF | PART NUMBER | QTY | PART NAME 1 2 3 4 5 6 (PRODUCT LEVEL) | SEE PAGE |
|---|---|---|---|---|---|---|
| | 1 | 1 | **268-4530** | 1 | FILM-WARNING (CRUSH HAZARD, READ OMM, U.S.) | |
| | 2 | 1 | **268-8872** | 1 | FILM-WARNING (CRUSH HAZARD, READ OMM, U.S.) | |

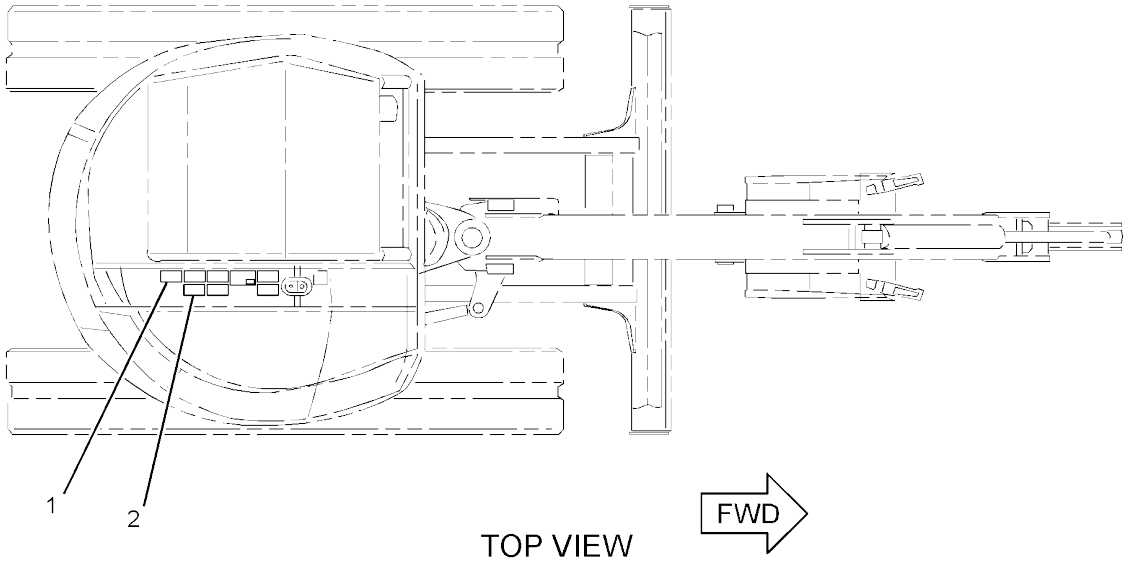


GRAPHIC #1 **<END>** g02770679

# SERVICE EQUIPMENT AND SUPPLIES

## *381-4579* FILM GP-U.S.–COUPLER

**AN ATTACHMENT**

**SMCS-7405, 7557** **i04629190**

| NOTE | PART NUMBER | QTY | PART NAME 1 2 3 4 5 6 (PRODUCT LEVEL) | SEE PAGE |
|---|---|---|---|---|
| Y | *381-4577* | 1 | FILM GP-U.S. (COUPLER) | 551 |

Y - SEPARATE ILLUSTRATION

<END>

# *377-9698* PLATE & FILM GP

**PART OF 376-6676 CHASSIS AR**

**SMCS-7405, 7557, 7563** **i04935888**

| NOTE | REF NO | GRAPHIC REF | PART NUMBER | QTY | PART NAME 1 2 3 4 5 6 (PRODUCT LEVEL) | SEE PAGE |
|---|---|---|---|---|---|---|
| | 1 | 1 | **7X-3229** | 2 | FILM-IDENTIFICATION (LIFT EYE, TIE-DOWN LOCATION) | |
| | 2 | 1,2 | **7X-7644** | 4 | FILM-IDENTIFICATION (TIE-DOWN) | |
| | 3 | 2 | **126-2900** | 1 | FILM-INSTRUCTION (LEVER LOCK) | |
| | 4 | 2 | **134-7258** | 1 | FILM-INFORMATION (EXTENDED LIFE COOLANT) | |
| | 5 | 2 | **136-0199** | 1 | FILM-INSTRUCTION (ENGINE SPEED DIAL) | |
| | 6 | 1,2 | **150-8896** | 2 | FILM-NOTICE (LIFT EYE LOCATION) | |
| | 7 | 1 | **190-5386** | 2 | FILM-STRIPE (ROUND RED REFLECTIVE) | |
| | 8 | 2 | **197-7177** | 1 | PLATE-CERTIFICATION | |
| | 9 | 1 | **200-5480** | 1 | FILM-INSTRUCTION (GREASE) | |
| | 10 | 1 | **219-0305** | 1 | FILM-WARNING (NO WELD, NO DRILL, READ OMM) | |
| | 11 | 1 | **239-6986** | 1 | PLATE-SERIAL NUMBER (MACHINE) | |
| | 12 | 1 | **273-0469** | 1 | FILM-INSTRUCTION (OPERATOR CONTROLS) | |
| | 13 | 1 | **273-0471** | 1 | FILM-WARNING (HIGH PRESSURE, READ MANUAL) | |
| | 14 | 2 | **279-9311** | 1 | FILM-INSTRUCTION (HYDRAULIC OIL, READ OMM) | |
| | 15 | 2 | **298-2139** | 1 | FILM-IDENTIFICATION (CAT, LH) | |
| | 16 | 1 | **298-2140** | 1 | FILM-IDENTIFICATION (CAT, RH) | |
| | 17 | 2 | **334-4603** | 1 | FILM-INFORMATION (HYDO ADVANCED 10) | |
| | 18 | 1 | **377-9722** | 1 | FILM-IDENTIFICATION (CAT) | |
| | 19 | 2 | **377-9725** | 1 | FILM-IDENTIFICATION (FUSE, RELAY PANEL) | |
| | 20 | 1 | **379-7052** | 1 | FILM-IDENTIFICATION (CAT, 303.5E CR) | |
| | 21 | 2 | **379-7053** | 1 | FILM-IDENTIFICATION (CAT, 303.5E CR) | |
| | 22 | 2 | **379-7054** | 1 | FILM-INFORMATION (LIFTING CAPACITIES, READ OMM) | |
| | 23 | 2 | **382-6356** | 1 | FILM-INFORMATION (LUBRICATION CHART) | |

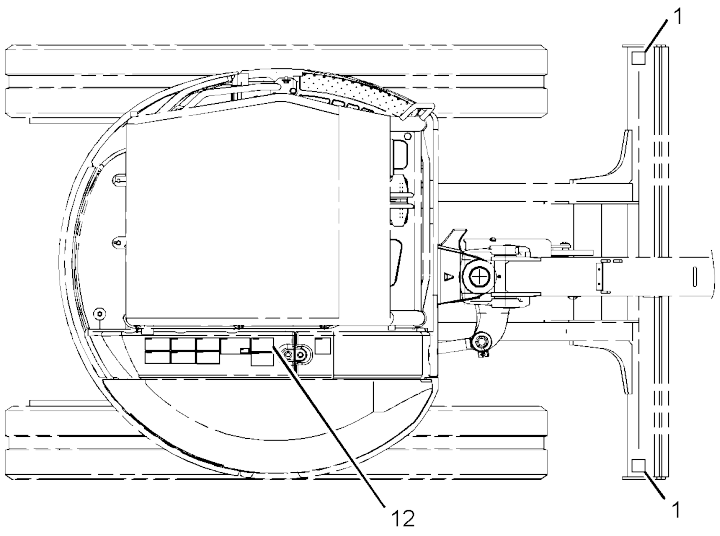


TOP VIEW FWD

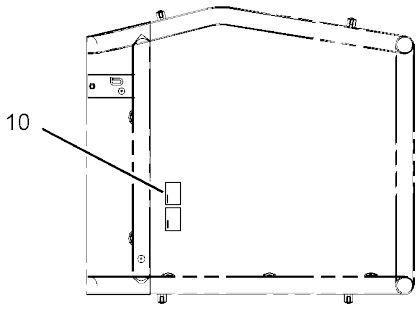


VIEW A-A

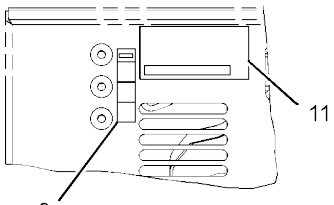


VIEW B-B

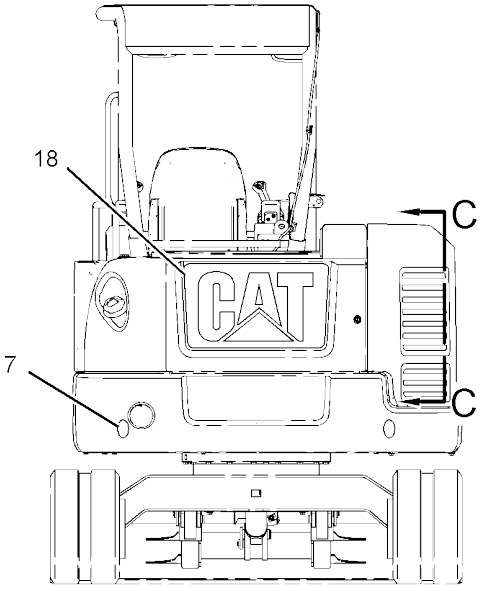


REAR VIEW

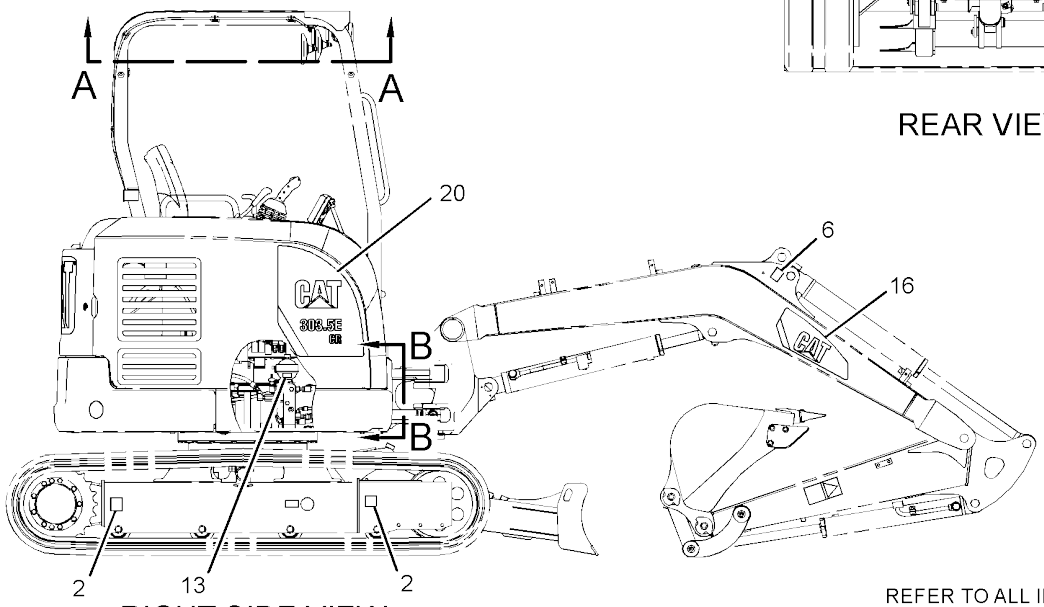


RIGHT SIDE VIEW

REFER TO ALL ILLUSTRATIONS OF THIS GROUP FOR AUXILIARY VIEWS

GRAPHIC #1 g02881138

*377-9698* **PLATE & FILM GP (*contd.*)** **i04935888**

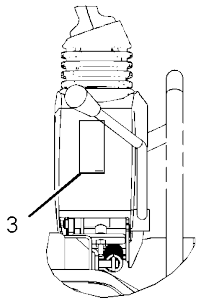


VIEW H-H

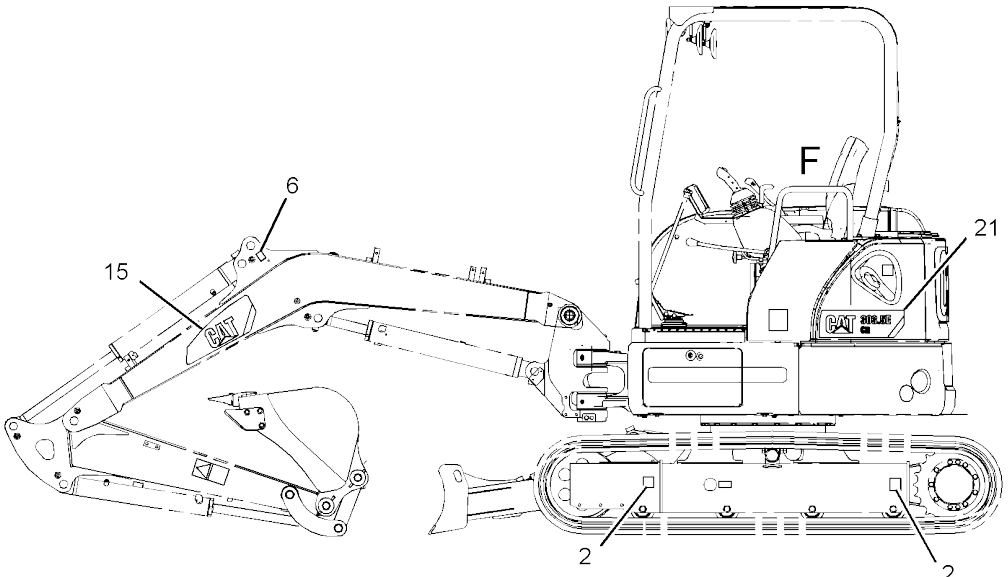


LEFT SIDE VIEW

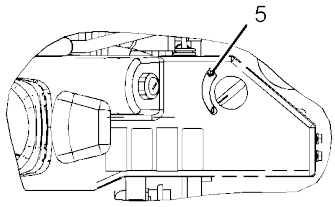


VIEW G-G

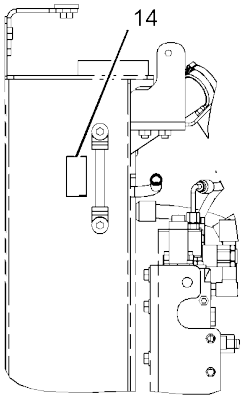


VIEW D-D

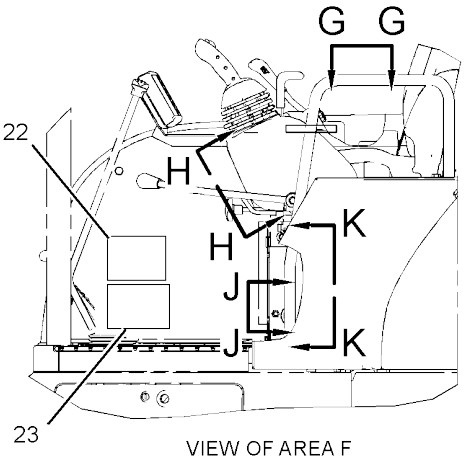


VIEW OF AREA F

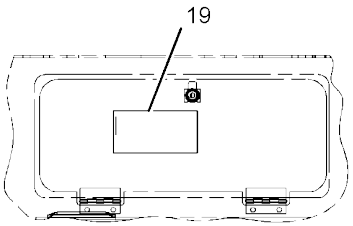


VIEW K-K

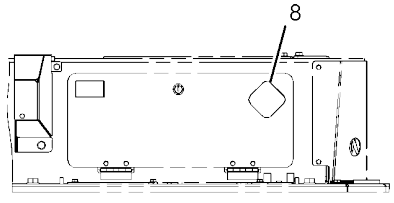


VIEW J-J

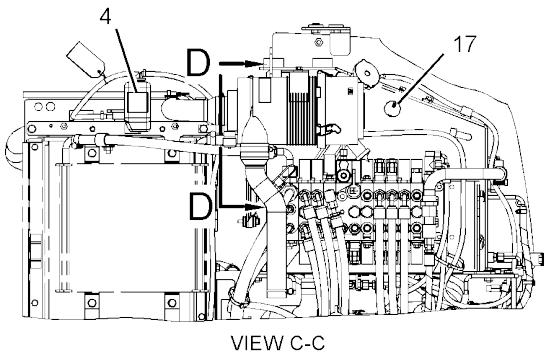


VIEW C-C

GRAPHIC #2 **<END>** g02882855

# *377-9714* PLATE & FILM GP–CAB

**PART OF 376-6692, 383-5927 CAB AR**
**AN ATTACHMENT**

**SMCS-7405, 7557, 7563** **i05345468**

| NOTE | REF NO | GRAPHIC REF | PART NUMBER | QTY | PART NAME 1 2 3 4 5 6 (PRODUCT LEVEL) | SEE PAGE |
|---|---|---|---|---|---|---|
| | 1 | 1 | **187-9185** | 1 | FILM-INFORMATION (ALTERNATE EXIT) | |
| | 2 | 1 | **303-2668** | 1 | PLATE-INSTRUCTION (AIR CONDITIONER, READ OMM) | |
| | 3 | 1 | **419-8301** | 1 | FILM-WARNING (ROPS, FOPS, OPS, READ OMM) | |

*377-9714* **PLATE & FILM GP (*contd.*)** **i05345468**

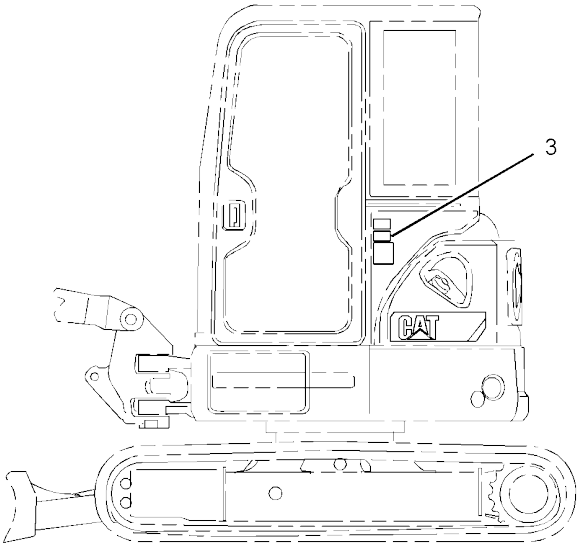


LEFT SIDE VIEW
(WITH CAB)

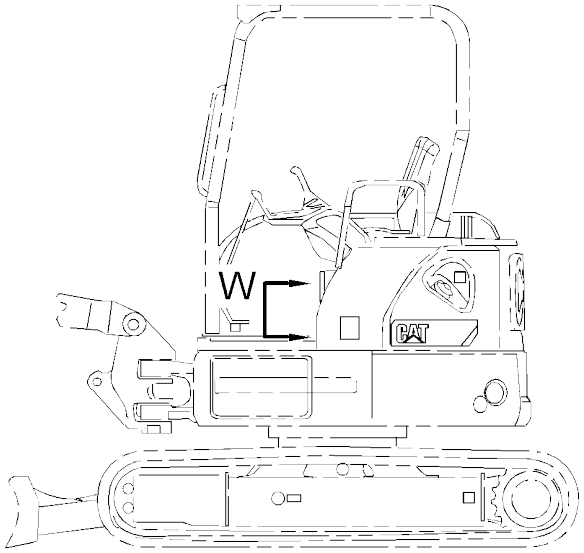


LEFT SIDE VIEW

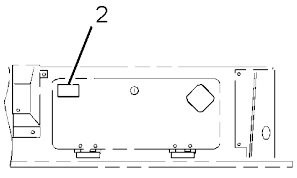


VIEW W

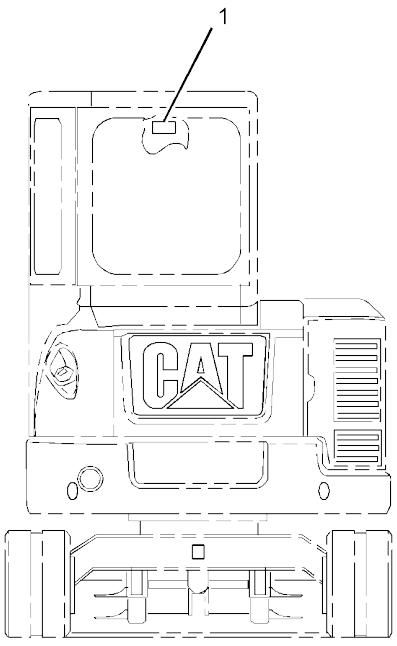


REAR VIEW

GRAPHIC #1 **<END>** g02975419

# PART NUMBER INDEX


| Part | Page |
|---|---|
| **1** | |
| 1H-7339 | 202 |
| 1J-9671 | 56 |
| 1M-6119 | 69 |
| | 73 |
| 1M-6120 | 69 |
| | 73 |
| 1P-4278 | 37 |
| | 56 |
| | 64 |
| 1R-5396 | 466 |
| | 467 |
| 1R-5468 | 123 |
| 1S-0994 | 223 |
| | 225 |
| | 227 |
| 1S-1014 | 517 |
| | 519 |
| 1S-1150 | 69 |
| | 73 |
| 1U-3202 | 412 |
| | 413 |
| | 414 |
| | 415 |
| | 416 |
| | 417 |
| | 418 |
| **2** | |
| 2D-6412 | 526 |
| | 527 |
| 2J-1020 | 184 |
| | 234 |
| 2L-8049 | 79 |
| | 80 |
| 2L-8050 | 69 |
| | 73 |
| 2L-8075 | 79 |
| | 80 |
| | 115 |
| 2L-8079 | 84 |
| | 100 |
| | 106 |
| 2M-3432 | 70 |
| | 74 |
| 2M-9780 | 213 |
| | 217 |
| | 227 |
| | 263 |
| | 265 |
| | 296 |
| | 338 |
| | 340 |
| | 353 |
| 2P-1279 | 184 |
| | 231 |
| | 234 |
| | 249 |
| | 267 |
| 2S-0736 | 469 |
| 2T-2991 | 263 |
| | 265 |
| 2U-2552 | 515 |
| **3** | |
| 3B-4510 | 509 |
| | 510 |
| 3B-4605 | 136 |
| 3B-4610 | 150 |
| 3B-4639 | 164 |
| | 166 |
| 3B-5322 | 419 |
| | 420 |
| 3B-8485 | 128 |
| | 386 |
| | 387 |
| 3B-8488 | 128 |
| | 188 |
| | 190 |
| | 192 |
| | 194 |
| | 198 |
| 3B-8489 | 144 |
| | 155 |
| | 188 |
| | 190 |
| | 192 |
| | 194 |
| | 196 |
| | 200 |
| | 360 |
| | 363 |
| | 364 |
| | 365 |
| | 367 |
| | 374 |
| | 375 |
| | 377 |
| | 379 |
| | 389 |
| | 426 |
| | 429 |
| | 431 |
| 3D-2824 | 221 |
| | 243 |
| 3E-2310 | 261 |
| 3E-6600 | 136 |
| 3E-7410 | 184 |
| | 241 |
| 3E-8020 | 445 |
| | 452 |
| | 459 |
| 3E-8299 | 160 |
| 3E-9179 | 82 |
| | 84 |
| | 100 |
| | 106 |
| 3G-6127 | 412 |
| | 413 |
| | 414 |
| | 415 |
| | 416 |
| | 417 |
| | 418 |
| 3J-1907 | 50 |
| | 69 |
| | 73 |
| | 121 |
| | 123 |
| | 184 |
| | 197 |
| | 219 |
| | 220 |
| | 221 |
| | 223 |
| | 225 |
| | 227 |
| | 228 |
| | 229 |
| | 236 |
| | 237 |
| | 239 |
| | 241 |
| | 243 |
| | 245 |
| | 247 |
| | 249 |
| | 250 |
| | 253 |
| | 254 |
| | 256 |
| | 257 |
| | 261 |
| | 267 |
| | 269 |
| | 270 |
| | 272 |
| | 273 |
| | 275 |
| | 276 |
| | 278 |
| | 280 |
| | 283 |
| | 290 |
| | 302 |
| | 304 |
| | 350 |
| 3J-7352 | 230 |
| 3J-7354 | 221 |
| | 230 |
| | 249 |
| | 250 |
| | 253 |
| | 254 |
| | 256 |
| | 257 |
| | 260 |
| | 261 |
| | 263 |
| | 265 |
| | 267 |
| | 272 |
| | 275 |
| | 278 |
| | 280 |
| 3K-0360 | 181 |
| | 204 |
| | 205 |
| | 214 |
| | 215 |
| | 221 |
| | 228 |
| | 229 |
| | 239 |
| | 250 |
| | 267 |
| | 270 |
| | 272 |
| | 275 |
| | 276 |
| | 278 |
| | 280 |
| 3K-8460 | 56 |
| 3S-2093 | 37 |
| | 44 |
| | 50 |
| | 56 |
| | 66 |
| | 69 |
| | 73 |
| | 79 |
| | 80 |
| | 82 |
| | 84 |
| | 87 |
| | 91 |
| | 92 |
| | 94 |
| | 99 |
| | 100 |
| | 103 |
| | 105 |
| | 106 |
| | 109 |
| | 111 |
| | 113 |
| | 114 |
| | 115 |
| | 117 |
| | 118 |
| | 155 |
| | 184 |
| | 249 |
| | 261 |
| | 263 |
| | 265 |
| | 278 |
| | 280 |
| | 432 |
| | 493 |
| | 499 |
| | 503 |
| 3S-6049 | 69 |
| | 73 |
| 3S-6050 | 69 |
| | 73 |
| 3T-0849 | 479 |
| | 480 |
| 3T-4693 | 82 |
| | 84 |
| | 100 |
| | 106 |
| 3T-4696 | 82 |
| | 84 |
| | 100 |
| | 106 |
| 3Y-9267 | 345 |
| **4** | |
| 4B-2043 | 66 |
| 4B-4863 | 70 |
| | 74 |
| 4D-7733 | 184 |
| 4H-0407 | 461 |
| | 462 |
| 4I-1536 | ▶175 |
| | 178 |
| 4I-1539 | 175 |
| 4I-3745 | 296 |
| 4I-4270 | 444 |
| | 451 |
| | 458 |
| 4I-5862 | 175 |
| 4I-6365 | 342 |
| 4I-8267 | 176 |
| 4I-9531 | 245 |
| | 247 |
| | 253 |
| | 256 |
| 4I-9532 | 245 |
| | 247 |
| | 253 |
| | 256 |
| 4I-9533 | 245 |
| | 247 |
| | 253 |


▶ PRIMARY REFERENCE

# PART NUMBER INDEX


| Part | Page |
|---|---|
| | 256 |
| 4I-9534 | 245 |
| | 247 |
| | 253 |
| | 256 |
| 4I-9535 | 245 |
| | 247 |
| | 253 |
| | 256 |
| 4I-9536 | 245 |
| | 247 |
| | 253 |
| | 256 |
| 4I-9537 | 245 |
| | 247 |
| | 253 |
| | 256 |
| 4I-9538 | 245 |
| | 247 |
| | 253 |
| | 256 |
| 4J-0524 | 243 |
| 4J-5477 | 184 |
| | 221 |
| | 227 |
| | 230 |
| | 231 |
| | 234 |
| | 241 |
| | 243 |
| | 245 |
| | 247 |
| | 249 |
| | 250 |
| | 253 |
| | 254 |
| | 256 |
| | 257 |
| | 260 |
| | 261 |
| | 267 |
| | 272 |
| | 275 |
| | 278 |
| | 280 |
| | 302 |
| | 304 |
| 4J-7533 | 358 |
| 4K-1388 | 243 |
| | 263 |
| | 265 |
| 4K-8302 | 115 |
| | 117 |
| 4M-5285 | 389 |
| 4P-7581 | 70 |
| | 74 |
| | 111 |
| | 117 |
| | 155 |
| 4P-8134 | 70 |
| | 74 |
| | 87 |
| 4S-1962 | 221 |
| | 263 |
| | 265 |
| | 267 |
| 4T-6780 | 202 |
| 4Y-3307 | 506 |
| 4Y-8939 | 139 |

## 5

| Part | Page |
|---|---|
| 5A-3604 | 286 |
| | 288 |
| 5C-2890 | 50 |
| | 66 |
| | 70 |
| | 74 |
| | 486 |
| 5C-7261 | 5 |
| | 43 |
| | 70 |
| | 74 |
| | 132 |
| | 150 |
| | 152 |
| | 465 |
| 5C-7423 | 531 |
| 5C-9553 | 70 |
| | 74 |
| | 100 |
| | 103 |
| | 106 |
| | 109 |
| | 425 |
| | 466 |
| | 467 |
| | 490 |
| | 517 |
| | 519 |
| | 530 |
| 5D-1986 | 196 |
| 5I-3272 | 374 |
| | 377 |
| 5I-4200 | 56 |
| 5I-8416 | ▶176 |
| | 178 |
| 5P-0597 | 243 |
| 5P-0743 | 263 |
| | 265 |
| 5P-1076 | 23 |
| | 24 |
| | 92 |
| | 137 |
| | 139 |
| | 161 |
| 5P-1404 | 227 |
| 5P-1475 | 79 |
| | 80 |
| 5P-1507 | 56 |
| | 64 |
| 5P-2369 | 499 |
| 5P-4115 | 70 |
| | 74 |
| | 517 |
| 5P-4116 | 56 |
| | 70 |
| | 74 |
| | 132 |
| | 134 |
| | 136 |
| | 150 |
| | 152 |
| | 245 |
| | 247 |
| | 463 |
| 5P-4423 | 155 |
| 5P-4571 | 114 |
| 5P-5675 | 69 |
| | 73 |
| 5P-5687 | 37 |
| | 137 |
| | 139 |
| 5P-5969 | 519 |
| 5P-7462 | 215 |
| 5P-7463 | 215 |
| 5P-7483 | 132 |
| | 152 |
| 5P-7958 | 63 |
| 5P-8250 | 202 |
| 5P-8500 | 490 |
| 5P-9205 | 37 |
| 5P-9297 | 231 |
| | 234 |
| 5P-9299 | 56 |

## 6

| Part | Page |
|---|---|
| 6B-1124 | 170 |
| 6B-5328 | 286 |
| 6D-1641 | 499 |
| | 503 |
| 6D-3479 | 296 |
| | 499 |
| 6E-0122 | 202 |
| 6F-4855 | 209 |
| 6F-6672 | 209 |
| 6F-7037 | 202 |
| 6H-3592 | 79 |
| | 80 |
| 6I-1418 | 76 |
| | 95 |
| 6I-6911 | 343 |
| | 347 |
| 6I-6912 | 343 |
| | 347 |
| 6J-1972 | 202 |
| 6J-5733 | 202 |
| 6K-8178 | 37 |
| | 56 |
| 6N-6984 | 137 |
| | 139 |
| | 522 |
| 6V-0484 | 241 |
| | 243 |
| | 250 |
| | 273 |
| | 276 |
| 6V-0683 | 215 |
| 6V-0852 | 243 |
| | 250 |
| 6V-1249 | 217 |
| 6V-1889 | 228 |
| | 229 |
| 6V-2235 | 499 |
| 6V-3668 | 228 |
| | 229 |
| 6V-3965 | 243 |
| | 250 |
| 6V-5192 | 123 |
| 6V-5587 | 288 |
| 6V-5683 | 290 |
| | 515 |
| 6V-5839 | 47 |
| 6V-7238 | 205 |
| 6V-7357 | 50 |
| | 499 |
| | 512 |
| | 513 |
| 6V-7644 | 170 |
| 6V-7723 | 290 |
| 6V-8077 | 261 |
| 6V-8200 | 290 |
| 6V-8213 | 270 |
| 6V-8397 | 214 |
| | 215 |
| | 218 |
| | 219 |
| | 220 |
| | 221 |
| | 223 |
| | 225 |
| | 236 |
| | 237 |
| | 243 |
| | 249 |
| | 250 |
| | 261 |
| | 263 |
| | 265 |
| | 267 |
| | 269 |
| | 270 |
| | 272 |
| | 273 |
| | 275 |
| | 276 |
| | 278 |
| | 280 |
| | 499 |
| | 503 |
| 6V-8398 | 212 |
| | 213 |
| | 217 |
| | 221 |
| | 227 |
| | 228 |
| | 229 |
| | 239 |
| | 263 |
| | 265 |
| | 267 |
| | 354 |
| | 355 |
| 6V-8400 | 345 |
| 6V-8513 | 142 |
| | 360 |
| | 365 |
| | 367 |
| | 369 |
| | 374 |
| | 375 |
| | 377 |
| | 379 |
| | 381 |
| | 382 |
| | 383 |
| 6V-8627 | 184 |
| | 221 |
| | 241 |
| | 250 |
| | 253 |
| | 256 |
| | 267 |
| | 302 |
| | 304 |
| 6V-8628 | 250 |
| | 253 |
| | 257 |
| | 261 |
| | 272 |
| | 275 |
| 6V-8633 | 221 |
| 6V-8634 | 267 |
| | 272 |
| | 275 |
| | 278 |
| | 280 |
| 6V-8636 | 220 |
| | 221 |


▶ PRIMARY REFERENCE

# PART NUMBER INDEX


| Part | Page |
|---|---|
| | 223 |
| | 225 |
| | 236 |
| | 237 |
| | 243 |
| | 250 |
| | 267 |
| | 269 |
| | 270 |
| | 272 |
| | 275 |
| 6V-8639 | 221 |
| | 228 |
| | 229 |
| | 239 |
| 6V-8641 | 184 |
| | 241 |
| | 245 |
| | 247 |
| | 249 |
| | 261 |
| | 272 |
| | 275 |
| | 278 |
| | 280 |
| | 302 |
| | 304 |
| 6V-8647 | 249 |
| | 253 |
| | 256 |
| | 260 |
| | 261 |
| 6V-8723 | 270 |
| 6V-8724 | 219 |
| | 261 |
| | 269 |
| | 270 |
| | 273 |
| | 276 |
| 6V-8780 | 221 |
| 6V-8993 | 184 |
| | 231 |
| | 234 |
| | 267 |
| 6V-9000 | 254 |
| | 257 |
| | 278 |
| | 280 |
| 6V-9001 | 219 |
| | 220 |
| | 243 |
| | 272 |
| | 275 |
| 6V-9004 | 243 |
| 6V-9010 | 254 |
| | 257 |
| 6V-9168 | 214 |
| | 215 |
| | 249 |
| 6V-9169 | 213 |
| | 217 |
| 6V-9189 | 18 |
| | 19 |
| 6V-9200 | 250 |
| 6V-9492 | 89 |
| 6V-9632 | 19 |
| | 22 |
| | 37 |
| | 50 |
| | 69 |
| | 73 |
| | 438 |
| | 440 |
| | 442 |
| | 446 |
| | 464 |
| 6V-9672 | 445 |
| | 452 |
| | 459 |
| 6V-9746 | 243 |
| | 263 |
| | 265 |
| 6V-9828 | 184 |
| | 231 |
| | 234 |
| 6V-9835 | 250 |
| | 254 |
| | 257 |
| 6V-9837 | 228 |
| | 229 |
| 6V-9849 | 230 |
| | 250 |
| | 253 |
| | 256 |
| | 272 |
| | 302 |
| | 304 |
| 6V-9850 | 250 |
| | 270 |
| | 272 |
| | 275 |
| | 499 |
| | 503 |
| 6V-9851 | 228 |
| | 229 |
| 6V-9853 | 243 |
| 6V-9873 | 228 |
| | 229 |
| | 239 |
| | 267 |
| 6V-9876 | 250 |
| | 272 |
| | 278 |
| | 280 |
| 7D-7233 | 245 |
| | 247 |
| 7I-1024 | 499 |
| | 503 |
| 7I-2272 | 100 |
| | 103 |
| | 106 |
| | 109 |
| | 282 |
| 7I-2673 | 56 |
| | 267 |
| | 530 |
| 7I-7403 | 283 |
| 7I-7439 | 37 |
| | 56 |
| | 499 |
| 7K-0897 | 424 |
| 7K-1181 | 56 |
| | 69 |
| | 73 |
| | 99 |
| | 103 |
| | 105 |
| | 109 |
| | 111 |
| | 115 |
| | 155 |
| | 184 |
| | 221 |
| | 227 |
| | 230 |
| | 231 |
| | 234 |
| | 241 |
| | 243 |
| | 245 |
| | 247 |
| | 249 |
| | 253 |
| | 256 |
| | 260 |
| | 261 |
| | 267 |
| | 272 |
| | 275 |
| | 278 |
| | 280 |
| | 499 |
| | 503 |
| 7N-5274 | 69 |
| | 73 |
| 7N-9070 | 463 |
| 7S-3916 | 184 |
| | 234 |
| 7S-3919 | 184 |
| | 234 |
| 7T-1099 | 50 |
| | 300 |
| | 301 |
| | 306 |
| | 360 |
| | 461 |
| | 465 |
| 7T-6799 | 99 |
| | 103 |
| | 105 |
| | 109 |
| 7V-6571 | 184 |
| | 234 |
| 7X-0515 | 169 |
| 7X-0579 | 150 |
| | 432 |
| | 493 |
| 7X-0632 | 64 |
| | 147 |
| 7X-0818 | 76 |
| | 95 |
| | 208 |
| 7X-2459 | 249 |
| 7X-2533 | 56 |
| 7X-2537 | 207 |
| | 208 |
| | 463 |
| 7X-2549 | 522 |
| 7X-2550 | 23 |
| | 24 |
| 7X-2556 | 522 |
| 7X-2563 | 129 |
| 7X-2564 | 129 |
| 7X-2619 | 519 |
| 7X-2621 | 243 |
| 7X-3164 | 228 |
| | 229 |
| 7X-3229 | 553 |
| 7X-7644 | 553 |
| 7X-7729 | 47 |
| | 64 |
| | 117 |
| | 132 |
| | 133 |
| | 145 |
| | 150 |
| | 152 |
| | 154 |
| | 220 |
| | 243 |
| | 250 |
| | 298 |
| | 300 |
| | 301 |
| | 306 |
| | 485 |
| | 492 |
| | 522 |
| 7X-7877 | 438 |
| | 440 |
| | 442 |
| | 446 |
| | 519 |
| 7X-7898 | 499 |
| | 503 |
| | 517 |
| | 519 |
| 7Y-1976 | 37 |
| | 296 |
| 7Y-3173 | 432 |
| | 493 |
| 7Y-3474 | 530 |
| 7Y-3951 | 79 |
| | 80 |
| 7Y-3952 | 79 |
| | 80 |
| 7Y-3962 | 94 |
| 7Y-3963 | 94 |
| 7Y-3964 | 94 |
| 7Y-3965 | 94 |
| 7Y-3966 | 94 |
| 7Y-3967 | 94 |
| 7Y-3993 | 79 |
| | 80 |
| 7Y-3995 | 79 |
| | 80 |
| 7Y-3996 | 79 |
| | 80 |
| 7Y-4528 | 278 |
| | 280 |
| 7Y-5292 | 445 |
| | 452 |
| | 459 |
| 7Y-5458 | 97 |
| 7Y-5464 | 97 |
| 7Y-5556 | 79 |
| | 80 |
| 7Y-8763 | 139 |
| 8C-3309 | 250 |
| | 261 |
| 8C-3312 | 286 |
| 8C-3446 | 263 |
| | 265 |
| 8C-3451 | 263 |
| | 265 |
| 8C-4535 | 546 |
| 8C-6354 | 81 |
| | 83 |
| | 99 |
| | 105 |
| 8C-6959 | 56 |
| 8C-6965 | 345 |
| 8C-7534 | 217 |
| 8C-8408 | 250 |
| | 254 |
| | 257 |


## 7

## 8

► PRIMARY REFERENCE

# PART NUMBER INDEX


| Part | Page |
|---|---|
| | 304 |
| 8C-8451 | 66 |
| 8C-8988 | 273 |
| | 276 |
| 8E-6208 | 412 |
| | 413 |
| | 414 |
| | 415 |
| | 416 |
| | 417 |
| | 418 |
| 8E-6209 | 412 |
| | 413 |
| | 414 |
| | 415 |
| | 416 |
| | 417 |
| | 418 |
| 8J-2574 | 202 |
| 8K-1433 | 56 |
| 8K-4739 | 263 |
| | 265 |
| 8L-8413 | 69 |
| | 73 |
| | 239 |
| | 275 |
| | 445 |
| | 452 |
| | 459 |
| 8M-2773 | 70 |
| 8P-5348 | 136 |
| 8S-0934 | 526 |
| | 527 |
| 8S-4723 | 526 |
| | 527 |
| 8T-0076 | 276 |
| 8T-0119 | 204 |
| 8T-0151 | 241 |
| 8T-0164 | 243 |
| | 304 |
| 8T-0249 | 239 |
| 8T-0269 | 424 |
| 8T-0288 | 70 |
| | 74 |
| | 356 |
| 8T-0328 | 70 |
| | 74 |
| | 100 |
| | 103 |
| | 106 |
| | 109 |
| 8T-0337 | 471 |
| 8T-1158 | 343 |
| | 345 |
| | 347 |
| 8T-1683 | 270 |
| 8T-1686 | 267 |
| 8T-1905 | 250 |
| 8T-2353 | 250 |
| | 254 |
| | 257 |
| | 261 |
| 8T-2888 | 136 |
| 8T-3313 | 267 |
| 8T-3425 | 499 |
| | 503 |
| 8T-3490 | 37 |
| | 64 |
| | 69 |
| | 73 |
| | 130 |
| | 132 |
| | 133 |
| | 136 |
| | 139 |
| | 150 |
| | 152 |
| | 153 |
| | 249 |
| | 267 |
| | 300 |
| | 301 |
| | 302 |
| | 306 |
| | 461 |
| | 462 |
| | 517 |
| | 519 |
| 8T-3597 | 139 |
| | 517 |
| 8T-3612 | 5 |
| | 37 |
| | 69 |
| | 73 |
| | 136 |
| | 267 |
| | 270 |
| | 304 |
| | 461 |
| | 462 |
| | 464 |
| | 517 |
| 8T-3647 | 5 |
| 8T-4121 | 37 |
| | 42 |
| | 50 |
| | 56 |
| | 64 |
| | 70 |
| | 74 |
| | 87 |
| | 91 |
| | 94 |
| | 100 |
| | 103 |
| | 107 |
| | 109 |
| | 115 |
| | 117 |
| | 137 |
| | 139 |
| | 142 |
| | 147 |
| | 155 |
| | 160 |
| | 184 |
| | 208 |
| | 212 |
| | 221 |
| | 223 |
| | 225 |
| | 227 |
| | 228 |
| | 229 |
| | 230 |
| | 231 |
| | 234 |
| | 237 |
| | 241 |
| | 243 |
| | 245 |
| | 247 |
| | 250 |
| | 254 |
| | 257 |
| | 261 |
| | 263 |
| | 265 |
| | 267 |
| | 270 |
| | 289 |
| | 296 |
| | 300 |
| | 301 |
| | 302 |
| | 304 |
| | 306 |
| | 307 |
| | 308 |
| | 464 |
| | 465 |
| | 469 |
| | 471 |
| | 484 |
| | 499 |
| | 503 |
| | 506 |
| | 509 |
| | 510 |
| | 517 |
| | 519 |
| 8T-4132 | 169 |
| 8T-4133 | 64 |
| | 132 |
| | 152 |
| | 221 |
| | 228 |
| | 229 |
| | 345 |
| | 363 |
| | 364 |
| | 365 |
| | 367 |
| | 429 |
| | 431 |
| | 444 |
| | 452 |
| | 458 |
| 8T-4136 | 42 |
| | 47 |
| | 56 |
| | 70 |
| | 74 |
| | 132 |
| | 133 |
| | 147 |
| | 150 |
| | 152 |
| | 154 |
| | 223 |
| | 225 |
| | 228 |
| | 229 |
| | 243 |
| | 250 |
| | 263 |
| | 265 |
| | 267 |
| | 296 |
| | 300 |
| | 301 |
| | 304 |
| | 306 |
| | 307 |
| | 308 |
| | 465 |
| | 499 |
| | 503 |
| | 517 |
| | 519 |
| 8T-4137 | 37 |
| | 50 |
| | 56 |
| | 64 |
| | 70 |
| | 74 |
| | 356 |
| 8T-4138 | 37 |
| | 50 |
| | 230 |
| | 499 |
| 8T-4139 | 160 |
| | 389 |
| | 461 |
| | 462 |
| | 492 |
| | 522 |
| 8T-4140 | 285 |
| 8T-4171 | 50 |
| | 70 |
| | 74 |

# PART NUMBER INDEX


| Part | Page |
|---|---|
| | 134 |
| | 432 |
| | 486 |
| | 493 |
| 8T-4172 | 363 |
| | 364 |
| | 365 |
| | 367 |
| | 429 |
| | 431 |
| 8T-4173 | 169 |
| | 461 |
| | 462 |
| 8T-4175 | 521 |
| 8T-4176 | 438 |
| | 440 |
| | 442 |
| | 446 |
| 8T-4177 | 37 |
| 8T-4179 | 213 |
| | 217 |
| 8T-4182 | 64 |
| | 208 |
| | 212 |
| | 221 |
| 8T-4183 | 137 |
| | 139 |
| | 157 |
| | 243 |
| | 278 |
| | 280 |
| | 289 |
| 8T-4184 | 137 |
| | 139 |
| 8T-4185 | 184 |
| | 231 |
| | 234 |
| | 267 |
| 8T-4186 | 37 |
| | 133 |
| | 208 |
| | 212 |
| | 237 |
| 8T-4189 | 70 |
| | 74 |
| | 94 |
| | 184 |
| | 241 |
| | 360 |
| | 464 |
| | 467 |
| | 517 |
| | 519 |
| 8T-4191 | 101 |
| | 103 |
| | 107 |
| | 109 |
| | 245 |
| | 247 |
| | 300 |
| | 301 |
| | 306 |
| | 471 |
| 8T-4192 | 92 |
| | 149 |
| | 215 |
| | 217 |
| | 478 |
| | 481 |
| | 482 |
| | 483 |
| | 498 |
| 8T-4193 | 509 |
| | 510 |
| 8T-4194 | 164 |
| | 166 |
| | 461 |
| | 462 |
| 8T-4195 | 37 |
| | 133 |
| | 150 |
| | 223 |
| | 225 |
| | 261 |
| | 263 |
| | 265 |
| | 292 |
| | 298 |
| | 300 |
| | 301 |
| | 306 |
| 8T-4196 | 70 |
| | 74 |
| | 137 |
| | 139 |
| | 142 |
| | 221 |
| | 267 |
| | 360 |
| | 465 |
| | 485 |
| | 522 |
| 8T-4199 | 245 |
| | 247 |
| | 438 |
| | 440 |
| | 442 |
| | 446 |
| 8T-4200 | 37 |
| | 42 |
| | 44 |
| | 56 |
| | 70 |
| | 74 |
| | 101 |
| | 103 |
| | 107 |
| | 109 |
| | 134 |
| | 136 |
| | 245 |
| | 247 |
| | 261 |
| | 302 |
| | 438 |
| | 440 |
| | 442 |
| | 446 |
| | 497 |
| | 499 |
| | 503 |
| | 517 |
| 8T-4205 | 37 |
| 8T-4222 | 37 |
| | 150 |
| | 445 |
| | 452 |
| | 459 |
| 8T-4223 | 23 |
| | 24 |
| | 89 |
| | 92 |
| | 125 |
| | 127 |
| | 137 |
| | 139 |
| | 142 |
| | 149 |
| | 157 |
| | 160 |
| | 162 |
| | 164 |
| | 166 |
| | 185 |
| | 213 |
| | 215 |
| | 217 |
| | 228 |
| | 229 |
| | 234 |
| | 243 |
| | 278 |
| | 280 |
| | 289 |
| | 389 |
| | 438 |
| | 440 |
| | 442 |
| | 445 |
| | 446 |
| | 452 |
| | 459 |
| | 461 |
| | 462 |
| | 478 |
| | 481 |
| | 482 |
| | 483 |
| | 498 |
| 8T-4224 | 5 |
| | 18 |
| | 19 |
| | 24 |
| | 37 |
| | 42 |
| | 43 |
| | 44 |
| | 70 |
| | 74 |
| | 76 |
| | 94 |
| | 95 |
| | 101 |
| | 103 |
| | 107 |
| | 109 |
| | 150 |
| | 185 |
| | 207 |
| | 208 |
| | 241 |
| | 245 |
| | 247 |
| | 261 |
| | 267 |
| | 290 |
| | 302 |
| | 304 |
| | 360 |
| | 438 |
| | 440 |
| | 442 |
| | 445 |
| | 446 |
| | 452 |
| | 459 |
| | 463 |
| | 464 |
| | 484 |
| | 497 |
| | 499 |
| | 503 |
| | 517 |
| | 519 |
| | 522 |
| 8T-4226 | 64 |
| 8T-4244 | 388 |
| | 404 |
| | 405 |
| 8T-4648 | 185 |
| | 234 |
| 8T-4778 | 406 |
| | 407 |
| | 408 |
| | 409 |
| | 410 |
| | 411 |
| 8T-4779 | 508 |
| 8T-4821 | 23 |
| | 24 |
| 8T-4908 | 5 |
| | 24 |
| | 43 |
| | 432 |
| | 463 |
| | 493 |
| 8T-4910 | 161 |
| | 185 |
| | 234 |
| 8T-4956 | 125 |
| | 127 |
| | 137 |
| | 139 |
| | 162 |
| | 438 |
| | 440 |
| | 442 |
| | 446 |
| | 461 |
| | 462 |
| 8T-4970 | 101 |
| | 103 |
| | 107 |
| | 109 |
| 8T-4971 | 464 |
| | 499 |
| 8T-5372 | 517 |
| | 519 |
| 8T-5376 | 294 |
| 8T-5439 | 129 |
| 8T-6381 | 129 |
| 8T-6411 | 445 |
| | 452 |
| | 459 |
| 8T-6466 | 64 |
| | 221 |
| 8T-6757 | 171 |
| 8T-6759 | 345 |
| 8T-6870 | 304 |
| 8T-7329 | 267 |
| 8T-7338 | 169 |
| 8T-7547 | 18 |
| | 19 |
| | 56 |
| | 150 |
| | 484 |
| | 522 |
| 8T-8442 | 286 |
| | 343 |
| | 347 |
| 8T-8729 | 79 |
| | 80 |
| | 81 |


► **PRIMARY REFERENCE**

# PART NUMBER INDEX


| Part | Page |
|---|---|
| | 83 |
| | 85 |
| | 86 |
| | 99 |
| | 103 |
| | 105 |
| | 109 |
| | 115 |
| | 184 |
| | 472 |
| | 473 |
| | 474 |
| 8T-8730 | 79 |
| | 80 |
| | 81 |
| | 83 |
| | 85 |
| | 86 |
| | 94 |
| | 100 |
| | 106 |
| | 184 |
| 8T-8737 | 79 |
| | 80 |
| | 81 |
| | 83 |
| | 85 |
| | 86 |
| | 87 |
| | 97 |
| | 100 |
| | 106 |
| | 114 |
| | 184 |
| | 472 |
| 8T-8799 | 70 |
| | 74 |
| 8T-8874 | 69 |
| | 73 |
| 8T-9080 | 123 |
| 8T-9636 | 79 |
| | 80 |
| 8X-5804 | 99 |
| | 103 |
| | 105 |
| | 109 |
| 8Y-6967 | 488 |
| | 489 |

## 9

| | |
|---|---|
| 9D-7924 | 64 |
| 9F-2167 | 221 |
| | 236 |
| 9H-3771 | 422 |
| | 423 |
| 9L-8781 | 137 |
| | 139 |
| | 522 |
| 9M-5617 | 136 |
| 9M-7959 | 64 |
| 9M-8406 | 70 |
| | 74 |
| | 115 |
| 9N-0869 | 76 |
| | 95 |
| 9R-2672 | 360 |
| 9R-2821 | 37 |
| | 374 |
| | 375 |
| | 377 |
| | 379 |
| 9S-4180 | 358 |
| 9S-4182 | 278 |
| 9S-4185 | 204 |
| 9S-4190 | 296 |
| 9S-4191 | 196 |
| | 250 |
| 9S-8002 | 261 |
| 9S-8004 | 197 |
| | 283 |
| 9T-2212 | 202 |
| 9T-4007 | 202 |
| 9W-0844 | 79 |
| | 80 |
| | 81 |
| | 83 |
| | 94 |
| | 100 |
| | 106 |
| | 114 |
| 9W-0852 | 79 |
| | 80 |
| | 81 |
| | 83 |
| | 99 |
| | 105 |
| | 115 |
| | 184 |
| 9W-1951 | 81 |
| | 83 |
| | 100 |
| | 106 |
| 9W-9615 | 85 |
| 9X-2027 | 289 |
| 9X-2032 | 70 |
| | 74 |
| | 438 |
| | 440 |
| | 442 |
| | 446 |
| 9X-2042 | 438 |
| | 440 |
| | 442 |
| | 445 |
| | 446 |
| | 452 |
| | 459 |
| | 488 |
| | 489 |
| 9X-2043 | 445 |
| | 452 |
| | 459 |
| 9X-2044 | 100 |
| | 103 |
| | 106 |
| | 109 |
| | 488 |
| | 489 |
| 9X-2133 | 499 |
| | 503 |
| 9X-2297 | 221 |
| | 236 |
| | 237 |
| | 269 |
| | 270 |
| | 273 |
| | 276 |
| 9X-3401 | 50 |
| | 79 |
| | 80 |
| | 81 |
| | 83 |
| | 97 |
| | 99 |
| | 105 |
| 9X-3402 | 69 |
| | 73 |
| | 79 |
| | 80 |
| | 82 |
| | 83 |
| | 100 |
| | 106 |
| 9X-4519 | 69 |
| | 73 |
| 9X-6032 | 294 |
| 9X-6153 | 515 |
| 9X-6165 | 56 |
| | 464 |
| 9X-6269 | 509 |
| 9X-8256 | 50 |
| | 66 |
| | 70 |
| | 74 |
| | 101 |
| | 103 |
| | 107 |
| | 109 |
| | 134 |
| | 136 |
| | 230 |
| | 425 |
| | 432 |
| | 466 |
| | 467 |
| | 490 |
| | 493 |
| | 499 |
| | 512 |
| | 513 |
| | 517 |
| | 519 |
| | 530 |
| 9X-8257 | 285 |
| | 461 |
| | 462 |
| | 508 |
| | 509 |
| | 510 |
| | 521 |
| | 522 |
| 9X-8488 | 89 |

## 0

| | |
|---|---|
| 002-0639 | 155 |
| 067-2551 | 184 |
| 086-0299 | 129 |
| 087-4454 | 176 |
| | ▶177 |
| 087-4456 | ▶178 |
| | 181 |
| 087-4575 | 177 |
| 087-4576 | 177 |
| 087-4577 | 177 |
| 087-4710 | 345 |
| 093-0083 | 142 |
| 093-1290 | 212 |
| | 221 |
| 093-1294 | 208 |
| 093-1429 | 363 |
| | 364 |
| | 365 |
| | 367 |
| | 374 |
| | 375 |
| | 377 |
| | 379 |
| 093-1430 | 360 |
| 093-2064 | 517 |
| | 519 |
| 093-5537 | 296 |
| 094-0876 | 342 |
| 095-0673 | 345 |
| 095-0736 | 70 |
| | 74 |
| 095-0742 | 100 |
| | 103 |
| | 106 |
| | 109 |
| | 486 |
| 095-0868 | 363 |
| | 364 |
| | 365 |
| | 367 |
| | 426 |
| | 427 |
| 095-0880 | 286 |
| 095-0912 | 432 |
| | 493 |
| 095-0929 | 294 |
| 095-0966 | 294 |
| 095-1207 | 444 |
| | 451 |
| | 458 |
| 095-1260 | 343 |
| | 345 |
| | 347 |
| 095-1387 | 499 |
| | 503 |
| 095-1388 | 263 |
| | 265 |
| 095-1390 | 37 |
| | 263 |
| | 265 |
| 095-1392 | 44 |
| 095-1393 | 44 |
| 095-1519 | 283 |
| 095-1571 | 290 |
| 095-1574 | 123 |
| | 311 |
| 095-1575 | 290 |
| | 345 |
| | 350 |
| | 351 |
| 095-1578 | 283 |
| | 343 |
| | 347 |
| 095-1579 | 283 |
| | 286 |
| | 311 |
| 095-1580 | 123 |
| 095-1582 | 123 |
| | 352 |
| 095-1584 | 350 |
| 095-1585 | 343 |
| | 347 |
| | 352 |
| 095-1586 | 283 |
| | 342 |
| | 354 |
| | 355 |
| 095-1590 | 352 |
| 095-1595 | 164 |
| | 166 |
| | 352 |
| 095-1596 | 123 |
| 095-1604 | 164 |
| | 166 |
| 095-1623 | 292 |
| | 294 |

# PART NUMBER INDEX


| Part | Page |
|---|---|
| 095-1657 | 171 |
| 095-1676 | 123 |
| 095-1701 | 263 |
| | 265 |
| 095-1707 | 190 |
| | 194 |
| 095-1708 | 194 |
| 095-1709 | 188 |
| | 192 |
| | 198 |
| 095-1710 | 188 |
| | 190 |
| | 192 |
| | 198 |
| | 200 |
| | 292 |
| 095-1711 | 200 |
| 095-1713 | 292 |
| | 294 |
| 095-1716 | 286 |
| 095-1717 | 296 |
| 095-1719 | 286 |
| 095-1725 | 121 |
| 095-1750 | 354 |
| | 355 |
| 095-1751 | 354 |
| | 355 |
| 095-1781 | 352 |
| 095-1794 | 164 |
| | 166 |
| 095-7951 | 292 |
| 095-8051 | 292 |
| 095-9397 | 292 |
| 096-1366 | 249 |
| 096-1628 | 342 |
| 096-4034 | 466 |
| | 467 |
| 096-4177 | 41 |
| 096-4535 | 343 |
| | 347 |
| 096-4543 | 343 |
| | 347 |
| 096-4833 | 283 |
| 096-4876 | 475 |
| | 476 |
| | 477 |
| 096-5028 | 41 |
| 096-5971 | 121 |
| | 123 |
| 096-6078 | 253 |
| | 256 |
| | 261 |
| | 275 |
| 096-6079 | 56 |
| | 237 |
| | 239 |
| | 241 |
| | 245 |
| | 247 |
| | 249 |
| | 253 |
| | 256 |
| | 267 |
| | 270 |
| | 499 |
| | 503 |
| 096-6080 | 253 |
| | 256 |
| | 260 |
| 096-6081 | 253 |
| | 256 |
| 096-6082 | 261 |
| | 275 |
| 096-6083 | 253 |
| | 256 |
| 096-6084 | 272 |
| | 275 |
| 096-6085 | 56 |
| | 260 |
| | 280 |
| | 499 |
| | 503 |
| 096-6166 | 89 |
| | 471 |
| 096-9278 | 100 |
| | 103 |
| | 106 |
| | 109 |
| 099-0361 | 343 |
| | 347 |
| 099-2374 | 283 |
| 099-3649 | 5 |
| 099-6137 | 342 |
| | 345 |
| 099-6144 | 345 |
| 099-6145 | 345 |
| 099-7197 | 123 |

## 1

| Part | Page |
|---|---|
| 101-7404 | 299 |
| | 309 |
| | 478 |
| | 481 |
| 102-8802 | 69 |
| | 73 |
| | 478 |
| | 481 |
| | 482 |
| | 483 |
| 102-8803 | 79 |
| | 80 |
| | 81 |
| | 83 |
| | 100 |
| | 106 |
| 102-8804 | 481 |
| | 482 |
| 102-8805 | 472 |
| | 473 |
| | 474 |
| 103-2529 | 85 |
| | 115 |
| 103-2543 | 101 |
| | 103 |
| | 107 |
| | 109 |
| 104-2091 | 488 |
| | 489 |
| 104-8081 | 338 |
| | 340 |
| 106-0210 | 97 |
| 107-3134 | 79 |
| | 80 |
| 107-3135 | 79 |
| | 80 |
| 107-3136 | 79 |
| | 80 |
| 108-7516 | 69 |
| | 73 |
| 109-2356 | 99 |
| | 103 |
| | 105 |
| | 109 |
| 110-6109 | 99 |
| | 103 |
| | 105 |
| 110-9198 | 81 |
| | 83 |
| | 100 |
| | 106 |
| 111-4837 | 69 |
| | 73 |
| 111-7898 | 81 |
| | 83 |
| | 99 |
| | 105 |
| 111-7899 | 66 |
| | 99 |
| | 103 |
| | 105 |
| | 109 |
| | 117 |
| 112-2628 | 253 |
| | 256 |
| 112-5282 | 310 |
| 112-9401 | 52 |
| 112-9604 | 82 |
| | 84 |
| | 100 |
| | 106 |
| 112-9609 | 81 |
| | 83 |
| | 99 |
| | 105 |
| 112-9610 | 81 |
| | 83 |
| | 99 |
| | 105 |
| 112-9611 | 82 |
| | 84 |
| | 100 |
| | 106 |
| 112-9612 | 82 |
| | 84 |
| | 100 |
| | 106 |
| 113-5099 | 82 |
| | 84 |
| | 100 |
| | 106 |
| 113-5100 | 82 |
| | 84 |
| | 100 |
| | 106 |
| 113-8490 | 81 |
| | 83 |
| | 99 |
| | 105 |
| 113-8491 | 81 |
| | 83 |
| | 99 |
| | 105 |
| 113-8492 | 81 |
| | 83 |
| | 99 |
| | 105 |
| 114-0623 | 354 |
| | 355 |
| 116-0255 | 79 |
| | 80 |
| 116-4157 | 81 |
| | 83 |
| | 99 |
| | 105 |
| 116-4158 | 81 |
| | 83 |
| | 99 |
| | 105 |
| 116-4159 | 81 |
| | 83 |
| | 99 |
| | 105 |
| 116-4160 | 82 |
| | 84 |
| | 100 |
| | 106 |
| 116-4161 | 82 |
| | 84 |
| | 100 |
| | 106 |
| 116-7471 | 99 |
| | 103 |
| | 105 |
| | 109 |
| 117-8929 | 519 |
| 118-8118 | 52 |
| 118-8119 | 52 |
| 119-3205 | 397 |
| | 398 |
| | 399 |
| | 400 |
| | 401 |
| | 402 |
| | 403 |
| 119-3662 | 79 |
| | 80 |
| 119-5388 | 345 |
| 119-5389 | 345 |
| 119-5391 | 345 |
| 119-5708 | 231 |
| | 234 |
| 119-9880 | 23 |
| | 24 |
| 120-4636 | 164 |
| | 166 |
| 120-4664 | 164 |
| | 166 |
| 121-3709 | 128 |
| 121-4480 | 52 |
| 121-7098 | 499 |
| 121-7136 | 499 |
| 121-7137 | 499 |
| 121-7138 | 499 |
| 122-4401 | 82 |
| | 84 |
| | 100 |
| | 106 |
| 124-2111 | 184 |
| 124-3548 | 81 |
| | 83 |
| | 99 |
| | 105 |
| 124-9636 | 81 |
| | 83 |
| | 99 |
| | 105 |
| 124-9637 | 81 |
| | 83 |
| | 99 |
| | 105 |
| 125-7874 | 79 |
| | 80 |
| | 82 |
| | 84 |
| | 85 |
| | 100 |
| | 106 |
| | 184 |
| 125-7875 | 79 |
| | 80 |
| 126-1767 | 81 |
| | 83 |


► PRIMARY REFERENCE

# PART NUMBER INDEX


| Part | Page |
|---|---|
| | 97 |
| | 99 |
| | 105 |
| 126-1768 | 69 |
| | 73 |
| | 82 |
| | 84 |
| | 100 |
| | 106 |
| 126-1774 | 81 |
| | 83 |
| | 99 |
| | 105 |
| 126-1865 | 345 |
| 126-1866 | 345 |
| 126-2900 | 553 |
| 127-2170 | 465 |
| 127-3925 | 444 |
| | 452 |
| | 458 |
| 127-3926 | 444 |
| | 451 |
| | 458 |
| 127-3927 | 445 |
| | 451 |
| | 459 |
| 127-3947 | 444 |
| | 451 |
| | 458 |
| 127-3987 | 445 |
| | 451 |
| | 459 |
| 127-4006 | 444 |
| | 452 |
| | 458 |
| 127-4839 | 47 |
| | 70 |
| | 74 |
| 128-2032 | 81 |
| | 83 |
| | 99 |
| | 105 |
| 128-2135 | 488 |
| | 489 |
| 128-8614 | 52 |
| 130-0252 | 499 |
| 131-1489 | 79 |
| | 80 |
| 132-5789 | 70 |
| | 74 |
| | 100 |
| | 103 |
| | 106 |
| | 109 |
| | 499 |
| | 503 |
| 132-7551 | 70 |
| | 74 |
| 132-7625 | 486 |
| 132-7711 | 342 |
| 132-9046 | 343 |
| | 347 |
| 133-2425 | 142 |
| 134-7113 | 239 |
| 134-7114 | 239 |
| 134-7115 | 239 |
| 134-7258 | 553 |
| 134-8726 | 41 |
| 135-9390 | 406 |
| | 407 |
| | 408 |
| | 409 |
| | 410 |
| | 411 |
| 135-9941 | 261 |
| 136-0199 | 553 |
| 136-0207 | 237 |
| 139-7325 | 123 |
| 139-7355 | 290 |
| 140-2334 | 41 |
| 140-3201 | 131 |
| 140-3355 | 37 |
| 140-3734 | 128 |
| | 386 |
| | 387 |
| 140-3750 | 190 |
| 140-4236 | 37 |
| 140-4238 | 37 |
| 140-4741 | 142 |
| 140-4763 | 37 |
| 140-4766 | 37 |
| 140-4780 | 146 |
| 140-4934 | 190 |
| 140-4986 | 161 |
| 140-5169 | 190 |
| 140-9378 | 66 |
| | 99 |
| | 103 |
| | 105 |
| | 109 |
| | 119 |
| | 120 |
| 141-2759 | 81 |
| | 83 |
| | 99 |
| | 105 |
| 142-5546 | 471 |
| 142-9572 | 89 |
| | 91 |
| | 94 |
| 143-2343 | 121 |
| 143-2344 | 121 |
| 143-2346 | 121 |
| 143-2358 | 121 |
| 144-0195 | 530 |
| 144-9962 | ►52 |
| | 56 |
| 145-1893 | 388 |
| | 404 |
| | 405 |
| 145-2237 | 245 |
| | 247 |
| 146-1086 | 188 |
| | 192 |
| | 198 |
| 146-3916 | 188 |
| | 192 |
| | 198 |
| 146-3923 | 188 |
| | 192 |
| 146-3957 | 198 |
| 146-3958 | 200 |
| 146-3968 | 200 |
| 146-3969 | 200 |
| | 188 |
| | 192 |
| | 194 |
| | 198 |
| | 200 |
| 146-4875 | 292 |
| | 294 |
| 146-4877 | 292 |
| | 294 |
| 146-5009 | 253 |
| | 256 |
| 147-1444 | 81 |
| | 83 |
| | 99 |
| | 105 |
| 147-4131 | 345 |
| 148-7925 | 227 |
| 148-8310 | 241 |
| 148-8316 | 249 |
| | 253 |
| | 256 |
| | 260 |
| | 261 |
| 148-8318 | 267 |
| | 272 |
| | 275 |
| | 278 |
| | 280 |
| 148-8325 | 184 |
| | 241 |
| | 245 |
| | 247 |
| | 249 |
| | 261 |
| | 272 |
| | 275 |
| | 278 |
| | 280 |
| | 302 |
| | 304 |
| 148-8328 | 221 |
| 148-8336 | 220 |
| | 221 |
| | 223 |
| | 225 |
| | 236 |
| | 237 |
| | 243 |
| | 249 |
| | 267 |
| | 269 |
| | 270 |
| | 272 |
| | 275 |
| 148-8340 | 221 |
| | 239 |
| 148-8346 | 267 |
| 148-8351 | 230 |
| | 250 |
| | 253 |
| | 256 |
| | 272 |
| | 302 |
| | 304 |
| 148-8353 | 219 |
| | 220 |
| | 243 |
| | 272 |
| | 275 |
| 148-8361 | 250 |
| 148-8363 | 250 |
| | 272 |
| | 278 |
| | 280 |
| 148-8367 | 250 |
| | 270 |
| | 272 |
| | 275 |
| | 499 |
| | 503 |
| 148-8368 | 184 |
| | 221 |
| | 241 |
| | 250 |
| | 253 |
| | 256 |
| | 267 |
| | 302 |
| | 304 |
| 148-8369 | 250 |
| | 253 |
| | 256 |
| | 261 |
| | 272 |
| | 275 |
| 148-8371 | 273 |
| | 275 |
| 148-8374 | 270 |
| 148-8378 | 219 |
| | 261 |
| | 269 |
| | 270 |
| | 273 |
| | 276 |
| 148-8383 | 270 |
| 148-8385 | 254 |
| | 257 |
| | 278 |
| | 280 |
| 148-8392 | 243 |
| 148-8405 | 56 |
| 148-8407 | 250 |
| 148-8410 | 296 |
| 148-8411 | 204 |
| 148-8443 | 249 |
| 149-3516 | 52 |
| 150-0810 | 121 |
| 150-0811 | 121 |
| 150-0812 | 121 |
| 150-0813 | 121 |
| 150-0814 | 121 |
| 150-0815 | 121 |
| 150-0818 | 121 |
| 150-0819 | 121 |
| 150-0826 | 123 |
| 150-0827 | 123 |
| 150-0829 | 123 |
| 150-0832 | 123 |
| 150-0834 | 123 |
| 150-0873 | 123 |
| 150-0874 | 123 |
| 150-0881 | 123 |
| 150-0885 | 312 |
| 150-0909 | 121 |
| 150-3033 | 243 |
| | 304 |
| 150-3036 | 250 |
| 150-3065 | 241 |
| | 243 |
| | 250 |
| | 273 |
| | 276 |
| 150-4027 | 261 |
| 150-4029 | 221 |
| 150-4042 | 254 |
| | 257 |
| 150-4043 | 239 |
| | 267 |
| 150-4047 | 250 |
| | 254 |
| | 257 |
| | 261 |
| 150-4052 | 184 |
| | 231 |
| | 234 |
| | 267 |
| 150-4086 | 70 |
| | 74 |
| 150-5968 | 250 |
| | 254 |
| | 257 |
| 150-6346 | 323 |


► PRIMARY REFERENCE

# PART NUMBER INDEX


| Part | Page |
|---|---|
| | 330 |
| | 332 |
| 150-6355 | 312 |
| | 315 |
| | 324 |
| 150-6367 | 312 |
| | 324 |
| 150-8896 | 553 |
| 151-1975 | 56 |
| 151-4841 | 227 |
| 152-3411 | 221 |
| 152-5717 | 213 |
| | 217 |
| 152-5718 | 213 |
| | 217 |
| 153-2602 | 79 |
| | 80 |
| | 81 |
| | 83 |
| | 99 |
| | 105 |
| 153-2631 | 79 |
| | 80 |
| | 82 |
| | 84 |
| | 100 |
| | 106 |
| 153-2994 | 213 |
| | 217 |
| | 227 |
| 153-2995 | 213 |
| | 217 |
| | 227 |
| 153-2996 | 214 |
| | 215 |
| 153-2997 | 214 |
| | 215 |
| 153-5223 | 345 |
| 153-5656 | 69 |
| | 73 |
| 153-6087 | 286 |
| 153-6237 | 243 |
| 153-7880 | 390 |
| 153-7881 | 406 |
| | 407 |
| | 408 |
| | 409 |
| | 410 |
| | 411 |
| 154-2233 | 164 |
| | 166 |
| 154-2235 | 164 |
| | 166 |
| 154-2236 | 164 |
| | 166 |
| 154-2302 | 37 |
| 154-2638 | ▶426 |
| 154-2704 | 388 |
| | 390 |
| | 391 |
| | 392 |
| | 393 |
| | 406 |
| | 407 |
| | 408 |
| | 410 |
| | 411 |
| | 412 |
| | 413 |
| | 414 |
| | 415 |
| | 416 |
| | 417 |
| | 418 |
| 155-0576 | 76 |
| | 95 |
| 155-2260 | 87 |
| 155-2270 | 79 |
| | 80 |
| | 81 |
| | 83 |
| | 85 |
| | 99 |
| | 105 |
| | 184 |
| 155-2271 | 86 |
| 155-2274 | 81 |
| | 83 |
| | 99 |
| | 105 |
| 155-3624 | 278 |
| 156-1200 | 52 |
| 156-6175 | 70 |
| | 74 |
| 156-6617 | 508 |
| | 509 |
| | 510 |
| 156-6618 | 509 |
| | 510 |
| 156-8801 | 272 |
| 156-8845 | 245 |
| | 247 |
| 158-4676 | 168 |
| 158-4677 | 168 |
| 158-4678 | 168 |
| 158-4679 | 168 |
| 158-4680 | 168 |
| 158-4681 | 168 |
| 158-4682 | 168 |
| 158-4683 | 168 |
| 158-4684 | 173 |
| 158-7802 | 99 |
| | 103 |
| 159-4700 | 180 |
| 159-8049 | 69 |
| | 73 |
| 159-8050 | 69 |
| | 73 |
| 159-8839 | 406 |
| | 407 |
| | 408 |
| | 409 |
| | 410 |
| | 411 |
| 159-9322 | 81 |
| | 83 |
| | 99 |
| 160-2243 | 261 |
| 160-2252 | 245 |
| | 247 |
| 161-2539 | 66 |
| 161-2560 | 214 |
| | 215 |
| 161-2561 | 214 |
| | 215 |
| 161-4130 | 429 |
| 162-7120 | 429 |
| | 431 |
| 163-6795 | 69 |
| | 73 |
| | 94 |
| | 99 |
| | 103 |
| | 105 |
| | 109 |
| | 114 |
| 163-6838 | 23 |
| | 24 |
| 163-7050 | 213 |
| | 217 |
| 163-9768 | 245 |
| | 247 |
| 163-9772 | 249 |
| 164-5546 | 184 |
| | 241 |
| 164-5567 | 243 |
| 164-5605 | 276 |
| 164-9639 | 227 |
| 164-9640 | 245 |
| | 247 |
| 164-9869 | 221 |
| | 236 |
| | 237 |
| | 269 |
| | 270 |
| | 273 |
| | 276 |
| 165-2273 | 205 |
| 165-4927 | 263 |
| | 265 |
| 165-4931 | 261 |
| 165-7014 | 250 |
| | 261 |
| 165-9431 | 342 |
| 165-9438 | 342 |
| 165-9463 | 345 |
| 165-9553 | 345 |
| 165-9554 | 345 |
| 166-1579 | 230 |
| 166-3032 | 273 |
| | 276 |
| 167-2186 | 202 |
| 167-2294 | 202 |
| 167-3593 | 82 |
| | 84 |
| | 100 |
| | 106 |
| 168-8389 | 388 |
| | 389 |
| | 390 |
| | 391 |
| | 392 |
| | 393 |
| | 406 |
| | 407 |
| | 408 |
| | 409 |
| | 410 |
| | 411 |
| | 412 |
| | 413 |
| | 414 |
| | 415 |
| | 416 |
| | 417 |
| | 418 |
| 169-1116 | 311 |
| 169-1130 | 311 |
| 169-1134 | 292 |
| 169-1135 | 292 |
| 169-1136 | 294 |
| 169-1169 | 283 |
| 169-1170 | 283 |
| 169-1172 | 283 |
| 169-1181 | ▶354 |
| | 356 |
| 169-4274 | 267 |
| 169-7393 | 230 |
| 170-4635 | 221 |
| 170-8794 | 200 |
| 171-0087 | 342 |
| 171-0689 | 43 |
| | 47 |
| 171-4046 | 488 |
| | 489 |
| 171-6728 | 239 |
| 172-1241 | 545 |
| 172-1759 | 381 |
| 172-1760 | 381 |
| 172-2596 | 146 |
| 174-2141 | 395 |
| 174-3016 | 79 |
| | 80 |
| | 81 |
| | 83 |
| | 100 |
| | 106 |
| 174-5907 | 74 |
| 174-7287 | 249 |
| 175-1794 | 360 |
| | 363 |
| | 364 |
| | 365 |
| | 367 |
| | 369 |
| | 374 |
| | 375 |
| | 377 |
| | 379 |
| 175-1795 | 360 |
| | 363 |
| | 364 |
| | 365 |
| | 367 |
| | 369 |
| | 374 |
| | 375 |
| | 377 |
| | 379 |
| 175-4721 | 194 |
| 175-4723 | 190 |
| 175-4734 | 194 |
| 176-1902 | 499 |
| 176-8440 | 23 |
| | 24 |
| 176-8464 | 360 |
| 176-8465 | 360 |
| 178-7539 | 438 |
| | 440 |
| | 442 |
| | 446 |
| 179-9013 | 424 |
| 180-8424 | 310 |
| 180-9933 | 261 |
| 183-7263 | 261 |
| 185-0522 | 345 |
| 185-0555 | 338 |
| | 340 |
| 185-1290 | 79 |
| | 80 |
| 185-8300 | 433 |
| | 495 |
| 187-2120 | 250 |
| | 254 |
| | 257 |
| | 304 |
| 187-8812 | ▶404 |
| 187-8813 | ▶404 |
| 187-8814 | ▶404 |
| 187-8815 | ▶404 |
| 187-8816 | ▶405 |
| 187-9185 | 539 |
| | 556 |


▶ PRIMARY REFERENCE

# PART NUMBER INDEX


| Part | Page |
|---|---|
| 188-9644 | 425 |
| 189-3158 | 113 |
| 190-4896 | 164 |
| | 166 |
| 190-5236 | 213 |
| | 217 |
| 190-5386 | 553 |
| 191-0348 | 132 |
| | 152 |
| | 154 |
| 191-3918 | 290 |
| 191-3920 | 290 |
| 191-3925 | 290 |
| 191-7503 | 289 |
| 191-7516 | 280 |
| | ▶292 |
| 191-7524 | 530 |
| 192-0633 | 121 |
| | 190 |
| 192-0638 | 188 |
| | 192 |
| | 194 |
| | 198 |
| | 200 |
| 192-1134 | 121 |
| | 123 |
| 193-5330 | 292 |
| | 294 |
| 194-0784 | 342 |
| 194-2903 | 204 |
| 195-0090 | 239 |
| 195-0601 | 37 |
| | 38 |
| 195-8154 | 147 |
| 196-1441 | 486 |
| 196-1479 | 445 |
| | 451 |
| | 459 |
| 196-1550 | 444 |
| | 451 |
| | 458 |
| 196-3784 | 345 |
| 196-3895 | 253 |
| | 256 |
| 196-4745 | 263 |
| | 265 |
| 197-7177 | 553 |
| 198-0852 | 91 |
| | 94 |
| 198-3899 | 524 |
| | 529 |
| 198-7543 | 343 |
| | 347 |
| 198-8153 | 343 |
| | 347 |
| 198-8154 | 343 |
| | 347 |
| 198-8156 | 343 |
| | 347 |
| 198-8159 | 343 |
| | 347 |
| 198-8160 | 343 |
| | 347 |
| 198-8161 | 343 |
| | 347 |
| 198-8162 | 343 |
| | 347 |
| 198-8163 | 343 |
| | 347 |
| 198-8164 | 343 |
| | 347 |
| 198-8165 | 343 |
| | 347 |
| 198-8166 | 343 |
| | 347 |
| 198-8167 | 343 |
| | 347 |
| 198-8168 | 343 |
| | 347 |
| 198-8169 | 343 |
| 198-8176 | 343 |
| | 347 |
| 198-8418 | 283 |
| 198-8419 | 283 |
| 198-8420 | 283 |
| 198-8421 | 283 |
| 198-8423 | 283 |
| 199-1148 | 192 |
| | 194 |
| 199-4803 | 144 |

## 2

| Part | Page |
|---|---|
| 200-4856 | 338 |
| | 340 |
| 200-5480 | 553 |
| 201-2638 | 512 |
| 202-7174 | 123 |
| 202-7187 | 123 |
| 203-2343 | 190 |
| 203-2344 | 190 |
| 203-4455 | 445 |
| | 451 |
| | 459 |
| 204-1611 | 56 |
| | 69 |
| | 73 |
| | 99 |
| | 103 |
| | 111 |
| | 115 |
| | 117 |
| | 499 |
| | 503 |
| 204-1974 | 343 |
| | 347 |
| 204-1976 | 343 |
| | 347 |
| 204-1979 | 343 |
| | 347 |
| 204-2281 | 230 |
| 204-4961 | 429 |
| | 431 |
| 204-4976 | 429 |
| | 431 |
| 205-2156 | 280 |
| 205-6079 | 155 |
| 207-0236 | 445 |
| | 451 |
| | 459 |
| 207-0785 | 467 |
| 207-0797 | 467 |
| 207-0799 | 467 |
| 207-0800 | 467 |
| 207-1686 | 114 |
| | 445 |
| | 452 |
| | 459 |
| 208-0156 | 249 |
| 208-0164 | 253 |
| | 256 |
| 208-0616 | 221 |
| 208-7733 | 526 |
| | 527 |
| 210-0686 | 241 |
| | 253 |
| | 256 |
| 210-1304 | 37 |
| 211-7455 | 467 |
| 212-0522 | 342 |
| 212-6073 | 194 |
| 213-7638 | 278 |
| 214-1324 | 247 |
| | 253 |
| | 256 |
| 214-3956 | 445 |
| | 452 |
| | 459 |
| 214-3962 | 444 |
| | 451 |
| | 458 |
| 214-3968 | 445 |
| | 451 |
| | 459 |
| | 505 |
| 214-3969 | 445 |
| | 451 |
| | 459 |
| | 505 |
| 214-7568 | 196 |
| | 243 |
| 214-7654 | 310 |
| 214-8827 | 132 |
| | 152 |
| 215-3277 | 310 |
| 216-1980 | 56 |
| 216-3247 | 245 |
| | 247 |
| | 249 |
| 216-7643 | 188 |
| | 192 |
| | 194 |
| | 198 |
| | 200 |
| 217-2456 | 249 |
| 218-4681 | 381 |
| | 382 |
| | 383 |
| 219-0305 | 553 |
| 219-9487 | 399 |
| 219-9488 | 401 |
| 219-9489 | 402 |
| 219-9490 | 403 |
| 220-0858 | ▶427 |
| | 428 |
| 221-0936 | 292 |
| 221-0937 | 292 |
| 221-0938 | 292 |
| 221-8045 | 546 |
| 222-0668 | 466 |
| | 467 |
| 222-2631 | 338 |
| | 340 |
| 224-0554 | 546 |
| 224-7717 | 549 |
| 224-8945 | 549 |
| 224-8946 | 546 |
| 225-0312 | 546 |
| 225-0313 | 549 |
| 225-3305 | 549 |
| 225-3322 | 488 |
| | 489 |
| 225-3697 | 296 |
| 225-4950 | 79 |
| | 80 |
| 225-5851 | 161 |
| 225-5852 | 161 |
| 226-0294 | 136 |
| 226-0338 | 136 |
| 226-2560 | 499 |
| | 503 |
| 226-8202 | 202 |
| 227-8807 | ▶179 |
| 228-2856 | 363 |
| | 364 |
| | 365 |
| | 367 |
| | 427 |
| 228-7315 | 549 |
| 228-7316 | 546 |
| 228-9253 | 549 |
| 228-9254 | 546 |
| 230-4009 | 79 |
| | 80 |
| | 81 |
| | 83 |
| | 100 |
| | 105 |
| 230-4011 | 69 |
| | 73 |
| | 79 |
| | 80 |
| | 81 |
| | 83 |
| | 94 |
| | 100 |
| | 106 |
| 230-4013 | 81 |
| | 83 |
| | 85 |
| | 106 |
| | 114 |
| 230-5008 | 81 |
| | 83 |
| | 86 |
| | 100 |
| | 106 |
| 230-5010 | 79 |
| | 80 |
| | 81 |
| | 83 |
| | 100 |
| | 106 |
| 231-3999 | 388 |
| | 404 |
| | 405 |
| 231-8571 | ▶388 |
| 232-3543 | 37 |
| 232-6311 | 79 |
| | 80 |
| 232-6314 | 79 |
| | 80 |
| 232-7405 | 69 |
| | 73 |
| 232-7692 | 164 |
| | 166 |
| 233-0099 | ▶89 |
| | 92 |
| 233-2877 | 394 |
| 233-2885 | 388 |
| 233-2898 | 394 |
| 233-2905 | 388 |
| | ▶394 |
| 233-2910 | 394 |
| 233-8447 | 196 |
| 234-8956 | 171 |
| 234-8958 | 171 |
| 234-8959 | 171 |
| 234-8962 | 171 |
| 234-8984 | 164 |
| | 166 |
| 235-0354 | 202 |
| 235-1365 | 549 |
| 235-1368 | 546 |

# PART NUMBER INDEX


| Part | Page |
|---|---|
| 235-8891 | 499 |
| 236-3257 | 209 |
| 236-3259 | 209 |
| 237-5096 | 426 |
| 237-6124 | 188 |
| | 192 |
| | 198 |
| 237-6128 | 192 |
| 237-6129 | 192 |
| 237-6130 | 192 |
| 237-6131 | 192 |
| 237-6134 | 198 |
| 237-6135 | 188 |
| | 198 |
| 237-6136 | 188 |
| | 192 |
| | 198 |
| 237-7078 | 194 |
| 237-7086 | 188 |
| | 194 |
| 237-7087 | 194 |
| 237-7088 | 194 |
| 237-7901 | 190 |
| 237-7904 | 190 |
| 237-8377 | 188 |
| | 192 |
| | 198 |
| 237-8378 | 200 |
| 239-3781 | 253 |
| | 256 |
| 239-4990 | 549 |
| 239-4991 | 546 |
| 239-6986 | 553 |
| 240-0454 | 44 |
| 240-2590 | 249 |
| 243-4505 | 50 |
| | 79 |
| | 80 |
| | 81 |
| | 83 |
| | 99 |
| | 100 |
| | 103 |
| | 105 |
| | 106 |
| | 109 |
| | 115 |
| 243-4506 | 81 |
| | 85 |
| | 106 |
| 243-4507 | 85 |
| | 99 |
| | 103 |
| | 105 |
| | 109 |
| | 184 |
| 243-4508 | 86 |
| | 97 |
| 243-4510 | 79 |
| | 80 |
| | 81 |
| | 83 |
| | 100 |
| | 106 |
| 244-1540 | 358 |
| 244-3712 | 196 |
| 244-8495 | 342 |
| 245-7819 | 433 |
| 245-7850 | 499 |
| 245-7903 | 464 |
| 245-8595 | 249 |
| 245-9398 | 497 |
| 246-0175 | 362 |
| 246-0176 | 389 |
| 246-0187 | 389 |
| 246-0188 | 389 |
| 246-0192 | ▶202 |
| | 389 |
| 246-2622 | 56 |
| 246-2641 | 490 |
| 247-4112 | ▶390 |
| 247-5086 | 37 |
| 248-8832 | 419 |
| 249-4175 | 202 |
| 250-1639 | 531 |
| 250-8771 | 313 |
| | 314 |
| | 316 |
| | 318 |
| | 320 |
| | 322 |
| | 323 |
| | 324 |
| | 326 |
| | 328 |
| | 330 |
| | 332 |
| | 334 |
| | 336 |
| 251-1391 | 69 |
| | 73 |
| | 87 |
| 251-2025 | 227 |
| 251-2026 | 227 |
| 251-4408 | 342 |
| 251-9845 | 194 |
| 252-2627 | 400 |
| 252-6793 | ▶227 |
| | 389 |
| 254-7563 | 546 |
| 255-1203 | 549 |
| 255-3402 | 398 |
| 255-3410 | 397 |
| 255-3727 | 249 |
| 258-2111 | 129 |
| 258-4095 | 526 |
| 258-4096 | 527 |
| 258-6257 | 432 |
| | 493 |
| 260-2659 | 230 |
| 260-6314 | 381 |
| | 382 |
| | 383 |
| 260-6326 | 385 |
| | 387 |
| 260-6342 | ▶169 |
| | 174 |
| 260-6348 | 161 |
| 260-6400 | 168 |
| 263-0768 | 56 |
| 263-3003 | 445 |
| | 459 |
| 263-9251 | ▶172 |
| | 174 |
| 263-9252 | 172 |
| | ▶173 |
| 263-9253 | ▶168 |
| | 173 |
| 263-9266 | ▶162 |
| | 172 |
| 263-9267 | 162 |
| 263-9268 | 162 |
| 264-5370 | 126 |
| | ▶127 |
| 264-5371 | 127 |
| 264-7029 | 69 |
| | 73 |
| | 79 |
| | 80 |
| | 81 |
| | 83 |
| | 94 |
| | 100 |
| | 106 |
| 264-7030 | 81 |
| | 83 |
| | 85 |
| | 106 |
| | 114 |
| 264-7031 | 81 |
| | 83 |
| | 86 |
| | 100 |
| | 106 |
| 264-7032 | 79 |
| | 80 |
| | 81 |
| | 83 |
| | 100 |
| | 106 |
| 264-7034 | 79 |
| | 80 |
| | 81 |
| | 83 |
| | 100 |
| | 106 |
| 265-8405 | 150 |
| 265-8407 | 150 |
| 265-8409 | 150 |
| 265-8463 | 132 |
| | 150 |
| | 152 |
| 265-8575 | 64 |
| 265-8577 | 64 |
| 265-8578 | 64 |
| 265-8579 | 64 |
| 265-8631 | 296 |
| 265-8632 | 296 |
| 265-8677 | 296 |
| 265-8713 | 128 |
| | 386 |
| | 387 |
| 265-8715 | 363 |
| | 364 |
| | 365 |
| | 367 |
| | 374 |
| | 375 |
| | 377 |
| | 379 |
| 265-8716 | 188 |
| | 192 |
| | 194 |
| 265-8717 | 198 |
| | 200 |
| 265-8720 | 360 |
| 265-8734 | ▶163 |
| | 174 |
| 265-8752 | 126 |
| | ▶285 |
| 265-8754 | ▶125 |
| | 126 |
| 266-1404 | 99 |
| | 103 |
| | 105 |
| | 109 |
| 266-1406 | 66 |
| 266-3872 | 142 |
| | 360 |
| 266-4024 | 146 |
| 266-4050 | 144 |
| 266-4051 | 363 |
| | 364 |
| | 365 |
| | 367 |
| 266-4064 | 365 |
| | 367 |
| | 369 |
| | 374 |
| | 375 |
| | 377 |
| | 379 |
| 266-4069 | ▶142 |
| | 359 |
| 266-4071 | 142 |
| 266-4078 | 142 |
| 266-4080 | 374 |
| | 375 |
| | 377 |
| | 379 |
| 266-4104 | 360 |
| 266-4106 | 360 |
| | 374 |
| | 375 |
| | 377 |
| | 379 |
| 266-4109 | 360 |
| 266-4763 | 381 |
| 266-4765 | 381 |
| 266-5431 | 546 |
| 266-6396 | ▶206 |
| | 285 |
| 266-6835 | 1 |
| | ▶497 |
| 266-6836 | 278 |
| | ▶294 |
| 266-6843 | ▶91 |
| 266-6935 | 69 |
| | 73 |
| | 99 |
| | 103 |
| | 105 |
| | 109 |
| 266-6979 | ▶188 |
| | 384 |
| 266-7379 | 37 |
| | 44 |
| | 50 |
| | 56 |
| | 66 |
| | 69 |
| | 73 |
| | 99 |
| | 103 |
| | 105 |
| | 109 |
| | 111 |
| | 114 |
| | 249 |
| | 263 |
| | 265 |
| | 499 |
| | 503 |
| 266-8792 | 160 |
| 266-8793 | 169 |
| | ▶171 |
| 266-8794 | 169 |
| | ▶170 |
| 267-0420 | ▶342 |
| | 475 |
| | 476 |
| | 477 |
| 267-0424 | ▶282 |
| | 302 |
| 267-1082 | 289 |


▶ PRIMARY REFERENCE

# PART NUMBER INDEX


| Part | Page |
|---|---|
| 267-1615 | ▶524 |
| | 528 |
| 267-4035 | 249 |
| 267-4036 | 249 |
| 267-4037 | 245 |
| | 247 |
| 267-4038 | 245 |
| | 247 |
| 267-4041 | 243 |
| 267-4042 | 243 |
| 267-4043 | 263 |
| | 265 |
| 267-4044 | 263 |
| | 265 |
| 267-4045 | 249 |
| 267-4046 | 249 |
| 267-4047 | 184 |
| | 241 |
| | 249 |
| | 275 |
| 267-4048 | 184 |
| | 241 |
| | 249 |
| | 275 |
| 267-4049 | 239 |
| 267-4050 | 239 |
| 267-4051 | 245 |
| | 247 |
| 267-4063 | 272 |
| 267-4093 | 245 |
| | 247 |
| | 249 |
| 267-4096 | 245 |
| | 247 |
| 267-4109 | 256 |
| 267-4144 | 267 |
| 267-4159 | 214 |
| | 215 |
| 267-4229 | 237 |
| 267-4279 | 220 |
| 267-4366 | ▶508 |
| | 511 |
| 267-4367 | ▶509 |
| | 511 |
| 267-4371 | ▶506 |
| | 507 |
| 267-4495 | 549 |
| 267-4767 | 69 |
| | 73 |
| 267-4768 | 69 |
| | 73 |
| 267-4829 | 164 |
| | 166 |
| 267-4831 | 164 |
| | 166 |
| 267-4832 | 164 |
| | 166 |
| 267-4833 | 164 |
| | 166 |
| 267-4835 | 164 |
| | 166 |
| 267-4836 | 164 |
| | 166 |
| 267-5348 | 521 |
| 267-5349 | 521 |
| 267-5355 | 521 |
| 267-7058 | 99 |
| | 103 |
| | 105 |
| | 109 |
| 267-7064 | 517 |
| | 519 |
| 267-8100 | 278 |
| | 280 |
| 267-9485 | 429 |
| | 431 |
| 268-1601 | 253 |
| | 256 |
| 268-4530 | 184 |
| | 551 |
| 268-8224 | ▶196 |
| | 429 |
| | 431 |
| 268-8872 | 184 |
| | 551 |
| 269-0120 | 540 |
| 269-0121 | 540 |
| 269-2299 | 282 |
| | ▶355 |
| 269-3795 | 182 |
| | ▶212 |
| 269-4194 | ▶213 |
| | 216 |
| 269-4197 | ▶207 |
| | 370 |
| 270-2002 | 23 |
| | 24 |
| 270-2003 | 23 |
| | 24 |
| 270-6501 | ▶146 |
| | 359 |
| 270-9557 | 150 |
| 270-9558 | 150 |
| 271-5317 | 445 |
| | 451 |
| | 459 |
| 271-5889 | 142 |
| 272-0474 | ▶469 |
| | 470 |
| 272-6271 | 79 |
| | 80 |
| 272-6304 | 79 |
| | 80 |
| 272-7832 | 338 |
| | 340 |
| | 353 |
| 272-7877 | 463 |
| 272-7881 | 463 |
| 273-0469 | 553 |
| 273-0471 | 553 |
| 273-0477 | 538 |
| 273-1445 | 432 |
| | ▶433 |
| 273-1450 | 493 |
| | ▶495 |
| 274-3344 | 294 |
| 274-3346 | 294 |
| 274-3349 | 294 |
| 274-3351 | 294 |
| 274-4199 | 249 |
| | ▶283 |
| 274-4201 | 283 |
| 274-4202 | 283 |
| 274-5381 | 164 |
| | 166 |
| 274-5472 | 267 |
| 274-6552 | 207 |
| | 208 |
| 274-8034 | 357 |
| 274-8039 | 357 |
| 274-8127 | 164 |
| 274-8128 | 166 |
| 274-8781 | 465 |
| 274-9034 | 286 |
| | ▶311 |
| 275-0773 | 469 |
| 275-0774 | 469 |
| 275-0775 | 471 |
| 275-0776 | 471 |
| 275-6285 | 509 |
| | 510 |
| 275-6785 | 81 |
| | 83 |
| | 99 |
| | 105 |
| 275-8629 | 531 |
| 275-8630 | 531 |
| 275-8631 | 531 |
| 275-8632 | 531 |
| 275-9724 | 275 |
| 276-3323 | 148 |
| 276-3324 | 148 |
| 276-3883 | 283 |
| 276-8684 | 458 |
| 276-9254 | 132 |
| | 152 |
| 276-9257 | 150 |
| 276-9258 | 150 |
| 276-9302 | 64 |
| 276-9309 | 299 |
| | 460 |
| 276-9997 | 438 |
| | 440 |
| | 442 |
| | 446 |
| 277-1873 | 56 |
| | 70 |
| | 74 |
| | 100 |
| | 103 |
| | 106 |
| | 109 |
| | 117 |
| | 254 |
| | 257 |
| 277-4196 | 170 |
| 277-4197 | 170 |
| 277-4378 | 363 |
| | ▶365 |
| 277-4381 | 363 |
| | 364 |
| | 365 |
| | 367 |
| 277-4382 | 363 |
| | 364 |
| | 365 |
| | 367 |
| 277-4383 | 363 |
| | 364 |
| | 365 |
| | 367 |
| 277-6028 | 444 |
| | 451 |
| | 458 |
| 277-6029 | 444 |
| | 451 |
| | 458 |
| 277-6030 | 486 |
| 277-6031 | 486 |
| 277-6032 | 486 |
| 277-9073 | 499 |
| 277-9412 | 499 |
| | 503 |
| 278-0797 | 208 |
| 278-0800 | 221 |
| 278-1983 | 200 |
| 278-1985 | 200 |
| 278-1986 | 200 |
| 278-1988 | 200 |
| 278-1990 | 200 |
| 278-2246 | 196 |
| 278-2248 | 196 |
| 278-2254 | 196 |
| 278-2256 | 196 |
| 278-2257 | 196 |
| 278-7613 | 432 |
| 278-7614 | 432 |
| | 493 |
| 278-7615 | 432 |
| | 493 |
| 278-8557 | 432 |
| | 493 |
| 278-8558 | 493 |
| 278-8626 | 192 |
| 278-8633 | 192 |
| 278-8635 | 192 |
| 278-8638 | 192 |
| 278-8641 | 188 |
| | 192 |
| 278-9122 | 198 |
| 278-9126 | 198 |
| 278-9127 | 198 |
| 278-9128 | 198 |
| 278-9129 | 198 |
| 278-9130 | 198 |
| 278-9164 | 194 |
| 278-9474 | 188 |
| 278-9475 | 188 |
| 278-9937 | 363 |
| | ▶367 |
| 278-9938 | 364 |
| | 367 |
| 279-0639 | 200 |
| 279-4308 | 396 |
| 279-4311 | ▶395 |
| | 406 |
| 279-4312 | ▶406 |
| 279-4313 | ▶407 |
| 279-4320 | ▶408 |
| 279-4321 | ▶409 |
| 279-4322 | ▶391 |
| 279-4323 | ▶392 |
| 279-4325 | ▶389 |
| 279-4684 | 290 |
| 279-4687 | 290 |
| 279-4691 | 290 |
| 279-4692 | 290 |
| 279-4693 | 290 |
| 279-4697 | 290 |
| 279-4698 | 290 |
| 279-4699 | 290 |
| 279-4701 | 290 |
| 279-4703 | 290 |
| | 351 |
| 279-4704 | 350 |
| 279-4705 | 290 |
| 279-4706 | 121 |
| | 123 |
| | 290 |
| 279-4707 | 290 |
| 279-4709 | 290 |
| 279-4712 | ▶350 |
| | 351 |
| 279-4730 | 270 |
| | 272 |
| | 275 |
| 279-4731 | 237 |
| | 272 |
| | 275 |
| 279-4732 | 56 |
| | 237 |
| | 272 |
| | 275 |
| 279-4733 | 237 |
| | 272 |
| | 275 |


▶ PRIMARY REFERENCE

# PART NUMBER INDEX


| Part | Page |
|---|---|
| 279-4734 | 239 |
| | 272 |
| | 275 |
| 279-4735 | 184 |
| | 231 |
| | 234 |
| | 237 |
| | 241 |
| | 272 |
| | 275 |
| 279-4736 | 272 |
| | 278 |
| | 280 |
| 279-4737 | 184 |
| | 221 |
| | 231 |
| | 234 |
| | 236 |
| | 241 |
| | 272 |
| | 275 |
| 279-4738 | 184 |
| | 221 |
| | 231 |
| | 234 |
| | 236 |
| | 241 |
| | 272 |
| | 275 |
| 279-4786 | 315 |
| 279-4796 | 313 |
| | 314 |
| | 318 |
| | 320 |
| | 323 |
| | 324 |
| | 326 |
| | 328 |
| | 330 |
| | 332 |
| | 334 |
| | 336 |
| 279-4810 | 315 |
| 279-7940 | 198 |
| 279-9095 | 171 |
| 279-9311 | 553 |
| 280-0406 | 531 |
| 280-0407 | 148 |
| | 444 |
| | 452 |
| | 458 |
| | 531 |
| 280-0408 | 444 |
| | 452 |
| | 458 |
| | 486 |
| | 531 |
| 280-0409 | 531 |
| 280-0410 | 531 |
| 280-0411 | 531 |
| 280-0412 | 531 |
| 280-0413 | 531 |
| 280-0414 | 531 |
| 280-0415 | 531 |
| 280-0416 | 531 |
| 280-0417 | 531 |
| 280-0418 | 531 |
| 280-0419 | 531 |
| 280-0421 | 444 |
| | 451 |
| | 458 |
| | ▶531 |
| 280-2313 | 171 |
| 280-2355 | 206 |
| | ▶288 |
| 280-2357 | 288 |
| 280-2358 | 288 |
| 280-2359 | 288 |
| 280-2360 | 288 |
| 280-2361 | 288 |
| 280-2362 | 288 |
| 280-2363 | 288 |
| 280-2364 | 286 |
| 280-2365 | 286 |
| 280-2367 | 286 |
| 280-2368 | 286 |
| 280-2369 | 286 |
| 280-2405 | 286 |
| 280-2652 | 228 |
| | 229 |
| 280-3035 | 253 |
| | 256 |
| 280-3097 | ▶121 |
| | 123 |
| 280-3098 | 121 |
| 280-3100 | 121 |
| 280-3101 | 121 |
| 280-3102 | 121 |
| 280-3103 | 121 |
| 280-3104 | 123 |
| 280-3105 | 123 |
| 280-3106 | 123 |
| 280-3107 | 123 |
| 280-3108 | 123 |
| 280-3109 | 123 |
| 280-3110 | 123 |
| 280-3111 | 123 |
| 280-3112 | 123 |
| 280-3116 | 123 |
| 280-3118 | 123 |
| 280-4441 | 290 |
| 280-4442 | 290 |
| 280-4443 | 290 |
| 280-4444 | 290 |
| 280-4446 | 290 |
| 280-4448 | 290 |
| 280-4449 | 290 |
| 280-4450 | 290 |
| 280-4451 | 290 |
| 280-4458 | 290 |
| 280-4459 | 290 |
| 280-7544 | 486 |
| 280-7548 | 486 |
| 280-7552 | 486 |
| 280-7554 | 486 |
| 280-7555 | 486 |
| 280-7559 | 486 |
| 280-7561 | 486 |
| 280-7562 | 486 |
| 280-7609 | ▶219 |
| | 384 |
| 280-7620 | ▶278 |
| | 384 |
| 280-8588 | 445 |
| | 451 |
| | 459 |
| 280-8590 | 444 |
| | 451 |
| | 458 |
| 280-8595 | 445 |
| | 451 |
| | 459 |
| 280-8597 | 445 |
| | 451 |
| | 459 |
| 280-8598 | 444 |
| | 451 |
| | 458 |
| 280-8599 | 445 |
| | 451 |
| | 459 |
| 280-8603 | 444 |
| | 451 |
| | 458 |
| 280-8604 | 445 |
| | 451 |
| | 459 |
| 280-8605 | 445 |
| | 451 |
| | 459 |
| 280-8607 | 445 |
| | 451 |
| | 459 |
| 280-8611 | 444 |
| | 452 |
| | 458 |
| 280-8618 | 444 |
| | 452 |
| | 458 |
| 280-8624 | 486 |
| 280-8625 | 444 |
| | 451 |
| | 458 |
| 280-8626 | 444 |
| | 451 |
| | 458 |
| 280-8984 | 429 |
| | 431 |
| 281-0865 | 363 |
| | 365 |
| 281-0902 | 142 |
| 281-0923 | 142 |
| 281-0924 | 142 |
| 281-0925 | 142 |
| 281-0926 | 142 |
| 281-0930 | 142 |
| 281-1019 | 360 |
| 281-1020 | ▶157 |
| 281-1106 | 360 |
| 281-1149 | 444 |
| | 451 |
| | 458 |
| 281-1150 | 451 |
| 281-1153 | 445 |
| | 451 |
| | 459 |
| 281-1154 | 444 |
| | 451 |
| | 458 |
| 281-1155 | 444 |
| | 451 |
| | 458 |
| 281-1159 | 444 |
| | 451 |
| | 458 |
| 281-1162 | 444 |
| | 451 |
| | 458 |
| 281-1164 | 444 |
| | 451 |
| | 458 |
| 281-1184 | 148 |
| 281-1185 | 148 |
| 281-1186 | 444 |
| | 451 |
| | 458 |
| | ▶505 |
| 281-1187 | 505 |
| 281-1190 | 505 |
| 281-1193 | 505 |
| 281-1194 | 505 |
| 281-1195 | 444 |
| | 451 |
| | 458 |
| | ▶486 |
| 281-1196 | 486 |
| 281-1199 | 486 |
| 281-1200 | 486 |
| 281-1551 | ▶410 |
| 281-2325 | 338 |
| 281-2326 | ▶312 |
| | 338 |
| | 340 |
| 281-2332 | ▶313 |
| | 338 |
| | 340 |
| 281-2334 | ▶314 |
| | 338 |
| | 340 |
| 281-2336 | ▶315 |
| | 338 |
| | 340 |
| 281-2952 | 312 |
| 281-2953 | 312 |
| 281-2954 | 312 |
| 281-2955 | 312 |
| 281-2956 | 312 |
| 281-2957 | 312 |
| 281-2958 | 312 |
| 281-2959 | 312 |
| 281-2960 | 312 |
| | 313 |
| | 314 |
| | 316 |
| | 318 |
| | 320 |
| | 322 |
| | 323 |
| | 324 |
| | 326 |
| | 328 |
| | 330 |
| | 332 |
| | 334 |
| | 336 |
| 281-2961 | 312 |
| | 313 |
| | 314 |
| | 316 |
| | 318 |
| | 320 |
| | 322 |
| | 323 |
| | 324 |
| | 326 |
| | 328 |
| | 330 |
| | 332 |
| | 334 |
| | 336 |
| 281-2962 | 312 |
| 281-2963 | 312 |
| 281-2965 | 312 |
| 281-2972 | 313 |
| | 314 |
| | 316 |
| | 318 |
| | 320 |
| | 322 |
| | 323 |
| | 324 |
| | 326 |
| | 328 |
| | 330 |
| | 332 |
| | 334 |


▶ PRIMARY REFERENCE

# PART NUMBER INDEX


| Part | Page |
|---|---|
| | 336 |
| 281-2973 | 313 |
| | 314 |
| | 316 |
| | 318 |
| | 322 |
| | 324 |
| | 326 |
| | 328 |
| 281-2974 | 313 |
| | 314 |
| | 316 |
| | 318 |
| | 320 |
| | 322 |
| | 323 |
| | 324 |
| | 326 |
| | 328 |
| | 330 |
| | 332 |
| | 334 |
| | 336 |
| 281-2975 | 313 |
| | 314 |
| | 316 |
| | 318 |
| | 320 |
| | 322 |
| | 323 |
| | 324 |
| | 326 |
| | 328 |
| | 330 |
| | 332 |
| | 334 |
| | 336 |
| 281-2976 | 313 |
| | 314 |
| | 316 |
| | 318 |
| | 320 |
| | 322 |
| | 323 |
| | 324 |
| | 326 |
| | 328 |
| | 330 |
| | 332 |
| | 334 |
| | 336 |
| 281-2977 | 313 |
| | 314 |
| | 316 |
| | 318 |
| | 320 |
| | 322 |
| | 324 |
| | 326 |
| | 328 |
| | 334 |
| | 336 |
| 281-2978 | 313 |
| | 314 |
| | 316 |
| | 318 |
| | 320 |
| | 322 |
| | 323 |
| | 324 |
| | 326 |
| | 328 |
| | 330 |
| | 332 |
| | 334 |
| | 336 |
| 281-2979 | 313 |
| | 314 |
| | 316 |
| | 318 |
| | 320 |
| | 322 |
| | 323 |
| | 324 |
| | 326 |
| | 328 |
| | 330 |
| | 332 |
| | 334 |
| | 336 |
| 281-2980 | 326 |
| | 328 |
| 281-2983 | 320 |
| | 323 |
| | 330 |
| | 332 |
| 281-2984 | 323 |
| | 330 |
| | 332 |
| 281-2985 | 313 |
| | 314 |
| | 316 |
| | 318 |
| | 320 |
| | 322 |
| | 323 |
| | 324 |
| | 326 |
| | 330 |
| | 332 |
| | 334 |
| | 336 |
| 281-2986 | 313 |
| | 314 |
| | 316 |
| | 318 |
| | 320 |
| | 322 |
| | 323 |
| | 324 |
| | 326 |
| | 330 |
| | 332 |
| | 334 |
| | 336 |
| 281-2987 | 323 |
| | 330 |
| | 332 |
| 281-2990 | 324 |
| 281-2991 | 324 |
| 281-2992 | 324 |
| 281-2993 | 324 |
| 281-2994 | 324 |
| 281-2995 | 324 |
| 281-3000 | 290 |
| 281-3052 | 206 |
| | ▶286 |
| 281-3053 | 286 |
| | ▶352 |
| 281-3650 | 486 |
| 281-3651 | 445 |
| | 451 |
| | 459 |
| 281-3653 | 444 |
| | 451 |
| | 458 |
| 281-3654 | 444 |
| | 451 |
| | 458 |
| 281-3655 | 486 |
| 281-3658 | 444 |
| | 452 |
| | 458 |
| 281-3660 | 445 |
| | 451 |
| | 459 |
| 281-3661 | 445 |
| | 451 |
| | 459 |
| 281-3662 | 445 |
| | 451 |
| | 459 |
| 281-3815 | ▶396 |
| | 409 |
| 281-3818 | 396 |
| 281-3824 | ▶411 |
| 281-3998 | 513 |
| 281-4450 | 451 |
| 281-4451 | 444 |
| | 451 |
| | 458 |
| | ▶533 |
| 281-4452 | 445 |
| | 451 |
| | 459 |
| 281-4453 | 445 |
| | 451 |
| | 459 |
| 281-5479 | 444 |
| | 452 |
| | 458 |
| 281-5480 | 444 |
| | 452 |
| | 458 |
| 281-5481 | 486 |
| 281-5483 | 444 |
| | 452 |
| | 458 |
| 281-5485 | 444 |
| | 452 |
| | 458 |
| | 505 |
| 281-5487 | 444 |
| | 448 |
| | 449 |
| | 452 |
| | 458 |
| 281-5488 | 444 |
| | 452 |
| | 458 |
| 281-5492 | 444 |
| | 452 |
| | 459 |
| 281-5496 | 445 |
| | 452 |
| | 459 |
| 281-5497 | 444 |
| | 452 |
| | 458 |
| 281-5507 | 445 |
| | 451 |
| | 459 |
| 281-5508 | 444 |
| | 451 |
| | 459 |
| 281-5509 | 444 |
| | 452 |
| | 459 |
| 281-6177 | 148 |
| 281-6196 | 445 |
| | 452 |
| | 459 |
| 281-6199 | 505 |
| 281-6262 | 486 |
| 281-6263 | 486 |
| 281-6264 | 486 |
| 281-6265 | 486 |
| 281-7860 | 445 |
| | 451 |
| | 459 |
| 281-8618 | 467 |
| 281-8619 | 467 |
| 281-8630 | 467 |
| 281-8631 | 467 |
| 281-8699 | ▶381 |
| | 384 |
| 281-9614 | 444 |
| | 451 |
| | 458 |
| 282-1712 | ▶362 |
| | 389 |
| 282-1713 | 362 |
| 282-2151 | 69 |
| | 73 |
| 282-2310 | 302 |
| 282-2725 | 445 |
| | 452 |
| | 459 |
| 282-9307 | ▶432 |
| | 435 |
| 282-9311 | ▶493 |
| | 494 |
| 282-9315 | ▶393 |
| 282-9318 | 261 |
| | ▶356 |
| 282-9320 | 212 |
| 282-9321 | 212 |
| 282-9326 | 223 |
| | 225 |
| 282-9327 | 223 |
| | 225 |
| 282-9328 | 218 |
| 282-9679 | 438 |
| | 440 |
| | 442 |
| | 446 |
| 282-9699 | 519 |
| 283-0274 | 519 |
| 283-2847 | 253 |
| | 256 |
| 283-4170 | 463 |
| 283-5350 | 278 |
| | 280 |
| 283-5352 | 278 |
| 283-7333 | 438 |
| | 440 |
| | 442 |
| | 446 |
| 283-7365 | 438 |
| | 440 |
| | 442 |
| | 446 |
| 283-9117 | 190 |
| 283-9118 | 190 |
| 283-9119 | 190 |
| 283-9120 | 190 |
| 283-9121 | 190 |
| 283-9122 | 190 |
| 284-0420 | ▶192 |
| | 359 |
| 284-0838 | 467 |
| 284-0839 | 467 |
| 284-0840 | 467 |
| 284-0850 | 466 |
| | 467 |
| 284-0863 | ▶198 |
| | 370 |
| 284-0884 | 198 |

# PART NUMBER INDEX


| Part | Page |
|---|---|
| 284-3880 | 41 |
| 284-5686 | 433 |
| | 495 |
| 284-6176 | 444 |
| | 452 |
| | 458 |
| 284-6179 | 445 |
| | 452 |
| | 459 |
| 284-6180 | 452 |
| 284-6393 | 157 |
| 285-1951 | 296 |
| 285-4408 | 444 |
| | 451 |
| | 458 |
| 285-4493 | 445 |
| | 452 |
| | 459 |
| 285-6278 | 444 |
| | 452 |
| | 458 |
| 285-7033 | 47 |
| 285-7702 | 154 |
| 285-7703 | 150 |
| 285-7836 | 524 |
| 285-8286 | ▶471 |
| | 516 |
| 286-6384 | ▶190 |
| | 384 |
| 286-7323 | 190 |
| 286-7324 | 190 |
| 286-9482 | 508 |
| | ▶515 |
| 287-0030 | 381 |
| 287-0035 | 128 |
| 287-7257 | 499 |
| | 503 |
| 288-0266 | 249 |
| 288-0267 | 249 |
| 288-0848 | ▶353 |
| | 370 |
| 288-1386 | 444 |
| | 451 |
| | 458 |
| 288-1388 | 445 |
| | 459 |
| 288-1389 | 445 |
| | 459 |
| 288-3462 | ▶123 |
| | 125 |
| 288-6841 | 531 |
| 288-6899 | 123 |
| 288-6900 | 123 |
| 288-6901 | 123 |
| 288-8570 | 221 |
| 288-9388 | 323 |
| | 330 |
| | 332 |
| 290-2943 | 398 |
| 290-2944 | 399 |
| 290-2945 | 400 |
| 290-2946 | 401 |
| 290-8287 | ▶147 |
| | 384 |
| 290-8288 | 147 |
| 290-8290 | 147 |
| 290-8293 | 147 |
| 291-0152 | 356 |
| 291-5214 | 24 |
| 292-0153 | 142 |
| 292-5739 | ▶92 |
| | 359 |
| 292-5740 | 92 |
| 292-8290 | ▶220 |
| | 384 |
| 292-8293 | ▶280 |
| | 384 |
| 292-8308 | 182 |
| | ▶214 |
| 292-8310 | 183 |
| | ▶215 |
| 292-8330 | 267 |
| 292-8335 | 220 |
| 292-8336 | 220 |
| 292-8345 | 278 |
| | 280 |
| 292-8346 | 278 |
| | 280 |
| 292-8349 | 213 |
| 292-8353 | 217 |
| 292-8364 | 214 |
| 292-8366 | 215 |
| 292-8504 | 37 |
| 293-3116 | 486 |
| 293-9743 | 249 |
| 294-0973 | 429 |
| | 431 |
| 294-1868 | 294 |
| 294-3097 | 142 |
| 294-7850 | 219 |
| 294-7851 | 219 |
| 294-7868 | 188 |
| | 198 |
| 294-7869 | 188 |
| | 192 |
| | 198 |
| 295-7340 | 549 |
| 296-0219 | 150 |
| 296-1942 | 345 |
| 296-2602 | 433 |
| | 495 |
| 296-2603 | 433 |
| | 495 |
| 296-2604 | 433 |
| | 495 |
| 296-2605 | 433 |
| | 495 |
| 296-2606 | 495 |
| 296-2607 | 433 |
| | 495 |
| 296-2608 | 433 |
| | 495 |
| 296-2609 | 495 |
| 296-2611 | 433 |
| | 495 |
| 296-2612 | 433 |
| | 495 |
| 296-2614 | 433 |
| | 495 |
| 296-2615 | 433 |
| | 495 |
| 296-2616 | 433 |
| | 495 |
| 296-2617 | 433 |
| | 495 |
| 296-2618 | 433 |
| 296-2619 | 433 |
| 296-2620 | 433 |
| 296-2621 | 433 |
| 296-2622 | 433 |
| 298-0663 | 50 |
| | 56 |
| | 69 |
| | 73 |
| | 94 |
| | 499 |
| 298-2139 | 553 |
| 298-2140 | 553 |
| 298-4282 | 546 |
| 298-4948 | 433 |
| 298-7736 | 223 |
| | 225 |
| 299-3784 | 43 |
| **3** | |
| 301-6875 | 432 |
| | 493 |
| 301-6892 | 192 |
| 301-6894 | 192 |
| 301-6897 | 194 |
| 303-1308 | 402 |
| 303-1309 | 403 |
| 303-1324 | ▶412 |
| 303-1325 | ▶413 |
| 303-1326 | ▶414 |
| 303-1327 | ▶415 |
| 303-1328 | ▶416 |
| 303-1329 | ▶417 |
| 303-1358 | ▶397 |
| | 412 |
| 303-1359 | ▶398 |
| | 413 |
| 303-1360 | ▶399 |
| | 414 |
| 303-1362 | ▶400 |
| | 415 |
| 303-1363 | ▶401 |
| | 416 |
| 303-1364 | ▶402 |
| | 417 |
| 303-2668 | 556 |
| 303-4492 | 290 |
| 303-6248 | 397 |
| | 398 |
| | 399 |
| | 400 |
| | 401 |
| | 402 |
| | 403 |
| 303-6249 | 397 |
| | 398 |
| | 399 |
| | 400 |
| | 401 |
| | 402 |
| | 403 |
| 303-9236 | 444 |
| | 451 |
| | 458 |
| 304-0121 | 256 |
| | 272 |
| 304-2819 | 5 |
| | 463 |
| 304-3524 | 194 |
| 304-3525 | 192 |
| | 194 |
| 304-3526 | 192 |
| | 194 |
| 304-3527 | 192 |
| | 194 |
| 304-7196 | 296 |
| 304-8800 | 533 |
| 304-8801 | 533 |
| 304-8802 | 533 |
| 305-5848 | 444 |
| | 458 |
| 305-5852 | 458 |
| 305-5853 | 458 |
| 306-5658 | 397 |
| 306-9039 | 105 |
| | 109 |
| 307-8151 | 221 |
| 307-8153 | 221 |
| 307-8156 | 221 |
| 308-4577 | 221 |
| 309-1917 | ▶429 |
| 309-1938 | ▶431 |
| 309-5679 | 194 |
| 309-5680 | 194 |
| 309-5902 | 200 |
| 309-5903 | 200 |
| 309-6024 | 429 |
| 309-6778 | 431 |
| 310-0420 | 345 |
| 310-0421 | 345 |
| 310-0422 | 345 |
| 310-1866 | 524 |
| 310-1867 | 524 |
| 310-4984 | 237 |
| | 273 |
| | 276 |
| 310-8780 | 194 |
| 311-1031 | 200 |
| 311-3072 | 253 |
| | 256 |
| | 261 |
| 311-7937 | 223 |
| | 225 |
| 311-8804 | 69 |
| | 73 |
| 312-5694 | 429 |
| | 431 |
| 313-2048 | 549 |
| 314-4242 | 245 |
| | 247 |
| 314-8292 | 533 |
| 314-8294 | 533 |
| 314-8295 | 533 |
| 314-8296 | 533 |
| 314-8298 | 533 |
| 314-8299 | 533 |
| 314-8300 | 533 |
| 315-5815 | 300 |
| | ▶338 |
| 315-5816 | 306 |
| | ▶340 |
| 315-7663 | ▶174 |
| 317-9220 | 245 |
| | 247 |
| 319-4420 | ▶97 |
| | 99 |
| | 103 |
| | 105 |
| | 109 |
| 320-3430 | 253 |
| 320-6540 | ▶343 |
| | 478 |
| | 481 |
| 321-6069 | 87 |
| 322-4582 | 541 |
| 322-8964 | 99 |
| | 103 |
| | 105 |
| | 109 |
| 324-5828 | 444 |
| | 452 |
| | 458 |
| 324-8994 | 340 |
| 325-9922 | 83 |
| 326-7184 | 253 |
| | 256 |
| 326-7782 | 343 |
| | 347 |


▶ PRIMARY REFERENCE

# PART NUMBER INDEX


| Part | Page |
|---|---|
| 326-8530 | ▶316 |
| | 340 |
| 327-1749 | 467 |
| 328-5659 | ▶318 |
| | 340 |
| 329-4756 | 253 |
| | 256 |
| 329-4757 | 253 |
| | 256 |
| 329-8369 | ▶320 |
| | 338 |
| | 340 |
| 330-5698 | 253 |
| 331-9872 | 345 |
| 331-9873 | 345 |
| 332-1292 | 290 |
| | ▶351 |
| 332-1809 | 484 |
| 332-1810 | 461 |
| | 462 |
| 332-4123 | ▶322 |
| | 338 |
| 332-4162 | 444 |
| | 458 |
| 333-9456 | 334 |
| 334-0257 | 132 |
| | 152 |
| 334-1186 | 436 |
| | 437 |
| | ▶510 |
| 334-4603 | 553 |
| 335-0517 | ▶180 |
| | 181 |
| 336-0683 | 340 |
| 336-9693 | 433 |
| | 495 |
| 336-9694 | 495 |
| 336-9695 | 495 |
| 336-9696 | 433 |
| 336-9697 | 433 |
| 339-1545 | 136 |
| 339-1548 | 136 |
| 340-2566 | 81 |
| | 83 |
| | 100 |
| | 106 |
| 340-2567 | 84 |
| | 106 |
| 341-0449 | 153 |
| 342-3327 | 506 |
| 346-8085 | 237 |
| 346-8086 | 237 |
| 346-8791 | 243 |
| 346-8792 | 243 |
| 347-6081 | ▶209 |
| | 296 |
| 347-6082 | 209 |
| 349-1756 | 69 |
| | 73 |
| 349-1812 | 69 |
| | 73 |
| 349-2709 | 245 |
| 352-7765 | ▶128 |
| | 381 |
| 352-7766 | 128 |
| 353-2981 | 519 |
| 353-4402 | 302 |
| 354-6977 | 464 |
| 354-6978 | 464 |
| 354-6980 | 464 |
| 354-6981 | 464 |
| 355-3393 | 1 |
| | ▶470 |
| 355-3411 | ▶93 |
| 355-3416 | ▶511 |
| 355-3417 | ▶511 |
| 355-3420 | ▶507 |
| 355-5382 | ▶216 |
| | 371 |
| | 372 |
| 356-0571 | 1 |
| | ▶126 |
| 356-1597 | 312 |
| 356-3823 | 307 |
| | ▶345 |
| 356-4545 | 49 |
| | ▶307 |
| | ▶308 |
| 356-7138 | 182 |
| | 183 |
| | ▶208 |
| 356-7139 | 208 |
| 357-5889 | ▶323 |
| | 340 |
| 357-5890 | ▶324 |
| | 338 |
| | 340 |
| 357-9061 | ▶528 |
| 358-2091 | 184 |
| | 241 |
| | ▶358 |
| 358-9162 | 519 |
| 359-5544 | 229 |
| 359-5545 | 228 |
| 359-5547 | 229 |
| 359-5548 | 228 |
| 359-6059 | ▶228 |
| | 429 |
| | 431 |
| 360-0047 | 330 |
| | 332 |
| 361-1069 | 422 |
| | 423 |
| 361-1071 | 424 |
| 361-1072 | 419 |
| | 420 |
| 361-1078 | 197 |
| 361-1081 | 419 |
| | ▶422 |
| 361-1082 | 422 |
| 361-1083 | 422 |
| | ▶424 |
| 361-1084 | 424 |
| 361-1085 | 424 |
| 361-1086 | 424 |
| 361-1087 | 422 |
| 361-1088 | 422 |
| 361-1090 | ▶230 |
| | 420 |
| 361-1094 | ▶419 |
| 361-1095 | ▶420 |
| | 421 |
| 361-1115 | 230 |
| 361-1116 | 230 |
| 361-1117 | 230 |
| 361-1121 | 420 |
| | ▶423 |
| 361-1122 | 423 |
| 361-1123 | 423 |
| | ▶425 |
| 361-1124 | 425 |
| 361-1125 | ▶197 |
| | 425 |
| 361-1126 | 425 |
| 361-1127 | 197 |
| 361-1128 | 197 |
| 361-1129 | 197 |
| 361-1130 | 197 |
| 361-1132 | 197 |
| | ▶310 |
| 361-1134 | 423 |
| 361-1157 | 423 |
| 361-1207 | 230 |
| 361-1208 | 230 |
| 361-1209 | 423 |
| 361-1210 | 422 |
| 361-5148 | 229 |
| 361-5149 | 228 |
| 362-1008 | 239 |
| 362-3225 | 50 |
| 363-5744 | 146 |
| 363-7173 | 80 |
| 363-9173 | 79 |
| | 82 |
| | 84 |
| | 100 |
| | 106 |
| 364-1693 | ▶428 |
| 364-3882 | 99 |
| | 103 |
| | 105 |
| | 109 |
| 364-5228 | ▶326 |
| | 338 |
| | 340 |
| 364-5229 | ▶328 |
| | 338 |
| | 340 |
| 364-5230 | ▶330 |
| | ▶332 |
| | 338 |
| 364-5232 | ▶334 |
| | 338 |
| | 340 |
| 364-6111 | 330 |
| 364-6125 | 345 |
| 364-6126 | 345 |
| 364-6127 | 345 |
| 365-2794 | 183 |
| | ▶231 |
| 365-2796 | 183 |
| | ▶234 |
| 365-6895 | 249 |
| 365-6912 | 184 |
| 365-6913 | 231 |
| | 234 |
| 365-6914 | 231 |
| | 234 |
| 365-6915 | 231 |
| | 234 |
| 365-6916 | 231 |
| 365-6917 | 231 |
| 365-6918 | 184 |
| 365-6919 | 184 |
| | 231 |
| | 234 |
| 365-6920 | 213 |
| | 217 |
| 365-6921 | 213 |
| | 217 |
| 365-6961 | 234 |
| 365-6962 | 234 |
| 366-4622 | 99 |
| | 103 |
| | 105 |
| | 109 |
| 366-9776 | 334 |
| | 336 |
| 367-0902 | 1 |
| | ▶129 |
| 367-0912 | 1 |
| | ▶133 |
| 367-0918 | 1 |
| | ▶150 |
| 367-0930 | 1 |
| | ▶64 |
| 367-0936 | 210 |
| | ▶298 |
| 367-0950 | 435 |
| | 436 |
| | 437 |
| | ▶485 |
| 367-0952 | 129 |
| 367-0962 | 129 |
| 367-0980 | 133 |
| 367-0984 | 133 |
| | ▶136 |
| 367-0985 | 136 |
| 367-1050 | ▶296 |
| | 298 |
| 367-1051 | 296 |
| 367-1089 | 64 |
| 367-1090 | 64 |
| 367-1092 | 64 |
| 367-1095 | 64 |
| 367-1096 | 64 |
| 367-1097 | 64 |
| 367-1101 | 129 |
| 367-7122 | 142 |
| 368-1278 | 358 |
| 368-1279 | 358 |
| 369-3043 | 241 |
| 369-3693 | ▶229 |
| | 429 |
| | 431 |
| 369-3699 | 154 |
| 369-3703 | 381 |
| | ▶385 |
| 370-4008 | 56 |
| 370-5338 | 49 |
| | ▶66 |
| 370-5342 | ▶69 |
| | 435 |
| | 436 |
| | 437 |
| 370-5345 | ▶73 |
| | 460 |
| 370-5348 | ▶113 |
| | 435 |
| | 436 |
| 370-5349 | ▶99 |
| | ▶103 |
| | 435 |
| | 436 |
| | 437 |
| 370-5350 | ▶105 |
| | ▶109 |
| | 460 |
| 370-5351 | 98 |
| | ▶114 |
| 370-5352 | 90 |
| | ▶94 |
| 370-5353 | 99 |
| | 103 |
| | 105 |
| | 109 |
| 370-5354 | 99 |
| | 103 |
| | 105 |
| | 109 |
| 370-5357 | 69 |
| | ▶79 |
| 370-5360 | 73 |
| | ▶80 |
| 370-5363 | 69 |
| | 73 |

# PART NUMBER INDEX


| Part | Page |
|---|---|
| 370-5366 | 69 |
| | 73 |
| 370-5367 | 69 |
| | 73 |
| 370-5368 | 99 |
| 370-5369 | 105 |
| 370-5370 | 114 |
| 370-5371 | 94 |
| 370-5372 | 69 |
| | 73 |
| 370-5375 | 69 |
| | 73 |
| 370-5396 | 115 |
| 371-8268 | 230 |
| 372-9897 | 270 |
| 372-9898 | 304 |
| | ▶357 |
| 373-2363 | 184 |
| 374-2025 | 289 |
| | ▶290 |
| 375-8117 | 218 |
| 376-0170 | ▶194 |
| | 363 |
| 376-0171 | ▶200 |
| | 359 |
| 376-2012 | 210 |
| | ▶289 |
| 376-3977 | 386 |
| 376-3978 | 382 |
| | ▶386 |
| 376-3979 | ▶382 |
| | ▶383 |
| | 384 |
| 376-6212 | 1 |
| | ▶144 |
| 376-6213 | 144 |
| 376-6672 | ▶1 |
| 376-6676 | ▶1 |
| 376-6680 | 1 |
| | ▶359 |
| 376-6692 | ▶435 |
| 376-6696 | ▶436 |
| 376-8851 | ▶472 |
| | 477 |
| 376-8852 | 472 |
| 376-8853 | 472 |
| | 473 |
| 376-8854 | 472 |
| | 473 |
| 376-8855 | ▶473 |
| | 475 |
| 376-8856 | 473 |
| 376-8857 | 478 |
| | 483 |
| 376-8858 | 100 |
| | 103 |
| | 106 |
| | 109 |
| 376-8859 | 76 |
| 376-9480 | 69 |
| | 73 |
| 376-9483 | ▶474 |
| | 476 |
| 376-9484 | 474 |
| 376-9485 | 474 |
| 376-9486 | 474 |
| 376-9492 | 50 |
| 376-9493 | 478 |
| | 481 |
| 376-9494 | ▶475 |
| | 480 |
| 376-9495 | ▶476 |
| | 479 |
| | 480 |
| 377-0325 | ▶76 |
| | 384 |
| 377-0326 | 1 |
| | ▶77 |
| 377-1150 | ▶160 |
| | 174 |
| 377-1151 | 160 |
| 377-5062 | ▶137 |
| | 521 |
| 377-5063 | 137 |
| 377-5075 | 137 |
| | 139 |
| 377-5085 | 137 |
| | 139 |
| 377-5086 | 137 |
| | 139 |
| 377-5087 | 137 |
| | 139 |
| 377-5088 | 137 |
| | 139 |
| 377-5089 | 137 |
| | 139 |
| 377-5090 | 137 |
| | 139 |
| 377-5091 | 137 |
| | 139 |
| 377-5092 | 137 |
| | 139 |
| 377-5093 | 137 |
| | 139 |
| 377-5094 | 137 |
| | 139 |
| 377-5095 | 137 |
| | 139 |
| 377-5096 | 137 |
| | ▶156 |
| 377-5098 | 139 |
| | 156 |
| 377-5100 | 139 |
| | 156 |
| 377-5101 | 139 |
| | 156 |
| 377-5102 | 139 |
| | 156 |
| 377-5103 | 156 |
| 377-5107 | 435 |
| | 436 |
| | ▶438 |
| | ▶440 |
| | ▶442 |
| 377-5108 | 438 |
| | ▶444 |
| | 448 |
| 377-5865 | 435 |
| | ▶488 |
| 377-5866 | 488 |
| 377-5868 | 488 |
| | 489 |
| 377-5869 | 488 |
| | 489 |
| 377-5870 | 488 |
| 377-5871 | 488 |
| | 489 |
| 377-5873 | 488 |
| | 489 |
| 377-5874 | 488 |
| 377-5875 | 488 |
| | 489 |
| 377-5876 | ▶435 |
| | 436 |
| 377-5933 | 519 |
| 377-5934 | 435 |
| | 436 |
| | 437 |
| 377-5936 | 519 |
| 377-5938 | 519 |
| 377-5942 | 519 |
| 377-5943 | 519 |
| 377-5945 | 519 |
| 377-5946 | 519 |
| 377-5947 | 519 |
| 377-5948 | 519 |
| 377-5949 | 519 |
| 377-5950 | 519 |
| 377-5951 | 519 |
| 377-5952 | 519 |
| 377-5958 | 384 |
| | ▶478 |
| 377-5959 | 519 |
| 377-7814 | 150 |
| 377-7862 | 132 |
| | 152 |
| 377-7864 | 150 |
| 377-7874 | 150 |
| 377-7881 | 150 |
| | ▶154 |
| 377-7882 | ▶152 |
| | 158 |
| 377-7883 | ▶131 |
| | 150 |
| 377-7885 | 150 |
| 377-7886 | ▶132 |
| | 158 |
| 377-7887 | ▶153 |
| | 154 |
| 377-7888 | ▶130 |
| | 131 |
| 377-7889 | 152 |
| 377-7891 | 153 |
| 377-7892 | 132 |
| 377-7893 | 130 |
| 377-7929 | 150 |
| 377-7930 | 150 |
| 377-7934 | 153 |
| 377-7935 | 153 |
| 377-7936 | 153 |
| 377-7937 | 130 |
| 377-7938 | 130 |
| 377-7939 | 130 |
| 377-7940 | 150 |
| 377-7942 | 485 |
| 377-7944 | 485 |
| 377-8861 | 182 |
| | ▶302 |
| 377-8872 | 187 |
| | ▶245 |
| 377-8874 | 183 |
| | ▶247 |
| 377-8876 | 183 |
| | ▶304 |
| 377-8916 | ▶370 |
| | 371 |
| 377-8917 | ▶370 |
| | 371 |
| | 372 |
| 377-8918 | ▶363 |
| 377-8919 | ▶363 |
| | 371 |
| | 372 |
| 377-8920 | ▶384 |
| 377-8930 | ▶384 |
| 377-8933 | ▶460 |
| 377-8934 | ▶49 |
| 377-8935 | ▶49 |
| 377-9033 | 249 |
| 377-9034 | 249 |
| 377-9042 | 260 |
| 377-9043 | 260 |
| 377-9053 | 275 |
| 377-9064 | 245 |
| | 247 |
| 377-9065 | 245 |
| 377-9066 | 245 |
| | 247 |
| 377-9068 | 245 |
| | 247 |
| 377-9071 | 253 |
| | 256 |
| 377-9081 | 499 |
| 377-9698 | 1 |
| | ▶553 |
| 377-9706 | 384 |
| | ▶534 |
| 377-9707 | 182 |
| | ▶535 |
| 377-9708 | 182 |
| | 183 |
| | ▶537 |
| 377-9709 | 183 |
| | ▶538 |
| | ▶546 |
| 377-9710 | ▶549 |
| 377-9711 | 435 |
| 377-9714 | 436 |
| | ▶556 |
| 377-9715 | 436 |
| | 437 |
| | ▶539 |
| 377-9722 | 553 |
| 377-9725 | 553 |
| 377-9728 | 535 |
| 377-9729 | 535 |
| 377-9730 | 537 |
| 378-1240 | 150 |
| 378-1265 | 47 |
| 378-1266 | 47 |
| 378-1267 | 40 |
| 378-1272 | 435 |
| | 436 |
| | ▶463 |
| 378-1293 | 436 |
| | 437 |
| | ▶494 |
| 378-2137 | 23 |
| | 24 |
| 378-2138 | 24 |
| 378-2139 | 24 |
| 378-2140 | 4 |
| | ▶63 |
| 378-2141 | ▶16 |
| | 203 |
| 378-2493 | ▶489 |
| | 494 |
| 378-2495 | 187 |
| | ▶479 |
| 378-2497 | 187 |
| | ▶480 |
| 378-2498 | ▶525 |
| 378-2499 | ▶525 |
| 378-2500 | ▶187 |
| | 371 |
| | 372 |
| 378-2501 | ▶187 |
| | 371 |
| | 372 |
| 378-2506 | 525 |
| | ▶526 |
| 378-2508 | 525 |
| | ▶527 |

# PART NUMBER INDEX


| Part | Page |
|---|---|
| 378-2511 | 489 |
| 378-7478 | ▶181 |
| 378-7480 | ▶181 |
| 378-8105 | 144 |
| 378-8111 | 144 |
| 378-8113 | 144 |
| 378-8121 | 144 |
| 378-8125 | 144 |
| 378-8129 | 144 |
| 378-8137 | 137 |
| | 139 |
| 378-8139 | ▶519 |
| | 521 |
| 378-8140 | 519 |
| 378-9508 | 247 |
| 378-9509 | 247 |
| 378-9630 | ▶87 |
| | 88 |
| 378-9631 | 87 |
| 378-9748 | 304 |
| 379-0803 | 50 |
| 379-0817 | 117 |
| 379-0828 | 79 |
| | 80 |
| 379-0830 | 81 |
| | 83 |
| | 100 |
| | 106 |
| 379-0855 | 23 |
| 379-0869 | 40 |
| 379-1946 | 438 |
| | 440 |
| | 442 |
| | 446 |
| 379-2000 | 302 |
| 379-2007 | 69 |
| | 73 |
| 379-2010 | ▶477 |
| | 479 |
| 379-2015 | 40 |
| 379-2026 | 438 |
| | 440 |
| | 442 |
| | 446 |
| 379-2027 | 438 |
| | 440 |
| | 442 |
| | 446 |
| 379-2028 | 438 |
| | 440 |
| | 442 |
| | 446 |
| 379-2996 | 489 |
| 379-3597 | ▶465 |
| | 516 |
| 379-3598 | 465 |
| | ▶466 |
| 379-3599 | 465 |
| | ▶467 |
| 379-3600 | 466 |
| 379-3608 | 466 |
| | 467 |
| 379-3610 | 467 |
| 379-3611 | 466 |
| 379-3612 | 466 |
| 379-3613 | 467 |
| 379-3614 | 467 |
| 379-3615 | 467 |
| 379-3616 | 467 |
| 379-3618 | 465 |
| 379-3623 | 467 |
| 379-3624 | 1 |
| | ▶516 |
| 379-3625 | 435 |
| | 436 |
| | 437 |
| | ▶521 |
| 379-3626 | 435 |
| | 436 |
| | 437 |
| | ▶530 |
| 379-3627 | 444 |
| 379-3628 | 519 |
| 379-3629 | 444 |
| | 452 |
| | 458 |
| 379-3630 | 444 |
| | 452 |
| | 458 |
| 379-4566 | 245 |
| | 247 |
| 379-4681 | ▶210 |
| 379-4683 | ▶182 |
| | 371 |
| | 372 |
| 379-4691 | 1 |
| | ▶155 |
| 379-4699 | 210 |
| | ▶236 |
| 379-4701 | ▶263 |
| | 384 |
| 379-4702 | ▶272 |
| | 384 |
| 379-4704 | 182 |
| | ▶269 |
| 379-4711 | 435 |
| | 436 |
| | ▶499 |
| 379-4712 | 436 |
| | 437 |
| | ▶503 |
| 379-4713 | 1 |
| | ▶210 |
| 379-4715 | 1 |
| | ▶182 |
| 379-4720 | ▶210 |
| 379-4721 | ▶182 |
| | 371 |
| | 372 |
| 379-4722 | ▶183 |
| | 372 |
| | 373 |
| 379-4723 | ▶187 |
| 379-4724 | ▶183 |
| 379-4725 | ▶216 |
| | 371 |
| | 372 |
| | 373 |
| 379-4726 | ▶203 |
| 379-4727 | ▶203 |
| 379-4728 | 1 |
| | ▶56 |
| 379-4729 | 210 |
| | ▶243 |
| 379-4730 | 210 |
| | ▶249 |
| 379-4731 | 210 |
| | ▶237 |
| 379-4732 | 182 |
| | ▶239 |
| 379-4733 | 210 |
| | ▶221 |
| 379-4734 | ▶300 |
| | ▶301 |
| | 384 |
| 379-4735 | 182 |
| | 183 |
| | ▶270 |
| 379-4736 | 187 |
| | ▶253 |
| 379-4737 | 183 |
| | ▶256 |
| 379-4738 | 216 |
| | ▶217 |
| 379-4739 | 203 |
| | ▶204 |
| 379-4740 | 203 |
| | ▶205 |
| 379-5264 | ▶181 |
| 379-5265 | ▶181 |
| 379-6412 | 153 |
| 379-6414 | 130 |
| 379-6415 | 150 |
| 379-6416 | 150 |
| 379-6417 | 485 |
| 379-6419 | ▶158 |
| 379-7052 | 553 |
| 379-7053 | 553 |
| 379-7054 | 553 |
| 379-8770 | 503 |
| 380-1777 | 1 |
| | ▶2 |
| 380-2456 | 182 |
| | 183 |
| | ▶218 |
| 380-2485 | ▶88 |
| 380-3496 | 37 |
| 380-4661 | 182 |
| | ▶260 |
| 380-5727 | ▶41 |
| | 42 |
| 380-6298 | 50 |
| 380-6300 | 49 |
| | ▶50 |
| 380-6303 | ▶115 |
| | 359 |
| 380-6357 | 289 |
| 380-6363 | 44 |
| 380-6364 | 4 |
| | ▶37 |
| 380-6365 | 37 |
| 380-6366 | 37 |
| 380-6367 | 37 |
| 380-6369 | 37 |
| 380-6370 | 37 |
| 380-6371 | 37 |
| 380-6374 | 37 |
| | 144 |
| 380-6375 | 37 |
| 380-6376 | 37 |
| 380-6385 | ▶23 |
| | 436 |
| | 437 |
| | 460 |
| 380-6386 | ▶18 |
| | 460 |
| 380-6387 | 18 |
| 380-6388 | ▶24 |
| | 435 |
| | 436 |
| 380-6389 | 435 |
| | 436 |
| | ▶464 |
| 380-6390 | 464 |
| 380-6391 | 464 |
| 380-6392 | 464 |
| 380-6393 | ▶19 |
| | 435 |
| | 436 |
| | 437 |
| 380-6394 | 19 |
| 380-6597 | 4 |
| | ▶5 |
| 380-7148 | 444 |
| | 452 |
| | 458 |
| 380-7149 | 444 |
| | 452 |
| | 458 |
| 380-7150 | ▶512 |
| | 514 |
| 380-7151 | ▶513 |
| | 514 |
| 380-7159 | 134 |
| 380-7160 | 134 |
| 380-7163 | 445 |
| | 452 |
| | 459 |
| 380-7205 | 56 |
| 380-7210 | 243 |
| 380-7215 | 243 |
| 380-7216 | 243 |
| 380-8799 | 1 |
| | ▶174 |
| 380-9952 | ▶161 |
| | 174 |
| 380-9992 | 243 |
| 380-9993 | 243 |
| 380-9994 | 243 |
| 380-9996 | 243 |
| 380-9997 | 499 |
| 380-9998 | 499 |
| 380-9999 | 499 |
| 381-0000 | 499 |
| 381-0001 | 499 |
| 381-0002 | 184 |
| | 241 |
| 381-0556 | 249 |
| 381-0557 | 249 |
| 381-0559 | 260 |
| 381-0561 | 239 |
| 381-0564 | 236 |
| 381-0565 | 221 |
| | 236 |
| 381-0578 | 272 |
| 381-0579 | 272 |
| 381-0580 | 272 |
| | 275 |
| 381-0581 | 272 |
| | 275 |
| 381-0582 | 272 |
| 381-0583 | 272 |
| | 275 |
| 381-0584 | 272 |
| | 275 |
| 381-0585 | 272 |
| | 275 |
| 381-0586 | 272 |
| 381-0587 | 272 |
| 381-0589 | 263 |
| | 265 |
| 381-0590 | 263 |
| 381-0592 | 263 |
| | 265 |
| 381-1119 | 300 |
| | 301 |
| | 306 |
| 381-1122 | 16 |
| 381-1123 | 16 |
| 381-1545 | 269 |
| 381-1546 | 269 |
| 381-1547 | 270 |
| 381-1552 | 270 |
| 381-1553 | 270 |


▶ PRIMARY REFERENCE

# PART NUMBER INDEX


| Part | Page |
|---|---|
| 381-1555 | 270 |
| 381-2048 | 253 |
| | 256 |
| 381-2049 | 253 |
| | 256 |
| 381-2050 | 253 |
| | 256 |
| 381-2051 | 253 |
| | 256 |
| 381-2052 | 253 |
| | 256 |
| 381-2053 | 184 |
| | 241 |
| 381-2054 | 256 |
| 381-2055 | 256 |
| 381-4576 | ▶540 |
| | 548 |
| 381-4577 | ▶551 |
| | 552 |
| 381-4578 | ▶548 |
| 381-4579 | ▶552 |
| 381-4596 | 152 |
| 381-4597 | 152 |
| 381-4598 | 152 |
| 381-5006 | 359 |
| | ▶360 |
| 381-5008 | 360 |
| 381-5010 | ▶370 |
| | 372 |
| | 373 |
| 381-5011 | 370 |
| | ▶374 |
| 381-5012 | 374 |
| 381-5014 | 374 |
| 381-5020 | ▶371 |
| | 372 |
| 381-5021 | 371 |
| | ▶375 |
| 381-5022 | 375 |
| 381-5030 | 370 |
| | ▶377 |
| 381-5031 | 377 |
| 381-5033 | 370 |
| | ▶379 |
| 381-5034 | 379 |
| 381-5786 | 5 |
| 381-7473 | 87 |
| 381-7474 | 164 |
| | 166 |
| 381-9193 | 249 |
| 381-9194 | 249 |
| 381-9195 | 253 |
| 381-9232 | ▶90 |
| 381-9235 | ▶118 |
| | 183 |
| 381-9236 | ▶85 |
| | 118 |
| | 184 |
| 381-9239 | ▶98 |
| 382-0400 | 460 |
| | ▶522 |
| 382-0401 | ▶139 |
| | 522 |
| 382-0402 | 139 |
| 382-0404 | 139 |
| 382-0406 | 460 |
| | ▶461 |
| 382-0407 | 461 |
| 382-0426 | 460 |
| | ▶492 |
| 382-0427 | 492 |
| 382-0497 | ▶158 |
| 382-0501 | 460 |
| | ▶484 |
| 382-0502 | 484 |
| 382-0503 | 484 |
| 382-0504 | ▶517 |
| | 522 |
| 382-0505 | 517 |
| 382-0509 | ▶514 |
| 382-0510 | 517 |
| 382-0517 | ▶514 |
| 382-0522 | 384 |
| | ▶481 |
| 382-0543 | 484 |
| 382-0544 | 517 |
| 382-0546 | 517 |
| 382-0547 | 517 |
| 382-0549 | 517 |
| 382-0560 | 210 |
| | ▶541 |
| 382-1147 | 200 |
| 382-1316 | ▶210 |
| | 371 |
| | 372 |
| 382-1317 | ▶211 |
| | 371 |
| | 372 |
| | 373 |
| 382-2147 | 517 |
| 382-2149 | 517 |
| 382-2150 | 517 |
| 382-2151 | 134 |
| 382-2152 | 134 |
| 382-2153 | 134 |
| 382-2154 | 134 |
| 382-2155 | 134 |
| 382-2156 | 134 |
| 382-2158 | 134 |
| 382-2159 | 134 |
| 382-2160 | 134 |
| 382-2162 | 134 |
| 382-2163 | 134 |
| 382-2164 | 134 |
| 382-2165 | 134 |
| 382-2166 | 134 |
| 382-2167 | 134 |
| 382-2168 | 134 |
| 382-2169 | 134 |
| 382-2170 | 134 |
| 382-2171 | 134 |
| 382-2172 | 134 |
| 382-2173 | 134 |
| 382-2174 | 134 |
| 382-2175 | 134 |
| 382-2176 | 134 |
| 382-2177 | ▶134 |
| | 522 |
| 382-2181 | 139 |
| 382-2543 | ▶183 |
| 382-2544 | ▶183 |
| 382-2547 | 223 |
| 382-2548 | 223 |
| 382-2551 | 183 |
| | ▶241 |
| 382-2558 | 225 |
| 382-2559 | 225 |
| 382-2560 | 280 |
| 382-2969 | 37 |
| 382-2970 | 37 |
| 382-3843 | ▶174 |
| 382-3844 | 174 |
| 382-4808 | 5 |
| 382-4810 | 5 |
| 382-4812 | 5 |
| 382-4813 | 5 |
| 382-4815 | 5 |
| 382-5689 | 130 |
| 382-5803 | 249 |
| 382-6314 | 519 |
| 382-6315 | 484 |
| 382-6321 | 134 |
| 382-6347 | 519 |
| 382-6356 | 553 |
| 382-8180 | 37 |
| 382-8802 | 243 |
| 382-8804 | 243 |
| 382-8805 | 243 |
| 382-8806 | 243 |
| 382-8808 | 243 |
| 382-8809 | 237 |
| 382-8810 | 237 |
| 382-8811 | 237 |
| 382-8812 | 237 |
| 382-8814 | 239 |
| 382-8815 | 239 |
| 382-8825 | 270 |
| 382-8826 | 270 |
| 382-9349 | 63 |
| 382-9362 | 241 |
| 382-9363 | 241 |
| 382-9364 | 241 |
| 382-9365 | 184 |
| | 241 |
| 383-0133 | 2 |
| | 3 |
| | 4 |
| | ▶40 |
| 383-0134 | 2 |
| | 3 |
| | 4 |
| | ▶68 |
| 383-0141 | 2 |
| | 3 |
| | 4 |
| | ▶32 |
| 383-0144 | 2 |
| | 3 |
| | 4 |
| | ▶33 |
| 383-0154 | 2 |
| | 3 |
| | 4 |
| | ▶96 |
| 383-0161 | 2 |
| | 3 |
| | 4 |
| | ▶34 |
| 383-0162 | 2 |
| | 3 |
| | 4 |
| | ▶36 |
| 383-0163 | 31 |
| | 36 |
| 383-0164 | 53 |
| 383-0165 | 20 |
| 383-0167 | 34 |
| 383-0168 | 53 |
| 383-0169 | 61 |
| 383-0170 | 22 |
| 383-0171 | 6 |
| | 8 |
| 383-0172 | 35 |
| 383-0173 | 46 |
| 383-0174 | 11 |
| 383-0175 | 11 |
| | 36 |
| 383-0176 | 35 |
| 383-0177 | 61 |
| 383-0178 | 68 |
| 383-0179 | 96 |
| 383-0180 | 17 |
| | 29 |
| 383-0181 | 96 |
| 383-0182 | 36 |
| 383-0183 | 53 |
| 383-0185 | 35 |
| 383-0186 | 35 |
| 383-0187 | 32 |
| 383-0188 | 61 |
| 383-0189 | 20 |
| | 53 |
| 383-0190 | 20 |
| 383-0191 | 29 |
| 383-0192 | 20 |
| 383-0193 | 20 |
| 383-0195 | 68 |
| 383-0196 | 96 |
| 383-0197 | 22 |
| | 35 |
| | 36 |
| 383-0198 | 53 |
| | 78 |
| 383-0199 | 61 |
| 383-0200 | 78 |
| 383-0201 | 96 |
| 383-0202 | 59 |
| 383-0203 | 7 |
| 383-0204 | 22 |
| 383-0205 | 29 |
| 383-0206 | 53 |
| | 68 |
| 383-0207 | 17 |
| | 22 |
| | 29 |
| | 35 |
| | 36 |
| | 96 |
| 383-0208 | 61 |
| 383-0209 | 53 |
| 383-0210 | 8 |
| 383-0211 | 53 |
| 383-0212 | 60 |
| 383-0214 | 78 |
| 383-0216 | 32 |
| 383-0217 | 7 |
| | 31 |
| 383-0218 | 10 |
| 383-0219 | 10 |
| 383-0220 | 10 |
| | 20 |
| 383-0221 | 10 |
| 383-0222 | 53 |
| 383-0223 | 53 |
| 383-0224 | 29 |
| 383-0225 | 34 |
| 383-0226 | 48 |
| 383-0227 | 6 |
| | 28 |
| 383-0228 | 8 |
| 383-0229 | 10 |
| 383-0230 | 20 |
| 383-0231 | 6 |
| | 8 |
| 383-0232 | 48 |
| 383-0233 | 48 |
| 383-0234 | 20 |
| 383-0250 | 2 |
| | 3 |
| | 4 |
| | ▶31 |
| 383-0252 | 61 |
| 383-0255 | 29 |
| 383-0256 | 11 |
| 383-0257 | 35 |
| 383-0258 | 22 |


▶ PRIMARY REFERENCE

# PART NUMBER INDEX


| Part | Page |
|---|---|
| 383-0259 | 13 |
| 383-0260 | 10 |
| 383-0261 | 10 |
| 383-0262 | 13 |
| 383-0263 | 14 |
| 383-0264 | 14 |
| 383-0265 | 14 |
| 383-0266 | 14 |
| 383-0267 | 29 |
| 383-0268 | 29 |
| 383-0269 | 29 |
| 383-0270 | 6 |
| 383-0271 | 8 |
| 383-0272 | 10 |
| 383-0273 | 34 |
| 383-0274 | 48 |
| 383-0275 | 48 |
| 383-0276 | 53 |
| 383-0277 | 53 |
| 383-0278 | 53 |
| | 78 |
| 383-0279 | 35 |
| | 45 |
| | 61 |
| 383-0280 | 61 |
| 383-0281 | 20 |
| 383-0282 | 55 |
| 383-0283 | 13 |
| 383-0284 | 55 |
| 383-0287 | 61 |
| 383-0288 | 61 |
| 383-0292 | 8 |
| 383-0293 | 34 |
| 383-0300 | 22 |
| 383-0302 | 20 |
| 383-0303 | 10 |
| 383-0304 | 10 |
| 383-0305 | 11 |
| 383-0306 | 29 |
| 383-0308 | 53 |
| 383-0309 | 48 |
| 383-0310 | 29 |
| 383-0314 | 61 |
| 383-0315 | 45 |
| 383-0317 | 53 |
| 383-0319 | 59 |
| 383-0320 | 59 |
| 383-0321 | 7 |
| | 31 |
| 383-0323 | 68 |
| 383-0330 | 68 |
| 383-0335 | 35 |
| 383-0336 | 20 |
| 383-0337 | 10 |
| 383-0339 | 32 |
| 383-0342 | 69 |
| | 73 |
| 383-0344 | 68 |
| 383-0345 | 17 |
| 383-0346 | 45 |
| 383-0347 | 11 |
| 383-0355 | 53 |
| 383-0356 | 35 |
| 383-0358 | 10 |
| 383-0360 | 13 |
| 383-0361 | 13 |
| 383-0374 | 27 |
| 383-0375 | 27 |
| 383-0382 | 7 |
| | 20 |
| | 46 |
| 383-0383 | 28 |
| 383-0385 | 10 |
| 383-0386 | 11 |
| 383-0387 | 14 |
| 383-0391 | 28 |
| 383-0392 | 8 |
| 383-0393 | 8 |
| 383-0396 | 35 |
| 383-0397 | 27 |
| 383-0398 | 8 |
| 383-0399 | 8 |
| 383-0400 | 8 |
| 383-0401 | 8 |
| 383-0402 | 20 |
| 383-0403 | 34 |
| 383-0404 | 31 |
| 383-0406 | 53 |
| 383-0407 | 53 |
| 383-0409 | 53 |
| 383-0412 | 78 |
| 383-0416 | 53 |
| 383-0418 | 53 |
| 383-0419 | 78 |
| 383-0420 | 17 |
| 383-0421 | 35 |
| 383-0423 | 20 |
| 383-0425 | 35 |
| 383-0426 | 20 |
| 383-0427 | 20 |
| | 35 |
| 383-0430 | 11 |
| 383-0431 | 11 |
| 383-0432 | 11 |
| 383-0433 | 36 |
| 383-0435 | 36 |
| 383-0437 | 33 |
| 383-0438 | 20 |
| 383-0439 | 35 |
| 383-0440 | 20 |
| 383-0446 | 11 |
| 383-0447 | 11 |
| 383-0451 | 11 |
| 383-0457 | 11 |
| 383-0458 | 11 |
| 383-0464 | 29 |
| 383-0465 | 6 |
| 383-0467 | 8 |
| 383-0468 | 11 |
| 383-0469 | 8 |
| 383-0470 | 8 |
| 383-0472 | 35 |
| 383-0473 | 13 |
| 383-0474 | 55 |
| 383-0475 | 60 |
| 383-0479 | 27 |
| 383-0480 | 28 |
| 383-0481 | 31 |
| 383-0486 | 20 |
| 383-0487 | 61 |
| 383-0489 | 33 |
| 383-0492 | 20 |
| 383-0502 | 27 |
| 383-0503 | 2 |
| | 3 |
| | 4 |
| | ▶20 |
| 383-0506 | 20 |
| 383-0508 | 59 |
| 383-0509 | 59 |
| 383-0510 | 59 |
| 383-0512 | 53 |
| 383-0513 | 53 |
| 383-0515 | 8 |
| 383-0519 | 60 |
| 383-0520 | 53 |
| 383-0521 | 53 |
| 383-0524 | 7 |
| 383-0528 | 27 |
| 383-0530 | 20 |
| 383-0531 | 32 |
| 383-0532 | 11 |
| 383-0534 | 14 |
| 383-0535 | 14 |
| 383-0537 | 60 |
| 383-0538 | 78 |
| 383-0544 | 60 |
| 383-0547 | 48 |
| 383-0550 | 61 |
| 383-0551 | 20 |
| 383-0553 | 11 |
| 383-0554 | 14 |
| 383-0555 | 13 |
| 383-0556 | 29 |
| 383-0557 | 11 |
| 383-0558 | 34 |
| 383-0559 | 55 |
| 383-0560 | 61 |
| 383-0562 | 61 |
| 383-0563 | 7 |
| 383-0568 | 60 |
| 383-0571 | 53 |
| 383-0574 | 7 |
| 383-0575 | 53 |
| 383-0576 | 17 |
| 383-0577 | 61 |
| 383-0579 | 27 |
| 383-0583 | 53 |
| 383-0584 | 53 |
| 383-0585 | 53 |
| 383-0586 | 53 |
| 383-0587 | 8 |
| 383-0588 | 48 |
| 383-0589 | 96 |
| 383-0592 | 68 |
| 383-0595 | 20 |
| 383-0596 | 14 |
| 383-0598 | 17 |
| 383-0615 | 210 |
| | ▶223 |
| 383-0616 | 211 |
| | ▶225 |
| 383-0640 | 1 |
| | ▶4 |
| 383-0641 | 4 |
| | ▶44 |
| 383-0642 | 44 |
| 383-0643 | 4 |
| | ▶43 |
| 383-3158 | ▶86 |
| | 111 |
| 383-3160 | 50 |
| 383-3163 | ▶111 |
| | 384 |
| 383-3164 | ▶85 |
| | 111 |
| 383-3206 | 194 |
| 383-4984 | 37 |
| 383-4985 | 37 |
| 383-5899 | ▶371 |
| 383-5900 | ▶371 |
| 383-5901 | ▶371 |
| 383-5902 | ▶372 |
| 383-5910 | ▶372 |
| 383-5911 | ▶372 |
| 383-5912 | ▶372 |
| 383-5913 | ▶373 |
| 383-5927 | ▶436 |
| 383-5928 | ▶437 |
| 383-5929 | ▶460 |
| 383-6388 | 144 |
| 383-8499 | 4 |
| | ▶42 |
| 383-8501 | 42 |
| 383-8502 | 44 |
| 383-8503 | 44 |
| 384-1039 | 358 |
| 384-1056 | 4 |
| | ▶47 |
| 384-5013 | ▶184 |
| 384-5670 | 519 |
| 384-5671 | 435 |
| | 436 |
| | 437 |
| 384-5673 | 525 |
| | ▶529 |
| 384-5674 | 529 |
| 384-5675 | 519 |
| 384-5676 | 519 |
| 384-5724 | 1 |
| | ▶145 |
| 384-5725 | 145 |
| 385-1276 | 481 |
| | 482 |
| 385-1277 | ▶95 |
| | 384 |
| 385-2795 | ▶275 |
| | 384 |
| 385-2796 | ▶261 |
| | 384 |
| 385-2797 | ▶265 |
| | 384 |
| 385-2800 | 265 |
| 385-2803 | 261 |
| 385-2806 | 261 |
| 385-2808 | 261 |
| 385-2809 | 261 |
| 385-2811 | 261 |
| 385-2812 | 249 |
| 385-2813 | 275 |
| 385-2814 | 275 |
| 385-2815 | 275 |
| 385-2816 | 275 |
| 385-4233 | 270 |
| 385-4234 | 270 |
| 385-4235 | 270 |
| 386-4561 | 2 |
| | 3 |
| | 4 |
| | ▶11 |
| 386-4564 | 2 |
| | 3 |
| | 4 |
| | ▶6 |
| 386-4566 | 2 |
| | 3 |
| | 4 |
| | ▶7 |
| 386-4570 | 2 |
| | 3 |
| | 4 |
| | ▶8 |
| 386-4588 | 2 |
| | 3 |
| | 4 |
| | ▶35 |
| 386-4592 | 2 |
| | 3 |
| | 4 |
| | ▶17 |
| 386-4635 | 2 |
| | 3 |
| | 4 |
| | ▶53 |
| 386-4637 | 2 |
| | 3 |

# PART NUMBER INDEX


| Part | Page |
|---|---|
| | 4 |
| | ▶14 |
| 386-4638 | 2 |
| | 3 |
| | 4 |
| | ▶22 |
| 386-4639 | 2 |
| | 3 |
| | 4 |
| | ▶55 |
| 386-4640 | 2 |
| | 3 |
| | 4 |
| | ▶59 |
| 386-4641 | 2 |
| | 3 |
| | 4 |
| | ▶45 |
| 386-4642 | 2 |
| | 3 |
| | 4 |
| | ▶46 |
| 386-4643 | 2 |
| | 3 |
| | 4 |
| | ▶29 |
| 386-4644 | 2 |
| | 3 |
| | 4 |
| | ▶60 |
| 386-4645 | 2 |
| | 3 |
| | 4 |
| | ▶26 |
| 386-4646 | 2 |
| | 3 |
| | 4 |
| | ▶27 |
| 386-4647 | 2 |
| | 3 |
| | 4 |
| | ▶78 |
| 386-4648 | 2 |
| | 3 |
| | 4 |
| | ▶28 |
| 386-4650 | 2 |
| | 3 |
| | 4 |
| | ▶61 |
| 386-4787 | 45 |
| 386-4788 | 45 |
| 386-4789 | 55 |
| 386-4790 | 78 |
| 386-4792 | 28 |
| 386-4794 | 28 |
| 386-6058 | 384 |
| | ▶542 |
| 386-6073 | 542 |
| 386-6914 | ▶10 |
| | 11 |
| 386-6918 | 26 |
| 386-6919 | 26 |
| 386-6920 | ▶13 |
| | 14 |
| 386-6921 | 14 |
| 386-6922 | 14 |
| 386-6923 | 14 |
| 386-6924 | 14 |
| 386-6925 | 14 |
| 386-6928 | 46 |
| 386-6930 | 7 |
| 386-6933 | 7 |
| 386-6934 | 6 |
| 386-6936 | 8 |
| 386-6937 | 17 |
| 386-6938 | 17 |
| 386-6939 | 61 |
| 386-6940 | 61 |
| 386-6941 | 61 |
| 386-6942 | 61 |
| 386-6943 | 61 |
| 386-6944 | 61 |
| 386-6945 | ▶48 |
| | 61 |
| 386-6946 | 48 |
| 386-6947 | 61 |
| 386-6948 | 53 |
| 386-6950 | 53 |
| 386-6951 | 53 |
| 386-6952 | 53 |
| 386-7523 | ▶403 |
| | 418 |
| 386-7524 | ▶418 |
| 387-3788 | 289 |
| 387-4682 | ▶525 |
| 387-4694 | 460 |
| 387-4695 | 438 |
| | 440 |
| | 442 |
| | 446 |
| 387-5260 | 69 |
| | 73 |
| 387-6389 | ▶119 |
| | 183 |
| 387-6390 | ▶120 |
| | 182 |
| | 183 |
| 387-9910 | 32 |
| 387-9912 | 35 |
| 388-6412 | 289 |
| 389-0705 | 68 |
| 389-0724 | 8 |
| 389-0725 | 8 |
| 389-0726 | 8 |
| 389-0727 | 8 |
| 389-0728 | 8 |
| 389-0729 | 8 |
| 389-1588 | 28 |
| 389-1591 | 35 |
| 389-1593 | 7 |
| 389-1596 | 27 |
| 389-1597 | 27 |
| 389-1607 | 27 |
| 389-2308 | 26 |
| 389-2309 | 22 |
| 389-8671 | 134 |
| 389-8672 | 134 |
| 389-8673 | 134 |
| 389-8690 | 436 |
| | 437 |
| | ▶446 |
| 389-8701 | 446 |
| | ▶448 |
| | 449 |
| | 450 |
| 389-8702 | ▶148 |
| | 448 |
| | 449 |
| | 450 |
| 389-8703 | 448 |
| 389-8733 | ▶149 |
| | 460 |
| 389-8734 | 149 |
| | 498 |
| 389-8737 | 462 |
| 389-8749 | 460 |
| | ▶462 |
| 389-8753 | 484 |
| 389-8762 | 466 |
| 389-8764 | 466 |
| 389-8773 | 546 |
| 389-8774 | 549 |
| 389-8775 | 498 |
| | 543 |
| 389-8776 | 436 |
| | 437 |
| | 460 |
| | ▶543 |
| 389-8800 | 275 |
| 389-9183 | 498 |
| | 543 |
| 390-9455 | 290 |
| 391-3148 | 158 |
| | ▶159 |
| 391-3149 | 159 |
| 391-3150 | 159 |
| 391-3151 | 159 |
| 391-3152 | 159 |
| 391-3153 | 159 |
| 391-3154 | 159 |
| 391-3155 | 159 |
| 391-3156 | 159 |
| 391-3157 | 159 |
| 391-3158 | 159 |
| 391-3159 | 159 |
| 391-3160 | 159 |
| 391-3161 | 159 |
| 391-3162 | 159 |
| 391-3163 | 159 |
| 391-3164 | 159 |
| 391-3165 | 159 |
| 391-3166 | 159 |
| 391-3188 | ▶306 |
| | 384 |
| 391-7843 | 47 |
| 392-0266 | 35 |
| 392-4127 | ▶3 |
| 392-4756 | 1 |
| | ▶77 |
| 392-4768 | 77 |
| | 100 |
| | 103 |
| | 106 |
| | 109 |
| 392-4933 | 77 |
| 392-4934 | 77 |
| 392-7373 | 163 |
| | ▶164 |
| 392-7374 | 163 |
| | ▶166 |
| 393-1257 | 460 |
| | ▶544 |
| 393-7501 | 309 |
| | ▶347 |
| 393-7502 | 8 |
| 394-2887 | 160 |
| 394-5921 | 347 |
| 394-8600 | 59 |
| 395-0080 | 7 |
| 395-0083 | 46 |
| 395-0661 | 26 |
| 395-0662 | 29 |
| 395-3419 | 534 |
| 397-6699 | 221 |
| 397-6742 | 221 |
| | 449 |
| | ▶451 |
| 415-8595 | 460 |
| 416-2294 | 308 |
| | ▶349 |
| 416-4255 | 77 |
| 416-6081 | ▶4 |
| 417-1065 | 301 |
| 417-1093 | 299 |
| 417-1105 | 267 |
| 417-1267 | 490 |
| 417-1272 | 490 |
| 417-1273 | 490 |
| 417-1274 | 490 |
| 417-1289 | ▶490 |
| | 491 |
| 417-9823 | 270 |
| 418-1566 | ▶363 |
| 418-1571 | ▶363 |
| 418-1572 | ▶364 |
| 418-1586 | 452 |
| 419-1204 | 384 |
| | ▶482 |
| 419-1237 | 442 |
| | 450 |
| | ▶458 |
| 419-1254 | 460 |
| 419-5871 | ▶491 |
| 419-8301 | 539 |
| | 556 |
| 420-1371 | ▶545 |
| 420-1391 | 363 |
| | ▶369 |
| 420-6337 | 460 |
| 421-2716 | 384 |
| | ▶483 |
| 421-2717 | ▶299 |
| | 460 |
| 421-2718 | ▶309 |
| | 435 |
| | 436 |
| | 437 |
| 421-8461 | ▶370 |
| 421-9099 | ▶267 |
| | 370 |
| 422-1353 | 267 |
| 422-1355 | 267 |
| 422-1356 | 267 |
| 422-1357 | 267 |
| 422-1360 | 231 |
| | 234 |
| | 267 |
| 422-1361 | 241 |
| | 267 |
| 422-2948 | ▶117 |
| | 210 |
| 422-2949 | ▶85 |
| | 117 |
| 425-7013 | ▶81 |
| | 109 |
| 425-7014 | ▶83 |
| | 103 |
| 430-8640 | ▶498 |
| 430-9229 | ▶498 |
| 431-0306 | ▶336 |
| 432-1346 | 544 |
| 433-3885 | 383 |
| | ▶387 |
| 433-3886 | 387 |
| 441-6279 | ▶421 |


## 4


| Part | Page |
|---|---|
| 415-6803 | 440 |


▶ PRIMARY REFERENCE

# MEMORANDA



©2013 Caterpillar
All Rights Reserved
Printed in Japan

CAT, CATERPILLAR, their respective logos, “Caterpillar Yellow”, and the POWER EDGE trade dress as well as corporate and product identity used herein, are trademarks of Caterpillar and may not be used without permission.