RUTHZIL TRATOR COMERCIAL DE PEÇAS LTDA 11 97083-6812 ROLANDO CITRANGULO

CATERPILLAR®

XEBP9520-02

OUTUBRO 2008

Parts Manual

303C SR Mini Hydraulic Excavator

Powered by S3Q2 Engine

SERIAL NUMBERS:
MSP00001-Up[Machine]

Product and Dealer Information

Note: For product identification plate locations, see the section “Product Identification Information” in the Operation and Maintenance Manual.

Delivery Date: _____

Product Information

Model: _____

Product Identification Number: _____

Engine Serial Number: _____

Transmission Serial Number: _____

Generator Serial Number: _____

Attachment Serial Numbers: _____

Attachment Information: _____

Customer Equipment Number: _____

Dealer Equipment Number: _____

Dealer Information

Name: _____ Branch: _____

Address: _____

_____

_____

	Dealer Contact	Phone Number	Hours
Sales:	_____	_____	_____
Parts:	_____	_____	_____
Service:	_____	_____	_____

GENERAL INFORMATION

1. MACHINE IDENTIFICATION

Caterpillar machines are identified by Product Identification Numbers (PIN). Some components included in a machine may be identified by Serial Numbers (S/N). Typical components that will be serialized include engines, transmissions, bulldozers, and rippers. The machine and engine are further identified by arrangement numbers and in some cases modification numbers. These numbers are shown on the product identification plate(s) and on the master plate in the operator's compartment.

Caterpillar dealers need all of these numbers to determine accurate parts identification.

Effective First Quarter 2001 the Caterpillar Product Identification Number (PIN) changed from 8 to 17 characters. In an effort to provide uniform equipment identification, Caterpillar and other construction equipment manufacturers are moving to comply with the latest version of the product identification numbering standard. Non-road machine PINs are defined by ISO 10261. The new PIN format will apply to all Caterpillar machines and generator sets. The PIN plates and frame marking will display the 17 character PIN. The new format will look like the following:

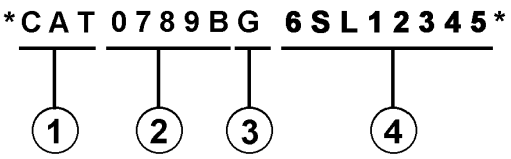

Where:

1. Caterpillar's World Manufacturing Code (characters 1-3)

2. Machine Descriptor (characters 4-8)

3. Check Character (character 9)

4. Machine Indicator Section (MIS) or Product Sequence Number (characters 10-17). These were previously referred to as the Serial Number.

Machines and generator sets produced before First Quarter 2001 will maintain their 8 character PIN format.

Components such as engines, transmissions, axles, etc. and work tools will continue to use an 8 character Serial Number (S/N).

2. ORDERING PARTS

⚠ WARNING

When replacement parts are required for this product Caterpillar recommends using Caterpillar replacement parts or parts with equivalent specifications including, but not limited to, physical dimensions, type, strength and material.

Failure to heed this warning can lead to premature failures, product damage, personal injury or death.

Quality Caterpillar replacement parts are available from Caterpillar dealers throughout the world. Their parts inventories are up to date and include all parts normally required to protect your investment in Caterpillar machines. Dealers may offer repair kits or remanufactured parts to allow selection of the most effective repair alternative for a particular situation. When ordering parts, your order should specify the quantity, part number, part name, and the serial number/product identification number of the machine for which the parts are needed.

3. PARTS MANUAL ORGANIZATION

Product information in this manual is presented as "information elements" that represent all of the components for the specific model. Engine Arrangement and Seat Group are examples of information elements. The information elements are organized alphabetically by part name and secondarily by part number within each major section of the manual.

4. MAINTENANCE PARTS INDEX

The Maintenance Parts Index, located near the beginning of the manual, references most frequently used maintenance part numbers, providing description, quantity, usage and page number. This information is organized alphabetically by part description.

GENERAL INFORMATION

5. INDEX

The index located near the front of the manual is an alphabetical listing of all information elements included in the manual. Page numbers are provided for quick reference to detailed parts identification illustrations and serviceable consist lists.

6. PART NUMBER INDEX

A numerical index listing all part numbers and the corresponding page number(s) appears at the back of the manual.

7. CAPTIONS

Captions located at the beginning of each information element identify the part number and part name along with additional descriptive information. PIN and S/N information found in each caption should be used to select correct information for a specific machine. Field replacement options, identification of optional attachment components, and where used ("part of") information is also provided.

8. NON-SERVICED PARTS

In some instances it is necessary to display non-serviced parts that are a link to a lower level serviceable consist lists. These non-serviced parts are indicated with mark "Z".

9. PARTS LIST REFERENCE NUMBERS

Numbers shown in the Ref No column correspond to numbers used in the associated graphic(s).

10. INDENTED PART NAMES

When a part name is indented in a parts list, it is part of (included in) the group or assembly under which it is indented.

11. ILLUSTRATION REFERENCE LETTERS

When necessary, illustrations contain reference letters (A, B, C etc.) that are intended to track lines and harnesses from one point to another. They are also used to show where to reconnect illustrations that have been separated.

12. ABBREVIATIONS AND SYMBOLS

O.D. – Outside Diameter
I.D. – Inside Diameter
A – Not A Part Of This Group
B – Use As Required
C – Change From Previous Type
D – Order By The m
E – Order By The cm
F – Not Shown
G – Order By The Inch
I – Refer To Hydraulic Information System
R – Remfg Part May Be Available
Y – Separate Illustration
Z – Not Serviced Separately
AS – Assembly
N/S – Not Serviced

ABBREVIATIONS OF COLORS

RD	Red
WH	White
OR	Orange
YL	Yellow
PK	Pink
BK	Black
GY	Gray
PU	Purple
BR	Brown
GN	Green
BU	Blue
T	Tan
DK/BU	Dark Blue
DK/GN	Dark Green
LT/BU	Light Blue
LT/GN	Light Green

13. NOTE:

Continuing improvement and advancement of product design may cause changes to your machine which may not be included in this publication. Whenever a question arises regarding your Caterpillar product or this publication, please consult your Caterpillar dealer for the latest available information.

INDEX

A

NAME PAGE

ADAPTER GROUP ····· 26
AIR CLEANER GROUP ····· 38
AIR CONDITIONER LINES GROUP ····· 526～531
AIR DUCT GROUP ····· 536
AIR LINES GROUP ····· 37
ASSIST HANDLE GROUP ····· 467
AUXILIARY HYDRAULIC LINES GROUP ····· 362～363

B

BATTERY AND WIRING GROUP ····· 60～79
BEARING AND GEAR GROUP ····· 291
BLADE AND MOUNTING GROUP ····· 451
BLADE CONTROL GROUP ····· 422～423
BLOCK ASSEMBLY ····· 389～400
BOOM ARRANGEMENT ····· 431
BOOM GROUP ····· 436～439
BOOM LINES GROUP ····· 370～373
BOTTOM GUARD GROUP ····· 261～262
BUCKET GROUP ····· 453～457
BUCKET LINES GROUP ····· 374～375
BUCKET LINKAGE ARRANGEMENT ····· 433
BUCKET LINKAGE GROUP ····· 445～447

C

CAB AND MOUNTING GROUP ····· 470～471
CAB ARRANGEMENT ····· 465～466
CAB DOOR GROUP ····· 484～485
CAB GROUP ····· 472～483
CAMSHAFT GROUP ····· 19
CANOPY ARRANGEMENT ····· 464
CANOPY GROUP ····· 468～469
CARRIER ROLLER GROUP ····· 293
CHARGING ALTERNATOR GROUP ····· 227
CHASSIS ARRANGEMENT ····· 241
CONDENSER AND MOUNTING GROUP ····· 537
CONDITIONER AND MOUNTING GROUP ····· 523
CONNECTOR GROUP ····· 224～225
CONSOLE GROUP ····· 515～519
CONSOLE WIRING GROUP ····· 80～111
CONTROL ARRANGEMENT ····· 177,304
CONTROL KIT ····· 230
COUNTERWEIGHT ARRANGEMENT ····· 281
COUNTERWEIGHT GROUP ····· 282～283
COVER ASSEMBLY ····· 255～256,258～260
COVER GROUP ····· 253～254,257～258,284
CRANKSHAFT ASSEMBLY ····· 17
CRANKSHAFT GROUP ····· 16
CRANKSHAFT PULLEY GROUP ····· 18
CYLINDER BLOCK ASSEMBLY ····· 12
CYLINDER BLOCK GROUP ····· 11
CYLINDER GROUP ····· 424～430

NAME PAGE

CYLINDER GUARD GROUP ····· 440～441
CYLINDER HEAD ASSEMBLY ····· 14
CYLINDER HEAD GROUP ····· 13
CYLINDER LINES GROUP ····· 376～377

E

ELECTRIC HORN GROUP ····· 520
ELECTRIC STARTING MOTOR GROUP ····· 226
ELECTRONIC CONTROL GROUP ····· 229
ELECTRONICS GROUP ····· 229
ENGINE ARRANGEMENT ····· 8～9
ENGINE MOUNTING GROUP ····· 285～286
ENGINE OIL FILLER GROUP ····· 25
ENGINE OIL FILTER AND MOUNTING GROUP ····· 25
ENGINE OIL PUMP GROUP ····· 24
EXHAUST EXTENSION GROUP ····· 42
EXHAUST MANIFOLD GROUP ····· 40
EXTENSION GROUP ····· 39

F

FAN GUARD GROUP ····· 34
FENDER COVER GROUP ····· 263～265
FENDER GROUP ····· 266～267
FILM GROUP ····· 540～566
FINAL DRIVE GROUP ····· 234～235
FIREWALL GROUP ····· 280
FLOOD LAMP GROUP ····· 222
FLYWHEEL GROUP ····· 23
FRONT GEAR GROUP ····· 23
FRONT HOUSING GROUP ····· 22
FRONT IDLER GROUP ····· 287～289
FRONT LINES GROUP ····· 318～319
FRONT WIRING GROUP ····· 112～113
FUEL FILTER GROUP ····· 58
FUEL FILTER LINES GROUP ····· 56～57
FUEL INJECTION LINES GROUP ····· 55
FUEL INJECTION PUMP GROUP ····· 54
FUEL TANK AND MOUNTING GROUP ····· 59

G

GEAR PUMP ASSEMBLY ····· 313
GEAR PUMP GROUP ····· 313
GENERAL ARRANGEMENT ····· 1
GLOW PLUG GROUP ····· 224
GOVERNOR CONTROL ARRANGEMENT ····· 45
GOVERNOR CONTROL GROUP ····· 46～53
GREASE LINES GROUP ····· 303

H

HAMMER ARRANGEMENT ····· 434
HEAD LAMP GROUP ····· 223
HEATER AND MOUNTING GROUP ····· 522

INDEX

NAME PAGE

HEATER LINES GROUP ····· 524～525
HEATER WIRING GROUP ····· 123
HOOD AND GUARD GROUP ····· 242～249
HOOD ASSEMBLY ····· 252
HOOD GROUP ····· 250～251
HYDRAULIC ARRANGEMENT ····· 304
HYDRAULIC HAMMER GROUP ····· 458～459
HYDRAULIC TANK AND FILTER GROUP ····· 310
HYDRAULIC TANK AND MOUNTING GROUP ····· 309

I

INLET MANIFOLD GROUP ····· 41
INSTALLATION ARRANGEMENT ····· 10

J

JUMPER LINES GROUP ····· 378

K

KNOB ASSEMBLY ····· 409～410

L

LIGHTING GROUP ····· 218
LITERATURE GROUP ····· 566

M

MECHANICAL SHUTOFF GROUP ····· 44
MONITOR AND MOUNTING GROUP ····· 507～513
MOTOR AND MOUNTING GROUP ····· 233,236
MOUNTING GROUP ····· 506
MUFFLER GROUP ····· 43

N

NONSEGMENTED SPROCKET GROUP ····· 232

O

OFFSET CONTROL GROUP ····· 419
OIL PAN GROUP ····· 18
OPERATOR ARRANGEMENT ····· 464
OPERATOR CONSOLE GROUP ····· 514
OPERATOR PLATFORM GROUP ····· 486～491

P

PILOT CONTROL GROUP ····· 419
PILOT LINES GROUP ····· 328～361
PILOT OPERATED HYDRAULIC CONTROL GROUP ··· 405,407～408,410～413
PILOT VALVE GROUP ····· 403,406,414～418
PISTON GROUP ····· 317
PLATE ASSEMBLY ····· 281,301,315
PLATFORM ASSEMBLY ····· 492～503
PLATFORM SUPPORT GROUP ····· 504～505
POWER TRAIN ARRANGEMENT ····· 232
PRESSURE REDUCING SOLENOID VALVE GROUP ····· 404

NAME PAGE

PUMP AND MOUNTING GROUP ····· 311
PUMP GROUP ····· 312
PUMP LINES GROUP ····· 320～323

Q

QUICK COUPLER GROUP ····· 460～463

R

RADIATOR GROUP ····· 28～33
REFRIGERANT COMPRESSOR GROUP ····· 538
RELIEF VALVE GROUP ····· 240
RETURN LINES GROUP ····· 364
ROD AND PISTON GROUP ····· 15
ROTARY ASSEMBLY ····· 314
RUBBER PAD GROUP ····· 300

S

SEAT BELT GROUP ····· 521
SEAT GROUP ····· 521
SENSOR AND MOUNTING GROUP ····· 448～450
SHAFT KIT ····· 317
SOLENOID VALVE GROUP ····· 388
SPECIAL ARRANGEMENT ····· 2～7
SPRING GROUP ····· 316
START SWITCH GROUP ····· 228
STARTING MOTOR FASTENER GROUP ····· 226
STICK ARRANGEMENT ····· 432
STICK GROUP ····· 442～444
STICK LINES GROUP ····· 365～369
STOPPER KIT ····· 316
STRAIGHT BLADE ARRANGEMENT ····· 433
STRAIGHT BLADE GROUP ····· 452
SUCTION FAN GROUP ····· 27
SUPPRESSION GROUP ····· 278～279
SWASHPLATE GROUP ····· 314
SWING DRIVE GROUP ····· 237
SWING MOTOR GROUP ····· 238
SWING MOTOR LINES GROUP ····· 326～327
SWITCH GROUP ····· 228
SWITCH PANEL GROUP ····· 231
SWIVEL GROUP ····· 404

T

TOOL ARRANGEMENT ····· 567
TOOL GROUP ····· 568
TRACK AND CARRIER ROLLER ARRANGEMENT ····· 292
TRACK ARRANGEMENT ····· 296～297
TRACK ASSEMBLY ····· 299
TRACK GROUP ····· 294～299
TRACK GUIDE GUARD GROUP ····· 301
TRACK LINK ASSEMBLY ····· 300
TRACK MOTOR LINES GROUP ····· 324～325

INDEX

NAME PAGE

TRACK ROLLER GROUP ····· 293
TRAVEL ALARM ARRANGEMENT ····· 308
TRAVEL AND CONTROL GROUP ····· 420～421

U

UNDERCARRIAGE ARRANGEMENT ····· 287
UNDERCARRIAGE FRAME GROUP ····· 290
UPPER FRAME ASSEMBLY ····· 274～277
UPPER FRAME GROUP ····· 268～273

V

VALVE AND MOUNTING GROUP ····· 379,381,383～387
VALVE GROUP ····· 239,380,382,401～402
VALVE MECHANISM COVER GROUP ····· 21
VALVE MECHANISM GROUP ····· 20

W

WASHER BOTTLE WIRING GROUP ····· 182～184
WATER PUMP ASSEMBLY ····· 36
WATER PUMP GROUP ····· 35
WINDSHIELD WASHER GROUP ····· 532～535
WIRING GROUP ····· 114～122,124～176,178～181

MODEL VIEW

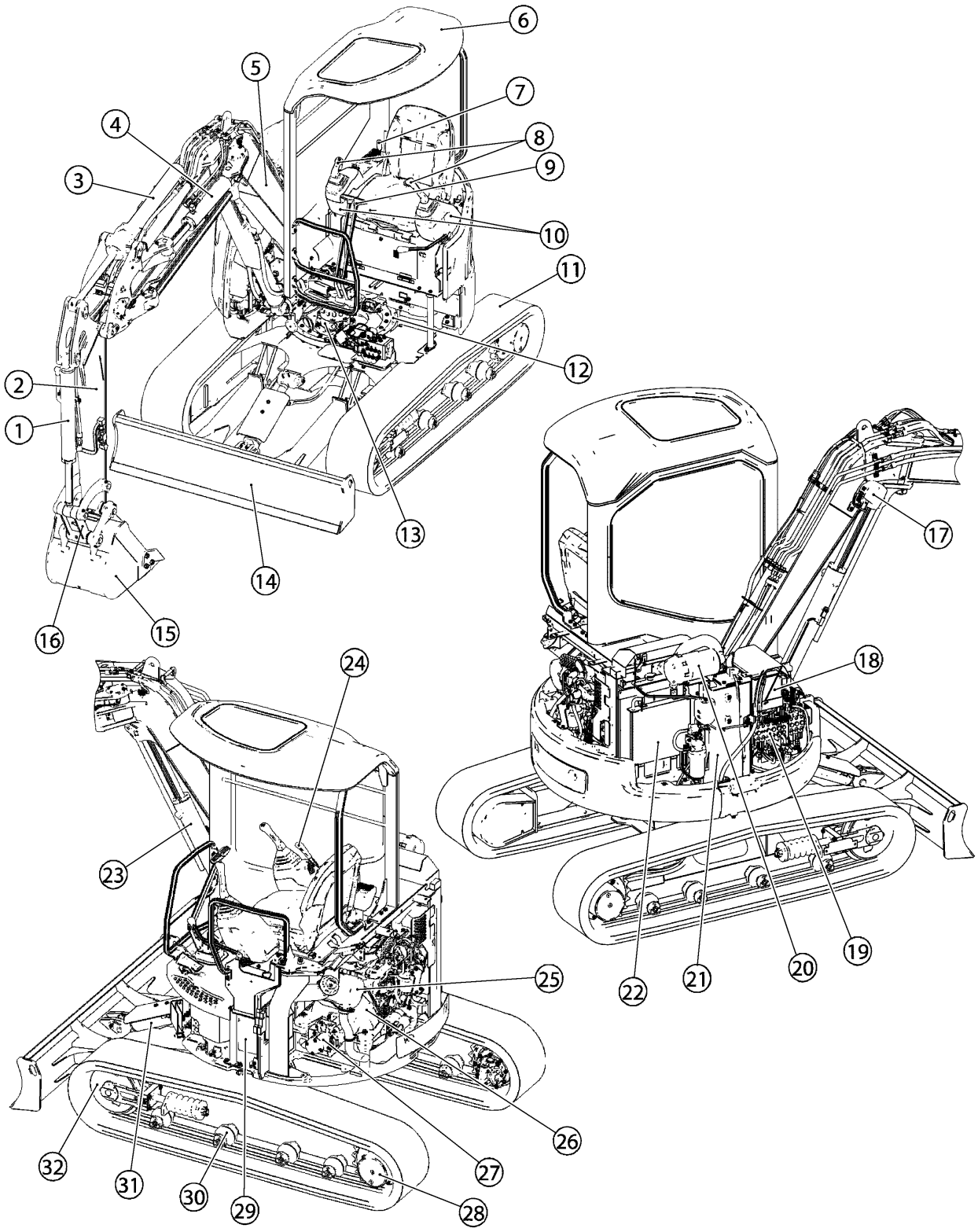

MODEL VIEW

MODEL VIEW

CONSISTS OF :

			PAGE
1	309-5675	BUCKET CYLINDER	425
2	298-2151	STICK	442
3	309-5674	STICK CYLINDER	428
4	299-7766	OFFSET CYLINDER	426
5	296-4436	BOOM	436
6	297-4668	CANOPY	468
7	307-9227	GOVERNOR CONTROL	46
8	306-1712	PILOT CONTROL	405
9	319-1459	TRAVEL CONTROL	420
10	306-1708	OPERATOR CONSOLE	514
11	205-1363	TRACK	294
12	308-2830	BEARING AND GEAR	291
13	295-3959	SWING MOTOR	236
14	295-3966	BLADE	451
15	241-5564	BUCKET	455
16	306-7306	BUCKET LINKAGE	445
17	231-9769	BOOM LIGHTING	218
18	296-1947	BATTERY	60
19	295-9330	CONTROL VALVE	379
20	297-4033	AIR CLEANER	38
21	296-1614	HYDRAULIC TANK	309
22	297-4029	RADIATOR	28
23	295-9371	BOOM CYLINDER	424
24	295-8643	BLADE CONTROL	422
25	319-2767	MUFFLER	43
26	319-5605	ENGINE	8
27	295-9365	PUMP	311
28	295-3960	TRAVEL MOTOR	233
29	296-1610	FUEL TANK	59
30	266-8793	TRACK ROLLER	293
31	295-9372	BLADE CYLINDER	427
32	287-7432	FRONT IDLER	287

J149872 HE01

LIST OF ATTACHMENT

CONSISTS OF :

PAGE

STICK

296-4440 STICK(LONG) ····· 432

TRACK

308-2832 TRACK(300mm WIDTH DOUBLE GROUSER SHOE) ····· 295

308-2833 TRACK(300mm WIDTH DOUBLE GROUSER SHOE)(RUBBER PAD) ····· 295

308-2834 TRACK(300mm WIDTH DOUBLE GROUSER SHOE)(RUBBER PAD) ····· 296

GUARD

314-2258 CYLINDER GUARD(BOOM) ····· 441

QUICK COUPLER

307-8512 QUICK COUPLER(CANOPY) ····· 460

319-1469 QUICK COUPLER(CAB) ····· 460

332-0041 QUICK COUPLER(CAB)(AIR CONDITIONER) ····· 461

HAMMER

307-8513 HAMMER(WITHOUT PIN) ····· 434

307-8514 HAMMER(WITH PIN) ····· 434

CAB

308-4117 CAB(HEATER) ····· 465

308-4118 CAB(AIR CONDITIONER) ····· 466

LIGHTING

307-9224 LIGHTING(CANOPY) ····· 220

307-9222 LIGHTING(CAB) ····· 218

WIRING(PL-JPN)

315-0302 WIRING(PL-JPN)(CANOPY) ····· 128

327-7634 WIRING(PL-JPN)(CANOPY)(AEC) ····· 134

317-2475 WIRING(PL-JPN)(CANOPY/CRANE) ····· 140

327-7635 WIRING(PL-JPN)(CANOPY/CRANE)(AEC) ····· 146

317-2476 WIRING(PL-JPN)(CAB) ····· 152

325-9883 WIRING(PL-JPN)(CAB)(AEC) ····· 158

317-2478 WIRING(PL-JPN)(CAB/CRANE) ····· 164

327-7636 WIRING(PL-JPN)(CAB/CRANE)(AEC) ····· 170

J153824 HE02

LIST OF ATTACHMENT

CONSISTS OF :

PAGE

TRAVEL ALARM

307-9237 TRAVEL ALARM ····· 308

CONTROL

310-4026 CONTROL(MSS)(AEC) ····· 177

HYDRAULIC SYSTEM

326-7175 CONTROL(STANDARD)(AIR CONDITIONER) ····· 305

307-6397 CONTROL(PATTERN CHANGE) ····· 305

326-7176 CONTROL(PATTERN CHANGE)(AIR CONDITIONER) ····· 306

322-9521 CONTROL(PATTERN CHANGE)(SHOVEL CRANE) ····· 306

331-7226 CONTROL(PATTERN CHANGE)(AIR CONDITIONER)(SHOVEL CRANE) ····· 307

295-9343 CONTROL(AUXILIARY)(SINGLE ACTION) ····· 307

AIR CLEANER

297-7464 AIR CLEANER ····· 38

COUNTERWEIGHT

296-1626 COUNTERWEIGHT(EXTRA) ····· 281

BUCKET

307-8511 BUCKET(320mm WIDTH-0.055m³) ····· 453

307-8510 BUCKET(420mm WIDTH-0.065m³) ····· 454

SHOVEL CRANE

307-8503 SHOVEL CRANE(CANOPY/STANDARD STICK) ····· 2

330-3619 SHOVEL CRANE(CANOPY/LONG STICK) ····· 3

307-8504 SHOVEL CRANE(CAB/STANDARD STICK) ····· 4

330-3620 SHOVEL CRANE(CAB/LONG STICK) ····· 6

J153825 HE02

MAINTENANCE PARTS INDEX

DESCRIPTION	PART NO.	PAGE NO.
V-BELT	270-6339	27
	280-3790	27
	326-7228	538
ELEMENT	156-1200	58
	146-7473	38
	146-7472	38
FILTER	120-0664	25
	5I-3572	536
FILTER ASSEMBLY	304-7196	310

MACHINE ARRANGEMENT

CONSISTS OF :

			PAGE
1	295-3955	UNDERCARRIAGE ARRANGEMENT	287
1	295-3961	STRAIGHT BLADE ARRANGEMENT	433
1	295-9329	HYDRAULIC ARRANGEMENT	304
1	296-1803	CHASSIS ARRANGEMENT	241
1	296-1806	POWER TRAIN ARRANGEMENT	232
1	296-1809	BOOM ARRANGEMENT	431
1	296-1812	BUCKET LINKAGE ARRANGEMENT	433
1	296-2599	INSTALLATION ARRANGEMENT	10
1	319-5605	ENGINE ARRANGEMENT	8

J146521 HE02

GENERAL ARRANGEMENT (296-1771 N/S)

MACHINE ARRANGEMENT

CONSISTS OF :

			PAGE
1	296-1768	CANOPY GROUP	469
1	307-6002	BOOM LINES GROUP	370
1	307-6003	STICK LINES GROUP	366
1	307-6004	PILOT LINES GROUP	342
1	307-8508	BUCKET LINKAGE GROUP	446
1	307-9228	MONITOR AND MOUNTING GROUP	508
1	307-9229	CONSOLE WIRING GROUP	94
1	307-9230	WIRING GROUP	114
1	307-9231	LIGHTING GROUP(WARNING)	221
1	308-4113	FILM GROUP	552
1	308-7814	CYLINDER GROUP(BLCV)	429
1	308-7815	CYLINDER GROUP(SLCV)	430
1	308-9559	CONNECTOR GROUP	224
1	319-6376	BOOM GROUP(OFFSET)	438

J146820 HE01

SPECIAL ARRANGEMENT (307-8503 N/S) -SHOVEL CRANE-CANOPY/STANDARD STICK
AN ATTACHMENT

CONSISTS OF :

			PAGE
1	296-1768	CANOPY GROUP	469
1	307-6002	BOOM LINES GROUP	370
1	307-6003	STICK LINES GROUP	366
1	307-6004	PILOT LINES GROUP	342
1	307-8508	BUCKET LINKAGE GROUP	446
1	307-9229	CONSOLE WIRING GROUP	94
1	307-9230	WIRING GROUP(ROTARY BEACON)	114
1	307-9231	WARNING LIGHTING GROUP	221
1	308-7814	CYLINDER GROUP(BLCV)	429
1	308-7815	CYLINDER GROUP(SLCV)	430
1	317-7738	FILM GROUP	554
1	319-6376	OFFSET BOOM GROUP	438
1	325-9930	CONNECTOR GROUP(CRANE)	225
1	329-3429	MONITOR AND MOUNTING GROUP	509

J153798 HE00

MACHINE ARRANGEMENT

CONSISTS OF :

			PAGE
1	307-6002	BOOM LINES GROUP	370
1	307-6003	STICK LINES GROUP	366
1	307-6004	PILOT LINES GROUP	342
1	307-8508	BUCKET LINKAGE GROUP	446
1	307-9232	MONITOR AND MOUNTING GROUP	510
1	307-9233	CONSOLE WIRING GROUP	100
1	307-9234	WIRING GROUP	116
1	307-9235	LIGHTING GROUP(WARNING)	221
1	308-4114	FILM GROUP	556
1	308-7814	CYLINDER GROUP(BLCV)	429
1	308-7815	CYLINDER GROUP(SLCV)	430
1	308-9559	CONNECTOR GROUP	224
1	319-6376	BOOM GROUP(OFFSET)	438

J146847 HE02

SPECIAL ARRANGEMENT (307-8504 N/S) -SHOVEL CRANE-CAB/STANDARD STICK
AN ATTACHMENT

CONSISTS OF :

			PAGE
1	307-6002	BOOM LINES GROUP	370
1	307-6003	STICK LINES GROUP	366
1	307-8508	BUCKET LINKAGE GROUP	446
1	307-9235	LIGHTING GROUP	221
1	308-4114	FILM GROUP	556
1	308-7814	CYLINDER GROUP(BLCV)	429
1	308-7815	CYLINDER GROUP(SLCV)	430
1	308-9559	CONNECTOR GROUP	224
1	319-6376	OFFSET BOOM GROUP	438
1	322-9478	PILOT LINES GROUP	344
1	325-9912	MONITOR AND MOUNTING GROUP	511
1	325-9917	CONSOLE WIRING GROUP	106
1	325-9918	WIRING GROUP	118

J152884 HE03

MACHINE ARRANGEMENT

CONSISTS OF :

			PAGE
1	307-6002	BOOM LINES GROUP	370
1	307-6003	STICK LINES GROUP	366
1	307-6004	PILOT LINES GROUP	342
1	307-8508	BUCKET LINKAGE GROUP	446
1	307-9233	CONSOLE WIRING GROUP	100
1	307-9234	WIRING GROUP	116
1	307-9235	WARNING LIGHTING GROUP	221
1	308-7814	CYLINDER GROUP(BLCV)	429
1	308-7815	CYLINDER GROUP(SLCV)	430
1	317-7739	FILM GROUP	558
1	319-6376	OFFSET BOOM GROUP	438
1	325-9930	CONNECTOR GROUP	225
1	329-3430	MONITOR AND MOUNTING GROUP	512

J152891 HE00

CONSISTS OF :

			PAGE
1	307-6002	BOOM LINES GROUP	370
1	307-6003	STICK LINES GROUP	366
1	307-8508	BUCKET LINKAGE GROUP	446
1	307-9235	WARNING LIGHTING GROUP	221
1	308-7814	CYLINDER GROUP(BLCV)	429
1	308-7815	CYLINDER GROUP(SLCV)	430
1	317-7739	FILM GROUP	558
1	319-6376	OFFSET BOOM GROUP	438
1	322-9478	PILOT LINES GROUP	344
1	325-9917	CONSOLE WIRING GROUP	106
1	325-9918	WIRING GROUP	118
1	325-9930	CONNECTOR GROUP	225
1	334-6597	MONITOR AND MOUNTING GROUP	513

J152900 HE01

ENGINE ARRANGEMENT

CONSISTS OF :

PAGE

CENTRAL STRUCTURE

1 283-1253 CYLINDER BLOCK GROUP ····· 11

3 283-1255 CONNECTING ROD AND PISTON GROUP ····· 15

1 283-1263 CRANKSHAFT GROUP ····· 16

1 283-1270 CAMSHAFT GROUP ····· 19

UPPER STRUCTURE

1 283-1272 CYLINDER HEAD GROUP ····· 13

1 283-1275 VALVE MECHANISM COVER GROUP ····· 21

1 283-1279 VALVE MECHANISM GROUP ····· 20

FRONT STRUCTURE

1 280-3724 FRONT HOUSING GROUP ····· 22

1 280-3725 FRONT GEAR GROUP ····· 23

1 283-1281 CRANKSHAFT PULLEY GROUP ····· 18

REAR STRUCTURE

1 283-1283 FLYWHEEL GROUP ····· 23

LOWER STRUCTURE

1 283-1286 OIL PAN GROUP ····· 18

J147886 X01

319-5605 ENGINE ARRANGEMENT -PRIMARY-PART 1 OF 2
PART OF 296-1771-Page 1

ENGINE ARRANGEMENT

CONSISTS OF :

PAGE

LUBRICATION SYSTEM

1 280-3721 ENGINE OIL FILLER GROUP ····· 25

1 283-1289 ENGINE OIL PUMP GROUP ····· 24

1 320-7129 ADAPTER GROUP(OIL FILTER) ····· 26

COOLING SYSTEM

1 280-3730 WATER PUMP GROUP ····· 35

INTAKE AND EXHAUST SYSTEM

1 283-1297 INLET MANIFOLD GROUP ····· 41

1 283-1299 EXHAUST MANIFOLD GROUP ····· 40

FUEL SYSTEM

1 283-1302 FUEL INJECTION PUMP GROUP ····· 54

1 283-1306 FUEL INJECTION LINES GROUP ····· 55

ELECTRICAL AND STARTING SYSTEM

1 280-3736 ELECTRIC STARTING MOTOR GROUP ····· 226

1 283-1309 CHARGING ALTERNATOR GROUP ····· 227

1 283-1311 GLOW PLUG GROUP ····· 224

J147887 X01

ENGINE ARRANGEMENT

CONSISTS OF :

			PAGE
1	307-8885	EXHAUST EXTENSION GROUP	42
1	319-2767	MUFFLER GROUP	43
1	297-4034	AIR LINES GROUP	37
1	297-4029	RADIATOR GROUP	28
1	276-2215	STARTING MOTOR FASTENER GROUP	226
1	319-2757	OIL FILTER AND MOUNTING GROUP	25
1	297-6492	ENGINE MOUNTING GROUP	285
1	286-2250	SUCTION FAN GROUP	27
1	297-4033	AIR CLEANER GROUP	38
1	277-8147	MECHANICAL SHUTOFF GROUP	44

J146529 X05

INSTALLATION ARRANGEMENT (296-2599 N/S)
PART OF 296-1771-Page 1

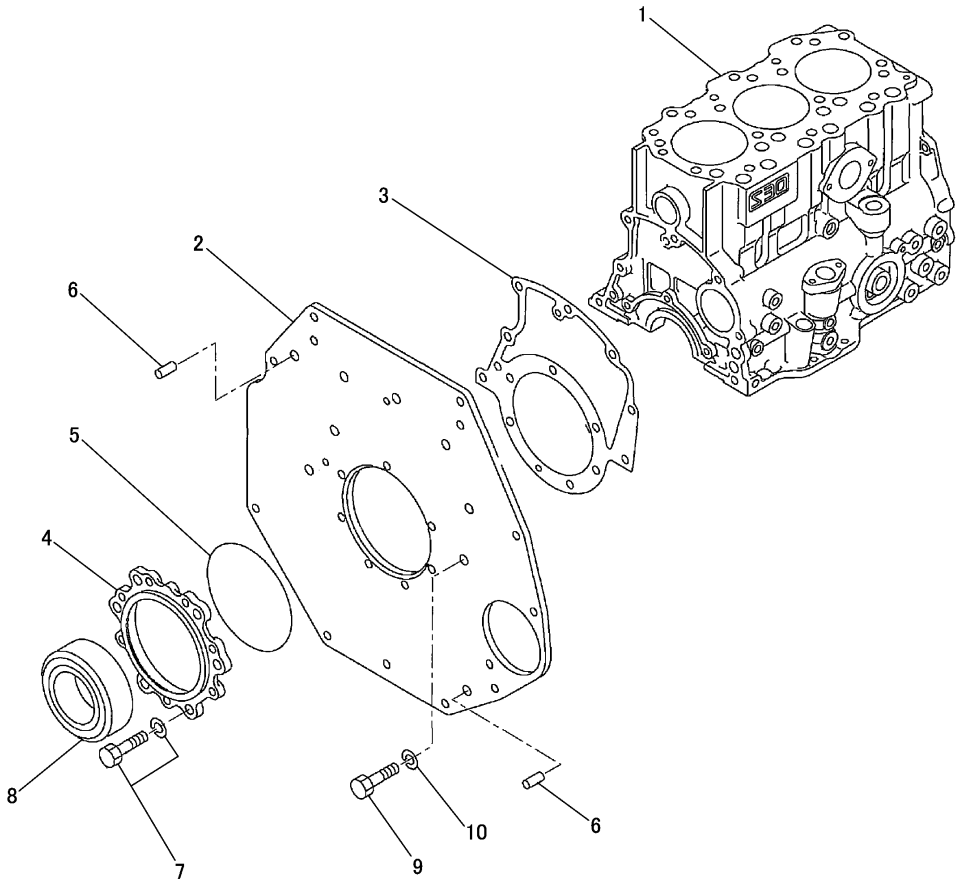

NOTE	No.	PART NO.	QTY	PART NAME	NOTE	No.	PART NO.	QTY	PART NAME
Y	1	319-3646	1	BLOCK AS					
	2	280-3739	1	PLATE					
	3	270-6224	1	GASKET					
	4	280-3740	1	CASE					
	5	280-3741	1	SEAL					
	6	195-8237	2	PIN					
	7	270-6203	7	BOLT					
	8	117-5015	1	SEAL AS					
	9	5I-4936	7	BOLT(M10×1.25)					
	10	7X-0796	7	LOCKWASHER					

Y-SEPARATE ILLUSTRATION

J148672 X02

CYLINDER BLOCK GROUP (283-1253 N/S)

PART OF 319-5605-Page 8
REFERENCE:319-3646-Page 12

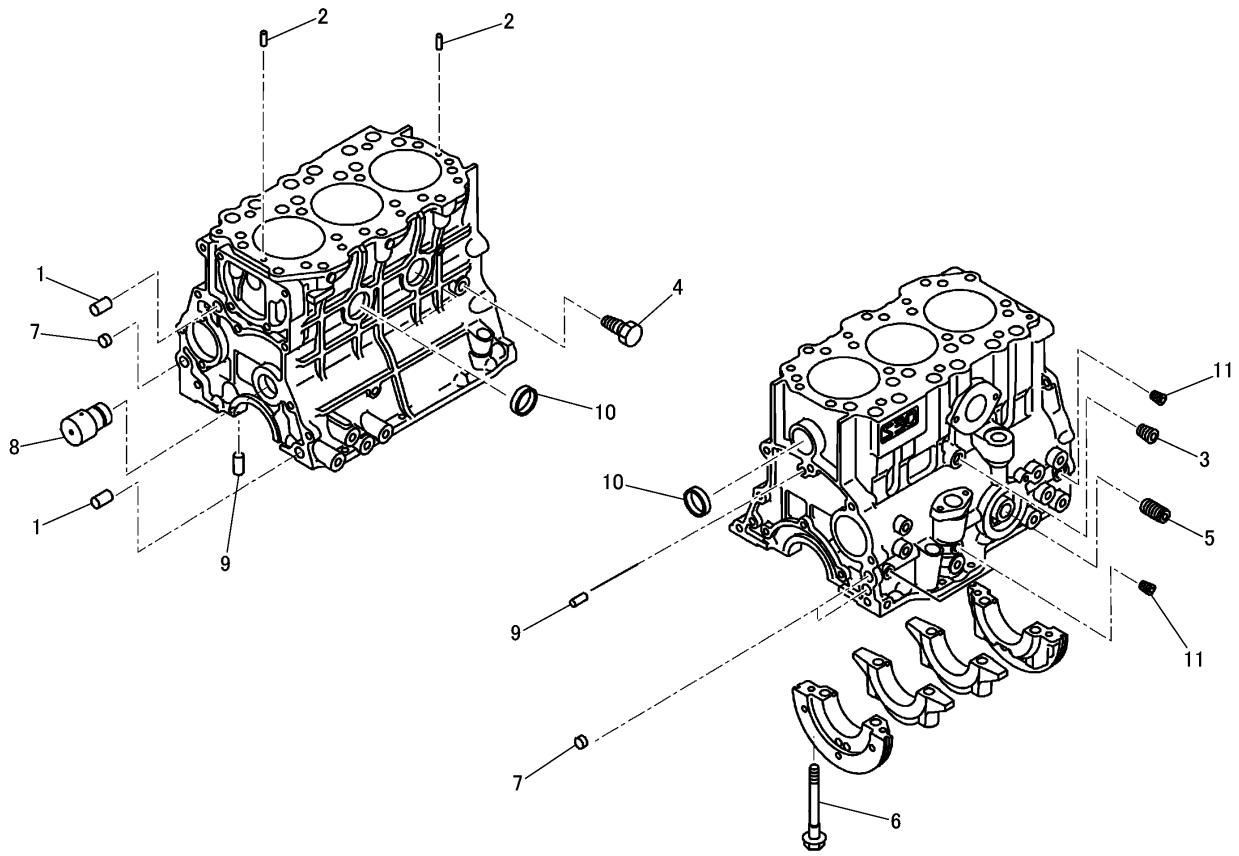

NOTE	No.	PART NO.	QTY	PART NAME	NOTE	No.	PART NO.	QTY	PART NAME
J	1	103-9275	2	PIN					
J	2	104-1218	2	PIN					
J	3	195-8211	1	PLUG					
J	4	195-8220	1	PLUG					
J	5	199-2142	1	SHAFT					
J	6	270-6163	8	BOLT					
J	7	270-6165	3	CAP					
J	8	270-6167	1	SHAFT					
J	9	273-9585	6	PIN					
J	10	3P-1896	4	PLUG					
J	11	5I-7505	4	PLUG					

J-SERVICE REPAIR

J148673 X00

319-3646 CYLINDER BLOCK ASSEMBLY
PART OF 283-1253-Page 11

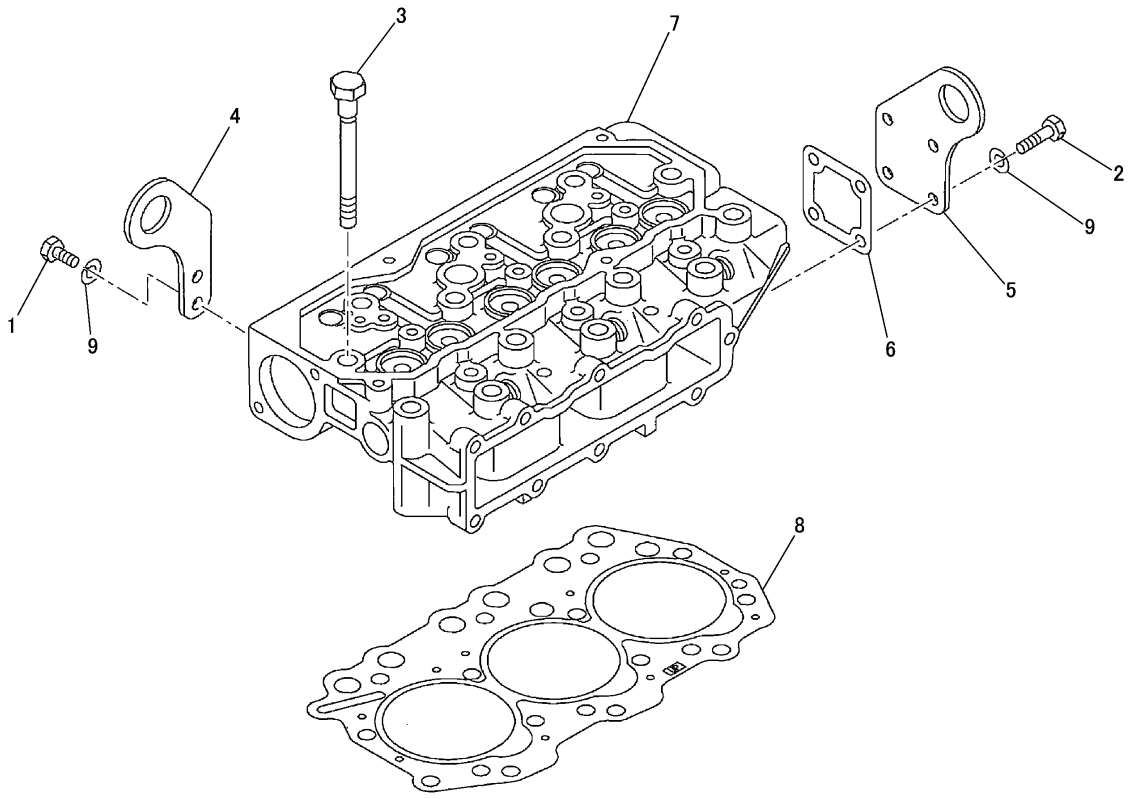

NOTE	No.	PART NO.	QTY	PART NAME	NOTE	No.	PART NO.	QTY	PART NAME
	1	8T－4200	2	BOLT(M8×1.25)					
	2	8T－4189	4	BOLT(M8×1.25)					
	3	270－6183	14	BOLT					
	4	270－6185	1	PLATE					
	5	270－6186	1	PLATE					
	6	270－6187	1	GASKET					
Y	7	283－1273	1	HEAD AS					
	8	283－1274	1	GASKET					
	9	3B－4505	6	LOCKWASHER					

Y-SEPARATE ILLUSTRATION

J141889 X01

CYLINDER HEAD GROUP (283-1272 N/S)

PART OF 319-5605-Page 8
REFERENCE:283-1273-Page 14

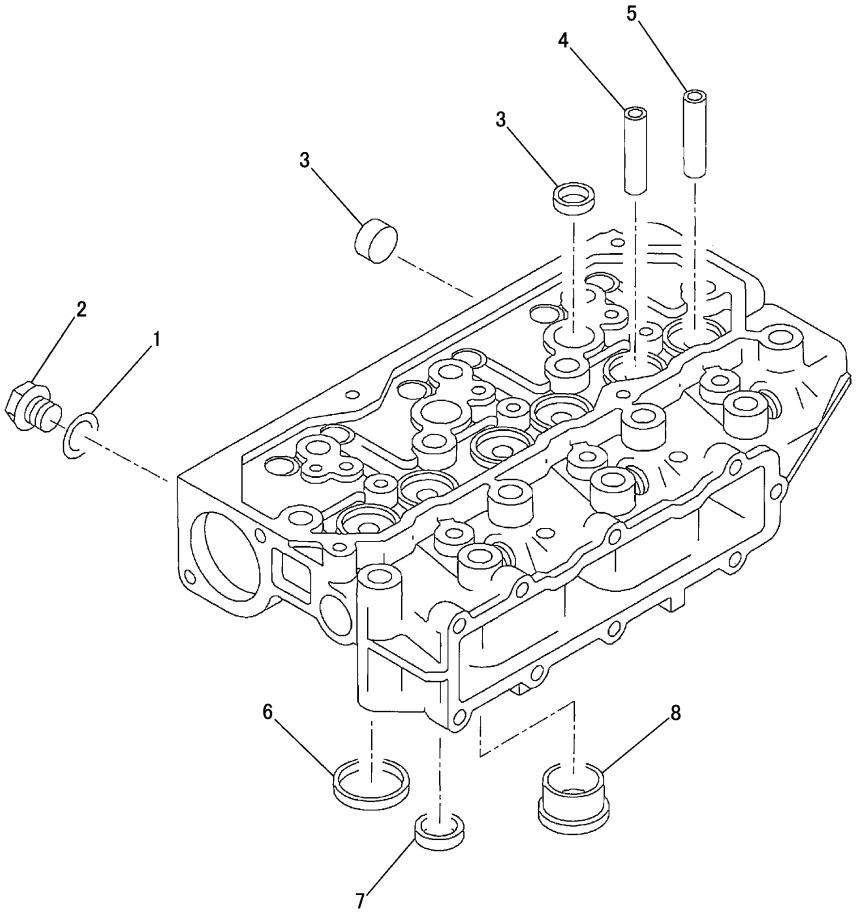

NOTE	No.	PART NO.	QTY	PART NAME	NOTE	No.	PART NO.	QTY	PART NAME
	1	5I-7628	1	GASKET					
	2	5I-8056	1	PLUG					
	3	103-9011	5	CAP					
	4	103-9247	3	GUIDE					
	5	270-6189	3	GUIDE					
	6	270-6190	3	SEAT					
	7	270-6191	3	SEAT					
	8	270-6192	3	JET					

J141890 X01

283-1273 CYLINDER HEAD ASSEMBLY
PART OF 283-1272-Page 13

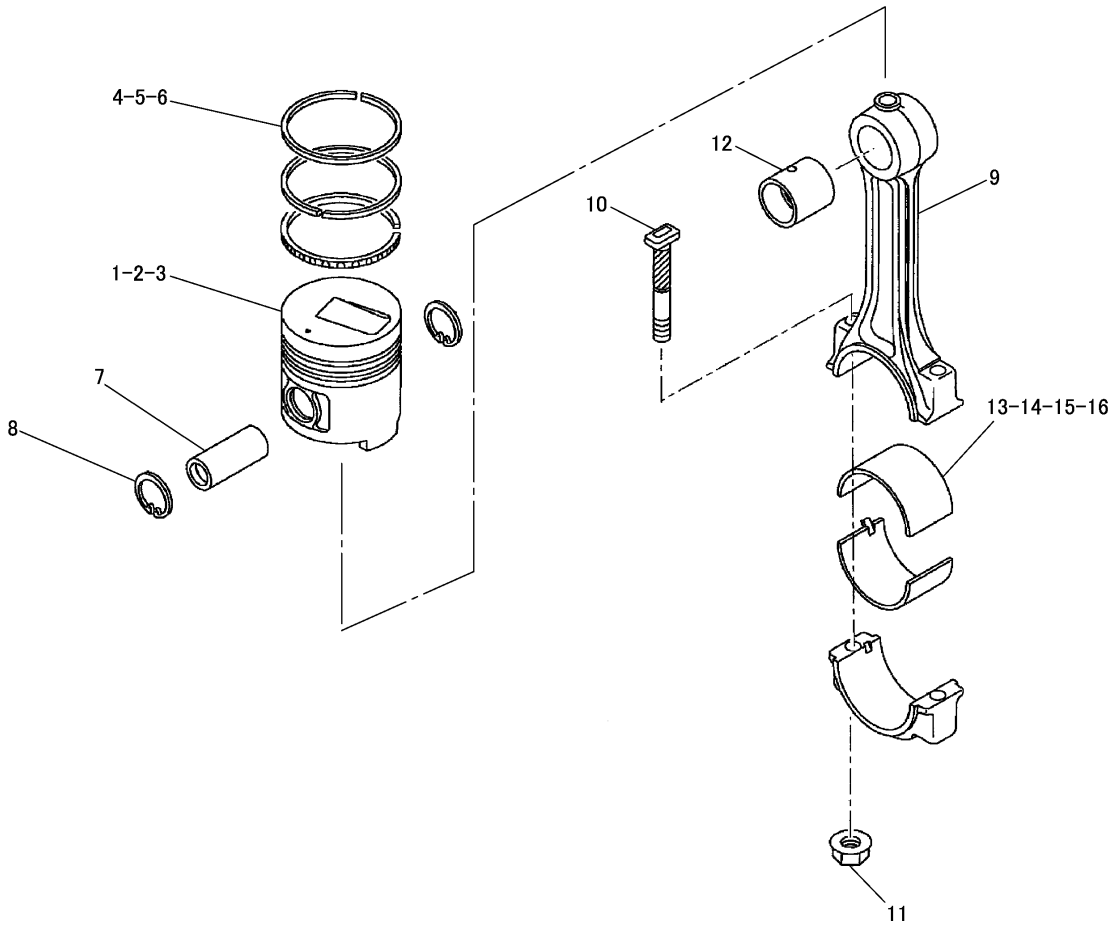

NOTE	No.	PART NO.	QTY	PART NAME	NOTE	No.	PART NO.	QTY	PART NAME
	1	282-8561	1	PISTON AS	J	15	238-8284	1	BEARING
J	2	282-8562	1	PISTON AS					(0.5mm UNDERSIZE)
				(0.25mm OVERSIZE)	J	16	238-8285	1	BEARING
J	3	282-8563	1	PISTON AS					(0.75mm UNDERSIZE)
				(0.5mm OVERSIZE)					
	4	283-1256	1	RING SET					
J	5	283-1261	1	RING SET					
				(0.25mm OVERSIZE)					
J	6	283-1262	1	RING SET					
				(0.5mm OVERSIZE)					
	7	270-6170	1	PIN					
	8	6V-5205	2	RING					
	9	272-0445	1	ROD AS					
J	10	128-2955	2	BOLT					
J	11	128-2956	2	NUT					
J	12	270-6175	1	BEARING					
	13	283-1257	1	BEARING					
J	14	238-8283	1	BEARING					
				(0.25mm UNDERSIZE)					

J-SERVICE REPAIR

J149870 X00

ROD AND PISTON GROUP (283-1255 N/S)
PART OF 319-5605-Page 8

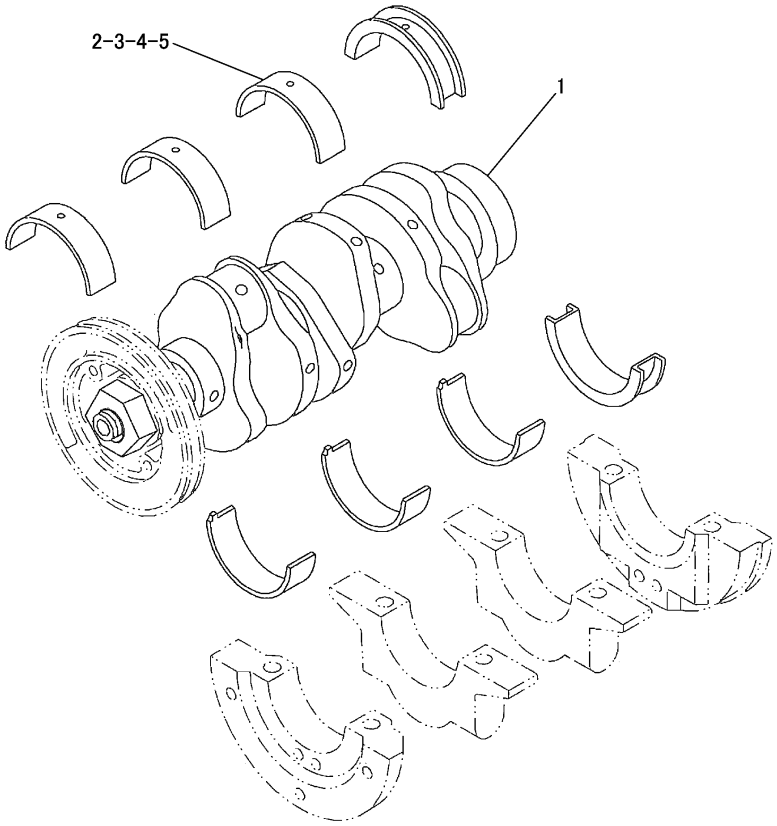

NOTE	No.	PART NO.	QTY	PART NAME	NOTE	No.	PART NO.	QTY	PART NAME
Y	1	283－1269	1	CRANKSHAFT AS					
	2	283－1264	1	BEARING SET(MAIN)					
	3	283－1265	1	BEARING SET (0.25mm UNDERSIZE)					
	4	283－1266	1	BEARING SET (0.50mm UNDERSIZE)					
	5	283－1267	1	BEARING SET (0.75mm UNDERSIZE)					

Y-SEPARATE ILLUSTRATION

J146278 X01

CRANKSHAFT GROUP (283-1263 N/S)

PART OF 319-5605-Page 8
REFERENCE:283-1269-Page 17

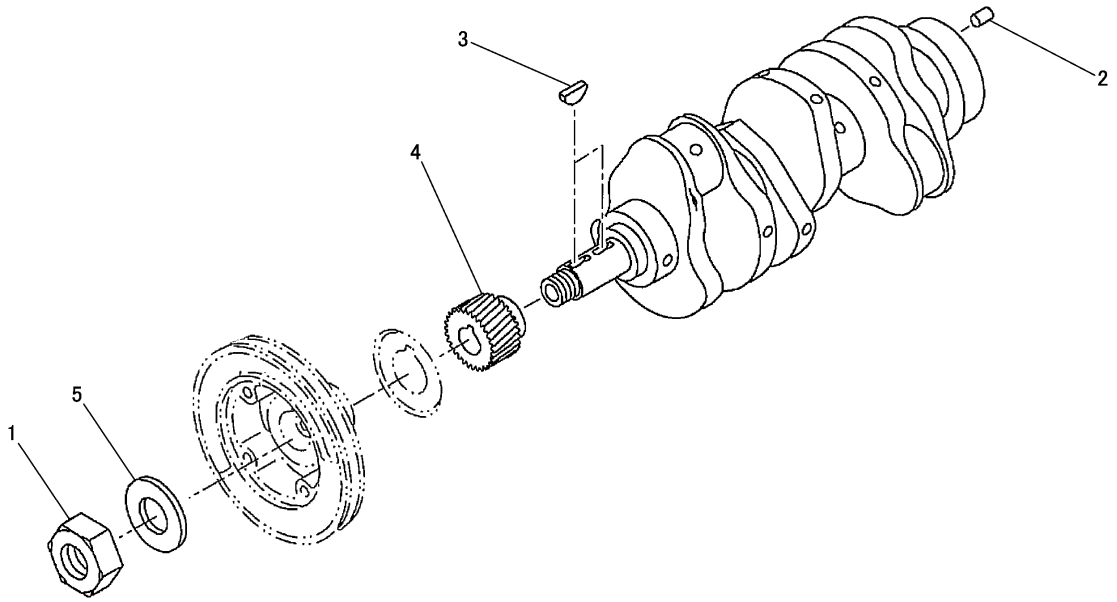

NOTE	No.	PART NO.	QTY	PART NAME	NOTE	No.	PART NO.	QTY	PART NAME
	1	094－3627	1	NUT					
	2	085－9513	2	PIN					
	3	094－4628	2	KEY					
	4	270－6178	1	GEAR					
	5	095－4904	1	WASHER					

J141888 X01

283-1269 CRANKSHAFT ASSEMBLY

PART OF 283-1263-Page 16

BASIC ENGINE

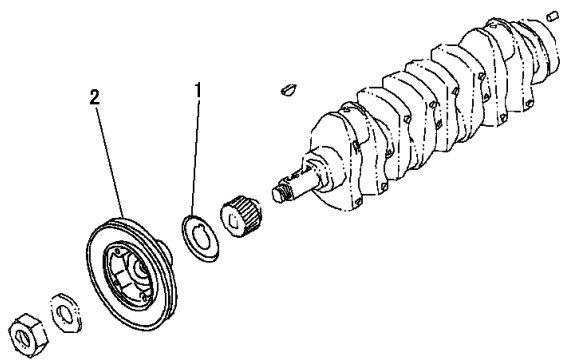

NOTE	No.	PART NO.	QTY	PART NAME
	1	270－6219	1	PLATE
	2	283－1282	1	PULLEY

J135980 X00

CRANKSHAFT PULLEY GROUP (283-1281 N/S)
PART OF 319-5605-Page 8

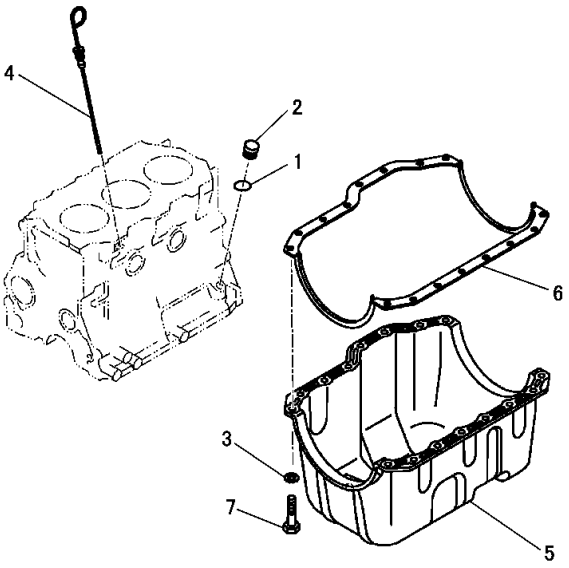

NOTE	No.	PART NO.	QTY	PART NAME
	1	5I－4993	1	SEAL
	2	107－3667	1	PLUG
	3	3B－4505	16	LOCKWASHER
	4	280－3751	1	GAGE
	5	283－1287	1	PAN AS
		135－8432	1	PLUG
		147－7156	1	GASKET
	6	309－2533	1	GASKET
	7	8T－4200	16	BOLT(M8×1.25)

J144585 X02

OIL PAN GROUP (283-1286 N/S)
PART OF 319-5605-Page 8

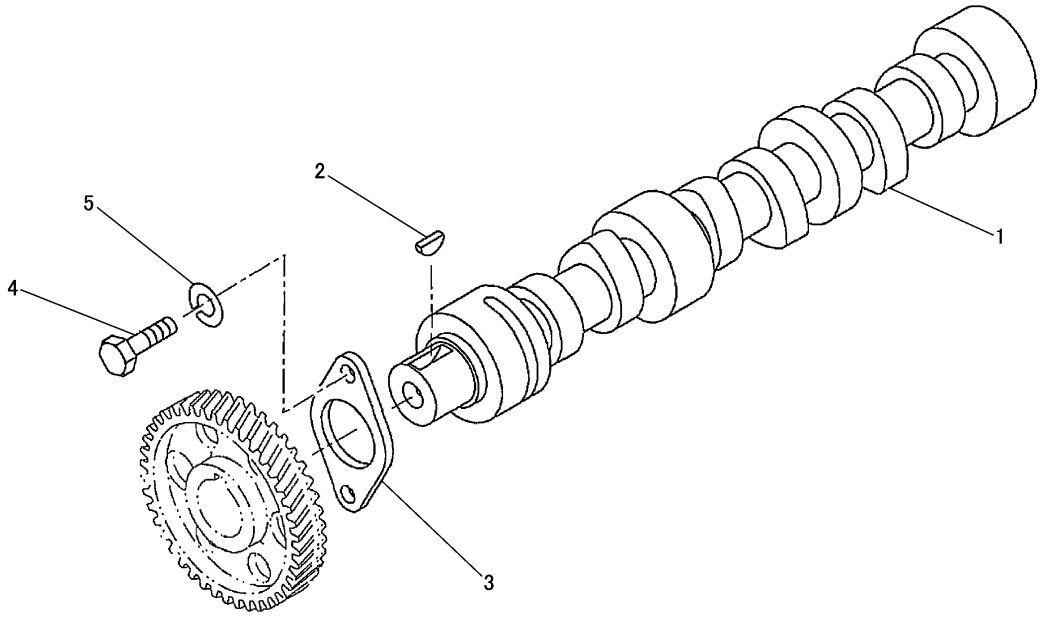

NOTE	No.	PART NO.	QTY	PART NAME	NOTE	No.	PART NO.	QTY	PART NAME
	1	283－1271	1	CAMSHAFT					
	2	094－4628	1	KEY					
	3	233－5485	1	PLATE					
	4	8T－4200	2	BOLT(M8×1.25)					
	5	3B－4505	2	LOCKWASHER					

J141884 X01

CAMSHAFT GROUP (283-1270 N/S)
PART OF 319-5605-Page 8

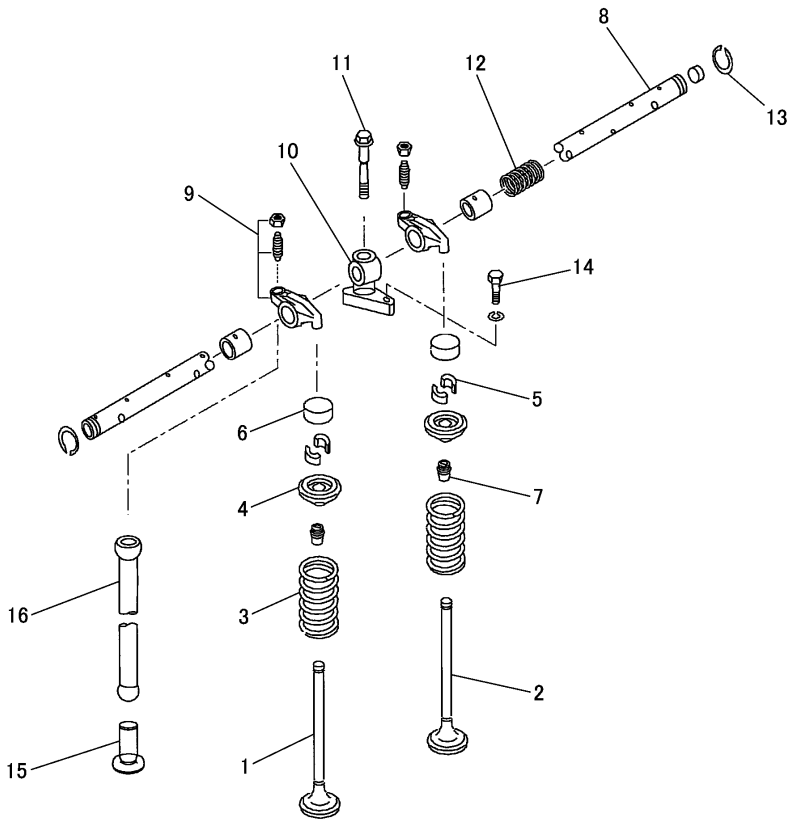

NOTE	No.	PART NO.	QTY	PART NAME	NOTE	No.	PART NO.	QTY	PART NAME
	1	250－4776	3	VALVE(INLET)					
	2	270－6196	3	VALVE(EXHAUST)					
	3	233－5471	6	SPRING					
	4	5I－7625	6	RETAINER					
	5	5I－7719	12	COTTER					
	6	5I－7630	6	CAP					
	7	270－6197	6	SEAL					
	8	283－1280	1	SHAFT AS					
	9	270－6199	6	ARM AS					
		091－3474	1	NUT(M8×1.25)					
		270－6200	1	SCREW					
	10	270－6201	3	BRACKET					
	11	199－2201	3	BOLT(M8×1.25)					
	12	221－5250	2	SPRING					
	13	195－8324	2	RING					
	14	270－6203	3	BOLT					
	15	103－9272	6	TAPPET					
	16	103－9273	6	ROD					

J134128 X00

VALVE MECHANISM GROUP (283-1279 N/S)
PART OF 319-5605-Page 8

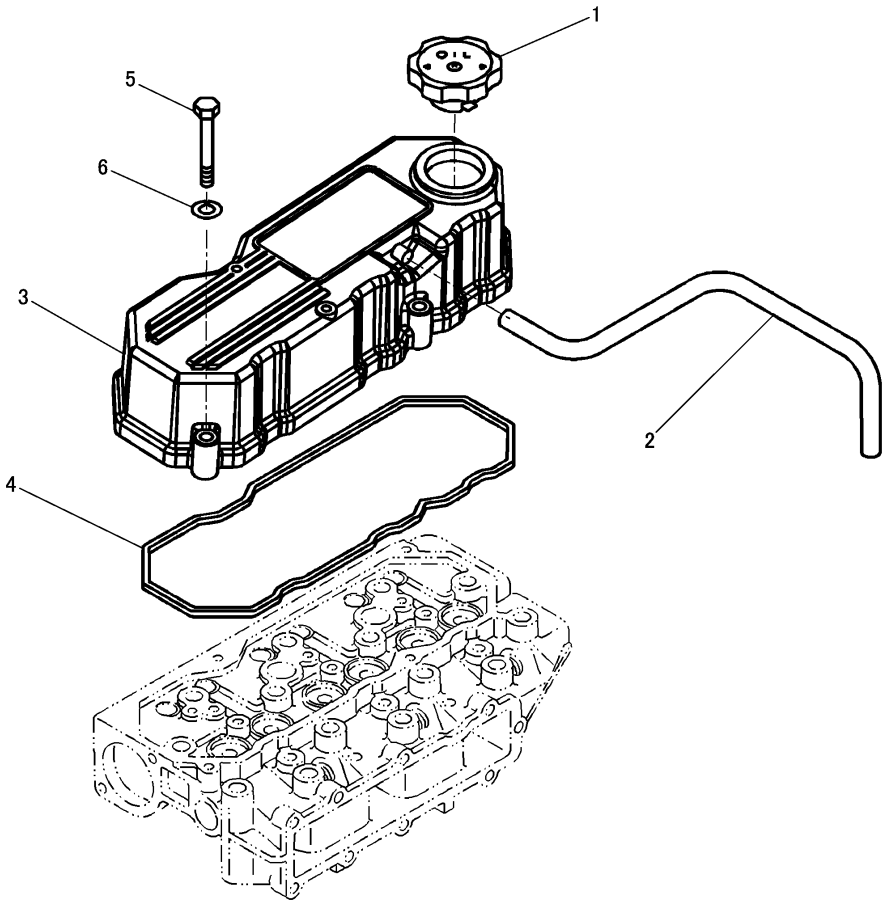

NOTE	No.	PART NO.	QTY	PART NAME	NOTE	No.	PART NO.	QTY	PART NAME
	1	199-2182	1	CAP					
	2	283-1278	1	HOSE					
	3	320-1022	1	COVER AS					
	4	283-1277	1	GASKET					
	5	195-8256	4	BOLT(M8×1.25)					
	6	3B-4505	4	LOCKWASHER					

J148674 X03

VALVE MECHANISM COVER GROUP (283-1275 N/S)
PART OF 319-5605-Page 8

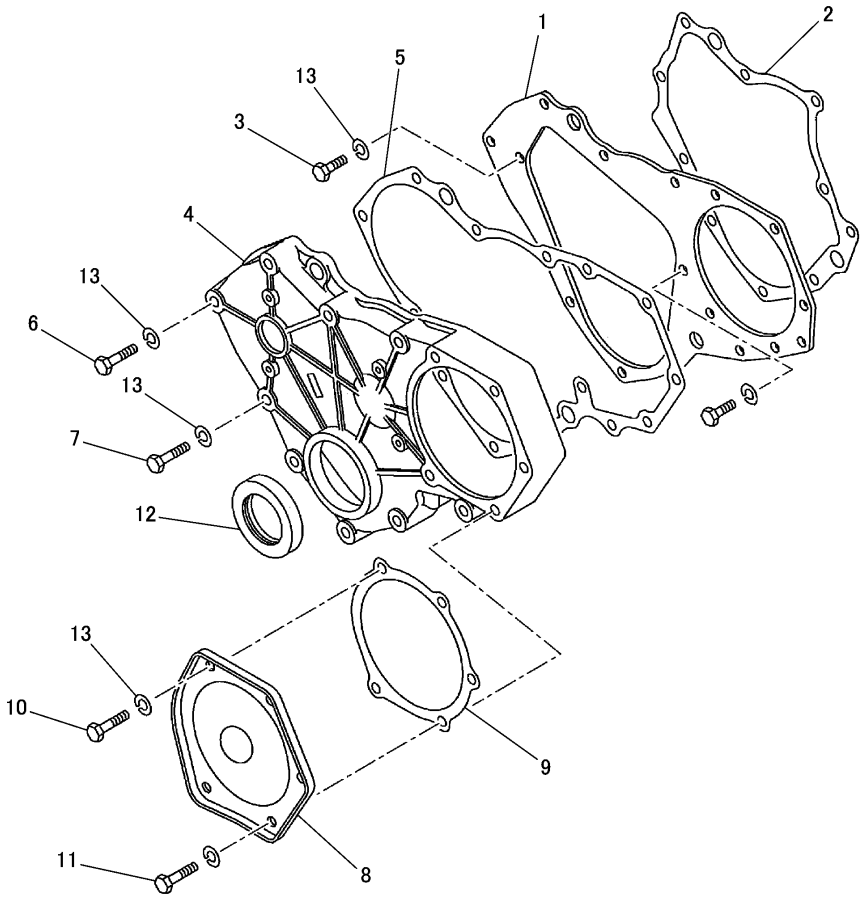

NOTE	No.	PART NO.	QTY	PART NAME	NOTE	No.	PART NO.	QTY	PART NAME
	1	270-6204	1	PLATE					
	2	270-6205	1	GASKET					
	3	8T-4200	2	BOLT(M8×1.25)					
	4	280-3747	1	HOUSING					
	5	270-6209	1	GASKET					
	6	8T-4197	1	BOLT(M8×1.25)					
	7	8T-6912	8	BOLT(M8×1.25)					
	8	280-3748	1	COVER					
	9	139-0850	1	GASKET					
	10	8T-6869	4	BOLT(M8×1.25)					
	11	270-6213	1	BOLT					
	12	270-6214	1	SEAL					
	13	3B-4505	15	LOCKWASHER					

J135820 X00

FRONT HOUSING GROUP (280-3724 N/S)

PART OF 319-5605-Page 8

BASIC ENGINE

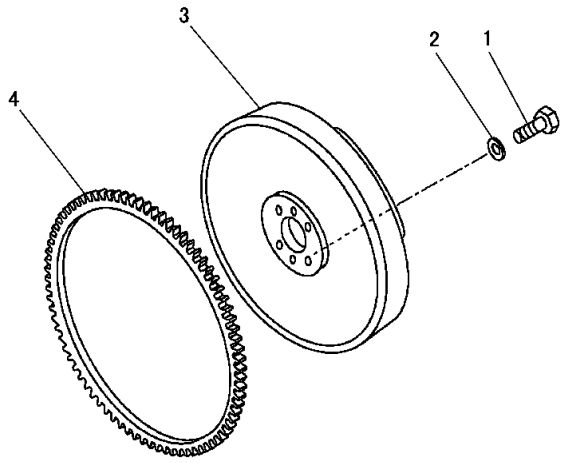

NOTE	No.	PART NO.	QTY	PART NAME
	1	5I-5005	4	BOLT(M12×1.25)
	2	096-2501	4	WASHER
	3	283-1284	1	FLYWHEEL AS
	4	270-6222	1	GEAR

J134127 X00

FLYWHEEL GROUP (283-1283 N/S)
PART OF 319-5605-Page 8

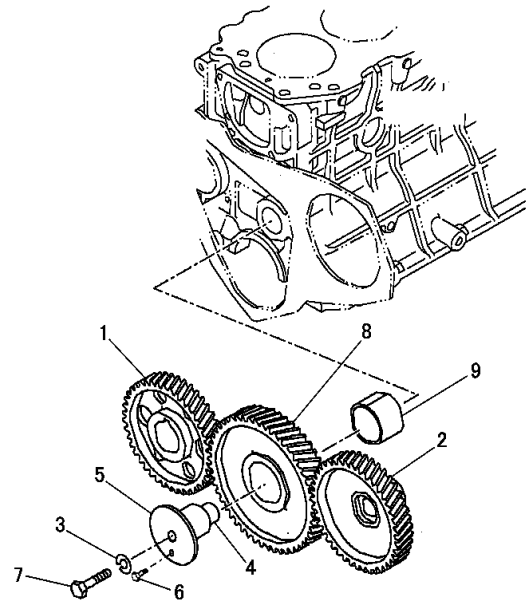

NOTE	No.	PART NO.	QTY	PART NAME
	1	270-6215	1	GEAR
	2	280-3749	1	GEAR
	3	7X-0796	1	LOCKWASHER
	4	222-8201	1	SHAFT
	5	222-8202	1	PLATE
	6	222-8212	1	BOLT(M10×1.25)
	7	5I-4936	1	BOLT(M10×1.25)
	8	270-6217	1	GEAR AS
	9	270-6218	1	BEARING

J138298 X00

FRONT GEAR GROUP (280-3725 N/S)
PART OF 319-5605-Page 8

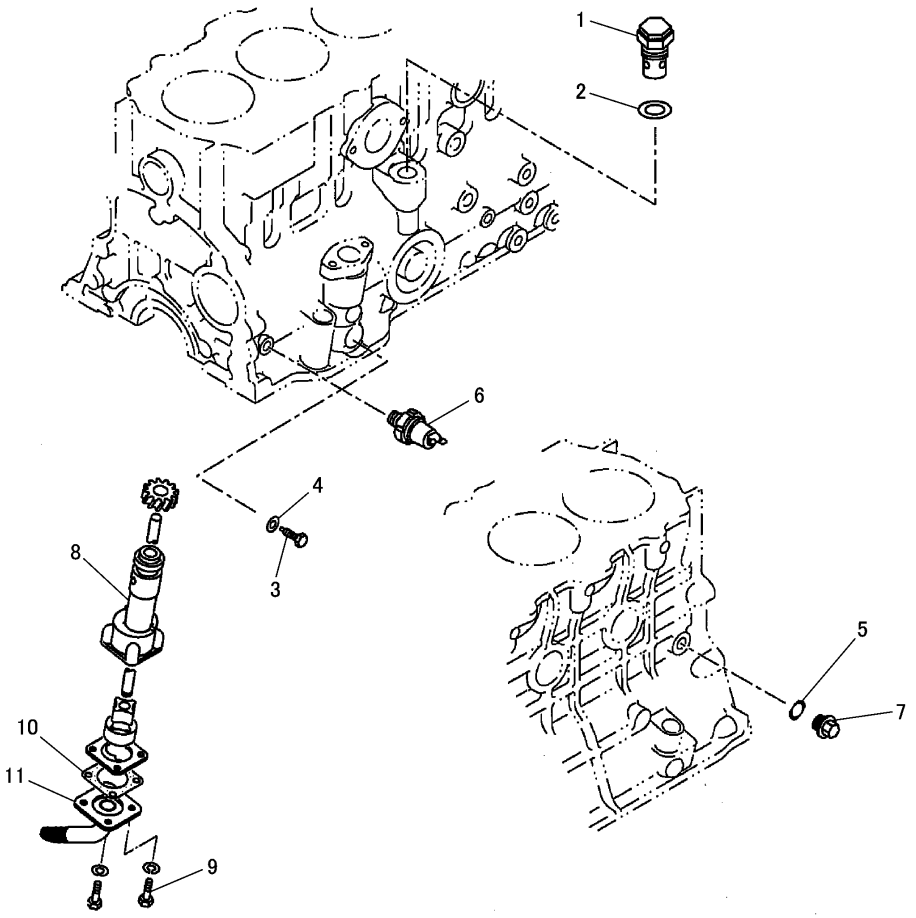

NOTE	No.	PART NO.	QTY	PART NAME	NOTE	No.	PART NO.	QTY	PART NAME
	1	103-9725	1	VALVE AS					
	2	5B-5947	1	GASKET					
	3	270-6233	1	BOLT					
	4	270-6234	1	GASKET					
	5	5I-7628	1	GASKET					
	6	195-8453	1	SWITCH AS					
	7	5I-8056	1	PLUG					
	8	282-8568	1	PUMP AS					
		282-8569	1	CASE AS					
		282-8570	1	ROTOR SHAFT AS					
		9X-8256	2	WASHER					
		096-2500	2	WASHER					
		8T-4138	2	BOLT(M6×1)					
	9	096-2500	2	WASHER					
		8T-4138	2	BOLT(M6×1)					
	10	282-8573	1	GASKET					
	11	283-1291	1	STRAINER					

J146634 X01

ENGINE OIL PUMP GROUP (283-1289 N/S)
PART OF 319-5605-Page 9

LUBRICATION SYSTEM

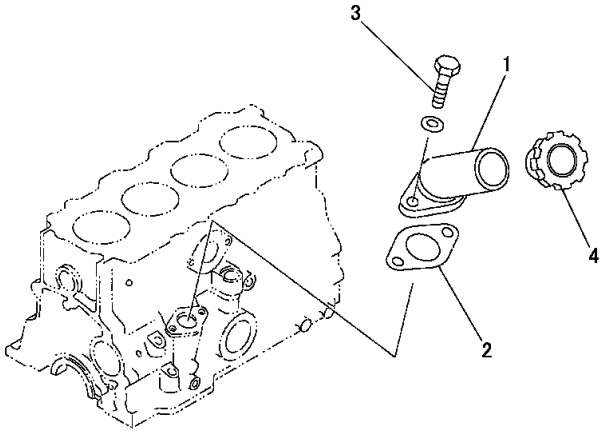

NOTE	No.	PART NO.	QTY	PART NAME
	1	280-3743	1	PIPE
	2	280-3805	1	GASKET
	3	8T-4189	2	BOLT(M8×1.25)
		3B-4505	2	LOCKWASHER
	4	234-0388	1	CAP FILLER

J141042 X01

ENGINE OIL FILLER GROUP (280-3721 N/S)

PART OF 319-5605-Page 9

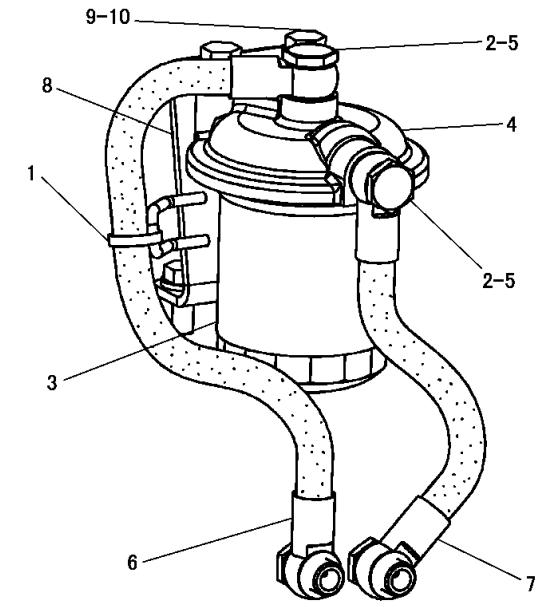

NOTE	No.	PART NO.	QTY	PART NAME
	1	3S-2093	1	STRAP
	2	096-9532	8	WASHER
	3	120-0664	1	FILTER
	4	232-2989	1	BRACKET
	5	232-2991	4	EYEBOLT(M16×1.5)
	6	267-4379	1	HOSE AS
	7	272-4828	1	HOSE AS
	8	319-2758	1	BRACKET AS
	9	8T-4121	4	WASHER
	10	8T-4136	4	BOLT(M10×1.5)

J147509 X00

ENGINE OIL FILTER AND MOUNTING GROUP (319-2757 N/S)

PART OF 296-2599-Page 10

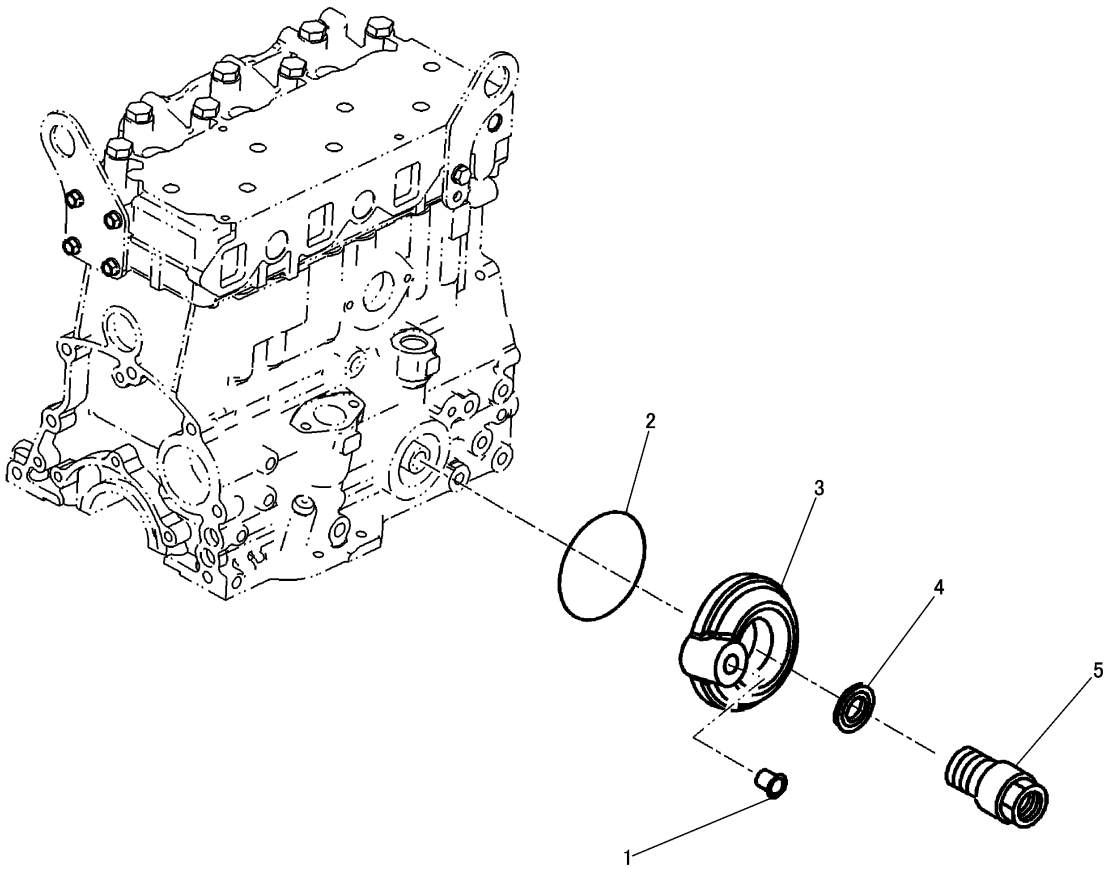

NOTE	No.	PART NO.	QTY	PART NAME	NOTE	No.	PART NO.	QTY	PART NAME
	1	195-8243	2	PLUG					
	2	F315306000	1	O-RING					
	3	270-6250	1	COVER					
	4	270-6251	1	WASHER					
	5	319-3734	1	CONNECTOR					

J147495 X00

ADAPTER GROUP (320-7129 N/S) -OIL FILTER
PART OF 319-5605-Page 9

COOLING SYSTEM

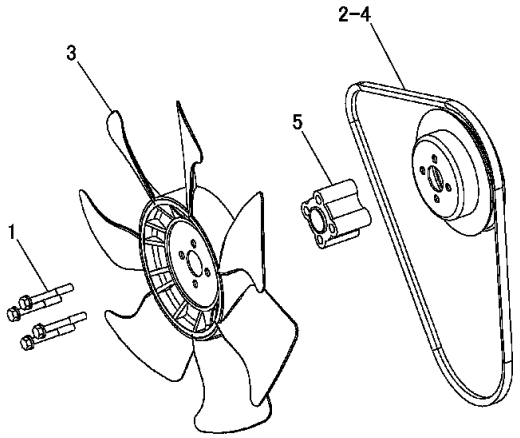

NOTE	No.	PART NO.	QTY	PART NAME
	1	8T-6869	4	BOLT(M8×1.25)
		3B-4505	4	LOCKWASHER
	2	270-6339	1	V-BELT
	3	280-3788	1	FAN
	4	286-0038	1	PULLEY
	5	289-7445	1	SPACER

J140882 X02

SUCTION FAN GROUP (286-2250 N/S)
PART OF 296-2599-Page 10

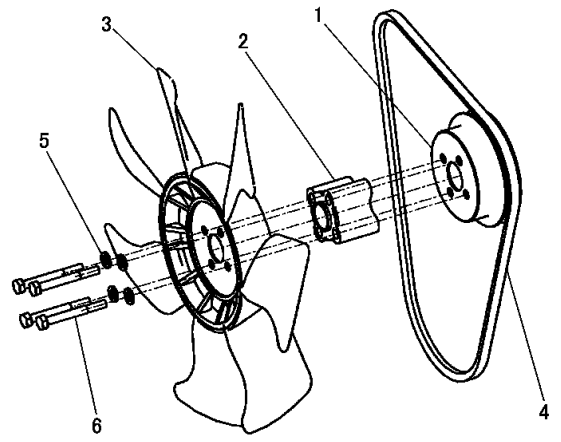

NOTE	No.	PART NO.	QTY	PART NAME
	1	234-4807	1	PULLEY
	2	270-6337	1	SPACER
	3	280-3788	1	FAN
	4	280-3790	1	V-BELT
	5	8T-4224	4	WASHER
	6	8T-6870	4	BOLT(M8×1.25)

J152828 X00

SUCTION FAN GROUP (334-7158 N/S)
PART OF 308-4118-Page 466
APPLIES TO CAB AIR CONDITIONER SPECIFICATION MACHINE
AN ATTACHMENT

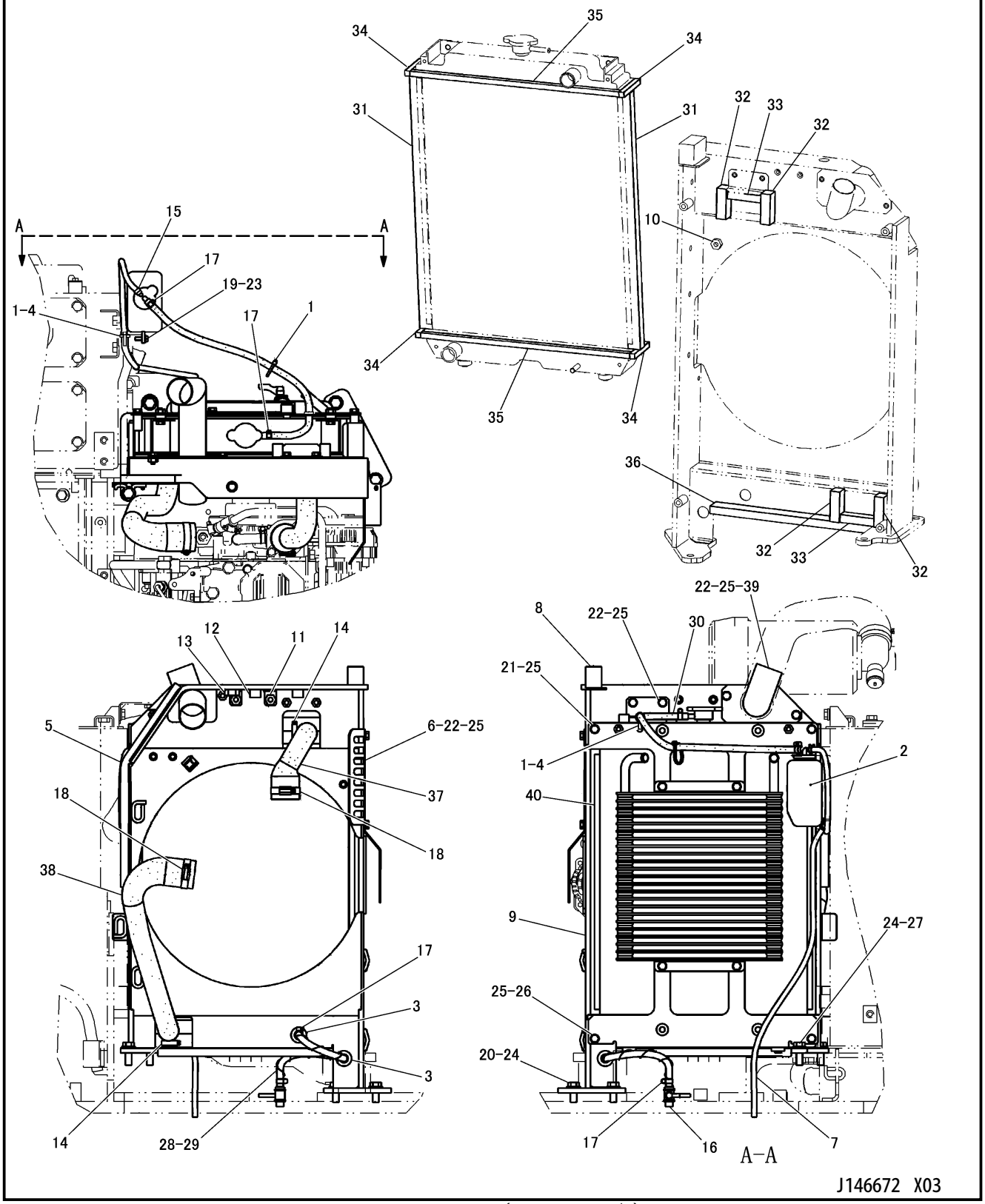

RADIATOR GROUP (297-4029 N/S)
PART OF 296-2599-Page 10

COOLING SYSTEM

NOTE	No.	PART NO.	QTY	PART NAME
	1	3S-2093	3	STRAP
	2	140-4236	1	TANK AS
		140-4238	1	CAP AS
	3	174-7233	2	GROMMET
	4	266-7379	2	STRAP
	5	269-5090	1	FORM
	6	291-0753	1	GUARD
E	7	292-8504		TUBE---94cm
	8	298-5000	1	FORM
Z	9	306-5733	1	SUPPORT AS
	10	8T-3490	2	NUT(M10×1.5)(WELD)
	11	8T-3612	5	NUT(M8×1.25)(WELD)
	12	9R-2821	2	BOSS(M10×1.5)
	13	9X-6269	1	NUT(M16×2)(WELD)
	14	095-1390	2	CLAMP
	15	140-4763	1	CLAMP
	16	175-4614	1	VALVE AS
	17	1P-4278	4	CLAMP
	18	240-0454	2	CLAMP
	19	8T-4138	2	BOLT(M6×1)
	20	8T-4139	2	BOLT(M12×1.75)
	21	8T-4189	2	BOLT(M8×1.25)
	22	8T-4200	6	BOLT(M8×1.25)
	23	8T-4205	2	WASHER
	24	8T-4223	4	WASHER
	25	8T-4224	10	WASHER
	26	8T-4908	2	BOLT(M8×1.25)
	27	8T-4956	2	BOLT(M12×1.75)
E	28	7I-7439		GUARD---39cm
E	29	7Y-1976		HOSE---43cm
E	30	7Y-1976		HOSE---53cm
D	31	5P-5687		SEAL---0.5m(×2)
D	32	5P-5687		SEAL---0.06m(×4)
D	33	5P-5687		SEAL---0.07m(×2)
E	34	146-1058		SEAL---7cm(×4)
E	35	146-1058		SEAL---42cm(×2)
E	36	3E-6602		SEAL---33cm
	37	306-5734	1	HOSE
	38	306-5735	1	HOSE
	39	317-2900	1	TUBE AS
Y	40	318-9213	1	RADIATOR GROUP

NOTE	No.	PART NO.	QTY	PART NAME

D-ORDER BY THE m
E-ORDER BY THE cm
Y-SEPARATE ILLUSTRATION
Z-NOT SERVICED SEPARATELY

J146672 X03

RADIATOR GROUP (297-4029 N/S)

PART OF 296-2599-Page 10
REFERENCE:318-9213-Page 32

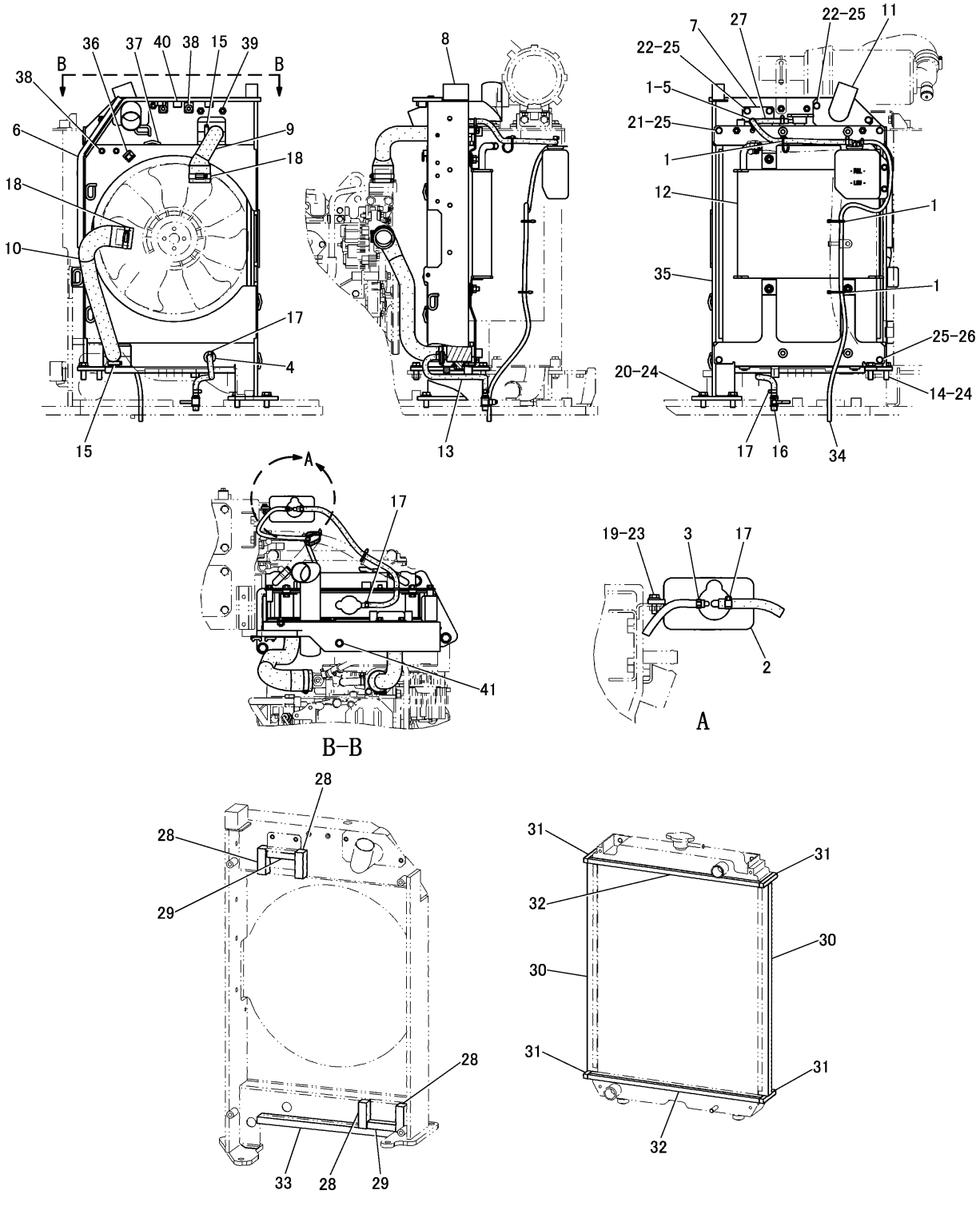

RADIATOR GROUP (334-5510 N/S) -OIL COOLER
PART OF 308-4118-Page 466
APPLIES TO CAB AIR CONDITIONER SPECIFICATION MACHINE
AN ATTACHMENT

COOLING SYSTEM

NOTE	No.	PART NO.	QTY	PART NAME
	1	3S-2093	4	STRAP
	2	140-4236	1	TANK AS
		140-4237	1	TANK
		140-4238	1	CAP AS
	3	140-4763	1	CLAMP
	4	174-7233	1	GROMMET
	5	266-7379	1	STRAP
	6	269-5090	1	FORM
Z	7	298-2342	1	PLATE
	8	298-5000	1	FORM
	9	306-5734	1	HOSE
	10	306-5735	1	HOSE
	11	317-2900	1	TUBE AS
Y	12	332-4449	1	RADIATOR GROUP
	13	332-4453	1	HOSE
	14	8T-4956	2	BOLT(M12×1.75)
	15	095-1390	2	CLAMP
	16	175-4614	1	VALVE AS
	17	1P-4278	4	CLAMP
	18	240-0454	2	CLAMP
	19	8T-4138	2	BOLT(M6×1)
	20	8T-4139	2	BOLT(M12×1.75)
	21	8T-4189	2	BOLT(M8×1.25)
	22	8T-4200	4	BOLT(M8×1.25)
	23	8T-4205	2	WASHER
	24	8T-4223	4	WASHER
	25	8T-4224	8	WASHER
	26	8T-4908	2	BOLT(M8×1.25)
E	27	7Y-1976		HOSE---53cm
D	28	5P-5687		SEAL---0.06m(×4)
D	29	5P-5687		SEAL---0.07m(×2)
D	30	5P-5687		SEAL---0.5m(×2)
E	31	146-1058		SEAL---7cm(×4)
E	32	146-1058		SEAL---42cm(×2)
E	33	3E-6602		SEAL---33cm
E	34	292-8504		TUBE---94cm
	35	334-5511	1	SUPPORT AS
	36	183-1051	1	CLIP
	37	7T-1099	7	LINK
	38	8T-3490	4	NUT(M10×1.5)(WELD)
	39	8T-3612	4	NUT(M8×1.25)(WELD)
	40	9R-2821	2	BOSS(M10×1.5)
	41	9X-6269	1	NUT(M16×2)(WELD)

D-ORDER BY THE m
E-ORDER BY THE cm
Y-SEPARATE ILLUSTRATION
Z-NOT SERVICED SEPARATELY

J152825 X00

RADIATOR GROUP (334-5510 N/S) -OIL COOLER

PART OF 308-4118-Page 466
REFERENCE:332-4449-Page 33
APPLIES TO CAB AIR CONDITIONER SPECIFICATION MACHINE
AN ATTACHMENT

COOLING SYSTEM

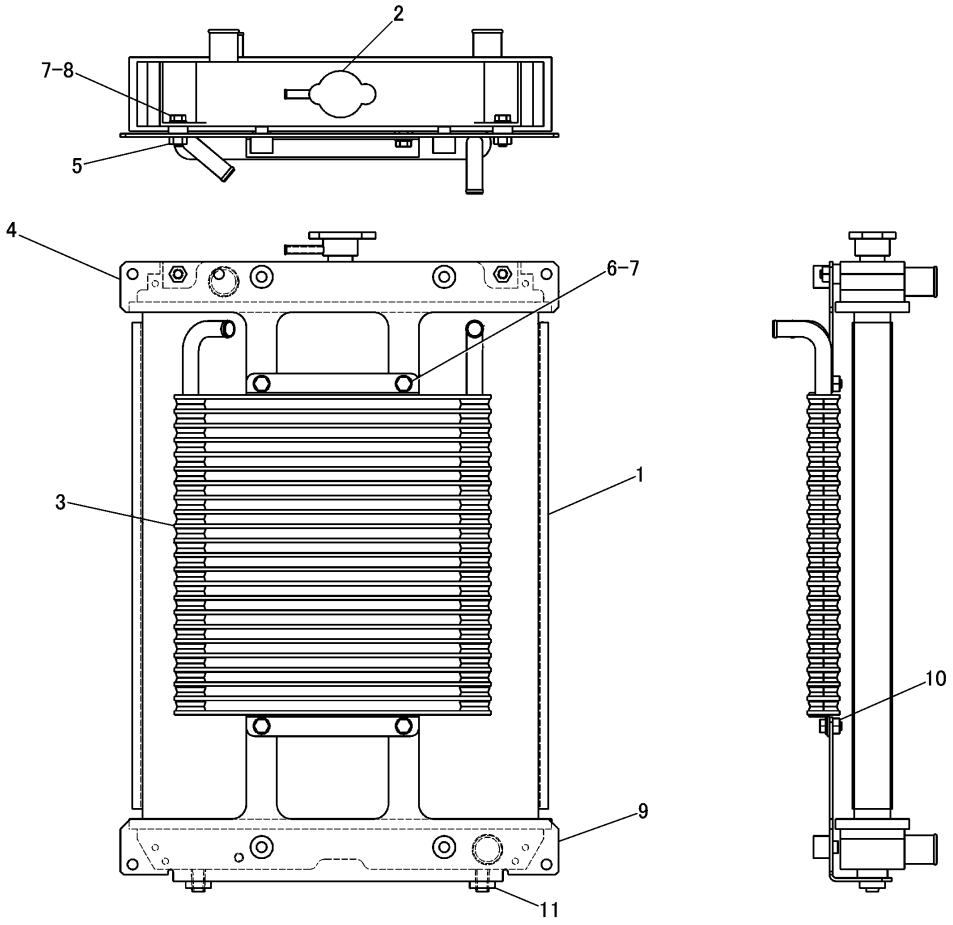

NOTE	No.	PART NO.	QTY	PART NAME	NOTE	No.	PART NO.	QTY	PART NAME
	1	271-7047	1	RADIATOR GROUP					
	2	247-5086	1	CAP					
	3	318-9215	1	CORE AS					
	4	319-1517	1	BRACKET AS					
	5	8T-3612	4	NUT(M8×1.25)(WELD)					
	6	8T-4200	4	BOLT(M8×1.25)					
	7	8T-4224	6	WASHER					
	8	8T-4908	2	BOLT(M8×1.25)					
	9	318-9214	1	BRACKET AS					
	10	8T-3612	2	NUT(M8×1.25)(WELD)					
	11	210-1304	2	CUSHION					

J147512 X00

RADIATOR GROUP (318-9213 N/S)
PART OF 297-4029-Page 29

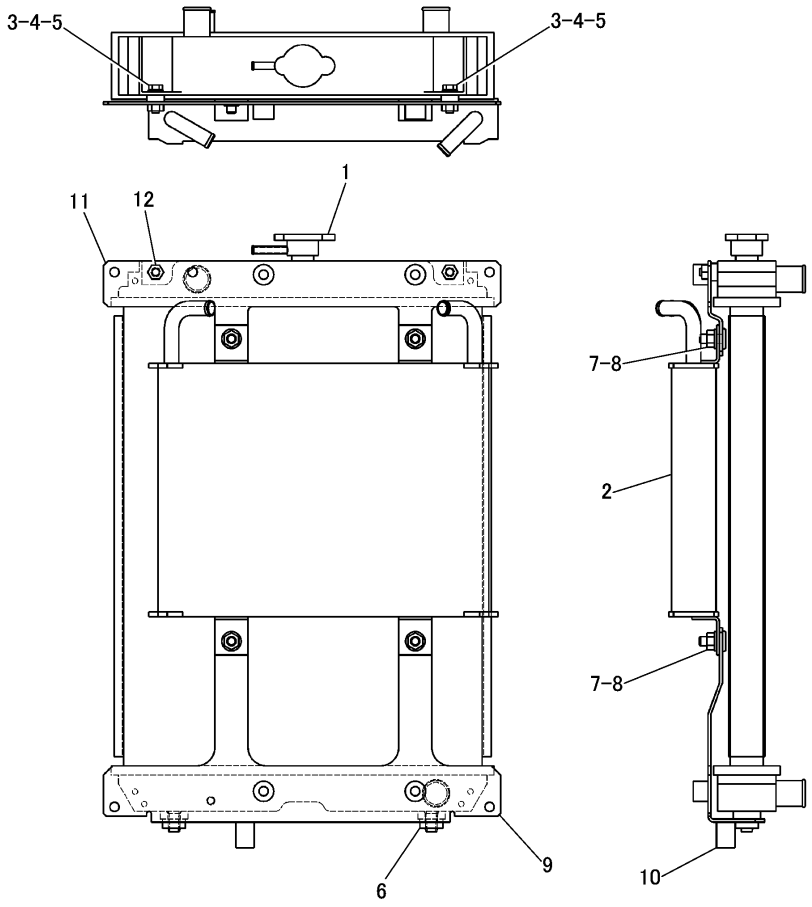

NOTE	No.	PART NO.	QTY	PART NAME	NOTE	No.	PART NO.	QTY	PART NAME
	1	271-7047	1	RADIATOR GROUP					
		247-5086	1	CAP					
	2	329-1082	1	CORE AS					
	3	8T-4224	2	WASHER					
	4	8T-4908	2	BOLT(M8×1.25)					
	5	332-4454	2	COLLAR					
	6	210-1304	2	CUSHION					
	7	8T-4121	4	WASHER					
	8	8T-4133	4	NUT(M10×1.5)					
	9	332-4450	1	BRACKET AS					
	10	9R-9359	1	BOSS(M10×1.5)					
	11	332-4451	1	BRACKET AS					
	12	8T-3612	2	NUT(M8×1.25)(WELD)					

J151915 X00

RADIATOR GROUP (332-4449 N/S) -OIL COOLER
PART OF 334-5510-Page 31
APPLIES TO CAB AIR CONDITIONER SPECIFICATION MACHINE
AN ATTACHMENT

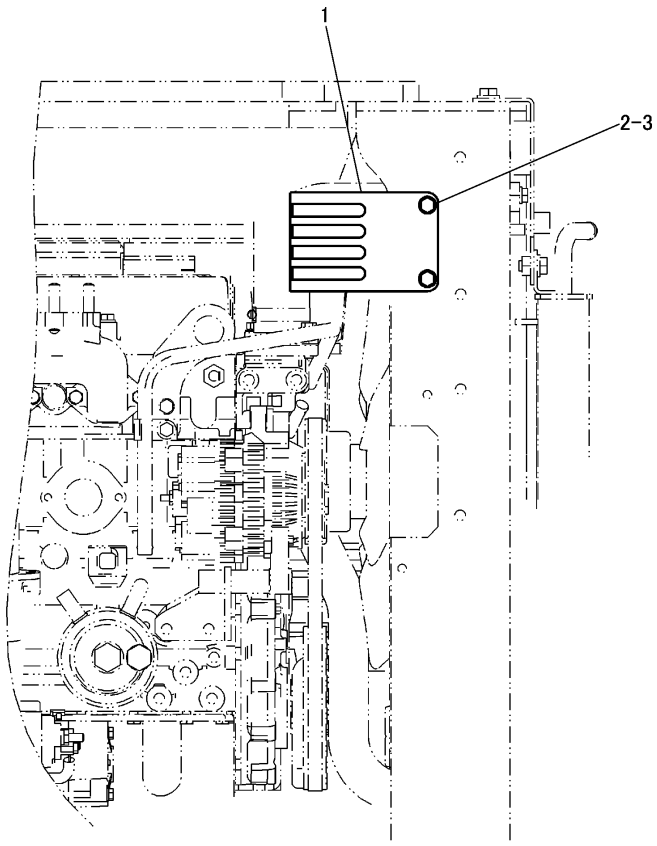

NOTE	No.	PART NO.	QTY	PART NAME	NOTE	No.	PART NO.	QTY	PART NAME
	1	317-2897	1	GUARD					
	2	8T-4200	2	BOLT(M8×1.25)					
	3	8T-4224	2	WASHER					

J152798 X02

FAN GUARD GROUP (308-4631 N/S)
PART OF 308-4117-Page 465, 308-4118-Page 466
AN ATTACHMENT

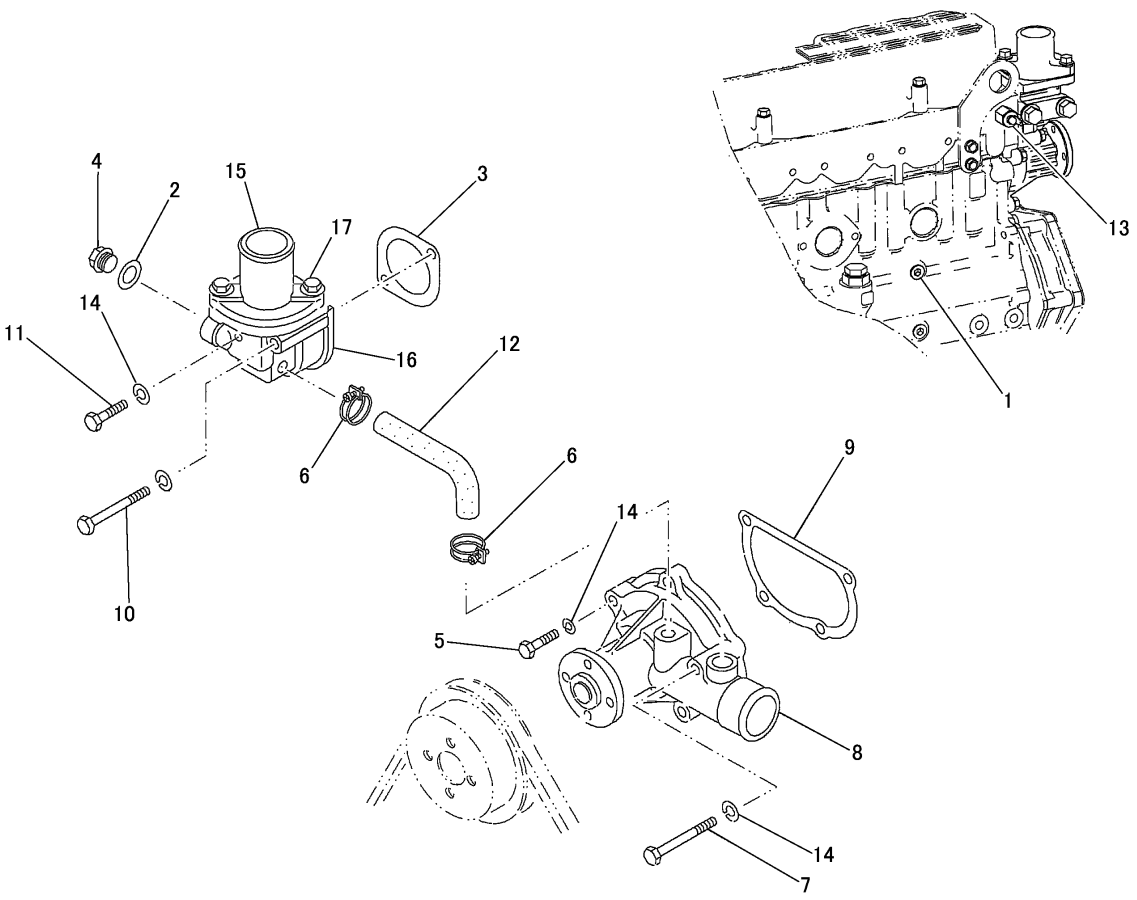

NOTE	No.	PART NO.	QTY	PART NAME	NOTE	No.	PART NO.	QTY	PART NAME
	1	5I-7505	1	PLUG					
	2	5I-7628	1	GASKET					
	3	5I-7728	1	GASKET					
	4	5I-8056	1	PLUG					
	5	8T-4197	3	BOLT(M8×1.25)					
	6	234-4830	2	CLAMP					
	7	8T-6869	1	BOLT(M8×1.25)					
Y	8	270-6252	1	PUMP AS					
	9	270-6256	1	GASKET					
	10	270-6257	1	BOLT					
	11	195-8256	1	BOLT(M8×1.25)					
	12	270-6261	1	HOSE					
	13	280-3754	1	SENDER					
	14	3B-4505	5	LOCKWASHER					
	15	288-8576	1	THERMOSTAT AS					
		235-4959	1	GASKET					
		103-9766	1	THERMOSTAT					
	16	235-4961	1	CASE AS					
	17	096-8475	2	BOLT					

Y-SEPARATE ILLUSTRATION

J141049 X01

WATER PUMP GROUP (280-3730 N/S)

PART OF 319-5605-Page 9
REFERENCE:270-6252-Page 36

COOLING SYSTEM

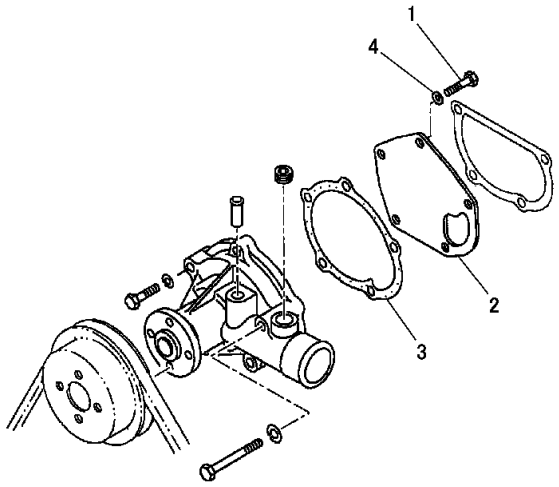

NOTE	No.	PART NO.	QTY	PART NAME
	1	8T－4189	1	BOLT(M8×1.25)
	2	270－6253	1	COVER
	3	270－6255	1	GASKET
	4	3B－4505	1	LOCKWASHER

J136915 X00

270-6252 WATER PUMP ASSEMBLY
PART OF 280-3730-Page 35

AIR INLET AND EXHAUST SYSTEM

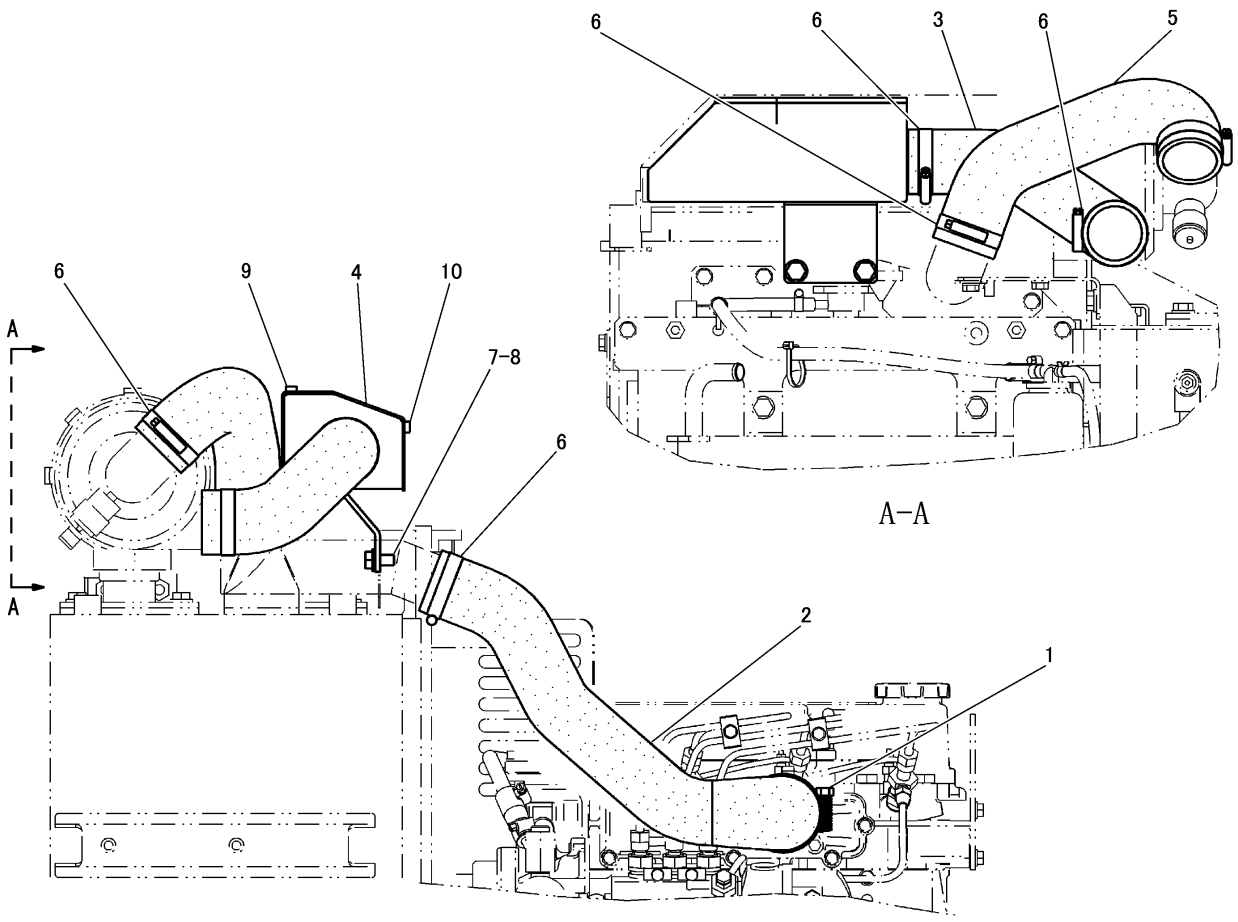

NOTE	No.	PART NO.	QTY	PART NAME	NOTE	No.	PART NO.	QTY	PART NAME
	1	095－1393	1	CLAMP					
	2	308－1781	1	HOSE					
	3	308－1786	1	HOSE					
	4	317－2893	1	CHANBER AS					
	5	317－2903	1	HOSE					
	6	095－1392	5	CLAMP					
	7	8T－4121	2	WASHER					
	8	8T－4137	2	BOLT(M10×1.5)					
D	9	128－2596		SEAL---0.18m					
D	10	128－2596		SEAL---0.20m					

D-ORDER BY THE m

J146667 X02

AIR LINES GROUP (297-4034 N/S)
PART OF 296-2599-Page 10

AIR INLET AND EXHAUST SYSTEM

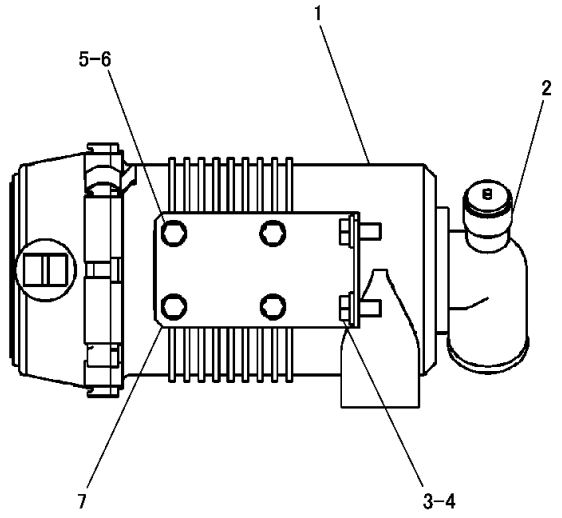

NOTE	No.	PART NO.	QTY	PART NAME
	1	306-5738	1	CLEANER GROUP
		146-7472	1	ELEMENT(PRIMARY)
	2	096-5028	1	INDICATOR
	3	8T-4121	2	WASHER
	4	8T-4137	2	BOLT(M10×1.5)
	5	8T-4189	4	BOLT(M8×1.25)
	6	8T-4224	4	WASHER
	7	310-8288	1	BRACKET

J146662 X03

AIR CLEANER GROUP (297-4033 N/S)
PART OF 296-2599-Page 10

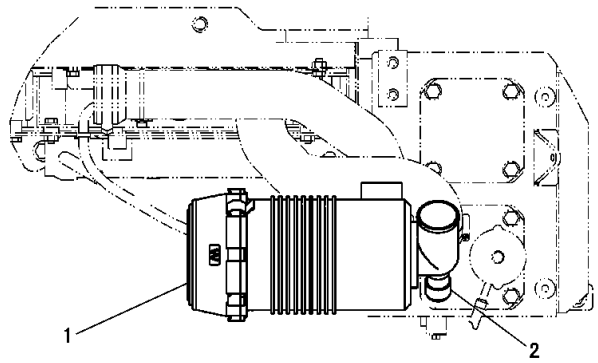

NOTE	No.	PART NO.	QTY	PART NAME
Z	1	307-9362	1	CLEANER GROUP
		146-7472	1	ELEMENT(PRIMARY)
		146-7473	1	ELEMENT(SECONDARY)
	2	096-5028	1	INDICATOR

Z-NOT SERVICED SEPARATELY

J146746 X00

AIR CLEANER GROUP (297-7464 N/S)
AN ATTACHMENT

AIR INLET AND EXHAUST SYSTEM

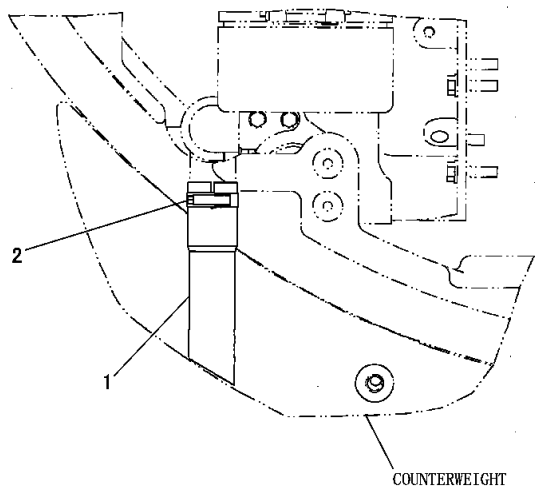

TOP VIEW

NOTE	No.	PART NO.	QTY	PART NAME
	1	269-5080	1	PIPE
	2	095-9785	1	CLAMP

J136033 X00

EXTENSION GROUP (276-1472 N/S)
PART OF 296-1626-Page 281
AN ATTACHMENT

AIR INLET AND EXHAUST SYSTEM

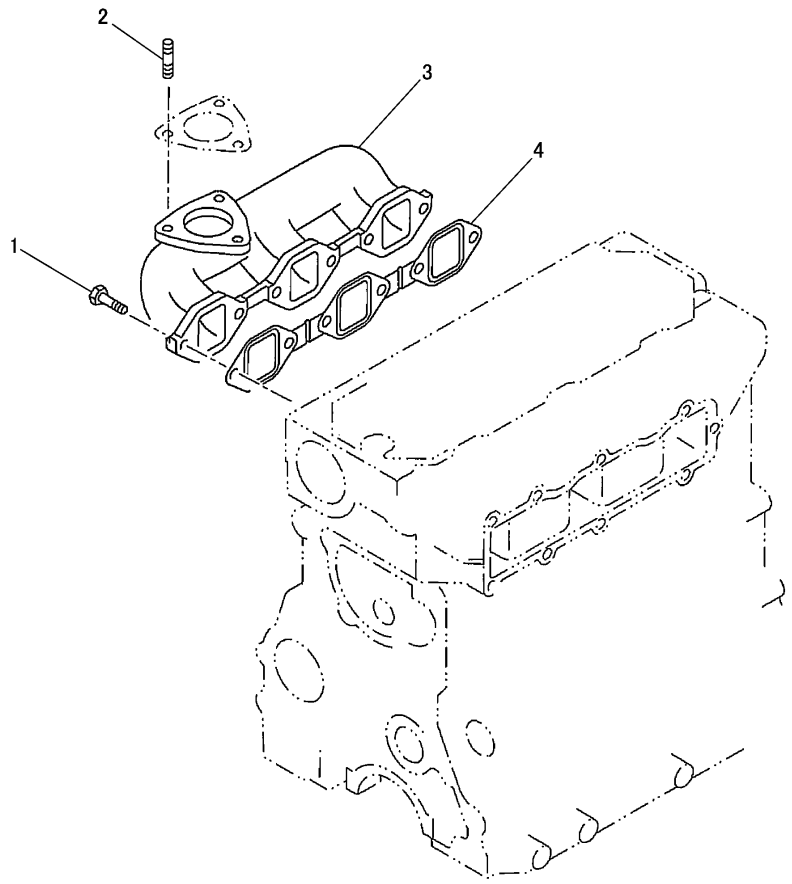

NOTE	No.	PART NO.	QTY	PART NAME	NOTE	No.	PART NO.	QTY	PART NAME
	1	8T－4189	6	BOLT(M8×1.25)					
	2	094－2524	3	STUD (M10×1.25/M10×1.5)					
	3	283－1300	1	MANIFOLD					
	4	283－1301	1	GASKET					

J141895 X02

EXHAUST MANIFOLD GROUP (283-1299 N/S)
PART OF 319-5605-Page 9

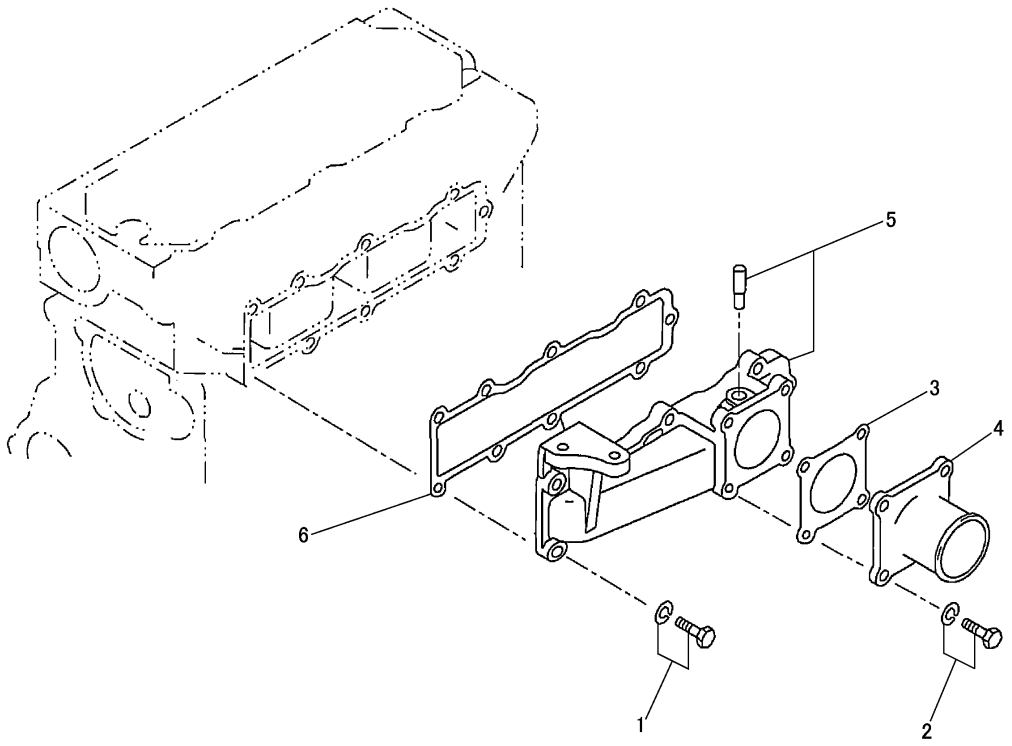

NOTE	No.	PART NO.	QTY	PART NAME	NOTE	No.	PART NO.	QTY	PART NAME
	1	3B－4505	9	LOCKWASHER					
		8T－4189	9	BOLT(M8×1.25)					
	2	096－2500	4	WASHER					
		8T－4138	4	BOLT(M6×1)					
	3	270－6265	1	GASKET					
	4	282－8590	1	PIPE					
	5	283－1298	1	MANIFOLD					
	6	283－4103	1	GASKET					

J141896 X01

INLET MANIFOLD GROUP (283-1297 N/S)
PART OF 319-5605-Page 9

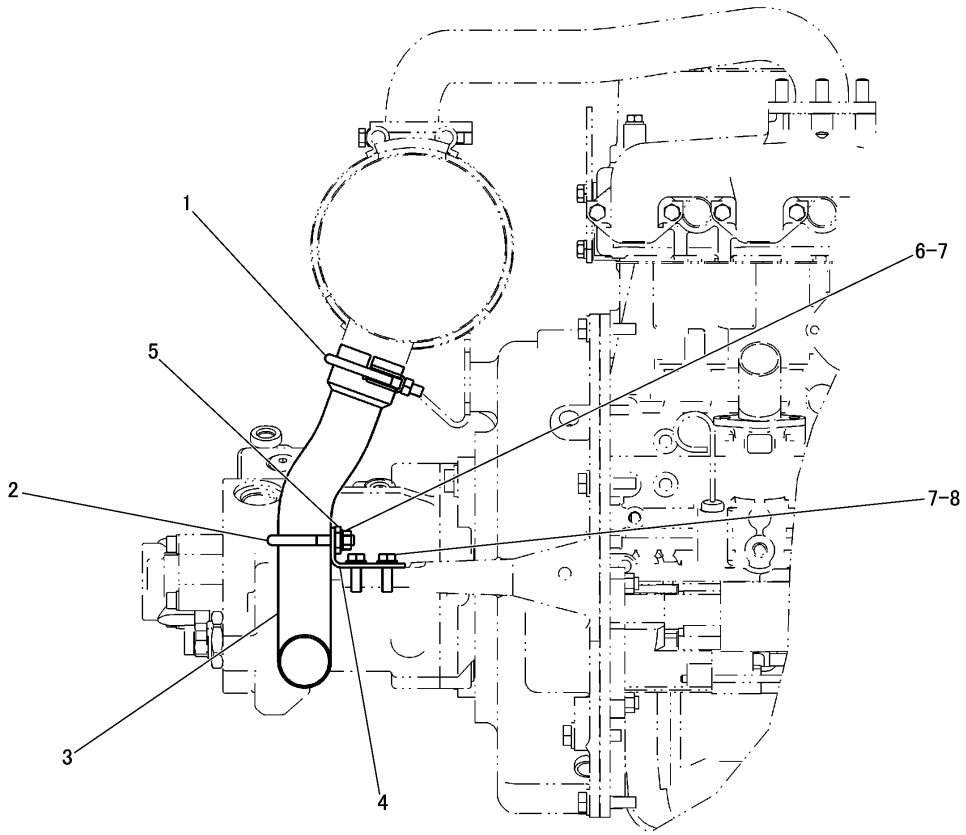

NOTE	No.	PART NO.	QTY	PART NAME	NOTE	No.	PART NO.	QTY	PART NAME
	1	299-3782	1	CLAMP AS					
	2	299-3784	1	U BOLT					
	3	307-9113	1	PIPE					
	4	307-9114	1	PLATE					
	5	308-1159	1	PLATE					
	6	5C-7261	2	NUT(M8×1.25)					
	7	8T-4224	4	WASHER					
	8	8T-4908	2	BOLT(M8×1.25)					

J146664 X00

EXHAUST EXTENSION GROUP (307-8885 N/S)
PART OF 296-2599-Page 10

AIR INLET AND EXHAUST SYSTEM

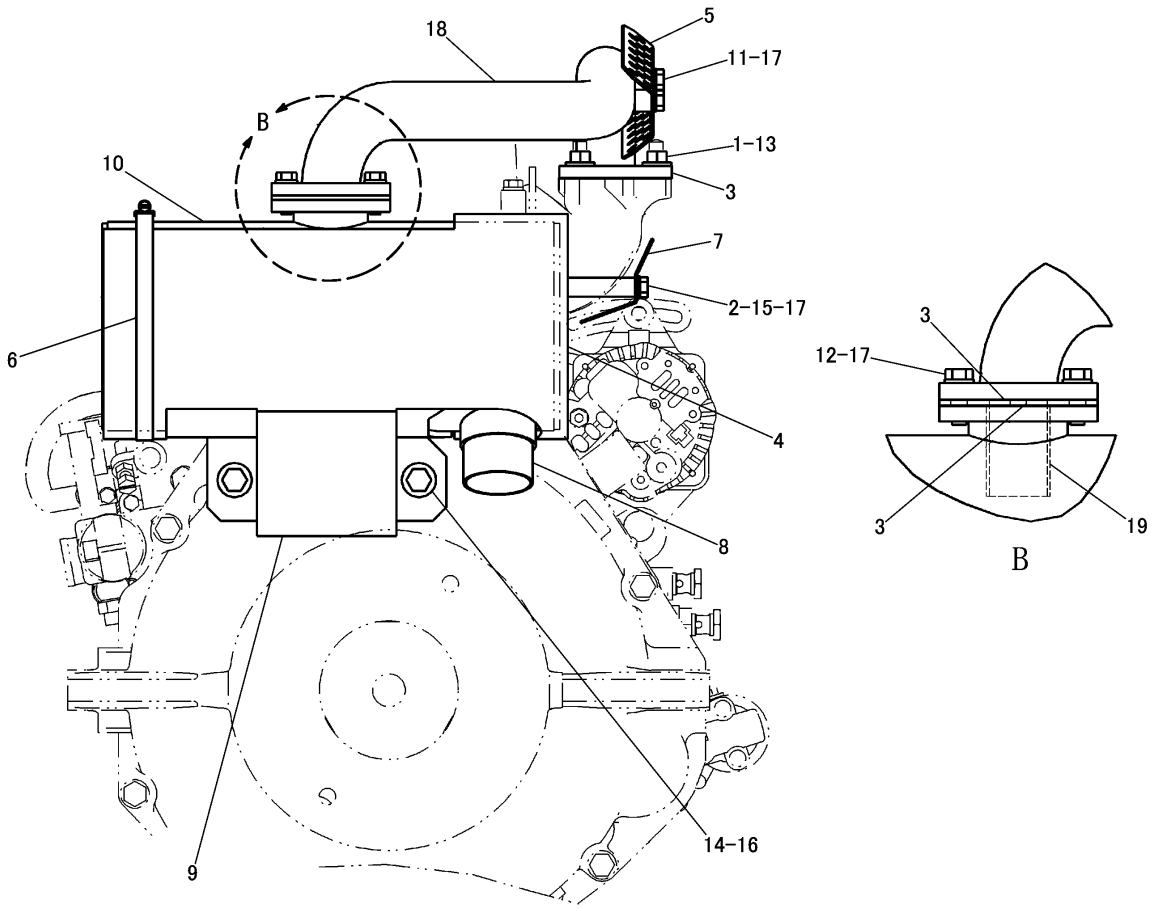

NOTE	No.	PART NO.	QTY	PART NAME	NOTE	No.	PART NO.	QTY	PART NAME
	1	5I-7633	3	NUT(M10×1.25)					
	2	267-4220	2	COLLAR					
	3	269-6105	3	GASKET					
	4	282-1656	1	INSULATOR					
	5	284-4992	1	PLATE					
	6	285-7033	1	CLAMP					
	7	287-4636	1	PLATE					
	8	303-2581	1	MUFFLER AS					
	9	270-1989	1	BRACKET AS					
	10	283-0529	1	MUFFLER AS					
	11	6V-2316	2	BOLT(M8×1.25)					
	12	6V-3940	3	BOLT(M8×1.25)					
	13	6V-5839	3	WASHER					
	14	7X-7729	2	WASHER					
	15	8T-0292	2	BOLT(M8×1.25)					
	16	8T-4136	2	BOLT(M10×1.5)					
	17	9M-1974	7	WASHER					
	18	315-3358	1	PIPE AS					
		8R-3857	2	BOSS(M8×1.25)					
	19	319-2768	1	ADAPTER AS					

J147511 X00

MUFFLER GROUP (319-2767 N/S)
PART OF 296-2599-Page 10

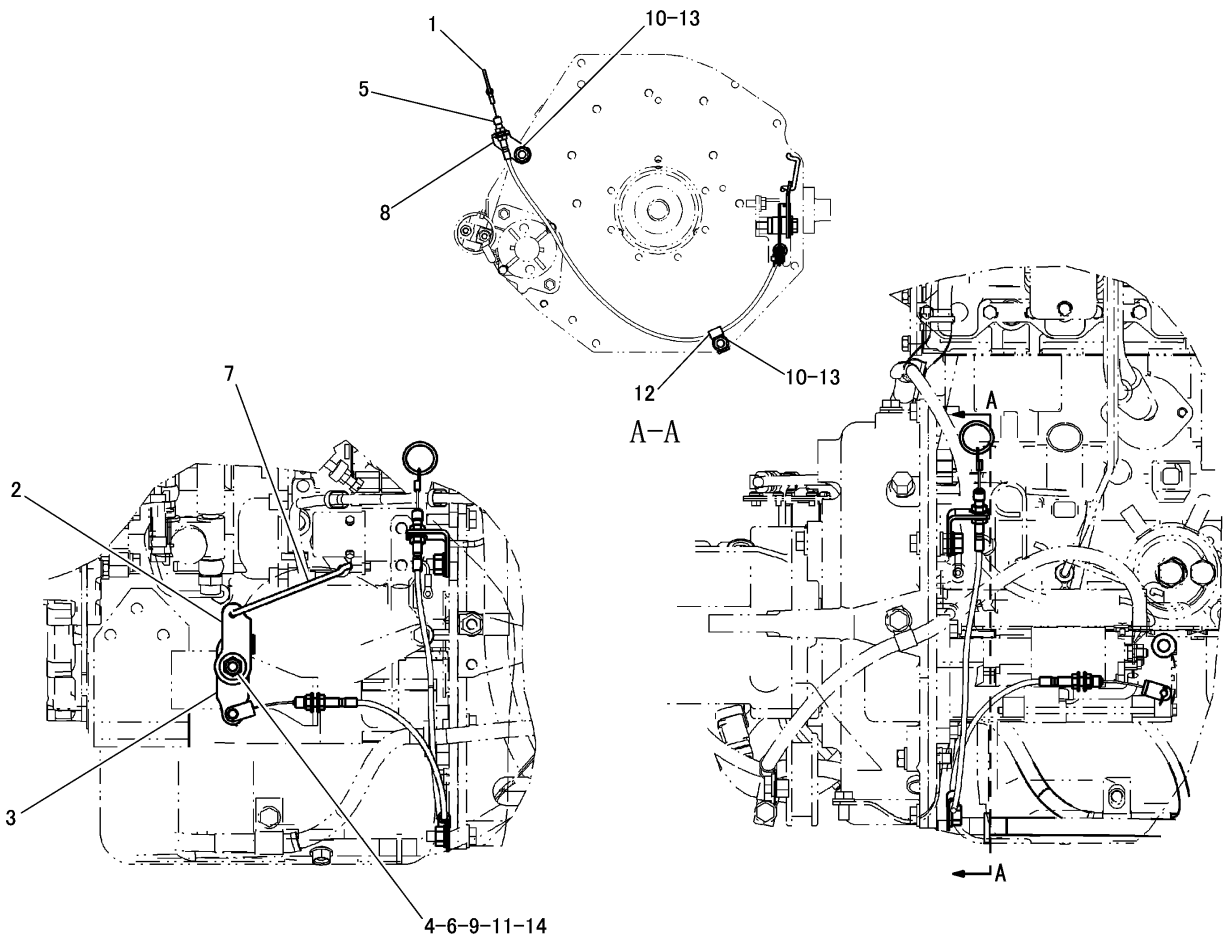

NOTE	No.	PART NO.	QTY	PART NAME	NOTE	No.	PART NO.	QTY	PART NAME
	1	099-3629	1	RING					
	2	276-3866	1	LEVER AS					
	3	276-3867	1	LEVER AS					
	4	277-8580	2	BEARING					
	5	278-4149	1	CABLE AS					
	6	278-4150	1	SPACER					
	7	278-4153	1	ROD					
	8	283-9600	1	BRACKET					
	9	4H-1225	1	WASHER					
	10	6V-8231	2	NUT(M10×1.25)					
	11	7X-7729	1	WASHER					
	12	8M-2772	1	CLIP					
	13	8T-4121	2	WASHER					
	14	8T-4185	1	BOLT(M10×1.5)					

J144598 X04

MECHANICAL SHUTOFF GROUP (277-8147 N/S)
PART OF 296-2599-Page 10

CONSISTS OF :

			PAGE
1	307-3453	PILOT LINES GROUP	360
1	307-9227	GOVERNOR CONTROL GROUP	46
1	310-1381	CONSOLE GROUP	516
1	318-0117	FILM GROUP	562

J146738 HE02

GOVERNOR CONTROL ARRANGEMENT (307-9226 N/S)
AUTOMATIC ENGINE SPEED CONTROL

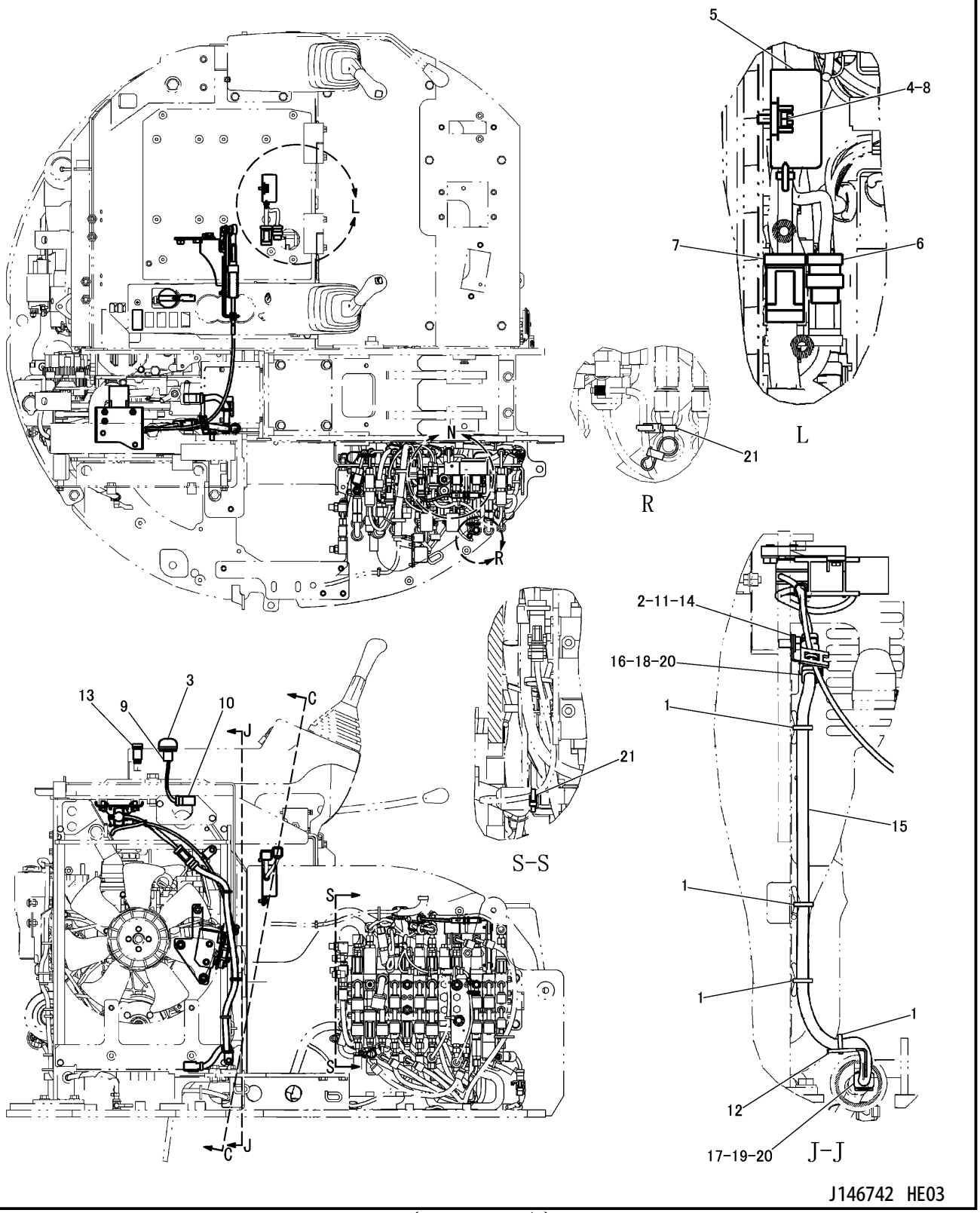

GOVERNOR CONTROL GROUP (307-9227 N/S) -AUTO IDLE-PART 1 OF 2
PART OF 307-9226-Page 45

FUEL SYSTEM

NOTE	No.	PART NO.	QTY	PART NAME	NOTE	No.	PART NO.	QTY	PART NAME
	1	3S-2093	4	STRAP					
	2	8T-4137	1	BOLT(M10×1.5)					
	3	150-0597	1	KNOB AS					
		7Y-9390	1	KNOB					
		150-0598	1	SEAL					
	4	5C-9553	2	BOLT(M6×1)					
	5	268-0254	1	CONTROL AS					
	6	186-3736	5	SOCKET					
		8T-8737	1	PLUG					
		230-5010	1	PLUG AS(6P)					
		264-7032	1	SEAL					
	7	186-3735	8	PIN					
		243-4509	1	RECEPTACLE AS(8P)					
	8	9X-8256	2	WASHER					
	9	268-0761	1	SWITCH AS					
	10	186-3735	3	PIN					
		243-4506	1	RECEPTACLE AS(3P)					
	11	4P-8134	1	CLIP					
	12	132-5789	1	CLIP					
	13	292-6666	1	SWITCH AS					
		111-7899	1	GASKET					
	14	8T-4121	1	WASHER					
	15	309-1561	1	HARNESS AS					
	16	230-5010	1	PLUG AS(6P)					
		264-7032	1	SEAL					
	17	243-4508	1	RECEPTACLE AS(6P)					
	18	9W-0844	5	SOCKET					
	19	9W-0852	5	PIN					
	20	8T-8737	2	PLUG					
	21	7I-2673	3	STRAP					

J146742 HE03

GOVERNOR CONTROL GROUP (307-9227 N/S) -AUTO IDLE-PART 1 OF 2
PART OF 307-9226-Page 45

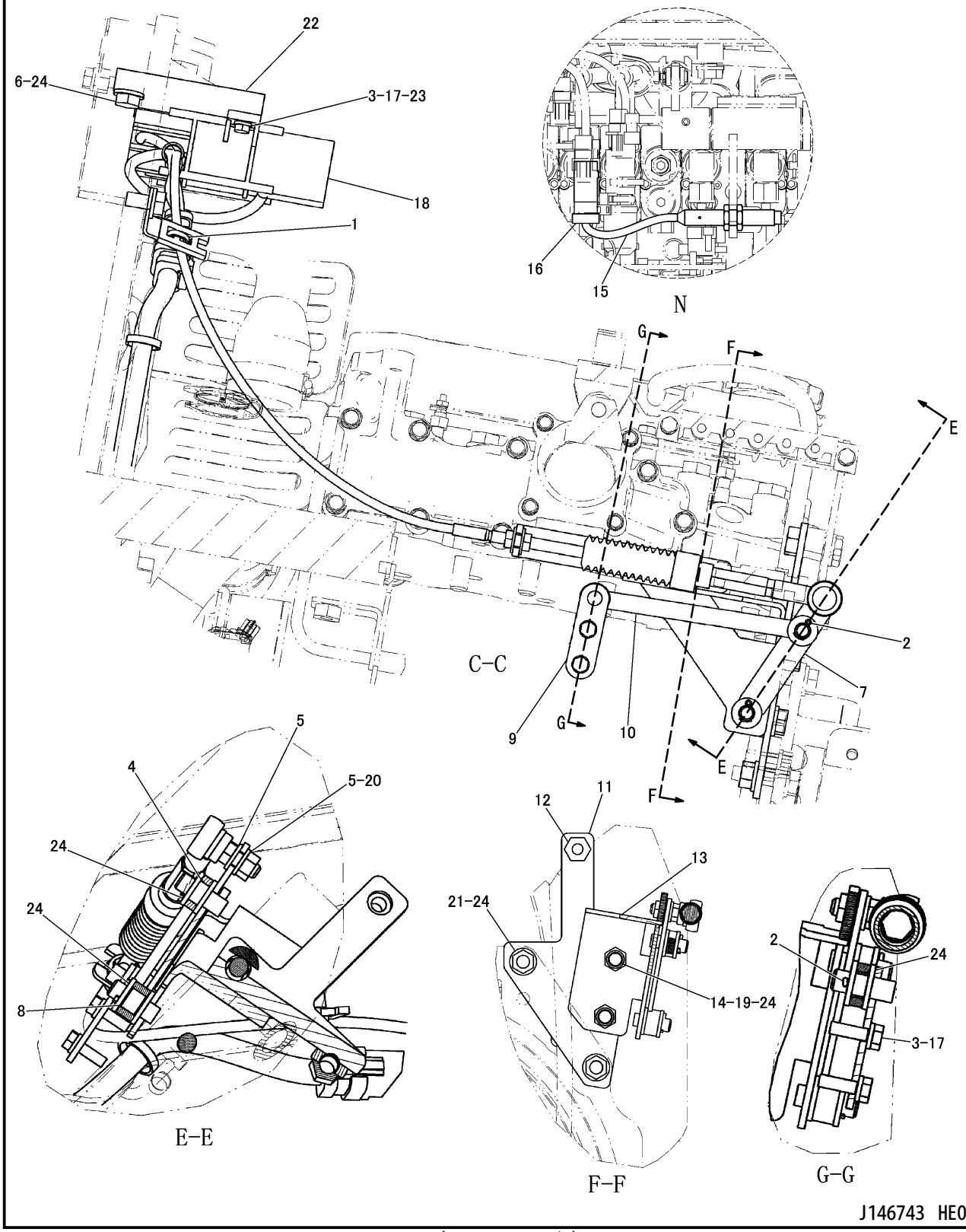

GOVERNOR CONTROL GROUP (307-9227 N/S) -AUTO IDLE-PART 2 OF 2
PART OF 307-9226-Page 45

FUEL SYSTEM

NOTE	No.	PART NO.	QTY	PART NAME	NOTE	No.	PART NO.	QTY	PART NAME
	1	3S-2093	1	STRAP					
	2	095-0843	3	COTTER PIN					
	3	9X-8256	5	WASHER					
	4	232-4832	2	BUSHING					
	5	8T-4224	2	WASHER					
	6	8T-4191	2	BOLT(M10×1.5)					
	7	281-8702	1	PLATE AS					
	8	282-9676	1	BUSHING					
	9	283-4708	1	PLATE AS					
	10	283-4709	1	PLATE					
	11	283-4710	1	PLATE AS					
	12	8T-3490	1	NUT(M10×1.5)(WELD)					
	13	283-4711	1	BRACKET AS					
	14	8T-3490	2	NUT(M10×1.5)(WELD)					
	15	312-7997	1	SWITCH AS					
	16	186-3735	2	PIN					
	17	8T-4138	5	BOLT(M6×1)					
	18	271-2029	1	MOTOR AS					
	19	8T-4136	2	BOLT(M10×1.5)					
	20	5C-7261	1	NUT(M8×1.25)					
	21	6V-8231	2	NUT(M10×1.25)					
	22	309-1560	1	BRACKET AS					
	23	6V-9632	3	NUT(M6×1)(WELD)					
	24	8T-4121	12	WASHER					

J146743 HE03

GOVERNOR CONTROL GROUP (307-9227 N/S) -AUTO IDLE-PART 2 OF 2
PART OF 307-9226-Page 45

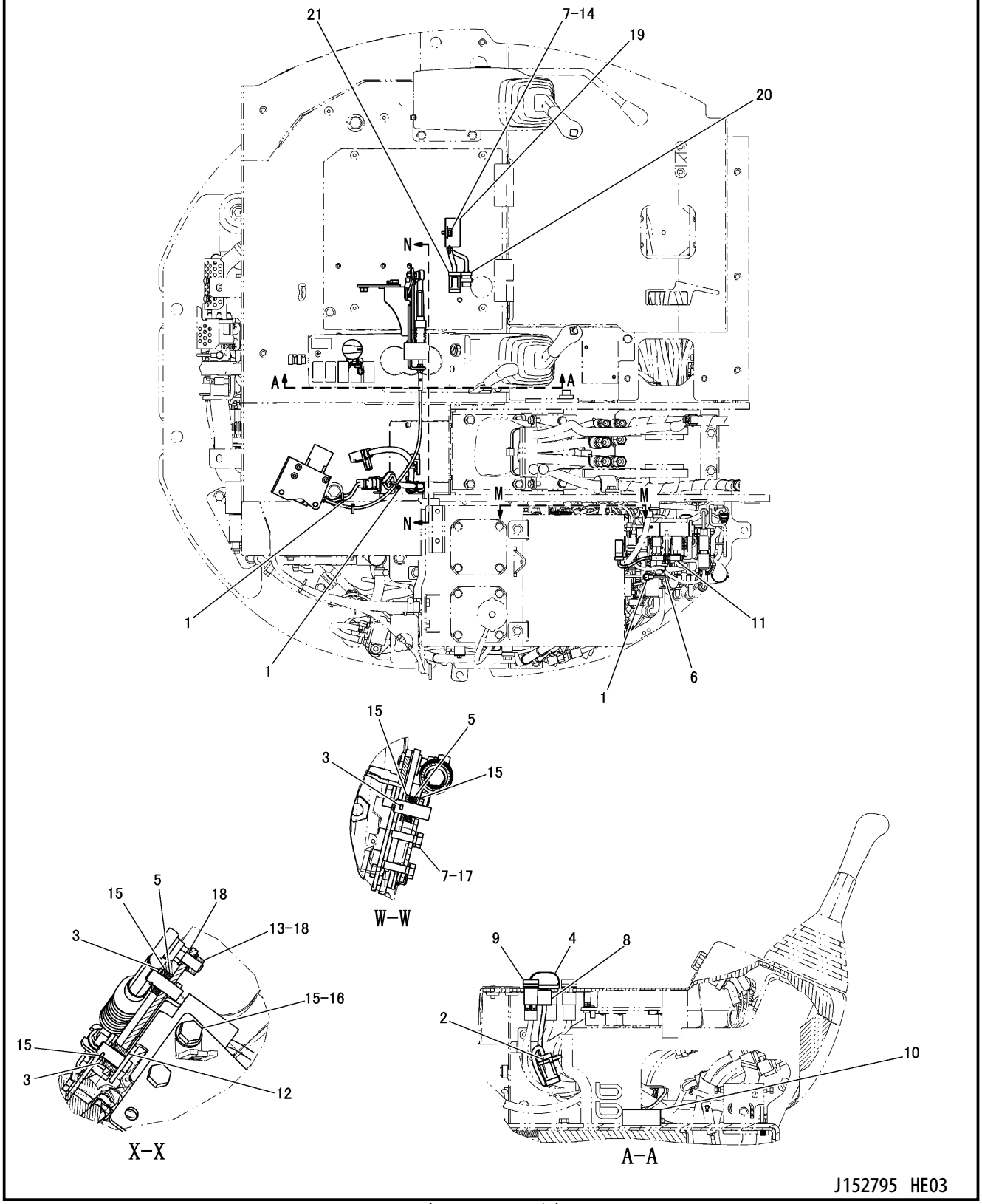

GOVERNOR CONTROL GROUP (305-9409 N/S) -AUTO IDLE-PART 1 OF 2
PART OF 308-4118-Page 466
APPLIES TO CAB AIR CONDITIONER SPECIFICATION MACHINE
AN ATTACHMENT

FUEL SYSTEM

NOTE	No.	PART NO.	QTY	PART NAME	NOTE	No.	PART NO.	QTY	PART NAME
	1	3S-2093	3	STRAP					
	2	7I-2673	1	STRAP					
	3	095-0843	3	COTTER PIN					
	4	150-0597	1	KNOB AS					
		7Y-9390	1	KNOB					
		150-0598	1	SEAL					
	5	232-4832	2	BUSHING					
	6	266-7379	1	STRAP					
	7	9X-8256	4	WASHER					
	8	268-0761	1	SWITCH AS					
		186-3735	3	PIN					
		243-4506	1	RECEPTACLE AS(3P)					
	9	292-6666	1	SWITCH AS					
		111-7899	1	GASKET					
	10	312-3641	1	INSULATION					
	11	312-7997	1	SWITCH AS					
		186-3735	2	PIN					
	12	322-0443	1	BUSHING					
	13	5C-7261	1	NUT(M8×1.25)					
	14	5C-9553	2	BOLT(M6×1)					
	15	8T-4121	6	WASHER					
	16	8T-4136	2	BOLT(M10×1.5)					
	17	8T-4138	2	BOLT(M6×1)					
	18	8T-4224	2	WASHER					
	19	268-0254	1	CONTROL AS					
	20	186-3736	5	SOCKET					
		230-5010	1	PLUG AS(6P)					
		8T-8737	1	PLUG					
	21	186-3735	8	PIN					
		243-4509	1	RECEPTACLE AS(8P)					

J152795 HE03

GOVERNOR CONTROL GROUP (305-9409 N/S) -AUTO IDLE-PART 1 OF 2
PART OF 308-4118-Page 466
APPLIES TO CAB AIR CONDITIONER SPECIFICATION MACHINE
AN ATTACHMENT

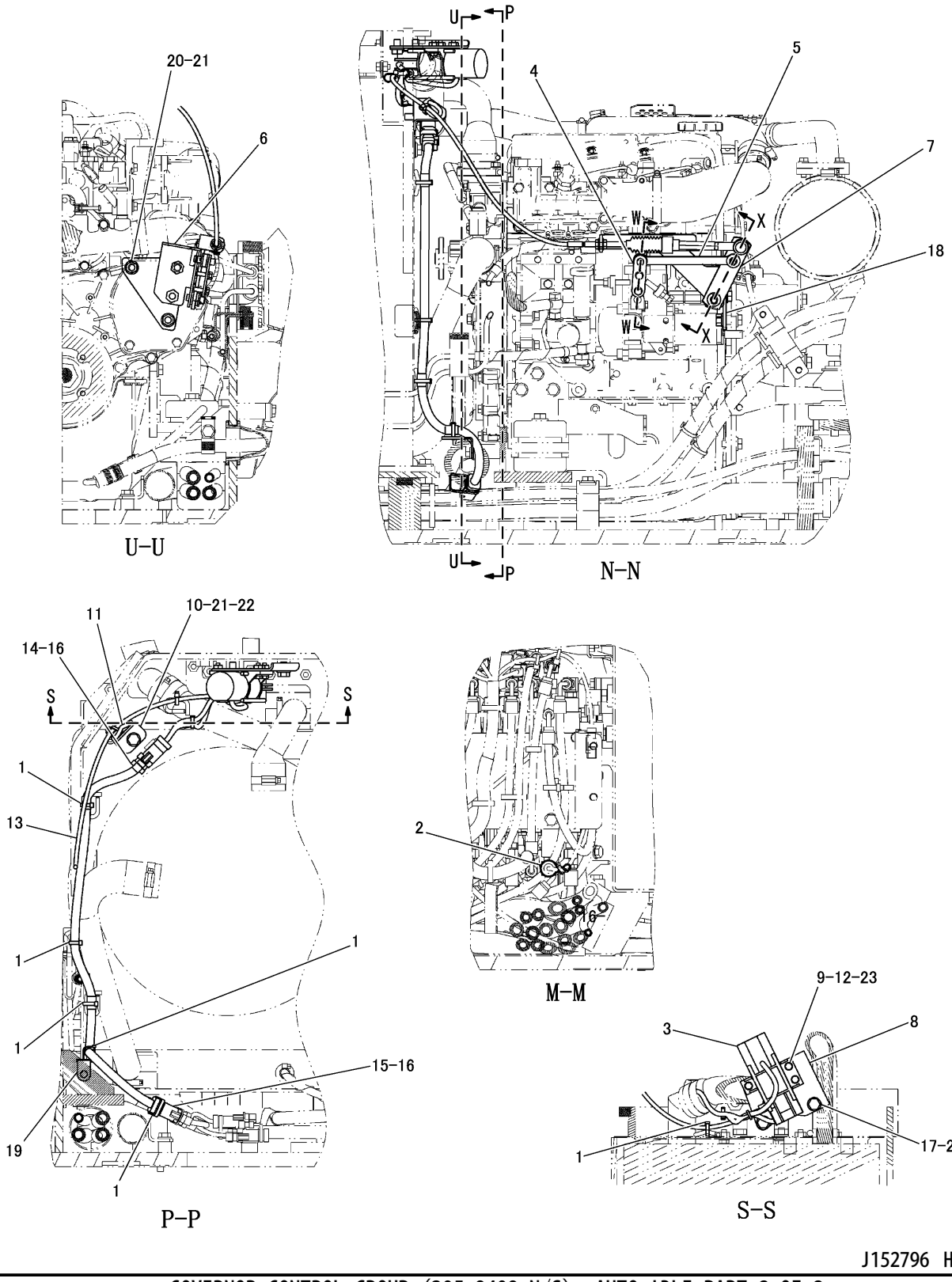

GOVERNOR CONTROL GROUP (305-9409 N/S) -AUTO IDLE-PART 2 OF 2
PART OF 308-4118-Page 466
APPLIES TO CAB AIR CONDITIONER SPECIFICATION MACHINE
AN ATTACHMENT

FUEL SYSTEM

NOTE	No.	PART NO.	QTY	PART NAME	NOTE	No.	PART NO.	QTY	PART NAME
	1	3S-2093	6	STRAP					
	2	7I-2673	1	STRAP					
	3	271-2029	1	MOTOR AS					
	4	283-4708	1	PLATE AS					
	5	283-4709	1	PLATE					
	6	283-4711	1	BRACKET AS					
	7	321-8831	1	PLATE AS					
	8	326-9706	1	BRACKET AS					
	9	6V-9632	3	NUT(M6×1)(WELD)					
	10	333-3117	1	BRACKET AS					
	11	7T-1099	1	LINK					
	12	9X-8256	3	WASHER					
	13	326-9714	1	HARNESS AS					
	14	230-5010	1	PLUG AS(6P)					
		9W-0844	5	SOCKET					
	15	243-4508	1	RECEPTACLE AS(6P)					
		9W-0852	5	PIN					
	16	8T-8737	2	PLUG					
	17	8T-4191	2	BOLT(M10×1.5)					
	18	281-8700	1	BRACKET					
	19	132-5789	1	CLIP					
	20	6V-8231	2	NUT(M10×1.25)					
	21	8T-4121	5	WASHER					
	22	8T-4137	1	BOLT(M10×1.5)					
	23	8T-4138	3	BOLT(M6×1)					

J152796 HE03

GOVERNOR CONTROL GROUP (305-9409 N/S) -AUTO IDLE-PART 2 OF 2
PART OF 308-4118-Page 466
APPLIES TO CAB AIR CONDITIONER SPECIFICATION MACHINE
AN ATTACHMENT

FUEL SYSTEM

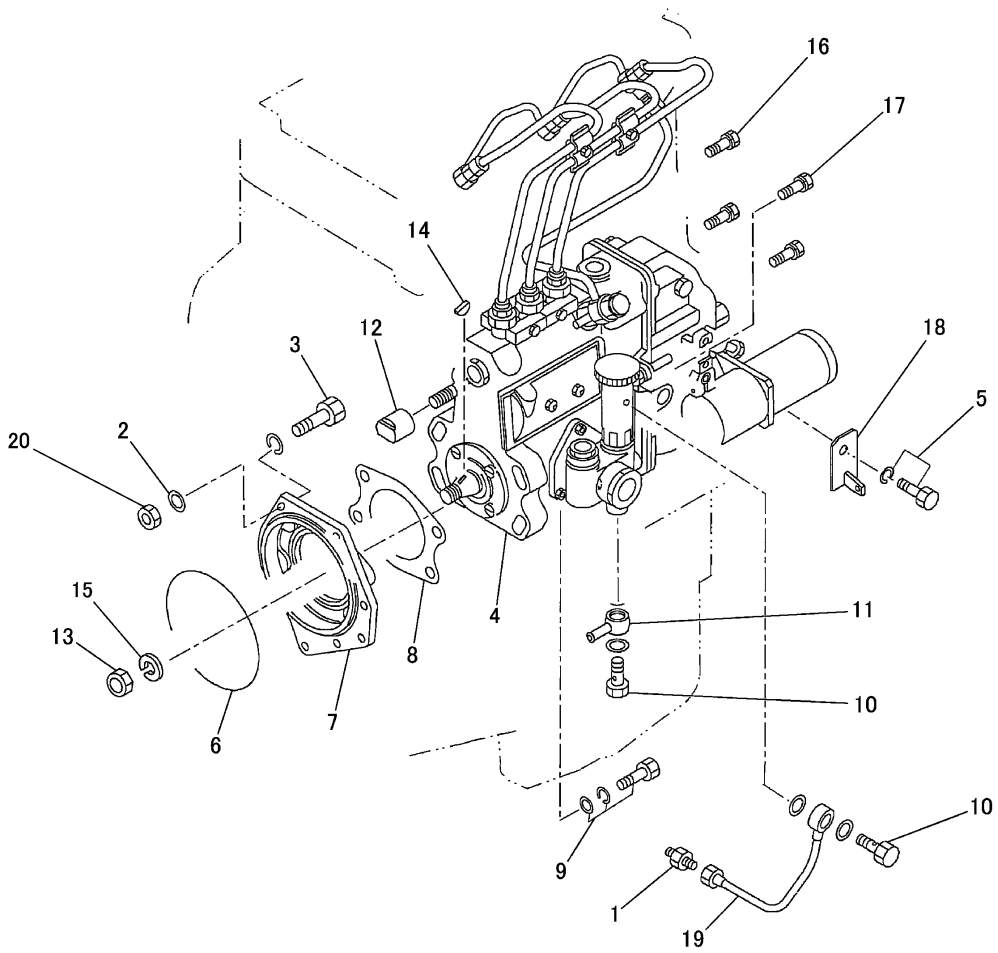

NOTE	No.	PART NO.	QTY	PART NAME	NOTE	No.	PART NO.	QTY	PART NAME
	1	5I-8058	1	CONNECTOR		20	5C-7261	1	NUT(M8×1.25)
	2	095-8638	1	WASHER					
	3	195-8222	1	BOLT(M8×1.25)					
	4	283-1305	1	PUMP AS					
	5	5I-4936	1	BOLT(M10×1.25)					
		7X-0796	1	LOCKWASHER					
	6	270-6286	1	SEAL					
	7	280-3769	1	FLANGE					
	8	280-3770	1	GASKET					
	9	280-3771	4	BOLT					
	10	280-3774	2	EYEBOLT					
	11	280-3775	1	COLOR					
	12	282-8615	1	COVER					
	13	9490502450	1	NUT					
	14	9491300190	1	KEY					
	15	095-6974	1	WASHER					
	16	096-8851	1	BOLT					
	17	096-8829	6	BOLT					
	18	283-3184	1	BRACKET					
	19	283-1304	1	PIPE					

J146632 X02

FUEL INJECTION PUMP GROUP (283-1302 N/S)
PART OF 319-5605-Page 9

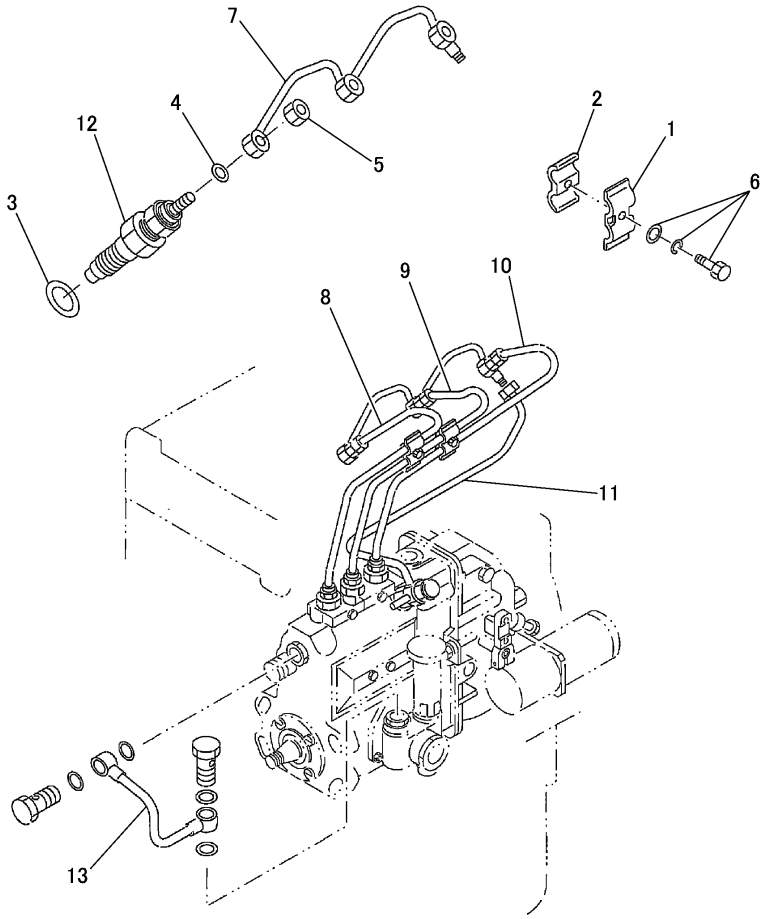

NOTE	No.	PART NO.	QTY	PART NAME	NOTE	No.	PART NO.	QTY	PART NAME
	1	122-8948	2	CLAMP					
	2	122-8949	2	CLAMP					
	3	139-7818	3	GASKET					
	4	139-7817	3	GASKET					
	5	139-7816	3	NUT(M12×1.5)					
	6	6V-7357	2	BOLT(M6×1)					
		9X-8256	2	WASHER					
		2U-2552	2	LOCKWASHER					
	7	283-1307	1	TUBE AS					
	8	280-3777	1	TUBE AS					
	9	280-3778	1	TUBE AS					
	10	280-3779	1	TUBE AS					
	11	283-1308	1	TUBE AS					
	12	280-3782	3	NOZZLE					
	13	280-3783	1	TUBE AS					

J141894 X01

FUEL INJECTION LINES GROUP (283-1306 N/S)
PART OF 319-5605-Page 9

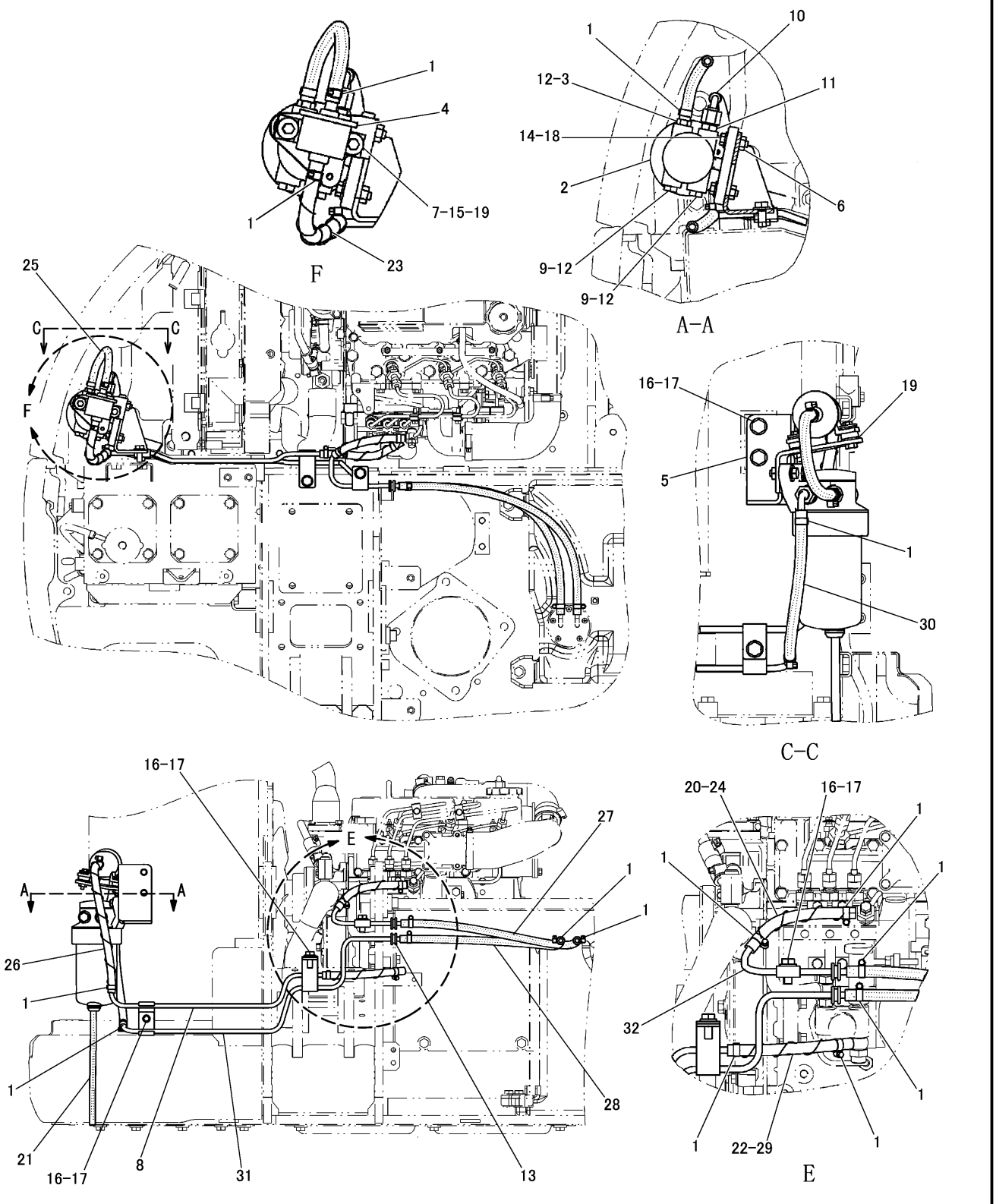

FUEL FILTER LINES GROUP (296-1619 N/S)
PART OF 296-1803-Page 241

FUEL SYSTEM

NOTE	No.	PART NO.	QTY	PART NAME	NOTE	No.	PART NO.	QTY	PART NAME
	1	1P-4278	14	CLAMP					
Y	2	144-9962	1	FILTER GROUP					
	3	151-1975	1	CONNECTOR					
	4	240-8381	1	PUMP AS					
	5	297-9390	1	BRACKET AS					
	6	8T-3612	2	NUT(M8×1.25)(WELD)					
	7	6V-9632	2	NUT(M6×1)(WELD)					
	8	317-8456	1	TUBE AS					
	9	3K-8460	2	PLUG					
	10	160-0614	1	TUBE AS					
	11	8T-5043	1	CONNECTOR					
		5P-7814	1	SEAL					
		8L-2779	1	SEAL					
	12	1J-9671	3	SEAL					
	13	4M-7470	2	GROMMET					
	14	5P-4116	2	WASHER					
	15	7X-2533	2	BOLT(M6×1)					
	16	8T-4121	5	WASHER					
	17	8T-4136	5	BOLT(M10×1.5)					
	18	8T-7547	2	BOLT(M8×1.25)					
	19	9X-6165	4	WASHER					
E	20	7I-7439		GUARD---13.5cm					
E	21	8C-6959		HOSE---24cm					
E	22	7I-7439		GUARD---14cm					
E	23	7I-7439		GUARD---29cm					
E	24	5P-1420		HOSE---16.5cm					
E	25	5P-1420		HOSE---23cm					
E	26	5P-1420		HOSE---32cm					
E	27	5P-1420		HOSE---51.5cm					
E	28	5P-1420		HOSE---48.5cm					
E	29	5P-1420		HOSE---17.5cm					
E	30	5P-1420		HOSE---27cm					
	31	317-8453	1	TUBE AS					
	32	300-4284	1	TUBE AS					

E-ORDER BY THE cm
Y-SEPARATE ILLUSTRATION

J146563 HE03

FUEL FILTER LINES GROUP (296-1619 N/S)

PART OF 296-1803-Page 241
REFERENCE:144-9962-Page 58

FUEL SYSTEM

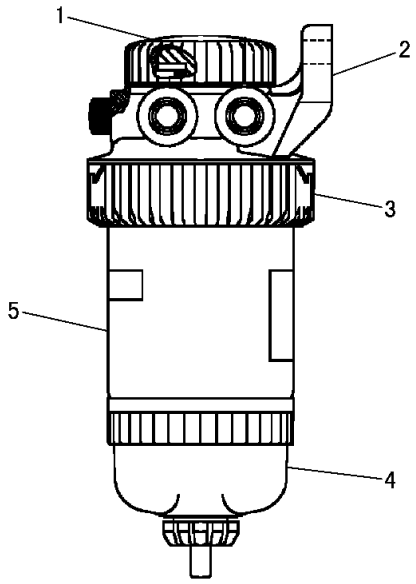

NOTE	No.	PART NO.	QTY	PART NAME
	1	118-8119	1	NUT
	2	149-3516	1	BASE AS
	3	118-8118	1	RING
	4	112-9401	1	BOWL AS
		128-8614	1	SEAL KIT
	5	156-1200	1	ELEMENT
				AVAILABLE REPAIR KIT(S):
		121-4480	1	BASE KIT (INCLUDES NUT、CAP、SEAL、PLUG AND RING)

J109244 0

144-9962 FUEL FILTER GROUP
PART OF 296-1619-Page 57

FUEL SYSTEM

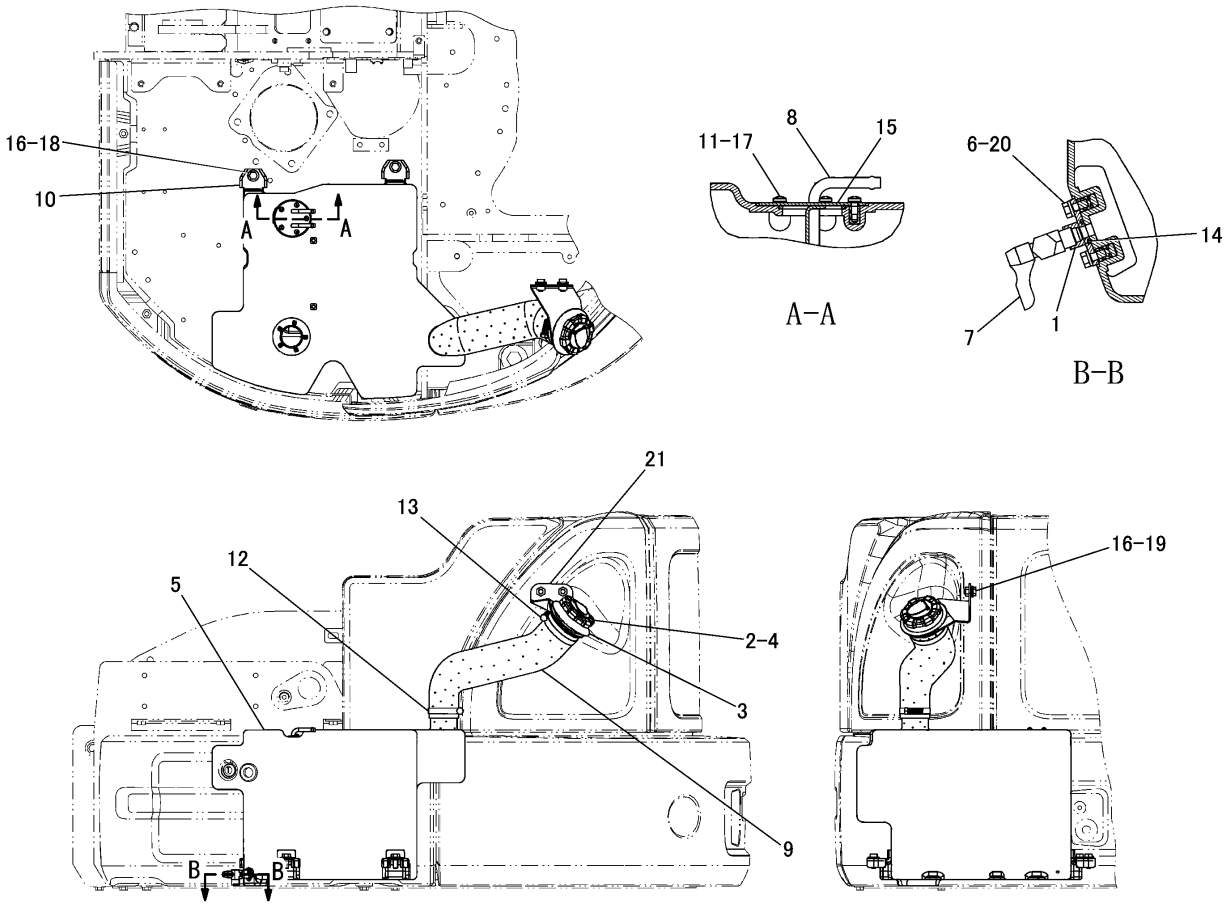

NOTE	No.	PART NO.	QTY	PART NAME	NOTE	No.	PART NO.	QTY	PART NAME
	1	233-4065	1	FLANGE AS		18	8T-4136	4	BOLT(M10×1.5)
	2	265-8575	1	CAP AS		19	8T-4137	2	BOLT(M10×1.5)
	3	265-8577	1	SEAL		20	8T-4970	2	BOLT(M6×1)
	4	265-8579	1	STRAINER		21	296-1665	1	FILLER AS
	5	296-1661	1	TANK AS			8T-3490	2	NUT(M10×1.5)(WELD)
	6	9X-8256	2	WASHER					
	7	296-1668	1	VALVE					
	8	300-4322	1	FRANGE AS					
	9	300-4326	1	HOSE					
	10	300-4327	4	SUPPORT AS					
		300-4328	1	SUPPORT					
		300-4399	2	FOAM					
		300-4329	2	FOAM					
	11	095-0736	5	SCREW(M5×0.8)					
	12	095-1393	1	CLAMP					
	13	9M-7959	1	CLAMP					
	14	4J-5268	1	SEAL					
	15	6V-7660	1	SEAL					
	16	7X-7729	6	WASHER					
	17	8T-0328	5	WASHER					

J146585 HE03

FUEL TANK AND MOUNTING GROUP (296-1610 N/S)
PART OF 296-1803-Page 241

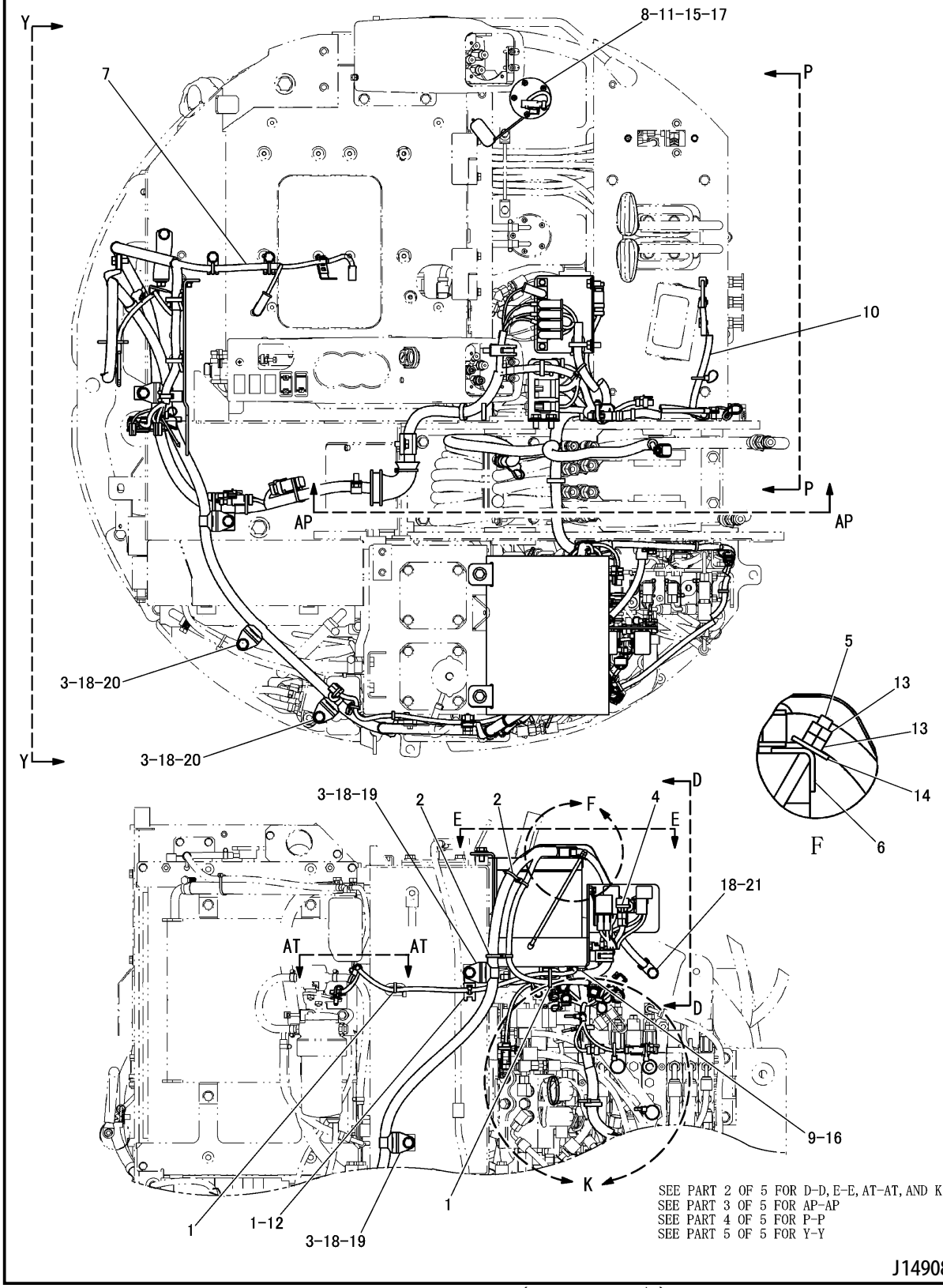

BATTERY AND WIRING GROUP (296-1947 N/S) -PART 1 OF 5
PART OF 296-1803-Page 241

ELECTRICAL AND STARTING SYSTEM

NOTE	No.	PART NO.	QTY	PART NAME
	1	3S-2093	4	STRAP
	2	7I-2673	2	STRAP
	3	111-4837	4	CLIP
	4	163-6795	1	STRAP
	5	196-3867	2	ROD
	6	267-4767	1	CLAMP
Y	7	306-2232	1	HARNESS AS
	8	311-4175	1	SENDER AS
	9	314-2868	1	WASHER
Y	10	317-2466	1	HARNESS AS
	11	095-0736	5	SCREW(M5×0.8)
	12	4P-7581	1	CLIP
	13	5C-2890	4	NUT(M6×1)
	14	5P-4115	2	WASHER
	15	6V-7660	1	SEAL
	16	7X-2619	1	BOLT(M6×1)
	17	8T-0328	5	WASHER
	18	8T-4121	5	WASHER
	19	8T-4136	2	BOLT(M10×1.5)
	20	8T-4137	2	BOLT(M10×1.5)
	21	8T-4191	1	BOLT(M10×1.5)

NOTE	No.	PART NO.	QTY	PART NAME

Y-SEPARATE ILLUSTRATION

J149082 HE07

BATTERY AND WIRING GROUP (296-1947 N/S) -PART 1 OF 5

PART OF 296-1803-Page 241

REFERENCE:306-2232-Page 185 317-2466-Page 187～189

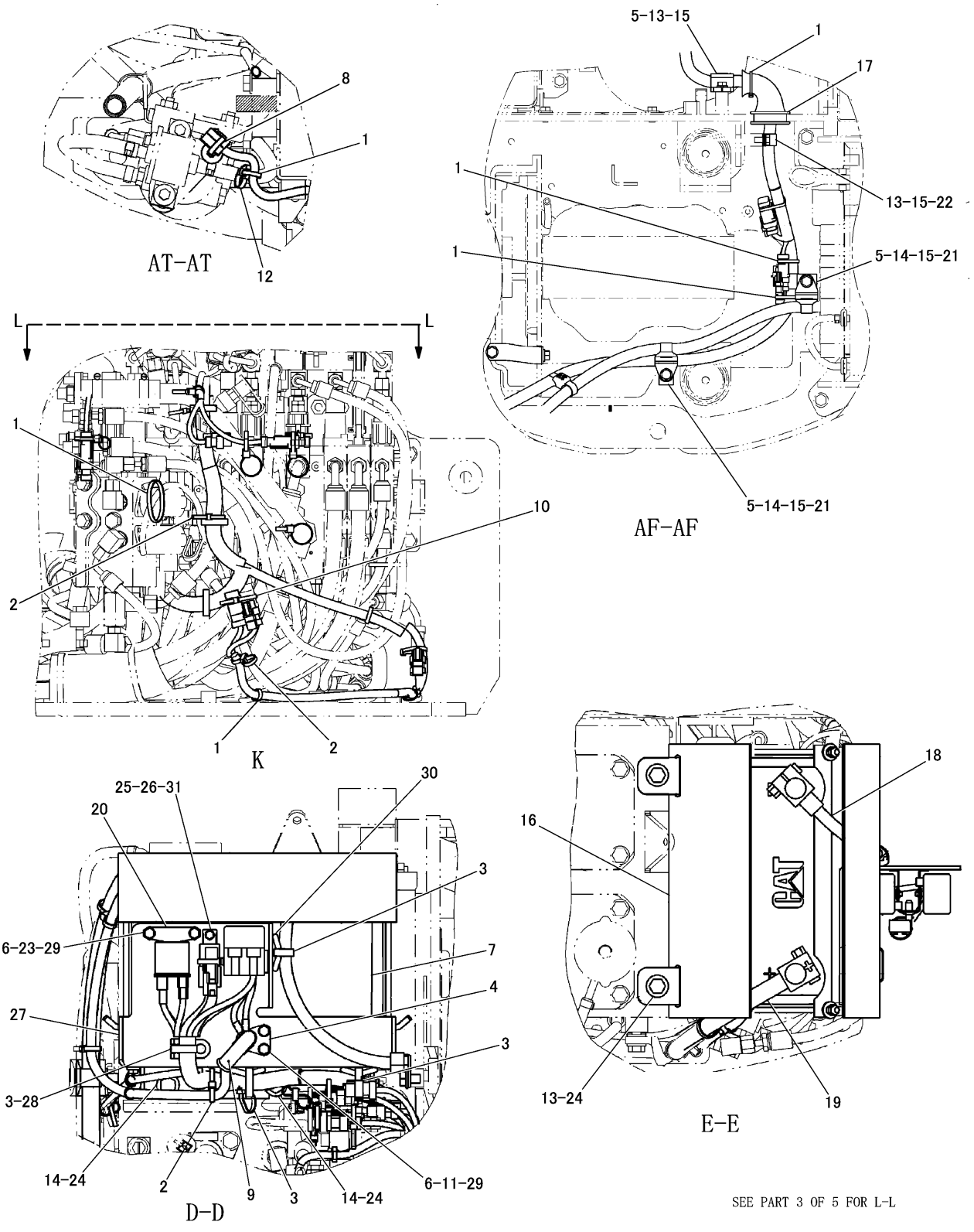

BATTERY AND WIRING GROUP (296-1947 N/S) -PART 2 OF 5
PART OF 296-1803-Page 241

ELECTRICAL AND STARTING SYSTEM

NOTE	No.	PART NO.	QTY	PART NAME	NOTE	No.	PART NO.	QTY	PART NAME
	1	3S-2093	6	STRAP					
	2	7I-2673	3	STRAP					
	3	7K-1181	4	STRAP					
	4	9G-8451	1	BLOCK AS					
	5	111-4837	3	CLIP					
	6	9X-8256	4	WASHER					
	7	153-5656	1	BATTERY(650A)					
	8	163-6795	1	STRAP					
	9	8T-8799	1	BOOT					
	10	204-1611	1	STRAP					
	11	8T-4970	2	BOLT(M6×1)					
	12	266-7379	1	STRAP					
	13	8T-4137	4	BOLT(M10×1.5)					
	14	8T-4136	4	BOLT(M10×1.5)					
	15	8T-4121	4	WASHER					
	16	298-3494	1	COVER					
	17	302-2662	1	GROMMET					
	18	306-2230	1	CABLE AS					
		7N-5274	1	COVER(BLACK)					
E		5P-0746		CABLE---40cm					
		275-9686	1	TERMINAL					
	19	306-2231	1	CABLE AS					
E		5P-0760		CABLE---228cm					
		8N-1725	1	COVER(RED)					
		267-4762	1	TERMINAL AS					
		8N-0869	1	COVER					
		030-1707	1	TARMINAL					
		2L-8067	1	TERMINAL					
	20	119-9895	1	GLOW RELAY					
	21	1S-6420	2	CLIP					
	22	6D-4246	1	CLIP					
	23	7X-2619	2	BOLT(M6×1)					
	24	7X-7729	4	WASHER					
	25	8T-0286	1	BOLT(M5×0.8)					
	26	8T-0328	1	WASHER					
	27	314-2844	1	BRACKET AS					
	28	4P-8134	1	CLIP					
	29	6V-9632	4	NUT(M6×1)(WELD)					
	30	7T-1099	4	LINK					
	31	8T-8874	1	NUT(M5×0.8)(WELD)					

E-ORDER BY THE cm

J149083 HE07

BATTERY AND WIRING GROUP (296-1947 N/S) -PART 2 OF 5

PART OF 296-1803-Page 241

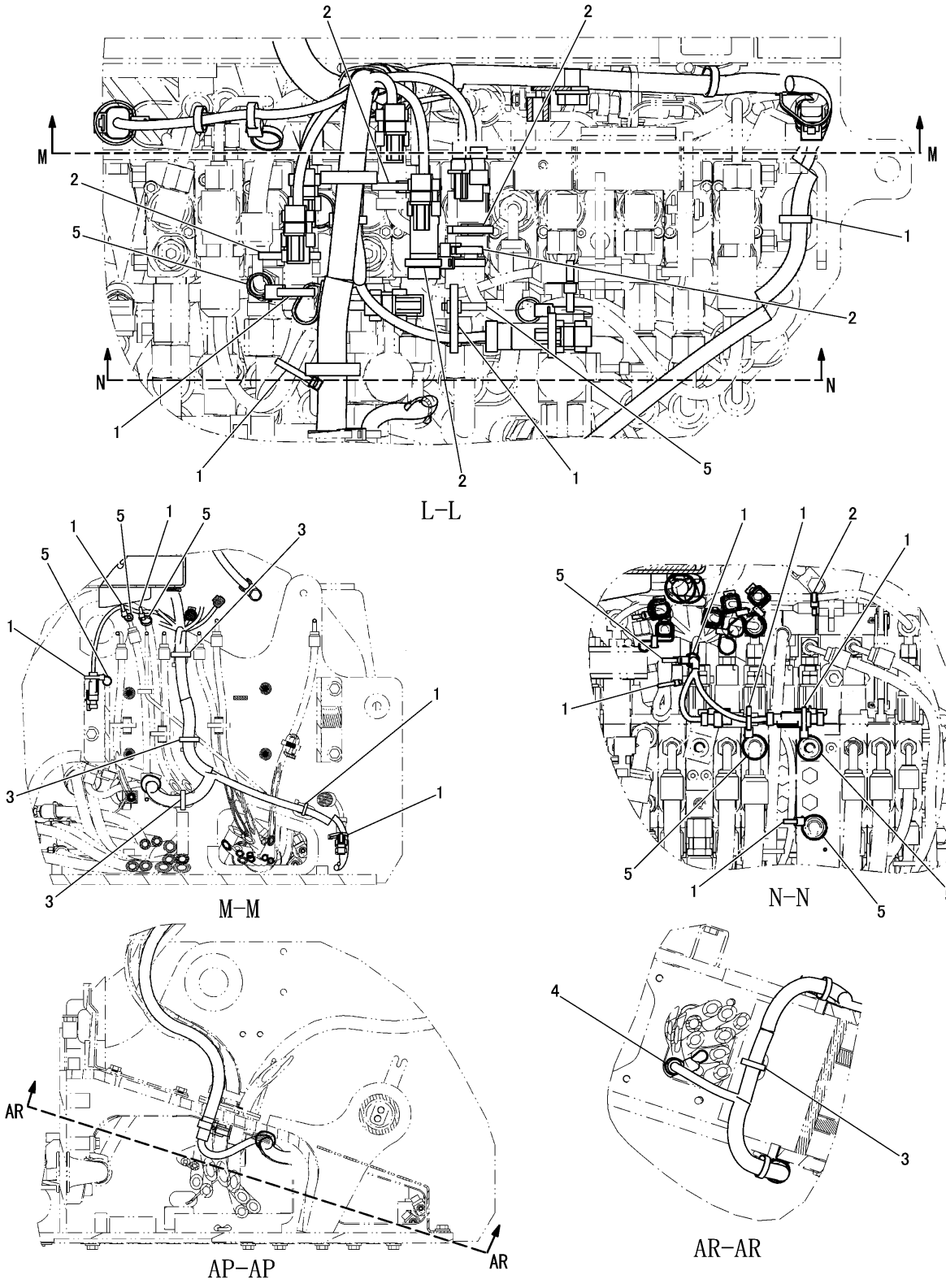

BATTERY AND WIRING GROUP (296-1947 N/S) -PART 3 OF 5
PART OF 296-1803-Page 241

ELECTRICAL AND STARTING SYSTEM

NOTE	No.	PART NO.	QTY	PART NAME	NOTE	No.	PART NO.	QTY	PART NAME
	1	3S-2093	14	STRAP					
	2	7I-2673	6	STRAP					
	3	7K-1181	4	STRAP					
	4	204-1673	1	STRAP					
	5	266-7379	9	STRAP					

J149084 HE07

BATTERY AND WIRING GROUP (296-1947 N/S) -PART 3 OF 5

PART OF 296-1803-Page 241

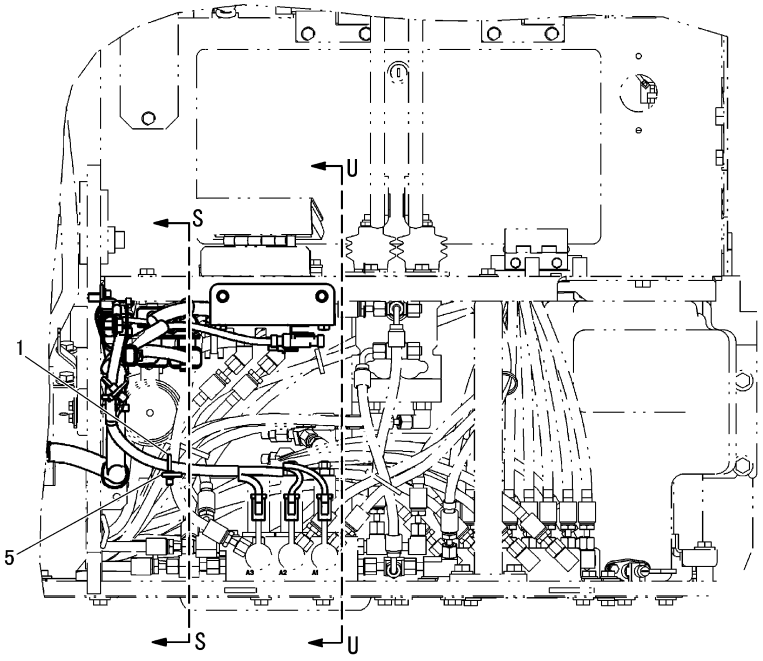

P–P

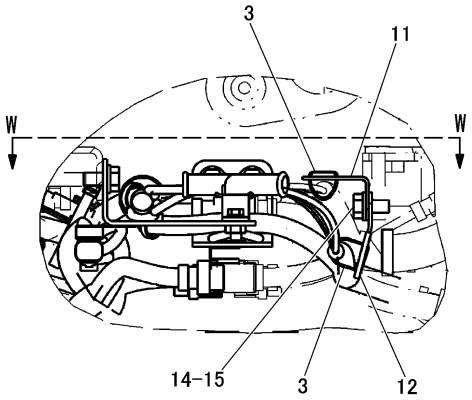

U–U

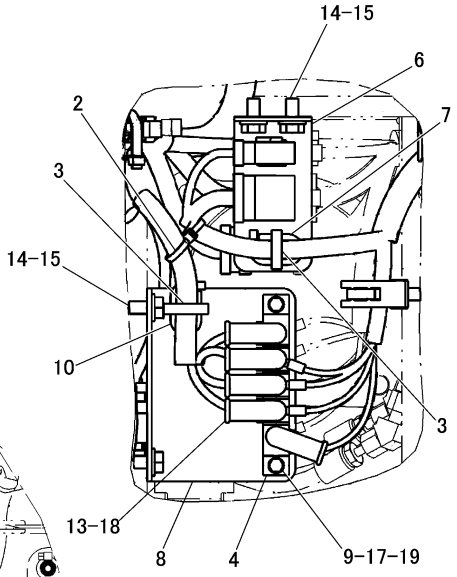

W–W

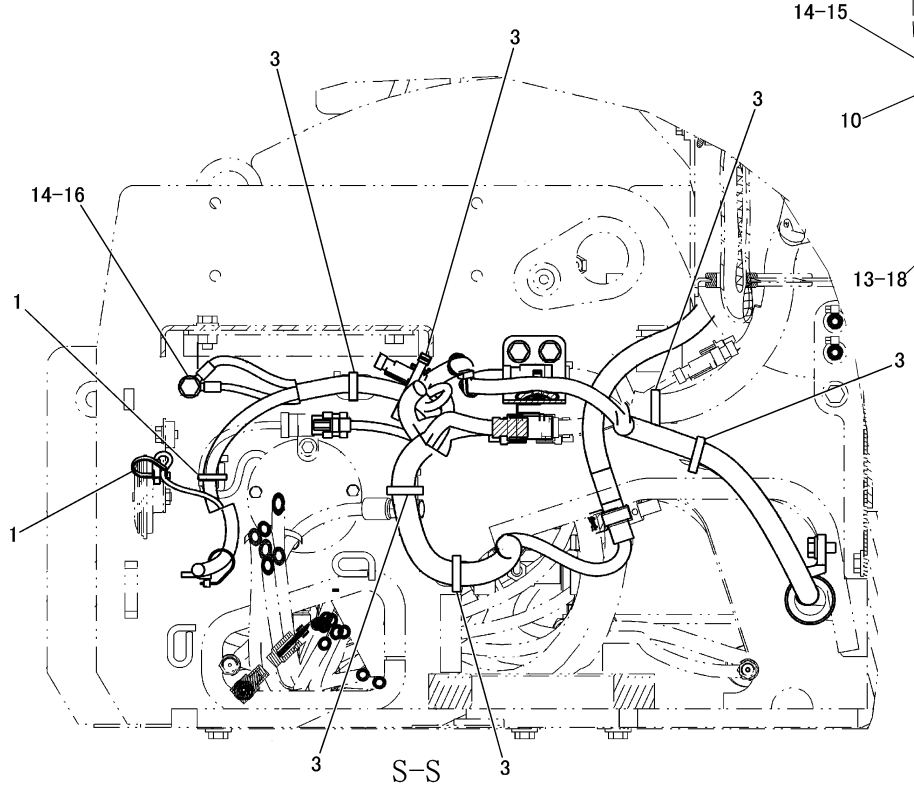

S–S

J149085 HE07

BATTERY AND WIRING GROUP (296-1947 N/S) -PART 4 OF 5
PART OF 296-1803-Page 241

ELECTRICAL AND STARTING SYSTEM

NOTE	No.	PART NO.	QTY	PART NAME
	1	3S-2093	3	STRAP
	2	7I-2673	1	STRAP
	3	7K-1181	10	STRAP
	4	121-1023	1	BLOCK
	5	266-7379	1	STRAP
	6	306-7254	1	BRACKET AS
		183-1051	5	CLIP
	7	7T-1099	1	LINK
	8	306-7256	1	BRACKET AS
		121-1029	1	CLIP
	9	6V-9632	2	NUT(M6×1)(WELD)
	10	7T-1099	1	LINK
	11	132-5789	1	CLIP
	12	4P-7581	1	CLIP
	13	5C-7883	5	BOLT(M6×1)
	14	8T-4121	6	WASHER
	15	8T-4137	5	BOLT(M10×1.5)
	16	8T-4191	1	BOLT(M10×1.5)
	17	8T-4970	2	BOLT(M6×1)
	18	8T-8799	5	BOOT
	19	9X-8256	2	WASHER

J149085 HE07

BATTERY AND WIRING GROUP (296-1947 N/S) -PART 4 OF 5

PART OF 296-1803-Page 241

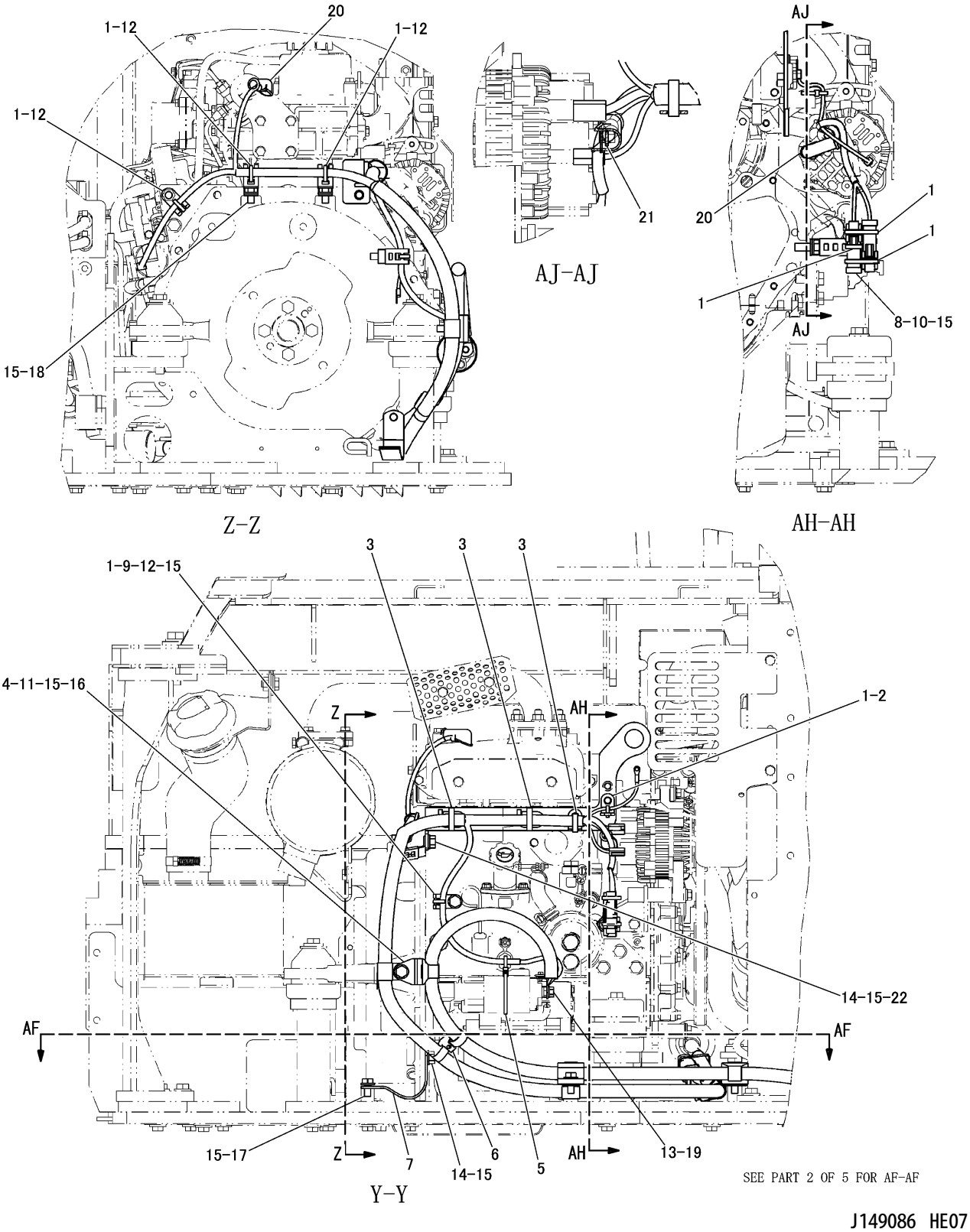

BATTERY AND WIRING GROUP (296-1947 N/S) -PART 5 OF 5
PART OF 296-1803-Page 241

ELECTRICAL AND STARTING SYSTEM

NOTE	No.	PART NO.	QTY	PART NAME	NOTE	No.	PART NO.	QTY	PART NAME
	1	3S-2093	8	STRAP					
	2	132-5789	1	CLIP					
	3	7K-1181	3	STRAP					
	4	111-4837	1	CLIP					
	5	204-1611	1	STRAP					
	6	204-1673	1	STRAP					
	7	278-2145	1	STRAP AS					
	8	298-0663	1	CLIP					
	9	119-9868	1	BOLT(M10×1.25)					
	10	127-4839	1	BOLT(M10×1.25)					
	11	1S-6420	1	CLIP					
	12	4P-8134	4	CLIP					
	13	5C-7261	1	NUT(M8×1.25)					
	14	6V-8231	2	NUT(M10×1.25)					
	15	8T-4121	8	WASHER					
	16	8T-4136	1	BOLT(M10×1.5)					
	17	8T-4137	1	BOLT(M10×1.5)					
	18	8T-4191	2	BOLT(M10×1.5)					
	19	8T-4224	1	WASHER					
	20	8T-8799	2	BOOT					
	21	9X-8256	1	WASHER					
	22	317-2962	1	BRACKET AS					
		132-5789	1	CLIP					
		7T-1099	2	LINK					

J149086 HE07

BATTERY AND WIRING GROUP (296-1947 N/S) -PART 5 OF 5

PART OF 296-1803-Page 241

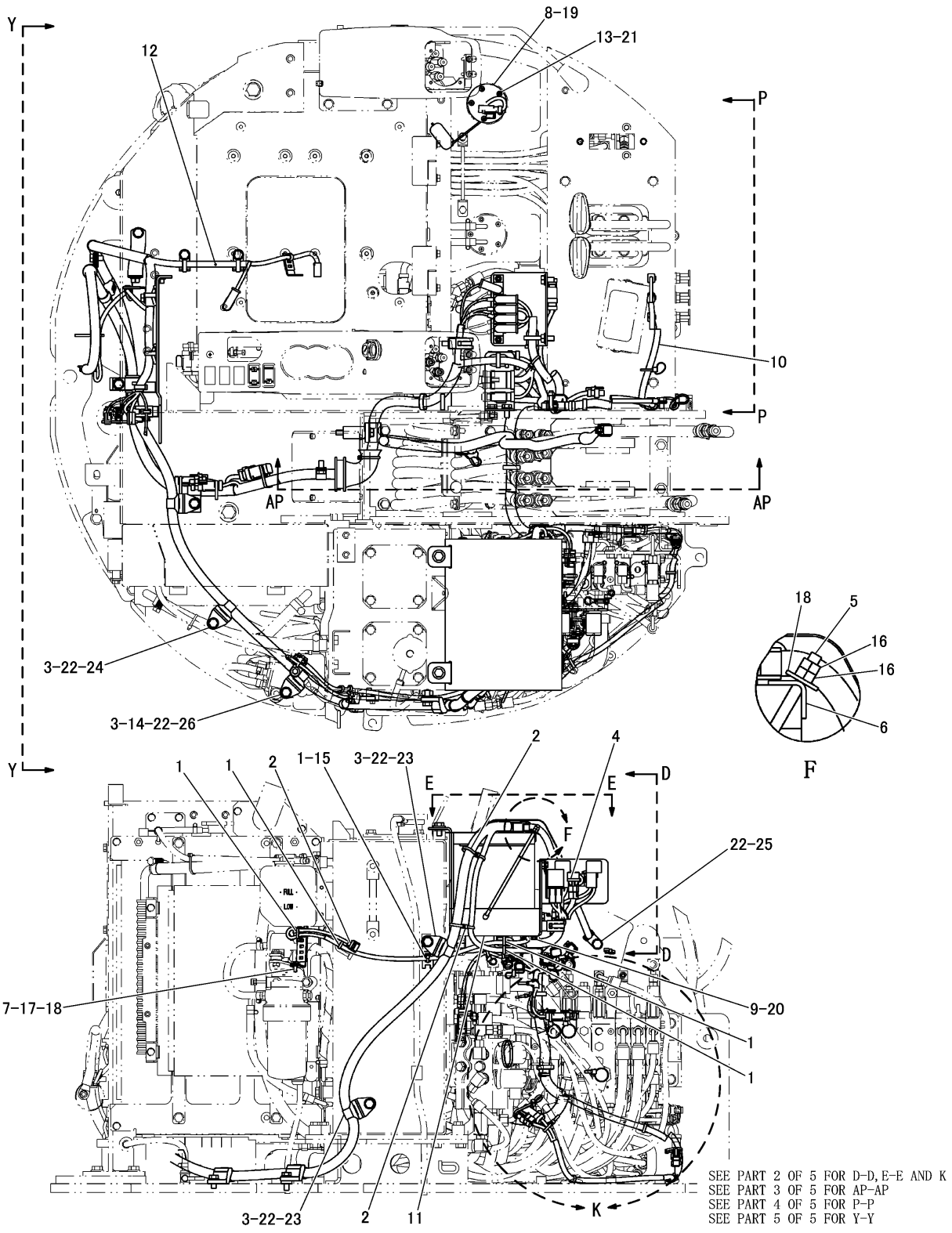

BATTERY AND WIRING GROUP (326-1017 N/S) -PART 1 OF 5
PART OF 308-4118-Page 466
APPLIES TO CAB AIR CONDITIONER SPECIFICATION MACHINE
AN ATTACHMENT

ELECTRICAL AND STARTING SYSTEM

NOTE	No.	PART NO.	QTY	PART NAME	NOTE	No.	PART NO.	QTY	PART NAME
	1	3S-2093	5	STRAP					
	2	7I-2673	3	STRAP					
	3	111-4837	4	CLIP					
	4	163-6795	1	STRAP					
	5	196-3867	2	ROD					
	6	267-4767	1	CLAMP					
	7	298-0663	1	CLIP					
	8	311-4175	1	SENDER AS					
	9	314-2868	1	WASHER					
Y	10	329-3441	1	HARNESS AS					
	11	329-3442	1	BRACKET AS					
Y	12	329-3450	1	HARNESS AS					
	13	095-0736	5	SCREW(M5×0.8)					
	14	4H-1225	1	WASHER					
	15	4P-7581	1	CLIP					
	16	5C-2890	4	NUT(M6×1)					
	17	5C-9553	1	BOLT(M6×1)					
	18	5P-4115	3	WASHER					
	19	6V-7660	1	SEAL					
	20	7X-2619	1	BOLT(M6×1)					
	21	8T-0328	5	WASHER					
	22	8T-4121	5	WASHER					
	23	8T-4136	2	BOLT(M10×1.5)					
	24	8T-4137	1	BOLT(M10×1.5)					
	25	8T-4191	1	BOLT(M10×1.5)					
	26	8T-4195	1	BOLT(M10×1.5)					

Y-SEPARATE ILLUSTRATION

J152809 HE00

BATTERY AND WIRING GROUP (326-1017 N/S) -PART 1 OF 5

PART OF 308-4118-Page 466
REFERENCE:329-3441-Page 190～193 329-3450-Page 186
APPLIES TO CAB AIR CONDITIONER SPECIFICATION MACHINE
AN ATTACHMENT

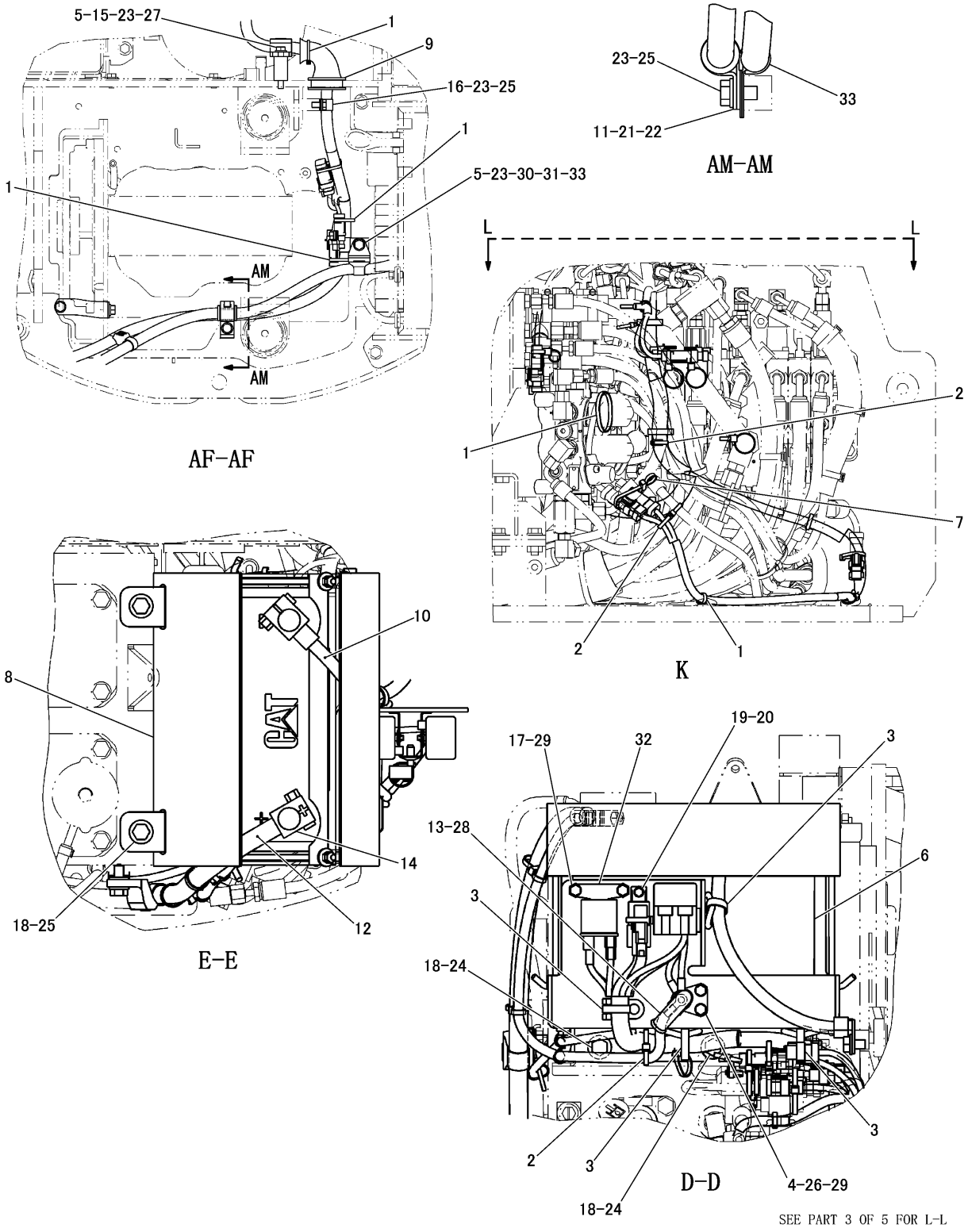

BATTERY AND WIRING GROUP (326-1017 N/S) -PART 2 OF 5
PART OF 308-4118-Page 466
APPLIES TO CAB AIR CONDITIONER SPECIFICATION MACHINE
AN ATTACHMENT

ELECTRICAL AND STARTING SYSTEM

NOTE	No.	PART NO.	QTY	PART NAME	NOTE	No.	PART NO.	QTY	PART NAME
	1	3S-2093	5	STRAP					
	2	7I-2673	3	STRAP					
	3	7K-1181	4	STRAP					
	4	9G-8451	1	BLOCK AS					
		4L-7124	1	BOLT(1/4-20)					
		6V-8185	2	NUT(1/4-20)					
		1H-3244	1	LOCKWASHER					
		4B-4276	2	WASHER					
	5	111-4837	2	CLIP					
	6	153-5656	1	BATTERY(650A)					
	7	204-1611	1	STRAP					
	8	298-3494	1	COVER					
	9	302-2662	1	GROMMET					
	10	306-2230	1	CABLE AS					
		7N-5274	1	COVER(BK)					
E		5P-0746		CABLE---40cm					
		275-9686	1	TERMINAL(90°)					
	11	306-8526	1	GROMMET					
	12	326-9710	1	CABLE AS					
		8N-0869	1	COVER					
		030-1707	1	TARMINAL					
E		5P-0760		CABLE---233cm					
	13	2L-8067	1	TERMINAL					
	14	8N-1725	1	COVER(RED)					
		3S-6049	1	TERMINAL AS(+)					
		1M-6119	1	BOLT(5/16-18)					
		1M-6120	1	NUT(5/16-18)					
	15	4I-7889	1	SPACER					
	16	6D-4246	1	CLIP					
	17	7X-2619	2	BOLT(M6×1)					
	18	7X-7729	4	WASHER					
	19	8T-0286	1	BOLT(M5×0.8)					
	20	8T-0328	1	WASHER					
	21	8T-1889	1	CLIP(SLOT)					
	22	8T-1890	1	CLIP(TAB)					
	23	8T-4121	4	WASHER					
	24	8T-4136	2	BOLT(M10×1.5)					
	25	8T-4137	4	BOLT(M10×1.5)					
	26	8T-4970	2	BOLT(M6×1)					
	27	8T-5005	1	BOLT(M10×1.5)					
	28	8T-8977	1	BOOT					
	29	9X-8256	4	WASHER					
	30	326-9712	1	SPACER					
	31	8T-6466	1	BOLT(M10×1.5)					
	32	119-9895	1	GLOW RELAY					
	33	1S-6420	2	CLIP					

E-ORDER BY THE cm

J152810 HE00

BATTERY AND WIRING GROUP (326-1017 N/S) -PART 2 OF 5

PART OF 308-4118-Page 466

APPLIES TO CAB AIR CONDITIONER SPECIFICATION MACHINE

AN ATTACHMENT

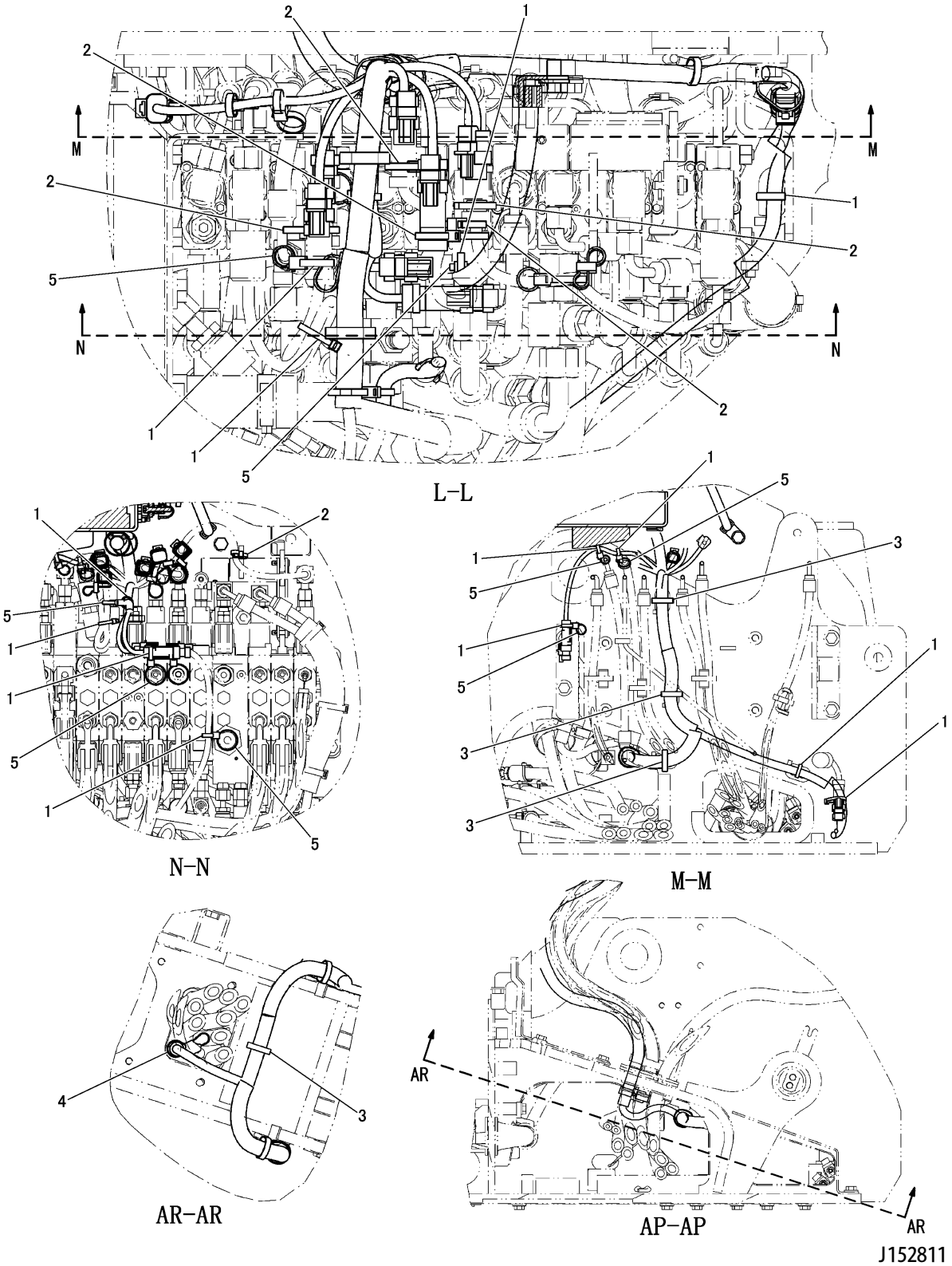

BATTERY AND WIRING GROUP (326-1017 N/S) -PART 3 OF 5
PART OF 308-4118-Page 466
APPLIES TO CAB AIR CONDITIONER SPECIFICATION MACHINE
AN ATTACHMENT

ELECTRICAL AND STARTING SYSTEM

NOTE	No.	PART NO.	QTY	PART NAME	NOTE	No.	PART NO.	QTY	PART NAME
	1	3S-2093	13	STRAP					
	2	7I-2673	6	STRAP					
	3	7K-1181	4	STRAP					
	4	204-1673	1	STRAP					
	5	266-7379	8	STRAP					

J152811 HE00

BATTERY AND WIRING GROUP (326-1017 N/S) -PART 3 OF 5
PART OF 308-4118-Page 466
APPLIES TO CAB AIR CONDITIONER SPECIFICATION MACHINE
AN ATTACHMENT

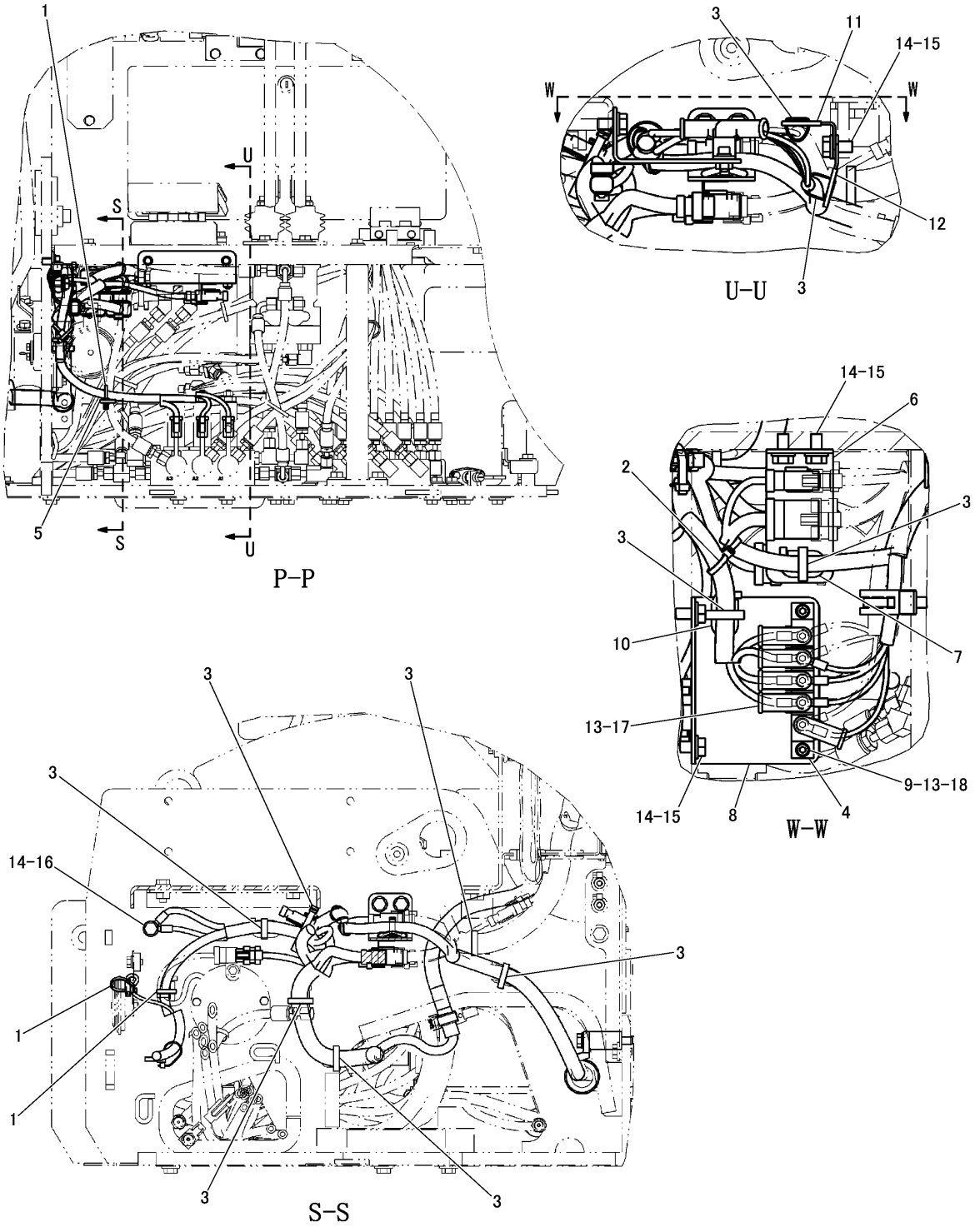

J152812 HE00

BATTERY AND WIRING GROUP (326-1017 N/S) -PART 4 OF 5
PART OF 308-4118-Page 466
APPLIES TO CAB AIR CONDITIONER SPECIFICATION MACHINE
AN ATTACHMENT

ELECTRICAL AND STARTING SYSTEM

NOTE	No.	PART NO.	QTY	PART NAME	NOTE	No.	PART NO.	QTY	PART NAME
	1	3S-2093	3	STRAP					
	2	7I-2673	1	STRAP					
	3	7K-1181	10	STRAP					
	4	121-1023	1	BLOCK					
	5	266-7379	1	STRAP					
	6	306-7254	1	BRACKET AS					
		183-1051	5	CLIP					
	7	7T-1099	1	LINK					
	8	306-7256	1	BRACKET AS					
		121-1029	1	CLIP					
	9	6V-9632	2	NUT(M6×1)(WELD)					
	10	7T-1099	1	LINK					
	11	132-5789	1	CLIP					
	12	4P-7581	1	CLIP					
	13	5C-7883	7	BOLT(M6×1)					
	14	8T-4121	6	WASHER					
	15	8T-4137	5	BOLT(M10×1.5)					
	16	8T-4191	1	BOLT(M10×1.5)					
	17	8T-8799	5	BOOT					
	18	9X-8256	2	WASHER					

J152812 HE00

BATTERY AND WIRING GROUP (326-1017 N/S) -PART 4 OF 5
PART OF 308-4118-Page 466
APPLIES TO CAB AIR CONDITIONER SPECIFICATION MACHINE
AN ATTACHMENT

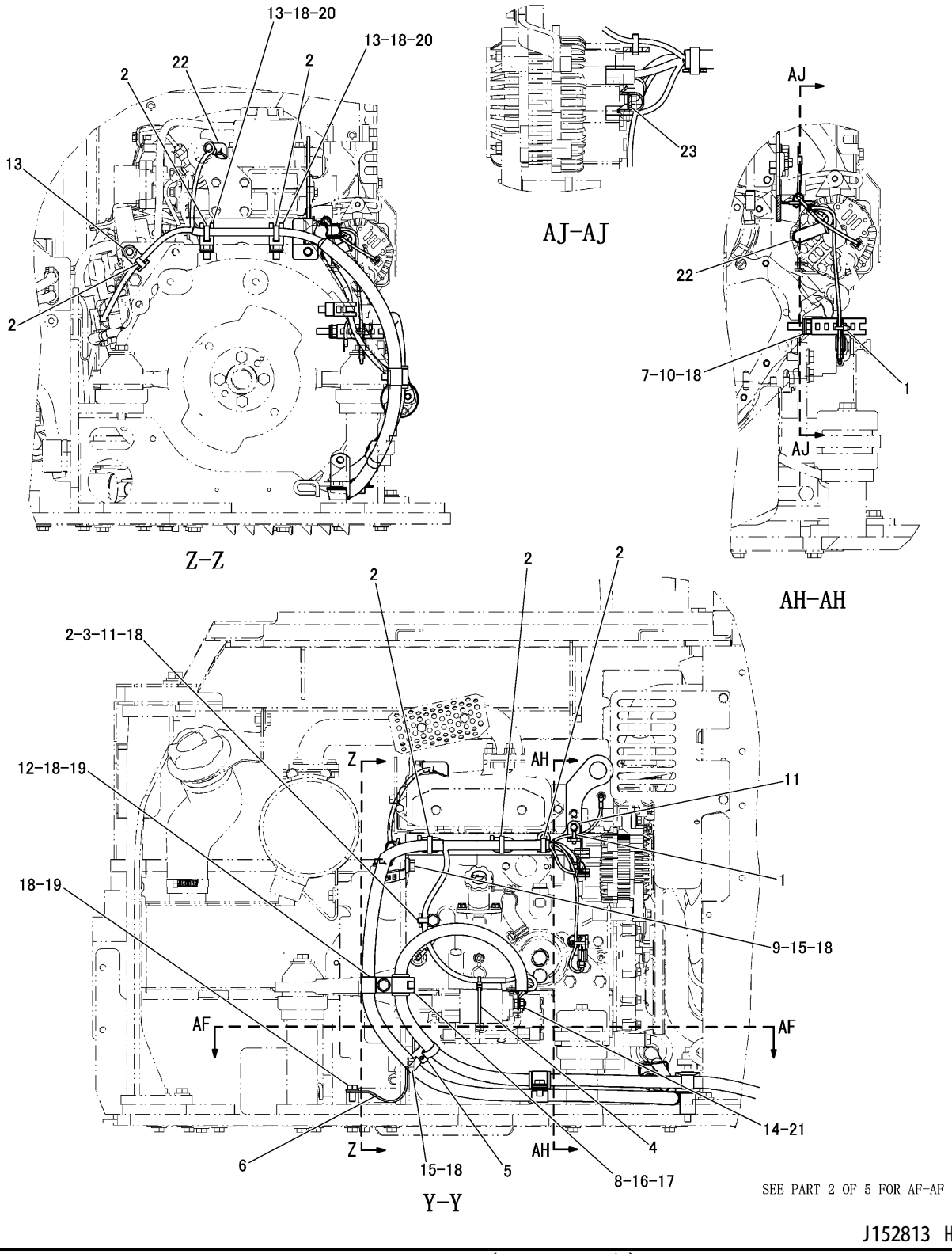

BATTERY AND WIRING GROUP (326-1017 N/S) -PART 5 OF 5
PART OF 308-4118-Page 466
APPLIES TO CAB AIR CONDITIONER SPECIFICATION MACHINE
AN ATTACHMENT

ELECTRICAL AND STARTING SYSTEM

NOTE	No.	PART NO.	QTY	PART NAME	NOTE	No.	PART NO.	QTY	PART NAME
	1	3S-2093	2	STRAP					
	2	7K-1181	7	STRAP					
	3	119-9868	1	BOLT(M10×1.25)					
	4	204-1611	1	STRAP					
	5	204-1673	1	STRAP					
	6	278-2145	1	STRAP AS					
	7	298-0663	1	CLIP					
	8	306-8526	1	GROMMET					
	9	317-2962	1	BRACKET AS					
	10	127-4839	1	BOLT(M10×1.25)					
	11	132-5789	2	CLIP					
	12	1S-6420	1	CLIP					
	13	4P-8134	3	CLIP					
	14	5C-7261	1	NUT(M8×1.25)					
	15	6V-8231	2	NUT(M10×1.25)					
	16	8T-1889	1	CLIP(SLOT)					
	17	8T-1890	1	CLIP(TAB)					
	18	8T-4121	8	WASHER					
	19	8T-4137	2	BOLT(M10×1.5)					
	20	8T-4191	2	BOLT(M10×1.5)					
	21	8T-4224	1	WASHER					
	22	8T-8799	2	BOOT					
	23	9X-8256	1	WASHER					

J152813 HE00

BATTERY AND WIRING GROUP (326-1017 N/S) -PART 5 OF 5

PART OF 308-4118-Page 466

APPLIES TO CAB AIR CONDITIONER SPECIFICATION MACHINE
AN ATTACHMENT

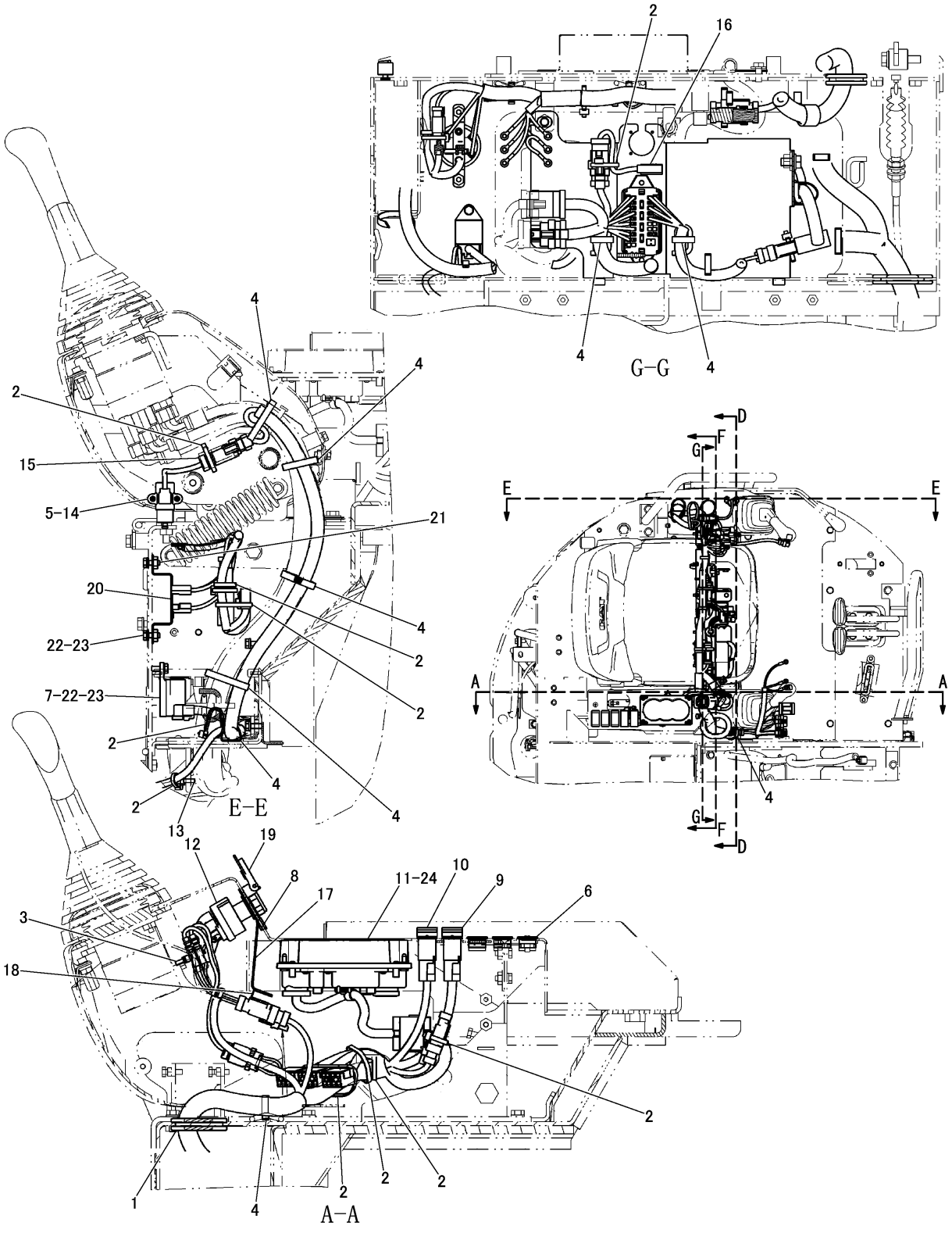

CONSOLE WIRING GROUP (296-1949 N/S) -PART 1 OF 2
PART OF 296-6133-Page 464

ELECTRICAL AND STARTING SYSTEM

NOTE	No.	PART NO.	QTY	PART NAME
	1	1S-1014	1	GROMMET
	2	3S-2093	10	STRAP
	3	7I-2673	1	STRAP
	4	7K-1181	9	STRAP
	5	158-4781	2	SCREW(M6×1)
	6	109-2356	2	PLUG
W		109-2356	1	PLUG
	7	119-9896	1	GLOW TIMER
	8	254-8249	1	PLUG
	9	266-1404	1	SWITCH AS
		111-7899	1	GASKET
	10	266-1405	1	SWITCH AS
		111-7899	1	GASKET
	11	266-3807	1	MONITOR GROUP
Y	12	267-9950	1	SWITCH GROUP
	13	266-7379	1	STRAP
	14	267-7058	1	SWITCH AS
	15	243-4505	1	RECEPTACLE AS(2P)
		186-3735	2	PIN
	16	302-6715	1	SWITCH AS
		243-4506	1	RECEPTACLE AS(3P)
	17	305-7224	1	PLATE AS
	18	183-1051	1	CLIP
	19	306-9039	1	COVER AS
	20	306-2248	1	BRACKET AS
	21	6V-9632	2	NUT(M6×1)(WELD)
	22	5C-9553	3	BOLT(M6×1)
	23	9X-8256	3	WASHER
	24	119-5026	4	SCREW(No.10-16)

NOTE	No.	PART NO.	QTY	PART NAME

W-STD/ATT REMOVAL
Y-SEPARATE ILLUSTRATION

J149786 HE03

CONSOLE WIRING GROUP (296-1949 N/S) -PART 1 OF 2

PART OF 296-6133-Page 464
REFERENCE:267-9950-Page 228

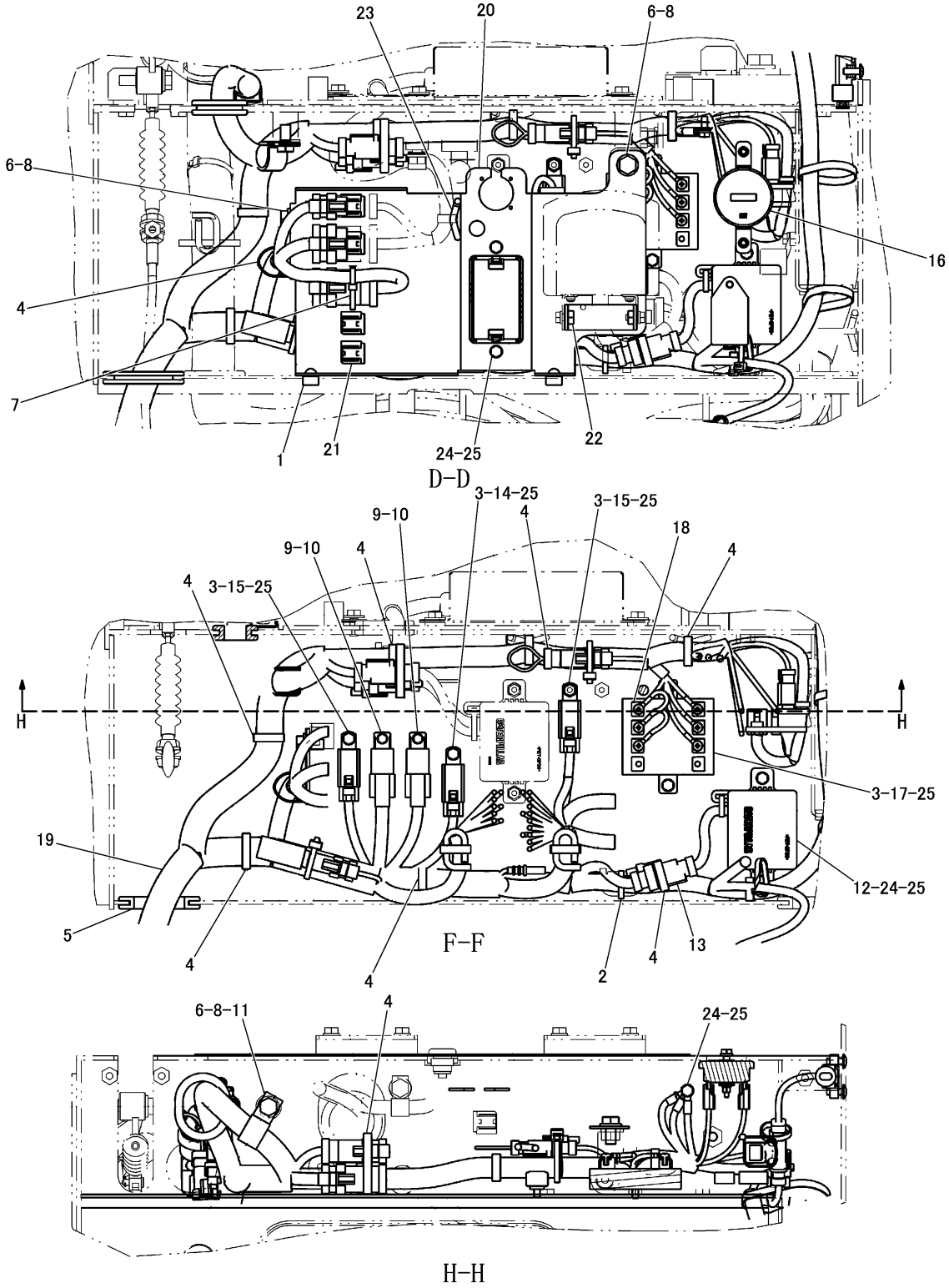

J149787 HE03

CONSOLE WIRING GROUP (296-1949 N/S) -PART 2 OF 2
PART OF 296-6133-Page 464

ELECTRICAL AND STARTING SYSTEM

NOTE	No.	PART NO.	QTY	PART NAME	NOTE	No.	PART NO.	QTY	PART NAME
	1	9M-5617	2	GROMMET					
	2	3S-2093	1	STRAP					
	3	8T-4171	5	BOLT(M6×1)					
	4	7K-1181	9	STRAP					
	5	7Y-8171	1	GROMMET					
	6	8T-4137	3	BOLT(M10×1.5)					
	7	204-1611	1	STRAP					
	8	8T-4121	3	WASHER					
	9	8T-0328	2	WASHER					
	10	8T-0287	2	BOLT(M5×0.8)					
	11	6D-4244	1	CLIP					
	12	266-6936	1	CONTROL AS					
	13	243-4508	1	RECEPTACLE AS(6P)					
		186-3735	5	PIN					
		8T-8737	1	PLUG					
	14	250-2048	1	RELAY AS					
	15	239-1182	2	RELAY AS					
	16	268-1964	1	METER KIT					
	17	155-7585	1	RESISTOR AS					
	18	095-0735	6	SCREW(M5×0.8)					
Y	19	317-2468	1	HARNESS AS					
	20	317-2978	1	BRACKET AS					
	21	183-1051	8	CLIP					
	22	6V-9632	2	NUT(M6×1)(WELD)					
	23	7T-1099	4	LINK					
	24	5C-9553	5	BOLT(M6×1)					
	25	9X-8256	10	WASHER					

Y-SEPARATE ILLUSTRATION

J149787 HE03

CONSOLE WIRING GROUP (296-1949 N/S) -PART 2 OF 2

PART OF 296-6133-Page 464

REFERENCE:317-2468-Page 194～197

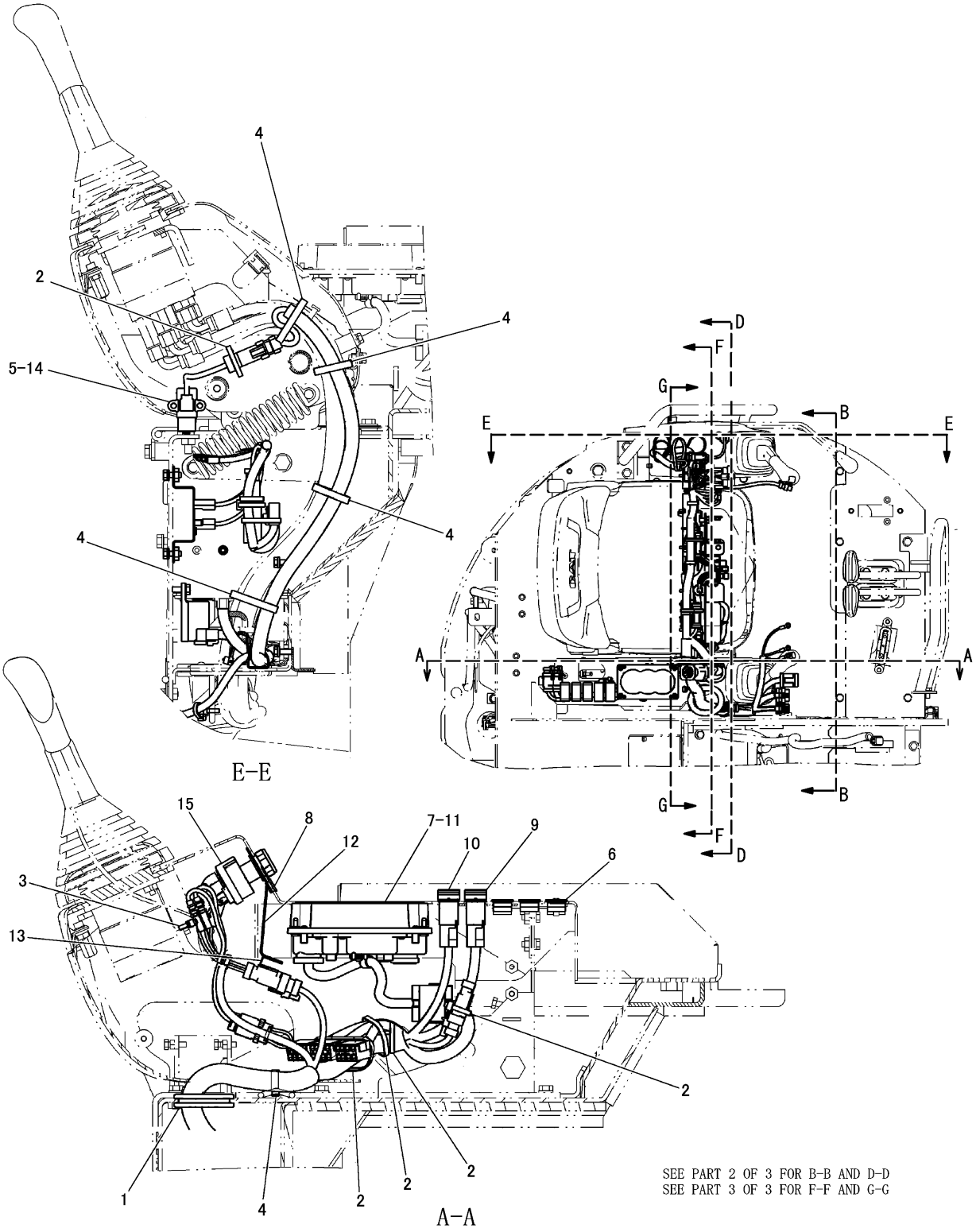

CONSOLE WIRING GROUP (317-2980 N/S) -CAB-PART 1 OF 3
PART OF 308-4117-Page 465
AN ATTACHMENT

ELECTRICAL AND STARTING SYSTEM

NOTE	No.	PART NO.	QTY	PART NAME
	1	1S-1014	1	GROMMET
	2	3S-2093	5	STRAP
	3	7I-2673	1	STRAP
	4	7K-1181	5	STRAP
	5	158-4781	2	SCREW(M6×1)
	6	109-2356	3	PLUG
	7	119-5026	4	SCREW(No.10-16)
	8	254-8249	1	PLUG
	9	266-1404	1	SWITCH AS
		111-7899	1	GASKET
	10	266-1405	1	SWITCH AS
		111-7899	1	GASKET
	11	266-3807	1	MONITOR GROUP
	12	305-7224	1	PLATE AS
	13	183-1051	1	CLIP
	14	267-7058	1	SWITCH AS
Y	15	267-9950	1	SWITCH GROUP

NOTE	No.	PART NO.	QTY	PART NAME

Y-SEPARATE ILLUSTRATION

J147560 HE00

CONSOLE WIRING GROUP (317-2980 N/S) -CAB-PART 1 OF 3

PART OF 308-4117-Page 465
REFERENCE:267-9950-Page 228
AN ATTACHMENT

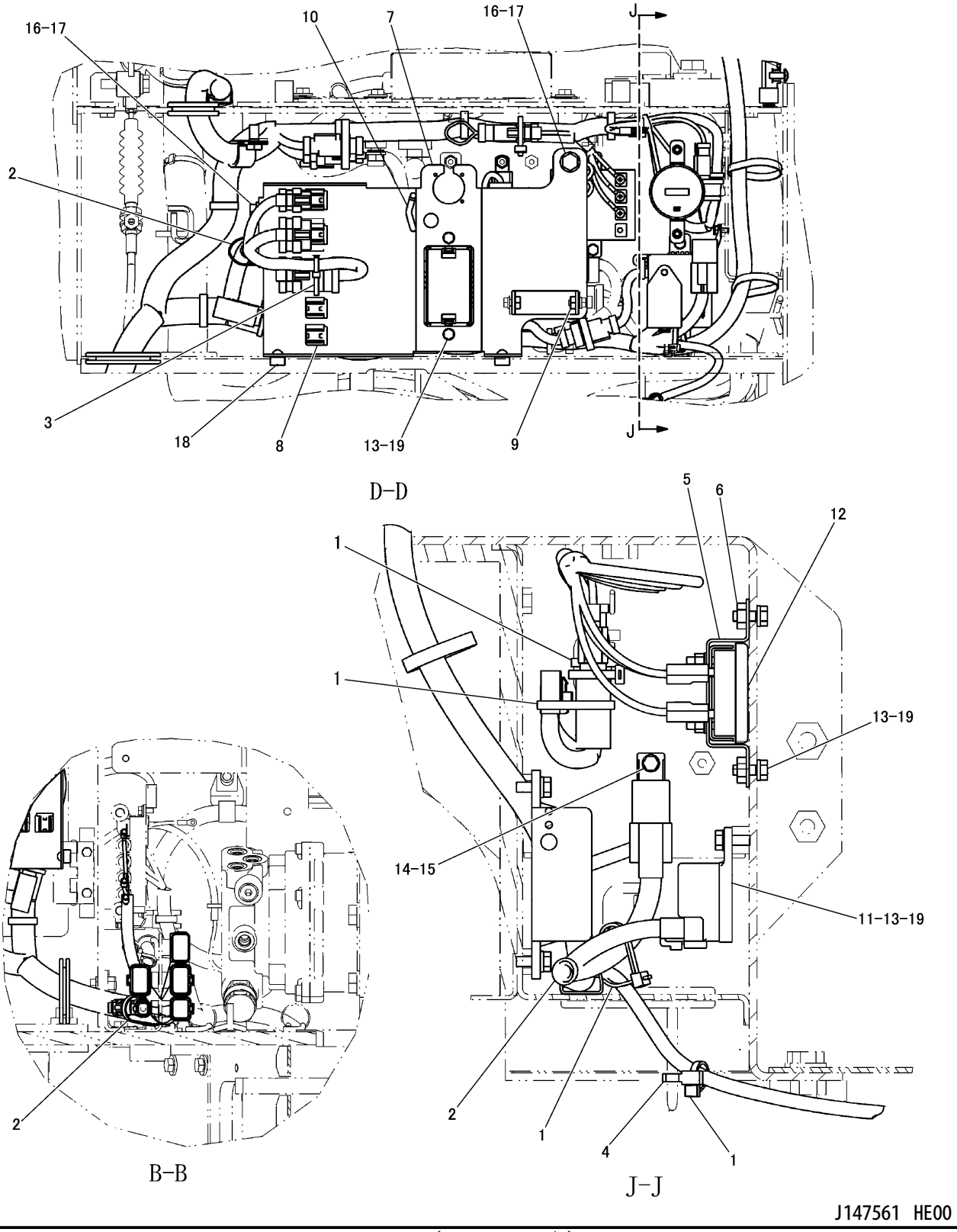

CONSOLE WIRING GROUP (317-2980 N/S) -CAB-PART 2 OF 3
PART OF 308-4117-Page 465
AN ATTACHMENT

ELECTRICAL AND STARTING SYSTEM

NOTE	No.	PART NO.	QTY	PART NAME	NOTE	No.	PART NO.	QTY	PART NAME
	1	3S-2093	4	STRAP					
	2	7K-1181	3	STRAP					
	3	204-1611	1	STRAP					
	4	266-7379	1	STRAP					
	5	306-2248	1	BRACKET AS					
	6	6V-9632	2	NUT(M6×1)(WELD)					
	7	317-2978	1	BRACKET AS					
	8	183-1051	8	CLIP					
	9	6V-9632	2	NUT(M6×1)(WELD)					
	10	7T-1099	4	LINK					
	11	119-9896	1	GLOW TIMER					
	12	161-3932	1	SERVICE METER KIT					
	13	5C-9553	5	BOLT(M6×1)					
	14	8T-0287	1	BOLT(M5×0.8)					
	15	8T-0328	1	WASHER					
	16	8T-4121	2	WASHER					
	17	8T-4137	2	BOLT(M10×1.5)					
	18	9M-5617	2	GROMMET					
	19	9X-8256	5	WASHER					

J147561 HE00

CONSOLE WIRING GROUP (317-2980 N/S) -CAB-PART 2 OF 3
PART OF 308-4117-Page 465
AN ATTACHMENT

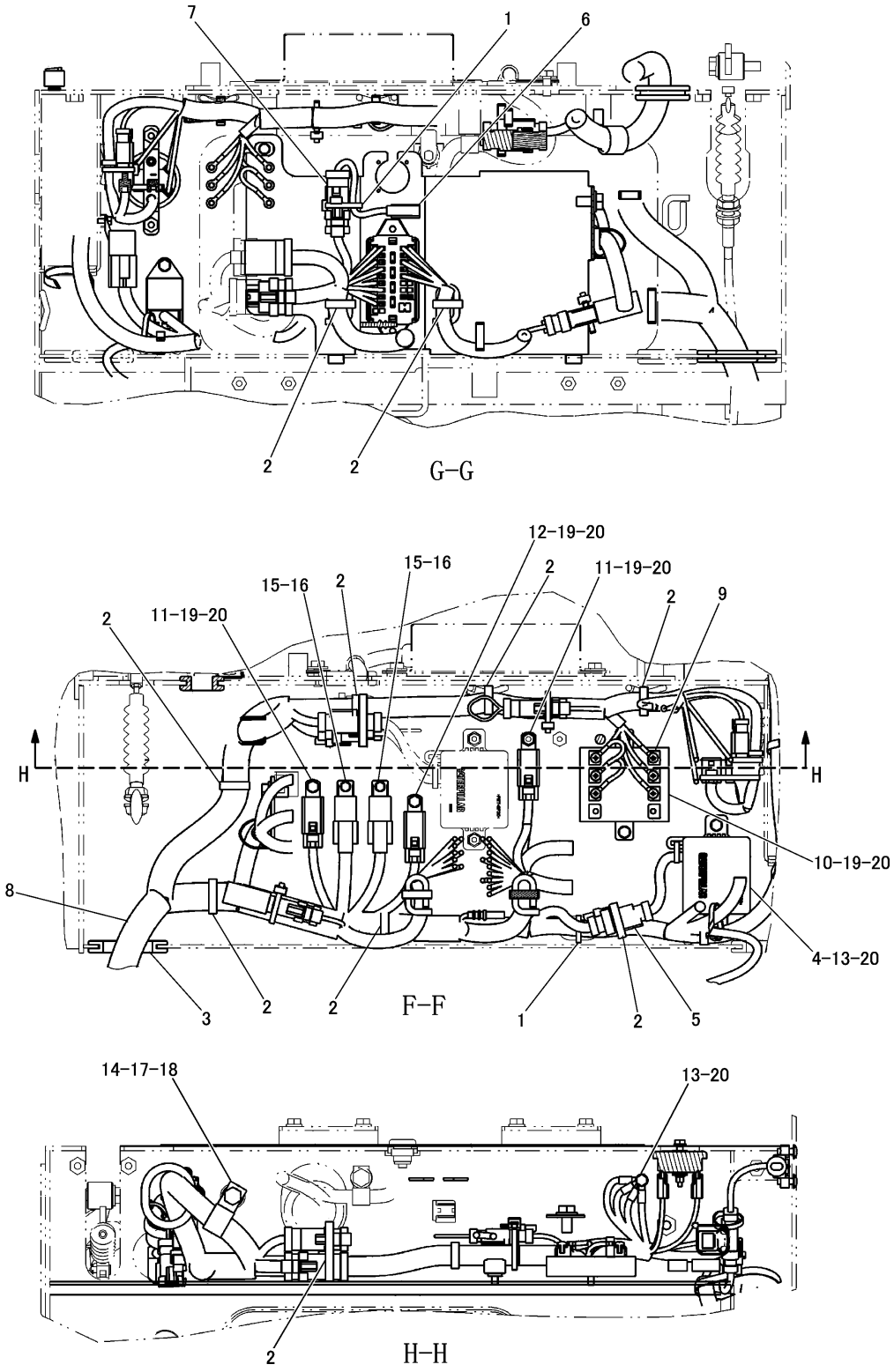

J147562 HE00

CONSOLE WIRING GROUP (317-2980 N/S) -CAB-PART 3 OF 3
PART OF 308-4117-Page 465
AN ATTACHMENT

ELECTRICAL AND STARTING SYSTEM

NOTE	No.	PART NO.	QTY	PART NAME	NOTE	No.	PART NO.	QTY	PART NAME
	1	3S-2093	2	STRAP					
	2	7K-1181	10	STRAP					
	3	7Y-8171	1	GROMMET					
	4	266-6936	1	CONTROL AS					
	5	243-4508	1	RECEPTACLE AS(6P)					
		8T-8729	5	PIN					
		8T-8737	1	PLUG					
	6	302-6715	1	SWITCH AS					
	7	243-4506	1	RECEPTACLE AS(3P)					
Y	8	317-2981	1	HARNESS AS					
	9	095-0735	6	SCREW(M5×0.8)					
	10	155-7585	1	RESISTOR AS					
	11	239-1182	2	RELAY AS					
	12	250-2048	1	RELAY AS					
	13	5C-9553	3	BOLT(M6×1)					
	14	6D-4244	1	CLIP					
	15	8T-0287	2	BOLT(M5×0.8)					
	16	8T-0328	2	WASHER					
	17	8T-4121	1	WASHER					
	18	8T-4137	1	BOLT(M10×1.5)					
	19	8T-4171	5	BOLT(M6×1)					
	20	9X-8256	8	WASHER					

Y-SEPARATE ILLUSTRATION

J147562 HE00

CONSOLE WIRING GROUP (317-2980 N/S) -CAB-PART 3 OF 3
PART OF 308-4117-Page 465
REFERENCE:317-2981-Page 198～201
AN ATTACHMENT

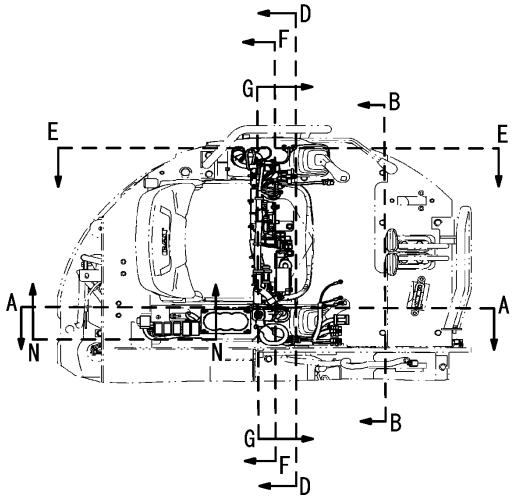

TOP VIEW

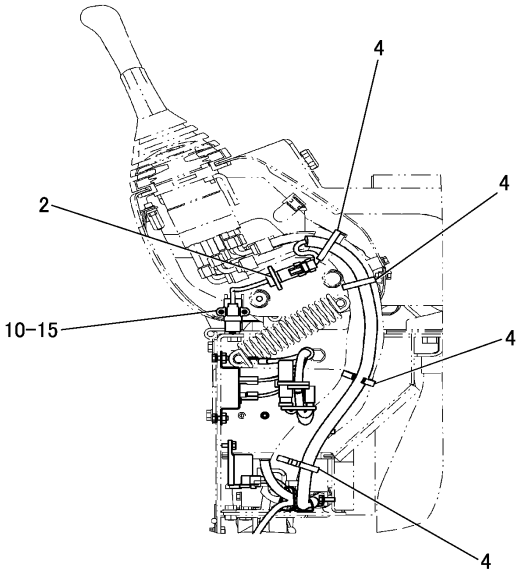

E-E

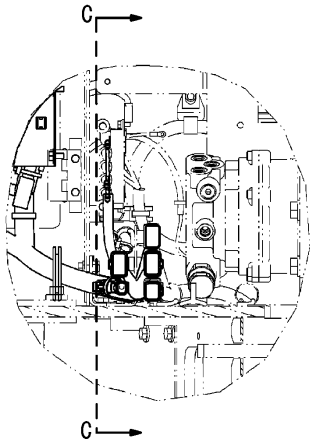

B-B

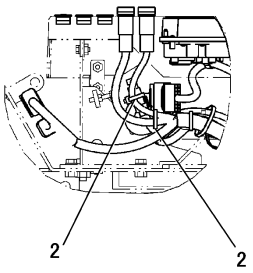

N-N

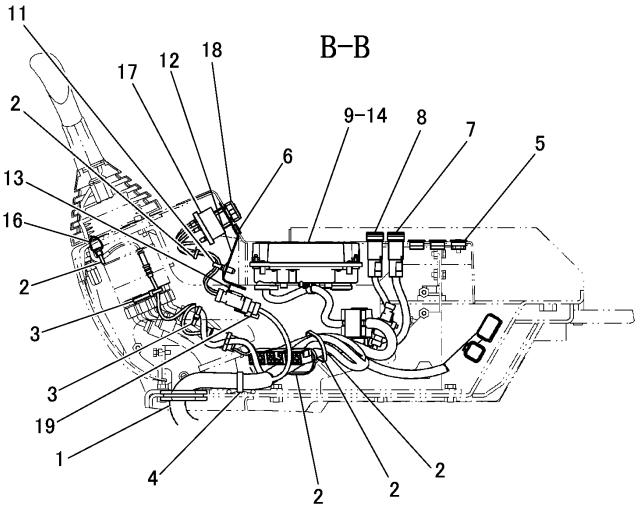

A-A

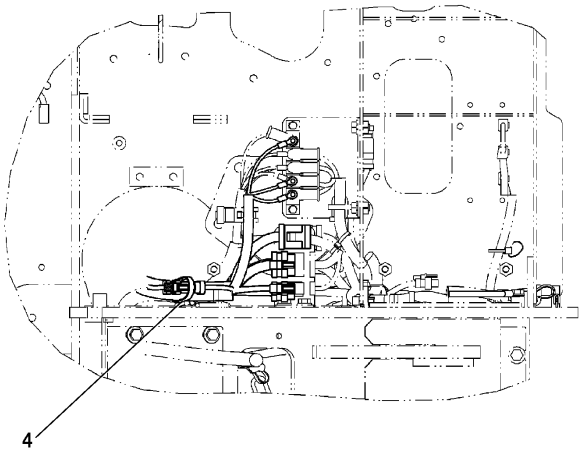

C-C

J152819 HE03

CONSOLE WIRING GROUP (326-7158 N/S) -CAB-PART 1 OF 2
PART OF 308-4118-Page 466
APPLIES TO CAB AIR CONDITIONER SPECIFICATION MACHINE
AN ATTACHMENT

ELECTRICAL AND STARTING SYSTEM

NOTE	No.	PART NO.	QTY	PART NAME	NOTE	No.	PART NO.	QTY	PART NAME
	1	1S-1014	1	GROMMET					
	2	3S-2093	8	STRAP					
	3	7I-2673	2	STRAP					
	4	7K-1181	6	STRAP					
	5	109-2356	3	PLUG					
	6	254-8249	1	PLUG					
	7	266-1404	1	SWITCH AS					
	8	266-1405	1	SWITCH AS					
	9	266-3807	1	MONITOR GROUP					
	10	267-7058	1	SWITCH AS					
		243-4505	1	RECEPTACLE AS(2P)					
		8T-8729	2	PIN					
	11	163-6795	1	STRAP					
	12	325-8719	1	PLATE AS					
	13	183-1051	1	CLIP					
	14	119-5026	4	SCREW(No.10-16)					
	15	158-4781	2	SCREW(M6×1)					
	16	266-7379	1	STRAP					
	17	322-8964	1	SWITCH AS					
	18	7T-6799	1	NUT(1-32)					
	19	243-4507	1	RECEPTACLE AS(4P)					
		186-3735	4	PIN					

J152819 HE03

CONSOLE WIRING GROUP (326-7158 N/S) -CAB-PART 1 OF 2
PART OF 308-4118-Page 466
APPLIES TO CAB AIR CONDITIONER SPECIFICATION MACHINE
AN ATTACHMENT

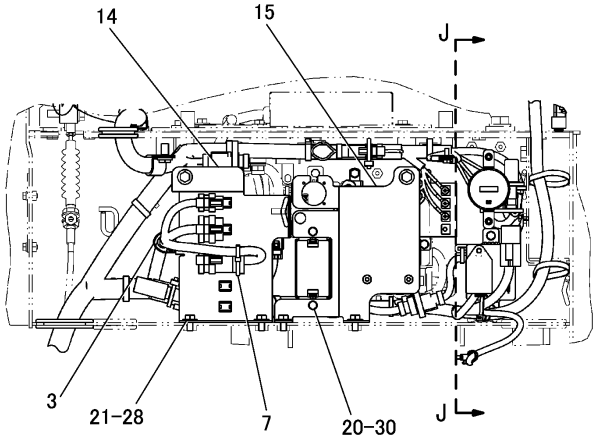

D-D

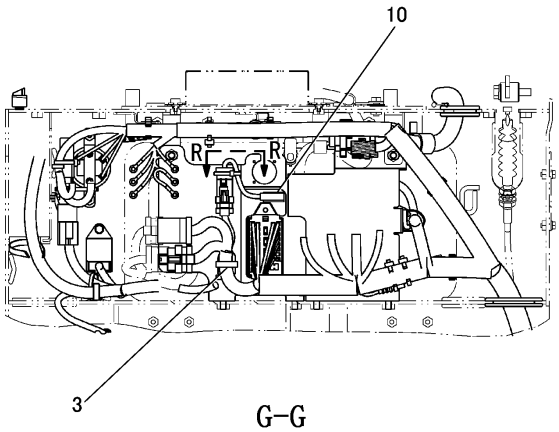

G-G

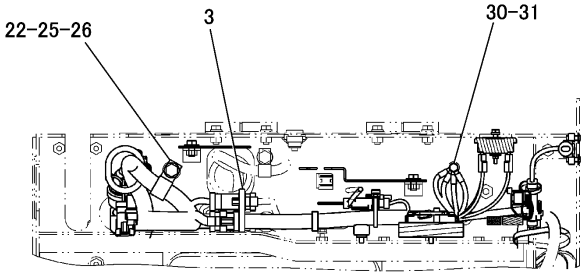

H-H

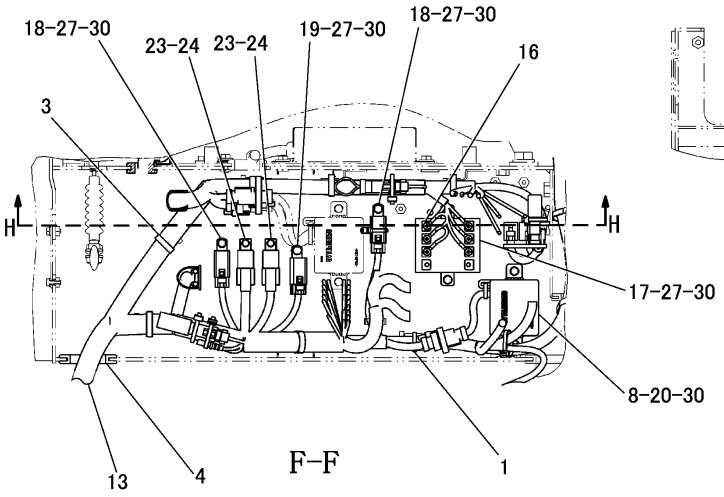

F-F

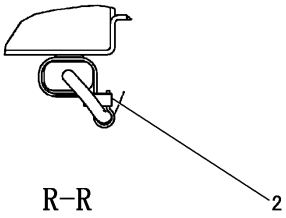

R-R

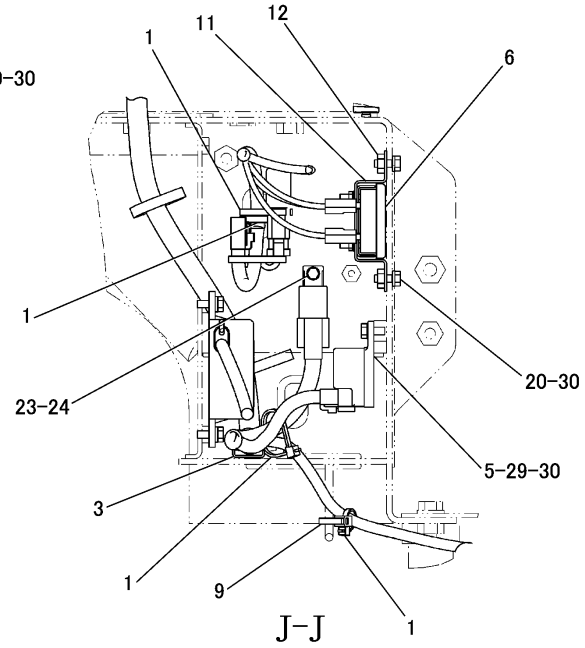

J-J

J152820 HE03

CONSOLE WIRING GROUP (326-7158 N/S) -CAB-PART 2 OF 2
PART OF 308-4118-Page 466
APPLIES TO CAB AIR CONDITIONER SPECIFICATION MACHINE
AN ATTACHMENT

ELECTRICAL AND STARTING SYSTEM

NOTE	No.	PART NO.	QTY	PART NAME	NOTE	No.	PART NO.	QTY	PART NAME
	1	3S-2093	5	STRAP					
	2	7I-2673	1	STRAP					
	3	7K-1181	11	STRAP					
	4	7Y-8171	1	GROMMET					
	5	119-9896	1	GLOW TIMER					
	6	268-1964	1	METER KIT					
		114-2505	1	FILM(SERVICE METER)					
	7	204-1611	1	STRAP					
	8	266-6936	1	CONTROL AS					
		243-4508	1	RECEPTACLE AS(6P)					
		8T-8729	5	PIN					
		8T-8737	1	PLUG					
	9	266-7379	1	STRAP					
	10	302-6715	1	SWITCH AS					
		243-4506	1	RECEPTACLE AS(3P)					
	11	306-2248	1	BRACKET AS					
	12	6V-9632	2	NUT(M6×1)(WELD)					
Y	13	325-9913	1	HARNESS AS					
	14	325-9924	1	BRACKET AS					
		325-9925	1	BRACKET					
		7T-1099	2	LINK					
	15	325-9936	1	BRACKET AS					
		091-4537	2	SPACER					
		7T-1099	1	LINK					
	16	095-0735	6	SCREW(M5×0.8)					
	17	155-7585	1	RESISTOR AS					
	18	239-1182	2	RELAY AS					
	19	250-2048	1	RELAY AS					
	20	5C-9553	6	BOLT(M6×1)					
	21	5P-4116	6	WASHER					
	22	6D-4244	1	CLIP					
	23	8T-0287	3	BOLT(M5×0.8)					
	24	8T-0328	3	WASHER					
	25	8T-4121	1	WASHER					
	26	8T-4137	1	BOLT(M10×1.5)					
	27	8T-4171	5	BOLT(M6×1)					
	28	8T-4200	6	BOLT(M8×1.25)					
	29	8T-4970	1	BOLT(M6×1)					
	30	9X-8256	13	WASHER					
	31	6V-7357	1	BOLT(M6×1)					

Y-SEPARATE ILLUSTRATION

J152820 HE03

CONSOLE WIRING GROUP (326-7158 N/S) -CAB-PART 2 OF 2

PART OF 308-4118-Page 466
REFERENCE:325-9913-Page 202～205
APPLIES TO CAB AIR CONDITIONER SPECIFICATION MACHINE
AN ATTACHMENT

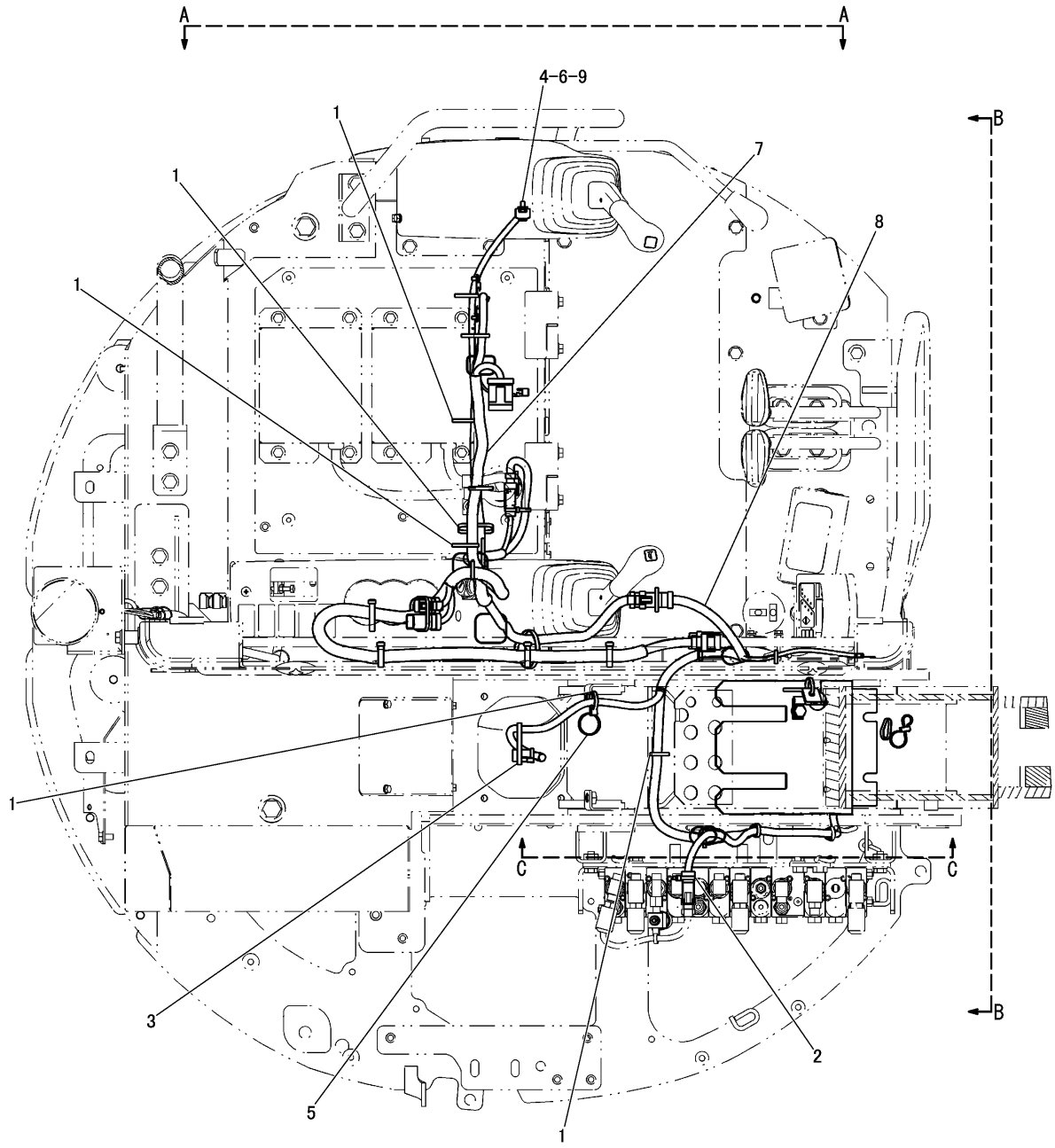

J146831 HE03

CONSOLE WIRING GROUP (307-9229 N/S) -STANDARD STICK/CANOPY-PART 1 OF 3
PART OF 307-8503-Page 2,330-3619-Page 3
AN ATTACHMENT

ELECTRICAL AND STARTING SYSTEM

NOTE	No.	PART NO.	QTY	PART NAME	NOTE	No.	PART NO.	QTY	PART NAME
	1	3S-2093	5	STRAP					
	2	7I-2673	1	STRAP					
	3	7K-1181	1	STRAP					
	4	239-1182	1	RELAY AS					
	5	266-7379	1	STRAP					
	6	9X-8256	1	WASHER					
Y	7	317-2481	1	HARNESS AS					
Y	8	317-2482	1	HARNESS AS					
	9	8T-4171	1	BOLT(M6×1)					

Y-SEPARATE ILLUSTRATION

J146831 HE03

CONSOLE WIRING GROUP (307-9229 N/S) -STANDARD STICK/CANOPY-PART 1 OF 3

PART OF 307-8503-Page 2, 330-3619-Page 3

REFERENCE:317-2481-Page 206 317-2482-Page 209

AN ATTACHMENT

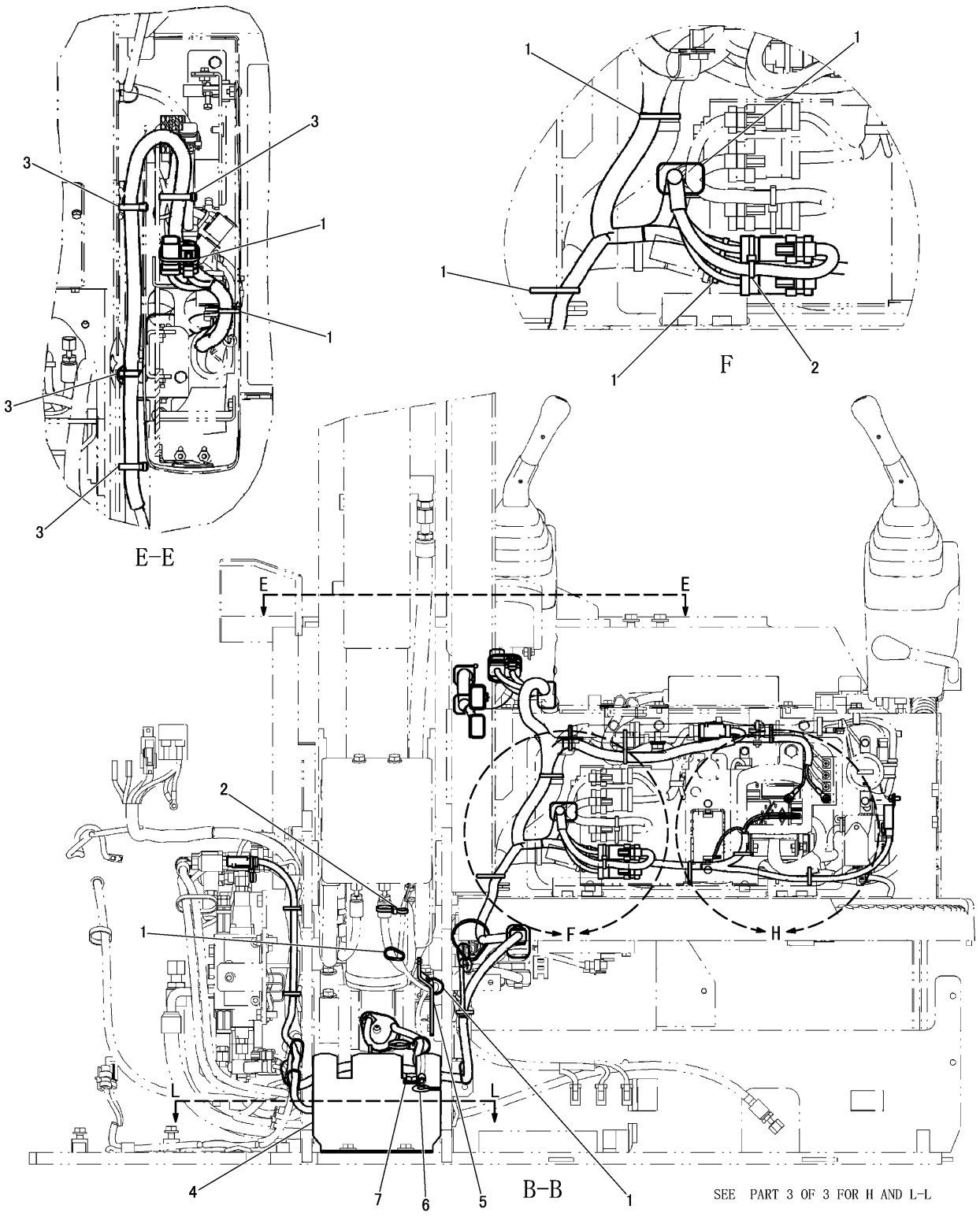

CONSOLE WIRING GROUP (307-9229 N/S) -STANDARD STICK/CANOPY-PART 2 OF 3
PART OF 307-8503-Page 2, 330-3619-Page 3
AN ATTACHMENT

NOTE	No.	PART NO.	QTY	PART NAME	NOTE	No.	PART NO.	QTY	PART NAME
	1	3S-2093	8	STRAP					
	2	7I-2673	2	STRAP					
	3	7K-1181	4	STRAP					
	4	311-4450	1	COVER AS					
		8T-3490	1	NUT(M10×1.5)(WELD)					
	5	239-0000	1	LEVER					
	6	8P-8540	1	GROMMET					
	7	8M-2772	1	CLIP					
		8T-4137	1	BOLT(M10×1.5)					
		8T-4121	1	WASHER					

J146832 HE03

CONSOLE WIRING GROUP (307-9229 N/S) -STANDARD STICK/CANOPY-PART 2 OF 3
PART OF 307-8503-Page 2, 330-3619-Page 3
AN ATTACHMENT

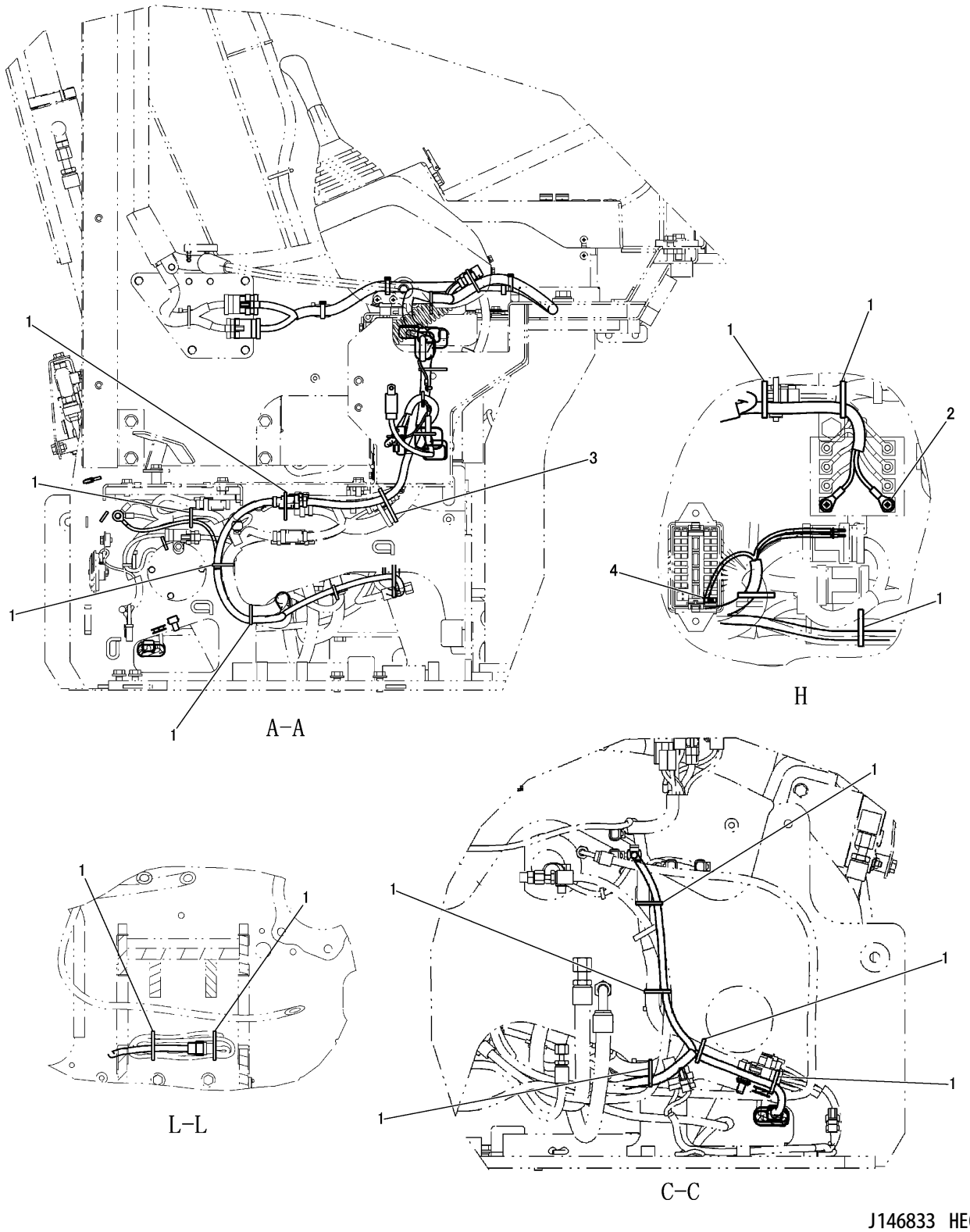

CONSOLE WIRING GROUP (307-9229 N/S) -STANDARD STICK/CANOPY-PART 3 OF 3
PART OF 307-8503-Page 2, 330-3619-Page 3
AN ATTACHMENT

ELECTRICAL AND STARTING SYSTEM

NOTE	No.	PART NO.	QTY	PART NAME	NOTE	No.	PART NO.	QTY	PART NAME
	1	3S−2093	15	STRAP					
	2	095−0735	2	SCREW(M5×0.8)					
	3	7K−1181	1	STRAP					
	4	113−8490	1	FUSE(10A)					

J146833 HE03

CONSOLE WIRING GROUP (307-9229 N/S) -STANDARD STICK/CANOPY-PART 3 OF 3
PART OF 307-8503-Page 2, 330-3619-Page 3
AN ATTACHMENT

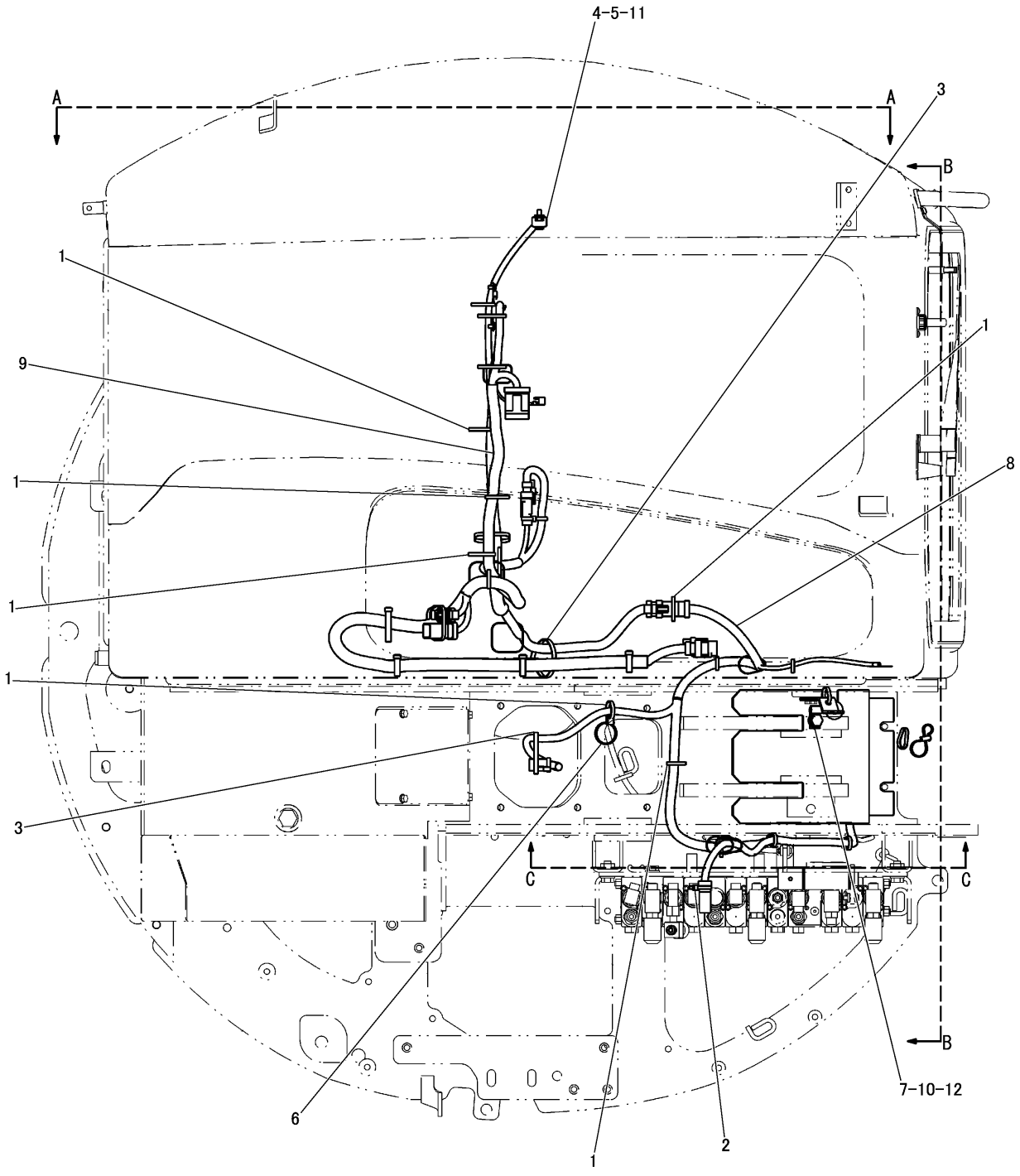

CONSOLE WIRING GROUP (307-9233 N/S) -STANDARD STICK/CAB-PART 1 OF 3
PART OF 307-8504-Page 4, 330-3620-Page 6
AN ATTACHMENT

ELECTRICAL AND STARTING SYSTEM

NOTE	No.	PART NO.	QTY	PART NAME	NOTE	No.	PART NO.	QTY	PART NAME
	1	3S-2093	6	STRAP					
	2	7I-2673	1	STRAP					
	3	7K-1181	2	STRAP					
	4	9X-8256	1	WASHER					
	5	8T-4171	1	BOLT(M6×1)					
	6	266-7379	1	STRAP					
	7	8T-4137	1	BOLT(M10×1.5)					
Y	8	317-2482	1	HARNESS AS					
Y	9	317-2976	1	HARNESS AS					
	10	8T-4121	1	WASHER					
	11	239-1182	1	RELAY AS					
	12	8M-2772	1	CLIP					

Y-SEPARATE ILLUSTRATION

J147597 HE01

CONSOLE WIRING GROUP (307-9233 N/S) -STANDARD STICK/CAB-PART 1 OF 3

PART OF 307-8504-Page 4, 330-3620-Page 6
REFERENCE:317-2482-Page 209 317-2976-Page 207
AN ATTACHMENT

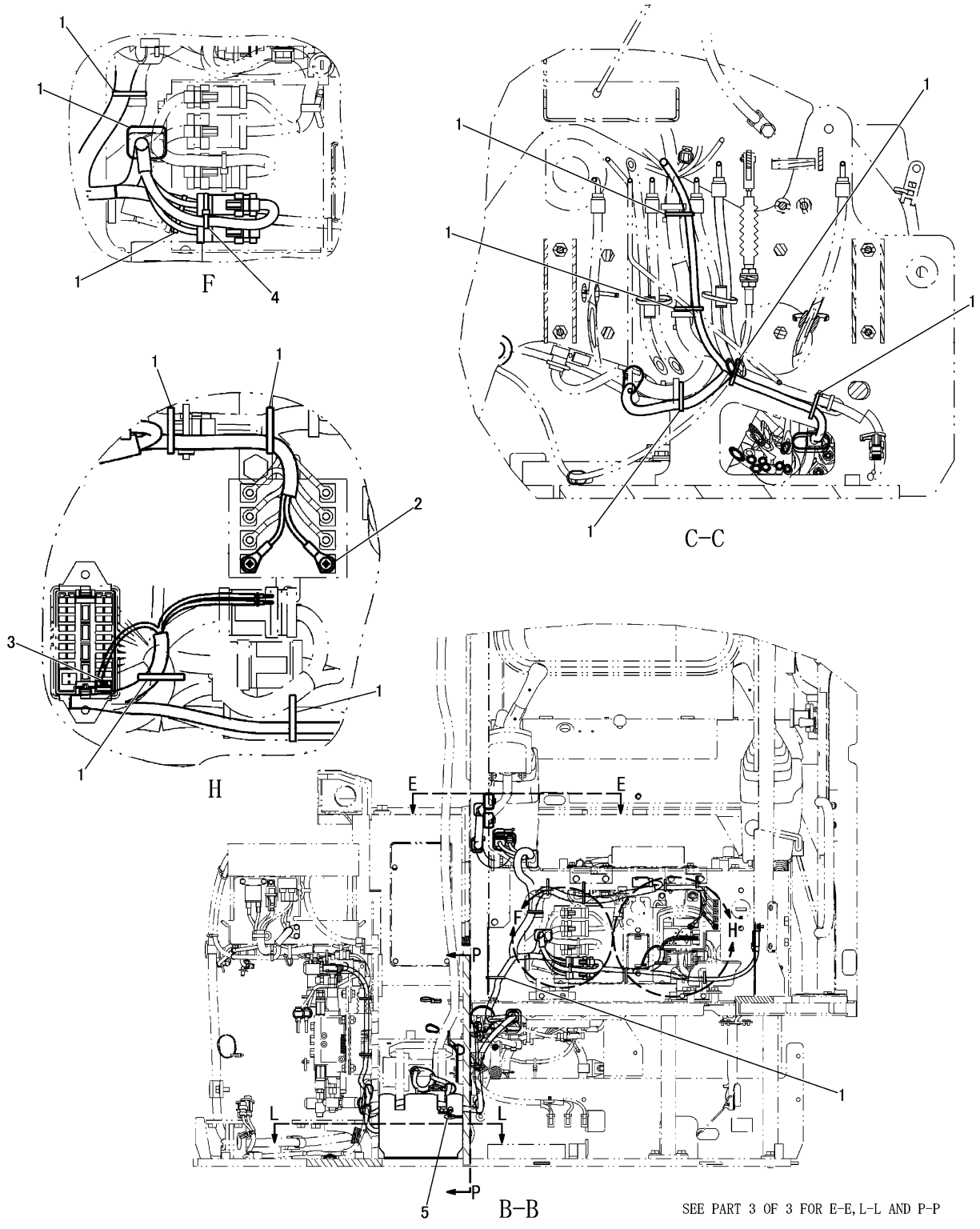

CONSOLE WIRING GROUP (307-9233 N/S) -STANDARD STICK/CAB-PART 2 OF 3
PART OF 307-8504-Page 4, 330-3620-Page 6
AN ATTACHMENT

ELECTRICAL AND STARTING SYSTEM

NOTE	No.	PART NO.	QTY	PART NAME	NOTE	No.	PART NO.	QTY	PART NAME
	1	3S−2093	13	STRAP					
	2	095−0735	2	SCREW(M5×0.8)					
	3	113−8490	1	FUSE(10A)					
	4	7I−2673	1	STRAP					
	5	8P−8540	1	GROMMET					

J147598 HE01

CONSOLE WIRING GROUP (307-9233 N/S) -STANDARD STICK/CAB-PART 2 OF 3
PART OF 307-8504-Page 4, 330-3620-Page 6
AN ATTACHMENT

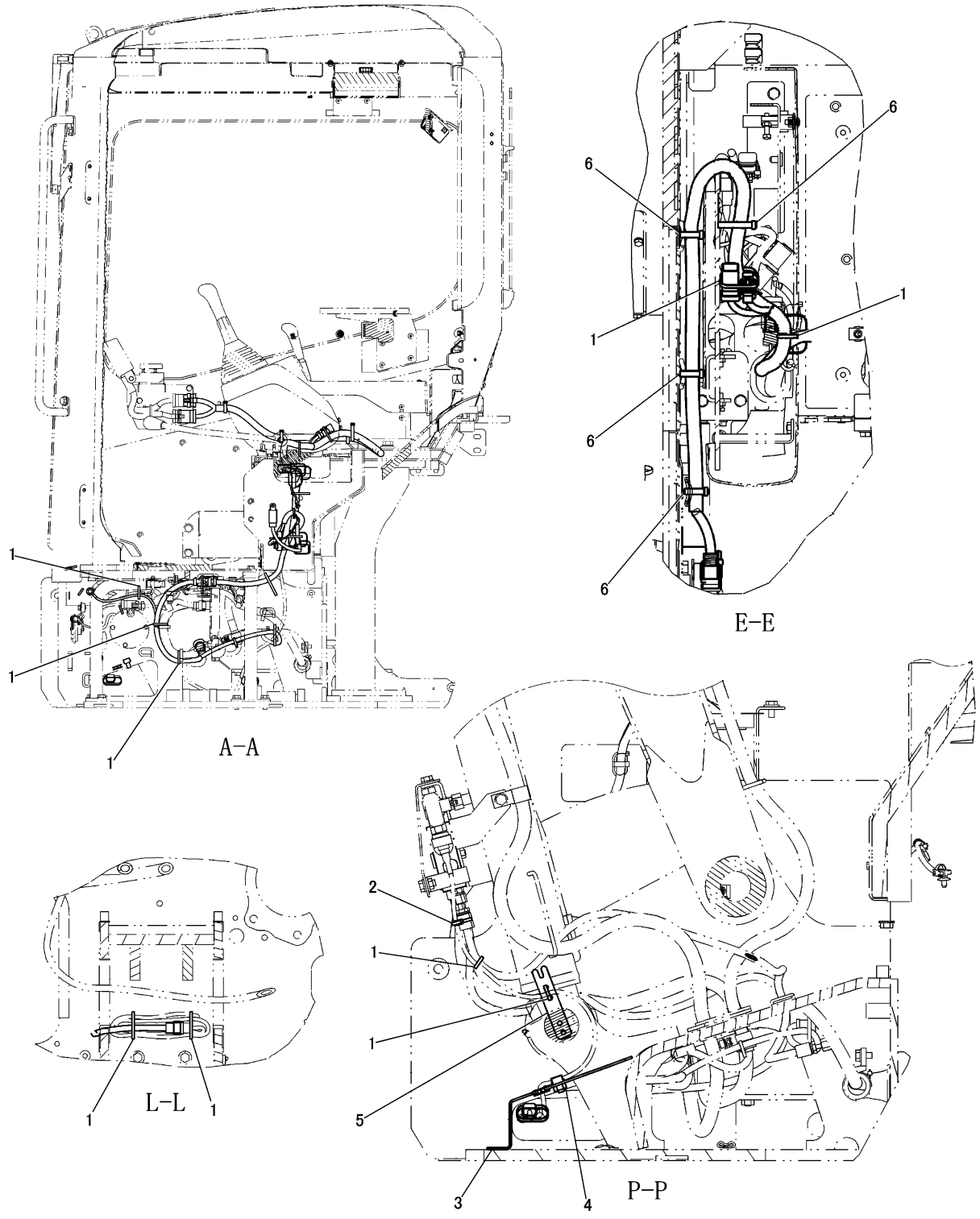

CONSOLE WIRING GROUP (307-9233 N/S) -STANDARD STICK/CAB-PART 3 OF 3
PART OF 307-8504-Page 4, 330-3620-Page 6
AN ATTACHMENT

ELECTRICAL AND STARTING SYSTEM

NOTE	No.	PART NO.	QTY	PART NAME	NOTE	No.	PART NO.	QTY	PART NAME
	1	3S−2093	9	STRAP					
	2	7I−2673	1	STRAP					
	3	311−4450	1	COVER AS					
	4	8T−3490	1	NUT(M10×1.5)(WELD)					
	5	239−0000	1	LEVER					
	6	7K−1181	4	STRAP					

J147599 HE01

CONSOLE WIRING GROUP (307-9233 N/S) -STANDARD STICK/CAB-PART 3 OF 3
PART OF 307-8504-Page 4, 330-3620-Page 6
AN ATTACHMENT

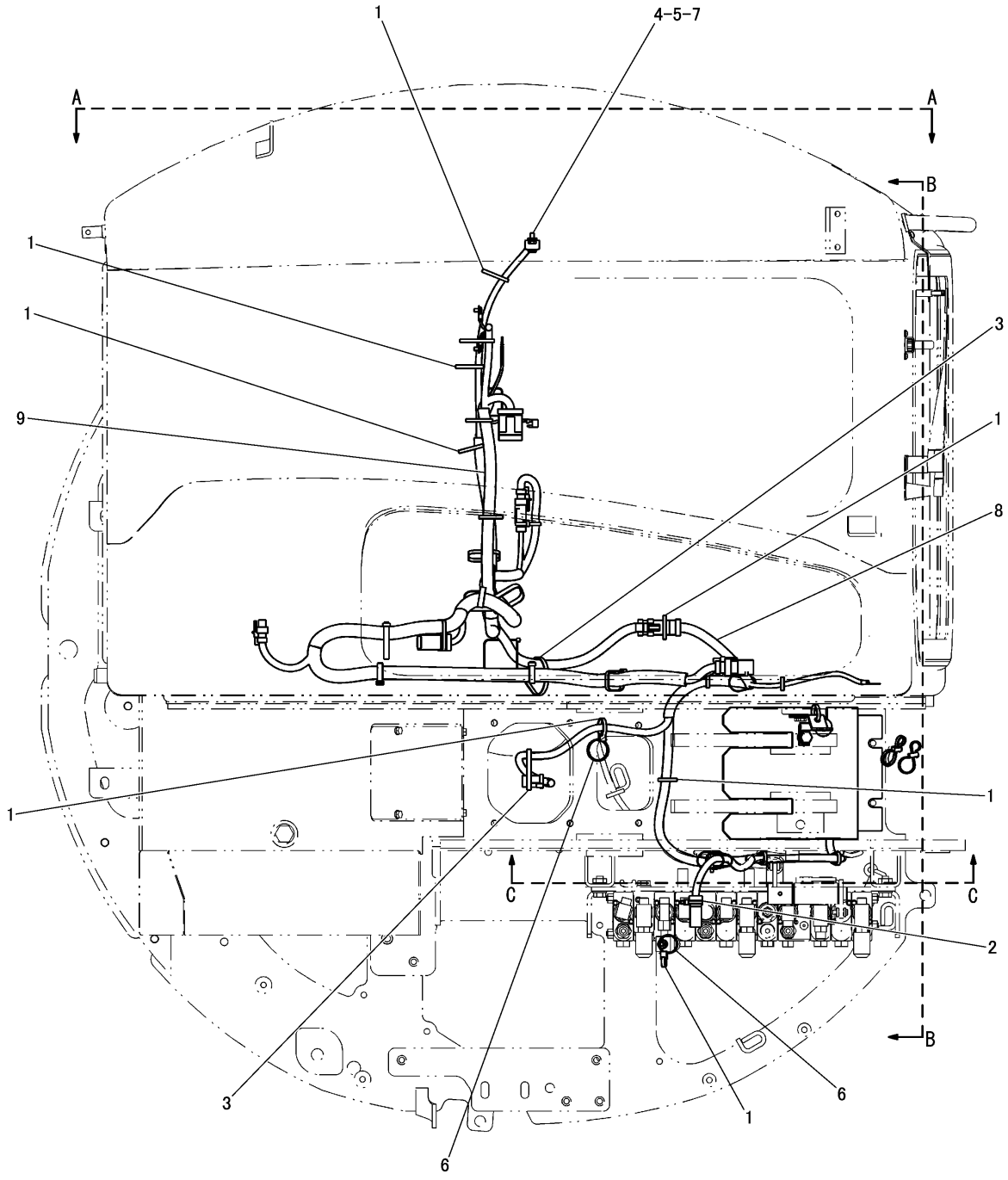

SEE PART 2 OF 3 FOR B-B AND C-C
SEE PART 3 OF 3 FOR A-A

J151967 HE00

CONSOLE WIRING GROUP (325-9917 N/S) -CAB/CRANE-PART 1 OF 3
PART OF 307-8504-Page 5, 330-3620-Page 7
ALSO APPLIES TO CAB AIR CONDITIONER SPECIFICATION MACHINE
AN ATTACHMENT

ELECTRICAL AND STARTING SYSTEM

NOTE	No.	PART NO.	QTY	PART NAME	NOTE	No.	PART NO.	QTY	PART NAME
	1	3S−2093	7	STRAP					
	2	7I−2673	1	STRAP					
	3	7K−1181	2	STRAP					
	4	239−1182	1	RELAY AS					
	5	8T−4171	1	BOLT(M6×1)					
	6	266−7379	2	STRAP					
	7	9X−8256	1	WASHER					
Y	8	317−2482	1	HARNESS AS					
Y	9	329−0044	1	HARNESS AS					

Y-SEPARATE ILLUSTRATION

J151967 HE00

CONSOLE WIRING GROUP (325-9917 N/S) -CAB/CRANE-PART 1 OF 3

PART OF 307-8504-Page 5, 330-3620-Page 7
REFERENCE:317-2482-Page 209 329-0044-Page 208
ALSO APPLIES TO CAB AIR CONDITIONER SPECIFICATION MACHINE
AN ATTACHMENT

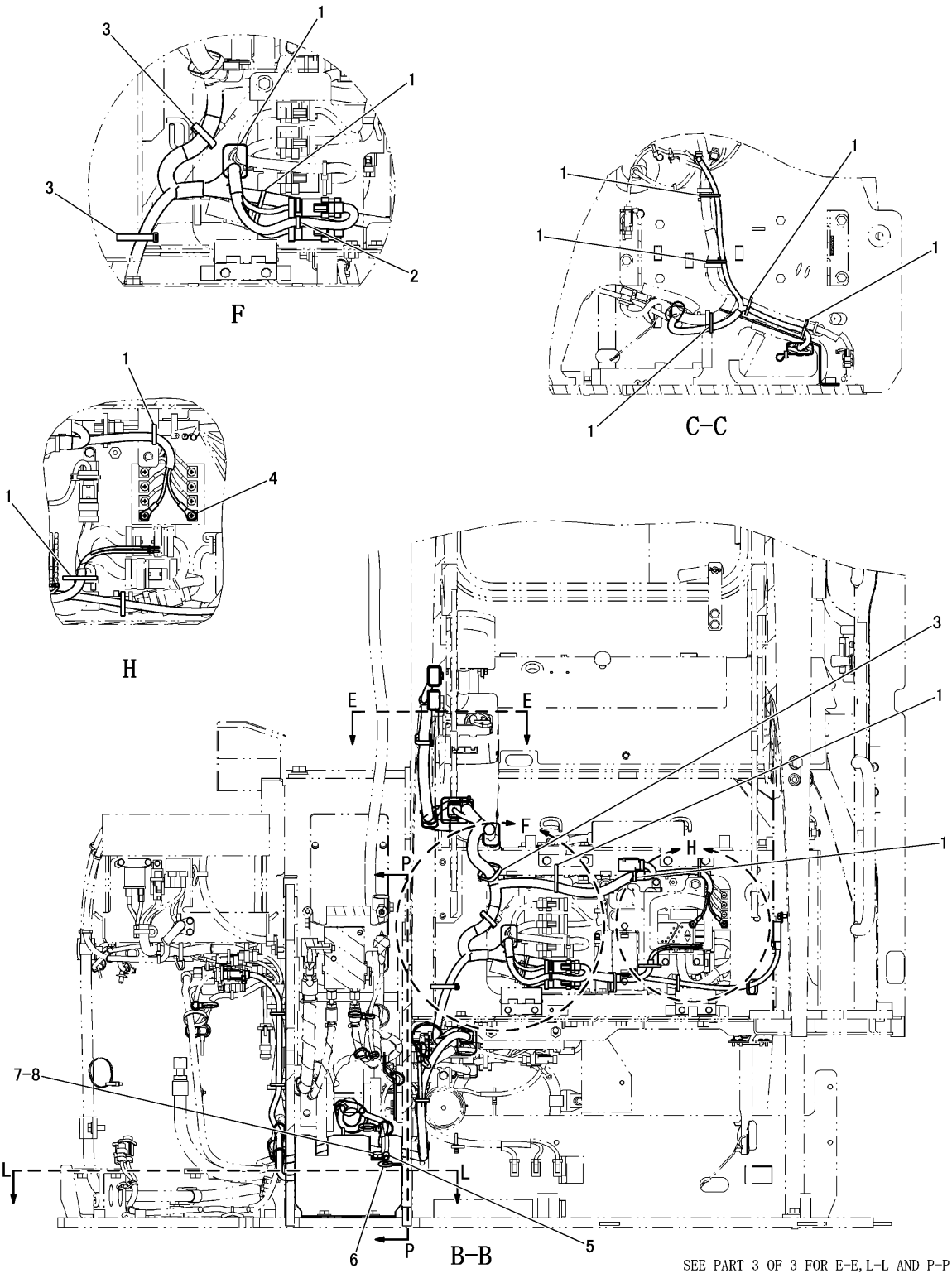

CONSOLE WIRING GROUP (325-9917 N/S) -CAB/CRANE-PART 2 OF 3
PART OF 307-8504-Page 5, 330-3620-Page 7
ALSO APPLIES TO CAB AIR CONDITIONER SPECIFICATION MACHINE
AN ATTACHMENT

NOTE	No.	PART NO.	QTY	PART NAME	NOTE	No.	PART NO.	QTY	PART NAME
	1	3S－2093	11	STRAP					
	2	7I－2673	1	STRAP					
	3	7K－1181	3	STRAP					
	4	095－0735	2	SCREW(M5×0.8)					
	5	8M－2772	1	CLIP					
	6	8P－8540	1	GROMMET					
	7	8T－4121	1	WASHER					
	8	8T－4137	1	BOLT(M10×1.5)					

J151968 HE00

CONSOLE WIRING GROUP (325-9917 N/S) -CAB/CRANE-PART 2 OF 3
PART OF 307-8504-Page 5, 330-3620-Page 7
ALSO APPLIES TO CAB AIR CONDITIONER SPECIFICATION MACHINE
AN ATTACHMENT

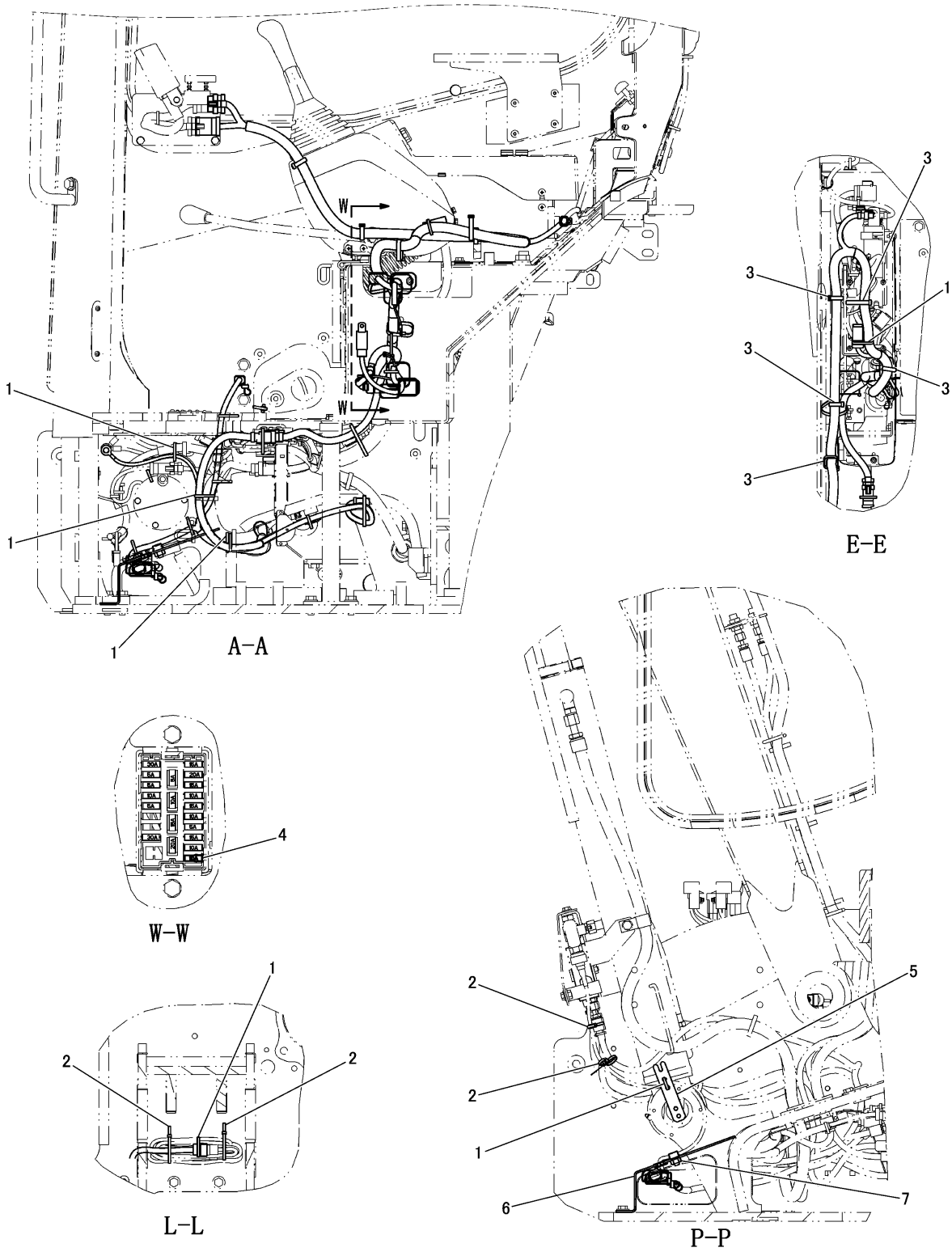

J151969 HE00

CONSOLE WIRING GROUP (325-9917 N/S) -CAB/CRANE-PART 3 OF 3
PART OF 307-8504-Page 5, 330-3620-Page 7
ALSO APPLIES TO CAB AIR CONDITIONER SPECIFICATION MACHINE
AN ATTACHMENT

NOTE	No.	PART NO.	QTY	PART NAME	NOTE	No.	PART NO.	QTY	PART NAME
	1	3S−2093	6	STRAP					
	2	7I−2673	4	STRAP					
	3	7K−1181	5	STRAP					
	4	113−8490	1	FUSE(10A)					
	5	239−0000	1	LEVER					
	6	311−4450	1	COVER AS					
	7	8T−3490	1	NUT(M10×1.5)(WELD)					

J151969 HE00

CONSOLE WIRING GROUP (325-9917 N/S) -CAB/CRANE-PART 3 OF 3
PART OF 307-8504-Page 5, 330-3620-Page 7
ALSO APPLIES TO CAB AIR CONDITIONER SPECIFICATION MACHINE
AN ATTACHMENT

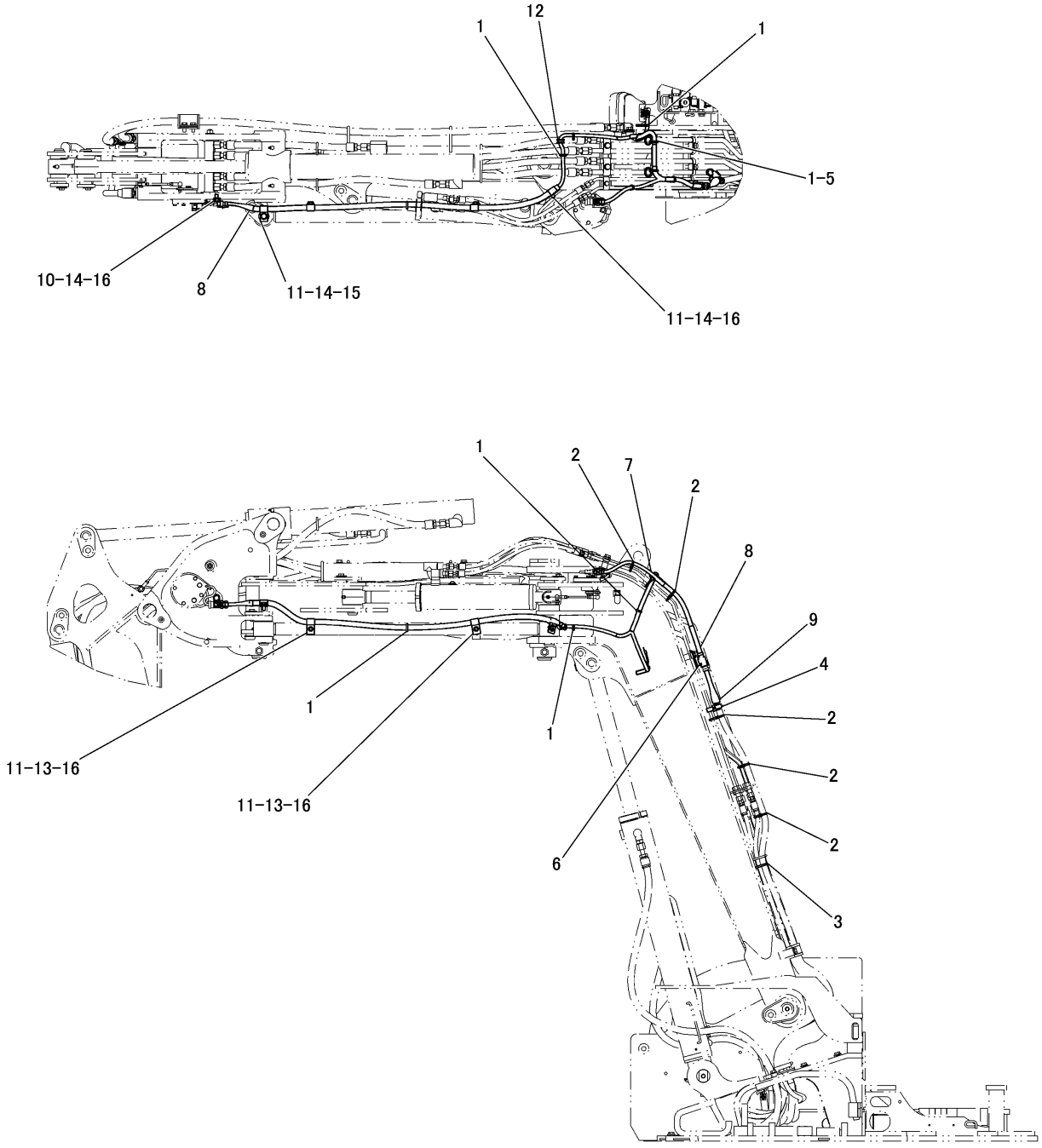

FRONT WIRING GROUP (296-1954 N/S)
PART OF 296-1809-Page 431

ELECTRICAL AND STARTING SYSTEM

NOTE	No.	PART NO.	QTY	PART NAME	NOTE	No.	PART NO.	QTY	PART NAME
	1	3S-2093	7	STRAP					
	2	7I-2673	5	STRAP					
	3	7K-1181	1	STRAP					
	4	204-1673	1	STRAP					
	5	266-7379	2	STRAP					
	6	306-2242	1	ANGLE AS					
		183-1051	1	CLIP					
Y	7	309-1449	1	HARNESS AS					
	8	320-9832	2	TUBE					
	9	321-0134	1	TUBE					
	10	116-0118	1	CLIP					
	11	4K-8302	4	CLIP					
	12	5P-8522	1	GROMMET					
	13	7X-7729	2	WASHER					
	14	8T-4121	3	WASHER					
	15	8T-4137	1	BOLT(M10×1.5)					
	16	8T-4191	4	BOLT(M10×1.5)					

Y-SEPARATE ILLUSTRATION

J149337 HE04

FRONT WIRING GROUP (296-1954 N/S)

PART OF 296-1809-Page 431
REFERENCE:309-1449-Page 210

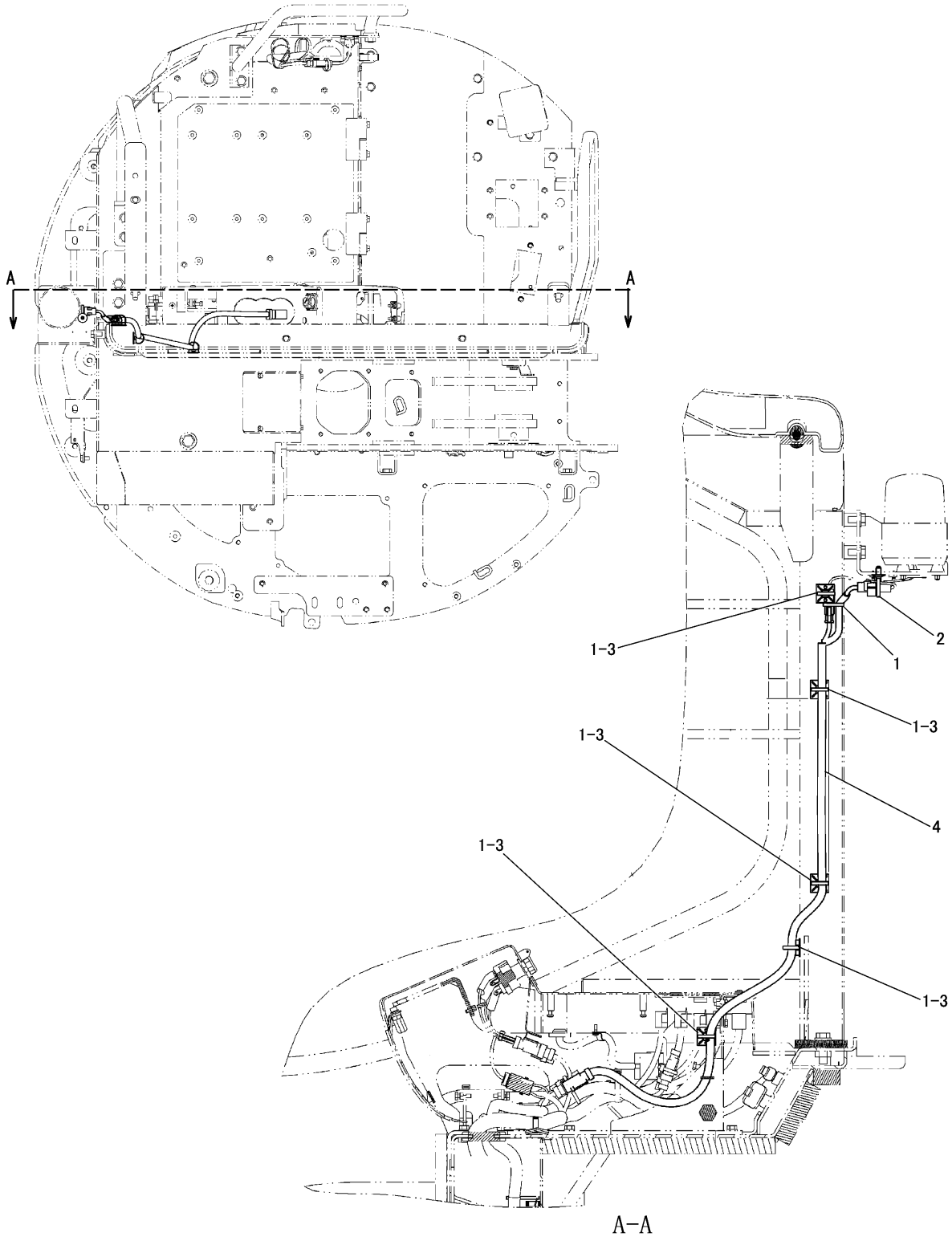

WIRING GROUP (307-9230 N/S) -ROTARY BEACON
PART OF 307-8503-Page 2, 330-3619-Page 3
AN ATTACHMENT

ELECTRICAL AND STARTING SYSTEM

NOTE	No.	PART NO.	QTY	PART NAME	NOTE	No.	PART NO.	QTY	PART NAME
	1	3S-2093	6	STRAP					
	2	163-6795	1	STRAP					
	3	235-8966	5	BASE					
Y	4	317-2972	1	HARNESS AS					

Y-SEPARATE ILLUSTRATION

J146836 HE02

WIRING GROUP (307-9230 N/S) -ROTARY BEACON

PART OF 307-8503-Page 2, 330-3619-Page 3
REFERENCE:317-2972-Page 211
AN ATTACHMENT

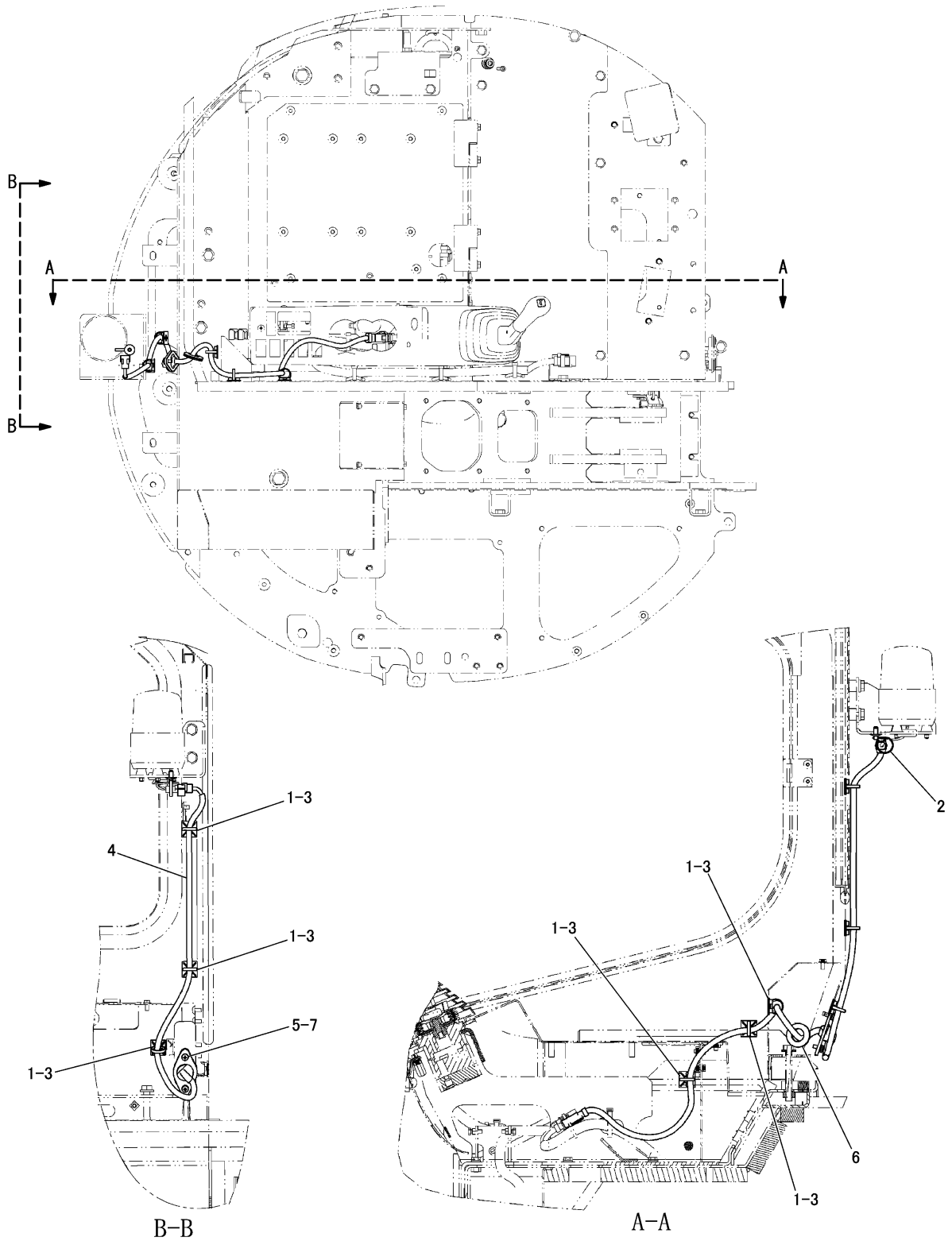

WIRING GROUP (307-9234 N/S) -ROTARY BEACON-CAB
PART OF 307-8504-Page 4, 330-3620-Page 6
AN ATTACHMENT

ELECTRICAL AND STARTING SYSTEM

NOTE	No.	PART NO.	QTY	PART NAME	NOTE	No.	PART NO.	QTY	PART NAME
	1	3S−2093	6	STRAP					
	2	163−6795	1	STRAP					
	3	235−8966	6	BASE					
Y	4	317−2975	1	HARNESS AS					
	5	095−0741	2	SCREW(M6×1)					
	6	170−2986	1	GROMMET					
	7	9X−8256	2	WASHER					

Y-SEPARATE ILLUSTRATION

J147601 HE00

WIRING GROUP (307-9234 N/S) -ROTARY BEACON-CAB

PART OF 307-8504-Page 4, 330-3620-Page 6
REFERENCE:317-2975-Page 211
AN ATTACHMENT

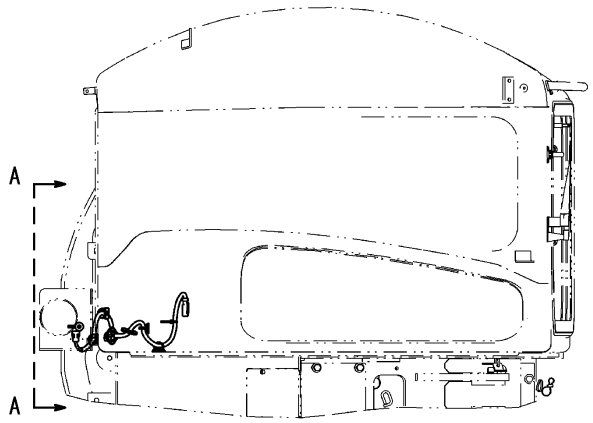

TOP VIEW

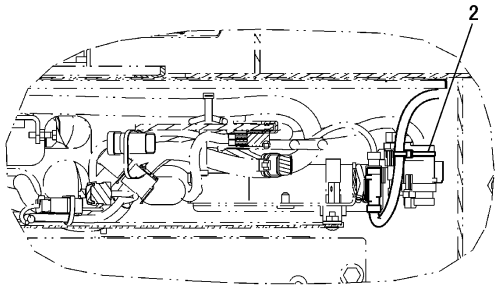

F-F

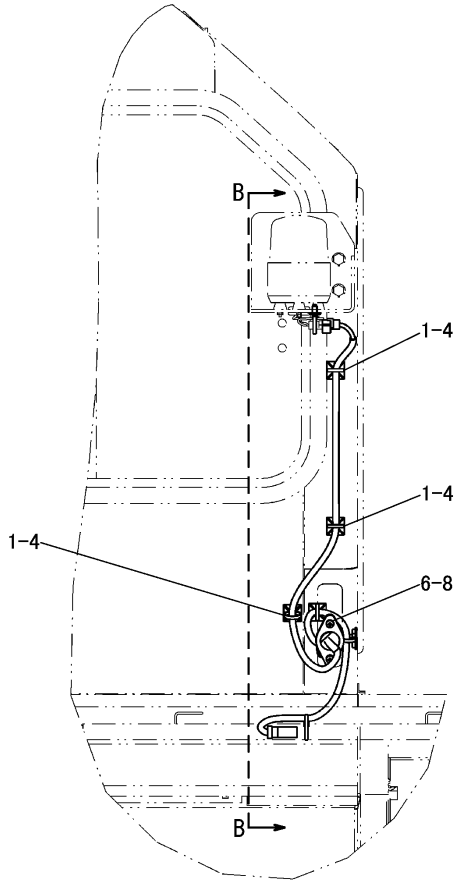

A-A

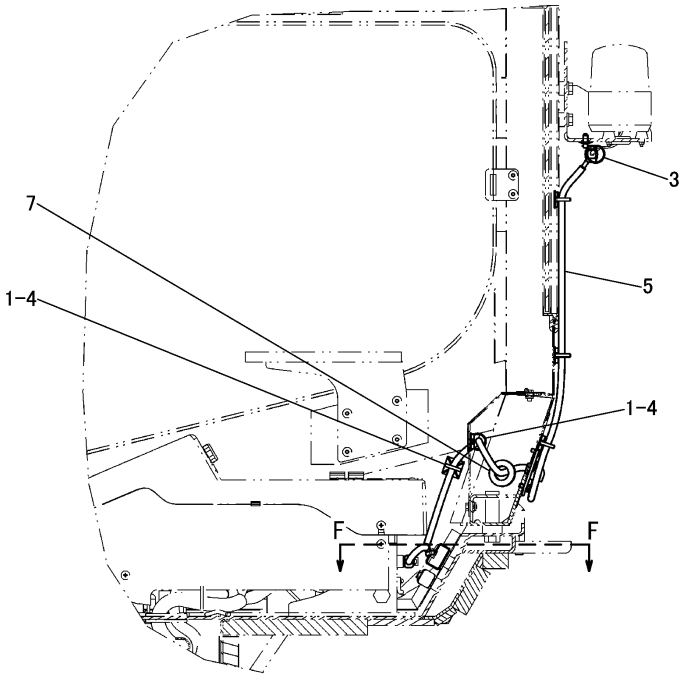

B-B

J151971 HE00

WIRING GROUP (325-9918 N/S) -ROTARY BEACON-CAB/CRANE
PART OF 307-8504-Page 5, 330-3620-Page 7
APPLIES TO CAB AIR CONDITIONER SPECIFICATION MACHINE
AN ATTACHMENT

ELECTRICAL AND STARTING SYSTEM

NOTE	No.	PART NO.	QTY	PART NAME	NOTE	No.	PART NO.	QTY	PART NAME
	1	3S−2093	5	STRAP					
	2	7I−2673	1	STRAP					
	3	163−6795	1	STRAP					
	4	235−8966	5	BASE					
Y	5	329−3425	1	HARNESS AS					
	6	095−0741	2	SCREW(M6×1)					
	7	170−2986	1	GROMMET					
	8	9X−8256	2	WASHER					

Y-SEPARATE ILLUSTRATION

J151971 HE00

WIRING GROUP (325-9918 N/S) -ROTARY BEACON-CAB/CRANE
PART OF 307-8504-Page 5, 330-3620-Page 7
REFERENCE:329-3425-Page 212
APPLIES TO CAB AIR CONDITIONER SPECIFICATION MACHINE
AN ATTACHMENT

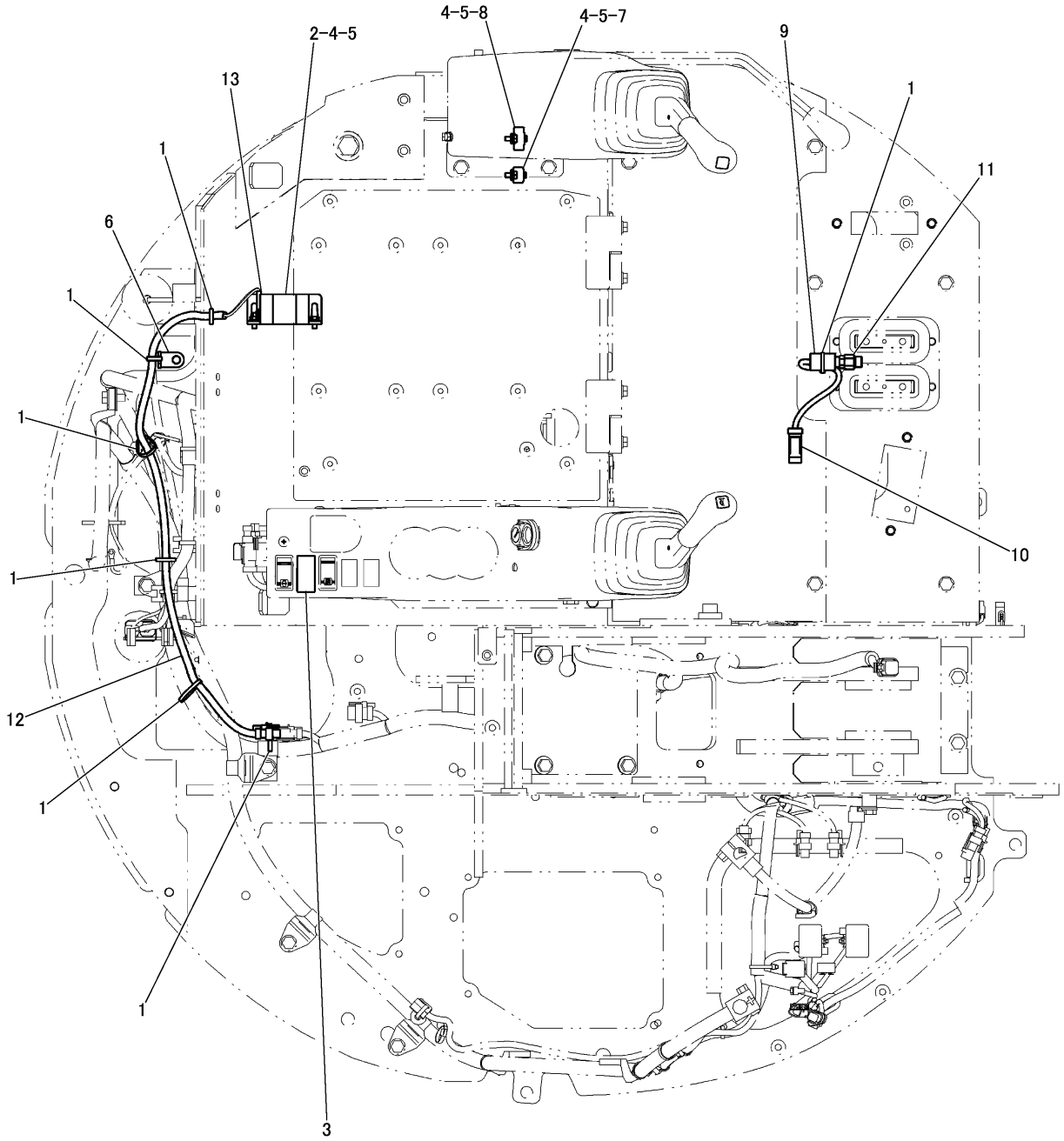

J146689 HE01

WIRING GROUP (309-3615 N/S) -TRAVEL ALARM
PART OF 307-9237-Page 308
AN ATTACHMENT

ELECTRICAL AND STARTING SYSTEM

NOTE	No.	PART NO.	QTY	PART NAME	NOTE	No.	PART NO.	QTY	PART NAME
	1	3S-2093	7	STRAP					
	2	161-2539	1	BUCKUP ALARM					
	3	266-1406	1	SWITCH AS					
		111-7899	1	GASKET					
	4	8T-4171	4	BOLT(M6×1)					
	5	9X-8256	4	WASHER					
	6	132-5789	1	CLIP					
	7	239-1182	1	RELAY AS					
	8	239-1183	1	RELAY AS					
	9	286-2305	1	SWITCH AS					
		286-2318	1	SWITCH AS					
	10	9W-0852	2	PIN					
		243-4505	1	RECEPTACLE AS(2P)					
	11	108-7516	1	FITTING					
		3J-1907	1	SEAL					
	12	309-3617	1	HARNESS AS					
		230-4011	1	PLUG AS(2P)					
		264-7029	1	SEAL					
		186-3736	2	SOCKET					
	13	5P-1475	2	TERMINAL					

J146689 HE01

WIRING GROUP (309-3615 N/S) -TRAVEL ALARM
PART OF 307-9237-Page 308
AN ATTACHMENT

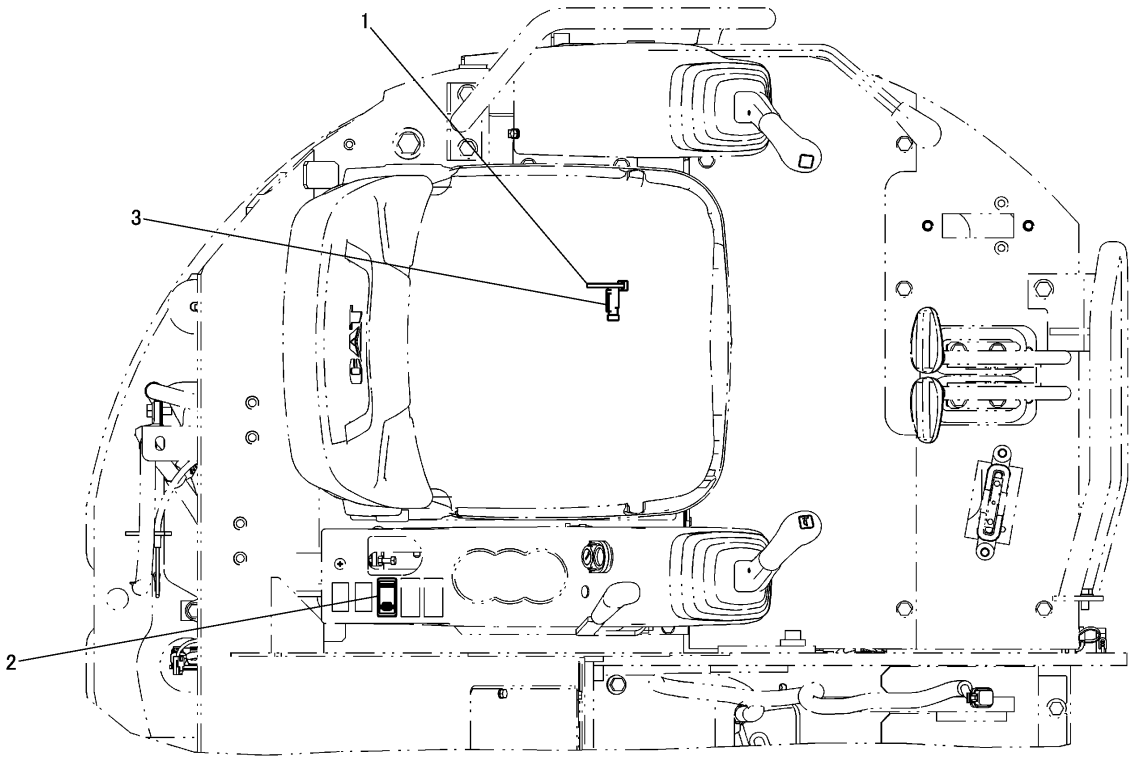

NOTE	No.	PART NO.	QTY	PART NAME	NOTE	No.	PART NO.	QTY	PART NAME
	1	3S-2093	1	STRAP					
	2	288-8587	1	SWITCH AS					
		111-7899	1	GASKET					
	3	289-3139	1	RESISTOR AS					

J147618 HE00

WIRING GROUP (307-9236 N/S) -ECO MODE

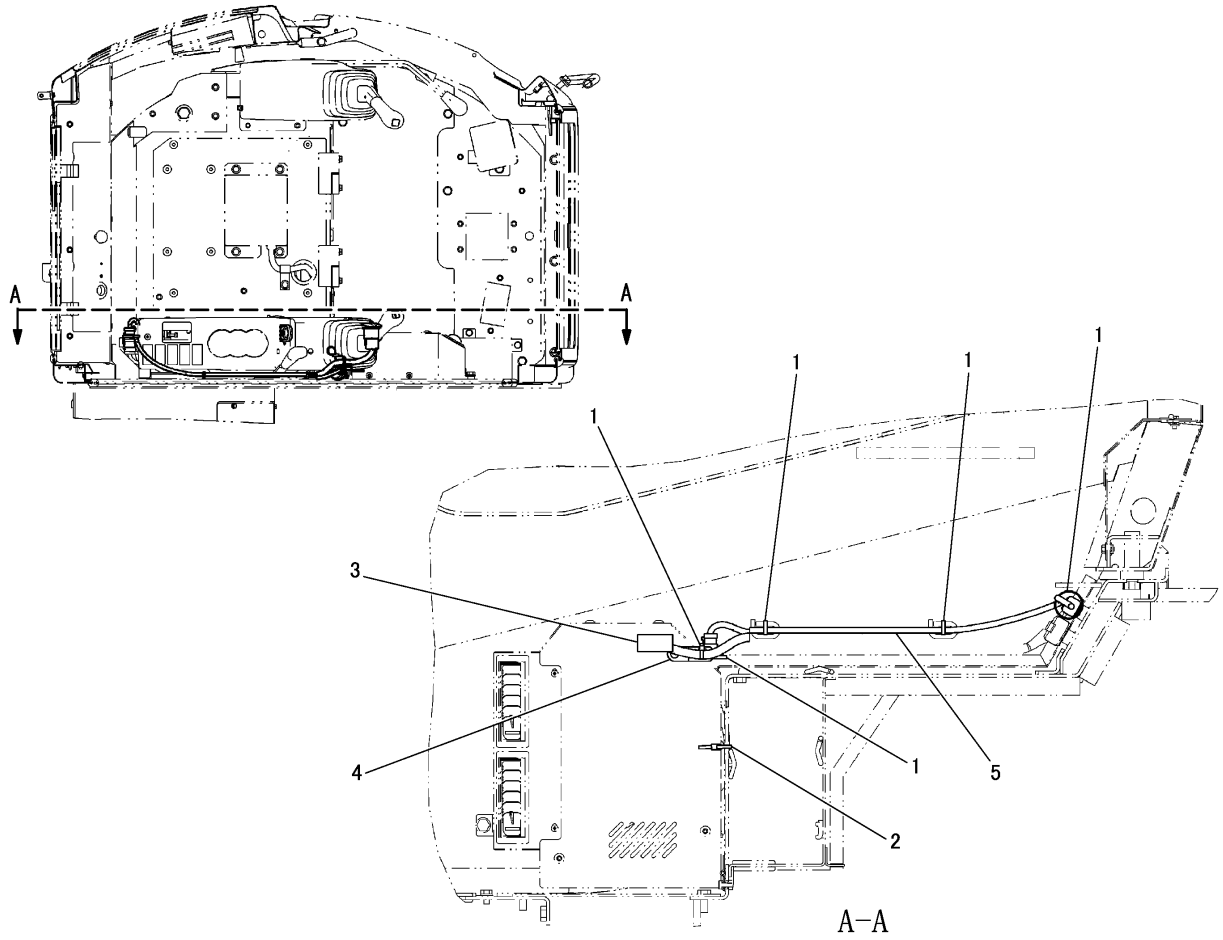

NOTE	No.	PART NO.	QTY	PART NAME	NOTE	No.	PART NO.	QTY	PART NAME
	1	3S-2093	5	STRAP					
	2	7I-2673	1	STRAP					
	3	231-2547	1	SWITCH AS					
	4	269-7680	1	CLIP					
Y	5	317-2969	1	HARNESS AS					

Y-SEPARATE ILLUSTRATION

J147558 HE00

HEATER WIRING GROUP (317-2967 N/S)

PART OF 308-4117-Page 465
REFERENCE:317-2969-Page 212
AN ATTACHMENT

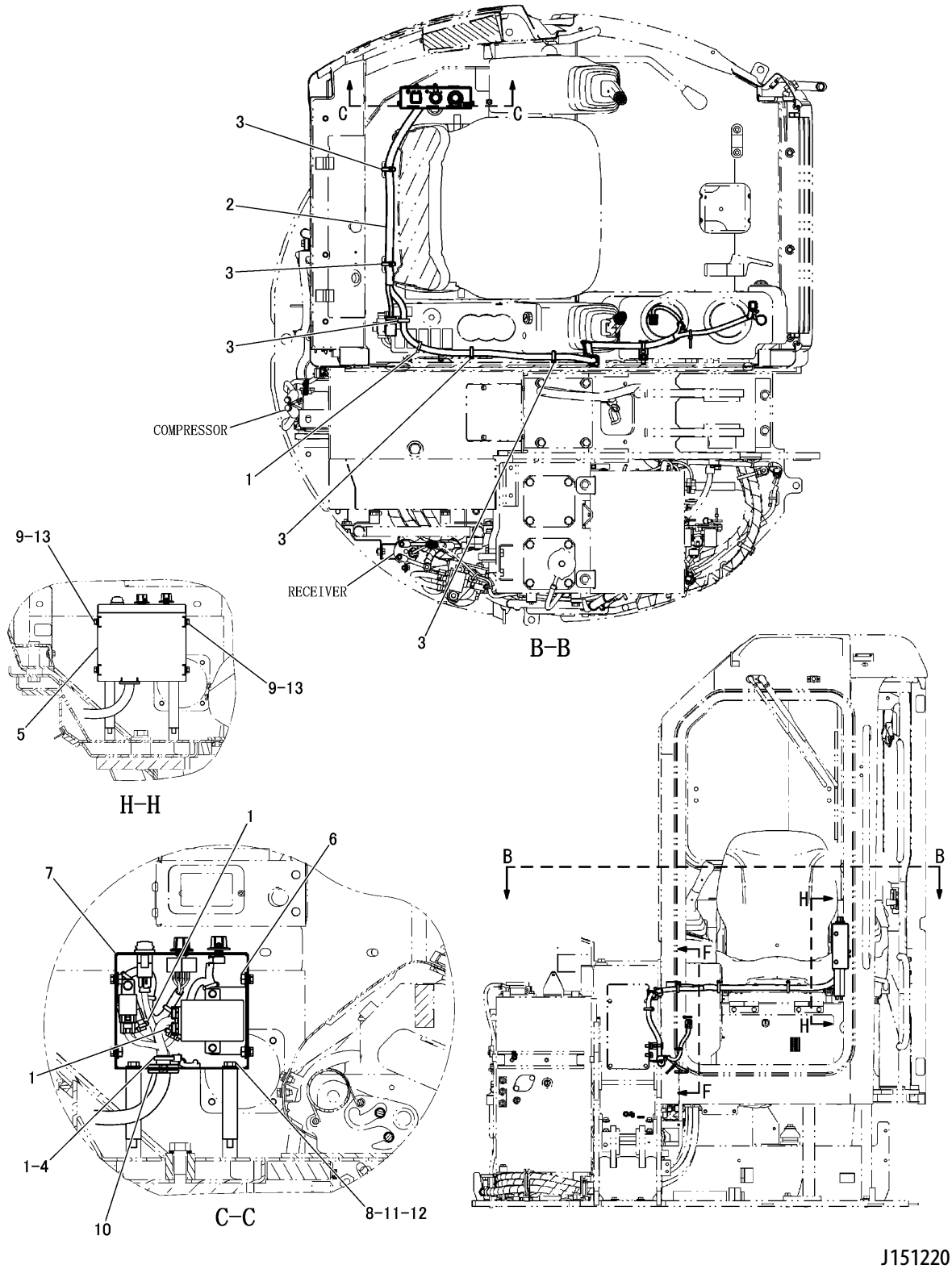

WIRING GROUP (311-1069 N/S) -AIR CONDITIONER-PART 1 OF 2
PART OF 308-4118-Page 466
APPLIES TO CAB AIR CONDITIONER SPECIFICATION MACHINE
AN ATTACHMENT

ELECTRICAL AND STARTING SYSTEM

NOTE	No.	PART NO.	QTY	PART NAME	NOTE	No.	PART NO.	QTY	PART NAME
	1	3S-2093	4	STRAP					
Y	2	325-9916	1	HARNESS AS					
	3	7K-1181	5	STRAP					
	4	266-7379	1	STRAP					
	5	325-9887	1	COVER AS					
		326-7160	1	COVER					
	6	6V-9632	4	NUT(M6×1)(WELD)					
Y	7	326-9702	1	PANEL GROUP					
	8	326-9711	2	SPACER					
	9	8T-4171	4	BOLT(M6×1)					
	10	2D-0388	1	GROMMET					
	11	5P-4116	2	WASHER					
	12	7X-2539	2	BOLT(M8×1.25)					
	13	9X-8256	4	WASHER					

Y-SEPARATE ILLUSTRATION

J151220 HE02

WIRING GROUP (311-1069 N/S) -AIR CONDITIONER-PART 1 OF 2

PART OF 308-4118-Page 466
REFERENCE:325-9916-Page 213 326-9702-Page 231
APPLIES TO CAB AIR CONDITIONER SPECIFICATION MACHINE
AN ATTACHMENT

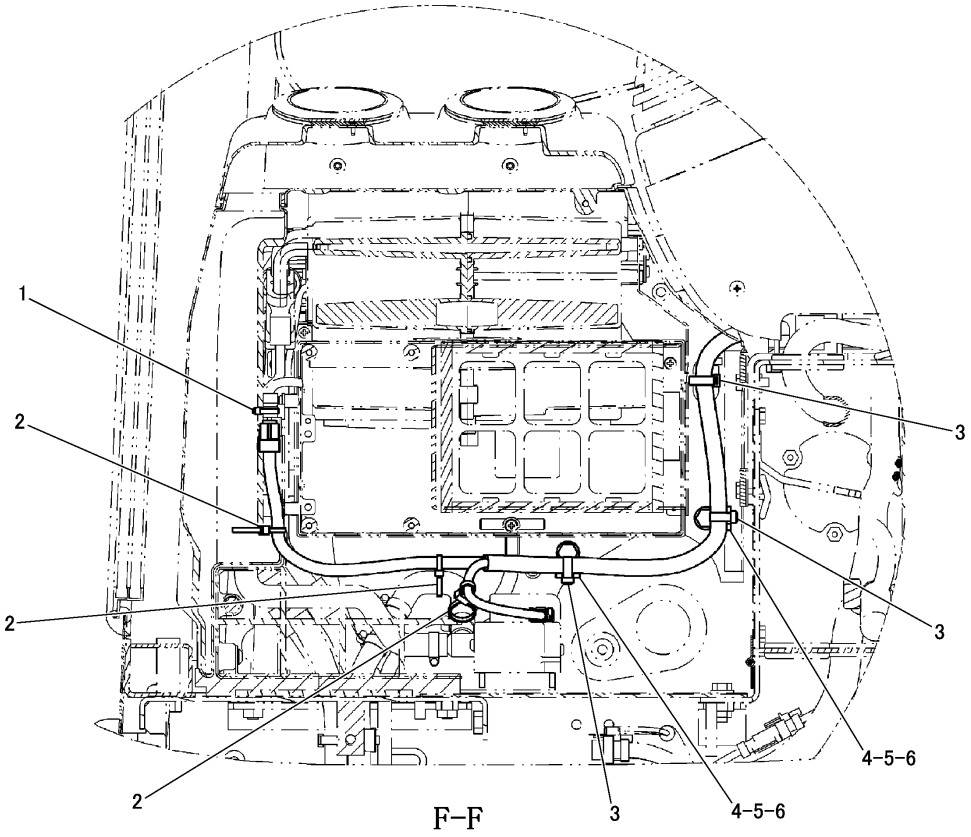

F–F

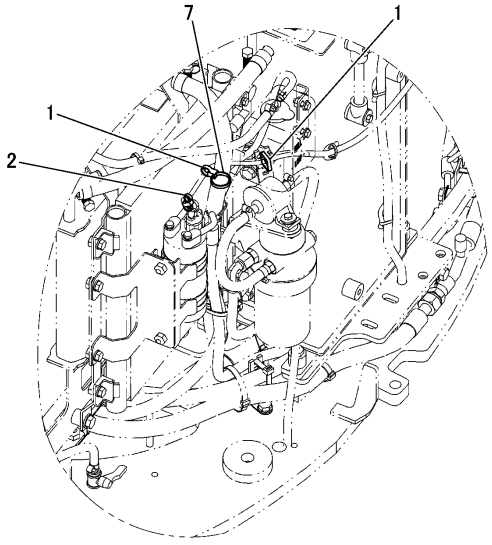

RECEIVER

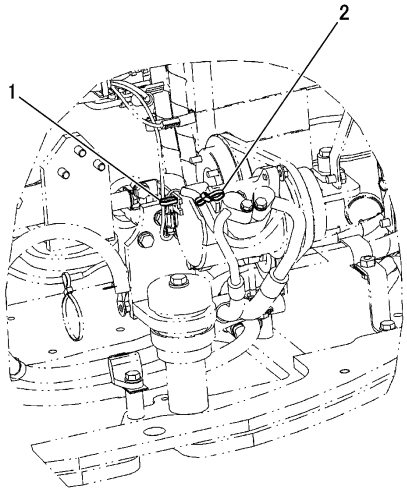

COMPRESSOR

J151544 HE02

WIRING GROUP (311-1069 N/S) -AIR CONDITIONER-PART 2 OF 2
PART OF 308-4118-Page 466
APPLIES TO CAB AIR CONDITIONER SPECIFICATION MACHINE
AN ATTACHMENT

ELECTRICAL AND STARTING SYSTEM

NOTE	No.	PART NO.	QTY	PART NAME	NOTE	No.	PART NO.	QTY	PART NAME
	1	3S−2093	4	STRAP					
	2	7I−2673	5	STRAP					
	3	7K−1181	3	STRAP					
	4	132−5789	2	CLIP					
	5	8T−4121	2	WASHER					
	6	8T−4191	2	BOLT(M10×1.5)					
	7	266−7379	1	STRAP					

J151544 HE02

WIRING GROUP (311-1069 N/S) -AIR CONDITIONER-PART 2 OF 2
PART OF 308-4118-Page 466
APPLIES TO CAB AIR CONDITIONER SPECIFICATION MACHINE
AN ATTACHMENT

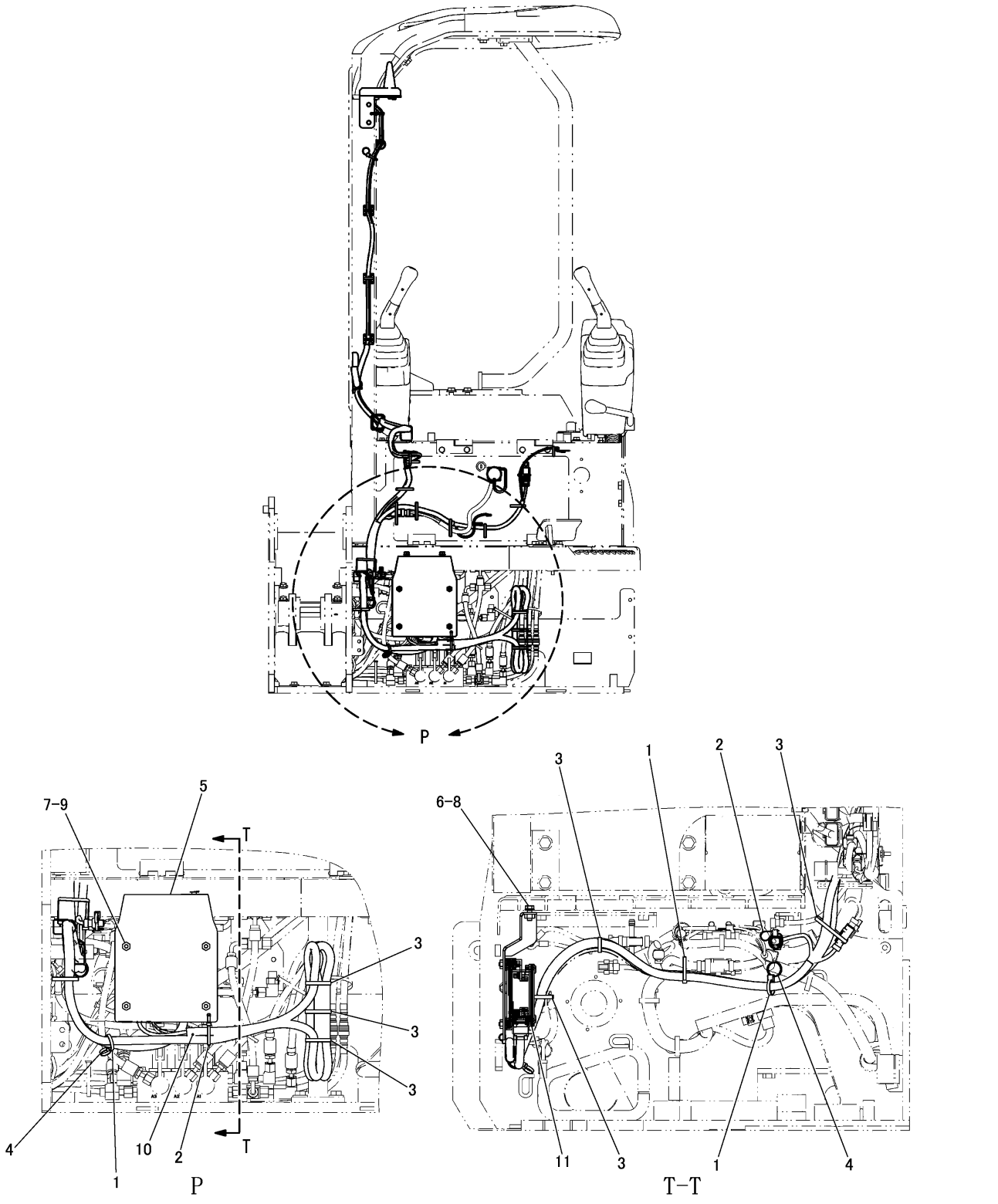

J152167 HE02

WIRING GROUP (315-0302 N/S) -PL-JPN-CANOPY-PART 1 OF 3
AN ATTACHMENT

ELECTRICAL AND STARTING SYSTEM

NOTE	No.	PART NO.	QTY	PART NAME	NOTE	No.	PART NO.	QTY	PART NAME
	1	3S-2093	3	STRAP					
	2	7I-2673	2	STRAP					
	3	7K-1181	6	STRAP					
	4	266-7379	2	STRAP					
	5	317-2472	1	BRACKET AS					
	6	8T-3612	2	NUT(M8×1.25)(WELD)					
	7	6V-9632	4	NUT(M6×1)(WELD)					
	8	8T-4189	2	BOLT(M8×1.25)					
		8T-4224	2	WASHER					
	9	3T-0849	4	BOLT(M6×1)					
		9X-8256	4	WASHER					
	10	300-4321	1	TUBE					
Y	11	308-6182	1	ELECTRONICS GROUP					

Y-SEPARATE ILLUSTRATION

J152167 HE02

WIRING GROUP (315-0302 N/S) -PL-JPN-CANOPY-PART 1 OF 3

REFERENCE:308-6182-Page 229

AN ATTACHMENT

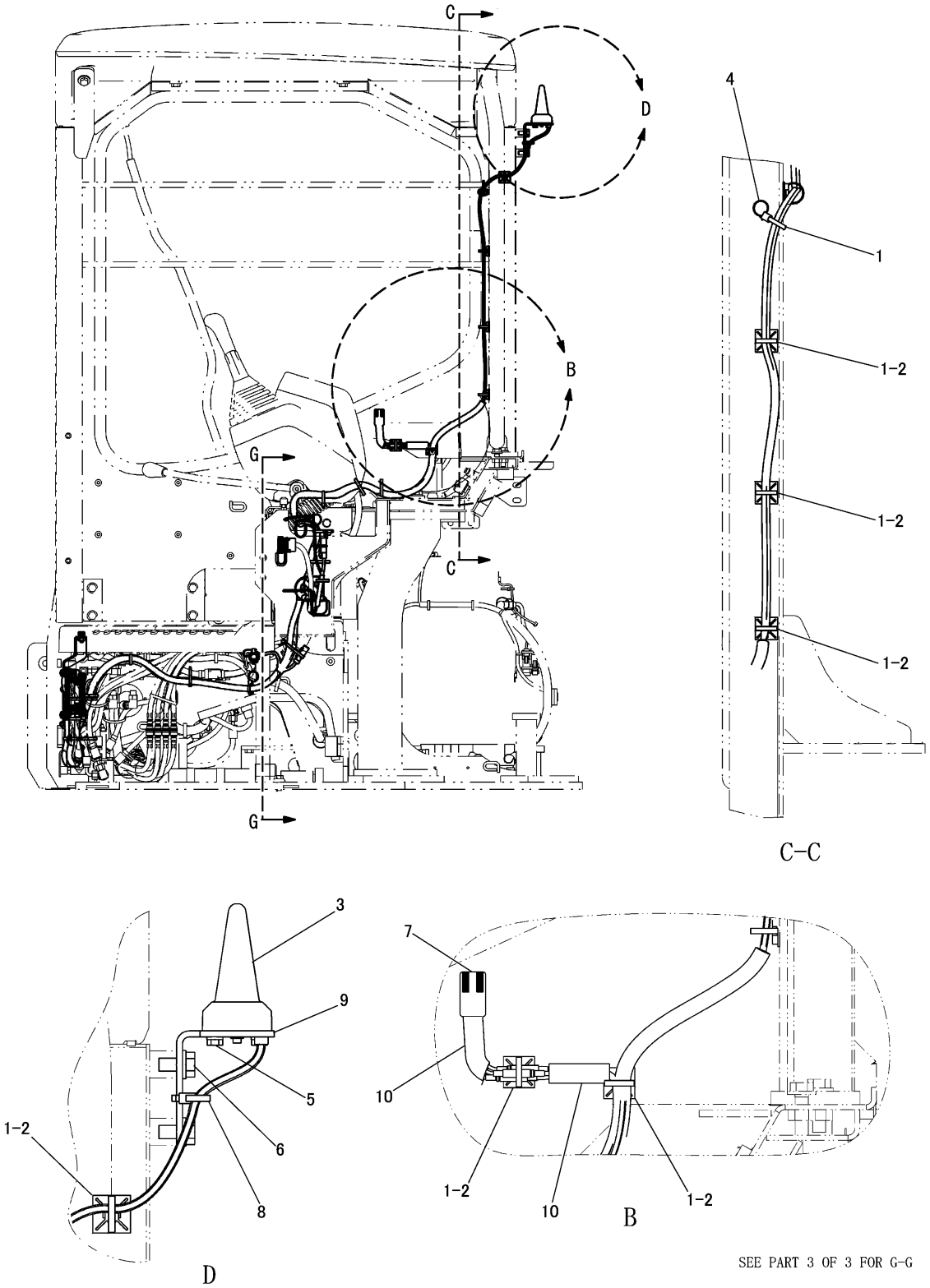

J152168 HE02

WIRING GROUP (315-0302 N/S) -PL-JPN-CANOPY-PART 2 OF 3
AN ATTACHMENT

ELECTRICAL AND STARTING SYSTEM

NOTE	No.	PART NO.	QTY	PART NAME	NOTE	No.	PART NO.	QTY	PART NAME
	1	3S-2093	7	STRAP					
	2	235-8966	6	BASE					
	3	270-5501	1	ANTENNA AS					
	4	266-7379	1	STRAP					
	5	8T-4970	2	BOLT(M6×1)					
		9X-8256	2	WASHER					
	6	8T-4137	2	BOLT(M10×1.5)					
		8T-4121	2	WASHER					
	7	317-9219	1	LAMP AS					
	8	7I-2673	1	STRAP					
	9	319-3711	1	BRACKET					
	10	320-9833	2	TUBE					

J152168 HE02

WIRING GROUP (315-0302 N/S) -PL-JPN-CANOPY-PART 2 OF 3
AN ATTACHMENT

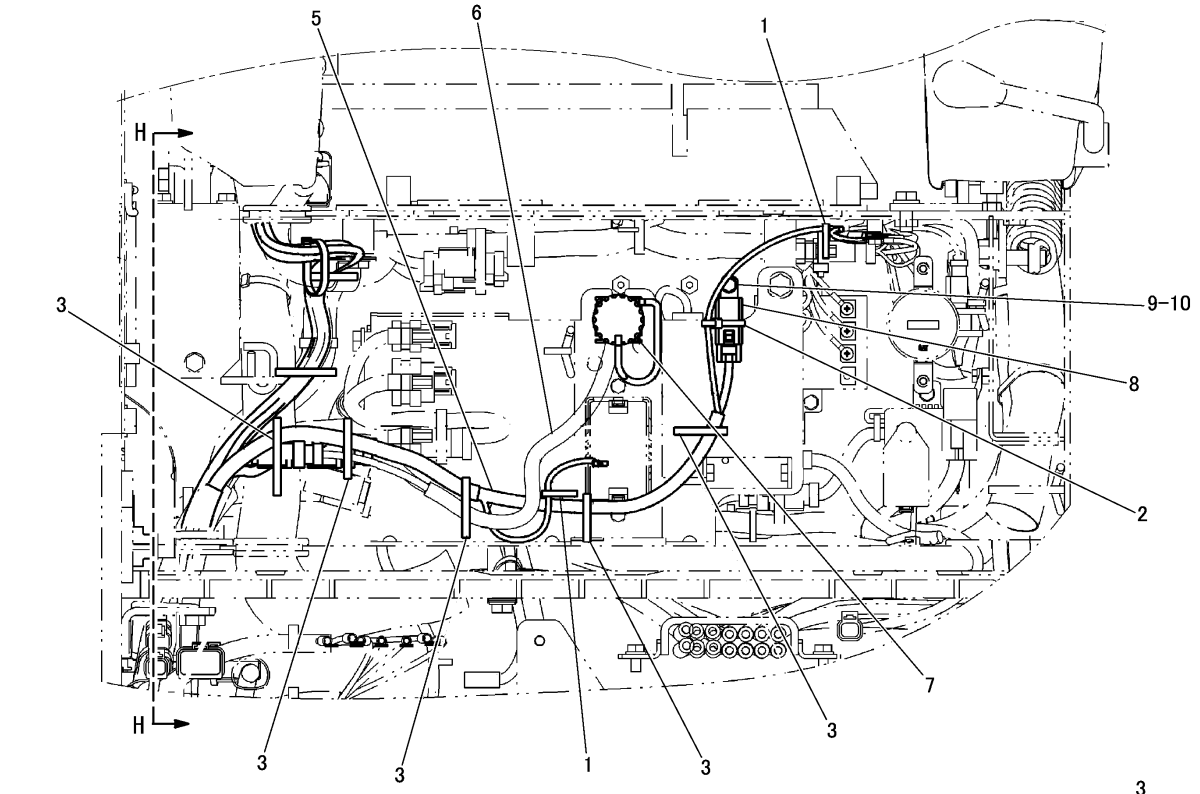

G-G

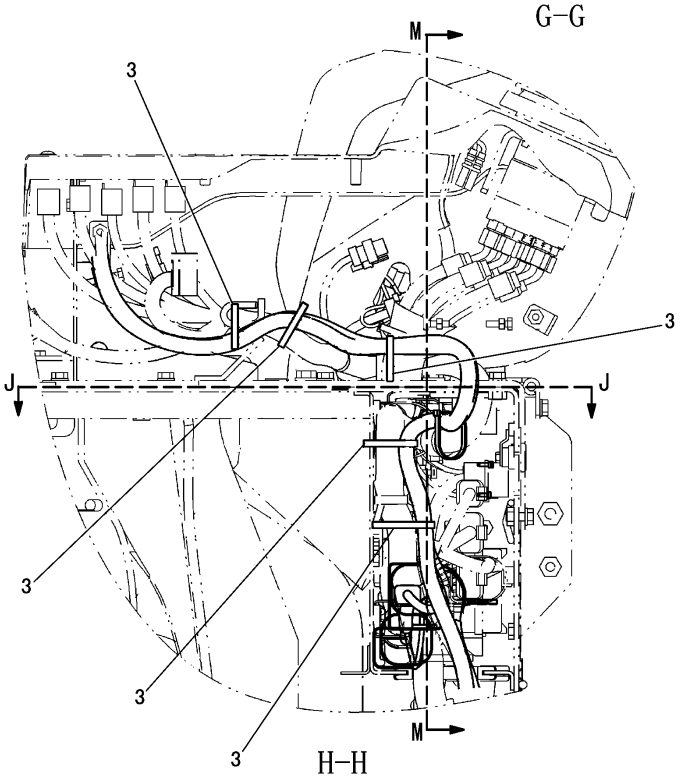

H-H

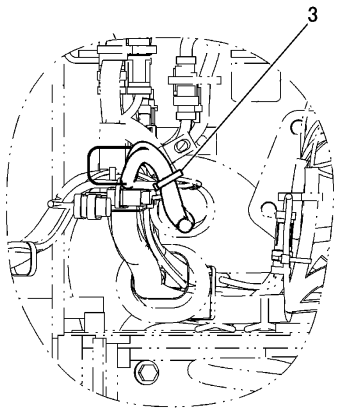

J-J

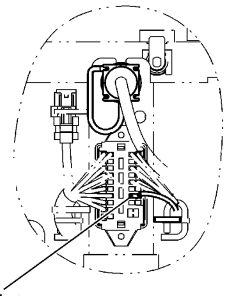

M-M

J152169 HE02

WIRING GROUP (315-0302 N/S) -PL-JPN-CANOPY-PART 3 OF 3
AN ATTACHMENT

ELECTRICAL AND STARTING SYSTEM

NOTE	No.	PART NO.	QTY	PART NAME	NOTE	No.	PART NO.	QTY	PART NAME
	1	3S−2093	2	STRAP					
	2	7I−2673	1	STRAP					
	3	7K−1181	11	STRAP					
	4	141−2759	1	FUSE(5A)					
Y	5	315−0303	1	HARNESS AS					
Y	6	317−2471	1	HARNESS AS					
	7	096−9278	3	SCREW					
	8	250−2048	1	RELAY AS					
	9	8T−4171	1	BOLT(M6×1)					
	10	9X−8256	1	WASHER					

Y-SEPARATE ILLUSTRATION

J152169 HE02

WIRING GROUP (315-0302 N/S) -PL-JPN-CANOPY-PART 3 OF 3

REFERENCE:315-0303-Page 214 317-2471-Page 217

AN ATTACHMENT

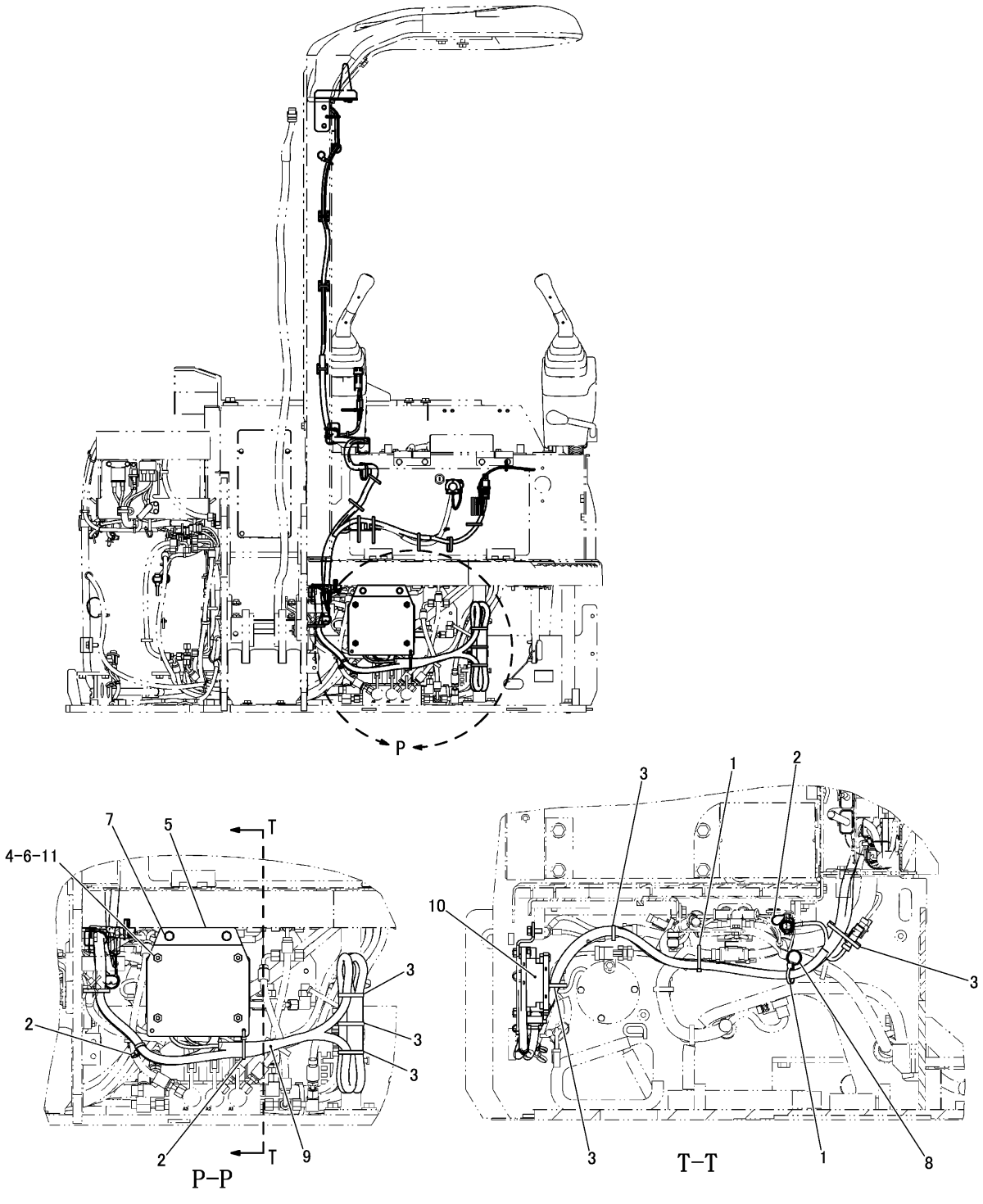

J151996 HE00

WIRING GROUP (327-7634 N/S) -PL-JPN-CANOPY-AEC-PART 1 OF 3
AN ATTACHMENT

ELECTRICAL AND STARTING SYSTEM

NOTE	No.	PART NO.	QTY	PART NAME	NOTE	No.	PART NO.	QTY	PART NAME
	1	3S-2093	2	STRAP					
	2	7I-2673	3	STRAP					
	3	7K-1181	6	STRAP					
	4	9X-8256	4	WASHER					
	5	325-9926	1	BRACKET AS					
	6	6V-9632	4	NUT(M6×1)(WELD)					
	7	8T-4189	2	BOLT(M8×1.25)					
		8T-4224	2	WASHER					
	8	266-7379	1	STRAP					
	9	300-4321	1	TUBE					
Y	10	308-6182	1	ELECTRONICS GROUP					
	11	3T-0849	4	BOLT(M6×1)					

Y-SEPARATE ILLUSTRATION

J151996 HE00

WIRING GROUP (327-7634 N/S) -PL-JPN-CANOPY-AEC-PART 1 OF 3

REFERENCE:308-6182-Page 229

AN ATTACHMENT

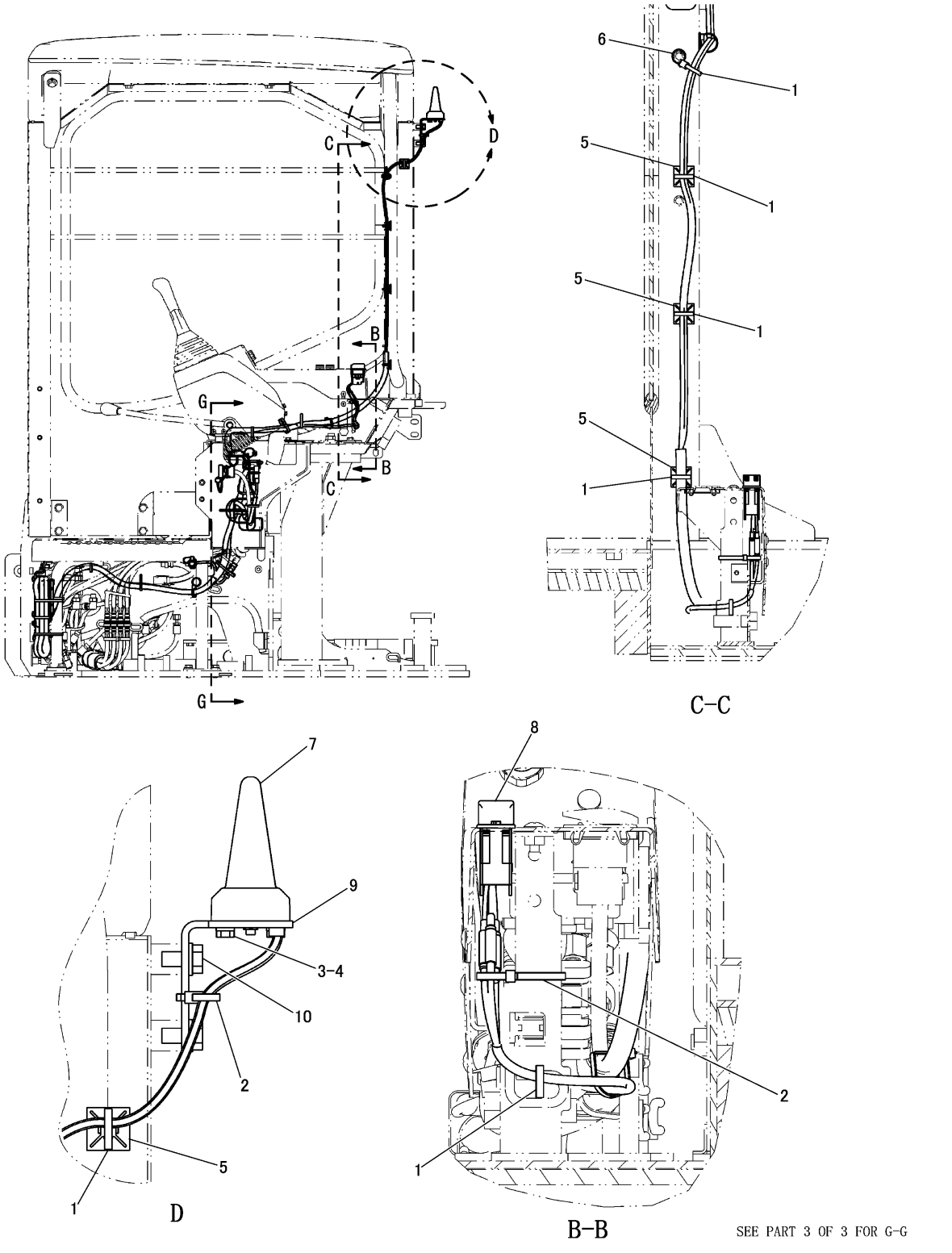

WIRING GROUP (327-7634 N/S) -PL-JPN-CANOPY-AEC-PART 2 OF 3
AN ATTACHMENT

ELECTRICAL AND STARTING SYSTEM

NOTE	No.	PART NO.	QTY	PART NAME	NOTE	No.	PART NO.	QTY	PART NAME
	1	3S-2093	6	STRAP					
	2	7I-2673	2	STRAP					
	3	8T-4970	2	BOLT(M6×1)					
	4	9X-8256	2	WASHER					
	5	235-8966	4	BASE					
	6	266-7379	1	STRAP					
	7	270-5501	1	ANTENNA AS					
	8	291-9335	1	LAMP AS					
		228-6089	1	PLUG					
		291-9339	1	LAMP GROUP					
	9	319-3711	1	BRACKET					
	10	8T-4121	2	WASHER					
		8T-4137	2	BOLT(M10×1.5)					

J151997 HE00

WIRING GROUP (327-7634 N/S) -PL-JPN-CANOPY-AEC-PART 2 OF 3
AN ATTACHMENT

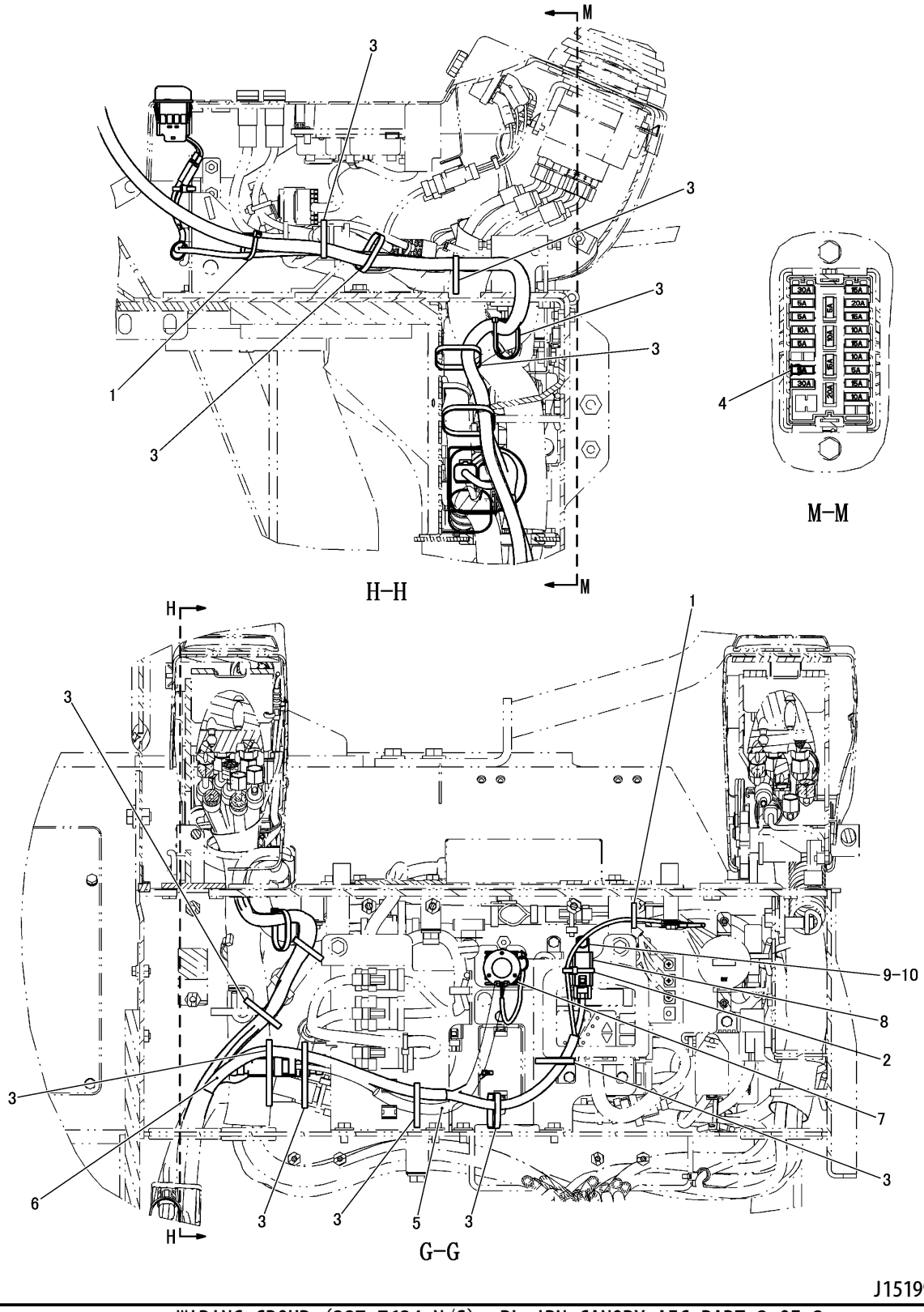

WIRING GROUP (327-7634 N/S) -PL-JPN-CANOPY-AEC-PART 3 OF 3
AN ATTACHMENT

ELECTRICAL AND STARTING SYSTEM

NOTE	No.	PART NO.	QTY	PART NAME	NOTE	No.	PART NO.	QTY	PART NAME
	1	3S−2093	2	STRAP					
	2	7I−2673	1	STRAP					
	3	7K−1181	11	STRAP					
	4	141−2759	1	FUSE(5A)					
Y	5	317−2471	1	HARNESS AS					
Y	6	331−9351	1	HARNESS AS					
	7	096−9278	3	SCREW					
	8	250−2048	1	RELAY AS					
	9	8T−4171	1	BOLT(M6×1)					
	10	9X−8256	1	WASHER					

Y-SEPARATE ILLUSTRATION

J151998 HE00

WIRING GROUP (327-7634 N/S) -PL-JPN-CANOPY-AEC-PART 3 OF 3

REFERENCE:317-2471-Page 217 331-9351-Page 215

AN ATTACHMENT

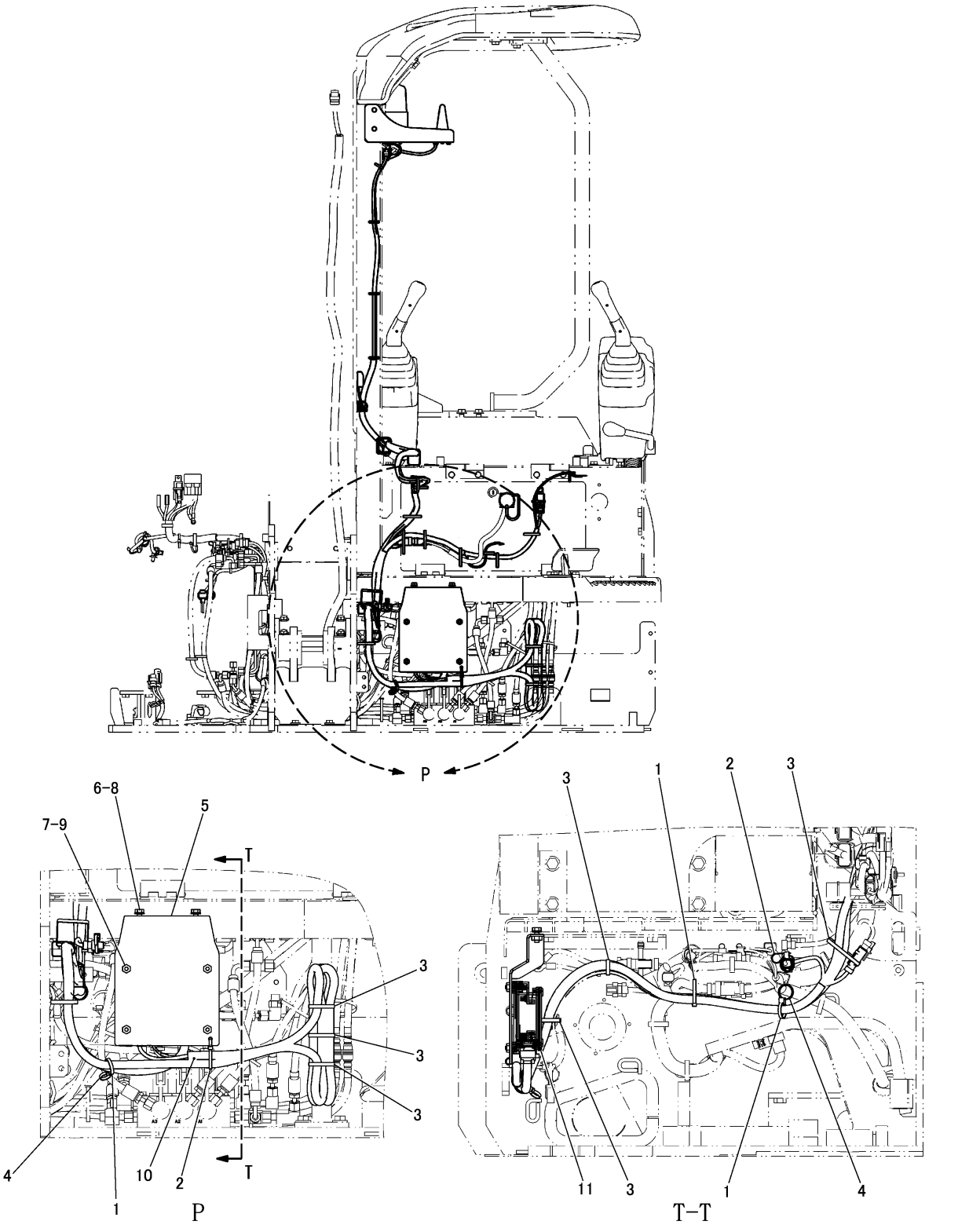

J153804 HE02

WIRING GROUP (317-2475 N/S) -PL-JPN-CANOPY/CRANE-PART 1 OF 3
AN ATTACHMENT

ELECTRICAL AND STARTING SYSTEM

NOTE	No.	PART NO.	QTY	PART NAME	NOTE	No.	PART NO.	QTY	PART NAME
	1	3S-2093	3	STRAP					
	2	7I-2673	2	STRAP					
	3	7K-1181	6	STRAP					
	4	266-7379	2	STRAP					
	5	317-2472	1	BRACKET AS					
	6	8T-3612	2	NUT(M8×1.25)(WELD)					
	7	6V-9632	4	NUT(M6×1)(WELD)					
	8	8T-4189	2	BOLT(M8×1.25)					
		8T-4224	2	WASHER					
	9	3T-0849	4	BOLT(M6×1)					
		9X-8256	4	WASHER					
	10	300-4321	1	TUBE					
Y	11	308-6182	1	ELECTRONICS GROUP					

Y-SEPARATE ILLUSTRATION

J153804 HE02

WIRING GROUP (317-2475 N/S) -PL-JPN-CANOPY/CRANE-PART 1 OF 3

REFERENCE:308-6182-Page 229

AN ATTACHMENT

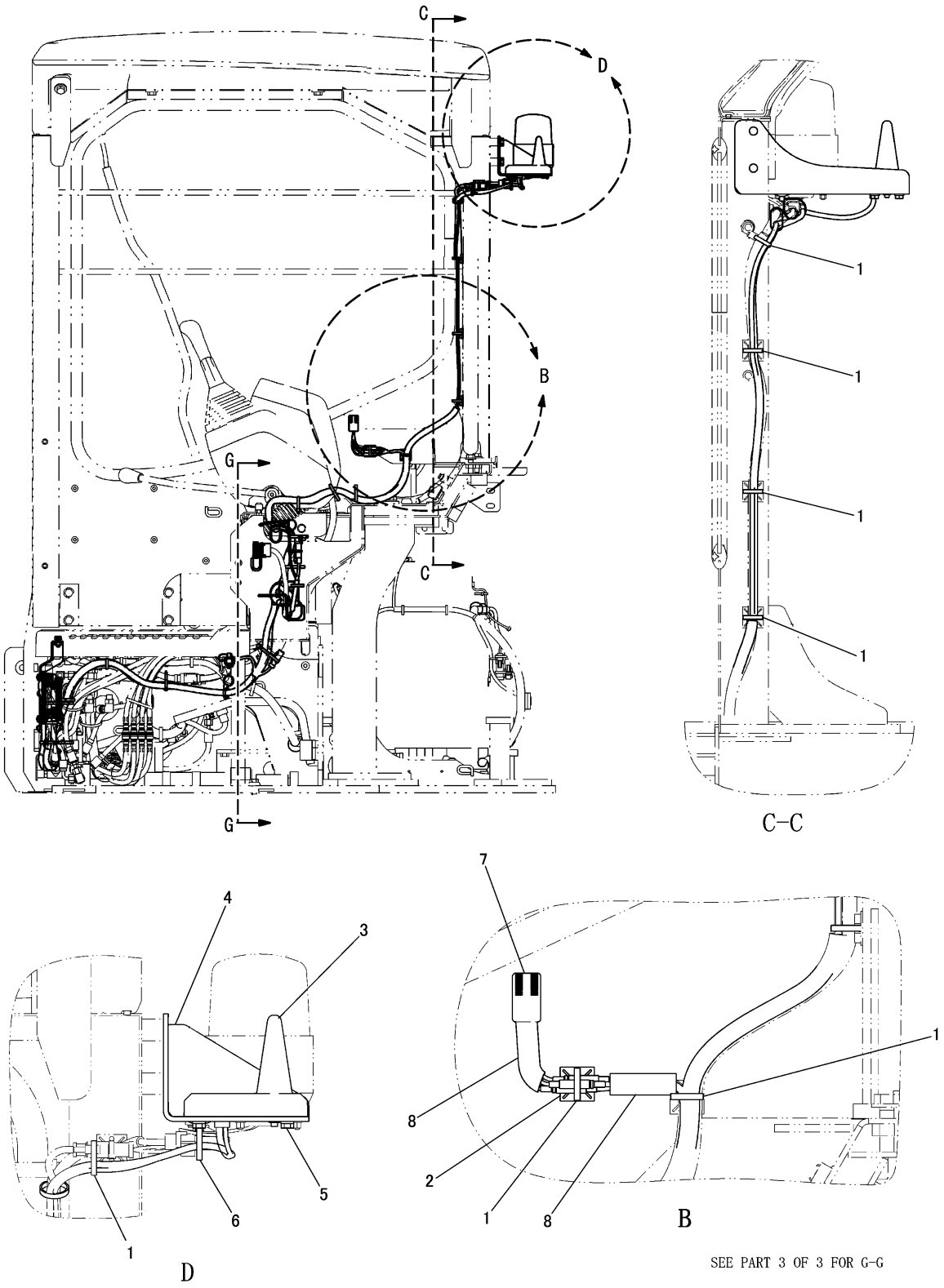

J153805 HE02

WIRING GROUP (317-2475 N/S) -PL-JPN-CANOPY/CRANE-PART 2 OF 3
AN ATTACHMENT

NOTE	No.	PART NO.	QTY	PART NAME	NOTE	No.	PART NO.	QTY	PART NAME
	1	3S−2093	7	STRAP					
	2	235−8966	1	BASE					
	3	270−5501	1	ANTENNA AS					
	4	315−0305	1	BRACKET					
	5	8T−4970	2	BOLT(M6×1)					
		9X−8256	2	WASHER					
	6	163−6795	1	STRAP					
	7	317−9219	1	LAMP AS					
	8	320−9833	2	TUBE					

J153805 HE02

WIRING GROUP (317-2475 N/S) -PL-JPN-CANOPY/CRANE-PART 2 OF 3
AN ATTACHMENT

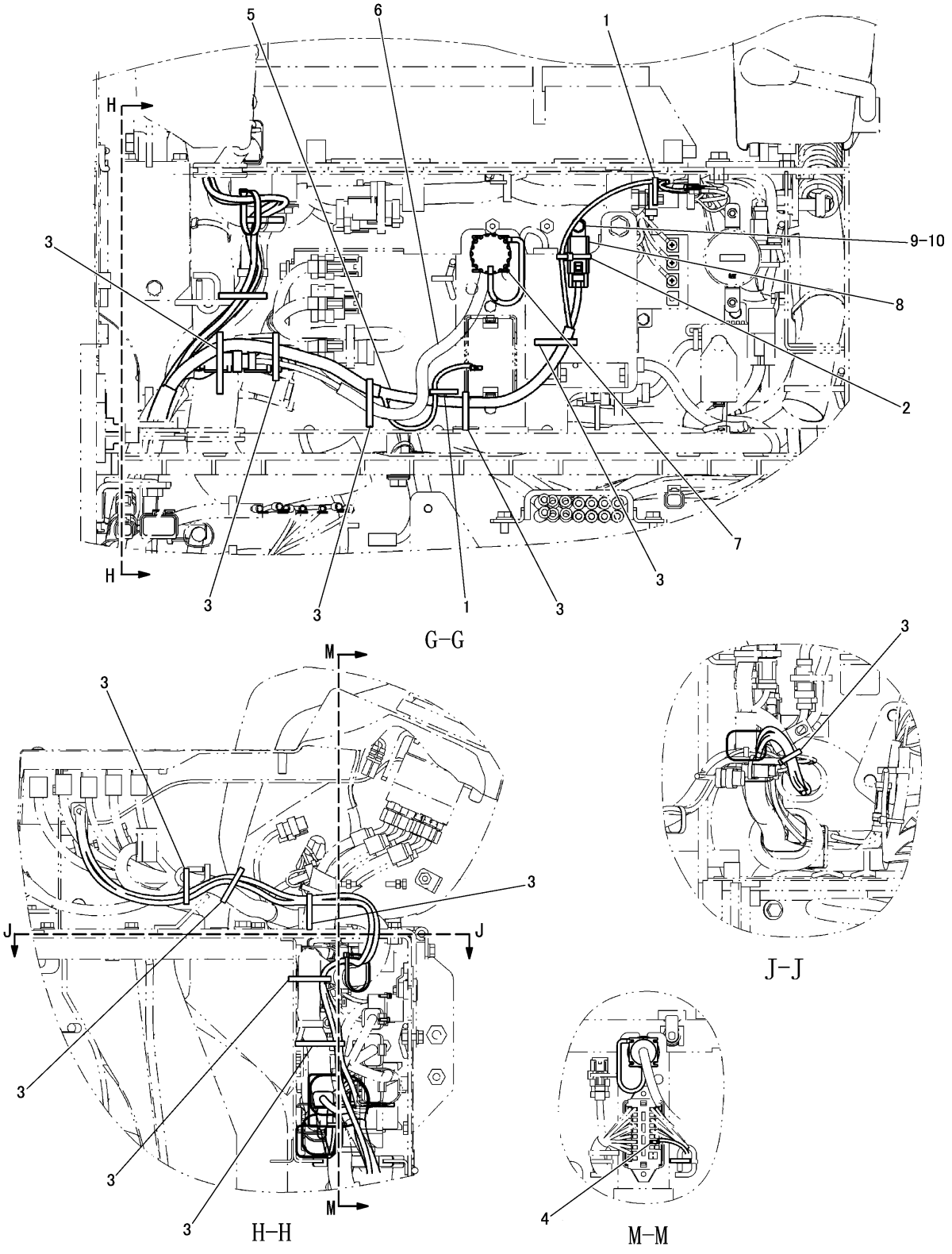

WIRING GROUP (317-2475 N/S) -PL-JPN-CANOPY/CRANE-PART 3 OF 3
AN ATTACHMENT

ELECTRICAL AND STARTING SYSTEM

NOTE	No.	PART NO.	QTY	PART NAME	NOTE	No.	PART NO.	QTY	PART NAME
	1	3S−2093	2	STRAP					
	2	7I−2673	1	STRAP					
	3	7K−1181	11	STRAP					
	4	141−2759	1	FUSE(5A)					
Y	5	315−0303	1	HARNESS AS					
Y	6	317−2471	1	HARNESS AS					
	7	096−9278	3	SCREW					
	8	250−2048	1	RELAY AS					
	9	8T−4171	1	BOLT(M6×1)					
	10	9X−8256	1	WASHER					

Y-SEPARATE ILLUSTRATION

J153806 HE02

WIRING GROUP (317-2475 N/S) -PL-JPN-CANOPY/CRANE-PART 3 OF 3

REFERENCE:315-0303-Page 214 317-2471-Page 217

AN ATTACHMENT

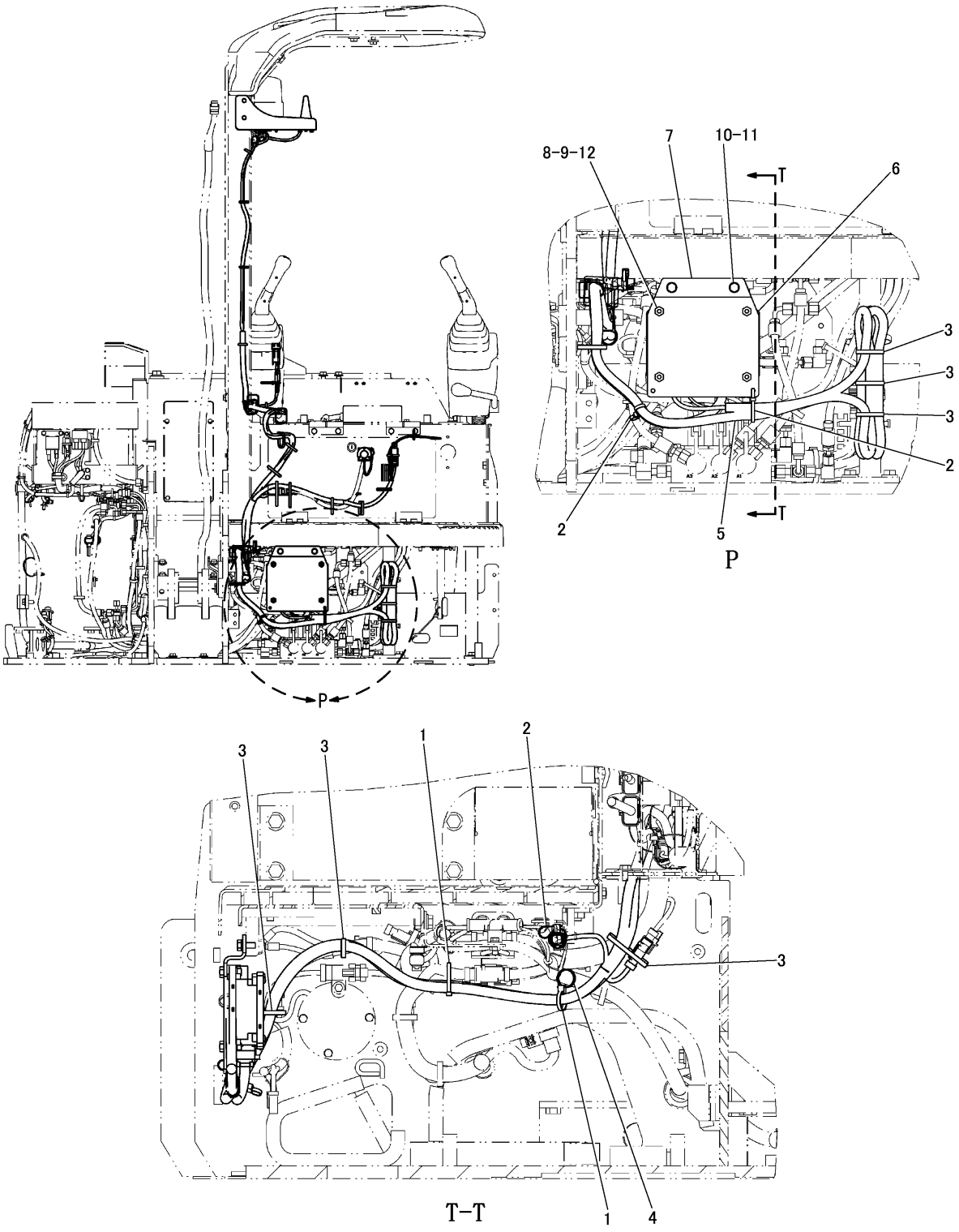

J151999 HE00

WIRING GROUP (327-7635 N/S) -PL-JPN-CANOPY/CRANE-AEC-PART 1 OF 3
AN ATTACHMENT

ELECTRICAL AND STARTING SYSTEM

NOTE	No.	PART NO.	QTY	PART NAME	NOTE	No.	PART NO.	QTY	PART NAME
	1	3S-2093	2	STRAP					
	2	7I-2673	3	STRAP					
	3	7K-1181	6	STRAP					
	4	266-7379	1	STRAP					
	5	300-4321	1	TUBE					
Y	6	308-6182	1	ELECTRONICS GROUP					
	7	325-9926	1	BRACKET AS					
	8	6V-9632	4	NUT(M6×1)(WELD)					
	9	3T-0849	4	BOLT(M6×1)					
	10	8T-4189	2	BOLT(M8×1.25)					
	11	8T-4224	2	WASHER					
	12	9X-8256	4	WASHER					

Y-SEPARATE ILLUSTRATION

J151999 HE00

WIRING GROUP (327-7635 N/S) -PL-JPN-CANOPY/CRANE-AEC-PART 1 OF 3

REFERENCE:308-6182-Page 229

AN ATTACHMENT

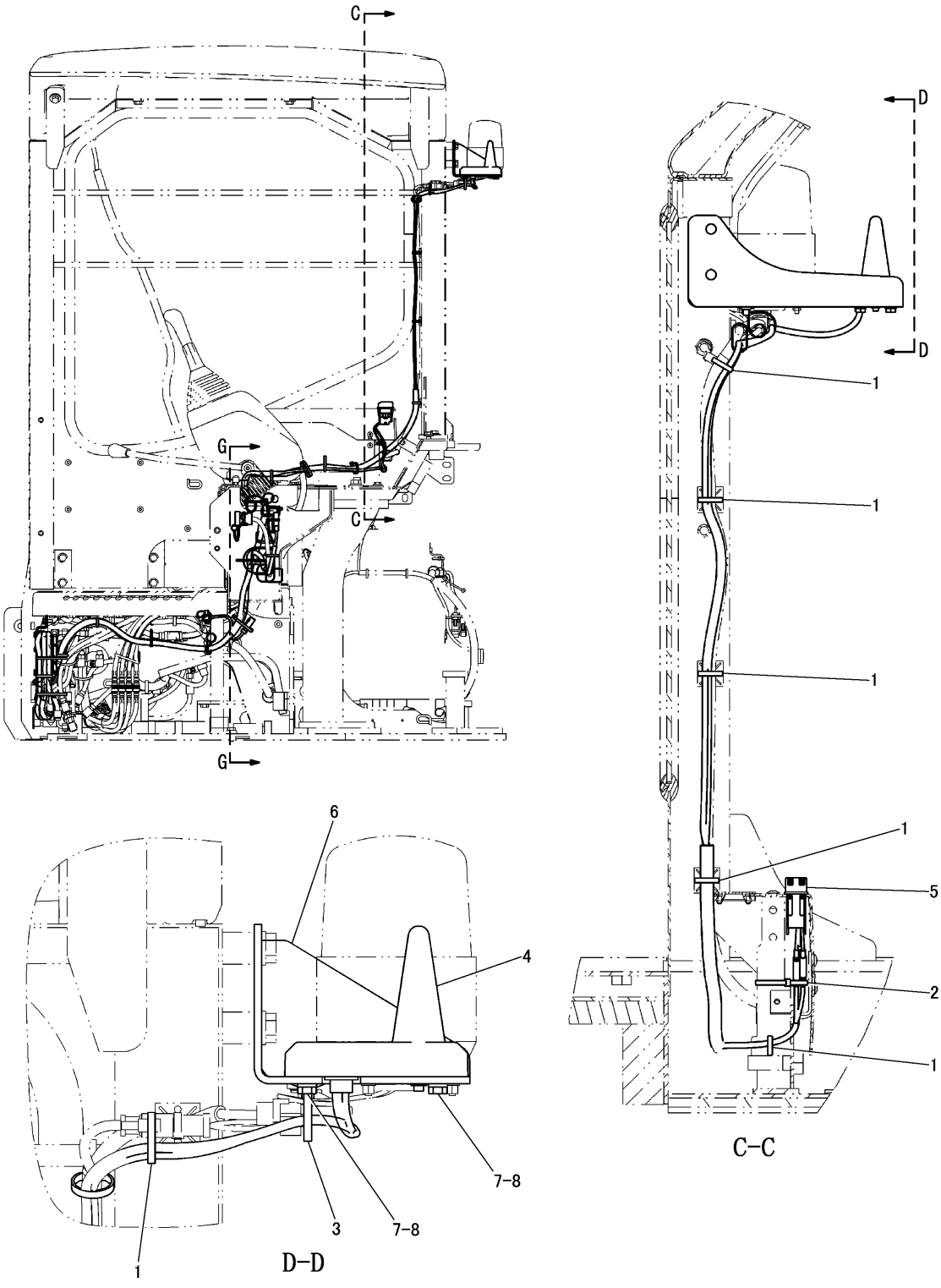

WIRING GROUP (327-7635 N/S) -PL-JPN-CANOPY/CRANE-AEC-PART 2 OF 3
AN ATTACHMENT

ELECTRICAL AND STARTING SYSTEM

NOTE	No.	PART NO.	QTY	PART NAME	NOTE	No.	PART NO.	QTY	PART NAME
	1	3S-2093	6	STRAP					
	2	7I-2673	1	STRAP					
	3	163-6795	1	STRAP					
	4	270-5501	1	ANTENNA AS					
	5	291-9335	1	LAMP AS					
		228-6089	1	PLUG					
		291-9339	1	LAMP GROUP					
	6	315-0305	1	BRACKET					
	7	8T-4970	2	BOLT(M6×1)					
	8	9X-8256	2	WASHER					

J152000 HE00

WIRING GROUP (327-7635 N/S) -PL-JPN-CANOPY/CRANE-AEC-PART 2 OF 3
AN ATTACHMENT

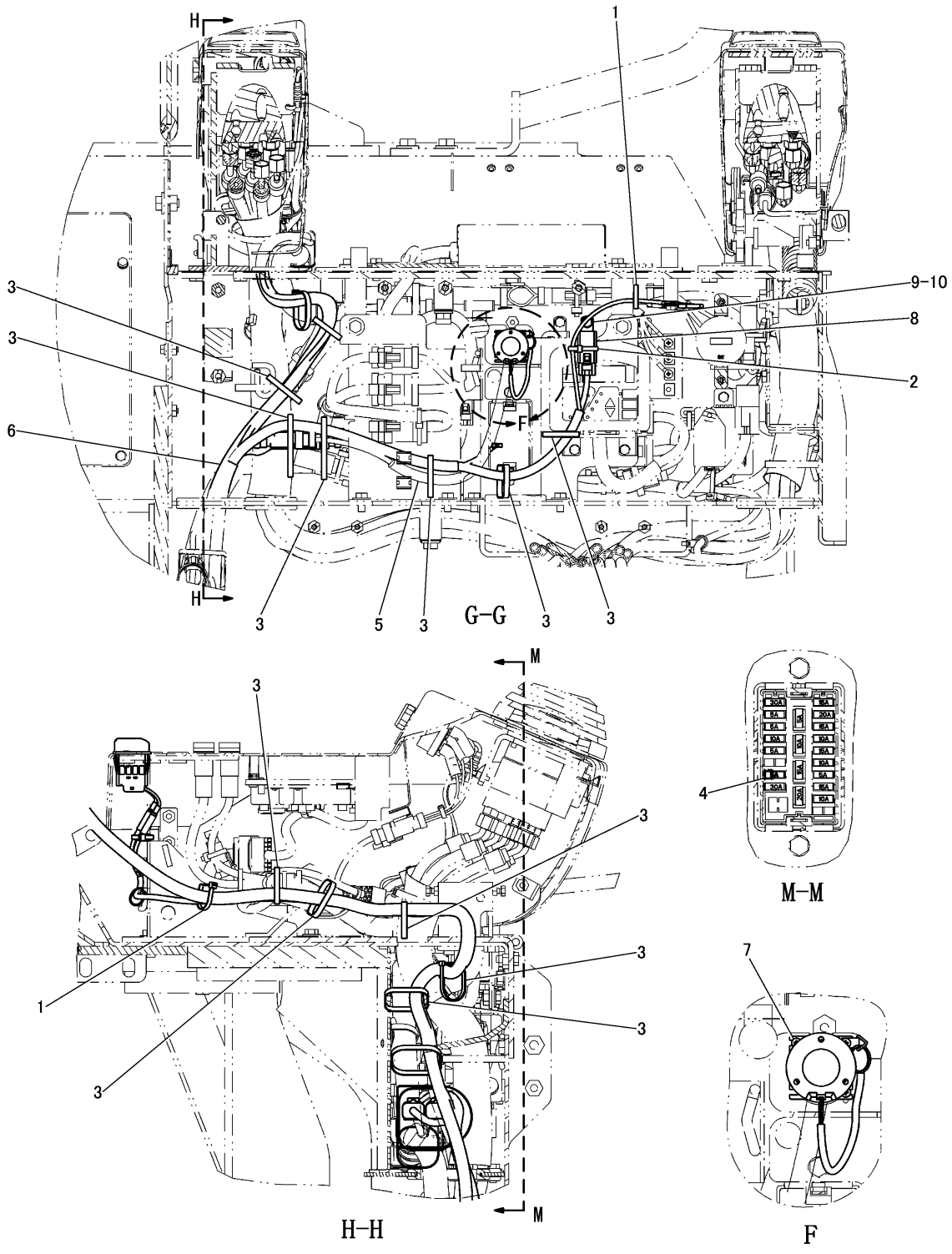

WIRING GROUP (327-7635 N/S) -PL-JPN-CANOPY/CRANE-AEC-PART 3 OF 3
AN ATTACHMENT

ELECTRICAL AND STARTING SYSTEM

NOTE	No.	PART NO.	QTY	PART NAME	NOTE	No.	PART NO.	QTY	PART NAME
	1	3S−2093	2	STRAP					
	2	7I−2673	1	STRAP					
	3	7K−1181	11	STRAP					
	4	141−2759	1	FUSE(5A)					
Y	5	317−2471	1	HARNESS AS					
Y	6	331−9351	1	HARNESS AS					
	7	096−9278	3	SCREW					
	8	250−2048	1	RELAY AS					
	9	8T−4171	1	BOLT(M6×1)					
	10	9X−8256	1	WASHER					

Y-SEPARATE ILLUSTRATION

J152001 HE00

WIRING GROUP (327-7635 N/S) -PL-JPN-CANOPY/CRANE-AEC-PART 3 OF 3

REFERENCE:317-2471-Page 217 331-9351-Page 215

AN ATTACHMENT

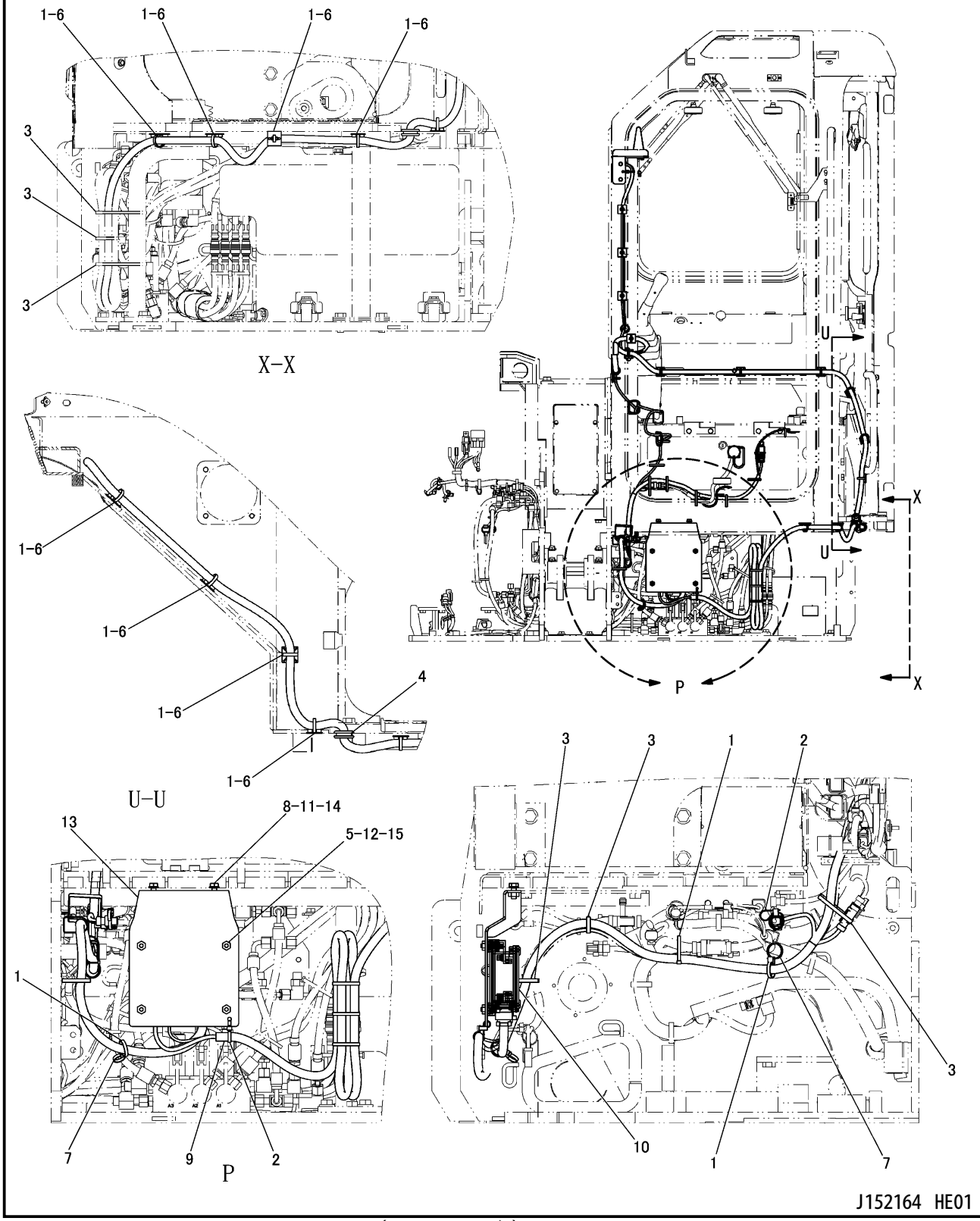

WIRING GROUP (317-2476 N/S) -PL-JPN-CAB-PART 1 OF 3
AN ATTACHMENT

ELECTRICAL AND STARTING SYSTEM

NOTE	No.	PART NO.	QTY	PART NAME	NOTE	No.	PART NO.	QTY	PART NAME
	1	3S-2093	11	STRAP					
	2	7I-2673	2	STRAP					
	3	7K-1181	6	STRAP					
	4	093-2069	1	GROMMET					
	5	9X-8256	4	WASHER					
	6	235-8966	8	BASE					
	7	266-7379	2	STRAP					
	8	8T-4224	2	WASHER					
	9	300-4321	1	TUBE					
Y	10	308-6182	1	ELECTRONICS GROUP					
	11	8T-4189	2	BOLT(M8×1.25)					
	12	3T-0849	4	BOLT(M6×1)					
	13	317-2472	1	BRACKET AS					
	14	8T-3612	2	NUT(M8×1.25)(WELD)					
	15	6V-9632	4	NUT(M6×1)(WELD)					

Y-SEPARATE ILLUSTRATION

J152164 HE01

WIRING GROUP (317-2476 N/S) -PL-JPN-CAB-PART 1 OF 3
REFERENCE:308-6182-Page 229
AN ATTACHMENT

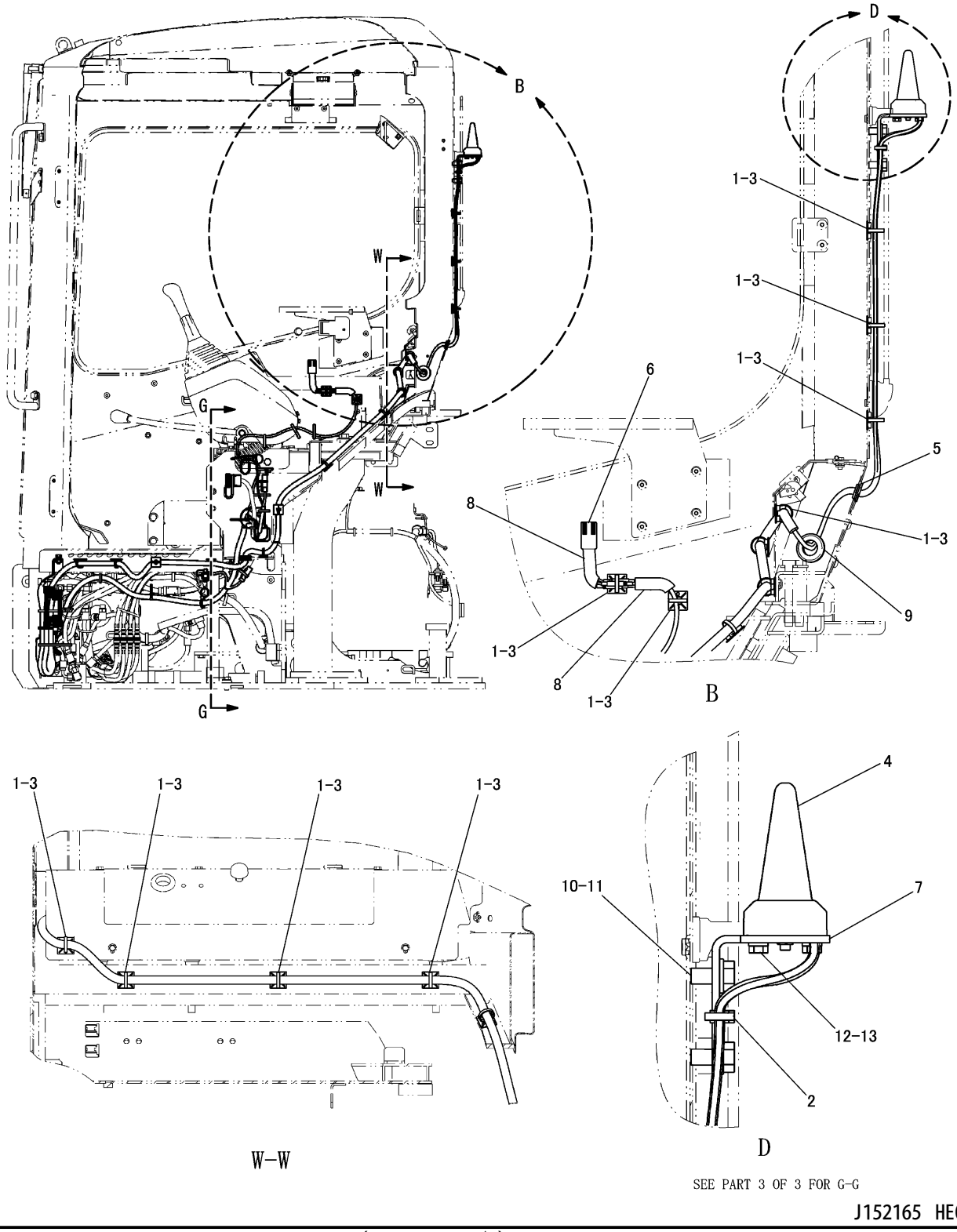

WIRING GROUP (317-2476 N/S) -PL-JPN-CAB-PART 2 OF 3
AN ATTACHMENT

ELECTRICAL AND STARTING SYSTEM

NOTE	No.	PART NO.	QTY	PART NAME	NOTE	No.	PART NO.	QTY	PART NAME
	1	3S-2093	10	STRAP					
	2	7I-2673	1	STRAP					
	3	235-8966	10	BASE					
	4	270-5501	1	ANTENNA AS					
	5	317-2485	1	GROMMET					
	6	317-9219	1	LAMP AS					
	7	319-3711	1	BRACKET					
	8	320-9833	2	TUBE					
	9	170-2986	1	GROMMET					
	10	8T-4121	2	WASHER					
	11	8T-4137	2	BOLT(M10×1.5)					
	12	8T-4970	2	BOLT(M6×1)					
	13	9X-8256	2	WASHER					

J152165 HE01

WIRING GROUP (317-2476 N/S) -PL-JPN-CAB-PART 2 OF 3
AN ATTACHMENT

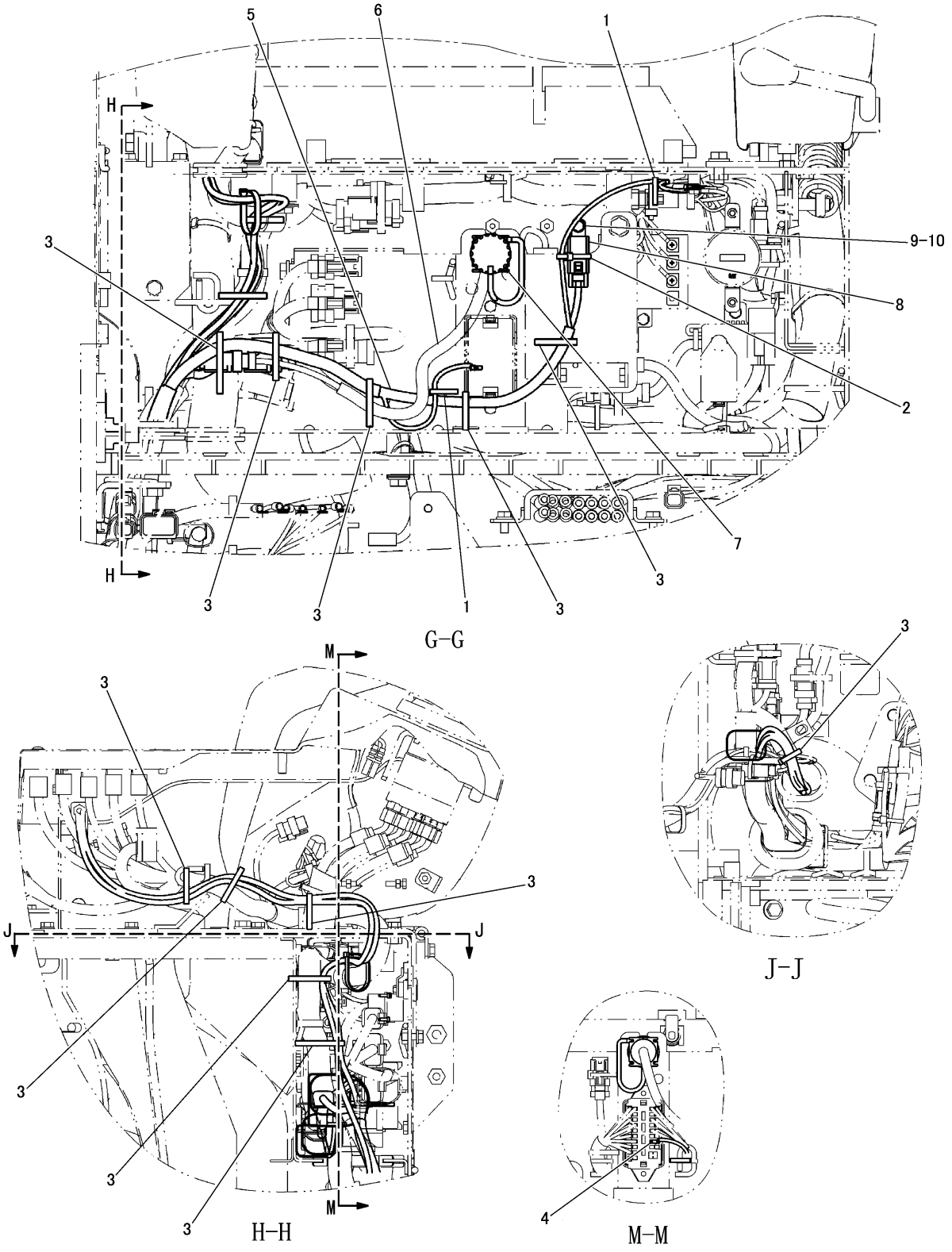

WIRING GROUP (317-2476 N/S) -PL-JPN-CAB-PART 3 OF 3
AN ATTACHMENT

ELECTRICAL AND STARTING SYSTEM

NOTE	No.	PART NO.	QTY	PART NAME	NOTE	No.	PART NO.	QTY	PART NAME
	1	3S-2093	2	STRAP					
	2	7I-2673	1	STRAP					
	3	7K-1181	11	STRAP					
	4	141-2759	1	FUSE(5A)					
Y	5	315-0303	1	HARNESS AS					
Y	6	317-2471	1	HARNESS AS					
	7	096-9278	3	SCREW					
	8	250-2048	1	RELAY AS					
	9	8T-4171	1	BOLT(M6×1)					
	10	9X-8256	1	WASHER					

Y-SEPARATE ILLUSTRATION

J152166 HE01

WIRING GROUP (317-2476 N/S) -PL-JPN-CAB-PART 3 OF 3

REFERENCE:315-0303-Page 214 317-2471-Page 217

AN ATTACHMENT

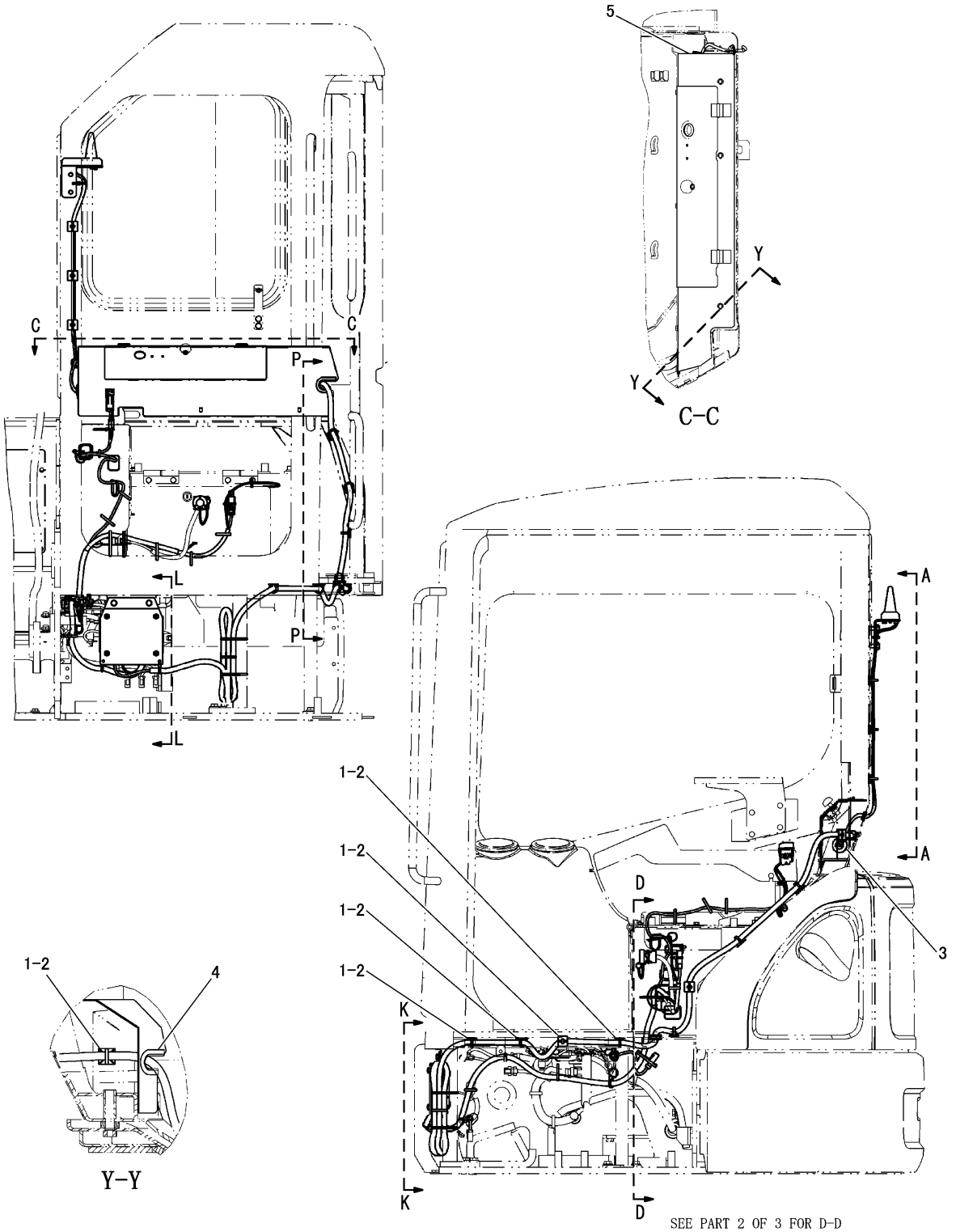

WIRING GROUP (325-9883 N/S) -PL-JPN-CAB-AEC-PART 1 OF 3
AN ATTACHMENT

ELECTRICAL AND STARTING SYSTEM

NOTE	No.	PART NO.	QTY	PART NAME	NOTE	No.	PART NO.	QTY	PART NAME
	1	3S-2093	8	STRAP					
	2	235-8966	8	BASE					
	3	170-2986	1	GROMMET					
D	4	5P-5952		SEAL---0.1m					
	5	331-9355	1	COVER AS					

D-ORDER BY THE m

J151383 HE03

WIRING GROUP (325-9883 N/S) -PL-JPN-CAB-AEC-PART 1 OF 3
AN ATTACHMENT

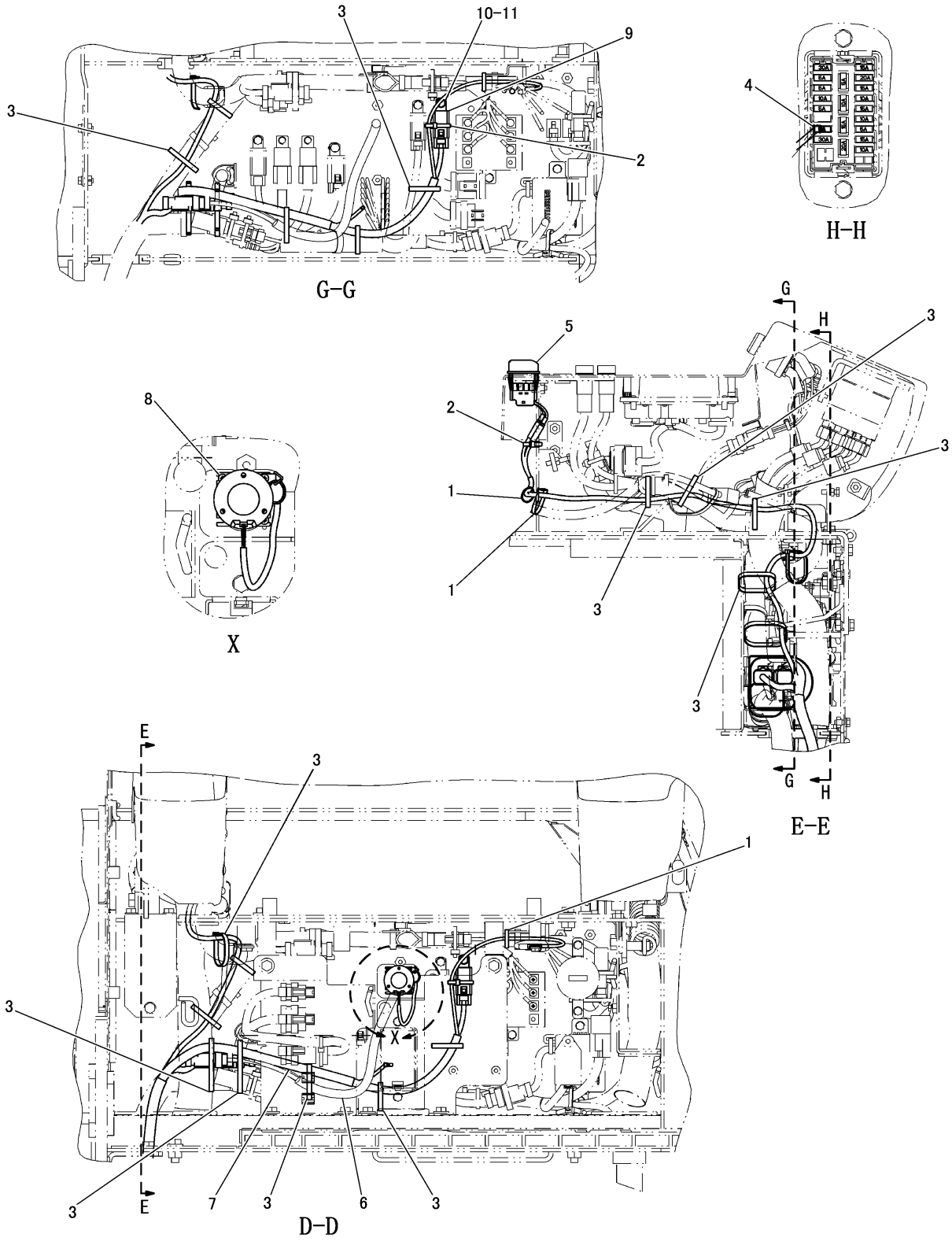

WIRING GROUP (325-9883 N/S) -PL-JPN-CAB-AEC-PART 2 OF 3
AN ATTACHMENT

ELECTRICAL AND STARTING SYSTEM

NOTE	No.	PART NO.	QTY	PART NAME	NOTE	No.	PART NO.	QTY	PART NAME
	1	3S-2093	3	STRAP					
	2	7I-2673	2	STRAP					
	3	7K-1181	11	STRAP					
	4	141-2759	1	FUSE(5A)					
	5	291-9335	1	LAMP AS					
		228-6089	1	PLUG					
		291-9339	1	LAMP GROUP					
Y	6	317-2471	1	HARNESS AS					
Y	7	331-9351	1	HARNESS AS					
	8	096-9278	3	SCREW					
	9	250-2048	1	RELAY AS					
	10	8T-4171	1	BOLT(M6×1)					
	11	9X-8256	1	WASHER					

Y-SEPARATE ILLUSTRATION

J151384 HE03

WIRING GROUP (325-9883 N/S) -PL-JPN-CAB-AEC-PART 2 OF 3

REFERENCE:317-2471-Page 217 331-9351-Page 215
AN ATTACHMENT

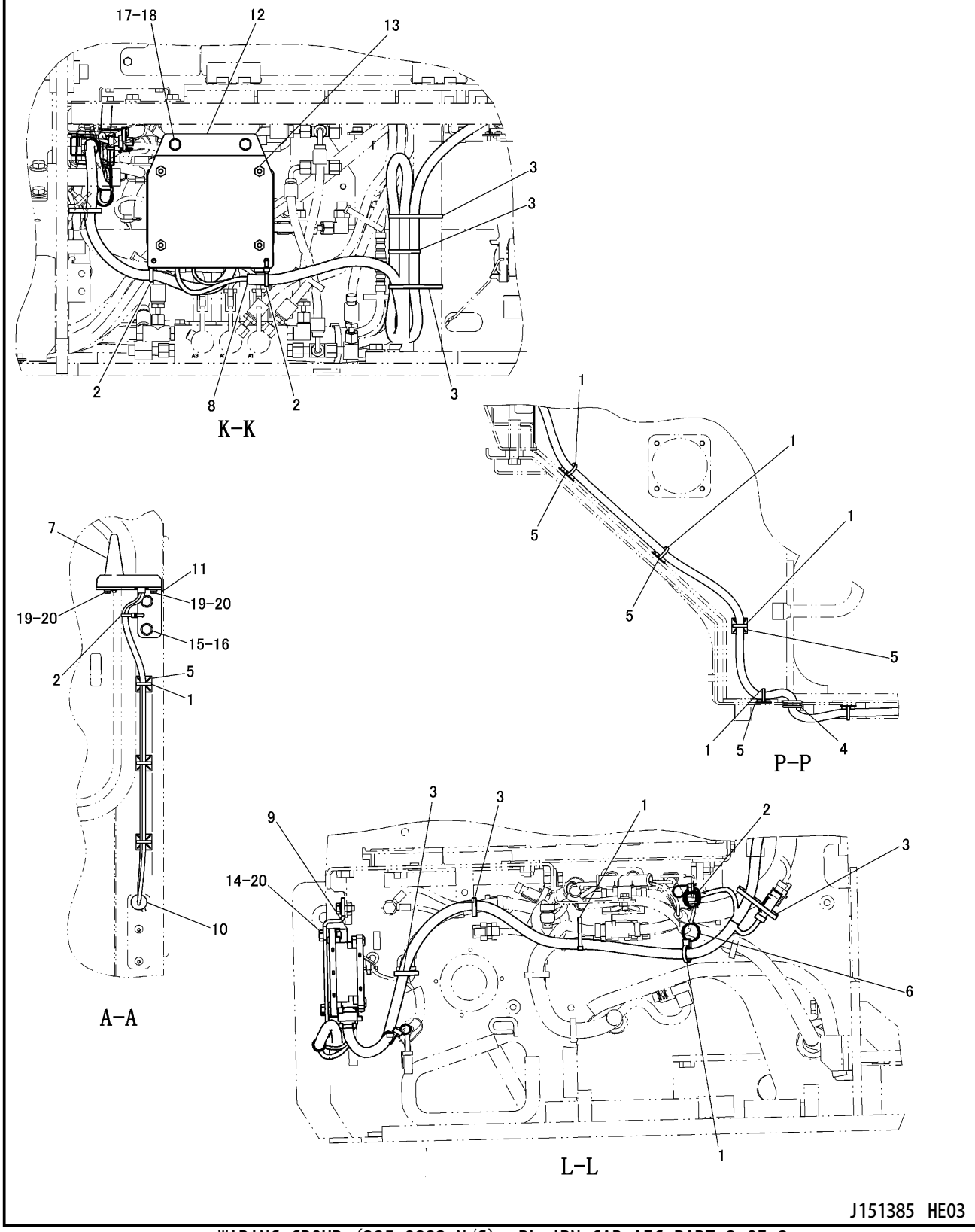

WIRING GROUP (325-9883 N/S) -PL-JPN-CAB-AEC-PART 3 OF 3
AN ATTACHMENT

ELECTRICAL AND STARTING SYSTEM

NOTE	No.	PART NO.	QTY	PART NAME	NOTE	No.	PART NO.	QTY	PART NAME
	1	3S-2093	9	STRAP					
	2	7I-2673	4	STRAP					
	3	7K-1181	6	STRAP					
	4	093-2069	1	GROMMET					
	5	235-8966	7	BASE					
	6	266-7379	1	STRAP					
	7	270-5501	1	ANTENNA AS					
	8	300-4321	1	TUBE					
Y	9	308-6182	1	ELECTRONICS GROUP					
	10	317-2485	1	GROMMET					
	11	319-3711	1	BRACKET					
	12	325-9926	1	BRACKET AS					
	13	6V-9632	4	NUT(M6×1)(WELD)					
	14	3T-0849	4	BOLT(M6×1)					
	15	8T-4121	2	WASHER					
	16	8T-4137	2	BOLT(M10×1.5)					
	17	8T-4189	2	BOLT(M8×1.25)					
	18	8T-4224	2	WASHER					
	19	8T-4970	2	BOLT(M6×1)					
	20	9X-8256	6	WASHER					

Y-SEPARATE ILLUSTRATION

J151385 HE03

WIRING GROUP (325-9883 N/S) -PL-JPN-CAB-AEC-PART 3 OF 3

REFERENCE:308-6182-Page 229

AN ATTACHMENT

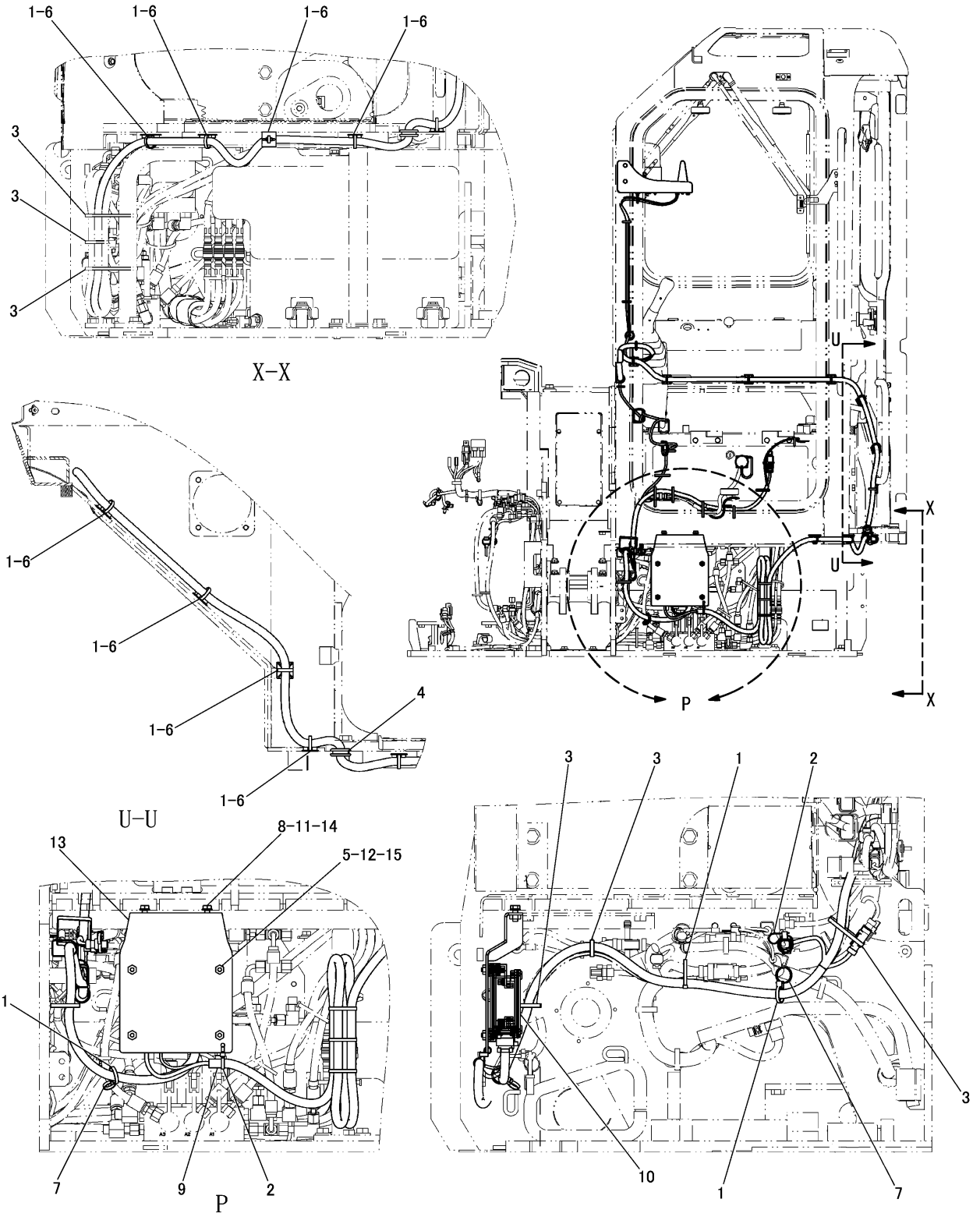

WIRING GROUP (317-2478 N/S) -PL-JPN-CAB/CRANE-PART 1 OF 3
AN ATTACHMENT

ELECTRICAL AND STARTING SYSTEM

NOTE	No.	PART NO.	QTY	PART NAME	NOTE	No.	PART NO.	QTY	PART NAME
	1	3S-2093	11	STRAP					
	2	7I-2673	2	STRAP					
	3	7K-1181	6	STRAP					
	4	093-2069	1	GROMMET					
	5	9X-8256	4	WASHER					
	6	235-8966	8	BASE					
	7	266-7379	2	STRAP					
	8	8T-4224	2	WASHER					
	9	300-4321	1	TUBE					
Y	10	308-6182	1	ELECTRONICS GROUP					
	11	8T-4189	2	BOLT(M8×1.25)					
	12	3T-0849	4	BOLT(M6×1)					
	13	317-2472	1	BRACKET AS					
	14	8T-3612	2	NUT(M8×1.25)(WELD)					
	15	6V-9632	4	NUT(M6×1)(WELD)					

Y-SEPARATE ILLUSTRATION

J149359 HE01

WIRING GROUP (317-2478 N/S) -PL-JPN-CAB/CRANE-PART 1 OF 3

REFERENCE:308-6182-Page 229

AN ATTACHMENT

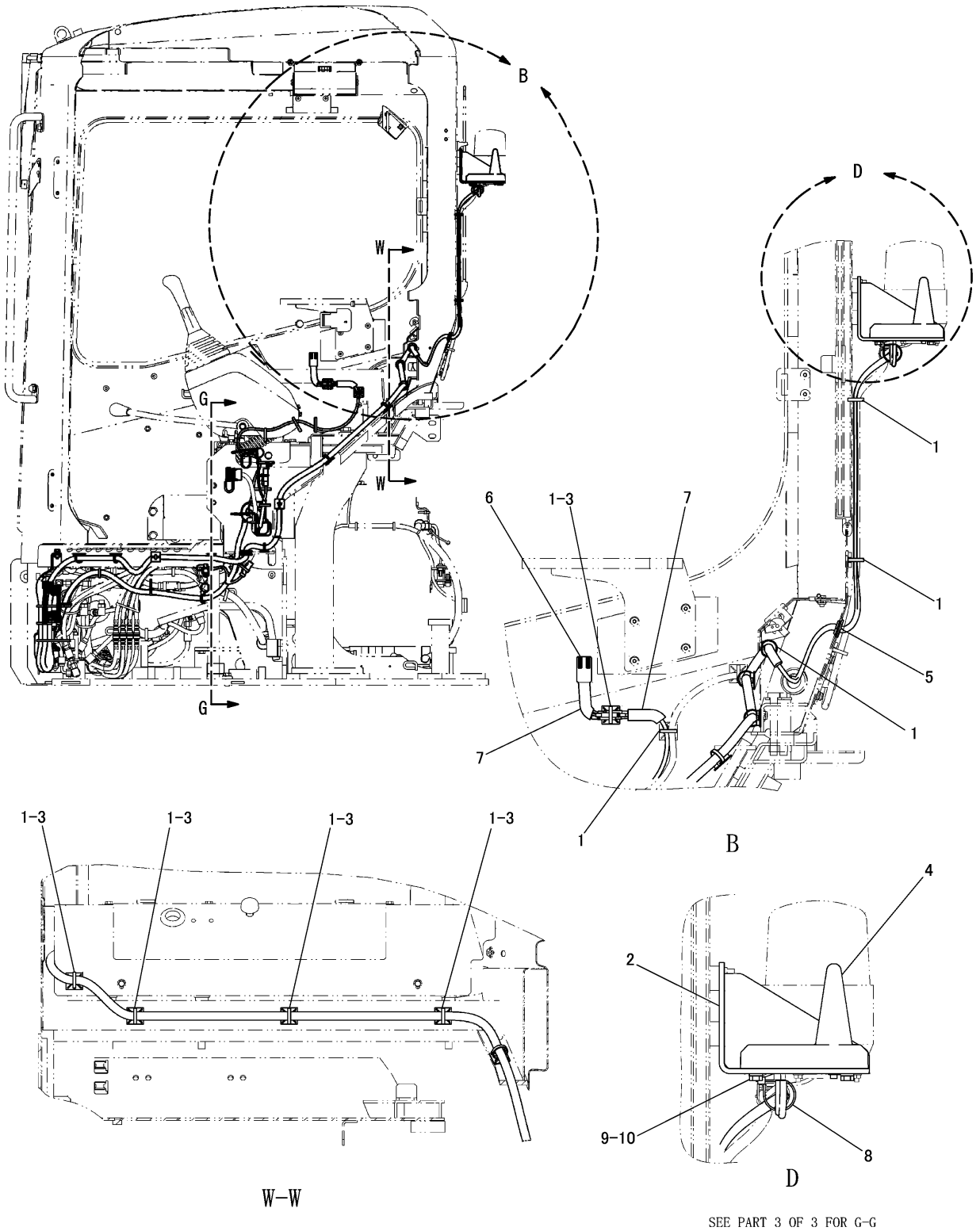

WIRING GROUP (317-2478 N/S) -PL-JPN-CAB/CRANE-PART 2 OF 3
AN ATTACHMENT

ELECTRICAL AND STARTING SYSTEM

NOTE	No.	PART NO.	QTY	PART NAME	NOTE	No.	PART NO.	QTY	PART NAME
	1	3S−2093	9	STRAP					
	2	315−0305	1	BRACKET					
	3	235−8966	5	BASE					
	4	270−5501	1	ANTENNA AS					
	5	317−2485	1	GROMMET					
	6	317−9219	1	LAMP AS					
	7	320−9833	2	TUBE					
	8	163−6795	1	STRAP					
	9	8T−4970	2	BOLT(M6×1)					
	10	9X−8256	2	WASHER					

J149360 HE01

WIRING GROUP (317-2478 N/S) -PL-JPN-CAB/CRANE-PART 2 OF 3
AN ATTACHMENT

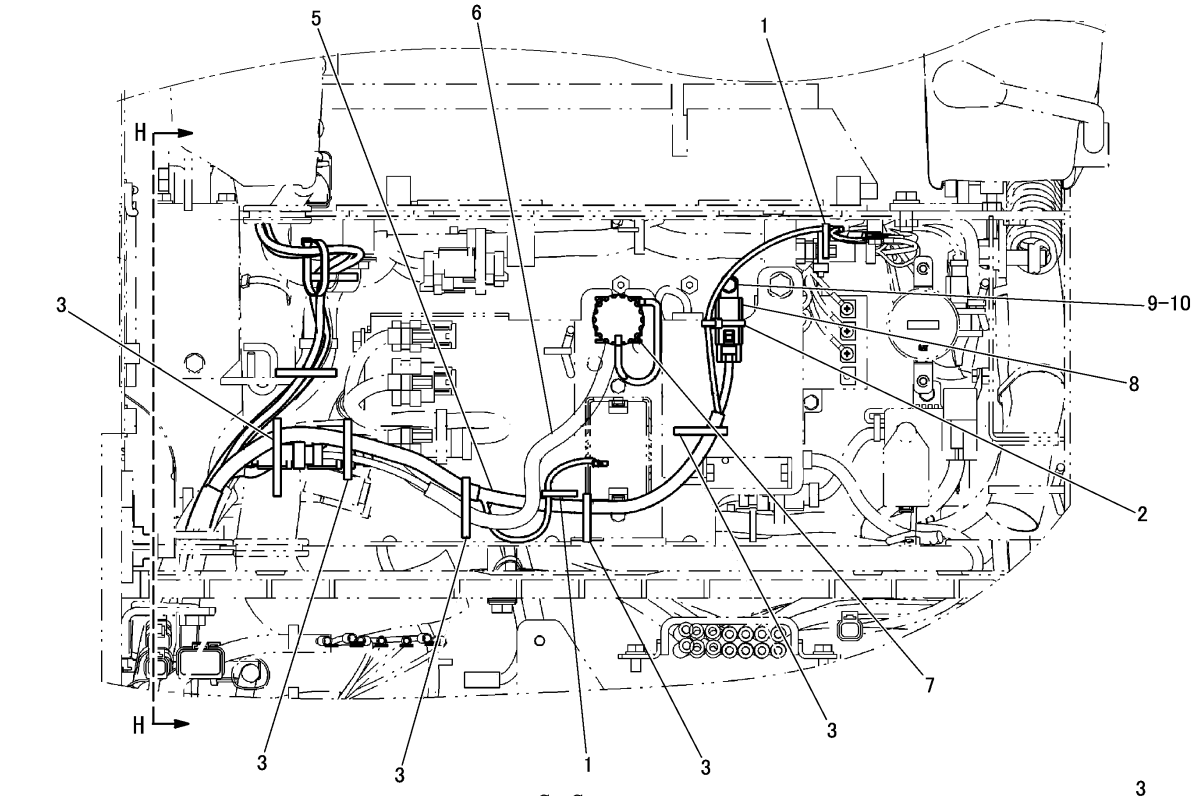

G-G

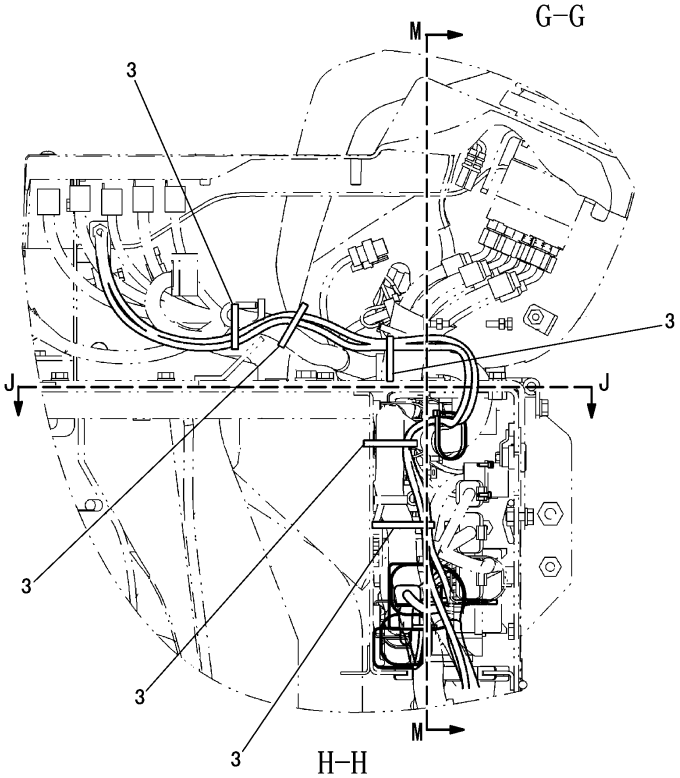

H-H

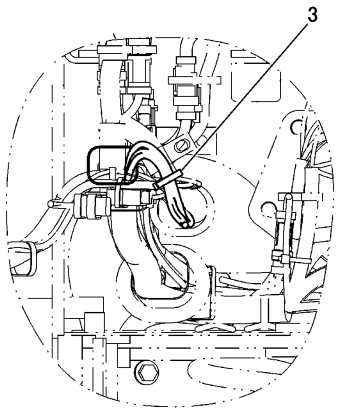

J-J

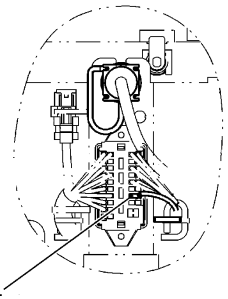

M-M

J149361 HE01

WIRING GROUP (317-2478 N/S) -PL-JPN-CAB/CRANE-PART 3 OF 3
AN ATTACHMENT

ELECTRICAL AND STARTING SYSTEM

NOTE	No.	PART NO.	QTY	PART NAME	NOTE	No.	PART NO.	QTY	PART NAME
	1	3S−2093	2	STRAP					
	2	7I−2673	1	STRAP					
	3	7K−1181	11	STRAP					
	4	141−2759	1	FUSE(5A)					
Y	5	315−0303	1	HARNESS AS					
Y	6	317−2471	1	HARNESS AS					
	7	096−9278	3	SCREW					
	8	250−2048	1	RELAY AS					
	9	8T−4171	1	BOLT(M6×1)					
	10	9X−8256	1	WASHER					

Y-SEPARATE ILLUSTRATION

J149361 HE01

WIRING GROUP (317-2478 N/S) -PL-JPN-CAB/CRANE-PART 3 OF 3

REFERENCE:315-0303-Page 214 317-2471-Page 217

AN ATTACHMENT

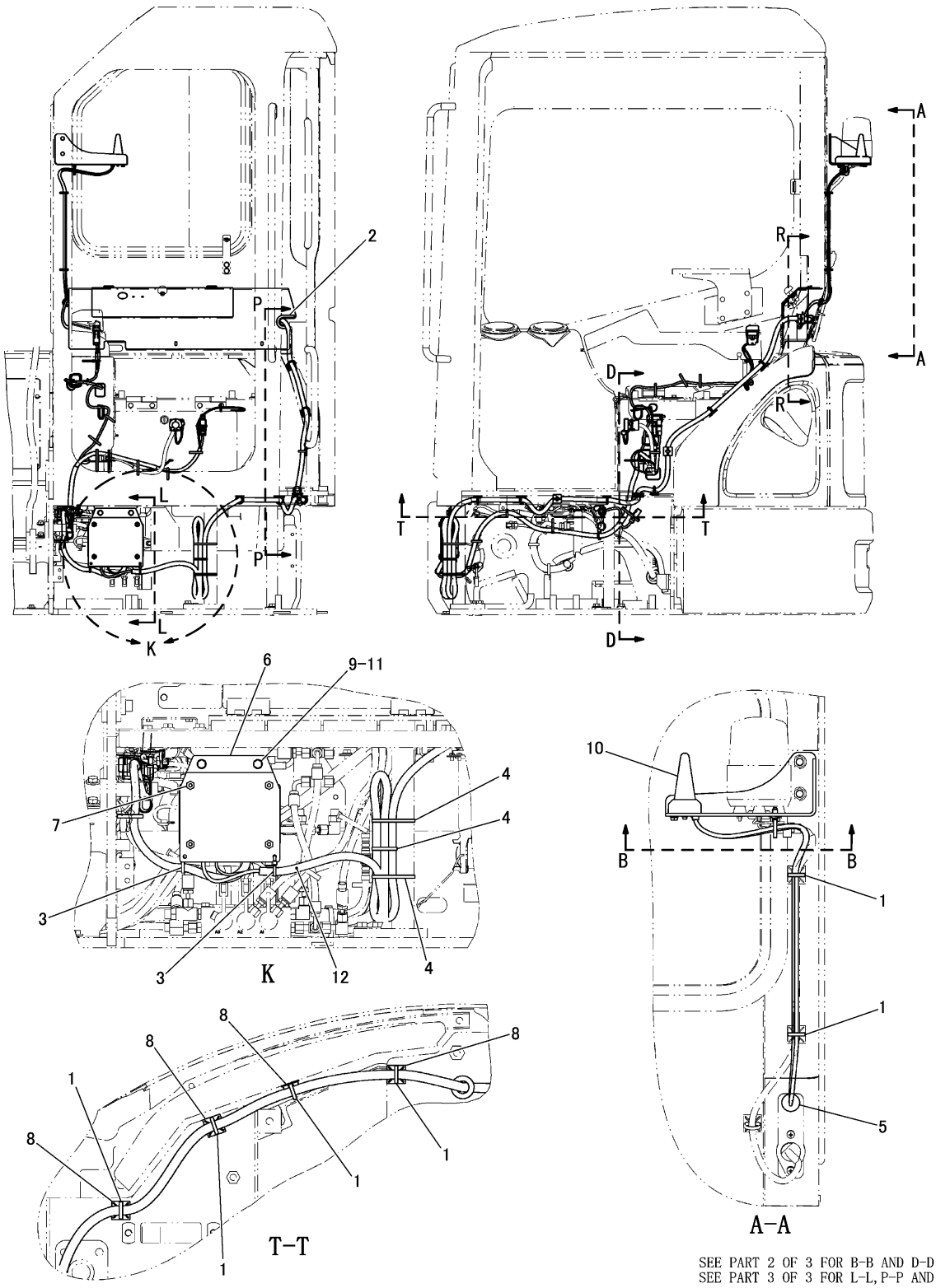

WIRING GROUP (327-7636 N/S) -PL-JPN-CAB/CRANE-AEC-PART 1 OF 3
AN ATTACHMENT

ELECTRICAL AND STARTING SYSTEM

NOTE	No.	PART NO.	QTY	PART NAME	NOTE	No.	PART NO.	QTY	PART NAME
	1	3S−2093	6	STRAP					
D	2	5P−5952	1	SEAL---0.1m					
	3	7I−2673	2	STRAP					
	4	7K−1181	3	STRAP					
	5	317−2485	1	GROMMET					
	6	325−9926	1	BRACKET AS					
	7	6V−9632	4	NUT(M6×1)(WELD)					
	8	235−8966	4	BASE					
	9	8T−4189	2	BOLT(M8×1.25)					
	10	270−5501	1	ANTENNA AS					
	11	8T−4224	2	WASHER					
	12	300−4321	1	TUBE					

D-ORDER BY THE m

J152161 HE01

WIRING GROUP (327-7636 N/S) -PL-JPN-CAB/CRANE-AEC-PART 1 OF 3
AN ATTACHMENT

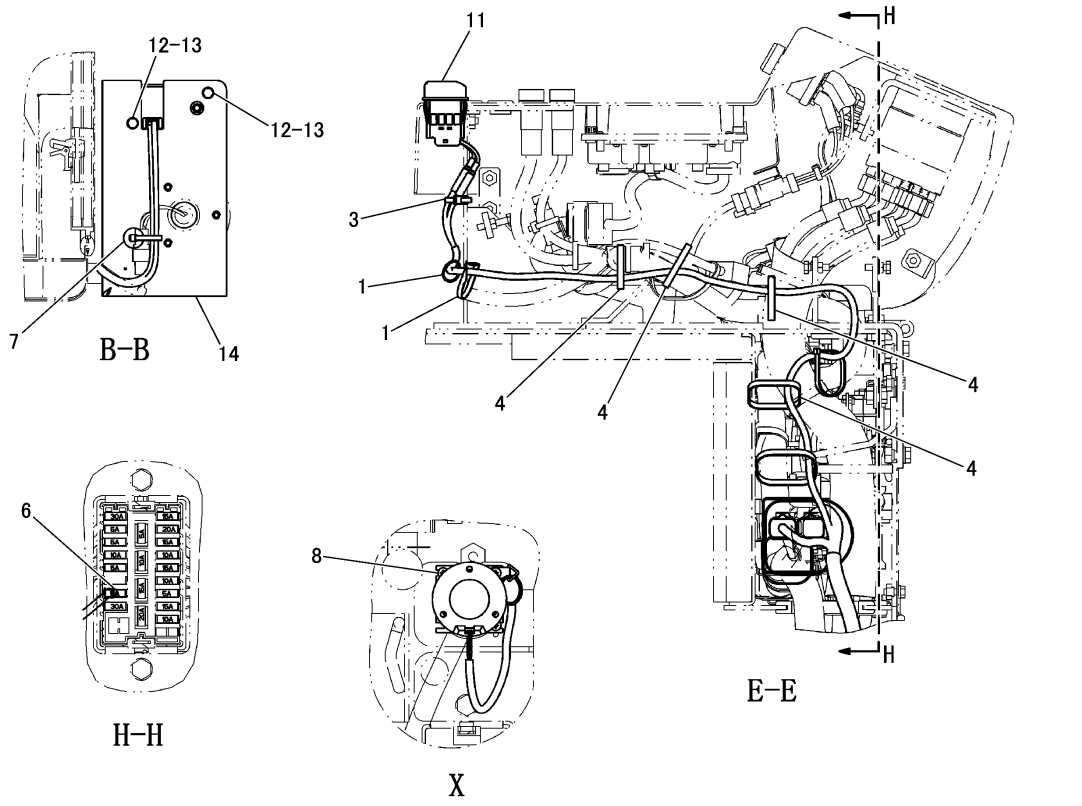

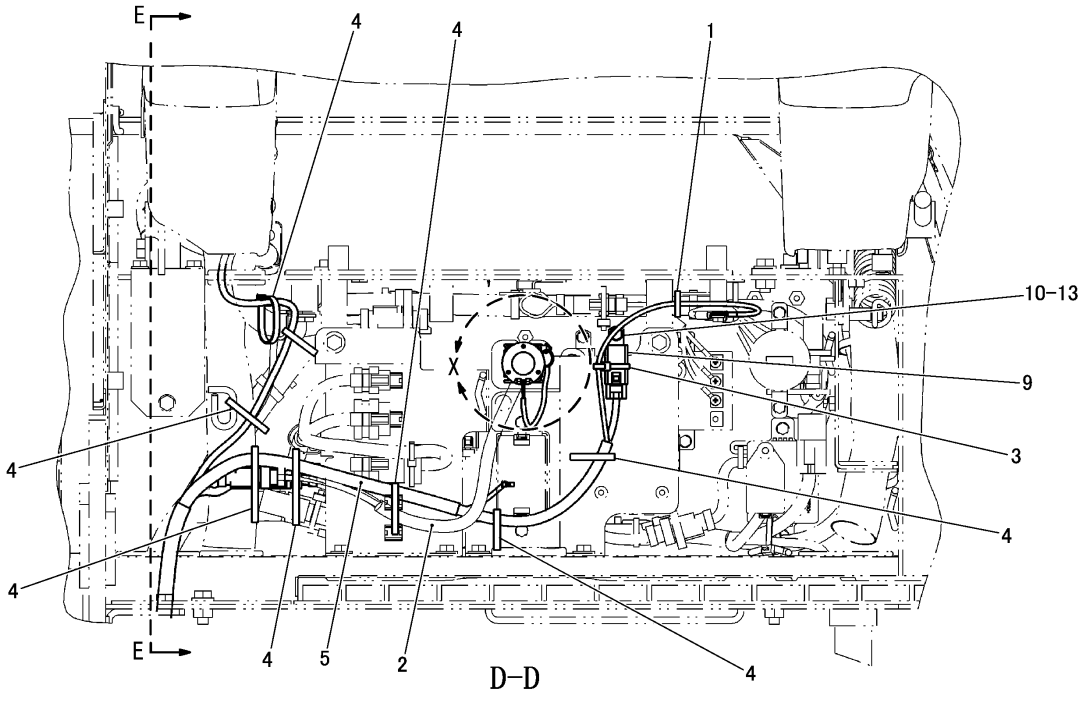

J152162 HE01

WIRING GROUP (327-7636 N/S) -PL-JPN-CAB/CRANE-AEC-PART 2 OF 3
AN ATTACHMENT

ELECTRICAL AND STARTING SYSTEM

NOTE	No.	PART NO.	QTY	PART NAME	NOTE	No.	PART NO.	QTY	PART NAME
	1	3S-2093	3	STRAP					
Y	2	317-2471	1	HARNESS AS					
	3	7I-2673	2	STRAP					
	4	7K-1181	11	STRAP					
Y	5	331-9351	1	HARNESS AS					
	6	141-2759	1	FUSE(5A)					
	7	163-6795	1	STRAP					
	8	096-9278	3	SCREW					
	9	250-2048	1	RELAY AS					
	10	8T-4171	1	BOLT(M6×1)					
	11	291-9335	1	LAMP AS					
		228-6089	1	PLUG					
		291-9339	1	LAMP GROUP					
	12	8T-4970	2	BOLT(M6×1)					
	13	9X-8256	3	WASHER					
	14	315-0305	1	BRACKET					

Y-SEPARATE ILLUSTRATION

J152162 HE01

WIRING GROUP (327-7636 N/S) -PL-JPN-CAB/CRANE-AEC-PART 2 OF 3

REFERENCE:317-2471-Page 217 331-9351-Page 215

AN ATTACHMENT

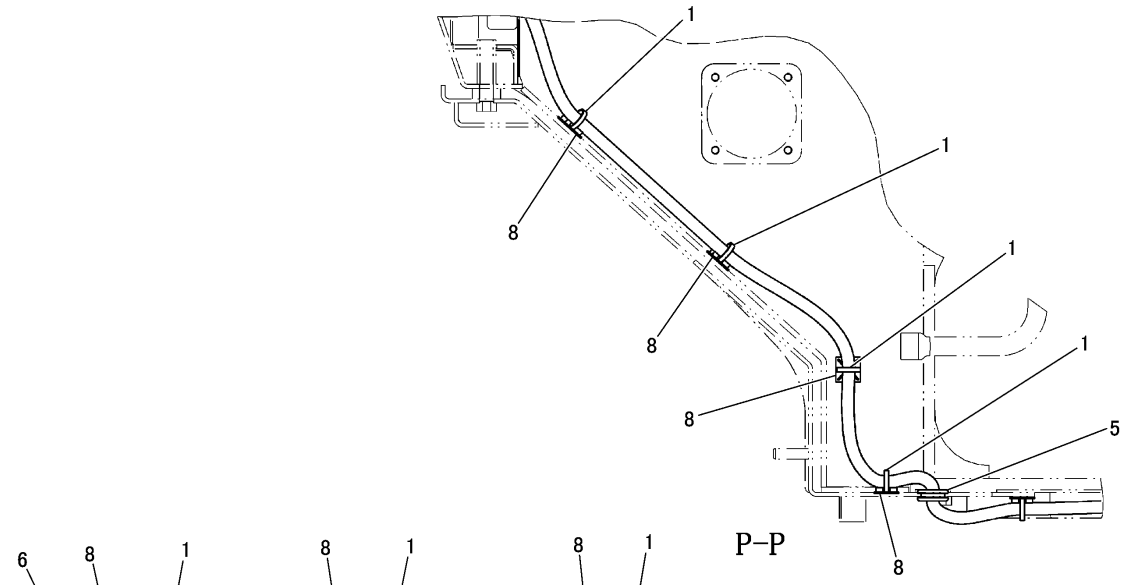

P–P

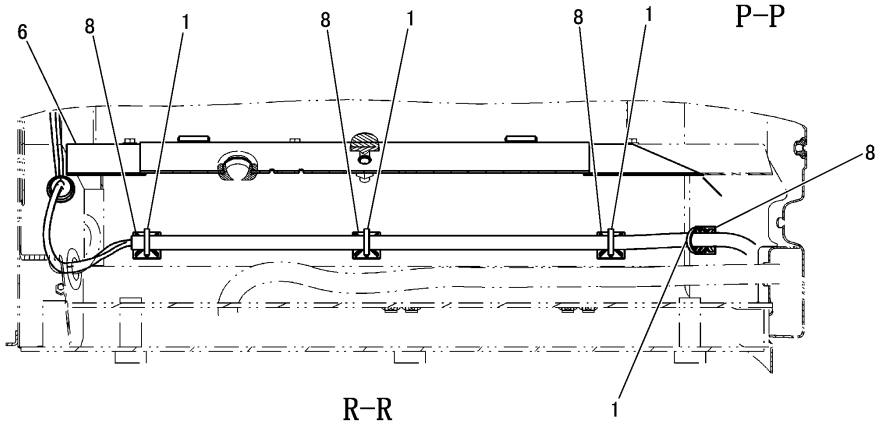

R–R

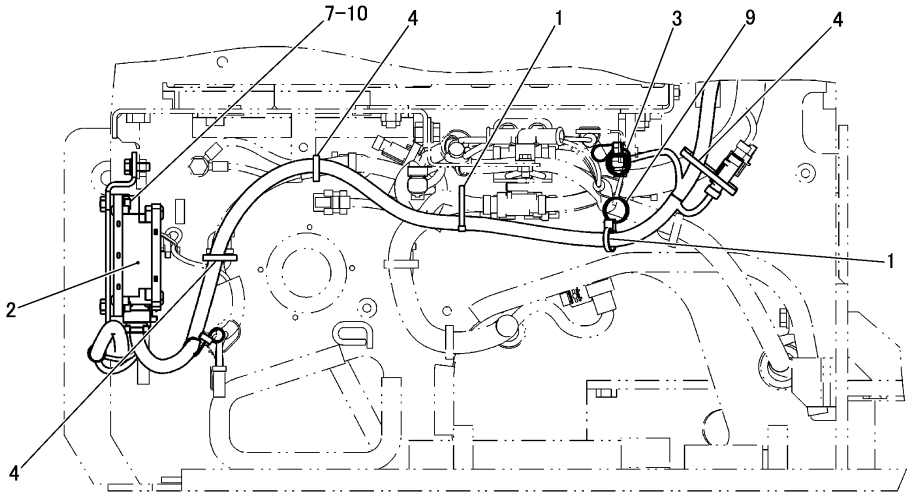

L–L

J152163 HE01

WIRING GROUP (327-7636 N/S) -PL-JPN-CAB/CRANE-AEC-PART 3 OF 3
AN ATTACHMENT

ELECTRICAL AND STARTING SYSTEM

NOTE	No.	PART NO.	QTY	PART NAME	NOTE	No.	PART NO.	QTY	PART NAME
	1	3S−2093	10	STRAP					
Y	2	308−6182	1	ELECTRONICS GROUP					
	3	7I−2673	1	STRAP					
	4	7K−1181	3	STRAP					
	5	093−2069	1	GROMMET					
	6	331−9355	1	COVER AS					
	7	3T−0849	4	BOLT(M6×1)					
	8	235−8966	8	BASE					
	9	266−7379	1	STRAP					
	10	9X−8256	4	WASHER					

Y-SEPARATE ILLUSTRATION

J152163 HE01

WIRING GROUP (327-7636 N/S) -PL-JPN-CAB/CRANE-AEC-PART 3 OF 3

REFERENCE:308-6182-Page 229

AN ATTACHMENT

ELECTRICAL AND STARTING SYSTEM

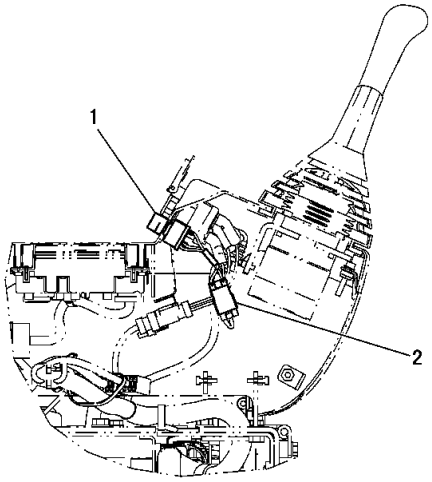

NOTE	No.	PART NO.	QTY	PART NAME
	1	253-5428	1	SWITCH AS
		7Y-5458	1	NUT(M12×1)
		7Y-5464	1	WASHER
	2	167-3543	3	TERMINAL
		167-3542	1	CONNECTOR

J149327 HE03

WIRING GROUP (306-1030 N/S)
PART OF 295-9343-Page 307
AN ATTACHMENT

ELECTRICAL AND STARTING SYSTEM

CONSISTS OF :

			PAGE
1	309-1465	CONSOLE GROUP	518
1	309-3616	WIRING GROUP	178
1	310-4266	FILM GROUP	561

J146752 HE01

CONTROL ARRANGEMENT (307-9238 N/S) -MSS
AN ATTACHMENT

CONSISTS OF :

			PAGE
1	309-3616	WIRING GROUP	178
1	310-2290	CONSOLE GROUP	517
1	310-4266	FILM GROUP	561

J146778 HE00

CONTROL ARRANGEMENT (310-4026 N/S) -MSS
AUTOMATIC ENGINE SPEED CONTROL
AN ATTACHMENT

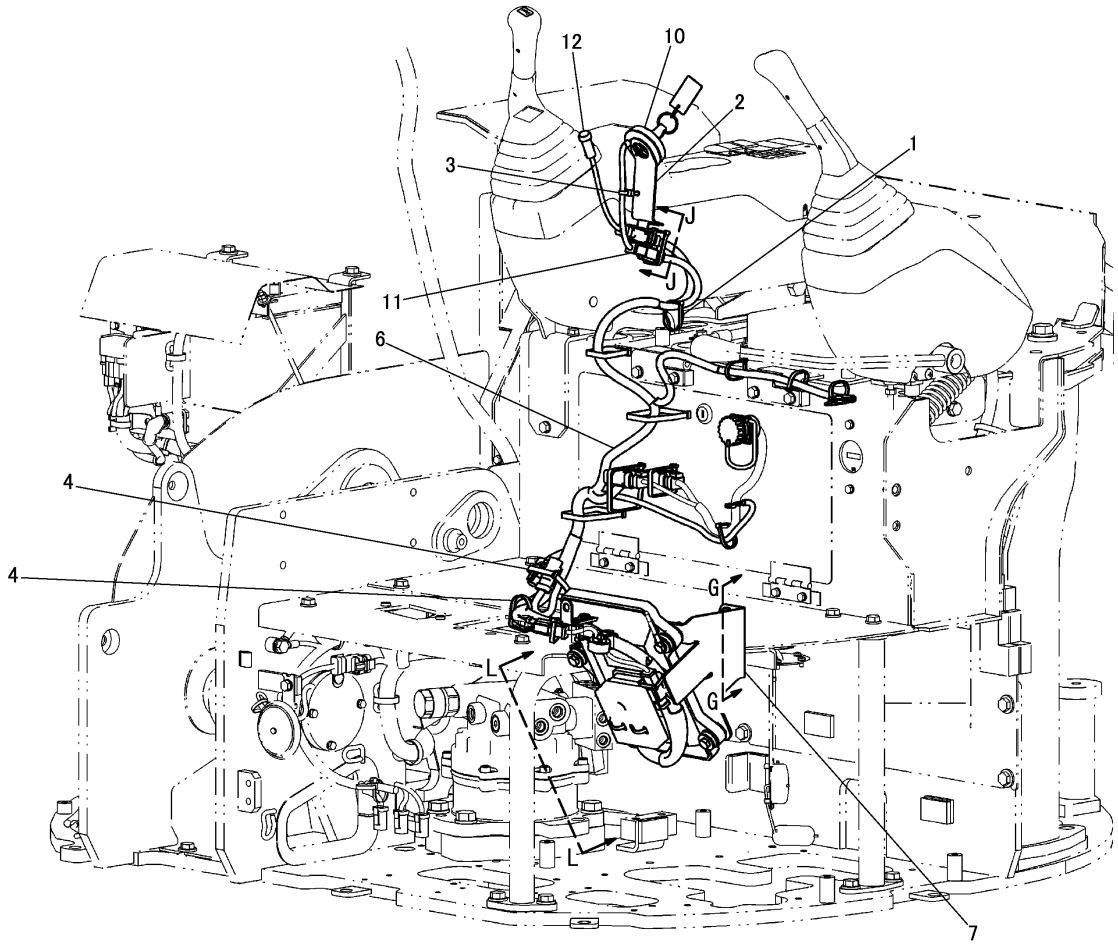

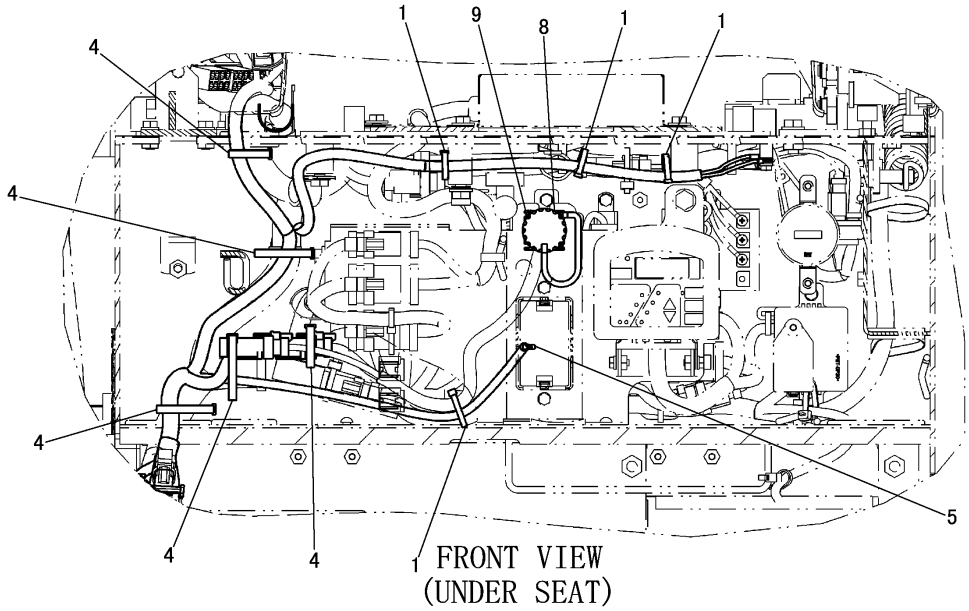

FRONT VIEW
(UNDER SEAT)

J146756 HE03

WIRING GROUP (309-3616 N/S) -MSS-PART 1 OF 2
PART OF 307-9238-Page 177, 310-4026-Page 177
AN ATTACHMENT

ELECTRICAL AND STARTING SYSTEM

NOTE	No.	PART NO.	QTY	PART NAME
	1	3S-2093	5	STRAP
	2	310-2295	1	PLATE AS
		183-1051	1	CLIP
	3	7I-2673	1	STRAP
	4	7K-1181	7	STRAP
	5	113-8490	1	FUSE(10A)
Y	6	309-3618	1	HARNESS AS
	7	309-3619	1	BRACKET AS
		7T-1099	1	LINK
		8T-3612	3	NUT(M8×1.25)(WELD)
Y	8	317-2471	1	HARNESS AS
	9	096-9278	3	SCREW
	10	206-5208	1	COIL AS
		205-8257	1	COIL AS
		186-3735	2	PIN
		198-5389	1	FILM(IGNITION SWITCH)
		200-5125	1	FILM(IGNITION SWITCH)
	11	102-8802	1	RECEPTACLE KIT(2P)
	12	165-5655	1	LAMP

Y-SEPARATE ILLUSTRATION

J146756 HE03

WIRING GROUP (309-3616 N/S) -MSS-PART 1 OF 2

PART OF 307-9238-Page 177, 310-4026-Page 177
REFERENCE:309-3618-Page 216 317-2471-Page 217
AN ATTACHMENT

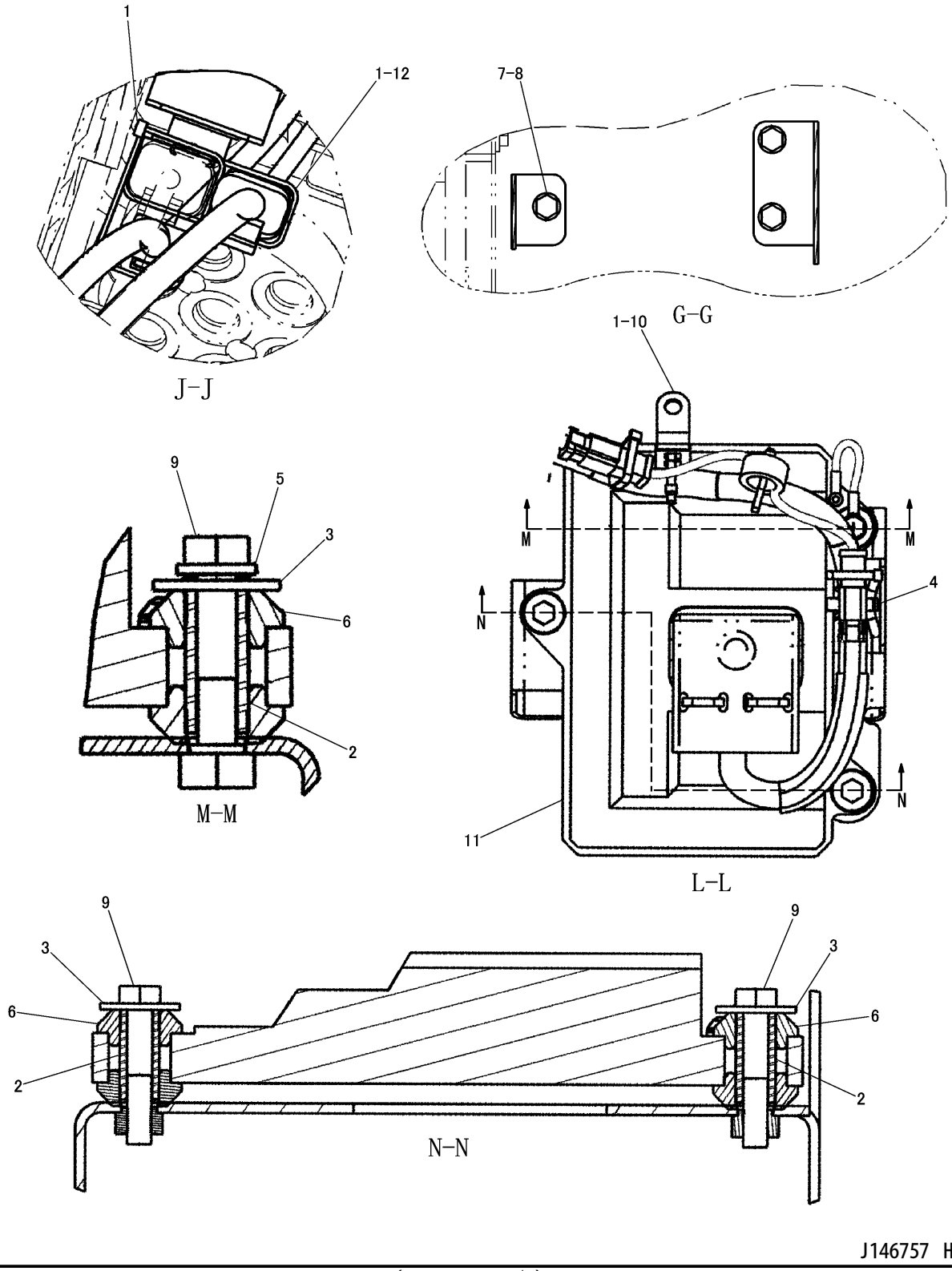

J146757 HE03

WIRING GROUP (309-3616 N/S) -MSS-PART 2 OF 2
PART OF 307-9238-Page 177, 310-4026-Page 177
AN ATTACHMENT

ELECTRICAL AND STARTING SYSTEM

NOTE	No.	PART NO.	QTY	PART NAME	NOTE	No.	PART NO.	QTY	PART NAME
	1	3S−2093	3	STRAP					
	2	6I−1418	3	SPACER					
	3	9N−0869	3	WASHER					
	4	7K−1181	1	STRAP					
	5	8T−4224	1	WASHER					
	6	155−0576	6	MOUNT					
	7	8T−4137	3	BOLT(M10×1.5)					
	8	8T−4121	3	WASHER					
	9	7X−0818	3	BOLT(M8×1.25)					
	10	132−5789	1	CLIP					
Y	11	207−5262	1	CONTROL KIT					
	12	243−4506	1	RECEPTACLE AS(3P)					

Y-SEPARATE ILLUSTRATION

J146757 HE03

WIRING GROUP (309-3616 N/S) -MSS-PART 2 OF 2
PART OF 307-9238-Page 177, 310-4026-Page 177
REFERENCE:207-5262-Page 230
AN ATTACHMENT

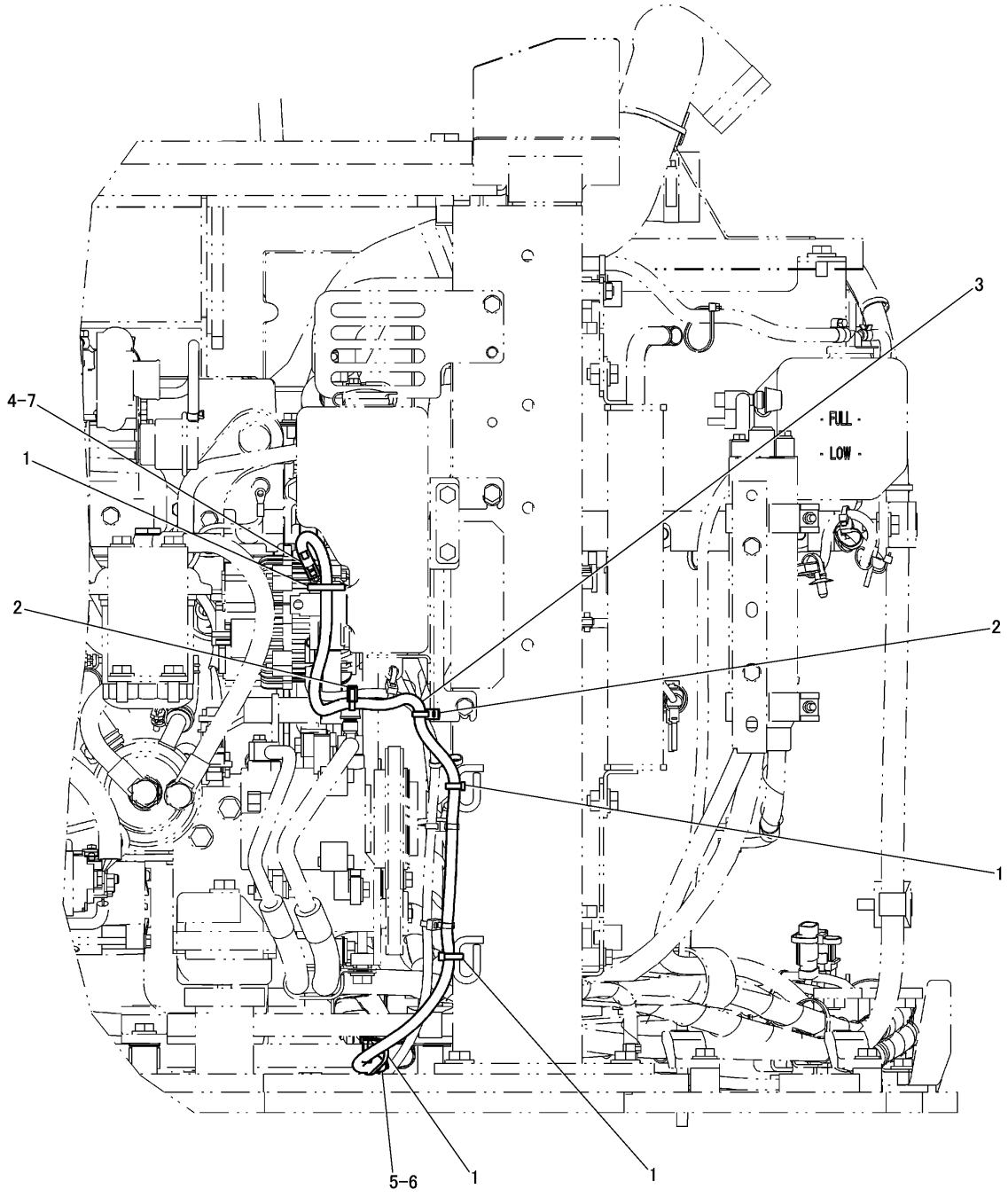

REAR VIEW

J146723 HE01

WASHER BOTTLE WIRING GROUP (310-7492 N/S)
PART OF 308-4117-Page 465
AN ATTACHMENT

ELECTRICAL AND STARTING SYSTEM

NOTE	No.	PART NO.	QTY	PART NAME	NOTE	No.	PART NO.	QTY	PART NAME
	1	3S-2093	4	STRAP					
	2	7I-2673	2	STRAP					
	3	318-2732	1	HARNESS AS					
	4	7Y-3952	1	CONNECTOR					
	5	243-4505	1	RECEPTACLE AS(2P)					
	6	8T-8729	2	PIN					
	7	7Y-3951	2	TERMINAL					

J146723 HE01

WASHER BOTTLE WIRING GROUP (310-7492 N/S)
PART OF 308-4117-Page 465
AN ATTACHMENT

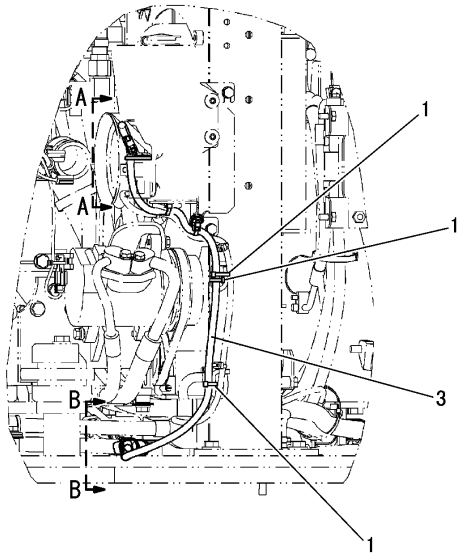

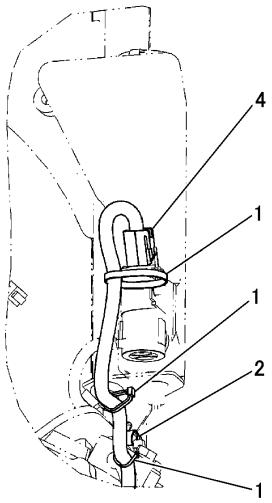

A–A

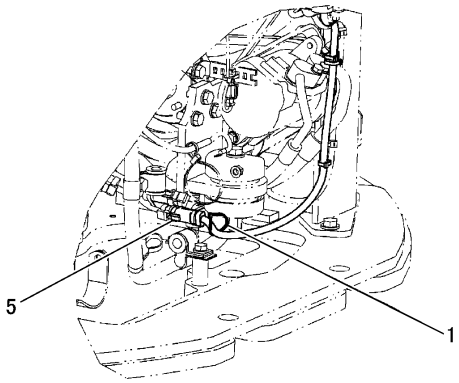

B–B

NOTE	No.	PART NO.	QTY	PART NAME	NOTE	No.	PART NO.	QTY	PART NAME
	1	3S−2093	7	STRAP					
	2	266−7379	1	STRAP					
	3	325−9915	1	HARNESS AS					
	4	7Y−3952	1	CONNECTOR					
		7Y−3951	2	TERMINAL					
	5	243−4505	1	RECEPTACLE AS(2P)					
		186−3735	2	PIN					

J152808 HE01

WASHER BOTTLE WIRING GROUP (325-9914 N/S)
PART OF 308-4118-Page 466
APPLIES TO CAB AIR CONDITIONER SPECIFICATION MACHINE
AN ATTACHMENT

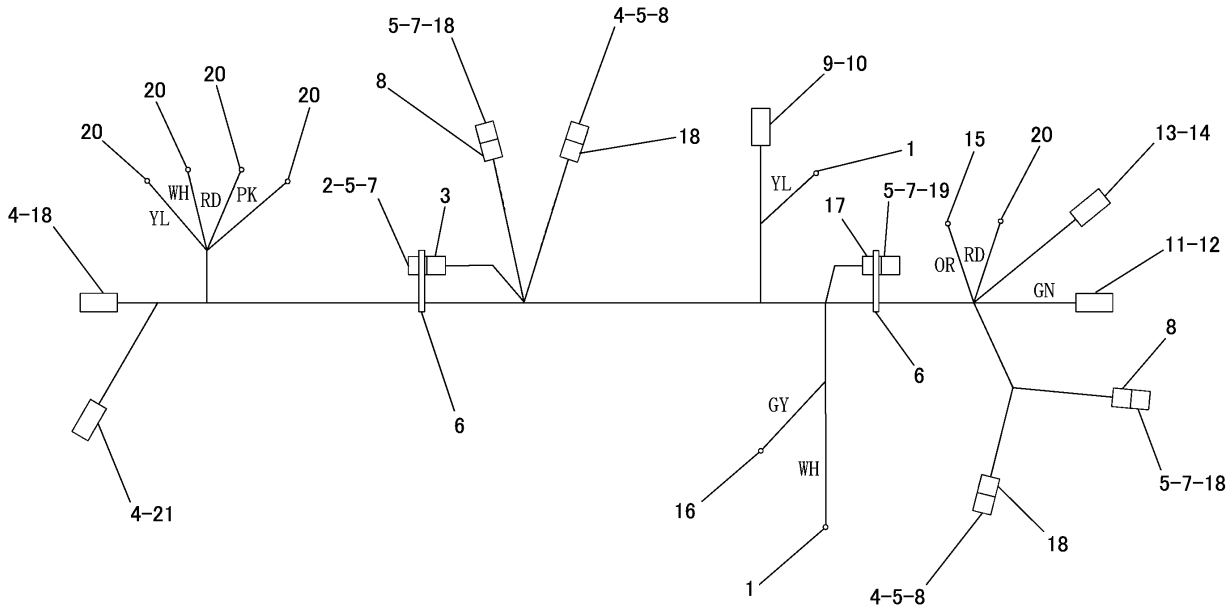

NOTE	No.	PART NO.	QTY	PART NAME	NOTE	No.	PART NO.	QTY	PART NAME
	1	2L−8066	2	TERMINAL		21	243−4510	1	RECEPTACLE AS(12P)
	2	243−4508	1	RECEPTACLE AS(6P)					
	3	230−5010	1	PLUG AS(6P)					
	4	8T−8729	18	PIN					
	5	8T−8737	17	PLUG					
	6	3S−2093	2	STRAP					
	7	186−3736	11	SOCKET					
	8	230−4011	4	PLUG AS(2P)					
	9	205−7461	1	TERMINAL					
	10	205−7460	1	CONNECTOR					
	11	7Y−3996	1	TERMINAL					
	12	7Y−3995	1	CONNECTOR					
	13	7Y−3951	2	TERMINAL					
	14	7Y−3952	1	CONNECTOR					
	15	2L−8076	1	TERMINAL					
	16	2L−8075	1	TERMINAL					
	17	155−2270	1	PLUG KIT(2P)					
	18	243−4505	5	RECEPTACLE AS(2P)					
	19	102−8802	1	RECEPTACLE KIT(2P)					
	20	2L−8067	5	TERMINAL					

J147437 HE02

306-2232 HARNESS ASSEMBLY -ENGINE
PART OF 296-1947-Page 61

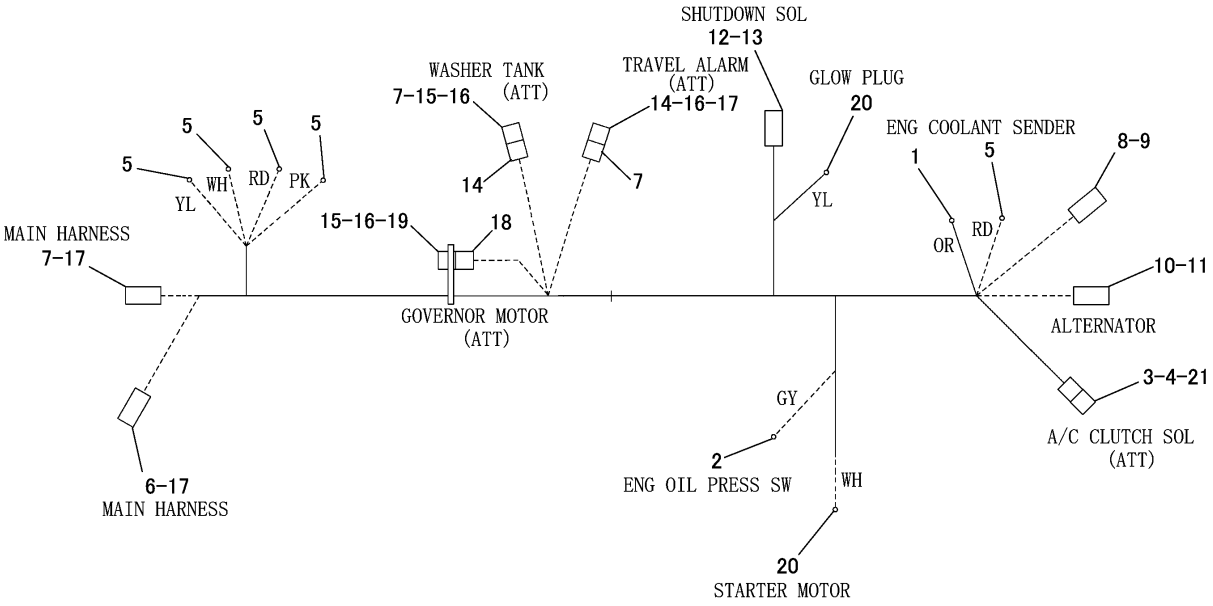

NOTE	No.	PART NO.	QTY	PART NAME	NOTE	No.	PART NO.	QTY	PART NAME
	1	2L-8076	1	TERMINAL		21	271-7713	1	PLUG
	2	2L-8075	1	TERMINAL					
	3	325-9921	1	TARMINAL					
	4	326-9698	1	CONNECTOR					
	5	2L-8067	5	TERMINAL					
	6	243-4510	1	RECEPTACLE AS(12P)					
	7	243-4505	3	RECEPTACLE AS(2P)					
	8	7Y-3952	1	CONNECTOR					
	9	7Y-3951	2	TERMINAL					
	10	7Y-3995	1	CONNECTOR					
	11	7Y-3996	1	TERMINAL					
	12	205-7460	1	CONNECTOR					
	13	205-7461	1	TERMINAL					
	14	230-4011	2	PLUG AS(2P)					
	15	186-3736	7	SOCKET					
	16	8T-8737	11	PLUG					
	17	186-3735	16	PIN					
	18	230-5010	1	PLUG AS(6P)					
	19	243-4508	1	RECEPTACLE AS(6P)					
	20	2L-8066	2	TERMINAL					

J151158 HE00

329-3450 HARNESS ASSEMBLY -ENGINE
PART OF 326-1017-Page 71
APPLIES TO CAB AIR CONDITIONER SPECIFICATION MACHINE
AN ATTACHMENT

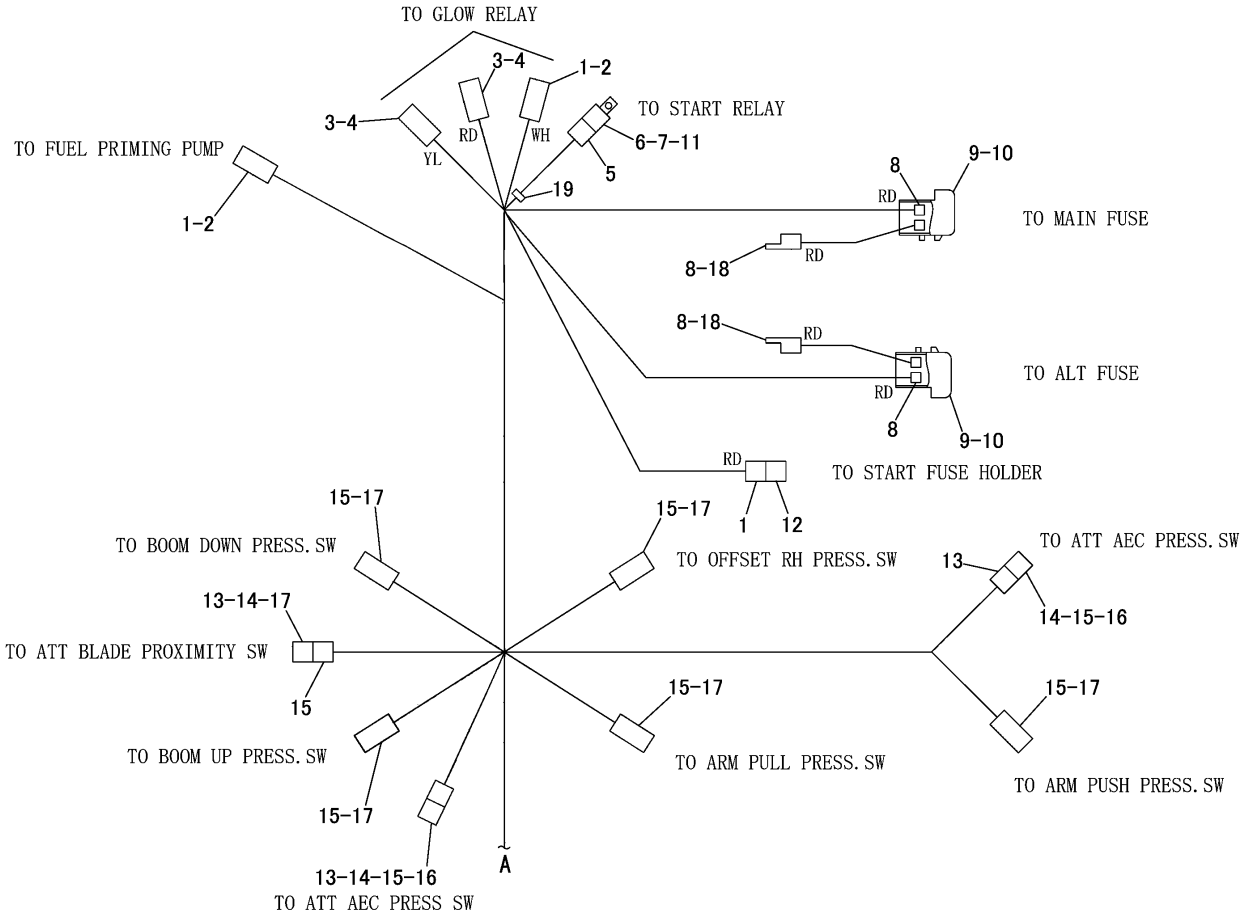

NOTE	No.	PART NO.	QTY	PART NAME	NOTE	No.	PART NO.	QTY	PART NAME
	1	7Y-3952	3	CONNECTOR		18	2L-8067	2	TERMINAL
	2	7Y-3951	4	TERMINAL		19	3S-2093	1	STRAP
	3	192-0615	2	CONNECTOR					
	4	192-0614	2	TERMINAL					
	5	267-9973	1	CONNECTOR					
	6	128-7714	2	TERMINAL					
	7	267-9977	2	TERMINAL					
	8	233-8700	8	TERMINAL					
	9	233-8366	2	HOLDER AS					
	10	233-0098	4	FUSE(50A)					
	11	266-6935	1	RELAY AS					
	12	7Y-3993	2	TERMINAL					
		185-1290	1	FUSE HOLDER					
		8T-9636	1	FUSE(30A)					
	13	243-4505	3	RECEPTACLE AS(2P)					
	14	8T-8737	6	PLUG					
	15	230-4011	8	PLUG AS(2P)					
		264-7029	1	SEAL					
	16	186-3735	4	SOCKET					
	17	186-3736	12	SOCKET					

J147438 HE01

317-2466 HARNESS ASSEMBLY -CHASSIS-PART 1 OF 3
PART OF 296-1947-Page 61

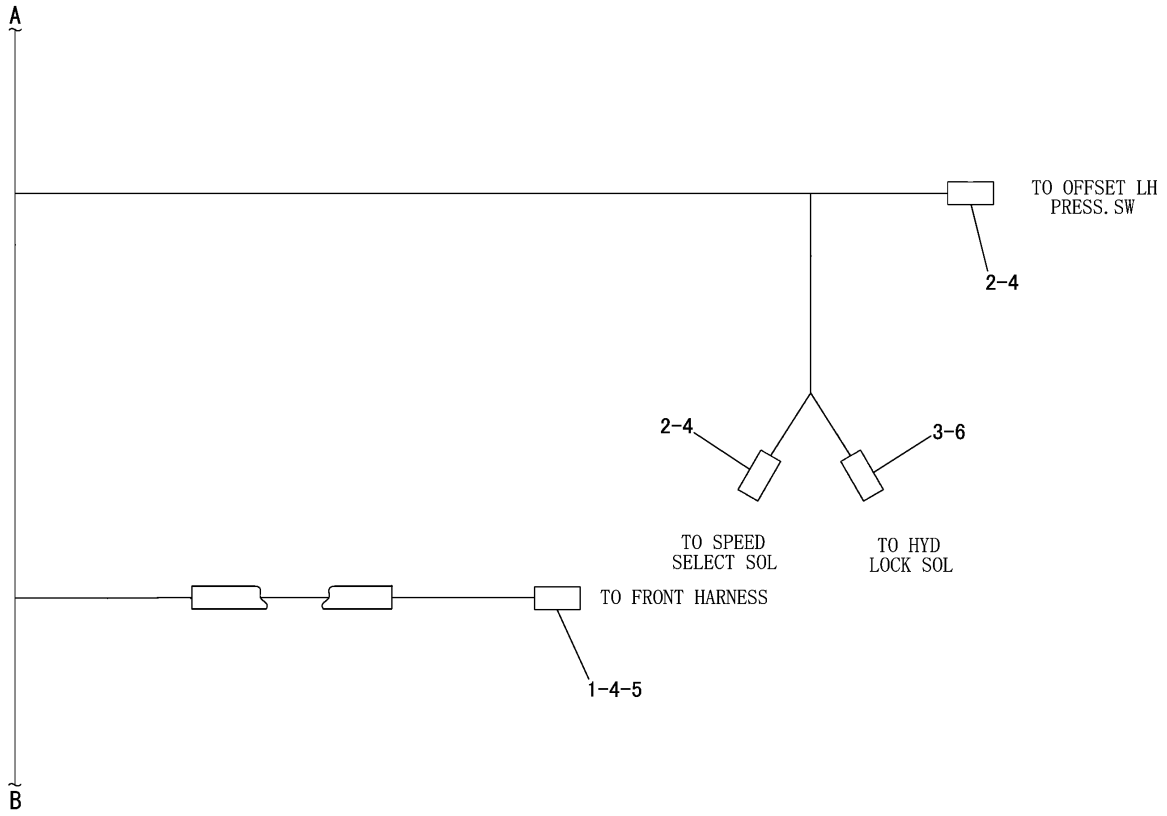

NOTE	No.	PART NO.	QTY	PART NAME	NOTE	No.	PART NO.	QTY	PART NAME
	1	230-5010	1	PLUG AS(6P)					
		264-7032	1	SEAL					
	2	230-4011	2	PLUG AS(2P)					
		264-7029	1	SEAL					
	3	186-3735	2	SOCKET					
	4	186-3736	8	SOCKET					
	5	9W-0844	2	SOCKET					
	6	243-4505	1	RECEPTACLE AS(2P)					

J147439 HE01

317-2466 HARNESS ASSEMBLY -CHASSIS-PART 2 OF 3
PART OF 296-1947-Page 61

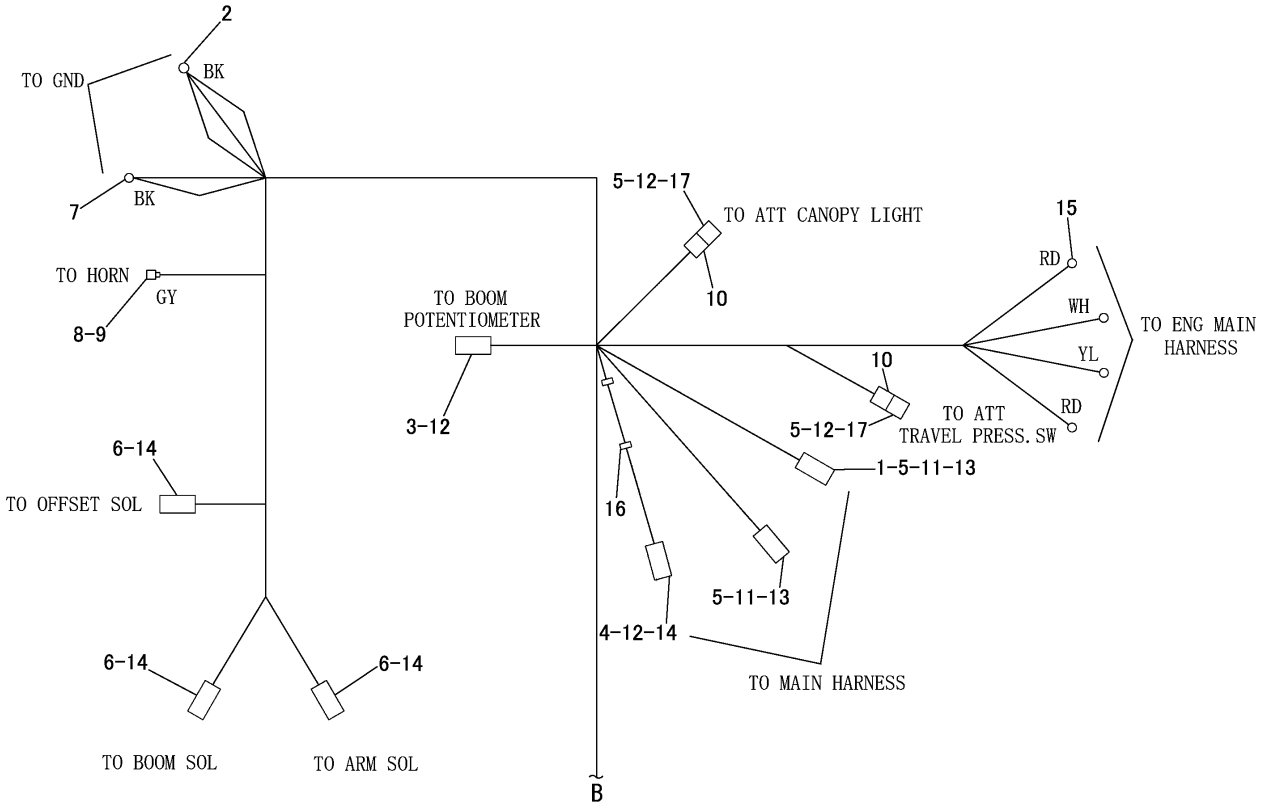

NOTE	No.	PART NO.	QTY	PART NAME	NOTE	No.	PART NO.	QTY	PART NAME
	1	2 4 3 − 4 5 0 9	1	RECEPTACLE AS(8P)					
	2	3 T − 4 6 9 6	1	TERMINAL					
	3	2 3 0 − 4 0 1 3	1	PLUG AS(3P)					
		2 6 4 − 7 0 3 0	1	SEAL					
	4	2 3 0 − 4 0 0 9	1	PLUG AS(12P)					
		2 6 4 − 7 0 3 4	1	SEAL					
	5	8 T − 8 7 3 7	7	PLUG					
	6	1 5 5 − 2 2 7 0	3	PLUG KIT(2P)					
	7	2 L − 8 0 7 9	1	TERMINAL					
	8	1 5 3 − 2 6 0 2	1	CONNECTOR					
	9	1 5 3 − 2 6 3 1	1	TERMINAL					
	10	2 3 0 − 4 0 1 1	2	PLUG AS(2P)					
		2 6 4 − 7 0 2 9	1	SEAL					
	11	1 8 6 − 3 7 3 5	10	SOCKET					
	12	1 8 6 − 3 7 3 6	18	SOCKET					
	13	9 W − 0 8 5 2	7	PIN					
	14	9 W − 0 8 4 4	7	SOCKET					
	15	2 L − 8 0 6 7	4	TERMINAL					
	16	3 S − 2 0 9 3	2	STRAP					
	17	2 4 3 − 4 5 0 5	2	RECEPTACLE AS(2P)					

J147440 HE01

317-2466 HARNESS ASSEMBLY -CHASSIS-PART 3 OF 3
PART OF 296-1947-Page 61

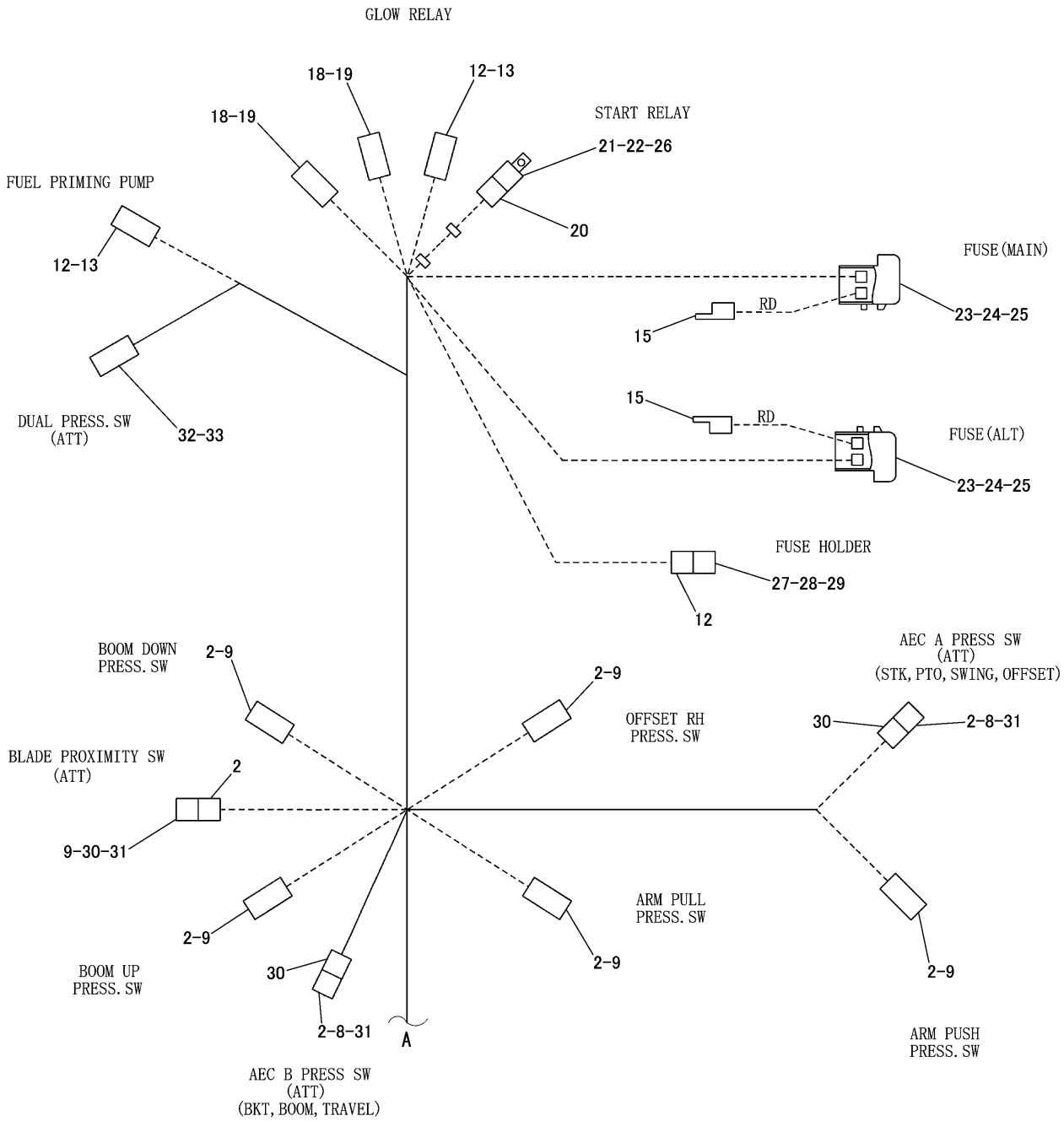

J151159 HE00

329-3441 HARNESS ASSEMBLY -CHASSIS
PART OF 326-1017-Page 71
APPLIES TO CAB AIR CONDITIONER SPECIFICATION MACHINE
AN ATTACHMENT

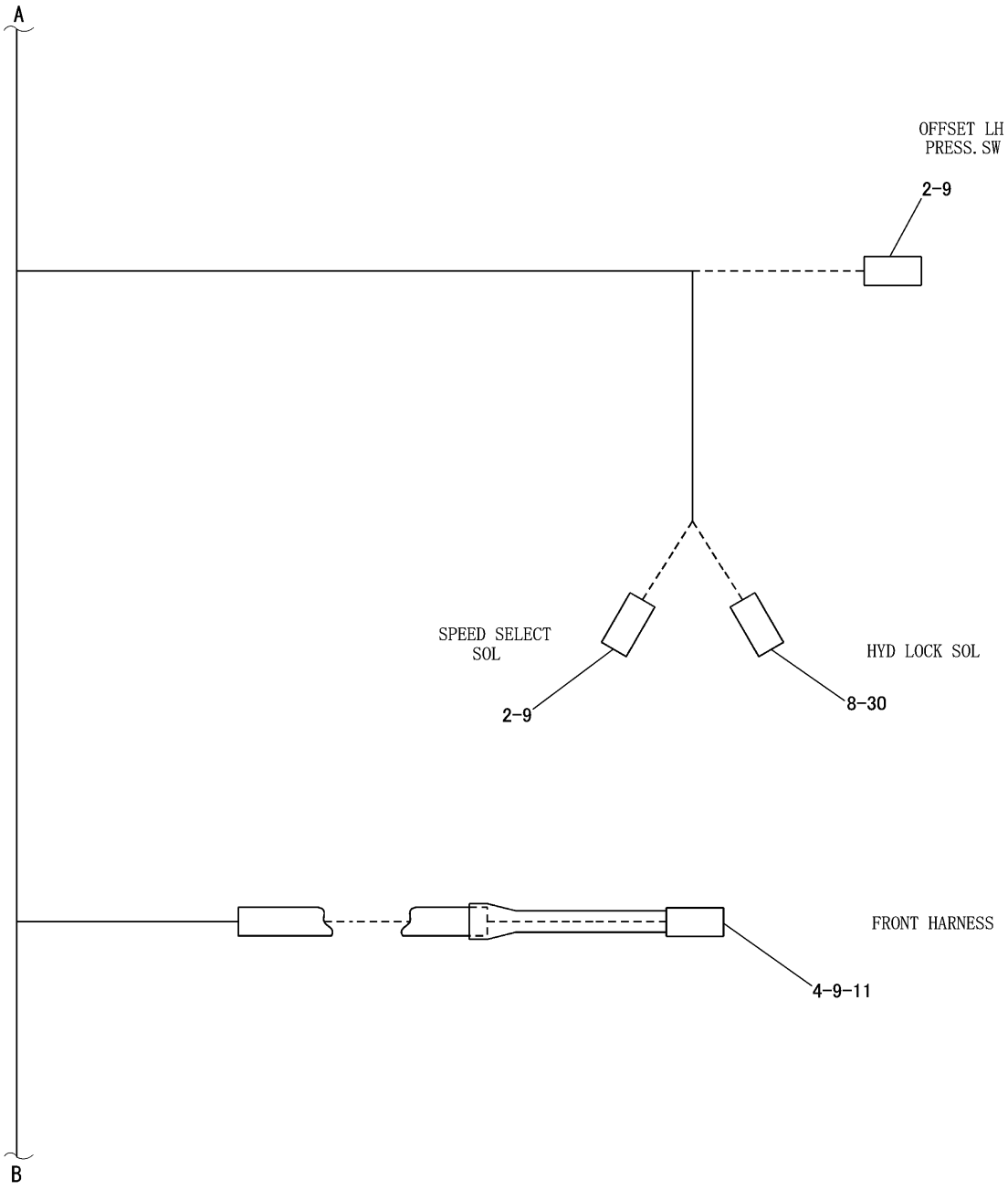

J151160 HE00

329-3441 HARNESS ASSEMBLY -CHASSIS
PART OF 326-1017-Page 71
APPLIES TO CAB AIR CONDITIONER SPECIFICATION MACHINE
AN ATTACHMENT

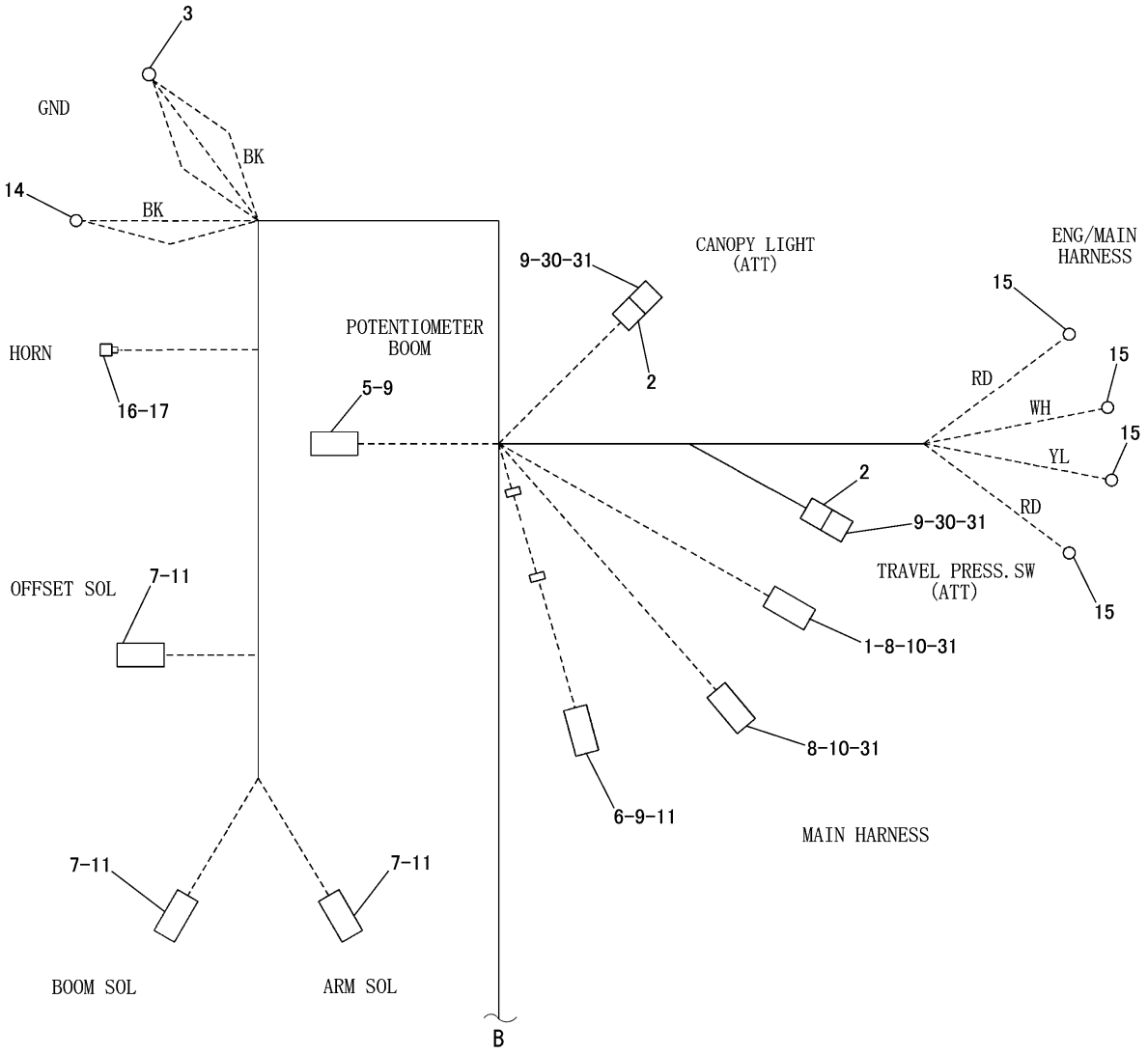

J151161 HE00

329-3441 HARNESS ASSEMBLY -CHASSIS
PART OF 326-1017-Page 71
APPLIES TO CAB AIR CONDITIONER SPECIFICATION MACHINE
AN ATTACHMENT

ELECTRICAL AND STARTING SYSTEM

NOTE	No.	PART NO.	QTY	PART NAME	NOTE	No.	PART NO.	QTY	PART NAME
	1	243-4509	1	RECEPTACLE AS(8P)					
	2	230-4011	12	PLUG AS(2P)					
	3	3T-4693	1	TERMINAL					
	4	230-5010	1	PLUG AS(6P)					
	5	230-4013	1	PLUG AS(3P)					
	6	230-4009	1	PLUG AS(12P)					
	7	155-2270	3	PLUG KIT(2P)					
	8	186-3735	17	PIN					
	9	186-3736	38	SOCKET					
	10	9W-0852	7	PIN					
	11	9W-0844	9	SOCKET					
	12	7Y-3952	3	CONNECTOR					
	13	7Y-3951	4	TERMINAL					
	14	3T-4696	1	TERMINAL					
	15	2L-8067	6	TERMINAL					
	16	153-2602	1	CONNECTOR					
	17	153-2631	1	TERMINAL					
	18	192-0615	2	CONNECTOR					
	19	192-0614	2	TERMINAL					
	20	267-9973	1	CONNECTOR					
	21	128-7714	2	TERMINAL					
	22	267-9977	2	TERMINAL					
	23	233-8700	8	TERMINAL					
	24	233-8366	2	HOLDER AS					
	25	233-0098	4	FUSE(50A)					
	26	266-6935	1	RELAY AS					
	27	7Y-3993	2	TERMINAL					
	28	185-1290	1	FUSE HOLDER					
	29	8T-9636	1	FUSE(30A)					
	30	243-4505	6	RECEPTACLE AS(2P)					
	31	8T-8737	12	PLUG					
	32	107-3136	2	PLUG					
	33	325-9882	1	CONNECTOR					

J151161 HE00

329-3441 HARNESS ASSEMBLY -CHASSIS

PART OF 326-1017-Page 71
APPLIES TO CAB AIR CONDITIONER SPECIFICATION MACHINE
AN ATTACHMENT

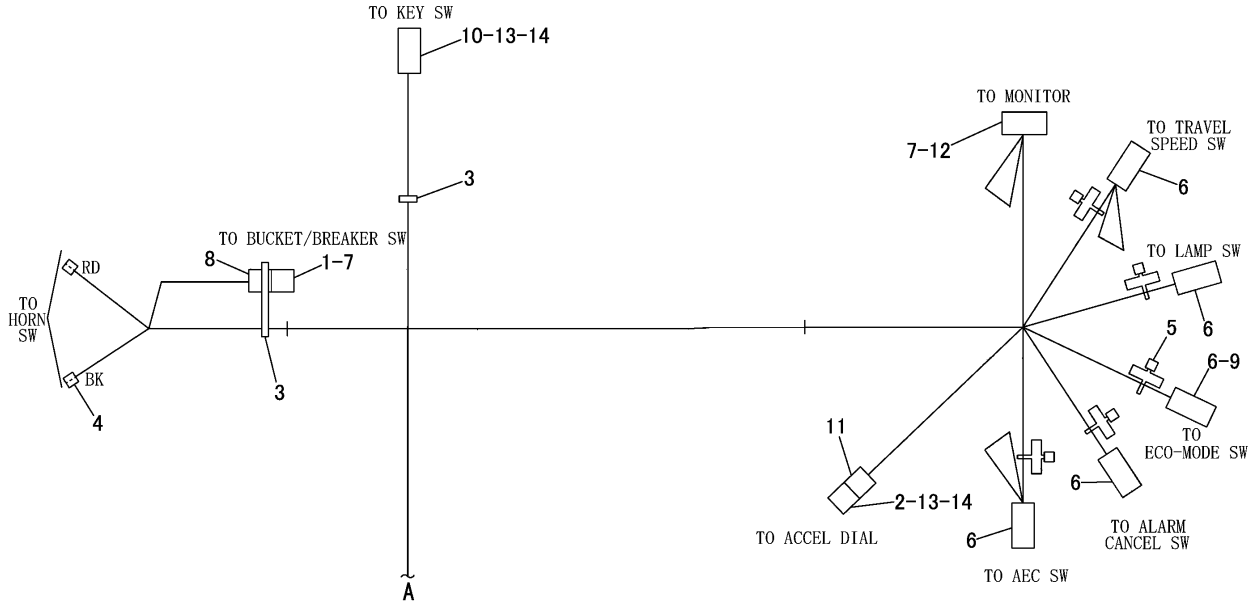

NOTE	No.	PART NO.	QTY	PART NAME	NOTE	No.	PART NO.	QTY	PART NAME
	1	253-6804	1	WIRE AS					
		167-3543	2	TERMINAL					
		167-3542	1	CONNECTOR					
	2	243-4506	1	RECEPTACLE AS(3P)					
	3	3S-2093	2	STRAP					
	4	7Y-3963	2	TERMINAL					
		7Y-3965	2	TUBE					
	5	9X-0344	5	STRAP					
	6	3E-9179	21	TERMINAL					
	7	102-7965	15	TERMINAL					
	8	163-6803	1	CONNECTOR					
	9	111-7898	5	CONNECTOR					
	10	230-5008	1	PLUG AS(4P)					
		264-7031		SEAL					
	11	230-4013	1	PLUG AS(3P)					
		264-7030		SEAL					
	12	111-4816	1	CONNECTOR					
	13	8T-8737	4	PLUG					
	14	186-3736	6	SOCKET					

J146580 HE01

317-2468 HARNESS ASSEMBLY -MAIN-CANOPY-PART 1 OF 4
PART OF 296-1949-Page 83

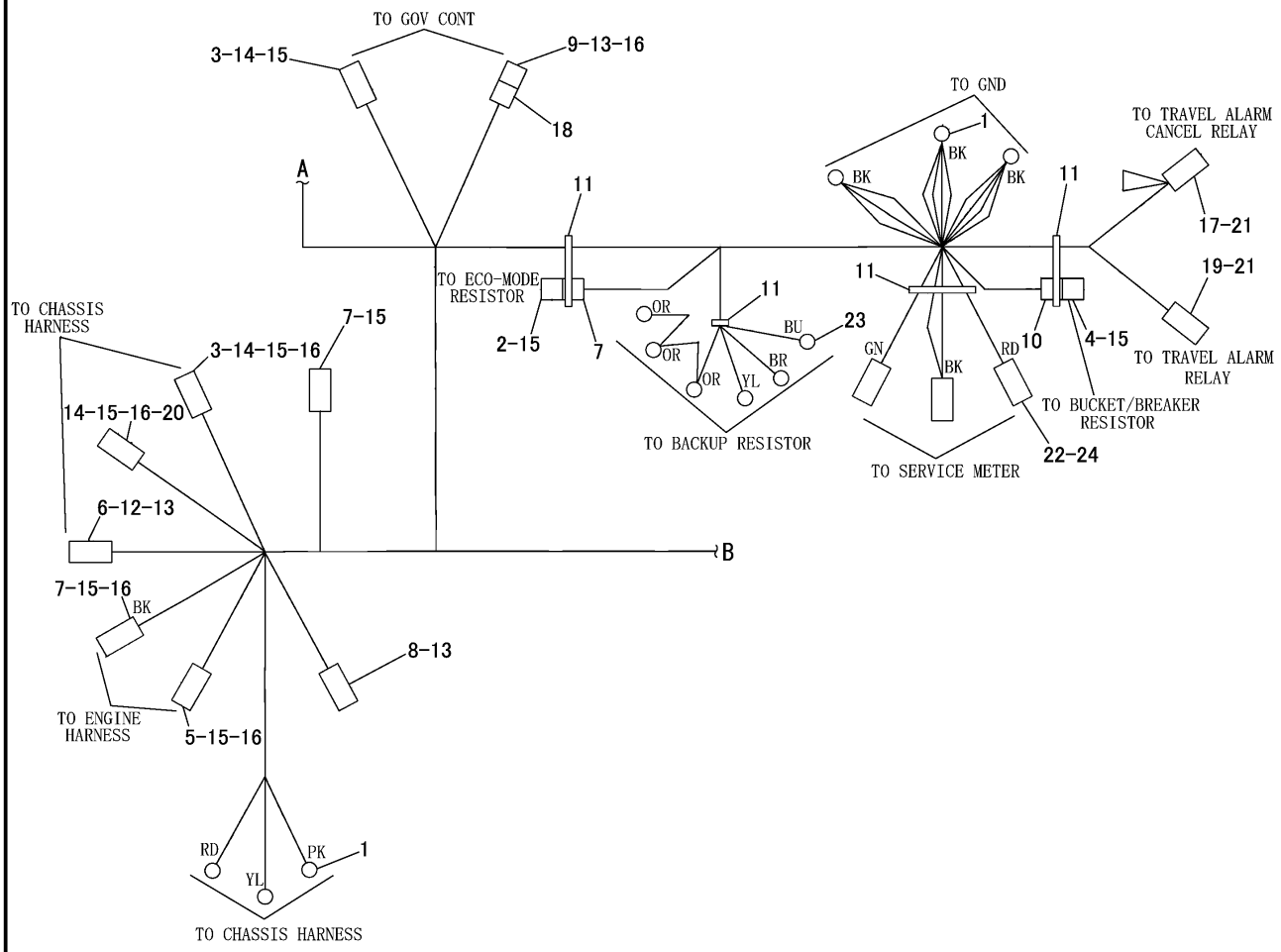

NOTE	No.	PART NO.	QTY	PART NAME	NOTE	No.	PART NO.	QTY	PART NAME
	1	2L-8067	6	TERMINAL		13	186-3735	18	PIN
	2	285-8923	1	WIRE AS		14	9W-0844	10	SOCKET
		186-3735	2	PIN		15	186-3736	33	SOCKET
		243-4505	1	RECEPTACLE AS(2P)		16	8T-8737	12	PLUG
	3	231-2295	2	PLUG AS(8P)		17	7Y-3958	1	CONNECTOR
		264-7033		SEAL		18	243-4508	1	RECEPTACLE AS(6P)
	4	253-5649	1	RESISTOR AS		19	7Y-3957	1	CONNECTOR
		102-8802	1	RECEPTACLE KIT(2P)		20	239-7356	1	PLUG AS(12P)
		186-3735	2	PIN			264-7034		SEAL
	5	230-4009	1	PLUG AS(12P)		21	7Y-3951	9	TERMINAL
		264-7034		SEAL		22	153-2602	3	CONNECTOR
	6	243-4510	1	RECEPTACLE AS(12P)		23	2L-8076	6	TERMINAL
	7	230-4011	3	PLUG AS(2P)		24	153-2631	3	TERMINAL
		264-7029		SEAL					
	8	243-4505	1	RECEPTACLE AS(2P)					
	9	230-5010	1	PLUG AS(6P)					
		264-7032		SEAL					
	10	155-2270	1	PLUG KIT(2P)					
	11	3S-2093	4	STRAP					
	12	9W-0852	1	PIN					

J146581 HE01

317-2468 HARNESS ASSEMBLY -MAIN-CANOPY-PART 2 OF 4
PART OF 296-1949-Page 83

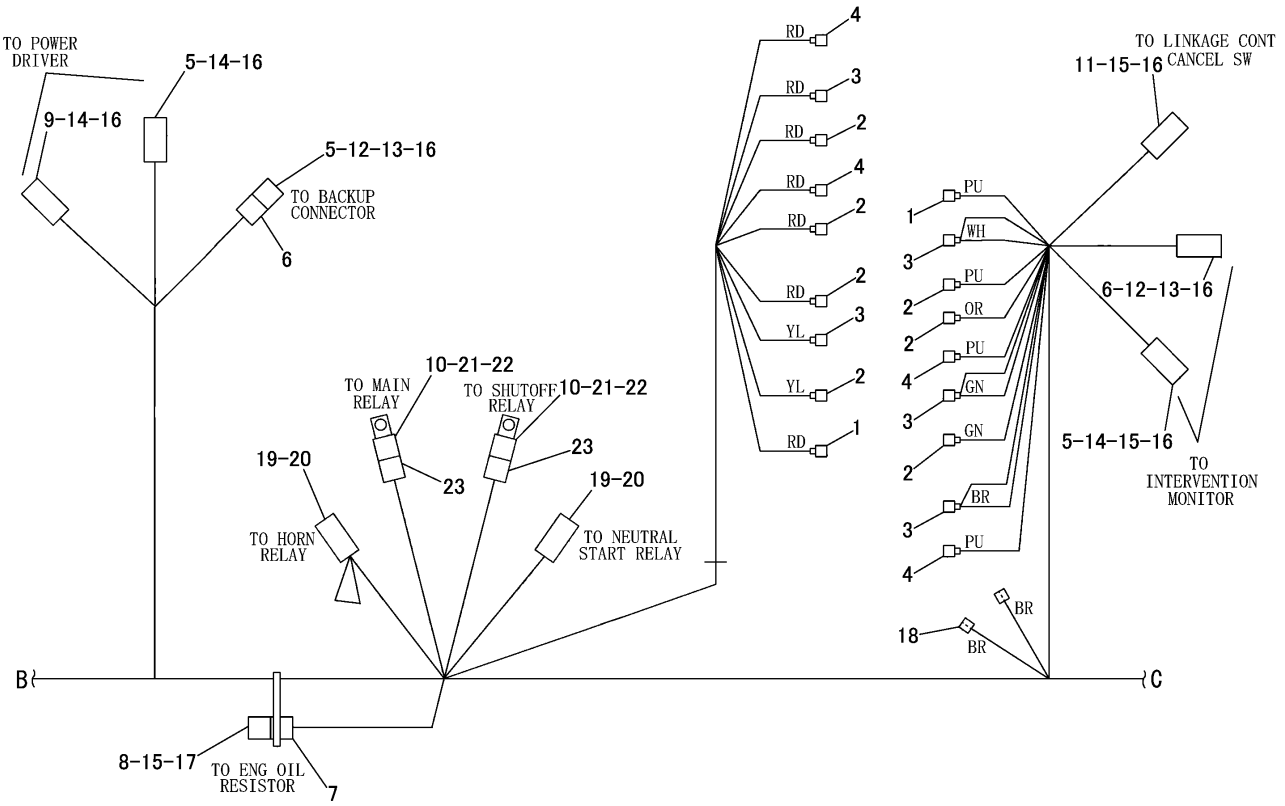

NOTE	No.	PART NO.	QTY	PART NAME	NOTE	No.	PART NO.	QTY	PART NAME
	1	233-8701	2	TERMINAL		15	186-3736	10	SOCKET
	2	233-8699	7	TERMINAL		16	8T-8737	29	PLUG
	3	249-6899	5	TERMINAL		17	3S-2093	1	STRAP
	4	233-8702	4	TERMINAL		18	7Y-3963	2	TERMINAL
	5	230-4009	3	PLUG AS(12P)			7Y-3965	2	TUBE
		264-7034		SEAL		19	7Y-3957	2	CONNECTOR
	6	243-4510	2	RECEPTACLE AS(12P)		20	7Y-3951	8	TERMINAL
	7	230-4011	1	PLUG AS(2P)		21	128-7714	4	TERMINAL
		264-7029		SEAL		22	267-9977	4	TERMINAL
	8	267-7076	1	RESISTOR AS		23	267-9973	2	CONNECTOR
		167-3543	2	TERMINAL					
		167-3542	1	CONNECTOR					
	9	230-5010	1	PLUG AS(6P)					
		264-7032		SEAL					
	10	266-6935	2	RELAY AS					
	11	230-4013	1	PLUG AS(3P)					
		264-7030		SEAL					
	12	9W-0852	5	PIN					
	13	186-3735	12	PIN					
	14	9W-0844	15	SOCKET					

J146582 HE01

317-2468 HARNESS ASSEMBLY -MAIN-CANOPY-PART 3 OF 4
PART OF 296-1949-Page 83

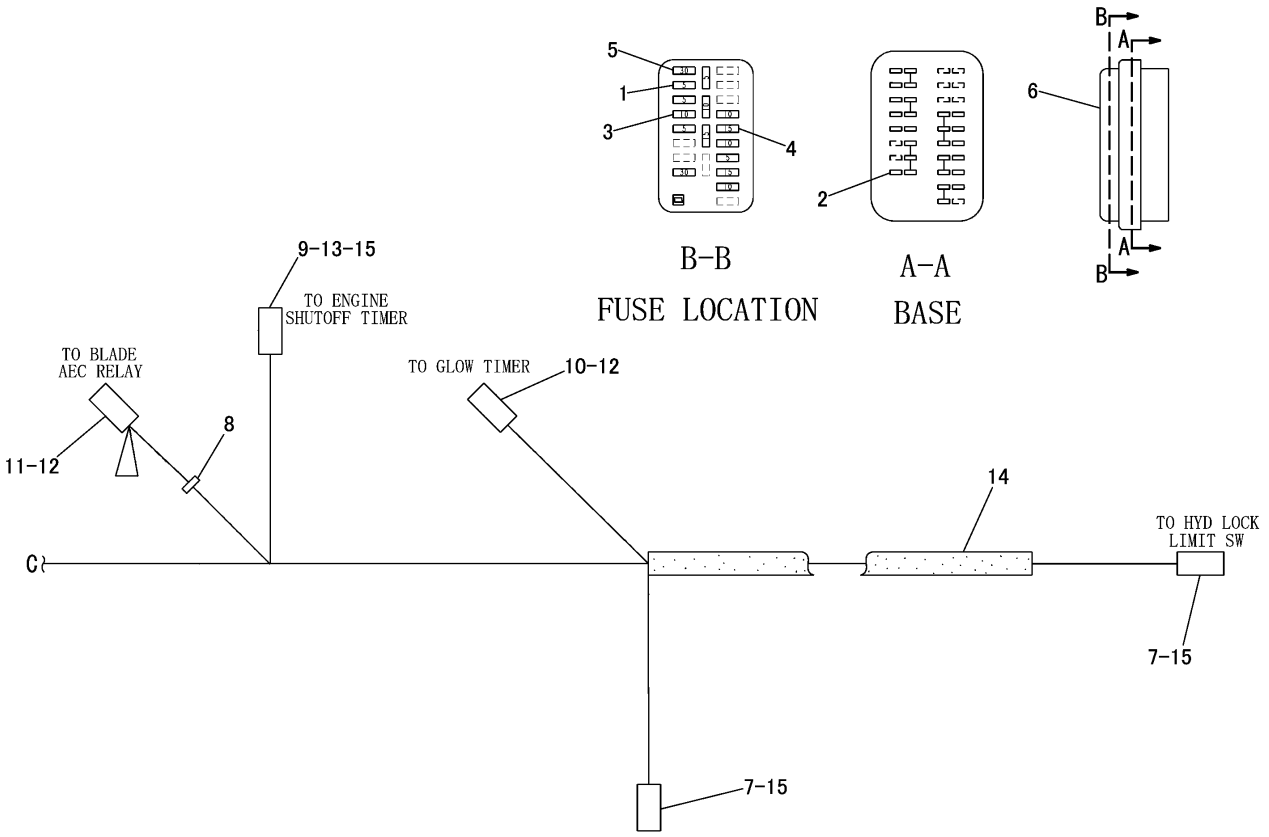

NOTE	No.	PART NO.	QTY	PART NAME	NOTE	No.	PART NO.	QTY	PART NAME
	1	141-2759	5	FUSE(5A)					
	2	233-8699	1	TERMINAL					
	3	113-8490	5	FUSE(10A)					
	4	113-8491	3	FUSE(15A)					
	5	124-3548	2	FUSE(30A)					
	6	231-7924	1	FUSE BOX AS					
		231-7925	1	COVER					
		231-7926	1	TOOL					
		231-9122	1	BASE					
	7	230-4011	2	PLUG AS(2P)					
		264-7029		SEAL					
	8	3S-2093	1	STRAP					
	9	230-5010	1	PLUG AS(6P)					
		264-7032		SEAL					
	10	7Y-3958	1	CONNECTOR					
	11	7Y-3957	1	CONNECTOR					
	12	7Y-3951	8	TERMINAL					
	13	8T-8737	1	PLUG					
E	14	103-2529		HOSE---50cm					
	15	186-3736	9	SOCKET					

E-ORDER BY THE cm

J146583 HE01

317-2468 HARNESS ASSEMBLY -MAIN-CANOPY-PART 4 OF 4
PART OF 296-1949-Page 83

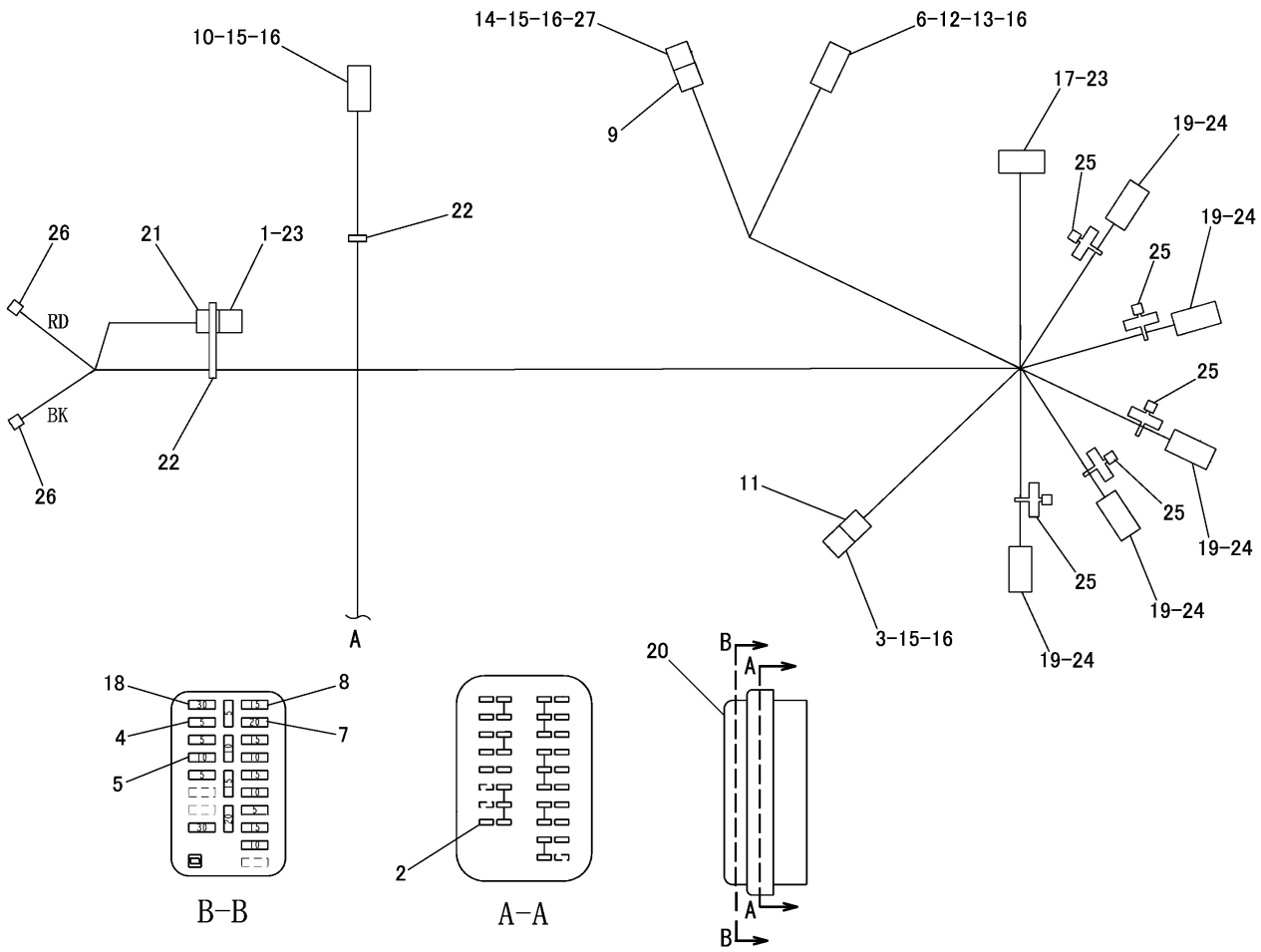

NOTE	No.	PART NO.	QTY	PART NAME	NOTE	No.	PART NO.	QTY	PART NAME
	1	253-6804	1	WIRE AS		19	111-7898	5	CONNECTOR
		167-3543	2	TERMINAL		20	231-7924	1	BOX AS
		167-3542	1	CONNECTOR		21	163-6803	1	CONNECTOR
	2	233-8699	1	TERMINAL		22	3S-2093	2	STRAP
	3	243-4506	1	RECEPTACLE AS(3P)		23	102-7965	15	TERMINAL
	4	141-2759	5	FUSE(5A)		24	3E-9179	22	TERMINAL
	5	113-8490	5	FUSE(10A)		25	9X-0344	5	STRAP
	6	243-4510	1	RECEPTACLE AS(12P)		26	7Y-3963	2	TERMINAL
	7	113-8492	2	FUSE(20A)			7Y-3965	2	TUBE
	8	113-8491	5	FUSE(15A)		27	243-4508	1	RECEPTACLE AS(6P)
	9	230-5010	1	PLUG AS(6P)					
	10	230-5008	1	PLUG AS(4P)					
	11	230-4013	1	PLUG AS(3P)					
	12	9W-0852	8	PIN					
	13	8T-8729	1	PIN					
	14	9W-0844	2	SOCKET					
	15	186-3736	9	SOCKET					
	16	8T-8737	14	PLUG					
	17	111-4816	1	CONNECTOR					
	18	124-3548	2	FUSE(30A)					

J147563 HE00

317-2981 HARNESS ASSEMBLY -MAIN-CAB-PART 1 OF 4
PART OF 317-2980-Page 89
AN ATTACHMENT

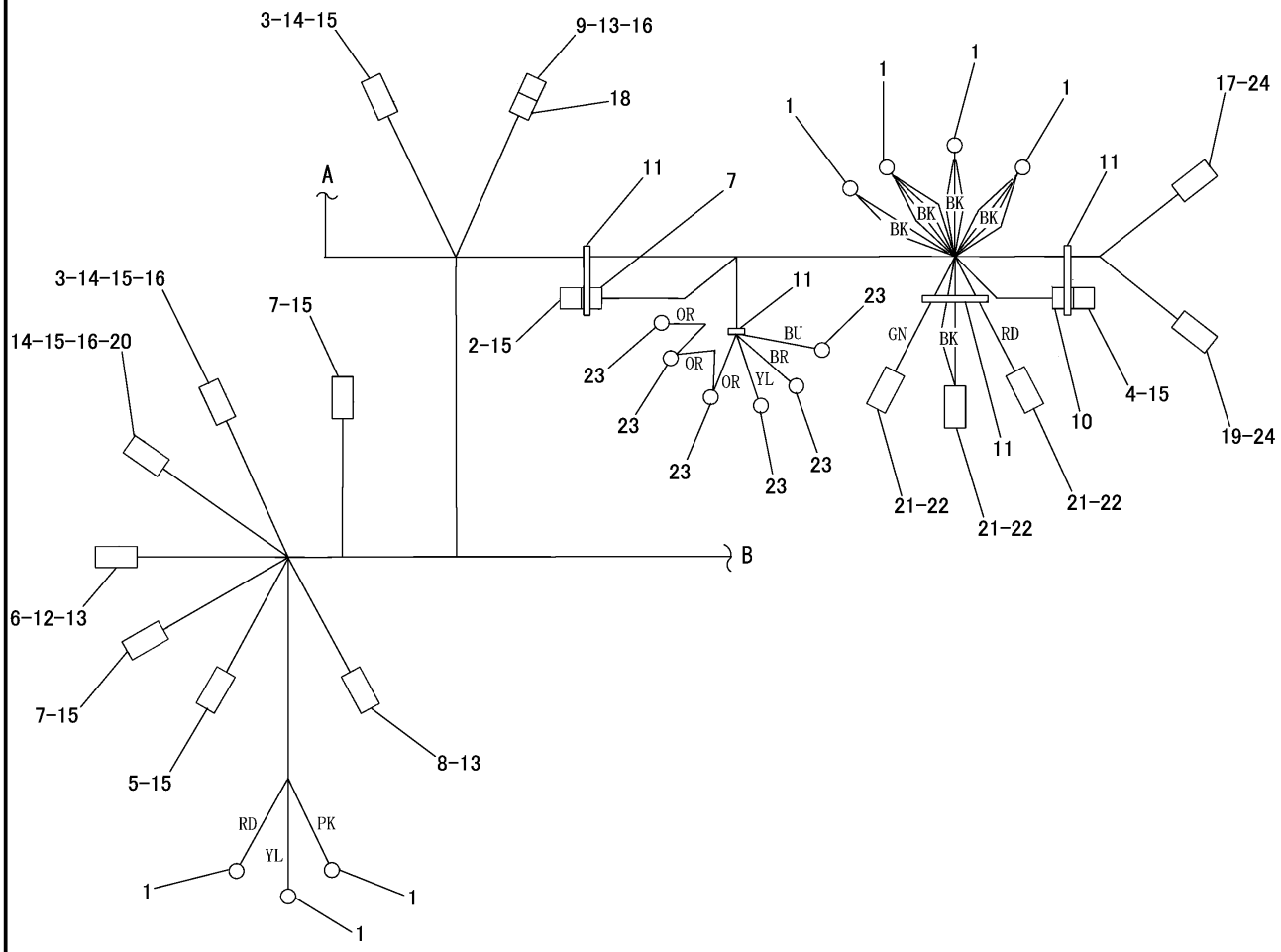

NOTE	No.	PART NO.	QTY	PART NAME	NOTE	No.	PART NO.	QTY	PART NAME
	1	2L-8067	7	TERMINAL		19	7Y-3957	1	CONNECTOR
	2	285-8923	1	WIRE AS		20	239-7356	1	PLUG AS(12P)
		8T-8729	2	PIN		21	153-2602	3	CONNECTOR
		243-4505	1	RECEPTACLE AS(2P)		22	153-2631	3	TERMINAL
	3	231-2295	2	PLUG AS(8P)		23	2L-8076	6	TERMINAL
	4	253-5649	1	RESISTOR AS		24	7Y-3951	9	TERMINAL
	5	230-4009	1	PLUG AS(12P)					
	6	243-4510	1	RECEPTACLE AS(12P)					
	7	230-4011	3	PLUG AS(2P)					
	8	243-4505	1	RECEPTACLE AS(2P)					
	9	230-5010	1	PLUG AS(6P)					
	10	155-2270	1	PLUG KIT(2P)					
	11	3S-2093	4	STRAP					
	12	9W-0852	1	PIN					
	13	8T-8729	18	PIN					
	14	9W-0844	10	SOCKET					
	15	186-3736	35	SOCKET					
	16	8T-8737	10	PLUG					
	17	7Y-3958	1	CONNECTOR					
	18	243-4508	1	RECEPTACLE AS(6P)					

J147564 HE00

317-2981 HARNESS ASSEMBLY -MAIN-CAB-PART 2 OF 4
PART OF 317-2980-Page 89
AN ATTACHMENT

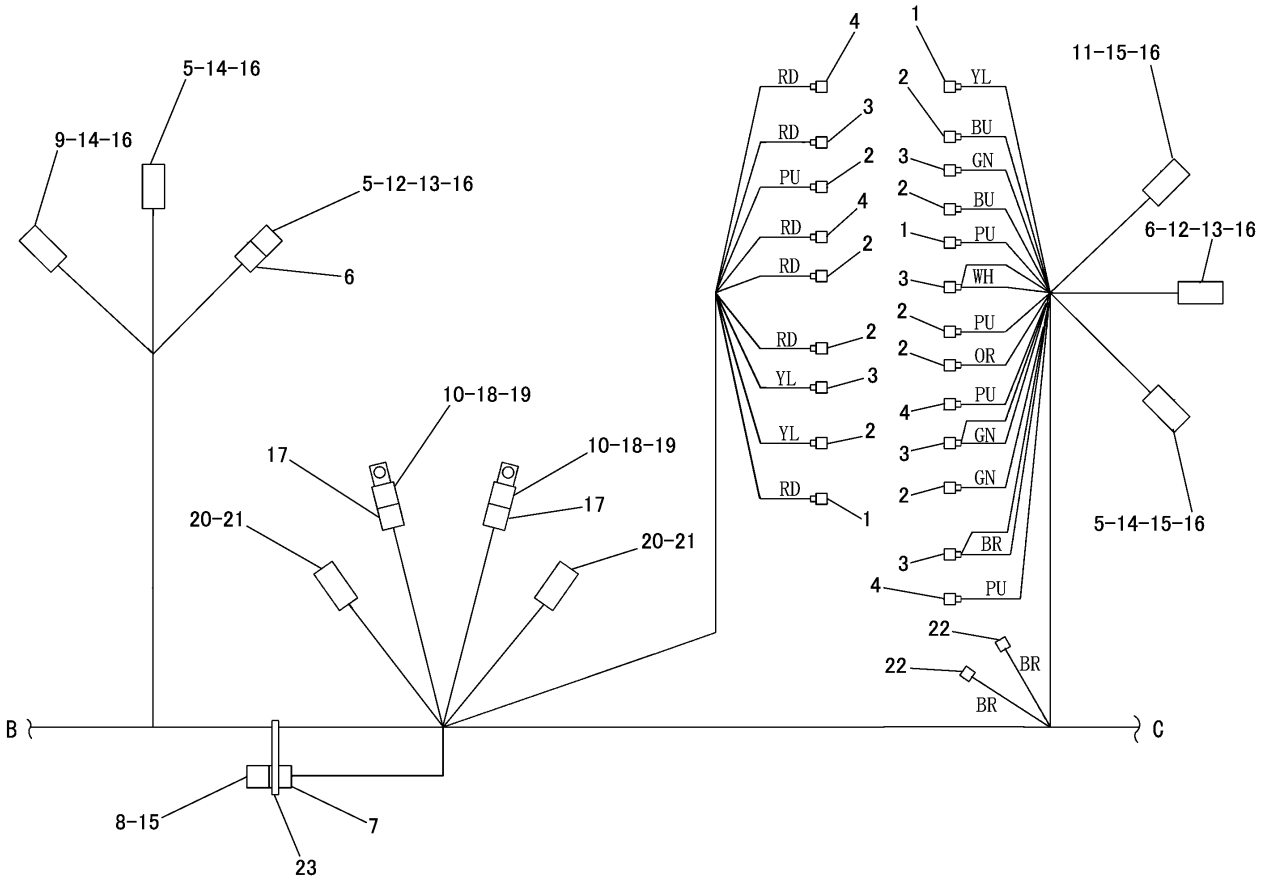

NOTE	No.	PART NO.	QTY	PART NAME	NOTE	No.	PART NO.	QTY	PART NAME
	1	233-8701	3	TERMINAL		21	7Y-3957	2	CONNECTOR
	2	233-8699	9	TERMINAL		22	7Y-3963	2	TERMINAL
	3	249-6899	6	TERMINAL			7Y-3965	2	TUBE
	4	233-8702	4	TERMINAL		23	3S-2093	1	STRAP
	5	230-4009	3	PLUG AS(12P)					
	6	243-4510	2	RECEPTACLE AS(12P)					
	7	230-4011	1	PLUG AS(2P)					
	8	267-7076	1	RESISTOR AS					
	9	230-5010	1	PLUG AS(6P)					
	10	266-6935	2	RELAY AS					
	11	230-4013	1	PLUG AS(3P)					
	12	9W-0852	5	PIN					
	13	8T-8729	12	PIN					
	14	9W-0844	15	SOCKET					
	15	186-3736	10	SOCKET					
	16	8T-8737	29	PLUG					
	17	267-9973	2	CONNECTOR					
	18	267-9977	4	TERMINAL					
	19	128-7714	4	TERMINAL					
	20	7Y-3951	8	TERMINAL					

J147565 HE00

317-2981 HARNESS ASSEMBLY -MAIN-CAB-PART 3 OF 4
PART OF 317-2980-Page 89
AN ATTACHMENT

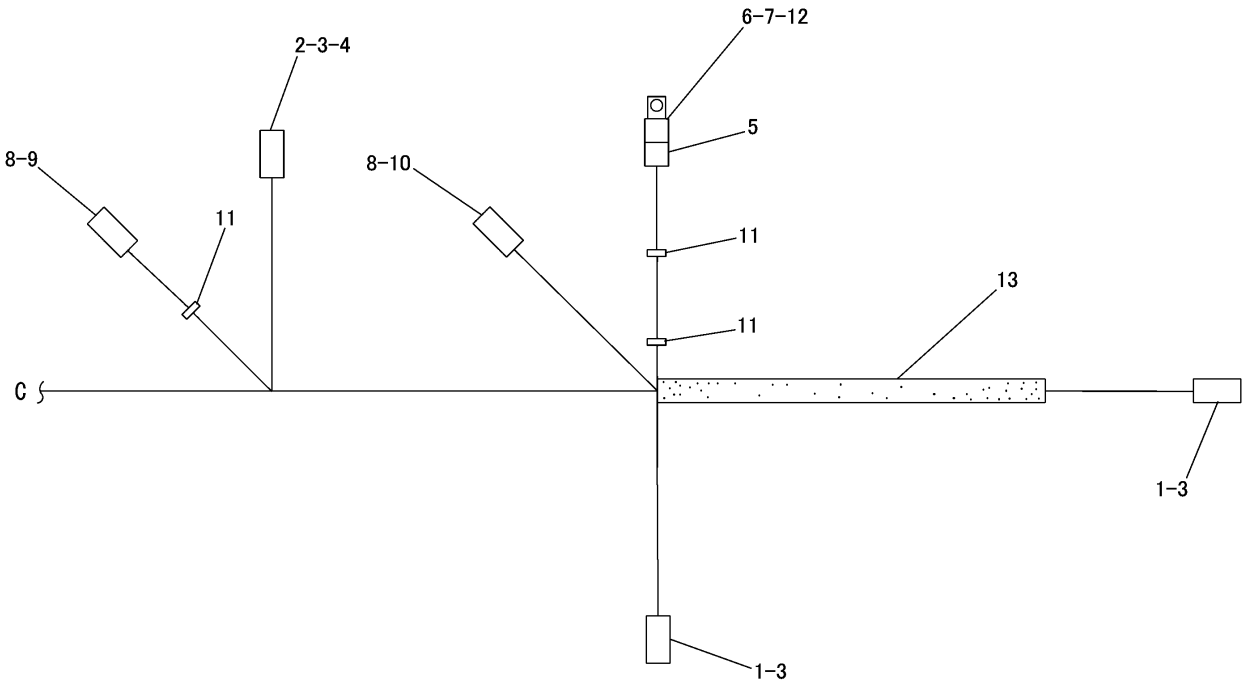

NOTE	No.	PART NO.	QTY	PART NAME	NOTE	No.	PART NO.	QTY	PART NAME
	1	230-4011	2	PLUG AS(2P)					
	2	230-5010	1	PLUG AS(6P)					
	3	186-3736	9	SOCKET					
	4	8T-8737	1	PLUG					
	5	267-9973	1	CONNECTOR					
	6	267-9977	2	TERMINAL					
	7	128-7714	2	TERMINAL					
	8	7Y-3951	8	TERMINAL					
	9	7Y-3957	1	CONNECTOR					
	10	7Y-3958	1	CONNECTOR					
	11	3S-2093	3	STRAP					
	12	266-6935	1	RELAY AS					
E	13	103-2529		HOSE---50cm					

E-ORDER BY THE cm

J147566 HE00

317-2981 HARNESS ASSEMBLY -MAIN-CAB-PART 4 OF 4
PART OF 317-2980-Page 89
AN ATTACHMENT

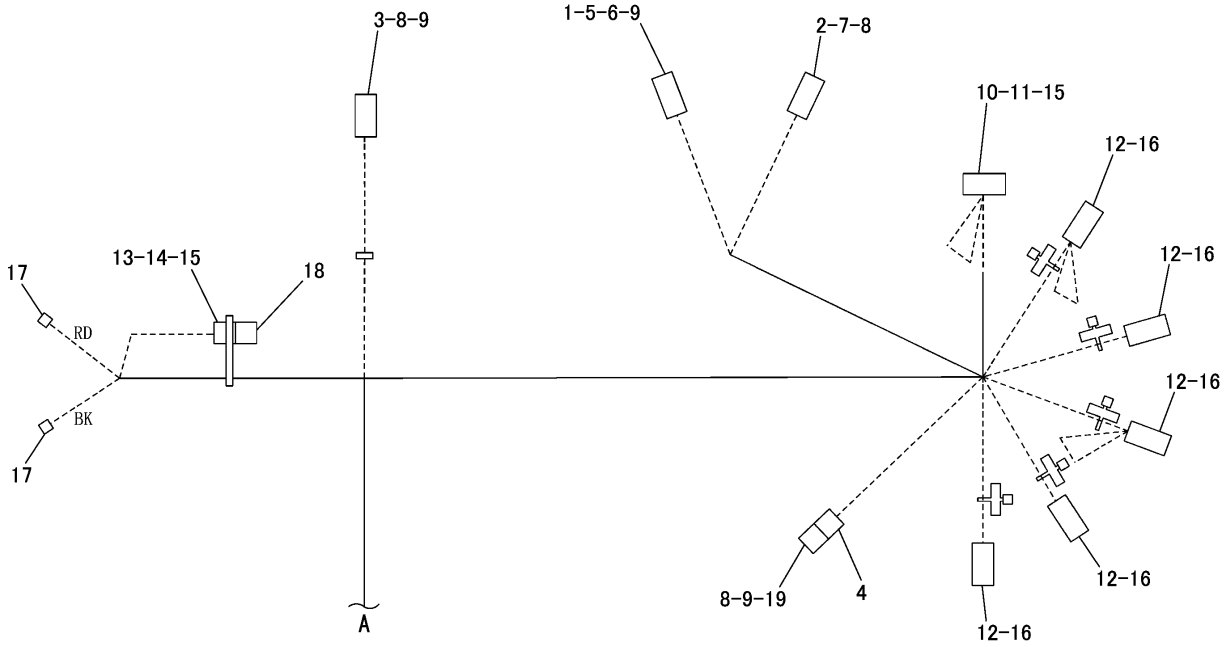

NOTE	No.	PART NO.	QTY	PART NAME	NOTE	No.	PART NO.	QTY	PART NAME
	1	243-4510	1	RECEPTACLE AS(12P)		19	243-4506	1	RECEPTACLE AS(3P)
	2	230-5010	1	PLUG AS(6P)					
	3	230-5008	1	PLUG AS(4P)					
	4	230-4013	1	PLUG AS(3P)					
	5	9W-0852	7	PIN					
	6	186-3735	2	PIN					
	7	9W-0844	3	SOCKET					
	8	186-3736	9	SOCKET					
	9	8T-8737	7	PLUG					
	10	111-4816	1	CONNECTOR					
	11	125-4840	1	WEDGE					
	12	111-7898	5	CONNECTOR					
	13	163-6803	1	CONNECTOR					
	14	167-3487	1	WEDGE					
	15	102-7965	15	TERMINAL					
	16	3E-9179	20	TERMINAL					
	17	7Y-3963	2	TERMINAL					
		7Y-3965	2	TUBE					
	18	167-3543	2	TERMINAL					
		167-3542	1	CONNECTOR					

J151771 HE01

325-9913 HARNESS ASSEMBLY -MAIN-CAB-PART 1 OF 4
PART OF 326-7158-Page 93
APPLIES TO CAB AIR CONDITIONER SPECIFICATION MACHINE
AN ATTACHMENT

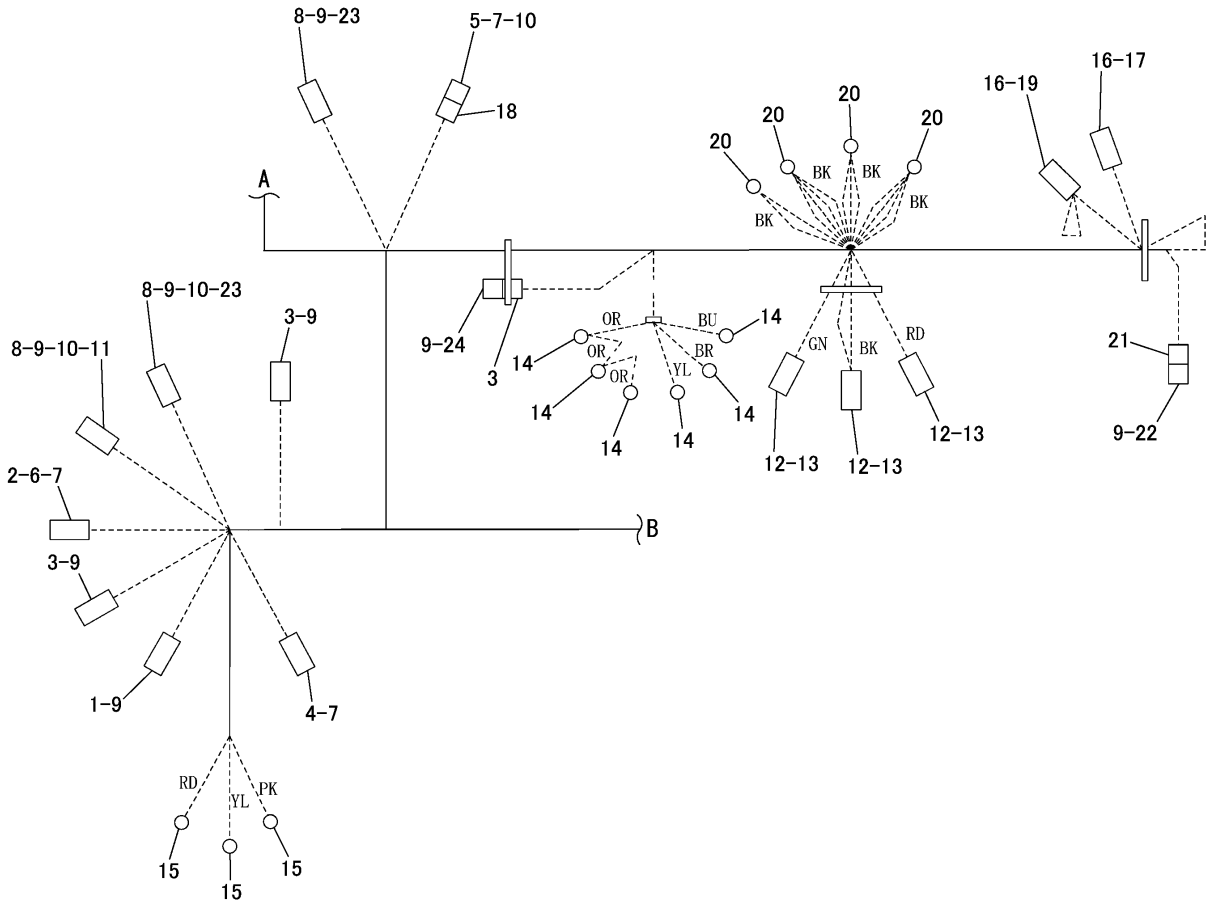

NOTE	No.	PART NO.	QTY	PART NAME	NOTE	No.	PART NO.	QTY	PART NAME
	1	230−4009	1	PLUG AS(12P)		21	155−2270	1	PLUG KIT(2P)
	2	243−4510	1	RECEPTACLE AS(12P)		22	253−5649	1	RESISTOR AS
	3	230−4011	3	PLUG AS(2P)		23	231−2295	2	PLUG AS(8P)
	4	243−4505	1	RECEPTACLE AS(2P)		24	186−3735	2	PIN
	5	230−5010	1	PLUG AS(6P)			243−4505	1	RECEPTACLE AS(2P)
	6	9W−0852	1	PIN					
	7	186−3735	18	PIN					
	8	9W−0844	9	SOCKET					
	9	186−3736	37	SOCKET					
	10	8T−8737	9	PLUG					
	11	239−7356	1	PLUG AS(12P)					
	12	153−2602	3	CONNECTOR					
	13	153−2631	3	TERMINAL					
	14	2L−8076	6	TERMINAL					
	15	2L−8067	3	TERMINAL					
	16	7Y−3951	9	TERMINAL					
	17	7Y−3957	1	CONNECTOR					
	18	243−4508	1	RECEPTACLE AS(6P)					
	19	7Y−3958	1	CONNECTOR					
	20	2L−8058	4	TERMINAL					

J151772 HE01

325-9913 HARNESS ASSEMBLY -MAIN-CAB-PART 2 OF 4
PART OF 326-7158-Page 93
APPLIES TO CAB AIR CONDITIONER SPECIFICATION MACHINE
AN ATTACHMENT

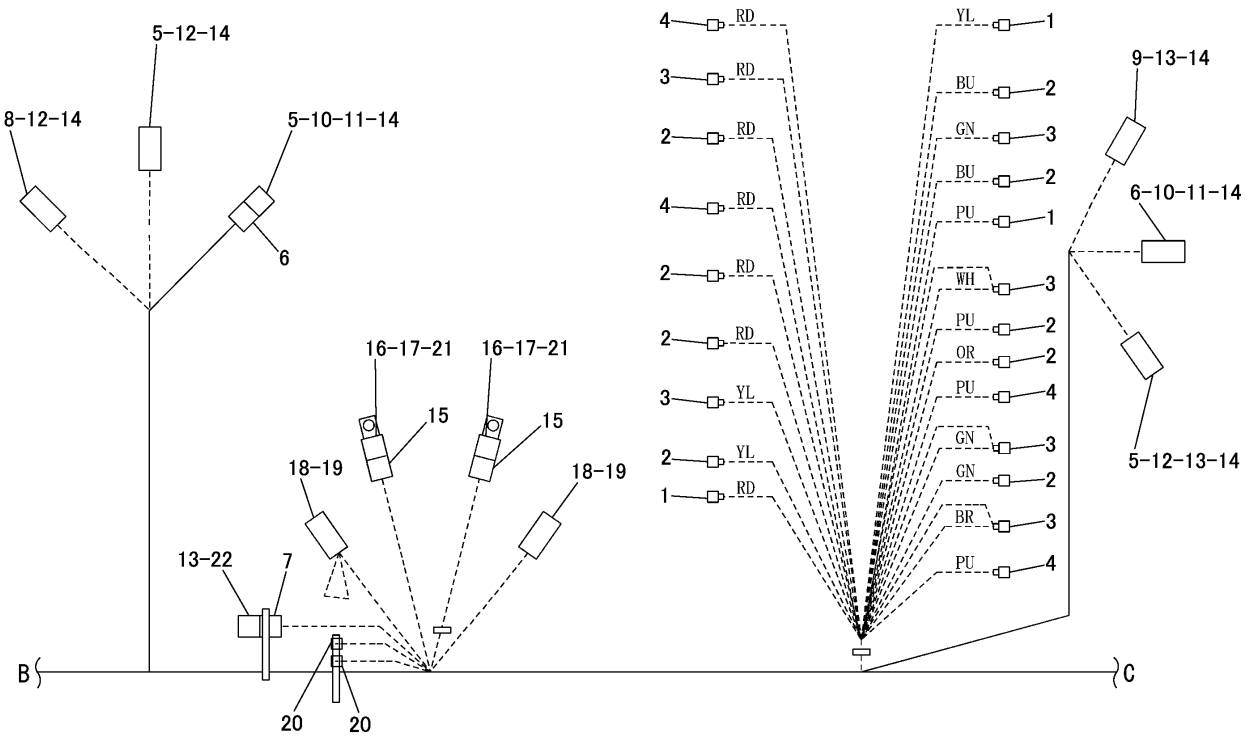

NOTE	No.	PART NO.	QTY	PART NAME	NOTE	No.	PART NO.	QTY	PART NAME
	1	233-8701	3	TERMINAL		20	7Y-3963	2	TERMINAL
	2	233-8699	9	TERMINAL			7Y-3965	2	TUBE
	3	249-6899	6	TERMINAL		21	266-6935	2	RELAY AS
	4	233-8702	4	TERMINAL		22	267-7076	1	RESISTOR AS
	5	230-4009	3	PLUG AS(12P)					
	6	243-4510	2	RECEPTACLE AS(12P)					
	7	230-4011	1	PLUG AS(2P)					
	8	230-5010	1	PLUG AS(6P)					
	9	230-4013	1	PLUG AS(3P)					
	10	9W-0852	5	PIN					
	11	186-3735	12	PIN					
	12	9W-0844	15	SOCKET					
	13	186-3736	10	SOCKET					
	14	8T-8737	29	PLUG					
	15	267-9973	2	CONNECTOR					
	16	267-9977	4	TERMINAL					
	17	128-7714	4	TERMINAL					
	18	7Y-3951	8	TERMINAL					
	19	7Y-3957	2	CONNECTOR					

J151773 HE01

325-9913 HARNESS ASSEMBLY -MAIN-CAB-PART 3 OF 4
PART OF 326-7158-Page 93
APPLIES TO CAB AIR CONDITIONER SPECIFICATION MACHINE
AN ATTACHMENT

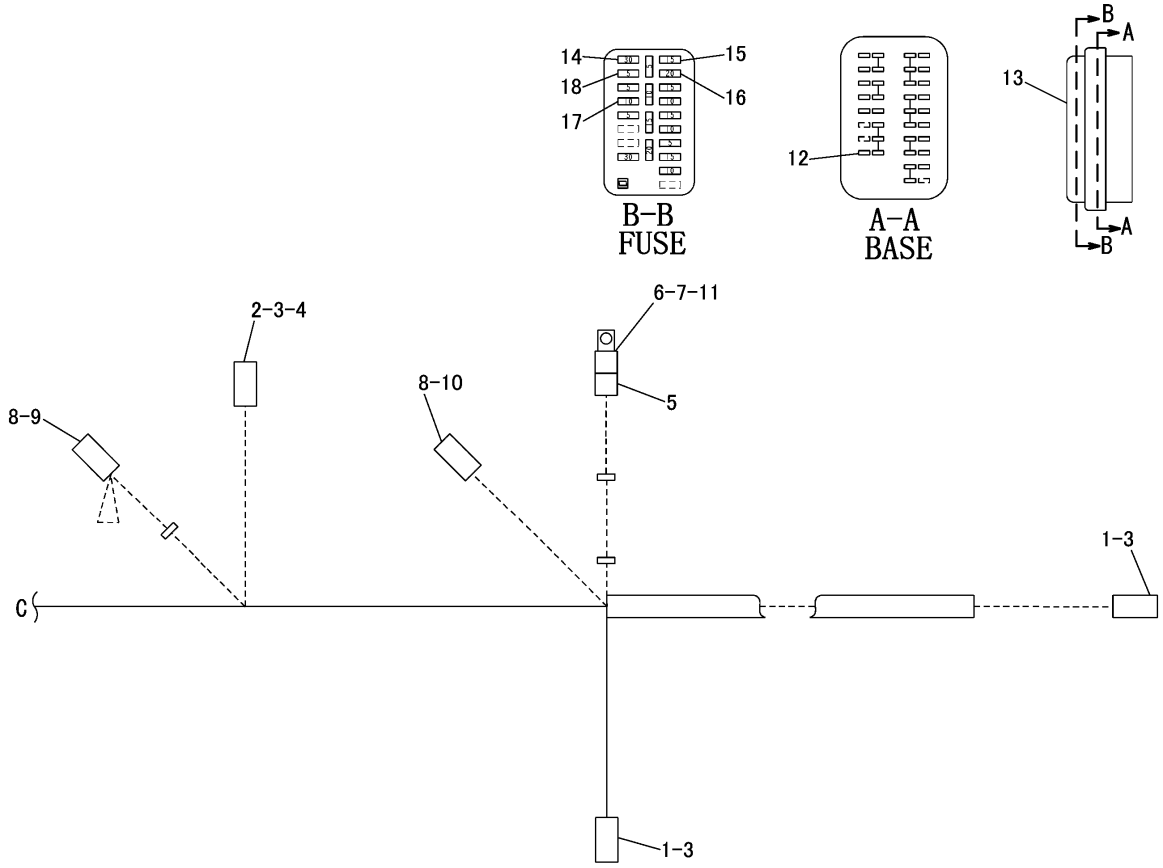

NOTE	No.	PART NO.	QTY	PART NAME	NOTE	No.	PART NO.	QTY	PART NAME
	1	230-4011	2	PLUG AS(2P)					
	2	230-5010	1	PLUG AS(6P)					
	3	186-3736	9	SOCKET					
	4	8T-8737	1	PLUG					
	5	267-9973	1	CONNECTOR					
	6	267-9977	2	TERMINAL					
	7	128-7714	2	TERMINAL					
	8	7Y-3951	8	TERMINAL					
	9	7Y-3957	1	CONNECTOR					
	10	7Y-3958	1	CONNECTOR					
	11	266-6935	1	RELAY AS					
	12	233-8699	1	TERMINAL					
	13	231-7924	1	FUSE BOX AS					
	14	124-3548	2	FUSE(30A)					
	15	113-8491	5	FUSE(15A)					
	16	113-8492	2	FUSE(20A)					
	17	113-8490	5	FUSE(10A)					
	18	141-2759	5	FUSE(5A)					

J151774 HE01

325-9913 HARNESS ASSEMBLY -MAIN-CAB-PART 4 OF 4
PART OF 326-7158-Page 93
APPLIES TO CAB AIR CONDITIONER SPECIFICATION MACHINE
AN ATTACHMENT

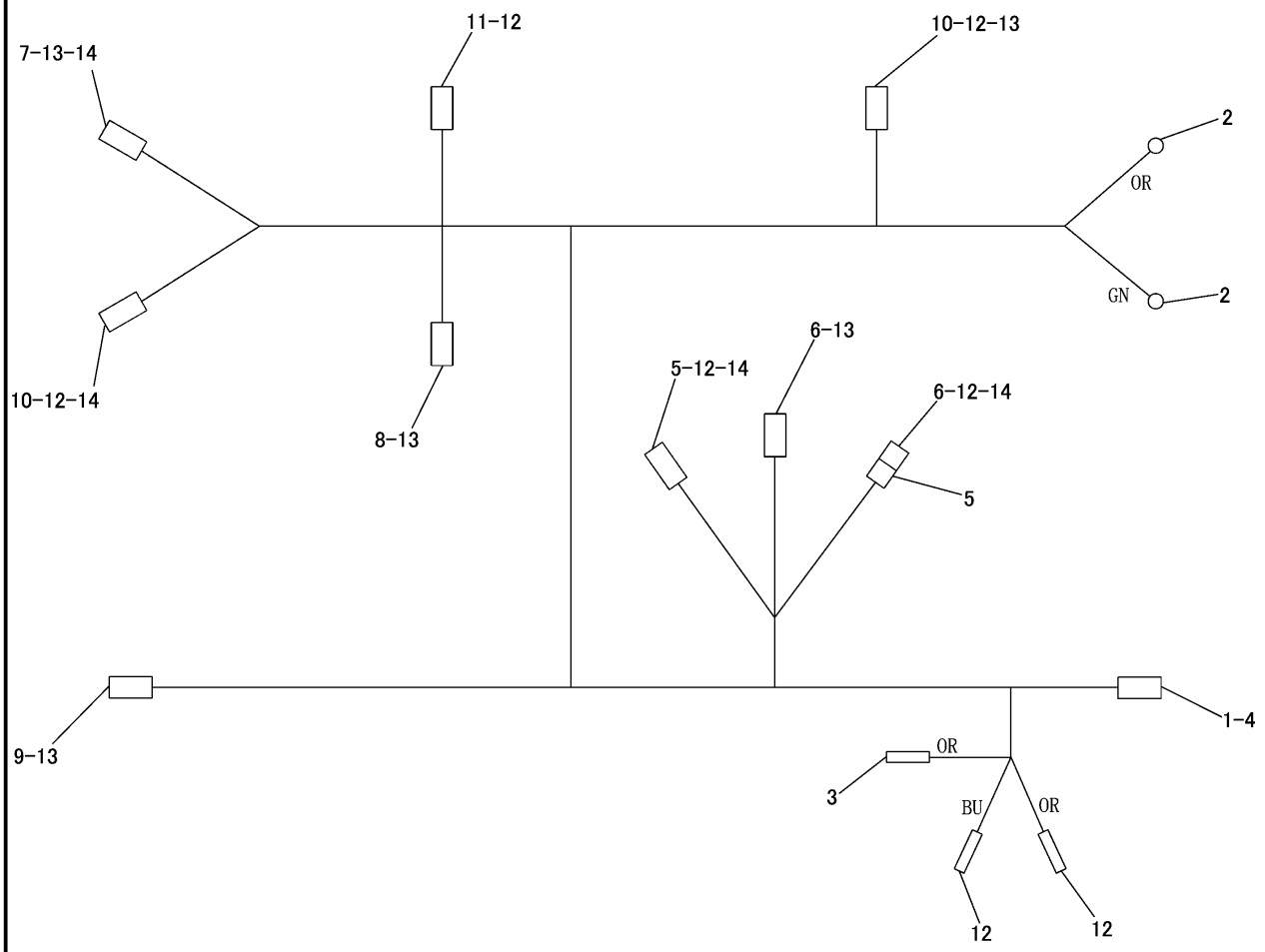

NOTE	No.	PART NO.	QTY	PART NAME	NOTE	No.	PART NO.	QTY	PART NAME
	1	7Y-3951	4	TERMINAL					
	2	2L-8076	2	TERMINAL					
	3	233-8699	1	TERMINAL					
	4	7Y-3957	1	CONNECTOR					
	5	243-4506	2	RECEPTACLE AS(3P)					
	6	230-4013	2	PLUG AS(3P)					
		264-7030	1	SEAL					
	7	230-4009	1	PLUG AS(12P)					
		264-7034	1	SEAL					
	8	230-5008	1	PLUG AS(4P)					
		264-7031	1	SEAL					
	9	230-5010	1	PLUG AS(6P)					
		264-7032	1	SEAL					
	10	243-4510	2	RECEPTACLE AS(12P)					
	11	243-4508	1	RECEPTACLE AS(6P)					
	12	186-3735	29	PIN					
	13	186-3736	13	SOCKET					
	14	8T-8737	14	PLUG					

J147344 HE00

317-2481 HARNESS ASSEMBLY -MAIN-CRANE
PART OF 307-9229-Page 95
AN ATTACHMENT

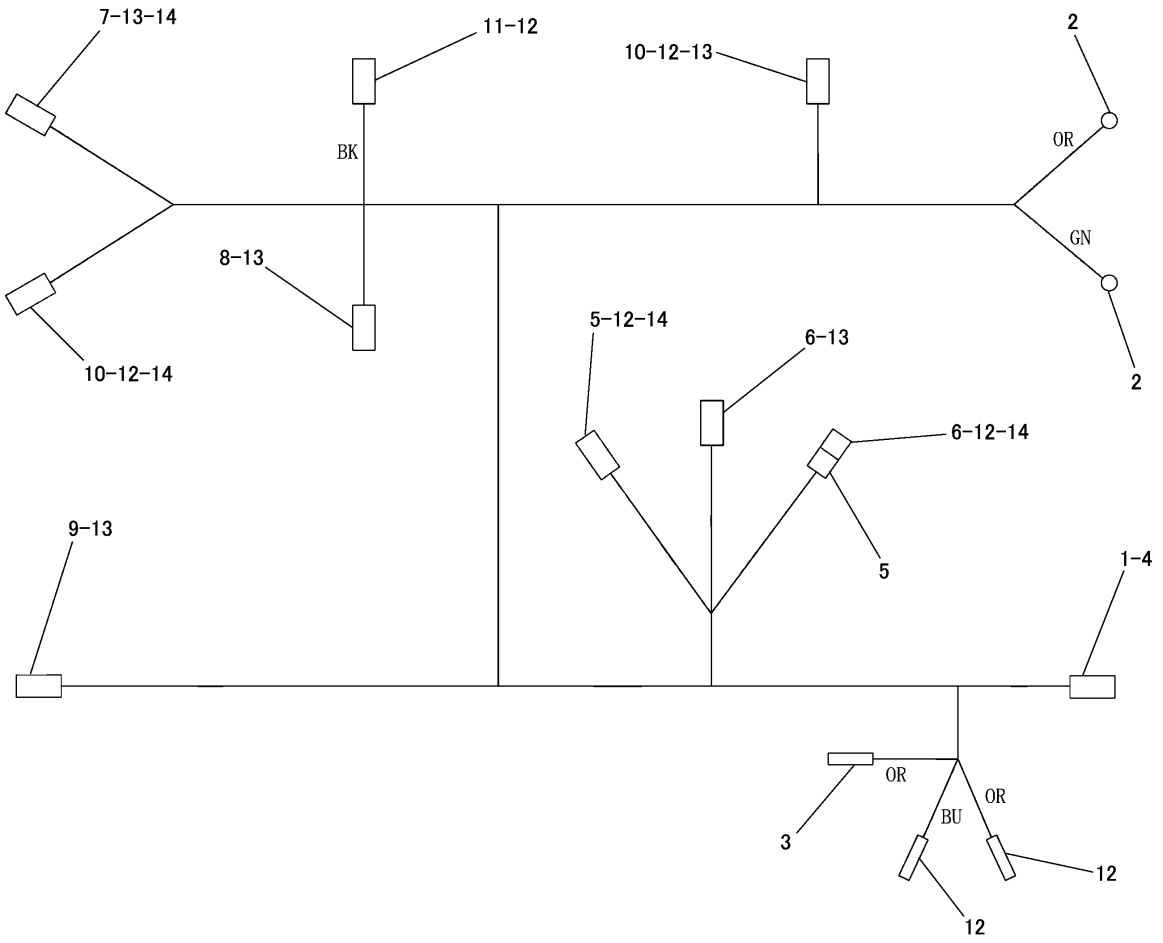

NOTE	No.	PART NO.	QTY	PART NAME	NOTE	No.	PART NO.	QTY	PART NAME
	1	7Y-3951	4	TERMINAL					
	2	2L-8076	2	TERMINAL					
	3	233-8699	1	TERMINAL					
	4	7Y-3957	1	CONNECTOR					
	5	243-4506	2	RECEPTACLE AS(3P)					
	6	230-4013	2	PLUG AS(3P)					
	7	230-4009	1	PLUG AS(12P)					
	8	230-4011	1	PLUG AS(2P)					
	9	230-5010	1	PLUG AS(6P)					
	10	243-4510	2	RECEPTACLE AS(12P)					
	11	243-4508	1	RECEPTACLE AS(6P)					
	12	186-3735	28	PIN					
	13	186-3736	21	SOCKET					
	14	8T-8737	15	PLUG					

J147600 HE00

317-2976 HARNESS ASSEMBLY -MAIN-CRANE
PART OF 307-9233-Page 101
AN ATTACHMENT

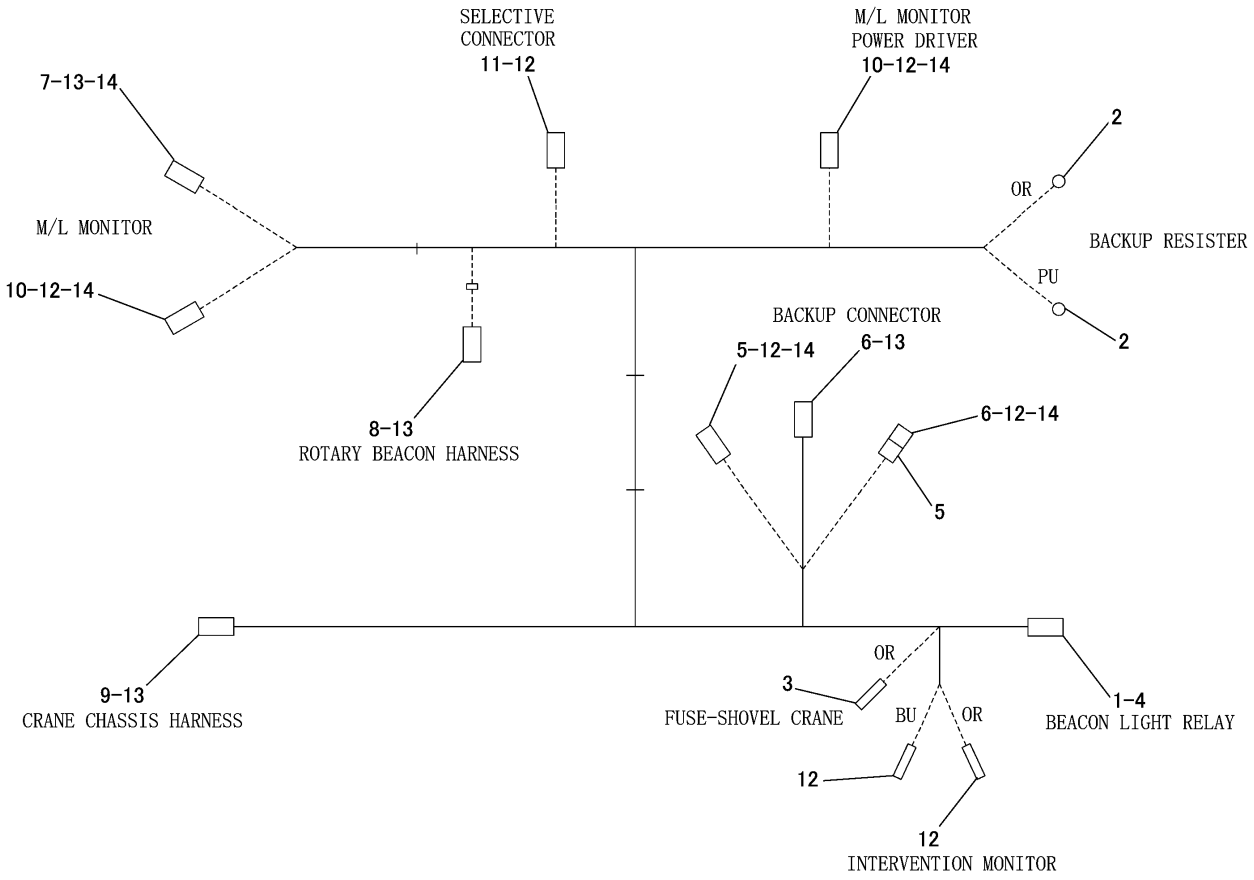

NOTE	No.	PART NO.	QTY	PART NAME	NOTE	No.	PART NO.	QTY	PART NAME
	1	7Y−3951	4	TERMINAL					
	2	2L−8076	2	TERMINAL					
	3	233−8699	1	TERMINAL					
	4	7Y−3957	1	CONNECTOR					
	5	243−4506	2	RECEPTACLE AS(3P)					
	6	230−4013	2	PLUG AS(3P)					
	7	230−4009	1	PLUG AS(12P)					
	8	230−4011	1	PLUG AS(4P)					
	9	230−5010	1	PLUG AS(6P)					
	10	243−4510	2	RECEPTACLE AS(12P)					
	11	243−4508	1	RECEPTACLE AS(6P)					
	12	186−3735	28	PIN					
	13	186−3736	21	SOCKET					
	14	8T−8737	15	PLUG					

J151970 HE00

329-0044 HARNESS ASSEMBLY -MAIN-CAB/CRANE
PART OF 325-9917-Page 107
ALSO APPLIES TO CAB AIR CONDITIONER SPECIFICATION MACHINE
AN ATTACHMENT

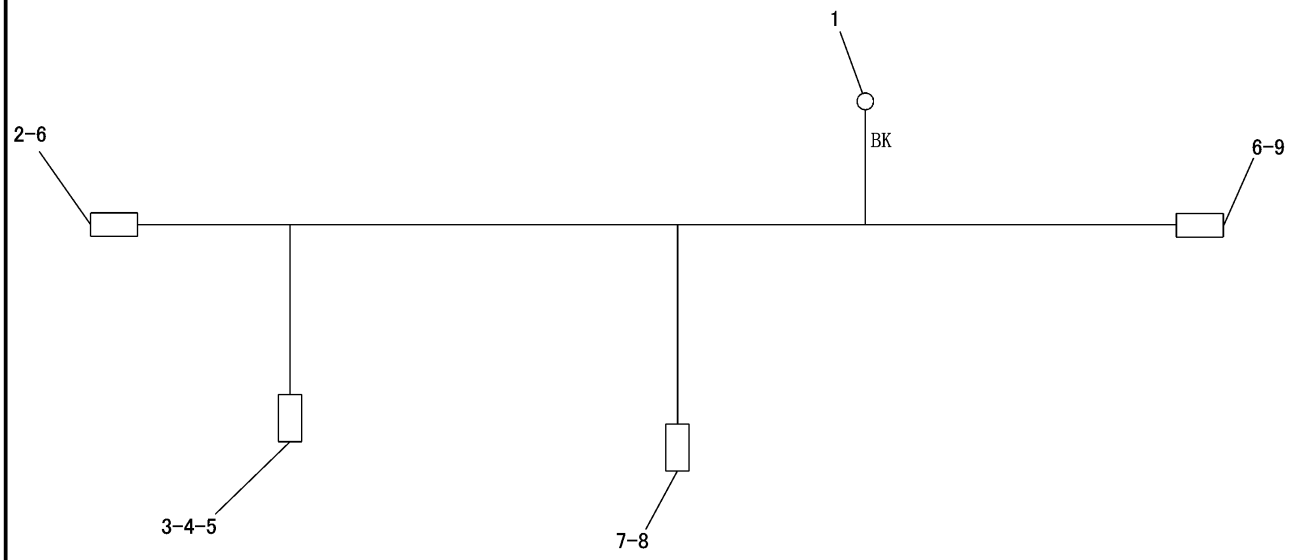

NOTE	No.	PART NO.	QTY	PART NAME	NOTE	No.	PART NO.	QTY	PART NAME
	1	2L-8079	1	TERMINAL					
	2	243-4505	1	RECEPTACLE AS(2P)					
	3	187-6419	1	CONNECTOR					
	4	187-6421	3	TERMINAL					
	5	117-1878	3	SEAL					
	6	186-3735	8	PIN					
	7	186-3736	2	SOCKET					
	8	155-2270	1	PLUG KIT(2P)					
	9	243-4508	1	RECEPTACLE AS(6P)					

J147345 HE00

317-2482 HARNESS ASSEMBLY -CHASSIS-CRANE
PART OF 307-9229-Page 95, 307-9233-Page 101, 325-9917-Page 107
AN ATTACHMENT

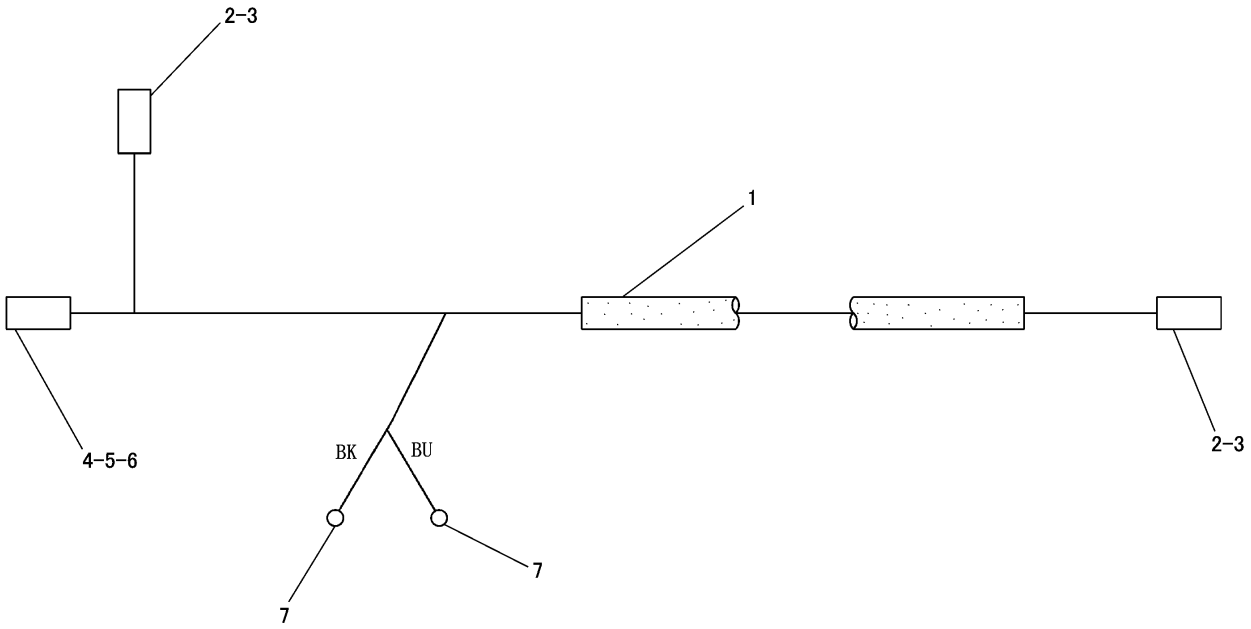

NOTE	No.	PART NO.	QTY	PART NAME	NOTE	No.	PART NO.	QTY	PART NAME
E	1	103-2529		HOSE---115cm					
	2	230-4013	2	PLUG AS(3P)					
	3	186-3736	6	SOCKET					
	4	243-4508	1	RECEPTACLE AS(6P)					
	5	9W-0852	2	PIN					
	6	8T-8729	4	PIN					
	7	2L-8075	2	TERMINAL					

E-ORDER BY THE cm

J146546 HE02

309-1449 HARNESS ASSEMBLY -FRONT
PART OF 296-1954-Page 113

ELECTRICAL AND STARTING SYSTEM

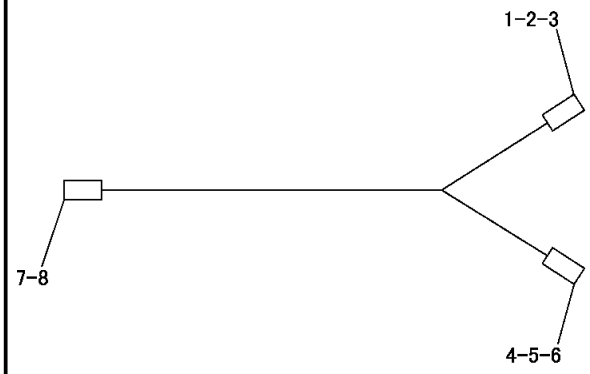

NOTE	No.	PART NO.	QTY	PART NAME
	1	187-6417	1	CONNECTOR
	2	187-6421	2	TERMINAL
	3	117-1878	2	SEAL
	4	207-7154	1	CONNECTOR
	5	207-7156	2	TERMINAL
	6	207-7157	2	SEAL
	7	243-4507	1	RECEPTACLE AS(4P)
	8	186-3735	4	PIN

J146740 HE00

317-2972 HARNESS ASSEMBLY
PART OF 307-9230-Page 115
AN ATTACHMENT

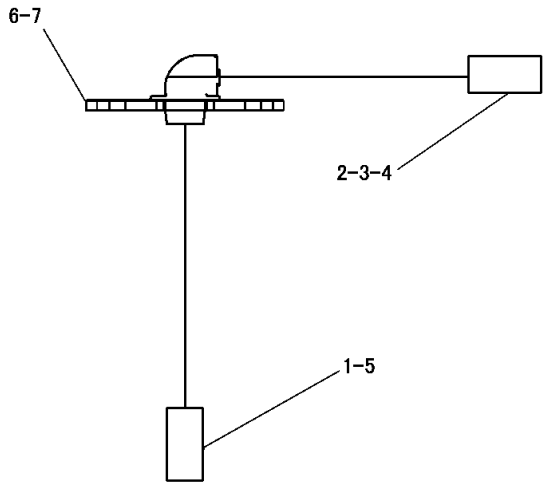

NOTE	No.	PART NO.	QTY	PART NAME
	1	9W-0852	2	PIN
	2	117-1878	2	SEAL
	3	187-6417	1	CONNECTOR
	4	187-6421	2	TERMINAL
	5	243-4505	1	RECEPTACLE AS(2P)
	6	285-6278	1	PLATE
	7	317-2477	1	PLATE

J146837 HE00

317-2975 HARNESS ASSEMBLY
PART OF 307-9234-Page 117
AN ATTACHMENT

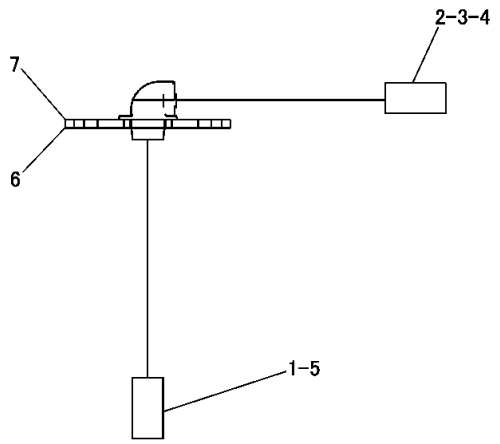

NOTE	No.	PART NO.	QTY	PART NAME
	1	9W-0852	2	PIN
	2	187-6417	1	CONNECTOR
	3	187-6421	2	TERMINAL
	4	187-6422	1	WEDGE
	5	243-4505	1	RECEPTACLE AS(2P)
	6	285-6278	1	PLATE
	7	317-2477	1	PLATE

J151972 HE00

329-3425 HARNESS ASSEMBLY
PART OF 325-9918-Page 119
ALSO APPLIES TO CAB AIR CONDITIONER SPECIFICATION MACHINE
AN ATTACHMENT

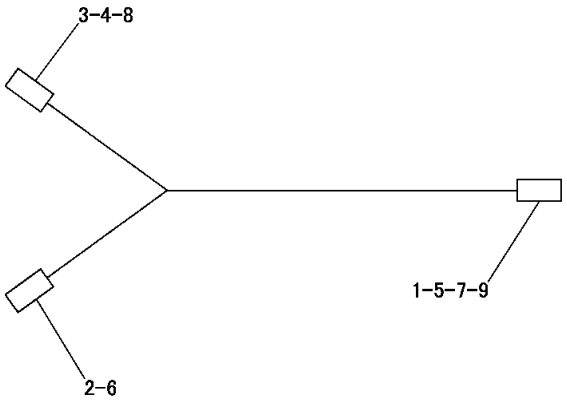

NOTE	No.	PART NO.	QTY	PART NAME
	1	9W-0852	2	PIN
	2	9W-0844	3	SOCKET
	3	111-7898	1	CONNECTOR
	4	3E-9179	3	TERMINAL
	5	8T-8737	3	PLUG
	6	155-2260	1	PLUG KIT(3P)
	7	243-4508	1	RECEPTACLE AS(6P)
	8	112-9611	2	TERMINAL
	9	186-3735	1	PIN

J147559 HE00

317-2969 HARNESS ASSEMBLY -HEATER
PART OF 317-2967-Page 123
AN ATTACHMENT

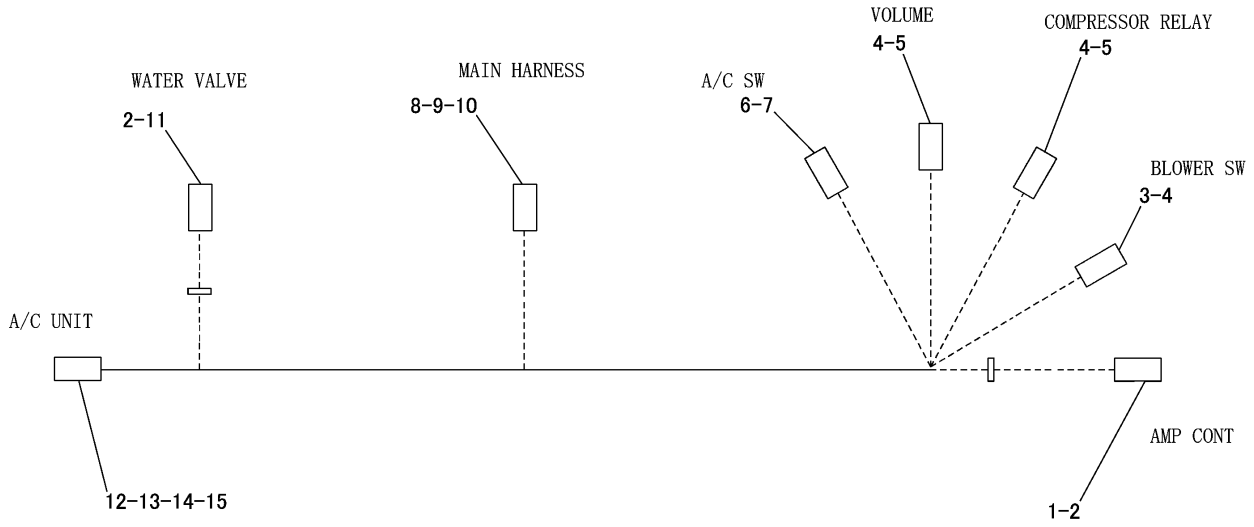

NOTE	No.	PART NO.	QTY	PART NAME	NOTE	No.	PART NO.	QTY	PART NAME
	1	325-9878	1	CONNECTOR					
	2	325-9879	22	TERMINAL					
	3	7Y-3958	1	CONNECTOR					
	4	7Y-3951	13	TERMINAL					
	5	7Y-3957	2	CONNECTOR					
	6	325-9880	1	CONNECTOR					
	7	167-3631	4	TERMINAL					
	8	243-4508	1	RECEPTACLE AS(6P)					
	9	186-3735	5	PIN					
	10	8T-8737	1	PLUG					
	11	325-9885	1	CONNECTOR					
	12	271-7711	1	HOUSING					
	13	271-7712	1	HOLDER					
	14	325-9921	6	TARMINAL					
	15	325-9922	6	SEAL					

J151548 HE00

325-9916 HARNESS ASSEMBLY -AIR CONDITIONER

PART OF 311-1069-Page 125
APPLIES TO CAB AIR CONDITIONER SPECIFICATION MACHINE
AN ATTACHMENT

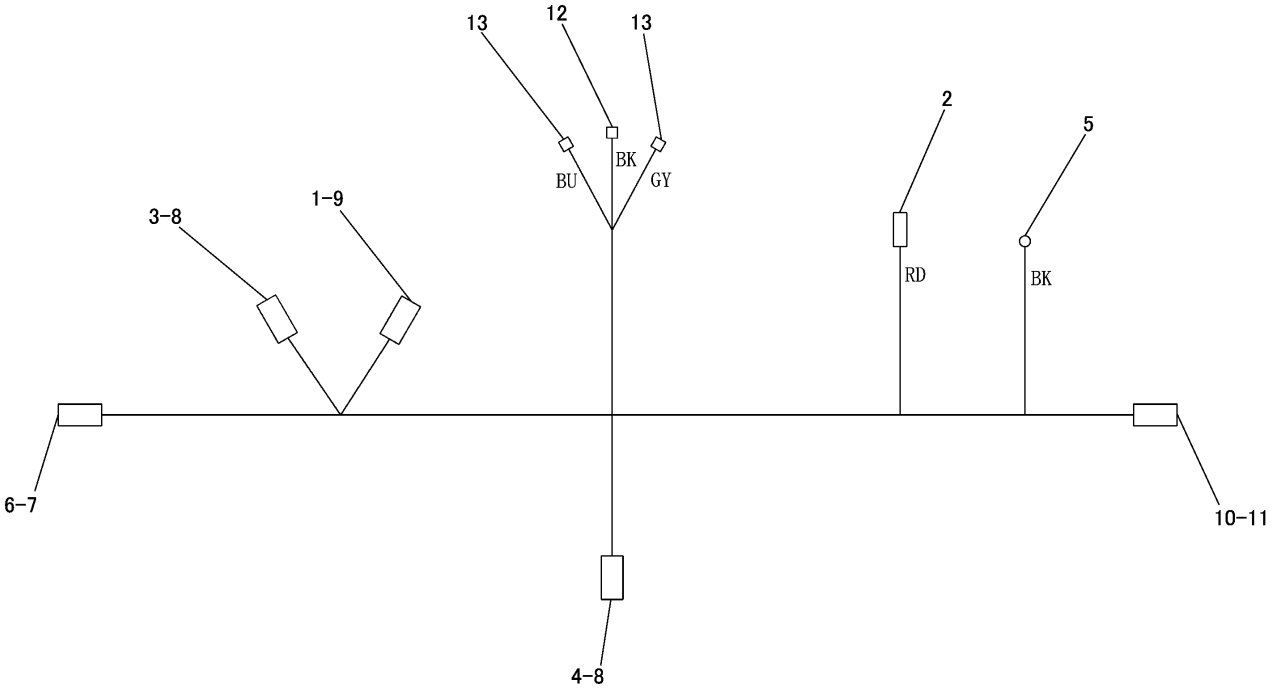

NOTE	No.	PART NO.	QTY	PART NAME	NOTE	No.	PART NO.	QTY	PART NAME
	1	230-4011	1	PLUG AS(2P)					
	2	233-8699	1	TERMINAL					
	3	243-4505	1	RECEPTACLE AS(2P)					
	4	243-4507	1	RECEPTACLE AS(4P)					
	5	2L-8077	1	TERMINAL					
	6	275-6785	1	PLUG AS					
	7	275-6786	7	TERMINAL					
	8	186-3735	6	PIN					
	9	186-3736	2	SOCKET					
	10	7Y-3951	4	TERMINAL					
	11	7Y-3957	1	CONNECTOR					
	12	7Y-3962	1	TERMINAL					
		7Y-3964	1	TUBE					
	13	7Y-3963	2	TERMINAL					
		7Y-3965	2	TUBE					

J147645 HE00

315-0303 HARNESS ASSEMBLY
PART OF 315-0302-Page 133, 317-2475-Page 145, 317-2476-Page 157, 317-2478-Page 169
AN ATTACHMENT

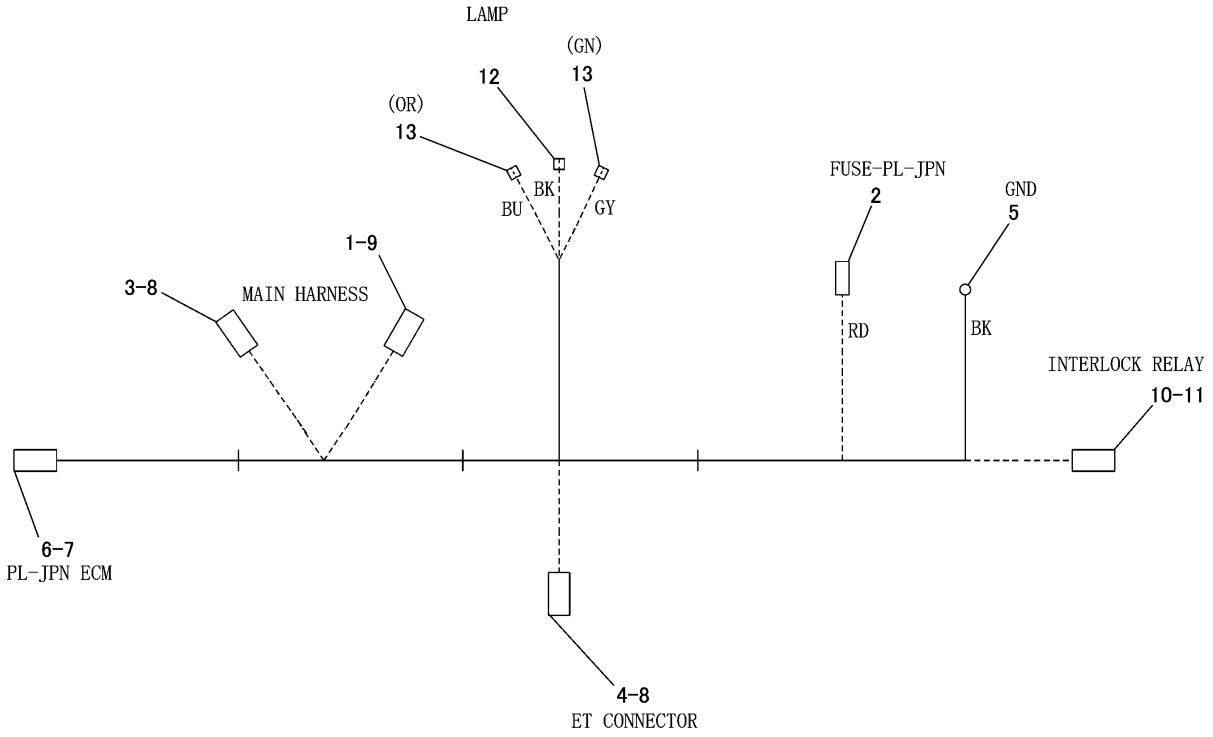

NOTE	No.	PART NO.	QTY	PART NAME	NOTE	No.	PART NO.	QTY	PART NAME
	1	230-4011	1	PLUG AS(2P)					
	2	233-8699	1	TERMINAL					
	3	243-4505	1	RECEPTACLE AS(2P)					
	4	243-4507	1	RECEPTACLE AS(4P)					
	5	2L-8077	1	TERMINAL					
	6	275-6785	1	PLUG AS					
	7	275-6786	7	TERMINAL					
	8	186-3735	6	PIN					
	9	186-3736	2	SOCKET					
	10	7Y-3951	4	TERMINAL					
	11	7Y-3957	1	CONNECTOR					
	12	7Y-3962	1	TERMINAL					
	13	7Y-3963	2	TERMINAL					

J151995 HE00

331-9351 HARNESS ASSEMBLY -PL-JPN
PART OF 325-9883-Page 161, 327-7634-Page 139, 327-7635-Page 151, 327-7636-Page 173
AN ATTACHMENT

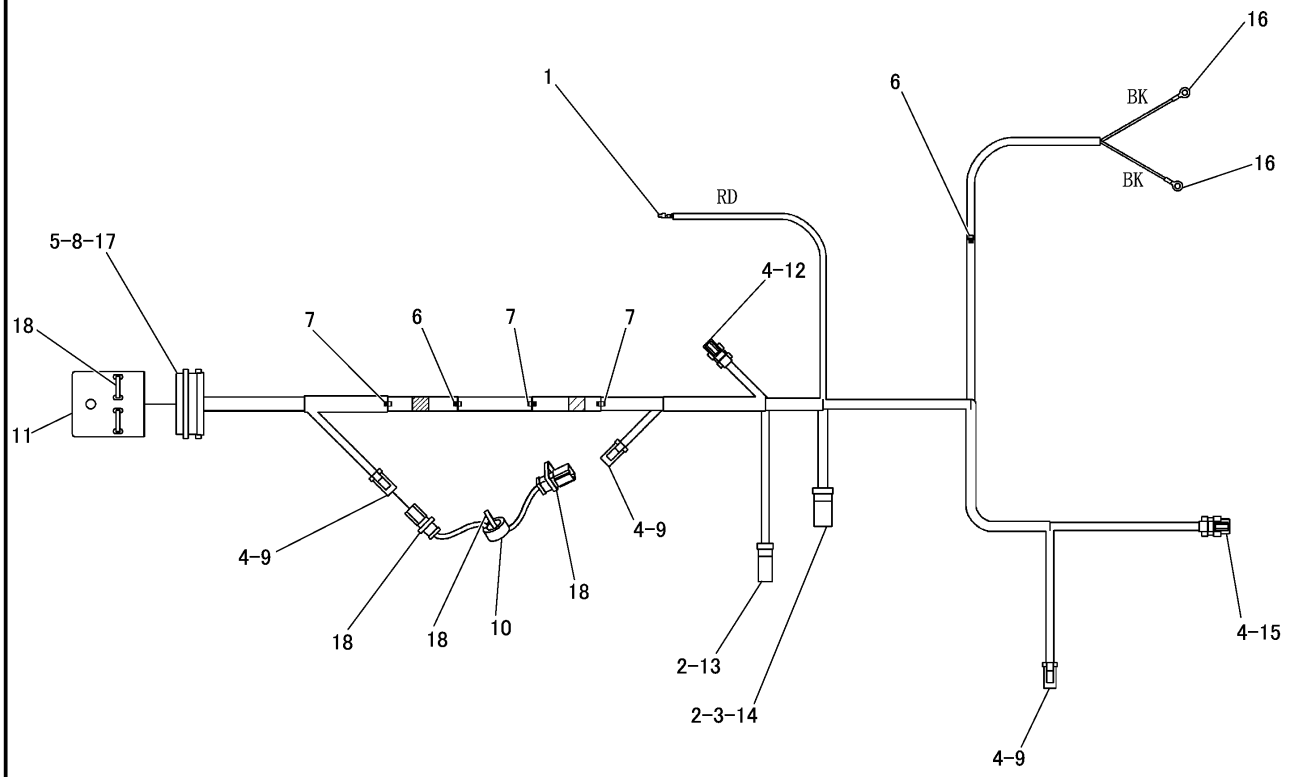

NOTE	No.	PART NO.	QTY	PART NAME	NOTE	No.	PART NO.	QTY	PART NAME
	1	233−8699	1	TERMINAL		16	2L−8077	2	TERMINAL
	2	186−3735	5	PIN		17	150−6766	1	PLUG AS(26P)
	3	9W−0852	1	PIN			159−9322	1	SEAL
	4	186−3736	11	SOCKET		18	3S−2093	5	STRAP
	5	9X−3402	17	SOCKET					
E	6	125−7874		TUBE---5cm(×2)					
E	7	125−7875		TUBE---5cm(×3)					
	8	8T−8737	9	PLUG					
	9	155−2270	3	PLUG KIT(12P)					
	10	222−3870	1	COIL AS					
		102−8802	2	RECEPTACLE KIT(2P)					
		186−3735	4	PIN					
E		9X−1813		SLEEVE---15cm					
	11	126−1774	1	ENDBELL					
	12	230−4011	1	PLUG AS(2P)					
		264−7029	1	SEAL					
	13	243−4505	1	RECEPTACLE AS(2P)					
	14	243−4507	1	RECEPTACLE AS(4P)					
	15	230−4013	1	PLUG AS(3P)					
		264−7030	1	SEAL					

E-ORDER BY THE cm

J146758 HE01

309-3618 HARNESS ASSEMBLY
PART OF 309-3616-Page 179
AN ATTACHMENT



NOTE	No.	PART NO.	QTY	PART NAME	NOTE	No.	PART NO.	QTY	PART NAME
	1	230-5008	2	PLUG AS(4P)					
	2	8C-6354	1	CAP					
	3	167-3593	1	STRAP					
	4	243-4507	1	RECEPTACLE AS(4P)					
	5	126-1767	4	PIN					
	6	186-3736	5	SOCKET					
	7	9W-0844	1	SOCKET					
	8	8T-8737	11	PLUG					
	9	9W-1951	1	RECEPTACLE					

J146977 HE00

317-2471 HARNESS ASSEMBLY

PART OF 309-3616-Page 179, 315-0302-Page 133, 317-2475-Page 145, 317-2476-Page 157, 317-2478-Page 169
325-9883-Page 161, 327-7634-Page 139, 327-7635-Page 151, 327-7636-Page 173
AN ATTACHMENT

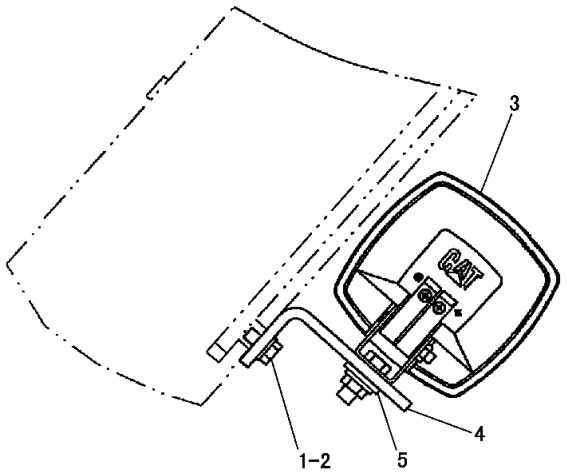

NOTE	No.	PART NO.	QTY	PART NAME
	1	8T-4137	1	BOLT(M10×1.5)
	2	8T-4121	1	WASHER
Y	3	233-0099	1	FLOOD LAMP GROUP
	4	233-3919	1	BRACKET
	5	5P-1076	1	WASHER

Y-SEPARATE ILLUSTRATION

J128924 E02

LIGHTING GROUP (231-9769 N/S) -BOOM

PART OF 296-1809-Page 431
REFERENCE:233-0099-Page 222

CONSISTS OF :

PAGE

1 198-0851 LIGHTING GROUP 219

J146812 HE00

LIGHTING GROUP (307-9222 N/S) -CAB

AN ATTACHMENT

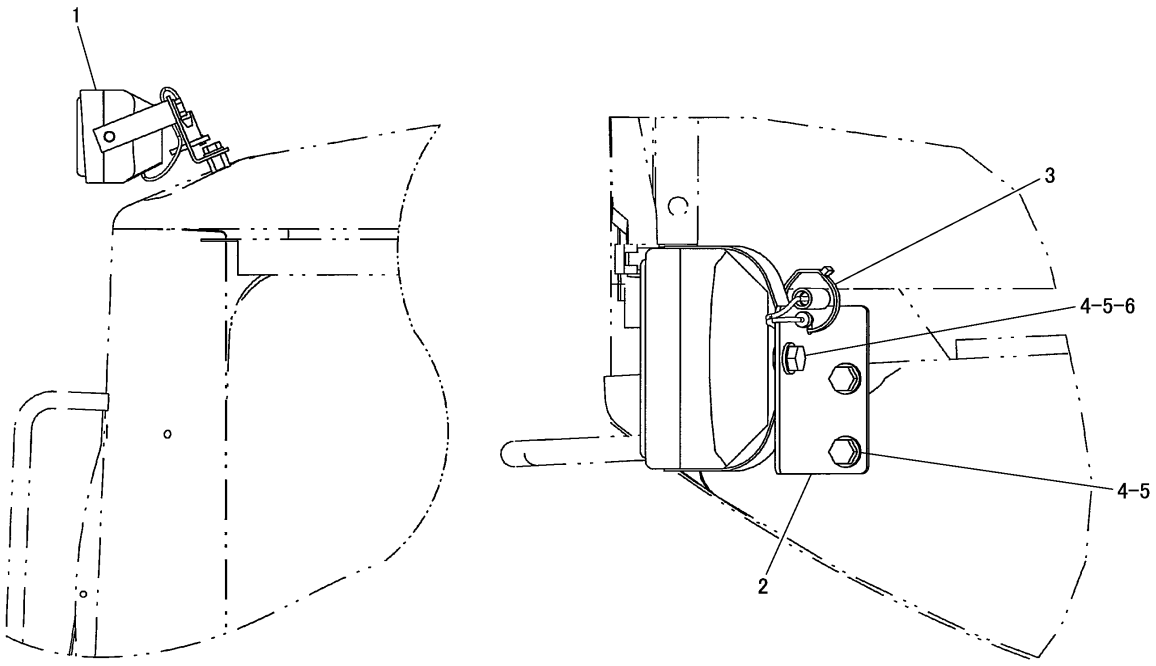

TOP VIEW

NOTE	No.	PART NO.	QTY	PART NAME	NOTE	No.	PART NO.	QTY	PART NAME
Y	1	198-0852	1	LAMP GROUP					
	2	198-0853	1	ANGLE					
	3	3S-2093	1	STRAP					
	4	8T-4137	3	BOLT(M10×1.5)					
	5	8T-4121	4	WASHER					
	6	8T-4133	1	NUT(M10×1.5)					

Y-SEPARATE ILLUSTRATION

J145268 X02

LIGHTING GROUP (198-0851 N/S) -CAB
PART OF 307-9222-Page 218
REFERENCE:198-0852-Page 222
AN ATTACHMENT

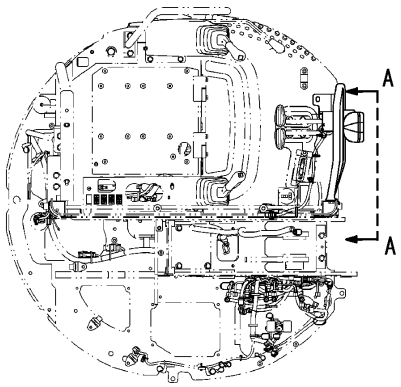

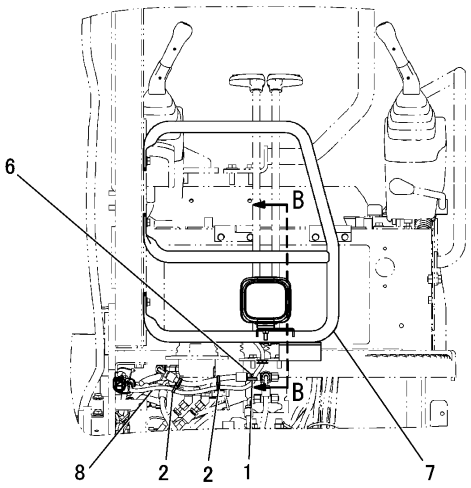

A–A

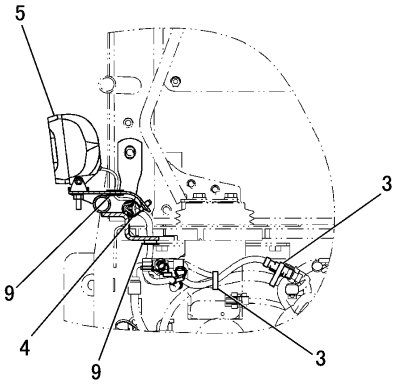

B–B

NOTE	No.	PART NO.	QTY	PART NAME	NOTE	No.	PART NO.	QTY	PART NAME
	1	3S−2093	1	STRAP					
	2	7I−2673	2	STRAP					
	3	7K−1181	2	STRAP					
	4	163−6795	1	STRAP					
Y	5	231−2495	1	LAMP GROUP					
	6	266−7379	1	STRAP					
	7	312−6332	1	HANDLE AS					
Y	8	317−2484	1	HARNESS AS					
	9	8P−8540	2	GROMMET					

Y-SEPARATE ILLUSTRATION

J149348 HE03

LIGHTING GROUP (307-9224 N/S) -CANOPY

REFERENCE:231-2495-Page 223 317-2484-Page 223
AN ATTACHMENT

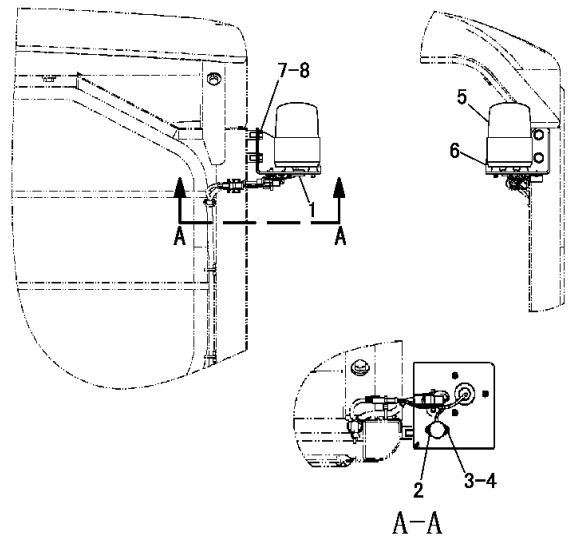

NOTE	No.	PART NO.	QTY	PART NAME
	1	093-2069	1	GROMMET
	2	125-5213	1	BUZZER AS
	3	125-5292	2	SCREW(M2.3×0.4)
	4	125-5298	2	WASHER
	5	199-5189	1	PATO LIGHT(YL)
	6	317-2483	1	BRACKET
	7	8T-4121	2	WASHER
	8	8T-4137	2	BOLT(M10×1.5)

J149351 HE02

LIGHTING GROUP (307-9231 N/S) -WARNING-CANOPY/CRANE
PART OF 307-8503-Page 2,330-3619-Page 3
AN ATTACHMENT

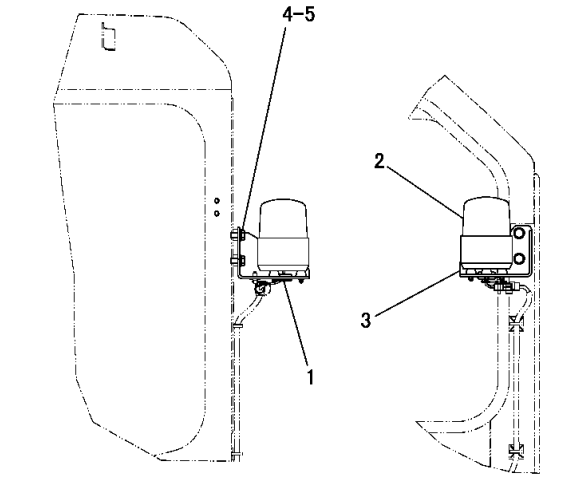

NOTE	No.	PART NO.	QTY	PART NAME
	1	093-2069	1	GROMMET
	2	199-5189	1	PATO LIGHT(YELLOW)
	3	317-2483	1	BRACKET
	4	8T-4121	2	WASHER
	5	8T-4137	2	BOLT(M10×1.5)

J147602 HE00

LIGHTING GROUP (307-9235 N/S) -WARNING-CAB/CRANE
PART OF 307-8504-Page 4,5,330-3620-Page 6,7
AN ATTACHMENT

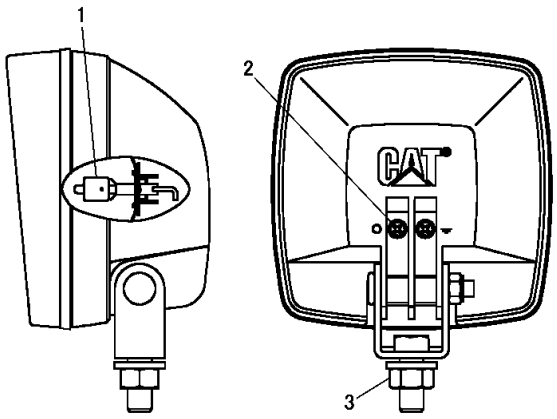

NOTE	No.	PART NO.	QTY	PART NAME
	1	142-9572	1	BULB(12V,55W)
	2	6V-9492	2	SCREW(M4×0.7)
		096-6166	2	WASHER
	3	8T-4223	1	WASHER
		9X-8488	1	NUT(M12×1.5)

J122664 E00

233-0099 FLOOD LAMP GROUP -VERTICAL-12V
PART OF 231-9769-Page 218

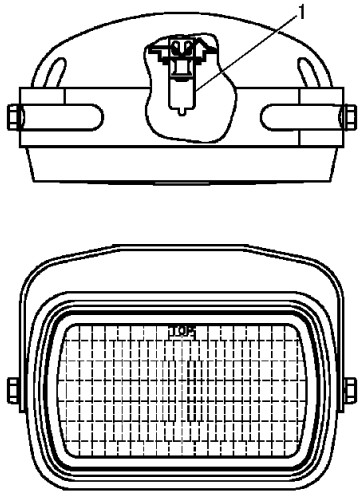

NOTE	No.	PART NO.	QTY	PART NAME
	1	142-9572	1	BULB(12V,55W)

J139874 X01

198-0852 FLOOD LAMP GROUP
PART OF 198-0851-Page 219
AN ATTACHMENT

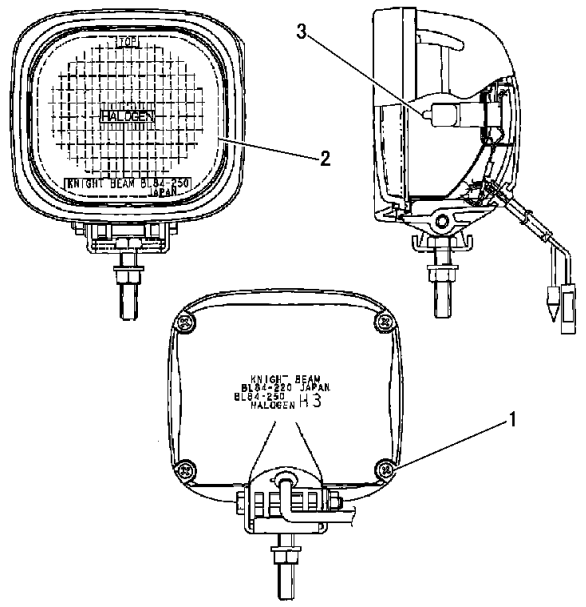

NOTE	No.	PART NO.	QTY	PART NAME
	1	257-3727	4	SCREW
	2	257-3728	1	LENS
	3	142-9572	1	BULB(12V,55W)

J147588 X02

231-2495 HEAD LAMP GROUP
PART OF 307-9224-Page 220
AN ATTACHMENT

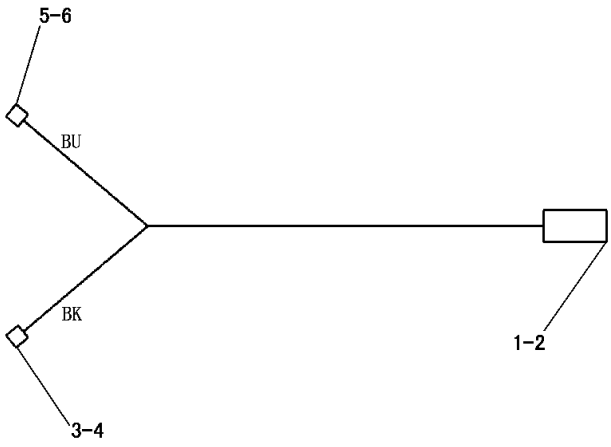

NOTE	No.	PART NO.	QTY	PART NAME
	1	243-4505	1	RECEPTACLE AS(2P)
	2	186-3735	2	PIN
	3	7Y-3962	1	TERMINAL
	4	7Y-3964	1	TUBE
	5	7Y-3963	1	TERMINAL
	6	7Y-3965	1	TUBE

J149349 HE01

317-2484 HARNESS ASSEMBLY
PART OF 307-9224-Page 220
AN ATTACHMENT

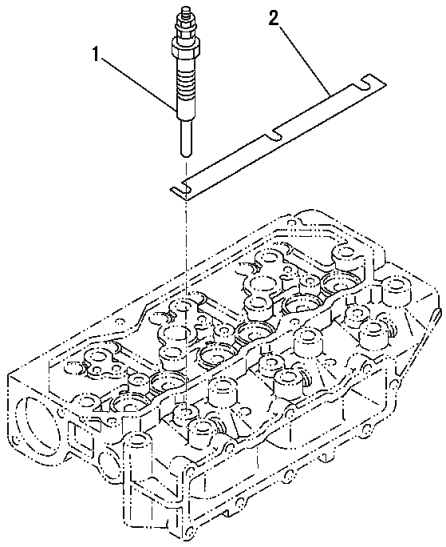

NOTE	No.	PART NO.	QTY	PART NAME
	1	199-2356	3	GLOW PLUG
	2	283-1312	1	PALTE

J141898 X01

GLOW PLUG GROUP (283-1311 N/S)
PART OF 319-5605-Page 9

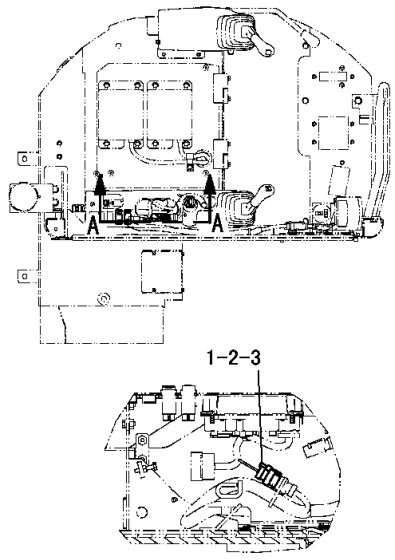

A-A

NOTE	No.	PART NO.	QTY	PART NAME
	1	186-3736	2	SOCKET
	2	8T-8737	4	PLUG
	3	230-5010	1	PLUG AS(6P)

J146844 HE01

CONNECTOR GROUP (308-9559 N/S) -CRANE-STANDARD STICK
PART OF 307-8503-Page 2,307-8504-Page 4,5
AN ATTACHMENT

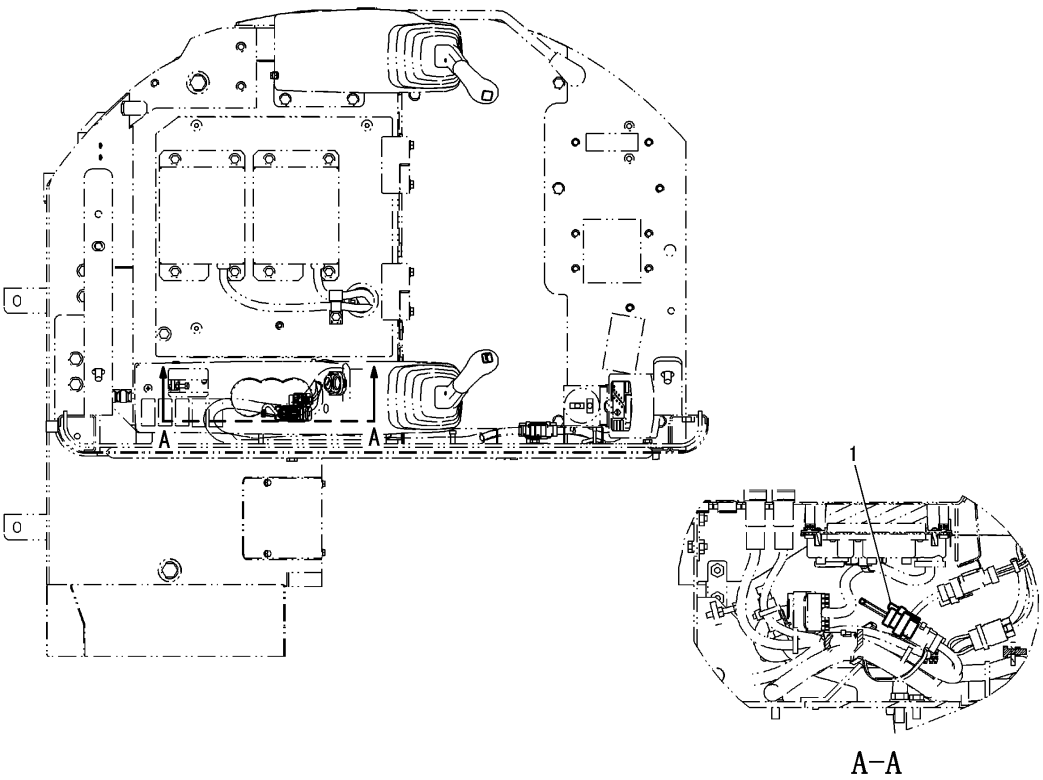

A-A

NOTE	No.	PART NO.	QTY	PART NAME	NOTE	No.	PART NO.	QTY	PART NAME
Z	1	325-9931	1	CONNECTOR AS					
		186-3736	3	SOCKET					
		8T-8737	3	PLUG					
		230-5010	1	PLUG AS(6P)					

Z-NOT SERVICED SEPARATELY

J152895 HE00

CONNECTOR GROUP (325-9930 N/S) -CRANE-LONG STICK
EFFECTIVE WITH SERIAL NO. MSP00401-
PART OF 330-3619-Page 3,330-3620-Page 6,7
AN ATTACHMENT

ELECTRICAL AND STARTING SYSTEM

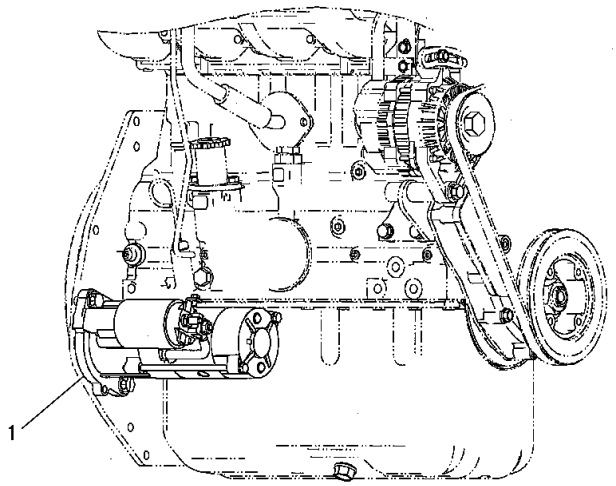

NOTE	No.	PART NO.	QTY	PART NAME
	1	280-3784	1	STARTING MOTOR AS

J141046 X01

ELECTRIC STARTING MOTOR GROUP (280-3736 N/S)

PART OF 319-5605-Page 9

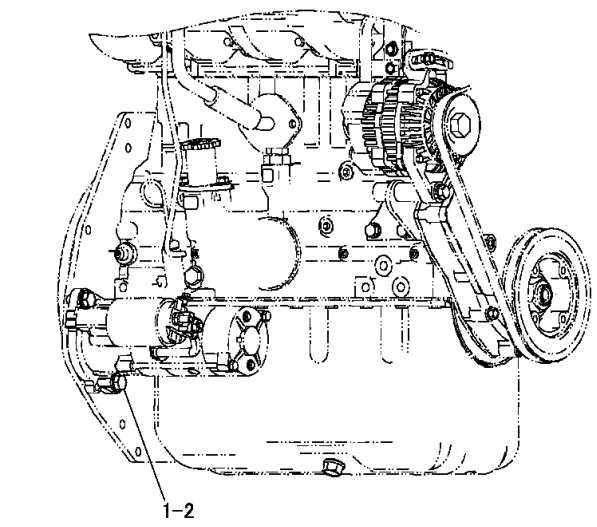

NOTE	No.	PART NO.	QTY	PART NAME
	1	127-4839	2	BOLT(M10×1.25)
	2	8T-4121	2	WASHER

J134943 X00

276-2215 STARTING MOTOR FASTENER GROUP

PART OF 296-2599-Page 10

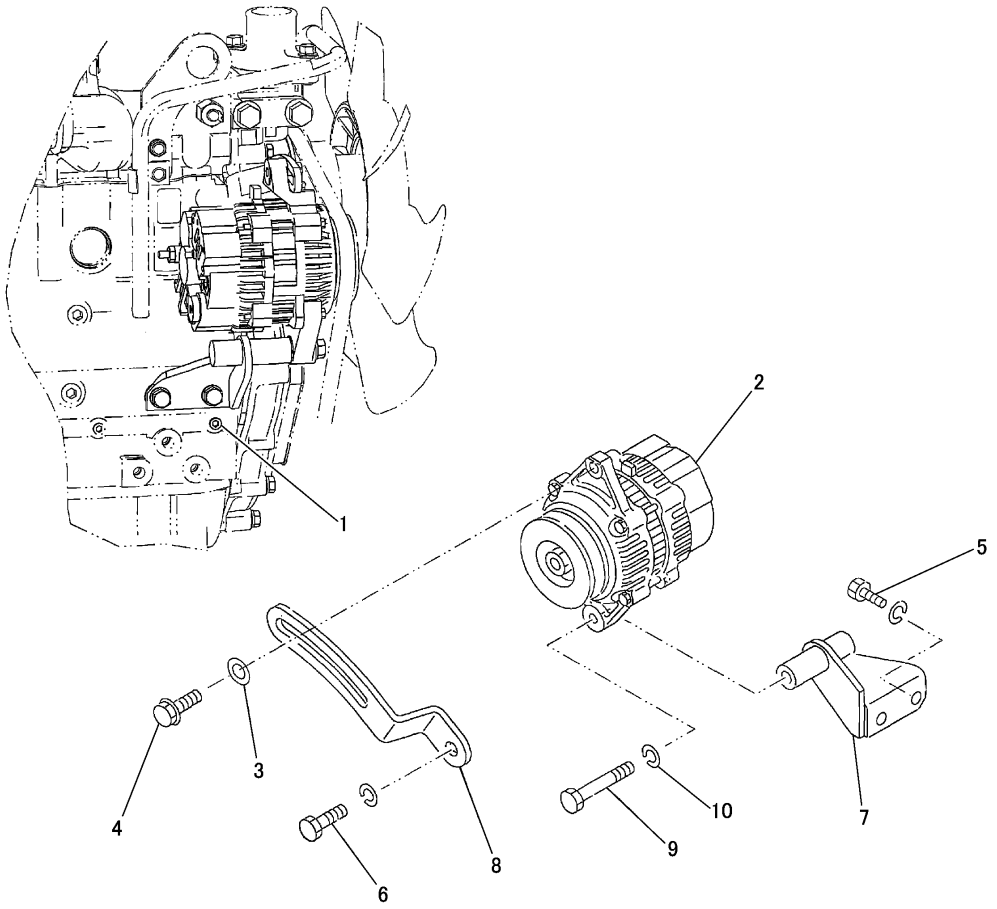

NOTE	No.	PART NO.	QTY	PART NAME	NOTE	No.	PART NO.	QTY	PART NAME
	1	5I-7505	1	PLUG					
	2	280-3787	1	ALTERNATOR AS					
	3	195-8497	1	WASHER					
	4	195-8498	1	BOLT(M8×1.25)					
	5	199-2178	2	BOLT(M10×1.25)					
	6	199-2262	1	BOLT(M8×1.25)					
	7	283-1310	1	BRACKET					
	8	280-3786	1	PLATE					
	9	035100035	1	BOLT					
	10	7X-0796	1	LOCKWASHER					

J141881 X01

CHARGING ALTERNATOR GROUP (283-1309 N/S)
PART OF 319-5605-Page 9

ELECTRICAL AND STARTING SYSTEM

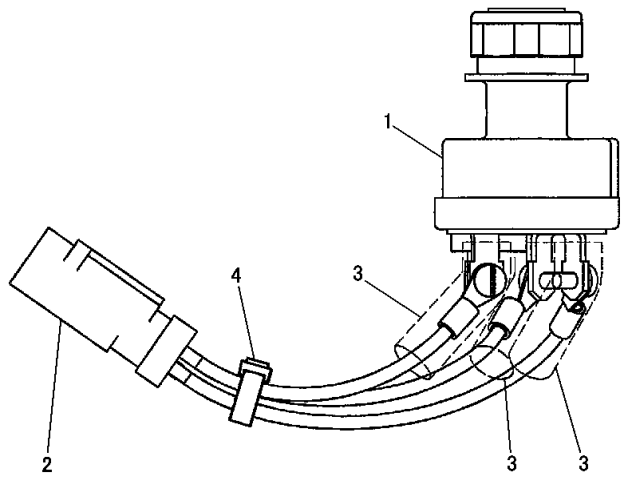

NOTE	No.	PART NO.	QTY	PART NAME
Y	1	9G-7641	1	SWITCH GROUP
	2	267-9952	1	HARNESS AS
		2L-8075	3	TERMINAL
		243-4507	1	RECEPTACLE AS(4P)
		8T-8737	1	PLUG
		186-3735	3	PIN
E	3	119-3662		TUBE---4cm(×3)
	4	3S-2093	1	STRAP

E-ORDER BY THE cm
Y-SEPARATE ILLUSTRATION

J138300 E02

267-9950 SWITCH GROUP

PART OF 296-1949-Page 81, 317-2980-Page 85
REFERENCE:9G-7641-Page 228

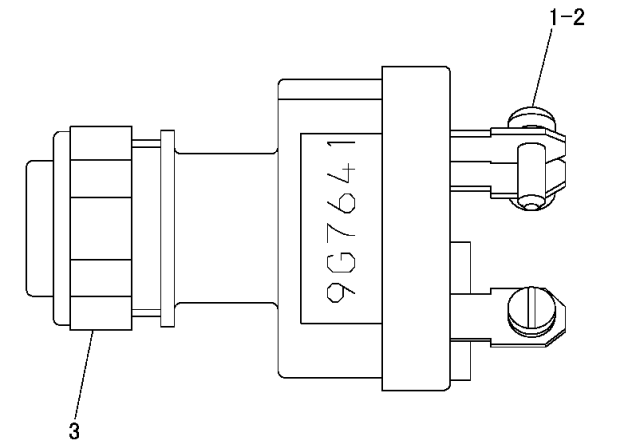

NOTE	No.	PART NO.	QTY	PART NAME
	1	6V-8362	4	SCREW(No.8-32)
	2	9B-7233	4	LOCKWASHER
	3	7T-6799	1	NUT(1-32)

J117143 X06

9G-7641 START SWITCH GROUP

PART OF 267-9950-Page 228

ELECTRICAL AND STARTING SYSTEM

CONSISTS OF :

PAGE

1 319-4471 ELECTRONIC CONTROL GROUP 229

J151959 X03

ELECTRONICS GROUP (308-6182 N/S) -PL-JPN

PART OF 315-0302-Page 129, 317-2475-Page 141, 317-2476-Page 153, 317-2478-Page 165, 325-9883-Page 163
327-7634-Page 135, 327-7635-Page 147, 327-7636-Page 175
AN ATTACHMENT

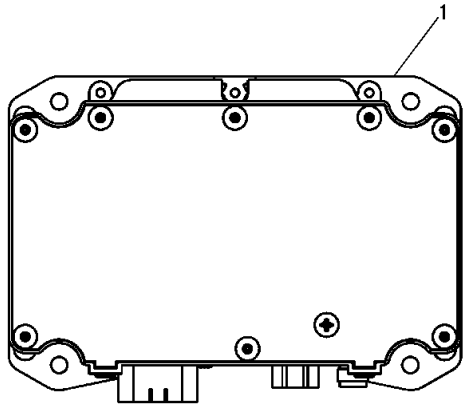

NOTE	No.	PART NO.	QTY	PART NAME
	1	309-5706	1	CONTROL GROUP

J151960 HE00

319-4471 ELECTRONIC CONTROL GROUP -PL-JPN

PART OF 308-6182-Page 229
AN ATTACHMENT

ELECTRICAL AND STARTING SYSTEM

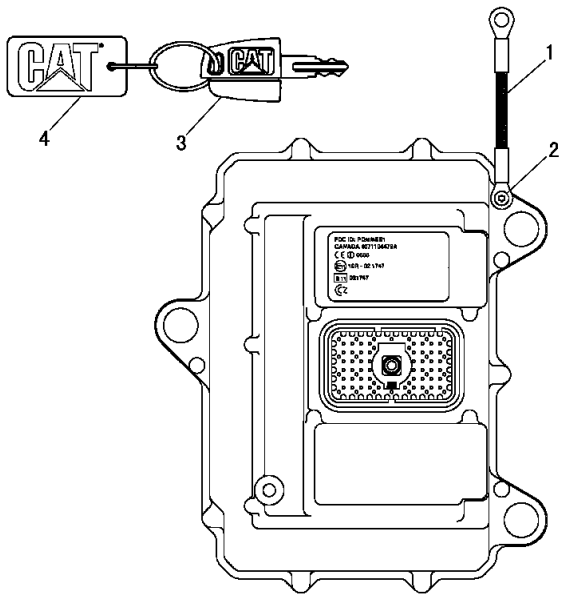

NOTE	No.	PART NO.	QTY	PART NAME
	1	7X-6315	1	STRAP
	2	184-2472	1	SCREW(No.8-32)
		134-4126	1	WASHER
	3	206-5165	2	KEY AS
	4	219-6314	2	TAG

J133068 -1

207-5262 CONTROL KIT -MSS
PART OF 309-3616-Page 181
AN ATTACHMENT

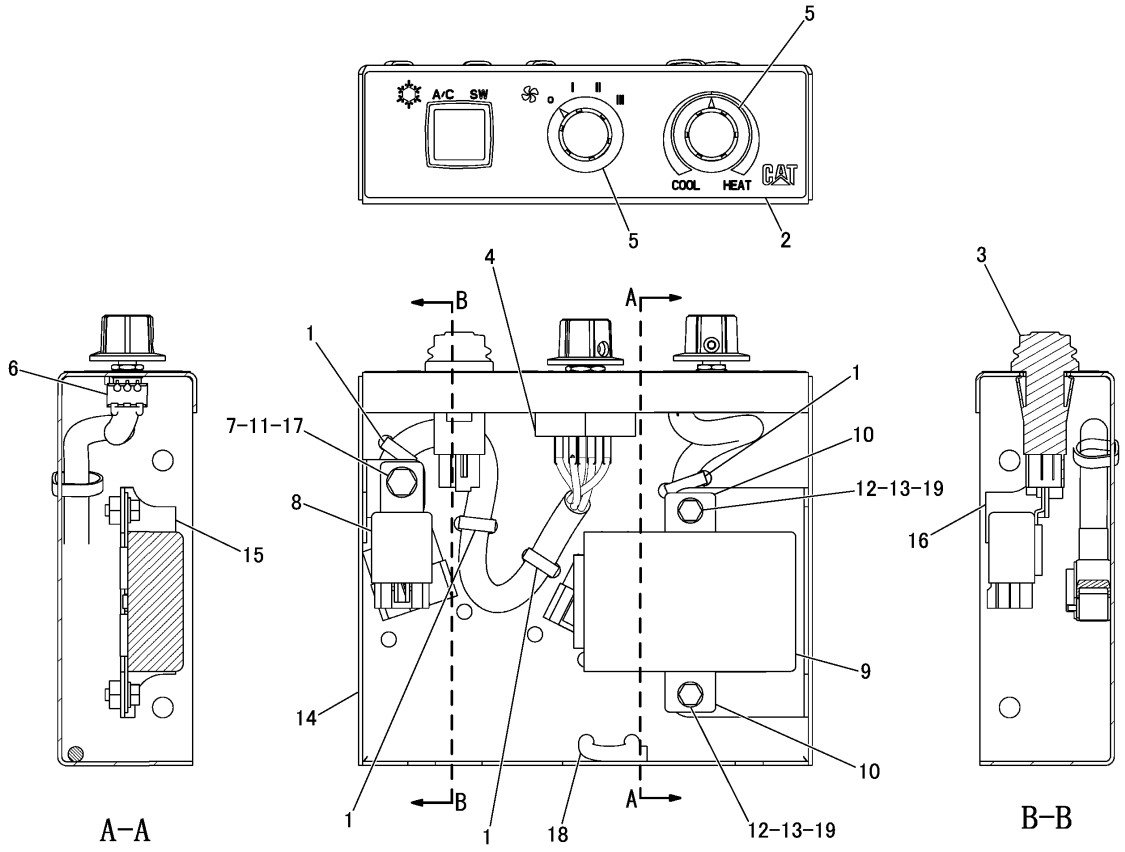

NOTE	No.	PART NO.	QTY	PART NAME	NOTE	No.	PART NO.	QTY	PART NAME
	1	3S-2093	4	STRAP					
	2	325-9888	1	FILM					
	3	325-9889	1	SWITCH AS					
	4	325-9890	1	SWITCH AS					
	5	325-9891	2	KNOB					
	6	325-9892	1	SWITCH AS					
	7	9X-8256	1	WASHER					
	8	325-9895	1	RELAY AS					
	9	325-9896	1	CONTROL AS					
	10	325-9897	2	BRACKET					
	11	7X-2619	1	BOLT(M6×1)					
	12	8T-0287	2	BOLT(M5×0.8)					
	13	8T-0328	2	WASHER					
	14	325-9893	1	BRACKET AS					
		325-9894	1	BRACKET					
	15	326-7159	1	BRACKET					
	16	328-0427	1	BRACKET					
	17	6V-9632	1	NUT(M6×1)(WELD)					
	18	7T-1099	1	LINK					
	19	8T-8874	2	NUT(M5×0.8)(WELD)					

J151551 HE01

326-9702 SWITCH PANEL GROUP
PART OF 311-1069-Page 125
APPLIES TO CAB AIR CONDITIONER SPECIFICATION MACHINE
AN ATTACHMENT

POWER TRAIN

CONSISTS OF :

			PAGE
1	193-7080	NONSEGMENTED SPROCKET GROUP ·····	232
1	295-3959	MOTOR AND MOUNTING GROUP(SWING) ·····	236
1	295-3960	MOTOR AND MOUNTING GROUP(TRAVEL) ·····	233

J146531 HE01

POWER TRAIN ARRANGEMENT (296-1806 N/S)
PART OF 296-1771-Page 1

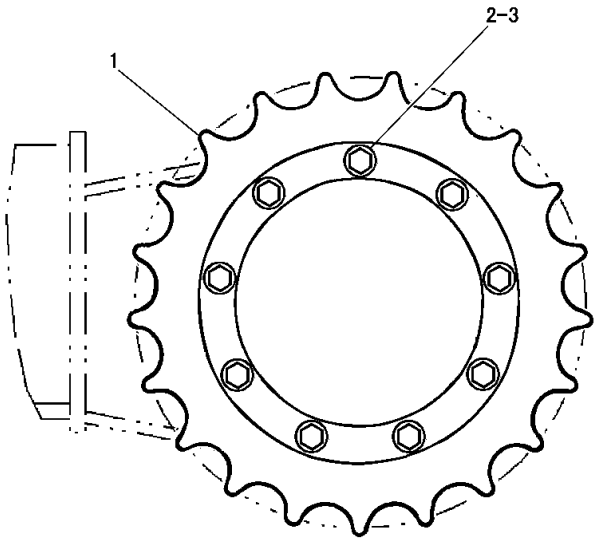

NOTE	No.	PART NO.	QTY	PART NAME
	1	193-7091	2	SPROCKET
	2	8T-4139	18	BOLT(M12×1.75)
	3	8T-4223	18	WASHER

J146679 X03

NONSEGMENTED SPROCKET GROUP (193-7080 N/S)
PART OF 296-1806-Page 232

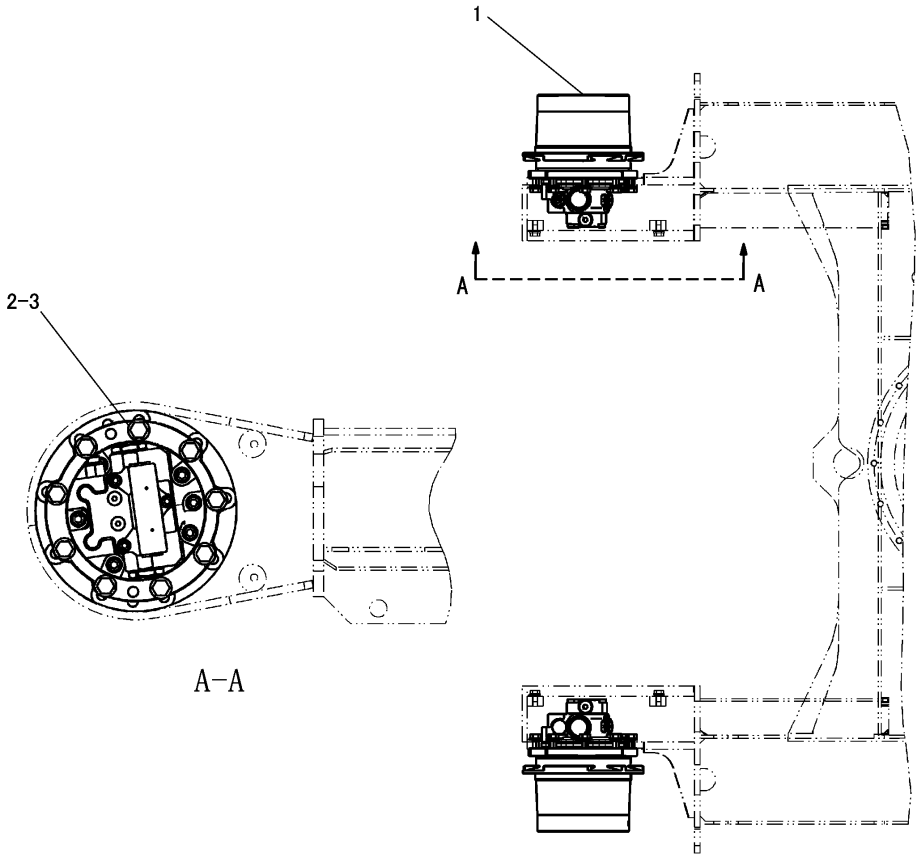

NOTE	No.	PART NO.	QTY	PART NAME	NOTE	No.	PART NO.	QTY	PART NAME
Y	1	295-9370	2	FINAL DRIVE GROUP					
	2	8T-4223	18	WASHER					
	3	8T-4956	18	BOLT(M12×1.75)					

Y-SEPARATE ILLUSTRATION

J146677 HE01

MOTOR AND MOUNTING GROUP (295-3960 N/S) -TRAVEL

PART OF 296-1806-Page 232
REFERENCE:295-9370-Page 234, 235

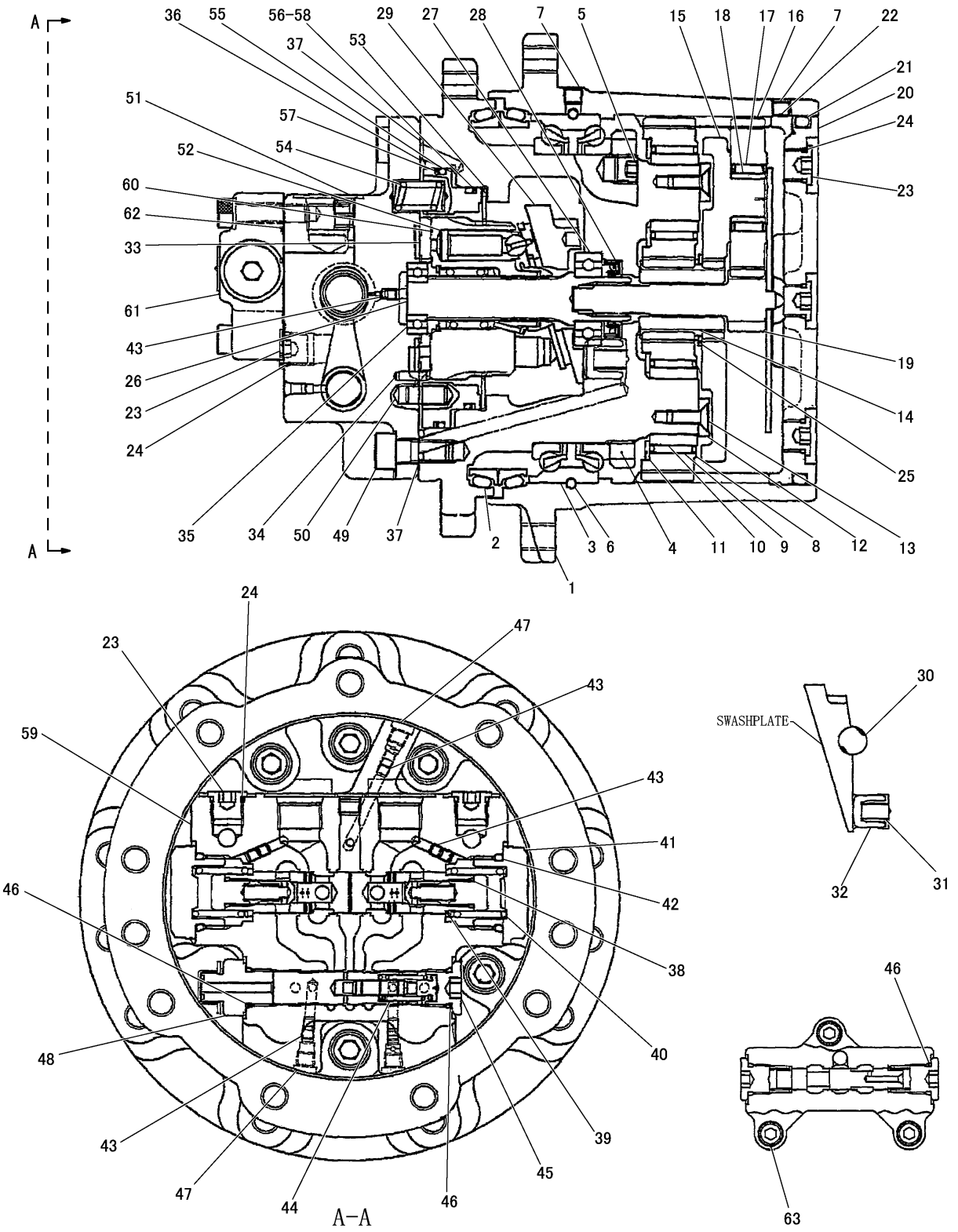

J146678 X02

FINAL DRIVE GROUP (295-9370 N/S)
PART OF 295-3960-Page 233

POWER TRAIN

NOTE	No.	PART NO.	QTY	PART NAME
	1	280-3097	1	GEAR GROUP
				(INCLUDES PARTS MARKED L)
LH	2	192-1134	2	SEAL
L	3	150-0909	1	BEARING
L	4	280-3098	1	NUT
L	5	150-0810	2	PLUG
L	6	143-2337	132	BALL
L	7	096-5971	2	PLUG
L	8	150-0811	4	GEAR
L	9	150-0812	4	BEARING
L	10	150-0813	4	RACE
L	11	150-0814	4	WASHER
L	12	143-2343	1	PLATE
L	13	143-2344	4	SCREW
L	14	150-0815	1	GEAR
L	15	280-3100	1	HOLDER
L	16	280-3101	3	GEAR
L	17	150-0818	3	BEARING
L	18	150-0819	3	RACE
L	19	280-3102	1	GEAR
L	20	280-3103	1	COVER
LH	21	095-1725	1	SEAL
LH	22	143-2358	1	WIRE
L	23	279-4706	7	PLUG
LH	24	3J-1907	7	SEAL
L	25	143-2346	1	RING
	26	150-0826	1	SHAFT
	27	150-0827	1	BEARING
H	28	202-7187	1	SEAL
	29	314-5291	1	PLATE
	30	150-0829	2	BALL
	31	280-3105	2	PISTON
	32	280-3106	2	SPRING
	33	150-0832	1	PLATE
	34	139-7325	1	PIN
	35	150-0834	1	BEARING
H	36	095-1676	1	SEAL
H	37	095-1574	4	SEAL
HN	38	095-1578	2	SEAL
	39	150-0873	2	SEAT
	40	150-0874	2	SPRING
	41	202-7174	2	CAP
H	42	095-1596	2	SEAL
	43	150-0881	8	ORIFICE
	44	280-3107	1	SPRING
	45	099-7197	1	PLUG
H	46	095-1582	4	SEAL
	47	1R-5468	3	PLUG
	48	280-3108	1	PLUG
	49	8T-9080	6	BOLT(M12×1.75)
	50	280-3109	4	PIN
	51	096-5971	1	PLUG
	52	280-3110	1	PISTON
	53	280-3111	1	DISK
	54	280-3112	8	SPRING
J	55	095-1674	1	SEAL
J	56	095-1671	1	SEAL
J	57	280-3113	1	RING
J	58	280-3114	1	RING
	59	288-6900	1	BLOCK KIT
				(INCLUDES PARTS MARKED N)
	60	280-3116	1	BARREL KIT
	61	288-6899	1	VALVE AS
				(INCLUDES PARTS MARKED K)
KH	62	095-1580	3	SEAL
K	63	6V-5192	3	BOLT(M8×1.25)
				AVAILABLE REPAIR KIT(S):
		288-6901	1	SEAL KIT
				(INCLUDES PARTS MARKED H)
		280-3118	1	SEAL KIT(BRAKE)
				(INCLUDES PARTS MARKED J)

J146678 X02

FINAL DRIVE GROUP (295-9370 N/S)
PART OF 295-3960-Page 233

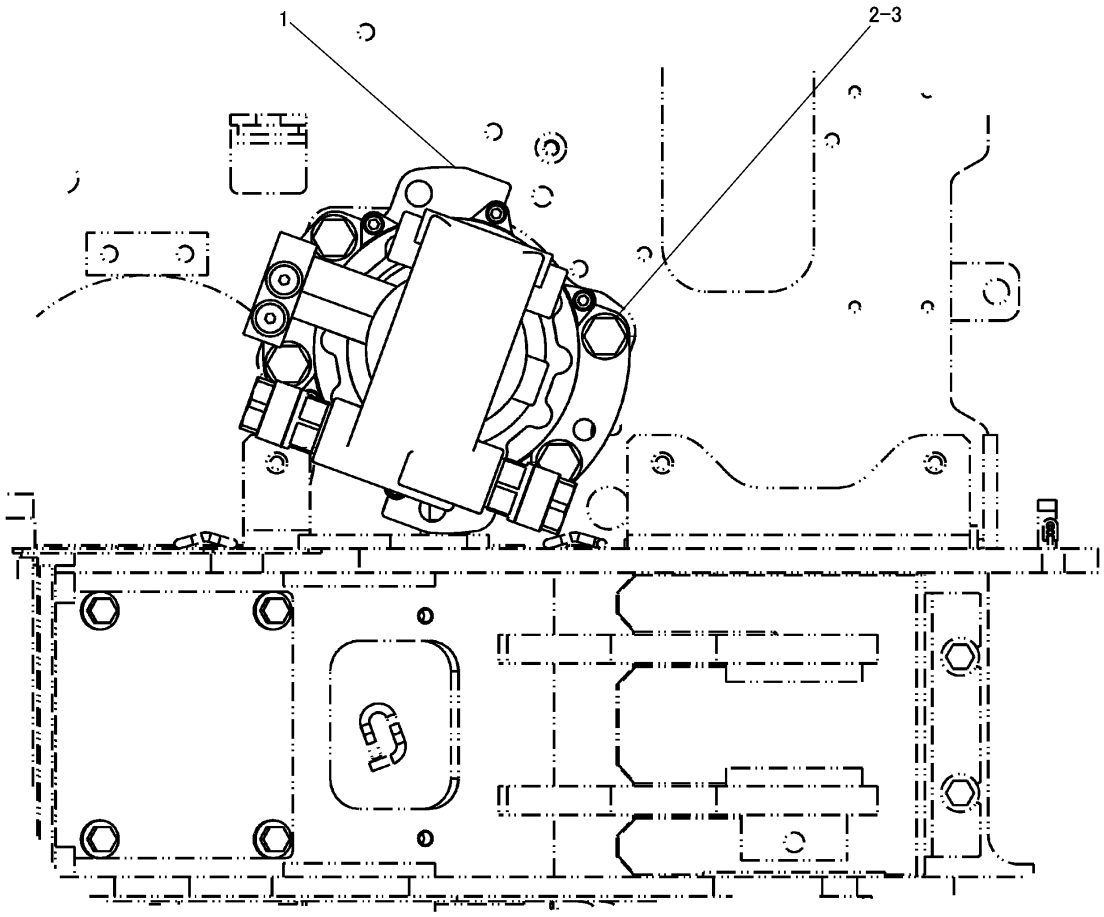

NOTE	No.	PART NO.	QTY	PART NAME	NOTE	No.	PART NO.	QTY	PART NAME
Y	1	295-9369	1	SWING DRIVE GROUP					
	2	8T-4193	4	BOLT(M16×2)					
	3	9X-8257	4	WASHER					

Y-SEPARATE ILLUSTRATION

J146676 HE01

MOTOR AND MOUNTING GROUP (295-3959 N/S) -SWING

PART OF 296-1806-Page 232
REFERENCE:295-9369-Page 237

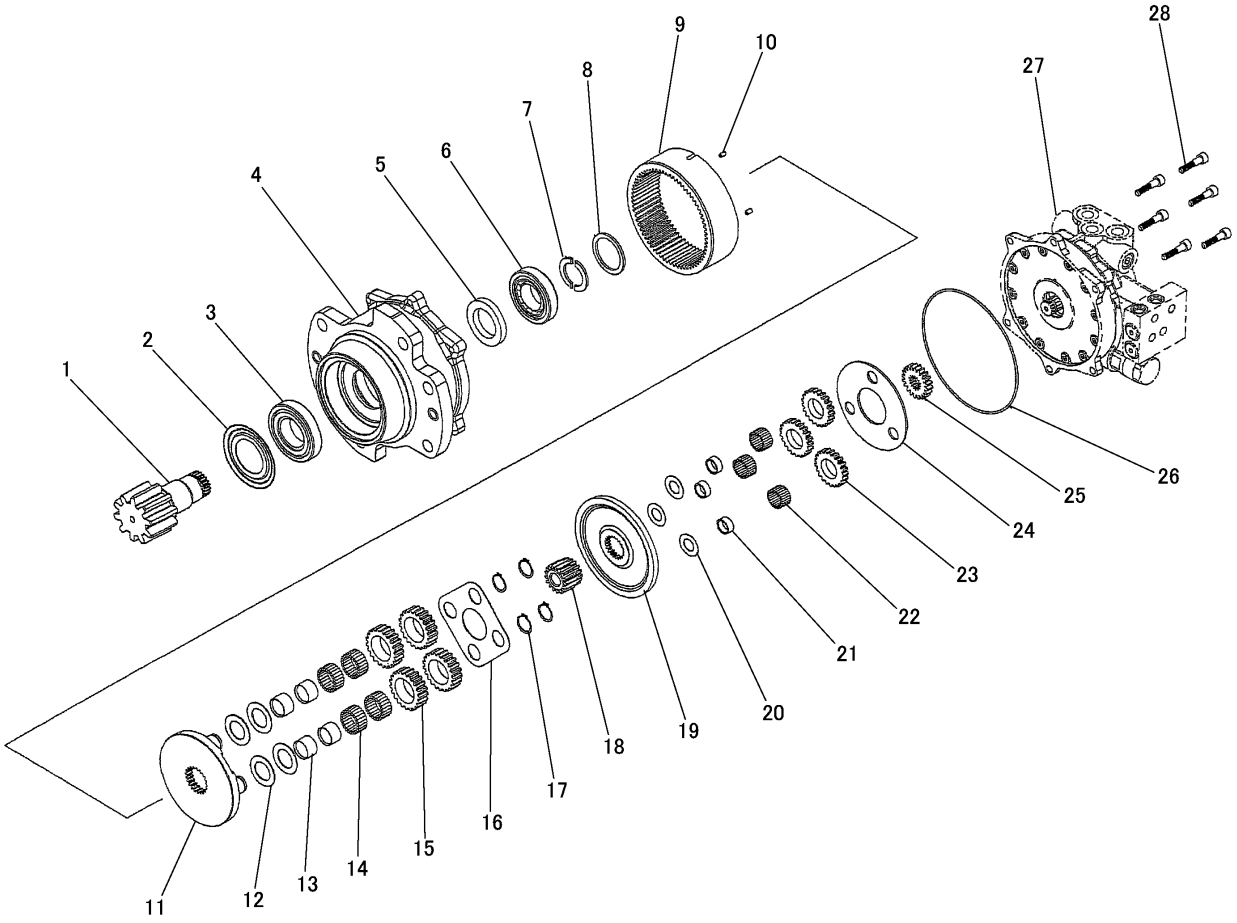

NOTE	No.	PART NO.	QTY	PART NAME	NOTE	No.	PART NO.	QTY	PART NAME
J	1		1	PINION SHAFT	L	21		3	RING
J	2		1	RING SEAL	L	22		72	NEEDLE
J	3		1	BEARING	L	23		3	GEAR
J	4		1	BODY	L	24		1	THRUST PLATE
J	5		1	SEAL		25	280-2358	1	GEAR
J	6		1	BEARING		26	9X-7391	1	SEAL
J	7		2	COLLAR	Y	27	314-8868	1	SWING MOTOR GROUP
	8	280-2360	1	RING		28	170-8763	6	SCREW
J	9		1	GEAR					
J	10		2	PIN					AVAILABLE REPAIR KIT(S):
K	11		1	CARRIER			280-2361	1	PINION KIT
K	12		4	THRUST WASHER					(INCLUDES PARTS MARKED J)
K	13		4	RING			280-2362	1	CARRIER 1 KIT
K	14		92	NEEDLE					(INCLUDES PARTS MARKED K)
K	15		4	GEAR			280-2363	1	CARRIER 2 KIT
K	16		1	THRUST PLATE					(INCLUDES PARTS MARKED L)
K	17	6V-5587	4	RING					
	18	280-2357	1	GEAR					
L	19		1	CARRIER					
L	20		3	THRUST WASHER					

Y-SEPARATE ILLUSTRATION

J146911 X02

SWING DRIVE GROUP (295-9369 N/S)

PART OF 295-3959-Page 236
REFERENCE:314-8868-Page 238

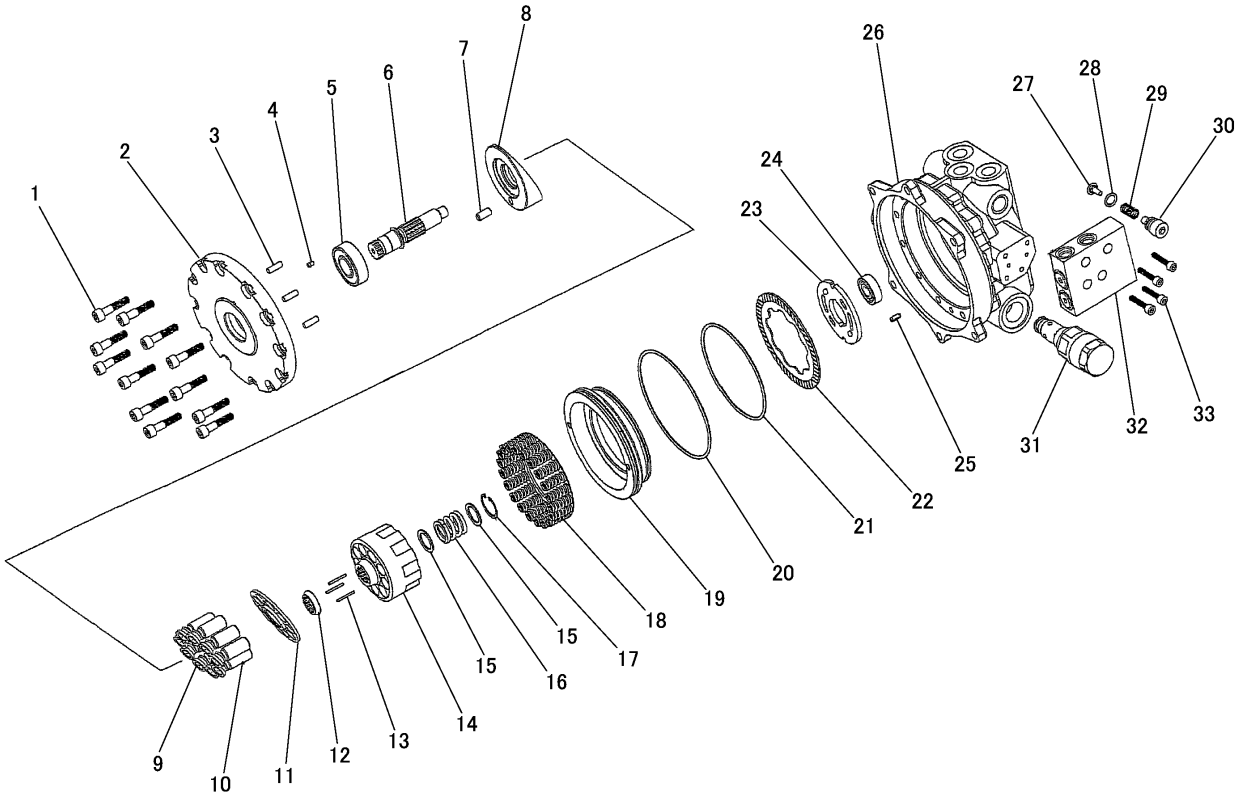

NOTE	No.	PART NO.	QTY	PART NAME	NOTE	No.	PART NO.	QTY	PART NAME
	1	170-8763	12	SCREW		22		1	DISK PLATE
	2		1	PLATE	K	23		1	VALVE PLATE
	3	280-2405	3	PIN	L	24	7F-8660	1	BEARING
	4	153-6087	1	FILTER	L	25	311-4452	1	SPRING PIN
	5	280-2364	1	BEARING	L	26		1	BODY
	6		1	SHAFT	L	27		2	CHECK VALVE
J	7	280-2365	1	PIN	LP	28	095-1579	2	SEAL
J	8		1	SWASH PLATE	L	29		2	SPRING
K	9		9	SHOE	L	30		2	PLUG
K	10		9	PISTON	Y	31	314-8869	2	VALVE GROUP
K	11		1	SHOE HOLDER	Y	32	274-9034	1	VALVE GROUP
K	12		1	BARREL HOLDER		33	236-9839	4	BOLT(M6×1)
K	13		3	PIN					
K	14		1	CYLINDER					AVAILABLE REPAIR KIT(S):
K	15		2	RETAINER			314-7713	1	SWASH PLATE KIT
K	16		1	SPRING					(INCLEDES PARTS MARKED J)
K	17	6V-5205	1	RING			280-2368	1	BARREL KIT
	18		1	SPRING AS					(INCLEDES PARTS MARKED K)
	19		1	BRAKE PISTON			280-2367	1	BODY KIT
P	20	096-5382	1	SEAL					(INCLEDES PARTS MARKED L)
P	21	095-1716	1	SEAL			314-7714	1	SEAL KIT
									(INCLEDES PARTS MARKED P)

Y-SEPARATE ILLUSTRATION

J146912 X00

314-8868 SWING MOTOR GROUP

PART OF 295-9369-Page 237
REFERENCE:314-8869-Page 240 274-9034-Page 239

POWER TRAIN

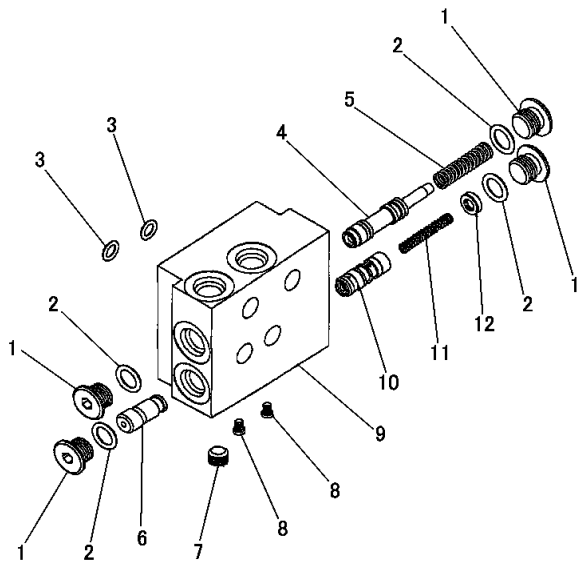

NOTE	No.	PART NO.	QTY	PART NAME
	1	169-1130	4	PLUG
J	2	095-1579	4	SEAL
J	3	095-1574	2	SEAL
	4		1	SPOOL
	5		1	SPRING
	6		1	STOPPER
	7	169-1116	1	PLUG
	8		2	PLUG
	9		1	BODY
	10		1	PISTON
	11		1	SPRING
	12		1	SPRING HOLDER
				AVAILABLE REPAIR KIT(S):
		314-9352	1	SEAL KIT (INCLUDES PARTS MARKED J)

J146914 X01

274-9034 VALVE GROUP
PART OF 314-8868-Page 238

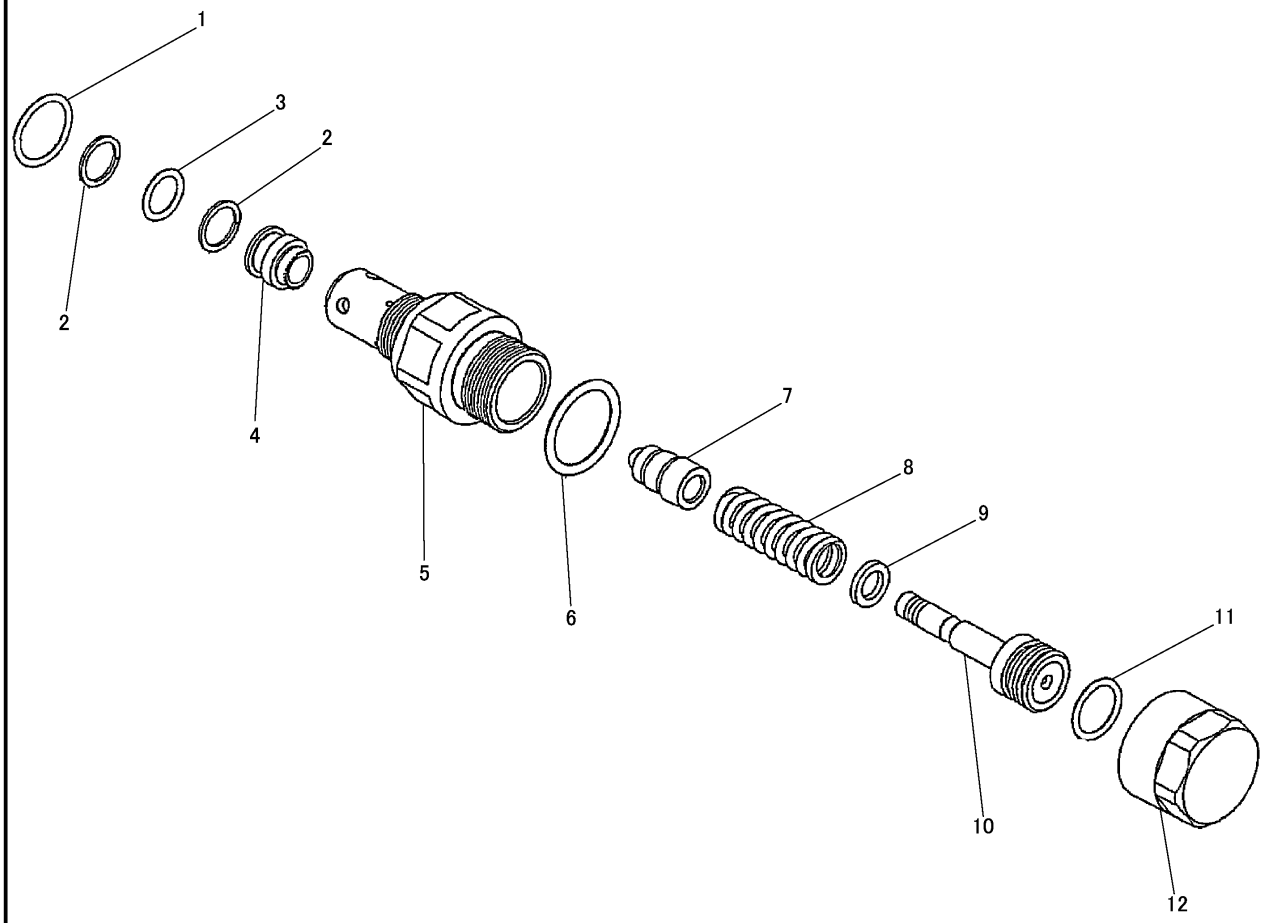

NOTE	No.	PART NO.	QTY	PART NAME	NOTE	No.	PART NO.	QTY	PART NAME
J	1	095−1590	1	SEAL					
J	2	095−1781	2	RING					
J	3	095−1582	1	SEAL					
	4		1	SEAT					
	5		1	RETAINER					
J	6	095−1595	1	SEAL					
	7		1	POPPET					
	8		1	SPRING					
	9		1	SPACER					
	10		1	PISTON					
J	11	095−1585	1	SEAL					
	12		1	CAP					
				AVAILABLE REPAIR KIT(S):					
		314−8928	1	SEAL KIT (INCLUDES PARTS MARKED J)					

J146913 X00

314-8869 RELIEF VALVE GROUP
PART OF 314-8868-Page 238

CONSISTS OF :

			PAGE
1	232-0419	ELECTRIC HORN GROUP	520
1	296-1599	COUNTERWEIGHT GROUP	282
1	296-1602	FENDER COVER GROUP	263
1	296-1607	HOOD AND GUARD GROUP	242
1	296-1610	FUEL TANK AND MOUNTING GROUP	59
1	296-1617	FIREWALL GROUP	280
1	296-1619	FUEL FILTER LINES GROUP	56
1	296-1769	COVER GROUP	284
1	296-1947	BATTERY AND WIRING GROUP	60
1	296-1948	SENSOR AND MOUNTING GROUP	448
1	296-6133	OPERATOR ARRANGEMENT	464
1	296-6893	BOTTOM GUARD GROUP	261
1	296-6894	UPPER FRAME GROUP	268
1	296-6896	GREASE LINES GROUP	303
1	296-7440	FILM GROUP	540

STD/ATT REMOVAL:

1 296-6901 GOVERNOR CONTROL GROUP

J149794 HE03

CHASSIS ARRANGEMENT (296-1803 N/S)
PART OF 296-1771-Page 1

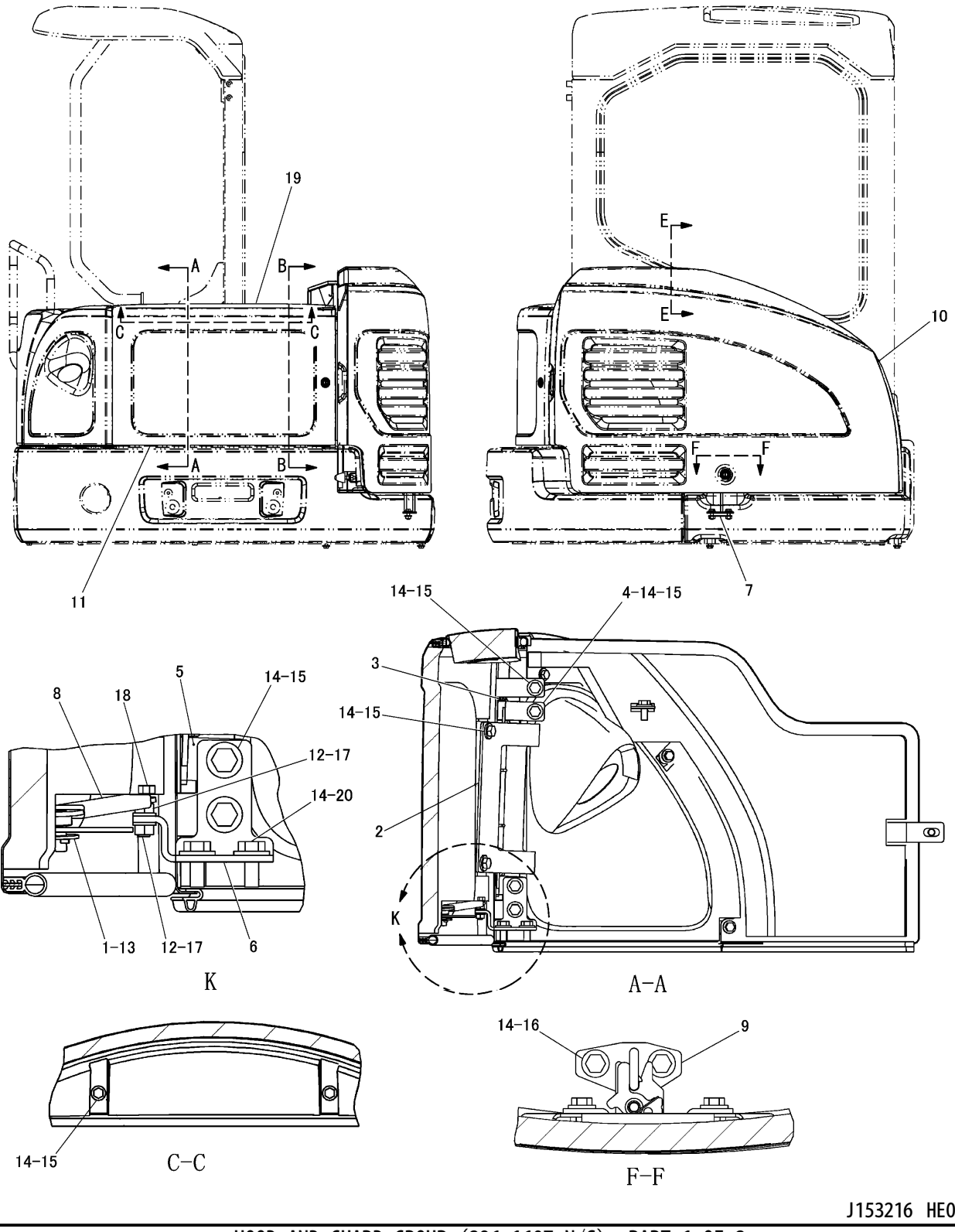

HOOD AND GUARD GROUP (296-1607 N/S) -PART 1 OF 2

PART OF 296-1803-Page 241

FRAME AND BODY

NOTE	No.	PART NO.	QTY	PART NAME	NOTE	No.	PART NO.	QTY	PART NAME
	1	3B−4610	1	COTTER PIN					
	2	265−8405	1	HINGE AS					
	3	3B−4610	1	COTTER PIN					
		8T−4224	1	WASHER					
Z	4	265−8466	1	SUPPORT AS					
		8T−3490	1	NUT(M10×1.5)(WELD)					
Z	5	265−8467	1	SUPPORT AS					
		8T−3490	1	NUT(M10×1.5)(WELD)					
	6	265−8409	1	BRACKET					
	7	276−9257	1	PLATE AS					
		8T−3490	1	NUT(M10×1.5)(WELD)					
	8	285−7703	1	PLATE AS					
	9	296−1714	1	STRIKER AS					
Y	10	300−4340	1	COVER GROUP(RH)					
Y	11	300−4380	1	HOOD GROUP					
	12	5C−7261	2	NUT(M8×1.25)					
	13	7X−0579	1	WASHER					
	14	7X−7729	12	WASHER					
	15	8T−4137	8	BOLT(M10×1.5)					
	16	8T−4195	2	BOLT(M10×1.5)					
	17	8T−4224	2	WASHER					
	18	8T−7547	1	BOLT(M8×1.25)					
Y	19	300−4382	1	COVER AS					
	20	8T−4136	2	BOLT(M10×1.5)					

Y-SEPARATE ILLUSTRATION
Z-NOT SERVICED SEPARATELY

J153216 HE03

HOOD AND GUARD GROUP (296-1607 N/S) -PART 1 OF 2

PART OF 296-1803-Page 241
REFERENCE:300-4340-Page 253 300-4380-Page 250 300-4382-Page 260

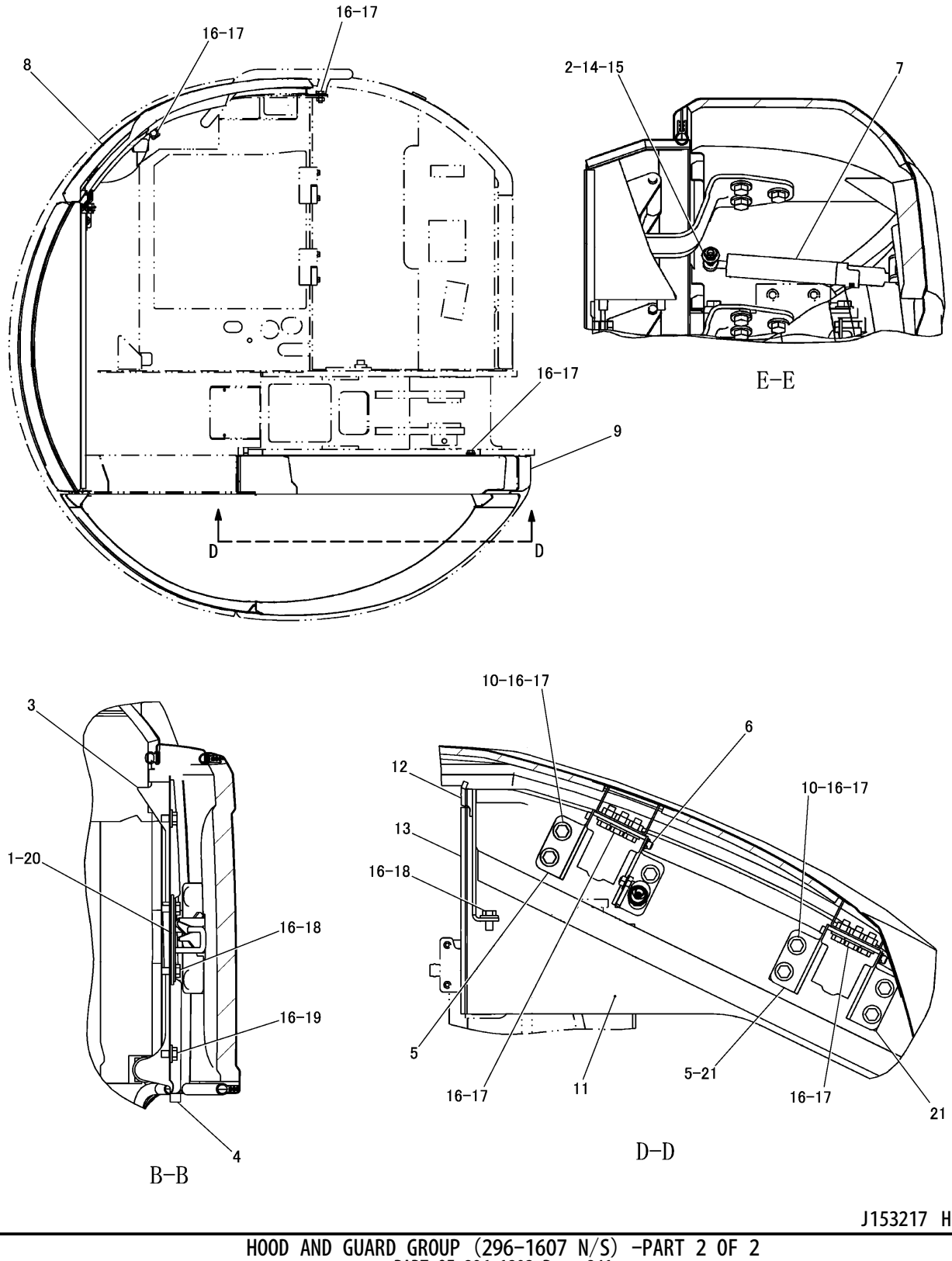

HOOD AND GUARD GROUP (296-1607 N/S) -PART 2 OF 2
PART OF 296-1803-Page 241

FRAME AND BODY

NOTE	No.	PART NO.	QTY	PART NAME
	1	265-8406	1	STRIKER AS
	2	265-8463	1	BALL STUD(M8×1.25)
	3	265-8504	1	SUPPORT AS
D	4	5P-5643		SEAL---0.07m
	5	296-1712	2	HINGE AS
	6	3B-4610	1	COTTER PIN
		7X-0608	3	WASHER
	7	296-1762	1	SPRING AS
Y	8	300-4343	1	COVER GROUP(LH)
	9	300-4348	1	COVER AS
		300-4349	1	COVER AS
	10	8T-3490	9	NUT(M10×1.5)(WELD)
	11	297-9523	1	INSULATION
E	12	8T-9005		SEAL---13cm
E	13	8T-9005		SEAL---28.5cm
	14	5C-7261	1	NUT(M8×1.25)
	15	5P-4116	1	WASHER
	16	7X-7729	23	WASHER
	17	8T-4136	17	BOLT(M10×1.5)
	18	8T-4137	4	BOLT(M10×1.5)
	19	8T-4191	2	BOLT(M10×1.5)
B	20	276-9258	2	SHIM(3mm THICK)
B	21	296-1763	2	SHIM(2mm THICK)

NOTE	No.	PART NO.	QTY	PART NAME

B-USE AS REQUIRED
D-ORDER BY THE m
E-ORDER BY THE cm
Y-SEPARATE ILLUSTRATION

J153217 HE03

HOOD AND GUARD GROUP (296-1607 N/S) -PART 2 OF 2

PART OF 296-1803-Page 241
REFERENCE:300-4343-Page 257

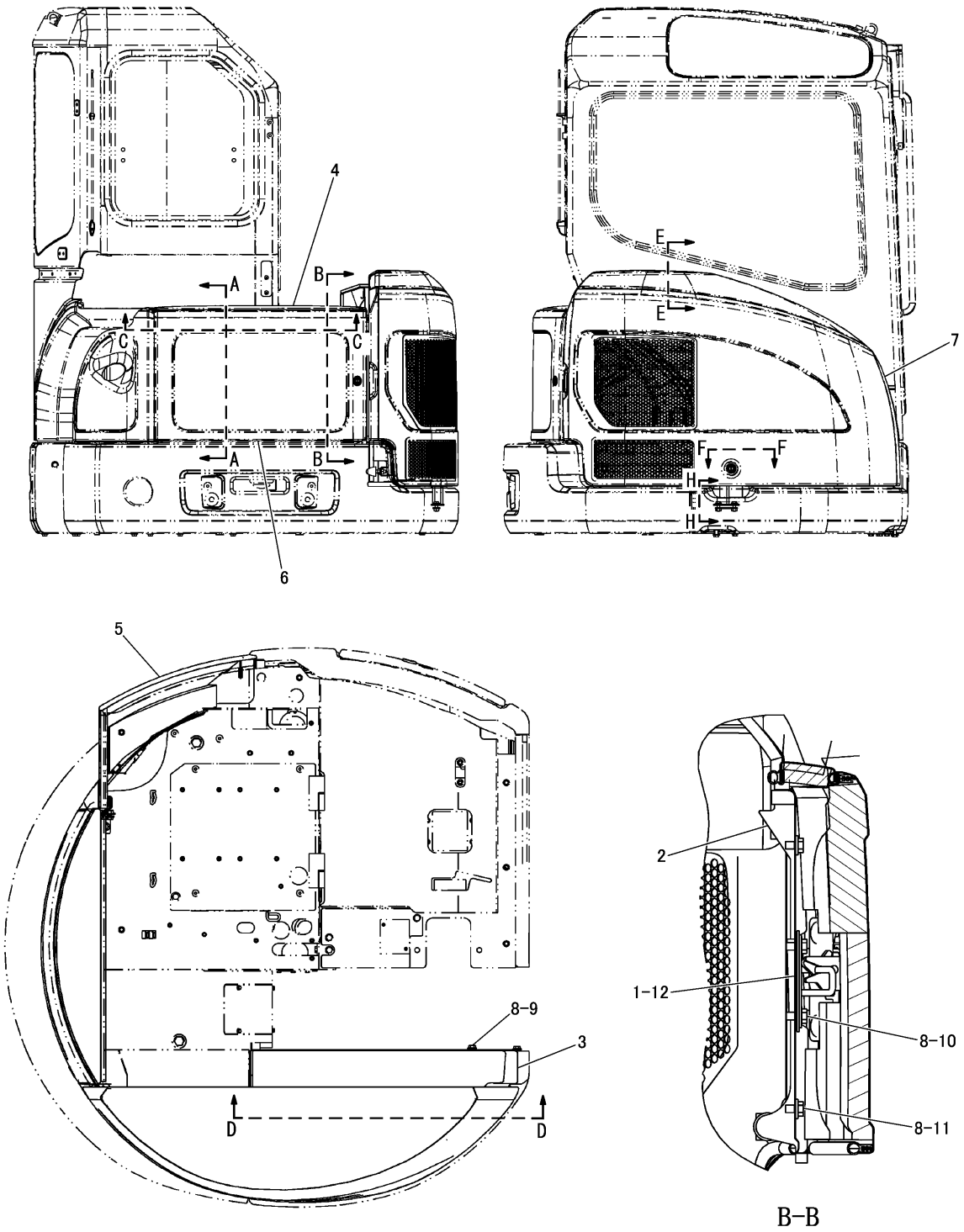

J151909 HE01

HOOD AND GUARD GROUP (331-7243 N/S) -PART 1 OF 2
PART OF 308-4118-Page 466
APPLIES TO CAB AIR CONDITIONER SPECIFICATION MACHINE
AN ATTACHMENT

FRAME AND BODY

NOTE	No.	PART NO.	QTY	PART NAME
	1	265-8406	1	STRIKER AS
	2	265-8504	1	SUPPORT AS
D		5P-5643		SEAL---0.07m
	3	300-4348	1	COVER AS
		297-9523	1	INSULATION
E		8T-9005		SEAL---13cm
E		8T-9005		SEAL---28.5cm
		300-4349	1	COVER AS
		8T-3490	9	NUT(M10×1.5)(WELD)
Y	4	300-4382	1	COVER AS
Y	5	309-0347	1	COVER GROUP(LH)
Y	6	324-6401	1	HOOD GROUP
Y	7	331-7244	1	COVER GROUP(RH)
	8	7X-7729	5	WASHER
	9	8T-4136	1	BOLT(M10×1.5)
	10	8T-4137	2	BOLT(M10×1.5)
	11	8T-4191	2	BOLT(M10×1.5)
B	12	276-9258	2	SHIM(3mm THICK)

NOTE	No.	PART NO.	QTY	PART NAME

B-USE AS REQUIRED
D-ORDER BY THE m
E-ORDER BY THE cm

Y-SEPARATE ILLUSTRATION

J151909 HE01

HOOD AND GUARD GROUP (331-7243 N/S) -PART 1 OF 2

PART OF 308-4118-Page 466
REFERENCE:300-4382-Page 260 309-0347-Page 258 324-6401-Page 251 331-7244-Page 254
APPLIES TO CAB AIR CONDITIONER SPECIFICATION MACHINE
AN ATTACHMENT

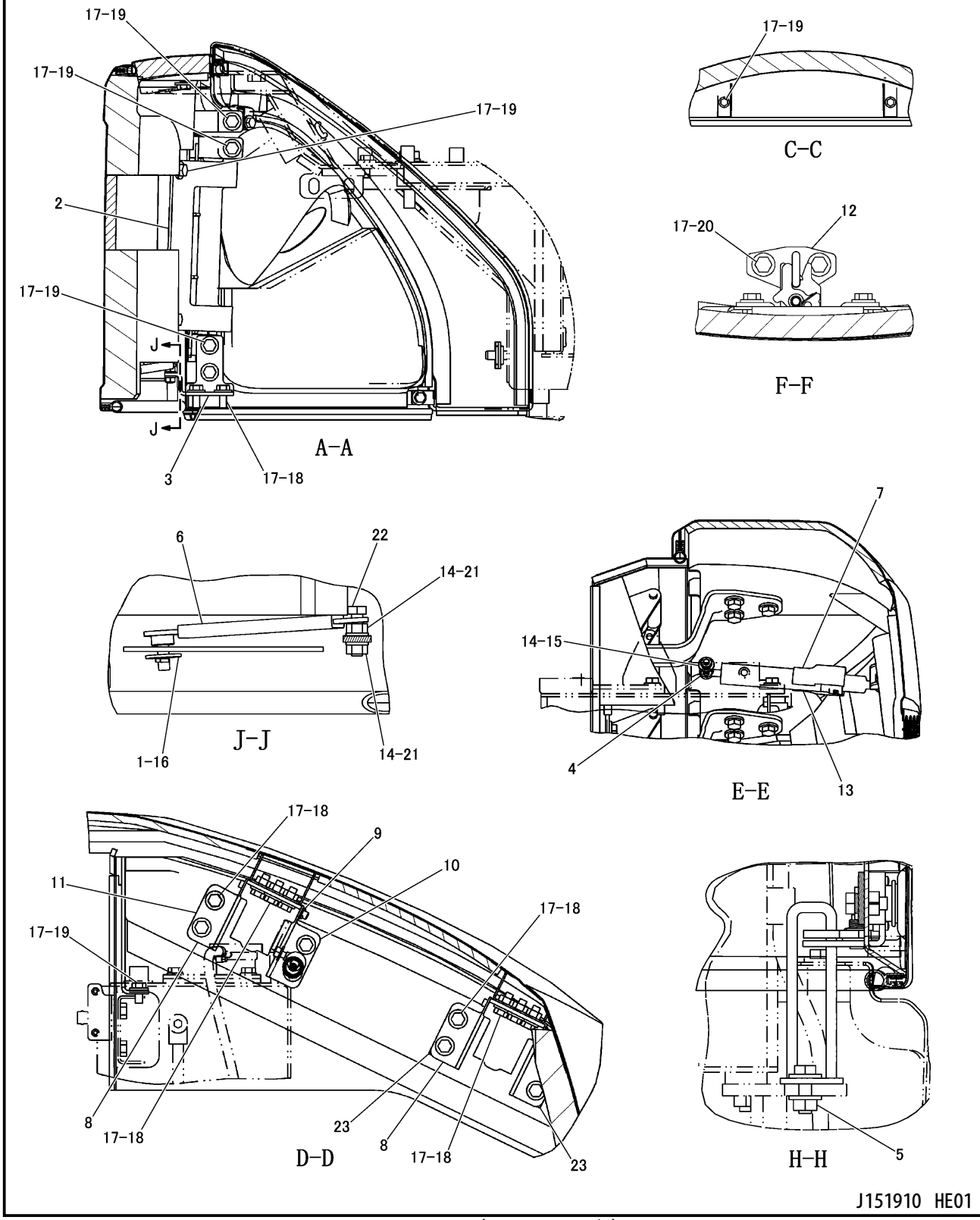

HOOD AND GUARD GROUP (331-7243 N/S) -PART 2 OF 2
PART OF 308-4118-Page 466
APPLIES TO CAB AIR CONDITIONER SPECIFICATION MACHINE
AN ATTACHMENT

FRAME AND BODY

NOTE	No.	PART NO.	QTY	PART NAME	NOTE	No.	PART NO.	QTY	PART NAME
	1	3B-4610	1	COTTER PIN					
	2	265-8405	1	HINGE AS					
	3	265-8409	1	BRACKET					
	4	265-8463	1	BALL STUD(M8×1.25)					
	5	276-9257	1	PLATE AS					
		8T-3490	2	NUT(M10×1.5)(WELD)					
	6	285-7703	1	PLATE AS					
	7	296-0219	1	COVER					
	8	296-1712	2	HINGE AS					
		7X-0608	3	WASHER					
	9	3B-4610	1	COTTER PIN					
	10	296-1750	1	SUPPORT					
	11	296-1751	1	SUPPORT AS					
	12	296-1714	1	STRIKER AS					
	13	296-1762	1	SPRING AS					
	14	5C-7261	3	NUT(M8×1.25)					
	15	5P-4116	1	WASHER					
	16	7X-0579	1	WASHER					
	17	7X-7729	28	WASHER					
	18	8T-4136	16	BOLT(M10×1.5)					
	19	8T-4137	10	BOLT(M10×1.5)					
	20	8T-4195	2	BOLT(M10×1.5)					
	21	8T-4224	2	WASHER					
	22	8T-7547	1	BOLT(M8×1.25)					
B	23	296-1763	2	SHIM(2.0mm THICK)					

B-USE AS REQUIRED

J151910 HE01

HOOD AND GUARD GROUP (331-7243 N/S) -PART 2 OF 2

PART OF 308-4118-Page 466
APPLIES TO CAB AIR CONDITIONER SPECIFICATION MACHINE
AN ATTACHMENT

FRAME AND BODY

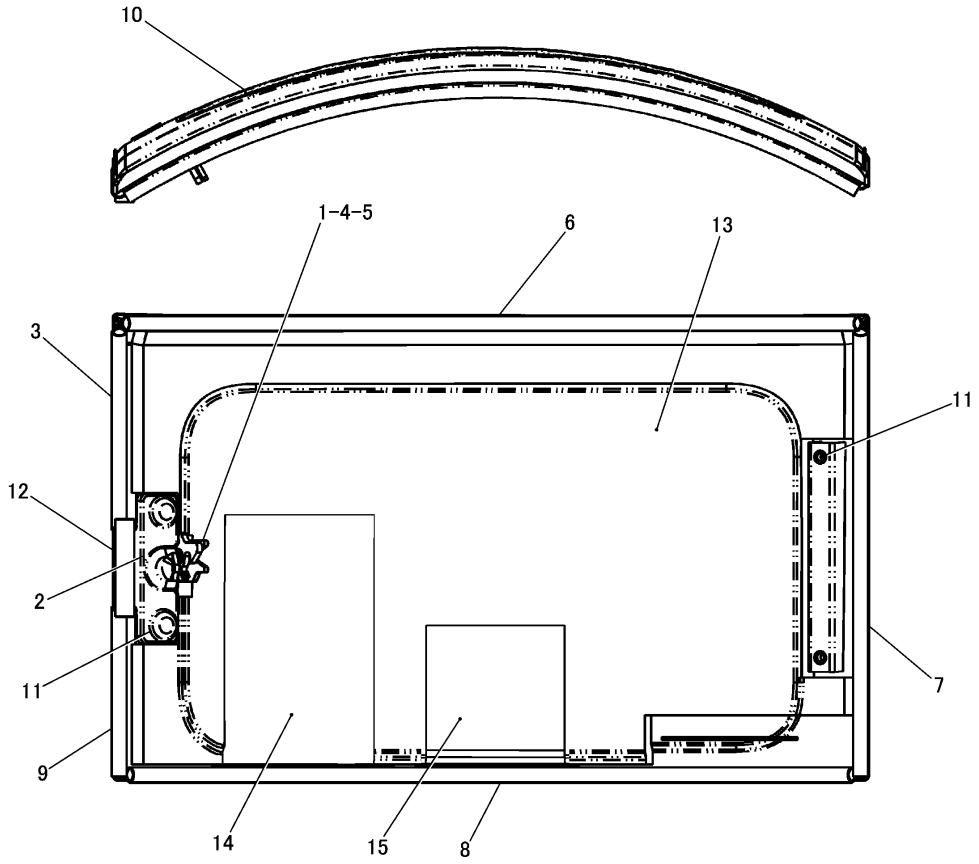

NOTE	No.	PART NO.	QTY	PART NAME	NOTE	No.	PART NO.	QTY	PART NAME
	1	276－9277	1	LATCH AS					
		191－0348	1	GROMMET					
		276－9278	1	LATCH AS					
	2	285－7702	1	COVER AS					
D	3	5P－8309		SEAL---0.225m					
	4	7X－7729	2	WASHER					
	5	8T－4136	2	BOLT(M10×1.5)					
D	6	5P－8309		SEAL---0.825m					
D	7	5P－8309		SEAL---0.48m					
D	8	5P－8309		SEAL---0.81m					
D	9	5P－8309		SEAL---0.18m					
	10	300－4381	1	HOOD AS					
		265－8500	1	HOOD AS					
	11	8T－3490	4	NUT(M10×1.5)(WELD)					
	12	276－9256	1	FOAM					
	13	316－7832	1	INSULATION					
	14	316－7862	1	INSULATION					
	15	316－7863	1	INSULATION					

D-ORDER BY THE m

J146560 HE00

300-4380 HOOD GROUP
PART OF 296-1607-Page 243

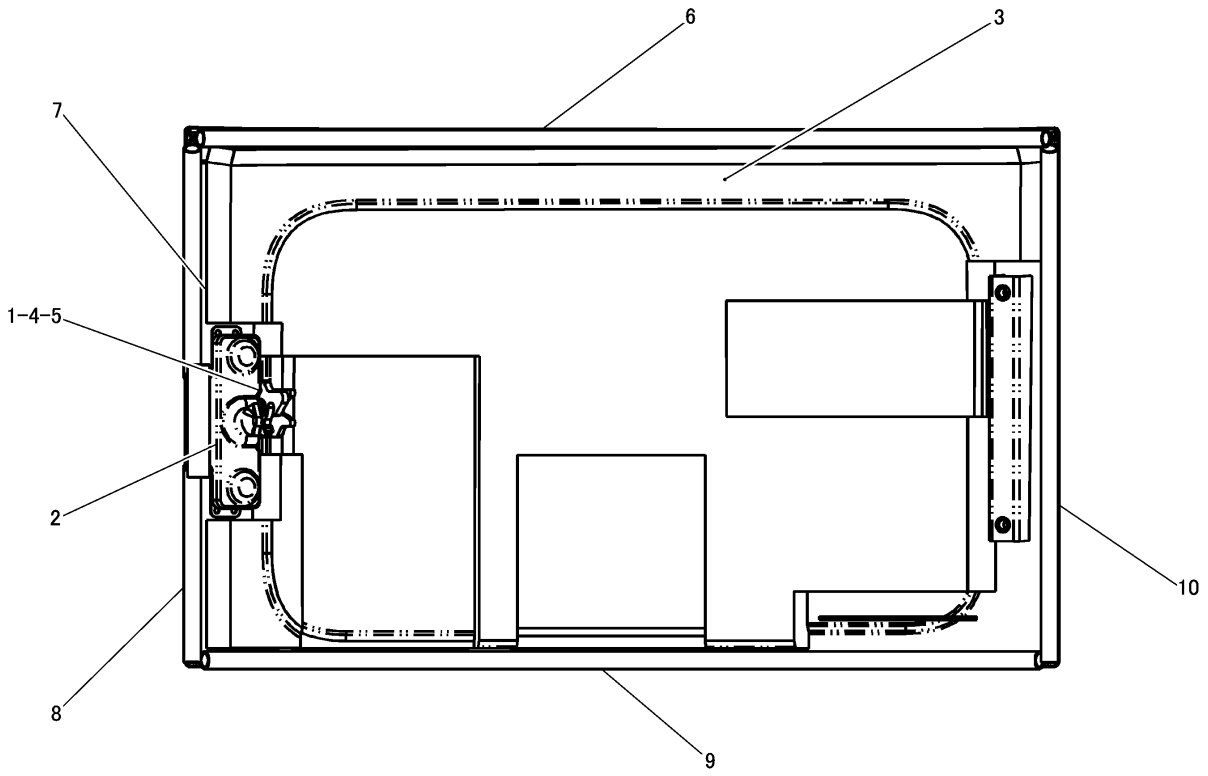

NOTE	No.	PART NO.	QTY	PART NAME	NOTE	No.	PART NO.	QTY	PART NAME
	1	276－9277	1	LATCH AS					
		191－0348	1	GROMMET					
		276－9278	1	LATCH AS					
	2	285－7702	1	COVER					
Y	3	324－6399	1	HOOD AS					
	4	7X－7729	2	WASHER					
	5	8T－4136	2	BOLT(M10×1.5)					
D	6	5P－8309		SEAL---0.825m					
D	7	5P－8309		SEAL---0.225m					
D	8	5P－8309		SEAL---0.18m					
D	9	5P－8309		SEAL---0.81m					
D	10	5P－8309		SEAL---0.48m					

D-ORDER BY THE m
Y-SEPARATE ILLUSTRATION

J151133 HE00

324-6401 HOOD GROUP

PART OF 331-7243-Page 247
REFERENCE:324-6399-Page 252
APPLIES TO CAB AIR CONDITIONER SPECIFICATION MACHINE
AN ATTACHMENT

FRAME AND BODY

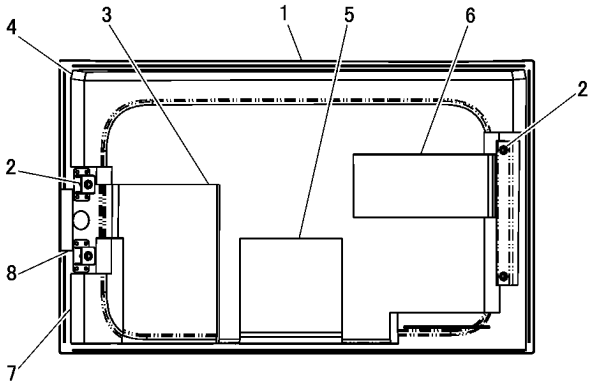

NOTE	No.	PART NO.	QTY	PART NAME
	1	265-8500	1	HOOD AS
	2	8T-3490	4	NUT(M10×1.5)(WELD)
	3	316-7862	1	INSULATION
	4	324-6491	1	INSULATION
	5	324-6492	1	INSULATION
	6	324-6493	1	INSULATION
	7	324-6494	1	INSULATION
	8	276-9256	1	FOAM

J151134 HE00

324-6399 HOOD ASSEMBLY

PART OF 324-6401-Page 251
APPLIES TO CAB AIR CONDITIONER SPECIFICATION MACHINE
AN ATTACHMENT

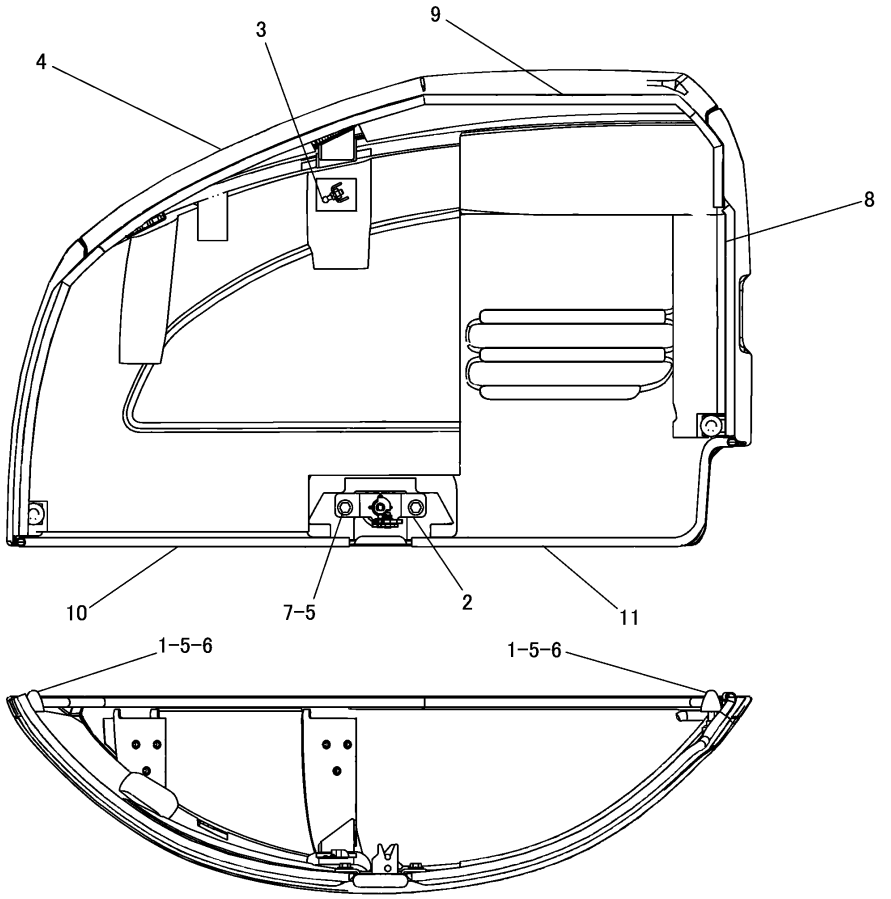

NOTE	No.	PART NO.	QTY	PART NAME	NOTE	No.	PART NO.	QTY	PART NAME
	1	7Y−8561	2	BUMPER					
	2	265−8460	1	LATCH AS					
		191−0348	1	GROMMET					
	3	265−8463	1	BALL STUD(M8×1.25)					
Y	4	300−4341	1	COVER AS(RH)					
	5	7X−7729	4	WASHER					
	6	8T−4133	2	NUT(M10×1.5)					
	7	8T−4136	2	BOLT(M10×1.5)					
D	8	5P−7483		SEAL---0.397m					
D	9	5P−8309		SEAL---1.839m					
D	10	5P−8309		SEAL---0.693m					
D	11	5P−8309		SEAL---0.812m					

D-ORDER BY THE m
Y-SEPARATE ILLUSTRATION

J146557 HE01

300-4340 COVER GROUP -RH

PART OF 296-1607-Page 243
REFERENCE:300-4341-Page 255

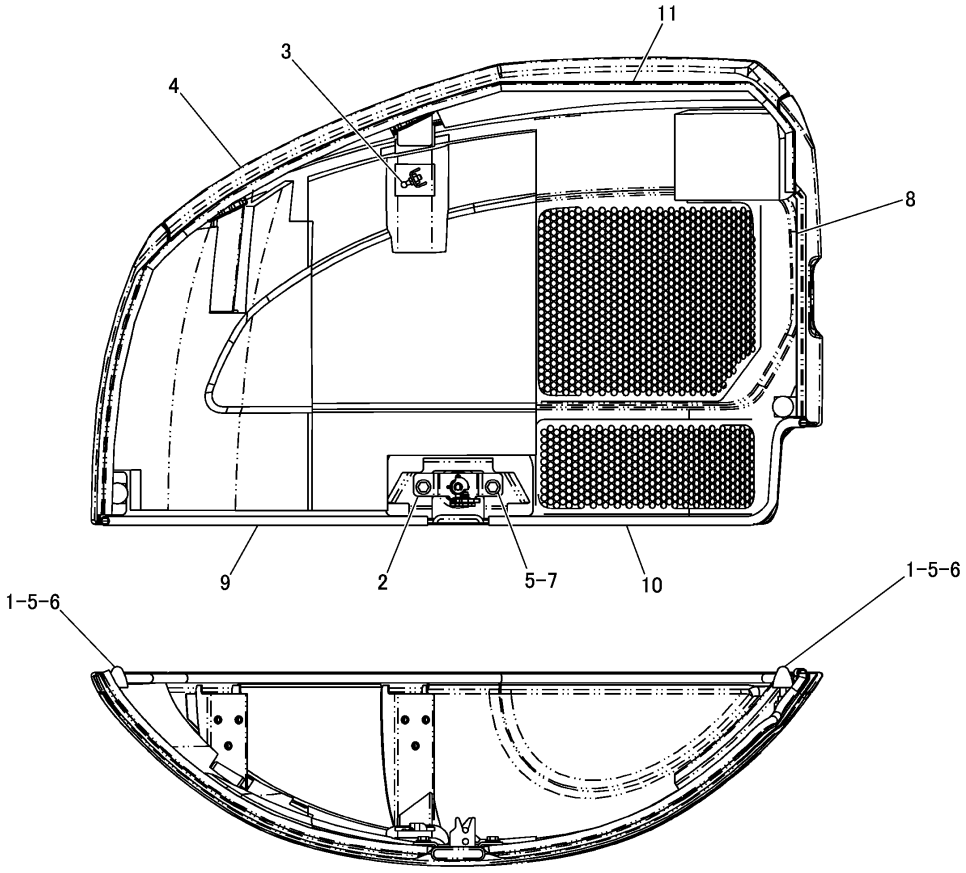

NOTE	No.	PART NO.	QTY	PART NAME	NOTE	No.	PART NO.	QTY	PART NAME
	1	7Y−8561	2	BUMPER					
	2	265−8460	1	LATCH AS					
		191−0348	1	GROMMET					
	3	265−8463	1	BALL STUD(M8×1.25)					
Y	4	331−7245	1	COVER AS					
	5	7X−7729	4	WASHER					
	6	8T−4133	2	NUT(M10×1.5)					
	7	8T−4136	2	BOLT(M10×1.5)					
D	8	5P−7483		SEAL---0.397m					
D	9	5P−8309		SEAL---0.693m					
D	10	5P−8309		SEAL---0.812m					
D	11	5P−8309		SEAL---1.839m					

D-ORDER BY THE m
Y-SEPARATE ILLUSTRATION

J151911 HE01

331-7244 COVER GROUP -RH

PART OF 331-7243-Page 247
REFERENCE:331-7245-Page 256
APPLIES TO CAB AIR CONDITIONER SPECIFICATION MACHINE
AN ATTACHMENT

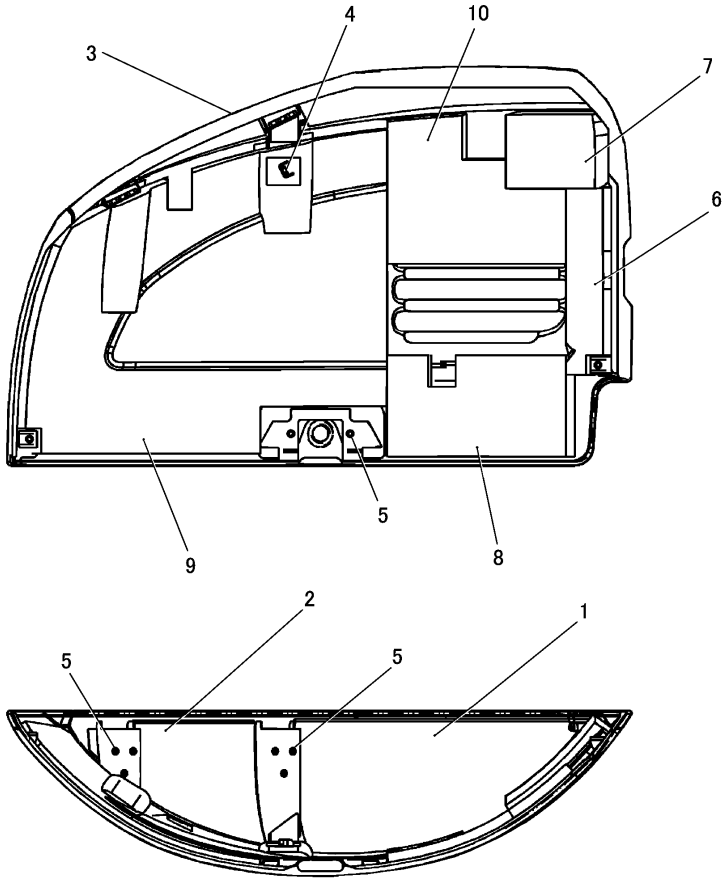

NOTE	No.	PART NO.	QTY	PART NAME	NOTE	No.	PART NO.	QTY	PART NAME
	1	297-9509	1	INSULATION					
	2	297-9511	1	INSULATION					
	3	300-4342	1	COVER AS(RH)					
	4	8T-3612	1	NUT(M8×1.25)(WELD)					
	5	8T-3490	8	NUT(M10×1.5)(WELD)					
	6	316-7859	1	INSULATION					
	7	316-7860	1	INSULATION					
	8	316-7864	1	INSULATION					
	9	316-7857	1	INSULATION					
	10	316-7858	1	INSULATION					

J146558 HE03

300-4341 COVER ASSEMBLY -RH

PART OF 300-4340-Page 253

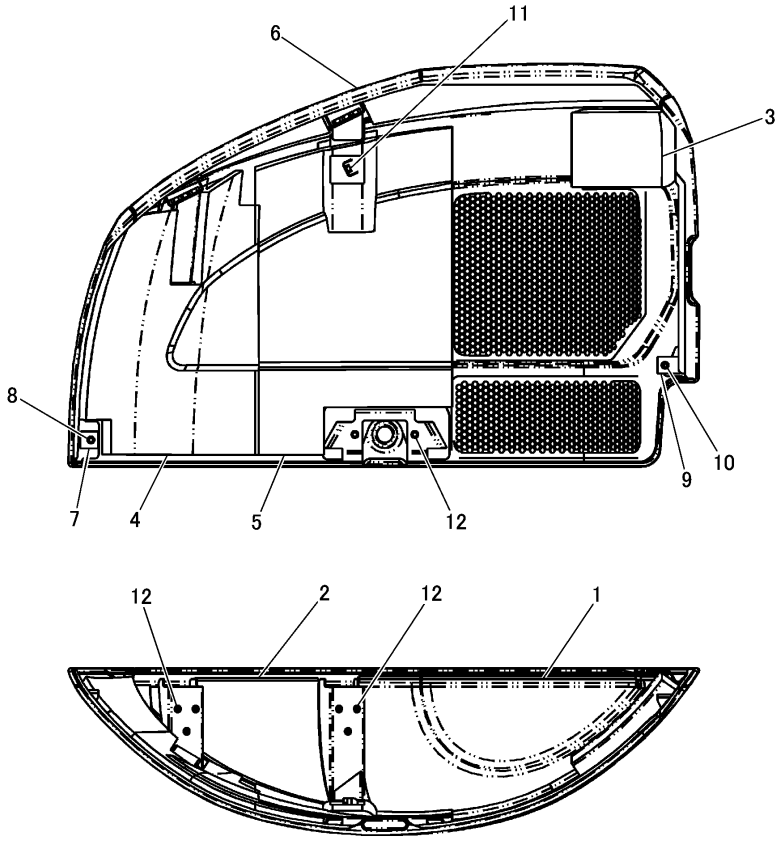

NOTE	No.	PART NO.	QTY	PART NAME	NOTE	No.	PART NO.	QTY	PART NAME
	1	297-9509	1	INSULATION					
	2	297-9511	1	INSULATION					
	3	316-7860	1	INSULATION					
	4	331-7241	1	INSULATION					
	5	331-7242	1	INSULATION					
	6	331-7246	1	COVER AS					
Z	7	265-8534	1	BRACKET AS					
	8	8T-3490	1	NUT(M10×1.5)(WELD)					
Z	9	265-8535	1	BRACKET AS					
	10	8T-3490	1	NUT(M10×1.5)(WELD)					
	11	8T-3612	1	NUT(M8×1.25)(WELD)					
	12	8T-3490	8	NUT(M10×1.5)(WELD)					

Z-NOT SERVICED SEPARATELY

J153787 HE01

331-7245 COVER ASSEMBLY -RH

PART OF 331-7244-Page 254

APPLIES TO CAB AIR CONDITIONER SPECIFICATION MACHINE
AN ATTACHMENT

FRAME AND BODY

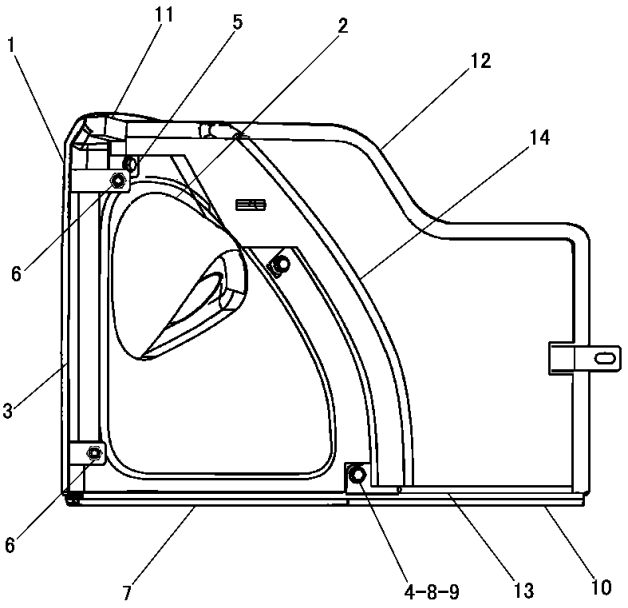

NOTE	No.	PART NO.	QTY	PART NAME
	1	300－4344	1	COVER AS(LH)
	2	300－4395	1	INSULATION
	3	300－4345	1	COVER AS(LH)
	4	8T－3612	3	NUT(M8×1.25)(WELD)
	5	300－4368	1	PLATE
	6	8T－3490	2	NUT(M10×1.5)(WELD)
E	7	125－5252		SEAL---54cm
	8	5P－4116	3	WASHER
	9	7X－2536	3	BOLT(M8×1.25)
E	10	125－5252		SEAL---32.5cm
	11	322－9852	1	FORM
Z	12	300－4346	1	COVER AS(LH)
	13	276－9284	1	FOAM
	14	297－9494	1	INSULATION

E-ORDER BY THE cm
Z-NOT SERVICED SEPARATELY

J148636 HE02

300-4343 COVER GROUP -LH

PART OF 296-1607-Page 245

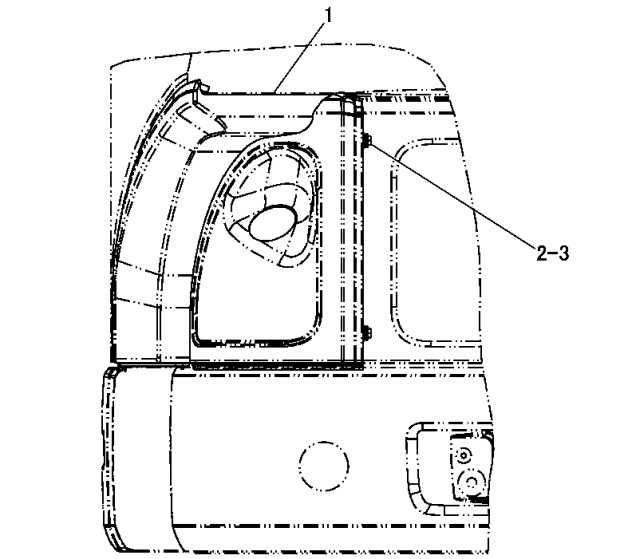

NOTE	No.	PART NO.	QTY	PART NAME
Y	1	309－0347	1	COVER GROUP(LH)
	2	7X－7729	2	WASHER
	3	8T－4137	2	BOLT(M10×1.5)

Y-SEPARATE ILLUSTRATION

J146698 HE01

COVER GROUP (296-1605 N/S) -CAB-LH

PART OF 308-4117-Page 465
REFERENCE:309-0347-Page 258
AN ATTACHMENT

FRAME AND BODY

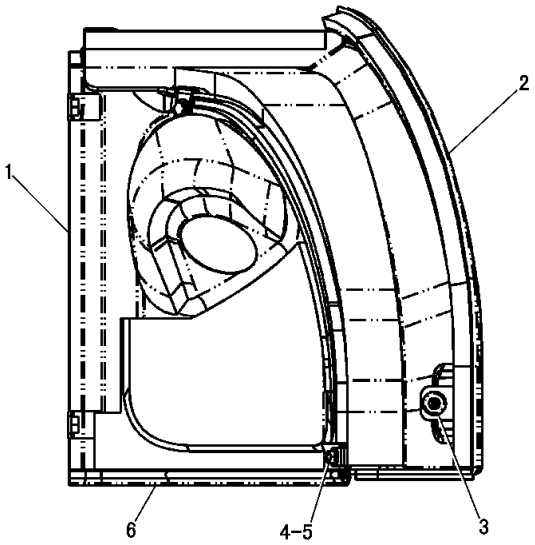

NOTE	No.	PART NO.	QTY	PART NAME
Y	1	309-0348	1	COVER AS(LH)
Y	2	309-0353	1	COVER AS(LH)
	3	140-3201	1	GROMMET
	4	5P-4116	2	WASHER
	5	7X-2536	2	BOLT(M8×1.25)
E	6	125-5252		SEAL---49cm

E-ORDER BY THE cm
Y-SEPARATE ILLUSTRATION

J146699 HE01

309-0347 COVER GROUP -LH

PART OF 296-1605-Page 257, 331-7243-Page 247
REFERENCE:309-0348-Page 258 309-0353-Page 259
AN ATTACHMENT

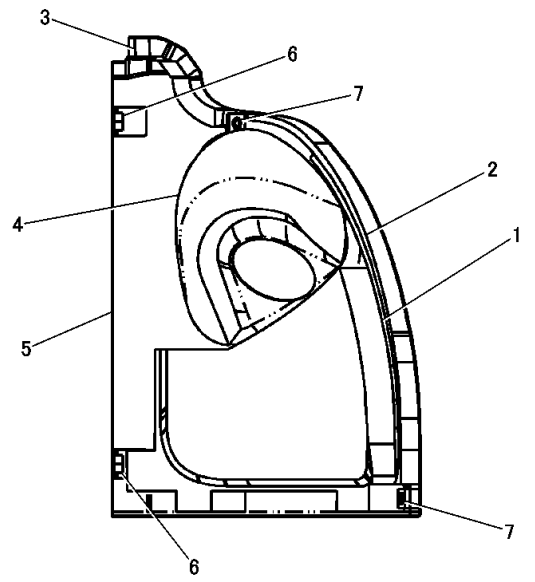

NOTE	No.	PART NO.	QTY	PART NAME
	1	318-4492	1	INSULATION
	2	309-0356	1	FOAM
	3	309-0358	1	FOAM
	4	316-7867	1	INSULATION
	5	309-0349	1	COVER AS
	6	8T-3490	2	NUT(M10×1.5)(WELD)
	7	8T-3612	2	NUT(M8×1.25)(WELD)

J146700 HE02

309-0348 COVER ASSEMBLY -LH

PART OF 309-0347-Page 258
AN ATTACHMENT

FRAME AND BODY

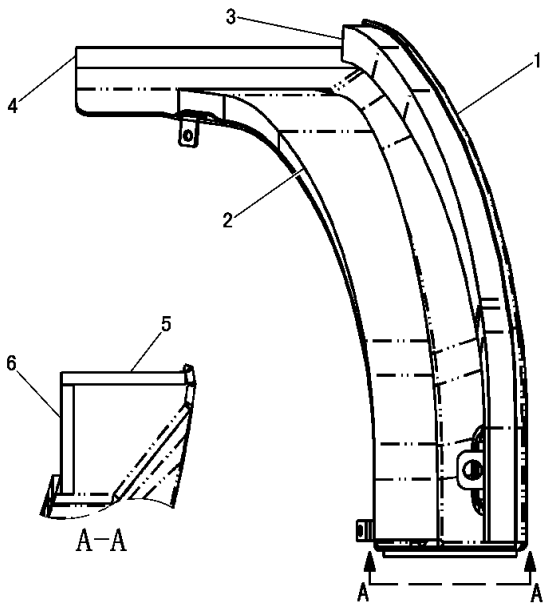

NOTE	No.	PART NO.	QTY	PART NAME
	1	309-0354	1	COVER AS
	2	318-4493	1	INSULATION
	3	319-5805	1	FOAM
	4	319-5806	1	FOAM
D	5	5P-5672		SEAL---0.132m
D	6	5P-5672		SEAL---0.116m

D-ORDER BY THE m

J146701 HE02

309-0353 COVER ASSEMBLY -LH
PART OF 309-0347-Page 258
AN ATTACHMENT

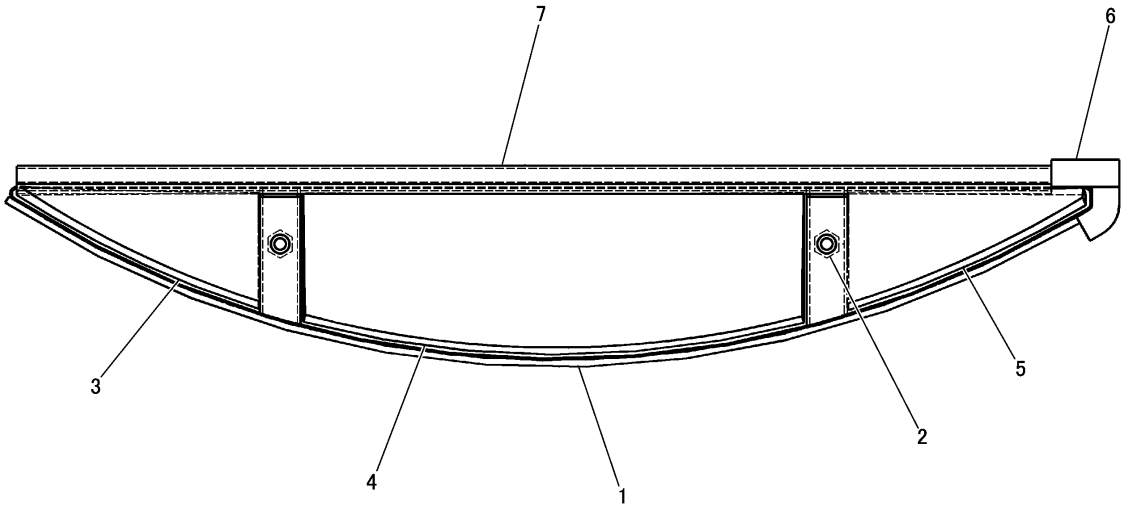

NOTE	No.	PART NO.	QTY	PART NAME	NOTE	No.	PART NO.	QTY	PART NAME
	1	300－4383	1	COVER AS					
Z		265－8503	1	COVER AS					
	2	8T－3490	2	NUT(M10×1.5)(WELD)					
	3	316－7833	1	INSULATION					
	4	316－7834	1	INSULATION					
	5	316－7835	1	INSULATION					
	6	276－9284	2	FOAM					
D	7	5P－7483		SEAL---0.76m					

D-ORDER BY THE m
Z-NOT SERVICED SEPARATELY

J151462 HE00

300-4382 COVER ASSEMBLY -TOP

PART OF 296-1607-Page 243, 331-7243-Page 247

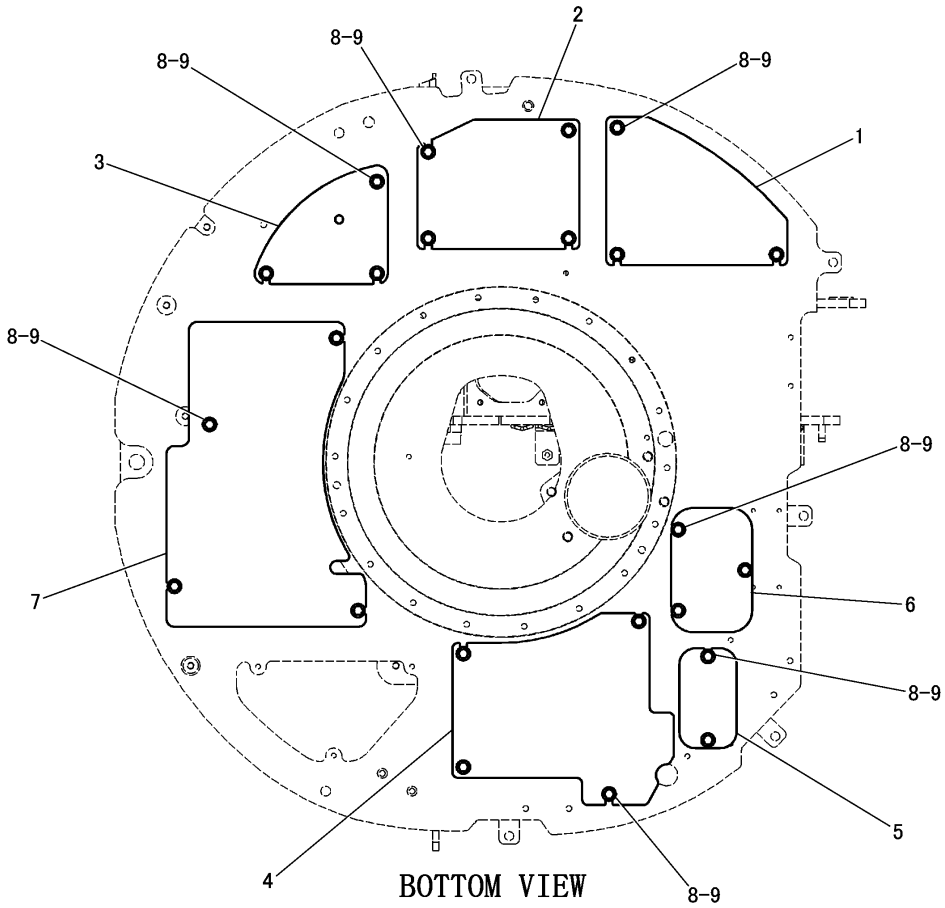

BOTTOM VIEW

NOTE	No.	PART NO.	QTY	PART NAME	NOTE	No.	PART NO.	QTY	PART NAME
	1	297-9109	1	COVER					
	2	297-9110	1	COVER					
	3	305-8237	1	COVER					
	4	305-8238	1	COVER					
	5	305-8239	1	COVER					
	6	307-8622	1	COVER					
	7	307-8628	1	COVER					
	8	7X-7729	23	WASHER					
	9	8T-4137	23	BOLT(M10×1.5)					

J149871 HE04

BOTTOM GUARD GROUP (296-6893 N/S)

PART OF 296-1803-Page 241

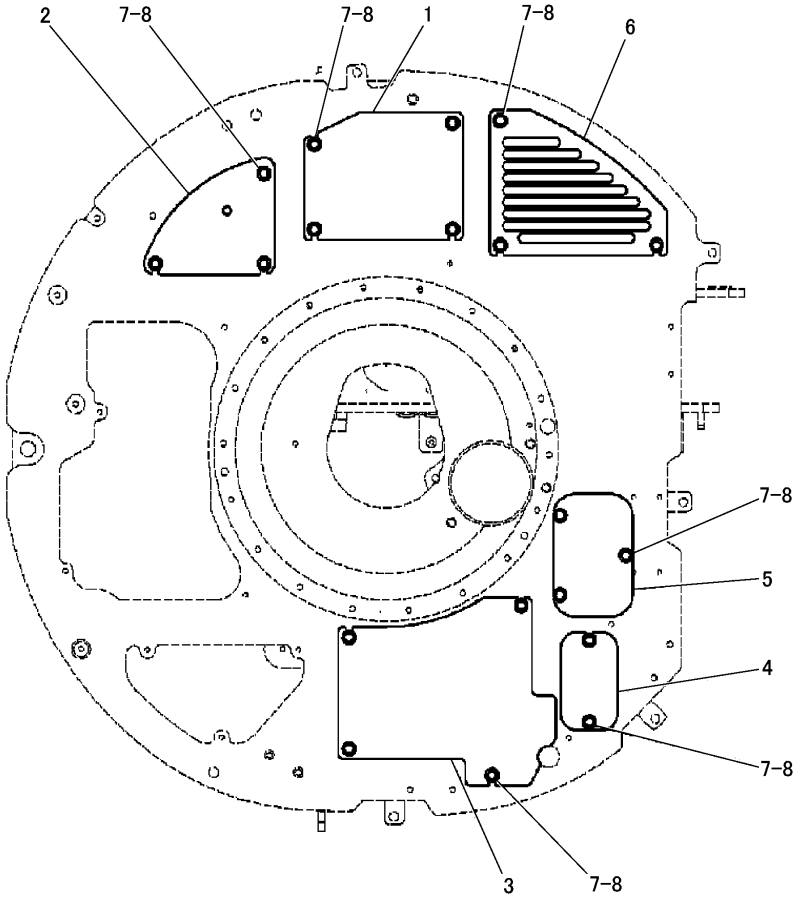

NOTE	No.	PART NO.	QTY	PART NAME	NOTE	No.	PART NO.	QTY	PART NAME
	1	297-9110	1	COVER					
	2	305-8237	1	COVER					
	3	305-8238	1	COVER					
	4	305-8239	1	COVER					
	5	307-8622	1	COVER					
	6	326-0907	1	COVER					
	7	7X-7729	19	WASHER					
	8	8T-4137	19	BOLT(M10×1.5)					

J146707 HE00

BOTTOM GUARD GROUP (334-7192 N/S)
PART OF 308-4118-Page 466
APPLIES TO CAB AIR CONDITIONER SPECIFICATION MACHINE
AN ATTACHMENT

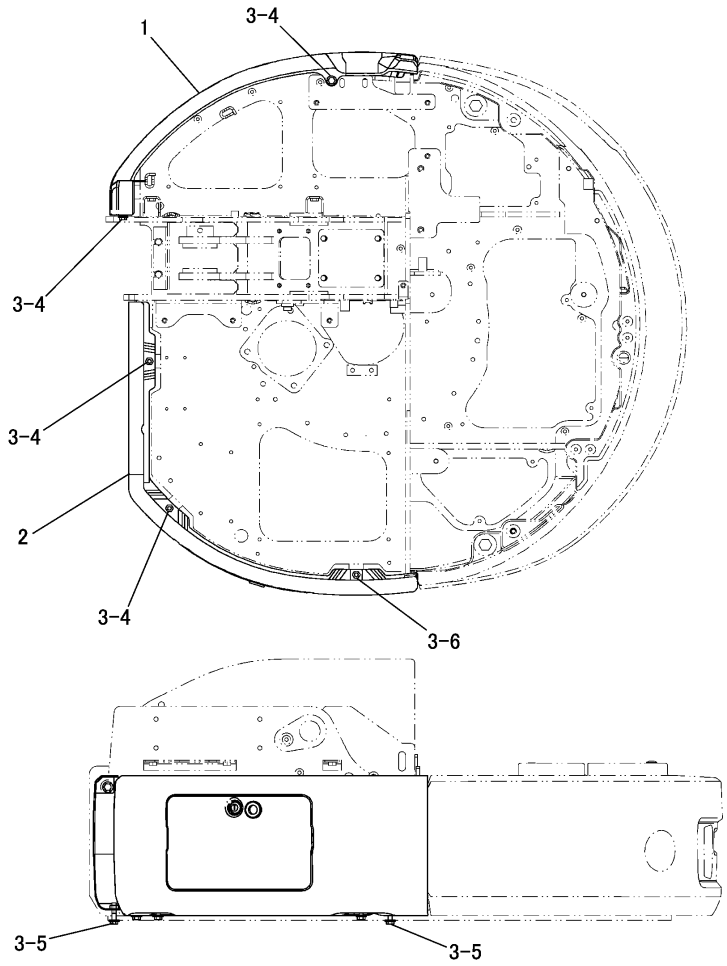

NOTE	No.	PART NO.	QTY	PART NAME	NOTE	No.	PART NO.	QTY	PART NAME
	1	300-4290	1	FENDER AS(RH)					
		300-4291	1	FENDER AS					
		8T-3490	3	NUT(M10×1.5)(WELD)					
		270-9488	1	INSULATION					
Y	2	300-4295	1	FENDER GROUP(LH)					
	3	7X-7729	7	WASHER					
	4	8T-4136	4	BOLT(M10×1.5)					
	5	8T-4182	2	BOLT(M10×1.5)					
	6	8T-4195	1	BOLT(M10×1.5)					

Y-SEPARATE ILLUSTRATION

J146549 HE01

FENDER COVER GROUP (296-1602 N/S)

PART OF 296-1803-Page 241
REFERENCE:300-4295-Page 266

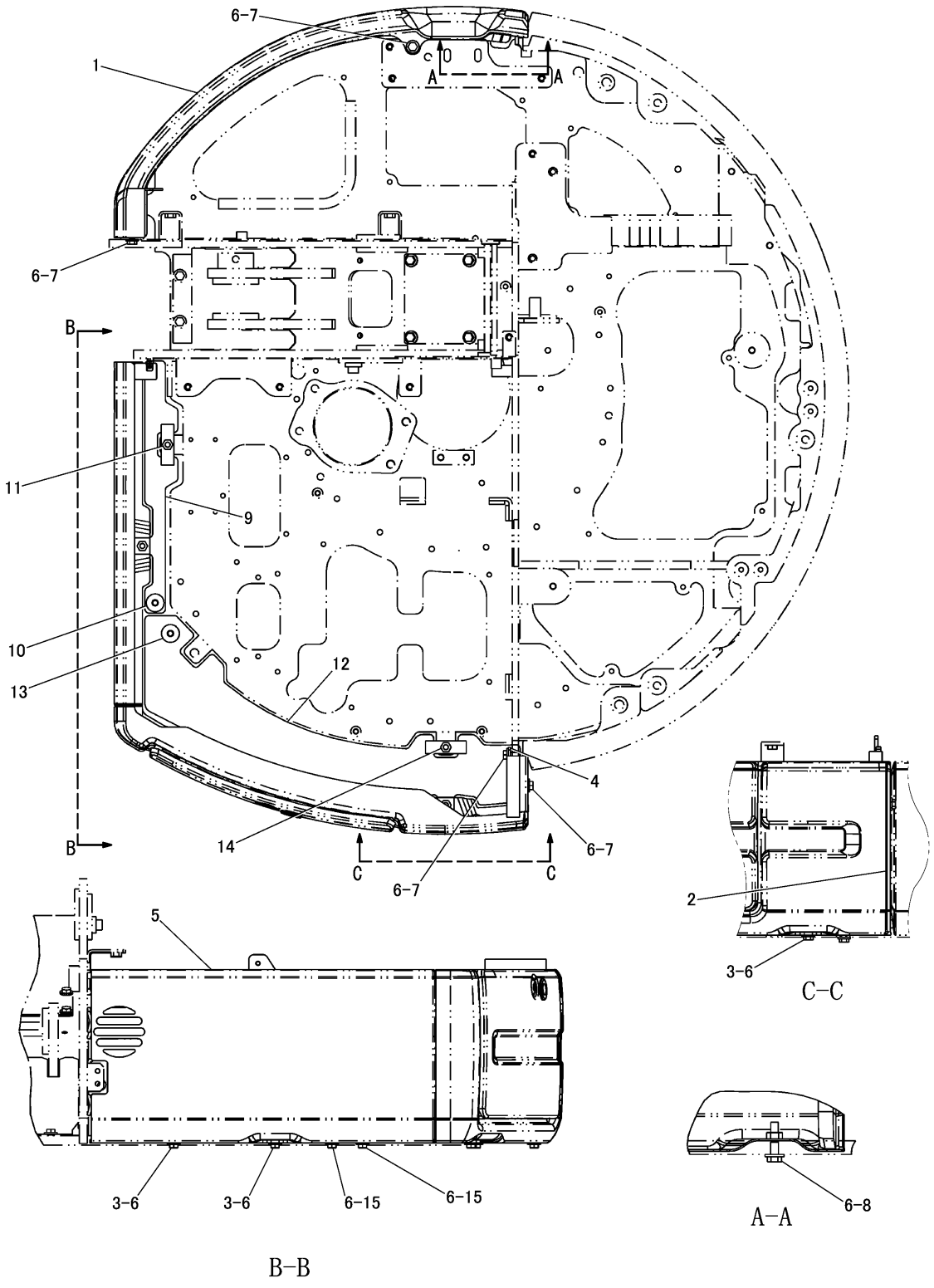

J146696 HE01

FENDER COVER GROUP (296-1603 N/S) -CAB
PART OF 308-4117-Page 465, 308-4118-Page 466
AN ATTACHMENT

FRAME AND BODY

NOTE	No.	PART NO.	QTY	PART NAME	NOTE	No.	PART NO.	QTY	PART NAME
	1	300－4290	1	FENDER AS(RH)					
		300－4291	1	FENDER AS					
		8T－3490	3	NUT(M10×1.5)(WELD)					
	2	316－7872	1	INSULATION					
	3	8T－4195	5	BOLT(M10×1.5)					
	4	309－0339	1	PLATE AS					
		8T－3490	1	NUT(M10×1.5)(WELD)					
Y	5	309－0340	1	FENDER GROUP					
	6	7X－7729	13	WASHER					
	7	8T－4136	4	BOLT(M10×1.5)					
	8	8T－4182	2	BOLT(M10×1.5)					
	9	309－0334	1	PLATE AS					
	10	7X－0563	1	WASHER					
	11	8T－3490	1	NUT(M10×1.5)(WELD)					
	12	309－0336	1	PLATE AS					
	13	7X－0563	1	WASHER					
	14	8T－3490	1	NUT(M10×1.5)(WELD)					
	15	8T－4186	2	BOLT(M10×1.5)					

Y-SEPARATE ILLUSTRATION

J146696 HE01

FENDER COVER GROUP (296-1603 N/S) -CAB

PART OF 308-4117-Page 465, 308-4118-Page 466
REFERENCE:309-0340-Page 267
AN ATTACHMENT

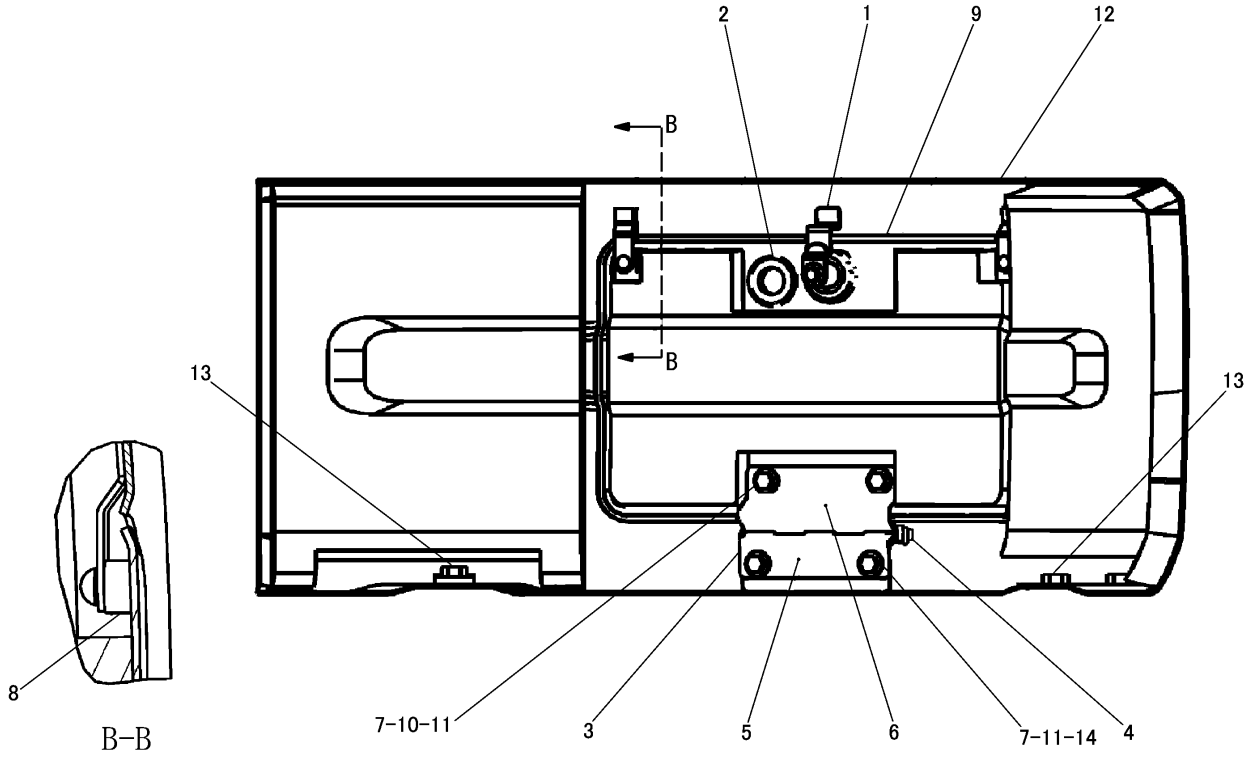

NOTE	No.	PART NO.	QTY	PART NAME	NOTE	No.	PART NO.	QTY	PART NAME
	1	226－0291	1	LOCK AS					
		226－0323	1	CAM					
	2	8P－5348	1	GROMMET					
	3	300－4305	1	HINGE AS					
	4	3B－4604	2	COTTER PIN					
		300－4308	1	PIN					
		9X－8256	2	WASHER					
	5	300－4306	1	PLATE					
	6	300－4307	1	PLATE					
	7	8T－4200	4	BOLT(M8×1.25)					
	8	9M－5617	2	GROMMET					
	9	300－4302	1	COVER AS					
	10	8T－3612	2	NUT(M8×1.25)(WELD)					
	11	5P－4116	4	WASHER					
	12	300－4296	1	FENDER AS(LH)					
		300－4297	1	FENDER AS(LH)					
	13	8T－3490	3	NUT(M10×1.5)(WELD)					
	14	8T－3612	2	NUT(M8×1.25)(WELD)					

J148631 HE02

FENDER GROUP (300-4295 N/S) -LH

PART OF 296-1602-Page 263

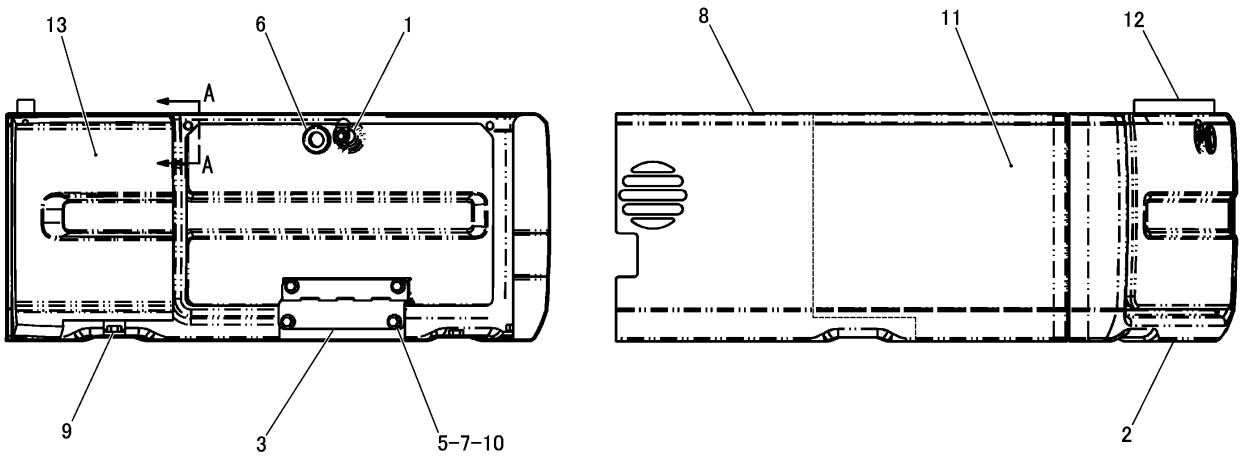

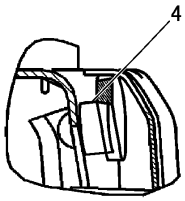

A-A

NOTE	No.	PART NO.	QTY	PART NAME	NOTE	No.	PART NO.	QTY	PART NAME
	1	226-0291	1	LOCK AS					
		226-0323	1	CAM					
	2	285-7674	1	COVER AS					
		8T-3612	2	NUT(M8×1.25)(WELD)					
	3	285-7677	1	HINGE AS					
		3B-4604	2	COTTER PIN					
		9X-8256	2	WASHER					
	4	9M-5617	2	GROMMET					
	5	5P-4116	4	WASHER					
	6	8P-5348	1	GROMMET					
	7	8T-4200	4	BOLT(M8×1.25)					
	8	309-0341	1	FENDER AS					
		309-0342	1	FENDER AS					
	9	8T-3490	3	NUT(M10×1.5)(WELD)					
	10	8T-3612	2	NUT(M8×1.25)(WELD)					
	11	318-4497	1	INSULATION					
	12	283-9603	1	FOAM					
	13	318-4496	1	INSULATION					

J149298 HE03

309-0340 FENDER GROUP -CAB-LH
PART OF 296-1603-Page 265
AN ATTACHMENT

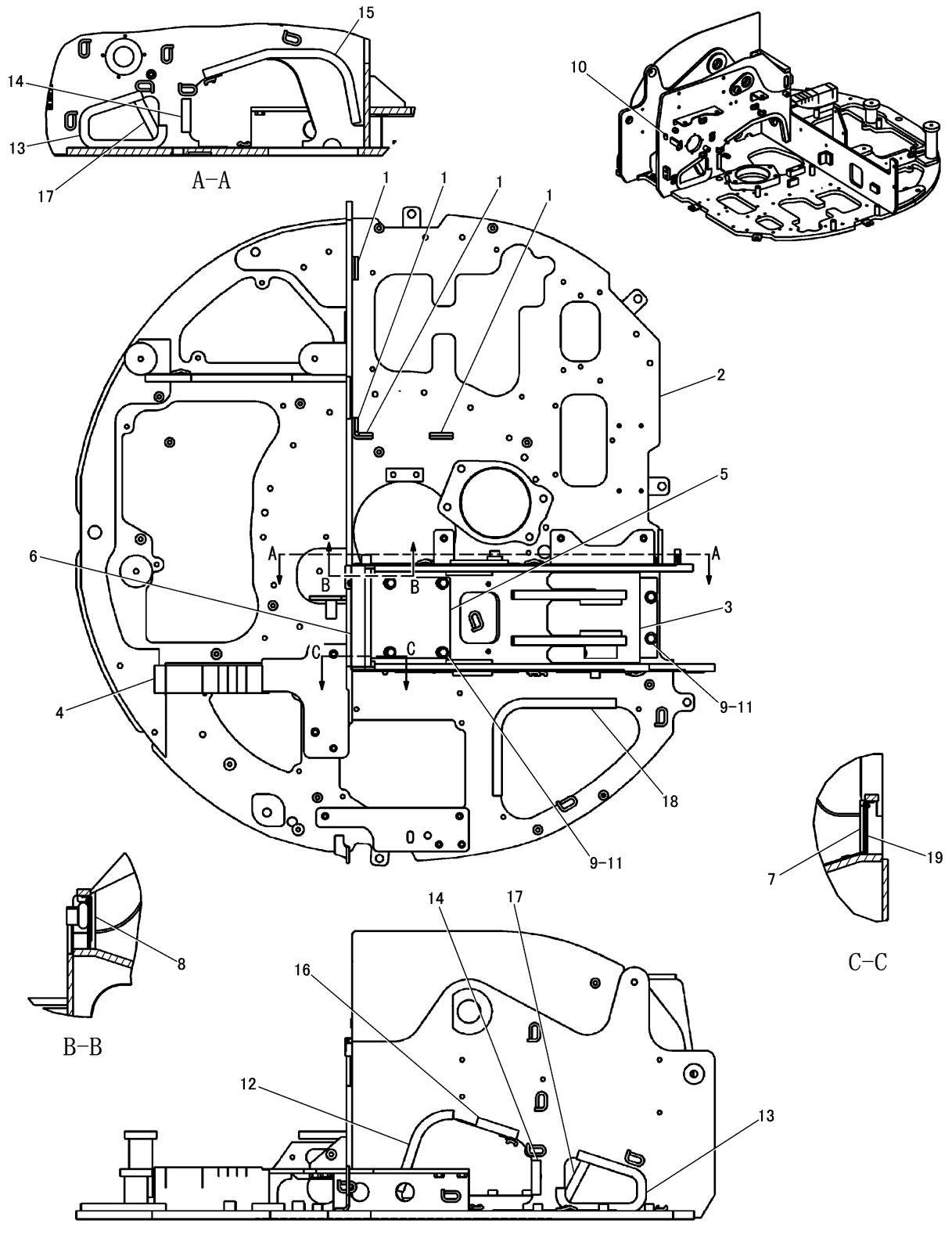

UPPER FRAME GROUP (296-6894 N/S)
EFFECTIVE WITH SERIAL NO. MSP00001-MSP00309
PART OF 296-1803-Page 241, 308-4118-Page 466

FRAME AND BODY

NOTE	No.	PART NO.	QTY	PART NAME	NOTE	No.	PART NO.	QTY	PART NAME
	1	233－4113	4	FOAM					
Y	2	296－6895	1	FRAME AS					
	3	305－8250	1	COVER					
	4	313－9305	1	INSULATION					
	5	319－8364	1	COVER AS					
		317－2521	1	COVER					
	6	317－2462	1	FOAM					
	7	317－2523	1	FOAM					
	8	319－9343	1	FOAM					
	9	8T－4137	6	BOLT(M10×1.5)					
E	10	3E－6600		SEAL---2cm					
	11	7X－7729	6	WASHER					
E	12	195－3237		SEAL---21.2cm					
E	13	195－3237		SEAL---30.7cm(×2)					
E	14	195－3237		SEAL---7.5cm(×2)					
E	15	195－3237		SEAL---44.6cm					
E	16	195－3237		SEAL---9.3cm					
E	17	195－3237		SEAL---12.2cm(×2)					
E	18	195－3237		SEAL---43.2cm					
	19	319－9344	1	FOAM					

E-ORDER BY THE cm
Y-SEPARATE ILLUSTRATION

J146553 HE07

UPPER FRAME GROUP (296-6894 N/S)

EFFECTIVE WITH SERIAL NO. MSP00001-MSP00309
PART OF 296-1803-Page 241, 308-4118-Page 466
REFERENCE:296-6895-Page 274～277

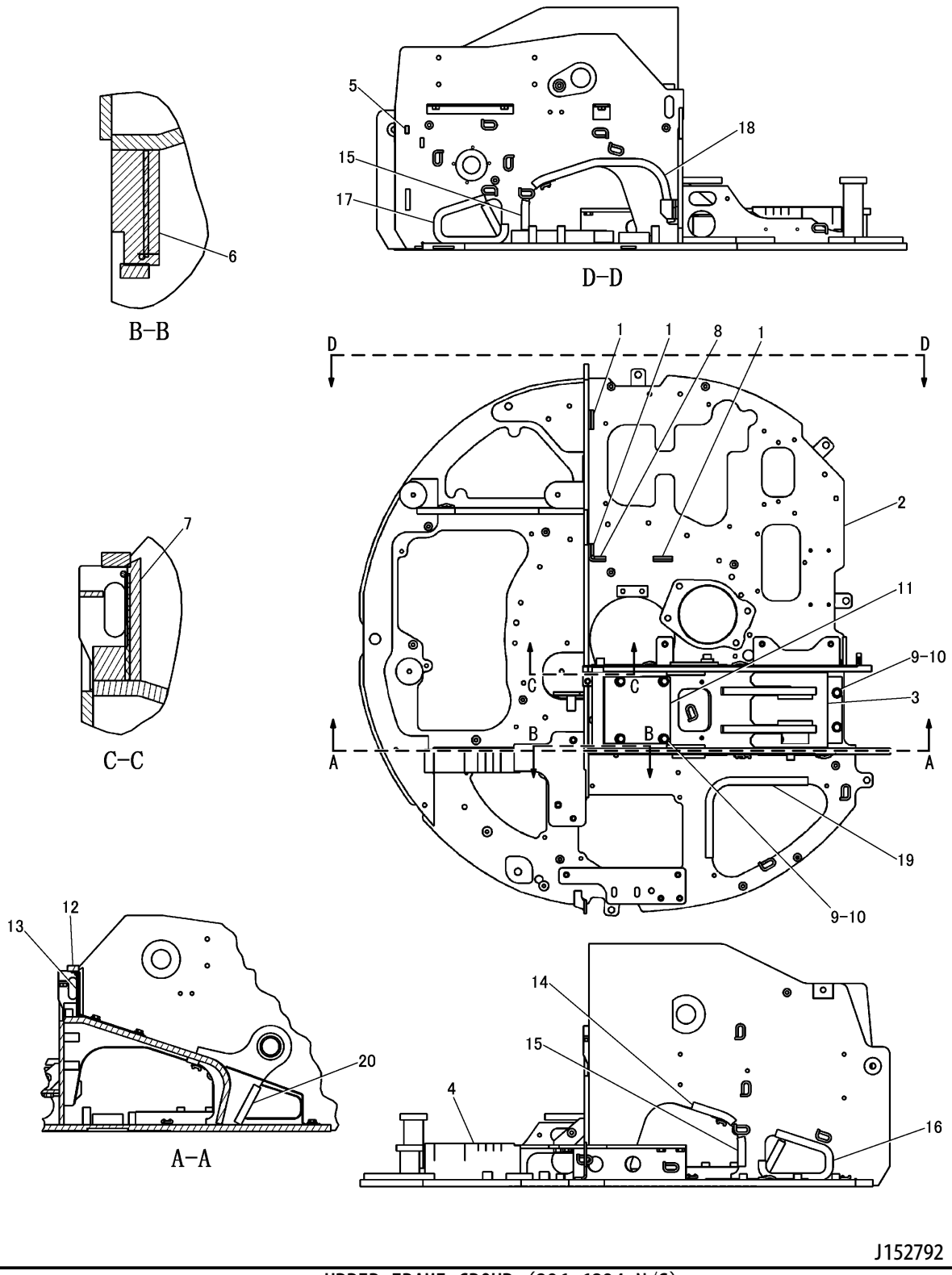

UPPER FRAME GROUP (296-6894 N/S)
EFFECTIVE WITH SERIAL NO. MSP00310-
PART OF 296-1803-Page 241, 308-4118-Page 466

FRAME AND BODY

NOTE	No.	PART NO.	QTY	PART NAME	NOTE	No.	PART NO.	QTY	PART NAME
C	1	233－4113	3	FOAM					
Y	2	296－6895	1	UPPER FRAME AS					
	3	305－8250	1	COVER					
	4	313－9305	1	INSULATION					
E	5	3E－6600		SEAL---2cm					
	6	319－9343	1	FOAM					
	7	319－9344	1	FOAM					
C	8	321－6574	1	FOAM					
	9	7X－7729	6	WASHER					
	10	8T－4137	6	BOLT(M10×1.5)					
Z	11	319－8364	1	COVER AS					
	12	317－2462	1	FOAM					
	13	319－8365	1	INSULATION					
E	14	195－3237		SEAL---9.3cm					
E	15	195－3237		SEAL---7.5cm(×2)					
CE	16	195－3237		SEAL---36.5cm					
CE	17	195－3237		SEAL---35cm					
CE	18	195－3237		SEAL---46cm					
CE	19	195－3237		SEAL---42.1cm					
CE	20	195－3237		SEAL---11cm(×2)					

C-CHANGE FROM PREVIOUS TYPE
E-ORDER BY THE cm
Y-SEPARATE ILLUSTRATION
Z-NOT SERVICED SEPARATELY

J152792 HE08

UPPER FRAME GROUP (296-6894 N/S)

EFFECTIVE WITH SERIAL NO. MSP00310-
PART OF 296-1803-Page 241, 308-4118-Page 466
REFERENCE:296-6895-Page 274～277

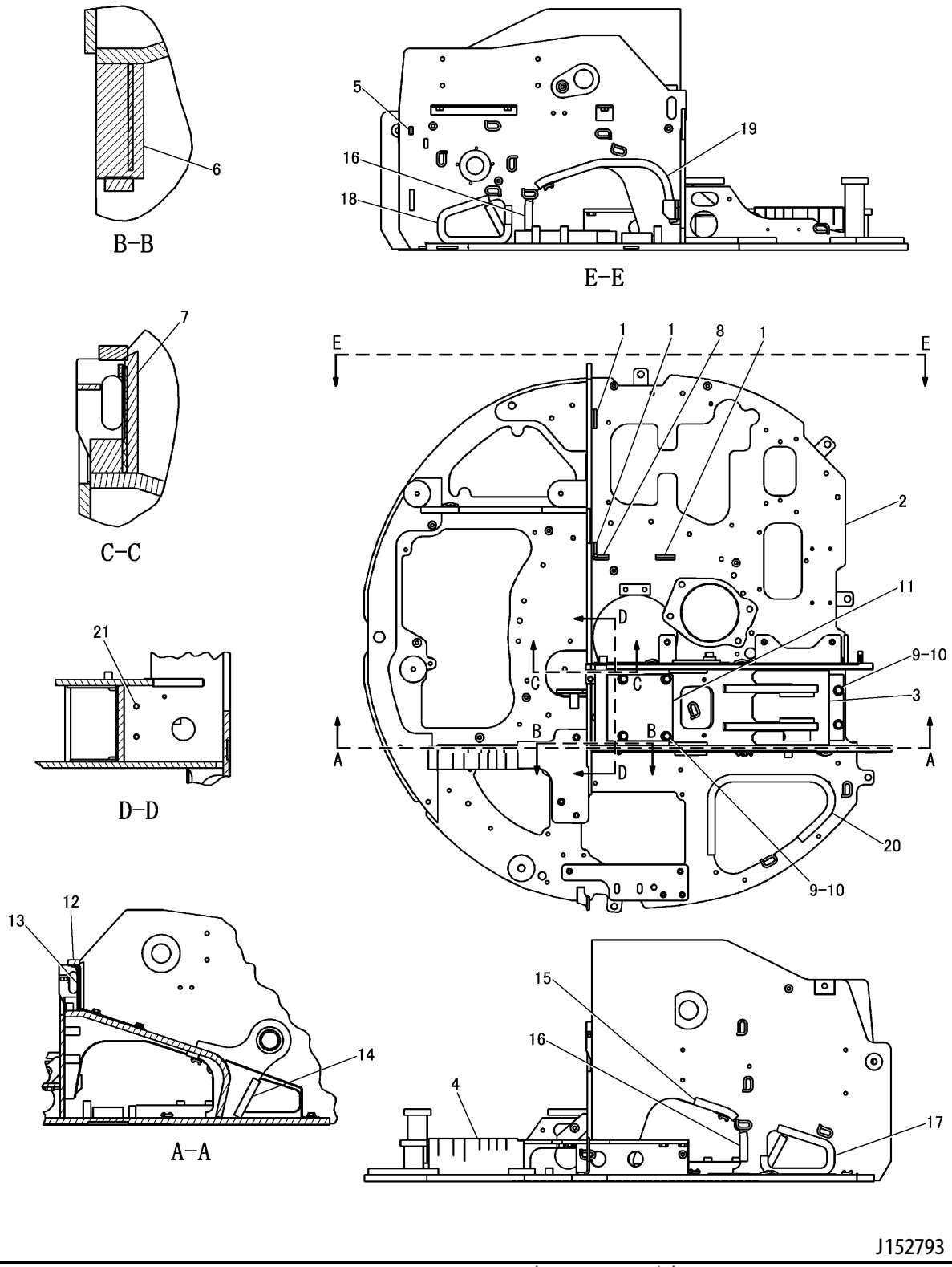

UPPER FRAME GROUP (296-6894 N/S)
PART OF 296-1803-Page 241, 308-4118-Page 466
ALSO APPLIES TO CAB AIR CONDITIONER SPECIFICATION MACHINE

FRAME AND BODY

NOTE	No.	PART NO.	QTY	PART NAME	NOTE	No.	PART NO.	QTY	PART NAME
	1	233-4113	3	FOAM					
Y	2	296-6895	1	UPPER FRAME AS					
	3	305-8250	1	COVER					
C	4	334-0626	1	INSULATION					
E	5	3E-6600		SEAL---2cm					
	6	319-9343	1	FOAM					
	7	319-9344	1	FOAM					
	8	321-6574	1	FOAM					
	9	7X-7729	6	WASHER					
	10	8T-4137	6	BOLT(M10×1.5)					
Z	11	319-8364	1	COVER AS					
	12	317-2462	1	FOAM					
	13	319-8365	1	INSULATION					
E	14	195-3237		SEAL---11cm(×2)					
E	15	195-3237		SEAL---9.3cm					
E	16	195-3237		SEAL---7.5cm(×2)					
E	17	195-3237		SEAL---36.5cm					
CE	18	195-3237		SEAL---40cm					
E	19	195-3237		SEAL---46cm					
CE	20	195-3237		SEAL---63cm					
C	21	4H-0408	2	PLUG					

C-CHANGE FROM PREVIOUS TYPE
E-ORDER BY THE cm
Y-SEPARATE ILLUSTRATION
Z-NOT SERVICED SEPARATELY

J152793 HE09

UPPER FRAME GROUP (296-6894 N/S)

PART OF 296-1803-Page 241, 308-4118-Page 466
REFERENCE:296-6895-Page 274～277
ALSO APPLIES TO CAB AIR CONDITIONER SPECIFICATION MACHINE

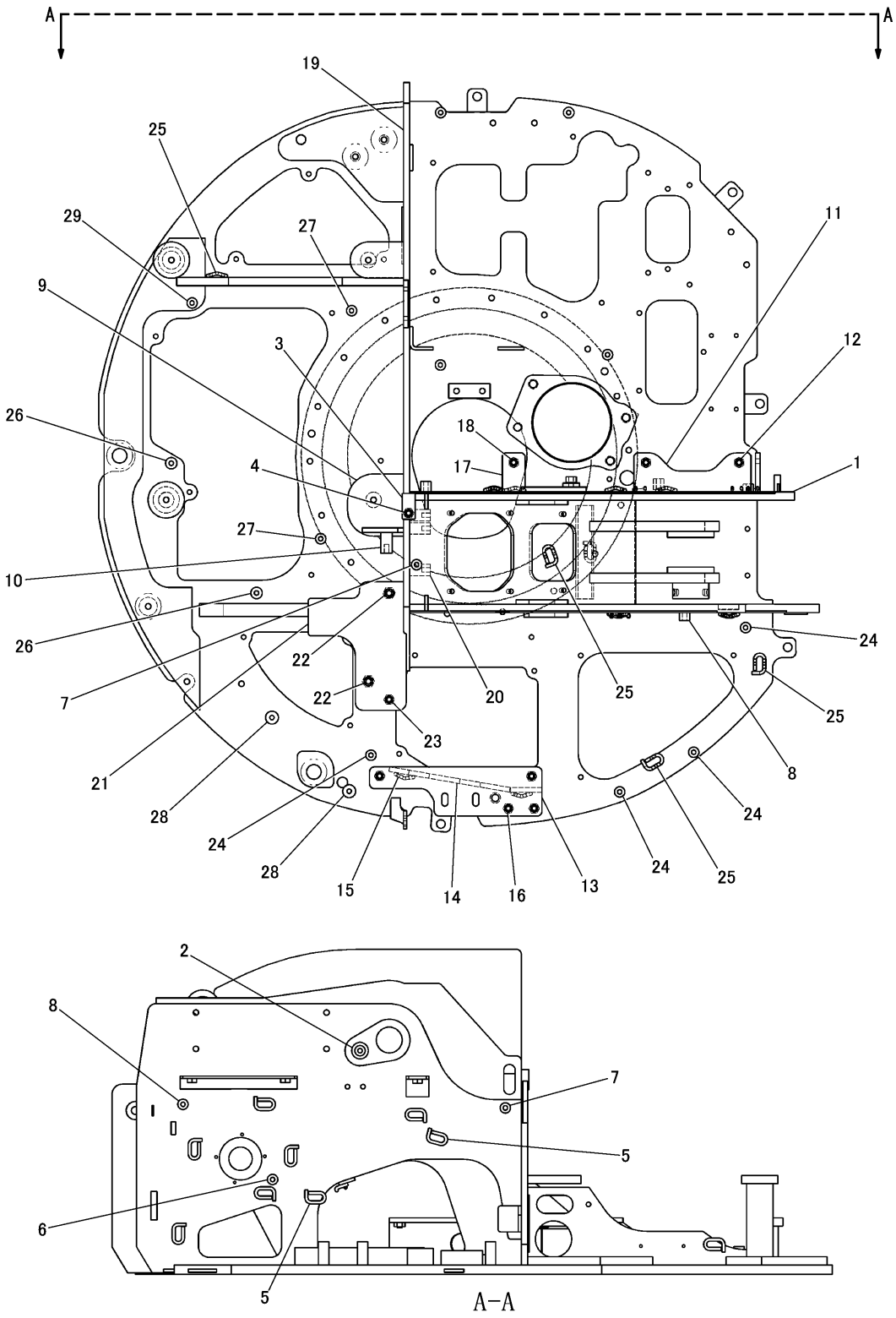

J147467 HE10

UPPER FRAME ASSEMBLY (296-6895 N/S)
PART OF 296-6894-Page 269, 271, 273

FRAME AND BODY

NOTE	No.	PART NO.	QTY	PART NAME	NOTE	No.	PART NO.	QTY	PART NAME
Z	1	296-8012	1	BRACKET AS					
	2	218-4736	1	BOSS(M10×1.5)					
Z	3	297-9118	1	PLATE AS					
	4	8T-3490	1	NUT(M10×1.5)(WELD)					
	5	7T-1099	13	LINK					
	6	9R-2613	1	BOSS(M10×1.5)					
	7	9R-2672	2	BOSS(M10×1.5)					
	8	9R-2821	2	BOSS(M10×1.5)					
Z	9	297-2936	1	PLATE AS					
	10	7Y-9552	1	BOSS(M10×1.5)					
Z	11	297-3348	1	SUPPORT AS					
	12	8T-3490	2	NUT(M10×1.5)(WELD)					
Z	13	305-5826	1	PLATE AS					
	14	305-5828	1	PLATE					
	15	7T-1099	2	LINK					
	16	8T-3490	4	NUT(M10×1.5)(WELD)					
Z	17	305-8244	1	PLATE AS					
	18	8T-3490	1	NUT(M10×1.5)(WELD)					
Z	19	307-8613	1	PLATE AS					
	20	7Y-9552	3	BOSS(M10×1.5)					
Z	21	307-8615	1	PLATE AS					
	22	8T-3597	2	NUT(M12×1.75)(WELD)					
	23	8T-3490	1	NUT(M10×1.5)(WELD)					
	24	9R-2821	4	BOSS(M10×1.5)					
	25	7T-1099	4	LINK					
	26	7Y-9552	2	BOSS(M10×1.5)					
	27	8R-2034	2	BOSS(M10×1.5)					
	28	9R-2060	2	BOSS(M10×1.5)					
	29	9R-2672	1	BOSS(M10×1.5)					

Z-NOT SERVICED SEPARATELY

J147467 HE10

UPPER FRAME ASSEMBLY (296-6895 N/S)

PART OF 296-6894-Page 269, 271, 273

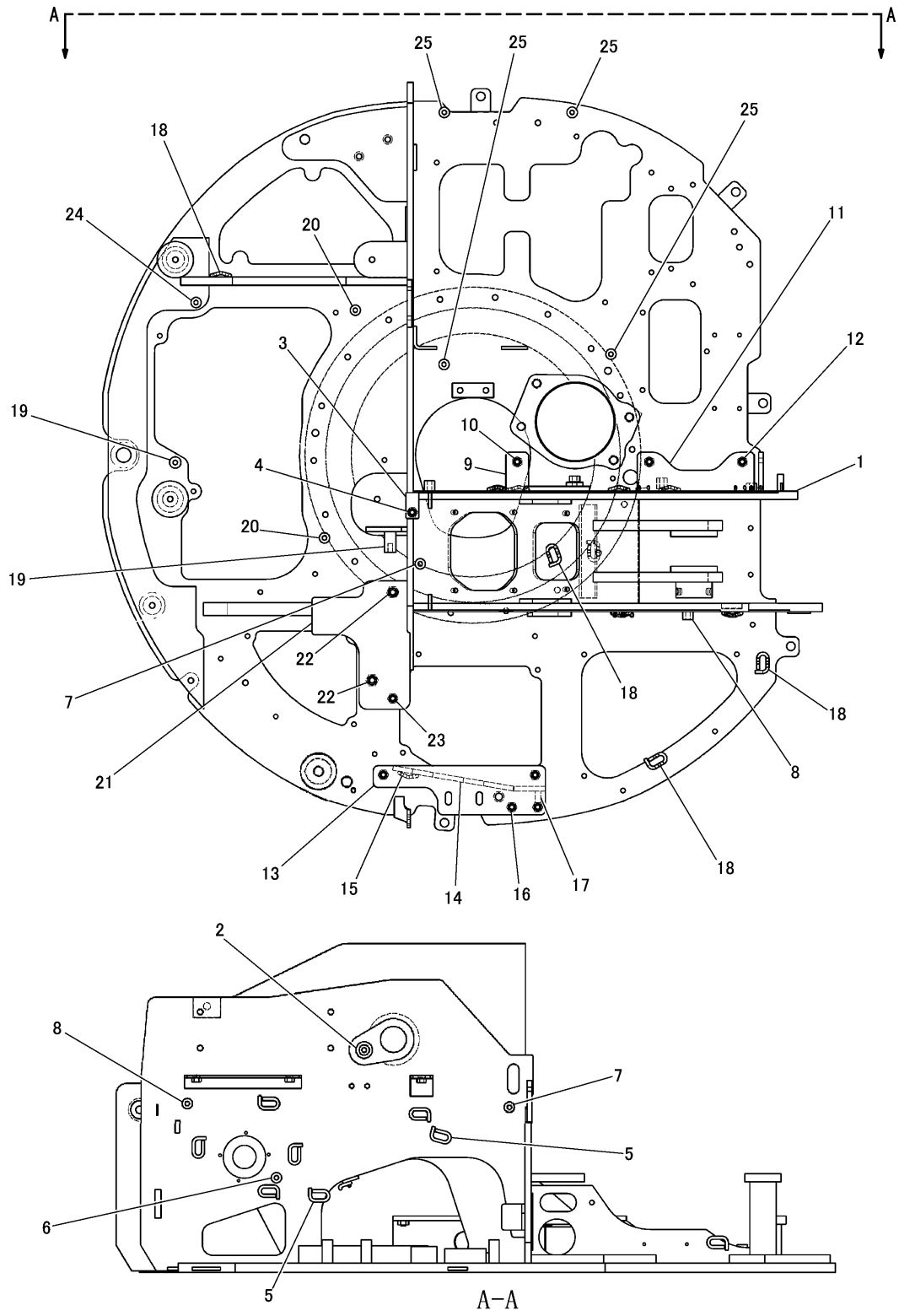

J152794 HE13

UPPER FRAME ASSEMBLY (296-6895 N/S)
PART OF 296-6894-Page 269, 271, 273
ALSO APPLIES TO CAB AIR CONDITIONER SPECIFICATION MACHINE

FRAME AND BODY

NOTE	No.	PART NO.	QTY	PART NAME	NOTE	No.	PART NO.	QTY	PART NAME
Z	1	296-8012	1	BRACKET AS					
	2	218-4736	1	BOSS(M10×1.5)					
Z	3	323-1998	1	PLATE AS					
	4	8T-3490	1	NUT(M10×1.5)(WELD)					
	5	7T-1099	12	LINK					
	6	9R-2613	1	BOSS(M10×1.5)					
	7	9R-2672	2	BOSS(M10×1.5)					
	8	9R-2821	2	BOSS(M10×1.5)					
Z	9	305-8244	1	PLATE AS					
	10	8T-3490	1	NUT(M10×1.5)(WELD)					
Z	11	297-3348	1	SUPPORT AS					
	12	8T-3490	2	NUT(M10×1.5)(WELD)					
Z	13	305-5826	1	PLATE AS					
	14	305-5828	1	PLATE					
	15	7T-1099	2	LINK					
	16	8T-3490	4	NUT(M10×1.5)(WELD)					
	17	9R-9359	1	BOSS(M10×1.5)					
	18	7T-1099	4	LINK					
	19	7Y-9552	2	BOSS(M10×1.5)					
	20	8R-2034	2	BOSS(M10×1.5)					
Z	21	307-8615	1	PLATE AS					
	22	8T-3597	2	NUT(M12×1.75)(WELD)					
	23	8T-3490	1	NUT(M10×1.5)(WELD)					
	24	9R-2672	1	BOSS(M10×1.5)					
	25	9R-9866	4	BOSS(M10×1.5)					

Z-NOT SERVICED SEPARATELY

J152794 HE13

UPPER FRAME ASSEMBLY (296-6895 N/S)

PART OF 296-6894-Page 269,271,273
ALSO APPLIES TO CAB AIR CONDITIONER SPECIFICATION MACHINE

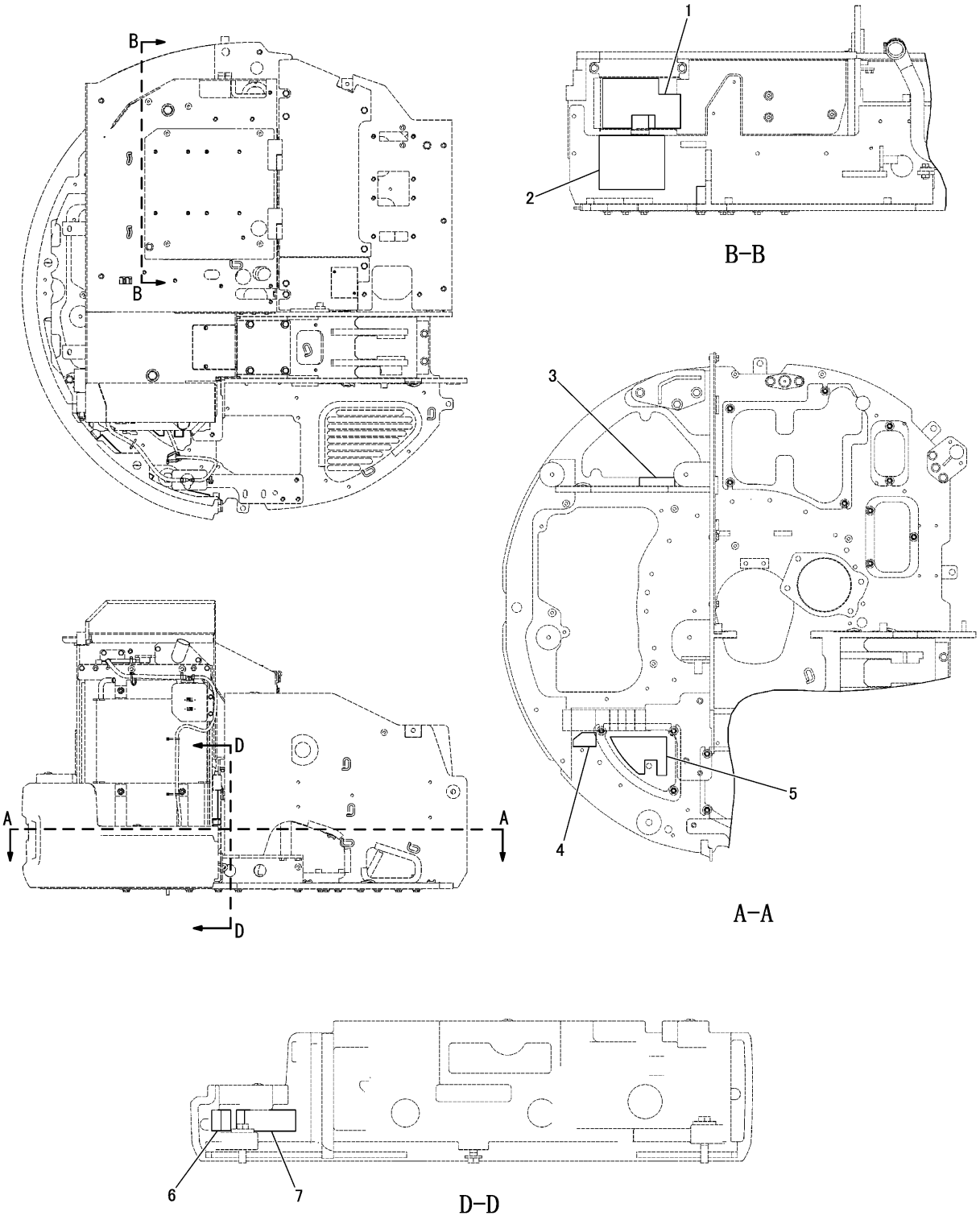

J152827 HE00

SUPPRESSION GROUP (334-6617 N/S) -SOUND
PART OF 308-4118-Page 466
APPLIES TO CAB AIR CONDITIONER SPECIFICATION MACHINE
AN ATTACHMENT

FRAME AND BODY

NOTE	No.	PART NO.	QTY	PART NAME	NOTE	No.	PART NO.	QTY	PART NAME
	1	329−1086	1	INSULATION					
	2	329−1087	1	INSULATION					
	3	329−1088	1	INSULATION					
	4	329−1094	1	INSULATION					
	5	329−1096	1	INSULATION					
	6	329−1099	1	INSULATION					
	7	329−1100	1	INSULATION					

J152827 HE00

SUPPRESSION GROUP (334-6617 N/S) -SOUND
PART OF 308-4118-Page 466
APPLIES TO CAB AIR CONDITIONER SPECIFICATION MACHINE
AN ATTACHMENT

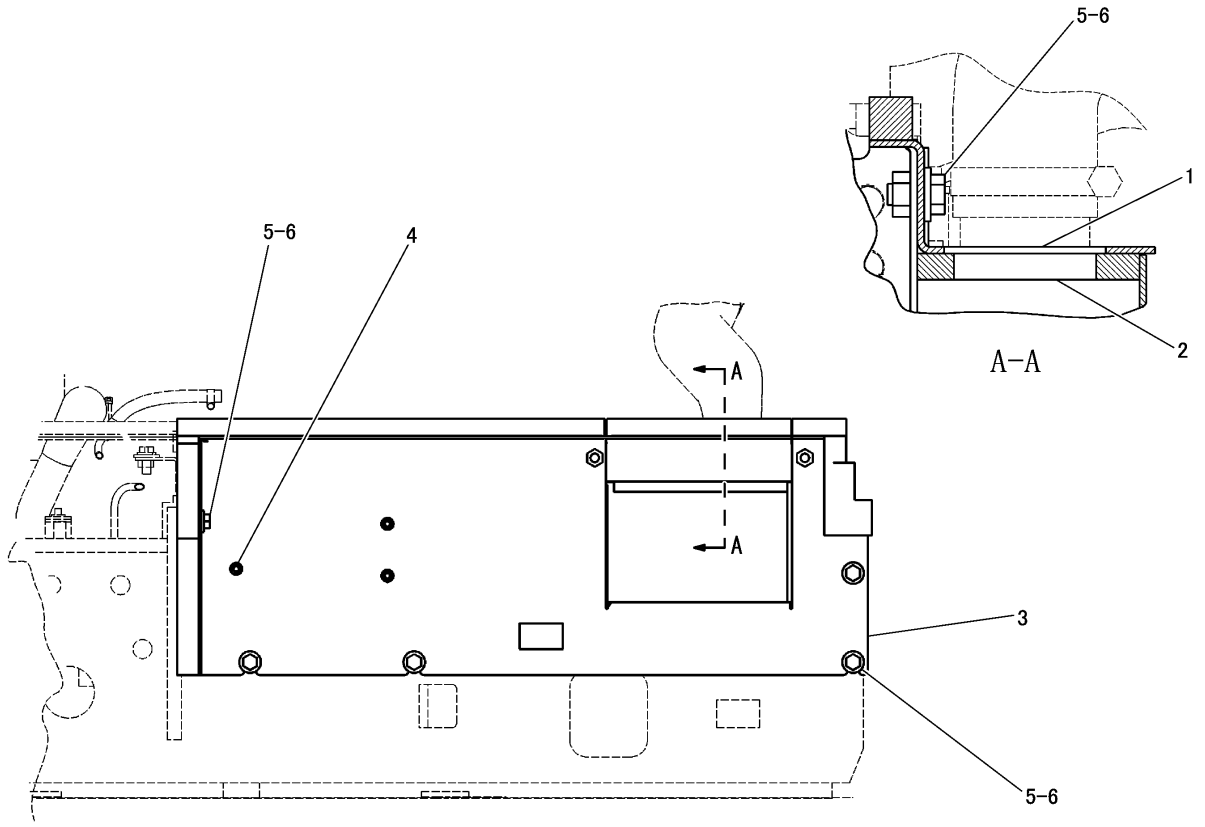

NOTE	No.	PART NO.	QTY	PART NAME	NOTE	No.	PART NO.	QTY	PART NAME
	1	300-4314	1	PLATE AS					
	2	300-4319	1	INSULATION					
Y	3	317-8457	1	PLATE AS					
	4	4H-0408	3	PLUG					
	5	7X-7729	7	WASHER					
	6	8T-4137	7	BOLT(M10×1.5)					

Y-SEPARATE ILLUSTRATION

J146551 HE03

FIREWALL GROUP (296-1617 N/S)

PART OF 296-1803-Page 241
REFERENCE:317-8457-Page 281

FRAME AND BODY

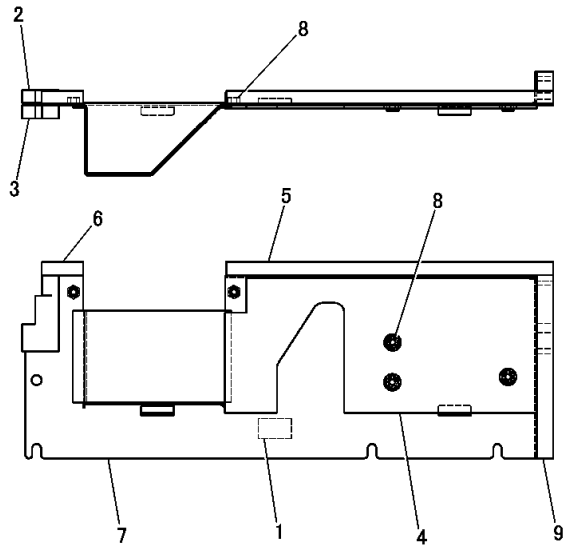

NOTE	No.	PART NO.	QTY	PART NAME
	1	233-4113	1	FOAM
	2	297-9386	1	FOAM
	3	297-9387	1	FOAM
	4	300-4316	1	INSULATION
	5	300-4317	1	FOAM
	6	300-4318	1	FOAM
	7	317-8450	1	PLATE AS
	8	8T-3490	5	NUT(M10×1.5)(WELD)
	9	317-8451	1	FOAM

J146552 HE00

317-8457 PLATE ASSEMBLY
PART OF 296-1617-Page 280

CONSISTS OF :

PAGE

1 265-8346 COUNTERWEIGHT GROUP(EXTRA) 283

1 276-1009 FILM GROUP 566

1 276-1472 EXTENSION GROUP 39

J146802 HE01

COUNTERWEIGHT ARRANGEMENT (296-1626 N/S) -EXTRA
AN ATTACHMENT

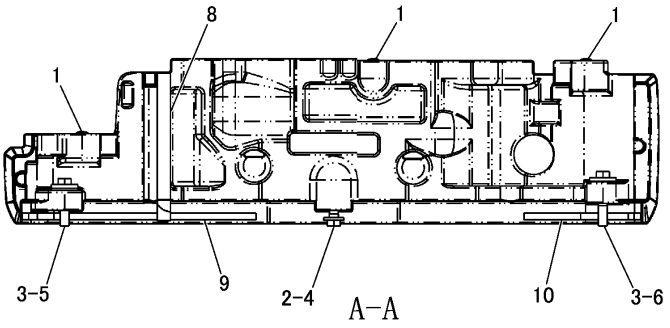

A-A

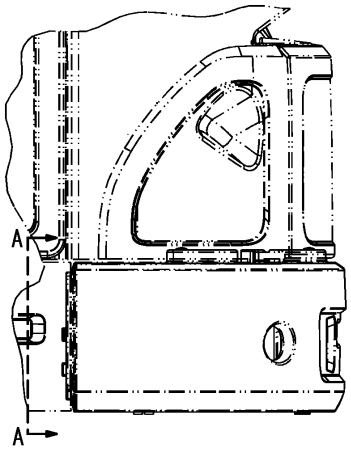

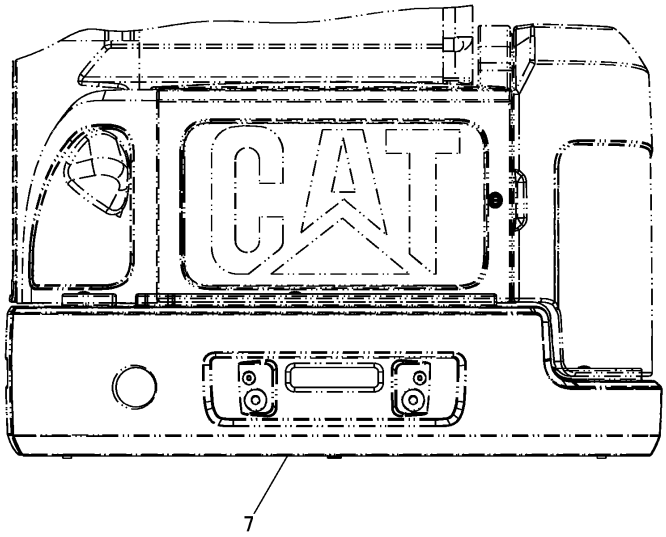

NOTE	No.	PART NO.	QTY	PART NAME	NOTE	No.	PART NO.	QTY	PART NAME
	1	258-2111	3	CAP					
	2	8T-5439	1	WASHER					
	3	086-0299	2	WASHER					
	4	7X-2563	1	BOLT(M20×2.5)					
	5	7X-2564	1	BOLT(M20×2.5)					
	6	7X-2566	1	BOLT(M20×2.5)					
Z	7	318-9216	1	COUNTERWEIGHT AS					
		265-8353	1	COUNTERWEIGHT AS					
	8	265-8360	1	INSULATION					
	9	318-9203	1	INSULATION					
	10	319-2769	1	INSULATION					

Z-NOT SERVICED SEPARATELY

J148629 HE02

COUNTERWEIGHT GROUP (296-1599 N/S)

PART OF 296-1803-Page 241

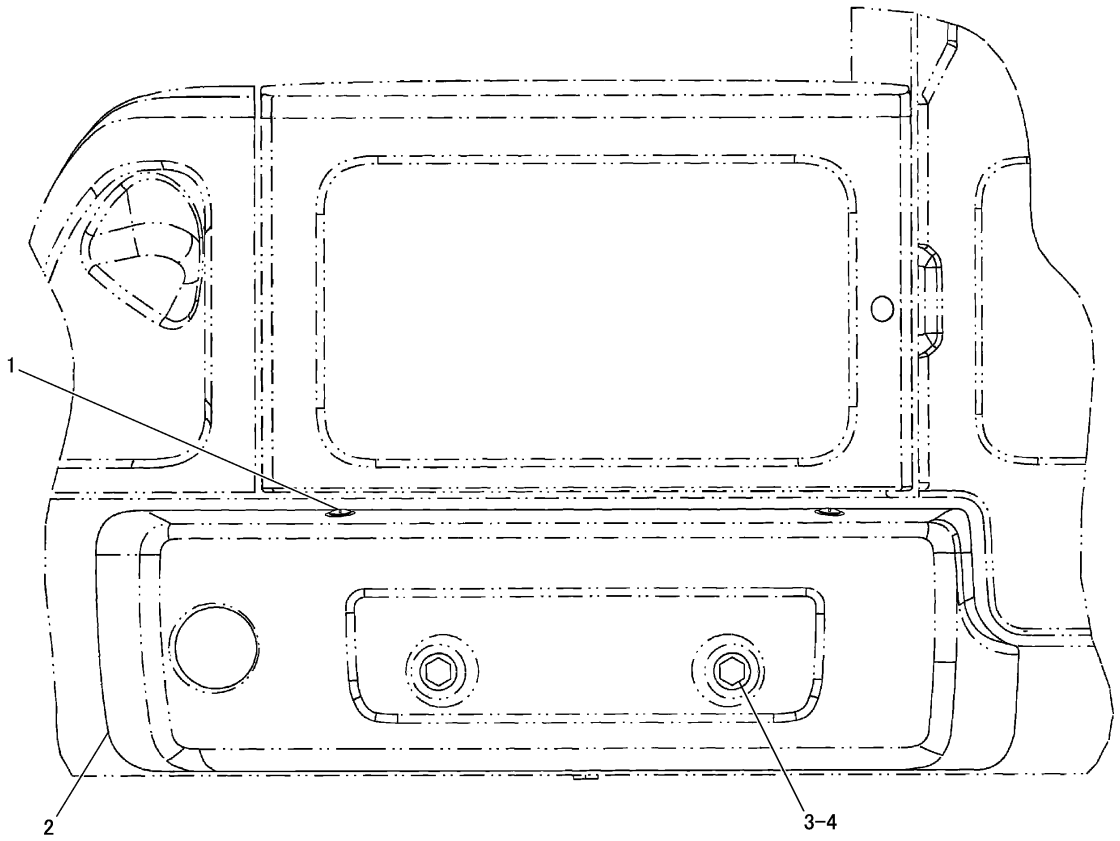

NOTE	No.	PART NO.	QTY	PART NAME	NOTE	No.	PART NO.	QTY	PART NAME
	1	258-2111	2	CAP					
	2	265-8356	1	COUNTERWEIGHT AS					
	3	7X-2488	2	BOLT(M20×2.5)					
	4	6C-9149	2	WASHER					

J134229 E03

COUNTERWEIGHT GROUP (265-8346 N/S) -EXTRA
PART OF 296-1626-Page 281
AN ATTACHMENT

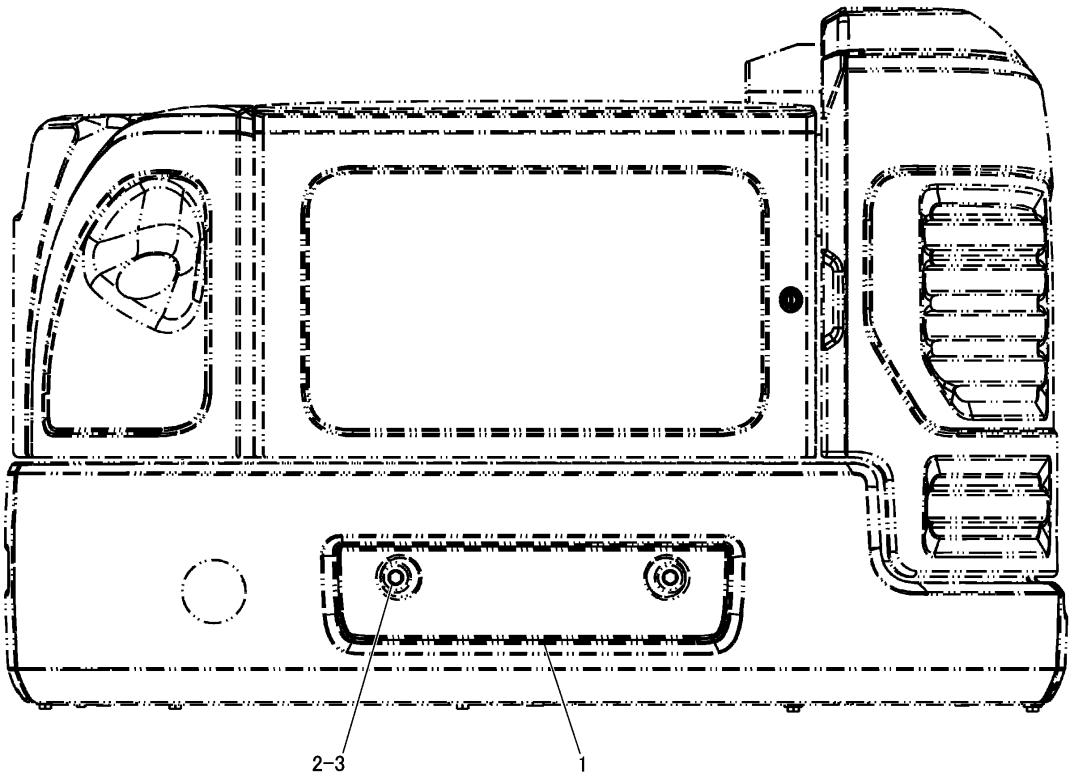

NOTE	No.	PART NO.	QTY	PART NAME	NOTE	No.	PART NO.	QTY	PART NAME
	1	194-7361	1	COVER					
	2	8T-4121	2	WASHER					
	3	8T-4137	2	BOLT(M10×1.5)					

J148630 HE01

COVER GROUP (296-1769 N/S) -COUNTERWEIGHT
PART OF 296-1803-Page 241

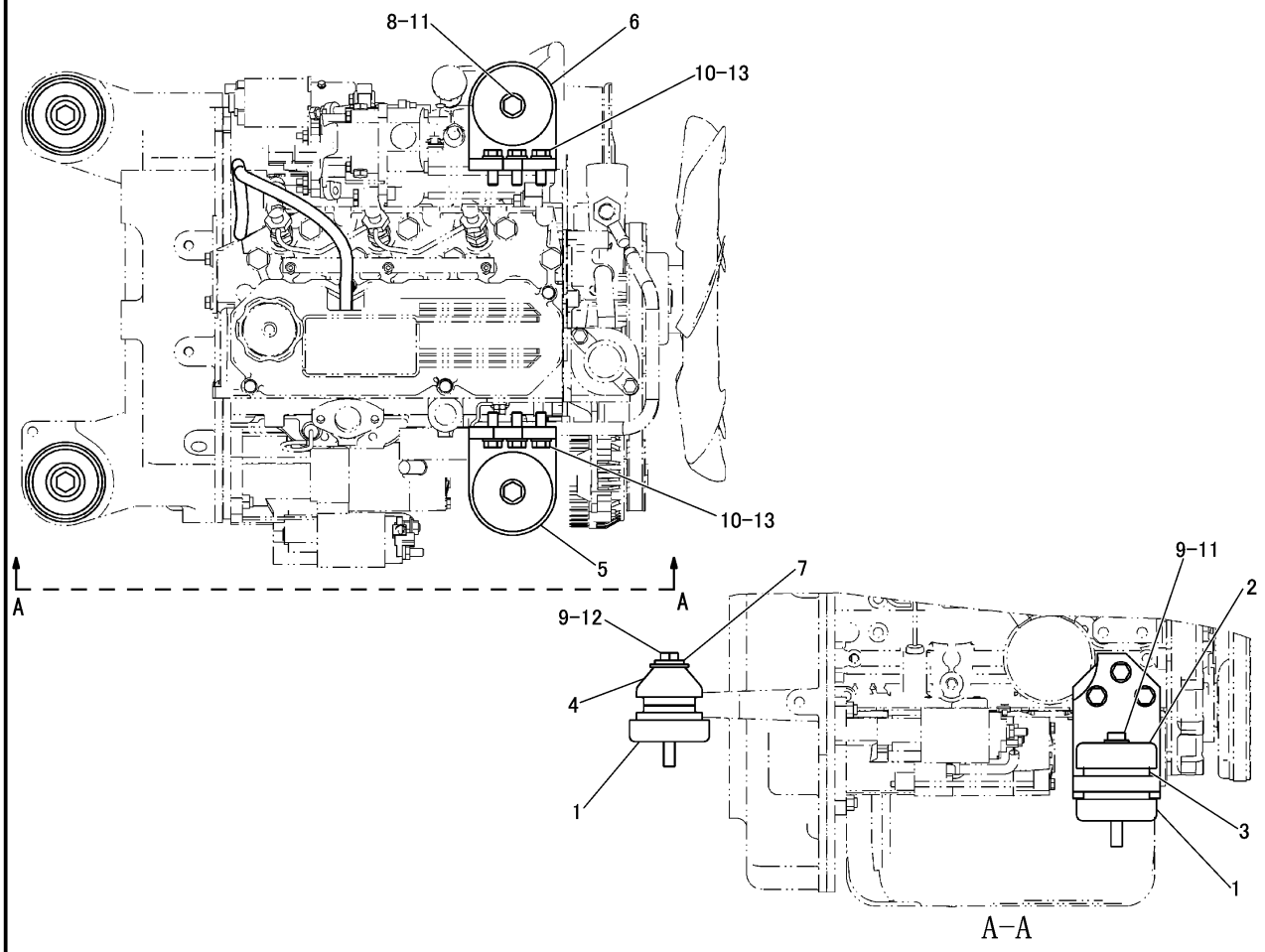

NOTE	No.	PART NO.	QTY	PART NAME	NOTE	No.	PART NO.	QTY	PART NAME
	1	163-6838	4	STOPPER					
	2	176-8440	2	STOPPER					
	3	270-2002	4	MOUNT					
	4	270-2003	4	MOUNT					
	5	283-4163	1	SUPPORT AS					
	6	305-2500	1	SUPPORT AS					
	7	5P-1076	2	WASHER					
	8	7X-2549	1	BOLT(M12×1.75)					
	9	7X-2550	3	BOLT(M12×1.75)					
	10	8T-4121	6	WASHER					
	11	8T-4223	2	WASHER					
	12	8T-4821	2	WASHER					
	13	9X-8912	6	BOLT(M10×1.25)					

J146668 X04

ENGINE MOUNTING GROUP (297-6492 N/S)
PART OF 296-2599-Page 10

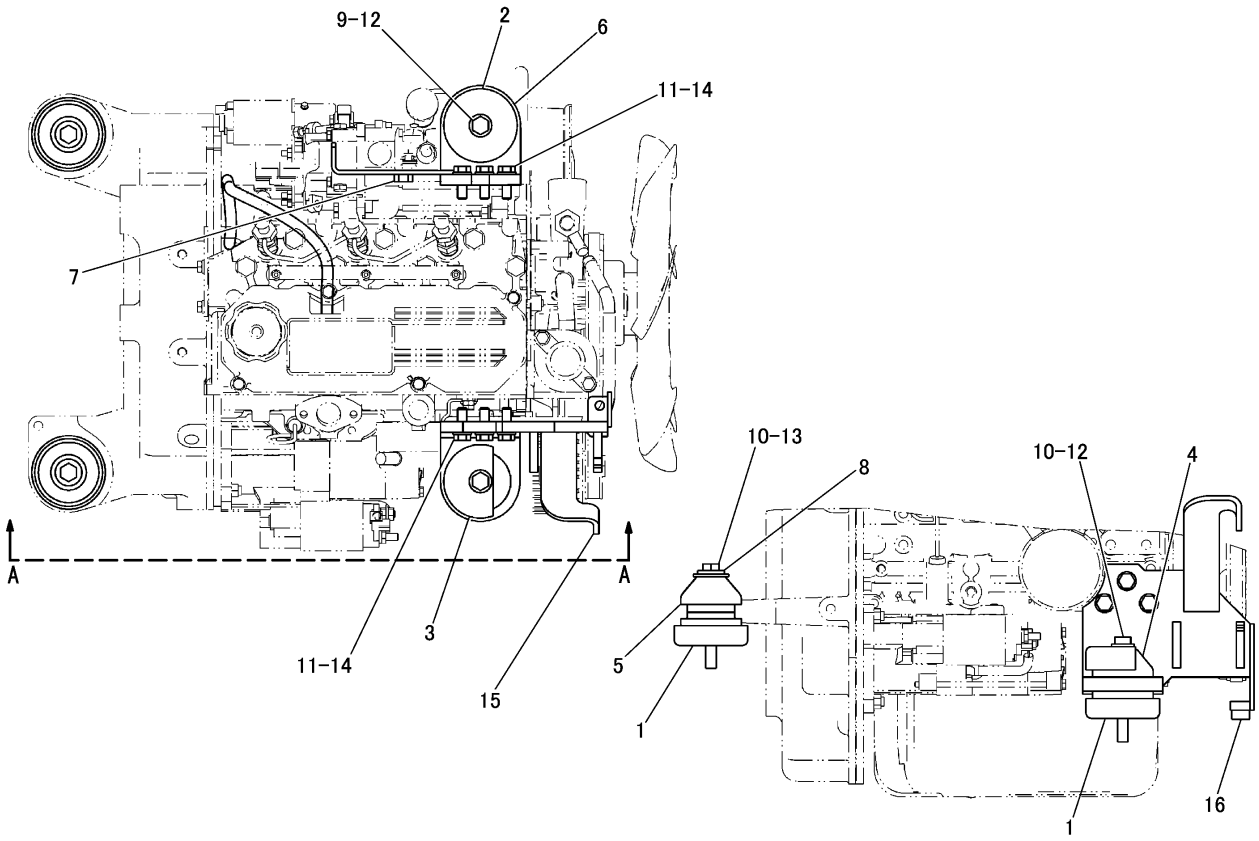

A-A

NOTE	No.	PART NO.	QTY	PART NAME	NOTE	No.	PART NO.	QTY	PART NAME
	1	163-6838	4	STOPPER					
	2	176-8440	1	STOPPER					
	3	267-1046	1	STOPPER					
	4	270-2002	4	MOUNT					
	5	270-2003	4	MOUNT					
	6	305-2500	1	SUPPORT AS					
	7	8T-3490	1	NUT(M10×1.5)(WELD)					
	8	5P-1076	2	WASHER					
	9	7X-2549	1	BOLT(M12×1.75)					
	10	7X-2550	3	BOLT(M12×1.75)					
	11	8T-4121	6	WASHER					
	12	8T-4223	2	WASHER					
	13	8T-4821	2	WASHER					
	14	9X-8912	6	BOLT(M10×1.25)					
	15	326-7247	1	BRACKET AS					
	16	184-6299	1	BOSS(M10×1.5)					

J151219 X03

ENGINE MOUNTING GROUP (307-9115 N/S)
PART OF 308-4118-Page 466
APPLIES TO CAB AIR CONDITIONER SPECIFICATION MACHINE
AN ATTACHMENT

FRAME AND BODY

CONSISTS OF :

			PAGE
1	260-6342	TRACK AND CARRIER ROLLER ARRANGEMENT ·····	292
1	287-7432	FRONT IDLER GROUP ·····	287
1	295-3943	UNDERCARRIAGE FRAME GROUP ·····	290
1	308-2830	BEARING AND GEAR GROUP ·····	291

J146532 HE01

UNDERCARRIAGE ARRANGEMENT (295-3955 N/S) -300mm RUBBER BELT
PART OF 296-1771-Page 1

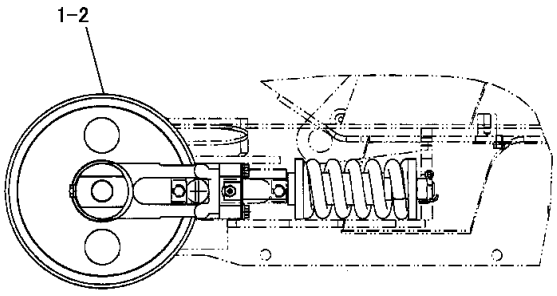

NOTE	No.	PART NO.	QTY	PART NAME
Y	1	287-7433	1	FRONT IDLER GROUP(LH)
Y	2	287-7434	1	FRONT IDLER GROUP(RH)

Y-SEPARATE ILLUSTRATION

J140691 E01

FRONT IDLER GROUP (287-7432 N/S)
PART OF 295-3955-Page 287
REFERENCE:287-7433-Page 288 287-7434-Page 289

FRAME AND BODY

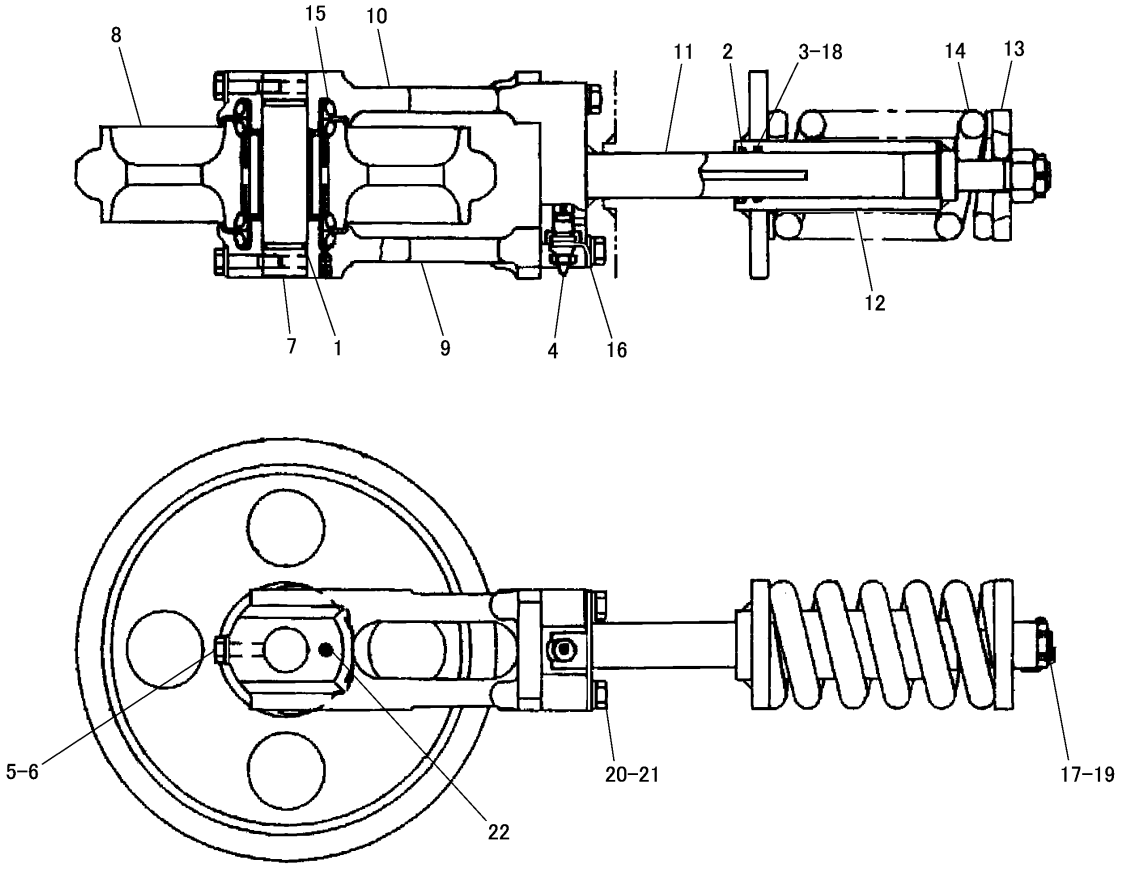

NOTE	No.	PART NO.	QTY	PART NAME	NOTE	No.	PART NO.	QTY	PART NAME
	1	095-1595	2	SEAL		20	8T-4223	4	WASHER
	2	140-4016	1	SEAL		21	8T-4910	4	BOLT(M12×1.75)
	3	140-4828	1	RING		22	8T-6757	1	PLUG
	4	154-2237	1	VALVE					
	5	217-3753	2	BOLT(M10×1.25)					
	6	217-3754	2	WASHER					
	7	234-8967	1	SHAFT					
	8	282-0977	1	IDLER AS					
		154-2233	2	BEARING					
	9	282-0980	1	SUPPORT(OUTER)					
	10	282-0979	1	SUPPORT(INNER)					
	11	234-8973	1	ROD AS					
	12	234-8978	1	CYLINDER AS					
	13	234-8982	1	SUPPORT					
	14	234-8983	1	SPRING					
	15	234-8984	2	SEAL GROUP					
	16	237-0127	1	STOPPER					
	17	240-5084	1	NUT(M24×3)					
	18	095-1601	1	SEAL					
	19	3B-4630	1	COTTER PIN					

J140692 E01

287-7433 FRONT IDLER GROUP -LH
PART OF 287-7432-Page 287

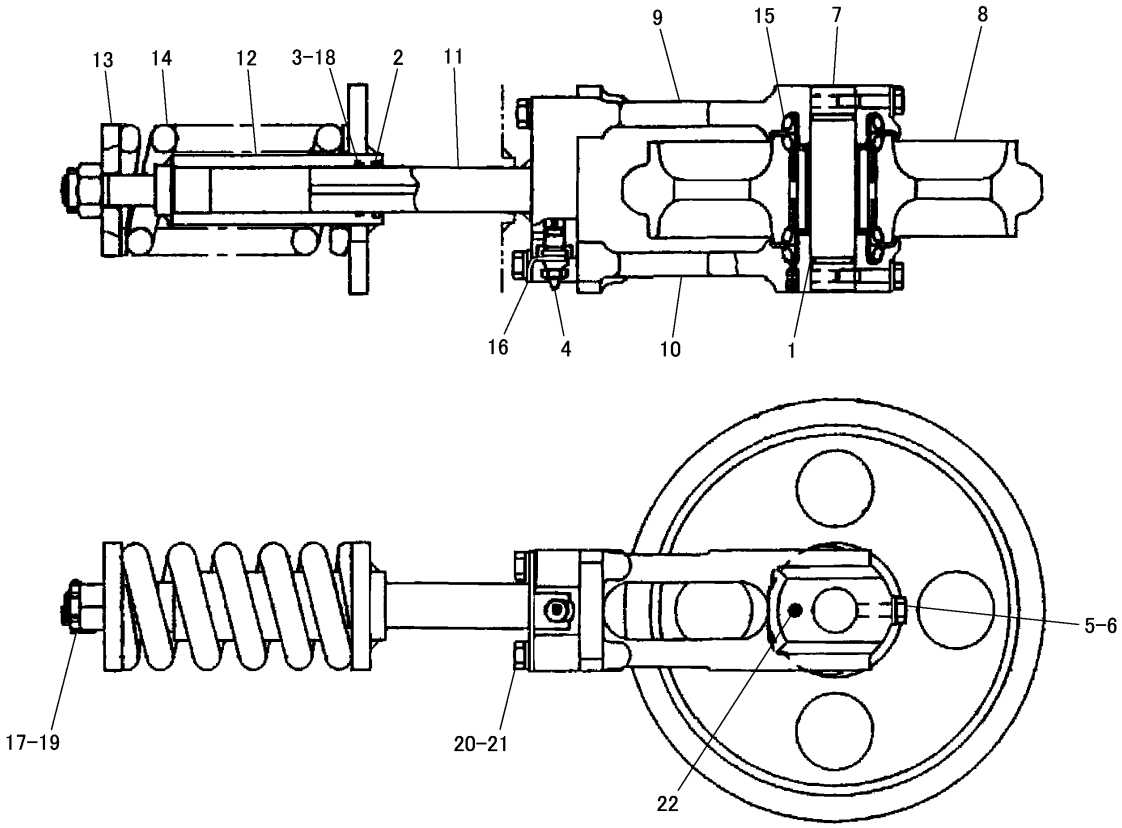

NOTE	No.	PART NO.	QTY	PART NAME	NOTE	No.	PART NO.	QTY	PART NAME
	1	095-1595	2	SEAL		20	8T-4223	4	WASHER
	2	140-4016	1	SEAL		21	8T-4910	4	BOLT(M12×1.75)
	3	140-4828	1	RING		22	8T-6757	1	PLUG
	4	154-2237	1	VALVE					
	5	217-3753	2	BOLT(M10×1.25)					
	6	217-3754	2	WASHER					
	7	234-8967	1	SHAFT					
	8	282-0977	1	IDLER AS					
		154-2233	2	BEARING					
	9	282-0979	1	SUPPORT(INNER)					
	10	282-0980	1	SUPPORT(OUTER)					
	11	234-8974	1	ROD AS					
	12	234-8978	1	CYLINDER AS					
	13	234-8982	1	SUPPORT					
	14	234-8983	1	SPRING					
	15	234-8984	2	SEAL GROUP					
	16	237-0127	1	STOPPER					
	17	240-5084	1	NUT(M24×3)					
	18	095-1601	1	SEAL					
	19	3B-4630	1	COTTER PIN					

J140693 E01

287-7434 FRONT IDLER GROUP -RH
PART OF 287-7432-Page 287

FRAME AND BODY

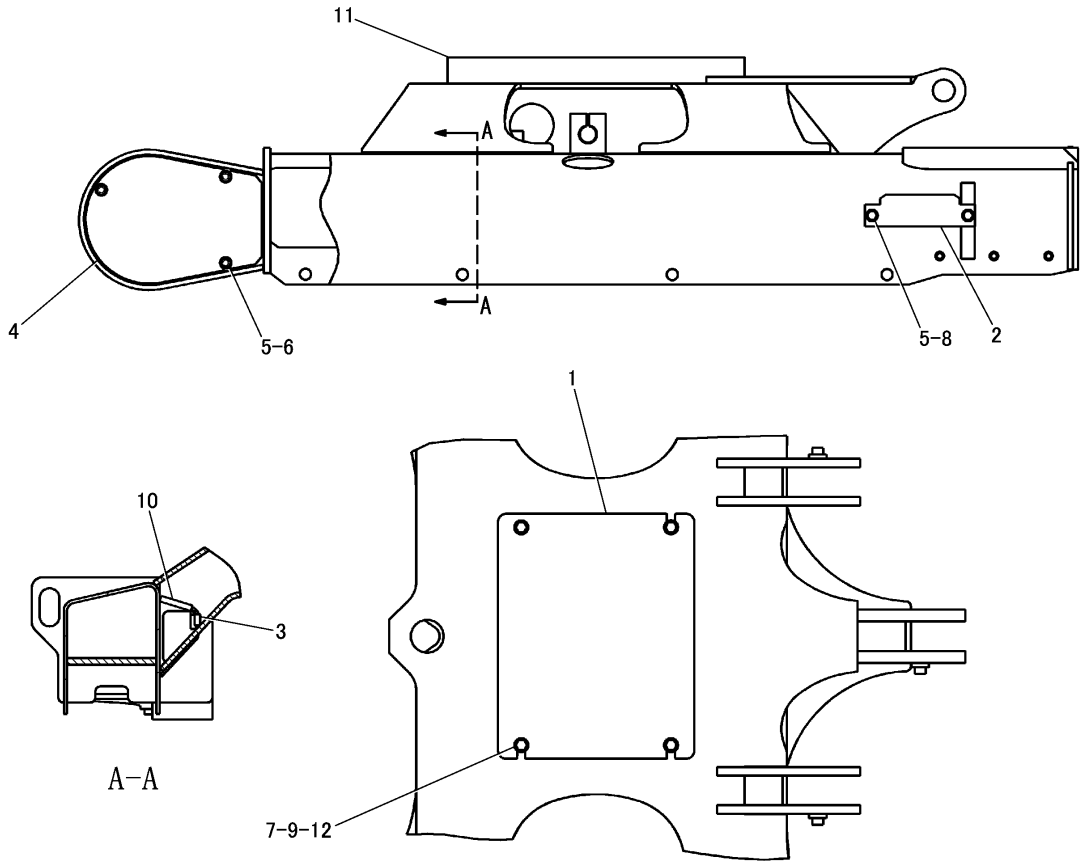

NOTE	No.	PART NO.	QTY	PART NAME	NOTE	No.	PART NO.	QTY	PART NAME
	1	1 9 1 − 4 6 3 1	1	COVER					
	2	2 4 6 − 9 9 6 6	2	COVER					
E	3	3 E − 8 2 9 9		SEAL---2cm(×2)					
	4	3 1 1 − 0 5 9 7	2	COVER					
	5	8 T − 4 1 2 1	10	WASHER					
	6	8 T − 4 1 3 7	6	BOLT(M10×1.5)					
	7	8 T − 4 1 3 9	4	BOLT(M12×1.75)					
	8	8 T − 4 1 9 1	4	BOLT(M10×1.5)					
	9	8 T − 4 2 2 3	4	WASHER					
E	10	3 E − 8 2 9 9		SEAL---6cm(×2)					
Z	11	2 9 5 − 3 9 4 4	1	FRAME AS					
Z		2 9 5 − 3 9 4 5	1	FRAME AS					
		7 T − 1 0 9 9	2	LINK					
	12	8 T − 3 5 9 7	4	NUT(M12×1.75)(WELD)					

E-ORDER BY THE cm
Z-NOT SERVICED SEPARATELY

J146680 HE02

UNDERCARRIAGE FRAME GROUP (295-3943 N/S)
PART OF 295-3955-Page 287

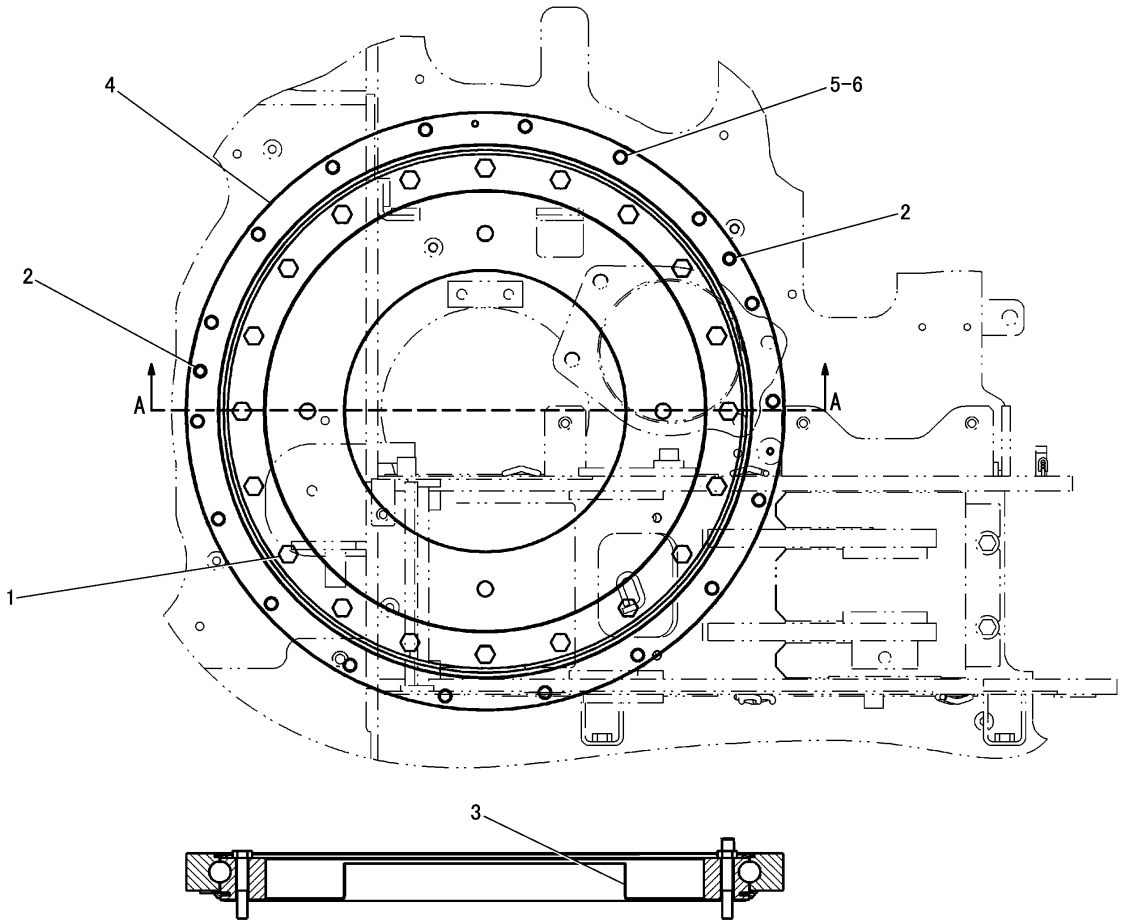

A-A

NOTE	No.	PART NO.	QTY	PART NAME	NOTE	No.	PART NO.	QTY	PART NAME
	1	140-4105	20	BOLT(M12×1.75)					
	2	140-4986	2	DOWEL					
	3	172-2600	1	PLATE					
	4	237-7880	1	BEARING AS					
E		225-5851		SEAL---180cm(INNER)					
E		225-5852		SEAL---180cm(OUTER)					
	5	8T-4223	18	WASHER					
	6	8T-4910	18	BOLT(M12×1.75)					

E-ORDER BY THE cm

J146681 HE00

BEARING AND GEAR GROUP (308-2830 N/S)

PART OF 295-3955-Page 287

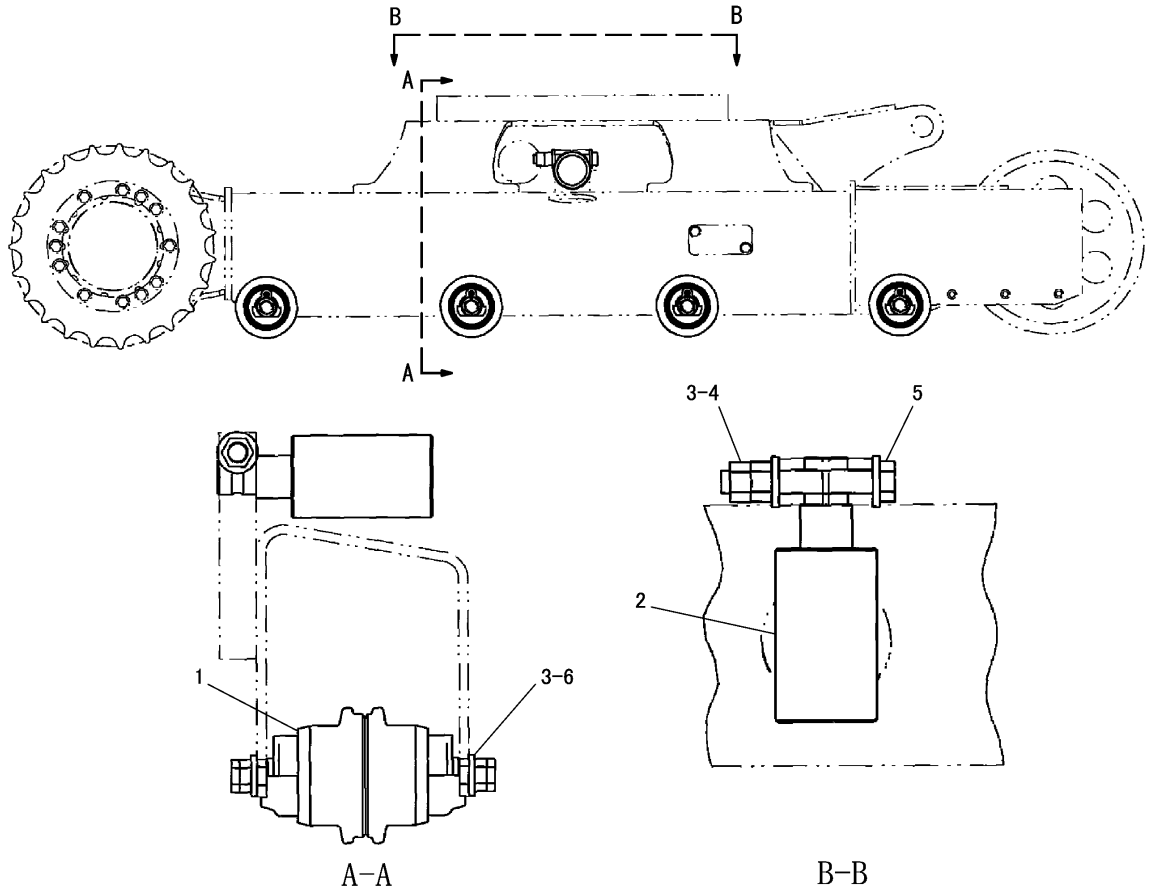

NOTE	No.	PART NO.	QTY	PART NAME	NOTE	No.	PART NO.	QTY	PART NAME
Y	1	266-8793	8	ROLLER GROUP					
Y	2	266-8794	2	ROLLER GROUP					
	3	7X-0515	20	WASHER					
	4	8T-4132	4	NUT(M16×2)					
	5	8T-4173	2	BOLT(M16×2)					
	6	8T-7338	16	BOLT(M16×2)					

Y-SEPARATE ILLUSTRATION

J134139 E01

TRACK AND CARRIER ROLLER ARRANGEMENT (260-6342 N/S)

PART OF 295-3955-Page 287
REFERENCE:266-8793-Page 293 266-8794-Page 293

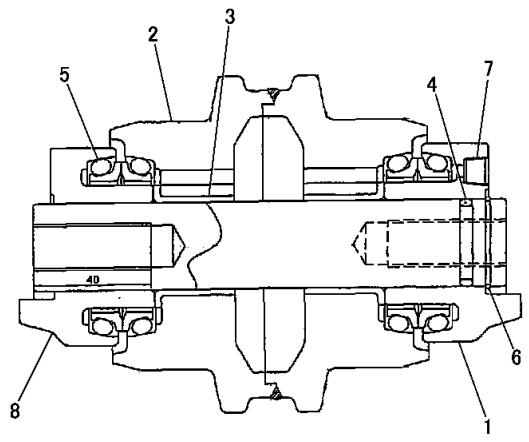

NOTE	No.	PART NO.	QTY	PART NAME
	1	234-8958	1	COLLAR
	2	279-9095	1	ROLLER AS
	3	234-8956	2	BEARING
	4	095-1657	1	SEAL
	5	234-8959	2	SEAL GROUP
	6	234-8962	1	RING
	7	8T-6757	1	PLUG
	8	280-2313	1	SHAFT AS

J144883 E03

266-8793 TRACK ROLLER GROUP -CENTER FLANGE
PART OF 260-6342-Page 292

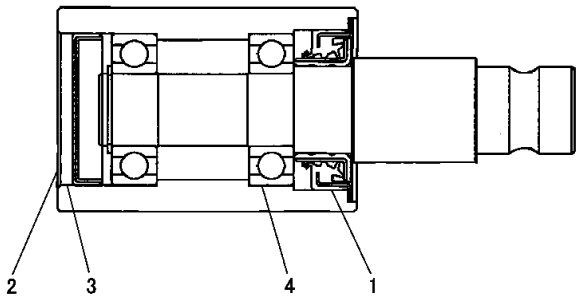

NOTE	No.	PART NO.	QTY	PART NAME
	1	277-4196	1	SEAL AS
	2	277-4197	1	CAP AS
	3	6V-7644	1	RING
	4	1B-3867	2	BEARING

J135997 E02

266-8794 CARRIER ROLLER GROUP
PART OF 260-6342-Page 292

CONSISTS OF :

PAGE

1 205-1363 TRACK GROUP 294

J146870 HE00

TRACK GROUP (308-2831 N/S) -300mm RUBBER BELT

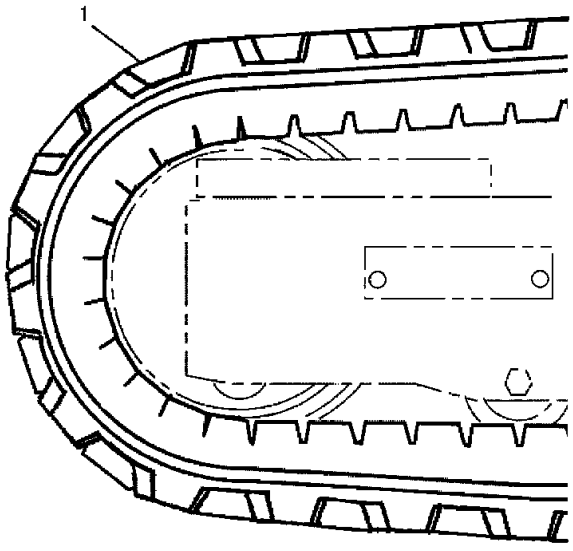

NOTE	No.	PART NO.	QTY	PART NAME
	1	233-2048	1	TRACK AS

J123113 X01

TRACK GROUP (205-1363 N/S) -300mm RUBBER BELT
PART OF 308-2831-Page 294

CONSISTS OF :

PAGE

1 238-7886 TRACK GROUP 296

J146871 HE00

TRACK GROUP (308-2832 N/S) -300mm DOUBLE GROUSER SHOE
AN ATTACHMENT

CONSISTS OF :

PAGE

1 238-7887 TRACK GROUP 297

J146869 HE00

TRACK GROUP (308-2833 N/S) -300mm DOUBLE GROUSER-RUBBER PAD
AN ATTACHMENT

CONSISTS OF :

			PAGE
1	238-7889	TRACK ARRANGEMENT	297

J146862 HE00

TRACK ARRANGEMENT (308-2834 N/S) -300mm DOUBLE GROUSER-RUBBER PAD
AN ATTACHMENT

CONSISTS OF :

			PAGE
1	163-7538	TRACK ASSEMBLY	299
1	237-8948	TRACK GUIDE GUARD GROUP	301

J123138 E00

TRACK GROUP (238-7886 N/S) -300mm DOUBLE GROUSER SHOE
PART OF 308-2832-Page 295
AN ATTACHMENT

CONSISTS OF :

			PAGE
1	185-4229	TRACK GROUP(RUBBER PAD)	299
1	237-8948	TRACK GUIDE GUARD GROUP	301

J123140 E00

TRACK GROUP (238-7887 N/S) -300mm DOUBLE GROUSER-RUBBER PAD
PART OF 308-2833-Page 295
AN ATTACHMENT

CONSISTS OF :

			PAGE
1	212-5122	TRACK GROUP(LH)	298
1	212-5123	TRACK GROUP(RH)	298
2	237-8948	TRACK GUIDE GUARD GROUP	301

J123142 E00

TRACK ARRANGEMENT (238-7889 N/S) -300mm DOUBLE GROUSER-RUBBER PAD
PART OF 308-2834-Page 296
AN ATTACHMENT

CONSISTS OF :

			PAGE
1	163-7538	TRACK ASSEMBLY	299
1	212-5124	RUBBER PAD GROUP	300

J123144 X00

TRACK GROUP (212-5122 N/S) -300mm DOUBLE GROUSER-RUBBER PAD-LH
PART OF 238-7889-Page 297
AN ATTACHMENT

CONSISTS OF :

			PAGE
1	163-7538	TRACK ASSEMBLY	299
1	212-5124	RUBBER PAD GROUP	300

J123891 X00

TRACK GROUP (212-5123 N/S) -300mm DOUBLE GROUSER-RUBBER PAD-RH
PART OF 238-7889-Page 297
AN ATTACHMENT

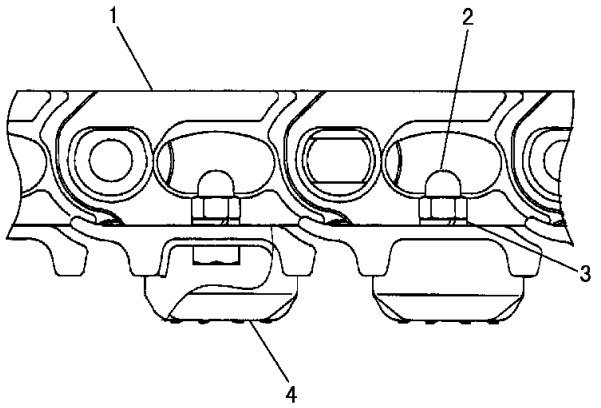

NOTE	No.	PART NO.	QTY	PART NAME
Y	1	163-7538	1	TRACK AS
	2	139-6411	86	NUT(M12)
	3	163-7094	86	WASHER
	4	184-2184	43	RUBBER PAT

Y-SEPARATE ILLUSTRATION

J107429 X00

TRACK GROUP (185-4229 N/S) -RUBBER PAD

PART OF 238-7887-Page 297
REFERENCE:163-7538-Page 299
AN ATTACHMENT

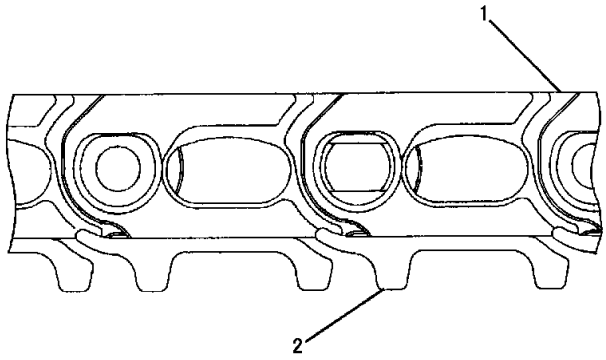

NOTE	No.	PART NO.	QTY	PART NAME
Y	1	163-7539	1	LINK AS
	2	158-4684	43	SHOE

Y-SEPARATE ILLUSTRATION

J146863 X04

163-7538 TRACK ASSEMBLY -300mm DOUBLE GROUSER SHOE

PART OF 185-4229-Page 299, 212-5122-Page 298, 212-5123-Page 298, 238-7886-Page 296
REFERENCE:163-7539-Page 300
AN ATTACHMENT

FRAME AND BODY

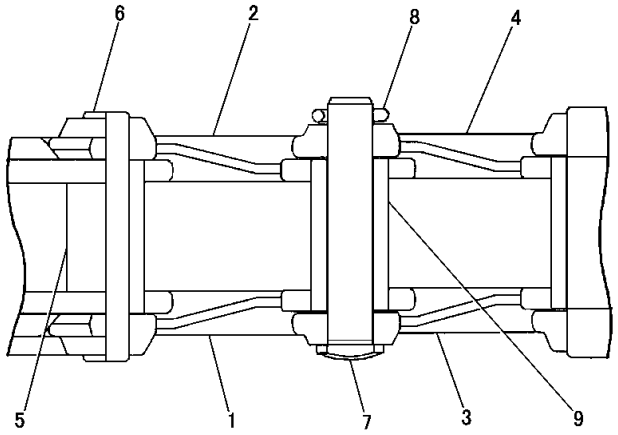

NOTE	No.	PART NO.	QTY	PART NAME
	1	158-4676	42	LINK(RH)
	2	158-4677	42	LINK(LH)
	3	158-4678	1	LINK(MASTER)(RH)
	4	158-4679	1	LINK(MASTER)(LH)
	5	158-4680	42	BUSHING
	6	158-4681	42	PIN
	7	158-4682	1	PIN(MASTER)
	8	158-4683	1	COTTER PIN
	9	260-6400	1	BUSHING(MASTER)

J146866 X02

163-7539 TRACK LINK ASSEMBLY

PART OF 163-7538-Page 299
AN ATTACHMENT

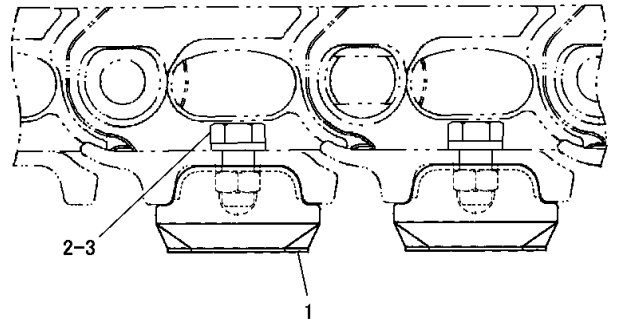

NOTE	No.	PART NO.	QTY	PART NAME
	1	212-5118	43	PAD AS
	2	212-5119	43	BOLT(M12×1.75)
	3	212-5120	43	WASHER

J123145 X00

RUBBER PAD GROUP (212-5124 N/S) -300mm

PART OF 212-5122-Page 298, 212-5123-Page 298
AN ATTACHMENT

FRAME AND BODY

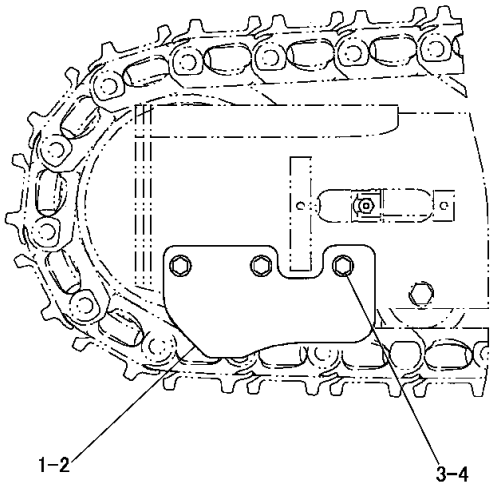

NOTE	No.	PART NO.	QTY	PART NAME
	1	252-0225	1	GUARD(LH)
	2	252-0226	1	GUARD(RH)
	3	8T-4183	6	BOLT(M12×1.75)
	4	8T-4223	6	WASHER

J137099 E01

TRACK GUIDE GUARD GROUP (237-8948 N/S)

PART OF 238-7886-Page 296, 238-7887-Page 297, 238-7889-Page 297
AN ATTACHMENT

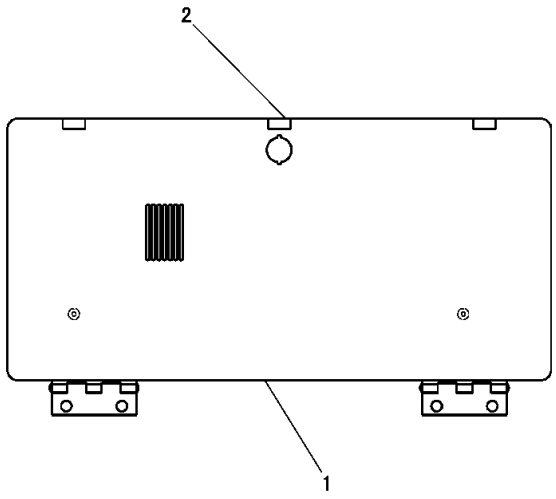

NOTE	No.	PART NO.	QTY	PART NAME
Z	1	319-1465	1	COVER AS
		306-7798	1	PLATE
D	2	8T-5372		SEAL---0.02m(×3)

D-ORDER BY THE m
Z-NOT SERVICED SEPARATELY

J146595 HE00

319-1464 PLATE ASSEMBLY

PART OF 307-8512-Page 460
AN ATTACHMENT

FRAME AND BODY

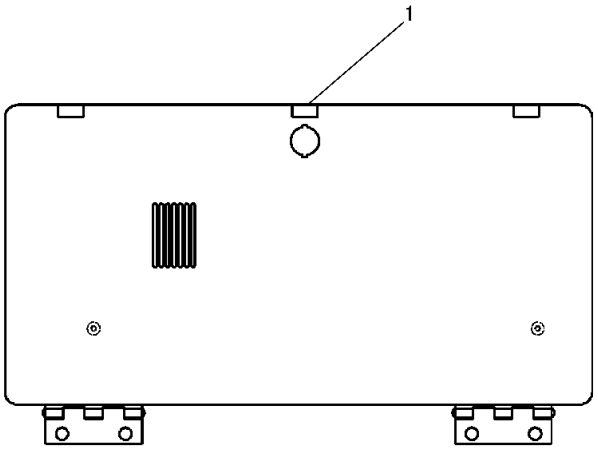

NOTE	No.	PART NO.	QTY	PART NAME
D	1	8T-5372		SEAL---0.02m

D-ORDER BY THE m

J146594 HE00

319-1466 PLATE ASSEMBLY

PART OF 319-1469-Page 460
AN ATTACHMENT

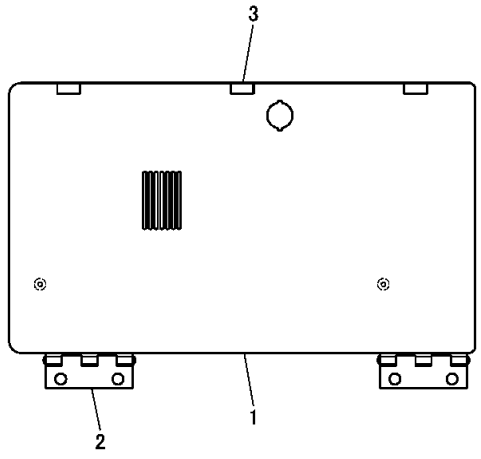

NOTE	No.	PART NO.	QTY	PART NAME
	1	332-0043	1	COVER AS
	2	215-1146	2	HINGE
D	3	8T-5372		SEAL---0.02m(×3)

D-ORDER BY THE m

J151954 HE00

332-0042 PLATE ASSEMBLY

PART OF 332-0041-Page 461
APPLIES TO CAB AIR CONDITIONER SPECIFICATION MACHINE
AN ATTACHMENT

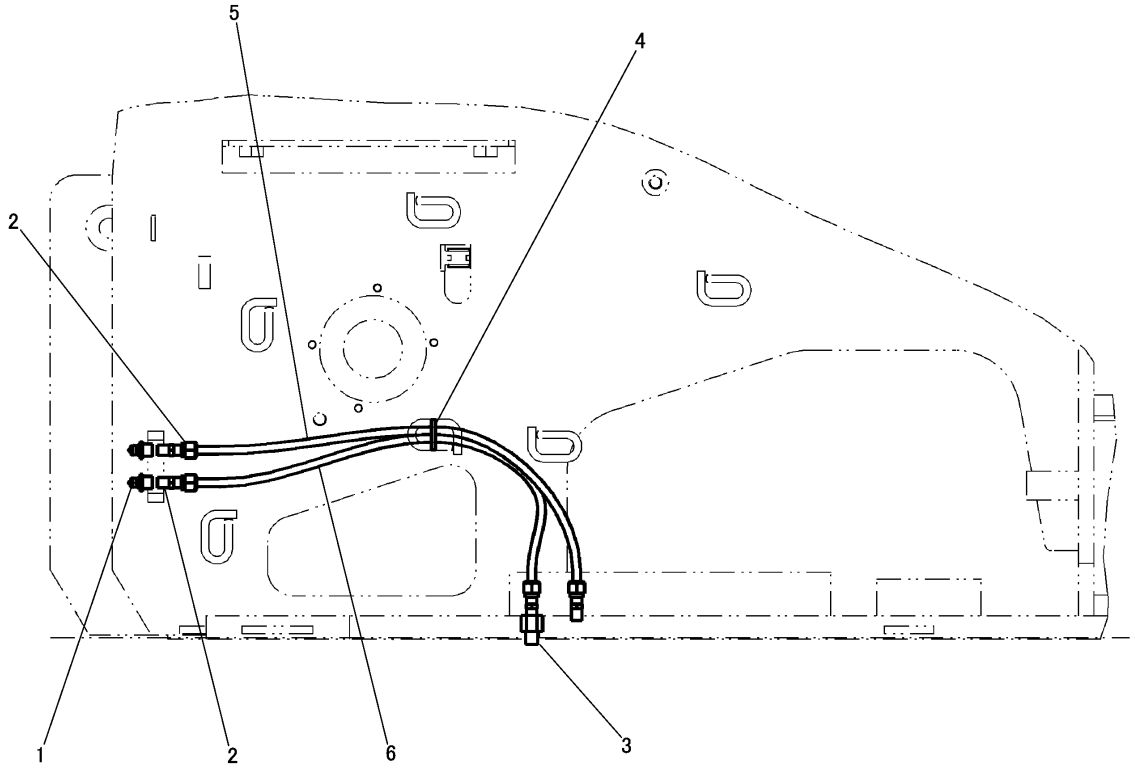

LEFT SIDE VIEW

NOTE	No.	PART NO.	QTY	PART NAME	NOTE	No.	PART NO.	QTY	PART NAME
	1	3B-8489	2	FITTING					
	2	5P-4400	4	CONNECTOR					
	3	002-0639	1	ADAPTER					
	4	3S-2093	1	STRAP					
J	5	205-6079		TUBE---3.8dm					
J	6	205-6079		TUBE---3.6dm					

J-ORDER BY THE dm

J146564 HE02

GREASE LINES GROUP (296-6896 N/S)

PART OF 296-1803-Page 241

HYDRAULIC SYSTEM

CONSISTS OF :

			PAGE
1	295-9330	VALVE AND MOUNTING GROUP	379
1	295-9332	FRONT LINES GROUP	318
1	295-9333	RETURN LINES GROUP	364
1	295-9336	PILOT LINES GROUP	328
1	295-9365	PUMP AND MOUNTING GROUP	311
1	296-1614	HYDRAULIC TANK AND MOUNTING GROUP	309
1	302-6607	TRACK MOTOR LINES GROUP	324
1	307-6392	SWING MOTOR LINES GROUP	326
1	307-6394	PUMP LINES GROUP	320

J146528 HE03

HYDRAULIC ARRANGEMENT (295-9329 N/S)
PART OF 296-1771-Page 1

CONSISTS OF :

			PAGE
1	295-9335	PILOT LINES GROUP	332

J147578 HE00

CONTROL ARRANGEMENT (314-5907 N/S) -STANDARD

CONSISTS OF :

			PAGE
1	326-6316	PILOT LINES GROUP	336

J151948 HE00

CONTROL ARRANGEMENT (326-7175 N/S) -STANDARD-AIR CONDITIONER
APPLIES TO CAB AIR CONDITIONER SPECIFICATION MACHINE
AN ATTACHMENT

CONSISTS OF :

			PAGE
1	295-9741	VALVE AND MOUNTING GROUP	384
1	297-8540	FILM GROUP	548
1	307-6399	PILOT LINES GROUP(4 WAY)	346

J146747 HE01

CONTROL ARRANGEMENT (307-6397 N/S) -PATTERN CHANGE
AN ATTACHMENT

CONSISTS OF :

			PAGE
1	295-9741	VALVE AND MOUNTING GROUP	384
1	297-8540	FILM GROUP	548
1	307-6399	PILOT LINES GROUP	346
1	322-9479	PILOT LINES GROUP(CRANE)	352

J151302 HE00

CONTROL ARRANGEMENT (322-9521 N/S) -PATTERN CHANGE-SHOVEL CRANE
AN ATTACHMENT

CONSISTS OF :

			PAGE
1	297-8540	FILM GROUP(4 WAY)	548
1	326-7177	PILOT LINES GROUP(4 WAYS)	354
1	328-1869	VALVE AND MOUNTING GROUP(4 WAYS)	385

J151329 HE01

CONTROL ARRANGEMENT (326-7176 N/S) -PATTERN CHANGE-AIR CONDITIONER
APPLIES TO CAB AIR CONDITIONER SPECIFICATION MACHINE
AN ATTACHMENT

CONSISTS OF :

			PAGE
1	297-8540	FILM GROUP	548
1	322-9479	PILOT LINES GROUP(CRANE)	352
1	326-7177	PILOT LINES GROUP	354
1	328-1869	VALVE AND MOUNTING GROUP	385

J151946 HE00

CONTROL ARRANGEMENT (331-7226 N/S) -PATTERN CHANGE-AIR CONDITIONER-SHOVEL CRANE
APPLIES TO CAB AIR CONDITIONER SPECIFICATION MACHINE
AN ATTACHMENT

CONSISTS OF :

			PAGE
1	233-7305	PILOT OPERATED HYDRAULIC CONTROL GROUP	413
1	295-9345	AUXILIARY HYDRAULIC LINES GROUP	362
1	306-1030	WIRING GROUP	176
1	308-3948	PILOT LINES GROUP	361
1	308-9562	FILM GROUP	564
1	319-6376	BOOM GROUP	438
1	319-6379	STICK GROUP	443

J146780 HE04

CONTROL ARRANGEMENT (295-9343 N/S) -AUXILIARY-SINGLE ACTION
AN ATTACHMENT

HYDRAULIC SYSTEM

CONSISTS OF :

			PAGE
1	309-1453	PILOT OPERATED HYDRAULIC CONTROL GROUP	411
1	309-3615	WIRING GROUP	120

J146684 HE00

TRAVEL ALARM ARRANGEMENT (307-9237 N/S)
AN ATTACHMENT

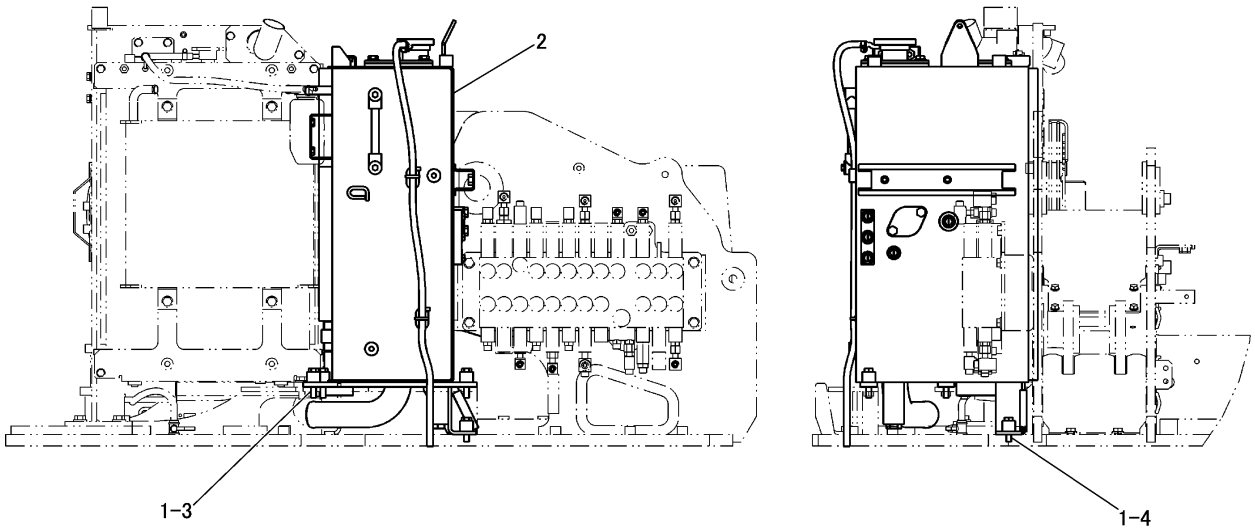

NOTE	No.	PART NO.	QTY	PART NAME	NOTE	No.	PART NO.	QTY	PART NAME
	1	163-5382	4	SPACER					
Y	2	300-4330	1	TANK GROUP					
	3	8T-4185	3	BOLT(M10×1.5)					
	4	8T-4186	1	BOLT(M10×1.5)					

Y-SEPARATE ILLUSTRATION

J146658 HE01

HYDRAULIC TANK AND MOUNTING GROUP (296-1614 N/S)

PART OF 295-9329-Page 304
REFERENCE:300-4330-Page 310

HYDRAULIC SYSTEM

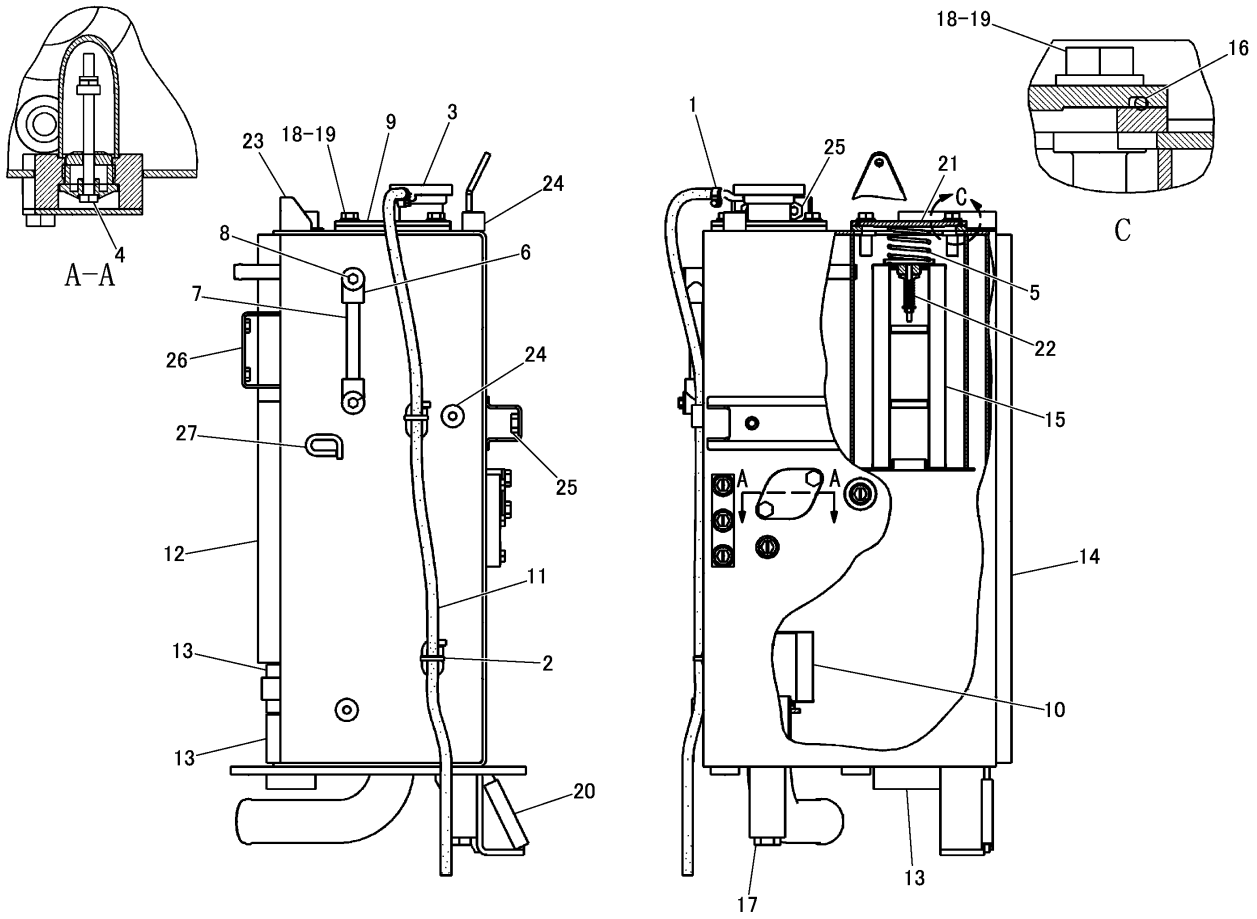

NOTE	No.	PART NO.	QTY	PART NAME	NOTE	No.	PART NO.	QTY	PART NAME
	1	1P-4278	1	CLAMP		16	095-1717	2	SEAL
	2	3S-2093	2	STRAP		17	2M-9780	1	SEAL
	3	4I-3745	1	CAP			9S-4190	1	PLUG
	4	093-5537	1	VALVE AS		18	8T-4121	8	WASHER
	5	225-3697	1	SPRING		19	8T-4136	8	BOLT(M10×1.5)
	6	227-0620	1	GAUGE AS	D	20	8T-3426		CHANNEL---0.08m
		236-3258	2	BLOCK		21	265-8632	1	COVER
		095-1519	4	SEAL		22	265-8677	1	VALVE AS
		6F-4855	4	SEAL		23	300-4331	1	TANK AS
	7	236-3257	1	PIPE		24	9R-2060	5	BOSS(M10×1.5)
	8	236-3259	2	BOLT(M10×1.5)		25	8T-3490	6	NUT(M10×1.5)(WELD)
	9	296-1690	1	COVER AS	Z	26	233-0940	1	BRACKET AS
		4I-3743	1	FILLER AS			6V-9632	2	NUT(M6×1)(WELD)
		194-7330	1	PIN		27	7T-1099	3	LINK
	10	296-1693	1	STRAINER					
E	11	7Y-1976		HOSE---83cm					
	12	300-4337	1	INSULATION					
	13	300-4338	3	INSULATION					
	14	300-4339	1	INSULATION					
	15	304-7196	1	FILTER AS					

D-ORDER BY THE m
E-ORDER BY THE cm
Z-NOT SERVICED SEPARATELY

J146659 HE03

HYDRAULIC TANK AND FILTER GROUP (300-4330 N/S)
PART OF 296-1614-Page 309

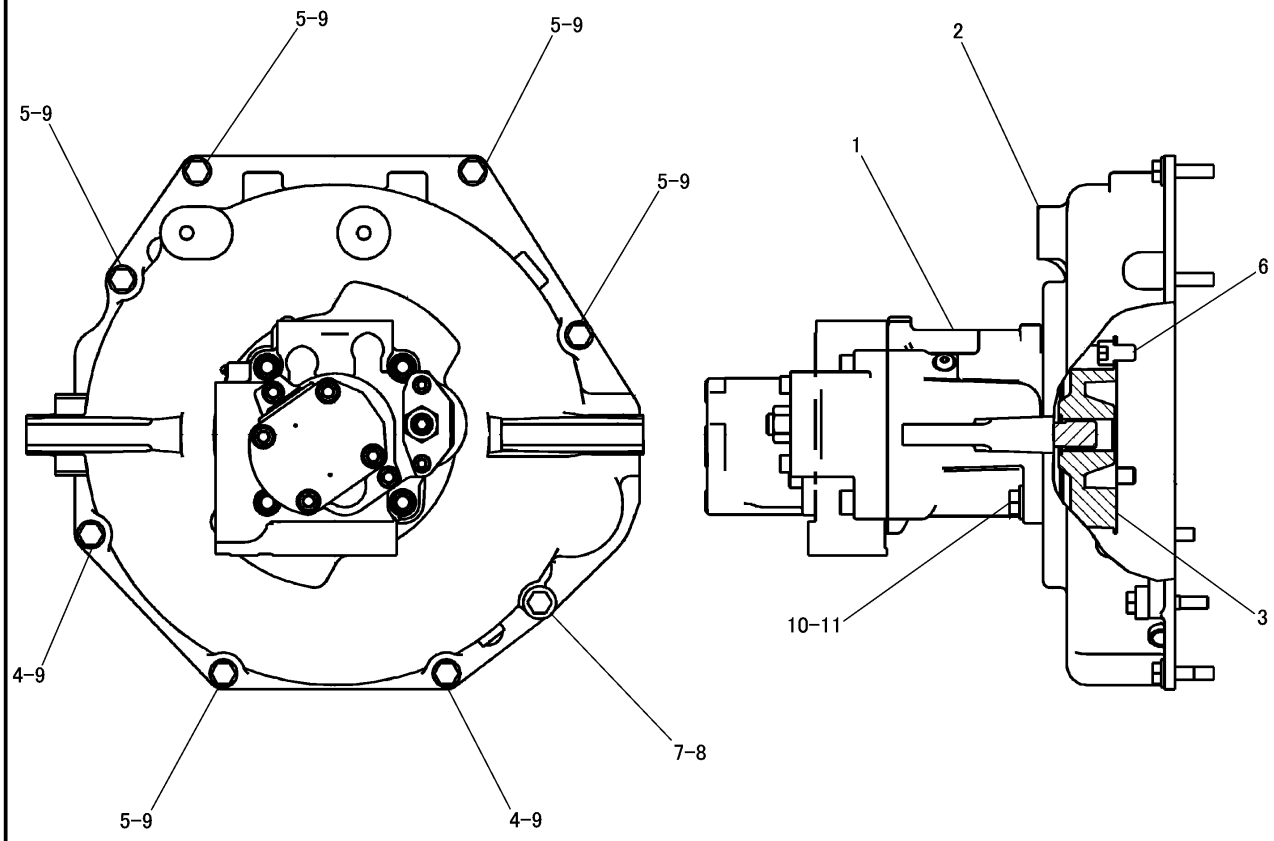

NOTE	No.	PART NO.	QTY	PART NAME	NOTE	No.	PART NO.	QTY	PART NAME
Y	1	295-9366	1	PUMP GROUP					
	2	297-4027	1	HOUSING					
	3	306-4349	1	COUPLING AS					
	4	127-4839	2	BOLT(M10×1.25)					
	5	128-7747	5	BOLT(M10×1.25)					
	6	191-7503	3	BOLT(M12×1.75)					
	7	198-4777	1	WASHER					
	8	205-6883	1	BOLT(M10×1.25)					
	9	8T-4121	7	WASHER					
	10	8T-4139	2	BOLT(M12×1.75)					
	11	8T-4223	2	WASHER					

Y-SEPARATE ILLUSTRATION

J149087 X03

PUMP AND MOUNTING GROUP (295-9365 N/S)

PART OF 295-9329-Page 304
REFERENCE:295-9366-Page 312

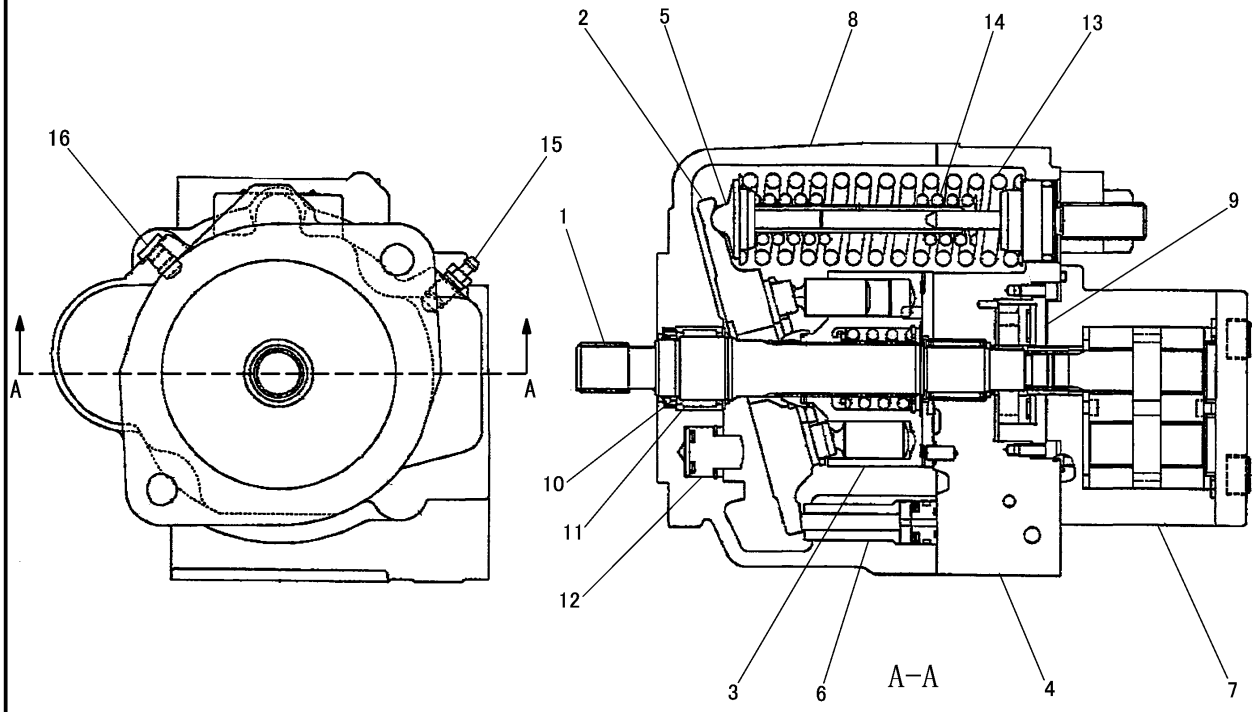

NOTE	No.	PART NO.	QTY	PART NAME	NOTE	No.	PART NO.	QTY	PART NAME
Y	1	323-9684	1	SHAFT KIT					
Y	2	323-9685	1	SWASHPLATE GROUP					
Y	3	323-9686	1	ROTARY AS					
Y	4	323-9687	1	PLATE AS					
Y	5	323-9688	1	SPRING GROUP					
Y	6	324-2863	1	PISTON GROUP					
Y	7	324-2864	1	PUMP AS					
L	8	323-9690	1	HOUSING					
Y	9	323-4187	1	GEAR PUMP GROUP					
L	10	323-9691	1	SEAL					
L	11	323-9692	1	BEARING					
Y	12	323-9693	1	STOPPER KIT					
	13	324-2865	1	SPRING					
	14	324-2866	1	SPRING					
	15	150-0502	1	VALVE AS					
	16	258-0037	1	PULG AS					

L-REPLACE AT THE SAME TIME
Y-SEPARATE ILLUSTRATION

J149088 X03

295-9366 PUMP GROUP -MAIN HYDRAULIC

PART OF 295-9365-Page 311
REFERENCE:323-9684-Page 317 323-9685-Page 314 323-9686-Page 314 323-9687-Page 315 323-9688-Page 316
324-2863-Page 317 324-2864-Page 313 323-4187-Page 313 323-9693-Page 316

HYDRAULIC SYSTEM

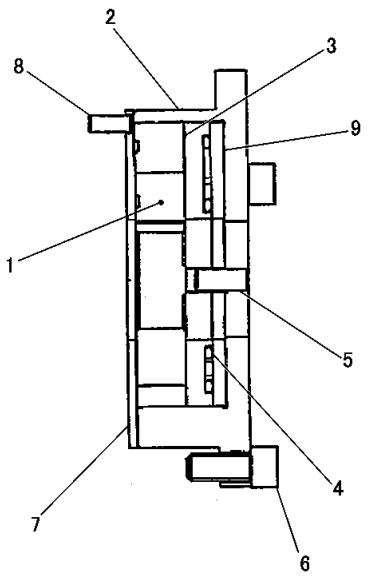

NOTE	No.	PART NO.	QTY	PART NAME
K	1	207-2598	1	GEAR
K	2	323-4188	1	CASE
K	3	207-2600	1	PLATE
	4	323-4189	1	SEAL
	5	4Y-0187	1	SPRING PIN
	6	207-2602	3	BOLT
K	7	207-2603	1	PLATE
	8	7Y-5272	1	SPRING PIN
	9	207-2604	1	PLATE

K-REPLACE AT THE SAME TIME

J148830 X00

GEAR PUMP GROUP (323-4187 N/S)

PART OF 295-9366-Page 312

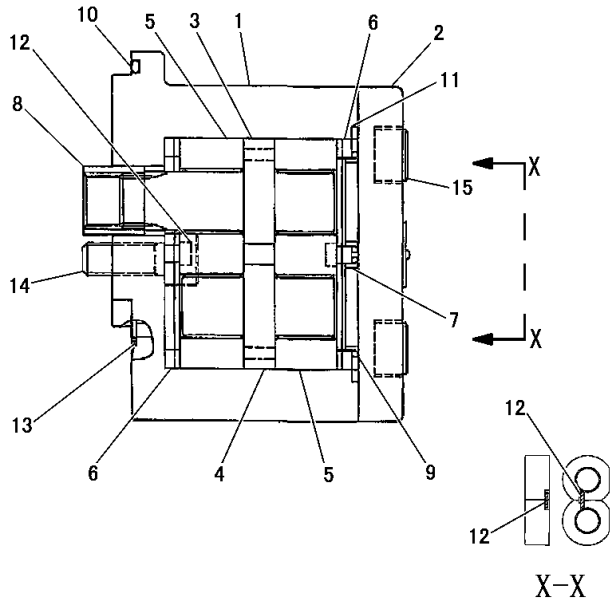

NOTE	No.	PART NO.	QTY	PART NAME
L	1	207-2575	1	HOUSING
	2	207-2576	1	COVER
L	3	324-2874	1	GEAR
L	4	324-2875	1	GEAR
L	5	169-7815	2	PLATE
	6	303-1450	2	PLATE
	7	099-2975	2	GUIDE
	8	207-2579	1	COUPLING
	9	150-0490	2	SEAL
	10	6V-7610	1	SEAL
	11	099-2972	1	RING
	12	085-6291	2	RING
	13	095-1573	1	SEAL
	14	8T-1159	2	BOLT(M10×1.5)
	15	6V-3938	4	BOLT(M10×1.5)

L-REPLACE AT THE SAME TIME

J149096 X00

GEAR PUMP ASSEMBLY (324-2864 N/S)

PART OF 295-9366-Page 312

HYDRAULIC SYSTEM

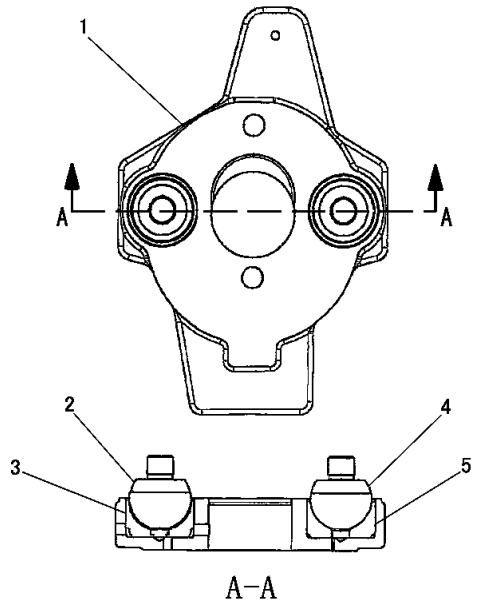

NOTE	No.	PART NO.	QTY	PART NAME
	1	323-9701	1	SWASHPLATE
L	2	323-9702	1	GUIDE
L	3	323-9703	1	BUSHING
L	4	323-9704	1	GUIDE
L	5	323-9705	1	BUSHING

L-REPLACE AT THE SAME TIME

J149090 X00

323-9685 SWASHPLATE GROUP -VARIABLE
PART OF 295-9366-Page 312

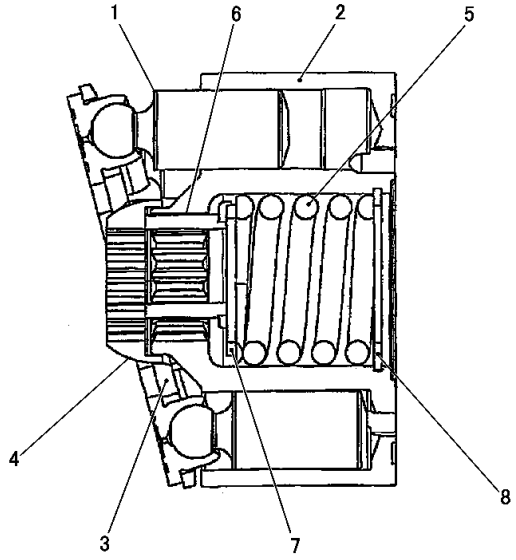

NOTE	No.	PART NO.	QTY	PART NAME
	1	323-9706	10	PISTON
	2	323-9707	1	BARREL
	3	323-9708	1	RETAINER
	4	323-9709	1	GUIDE
	5	323-9710	1	SPRING
	6	323-9712	3	PIN
	7	323-9713	1	SPRING SEAT
	8	323-9714	1	RING

J149091 X00

323-9686 ROTARY ASSEMBLY
PART OF 295-9366-Page 312

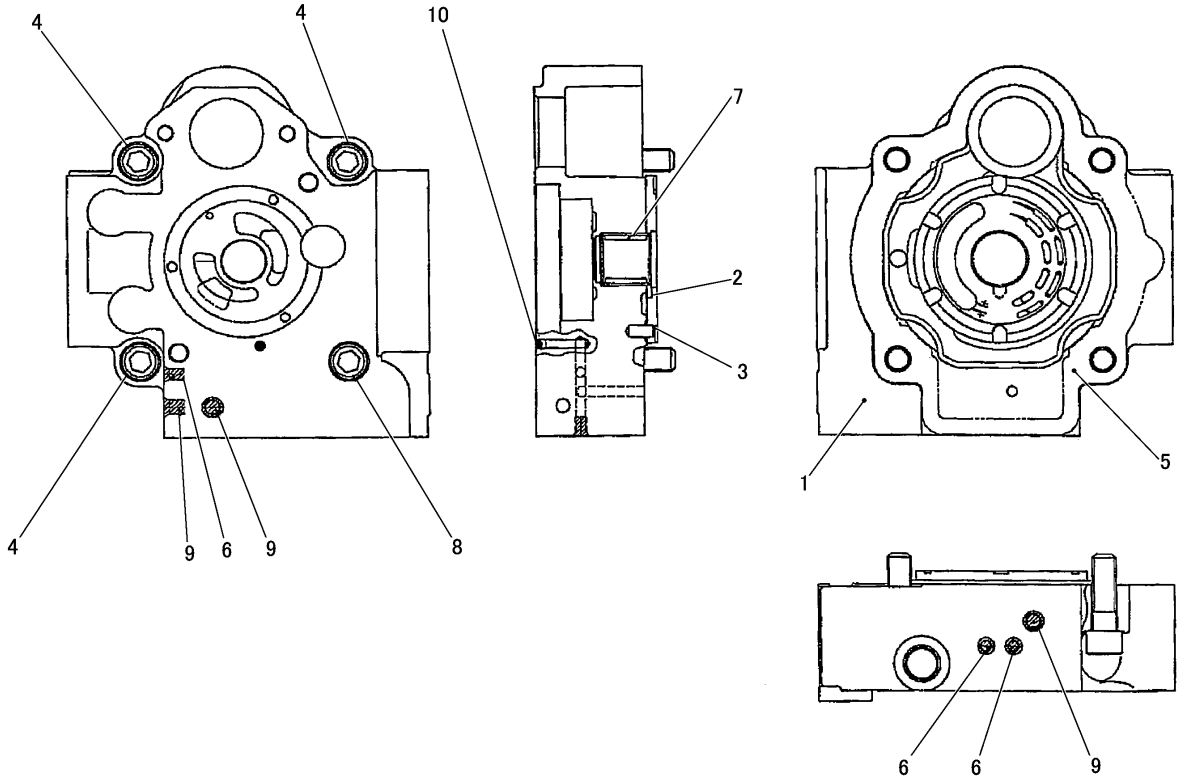

NOTE	No.	PART NO.	QTY	PART NAME	NOTE	No.	PART NO.	QTY	PART NAME
L	1	323-9719	1	PLATE					
	2	323-9720	1	PLATE					
L	3	323-9721	1	PIN					
	4	323-9722	3	BOLT					
	5	323-9723	1	PACKING					
	6	134-7515	2	PLUG					
	7	323-9724	1	BEARING					
	8	153-6129	1	BOLT					
	9	134-7514	2	PLUG					
	10	323-9725	1	ORIFICE					

L-REPLACE AT THE SAME TIME

J149092 X00

323-9687 PLATE ASSEMBLY
PART OF 295-9366-Page 312

HYDRAULIC SYSTEM

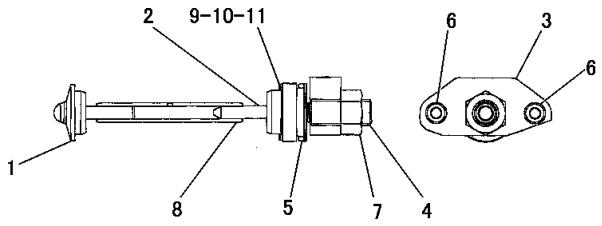

NOTE	No.	PART NO.	QTY	PART NAME
	1	323-9726	1	SPRING SEAT
	2	323-9727	1	SPRING SEAT
	3	207-1677	1	COVER
	4	150-0464	1	SCREW
	5	150-0467	1	SEAT
	6	150-0468	2	BOLT
	7	150-0469	1	BOLT
	8	323-9728	1	GUIDE
B	9	323-9729	1	SHIM(1mmSHICK)
B	10	323-9730	1	SHIM(0.5mmSHICK)
B	11	323-9731	1	SHIM(0.3mmSHICK)

B-USE AS REQUIRED

J149093 X00

SPRING GROUP (323-9688 N/S)

PART OF 295-9366-Page 312

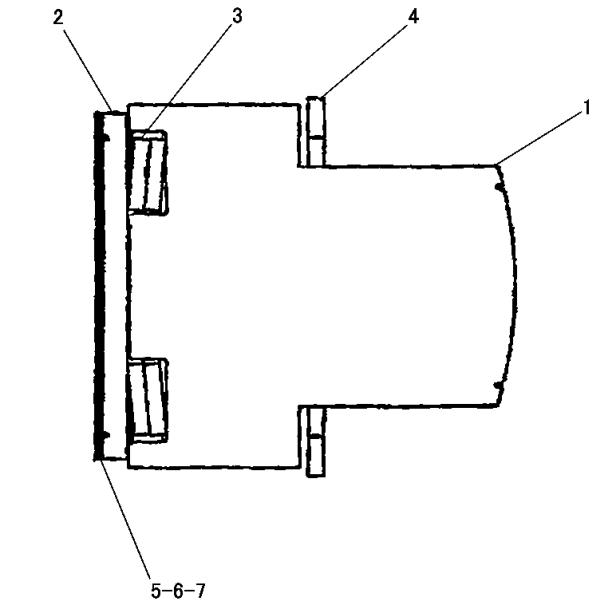

NOTE	No.	PART NO.	QTY	PART NAME
	1	323-9758	1	GUIDE
	2	323-9759	1	SPACER
	3	323-9760	2	SPRING
	4	323-9761	1	RING
B	5	323-9762	1	SHIM(0.1mmTHICK)
B	6	323-9763	1	SHIM(0.15mmTHICK)
B	7	323-9764	1	SHIM(0.2mmTHICK)

B-USE AS REQUIRED

J149094 X00

323-9693 STOPPER KIT

PART OF 295-9366-Page 312

HYDRAULIC SYSTEM

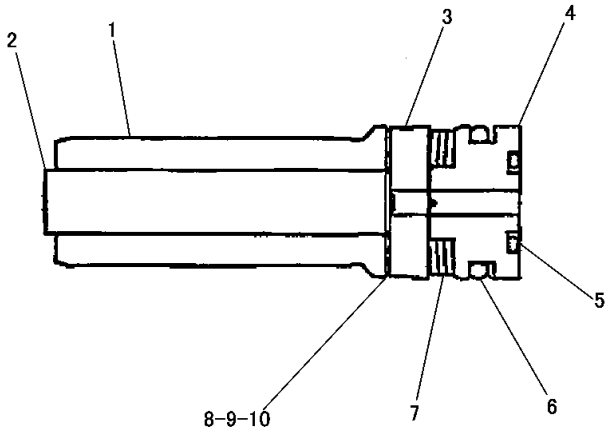

NOTE	No.	PART NO.	QTY	PART NAME
	1	324-2867	1	SLEEVE
	2	324-2873	1	PIN
	3	323-9734	1	SPACER
	4	323-9735	1	PISTON
	5	095-1576	1	SEAL
	6	095-1583	1	SEAL
	7	323-9760	3	SPRING
B	8	323-9740	1	SHIM(0.1mm SHICK)
B	9	323-9741	1	SHIM(0.5mm SHICK)
B	10	323-9742	1	SHIM(1mm SHICK)

B-USE AS REQUIRED

J149095 X00

PISTON GROUP (324-2863 N/S)
PART OF 295-9366-Page 312

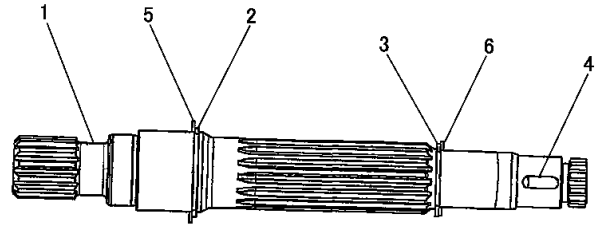

NOTE	No.	PART NO.	QTY	PART NAME
	1	323-9696	1	SHAFT
	2	323-9697	1	RING
	3	323-9700	1	RING
	4	197-3816	1	KEY
	5	323-9698	1	SHIM
	6	323-9699	1	SHIM

J149089 X00

323-9684 SHAFT KIT
PART OF 295-9366-Page 312

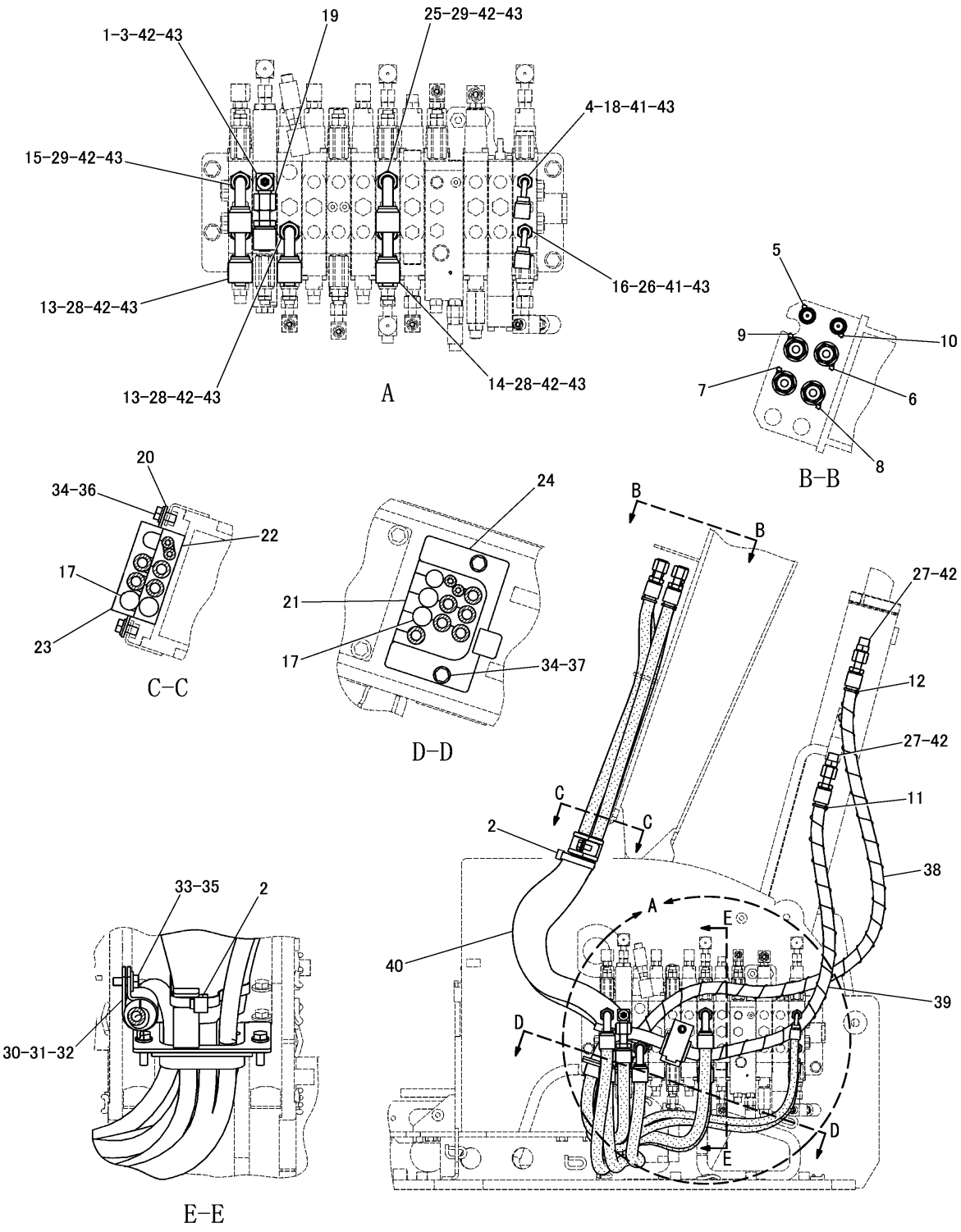

FRONT LINES GROUP (295-9332 N/S)
PART OF 295-9329-Page 304

HYDRAULIC SYSTEM

NOTE	No.	PART NO.	QTY	PART NAME
	1	9F-2167	1	SCREW(3/8-24)
	2	136-0207	2	STRAP
	3	237-6091	1	ELBOW
	4	156-8845	1	CONNECTOR
	5	279-4730	1	STRAP(BK)
	6	279-4731	1	STRAP(RD)
	7	279-4732	1	STRAP(YL)
	8	279-4733	1	STRAP(BU)
	9	279-4735	1	STRAP(OR)
	10	279-4736	1	STRAP(WH)
	11	279-4737	1	STRAP(GN)
	12	279-4738	1	STRAP(PU)
	13	296-1565	2	HOSE AS
	14	296-1569	1	HOSE AS
	15	296-1573	1	HOSE AS
	16	296-1575	1	HOSE AS
	17	309-9323	4	SPACER
	18	311-8429	1	HOSE AS
	19	311-8431	1	HOSE AS
	20	312-0706	1	PLATE AS
	21	317-3042	1	GROMMET
	22	317-3043	1	GROMMET
	23	317-3044	1	GROMMET
	24	317-3045	1	PLATE AS
	25	317-7725	1	HOSE AS
	26	6V-8641	1	CONNECTOR
	27	6V-8639	2	CONNECTOR
		3K-0360	2	SEAL
	28	6V-9873	3	CONNECTOR
	29	8T-5050	2	CONNECTOR
	30	5P-7464	1	CLIP(SLOT)
	31	5P-7465	1	CLIP(TAB)
	32	6V-1249	1	GROMMET
	33	7X-7729	1	WASHER
	34	8T-4121	4	WASHER
	35	8T-4136	1	BOLT(M10×1.5)
	36	8T-4137	2	BOLT(M10×1.5)
	37	8T-4196	2	BOLT(M10×1.5)
E	38	149-7372		SLEEVE---108cm
E	39	149-7372		SLEEVE---69cm
E	40	310-4984		SLEEVE---50cm
	41	4J-5477	2	SEAL
	42	6V-8398	8	SEAL
	43	3J-1907	8	SEAL

E-ORDER BY THE cm

J148675 HE05

FRONT LINES GROUP (295-9332 N/S)

PART OF 295-9329-Page 304

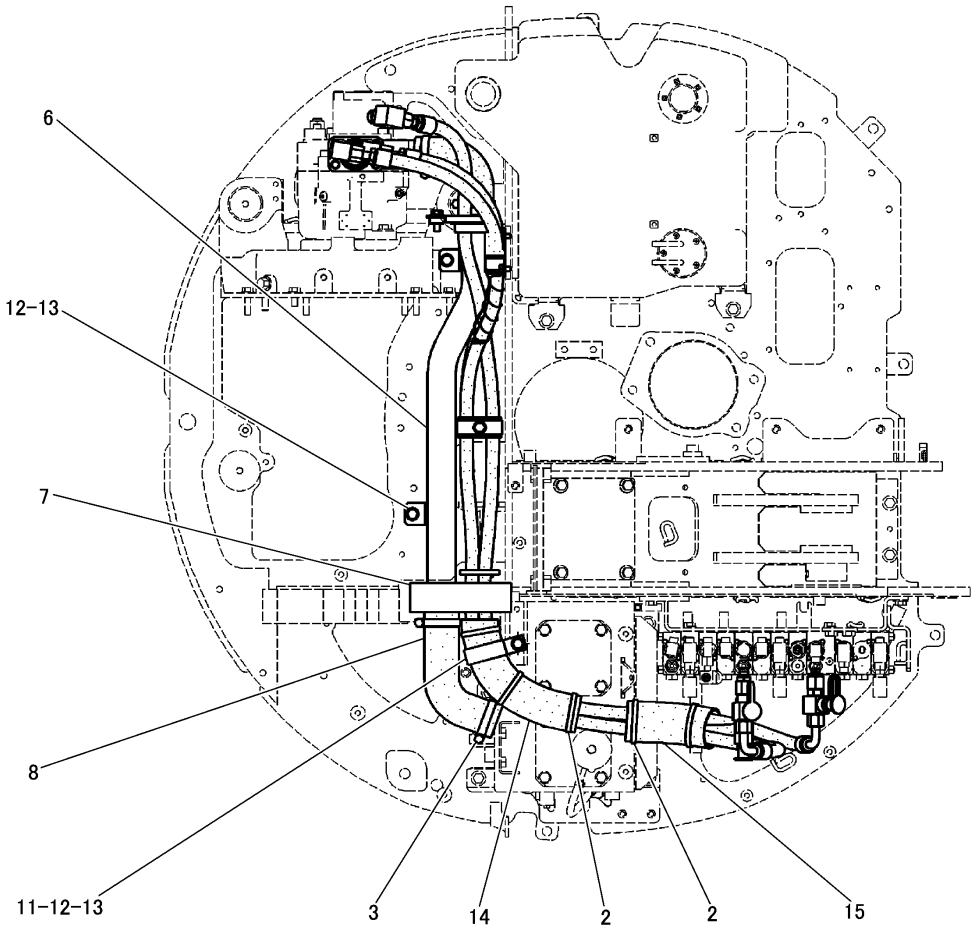

HOSE END CONNECTION TABLE		
HOSE	CONNECTION PORT NAME	
PART NO.	CONTROL VALVE	PUMP
297-6472	P1	A1
297-6473	P2	A2
297-6474	P3	A3

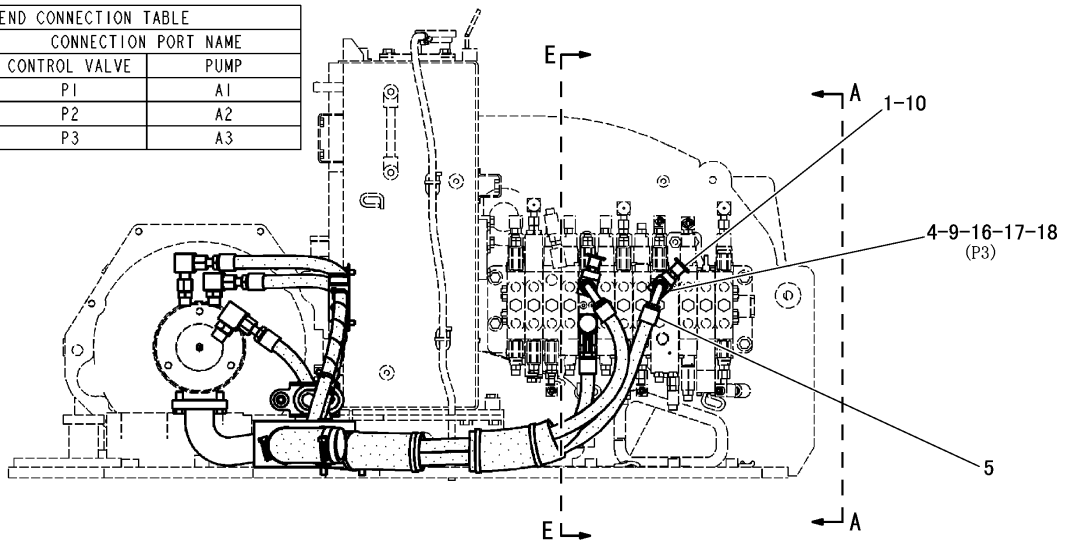

J146643 HE05

PUMP LINES GROUP (307-6394 N/S) -PART 1 OF 2
PART OF 295-9329-Page 304

HYDRAULIC SYSTEM

NOTE	No.	PART NO.	QTY	PART NAME	NOTE	No.	PART NO.	QTY	PART NAME
	1	6V-0852	1	CAP					
	2	7K-1181	6	STRAP					
	3	095-1392	2	CLAMP					
	4	8T-6338	1	TEE					
	5	297-6474	1	HOSE AS					
	6	297-6475	1	PIPE AS					
	7	297-6490	1	INSULATION					
	8	306-7768	1	HOSE					
	9	5P-8874	1	ADAPTER					
	10	6V-3965	1	NIPPLE AS					
	11	3P-9847	1	CLIP					
	12	8T-4121	3	WASHER					
	13	8T-4137	3	BOLT(M10×1.5)					
E	14	134-4540		HOSE---26cm					
E	15	134-4540		HOSE---15cm					
	16	3J-1907	2	SEAL					
	17	3K-0360	1	SEAL					
	18	6V-8398	1	SEAL					

E-ORDER BY THE cm

J146643 HE05

PUMP LINES GROUP (307-6394 N/S) -PART 1 OF 2

PART OF 295-9329-Page 304

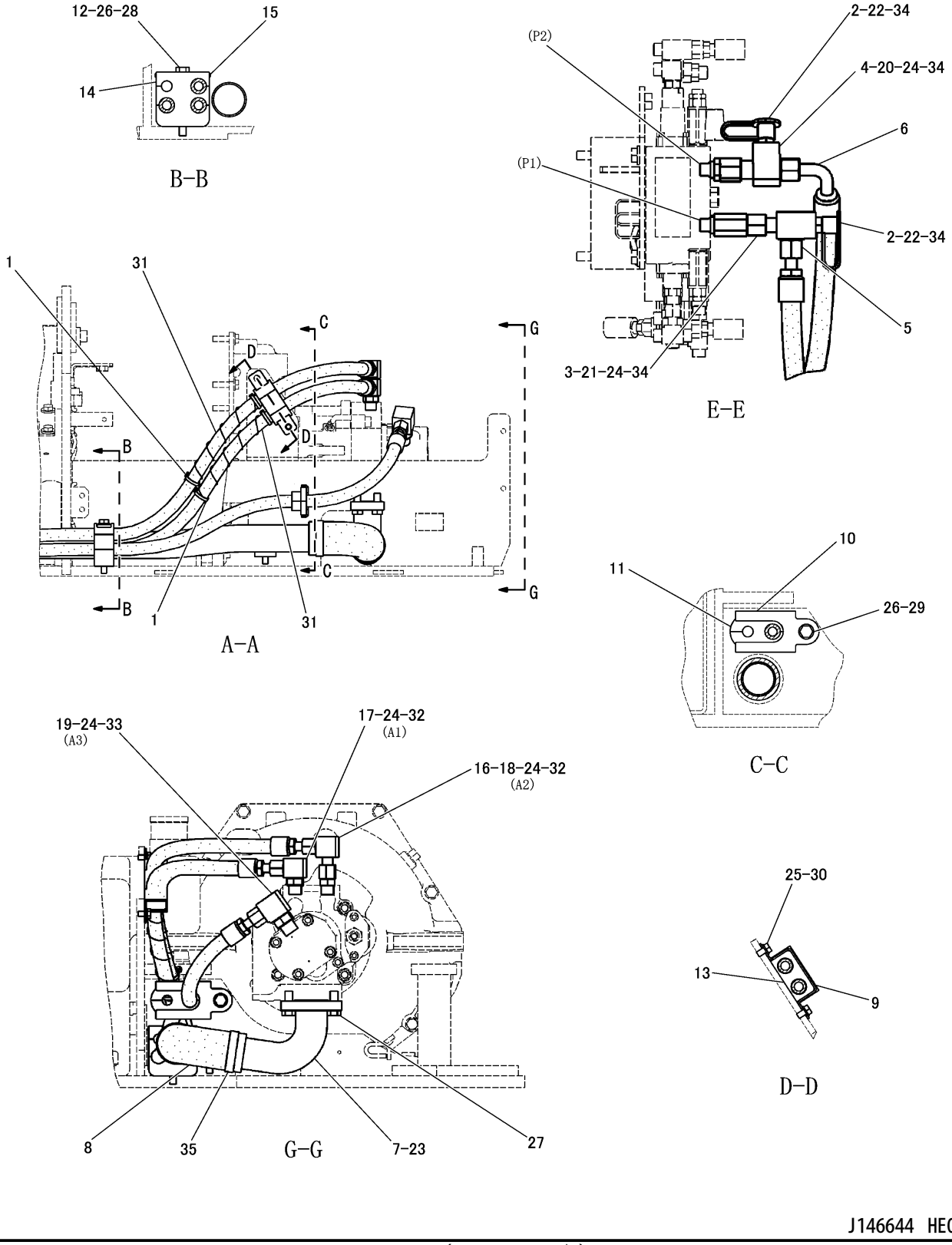

J146644 HE05

PUMP LINES GROUP (307-6394 N/S) -PART 2 OF 2
PART OF 295-9329-Page 304

HYDRAULIC SYSTEM

NOTE	No.	PART NO.	QTY	PART NAME	NOTE	No.	PART NO.	QTY	PART NAME
	1	3S−2093	4	STRAP					
	2	6V−0852	2	CAP					
	3	081−5645	1	TEE					
	4	7X−0871	1	TEE					
	5	297−6472	1	HOSE AS					
	6	297−6473	1	HOSE AS					
	7	297−6479	1	PIPE AS					
	8	297−6481	1	HOSE					
	9	297−6485	1	PLATE					
	10	317−3000	1	PLATE AS					
	11	317−3003	1	GROMMET					
	12	317−3004	1	COLLAR					
	13	317−3005	1	GROMMET					
	14	318−0379	1	GROMMET					
	15	140−4276	1	PLATE					
	16	6V−8639	1	CONNECTOR					
	17	6V−8625	1	ELBOW					
	18	6V−9851	1	ELBOW					
	19	6V−8721	1	ELBOW					
	20	6V−9873	1	CONNECTOR					
	21	8T−5050	1	CONNECTOR					
	22	6V−3965	2	NIPPLE AS					
	23	4J−0524	1	SEAL					
	24	6V−8398	8	SEAL					
	25	7X−2536	2	BOLT(M8×1.25)					
	26	8T−4121	2	WASHER					
	27	8T−4139	4	BOLT(M12×1.75)					
	28	8T−4178	1	BOLT(M10×1.5)					
	29	8T−4195	1	BOLT(M10×1.5)					
	30	8T−4224	2	WASHER					
E	31	149−7372		SLEEVE---20cm(×2)					
	32	3K−0360	2	SEAL					
	33	2M−9780	1	SEAL					
	34	3J−1907	4	SEAL					
	35	095−1392	2	CLAMP					

E-ORDER BY THE cm

J146644 HE05

PUMP LINES GROUP (307-6394 N/S) -PART 2 OF 2
PART OF 295-9329-Page 304

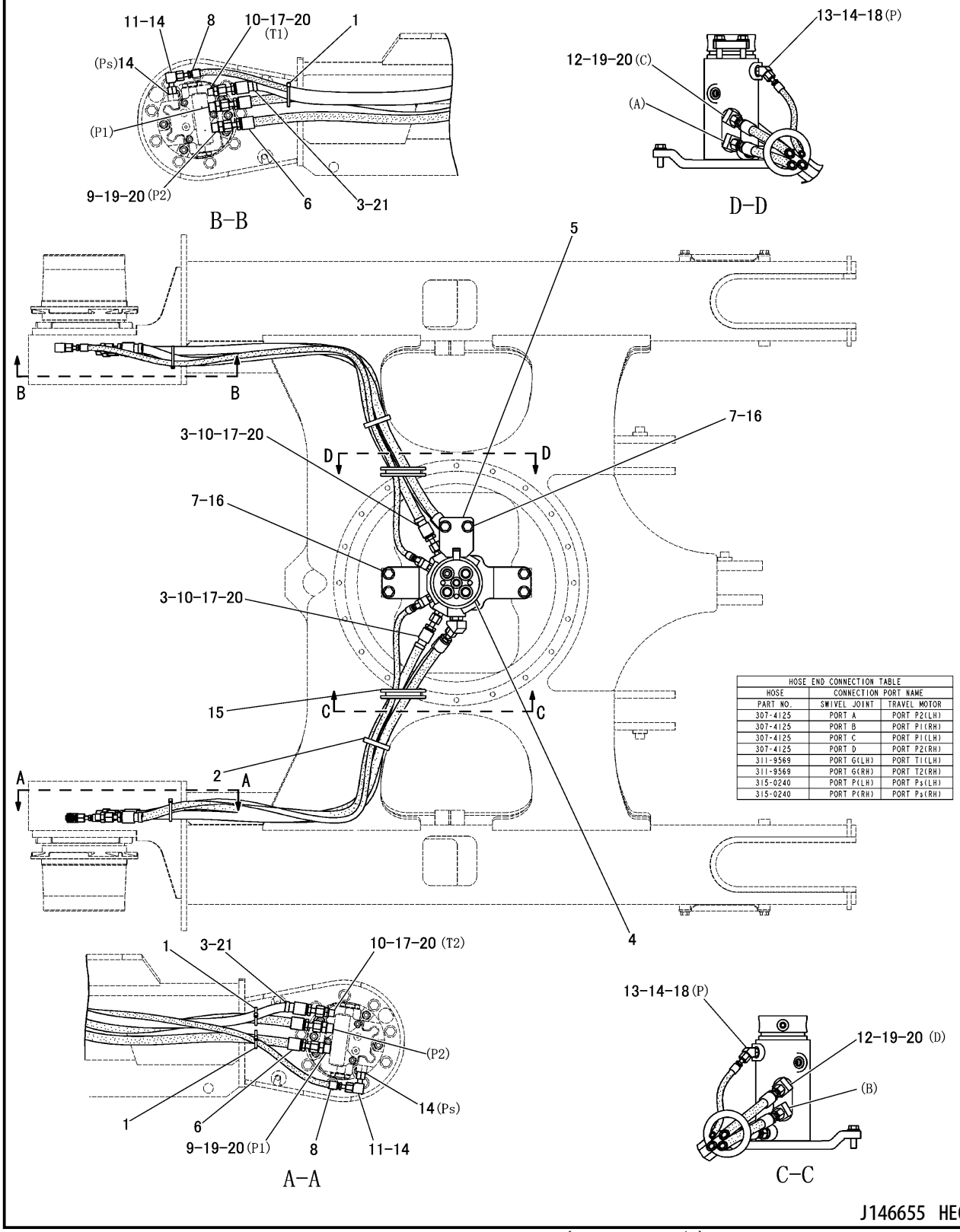

TRACK MOTOR LINES GROUP (302-6607 N/S)
PART OF 295-9329-Page 304

HYDRAULIC SYSTEM

NOTE	No.	PART NO.	QTY	PART NAME	NOTE	No.	PART NO.	QTY	PART NAME
	1	3S-2093	3	STRAP					
	2	7K-1181	2	STRAP					
	3	096-6085	4	TAPE(RED)					
Y	4	191-7516	1	SWIVEL GROUP					
	5	267-8100	1	PLATE					
	6	307-4125	4	HOSE AS					
	7	8T-4223	6	WASHER					
	8	315-0240	2	HOSE AS					
	9	6V-8634	4	CONNECTOR					
	10	6V-8636	4	CONNECTOR					
	11	6V-9849	2	ELBOW					
	12	6V-9876	4	ELBOW					
	13	6V-9000	2	ELBOW					
	14	4J-5477	6	SEAL					
	15	7Y-4528	2	GROMMET					
	16	8T-4183	6	BOLT(M12×1.75)					
	17	3J-1907	4	SEAL					
	18	3J-7354	2	SEAL					
	19	3K-0360	8	SEAL					
	20	6V-8397	12	SEAL					
	21	311-9569	2	HOSE AS					

Y-SEPARATE ILLUSTRATION

J146655 HE02

TRACK MOTOR LINES GROUP (302-6607 N/S)

PART OF 295-9329-Page 304
REFERENCE:191-7516-Page 404

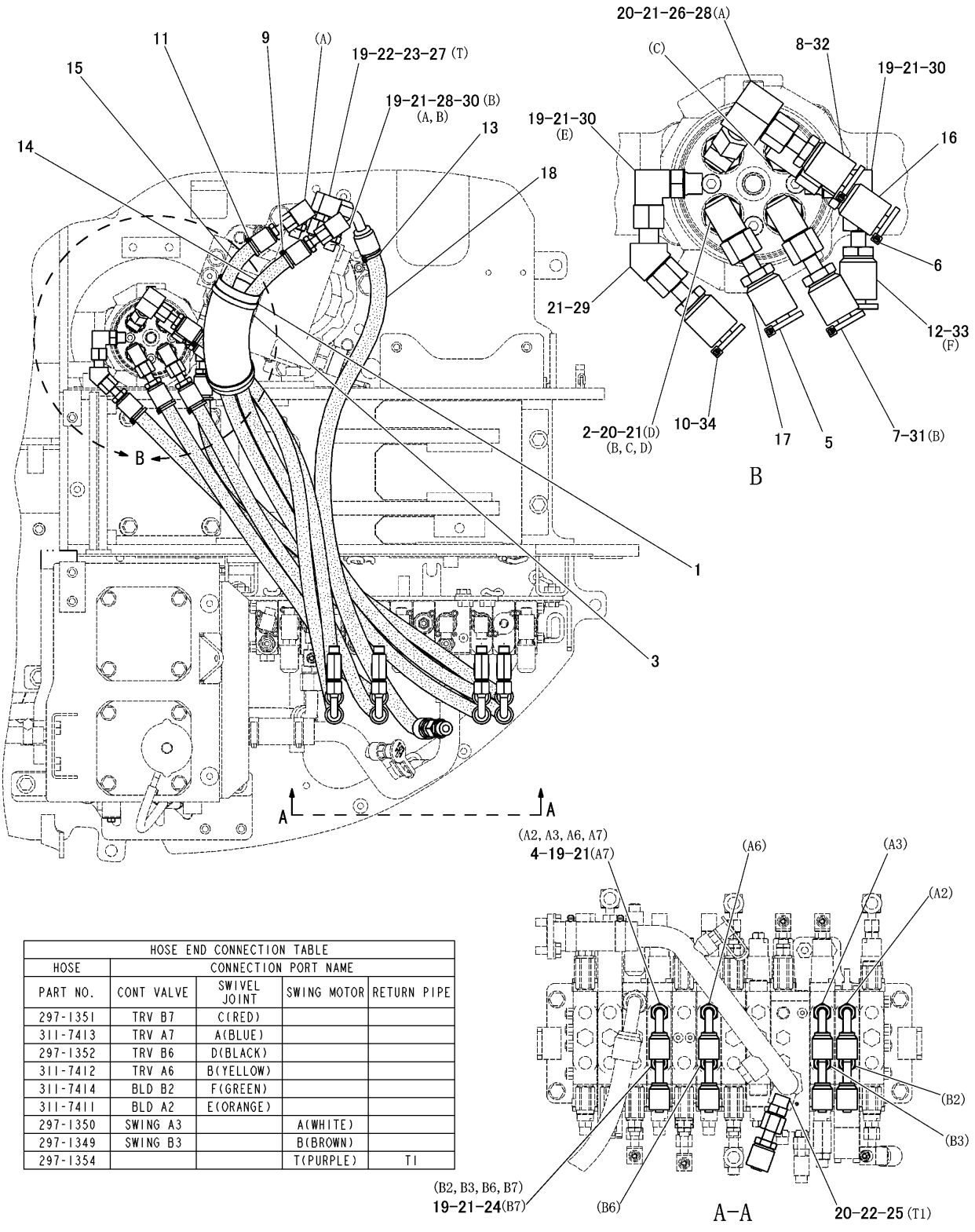

HOSE END CONNECTION TABLE				
HOSE	CONNECTION PORT NAME			
PART NO.	CONT VALVE	SWIVEL JOINT	SWING MOTOR	RETURN PIPE
297-1351	TRV B7	C(RED)		
311-7413	TRV A7	A(BLUE)		
297-1352	TRV B6	D(BLACK)		
311-7412	TRV A6	B(YELLOW)		
311-7414	BLD B2	F(GREEN)		
311-7411	BLD A2	E(ORANGE)		
297-1350	SWING A3		A(WHITE)	
297-1349	SWING B3		B(BROWN)	
297-1354			T(PURPLE)	T1

J146650 HE01

SWING MOTOR LINES GROUP (307-6392 N/S)
PART OF 295-9329-Page 304

HYDRAULIC SYSTEM

NOTE	No.	PART NO.	QTY	PART NAME	NOTE	No.	PART NO.	QTY	PART NAME
	1	7K-1181	2	STRAP					
	2	6V-8723	3	ELBOW					
	3	210-0686	1	FORM					
	4	237-6095	4	CONNECTOR					
	5	279-4730	1	STRAP(BLACK)					
	6	279-4731	1	STRAP(RED)					
	7	279-4732	1	STRAP(YELLOW)					
	8	279-4733	1	STRAP(BLUE)					
	9	279-4734	1	STRAP(BROWN)					
	10	279-4735	1	STRAP(ORANGE)					
	11	279-4736	1	STRAP(WHITE)					
	12	279-4737	1	STRAP(GREEN)					
	13	279-4738	1	STRAP(PURPLE)					
	14	297-1349	1	HOSE AS					
	15	297-1350	1	HOSE AS					
	16	297-1351	1	HOSE AS					
	17	297-1352	1	HOSE AS					
	18	297-1354	1	HOSE AS					
	19	3J-1907	13	SEAL					
	20	3K-0360	15	SEAL					
	21	6V-8397	20	SEAL					
	22	6V-8398	2	SEAL					
	23	8T-0151	1	ADAPTER					
	24	6V-8636	4	CONNECTOR					
	25	6V-8639	1	CONNECTOR					
	26	6V-9876	1	ELBOW					
	27	8T-6876	1	ELBOW					
	28	6V-9850	3	ELBOW					
	29	8C-8988	1	ELBOW					
	30	6V-8724	4	ELBOW					
	31	311-7412	1	HOSE AS					
	32	311-7413	1	HOSE AS					
	33	311-7414	1	HOSE AS					
	34	311-7411	1	HOSE AS					

J146650 HE01

SWING MOTOR LINES GROUP (307-6392 N/S)

PART OF 295-9329-Page 304

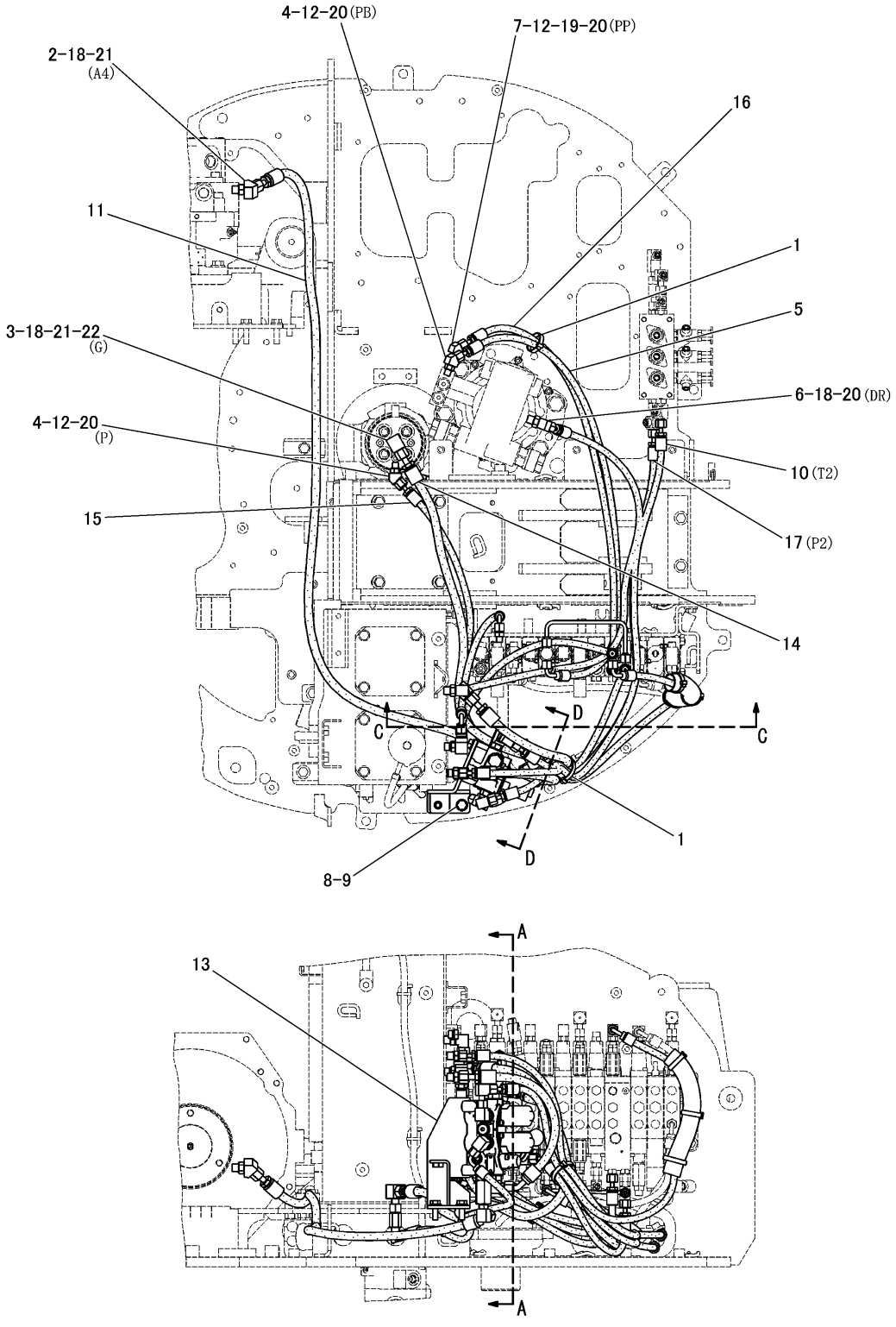

J148676 HE07

PILOT LINES GROUP (295-9336 N/S) -STANDARD-PART 1 OF 2
PART OF 295-9329-Page 304

HYDRAULIC SYSTEM

NOTE	No.	PART NO.	QTY	PART NAME	NOTE	No.	PART NO.	QTY	PART NAME
	1	7K−1181	2	STRAP					
	2	6V−9001	1	ELBOW					
	3	6V−9850	1	ELBOW					
	4	6V−9000	2	ELBOW					
	5	298−7651	1	HOSE AS					
	6	8T−0164	1	CONNECTOR					
	7	8C−8408	1	ELBOW					
	8	8T−4121	2	WASHER					
	9	8T−4195	2	BOLT(M10×1.5)					
	10	304−0249	1	HOSE AS					
	11	304−9280	1	HOSE AS					
	12	3J−7354	3	SEAL					
Y	13	306−6669	1	VALVE AND MOUNTING GROUP					
	14	311−8011	1	HOSE AS					
	15	313−2787	1	HOSE AS					
	16	317−2442	1	HOSE AS					
	17	317−2443	1	HOSE AS					
	18	3J−1907	3	SEAL					
	19	6V−8647	1	CONNECTOR					
	20	4J−5477	5	SEAL					
	21	6V−8397	3	SEAL					
	22	8T−0075	1	CONNECTOR					

Y-SEPARATE ILLUSTRATION

J148676 HE07

PILOT LINES GROUP (295-9336 N/S) -STANDARD-PART 1 OF 2

PART OF 295-9329-Page 304
REFERENCE:306-6669-Page 383

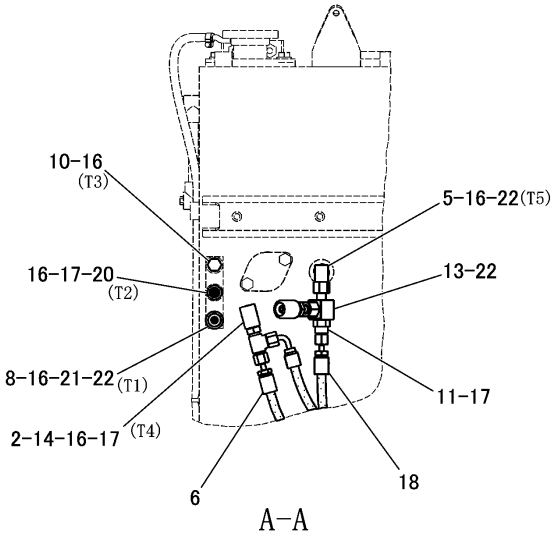

A-A

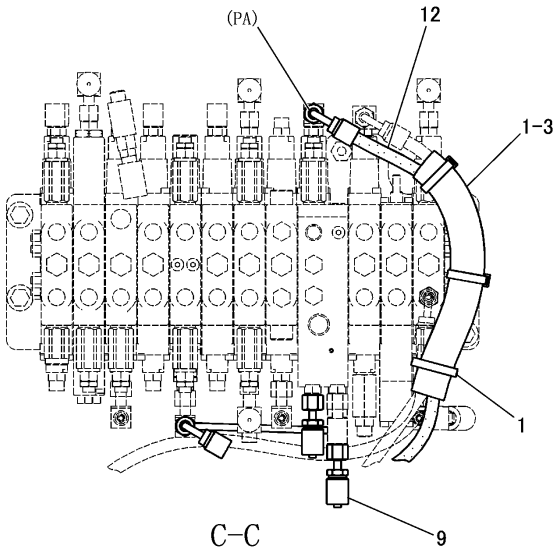

C-C

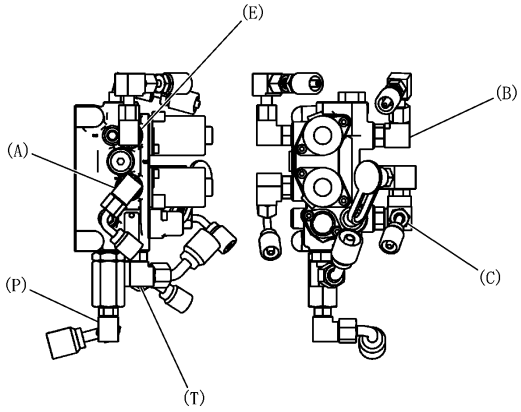

D-D

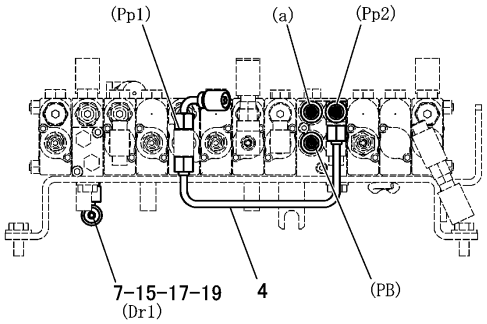

HOSE CONNECTION TABLE							
HOSE	CONNECTION PORT NAME						
PART NO.	CONTROL VALVE	SWING MOTOR	VALVE GP-PILOT	HYD TANK	PUMP	SWIVEL JOINT	REDUCING VALVE
306-5291	PA		E				
298-7652	PB			T4			
298-7649	Pp1-Pp2						
298-7651	Pp1	PB					
317-2442	a	PP					
298-7654	Dr1			T4			
304-9280			P		A4		
298-7656			T	T1			
302-5495	Pp2		C				
313-2787			A			P	
317-2443			B				P2
304-0249				T2			T2
317-2444		DR		T5			
311-8011				T5		G	

J148677 HE07

PILOT LINES GROUP (295-9336 N/S) -STANDARD-PART 2 OF 2
PART OF 295-9329-Page 304

HYDRAULIC SYSTEM

NOTE	No.	PART NO.	QTY	PART NAME	NOTE	No.	PART NO.	QTY	PART NAME
	1	7K-1181	3	STRAP					
	2	205-7197	1	TEE					
	3	245-8596	1	FORM					
	4	298-7649	1	TUBE AS					
	5	6V-8724	1	ELBOW					
	6	298-7652	1	HOSE AS					
	7	298-7654	1	HOSE AS					
	8	298-7656	1	HOSE AS					
	9	302-5495	1	HOSE AS					
	10	9S-4191	1	PLUG					
	11	6V-8934	1	REDUCER AS					
	12	306-5291	1	HOSE AS					
	13	6V-9836	1	TEE					
	14	6V-0484	1	ADAPTER					
	15	3J-7354	1	SEAL					
	16	3J-1907	6	SEAL					
	17	4J-5477	5	SEAL					
	18	317-2444	1	HOSE AS					
	19	6V-8647	1	CONNECTOR					
	20	6V-8641	1	CONNECTOR					
	21	6V-8636	1	CONNECTOR					
	22	6V-8397	4	SEAL					

J148677 HE07

PILOT LINES GROUP (295-9336 N/S) -STANDARD-PART 2 OF 2

PART OF 295-9329-Page 304

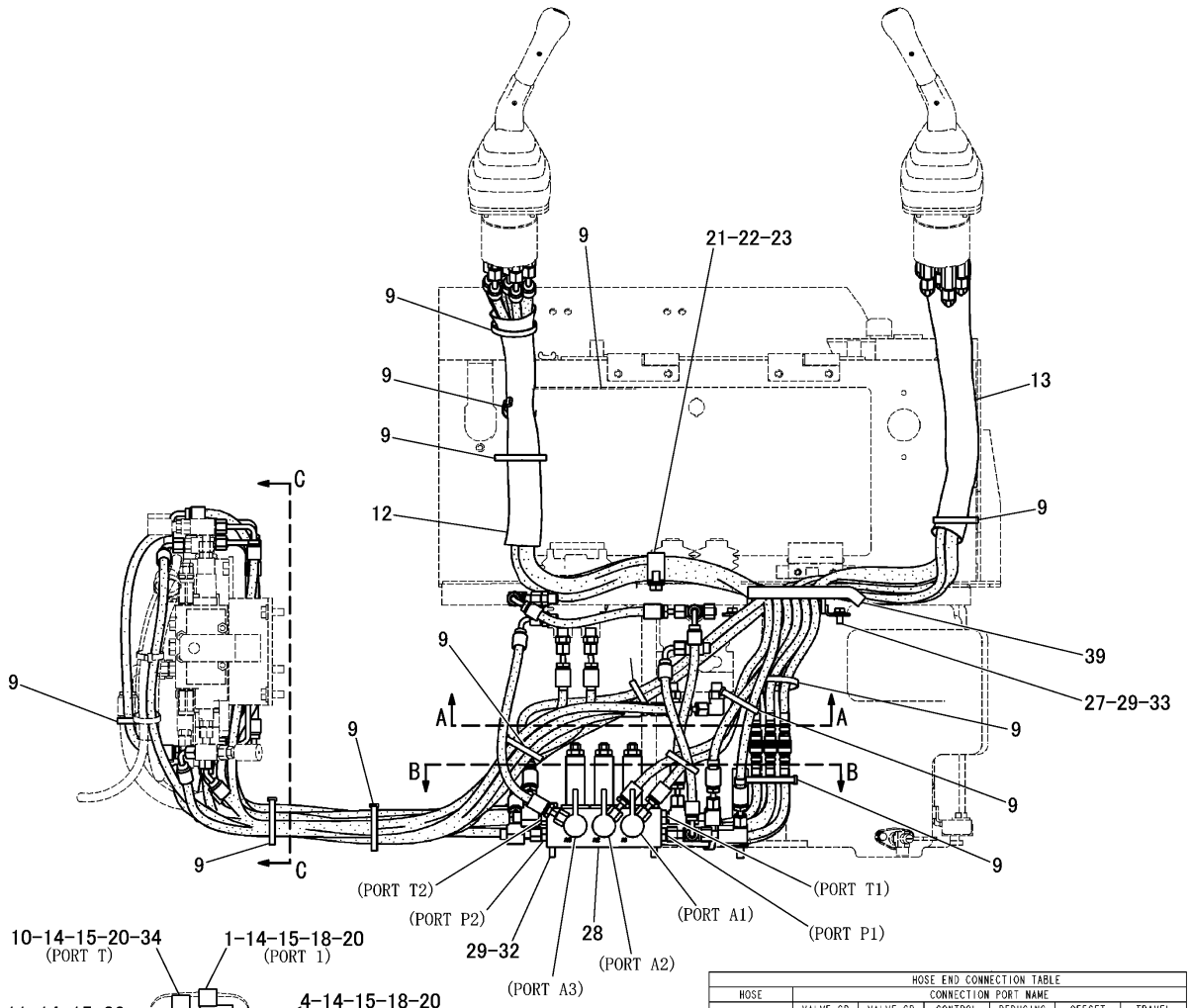

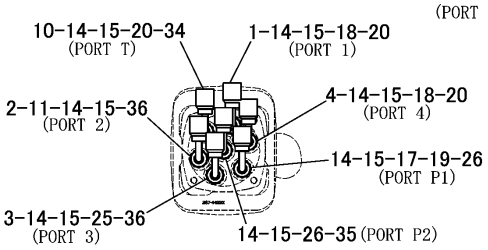

BOTTOM VIEW
(PILOT LH)

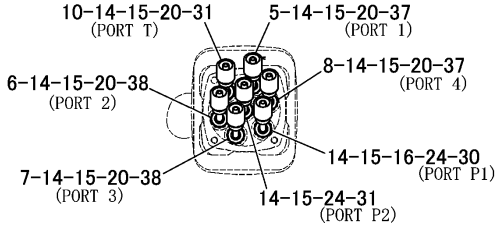

BOTTOM VIEW
(PILOT RH)

HOSE END CONNECTION TABLE						
HOSE	CONNECTION PORT NAME					
PART NO.	VALVE GP -PILOT RH	VALVE GP -PILOT LH	CONTROL VALVE	REDUCING VALVE	OFFSET VALVE	TRAVEL VALVE
199-6941				A3	P	
196-3891					T	T
245-8014				T1		T
302-5564				P1		P
192-2385			Pa6			2
317-0865			Pb6			1
299-2122			Pa7			4
313-2789			Pb7			3
192-3161			Pa1		A	
206-6085			Pb1		B	
319-3766			Pb8-Pb8'			
298-7648			Pa8-B UP			
312-8660	1					
312-8661	2					
312-8661	3					
312-8660	4					
299-2128	P1			P1		
299-2129	P2			A2		
299-2129	T			T2		
239-3740		1				
311-4184		2				
311-4184		3				
239-3740		4				
234-0682		P1		P2		
311-4179		P2		A1		
306-1645		T		T1		
239-3780			Pa8			
312-8659			Pb10			
312-8658			Pb8			
312-8655			Pa10			
312-8656			Pb3			
312-8654			Pa5			
239-3778			Pa3			
312-8657			Pb5			
314-9796			Pa4-Pb4			

J149311 HE06

PILOT LINES GROUP (295-9335 N/S) -STANDARD-PART 1 OF 2
PART OF 314-5907-Page 304

HYDRAULIC SYSTEM

NOTE	No.	PART NO.	QTY	PART NAME	NOTE	No.	PART NO.	QTY	PART NAME
	1	4I-9531	1	BAND(L1,RD)					
	2	4I-9532	1	BAND(L2,YL)					
	3	4I-9533	1	BAND(L3,BU)					
	4	4I-9534	1	BAND(L4,BR)					
	5	4I-9535	1	BAND(R1,OR)					
	6	4I-9536	1	BAND(R2,WH)					
	7	4I-9537	1	BAND(R3,GN)					
	8	4I-9538	1	BAND(R4,PU)					
	9	7K-1181	13	STRAP					
	10	096-6085	2	TAPE(RD)					
	11	145-2237	1	CONNECTOR					
E	12	6R-2052		SLEEVE---36cm					
E	13	6R-2052		SLEEVE---46cm					
	14	3J-1907	14	SEAL					
	15	4J-5477	14	SEAL					
	16	096-6080	1	TAPE(BU)					
	17	234-0682	1	HOSE AS					
	18	239-3740	2	HOSE AS					
	19	096-6081	1	TAPE(OR)					
	20	6V-8641	8	CONNECTOR					
	21	7D-7233	1	CLIP					
	22	8T-4121	1	WASHER					
	23	8T-4137	1	BOLT(M10×1.5)					
	24	267-4037	2	CONNECTOR					
	25	156-8845	1	CONNECTOR					
	26	216-3247	2	CONNECTOR					
	27	8T-4200	2	BOLT(M8×1.25)					
Y	28	298-7650	1	VALVE GROUP					
	29	8T-4224	6	WASHER					
	30	299-2128	1	HOSE AS					
	31	299-2129	2	HOSE AS					
	32	8T-6870	4	BOLT(M8×1.25)					
	33	305-7871	1	GUIDE AS					
	34	306-1645	1	HOSE AS					
	35	311-4179	1	HOSE AS					
	36	311-4184	2	HOSE AS					
	37	312-8660	2	HOSE AS					
	38	312-8661	2	HOSE AS					
D	39	8T-3426		CHANNEL---0.17m					

D-ORDER BY THE m
E-ORDER BY THE cm
Y-SEPARATE ILLUSTRATION

J149311 HE06

PILOT LINES GROUP (295-9335 N/S) -STANDARD-PART 1 OF 2

PART OF 314-5907-Page 304
REFERENCE:298-7650-Page 381

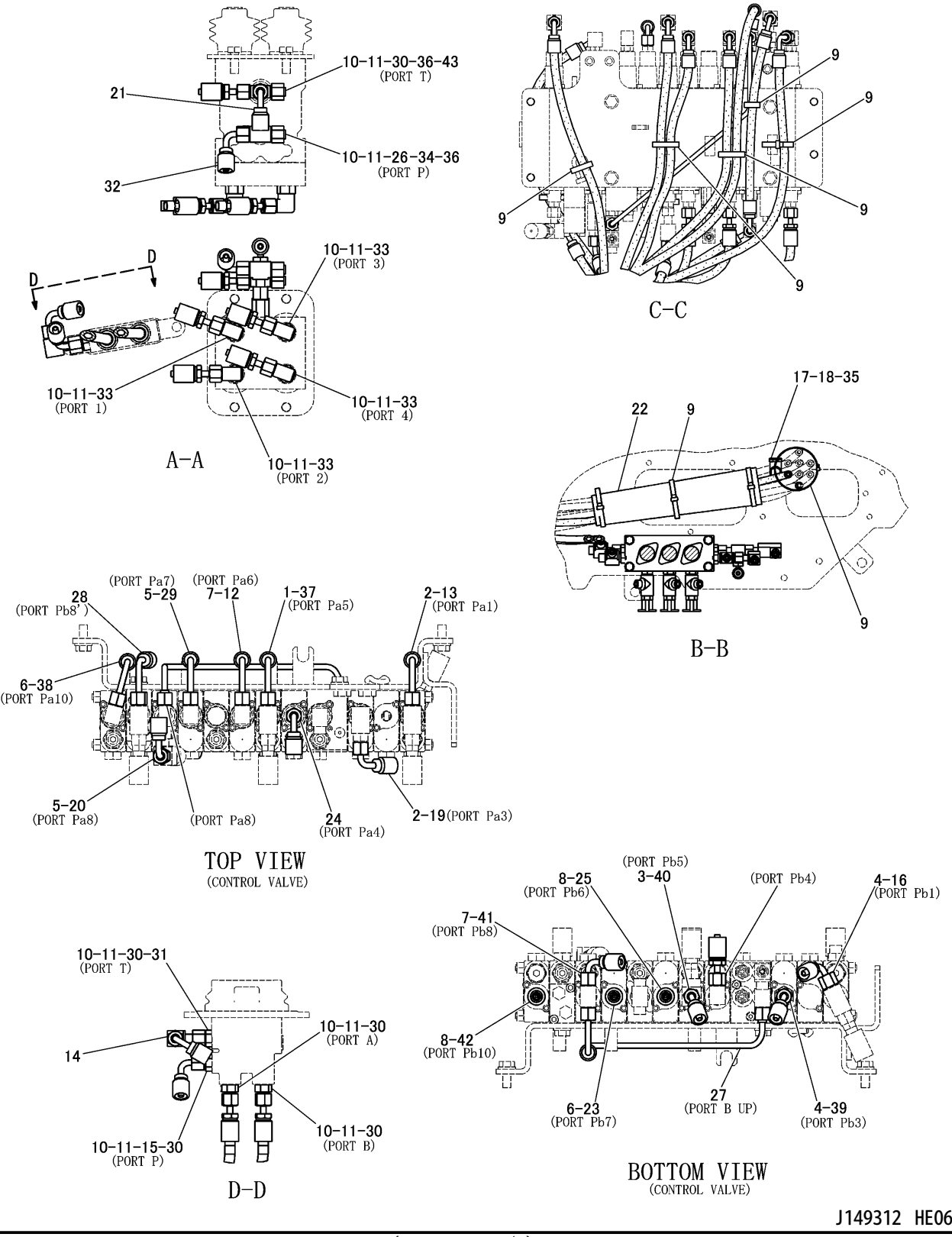

PILOT LINES GROUP (295-9335 N/S) -STANDARD-PART 2 OF 2
PART OF 314-5907-Page 304

HYDRAULIC SYSTEM

NOTE	No.	PART NO.	QTY	PART NAME	NOTE	No.	PART NO.	QTY	PART NAME
	1	4I-9531	1	BAND(L1,RD)					
	2	4I-9532	2	BAND(L2,YL)					
	3	4I-9533	1	BAND(L3,BU)					
	4	4I-9534	2	BAND(L4,BRN)					
	5	4I-9535	2	BAND(R1,OR)					
	6	4I-9536	2	BAND(R2,WH)					
	7	4I-9537	2	BAND(R3,GN)					
	8	4I-9538	2	BAND(R4,PU)					
	9	7K-1181	9	STRAP					
	10	3J-1907	10	SEAL					
	11	4J-5477	16	SEAL					
	12	192-2385	1	HOSE AS					
	13	192-3161	1	HOSE AS					
	14	196-3891	1	HOSE AS					
	15	199-6941	1	HOSE AS					
	16	206-6085	1	HOSE AS					
	17	8T-4121	1	WASHER					
	18	8T-4137	1	BOLT(M10×1.5)					
	19	239-3778	1	HOSE AS					
	20	239-3780	1	HOSE AS					
	21	245-8014	1	HOSE AS					
	22	245-8595	1	FORM					
	23	313-2789	1	HOSE AS					
	24	314-9796	1	HOSE AS					
	25	317-0865	1	HOSE AS					
	26	216-3247	1	CONNECTOR					
	27	298-7648	1	TUBE AS					
	28	319-3766	1	HOSE AS					
	29	299-2122	1	HOSE AS					
	30	6V-8641	5	CONNECTOR					
	31	6V-9849	1	ELBOW					
	32	302-5564	1	HOSE AS					
	33	6V-8627	4	ELBOW					
	34	6V-9842	1	TEE					
	35	277-1873	1	CLIP					
	36	6V-9828	2	CAP AS					
	37	312-8654	1	HOSE AS					
	38	312-8655	1	HOSE AS					
	39	312-8656	1	HOSE AS					
	40	312-8657	1	HOSE AS					
	41	312-8658	1	HOSE AS					
	42	312-8659	1	HOSE AS					
	43	267-4035	1	CROSS					

J149312 HE06

PILOT LINES GROUP (295-9335 N/S) -STANDARD-PART 2 OF 2

PART OF 314-5907-Page 304

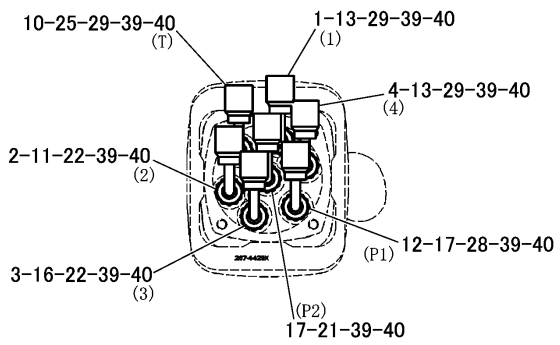

BOTTOM VIEW
(PILOT LH)

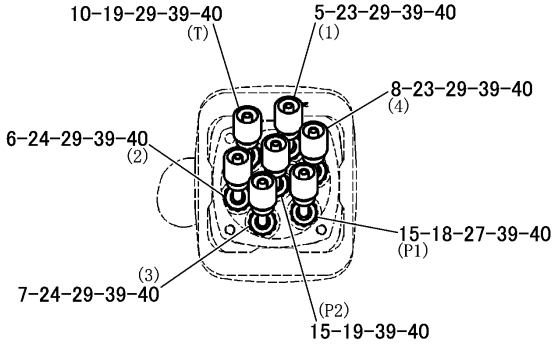

BOTTOM VIEW
(PILOT RH)

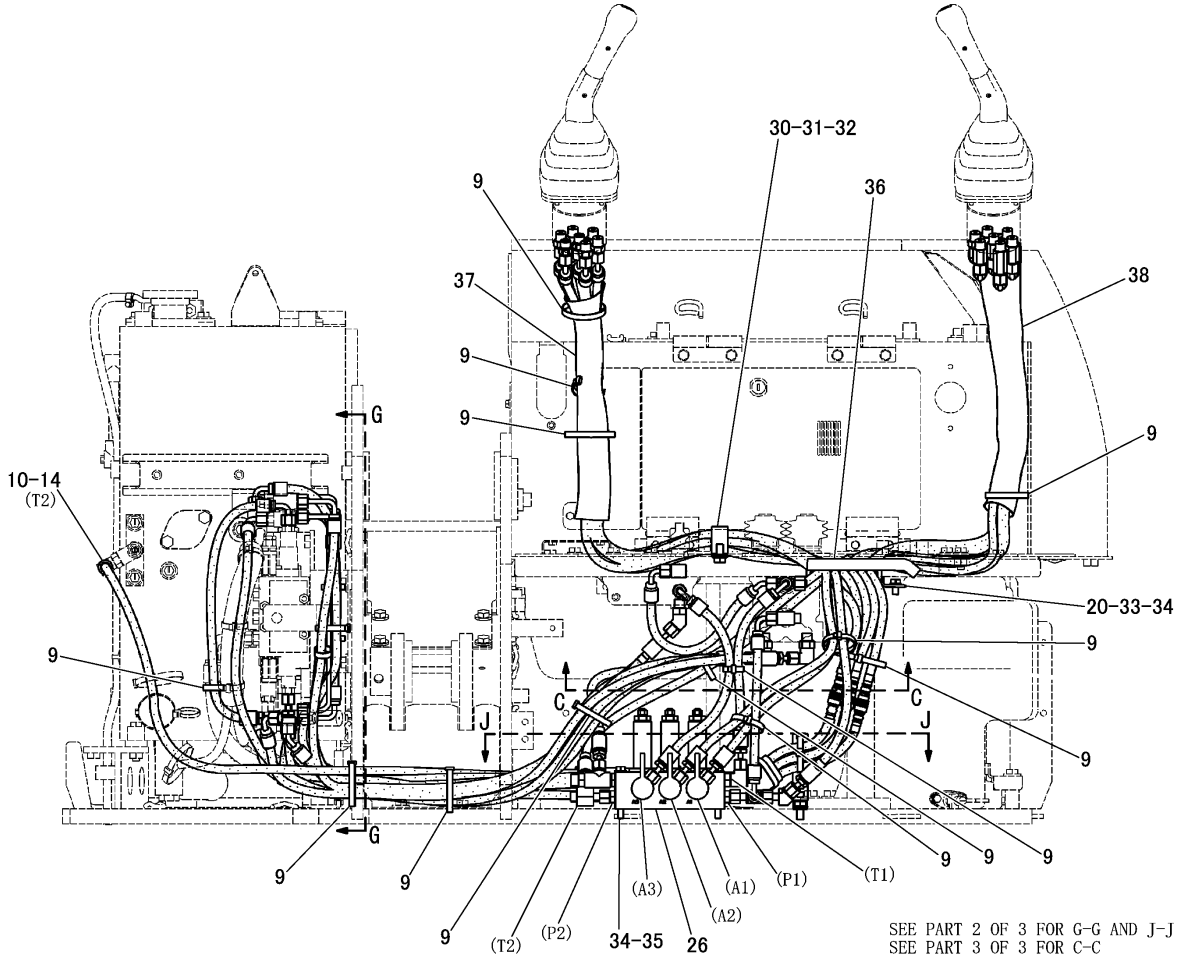

J151950 HE01

PILOT LINES GROUP (326-6316 N/S) -STANDARD-AIR CONDITIONER-PART 1 OF 3
PART OF 326-7175-Page 305
APPLIES TO CAB AIR CONDITIONER SPECIFICATION MACHINE
AN ATTACHMENT

HYDRAULIC SYSTEM

NOTE	No.	PART NO.	QTY	PART NAME	NOTE	No.	PART NO.	QTY	PART NAME
	1	4I-9531	1	BAND(L1,RD)					
	2	4I-9532	1	BAND(L2,YL)					
	3	4I-9533	1	BAND(L3,BU)					
	4	4I-9534	1	BAND(L4,BR)					
	5	4I-9535	1	BAND(R1,OR)					
	6	4I-9536	1	BAND(R2,WH)					
	7	4I-9537	1	BAND(R3,GN)					
	8	4I-9538	1	BAND(R4,PU)					
	9	7K-1181	14	STRAP					
	10	096-6085	3	TAPE(RD)					
	11	145-2237	1	CONNECTOR					
	12	234-0682	1	HOSE AS					
	13	239-3740	2	HOSE AS					
	14	239-3750	1	HOSE AS					
	15	267-4037	2	CONNECTOR					
	16	156-8845	1	CONNECTOR					
	17	216-3247	2	CONNECTOR					
	18	299-2128	1	HOSE AS					
	19	299-2129	2	HOSE AS					
	20	305-7871	1	GUIDE AS					
	21	311-4179	1	HOSE AS					
	22	311-4184	2	HOSE AS					
	23	312-8660	2	HOSE AS					
	24	312-8661	2	HOSE AS					
	25	320-3424	1	HOSE AS					
Y	26	328-1868	1	VALVE AND MOUNTING GROUP					
	27	096-6080	1	TAPE(BU)					
	28	096-6081	1	TAPE(OR)					
	29	6V-8641	8	CONNECTOR					
	30	7D-7233	1	CLIP					
	31	8T-4121	1	WASHER					
	32	8T-4137	1	BOLT(M10×1.5)					
	33	8T-4200	2	BOLT(M8×1.25)					
	34	8T-4224	6	WASHER					
	35	8T-6870	4	BOLT(M8×1.25)					
D	36	091-8488		CHANNEL---0.17m					
E	37	6R-2052		SLEEVE---36cm					
E	38	6R-2052		SLEEVE---46cm					
	39	3J-1907	14	SEAL					
	40	4J-5477	14	SEAL					

D-ORDER BY THE m
E-ORDER BY THE cm
Y-SEPARATE ILLUSTRATION

J151950 HE01

PILOT LINES GROUP (326-6316 N/S) -STANDARD-AIR CONDITIONER-PART 1 OF 3

PART OF 326-7175-Page 305
REFERENCE:328-1868-Page 381

APPLIES TO CAB AIR CONDITIONER SPECIFICATION MACHINE
AN ATTACHMENT

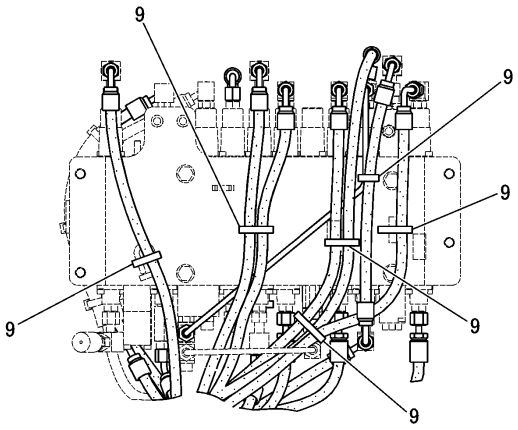

G–G

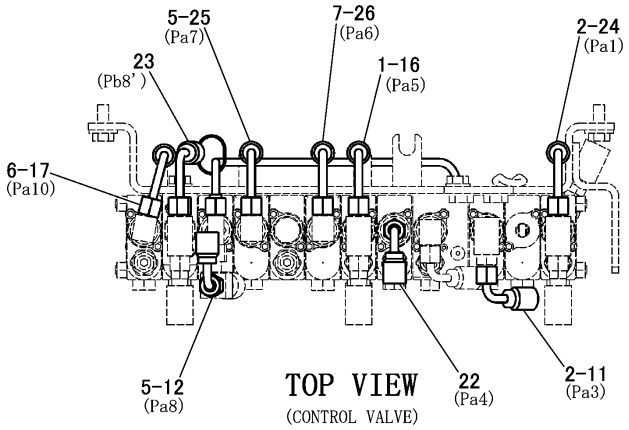

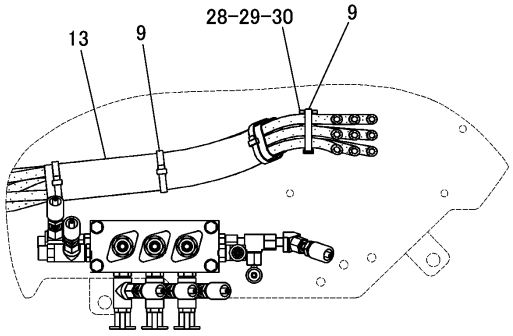

J–J

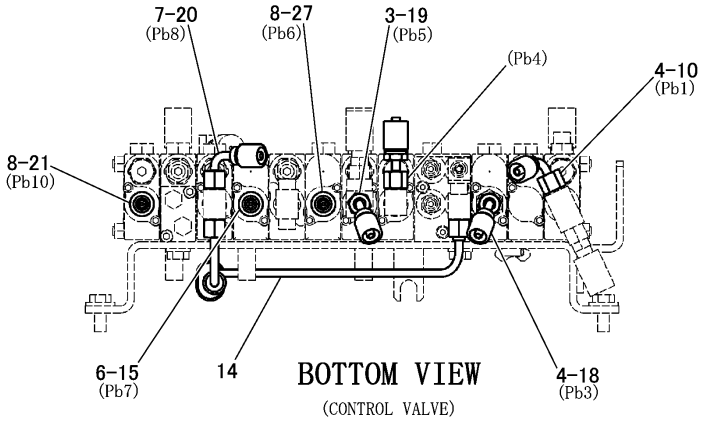

J151951 HE01

PILOT LINES GROUP (326-6316 N/S) -STANDARD-AIR CONDITIONER-PART 2 OF 3
PART OF 326-7175-Page 305
APPLIES TO CAB AIR CONDITIONER SPECIFICATION MACHINE
AN ATTACHMENT

HYDRAULIC SYSTEM

NOTE	No.	PART NO.	QTY	PART NAME	NOTE	No.	PART NO.	QTY	PART NAME
	1	4I-9531	1	BAND(L1,RD)					
	2	4I-9532	2	BAND(L2,YL)					
	3	4I-9533	1	BAND(L3,BU)					
	4	4I-9534	2	BAND(L4,BR)					
	5	4I-9535	2	BAND(R1,OR)					
	6	4I-9536	2	BAND(R2,WH)					
	7	4I-9537	2	BAND(R3,GN)					
	8	4I-9538	2	BAND(R4,PU)					
	9	7K-1181	10	STRAP					
	10	206-6085	1	HOSE AS					
	11	239-3778	1	HOSE AS					
	12	239-3780	1	HOSE AS					
	13	245-8595	1	FORM					
	14	298-7648	1	TUBE AS					
	15	304-0249	1	HOSE AS					
	16	312-8654	1	HOSE AS					
	17	333-5236	1	HOSE AS					
	18	312-8656	1	HOSE AS					
	19	312-8657	1	HOSE AS					
	20	312-8658	1	HOSE AS					
	21	312-8659	1	HOSE AS					
	22	314-9796	1	HOSE AS					
	23	319-3766	1	HOSE AS					
	24	326-7185	1	HOSE AS					
	25	326-7186	1	HOSE AS					
	26	326-7187	1	HOSE AS					
	27	326-7188	1	HOSE AS					
	28	277-1873	1	CLIP					
	29	8T-4121	1	WASHER					
	30	8T-4137	1	BOLT(M10×1.5)					

J151951 HE01

PILOT LINES GROUP (326-6316 N/S) -STANDARD-AIR CONDITIONER-PART 2 OF 3

PART OF 326-7175-Page 305

APPLIES TO CAB AIR CONDITIONER SPECIFICATION MACHINE

AN ATTACHMENT

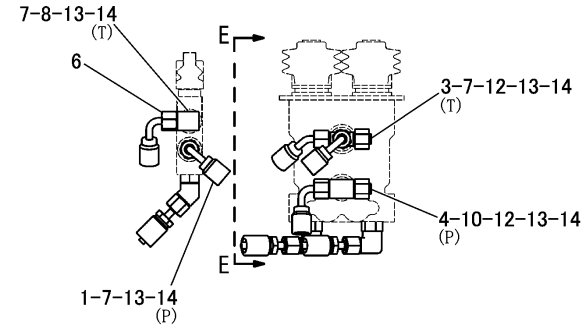

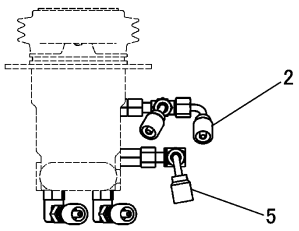

E-E

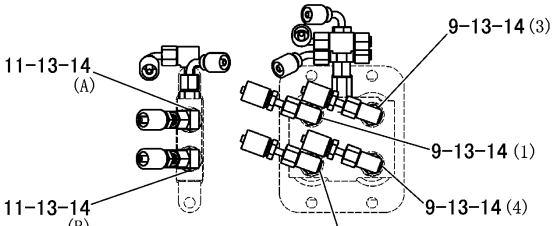

C-C

HOSE	CONNECTION PORT NAME						
PART NO.	VALVE GP -PILOT RH	VALVE GP -PILOT LH	CONTROL VALVE	REDUCING VALVE	OFFSET VALVE	TRAVEL VALVE	HYD TANK
199-6941				A3	P		
326-7172					T	T	
239-3757				T1		T	
302-5564				P1		P	
326-7187			Pa6			2	
326-7188			Pb6			1	
326-7186			Pa7			4	
304-0249			Pb7			3	
326-7185			Pa1		A		
206-6085			Pb1		B		
319-3766			Pb8-Pb8′				
298-7648			Pa8-B UP				
312-8660	1						
312-8661	2						
312-8661	3						
312-8660	4						
299-2128	P1			P1			
299-2129	P2			A2			
299-2129	T			T2			
239-3740		1					
311-4184		2					
311-4184		3					
239-3740		4					
234-0682		P1		P2			
311-4179		P2		A1			
320-3424		T					
239-3780			Pa8				
312-8659			Pb10				
312-8658			Pb8				
333-5236			Pa10				
312-8656			Pb3				
312-8654			Pa5				
239-3778			Pa3				
312-8657			Pb5				
314-9796			Pa4-Pb4				
239-3750							T2

J151952 HE01

PILOT LINES GROUP (326-6316 N/S) -STANDARD-AIR CONDITIONER-PART 3 OF 3
PART OF 326-7175-Page 305
APPLIES TO CAB AIR CONDITIONER SPECIFICATION MACHINE
AN ATTACHMENT

HYDRAULIC SYSTEM

NOTE	No.	PART NO.	QTY	PART NAME	NOTE	No.	PART NO.	QTY	PART NAME
	1	199-6941	1	HOSE AS					
	2	239-3757	1	HOSE AS					
	3	267-4035	1	CROSS					
	4	216-3247	1	CONNECTOR					
	5	302-5564	1	HOSE AS					
	6	326-7172	1	HOSE AS					
	7	6V-8641	3	CONNECTOR					
	8	6V-9849	1	ELBOW					
	9	6V-8627	4	ELBOW					
	10	6V-9842	1	TEE					
	11	8T-0164	2	ELBOW					
	12	6V-9828	2	CAP AS					
	13	3J-1907	10	SEAL					
	14	4J-5477	16	SEAL					

J151952 HE01

PILOT LINES GROUP (326-6316 N/S) -STANDARD-AIR CONDITIONER-PART 3 OF 3

PART OF 326-7175-Page 305

APPLIES TO CAB AIR CONDITIONER SPECIFICATION MACHINE

AN ATTACHMENT

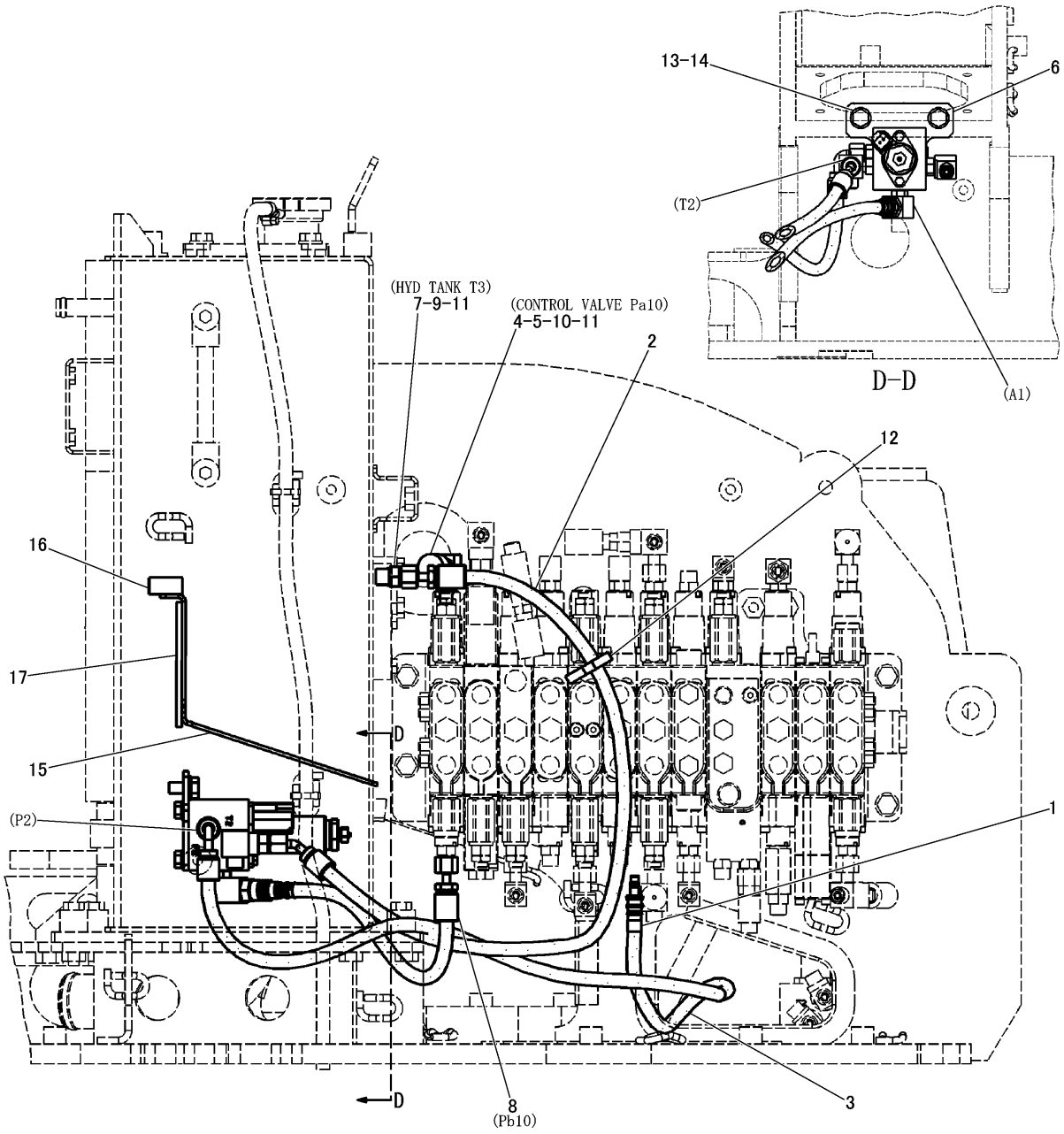

HOSE END CONNECTION TABLE				
HOSE	CONNECTION PORT NAME			
PART NO.	CONTROL VALVE	VALVE GP	VALVE GP -PILOT RH	HYD TANK
317-7766	Pb10	A1		
(312-8660)			4	
239-3779		P2		
211-4646		T2		T3

J146827 HE02

PILOT LINES GROUP (307-6004 N/S) -STANDARTD/CRANE
PART OF 307-8503-Page 2, 307-8504-Page 4, 330-3619-Page 3, 330-3620-Page 6
AN ATTACHMENT

HYDRAULIC SYSTEM

NOTE	No.	PART NO.	QTY	PART NAME	NOTE	No.	PART NO.	QTY	PART NAME
	1	4I-9538	1	BAND(R4,PU)					
	2	211-4646	1	HOSE AS					
	3	239-3779	1	HOSE AS					
	4	286-2304	1	SWITCH AS					
		108-7516	1	FITTING					
		3J-1907	1	SEAL					
Z		286-2317	1	SWITCH AS					
		9W-0844	2	SOCKET					
		230-4011	1	PLUG AS(2P)					
	5	308-9568	1	TEE					
Y	6	311-8012	1	VALVE GROUP					
	7	3J-1907	1	SEAL					
	8	317-7766	1	HOSE AS					
	9	6V-8641	1	CONNECTOR					
	10	3J-7354	1	SEAL					
	11	4J-5477	2	SEAL					
	12	7K-1181	1	STRAP					
	13	8T-4121	2	WASHER					
	14	8T-4137	2	BOLT(M10×1.5)					
	15	319-9110	1	COVER AS					
	16	317-2462	1	FOAM					
	17	319-8365	1	INSULATION					

Y-SEPARATE ILLUSTRATION
Z-NOT SERVICED SEPARATELY

J146827 HE02

PILOT LINES GROUP (307-6004 N/S) -STANDARTD/CRANE

PART OF 307-8503-Page 2,307-8504-Page 4,330-3619-Page 3,330-3620-Page 6
REFERENCE:311-8012-Page 386
AN ATTACHMENT

HOSE END CONNECTION TABLE				
HOSE	CONNECTION PORT NAME			
PART NO.	CONTROL VALVE	VALVE GP	VALVE GP -PILOT RH	HYD TANK
317-7766	Pb10	A1		
(312-8660)			4	
239-3779		P2		
196-3885		T2		T3

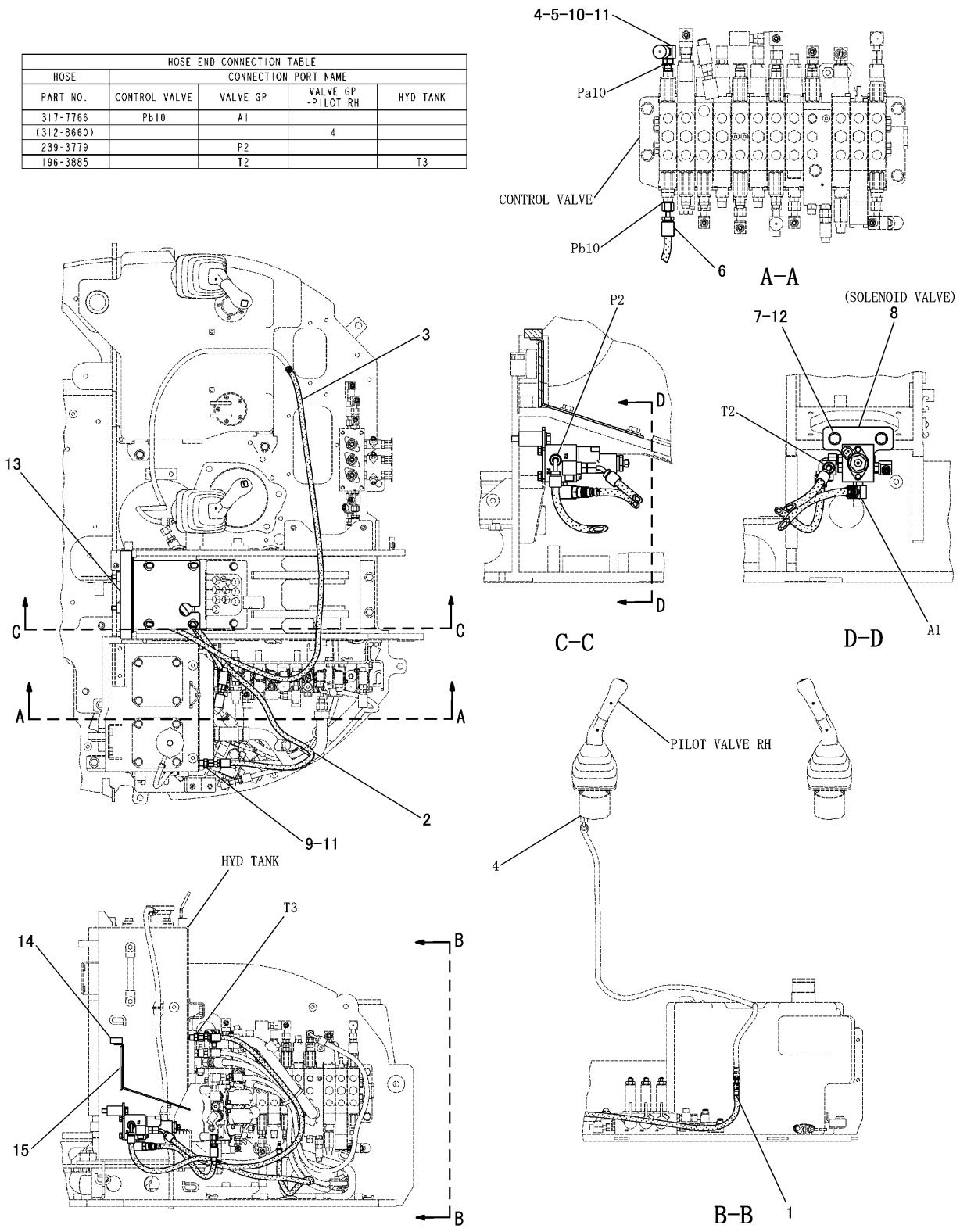

J151352 HE00

PILOT LINES GROUP (322-9478 N/S) -STANDARTD/CRANE
PART OF 307-8504-Page 5, 330-3620-Page 7
ALSO APPLIES TO CAB AIR CONDITIONER SPECIFICATION MACHINE
AN ATTACHMENT

HYDRAULIC SYSTEM

NOTE	No.	PART NO.	QTY	PART NAME	NOTE	No.	PART NO.	QTY	PART NAME
	1	4I-9538	1	BAND(R4,PU)					
	2	196-3885	1	HOSE AS					
	3	239-3779	1	HOSE AS					
	4	286-2304	1	SWITCH AS					
		108-7516	1	FITTING					
		3J-1907	1	SEAL					
Z		286-2317	1	SWITCH AS					
		9W-0844	2	SOCKET					
		230-4011	1	PLUG AS(2P)					
	5	308-9568	1	TEE					
	6	317-7766	1	HOSE AS					
	7	8T-6466	2	BOLT(M10×1.5)					
Y	8	323-6464	1	VALVE GROUP					
	9	6V-8641	1	CONNECTOR					
		3J-1907	1	SEAL					
	10	3J-7354	1	SEAL					
	11	4J-5477	2	SEAL					
	12	8T-4121	2	WASHER					
	13	319-9110	1	COVER AS					
	14	317-2462	1	FOAM					
	15	319-8365	1	INSULATION					

Y-SEPARATE ILLUSTRATION
Z-NOT SERVICED SEPARATELY

J151352 HE00

PILOT LINES GROUP (322-9478 N/S) -STANDARTD/CRANE

PART OF 307-8504-Page 5, 330-3620-Page 7
REFERENCE:323-6464-Page 387
ALSO APPLIES TO CAB AIR CONDITIONER SPECIFICATION MACHINE
AN ATTACHMENT

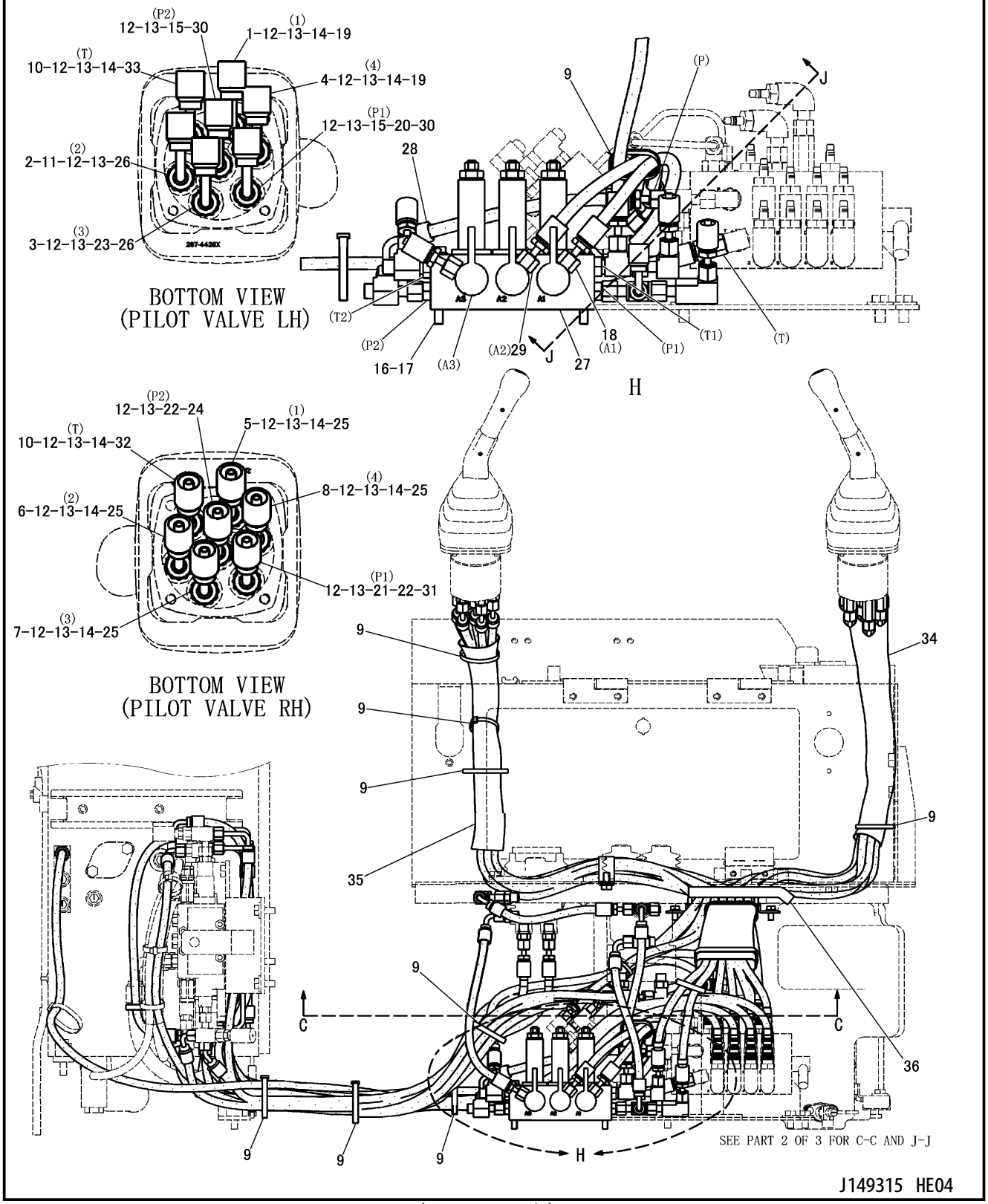

PILOT LINES GROUP (307-6399 N/S) -4 WAYS-PART 1 OF 3
PART OF 307-6397-Page 305, 322-9521-Page 306
AN ATTACHMENT

HYDRAULIC SYSTEM

NOTE	No.	PART NO.	QTY	PART NAME
	1	4I-9531	1	BAND(L1,RD)
	2	4I-9532	1	BAND(L2,YL)
	3	4I-9533	1	BAND(L3,BU)
	4	4I-9534	1	BAND(L4,BR)
	5	4I-9535	1	BAND(R1,OR)
	6	4I-9536	1	BAND(R2,WH)
	7	4I-9537	1	BAND(R3,GN)
	8	4I-9538	1	BAND(R4,PU)
	9	7K-1181	10	STRAP
	10	096-6085	2	TAPE(RD)
	11	145-2237	1	CONNECTOR
	12	3J-1907	14	SEAL
	13	4J-5477	14	SEAL
	14	6V-8641	8	CONNECTOR
	15	216-3247	2	CONNECTOR
	16	8T-4224	4	WASHER
	17	8T-6870	4	BOLT(M8×1.25)
	18	234-0685	1	HOSE AS
	19	239-3740	2	HOSE AS
	20	096-6081	1	TAPE(OR)
	21	096-6080	1	TAPE(BU)
	22	267-4037	2	CONNECTOR
	23	156-8845	1	CONNECTOR
	24	313-1112	1	HOSE AS
	25	313-1111	4	HOSE AS
	26	311-4184	2	HOSE AS
Y	27	298-7650	1	VALVE GROUP
	28	299-0052	1	HOSE AS
	29	306-5293	1	HOSE AS
	30	299-2124	2	HOSE AS
	31	299-2128	1	HOSE AS
	32	299-2129	1	HOSE AS
	33	306-1645	1	HOSE AS
E	34	6R-2052		SLEEVE---46cm
E	35	6R-2052		SLEEVE---36cm
D	36	8T-3426		CHANNEL---0.17m

NOTE	No.	PART NO.	QTY	PART NAME

D-ORDER BY THE m
E-ORDER BY THE cm
Y-SEPARATE ILLUSTRATION

J149315 HE04

PILOT LINES GROUP (307-6399 N/S) -4 WAYS-PART 1 OF 3

PART OF 307-6397-Page 305, 322-9521-Page 306
REFERENCE:298-7650-Page 381
AN ATTACHMENT

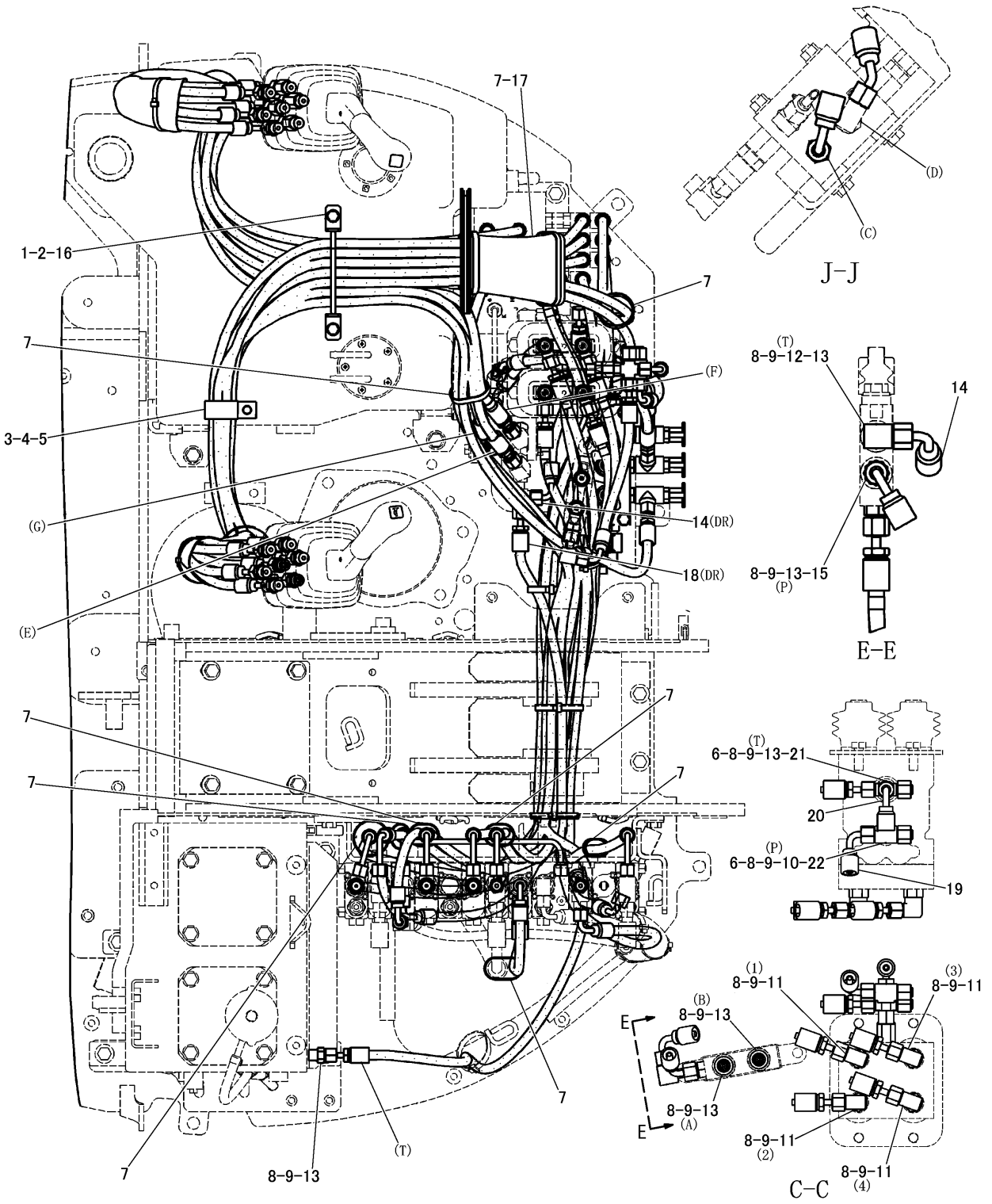

PILOT LINES GROUP (307-6399 N/S) -4 WAYS-PART 2 OF 3
PART OF 307-6397-Page 305, 322-9521-Page 306
AN ATTACHMENT

HYDRAULIC SYSTEM

NOTE	No.	PART NO.	QTY	PART NAME	NOTE	No.	PART NO.	QTY	PART NAME
	1	8T-4224	2	WASHER					
	2	8T-4200	2	BOLT(M8×1.25)					
	3	8T-4137	1	BOLT(M10×1.5)					
	4	8T-4121	1	WASHER					
	5	7D-7233	1	CLIP					
	6	6V-9828	2	CAP AS					
	7	7K-1181	10	STRAP					
	8	4J-5477	17	SEAL					
	9	3J-1907	11	SEAL					
	10	6V-9842	1	TEE					
	11	6V-8627	4	ELBOW					
	12	6V-9849	1	ELBOW					
	13	6V-8641	6	CONNECTOR					
	14	196-3891	2	HOSE AS					
	15	199-6941	1	HOSE AS					
	16	305-7871	1	GUIDE AS					
	17	210-0686	1	FORM					
	18	302-5571	1	HOSE AS					
	19	302-5564	1	HOSE AS					
	20	245-8014	1	HOSE AS					
	21	267-4035	1	CROSS					
	22	216-3247	1	CONNECTOR					

J149316 HE04

PILOT LINES GROUP (307-6399 N/S) -4 WAYS-PART 2 OF 3
PART OF 307-6397-Page 305, 322-9521-Page 306
AN ATTACHMENT

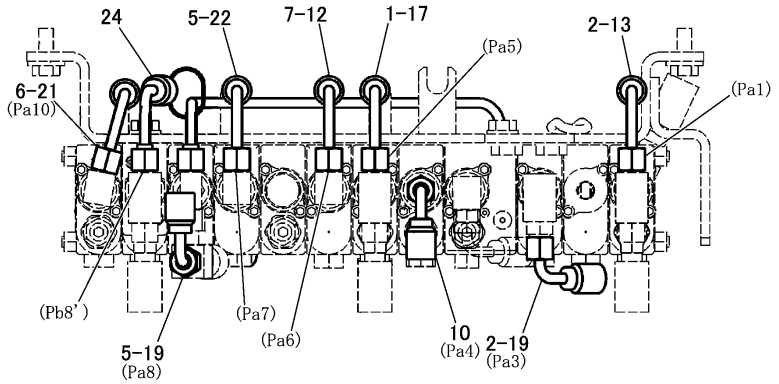

TOP VIEW(CONTROL VALVE)

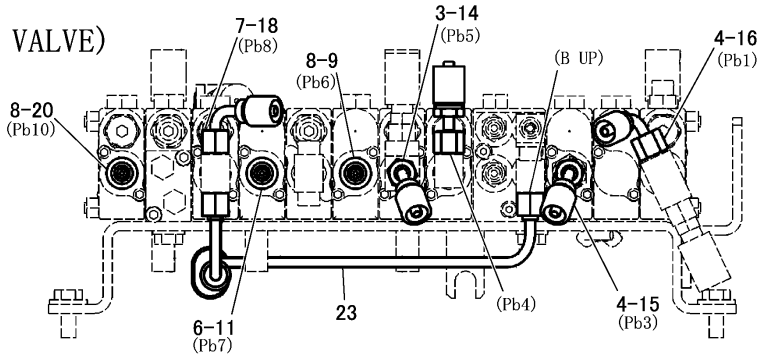

BOTTOM VIEW(CONTROL VALVE)

HOSE END CONNECTION TABLE									
HOSE	CONNECTION PORT NAME								
PART NO.	VALVE GP -PILOT RH	VALVE GP -PILOT LH	CONTROL VALVE	REDUCING VALVE	OFFSET VALVE	TRAVEL VALVE	PATTERN CHANGE	SELECTOR VALVE	HYDRAULIC TANK
199-6941				A3	P				
196-3891					T	T			
245-8014				T1		T			
302-5564				P1		P			
192-2385			Pa6			2			
317-0865			Pb6			1			
299-2122			Pa7			4			
313-2789			Pb7			3			
192-3161			Pa1		A				
206-6085			Pb1		B				
319-3766			Pb8-Pb8'						
298-7648			Pa8-B UP						
313-1111	1						A		
313-1111	2						B		
313-1111	3						C		
313-1111	4						D		
299-2128	P1			P1					
313-1112	P2							G	
299-2129	T			T2					
239-3740		1					G		
311-4184		2					H		
311-4184		3					E		
239-3740		4					F		
299-2124		P1						F	
299-2124		P2						E	
306-1645		T		T1					
313-1104			Pa8				1		
311-4170			Pa10				2		
313-1105			Pb8				3		
311-4178			Pb10				4		
313-1108			Pb3				5		
313-1106			Pa5				6		
313-1104			Pa3				7		
313-1109			Pb5				8		
314-9796			Pa4-Pb4						
302-5571								DR	T
299-0052				P2			P		
234-0685				A1				C	
306-5293				A2				D	
196-3891							T	DR	

J149317 HE04

PILOT LINES GROUP (307-6399 N/S) -4 WAYS-PART 3 OF 3
PART OF 307-6397-Page 305, 322-9521-Page 306
AN ATTACHMENT

HYDRAULIC SYSTEM

NOTE	No.	PART NO.	QTY	PART NAME	NOTE	No.	PART NO.	QTY	PART NAME
	1	4I-9531	1	BAND(L1,RD)					
	2	4I-9532	2	BAND(L2,YL)					
	3	4I-9533	1	BAND(L3,BU)					
	4	4I-9534	2	BAND(L4,BR)					
	5	4I-9535	2	BAND(R1,OR)					
	6	4I-9536	2	BAND(R2,WH)					
	7	4I-9537	2	BAND(R3,GN)					
	8	4I-9538	2	BAND(R4,PU)					
	9	317-0865	1	HOSE AS					
	10	314-9796	1	HOSE AS					
	11	313-2789	1	HOSE AS					
	12	192-2385	1	HOSE AS					
	13	192-3161	1	HOSE AS					
	14	313-1109	1	HOSE AS					
	15	313-1108	1	HOSE AS					
	16	206-6085	1	HOSE AS					
	17	313-1106	1	HOSE AS					
	18	313-1105	1	HOSE AS					
	19	313-1104	2	HOSE AS					
	20	311-4178	1	HOSE AS					
	21	311-4170	1	HOSE AS					
	22	299-2122	1	HOSE AS					
	23	298-7648	1	TUBE AS					
	24	319-3766	1	HOSE AS					

J149317 HE04

PILOT LINES GROUP (307-6399 N/S) -4 WAYS-PART 3 OF 3

PART OF 307-6397-Page 305, 322-9521-Page 306

AN ATTACHMENT

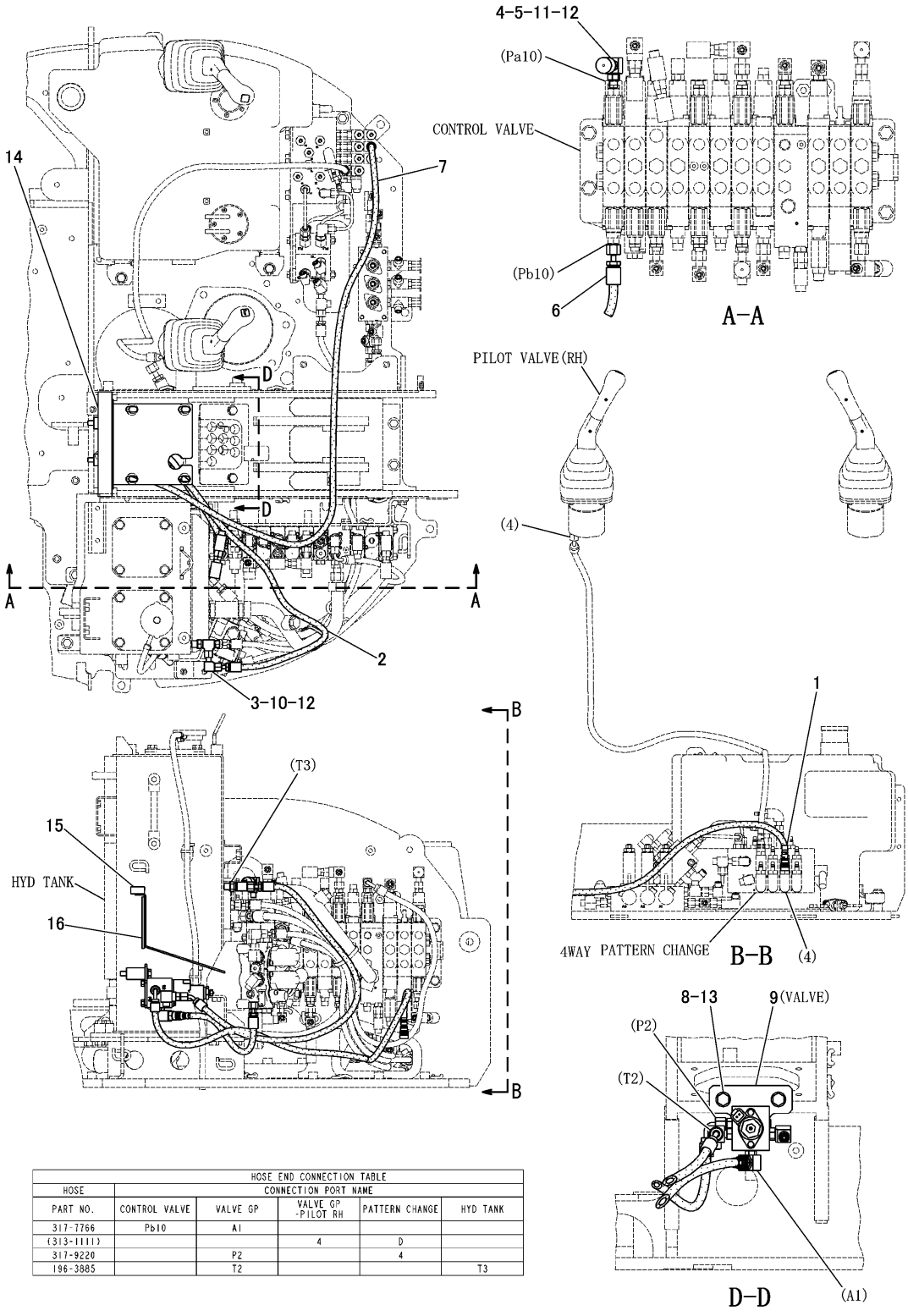

HOSE END CONNECTION TABLE					
HOSE	CONNECTION PORT NAME				
PART NO.	CONTROL VALVE	VALVE GP	VALVE GP -PILOT RH	PATTERN CHANGE	HYD TANK
317-7766	Pb10	A1			
(313-1111)			4	D	
317-9220		P2		4	
196-3885		T2			T3

J151307 HE00

PILOT LINES GROUP (322-9479 N/S) -4 WAYS/CRANE
PART OF 322-9521-Page 306, 331-7226-Page 307
APPLIES TO CAB AIR CONDITIONER SPECIFICATION MACHINE
AN ATTACHMENT

HYDRAULIC SYSTEM

NOTE	No.	PART NO.	QTY	PART NAME
	1	4I-9538	1	BAND(R4,PU)
	2	196-3885	1	HOSE AS
	3	205-7197	1	TEE
		3J-1907	1	SEAL
	4	286-2304	1	SWITCH AS
Z		286-2317	1	SWITCH AS
		9W-0844	2	SOCKET
		230-4011	1	PLUG AS(2P)
		108-7516	1	FITTING
		3J-1907	1	SEAL
	5	308-9568	1	TEE
	6	317-7766	1	HOSE AS
	7	317-9220	1	HOSE AS
	8	8T-6466	2	BOLT(M10×1.5)
Y	9	323-6464	1	VALVE GROUP
	10	6V-9849	1	ELBOW
	11	3J-7354	1	SEAL
	12	4J-5477	4	SEAL
	13	8T-4121	2	WASHER
	14	319-9110	1	COVER AS
	15	317-2462	1	FOAM
	16	319-8365	1	INSULATION

NOTE	No.	PART NO.	QTY	PART NAME

Y-SEPARATE ILLUSTRATION
Z-NOT SERVICED SEPARATELY

J151307 HE00

PILOT LINES GROUP (322-9479 N/S) -4 WAYS/CRANE

PART OF 322-9521-Page 306, 331-7226-Page 307
REFERENCE:323-6464-Page 387
APPLIES TO CAB AIR CONDITIONER SPECIFICATION MACHINE
AN ATTACHMENT

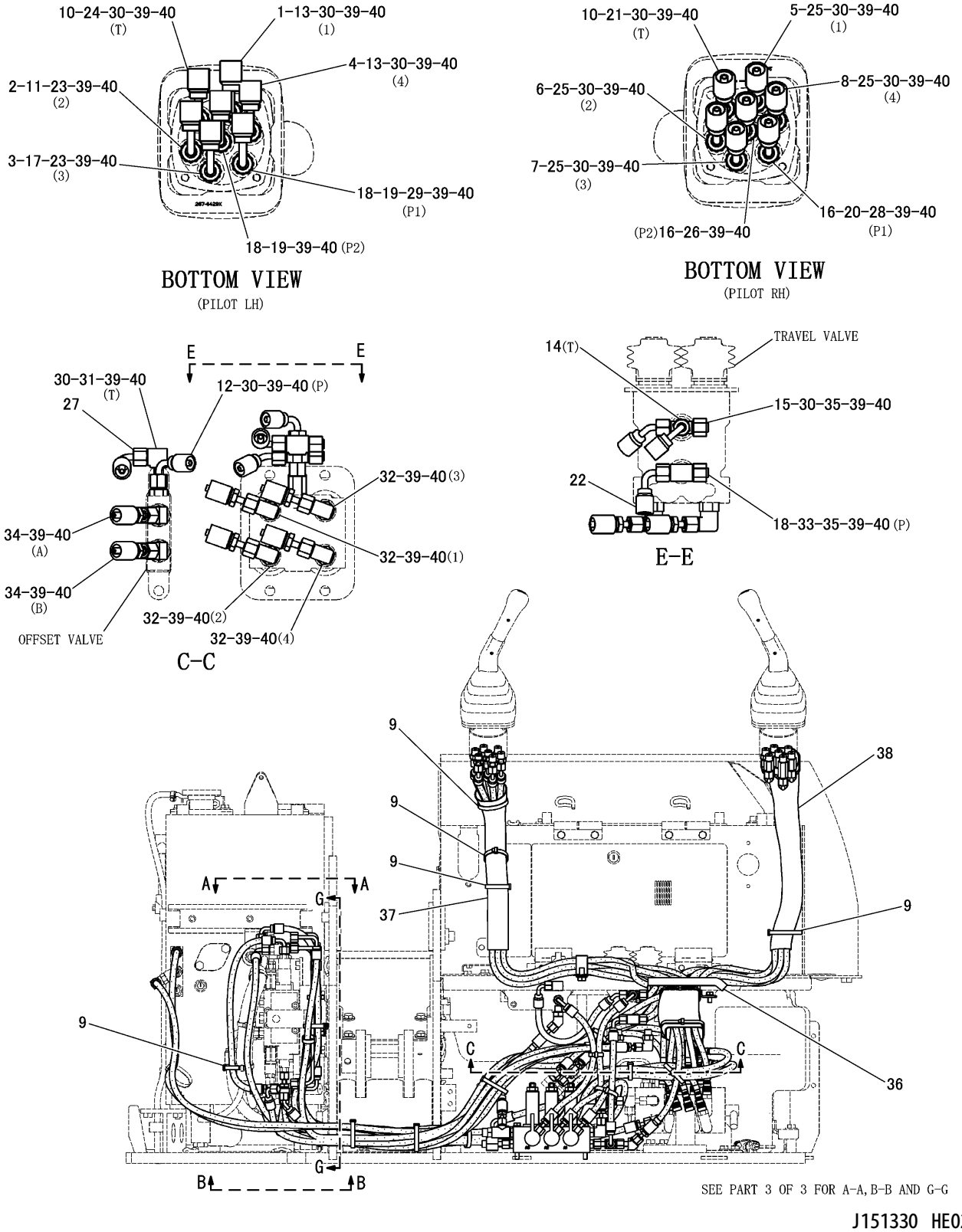

PILOT LINES GROUP (326-7177 N/S) -AIR CONDITIONER-4 WAYS-PART 1 OF 3
PART OF 326-7176-Page 306, 331-7226-Page 307
APPLIES TO CAB AIR CONDITIONER SPECIFICATION MACHINE
AN ATTACHMENT

HYDRAULIC SYSTEM

NOTE	No.	PART NO.	QTY	PART NAME
	1	4I-9531	1	BAND(L1,RD)
	2	4I-9532	1	BAND(L2,YL)
	3	4I-9533	1	BAND(L3,BU)
	4	4I-9534	1	BAND(L4,BRN)
	5	4I-9535	1	BAND(R1,OR)
	6	4I-9536	1	BAND(R2,WH)
	7	4I-9537	1	BAND(R3,GN)
	8	4I-9538	1	BAND(R4,PU)
	9	7K-1181	5	STRAP
	10	096-6085	2	TAPE(RD)
	11	145-2237	1	CONNECTOR
	12	199-6941	1	HOSE AS
	13	239-3740	2	HOSE AS
	14	239-3757	1	HOSE AS
	15	267-4035	1	CROSS
	16	267-4037	2	CONNECTOR
	17	156-8845	1	CONNECTOR
	18	216-3247	3	CONNECTOR
	19	299-2124	2	HOSE AS
	20	299-2128	1	HOSE AS
	21	299-2129	1	HOSE AS
	22	302-5564	1	HOSE AS
	23	311-4184	2	HOSE AS
	24	313-1104	1	HOSE AS
	25	313-1111	4	HOSE AS
	26	313-1112	1	HOSE AS
	27	326-7172	1	HOSE AS
	28	096-6080	1	TAPE(BU)
	29	096-6081	1	TAPE(OR)
	30	6V-8641	11	CONNECTOR
	31	6V-9849	1	ELBOW
	32	6V-8627	4	ELBOW
	33	6V-9842	1	TEE
	34	8T-0164	2	ELBOW
	35	6V-9828	2	CAP AS
D	36	8T-3426		CHANNEL---0.17m
E	37	6R-2052		SLEEVE---36cm
E	38	6R-2052		SLEEVE---47cm
	39	3J-1907	24	SEAL
	40	4J-5477	28	SEAL

NOTE	No.	PART NO.	QTY	PART NAME

D-ORDER BY THE m
E-ORDER BY THE cm

J151330 HE02

PILOT LINES GROUP (326-7177 N/S) -AIR CONDITIONER-4 WAYS-PART 1 OF 3

PART OF 326-7176-Page 306, 331-7226-Page 307
APPLIES TO CAB AIR CONDITIONER SPECIFICATION MACHINE
AN ATTACHMENT

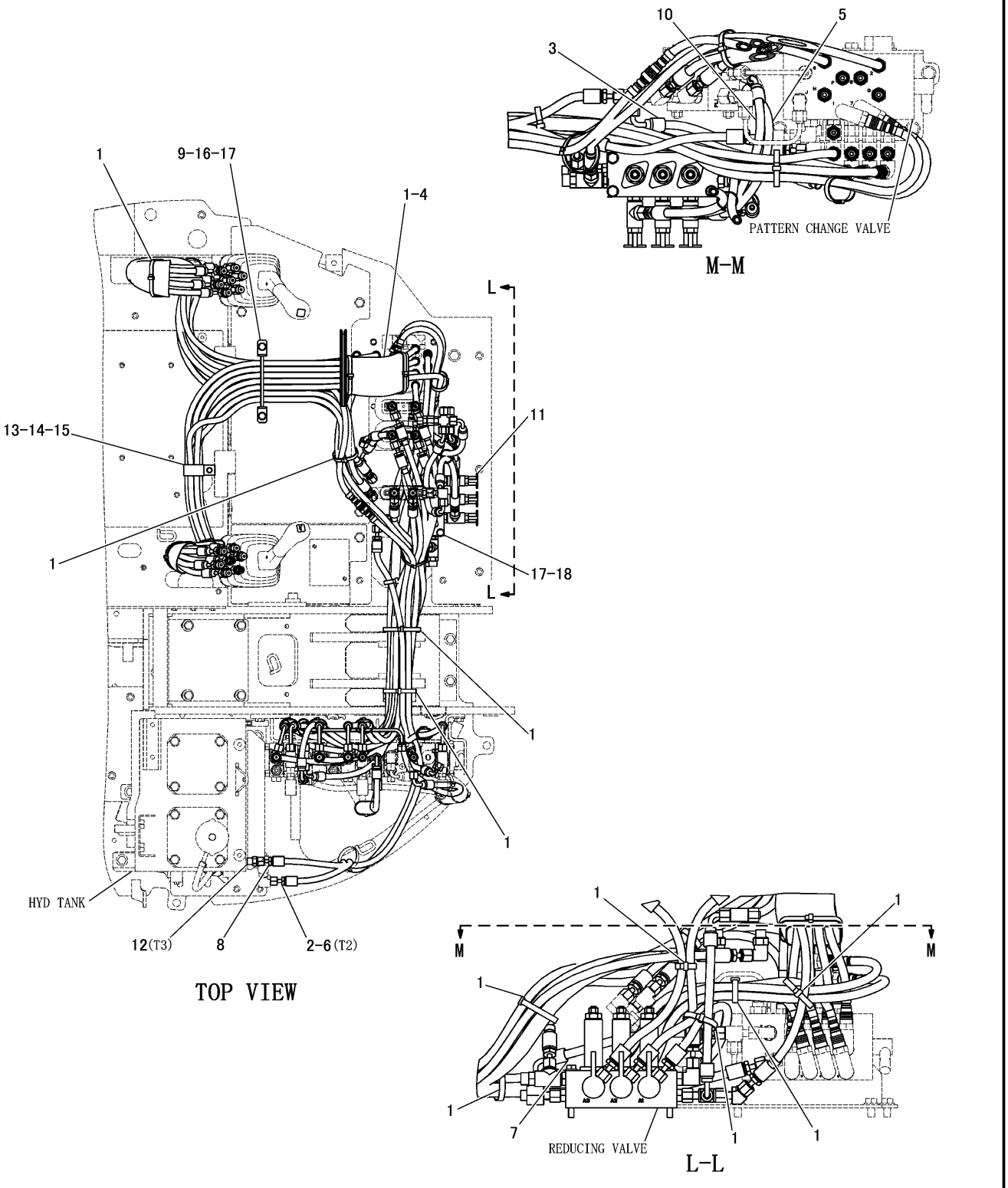

PILOT LINES GROUP (326-7177 N/S) -AIR CONDITIONER-4 WAYS-PART 2 OF 3
PART OF 326-7176-Page 306, 331-7226-Page 307
APPLIES TO CAB AIR CONDITIONER SPECIFICATION MACHINE
AN ATTACHMENT

HYDRAULIC SYSTEM

NOTE	No.	PART NO.	QTY	PART NAME	NOTE	No.	PART NO.	QTY	PART NAME
	1	7K−1181	12	STRAP					
	2	096−6085	1	TAPE(RD)					
	3	196−3891	1	HOSE AS					
	4	210−0686	1	FORM					
	5	234−0685	1	HOSE AS					
	6	239−3753	1	HOSE AS					
	7	299−0052	1	HOSE AS					
	8	302−5571	1	HOSE AS					
	9	305−7871	1	GUIDE AS					
	10	306−5293	1	HOSE AS					
Y	11	328−1868	1	AVLVE GROUP					
	12	6V−8641	1	CONNECTOR					
		3J−1907	1	SEAL					
		4J−5477	1	SEAL					
	13	7D−7233	1	CLIP					
	14	8T−4121	1	WASHER					
	15	8T−4137	1	BOLT(M10×1.5)					
	16	8T−4200	2	BOLT(M8×1.25)					
	17	8T−4224	6	WASHER					
	18	8T−6870	4	BOLT(M8×1.25)					

Y-SEPARATE ILLUSTRATION

J151331 HE02

PILOT LINES GROUP (326-7177 N/S) -AIR CONDITIONER-4 WAYS-PART 2 OF 3

PART OF 326-7176-Page 306, 331-7226-Page 307
REFERENCE:328-1868-Page 381
APPLIES TO CAB AIR CONDITIONER SPECIFICATION MACHINE
AN ATTACHMENT

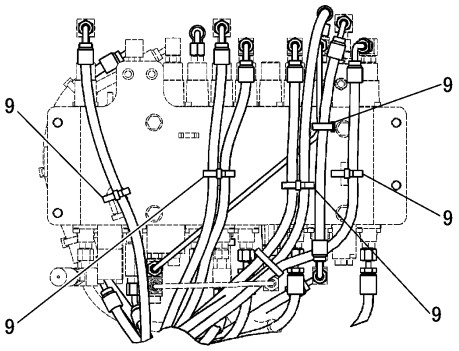

G-G

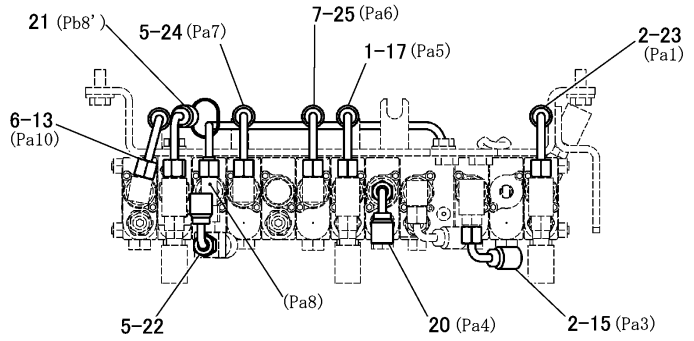

A-A

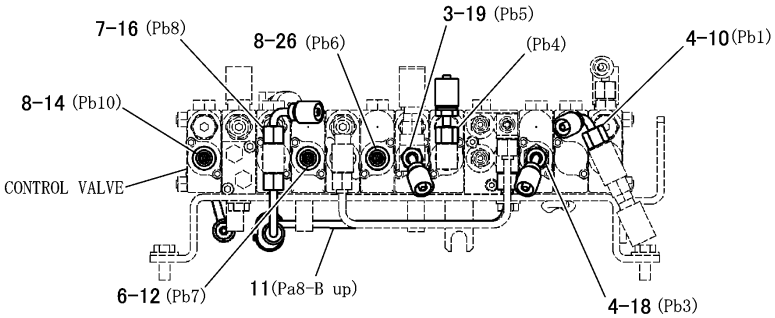

B-B

HOSE END CONNECTION TABLE									
HOSE	CONNECTION PORT NAME								
PART NO.	VALVE GP -PILOT RH	VALVE GP -PILOT LH	CONTROL VALVE	REDUCING VALVE	OFFSET VALVE	TRAVEL VALVE	PATTERN CHANGE	SELECTOR VALVE	HYDRAULIC TANK
199-6941				A3	P				
326-7172					T	T			
239-3757				T1		T			
302-5564				P1		P			
326-7187			Pa6			2			
326-7188			Pb6			1			
326-7186			Pa7			4			
304-0249			Pb7			3			
326-7185			Pa1		A				
206-6085			Pb1		B				
319-3766			Pb8-Pb8'						
298-7648			Pa8-B UP						
313-1111	1						A		
313-1111	2						B		
313-1111	3						C		
313-1111	4						D		
299-2128	P1			P1					
313-1112	P2							G	
299-2129	T			T2					
239-3740		1					G		
311-4184		2					H		
311-4184		3					E		
239-3740		4					F		
299-2124		P1						F	
299-2124		P2						E	
313-1104		T							
326-7184			Pa8				1		
333-5238			Pa10				2		
313-1105			Pb8				3		
311-4178			Pb10				4		
313-1108			Pb3				5		
313-1106			Pa5				6		
311-8015			Pa3				7		
313-1109			Pb5				8		
314-9796			Pa4-Pb4						
302-5571								DR	T3
299-0052				P2			P		
234-0685				A1				C	
306-5293				A2				D	
196-3891							T	DR	
239-3753									T2

J151332 HE02

PILOT LINES GROUP (326-7177 N/S) -AIR CONDITIONER-4 WAYS-PART 3 OF 3
PART OF 326-7176-Page 306, 331-7226-Page 307
APPLIES TO CAB AIR CONDITIONER SPECIFICATION MACHINE
AN ATTACHMENT

HYDRAULIC SYSTEM

NOTE	No.	PART NO.	QTY	PART NAME	NOTE	No.	PART NO.	QTY	PART NAME
	1	4I-9531	1	BAND(L1,RD)					
	2	4I-9532	2	BAND(L2,YL)					
	3	4I-9533	1	BAND(L3,BU)					
	4	4I-9534	2	BAND(L4,BRN)					
	5	4I-9535	2	BAND(R1,OR)					
	6	4I-9536	2	BAND(R2,WH)					
	7	4I-9537	2	BAND(R3,GN)					
	8	4I-9538	2	BAND(R4,PU)					
	9	7K-1181	5	STRAP					
	10	206-6085	1	HOSE AS					
	11	298-7648	1	TUBE AS					
	12	304-0249	1	HOSE AS					
	13	333-5238	1	HOSE AS					
	14	311-4178	1	HOSE AS					
	15	311-8015	1	HOSE AS					
	16	313-1105	1	HOSE AS					
	17	313-1106	1	HOSE AS					
	18	313-1108	1	HOSE AS					
	19	313-1109	1	HOSE AS					
	20	314-9796	1	HOSE AS					
	21	319-3766	1	HOSE AS					
	22	326-7184	1	HOSE AS					
	23	326-7185	1	HOSE AS					
	24	326-7186	1	HOSE AS					
	25	326-7187	1	HOSE AS					
	26	326-7188	1	HOSE AS					

J151332 HE02

PILOT LINES GROUP (326-7177 N/S) -AIR CONDITIONER-4 WAYS-PART 3 OF 3
PART OF 326-7176-Page 306, 331-7226-Page 307
APPLIES TO CAB AIR CONDITIONER SPECIFICATION MACHINE
AN ATTACHMENT

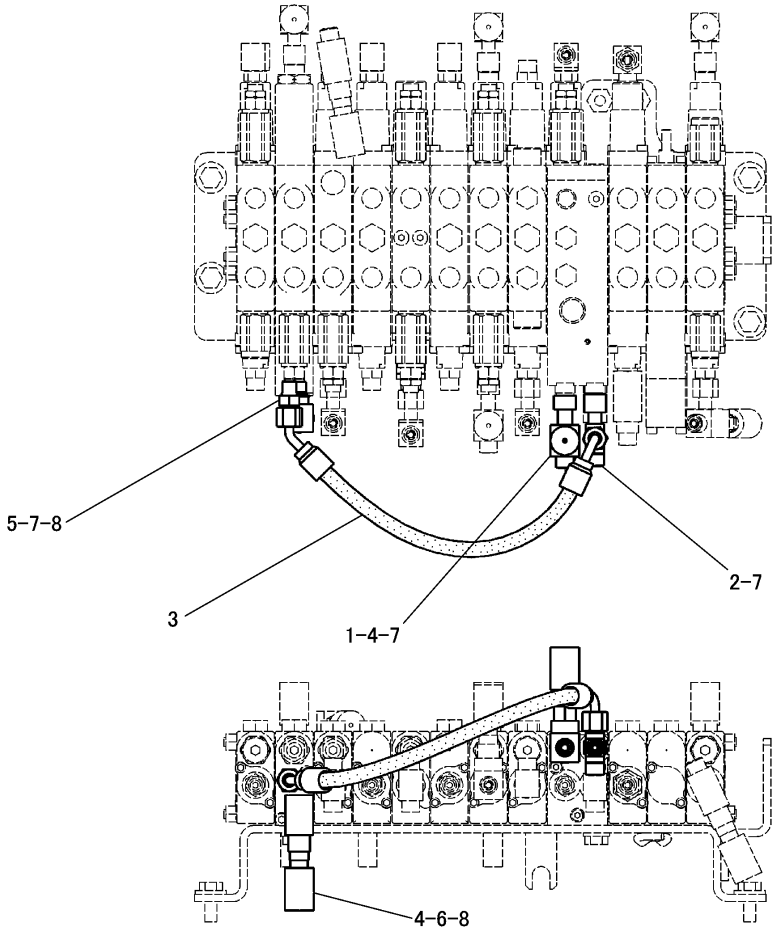

NOTE	No.	PART NO.	QTY	PART NAME	NOTE	No.	PART NO.	QTY	PART NAME
	1	7X-2444	1	TEE					
	2	267-4035	1	CROSS					
	3	307-1419	1	HOSE AS					
	4	308-3147	2	SWITCH AS					
		108-7516	1	FITTING					
		3J-1907	1	SEAL					
	5	6V-8647	1	CONNECTOR					
	6	135-9941	1	ADAPTER					
	7	4J-5477	5	SEAL					
	8	3J-7354	2	SEAL					

J146739 HE02

PILOT LINES GROUP (307-3453 N/S)
PART OF 307-9226-Page 45, 308-4118-Page 466

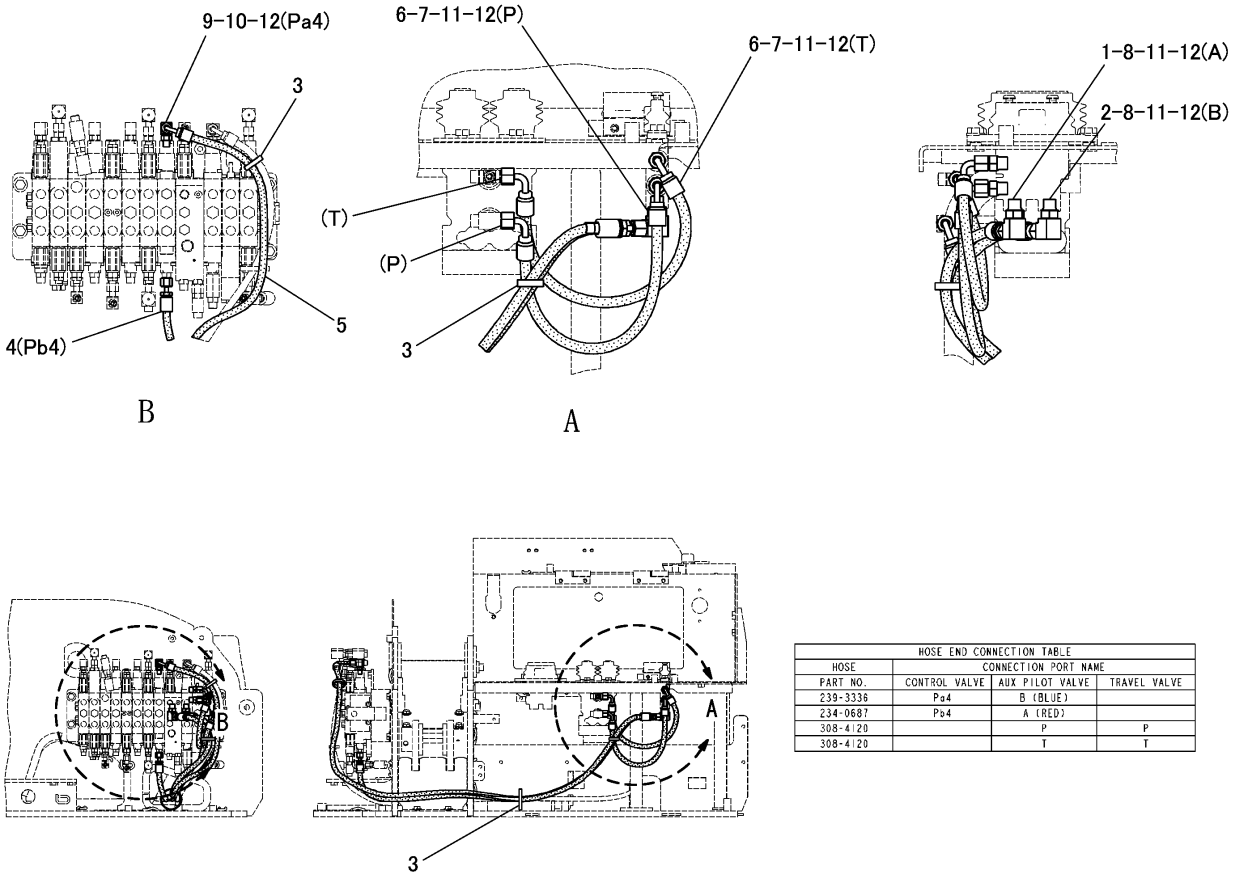

HOSE END CONNECTION TABLE			
HOSE	CONNECTION PORT NAME		
PART NO.	CONTROL VALVE	AUX PILOT VALVE	TRAVEL VALVE
239-3336	Pa4	B (BLUE)	
234-0687	Pb4	A (RED)	
308-4120		P	P
308-4120		T	T

NOTE	No.	PART NO.	QTY	PART NAME	NOTE	No.	PART NO.	QTY	PART NAME
	1	4I-9531	1	BAND(L1,RD)					
	2	4I-9533	1	BAND(L3,BU)					
	3	7K-1181	3	STRAP					
	4	234-0687	1	HOSE AS					
	5	239-3336	1	HOSE AS					
	6	308-4120	2	HOSE AS					
	7	6V-8641	2	CONNECTOR					
	8	6V-8627	2	ELBOW					
	9	3J-7354	1	SEAL					
	10	6V-8628	1	ELBOW					
	11	3J-1907	4	SEAL					
	12	4J-5477	5	SEAL					

J146786 HE01

PILOT LINES GROUP (308-3948 N/S)
PART OF 295-9343-Page 307
AN ATTACHMENT

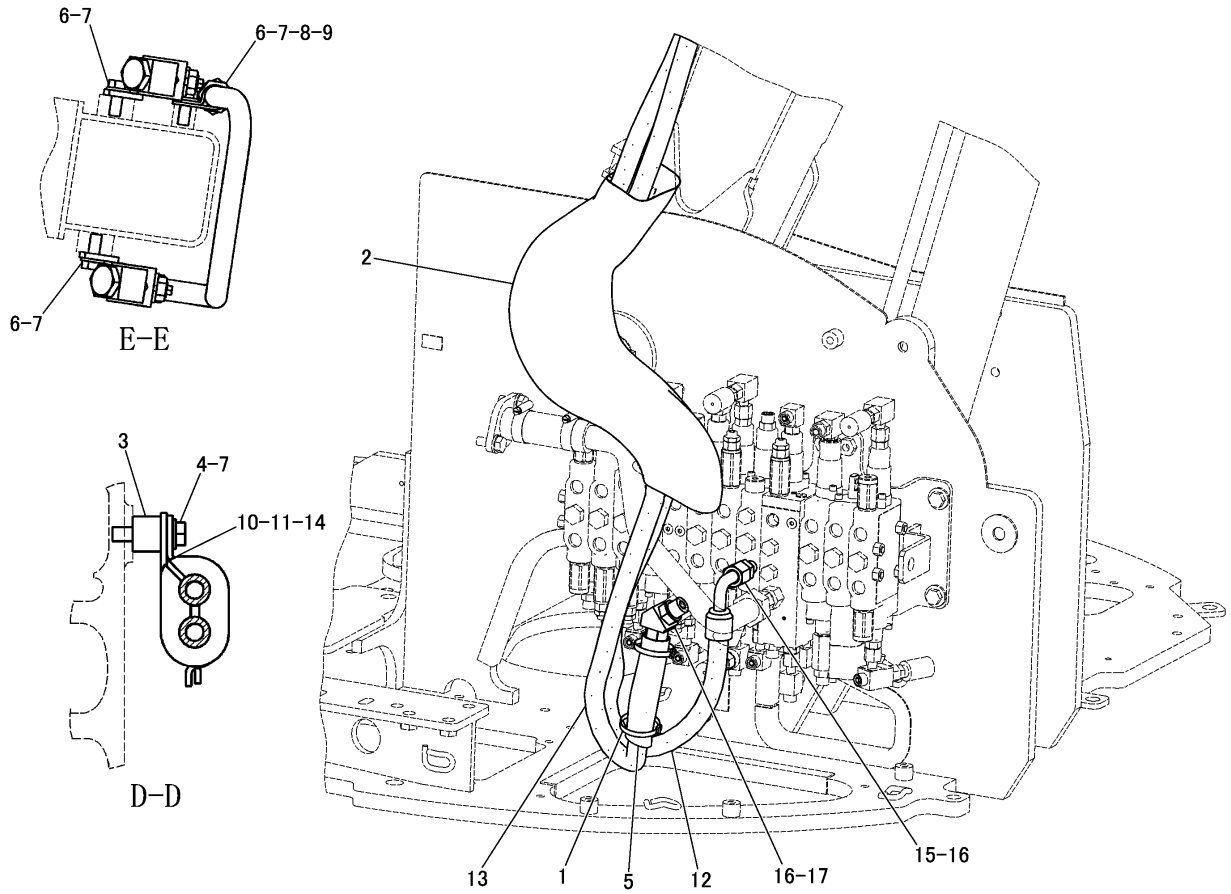

NOTE	No.	PART NO.	QTY	PART NAME	NOTE	No.	PART NO.	QTY	PART NAME
	1	7K-1181	2	STRAP					
E	2	310-4985		SLEEVE---50cm					
	3	091-9035	2	SPACER					
	4	8T-4182	2	BOLT(M10×1.5)					
	5	210-0686	1	FORM					
	6	8T-4136	5	BOLT(M10×1.5)					
	7	8T-4121	7	WASHER					
	8	8T-1888	1	CLIP(TAB)					
	9	8T-1887	1	CLIP(SLOT)					
	10	3G-8054	1	CLIP(TAB)					
	11	3G-8057	1	CLIP(SLOT)					
	12	296-1573	1	HOSE AS					
	13	296-1579	1	HOSE AS					
	14	6V-0974	1	GROMMET					
	15	3J-1907	1	SEAL					
		6V-9873	1	CONNECTOR					
	16	6V-8398	2	SEAL					
	17	3K-0360	1	SEAL					
		6V-9002	1	ELBOW					

E-ORDER BY THE cm

J146783 HE04

AUXILIARY HYDRAULIC LINES GROUP (295-9345 N/S) -SINGLE ACTION-PART 1 OF 2
PART OF 295-9343-Page 307
AN ATTACHMENT

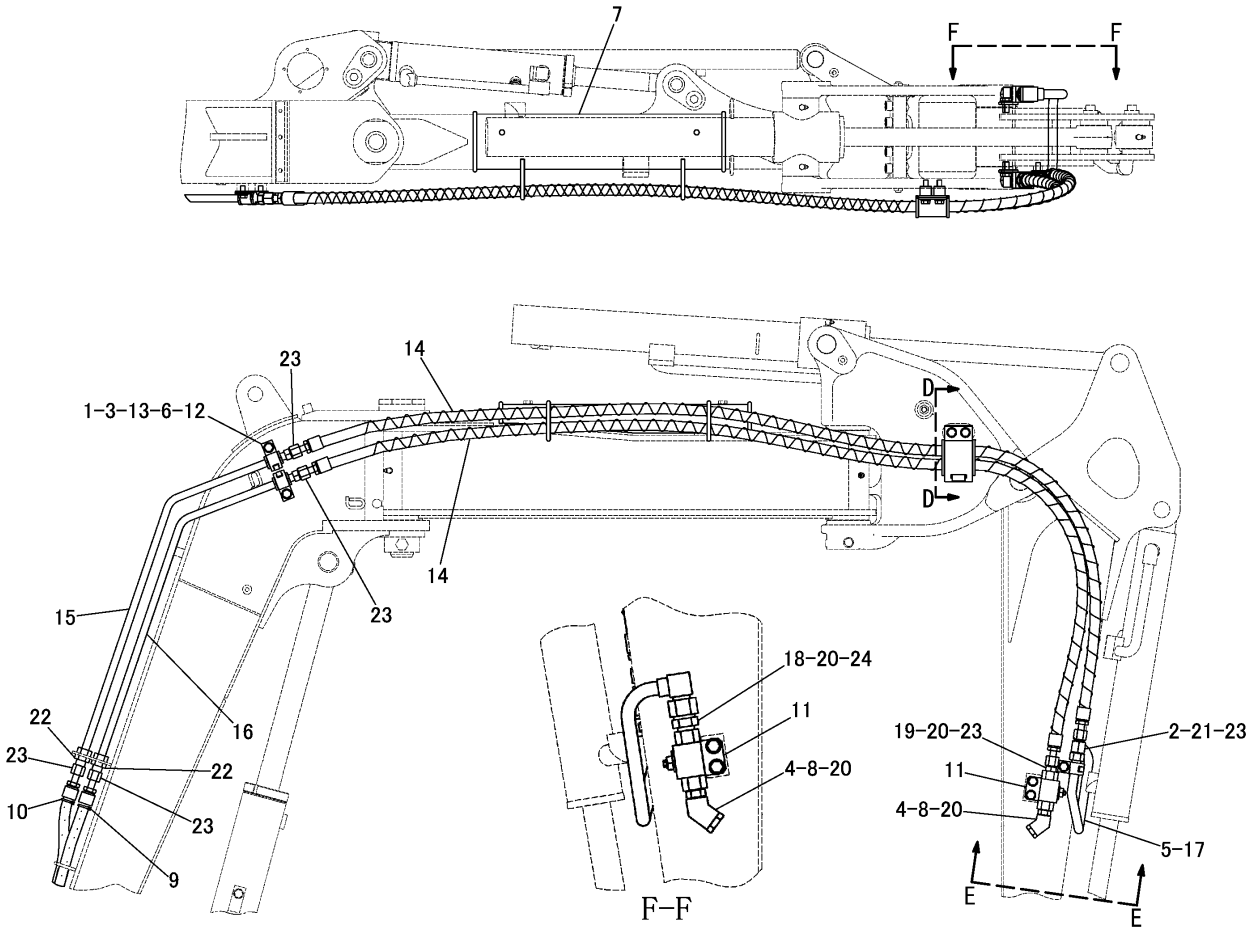

NOTE	No.	PART NO.	QTY	PART NAME	NOTE	No.	PART NO.	QTY	PART NAME
	1	8T－4137	2	BOLT(M10×1.5)		16	308－3162	1	TUBE AS
	2	9X－6581	1	NUT(1-14)		17	308－3163	1	TUBE AS
	3	8T－4121	2	WASHER		18	6V－9874	1	CONNECTOR
	4	236－1425	2	PLUG		19	6V－8639	1	CONNECTOR
		095－1585	2	SEAL		20	3K－0360	4	SEAL
	5	7J－9108	1	SEAL		21	6V－8939	1	REDUCER
	6	221－3525	2	GROMMET		22	6V－9169	2	NUT(13/16-16)
	7	241－4480	1	COVER AS		23	6V－8398	6	SEAL
		241－3076	1	COVER		24	6V－9746	1	SEAL
	8	268－7307	2	ADAPTER					
	9	279－4734	1	STRAP(BR)					
	10	279－4736	1	STRAP(WH)					
	11	296－1052	2	VALVE AS					
		314－7327	2	PLATE					
		4B－4274	1	WASHER					
		8T－0286	1	BOLT(M5×0.8)					
	12	7S－3916	2	CLIP(TAB)					
	13	7S－3919	2	CLIP(SLOT)					
	14	297－1363	2	HOSE AS					
	15	308－3161	1	TUBE AS					

J146784 HE04

AUXILIARY HYDRAULIC LINES GROUP (295-9345 N/S) -SINGLE ACTION-PART 2 OF 2
PART OF 295-9343-Page 307
AN ATTACHMENT

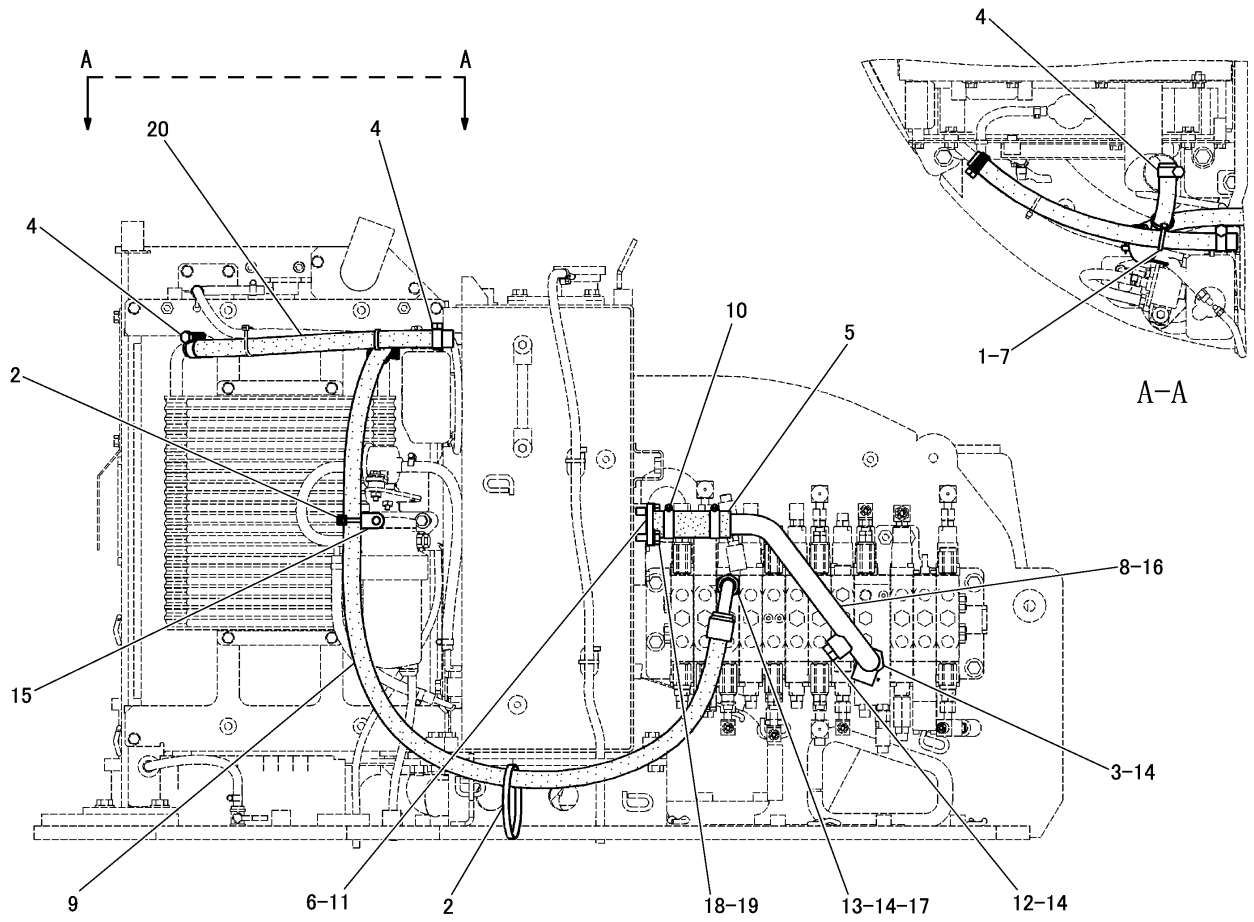

NOTE	No.	PART NO.	QTY	PART NAME	NOTE	No.	PART NO.	QTY	PART NAME
	1	3S-2093	1	STRAP					
	2	7K-1181	2	STRAP					
	3	7X-3164	1	ADAPTER					
	4	095-1388	3	CLAMP					
	5	196-4745	1	HOSE					
	6	239-0390	1	PIPE AS					
	7	266-7379	1	STRAP					
	8	314-8865	1	PIPE AS					
	9	319-1552	1	HOSE AS					
	10	095-1390	2	CLAMP					
	11	095-1701	1	SEAL					
	12	9S-4185	1	PLUG					
	13	172-0679	1	CONNECTOR					
	14	3K-0360	3	SEAL					
	15	4P-8134	1	CLIP					
	16	6V-8398	1	SEAL					
	17	7J-9108	1	SEAL					
	18	8T-4121	2	WASHER					
	19	8T-4136	2	BOLT(M10×1.5)					
E	20	5P-0743		HOSE---41cm					

E-ORDER BY THE cm

J146646 HE04

RETURN LINES GROUP (295-9333 N/S)

PART OF 295-9329-Page 304

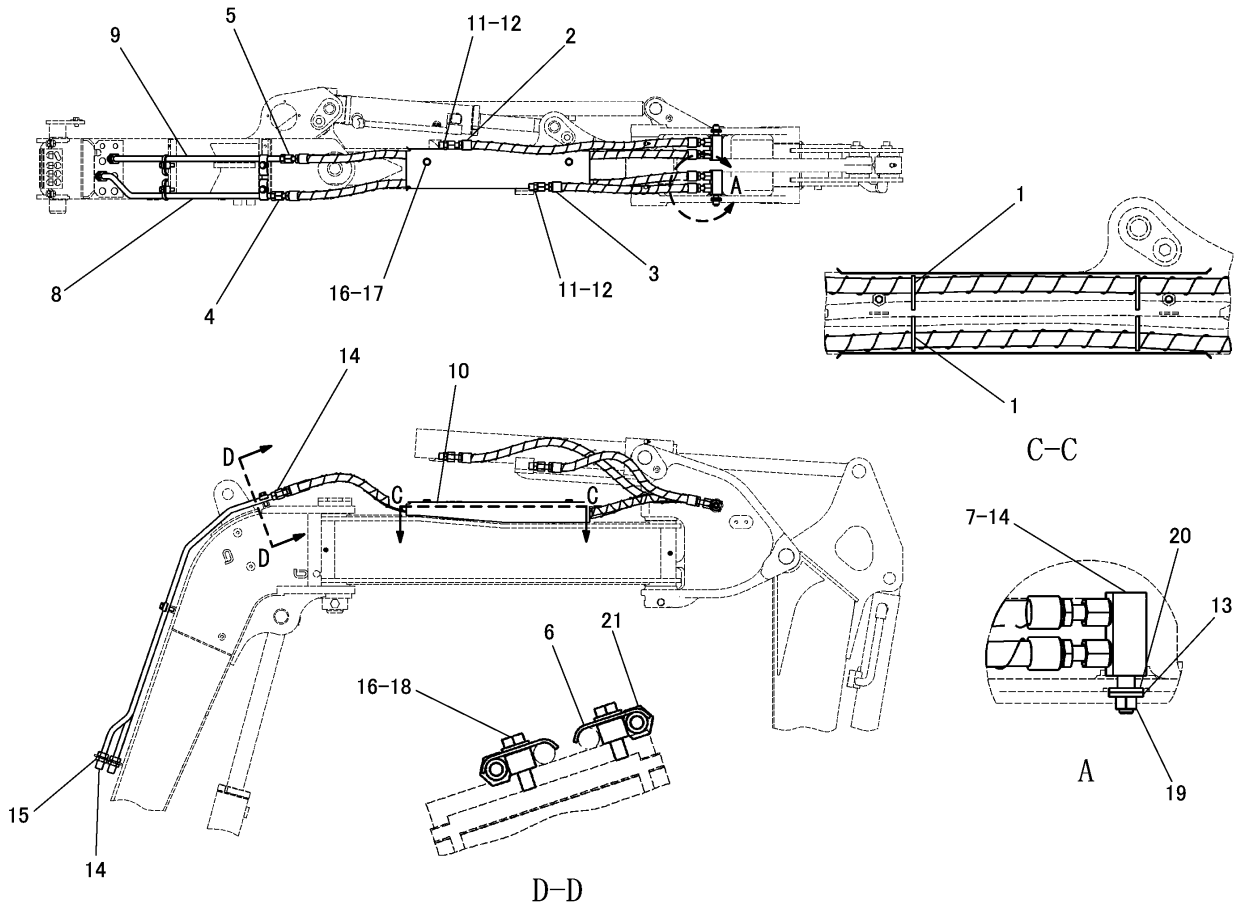

NOTE	No.	PART NO.	QTY	PART NAME	NOTE	No.	PART NO.	QTY	PART NAME
	1	3S-2093	4	STRAP		21	154-2302	4	SPACER
	2	234-0862	1	HOSE AS					
	3	241-3061	1	HOSE AS					
	4	241-3063	1	HOSE AS					
	5	241-3064	1	HOSE AS					
	6	241-3075	4	CLIP					
	7	241-4478	2	CONNECTOR					
	8	308-3159	1	TUBE AS					
	9	308-3160	1	TUBE AS					
	10	316-8394	1	COVER					
	11	3K-0360	2	SEAL					
	12	6V-8639	2	CONNECTOR					
	13	5P-1076	2	WASHER					
	14	6V-8398	9	SEAL					
	15	6V-9169	2	NUT(13/16-16)					
	16	8T-4121	6	WASHER					
	17	8T-4137	2	BOLT(M10×1.5)					
	18	8T-4196	4	BOLT(M10×1.5)					
	19	8T-4244	2	NUT(M12×1.75)					
	20	9X-8257	2	WASHER					

J146858 HE02

STICK LINES GROUP (295-9339 N/S)
PART OF 296-4439-Page 432, 296-4440-Page 432

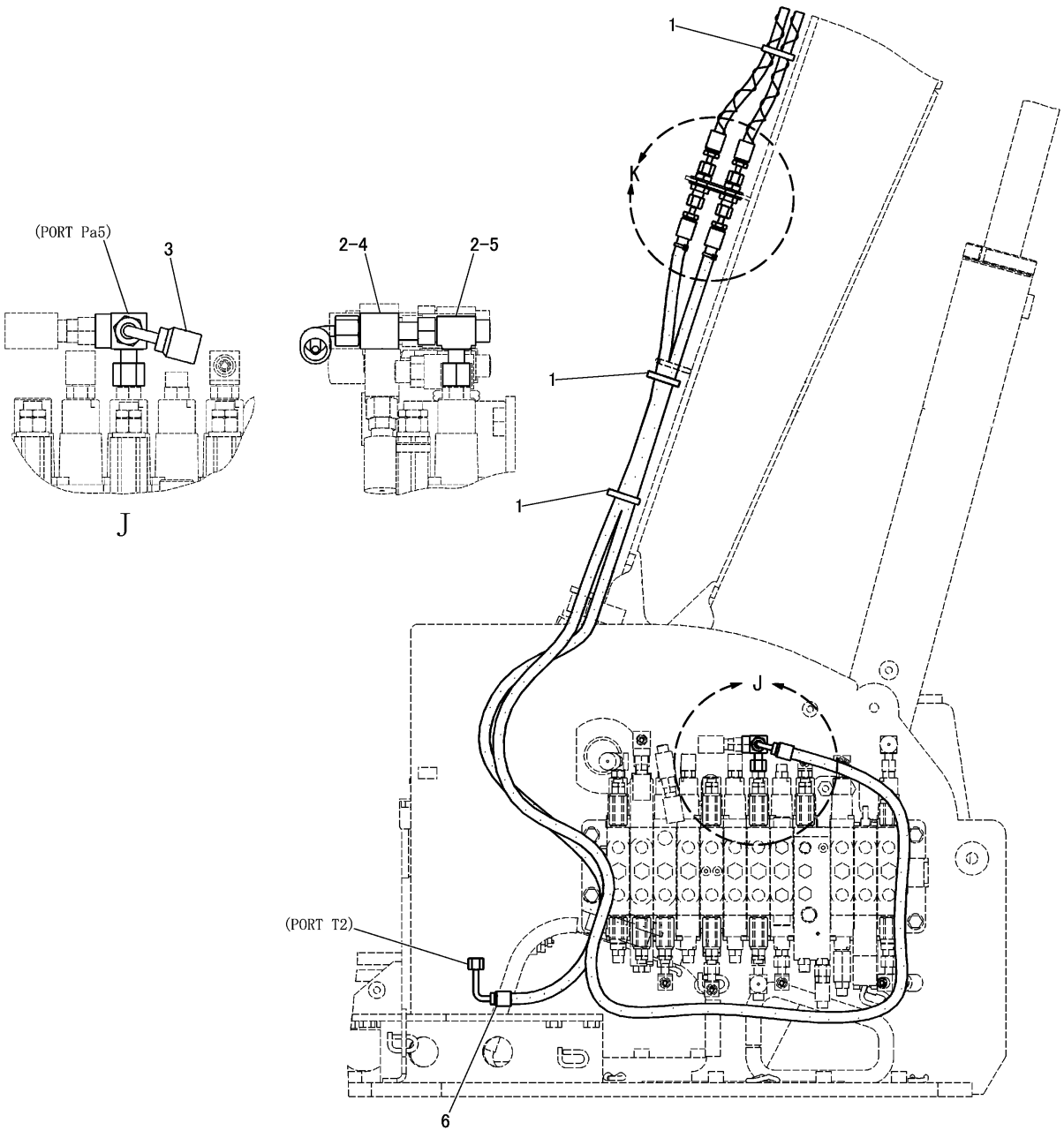

HOSE END CONNECTION TABLE						
HOSE	CONNECTION PORT NAME					
PART NO.	SLCV	BOOM PLATE A	CONTROL VALVE	VALVE GP	CONNECTOR	BOOM PLATE C
309-0247	A				STICK CYL(ROD)	
309-0248	DR					Tc
309-0249		Ta				Tc
309-0250	PL					Pc
309-0251		Pa				Pc
302-4124		Ta		T2		
233-2096		Pa	Pa5			

J146823 HE01

STICK LINES GROUP (307-6003 N/S) -CHECK VALVE-PART 1 OF 2
PART OF 307-8503-Page 2, 307-8504-Page 4, 5, 330-3619-Page 3, 330-3620-Page 6, 7
AN ATTACHMENT

HYDRAULIC SYSTEM

NOTE	No.	PART NO.	QTY	PART NAME	NOTE	No.	PART NO.	QTY	PART NAME
	1	7K−1181	3	STRAP					
	2	4J−5477	3	SEAL					
	3	233−2096	1	HOSE AS					
	4	7X−2444	1	TEE					
	5	6V−9842	1	TEE					
	6	302−4124	1	HOSE AS					

J146823 HE01

STICK LINES GROUP (307-6003 N/S) -CHECK VALVE-PART 1 OF 2
PART OF 307-8503-Page 2, 307-8504-Page 4, 5, 330-3619-Page 3, 330-3620-Page 6, 7
AN ATTACHMENT

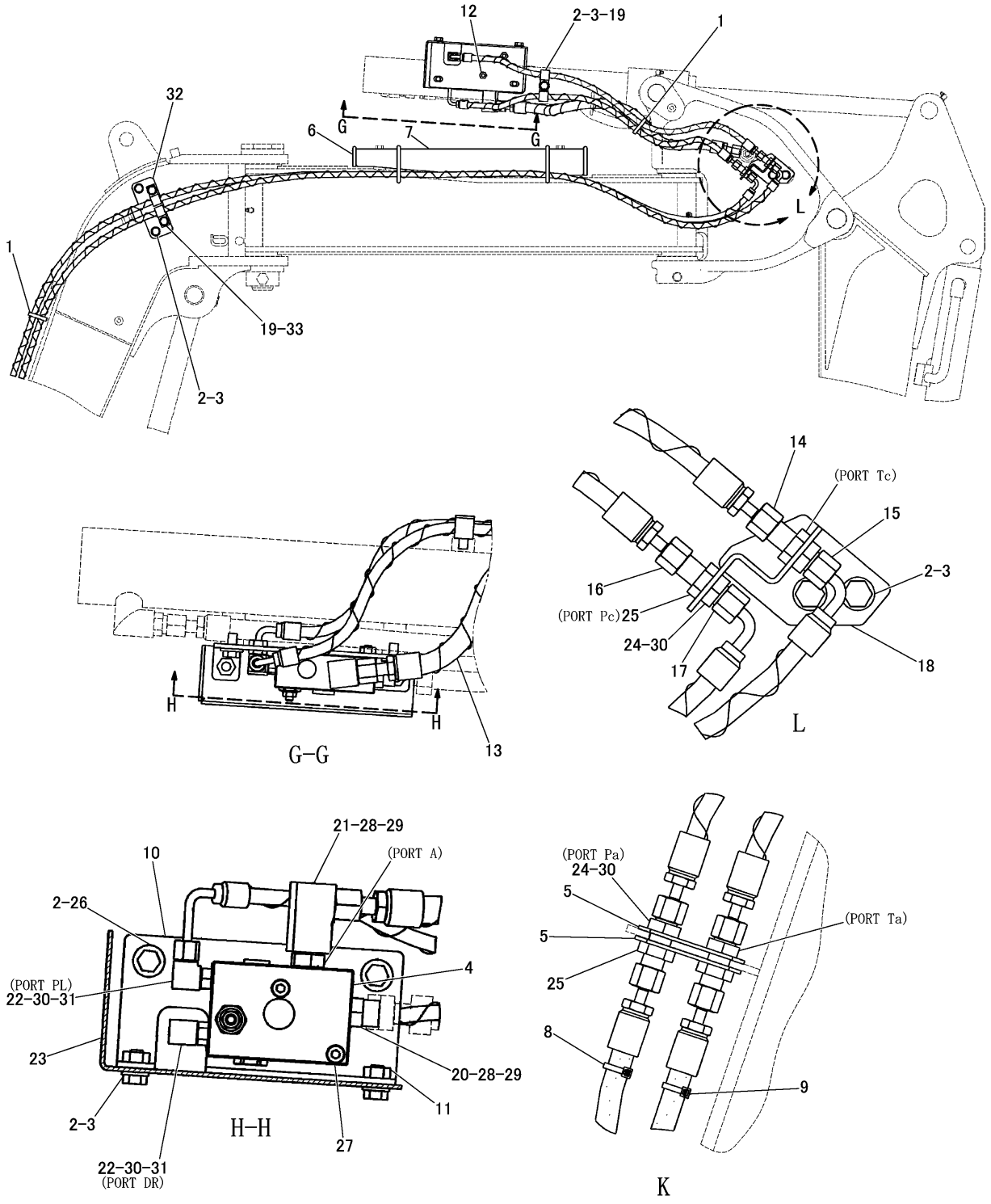

STICK LINES GROUP (307-6003 N/S) -CHECK VALVE-PART 2 OF 2
PART OF 307-8503-Page 2, 307-8504-Page 4, 5, 330-3619-Page 3, 330-3620-Page 6, 7
AN ATTACHMENT

HYDRAULIC SYSTEM

NOTE	No.	PART NO.	QTY	PART NAME	NOTE	No.	PART NO.	QTY	PART NAME
	1	7K-1181	2	STRAP					
	2	8T-4137	11	BOLT(M10×1.5)					
	3	8T-4121	9	WASHER					
Y	4	237-4406	1	VALVE GROUP					
	5	239-1511	2	PLATE					
	6	241-4480	1	COVER AS					
	7	241-3076	1	COVER					
	8	279-4736	1	STRAP(WH)					
	9	279-4734	1	STRAP(BR)					
	10	308-9565	1	BRACKET AS					
	11	8T-3490	2	NUT(M10×1.5)(WELD)					
	12	8T-3612	2	NUT(M8×1.25)(WELD)					
	13	309-0247	1	HOSE AS					
	14	309-0248	1	HOSE AS					
	15	309-0249	1	HOSE AS					
	16	309-0250	1	HOSE AS					
	17	309-0251	1	HOSE AS					
	18	314-6535	1	BRACKET AS					
	19	067-2551	4	CLIP					
	20	6V-8639	1	CONNECTOR					
	21	8T-1686	1	ELBOW					
	22	3J-7354	2	SEAL					
	23	308-9567	1	BRACKET					
	24	6V-8993	4	UNION					
	25	2P-1279	4	LOCKNUT(9/16-18)					
	26	7X-7729	2	WASHER					
	27	8T-0338	2	BOLT(M8×1.25)					
	28	3K-0360	2	SEAL					
	29	6V-8398	2	SEAL					
	30	4J-5477	10	SEAL					
	31	6V-8628	2	ELBOW					
	32	309-0245	1	BRACKET AS					
	33	8T-3490	2	NUT(M10×1.5)(WELD)					

Y-SEPARATE ILLUSTRATION

J146824 HE01

STICK LINES GROUP (307-6003 N/S) -CHECK VALVE-PART 2 OF 2

PART OF 307-8503-Page 2, 307-8504-Page 4, 5, 330-3619-Page 3, 330-3620-Page 6, 7
REFERENCE:237-4406-Page 418
AN ATTACHMENT

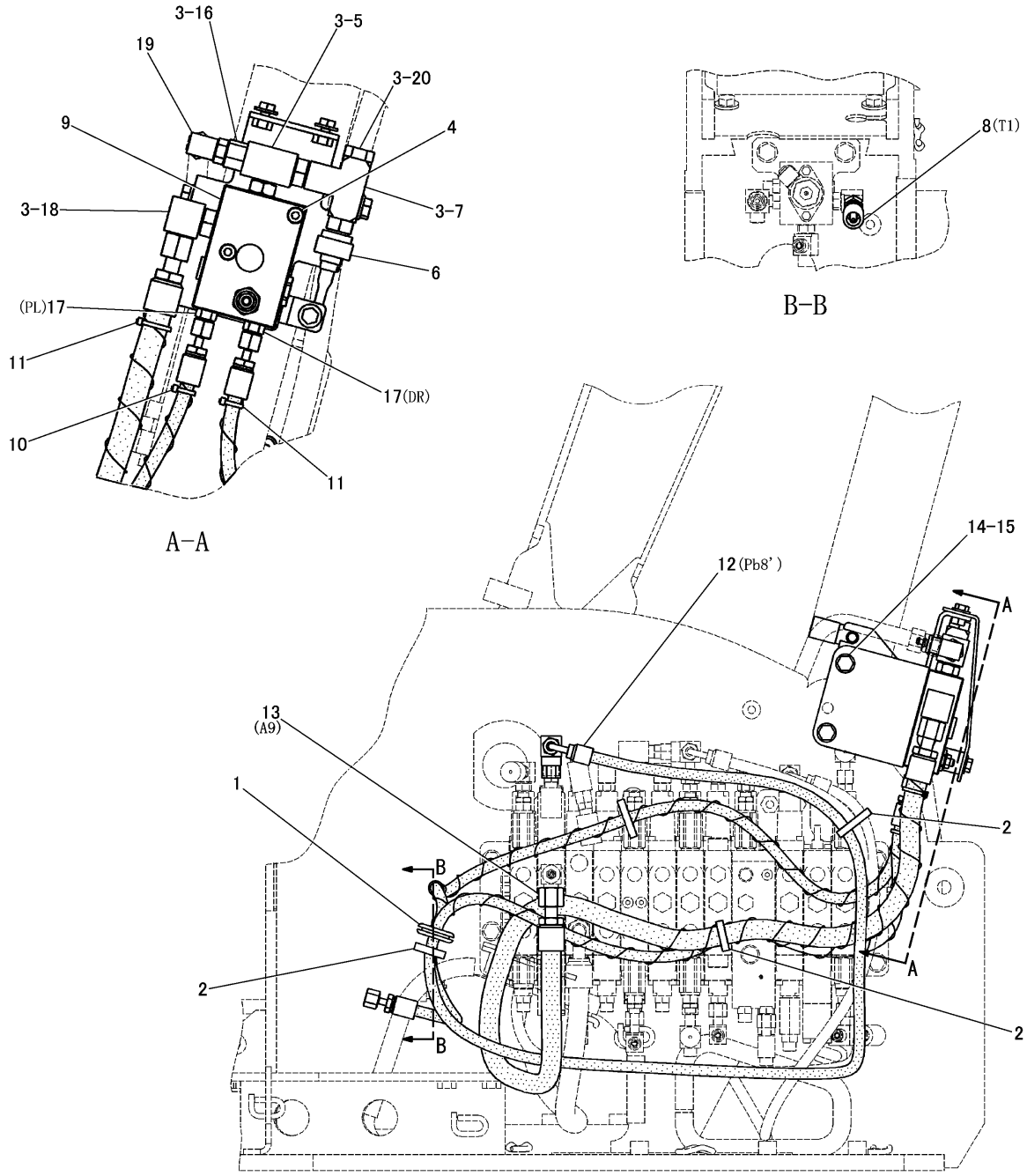

HOSE END CONNECTION TABLE				
HOSE	CONNECTION PORT NAME			
PART NO.	BLCV	CONTROL VALVE	BOOM CYL	VALVE GP
312-3731		A9	ROD	
234-0699	DR			T1
312-3729	PL	Pb8'		

J146821 HE01

BOOM LINES GROUP (307-6002 N/S) -CHECK VALVE-PART 1 OF 2
PART OF 307-8503-Page 2, 307-8504-Page 4, 5, 330-3619-Page 3, 330-3620-Page 6, 7
AN ATTACHMENT

HYDRAULIC SYSTEM

NOTE	No.	PART NO.	QTY	PART NAME	NOTE	No.	PART NO.	QTY	PART NAME
	1	2D−0388	1	GROMMET					
	2	7K−1181	3	STRAP					
	3	3K−0360	5	SEAL					
	4	8T−0338	2	BOLT(M8×1.25)					
	5	168−3332	1	TEE					
	6	217−2447	1	SENSOR AS					
	7	231−6724	1	CONNECTOR					
	8	234−0699	1	HOSE AS					
Y	9	237−4406	1	PILOT VALVE GROUP					
	10	279−4735	1	STRAP(OR)					
	11	279−4737	2	STRAP(GN)					
	12	312−3729	1	HOSE AS					
	13	312−3731	1	HOSE AS					
	14	8T−4121	2	WASHER					
	15	8T−4137	2	BOLT(M10×1.5)					
	16	5P−6944	1	ADAPTER					
	17	6V−8647	2	CONNECTOR					
		3J−7354	2	SEAL					
		4J−5477	2	SEAL					
	18	6V−8625	1	ELBOW					
		6V−8398	1	SEAL					
	19	6V−8724	1	ELBOW					
		3J−1907	1	SEAL					
		6V−8397	1	SEAL					
	20	9S−4185	1	PLUG					

Y-SEPARATE ILLUSTRATION

J146821 HE01

BOOM LINES GROUP (307-6002 N/S) -CHECK VALVE-PART 1 OF 2

PART OF 307-8503-Page 2, 307-8504-Page 4, 5, 330-3619-Page 3, 330-3620-Page 6, 7
REFERENCE:237-4406-Page 418
AN ATTACHMENT

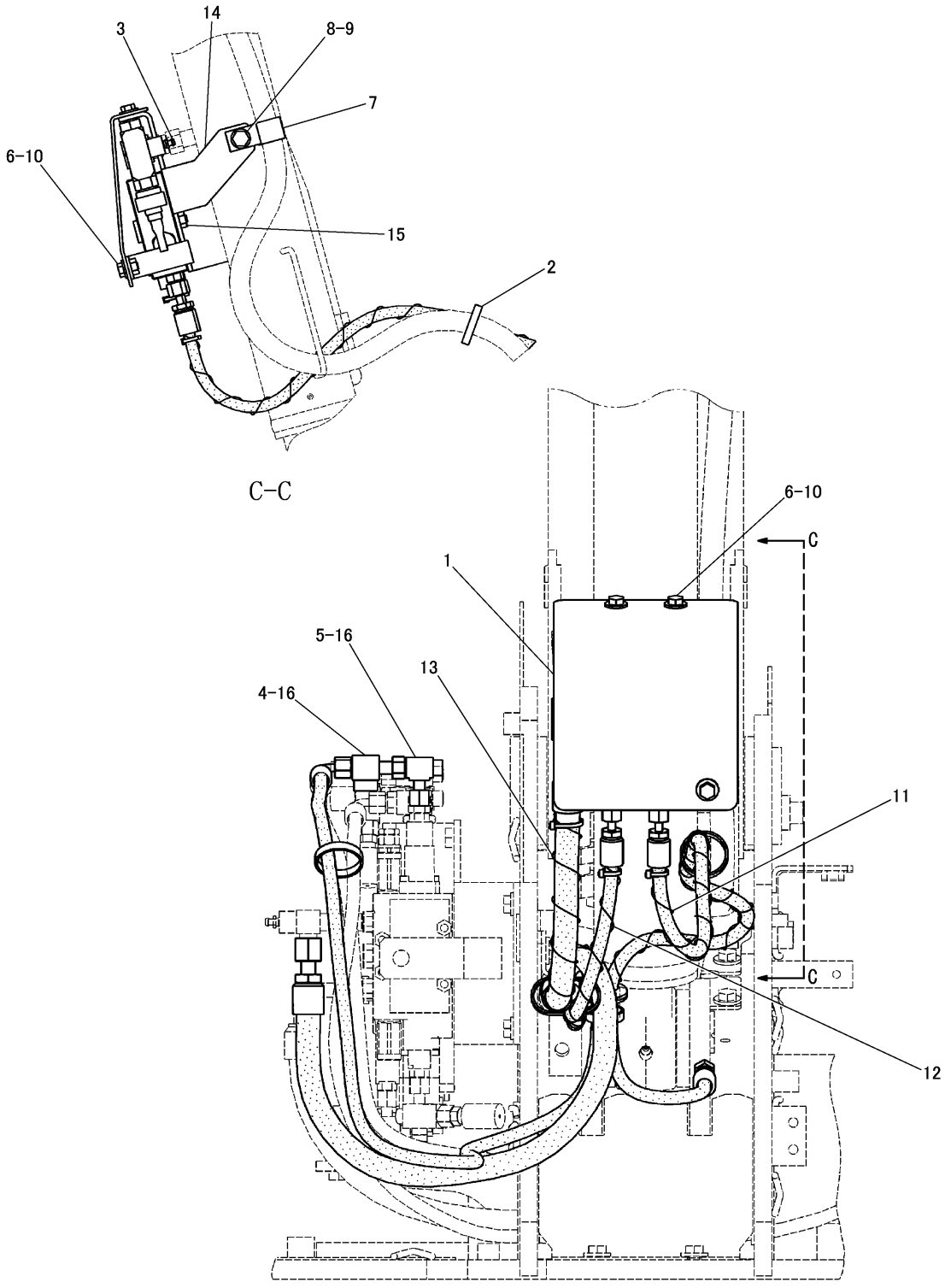

BOOM LINES GROUP (307-6002 N/S) -CHECK VALVE-PART 2 OF 2
PART OF 307-8503-Page 2, 307-8504-Page 4, 5, 330-3619-Page 3, 330-3620-Page 6, 7
AN ATTACHMENT

HYDRAULIC SYSTEM

NOTE	No.	PART NO.	QTY	PART NAME	NOTE	No.	PART NO.	QTY	PART NAME
	1	316-2181	1	COVER					
	2	7K-1181	1	STRAP					
	3	9F-2167	1	SCREW(3/8-24)					
	4	7X-2444	1	TEE					
	5	6V-9842	1	TEE					
	6	5P-4116	3	WASHER					
	7	6D-4636	1	CLIP					
	8	8T-4121	1	WASHER					
	9	8T-4137	1	BOLT(M10×1.5)					
	10	8T-4200	3	BOLT(M8×1.25)					
E	11	149-7370		SLEEVE---78cm					
E	12	149-7370		SLEEVE---70cm					
E	13	149-7372		SLEEVE---45cm					
	14	316-2178	1	BRACKET AS					
	15	8T-3612	5	NUT(M8×1.25)(WELD)					
	16	4J-5477	3	SEAL					

E-ORDER BY THE cm

J146822 HE01

BOOM LINES GROUP (307-6002 N/S) -CHECK VALVE-PART 2 OF 2
PART OF 307-8503-Page 2,307-8504-Page 4,5,330-3619-Page 3,330-3620-Page 6,7
AN ATTACHMENT

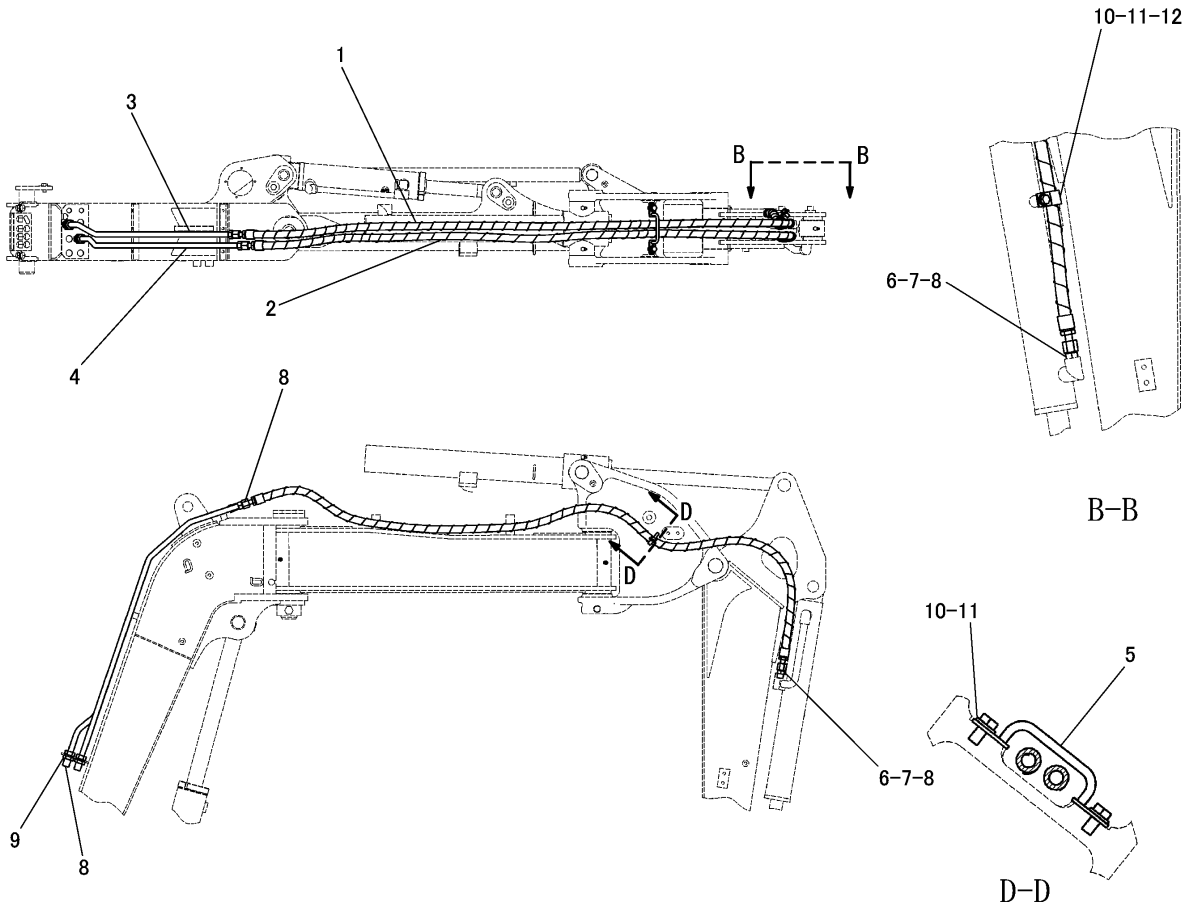

NOTE	No.	PART NO.	QTY	PART NAME	NOTE	No.	PART NO.	QTY	PART NAME
	1	241-3065	1	HOSE AS					
	2	241-3066	1	HOSE AS					
	3	308-3157	1	TUBE AS					
	4	308-3158	1	TUBE AS					
	5	312-4506	1	GUIDE AS					
	6	3K-0360	2	SEAL					
	7	6V-8639	2	CONNECTOR					
	8	6V-8398	6	SEAL					
	9	6V-9169	2	NUT(13/16-16)					
	10	8T-4121	3	WASHER					
	11	8T-4137	3	BOLT(M10×1.5)					
	12	149-7738	1	CLIP					

J146856 HE02

BUCKET LINES GROUP (295-9338 N/S)
PART OF 296-4439-Page 432

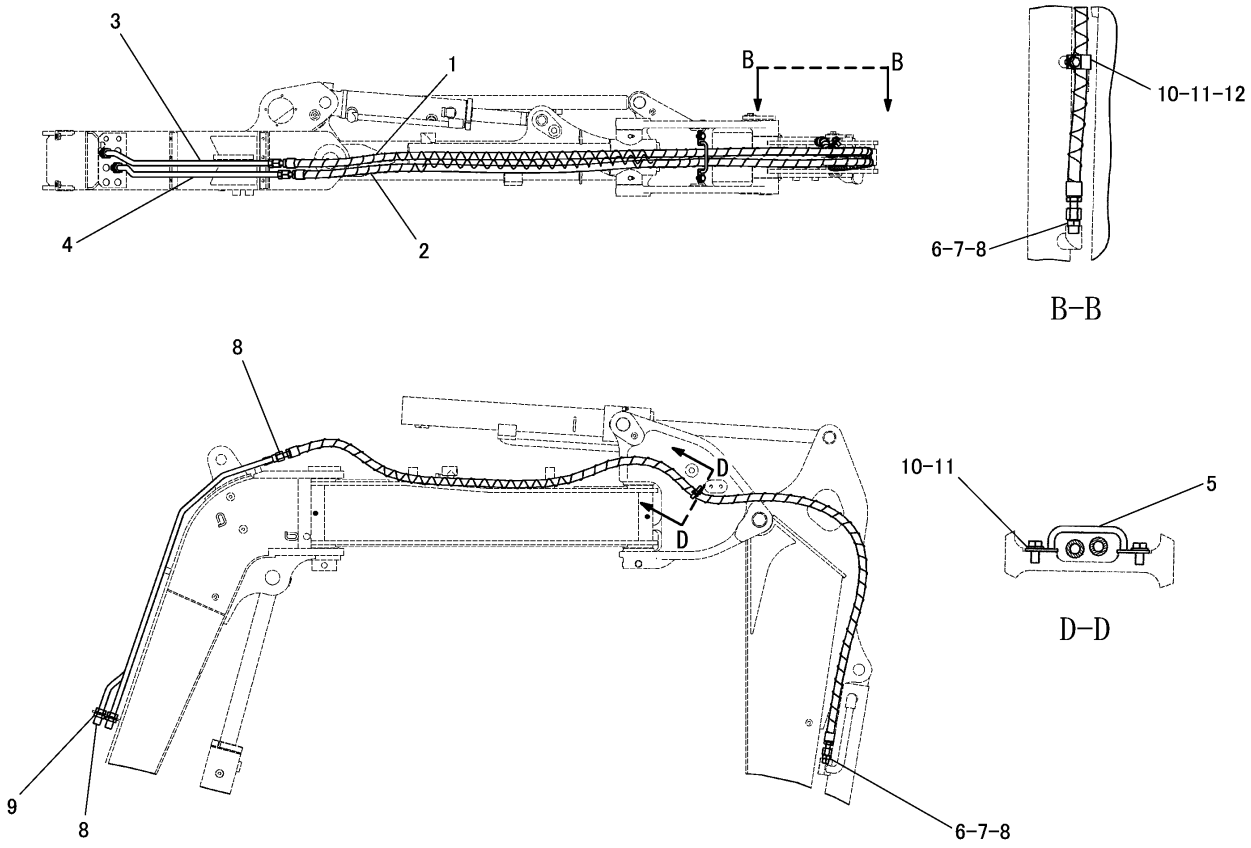

NOTE	No.	PART NO.	QTY	PART NAME	NOTE	No.	PART NO.	QTY	PART NAME
	1	241-3067	1	HOSE AS					
	2	241-3068	1	HOSE AS					
	3	308-3157	1	TUBE AS					
	4	308-3158	1	TUBE AS					
	5	312-4506	1	GUIDE AS					
	6	3K-0360	2	SEAL					
	7	6V-8639	2	CONNECTOR					
	8	6V-8398	6	SEAL					
	9	6V-9169	2	NUT(13/16-16)					
	10	8T-4121	3	WASHER					
	11	8T-4137	3	BOLT(M10×1.5)					
	12	149-7738	1	CLIP					

J146887 HE02

BUCKET LINES GROUP (295-9340 N/S) -LONG STICK
PART OF 296-4440-Page 432
AN ATTACHMENT

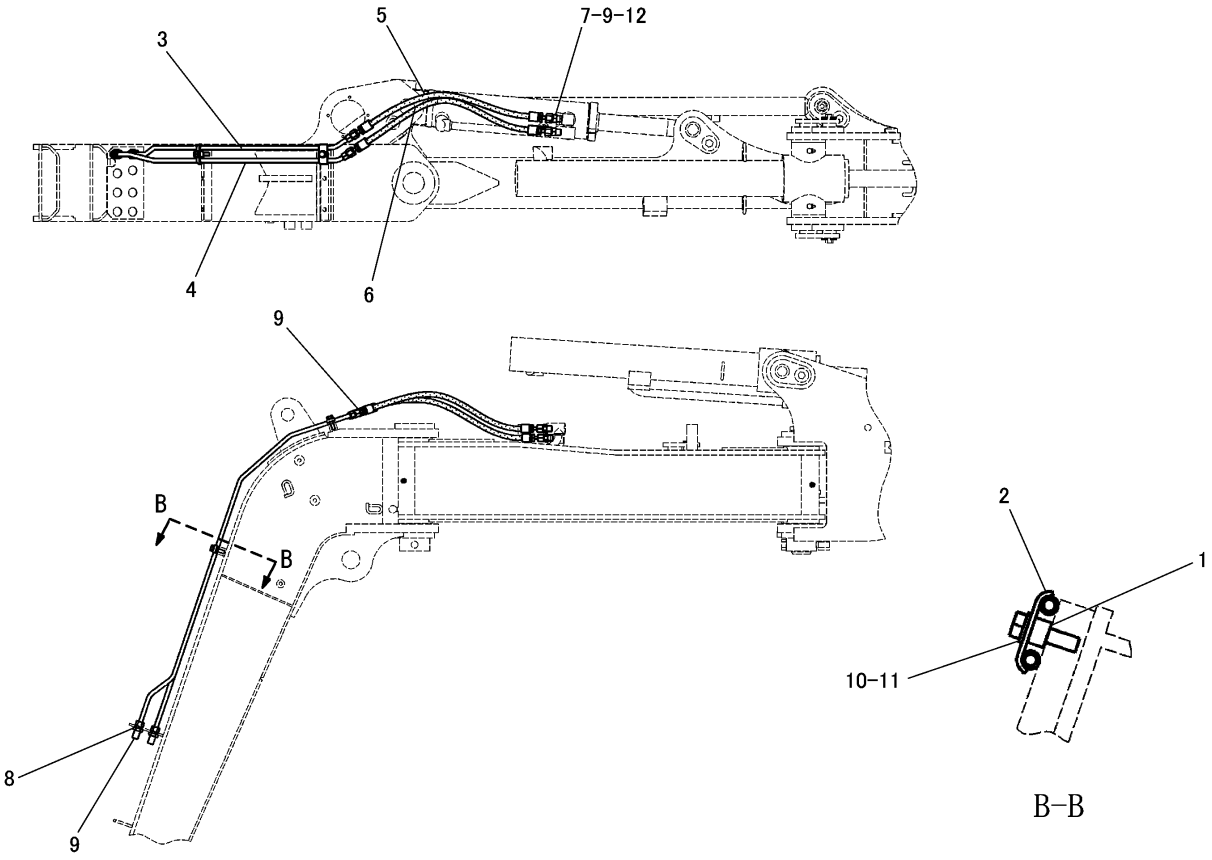

NOTE	No.	PART NO.	QTY	PART NAME	NOTE	No.	PART NO.	QTY	PART NAME
	1	233-2836	2	SPACER					
	2	233-2839	2	CLIP					
	3	308-3155	1	TUBE AS					
	4	308-3156	1	TUBE AS					
	5	308-3579	1	HOSE AS					
	6	308-3580	1	HOSE AS					
	7	6V-8641	2	CONNECTOR					
	8	2P-1279	2	LOCKNUT(9/16-18)					
	9	4J-5477	6	SEAL					
	10	8T-4224	2	WASHER					
	11	8T-7547	2	BOLT(M8×1.25)					
	12	3J-1907	2	SEAL					

J146542 HE01

CYLINDER LINES GROUP (295-9337 N/S) -OFFSET
PART OF 296-1809-Page 431

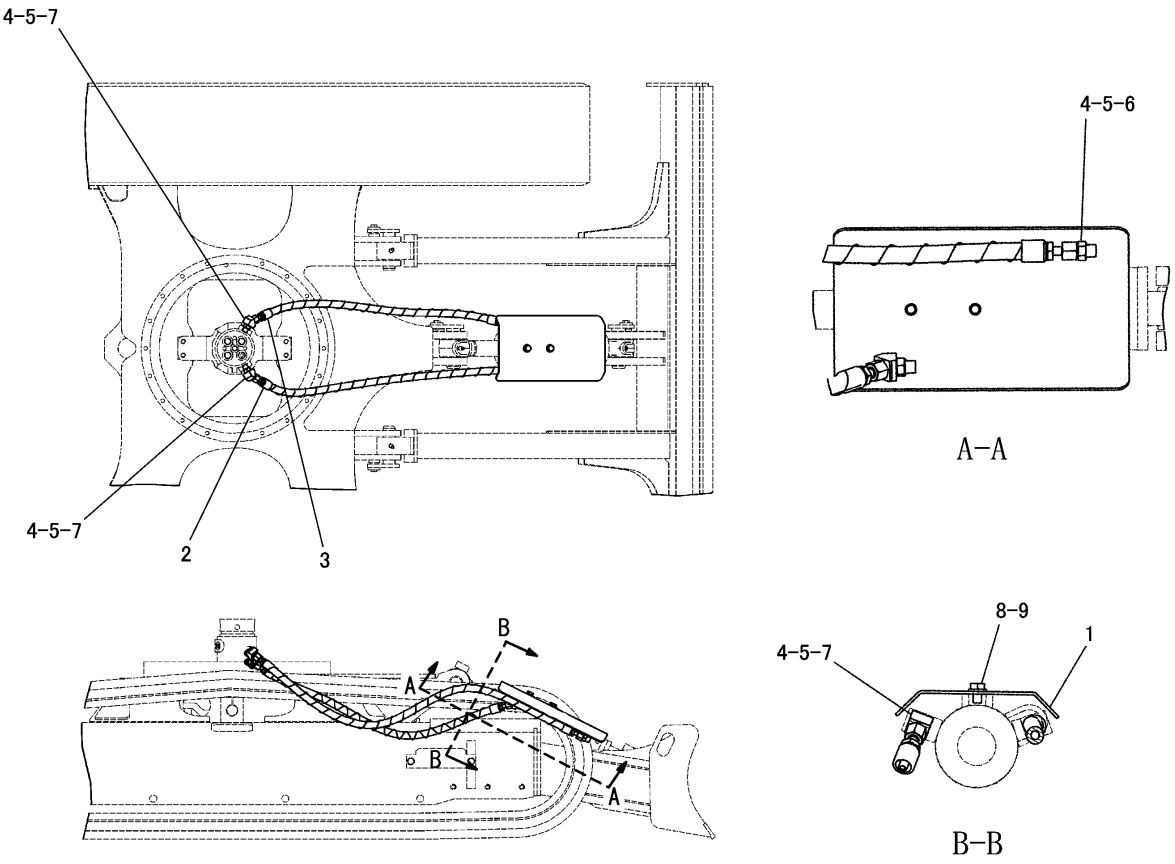

NOTE	No.	PART NO.	QTY	PART NAME	NOTE	No.	PART NO.	QTY	PART NAME
	1	185-4232	1	COVER					
	2	296-7894	1	HOSE AS					
	3	296-7895	1	HOSE AS					
	4	3J-1907	4	SEAL					
	5	6V-8397	4	SEAL					
	6	6V-8636	1	CONNECTOR					
	7	6V-9001	3	ELBOW					
	8	8T-4121	2	WASHER					
	9	8T-4191	2	BOLT(M10×1.5)					

J146537 HE01

CYLINDER LINES GROUP (295-9328 N/S) -BLADE
PART OF 295-3961-Page 433

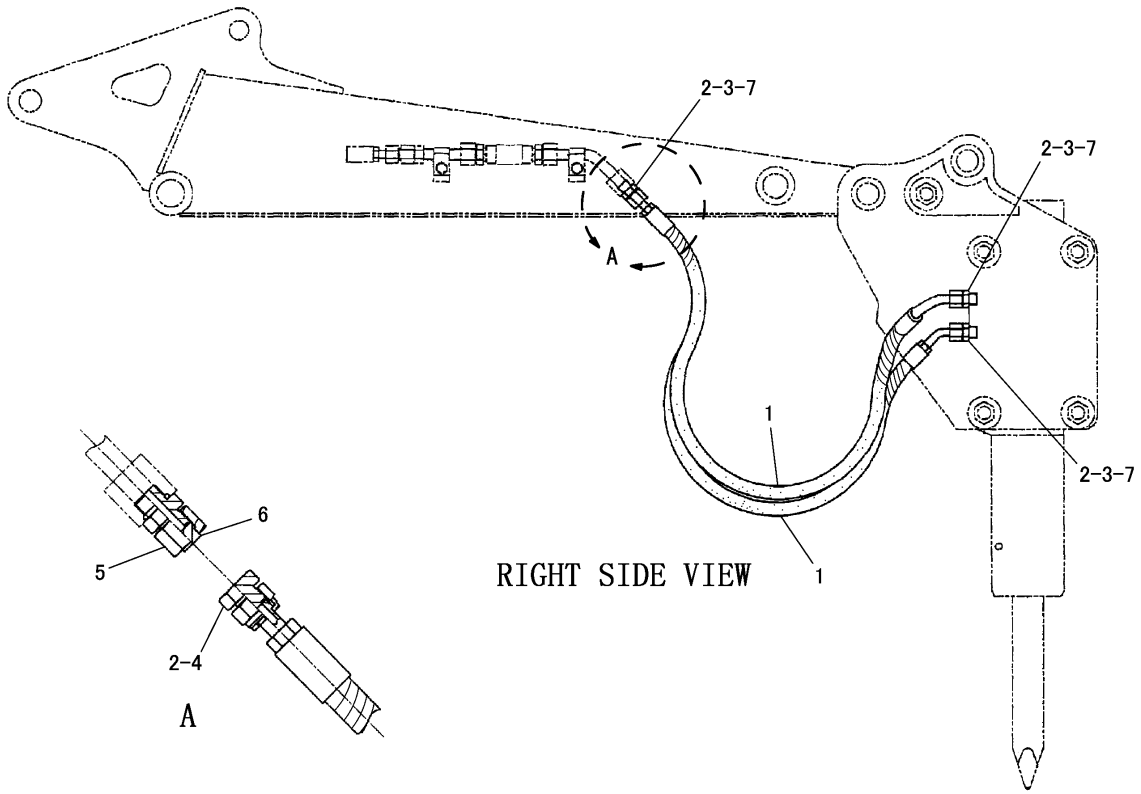

NOTE	No.	PART NO.	QTY	PART NAME	NOTE	No.	PART NO.	QTY	PART NAME
	1	165-1134	2	HOSE AS					
	2	6V-8398	6	SEAL					
	3	165-1094	4	CONNECTOR					
J	4	6V-9509	2	PLUG					
J	5	6V-8554	2	NUT(13/16-16)					
J	6	6V-9356	2	PLUG					
	7	095-1585	4	SEAL					

J-SET IT IN TOOL BOX

J138421 E02

JUMPER LINES GROUP (165-1015 N/S)
PART OF 277-3432-Page 435, 278-4557-Page 435
AN ATTACHMENT

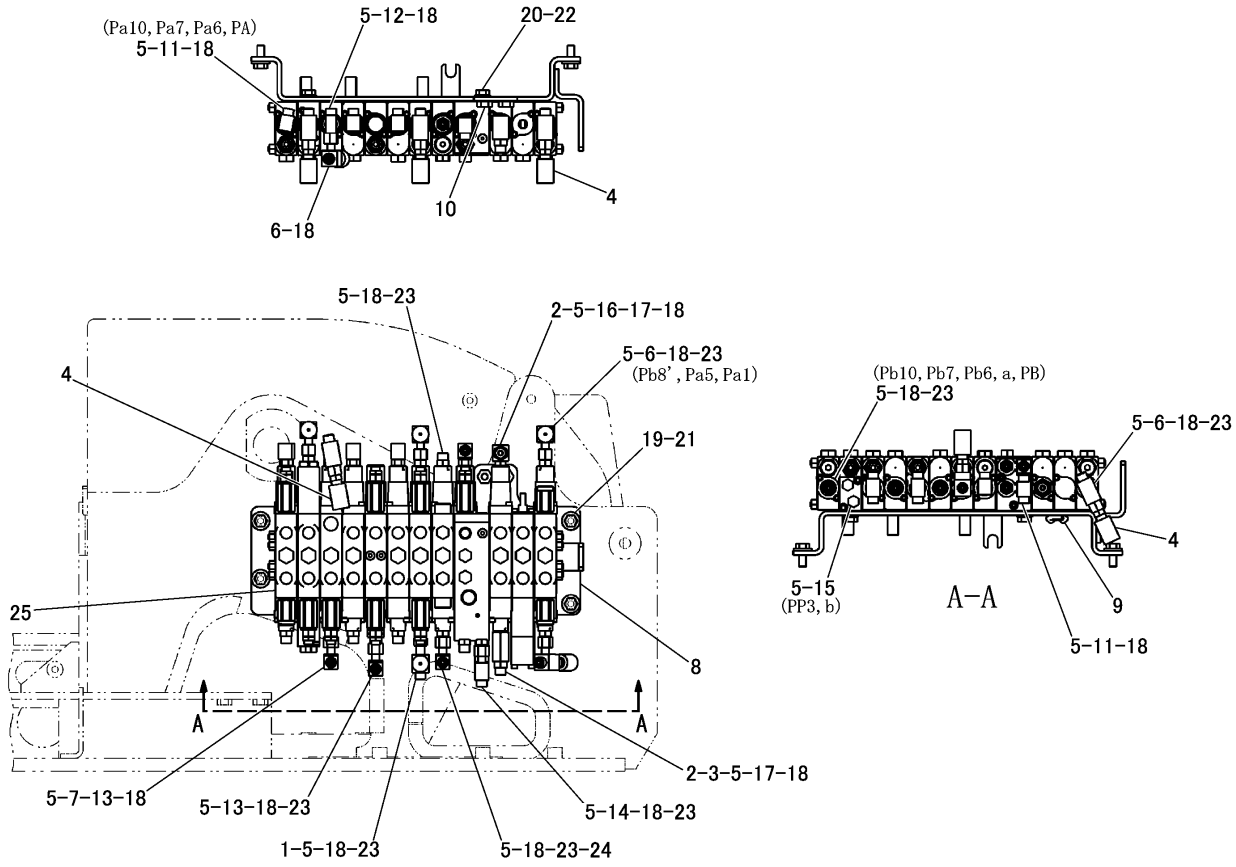

NOTE	No.	PART NO.	QTY	PART NAME	NOTE	No.	PART NO.	QTY	PART NAME
	1	7X-2444	1	TEE		18	4J-5477	37	SEAL
	2	201-5348	2	CONNECTOR		19	7X-7729	4	WASHER
	3	246-9947	1	ADAPTER		20	8T-4121	4	WASHER
	4	286-2305	6	SWITCH AS		21	8T-4136	4	BOLT(M10×1.5)
		3J-1907	1	SEAL		22	8T-4137	4	BOLT(M10×1.5)
		108-7516	1	FITTING		23	6V-8647	14	CONNECTOR
		286-2318	1	SWITCH AS		24	6V-9849	1	ELBOW
	5	3J-7354	25	SEAL	Y	25	295-9368	1	VALVE GROUP
	6	298-4919	5	FITTING					
	7	303-4110	1	CONNECTOR					
	8	316-6144	1	SUPPORT AS					
	9	7T-1099	1	LINK					
	10	8T-3490	2	NUT(M10×1.5)(WELD)					
	11	6V-8628	5	ELBOW					
	12	6V-8773	1	TEE					
	13	6V-9842	2	TEE					
	14	6V-9835	1	TEE					
	15	9S-4182	2	PLUG					
	16	135-9941	1	ADAPTER					
	17	3J-1907	2	SEAL					

Y-SEPARATE ILLUSTRATION

J148678 HE03

VALVE AND MOUNTING GROUP (295-9330 N/S)

PART OF 295-9329-Page 304
REFERENCE:295-9368-Page 380

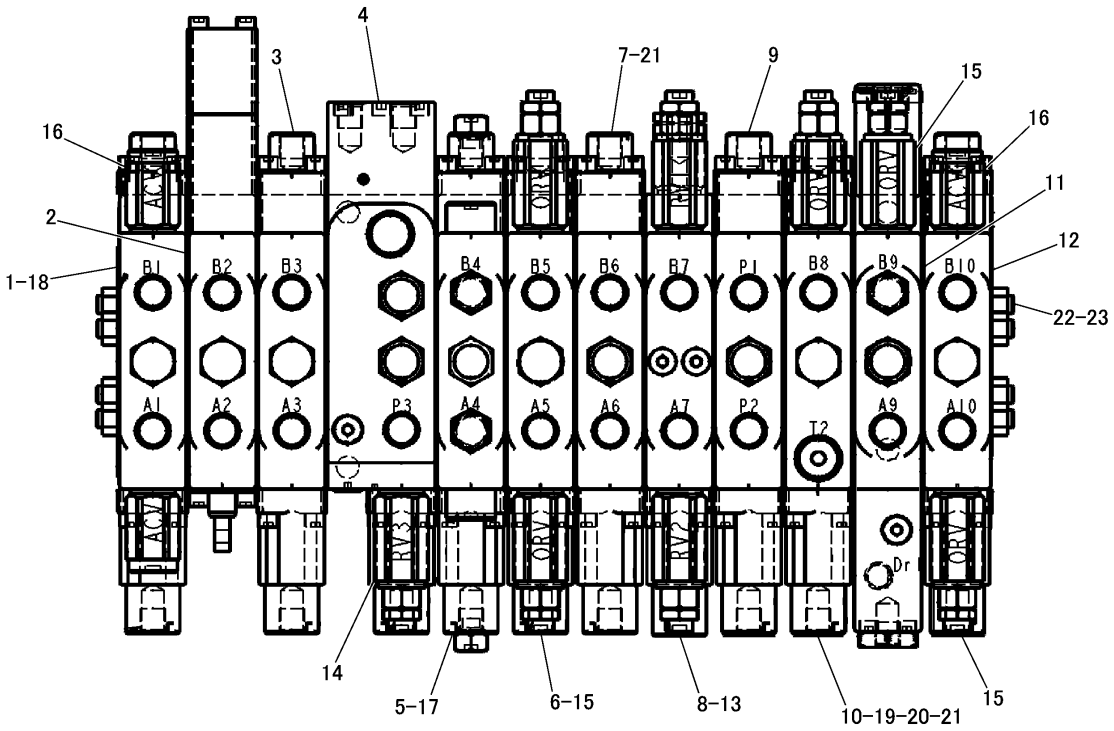

NOTE	No.	PART NO.	QTY	PART NAME	NOTE	No.	PART NO.	QTY	PART NAME
Y	1	239-7703	1	BLOCK AS		19	095-1521	11	SEAL
Y	2	216-0397	1	BLOCK AS		20	095-1576	1	SEAL
Y	3	315-4335	1	BLOCK AS		21	095-1578	2	SEAL
Y	4	315-4336	1	BLOCK AS		22	202-8813	4	BOLT
Y	5	315-4337	1	BLOCK AS		23	139-6220	8	NUT
Y	6	239-7704	1	BLOCK AS					
Y	7	202-8804	1	BLOCK AS					
Y	8	202-8805	1	BLOCK AS					
Y	9	315-4338	1	BLOCK AS					
Y	10	315-4339	1	BLOCK AS					
Y	11	315-4340	1	BLOCK AS					
Y	12	315-4341	1	BLOCK AS					
	13	202-8810	2	VALVE GROUP					
	14	315-4342	1	VALVE GROUP					
	15	202-8812	5	VALVE GROUP					
	16	139-6223	3	VALVE GROUP					
		095-1582	1	SEAL					
	17	139-6222	2	VALVE GROUP					
		095-1582	1	SEAL					
	18	139-5077	11	SEAL					

Y-SEPARATE ILLUSTRATION

J149067 X02

295-9368 VALVE GROUP -BANK-12

PART OF 295-9330-Page 379

REFERENCE:239-7703-Page 396 216-0397-Page 397 315-4335-Page 393 315-4336-Page 391 315-4337-Page 394 239-7704-Page 398 202-8804-Page 399 202-8805-Page 400 315-4338-Page 392 315-4339-Page 389 315-4340-Page 390 315-4341-Page 395

HYDRAULIC SYSTEM

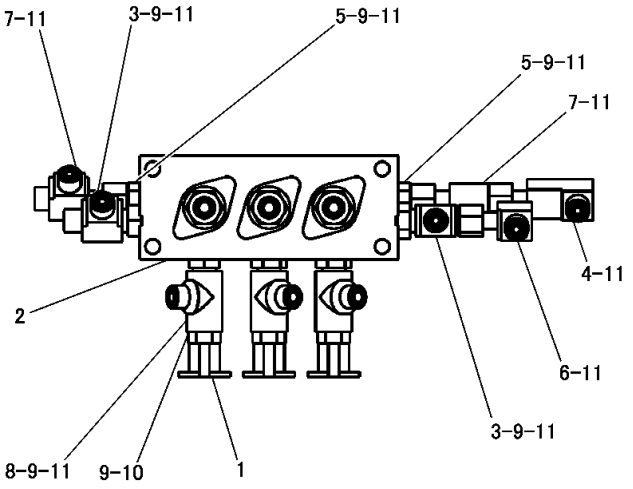

NOTE	No.	PART NO.	QTY	PART NAME
	1	6V-0852	3	CAP
Y	2	205-5527	1	VALVE GROUP
	3	205-7197	2	TEE
	4	288-0267	1	ELBOW
	5	6V-8641	2	CONNECTOR
	6	6V-9849	1	ELBOW
	7	6V-9835	2	TEE
	8	8C-3309	3	TEE
	9	3J-1907	10	SEAL
	10	6V-3965	3	NIPPLE AS
	11	4J-5477	13	SEAL

Y-SEPARATE ILLUSTRATION

J147383 HE03

298-7650 VALVE AND MOUNTING GROUP

PART OF 295-9335-Page 333, 307-6399-Page 347
REFERENCE:205-5527-Page 382

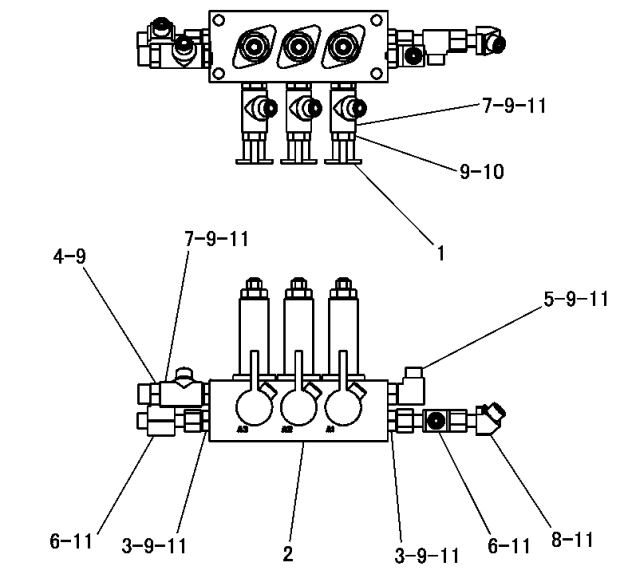

NOTE	No.	PART NO.	QTY	PART NAME
	1	6V-0852	3	CAP
Y	2	205-5527	1	VALVE GROUP
	3	6V-8641	2	CONNECTOR
	4	6V-8397	1	SEAL
		6V-8636	1	CONNECTOR
	5	6V-8627	1	ELBOW
	6	6V-9835	2	TEE
	7	8C-3309	4	TEE
	8	8C-8408	1	ELBOW
	9	3J-1907	11	SEAL
	10	6V-3965	3	NIPPLE AS
	11	4J-5477	12	SEAL

Y-SEPARATE ILLUSTRATION

J151333 HE01

328-1868 VALVE AND MOUNTING GROUP -AIR CONDITIONER

PART OF 326-6316-Page 337, 326-7177-Page 357
REFERENCE:205-5527-Page 382
APPLIES TO CAB AIR CONDITIONER SPECIFICATION MACHINE
AN ATTACHMENT

HYDRAULIC SYSTEM

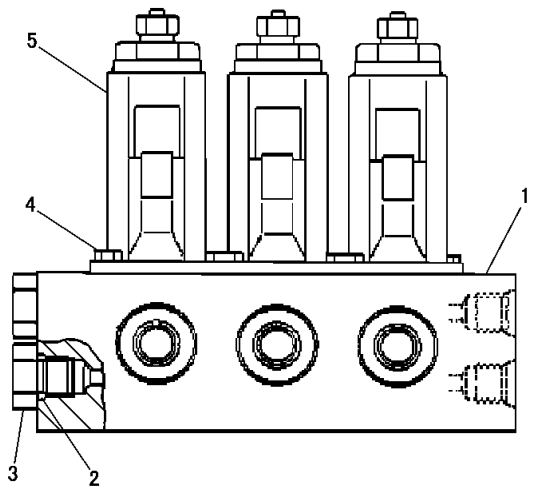

NOTE	No.	PART NO.	QTY	PART NAME
	1	169-1180	1	CASE
	2	3J-1907	2	SEAL
	3	110-5525	2	PLUG
	4	8T-0288	6	BOLT(M5×0.8)
Y	5	169-1181	3	VALVE GROUP

Y-SEPARATE ILLUSTRATION

J128869 X00

205-5527 VALVE GROUP -MANIFOLD AND REDUCING

PART OF 298-7650-Page 381, 328-1868-Page 381
REFERENCE:169-1181-Page 404

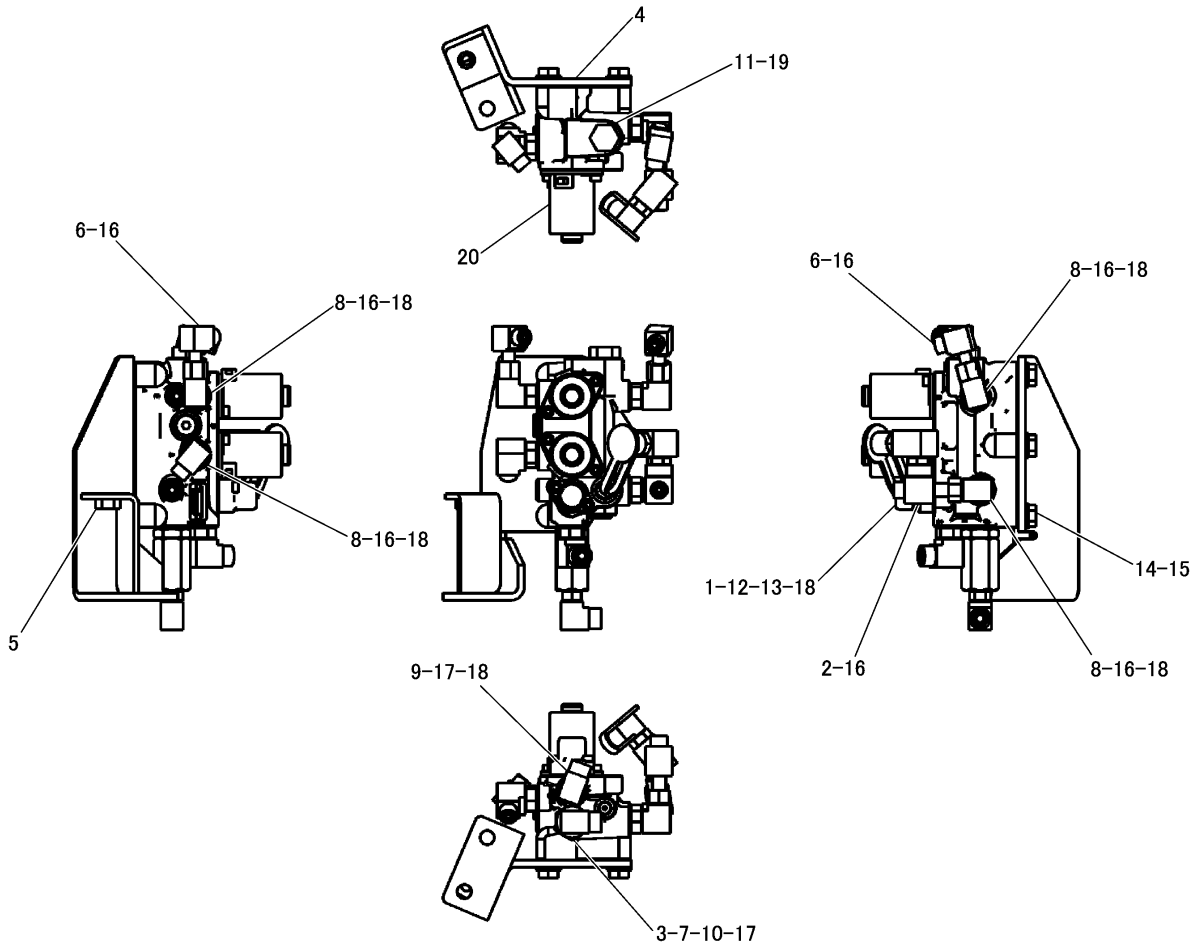

NOTE	No.	PART NO.	QTY	PART NAME	NOTE	No.	PART NO.	QTY	PART NAME
	1	6V-0852	1	CAP	Y	20	297-3003	1	VALVE GROUP
	2	7X-2444	1	TEE					
	3	217-2456	1	FILTER AS					
		3J-1907	1	SEAL					
	4	306-6672	1	BRACKET AS					
	5	8T-3490	1	NUT(M10×1.5)(WELD)					
	6	6V-9849	2	ELBOW					
	7	6V-9200	1	ELBOW					
	8	6V-8627	4	ELBOW					
	9	6V-8724	1	ELBOW					
	10	3J-7354	1	SEAL					
	11	9S-4185	1	PLUG					
	12	6V-0484	1	ADAPTER					
	13	6V-3965	1	NIPPLE AS					
	14	8T-4121	3	WASHER					
	15	8T-4137	3	BOLT(M10×1.5)					
	16	4J-5477	7	SEAL					
	17	6V-8397	2	SEAL					
	18	3J-1907	6	SEAL					
	19	3K-0360	1	SEAL					

Y-SEPARATE ILLUSTRATION

J146642 HE03

306-6669 VALVE AND MOUNTING GROUP -PILOT

PART OF 295-9336-Page 329
REFERENCE:297-3003-Page 401

HYDRAULIC SYSTEM

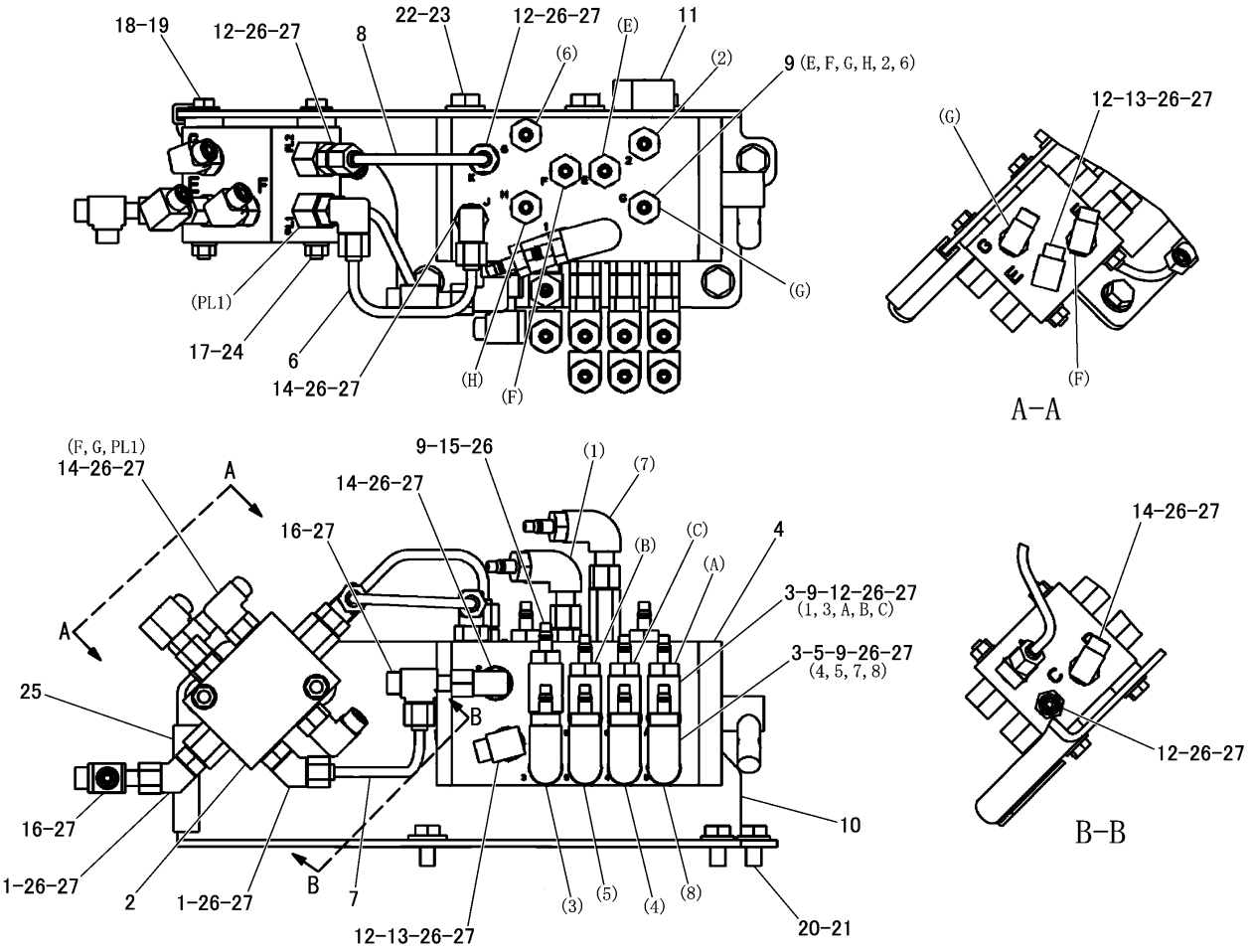

NOTE	No.	PART NO.	QTY	PART NAME	NOTE	No.	PART NO.	QTY	PART NAME
	1	8T-0164	2	ELBOW		21	8T-4137	3	BOLT(M10×1.5)
Y	2	205-3869	1	VALVE GROUP		22	8T-4192	3	BOLT(M12×1.75)
	3	213-3745	9	ELBOW		23	8T-4223	3	WASHER
Y	4	232-1416	1	PILOT VALVE GROUP		24	8T-4224	2	WASHER
	5	156-8845	4	CONNECTOR	D	25	8T-3426		CHANNEL---0.07m
	6	298-5780	1	TUBE AS		26	3J-1907	23	SEAL
	7	298-5781	1	TUBE AS		27	4J-5477	28	SEAL
	8	307-4126	1	TUBE AS					
	9	311-3072	16	CONNECTOR AS					
	10	314-9366	1	BRACKET AS					
	11	318-0118	1	FOAM					
	12	6V-8641	10	CONNECTOR					
	13	6V-9849	2	ELBOW					
	14	6V-8627	6	ELBOW					
	15	6V-0484	1	ADAPTER					
	16	6V-9835	2	TEE					
	17	5C-7261	2	NUT(M8×1.25)					
	18	5P-4116	2	WASHER					
	19	7X-2538	2	BOLT(M8×1.25)					
	20	8T-4121	3	WASHER					

D-ORDER BY THE m
Y-SEPARATE ILLUSTRATION

J149314 HE06

VALVE AND MOUNTING GROUP (295-9741 N/S) -4 WAYS

PART OF 307-6397-Page 305, 322-9521-Page 306
REFERENCE:205-3869-Page 402 232-1416-Page 403
AN ATTACHMENT

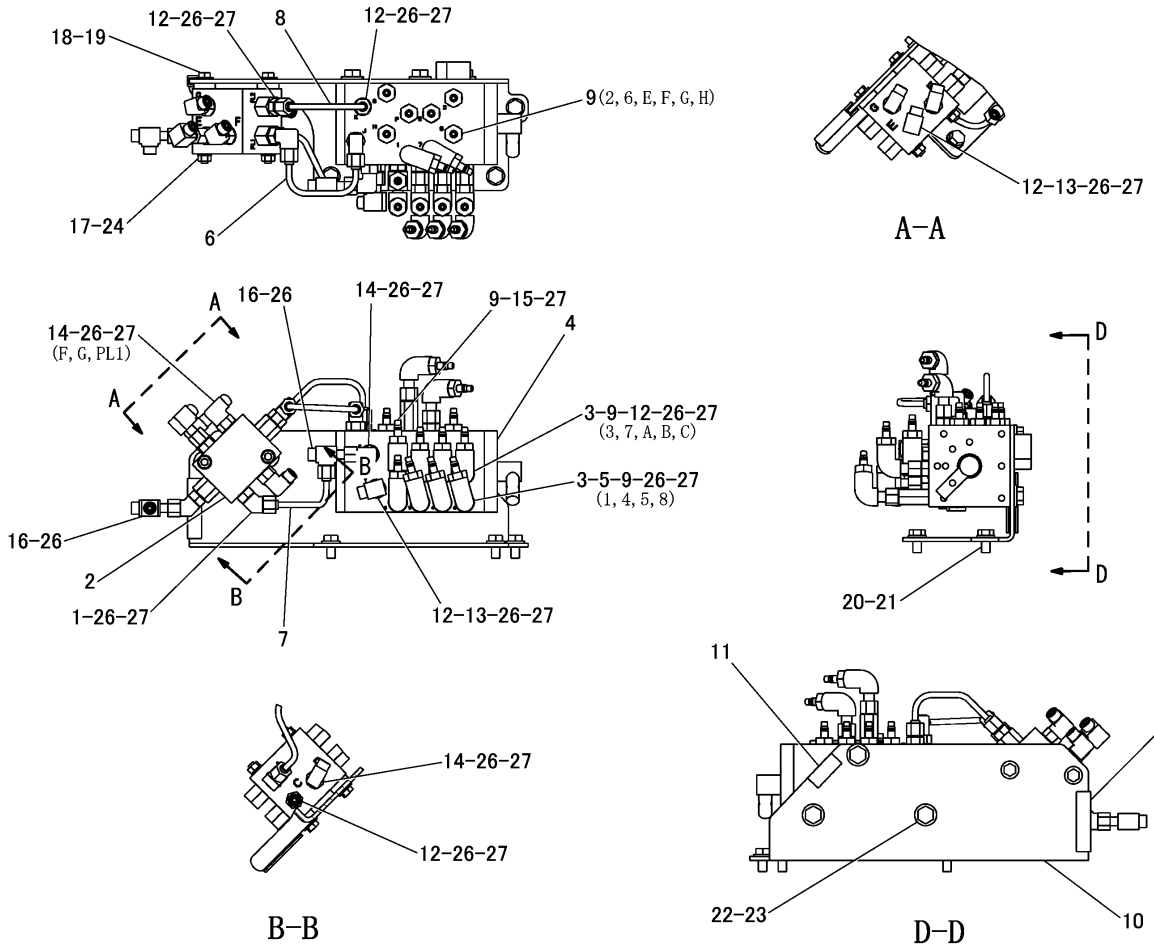

NOTE	No.	PART NO.	QTY	PART NAME	NOTE	No.	PART NO.	QTY	PART NAME
	1	8T－0164	2	ELBOW		21	8T－4137	3	BOLT(M10×1.5)
Y	2	205－3869	1	VALVE GROUP		22	8T－4192	3	BOLT(M12×1.75)
	3	213－3745	9	ELBOW		23	8T－4223	3	WASHER
Y	4	232－1416	1	VALVE GROUP		24	8T－4224	2	WASHER
	5	156－8845	4	CONNECTOR	D	25	8T－3426		CHANNEL---0.07m
	6	298－5780	1	TUBE AS		26	4J－5477	28	SEAL
	7	298－5781	1	TUBE AS		27	3J－1907	23	SEAL
	8	307－4126	1	TUBE AS					
	9	311－3072	16	CONNECTOR AS					
	10	314－9366	1	BRACKET AS					
	11	318－0118	1	FOAM					
	12	6V－8641	10	CONNECTOR					
	13	6V－9849	2	ELBOW					
	14	6V－8627	6	ELBOW					
	15	6V－0484	1	ADAPTER					
	16	6V－9835	2	TEE					
	17	5C－7261	2	NUT(M8×1.25)					
	18	5P－4116	2	WASHER					
	19	7X－2538	2	BOLT(M8×1.25)					
	20	8T－4121	3	WASHER					

D-ORDER BY THE m
Y-SEPARATE ILLUSTRATION

J151337 HE00

VALVE AND MOUNTING GROUP (328-1869 N/S) -AIR CONDITIONER-4 WAYS

PART OF 326-7176-Page 306, 331-7226-Page 307
REFERENCE:205-3869-Page 402 232-1416-Page 403
APPLIES TO CAB AIR CONDITIONER SPECIFICATION MACHINE
AN ATTACHMENT

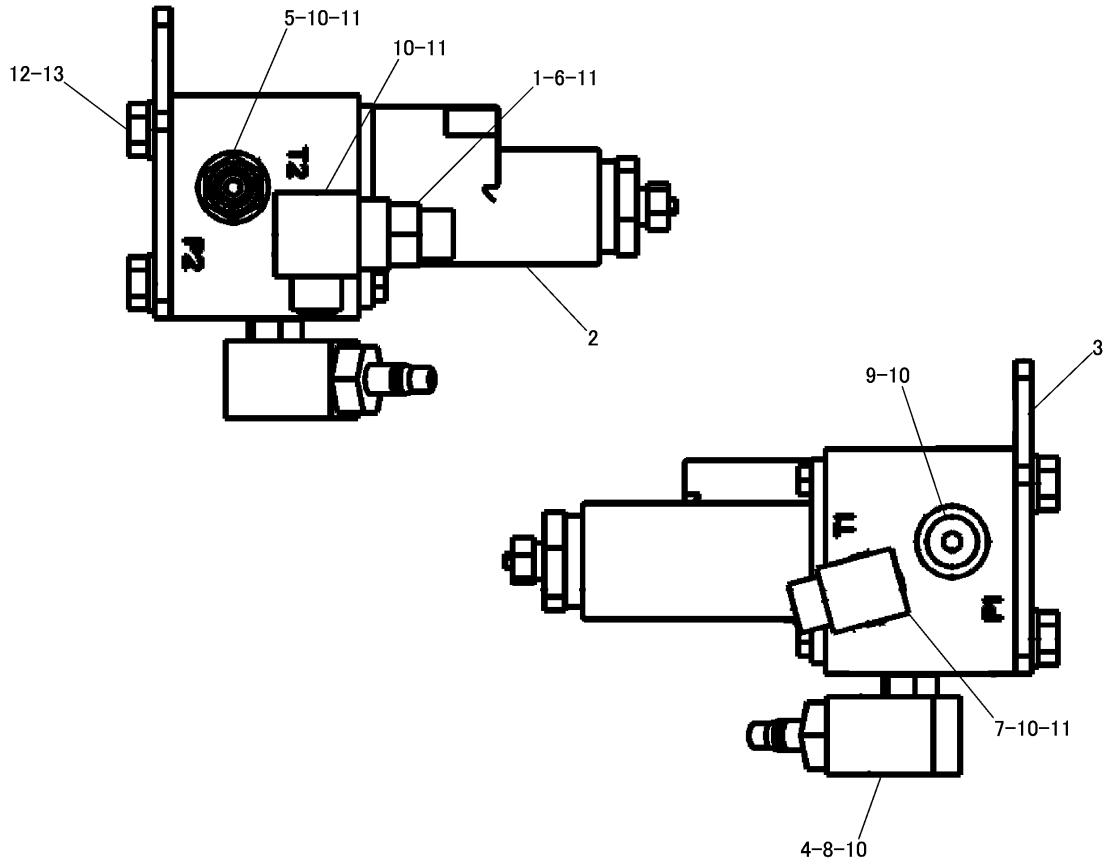

NOTE	No.	PART NO.	QTY	PART NAME	NOTE	No.	PART NO.	QTY	PART NAME
	1	3J-1907	1	SEAL					
Y	2	282-9317	1	VALVE GROUP					
	3	308-9564	1	PLATE					
	4	311-3072	1	CONNECTOR AS					
	5	6V-8647	1	CONNECTOR					
	6	6V-8641	1	CONNECTOR					
	7	6V-8628	1	ELBOW					
	8	135-9941	1	ADAPTER					
	9	9S-8002	1	PLUG					
	10	3J-7354	5	SEAL					
	11	4J-5477	4	SEAL					
	12	8T-4200	2	BOLT(M8×1.25)					
	13	8T-4224	2	WASHER					

Y-SEPARATE ILLUSTRATION

J147490 HE00

311-8012 VALVE AND MOUNTING GROUP -SHOVEL CRANE
PART OF 307-6004-Page 343
REFERENCE:282-9317-Page 388
AN ATTACHMENT

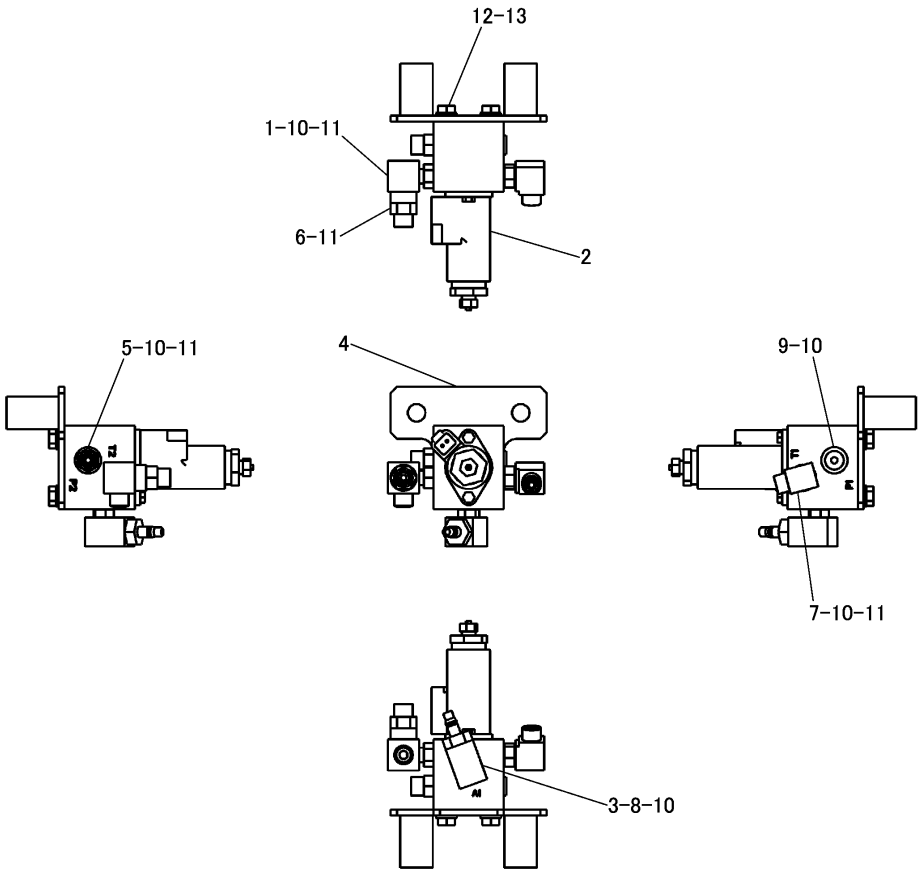

NOTE	No.	PART NO.	QTY	PART NAME	NOTE	No.	PART NO.	QTY	PART NAME
	1	8Y-7452	1	TEE					
Y	2	282-9317	1	SOLENOID VALVE GROUP					
	3	311-3072	1	CONNECTOR AS					
	4	323-6465	1	PLATE AS					
	5	6V-8647	1	CONNECTOR					
	6	6V-8641	1	CONNECTOR					
		3J-1907	1	SEAL					
	7	6V-8628	1	ELBOW					
	8	135-9941	1	ADAPTER					
	9	9S-8002	1	PLUG					
	10	3J-7354	5	SEAL					
	11	4J-5477	4	SEAL					
	12	8T-4200	2	BOLT(M8×1.25)					
	13	8T-4224	2	WASHER					

Y-SEPARATE ILLUSTRATION

J151308 HE00

323-6464 VALVE AND MOUNTING GROUP -SHOVEL CRANE

PART OF 322-9478-Page 345, 322-9479-Page 353
REFERENCE:282-9317-Page 388
ALSO APPLIES TO CAB AIR CONDITIONER SPECIFICATION MACHINE
AN ATTACHMENT

HYDRAULIC SYSTEM

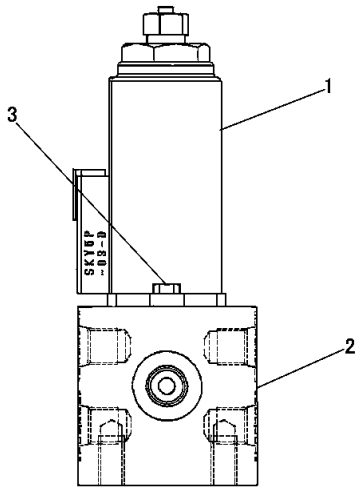

NOTE	No.	PART NO.	QTY	PART NAME
Y	1	169－1181	1	VALVE GROUP
	2	290－0230	1	BLOCK
	3	8T－0288	2	BOLT(M5×0.8)

Y-SEPARATE ILLUSTRATION

J137773 X00

282-9317 SOLENOID VALVE GROUP

PART OF 311-8012-Page 386, 323-6464-Page 387
REFERENCE:169-1181-Page 404
AN ATTACHMENT

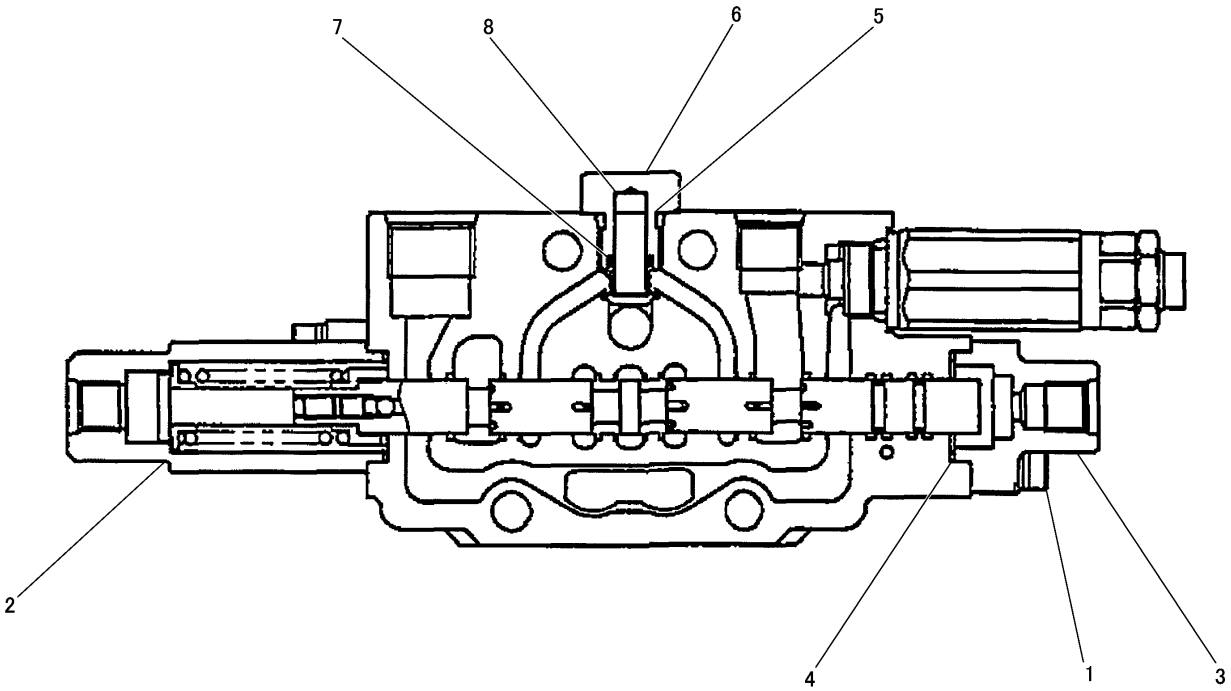

NOTE	No.	PART NO.	QTY	PART NAME	NOTE	No.	PART NO.	QTY	PART NAME
	1	183-9723	4	BOLT					
	2	183-9720	1	COVER					
	3	183-9719	1	COVER					
	4	139-5057	2	SEAL					
	5	095-1578	1	SEAL					
	6	139-5086	1	PLUG					
	7	139-5087	1	SPRING					
	8	139-5088	1	VALVE					

J149073 X00

BLOCK ASSEMBLY (315-4339 N/S) -BOOM
PART OF 295-9368-Page 380

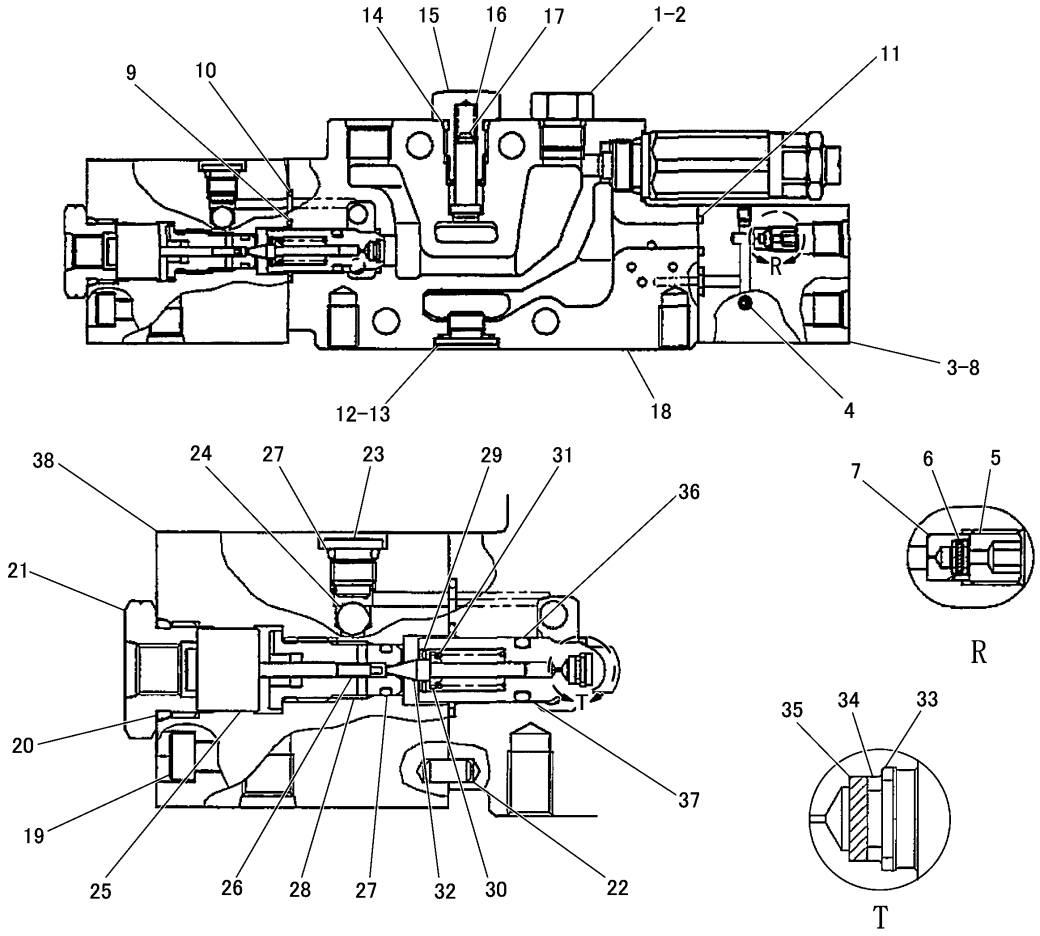

NOTE	No.	PART NO.	QTY	PART NAME	NOTE	No.	PART NO.	QTY	PART NAME
	1	3J-1907	1	SEAL		21	196-4282	1	BUSHING
	2	202-6272	1	PLUG		22	196-4281	2	PIN
	3	8T-9534	2	BOLT(M6×1)		23	196-4280	1	PLUG
	4	139-6208	2	PLUG		24	196-4279	1	BALL
	5	202-9243	1	PLUG		25	196-4278	1	PISTON
	6	196-5221	1	FILTER		26	196-4277	1	PISTON
	7	202-9242	1	CASE		27	139-7309	2	SEAL
	8	202-6262	1	BLOCK		28	196-4276	1	GUIDE
	9	196-4266	1	SEAL		29	196-4275	1	RING
	10	139-5075	2	SEAL		30	196-4274	1	SEAT
	11	095-1578	1	SEAL		31	196-4273	1	SPRING
	12	196-4264	1	SEAL		32	196-4272	1	VALVE
	13	140-5625	1	PLUG		33	196-4271	1	CLIP
	14	095-1579	1	SEAL		34	196-1270	1	SPACER
	15	139-6204	1	PLUG		35	196-4269	1	FILTER
	16	139-6205	1	SPRING		36	196-4268	1	SEAL
	17	139-6206	1	VALVE AS		37	196-4267	1	VALVE
	18	315-6482	1	BODY		38	221-6723	1	BODY
	19	8T-2922	2	BOLT(M6×1)					
	20	095-1585	1	SEAL					

J149075 X00

BLOCK ASSEMBLY (315-4340 N/S) -BOOMLOCK
PART OF 295-9368-Page 380

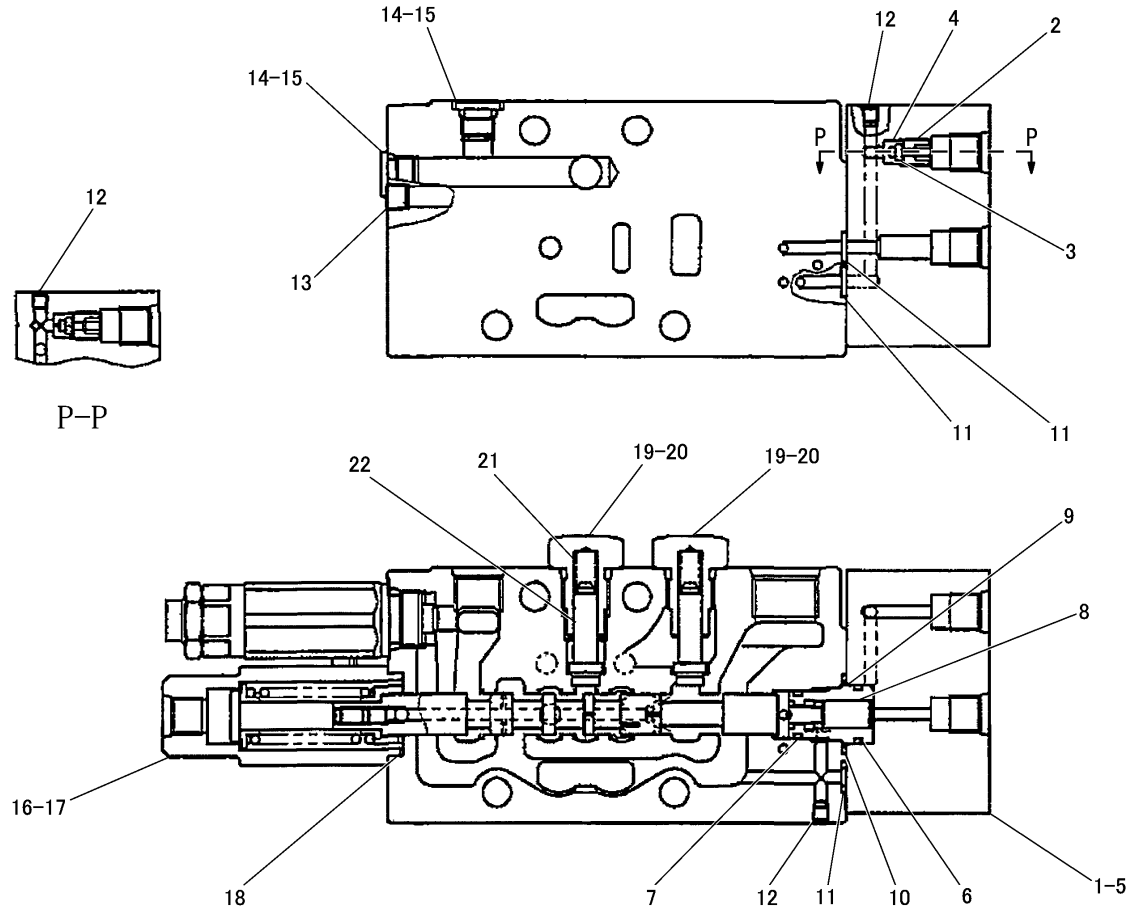

NOTE	No.	PART NO.	QTY	PART NAME	NOTE	No.	PART NO.	QTY	PART NAME
	1	8T-3283	3	BOLT(M5×0.8)		21	139-6205	2	SPRING
	2	202-9243	1	PLUG		22	139-6206	2	VALVE AS
	3	196-5221	1	FILTER					
	4	202-9242	1	CASE					
	5	202-9241	1	BLOCK					
	6	202-9240	1	SEAL					
	7	202-9239	1	SEAL					
	8	202-9238	1	PISTON					
	9	202-9237	1	CASE					
	10	202-9236	1	SEAL					
	11	139-5075	3	SEAL					
	12	139-6208	3	PLUG					
	13	139-6218	1	PLUG					
	14	139-7309	2	SEAL					
	15	139-6444	2	PLUG					
	16	183-9723	2	BOLT					
	17	183-9720	1	COVER					
	18	139-5057	1	SEAL					
	19	095-1579	2	SEAL					
	20	139-6204	2	PLUG					

J149069 X00

BLOCK ASSEMBLY (315-4336 N/S) -BOOM/PTO CONFLUENCE

PART OF 295-9368-Page 380

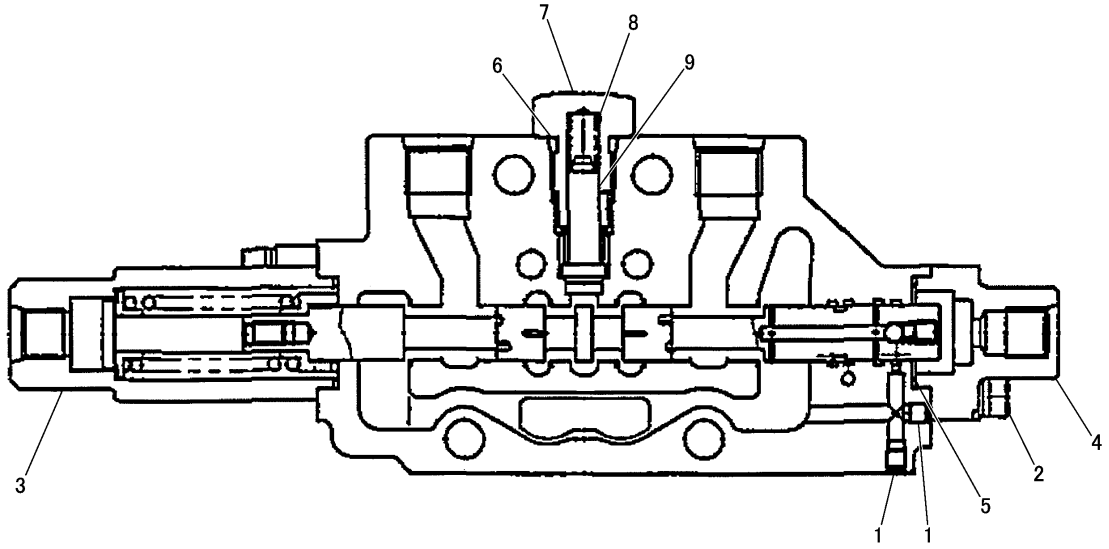

NOTE	No.	PART NO.	QTY	PART NAME	NOTE	No.	PART NO.	QTY	PART NAME
	1	139-6208	2	PLUG					
	2	183-9723	4	BOLT					
	3	183-9720	1	COVER					
	4	183-9719	1	COVER					
	5	139-5057	2	SEAL					
	6	095-1578	1	SEAL					
	7	139-6204	1	PLUG					
	8	139-6205	1	SPRING					
	9	139-6206	1	VALVE AS					

J149072 X00

BLOCK ASSEMBLY (315-4338 N/S) -TRAVEL
PART OF 295-9368-Page 380

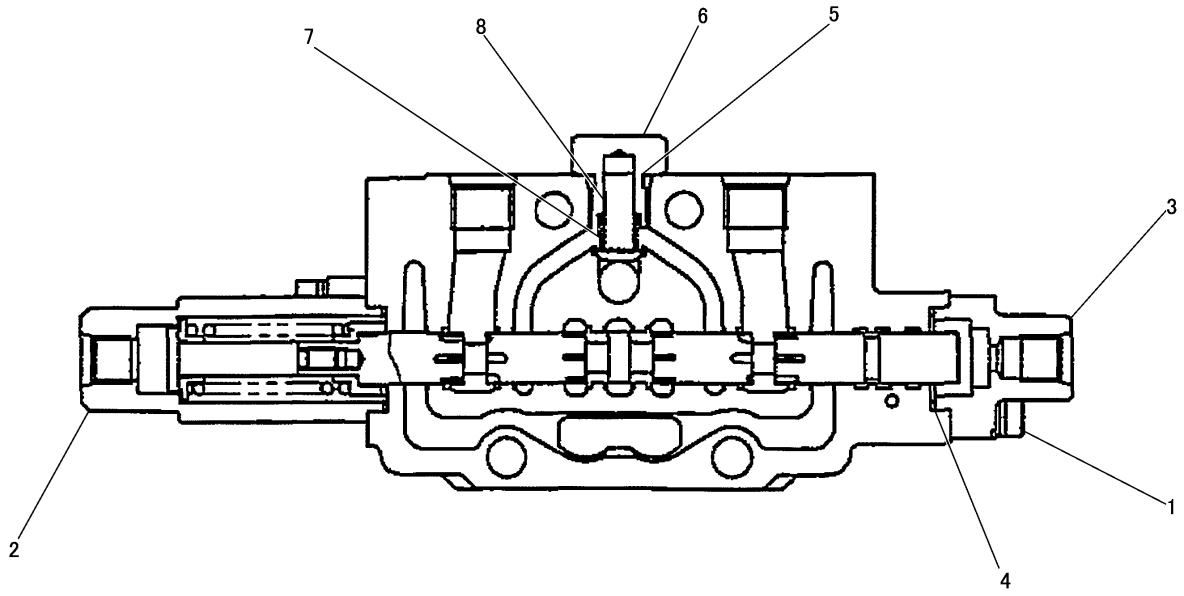

NOTE	No.	PART NO.	QTY	PART NAME	NOTE	No.	PART NO.	QTY	PART NAME
	1	183-9723	4	BOLT					
	2	183-9720	1	COVER					
	3	183-9719	1	COVER					
	4	139-5057	2	SEAL					
	5	095-1578	1	SEAL					
	6	139-5086	1	PLUG					
	7	139-5087	1	SPRING					
	8	139-5088	1	VALVE					

J149068 X00

BLOCK ASSEMBLY (315-4335 N/S) -SWING
PART OF 295-9368-Page 380

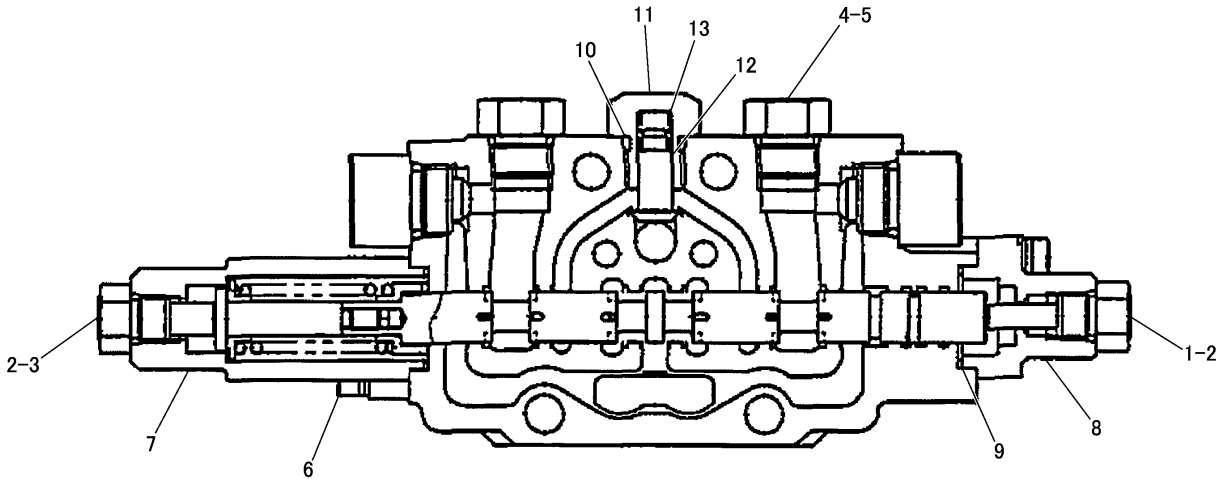

NOTE	No.	PART NO.	QTY	PART NAME	NOTE	No.	PART NO.	QTY	PART NAME
	1	315-6476	1	PLUG					
	2	315-6477	2	SEAL					
	3	315-6478	1	PLUG					
	4	3J-1907	2	SEAL					
	5	202-6272	2	PLUG					
	6	183-9723	4	BOLT					
	7	183-9720	1	COVER					
	8	183-9719	1	COVER					
	9	139-5057	2	SEAL					
	10	095-1578	1	SEAL					
	11	315-6479	1	PLUG					
	12	315-6480	1	SPRING					
	13	315-6481	1	VALVE					

J149071 X00

BLOCK ASSEMBLY (315-4337 N/S) -PTO
PART OF 295-9368-Page 380

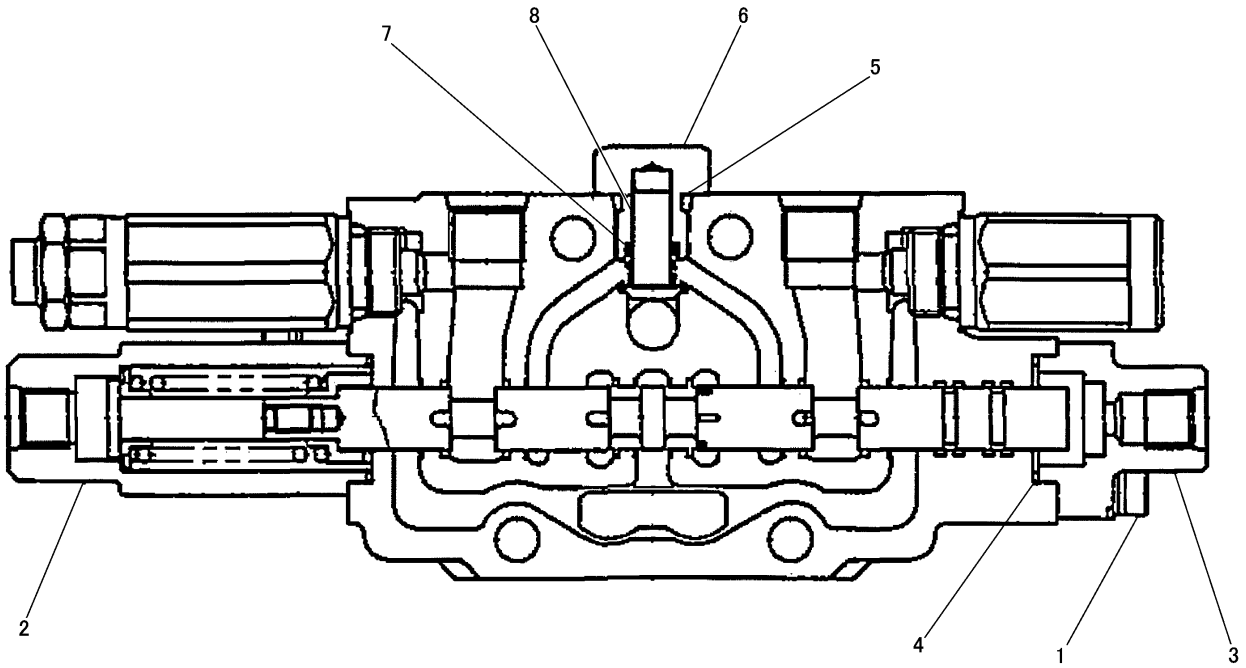

NOTE	No.	PART NO.	QTY	PART NAME	NOTE	No.	PART NO.	QTY	PART NAME
	1	183-9723	4	BOLT					
	2	183-9720	1	COVER					
	3	183-9719	1	COVER					
	4	139-5057	2	SEAL					
	5	095-1578	1	SEAL					
	6	139-5086	1	PLUG					
	7	139-5087	1	SPRING					
	8	139-5088	1	VALVE					

J149076 X00

BLOCK ASSEMBLY (315-4341 N/S) -BUCKET
PART OF 295-9368-Page 380

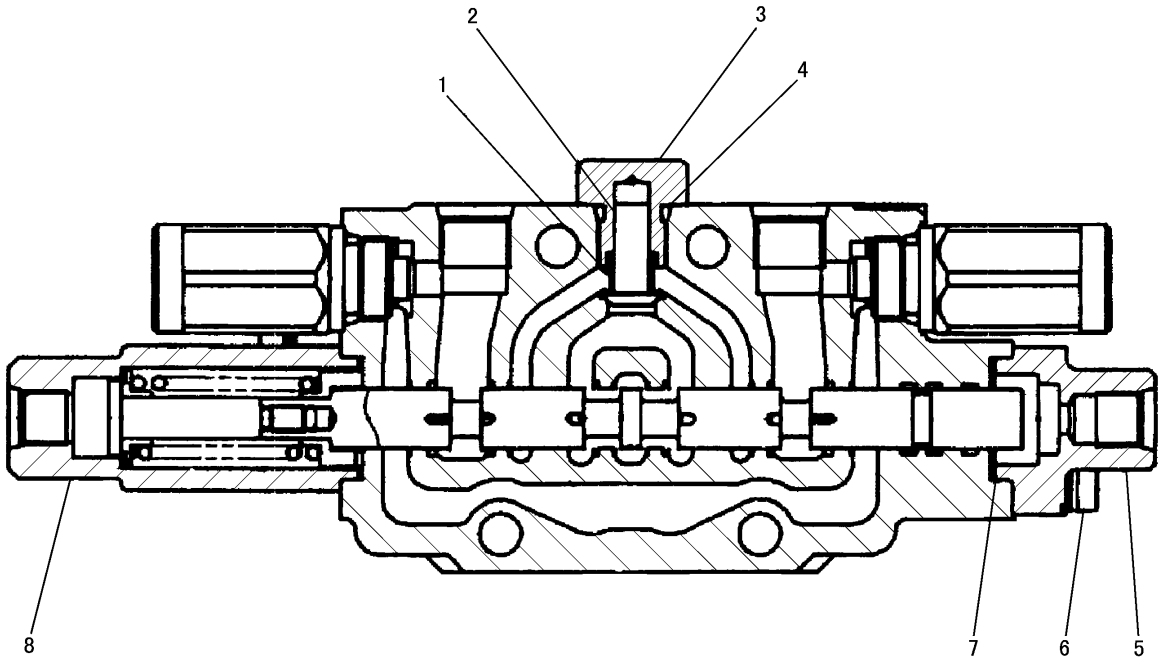

NOTE	No.	PART NO.	QTY	PART NAME	NOTE	No.	PART NO.	QTY	PART NAME
	1	139-5087	1	SPRING					
	2	139-5088	1	VALVE					
	3	139-5086	1	PLUG					
	4	095-1579	1	SEAL					
	5	183-9719	1	COVER					
	6	183-9723	4	BOLT					
	7	139-5057	2	SEAL					
	8	183-9720	1	COVER					

J125818 X00

239-7703 BLOCK ASSEMBLY -OFFSET
PART OF 295-9368-Page 380

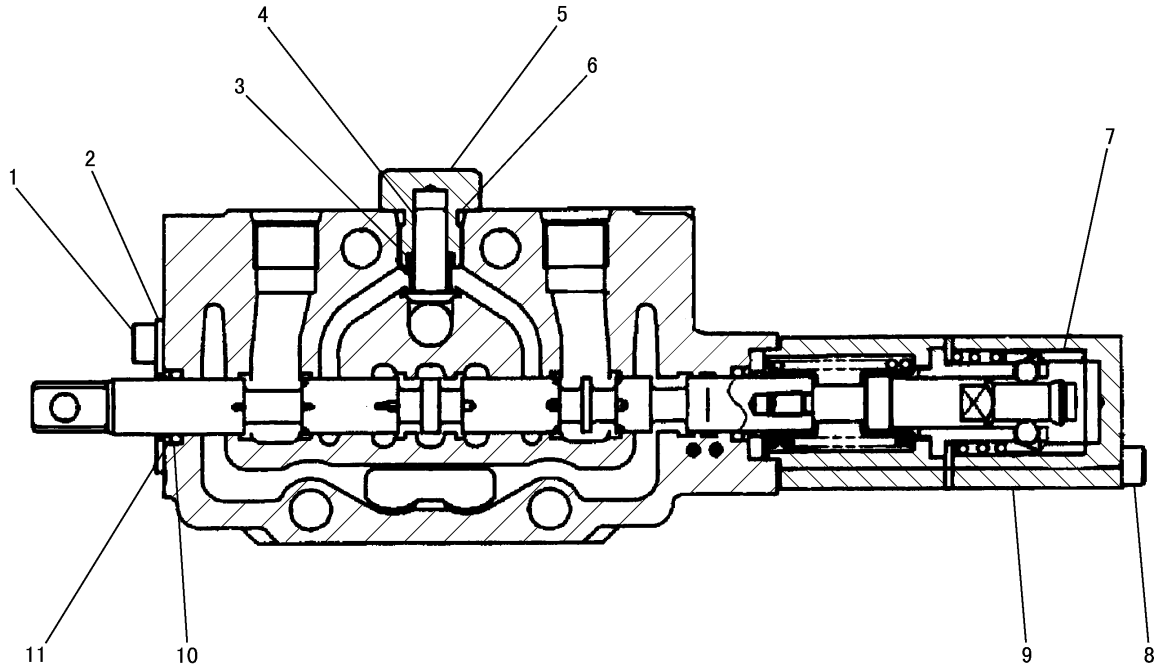

NOTE	No.	PART NO.	QTY	PART NAME	NOTE	No.	PART NO.	QTY	PART NAME
	1	099－0822	2	BOLT(M5×0.8)					
	2	139－5081	1	PLATE					
	3	139－5087	1	SPRING					
	4	139－5088	1	VALVE					
	5	139－5086	1	PLUG					
	6	095－1579	1	SEAL					
	7	139－6201	1	STOPPER					
	8	139－6199	2	BOLT					
	9	139－6200	1	COVER					
	10	095－1516	1	SEAL					
	11	139－5082	1	SEAL					

J115993 X00

216-0397 BLOCK ASSEMBLY
PART OF 295-9368-Page 380

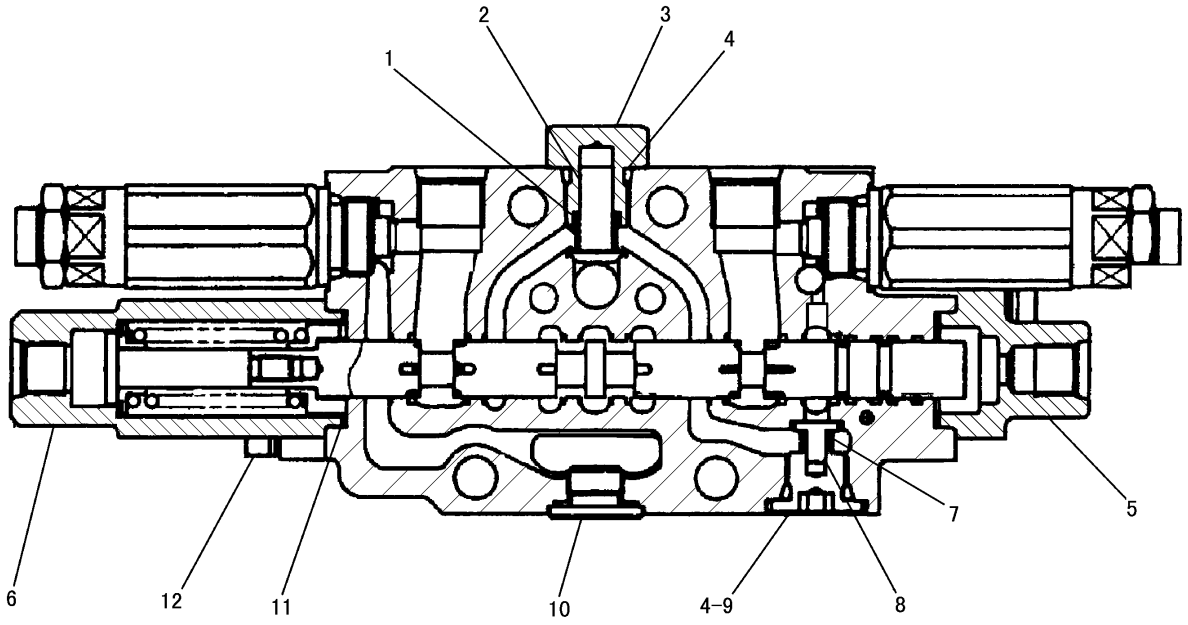

NOTE	No.	PART NO.	QTY	PART NAME	NOTE	No.	PART NO.	QTY	PART NAME
	1	139-5087	1	SPRING					
	2	139-5088	1	VALVE					
	3	139-5086	1	PLUG					
	4	095-1579	2	SEAL					
	5	183-9719	1	COVER					
	6	183-9720	1	COVER					
	7	140-5622	1	SPRING					
	8	140-5623	1	VALVE					
	9	140-5624	1	PLUG					
	10	140-5625	1	PLUG					
		196-4264	1	SEAL					
	11	139-5057	2	SEAL					
	12	183-9723	4	BOLT					

J125820 X00

239-7704 BLOCK ASSEMBLY
PART OF 295-9368-Page 380

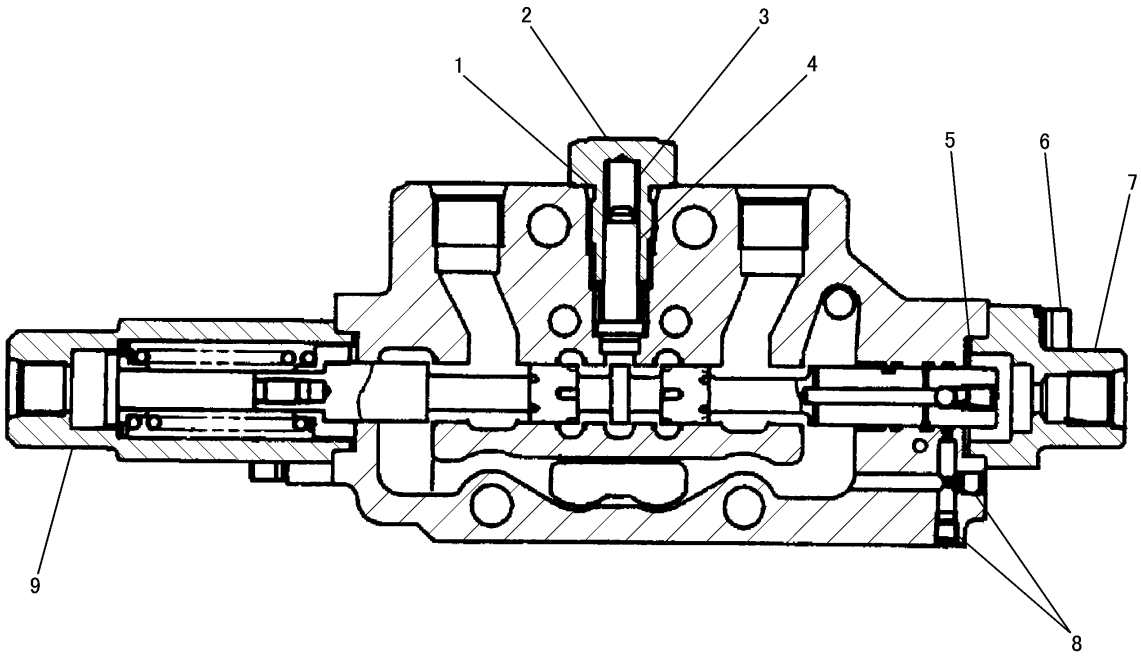

NOTE	No.	PART NO.	QTY	PART NAME	NOTE	No.	PART NO.	QTY	PART NAME
	1	095-1579	1	SEAL					
	2	139-6204	1	PLUG					
	3	139-6205	1	SPRING					
	4	139-6206	1	VALVE AS					
	5	139-5057	2	SEAL					
	6	183-9723	4	BOLT					
	7	183-9719	1	COVER					
	8	139-6208	2	PLUG					
	9	183-9720	1	COVER					

J107752 X00

202-8804 BLOCK ASSEMBLY
PART OF 295-9368-Page 380

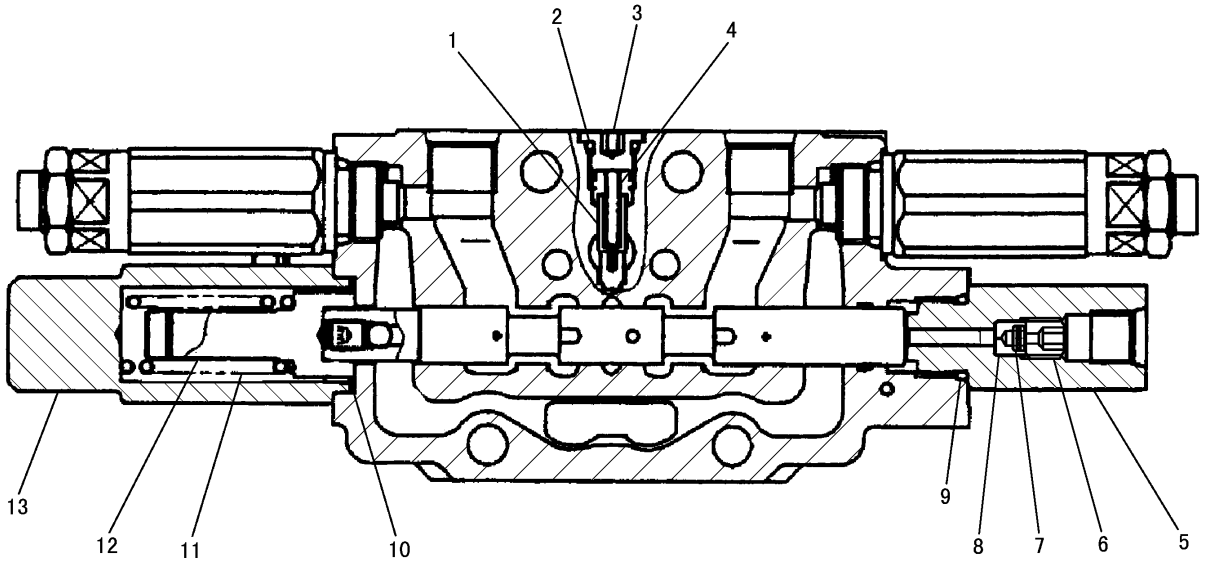

NOTE	No.	PART NO.	QTY	PART NAME	NOTE	No.	PART NO.	QTY	PART NAME
	1	139-6215	2	VALVE AS					
	2	095-1575	2	SEAL					
	3	139-6444	2	PLUG					
	4	139-6214	2	SPRING					
	5	203-1893	1	COVER					
	6	202-9243	1	PLUG					
	7	196-5221	1	FILTER					
	8	202-9242	1	CASE					
	9	095-1582	1	SEAL					
	10	139-5057	1	SEAL					
	11	139-6216	1	SPRING					
	12	203-1894	1	STOPPER					
	13	203-1895	1	COVER					
		183-9723	2	BOLT					

J107753 X00

202-8805 BLOCK ASSEMBLY
PART OF 295-9368-Page 380

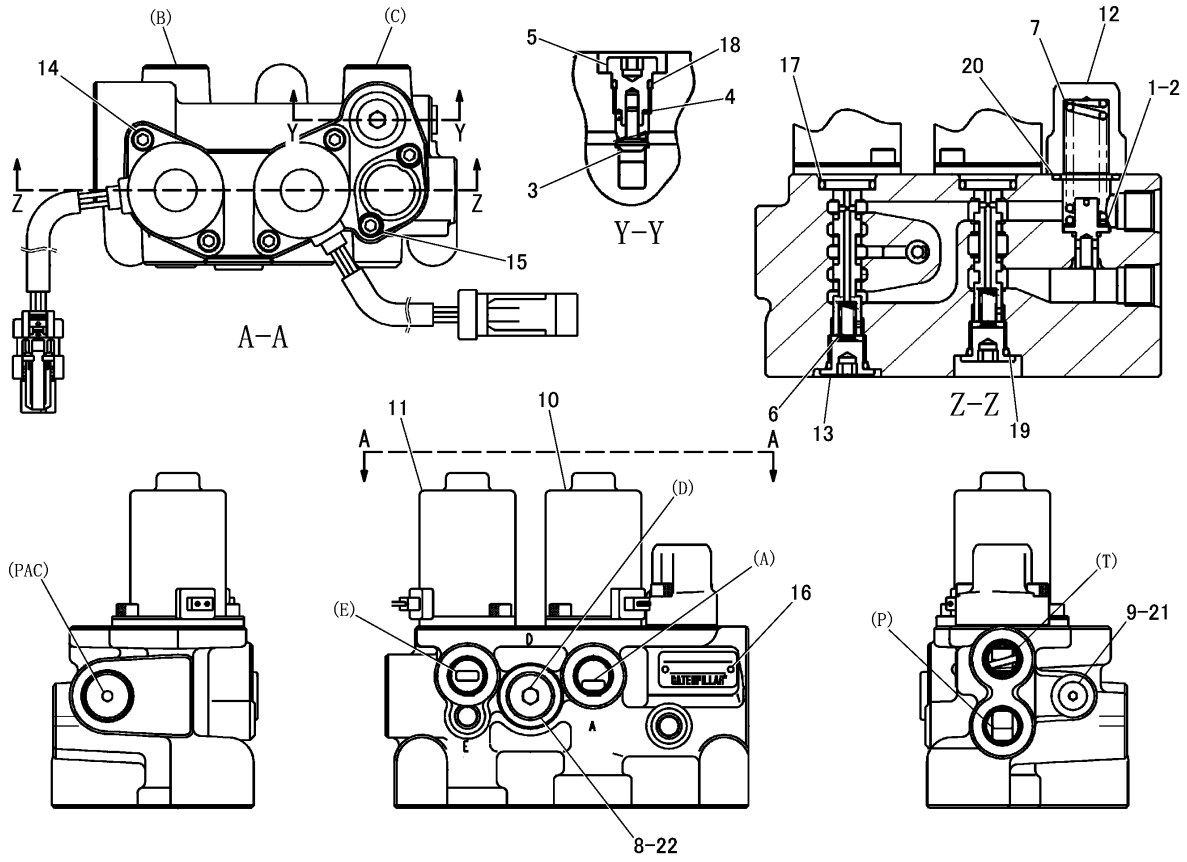

NOTE	No.	PART NO.	QTY	PART NAME	NOTE	No.	PART NO.	QTY	PART NAME
	1	169-1169	1	SHIM		21	4J-7533	1	SEAL
	2	169-1170	2	SHIM		22	3J-1907	1	SEAL
	3	198-8418	1	PLUNGER					
	4	198-8419	1	SPRING					
	5	198-8420	1	PLUG					
	6	7I-7403	2	SPRING					
	7	308-4617	1	SPRING					
	8	9S-8004	1	PLUG					
	9	9S-8001	1	PLUG					
	10	274-4201	1	SOLENOID					
	11	274-4202	1	SOLENOID					
	12	276-3883	1	COVER					
	13	198-8423	2	PLUG					
	14	099-2374	4	BOLT(M5×0.8)					
	15	096-4833	2	BOLT(M5×0.8)					
	16	197-0758	2	SCREW					
	17	095-1519	2	SEAL					
	18	095-1578	1	SEAL					
	19	095-1579	2	SEAL					
	20	095-1586	1	SEAL					

J147507 X02

VALVE GROUP (297-3003 N/S) -MANIFOLD AND RELIEF
PART OF 306-6669-Page 383

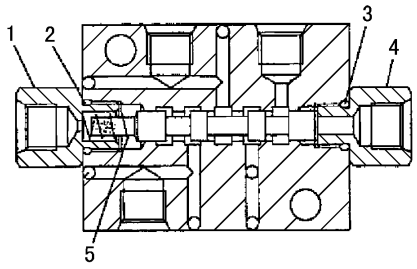

A–A

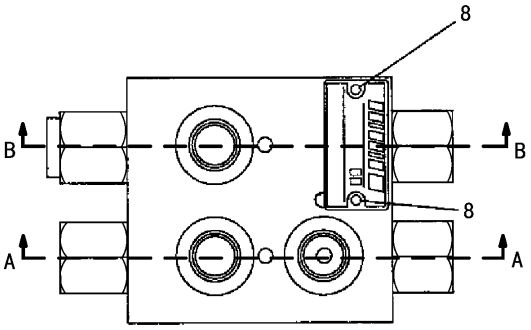

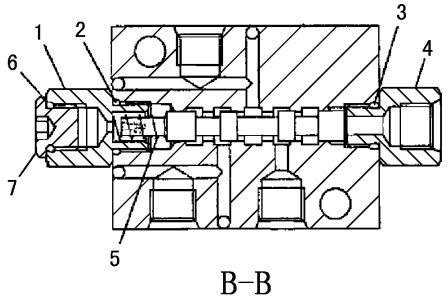

B–B

NOTE	No.	PART NO.	QTY	PART NAME	NOTE	No.	PART NO.	QTY	PART NAME
	1	125−1908	2	PLUG					
	2	095−1582	2	SEAL					
	3	095−1579	2	SEAL					
	4	125−1907	2	PLUG					
	5	125−1909	2	SPRING					
	6	3J−1907	1	SEAL					
	7	102−0818	1	PLUG					
	8	197−0758	2	SCREW					

J128862 X01

205-3869 VALVE GROUP -SELECTOR
PART OF 295-9741-Page 384, 328-1869-Page 385
AN ATTACHMENT

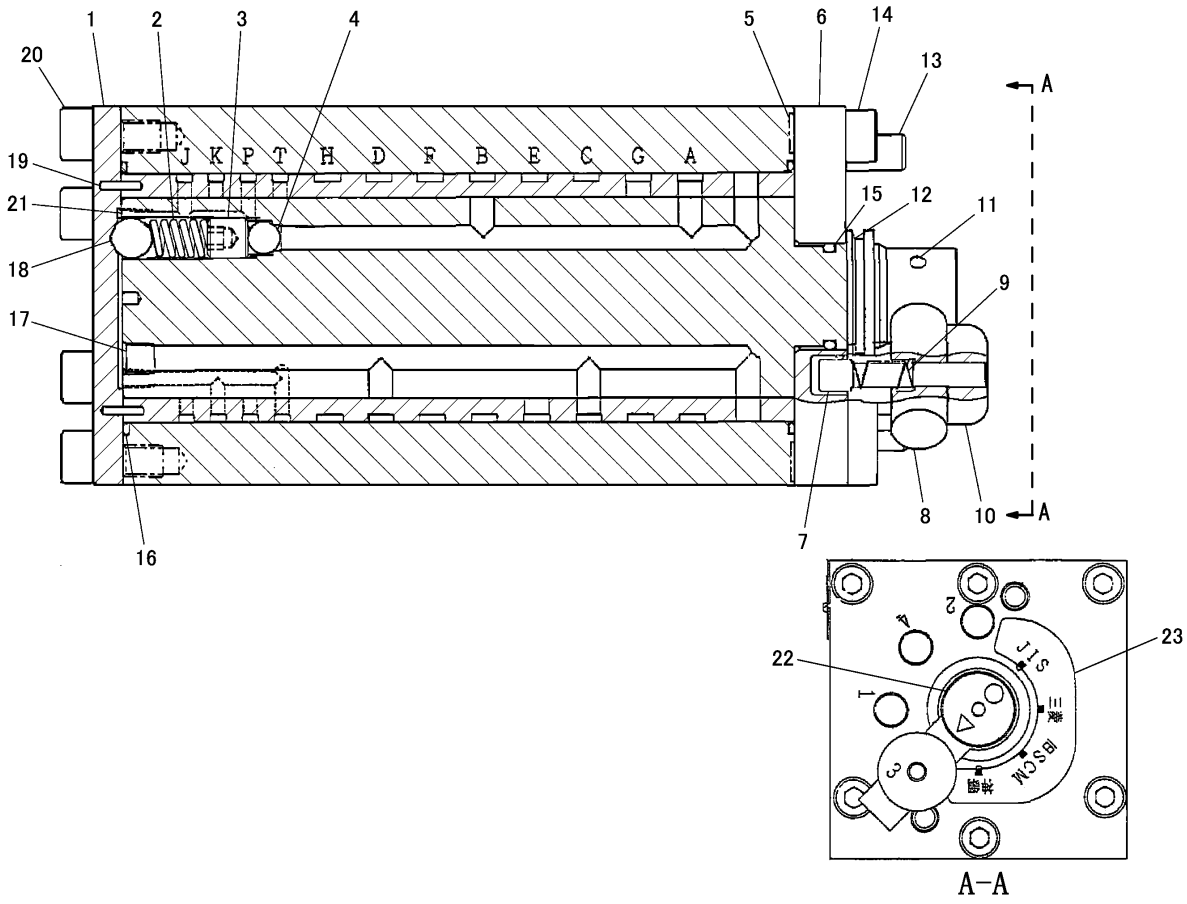

NOTE	No.	PART NO.	QTY	PART NAME	NOTE	No.	PART NO.	QTY	PART NAME
	1	234-1002	1	COVER		21	169-1168	7	PLUG
	2	125-1912	1	SPRING		22	202-9226	1	FILM
	3	6V-7613	1	SETSCREW(M10×1.5)		23	202-9225	1	FILM
	4	085-7085	1	BALL(SMALL)					
	5	169-1177	8	RING					
	6	234-1003	1	COVER					
	7	217-9451	1	PIN					
	8	217-9456	1	LEVER					
	9	217-9453	1	SPRING					
	10	217-9452	1	KNOB					
	11	085-7083	1	PIN(SPRING)					
	12	6I-6923	1	SEAL					
	13	169-1164	2	PIN					
	14	5A-3604	6	BOLT(M8×1.25)					
	15	183-9438	1	SEAL					
	16	169-1176	2	RING					
	17	8T-6759	7	PLUG					
	18	006-6803	1	BALL(LARGE)					
	19	085-7081	4	NEEDLE					
	20	6V-8202	6	BOLT(M8×1.25)					

J123183 X01

232-1416 PILOT VALVE GROUP

PART OF 295-9741-Page 384, 328-1869-Page 385
AN ATTACHMENT

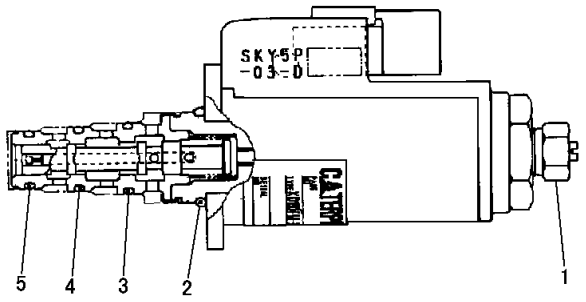

NOTE	No.	PART NO.	QTY	PART NAME
	1	114-0623	1	NUT AS(M6×1)
	2	095-1586	1	SEAL
	3	095-1751	1	SEAL
	4	6V-8398	1	SEAL
	5	095-1750	1	SEAL

J138046 X00

169-1181 PRESSURE REDUCING SOLENOID VALVE GROUP

PART OF 205-5527-Page 382, 282-9317-Page 388

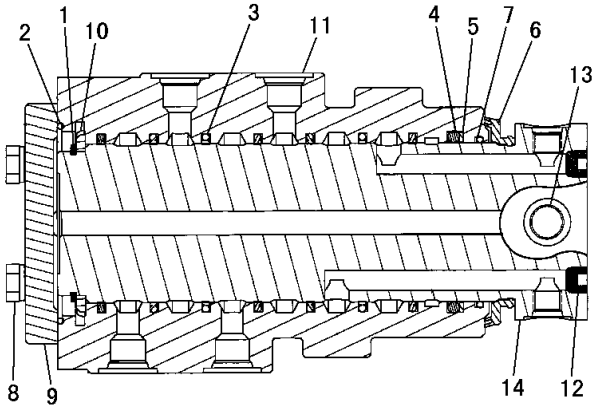

NOTE	No.	PART NO.	QTY	PART NAME
	1	095-7951	1	RING
	2	095-1713	1	SEAL
	3	193-5330	7	SEAL AS
	4	095-1623	1	SEAL
	5	146-4875	1	SEAL
	6	146-4877	1	SEAL
	7	095-1710	1	SEAL
	8	8T-4195	4	BOLT(M10×1.5)
		095-9397	4	LOCKWASHER
	9	169-1134	1	FLANGE
	10	169-1135	1	RING
	11	221-0937	1	HOUSING
	12	095-8051	3	PLUG
	13	221-0938	1	PIN
	14	221-0936	1	SHAFT

J118441 X04

191-7516 SWIVEL GROUP

PART OF 302-6607-Page 325

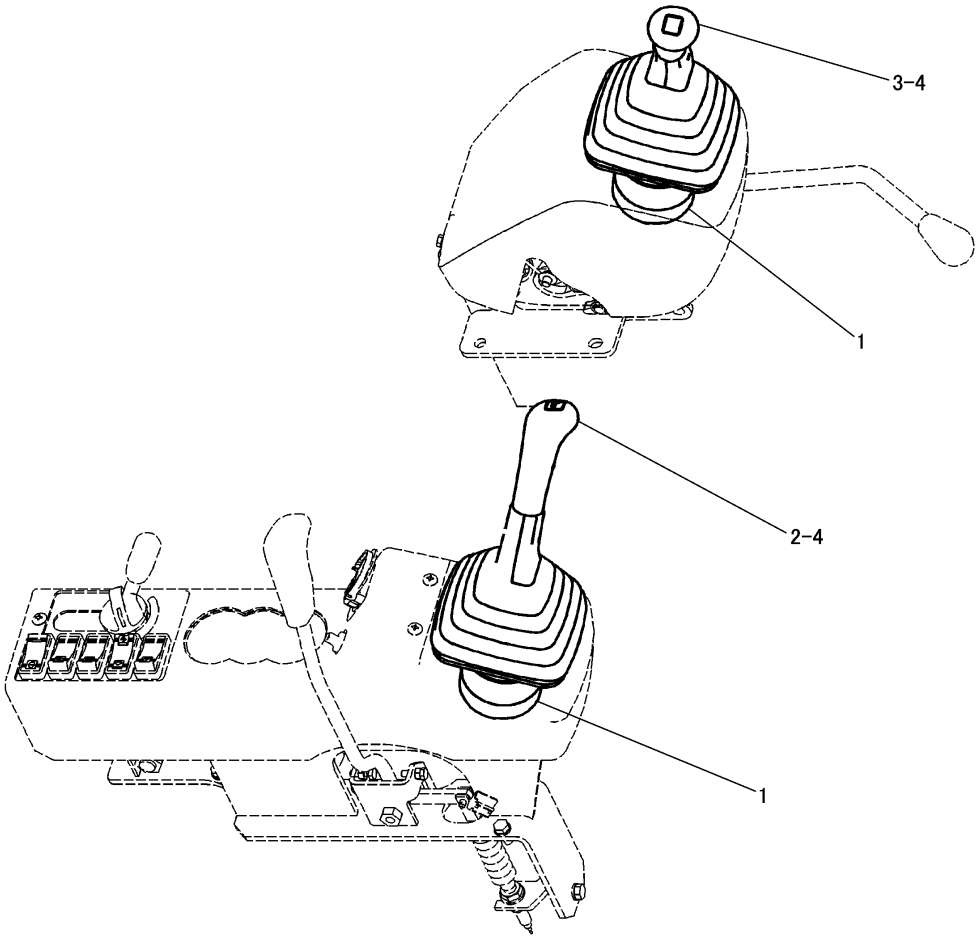

NOTE	No.	PART NO.	QTY	PART NAME	NOTE	No.	PART NO.	QTY	PART NAME
Y	1	205-8914	2	VALVE GROUP					
Y	2	267-3330	1	CONTROL GROUP(RH)					
Y	3	267-3331	1	CONTROL GROUP(LH)					
	4	3T-0849	6	BOLT(M6×1)					

Y-SEPARATE ILLUSTRATION

J146682 HE01

PILOT OPERATED HYDRAULIC CONTROL GROUP (306-1712 N/S)
PART OF 296-6133-Page 464
REFERENCE:205-8914-Page 406 267-3330-Page 407 267-3331-Page 408

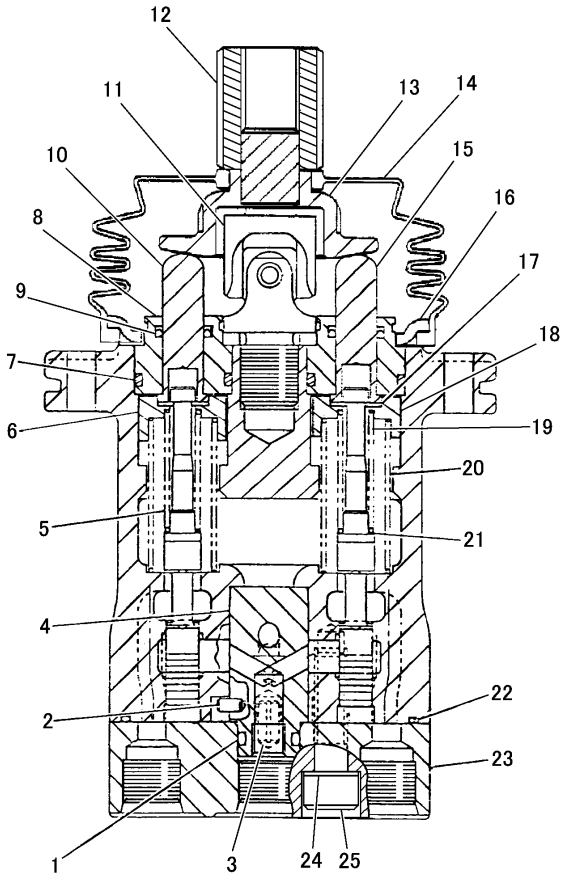

NOTE	No.	PART NO.	QTY	PART NAME	NOTE	No.	PART NO.	QTY	PART NAME
	1	095-1579	1	SEAL		21	099-9137	4	WASHER
	2	169-1178	1	PIN		22	132-7641	1	SEAL
	3	139-4804	1	PIN		23	132-7642	1	PLATE
	4	132-7640	1	BUSHING		24	096-4498	2	WASHER
	5	039-4818	2	SPRING		25	139-4803	2	BOLT
	6	096-4500	2	SEAT					
	7	095-1586	4	SEAL					
	8	096-1628	4	PLUG					
	9	094-0876	4	SEAL					
	10	114-8242	2	ROD					
	11	4I-6365	1	JOINT					
	12	131-5915	1	NUT					
	13	165-9431	1	PLATE					
	14	171-0087	1	BELLOW					
	15	135-8956	2	ROD					
	16	165-9438	1	PLATE					
	17	099-6136	8	WASHER					
	18	118-4085	2	SEAT					
	19	171-0684	2	SPRING					
	20	7I-7224	4	SPRING					

J128875 X00

205-8914 PILOT VALVE GROUP
PART OF 306-1712-Page 405

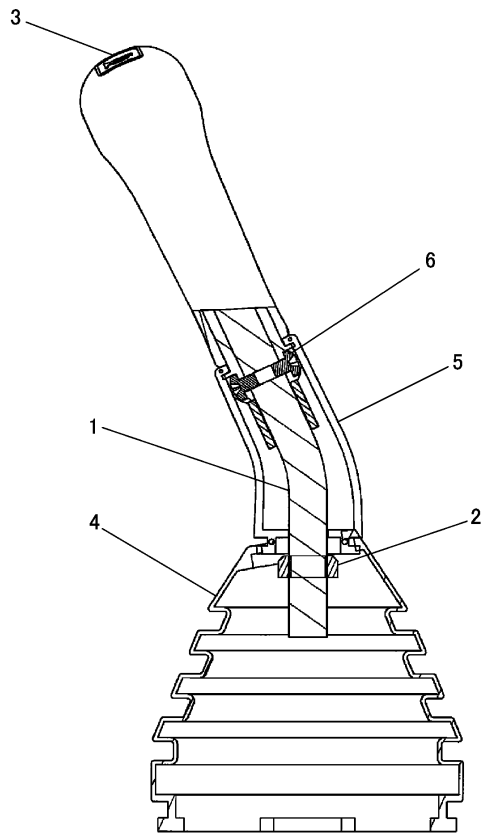

NOTE	No.	PART NO.	QTY	PART NAME	NOTE	No.	PART NO.	QTY	PART NAME
	1	124-4010	1	LEVER					
	2	284-7401	1	NUT(M14×2)					
Y	3	245-7842	1	KNOB AS					
	4	267-4429	1	BOOT					
	5	268-3014	1	ADAPTER AS					
	6	096-2617	2	SCREW(M5×0.8)					

Y-SEPARATE ILLUSTRATION

J134092 E02

267-3330 PILOT OPERATED HYDRAULIC CONTROL GROUP -RH
PART OF 306-1712-Page 405
REFERENCE:245-7842-Page 409

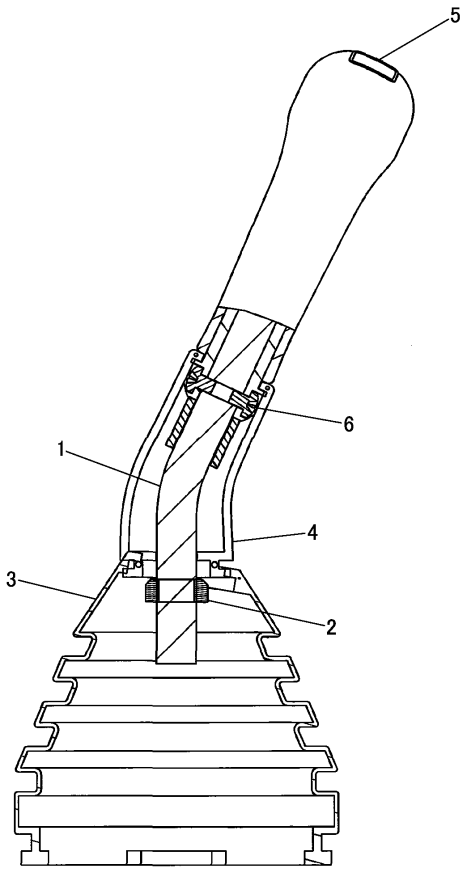

NOTE	No.	PART NO.	QTY	PART NAME	NOTE	No.	PART NO.	QTY	PART NAME
	1	124－4010	1	LEVER					
	2	212－0523	1	NUT					
	3	267－4429	1	BOOT					
	4	268－3014	1	ADAPTER AS					
Y	5	282－1523	1	KNOB AS					
	6	096－2617	2	SCREW(M5×0.8)					

Y-SEPARATE ILLUSTRATION

J146683 HE02

267-3331 PILOT OPERATED HYDRAULIC CONTROL GROUP -LH

PART OF 306-1712-Page 405
REFERENCE:282-1523-Page 410

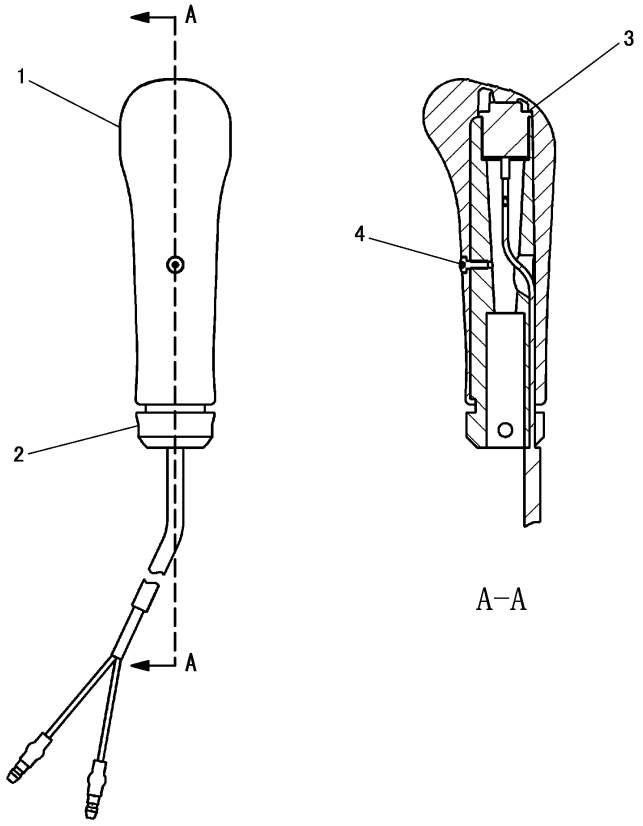

NOTE	No.	PART NO.	QTY	PART NAME	NOTE	No.	PART NO.	QTY	PART NAME
	1	245-7843	1	KNOB					
	2	124-4009	1	SHAFT					
	3	222-0225	1	SWITCH AS					
	4	6I-5298	1	SCREW(M3×0.5)					

J134093 E00

245-7842 KNOB ASSEMBLY -RH
PART OF 267-3330-Page 407

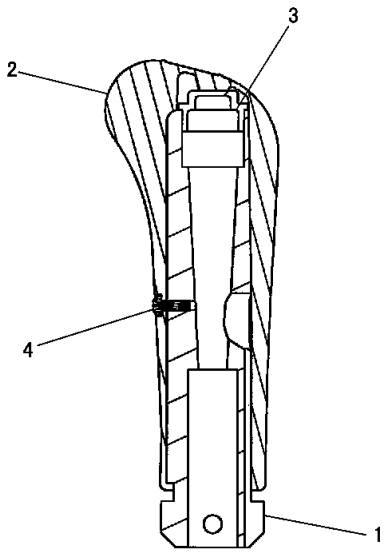

NOTE	No.	PART NO.	QTY	PART NAME
	1	124-4009	1	SHAFT
	2	245-7845	1	KNOB
	3	282-1524	1	CAP
	4	6I-5298	1	SCREW(M3×0.5)

J134095 E01

282-1523 KNOB ASSEMBLY -LH

PART OF 267-3331-Page 408

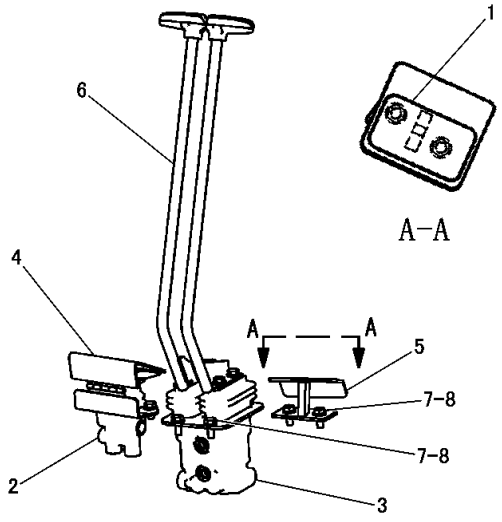

NOTE	No.	PART NO.	QTY	PART NAME
	1	124-9156	1	TREAD
Y	2	162-4578	1	PILOT VALVE GROUP
Y	3	205-8913	1	PILOT VALVE GROUP
Y	4	218-3531	1	PILOT CONTROL GROUP
	5	317-3537	1	FOOT REST AS
Y	6	319-1459	1	TRAVEL AND CONTROL GROUP
	7	8T-4121	6	WASHER
	8	8T-4136	6	BOLT(M10×1.5)

Y-SEPARATE ILLUSTRATION

J148653 HE05

PILOT OPERATED HYDRAULIC CONTROL GROUP (297-8537 N/S)

PART OF 296-6133-Page 464
REFERENCE:162-4578-Page 414 205-8913-Page 415 218-3531-Page 419 319-1459-Page 420

HYDRAULIC SYSTEM

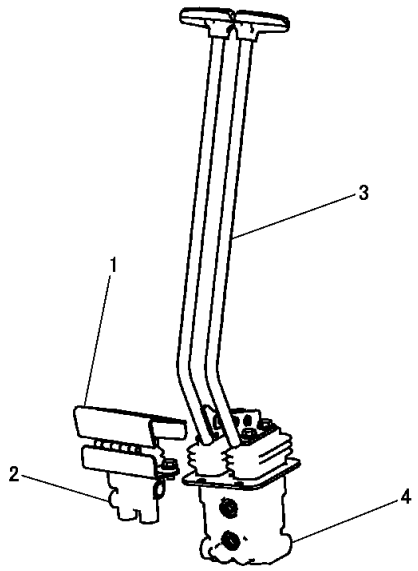

NOTE	No.	PART NO.	QTY	PART NAME
Y	1	154-2198	1	CONTROL GROUP
Y	2	162-4578	1	PILOT VALVE GROUP
Y	3	285-8286	1	CONTROL GROUP
Y	4	307-1746	1	PILOT VALVE GROUP

Y-SEPARATE ILLUSTRATION

J146687 HE00

PILOT OPERATED HYDRAULIC CONTROL GROUP (309-1453 N/S)

EFFECTIVE WITH SERIAL NO. MSP00001-MSP00204
PART OF 307-9237-Page 308
REFERENCE:154-2198-Page 419 162-4578-Page 414 285-8286-Page 421 307-1746-Page 416, 417
AN ATTACHMENT

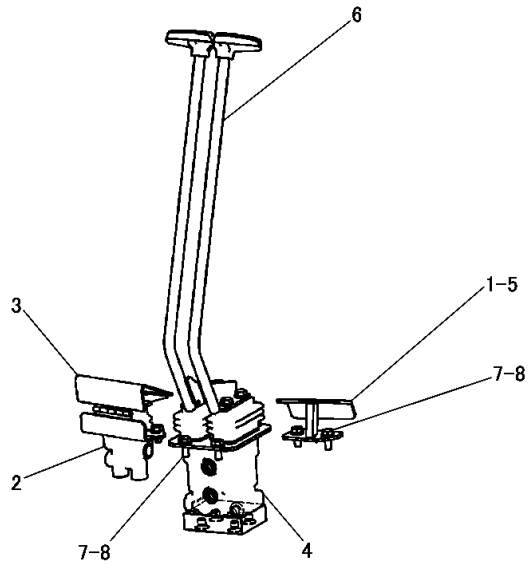

NOTE	No.	PART NO.	QTY	PART NAME
C	1	124-9156	1	TREAD
Y	2	162-4578	1	PILOT VALVE GROUP
YC	3	218-3531	1	PILOT CONTROL GROUP
Y	4	307-1746	1	VALVE GROUP
C	5	317-3537	1	FOOT REST AS
YC	6	319-1459	1	TRAVEL AND CONTROL GROUP
C	7	8T-4121	6	WASHER
C	8	8T-4136	6	BOLT(M10×1.5)

C-CHANGE FROM PREVIOUS TYPE
Y-SEPARATE ILLUSTRATION

J149106 HE01

PILOT OPERATED HYDRAULIC CONTROL GROUP (309-1453 N/S)

EFFECTIVE WITH SERIAL NO. MSP00205-
PART OF 307-9237-Page 308
REFERENCE:162-4578-Page 414 218-3531-Page 419 307-1746-Page 416, 417 319-1459-Page 420
AN ATTACHMENT

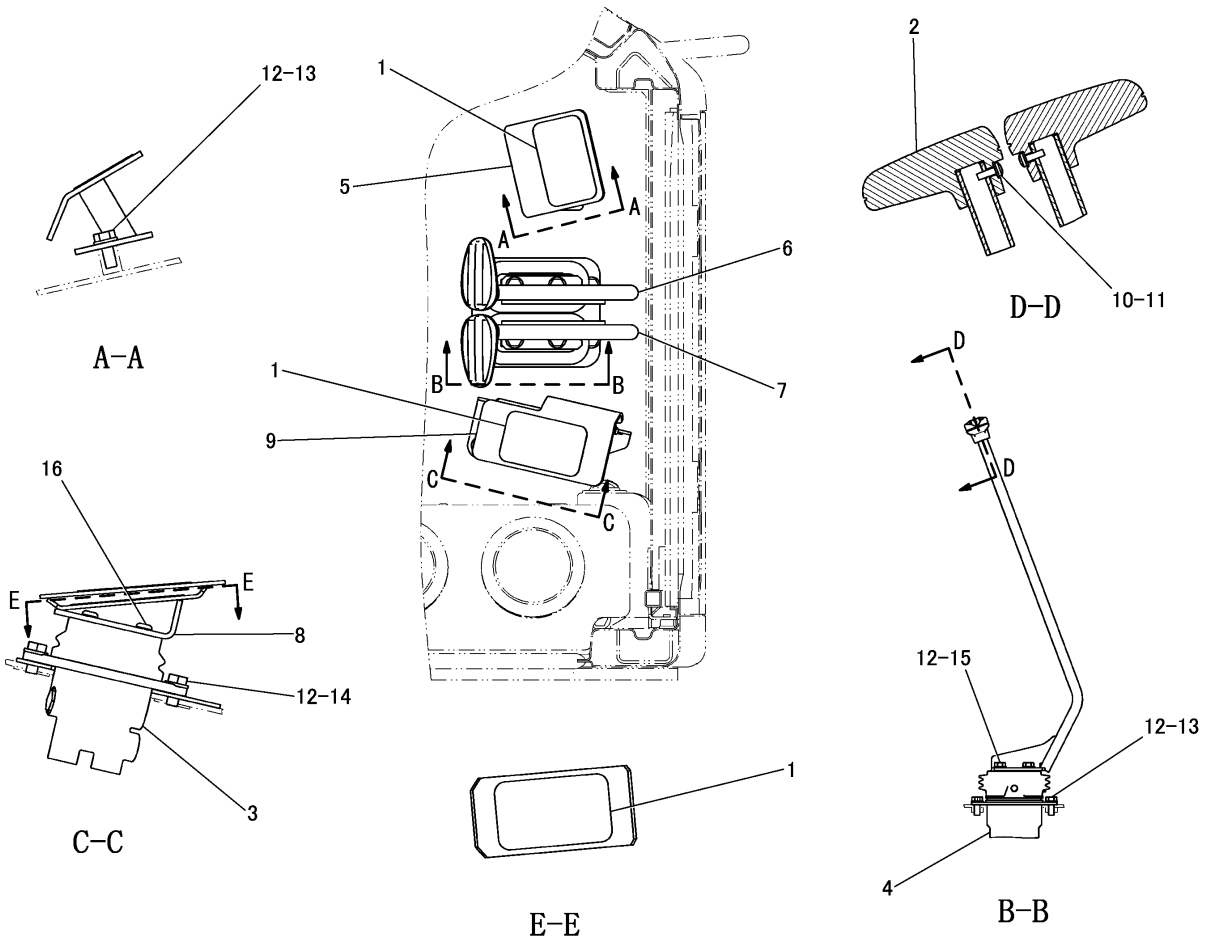

NOTE	No.	PART NO.	QTY	PART NAME	NOTE	No.	PART NO.	QTY	PART NAME
	1	124-9156	3	TREAD					
	2	142-5546	2	KNOB					
Y	3	162-4578	1	VALVE GROUP					
Y	4	205-8913	1	VALVE GROUP					
	5	317-3537	1	FOOT REST AS					
	6	319-1455	1	LEVER AS(LH)					
	7	319-1456	1	LEVER AS(RH)					
	8	326-7740	1	PEDAL AS					
	9	326-7743	1	COVER AS					
	10	096-6166	2	WASHER					
	11	8T-0337	2	SCREW(M4×0.7)					
	12	8T-4121	12	WASHER					
	13	8T-4136	6	BOLT(M10×1.5)					
	14	8T-4137	2	BOLT(M10×1.5)					
	15	8T-4191	4	BOLT(M10×1.5)					
	16	9X-2616	2	SCREW(M8×1.25)					

Y-SEPARATE ILLUSTRATION

J151230 HE00

PILOT OPERATED HYDRAULIC CONTROL GROUP (326-1697 N/S) -CAB

PART OF 308-4118-Page 466
REFERENCE:162-4578-Page 414 205-8913-Page 415
APPLIES TO CAB AIR CONDITIONER SPECIFICATION MACHINE
AN ATTACHMENT

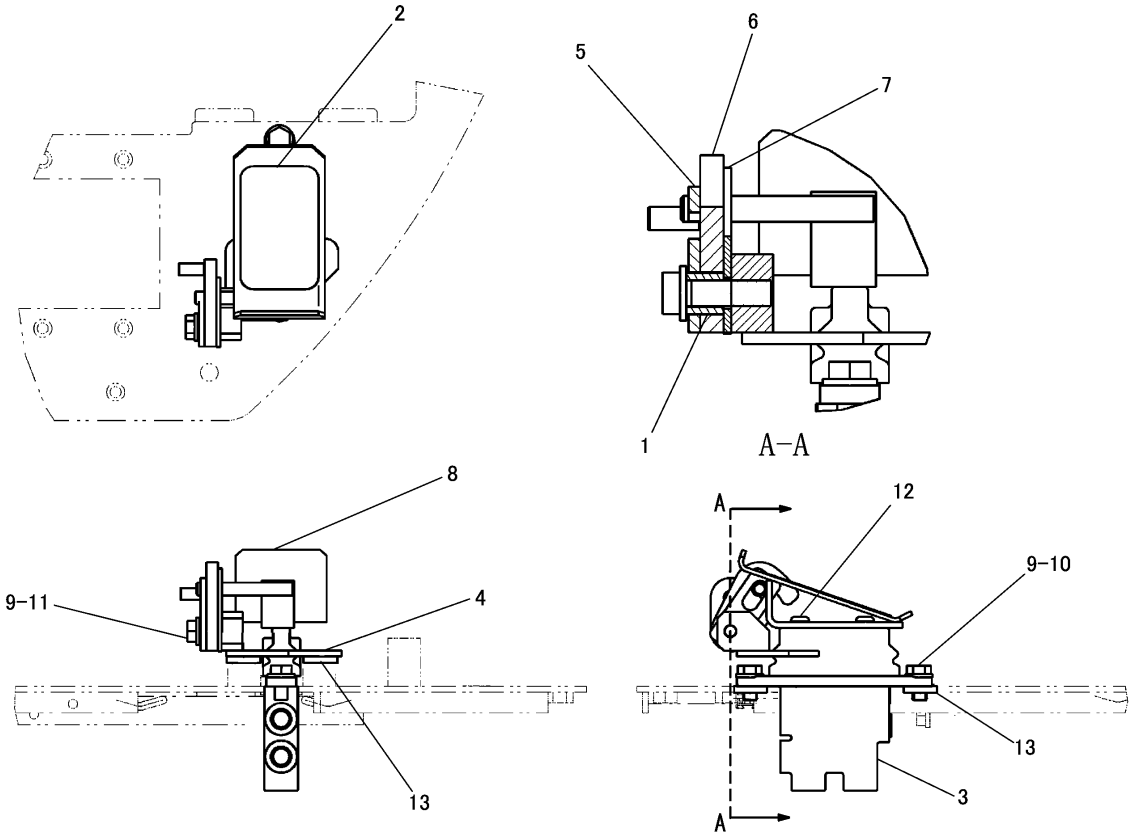

NOTE	No.	PART NO.	QTY	PART NAME	NOTE	No.	PART NO.	QTY	PART NAME
	1	6H-7127	1	LUG					
	2	124-9156	1	TREAD					
Y	3	162-4578	1	PILOT VALVE GROUP					
	4	206-2402	1	BRACKET AS					
	5	206-2403	1	PLATE					
	6	206-2405	1	PLATE AS					
	7	206-2406	1	PLATE					
	8	218-3536	1	PEDAL AS					
	9	8T-4121	3	WASHER					
	10	8T-4137	2	BOLT(M10×1.5)					
	11	8T-4196	1	BOLT(M10×1.5)					
	12	9X-2616	2	SCREW(M8×1.25)					
	13	8T-7971	4	WASHER					

Y-SEPARATE ILLUSTRATION

J149323 HE03

PILOT OPERATED HYDRAULIC CONTROL GROUP (233-7305 N/S)
PART OF 295-9343-Page 307
REFERENCE:162-4578-Page 414
AN ATTACHMENT

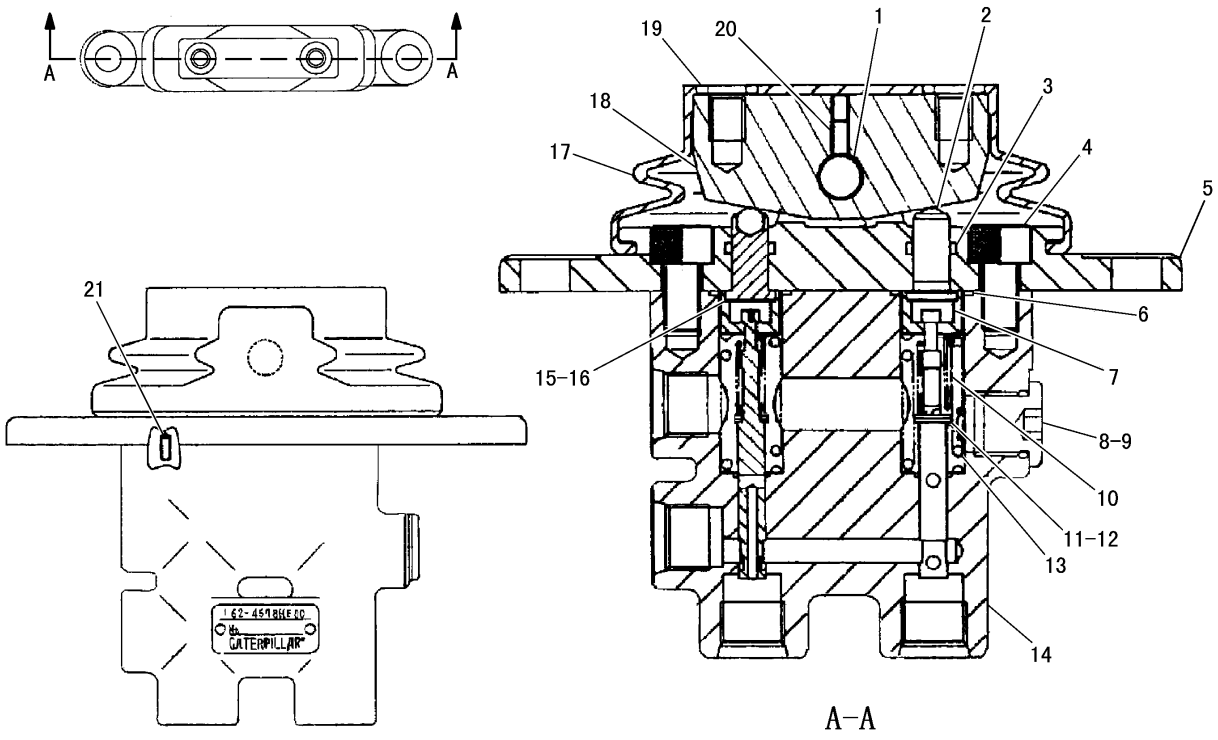

A-A

NOTE	No.	PART NO.	QTY	PART NAME	NOTE	No.	PART NO.	QTY	PART NAME
	1	136-0147	1	PIN		21	096-4544	2	PIN
	2	136-0140	2	PUSHROD					
	3	095-1512	2	SEAL					
	4	6V-8202	2	BOLT(M8×1.25)					
	5	136-0143	1	COVER					
	6	136-0152	2	SEAL					
	7	137-9114	2	SEAT					
	8	102-0818	1	PLUG					
	9	3J-1907	1	SEAL					
	10	136-0141	2	SPRING					
	11	136-0156	2	WASHER					
	12	136-0145	6	SHIM(0.1mm THICK)					
	13	136-0148	2	SPRING					
	14	185-9075	1	BODY AS					
	15	136-0151	2	SHIM(0.2mm THICK)					
	16	136-0150	2	SHIM(0.1mm THICK)					
	17	136-0149	1	BOOT					
	18	136-0146	1	PEDAL					
	19	136-0157	2	WASHER					
	20	136-0155	1	SETSCREW(M4×0.7)					

J131976 E01

162-4578 PILOT VALVE GROUP

PART OF 233-7305-Page 413, 297-8537-Page 410, 309-1453-Page 411, 326-1697-Page 412

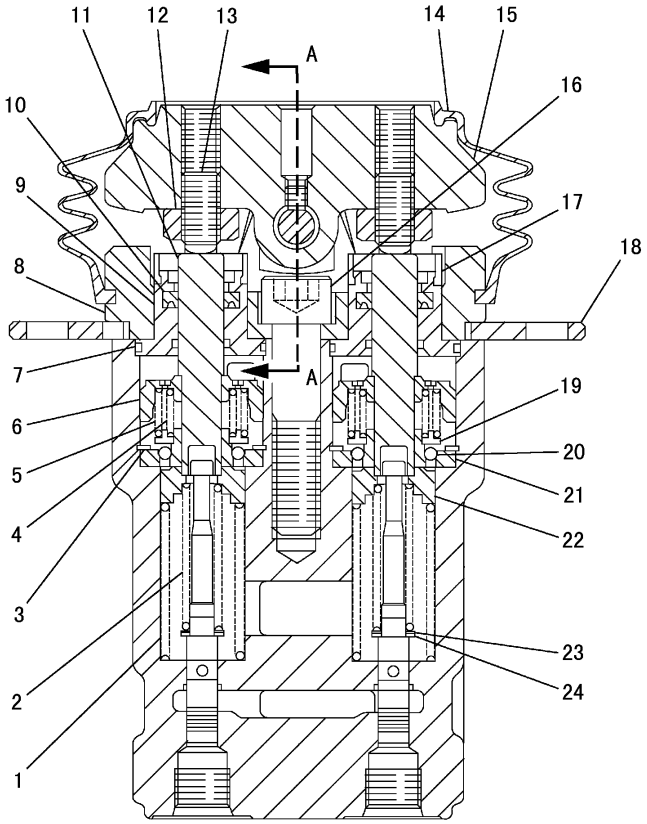

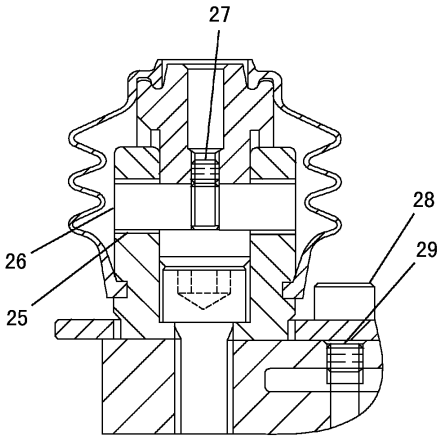

A-A

NOTE	No.	PART NO.	QTY	PART NAME	NOTE	No.	PART NO.	QTY	PART NAME
	1	123-2605	4	SPRING		21	119-5392	4	BUSHING
	2	131-5818	4	SPRING		22	165-9551	4	SEAT
	3	095-0936	4	RING		23	099-6137	4	WASHER
	4	126-1865	4	SPRING		24	099-6141	4	WASHER
	5	126-1866	4	SPRING		25	099-6144	4	BUSHING
	6	147-4221	4	PISTON		26	099-6145	2	CAMSHAFT
	7	6V-8400	4	SEAL		27	095-1260	2	SETSCREW(M6×1)
	8	165-9463	2	COVER		28	8T-1158	2	BOLT(M8×1.25)
	9	165-9554	4	PLUG		29	8T-6759	2	PLUG
	10	119-5389	4	PACKING					
	11	165-9552	4	PUSHROD					
	12	8T-4133	4	NUT(M10×1.5)					
	13	087-4710	4	SETSCREW(M10×1.5)					
	14	147-4131	2	BELLOW					
	15	087-5708	2	PEDAL					
	16	8T-0343	2	BOLT(M12×1.25)					
	17	119-5388	4	CAP					
	18	165-9553	1	COVER					
	19	119-5391	4	SEAT					
	20	153-5223	12	BALL					

J108654 X00

205-8913 PILOT VALVE GROUP

PART OF 297-8537-Page 410, 326-1697-Page 412

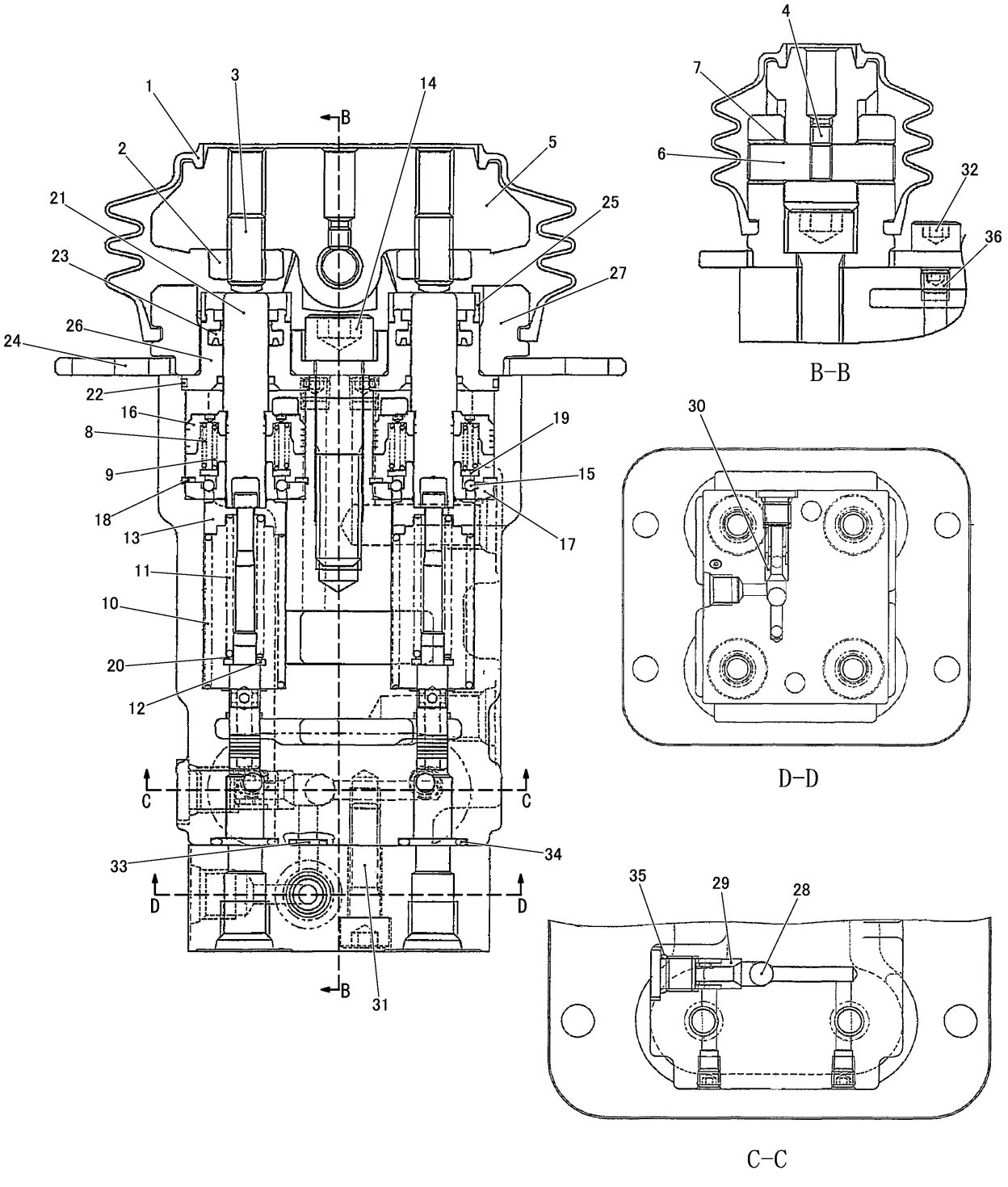

307-1746 PILOT VALVE GROUP
PART OF 309-1453-Page 411
AN ATTACHMENT

HYDRAULIC SYSTEM

NOTE	No.	PART NO.	QTY	PART NAME	NOTE	No.	PART NO.	QTY	PART NAME
	1	147-4131	2	BELLOW					
	2	8T-4133	4	NUT(M10×1.5)					
	3	087-4710	4	SETSCREW(M10×1.5)					
	4	095-1260	2	SETSCREW(M6×1)					
	5	087-5708	2	PEDAL					
	6	099-6145	2	CAMSHAFT					
	7	099-6144	4	BUSHING					
	8	126-1866	4	SPRING					
	9	126-1865	4	SPRING					
	10	123-2605	4	SPRING					
	11	131-5818	4	SPRING					
	12	099-6141	4	WASHER					
	13	165-9551	4	SEAT					
	14	8T-0343	2	BOLT(M12×1.25)					
	15	153-5223	12	BALL					
	16	147-4221	4	PISTON					
	17	119-5392	4	BUSHING					
	18	095-0936	4	RING					
	19	119-5391	4	SEAT					
	20	099-6137	4	WASHER					
	21	165-9552	4	PUSHROD					
	22	6V-8400	4	SEAL					
	23	119-5389	4	PACKING					
	24	165-9553	1	COVER					
	25	119-5388	4	CAP					
	26	165-9554	4	PLUG					
	27	165-9463	2	COVER					
	28	9M-5590	3	BALL					
	29	272-5714	2	SEAT					
	30	165-9464	1	SEAT					
	31	6V-5192	2	BOLT(M8×1.25)					
	32	8T-1158	2	BOLT(M8×1.25)					
	33	095-1574	2	SEAL					
	34	095-1582	4	SEAL					
	35	095-1578	3	SEAL					
	36	8T-6759	6	PLUG					

J147469 X04

307-1746 PILOT VALVE GROUP

PART OF 309-1453-Page 411
AN ATTACHMENT

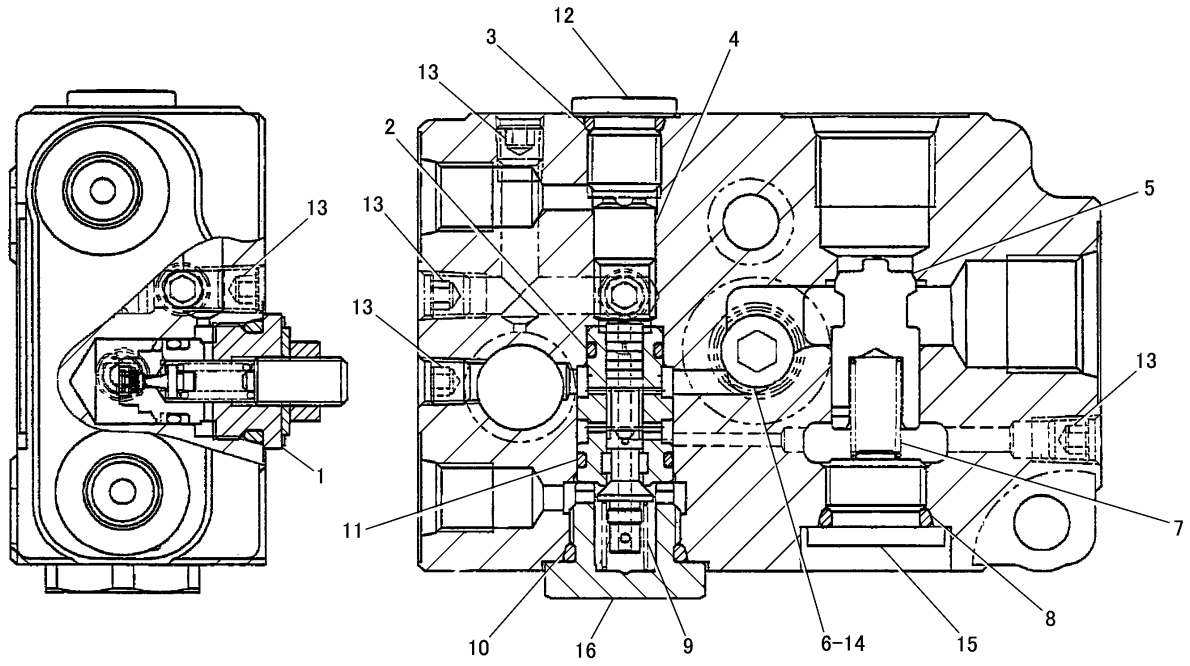

NOTE	No.	PART NO.	QTY	PART NAME	NOTE	No.	PART NO.	QTY	PART NAME
	1	239-0833	1	VALVE					
	2	6V-8397	1	SEAL					
	3	095-1578	1	SEAL					
	4	239-0832	1	PISTON					
	5	239-0836	1	PLUNGER					
	6	095-1579	1	SEAL					
	7	250-3110	1	SPRING					
	8	095-1582	1	SEAL					
	9	239-0835	1	SPRING					
	10	095-1584	1	SEAL					
	11	6V-8398	1	SEAL					
	12	107-6479	1	PLUG					
	13	7I-8084	5	PLUG					
	14	170-9997	1	PLUG					
	15	250-3111	1	PLUG					
	16	250-3112	1	PLUG					

J129205 X01

237-4406 PILOT VALVE GROUP
PART OF 307-6002-Page 371, 307-6003-Page 369
AN ATTACHMENT

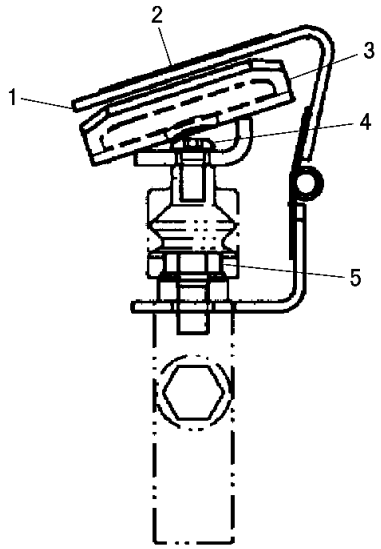

NOTE	No.	PART NO.	QTY	PART NAME
	1	199-7926	1	COVER AS
	2	124-9156	2	TREAD
	3	218-3532	1	PEDAL AS
	4	9X-2616	2	SCREW(M8×1.25)
	5	8T-4137	2	BOLT(M10×1.5)
		8T-4121	2	WASHER

J112875 X00

PILOT CONTROL GROUP (218-3531 N/S)

EFFECTIVE WITH SERIAL NO. MSP00001-(STD),MSP00205-(ATT)
PART OF 297-8537-Page 410,309-1453-Page 411

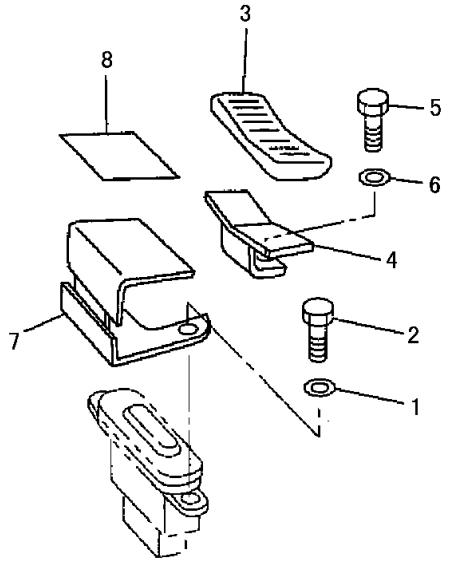

NOTE	No.	PART NO.	QTY	PART NAME
	1	8T-4121	2	WASHER
	2	8T-4137	2	BOLT(M10×1.5)
	3	125-7358	1	PEDAL
	4	154-2277	1	PEDAL AS
	5	8T-4200	2	BOLT(M8×1.25)
	6	8T-4224	2	WASHER
	7	199-7926	1	COVER AS
	8	124-9156	1	TREAD

J115148 X05

OFFSET CONTROL GROUP (154-2198 N/S)

EFFECTIVE WITH SERIAL NO. MSP00001-MSP00204
PART OF 309-1453-Page 411
AN ATTACHMENT

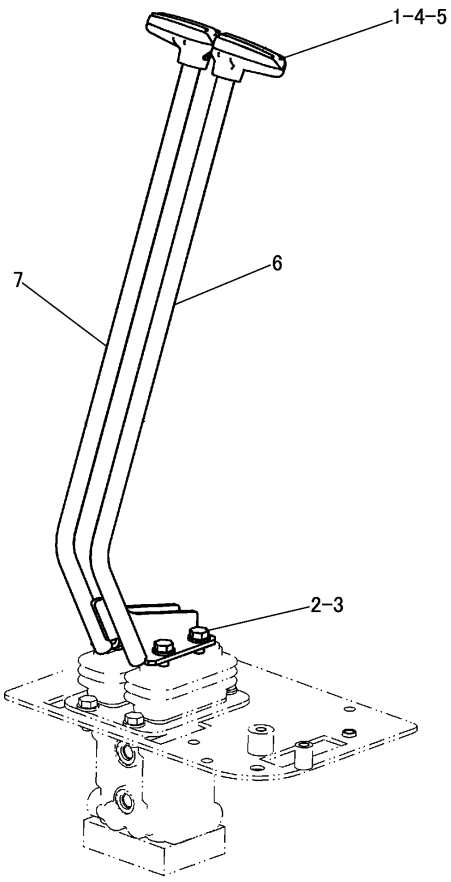

NOTE	No.	PART NO.	QTY	PART NAME	NOTE	No.	PART NO.	QTY	PART NAME
	1	142-5546	2	KNOB					
	2	8T-4121	4	WASHER					
	3	8T-4191	4	BOLT(M10×1.5)					
	4	096-6166	2	WASHER					
	5	8T-0337	2	SCREW(M4×0.7)					
	6	319-1455	1	LEVER AS(LH)					
	7	319-1456	1	LEVER AS(RH)					

J146673 HE00

TRAVEL AND CONTROL GROUP (319-1459 N/S)
EFFECTIVE WITH SERIAL NO. MSP00001-(STD),MSP00205-(ATT)
PART OF 297-8537-Page 410,309-1453-Page 411

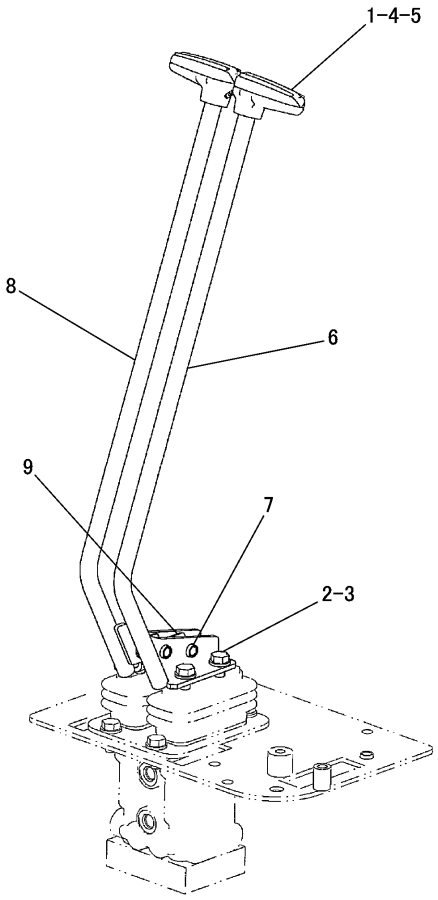

NOTE	No.	PART NO.	QTY	PART NAME	NOTE	No.	PART NO.	QTY	PART NAME
	1	142-5546	2	KNOB					
	2	8T-4121	4	WASHER					
	3	8T-4191	4	BOLT(M10×1.5)					
	4	095-0728	2	SCREW(M4×0.7)					
	5	096-6166	2	WASHER					
	6	275-0775	1	LEVER AS(LH)					
	7	194-6377	2	NUT(M10×1.5)(WELD)					
	8	275-0776	1	LEVER AS(RH)					
	9	194-6377	2	NUT(M10×1.5)(WELD)					

J136469 E00

TRAVEL AND CONTROL GROUP (285-8286 N/S)
EFFECTIVE WITH SERIAL NO. MSP00001-MSP00204
PART OF 309-1453-Page 411
AN ATTACHMENT

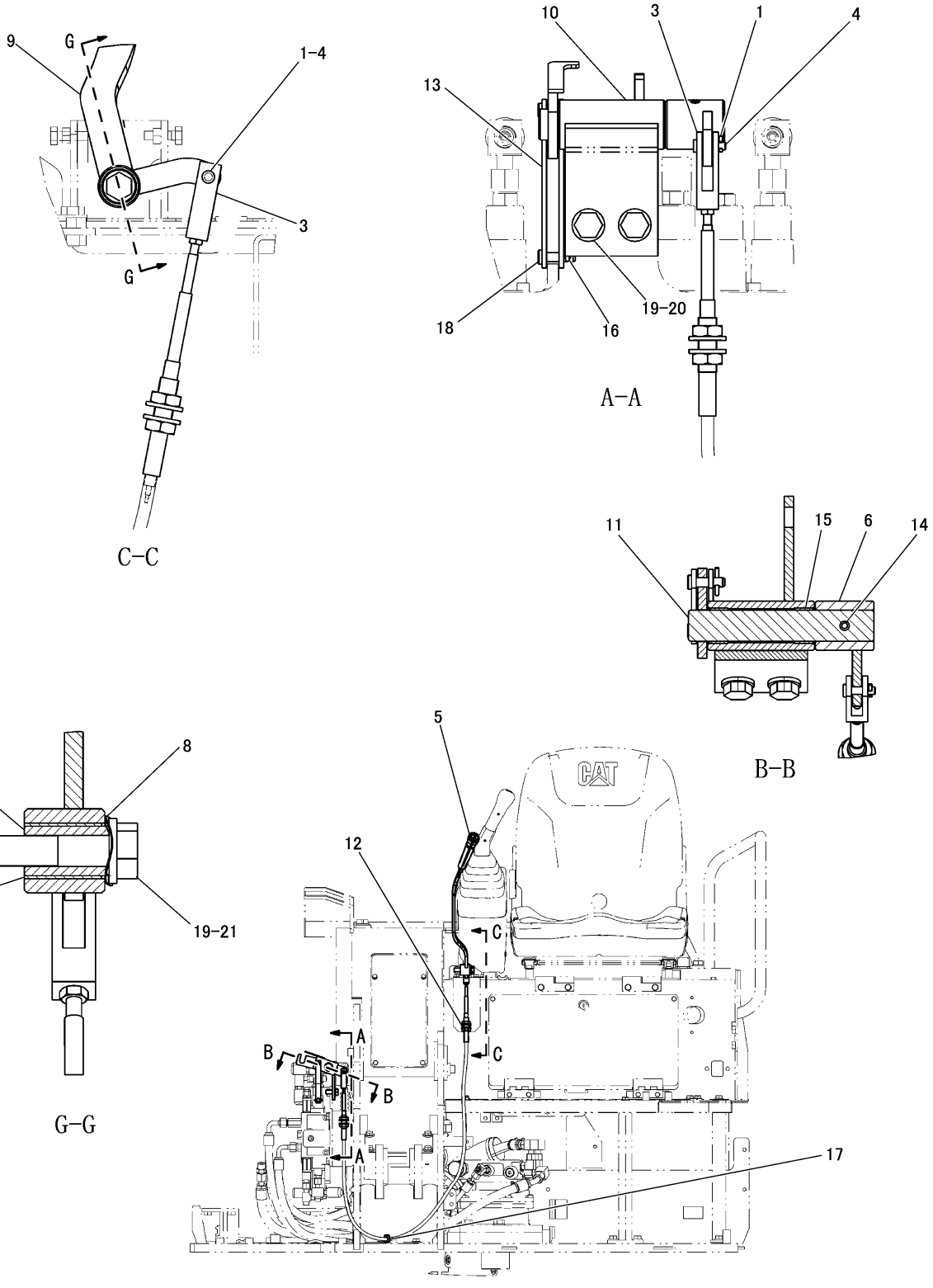

J146535 HE03

BLADE CONTROL GROUP (295-8643 N/S)
PART OF 295-3961-Page 433

HYDRAULIC SYSTEM

NOTE	No.	PART NO.	QTY	PART NAME	NOTE	No.	PART NO.	QTY	PART NAME
	1	095-0843	2	COTTER PIN					
	2	140-3348	1	BUSHING					
	3	239-0408	2	CLEVIS					
	4	246-0826	2	PIN					
	5	289-3163	1	KNOB					
	6	298-5070	1	LINK AS					
	7	302-2787	1	WASHER					
	8	302-2792	1	WASHER					
	9	316-6167	1	LEVER AS					
	10	316-6171	1	BRACKET AS					
	11	316-6173	1	LINK AS					
	12	316-6176	1	CABLE AS					
	13	317-0048	2	ROD END					
	14	095-9230	1	SPRING PIN					
	15	212-7911	2	BUSHING					
	16	3B-4607	2	COTTER PIN					
	17	3S-2093	1	STRAP					
	18	7X-2618	2	PIN					
	19	8T-4121	3	WASHER					
	20	8T-4136	2	BOLT(M10×1.5)					
	21	8T-4182	1	BOLT(M10×1.5)					

J146535 HE03

BLADE CONTROL GROUP (295-8643 N/S)

PART OF 295-3961-Page 433

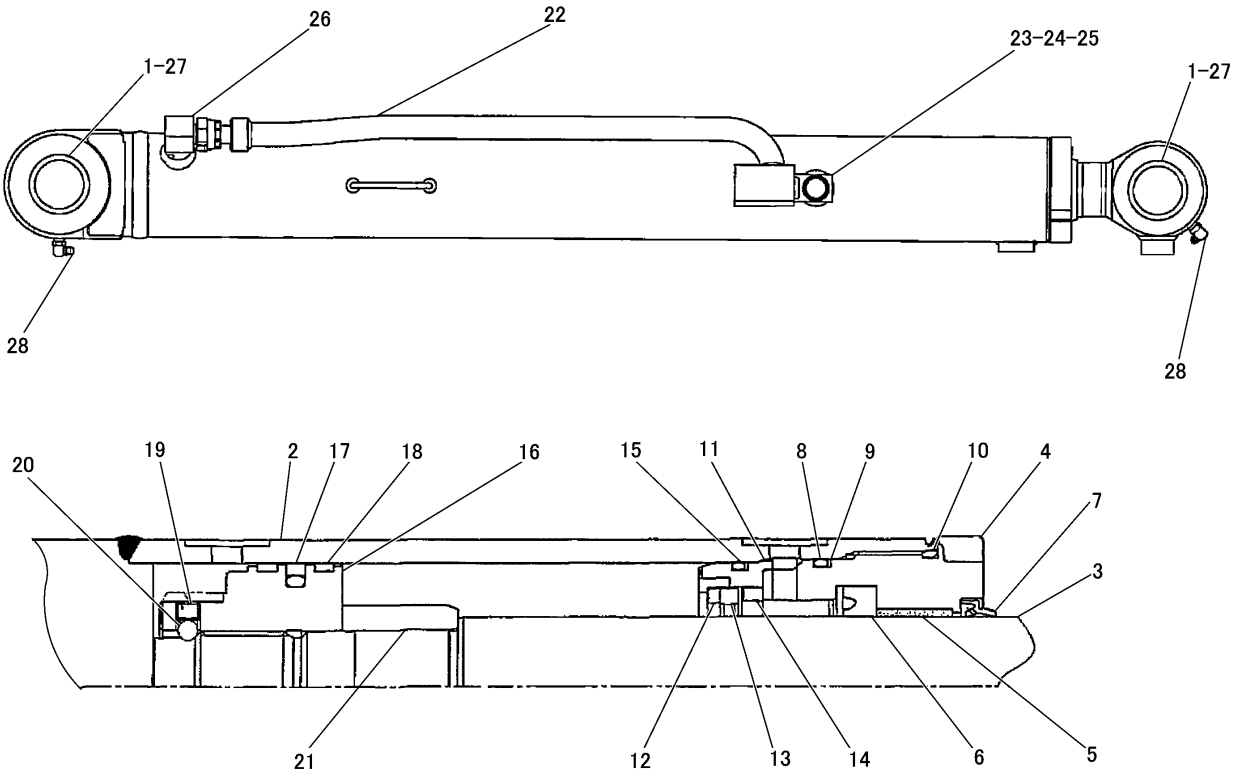

NOTE	No.	PART NO.	QTY	PART NAME	NOTE	No.	PART NO.	QTY	PART NAME
	1	151-4649	2	BUSHING	J	19	146-1089	1	SCREW
	2	318-0149	1	CYLINDER AS	J	20	146-3969	1	BALL
				(INCLUDES PARTS MARKED L)		21	237-6137	1	BEARING
	3	318-0150	1	ROD AS		22	318-0151	1	PIPE AS
				(INCLUDES PARTS MARKED T)		23	8T-4223	1	WASHER
P	4	237-6120	1	HEAD		24	237-7091	1	LOCKWASHER
P	5	311-1031	1	BUSHING		25	8T-4192	1	BOLT(M12×1.75)
PK	6	146-3957	1	RING		26	219-7323	1	SEAL
PK	7	146-3958	1	RING	TL	27	152-2457	4	SEAL
PKH	8	095-1709	2	SEAL	TL	28	3B-8488	2	FITTING
PK	9	237-6124	1	RING					
PK	10	095-1710	1	SEAL					AVAILABLE REPAIR KIT(S):
H	11	237-6128	1	HOLDER			314-7378	1	HEAD AS
H	12	237-6129	1	SPACER					(INCLUDES PARTS MARKED P)
H	13	237-6130	1	SEAL			237-6127	1	HOLDER AS
H	14	237-6131	1	COLLAR					(INCLUDES PARTS MARKED H)
KH	15	278-8633	1	RING			237-6134	1	PISTON AS
J	16	237-6135	1	PISTON					(INCLUDES PARTS MARKED J)
KJ	17	146-3923	1	SEAL AS			239-9707	1	SEAL KIT
KJ	18	237-6136	2	RING					(INCLUDES PARTS MARKED K)

J148625 X06

295-9371 CYLINDER GROUP -BOOM-80mm BORE × 681mm STROKE
PART OF 296-1809-Page 431

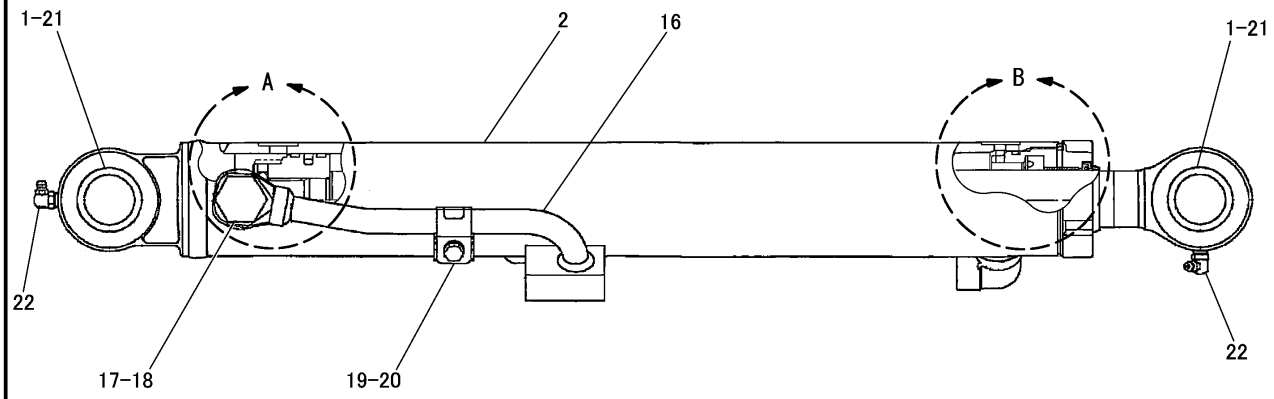

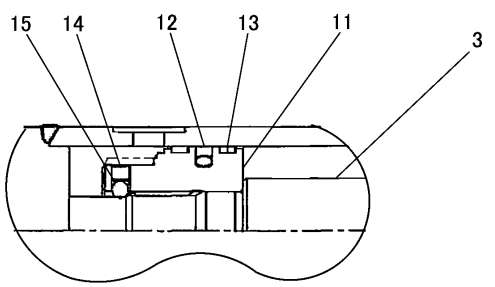

A

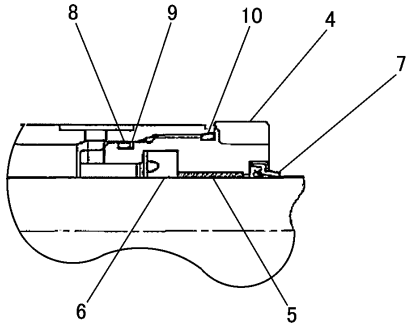

B

NOTE	No.	PART NO.	QTY	PART NAME	NOTE	No.	PART NO.	QTY	PART NAME
	1	265-8713	2	BEARING	L	18	304-3526	2	SEAL
	2	318-0712	1	CYLINDER AS	L	19	306-9642	1	BOLT
				(INCLUDES PARTS MARKED K)	L	20	199-1148	1	HOLDER
	3	318-0714	1	ROD AS	JK	21	175-4723	4	SEAL
				(INCLUDES PARTS MARKED J)	JK	22	3B-8488	2	FITTING
Q	4	237-7899	1	HEAD					
Q	5	310-8780	1	BUSHING					AVAILABLE REPAIR KIT(S):
QP	6	212-6073	1	RING			315-4330	1	HEAD AS
QP	7	175-4734	1	RING					(INCLUDES PARTS MARKED Q)
QP	8	095-1706	1	SEAL			237-7902	1	PISTON AS
QP	9	237-7901	1	RING					(INCLUDES PARTS MARKED H)
PQ	10	095-1707	1	SEAL	KN		304-3524	1	PLUG AS
H	11	237-7903	1	PISTON					(INCLUDES PARTS MARKED L)
HP	12	140-3750	1	RING AS			240-0453	1	SEAL KIT
HP	13	317-9672	2	RING					(INCLUDES PARTS MARKED P)
H	14	146-1089	1	SCREW					
H	15	146-3969	1	BALL					
K	16	318-0716	1	PIPE AS					
				(INCLUDES PARTS MARKED N)					
L	17	304-3525	1	PLUG					

J149102 X02

309-5675 CYLINDER GROUP -BUCKET-65mm BORE × 487mm STROKE
PART OF 296-1812-Page 433

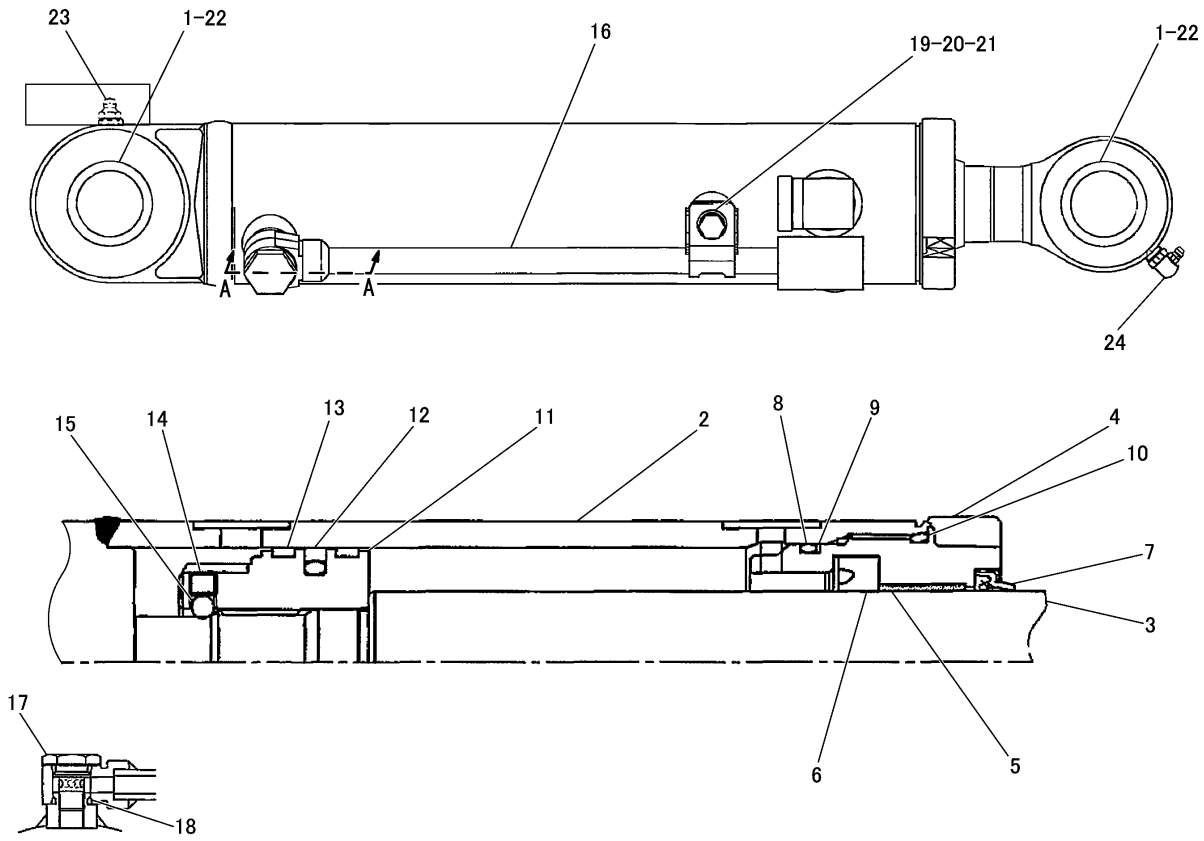

A-A

NOTE	No.	PART NO.	QTY	PART NAME	NOTE	No.	PART NO.	QTY	PART NAME
	1	140-5169	2	BUSHING	T	18	306-9640	2	SEAL
	2	318-1631	1	CYLINDER AS	T	19	306-9642	1	BOLT
				(INCLUDES PARTS MARKED P)	T	20	306-9643	1	WASHER
	3	237-8337	1	ROD AS	T	21	306-9644	1	HOLDER
				(INCLUDES PARTS MARKED H)	HP	22	175-4723	4	SEAL
J	4	309-5680	1	HEAD	P	23	3B-8489	1	FITTING
J	5	310-8780	1	BUSHING	PH	24	3B-8488	1	FITTING
JN	6	212-6073	1	RING					
JN	7	175-4734	1	RING					AVAILABLE REPAIR KIT(S):
JN	8	095-1707	1	SEAL			309-5679	1	HEAD AS
JN	9	237-7078	1	RING					(INCLUDES PARTS MARKED J)
JN	10	095-1708	1	SEAL			237-7086	1	PISTON AS
K	11	237-7087	1	PISTON					(INCLUDES PARTS MARKED K)
KN	12	175-4721	1	SEAL AS	PL		306-7933	1	PLUG AS
KN	13	237-7088	2	RING					(INCLUDES PARTS MARKED T)
K	14	216-7643	1	SCREW(M8×1.25)			251-9845	1	SEAL KIT
K	15	146-3969	1	BALL					(INCLUDES PARTS MARKED N)
P	16	318-1632	1	PIPE AS					
				(INCLUDES PARTS MARKED L)					
T	17	306-9639	1	PLUG					

J148624 X03

299-7766 CYLINDER GROUP -OFFSET-70mm BORE × 250mm STROKE

PART OF 296-1809-Page 431

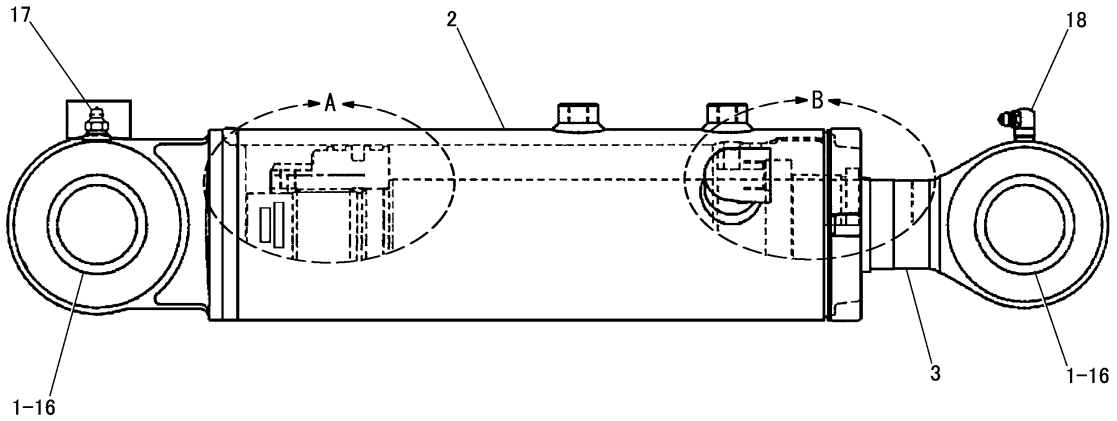

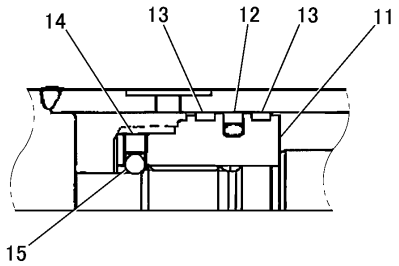

A

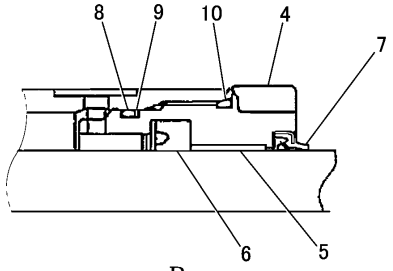

B

NOTE	No.	PART NO.	QTY	PART NAME	NOTE	No.	PART NO.	QTY	PART NAME
	1	265-8716	2	BEARING					AVAILABLE REPAIR KIT(S):
	2	318-2226	1	CYLINDER AS			314-7377	1	HEAD AS
				(INCLUDES PARTS MARKED N)					(INCLUDES PARTS MARKED L)
	3	318-2227	1	ROD AS			237-6134	1	PISTON AS
				(INCLUDES PARTS MARKED K)					(INCLUDES PARTS MARKED H)
L	4	294-7869	1	HEAD			279-7940	1	SEAL KIT
L	5	314-7387	1	BUSHING					(INCLUDES PARTS MARKED J)
JL	6	146-3916	1	RING					
JL	7	146-1086	1	RING					
JL	8	095-1709	1	SEAL					
JL	9	237-6124	1	RING					
JL	10	095-1710	1	SEAL					
H	11	237-6135	1	PISTON					
JH	12	146-3923	1	SEAL AS					
JH	13	237-6136	2	RING					
H	14	146-1089	1	SCREW					
H	15	146-3969	1	BALL					
KN	16	175-4723	4	SEAL					
N	17	3B-8489	1	FITTING					
K	18	3B-8488	1	FITTING					

J146536 X03

295-9372 CYLINDER GROUP -BLADE-80mm BORE × 165mm STROKE
PART OF 295-3961-Page 433

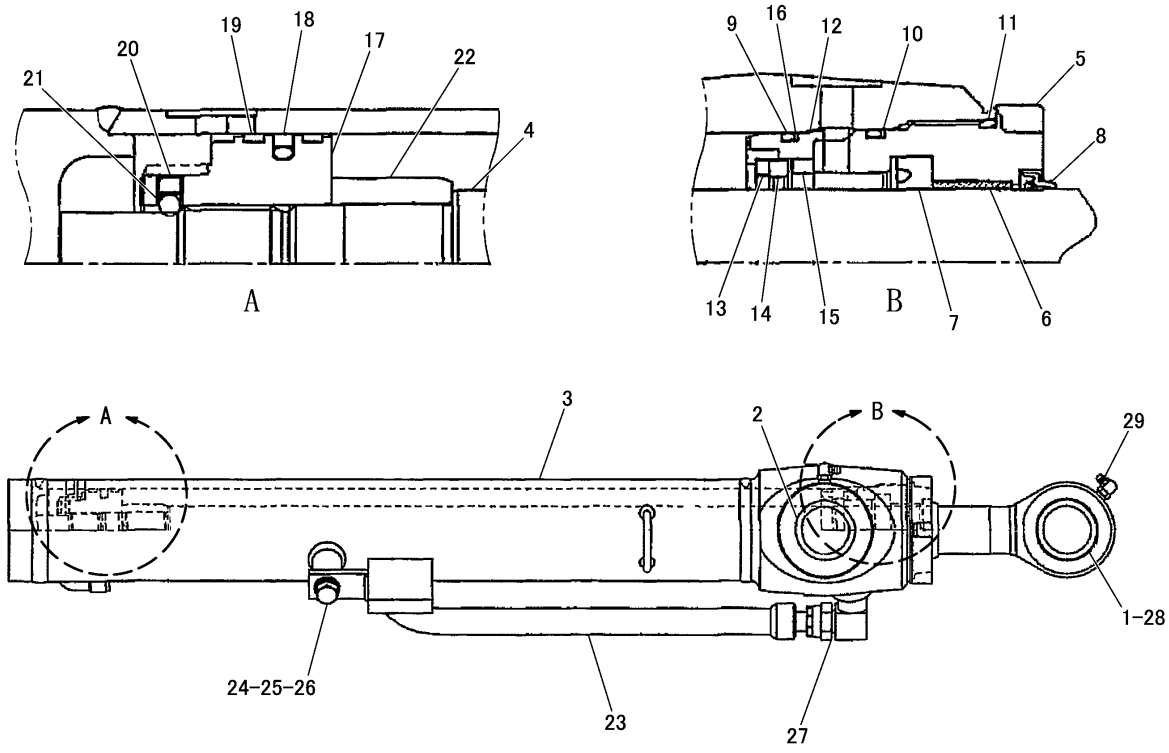

NOTE	No.	PART NO.	QTY	PART NAME	NOTE	No.	PART NO.	QTY	PART NAME
	1	265-8716	1	BEARING	NK	19	237-7088	1	RING
	2	265-8718	2	BEARING	N	20	216-7643	1	SCREW(M8×1.25)
	3	317-9709	1	CYLINDER AS	N	21	146-3969	1	BALL
				(INCLUDES PARTS MARKED L)		22	237-7089	1	BEARING
	4	317-9710	1	ROD AS		23	237-7090	1	PIPE AS
				(INCLUDES PARTS MARKED P)		24	8T-4121	1	WASHER
H	5	309-5680	1	HEAD		25	237-6139	1	LOCKWASHER
H	6	310-8780	1	BUSHING		26	8T-4136	1	BOLT(M10×1.5)
HK	7	212-6073	1	RING		27	6V-8398	1	SEAL
HK	8	175-4734	1	RING	PL	28	192-0638	4	SEAL
HJK	9	095-1707	2	SEAL	PL	29	3B-8488	3	FITTING
HK	10	237-7078	1	RING					AVAILABLE REPAIR KIT(S):
HK	11	095-1708	1	SEAL			309-5679	1	HEAD AS
J	12	237-7081	1	HOLDER					(INCLUDES PARTS MARKED H)
J	13	237-7082	1	SPACER			237-7080	1	HOLDER AS
J	14	237-7083	1	SEAL					(INCLUDES PARTS MARKED J)
J	15	237-7084	1	COLLAR			237-7086	1	PISTON AS
JK	16	237-7085	1	RING					(INCLUDES PARTS MARKED N)
N	17	237-7087	1	PISTON			240-0139	1	SEAL KIT
NK	18	175-4721	1	SEAL AS					(INCLUDES PARTS MARKED K)

J149354 X03

309-5674 CYLINDER GROUP -STICK-70mm BORE × 589mm STROKE
PART OF 296-4439-Page 432, 296-4440-Page 432

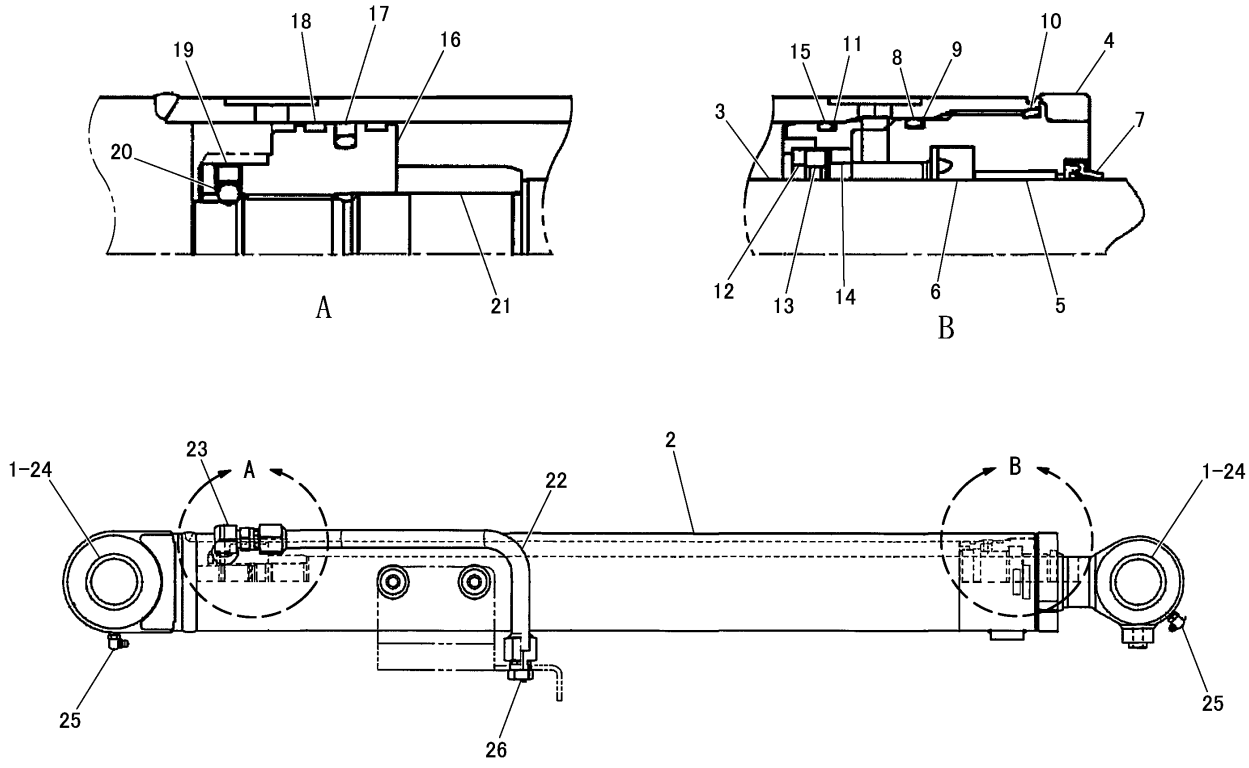

NOTE	No.	PART NO.	QTY	PART NAME	NOTE	No.	PART NO.	QTY	PART NAME
	1	151－4649	2	BUSHING	J	19	146－1089	1	SCREW
	2	318－2709	1	CYLINDER AS	J	20	146－3969	1	BALL
				(INCLUDES PARTS MARKED N)		21	237－6137	1	BEARING
	3	318－0150	1	ROD AS		22	318－2710	1	PIPE AS
				(INCLUDES PARTS MARKED P)					(INCLUDES PARTS MARKED K)
S	4	237－6120	1	HEAD		23	216－7244	1	SEAL
S	5	311－1031	1	BUSHING	NP	24	152－2457	4	SEAL
SL	6	146－3957	1	RING	NP	25	3B－8488	2	FITTING
SL	7	146－3958	1	RING	K	26	322－4851	1	PLUG AS
SHL	8	095－1709	2	SEAL					
SL	9	237－6124	1	RING					AVAILABLE REPAIR KIT(S):
SL	10	095－1710	1	SEAL			314－7378	1	HEAD AS
H	11	237－6128	1	HOLDER					(INCLUDES PARTS MARKED S)
H	12	237－6129	1	SPACER			237－6127	1	HOLDER AS
H	13	237－6130	1	SEAL					(INCLUDES PARTS MARKED H)
H	14	237－6131	1	COLLAR			237－6134	1	PISTON AS
HL	15	278－8633	1	RING					(INCLUDES PARTS MARKED J)
J	16	237－6135	1	PISTON			239－9707	1	SEAL KIT
JL	17	146－3923	1	SEAL AS					(INCLUDES PARTS MARKED L)
JL	18	237－6136	2	RING					

J149352 X03

308-7814 CYLINDER GROUP -BLCV-80mm BORE × 681mm STROKE

PART OF 307-8503-Page 2, 307-8504-Page 4, 5, 330-3619-Page 3, 330-3620-Page 6, 7
AN ATTACHMENT

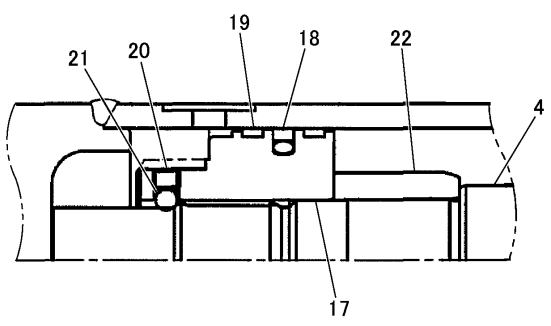

A

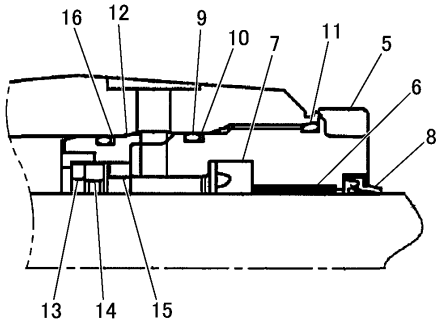

B

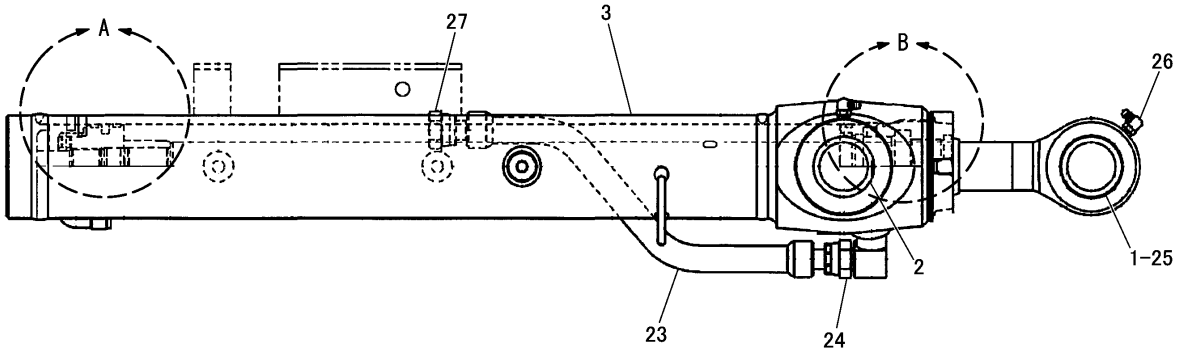

NOTE	No.	PART NO.	QTY	PART NAME	NOTE	No.	PART NO.	QTY	PART NAME
	1	265−8716	1	BEARING	JL	19	237−7088	2	RING
	2	265−8718	2	BEARING	J	20	216−7643	1	SCREW(M8×1.25)
	3	318−3397	1	CYLINDER AS	J	21	146−3969	1	BALL
				(INCLUDES PARTS MARKED N)		22	237−7089	1	BEARING
	4	317−9710	1	ROD AS		23	318−3398	1	PIPE AS
				(INCLUDES PARTS MARKED S)					(INCLUDES PARTS MARKED K)
P	5	309−5680	1	HEAD		24	6V−8398	1	SEAL
P	6	310−8780	1	BUSHING	NS	25	192−0638	4	SEAL
PL	7	212−6073	1	RING	NS	26	3B−8488	3	FITTING
PL	8	175−4734	1	RING	K	27	317−9593	1	PLUG AS
PHL	9	095−1707	2	SEAL					
PL	10	237−7078	1	RING					AVAILABLE REPAIR KIT(S):
PL	11	095−1708	1	SEAL			309−5679	1	HEAD AS
H	12	237−7081	1	HOLDER					(INCLUDES PARTS MARKED P)
H	13	237−7082	1	SPACER			237−7080	1	HOLDER AS
H	14	237−7083	1	SEAL					(INCLUDES PARTS MARKED H)
H	15	237−7084	1	COLLAR			237−7086	1	PISTON AS
HL	16	237−7085	1	RING					(INCLUDES PARTS MARKED J)
J	17	237−7087	1	PISTON			240−0139	1	SEAL KIT
JL	18	175−4721	1	SEAL AS					(INCLUDES PARTS MARKED L)

J149353 X02

308-7815 CYLINDER GROUP -SLCV-70mm BORE × 589mm STROKE
PART OF 307-8503-Page 2, 307-8504-Page 4, 5, 330-3619-Page 3, 330-3620-Page 6, 7
AN ATTACHMENT

CONSISTS OF :

			PAGE
1	231-9769	LIGHTING GROUP(BOOM)	218
1	295-9337	CYLINDER LINES GROUP	376
1	296-1954	FRONT WIRING GROUP	112
1	296-4436	BOOM GROUP(OFFSET)	436
1	306-7330	CYLINDER GUARD GROUP	440
1	296-1952	SENSOR AND MOUNTING GROUP(OFFSET)	450
1	296-1953	SENSOR AND MOUNTING GROUP(STICK)	449
1	295-9371	CYLINDER GROUP(BOOM)	424
1	299-7766	CYLINDER GROUP(OFFSET)	426

J146524 HE02

BOOM ARRANGEMENT (296-1809 N/S) -HYDRAULIC OFFSET BOOM
PART OF 296-1771-Page 1

CONSISTS OF :

			PAGE
1	295-9338	BUCKET LINES GROUP	374
1	295-9339	STICK LINES GROUP	365
1	298-2151	STICK GROUP	442
1	309-5674	CYLINDER GROUP(STICK)	428

J146852 HE03

STICK ARRANGEMENT (296-4439 N/S) -STANDARD

CONSISTS OF :

			PAGE
1	224-8367	FILM GROUP	565
1	295-9339	STICK LINES GROUP	365
1	295-9340	BUCKET LINES GROUP(LONG STICK)	375
1	298-2154	STICK GROUP(LONG)	444
1	309-5674	CYLINDER GROUP(STICK)	428
1	295-9375	MONITOR CONTROL GROUP	

J146879 HE03

STICK ARRANGEMENT (296-4440 N/S) -LONG
AN ATTACHMENT

CONSISTS OF :

			PAGE
1	295-3966	BLADE AND MOUNTING GROUP	451
1	295-8643	BLADE CONTROL GROUP	422
1	295-9328	CYLINDER LINES GROUP	377
1	295-9372	CYLINDER GROUP(BLADE)	427

J146523 HE01

STRAIGHT BLADE ARRANGEMENT (295-3961 N/S)
PART OF 296-1771-Page 1

CONSISTS OF :

			PAGE
1	306-7306	BUCKET LINKAGE GROUP	445
1	309-5675	CYLINDER GROUP(BUCKET)	425

J146530 HE02

BUCKET LINKAGE ARRANGEMENT (296-1812 N/S)
PART OF 296-1771-Page 1

CONSISTS OF :

PAGE

1 277-3432 HAMMER ARRANGEMENT 435

J146810 HE00

HAMMER ARRANGEMENT (307-8513 N/S)
AN ATTACHMENT

CONSISTS OF :

PAGE

1 278-4557 HAMMER ARRANGEMENT 435

J146804 HE00

HAMMER ARRANGEMENT (307-8514 N/S)
AN ATTACHMENT

CONSISTS OF :

			PAGE
1	165-1015	JUMPER LINES GROUP	378
1	165-1016	HYDRAULIC HAMMER GROUP	458
1	246-8372	BUCKET LINKAGE GROUP(HAMMER)	447
1	276-3317	FILM GROUP	563
1	165-1130	ADJUSTER TOOL ASSEMBLY	

J146811 HE01

HAMMER ARRANGEMENT (277-3432 N/S)
PART OF 307-8513-Page 434
AN ATTACHMENT

CONSISTS OF :

			PAGE
1	165-1015	JUMPER LINES GROUP	378
1	165-1016	HYDRAULIC HAMMER GROUP	458
1	276-3317	FILM GROUP	563
4	8T-4133	NUT(M10×1.5)	
1	8T-4178	BOLT(M10×1.5)	
1	8T-6685	BOLT(M10×1.5)	
2	232-4255	PIN	
1	165-1130	ADJUSTER TOOL ASSEMBLY	

J146805 HE01

HAMMER ARRANGEMENT (278-4557 N/S)
PART OF 307-8514-Page 434
AN ATTACHMENT

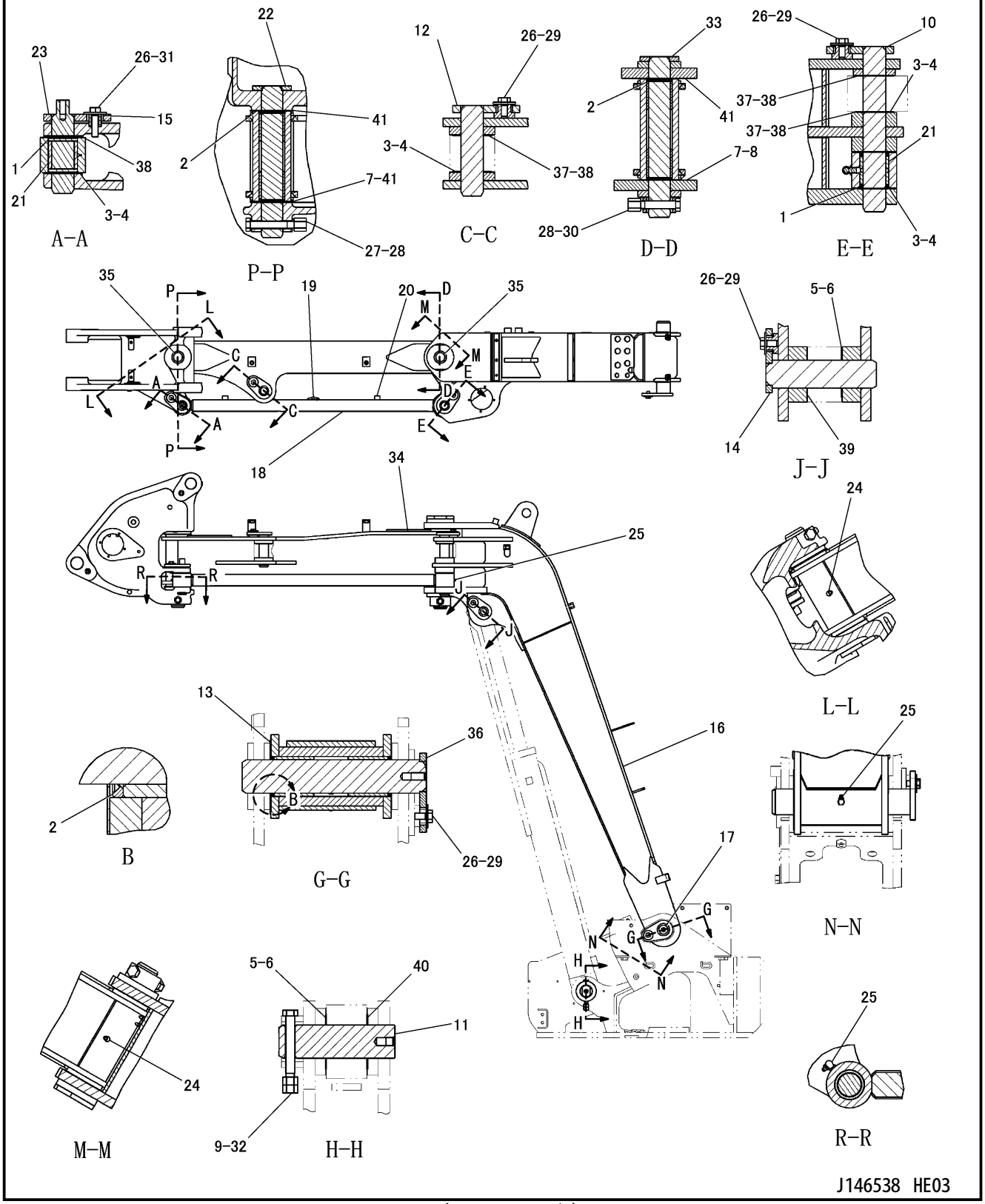

BOOM GROUP (296-4436 N/S) -OFFSET
PART OF 296-1809-Page 431

IMPLEMENTS

NOTE	No.	PART NO.	QTY	PART NAME	NOTE	No.	PART NO.	QTY	PART NAME
	1	140-3734	4	SEAL					
	2	150-5697	6	SEAL					
B	3	175-1792	4	SHIM(0.5mm THICK)					
B	4	175-1793	7	SHIM(1mm THICK)					
B	5	176-8464	2	SHIM(0.5mm THICK)					
B	6	176-8465	3	SHIM(1mm THICK)					
B	7	176-8466	2	SHIM(0.5mm THICK)					
B	8	176-8467	2	SHIM(1mm THICK)					
	9	198-5646	1	BOLT(M12×1.75)					
	10	232-4251	1	PIN AS					
	11	232-4256	1	PIN					
	12	232-4273	1	PIN AS					
B	13	234-2732	3	SHIM(1mm THICK)					
	14	240-8128	1	PIN AS					
	15	266-3872	1	BOSS					
	16	296-4437	1	BOOM AS					
	17	299-3861	2	BEARING					
	18	306-7325	1	BAR AS					
Z		232-4294	1	BAR AS					
	19	7T-1099	1	LINK					
	20	9R-2821	2	BOSS(M10×1.5)					
	21	265-8713	2	BEARING					
	22	311-0586	1	PIN AS					
	23	316-0803	1	PIN AS					
	24	3B-8485	2	FITTING					
	25	3B-8488	3	FITTING					
	26	6V-8513	5	WASHER					
	27	7X-2475	1	BOLT(M16×2)					
	28	8T-4132	4	NUT(M16×2)					
	29	8T-4137	4	BOLT(M10×1.5)					
	30	8T-4173	1	BOLT(M16×2)					
	31	8T-4196	1	BOLT(M10×1.5)					
	32	8T-4244	2	NUT(M12×1.75)					
	33	306-7326	1	PIN AS					
	34	306-7324	1	BOOM AS					
	35	299-3861	4	BEARING					
	36	307-8500	1	PIN AS					
	37	175-1792	3	SHIM(0.5mm THICK)					
	38	175-1793	5	SHIM(1mm THICK)					
	39	176-8464	1	SHIM(0.5mm THICK)					
	40	176-8465	1	SHIM(1mm THICK)					
	41	176-8467	4	SHIM(1mm THICK)					

B-USE AS REQUIRED
Z-NOT SERVICED SEPARATELY

J146538 HE03

BOOM GROUP (296-4436 N/S) -OFFSET

PART OF 296-1809-Page 431

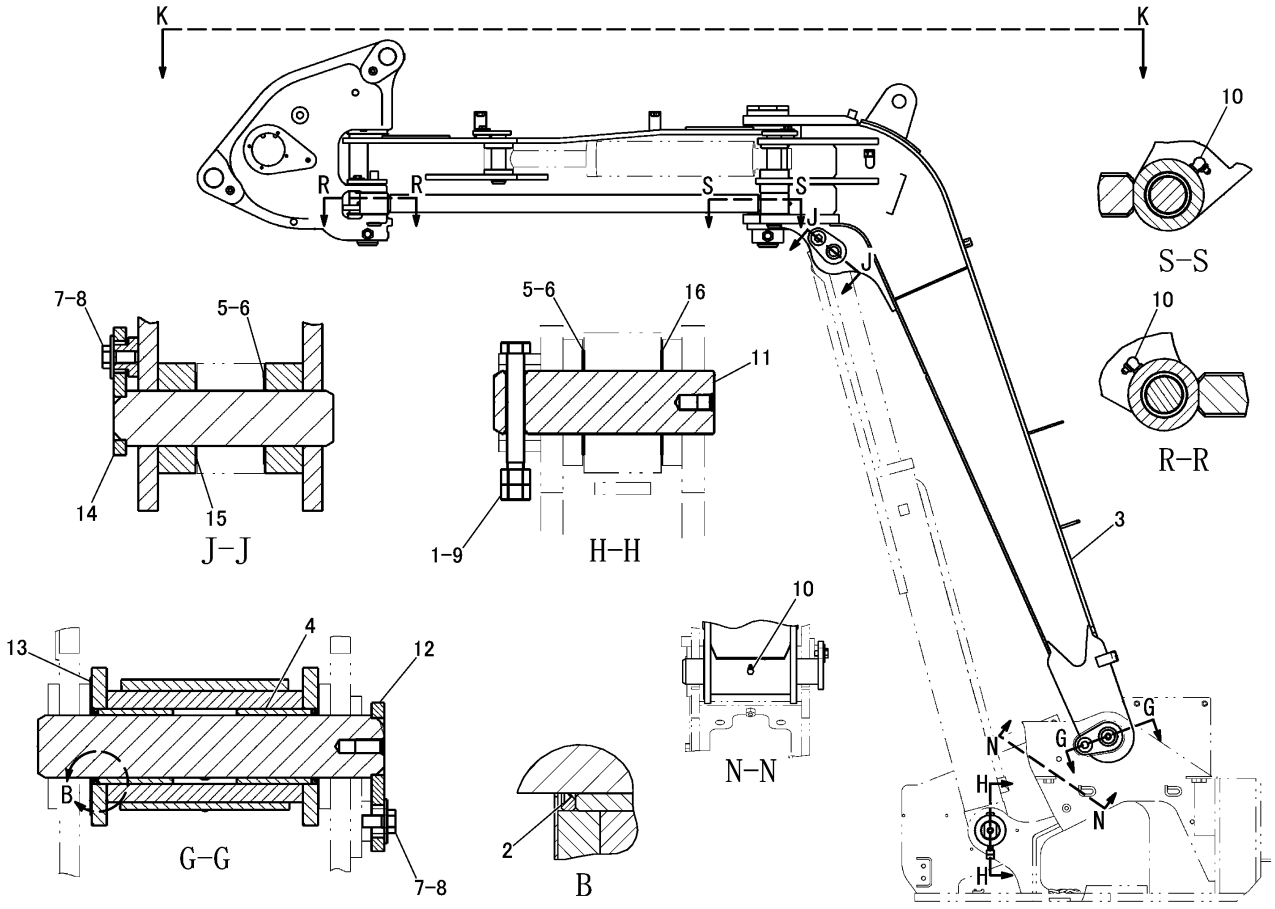

NOTE	No.	PART NO.	QTY	PART NAME	NOTE	No.	PART NO.	QTY	PART NAME
	1	8T-4244	2	NUT(M12×1.75)					
	2	150-5697	2	SEAL					
	3	319-6377	1	BOOM AS					
	4	299-3861	2	BEARING					
B	5	176-8464	2	SHIM(0.5mm THICK)					
B	6	176-8465	3	SHIM(1mm THICK)					
	7	8T-4137	2	BOLT(M10×1.5)					
	8	6V-8513	2	WASHER					
	9	198-5646	1	BOLT(M12×1.75)					
	10	3B-8488	3	FITTING					
	11	232-4256	1	PIN					
	12	307-8500	1	PIN AS					
B	13	234-2732	3	SHIM(1mm THICK)					
	14	240-8128	1	PIN AS					
	15	176-8464	1	SHIM(0.5mm THICK)					
	16	176-8465	1	SHIM(1mm THICK)					

B-USE AS REQUIRED

J147582 HE00

BOOM GROUP (319-6376 N/S) -OFFSET-PART 1 OF 2
PART OF 295-9343-Page 307, 307-8503-Page 2, 307-8504-Page 4, 5, 330-3619-Page 3, 330-3620-Page 6, 7
AN ATTACHMENT

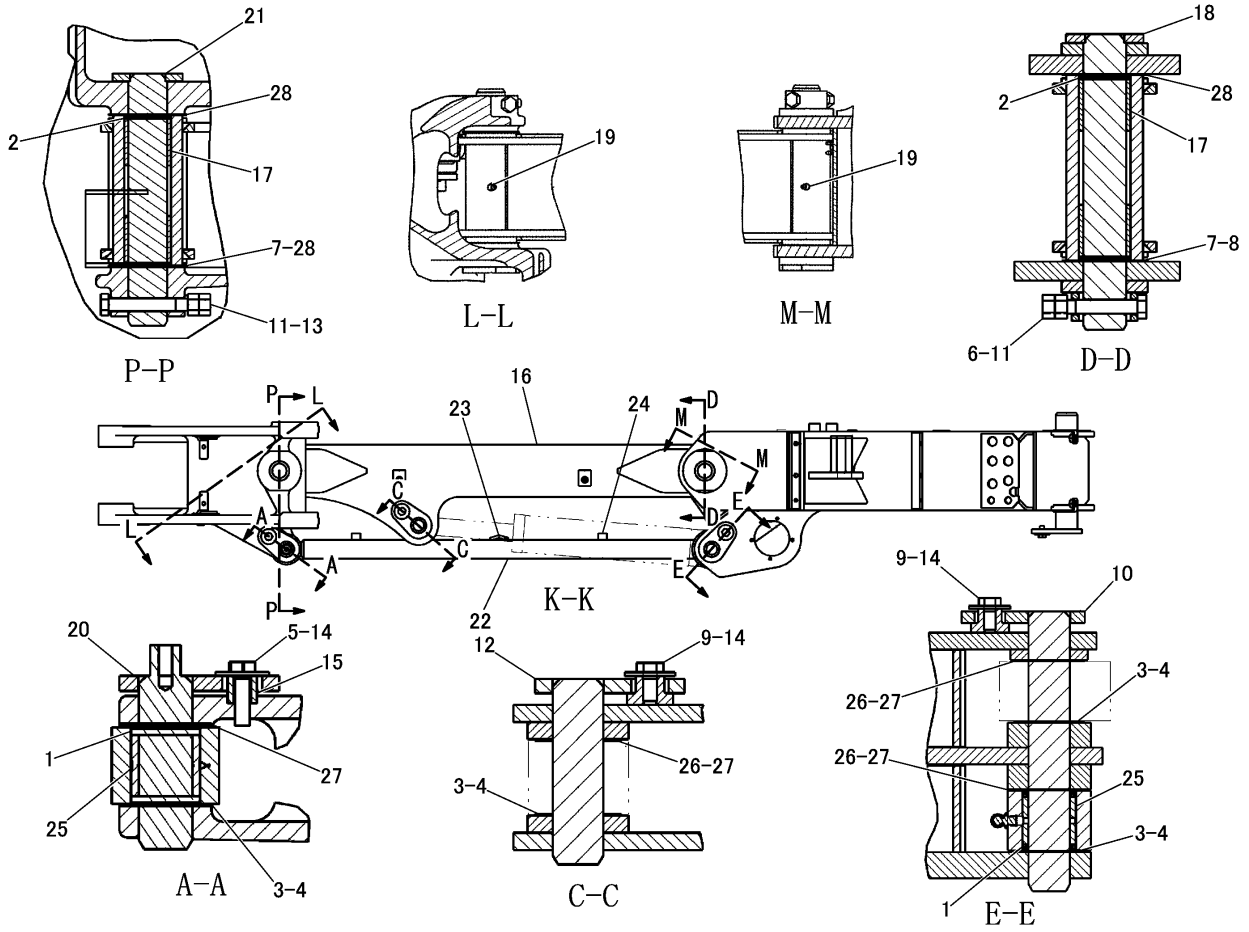

NOTE	No.	PART NO.	QTY	PART NAME	NOTE	No.	PART NO.	QTY	PART NAME
	1	140-3734	4	SEAL		21	311-0586	1	PIN AS
	2	150-5697	4	SEAL		22	306-7325	1	BAR AS
B	3	175-1792	4	SHIM(0.5mm THICK)	Z		232-4294	1	BAR AS
B	4	175-1793	7	SHIM(1mm THICK)		23	7T-1099	1	LINK
	5	8T-4196	1	BOLT(M10×1.5)		24	9R-2821	2	BOSS(M10×1.5)
	6	8T-4173	1	BOLT(M16×2)		25	265-8713	2	BEARING
B	7	176-8466	2	SHIM(0.5mm THICK)		26	175-1792	3	SHIM(0.5mm THICK)
B	8	176-8467	2	SHIM(1mm THICK)		27	175-1793	5	SHIM(1mm THICK)
	9	8T-4137	2	BOLT(M10×1.5)		28	176-8467	4	SHIM(1mm THICK)
	10	232-4251	1	PIN AS					
	11	8T-4132	4	NUT(M16×2)					
	12	232-4273	1	PIN AS					
	13	7X-2475	1	BOLT(M16×2)					
	14	6V-8513	3	WASHER					
	15	266-3872	1	BOSS					
	16	306-7324	1	BOOM AS					
	17	299-3861	4	BEARING					
	18	306-7326	1	PIN AS					
	19	3B-8485	2	FITTING					
	20	316-0803	1	PIN AS					

B-USE AS REQUIRED
Z-NOT SERVICED SEPARATELY

J147583 HE00

BOOM GROUP (319-6376 N/S) -OFFSET-PART 2 OF 2

PART OF 295-9343-Page 307, 307-8503-Page 2, 307-8504-Page 4, 5, 330-3619-Page 3, 330-3620-Page 6, 7
AN ATTACHMENT

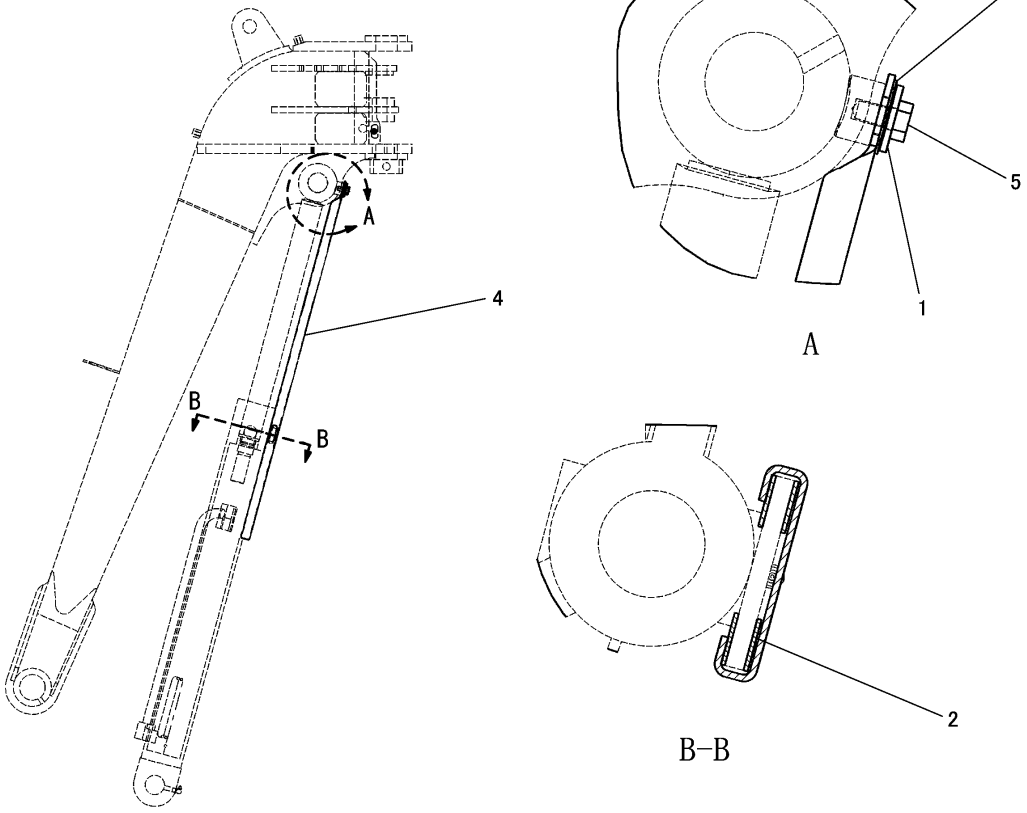

NOTE	No.	PART NO.	QTY	PART NAME	NOTE	No.	PART NO.	QTY	PART NAME
	1	140-4780	1	WASHER					
	2	172-2596	2	TUBE					
	3	266-4024	1	WASHER					
	4	307-8502	1	COVER					
	5	8T-4137	1	BOLT(M10×1.5)					

J146541 HE00

CYLINDER GUARD GROUP (306-7330 N/S) -BOOM
PART OF 296-1809-Page 431

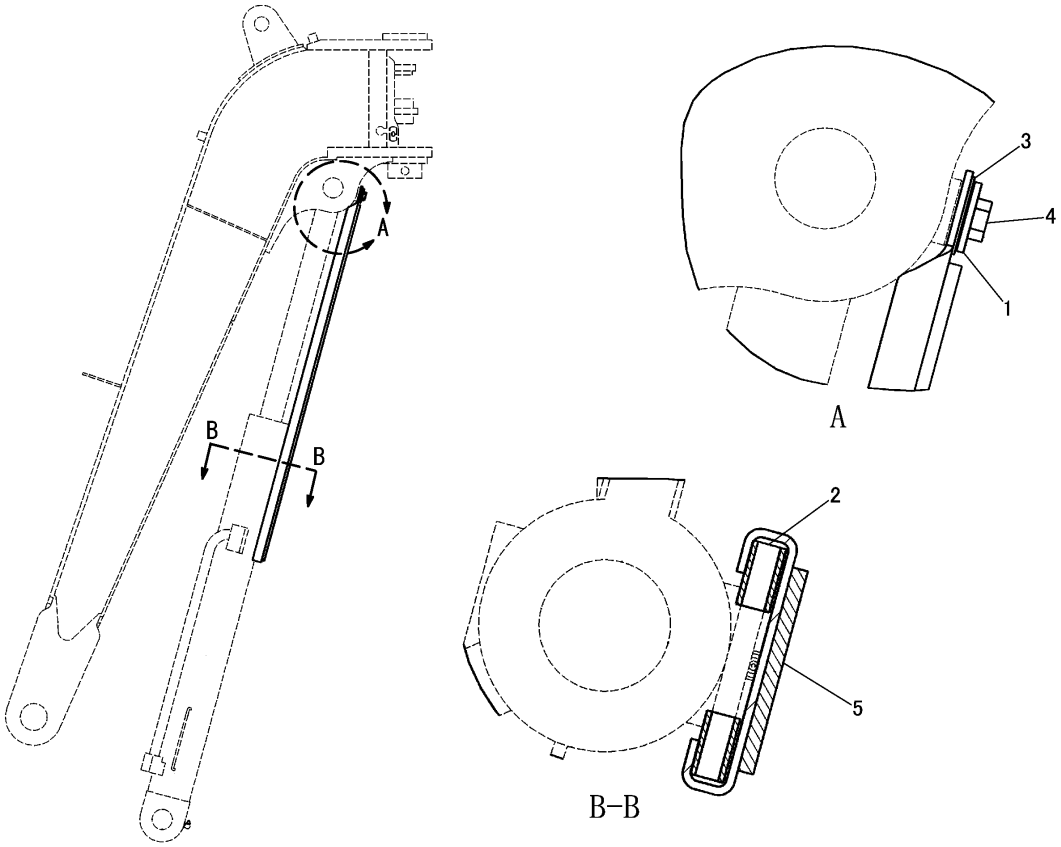

NOTE	No.	PART NO.	QTY	PART NAME	NOTE	No.	PART NO.	QTY	PART NAME
	1	140－4780	1	WASHER					
	2	172－2596	2	TUBE					
	3	266－4024	1	WASHER					
	4	8T－4137	1	BOLT(M10×1.5)					
	5	314－2261	1	COVER AS					

J146893 HE00

CYLINDER GUARD GROUP (314-2258 N/S) -BOOM
AN ATTACHMENT

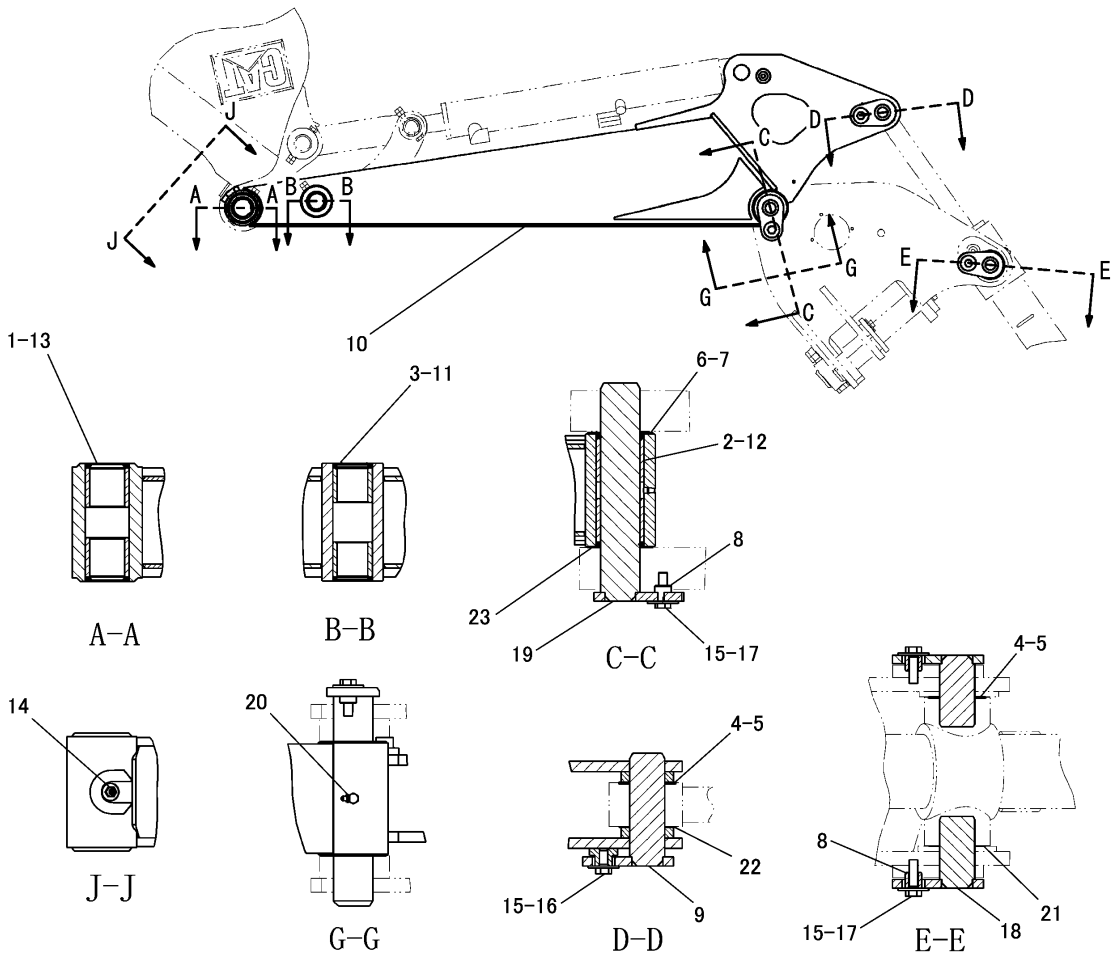

NOTE	No.	PART NO.	QTY	PART NAME	NOTE	No.	PART NO.	QTY	PART NAME
	1	093-1429	2	SEAL		21	175-1794	1	SHIM
	2	093-1430	2	SEAL		22	175-1795	1	SHIM
	3	140-3734	2	SEAL		23	176-8465	1	SHIM
B	4	175-1794	2	SHIM(0.5mm THICK)					
B	5	175-1795	3	SHIM(1.0mm THICK)					
B	6	176-8464	1	SHIM(0.5mm THICK)					
B	7	176-8465	1	SHIM(1.0mm THICK)					
	8	266-3872	3	BOSS					
	9	266-4064	1	PIN AS					
	10	298-2152	1	STICK AS					
	11	265-8714	2	BEARING					
	12	306-5212	2	BEARING					
	13	306-5213	2	BEARING					
	14	3B-8489	1	FITTING					
	15	6V-8513	4	WASHER					
	16	8T-4137	1	BOLT(M10×1.5)					
	17	8T-4196	3	BOLT(M10×1.5)					
	18	316-0805	2	PIN AS					
	19	316-0807	1	PIN AS					
	20	3B-8488	1	FITTING					

B-USE AS REQUIRED

J146859 HE03

STICK GROUP (298-2151 N/S) -STANDARD
PART OF 296-4439-Page 432
1.2m STICK

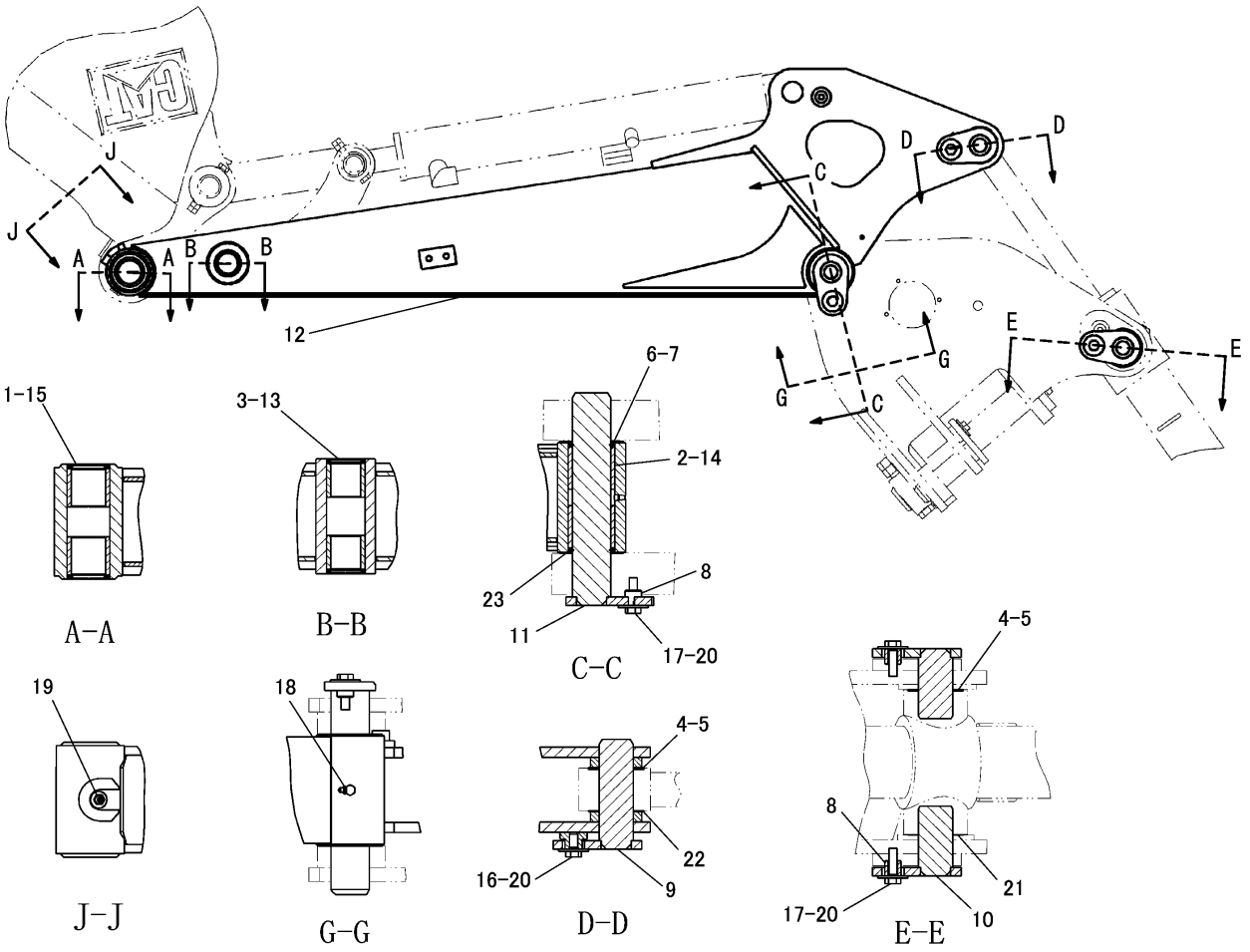

NOTE	No.	PART NO.	QTY	PART NAME	NOTE	No.	PART NO.	QTY	PART NAME
	1	093-1429	2	SEAL		21	175-1794	1	SHIM
	2	093-1430	2	SEAL		22	175-1795	1	SHIM
	3	140-3734	2	SEAL		23	176-8465	1	SHIM
B	4	175-1794	2	SHIM(0.5mm THICK)					
B	5	175-1795	3	SHIM(1.0mm THICK)					
B	6	176-8464	1	SHIM(0.5mm THICK)					
B	7	176-8465	1	SHIM(1.0mm THICK)					
	8	266-3872	3	BOSS					
	9	266-4064	1	PIN AS					
	10	316-0805	2	PIN AS					
	11	316-0807	1	PIN AS					
	12	319-6380	1	STICK AS					
	13	265-8714	2	BEARING					
	14	306-5212	2	BEARING					
	15	306-5213	2	BEARING					
	16	8T-4137	1	BOLT(M10×1.5)					
	17	8T-4196	3	BOLT(M10×1.5)					
	18	3B-8488	1	FITTING					
	19	3B-8489	1	FITTING					
	20	6V-8513	4	WASHER					

B-USE AS REQUIRED

J147587 HE00

STICK GROUP (319-6379 N/S) -STANDARD-AUXILIARY
PART OF 295-9343-Page 307
1.2m STICK
AN ATTACHMENT

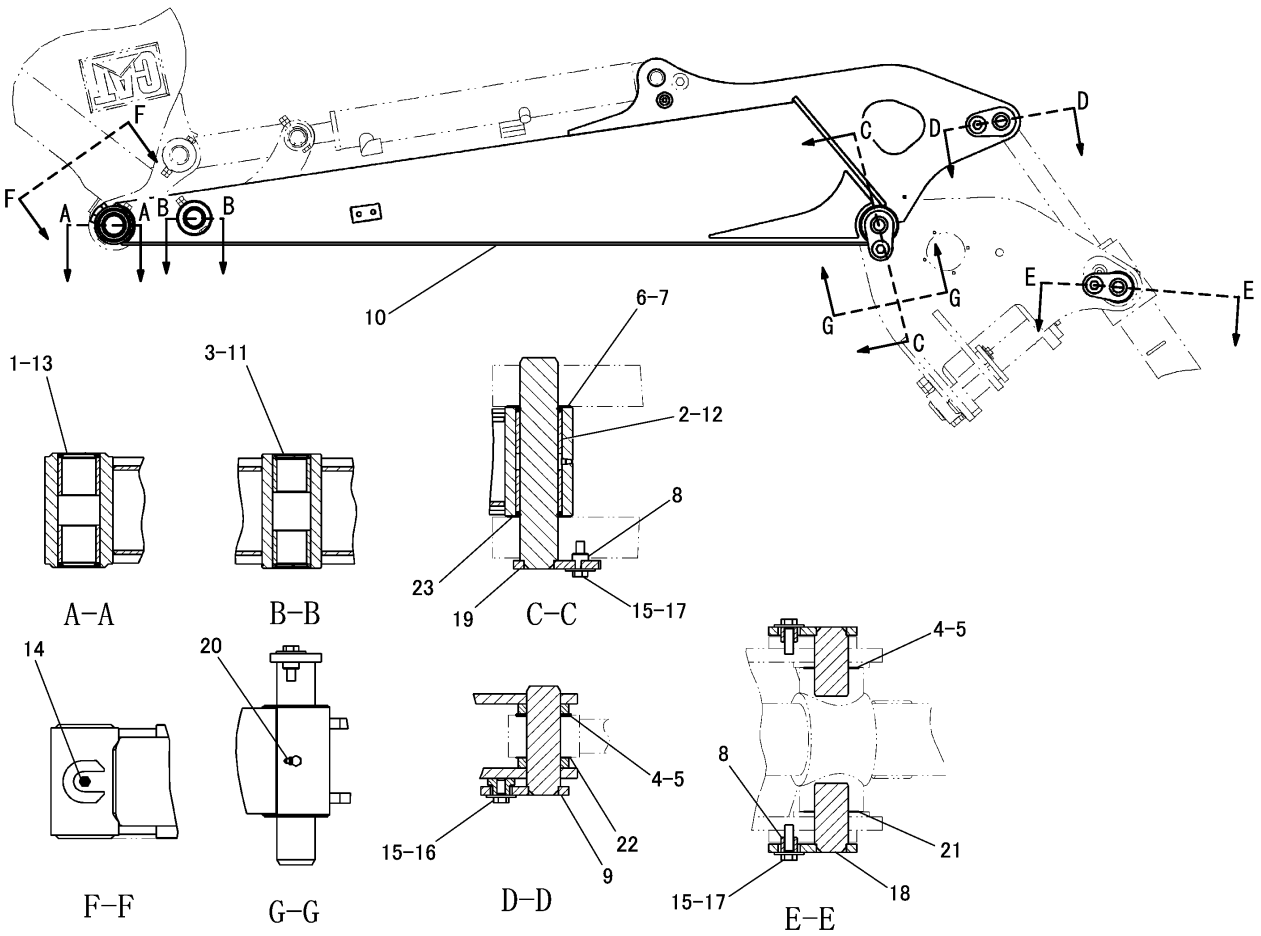

NOTE	No.	PART NO.	QTY	PART NAME	NOTE	No.	PART NO.	QTY	PART NAME
	1	093-1429	2	SEAL		19	316-0807	1	PIN AS
	2	093-1430	2	SEAL		20	3B-8488	1	FITTING
	3	140-3734	2	SEAL		21	175-1794	1	SHIM
B	4	175-1794	2	SHIM(0.5mm THICK)		22	175-1795	1	SHIM
B	5	175-1795	3	SHIM(1.0mm THICK)		23	176-8465	1	SHIM
B	6	176-8464	1	SHIM(0.5mm THICK)					
B	7	176-8465	1	SHIM(1.0mm THICK)					
	8	266-3872	3	BOSS					
	9	266-4064	1	PIN AS					
	10	298-2155	1	STICK AS					
Z		298-2156	1	STICK AS					
		9R-2672	2	BOSS(M10×1.5)					
	11	265-8714	2	BEARING					
	12	306-5212	2	BEARING					
	13	306-5213	2	BEARING					
	14	3B-8489	1	FITTING					
	15	6V-8513	4	WASHER					
	16	8T-4137	1	BOLT(M10×1.5)					
	17	8T-4196	3	BOLT(M10×1.5)					
	18	316-0805	2	PIN AS					

B-USE AS REQUIRED
Z-NOT SERVICED SEPARATELY

J146890 HE02

STICK GROUP (298-2154 N/S) -LONG

PART OF 296-4440-Page 432
1.6m STICK
AN ATTACHMENT

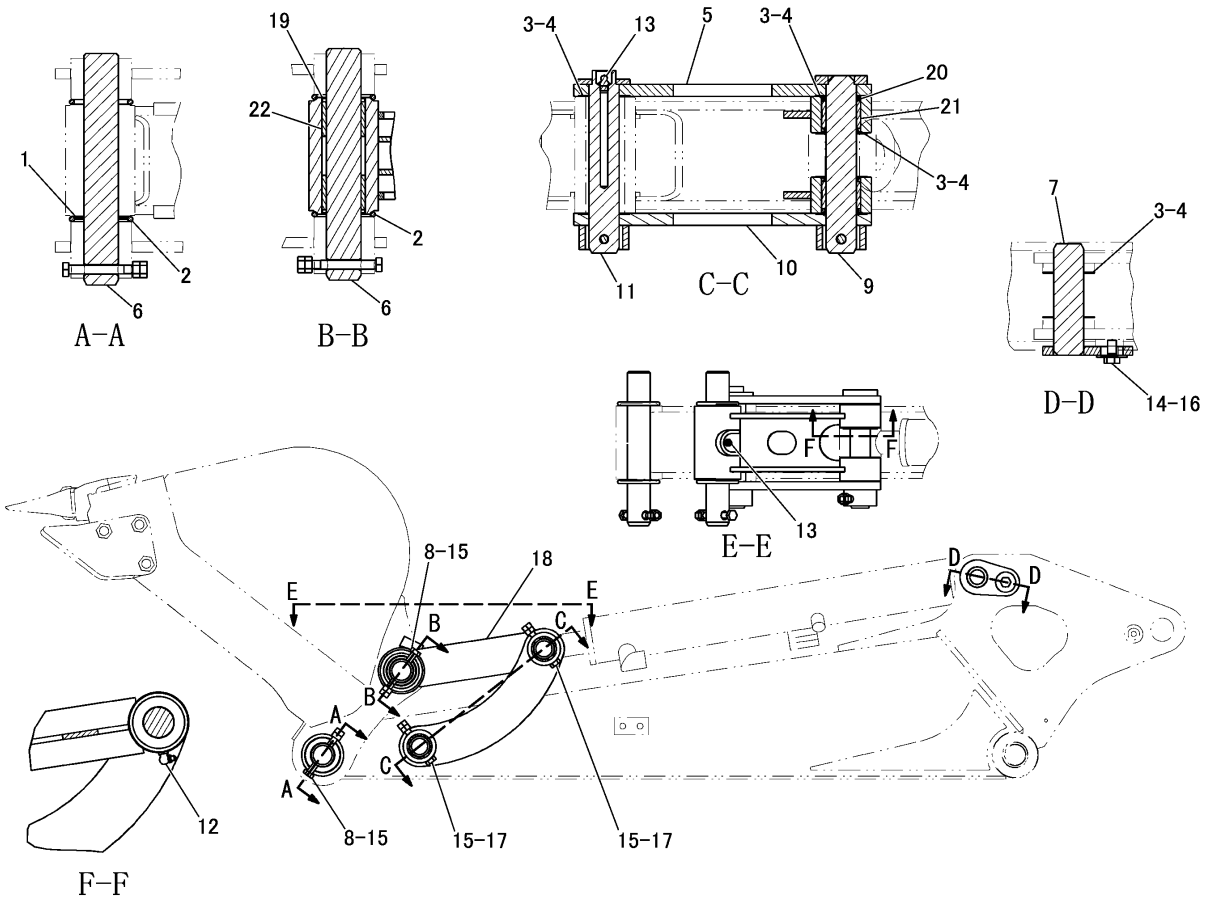

NOTE	No.	PART NO.	QTY	PART NAME	NOTE	No.	PART NO.	QTY	PART NAME
B	1	121-3708	2	SHIM(1.0mm THICK)		18	306-7307	1	LINK AS
	2	146-2932	4	SEAL			306-7308	1	LINK
B	3	175-1792	7	SHIM(0.5mm THICK)		19	093-1429	2	SEAL
B	4	175-1793	4	SHIM(1mm THICK)		20	140-3734	4	SEAL
	5	203-2864	1	LINK		21	265-8712	2	BEARING
	6	232-4255	2	PIN		22	265-8715	2	BEARING
	7	232-4273	1	PIN AS					
	8	8T-4178	2	BOLT(M10×1.5)					
	9	306-7310	1	PIN AS					
	10	306-7312	1	LINK AS					
		203-2864	1	LINK					
	11	306-7314	1	PIN AS					
	12	3B-8488	2	FITTING					
	13	3B-8489	2	FITTING					
	14	6V-8513	1	WASHER					
	15	8T-4133	8	NUT(M10×1.5)					
	16	8T-4137	1	BOLT(M10×1.5)					
	17	8T-4172	2	BOLT(M10×1.5)					

B-USE AS REQUIRED

J146675 HE00

BUCKET LINKAGE GROUP (306-7306 N/S)
PART OF 296-1812-Page 433

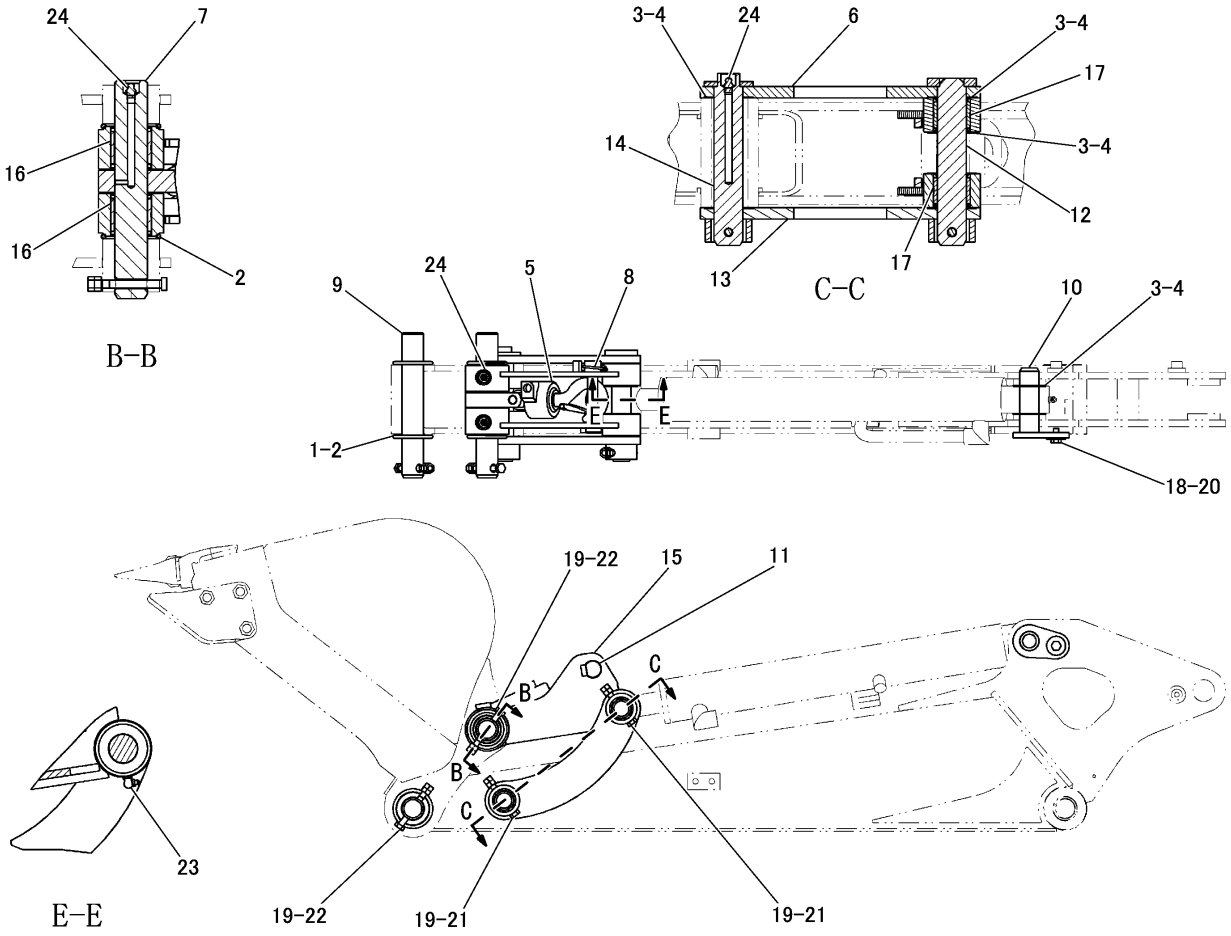

NOTE	No.	PART NO.	QTY	PART NAME	NOTE	No.	PART NO.	QTY	PART NAME
B	1	121-3708	2	SHIM(1mm THICK)		15	307-8505	1	LINK AS
	2	Z440100620	4	SEAL			307-8506	1	LINK AS
B	3	175-1792	7	SHIM(0.5mm THICK)		16	093-1429	4	SEAL
B	4	175-1793	4	SHIM(1mm THICK)			265-8716	2	BEARING
	5	199-0569	1	HOOK GROUP		17	140-3734	4	SEAL
		220-4000	1	LATCH KIT			265-8712	2	BEARING
				-OR-		18	6V-8513	1	WASHER
		331-1437	1	HOOK GROUP		19	8T-4133	8	NUT(M10×1.5)
				(NEW COMPANY NAME)		20	8T-4137	1	BOLT(M10×1.5)
		220-4000	1	LATCH KIT		21	8T-4172	2	BOLT(M10×1.5)
	6	203-2864	1	LINK		22	8T-4178	2	BOLT(M10×1.5)
	7	203-7171	1	PIN		23	3B-8488	2	FITTING
	8	210-2957	1	PIN		24	3B-8489	4	FITTING
	9	232-4255	1	PIN					
	10	232-4273	1	PIN AS					
	11	284-6392	1	PIN					
	12	306-7310	1	PIN AS					
	13	306-7312	1	LINK AS					
		203-2864	1	LINK					
	14	306-7314	1	PIN AS					

B-USE AS REQUIRED

J146829 HE00

BUCKET LINKAGE GROUP (307-8508 N/S) -CRANE

PART OF 307-8503-Page 2, 307-8504-Page 4, 5, 330-3619-Page 3, 330-3620-Page 6, 7
AN ATTACHMENT

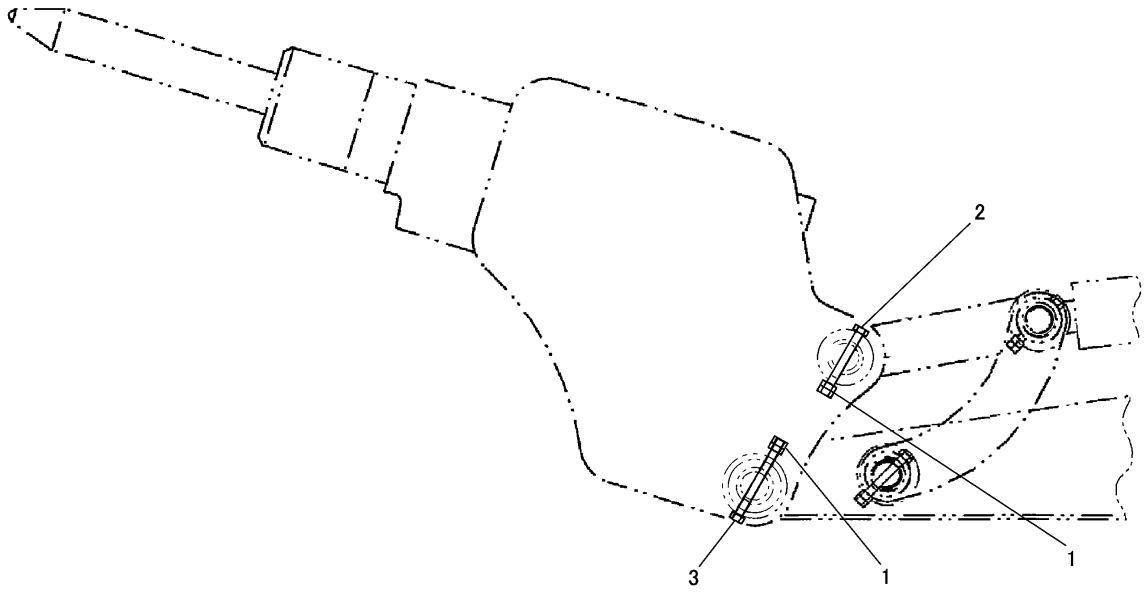

NOTE	No.	PART NO.	QTY	PART NAME	NOTE	No.	PART NO.	QTY	PART NAME
	1	8T-4133	4	NUT(M10×1.5)					
	2	8T-4178	1	BOLT(M10×1.5)					
	3	8T-6685	1	BOLT(M10×1.5)					

J129187 E00

BUCKET LINKAGE GROUP (246-8372 N/S) -HAMMER
PART OF 277-3432-Page 435
AN ATTACHMENT

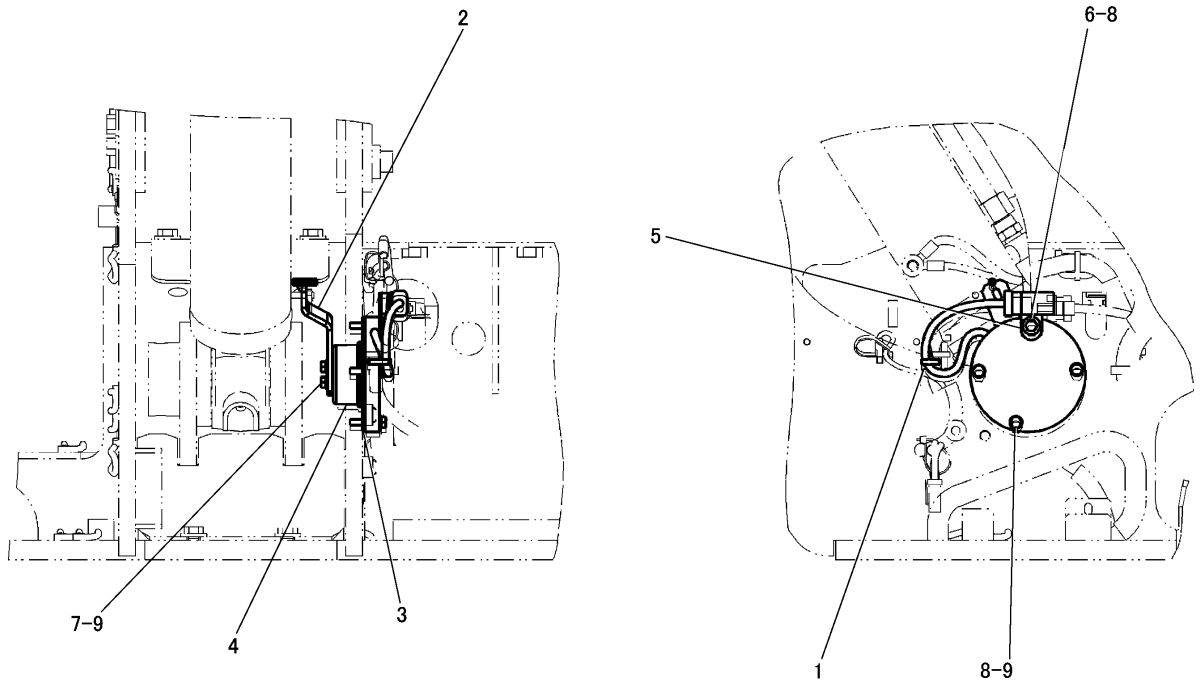

NOTE	No.	PART NO.	QTY	PART NAME	NOTE	No.	PART NO.	QTY	PART NAME
	1	3S-2093	1	STRAP					
	2	233-3918	1	LEVER					
	3	240-9794	1	PLATE					
	4	284-3838	1	SENSOR AS					
	5	116-0118	1	CLIP					
	6	8T-2228	1	WASHER					
	7	8T-4970	2	BOLT(M6×1)					
	8	8T-4971	4	BOLT(M6×1)					
	9	9X-8256	5	WASHER					

J146584 HE01

SENSOR AND MOUNTING GROUP (296-1948 N/S) -BOOM

PART OF 296-1803-Page 241

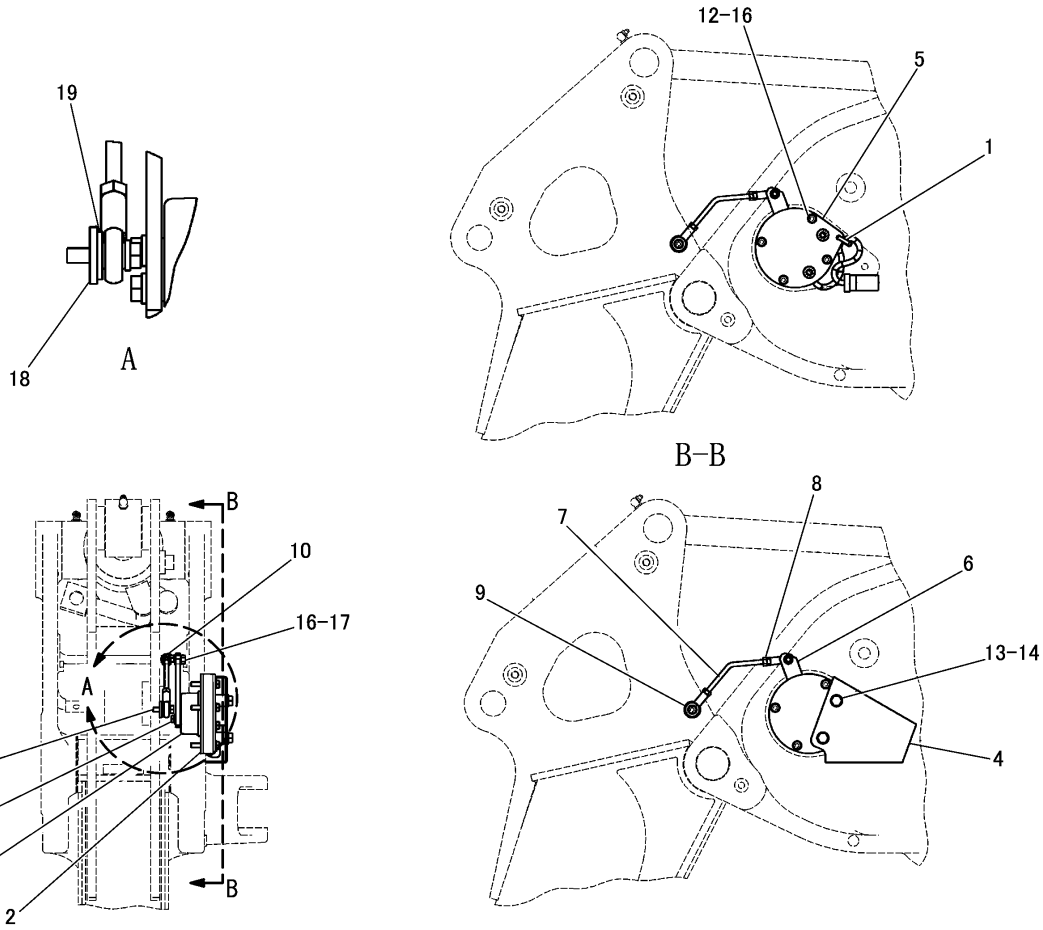

NOTE	No.	PART NO.	QTY	PART NAME	NOTE	No.	PART NO.	QTY	PART NAME
	1	3S-2093	1	STRAP					
	2	240-9794	1	PLATE					
	3	284-3838	1	SENSOR AS					
	4	318-2723	1	COVER					
	5	318-3570	1	PLATE AS					
	6	240-9792	1	LEVER					
	7	241-3594	1	ROD AS					
	8	5C-2890	2	NUT(M6×1)					
	9	8C-3111	1	ROD END					
	10	207-6735	1	BALL JOINT					
	11	6V-7357	1	BOLT(M6×1)					
	12	7X-2533	4	BOLT(M6×1)					
	13	8T-4200	2	BOLT(M8×1.25)					
	14	8T-4224	2	WASHER					
	15	8T-4970	2	BOLT(M6×1)					
	16	9X-8256	9	WASHER					
	17	5C-2890	1	NUT(M6×1)					
	18	5P-1075	1	WASHER					
	19	5P-4115	1	WASHER					

J146544 HE02

SENSOR AND MOUNTING GROUP (296-1953 N/S) -STICK
PART OF 296-1809-Page 431

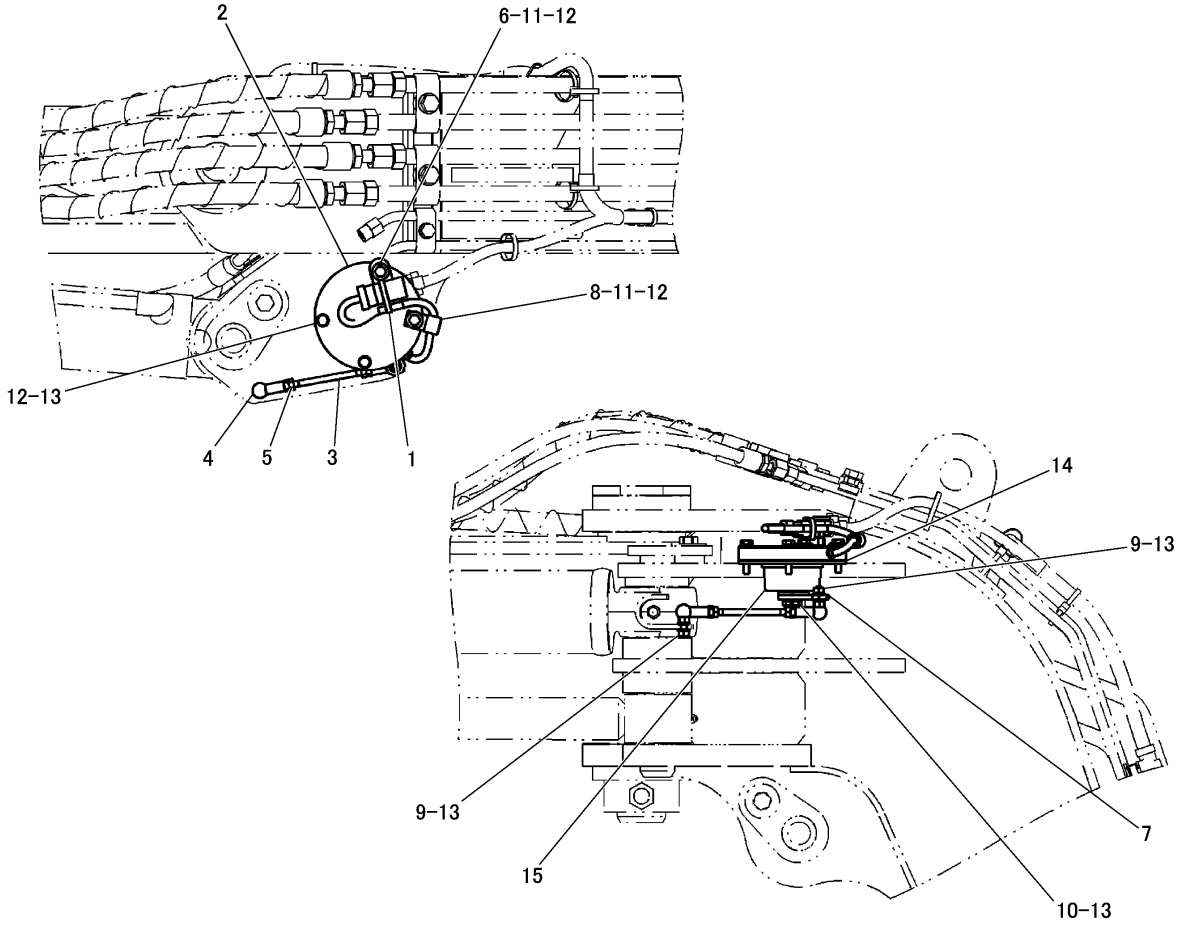

NOTE	No.	PART NO.	QTY	PART NAME	NOTE	No.	PART NO.	QTY	PART NAME
	1	3S-2093	1	STRAP					
	2	233-4921	1	STRIP					
	3	233-4923	1	ROD AS					
	4	207-6735	2	BALL JOINT					
	5	5C-2890	2	NUT(M6×1)					
	6	116-0118	1	CLIP					
	7	240-9796	1	LEVER AS					
	8	4D-7794	1	CLIP					
	9	5C-2890	2	NUT(M6×1)					
	10	5C-9553	2	BOLT(M6×1)					
	11	8T-2228	2	WASHER					
	12	8T-4971	4	BOLT(M6×1)					
	13	9X-8256	8	WASHER					
	14	240-9794	1	PLATE					
	15	284-3838	1	SENSOR AS					

J149336 HE02

SENSOR AND MOUNTING GROUP (296-1952 N/S) -OFFSET
PART OF 296-1809-Page 431

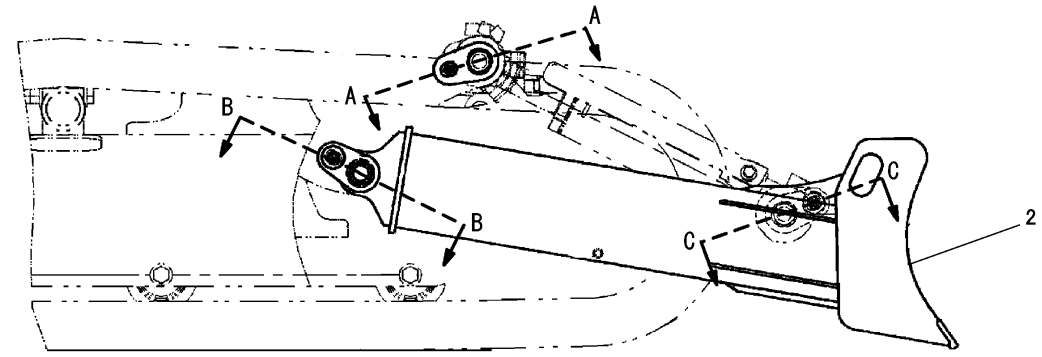

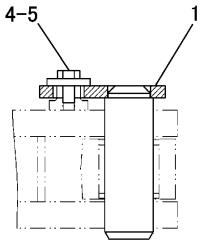

A-A

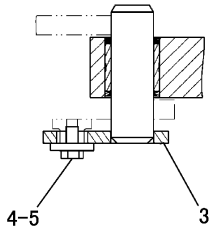

B-B

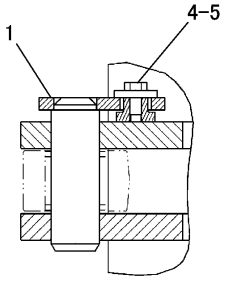

C-C

NOTE	No.	PART NO.	QTY	PART NAME	NOTE	No.	PART NO.	QTY	PART NAME
	1	260-6314	2	PIN AS					
Y	2	311-8036	1	BLADE AS					
	3	316-6857	2	PIN AS					
	4	6V-8513	4	WASHER					
	5	8T-4137	4	BOLT(M10×1.5)					

Y-SEPARATE ILLUSTRATION

J146533 HE04

BLADE AND MOUNTING GROUP (295-3966 N/S)

PART OF 295-3961-Page 433
REFERENCE:311-8036-Page 452

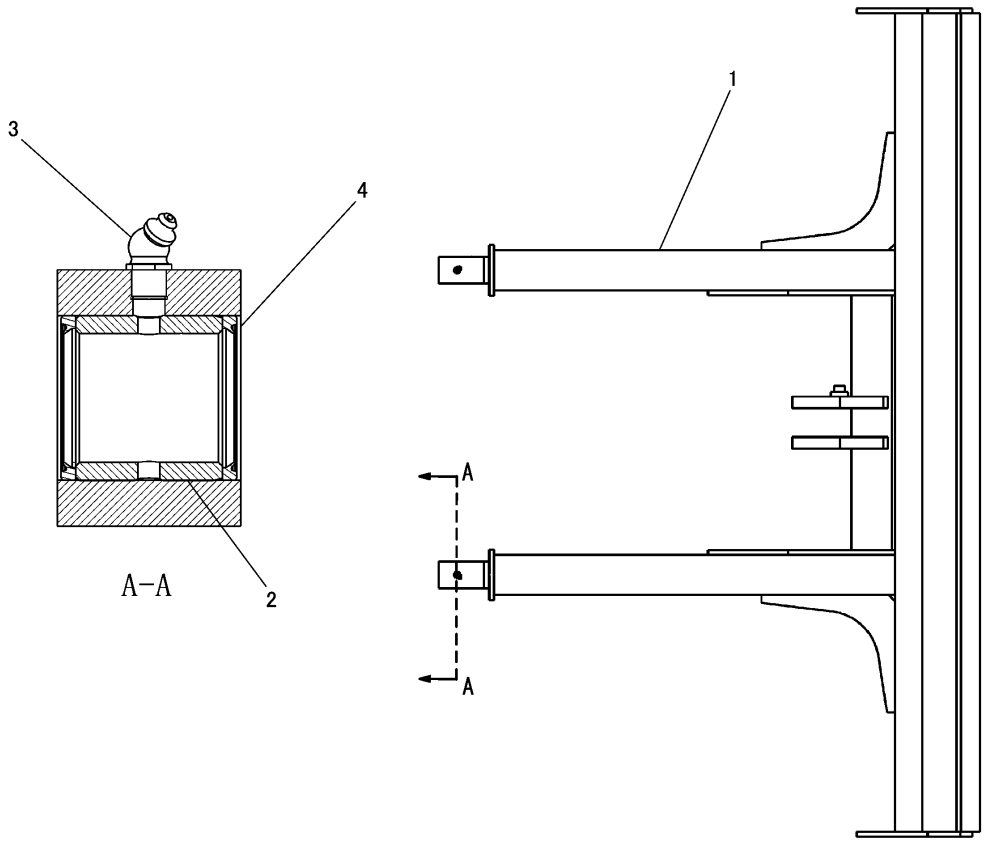

NOTE	No.	PART NO.	QTY	PART NAME	NOTE	No.	PART NO.	QTY	PART NAME
	1	311-8037	1	BLADE AS					
	2	265-8713	2	BEARING					
	3	3B-8485	2	FITTING					
	4	140-3734	4	SEAL					

J146534 HE00

STRAIGHT BLADE GROUP (311-8036 N/S)
PART OF 295-3966-Page 451

CONSISTS OF :

PAGE
1 241-5564 BUCKET GROUP 455

J146692 HE00

BUCKET GROUP (307-8509 N/S) -GENERAL PURPOSE
0.09m³,500mm WIDTH

CONSISTS OF :

PAGE
1 241-9245 BUCKET GROUP 456

J146690 HE00

BUCKET GROUP (307-8511 N/S) -GENERAL PURPOSE
0.055m³,320mm WIDTH
AN ATTACHMENT

WORK TOOLS

CONSISTS OF :

PAGE

1 241-9215 BUCKET GROUP 457

J146691 HE00

BUCKET GROUP (307-8510 N/S) -GENERAL PURPOSE
0.065m³,420mm WIDTH
AN ATTACHMENT

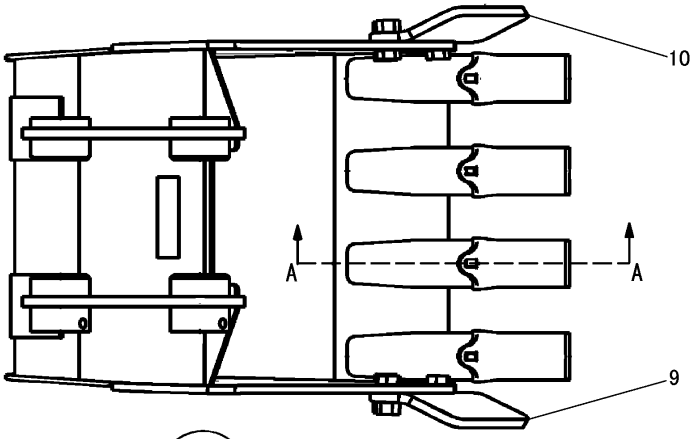

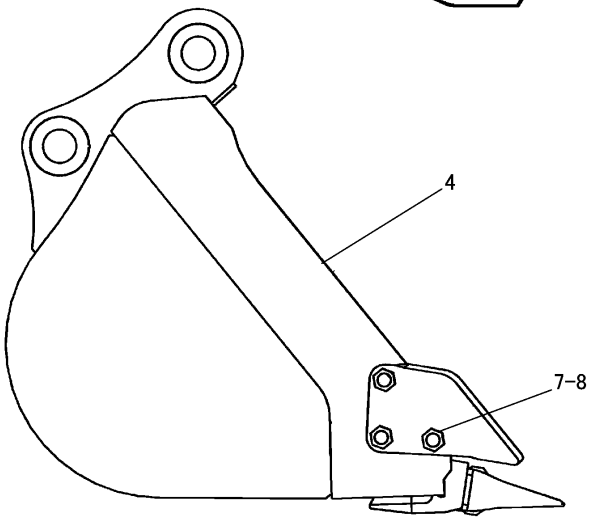

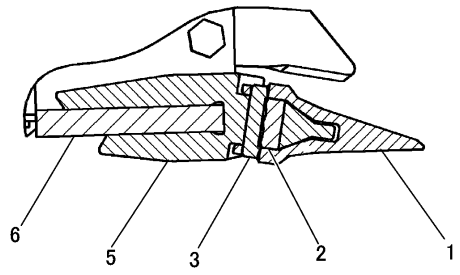

A-A

NOTE	No.	PART NO.	QTY	PART NAME	NOTE	No.	PART NO.	QTY	PART NAME
	1	HE2291097	4	TOOTH					
	2	HE2291099	4	RUBBER					
	3	HE2291098	4	LOCK PIN					
	4	241-5565	1	BUCKET AS					
	5	119-9937	4	ADAPTER					
	6	241-5568	1	EDGE					
	7	8T-4132	6	NUT(M16×2)					
	8	8T-4779	6	BOLT(M16×2)					
	9	241-7923	1	SIDE CUTTER(LH)					
	10	241-7924	1	SIDE CUTTER(RH)					
FJ	11	121-3708	1	SHIM(1.0mm THICK)					

F-NOT SHOWN
J-USE AS ADJUSTMENT CLEARANCE

J147517 HE02

BUCKET GROUP (241-5564 N/S) -GENERAL PURPOSE

PART OF 307-8509-Page 453
0.09m³, 500mm WIDTH

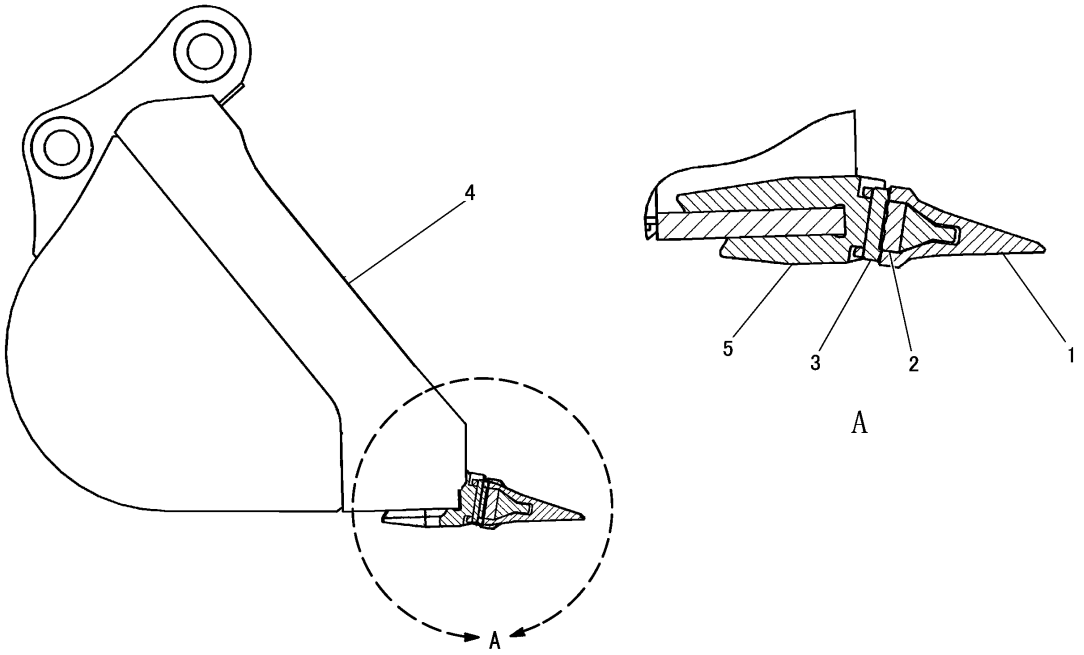

NOTE	No.	PART NO.	QTY	PART NAME	NOTE	No.	PART NO.	QTY	PART NAME
	1	HE2291097	3	TOOTH					
	2	HE2291099	3	RUBBER					
	3	HE2291098	3	LOCK PIN					
	4	241-9247	1	BUCKET AS					
	5	119-9937	3	ADAPTER					
FJ	6	121-3708	1	SHIM(1.0mm THICK)					

F-NOT SHOWN
J-USE AS ADJUSTMENT CLEARANCE

J147515 HE02

241-9245 BUCKET GROUP -GENERAL PURPOSE

PART OF 307-8511-Page 453
0.055m³, 320mm WIDTH
AN ATTACHMENT

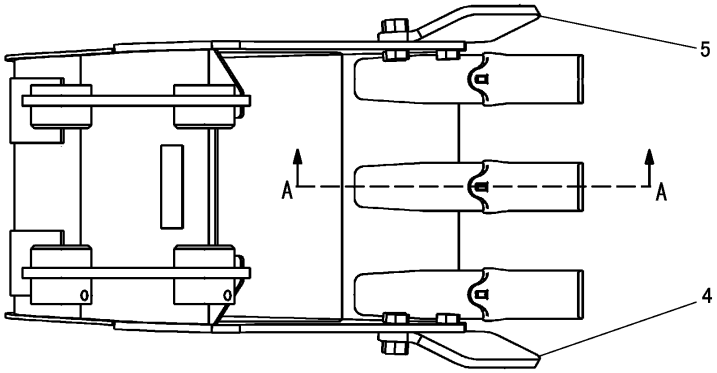

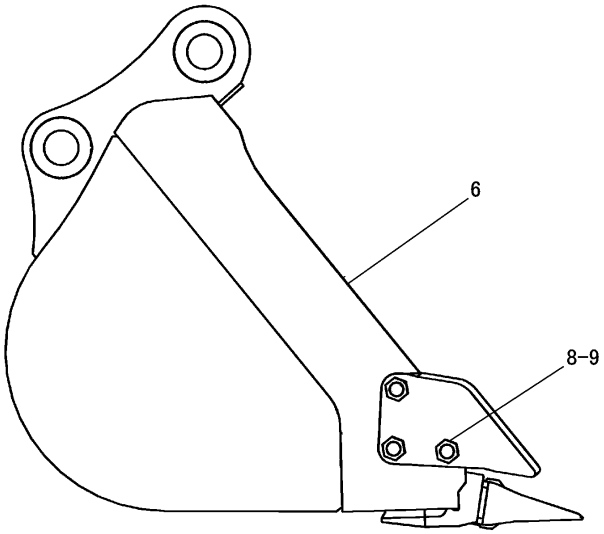

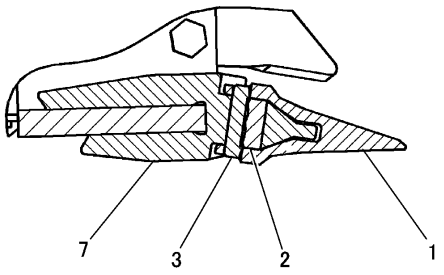

A-A

NOTE	No.	PART NO.	QTY	PART NAME	NOTE	No.	PART NO.	QTY	PART NAME
	1	HE2291097	3	TOOTH					
	2	HE2291099	3	RUBBER					
	3	HE2291098	3	LOCK PIN					
	4	241-7923	1	SIDE CUTTER(LH)					
	5	241-7924	1	SIDE CUTTER(RH)					
	6	241-9216	1	BUCKET AS					
	7	119-9937	3	ADAPTER					
	8	8T-4779	6	BOLT(M16×2)					
	9	8T-4132	6	NUT(M16×2)					
FJ	10	121-3708	1	SHIM(1.0mm THICK)					

F-NOT SHOWN
J-USE AS ADJUSTMENT CLEARANCE

J147516 HE02

BUCKET GROUP (241-9215 N/S) -GENERAL PURPOSE

PART OF 307-8510-Page 454
0.065m³, 420mm WIDTH
AN ATTACHMENT

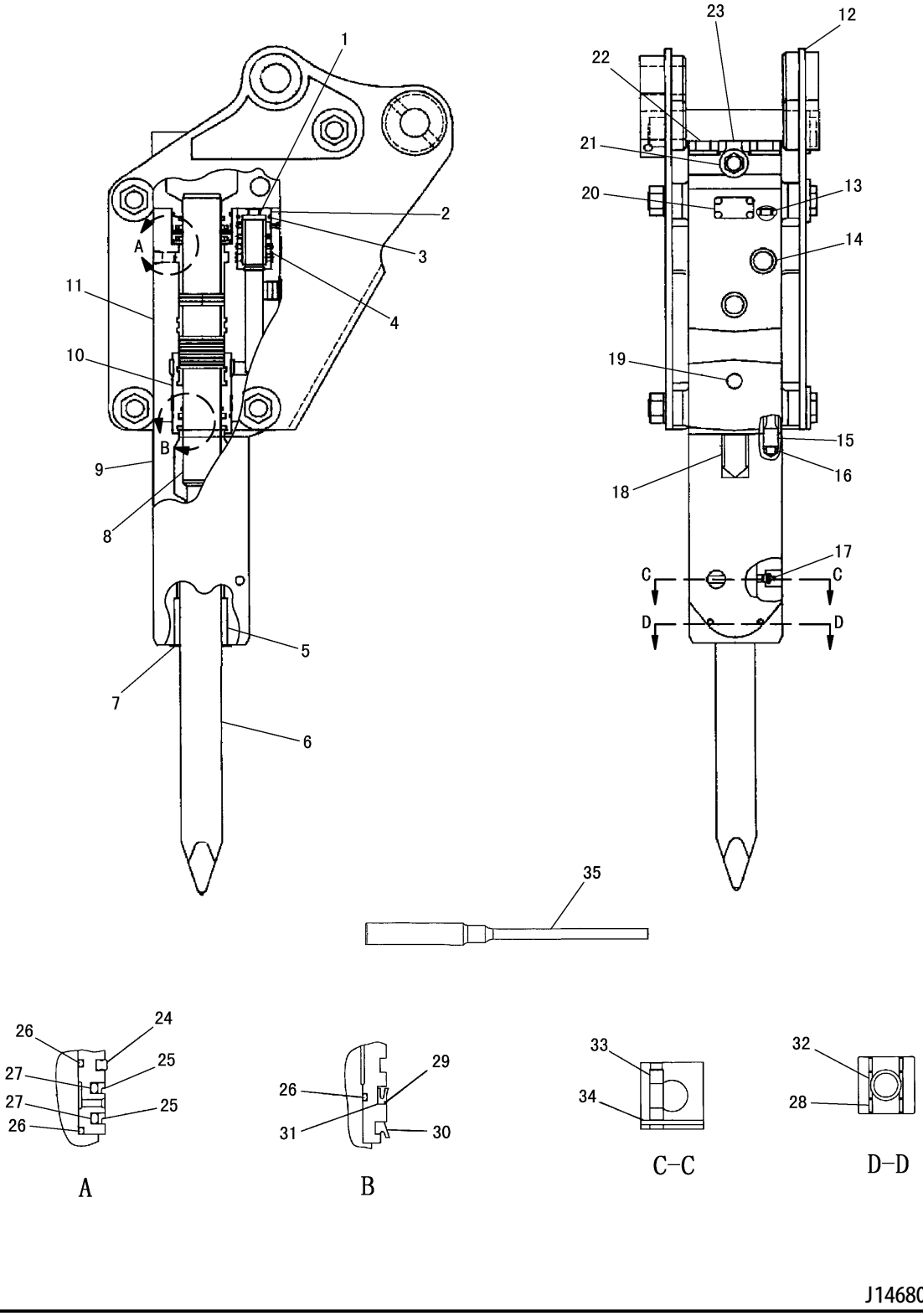

J146807 HE02

165-1016 HYDRAULIC HAMMER GROUP
PART OF 277-3432-Page 435, 278-4557-Page 435
AN ATTACHMENT

WORK TOOLS

NOTE	No.	PART NO.	QTY	PART NAME	NOTE	No.	PART NO.	QTY	PART NAME
	1	165-1036	1	SEAL					
	2	165-1034	1	COVER					
	3	095-1604	1	SEAL					
	4	165-1035	1	PISTON					
	5	165-1060	1	BUSHING					
	6	165-1077	1	TOOL					
	7	165-1076	1	CAP					
	8	165-1045	1	PISTON					
	9	165-1055	1	BLOCK					
	10	165-1080	1	BUSHING					
	11	165-1042	1	CYLINDER					
	12	165-1078	1	PLATE GROUP					
	13	165-1040	3	SEAL					
	14	165-1079	1	PLUG					
	15	165-1071	4	BOLT(M24×3)					
	16	165-1073	4	SPRING					
	17	165-1026	1	NIPPLE					
	18	165-1051	1	FILM					
	19	165-1070	1	PLUG					
	20	165-1075	1	PLATE					
		095-7930	4	SCREW(M4×0.7)					
	21	165-1041	1	VALVE					
	22	165-1072	4	NUT(M24×3)					
		165-1074	4	WASHER					
	23	165-1044	1	COVER					
	24	165-1064	1	SEAL					
	25	165-1065	2	SEAL					
	26	095-1709	3	SEAL					
	27	165-1066	2	SEAL					
	28	165-1063	4	PIN					
	29	165-1068	1	SEAL					
	30	165-1069	1	SEAL					
	31	165-1067	1	SEAL					
	32	165-1062	2	PIN					
	33	165-1061	1	PIN					
	34	165-1028	1	PIN					
J	35	165-1098	1	TOOL					

J-SET IN TOOL BOX

J146807 HE02

165-1016 HYDRAULIC HAMMER GROUP

PART OF 277-3432-Page 435, 278-4557-Page 435
AN ATTACHMENT

CONSISTS OF :

			PAGE
1	240-4077	QUICK COUPLER GROUP	462
1	319-1464	PLATE ASSEMBLY	301

J146799 HE01

QUICK COUPLER GROUP (307-8512 N/S) -CANOPY
AN ATTACHMENT

CONSISTS OF :

			PAGE
1	240-4077	QUICK COUPLER GROUP	462
1	319-1466	PLATE ASSEMBLY	302

J146593 HE00

QUICK COUPLER GROUP (319-1469 N/S) -CAB
AN ATTACHMENT

WORK TOOLS

CONSISTS OF :

			PAGE
1	332-0042	PLATE ASSEMBLY	302
1	240-4077	QUICK COUPLER GROUP	462
2	326-5033	CLIP	

J151953 HE00

QUICK COUPLER GROUP (332-0041 N/S) -CAB-AIR CONDITIONER
APPLIES TO CAB AIR CONDITIONER SPECIFICATION MACHINE
AN ATTACHMENT

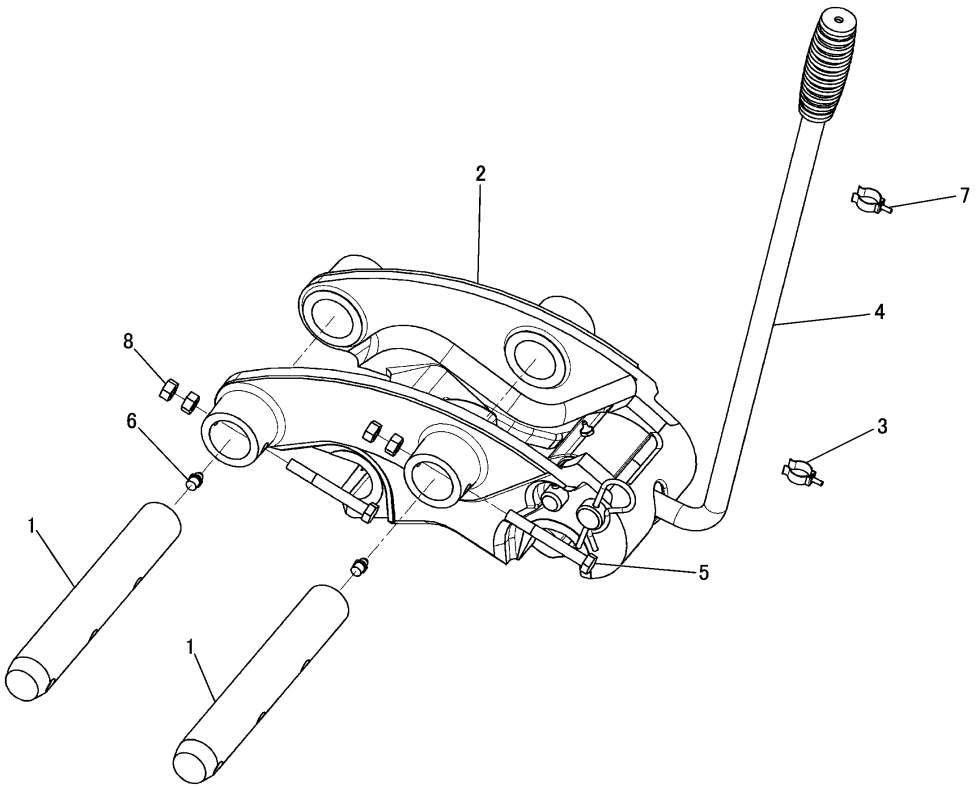

NOTE	No.	PART NO.	QTY	PART NAME	NOTE	No.	PART NO.	QTY	PART NAME
	1	173-8248	2	PIN					
Y	2	240-4078	1	COUPLER GROUP					
	3	251-4538	2	CLIP					
	4	281-3849	1	RELEASE HANDLE					
	5	8T-4172	2	BOLT(M10×1.5)					
	6	3B-8489	2	FITTING					
	7	6V-5210	2	SCREW(M4×0.7)					
	8	8T-4133	4	NUT(M10×1.5)					

Y-SEPARATE ILLUSTRATION

J146144 S03

240-4077 QUICK COUPLER GROUP

PART OF 307-8512-Page 460, 319-1469-Page 460, 332-0041-Page 461
REFERENCE:240-4078-Page 463
AN ATTACHMENT

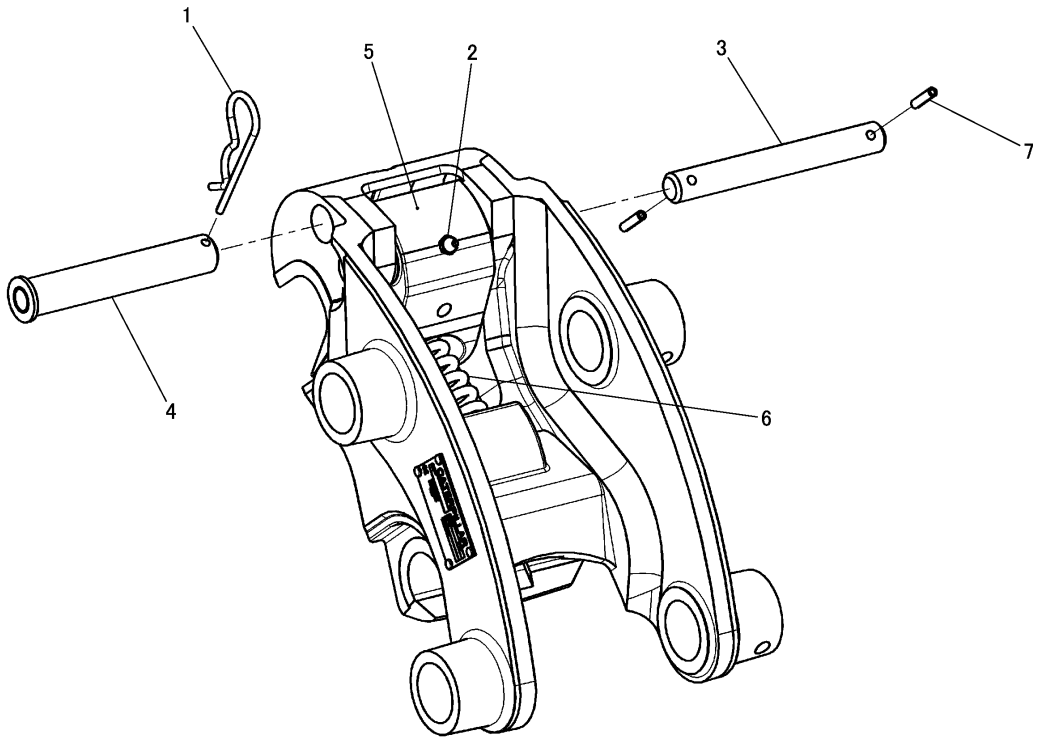

NOTE	No.	PART NO.	QTY	PART NAME	NOTE	No.	PART NO.	QTY	PART NAME
	1	5P-8837	1	LOCK PIN					
	2	091-5928	1	FITTING					
	3	240-4063	1	PIN					
	4	240-4064	1	PIN					
	5	240-4079	1	HOOK					
	6	276-7364	1	SPRING					
	7	096-4837	2	PIN					

J140940 S03

240-4078 QUICK COUPLER GROUP
PART OF 240-4077-Page 462
AN ATTACHMENT

OPERATOR STATION

CONSISTS OF :

			PAGE
1	295-5806	SEAT GROUP	521
1	296-1622	OPERATOR PLATFORM GROUP	486
1	296-1949	CONSOLE WIRING GROUP	80
1	296-1950	MONITOR AND MOUNTING GROUP	507
1	297-8537	PILOT OPERATED HYDRAULIC CONTROL GROUP	410
1	306-1708	OPERATOR CONSOLE GROUP	514
1	306-1712	PILOT OPERATED HYDRAULIC CONTROL GROUP	405

J146569 HE04

OPERATOR ARRANGEMENT (296-6133 N/S)
PART OF 296-1803-Page 241

CONSISTS OF :

			PAGE
1	297-4668	CANOPY GROUP	468
1	306-1716	ASSIST HANDLE GROUP	467
1	317-0075	PLATFORM SUPPORT GROUP	504

J146732 HE02

CANOPY ARRANGEMENT (297-4667 N/S)

OPERATOR STATION

CONSISTS OF :

			PAGE
1	296-1603	FENDER COVER GROUP(CAB)	264
1	296-1605	COVER GROUP(CAB)(LH)	257
1	308-4111	FILM GROUP(CAB)	549
1	308-4119	CAB AND MOUNTING GROUP	470
1	308-4631	FAN GUARD GROUP	34
1	309-0168	WINDSHIELD WASHER GROUP	532
1	310-7492	WASHER BOTTLE WIRING GROUP	182
1	317-0073	SEAT BELT GROUP	521
1	317-2967	HEATER WIRING GROUP	123
1	317-2980	CONSOLE WIRING GROUP	84
1	317-9626	HEATER AND MOUNTING GROUP	522
1	317-9674	OPERATOR PLATFORM GROUP	488
1	318-0119	PLATFORM SUPPORT GROUP	505
1	318-0148	HEATER LINES GROUP	524
1	318-1703	MOUNTING GROUP	506

J146726 HE02

CAB ARRANGEMENT (308-4117 N/S) -HEATER
AN ATTACHMENT

OPERATOR STATION

CONSISTS OF :

			PAGE
1	296-1603	FENDER COVER GROUP	264
1	296-6894	UPPER FRAME GROUP	268
1	305-9409	GOVERNOR CONTROL GROUP	50
1	307-3453	PILOT LINES GROUP	360
1	307-9115	ENGINE MOUNTING GROUP	286
1	308-4112	FILM GROUP	550
1	308-4631	FAN GUARD GROUP	34
1	310-1381	CONSOLE GROUP	516
1	311-1069	WIRING GROUP	124
1	317-0073	SEAT BELT GROUP	521
1	318-0117	FILM GROUP	562
1	322-4007	CONDITIONER AND MOUNTING GROUP	523
1	322-4009	AIR DUCT GROUP	536
1	322-4010	AIR CONDITIONER LINES GROUP	526
1	322-4012	CAB AND MOUNTING GROUP	471
1	325-9914	WASHER BOTTLE WIRING GROUP	184
1	326-1017	BATTERY AND WIRING GROUP	70
1	326-1697	PILOT OPERATED HYDRAULIC CONTROL GROUP	412
1	326-7151	OPERATOR PLATFORM GROUP	490
1	326-7158	CONSOLE WIRING GROUP	90
1	326-7191	WINDSHIELD WASHER GROUP	534
1	326-7822	REFRIGERANT COMPRESSOR GROUP	538
1	329-2918	CONDENSER AND MOUNTING GROUP	537
1	331-7243	HOOD AND GUARD GROUP	246
1	334-5510	RADIATOR GROUP	30
1	334-6617	SUPPRESSION GROUP	278
1	334-7158	SUCTION FAN GROUP	27
1	334-7192	BOTTOM GUARD GROUP	262

J146694 HE03

CAB ARRANGEMENT (308-4118 N/S) -AIR CONDITIONER
AN ATTACHMENT

OPERATOR STATION

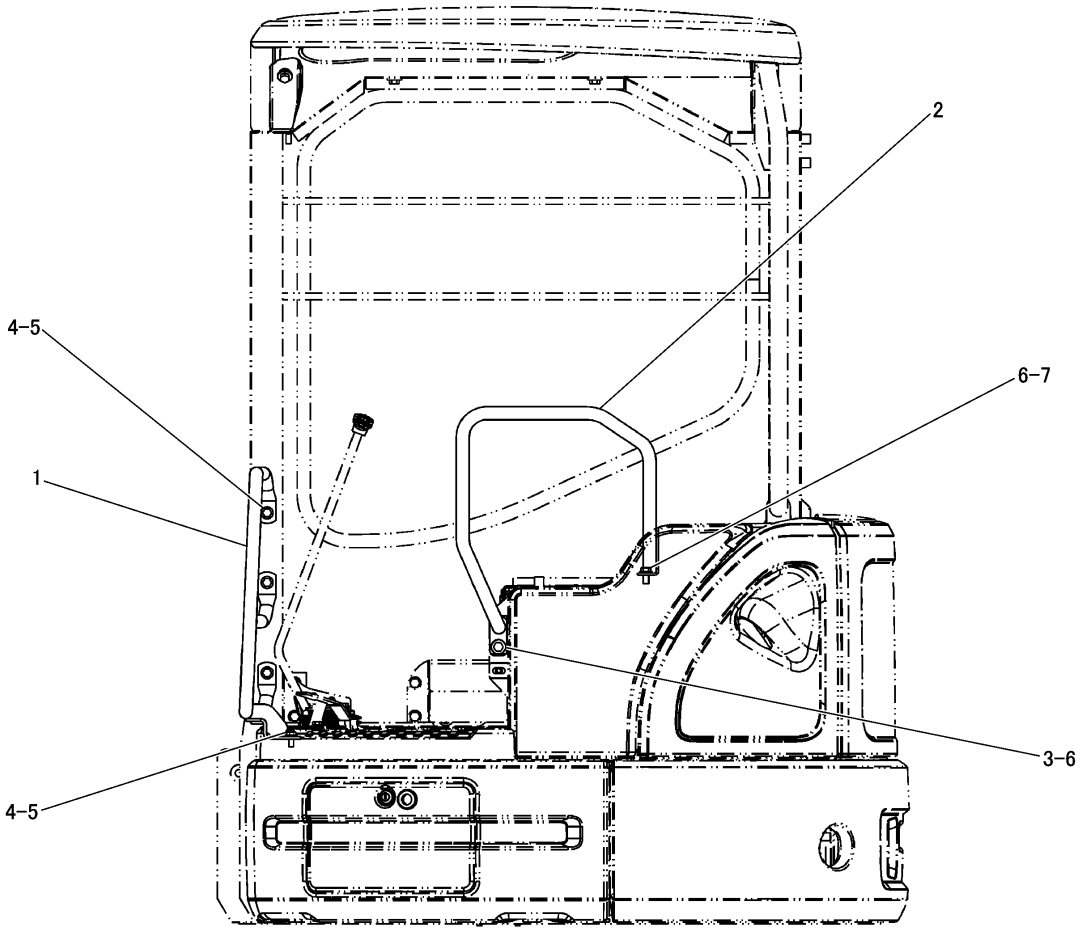

NOTE	No.	PART NO.	QTY	PART NAME	NOTE	No.	PART NO.	QTY	PART NAME
	1	309-0425	1	HANDLE AS					
	2	309-0429	1	HANDLE AS					
	3	5P-1076	1	WASHER					
	4	7X-7729	4	WASHER					
	5	8T-4136	4	BOLT(M10×1.5)					
	6	8T-4192	3	BOLT(M12×1.75)					
	7	8T-4223	2	WASHER					

J146735 HE02

ASSIST HANDLE GROUP (306-1716 N/S)

PART OF 297-4667-Page 464

OPERATOR STATION

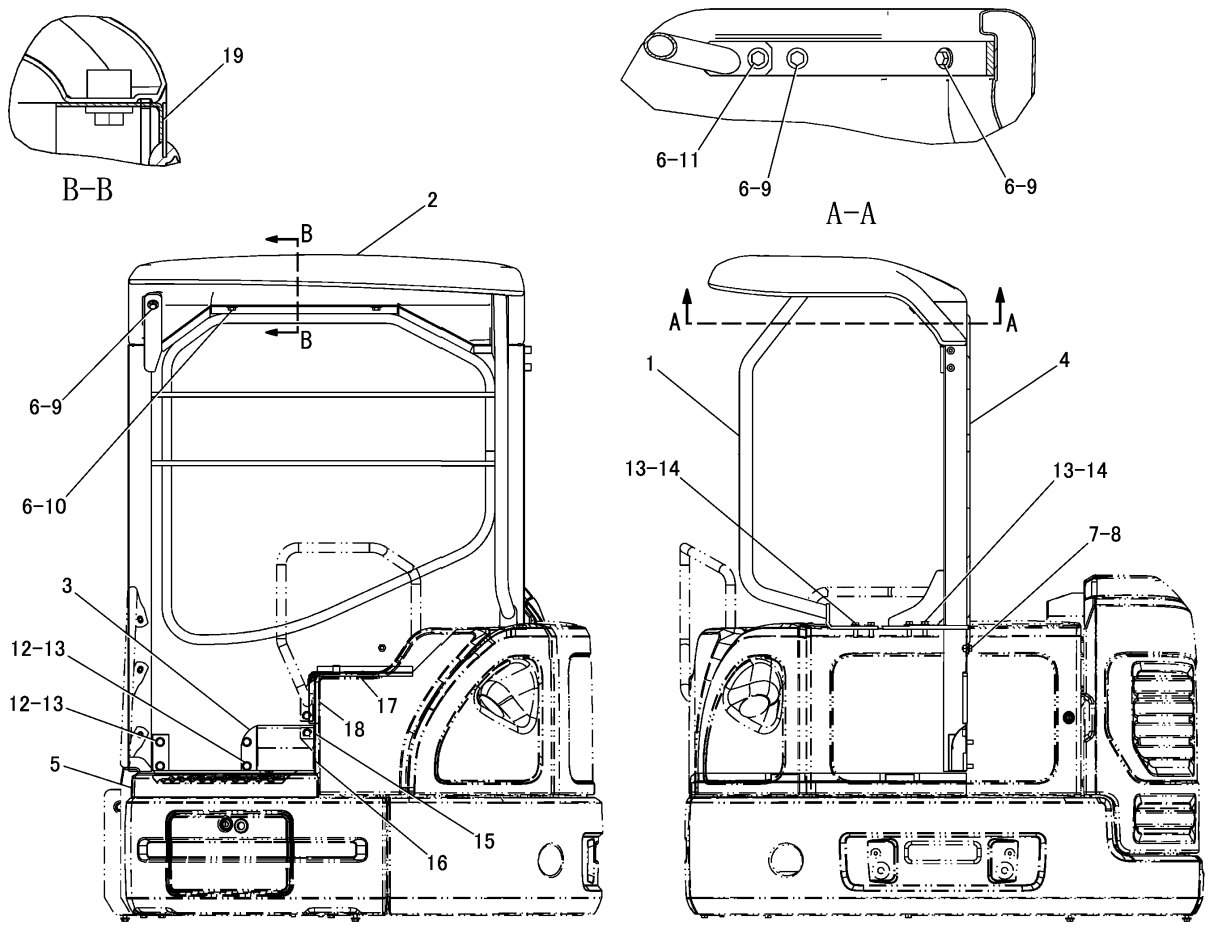

NOTE	No.	PART NO.	QTY	PART NAME	NOTE	No.	PART NO.	QTY	PART NAME
	1	317-4046	1	POST AS	D	17	5P-5639		SEAL---0.282m
	2	298-5208	1	ROOF AS	D	18	5P-5639		SEAL---0.137m
		241-9211	1	GLASS	D	19	309-0424		SEAL---1.294m
		146-8233	1	SEAL---1.798m					
	3	298-5299	1	COVER					
	4	309-0419	1	CANOPY AS					
		298-5213	1	GLASS					
D		183-9449		SEAL---3.269m					
	5	309-0423	1	FLOORMAT					
	6	5P-1076	6	WASHER					
	7	7X-7729	1	WASHER					
	8	8T-4137	1	BOLT(M10×1.5)					
	9	8T-4139	3	BOLT(M12×1.75)					
	10	8T-4179	2	BOLT(M12×1.75)					
	11	8T-4183	1	BOLT(M12×1.75)					
	12	8T-4192	4	BOLT(M12×1.75)					
	13	8T-4223	8	WASHER					
	14	8T-4956	4	BOLT(M12×1.75)					
D	15	5P-6969		CHANNEL---0.02m					
D	16	5P-6969		CHANNEL---0.05m					

D-ORDER BY THE m

J149310 HE06

CANOPY GROUP (297-4668 N/S)

PART OF 297-4667-Page 464

OPERATOR STATION

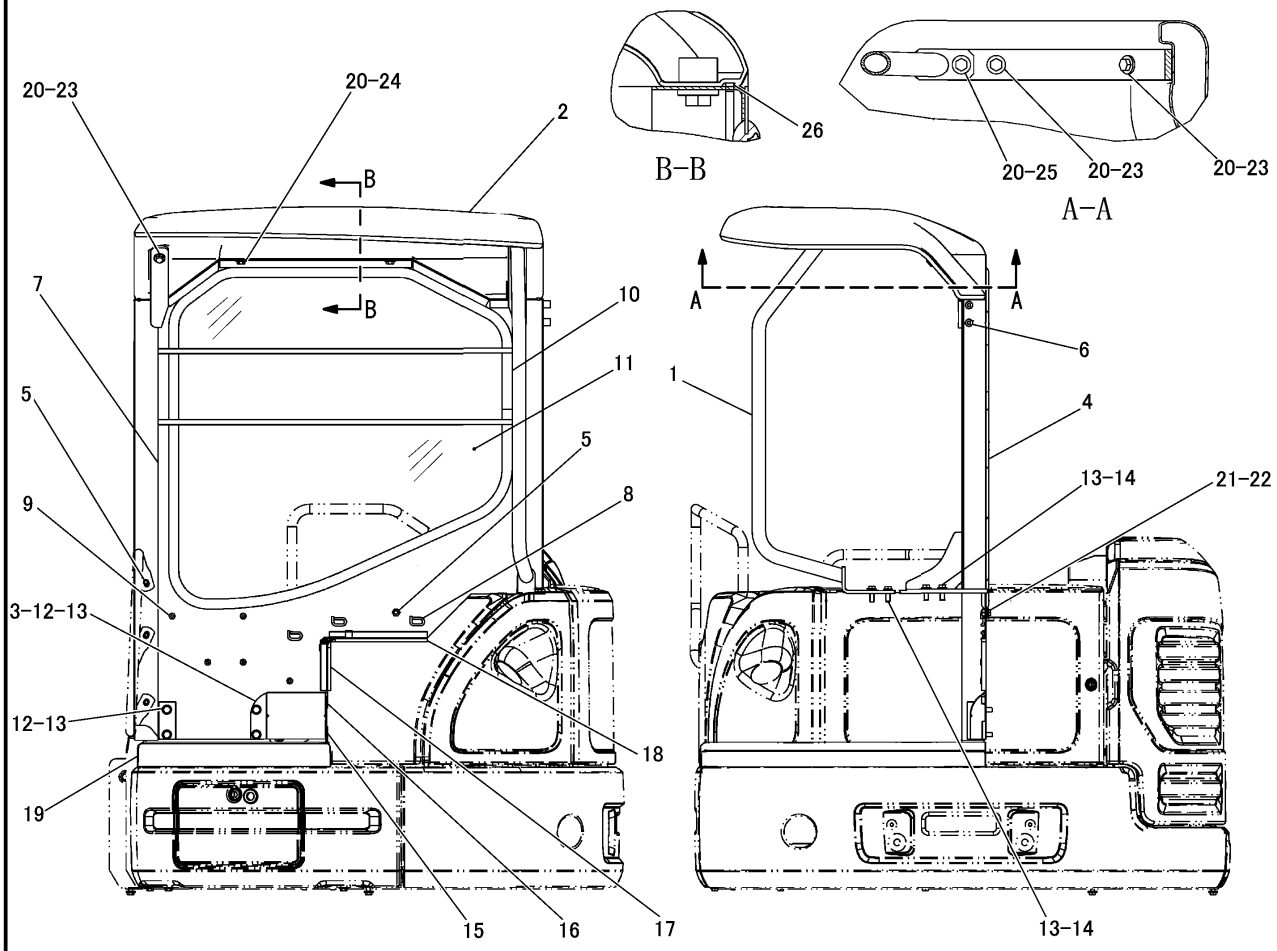

NOTE	No.	PART NO.	QTY	PART NAME
	1	317－4046	1	POST AS
	2	298－5208	1	ROOF AS
		241－9211	1	GLASS
		146－8233	1	SEAL---1.9m
	3	298－5299	1	COVER
	4	309－0420	1	CANOPY AS
		309－0421	1	PANEL AS
	5	8T－3490	4	NUT(M10×1.5)(WELD)
	6	9R－2672	2	BOSS(M10×1.5)
	7	306－7820	1	PANEL
	8	7T－1099	3	LINK
	9	8R－3857	5	BOSS(M8×1.25)
H	10	183－9449		SEAL---33dm
	11	298－5213	1	GLASS
	12	8T－4192	4	BOLT(M12×1.75)
	13	8T－4223	8	WASHER
	14	8T－4956	4	BOLT(M12×1.75)
D	15	5P－6969		SEAL---0.05m
D	16	5P－6969		SEAL---0.02m
D	17	5P－5639		SEAL---0.137m
D	18	5P－5639		SEAL---0.282m
	19	309－0423	1	FLOORMAT
	20	5P－1076	6	WASHER
	21	7X－7729	1	WASHER
	22	8T－4137	1	BOLT(M10×1.5)
	23	8T－4139	3	BOLT(M12×1.75)
	24	8T－4179	2	BOLT(M12×1.75)
	25	8T－4183	1	BOLT(M12×1.75)
E	26	297－9448		SEAL---129.4cm

D-ORDER BY THE m
E-ORDER BY THE cm
H-ODER BY THE dm

J149350 HE01

CANOPY GROUP (296-1768 N/S) -SHOVEL CRANE
PART OF 307-8503-Page 2, 330-3619-Page 3
AN ATTACHMENT

OPERATOR STATION

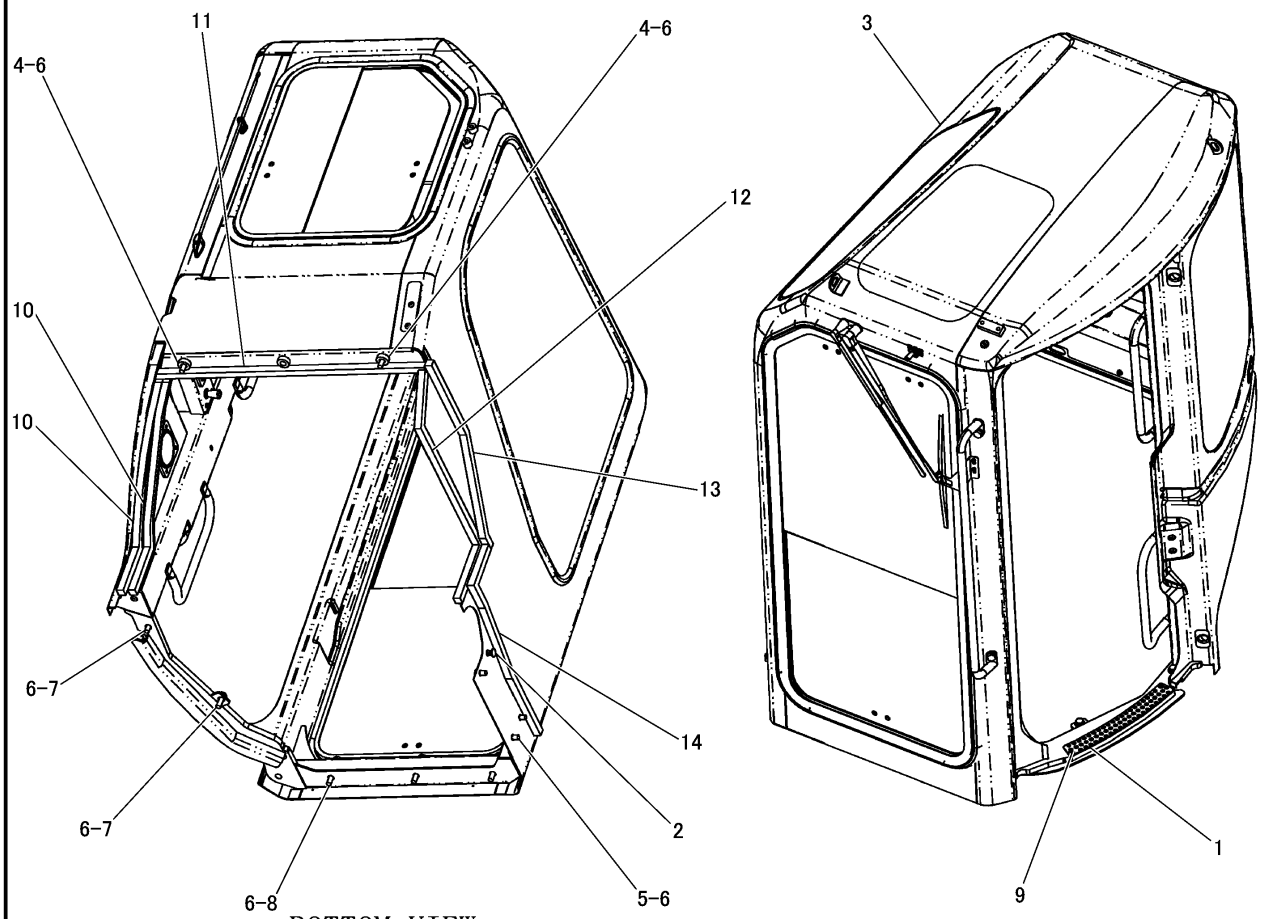

BOTTOM VIEW

NOTE	No.	PART NO.	QTY	PART NAME	NOTE	No.	PART NO.	QTY	PART NAME
	1	202－0725	1	PLATE					
	2	214－6198	1	PLUG					
Y	3	309－0678	1	CAB GROUP					
	4	8T－4176	2	BOLT(M12×1.75)					
	5	8T－4179	3	BOLT(M12×1.75)					
	6	8T－4223	10	WASHER					
	7	8T－4956	2	BOLT(M12×1.75)					
	8	8T－6868	3	BOLT(M12×1.75)					
	9	9X－2616	2	SCREW(M8×1.25)					
E	10	282－9679		SEAL---63cm(×2)					
E	11	282－9679		SEAL---78.5cm					
E	12	282－9679		SEAL---64cm					
E	13	282－9679		SEAL---62cm					
E	14	282－9679		SEAL---71cm					

E-ORDER BY THE cm
Y-SEPARATE ILLUSTRATION

J146708 HE03

CAB AND MOUNTING GROUP (308-4119 N/S)
PART OF 308-4117-Page 465
REFERENCE:309-0678-Page 472～477
AN ATTACHMENT

OPERATOR STATION

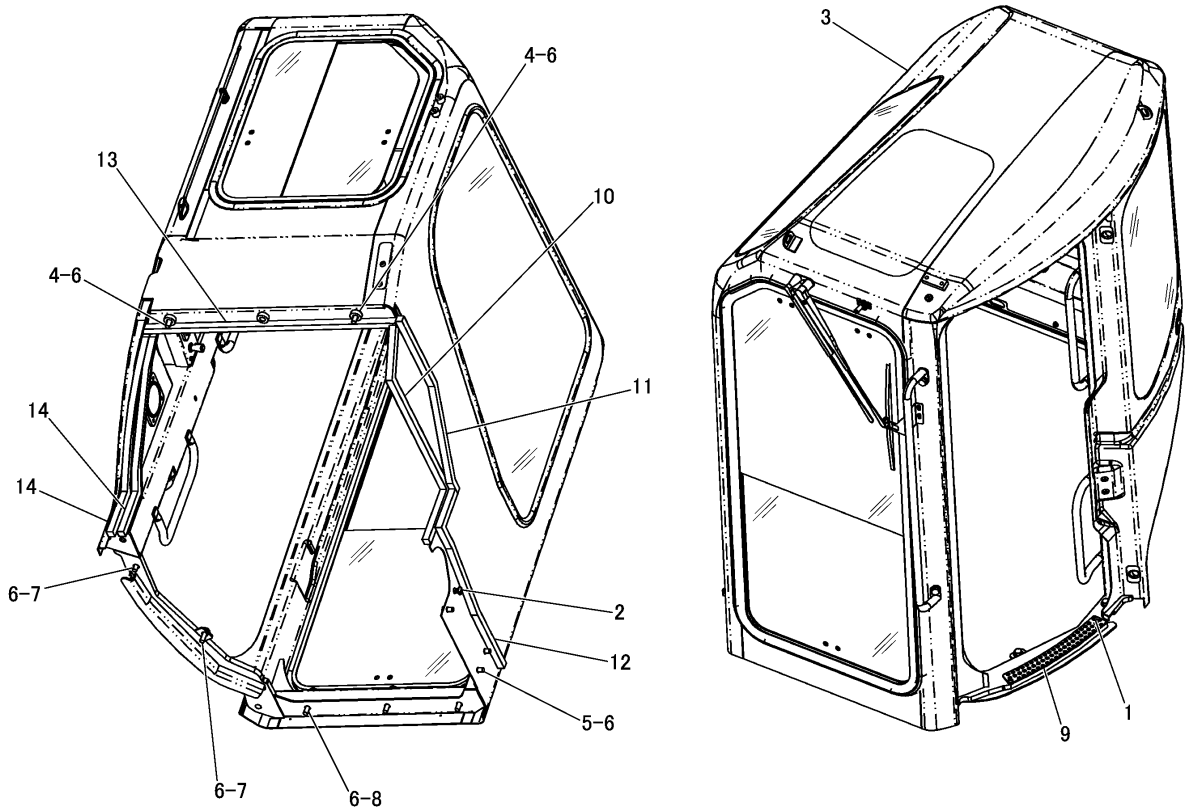

BOTTOM VIEW

NOTE	No.	PART NO.	QTY	PART NAME	NOTE	No.	PART NO.	QTY	PART NAME
	1	202-0725	1	PLATE					
	2	214-6198	1	PLUG					
Y	3	322-4013	1	CAB GROUP					
	4	8T-4176	2	BOLT(M12×1.75)					
	5	8T-4179	3	BOLT(M12×1.75)					
	6	8T-4223	10	WASHER					
	7	8T-4956	2	BOLT(M12×1.75)					
	8	8T-6868	3	BOLT(M12×1.75)					
	9	9X-2616	2	SCREW(M8×1.25)					
	10	282-9679	1	SEAL---0.64m					
	11	282-9679	1	SEAL---0.62m					
	12	282-9679	1	SEAL---0.71m					
	13	282-9679	1	SEAL---0.785m					
	14	282-9679	2	SEAL---0.63m(×2)					

Y-SEPARATE ILLUSTRATION

J152800 HE00

CAB AND MOUNTING GROUP (322-4012 N/S)

PART OF 308-4118-Page 466
REFERENCE:322-4013-Page 478～483
APPLIES TO CAB AIR CONDITIONER SPECIFICATION MACHINE
AN ATTACHMENT

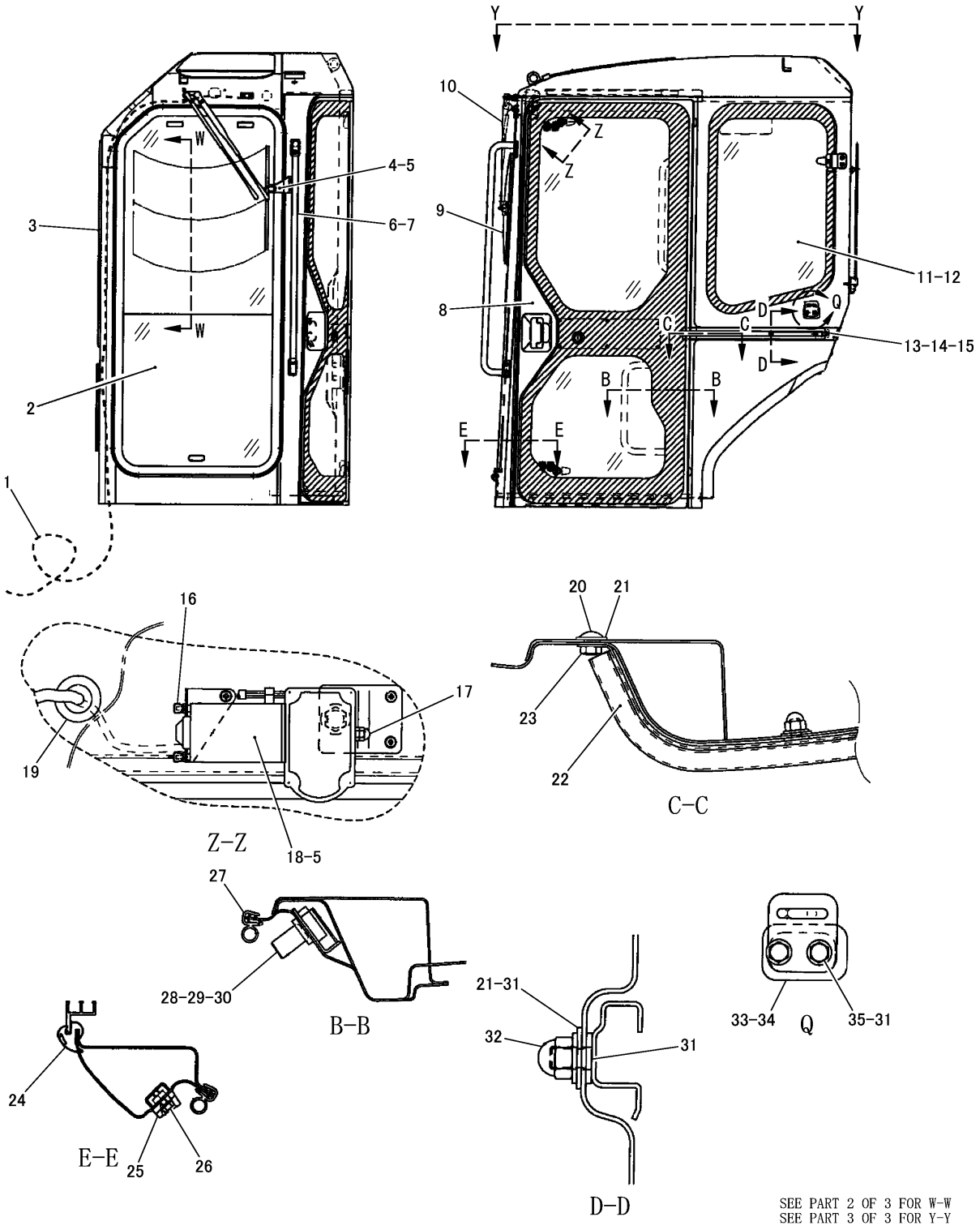

J148046 HE02

CAB GROUP (309-0678 N/S) -PART 1 OF 3
PART OF 308-4119-Page 470
AN ATTACHMENT

OPERATOR STATION

NOTE	No.	PART NO.	QTY	PART NAME	NOTE	No.	PART NO.	QTY	PART NAME
	1	127-3944	1	HOSE					
	2	322-3015	1	SASH(FRONT)					
	3	322-2999	1	CAB GROUP					
	4	322-3017	1	PLATE					
	5	8T-6411	5	SCREW(M6×1)					
	6	203-4440	1	HANDLE AS					
	7	8T-4192	2	BOLT(M12×1.75)					
Y	8	203-4449	1	DOOR GROUP					
	9	243-0822	1	BLADE					
	10	322-3016	1	WIPER ARM					
	11	226-9843	1	GLASS					
	12	132-7616	1	CUSHION					
	13	204-6890	1	COVER					
	14	8T-4138	1	BOLT(M6×1)					
	15	095-1777	1	RING					
	16	255-0307	2	CAP					
	17	255-0308	1	NUT(M6×1)					
	18	243-0820	1	MOTOR					
	19	127-4005	1	GROMMET					
	20	162-4852	1	SCREW(M8×1.25)					
	21	172-1870	4	PLATE					
	22	127-3932	1	RAIL AS					
	23	8T-7963	1	LOCKNUT(M8×1.25)					
	24	242-3767	1	SEAL					
	25	127-3928	2	STRIKER					
	26	5C-9553	4	BOLT(M6×1)					
	27	127-3924	1	SEAL					
	28	127-3929	1	STRIKER					
	29	8T-4223	2	WASHER					
	30	207-0211	2	BOLT(M10×1.5)					
	31	8T-4224	8	WASHER					
	32	6I-5342	3	NUT(M8×1.25)					
	33	127-3930	1	PLATE					
	34	127-3931	1	STRIKER					
	35	8T-4200	2	BOLT(M8×1.25)					

Y-SEPARATE ILLUSTRATION

J148046 HE02

CAB GROUP (309-0678 N/S) -PART 1 OF 3

PART OF 308-4119-Page 470
REFERENCE:203-4449-Page 484, 485
AN ATTACHMENT

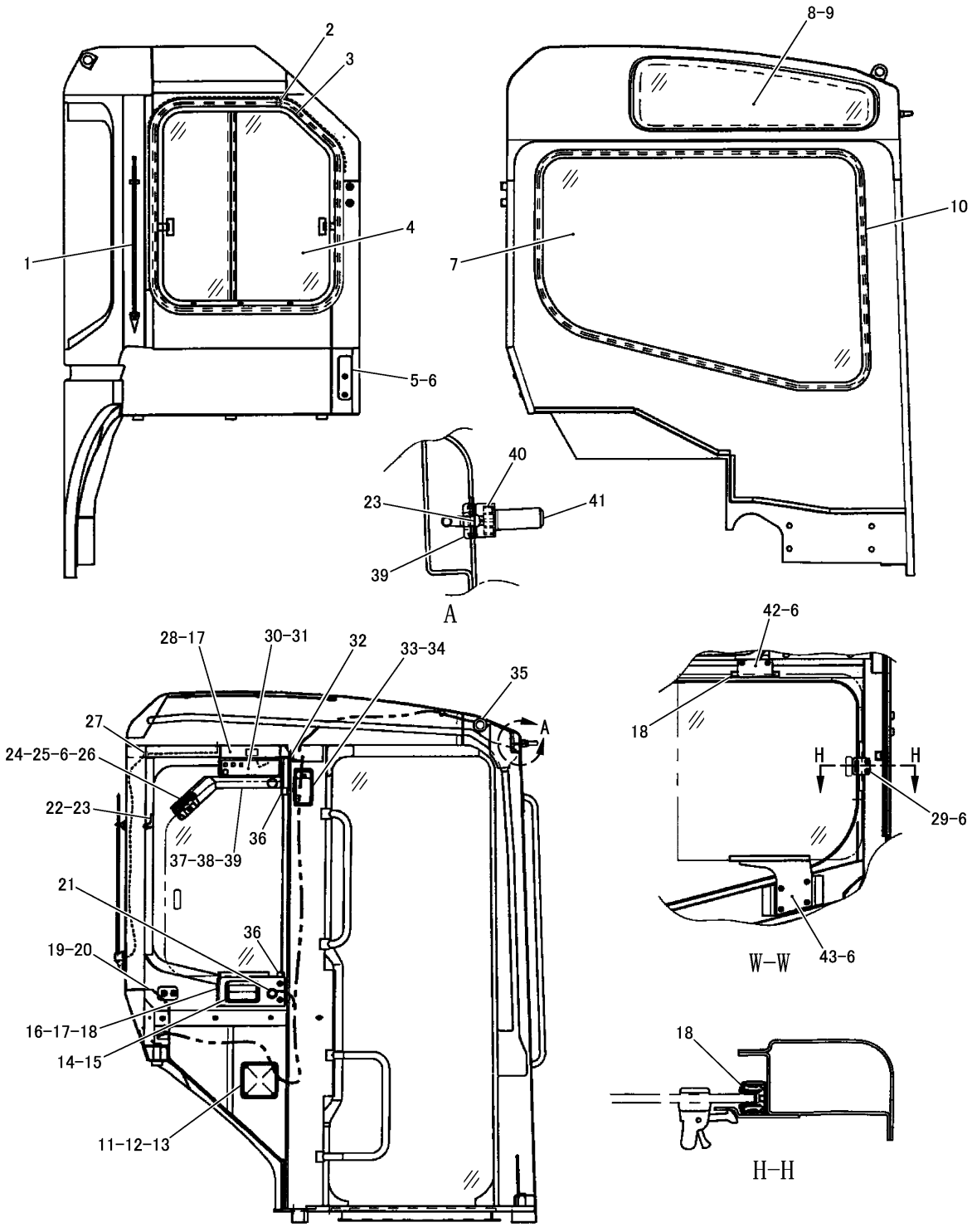

CAB GROUP (309-0678 N/S) -PART 2 OF 3
PART OF 308-4119-Page 470
AN ATTACHMENT

OPERATOR STATION

NOTE	No.	PART NO.	QTY	PART NAME	NOTE	No.	PART NO.	QTY	PART NAME
	1	211-9741	1	ANTENNA AS					
	2	127-3940	1	RING					
	3	242-3757	1	SEAL					
	4	322-3001	1	SASH					
	5	322-3019	1	PLATE					
	6	9X-2042	11	SCREW(M6×1)					
	7	254-6624	1	GLASS					
	8	246-9977	1	GLASS					
	9	242-3766	1	SEAL					
	10	242-3759	1	SEAL					
	11	203-4454	1	GRILL					
	12	203-4455	1	SPEAKER					
	13	6V-9632	4	NUT(M6×1)(WELD)					
	14	203-4433	1	ASHTRAY					
	15	203-5391	2	SCREW					
	16	322-3005	1	BOX					
	17	8T-6411	8	SCREW(M6×1)					
	18	203-4445	3	RUBBER					
	19	322-3004	1	COVER					
	20	8T-4171	6	BOLT(M6×1)					
	21	139-6341	1	CIGAR LIGHTER AS					
	22	127-3925	1	HOOK					
	23	7Y-5292	4	SCREW(M4×0.7)					
	24	4I-4253	1	HOLDER					
	25	3E-8020	2	SCREW(M6×1)					
	26	254-6633	1	PLATE AS					
	27	136-0258	1	GROMMET					
	28	322-3006	1	BRACKET					
	29	254-6630	1	PLATE					
	30	245-8666	1	RADIO AS					
	31	095-0736	4	SCREW(M5×0.8)					
	32	203-4456	1	SEAL					
	33	281-1159	1	ROOM LAMP AS					
	34	6V-9672	2	SCREW(M4×0.7)					
	35	127-4005	1	GROMMET					
	36	254-6634	2	STOPPER					
	37	322-3018	1	BRACKET					
	38	255-0309	2	BOLT					
	39	230-0182	2	CAP					
	40	243-0891	1	BRACKET					
	41	127-3926	1	NOZZLE					
	42	254-6629	1	BRACKET					
	43	322-3020	1	BRACKET					

J148047 HE02

CAB GROUP (309-0678 N/S) -PART 2 OF 3
PART OF 308-4119-Page 470
AN ATTACHMENT

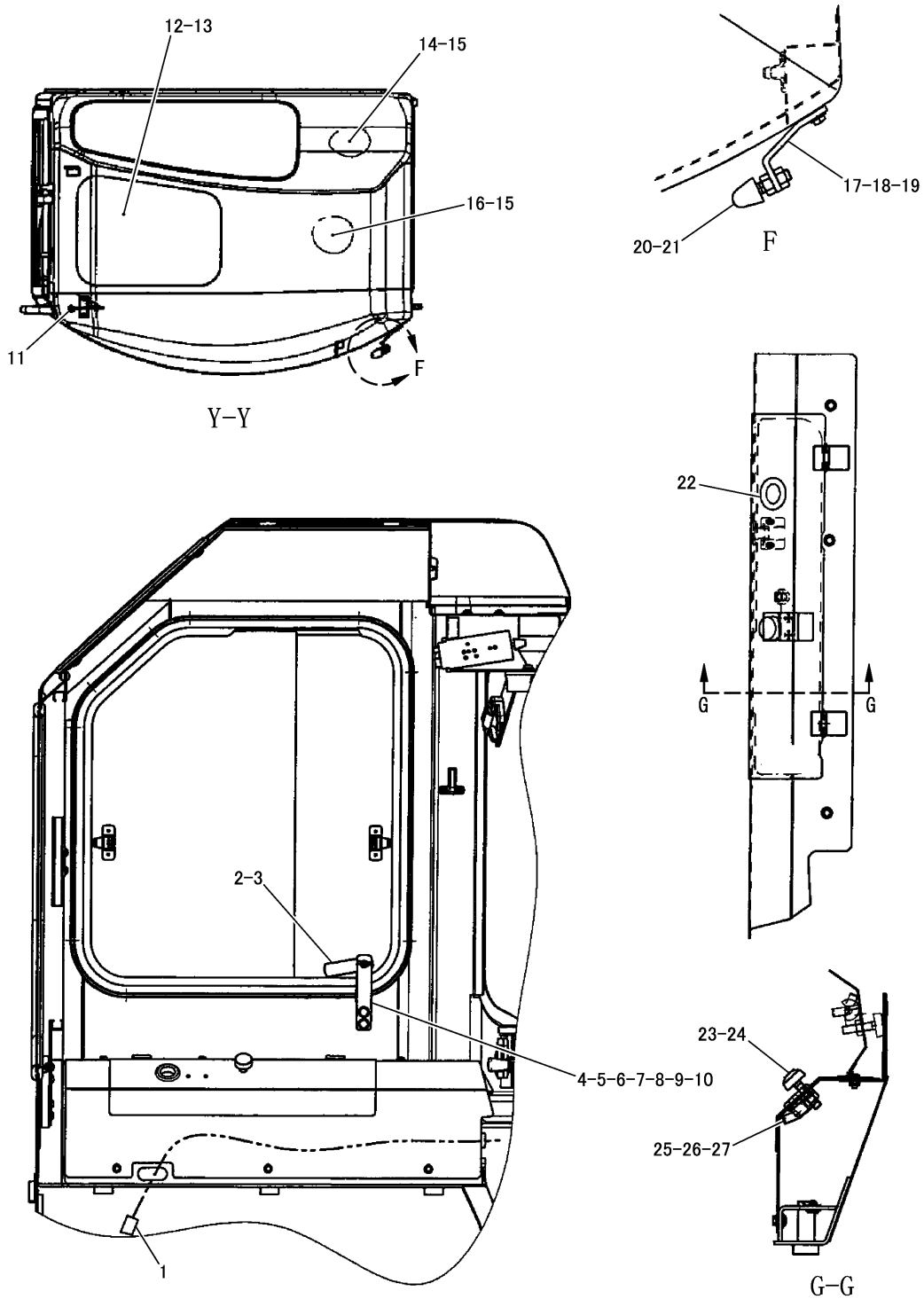

J148048 HE02

CAB GROUP (309-0678 N/S) -PART 3 OF 3
PART OF 308-4119-Page 470
AN ATTACHMENT

OPERATOR STATION

NOTE	No.	PART NO.	QTY	PART NAME	NOTE	No.	PART NO.	QTY	PART NAME
	1	322−3000	1	HARNESS AS					
	2	322−3008	1	BRACKET					
	3	322−3012	1	COVER					
	4	322−3007	1	BRACKET					
	5	322−3009	1	PIN					
	6	322−3010	1	WASHER					
	7	322−3011	2	WASHER					
	8	132−7679	1	PIN(SPRING)					
	9	322−3013	4	WASHER					
	10	322−3014	2	BOLT					
	11	203−4457	1	GROMMET					
	12	322−3023	1	GLASS					
	13	229−1382	1	SEAL					
	14	322−3003	1	LINER					
	15	185−8205	10	CLIP					
	16	322−3002	1	LINER					
	17	127−3948	1	BRACKET					
	18	8T−4200	2	BOLT(M8×1.25)					
	19	8T−4224	2	WASHER					
	20	127−3947	1	BUMPER					
	21	095−1207	2	NUT(M12×1.75)					
	22	209−7838	1	GROMMET					
	23	139−6403	1	STOPPER					
	24	8T−4133	1	NUT(M10×1.5)					
	25	209−7840	1	STOPPER					
	26	095−0728	2	SCREW(M4×0.7)					
	27	5P−7848	2	NUT(M4×0.7)					

J148048 HE02

CAB GROUP (309-0678 N/S) -PART 3 OF 3
PART OF 308-4119-Page 470
AN ATTACHMENT

OPERATOR STATION

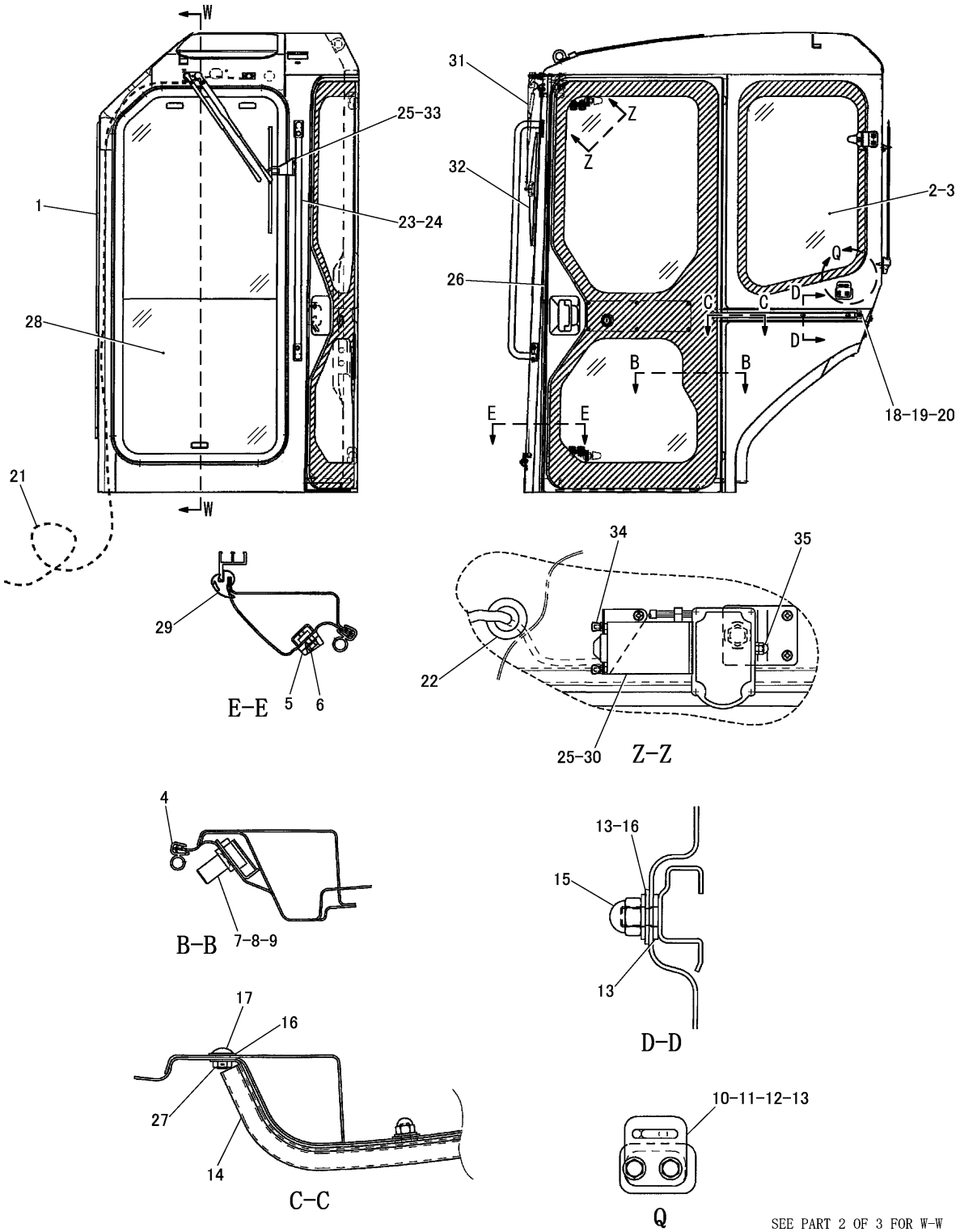

J152803 HE01

CAB GROUP (322-4013 N/S) -PART 1 OF 3

PART OF 322-4012-Page 471

APPLIES TO CAB AIR CONDITIONER SPECIFICATION MACHINE

AN ATTACHMENT

OPERATOR STATION

NOTE	No.	PART NO.	QTY	PART NAME	NOTE	No.	PART NO.	QTY	PART NAME
	1	332-4161	1	CAB AS					
	2	226-9843	1	GLASS					
	3	132-7616	1	CUSHION					
	4	127-3924	1	SEAL					
	5	127-3928	2	STRIKER					
	6	5C-9553	4	BOLT(M6×1)					
	7	127-3929	1	STRIKER					
	8	8T-4223	2	WASHER					
	9	207-0211	2	BOLT(M10×1.5)					
	10	127-3930	1	PLATE					
	11	127-3931	1	STRIKER					
	12	8T-4200	2	BOLT(M8×1.25)					
	13	8T-4224	8	WASHER					
	14	127-3932	1	RAIL AS					
	15	6I-5342	3	NUT(M8×1.25)					
	16	172-1870	4	PLATE					
	17	162-4852	1	SCREW(M8×1.25)					
	18	204-6890	1	COVER					
	19	8T-4138	1	BOLT(M6×1)					
	20	095-1777	1	RING					
	21	127-3944	1	HOSE					
	22	127-4005	1	GROMMET					
	23	203-4440	1	HANDLE AS					
	24	8T-4192	2	BOLT(M12×1.75)					
	25	8T-6411	5	SCREW(M6×1)					
Y	26	203-4449	1	CAB DOOR GROUP					
	27	8T-7963	1	LOCKNUT(M8×1.25)					
	28	322-3015	1	SASH(FRONT)					
	29	242-3767	1	SEAL					
	30	243-0820	1	MOTOR					
	31	332-9142	1	ARM					
	32	243-0822	1	BLADE					
	33	322-3017	1	PLATE					
	34	255-0307	2	CAP					
	35	255-0308	1	NUT(M6×1)					

Y-SEPARATE ILLUSTRATION

J152803 HE01

CAB GROUP (322-4013 N/S) -PART 1 OF 3

PART OF 322-4012-Page 471
REFERENCE:203-4449-Page 484, 485
APPLIES TO CAB AIR CONDITIONER SPECIFICATION MACHINE
AN ATTACHMENT

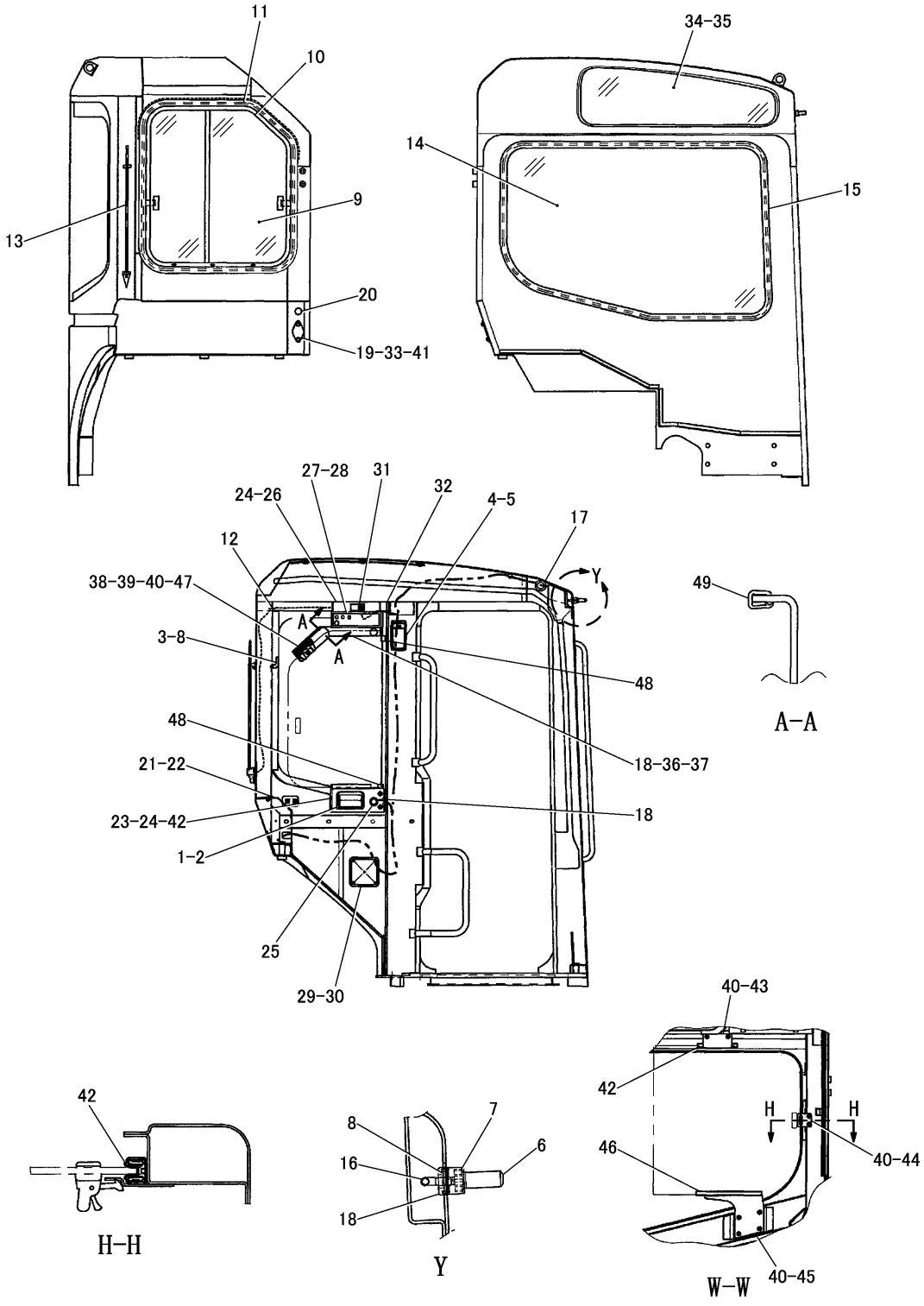

CAB GROUP (322-4013 N/S) -PART 2 OF 3
PART OF 322-4012-Page 471
APPLIES TO CAB AIR CONDITIONER SPECIFICATION MACHINE
AN ATTACHMENT

OPERATOR STATION

NOTE	No.	PART NO.	QTY	PART NAME	NOTE	No.	PART NO.	QTY	PART NAME
	1	203-4433	1	ASHTRAY					
	2	332-9141	2	SCREW					
	3	127-3925	1	HOOK					
	4	281-1159	1	ROOM LAMP AS					
	5	6V-9672	2	SCREW(M4×0.7)					
	6	127-3926	1	NOZZLE					
	7	243-0891	1	BRACKET					
	8	7Y-5292	4	SCREW(M4×0.7)					
	9	322-3001	1	SASH					
	10	242-3757	1	SEAL					
	11	127-3940	1	RING					
	12	136-0258	1	GROMMET					
	13	211-9741	1	ANTENNA AS					
	14	332-7931	1	GLASS					
	15	242-3759	1	SEAL					
	16	127-3944	1	HOSE					
	17	127-4005	1	GROMMET					
	18	230-0182	3	CAP					
	19	281-5483	2	BOLT					
	20	332-4162	1	PLATE					
	21	322-3004	1	COVER					
	22	8T-4171	6	BOLT(M6×1)					
	23	322-3005	1	BOX					
	24	8T-6411	8	SCREW(M6×1)					
	25	139-6341	1	CIGAR LIGHTER AS					
	26	322-3006	1	BRACKET					
	27	245-8666	1	RADIO AS					
	28	095-0736	4	SCREW(M5×0.8)					
	29	203-4454	1	GRILL					
	30	203-4455	1	SPEAKER					
	31	158-7802	1	SWITCH AS					
		111-7899	1	GASKET					
	32	203-4456	1	SEAL					
	33	285-6278	1	PLATE					
	34	242-3766	1	SEAL					
	35	246-9977	1	GLASS					
	36	322-3018	1	BRACKET					
	37	255-0309	2	BOLT					
	38	4I-4253	1	HOLDER					
	39	3E-8020	2	SCREW(M6×1)					
	40	9X-2042	9	SCREW(M6×1)					
	41	322-3019	1	COVER					
	42	203-4445	3	RUBBER					
	43	254-6629	1	BRACKET					
	44	254-6630	1	PLATE					
	45	322-3020	1	BRACKET					
	46	254-6632	1	SEAL					
	47	254-6633	1	PLATE AS					
	48	254-6634	2	STOPPER					
	49	332-4164	1	TRIM					

J152804 HE01

CAB GROUP (322-4013 N/S) -PART 2 OF 3

PART OF 322-4012-Page 471

APPLIES TO CAB AIR CONDITIONER SPECIFICATION MACHINE
AN ATTACHMENT

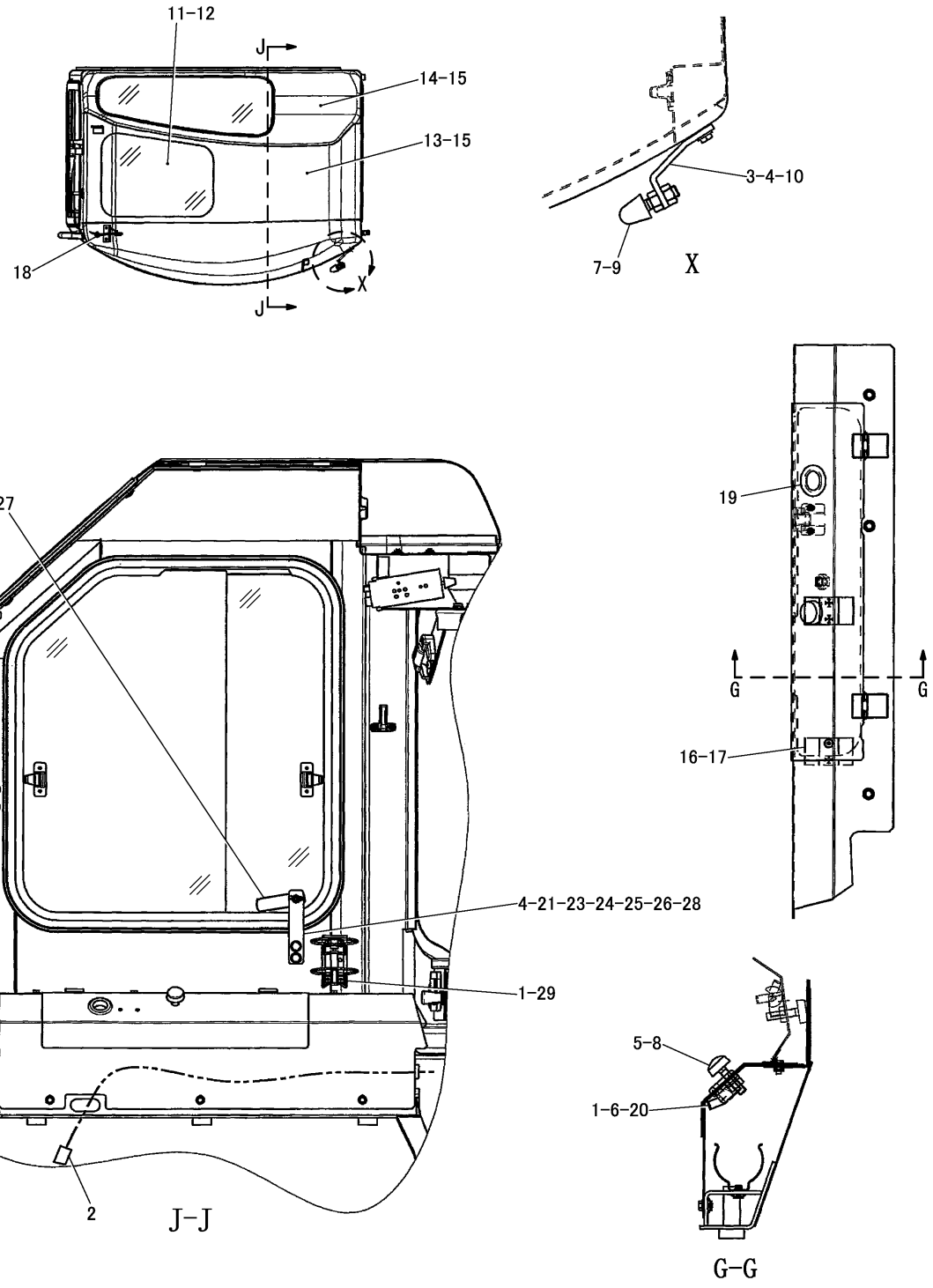

CAB GROUP (322-4013 N/S) -PART 3 OF 3
PART OF 322-4012-Page 471
APPLIES TO CAB AIR CONDITIONER SPECIFICATION MACHINE
AN ATTACHMENT

OPERATOR STATION

NOTE	No.	PART NO.	QTY	PART NAME	NOTE	No.	PART NO.	QTY	PART NAME
	1	8T-0337	4	SCREW(M4×0.7)					
	2	322-3000	1	HARNESS AS					
	3	8T-4200	2	BOLT(M8×1.25)					
	4	8T-4224	6	WASHER					
	5	8T-4133	1	NUT(M10×1.5)					
	6	209-7840	1	STOPPER					
	7	127-3947	1	BUMPER					
	8	139-6403	1	STOPPER					
	9	095-1207	2	NUT(M12×1.75)					
	10	127-3948	1	BRACKET					
	11	322-3023	1	GLASS					
	12	229-1382	1	SEAL					
	13	322-3002	1	LINER					
	14	322-3003	1	LINER					
	15	185-8205	10	CLIP					
	16	239-6387	2	CLAMP					
	17	8T-6411	4	SCREW(M6×1)					
	18	203-4457	1	GROMMET					
	19	209-7838	1	GROMMET					
	20	5P-7848	2	NUT(M4×0.7)					
	21	322-3007	1	BRACKET					
	22	322-3008	1	BRACKET					
	23	322-3009	1	PIN					
	24	322-3010	1	WASHER					
	25	322-3011	2	WASHER					
	26	132-7679	1	PIN(SPRING)					
	27	322-3012	1	COVER					
	28	322-3014	2	BOLT					
	29	245-6230	1	CUP					

J152805 HE01

CAB GROUP (322-4013 N/S) -PART 3 OF 3

PART OF 322-4012-Page 471

APPLIES TO CAB AIR CONDITIONER SPECIFICATION MACHINE
AN ATTACHMENT

OPERATOR STATION

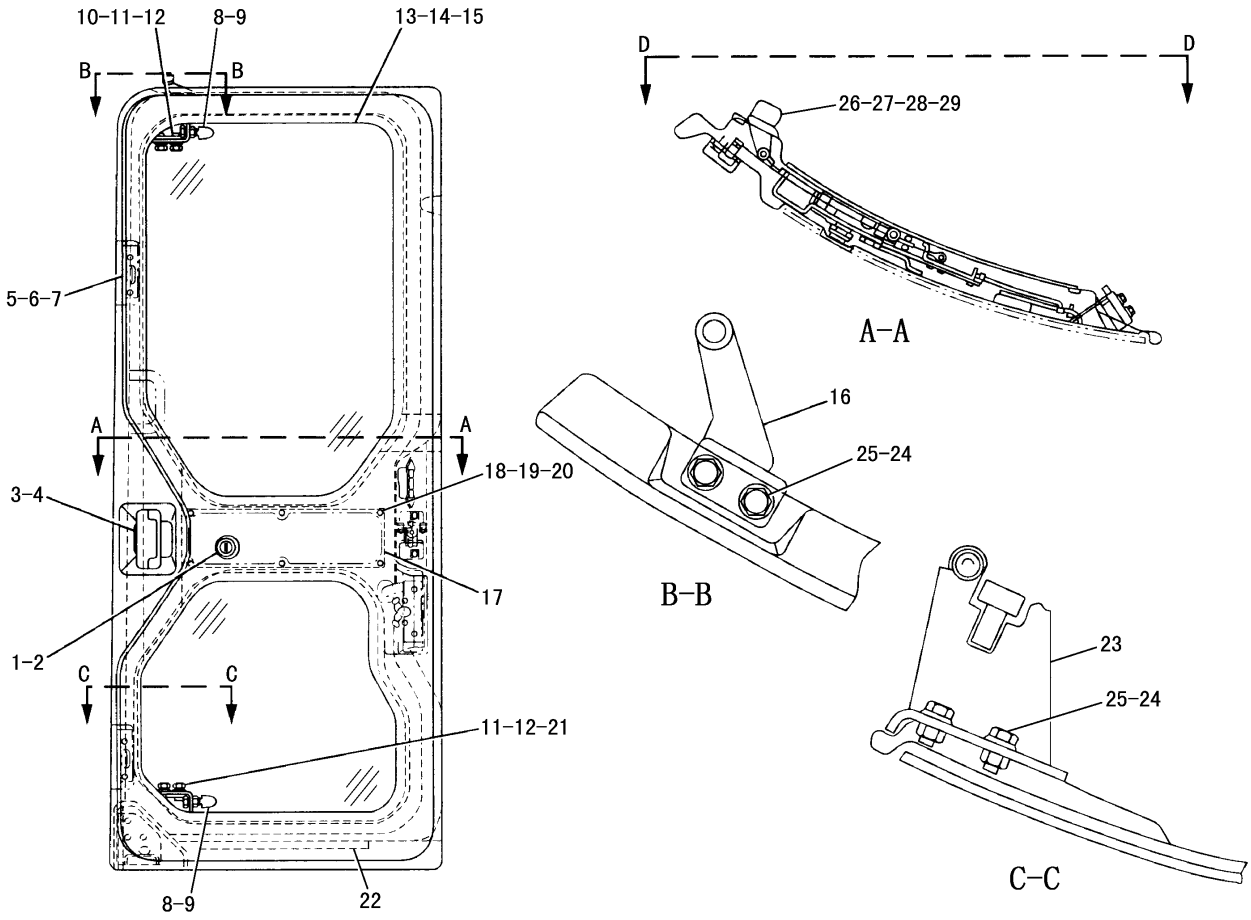

NOTE	No.	PART NO.	QTY	PART NAME	NOTE	No.	PART NO.	QTY	PART NAME
	1	169-7976	1	KEY AS		21	132-7628	1	BRACKET
	2	132-7626	1	SEAL		22	127-4000	1	SEAL
	3	132-7623	1	HANDLE AS		23	127-3961	1	ROLLER AS
	4	8T-4134	2	NUT(M6×1)		24	8T-4224	5	WASHER
	5	127-3958	2	STRIKER		25	8T-4200	5	BOLT(M8×1.25)
	6	8T-4171	4	BOLT(M6×1)		26	132-7624	1	HANDLE AS
	7	127-3959	4	SHIM		27	095-0742	2	SCREW(M6×1)
	8	132-7627	2	BUMPER		28	2U-2552	2	LOCKWASHER
	9	095-1207	4	NUT(M12×1.75)		29	9X-8256	2	WASHER
	10	127-3997	1	BRACKET					
	11	8T-4192	4	BOLT(M12×1.75)					
	12	8T-4223	4	WASHER					
	13	226-9842	1	GLASS					
	14	132-7622	1	CUSHION					
	15	132-7629	1	CUSHION					
	16	260-6313	1	ROLLER AS					
	17	127-3998	1	COVER AS					
	18	6V-9673	6	SCREW(M5×0.8)					
	19	3B-4503	6	LOCKWASHER					
	20	8T-0328	6	WASHER					

J139059 X02

203-4449 CAB DOOR GROUP -PART 1 OF 2
PART OF 309-0678-Page 473, 322-4013-Page 479
AN ATTACHMENT

OPERATOR STATION

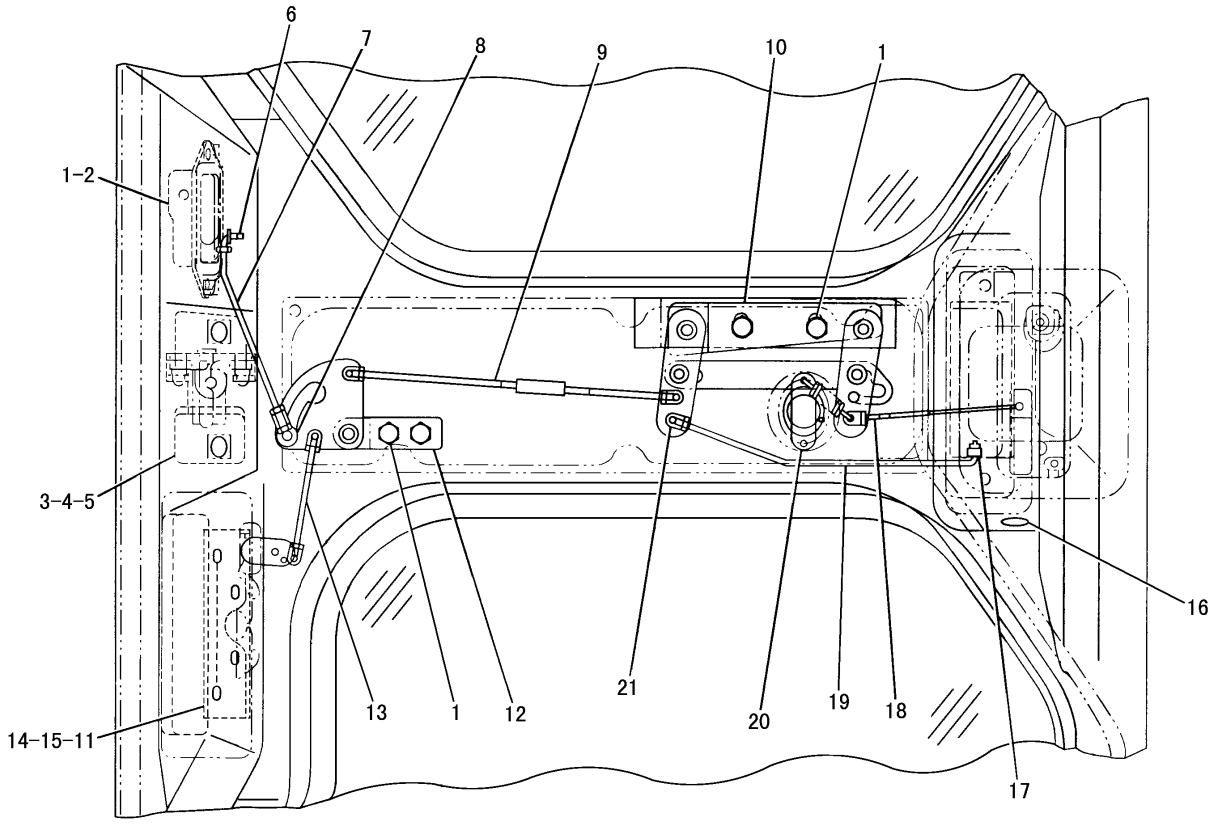

D-D

NOTE	No.	PART NO.	QTY	PART NAME	NOTE	No.	PART NO.	QTY	PART NAME
	1	8T-4171	6	BOLT(M6×1)		21	127-3991	5	SNAP
	2	132-7625	1	LOCK AS					
	3	127-3962	1	ROLLER AS					
	4	8T-4200	2	BOLT(M8×1.25)					
	5	8T-4224	2	WASHER					
	6	127-4001	1	SNAP					
	7	136-0234	1	ROD					
	8	136-0235	1	HOLDER					
	9	136-0238	1	ROD					
	10	136-0230	1	REMOTE CONTROL AS					
	11	127-3990	1	LOCK					
	12	136-0232	1	LINK AS					
	13	162-4666	1	ROD					
	14	9X-8256	4	WASHER					
	15	7X-2533	4	BOLT(M6×1)					
	16	127-4003	1	GROMMET					
	17	136-0259	1	SNAP					
	18	136-0233	1	CABLE AS					
	19	136-0237	1	ROD					
	20	136-0231	1	PLATE AS					

J139060 X02

203-4449 CAB DOOR GROUP -PART 2 OF 2

PART OF 309-0678-Page 473, 322-4013-Page 479
AN ATTACHMENT

OPERATOR STATION

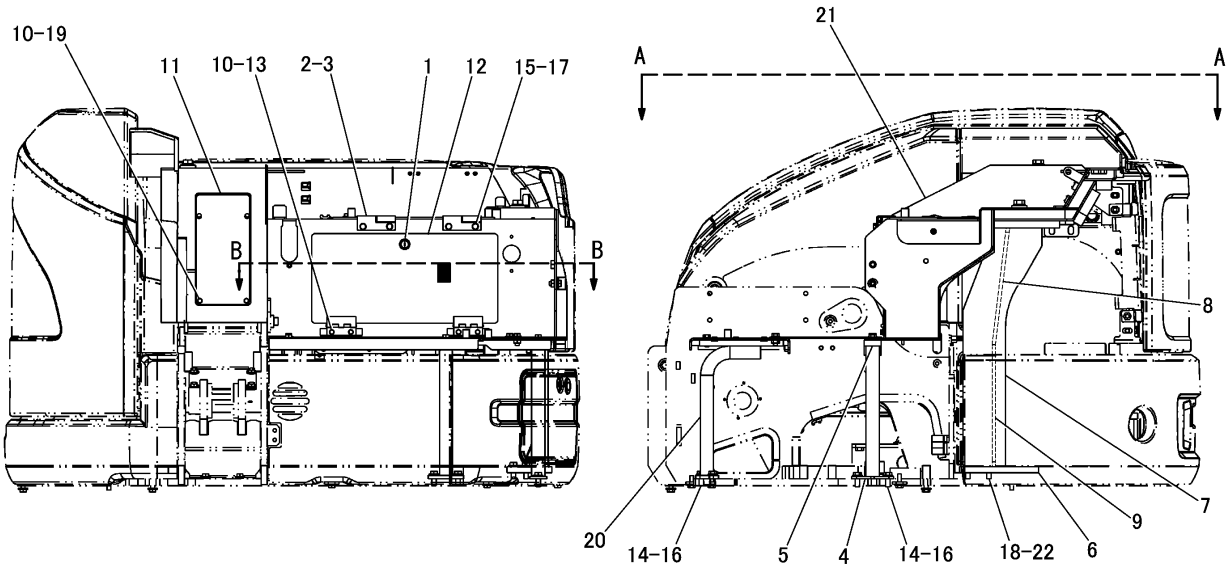

NOTE	No.	PART NO.	QTY	PART NAME	NOTE	No.	PART NO.	QTY	PART NAME
	1	267-7064	1	LOCK AS		17	8T-4224	4	WASHER
	2	285-6906	2	HINGE		18	8T-4956	2	BOLT(M12×1.75)
	3	285-6907	2	BEARING		19	8T-4970	4	BOLT(M6×1)
	4	306-7793	1	SUPPORT AS	W	20	306-7824	1	SUPPORT AS(FRONT)
	5	306-7796	1	BOSS(M10×1.5)	Y	21	309-0378	1	PLATFORM AS
Z	6	306-7799	1	FRAME AS(REAR)		22	5P-1076	2	WASHER
	7	306-7800	1	PLATE					
	8	306-7801	1	PLATE					
	9	306-7802	1	PLATE					
	10	9X-8256	8	WASHER					
	11	316-0811	1	COVER AS					
		298-6242	1	PLATE					
	12	316-0812	1	PLATE AS					
D		8T-5372		SEAL---0.02m(×3)					
		306-7797	1	COVER AS					
		306-7798	1	PLATE					
	13	5C-9553	4	BOLT(M6×1)					
	14	8T-4139	4	BOLT(M12×1.75)					
	15	8T-4189	4	BOLT(M8×1.25)					
	16	8T-4223	4	WASHER					

D-ORDER BY THE m
W-STD/ATT REMOVAL
Y-SEPARATE ILLUSTRATION
Z-NOT SERVICED SEPARATELY

J148660 HE03

OPERATOR PLATFORM GROUP (296-1622 N/S) -PART 1 OF 2

PART OF 296-6133-Page 464
REFERENCE:309-0378-Page 492, 493

OPERATOR STATION

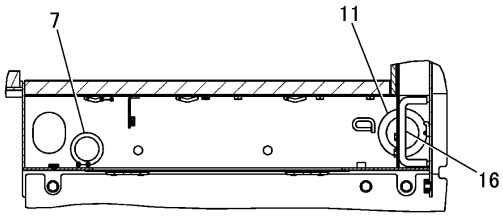

B-B

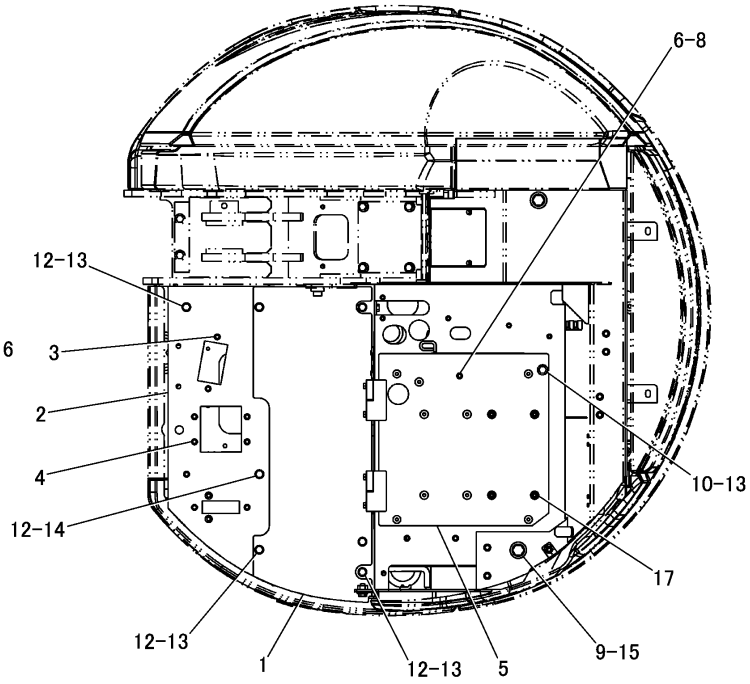

A-A

NOTE	No.	PART NO.	QTY	PART NAME	NOTE	No.	PART NO.	QTY	PART NAME
	1	306-7803	1	PLATE					
	2	306-7804	1	PLATE AS					
		306-7805	1	PLATE					
	3	194-6377	4	NUT(M10×1.5)(WELD)					
	4	8T-3490	7	NUT(M10×1.5)(WELD)					
	5	316-0810	1	PLATE AS					
		298-6241	1	SUPPORT AS					
	6	8T-3490	1	NUT(M10×1.5)(WELD)					
	7	1S-1014	1	GROMMET					
	8	4H-0408	1	PLUG					
	9	7X-2554	2	BOLT(M16×2)					
	10	7X-7729	1	WASHER					
	11	7Y-8171	1	GROMMET					
	12	8T-4121	7	WASHER					
	13	8T-4136	7	BOLT(M10×1.5)					
	14	8T-4137	1	BOLT(M10×1.5)					
	15	9X-8257	2	WASHER					
E	16	7X-7877		STRIP---18.3cm					
	17	1J-0245	4	PLUG					

E-ORDER BY THE cm

J148661 HE03

OPERATOR PLATFORM GROUP (296-1622 N/S) -PART 2 OF 2

PART OF 296-6133-Page 464

OPERATOR STATION

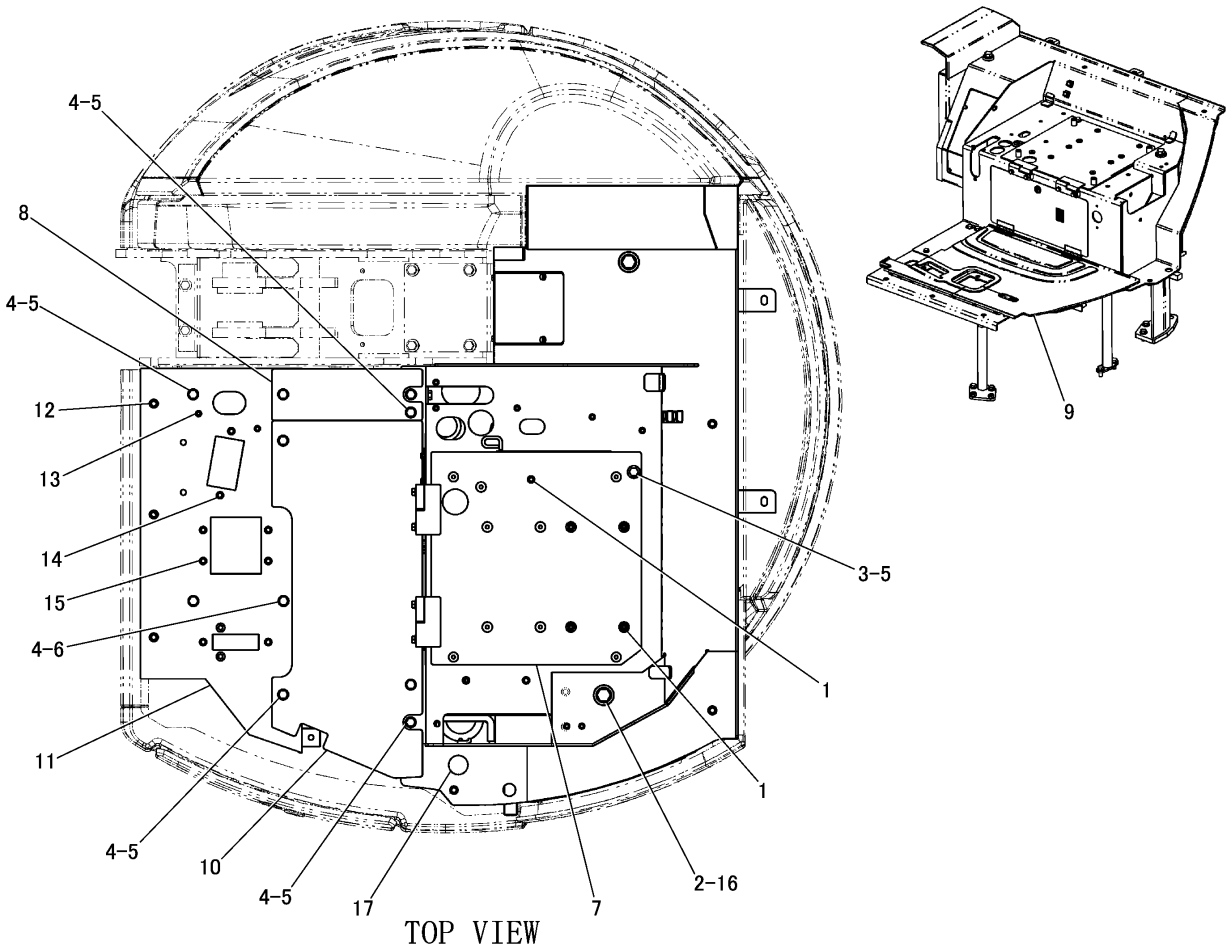

TOP VIEW

NOTE	No.	PART NO.	QTY	PART NAME	NOTE	No.	PART NO.	QTY	PART NAME
	1	4H-0408	5	PLUG					
	2	7X-2554	2	BOLT(M16×2)					
	3	7X-7729	1	WASHER					
	4	8T-4121	10	WASHER					
	5	8T-4136	9	BOLT(M10×1.5)					
	6	8T-4137	2	BOLT(M10×1.5)					
	7	316-0810	1	PLATE AS					
		298-6241	1	SUPPORT AS					
		8T-3490	1	NUT(M10×1.5)(WELD)					
	8	317-9666	1	PLATE					
	9	317-9647	1	FLOORMAT					
	10	317-9648	1	PLATE					
	11	317-9649	1	PLATE AS					
	12	8T-3597	3	NUT(M12×1.75)(WELD)					
	13	8T-3612	2	NUT(M8×1.25)(WELD)					
	14	194-6377	4	NUT(M10×1.5)(WELD)					
	15	8T-3490	8	NUT(M10×1.5)(WELD)					
	16	9X-8257	2	WASHER					
	17	8P-6364	1	PLUG					

J149306 HE01

OPERATOR PLATFORM GROUP (317-9674 N/S) -PART 1 OF 2
PART OF 308-4117-Page 465
AN ATTACHMENT

OPERATOR STATION

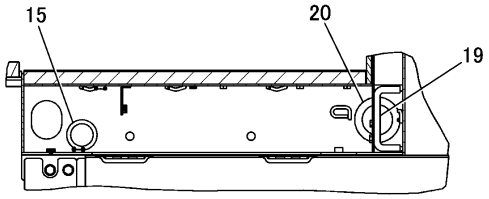

A-A

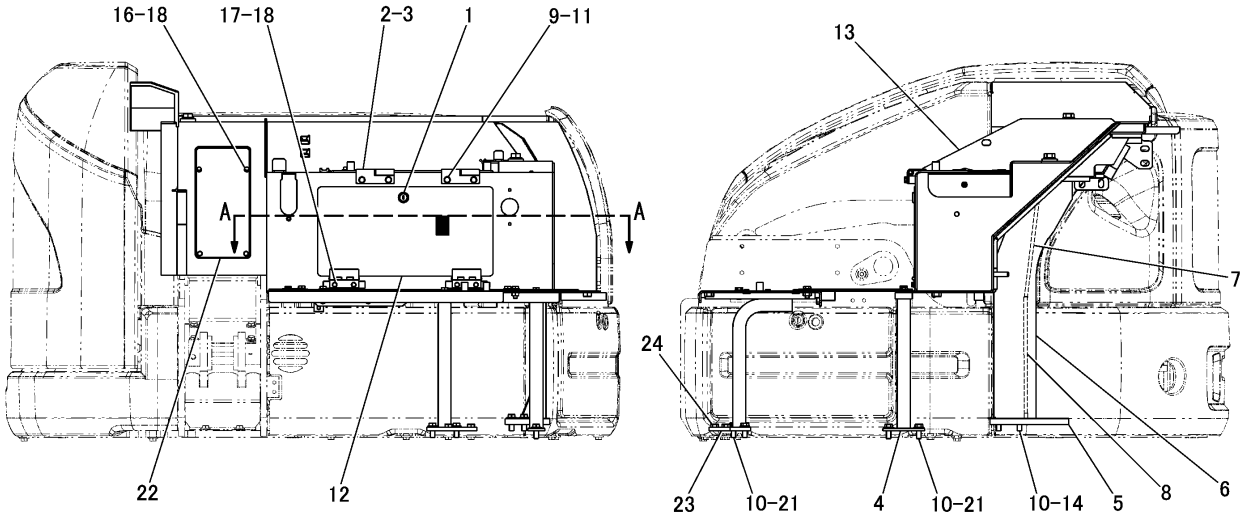

NOTE	No.	PART NO.	QTY	PART NAME	NOTE	No.	PART NO.	QTY	PART NAME
	1	267-7064	1	LOCK AS		20	7Y-8171	1	GROMMET
	2	285-6906	2	HINGE		21	8T-4139	4	BOLT(M12×1.75)
	3	285-6907	2	BEARING		22	316-0811	1	COVER AS
	4	306-7793	1	SUPPORT AS		23	310-1280	1	SUPPORT AS
Z	5	306-7799	1	FRAME AS		24	8T-3490	2	NUT(M10×1.5)(WELD)
	6	306-7800	1	PLATE					
	7	306-7801	1	PLATE					
	8	306-7802	1	PLATE					
	9	8T-4189	4	BOLT(M8×1.25)					
	10	8T-4223	6	WASHER					
	11	8T-4224	4	WASHER					
	12	317-9652	1	PLATE AS					
D		8T-5372		SEAL---0.02m(×3)					
Y	13	317-9655	1	PLATFORM AS					
	14	8T-4956	2	BOLT(M12×1.75)					
	15	1S-1014	1	GROMMET					
	16	8T-4970	4	BOLT(M6×1)					
	17	5C-9553	4	BOLT(M6×1)					
	18	9X-8256	8	WASHER					
E	19	7X-7877		STRIP---18.3cm					

D-ORDER BY THE m
E-ORDER BY THE cm
Y-SEPARATE ILLUSTRATION
Z-NOT SERVICED SEPARATELY

J149307 HE01

OPERATOR PLATFORM GROUP (317-9674 N/S) -PART 2 OF 2

PART OF 308-4117-Page 465
REFERENCE:317-9655-Page 494, 495
AN ATTACHMENT

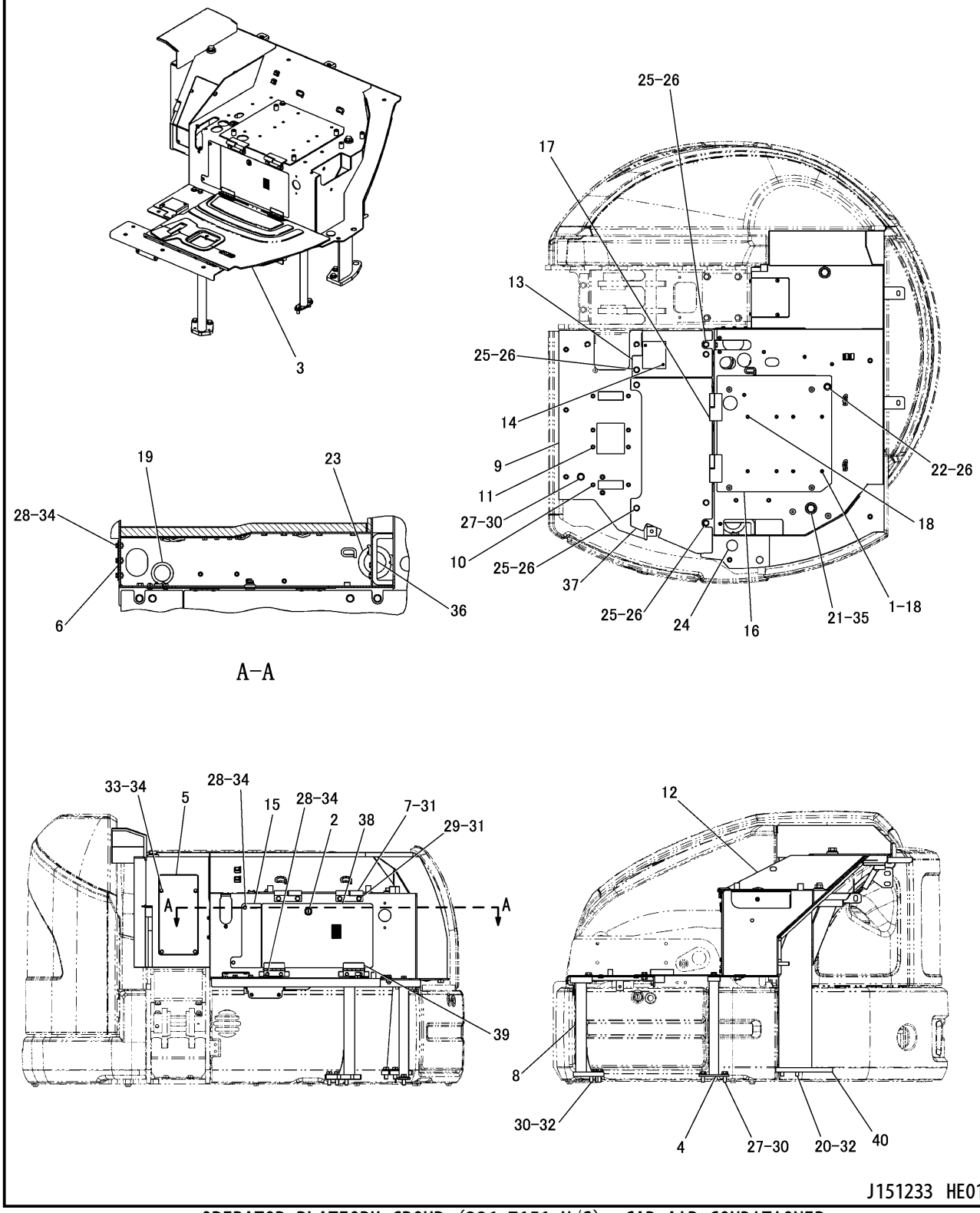

OPERATOR PLATFORM GROUP (326-7151 N/S) -CAB-AIR CONDITIONER

PART OF 308-4118-Page 466

APPLIES TO CAB AIR CONDITIONER SPECIFICATION MACHINE

AN ATTACHMENT

OPERATOR STATION

NOTE	No.	PART NO.	QTY	PART NAME
	1	1J-0245	4	PLUG
	2	267-7064	1	LOCK AS
	3	326-7154	1	FLOORMAT
	4	306-7793	1	SUPPORT AS
	5	316-0811	1	COVER AS
	6	317-4070	1	COVER
	7	317-4071	2	HINGE AS
	8	326-1696	1	SUPPORT AS
	9	326-7197	1	PLATE AS
		5G-8480	1	LUG
		8T-3597	2	NUT(M12×1.75)(WELD)
		8T-3612	2	NUT(M8×1.25)(WELD)
	10	194-6377	4	NUT(M10×1.5)(WELD)
	11	8T-3490	9	NUT(M10×1.5)(WELD)
Y	12	326-7199	1	PLATFORM AS
	13	326-7202	1	PLATE AS
	14	8T-8874	2	NUT(M5×0.8)(WELD)
	15	326-7221	1	PLATE
	16	327-5019	1	PLATE AS
		316-4188	1	INSULATION
Z		317-4068	1	SUPPORT AS
		317-4069	1	PLATE
	17	317-4074	2	HINGE
	18	8T-3612	9	NUT(M8×1.25)(WELD)
	19	1S-1014	1	GROMMET
	20	5P-1076	2	WASHER
	21	7X-2554	2	BOLT(M16×2)
	22	7X-7729	1	WASHER
	23	7Y-8171	1	GROMMET
	24	8P-6364	1	PLUG
	25	8T-4121	7	WASHER
	26	8T-4136	8	BOLT(M10×1.5)
	27	8T-4139	3	BOLT(M12×1.75)
	28	5C-9553	9	BOLT(M6×1)
	29	8T-4189	4	BOLT(M8×1.25)
	30	8T-4223	6	WASHER
	31	8T-4224	6	WASHER
	32	8T-4956	5	BOLT(M12×1.75)
	33	8T-4970	4	BOLT(M6×1)
	34	9X-8256	13	WASHER
	35	9X-8257	2	WASHER
E	36	7X-7877		STRIP---23.5cm
	37	326-7198	1	PLATE
	38	326-7220	1	PLATE AS
D		8T-5372		SEAL---0.02m(×3)
		326-7761	1	COVER AS
	39	215-1146	2	HINGE
	40	327-5020	1	FRAME AS

D-ORDER BY THE m
E-ORDER BY THE cm
Y-SEPARATE ILLUSTRATION
Z-NOT SERVICED SEPARATELY

J151233 HE01

OPERATOR PLATFORM GROUP (326-7151 N/S) -CAB-AIR CONDITIONER

PART OF 308-4118-Page 466
REFERENCE:326-7199-Page 496, 497
APPLIES TO CAB AIR CONDITIONER SPECIFICATION MACHINE
AN ATTACHMENT

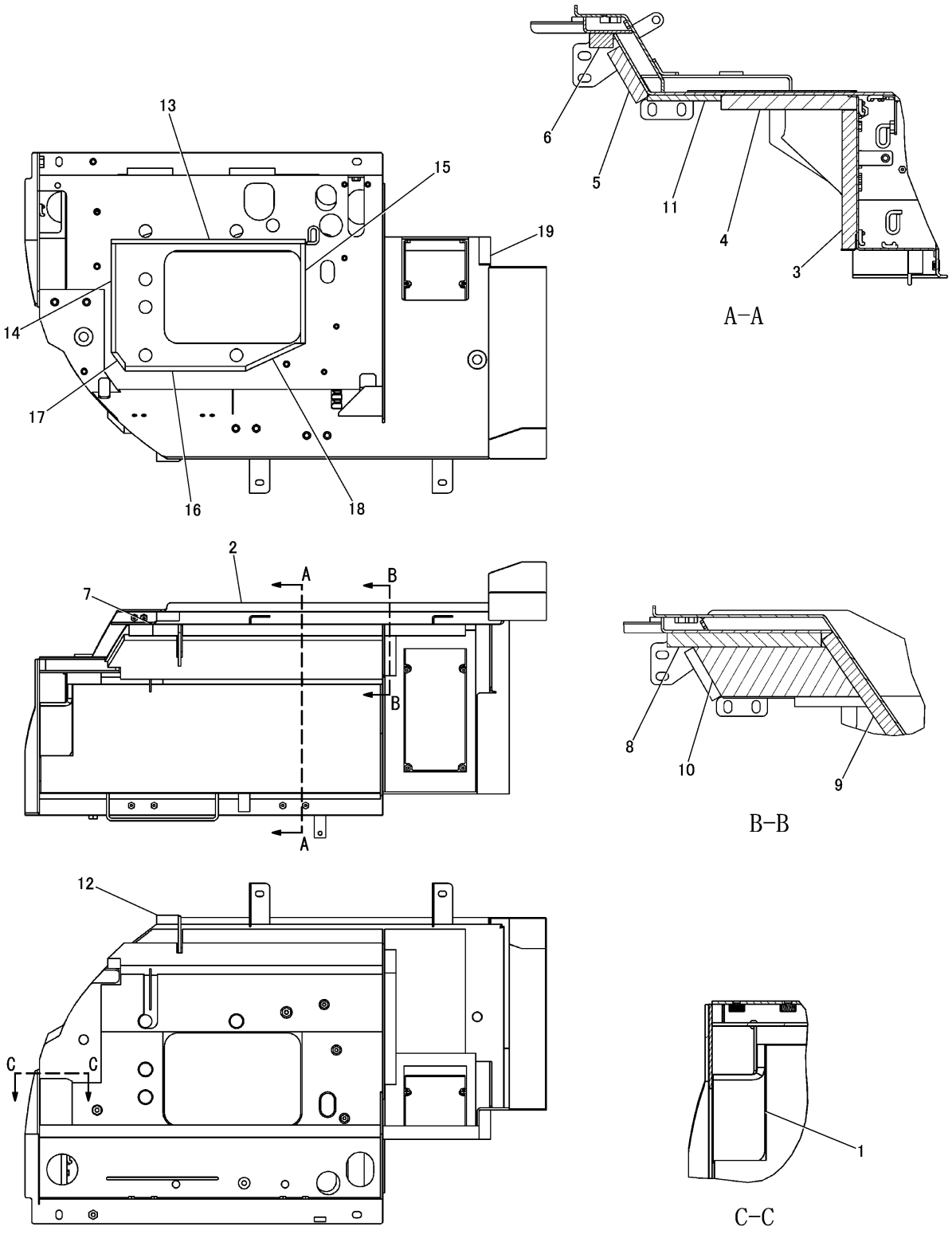

PLATFORM ASSEMBLY (309-0378 N/S)
PART OF 296-1622-Page 486

OPERATOR STATION

NOTE	No.	PART NO.	QTY	PART NAME	NOTE	No.	PART NO.	QTY	PART NAME
	1	306-7812	1	INSULATION					
Y	2	309-0379	1	PLATFORM AS					
	3	316-4180	1	INSULATION					
	4	316-4181	1	INSULATION					
	5	316-4182	1	INSULATION					
	6	316-4183	1	INSULATION					
	7	316-4184	1	INSULATION					
	8	316-4187	1	INSULATION					
	9	316-4186	1	INSULATION					
	10	316-4185	1	INSULATION					
	11	316-7831	1	INSULATION					
	12	316-9966	1	FOAM					
	13	317-4001	1	FOAM					
	14	317-4002	1	FOAM					
	15	317-4003	1	FOAM					
	16	317-4004	1	FOAM					
	17	317-4005	1	FOAM					
	18	317-4006	1	FOAM					
	19	317-4007	1	FOAM					

Y-SEPARATE ILLUSTRATION

J147150 HE00

PLATFORM ASSEMBLY (309-0378 N/S)

PART OF 296-1622-Page 486
REFERENCE:309-0379-Page 498, 499

OPERATOR STATION

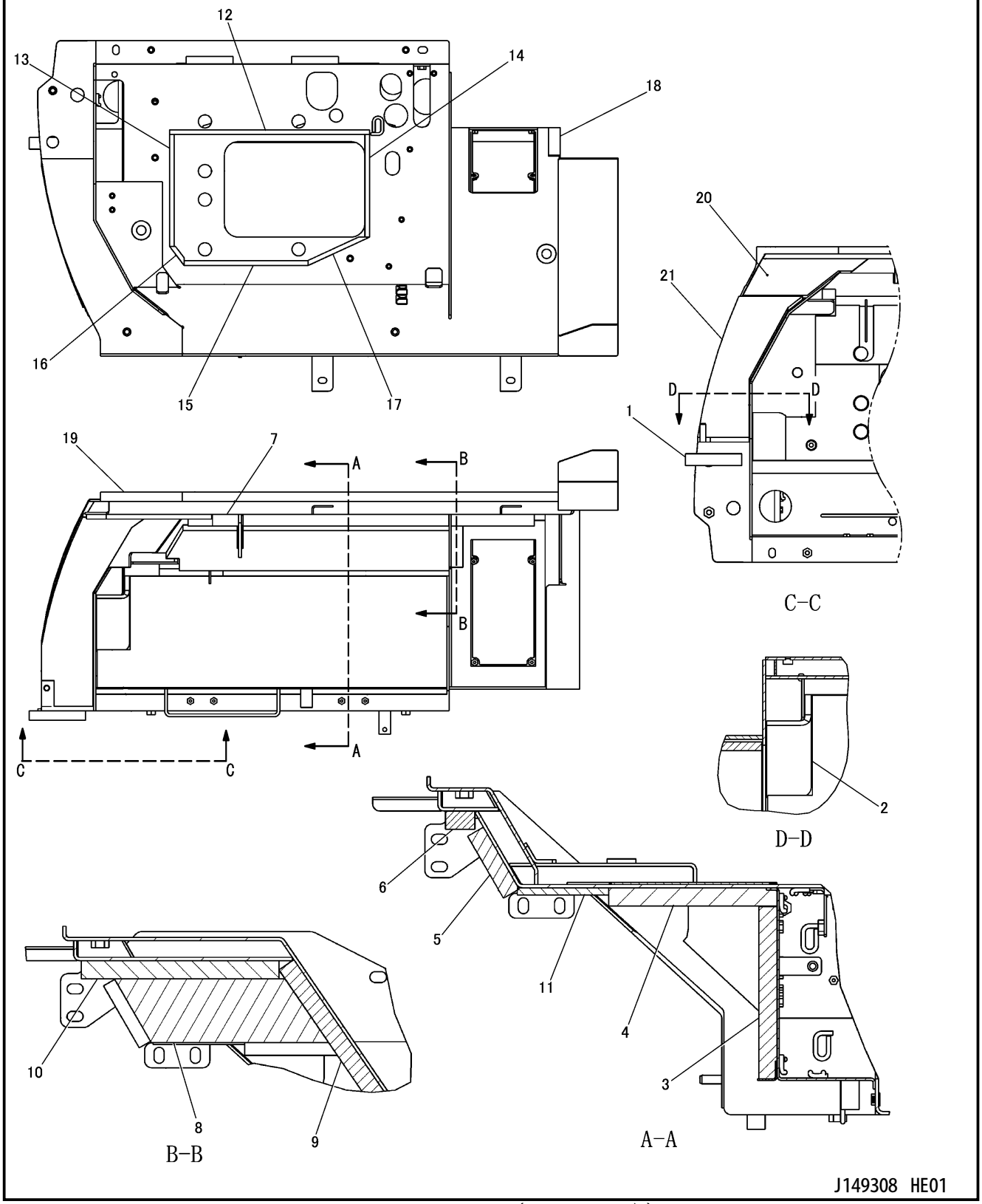

PLATFORM ASSEMBLY (317-9655 N/S)
PART OF 317-9674-Page 489
AN ATTACHMENT

OPERATOR STATION

NOTE	No.	PART NO.	QTY	PART NAME	NOTE	No.	PART NO.	QTY	PART NAME
	1	283-9603	1	FOAM					
	2	306-7812	1	INSULATION					
	3	316-4180	1	INSULATION					
	4	316-4181	1	INSULATION					
	5	316-4182	1	INSULATION					
	6	316-4183	1	INSULATION					
	7	316-4184	1	INSULATION					
	8	316-4185	1	INSULATION					
	9	316-4186	1	INSULATION					
	10	316-4187	1	INSULATION					
	11	316-7831	1	INSULATION					
	12	317-4001	1	FOAM					
	13	317-4002	1	FOAM					
	14	317-4003	1	FOAM					
	15	317-4004	1	FOAM					
	16	317-4005	1	FOAM					
	17	317-4006	1	FOAM					
	18	317-4007	1	FOAM					
Y	19	317-9658	1	PLATFORM AS					
	20	318-3395	1	INSULATION					
	21	318-3396	1	INSULATION					

Y-SEPARATE ILLUSTRATION

J149308 HE01

PLATFORM ASSEMBLY (317-9655 N/S)

PART OF 317-9674-Page 489
REFERENCE:317-9658-Page 500, 501
AN ATTACHMENT

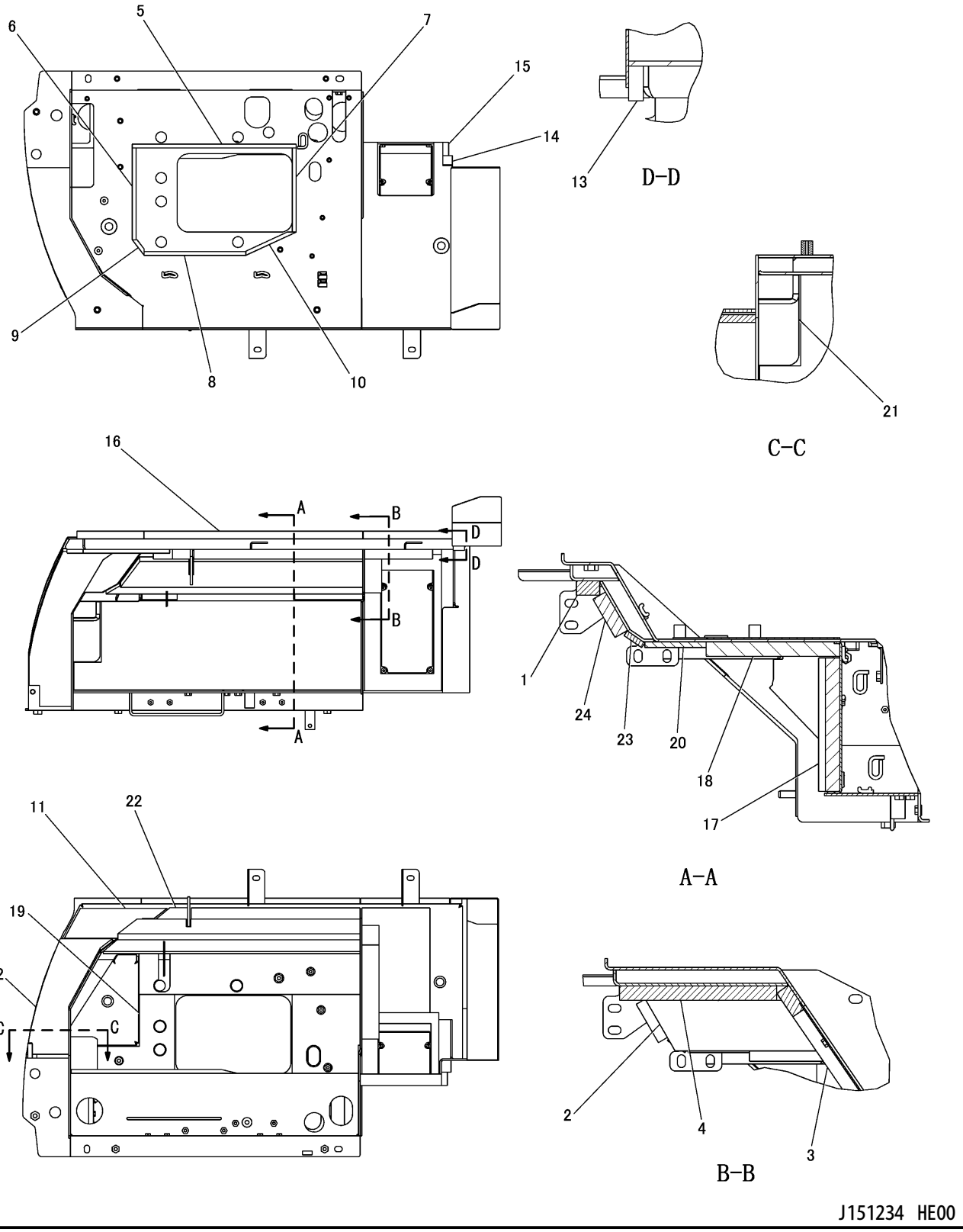

326-7199 PLATFORM ASSEMBLY
PART OF 326-7151-Page 491
APPLIES TO CAB AIR CONDITIONER SPECIFICATION MACHINE
AN ATTACHMENT

OPERATOR STATION

NOTE	No.	PART NO.	QTY	PART NAME	NOTE	No.	PART NO.	QTY	PART NAME
	1	316-4183	1	INSULATION					
	2	316-4185	1	INSULATION					
	3	316-4186	1	INSULATION					
	4	316-4187	1	INSULATION					
	5	317-4001	1	FOAM					
	6	317-4002	1	FOAM					
	7	317-4003	1	FOAM					
	8	317-4004	1	FOAM					
	9	317-4005	1	FOAM					
	10	317-4006	1	FOAM					
	11	318-3395	1	INSULATION					
	12	318-3396	1	INSULATION					
	13	323-6961	1	FOAM					
	14	324-7084	1	FOAM					
	15	324-7085	1	FOAM					
Y	16	326-7200	1	PLATFORM AS					
	17	327-5553	1	INSULATION					
	18	327-5554	1	INSULATION					
	19	327-5555	1	INSULATION					
	20	327-5556	1	INSULATION					
	21	327-5557	1	INSULATION					
	22	327-5560	1	INSULATION					
	23	327-8231	1	INSULATION					
	24	327-7232	1	INSULATION					

Y-SEPARATE ILLUSTRATION

J151234 HE00

326-7199 PLATFORM ASSEMBLY

PART OF 326-7151-Page 491
REFERENCE:326-7200-Page 502, 503
APPLIES TO CAB AIR CONDITIONER SPECIFICATION MACHINE
AN ATTACHMENT

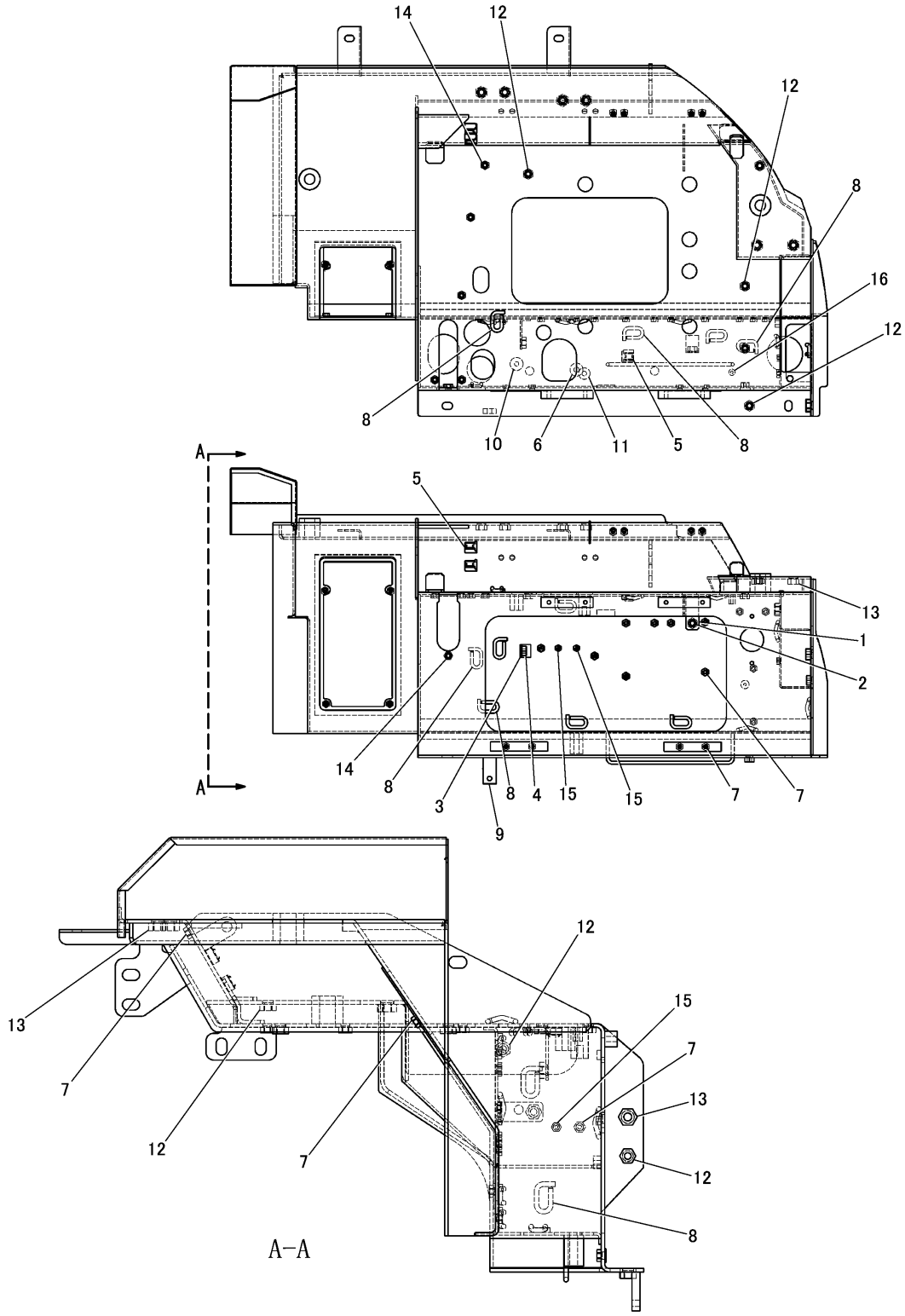

J147274 HE02

309-0379 PLATFORM ASSEMBLY

PART OF 309-0378-Page 493

OPERATOR STATION

NOTE	No.	PART NO.	QTY	PART NAME	NOTE	No.	PART NO.	QTY	PART NAME
Z	1	275-7242	1	BRACKET AS					
	2	8T-3490	1	NUT(M10×1.5)(WELD)					
Z	3	317-4000	1	PLATE AS					
	4	8T-3490	1	NUT(M10×1.5)(WELD)					
	5	181-1051	3	CLIP					
	6	4Y-8939	1	BOSS(M10×1.5)					
	7	6V-9632	25	NUT(M6×1)(WELD)					
	8	7T-1099	12	LINK					
	9	7Y-6215	1	PLATE					
	10	7Y-8763	1	BOSS(M10×1.5)					
	11	7Y-9552	1	BOSS(M10×1.5)					
	12	8T-3490	7	NUT(M10×1.5)(WELD)					
	13	8T-3597	7	NUT(M12×1.75)(WELD)					
	14	8T-3612	7	NUT(M8×1.25)(WELD)					
	15	8T-8874	3	NUT(M5×0.8)(WELD)					
	16	8X-4245	1	BOSS(M6×1)					

Z-NOT SERVICED SEPARATELY

J147274 HE02

309-0379 PLATFORM ASSEMBLY
PART OF 309-0378-Page 493

OPERATOR STATION

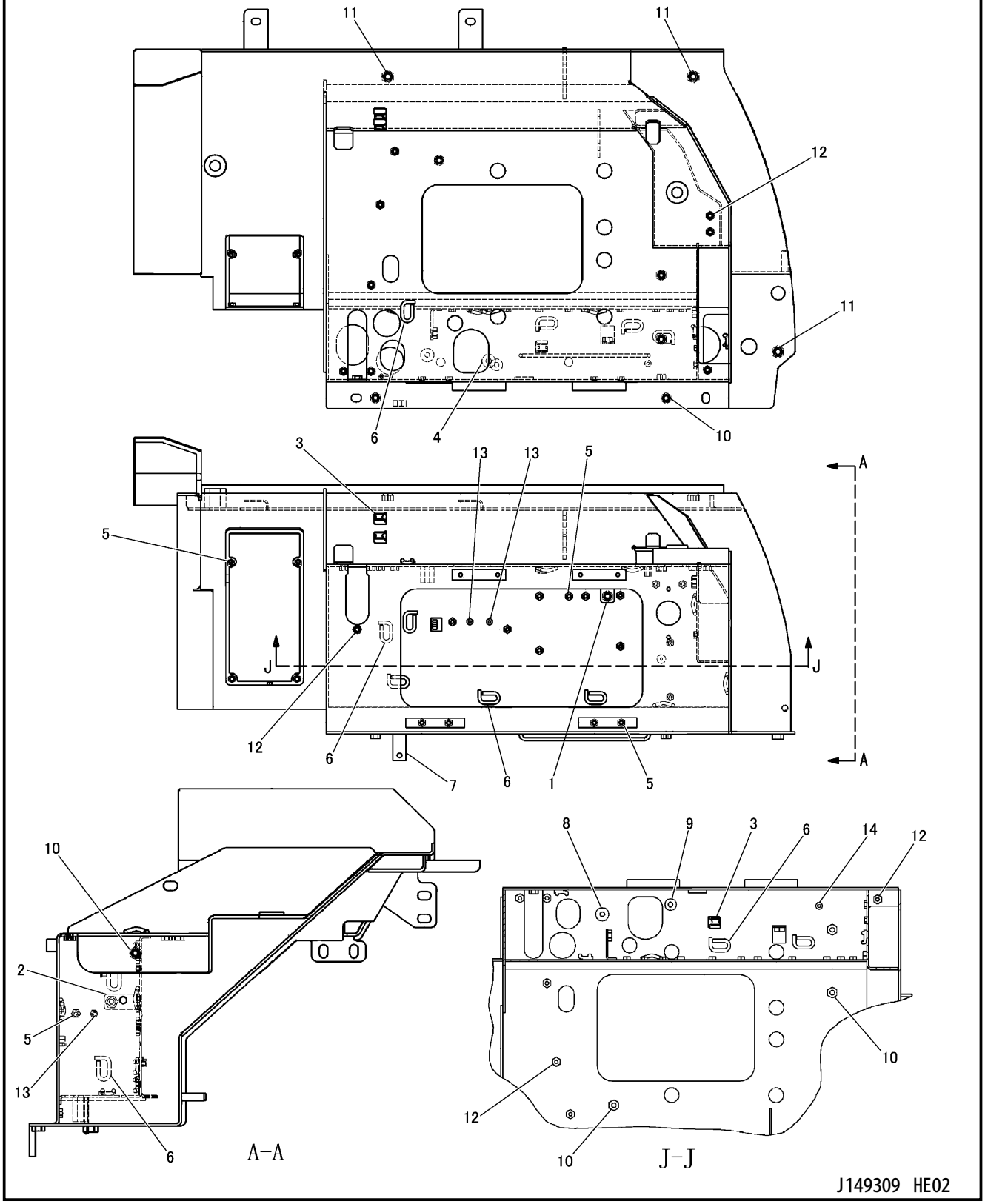

317-9658 PLATFORM ASSEMBLY
PART OF 317-9655-Page 495
AN ATTACHMENT

OPERATOR STATION

NOTE	No.	PART NO.	QTY	PART NAME	NOTE	No.	PART NO.	QTY	PART NAME
Z	1	275-7242	1	BRACKET AS					
		8T-3490	1	NUT(M10×1.5)(WELD)					
Z	2	317-4000	1	PLATE AS					
		8T-3490	1	NUT(M10×1.5)(WELD)					
	3	183-1051	3	CLIP					
	4	4Y-8939	1	BOSS(M10×1.5)					
	5	6V-9632	21	NUT(M6×1)(WELD)					
	6	7T-1099	12	LINK					
	7	7Y-6215	1	PLATE					
	8	7Y-8763	1	BOSS(M10×1.5)					
	9	7Y-9552	1	BOSS(M10×1.5)					
	10	8T-3490	6	NUT(M10×1.5)(WELD)					
	11	8T-3597	3	NUT(M12×1.75)(WELD)					
	12	8T-3612	9	NUT(M8×1.25)(WELD)					
	13	8T-8874	3	NUT(M5×0.8)(WELD)					
	14	8X-4245	1	BOSS(M6×1)					

Z-NOT SERVICED SEPARATELY

J149309 HE02

317-9658 PLATFORM ASSEMBLY

PART OF 317-9655-Page 495
AN ATTACHMENT

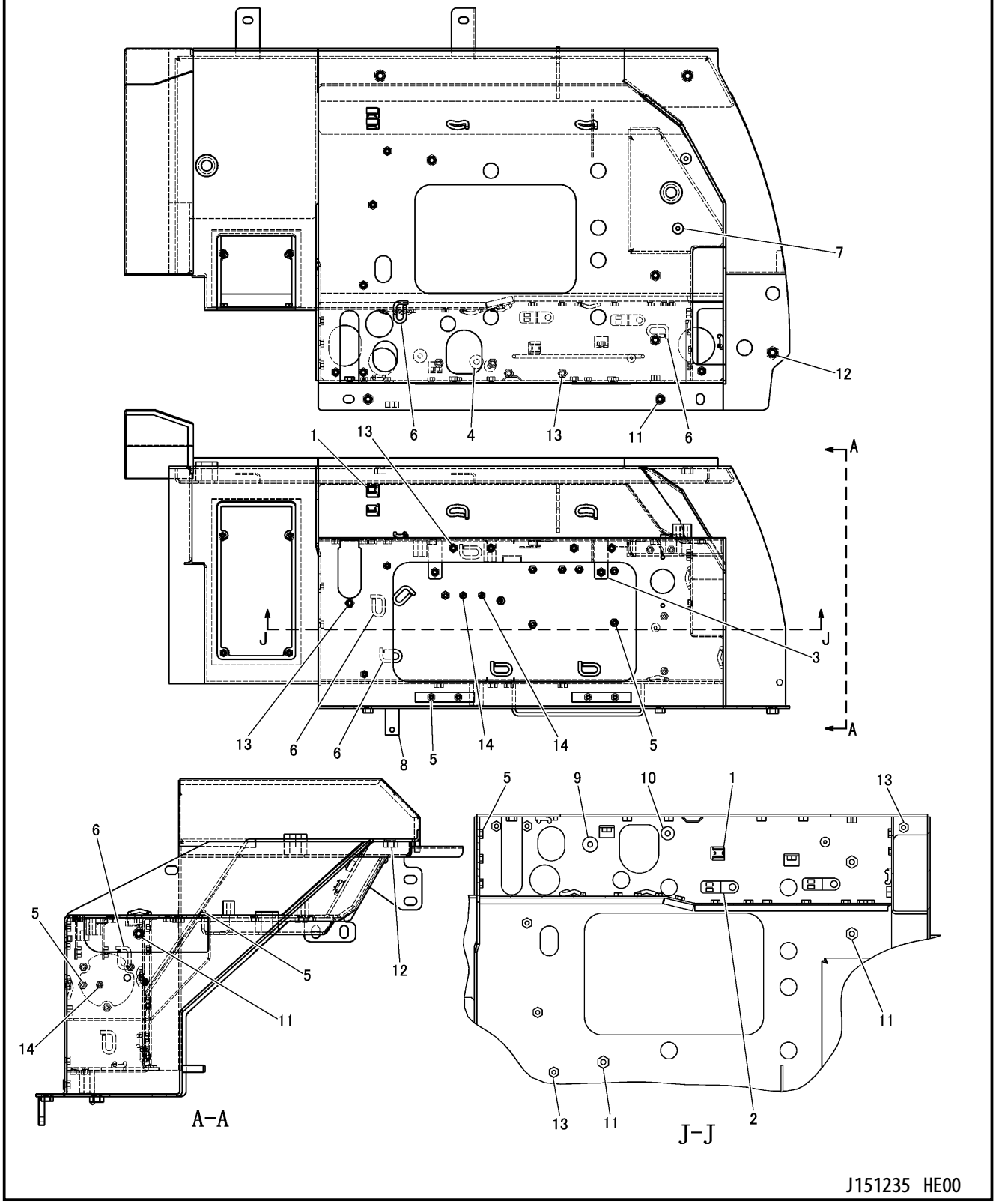

326-7200 PLATFORM ASSEMBLY
PART OF 326-7199-Page 497
APPLIES TO CAB AIR CONDITIONER SPECIFICATION MACHINE
AN ATTACHMENT

OPERATOR STATION

NOTE	No.	PART NO.	QTY	PART NAME	NOTE	No.	PART NO.	QTY	PART NAME
	1	183-1051	3	CLIP					
	2	269-7680	2	CLIP					
Z	3	317-4063	2	BRACKET AS					
		8T-3612	1	NUT(M8×1.25)(WELD)					
	4	4Y-8939	1	BOSS(M10×1.5)					
	5	6V-9632	26	NUT(M6×1)(WELD)					
	6	7T-1099	12	LINK					
	7	7Y-3459	2	BOSS(M8×1.25)					
	8	7Y-6215	1	PLATE					
	9	7Y-8763	1	BOSS(M10×1.5)					
	10	7Y-9552	1	BOSS(M10×1.5)					
	11	8T-3490	6	NUT(M10×1.5)(WELD)					
	12	8T-3597	3	NUT(M12×1.75)(WELD)					
	13	8T-3612	15	NUT(M8×1.25)(WELD)					
	14	8T-8874	3	NUT(M5×0.8)(WELD)					

Z-NOT SERVICED SEPARATELY

J151235 HE00

326-7200 PLATFORM ASSEMBLY

PART OF 326-7199-Page 497
APPLIES TO CAB AIR CONDITIONER SPECIFICATION MACHINE
AN ATTACHMENT

OPERATOR STATION

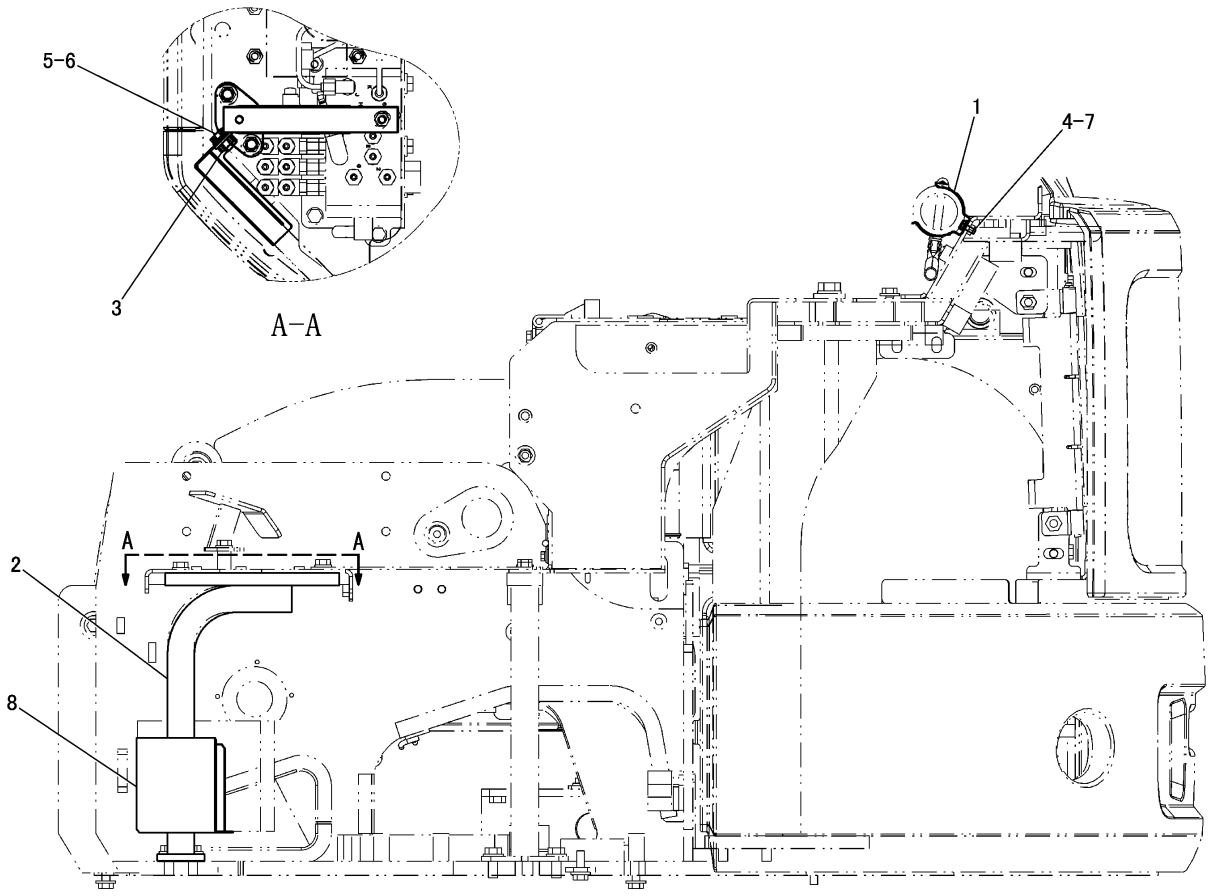

NOTE	No.	PART NO.	QTY	PART NAME	NOTE	No.	PART NO.	QTY	PART NAME
	1	239-6387	2	CLAMP					
	2	317-0076	1	SUPPORT AS					
	3	8T-3490	2	NUT(M10×1.5)(WELD)					
	4	5C-9553	4	BOLT(M6×1)					
	5	8T-4121	2	WASHER					
	6	8T-4137	2	BOLT(M10×1.5)					
	7	9X-8256	4	WASHER					
	8	317-0078	1	PLATE AS					

J147354 HE00

PLATFORM SUPPORT GROUP (317-0075 N/S)

PART OF 297-4667-Page 464

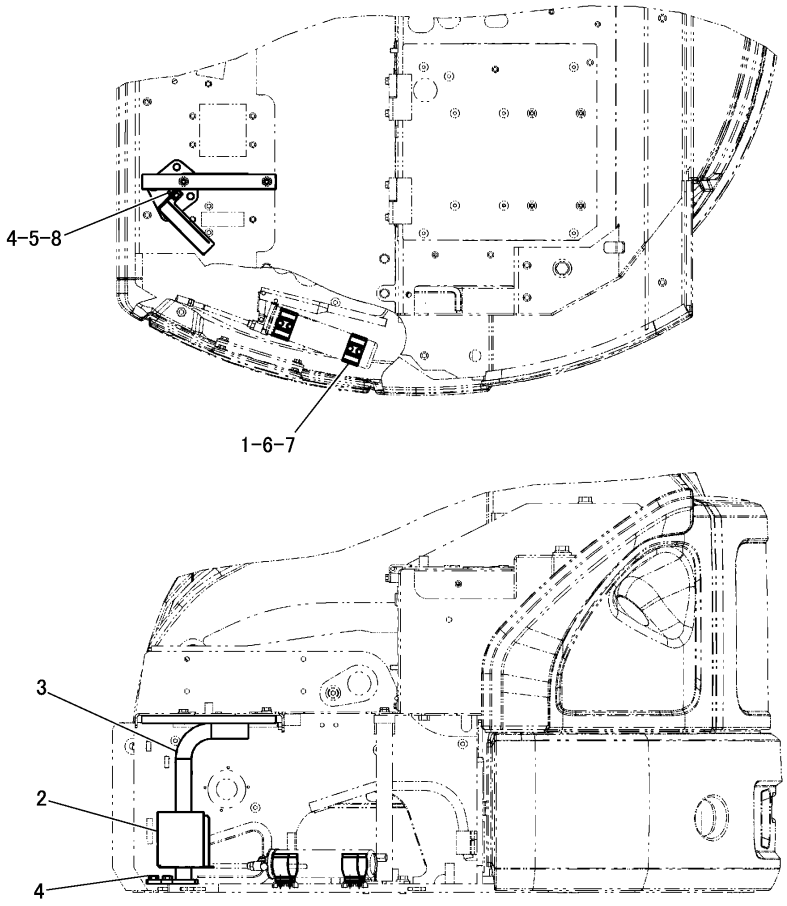

NOTE	No.	PART NO.	QTY	PART NAME	NOTE	No.	PART NO.	QTY	PART NAME
	1	239-6387	2	CLAMP					
	2	317-0078	1	PLATE AS					
	3	317-9663	1	SUPPORT AS					
	4	8T-3490	4	NUT(M10×1.5)(WELD)					
	5	8T-4137	2	BOLT(M10×1.5)					
	6	8T-4171	4	BOLT(M6×1)					
	7	9X-8256	4	WASHER					
	8	8T-4121	2	WASHER					

J147574 HE00

PLATFORM SUPPORT GROUP (318-0119 N/S)
PART OF 308-4117-Page 465
AN ATTACHMENT

OPERATOR STATION

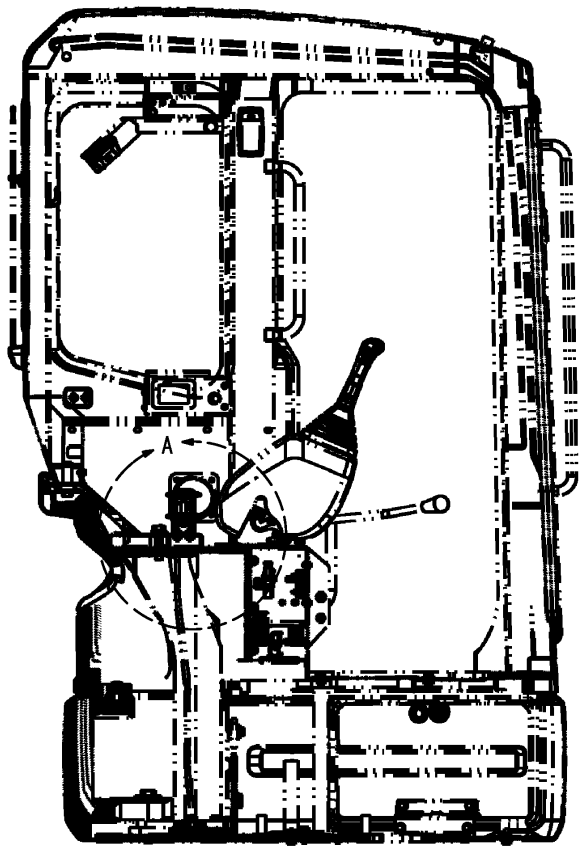

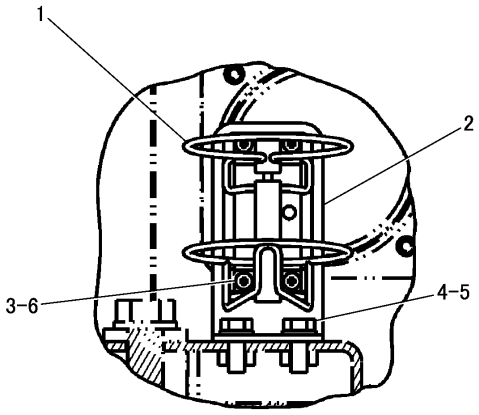

A

NOTE	No.	PART NO.	QTY	PART NAME	NOTE	No.	PART NO.	QTY	PART NAME
	1	245-6230	1	CUP					
	2	318-1700	1	BRACKET AS					
	3	9X-2032	4	NUT(M4×0.7)(WELD)					
	4	8T-4189	2	BOLT(M8×1.25)					
	5	8T-4224	2	WASHER					
	6	6V-5210	4	SCREW(M4×0.7)					

J147576 HE00

MOUNTING GROUP (318-1703 N/S) -CUP HOLDER
PART OF 308-4117-Page 465
AN ATTACHMENT

OPERATOR STATION

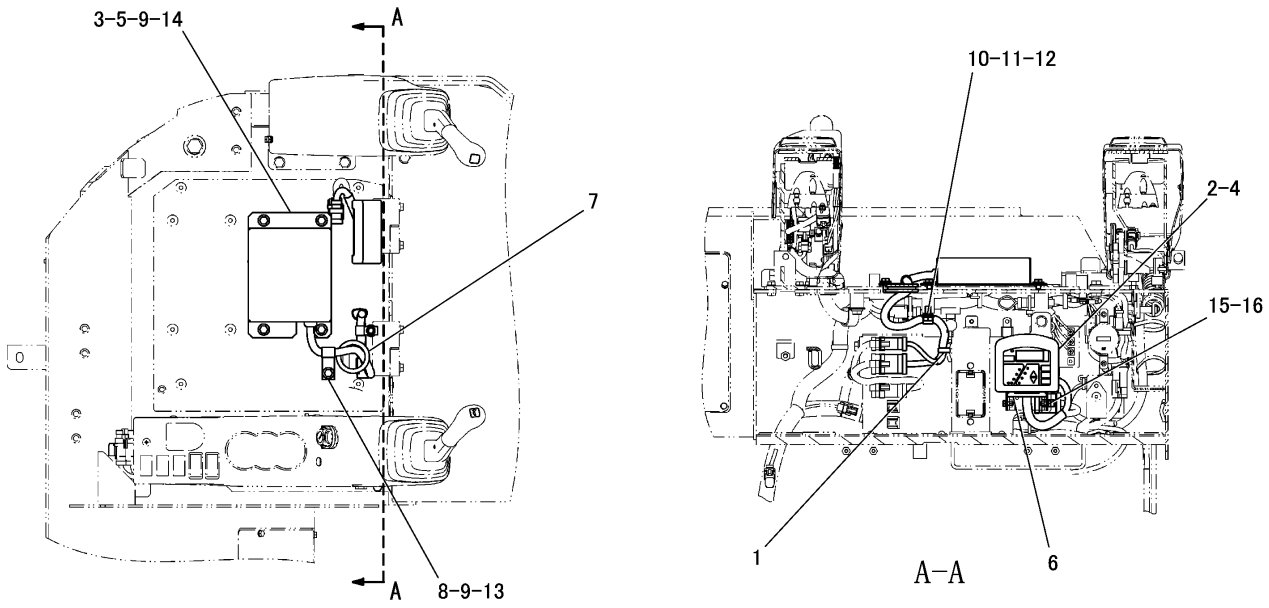

NOTE	No.	PART NO.	QTY	PART NAME	NOTE	No.	PART NO.	QTY	PART NAME
	1	7K-1181	1	STRAP					
	2	140-3246	1	COVER					
	3	238-9993	1	COVER					
	4	297-6525	1	CONTROL GROUP					
	5	297-6528	1	CONTROL AS					
	6	312-8648	1	SUPPORT					
	7	1S-1014	1	GROMMET					
	8	4D-9517	1	CLIP					
	9	5P-4116	5	WASHER					
	10	8M-2770	1	CLIP					
	11	8T-4121	1	WASHER					
	12	8T-4137	1	BOLT(M10×1.5)					
	13	8T-4189	1	BOLT(M8×1.25)					
	14	8T-4199	4	BOLT(M8×1.25)					
	15	8T-4970	2	BOLT(M6×1)					
	16	9X-8256	2	WASHER					

J146573 HE04

MONITOR AND MOUNTING GROUP (296-1950 N/S)

PART OF 296-6133-Page 464

OPERATOR STATION

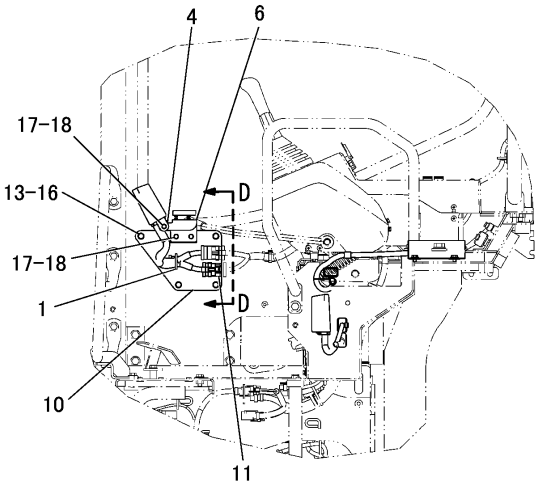

A-A

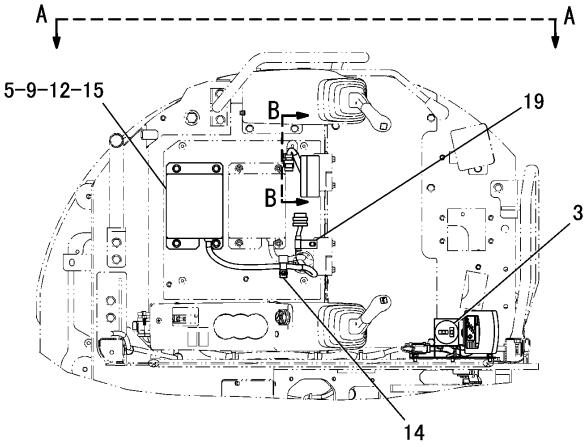

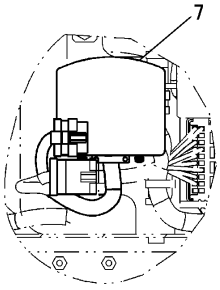

B-B

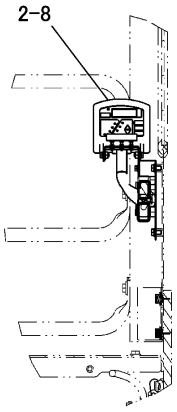

D-D

NOTE	No.	PART NO.	QTY	PART NAME	NOTE	No.	PART NO.	QTY	PART NAME
	1	3S-2093	1	STRAP		19	4D-9517	1	CLIP
	2	140-3246	1	COVER					
	3	186-3792	1	TILT(SWITCH)					
	4	200-4602	1	SUPPORT AS					
	5	238-9993	1	COVER					
	6	238-9994	1	BRACKET AS					
		6V-9632	2	NUT(M6×1)(WELD)					
	7	309-3611	1	CONTROL GROUP					
	8	309-3612	1	CONTROL GROUP					
	9	309-3613	1	CONTROL AS					
	10	317-2970	1	BRACKET AS					
		7T-1099	1	LINK					
	11	183-1051	2	CLIP					
	12	5P-4116	4	WASHER					
	13	7X-2536	4	BOLT(M8×1.25)					
	14	8M-2770	1	CLIP					
	15	8T-4199	4	BOLT(M8×1.25)					
	16	8T-4224	4	WASHER					
	17	8T-4970	4	BOLT(M6×1)					
	18	9X-8256	4	WASHER					

J146830 HE03

MONITOR AND MOUNTING GROUP (307-9228 N/S) -CANOPY/CRANE-STANDARD
PART OF 307-8503-Page 2
AN ATTACHMENT

OPERATOR STATION

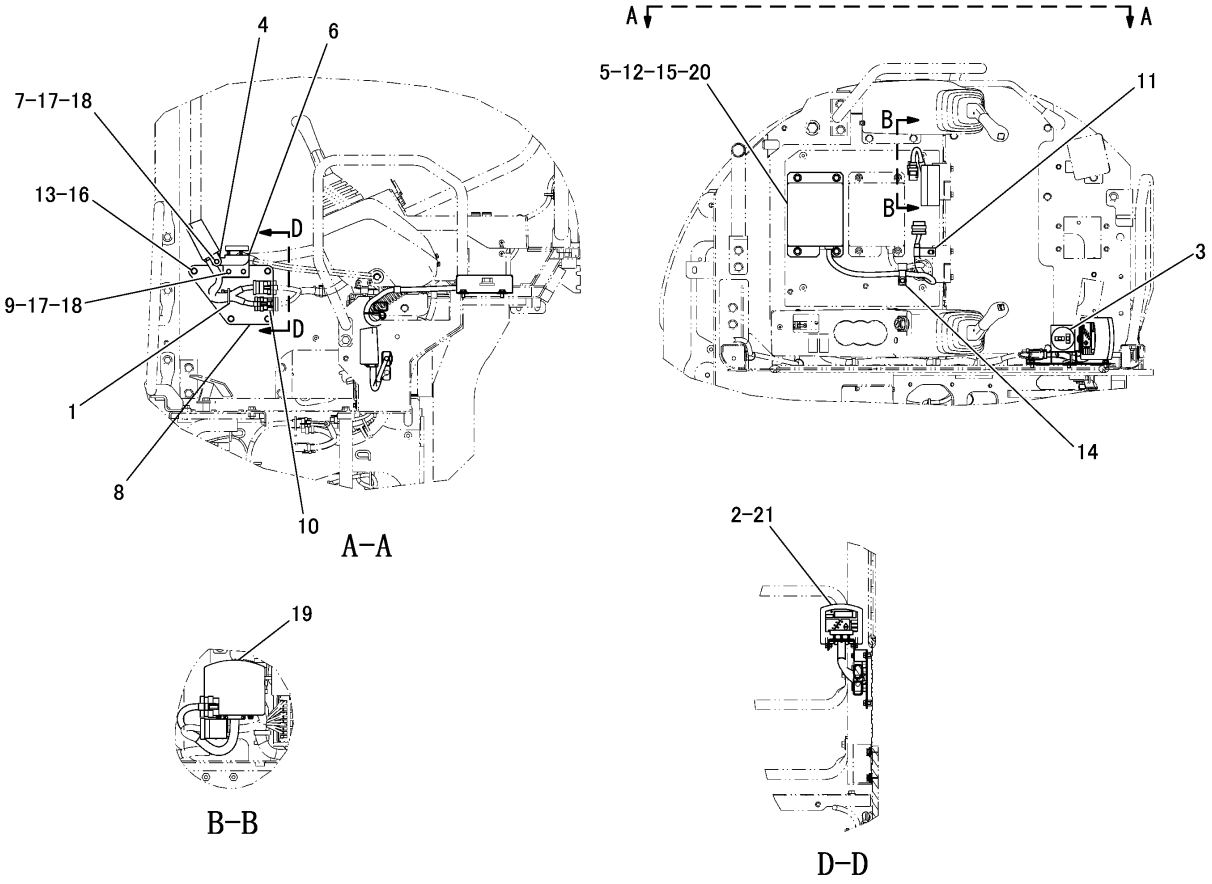

NOTE	No.	PART NO.	QTY	PART NAME	NOTE	No.	PART NO.	QTY	PART NAME
	1	3S-2093	1	STRAP		19	317-9207	1	CONTROL GROUP
	2	140-3246	1	COVER		20	309-3613	1	CONTROL AS
	3	186-3792	1	TILT(SWITCH)		21	317-9210	1	CONTROL GROUP
	4	200-4602	1	SUPPORT AS					
	5	238-9993	1	COVER					
	6	238-9994	1	BRACKET AS					
	7	6V-9632	2	NUT(M6×1)(WELD)					
	8	317-2970	1	BRACKET AS					
		7T-1099	1	LINK					
Z		237-6076	1	BRACKET AS					
	9	6V-9632	2	NUT(M6×1)(WELD)					
	10	183-1051	2	CLIP					
	11	4D-9517	1	CLIP					
	12	5P-4116	4	WASHER					
	13	7X-2536	4	BOLT(M8×1.25)					
	14	8M-2770	1	CLIP					
	15	8T-4200	4	BOLT(M8×1.25)					
	16	8T-4224	4	WASHER					
	17	8T-4970	4	BOLT(M6×1)					
	18	9X-8256	4	WASHER					

Z-NOT SERVICED SEPARATELY

J153803 HE01

MONITOR AND MOUNTING GROUP (329-3429 N/S) -CANOPY/CRANE-LONG
EFFECTIVE WITH SERIAL NO. MSP00401-
PART OF 330-3619-Page 3
AN ATTACHMENT

OPERATOR STATION

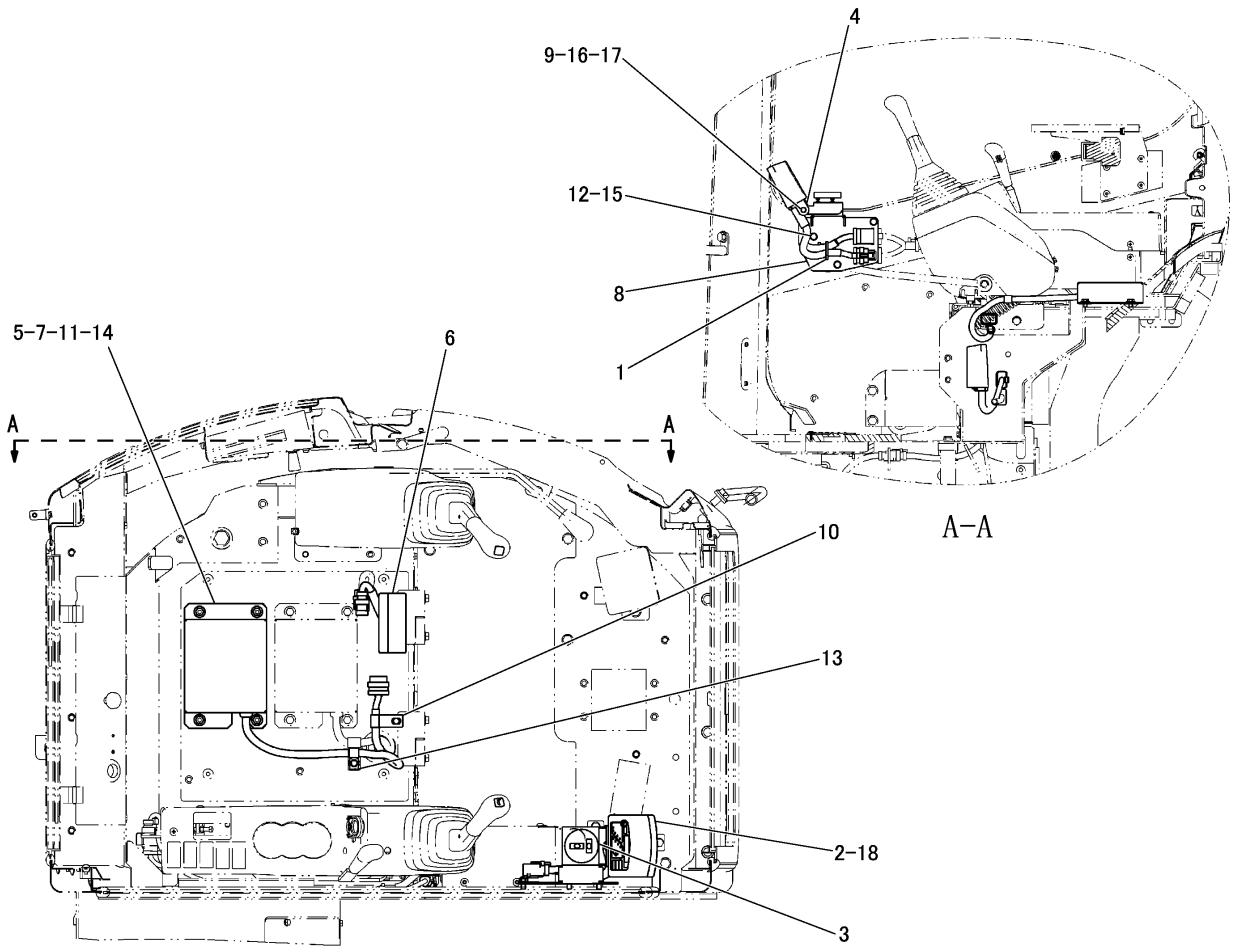

NOTE	No.	PART NO.	QTY	PART NAME	NOTE	No.	PART NO.	QTY	PART NAME
	1	3S-2093	1	STRAP					
	2	140-3246	1	COVER					
	3	186-3792	1	TILT(SWITCH)					
	4	200-4602	1	SUPPORT AS					
	5	238-9993	1	COVER					
	6	309-3611	1	CONTROL GROUP					
	7	309-3613	1	CONTROL AS					
	8	317-2973	1	BRACKET AS					
		183-1051	2	CLIP					
		7T-1099	1	LINK					
	9	6V-9632	2	NUT(M6×1)(WELD)					
	10	4D-9517	1	CLIP					
	11	5P-4116	4	WASHER					
	12	7X-2536	3	BOLT(M8×1.25)					
	13	8M-2770	1	CLIP					
	14	8T-4199	4	BOLT(M8×1.25)					
	15	8T-4224	3	WASHER					
	16	8T-4970	2	BOLT(M6×1)					
	17	9X-8256	2	WASHER					
	18	317-9209	1	CONTROL GROUP					

J147596 HE01

MONITOR AND MOUNTING GROUP (307-9232 N/S) -CAB
PART OF 307-8504-Page 4
AN ATTACHMENT

OPERATOR STATION

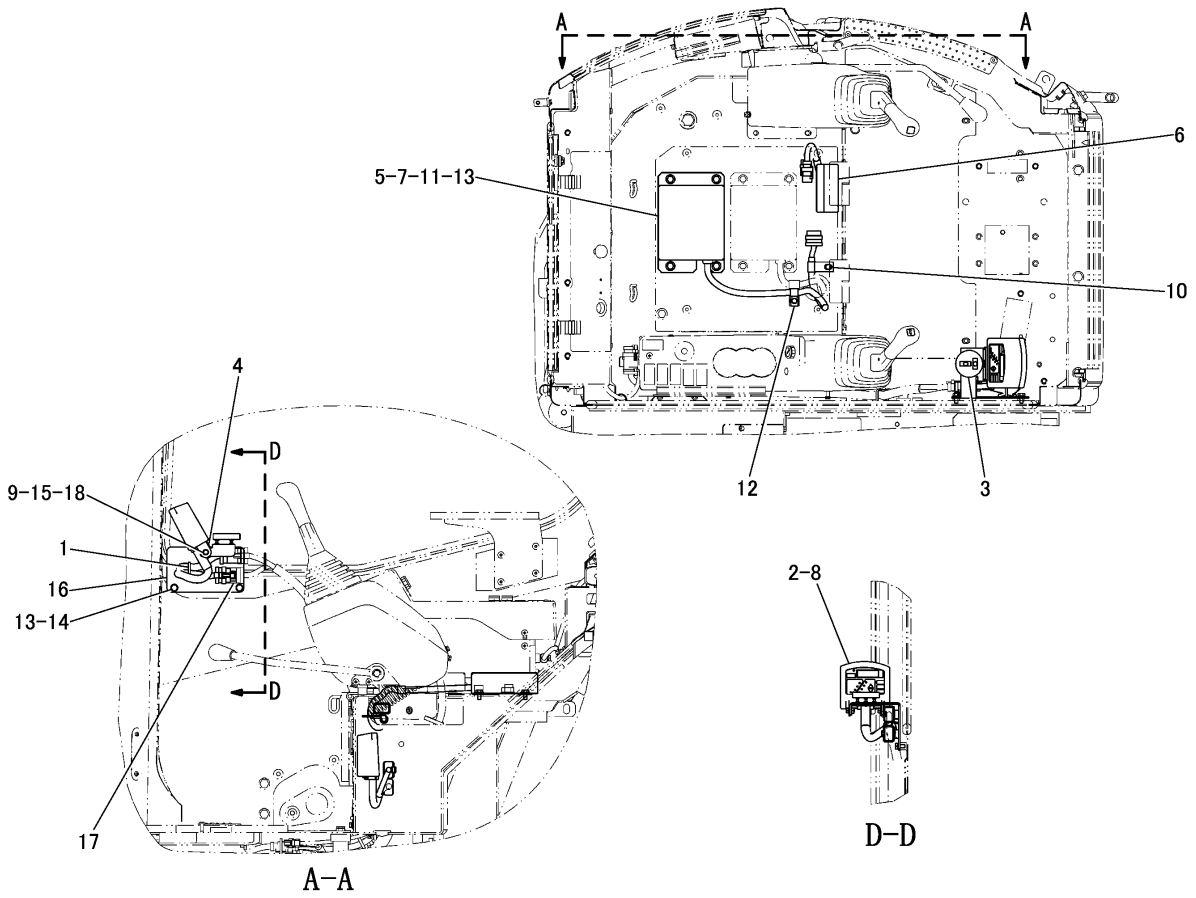

NOTE	No.	PART NO.	QTY	PART NAME	NOTE	No.	PART NO.	QTY	PART NAME
	1	3S-2093	1	STRAP					
	2	140-3246	1	COVER					
	3	186-3792	1	TILT(SWITCH)					
	4	200-4602	1	SUPPORT AS					
	5	238-9993	1	COVER					
	6	309-3611	1	CONTROL GROUP					
	7	309-3613	1	CONTROL AS					
	8	317-9209	1	CONTROL GROUP					
	9	9X-8256	2	WASHER					
	10	4D-9517	1	CLIP					
	11	5P-4116	4	WASHER					
	12	8M-2770	1	CLIP					
	13	8T-4200	6	BOLT(M8×1.25)					
	14	8T-4224	2	WASHER					
	15	8T-4970	2	BOLT(M6×1)					
	16	325-9903	1	BRACKET AS					
		7T-1099	1	LINK					
	17	183-1051	2	CLIP					
	18	6V-9632	2	NUT(M6×1)(WELD)					

J152890 HE00

MONITOR AND MOUNTING GROUP (325-9912 N/S) -CAB/CRANE-STANDARD
PART OF 307-8504-Page 5
ALSO APPLIES TO CAB AIR CONDITIONER SPECIFICATION MACHINE
AN ATTACHMENT

OPERATOR STATION

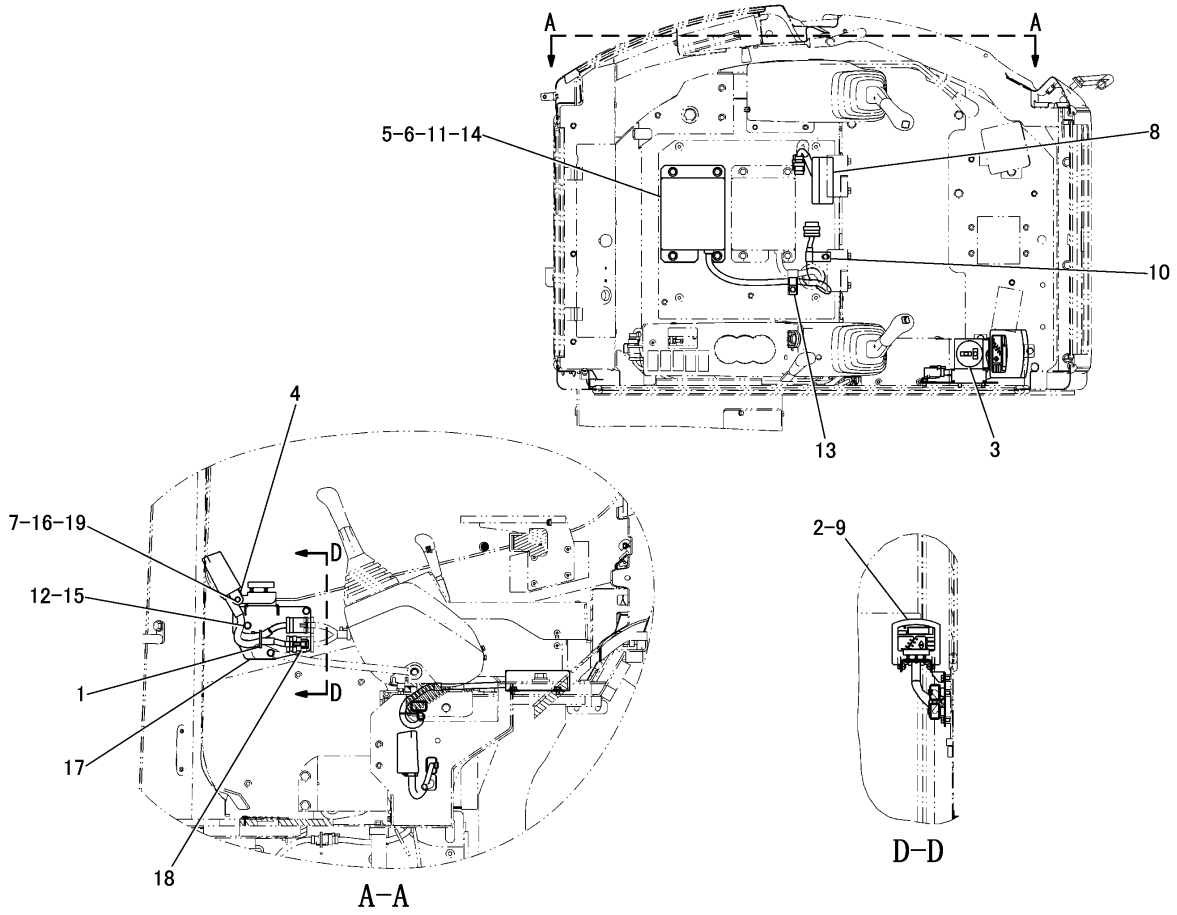

NOTE	No.	PART NO.	QTY	PART NAME	NOTE	No.	PART NO.	QTY	PART NAME
	1	3S-2093	1	STRAP					
	2	140-3246	1	COVER					
	3	186-3792	1	TILT(SWITCH)					
	4	200-4602	1	SUPPORT AS					
	5	238-9993	1	COVER					
	6	309-3613	1	CONTROL AS					
	7	9X-8256	2	WASHER					
	8	317-9207	1	CONTROL GROUP					
	9	317-9211	1	CONTROL GROUP					
	10	4D-9517	1	CLIP					
	11	5P-4116	4	WASHER					
	12	7X-2536	3	BOLT(M8×1.25)					
	13	8M-2770	1	CLIP					
	14	8T-4199	4	BOLT(M8×1.25)					
	15	8T-4224	3	WASHER					
	16	8T-4970	2	BOLT(M6×1)					
	17	317-2973	1	BRACKET AS					
		7T-1099	1	LINK					
	18	183-1051	2	CLIP					
	19	6V-9632	2	NUT(M6×1)(WELD)					

J152897 HE00

MONITOR AND MOUNTING GROUP (329-3430 N/S) -CAB/CRANE-LONG
EFFECTIVE WITH SERIAL NO. MSP00401-
PART OF 330-3620-Page 6
AN ATTACHMENT

OPERATOR STATION

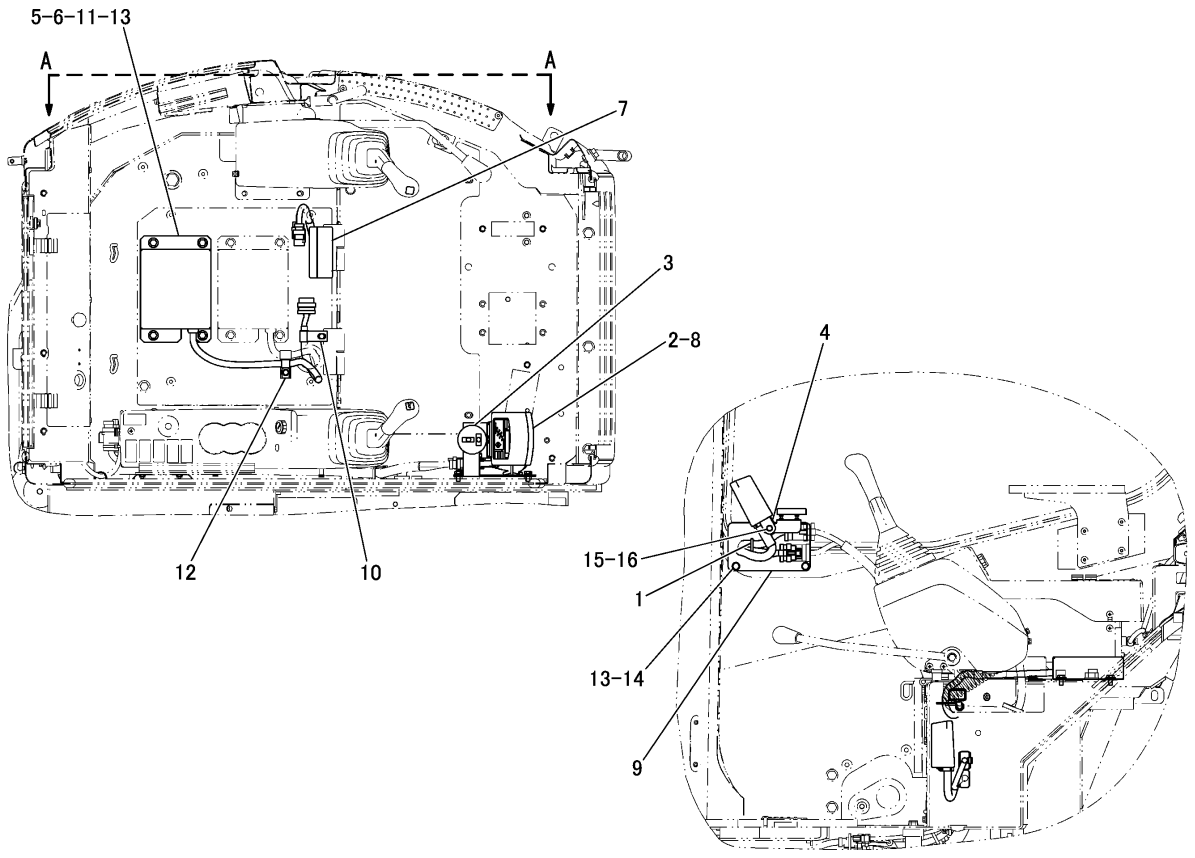

A-A

NOTE	No.	PART NO.	QTY	PART NAME	NOTE	No.	PART NO.	QTY	PART NAME
	1	3S-2093	1	STRAP					
	2	140-3246	1	COVER					
	3	186-3792	1	TILT(SWITCH)					
	4	200-4602	1	SUPPORT AS					
	5	238-9993	1	COVER					
	6	309-3613	1	CONTROL AS					
	7	317-9207	1	CONTROL GROUP					
	8	317-9211	1	CONTROL GROUP					
	9	325-9903	1	BRACKET AS					
		183-1051	2	CLIP					
		6V-9632	2	NUT(M6×1)(WELD)					
		7T-1099	1	LINK					
	10	4D-9517	1	CLIP					
	11	5P-4116	4	WASHER					
	12	8M-2770	1	CLIP					
	13	8T-4200	6	BOLT(M8×1.25)					
	14	8T-4224	2	WASHER					
	15	8T-4970	2	BOLT(M6×1)					
	16	9X-8256	2	WASHER					

J152903 HE00

MONITOR AND MOUNTING GROUP (334-6597 N/S) -CAB/CRANE-LONG
PART OF 330-3620-Page 7
ALSO APPLIES TO CAB AIR CONDITIONER SPECIFICATION MACHINE
AN ATTACHMENT

OPERATOR STATION

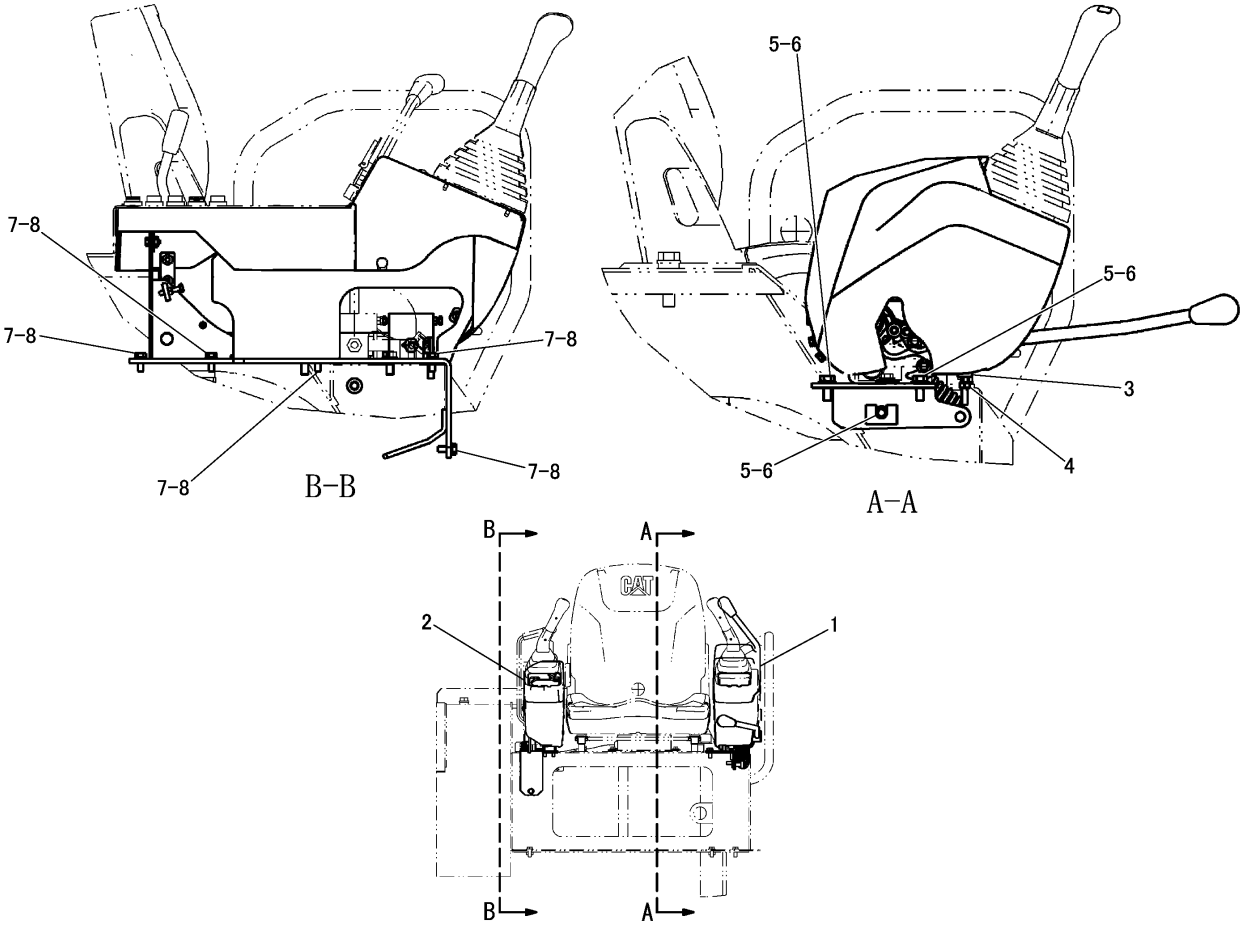

NOTE	No.	PART NO.	QTY	PART NAME	NOTE	No.	PART NO.	QTY	PART NAME
Y	1	268-2522	1	CONSOLE GROUP(LH)					
W	2	306-1710	1	CONSOLE GROUP					
	3	274-8781	1	BUMPER					
	4	5C-7261	1	NUT(M8×1.25)					
	5	8T-4121	3	WASHER					
	6	8T-4136	3	BOLT(M10×1.5)					
	7	8T-4189	6	BOLT(M8×1.25)					
	8	8T-4224	6	WASHER					

W-STD/ATT REMOVAL
Y-SEPARATE ILLUSTRATION

J149796 HE02

OPERATOR CONSOLE GROUP (306-1708 N/S)

PART OF 296-6133-Page 464
REFERENCE:268-2522-Page 515

OPERATOR STATION

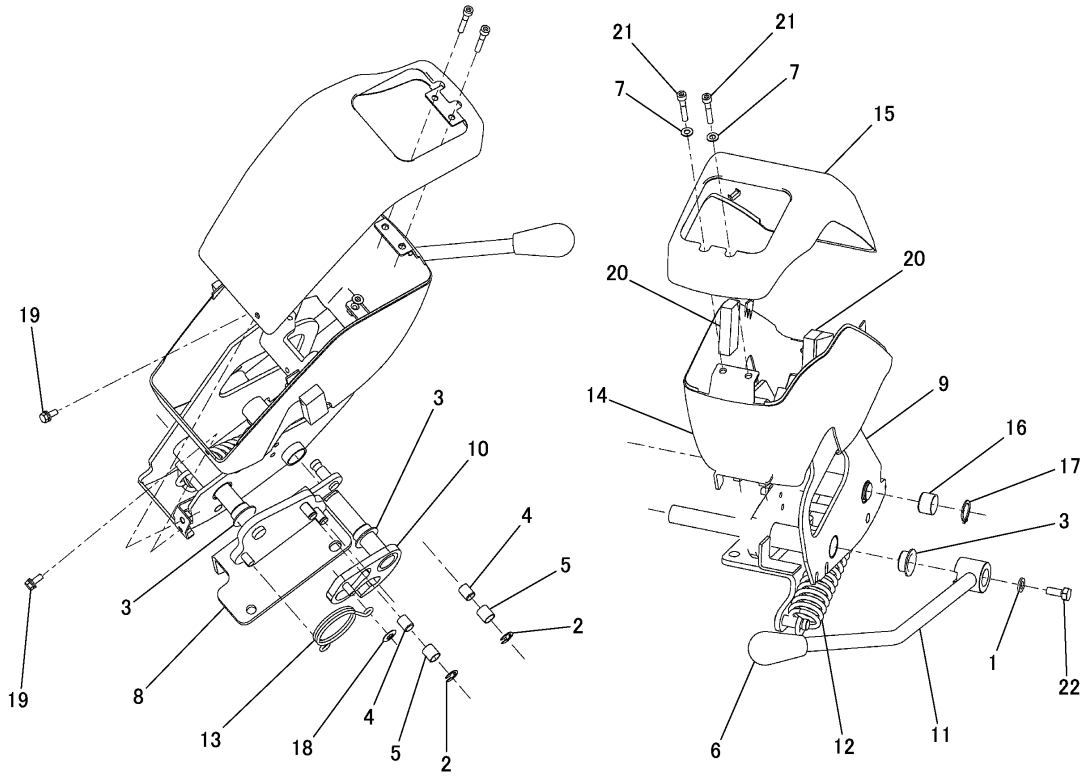

NOTE	No.	PART NO.	QTY	PART NAME	NOTE	No.	PART NO.	QTY	PART NAME
	1	207－0785	1	WASHER		20	285－8918	3	SPACER
	2	207－0795	2	RING		21	1R－5396	2	BOLT(M6×1)
	3	207－0797	3	BUSHING		22	8T－4189	1	BOLT(M8×1.25)
	4	207－0799	2	BUSHING					
	5	207－0800	2	BUSHING					
	6	211－7455	1	KNOB					
	7	222－0668	2	WASHER					
	8	281－8600	1	SUPPORT AS(LH)					
	9	281－8607	1	FRAME AS(LH)					
		121－1029	1	CLIP					
	10	281－8618	1	PLATE AS					
	11	281－8619	1	LEVER AS					
	12	281－8630	1	SPRING					
	13	281－8631	1	SPRING					
	14	281－8637	1	COVER					
	15	283－6293	1	COVER					
	16	284－0838	1	BUSHING					
	17	284－0839	1	CLIP					
	18	284－0840	1	NUT					
	19	290－8310	2	BOLT AS(M6)					

J138100 E06

268-2522 CONSOLE GROUP -LH

PART OF 306-1708-Page 514

OPERATOR STATION

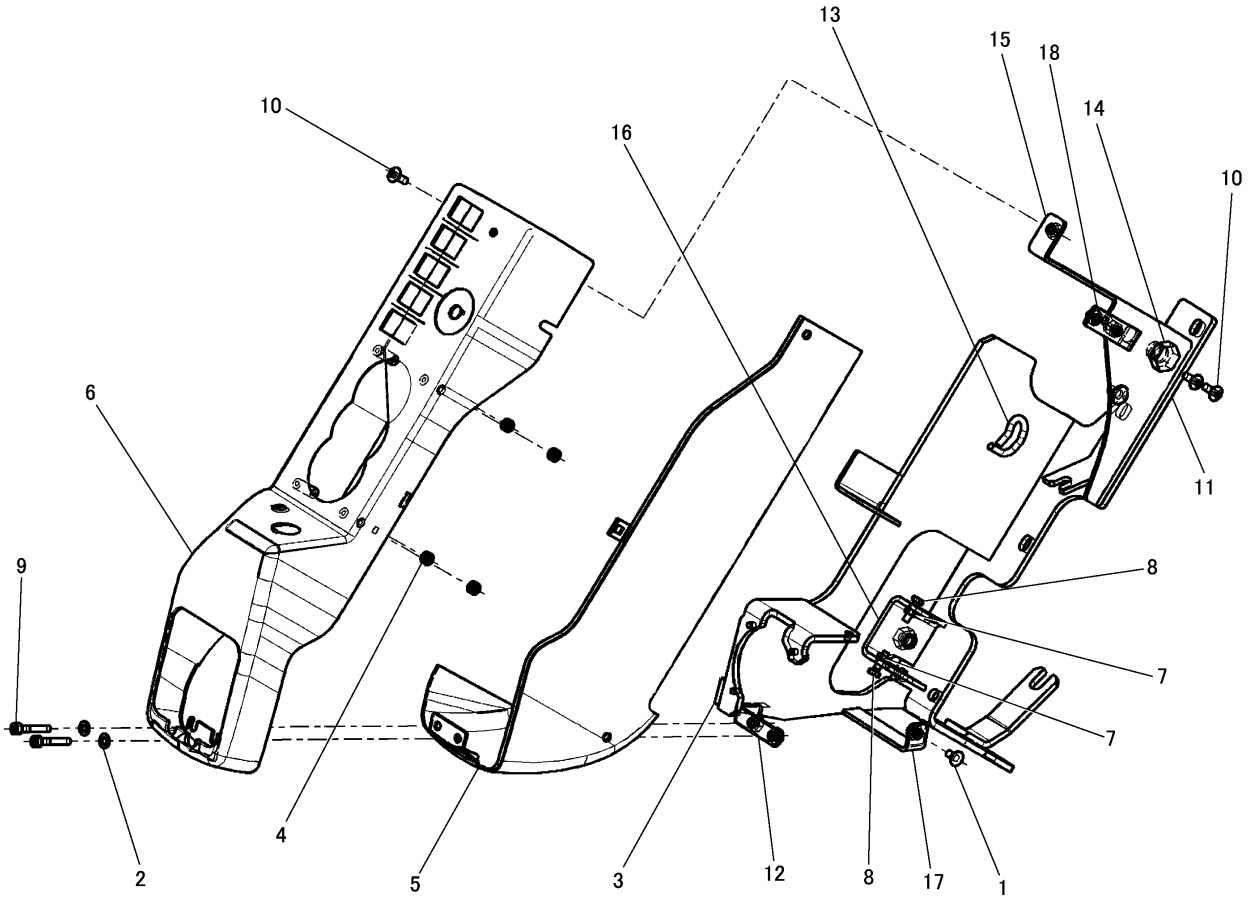

NOTE	No.	PART NO.	QTY	PART NAME	NOTE	No.	PART NO.	QTY	PART NAME
	1	139-4848	1	SCREW(M6×1)		11	317-0047	1	FRAME AS(RH)
	2	222-0668	2	WASHER		12	281-8596	1	PLATE AS
	3	285-8918	1	SPACER		13	7T-1099	1	LINK
	4	302-7767	4	NUT		14	8T-4193	1	BOLT(M16×2)
	5	305-2504	1	COVER	Z	15	305-1874	1	PLATE AS
	6	308-4576	1	COVER			6V-9632	1	NUT(M6×1)(WELD)
	7	5C-2890	2	NUT(M6×1)	Z	16	306-7827	1	BRACKET AS
	8	8T-4138	2	BOLT(M6×1)			8T-3490	1	NUT(M10×1.5)(WELD)
	9	1R-5396	2	BOLT(M6×1)	Z	17	310-1826	1	PLATE AS
	10	158-4781	3	SCREW(M6×1)			6V-9632	1	NUT(M6×1)(WELD)
					Z	18	305-1873	1	SUPPORT AS
							6V-9632	2	NUT(M6×1)(WELD)

Z-NOT SERVICED SEPARATELY

J146745 HE03

CONSOLE GROUP (310-1381 N/S) -RH

PART OF 307-9226-Page 45, 308-4118-Page 466

OPERATOR STATION

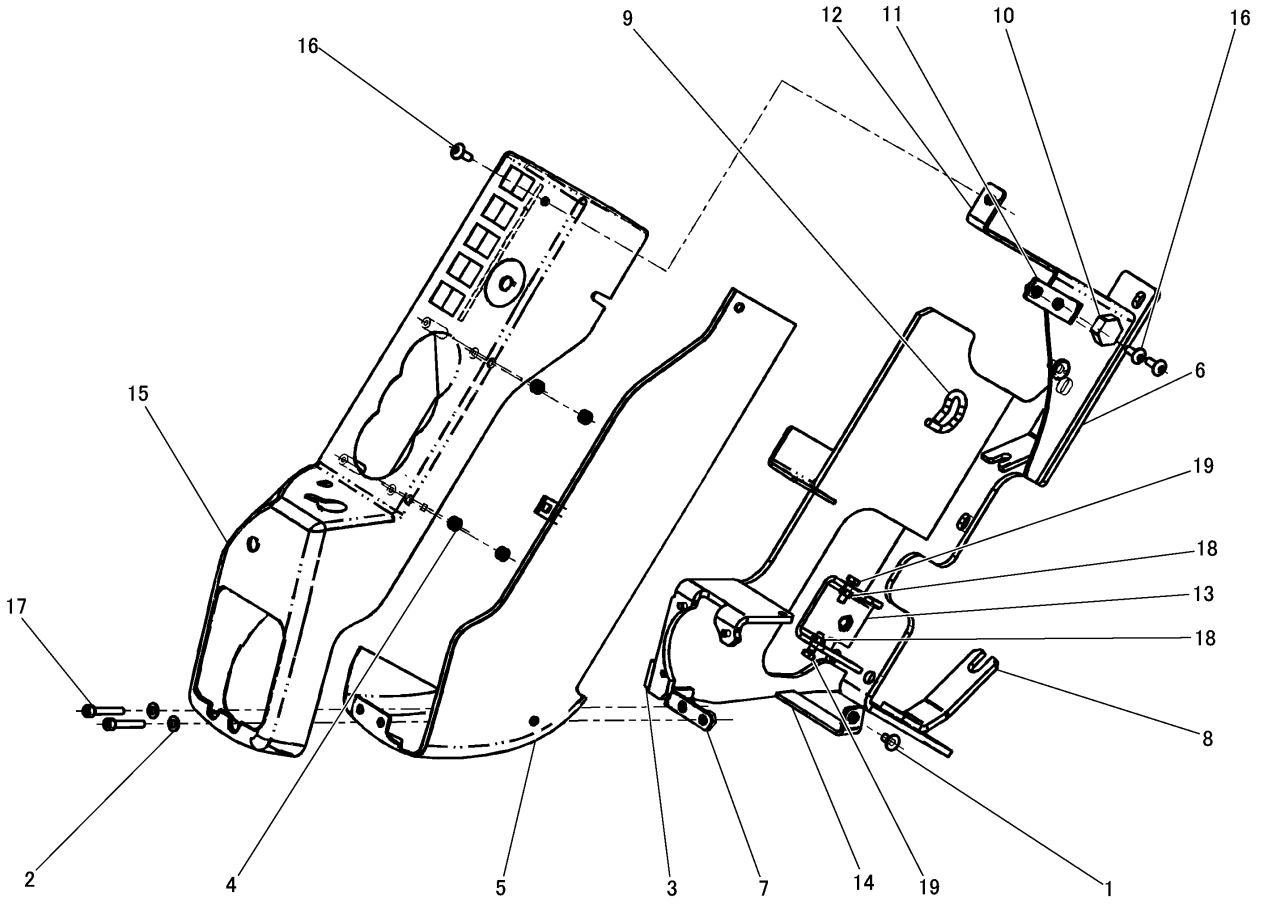

NOTE	No.	PART NO.	QTY	PART NAME	NOTE	No.	PART NO.	QTY	PART NAME
	1	139-4848	1	SCREW(M6×1)		17	1R-5396	2	BOLT(M6×1)
	2	222-0668	2	WASHER		18	5C-2890	2	NUT(M6×1)
	3	285-8918	1	SPACER		19	8T-4138	2	BOLT(M6×1)
	4	302-7767	4	NUT					
	5	305-2504	1	COVER					
	6	317-0047	1	FRAME AS(RH)					
	7	281-8596	1	PLATE AS					
	8	317-0049	1	PLATE					
	9	7T-1099	1	LINK					
	10	8T-4193	1	BOLT(M16×2)					
Z	11	305-1873	1	SUPPORT AS					
		6V-9632	2	NUT(M6×1)(WELD)					
Z	12	305-1874	1	PLATE AS					
		6V-9632	1	NUT(M6×1)(WELD)					
Z	13	306-7827	1	BRACKET AS					
		8T-3490	1	NUT(M10×1.5)(WELD)					
Z	14	310-1826	1	PLATE AS					
		6V-9632	1	NUT(M6×1)(WELD)					
	15	317-4917	1	COVER					
	16	158-4781	3	SCREW(M6×1)					

Z-NOT SERVICED SEPARATELY

J146779 HE03

CONSOLE GROUP (310-2290 N/S) -RH-MSS-AEC

PART OF 310-4026-Page 177
AN ATTACHMENT

OPERATOR STATION

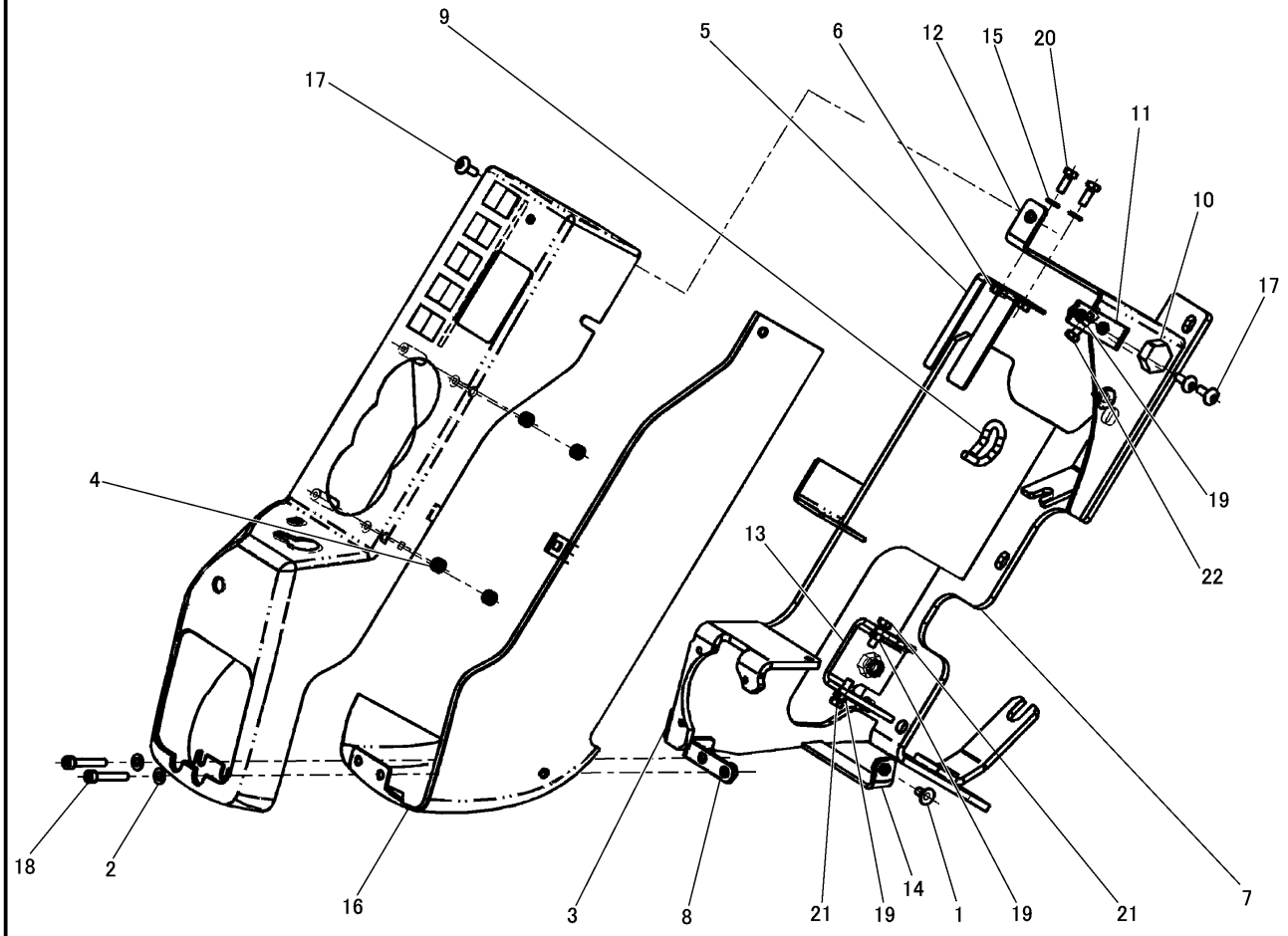

NOTE	No.	PART NO.	QTY	PART NAME	NOTE	No.	PART NO.	QTY	PART NAME
	1	139－4848	1	SCREW(M6×1)		17	158－4781	3	SCREW(M6×1)
	2	222－0668	2	WASHER		18	1R－5396	2	BOLT(M6×1)
	3	285－8918	1	SPACER		19	5C－2890	3	NUT(M6×1)
	4	302－7767	4	NUT		20	5C－9553	2	BOLT(M6×1)
	5	305－1529	1	GUIDE AS		21	8T－4138	2	BOLT(M6×1)
	6	6V－9632	2	NUT(M6×1)(WELD)		22	8T－4971	1	BOLT(M6×1)
	7	317－0047	1	FRAME AS(RH)					
	8	281－8596	1	PLATE AS					
	9	7T－1099	1	LINK					
	10	8T－4193	1	BOLT(M16×2)					
Z	11	305－1873	1	SUPPORT AS					
		6V－9632	2	NUT(M6×1)(WELD)					
Z	12	305－1874	1	PLATE AS					
		6V－9632	1	NUT(M6×1)(WELD)					
Z	13	306－7827	1	BRACKET AS					
		8T－3490	1	NUT(M10×1.5)(WELD)					
Z	14	310－1826	1	PLATE AS					
		6V－9632	1	NUT(M6×1)(WELD)					
	15	9X－8256	2	WASHER					
	16	305－2504	1	COVER					

Z-NOT SERVICED SEPARATELY

J146753 HE03

CONSOLE GROUP (309-1465 N/S) -RH-MSS

PART OF 307-9238-Page 177
AN ATTACHMENT

OPERATOR STATION

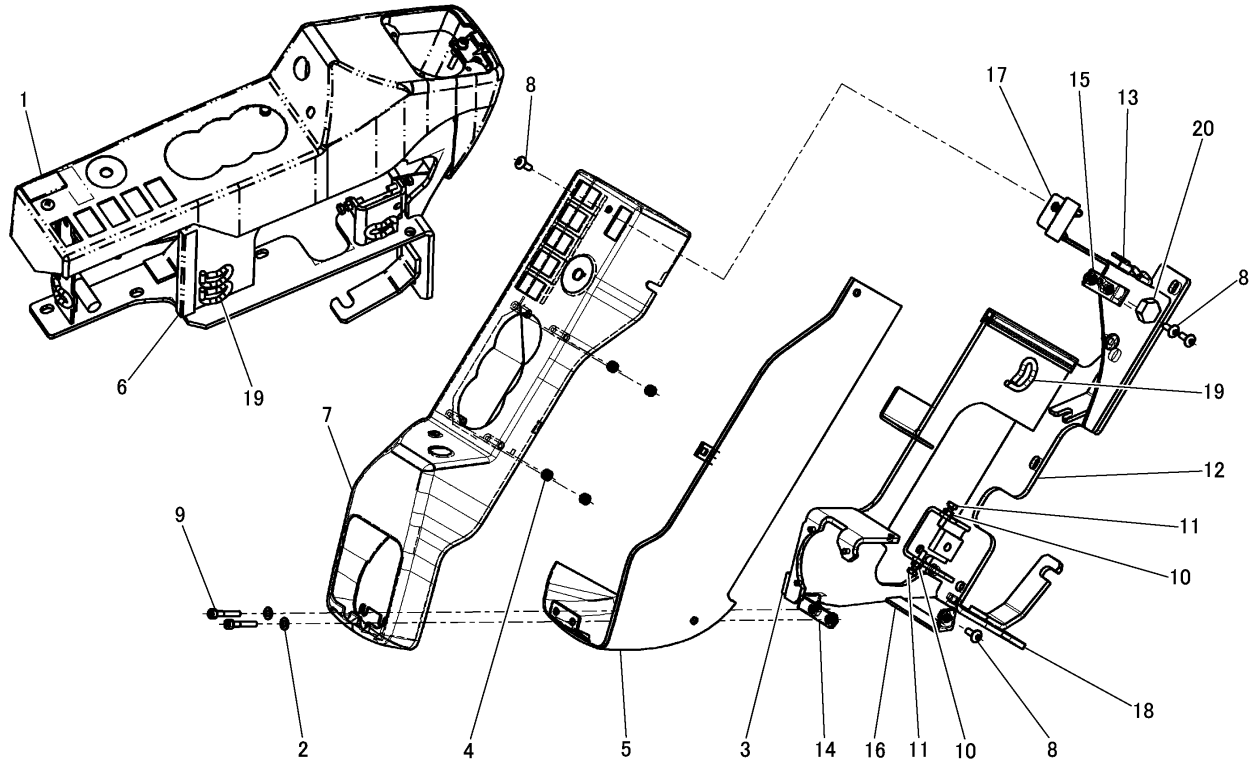

NOTE	No.	PART NO.	QTY	PART NAME	NOTE	No.	PART NO.	QTY	PART NAME
	1	109-2356	1	PLUG		12	326-1695	1	FRAME AS
	2	222-0668	2	WASHER		13	183-1051	1	CLIP
	3	285-8918	1	SPACER		14	281-8596	1	PLATE AS
	4	302-7767	4	NUT	Z	15	305-1873	1	SUPPORT AS
	5	305-2504	1	COVER			6V-9632	2	NUT(M6×1)(WELD)
D	6	8T-3426		CHANNEL---0.15m	Z	16	310-1826	1	PLATE AS
	7	327-0634	1	COVER			6V-9632	1	NUT(M6×1)(WELD)
	8	158-4781	4	SCREW(M6×1)	Z	17	327-0637	1	PLATE AS
	9	1R-5396	2	BOLT(M6×1)			6V-9632	1	NUT(M6×1)(WELD)
	10	5C-2890	2	NUT(M6×1)	Z	18	327-0640	1	PLATE AS
	11	6V-7357	2	BOLT(M6×1)			8T-3612	1	NUT(M8×1.25)(WELD)
						19	7T-1099	5	LINK
						20	8T-4193	1	BOLT(M16×2)

D-ORDER BY THE m
Z-NOT SERVICED SEPARATELY

J151327 HE06

CONSOLE GROUP (310-1381 N/S) -RH-AEC

PART OF 307-9226-Page 45, 308-4118-Page 466
AN ATTACHMENT

OPERATOR STATION

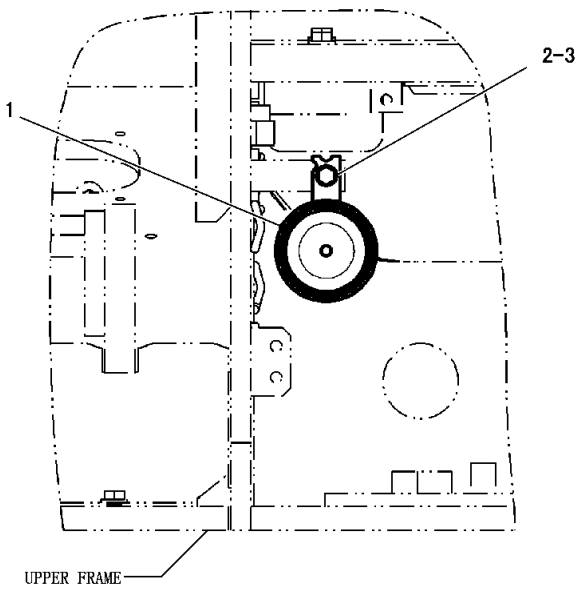

NOTE	No.	PART NO.	QTY	PART NAME
	1	245-9398	1	HORN AS
	2	8T-4200	1	BOLT(M8×1.25)
	3	8T-4224	1	WASHER

J146562 HE02

ELECTRIC HORN GROUP (232-0419 N/S)
PART OF 296-1803-Page 241

OPERATOR STATION

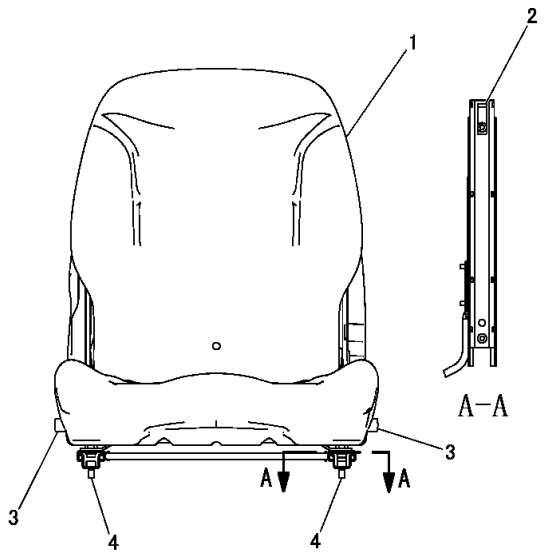

NOTE	No.	PART NO.	QTY	PART NAME
	1	297-9106	1	SEAT GROUP
	2	317-4657	1	PLATE
	3	323-1454	2	CAP
	4	6V-8202	4	BOLT(M8×1.25)

J148662 HE04

SEAT GROUP (295-5806 N/S)
PART OF 296-6133-Page 464

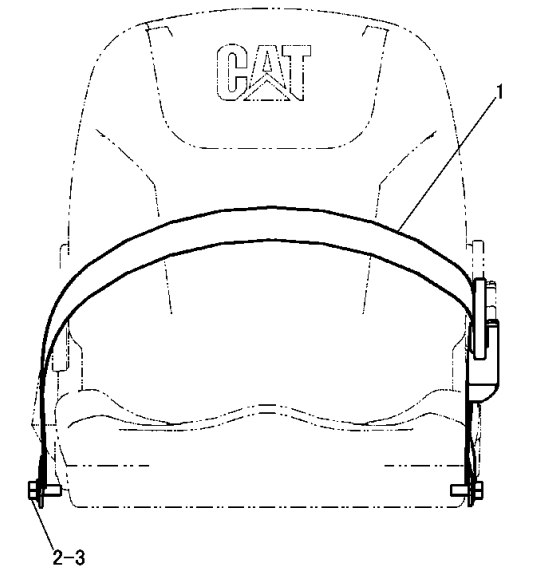

NOTE	No.	PART NO.	QTY	PART NAME
	1	246-6823	1	BELT AS
	2	8T-5360	2	WASHER
	3	8T-9381	2	BOLT(7/16-20)

J151221 HE02

SEAT BELT GROUP (317-0073 N/S)
PART OF 308-4117-Page 465, 308-4118-Page 466
AN ATTACHMENT

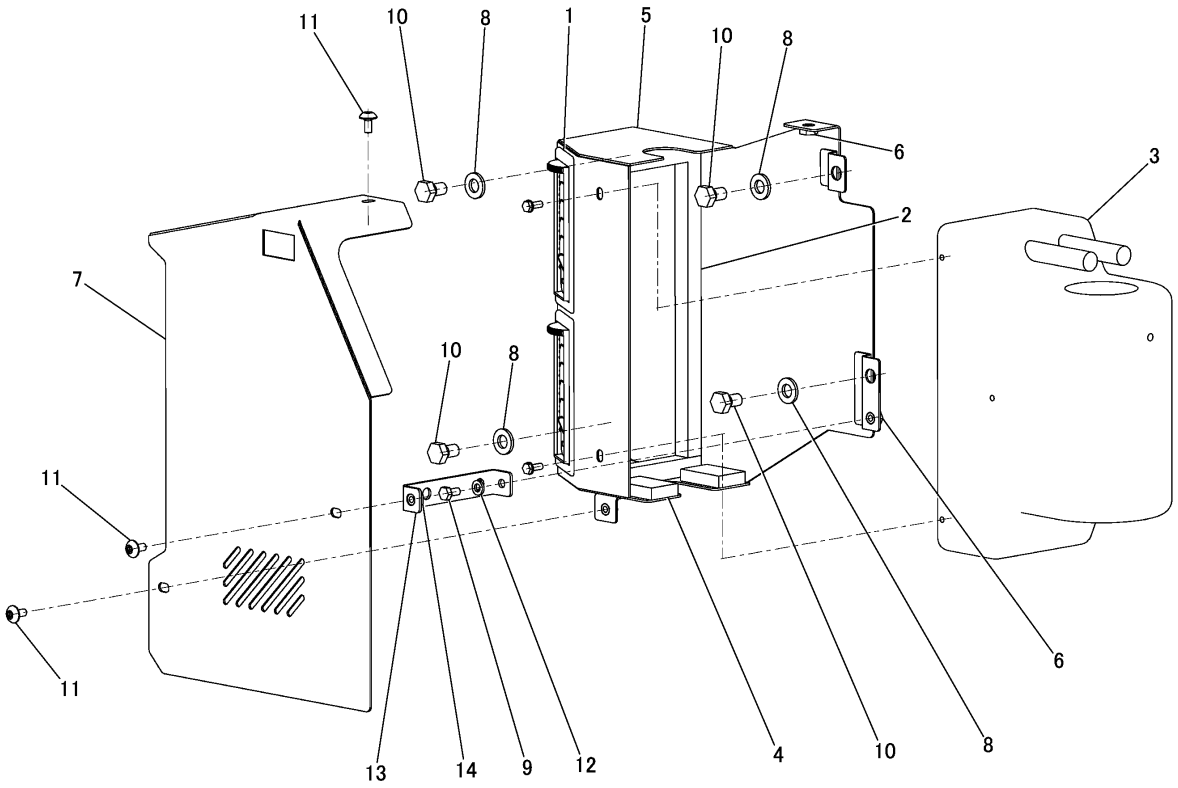

NOTE	No.	PART NO.	QTY	PART NAME	NOTE	No.	PART NO.	QTY	PART NAME
	1	8Y－6967	2	LOUVER AS					
	2	316－1533	1	INSULATION					
	3	318－1709	1	HEATER GROUP					
		233－1321	1	HEATER GROUP					
	4	318－2215	2	RUBBER					
	5	318－9906	1	PLATE AS					
	6	6V－9632	3	NUT(M6×1)(WELD)					
	7	318－9911	1	COVER AS					
	8	8T－4121	4	WASHER					
	9	8T－4171	1	BOLT(M6×1)					
	10	8T－4191	4	BOLT(M10×1.5)					
	11	9X－2042	3	SCREW(M6×1)					
	12	9X－8256	1	WASHER					
	13	318－9914	1	BRACKET AS					
	14	6V－9632	1	NUT(M6×1)(WELD)					

J147568 HE01

HEATER AND MOUNTING GROUP (317-9626 N/S)
PART OF 308-4117-Page 465
AN ATTACHMENT

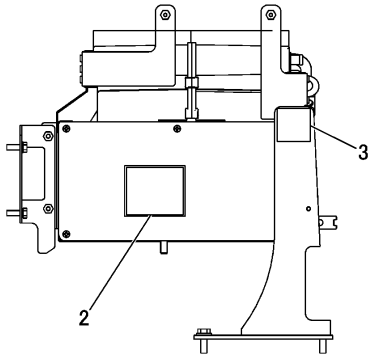

B-B

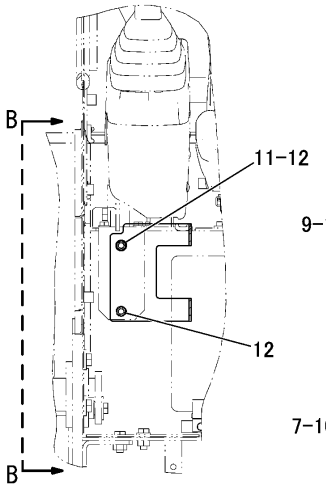

A-A

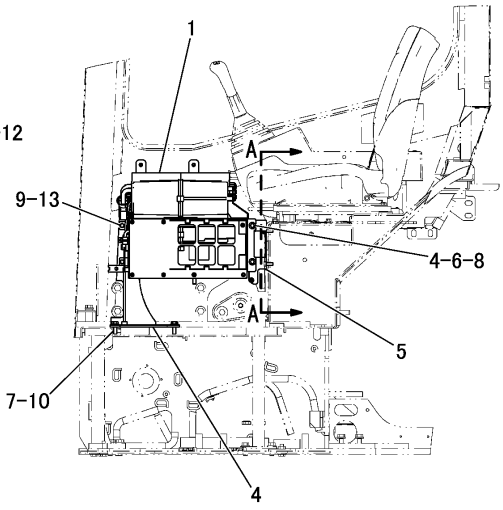

NOTE	No.	PART NO.	QTY	PART NAME	NOTE	No.	PART NO.	QTY	PART NAME
	1	326-1673	1	CONDITIONER AS					
	2	326-1674	1	FOAM					
	3	326-1675	1	FOAM					
	4	5C-9553	2	BOLT(M6×1)					
Z	5	326-1687	1	BRACKET AS					
	6	6V-9632	2	NUT(M6×1)(WELD)					
	7	5P-1075	2	WASHER					
	8	5P-4115	2	WASHER					
	9	7X-2619	3	BOLT(M6×1)					
	10	8T-4195	2	BOLT(M10×1.5)					
	11	8T-4224	1	WASHER					
	12	8T-4908	2	BOLT(M8×1.25)					
	13	9X-8256	3	WASHER					

Z-NOT SERVICED SEPARATELY

J151222 HE00

CONDITIONER AND MOUNTING GROUP (322-4007 N/S)

PART OF 308-4118-Page 466
APPLIES TO CAB AIR CONDITIONER SPECIFICATION MACHINE
AN ATTACHMENT

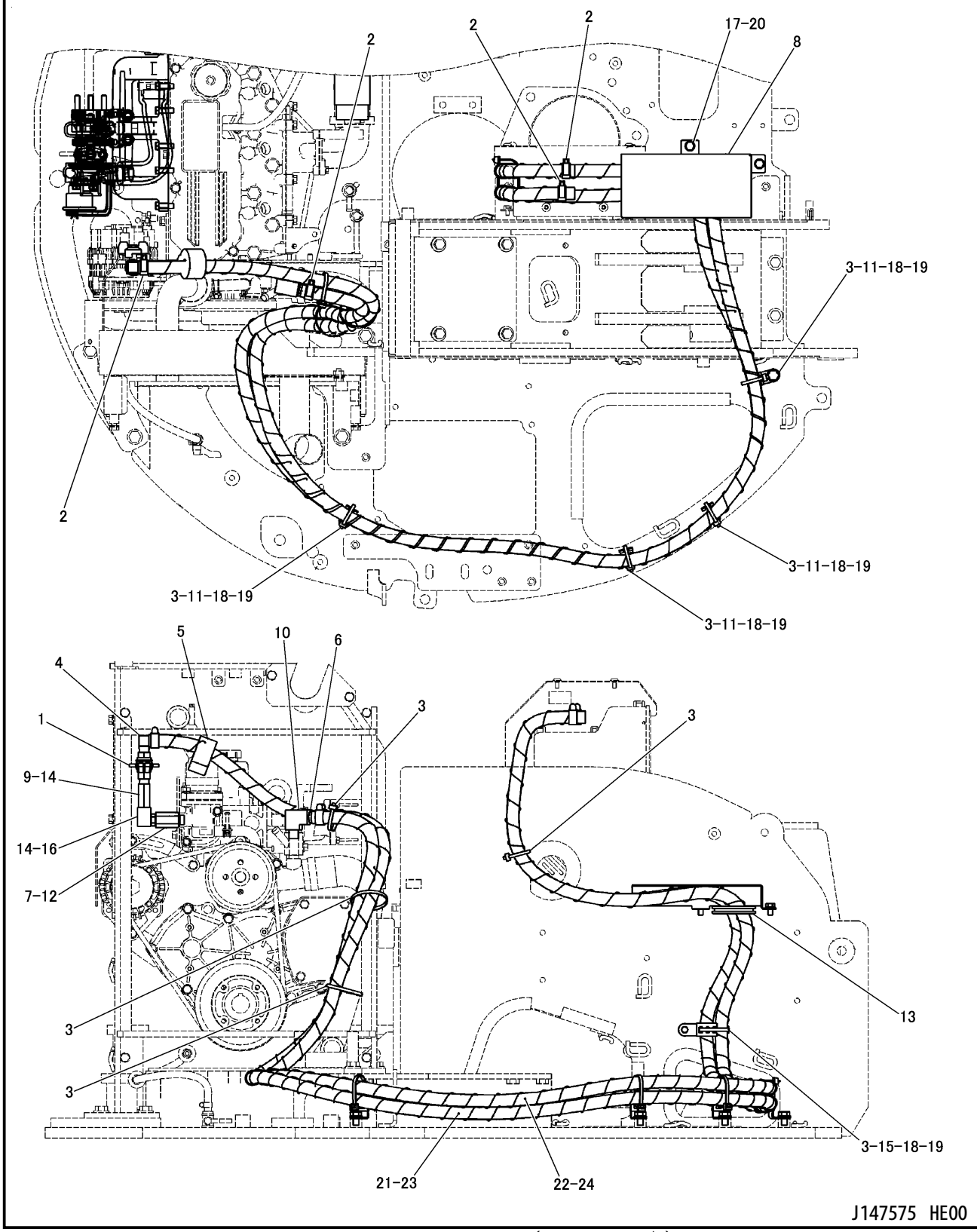

HEATER LINES GROUP (318-0148 N/S)
PART OF 308-4117-Page 465
AN ATTACHMENT

OPERATOR STATION

NOTE	No.	PART NO.	QTY	PART NAME	NOTE	No.	PART NO.	QTY	PART NAME
	1	4I-0379	1	VALVE					
	2	5D-1026	4	CLAMP					
	3	7K-1181	9	STRAP					
	4	004-6810	1	ELBOW					
	5	095-4510	1	PROTECTOR					
	6	216-0568	1	NIPPLE					
	7	317-9664	1	ADAPTER					
	8	318-2187	1	COVER					
	9	318-2712	1	CONNECTOR					
	10	126-4714	1	ELBOW					
	11	132-5789	4	CLIP					
	12	1S-0379	1	GASKET					
	13	239-1498	1	GROMMET					
	14	3J-1907	2	SEAL					
	15	4P-7581	1	CLIP					
	16	6V-0484	1	ADAPTER					
	17	7X-2536	2	BOLT(M8×1.25)					
	18	8T-4121	5	WASHER					
	19	8T-4191	5	BOLT(M10×1.5)					
	20	8T-4224	2	WASHER					
E	21	7I-1024		GUARD---312cm					
E	22	7I-1024		GUARD---342cm					
E	23	5P-0767		HOSE---320cm					
E	24	5P-0767		HOSE---350cm					

E-ORDER BY THE cm

J147575 HE00

HEATER LINES GROUP (318-0148 N/S)

PART OF 308-4117-Page 465
AN ATTACHMENT

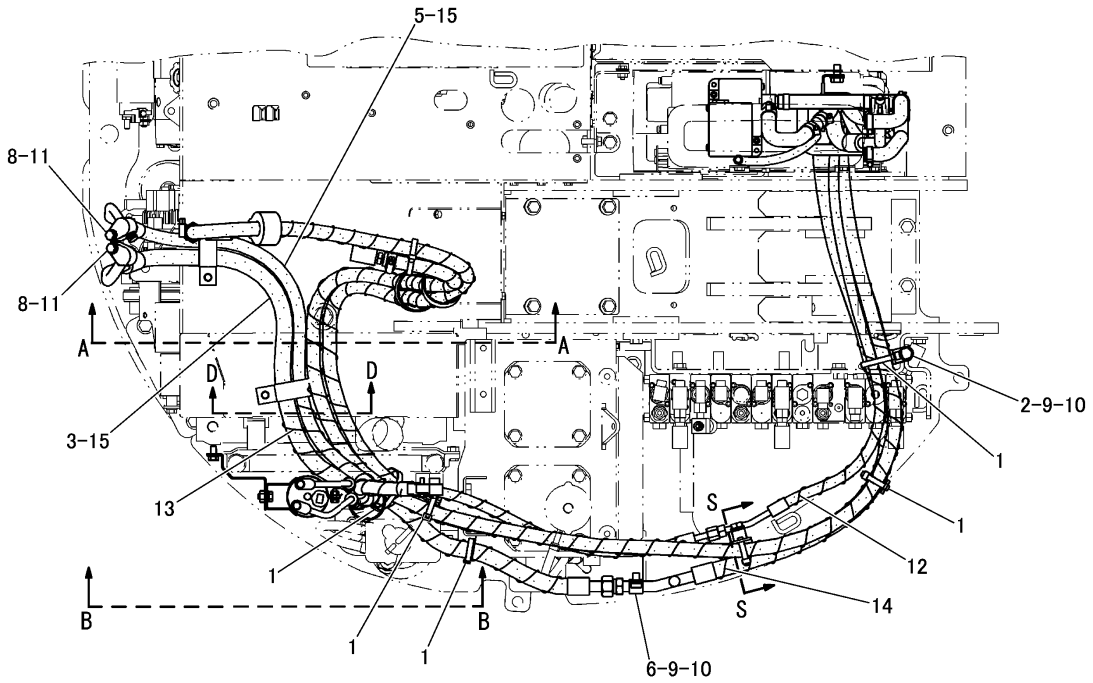

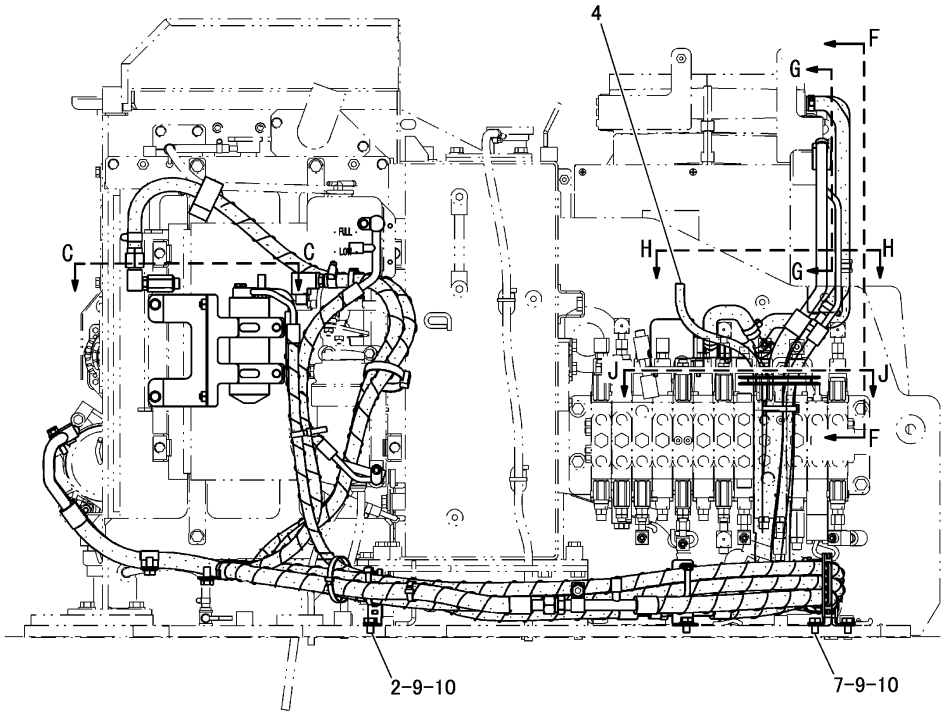

SEE PART 2 OF 3 FOR A-A, B-B, F-F AND J-J
SEE PART 3 OF 3 FOR C-C, D-D, G-G, H-H AND S-S

J151224 HE03

AIR CONDITIONER LINES GROUP (322-4010 N/S) -PART 1 OF 3
PART OF 308-4118-Page 466
APPLIES TO CAB AIR CONDITIONER SPECIFICATION MACHINE
AN ATTACHMENT

OPERATOR STATION

NOTE	No.	PART NO.	QTY	PART NAME	NOTE	No.	PART NO.	QTY	PART NAME
	1	7K−1181	5	STRAP					
	2	298−0663	2	CLIP					
	3	321−8909	1	HOSE AS					
	4	326−7194	1	HOSE					
	5	329−4201	1	HOSE AS					
	6	174−5907	1	CLIP					
	7	277−1873	1	CLIP					
	8	7X−2537	2	BOLT(M8×1.25)					
	9	8T−4121	4	WASHER					
	10	8T−4191	4	BOLT(M10×1.5)					
	11	8T−4224	2	WASHER					
E	12	7I−7439		GUARD---38cm					
E	13	7I−1024		GUARD---64cm					
E	14	7I−1024		GUARD---63cm					
	15	096−6079	2	TAPE(WH)					

E-ORDER BY THE cm

J151224 HE03

AIR CONDITIONER LINES GROUP (322-4010 N/S) -PART 1 OF 3

PART OF 308-4118-Page 466
APPLIES TO CAB AIR CONDITIONER SPECIFICATION MACHINE
AN ATTACHMENT

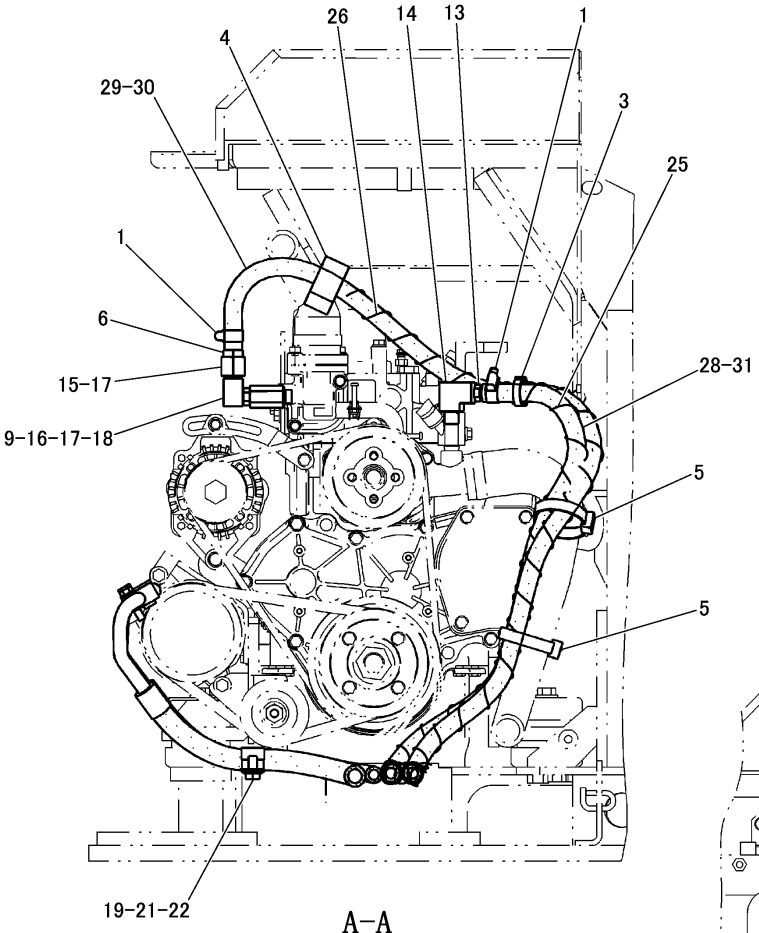

A-A

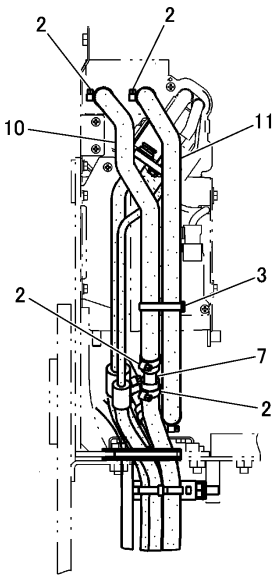

F-F

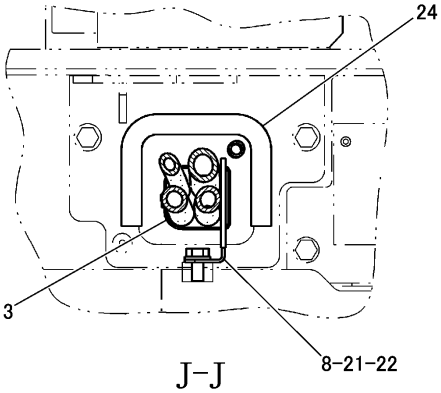

J-J

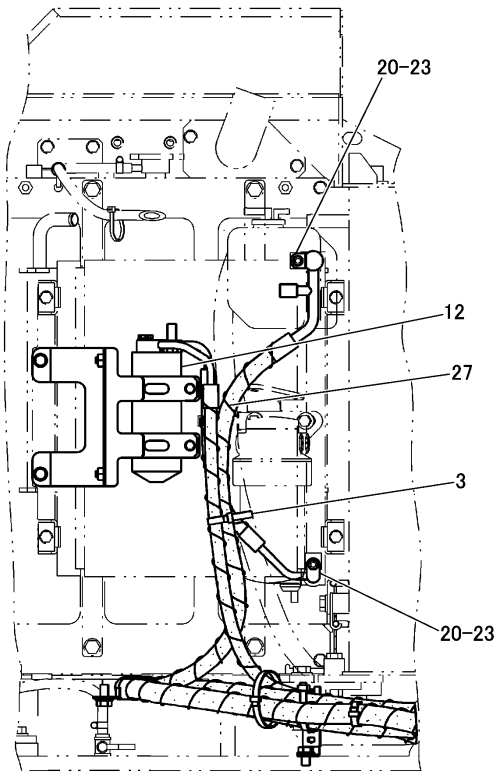

B-B

J151225 HE03

AIR CONDITIONER LINES GROUP (322-4010 N/S) -PART 2 OF 3
PART OF 308-4118-Page 466
APPLIES TO CAB AIR CONDITIONER SPECIFICATION MACHINE
AN ATTACHMENT

OPERATOR STATION

NOTE	No.	PART NO.	QTY	PART NAME	NOTE	No.	PART NO.	QTY	PART NAME
	1	5D-1026	2	CLAMP					
	2	5V-9155	4	CLAMP					
	3	7K-1181	4	STRAP					
	4	095-4510	1	PROTECTOR					
	5	136-0207	2	STRAP					
	6	034-3679	1	NIPPLE					
		3K-0360	1	SEAL					
	7	212-0093	1	NIPPLE					
	8	298-0663	1	CLIP					
	9	317-9664	1	ADAPTER					
	10	326-7165	1	HOSE					
	11	326-7168	1	HOSE					
	12	326-7192	1	RECEIVER AS					
	13	126-4710	1	NIPPLE					
	14	126-4714	1	ELBOW					
	15	5P-8874	1	ADAPTER					
	16	6V-0484	1	ADAPTER					
	17	3J-1907	2	SEAL					
	18	1S-0379	1	GASKET					
	19	6D-1641	1	CLIP					
	20	6V-7357	2	BOLT(M6×1)					
	21	8T-4121	2	WASHER					
	22	8T-4137	2	BOLT(M10×1.5)					
	23	9X-8256	2	WASHER					
D	24	8T-3426		CHANNEL---0.235m					
E	25	7I-1024		GUARD---198cm					
E	26	7I-1024		GUARD---219.5cm					
E	27	7I-1024		GUARD---49.5cm					
E	28	9X-2133		HOSE---266cm					
E	29	9X-2133		HOSE---304cm					
	30	096-6085	3	TAPE(RD)					
	31	096-6079	1	TAPE(WH)					

D-ORDER BY THE m
E-ORDER BY THE cm

J151225 HE03

AIR CONDITIONER LINES GROUP (322-4010 N/S) -PART 2 OF 3

PART OF 308-4118-Page 466
APPLIES TO CAB AIR CONDITIONER SPECIFICATION MACHINE
AN ATTACHMENT

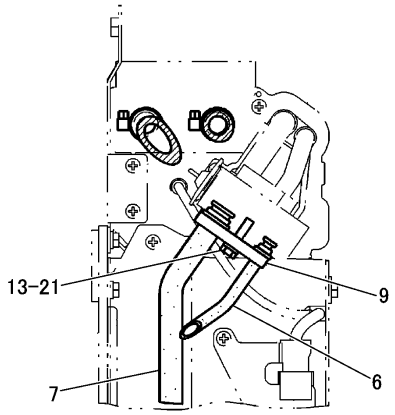

G-G

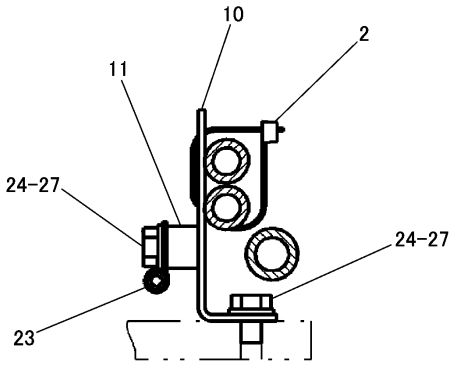

S-S

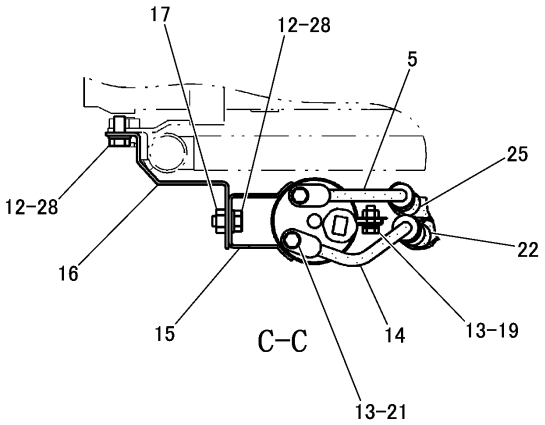

C-C

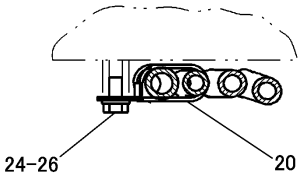

D-D

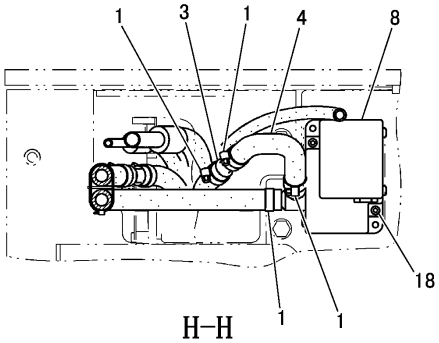

H-H

J151226 HE03

AIR CONDITIONER LINES GROUP (322-4010 N/S) -PART 3 OF 3
PART OF 308-4118-Page 466
APPLIES TO CAB AIR CONDITIONER SPECIFICATION MACHINE
AN ATTACHMENT

OPERATOR STATION

NOTE	No.	PART NO.	QTY	PART NAME	NOTE	No.	PART NO.	QTY	PART NAME
	1	5V-9155	4	CLAMP					
	2	7K-1181	1	STRAP					
	3	212-0093	1	NIPPLE					
	4	326-7167	1	HOSE					
	5	326-7179	1	HOSE AS					
	6	332-1249	1	HOSE AS					
	7	332-1250	1	HOSE AS					
	8	326-7193	1	VALVE AS					
	9	326-7215	1	PLATE					
	10	326-7216	1	PLATE AS					
	11	9R-2821	1	BOSS(M10×1.5)					
	12	8T-4224	4	WASHER					
	13	9X-8256	5	WASHER					
	14	329-4202	1	HOSE AS					
	15	329-4203	1	BRACKET AS					
	16	329-4204	1	BRACKET AS					
	17	8T-3612	2	NUT(M8×1.25)(WELD)					
	18	105-3480	2	BOLT(M5×0.8)					
	19	5C-9553	2	BOLT(M6×1)					
	20	6D-1641	1	CLIP					
	21	6V-7357	3	BOLT(M6×1)					
E	22	7I-7439		GUARD---94cm					
	23	5P-9085	1	CLIP					
	24	8T-4121	3	WASHER					
E	25	7I-7439		GUARD---21cm					
	26	8T-4137	1	BOLT(M10×1.5)					
	27	8T-4191	2	BOLT(M10×1.5)					
	28	8T-4200	4	BOLT(M8×1.25)					

E-ORDER BY THE cm

J151226 HE03

AIR CONDITIONER LINES GROUP (322-4010 N/S) -PART 3 OF 3

PART OF 308-4118-Page 466
APPLIES TO CAB AIR CONDITIONER SPECIFICATION MACHINE
AN ATTACHMENT

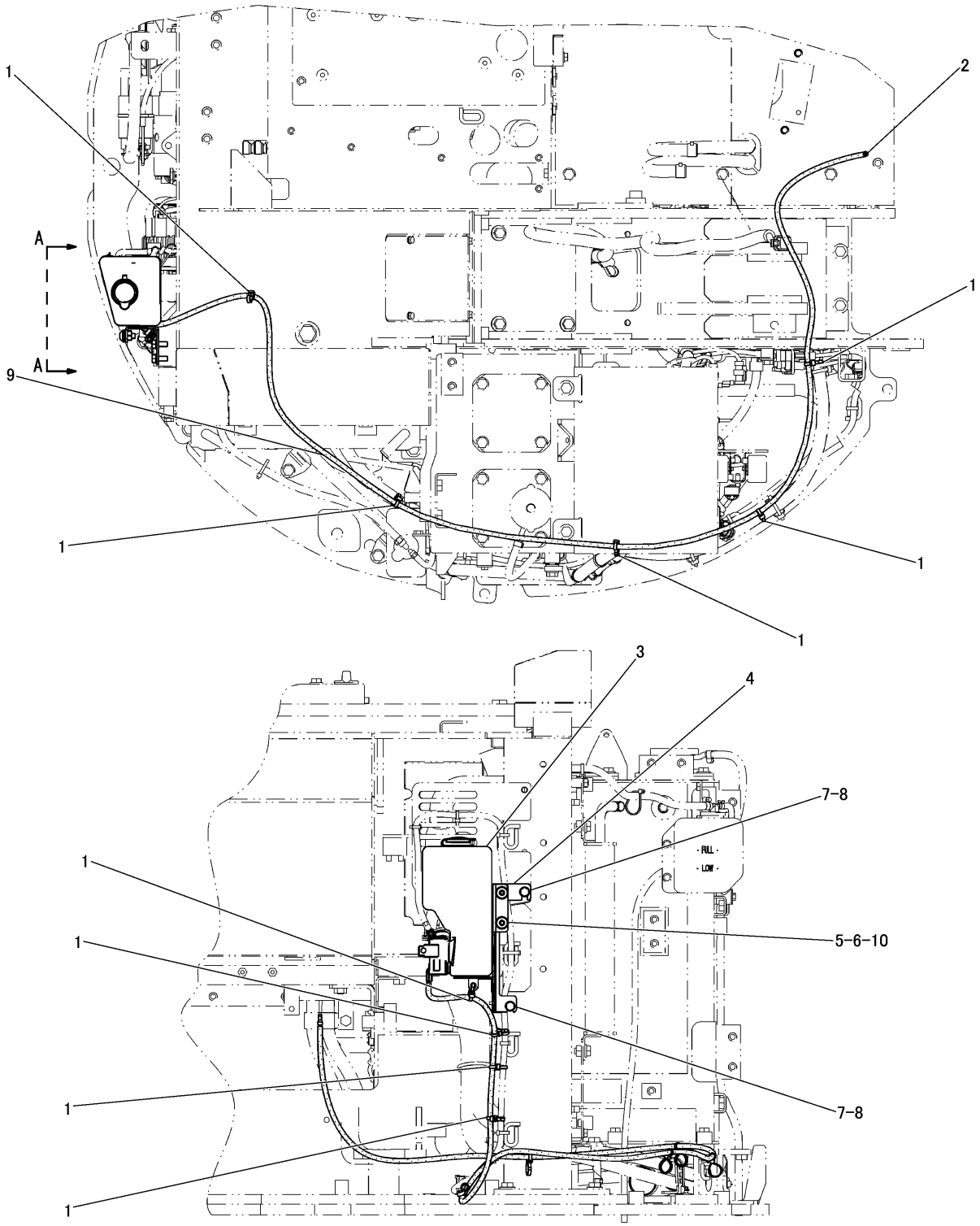

A-A

J146713 HE02

WINDSHIELD WASHER GROUP (309-0168 N/S)
PART OF 308-4117-Page 465
AN ATTACHMENT

OPERATOR STATION

NOTE	No.	PART NO.	QTY	PART NAME	NOTE	No.	PART NO.	QTY	PART NAME
	1	7I-2673	9	STRAP					
	2	7Y-3474	1	VALVE AS					
	3	275-3969	1	BOTTLE GROUP					
	4	317-7730	1	BRACKET AS					
	5	8T-3612	2	NUT(M8×1.25)(WELD)					
	6	5P-4116	2	WASHER					
	7	8T-4189	2	BOLT(M8×1.25)					
	8	8T-4224	2	WASHER					
E	9	144-0195		HOSE---260cm					
	10	127-2170	2	SCREW(M8×1.25)					

E-ORDER BY THE cm

J146713 HE02

WINDSHIELD WASHER GROUP (309-0168 N/S)

PART OF 308-4117-Page 465
AN ATTACHMENT

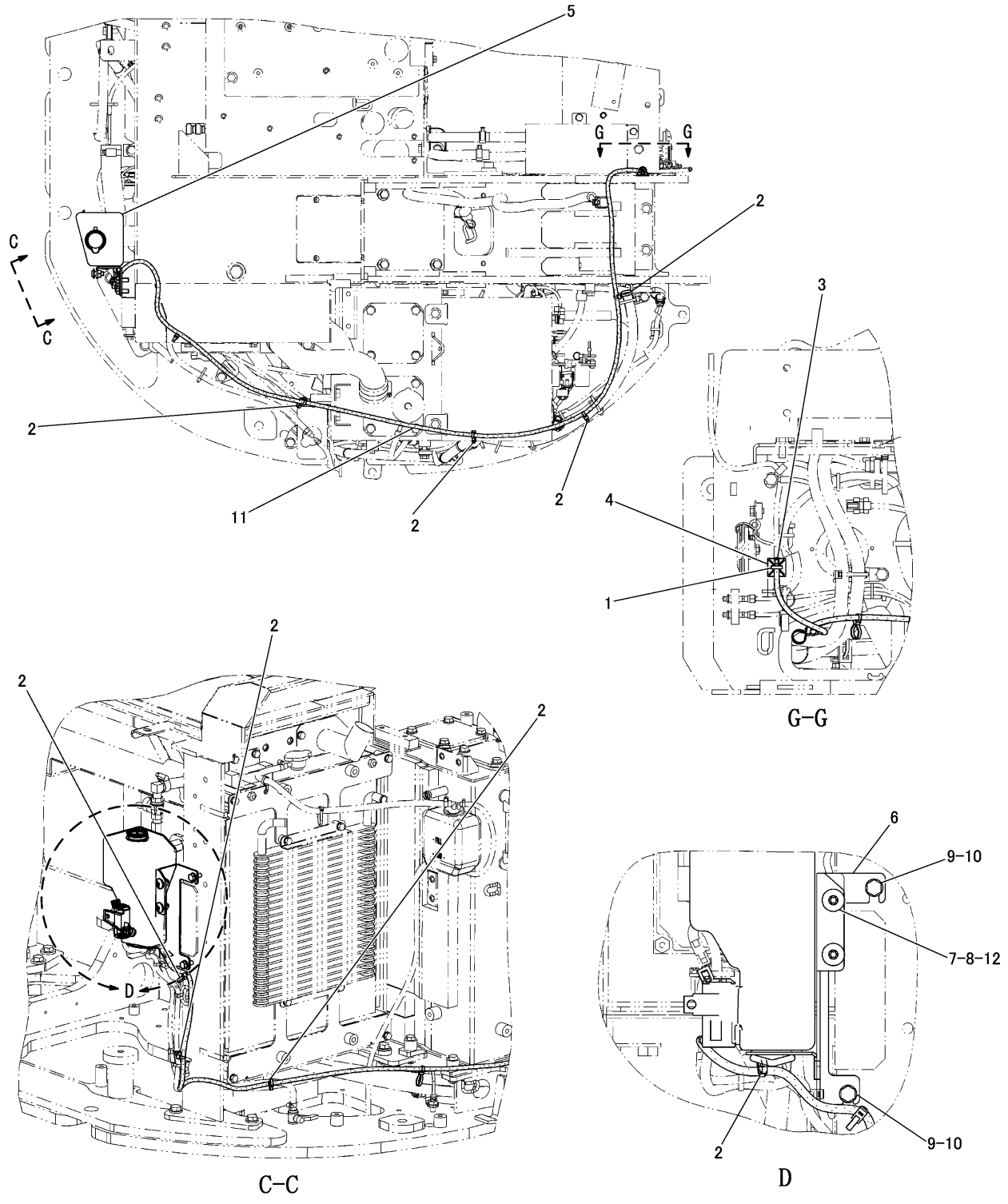

WINDSHIELD WASHER GROUP (326-7191 N/S)
PART OF 308-4118-Page 466
APPLIES TO CAB AIR CONDITIONER SPECIFICATION MACHINE
AN ATTACHMENT

OPERATOR STATION

NOTE	No.	PART NO.	QTY	PART NAME	NOTE	No.	PART NO.	QTY	PART NAME
	1	3S−2093	1	STRAP					
	2	7I−2673	8	STRAP					
	3	7Y−3474	1	VALVE AS					
	4	235−8966	1	BASE					
	5	275−3969	1	BOTTLE GROUP					
	6	326−9703	1	BRACKET AS					
		7T−1099	1	LINK					
	7	8T−3612	2	NUT(M8×1.25)(WELD)					
	8	5P−4116	2	WASHER					
	9	8T−4189	2	BOLT(M8×1.25)					
	10	8T−4224	2	WASHER					
E	11	144−0195		HOSE---235cm					
	12	127−2170	2	SCREW(M8×1.25)					

E-ORDER BY THE cm

J151236 HE00

WINDSHIELD WASHER GROUP (326-7191 N/S)

PART OF 308-4118-Page 466
APPLIES TO CAB AIR CONDITIONER SPECIFICATION MACHINE
AN ATTACHMENT

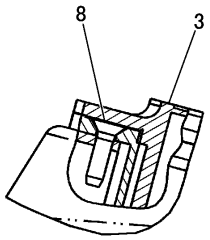

D

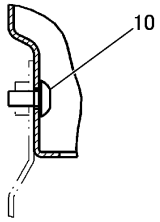

A-A

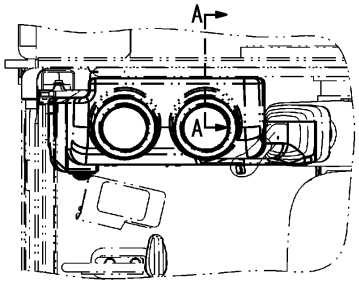

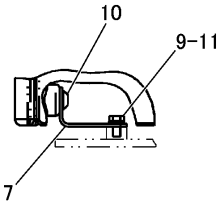

E

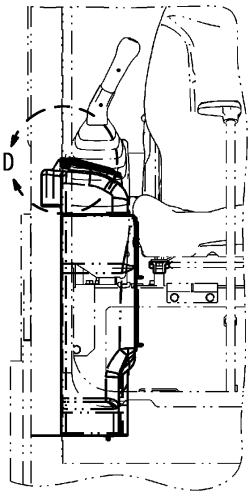

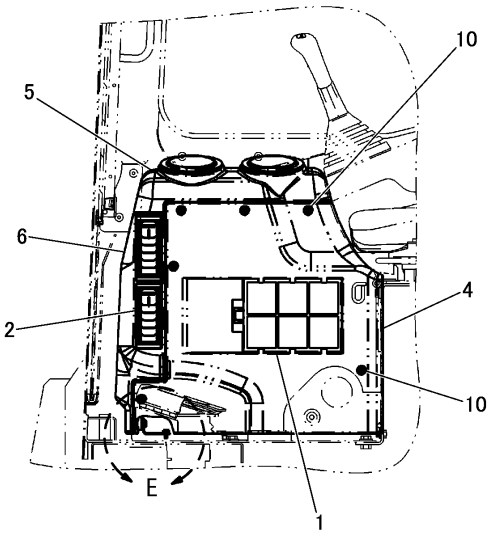

NOTE	No.	PART NO.	QTY	PART NAME	NOTE	No.	PART NO.	QTY	PART NAME
	1	5I-3572	1	FILTER					
	2	8Y-6967	2	LOUVER AS					
	3	171-4046	2	LOUVER AS					
	4	322-4014	1	COVER AS					
	5	322-4015	1	DUCT					
	6	322-4016	1	DUCT AS					
	7	326-1678	1	BRACKET					
	8	104-2091	8	SCREW(No.6-20)					
	9	8T-4171	1	BOLT(M6×1)					
	10	9X-2042	9	SCREW(M6×1)					
	11	9X-8256	1	WASHER					

J151223 HE01

AIR DUCT GROUP (322-4009 N/S)
PART OF 308-4118-Page 466
APPLIES TO CAB AIR CONDITIONER SPECIFICATION MACHINE
AN ATTACHMENT

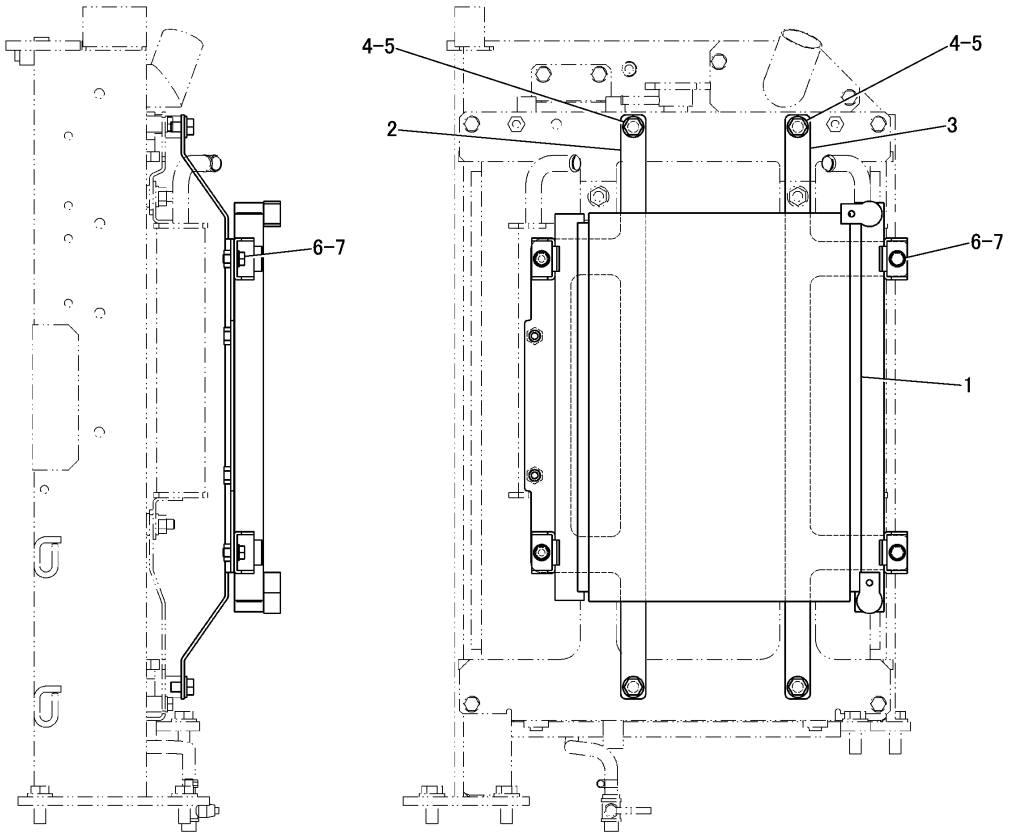

NOTE	No.	PART NO.	QTY	PART NAME	NOTE	No.	PART NO.	QTY	PART NAME
	1	326-7231	1	CONDENSER AS					
	2	329-2919	1	BRACKET AS					
		8T-3612	4	NUT(M8×1.25)(WELD)					
	3	329-2920	1	BRACKET AS					
		8T-3612	2	NUT(M8×1.25)(WELD)					
	4	8T-4121	4	WASHER					
	5	8T-4191	4	BOLT(M10×1.5)					
	6	8T-4200	4	BOLT(M8×1.25)					
	7	8T-4224	4	WASHER					

J151258 X01

CONDENSER AND MOUNTING GROUP (329-2918 N/S)
PART OF 308-4118-Page 466
APPLIES TO CAB AIR CONDITIONER SPECIFICATION MACHINE
AN ATTACHMENT

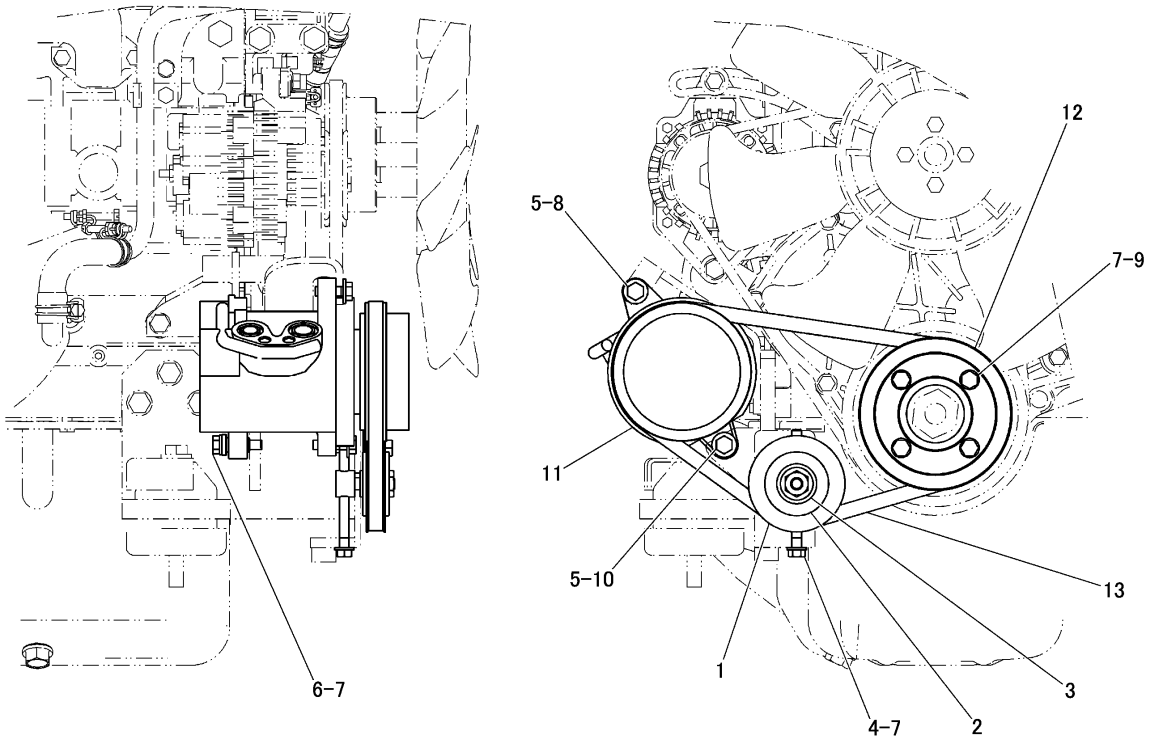

NOTE	No.	PART NO.	QTY	PART NAME	NOTE	No.	PART NO.	QTY	PART NAME
	1	125-1657	1	PULLEY AS					
		150-2159	1	SHAFT					
	2	125-1646	1	COVER					
	3	150-2161	1	COLLAR					
	4	150-2162	1	BOLT(M8×1.25)					
	5	5P-4116	2	WASHER					
	6	7X-2537	1	BOLT(M8×1.25)					
	7	8T-4224	6	WASHER					
	8	8T-4908	1	BOLT(M8×1.25)					
	9	8T-6912	4	BOLT(M8×1.25)					
	10	8T-7547	1	BOLT(M8×1.25)					
	11	326-7226	1	COMPRESSOR GROUP					
	12	326-7227	1	PULLEY					
	13	326-7228	1	V BELT					

J151237 X01

REFRIGERANT COMPRESSOR GROUP (326-7822 N/S)
PART OF 308-4118-Page 466
APPLIES TO CAB AIR CONDITIONER SPECIFICATION MACHINE
AN ATTACHMENT

MEMORANDUM

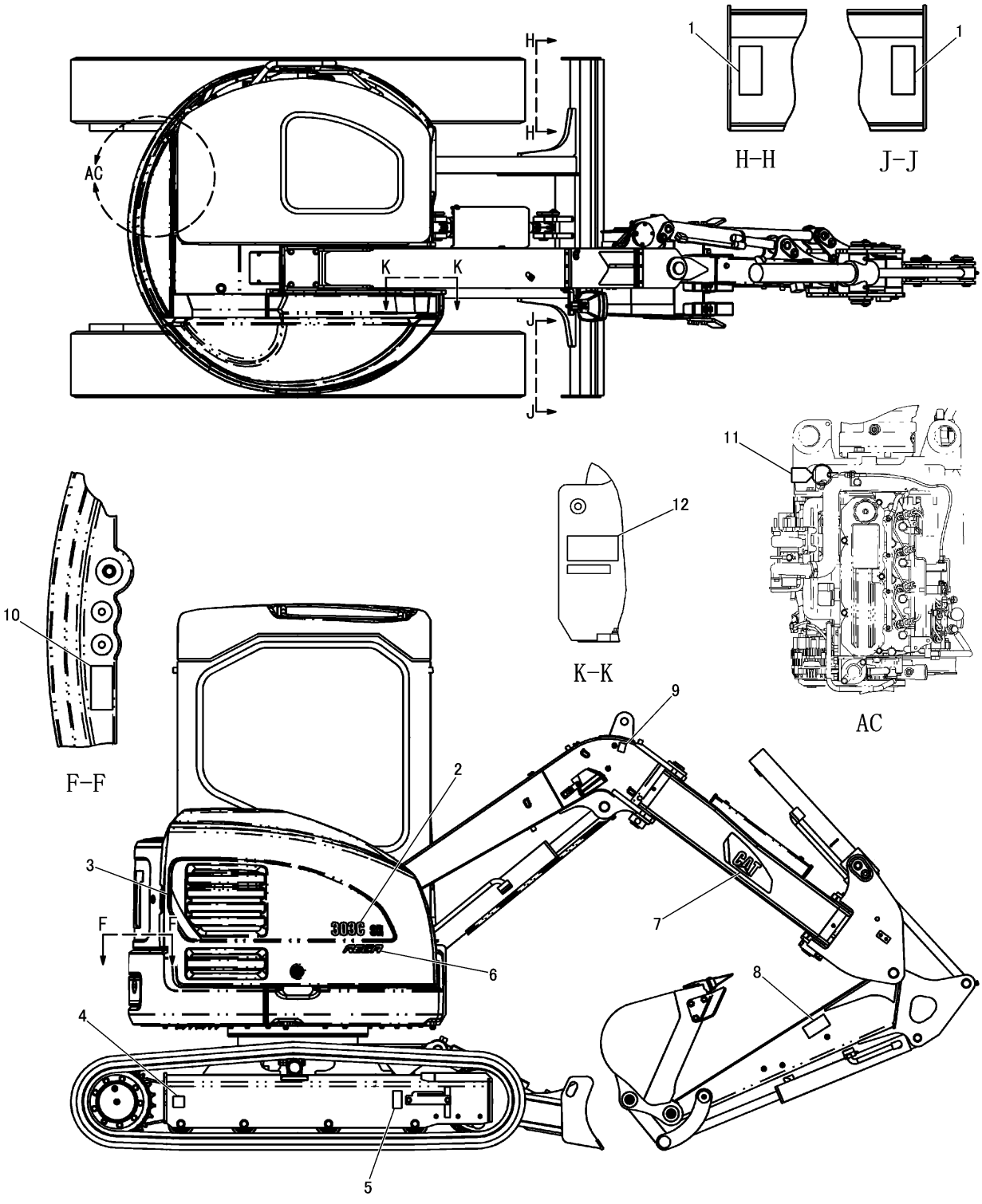

FILM GROUP (296-7440 N/S) -PART 1 OF 4
PART OF 296-1803-Page 241

SERVICE EQUIPMENT AND SUPPLIES

NOTE	No.	PART NO.	QTY	PART NAME	NOTE	No.	PART NO.	QTY	PART NAME
	1	7X−3229	2	FILM(LIFT/TIE DOWN)					
	2	311−7402	1	FILM(303C SR)					
	3	311−7401	1	FILM(STRIP)(RH)					
	4	7X−7644	1	FILM(TIE DOWN)					
	5	160−6832	1	FILM(PLUG)					
	6	298−2276	1	FILM(REGA)					
	7	298−2136	1	FILM(CAT)(RH)					
	8	160−6854	1	FILM(DO NOT APPROACH)					
	9	150−8896	1	FILM(LIFT)					
	10	277−6882	1	FILM(SCALD)					
	11	256−0872	1	FILM(ENGINE SHUTOFF)					
Z	12		1	PLATE(PIN)					
FY	13	273−0461	1	LITERATURE GROUP					

F-NOT SHOWN
Y-SEPARATE ILLUSTRATION
Z-NOT SERVICED SEPARATELY

J148643 HE05

FILM GROUP (296-7440 N/S) -PART 1 OF 4

PART OF 296-1803-Page 241
REFERENCE:273-0461-Page 566

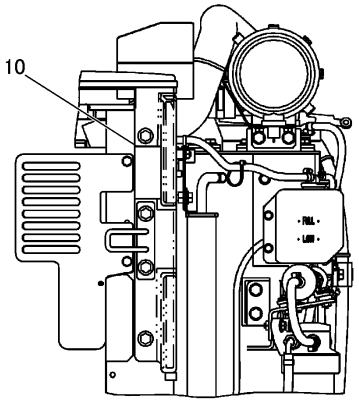

V-V

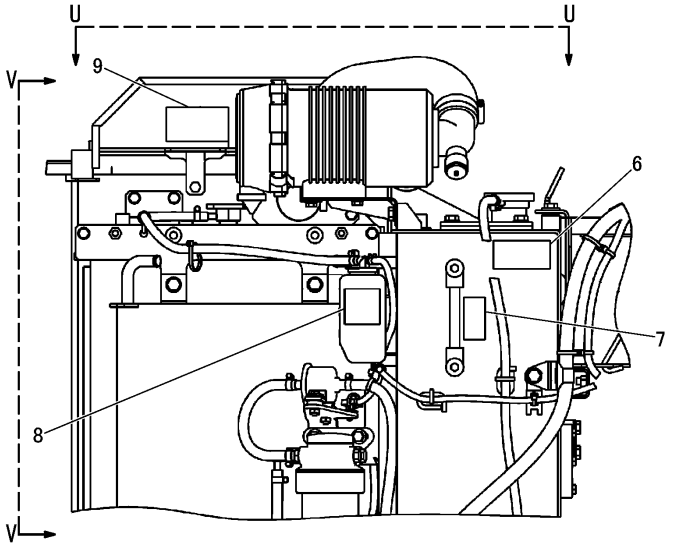

L-L

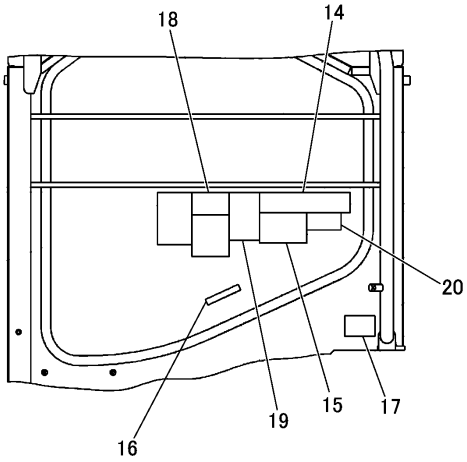

M-M

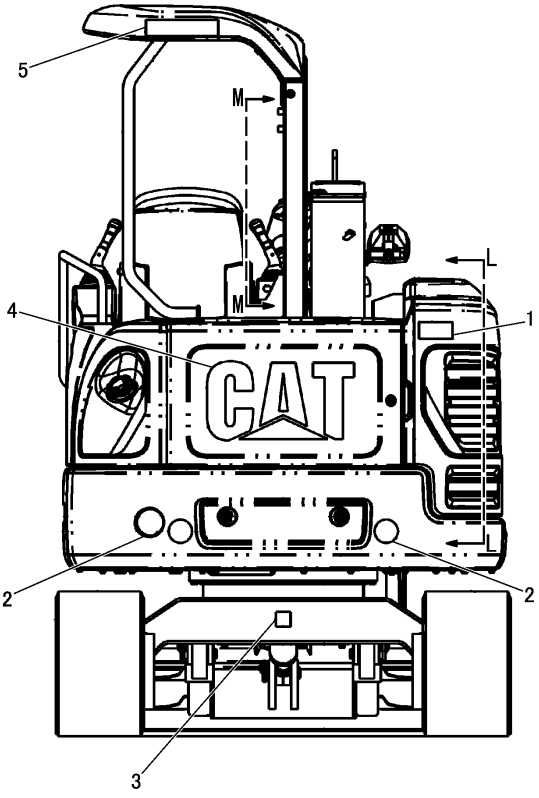

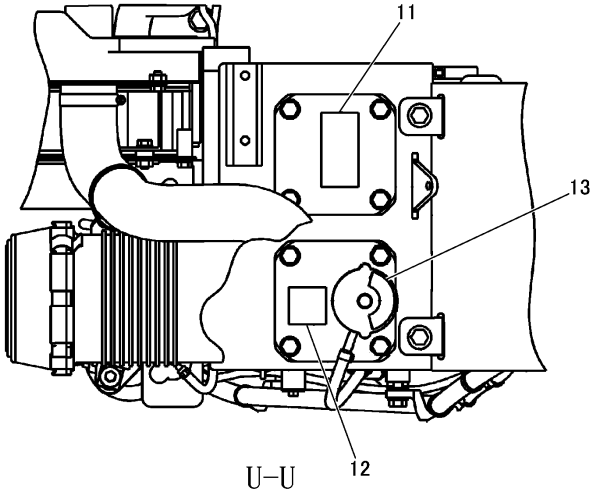

U-U

J148644 HE05

FILM GROUP (296-7440 N/S) -PART 2 OF 4
PART OF 296-1803-Page 241

SERVICE EQUIPMENT AND SUPPLIES

NOTE	No.	PART NO.	QTY	PART NAME
	1	160-6858	1	FILM(DO NOT APPROACH)
	2	190-5386	2	FILM(RED REFLECTIVE TAPE)
	3	7X-7644	1	FILM(TIE DOWN)
	4	279-9304	1	FILM(CAT)
	5	245-2640	1	FILM(CATERPILLAR)
	6	160-6883	1	FILM(ELECTRIC SHOCK)
	7	279-9311	1	FILM(HYD OIL SYSTEM)
	8	134-7258	1	FILM(EXTENDED LIFE COOLANT)
	9	160-6824	1	FILM(SCALD)
	10	160-6841	1	FILM(BELT)
	11	160-6822	1	FILM(SCALD)
	12	158-7864	1	FILM(HYD OIL)
	13	287-8552	1	FILM(HYD OIL)
	14	321-7177	1	FILM(COMBO)
	15	244-5747	1	FILM(WARNING)
	16	191-0322	1	FILM(BLADE CONTROL)
	17	126-2888	1	FILM(WARNING)
	18	126-2892	1	PLATE(INSTRUCTION)
	19	126-2886	1	FILM(WARNING) (OLD COMPANY NAME) -OR- 330-8879 1 FILM(WARNING) (NEW COMPANY NAME)
	20	283-8827	1	FILM(FIRE PREVENTION)

J148644 HE05

FILM GROUP (296-7440 N/S) -PART 2 OF 4

PART OF 296-1803-Page 241

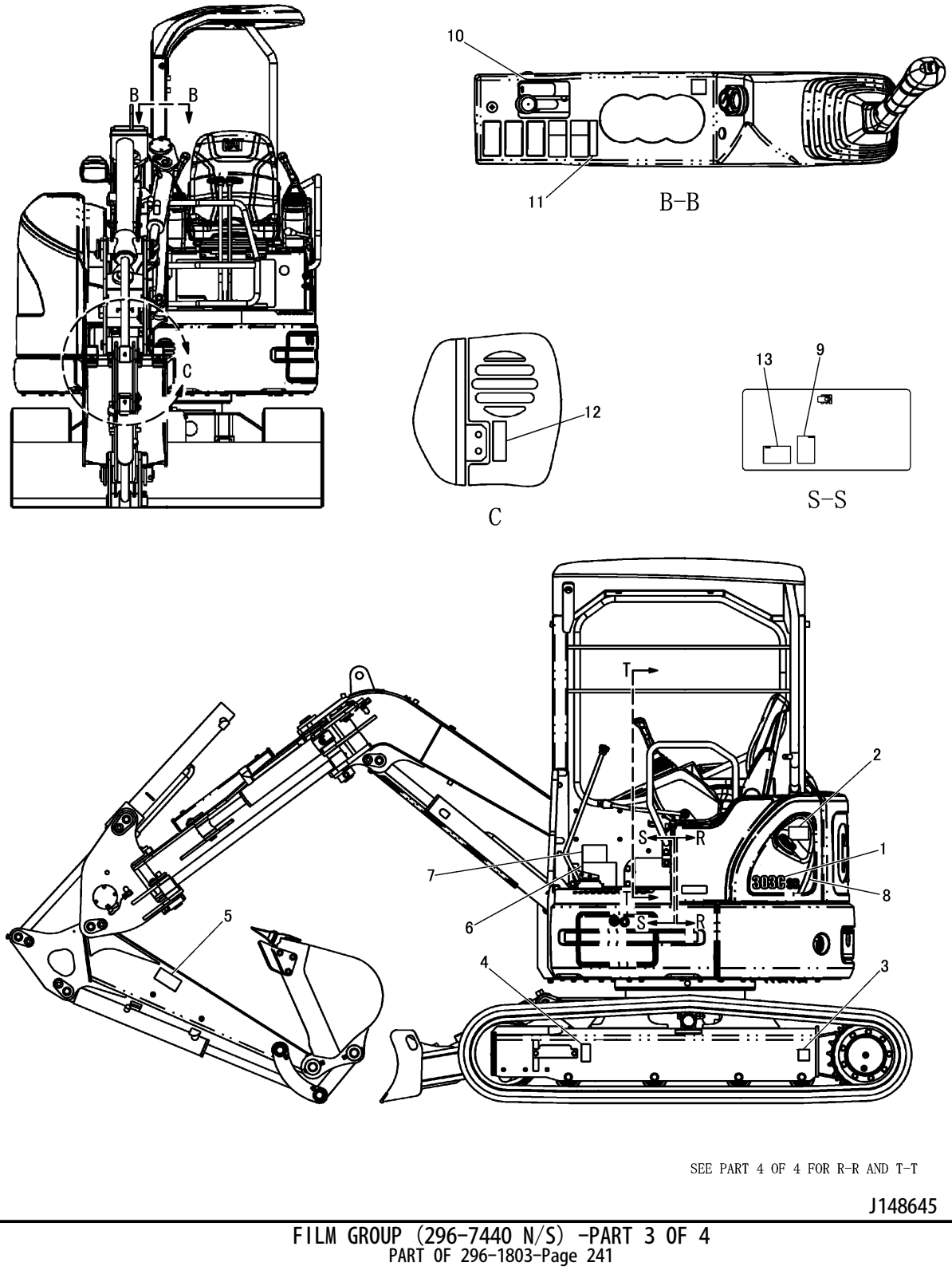

SEE PART 4 OF 4 FOR R-R AND T-T

J148645 HE05

FILM GROUP (296-7440 N/S) -PART 3 OF 4
PART OF 296-1803-Page 241

SERVICE EQUIPMENT AND SUPPLIES

NOTE	No.	PART NO.	QTY	PART NAME	NOTE	No.	PART NO.	QTY	PART NAME
	1	311-7402	1	FILM(303C SR)					
	2	291-9334	1	FILM(DIESEL FUEL)					
	3	7X-7644	1	FILM(TIE DOWN)					
	4	160-6832	1	FILM(PLUG)					
	5	160-6854	1	FILM(DO NOT APPROACH)					
	6	308-3577	1	FILM(LUBE CHART)					
	7	317-3915	1	FILM(INSTRUCTION)					
	8	298-2147	1	FILM(STRIPE)(LH)					
	9	316-9714	1	FILM(FUSE PANEL)					
	10	150-8897	1	FILM(GOVERNOR CONTROL)					
	11	318-1705	1	FILM(INSTRUCTION)					
	12	176-8452	1	FILM(GREASE POINTS)					
	13	126-2887	1	FILM(WARNING)(SW)					

J148645 HE05

FILM GROUP (296-7440 N/S) -PART 3 OF 4

PART OF 296-1803-Page 241

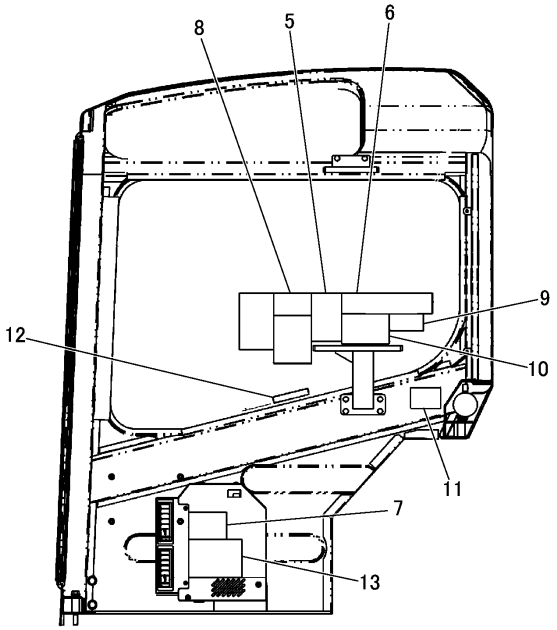

W–W

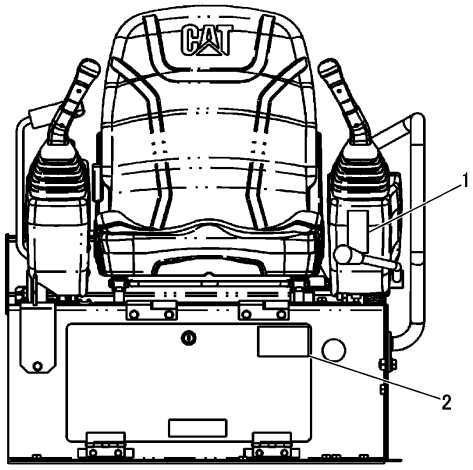

T–T

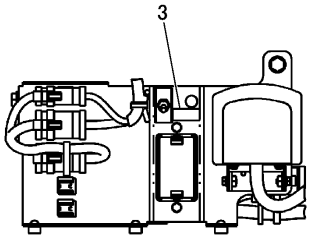

R–R

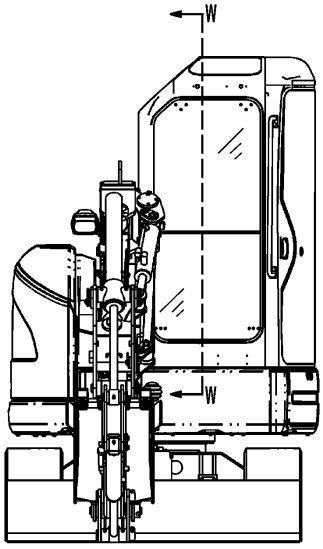

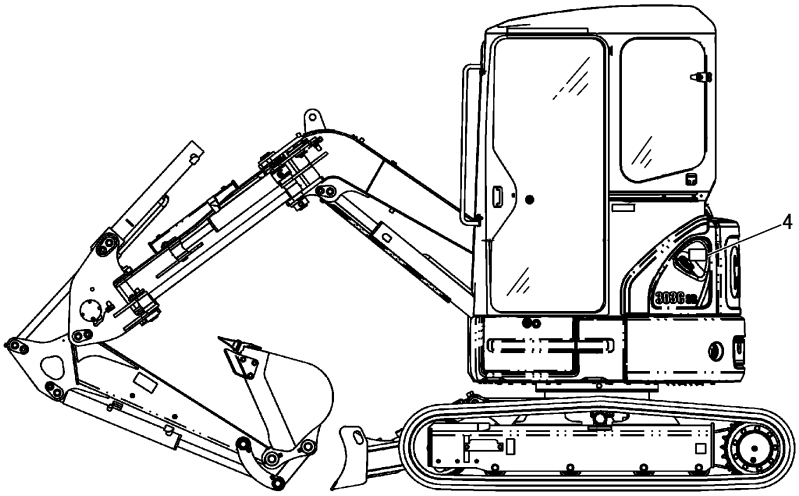

CAB

J148646 HE05

FILM GROUP (296-7440 N/S) -PART 4 OF 4
PART OF 296-1803-Page 241

SERVICE EQUIPMENT AND SUPPLIES

NOTE	No.	PART NO.	QTY	PART NAME
	1	126-2900	1	FILM(LEVER LOCK)
	2	314-9791	1	FILM(REGISTRATION) (OLD COMPANY NAME) -OR-
		330-7092	1	FILM(REGISTRATION) (NEW COMPANY NAME)
	3	191-0366	1	FILM(SW)
	4	291-9334	1	FILM(DIESEL FUEL)
	5	126-2886	1	FILM(WARNING) (OLD COMPANY NAME) -OR-
		330-8879	1	FILM(WARNING) (NEW COMPANY NAME)
	6	321-7177	1	FILM(COMBO)
	7	317-3915	1	FILM(INSTRUCTION)
	8	126-2892	1	PLATE(INSTRUCTION)
	9	283-8827	1	FILM(FIRE PREVENTION)
	10	244-5747	1	FILM(WARNING)
	11	126-2888	1	FILM(WARNING)
	12	191-0322	1	FILM(BLADE CONTROL)
	13	308-3577	1	FILM(LUBE CHART)

J148646 HE05

FILM GROUP (296-7440 N/S) -PART 4 OF 4

PART OF 296-1803-Page 241

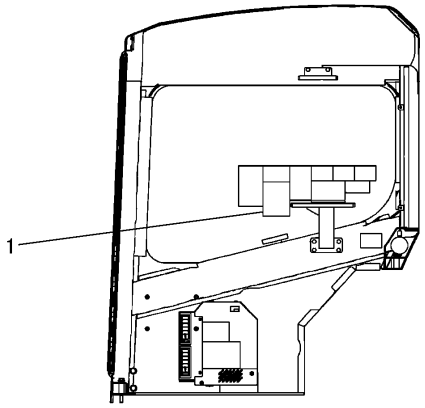

W–W

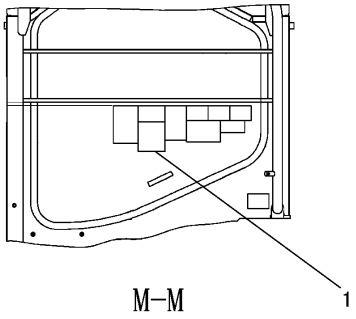

M–M

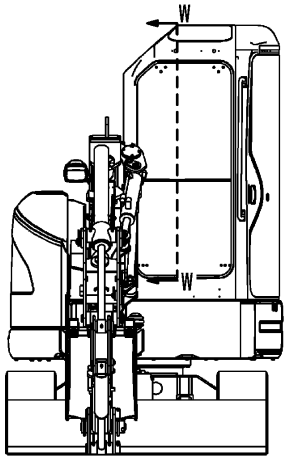

CAB

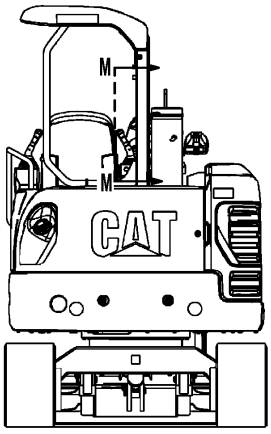

CANOPY

NOTE	No.	PART NO.	QTY	PART NAME	NOTE	No.	PART NO.	QTY	PART NAME
	1	1 2 6 − 2 8 9 9	1	PLATE(INSTRUCTION)					

J146750 HE01

FILM GROUP (297-8540 N/S) -4 WAY
PART OF 307-6397-Page 305, 322-9521-Page 306, 326-7176-Page 306, 331-7226-Page 307
AN ATTACHMENT

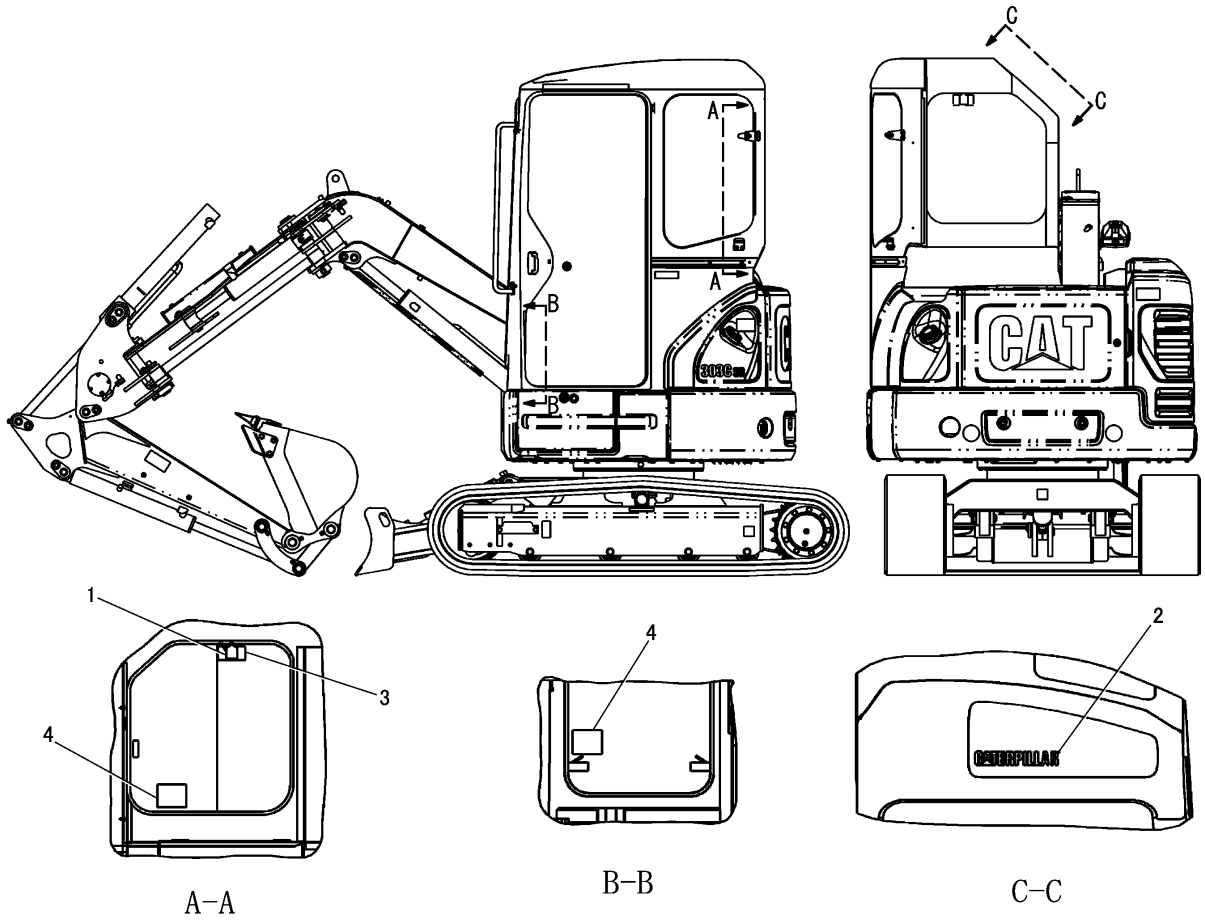

NOTE	No.	PART NO.	QTY	PART NAME	NOTE	No.	PART NO.	QTY	PART NAME
	1	8T-6842	1	FILM(ALTERNATE EXIT)					
	2	132-8286	1	FILM(CATERPILLAR)					
	3	187-0661	1	FILM(ALTERNATE EXIT)					
	4	253-6936	2	FILM(WARNING)					

J146727 HE00

FILM GROUP (308-4111 N/S) -CAB
PART OF 308-4117-Page 465
AN ATTACHMENT

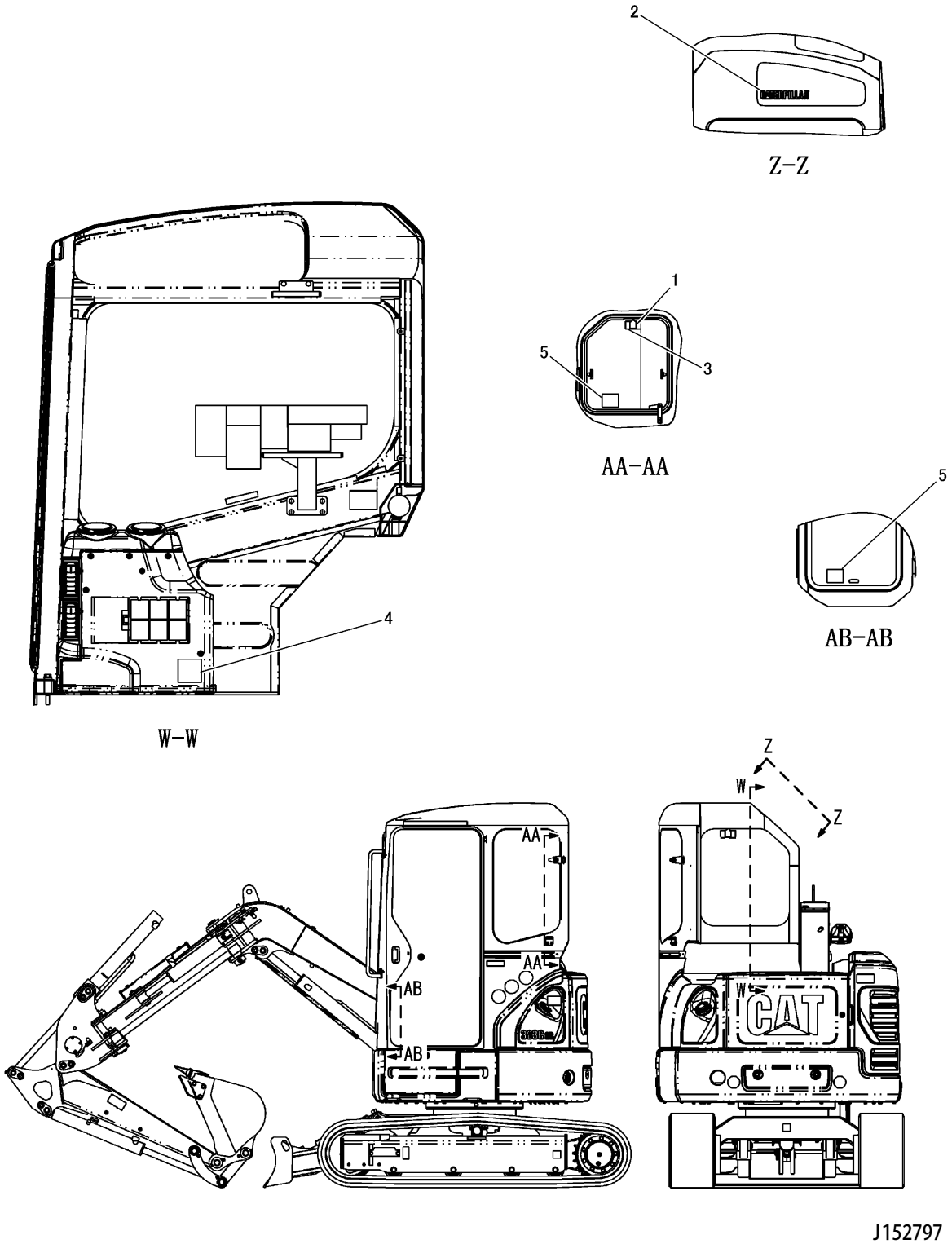

J152797 HE01

FILM GROUP (308-4112 N/S) -CAB-AIR CONDITIONER
PART OF 308-4118-Page 466
APPLIES TO CAB AIR CONDITIONER SPECIFICATION MACHINE
AN ATTACHMENT

SERVICE EQUIPMENT AND SUPPLIES

NOTE	No.	PART NO.	QTY	PART NAME	NOTE	No.	PART NO.	QTY	PART NAME
	1	8T-6842	1	FILM(INFORMATION)					
	2	132-8286	1	FILM(CATERPILLAR)					
	3	187-0661	1	FILM(ALTERNATE EXIT)					
	4	219-3146	1	FILM(NOTICE)					
	5	253-6936	2	FILM(WARNING)					

J152797 HE01

FILM GROUP (308-4112 N/S) -CAB-AIR CONDITIONER
PART OF 308-4118-Page 466
APPLIES TO CAB AIR CONDITIONER SPECIFICATION MACHINE
AN ATTACHMENT

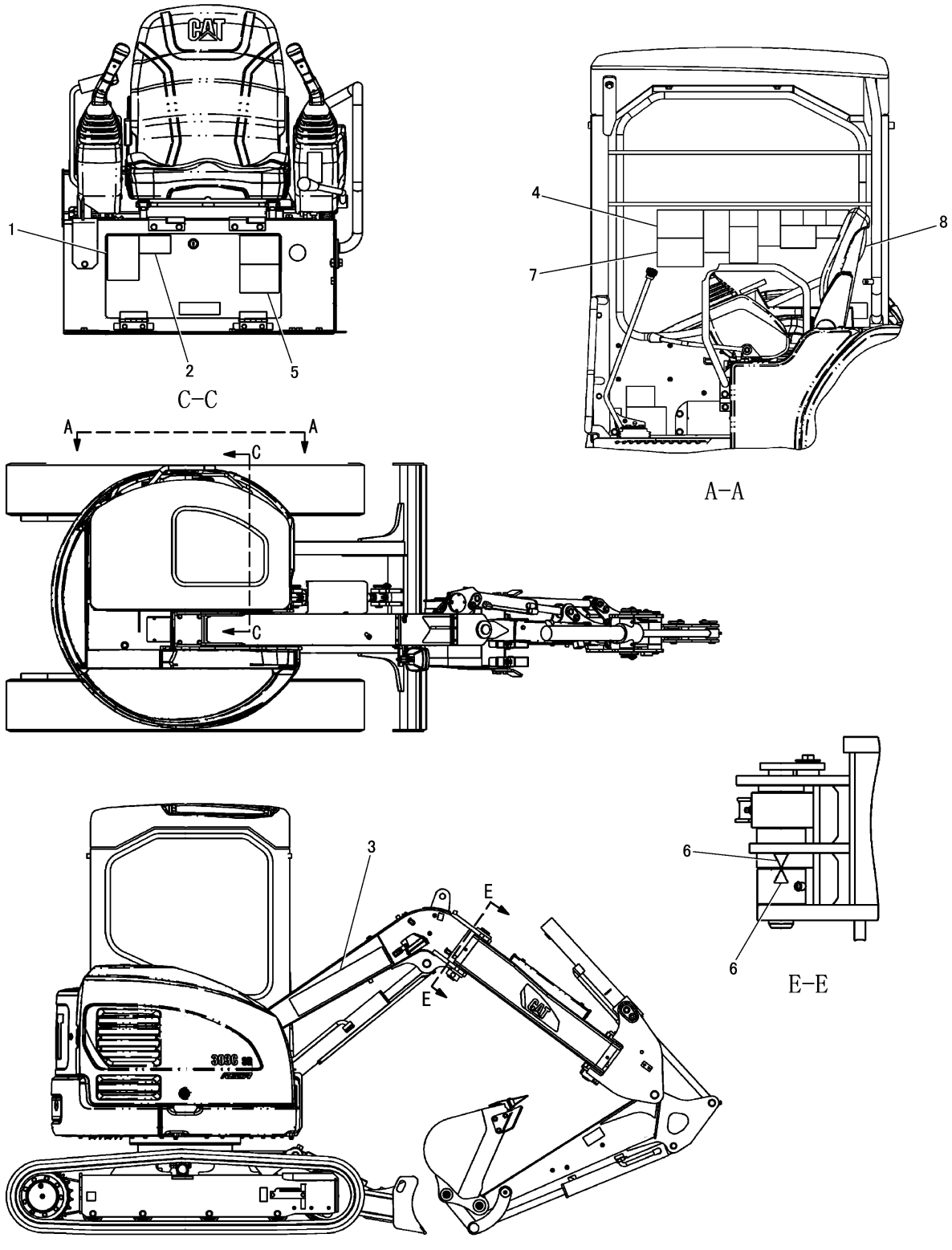

FILM GROUP (308-4113 N/S) -CRANE-CANOPY
PART OF 307-8503-Page 2
AN ATTACHMENT

SERVICE EQUIPMENT AND SUPPLIES

NOTE	No.	PART NO.	QTY	PART NAME
	1	200-4597	1	FILM(WARNING)
	2	201-9144	1	FILM(WARNING)
	3	289-8776	1	FILM
	4	308-9553	1	FILM(WARNING)
	5	317-7746	1	FILM(REGISTRATION) (OLD COMPANY NAME)
				-OR-
		330-7093	1	FILM(REGISTRATION) (NEW COMPANY NAME)
	6	311-4508	2	FILM
	7	311-0598	1	FILM(LIFTING CAPACITY)
	8	311-0599	1	PLATE(LIFTING CAPACITY) (OLD COMPANY NAME)
				-OR-
		330-7094	1	PLATE(LIFTING CAPACITY) (NEW COMPANY NAME)

J146840 HE03

FILM GROUP (308-4113 N/S) -CRANE-CANOPY
PART OF 307-8503-Page 2
AN ATTACHMENT

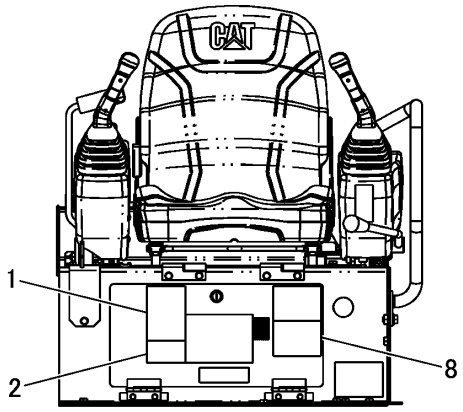

C-C

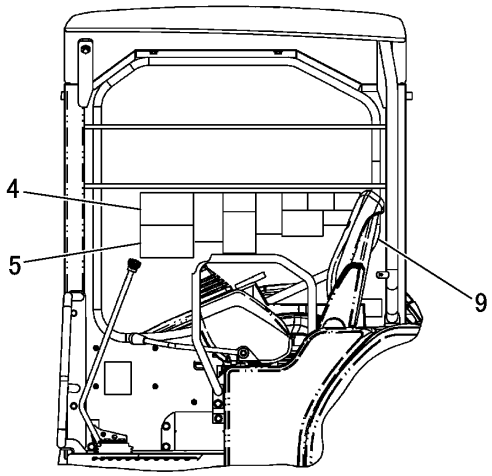

A-A

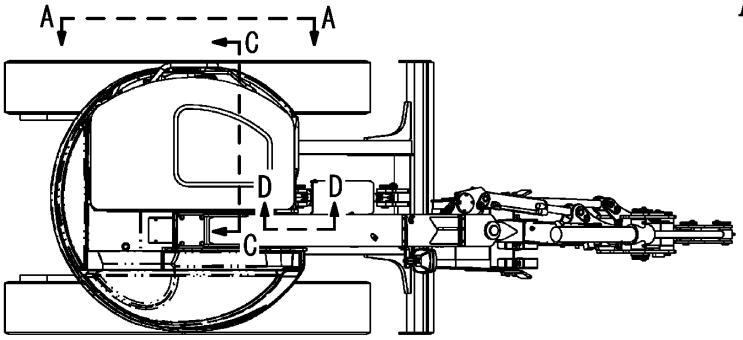

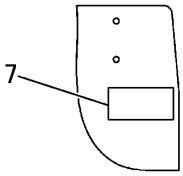

D-D

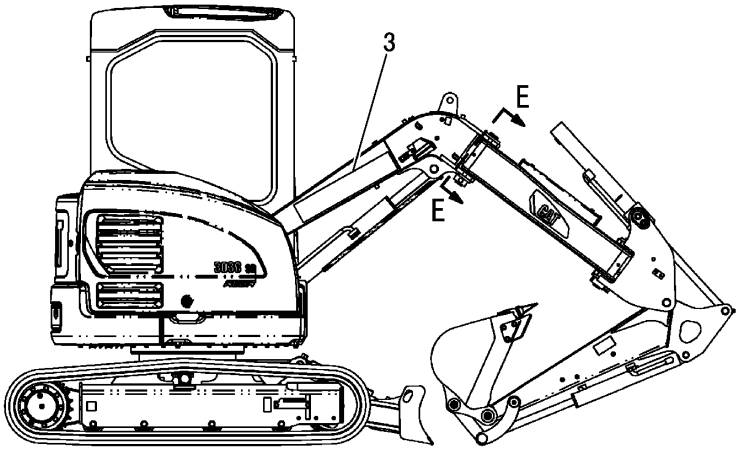

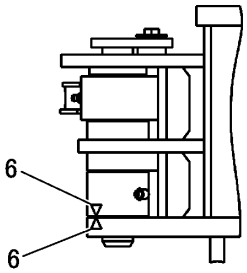

E-E

J153801 HE01

FILM GROUP (317-7738 N/S) -SHOVEL CRANE-CANOPY/LONG STICK
EFFECTIVE WITH SERIAL NO. MSP00401-
PART OF 330-3619-Page 3
AN ATTACHMENT

SERVICE EQUIPMENT AND SUPPLIES

NOTE	No.	PART NO.	QTY	PART NAME	NOTE	No.	PART NO.	QTY	PART NAME
	1	200-4597	1	FILM(WARNING)					
	2	201-9144	1	FILM(WARNING)					
	3	289-8776	1	FILM					
	4	308-9553	1	FILM(WARNING)					
	5	317-7741	1	FILM(LIFTING CAPACITY)					
	6	329-8374	2	FILM					
	7	330-7026	1	PLATE					
	8	330-8855	1	FILM(REGISTRATION)					
	9	330-8856	1	PLATE(LIFTING CAPACITY)					

J153801 HE01

FILM GROUP (317-7738 N/S) -SHOVEL CRANE-CANOPY/LONG STICK
EFFECTIVE WITH SERIAL NO. MSP00401-
PART OF 330-3619-Page 3
AN ATTACHMENT

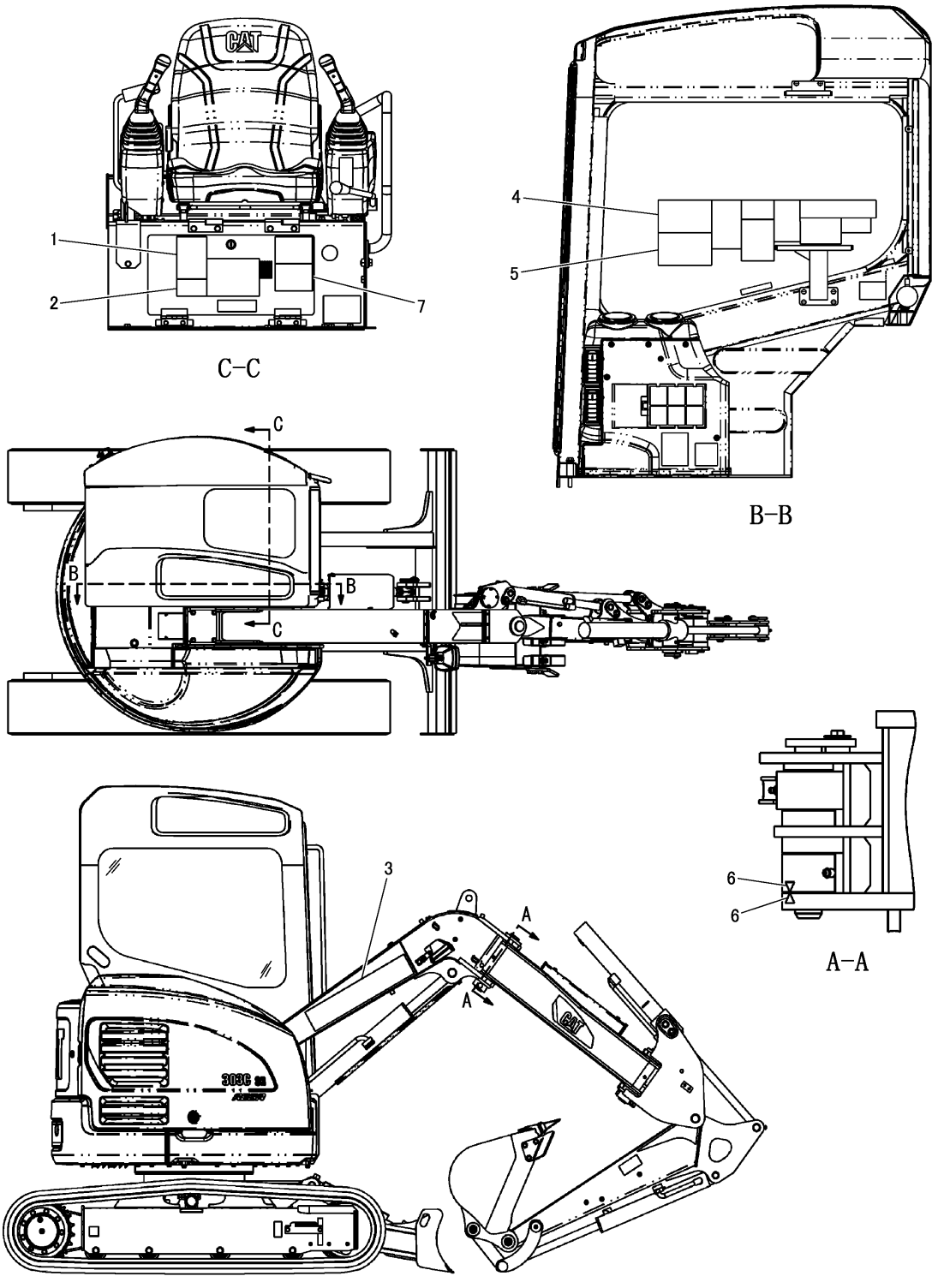

J152889 HE04

FILM GROUP (308-4114 N/S) -CRANE-CAB
PART OF 307-8504-Page 4,5
AN ATTACHMENT

SERVICE EQUIPMENT AND SUPPLIES

NOTE	No.	PART NO.	QTY	PART NAME
	1	200-4597	1	FILM(WARNING)
	2	201-9144	1	FILM(WARNING)
	3	289-8776	1	FILM
	4	308-9553	1	FILM(WARNING)
	5	311-0598	1	FILM(LIFTING CAPACITY)
	6	329-8374	2	FILM
	7	319-6382	1	FILM(REGISTRATION) (OLD COMPANY NAME)
				-OR-
		330-7095	1	FILM(REGISTRATION) (NEW COMPANY NAME)
FK	8	311-0599	1	PLATE(LIFTING CAPACITY) (OLD COMPANY NAME)
				-OR-
FK		330-7094	1	PLATE(LIFTING CAPACITY) (NEW COMPANY NAME)

NOTE	No.	PART NO.	QTY	PART NAME

F-NOT SHOWN
K-PLACE WITH MANUALS

J152889 HE04

FILM GROUP (308-4114 N/S) -CRANE-CAB
PART OF 307-8504-Page 4,5
AN ATTACHMENT

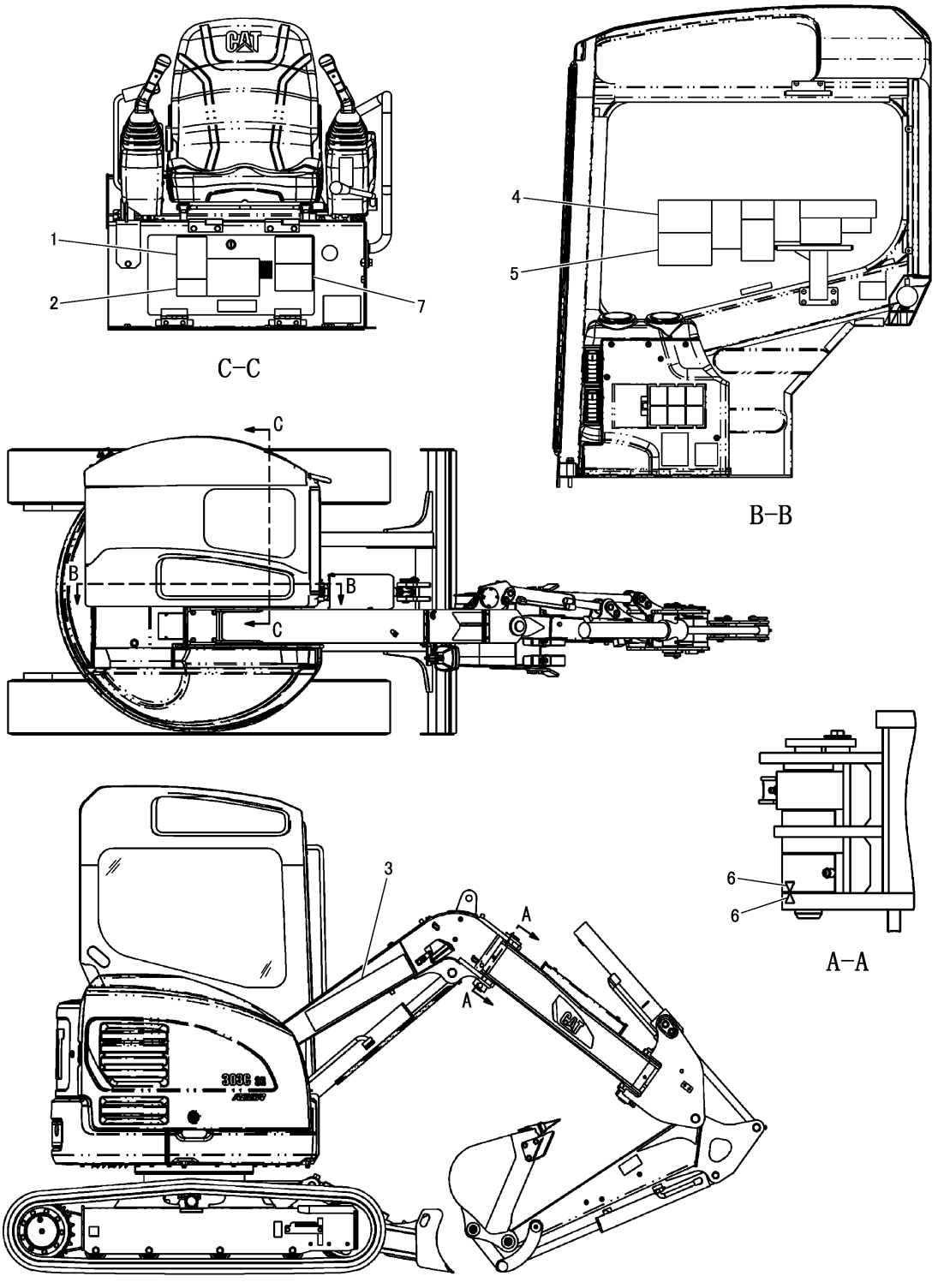

FILM GROUP (317-7739 N/S) -SHOVEL CRANE-CAB/LONG STICK
EFFECTIVE WITH SERIAL NO. MSP00401-
PART OF 330-3620-Page 6,7
AN ATTACHMENT

SERVICE EQUIPMENT AND SUPPLIES

NOTE	No.	PART NO.	QTY	PART NAME	NOTE	No.	PART NO.	QTY	PART NAME
	1	200-4597	1	FILM(WARNING)					
	2	201-9144	1	FILM(WARNING)					
	3	289-8776	1	FILM					
	4	308-9553	1	FILM(WARNING)					
	5	317-7741	1	FILM(LIFTING CAPACITY)					
	6	329-8374	2	FILM					
	7	330-8857	1	FILM(REGISTRATION)					
FK	8	330-8856	1	PLATE(LIFTING CAPACITY)					

F-NOT SHOWN
K-PLACE WITH MANUALS

J152893 HE01

FILM GROUP (317-7739 N/S) -SHOVEL CRANE-CAB/LONG STICK
EFFECTIVE WITH SERIAL NO. MSP00401-
PART OF 330-3620-Page 6,7
AN ATTACHMENT

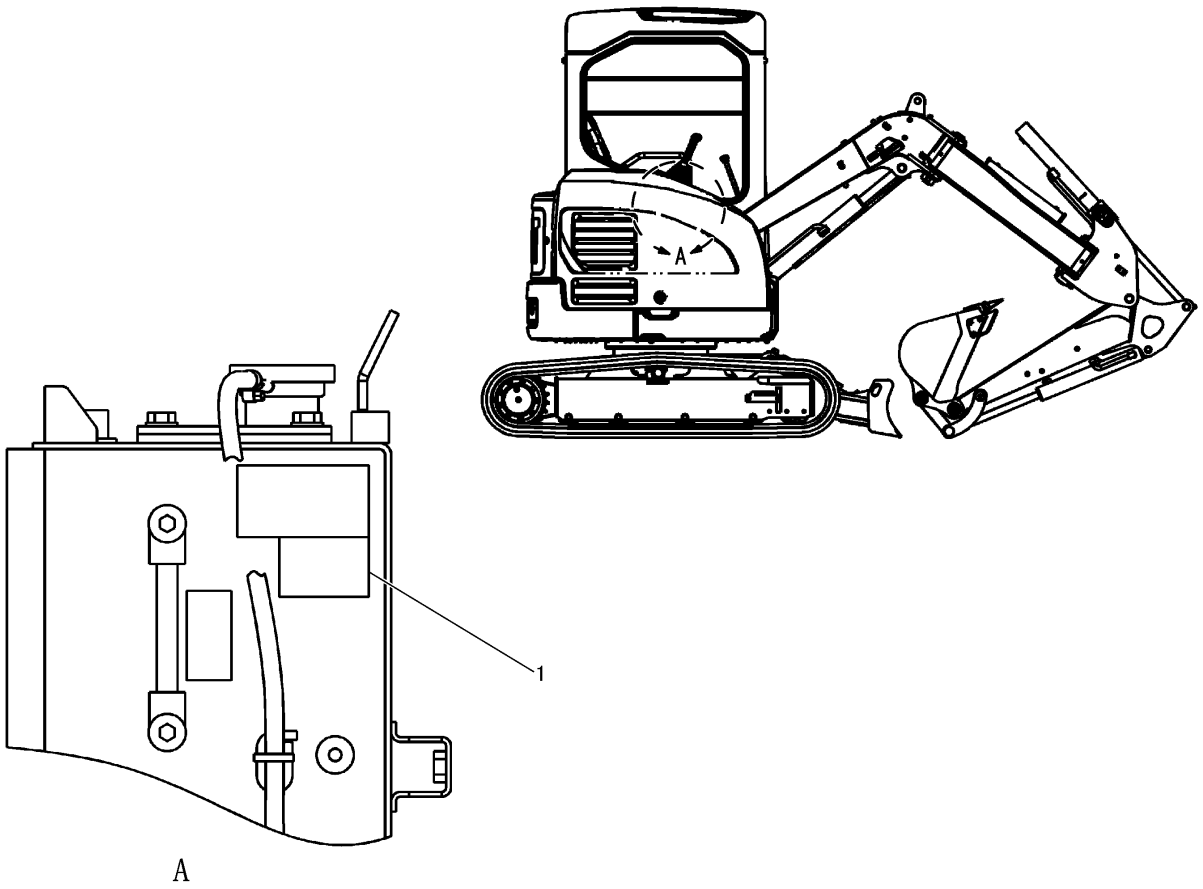

NOTE	No.	PART NO.	QTY	PART NAME	NOTE	No.	PART NO.	QTY	PART NAME
	1	154-0779	1	FILM(COLD WEATHER)					

J146816 HE00

FILM GROUP (308-4116 N/S) -COLD WEATHER
AN ATTACHMENT

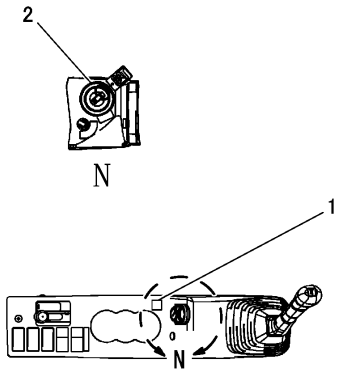

B–B

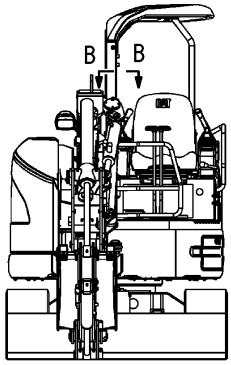

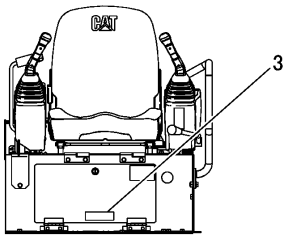

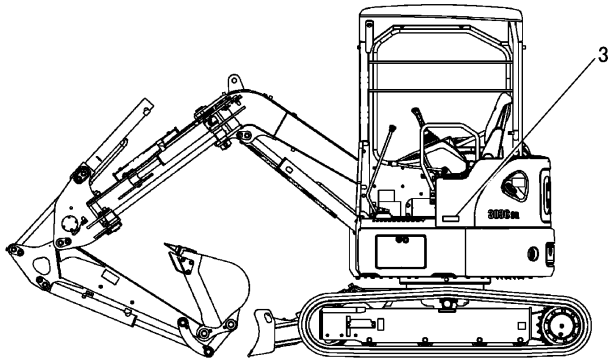

CANOPY

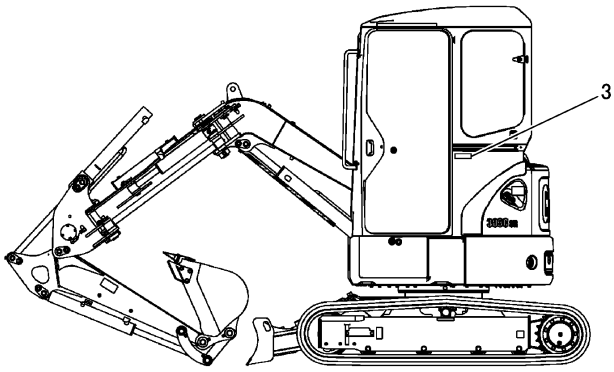

CAB

NOTE	No.	PART NO.	QTY	PART NAME	NOTE	No.	PART NO.	QTY	PART NAME
	1	205−0826	1	FILM(MACHINE SECURITY)					
	2	224−3385	1	FILM(MSS EXCITER)					
	3	235−7959	2	FILM(MACHINE SECURITY)					

J146759 HE01

FILM GROUP (310-4266 N/S) -SECURITY
PART OF 307-9238-Page 177, 310-4026-Page 177
AN ATTACHMENT

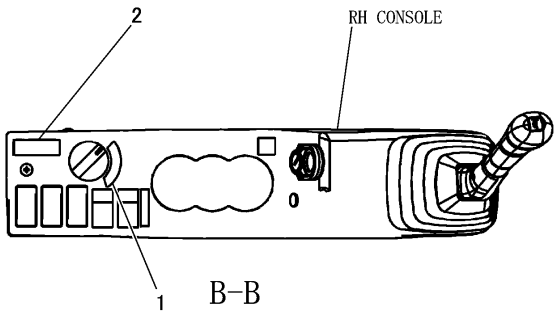

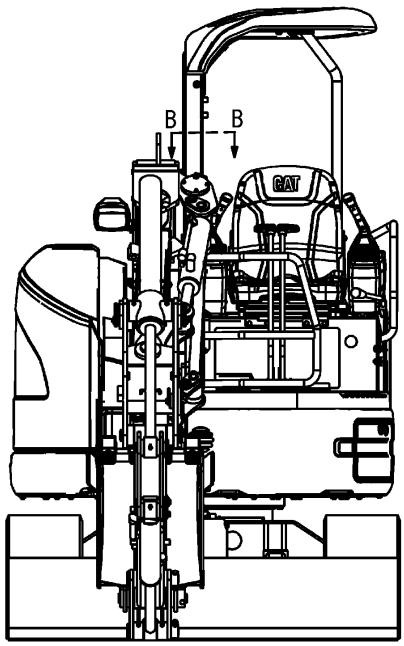

CAB/CANOPY

NOTE	No.	PART NO.	QTY	PART NAME	NOTE	No.	PART NO.	QTY	PART NAME
	1	136-0199	1	FILM(GOVERNOR SW)					
	2	288-3909	1	FILM(NOTICE)					

J147577 HE01

FILM GROUP (318-0117 N/S) -AEC
PART OF 307-9226-Page 45, 308-4118-Page 466

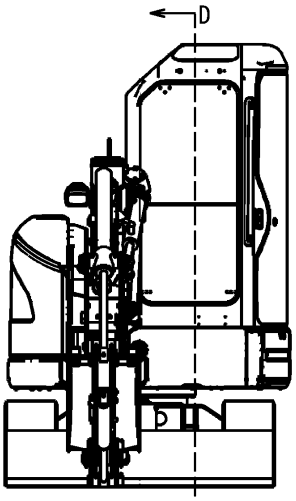

CAB

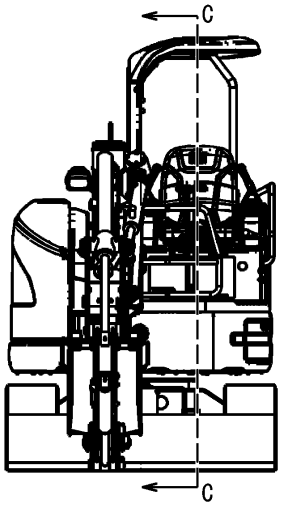

CANOPY

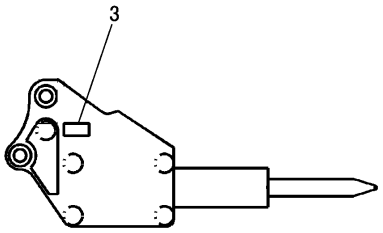

HAMMER

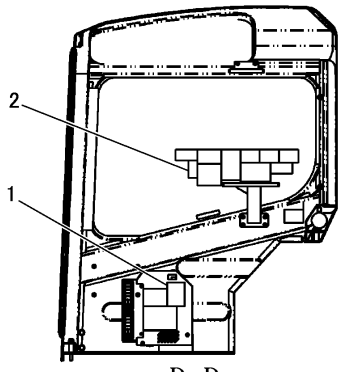

D–D

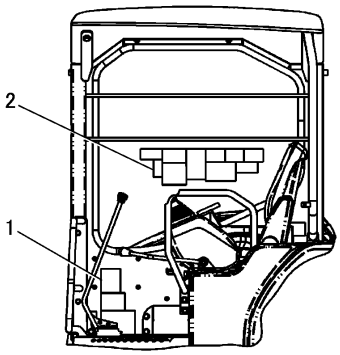

C–C

NOTE	No.	PART NO.	QTY	PART NAME	NOTE	No.	PART NO.	QTY	PART NAME
	1	118－6054	1	FILM(NOTICE)					
	2	160－6885	1	FILM(HANGING PROHIBITION)					
	3	160－6886	2	FILM(DO NOT APPROCH)					

J146809 HE04

FILM GROUP (276-3317 N/S)
PART OF 277-3432-Page 435, 278-4557-Page 435
AN ATTACHMENT

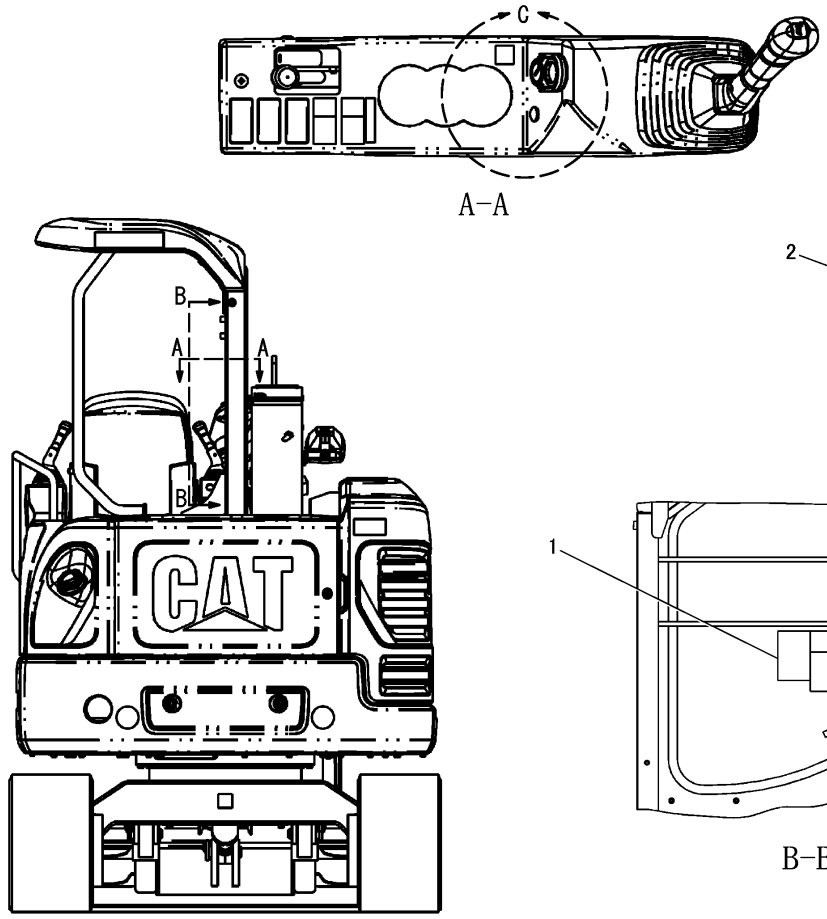

NOTE	No.	PART NO.	QTY	PART NAME	NOTE	No.	PART NO.	QTY	PART NAME
	1	253-6797	1	FILM(WARNING)					
	2	308-2798	1	FILM(IDENTIFICATION)					

J146787 HE00

FILM GROUP (308-9562 N/S) -POWER TAKE OFF
PART OF 295-9343-Page 307
AN ATTACHMENT

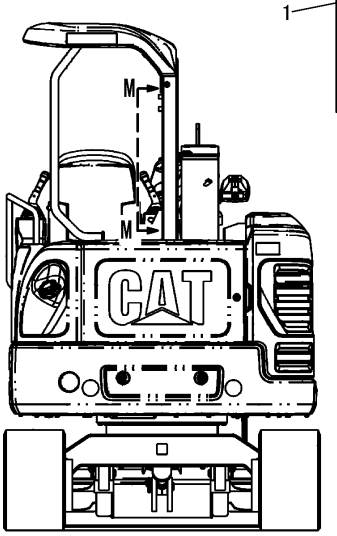

CANOPY

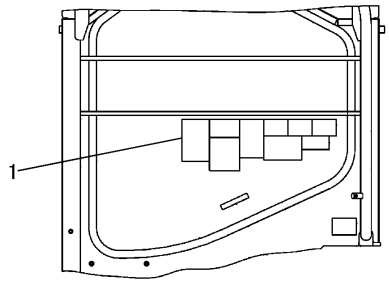

M-M

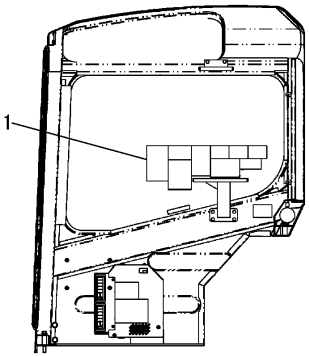

W-W

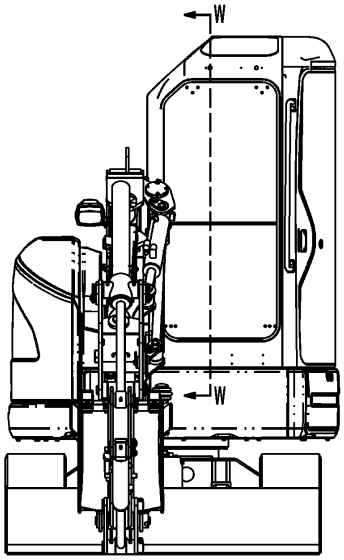

CAB

NOTE	No.	PART NO.	QTY	PART NAME	NOTE	No.	PART NO.	QTY	PART NAME
	1	163-7145	1	FILM(WARNING)(LONG ARM)					

J146884 HE02

FILM GROUP (224-8367 N/S) -LONG
PART OF 296-4440-Page 432
AN ATTACHMENT

SERVICE EQUIPMENT AND SUPPLIES

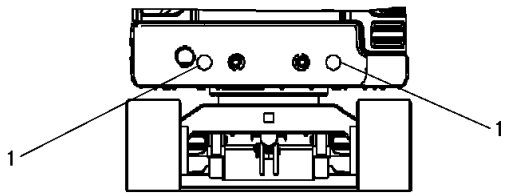

(EXTRA COUNTERWEIGHT)

NOTE	No.	PART NO.	QTY	PART NAME
	1	190-5386	2	FILM(RED REFLECTIVE TAPE)

J146803 HE02

FILM GROUP (276-1009 N/S)
PART OF 296-1626-Page 281
AN ATTACHMENT

CONSISTS OF :

2 5P-7958 SLEEVE

(FOR ESTABLISHING OPERATION/LUBE/MAINTENANCE GUIDES)

1 099-3645 LANYARD CABLE

(FOR ESTABLISHING OPERATION/LUBE/MAINTENANCE GUIDES)

2 278-1585 KEY(INTO ENVELOPE)

1 284-9137 KEY ENVELOPE

(INTO LITERATURE COMPARTMENT)

1 7F-3400 BAG

J138250 E04

LITERATURE GROUP (273-0461 N/S)
PART OF 296-7440-Page 541

CONSISTS OF :

PAGE

1 120-6285 TOOL GROUP 568

J146861 HE01

TOOL ARRANGEMENT (300-2805 N/S)

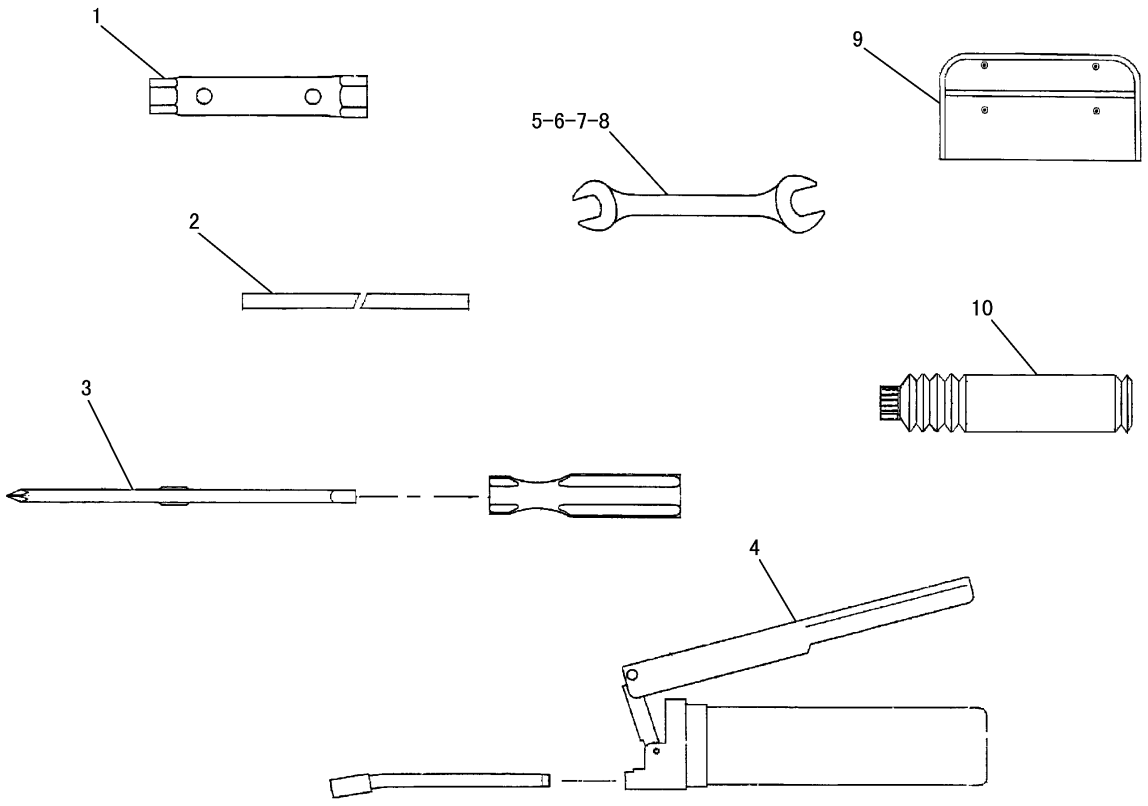

NOTE	No.	PART NO.	QTY	PART NAME	NOTE	No.	PART NO.	QTY	PART NAME
	1	171－0414	1	WRENCH BOX					
	2	171－0415	1	HANDLE					
	3	171－0416	1	DRIVER					
	4	171－0421	1	GREASE GUN AS					
	5	171－0420	1	SPANNER(10,13)					
	6	171－0419	1	SPANNER(16,18)					
	7	171－0418	1	SPANNER(17,19)					
	8	171－0417	1	SPANNER(19,20)					
	9	171－0423	1	BAG					
	10	171－0422	1	GREASE					

J136120 X02

120-6285 TOOL GROUP
PART OF 300-2805-Page 567

MEMORANDUM

PART NUMBER INDEX

Part No. Page

1

1B-3867 ····· 293
1H-3244 ····· 72
73
1J-0245 ····· 487
490
491
1J-9671 ····· 56
57
1M-6119 ····· 72
73
1M-6120 ····· 72
73
1P-4278 ····· 28
29
30
31
56
57
310
1R-5396 ····· 515
516
517
518
519
1R-5468 ····· 234
235
1S-0379 ····· 524
525
528
529
1S-1014 ····· 80
81
84
85
90
91
487
489
490
491
507
1S-6420 ····· 62
63
68
69
72
73
78
79

2

2D-0388 ····· 124
125
370
371
2L-8058 ····· 203
2L-8066 ····· 185
186
2L-8067 ····· 62
63
2L-8067 ····· 72
73
185
186
187
189
190
191
192
193
195
199
203
2L-8075 ····· 185
186
210
228
2L-8076 ····· 185
186
195
199
203
206
207
208
2L-8077 ····· 214
215
216
2L-8079 ····· 189
209
2M-9780 ····· 310
322
323
2P-1279 ····· 368
369
376
2U-2552 ····· 55
484

3

3B-4503 ····· 484
3B-4505 ····· 13
18
19
21
22
25
27
35
36
41
3B-4604 ····· 266
267
3B-4607 ····· 422
423
3B-4610 ····· 242
243
244
245
248
249
3B-4630 ····· 288
3B-4630 ····· 289
3B-8485 ····· 436
437
439
452
3B-8488 ····· 424
425
426
427
428
429
430
436
437
438
442
443
444
445
446
3B-8489 ····· 303
426
427
442
443
444
445
446
462
3E-6600 ····· 268
269
270
271
272
273
3E-6602 ····· 28
29
30
31
3E-8020 ····· 474
475
480
481
3E-8299 ····· 290
3E-9179 ····· 194
198
202
212
3G-8054 ····· 362
3G-8057 ····· 362
3J-1907 ····· 120
121
234
235
318
319
320
321
322
323
324
325
326

▲ PRIMARY REFERENCE

PART NUMBER INDEX

Part No.	Page
3J-1907	327
	328
	329
	330
	331
	332
	333
	334
	335
	336
	337
	340
	341
	342
	343
	344
	345
	346
	347
	348
	349
	352
	353
	354
	355
	356
	357
	360
	361
	362
	370
	371
	376
	377
	379
	381
	382
	383
	384
	385
	386
	387
	390
	394
	401
	402
	414
	524
	525
	528
	529
3J-7354	324
	325
	328
	329
	330
	331
	342
	343
	344
	345
	352
	353

Part No.	Page
3J-7354	360
	361
	368
	369
	370
	371
	379
	383
	386
	387
3K-0360	318
	319
	320
	321
	322
	323
	324
	325
	326
	327
	362
	363
	364
	365
	368
	369
	370
	371
	374
	375
	383
	528
	529
3K-8460	56
	57
3P-1896	12
3P-9847	320
	321
3S-2093	25
	28
	29
	30
	31
	46
	47
	48
	49
	50
	51
	52
	53
	60
	61
	62
	63
	64
	65
	66
	67
	68
	69
	70
	71

Part No.	Page
3S-2093	72
	73
	74
	75
	76
	77
	78
	79
	80
	81
	82
	83
	84
	85
	86
	87
	88
	89
	90
	91
	92
	93
	94
	95
	96
	97
	98
	99
	100
	101
	102
	103
	104
	105
	106
	107
	108
	109
	110
	111
	112
	113
	114
	115
	116
	117
	118
	119
	120
	121
	122
	123
	124
	125
	126
	127
	128
	129
	130
	131
	132
	133
	134

▲ PRIMARY REFERENCE

PART NUMBER INDEX

Part No.	Page
3S-2093	135
	136
	137
	138
	139
	140
	141
	142
	143
	144
	145
	146
	147
	148
	149
	150
	151
	152
	153
	154
	155
	156
	157
	158
	159
	160
	161
	162
	163
	164
	165
	166
	167
	168
	169
	170
	171
	172
	173
	174
	175
	178
	179
	180
	181
	182
	183
	184
	185
	187
	189
	194
	195
	196
	197
	198
	199
	200
	201
	216
	219
	220
	228

Part No.	Page
3S-2093	231
	303
	310
	322
	323
	324
	325
	364
	365
	422
	423
	448
	449
	450
	508
	509
	510
	511
	512
	513
	534
	535
3S-6049	72
	73
3T-0849	128
	129
	134
	135
	140
	141
	146
	147
	152
	153
	162
	163
	164
	165
	174
	175
	405
3T-4693	190
	191
	192
	193
3T-4696	189
	190
	191
	192
	193

4

Part No.	Page
4B-4274	363
4B-4276	72
	73
4D-7794	450
4D-9517	507
	508
	509
	510
	511
	512

Part No.	Page
4D-9517	513
4H-0408	272
	273
	280
	487
	488
4H-1225	44
	70
	71
4I-0379	524
	525
4I-3743	310
4I-3745	310
4I-4253	474
	475
	480
	481
4I-6365	406
4I-7889	72
	73
4I-9531	332
	333
	334
	335
	336
	337
	338
	339
	346
	347
	350
	351
	354
	355
	358
	359
	361
4I-9532	332
	333
	334
	335
	336
	337
	338
	339
	346
	347
	350
	351
	354
	355
	358
	359
4I-9533	332
	333
	334
	335
	336
	337
	338
	339
	346
	347

▲ PRIMARY REFERENCE

PART NUMBER INDEX

Part No.	Page
4I-9533	350
	351
	354
	355
	358
	359
	361
4I-9534	332
	333
	334
	335
	336
	337
	338
	339
	346
	347
	350
	351
	354
	355
	358
	359
4I-9535	332
	333
	334
	335
	336
	337
	338
	339
	346
	347
	350
	351
	354
	355
	358
	359
4I-9536	332
	333
	334
	335
	336
	337
	338
	339
	346
	347
	350
	351
	354
	355
	358
	359
4I-9537	332
	333
	334
	335
	336
	337
	338
	339
4I-9537	346
	347
	350
	351
	354
	355
	358
	359
4I-9538	332
	333
	334
	335
	336
	337
	338
	339
	342
	343
	344
	345
	346
	347
	350
	351
	352
	353
	354
	355
	358
	359
4J-0524	322
	323
4J-5268	59
4J-5477	318
	319
	324
	325
	328
	329
	330
	331
	332
	333
	334
	335
	336
	337
	340
	341
	342
	343
	344
	345
	346
	347
	348
	349
	352
	353
	354
	355
	356
	357
4J-5477	360
	361
	366
	367
	368
	369
	370
	371
	372
	373
	376
	379
	381
	383
	384
	385
	386
	387
4J-7533	401
4K-8302	112
	113
4L-7124	72
	73
4M-7470	56
	57
4P-7581	60
	61
	66
	67
	70
	71
	76
	77
	524
	525
4P-8134	46
	47
	62
	63
	68
	69
	78
	79
	364
4Y-0187	313
4Y-8939	498
	499
	500
	501
	502
	503
5	
5A-3604	403
5B-5947	24
5C-2890	60
	61
	70
	71
	449
	450
	516

▲ PRIMARY REFERENCE

PART NUMBER INDEX

Part No.	Page
5C-2890	517
	518
	519
5C-7261	42
	48
	49
	50
	51
	54
	68
	69
	78
	79
	242
	243
	244
	245
	248
	249
	384
	385
	514
5C-7883	66
	67
	76
	77
5C-9553	46
	47
	50
	51
	70
	71
	80
	81
	82
	83
	86
	87
	88
	89
	92
	93
	450
	472
	473
	478
	479
	486
	489
	490
	491
	504
	518
	523
	530
	531
5D-1026	524
	525
	528
	529
5G-8480	490
	491
5I-3572	536
5I-4936	11
	23
	54
5I-4993	18
5I-5005	23
5I-7505	12
	35
	227
5I-7625	20
5I-7628	14
	24
	35
5I-7630	20
5I-7633	43
5I-7719	20
5I-7728	35
5I-8056	14
	24
	35
5I-8058	54
5P-0743	364
5P-0746	62
	63
	72
	73
5P-0760	62
	63
	72
	73
5P-0767	524
	525
5P-1075	449
	523
5P-1076	218
	285
	286
	365
	467
	468
	469
	486
	490
	491
5P-1420	56
	57
5P-1475	120
	121
5P-4115	60
	61
	70
	71
	449
	523
5P-4116	56
	57
	92
	93
	124
	125
	244
	245
	248
	249
5P-4116	257
	258
	266
	267
	372
	373
	384
	385
	507
	508
	509
	510
	511
	512
	513
	532
	533
	534
	535
	538
5P-4400	303
5P-5639	468
	469
5P-5643	244
	245
	246
	247
5P-5672	259
5P-5687	28
	29
	30
	31
5P-5952	158
	159
	170
	171
5P-6944	370
	371
5P-6969	468
	469
5P-7464	318
	319
5P-7465	318
	319
5P-7483	253
	254
	260
5P-7814	56
	57
5P-7848	476
	477
	482
	483
5P-7958	566
5P-8309	250
	251
	253
	254
5P-8522	112
	113
5P-8837	463
5P-8874	320
	321

▲ PRIMARY REFERENCE

PART NUMBER INDEX

Part No.	Page
5P-8874	528
	529
5P-9085	530
	531
5V-9155	528
	529
	530
	531
6	
6C-9149	283
6D-1641	528
	529
	530
	531
6D-4244	82
	83
	88
	89
	92
	93
6D-4246	62
	63
	72
	73
6D-4636	372
	373
6F-4855	310
6H-7127	413
6I-1418	180
	181
6I-5298	409
	410
6I-5342	472
	473
	478
	479
6I-6923	403
6R-2052	332
	333
	336
	337
	346
	347
	354
	355
6V-0484	330
	331
	383
	384
	385
	524
	525
	528
	529
6V-0852	320
	321
	322
	323
	381
	383
6V-0974	362
6V-1249	318
	319
6V-2316	43
6V-3938	313
6V-3940	43
6V-3965	320
	321
	322
	323
	381
	383
6V-5192	234
	235
	416
	417
6V-5205	15
	238
6V-5210	462
	506
6V-5587	237
6V-5839	43
6V-7357	55
	92
	93
	449
	519
	528
	529
	530
	531
6V-7610	313
6V-7613	403
6V-7644	293
6V-7660	59
	60
	61
	70
	71
6V-8185	72
	73
6V-8202	403
	414
	521
6V-8231	44
	48
	49
	52
	53
	68
	69
	78
	79
6V-8362	228
6V-8397	324
	325
	326
	327
	328
	329
	330
	331
	370
	371
6V-8397	377
	381
	383
	418
6V-8398	318
	319
	320
	321
	322
	323
	326
	327
	362
	363
	364
	365
	368
	369
	370
	371
	374
	375
	378
	404
	418
	428
	430
6V-8400	415
	416
	417
6V-8513	436
	437
	438
	439
	442
	443
	444
	445
	446
	451
6V-8554	378
6V-8625	322
	323
	370
	371
6V-8627	334
	335
	340
	341
	348
	349
	354
	355
	361
	381
	383
	384
	385
6V-8628	361
	368
	369
	379
	386

▲ PRIMARY REFERENCE

PART NUMBER INDEX

Part No.	Page
6V-8628	387
6V-8634	324
	325
6V-8636	324
	325
	326
	327
	330
	331
	377
	381
6V-8639	318
	319
	322
	323
	326
	327
	363
	365
	368
	369
	374
	375
6V-8641	318
	319
	330
	331
	332
	333
	334
	335
	336
	337
	340
	341
	342
	343
	344
	345
	346
	347
	348
	349
	354
	355
	356
	357
	361
	376
	381
	384
	385
	386
	387
6V-8647	328
	329
	330
	331
	360
	370
	371
	379
	386
6V-8647	387
6V-8721	322
	323
6V-8723	326
	327
6V-8724	326
	327
	330
	331
	370
	371
	383
6V-8773	379
6V-8934	330
	331
6V-8939	363
6V-8993	368
	369
6V-9000	324
	325
	328
	329
6V-9001	328
	329
	377
6V-9002	362
6V-9169	363
	365
	374
	375
6V-9200	383
6V-9356	378
6V-9492	222
6V-9509	378
6V-9632	48
	49
	52
	53
	56
	57
	62
	63
	66
	67
	76
	77
	80
	81
	82
	83
	86
	87
	92
	93
	124
	125
	128
	129
	134
	135
	140
	141
	146
6V-9632	147
	152
	153
	162
	163
	164
	165
	170
	171
	231
	310
	474
	475
	498
	499
	500
	501
	502
	503
	508
	509
	510
	511
	512
	513
	516
	517
	518
	519
	522
	523
6V-9672	474
	475
	480
	481
6V-9673	484
6V-9746	363
6V-9828	334
	335
	340
	341
	348
	349
	354
	355
6V-9835	379
	381
	384
	385
6V-9836	330
	331
6V-9842	334
	335
	340
	341
	348
	349
	354
	355
	366
	367
	372
	373

▲ PRIMARY REFERENCE

PART NUMBER INDEX

Part No.	Page
6V-9842	379
6V-9849	324
	325
	334
	335
	340
	341
	348
	349
	352
	353
	354
	355
	379
	381
	383
	384
	385
6V-9850	326
	327
	328
	329
6V-9851	322
	323
6V-9873	318
	319
	322
	323
	362
6V-9874	363
6V-9876	324
	325
	326
	327
7	
7D-7233	332
	333
	336
	337
	348
	349
	356
	357
7F-3400	566
7F-8660	238
7I-1024	524
	525
	526
	527
	528
	529
7I-2673	46
	47
	50
	51
	52
	53
	60
	61
	62
	63
7I-2673	64
	65
	66
	67
	70
	71
	72
	73
	74
	75
	76
	77
	80
	81
	84
	85
	90
	91
	92
	93
	94
	95
	96
	97
	100
	101
	102
	103
	104
	105
	106
	107
	108
	109
	110
	111
	112
	113
	118
	119
	123
	126
	127
	128
	129
	130
	131
	132
	133
	134
	135
	136
	137
	138
	139
	140
	141
	144
	145
	146
	147
	148
	149
7I-2673	150
	151
	152
	153
	154
	155
	156
	157
	160
	161
	162
	163
	164
	165
	168
	169
	170
	171
	172
	173
	174
	175
	178
	179
	182
	183
	220
	532
	533
	534
	535
7I-7224	406
7I-7403	401
7I-7439	28
	29
	56
	57
	526
	527
	530
	531
7I-8084	418
7J-9108	363
	364
7K-1181	62
	63
	64
	65
	66
	67
	68
	69
	72
	73
	74
	75
	76
	77
	78
	79
	80
	81
	82

▲ PRIMARY REFERENCE

PART NUMBER INDEX

Part No.	Page
7K-1181	83
	84
	85
	86
	87
	88
	89
	90
	91
	92
	93
	94
	95
	96
	97
	98
	99
	100
	101
	104
	105
	106
	107
	108
	109
	110
	111
	112
	113
	124
	125
	126
	127
	128
	129
	132
	133
	134
	135
	138
	139
	140
	141
	144
	145
	146
	147
	150
	151
	152
	153
	156
	157
	160
	161
	162
	163
	164
	165
	168
	169
	170
	171

Part No.	Page
7K-1181	172
	173
	174
	175
	178
	179
	180
	181
	220
	320
	321
	324
	325
	326
	327
	328
	329
	330
	331
	332
	333
	334
	335
	336
	337
	338
	339
	342
	343
	346
	347
	348
	349
	354
	355
	356
	357
	358
	359
	361
	362
	364
	366
	367
	368
	369
	370
	371
	372
	373
	507
	524
	525
	526
	527
	528
	529
	530
	531
7N-5274	62
	63
	72
	73

Part No.	Page
7S-3916	363
7S-3919	363
7T-1099	30
	31
	52
	53
	62
	63
	66
	67
	68
	69
	76
	77
	82
	83
	86
	87
	92
	93
	178
	179
	231
	274
	275
	276
	277
	290
	310
	379
	436
	437
	439
	469
	498
	499
	500
	501
	502
	503
	508
	509
	510
	511
	512
	513
	516
	517
	518
	519
	534
	535
7T-6799	90
	91
	228
7X-0515	292
7X-0563	264
	265
7X-0579	242
	243
	248
	249
7X-0608	244

▲ PRIMARY REFERENCE

PART NUMBER INDEX

Part No.	Page
7X-0608	245
	248
	249
7X-0796	11
	23
	54
	227
7X-0818	180
	181
7X-0871	322
	323
7X-2444	360
	366
	367
	372
	373
	379
	383
7X-2475	436
	437
	439
7X-2488	283
7X-2533	56
	57
	449
	485
7X-2536	257
	258
	322
	323
	508
	509
	510
	512
	524
	525
7X-2537	526
	527
	538
7X-2538	384
	385
7X-2539	124
	125
7X-2549	285
	286
7X-2550	285
	286
7X-2554	487
	488
	490
	491
7X-2563	282
7X-2564	282
7X-2566	282
7X-2618	422
	423
7X-2619	60
	61
	62
	63
	70
	71
	72

Part No.	Page
7X-2619	73
	231
	523
7X-3164	364
7X-3229	540
	541
7X-6315	230
7X-7644	540
	541
	542
	543
	544
	545
7X-7729	43
	44
	59
	62
	63
	72
	73
	112
	113
	242
	243
	244
	245
	246
	247
	248
	249
	250
	251
	253
	254
	257
	261
	262
	263
	264
	265
	268
	269
	270
	271
	272
	273
	280
	318
	319
	368
	369
	379
	467
	468
	469
	487
	488
	490
	491
7X-7877	487
	489
	490
	491

Part No.	Page
7Y-1976	28
	29
	30
	31
	310
7Y-3459	502
	503
7Y-3474	532
	533
	534
	535
7Y-3951	182
	183
	184
	185
	186
	187
	190
	191
	192
	193
	195
	196
	197
	199
	200
	201
	203
	204
	205
	206
	207
	208
	213
	214
	215
7Y-3952	182
	183
	184
	185
	186
	187
	190
	191
	192
	193
7Y-3957	195
	196
	197
	199
	200
	201
	203
	204
	205
	206
	207
	208
	213
	214
	215
7Y-3958	195
	197

▲ PRIMARY REFERENCE

PART NUMBER INDEX

Part No.	Page
7Y-3958	199
	201
	203
	205
	213
7Y-3962	214
	215
	223
7Y-3963	194
	196
	198
	200
	202
	204
	214
	215
	223
7Y-3964	214
	223
7Y-3965	194
	196
	198
	200
	202
	204
	214
	223
7Y-3993	187
	190
	191
	192
	193
7Y-3995	185
	186
7Y-3996	185
	186
7Y-4528	324
	325
7Y-5272	313
7Y-5292	474
	475
	480
	481
7Y-5458	176
7Y-5464	176
7Y-6215	498
	499
	500
	501
	502
	503
7Y-8171	82
	83
	88
	89
	92
	93
	487
	489
	490
	491
7Y-8561	253
	254
7Y-8763	498
	499
	500
	501
	502
	503
7Y-9390	46
	47
	50
	51
7Y-9552	274
	275
	276
	277
	498
	499
	500
	501
	502
	503
8C-3111	449
8C-3309	381
8C-6354	217
8C-6959	56
	57
8C-8408	328
	329
	381
8C-8988	326
	327
8L-2779	56
	57
8M-2770	507
	508
	509
	510
	511
	512
	513
8M-2772	44
	96
	97
	100
	101
	108
	109
8N-0869	62
	63
	72
	73
8N-1725	62
	63
	72
	73
8P-5348	266
	267
8P-6364	488
	490
	491
8P-8540	96
8P-8540	97
	102
	103
	108
	109
	220
8R-2034	274
	275
	276
	277
8R-3857	43
	469
8T-0075	328
	329
8T-0151	326
	327
8T-0164	328
	329
	340
	341
	354
	355
	384
	385
8T-0286	62
	63
	72
	73
	363
8T-0287	82
	83
	86
	87
	88
	89
	92
	93
	231
8T-0288	382
	388
8T-0292	43
8T-0328	59
	60
	61
	62
	63
	70
	71
	72
	73
	82
	83
	86
	87
	88
	89
	92
	93
	231
	484
8T-0337	412
	420
	482

▲ PRIMARY REFERENCE

PART NUMBER INDEX

Part No.	Page
8T-0337	483
8T-0338	368
	369
	370
	371
8T-0343	415
	416
	417
8T-1158	415
	416
	417
8T-1159	313
8T-1686	368
	369
8T-1887	362
8T-1888	362
8T-1889	72
	73
	78
	79
8T-1890	72
	73
	78
	79
8T-2228	448
	450
8T-2922	390
8T-3283	391
8T-3426	310
	332
	333
	346
	347
	354
	355
	384
	385
	519
	528
	529
8T-3490	28
	29
	30
	31
	48
	49
	59
	96
	97
	104
	105
	110
	111
	242
	243
	244
	245
	246
	247
	248
	249
	250
	252

Part No.	Page
8T-3490	255
	256
	257
	258
	260
	263
	264
	265
	266
	267
	274
	275
	276
	277
	281
	286
	310
	368
	369
	379
	383
	469
	487
	488
	489
	490
	491
	498
	499
	500
	501
	502
	503
	504
	505
	516
	517
	518
8T-3597	274
	275
	276
	277
	290
	488
	490
	491
	498
	499
	500
	501
	502
	503
8T-3612	28
	29
	30
	31
	32
	33
	56
	57
	128
	129
	140

Part No.	Page
8T-3612	141
	152
	153
	164
	165
	178
	179
	255
	256
	257
	258
	266
	267
	368
	369
	372
	373
	488
	490
	491
	498
	499
	500
	501
	502
	503
	519
	530
	531
	532
	533
	534
	535
	537
8T-4121	25
	33
	37
	38
	44
	46
	47
	48
	49
	50
	51
	52
	53
	56
	57
	60
	61
	62
	63
	66
	67
	68
	69
	70
	71
	72
	73
	76
	77

▲ PRIMARY REFERENCE

PART NUMBER INDEX

Part No.	Page
8T-4121	78
	79
	82
	83
	86
	87
	88
	89
	92
	93
	96
	97
	100
	101
	108
	109
	112
	113
	126
	127
	130
	131
	136
	137
	154
	155
	162
	163
	180
	181
	218
	219
	221
	226
	284
	285
	286
	290
	310
	311
	318
	319
	320
	321
	322
	323
	328
	329
	332
	333
	334
	335
	336
	337
	338
	339
	342
	343
	344
	345
	348
	349
	352

Part No.	Page
8T-4121	353
	356
	357
	362
	363
	364
	365
	368
	369
	370
	371
	372
	373
	374
	375
	377
	379
	383
	384
	385
	410
	411
	412
	413
	419
	420
	421
	422
	423
	428
	487
	488
	490
	491
	504
	505
	507
	514
	522
	524
	525
	526
	527
	528
	529
	530
	531
	537
8T-4132	292
	436
	437
	439
	455
	457
8T-4133	33
	219
	253
	254
	415
	416
	417
	435
	445

Part No.	Page
8T-4133	446
	447
	462
	476
	477
	482
	483
8T-4134	484
8T-4136	25
	43
	48
	49
	50
	51
	56
	57
	59
	60
	61
	62
	63
	68
	69
	70
	71
	72
	73
	242
	243
	244
	245
	246
	247
	248
	249
	250
	251
	253
	254
	263
	264
	265
	310
	318
	319
	362
	364
	379
	410
	411
	412
	422
	423
	428
	467
	487
	488
	490
	491
	514
8T-4137	37
	38
	46

▲ PRIMARY REFERENCE

PART NUMBER INDEX

Part No.	Page
8T-4137	47
	52
	53
	59
	60
	61
	62
	63
	66
	67
	68
	69
	70
	71
	72
	73
	76
	77
	78
	79
	82
	83
	86
	87
	88
	89
	92
	93
	96
	97
	100
	101
	108
	109
	112
	113
	130
	131
	136
	137
	154
	155
	162
	163
	180
	181
	218
	219
	221
	242
	243
	244
	245
	246
	247
	248
	249
	257
	261
	262
	268
	269
	270
8T-4137	271
	272
	273
	280
	284
	290
	318
	319
	320
	321
	332
	333
	334
	335
	336
	337
	338
	339
	342
	343
	348
	349
	356
	357
	363
	365
	368
	369
	370
	371
	372
	373
	374
	375
	379
	383
	384
	385
	412
	413
	419
	436
	437
	438
	439
	440
	441
	442
	443
	444
	445
	446
	451
	468
	469
	487
	488
	504
	505
	507
	528
	529
	530
8T-4137	531
8T-4138	24
	28
	29
	30
	31
	41
	48
	49
	50
	51
	52
	53
	472
	473
	478
	479
	516
	517
	518
8T-4139	28
	29
	30
	31
	232
	290
	311
	322
	323
	468
	469
	486
	489
	490
	491
8T-4171	82
	83
	88
	89
	92
	93
	94
	95
	100
	101
	106
	107
	120
	121
	124
	125
	132
	133
	138
	139
	144
	145
	150
	151
	156
	157
	160
	161

▲ PRIMARY REFERENCE

PART NUMBER INDEX

Part No.	Page
8T-4171	168
	169
	172
	173
	474
	475
	480
	481
	484
	485
	505
	522
	536
8T-4172	445
	446
	462
8T-4173	292
	436
	437
	439
8T-4176	470
	471
8T-4178	322
	323
	435
	445
	446
	447
8T-4179	468
	469
	470
	471
8T-4182	263
	264
	265
	362
	422
	423
8T-4183	301
	324
	325
	468
	469
8T-4185	44
	309
8T-4186	264
	265
	309
8T-4189	13
	25
	28
	29
	30
	31
	36
	38
	40
	41
	128
	129
	134
	135
	140
8T-4189	141
	146
	147
	152
	153
	162
	163
	164
	165
	170
	171
	486
	489
	490
	491
	506
	507
	514
	515
	532
	533
	534
	535
8T-4191	48
	49
	52
	53
	60
	61
	66
	67
	68
	69
	70
	71
	76
	77
	78
	79
	112
	113
	126
	127
	244
	245
	246
	247
	290
	377
	412
	420
	421
	522
	524
	525
	526
	527
	530
	531
	537
8T-4192	384
	385
	424
8T-4192	467
	468
	469
	472
	473
	478
	479
	484
8T-4193	236
	516
	517
	518
	519
8T-4195	70
	71
	242
	243
	248
	249
	263
	264
	265
	322
	323
	328
	329
	404
	523
8T-4196	318
	319
	365
	413
	436
	437
	439
	442
	443
	444
8T-4197	22
	35
8T-4199	507
	508
	510
	512
8T-4200	13
	18
	19
	22
	28
	29
	30
	31
	32
	34
	92
	93
	266
	267
	332
	333
	336
	337
	348

▲ PRIMARY REFERENCE

PART NUMBER INDEX

Part No.	Page
8T-4200	349
	356
	357
	372
	373
	386
	387
	419
	449
	472
	473
	476
	477
	478
	479
	482
	483
	484
	485
	509
	511
	513
	520
	530
	531
	537
8T-4205	28
	29
	30
	31
8T-4223	28
	29
	30
	31
	222
	232
	233
	285
	286
	288
	289
	290
	291
	301
	311
	324
	325
	384
	385
	424
	467
	468
	469
	470
	471
	472
	473
	478
	479
	484
	486
	489
	490

Part No.	Page
8T-4223	491
8T-4224	27
	28
	29
	30
	31
	32
	33
	34
	38
	42
	48
	49
	50
	51
	68
	69
	78
	79
	128
	129
	134
	135
	140
	141
	146
	147
	152
	153
	162
	163
	164
	165
	170
	171
	180
	181
	242
	243
	248
	249
	322
	323
	332
	333
	336
	337
	346
	347
	348
	349
	356
	357
	376
	384
	385
	386
	387
	419
	449
	472
	473
	476

Part No.	Page
8T-4224	477
	478
	479
	482
	483
	484
	485
	486
	489
	490
	491
	506
	508
	509
	510
	511
	512
	513
	514
	520
	523
	524
	525
	526
	527
	530
	531
	532
	533
	534
	535
	537
	538
8T-4244	365
	436
	437
	438
8T-4779	455
	457
8T-4821	285
	286
8T-4908	28
	29
	30
	31
	32
	33
	42
	523
	538
8T-4910	288
	289
	291
8T-4956	28
	29
	30
	31
	233
	468
	469
	470
	471
	486

▲ PRIMARY REFERENCE

PART NUMBER INDEX

Part No.	Page
8T-4956	489
	490
	491
8T-4970	59
	62
	63
	66
	67
	72
	73
	92
	93
	130
	131
	136
	137
	142
	143
	148
	149
	154
	155
	162
	163
	166
	167
	172
	173
	448
	449
	486
	489
	490
	491
	507
	508
	509
	510
	511
	512
	513
8T-4971	448
	450
	518
8T-5005	72
	73
8T-5043	56
	57
8T-5050	318
	319
	322
	323
8T-5360	521
8T-5372	301
	302
	486
	489
	490
	491
8T-5439	282
8T-6338	320
	321
8T-6411	472
8T-6411	473
	474
	475
	478
	479
	480
	481
	482
	483
8T-6466	72
	73
	344
	345
	352
	353
8T-6685	435
	447
8T-6757	288
	289
	293
8T-6759	403
	415
	416
	417
8T-6842	549
	550
	551
8T-6868	470
	471
8T-6869	22
	27
	35
8T-6870	27
	332
	333
	336
	337
	346
	347
	356
	357
8T-6876	326
	327
8T-6912	22
	538
8T-7338	292
8T-7547	56
	57
	242
	243
	248
	249
	376
	538
8T-7963	472
	473
	478
	479
8T-7971	413
8T-8729	88
	89
	90
	91
8T-8729	92
	93
	182
	183
	185
	198
	199
	200
	210
8T-8737	46
	47
	50
	51
	52
	53
	82
	83
	88
	89
	92
	93
	185
	186
	187
	189
	190
	191
	192
	193
	194
	195
	196
	197
	198
	199
	200
	201
	202
	203
	204
	205
	206
	207
	208
	212
	213
	216
	217
	224
	225
	228
8T-8799	62
	63
	66
	67
	68
	69
	76
	77
	78
	79
8T-8874	62
	63

▲ PRIMARY REFERENCE

PART NUMBER INDEX

Part No.	Page
8T-8874	231
	490
	491
	498
	499
	500
	501
	502
	503
8T-8977	72
	73
8T-9005	244
	245
	246
	247
8T-9080	234
	235
8T-9381	521
8T-9534	390
8T-9636	187
	190
	191
	192
	193
8X-4245	498
	499
	500
	501
8Y-6967	522
	536
8Y-7452	387
9	
9B-7233	228
9F-2167	318
	319
	372
	373
9G-7641	228
	▲228
9G-8451	62
	63
	72
	73
9M-1974	43
9M-5590	416
	417
9M-5617	82
	83
	86
	87
	266
	267
9M-7959	59
9N-0869	180
	181
9R-2060	274
	275
	310
9R-2613	274
	275
	276
9R-2613	277
9R-2672	274
	275
	276
	277
	444
	469
9R-2821	28
	29
	30
	31
	274
	275
	276
	277
	436
	437
	439
	530
	531
9R-9359	33
	276
	277
9R-9866	276
	277
9S-4182	379
9S-4185	364
	370
	371
	383
9S-4190	310
9S-4191	330
	331
9S-8001	401
9S-8002	386
	387
9S-8004	401
9W-0844	46
	47
	52
	53
	188
	189
	190
	191
	192
	193
	195
	196
	198
	199
	200
	202
	203
	204
	212
	217
	342
	343
	344
	345
	352
	353
9W-0852	46
	47
	52
	53
	120
	121
	189
	190
	191
	192
	193
	195
	196
	198
	199
	200
	202
	203
	204
	210
	211
	212
	216
9W-1951	217
9X-0344	194
	198
9X-1813	216
9X-2032	506
9X-2042	474
	475
	480
	481
	522
	536
9X-2133	528
	529
9X-2616	412
	413
	419
	470
	471
9X-3402	216
9X-6165	56
	57
9X-6269	28
	29
	30
	31
9X-6581	363
9X-7391	237
9X-8256	24
	46
	47
	48
	49
	50
	51
	52
	53
	55
	59
	62
	63

▲ PRIMARY REFERENCE

PART NUMBER INDEX

Part No.	Page
9X-8256	66
	67
	68
	69
	72
	73
	76
	77
	78
	79
	80
	81
	82
	83
	86
	87
	88
	89
	92
	93
	94
	95
	100
	101
	106
	107
	116
	117
	118
	119
	120
	121
	124
	125
	128
	129
	130
	131
	132
	133
	134
	135
	136
	137
	138
	139
	140
	141
	142
	143
	144
	145
	146
	147
	148
	149
	150
	151
	152
	153
	154
	155
	156
9X-8256	157
	160
	161
	162
	163
	164
	165
	166
	167
	168
	169
	172
	173
	174
	175
	231
	266
	267
	448
	449
	450
	484
	485
	486
	489
	490
	491
	504
	505
	507
	508
	509
	510
	511
	512
	513
	518
	522
	523
	528
	529
	530
	531
	536
9X-8257	236
	365
	487
	488
	490
	491
9X-8488	222
9X-8912	285
	286

0

002-0639	303
004-6810	524
	525
006-6803	403
030-1707	62
	63
	72
030-1707	73
034-3679	528
	529
03510035	227
039-4818	406
067-2551	368
	369
081-5645	322
	323
085-6291	313
085-7081	403
085-7083	403
085-7085	403
085-9513	17
086-0299	282
087-4710	415
	416
	417
087-5708	415
	416
	417
091-3474	20
091-4537	92
	93
091-5928	463
091-8488	336
	337
091-9035	362
093-1429	442
	443
	444
	445
	446
093-1430	442
	443
	444
093-2069	152
	153
	162
	163
	164
	165
	174
	175
	221
093-5537	310
094-0876	406
094-2524	40
094-3627	17
094-4628	17
	19
095-0728	421
	476
	477
095-0735	82
	83
	88
	89
	92
	93
	98
	99
	102

▲ PRIMARY REFERENCE

PART NUMBER INDEX

Part No.	Page
095-0735	103
	108
	109
095-0736	59
	60
	61
	70
	71
	474
	475
	480
	481
095-0741	116
	117
	118
	119
095-0742	484
095-0843	48
	49
	50
	51
	422
	423
095-0936	415
	416
	417
095-1207	476
	477
	482
	483
	484
095-1260	415
	416
	417
095-1388	364
095-1390	28
	29
	30
	31
	364
095-1392	37
	320
	321
	322
	323
095-1393	37
	59
095-1512	414
095-1516	397
095-1519	310
	401
095-1521	380
095-1573	313
095-1574	234
	235
	239
	416
	417
095-1575	400
095-1576	317
	380
095-1578	234
	235
095-1578	380
	389
	390
	392
	393
	394
	395
	401
	416
	417
	418
095-1579	238
	239
	390
	391
	396
	397
	398
	399
	401
	402
	406
	418
095-1580	234
	235
095-1582	234
	235
	240
	380
	400
	402
	416
	417
	418
095-1583	317
095-1584	418
095-1585	240
	363
	378
	390
095-1586	401
	404
	406
095-1590	240
095-1595	240
	288
	289
095-1596	234
	235
095-1601	288
	289
095-1604	458
	459
095-1623	404
095-1657	293
095-1671	234
	235
095-1674	234
	235
095-1676	234
	235
095-1701	364
095-1706	425
095-1707	425
	426
	428
	430
095-1708	426
	428
	430
095-1709	424
	427
	429
	458
	459
095-1710	404
	424
	427
	429
095-1713	404
095-1716	238
095-1717	310
095-1725	234
	235
095-1750	404
095-1751	404
095-1777	472
	473
	478
	479
095-1781	240
095-4510	524
	525
	528
	529
095-4904	17
095-6974	54
095-7930	458
	459
095-7951	404
095-8051	404
095-8638	54
095-9230	422
	423
095-9397	404
095-9785	39
096-1628	406
096-2500	24
	41
096-2501	23
096-2617	407
	408
096-4498	406
096-4500	406
096-4544	414
096-4833	401
096-4837	463
096-5028	38
096-5382	238
096-5971	234
	235
096-6079	526
	527
	528
	529
096-6080	332

▲ PRIMARY REFERENCE

PART NUMBER INDEX

Part No.	Page
096-6080	333
	336
	337
	346
	347
	354
	355
096-6081	332
	333
	336
	337
	346
	347
	354
	355
096-6085	324
	325
	332
	333
	336
	337
	346
	347
	354
	355
	356
	357
	528
	529
096-6166	222
	412
	420
	421
096-8475	35
096-8829	54
096-8851	54
096-9278	132
	133
	138
	139
	144
	145
	150
	151
	156
	157
	160
	161
	168
	169
	172
	173
	178
	179
096-9532	25
099-0822	397
099-2374	401
099-2972	313
099-2975	313
099-3629	44
099-3645	566
099-6136	406
099-6137	415
099-6137	416
	417
099-6141	415
	416
	417
099-6144	415
	416
	417
099-6145	415
	416
	417
099-7197	234
	235
099-9137	406
1	
102-0818	402
	414
102-7965	194
	198
	202
102-8802	178
	179
	185
	195
	216
103-2529	197
	201
	210
103-9011	14
103-9247	14
103-9272	20
103-9273	20
103-9275	12
103-9725	24
103-9766	35
104-1218	12
104-2091	536
105-3480	530
	531
107-3136	190
	191
	192
	193
107-3667	18
107-6479	418
108-7516	120
	121
	342
	343
	344
	345
	352
	353
	360
	379
109-2356	80
	81
	84
	85
	90
	91
109-2356	519
110-5525	382
111-4816	194
	198
	202
111-4837	60
	61
	62
	63
	68
	69
	70
	71
	72
	73
111-7898	194
	198
	202
	212
111-7899	46
	47
	50
	51
	80
	81
	84
	85
	120
	121
	122
	480
	481
112-9401	58
112-9611	212
113-8490	98
	99
	102
	103
	110
	111
	178
	179
	197
	198
	205
113-8491	197
	198
	205
113-8492	198
	205
114-0623	404
114-2505	92
	93
114-8242	406
116-0118	112
	113
	448
	450
117-1878	209
	211
117-5015	11
118-4085	406
118-6054	563

▲ PRIMARY REFERENCE

PART NUMBER INDEX

Part No.	Page
118-8118	58
118-8119	58
119-3662	228
119-5026	80
	81
	84
	85
	90
	91
119-5388	415
	416
	417
119-5389	415
	416
	417
119-5391	415
	416
	417
119-5392	415
	416
	417
119-9868	68
	69
	78
	79
119-9895	62
	63
	72
	73
119-9896	80
	81
	86
	87
	92
	93
119-9937	455
	456
	457
120-0664	25
120-6285	567
	▲568
121-1023	66
	67
	76
	77
121-1029	66
	67
	76
	77
	515
121-3708	445
	446
	455
	456
	457
121-4480	58
122-8948	55
122-8949	55
123-2605	415
	416
	417
124-3548	197
	198
124-3548	205
124-4009	409
	410
124-4010	407
	408
124-9156	410
	411
	412
	413
	419
125-1646	538
125-1657	538
125-1907	402
125-1908	402
125-1909	402
125-1912	403
125-4840	202
125-5213	221
125-5252	257
	258
125-5292	221
125-5298	221
125-7358	419
125-7874	216
125-7875	216
126-1767	217
126-1774	216
126-1865	415
	416
	417
126-1866	415
	416
	417
126-2886	542
	543
	546
	547
126-2887	544
	545
126-2888	542
	543
	546
	547
126-2892	542
	543
	546
	547
126-2899	548
126-2900	546
	547
126-4710	528
	529
126-4714	524
	525
	528
	529
127-2170	532
	533
	534
	535
127-3924	472
	473
	478
127-3924	479
127-3925	474
	475
	480
	481
127-3926	474
	475
	480
	481
127-3928	472
	473
	478
	479
127-3929	472
	473
	478
	479
127-3930	472
	473
	478
	479
127-3931	472
	473
	478
	479
127-3932	472
	473
	478
	479
127-3940	474
	475
	480
	481
127-3944	472
	473
	478
	479
	480
	481
127-3947	476
	477
	482
	483
127-3948	476
	477
	482
	483
127-3958	484
127-3959	484
127-3961	484
127-3962	485
127-3990	485
127-3991	485
127-3997	484
127-3998	484
127-4000	484
127-4001	485
127-4003	485
127-4005	472
	473
	474
	475
	478

▲ PRIMARY REFERENCE

PART NUMBER INDEX

Part No.	Page
127-4005	479
	480
	481
127-4839	68
	69
	78
	79
	226
	311
128-2596	37
128-2955	15
128-2956	15
128-7714	187
	190
	191
	192
	193
	196
	200
	201
	204
	205
128-7747	311
128-8614	58
131-5818	415
	416
	417
131-5915	406
132-5789	46
	47
	52
	53
	66
	67
	68
	69
	76
	77
	78
	79
	120
	121
	126
	127
	180
	181
	524
	525
132-7616	472
	473
	478
	479
132-7622	484
132-7623	484
132-7624	484
132-7625	485
132-7626	484
132-7627	484
132-7628	484
132-7629	484
132-7640	406
132-7641	406
132-7642	406
132-7679	476
	477
	482
	483
132-8286	549
	550
	551
134-4126	230
134-4540	320
	321
134-7258	542
	543
134-7514	315
134-7515	315
135-8432	18
135-8956	406
135-9941	360
	379
	386
	387
136-0140	414
136-0141	414
136-0143	414
136-0145	414
136-0146	414
136-0147	414
136-0148	414
136-0149	414
136-0150	414
136-0151	414
136-0152	414
136-0155	414
136-0156	414
136-0157	414
136-0199	562
136-0207	318
	319
	528
	529
136-0230	485
136-0231	485
136-0232	485
136-0233	485
136-0234	485
136-0235	485
136-0237	485
136-0238	485
136-0258	474
	475
	480
	481
136-0259	485
137-9114	414
139-0850	22
139-4803	406
139-4804	406
139-4848	516
	517
	518
139-5057	389
	391
	392
	393
139-5057	394
	395
	396
	398
	399
	400
139-5075	390
	391
139-5077	380
139-5081	397
139-5082	397
139-5086	389
	393
	395
	396
	397
	398
139-5087	389
	393
	395
	396
	397
	398
139-5088	389
	393
	395
	396
	397
	398
139-6199	397
139-6200	397
139-6201	397
139-6204	390
	391
	392
	399
139-6205	390
	391
	392
	399
139-6206	390
	391
	392
	399
139-6208	390
	391
	392
	399
139-6214	400
139-6215	400
139-6216	400
139-6218	391
139-6220	380
139-6222	380
139-6223	380
139-6341	474
	475
	480
	481
139-6403	476
	477
	482
	483

▲ PRIMARY REFERENCE

PART NUMBER INDEX

Part No.	Page
139-6411	299
139-6444	391
	400
139-7309	390
	391
139-7325	234
	235
139-7816	55
139-7817	55
139-7818	55
140-3201	258
140-3246	507
	508
	509
	510
	511
	512
	513
140-3348	422
	423
140-3734	436
	437
	439
	442
	443
	444
	445
	446
	452
140-3750	425
140-4016	288
	289
140-4105	291
140-4236	28
	29
	30
	31
140-4237	30
	31
140-4238	28
	29
	30
	31
140-4276	322
	323
140-4763	28
	29
	30
	31
140-4780	440
	441
140-4828	288
	289
140-4986	291
140-5169	426
140-5622	398
140-5623	398
140-5624	398
140-5625	390
	398
141-2759	132
	133
	138
141-2759	139
	144
	145
	150
	151
	156
	157
	160
	161
	168
	169
	172
	173
	197
	198
	205
142-5546	412
	420
	421
142-9572	222
	223
143-2337	234
	235
143-2343	234
	235
143-2344	234
	235
143-2346	234
	235
143-2358	234
	235
144-0195	532
	533
	534
	535
144-9962	56
	57
	▲58
145-2237	332
	333
	336
	337
	346
	347
	354
	355
146-1058	28
	29
	30
	31
146-1086	427
146-1089	424
	425
	427
	429
146-2932	445
146-3916	427
146-3923	424
	427
	429
146-3957	424
	429
146-3958	424
146-3958	429
146-3969	424
	425
	426
	427
	428
	429
	430
146-4875	404
146-4877	404
146-7472	38
146-7473	38
146-8233	468
	469
147-4131	415
	416
	417
147-4221	415
	416
	417
147-7156	18
149-3516	58
149-7370	372
	373
149-7372	318
	319
	322
	323
	372
	373
149-7738	374
	375
150-0464	316
150-0467	316
150-0468	316
150-0469	316
150-0490	313
150-0502	312
150-0597	46
	47
	50
	51
150-0598	46
	47
	50
	51
150-0810	234
	235
150-0811	234
	235
150-0812	234
	235
150-0813	234
	235
150-0814	234
	235
150-0815	234
	235
150-0818	234
	235
150-0819	234
	235
150-0826	234

▲ PRIMARY REFERENCE

PART NUMBER INDEX

Part No.	Page
150-0826	235
150-0827	234
	235
150-0829	234
	235
150-0832	234
	235
150-0834	234
	235
150-0873	234
	235
150-0874	234
	235
150-0881	234
	235
150-0909	234
	235
150-2159	538
150-2161	538
150-2162	538
150-5697	436
	437
	438
	439
150-6766	216
150-8896	540
	541
150-8897	544
	545
151-1975	56
	57
151-4649	424
	429
152-2457	424
	429
153-2602	189
	190
	191
	192
	193
	195
	199
	203
153-2631	189
	190
	191
	192
	193
	195
	199
	203
153-5223	415
	416
	417
153-5656	62
	63
	72
	73
153-6087	238
153-6129	315
154-0779	560
154-2198	411
	▲419
154-2233	288
	289
154-2237	288
	289
154-2277	419
154-2302	365
155-0576	180
	181
155-2260	212
155-2270	185
	189
	190
	191
	192
	193
	195
	199
	203
	209
	216
155-7585	82
	83
	88
	89
	92
	93
156-1200	58
156-8845	318
	319
	332
	333
	336
	337
	346
	347
	354
	355
	384
	385
158-4676	300
158-4677	300
158-4678	300
158-4679	300
158-4680	300
158-4681	300
158-4682	300
158-4683	300
158-4684	299
158-4781	80
	81
	84
	85
	90
	91
	516
	517
	518
	519
158-7802	480
	481
158-7864	542
	543
159-9322	216
160-0614	56
	57
160-6822	542
	543
160-6824	542
	543
160-6832	540
	541
	544
	545
160-6841	542
	543
160-6854	540
	541
	544
	545
160-6858	542
	543
160-6883	542
	543
160-6885	563
160-6886	563
161-2539	120
	121
161-3932	86
	87
162-4578	410
	411
	412
	413
	▲414
162-4666	485
162-4852	472
	473
	478
	479
163-5382	309
163-6795	60
	61
	62
	63
	70
	71
	90
	91
	114
	115
	116
	117
	118
	119
	142
	143
	148
	149
	166
	167
	172
	173
	220
163-6803	194
	198
	202

▲ PRIMARY REFERENCE

PART NUMBER INDEX

Part No.	Page
163-6838	285
	286
163-7094	299
163-7145	565
163-7538	296
	298
	299
	▲299
163-7539	299
	▲300
165-1015	435
	▲378
165-1016	435
	▲458
	▲459
165-1026	458
	459
165-1028	458
	459
165-1034	458
	459
165-1035	458
	459
165-1036	458
	459
165-1040	458
	459
165-1041	458
	459
165-1042	458
	459
165-1044	458
	459
165-1045	458
	459
165-1051	458
	459
165-1055	458
	459
165-1060	458
	459
165-1061	458
	459
165-1062	458
	459
165-1063	458
	459
165-1064	458
	459
165-1065	458
	459
165-1066	458
	459
165-1067	458
	459
165-1068	458
	459
165-1069	458
	459
165-1070	458
	459
165-1071	458
	459
165-1072	458
	459
165-1073	458
	459
165-1074	458
	459
165-1075	458
	459
165-1076	458
	459
165-1077	458
	459
165-1078	458
	459
165-1079	458
	459
165-1080	458
	459
165-1094	378
165-1098	458
	459
165-1130	435
165-1134	378
165-5655	178
	179
165-9431	406
165-9438	406
165-9463	415
	416
	417
165-9464	416
	417
165-9551	415
	416
	417
165-9552	415
	416
	417
165-9553	415
	416
	417
165-9554	415
	416
	417
167-3487	202
167-3542	176
	194
	196
	198
	202
167-3543	176
	194
	196
	198
	202
167-3593	217
167-3631	213
168-3332	370
	371
169-1116	239
169-1130	239
169-1134	404
169-1135	404
169-1164	403
169-1168	403
169-1169	401
169-1170	401
169-1176	403
169-1177	403
169-1178	406
169-1180	382
169-1181	382
	388
	▲404
169-7815	313
169-7976	484
170-2986	116
	117
	118
	119
	154
	155
	158
	159
170-8763	237
	238
170-9997	418
171-0087	406
171-0414	568
171-0415	568
171-0416	568
171-0417	568
171-0418	568
171-0419	568
171-0420	568
171-0421	568
171-0422	568
171-0423	568
171-0684	406
171-4046	536
172-0679	364
172-1870	472
	473
	478
	479
172-2596	440
	441
172-2600	291
173-8248	462
174-5907	526
	527
174-7233	28
	29
	30
	31
175-1792	436
	437
	439
	445
	446
175-1793	436
	437
	439
	445
	446
175-1794	442

▲ PRIMARY REFERENCE

PART NUMBER INDEX

Part No.	Page
175-1794	443
	444
175-1795	442
	443
	444
175-4614	28
	29
	30
	31
175-4721	426
	428
	430
175-4723	425
	426
	427
175-4734	425
	426
	428
	430
176-8440	285
	286
176-8452	544
	545
176-8464	436
	437
	438
	442
	443
	444
176-8465	436
	437
	438
	442
	443
	444
176-8466	436
	437
	439
176-8467	436
	437
	439
181-1051	498
	499
183-1051	30
	31
	66
	67
	76
	77
	80
	81
	82
	83
	84
	85
	86
	87
	90
	91
	112
	113
	178
	179
183-1051	500
	501
	502
	503
	508
	509
	510
	511
	512
	513
	519
183-9438	403
183-9449	468
	469
183-9719	389
	392
	393
	394
	395
	396
	398
	399
183-9720	389
	391
	392
	393
	394
	395
	396
	398
	399
183-9723	389
	391
	392
	393
	394
	395
	396
	398
	399
	400
184-2184	299
184-2472	230
184-6299	286
185-1290	187
	190
	191
	192
	193
185-4229	297
	▲299
185-4232	377
185-8205	476
	477
	482
	483
185-9075	414
186-3735	46
	47
	48
	49
	50
	51
186-3735	80
	81
	82
	83
	90
	91
	178
	179
	184
	186
	187
	188
	189
	190
	191
	192
	193
	195
	196
	202
	203
	204
	206
	207
	208
	209
	211
	212
	213
	214
	215
	216
	223
	228
186-3736	46
	47
	50
	51
	120
	121
	185
	186
	187
	188
	189
	190
	191
	192
	193
	194
	195
	196
	197
	198
	199
	200
	201
	202
	203
	204
	205
	206
	207

▲ PRIMARY REFERENCE

PART NUMBER INDEX

Part No.	Page
186-3736	208
	209
	210
	214
	215
	216
	217
	224
	225
186-3792	508
	509
	510
	511
	512
	513
187-0661	549
	550
	551
187-6417	211
	212
187-6419	209
187-6421	209
	211
	212
187-6422	212
190-5386	542
	543
	566
191-0322	542
	543
	546
	547
191-0348	250
	251
	253
	254
191-0366	546
	547
191-4631	290
191-7503	311
191-7516	324
	325
	▲404
192-0614	187
	190
	191
	192
	193
192-0615	187
	190
	191
	192
	193
192-0638	428
	430
192-1134	234
	235
192-2385	334
	335
	350
	351
192-3161	334
	335
192-3161	350
	351
193-5330	404
193-7080	232
	▲232
193-7091	232
194-6377	421
	487
	488
	490
	491
194-7330	310
194-7361	284
195-3237	268
	269
	270
	271
	272
	273
195-8211	12
195-8220	12
195-8222	54
195-8237	11
195-8243	26
195-8256	21
	35
195-8324	20
195-8453	24
195-8497	227
195-8498	227
196-1270	390
196-3867	60
	61
	70
	71
196-3885	344
	345
	352
	353
196-3891	334
	335
	348
	349
	356
	357
196-4264	390
	398
196-4266	390
196-4267	390
196-4268	390
196-4269	390
196-4271	390
196-4272	390
196-4273	390
196-4274	390
196-4275	390
196-4276	390
196-4277	390
196-4278	390
196-4279	390
196-4280	390
196-4281	390
196-4282	390
196-4745	364
196-5221	390
	391
	400
197-0758	401
	402
197-3816	317
198-0851	218
	▲219
198-0852	219
	▲222
198-0853	219
198-4777	311
198-5389	178
	179
198-5646	436
	437
	438
198-8418	401
198-8419	401
198-8420	401
198-8423	401
199-0569	446
199-1148	425
199-2142	12
199-2178	227
199-2182	21
199-2201	20
199-2262	227
199-2356	224
199-5189	221
199-6941	334
	335
	340
	341
	348
	349
	354
	355
199-7926	419
2	
200-4597	552
	553
	554
	555
	556
	557
	558
	559
200-4602	508
	509
	510
	511
	512
	513
200-5125	178
	179
201-5348	379
201-9144	552
	553
	554

▲ PRIMARY REFERENCE

PART NUMBER INDEX

Part No.	Page
201-9144	555
	556
	557
	558
	559
202-0725	470
	471
202-6262	390
202-6272	390
	394
202-7174	234
	235
202-7187	234
	235
202-8804	380
	▲399
202-8805	380
	▲400
202-8810	380
202-8812	380
202-8813	380
202-9225	403
202-9226	403
202-9236	391
202-9237	391
202-9238	391
202-9239	391
202-9240	391
202-9241	391
202-9242	390
	391
	400
202-9243	390
	391
	400
203-1893	400
203-1894	400
203-1895	400
203-2864	445
	446
203-4433	474
	475
	480
	481
203-4440	472
	473
	478
	479
203-4445	474
	475
	480
	481
203-4449	472
	473
	478
	479
	▲484
	▲485
203-4454	474
	475
	480
	481
203-4455	474

Part No.	Page
203-4455	475
	480
	481
203-4456	474
	475
	480
	481
203-4457	476
	477
	482
	483
203-5391	474
	475
203-7171	446
204-1611	62
	63
	68
	69
	72
	73
	78
	79
	82
	83
	86
	87
	92
	93
204-1673	64
	65
	68
	69
	74
	75
	78
	79
	112
	113
204-6890	472
	473
	478
	479
205-0826	561
205-1363	294
	▲294
205-3869	384
	385
	▲402
205-5527	381
	▲382
205-6079	303
205-6883	311
205-7197	330
	331
	352
	353
	381
205-7460	185
	186
205-7461	185
	186
205-8257	178
	179

Part No.	Page
205-8913	410
	412
	▲415
205-8914	405
	▲406
206-2402	413
206-2403	413
206-2405	413
206-2406	413
206-5165	230
206-5208	178
	179
206-6085	334
	335
	338
	339
	350
	351
	358
	359
207-0211	472
	473
	478
	479
207-0785	515
207-0795	515
207-0797	515
207-0799	515
207-0800	515
207-1677	316
207-2575	313
207-2576	313
207-2579	313
207-2598	313
207-2600	313
207-2602	313
207-2603	313
207-2604	313
207-5262	180
	181
	▲230
207-6735	449
	450
207-7154	211
207-7156	211
207-7157	211
209-7838	476
	477
	482
	483
209-7840	476
	477
	482
	483
210-0686	326
	327
	348
	349
	356
	357
	362
210-1304	32
	33

▲ PRIMARY REFERENCE

PART NUMBER INDEX

Part No.	Page
210-2957	446
211-4646	342
	343
211-7455	515
211-9741	474
	475
	480
	481
212-0093	528
	529
	530
	531
212-0523	408
212-5118	300
212-5119	300
212-5120	300
212-5122	297
	▲298
212-5123	297
	▲298
212-5124	298
	▲300
212-6073	425
	426
	428
	430
212-7911	422
	423
213-3745	384
	385
214-6198	470
	471
215-1146	302
	490
	491
216-0397	380
	▲397
216-0568	524
	525
216-3247	332
	333
	334
	335
	336
	337
	340
	341
	346
	347
	348
	349
	354
	355
216-7244	429
216-7643	426
	428
	430
217-2447	370
	371
217-2456	383
217-3753	288
	289
217-3754	288
217-3754	289
217-9451	403
217-9452	403
217-9453	403
217-9456	403
218-3531	410
	411
	▲419
218-3532	419
218-3536	413
218-4736	274
	275
	276
	277
219-3146	550
	551
219-6314	230
219-7323	424
220-4000	446
221-0936	404
221-0937	404
221-0938	404
221-3525	363
221-5250	20
221-6723	390
222-0225	409
222-0668	515
	516
	517
	518
	519
222-3870	216
222-8201	23
222-8202	23
222-8212	23
224-3385	561
224-8367	432
	▲565
225-3697	310
225-5851	291
225-5852	291
226-0291	266
	267
226-0323	266
	267
226-9842	484
226-9843	472
	473
	478
	479
227-0620	310
228-6089	136
	137
	148
	149
	160
	161
	172
	173
229-1382	476
	477
	482
	483
230-0182	474
	475
	480
	481
230-4009	189
	190
	191
	192
	193
	195
	196
	199
	200
	203
	204
	206
	207
	208
230-4011	120
	121
	185
	186
	187
	188
	189
	190
	191
	192
	193
	195
	196
	197
	199
	200
	201
	203
	204
	205
	207
	208
	214
	215
	216
	342
	343
	344
	345
	352
	353
230-4013	189
	190
	191
	192
	193
	194
	196
	198
	200
	202
	204
	206
	207
	208

▲ PRIMARY REFERENCE

PART NUMBER INDEX

Part No.	Page
230-4013	210
	216
230-5008	194
	198
	202
	206
	217
230-5010	46
	47
	50
	51
	52
	53
	185
	186
	188
	190
	191
	192
	193
	195
	196
	197
	198
	199
	200
	201
	202
	203
	204
	205
	206
	207
	208
	224
	225
231-2295	195
	199
	203
231-2495	220
	▲223
231-2547	123
231-6724	370
	371
231-7924	197
	198
	205
231-7925	197
231-7926	197
231-9122	197
231-9769	431
	▲218
232-0419	241
	▲520
232-1416	384
	385
	▲403
232-2989	25
232-2991	25
232-4251	436
	437
	439
232-4255	435
232-4255	445
	446
232-4256	436
	437
	438
232-4273	436
	437
	439
	445
	446
232-4294	436
	437
	439
232-4832	48
	49
	50
	51
233-0098	187
	190
	191
	192
	193
233-0099	218
	▲222
233-0940	310
233-1321	522
233-2048	294
233-2096	366
	367
233-2836	376
233-2839	376
233-3918	448
233-3919	218
233-4065	59
233-4113	268
	269
	270
	271
	272
	273
	281
233-4921	450
233-4923	450
233-5471	20
233-5485	19
233-7305	307
	▲413
233-8366	187
	190
	191
	192
	193
233-8699	196
	197
	198
	200
	204
	205
	206
	207
	208
	214
	215
233-8699	216
233-8700	187
	190
	191
	192
	193
233-8701	196
	200
	204
233-8702	196
	200
	204
234-0388	25
234-0682	332
	333
	336
	337
234-0685	346
	347
	356
	357
234-0687	361
234-0699	370
	371
234-0862	365
234-1002	403
234-1003	403
234-2732	436
	437
	438
234-4807	27
234-4830	35
234-8956	293
234-8958	293
234-8959	293
234-8962	293
234-8967	288
	289
234-8973	288
234-8974	289
234-8978	288
	289
234-8982	288
	289
234-8983	288
	289
234-8984	288
	289
235-4959	35
235-4961	35
235-7959	561
235-8966	114
	115
	116
	117
	118
	119
	130
	131
	136
	137
	142
	143

▲ PRIMARY REFERENCE

PART NUMBER INDEX

Part No.	Page
235-8966	152
	153
	154
	155
	158
	159
	162
	163
	164
	165
	166
	167
	170
	171
	174
	175
	534
	535
236-1425	363
236-3257	310
236-3258	310
236-3259	310
236-9839	238
237-0127	288
	289
237-4406	368
	369
	370
	371
	▲418
237-6076	509
237-6091	318
	319
237-6095	326
	327
237-6120	424
	429
237-6124	424
	427
	429
237-6127	424
	429
237-6128	424
	429
237-6129	424
	429
237-6130	424
	429
237-6131	424
	429
237-6134	424
	427
	429
237-6135	424
	427
	429
237-6136	424
	427
	429
237-6137	424
	429
237-6139	428
237-7078	426

Part No.	Page
237-7078	428
	430
237-7080	428
	430
237-7081	428
	430
237-7082	428
	430
237-7083	428
	430
237-7084	428
	430
237-7085	428
	430
237-7086	426
	428
	430
237-7087	426
	428
	430
237-7088	426
	428
	430
237-7089	428
	430
237-7090	428
237-7091	424
237-7880	291
237-7899	425
237-7901	425
237-7902	425
237-7903	425
237-8337	426
237-8948	296
	297
	▲301
238-7886	295
	▲296
238-7887	295
	▲297
238-7889	296
	▲297
238-8283	15
238-8284	15
238-8285	15
238-9993	507
	508
	509
	510
	511
	512
	513
238-9994	508
	509
239-0000	96
	97
	104
	105
	110
	111
239-0390	364
239-0408	422
	423

Part No.	Page
239-0832	418
239-0833	418
239-0835	418
239-0836	418
239-1182	82
	83
	88
	89
	92
	93
	94
	95
	100
	101
	106
	107
	120
	121
239-1183	120
	121
239-1498	524
	525
239-1511	368
	369
239-3336	361
239-3740	332
	333
	336
	337
	346
	347
	354
	355
239-3750	336
	337
239-3753	356
	357
239-3757	340
	341
	354
	355
239-3778	334
	335
	338
	339
239-3779	342
	343
	344
	345
239-3780	334
	335
	338
	339
239-6387	482
	483
	504
	505
239-7356	195
	199
	203
239-7703	380
	▲396
239-7704	380

▲ PRIMARY REFERENCE

PART NUMBER INDEX

Part No.	Page
239-7704	▲398
239-9707	424
	429
240-0139	428
	430
240-0453	425
240-0454	28
	29
	30
	31
240-4063	463
240-4064	463
240-4077	460
	461
	▲462
240-4078	462
	▲463
240-4079	463
240-5084	288
	289
240-8128	436
	437
	438
240-8381	56
	57
240-9792	449
240-9794	448
	449
	450
240-9796	450
241-3061	365
241-3063	365
241-3064	365
241-3065	374
241-3066	374
241-3067	375
241-3068	375
241-3075	365
241-3076	363
	368
	369
241-3594	449
241-4478	365
241-4480	363
	368
	369
241-5564	453
	▲455
241-5565	455
241-5568	455
241-7923	455
	457
241-7924	455
	457
241-9211	468
	469
241-9215	454
	▲457
241-9216	457
241-9245	453
	▲456
241-9247	456
242-3757	474
242-3757	475
	480
	481
242-3759	474
	475
	480
	481
242-3766	474
	475
	480
	481
242-3767	472
	473
	478
	479
243-0820	472
	473
	478
	479
243-0822	472
	473
	478
	479
243-0891	474
	475
	480
	481
243-4505	80
	81
	90
	91
	120
	121
	182
	183
	184
	185
	186
	187
	188
	189
	190
	191
	192
	193
	195
	199
	203
	209
	211
	212
	214
	215
	216
	223
243-4506	46
	47
	50
	51
	80
	81
	88
	89
243-4506	92
	93
	180
	181
	194
	198
	202
	206
	207
	208
243-4507	90
	91
	211
	214
	215
	216
	217
	228
243-4508	46
	47
	52
	53
	82
	83
	88
	89
	92
	93
	185
	186
	195
	198
	199
	203
	206
	207
	208
	209
	210
	212
	213
243-4509	46
	47
	50
	51
	189
	190
	191
	192
	193
243-4510	185
	186
	195
	196
	198
	199
	200
	202
	203
	204
	206
	207
	208

▲ PRIMARY REFERENCE

PART NUMBER INDEX

Part No.	Page
244-5747	542
	543
	546
	547
245-2640	542
	543
245-6230	482
	483
	506
245-7842	407
	▲409
245-7843	409
245-7845	410
245-8014	334
	335
	348
	349
245-8595	334
	335
	338
	339
245-8596	330
	331
245-8666	474
	475
	480
	481
245-9398	520
246-0826	422
	423
246-6823	521
246-8372	435
	▲447
246-9947	379
246-9966	290
246-9977	474
	475
	480
	481
247-5086	32
	33
249-6899	196
	200
	204
250-2048	82
	83
	88
	89
	92
	93
	132
	133
	138
	139
	144
	145
	150
	151
	156
	157
	160
	161
	168
250-2048	169
	172
	173
250-3110	418
250-3111	418
250-3112	418
250-4776	20
251-4538	462
251-9845	426
252-0225	301
252-0226	301
253-5428	176
253-5649	195
	199
	203
253-6797	564
253-6804	194
	198
253-6936	549
	550
	551
254-6624	474
	475
254-6629	474
	475
	480
	481
254-6630	474
	475
	480
	481
254-6632	480
	481
254-6633	474
	475
	480
	481
254-6634	474
	475
	480
	481
254-8249	80
	81
	84
	85
	90
	91
255-0307	472
	473
	478
	479
255-0308	472
	473
	478
	479
255-0309	474
	475
	480
	481
256-0872	540
	541
257-3727	223
257-3728	223
258-0037	312
258-2111	282
	283
260-6313	484
260-6314	451
260-6342	287
	▲292
260-6400	300
264-7029	120
	121
	187
	188
	189
	195
	196
	197
	216
264-7030	189
	194
	196
	206
	216
264-7031	194
	206
264-7032	46
	47
	188
	195
	196
	197
	206
264-7033	195
264-7034	189
	195
	196
	206
265-8346	281
	▲283
265-8353	282
265-8356	283
265-8360	282
265-8405	242
	243
	248
	249
265-8406	244
	245
	246
	247
265-8409	242
	243
	248
	249
265-8460	253
	254
265-8463	244
	245
	248
	249
	253
	254
265-8466	242
	243

▲ PRIMARY REFERENCE

PART NUMBER INDEX

Part No.	Page
265-8467	242
	243
265-8500	250
	252
265-8503	260
265-8504	244
	245
	246
	247
265-8534	256
265-8535	256
265-8575	59
265-8577	59
265-8579	59
265-8632	310
265-8677	310
265-8712	445
	446
265-8713	425
	436
	437
	439
	452
265-8714	442
	443
	444
265-8715	445
265-8716	427
	428
	430
	446
265-8718	428
	430
266-1404	80
	81
	84
	85
	90
	91
266-1405	80
	81
	84
	85
	90
	91
266-1406	120
	121
266-3807	80
	81
	84
	85
	90
	91
266-3872	436
	437
	439
	442
	443
	444
266-4024	440
	441
266-4064	442
	443
266-4064	444
266-6935	187
	190
	191
	192
	193
	196
	200
	201
	204
	205
266-6936	82
	83
	88
	89
	92
	93
266-7379	28
	29
	30
	31
	50
	51
	62
	63
	64
	65
	66
	67
	74
	75
	76
	77
	80
	81
	86
	87
	90
	91
	92
	93
	94
	95
	100
	101
	106
	107
	112
	113
	124
	125
	126
	127
	128
	129
	130
	131
	134
	135
	136
	137
	140
	141
266-7379	146
	147
	152
	153
	162
	163
	164
	165
	174
	175
	184
	220
	364
266-8793	292
	▲293
266-8794	292
	▲293
267-1046	286
267-3330	405
	▲407
267-3331	405
	▲408
267-4035	334
	335
	340
	341
	348
	349
	354
	355
	360
267-4037	332
	333
	336
	337
	346
	347
	354
	355
267-4220	43
267-4379	25
267-4429	407
	408
267-4762	62
	63
267-4767	60
	61
	70
	71
267-7058	80
	81
	84
	85
	90
	91
267-7064	486
	489
	490
	491
267-7076	196
	200
	204
267-8100	324

▲ PRIMARY REFERENCE

PART NUMBER INDEX

Part No.	Page
267-8100	325
267-9950	80
	81
	84
	85
	▲228
267-9952	228
267-9973	187
	190
	191
	192
	193
	196
	200
	201
	204
	205
267-9977	187
	190
	191
	192
	193
	196
	200
	201
	204
	205
268-0254	46
	47
	50
	51
268-0761	46
	47
	50
	51
268-1964	82
	83
	92
	93
268-2522	514
	▲515
268-3014	407
	408
268-7307	363
269-5080	39
269-5090	28
	29
	30
	31
269-6105	43
269-7680	123
	502
	503
270-1989	43
270-2002	285
	286
270-2003	285
	286
270-5501	130
	131
	136
	137
	142
270-5501	143
	148
	149
	154
	155
	162
	163
	166
	167
	170
	171
270-6163	12
270-6165	12
270-6167	12
270-6170	15
270-6175	15
270-6178	17
270-6183	13
270-6185	13
270-6186	13
270-6187	13
270-6189	14
270-6190	14
270-6191	14
270-6192	14
270-6196	20
270-6197	20
270-6199	20
270-6200	20
270-6201	20
270-6203	11
	20
270-6204	22
270-6205	22
270-6209	22
270-6213	22
270-6214	22
270-6215	23
270-6217	23
270-6218	23
270-6219	18
270-6222	23
270-6224	11
270-6233	24
270-6234	24
270-6250	26
270-6251	26
270-6252	35
	▲36
270-6253	36
270-6255	36
270-6256	35
270-6257	35
270-6261	35
270-6265	41
270-6286	54
270-6337	27
270-6339	27
270-9488	263
271-2029	48
	49
	52
	53
271-7047	32
	33
271-7711	213
271-7712	213
271-7713	186
272-0445	15
272-4828	25
272-5714	416
	417
273-0461	540
	541
	▲566
273-9585	12
274-4201	401
274-4202	401
274-8781	514
274-9034	238
	▲239
275-0775	421
275-0776	421
275-3969	532
	533
	534
	535
275-6785	214
	215
275-6786	214
	215
275-7242	498
	499
	500
	501
275-9686	62
	63
	72
	73
276-1009	281
	▲566
276-1472	281
	▲39
276-2215	10
	▲226
276-3317	435
	▲563
276-3866	44
276-3867	44
276-3883	401
276-7364	463
276-9256	250
	252
276-9257	242
	243
	248
	249
276-9258	244
	245
	246
	247
276-9277	250
	251
276-9278	250
	251
276-9284	257

▲ PRIMARY REFERENCE

PART NUMBER INDEX

Part No.	Page
276-9284	260
277-1873	334
	335
	338
	339
	526
	527
277-3432	434
	▲435
277-4196	293
277-4197	293
277-6882	540
	541
277-8147	10
	▲44
277-8580	44
278-1585	566
278-2145	68
	69
	78
	79
278-4149	44
278-4150	44
278-4153	44
278-4557	434
	▲435
278-8633	424
	429
279-4706	234
	235
279-4730	318
	319
	326
	327
279-4731	318
	319
	326
	327
279-4732	318
	319
	326
	327
279-4733	318
	319
	326
	327
279-4734	326
	327
	363
	368
	369
279-4735	318
	319
	326
	327
	370
	371
279-4736	318
	319
	326
	327
	363
	368
279-4736	369
279-4737	318
	319
	326
	327
	370
	371
279-4738	318
	319
	326
	327
279-7940	427
279-9095	293
279-9304	542
	543
279-9311	542
	543
280-2313	293
280-2357	237
280-2358	237
280-2360	237
280-2361	237
280-2362	237
280-2363	237
280-2364	238
280-2365	238
280-2367	238
280-2368	238
280-2405	238
280-3097	234
	235
280-3098	234
	235
280-3100	234
	235
280-3101	234
	235
280-3102	234
	235
280-3103	234
	235
280-3105	234
	235
280-3106	234
	235
280-3107	234
	235
280-3108	234
	235
280-3109	234
	235
280-3110	234
	235
280-3111	234
	235
280-3112	234
	235
280-3113	234
	235
280-3114	234
	235
280-3116	234
	235
280-3118	234
	235
280-3721	9
	▲25
280-3724	8
	▲22
280-3725	8
	▲23
280-3730	9
	▲35
280-3736	9
	▲226
280-3739	11
280-3740	11
280-3741	11
280-3743	25
280-3747	22
280-3748	22
280-3749	23
280-3751	18
280-3754	35
280-3769	54
280-3770	54
280-3771	54
280-3774	54
280-3775	54
280-3777	55
280-3778	55
280-3779	55
280-3782	55
280-3783	55
280-3784	226
280-3786	227
280-3787	227
280-3788	27
280-3790	27
280-3805	25
281-1159	474
	475
	480
	481
281-3849	462
281-5483	480
	481
281-8596	516
	517
	518
	519
281-8600	515
281-8607	515
281-8618	515
281-8619	515
281-8630	515
281-8631	515
281-8637	515
281-8700	52
	53
281-8702	48
	49
282-0977	288
	289
282-0979	288
	289

▲ PRIMARY REFERENCE

PART NUMBER INDEX

Part No.	Page
282-0980	288
	289
282-1523	408
	▲410
282-1524	410
282-1656	43
282-8561	15
282-8562	15
282-8563	15
282-8568	24
282-8569	24
282-8570	24
282-8573	24
282-8590	41
282-8615	54
282-9317	386
	387
	▲388
282-9676	48
	49
282-9679	470
	471
283-0529	43
283-1253	8
	▲11
283-1255	8
	▲15
283-1256	15
283-1257	15
283-1261	15
283-1262	15
283-1263	8
	▲16
283-1264	16
283-1265	16
283-1266	16
283-1267	16
283-1269	16
	▲17
283-1270	8
	▲19
283-1271	19
283-1272	8
	▲13
283-1273	13
	▲14
283-1274	13
283-1275	8
	▲21
283-1277	21
283-1278	21
283-1279	8
	▲20
283-1280	20
283-1281	8
	▲18
283-1282	18
283-1283	8
	▲23
283-1284	23
283-1286	8
	▲18
283-1287	18
283-1289	9
	▲24
283-1291	24
283-1297	9
	▲41
283-1298	41
283-1299	9
	▲40
283-1300	40
283-1301	40
283-1302	9
	▲54
283-1304	54
283-1305	54
283-1306	9
	▲55
283-1307	55
283-1308	55
283-1309	9
	▲227
283-1310	227
283-1311	9
	▲224
283-1312	224
283-3184	54
283-4103	41
283-4163	285
283-4708	48
	49
	52
	53
283-4709	48
	49
	52
	53
283-4710	48
	49
283-4711	48
	49
	52
	53
283-6293	515
283-8827	542
	543
	546
	547
283-9600	44
283-9603	267
	494
	495
284-0838	515
284-0839	515
284-0840	515
284-3838	448
	449
	450
284-4992	43
284-6392	446
284-7401	407
284-9137	566
285-6278	211
	212
	480
285-6278	481
285-6906	486
	489
285-6907	486
	489
285-7033	43
285-7674	267
285-7677	267
285-7702	250
	251
285-7703	242
	243
	248
	249
285-8286	411
	▲421
285-8918	515
	516
	517
	518
	519
285-8923	195
	199
286-0038	27
286-2250	10
	▲27
286-2304	342
	343
	344
	345
	352
	353
286-2305	120
	121
	379
286-2317	342
	343
	344
	345
	352
	353
286-2318	120
	121
	379
287-4636	43
287-7432	287
	▲287
287-7433	287
	▲288
287-7434	287
	▲289
287-8552	542
	543
288-0267	381
288-3909	562
288-6899	234
	235
288-6900	234
	235
288-6901	234
	235
288-8576	35
288-8587	122

▲ PRIMARY REFERENCE

PART NUMBER INDEX

Part No.	Page
289-3139	122
289-3163	422
	423
289-7445	27
289-8776	552
	553
	554
	555
	556
	557
	558
	559
290-0230	388
290-8310	515
291-0753	28
	29
291-9334	544
	545
	546
	547
291-9335	136
	137
	148
	149
	160
	161
	172
	173
291-9339	136
	137
	148
	149
	160
	161
	172
	173
292-6666	46
	47
	50
	51
292-8504	28
	29
	30
	31
294-7869	427
295-3943	287
	▲290
295-3944	290
295-3945	290
295-3955	1
	▲287
295-3959	232
	▲236
295-3960	232
	▲233
295-3961	1
	▲433
295-3966	433
	▲451
295-5806	464
	▲521
295-8643	433
	▲422
295-8643	▲423
295-9328	433
	▲377
295-9329	1
	▲304
295-9330	304
	▲379
295-9332	304
	▲318
	▲319
295-9333	304
	▲364
295-9335	304
	▲332
	▲333
	▲334
	▲335
295-9336	304
	▲328
	▲329
	▲330
	▲331
295-9337	431
	▲376
295-9338	432
	▲374
295-9339	432
	▲365
295-9340	432
	▲375
295-9343	▲307
295-9345	307
	▲362
	▲363
295-9365	304
	▲311
295-9366	311
	▲312
295-9368	379
	▲380
295-9369	236
	▲237
295-9370	233
	▲234
	▲235
295-9371	431
	▲424
295-9372	433
	▲427
295-9375	432
295-9741	305
	306
	▲384
296-0219	248
	249
296-1052	363
296-1565	318
	319
296-1569	318
	319
296-1573	318
	319
	362
296-1575	318
	319
296-1579	362
296-1599	241
	▲282
296-1602	241
	▲263
296-1603	465
	466
	▲264
	▲265
296-1605	465
	▲257
296-1607	241
	▲242
	▲243
	▲244
	▲245
296-1610	241
	▲59
296-1614	304
	▲309
296-1617	241
	▲280
296-1619	241
	▲56
	▲57
296-1622	464
	▲486
	▲487
296-1626	▲281
296-1661	59
296-1665	59
296-1668	59
296-1690	310
296-1693	310
296-1712	244
	245
	248
	249
296-1714	242
	243
	248
	249
296-1750	248
	249
296-1751	248
	249
296-1762	244
	245
	248
	249
296-1763	244
	245
	248
	249
296-1768	2
	3
	▲469
296-1769	241
	▲284
296-1771	▲1
296-1803	1

▲ PRIMARY REFERENCE

PART NUMBER INDEX

Part No.	Page
296-1803	▲241
296-1806	1
	▲232
296-1809	1
	▲431
296-1812	1
	▲433
296-1947	241
	▲60
	▲61
	▲62
	▲63
	▲64
	▲65
	▲66
	▲67
	▲68
	▲69
296-1948	241
	▲448
296-1949	464
	▲80
	▲81
	▲82
	▲83
296-1950	464
	▲507
296-1952	431
	▲450
296-1953	431
	▲449
296-1954	431
	▲112
	▲113
296-2599	1
	▲10
296-4436	431
	▲436
	▲437
296-4437	436
	437
296-4439	▲432
296-4440	▲432
296-6133	241
	▲464
296-6893	241
	▲261
296-6894	241
	466
	▲268
	▲269
	▲270
	▲271
	▲272
	▲273
296-6895	268
	269
	270
	271
	272
	273
	▲274
	▲275
296-6895	▲276
	▲277
296-6896	241
	▲303
296-6901	241
296-7440	241
	▲540
	▲541
	▲542
	▲543
	▲544
	▲545
	▲546
	▲547
296-7894	377
296-7895	377
296-8012	274
	275
	276
	277
297-1349	326
	327
297-1350	326
	327
297-1351	326
	327
297-1352	326
	327
297-1354	326
	327
297-1363	363
297-2936	274
	275
297-3003	383
	▲401
297-3348	274
	275
	276
	277
297-4027	311
297-4029	10
	▲28
	▲29
297-4033	10
	▲38
297-4034	10
	▲37
297-4667	▲464
297-4668	464
	▲468
297-6472	322
	323
297-6473	322
	323
297-6474	320
	321
297-6475	320
	321
297-6479	322
	323
297-6481	322
	323
297-6485	322
297-6485	323
297-6490	320
	321
297-6492	10
	▲285
297-6525	507
297-6528	507
297-7464	▲38
297-8537	464
	▲410
297-8540	305
	306
	307
	▲548
297-9106	521
297-9109	261
297-9110	261
	262
297-9118	274
	275
297-9386	281
297-9387	281
297-9390	56
	57
297-9448	469
297-9494	257
297-9509	255
	256
297-9511	255
	256
297-9523	244
	245
	246
	247
298-0663	68
	69
	70
	71
	78
	79
	526
	527
	528
	529
298-2136	540
	541
298-2147	544
	545
298-2151	432
	▲442
298-2152	442
298-2154	432
	▲444
298-2155	444
298-2156	444
298-2276	540
	541
298-2342	30
	31
298-3494	62
	63
	72
	73

▲ PRIMARY REFERENCE

PART NUMBER INDEX

Part No.	Page
298-4919	379
298-5000	28
	29
	30
	31
298-5070	422
	423
298-5208	468
	469
298-5213	468
	469
298-5299	468
	469
298-5780	384
	385
298-5781	384
	385
298-6241	487
	488
298-6242	486
298-7648	334
	335
	338
	339
	350
	351
	358
	359
298-7649	330
	331
298-7650	332
	333
	346
	347
	▲381
298-7651	328
	329
298-7652	330
	331
298-7654	330
	331
298-7656	330
	331
299-0052	346
	347
	356
	357
299-2122	334
	335
	350
	351
299-2124	346
	347
	354
	355
299-2128	332
	333
	336
	337
	346
	347
	354
	355
299-2129	332
	333
	336
	337
	346
	347
	354
	355
299-3782	42
299-3784	42
299-3861	436
	437
	438
	439
299-7766	431
	▲426
3	
300-2805	▲567
300-4284	56
	57
300-4290	263
	264
	265
300-4291	263
	264
	265
300-4295	263
	▲266
300-4296	266
300-4297	266
300-4302	266
300-4305	266
300-4306	266
300-4307	266
300-4308	266
300-4314	280
300-4316	281
300-4317	281
300-4318	281
300-4319	280
300-4321	128
	129
	134
	135
	140
	141
	146
	147
	152
	153
	162
	163
	164
	165
	170
	171
300-4322	59
300-4326	59
300-4327	59
300-4328	59
300-4329	59
300-4330	309
	▲310
300-4331	310
300-4337	310
300-4338	310
300-4339	310
300-4340	242
	243
	▲253
300-4341	253
	▲255
300-4342	255
300-4343	244
	245
	▲257
300-4344	257
300-4345	257
300-4346	257
300-4348	244
	245
	246
	247
300-4349	244
	245
	246
	247
300-4368	257
300-4380	242
	243
	▲250
300-4381	250
300-4382	242
	243
	246
	247
	▲260
300-4383	260
300-4395	257
300-4399	59
302-2662	62
	63
	72
	73
302-2787	422
	423
302-2792	422
	423
302-4124	366
	367
302-5495	330
	331
302-5564	334
	335
	340
	341
	348
	349
	354
	355
302-5571	348
	349
	356
	357

▲ PRIMARY REFERENCE

PART NUMBER INDEX

Part No.	Page
302-6607	304
	▲324
	▲325
302-6715	80
	81
	88
	89
	92
	93
302-7767	516
	517
	518
	519
303-1450	313
303-2581	43
303-4110	379
304-0249	328
	329
	338
	339
	358
	359
304-3524	425
304-3525	425
304-3526	425
304-7196	310
304-9280	328
	329
305-1529	518
305-1873	516
	517
	518
	519
305-1874	516
	517
	518
305-2500	285
	286
305-2504	516
	517
	518
	519
305-5826	274
	275
	276
	277
305-5828	274
	275
	276
	277
305-7224	80
	81
	84
	85
305-7871	332
	333
	336
	337
	348
	349
	356
	357
305-8237	261
305-8237	262
305-8238	261
	262
305-8239	261
	262
305-8244	274
	275
	276
	277
305-8250	268
	269
	270
	271
	272
	273
305-9409	466
	▲50
	▲51
	▲52
	▲53
306-1030	307
	▲176
306-1645	332
	333
	346
	347
306-1708	464
	▲514
306-1710	514
306-1712	464
	▲405
306-1716	464
	▲467
306-2230	62
	63
	72
	73
306-2231	62
	63
306-2232	60
	61
	▲185
306-2242	112
	113
306-2248	80
	81
	86
	87
	92
	93
306-4349	311
306-5212	442
	443
	444
306-5213	442
	443
	444
306-5291	330
	331
306-5293	346
	347
	356
	357
306-5733	28
	29
306-5734	28
	29
	30
	31
306-5735	28
	29
	30
	31
306-5738	38
306-6669	328
	329
	▲383
306-6672	383
306-7254	66
	67
	76
	77
306-7256	66
	67
	76
	77
306-7306	433
	▲445
306-7307	445
306-7308	445
306-7310	445
	446
306-7312	445
	446
306-7314	445
	446
306-7324	436
	437
	439
306-7325	436
	437
	439
306-7326	436
	437
	439
306-7330	431
	▲440
306-7768	320
	321
306-7793	486
	489
	490
	491
306-7796	486
306-7797	486
306-7798	301
	486
306-7799	486
	489
306-7800	486
	489
306-7801	486
	489
306-7802	486
	489
306-7803	487

▲ PRIMARY REFERENCE

PART NUMBER INDEX

Part No.	Page
306-7804	487
306-7805	487
306-7812	492
	493
	494
	495
306-7820	469
306-7824	486
306-7827	516
	517
	518
306-7933	426
306-8526	72
	73
	78
	79
306-9039	80
	81
306-9639	426
306-9640	426
306-9642	425
	426
306-9643	426
306-9644	426
307-1419	360
307-1746	411
	▲416
	▲417
307-3453	45
	466
	▲360
307-4125	324
	325
307-4126	384
	385
307-6002	2
	3
	4
	5
	6
	7
	▲370
	▲371
	▲372
	▲373
307-6003	2
	3
	4
	5
	6
	7
	▲366
	▲367
	▲368
	▲369
307-6004	2
	3
	4
	6
	▲342
	▲343
307-6392	304
	▲326
307-6392	▲327
307-6394	304
	▲320
	▲321
	▲322
	▲323
307-6397	▲305
307-6399	305
	306
	▲346
	▲347
	▲348
	▲349
	▲350
	▲351
307-8500	436
	437
	438
307-8502	440
307-8503	▲2
307-8504	▲4
	▲5
307-8505	446
307-8506	446
307-8508	2
	3
	4
	5
	6
	7
	▲446
307-8509	▲453
307-8510	▲454
307-8511	▲453
307-8512	▲460
307-8513	▲434
307-8514	▲434
307-8613	274
	275
307-8615	274
	275
	276
	277
307-8622	261
	262
307-8628	261
307-8885	10
	▲42
307-9113	42
307-9114	42
307-9115	466
	▲286
307-9222	▲218
307-9224	▲220
307-9226	▲45
307-9227	45
	▲46
	▲47
	▲48
	▲49
307-9228	2
	▲508
307-9229	2
307-9229	3
	▲94
	▲95
	▲96
	▲97
	▲98
	▲99
307-9230	2
	3
	▲114
	▲115
307-9231	2
	3
	▲221
307-9232	4
	▲510
307-9233	4
	6
	▲100
	▲101
	▲102
	▲103
	▲104
	▲105
307-9234	4
	6
	▲116
	▲117
307-9235	4
	5
	6
	7
	▲221
307-9236	▲122
307-9237	▲308
307-9238	▲177
307-9362	38
308-1159	42
308-1781	37
308-1786	37
308-2798	564
308-2830	287
	▲291
308-2831	▲294
308-2832	▲295
308-2833	▲295
308-2834	▲296
308-3147	360
308-3155	376
308-3156	376
308-3157	374
	375
308-3158	374
	375
308-3159	365
308-3160	365
308-3161	363
308-3162	363
308-3163	363
308-3577	544
	545
	546
	547

▲ PRIMARY REFERENCE

PART NUMBER INDEX

Part No.	Page
308-3579	376
308-3580	376
308-3948	307
	▲361
308-4111	465
	▲549
308-4112	466
	▲550
	▲551
308-4113	2
	▲552
	▲553
308-4114	4
	5
	▲556
	▲557
308-4116	▲560
308-4117	▲465
308-4118	▲466
308-4119	465
	▲470
308-4120	361
308-4576	516
308-4617	401
308-4631	465
	466
	▲34
308-6182	128
	129
	134
	135
	140
	141
	146
	147
	152
	153
	162
	163
	164
	165
	174
	175
	▲229
308-7814	2
	3
	4
	5
	6
	7
	▲429
308-7815	2
	3
	4
	5
	6
	7
	▲430
308-9553	552
	553
	554
	555
	556
308-9553	557
	558
	559
308-9559	2
	4
	5
	▲224
308-9562	307
	▲564
308-9564	386
308-9565	368
	369
308-9567	368
	369
308-9568	342
	343
	344
	345
	352
	353
309-0168	465
	▲532
	▲533
309-0245	368
	369
309-0247	368
	369
309-0248	368
	369
309-0249	368
	369
309-0250	368
	369
309-0251	368
	369
309-0334	264
	265
309-0336	264
	265
309-0339	264
	265
309-0340	264
	265
	▲267
309-0341	267
309-0342	267
309-0347	246
	247
	257
	▲258
309-0348	258
	▲258
309-0349	258
309-0353	258
	▲259
309-0354	259
309-0356	258
309-0358	258
309-0378	486
	▲492
	▲493
309-0379	492
	493
309-0379	▲498
	▲499
309-0419	468
309-0420	469
309-0421	469
309-0423	468
	469
309-0424	468
309-0425	467
309-0429	467
309-0678	470
	▲472
	▲473
	▲474
	▲475
	▲476
	▲477
309-1449	112
	113
	▲210
309-1453	308
	▲411
309-1465	177
	▲518
309-1560	48
	49
309-1561	46
	47
309-2533	18
309-3611	508
	510
	511
309-3612	508
309-3613	508
	509
	510
	511
	512
	513
309-3615	308
	▲120
	▲121
309-3616	177
	▲178
	▲179
	▲180
	▲181
309-3617	120
	121
309-3618	178
	179
	▲216
309-3619	178
	179
309-5674	432
	▲428
309-5675	433
	▲425
309-5679	426
	428
	430
309-5680	426
	428

▲ PRIMARY REFERENCE

PART NUMBER INDEX

Part No.	Page
309-5680	430
309-5706	229
309-9323	318
	319
310-1280	489
310-1381	45
	466
	▲516
	▲519
310-1826	516
	517
	518
	519
310-2290	177
	▲517
310-2295	178
	179
310-4026	▲177
310-4266	177
	▲561
310-4984	318
	319
310-4985	362
310-7492	465
	▲182
	▲183
310-8288	38
310-8780	425
	426
	428
	430
311-0586	436
	437
	439
311-0597	290
311-0598	552
	553
	556
	557
311-0599	552
	553
	556
	557
311-1031	424
	429
311-1069	466
	▲124
	▲125
	▲126
	▲127
311-3072	384
	385
	386
	387
311-4170	350
	351
311-4175	60
	61
	70
	71
311-4178	350
	351
	358
311-4178	359
311-4179	332
	333
	336
	337
311-4184	332
	333
	336
	337
	346
	347
	354
	355
311-4450	96
	97
	104
	105
	110
	111
311-4452	238
311-4508	552
	553
311-7401	540
	541
311-7402	540
	541
	544
	545
311-7411	326
	327
311-7412	326
	327
311-7413	326
	327
311-7414	326
	327
311-8011	328
	329
311-8012	342
	343
	▲386
311-8015	358
	359
311-8036	451
	▲452
311-8037	452
311-8429	318
	319
311-8431	318
	319
311-9569	324
	325
312-0706	318
	319
312-3641	50
	51
312-3729	370
	371
312-3731	370
	371
312-4506	374
	375
312-6332	220
312-7997	48
	49
	50
	51
312-8648	507
312-8654	334
	335
	338
	339
312-8655	334
	335
312-8656	334
	335
	338
	339
312-8657	334
	335
	338
	339
312-8658	334
	335
	338
	339
312-8659	334
	335
	338
	339
312-8660	332
	333
	336
	337
312-8661	332
	333
	336
	337
313-1104	350
	351
	354
	355
313-1105	350
	351
	358
	359
313-1106	350
	351
	358
	359
313-1108	350
	351
	358
	359
313-1109	350
	351
	358
	359
313-1111	346
	347
	354
	355
313-1112	346
	347
	354
	355

▲ PRIMARY REFERENCE

PART NUMBER INDEX

Part No.	Page
313-2787	328
	329
313-2789	334
	335
	350
	351
313-9305	268
	269
	270
	271
314-2258	▲441
314-2261	441
314-2844	62
	63
314-2868	60
	61
	70
	71
314-5291	234
	235
314-5907	▲304
314-6535	368
	369
314-7327	363
314-7377	427
314-7378	424
	429
314-7387	427
314-7713	238
314-7714	238
314-8865	364
314-8868	237
	▲238
314-8869	238
	▲240
314-8928	240
314-9352	239
314-9366	384
	385
314-9791	546
	547
314-9796	334
	335
	338
	339
	350
	351
	358
	359
315-0240	324
	325
315-0302	▲128
	▲129
	▲130
	▲131
	▲132
	▲133
315-0303	132
	133
	144
	145
	156
	157
315-0303	168
	169
	▲214
315-0305	142
	143
	148
	149
	166
	167
	172
	173
315-3358	43
315-4330	425
315-4335	380
	▲393
315-4336	380
	▲391
315-4337	380
	▲394
315-4338	380
	▲392
315-4339	380
	▲389
315-4340	380
	▲390
315-4341	380
	▲395
315-4342	380
315-6476	394
315-6477	394
315-6478	394
315-6479	394
315-6480	394
315-6481	394
315-6482	390
316-0803	436
	437
	439
316-0805	442
	443
	444
316-0807	442
	443
	444
316-0810	487
	488
316-0811	486
	489
	490
	491
316-0812	486
316-1533	522
316-2178	372
	373
316-2181	372
	373
316-4180	492
	493
	494
	495
316-4181	492
	493
	494
316-4181	495
316-4182	492
	493
	494
	495
316-4183	492
	493
	494
	495
	496
	497
316-4184	492
	493
	494
	495
	496
	497
316-4185	492
	493
	494
	495
	496
	497
316-4186	492
	493
	494
	495
	496
	497
316-4187	492
	493
	494
	495
	496
	497
316-4188	490
	491
316-6144	379
316-6167	422
	423
316-6171	422
	423
316-6173	422
	423
316-6176	422
	423
316-6857	451
316-7831	492
	493
	494
	495
316-7832	250
316-7833	260
316-7834	260
316-7835	260
316-7857	255
316-7858	255
316-7859	255
316-7860	255
	256
316-7862	250
	252
316-7863	250
316-7864	255
316-7867	258

▲ PRIMARY REFERENCE

PART NUMBER INDEX

Part No.	Page
316-7872	264
	265
316-8394	365
316-9714	544
	545
316-9966	492
	493
317-0047	516
	517
	518
317-0048	422
	423
317-0049	517
317-0073	465
	466
	▲521
317-0075	464
	▲504
317-0076	504
317-0078	504
	505
317-0865	334
	335
	350
	351
317-2442	328
	329
317-2443	328
	329
317-2444	330
	331
317-2462	268
	269
	270
	271
	272
	273
	342
	343
	344
	345
	352
	353
317-2466	60
	61
	▲187
	▲188
	▲189
317-2468	82
	83
	▲194
	▲195
	▲196
	▲197
317-2471	132
	133
	138
	139
	144
	145
	150
	151
	156
317-2471	157
	160
	161
	168
	169
	172
	173
	178
	179
	▲217
317-2472	128
	129
	140
	141
	152
	153
	164
	165
317-2475	▲140
	▲141
	▲142
	▲143
	▲144
	▲145
317-2476	▲152
	▲153
	▲154
	▲155
	▲156
	▲157
317-2477	211
	212
317-2478	▲164
	▲165
	▲166
	▲167
	▲168
	▲169
317-2481	94
	95
	▲206
317-2482	94
	95
	100
	101
	106
	107
	▲209
317-2483	221
317-2484	220
	▲223
317-2485	154
	155
	162
	163
	166
	167
	170
	171
317-2521	268
	269
317-2523	268
	269
317-2893	37
317-2897	34
317-2900	28
	29
	30
	31
317-2903	37
317-2962	68
	69
	78
	79
317-2967	465
	▲123
317-2969	123
	▲212
317-2970	508
	509
317-2972	114
	115
	▲211
317-2973	510
	512
317-2975	116
	117
	▲211
317-2976	100
	101
	▲207
317-2978	82
	83
	86
	87
317-2980	465
	▲84
	▲85
	▲86
	▲87
	▲88
	▲89
317-2981	88
	89
	▲198
	▲199
	▲200
	▲201
317-3000	322
	323
317-3003	322
	323
317-3004	322
	323
317-3005	322
	323
317-3042	318
	319
317-3043	318
	319
317-3044	318
	319
317-3045	318
	319
317-3537	410
	411

▲ PRIMARY REFERENCE

PART NUMBER INDEX

Part No.	Page
317-3537	412
317-3915	544
	545
	546
	547
317-4000	498
	499
	500
	501
317-4001	492
	493
	494
	495
	496
	497
317-4002	492
	493
	494
	495
	496
	497
317-4003	492
	493
	494
	495
	496
	497
317-4004	492
	493
	494
	495
	496
	497
317-4005	492
	493
	494
	495
	496
	497
317-4006	492
	493
	494
	495
	496
	497
317-4007	492
	493
	494
	495
317-4046	468
	469
317-4063	502
	503
317-4068	490
	491
317-4069	490
	491
317-4070	490
	491
317-4071	490
	491
317-4074	490
	491
317-4657	521
317-4917	517
317-7725	318
	319
317-7730	532
	533
317-7738	3
	▲554
	▲555
317-7739	6
	7
	▲558
	▲559
317-7741	554
	555
	558
	559
317-7746	552
	553
317-7766	342
	343
	344
	345
	352
	353
317-8450	281
317-8451	281
317-8453	56
	57
317-8456	56
	57
317-8457	280
	▲281
317-9207	509
	512
	513
317-9209	510
	511
317-9210	509
317-9211	512
	513
317-9219	130
	131
	142
	143
	154
	155
	166
	167
317-9220	352
	353
317-9593	430
317-9626	465
	▲522
317-9647	488
317-9648	488
317-9649	488
317-9652	489
317-9655	489
	▲494
	▲495
317-9658	494
	495
317-9658	▲500
	▲501
317-9663	505
317-9664	524
	525
	528
	529
317-9666	488
317-9672	425
317-9674	465
	▲488
	▲489
317-9709	428
317-9710	428
	430
318-0117	45
	466
	▲562
318-0118	384
	385
318-0119	465
	▲505
318-0148	465
	▲524
	▲525
318-0149	424
318-0150	424
	429
318-0151	424
318-0379	322
	323
318-0712	425
318-0714	425
318-0716	425
318-1631	426
318-1632	426
318-1700	506
318-1703	465
	▲506
318-1705	544
	545
318-1709	522
318-2187	524
	525
318-2215	522
318-2226	427
318-2227	427
318-2709	429
318-2710	429
318-2712	524
	525
318-2723	449
318-2732	182
	183
318-3395	494
	495
	496
	497
318-3396	494
	495
	496
	497
318-3397	430

▲ PRIMARY REFERENCE

PART NUMBER INDEX

Part No.	Page
318-3398	430
318-3570	449
318-4492	258
318-4493	259
318-4496	267
318-4497	267
318-9203	282
318-9213	28
	29
	▲32
318-9214	32
318-9215	32
318-9216	282
318-9906	522
318-9911	522
318-9914	522
319-1455	412
	420
319-1456	412
	420
319-1459	410
	411
	▲420
319-1464	460
	▲301
319-1465	301
319-1466	460
	▲302
319-1469	▲460
319-1517	32
319-1552	364
319-2757	10
	▲25
319-2758	25
319-2767	10
	▲43
319-2768	43
319-2769	282
319-3646	11
	▲12
319-3711	130
	131
	136
	137
	154
	155
	162
	163
319-3734	26
319-3766	334
	335
	338
	339
	350
	351
	358
	359
319-4471	229
	▲229
319-5605	1
	▲8
	▲9
319-5805	259
319-5806	259
319-6376	2
	3
	4
	5
	6
	7
	307
	▲438
	▲439
319-6377	438
319-6379	307
	▲443
319-6380	443
319-6382	556
	557
319-8364	268
	269
	270
	271
	272
	273
319-8365	270
	271
	272
	273
	342
	343
	344
	345
	352
	353
319-9110	342
	343
	344
	345
	352
	353
319-9343	268
	269
	270
	271
	272
	273
319-9344	268
	269
	270
	271
	272
	273
320-1022	21
320-3424	336
	337
320-7129	9
	▲26
320-9832	112
	113
320-9833	130
	131
	142
	143
	154
	155
320-9833	166
	167
321-0134	112
	113
321-6574	270
	271
	272
	273
321-7177	542
	543
	546
	547
321-8831	52
	53
321-8909	526
	527
322-0443	50
	51
322-2999	472
	473
322-3000	476
	477
	482
	483
322-3001	474
	475
	480
	481
322-3002	476
	477
	482
	483
322-3003	476
	477
	482
	483
322-3004	474
	475
	480
	481
322-3005	474
	475
	480
	481
322-3006	474
	475
	480
	481
322-3007	476
	477
	482
	483
322-3008	476
	477
	482
	483
322-3009	476
	477
	482
	483
322-3010	476
	477
	482

▲ PRIMARY REFERENCE

PART NUMBER INDEX

Part No.	Page
322-3010	483
322-3011	476
	477
	482
	483
322-3012	476
	477
	482
	483
322-3013	476
	477
322-3014	476
	477
	482
	483
322-3015	472
	473
	478
	479
322-3016	472
	473
322-3017	472
	473
	478
	479
322-3018	474
	475
	480
	481
322-3019	474
	475
	480
	481
322-3020	474
	475
	480
	481
322-3023	476
	477
	482
	483
322-4007	466
	▲523
322-4009	466
	▲536
322-4010	466
	▲526
	▲527
	▲528
	▲529
	▲530
	▲531
322-4012	466
	▲471
322-4013	471
	▲478
	▲479
	▲480
	▲481
	▲482
	▲483
322-4014	536
322-4015	536
322-4016	536
322-4851	429
322-8964	90
	91
322-9478	5
	7
	▲344
	▲345
322-9479	306
	307
	▲352
	▲353
322-9521	▲306
322-9852	257
323-1454	521
323-1998	276
	277
323-4187	312
	▲313
323-4188	313
323-4189	313
323-6464	344
	345
	352
	353
	▲387
323-6465	387
323-6961	496
	497
323-9684	312
	▲317
323-9685	312
	▲314
323-9686	312
	▲314
323-9687	312
	▲315
323-9688	312
	▲316
323-9690	312
323-9691	312
323-9692	312
323-9693	312
	▲316
323-9696	317
323-9697	317
323-9698	317
323-9699	317
323-9700	317
323-9701	314
323-9702	314
323-9703	314
323-9704	314
323-9705	314
323-9706	314
323-9707	314
323-9708	314
323-9709	314
323-9710	314
323-9712	314
323-9713	314
323-9714	314
323-9719	315
323-9720	315
323-9721	315
323-9722	315
323-9723	315
323-9724	315
323-9725	315
323-9726	316
323-9727	316
323-9728	316
323-9729	316
323-9730	316
323-9731	316
323-9734	317
323-9735	317
323-9740	317
323-9741	317
323-9742	317
323-9758	316
323-9759	316
323-9760	316
	317
323-9761	316
323-9762	316
323-9763	316
323-9764	316
324-2863	312
	▲317
324-2864	312
	▲313
324-2865	312
324-2866	312
324-2867	317
324-2873	317
324-2874	313
324-2875	313
324-6399	251
	▲252
324-6401	246
	247
	▲251
324-6491	252
324-6492	252
324-6493	252
324-6494	252
324-7084	496
	497
324-7085	496
	497
325-8719	90
	91
325-9878	213
325-9879	213
325-9880	213
325-9882	190
	191
	192
	193
325-9883	▲158
	▲159
	▲160
	▲161
	▲162
	▲163

▲ PRIMARY REFERENCE

PART NUMBER INDEX

Part No.	Page
325-9885	213
325-9887	124
	125
325-9888	231
325-9889	231
325-9890	231
325-9891	231
325-9892	231
325-9893	231
325-9894	231
325-9895	231
325-9896	231
325-9897	231
325-9903	511
	513
325-9912	5
	▲511
325-9913	92
	93
	▲202
	▲203
	▲204
	▲205
325-9914	466
	▲184
325-9915	184
325-9916	124
	125
	▲213
325-9917	5
	7
	▲106
	▲107
	▲108
	▲109
	▲110
	▲111
325-9918	5
	7
	▲118
	▲119
325-9921	186
	213
325-9922	213
325-9924	92
	93
325-9925	92
	93
325-9926	134
	135
	146
	147
	162
	163
	170
	171
325-9930	3
	6
	7
	▲225
325-9931	225
325-9936	92
	93
326-0907	262
326-1017	466
	▲70
	▲71
	▲72
	▲73
	▲74
	▲75
	▲76
	▲77
	▲78
	▲79
326-1673	523
326-1674	523
326-1675	523
326-1678	536
326-1687	523
326-1695	519
326-1696	490
	491
326-1697	466
	▲412
326-5033	461
326-6316	305
	▲336
	▲337
	▲338
	▲339
	▲340
	▲341
326-7151	466
	▲490
	▲491
326-7154	490
	491
326-7158	466
	▲90
	▲91
	▲92
	▲93
326-7159	231
326-7160	124
	125
326-7165	528
	529
326-7167	530
	531
326-7168	528
	529
326-7172	340
	341
	354
	355
326-7175	▲305
326-7176	▲306
326-7177	306
	307
	▲354
	▲355
	▲356
	▲357
	▲358
	▲359
326-7179	530
	531
326-7184	358
	359
326-7185	338
	339
	358
	359
326-7186	338
	339
	358
	359
326-7187	338
	339
	358
	359
326-7188	338
	339
	358
	359
326-7191	466
	▲534
	▲535
326-7192	528
	529
326-7193	530
	531
326-7194	526
	527
326-7197	490
	491
326-7198	490
	491
326-7199	490
	491
	▲496
	▲497
326-7200	496
	497
	▲502
	▲503
326-7202	490
	491
326-7215	530
	531
326-7216	530
	531
326-7220	490
	491
326-7221	490
	491
326-7226	538
326-7227	538
326-7228	538
326-7231	537
326-7247	286
326-7740	412
326-7743	412
326-7761	490
	491
326-7822	466
	▲538
326-9698	186

▲ PRIMARY REFERENCE

PART NUMBER INDEX

Part No.	Page
326-9702	124
	125
	▲231
326-9703	534
	535
326-9706	52
	53
326-9710	72
	73
326-9711	124
	125
326-9712	72
	73
326-9714	52
	53
327-0634	519
327-0637	519
327-0640	519
327-5019	490
	491
327-5020	490
	491
327-5553	496
	497
327-5554	496
	497
327-5555	496
	497
327-5556	496
	497
327-5557	496
	497
327-5560	496
	497
327-7232	496
	497
327-7634	▲134
	▲135
	▲136
	▲137
	▲138
	▲139
327-7635	▲146
	▲147
	▲148
	▲149
	▲150
	▲151
327-7636	▲170
	▲171
	▲172
	▲173
	▲174
	▲175
327-8231	496
	497
328-0427	231
328-1868	336
	337
	356
	357
	▲381
328-1869	306
328-1869	307
	▲385
329-0044	106
	107
	▲208
329-1082	33
329-1086	278
	279
329-1087	278
	279
329-1088	278
	279
329-1094	278
	279
329-1096	278
	279
329-1099	278
	279
329-1100	278
	279
329-2918	466
	▲537
329-2919	537
329-2920	537
329-3425	118
	119
	▲212
329-3429	3
	▲509
329-3430	6
	▲512
329-3441	70
	71
	▲190
	▲191
	▲192
	▲193
329-3442	70
	71
329-3450	70
	71
	▲186
329-4201	526
	527
329-4202	530
	531
329-4203	530
	531
329-4204	530
	531
329-8374	554
	555
	556
	557
	558
	559
330-3619	▲3
330-3620	▲6
	▲7
330-7026	554
	555
330-7092	546
	547
330-7093	552
	553
330-7094	552
	553
	556
	557
330-7095	556
	557
330-8855	554
	555
330-8856	554
	555
	558
	559
330-8857	558
	559
330-8879	542
	543
	546
	547
331-1437	446
331-7226	▲307
331-7241	256
331-7242	256
331-7243	466
	▲246
	▲247
	▲248
	▲249
331-7244	246
	247
	▲254
331-7245	254
	▲256
331-7246	256
331-9351	138
	139
	150
	151
	160
	161
	172
	173
	▲215
331-9355	158
	159
	174
	175
332-0041	▲461
332-0042	461
	▲302
332-0043	302
332-1249	530
	531
332-1250	530
	531
332-4161	478
	479
332-4162	480
	481
332-4164	480
	481
332-4449	30

▲ PRIMARY REFERENCE

PART NUMBER INDEX

Part No.	Page
332-4449	31
	▲33
332-4450	33
332-4451	33
332-4453	30
	31
332-4454	33
332-7931	480
	481
332-9141	480
	481
332-9142	478
	479
333-3117	52
	53
333-5236	338
	339
333-5238	358
	359
334-0626	272
	273
334-5510	466
	▲30
	▲31
334-5511	30
	31
334-6597	7
	▲513
334-6617	466
	▲278
	▲279
334-7158	466
	▲27
334-7192	466
	▲262

9

9490502450	54
9491300190	54

F

F315306000	26

H

HE2291097	455
	456
	457
HE2291098	455
	456
	457
HE2291099	455
	456
	457

Z

Z440100620	446

▲ PRIMARY REFERENCE

XEBP9520-02(10-2008)

Printed in JAPAN