SEBP5979-06
January 2014

RUTHZIL TRATOR COMERCIAL DE PEÇAS LTDA 11 97083-6812 ROLANDO

Parts Manual

304E Mini Hydraulic Excavator

TTN1-Up (Machine)

Product and Dealer Information

Note: For product identification plate locations, see the section “Product Identification Information” in the Operation and Maintenance Manual.

Delivery Date: _____

Product Information

Model: _____

Product Identification Number: _____

Engine Serial Number: _____

Transmission Serial Number: _____

Generator Serial Number: _____

Attachment Serial Numbers: _____

Attachment Information: _____

Customer Equipment Number: _____

Dealer Equipment Number: _____

Dealer Information

Name: _____ Branch: _____

Address: _____

_____

_____

	Dealer Contact	Phone Number	Hours
Sales:	_____	_____	_____
Parts:	_____	_____	_____
Service:	_____	_____	_____

MEMORANDA

TABLE OF CONTENTS

NAME	PAGE
GENERAL INFORMATION	**A4**
REPAIR ALTERNATIVES	**A7**
SUPPLEMENTAL COOLANT ADDITIVES	A8
MAINTENANCE PARTS	**A9**
INDEX	**A11**
MACHINE ARRANGEMENT	**1**
CHASSIS AR	1
COMMON AR	1
ENGINE ARRANGEMENT	**2**
ENGINE AR-COMPLETE	2
ENGINE AR-PRIMARY	3
INSTALLATION AR-ENGINE	5
BASIC ENGINE	**6**
BELT TENSIONER GP	6
CAMSHAFT GP	7
COVER GP-VALVE MECHANISM	8
CRANKSHAFT GP	9
CYLINDER BLOCK AS	11
CYLINDER BLOCK GP	12
CYLINDER HEAD AS	14
CYLINDER HEAD GP	15
DRAIN GP-ECOLOGY	17
DRAIN GP-ENGINE OIL	19
FLYWHEEL GP	20
GUARD GP-FAN	21
HOUSING GP-FRONT	23
LIFTING GP-ENGINE	25
MOUNTING GP-ENGINE	26
PAN GP-OIL	30
PISTON & ROD GP	31
PULLEY GP-FAN DRIVE	32
VALVE MECHANISM GP	33
LUBRICATION SYSTEM	**35**
FILLER GP-ENGINE OIL	35
FILTER GP-ENGINE OIL	36
GAUGE GP-OIL LEVEL (DIPSTICK)	37
PUMP GP-ENGINE OIL	38
COOLING SYSTEM	**39**
LINES GP-WATER	39
PUMP GP-WATER	40
RADIATOR & HYD OIL COOLER GP	41
AIR INLET AND EXHAUST SYSTEM	**44**
ACCESSORY GP-ENGINE	44
AIR CLEANER GP	45
EXTENSION GP-EXHAUST	47
LINES GP-AIR	48
MANIFOLD GP-EXHAUST	49
MANIFOLD GP-INLET	50
MUFFLER GP	51
FUEL SYSTEM	**52**
CONTROL AR-GOVERNOR	52
CONTROL GP-GOVERNOR	53
FILTER GP-WATER SEP & FUEL	55
GOVERNOR GP	56
LINES GP-FUEL	58
LINES GP-FUEL FILTER	59
LINES GP-FUEL INJECTION	62
NOZZLE GP-UNIT INJECTOR	63
PUMP GP-FUEL INJECTION	64
SHUTOFF GP-MANUAL	66
TANK & MTG GP-FUEL	67
ELECTRICAL AND STARTING SYSTEM	69
ALARM GP-TRAVEL	69
ALTERNATOR GP-CHARGING	71
BATTERY & WIRING GP	72
CONTROL & MTG GP-ELECTRONIC	81
ELECTRONICS GP-MACHINE	82
ELECTRONICS GP-MONITOR	82
GLOW PLUG GP	83
HARNESS AS-CONSOLE	84
HARNESS AS-CONTROL	88
HARNESS AS-QUICK COUPLER	88
HARNESS AS-SENSOR	88
HARNESS AS-SOLENOID	89
HEATER GP-JACKET WATER	90
LAMP GP-FLOOD	92
LIGHTING AR-FLOOD	93
LIGHTING GP-FLOOD	94
MOUNTING GP-ELECTRONIC CONTROL	98
STARTING MOTOR GP-ELECTRIC	99
SWITCH GP-ROTARY	100
WIRING GP-CAB	101
WIRING GP-CONSOLE	102
WIRING GP-ENGINE	116
WIRING GP-LIGHTING	117
WIRING GP-OVERLOAD WARNING	119
WIRING GP-QUICK COUPLER	120
WIRING GP-RELAY PANEL	121
POWER TRAIN	**123**
DRIVE GP-FINAL	123
MOTOR & MTG GP-TRAVEL	128
POWER TRAIN AR	129
SPROCKET GP	130
FRAME AND BODY	**131**
C-FRAME GP-POWER ANGLING	131

TABLE OF CONTENTS

NAME	PAGE
COUNTERWEIGHT GP	132
COVER AS	133
COVER GP-ACCESS	134
COVER GP-FENDER	136
COVER GP-SOUND SUPPRESSION	137
FENDER GP	139
FRAME GP-REAR	140
FRAME GP-SWING	145
FRAME GP-UPPER	146
GUARD GP-BOTTOM	147
GUARD GP-CYLINDER	148
GUARD GP-FRONT	150
HOOD & GUARD GP	152
HOOD AS	155
HOOD GP	156
LINES GP-GREASE	157
PLATE AS	158
STOP GP-SWING	159
SUPPRESSION AR-SOUND	160
SUPPRESSION GP-SOUND	161
UNDERCARRIAGE	**162**
FRAME GP-UNDERCARRIAGE	162
GEAR & BEARING GP-SWING	163
GUARD GP-TRACK GUIDE	164
IDLER GP-FRONT	165
LINK AS-TRACK	175
ROLLER AR-TRACK & CARRIER	176
ROLLER GP-TRACK CARRIER	177
ROLLER GP-TRACK-CENTER FLANGE	178
TRACK GP	179
UNDERCARRIAGE AR	181
HYDRAULIC SYSTEM	**182**
ACCUMULATOR GP-HYDRAULIC	182
CONTROL AR-AUXILIARY	189
CONTROL AR-COUPLER	190
CONTROL AR-HYDRAULIC	195
CONTROL AR-PILOT HYDRAULIC	195
CYLINDER GP-BLADE	196
CYLINDER GP-BOOM	200
CYLINDER GP-BUCKET	202
CYLINDER GP-HYDRAULIC	204
CYLINDER GP-STICK	206
CYLINDER GP-SWING BOOM	208
CYLINDER GP-TILT	210
DRAIN GP-OIL	211
DRIVE GP-SWING	213
FASTENER GP-LINES	214
GAUGE GP-SIGHT	216
HYDRAULIC AR	217
LINES AR-BOOM	217
LINES AR-BUCKET	217
LINES GP-AUXILIARY HYDRAULIC	219
LINES GP-BLADE	226
LINES GP-BOOM CHECK VALVE	228
LINES GP-BUCKET	233
LINES GP-BUCKET CYLINDER	236
LINES GP-CHECK VALVE	237
LINES GP-CONNECTING	239
LINES GP-COUPLER	241
LINES GP-FRONT	246
LINES GP-HYDRAULIC PUMP	253
LINES GP-PILOT	255
LINES GP-RETURN	271
LINES GP-STICK	275
LINES GP-SWING CYLINDER	276
LINES GP-SWING MOTOR	279
LINES GP-TRAVEL MOTOR	285
MANIFOLD & SOLENOID GP-CONTROL	289
MANIFOLD GP-CONTROL	290
MOTOR & MTG GP-SWING	292
MOTOR GP-SWING	293
PLANETARY GP-SWING DRIVE	295
PUMP & MTG GP-MAIN HYDRAULIC	296
PUMP GP-GEAR	297
PUMP GP-PISTON	298
SWIVEL GP	301
TANK & FILTER GP-HYDRAULIC	305
TANK & MTG GP-HYDRAULIC	307
VALVE & MOUNTING GP	308
VALVE & MTG GP-BANK	309
VALVE & MTG GP-CONTROL	311
VALVE & MTG GP-MAIN CONTROL	315
VALVE & MTG GP-PILOT	317
VALVE GP-CHECK	320
VALVE GP-CONTROL	321
VALVE GP-MAIN CONTROL	342
VALVE GP-PILOT	348
VALVE GP-PUMP CONTROL	356
VALVE GP-RELIEF	358
VALVE GP-SOLENOID	360
VALVE GP-SOLENOID & MANIFOLD	364
IMPLEMENTS	**365**
BOOM AR	365
BOOM GP	366
BRACKET GP-MOUNTING	368
KIT-BOOM	369
LINKAGE AR-BUCKET	372
LINKAGE GP-BUCKET	374
STICK AR	379
STICK AR-HOE	381
STICK GP-HOE	383
WORK TOOLS	**390**
BLADE & BEARING AS	390
BLADE & MOUNTING GP	391

TABLE OF CONTENTS

NAME	PAGE
BLADE AR-ANGLING	394
BLADE AR-STRAIGHT	394
BLADE GP-STRAIGHT	395
BUCKET AR-GENERAL PURPOSE	397
BUCKET AR-TILTABLE	398
BUCKET AS-DITCH CLEANING	399
BUCKET AS-GENERAL PURPOSE	403
BUCKET AS-HOE	406
BUCKET GP-EXCAVATION	413
BUCKET GP-GENERAL PURPOSE	415
BUCKET GP-HOE	421
COUPLER AR-QUICK	428
COUPLER GP-QUICK	431
LOCK GP-QUICK COUPLER	433
MOUNTING GP-BUCKET	435
THUMB GP	438
OPERATOR STATION	**441**
AIR CONDITIONER & MOUNTING GP	441
AIR CONDITIONER GP	442
CAB AR	444
CAB GP	447
CANOPY AR	469
CANOPY AR-OPEN ROPS	469
CANOPY GP	470
COMPRESSOR GP-REFRIGERANT	472
CONDENSER & MTG GP-REFRIGERANT	473
CONSOLE GP-OPERATOR	474
CONTROL & MTG GP-PEDAL	478
CONTROL GP-HYDRAULIC HAND	480
CONTROL GP-JOYSTICK	481
CONTROL GP-PILOT OPERATED HYD	487
COVER GP-ACCESS	493
COVER GP-CAB	494
DOOR GP-CAB	495
DUCT GP-CAB AIR	497
GUARD GP-VANDALISM	499
HANDRAIL GP	501
HEATER & MTG GP-CAB	502
HEATER AR-CAB	503
HEATER GP-CAB	504
HORN GP-ELECTRIC	506
KIT-GUARD	507
LINES GP-AIR CONDITIONER	508
LINES GP-HEATER	512
LINK GP-WINDOW	514
MIRROR GP-DOWN VIEW	515
MIRROR GP-REAR VIEW	517
MOUNTING GP-MIRROR	524
OPERATOR AR	525
PLATFORM GP	526
PLATFORM GP-OPERATOR	528
SEAT & MOUNTING GP	533
SEAT BELT GP	535
SEAT GP-SUSPENSION	538
WASHER GP-WINDOW	541
WINDOW GP-CAB	542
WINDOW GP-SLIDING	544
SERVICE EQUIPMENT AND SUPPLIES	**545**
FILM GP	545
FILM GP-INTERNATIONAL	557
FILM GP-U.S.	560
PLATE & FILM GP	564
PART NUMBER INDEX	**B1**

1. MACHINE IDENTIFICATION

Cat machines are identified by Product Identification Numbers (PIN). Some components included in a machine may be identified by Serial Numbers (S/N). Typical components that will be serialized include engines, transmissions, bulldozers, and rippers. The machine and engine are further identified by arrangement numbers and in some cases modification numbers. These numbers are shown on the product identification plate(s) and on the master plate in the operator's compartment.

Cat dealers need all of these numbers to determine accurate parts identification.

Effective First Quarter 2001 the Cat Product Identification Number (PIN) changed from 8 to 17 characters. In an effort to provide uniform equipment identification, Caterpillar and other construction equipment manufacturers are moving to comply with the latest version of the product identification numbering standard. Non-road machine PINs are defined by ISO 10261. The new PIN format will apply to all Cat machines and generator sets. The PIN plates and frame marking will display the 17 character PIN. The new format will look like the following:

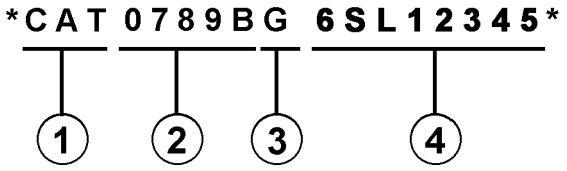

Where:

1. Caterpillar's World Manufacturing Code (characters 1-3)

2. Machine Descriptor (characters 4-8)

3. Check Character (character 9)

4. Machine Indicator Section (MIS) or Product Sequence Number (characters 10-17). These were previously referred to as the Serial Number.

Machines and generator sets produced before First Quarter 2001 will maintain their 8 character PIN format.

Components such as engines, transmissions, axles, etc. and work tools will continue to use an 8 character Serial Number (S/N).

2. ORDERING PARTS

⚠ WARNING

When replacement parts are required for this product Caterpillar recommends using Caterpillar replacement parts or parts with equivalent specifications including, but not limited to, physical dimensions, type, strength and material.

Failure to heed this warning can lead to premature failures, product damage, personal injury or death.

Quality Cat replacement parts are available from Cat dealers throughout the world. Their parts inventories are up to date and include all parts normally required to protect your investment in Cat machines. Dealers may offer repair kits or remanufactured parts to allow selection of the most effective repair alternative for a particular situation. When ordering parts, your order should specify the quantity, part number, part name, and the serial number/product identification number of the machine for which the parts are needed.

3. PARTS MANUAL ORGANIZATION

Product information in this manual is presented as "information elements" that represent all of the components for the specific model. Engine Arrangement and Seat Group are examples of information elements. The information elements are organized alphabetically by part name and secondarily by part number within each major section of the manual.

4. TABLE OF CONTENTS

A table of contents (TOC) is found at the beginning of the manual. The TOC lists each section of the manual with a complete list of all information elements organized as they appear in the manual. Page numbers are provided for quick reference to detailed parts identification illustrations and serviceable consist lists.

5. MAINTENANCE PARTS INDEX

The Maintenance Parts Index, located near the beginning of the manual, references most frequently used maintenance part numbers, providing description, quantity, usage and page number. This information is organized alphabetically by part description.

6. INDEX

The index located near the front of the manual is an alphabetical listing of all information elements included in the manual. Page numbers are provided for quick reference to detailed parts identification illustrations and serviceable consist lists.

7. PART NUMBER INDEX

A numerical index listing all part numbers and the corresponding page number(s) appears at the back of the manual.

8. CAPTIONS

Captions located at the beginning of each information element identify the part number and part name along with additional descriptive information. PIN and S/N information found in each caption should be used to select correct information for a specific machine. Field replacement options, identification of optional attachment components, and where used ("part of") information is also provided.

The first line of a caption is shown in larger type font to indicate the beginning of an information element. Captions for additional pages that may be required to illustrate an information element will be shown in standard type font and will include the term *(contd.)* .

9. NON-SERVICED PARTS

In some instances it is necessary to display non-serviced parts that are a link to a lower level serviceable consist lists. These non-serviced part numbers are shown in *italic* type indicating that they are not available.

10. PARTS LIST REFERENCE NUMBERS

Numbers shown in the Ref No column correspond to numbers used in the associated graphic(s). An alphabetic suffix may be added to a reference number to identify lower level consist items. Numbers shown in the Graphic Ref column refer to the graphic number identifier displayed in the lower left corner of each illustration. The Graphic Ref number may be used in combination with the item Ref No to determine the correct part number. There may be intentional omission of a Ref No in a consist list as information is updated to reflect the latest serviceable part numbers.

11. INDENTED PART NAMES

When a part name is indented in a parts list, it is part of (included in) the group or assembly under which it is indented.

12. ILLUSTRATION REFERENCE LETTERS

When necessary, illustrations contain reference letters (A, B, C etc.) that are intended to track lines and harnesses from one point to another. They are also used to show where to reconnect illustrations that have been separated.

13. ABBREVIATIONS AND SYMBOLS

O.D. – Outside Diameter
I.D. – Inside Diameter
A – Not Part Of This Group
B – Use As Required
C – Change From Previous Type
D – Order By The Meter
E – Order By The Centimeter
F – Not Shown
G – Order By The Inch
I – Refer To Hydraulic Information System
M – Metric Part
R – Remfg Part May Be Available
Y – Separate Illustration
Z – Not Serviced Separately

14. DESCRIPTION OF TYPE CHANGES

Type - A type is defined as any configuration change that requires an additional Information Element for an Arrangement, Group, or Assembly. If serial number breaks for types are not available, a type # (Type 1, Type 2, etc.) will be displayed in the caption. These "type" changes are identified with a "C" note (change from previous type) in the Parts List. Only the "types" that apply to this Parts Manual will be included. Additional types may exist causing "C" notes to appear on an Information Element when no other types are shown.

15.<END>

This symbol indicates the end of an information element.

NOTE:

Continuing improvement and advancement of product design may cause changes to your machine which may not be included in this publication. Whenever a question arises regarding your Cat product or this publication, please consult your Cat dealer for the latest available information.

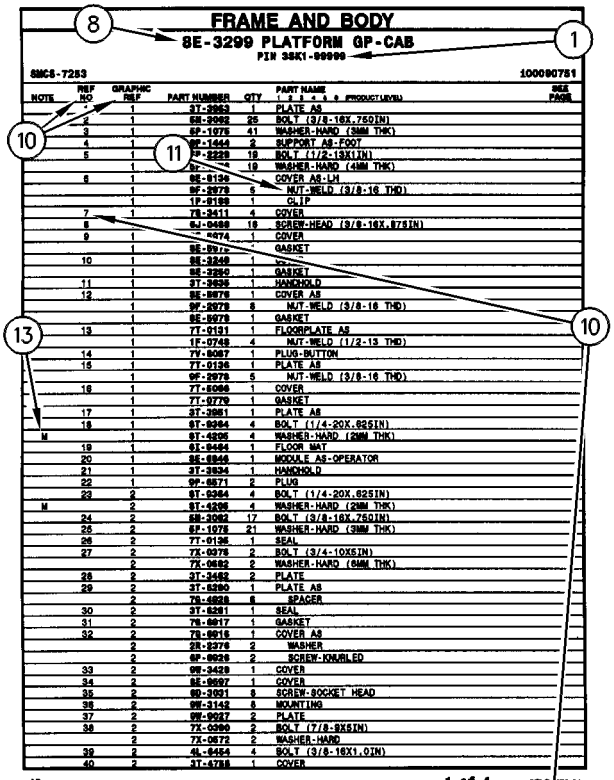

FRAME AND BODY

8E-3299 PLATFORM GP-CAB

PIN 38K1-00999

SMCS-7283 100090751

NOTE	REF NO	GRAPHIC REF	PART NUMBER	QTY	PART NAME 1 2 3 4 5 6 (PRODUCT LEVEL)	SEE PAGE
	-	1	3T-3963	1	PLATE AS	
	2	1	6M-3982	25	BOLT (3/8-16X.75DIN)	
	3	1	5P-1078	41	WASHER-HARD (3MM THK)	
	4	1	9F-1444	2	SUPPORT AS-FOOT	
	5	1	7P-2229	19	BOLT (1/2-13X1IN)	
		1	5P-[illegible]	19	WASHER-HARD (4MM THK)	
	6	1	8E-8136	-	COVER AS-LH	
		1	9F-2979	6	NUT-WELD (3/8-16 THD)	
		1	1F-8188	1	CLIP	
	7	1	7S-3411	4	COVER	
	8		6J-0488	19	SCREW-HEAD (3/8-16X.875IN)	
	9	1	[illegible]-4074	1	COVER	
		1	8E-8976	-	GASKET	
	10	1	8E-3249	1	[illegible]	
		1	8E-3250	1	GASKET	
	11	1	3T-3935	1	HANDHOLD	
	12	1	8E-8978	1	COVER AS	
		1	9F-2979	8	NUT-WELD (3/8-16 THD)	
		1	8E-8979	1	GASKET	
	13	1	7T-0131	1	FLOORPLATE AS	
		1	1F-0748	4	NUT-WELD (1/2-13 THD)	
	14	1	7V-8067	1	PLUG-BUTTON	
	15	1	7T-0136	1	PLATE AS	
		1	9F-2979	5	NUT-WELD (3/8-16 THD)	
	16	1	7T-8066	1	COVER	
		1	7T-0779	1	GASKET	
	17	1	3T-3951	1	PLATE AS	
	18	1	6T-9364	4	BOLT (1/4-20X.625IN)	
M		1	6T-4206	4	WASHER-HARD (2MM THK)	
	19	1	6T-9494	1	FLOOR MAT	
	20	1	8E-8946	1	MODULE AS-OPERATOR	
	21	1	3T-3934	1	HANDHOLD	
	22	1	9F-8571	2	PLUG	
	23	2	6T-9364	4	BOLT (1/4-20X.625IN)	
M		2	6T-4206	4	WASHER-HARD (2MM THK)	
	24	2	6M-3982	17	BOLT (3/8-16X.75DIN)	
	25	2	5P-1078	21	WASHER-HARD (3MM THK)	
	26	2	7T-0136	1	SEAL	
	27	2	7X-0378	2	BOLT (3/4-10X5IN)	
		2	7X-0682	2	WASHER-HARD (6MM THK)	
	28	2	3T-3482	2	PLATE	
	29	2	3T-8280	1	PLATE AS	
		2	7S-4828	6	SPACER	
	30	2	3T-8281	1	SEAL	
	31	2	7S-8817	1	GASKET	
	32	2	7S-8816	1	COVER AS	
		2	2S-2376	2	WASHER	
		2	9F-8628	2	SCREW-KNURLED	
	33	2	9W-3429	1	COVER	
	34	2	8E-8697	1	COVER	
	35	2	9D-3931	8	SCREW-SOCKET HEAD	
	36	2	9W-3142	8	MOUNTING	
	37	2	9W-9927	2	PLATE	
	38	2	7X-0290	2	BOLT (7/8-9X5IN)	
		2	7X-0572	2	WASHER-HARD	
	39	2	4L-6454	4	BOLT (3/8-16X1.0IN)	
	40	2	3T-4788	1	COVER	

12 FRAME AND BODY 1 of 4 SELP[illegible]70-01

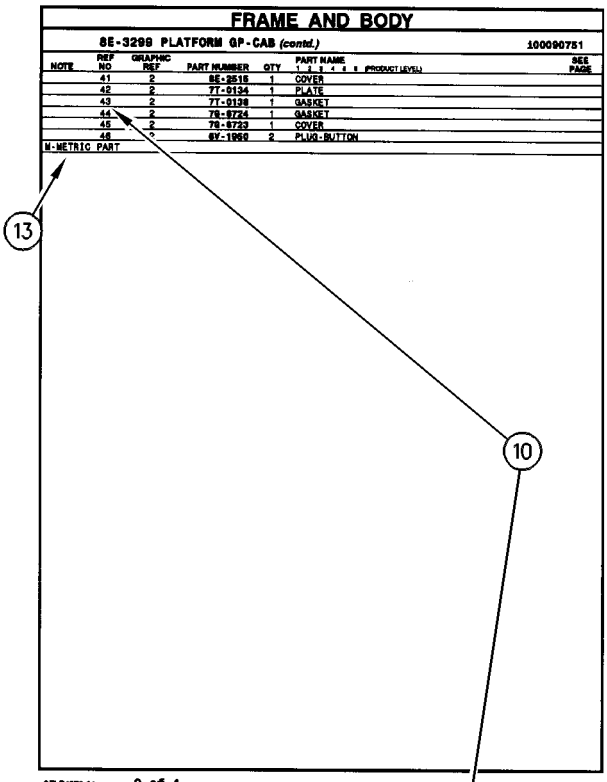

FRAME AND BODY

8E-3299 PLATFORM GP-CAB (contd.) 100090751

NOTE	REF NO	GRAPHIC REF	PART NUMBER	QTY	PART NAME 1 2 3 4 5 6 (PRODUCT LEVEL)	SEE PAGE
	41	2	8E-2516	1	COVER	
	42	2	7T-0134	1	PLATE	
	43	2	7T-0138	1	GASKET	
	44	2	7S-8724	1	GASKET	
	45	2	7S-8723	1	COVER	
	46	2	6V-1960	2	PLUG-BUTTON	

M-METRIC PART

SELP4570-01 2 of 4 FRAME AND BODY 13

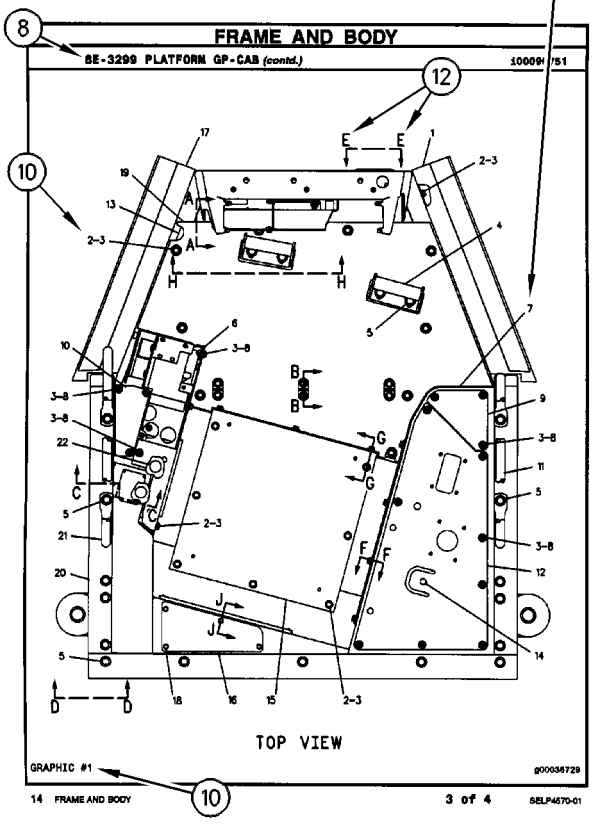

FRAME AND BODY

8E-3299 PLATFORM GP-CAB (contd.) 100090751

TOP VIEW

GRAPHIC #1 g00036729

14 FRAME AND BODY 3 of 4 SELP4570-01

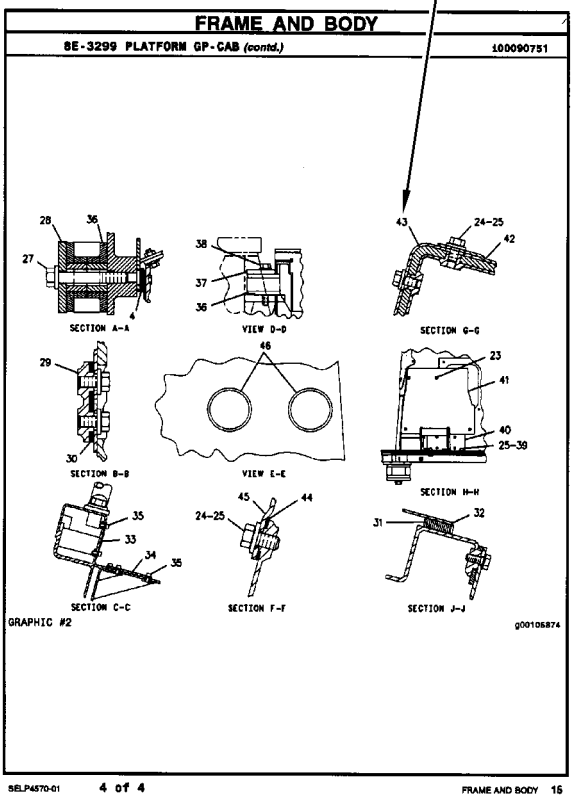

FRAME AND BODY

8E-3299 PLATFORM GP-CAB (contd.) 100090751

SECTION A-A

VIEW D-D

SECTION G-G

SECTION B-B

VIEW E-E

SECTION H-H

SECTION C-C

SECTION F-F

SECTION J-J

GRAPHIC #2 g00105874

SELP4570-01 4 of 4 FRAME AND BODY 15

REMANUFACTURED COMPONENTS

As an option when making repairs consider Cat Remanufactured Components. Components that are available through the Cat Remanufactured Program are identified three ways in the parts book:

- with the letter R in the note field of the parts list
- with an R* at the beginning of the first line of the caption
- with an *R at the end of the first line of the caption

Typical components included in the Remanufacturing Program include:

ALTERNATORS
CONNECTING RODS
CRANKSHAFTS - UNDERSIZE
CRANKSHAFTS - UPGRADE TO NEW
CYLINDER HEADS
ELECTRONIC CONTROL MODULES (ECM)
ELECTRONIC SENSORS
FUEL INJECTORS
FUEL NOZZLES
FUEL PUMPS
GOVERNORS
OIL PUMPS
PISTONS
SHORT BLOCKS
STARTERS
TURBOCHARGERS - COMPLETE
TURBOCHARGER CARTRIDGES
WATER PUMPS

Cat Remanufactured engines for many engine arrangements are also available.

SUPPLEMENTAL COOLANT ADDITIVES

CUSTOMER BENEFITS:

Protects against cavitation, foam, erosion, corrosion, and scale buildup in cooling systems.

- Provides measured coolant conditioner.

DESCRIPTION:

Additives deplete from the coolant with normal operation. For this reason, Supplemental Coolant Additives (SCA) must be added to all heavy duty coolants at regular intervals. In addition, when not using a fully formulated, pre-charged antifreeze, like Cat DEAC, an initial charge of SCA must be added to the cooling system. The amount of SCA added to the system is dependent on the capacity of the system.

The SCA for initial fill is provided as a liquid. SCA's for maintenance intervals are available in liquid form and as a spin-on element. (No Spin-on available for 3600 Family of Engines)

NOTE:

The amount of SCA added at initial fill is not the same as the amount added at maintenance intervals.

The coolant additive elements can be used with any ethylene or propylene glycol type antifreeze which meets ASTM D4985 or ASTM D5345 Specifications.

NOTE:

For use with standard heavy duty coolant only, not for use with Extended Life Coolant.

PARTS NEEDED:

Cooling System Capacity		Liquid SCA at Initial Fill	Liquid SCA at Maintenance*	Spin-on SCA Maintenance Element*
Liters	Gallons			
22-30	(6-8)	3P-2044 (1)	6V-3542 (1)	111-2370 (1)
30-38	(8-10)	3P-2044 (1) 6V-3542 (1)	111-2372 (1)	111-2369 (1)
38-49	(10-13)	3P-2044 (1) 8T-1589 (1)	111-2372 (1)	111-2369 (1)
49-64	(13-17)	3P-2044 (2)	8T-1589 (1)	9N-3368 (1)
64-83	(17-22)	3P-2044 (2) 8T-1589 (1)	111-2372 (1) 6V-3542 (1)	111-2371 (1)
83-114	(22-30)	3P-2044 (3) 8T-1589 (1)	3P-2044 (1)	9N-3718 (1)
114-163	(30-43)	3P-2044 (5)	3P-2044 (1) 6V-3542 (1)	111-2371 (2)
163-242	(43-64)	3P-2044 (8)	3P-2044 (2)	9N-3718 (2)

** Normal maintenance period is 250 hrs. See your Operation and Maintenance Manual for complete coolant maintenance instructions.*

( ) Indicates quantity required.

MAINTENANCE PARTS

DESCRIPTION	PART NUMBER	QTY	WHERE USED	PAGE
AIR INLET AND EXHAUST SYSTEM				
FILTER ELEMENT AS-AIR (PRIMARY)	134-8726	1	AIR CLEANER GP	45
FILTER ELEMENT AS-AIR (SECONDARY)	140-2334	1	AIR CLEANER GP	45
BASIC ENGINE				
PLUG (DRAIN, ENGINE OIL)	386-6918	2	PAN GP-OIL	30
V-BELT (FAN)	389-1590	1	PULLEY GP-FAN DRIVE	32
COOLING SYSTEM				
CAP AS (COOLANT RECOVERY)	140-4238	1	RADIATOR & HYD OIL COOLER GP	41
CAP-RADIATOR	247-5086	1	RADIATOR & HYD OIL COOLER GP	41
GASKET (THERMOSTAT HOUSING)	383-0335	1	LINES GP-WATER	39
GASKET (WATER TEMPERATURE REGULATOR)	383-0421	1	LINES GP-WATER	39
REGULATOR AS (WATER TEMPERATURE)	392-0266	1	LINES GP-WATER	39
ELECTRICAL AND STARTING SYSTEM				
BATTERY (12-VOLT, MAINTENANCE FREE)	153-5656	1	BATTERY & WIRING GP	72
		1	BATTERY & WIRING GP	77
FUSE (10-AMPERE)	113-8490	8	HARNESS AS-CONSOLE	84
		9	HARNESS AS-CONSOLE	86
		9	WIRING GP-CONSOLE	102
		8	WIRING GP-CONSOLE	108
FUSE (15-AMPERE)	113-8491	4	HARNESS AS-CONSOLE	84
		4	HARNESS AS-CONSOLE	86
		4	WIRING GP-CONSOLE	102
		4	WIRING GP-CONSOLE	108
FUSE (20-AMPERE)	113-8492	1	HARNESS AS-CONSOLE	84
		2	HARNESS AS-CONSOLE	86
		2	WIRING GP-CONSOLE	102
		1	WIRING GP-CONSOLE	108
FUSE (30-AMPERE)	124-3548	2	HARNESS AS-CONSOLE	84
		3	HARNESS AS-CONSOLE	86
		3	WIRING GP-CONSOLE	102
		2	WIRING GP-CONSOLE	108
	8T-9636	1	BATTERY & WIRING GP	72
		1	BATTERY & WIRING GP	77
FUSE (5-AMPERE)	141-2759	3	HARNESS AS-CONSOLE	84
		3	HARNESS AS-CONSOLE	86
		3	WIRING GP-CONSOLE	102
		3	WIRING GP-CONSOLE	108
FUSE (60-AMPERE)	232-6314	1	BATTERY & WIRING GP	72
		1	BATTERY & WIRING GP	77
	379-0828	2	BATTERY & WIRING GP	72

MAINTENANCE PARTS

DESCRIPTION	PART NUMBER	QTY	WHERE USED	PAGE
		2	BATTERY & WIRING GP	77
GLOW PLUG	383-0538	4	GLOW PLUG GP	83
LAMP (12-VOLT, 55-WATT)	142-9572	1	LAMP GP-FLOOD	92
		1	LIGHTING GP-FLOOD	94
		1	LIGHTING GP-FLOOD	97
FUEL SYSTEM				
BOWL AS-WATER COLLECTION	112-9401	1	FILTER GP-WATER SEP & FUEL	55
CAP-FUEL (LOCKABLE, VENTED)	265-8575	1	TANK & MTG GP-FUEL	67
FILTER ELEMENT-FUEL (WATER SEPARATOR)	156-1200	1	FILTER GP-WATER SEP & FUEL	55
STRAINER-FUEL (TANK)	265-8579	1	TANK & MTG GP-FUEL	67
HYDRAULIC SYSTEM				
CAP AS	6V-9828	3	LINES GP-COUPLER	242
		3	LINES GP-COUPLER	244
CAP-PRESSURE (HYDRAULIC TANK)	4I-3745	1	TANK & FILTER GP-HYDRAULIC	305
FILTER ELEMENT AS-OIL (HYDRAULIC, PILOT)	217-2456	1	LINES GP-PILOT	259
FILTER ELEMENT-OIL (HYDRAULIC)	304-7196	1	TANK & FILTER GP-HYDRAULIC	305
STRAINER-SUCTION (HYDRAULIC TANK)	285-1951	1	TANK & FILTER GP-HYDRAULIC	305
LUBRICATION SYSTEM				
FILTER-ENGINE OIL	377-6969	1	FILTER GP-ENGINE OIL	36
STRAINER-OIL (ENGINE)	383-0531	1	FILTER GP-ENGINE OIL	36
OPERATOR STATION				
BLADE AS-WIPER (450-MM) (FRONT)	275-8631	1	WINDOW GP-CAB	542
DRYER-REFRIGERANT (RECEIVER) (AIR CONDITIONER)	176-1902	1	LINES GP-AIR CONDITIONER	508
FILTER ELEMENT-CAB AIR	284-5686	1	AIR CONDITIONER GP	442
		1	HEATER GP-CAB	504
LAMP (12-VOLT, 5-WATT)	303-9236	1	CAB GP	453
		1	CAB GP	460
		1	CAB GP	467
LAMP AS (12-VOLT, 5-WATT)	281-1159	1	CAB GP	453
		1	CAB GP	460
		1	CAB GP	467
SEAT BELT GP (RETRACTABLE, 2-IN)	378-2506	1	SEAT BELT GP	535
SEAT BELT GP (RETRACTABLE, 3-IN)	378-2508	1	SEAT BELT GP	535
SEAT BELT GP (RETRACTABLE, 51-MM (2-IN))	258-4095	1	SEAT BELT GP	536
SEAT BELT GP (RETRACTABLE, 76-MM (3-IN))	258-4096	1	SEAT BELT GP	537
V-BELT (AIR CONDITIONER COMPRESSOR)	272-7881	1	COMPRESSOR GP-REFRIGERANT	472

INDEX

NAME PAGE

A

ACCESSORY GP-ENGINE 44
ACCUMULATOR GP-HYDRAULIC. 188
ACCUMULATOR GP-HYDRAULIC–CANADA 188
ACCUMULATOR GP-HYDRAULIC–CHARGED. . . 182
183
184
185
187
ACCUMULATOR GP-HYDRAULIC–
UNCHARGED 186
AIR CLEANER GP 45
46
AIR CONDITIONER & MOUNTING GP. 441
AIR CONDITIONER GP 442
AIR CONDITIONER GP–WITH AIR DUCT 444
ALARM GP-TRAVEL 69
ALTERNATOR GP-CHARGING 71

B

BATTERY (12-VOLT, MAINTENANCE FREE) 72
77
BATTERY & WIRING GP–CAB 72
77
BELT TENSIONER GP. 6
BLADE & BEARING AS. 390
BLADE & MOUNTING GP. 392
393
BLADE & MOUNTING GP–POWER ANGLE 391
BLADE AR-ANGLING 394
BLADE AR-STRAIGHT 394
BLADE AS-WIPER (450-MM) (FRONT) 542
BLADE GP-STRAIGHT 395
396
BLOCK GP-HYDRAULIC (PILOT CONTROL). . . . 259
BOOM AR 365
BOOM GP 366
BOWL AS-WATER COLLECTION 55
BRACKET GP-MOUNTING–BUCKET 368
BUCKET AR-GENERAL PURPOSE 397
BUCKET AR-TILTABLE 398
BUCKET AS-DITCH CLEANING 399
400
401
402
BUCKET AS-GENERAL PURPOSE 403
404
405
BUCKET AS-HOE 406
407
408
409
410
411
BUCKET AS-HOE–HEAVY-DUTY 412
BUCKET GP-EXCAVATION. 413
414

NAME PAGE

BUCKET GP-GENERAL PURPOSE 415
416
417
418
419
420
BUCKET GP-HOE 423
424
425
426
BUCKET GP-HOE–HEAVY-DUTY 421
422
427

C

C-FRAME GP-POWER ANGLING 131
CAB AR–WITH AIR CONDITIONER 444
445
CAB AR–WITH HEATER 445
446
CAB GP 447
449
451
453
455
460
467
CAB GP–WITH FRONT GUARD 457
458
459
CAMSHAFT GP 7
CANOPY AR 469
CANOPY AR-OPEN ROPS 469
CANOPY GP 470
471
CAP AS 242
244
CAP AS (COOLANT RECOVERY) 41
CAP-FUEL (LOCKABLE, VENTED). 67
CAP-PRESSURE (HYDRAULIC TANK) 305
CAP-RADIATOR 41
CHASSIS AR. 1
COIL GP-EVAPORATOR 442
COMMON AR 1
COMPRESSOR GP-REFRIGERANT 472
CONDENSER & MTG GP-REFRIGERANT. 473
CONSOLE GP-OPERATOR. 474
CONSOLE GP-OPERATOR–LH 476
CONSOLE GP-OPERATOR–RH. 475
CONTROL & MTG GP-ELECTRONIC 81
CONTROL & MTG GP-PEDAL–TRAVEL. 478
479
CONTROL AR-AUXILIARY. 189
CONTROL AR-AUXILIARY–2-WAY 190
CONTROL AR-AUXILIARY–2ND AUXILIARY, LONG
STICK 190
CONTROL AR-AUXILIARY–2ND AUXILIARY,
STANDARD STICK 189
CONTROL AR-AUXILIARY–SWING BOOM. 189

INDEX

NAME	PAGE
CONTROL AR-COUPLER	192
CONTROL AR-COUPLER–LONG STICK	191
CONTROL AR-COUPLER–STANDARD STICK	190
CONTROL AR-GOVERNOR–AUTOMATIC IDLE	52
CONTROL AR-GOVERNOR–AUTOMATIC IDLE, TRAVEL ALARM	52
CONTROL AR-HYDRAULIC–2ND AUXILIARY	195
CONTROL AR-HYDRAULIC–STANDARD JOYSTICK	195
CONTROL AR-PILOT HYDRAULIC–STANDARD	195
CONTROL GP-GOVERNOR–AUTOMATIC IDLE	53
CONTROL GP-HANDLE (LH)	481 482
CONTROL GP-HANDLE (RH)	483
CONTROL GP-HYDRAULIC HAND–TRAVEL	480
CONTROL GP-JOYSTICK–LH	481 482 484 486
CONTROL GP-JOYSTICK–RH	483 485
CONTROL GP-MACHINE (ELECTRONIC CONTROL)	81
CONTROL GP-PILOT OPERATED HYD	488 491
CONTROL GP-PILOT OPERATED HYD–2ND AUXILIARY	489
CONTROL GP-PILOT OPERATED HYD–BLADE	487 490 492
CORE AS-HYDRAULIC OIL COOLER	41
COUNTERWEIGHT GP	132
COUPLER AR-QUICK	428 429 430
COUPLER GP-QUICK	431 432
COVER AS–LH	133
COVER GP-ACCESS	493
COVER GP-ACCESS–LH	134
COVER GP-ACCESS–RH	135
COVER GP-CAB–TOP	494
COVER GP-FENDER	136
COVER GP-SOUND SUPPRESSION	137
COVER GP-VALVE MECHANISM	8
CRANKSHAFT GP	9
CYLINDER BLOCK AS	11
CYLINDER BLOCK GP	12
CYLINDER GP-BLADE–ANGLE	198
CYLINDER GP-BLADE–RAISE, LOWER	196
CYLINDER GP-BOOM	200
CYLINDER GP-BUCKET	202
CYLINDER GP-HYDRAULIC	204 205
CYLINDER GP-STICK	206
CYLINDER GP-SWING BOOM	208
CYLINDER GP-TILT	210
CYLINDER HEAD AS	14
CYLINDER HEAD GP	15

D

NAME	PAGE
DOOR GP-CAB	495
DRAIN GP-ECOLOGY–ECOLOGY, HYDRAULIC TANK	18
DRAIN GP-ECOLOGY–ENGINE, HYDRAULIC TANK	17
DRAIN GP-ENGINE OIL–ECOLOGY	19
DRAIN GP-OIL	211
DRAIN GP-OIL–HYDRAULIC TANK, STANDARD	211 212
DRIVE GP-FINAL	123 125
DRIVE GP-SWING	213
DRYER-REFRIGERANT (RECEIVER) (AIR CONDITIONER)	508
DUCT GP-CAB AIR	497 498

E

NAME	PAGE
ELECTRONICS GP-MACHINE	82
ELECTRONICS GP-MONITOR	82
ENGINE AR-COMPLETE	2
ENGINE AR-PRIMARY	3 4 5
EXTENSION GP-EXHAUST	47

F

NAME	PAGE
FASTENER GP-LINES	215
FASTENER GP-LINES–STICK	214
FENDER GP–LH	139
FILLER GP-ENGINE OIL	35
FILM GP	554 556
FILM GP-INTERNATIONAL	557
FILM GP-INTERNATIONAL–COUPLER	559
FILM GP-U.S.	560
FILM GP-U.S.–COUPLER	562 563
FILM GP–2-WAY	549 552
FILM GP–2ND AUXILIARY	548
FILM GP–ANGLE BLADE	553
FILM GP–AUXILIARY	546
FILM GP–CAB HEATER	550 555
FILM GP–COUPLER	551
FILM GP–STRAIGHT BLADE	545
FILM-IDENTIFICATION (DIESEL FUEL)	557
FILM-IDENTIFICATION (LIFT EYE, TIE-DOWN LOCATION)	556
FILM-NOTICE (LIFT EYE LOCATION)	564

INDEX

NAME PAGE

FILM-WARNING (CRUSH HAZARD, READ OMM, U.S.). 192
FILM-WARNING (HIGH PRESSURE CYLINDER) 187
FILM-WARNING (JUMP START, READ OMM, U. S.). 560
FILM-WARNING (NO WELD, NO DRILL, READ OMM). 564
FILM-WARNING (TIPPING HAZARD, READ OMM). 369
FILTER ELEMENT AS-AIR (PRIMARY) 45
FILTER ELEMENT AS-AIR (SECONDARY) 45
FILTER ELEMENT AS-OIL (HYDRAULIC, PILOT). 259
FILTER ELEMENT-CAB AIR. 442 504
FILTER ELEMENT-FUEL (WATER SEPARATOR) 55
FILTER ELEMENT-OIL (HYDRAULIC) 305
FILTER GP-ENGINE OIL 36
FILTER GP-WATER SEP & FUEL 55
FILTER-ENGINE OIL. 36
FINAL DRIVE GP 123 125
FLOOR MAT 444 445 446 469
FLYWHEEL GP 20
FRAME GP-REAR–CAB 140
FRAME GP-REAR–CANOPY. 142
FRAME GP-SWING–BOOM. 145
FRAME GP-UNDERCARRIAGE 162
FRAME GP-UPPER. 146
FUSE (10-AMPERE) 84 86 102 108
FUSE (15-AMPERE) 84 86 102 108
FUSE (20-AMPERE) 84 86 102 108
FUSE (30-AMPERE) 72 77 84 86 102 108
FUSE (5-AMPERE) 84 86 102 108
FUSE (60-AMPERE) 72 77

NAME PAGE

G

GASKET (THERMOSTAT HOUSING). 39
GASKET (WATER TEMPERATURE REGULATOR) 39
GAUGE GP-OIL LEVEL (DIPSTICK)–ENGINE. . . . 37
GAUGE GP-SIGHT–HYDRAULIC OIL LEVEL . . . 216
GAUGE-OIL LEVEL (ENGINE) (DIPSTICK) 37
GEAR & BEARING GP-SWING. 163
GLOW PLUG. 83
GLOW PLUG GP. 83
GOVERNOR GP. 56
GUARD GP-BOTTOM. 147
GUARD GP-CYLINDER–BOOM 148
GUARD GP-CYLINDER–POWER ANGLE 149
GUARD GP-FAN 21 22
GUARD GP-FRONT. 150
GUARD GP-FRONT–MESH. 151
GUARD GP-TRACK GUIDE 164
GUARD GP-VANDALISM. 499 500

H

HANDRAIL GP 501
HARNESS AS-CAB 453 461 467
HARNESS AS-CHASSIS 72 77
HARNESS AS-CONSOLE (CAB) 102
HARNESS AS-CONSOLE (CANOPY). 108
HARNESS AS-CONSOLE–CAB 86
HARNESS AS-CONSOLE–CANOPY 84
HARNESS AS-CONTROL (CAB, CANOPY) 114
HARNESS AS-CONTROL–CAB, CANOPY 88
HARNESS AS-HEATER 504
HARNESS AS-HEATER & AIR COND 442
HARNESS AS-HEATER & AIR COND (CAB) . . . 441 502
HARNESS AS-LIGHTING (CANOPY) 97
HARNESS AS-LIGHTING (FRONT). 117
HARNESS AS-LIGHTING (WARNING BEACON, POWER RECEP) 118
HARNESS AS-QUICK COUPLER 88
HARNESS AS-SENSOR–OVERLOAD. 88
HARNESS AS-SOLENOID–CAB, CANOPY. 89
HARNESS AS-WIRING (JACKET WATER HEATER) 90
HARNESS AS-WIRING (WIPER MOTOR) 453 460 467
HEATER & MTG GP-CAB. 502
HEATER AR-CAB 503
HEATER GP-CAB 504
HEATER GP-JACKET WATER. 90 91
HOOD & GUARD GP. 152 154

INDEX

NAME PAGE

HOOD AS 155
HOOD GP 156
HORN GP-ELECTRIC 506
HOUSING GP-FRONT 23
HYDRAULIC AR 217

I

IDLER GP-FRONT 165
166
IDLER GP-FRONT–LH 167
171
IDLER GP-FRONT–RH 169
173
INDICATOR-AIR FILTER CHANGE 45
INSTALLATION AR-ENGINE 5

K

KIT-BOOM–BOOM LOWERING 369
KIT-GUARD–CANOPY 507

L

LAMP (12-VOLT, 5-WATT) 453
460
467
LAMP (12-VOLT, 55-WATT) 92
94
97
LAMP AS (12-VOLT, 5-WATT) 453
460
467
LAMP GP-FLOOD (12-VOLT) 97
LAMP GP-FLOOD (12-VOLT) (CAB) 94
LAMP GP-FLOOD–BOOM 92
LIFTING GP-ENGINE 25
LIGHTING AR-FLOOD–CANOPY 93
LIGHTING GP-FLOOD–BOOM 95
LIGHTING GP-FLOOD–CAB 94
96
LIGHTING GP-FLOOD–CANOPY 97
LINES AR-BOOM 217
LINES AR-BOOM–CHECK VALVE 217
LINES AR-BUCKET 217
LINES AR-BUCKET–LONG STICK 218
LINES GP-AIR 48
LINES GP-AIR CONDITIONER 508
LINES GP-AUXILIARY HYDRAULIC–2ND AUXILIARY, BOOM 225
LINES GP-AUXILIARY HYDRAULIC–2ND AUXILIARY, LONG STICK 222
LINES GP-AUXILIARY HYDRAULIC–2ND AUXILIARY, STANDARD STICK 221
LINES GP-AUXILIARY HYDRAULIC–BOOM 219
LINES GP-AUXILIARY HYDRAULIC–LONG STICK 223
224
LINES GP-AUXILIARY HYDRAULIC–STANDARD STICK 220
223
LINES GP-BLADE–ANGLE 226
LINES GP-BLADE–RAISE, LOWER 227
LINES GP-BOOM CHECK VALVE 228
230
LINES GP-BUCKET 233
LINES GP-BUCKET CYLINDER 236
LINES GP-BUCKET–LONG STICK 235
LINES GP-CHECK VALVE 237
LINES GP-CONNECTING–LH 240
LINES GP-CONNECTING–RH 239
LINES GP-COUPLER 241
LINES GP-COUPLER–LONG STICK 244
LINES GP-COUPLER–STANDARD STICK 242
LINES GP-FRONT–AUXILIARY 248
LINES GP-FRONT–BOOM CYLINDER 250
LINES GP-FRONT–BUCKET, STICK CYLINDER 246
LINES GP-FRONT–QUICK COUPLER 251
LINES GP-FUEL 58
LINES GP-FUEL FILTER 59
LINES GP-FUEL INJECTION 62
LINES GP-GREASE 157
LINES GP-HEATER 512
LINES GP-HYDRAULIC PUMP 253
LINES GP-PILOT 259
LINES GP-PILOT–2-WAY 265
LINES GP-PILOT–AUXILIARY 268
LINES GP-PILOT–BLADE ANGLE 269
LINES GP-PILOT–JOYSTICK 255
LINES GP-PILOT–JOYSTICK, 2-WAY 257
LINES GP-PILOT–STANDARD 262
LINES GP-RETURN 271
LINES GP-RETURN–BLADE 273
LINES GP-STICK 275
LINES GP-SWING CYLINDER–2ND AUXILIARY 277
LINES GP-SWING CYLINDER–BOOM 276
LINES GP-SWING MOTOR 282
LINES GP-SWING MOTOR–STANDARD 279
LINES GP-TRAVEL MOTOR 285
287
LINES GP-WATER 39
LINK AS-TRACK 175
LINK GP-WINDOW 514
LINKAGE AR-BUCKET–WITH LIFTING EYE 372
LINKAGE AR-BUCKET–WITHOUT LIFTING EYE 372
373
LINKAGE GP-BUCKET 374
378
LINKAGE GP-BUCKET–WITH LIFTING EYE 376
LOCK GP (FENDER) 139
LOCK GP-MECHANICAL 431
432
LOCK GP-QUICK COUPLER 433
434

INDEX

NAME PAGE

M

MANIFOLD & SOLENOID GP-CONTROL–AUXILIARY, BOOM SWING 289
MANIFOLD GP-CONTROL. 290
MANIFOLD GP-EXHAUST 49
MANIFOLD GP-INLET. 50
MIRROR GP-DOWN VIEW–CAB 516
MIRROR GP-DOWN VIEW–EXTERIOR, REAR, RH 515
MIRROR GP-REAR VIEW–CAB, WITH FRONT GUARD 519
MIRROR GP-REAR VIEW–EXTERIOR, LH. 517 520 521
MIRROR GP-REAR VIEW–EXTERIOR, RH 518 520 522
MIRROR GP-REAR VIEW–LH 523
MIRROR GP-REAR VIEW–RH 523
MONITOR GP-OPERATOR (CAB CONSOLE) . . . 103 106 109 112
MOTOR & MTG GP-SWING. 292
MOTOR & MTG GP-TRAVEL. 128
MOTOR GP-SWING 293
MOUNTING GP-BUCKET. 435 436 437
MOUNTING GP-ELECTRONIC CONTROL 98
MOUNTING GP-ENGINE 26 28
MOUNTING GP-MIRROR. 524
MUFFLER GP 51

N

NOZZLE GP-UNIT INJECTOR 63

O

OPERATOR AR 525

P

PADLOCK GP. 499
PAN GP-OIL 30
PISTON & ROD GP 31
PLANETARY GP-SWING DRIVE 295
PLATE & FILM GP 564
PLATE & FILM GP–CAB 568
PLATE AS 158
PLATFORM GP 526
PLATFORM GP-OPERATOR. 528 531
PLATFORM GP-OPERATOR–CAB 530
PLUG (DRAIN, ENGINE OIL). 30

NAME PAGE

POWER TRAIN AR. 129
PULLEY GP-FAN DRIVE. 32
PUMP & MTG GP-MAIN HYDRAULIC. 296
PUMP GP-ENGINE OIL 38
PUMP GP-FUEL INJECTION 64
PUMP GP-GEAR–PILOT 297
PUMP GP-PISTON–MAIN HYDRAULIC 298
PUMP GP-WATER. 40

R

RADIATOR & HYD OIL COOLER GP. 41
REGULATOR AS (WATER TEMPERATURE) 39
RELAY AS (12-VOLT). 102 106 108 112
RELAY AS (12-VOLT) (2ND AUXILIARY). 122
RELAY AS (12-VOLT) (BACKUP ALARM) 69
RELAY AS (12-VOLT) (MAIN) 112
RELAY AS (12-VOLT) (PATTERN CHANGE) . . . 121
RELAY AS (12-VOLT) (START). 72 77
RELAY AS (24-VOLT) (ENGINE START) 44
RELAY AS (AIR CONDITIONER COMPRESSOR) 504
RELAY AS (BLOWER FAN) 442
RELAY AS (BLOWER MOTOR). 442
ROLLER AR-TRACK & CARRIER. 176
ROLLER GP-TRACK CARRIER 177
ROLLER GP-TRACK-CENTER FLANGE 178

S

SEAL (FRONT) 12
SEAL (REAR) 12
SEAL GP 469
SEAL GP-DUO-CONE. 167 169 171 173
SEAL GP-METAL FACE 178
SEAT & MOUNTING GP–CLOTH, LOW BACK, SUSPENSION 533
SEAT & MOUNTING GP–HIGH BACK, CLOTH, SUSPENSION 535
SEAT & MOUNTING GP–LOW BACK, SUSPENSION, VINYL. 534
SEAT BELT GP (RETRACTABLE, 2-IN) 535
SEAT BELT GP (RETRACTABLE, 3-IN) 535
SEAT BELT GP (RETRACTABLE, 51-MM (2-IN)) 536
SEAT BELT GP (RETRACTABLE, 76-MM (3-IN)) 537
SEAT BELT GP–3-IN 535
SEAT BELT GP–RETRACTABLE, 2-IN 535 536
SEAT BELT GP–RETRACTABLE, 3-IN 537

INDEX

NAME	PAGE
SEAT GP (CLOTH, LOW BACK, SUSPENSION)	533
SEAT GP (HIGH BACK, TILT)	538
SEAT GP (VINYL, LOW BACK, TILT)	534
SEAT GP-SUSPENSION (CLOTH, HIGH BACK)	540
SEAT GP-SUSPENSION–CLOTH	539
SEAT GP-SUSPENSION–CLOTH, HIGH BACK	538 540
SEAT GP-SUSPENSION–VINYL	539
SENDER AS-FUEL LEVEL	78
SENDER AS-FUEL LEVEL (FUEL TANK)	73
SENSOR (THERMOCOUPLE) (ENGINE COOLANT TEMPERATURE)	73 78
SENSOR GP-PRESSURE (BOOM CYL, HEAD END)	369
SENSOR GP-PRESSURE (BOWL CYLINDER, ROD END)	230
SENSOR-TEMPERATURE (REFRIGERANT)	442
SERVICE GP-MONITOR	82
SHUTOFF GP-MANUAL–ENGINE	66
SOFTWARE GP-MACHINE	82
SOFTWARE GP-MONITOR	82 103 106 109 112
SOLENOID (HYDRAULIC LOCKOUT)	290
SOLENOID (SPEED SELECT)	290
SOLENOID AS (ENGINE SHUTOFF)	83
SPRING AS-GAS (LOCKABLE)	152
SPROCKET GP	130
STARTING MOTOR GP-ELECTRIC	99
STICK AR	379
STICK AR-HOE–HEAVY-DUTY, LONG	382
STICK AR-HOE–LONG, THUMB	381
STICK AR-HOE–STANDARD	382
STICK AR-HOE–STANDARD, THUMB	381
STICK AR–2ND AUXILIARY, LONG	380 381
STICK AR–2ND AUXILIARY, STANDARD	379 380
STICK AR–CHECK VALVE	381
STICK AR–LONG	379 380
STICK GP-HOE–HEAVY-DUTY, LONG	385
STICK GP-HOE–LONG, THUMB	386
STICK GP-HOE–STANDARD	383
STICK GP-HOE–STANDARD, THUMB	388
STOP GP-SWING–BOOM	159
STRAINER-FUEL (TANK)	67
STRAINER-OIL (ENGINE)	36
STRAINER-SUCTION (HYDRAULIC TANK)	305
SUPPRESSION AR-SOUND–EUROPEAN MARKET	160
SUPPRESSION AR-SOUND–HIGH AMBIENT	160
SUPPRESSION GP-SOUND	161
SWITCH AS (ENGINE SHUTOFF)	56
SWITCH AS-LIMIT (HYDRAULIC LOCKOUT)	102 106 108 112
SWITCH AS-PRESSURE (PILOT OIL)	72 77
SWITCH AS-PRESSURE (PILOT, TRAVEL)	53
SWITCH AS-ROCKER (LIGHT)	102 106 108 112
SWITCH AS-ROCKER (OVERLOAD WARNING)	119 369
SWITCH AS-ROCKER (TRAVEL ALARM CANCEL)	69
SWITCH AS-ROCKER (WINDOW WASHER, WIPER)	102 106
SWITCH AS-START (ENGINE)	102 106 108 112
SWITCH GP-ROTARY–THROTTLE POSITION	100
SWITCH-PRESSURE (OIL, ENGINE)	36
SWIVEL GP	301 303

T

TANK & FILTER GP-HYDRAULIC	305
TANK & MTG GP-FUEL	67
TANK & MTG GP-HYDRAULIC	307
TANK GP-WINDOW WASHER	541
THUMB GP	438 440
TIP GP-LONG	421 422 423 424 425 426 427
TOOTH GP-UNI	415 416 417 418 419 420
TRACK GP	179
TRACK GP–RUBBER BELT	179
TRACK GP–STEEL	180

U

UNDERCARRIAGE AR	181

INDEX

NAME PAGE

V

V-BELT (AIR CONDITIONER COMPRESSOR) 472
V-BELT (FAN) 32
VALVE & MOUNTING GP–CANOPY 308
VALVE & MTG GP-BANK 309 310
VALVE & MTG GP-CONTROL–2-WAY 313
VALVE & MTG GP-CONTROL–AUXILIARY, BOOM SWING 311
VALVE & MTG GP-MAIN CONTROL–BLADE ANGLE 315 316
VALVE & MTG GP-PILOT–CAB 319
VALVE & MTG GP-PILOT–TRAVEL 317 318
VALVE AS-RELIEF (ANGLE BLADE) 343 346
VALVE AS-RELIEF (LINE) 342 343 345 346 359
VALVE GP-CHECK 369
VALVE GP-CHECK (HYDRAULIC CONTROL LOCK) 205
VALVE GP-CHECK (PILOT OPERATED) 230
VALVE GP-CHECK (PILOT OPERATED) 237
VALVE GP-CHECK (QUICK COUPLER) 364
VALVE GP-CHECK–HYDRAULIC CONTROL LOCK 320
VALVE GP-CONTROL 321
VALVE GP-CONTROL (SWING BOOM, WORK TOOL) 277
VALVE GP-CONTROL–ANGLE 329
VALVE GP-CONTROL–AUXILIARY 331
VALVE GP-CONTROL–BLADE 324 335
VALVE GP-CONTROL–BOOM 333
VALVE GP-CONTROL–BOOM SWING 328
VALVE GP-CONTROL–BUCKET 326
VALVE GP-CONTROL–INLET 322
VALVE GP-CONTROL–OUTLET 323
VALVE GP-CONTROL–STICK 336 337 341
VALVE GP-CONTROL–SWING 327
VALVE GP-CONTROL–TRAVEL RIGHT 339
VALVE GP-LOAD CONTROL (BOOM LOWERING) 228
VALVE GP-MAIN CONTROL 315 345
VALVE GP-MAIN CONTROL–12-BANK 343
VALVE GP-MAIN CONTROL–ANGLE BLADE . . . 346
VALVE GP-MAIN CONTROL–STANDARD 342
VALVE GP-PILOT (CANOPY) 308
VALVE GP-PILOT–BLADE CONTROL 349 353
VALVE GP-PILOT–JOYSTICK 348
VALVE GP-PILOT–WITH SHUTTLE 351 355
VALVE GP-PRESSURE REDUCING (QUICK COUPLER) 364
VALVE GP-PUMP CONTROL 356 357
VALVE GP-REDUCING (SLOW RETURN) 262 265
VALVE GP-RELIEF 358
VALVE GP-RELIEF (OUTLET) 323
VALVE GP-RELIEF–LINE, THUMB 359
VALVE GP-SHUTOFF (HYDRAULIC TANK) 18
VALVE GP-SOLENOID 360 361 362 363
VALVE GP-SOLENOID (12-VOLT) (FLOW CONTROL) 363
VALVE GP-SOLENOID (12-VOLT) (QUICK COUPLER) 364
VALVE GP-SOLENOID (AUXILIARY, BOOM SWING) 289
VALVE GP-SOLENOID (BLADE) 269 362
VALVE GP-SOLENOID (FLOW CONTROL) (2-WAY) 313
VALVE GP-SOLENOID & MANIFOLD–QUICK COUPLER 364
VALVE MECHANISM GP 33

W

WASHER GP-WINDOW 541
WINDOW GP-CAB 542
WINDOW GP-SLIDING 544
WIRING GP-CAB–CANOPY 101
WIRING GP-CONSOLE–CAB 102 106
WIRING GP-CONSOLE–CANOPY 108 112
WIRING GP-CONSOLE–POWER ANGLE 114
WIRING GP-ENGINE–REFRIGERANT COMPRESSOR 116
WIRING GP-LIGHTING 117
WIRING GP-LIGHTING–WARNING BEACON, POWER RECEP 118
WIRING GP-OVERLOAD WARNING 119
WIRING GP-QUICK COUPLER 120
WIRING GP-RELAY PANEL–2ND AUXILIARY . . . 122
WIRING GP-RELAY PANEL–PATTERN CHANGE 121

MEMORANDA

MACHINE ARRANGEMENT

376-6675 CHASSIS AR

PART OF 376-6671 COMMON AR

SMCS-7000 **i04629845**

NOTE	PART NUMBER	QTY	PART NAME 1 2 3 4 5 6 (PRODUCT LEVEL)	SEE PAGE
Y	*367-0904*	1	COUNTERWEIGHT GP	132
Y	*367-0912*	1	COVER GP-FENDER	136
Y	*376-6206*	1	FRAME GP-UPPER	146
Y	*379-2988*	1	GUARD GP-BOTTOM	147
Y	*367-0918*	1	HOOD & GUARD GP	152
Y	*266-6835*	1	HORN GP-ELECTRIC	506
Y	*379-4692*	1	LINES GP-FUEL FILTER	59
Y	*379-4691*	1	LINES GP-GREASE	157
Y	*379-3624*	1	OPERATOR AR	525
Y	*377-9699*	1	PLATE & FILM GP	564
Y	*367-0930*	1	TANK & MTG GP-FUEL	67

Y - SEPARATE ILLUSTRATION

<END>

376-6671 COMMON AR

SMCS-7000 **i05289932**

NOTE	PART NUMBER	QTY	PART NAME 1 2 3 4 5 6 (PRODUCT LEVEL)	SEE PAGE
Y	*376-6679*	1	BOOM AR	365
Y	*376-6675*	1	CHASSIS AR	1
Y	*355-3393*	1	CONTROL & MTG GP-PEDAL (TRAVEL)	479
Y	*379-4680*	1	CONTROL AR-AUXILIARY	189
Y	*392-4759*	1	ELECTRONICS GP-MACHINE	82
Y	*377-0326*	1	ELECTRONICS GP-MONITOR	82
Y	**378-3248**	1	ENGINE AR-COMPLETE	2
			S/N: TTN1-908	
Y	*379-4678*	1	HYDRAULIC AR	217
Y	*380-6359*	1	INSTALLATION AR-ENGINE	5
Y	*264-8384*	1	POWER TRAIN AR	129
Y	*380-8798*	1	UNDERCARRIAGE AR	181

Y - SEPARATE ILLUSTRATION

<END>

ENGINE ARRANGEMENT

378-3248 ENGINE AR-COMPLETE

S/N: TTN1-908
31 BRAKE KW (42 BHP) AT 2200 RPM
FIELD REPLACEMENT ORDER 416-6082—PAGE: 5
PART OF 376-6671 COMMON AR

SMCS-1000 **i04669615**

NOTE	PART NUMBER	QTY	PART NAME 1 2 3 4 5 6 (PRODUCT LEVEL)	SEE PAGE
Y	*383-0133*	1	ACCESSORY GP-ENGINE	44
Y	*383-0134*	1	ALTERNATOR GP-CHARGING	71
Y	*383-0137*	1	CAMSHAFT GP	7
Y	*383-0139*	1	COVER GP-VALVE MECHANISM	8
Y	*383-0140*	1	CRANKSHAFT GP	9
Y	*383-0136*	1	CYLINDER BLOCK GP	12
Y	*383-0145*	1	CYLINDER HEAD GP	15
Y	*383-0250*	1	FILLER GP-ENGINE OIL	35
Y	*383-0141*	1	FILTER GP-ENGINE OIL (WITH SWITCH)	36
Y	*383-0142*	1	FLYWHEEL GP	20
Y	*383-0144*	1	GAUGE GP-OIL LEVEL (DIPSTICK) (ENGINE)	37
Y	*383-0158*	1	GLOW PLUG GP	83
Y	*383-0570*	1	GOVERNOR GP	56
Y	*383-0503*	1	HOUSING GP-FRONT	23
Y	*383-0146*	1	LIFTING GP-ENGINE	25
Y	*383-0147*	1	LINES GP-FUEL	58
Y	*383-0148*	1	LINES GP-FUEL INJECTION	62
Y	*385-5059*	1	LINES GP-WATER	39
Y	*383-0151*	1	MANIFOLD GP-EXHAUST	49
Y	*383-0152*	1	MANIFOLD GP-INLET	50
Y	*383-0155*	1	NOZZLE GP-UNIT INJECTOR	63
Y	*383-0156*	1	PAN GP-OIL	30
Y	*383-0157*	1	PISTON & ROD GP	31
Y	*383-0159*	1	PULLEY GP-FAN DRIVE	32
Y	*383-0161*	1	PUMP GP-ENGINE OIL	38
Y	*383-0160*	1	PUMP GP-FUEL INJECTION	64
Y	*383-0162*	1	PUMP GP-WATER	40
Y	*383-0154*	1	STARTING MOTOR GP-ELECTRIC	99
Y	*383-0153*	1	VALVE MECHANISM GP	33

Y - SEPARATE ILLUSTRATION

<END>

431-6154 ENGINE AR-COMPLETE

AN ATTACHMENT

SMCS-1000 **i05383019**

NOTE	PART NUMBER	QTY	PART NAME 1 2 3 4 5 6 (PRODUCT LEVEL)	SEE PAGE
Y	**392-4128**	1	ENGINE AR-PRIMARY	4

Y - SEPARATE ILLUSTRATION

<END>

431-6157 ENGINE AR-COMPLETE

AN ATTACHMENT

SMCS-1000 **i05383016**

NOTE	PART NUMBER	QTY	PART NAME 1 2 3 4 5 6 (PRODUCT LEVEL)	SEE PAGE
Y	**378-3252**	1	ENGINE AR-PRIMARY	3

Y - SEPARATE ILLUSTRATION

<END>

ENGINE ARRANGEMENT

378-3252 ENGINE AR-PRIMARY

31 BRAKW KW (42 BHP) AT 2200 RPM
PART OF 431-6157 ENGINE AR-COMPLETE
AN ATTACHMENT

SMCS-1000 **i05338007**

NOTE	PART NUMBER	QTY	PART NAME 1 2 3 4 5 6 (PRODUCT LEVEL)	SEE PAGE
Y	*383-0133*	1	ACCESSORY GP-ENGINE	44
Y	*383-0134*	1	ALTERNATOR GP-CHARGING	71
Y	*383-0137*	1	CAMSHAFT GP	7
Y	*383-0139*	1	COVER GP-VALVE MECHANISM	8
Y	*383-0140*	1	CRANKSHAFT GP	9
Y	*383-0136*	1	CYLINDER BLOCK GP	12
Y	*383-0145*	1	CYLINDER HEAD GP	15
Y	*383-0250*	1	FILLER GP-ENGINE OIL	35
Y	*383-0141*	1	FILTER GP-ENGINE OIL (WITH SWITCH)	36
Y	*383-0142*	1	FLYWHEEL GP	20
Y	*383-0144*	1	GAUGE GP-OIL LEVEL (DIPSTICK) (ENGINE)	37
Y	*383-0158*	1	GLOW PLUG GP	83
Y	*383-0570*	1	GOVERNOR GP	56
Y	*383-0503*	1	HOUSING GP-FRONT	23
Y	*383-0146*	1	LIFTING GP-ENGINE	25
Y	*383-0147*	1	LINES GP-FUEL	58
Y	*383-0148*	1	LINES GP-FUEL INJECTION	62
Y	*385-5059*	1	LINES GP-WATER	39
Y	*383-0151*	1	MANIFOLD GP-EXHAUST	49
Y	*383-0152*	1	MANIFOLD GP-INLET	50
Y	*383-0155*	1	NOZZLE GP-UNIT INJECTOR	63
Y	*383-0156*	1	PAN GP-OIL	30
Y	*383-0157*	1	PISTON & ROD GP	31
Y	*383-0159*	1	PULLEY GP-FAN DRIVE	32
Y	*383-0161*	1	PUMP GP-ENGINE OIL	38
Y	*383-0160*	1	PUMP GP-FUEL INJECTION	64
Y	*383-0162*	1	PUMP GP-WATER	40
Y	*383-0154*	1	STARTING MOTOR GP-ELECTRIC	99
Y	*383-0153*	1	VALVE MECHANISM GP	33

Y - SEPARATE ILLUSTRATION

<END>

ENGINE ARRANGEMENT

392-4128 ENGINE AR-PRIMARY

31 BRAKE KW (42 BHP) AT 2200 RPM
FIELD REPLACEMENT ORDER 416-6082—PAGE: 5
PART OF 431-6154 ENGINE AR-COMPLETE
AN ATTACHMENT

SMCS-1000 **i05255573**

NOTE	PART NUMBER	QTY	PART NAME 1 2 3 4 5 6 (PRODUCT LEVEL)	SEE PAGE
Y	*383-0133*	1	ACCESSORY GP-ENGINE	44
Y	*383-0134*	1	ALTERNATOR GP-CHARGING	71
Y	*383-0137*	1	CAMSHAFT GP	7
Y	*383-0139*	1	COVER GP-VALVE MECHANISM	8
Y	*383-0140*	1	CRANKSHAFT GP	9
Y	*383-0136*	1	CYLINDER BLOCK GP	12
Y	*383-0145*	1	CYLINDER HEAD GP	15
Y	*383-0250*	1	FILLER GP-ENGINE OIL	35
Y	*383-0141*	1	FILTER GP-ENGINE OIL (WITH SWITCH)	36
Y	*383-0142*	1	FLYWHEEL GP	20
Y	*383-0144*	1	GAUGE GP-OIL LEVEL (DIPSTICK) (ENGINE)	37
Y	*383-0158*	1	GLOW PLUG GP	83
Y	*383-0570*	1	GOVERNOR GP	56
Y	*383-0503*	1	HOUSING GP-FRONT	23
Y	*383-0146*	1	LIFTING GP-ENGINE	25
Y	*383-0147*	1	LINES GP-FUEL	58
Y	*383-0148*	1	LINES GP-FUEL INJECTION	62
Y	*385-5059*	1	LINES GP-WATER	39
Y	*383-0151*	1	MANIFOLD GP-EXHAUST	49
Y	*383-0152*	1	MANIFOLD GP-INLET	50
Y	*383-0155*	1	NOZZLE GP-UNIT INJECTOR	63
Y	*383-0156*	1	PAN GP-OIL	30
Y	**383-0157**	1	PISTON & ROD GP	31
Y	*383-0159*	1	PULLEY GP-FAN DRIVE	32
Y	*383-0161*	1	PUMP GP-ENGINE OIL	38
Y	*383-0160*	1	PUMP GP-FUEL INJECTION	64
Y	*383-0162*	1	PUMP GP-WATER	40
Y	*383-0154*	1	STARTING MOTOR GP-ELECTRIC	99
Y	*383-0153*	1	VALVE MECHANISM GP	33

Y - SEPARATE ILLUSTRATION

<END>

ENGINE ARRANGEMENT

416-6082 ENGINE AR-PRIMARY

31 BRAKE KW (42 BHP) AT 2200 RPM

FIELD REPLACEMENT FOR 378-3248—PAGE: 2, 392-4128—PAGE: 4

SMCS-1000 **i05325273**

NOTE	PART NUMBER	QTY	PART NAME 1 2 3 4 5 6 (PRODUCT LEVEL)	SEE PAGE
Y	*383-0133*	1	ACCESSORY GP-ENGINE	44
Y	*383-0134*	1	ALTERNATOR GP-CHARGING	71
Y	*383-0137*	1	CAMSHAFT GP	7
Y	*383-0139*	1	COVER GP-VALVE MECHANISM	8
Y	*383-0140*	1	CRANKSHAFT GP	9
Y	*383-0136*	1	CYLINDER BLOCK GP	12
Y	*383-0145*	1	CYLINDER HEAD GP	15
Y	*383-0250*	1	FILLER GP-ENGINE OIL	35
Y	*383-0141*	1	FILTER GP-ENGINE OIL (WITH SWITCH)	36
Y	*383-0142*	1	FLYWHEEL GP	20
Y	*383-0144*	1	GAUGE GP-OIL LEVEL (DIPSTICK) (ENGINE)	37
Y	*383-0158*	1	GLOW PLUG GP	83
Y	*383-0570*	1	GOVERNOR GP	56
Y	*383-0503*	1	HOUSING GP-FRONT	23
Y	*383-0146*	1	LIFTING GP-ENGINE	25
Y	*383-0147*	1	LINES GP-FUEL	58
Y	*383-0148*	1	LINES GP-FUEL INJECTION	62
Y	*385-5059*	1	LINES GP-WATER	39
Y	*383-0151*	1	MANIFOLD GP-EXHAUST	49
Y	*383-0152*	1	MANIFOLD GP-INLET	50
Y	*383-0155*	1	NOZZLE GP-UNIT INJECTOR	63
Y	*383-0156*	1	PAN GP-OIL	30
Y	**383-0157**	1	PISTON & ROD GP	31
Y	*383-0159*	1	PULLEY GP-FAN DRIVE	32
Y	*383-0161*	1	PUMP GP-ENGINE OIL	38
Y	*383-0160*	1	PUMP GP-FUEL INJECTION	64
Y	*383-0162*	1	PUMP GP-WATER	40
Y	*383-0154*	1	STARTING MOTOR GP-ELECTRIC	99
Y	*383-0153*	1	VALVE MECHANISM GP	33

Y - SEPARATE ILLUSTRATION

<END>

380-6359 INSTALLATION AR-ENGINE

PART OF 376-6671 COMMON AR

SMCS-1000 **i04638093**

NOTE	PART NUMBER	QTY	PART NAME 1 2 3 4 5 6 (PRODUCT LEVEL)	SEE PAGE
Y	*383-8499*	1	AIR CLEANER GP	46
Y	*380-6597*	1	BELT TENSIONER GP	6
Y	*380-6377*	1	EXTENSION GP-EXHAUST	47
Y	*387-3558*	1	LINES GP-AIR	48
Y	*378-1264*	1	MUFFLER GP	51
Y	*380-6364*	1	RADIATOR & HYD OIL COOLER GP	41
Y	*378-2140*	1	SHUTOFF GP-MANUAL (FUEL INJECTION PUMP)	66

Y - SEPARATE ILLUSTRATION

<END>

380-6597 BELT TENSIONER GP

PART OF 380-6359 INSTALLATION AR-ENGINE

SMCS-1357, 1358, 1397 **i05437155**

NOTE	REF NO	GRAPHIC REF	PART NUMBER	QTY	PART NAME 1 2 3 4 5 6 (PRODUCT LEVEL)	SEE PAGE
	1	1	**382-4808**	1	BRACKET AS	
		1	**381-5786**	1	SPACER (9X16X54-MM THK)	
	2	1	**382-4810**	1	BRACKET AS	
M		1	**8T-3612**	1	NUT-WELD (M8X1.25-THD)	
	3	1	**382-4812**	1	SPACER (9X22X8.5-MM THK)	
	4	1	**382-4813**	1	BRACKET AS	
M		1	**8T-3612**	1	NUT-WELD (M8X1.25-THD)	
	5	1	**382-4815**	1	SLEEVE	
M	6	1	**099-3649**	1	BOLT (M8X1.25X40-MM)	
	7	1	**304-2819**	1	BOLT (M8X1.25X100-MM)	
M	8	1	**5C-7261**	1	NUT (M8X1.25-THD)	
M	9	1	**8T-3647**	2	BOLT (M8X1.25X80-MM)	
	10	1	**8T-4224**	6	WASHER-HARD (8.8X16X2-MM THK)	
M	11	1	**8T-4908**	1	BOLT (M8X1.25X25-MM)	

M - METRIC PART

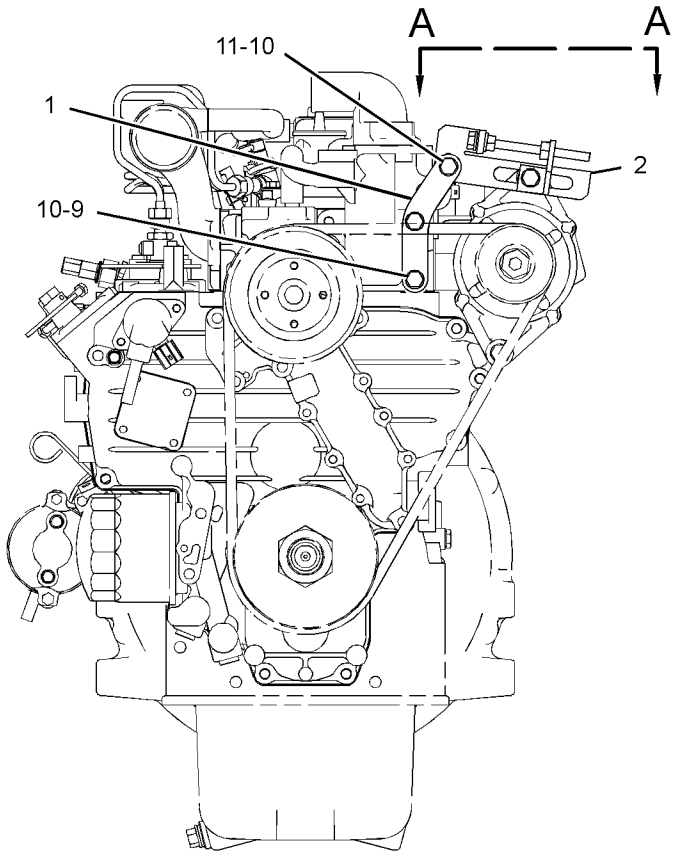

FRONT VIEW OF ENGINE

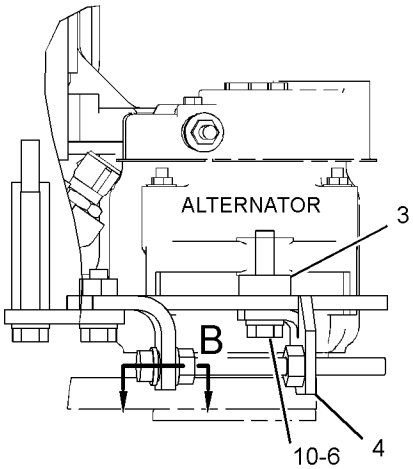

VIEW A-A

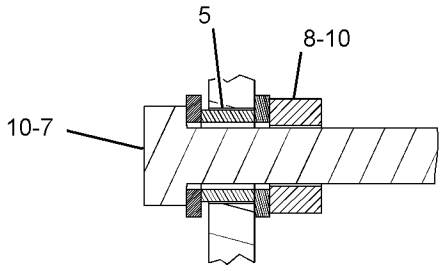

SECTION B

GRAPHIC #1 **<END>** g02769076

383-0137 CAMSHAFT GP

S/N: TTN1-908

PART OF 378-3248 ENGINE AR-COMPLETE, 378-3252, 392-4128, 416-6082 ENGINE AR-PRIMARY
ALSO AN ATTACHMENT

SMCS-1210, 1211, 1212

i04659451

NOTE	REF NO	GRAPHIC REF	PART NUMBER	QTY	PART NAME 1 2 3 4 5 6 (PRODUCT LEVEL)	SEE PAGE
	1	1	**383-0171**	2	BOLT	
	2	1	*383-0540*	1	CAMSHAFT AS	
	2A	1	**383-0227**	1	KEY-FEATHER	
	2B	1	**383-0231**	1	BALL	
	2C	1	**383-0270**	1	STOPPER (CAMSHAFT)	
	2D	1	**383-0465**	1	GEAR-CAMSHAFT (68-TEETH)	

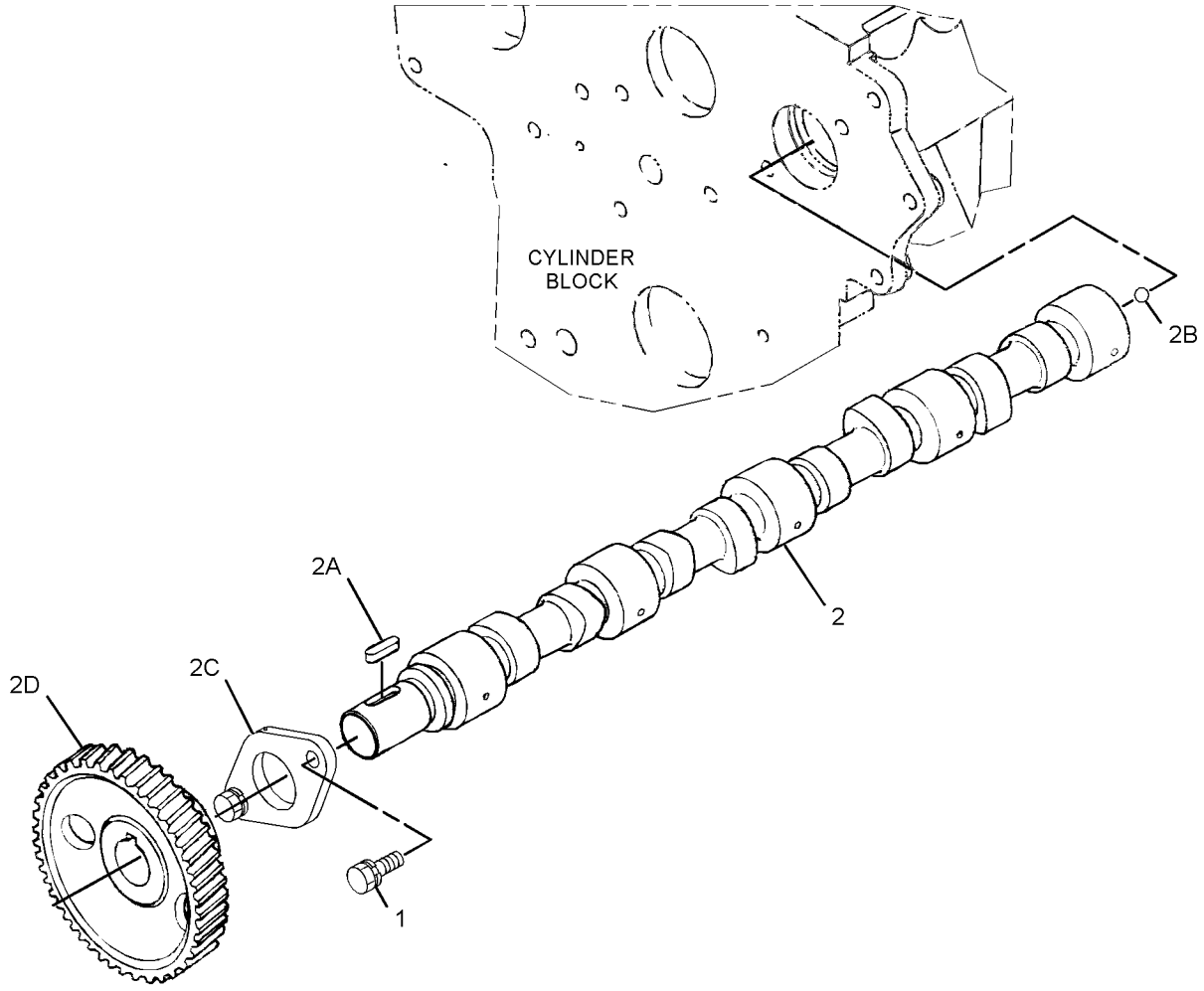

GRAPHIC #1

<END>

g02789469

383-0139 COVER GP-VALVE MECHANISM

S/N: TTN1-908

PART OF 378-3248 ENGINE AR-COMPLETE, 378-3252, 392-4128, 416-6082 ENGINE AR-PRIMARY
ALSO AN ATTACHMENT

SMCS-1107, 1120

i04935916

NOTE	REF NO	GRAPHIC REF	PART NUMBER	QTY	PART NAME 1 2 3 4 5 6 (PRODUCT LEVEL)	SEE PAGE
	1	1	**383-0217**	1	SEAL-O-RING	
	2	1	**383-0321**	1	PLUG-FILLER	
	3	1	*383-0499*	1	COVER AS-VALVE	
	3A	1	**383-0203**	4	SCREW	
	3B	1	**383-0382**	1	PIPE	
	3C	1	**383-0524**	1	COVER	
	3D	1	**383-0563**	1	VALVE-BREATHER	
	4	1	**383-0565**	1	GASKET	
	5	1	**383-0574**	10	BOLT	
	6	1	**389-1592**	1	HOSE-BREATHER	
	7	1	**389-1593**	2	CLAMP	

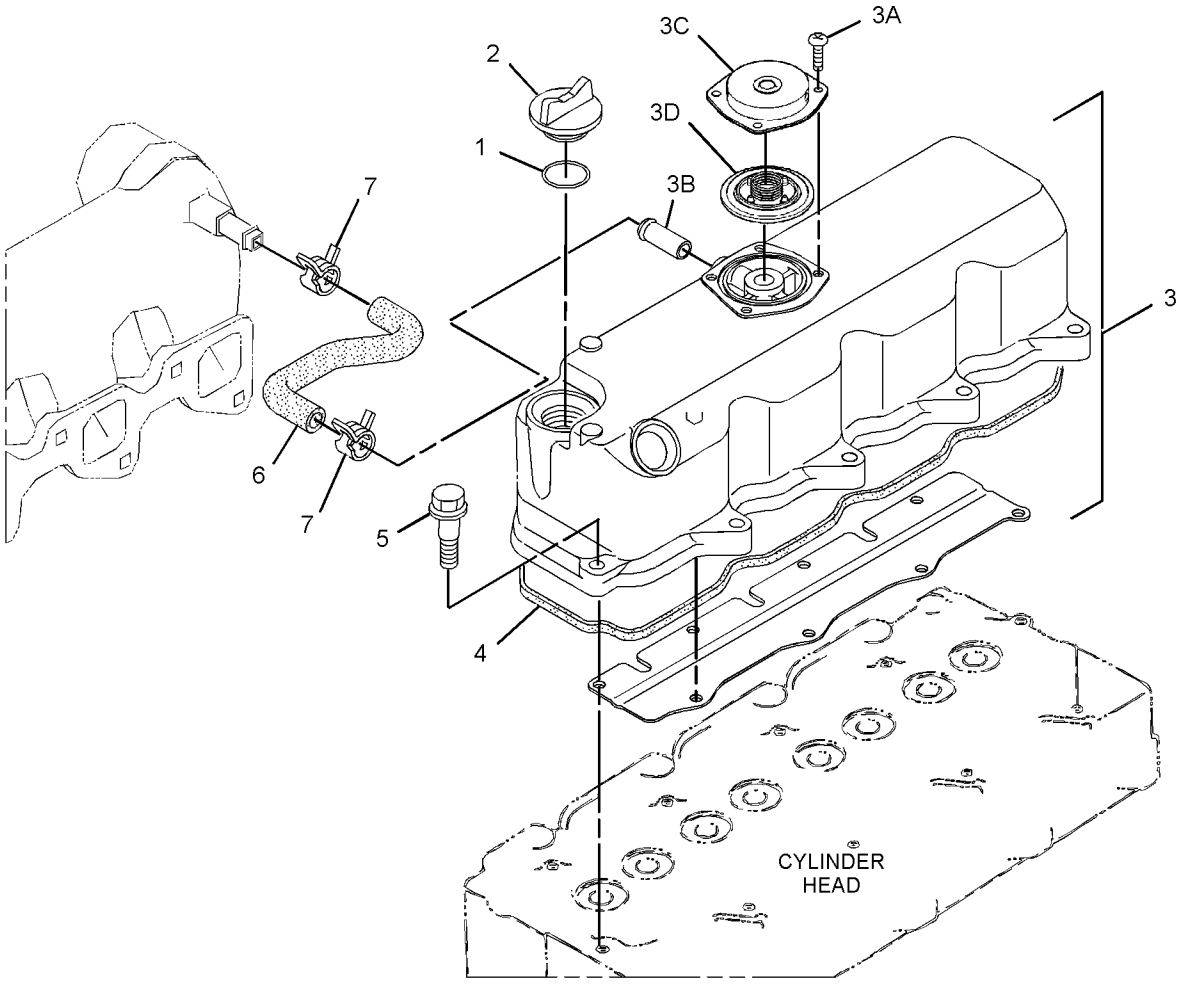

GRAPHIC #1

<END>

g02789497

383-0140 CRANKSHAFT GP

S/N: TTN1-908

PART OF 378-3248 ENGINE AR-COMPLETE, 378-3252, 392-4128, 416-6082 ENGINE AR-PRIMARY
ALSO AN ATTACHMENT

SMCS-1160, 1161, 1202, 1203, 1204, 1230, 1231, 1232 **i05060488**

NOTE	REF NO	GRAPHIC REF	PART NUMBER	QTY	PART NAME 1 2 3 4 5 6 (PRODUCT LEVEL)	SEE PAGE
	1	1	**383-0467**	1	BEARING-CRANKSHAFT	
	2	1	**383-0469**	2	BUSHING	
	3	1	**383-0470**	2	BUSHING	
	4	1	**383-0392**	1	COLLAR-CAMSHAFT	
	5	1	**383-0533**	1	CRANKSHAFT AS	
	5A	1	**383-0231**	4	BALL	
	5B	1	**383-0393**	1	BEARING-CRANKSHAFT	
	6	1	**383-0515**	1	GEAR AS-IDLER (79-TEETH)	
		1	**383-0401**	1	GEAR-IDLER	
	7	1	**383-0587**	1	COLLAR-GEAR CONTROL	
	8	1	**383-0399**	1	GEAR-CRANKSHAFT (34-TEETH)	
	9	1	**383-0228**	1	KEY-FEATHER	
	10	1	**383-0271**	1	NUT	
	11	1	**383-0398**	1	PIN-STRAIGHT	
	12	1	**383-0210**	1	SEAL-O-RING	
	13	1	**383-0400**	1	SHAFT-GEAR	
	14	1	**383-0292**	1	SLINGER-OIL	
	15	1	**383-0171**	3	BOLT	
	16	1	**393-7502**	2	BOLT-FLANGE HEAD	
	17	1	**389-0724**	1	BEARING-MAIN (0.20-MM UNDERSIZE)	
	18	1	**389-0725**	1	BEARING-MAIN (0.40-MM UNDERSIZE)	
	19	1	**389-0726**	2	BEARING-THRUST (0.20-MM OVERSIZE)	
	20	1	**389-0728**	2	BEARING-THRUST (0.20 OVERSIZE)	
	21	1	**389-0727**	2	BEARING-THRUST (0.40-MM OVERSIZE)	
	22	1	**389-0729**	2	BEARING-THRUST (0.40 OVERSIZE)	

383-0140 **CRANKSHAFT GP (*contd.*)** **i05060488**

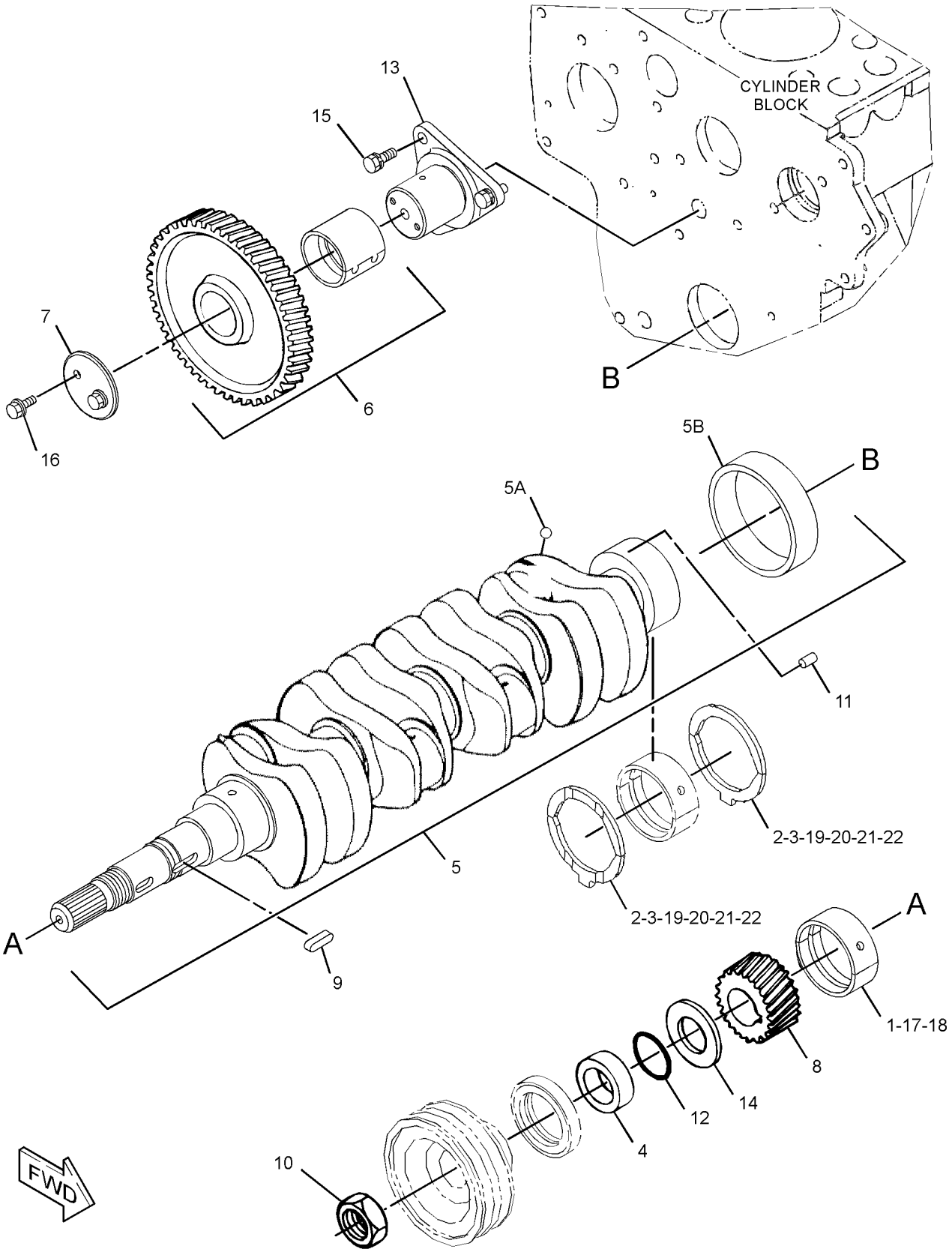

GRAPHIC #1 **<END>** g03234521

383-0488 CYLINDER BLOCK AS

PART OF 383-0136 CYLINDER BLOCK GP
ALSO AN ATTACHMENT

SMCS-1201 **i04642233**

NOTE	REF NO	GRAPHIC REF	PART NUMBER	QTY	PART NAME 1 2 3 4 5 6 (PRODUCT LEVEL)	SEE PAGE
	1	1	**383-0261**	2	CAP	
	2	1	**383-0260**	6	CAP	
	3	1	**383-0358**	1	CAP	
	4	1	**383-0218**	2	PIN	
	5	1	**383-0219**	3	PIN	
	6	1	**383-0220**	2	PIN	
	7	1	**383-0221**	1	PIN	
	8	1	**383-0303**	6	PLUG	
	9	1	**383-0304**	2	PLUG	
	10	1	**383-0337**	1	PLUG	
	11	1	**383-0385**	3	PLUG	

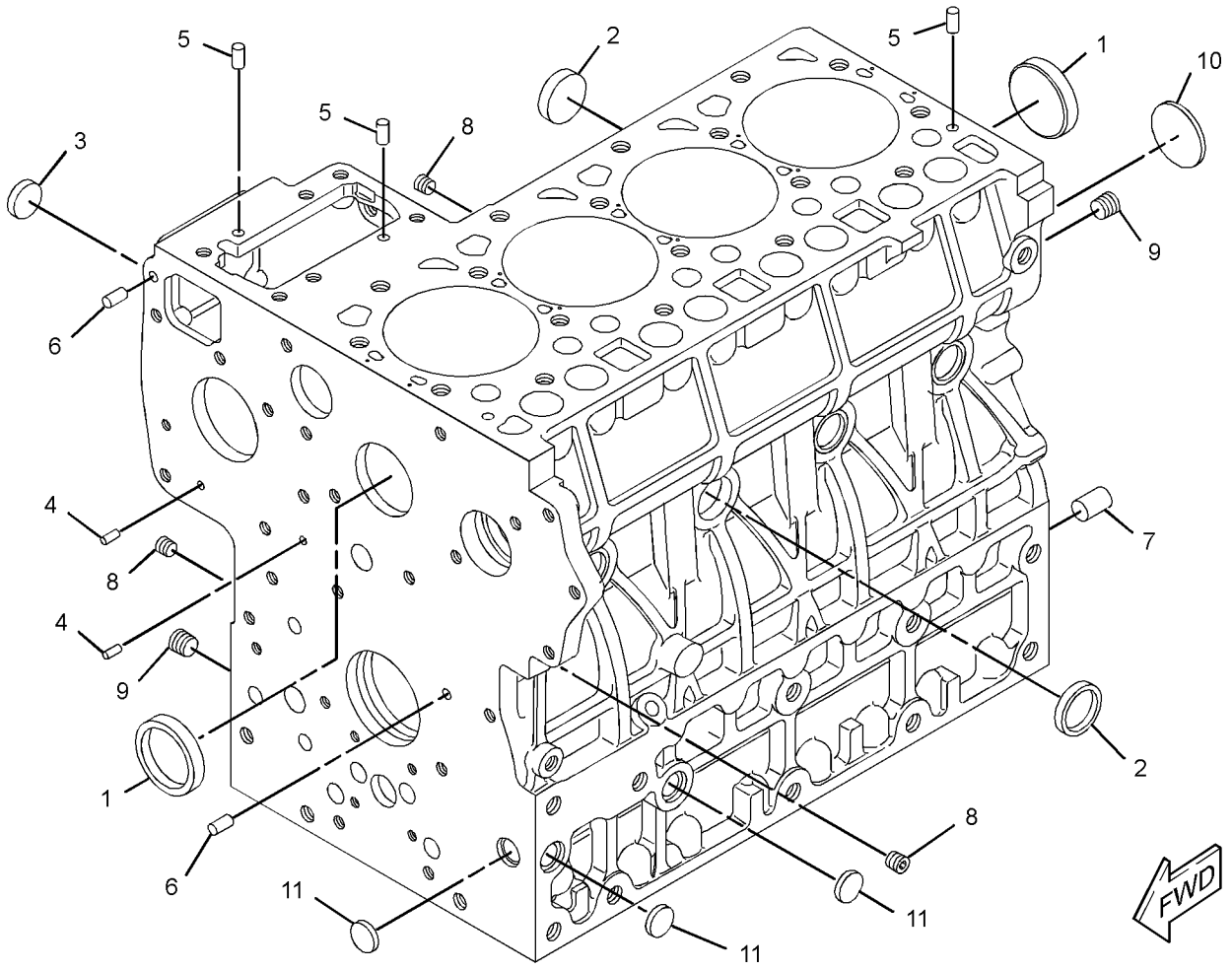

GRAPHIC #1 **<END>** g02789540

383-0136 CYLINDER BLOCK GP

S/N: TTN1-908

PART OF 378-3248 ENGINE AR-COMPLETE, 378-3252, 392-4128, 416-6082 ENGINE AR-PRIMARY
ALSO AN ATTACHMENT

SMCS-1201 **i04639515**

NOTE	REF NO	GRAPHIC REF	PART NUMBER	QTY	PART NAME 1 2 3 4 5 6 (PRODUCT LEVEL)	SEE PAGE
Y	1	1	*383-0488*	1	CYLINDER BLOCK AS	11
	2	1	*383-0432*	1	CASE AS	
	2A	1	**383-0447**	2	BOLT	
	2B	1	**383-0468**	2	BEARING	
		1	**383-0430**	2	BEARING (0.20-MM UNDERSIZE)	
		1	**383-0431**	2	BEARING (0.40-MM UNDERSIZE)	
	3	1	*383-0457*	1	CASE AS	
	3A	1	**383-0447**	2	BOLT	
	3B	1	**383-0468**	2	BEARING	
		1	**383-0430**	2	BEARING (0.20-MM UNDERSIZE)	
		1	**383-0431**	2	BEARING (0.40-MM UNDERSIZE)	
	4	1	*383-0458*	1	CASE AS	
	4A	1	**383-0447**	2	BOLT	
	4B	1	**383-0468**	2	BEARING	
		1	**383-0430**	2	BEARING (0.20-MM UNDERSIZE)	
		1	**383-0431**	2	BEARING (0.40-MM UNDERSIZE)	
	5	1	*383-0459*	1	CASE AS	
	5A	1	**383-0447**	2	BOLT	
	5B	1	**383-0468**	2	BEARING	
		1	**383-0430**	2	BEARING (0.20-MM UNDERSIZE)	
		1	**383-0431**	2	BEARING (0.40-MM UNDERSIZE)	
	6	1	**383-0174**	8	BOLT	
	7	1	**383-0175**	8	BOLT	
	8	1	**383-0305**	3	BOLT	
	9	1	**383-0532**	1	COVER	
	10	1	**383-0386**	1	FITTING	
	11	1	**383-0256**	1	GASKET	
	12	1	**383-0446**	1	GASKET	
	13	1	**383-0451**	1	GASKET	
	14	1	**383-0229**	1	PLUG	
	15	1	**383-0557**	1	PLUG	
	16	1	**383-0347**	1	SEAL (REAR)	
	17	1	**383-0553**	1	SEAL (FRONT)	

Y - SEPARATE ILLUSTRATION

383-0136 **CYLINDER BLOCK GP (*contd.*)** **i04639515**

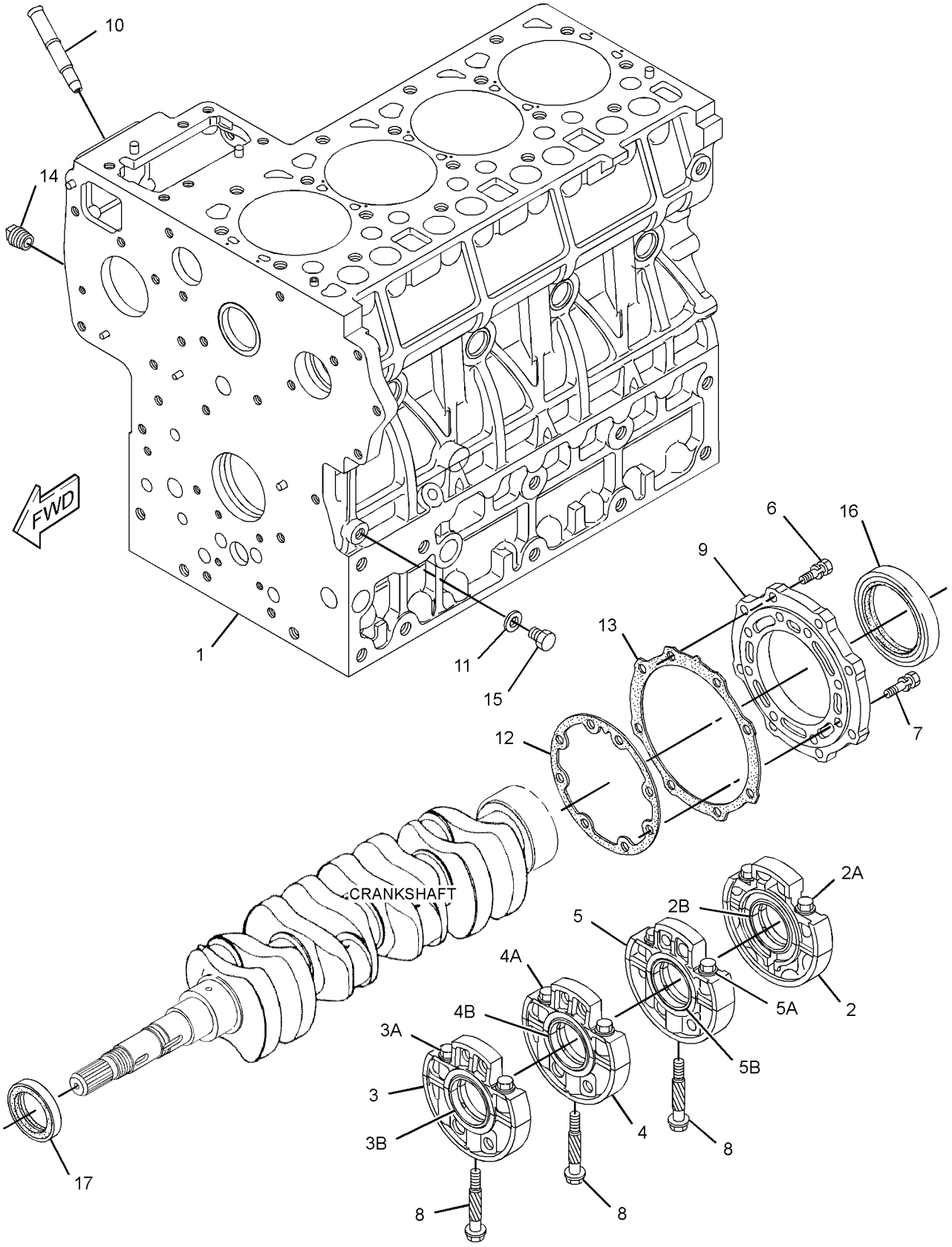

GRAPHIC #1 **<END>** g02789590

383-0517 CYLINDER HEAD AS

PART OF 383-0145 CYLINDER HEAD GP
ALSO AN ATTACHMENT

SMCS-1100 **i04642655**

NOTE	REF NO	GRAPHIC REF	PART NUMBER	QTY	PART NAME 1 2 3 4 5 6 (PRODUCT LEVEL)	SEE PAGE
	1	1	**383-0259**	12	CAP	
	2	1	**383-0262**	1	CAP	
	3	1	**383-0283**	2	PLUG	
	4	1	**383-0360**	4	SEAT-VALVE (EXHAUST)	
	5	1	**383-0361**	4	SEAT-VALVE (INLET)	
	6	1	**383-0473**	4	GUIDE-VALVE (EXHAUST)	
	7	1	**383-0555**	4	GUIDE-VALVE (INLET)	

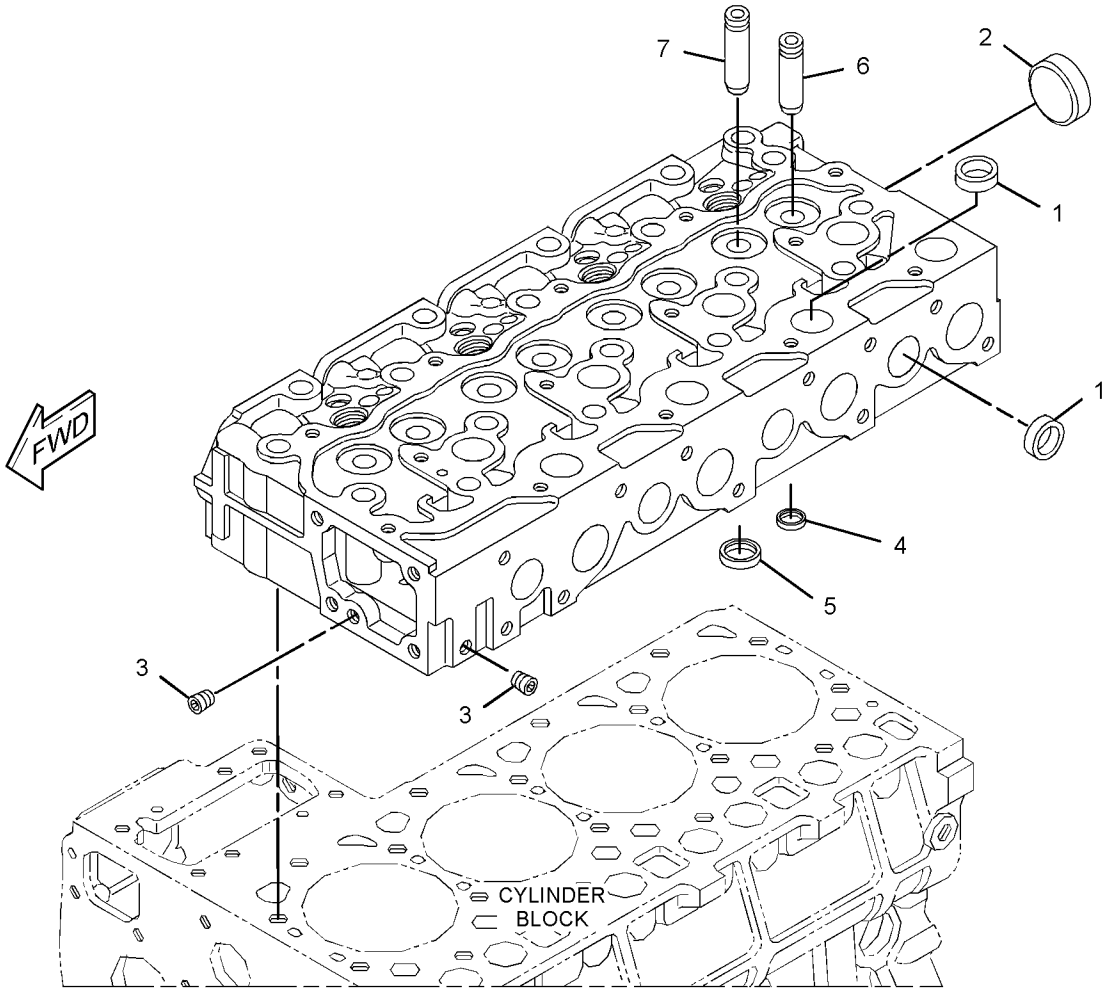

GRAPHIC #1 **<END>** g02790077

383-0145 CYLINDER HEAD GP

S/N: TTN1-908

PART OF 378-3248 ENGINE AR-COMPLETE, 378-3252, 392-4128, 416-6082 ENGINE AR-PRIMARY

ALSO AN ATTACHMENT

SMCS-1100 **i05326340**

NOTE	REF NO	GRAPHIC REF	PART NUMBER	QTY	PART NAME 1 2 3 4 5 6 (PRODUCT LEVEL)	SEE PAGE
	1	1	**383-0263**	8	SEAL	
	2	1	**383-0264**	8	CAP	
	3	1	**383-0265**	8	RETAINER	
	4	1	**383-0266**	8	COLLAR	
	5	1	**383-0387**	18	BOLT	
	6	1	**383-0493**	1	GASKET (1.20-MM THK)	
		1	**383-0494**	1	GASKET (1.15-MM THK)	
		1	**383-0495**	1	GASKET (1.25-MM THK)	
		1	**383-0496**	1	GASKET (1.30-MM THK)	
		1	**383-0497**	1	GASKET (1.35-MM THK)	
Y	7	1	**383-0517**	1	CYLINDER HEAD AS	14
	8	1	**383-0534**	4	VALVE-INLET	
	9	1	**383-0535**	4	VALVE-EXHAUST	
	10	1	**383-0554**	8	SPRING-VALVE	
	11	1	**395-3381**	1	PLUG	

Y - SEPARATE ILLUSTRATION

383-0145 **CYLINDER HEAD GP (*contd.*)** **i05326340**

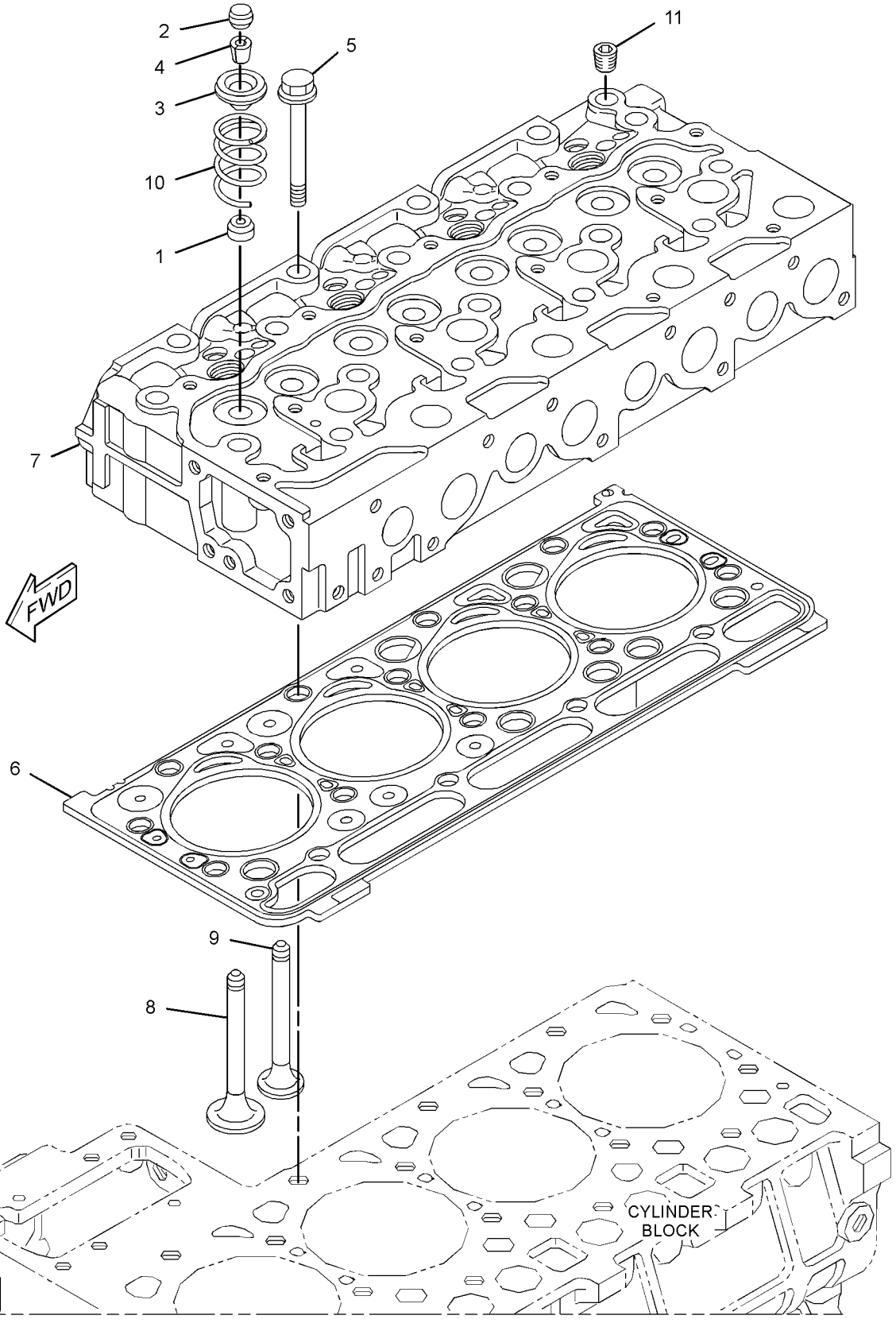

GRAPHIC #1 **<END>** g03404588

379-4690 DRAIN GP-ECOLOGY—ENGINE, HYDRAULIC TANK

CANNOT BE USED WITH 379-4689—PAGE: 211

AN ATTACHMENT

SMCS-1302 **i04629173**

NOTE	PART NUMBER	QTY	PART NAME 1 2 3 4 5 6 (PRODUCT LEVEL)	SEE PAGE
Y	*379-4710*	1	DRAIN GP-ECOLOGY (HYDRAULIC OIL)	18
Y	*378-2141*	1	DRAIN GP-ENGINE OIL (ECOLOGY)	19

Y - SEPARATE ILLUSTRATION

<END>

379-4710 DRAIN GP-ECOLOGY–ECOLOGY, HYDRAULIC TANK

PART OF 379-4690 DRAIN GP-ECOLOGY

AN ATTACHMENT

SMCS-1302 **i04629175**

NOTE	REF NO	GRAPHIC REF	PART NUMBER	QTY	PART NAME 1 2 3 4 5 6 (PRODUCT LEVEL)	SEE PAGE
	1	1	*165-2273*	1	VALVE GP-SHUTOFF (HYDRAULIC TANK)	
		1	**3K-0360**	1	SEAL-O-RING	
		1	**6V-7238**	1	VALVE-SHUTOFF (COOLANT DRAIN)	

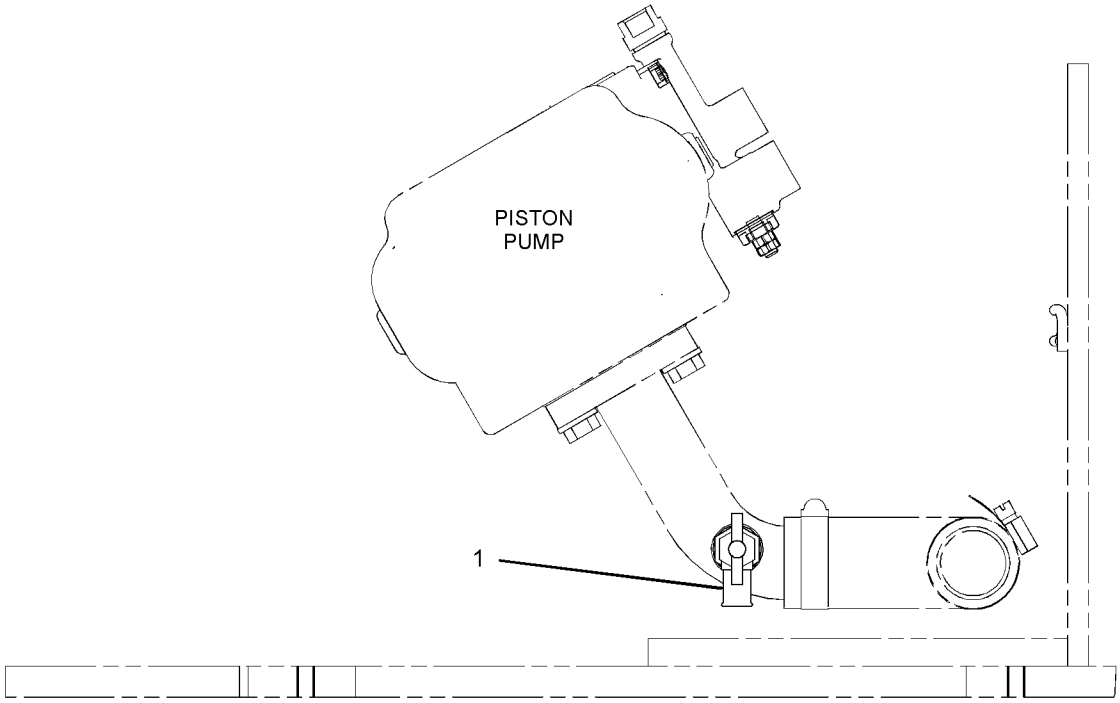

RIGHT SIDE VIEW

GRAPHIC #1 **<END>** g02798318

378-2141 DRAIN GP-ENGINE OIL–ECOLOGY

PART OF 379-4690 DRAIN GP-ECOLOGY

AN ATTACHMENT

SMCS-1302 **i04935892**

NOTE	REF NO	GRAPHIC REF	PART NUMBER	QTY	PART NAME 1 2 3 4 5 6 (PRODUCT LEVEL)	SEE PAGE
	1	1	**381-1122**	1	SHUTOFF AS (ENGINE OIL)	
		1	**381-1123**	1	GASKET	

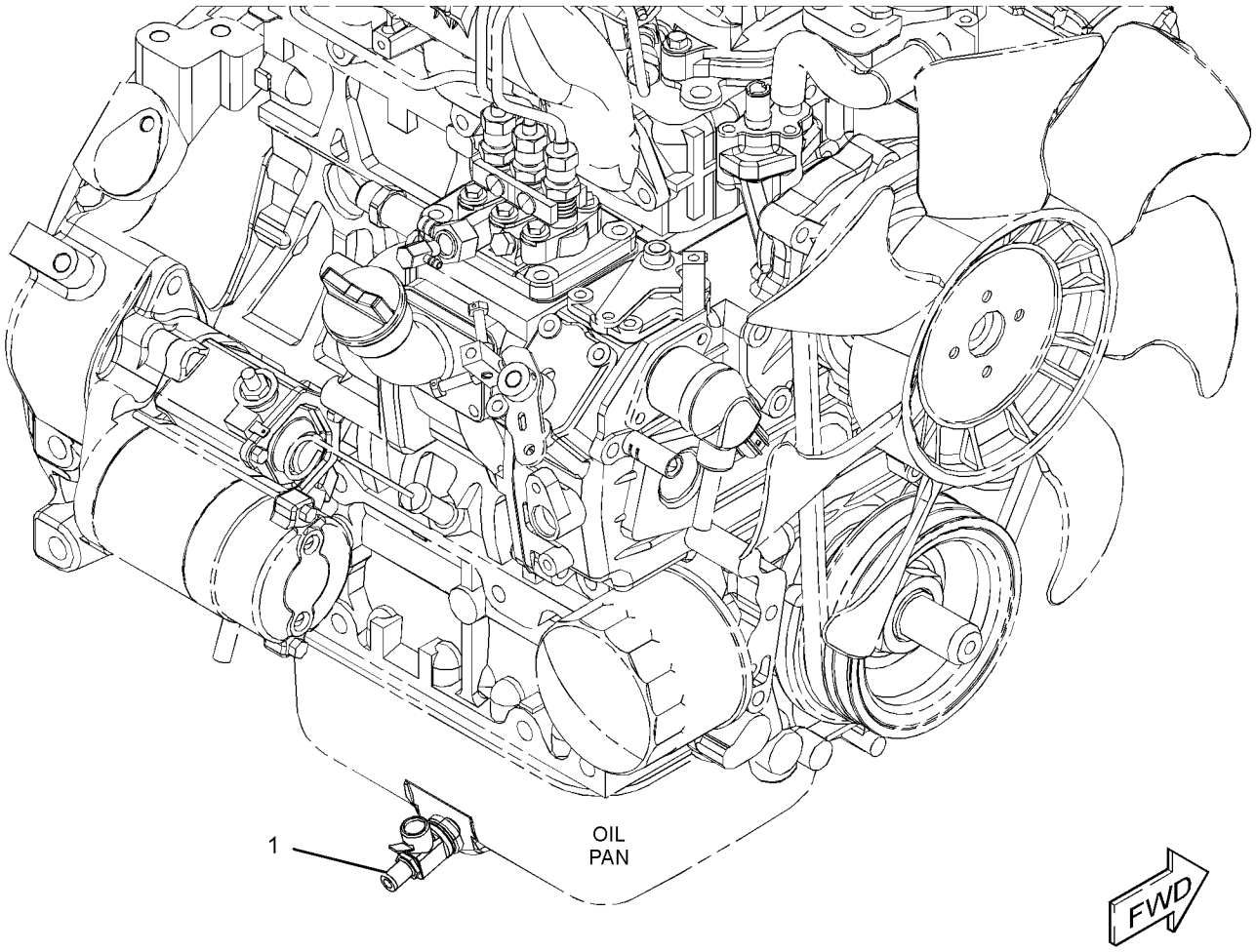

GRAPHIC #1 **<END>** g02765999

383-0142 FLYWHEEL GP

S/N: TTN1-908

PART OF 378-3248 ENGINE AR-COMPLETE, 378-3252, 392-4128, 416-6082 ENGINE AR-PRIMARY

ALSO AN ATTACHMENT

SMCS-1156, 1157, 1158 **i04935917**

NOTE	REF NO	GRAPHIC REF	PART NUMBER	QTY	PART NAME 1 2 3 4 5 6 (PRODUCT LEVEL)	SEE PAGE
	1	1	**383-0180**	1	BOLT	
	2	1	**383-0207**	1	WASHER	
	3	1	**383-0345**	11	BOLT	
	4	1	**383-0576**	6	BOLT	
	5	1	**383-0598**	1	COVER	
	6	1	**386-6938**	1	HOUSING-FLYWHEEL	
	7	1	**389-2314**	1	FLYWHEEL AS	
	7A	1	**383-0420**	1	GEAR-RING	

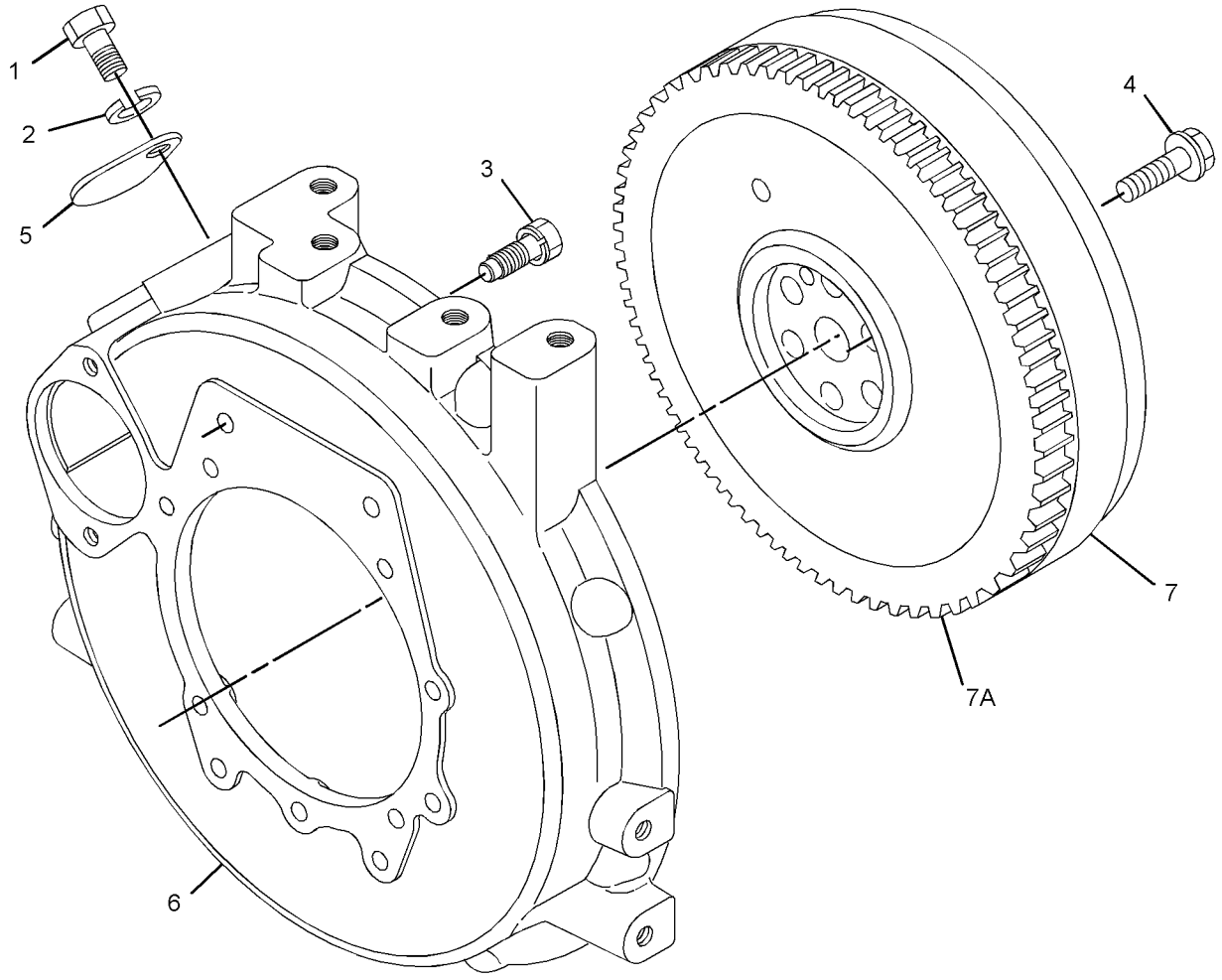

GRAPHIC #1 **<END>** g02790762

380-6386 GUARD GP-FAN

PART OF 383-5926 CANOPY AR, 377-8932 CANOPY AR-OPEN ROPS AN ATTACHMENT

SMCS-1360 **i04623158**

NOTE	REF NO	GRAPHIC REF	PART NUMBER	QTY	PART NAME 1 2 3 4 5 6 (PRODUCT LEVEL)	SEE PAGE
	1	1	**380-6387**	1	PLATE	
M	2	1	**6V-9189**	2	LOCKNUT (M8X1.25-THD)	
	3	1	**8T-4224**	2	WASHER-HARD (8.8X16X2-MM THK)	
M	4	1	**8T-7547**	2	BOLT (M8X1.25X30-MM)	

M - METRIC PART

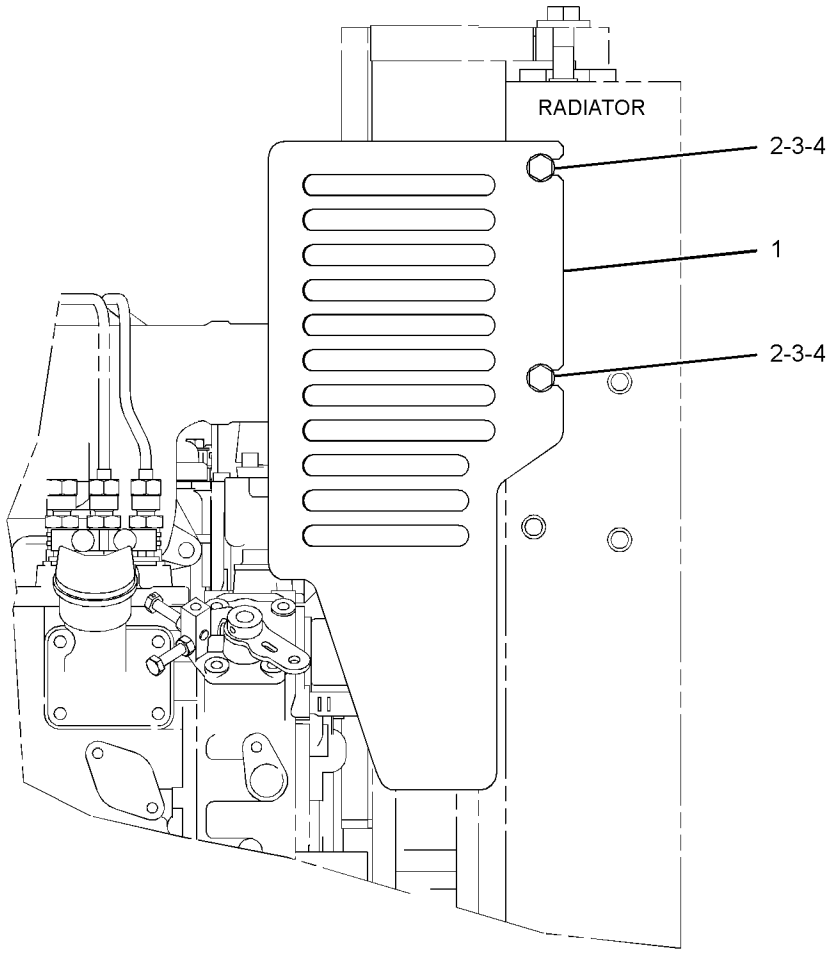

REAR VIEW

GRAPHIC #1 **<END>** g02798488

380-6393 GUARD GP-FAN

PART OF 376-6691, 376-6695, 383-5924, 383-5925 CAB AR
AN ATTACHMENT

SMCS-1360 **i04617857**

NOTE	REF NO	GRAPHIC REF	PART NUMBER	QTY	PART NAME 1 2 3 4 5 6 (PRODUCT LEVEL)	SEE PAGE
	1	1	**380-6394**	1	PLATE AS	
M		1	**6V-9632**	2	NUT-WELD (M6X1-THD)	
M	2	1	**6V-9189**	2	LOCKNUT (M8X1.25-THD)	
	3	1	**8T-4224**	2	WASHER-HARD (8.8X16X2-MM THK)	
M	4	1	**8T-7547**	2	BOLT (M8X1.25X30-MM)	

M - METRIC PART

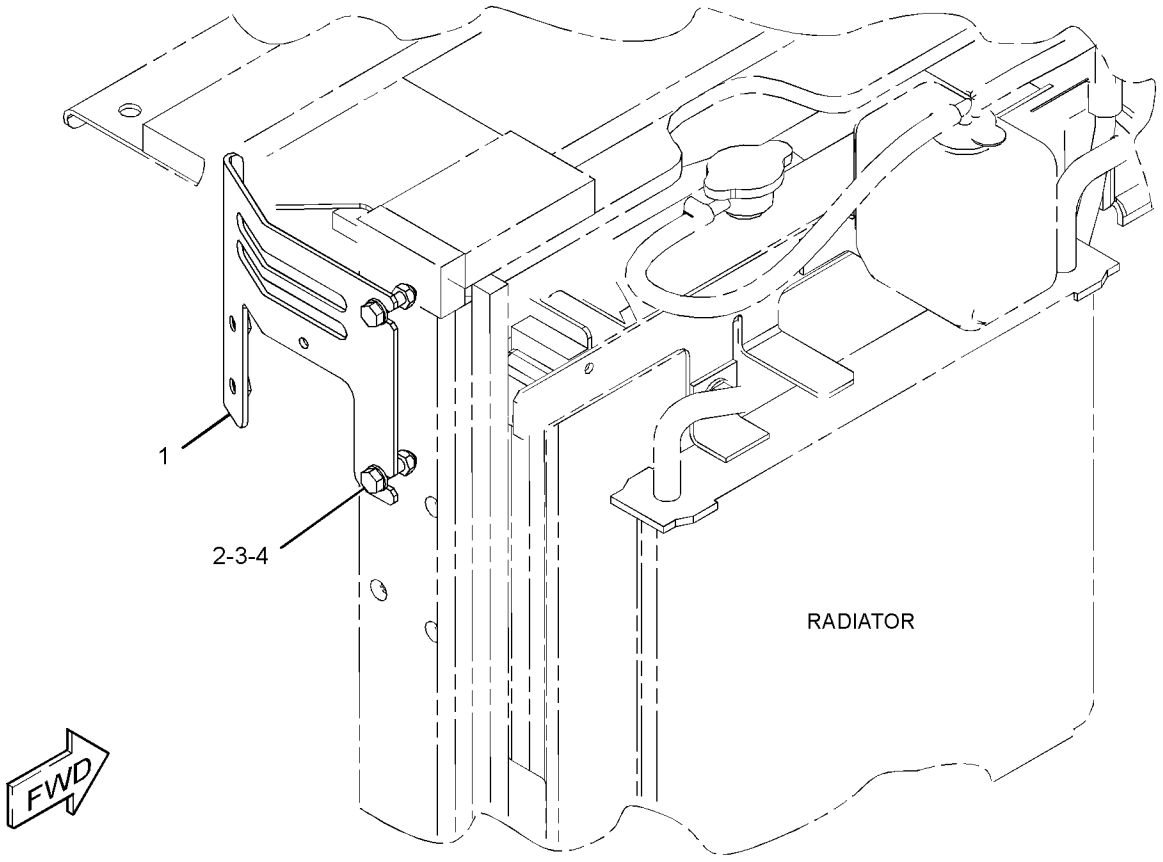

GRAPHIC #1 **<END>** g02801518

383-0503 HOUSING GP-FRONT

S/N: TTN1-908

PART OF 378-3248 ENGINE AR-COMPLETE, 378-3252, 392-4128, 416-6082 ENGINE AR-PRIMARY

ALSO AN ATTACHMENT

SMCS-1151, 1162, 1166, 1206

i04603486

NOTE	REF NO	GRAPHIC REF	PART NUMBER	QTY	PART NAME 1 2 3 4 5 6 (PRODUCT LEVEL)	SEE PAGE
	1	1	**383-0165**	3	BOLT	
	2	1	**383-0189**	1	BOLT	
	3	1	**383-0190**	2	BOLT	
	4	1	**383-0192**	1	BOLT	
	5	1	**383-0193**	4	BOLT	
	6	1	**383-0220**	2	PIN	
	7	1	**383-0230**	1	CAP	
	8	1	**383-0234**	1	BALL	
	9	1	**383-0281**	1	SPRING	
	10	1	**383-0302**	1	GUIDE	
	11	1	**383-0402**	1	PIPE	
	12	1	**383-0423**	1	GASKET	
	13	1	**383-0426**	7	BOLT	
	14	1	**383-0438**	1	GASKET	
	15	1	*383-0440*	1	FLANGE AS	
	15A	1	**383-0427**	1	PLUG	
	16	1	**383-0492**	1	GASKET	
	17	1	**383-0506**	1	COLLAR	
	18	1	**383-0530**	2	BOLT	
	19	1	**383-0551**	1	HOUSING AS-FRONT	
	19A	1	**383-0336**	2	PLUG	
	20	1	*383-0595*	1	FLANGE AS	
	20A	1	**383-0382**	1	PIPE	
	20B	1	**383-0486**	1	PLUG	

383-0503 **HOUSING GP-FRONT (*contd.*)** **i04603486**

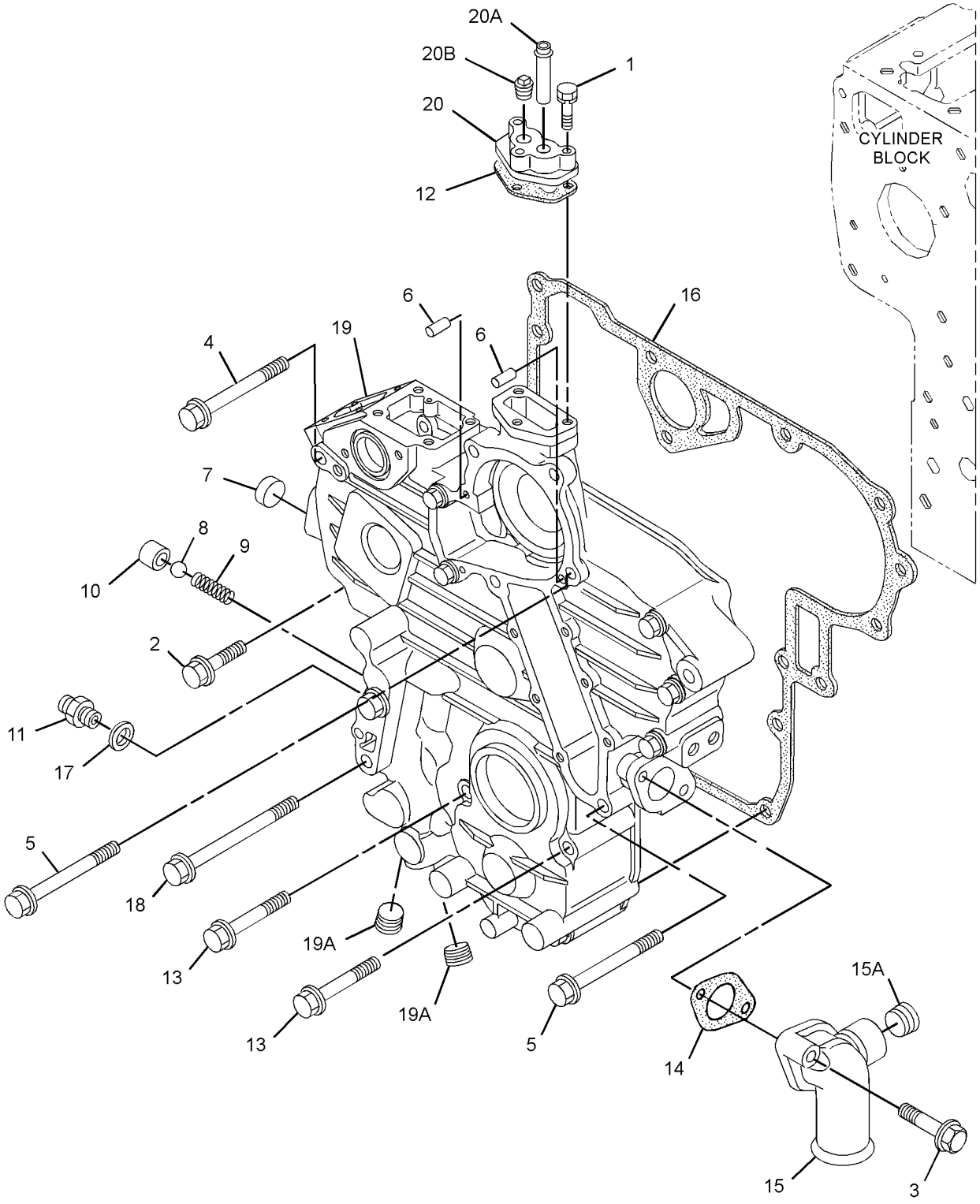

GRAPHIC #1 **<END>** g02791277

383-0146 LIFTING GP-ENGINE

S/N: TTN1-908

PART OF 378-3248 ENGINE AR-COMPLETE, 378-3252, 392-4128, 416-6082 ENGINE AR-PRIMARY
ALSO AN ATTACHMENT

SMCS-1122 **i04603462**

NOTE	REF NO	GRAPHIC REF	PART NUMBER	QTY	PART NAME 1 2 3 4 5 6 (PRODUCT LEVEL)	SEE PAGE
	1	1	**383-0170**	1	BOLT	
	2	1	**383-0197**	1	NUT	
	3	1	**383-0204**	1	WASHER	
	4	1	**383-0207**	1	WASHER	
	5	1	**383-0300**	2	STUD	
	6	1	**383-0340**	1	PLATE	
	7	1	**389-2309**	1	PLATE	

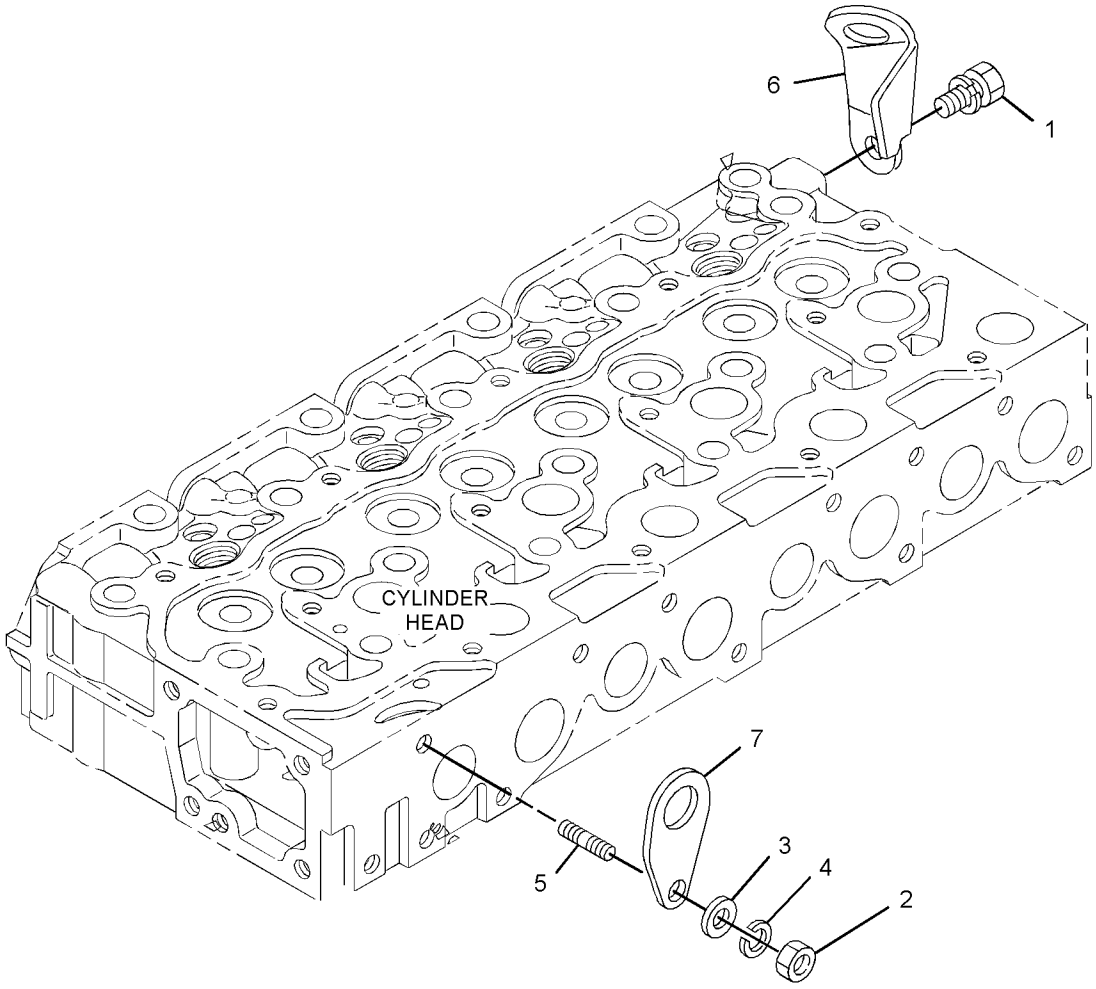

GRAPHIC #1 **<END>** g02791380

378-2136 MOUNTING GP-ENGINE

PART OF 376-6691, 383-5924 CAB AR

AN ATTACHMENT

SMCS-1152, 1153, 1154 **i04565463**

NOTE	REF NO	GRAPHIC REF	PART NUMBER	QTY	PART NAME 1 2 3 4 5 6 (PRODUCT LEVEL)	SEE PAGE
	1	1	**119-9880**	6	BOLT (M12X1.25X30-MM)	
	2	1	**163-6838**	2	STOP	
	3	1	**176-8440**	1	STOP	
	4	1	**291-5214**	1	STOP	
	5	1	**267-1048**	4	MOUNT-RUBBER	
	6	1	**267-1050**	4	MOUNT-RUBBER	
	7	1	**378-2137**	1	SUPPORT AS	
	8	1	**378-2138**	1	SUPPORT AS	
	9	1	**378-2139**	1	SUPPORT AS	
	10	1	**5P-1076**	2	WASHER-HARD (13.5X30X4-MM THK)	
M	11	1	**7X-2550**	4	BOLT (M12X1.75X110-MM)	
	12	1	**8T-4223**	8	WASHER-HARD (13.5X25.5X3-MM THK)	
	13	1	**8T-4224**	2	WASHER-HARD (8.8X16X2-MM THK)	
	14	1	**8T-4821**	2	WASHER (13.5X40X3-MM THK)	
M	15	1	**8T-4908**	2	BOLT (M8X1.25X25-MM)	

M - METRIC PART

378-2136 **MOUNTING GP-ENGINE (*contd.*)** **i04565463**

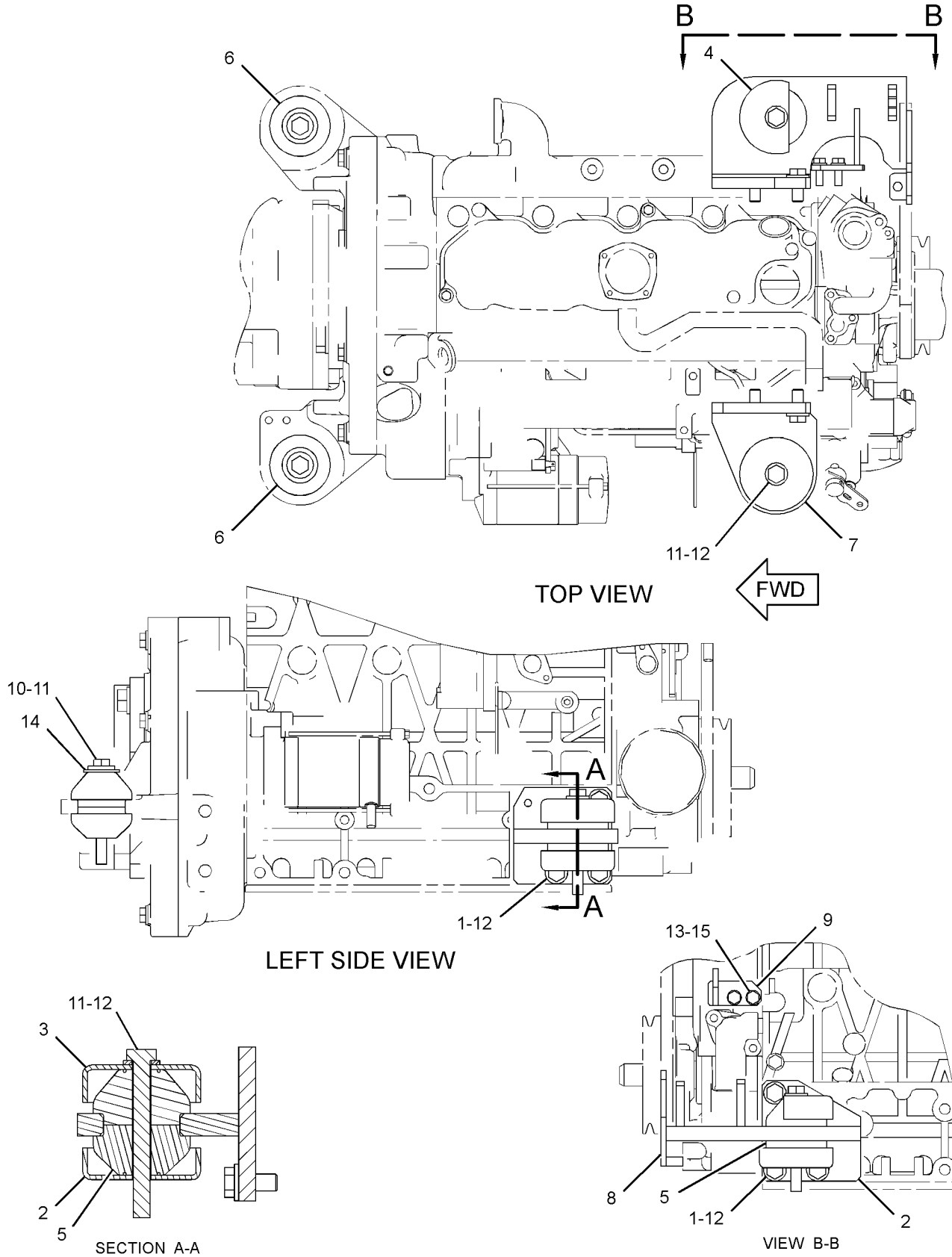

GRAPHIC #1

<END>

g02769417

379-0801 MOUNTING GP-ENGINE

PART OF 376-6695, 383-5925 CAB AR, 383-5926 CANOPY AR, 377-8932 CANOPY AR-OPEN ROPS AN ATTACHMENT

SMCS-1152, 1153, 1154 **i04565465**

NOTE	REF NO	GRAPHIC REF	PART NUMBER	QTY	PART NAME 1 2 3 4 5 6 (PRODUCT LEVEL)	SEE PAGE
	1	1	**119-9880**	6	BOLT (M12X1.25X30-MM)	
	2	1	**163-6838**	2	STOP	
	3	1	**176-8440**	2	STOP	
	4	1	**267-1048**	4	MOUNT-RUBBER	
	5	1	**267-1050**	4	MOUNT-RUBBER	
	6	1	**378-2137**	1	SUPPORT AS	
	7	1	**379-0855**	1	SUPPORT AS	
	8	1	**5P-1076**	2	WASHER-HARD (13.5X30X4-MM THK)	
M	9	1	**7X-2550**	4	BOLT (M12X1.75X110-MM)	
	10	1	**8T-4223**	8	WASHER-HARD (13.5X25.5X3-MM THK)	
	11	1	**8T-4821**	2	WASHER (13.5X40X3-MM THK)	

M - METRIC PART

379-0801 **MOUNTING GP-ENGINE (*contd.*)** **i04565465**

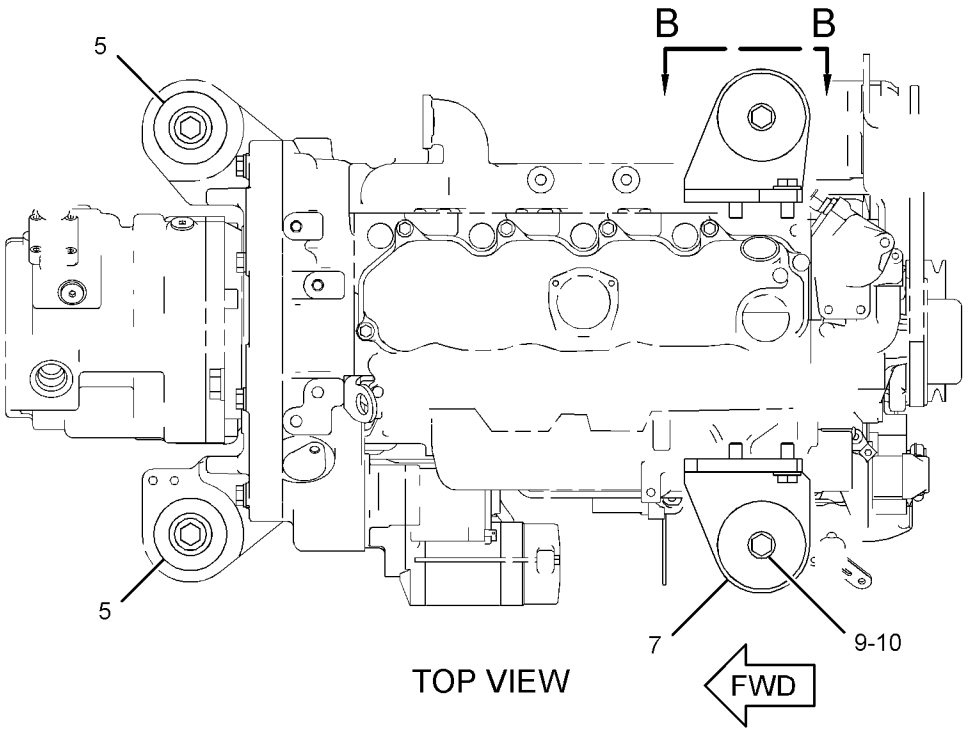

TOP VIEW

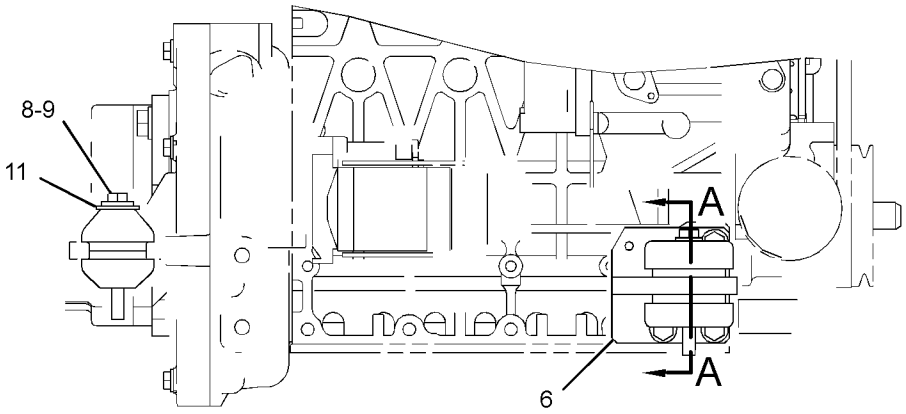

LEFT SIDE VIEW

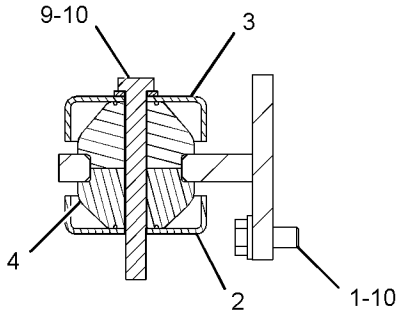

SECTION A-A

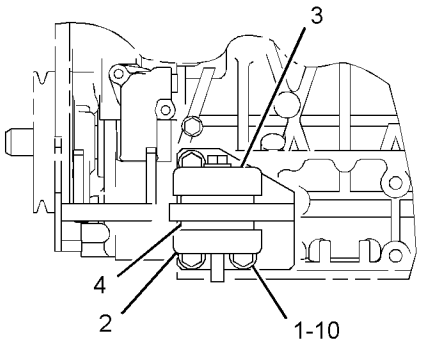

VIEW B-B

GRAPHIC #1 **<END>** g02768716

383-0156 PAN GP-OIL

S/N: TTN1-908

PART OF 378-3248 ENGINE AR-COMPLETE, 378-3252, 392-4128, 416-6082 ENGINE AR-PRIMARY

ALSO AN ATTACHMENT

SMCS-1302 **i04603476**

NOTE	REF NO	GRAPHIC REF	PART NUMBER	QTY	PART NAME 1 2 3 4 5 6 (PRODUCT LEVEL)	SEE PAGE
	1	1	**386-6918**	2	PLUG (DRAIN, ENGINE OIL)	
	2	1	**386-6919**	2	GASKET	
	3	1	**389-2307**	1	PAN AS-OIL (ENGINE)	
	4	1	**389-2308**	24	BOLT-FLANGE HEAD	

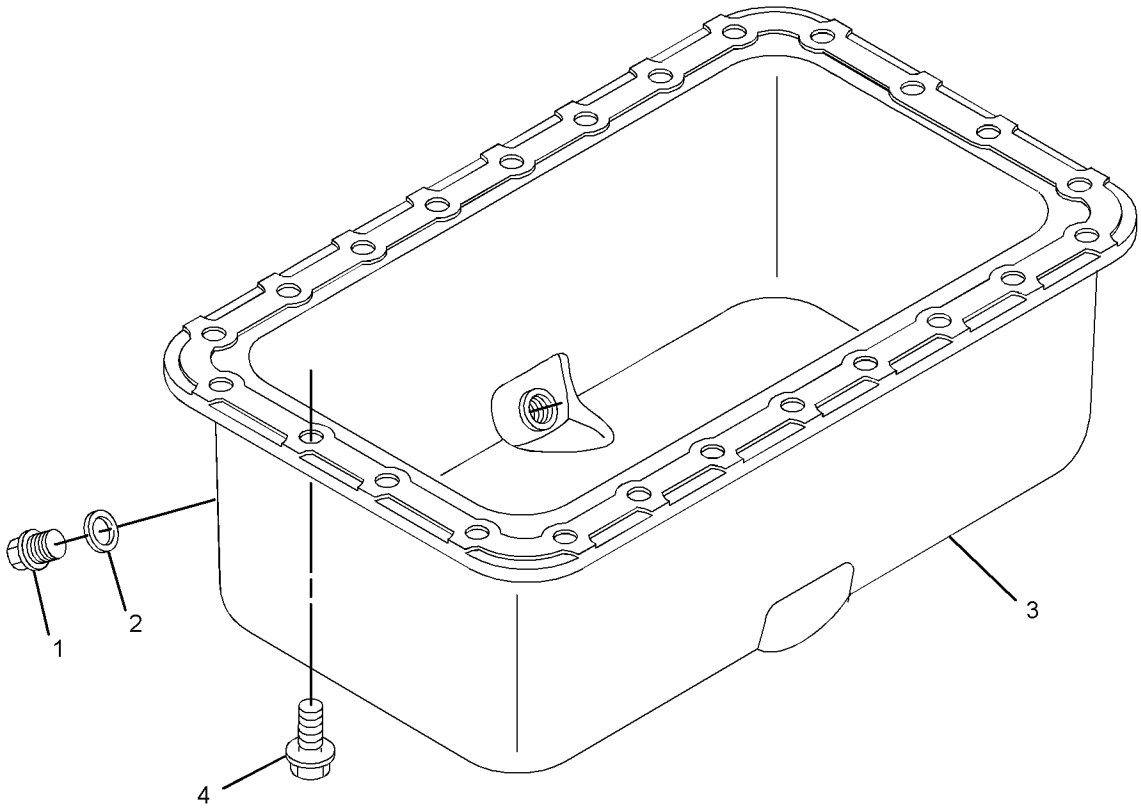

GRAPHIC #1 **<END>** g02790784

383-0157 PISTON & ROD GP

S/N: TTN1-908

PART OF 378-3248 ENGINE AR-COMPLETE, 378-3252, 392-4128, 416-6082 ENGINE AR-PRIMARY

ALSO AN ATTACHMENT

SMCS-1213, 1214, 1215, 1218, 1219, 1225, 1239 **i04603477**

NOTE	REF NO	GRAPHIC REF	PART NUMBER	QTY	PART NAME 1 2 3 4 5 6 (PRODUCT LEVEL)	SEE PAGE
	1	1	**383-0374**	4	ROD AS	
					(EACH INCLUDES)	
	1A	1	**383-0375**	1	BEARING-CRANKSHAFT	
AB		1	**389-1596**		BEARING-CRANKSHAFT (0.20-MM UNDERSIZE)	
AB		1	**389-1597**		BEARING-CRANKSHAFT (0.40-MM UNDERSIZE)	
	1B	1	**383-0579**	2	BOLT	
	1C	1	**389-1607**	1	BEARING	
	2	1	**383-0397**	4	PIN-PISTON	
	3	1	**383-0479**	8	CLIP-PIN	
	4	1	**383-0502**	4	RING AS-PISTON	
AB		1	**389-1595**		RING AS-PISTON (0.25-MM OS)	
	5	1	**383-0528**	4	PISTON	
AB		1	**389-1594**		PISTON (0.25-MM OS)	

A - NOT PART OF THIS GROUP
B - USE AS REQUIRED

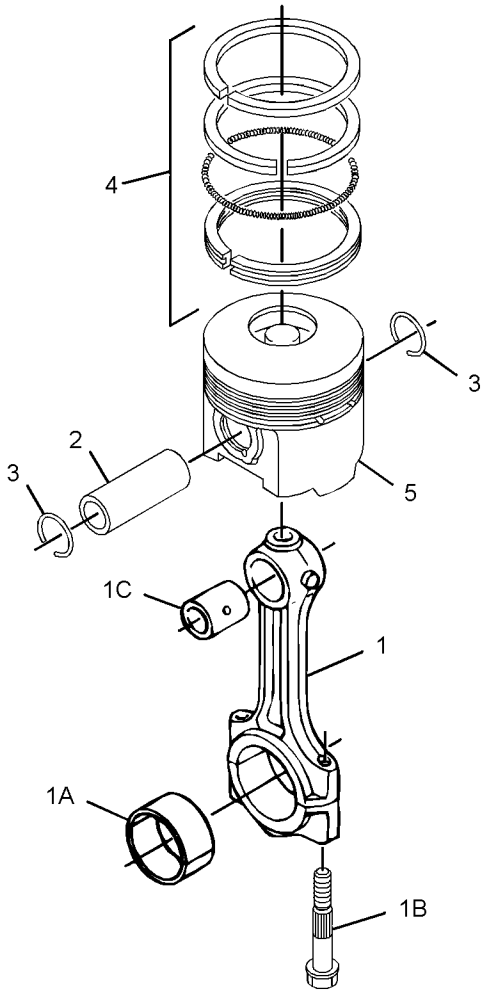

GRAPHIC #1 **<END>** g02791975

383-0159 PULLEY GP-FAN DRIVE

S/N: TTN1-908

PART OF 378-3248 ENGINE AR-COMPLETE, 378-3252, 392-4128, 416-6082 ENGINE AR-PRIMARY
ALSO AN ATTACHMENT

SMCS-1357, 1359

i04603479

NOTE	REF NO	GRAPHIC REF	PART NUMBER	QTY	PART NAME 1 2 3 4 5 6 (PRODUCT LEVEL)	SEE PAGE
	1	1	**383-0227**	1	KEY-FEATHER	
	2	1	**383-0391**	1	FAN-SUCTION	
	3	1	**386-4792**	4	BOLT-FLANGE HEAD	
	4	1	**389-1587**	1	PULLEY-FAN	
	5	1	**389-1588**	1	SPACER-FAN	
	6	1	**389-1589**	1	PULLEY-FAN DRIVE	
	7	1	**389-1590**	1	V-BELT (FAN)	

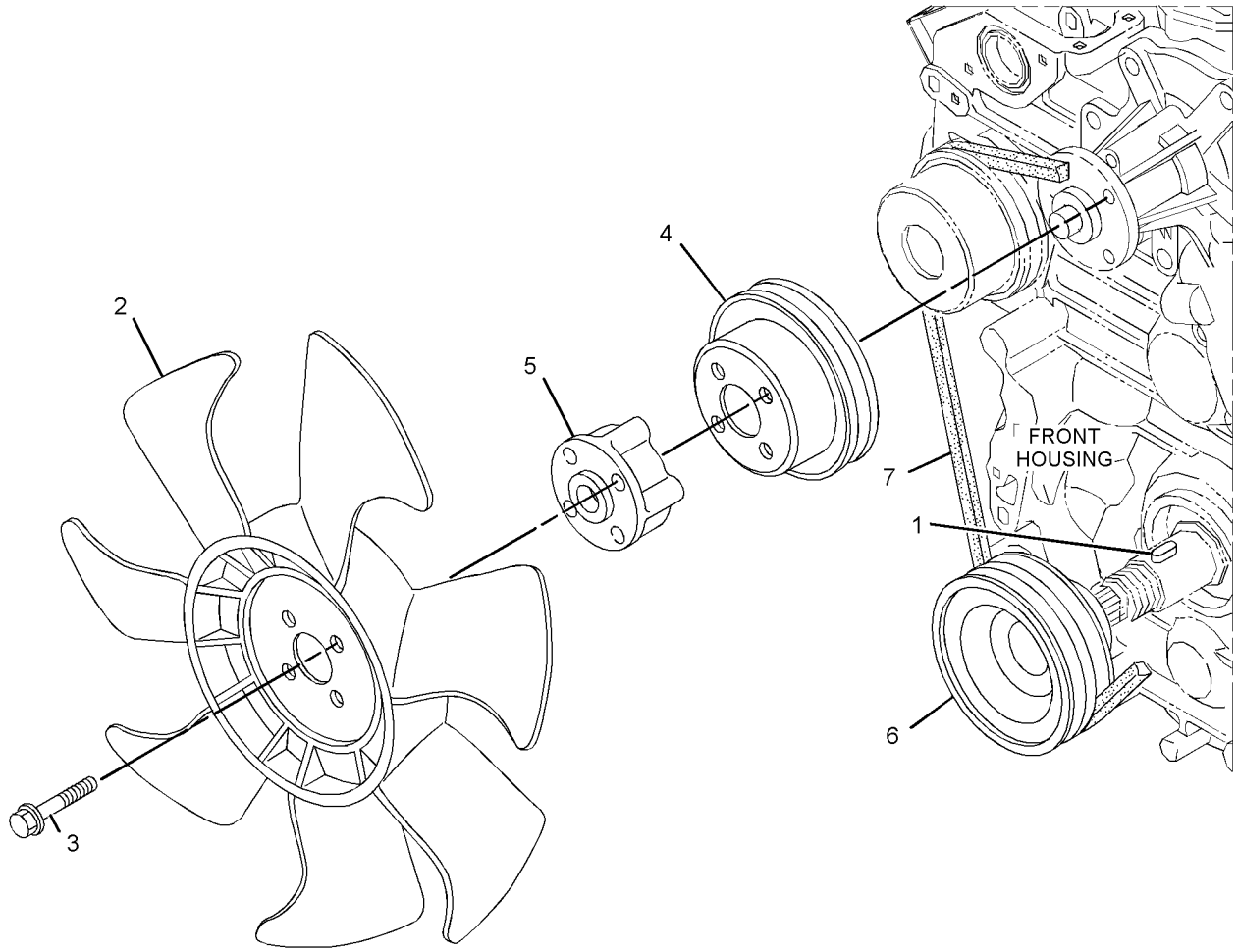

GRAPHIC #1 **<END>** g02792040

383-0153 VALVE MECHANISM GP

S/N: TTN1-908

PART OF 378-3248 ENGINE AR-COMPLETE, 378-3252, 392-4128, 416-6082 ENGINE AR-PRIMARY
ALSO AN ATTACHMENT

SMCS-1102, 1112, 1121, 1123, 1208, 1209

i04603472

NOTE	REF NO	GRAPHIC REF	PART NUMBER	QTY	PART NAME 1 2 3 4 5 6 (PRODUCT LEVEL)	SEE PAGE
	1	1	**383-0180**	2	BOLT	
	2	1	**383-0191**	4	BOLT	
	3	1	**383-0205**	2	WASHER	
	4	1	**383-0207**	2	WASHER	
	5	1	**383-0224**	1	SPRING	
	6	1	**383-0267**	3	SPRING	
	7	1	**383-0268**	4	BRACKET	
	8	1	**383-0269**	2	WASHER	
	9	1	**383-0306**	8	TAPPET	
	10	1	**383-0310**	8	ARM AS (VALVE MECHANISM)	
					(EACH INCLUDES)	
	10A	1	**383-0255**	1	NUT	
	10B	1	**383-0556**	1	SCREW	
	11	1	**383-0463**	1	SHAFT	
	12	1	**383-0464**	8	PUSHROD	

383-0153 **VALVE MECHANISM GP (*contd.*)** **i04603472**

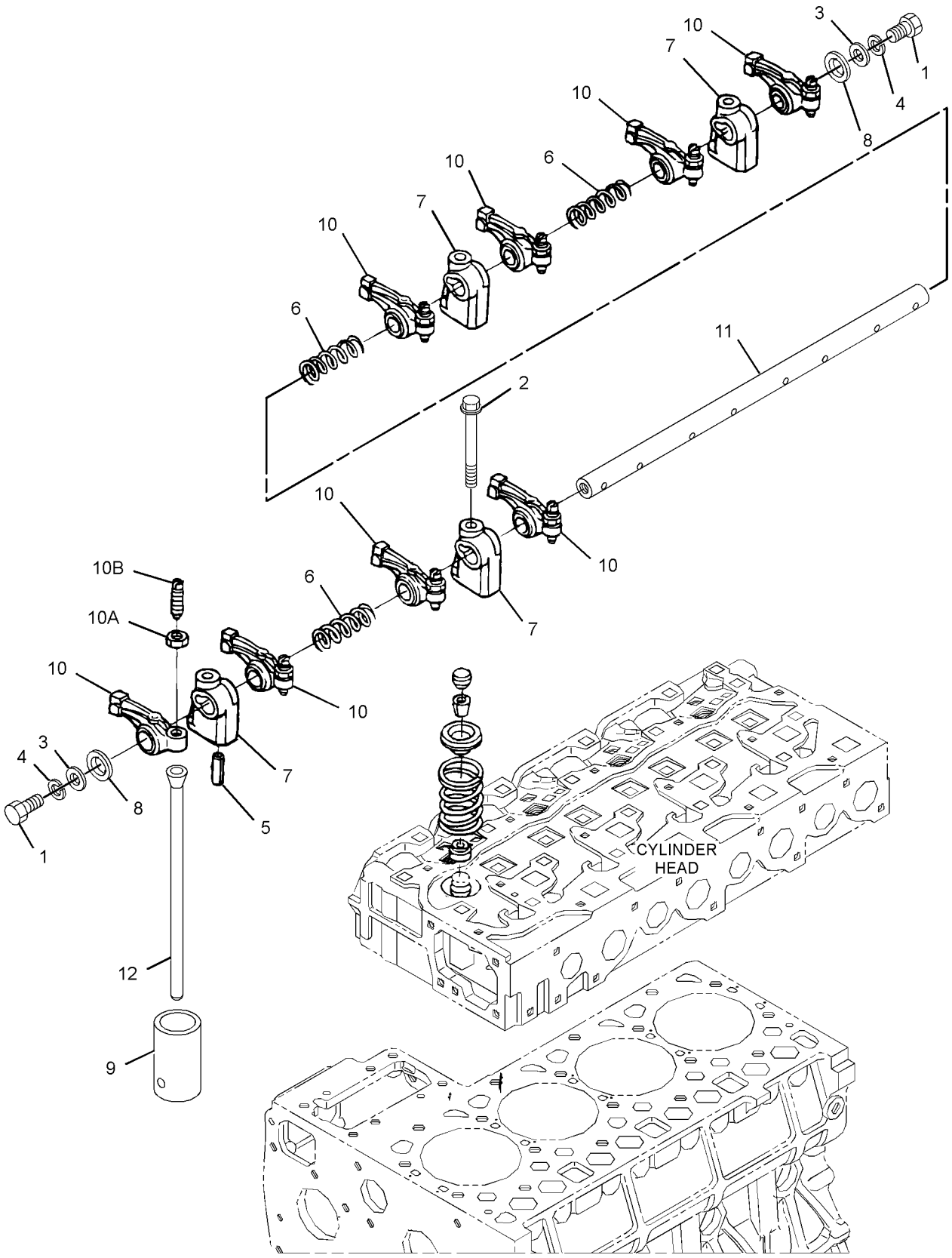

GRAPHIC #1 **<END>** g02791983

383-0250 FILLER GP-ENGINE OIL

S/N: TTN1-908

PART OF 378-3248 ENGINE AR-COMPLETE, 378-3252, 392-4128, 416-6082 ENGINE AR-PRIMARY
ALSO AN ATTACHMENT

SMCS-1316 **i05006755**

NOTE	REF NO	GRAPHIC REF	PART NUMBER	QTY	PART NAME 1 2 3 4 5 6 (PRODUCT LEVEL)	SEE PAGE
	1	1	**383-0163**	4	BOLT	
	2	1	**383-0217**	1	SEAL-O-RING	
	3	1	**383-0321**	1	PLUG-FILLER (ENGINE OIL)	
	4	1	**383-0404**	1	GASKET	
	5	1	**383-0481**	1	FLANGE	

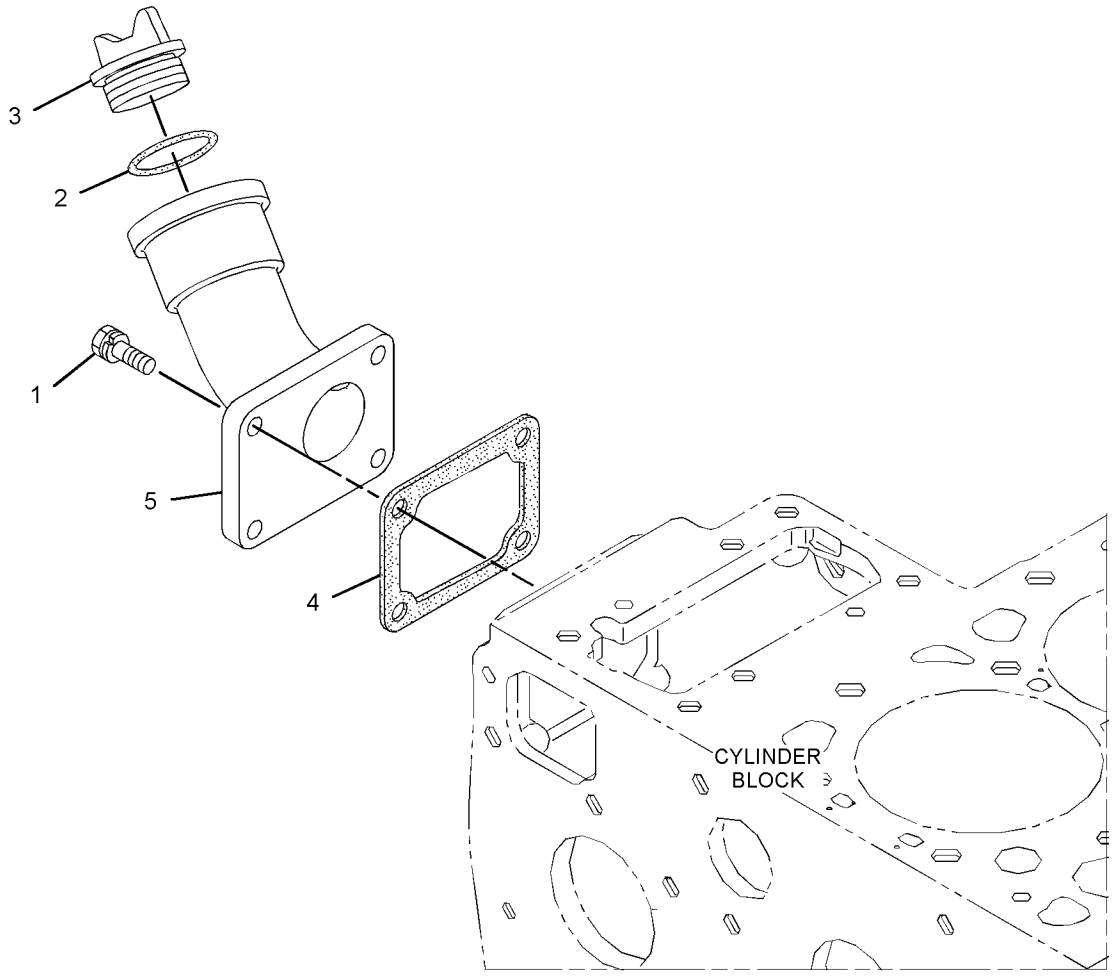

GRAPHIC #1 **<END>** g02790220

383-0141 FILTER GP-ENGINE OIL

S/N: TTN1-908

PART OF 378-3248 ENGINE AR-COMPLETE, 378-3252, 392-4128, 416-6082 ENGINE AR-PRIMARY

ALSO AN ATTACHMENT

SMCS-1306, 1308, 1318

i05597970

NOTE	REF NO	GRAPHIC REF	PART NUMBER	QTY	PART NAME 1 2 3 4 5 6 (PRODUCT LEVEL)	SEE PAGE
	1	1	**383-0187**	1	BOLT	
	2	1	**383-0216**	1	SEAL-O-RING	
	3	1	**377-6969**	1	FILTER-ENGINE OIL	
	4	1	**383-0531**	1	STRAINER-OIL (ENGINE)	
	5	1	**387-9910**	1	SWITCH-PRESSURE (OIL, ENGINE)	

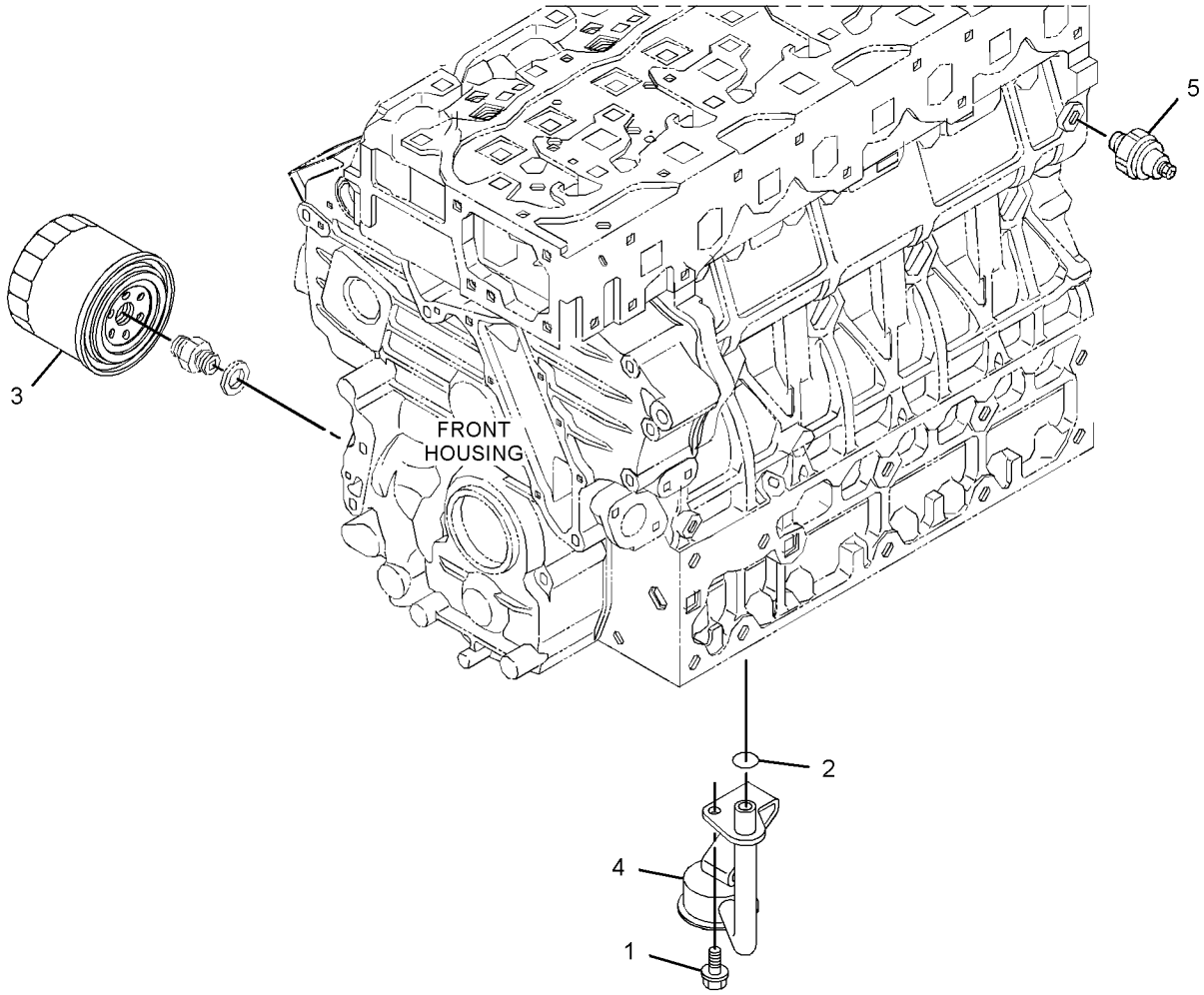

GRAPHIC #1

<END>

g02791517

383-0144 GAUGE GP-OIL LEVEL (DIPSTICK)—ENGINE

S/N: TTN1-908

PART OF 378-3248 ENGINE AR-COMPLETE, 378-3252, 392-4128, 416-6082 ENGINE AR-PRIMARY

ALSO AN ATTACHMENT

SMCS-1326 **i04639956**

NOTE	REF NO	GRAPHIC REF	PART NUMBER	QTY	PART NAME 1 2 3 4 5 6 (PRODUCT LEVEL)	SEE PAGE
	1	1	**383-0437**	1	GAUGE-OIL LEVEL (ENGINE) (DIPSTICK)	
	2	1	**383-0489**	1	PLUG	

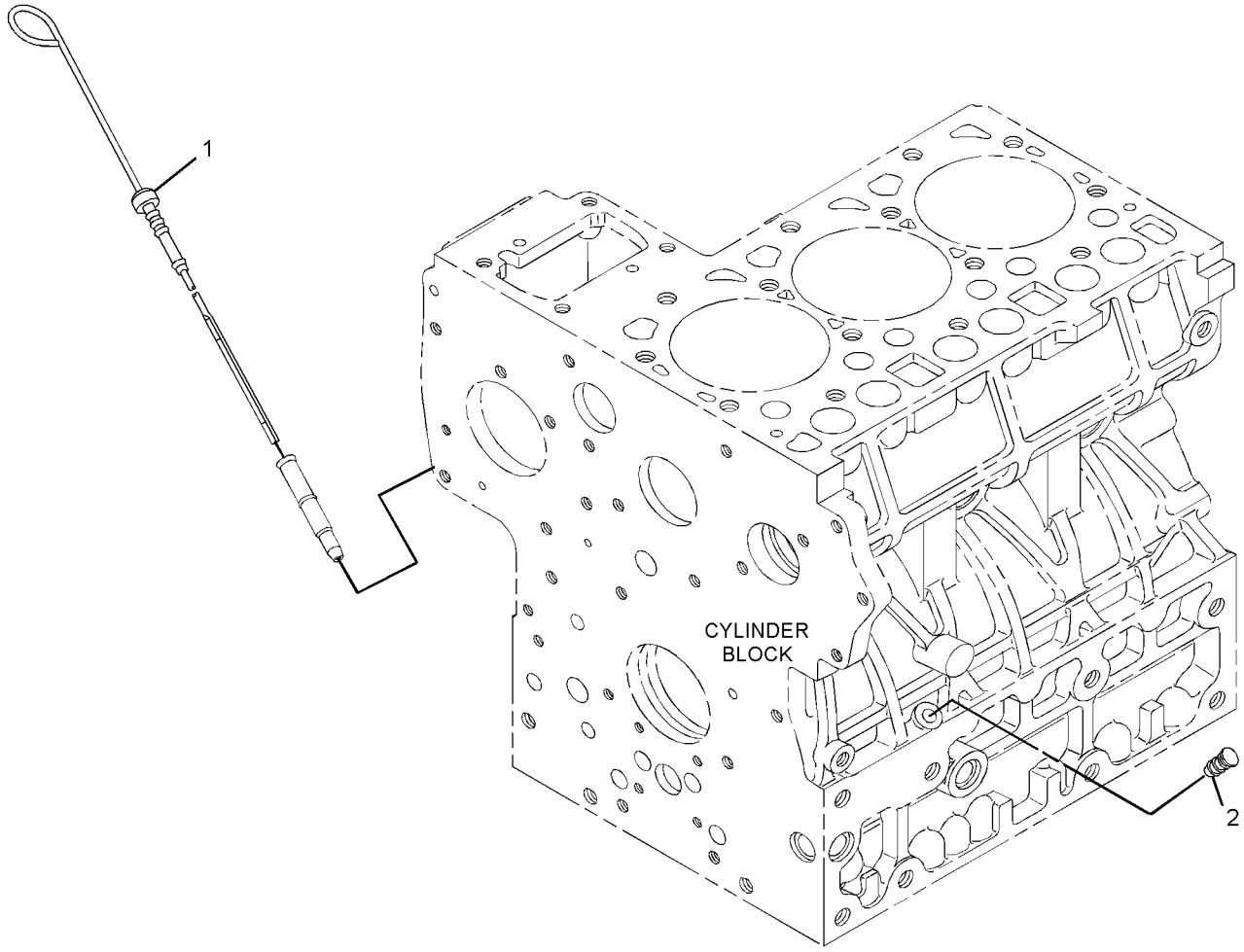

GRAPHIC #1 **<END>** g02790001

383-0161 PUMP GP-ENGINE OIL

S/N: TTN1-908

PART OF 378-3248 ENGINE AR-COMPLETE, 378-3252, 392-4128, 416-6082 ENGINE AR-PRIMARY

ALSO AN ATTACHMENT

SMCS-1304, 1315

i05437158

NOTE	REF NO	GRAPHIC REF	PART NUMBER	QTY	PART NAME 1 2 3 4 5 6 (PRODUCT LEVEL)	SEE PAGE
	1	1	**383-0167**	4	BOLT	
	2	1	**383-0225**	1	KEY-FEATHER	
	3	1	**383-0273**	1	NUT	
	4	1	**383-0293**	1	PUMP AS-ENGINE OIL	
	5	1	**383-0403**	1	GASKET-OIL PUMP	
	6	1	**383-0558**	1	GEAR (45-TEETH)	

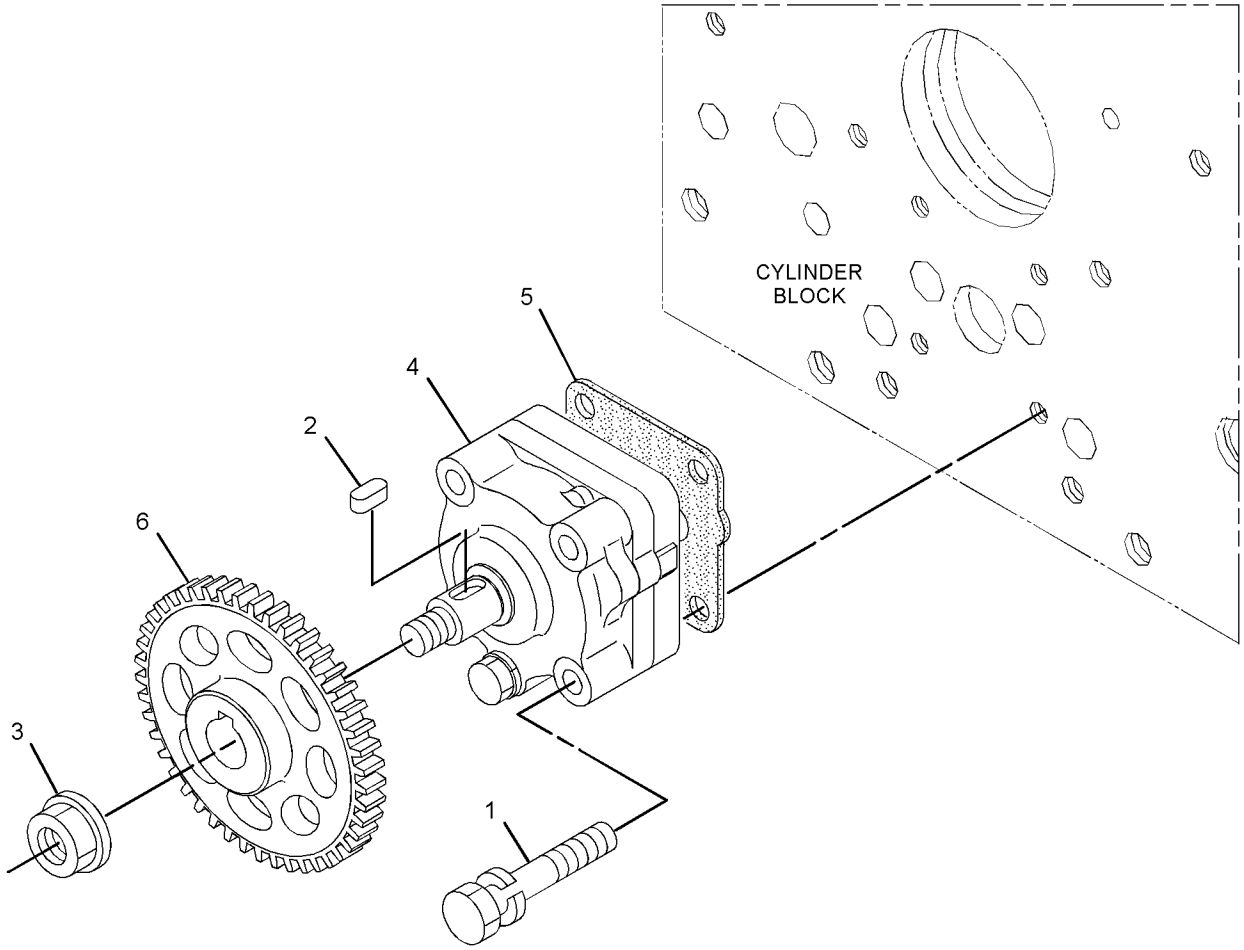

GRAPHIC #1 **<END>** g02790780

385-5059 LINES GP-WATER

S/N: TTN1-908

PART OF 378-3248 ENGINE AR-COMPLETE, 378-3252, 392-4128, 416-6082 ENGINE AR-PRIMARY

ALSO AN ATTACHMENT

SMCS-1355, 1380, 1393 **i05120853**

NOTE	REF NO	GRAPHIC REF	PART NUMBER	QTY	PART NAME 1 2 3 4 5 6 (PRODUCT LEVEL)	SEE PAGE
	1	1	**383-0172**	2	BOLT	
	2	1	**383-0176**	2	BOLT	
	3	1	**383-0197**	1	NUT	
	4	1	**383-0207**	1	WASHER	
	5	1	**383-0257**	1	CLIP	
	6	1	**383-0279**	1	STUD	
	7	1	**383-0335**	1	GASKET (THERMOSTAT HOUSING)	
	8	1	**383-0396**	1	CLAMP-HOSE	
	9	1	**383-0421**	1	GASKET (WATER TEMPERATURE REGULATOR)	
	10	1	**392-0266**	1	REGULATOR AS (WATER TEMPERATURE)	
	11	1	**383-0425**	1	BOLT	
	12	1	**383-0439**	1	FLANGE AS	
	12A	1	**383-0185**	2	BOLT-FLANGE HEAD	
	12B	1	**383-0186**	1	BOLT-FLANGE HEAD	
	12C	1	**383-0427**	1	PLUG	
	13	1	**383-0472**	1	HOSE-WATER	
	14	1	**383-0356**	1	COVER-THERMOSTAT	
	15	1	**387-9912**	1	WASHER	
	16	1	**389-1591**	1	ADAPTER	

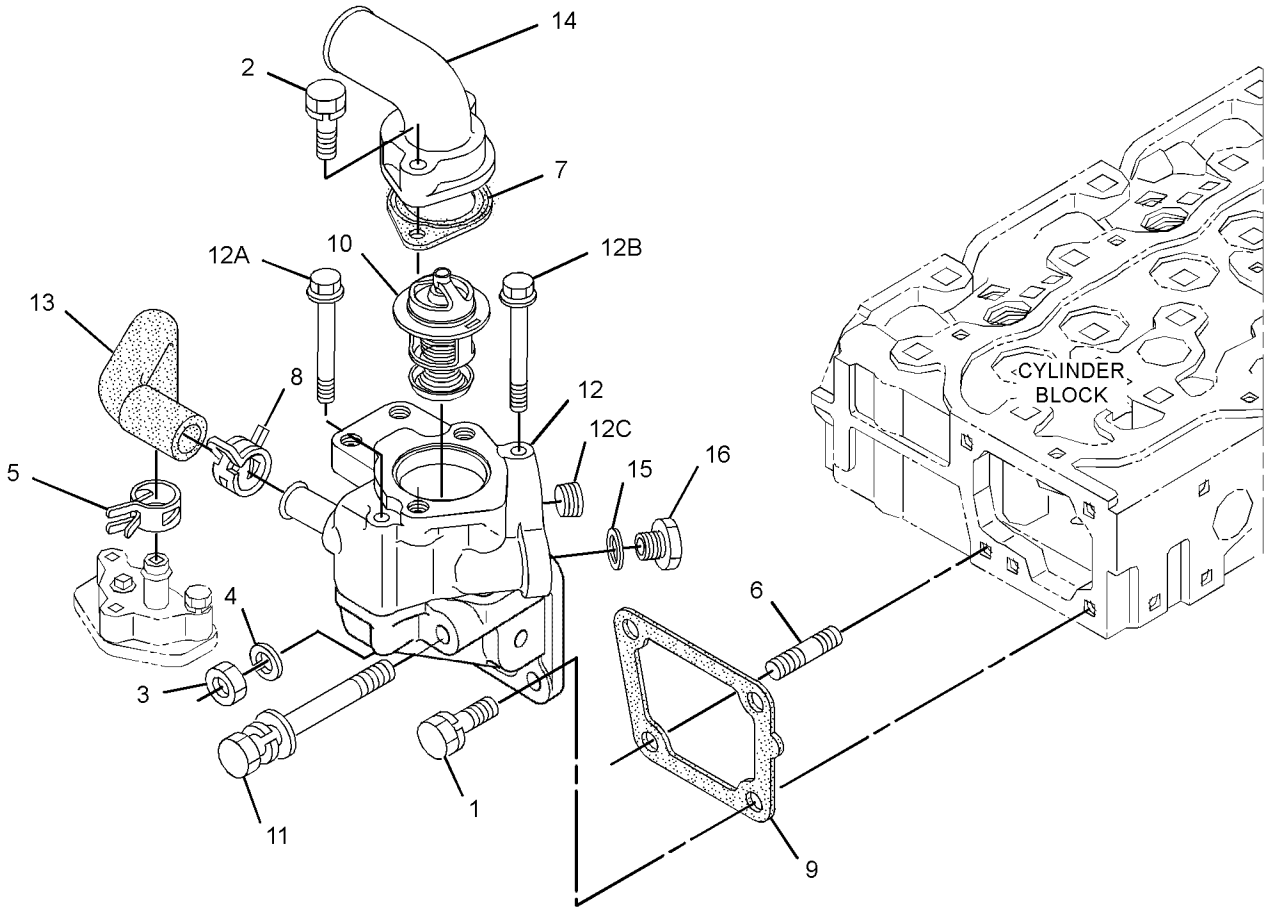

GRAPHIC #1 **<END>** g02793617

383-0162 PUMP GP-WATER

S/N: TTN1-908

PART OF 378-3248 ENGINE AR-COMPLETE, 378-3252, 392-4128, 416-6082 ENGINE AR-PRIMARY

ALSO AN ATTACHMENT

SMCS-1355, 1361, 1364, 1373, 1384, 1389 **i04603484**

NOTE	REF NO	GRAPHIC REF	PART NUMBER	QTY	PART NAME 1 2 3 4 5 6 (PRODUCT LEVEL)	SEE PAGE
	1	1	**383-0163**	6	BOLT	
	2	1	**383-0175**	2	BOLT	
	3	1	**383-0182**	1	STUD	
	4	1	**383-0197**	1	NUT	
	5	1	**383-0207**	1	WASHER	
	6	1	**383-0433**	1	PUMP AS-WATER	
	7	1	**383-0435**	1	GASKET-WATER PUMP	

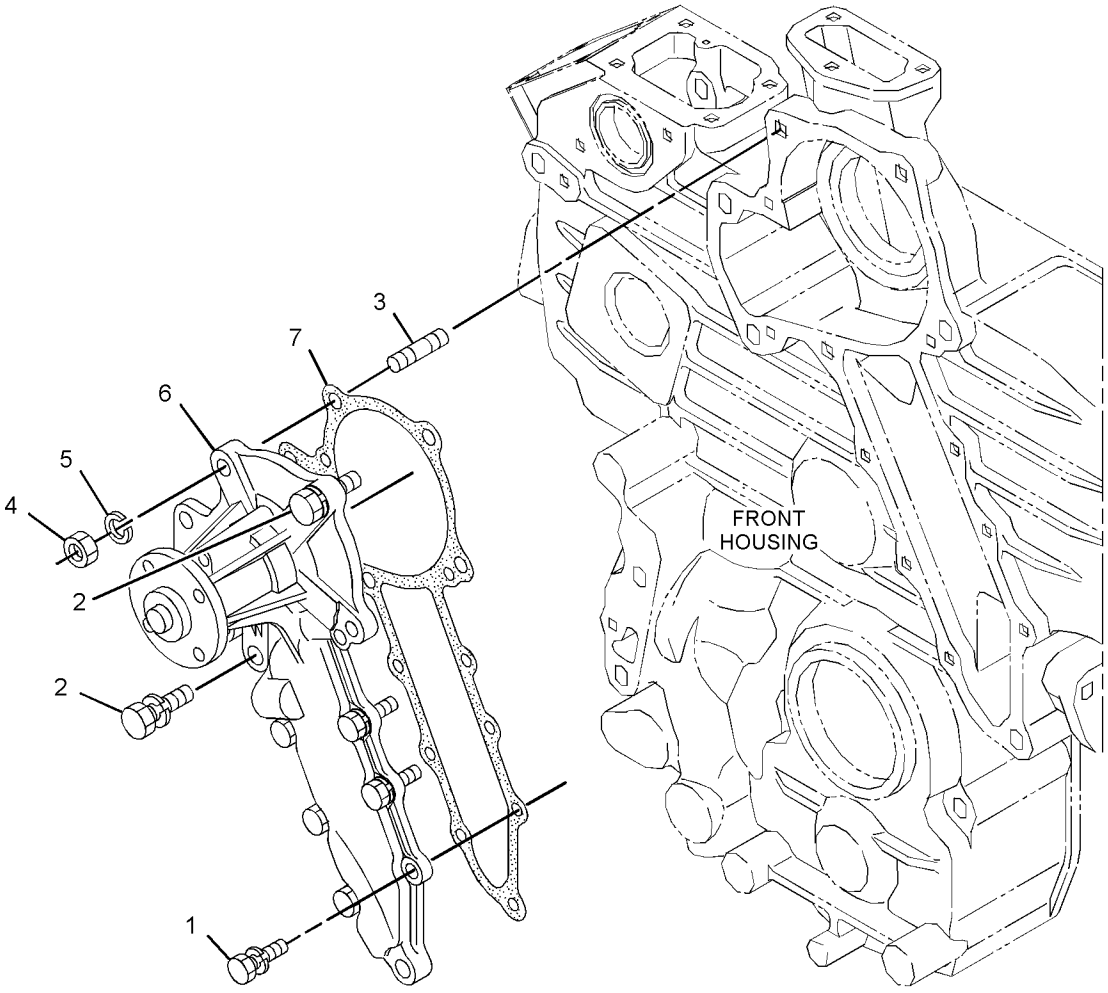

GRAPHIC #1 **<END>** g02792139

380-6364 RADIATOR & HYD OIL COOLER GP

PART OF 380-6359 INSTALLATION AR-ENGINE

SMCS-1351, 1353, 1356, 1374, 1382, 1386 **i05204637**

NOTE	REF NO	GRAPHIC REF	PART NUMBER	QTY	PART NAME 1 2 3 4 5 6 (PRODUCT LEVEL)	SEE PAGE
	1	1	**3S-2093**	1	STRAP-CABLE	
	2	1	**140-3355**	6	SPACER (17X28X4.5-MM THK)	
	3	1	**140-4236**	1	TANK AS-COOLANT (RECOVERY)	
		1	**140-4238**	1	CAP AS (COOLANT RECOVERY)	
	4	1	**140-4763**	1	CLAMP	
	5	1	**140-4766**	2	CLAMP	
	6	1	**232-3543**	1	COCK AS	
	7	1	**266-7379**	1	STRAP-CABLE	
	8	1	**380-3496**	1	CORE AS-HYDRAULIC OIL COOLER	
	9	1	**380-6365**	1	HOSE	
	10	1	**380-6366**	1	HOSE	
	11	1	**380-6367**	1	RADIATOR AS	
		1	**247-5086**	1	CAP-RADIATOR	
	12	1	**380-6369**	1	BRACKET AS	
M		1	**6V-9632**	2	NUT-WELD (M6X1-THD)	
M		1	**8T-3490**	5	NUT-WELD (M10X1.5-THD)	
M		1	**8T-3612**	2	NUT-WELD (M8X1.25-THD)	
	13	1	**380-6370**	1	BRACKET AS	
M		1	**8T-3490**	5	NUT-WELD (M10X1.5-THD)	
		1	**154-2302**	1	SPACER (11X20X15-MM THK)	
	14	1	**380-6371**	1	SHROUD AS	
M		1	**8T-3612**	4	NUT-WELD (M8X1.25-THD)	
M		1	**9R-2821**	1	BOSS (M10X1.5X15-MM)	
	16	1	**380-6374**	1	FOAM	
	17	1	**380-6375**	1	FOAM	
	18	1	**380-6376**	1	FOAM	
	19	1	**292-8504**		TUBE (130-CM)	
	20	1	**382-2969**	1	PLATE AS	
	21	1	**382-2970**	1	PLATE AS	
	22	1	**382-8180**	1	FOAM	
	23	1	**383-4984**	1	FOAM	
	24	1	**383-4985**	1	FOAM	
	25	1	**095-1390**	2	CLAMP-HOSE	
	26	1	**1P-4278**	4	CLAMP-HOSE	
	27	1	**210-1304**	2	MOUNT-RUBBER	
	28	1	**6K-8178**	1	CLIP	
	30	1	**8T-4121**	12	WASHER-HARD (11X21X2.5-MM THK)	
M	31	1	**8T-4137**	15	BOLT (M10X1.5X20-MM)	
M	32	1	**8T-4138**	2	BOLT (M6X1X20-MM)	
M	33	1	**8T-4177**	2	BOLT (M8X1.25X90-MM)	
M	34	1	**8T-4186**	1	BOLT (M10X1.5X40-MM)	
M	35	1	**8T-4195**	2	BOLT (M10X1.5X30-MM)	
M	36	1	**8T-4200**	2	BOLT (M8X1.25X16-MM)	
	37	1	**8T-4205**	2	WASHER-HARD (7.2X14.5X2-MM THK)	
	38	1	**8T-4222**	6	WASHER-PLATED (11X32X2.5-MM THK)	
	39	1	**8T-4224**	6	WASHER-HARD (8.8X16X2-MM THK)	
E	40	1	**7I-7439**		GUARD (6-CM)	
E	41	1	**7Y-1976**		HOSE-WATER (35-CM)	
E	41A	1	**7Y-1976**		HOSE-WATER (36-CM)	
D	42	1	**5P-9205**		SEAL (0.2-M)	
D	43	1	**5P-5687**		SEAL (0.1-M EACH)	
D	43A	1	**5P-5687**		SEAL (0.5-M)	
D	43B	1	**5P-5687**		SEAL (0.2-M)	
E	44	1	**195-0601**		SEAL (10-CM EACH)	
E	44A	1	**195-0601**		SEAL (4.5-CM)	
E	44B	1	**195-0601**		SEAL (5-CM EACH)	
E	44C	1	**195-0601**		SEAL (42-CM)	
E	44D	1	**195-0601**		SEAL (50-CM EACH)	

380-6364 **RADIATOR & HYD OIL COOLER GP (*contd.*)** **i05204637**

NOTE	REF NO	GRAPHIC REF	PART NUMBER	QTY	PART NAME 1 2 3 4 5 6 (PRODUCT LEVEL)	SEE PAGE
E	44E	1	**195-0601**		SEAL (13.5-CM EACH)	
E	44F	1	**195-0601**		SEAL (61.5-CM)	
E	44G	1	**195-0601**		SEAL (38.2-CM)	
E	44H	1	**195-0601**		SEAL (2.5-CM)	
E	44I	1	**195-0601**		SEAL (8-CM)	
E	44J	1	**195-0601**		SEAL (56-CM EACH)	
E	44K	1	**195-0601**		SEAL (6-CM EACH)	

D - ORDER BY THE METER
E - ORDER BY THE CENTIMETER
M - METRIC PART

380-6364 **RADIATOR & HYD OIL COOLER GP (*contd.*)** **i05204637**

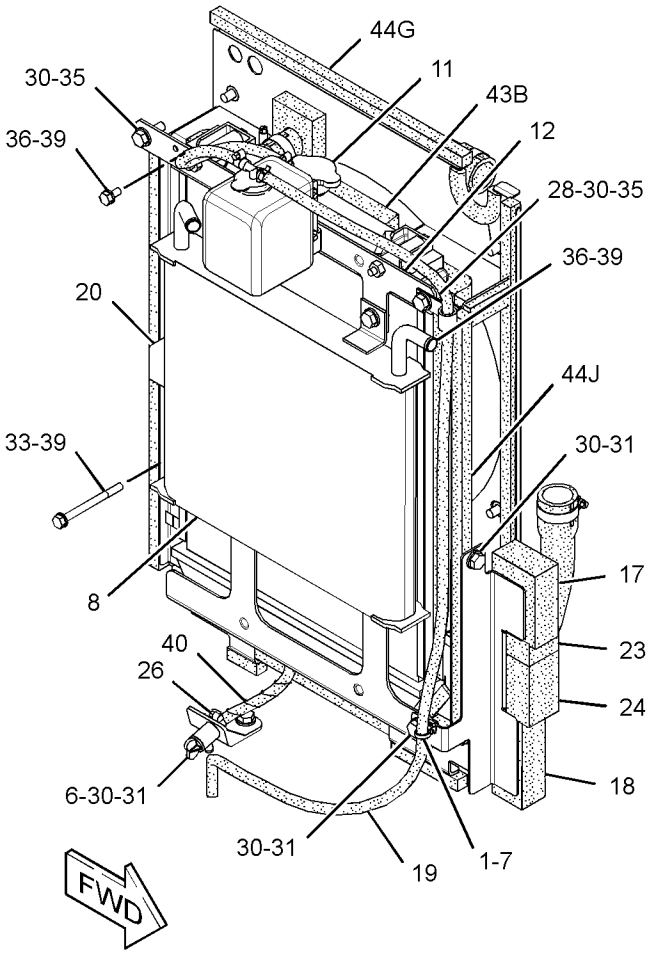

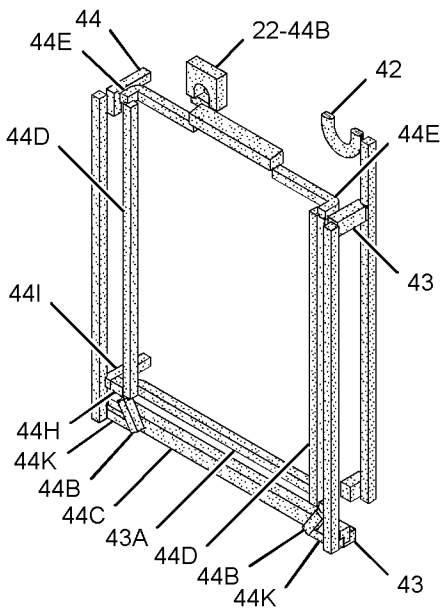

(PARTS REMOVED FOR CLARITY)

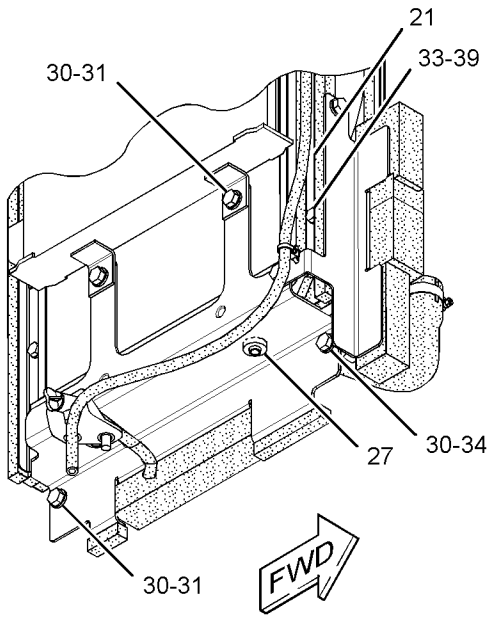

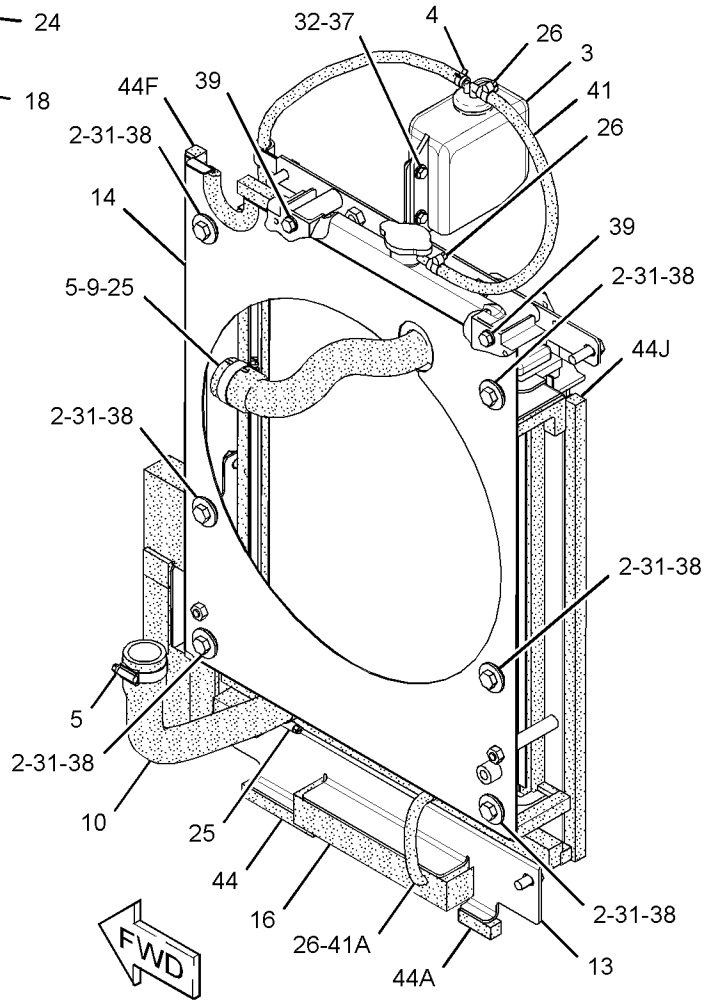

GRAPHIC #1

<END>

g03334270

383-0133 ACCESSORY GP-ENGINE

S/N: TTN1-908

PART OF 378-3248 ENGINE AR-COMPLETE, 378-3252, 392-4128, 416-6082 ENGINE AR-PRIMARY
ALSO AN ATTACHMENT

SMCS-1059, 1395

i04785874

NOTE	REF NO	GRAPHIC REF	PART NUMBER	QTY	PART NAME 1 2 3 4 5 6 (PRODUCT LEVEL)	SEE PAGE
	1	1	**378-1267**	1	GASKET	
	2	1	**379-0869**	1	CONNECTOR (WATER RETURN)	
F			**379-2015**	1	RELAY AS (24-VOLT) (ENGINE START)	

F - NOT SHOWN

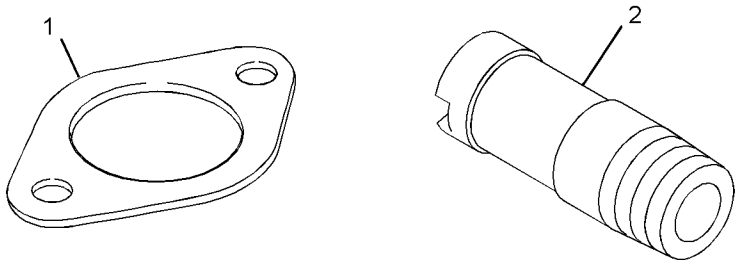

GRAPHIC #1

<END>

g02789465

380-5727 AIR CLEANER GP

PART OF 383-8499 AIR CLEANER GP

SMCS-1051, 1054 **i04589469**

NOTE	REF NO	GRAPHIC REF	PART NUMBER	QTY	PART NAME 1 2 3 4 5 6 (PRODUCT LEVEL)	SEE PAGE
	1	1	**096-4177**	1	VALVE-EVACUATION (AIR CLEANER)	
	2	1	**096-5028**	1	INDICATOR-AIR FILTER CHANGE	
	3	1	**134-8726**	1	FILTER ELEMENT AS-AIR (PRIMARY)	
	4	1	**140-2334**	1	FILTER ELEMENT AS-AIR (SECONDARY)	
	5	1	**284-3880**	1	CAP-PROTECTIVE	

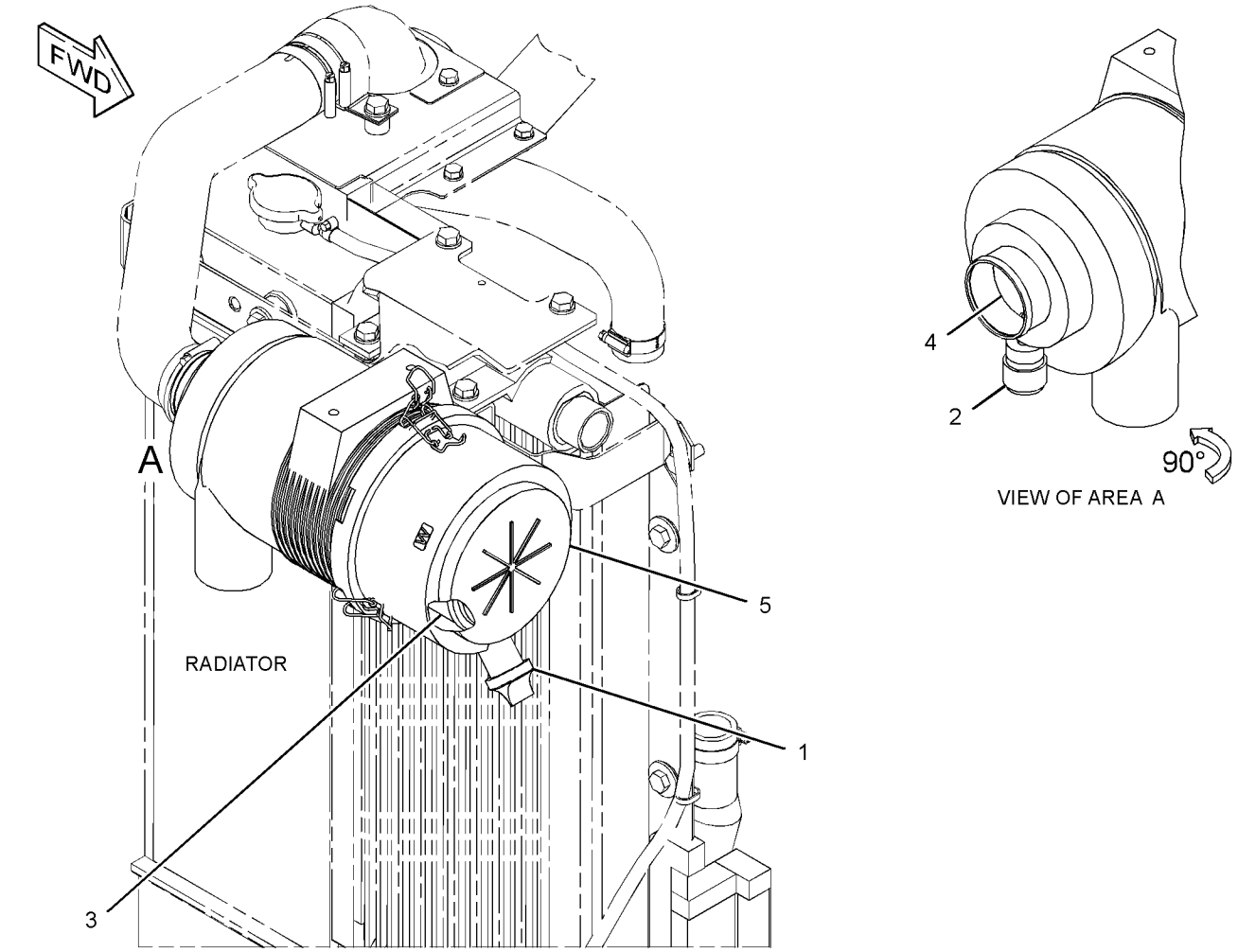

GRAPHIC #1 **<END>** g02764323

383-8499 AIR CLEANER GP

PART OF 380-6359 INSTALLATION AR-ENGINE

SMCS-1051, 1054 **i04629857**

NOTE	REF NO	GRAPHIC REF	PART NUMBER	QTY	PART NAME 1 2 3 4 5 6 (PRODUCT LEVEL)	SEE PAGE
Y	1	1	**380-5727**	1	AIR CLEANER GP	45
	2	1	**383-8501**	1	BRACKET	
	3	1	**8T-4121**	2	WASHER-HARD (11X21X2.5-MM THK)	
M	4	1	**8T-4136**	2	BOLT (M10X1.5X25-MM)	
M	5	1	**8T-4200**	2	BOLT (M8X1.25X16-MM)	
	6	1	**8T-4224**	2	WASHER-HARD (8.8X16X2-MM THK)	

M - METRIC PART
Y - SEPARATE ILLUSTRATION

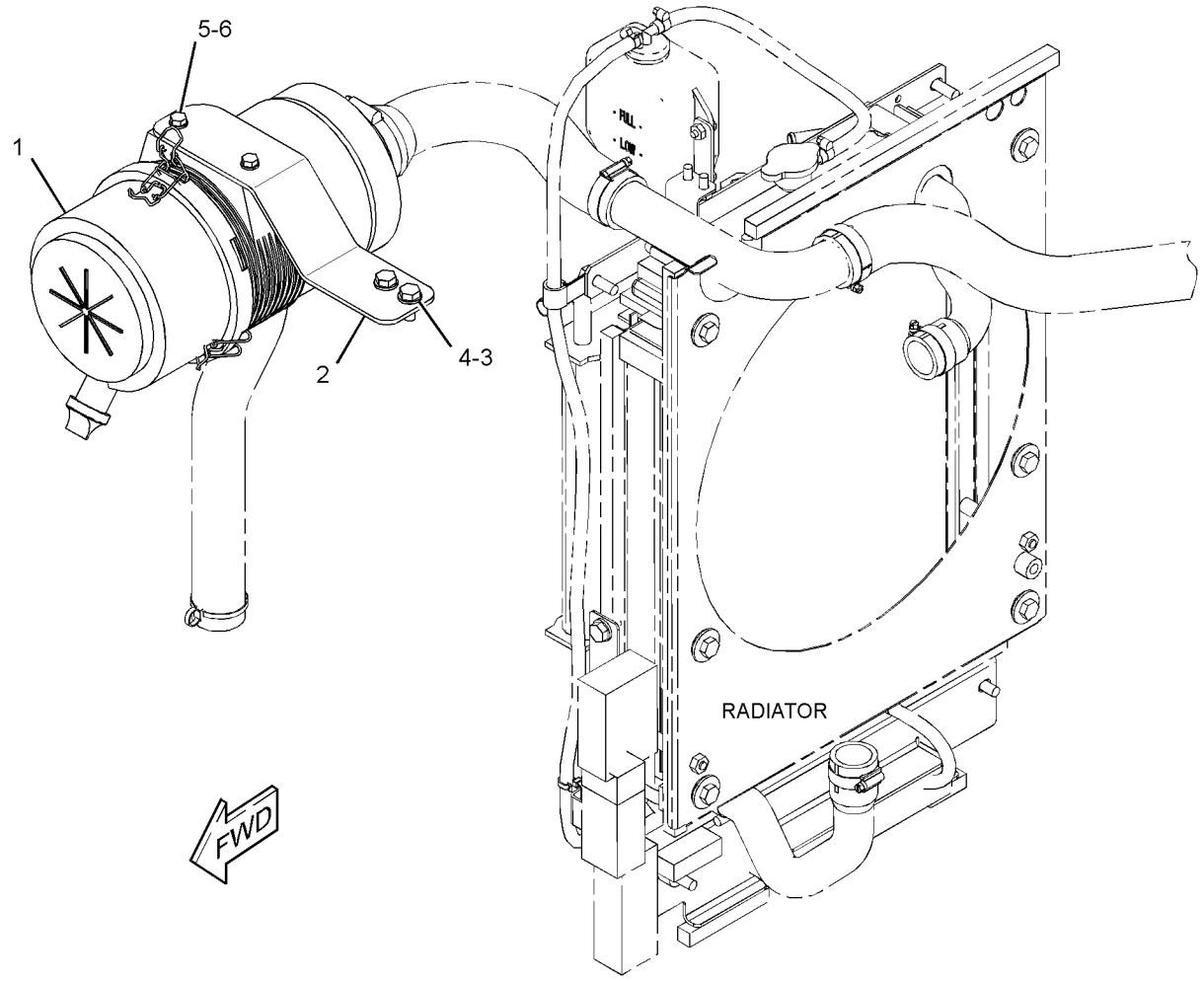

GRAPHIC #1 **<END>** g02789070

AIR INLET AND EXHAUST SYSTEM

380-6377 EXTENSION GP-EXHAUST

PART OF 380-6359 INSTALLATION AR-ENGINE

SMCS-1061 **i04629854**

NOTE	REF NO	GRAPHIC REF	PART NUMBER	QTY	PART NAME 1 2 3 4 5 6 (PRODUCT LEVEL)	SEE PAGE
	1	1	**171-0689**	1	CLAMP AS-EXHAUST	
	2	1	**299-3784**	1	U-BOLT	
M	3	1	**8T-4908**	2	BOLT (M8X1.25X25-MM)	
	4	1	**8T-4224**	4	WASHER-HARD (8.8X16X2-MM THK)	
M	5	1	**5C-7261**	4	NUT (M8X1.25-THD)	

M - METRIC PART

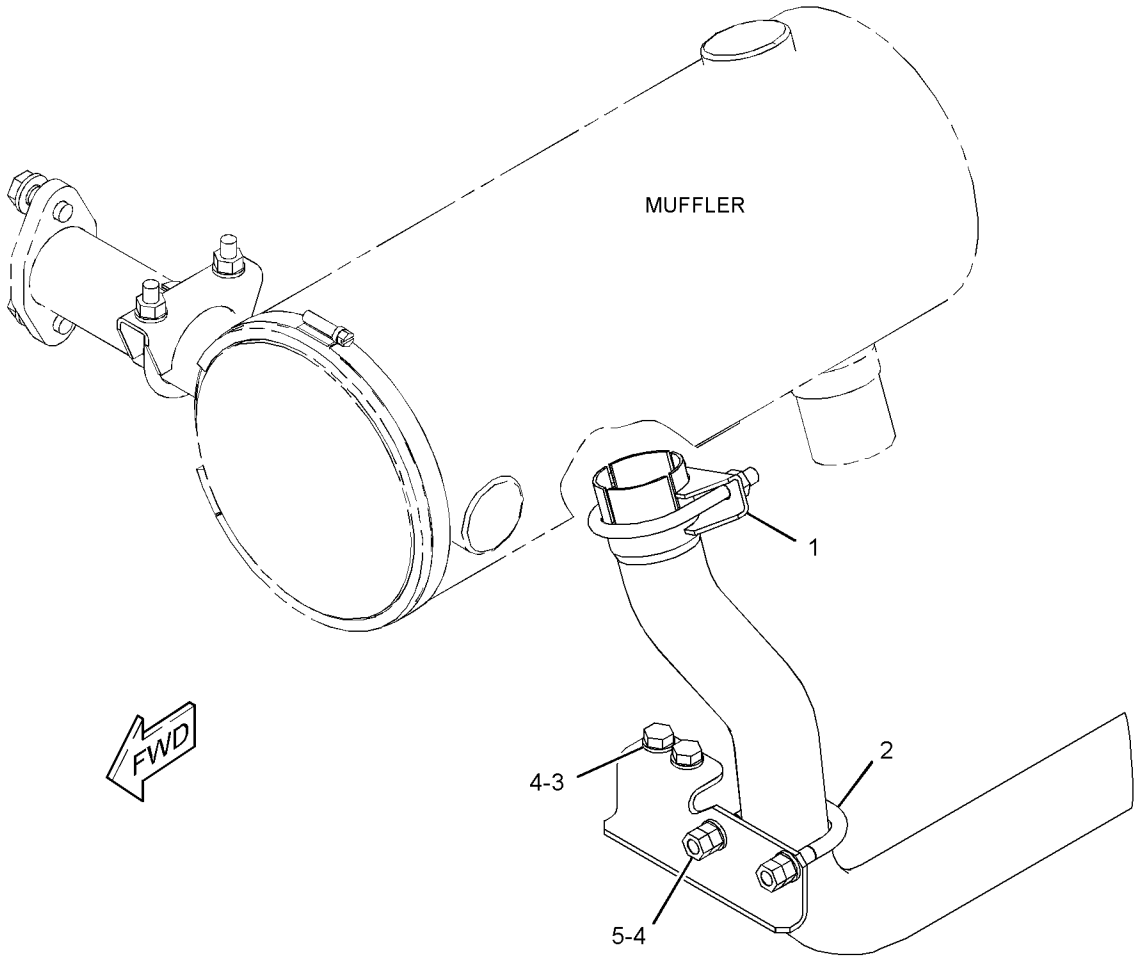

GRAPHIC #1 **<END>** g02799190

AIR INLET AND EXHAUST SYSTEM

387-3558 LINES GP-AIR

PART OF 380-6359 INSTALLATION AR-ENGINE

SMCS-1071 **i04935903**

NOTE	REF NO	GRAPHIC REF	PART NUMBER	QTY	PART NAME 1 2 3 4 5 6 (PRODUCT LEVEL)	SEE PAGE
	1	1	**3S-2093**	1	STRAP-CABLE	
	2	1	**095-1392**	1	CLAMP-HOSE	
	3	1	**095-1393**	2	CLAMP-HOSE	
	4	1	**240-0454**	2	CLAMP-HOSE	
	5	1	**266-7379**	1	STRAP-CABLE	
	6	1	**380-6362**	1	HOSE	
	7	1	**380-6363**	1	TUBE AS	
	8	1	**383-8502**	1	HOSE	
	9	1	**383-8503**	1	HOSE	
M	10	1	**8T-4200**	2	BOLT (M8X1.25X16-MM)	
	11	1	**8T-4224**	2	WASHER-HARD (8.8X16X2-MM THK)	

M - METRIC PART

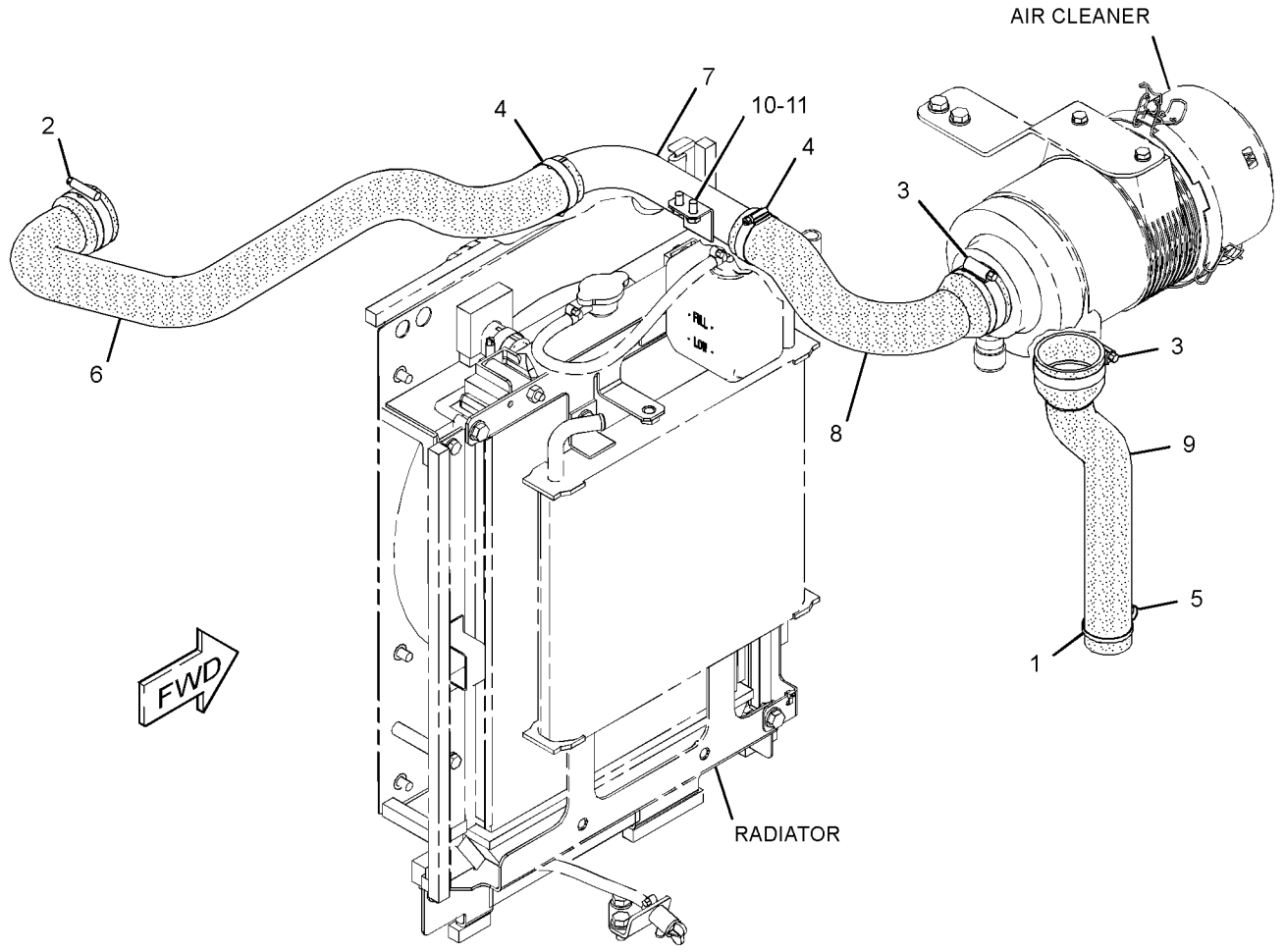

GRAPHIC #1 **<END>** g02789084

383-0151 MANIFOLD GP-EXHAUST

S/N: TTN1-908

PART OF 378-3248 ENGINE AR-COMPLETE, 378-3252, 392-4128, 416-6082 ENGINE AR-PRIMARY

ALSO AN ATTACHMENT

SMCS-1059 **i04603469**

NOTE	REF NO	GRAPHIC REF	PART NUMBER	QTY	PART NAME 1 2 3 4 5 6 (PRODUCT LEVEL)	SEE PAGE
	1	1	**383-0315**	8	STUD	
	2	1	**383-0346**	8	NUT	
	3	1	**383-0460**	1	GASKET	
	4	1	**383-0461**	1	GASKET	
	5	1	**383-0604**	1	MANIFOLD-EXHAUST	

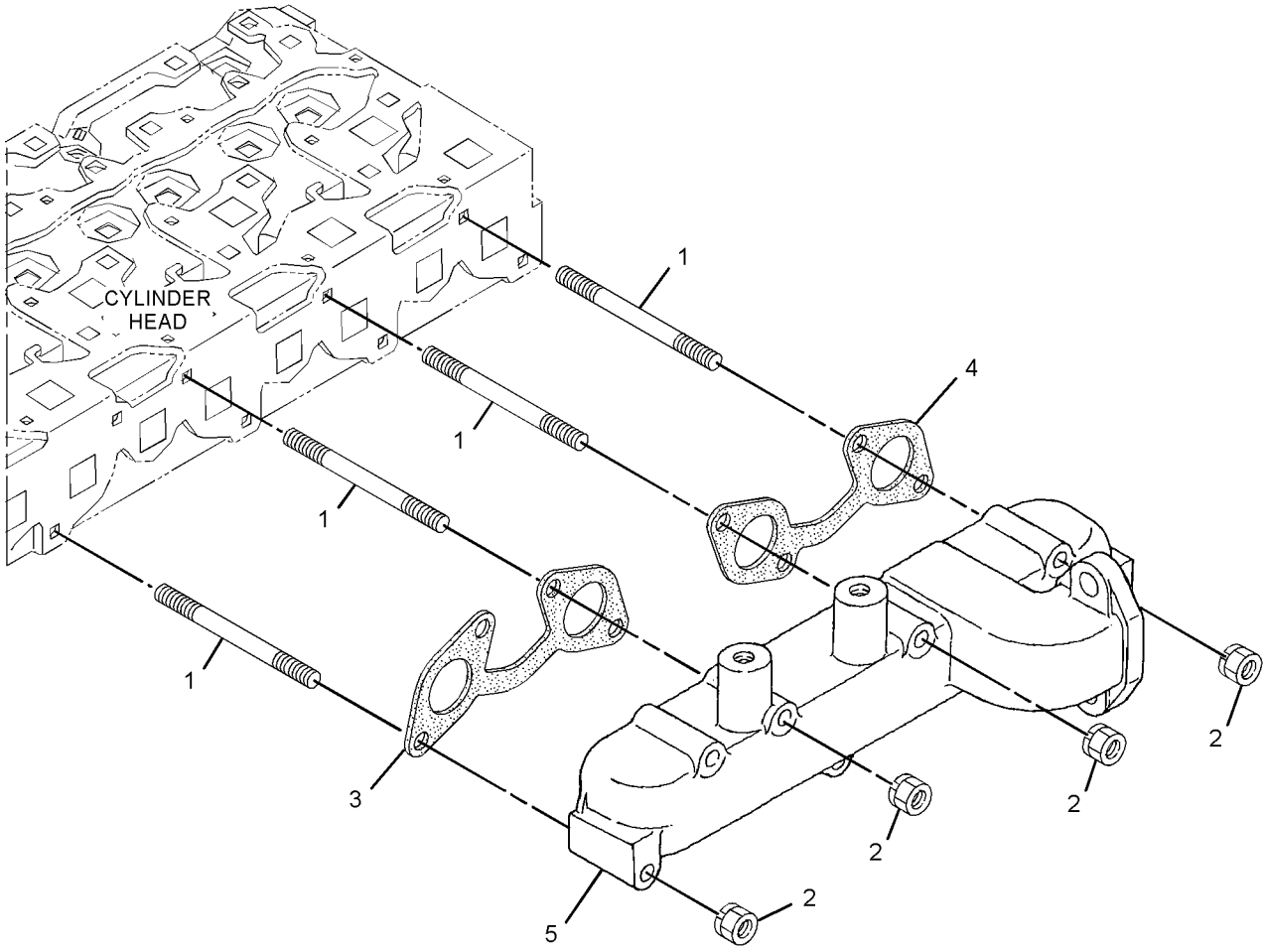

GRAPHIC #1 **<END>** g02791250

383-0152 MANIFOLD GP-INLET

S/N: TTN1-908

PART OF 378-3248 ENGINE AR-COMPLETE, 378-3252, 392-4128, 416-6082 ENGINE AR-PRIMARY

ALSO AN ATTACHMENT

SMCS-1058 **i04603471**

NOTE	REF NO	GRAPHIC REF	PART NUMBER	QTY	PART NAME 1 2 3 4 5 6 (PRODUCT LEVEL)	SEE PAGE
	1	1	**383-0173**	7	BOLT	
	2	1	**383-0491**	1	MANIFOLD AS (INLET)	
	2A	1	**383-0382**	1	PIPE	
	3	1	**383-0498**	1	GASKET	

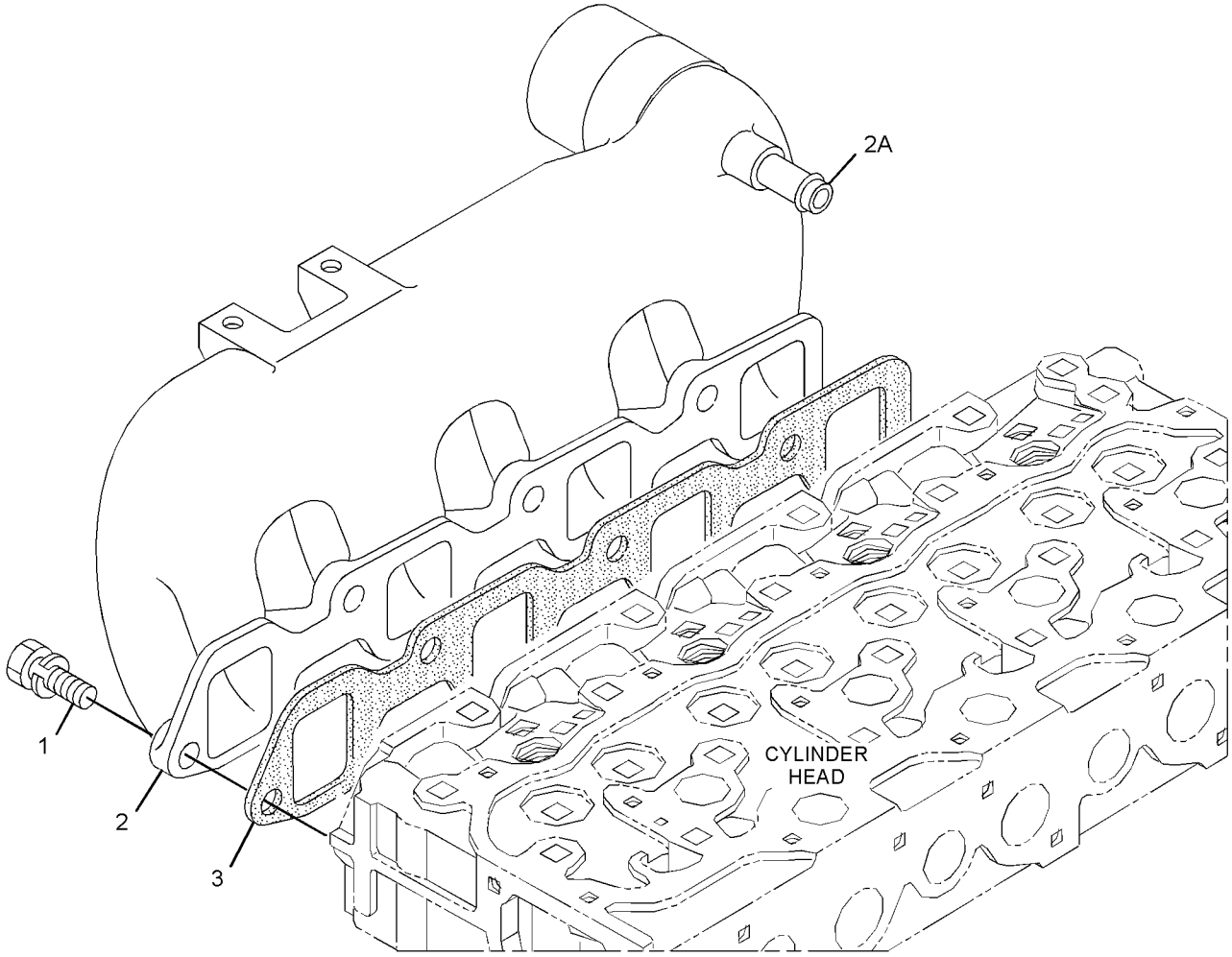

GRAPHIC #1 **<END>** g02791940

378-1264 MUFFLER GP

PART OF 380-6359 INSTALLATION AR-ENGINE

SMCS-1062 **i04589459**

NOTE	REF NO	GRAPHIC REF	PART NUMBER	QTY	PART NAME 1 2 3 4 5 6 (PRODUCT LEVEL)	SEE PAGE
	1	1	**171-0689**	1	CLAMP AS-EXHAUST	
	2	1	**285-7033**	1	CLAMP-HOSE	
	3	1	**378-1265**	1	MUFFLER AS	
	4	1	**378-1266**	1	INSULATOR	
	5	1	**378-1268**	1	TUBE AS	
M	6	1	**127-4839**	2	BOLT (M10X1.25X25-MM)	
	7	1	**6V-5839**	2	WASHER (11X21X2.5-MM THK)	
	8	1	**7X-7729**	2	WASHER (11X25X3-MM THK)	
M	9	1	**8T-4136**	2	BOLT (M10X1.5X25-MM)	

M - METRIC PART

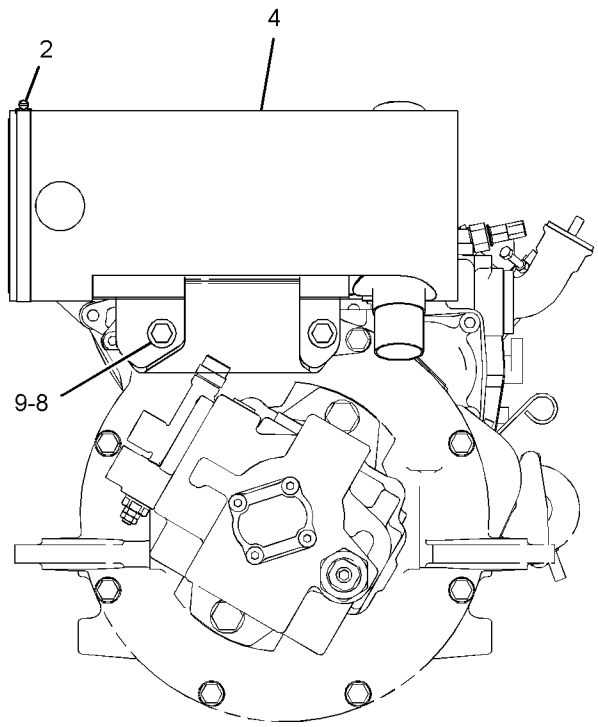

REAR VIEW

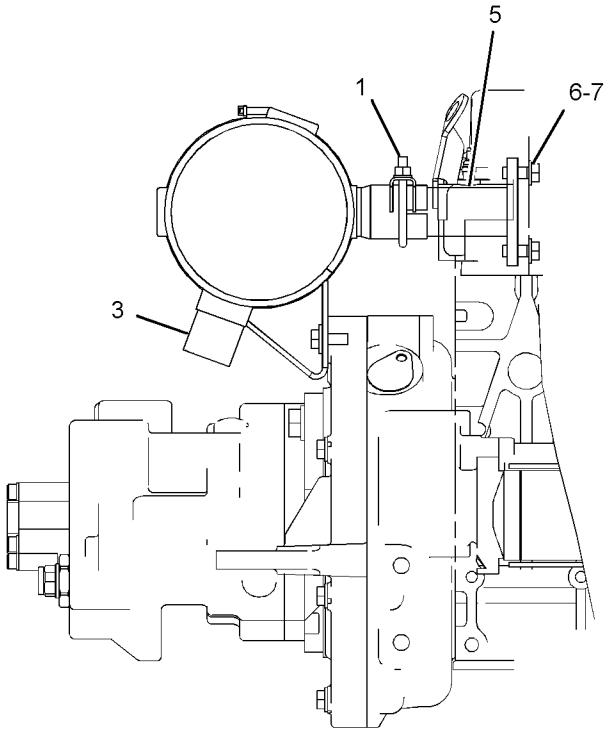

LEFT SIDE VIEW

GRAPHIC #1 **<END>** g02768701

377-8921 CONTROL AR-GOVERNOR—AUTOMATIC IDLE

AN ATTACHMENT

SMCS-1264, 1265, 1276 **i04611684**

NOTE	PART NUMBER	QTY	PART NAME 1 2 3 4 5 6 (PRODUCT LEVEL)	SEE PAGE
Y	*370-5340*	1	CONTROL GP-GOVERNOR (AUTOMATIC IDLE)	53
Y	*356-4545*	1	VALVE & MTG GP-PILOT (TRAVEL)	317

Y - SEPARATE ILLUSTRATION

<END>

377-8922 CONTROL AR-GOVERNOR—AUTOMATIC IDLE, TRAVEL ALARM

AN ATTACHMENT

SMCS-1264, 1265, 1276 **i04611685**

NOTE	PART NUMBER	QTY	PART NAME 1 2 3 4 5 6 (PRODUCT LEVEL)	SEE PAGE
Y	*370-5338*	1	ALARM GP-TRAVEL	69
Y	*370-5340*	1	CONTROL GP-GOVERNOR	53
Y	*356-4545*	1	VALVE & MTG GP-PILOT (TRAVEL)	317

Y - SEPARATE ILLUSTRATION

<END>

370-5340 CONTROL GP-GOVERNOR—AUTOMATIC IDLE

PART OF 377-8921, 377-8922 CONTROL AR-GOVERNOR

AN ATTACHMENT

SMCS-1265, 1276 **i04611681**

NOTE	REF NO	GRAPHIC REF	PART NUMBER	QTY	PART NAME 1 2 3 4 5 6 (PRODUCT LEVEL)	SEE PAGE
	1	1	**3S-2093**	4	STRAP-CABLE	
	2	1	**266-7379**	1	STRAP-CABLE	
	3	1	**362-3225**	1	SWITCH AS-PRESSURE (PILOT, TRAVEL)	
		1	**9X-3401**	2	PIN-CONNECTOR (16-GA TO 18-GA)	
		1	**243-4505**	1	RECEPTACLE AS-CONNECTOR (2-PIN)	
	4	1	**376-9492**	1	CONTROL AS	
	5	1	**379-0803**	1	MOTOR AS-GOVERNOR (12-VOLT)	
	6	1	**380-6298**	1	BRACKET AS	
M		1	**6V-9632**	3	NUT-WELD (M6X1-THD)	
		1	**7T-1099**	1	LINK	
	7	1	**383-3160**	1	BRACKET AS	
		1	**7T-1099**	1	LINK	
	8	1	**132-5789**	1	CLIP	
	9	1	**3J-1907**	1	SEAL-O-RING	
M	10	1	**5C-2890**	1	NUT (M6X1-THD)	
M	11	1	**6V-7357**	2	BOLT (M6X1X25-MM)	
	12	1	**8T-4121**	3	WASHER-HARD (11X21X2.5-MM THK)	
M	13	1	**8T-4137**	3	BOLT (M10X1.5X20-MM)	
M	14	1	**8T-4138**	3	BOLT (M6X1X20-MM)	
M	15	1	**8T-4171**	2	BOLT (M6X1X12-MM)	
	16	1	**9X-8256**	9	WASHER (6.6X12X2-MM THK)	

M - METRIC PART

370-5340 **CONTROL GP-GOVERNOR (*contd.*)** **i04611681**

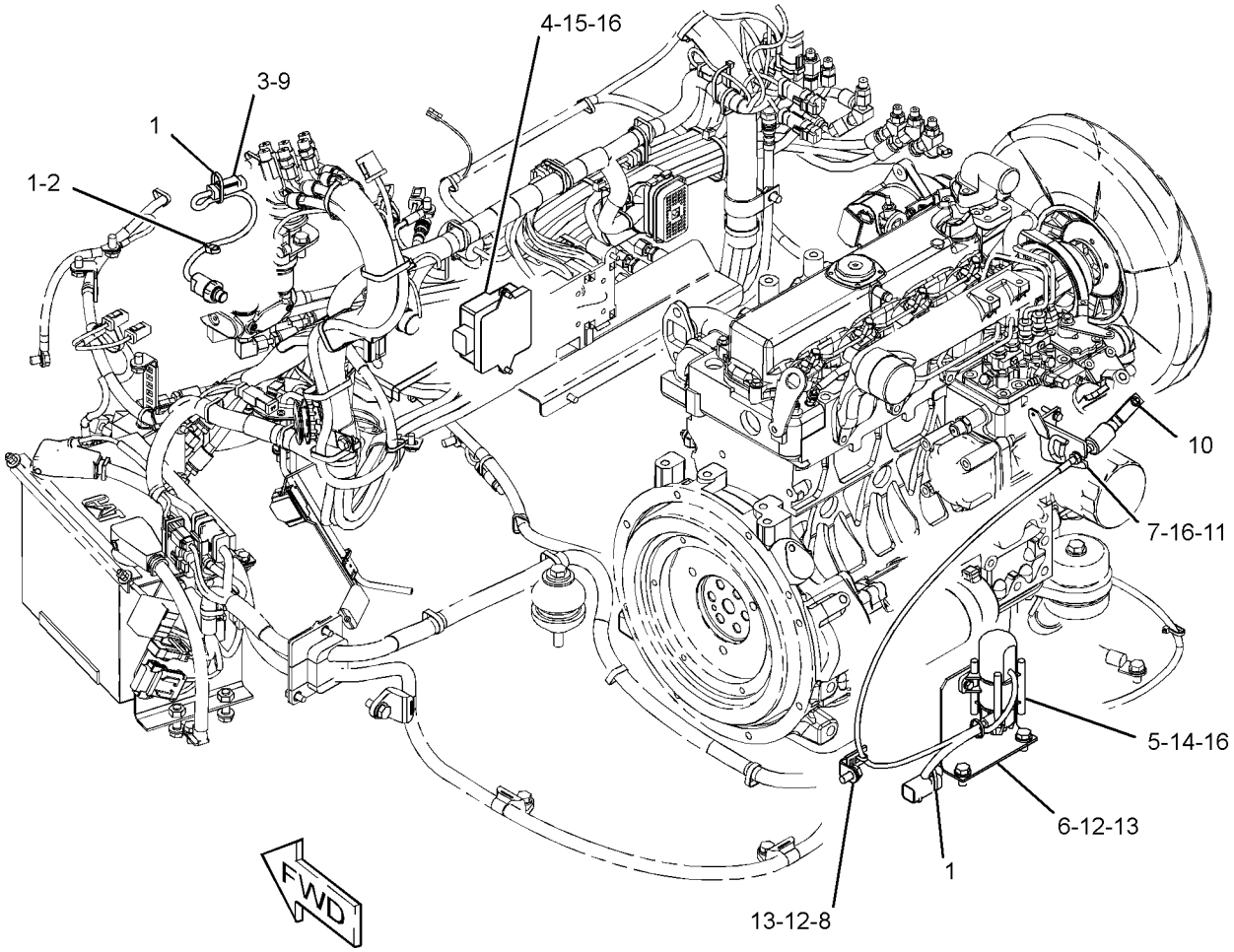

GRAPHIC #1 **<END>** g02804557

144-9962 FILTER GP-WATER SEP & FUEL

PART OF 379-4692 LINES GP-FUEL FILTER

SMCS-1261, 1263 **i03998686**

NOTE	REF NO	GRAPHIC REF	PART NUMBER	QTY	PART NAME 1 2 3 4 5 6 (PRODUCT LEVEL)	SEE PAGE
	1	1	**156-1200**	1	FILTER ELEMENT-FUEL (WATER SEPARATOR)	
	2	1	**149-3516**	1	BASE AS	
	3	1	**118-8118**	1	RING-RETAINING	
	4	1	**112-9401**	1	BOWL AS-WATER COLLECTION	
		1	**128-8614**	1	KIT-SEAL (WATER SEPARATOR)	
					(INCLUDES SEALS FOR HEADER/ELEMENT, DRAIN VALVE, HEADER/BOWL & BOLT/BOWL)	
	5	1	**118-8119**	1	NUT	
					AVAILABLE REPAIR KIT(S):	
			121-4480	1	KIT-WATER BASE (WATER SEPARATOR)	
					(INCLUDES CAP NUT, HEADER CAP, CAP SEAL, VOLUME PLUG, VENT PLUG, DUST SEAL, O-RING SEAL & RETAINING RING)	

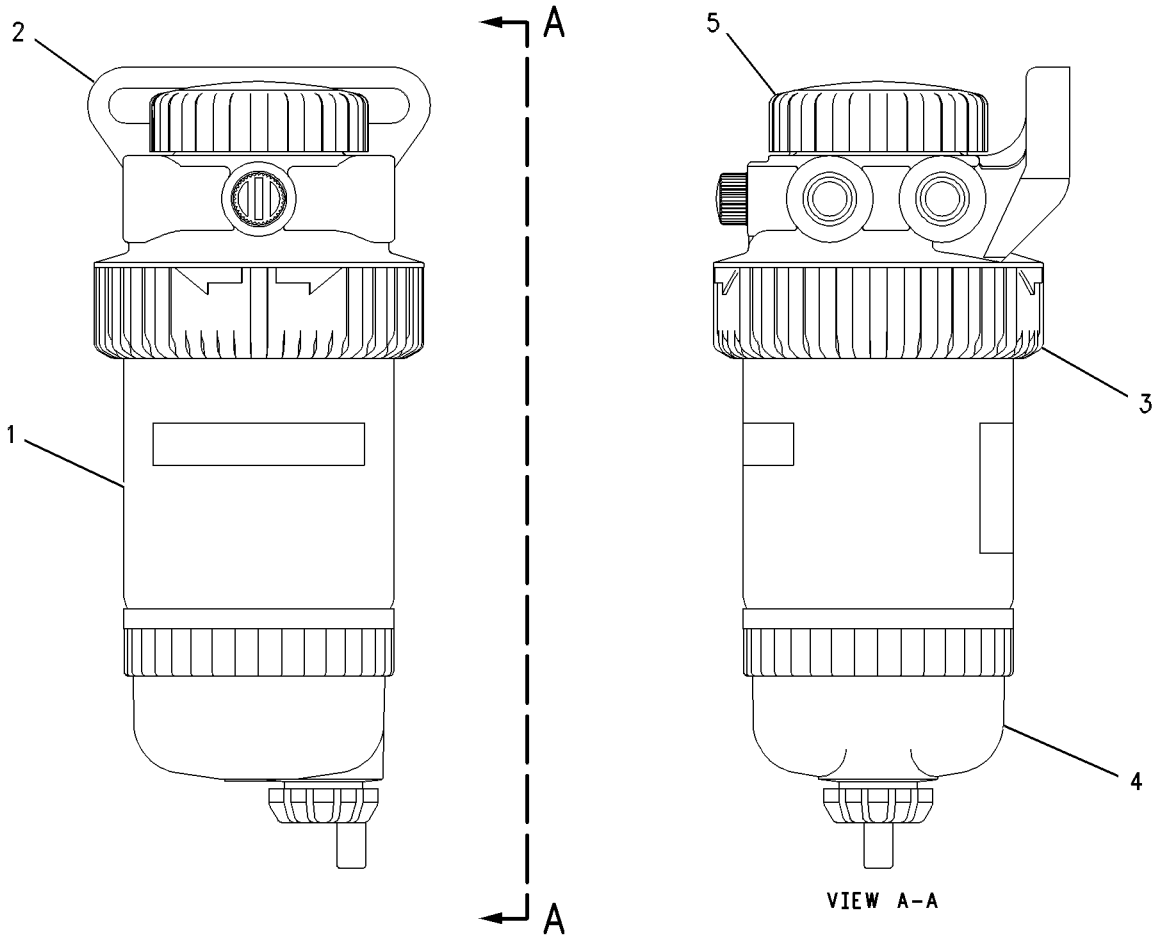

GRAPHIC #1 **<END>** g00430959

383-0570 GOVERNOR GP

S/N: TTN1-908

PART OF 378-3248 ENGINE AR-COMPLETE, 378-3252, 392-4128, 416-6082 ENGINE AR-PRIMARY
ALSO AN ATTACHMENT

SMCS-1264, 1908

i05060489

NOTE	REF NO	GRAPHIC REF	PART NUMBER	QTY	PART NAME 1 2 3 4 5 6 (PRODUCT LEVEL)	SEE PAGE
	1	1	**383-0164**	4	BOLT	
	2	1	**383-0168**	1	BOLT	
	3	1	**383-0189**	2	BOLT	
	4	1	**383-0198**	4	NUT-FLANGE	
	5	1	**383-0209**	4	GASKET	
	6	1	**383-0278**	4	STUD	
	7	1	**383-0308**	2	GASKET	
	8	1	**383-0317**	1	CAP	
	9	1	**383-0406**	1	BOLT-ADJUSTMENT	
	11	1	**383-0416**	2	GASKET	
	12	1	**383-0429**	1	SPRING-GOVERNOR	
	13	1	**383-0484**	1	SPRING-GOVERNOR	
	14	1	**383-0512**	1	LEVER AS-CONTROL (SPEED CONTROL)	
	14A	1	**383-0223**	1	PIN-SPRING	
	14B	1	**383-0355**	1	SEAL-OIL	
	14C	1	**383-0407**	1	LEVER AS-GOVERNOR	
	14D	1	**383-0418**	1	SPRING-RETURN	
	14E	1	**383-0513**	1	LEVER-CONTROL	
	15	1	**383-0521**	1	SWITCH AS (ENGINE SHUTOFF)	
	15A	1	**383-0211**	1	SEAL-O-RING	
	15B	1	**383-0520**	1	BOLT-ADJUSTMENT	
	15C	1	**383-0575**	1	NUT-SELF LOCKING	
	16	1	**383-0571**	1	CAP	
	17	1	**383-0583**	1	SPRING GP-GOVERNOR (LEVER STOP)	
	17A	1	**383-0222**	1	PIN-SPRING	
	17B	1	**383-0418**	1	SPRING-RETURN	
	17C	1	**383-0584**	1	LEVER AS-STOP	
	17D	1	**383-0585**	1	LEVER-STOP	
	17E	1	**383-0586**	2	SEAL	
	18	1	**383-0591**	1	LEVER AS-FORK	
	18A	1	**383-0206**	1	LOCKWASHER	
	18B	1	**383-0276**	1	HOLDER	
	18C	1	**383-0277**	1	BOLT	
	18D	1	**383-0409**	1	LEVER	

383-0570 **GOVERNOR GP (*contd.*)** **i05060489**

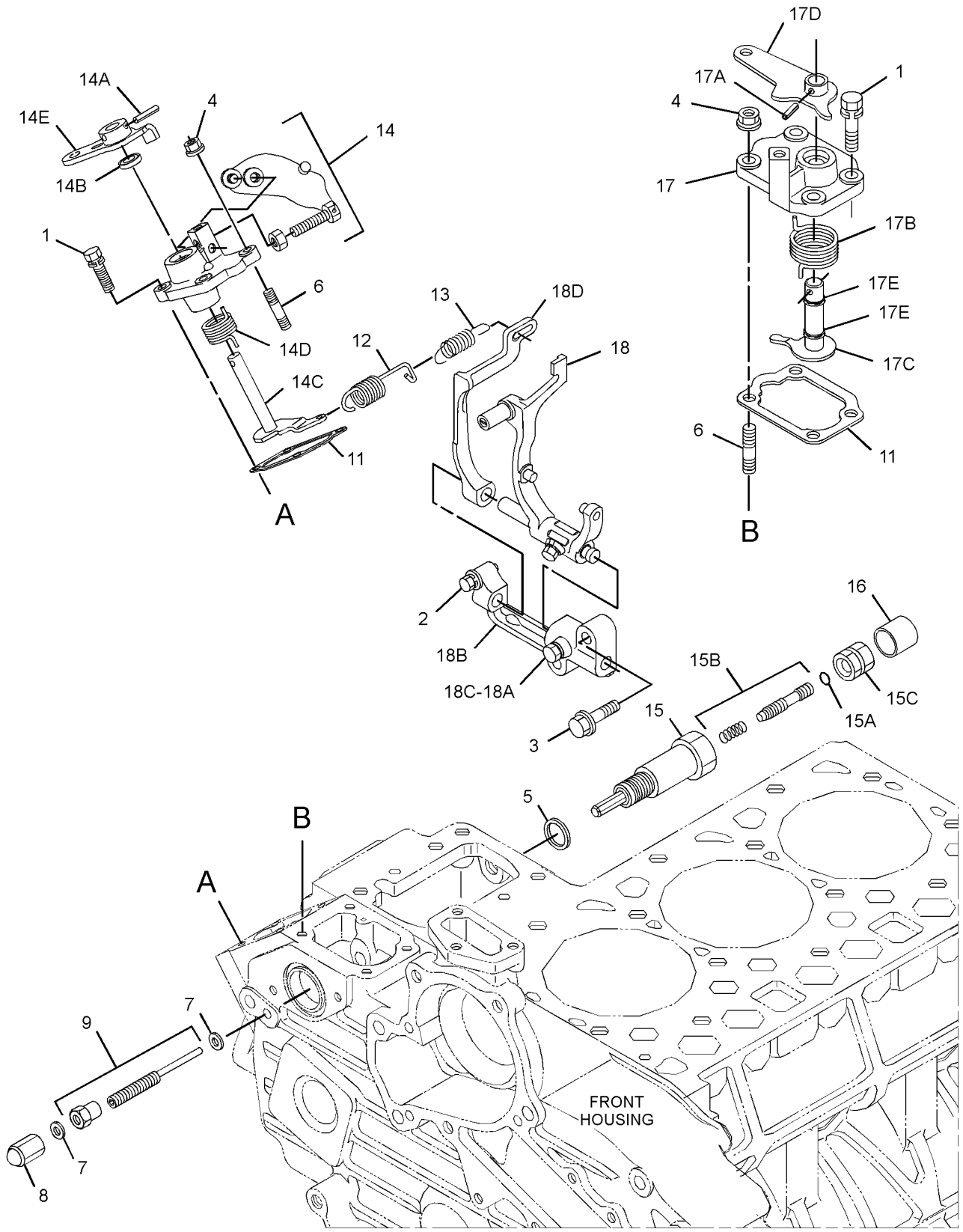

GRAPHIC #1 **<END>** g03230984

383-0147 LINES GP-FUEL

PART OF 378-3248 ENGINE AR-COMPLETE, 378-3252, 392-4128, 416-6082 ENGINE AR-PRIMARY ALSO AN ATTACHMENT

SMCS-1274 **i04603463**

NOTE	REF NO	GRAPHIC REF	PART NUMBER	QTY	PART NAME 1 2 3 4 5 6 (PRODUCT LEVEL)	SEE PAGE
	1	1	**383-0252**	1	JOINT	
	2	1	**383-0282**	1	CLAMP AS	
	3	1	**383-0474**	4	BOLT	
	4	1	**383-0559**	1	TUBE AS-FUEL	
	4A	1	**383-0284**	2	CLIP-PIPE	
	5	1	**383-0567**	1	PIPE AS	

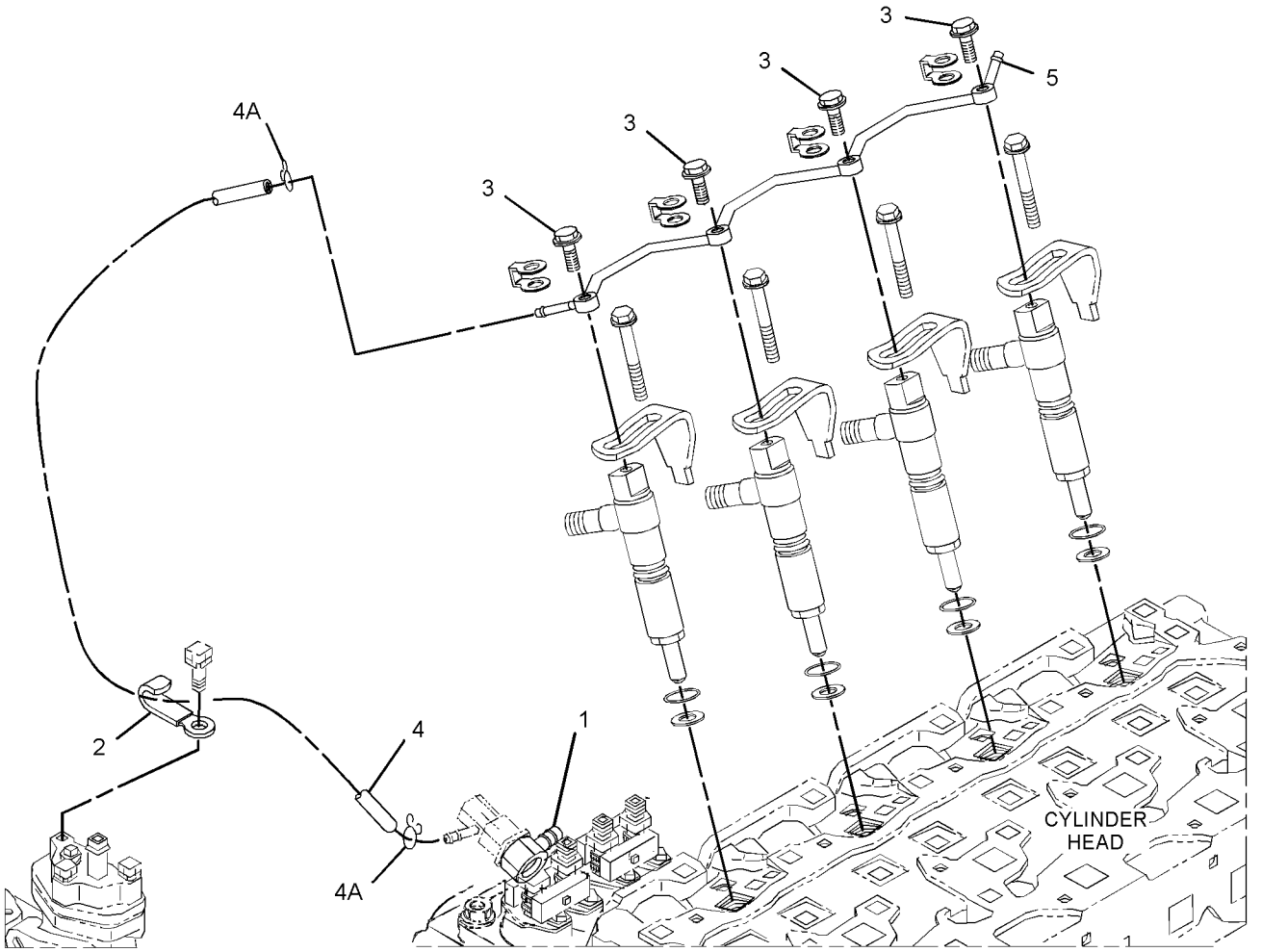

GRAPHIC #1 **<END>** g02792604

379-4692 LINES GP-FUEL FILTER

PART OF 376-6675 CHASSIS AR

SMCS-1261, 1274 **i04629837**

NOTE	REF NO	GRAPHIC REF	PART NUMBER	QTY	PART NAME 1 2 3 4 5 6 (PRODUCT LEVEL)	SEE PAGE
	1	1,2	**1P-4278**	8	CLAMP-HOSE	
	2	2	**3S-2093**	1	STRAP-CABLE	
	3	2	**7I-2673**	2	STRAP-CABLE	
	4	1,2	**7K-1181**	6	STRAP-CABLE	
Y	5	2	**144-9962**	1	FILTER GP-WATER SEP & FUEL	55
	6	2	**151-1975**	1	CONNECTOR	
	7	2	**216-1980**	1	GROMMET	
	8	2	**204-1611**	1	STRAP (DUAL)	
	9	2	**246-2622**	1	ELBOW AS	
	10	2	**266-7379**	1	STRAP-CABLE	
	11	2	**279-4732**	1	STRAP-CABLE (YELLOW)	
	12	2	**298-0663**	2	CLIP	
	13	2	**370-4008**	1	PUMP AS-FUEL	
	14	2	**380-7205**	1	BRACKET AS	
M		2	**6V-9632**	2	NUT-WELD (M6X1-THD)	
M		2	**8T-3490**	1	NUT-WELD (M10X1.5-THD)	
M		2	**8T-3612**	2	NUT-WELD (M8X1.25-THD)	
	15	2	*148-8405*	2	PLUG AS	
					(EACH INCLUDES)	
		2	**1J-9671**	1	SEAL-O-RING	
		2	**3K-8460**	1	PLUG	
	16	2	**1J-9671**	1	SEAL-O-RING	
	17	2	**277-1873**	1	CLIP	
	18	1,2	**5P-4116**	4	WASHER-HARD (8.8X20.5X2-MM THK)	
	19	1	**5P-9299**	2	CLIP	
	20	1	**6K-8178**	2	CLIP	
M	21	2	**7X-2533**	2	BOLT (M6X1X35-MM)	
	22	2	**8K-1433**	1	GROMMET	
	23	2	**8T-4121**	4	WASHER-HARD (11X21X2.5-MM THK)	
M	24	2	**8T-4136**	2	BOLT (M10X1.5X25-MM)	
M	25	2	**8T-4137**	2	BOLT (M10X1.5X20-MM)	
M	26	1	**8T-4200**	2	BOLT (M8X1.25X16-MM)	
M	27	2	**8T-7547**	2	BOLT (M8X1.25X30-MM)	
	28	2	**9X-6165**	4	WASHER (6.5X22X2.5-MM THK)	
E	29	2	**7I-7439**		GUARD (33-CM)	
E	29A	1	**7I-7439**		GUARD (43-CM)	
E	30	2	**5I-4200**		GUARD (38-CM)	
E	30A	1	**5I-4200**		GUARD (83-CM)	
E	31	2	**8C-6959**		HOSE (26-CM)	
E	32	1	**263-0768**		HOSE (300-CM)	
E	33	1	**5P-1507**		HOSE (148-CM)	
E	33A	2	**5P-1507**		HOSE (29.5-CM)	
E	33B	2	**5P-1507**		HOSE (173.5-CM)	
	34	2	**096-6079**	1	TAPE (WHITE)	
	35	1	**096-6085**	1	TAPE (RED)	

E - ORDER BY THE CENTIMETER
M - METRIC PART
Y - SEPARATE ILLUSTRATION

379-4692 **LINES GP-FUEL FILTER (*contd.*)** **i04629837**

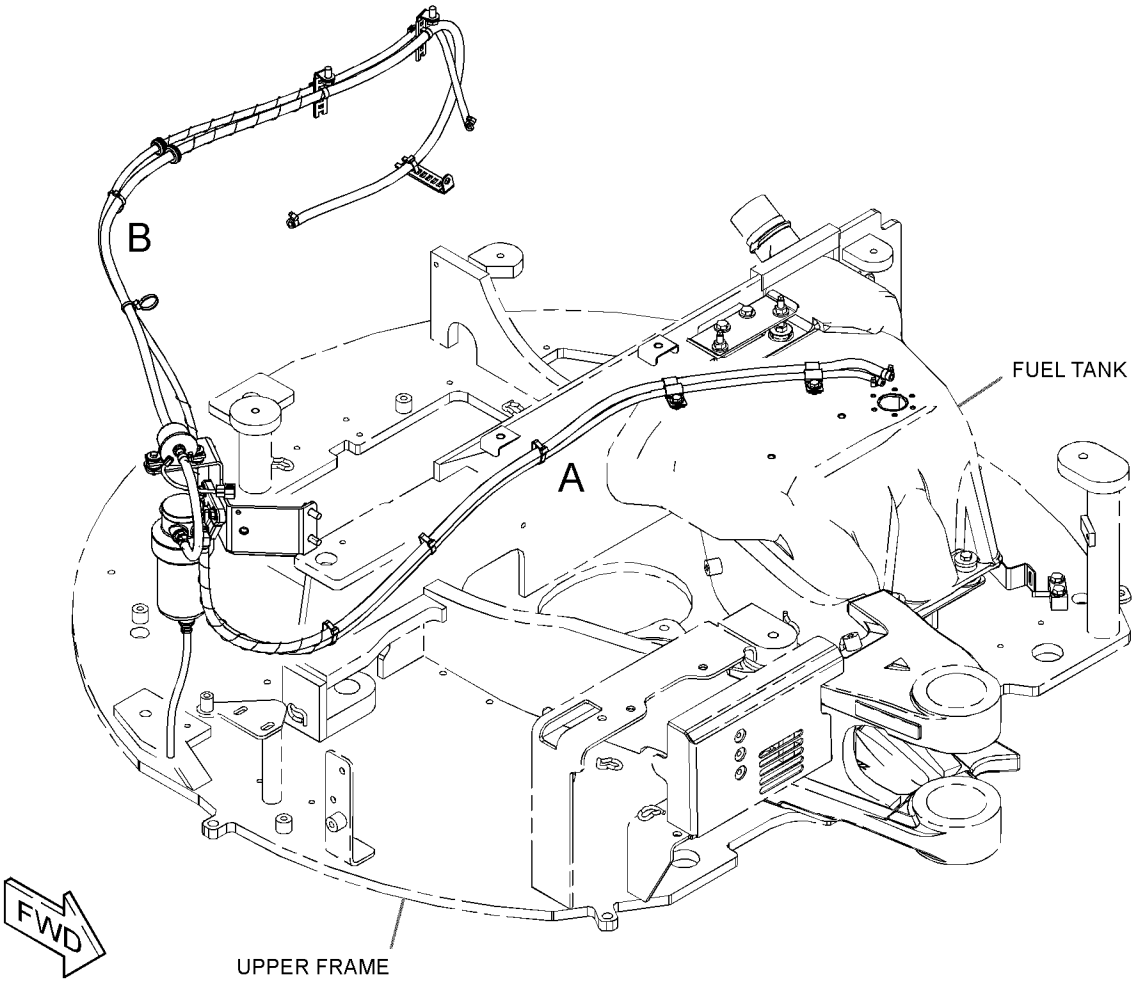

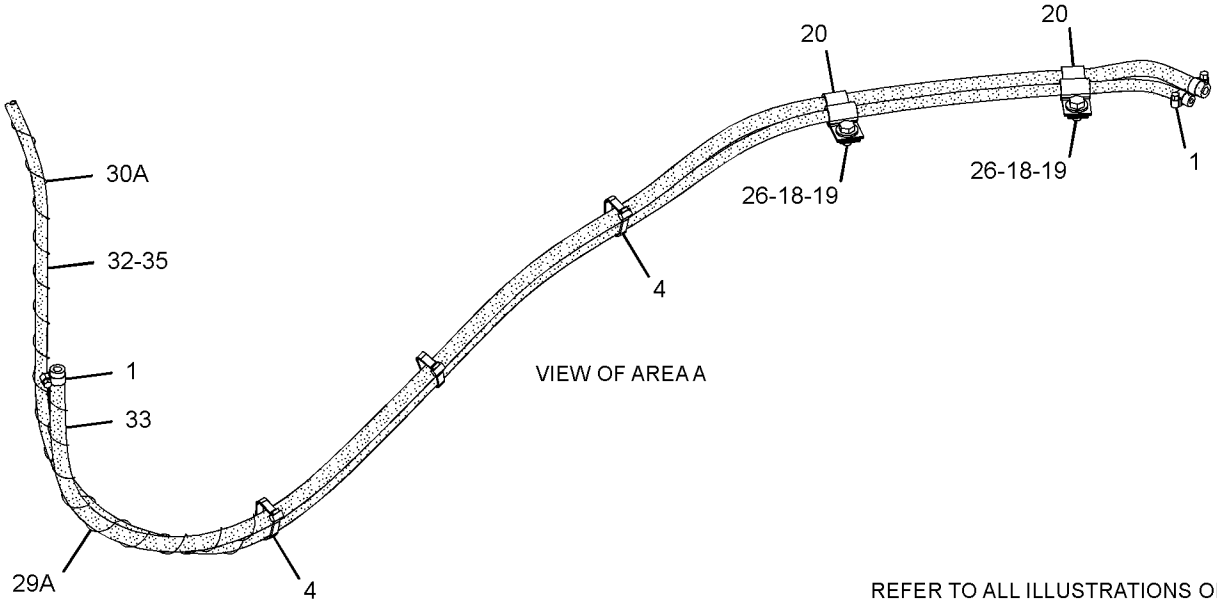

REFER TO ALL ILLUSTRATIONS OF THIS GROUP FOR AUXILIARY VIEWS

GRAPHIC #1

g02802856

379-4692 **LINES GP-FUEL FILTER (*contd.*)** **i04629837**

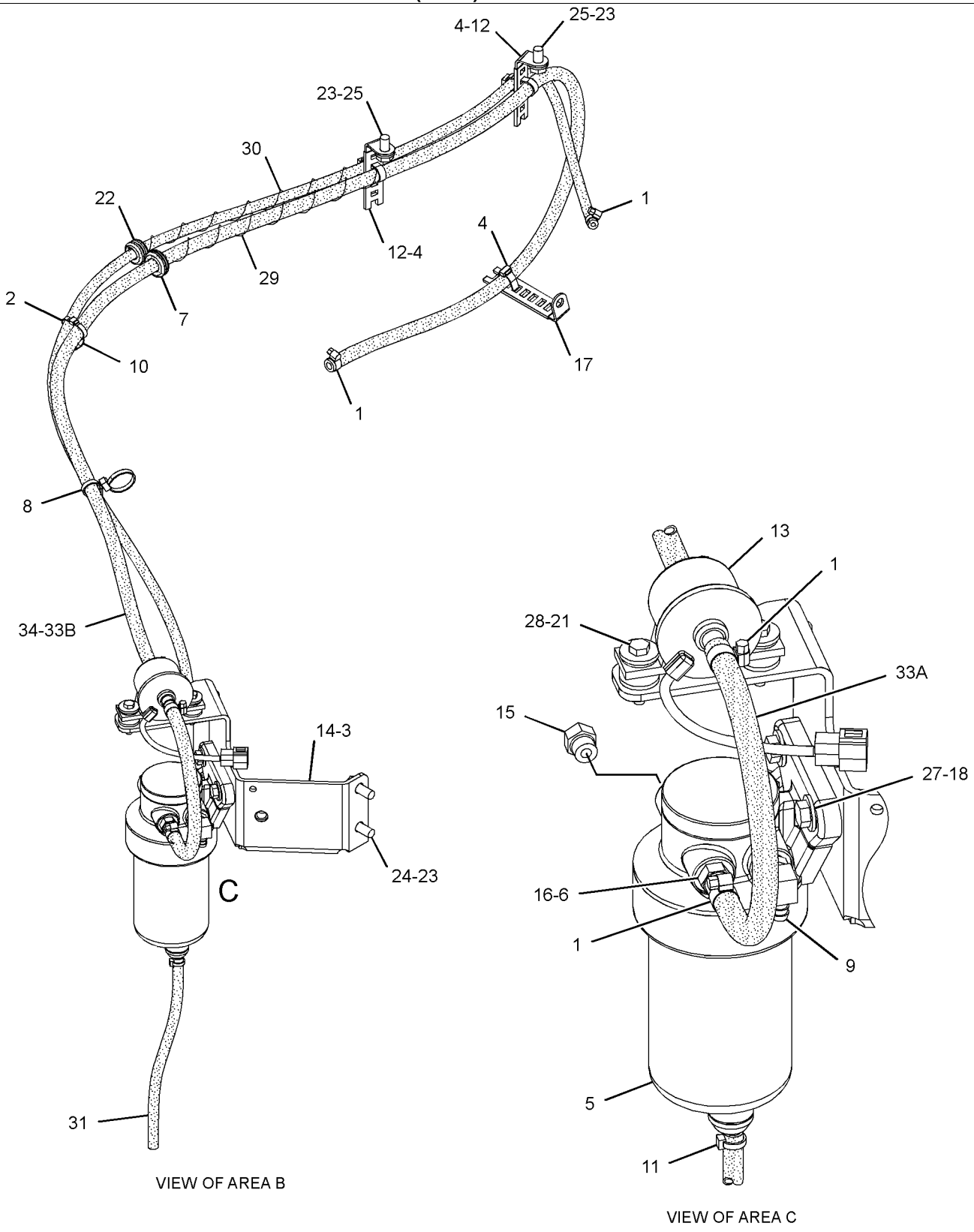

GRAPHIC #2 **<END>** g02802857

383-0148 LINES GP-FUEL INJECTION

S/N: TTN1-908

PART OF 378-3248 ENGINE AR-COMPLETE, 378-3252, 392-4128, 416-6082 ENGINE AR-PRIMARY

ALSO AN ATTACHMENT

SMCS-1252, 1254

i05006751

NOTE	REF NO	GRAPHIC REF	PART NUMBER	QTY	PART NAME 1 2 3 4 5 6 (PRODUCT LEVEL)	SEE PAGE
	1	1	**383-0202**	2	SCREW	
	2	1	**383-0319**	2	CLAMP-PIPE	
	3	1	**383-0320**	2	CLAMP-PIPE	
	4	1	**383-0508**	1	TUBE	
	5	1	**383-0509**	1	TUBE	
	6	1	**383-0510**	1	TUBE	
	7	1	**383-0511**	1	TUBE	

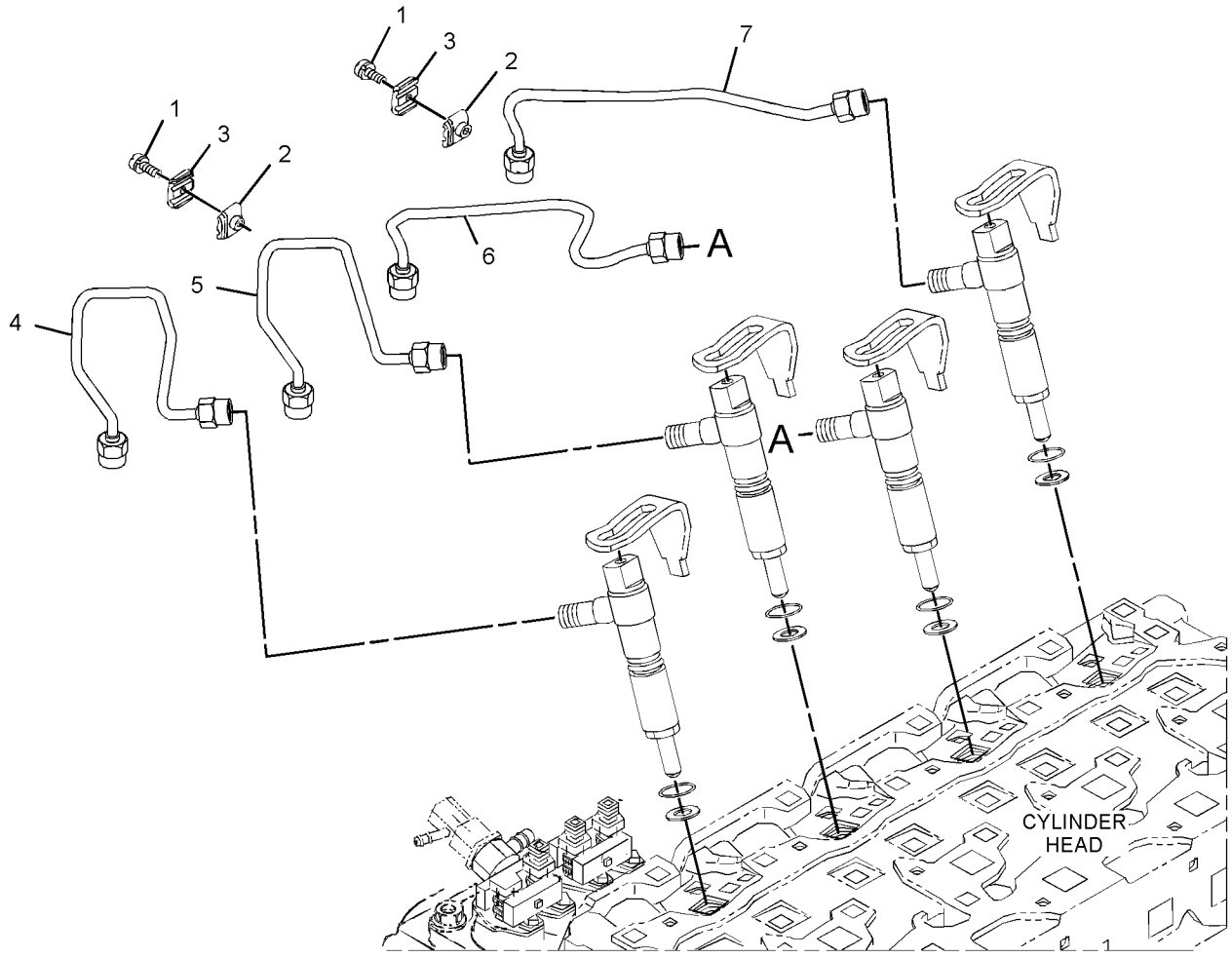

GRAPHIC #1

<END>

g02793221

383-0155 NOZZLE GP-UNIT INJECTOR

S/N: TTN1-908

PART OF 378-3248 ENGINE AR-COMPLETE, 378-3252, 392-4128, 416-6082 ENGINE AR-PRIMARY
ALSO AN ATTACHMENT

SMCS-1254, 1290

i04603474

NOTE	REF NO	GRAPHIC REF	PART NUMBER	QTY	PART NAME 1 2 3 4 5 6 (PRODUCT LEVEL)	SEE PAGE
	1	1	**383-0212**	4	SEAL-O-RING	
	2	1	**383-0475**	4	GASKET	
	3	1	**383-0519**	4	PACKING	
	4	1	**383-0537**	4	CLAMP-NOZZLE	
	5	1	**383-0544**	4	HOLDER AS (NOZZLE)	
	6	1	**383-0568**	4	BOLT	

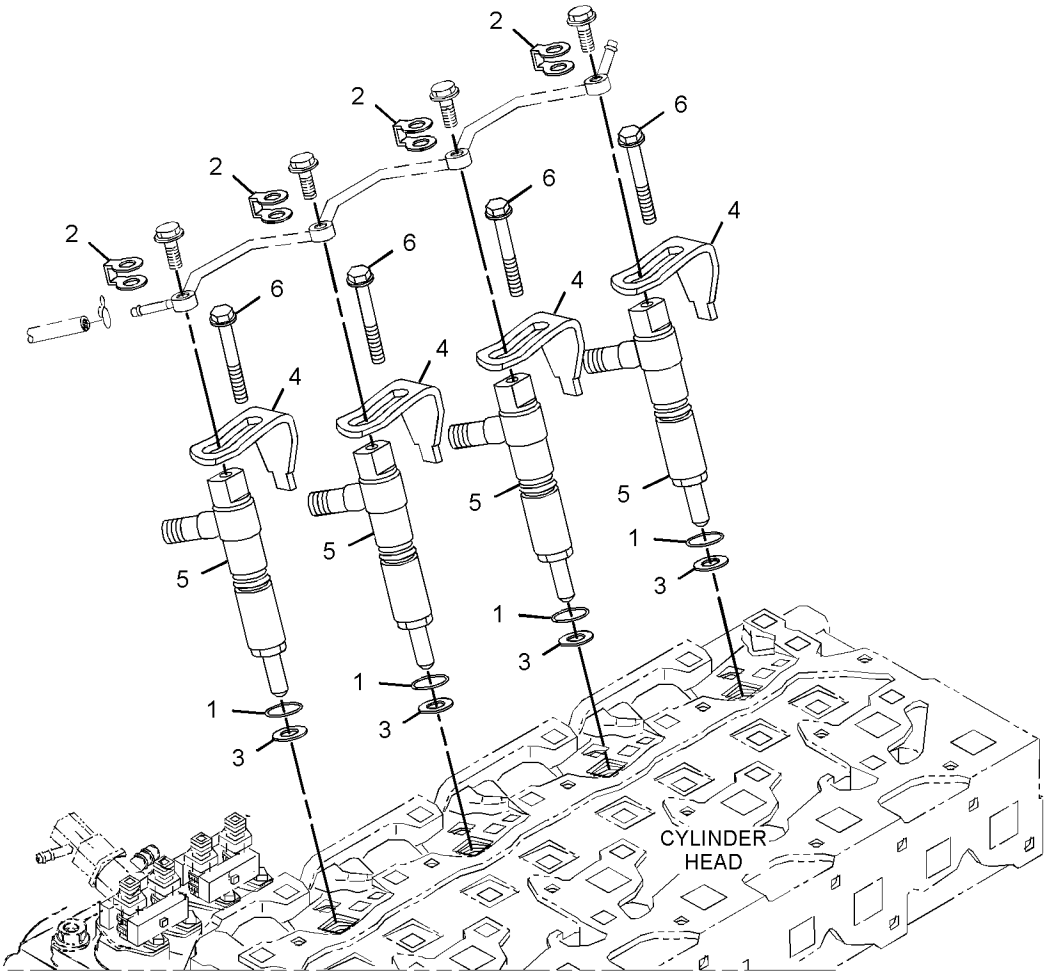

GRAPHIC #1

<END>

g02791984

383-0160 PUMP GP-FUEL INJECTION

S/N: TTN1-908

PART OF 378-3248 ENGINE AR-COMPLETE, 378-3252, 392-4128, 416-6082 ENGINE AR-PRIMARY
ALSO AN ATTACHMENT

SMCS-1251, 1290

i05437157

NOTE	REF NO	GRAPHIC REF	PART NUMBER	QTY	PART NAME 1 2 3 4 5 6 (PRODUCT LEVEL)	SEE PAGE
	1	1	**383-0169**	2	BOLT	
	2	1	**383-0177**	4	BOLT	
	3	1	**383-0188**	4	BOLT	
	4	1	**383-0199**	2	NUT-FLANGE	
	5	1	**383-0208**	1	RING-SNAP	
	6	1	**383-0279**	2	STUD	
	7	1	**383-0280**	1	COVER-FUEL	
	8	1	**383-0314**	1	ORIFICE AS	
	9	1	**383-0388**	1	SHIM (0.2-MM THK)	
	10	1	**383-0389**	1	SHIM (0.25-MM THK)	
	11	1	**383-0390**	1	SHIM (0.3-MM THK)	
	12	1	**383-0487**	1	GASKET	
	13	1	**383-0507**	1	SHIM (0.35-MM THK)	
	14	1	**383-0536**	1	PUMP AS-FUEL INJECTION	
	14A	1	**383-0287**	2	SCREW	
	14B	1	**383-0288**	2	PACKING	
	15	1	**383-0541**	1	CAMSHAFT GP (FUEL INJECTION PUMP)	
	15A	1	**383-0226**	1	KEY-FEATHER	
	15B	1	**383-0232**	7	BALL	
	15C	1	**383-0233**	39	BALL	
	15D	1	**383-0274**	1	RING-SNAP	
	15E	1	**383-0275**	1	RING-SNAP	
	15F	1	**383-0309**	1	SLEEVE	
	15G	1	**383-0341**	1	GEAR-PUMP (68-TEETH)	
	15H	1	**383-0547**	1	COVER-GOVERNOR	
	15I	1	**383-0588**	1	BALL BEARING	
	16	1	**383-0546**	1	COLLAR	
	17	1	**383-0550**	1	BALL BEARING	
	18	1	**383-0560**	1	BOLT	
	19	1	**383-0561**	1	SHIM (0.175-MM THK)	
	20	1	**383-0562**	2	GASKET	
	21	1	**383-0577**	1	STOPPER (FUEL)	

383-0160 **PUMP GP-FUEL INJECTION (*contd.*)** **i05437157**

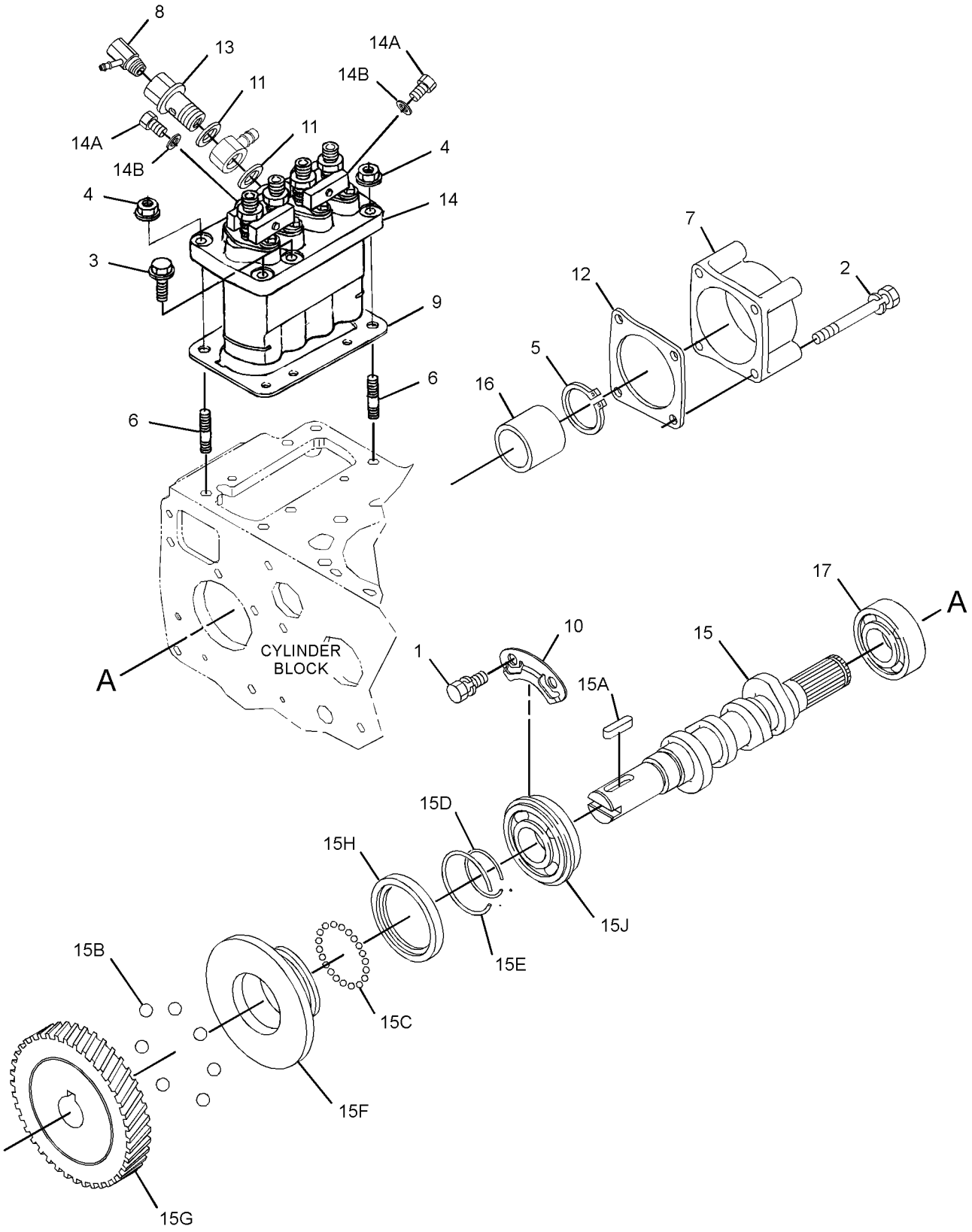

GRAPHIC #1 **<END>** g02792738

378-2140 SHUTOFF GP-MANUAL–ENGINE

PART OF 380-6359 INSTALLATION AR-ENGINE

SMCS-1265, 1704, 7418 **i04589460**

NOTE	REF NO	GRAPHIC REF	PART NUMBER	QTY	PART NAME 1 2 3 4 5 6 (PRODUCT LEVEL)	SEE PAGE
	1	1	**5P-7958**	2	SLEEVE-CABLE SPLICE	
	2	1	**382-9349**	1	CABLE-LANYARD	

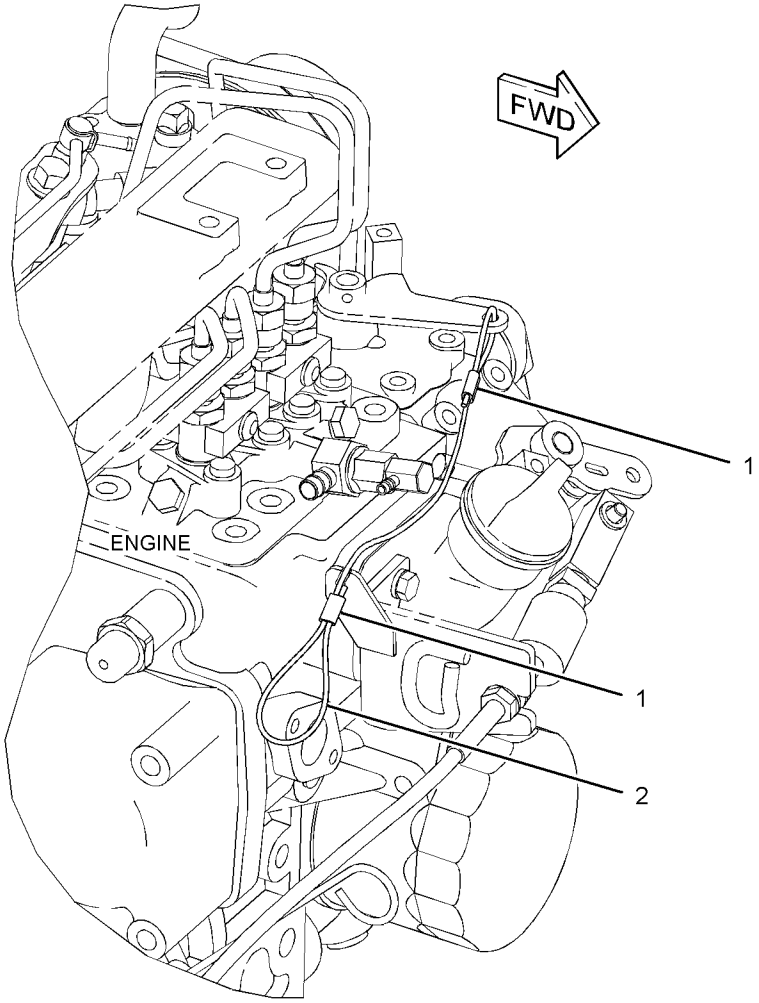

GRAPHIC #1 **<END>** g02766420

367-0930 TANK & MTG GP-FUEL

PART OF 376-6675 CHASSIS AR

SMCS-1273 **i04629823**

NOTE	REF NO	GRAPHIC REF	PART NUMBER	QTY	PART NAME 1 2 3 4 5 6 (PRODUCT LEVEL)	SEE PAGE
	1	1	**265-8577**	1	SEAL	
	2	1	**1P-4278**	2	CLAMP-HOSE	
	3	1	**9D-7924**	2	MOUNTING AS	
	4	1	**9M-7959**	2	CLAMP-HOSE	
	5	1	**265-8575**	1	CAP-FUEL (LOCKABLE, VENTED)	
	6	1	**265-8578**	2	MOUNT	
	7	1	**265-8579**	1	STRAINER-FUEL (TANK)	
	8	1	**276-9302**	1	FILLER AS-FUEL (TANK)	
	9	1	**367-1089**	1	PLATE AS	
M		1	**8T-3490**	2	NUT-WELD (M10X1.5-THD)	
	10	1	**367-1090**	1	BLOCK AS	
	11	1	**367-1092**	1	VALVE (DRAIN, FUEL TANK)	
	12	1	**367-1095**	1	TANK AS-FUEL	
	13	1	**367-1096**	1	HOSE	
	14	1	**367-1097**	1	FOAM	
	15	1	**7X-0632**	2	WASHER-HARD (11X36X6-MM THK)	
	16	1	**7X-7729**	7	WASHER (11X25X3-MM THK)	
	17	1	**8T-4121**	2	WASHER-HARD (11X21X2.5-MM THK)	
M	18	1	**8T-4133**	3	NUT (M10X1.5-THD)	
M	19	1	**8T-4137**	4	BOLT (M10X1.5X20-MM)	
M	20	1	**8T-4182**	2	BOLT (M10X1.5X45-MM)	
	21	1	**8T-4226**	2	WASHER-PLATED (10.5X45X3-MM THK)	
M	22	1	**8T-6466**	2	BOLT (M10X1.5X60-MM)	
E	23	1	**5P-1507**		HOSE (39-CM)	

E - ORDER BY THE CENTIMETER
M - METRIC PART

367-0930 **TANK & MTG GP-FUEL (*contd.*)** **i04629823**

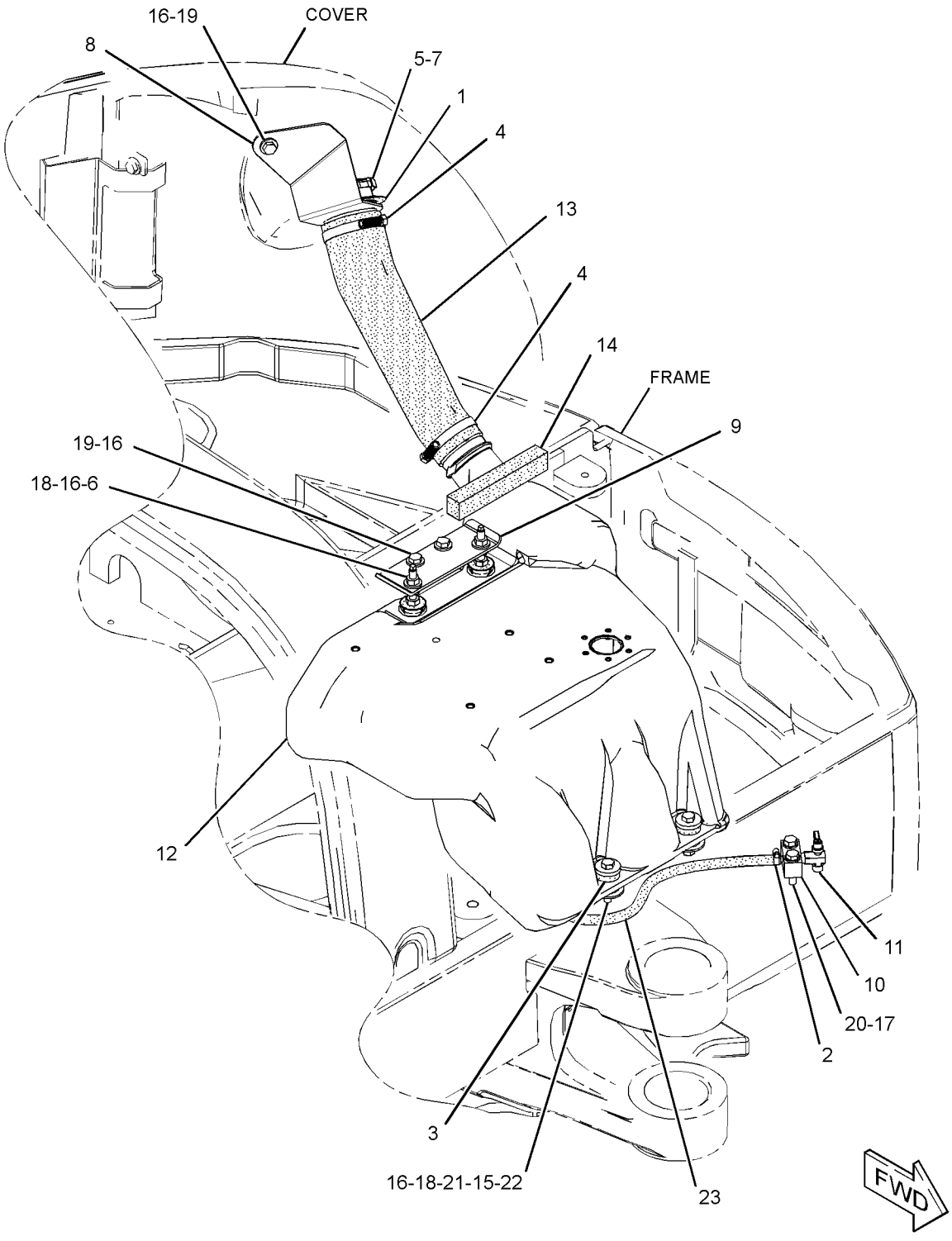

GRAPHIC #1 **<END>** g02802277

370-5338 ALARM GP-TRAVEL

PART OF 377-8922 CONTROL AR-GOVERNOR

AN ATTACHMENT

SMCS-7429 **i05033594**

NOTE	REF NO	GRAPHIC REF	PART NUMBER	QTY	PART NAME 1 2 3 4 5 6 (PRODUCT LEVEL)	SEE PAGE
	1	1	**3S-2093**	2	STRAP-CABLE	
	2	1	**140-9378**	1	RELAY AS (12-VOLT) (BACKUP ALARM)	
	3	1	**161-2539**	1	ALARM AS (BACKUP)	
		1	**4B-2043**	2	NUT (8-32-THD)	
	4	1	**266-1406**	1	SWITCH AS-ROCKER (TRAVEL ALARM CANCEL)	
		1	**111-7899**	1	GASKET	
	5	1	**266-7379**	1	STRAP-CABLE	
M	6	1	**5C-2890**	2	NUT (M6X1-THD)	
M	7	1	**8C-8451**	2	BOLT (M6X1X40-MM)	
	8	1	**9X-8256**	4	WASHER (6.6X12X2-MM THK)	

M - METRIC PART

370-5338 **ALARM GP-TRAVEL (*contd.*)** **i05033594**

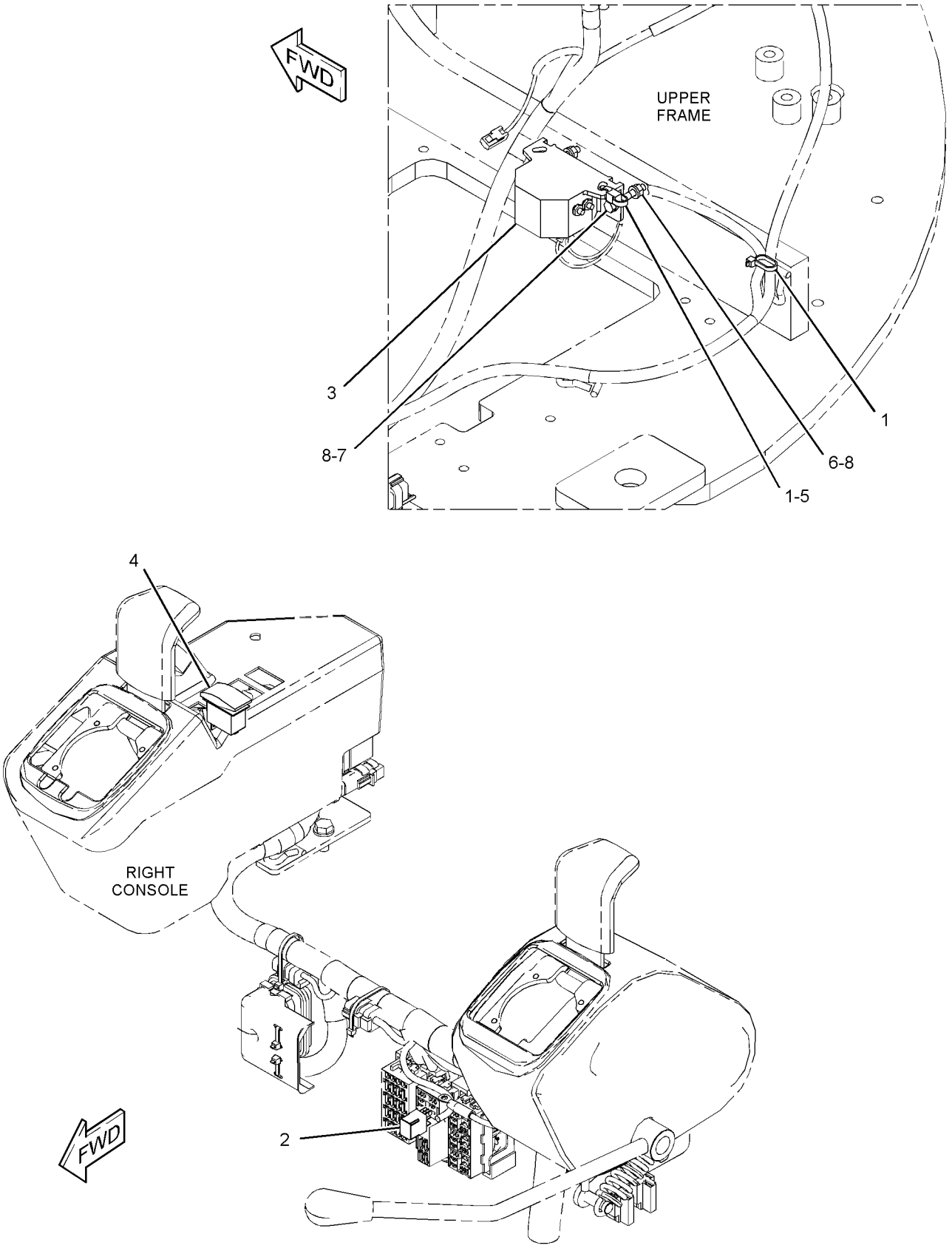

GRAPHIC #1 **<END>** g02801598

383-0134 ALTERNATOR GP-CHARGING

S/N: TTN1-908
12-VOLT, 60-AMPERE
PART OF 378-3248 ENGINE AR-COMPLETE, 378-3252, 392-4128, 416-6082 ENGINE AR-PRIMARY
ALSO AN ATTACHMENT

SMCS-1405 **i05006746**

NOTE	REF NO	GRAPHIC REF	PART NUMBER	QTY	PART NAME 1 2 3 4 5 6 (PRODUCT LEVEL)	SEE PAGE
	1	1	**383-0592**	1	ALTERNATOR AS (12-VOLT, 60-AMPERE)	
	1A	1	**383-0323**	1	COLLAR	
	1B	1	**383-0330**	1	NUT	
	1C	1	**383-0344**	1	PULLEY-ALTERNATOR	
	2	1	**383-0178**	1	BOLT	
	3	1	**389-0705**	1	BOLT-FLANGE HEAD	
	4	1	**383-0206**	1	LOCKWASHER	
	5	1	**383-0195**	1	NUT-HEX	

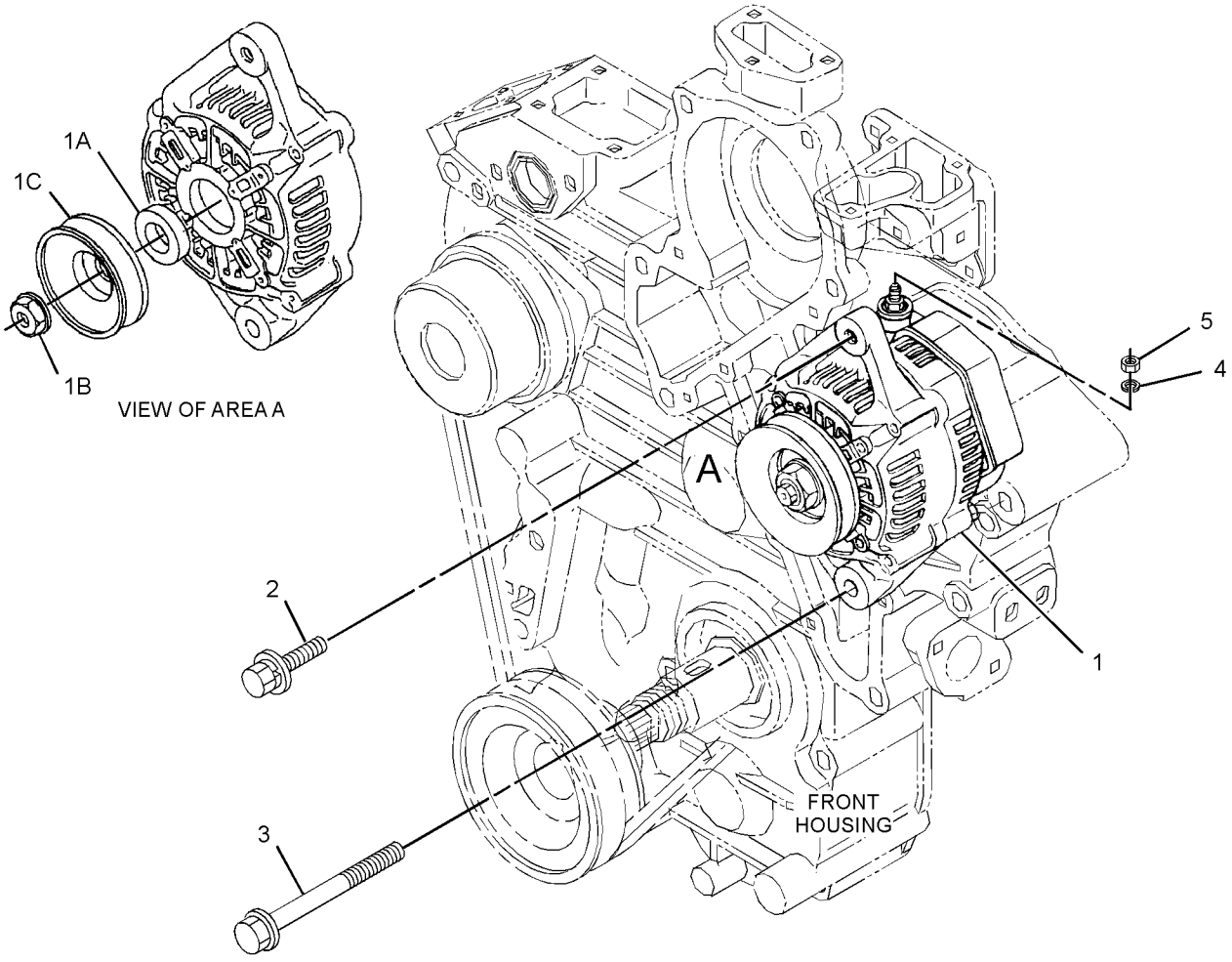

GRAPHIC #1 **<END>** g02788441

370-5343 BATTERY & WIRING GP–CAB

PART OF 376-6691, 376-6695, 383-5924, 383-5925 CAB AR
AN ATTACHMENT

SMCS-1401, 1402, 1408 **i05425780**

NOTE	REF NO	GRAPHIC REF	PART NUMBER	QTY	PART NAME 1 2 3 4 5 6 (PRODUCT LEVEL)	SEE PAGE
	1	1	**1S-1150**	2	SPACER (0.391X0.5X0.19-IN THK)	
	2	1,2	**3S-2093**	36	STRAP-CABLE	
	3	2	**7K-1181**	8	STRAP-CABLE	
	4	2	**9V-4924**	1	SPACER (13.8X28X11.5-MM THK)	
	5	1,2	**111-4837**	3	CLIP	
	6	2	**119-9880**	1	BOLT (M12X1.25X30-MM)	
	7	1	**153-5656**	1	BATTERY (12-VOLT, MAINTENANCE FREE)	
	8	2	**163-6795**	1	STRAP-CABLE	
	9	1	**204-1611**	5	STRAP (DUAL)	
	10	2	**232-7405**	1	BRACKET	
	11	2	**251-1391**	2	BOLT (M10X1.25X16-MM)	
	12	2	**266-6935**	1	RELAY AS (12-VOLT) (START)	
	13	1,2	**266-7379**	4	STRAP-CABLE	
	14	1	**267-4767**	1	CLAMP	
	15	1	**267-4768**	2	ROD	
	16	1	**282-2151**	1	GROMMET	
	17	2	**298-0663**	1	CLIP	
	18	1	**349-1812**	1	SWITCH AS-PRESSURE (PILOT OIL)	
		1	**3J-1907**	1	SEAL-O-RING	
		1	**108-7516**	1	FITTING	
		1	*349-1756*	1	SWITCH AS-PRESSURE (PILOT OIL)	
		1	**9X-3402**	2	SOCKET-CONNECTOR (16-GA TO 18-GA)	
					–OR–	
		1	**126-1768**	2	SOCKET-CONNECTOR (14-GA TO 16-GA)	
		1	**230-4011**	1	PLUG AS-CONNECTOR (2-PIN)	
		1	**264-7029**	1	SEAL-CONNECTOR	
	19	1	**370-5358**	1	HARNESS AS-CHASSIS	
		1	**7Y-3952**	3	PLUG-CONNECTOR (2-PIN)	
		1	**7Y-3995**	1	CONNECTOR-PLUG	
		1	**153-2602**	1	RECEPTACLE-CONNECTOR (1-PIN)	
		1	**8T-9636**	1	FUSE (30-AMPERE)	
		1	**232-6314**	1	FUSE (60-AMPERE)	
		1	**379-0828**	2	FUSE (60-AMPERE)	
		1	**225-4950**	1	HOLDER AS-FUSE	
		1	**107-3134**	1	HOUSING-CONNECTOR	
		1	**8T-8729**	10	PIN-CONNECTOR (16-GA TO 18-GA)	
		1	**9W-0852**	8	PIN-CONNECTOR (14-GA TO 16-GA)	
		1	**9X-3401**	2	PIN-CONNECTOR (16-GA TO 18-GA)	
					–OR–	
		1	**126-1767**	2	PIN-CONNECTOR (14-GA TO 16-GA)	
		1	**155-2270**	2	KIT-CONNECTING PLUG (2-PIN)	
					(INCLUDES PLUG AS, WEDGE & INTERFACE SEAL)	
		1	**230-4009**	1	PLUG AS-CONNECTOR (12-PIN)	
		1	**264-7034**	1	SEAL-CONNECTOR	
		1	**230-4011**	4	PLUG AS-CONNECTOR (2-PIN)	
					(EACH INCLUDES)	
		1	**264-7029**	1	SEAL-CONNECTOR	
		1	**230-5010**	1	PLUG AS-CONNECTOR (6-PIN)	
		1	**174-3016**	1	PLUG AS-CONNECTOR (3-PIN)	
		1	**8T-8737**	7	PLUG-SEAL	
		1	**107-3136**	2	PLUG-SEAL	
		1	**102-8803**	1	KIT-RECEPTACLE (3-PIN)	
					(INCLUDES RECEPTACLE AS & WEDGE)	
		1	**243-4505**	4	RECEPTACLE AS-CONNECTOR (2-PIN)	
		1	**243-4510**	1	RECEPTACLE AS-CONNECTOR (12-PIN)	
		1	**8T-8730**	10	SOCKET-CONNECTOR (16-GA TO 18-GA)	
		1	**9W-0844**	14	SOCKET-CONNECTOR (14-GA TO 16-GA)	

370-5343 **BATTERY & WIRING GP (*contd.*)** **i05425780**

NOTE	REF NO	GRAPHIC REF	PART NUMBER	QTY	PART NAME 1 2 3 4 5 6 (PRODUCT LEVEL)	SEE PAGE
		1	**9X-3402**	2	SOCKET-CONNECTOR (16-GA TO 18-GA)	
					—OR—	
		1	**126-1768**	2	SOCKET-CONNECTOR (14-GA TO 16-GA)	
		1	**3S-2093**	4	STRAP-CABLE	
		1	**232-6311**	2	TERMINAL	
		1	**363-9173**	3	TERMINAL (14-GA TO 18-GA)	
		1	**5P-1475**		TERMINAL-FORK (14-GA TO 16-GA, NO. 8 SCREW)	
		1	*131-1489*	1	TERMINAL AS-RING (6-GA TO 8-GA)	
		1	**6H-3592**	1	TERMINAL-RING (6-GA TO 8-GA, 5/16-IN SCREW)	
E		1	**119-3662**		TUBE-HEAT SHRINK (10.85-MM DIA) (4-CM)	
		1	**2L-8075**	2	TERMINAL-RING (14-GA TO 16-GA, NO. 8 SCREW)	
		1	**2L-8049**	1	TERMINAL-RING (6-GA, NO. 10 SCREW)	
		1	*272-6304*	1	TERMINAL AS	
		1	**272-6271**	1	TERMINAL-RING	
E		1	**125-7875**		TUBE-HEAT SHRINK (7.44-MM DIA) (4-CM)	
		1	**107-3135**	1	TERMINAL (16-GA TO 20-GA)	
		1	**7Y-3951**	4	TERMINAL-BLADE (14-GA)	
		1	**7Y-3993**	2	TERMINAL-BLADE (12-GA)	
		1	**7Y-3996**	1	TERMINAL-BLADE (14-GA TO 20-GA)	
		1	**7Y-5556**	2	TERMINAL	
		1	**116-0255**	2	TERMINAL-BLADE (10-GA TO 20-GA)	
		1	**153-2631**	1	TERMINAL (FEMALE)	
E		1	**125-7874**		TUBE-HEAT SHRINK (5.72-MM DIA) (30-CM)	
	20	1	**370-5364**	1	CABLE AS (POSITIVE)	
		1	**9X-4519**	1	BOOT (RED)	
E		1	**159-8049**		CABLE (00-GA, RED) (210-CM)	
		1	**2L-8050**	1	TERMINAL-RING (6-GA, 1/4-IN SCREW)	
		1	**3S-6049**	1	TERMINAL AS-BATTERY (POSITIVE)	
		1	**1M-6119**	1	BOLT (5/16-18X1.375-IN)	
		1	**1M-6120**	1	NUT (5/16-18-THD)	
		1	*352-4708*	1	BOOT AS	
		1	**8L-8413**	1	STRAP-CABLE	
	21	1	**370-5366**	1	CABLE AS-BATTERY (NEGATIVE)	
		1	**3S-6050**	1	TERMINAL AS-BATTERY (NEGATIVE)	
		1	**1M-6119**	2	BOLT (5/16-18X1.375-IN)	
		1	**1M-6120**	2	NUT (5/16-18-THD)	
		1	**7N-5274**	1	COVER AS-TERMINAL (BLACK)	
		1	**8L-8413**	1	STRAP-CABLE	
E		1	**159-8050**		CABLE (00-GA, BLACK) (33-CM)	
		1	**311-8804**	1	TERMINAL	
	22	2	**370-5367**	1	STRAP AS-GROUND	
	23	1	**370-5372**	1	GROMMET	
	24	1	**370-5375**	1	PLATE	
	25	1	**376-9480**	1	SENDER AS-FUEL LEVEL (FUEL TANK)	
		1	**102-8802**	1	KIT-RECEPTACLE (2-PIN)	
					(INCLUDES RECEPTACLE AS & WEDGE)	
		1	**379-2007**	1	GASKET	
	26	2	**383-0342**	1	SENSOR (THERMOCOUPLE) (ENGINE COOLANT TEMPERATURE)	
	27	2	**387-5260**	1	PLATE AS	
M		2	**6V-9632**	2	NUT-WELD (M6X1-THD)	
M		2	**8T-3490**	2	NUT-WELD (M10X1.5-THD)	
M		2	**8T-3612**	3	NUT-WELD (M8X1.25-THD)	
M		2	**8T-8874**	1	NUT-WELD (M5X0.8-THD)	
M		2	**9X-2032**	2	NUT-WELD (M4X0.7-THD)	
M	28	1	**095-0736**	6	SCREW-MACHINE (M5X0.8X10-MM)	
M	29	2	**127-4839**	1	BOLT (M10X1.25X25-MM)	
	30	2	**132-5789**	1	CLIP	
	31	2	**132-7551**	1	SPACER (11X19X6-MM THK)	
M	32	2	**150-4086**	2	SCREW (M4X0.7X16-MM)	

370-5343 **BATTERY & WIRING GP (*contd.*)** **i05425780**

NOTE	REF NO	GRAPHIC REF	PART NUMBER	QTY	PART NAME 1 2 3 4 5 6 (PRODUCT LEVEL)	SEE PAGE
	33	2	**156-6175**	3	CLIP	
	34	2	**1S-1015**	1	CLIP	
	35	2	**277-1873**	2	CLIP	
	36	1	**2M-3432**	1	GROMMET	
	37	2	**2V-1771**	1	GROMMET	
	38	2	**4B-4863**	2	WASHER (4.7X11X1.2-MM THK)	
	39	1,2	**4P-7581**	3	CLIP	
	40	2	**4P-8134**	2	CLIP	
M	41	1,2	**5C-2890**	5	NUT (M6X1-THD)	
M	42	2	**5C-7261**	1	NUT (M8X1.25-THD)	
M	43	2	**5C-9553**	1	BOLT (M6X1X16-MM)	
	44	1	**5P-4115**	2	WASHER-HARD (7.2X19X2-MM THK)	
	45	2	**5P-4116**	2	WASHER-HARD (8.8X20.5X2-MM THK)	
	46	2	**8M-2773**	2	CLIP	
M	47	2	**7I-2272**	1	BOLT (M5X0.8X12-MM)	
	48	2	**8T-0328**	1	WASHER-HARD (5.5X10X1-MM THK)	
	49	1,2	**8T-4121**	12	WASHER-HARD (11X21X2.5-MM THK)	
M	50	1,2	**8T-4136**	3	BOLT (M10X1.5X25-MM)	
M	51	1,2	**8T-4137**	4	BOLT (M10X1.5X20-MM)	
M	52	2	**8T-4171**	3	BOLT (M6X1X12-MM)	
M	53	1	**8T-4189**	2	BOLT (M8X1.25X20-MM)	
M	54	2	**8T-4196**	2	BOLT (M10X1.5X35-MM)	
M	55	2	**8T-4200**	6	BOLT (M8X1.25X16-MM)	
	56	2	**8T-4223**	1	WASHER-HARD (13.5X25.5X3-MM THK)	
	57	1,2	**8T-4224**	9	WASHER-HARD (8.8X16X2-MM THK)	
M	58	2	**8T-4908**	1	BOLT (M8X1.25X25-MM)	
	59	1,2	**8T-8799**	2	BOOT (RED)	
	60	2	**9M-8406**	1	CLIP	
	61	2	**9X-8256**	5	WASHER (6.6X12X2-MM THK)	

E - ORDER BY THE CENTIMETER
M - METRIC PART

370-5343 **BATTERY & WIRING GP (*contd.*)** **i05425780**

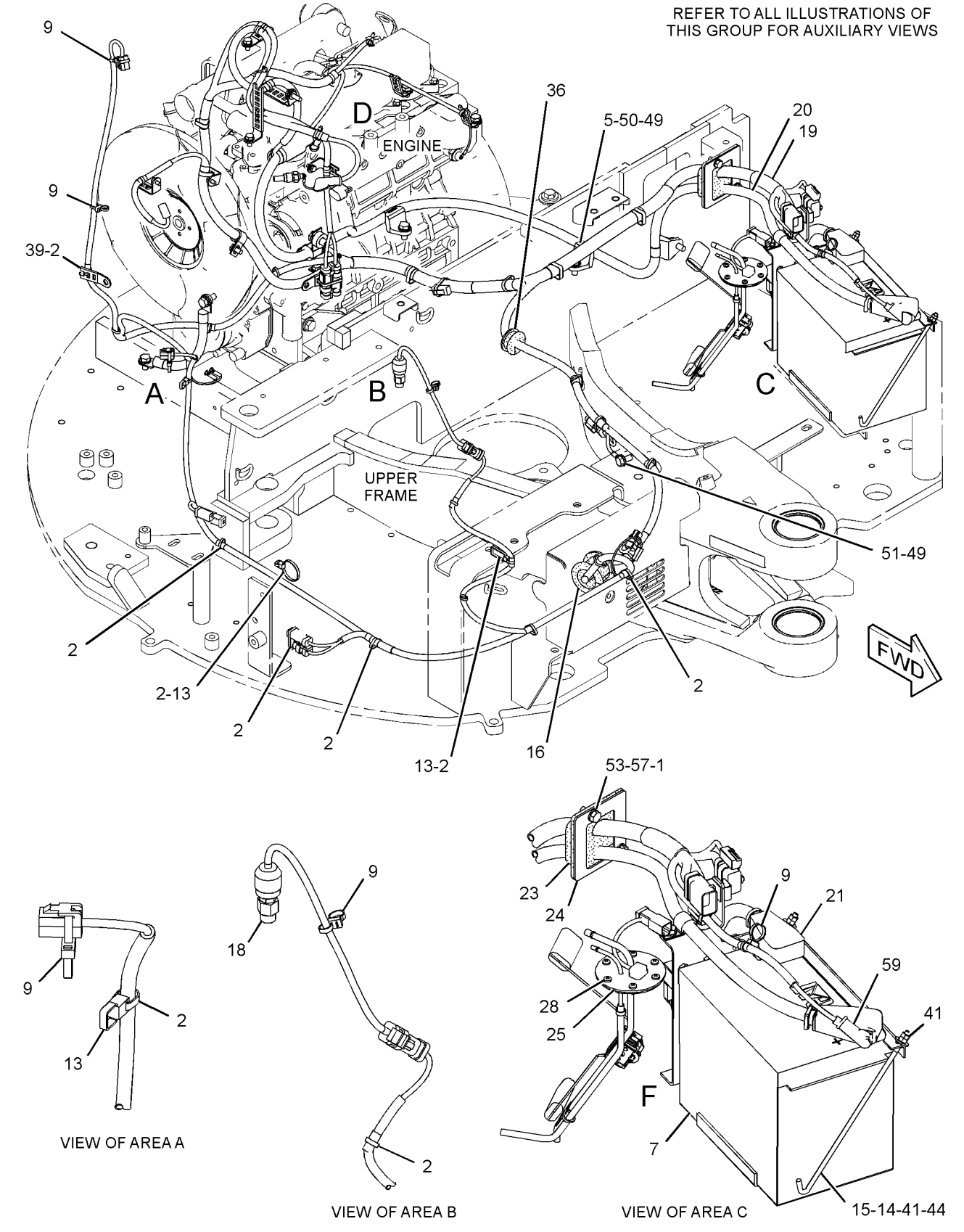

GRAPHIC #1

g02801217

370-5343 **BATTERY & WIRING GP (*contd.*)** **i05425780**

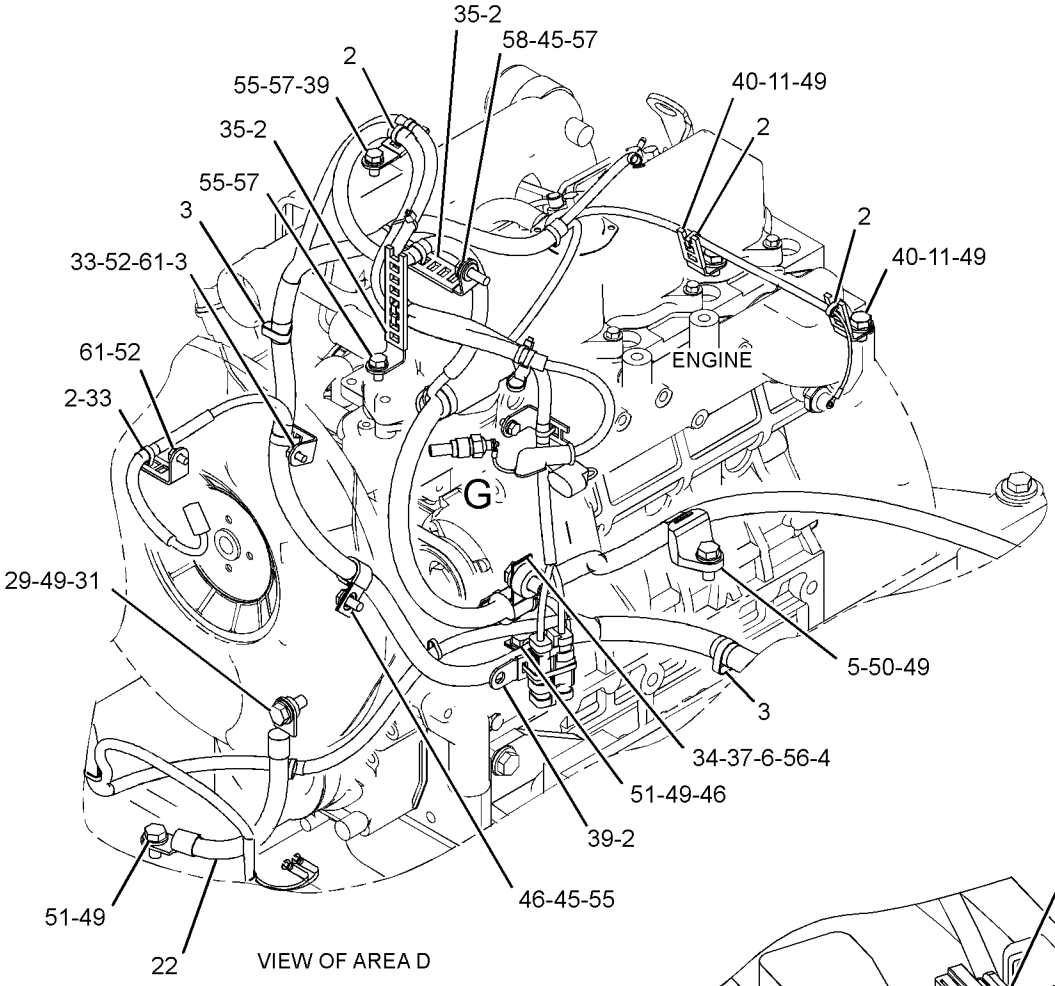

VIEW OF AREA D

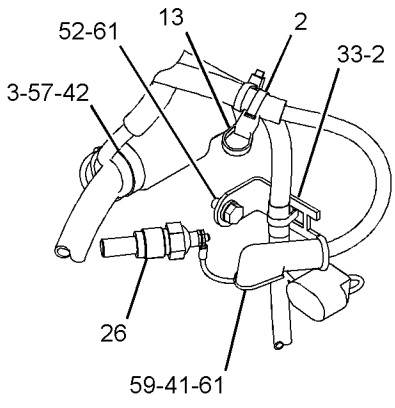

VIEW OF AREA G

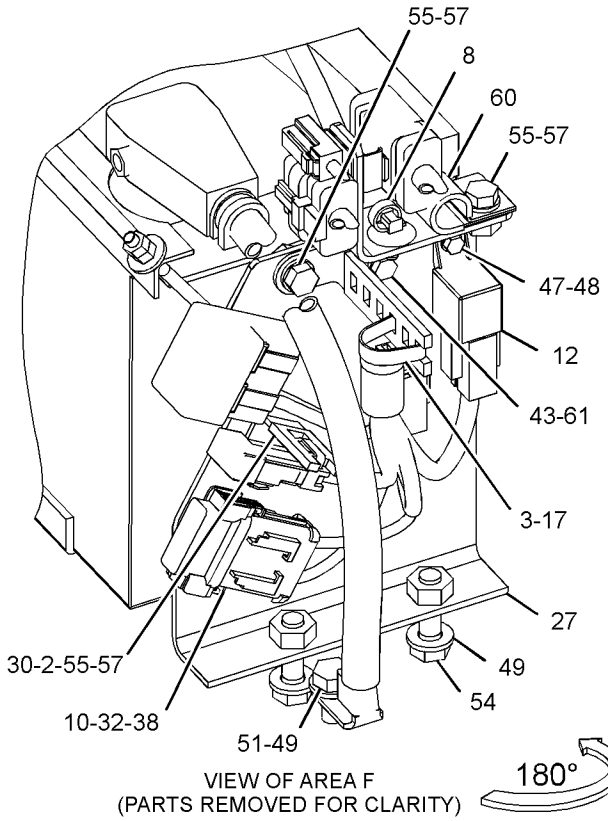

VIEW OF AREA F
(PARTS REMOVED FOR CLARITY)

GRAPHIC #2 **<END>** g02801218

370-5346 BATTERY & WIRING GP–CAB

PART OF 383-5926 CANOPY AR, 377-8932 CANOPY AR-OPEN ROPS
AN ATTACHMENT

SMCS-1401, 1402, 1408 **i05049891**

NOTE	REF NO	GRAPHIC REF	PART NUMBER	QTY	PART NAME 1 2 3 4 5 6 (PRODUCT LEVEL)	SEE PAGE
	1	1	**1S-1150**	2	SPACER (0.391X0.5X0.19-IN THK)	
	2	1	**3S-2093**	32	STRAP-CABLE	
	3	1	**7K-1181**	8	STRAP-CABLE	
	4	1	**9V-4924**	1	SPACER (13.8X28X11.5-MM THK)	
	5	1	**111-4837**	3	CLIP	
	6	1	**119-9880**	1	BOLT (M12X1.25X30-MM)	
	7	1	**153-5656**	1	BATTERY (12-VOLT, MAINTENANCE FREE)	
	8	1	**163-6795**	1	STRAP-CABLE	
	9	1	**204-1611**	3	STRAP (DUAL)	
	10	1	**232-7405**	1	BRACKET	
	11	1	**251-1391**	2	BOLT (M10X1.25X16-MM)	
	12	1	**266-6935**	1	RELAY AS (12-VOLT) (START)	
	13	1	**266-7379**	3	STRAP-CABLE	
	14	1	**267-4767**	1	CLAMP	
	15	1	**267-4768**	2	ROD	
	16	1	**282-2151**	1	GROMMET	
	17	1	**298-0663**	1	CLIP	
	18	1	**349-1812**	1	SWITCH AS-PRESSURE (PILOT OIL)	
		1	**3J-1907**	1	SEAL-O-RING	
		1	**108-7516**	1	FITTING	
		1	*349-1756*	1	SWITCH AS-PRESSURE (PILOT OIL)	
		1	**9X-3402**	2	SOCKET-CONNECTOR (16-GA TO 18-GA)	
					–OR–	
		1	**126-1768**	2	SOCKET-CONNECTOR (14-GA TO 16-GA)	
		1	**230-4011**	1	PLUG AS-CONNECTOR (2-PIN)	
		1	**264-7029**	1	SEAL-CONNECTOR	
	19	1	**370-5361**	1	HARNESS AS-CHASSIS	
		1	**7Y-3952**	2	PLUG-CONNECTOR (2-PIN)	
		1	**7Y-3995**	1	CONNECTOR-PLUG	
		1	**153-2602**	1	RECEPTACLE-CONNECTOR (1-PIN)	
		1	**8T-9636**	1	FUSE (30-AMPERE)	
		1	**232-6314**	1	FUSE (60-AMPERE)	
		1	**379-0828**	2	FUSE (60-AMPERE)	
		1	**225-4950**	1	HOLDER AS-FUSE	
		1	**107-3134**	1	HOUSING-CONNECTOR	
		1	**8T-8729**	10	PIN-CONNECTOR (16-GA TO 18-GA)	
		1	**9W-0852**	6	PIN-CONNECTOR (14-GA TO 16-GA)	
		1	**9X-3401**	2	PIN-CONNECTOR (16-GA TO 18-GA)	
					–OR–	
		1	**126-1767**	2	PIN-CONNECTOR (14-GA TO 16-GA)	
		1	**155-2270**	1	KIT-CONNECTING PLUG (2-PIN)	
					(INCLUDES PLUG AS, WEDGE & INTERFACE SEAL)	
		1	**230-4009**	1	PLUG AS-CONNECTOR (12-PIN)	
		1	**264-7034**	1	SEAL-CONNECTOR	
		1	**230-4011**	2	PLUG AS-CONNECTOR (2-PIN)	
					(EACH INCLUDES)	
		1	**264-7029**	1	SEAL-CONNECTOR	
		1	**230-5010**	1	PLUG AS-CONNECTOR (6-PIN)	
		1	**174-3016**	1	PLUG AS-CONNECTOR (3-PIN)	
		1	**8T-8737**	5	PLUG-SEAL	
		1	**107-3136**	2	PLUG-SEAL	
		1	**102-8803**	1	KIT-RECEPTACLE (3-PIN)	
					(INCLUDES RECEPTACLE AS & WEDGE)	
		1	**243-4505**	2	RECEPTACLE AS-CONNECTOR (2-PIN)	
		1	**243-4510**	1	RECEPTACLE AS-CONNECTOR (12-PIN)	
		1	**8T-8730**	10	SOCKET-CONNECTOR (16-GA TO 18-GA)	
		1	**9W-0844**	8	SOCKET-CONNECTOR (14-GA TO 16-GA)	

370-5346 **BATTERY & WIRING GP (*contd.*)** **i05049891**

NOTE	REF NO	GRAPHIC REF	PART NUMBER	QTY	PART NAME 1 2 3 4 5 6 (PRODUCT LEVEL)	SEE PAGE
		1	**9X-3402**	2	SOCKET-CONNECTOR (16-GA TO 18-GA)	
					—OR—	
		1	**126-1768**	2	SOCKET-CONNECTOR (14-GA TO 16-GA)	
		1	**3S-2093**	3	STRAP-CABLE	
		1	**232-6311**	2	TERMINAL	
		1	**363-9173**	3	TERMINAL (14-GA TO 18-GA)	
		1	**5P-1475**		TERMINAL-FORK (14-GA TO 16-GA, NO. 8 SCREW)	
		1	*131-1489*	1	TERMINAL AS-RING (6-GA TO 8-GA)	
		1	**6H-3592**	1	TERMINAL-RING (6-GA TO 8-GA, 5/16-IN SCREW)	
E		1	**119-3662**		TUBE-HEAT SHRINK (10.85-MM DIA) (4-CM)	
		1	**2L-8075**	2	TERMINAL-RING (14-GA TO 16-GA, NO. 8 SCREW)	
		1	**2L-8049**	1	TERMINAL-RING (6-GA, NO. 10 SCREW)	
		1	*272-6304*	1	TERMINAL AS	
		1	**272-6271**	1	TERMINAL-RING	
E		1	**125-7875**		TUBE-HEAT SHRINK (7.44-MM DIA) (4-CM)	
		1	**107-3135**	1	TERMINAL (16-GA TO 20-GA)	
		1	**7Y-3951**	2	TERMINAL-BLADE (14-GA)	
		1	**7Y-3993**	2	TERMINAL-BLADE (12-GA)	
		1	**7Y-3996**	1	TERMINAL-BLADE (14-GA TO 20-GA)	
		1	**7Y-5556**	2	TERMINAL	
		1	**116-0255**	2	TERMINAL-BLADE (10-GA TO 20-GA)	
		1	**153-2631**	1	TERMINAL (FEMALE)	
E		1	**125-7874**		TUBE-HEAT SHRINK (5.72-MM DIA) (25-CM)	
	20	1	**370-5364**	1	CABLE AS (POSITIVE)	
		1	**9X-4519**	1	BOOT (RED)	
E		1	**159-8049**		CABLE (00-GA, RED) (210-CM)	
		1	**2L-8050**	1	TERMINAL-RING (6-GA, 1/4-IN SCREW)	
		1	**3S-6049**	1	TERMINAL AS-BATTERY (POSITIVE)	
		1	**1M-6119**	1	BOLT (5/16-18X1.375-IN)	
		1	**1M-6120**	1	NUT (5/16-18-THD)	
		1	*352-4708*	1	BOOT AS	
		1	**8L-8413**	1	STRAP-CABLE	
	21	1	**370-5366**	1	CABLE AS-BATTERY (NEGATIVE)	
		1	**3S-6050**	1	TERMINAL AS-BATTERY (NEGATIVE)	
		1	**1M-6119**	2	BOLT (5/16-18X1.375-IN)	
		1	**1M-6120**	2	NUT (5/16-18-THD)	
		1	**7N-5274**	1	COVER AS-TERMINAL (BLACK)	
		1	**8L-8413**	1	STRAP-CABLE	
E		1	**159-8050**		CABLE (00-GA, BLACK) (33-CM)	
		1	**311-8804**	1	TERMINAL	
	22	1	**370-5367**	1	STRAP AS-GROUND	
	23	1	**370-5372**	1	GROMMET	
	24	1	**370-5375**	1	PLATE	
	25	1	**376-9480**	1	SENDER AS-FUEL LEVEL	
		1	**102-8802**	1	KIT-RECEPTACLE (2-PIN)	
					(INCLUDES RECEPTACLE AS & WEDGE)	
		1	**379-2007**	1	GASKET	
	26	1	**383-0342**	1	SENSOR (THERMOCOUPLE) (ENGINE COOLANT TEMPERATURE)	
	27	1	**387-5260**	1	PLATE AS	
M		1	**6V-9632**	2	NUT-WELD (M6X1-THD)	
M		1	**8T-3490**	2	NUT-WELD (M10X1.5-THD)	
M		1	**8T-3612**	3	NUT-WELD (M8X1.25-THD)	
M		1	**8T-8874**	1	NUT-WELD (M5X0.8-THD)	
M		1	**9X-2032**	2	NUT-WELD (M4X0.7-THD)	
M	28	1	**095-0736**	6	SCREW-MACHINE (M5X0.8X10-MM)	
M	29	1	**127-4839**	1	BOLT (M10X1.25X25-MM)	
	30	1	**132-5789**	1	CLIP	
	31	1	**132-7551**	1	SPACER (11X19X6-MM THK)	
M	32	1	**150-4086**	2	SCREW (M4X0.7X16-MM)	

370-5346 **BATTERY & WIRING GP (*contd.*)** **i05049891**

NOTE	REF NO	GRAPHIC REF	PART NUMBER	QTY	PART NAME 1 2 3 4 5 6 (PRODUCT LEVEL)	SEE PAGE
	33	1	**156-6175**	3	CLIP	
	34	1	**174-5907**	2	CLIP	
	35	1	**1S-1015**	1	CLIP	
	36	1	**277-1873**	2	CLIP	
	37	1	**2M-3432**	1	GROMMET	
	38	1	**2V-1771**	1	GROMMET	
	39	1	**4B-4863**	2	WASHER (4.7X11X1.2-MM THK)	
	40	1	**4P-7581**	1	CLIP	
	41	1	**4P-8134**	2	CLIP	
M	42	1	**5C-2890**	5	NUT (M6X1-THD)	
M	43	1	**5C-7261**	1	NUT (M8X1.25-THD)	
M	44	1	**5C-9553**	1	BOLT (M6X1X16-MM)	
	45	1	**5P-4115**	2	WASHER-HARD (7.2X19X2-MM THK)	
	46	1	**5P-4116**	2	WASHER-HARD (8.8X20.5X2-MM THK)	
M	47	1	**7I-2272**	1	BOLT (M5X0.8X12-MM)	
	48	1	**8T-0328**	1	WASHER-HARD (5.5X10X1-MM THK)	
	49	1	**8T-4121**	12	WASHER-HARD (11X21X2.5-MM THK)	
M	50	1	**8T-4136**	3	BOLT (M10X1.5X25-MM)	
M	51	1	**8T-4137**	4	BOLT (M10X1.5X20-MM)	
M	52	1	**8T-4171**	3	BOLT (M6X1X12-MM)	
M	53	1	**8T-4189**	2	BOLT (M8X1.25X20-MM)	
M	54	1	**8T-4196**	2	BOLT (M10X1.5X35-MM)	
M	55	1	**8T-4200**	6	BOLT (M8X1.25X16-MM)	
	56	1	**8T-4223**	1	WASHER-HARD (13.5X25.5X3-MM THK)	
	57	1	**8T-4224**	9	WASHER-HARD (8.8X16X2-MM THK)	
M	58	1	**8T-4908**	1	BOLT (M8X1.25X25-MM)	
	59	1	**8T-8799**	2	BOOT (RED)	
	60	1	**9M-8406**	1	CLIP	
	61	1	**9X-8256**	5	WASHER (6.6X12X2-MM THK)	

E - ORDER BY THE CENTIMETER
M - METRIC PART

370-5346 **BATTERY & WIRING GP (*contd.*)** **i05049891**

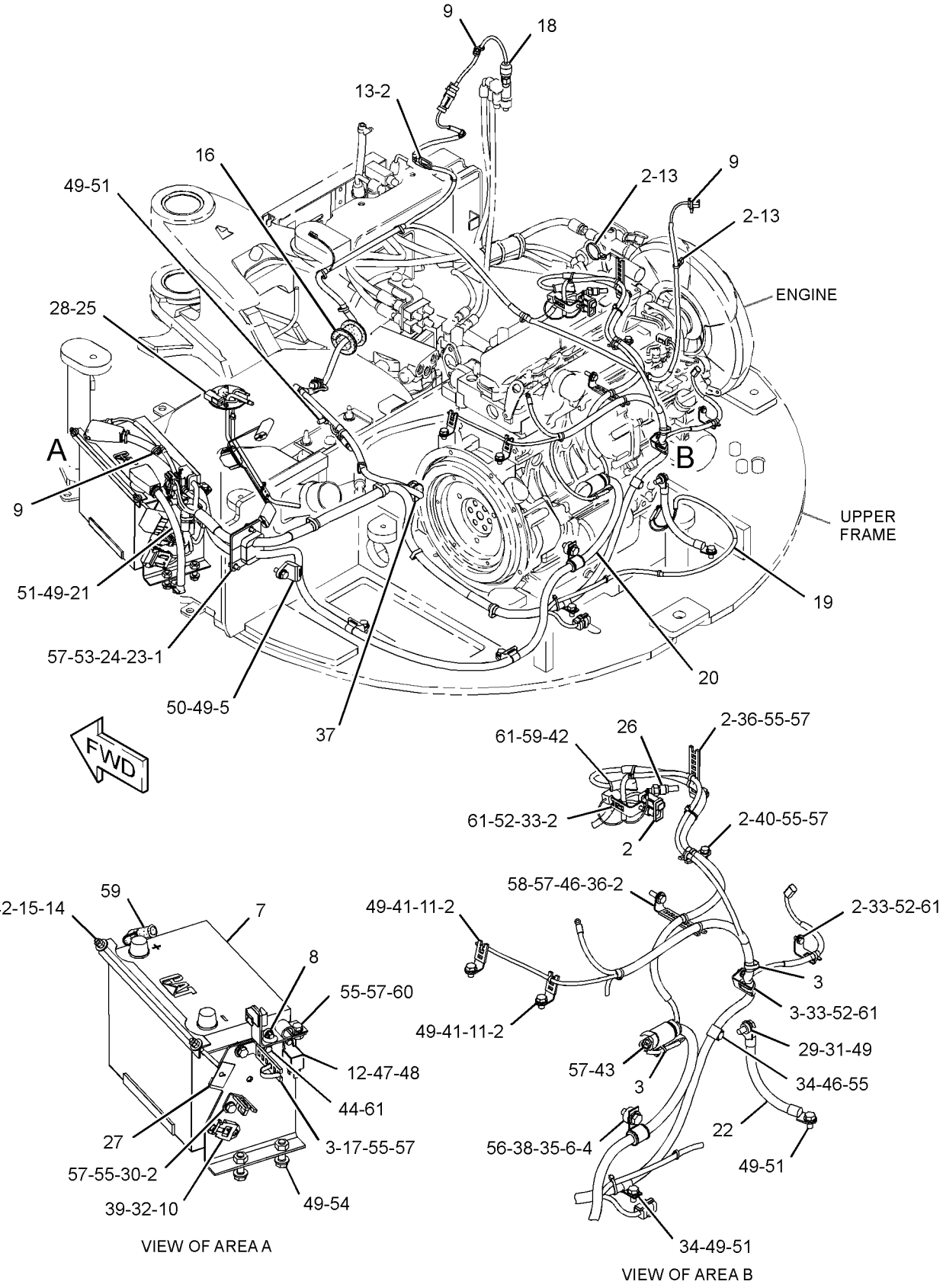

GRAPHIC #1 **<END>** g02799121

377-0325 CONTROL & MTG GP-ELECTRONIC

PART OF 377-8915 BLADE AR-STRAIGHT

AN ATTACHMENT

SMCS-1901, 7490, 7610 **i04560856**

NOTE	REF NO	GRAPHIC REF	PART NUMBER	QTY	PART NAME 1 2 3 4 5 6 (PRODUCT LEVEL)	SEE PAGE
	1	1	**6I-1418**	4	SPACER (8.2X12.7X28.7-MM THK)	
	2	1	**155-0576**	8	MOUNT-ISOLATION	
	3	1	**376-8859**	1	CONTROL GP-MACHINE (ELECTRONIC CONTROL)	
M	4	1	**7X-0818**	4	BOLT (M8X1.25X45-MM)	
	5	1	**8T-4224**	1	WASHER-HARD (8.8X16X2-MM THK)	
	6	1	**9N-0869**	8	WASHER-HARD (8.8X25.5X2-MM THK)	

M - METRIC PART

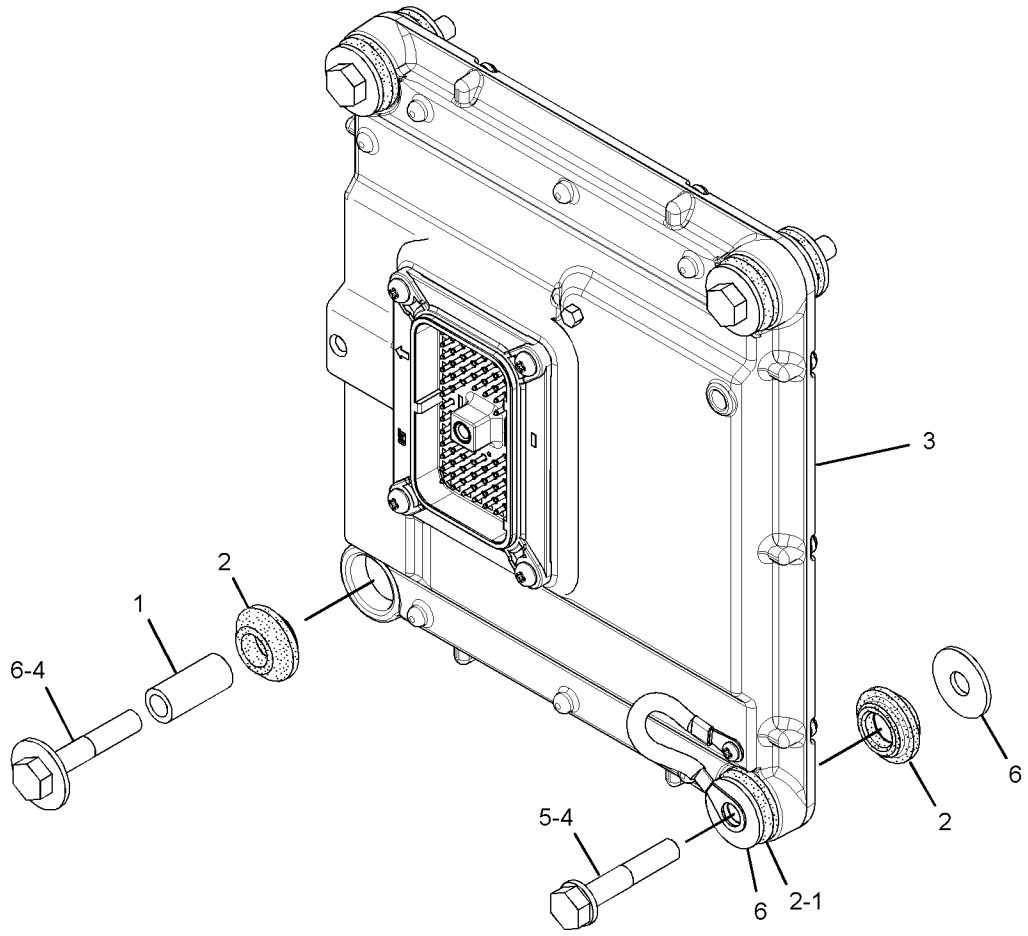

GRAPHIC #1 **<END>** g02766536

392-4759 ELECTRONICS GP-MACHINE

PART OF 376-6671 COMMON AR

SMCS-7610, 7620 **i05628632**

NOTE	PART NUMBER	QTY	PART NAME 1 2 3 4 5 6 (PRODUCT LEVEL)	SEE PAGE
	433-5569	1	SOFTWARE GP-MACHINE	
			<END>	

377-0326 ELECTRONICS GP-MONITOR

PART OF 376-6671 COMMON AR

SMCS-7490, 7601, 7603, 7610, 7620 **i05221683**

NOTE	PART NUMBER	QTY	PART NAME 1 2 3 4 5 6 (PRODUCT LEVEL)	SEE PAGE
	392-4768	1	SOFTWARE GP-MONITOR	
			—OR—	
	416-4255	1	SERVICE GP-MONITOR	
			(OPTIONAL SERVICE REPLACEMENT)(INCLUDES CONTROL GP & SOFTWARE)	
			<END>	

383-0158 GLOW PLUG GP

S/N: TTN1-908

PART OF 378-3248 ENGINE AR-COMPLETE, 378-3252, 392-4128, 416-6082 ENGINE AR-PRIMARY
ALSO AN ATTACHMENT

SMCS-1412 **i05006753**

NOTE	REF NO	GRAPHIC REF	PART NUMBER	QTY	PART NAME 1 2 3 4 5 6 (PRODUCT LEVEL)	SEE PAGE
	1	1	**383-0198**	2	NUT-FLANGE	
	2	1	**383-0200**	4	NUT-FLANGE	
	3	1	**383-0214**	1	SEAL-O-RING	
	4	1	**383-0278**	2	STUD	
	5	1	**383-0419**	1	SOLENOID AS (ENGINE SHUTOFF)	
	6	1	**383-0523**	1	WIRE-GLOW PLUG	
	7	1	**383-0538**	4	GLOW PLUG	
	8	1	**383-0412**	1	GUIDE AS (FUEL SHUTOFF)	

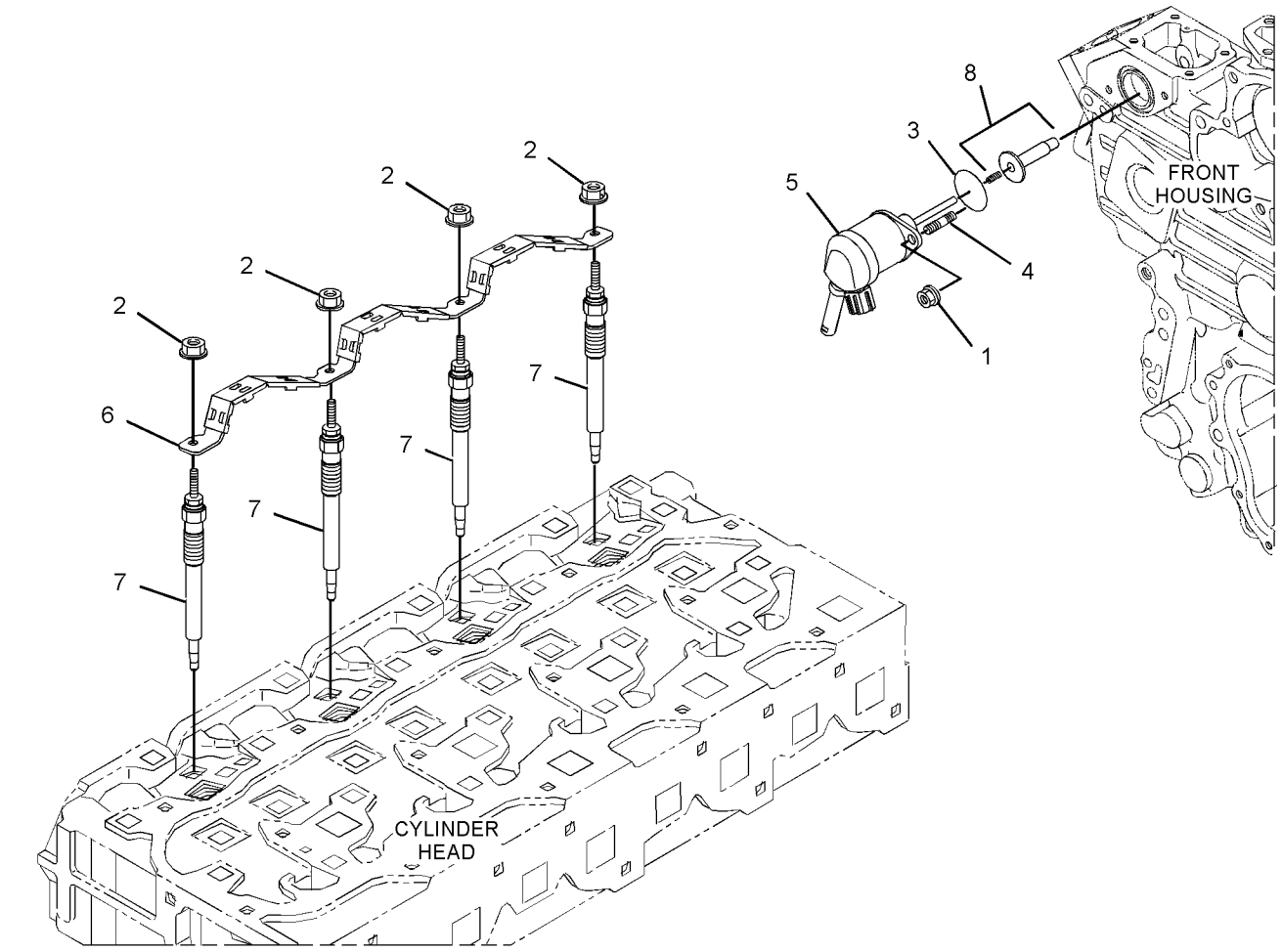

GRAPHIC #1 **<END>** g03194198

425-7013 HARNESS AS-CONSOLE—CANOPY

S/N: TTN874-UP
PART OF 370-5350 WIRING GP-CONSOLE
AN ATTACHMENT

SMCS-1408, 7451

i05384852

NOTE	PART NUMBER	QTY	PART NAME 1 2 3 4 5 6 (PRODUCT LEVEL)	SEE PAGE
	116-4159	1	BASE	
	112-9609	1	BLOCK-MICRORELAY	
	124-9636	1	BLOCK-MINIFUSE	
	116-4157	1	BLOCK-RELAY & FUSE	
	8C-6354	1	CAP-RECEPTACLE (ET CONNECTOR)	
	111-7898	3	CONNECTOR	
	126-1774	1	COVER-CONNECTOR	
	113-8490	8	FUSE (10-AMPERE)	
	113-8491	4	FUSE (15-AMPERE)	
	113-8492	1	FUSE (20-AMPERE)	
	124-3548	2	FUSE (30-AMPERE)	
	141-2759	3	FUSE (5-AMPERE)	
	128-2032	6	LATCH	
	112-9610	2	LOCK-MICRORELAY	
	124-9637	1	LOCK-MINIFUSE	
	116-4158	1	LOCK-RELAY & FUSE	
	8T-8729	6	PIN-CONNECTOR (16-GA TO 18-GA)	
	9W-0852	5	PIN-CONNECTOR (14-GA TO 16-GA)	
	9X-3401	8	PIN-CONNECTOR (16-GA TO 18-GA)	
			—OR—	
	126-1767	8	PIN-CONNECTOR (14-GA TO 16-GA)	
	147-1444	1	PLUG AS-CONNECTOR (70-PIN)	
	159-9322	1	SEAL-O-RING	
	155-2270	8	KIT-CONNECTING PLUG (2-PIN)	
	155-2274	2	KIT-CONNECTING PLUG (6-PIN)	
			(EACH PLUG KIT INCLUDES PLUG AS, WEDGE & INTERFACE SEAL)	
	174-3016	1	PLUG AS-CONNECTOR (3-PIN)	
	230-4009	1	PLUG AS-CONNECTOR (12-PIN)	
	264-7034	1	SEAL-CONNECTOR	
	230-4011	3	PLUG AS-CONNECTOR (2-PIN)	
			(EACH INCLUDES)	
	264-7029	1	SEAL-CONNECTOR	
	230-4013	2	PLUG AS-CONNECTOR (3-PIN)	
			(EACH INCLUDES)	
	264-7030	1	SEAL-CONNECTOR	
	230-5008	2	PLUG AS-CONNECTOR (4-PIN)	
			(EACH INCLUDES)	
	264-7031	1	SEAL-CONNECTOR	
	230-5010	2	PLUG AS-CONNECTOR (6-PIN)	
			(EACH INCLUDES)	
	264-7032	1	SEAL-CONNECTOR	
	275-6785	1	PLUG AS-CONNECTOR	
	379-0830	1	PLUG AS-CONNECTOR	
	8T-8737	49	PLUG-SEAL	
	110-9198	5	PLUG-SEAL	
	340-2566	23	PLUG-SEAL	
	102-8803	1	KIT-RECEPTACLE (3-PIN)	
			(INCLUDES RECEPTACLE AS & WEDGE)	
	243-4505	1	RECEPTACLE AS-CONNECTOR (2-PIN)	
	243-4506	1	RECEPTACLE AS-CONNECTOR (3-PIN)	
	243-4510	1	RECEPTACLE AS-CONNECTOR (12-PIN)	
	9W-1951	1	RECEPTACLE-CONNECTOR (9-PIN)	
	153-2602	3	RECEPTACLE-CONNECTOR (1-PIN)	
	8T-8730	91	SOCKET-CONNECTOR (16-GA TO 18-GA)	
	9W-0844	10	SOCKET-CONNECTOR (14-GA TO 16-GA)	

425-7013 **HARNESS AS-CONSOLE (*contd.*)** **i05384852**

NOTE	PART NUMBER	QTY	PART NAME 1 2 3 4 5 6 (PRODUCT LEVEL)	SEE PAGE
	9X-3402	2	SOCKET-CONNECTOR (16-GA TO 18-GA)	
			—OR—	
	126-1768	2	SOCKET-CONNECTOR (14-GA TO 16-GA)	
	167-3593	1	STRAP	
	3S-2093	14	STRAP-CABLE	
	122-4401	5	TERMINAL	
	153-2631	3	TERMINAL (FEMALE)	
	363-9173	2	TERMINAL (14-GA TO 18-GA)	
	3T-4693	2	TERMINAL-RING (8-GA, 7/16-IN SCREW)	
			—OR—	
	3T-4696	2	TERMINAL-RING (10-GA TO 12-GA, 7/16-IN SCREW)	
	112-9604	6	TERMINAL-BLADE (16-GA TO 18-GA)	
	112-9611	19	TERMINAL-BLADE	
	112-9612	20	TERMINAL-BLADE	
	116-4160	3	TERMINAL-BLADE (12-GA TO 14-GA)	
	116-4161	9	TERMINAL-BLADE (16-GA TO 18-GA)	
	113-5099	2	TERMINAL-BUS	
	113-5100	2	TERMINAL-BUS	
	3E-9179	3	TERMINAL-RECEPTACLE (14-GA TO 18-GA)	
E	**125-7874**		TUBE-HEAT SHRINK (5.72-MM DIA) (110-CM)	

E - ORDER BY THE CENTIMETER

<END>

425-7014 HARNESS AS-CONSOLE–CAB

S/N: TTN874-UP
PART OF 370-5349 WIRING GP-CONSOLE
AN ATTACHMENT

SMCS-1408, 7451

i05384849

NOTE	PART NUMBER	QTY	PART NAME 1 2 3 4 5 6 (PRODUCT LEVEL)	SEE PAGE
	116-4159	1	BASE	
	112-9609	1	BLOCK-MICRORELAY	
	124-9636	1	BLOCK-MINIFUSE	
	116-4157	1	BLOCK-RELAY & FUSE	
	8C-6354	1	CAP-RECEPTACLE (ET CONNECTOR)	
	111-7898	4	CONNECTOR	
	153-2602	3	RECEPTACLE-CONNECTOR (1-PIN)	
	126-1774	1	COVER-CONNECTOR	
	113-8490	9	FUSE (10-AMPERE)	
	113-8491	4	FUSE (15-AMPERE)	
	113-8492	2	FUSE (20-AMPERE)	
	124-3548	3	FUSE (30-AMPERE)	
	141-2759	3	FUSE (5-AMPERE)	
	128-2032	6	LATCH	
	112-9610	2	LOCK-MICRORELAY	
	124-9637	1	LOCK-MINIFUSE	
	116-4158	1	LOCK-RELAY & FUSE	
	8T-8729	8	PIN-CONNECTOR (16-GA TO 18-GA)	
	9W-0852	11	PIN-CONNECTOR (14-GA TO 16-GA)	
	9X-3401	8	PIN-CONNECTOR (16-GA TO 18-GA)	
	126-1767	6	PIN-CONNECTOR (14-GA TO 16-GA)	
	275-6785	1	PLUG AS-CONNECTOR	
	147-1444	1	PLUG AS-CONNECTOR (70-PIN)	
	159-9322	1	SEAL-O-RING	
	155-2270	8	KIT-CONNECTING PLUG (2-PIN)	
	155-2274	2	KIT-CONNECTING PLUG (6-PIN)	
			(EACH PLUG KIT INCLUDES PLUG AS,WEDGE & INTERFACE SEAL)	
	230-4009	1	PLUG AS-CONNECTOR (12-PIN)	
	264-7034	1	SEAL-CONNECTOR	
	230-4011	3	PLUG AS-CONNECTOR (2-PIN)	
			(EACH INCLUDES)	
	264-7029	1	SEAL-CONNECTOR	
	230-4013	1	PLUG AS-CONNECTOR (3-PIN)	
	264-7030	1	SEAL-CONNECTOR	
	230-5008	3	PLUG AS-CONNECTOR (4-PIN)	
			(EACH INCLUDES)	
	264-7031	1	SEAL-CONNECTOR	
	230-5010	2	PLUG AS-CONNECTOR (6-PIN)	
			(EACH INCLUDES)	
	264-7032	1	SEAL-CONNECTOR	
	379-0830	1	PLUG AS-CONNECTOR	
	174-3016	1	PLUG AS-CONNECTOR (3-PIN)	
	8T-8737	47	PLUG-SEAL	
	110-9198	5	PLUG-SEAL	
	340-2566	23	PLUG-SEAL	
	102-8803	1	KIT-RECEPTACLE (3-PIN)	
			(INCLUDES RECEPTACLE AS & WEDGE)	
	243-4505	1	RECEPTACLE AS-CONNECTOR (2-PIN)	
	243-4510	2	RECEPTACLE AS-CONNECTOR (12-PIN)	
	9W-1951	1	RECEPTACLE-CONNECTOR (9-PIN)	
	325-9922	2	SEAL	
	8T-8730	92	SOCKET-CONNECTOR (16-GA TO 18-GA)	
	9W-0844	13	SOCKET-CONNECTOR (14-GA TO 16-GA)	
	9X-3402	2	SOCKET-CONNECTOR (16-GA TO 18-GA)	
			–OR–	

425-7014 **HARNESS AS-CONSOLE (*contd.*)** **i05384849**

NOTE	PART NUMBER	QTY	PART NAME 1 2 3 4 5 6 (PRODUCT LEVEL)	SEE PAGE
	126-1768	2	SOCKET-CONNECTOR (14-GA TO 16-GA)	
	340-2567	11	WIRE AS	
	167-3593	1	STRAP	
	3S-2093	15	STRAP-CABLE	
	122-4401	8	TERMINAL	
	363-9173	4	TERMINAL (14-GA TO 18-GA)	
	2L-8079	1	TERMINAL-RING (14-GA TO 16-GA, 3/8-IN SCREW)	
	3T-4693	2	TERMINAL-RING (8-GA, 7/16-IN SCREW)	
			—OR—	
	3T-4696	2	TERMINAL-RING (10-GA TO 12-GA, 7/16-IN SCREW)	
	112-9604	6	TERMINAL-BLADE (16-GA TO 18-GA)	
	112-9611	19	TERMINAL-BLADE	
	112-9612	20	TERMINAL-BLADE	
	116-4160	4	TERMINAL-BLADE (12-GA TO 14-GA)	
	116-4161	11	TERMINAL-BLADE (16-GA TO 18-GA)	
	113-5099	2	TERMINAL-BUS	
	113-5100	3	TERMINAL-BUS	
	153-2631	3	TERMINAL (FEMALE)	
	3E-9179	7	TERMINAL-RECEPTACLE (14-GA TO 18-GA)	
E	**125-7874**		TUBE-HEAT SHRINK (5.72-MM DIA) (120-CM)	

E - ORDER BY THE CENTIMETER

<END>

383-3164 HARNESS AS-CONTROL—CAB, CANOPY

PART OF 383-3163 WIRING GP-CONSOLE

AN ATTACHMENT

SMCS-1408 **i05046509**

NOTE	PART NUMBER	QTY	PART NAME 1 2 3 4 5 6 (PRODUCT LEVEL)	SEE PAGE
	155-2270	2	KIT-CONNECTING PLUG (2-PIN)	
			(EACH INCLUDES PLUG AS, WEDGE & INTERFACE SEAL)	
	8T-8729	3	PIN-CONNECTOR (16-GA TO 18-GA)	
	8T-8737	1	PLUG-SEAL	
	243-4507	1	RECEPTACLE AS-CONNECTOR (4-PIN)	
	8T-8730	4	SOCKET-CONNECTOR (16-GA TO 18-GA)	
E	**125-7874**		TUBE-HEAT SHRINK (5.72-MM DIA) (5-CM)	

E - ORDER BY THE CENTIMETER

<END>

381-9236 HARNESS AS-QUICK COUPLER

PART OF 381-9235 WIRING GP-QUICK COUPLER

AN ATTACHMENT

SMCS-1408, 6129 **i05297807**

NOTE	PART NUMBER	QTY	PART NAME 1 2 3 4 5 6 (PRODUCT LEVEL)	SEE PAGE
	8T-8729	2	PIN-CONNECTOR (16-GA TO 18-GA)	
	9W-9615	1	RING	
	155-2270	2	KIT-CONNECTING PLUG (2-PIN)	
			(EACH PLUG KIT INCLUDES PLUG AS, WEDGE & INTERFACE SEAL)	
	8T-8737	1	PLUG-SEAL	
	243-4507	1	RECEPTACLE AS-CONNECTOR (4-PIN)	
	8T-8730	4	SOCKET-CONNECTOR (16-GA TO 18-GA)	
E	**125-7874**		TUBE-HEAT SHRINK (5.72-MM DIA) (5-CM)	

E - ORDER BY THE CENTIMETER

<END>

422-2949 HARNESS AS-SENSOR—OVERLOAD

PART OF 426-0242 KIT-BOOM, 422-2948 WIRING GP-OVERLOAD WARNING

AN ATTACHMENT

SMCS-1408, 1901 **i05376431**

NOTE	PART NUMBER	QTY	PART NAME 1 2 3 4 5 6 (PRODUCT LEVEL)	SEE PAGE
E	**103-2529**		HOSE (122-CM)	
	8T-8729	3	PIN-CONNECTOR (16-GA TO 18-GA)	
	230-4013	1	PLUG AS-CONNECTOR (3-PIN)	
	264-7030	1	SEAL-CONNECTOR	
	243-4506	1	RECEPTACLE AS-CONNECTOR (3-PIN)	
	8T-8730	3	SOCKET-CONNECTOR (16-GA TO 18-GA)	

E - ORDER BY THE CENTIMETER

<END>

383-3158 HARNESS AS-SOLENOID—CAB, CANOPY

PART OF 383-3163 WIRING GP-CONSOLE

AN ATTACHMENT

SMCS-1408 **i04916635**

NOTE	PART NUMBER	QTY	PART NAME 1 2 3 4 5 6 (PRODUCT LEVEL)	SEE PAGE
	8T-8729	6	PIN-CONNECTOR (16-GA TO 18-GA)	
	155-2271	1	KIT-CONNECTING PLUG (4-PIN)	
			(INCLUDES PLUG AS, WEDGE & INTERFACE SEAL)	
	230-5008	1	PLUG AS-CONNECTOR (4-PIN)	
	264-7031	1	SEAL-CONNECTOR	
	8T-8737	2	PLUG-SEAL	
	243-4508	1	RECEPTACLE AS-CONNECTOR (6-PIN)	
	8T-8730	6	SOCKET-CONNECTOR (16-GA TO 18-GA)	

<END>

378-9630 HEATER GP-JACKET WATER

120-VOLT

PART OF 380-2485 HEATER GP-JACKET WATER

AN ATTACHMENT

SMCS-1383 **i04559503**

NOTE	REF NO	GRAPHIC REF	PART NUMBER	QTY	PART NAME 1 2 3 4 5 6 (PRODUCT LEVEL)	SEE PAGE
	1	1	**3S-2093**	2	STRAP-CABLE	
	2	1	**251-1391**	1	BOLT (M10X1.25X16-MM)	
	3	1	**321-6069**	1	CORD AS-HEATER ELEMENT (120-VOLT)	
	4	1	**378-9631**	1	HEATER AS	
	5	1	**381-7473**	1	HARNESS AS-WIRING (JACKET WATER HEATER)	
		1	**8T-8737**	3	PLUG-SEAL	
		1	**155-2260**	1	KIT-CONNECTING PLUG (3-PIN)	
					(INCLUDES PLUG AS, WEDGE & INTERFACE SEAL)	
	6	1	**4P-8134**	1	CLIP	
	7	1	**8T-4121**	1	WASHER-HARD (11X21X2.5-MM THK)	

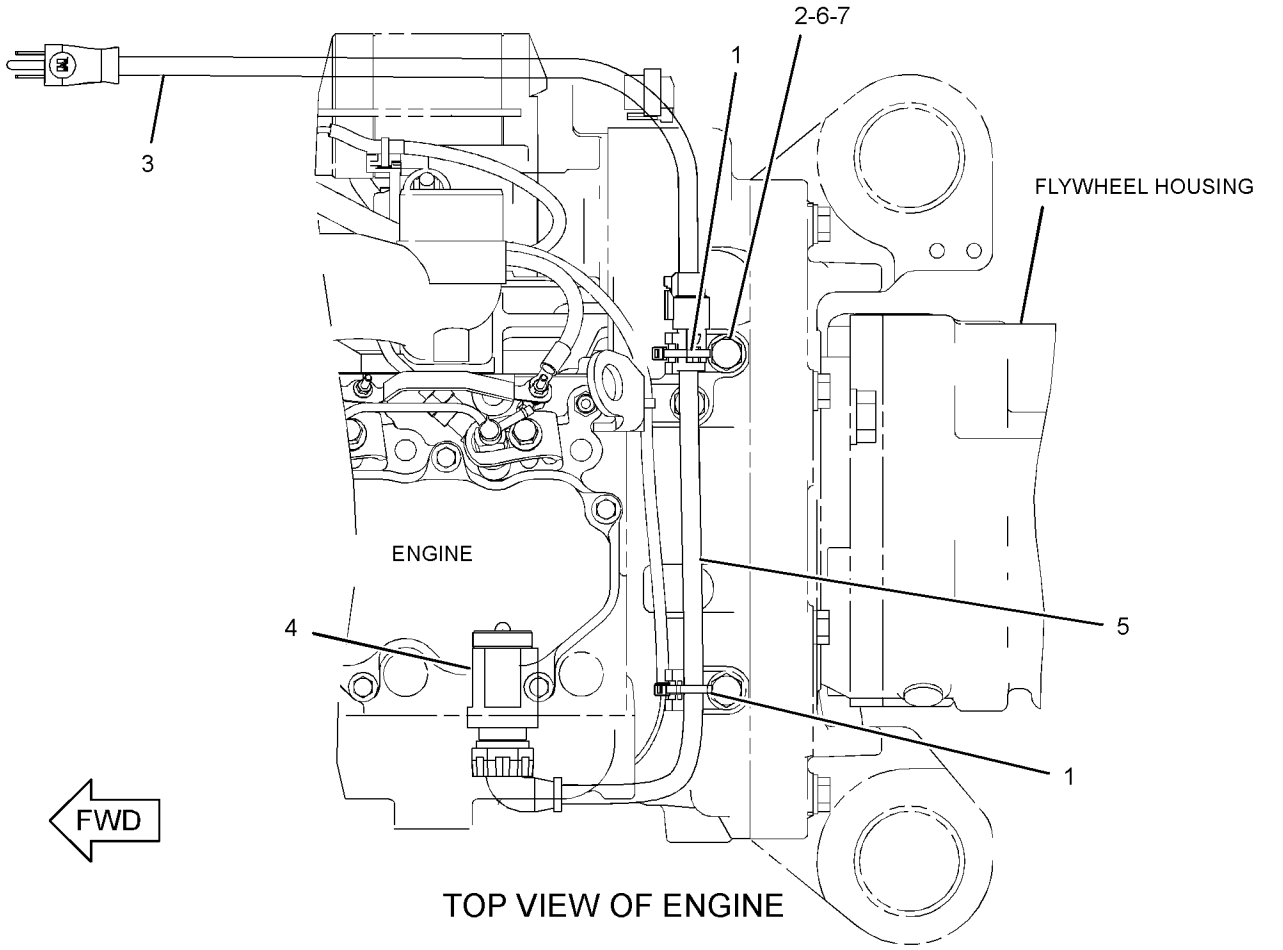

TOP VIEW OF ENGINE

GRAPHIC #1 **<END>** g02776877

380-2485 HEATER GP-JACKET WATER

AN ATTACHMENT

SMCS-1383 **i04629186**

NOTE	PART NUMBER	QTY	PART NAME 1 2 3 4 5 6 (PRODUCT LEVEL)	SEE PAGE
Y	*378-9630*	1	HEATER GP-JACKET WATER	90

Y - SEPARATE ILLUSTRATION

<END>

233-0099 LAMP GP-FLOOD–BOOM

12-VOLT

PART OF 292-5739 LIGHTING GP-FLOOD

SMCS-1429, 1434 **i05298542**

NOTE	REF NO	GRAPHIC REF	PART NUMBER	QTY	PART NAME 1 2 3 4 5 6 (PRODUCT LEVEL)	SEE PAGE
	1	1	**142-9572**	1	LAMP (12-VOLT, 55-WATT)	
M	2	1	**6V-9492**	2	SCREW-MACHINE (M4X0.7X25-MM)	
	3	1	**096-6166**	2	WASHER-HARD (4.5X9X1-MM THK)	
	4	1	**8T-4223**	1	WASHER-HARD (13.5X25.5X3-MM THK)	
M	5	1	**9X-8488**	1	NUT-HEX THIN (M12X1.5-THD)	

M - METRIC PART

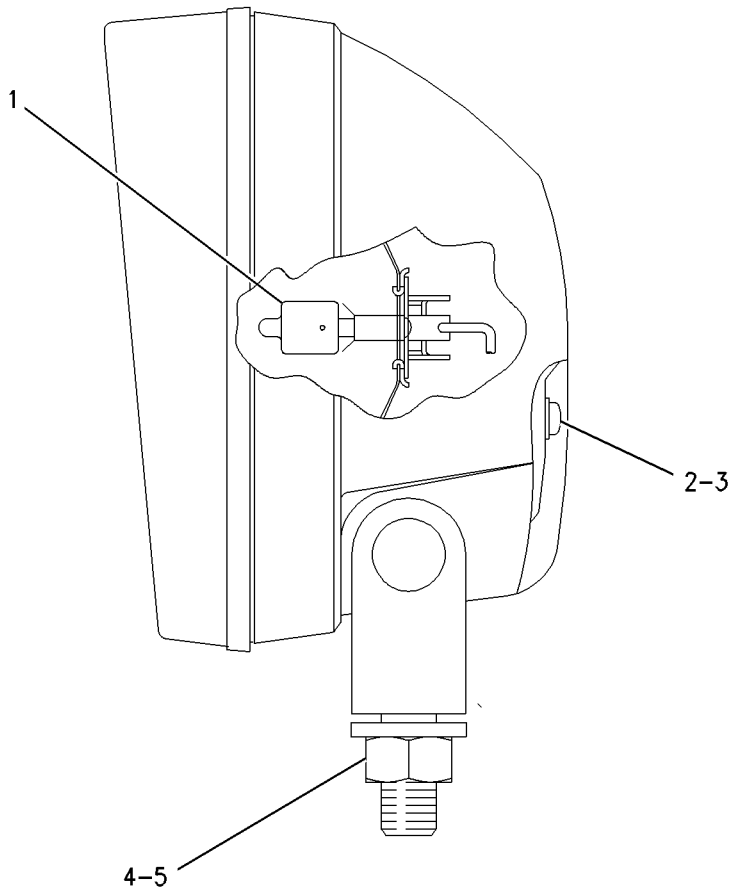

GRAPHIC #1 **<END>** g00861794

381-9232 LIGHTING AR-FLOOD—CANOPY

AN ATTACHMENT

SMCS-1434 **i04629194**

NOTE	PART NUMBER	QTY	PART NAME 1 2 3 4 5 6 (PRODUCT LEVEL)	SEE PAGE
Y	*370-5352*	1	LIGHTING GP-FLOOD (CANOPY)	97

Y - SEPARATE ILLUSTRATION

<END>

266-6843 LIGHTING GP-FLOOD—CAB

CANNOT BE USED WITH CANOPY
PART OF 355-3411 LIGHTING GP-FLOOD
AN ATTACHMENT

SMCS-1434 **i03964912**

NOTE	REF NO	GRAPHIC REF	PART NUMBER	QTY	PART NAME 1 2 3 4 5 6 (PRODUCT LEVEL)	SEE PAGE
	1	1	**198-0852**	1	LAMP GP-FLOOD (12-VOLT) (CAB)	
		1	**142-9572**	1	LAMP (12-VOLT, 55-WATT)	
	2	1	**8T-4121**	1	WASHER-HARD (11X21X2.5-MM THK)	
M	3	1	**8T-4137**	1	BOLT (M10X1.5X20-MM)	
	4	1	**3S-2093**	1	STRAP-CABLE	

M - METRIC PART

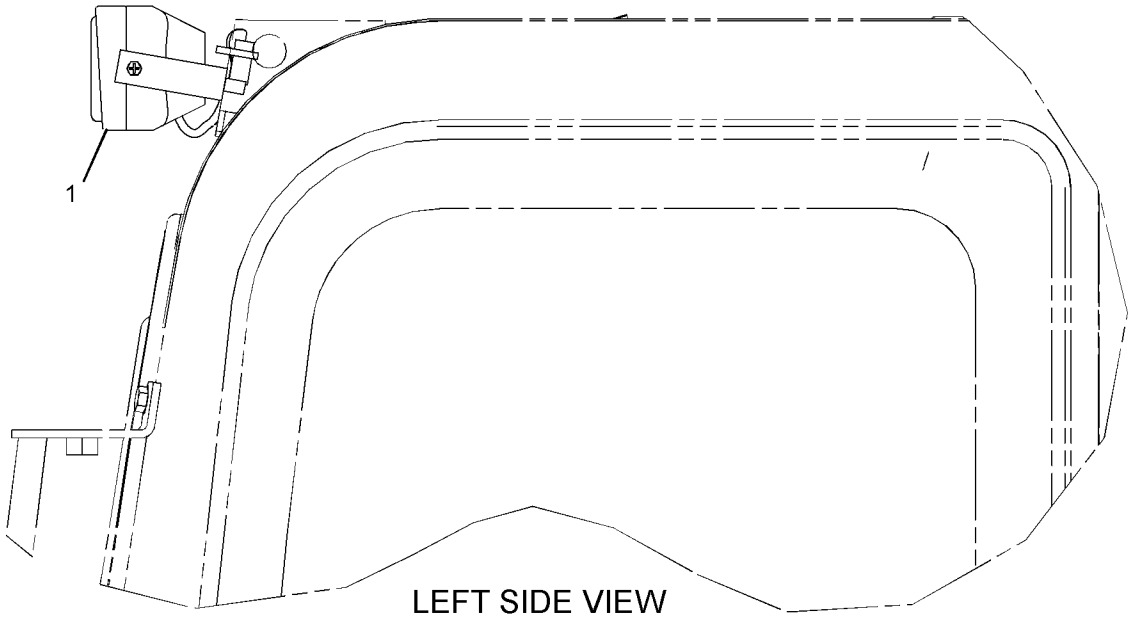

LEFT SIDE VIEW

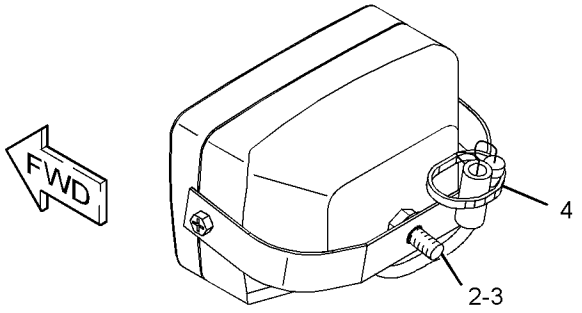

GRAPHIC #1 **<END>** g01205353

292-5739 LIGHTING GP-FLOOD—BOOM

PART OF 376-6679 BOOM AR

SMCS-1434 **i03970700**

NOTE	REF NO	GRAPHIC REF	PART NUMBER	QTY	PART NAME 1 2 3 4 5 6 (PRODUCT LEVEL)	SEE PAGE
	1	1	**3S-2093**	1	STRAP-CABLE	
Y	2	1	**233-0099**	1	LAMP GP-FLOOD (12-VOLT) (BOOM)	92
	3	1	**292-5740**	1	PLATE	
	4	1	**5P-1076**	1	WASHER-HARD (13.5X30X4-MM THK)	
M	5	1	**8T-4192**	1	BOLT (M12X1.75X25-MM)	
	6	1	**8T-4223**	1	WASHER-HARD (13.5X25.5X3-MM THK)	

M - METRIC PART
Y - SEPARATE ILLUSTRATION

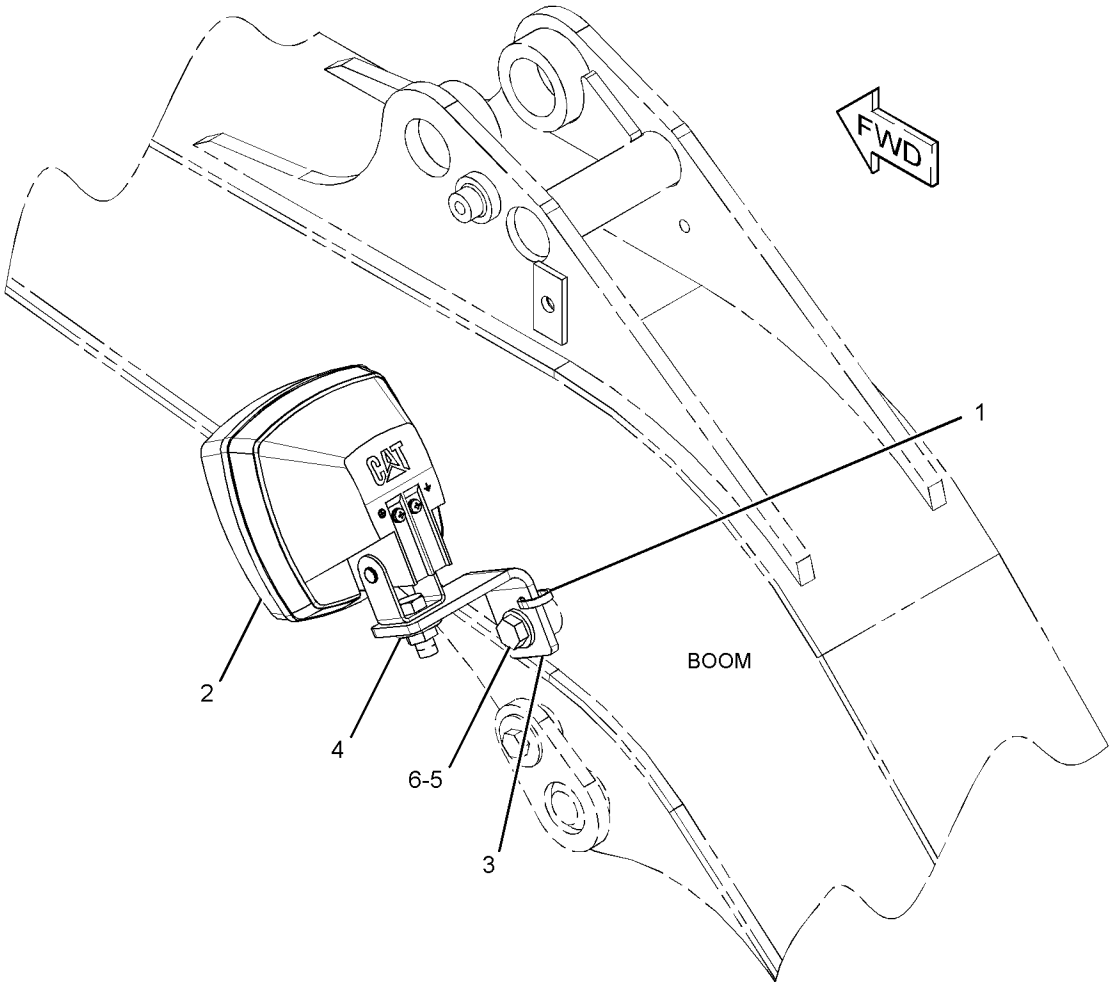

GRAPHIC #1 **<END>** g01311751

355-3411 LIGHTING GP-FLOOD—CAB

AN ATTACHMENT

SMCS-1434 **i04006591**

NOTE	PART NUMBER	QTY	PART NAME 1 2 3 4 5 6 (PRODUCT LEVEL)	SEE PAGE
Y	*266-6843*	1	LIGHTING GP-FLOOD (CAB)	94

Y - SEPARATE ILLUSTRATION

<END>

370-5352 LIGHTING GP-FLOOD—CANOPY

PART OF 381-9232 LIGHTING AR-FLOOD

AN ATTACHMENT

SMCS-1434 **i05425787**

NOTE	REF NO	GRAPHIC REF	PART NUMBER	QTY	PART NAME 1 2 3 4 5 6 (PRODUCT LEVEL)	SEE PAGE
	1	1	**3S-2093**	11	STRAP-CABLE	
	2	1	**163-6795**	1	STRAP-CABLE	
	3	1	**198-0852**	1	LAMP GP-FLOOD (12-VOLT)	
		1	**142-9572**	1	LAMP (12-VOLT, 55-WATT)	
	4	1	**298-0663**	1	CLIP	
	5	1	**370-5371**	1	HARNESS AS-LIGHTING (CANOPY)	
		1	**230-4011**	1	PLUG AS-CONNECTOR (2-PIN)	
		1	**264-7029**	1	SEAL-CONNECTOR	
		1	**8T-8730**	1	SOCKET-CONNECTOR (16-GA TO 18-GA)	
		1	**9W-0844**	1	SOCKET-CONNECTOR (14-GA TO 16-GA)	
		1	*7Y-3966*	1	TERMINAL AS	
		1	**7Y-3962**	1	TERMINAL-BULLET (MALE)	
		1	**7Y-3964**	1	TUBE (CONNECTOR TERMINAL)	
		1	*7Y-3967*	1	TERMINAL AS	
		1	**7Y-3963**	1	TERMINAL-BULLET (FEMALE)	
		1	**7Y-3965**	1	TUBE (RECEPTACLE TERMINAL)	
	6	1	**8T-4121**	1	WASHER-HARD (11X21X2.5-MM THK)	
M	7	1	**8T-4137**	1	BOLT (M10X1.5X20-MM)	
M	8	1	**8T-4189**	1	BOLT (M8X1.25X20-MM)	
	9	1	**8T-4224**	1	WASHER-HARD (8.8X16X2-MM THK)	

M - METRIC PART

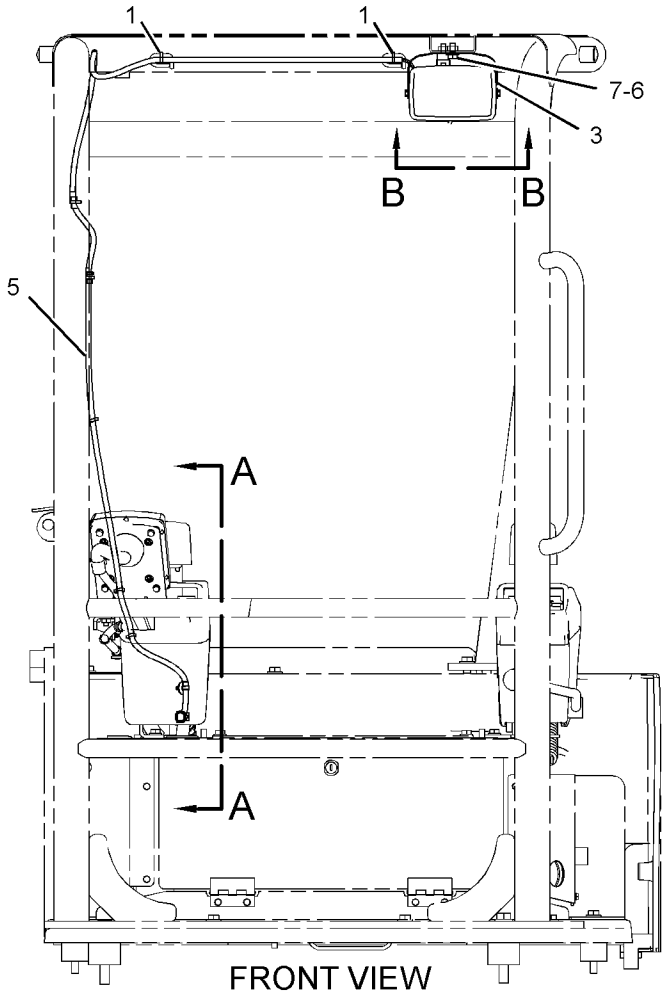

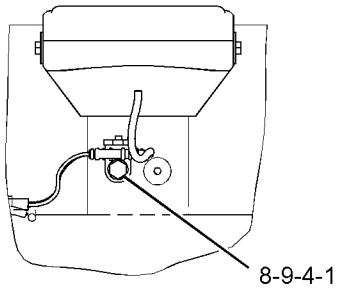

VIEW B-B

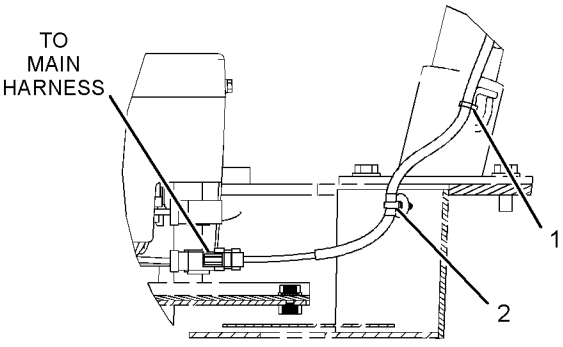

VIEW A-A

GRAPHIC #1 **<END>** g02791406

385-1277 MOUNTING GP-ELECTRONIC CONTROL

PART OF 377-8928 BLADE AR-ANGLING
AN ATTACHMENT

SMCS-1901, 7610

i04728120

NOTE	REF NO	GRAPHIC REF	PART NUMBER	QTY	PART NAME 1 2 3 4 5 6 (PRODUCT LEVEL)	SEE PAGE
	1	1	**6I-1418**	4	SPACER (8.2X12.7X28.7-MM THK)	
	2	1	**155-0576**	8	MOUNT-ISOLATION	
	3	1	**9N-0869**	8	WASHER-HARD (8.8X25.5X2-MM THK)	
M	4	1	**7X-0818**	4	BOLT (M8X1.25X45-MM)	
	5	1	**8T-4224**	1	WASHER-HARD (8.8X16X2-MM THK)	

M - METRIC PART

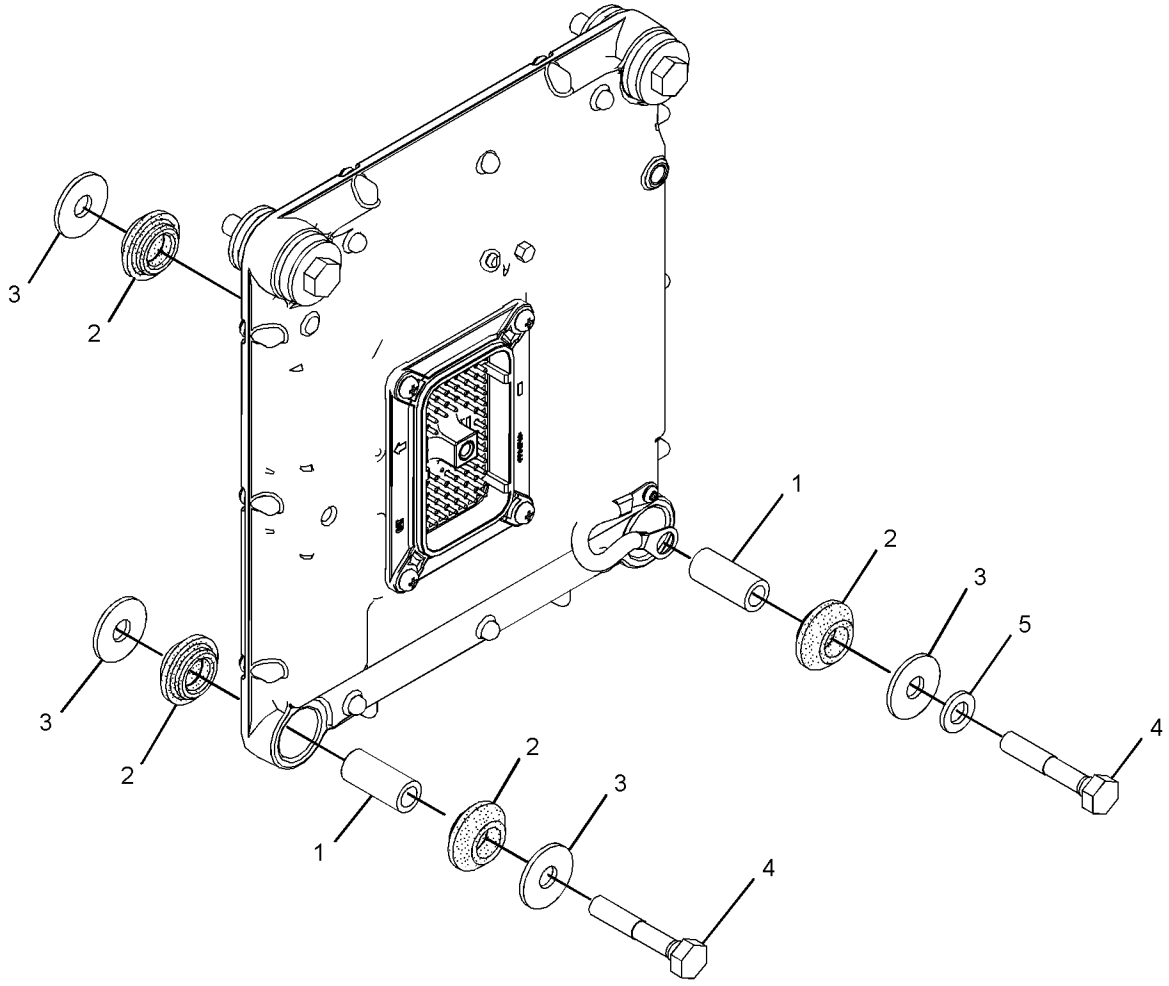

GRAPHIC #1

<END>

g02853159

383-0154 STARTING MOTOR GP-ELECTRIC

S/N: TTN1-908
12-VOLT
PART OF 378-3248 ENGINE AR-COMPLETE, 378-3252, 392-4128, 416-6082 ENGINE AR-PRIMARY
ALSO AN ATTACHMENT

SMCS-1453 **i04603473**

NOTE	REF NO	GRAPHIC REF	PART NUMBER	QTY	PART NAME 1 2 3 4 5 6 (PRODUCT LEVEL)	SEE PAGE
	1	1	**383-0179**	1	BOLT	
	2	1	**383-0181**	1	STUD	
	3	1	**383-0196**	1	NUT-HEX	
	4	1	**383-0201**	1	NUT-FLANGE	
	5	1	**383-0207**	1	WASHER	
	6	1	**383-0589**	1	STARTING MOTOR AS	

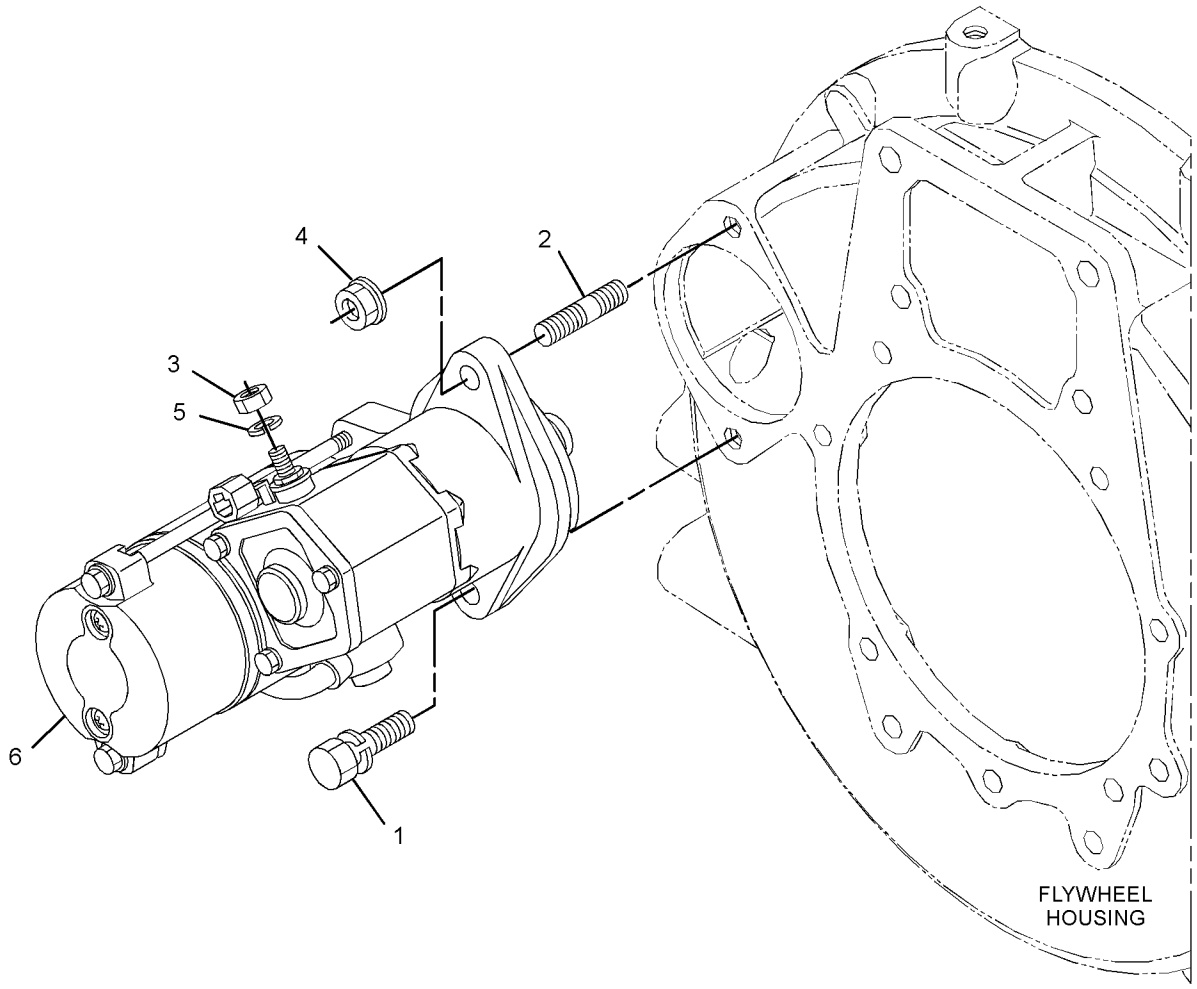

GRAPHIC #1 **<END>** g02791238

319-4420 SWITCH GP-ROTARY–THROTTLE POSITION

PART OF 370-5349, 370-5350 WIRING GP-CONSOLE

AN ATTACHMENT

SMCS-7332 **i04655678**

NOTE	REF NO	GRAPHIC REF	PART NUMBER	QTY	PART NAME 1 2 3 4 5 6 (PRODUCT LEVEL)	SEE PAGE
	1	1	**243-4508**	1	RECEPTACLE AS-CONNECTOR (6-PIN)	
	2	1	**9X-3401**	5	PIN-CONNECTOR (16-GA TO 18-GA)	
					–OR–	
		1	**126-1767**	5	PIN-CONNECTOR (14-GA TO 16-GA)	
	3	1	**8T-8737**	1	PLUG-SEAL	
M	4	1	**7Y-5458**	1	NUT (M12X1-THD)	
	5	1	**7Y-5464**	1	WASHER (12.2X15.4X0.5-MM THK)	
	6	1	**106-0210**	1	SEAL	

M - METRIC PART

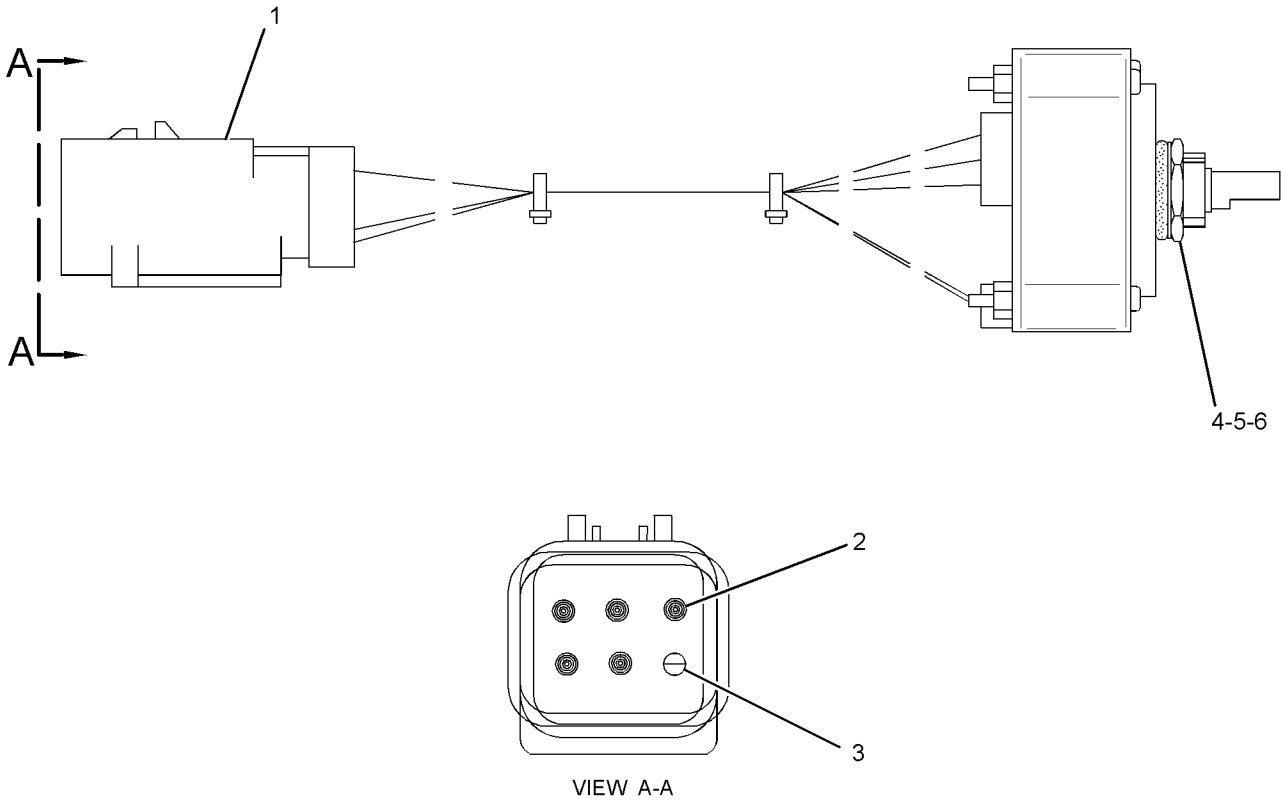

GRAPHIC #1 **<END>** g01588034

381-9239 WIRING GP-CAB–CANOPY
AN ATTACHMENT

SMCS-1408, 7301 **i04629196**

NOTE	PART NUMBER	QTY	PART NAME 1 2 3 4 5 6 (PRODUCT LEVEL)	SEE PAGE
Y	*370-5351*	1	WIRING GP-LIGHTING	118

Y - SEPARATE ILLUSTRATION

<END>

370-5349 WIRING GP-CONSOLE–CAB

S/N: TTN1-873

PART OF 376-6691, 376-6695, 383-5924, 383-5925 CAB AR

AN ATTACHMENT

SMCS-1408 **i05209228**

NOTE	REF NO	GRAPHIC REF	PART NUMBER	QTY	PART NAME 1 2 3 4 5 6 (PRODUCT LEVEL)	SEE PAGE
	1	1	**3S-2093**	8	STRAP-CABLE	
	2	1	**7K-1181**	22	STRAP-CABLE	
	3	1	**8X-5804**	1	STRAP AS-GROUND	
	4	1	**109-2356**	4	PLUG	
	5	1	**110-6109**	1	KNOB-CONTROL (FLOW CONTROL SWITCH)	
	6	1	**116-7471**	1	PULLER-MINIFUSE	
	7	1	**140-9378**	6	RELAY AS (12-VOLT)	
	8	1	**158-7802**	1	SWITCH AS-ROCKER (WINDOW WASHER, WIPER)	
		1	**111-7899**	1	GASKET	
	9	1	**163-6795**	3	STRAP-CABLE	
	10	1	**204-1611**	1	STRAP (DUAL)	
	11	1	**266-1404**	1	SWITCH AS-ROCKER (LIGHT)	
		1	**111-7899**	1	GASKET	
	12	1	**266-6935**	2	RELAY AS (12-VOLT)	
	13	1	**266-7379**	1	STRAP-CABLE	
	14	1	**267-7058**	1	SWITCH AS-LIMIT (HYDRAULIC LOCKOUT)	
		1	**8T-8729**	2	PIN-CONNECTOR (16-GA TO 18-GA)	
		1	**243-4505**	1	RECEPTACLE AS-CONNECTOR (2-PIN)	
Y	15	1	**319-4420**	1	SWITCH GP-ROTARY (THROTTLE POSITION)	100
J	16	1	**322-8964**	1	SWITCH AS-START (ENGINE)	
		1	**7T-6799**	1	NUT-MOUNTING (1-32-THD)	
		1	**8T-8729**	4	PIN-CONNECTOR (16-GA TO 18-GA)	
		1	**243-4507**	1	RECEPTACLE AS-CONNECTOR (4-PIN)	
	17	1	**366-4622**	1	KIT-SERVICE METER	
					(INCLUDES SERVICE METER & FILM)	
	18	1	**364-3882**	1	BUZZER (12-VOLT)	
	19	1	**370-5353**	1	BRACKET	
	20	1	**370-5354**	1	PLATE AS	
	21	1	**370-5368**	1	HARNESS AS-CONSOLE (CAB)	
		1	**116-4159**	1	BASE	
		1	**112-9609**	1	BLOCK-MICRORELAY	
		1	**124-9636**	1	BLOCK-MINIFUSE	
		1	**116-4157**	1	BLOCK-RELAY & FUSE	
		1	**8C-6354**	1	CAP-RECEPTACLE (ET CONNECTOR)	
		1	**111-7898**	3	CONNECTOR	
		1	**153-2602**	3	RECEPTACLE-CONNECTOR (1-PIN)	
		1	**126-1774**	1	COVER-CONNECTOR	
		1	**113-8490**	9	FUSE (10-AMPERE)	
		1	**113-8491**	4	FUSE (15-AMPERE)	
		1	**113-8492**	2	FUSE (20-AMPERE)	
		1	**124-3548**	3	FUSE (30-AMPERE)	
		1	**141-2759**	3	FUSE (5-AMPERE)	
		1	**128-2032**	6	LATCH	
		1	**112-9610**	2	LOCK-MICRORELAY	
		1	**124-9637**	1	LOCK-MINIFUSE	
		1	**116-4158**	1	LOCK-RELAY & FUSE	
		1	**8T-8729**	8	PIN-CONNECTOR (16-GA TO 18-GA)	
		1	**9W-0852**	11	PIN-CONNECTOR (14-GA TO 16-GA)	
		1	**9X-3401**	8	PIN-CONNECTOR (16-GA TO 18-GA)	
					-OR-	
		1	**126-1767**	8	PIN-CONNECTOR (14-GA TO 16-GA)	
		1	**275-6785**	1	PLUG AS-CONNECTOR	
		1	**147-1444**	1	PLUG AS-CONNECTOR (70-PIN)	
		1	**159-9322**	1	SEAL-O-RING	
		1	**155-2270**	8	KIT-CONNECTING PLUG (2-PIN)	
		1	**155-2274**	2	KIT-CONNECTING PLUG (6-PIN)	

370-5349 **WIRING GP-CONSOLE (*contd.*)** **i05209228**

NOTE	REF NO	GRAPHIC REF	PART NUMBER	QTY	PART NAME 1 2 3 4 5 6 (PRODUCT LEVEL)	SEE PAGE
					(EACH PLUG KIT INCLUDES PLUG AS, WEDGE & INTERFACE SEAL)	
		1	**230-4009**	1	PLUG AS-CONNECTOR (12-PIN)	
		1	**264-7034**	1	SEAL-CONNECTOR	
		1	**230-4011**	3	PLUG AS-CONNECTOR (2-PIN)	
					(EACH INCLUDES)	
		1	**264-7029**	1	SEAL-CONNECTOR	
		1	**230-5008**	3	PLUG AS-CONNECTOR (4-PIN)	
					(EACH INCLUDES)	
		1	**264-7031**	1	SEAL-CONNECTOR	
		1	**230-5010**	2	PLUG AS-CONNECTOR (6-PIN)	
					(EACH INCLUDES)	
		1	**264-7032**	1	SEAL-CONNECTOR	
		1	**379-0830**	1	PLUG AS-CONNECTOR	
		1	**174-3016**	1	PLUG AS-CONNECTOR (3-PIN)	
		1	**8T-8737**	49	PLUG-SEAL	
		1	**110-9198**	5	PLUG-SEAL	
		1	**340-2566**	23	PLUG-SEAL	
		1	**102-8803**	1	KIT-RECEPTACLE (3-PIN)	
					(INCLUDES RECEPTACLE AS & WEDGE)	
		1	**243-4505**	1	RECEPTACLE AS-CONNECTOR (2-PIN)	
		1	**243-4510**	2	RECEPTACLE AS-CONNECTOR (12-PIN)	
		1	**9W-1951**	1	RECEPTACLE-CONNECTOR (9-PIN)	
		1	**8T-8730**	87	SOCKET-CONNECTOR (16-GA TO 18-GA)	
		1	**9W-0844**	13	SOCKET-CONNECTOR (14-GA TO 16-GA)	
		1	**9X-3402**	2	SOCKET-CONNECTOR (16-GA TO 18-GA)	
					-OR-	
		1	**126-1768**	2	SOCKET-CONNECTOR (14-GA TO 16-GA)	
		1	**167-3593**	1	STRAP	
		1	**3S-2093**	13	STRAP-CABLE	
		1	**122-4401**	5	TERMINAL	
		1	**363-9173**	4	TERMINAL (14-GA TO 18-GA)	
		1	**2L-8079**	1	TERMINAL-RING (14-GA TO 16-GA, 3/8-IN SCREW)	
					—OR—	
		1	**3T-4696**	1	TERMINAL-RING (10-GA TO 12-GA, 7/16-IN SCREW)	
		1	**3T-4693**	2	TERMINAL-RING (8-GA, 7/16-IN SCREW)	
					—OR—	
		1	**3T-4696**	2	TERMINAL-RING (10-GA TO 12-GA, 7/16-IN SCREW)	
		1	**112-9604**	6	TERMINAL-BLADE (16-GA TO 18-GA)	
		1	**112-9611**	18	TERMINAL-BLADE	
		1	**112-9612**	20	TERMINAL-BLADE	
		1	**116-4160**	4	TERMINAL-BLADE (12-GA TO 14-GA)	
		1	**116-4161**	11	TERMINAL-BLADE (16-GA TO 18-GA)	
		1	**113-5099**	2	TERMINAL-BUS	
		1	**113-5100**	3	TERMINAL-BUS	
		1	**153-2631**	3	TERMINAL (FEMALE)	
		1	**3E-9179**	7	TERMINAL-RECEPTACLE (14-GA TO 18-GA)	
E		1	**125-7874**		TUBE-HEAT SHRINK (5.72-MM DIA) (120-CM)	
	22	1	**376-8858**	1	MONITOR GP-OPERATOR (CAB CONSOLE)	
		1	**392-4768**	1	SOFTWARE GP-MONITOR	
M	23	1	**095-0742**	2	SCREW-MACHINE (M6X1X16-MM)	
M	24	1	**096-9278**	3	SCREW-PAN HEAD	
	25	1	**132-5789**	2	CLIP	
M	26	1	**9X-2044**	2	SCREW-TRUSS HEAD (M6X1X16-MM)	
	27	1	**277-1873**	1	CLIP	
M	28	1	**5C-9553**	4	BOLT (M6X1X16-MM)	
M	29	1	**7I-2272**	2	BOLT (M5X0.8X12-MM)	
	30	1	**8T-0328**	2	WASHER-HARD (5.5X10X1-MM THK)	
	31	1	**8T-4121**	6	WASHER-HARD (11X21X2.5-MM THK)	
M	32	1	**8T-4137**	2	BOLT (M10X1.5X20-MM)	

370-5349 **WIRING GP-CONSOLE (*contd.*)** **i05209228**

NOTE	REF NO	GRAPHIC REF	PART NUMBER	QTY	PART NAME 1 2 3 4 5 6 (PRODUCT LEVEL)	SEE PAGE
M	33	1	**8T-4191**	4	BOLT (M10X1.5X16-MM)	
M	34	1	**8T-4200**	2	BOLT (M8X1.25X16-MM)	
	35	1	**8T-4224**	2	WASHER-HARD (8.8X16X2-MM THK)	
M	36	1	**8T-4970**	1	BOLT (M6X1X14-MM)	
	37	1	**9X-8256**	5	WASHER (6.6X12X2-MM THK)	
E	38	1	**103-2543**		SEAL (3-CM)	

E - ORDER BY THE CENTIMETER
J - REQUIRES CORPORATE KEY
M - METRIC PART
Y - SEPARATE ILLUSTRATION

370-5349 **WIRING GP-CONSOLE (*contd.*)** **i05209228**

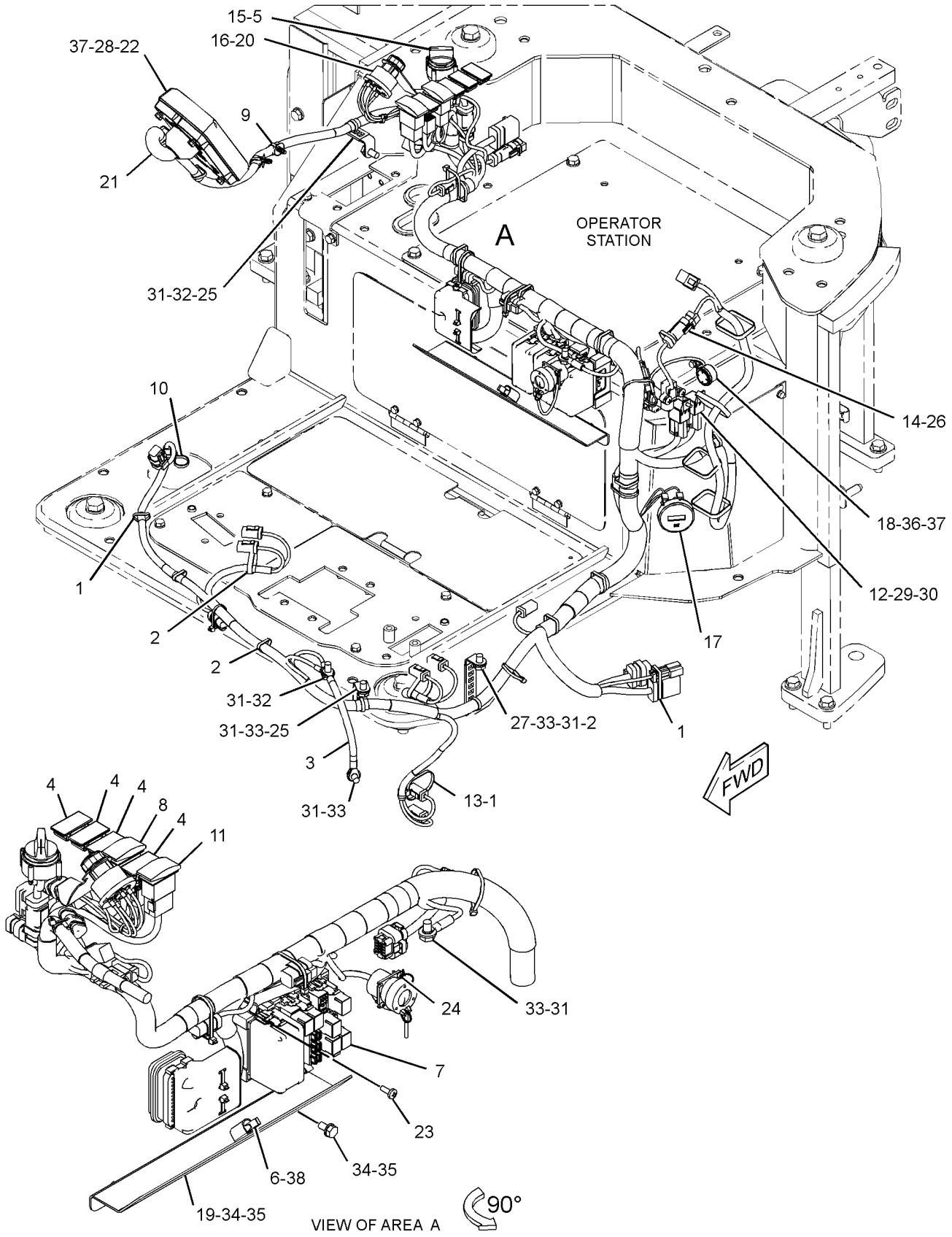

GRAPHIC #1 **<END>** g03404261

370-5349 WIRING GP-CONSOLE–CAB

S/N: TTN874-UP

PART OF 376-6691, 376-6695, 383-5924, 383-5925 CAB AR

AN ATTACHMENT

SMCS-1408 **i05384839**

NOTE	REF NO	GRAPHIC REF	PART NUMBER	QTY	PART NAME 1 2 3 4 5 6 (PRODUCT LEVEL)	SEE PAGE
	1	1	**3S-2093**	8	STRAP-CABLE	
	2	1	**7K-1181**	22	STRAP-CABLE	
	3	1	**8X-5804**	1	STRAP AS-GROUND	
	4	1	**109-2356**	4	PLUG	
	5	1	**110-6109**	1	KNOB-CONTROL (FLOW CONTROL SWITCH)	
	6	1	**116-7471**	1	PULLER-MINIFUSE	
	7	1	**140-9378**	6	RELAY AS (12-VOLT)	
	8	1	**158-7802**	1	SWITCH AS-ROCKER (WINDOW WASHER, WIPER)	
		1	**111-7899**	1	GASKET	
	9	1	**163-6795**	3	STRAP-CABLE	
	10	1	**204-1611**	1	STRAP (DUAL)	
	11	1	**266-1404**	1	SWITCH AS-ROCKER (LIGHT)	
		1	**111-7899**	1	GASKET	
	12	1	**266-6935**	2	RELAY AS (12-VOLT)	
	13	1	**266-7379**	1	STRAP-CABLE	
	14	1	**267-7058**	1	SWITCH AS-LIMIT (HYDRAULIC LOCKOUT)	
		1	**8T-8729**	2	PIN-CONNECTOR (16-GA TO 18-GA)	
		1	**243-4505**	1	RECEPTACLE AS-CONNECTOR (2-PIN)	
Y	15	1	**319-4420**	1	SWITCH GP-ROTARY (THROTTLE POSITION)	100
J	16	1	**322-8964**	1	SWITCH AS-START (ENGINE)	
		1	**7T-6799**	1	NUT-MOUNTING (1-32-THD)	
		1	**8T-8729**	4	PIN-CONNECTOR (16-GA TO 18-GA)	
		1	**243-4507**	1	RECEPTACLE AS-CONNECTOR (4-PIN)	
	17	1	**366-4622**	1	KIT-SERVICE METER	
					(INCLUDES SERVICE METER & FILM)	
	18	1	**364-3882**	1	BUZZER (12-VOLT)	
	19	1	**370-5353**	1	BRACKET	
	20	1	**370-5354**	1	PLATE AS	
CY	21	1	**425-7014**	1	HARNESS AS-CONSOLE (CAB)	86
	22	1	**376-8858**	1	MONITOR GP-OPERATOR (CAB CONSOLE)	
		1	**392-4768**	1	SOFTWARE GP-MONITOR	
M	23	1	**095-0742**	2	SCREW-MACHINE (M6X1X16-MM)	
M	24	1	**096-9278**	3	SCREW-PAN HEAD	
	25	1	**132-5789**	2	CLIP	
M	26	1	**9X-2044**	2	SCREW-TRUSS HEAD (M6X1X16-MM)	
	27	1	**277-1873**	1	CLIP	
M	28	1	**5C-9553**	4	BOLT (M6X1X16-MM)	
M	29	1	**7I-2272**	2	BOLT (M5X0.8X12-MM)	
	30	1	**8T-0328**	2	WASHER-HARD (5.5X10X1-MM THK)	
	31	1	**8T-4121**	6	WASHER-HARD (11X21X2.5-MM THK)	
M	32	1	**8T-4137**	2	BOLT (M10X1.5X20-MM)	
M	33	1	**8T-4191**	4	BOLT (M10X1.5X16-MM)	
M	34	1	**8T-4200**	2	BOLT (M8X1.25X16-MM)	
	35	1	**8T-4224**	2	WASHER-HARD (8.8X16X2-MM THK)	
M	36	1	**8T-4970**	1	BOLT (M6X1X14-MM)	
	37	1	**9X-8256**	5	WASHER (6.6X12X2-MM THK)	
E	38	1	**103-2543**		SEAL (3-CM)	

C - CHANGE FROM PREVIOUS TYPE
E - ORDER BY THE CENTIMETER
J - REQUIRES CORPORATE KEY
M - METRIC PART
Y - SEPARATE ILLUSTRATION

370-5349 **WIRING GP-CONSOLE (*contd.*)** **i05384839**

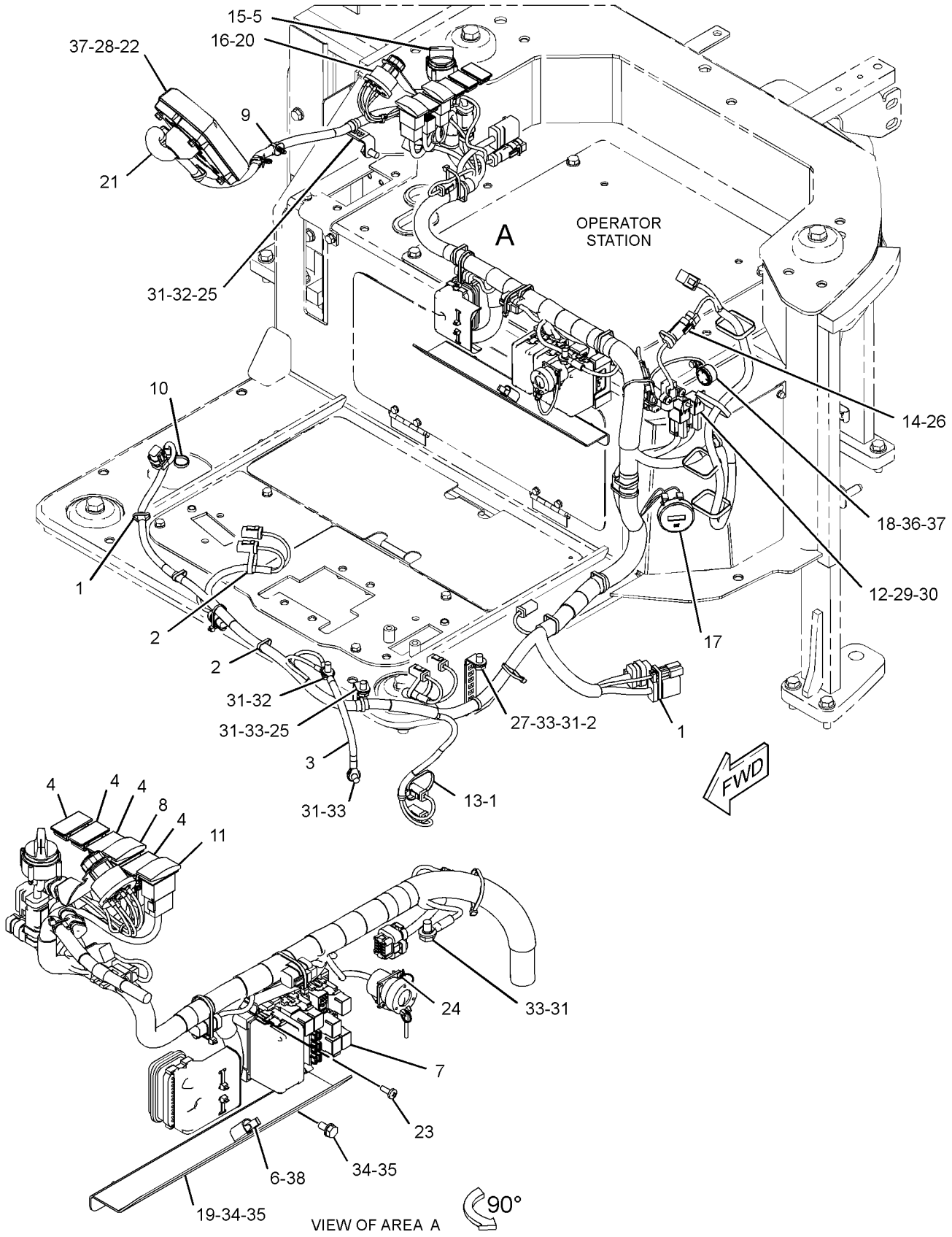

GRAPHIC #1 **<END>** g03404261

370-5350 WIRING GP-CONSOLE–CANOPY

S/N: TTN1-873

PART OF 383-5926 CANOPY AR, 377-8932 CANOPY AR-OPEN ROPS AN ATTACHMENT

SMCS-1408 **i05437152**

NOTE	REF NO	GRAPHIC REF	PART NUMBER	QTY	PART NAME 1 2 3 4 5 6 (PRODUCT LEVEL)	SEE PAGE
	1	1	**3S-2093**	8	STRAP-CABLE	
	2	1	**7K-1181**	21	STRAP-CABLE	
	3	1	**8X-5804**	1	STRAP AS-GROUND	
	4	1	**109-2356**	5	PLUG	
	5	1	**110-6109**	1	KNOB-CONTROL (THROTTLE)	
	6	1	**116-7471**	1	PULLER-MINIFUSE	
	7	1	**140-9378**	6	RELAY AS (12-VOLT)	
	8	1	**163-6795**	3	STRAP-CABLE	
	9	1	**266-1404**	1	SWITCH AS-ROCKER (LIGHT)	
		1	**111-7899**	1	GASKET	
	10	1	**266-6935**	1	RELAY AS (12-VOLT)	
	11	1	**266-7379**	1	STRAP-CABLE	
	12	1	**267-7058**	1	SWITCH AS-LIMIT (HYDRAULIC LOCKOUT)	
		1	**8T-8729**	2	PIN-CONNECTOR (16-GA TO 18-GA)	
		1	**243-4505**	1	RECEPTACLE AS-CONNECTOR (2-PIN)	
	13	1	**306-9039**	1	COVER AS-PROTECTION	
Y	14	1	**319-4420**	1	SWITCH GP-ROTARY (THROTTLE POSITION)	100
J	15	1	**322-8964**	1	SWITCH AS-START (ENGINE)	
		1	**7T-6799**	1	NUT-MOUNTING (1-32-THD)	
		1	**8T-8729**	4	PIN-CONNECTOR (16-GA TO 18-GA)	
		1	**243-4507**	1	RECEPTACLE AS-CONNECTOR (4-PIN)	
	16	1	**366-4622**	1	KIT-SERVICE METER (INCLUDES SERVICE METER & FILM)	
	17	1	**364-3882**	1	BUZZER (12-VOLT)	
	18	1	**370-5353**	1	BRACKET	
	19	1	**370-5354**	1	PLATE AS	
	20	1	**370-5369**	1	HARNESS AS-CONSOLE (CANOPY)	
		1	**116-4159**	1	BASE	
		1	**112-9609**	1	BLOCK-MICRORELAY	
		1	**124-9636**	1	BLOCK-MINIFUSE	
		1	**116-4157**	1	BLOCK-RELAY & FUSE	
		1	**8C-6354**	1	CAP-RECEPTACLE (ET CONNECTOR)	
		1	**111-7898**	2	CONNECTOR	
		1	**153-2602**	3	RECEPTACLE-CONNECTOR (1-PIN)	
		1	**126-1774**	1	COVER-CONNECTOR	
		1	**113-8490**	8	FUSE (10-AMPERE)	
		1	**113-8491**	4	FUSE (15-AMPERE)	
		1	**113-8492**	1	FUSE (20-AMPERE)	
		1	**124-3548**	2	FUSE (30-AMPERE)	
		1	**141-2759**	3	FUSE (5-AMPERE)	
		1	**128-2032**	6	LATCH	
		1	**112-9610**	2	LOCK-MICRORELAY	
		1	**124-9637**	1	LOCK-MINIFUSE	
		1	**116-4158**	1	LOCK-RELAY & FUSE	
		1	**8T-8729**	6	PIN-CONNECTOR (16-GA TO 18-GA)	
		1	**9W-0852**	5	PIN-CONNECTOR (14-GA TO 16-GA)	
		1	**9X-3401**	8	PIN-CONNECTOR (16-GA TO 18-GA)	
					–OR–	
		1	**126-1767**	8	PIN-CONNECTOR (14-GA TO 16-GA)	
		1	**275-6785**	1	PLUG AS-CONNECTOR	
		1	**147-1444**	1	PLUG AS-CONNECTOR (70-PIN)	
		1	**155-2270**	8	KIT-CONNECTING PLUG (2-PIN)	
		1	**155-2274**	2	KIT-CONNECTING PLUG (6-PIN)	
					(EACH PLUG KIT INCLUDES PLUG AS, WEDGE & INTERFACE SEAL)	
		1	**230-4009**	1	PLUG AS-CONNECTOR (12-PIN)	

370-5350 **WIRING GP-CONSOLE (*contd.*)** **i05437152**

NOTE	REF NO	GRAPHIC REF	PART NUMBER	QTY	PART NAME 1 2 3 4 5 6 (PRODUCT LEVEL)	SEE PAGE
		1	**264-7034**	1	SEAL-CONNECTOR	
		1	**230-4011**	3	PLUG AS-CONNECTOR (2-PIN)	
					(EACH INCLUDES)	
		1	**264-7029**	1	SEAL-CONNECTOR	
		1	**230-4013**	1	PLUG AS-CONNECTOR (3-PIN)	
		1	**264-7030**	1	SEAL-CONNECTOR	
		1	**230-5008**	2	PLUG AS-CONNECTOR (4-PIN)	
					(EACH INCLUDES)	
		1	**264-7031**	1	SEAL-CONNECTOR	
		1	**230-5010**	2	PLUG AS-CONNECTOR (6-PIN)	
					(EACH INCLUDES)	
		1	**264-7032**	1	SEAL-CONNECTOR	
		1	**379-0830**	1	PLUG AS-CONNECTOR	
		1	**174-3016**	1	PLUG AS-CONNECTOR (3-PIN)	
		1	**8T-8737**	51	PLUG-SEAL	
		1	**110-9198**	5	PLUG-SEAL	
		1	**340-2566**	23	PLUG-SEAL	
		1	**102-8803**	1	KIT-RECEPTACLE (3-PIN)	
					(INCLUDES RECEPTACLE AS & WEDGE)	
		1	**243-4505**	1	RECEPTACLE AS-CONNECTOR (2-PIN)	
		1	**243-4506**	1	RECEPTACLE AS-CONNECTOR (3-PIN)	
		1	**243-4510**	1	RECEPTACLE AS-CONNECTOR (12-PIN)	
		1	**9W-1951**	1	RECEPTACLE-CONNECTOR (9-PIN)	
		1	**8T-8730**	86	SOCKET-CONNECTOR (16-GA TO 18-GA)	
		1	**9W-0844**	10	SOCKET-CONNECTOR (14-GA TO 16-GA)	
		1	**9X-3402**	2	SOCKET-CONNECTOR (16-GA TO 18-GA)	
					—OR—	
		1	**126-1768**	2	SOCKET-CONNECTOR (14-GA TO 16-GA)	
		1	**340-2567**	11	WIRE AS	
		1	**167-3593**	1	STRAP	
		1	**3S-2093**	12	STRAP-CABLE	
		1	**122-4401**	2	TERMINAL	
		1	**363-9173**	2	TERMINAL (14-GA TO 18-GA)	
		1	**2L-8079**	1	TERMINAL-RING (14-GA TO 16-GA, 3/8-IN SCREW)	
					—OR—	
		1	**3T-4696**	1	TERMINAL-RING (10-GA TO 12-GA, 7/16-IN SCREW)	
		1	**3T-4693**	1	TERMINAL-RING (8-GA, 7/16-IN SCREW)	
					—OR—	
		1	**3T-4696**	1	TERMINAL-RING (10-GA TO 12-GA, 7/16-IN SCREW)	
		1	**112-9604**	6	TERMINAL-BLADE (16-GA TO 18-GA)	
		1	**112-9611**	18	TERMINAL-BLADE	
		1	**112-9612**	20	TERMINAL-BLADE	
		1	**116-4160**	3	TERMINAL-BLADE (12-GA TO 14-GA)	
		1	**116-4161**	9	TERMINAL-BLADE (16-GA TO 18-GA)	
		1	**113-5099**	2	TERMINAL-BUS	
		1	**113-5100**	2	TERMINAL-BUS	
		1	**153-2631**	3	TERMINAL (FEMALE)	
		1	**3E-9179**	3	TERMINAL-RECEPTACLE (14-GA TO 18-GA)	
E		1	**125-7874**		TUBE-HEAT SHRINK (5.72-MM DIA) (110-CM)	
	21	1	**376-8858**	1	MONITOR GP-OPERATOR (CAB CONSOLE)	
		1	**392-4768**	1	SOFTWARE GP-MONITOR	
M	22	1	**095-0742**	2	SCREW-MACHINE (M6X1X16-MM)	
M	23	1	**096-9278**	3	SCREW-PAN HEAD	
	24	1	**132-5789**	2	CLIP	
M	25	1	**9X-2044**	2	SCREW-TRUSS HEAD (M6X1X16-MM)	
	26	1	**277-1873**	1	CLIP	
M	27	1	**5C-9553**	4	BOLT (M6X1X16-MM)	
M	28	1	**7I-2272**	1	BOLT (M5X0.8X12-MM)	
	29	1	**8T-0328**	1	WASHER-HARD (5.5X10X1-MM THK)	

370-5350 **WIRING GP-CONSOLE (*contd.*)** **i05437152**

NOTE	REF NO	GRAPHIC REF	PART NUMBER	QTY	PART NAME 1 2 3 4 5 6 (PRODUCT LEVEL)	SEE PAGE
	30	1	**8T-4121**	6	WASHER-HARD (11X21X2.5-MM THK)	
M	31	1	**8T-4137**	2	BOLT (M10X1.5X20-MM)	
M	32	1	**8T-4191**	4	BOLT (M10X1.5X16-MM)	
M	33	1	**8T-4200**	2	BOLT (M8X1.25X16-MM)	
	34	1	**8T-4224**	2	WASHER-HARD (8.8X16X2-MM THK)	
M	35	1	**8T-4970**	1	BOLT (M6X1X14-MM)	
	36	1	**9X-8256**	5	WASHER (6.6X12X2-MM THK)	
E	37	1	**103-2543**		SEAL (3-CM)	

E - ORDER BY THE CENTIMETER
J - REQUIRES CORPORATE KEY
M - METRIC PART
Y - SEPARATE ILLUSTRATION

370-5350 **WIRING GP-CONSOLE (*contd.*)** **i05437152**

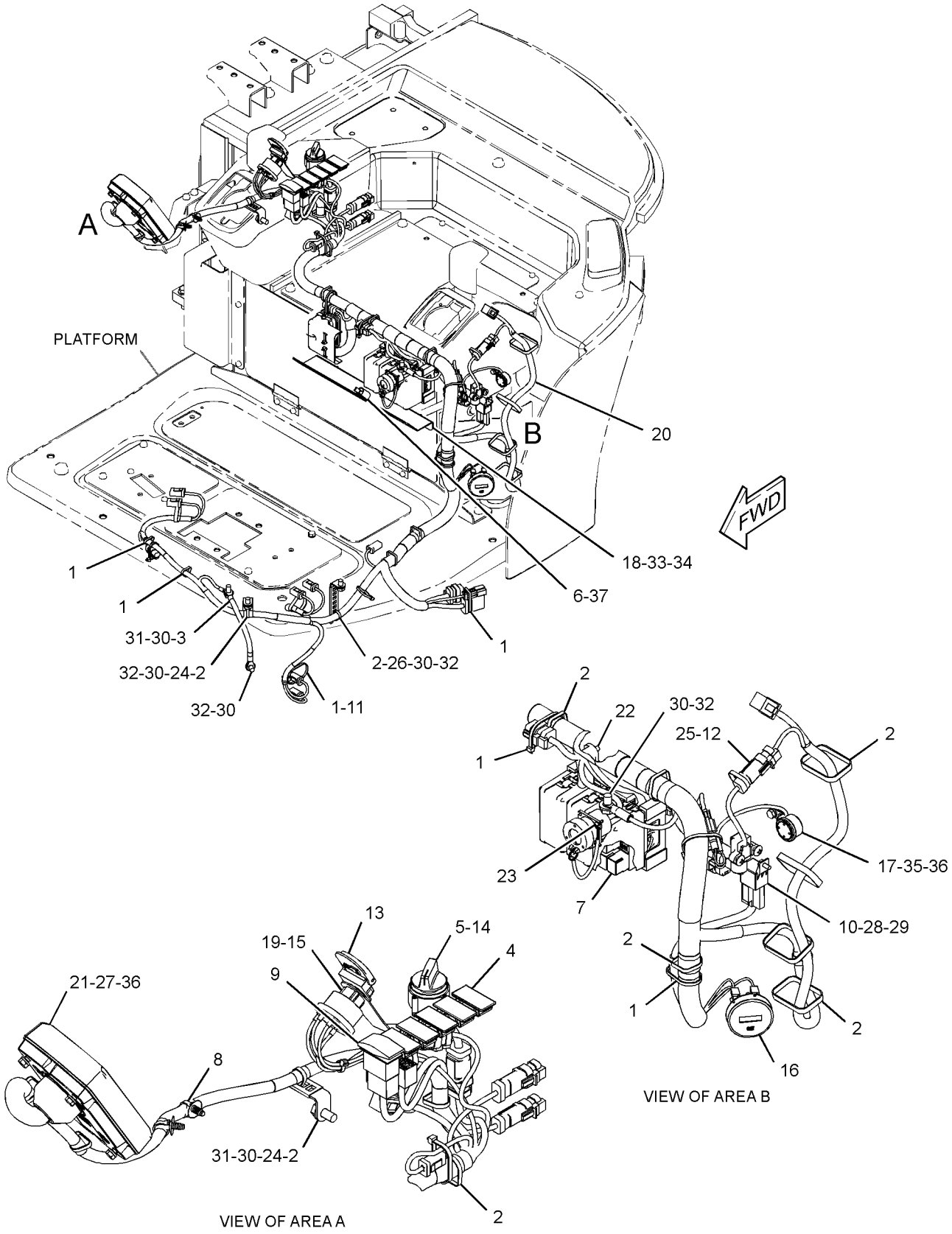

GRAPHIC #1 **<END>** g03404565

370-5350 WIRING GP-CONSOLE–CANOPY

S/N: TTN874-UP

PART OF 383-5926 CANOPY AR, 377-8932 CANOPY AR-OPEN ROPS AN ATTACHMENT

SMCS-1408 **i05437153**

NOTE	REF NO	GRAPHIC REF	PART NUMBER	QTY	PART NAME 1 2 3 4 5 6 (PRODUCT LEVEL)	SEE PAGE
	1	1	**3S-2093**	8	STRAP-CABLE	
	2	1	**7K-1181**	21	STRAP-CABLE	
	3	1	**8X-5804**	1	STRAP AS-GROUND	
	4	1	**109-2356**	5	PLUG	
	5	1	**110-6109**	1	KNOB-CONTROL (THROTTLE)	
	6	1	**116-7471**	1	PULLER-MINIFUSE	
	7	1	**140-9378**	6	RELAY AS (12-VOLT)	
	8	1	**163-6795**	3	STRAP-CABLE	
	9	1	**266-1404**	1	SWITCH AS-ROCKER (LIGHT)	
		1	**111-7899**	1	GASKET	
	10	1	**266-6935**	1	RELAY AS (12-VOLT) (MAIN)	
	11	1	**266-7379**	1	STRAP-CABLE	
	12	1	**267-7058**	1	SWITCH AS-LIMIT (HYDRAULIC LOCKOUT)	
		1	**8T-8729**	2	PIN-CONNECTOR (16-GA TO 18-GA)	
		1	**243-4505**	1	RECEPTACLE AS-CONNECTOR (2-PIN)	
	13	1	**306-9039**	1	COVER AS-PROTECTION	
Y	14	1	**319-4420**	1	SWITCH GP-ROTARY (THROTTLE POSITION)	100
J	15	1	**322-8964**	1	SWITCH AS-START (ENGINE)	
		1	**7T-6799**	1	NUT-MOUNTING (1-32-THD)	
		1	**8T-8729**	4	PIN-CONNECTOR (16-GA TO 18-GA)	
		1	**243-4507**	1	RECEPTACLE AS-CONNECTOR (4-PIN)	
	16	1	**366-4622**	1	KIT-SERVICE METER (INCLUDES SERVICE METER & FILM)	
	17	1	**364-3882**	1	BUZZER (12-VOLT)	
	18	1	**370-5353**	1	BRACKET	
	19	1	**370-5354**	1	PLATE AS	
CY	20	1	**425-7013**	1	HARNESS AS-CONSOLE (CANOPY)	84
	21	1	**376-8858**	1	MONITOR GP-OPERATOR (CAB CONSOLE)	
		1	**392-4768**	1	SOFTWARE GP-MONITOR	
M	22	1	**095-0742**	2	SCREW-MACHINE (M6X1X16-MM)	
M	23	1	**096-9278**	3	SCREW-PAN HEAD	
	24	1	**132-5789**	2	CLIP	
M	25	1	**9X-2044**	2	SCREW-TRUSS HEAD (M6X1X16-MM)	
	26	1	**277-1873**	1	CLIP	
M	27	1	**5C-9553**	4	BOLT (M6X1X16-MM)	
M	28	1	**7I-2272**	1	BOLT (M5X0.8X12-MM)	
	29	1	**8T-0328**	1	WASHER-HARD (5.5X10X1-MM THK)	
	30	1	**8T-4121**	6	WASHER-HARD (11X21X2.5-MM THK)	
M	31	1	**8T-4137**	2	BOLT (M10X1.5X20-MM)	
M	32	1	**8T-4191**	4	BOLT (M10X1.5X16-MM)	
M	33	1	**8T-4200**	2	BOLT (M8X1.25X16-MM)	
	34	1	**8T-4224**	2	WASHER-HARD (8.8X16X2-MM THK)	
M	35	1	**8T-4970**	1	BOLT (M6X1X14-MM)	
	36	1	**9X-8256**	5	WASHER (6.6X12X2-MM THK)	
E	37	1	**103-2543**		SEAL (3-CM)	

C - CHANGE FROM PREVIOUS TYPE
E - ORDER BY THE CENTIMETER
J - REQUIRES CORPORATE KEY
M - METRIC PART
Y - SEPARATE ILLUSTRATION

370-5350 **WIRING GP-CONSOLE (*contd.*)** **i05437153**

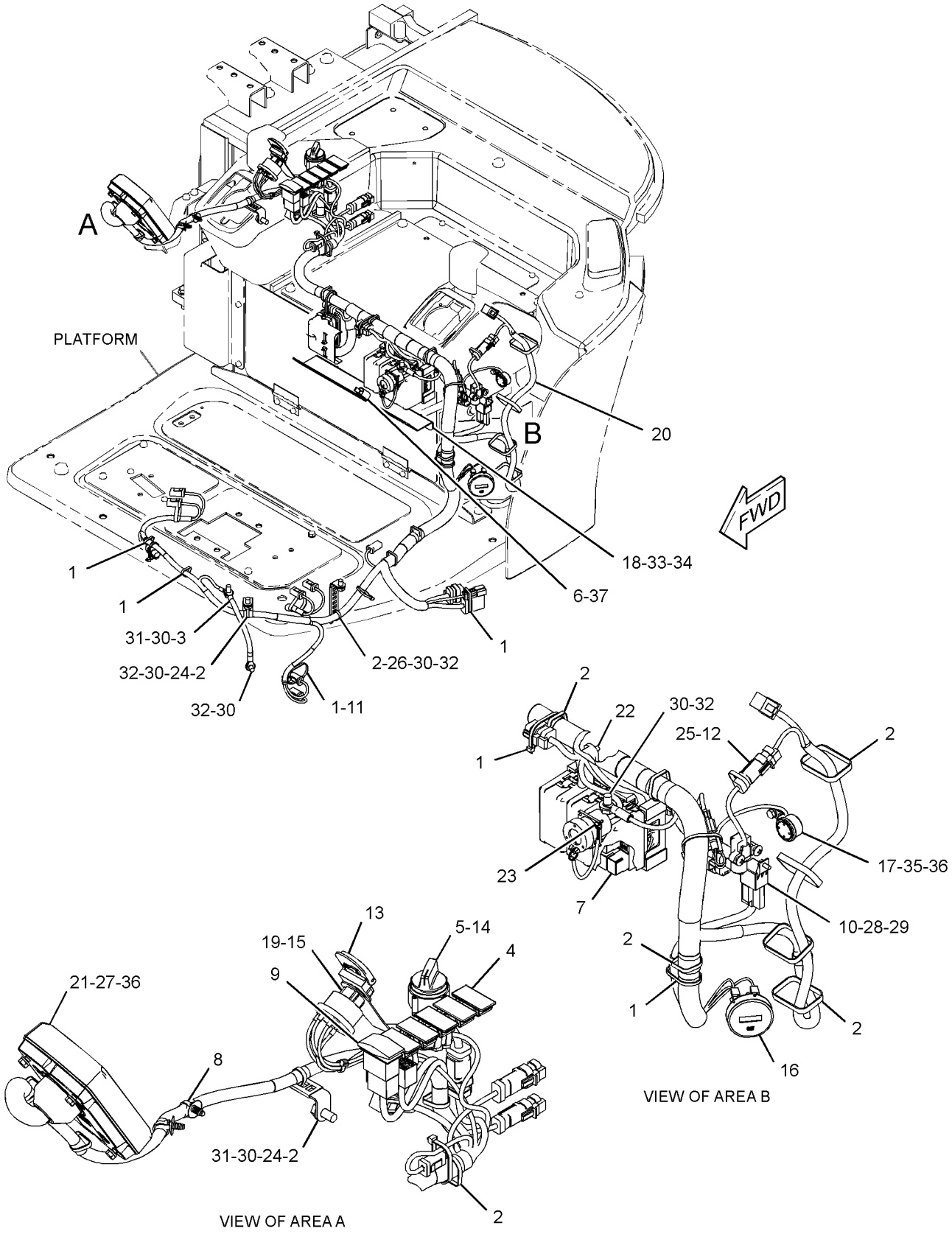

GRAPHIC #1 **<END>** g03404565

383-3163 WIRING GP-CONSOLE—POWER ANGLE

PART OF 377-8928 BLADE AR-ANGLING

AN ATTACHMENT

SMCS-1408 **i05033720**

NOTE	REF NO	GRAPHIC REF	PART NUMBER	QTY	PART NAME 1 2 3 4 5 6 (PRODUCT LEVEL)	SEE PAGE
	1	1	**3S-2093**	13	STRAP-CABLE	
	2	1	**7K-1181**	1	STRAP-CABLE	
	3	1	**204-1611**	2	STRAP (DUAL)	
	4	1	**266-7379**	2	STRAP-CABLE	
Y	5	1	**383-3158**	1	HARNESS AS-SOLENOID (CAB, CANOPY)	89
Y	6	1	**383-3164**	1	HARNESS AS-CONTROL (CAB, CANOPY)	88
	7	1	**4P-7581**	1	CLIP	

Y - SEPARATE ILLUSTRATION

383-3163 **WIRING GP-CONSOLE (*contd.*)** **i05033720**

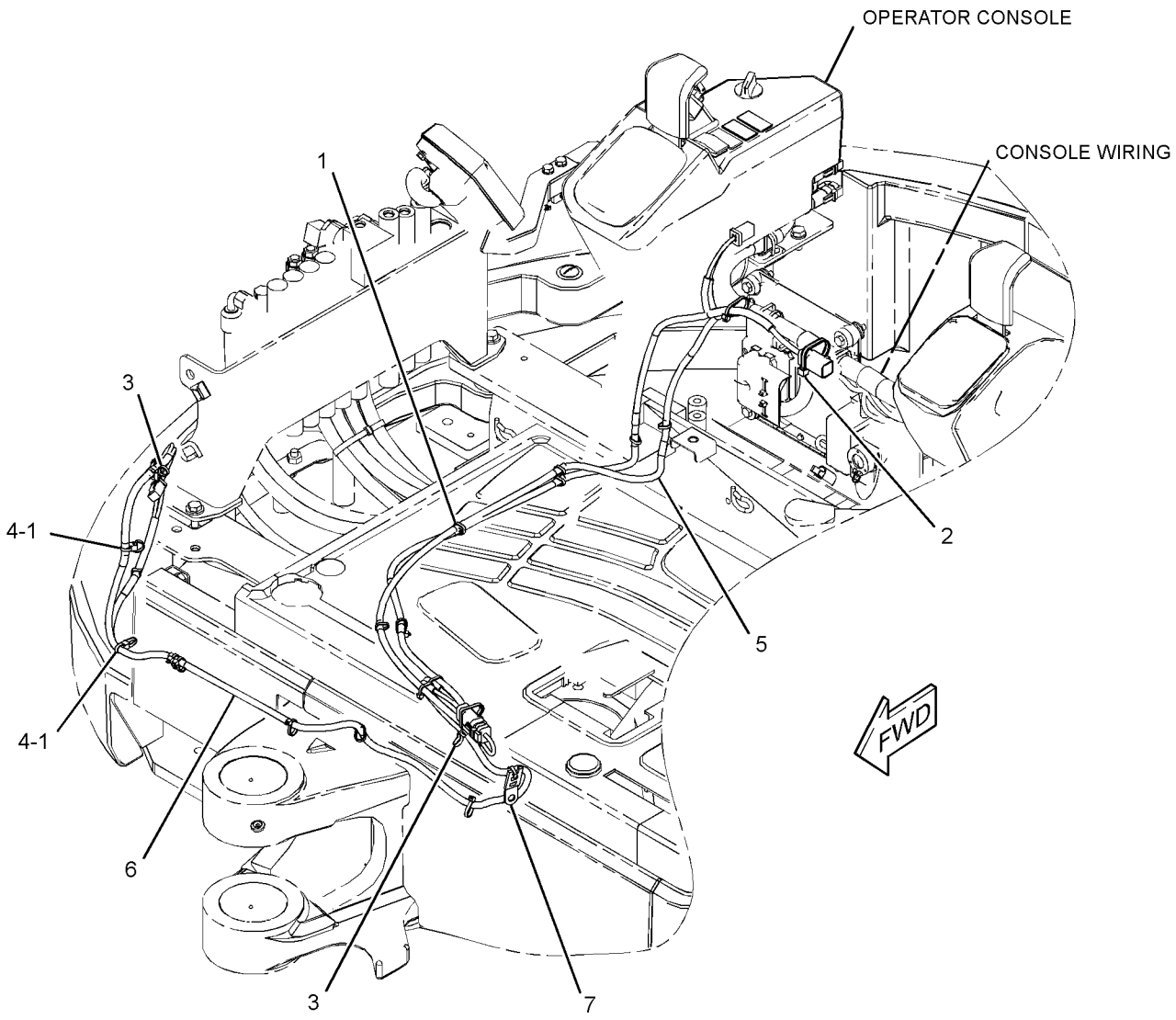

GRAPHIC #1 **<END>** g02799120

370-5348 WIRING GP-ENGINE–REFRIGERANT COMPRESSOR

PART OF 376-6691, 383-5924 CAB AR

AN ATTACHMENT

SMCS-1408 **i04565437**

NOTE	REF NO	GRAPHIC REF	PART NUMBER	QTY	PART NAME 1 2 3 4 5 6 (PRODUCT LEVEL)	SEE PAGE
	1	1	**3S-2093**	1	STRAP-CABLE	
	2	1	**189-3158**	1	SUPPRESSOR-ARC	

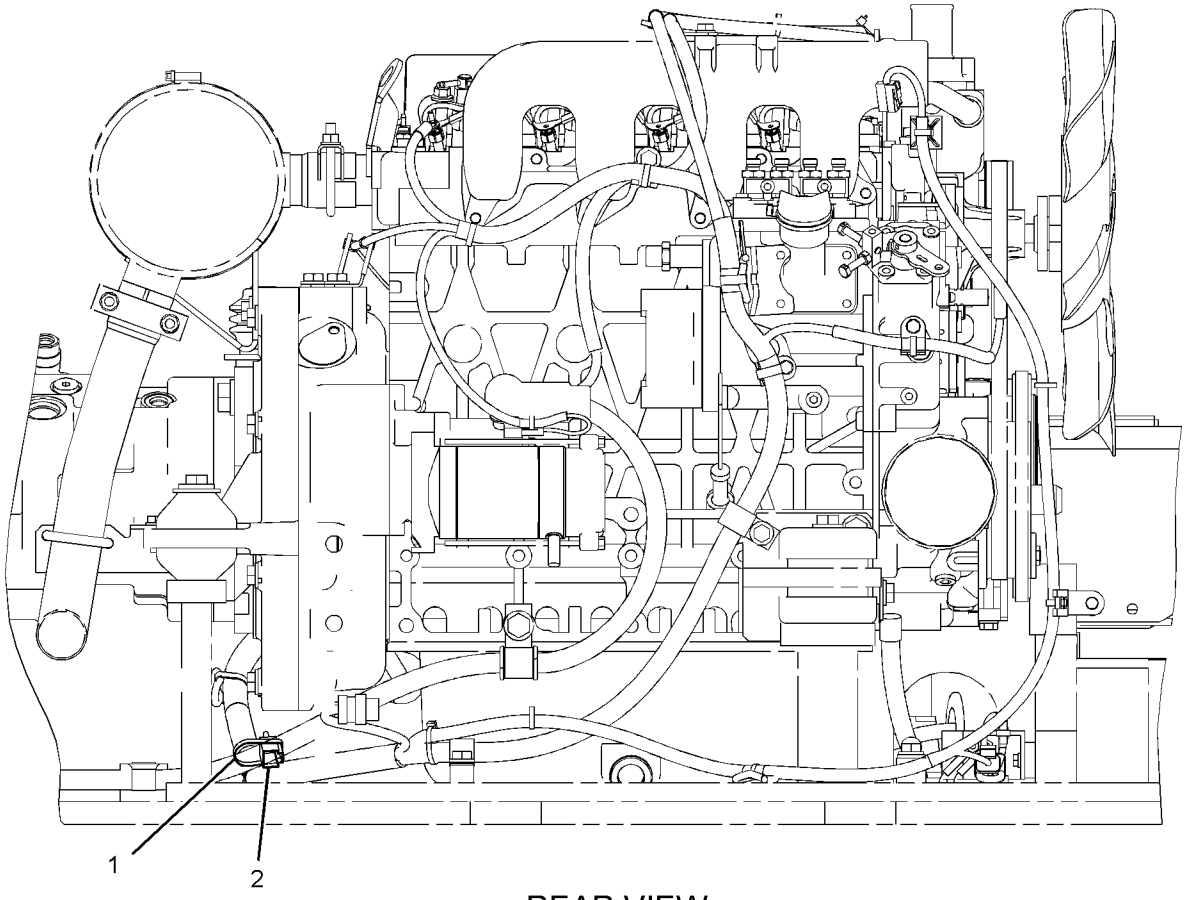

REAR VIEW

GRAPHIC #1 **<END>** g02786039

370-5333 WIRING GP-LIGHTING

PART OF 376-6679 BOOM AR

SMCS-1408, 1429 **i05426509**

NOTE	REF NO	GRAPHIC REF	PART NUMBER	QTY	PART NAME 1 2 3 4 5 6 (PRODUCT LEVEL)	SEE PAGE
	1	1	**3S-2093**	2	STRAP-CABLE	
	2	1	**7K-1181**	2	STRAP-CABLE	
	3	1	**204-1611**	1	STRAP (DUAL)	
	4	1	**370-5396**	1	HARNESS AS-LIGHTING (FRONT)	
E		1	**103-2529**		HOSE (167-CM)	
		1	**8T-8729**	1	PIN-CONNECTOR (16-GA TO 18-GA)	
		1	**9W-0852**	1	PIN-CONNECTOR (14-GA TO 16-GA)	
		1	**243-4505**	1	RECEPTACLE AS-CONNECTOR (2-PIN)	
		1	**2L-8075**	2	TERMINAL-RING (14-GA TO 16-GA, NO. 8 SCREW)	
	5	1	**119-5708**	1	CLIP	
	6	1	**4K-8302**	1	CLIP	
	7	1	**8T-4121**	3	WASHER-HARD (11X21X2.5-MM THK)	
M	8	1	**8T-4137**	3	BOLT (M10X1.5X20-MM)	
	9	1	**9M-8406**	1	CLIP	

E - ORDER BY THE CENTIMETER
M - METRIC PART

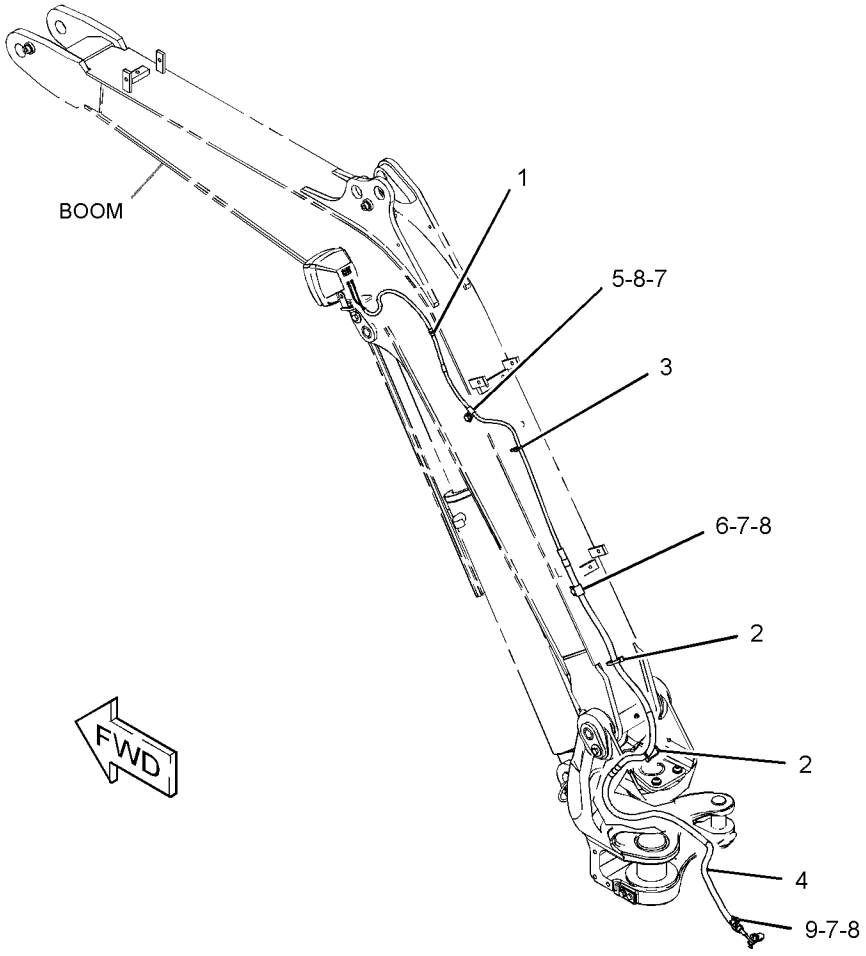

GRAPHIC #1 **<END>** g02798937

370-5351 WIRING GP-LIGHTING—WARNING BEACON, POWER RECEP

PART OF 381-9239 WIRING GP-CAB

AN ATTACHMENT

SMCS-1408, 1429 **i04652870**

NOTE	REF NO	GRAPHIC REF	PART NUMBER	QTY	PART NAME 1 2 3 4 5 6 (PRODUCT LEVEL)	SEE PAGE
	1	1	**3S-2093**	4	STRAP-CABLE	
	2	1	**163-6795**	1	STRAP-CABLE	
	3	1	**207-1686**	1	SOCKET	
	4	1	**266-7379**	1	STRAP-CABLE	
	5	1	**370-5370**	1	HARNESS AS-LIGHTING (WARNING BEACON, POWER RECEP)	
		1	**230-4013**	1	PLUG AS-CONNECTOR (3-PIN)	
		1	**264-7030**	1	SEAL-CONNECTOR	
		1	**8T-8737**	1	PLUG-SEAL	
		1	**9W-0844**	2	SOCKET-CONNECTOR (14-GA TO 16-GA)	
		1	**5P-4571**	2	TERMINAL-BLADE (14-GA TO 16-GA)	

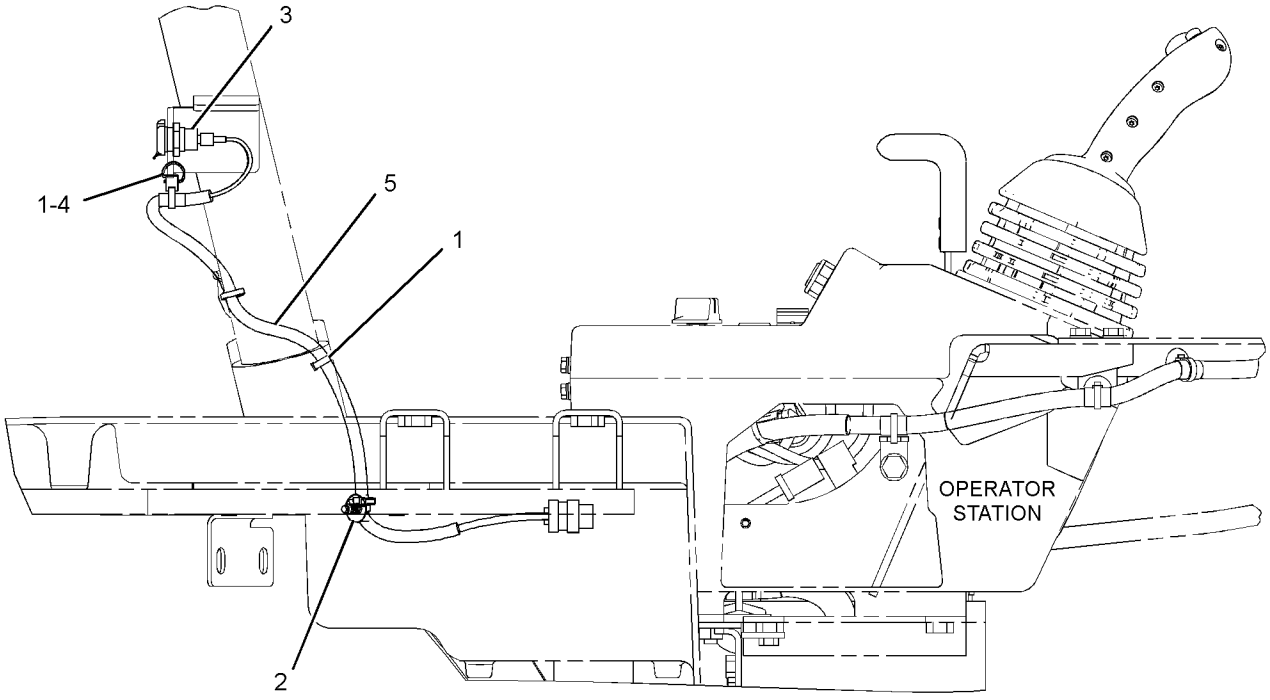

RIGHT SIDE VIEW

GRAPHIC #1 **<END>** g02791495

422-2948 WIRING GP-OVERLOAD WARNING

PART OF 379-4682 LINES AR-BOOM
AN ATTACHMENT

SMCS-1408 **i05376430**

NOTE	REF NO	GRAPHIC REF	PART NUMBER	QTY	PART NAME 1 2 3 4 5 6 (PRODUCT LEVEL)	SEE PAGE
	1	1	**3S-2093**	7	STRAP-CABLE	
	2	1	**204-1611**	1	STRAP (DUAL)	
	3	1	**379-0817**	1	SWITCH AS-ROCKER (OVERLOAD WARNING)	
		1	**111-7899**	1	GASKET	
Y	4	1	**422-2949**	1	HARNESS AS-SENSOR (OVERLOAD)	88
	5	1	**277-1873**	1	CLIP	
	6	1	**4K-8302**	1	CLIP	
	7	1	**4P-7581**	1	CLIP	
	8	1	**7X-7729**	1	WASHER (11X25X3-MM THK)	
	9	1	**8T-4121**	1	WASHER-HARD (11X21X2.5-MM THK)	
M	10	1	**8T-4137**	2	BOLT (M10X1.5X20-MM)	

M - METRIC PART
Y - SEPARATE ILLUSTRATION

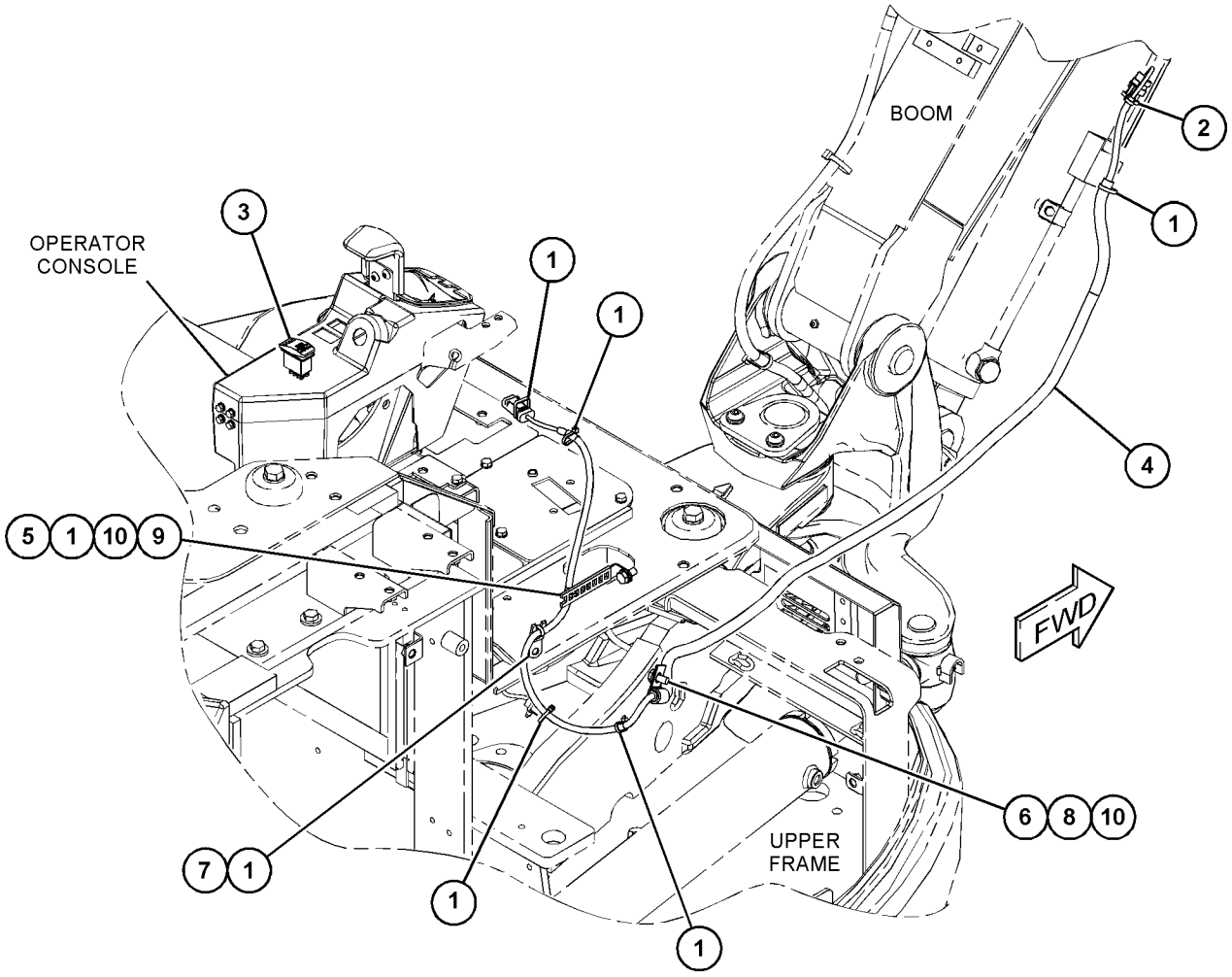

GRAPHIC #1 **<END>** g03405144

381-9235 WIRING GP-QUICK COUPLER

PART OF 382-2545, 382-2546 CONTROL AR-COUPLER

AN ATTACHMENT

SMCS-1408, 6129 **i05437156**

NOTE	REF NO	GRAPHIC REF	PART NUMBER	QTY	PART NAME 1 2 3 4 5 6 (PRODUCT LEVEL)	SEE PAGE
	1	1	**3S-2093**	6	STRAP-CABLE	
Y	2	1	**381-9236**	1	HARNESS AS-QUICK COUPLER	88

Y - SEPARATE ILLUSTRATION

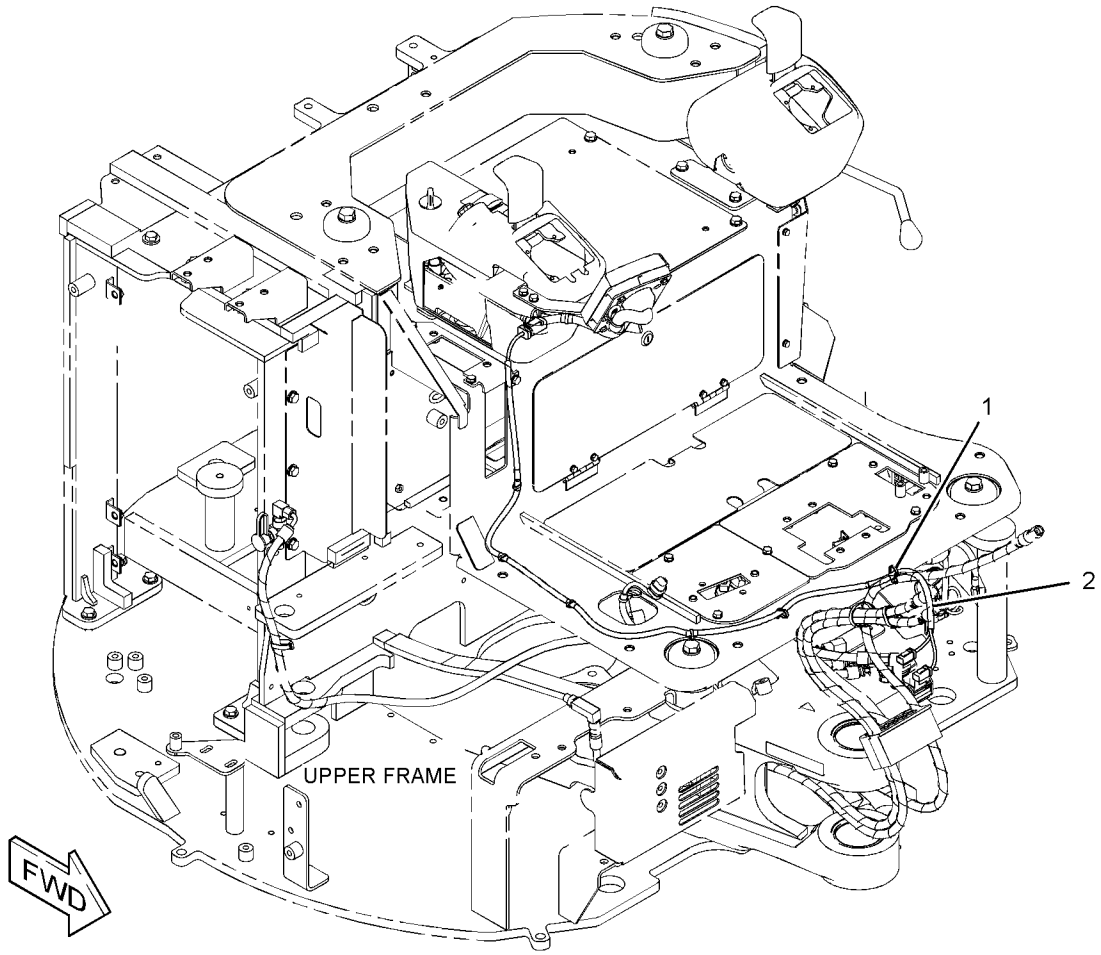

GRAPHIC #1 **<END>** g02777052

387-6389 WIRING GP-RELAY PANEL–PATTERN CHANGE

PART OF 379-4687 CONTROL AR-AUXILIARY

AN ATTACHMENT

SMCS-1408, 1420, 1422 **i04623163**

NOTE	REF NO	GRAPHIC REF	PART NUMBER	QTY	PART NAME 1 2 3 4 5 6 (PRODUCT LEVEL)	SEE PAGE
	1	1	**140-9378**	1	RELAY AS (12-VOLT) (PATTERN CHANGE)	

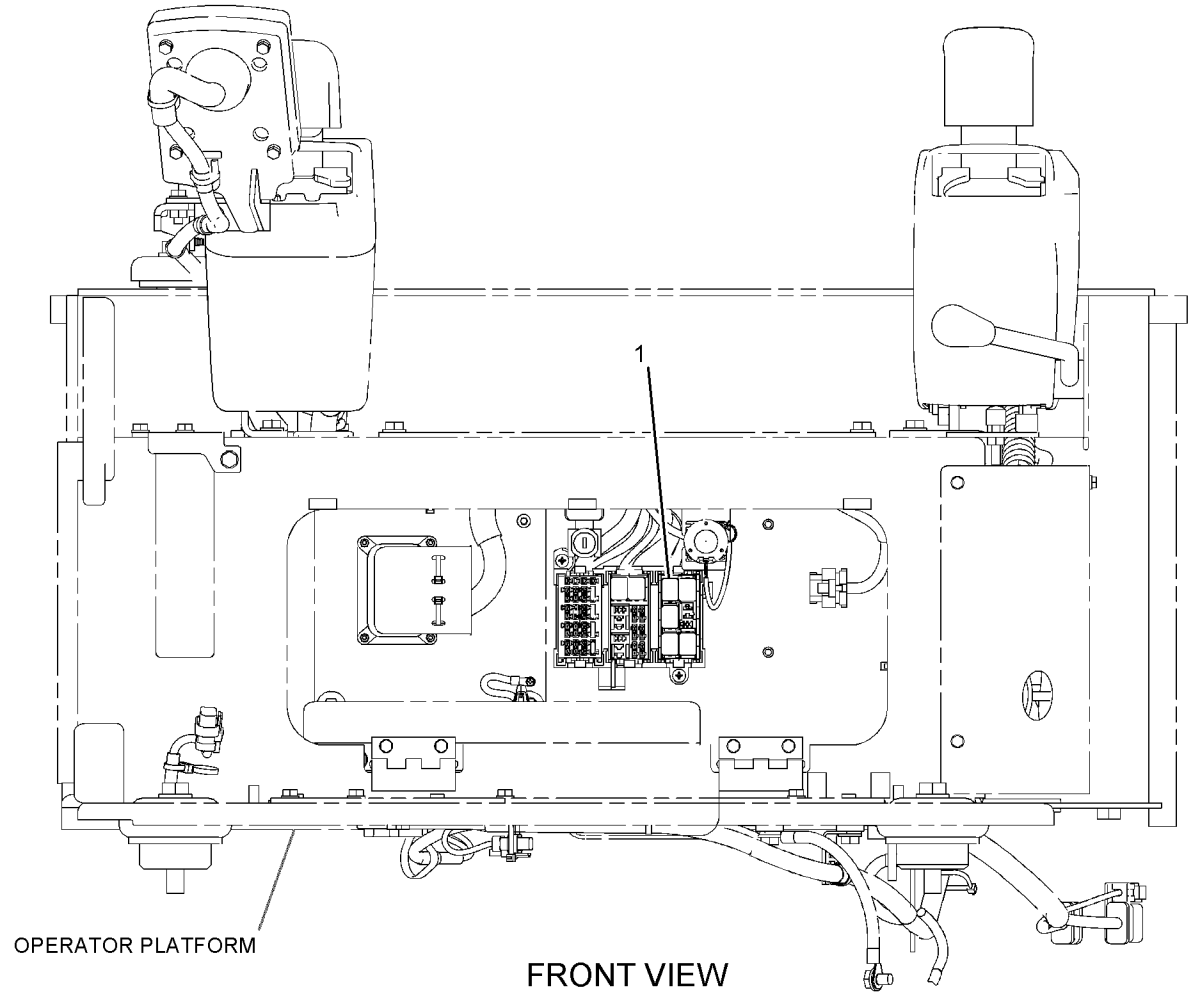

GRAPHIC #1

<END>

g02798865

387-6390 WIRING GP-RELAY PANEL–2ND AUXILIARY

PART OF 379-4684, 379-4685 CONTROL AR-AUXILIARY

AN ATTACHMENT

SMCS-1408, 1420, 1422 **i04623164**

NOTE	REF NO	GRAPHIC REF	PART NUMBER	QTY	PART NAME 1 2 3 4 5 6 (PRODUCT LEVEL)	SEE PAGE
	1	1	**140-9378**	1	RELAY AS (12-VOLT) (2ND AUXILIARY)	

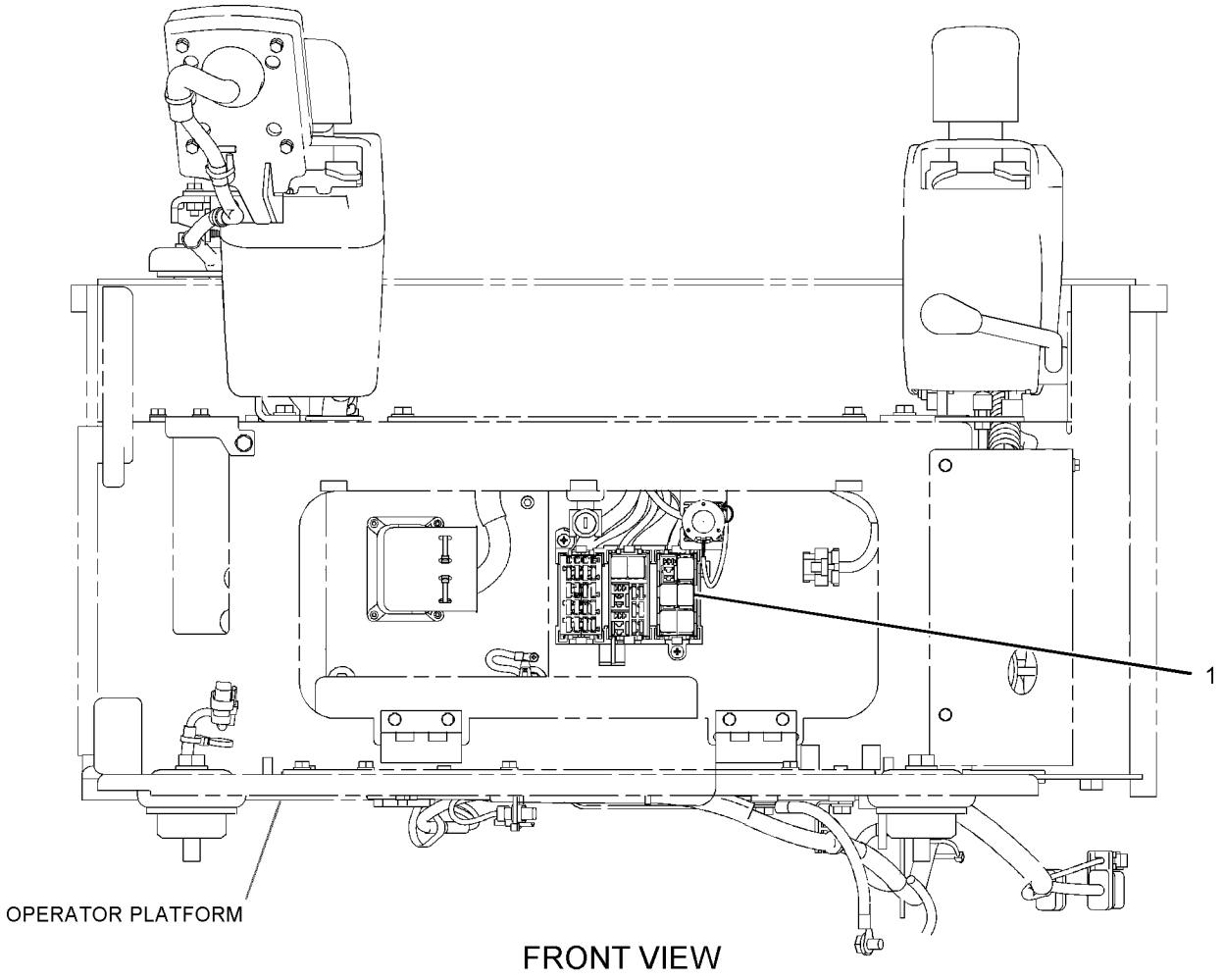

FRONT VIEW

GRAPHIC #1 **<END>** g02798945

280-3097 DRIVE GP-FINAL

PART OF 291-9390 DRIVE GP-FINAL

SMCS-4050 **i04019566**

NOTE	REF NO	GRAPHIC REF	PART NUMBER	QTY	PART NAME 1 2 3 4 5 6 (PRODUCT LEVEL)	SEE PAGE
	1	1	**192-1134**	2	SEAL	
	2	1	**150-0909**	1	BEARING	
	3	1	**280-3098**	1	NUT	
	4	1	**150-0810**	2	PLUG	
	5	1	**192-0633**	132	BALL	
	6	1	**096-5971**	2	PLUG	
	7	1	**150-0811**	4	GEAR	
	8	1	**150-0812**	4	BEARING AS-NEEDLE	
	9	1	**150-0813**	4	RACE-INNER	
	10	1	**150-0814**	4	WASHER	
	11	1	**143-2343**	1	PLATE	
	12	1	**143-2344**	4	SCREW	
	13	1	**150-0815**	1	GEAR	
	14	1	**280-3100**	1	HOLDER	
	15	1	**280-3101**	3	GEAR	
	16	1	**150-0818**	3	BEARING	
	17	1	**150-0819**	3	RACE	
	18	1	**280-3102**	1	GEAR	
	19	1	**280-3103**	1	COVER	
	20	1	**095-1725**	1	SEAL-O-RING	
	21	1	**143-2358**	1	WIRE	
	22	1	**279-4706**	3	PLUG	
	23	1	**3J-1907**	3	SEAL-O-RING	
	24	1	**143-2346**	1	RING	

280-3097 **DRIVE GP-FINAL (*contd.*)** **i04019566**

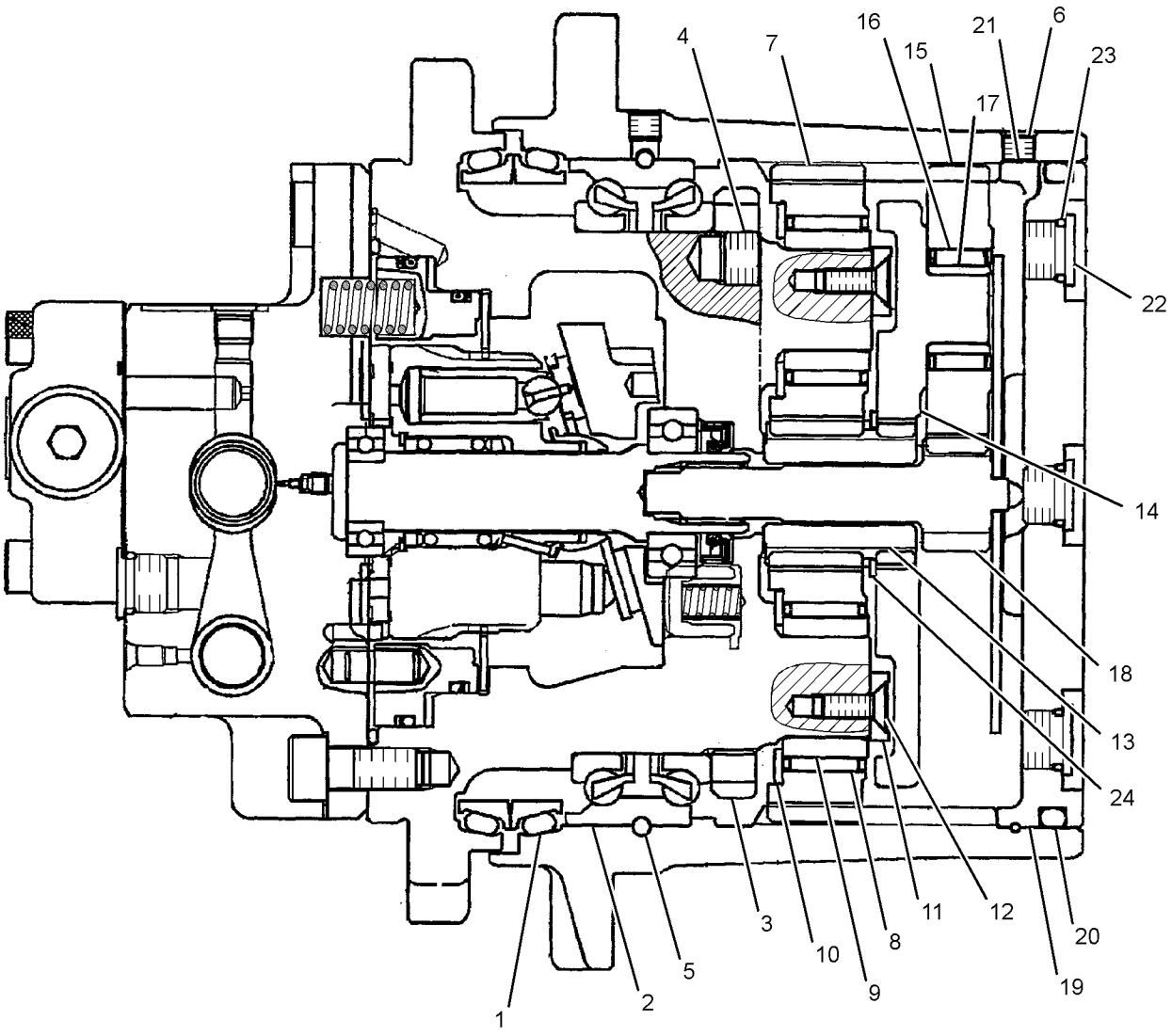

GRAPHIC #1 **<END>** g01387686

291-9390 DRIVE GP-FINAL

PART OF 292-0176 MOTOR & MTG GP-TRAVEL

SMCS-4050 **i04019565**

NOTE	REF NO	GRAPHIC REF	PART NUMBER	QTY	PART NAME 1 2 3 4 5 6 (PRODUCT LEVEL)	SEE PAGE
Y	1	1	**280-3097**	1	DRIVE GP-FINAL	123
J	2	1	**192-1134**	2	SEAL	
	3	1	**150-0909**	1	BEARING	
	4	1	**280-3098**	1	NUT	
	5	1	**150-0810**	2	PLUG	
	6	1	**143-2337**	132	BALL	
	7	1	**096-5971**	2	PLUG	
	8	1	**150-0811**	4	GEAR	
	9	1	**150-0812**	4	BEARING AS-NEEDLE	
	10	1	**150-0813**	4	LACE	
	11	1	**150-0814**	4	WASHER	
	12	1	**143-2343**	1	PLATE	
	13	1	**143-2344**	4	SCREW	
	14	1	**150-0815**	1	GEAR	
	15	1	**280-3100**	1	HOLDER	
	16	1	**280-3101**	3	GEAR	
	17	1	**150-0818**	3	BEARING	
	18	1	**150-0819**	3	RACE	
	19	1	**280-3102**	1	GEAR	
	20	1	**280-3103**	1	COVER	
J	21	1	**095-1725**	1	SEAL-O-RING	
J	22	1	**143-2358**	1	WIRE	
	23	1,2	**279-4706**	7	PLUG	
J	24	1,2	**3J-1907**	7	SEAL-O-RING	
	25	1	**143-2346**	1	RING	
	26	1	**150-0826**	1	SHAFT	
	27	1	**150-0827**	1	BEARING	
J	28	1	**202-7187**	1	SEAL	
	29	1	**280-3104**	1	SWASHPLATE	
	30	2	**150-0829**	2	BALL	
	31	2	**280-3105**	2	PISTON	
	32	2	**280-3106**	2	SPRING	
	33	1	**150-0832**	1	PLATE	
	34	1	**139-7325**	1	PIN	
	35	1	**150-0834**	1	BEARING	
J	36	1	**095-1676**	1	SEAL-O-RING	
J	37	1	**095-1574**	4	SEAL-O-RING	
J	38	2	**095-1578**	2	SEAL-O-RING	
	39	2	**150-0873**	2	SEAT	
	40	2	**150-0874**	2	SPRING	
	41	2	**202-7174**	2	CAP	
J	42	2	**095-1596**	2	SEAL-O-RING	
	43	1,2	**099-5349**	8	ORIFICE	
	44	2	**280-3107**	1	SPRING	
	45	2	**099-7197**	1	PLUG	
J	46	1,2	**095-1582**	4	SEAL-O-RING	
	47	2	**1R-5468**	3	PLUG	
	48	2	**280-3108**	1	PLUG	
M	49	1	**8T-9080**	6	BOLT-SOCKET HEAD (M12X1.75X20-MM)	
	50	1,2	**280-3109**	4	PIN	
	51	1	**096-5971**	1	PLUG	
	52	1	**280-3110**	1	PISTON	
	53	1	**280-3111**	1	DISC	
	54	1	**280-3112**	8	SPRING	
L	55	1	**095-1674**	1	SEAL-O-RING	
L	56	1	**095-1671**	1	SEAL-O-RING	
L	57	1	**280-3113**	1	RING	
L	58	1	**280-3114**	1	RING	
	59	2	**288-6900**	1	KIT-BLOCK (TRAVEL MOTOR)	
					(INCLUDES SEAL-O-RINGS, PLATE, SPOOL ASSEMBLIES, SPOOLS, VALVE, SPRING & PLUGS)	

291-9390 **DRIVE GP-FINAL (*contd.*)** **i04019565**

NOTE	REF NO	GRAPHIC REF	PART NUMBER	QTY	PART NAME 1 2 3 4 5 6 (PRODUCT LEVEL)	SEE PAGE
	60	1	**280-3116**	1	KIT-BARREL (TRAVEL MOTOR)	
					(INCLUDES BARREL, COLLAR, SPRING, WASHER, PINS, RING, HOLDER-RETAINER , PLATE & PISTON ASSEMBLIES)	
	61	1	**288-6899**	1	VALVE AS	
J	62	1	**095-1580**	3	SEAL-O-RING	
M	63	1	**6V-5192**	3	BOLT-SOCKET HEAD (M8X1.25X30-MM)	
					AVAILABLE REPAIR KIT(S):	
J			**288-6901**	1	KIT-SEAL (TRAVEL MOTOR)	
L			**280-3118**	1	KIT-BRAKE (TRAVEL MOTOR)	

J - KIT MARKED J SERVICES PARTS MARKED J
L - KIT MARKED L SERVICES PARTS MARKED L
M - METRIC PART
Y - SEPARATE ILLUSTRATION

REFER TO ALL ILLUSTRATIONS OF THIS GROUP FOR AUXILIARY VIEWS

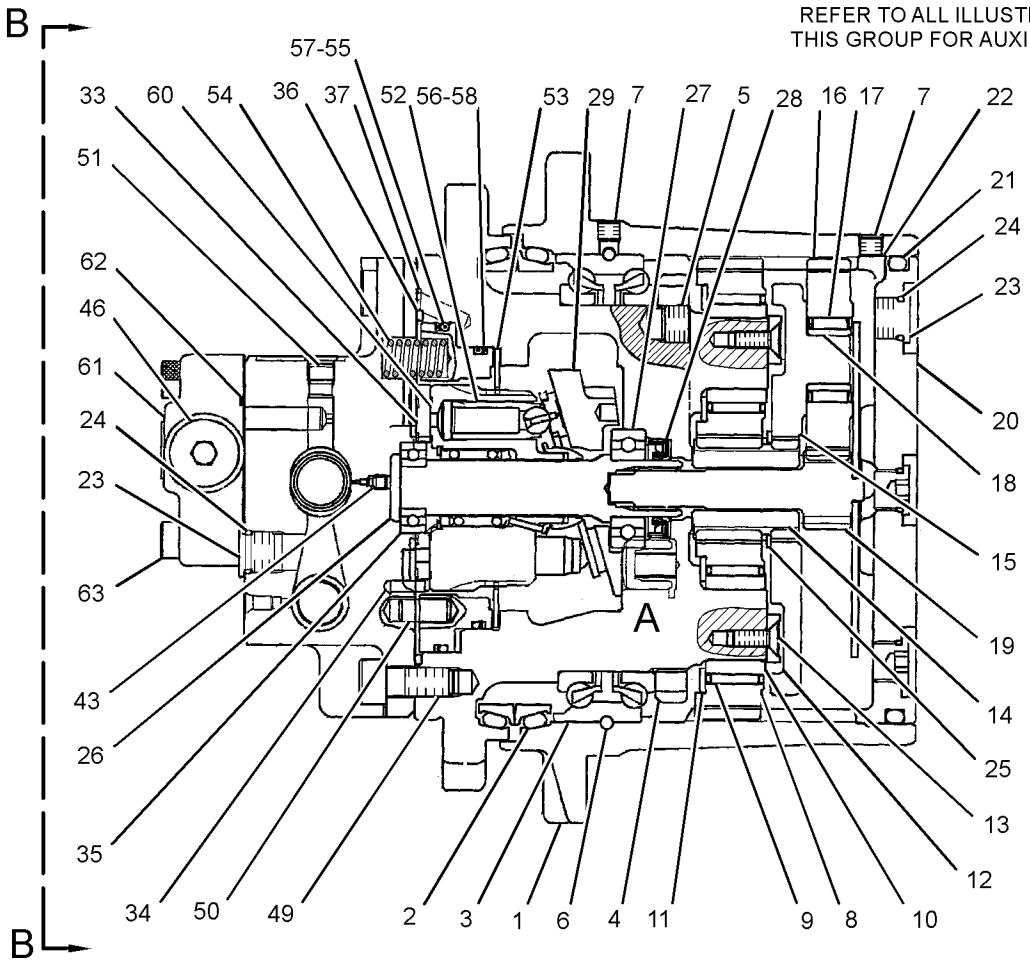

GRAPHIC #1 g01373817

291-9390 **DRIVE GP-FINAL (*contd.*)** **i04019565**

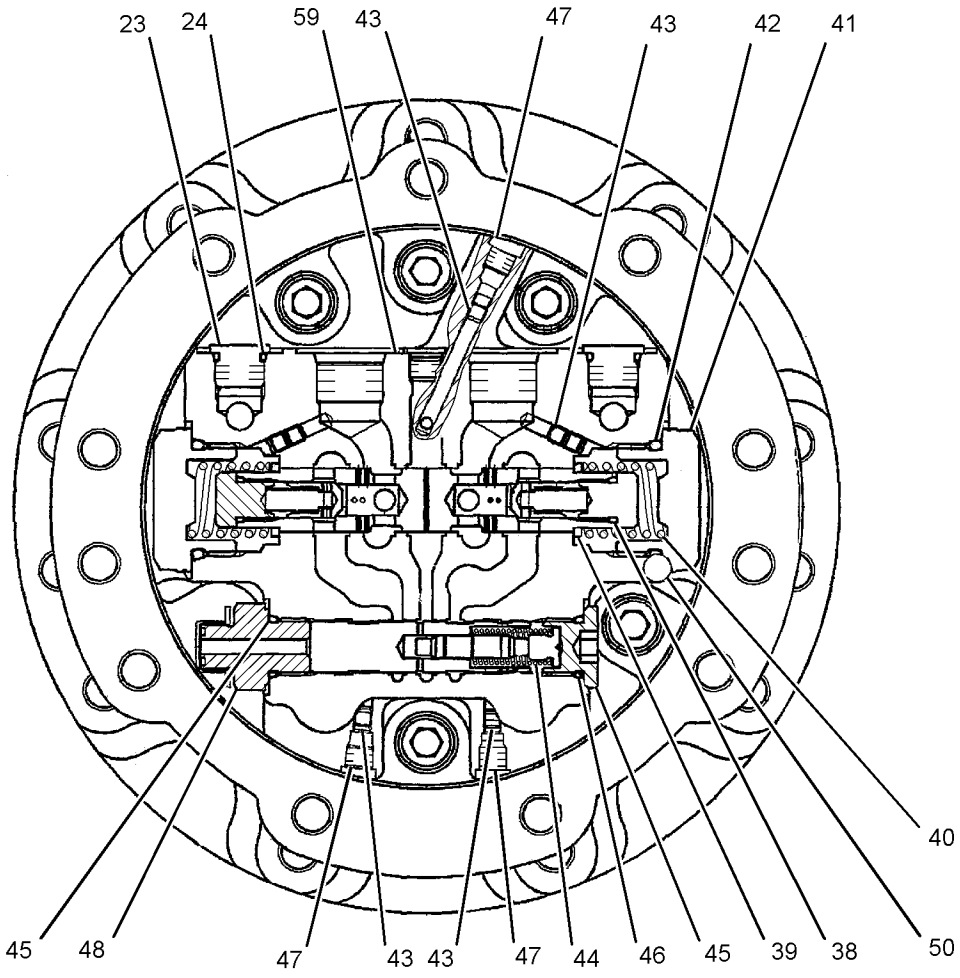

VIEW B-B

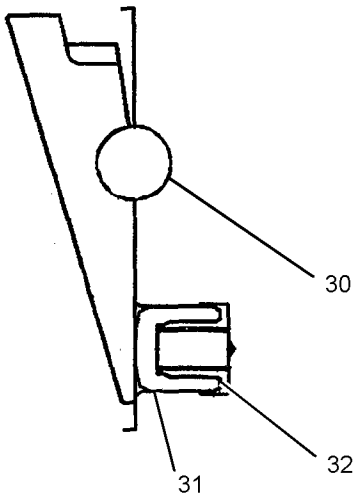

VIEW OF AREA A

GRAPHIC #2 **<END>** g01373825

292-0176 MOTOR & MTG GP-TRAVEL

PART OF 264-8384 POWER TRAIN AR

SMCS-4351 **i04019564**

NOTE	REF NO	GRAPHIC REF	PART NUMBER	QTY	PART NAME 1 2 3 4 5 6 (PRODUCT LEVEL)	SEE PAGE
Y	1	1	**291-9390**	2	DRIVE GP-FINAL	125
	2	1	**8T-4223**	22	WASHER-HARD (13.5X25.5X3-MM THK)	
M	3	1	**8T-4956**	22	BOLT (M12X1.75X35-MM)	

M - METRIC PART
Y - SEPARATE ILLUSTRATION

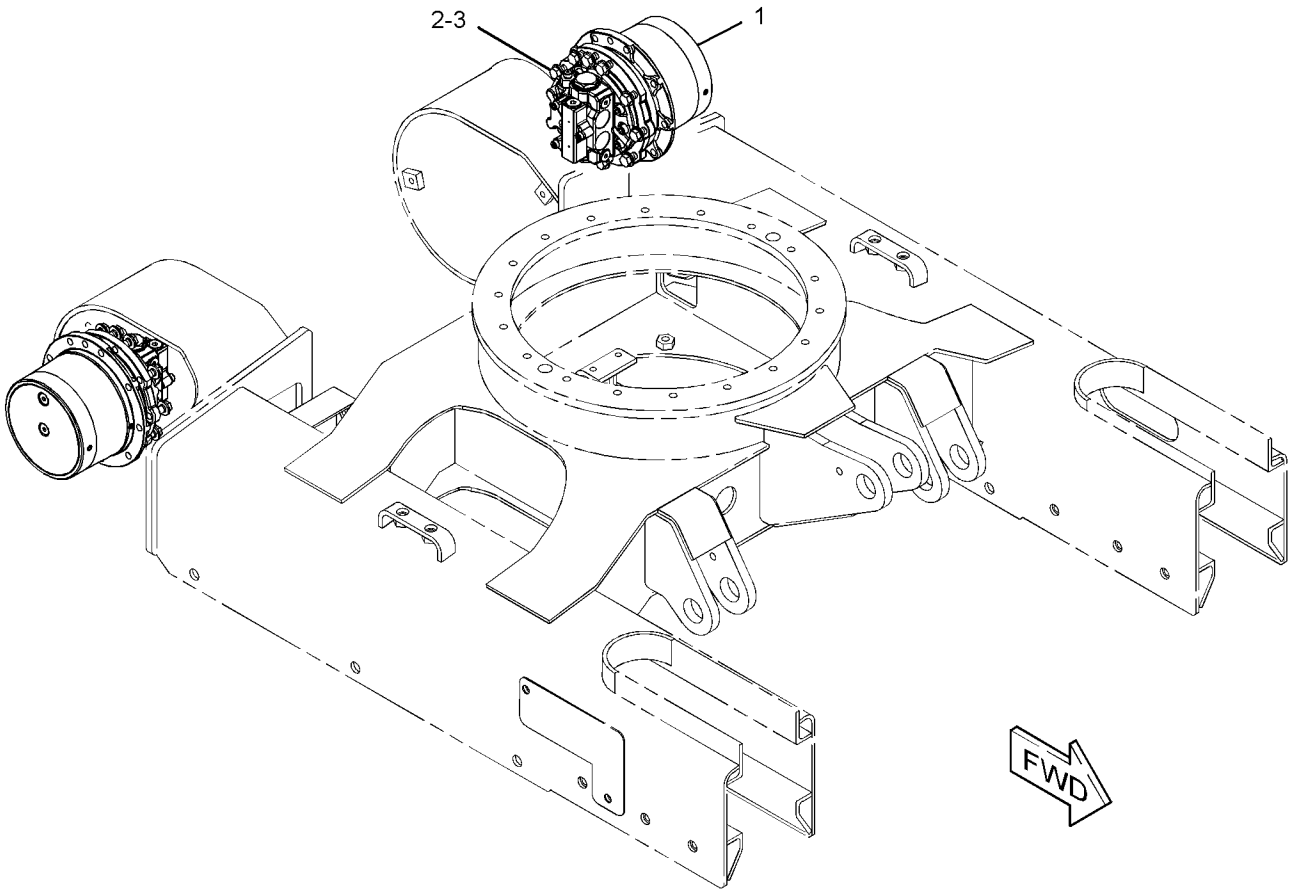

GRAPHIC #1 **<END>** g01299275

264-8384 POWER TRAIN AR

PART OF 376-6671 COMMON AR

SMCS-3000, 4000

i04019562

NOTE	PART NUMBER	QTY	PART NAME 1 2 3 4 5 6 (PRODUCT LEVEL)	SEE PAGE
Y	*265-8752*	1	MOTOR & MTG GP-SWING	292
Y	*292-0176*	1	MOTOR & MTG GP-TRAVEL	128
Y	*264-5370*	2	SPROCKET GP	130

Y - SEPARATE ILLUSTRATION

<END>

264-5370 SPROCKET GP

PART OF 264-8384 POWER TRAIN AR

SMCS-4164 **i04019563**

NOTE	REF NO	GRAPHIC REF	PART NUMBER	QTY	PART NAME 1 2 3 4 5 6 (PRODUCT LEVEL)	SEE PAGE
	1	1	**264-5371**	1	SPROCKET	
	2	1	**8T-4223**	11	WASHER-HARD (13.5X25.5X3-MM THK)	
M	3	1	**8T-4956**	11	BOLT (M12X1.75X35-MM)	

M - METRIC PART

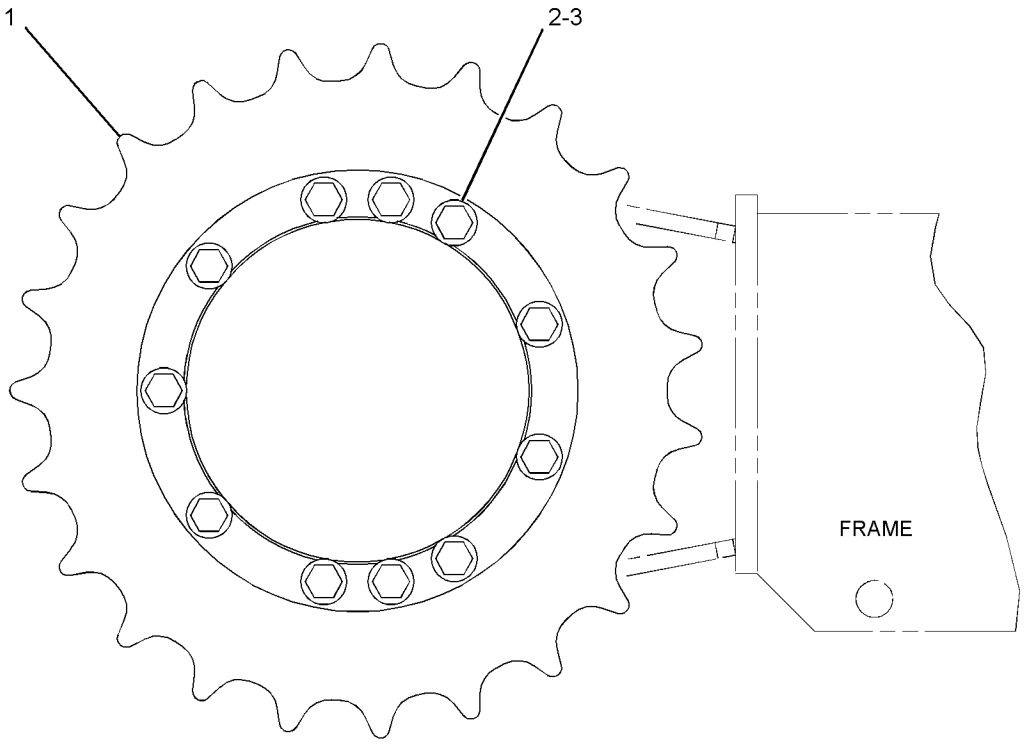

RIGHT SIDE VIEW

GRAPHIC #1 **<END>** g01944766

352-7765 C-FRAME GP-POWER ANGLING

PART OF 344-3682 BLADE & MOUNTING GP

AN ATTACHMENT

SMCS-6063 **i04016793**

NOTE	REF NO	GRAPHIC REF	PART NUMBER	QTY	PART NAME 1 2 3 4 5 6 (PRODUCT LEVEL)	SEE PAGE
	1	1	**121-3709**	2	SEAL-LIP TYPE	
	2	1	**140-3734**	4	SEAL-DUST	
	3	1	**352-7766**	1	FRAME & BEARING AS	
		1	**265-8713**	2	BUSHING	
		1	**287-0035**	2	BUSHING	
	4	1	**3B-8485**	2	FITTING-GREASE	
	5	1	**3B-8488**	1	FITTING-GREASE	

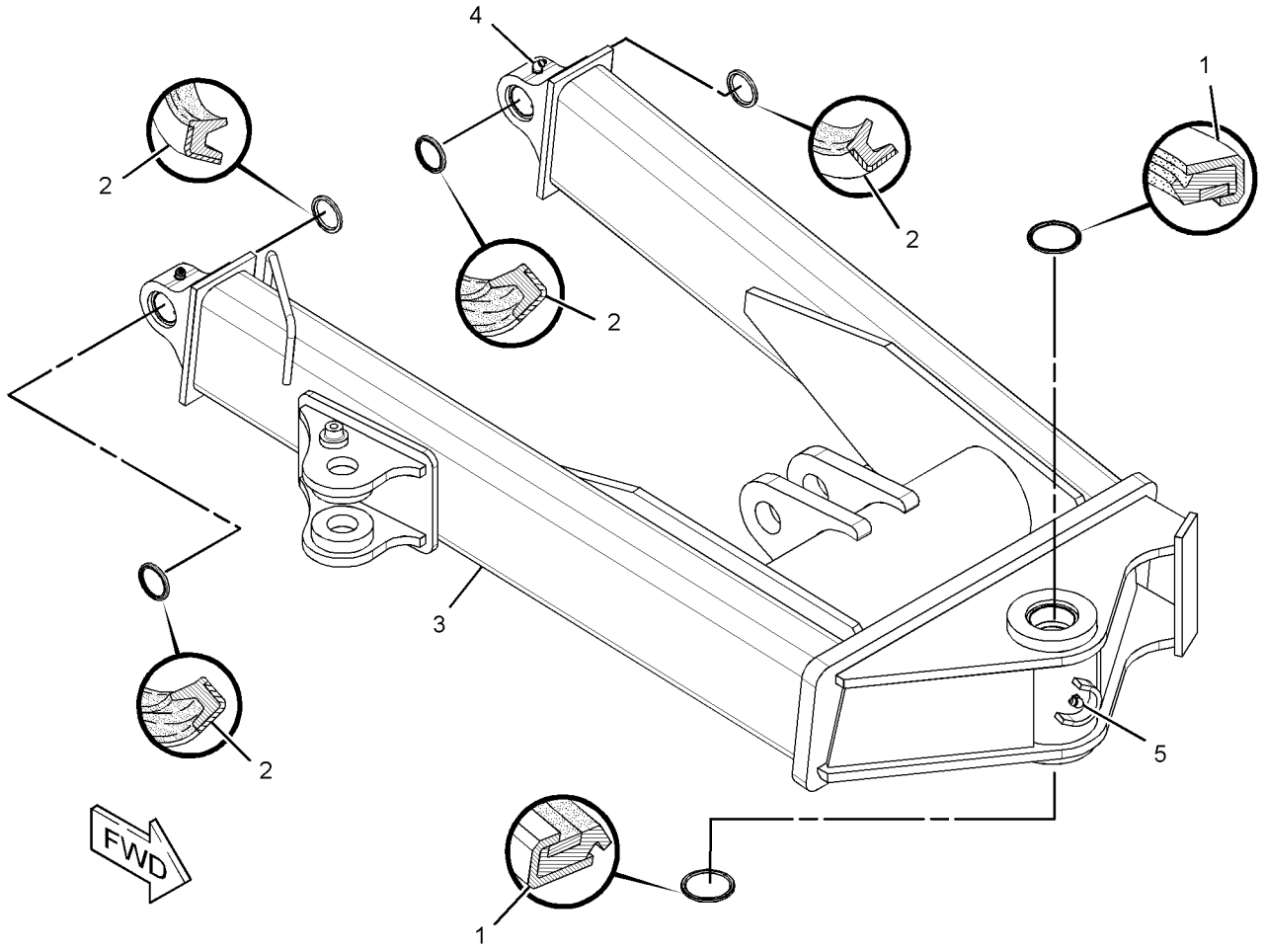

GRAPHIC #1 **<END>** g01365731

367-0904 COUNTERWEIGHT GP

PART OF 376-6675 CHASSIS AR

SMCS-7055, 7056 **i04629808**

NOTE	REF NO	GRAPHIC REF	PART NUMBER	QTY	PART NAME 1 2 3 4 5 6 (PRODUCT LEVEL)	SEE PAGE
	1	1	**258-2111**	3	CAP	
	2	1	**367-0954**	1	COUNTERWEIGHT AS	
		1	**367-0964**	1	COUNTERWEIGHT AS	
		1	**367-1101**	1	FOAM	
	3	1	**086-0299**	2	WASHER (22X60X9-MM THK)	
M	4	1	**7X-2563**	1	BOLT (M20X2.5X60-MM)	
M	5	1	**7X-2564**	1	BOLT (M20X2.5X90-MM)	
	6	1	**8T-5439**	1	WASHER-HARD (21.5X45X6-MM THK)	
M	7	1	**8T-6381**	1	BOLT (M20X2.5X120-MM)	

M - METRIC PART

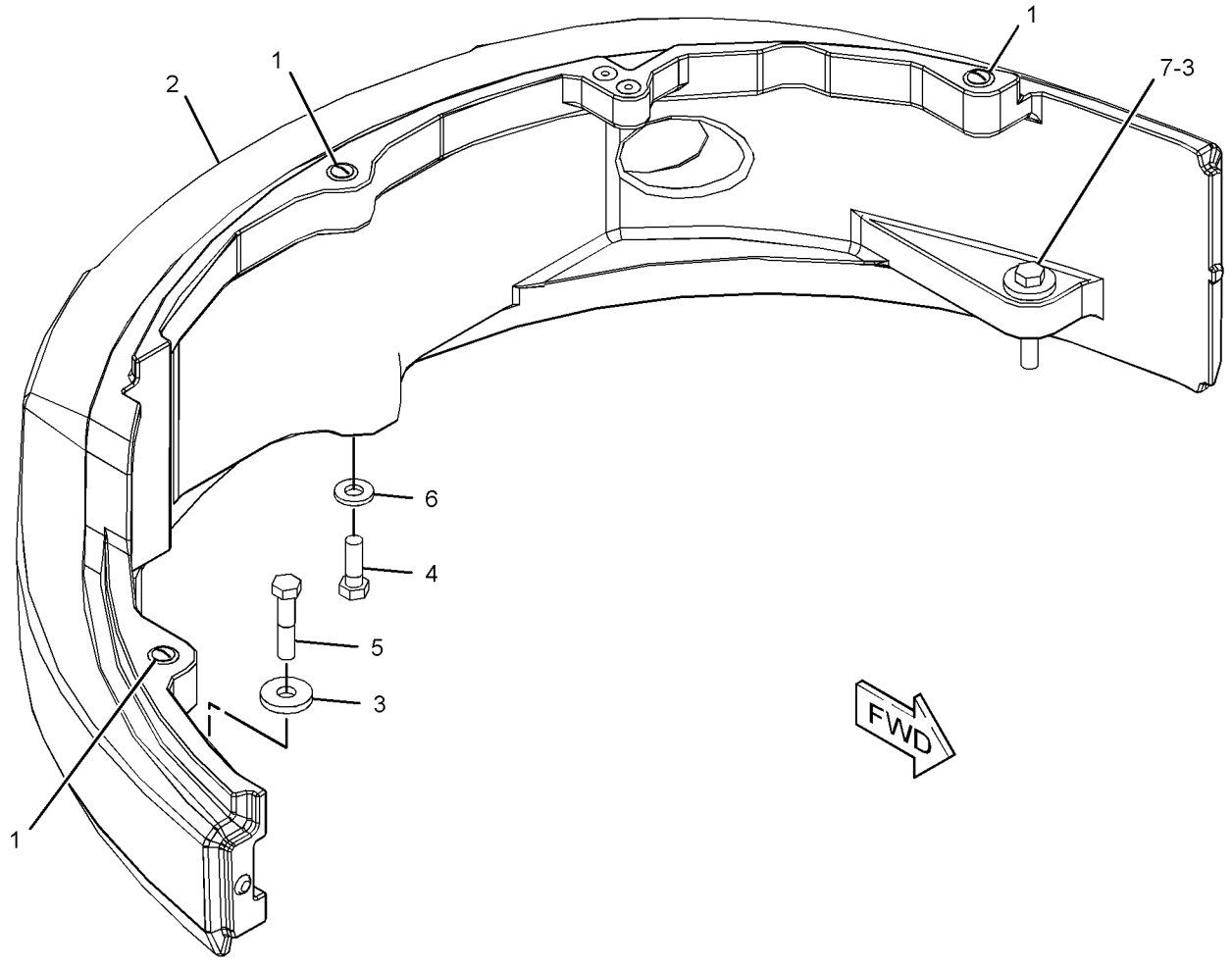

GRAPHIC #1 **<END>** g02789143

377-7888 COVER AS–LH

PART OF 377-7883 COVER GP-ACCESS

SMCS-7253 **i04638090**

NOTE	REF NO	GRAPHIC REF	PART NUMBER	QTY	PART NAME 1 2 3 4 5 6 (PRODUCT LEVEL)	SEE PAGE
	1	1	*377-7893*	1	COVER AS (LH)	
M		1	**8T-3490**	2	NUT-WELD (M10X1.5-THD)	
	2	1	**377-7937**	1	FOAM	
	3	1	**377-7938**	1	FOAM	
	4	1	**377-7939**	1	FOAM	
	5	1	**379-6414**	1	INSULATION	
	6	1	**382-5689**	1	INSULATION	

M - METRIC PART

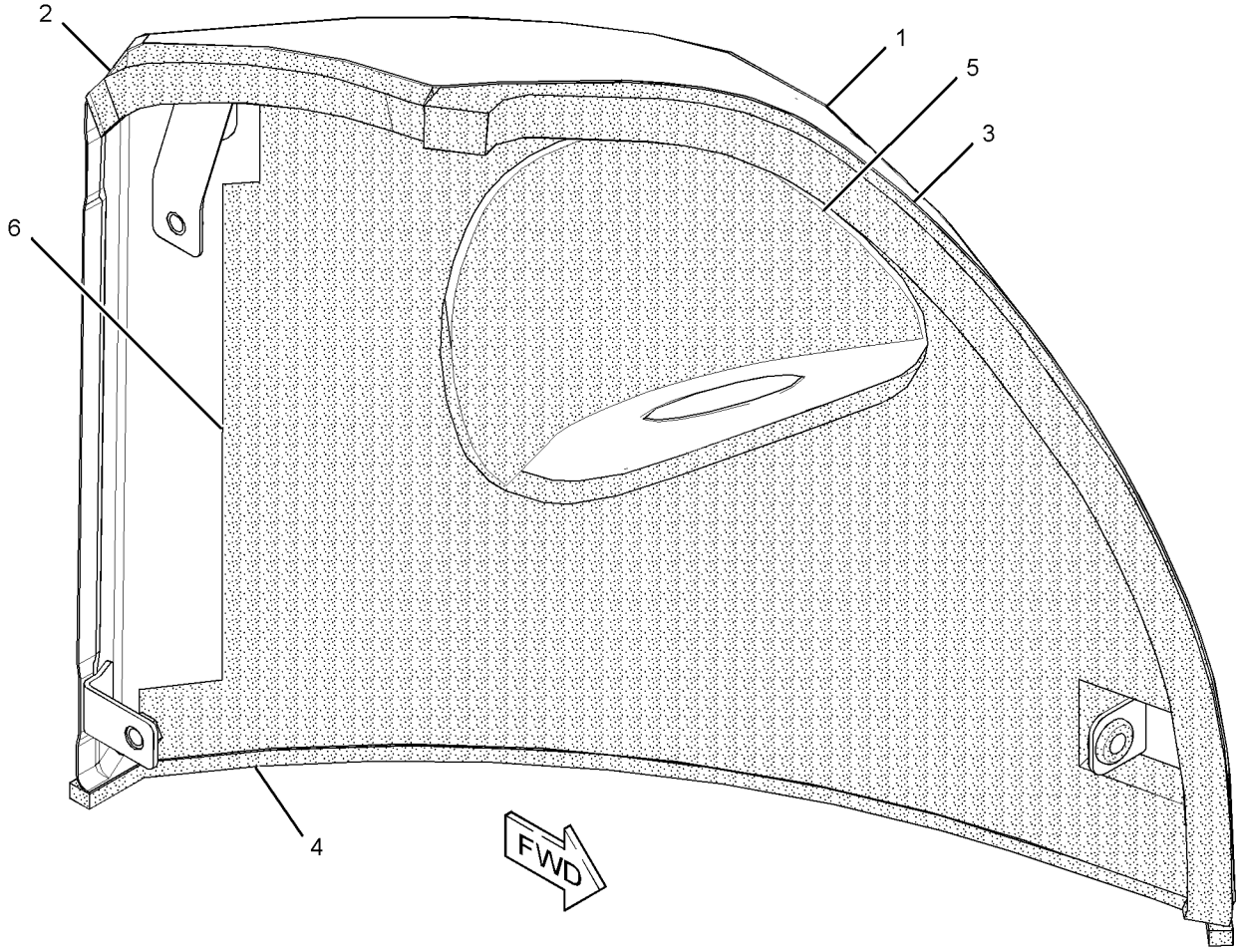

GRAPHIC #1 **<END>** g02801396

377-7883 COVER GP-ACCESS–LH

PART OF 367-0918 HOOD & GUARD GP

SMCS-726A **i04638089**

NOTE	REF NO	GRAPHIC REF	PART NUMBER	QTY	PART NAME 1 2 3 4 5 6 (PRODUCT LEVEL)	SEE PAGE
Y	1	1	*377-7888*	1	COVER AS (LH)	133
	2	1	**140-3201**	1	GROMMET	

Y - SEPARATE ILLUSTRATION

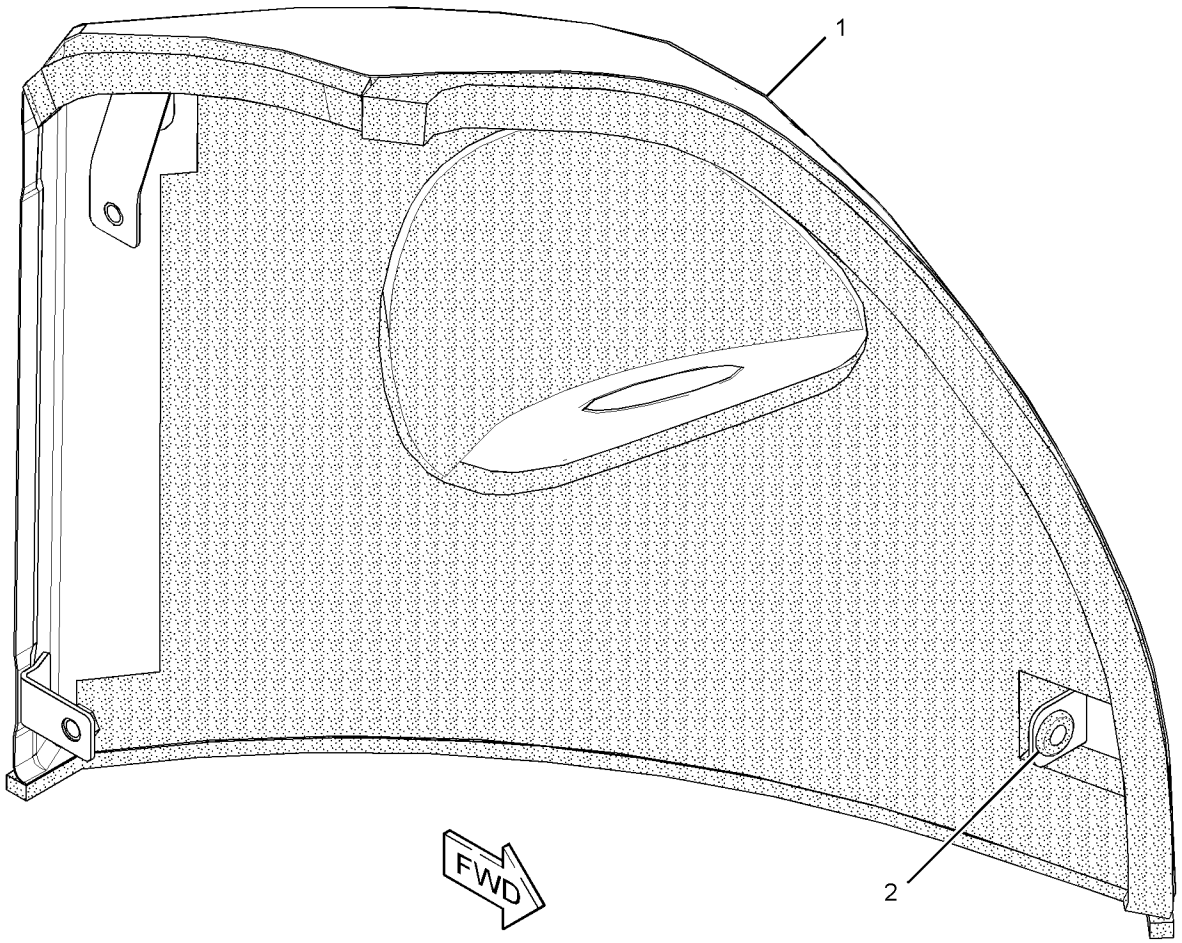

GRAPHIC #1 **<END>** g02801059

377-7886 COVER GP-ACCESS–RH

PART OF 379-6419 SUPPRESSION AR-SOUND
AN ATTACHMENT

SMCS-726A **i04629109**

NOTE	REF NO	GRAPHIC REF	PART NUMBER	QTY	PART NAME 1 2 3 4 5 6 (PRODUCT LEVEL)	SEE PAGE
	1	1	**265-8463**	1	STUD-BALL	
	2	1	**276-9254**	3	BUMPER	
	3	1	**334-0257**	2	BUMPER	
	4	1	**377-7862**	1	LATCH AS	
		1	**191-0348**	1	GROMMET	
	5	1	*377-7892*	1	COVER AS (RH)	
M		1	**8T-3490**	10	NUT-WELD (M10X1.5-THD)	
M	6	1	**5C-7261**	1	NUT (M8X1.25-THD)	
	7	1	**5P-4116**	1	WASHER-HARD (8.8X20.5X2-MM THK)	
	8	1	**7X-7729**	4	WASHER (11X25X3-MM THK)	
M	9	1	**8T-4133**	2	NUT (M10X1.5-THD)	
M	10	1	**8T-4136**	2	BOLT (M10X1.5X25-MM)	
D	11	1	**5P-7483**		SEAL (0.5-M)	
J	12	1	**214-8827**		SEAL (19.7-DM)	
J	12A	1	**214-8827**		SEAL (7.3-DM)	
J	12B	1	**214-8827**		SEAL (8.7-DM)	

D - ORDER BY THE METER
J - ORDER BY THE DECIMETER
M - METRIC PART

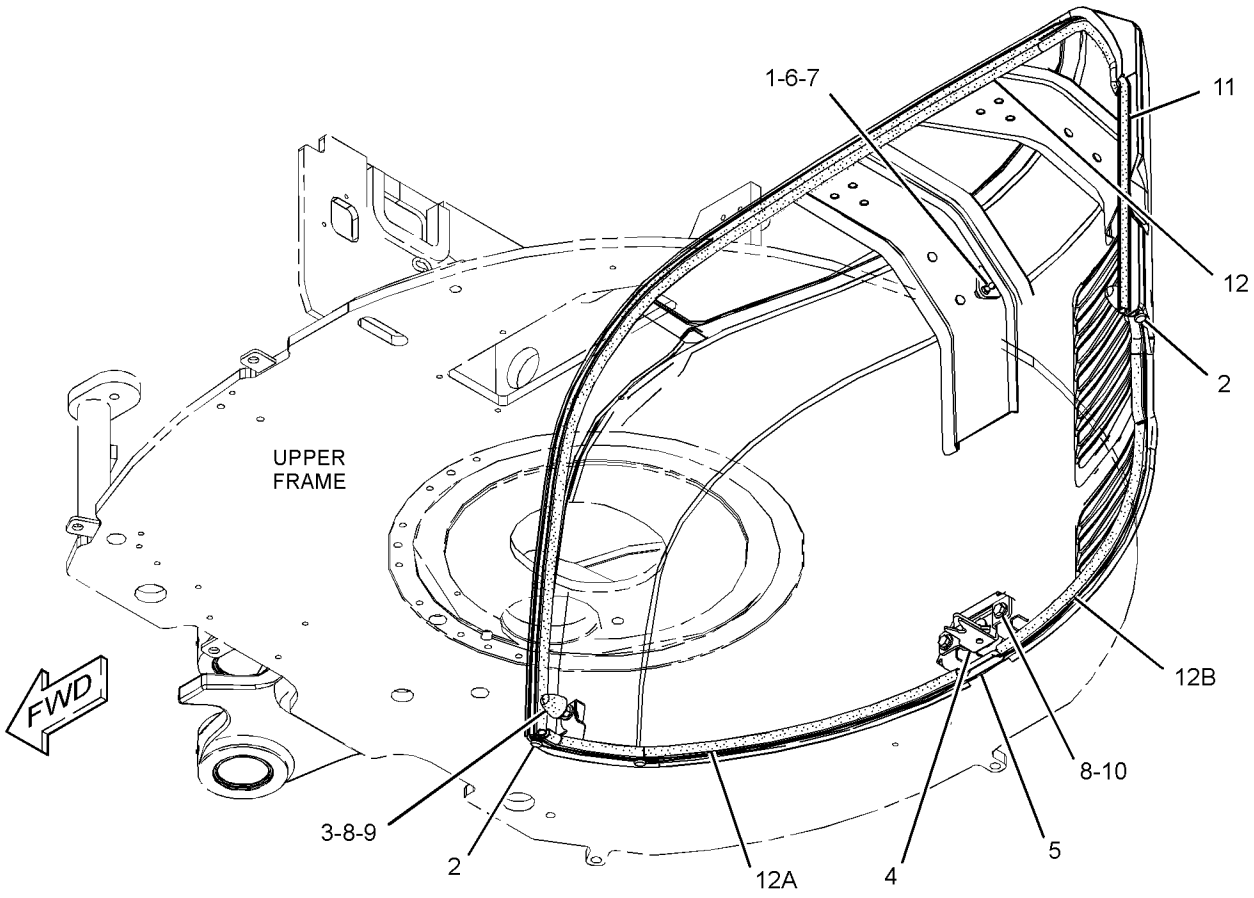

GRAPHIC #1 **<END>** g02799961

367-0912 COVER GP-FENDER

PART OF 376-6675 CHASSIS AR

SMCS-7252 **i04629809**

NOTE	REF NO	GRAPHIC REF	PART NUMBER	QTY	PART NAME 1 2 3 4 5 6 (PRODUCT LEVEL)	SEE PAGE
	1	1	*367-0980*	1	FENDER AS (RH)	
M		1	**8T-3490**	3	NUT-WELD (M10X1.5-THD)	
Y	2	1	*367-0984*	1	FENDER GP (LH)	139
	3	1	**7X-7729**	7	WASHER (11X25X3-MM THK)	
M	4	1	**8T-4136**	2	BOLT (M10X1.5X25-MM)	
M	5	1	**8T-4186**	2	BOLT (M10X1.5X40-MM)	
M	6	1	**8T-4195**	3	BOLT (M10X1.5X30-MM)	

M - METRIC PART
Y - SEPARATE ILLUSTRATION

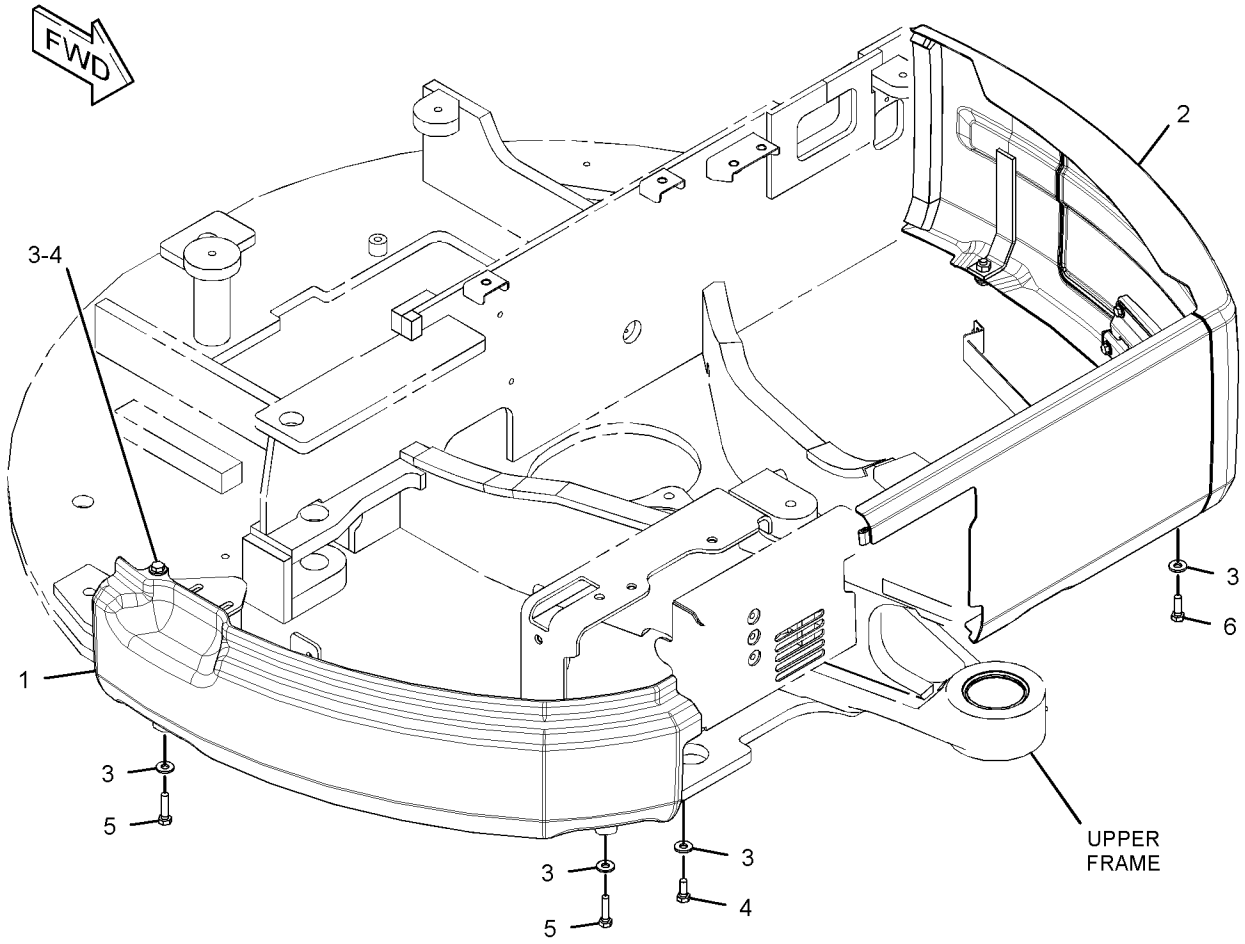

GRAPHIC #1 **<END>** g02798344

382-2177 COVER GP-SOUND SUPPRESSION

PART OF 382-0400 PLATFORM GP-OPERATOR

AN ATTACHMENT

SMCS-1801, 7251

i04775403

NOTE	REF NO	GRAPHIC REF	PART NUMBER	QTY	PART NAME 1 2 3 4 5 6 (PRODUCT LEVEL)	SEE PAGE
	1	1	**380-7159**	1	COVER AS	
	2	1	**380-7160**	1	COVER AS (LH)	
	3	1	**382-2151**	1	COVER	
	4	1	**382-2152**	2	INSULATION	
	5	1	**382-2153**	1	INSULATION	
	6	1	**382-2154**	1	INSULATION	
	7	1	**382-2155**	1	INSULATION	
	8	1	**382-2156**	1	INSULATION	
	9	1	**382-2158**	1	INSULATION	
	10	1	**382-2159**	1	INSULATION	
	11	1	**382-2160**	2	SEAL	
	12	1	**382-2162**	1	SEAL	
	13	1	**382-2163**	1	INSULATION	
	14	1	**382-2164**	1	INSULATION	
	15	1	**382-2165**	1	INSULATION	
	16	1	**382-2166**	1	SEAL	
	17	1	**382-2167**	1	SEAL	
	18	1	**382-2168**	1	SEAL	
	19	1	**382-2169**	1	SEAL	
	20	1	**382-2170**	1	SEAL	
	21	1	**382-2171**	1	SEAL	
	22	1	**382-2172**	1	SEAL	
	23	1	**382-2173**	1	SEAL	
	24	1	**382-2174**	1	SEAL	
	25	1	**382-2175**	1	SEAL	
	26	1	**382-2176**	2	SEAL	
	27	1	**382-6321**	1	SEAL	
	28	1	**389-8671**	1	INSULATION	
	29	1	**389-8672**	1	INSULATION	
	30	1	**389-8673**	2	INSULATION	
	31	1	**5P-4116**	2	WASHER-HARD (8.8X20.5X2-MM THK)	
M	32	1	**8T-4171**	4	BOLT (M6X1X12-MM)	
M	33	1	**8T-4200**	2	BOLT (M8X1.25X16-MM)	
	34	1	**9X-8256**	4	WASHER (6.6X12X2-MM THK)	

M - METRIC PART

382-2177 **COVER GP-SOUND SUPPRESSION (*contd.*)** **i04775403**

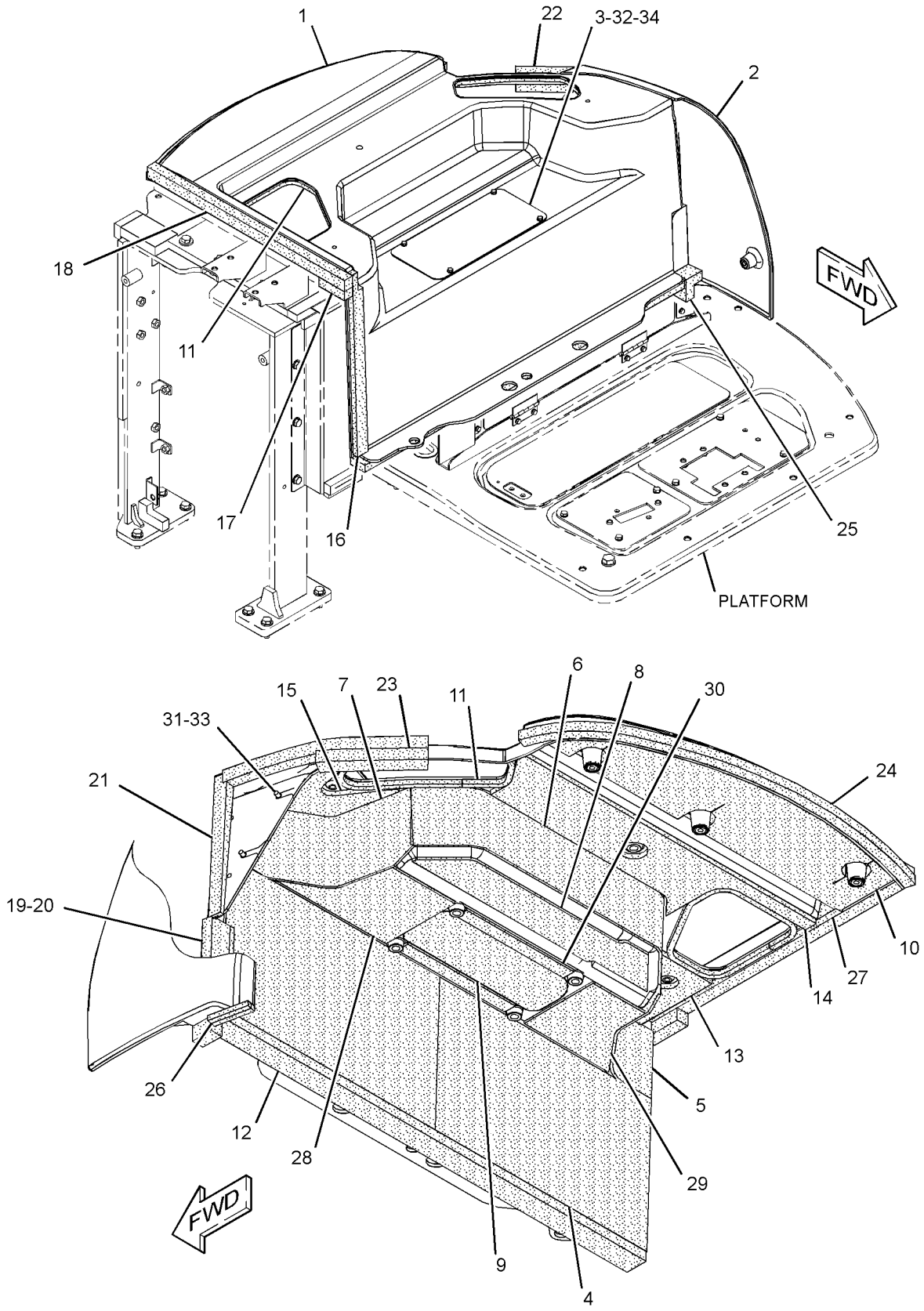

GRAPHIC #1 **<END>** g02800756

367-0984 FENDER GP–LH

PART OF 367-0912 COVER GP-FENDER

SMCS-7252 **i04629814**

NOTE	REF NO	GRAPHIC REF	PART NUMBER	QTY	PART NAME 1 2 3 4 5 6 (PRODUCT LEVEL)	SEE PAGE
	1	1	*8T-2888*	1	LOCK GP (FENDER)	
J		1	**226-0294**	1	LOCK AS	
		1	**226-0338**	1	CAM	
	2	1	**339-1545**	1	COVER AS-FENDER	
M		1	**8T-3612**	2	NUT-WELD (M8X1.25-THD)	
	3	1	**339-1548**	1	HINGE AS	
		1	**3B-4605**	2	PIN-COTTER	
		1	**9X-8256**	2	WASHER (6.6X12X2-MM THK)	
	4	1	**367-0985**	1	FENDER AS (LH)	
M		1	**8T-3490**	3	NUT-WELD (M10X1.5-THD)	
M		1	**8T-3612**	2	NUT-WELD (M8X1.25-THD)	
	5	1	**5P-4116**	4	WASHER-HARD (8.8X20.5X2-MM THK)	
	6	1	**8P-5348**	1	GROMMET	
M	7	1	**8T-4200**	4	BOLT (M8X1.25X16-MM)	
	8	1	**9M-5617**	2	GROMMET	
E	9	1	**3E-6600**		SEAL (2-CM)	

E - ORDER BY THE CENTIMETER
J - REQUIRES CORPORATE KEY
M - METRIC PART

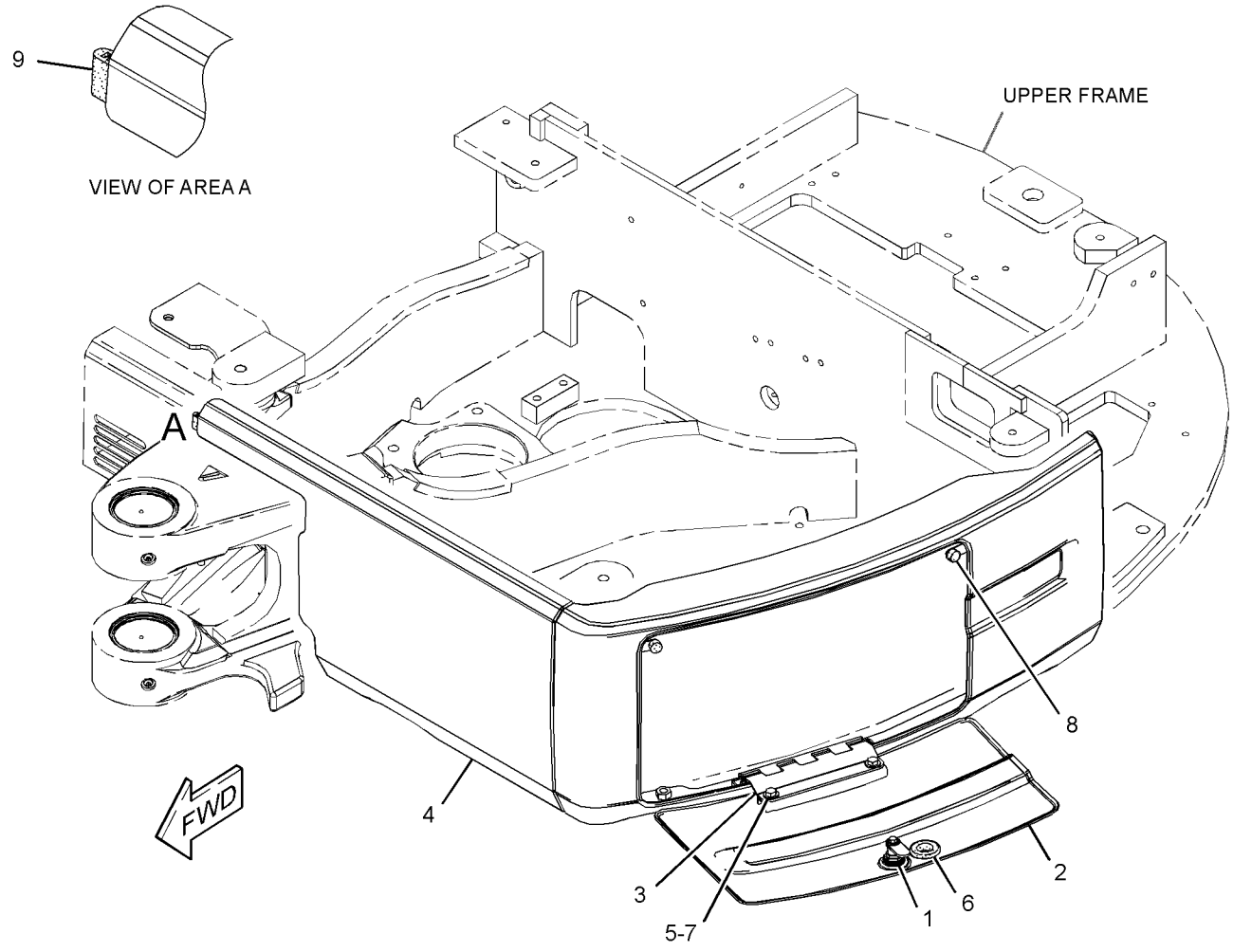

GRAPHIC #1 **<END>** g02798870

377-5062 FRAME GP-REAR–CAB

PART OF 379-3625 PLATFORM GP-OPERATOR

AN ATTACHMENT

SMCS-7051 **i04617852**

NOTE	REF NO	GRAPHIC REF	PART NUMBER	QTY	PART NAME 1 2 3 4 5 6 (PRODUCT LEVEL)	SEE PAGE
	1	1	**6N-6984**	2	MOUNT-RUBBER	
	2	1	**377-5063**	1	FRAME AS-REAR (LH)	
	3	1	**377-5075**	1	FRAME AS-REAR (RH)	
	4	1	**377-5085**	1	PLATE	
	5	1	**377-5086**	1	INSULATION	
	6	1	**377-5087**	1	INSULATION	
	7	1	**377-5088**	1	INSULATION	
	8	1	**377-5089**	1	FOAM	
	9	1	**377-5090**	1	FOAM	
	10	1	**377-5091**	1	FOAM	
	11	1	**377-5092**	1	FOAM	
	12	1	**377-5093**	1	FOAM	
	13	1	**377-5094**	1	FOAM	
	14	1	**377-5095**	1	FOAM	
Y	15	1	**377-5096**	1	PLATE AS	158
	16	1	**378-8137**	1	FOAM	
	18	1	**5P-1076**	3	WASHER-HARD (13.5X30X4-MM THK)	
	19	1	**8T-4121**	3	WASHER-HARD (11X21X2.5-MM THK)	
M	20	1	**8T-4137**	3	BOLT (M10X1.5X20-MM)	
M	21	1	**8T-4183**	3	BOLT (M12X1.75X40-MM)	
M	22	1	**8T-4184**	5	BOLT (M12X1.75X45-MM)	
M	23	1	**8T-4196**	2	BOLT (M10X1.5X35-MM)	
	24	1	**8T-4223**	8	WASHER-HARD (13.5X25.5X3-MM THK)	
M	25	1	**8T-4956**	3	BOLT (M12X1.75X35-MM)	
	26	1	**9L-8781**	2	WASHER (0.406X1.5X0.188-IN THK)	
D	27	1	**5P-5687**		SEAL (0.1-M EACH)	
D	27A	1	**5P-5687**		SEAL (0.2-M EACH)	

D - ORDER BY THE METER
M - METRIC PART
Y - SEPARATE ILLUSTRATION

377-5062 **FRAME GP-REAR (*contd.*)** **i04617852**

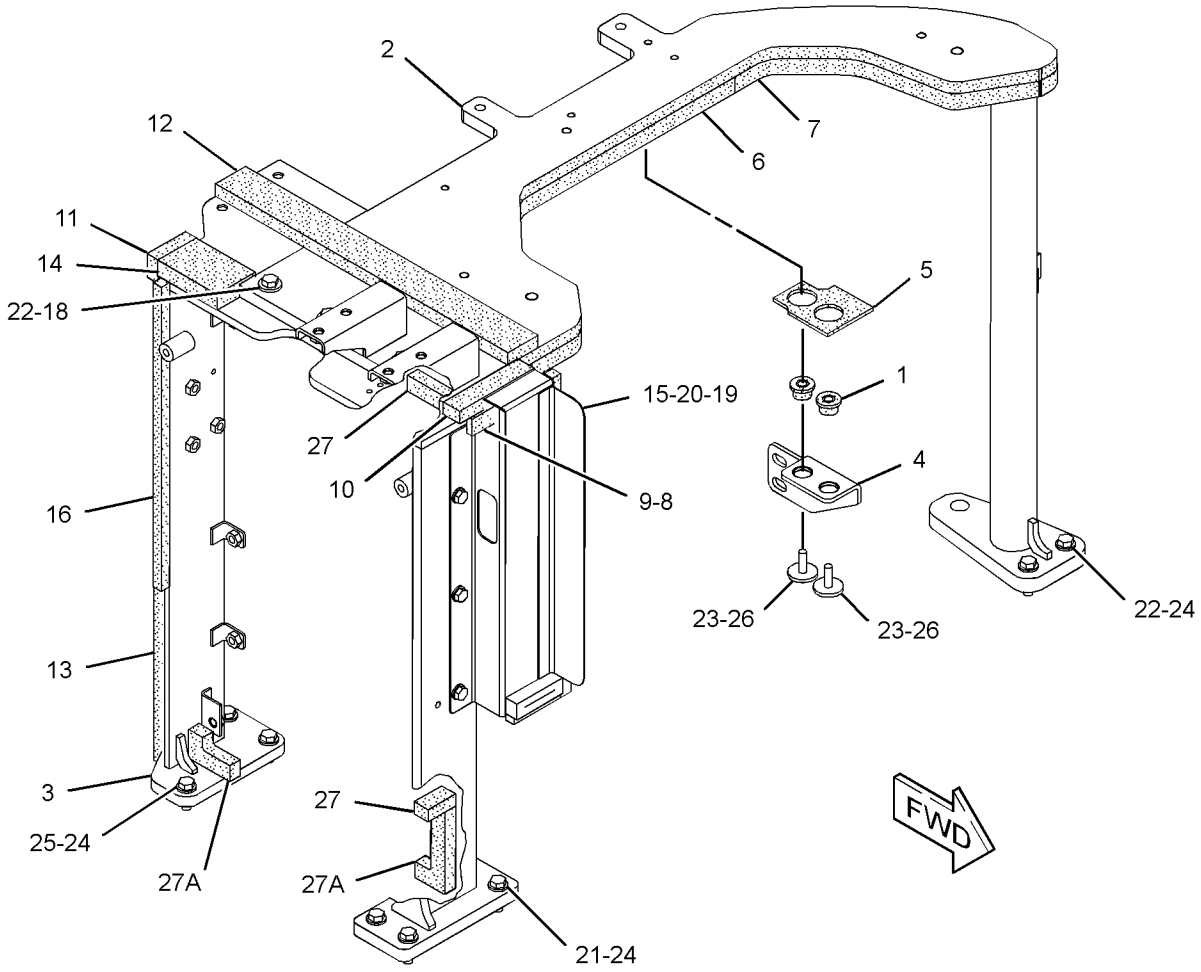

GRAPHIC #1 **<END>** g02811496

382-0401 FRAME GP-REAR–CANOPY

PART OF 382-0400 PLATFORM GP-OPERATOR

AN ATTACHMENT

SMCS-7051 **i04623160**

NOTE	REF NO	GRAPHIC REF	PART NUMBER	QTY	PART NAME 1 2 3 4 5 6 (PRODUCT LEVEL)	SEE PAGE
	1	2	**6N-6984**	2	MOUNT-RUBBER	
	2	1	**377-5075**	1	FRAME AS-REAR (RH)	
		1	**4Y-8939**	1	BOSS (M10X1.5X40-MM)	
M		1	**7Y-8763**	1	BOSS (M10X1.5X25-MM)	
M		1	**8T-3490**	11	NUT-WELD (M10X1.5-THD)	
M		1	**8T-3597**	3	NUT-WELD (M12X1.75-THD)	
	3	2	**377-5085**	1	PLATE	
	4	2	**377-5086**	1	INSULATION	
	5	2	**377-5087**	1	INSULATION	
	6	2	**377-5088**	1	INSULATION	
	7	2	**377-5089**	1	FOAM	
	8	1	**377-5090**	1	FOAM	
	9	1	**377-5091**	1	FOAM	
	10	1	**377-5092**	1	FOAM	
	11	1	**377-5093**	1	FOAM	
	12	1	**377-5094**	1	FOAM	
	13	1	**377-5095**	1	FOAM	
	14	1	**378-8137**	1	FOAM	
	15	1	**382-0402**	1	FRAME AS-REAR (LH)	
M		1	**8T-3490**	4	NUT-WELD (M10X1.5-THD)	
	16	1	**382-0404**	1	SEAL AS	
		1	**377-5098**	1	FOAM	
		1	**377-5100**	1	FOAM	
		1	**377-5101**	1	FOAM	
		1	**377-5102**	1	FOAM	
	17	2	**382-2181**	1	INSULATION	
	18	1	**5P-1076**	3	WASHER-HARD (13.5X30X4-MM THK)	
	19	1	**8T-4121**	3	WASHER-HARD (11X21X2.5-MM THK)	
M	20	1	**8T-4137**	3	BOLT (M10X1.5X20-MM)	
M	21	1	**8T-4183**	3	BOLT (M12X1.75X40-MM)	
M	22	1	**8T-4184**	5	BOLT (M12X1.75X45-MM)	
M	23	2	**8T-4196**	2	BOLT (M10X1.5X35-MM)	
	24	1	**8T-4223**	8	WASHER-HARD (13.5X25.5X3-MM THK)	
M	25	1	**8T-4956**	3	BOLT (M12X1.75X35-MM)	
	26	2	**9L-8781**	2	WASHER (0.406X1.5X0.188-IN THK)	
D	27	1,2	**5P-5687**		SEAL (0.1-M EACH)	
D	27A	2	**5P-5687**		SEAL (0.2-M)	

D - ORDER BY THE METER
M - METRIC PART

382-0401 **FRAME GP-REAR (*contd.*)** **i04623160**

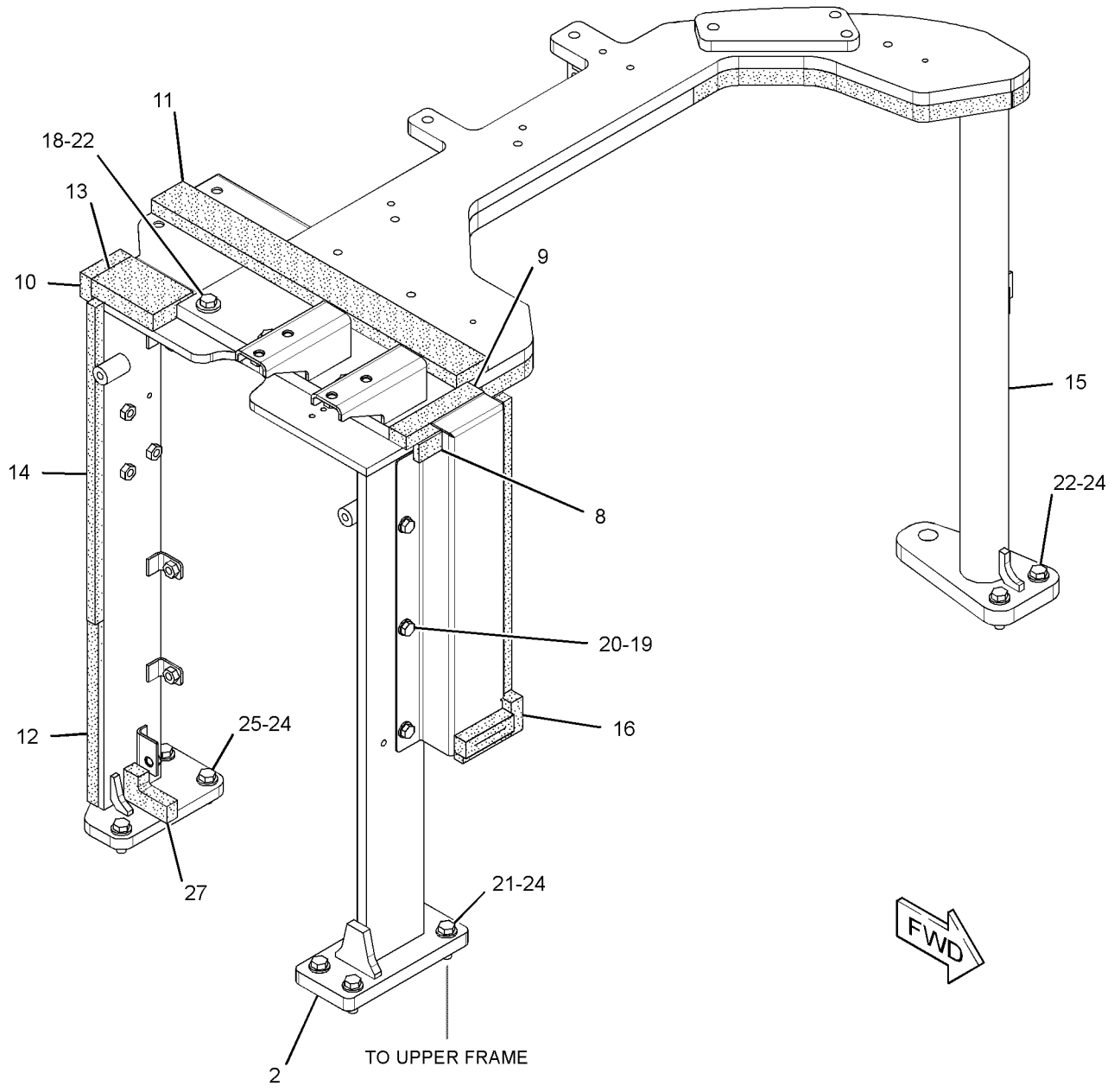

GRAPHIC #1 g02814217

382-0401 **FRAME GP-REAR (*contd.*)** **i04623160**

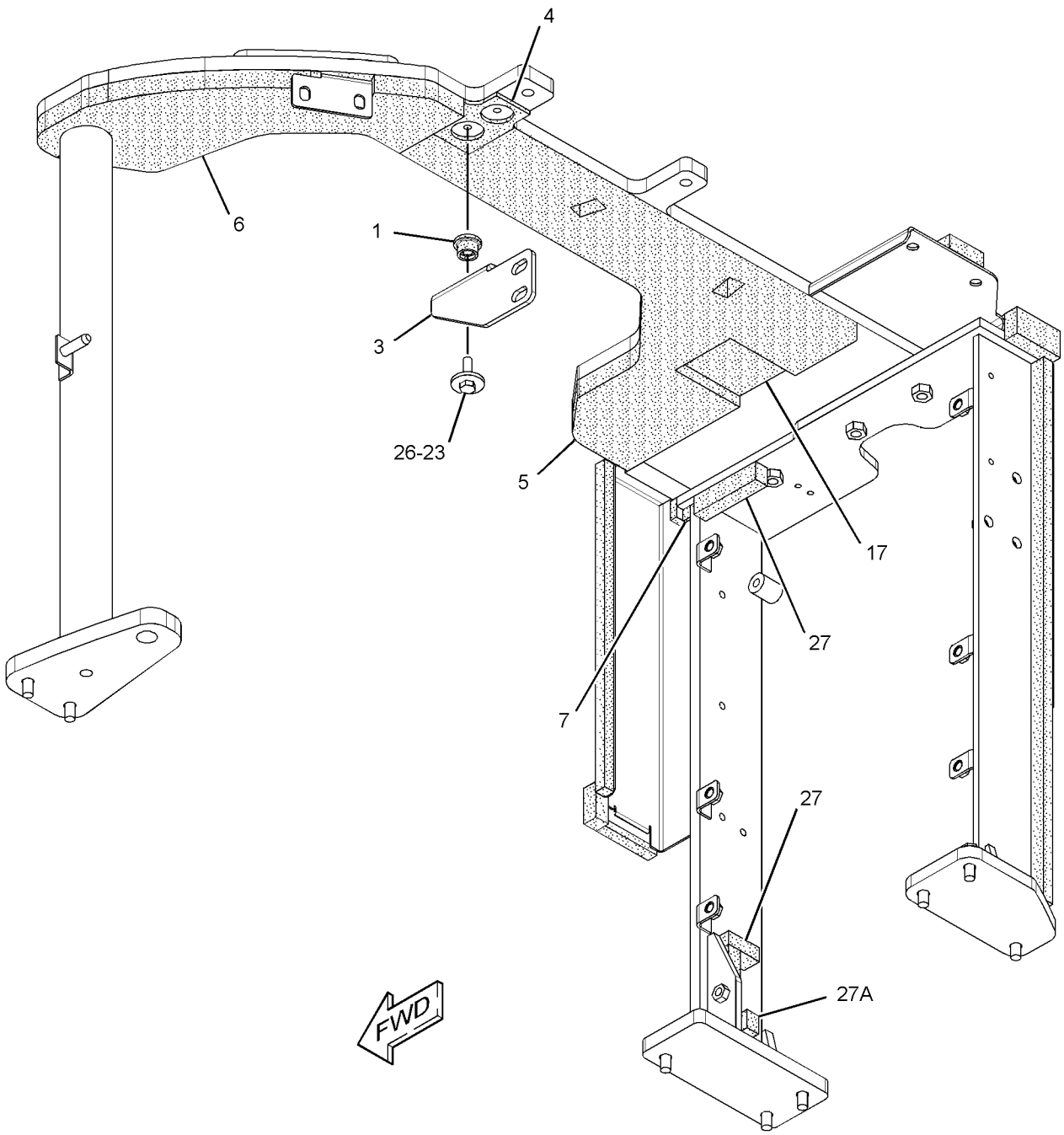

GRAPHIC #2 **<END>** g02814656

270-6520 FRAME GP-SWING–BOOM

PART OF 376-6679 BOOM AR

SMCS-6506 **i04019712**

NOTE	REF NO	GRAPHIC REF	PART NUMBER	QTY	PART NAME 1 2 3 4 5 6 (PRODUCT LEVEL)	SEE PAGE
B	1	1	**093-0083**	2	SHIM (1-MM THK)	
B	2	1	**133-2425**	1	SHIM (0.5-MM THK)	
B	3	1	**140-4741**	4	SHIM (1-MM THK)	
	4	1	**266-3872**	1	BOSS	
	5	1	**292-0153**	2	PIN AS	
	6	1	**266-4078**	2	WASHER-THRUST (82X140X3-MM THK)	
	7	1	**271-5889**	2	SCREW (M12X1.75X50-MM)	
	8	1	**281-0902**	1	PIN AS	
	9	1	**281-0926**	2	BOSS	
	10	1	**294-3097**	1	PIN AS	
	11	1	**281-0930**	1	PIN	
	12	1	**281-0969**	1	SUPPORT AS-BEARING	
		1	**281-0923**	1	BUSHING	
		1	**281-0924**	2	BUSHING	
		1	**281-0925**	1	BUSHING	
	13	1	**6V-8513**	2	WASHER-HARD (11X35X2.5-MM THK)	
	14	1	**8T-4121**	1	WASHER-HARD (11X21X2.5-MM THK)	
M	15	1	**8T-4137**	2	BOLT (M10X1.5X20-MM)	
M	16	1	**8T-4196**	1	BOLT (M10X1.5X35-MM)	
	17	1	**8T-4223**	2	WASHER-HARD (13.5X25.5X3-MM THK)	

B - USE AS REQUIRED
M - METRIC PART

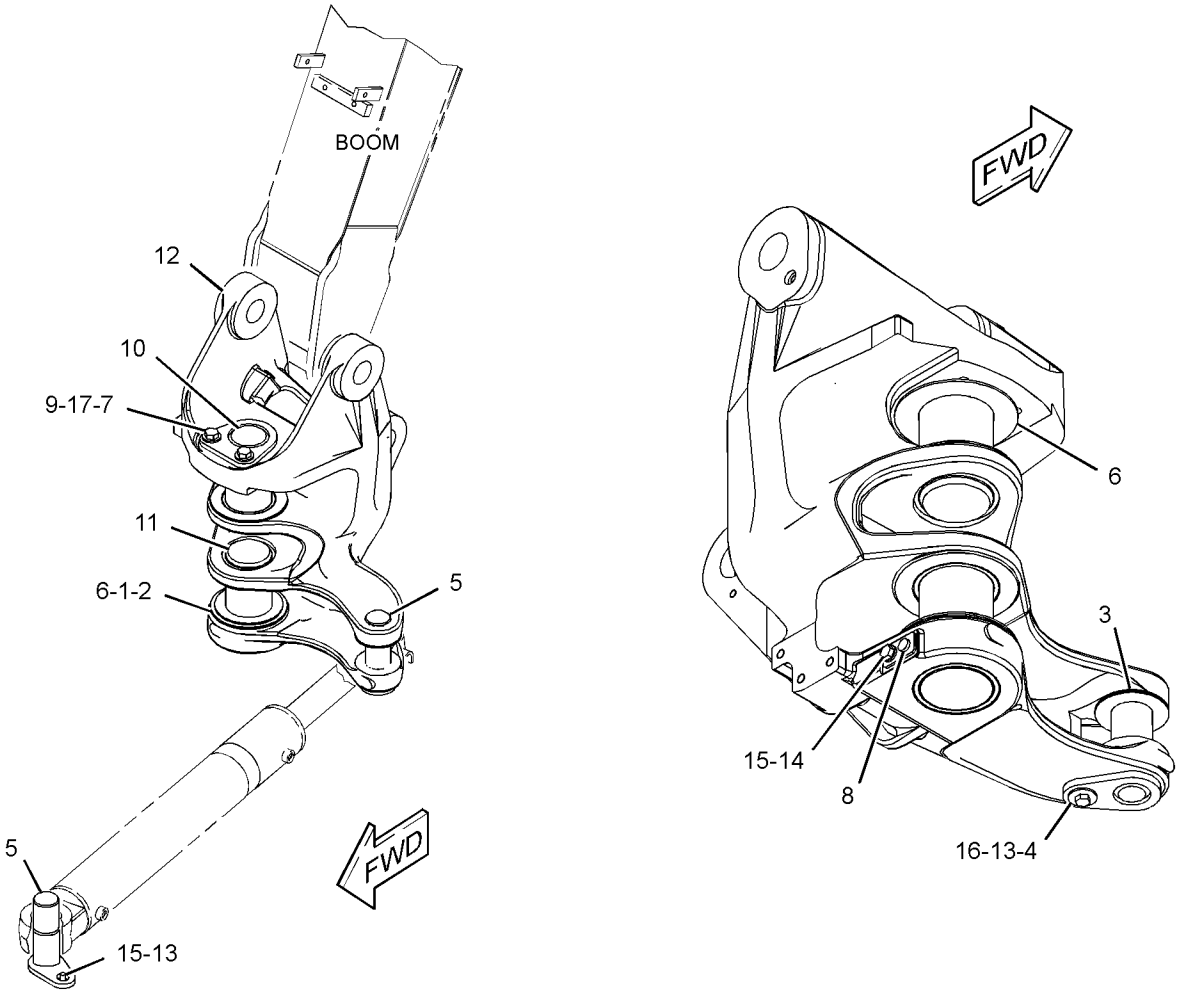

GRAPHIC #1 **<END>** g02194413

376-6206 FRAME GP-UPPER

PART OF 376-6675 CHASSIS AR

SMCS-7051 **i04775400**

NOTE	REF NO	GRAPHIC REF	PART NUMBER	QTY	PART NAME 1 2 3 4 5 6 (PRODUCT LEVEL)	SEE PAGE
	1	1	**376-6207**	1	FRAME AS-UPPER	
	1A	1	**266-4050**	2	BUSHING	
		1	**199-4803**	4	SEAL-LIP TYPE	
	2	1	**378-8105**	1	SEAL	
	3	1	**378-8111**	1	SEAL	
	4	1	**378-8113**	1	FOAM	
	5	1	**378-8121**	1	FOAM	
	6	1	**378-8125**	1	FOAM	
	7	1	**378-8129**	1	FOAM	
	8	1	**383-6388**	1	FOAM	
	9	1	**3B-8489**	2	FITTING-GREASE	
	10	1	**380-6374**	1	FOAM	
					PARTS SHOWN IN GRAPHIC(S) WITHOUT A REFERENCE NUMBER ARE NOT SERVICED SEPARATELY	

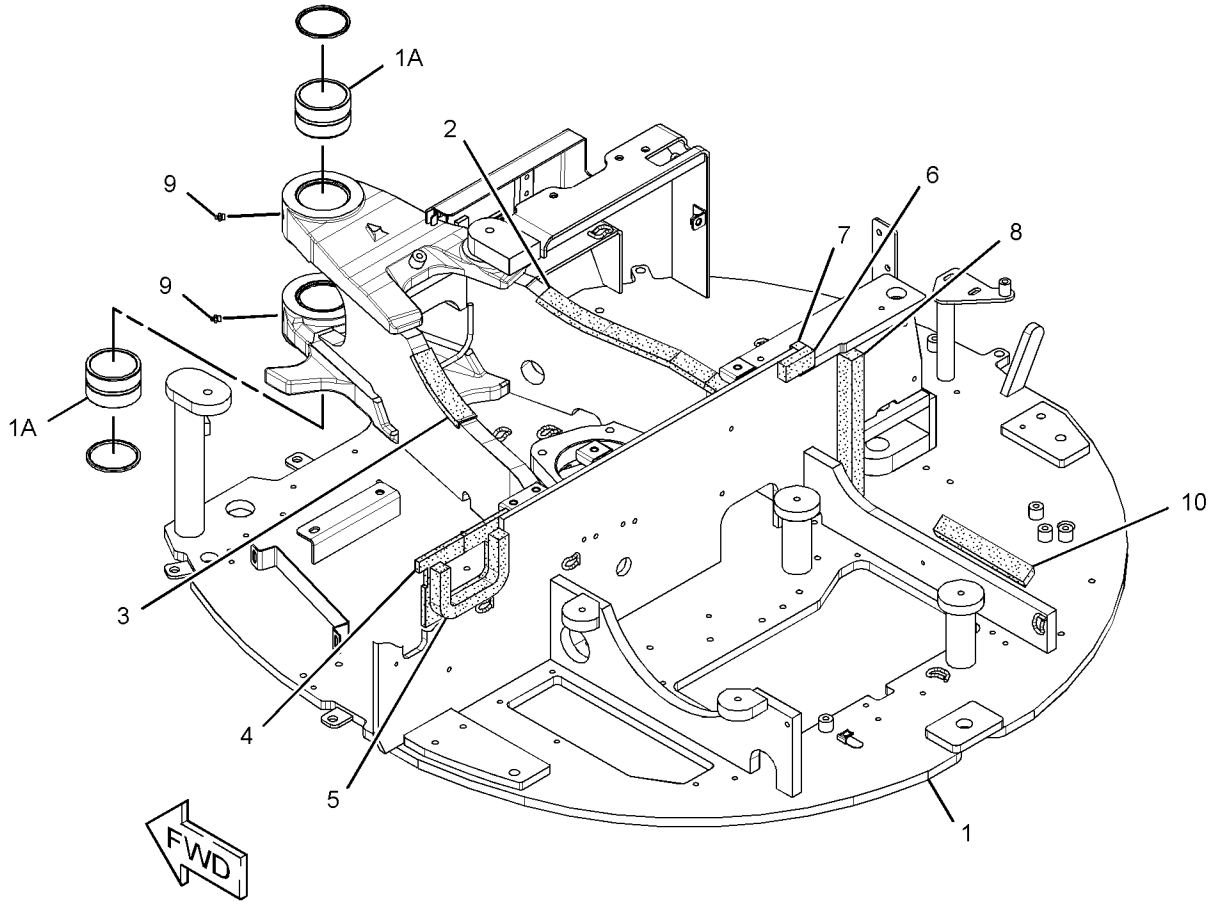

GRAPHIC #1 **<END>** g02934198

379-2988 GUARD GP-BOTTOM

PART OF 376-6675 CHASSIS AR

SMCS-7153 **i04629831**

NOTE	REF NO	GRAPHIC REF	PART NUMBER	QTY	PART NAME 1 2 3 4 5 6 (PRODUCT LEVEL)	SEE PAGE
	1	1	**378-2263**	1	COVER	
	2	1	**379-2989**	1	COVER	
	3	1	**7X-7729**	8	WASHER (11X25X3-MM THK)	
M	4	1	**8T-4137**	8	BOLT (M10X1.5X20-MM)	

M - METRIC PART

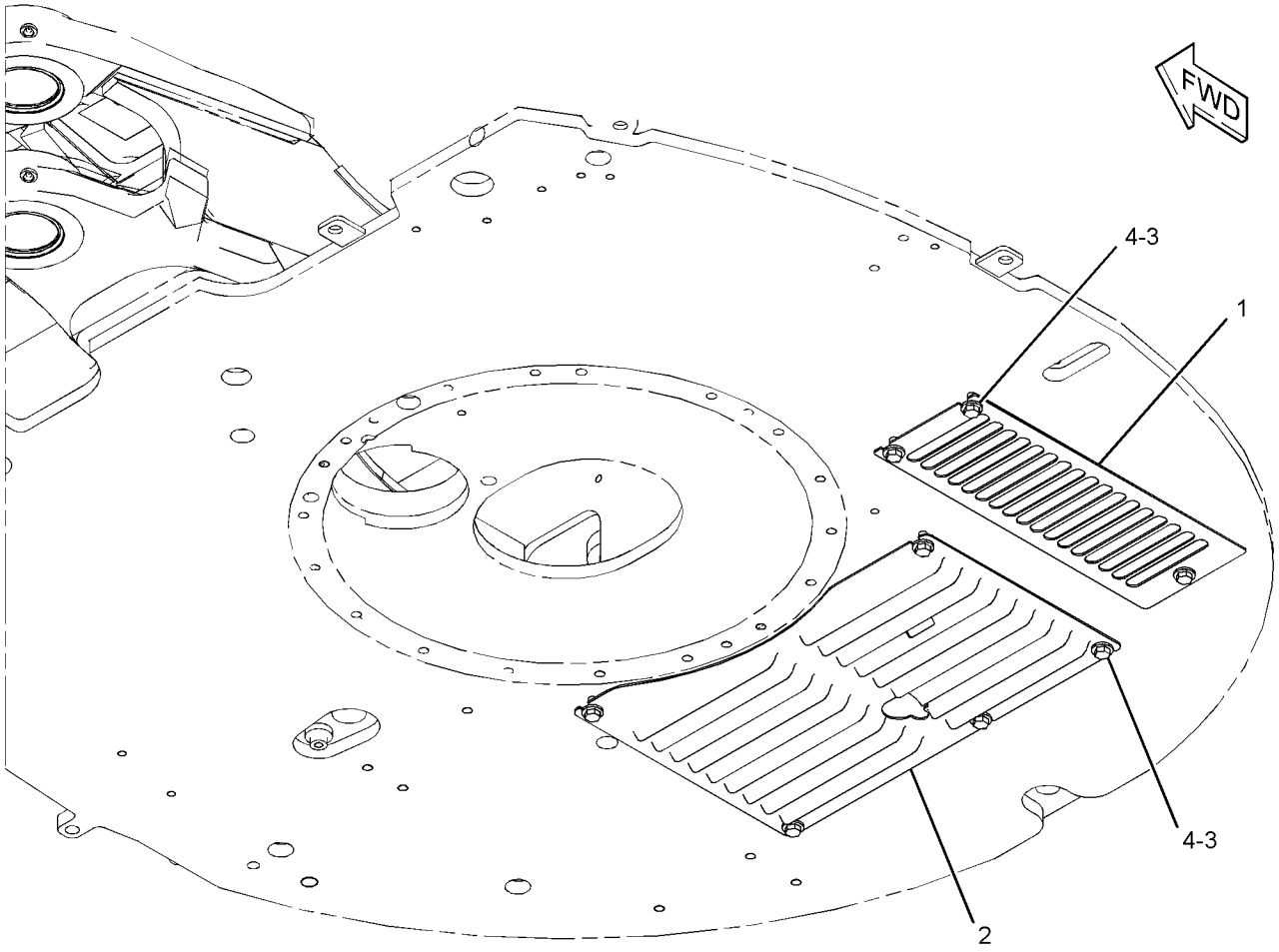

GRAPHIC #1 **<END>** g02798331

270-6515 GUARD GP-CYLINDER–BOOM

PART OF 376-6679 BOOM AR

SMCS-7164 **i04046738**

NOTE	REF NO	GRAPHIC REF	PART NUMBER	QTY	PART NAME 1 2 3 4 5 6 (PRODUCT LEVEL)	SEE PAGE
	1	1	**140-4780**	1	WASHER (10.5X32X3.2-MM THK)	
	2	1	**172-2596**	2	TUBE	
	3	1	**266-4024**	1	WASHER-SPRING	
	4	1	**363-5745**	1	COVER-ROD	
M	5	1	**8T-4137**	1	BOLT (M10X1.5X20-MM)	

M - METRIC PART

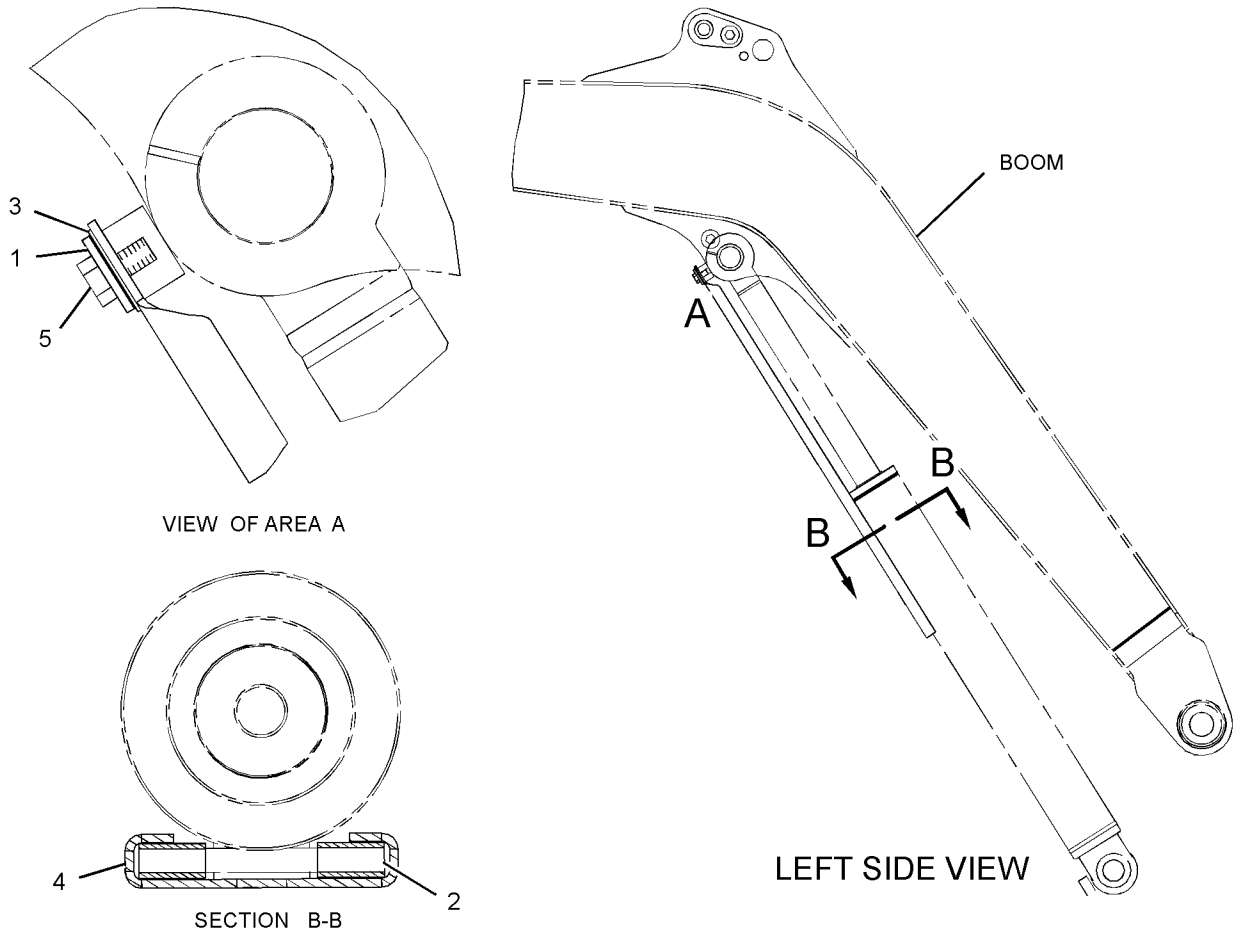

GRAPHIC #1 **<END>** g01235476

290-8287 GUARD GP-CYLINDER—POWER ANGLE

PART OF 377-8928 BLADE AR-ANGLING

AN ATTACHMENT

SMCS-7164 **i04015470**

NOTE	REF NO	GRAPHIC REF	PART NUMBER	QTY	PART NAME 1 2 3 4 5 6 (PRODUCT LEVEL)	SEE PAGE
	1	1	**195-8154**	2	GUIDE	
	2	1	**290-8288**	1	COVER AS	
	3	1	**290-8290**	1	COVER AS	
	4	1	**290-8293**	1	COVER-ROD	
	5	1	**7X-0632**	1	WASHER-HARD (11X36X6-MM THK)	
	6	1	**8T-4121**	6	WASHER-HARD (11X21X2.5-MM THK)	
M	7	1	**8T-4136**	4	BOLT (M10X1.5X25-MM)	
M	8	1	**8T-4137**	3	BOLT (M10X1.5X20-MM)	

M - METRIC PART

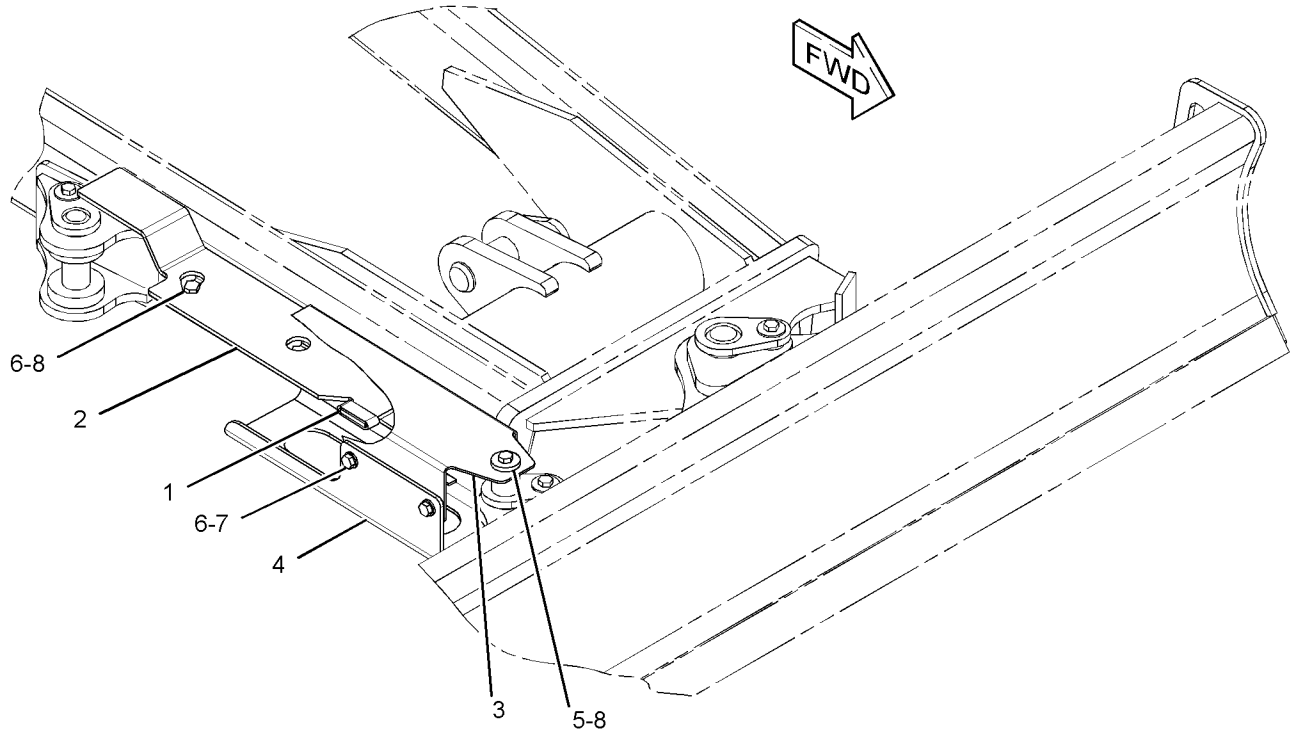

GRAPHIC #1 **<END>** g01359560

389-8702 GUARD GP-FRONT

PART OF 389-8701 CAB GP

AN ATTACHMENT

SMCS-7182 **i04633349**

NOTE	PART NUMBER	QTY	PART NAME 1 2 3 4 5 6 (PRODUCT LEVEL)	SEE PAGE
	276-3323	1	GUARD AS	
	280-0407	2	BOLT	
	281-6177	6	BOLT	
	281-1184	1	PLATE	
	281-1185	2	PLATE	
	276-3324	1	SEAL	

<END>

389-8733 GUARD GP-FRONT–MESH

PART OF 383-5926 CANOPY AR

AN ATTACHMENT

SMCS-7182 **i04728121**

NOTE	REF NO	GRAPHIC REF	PART NUMBER	QTY	PART NAME 1 2 3 4 5 6 (PRODUCT LEVEL)	SEE PAGE
	1	1	**389-8734**	1	FRAME AS	
M	2	1	**8T-4192**	8	BOLT (M12X1.75X25-MM)	
	3	1	**8T-4223**	8	WASHER-HARD (13.5X25.5X3-MM THK)	

M - METRIC PART

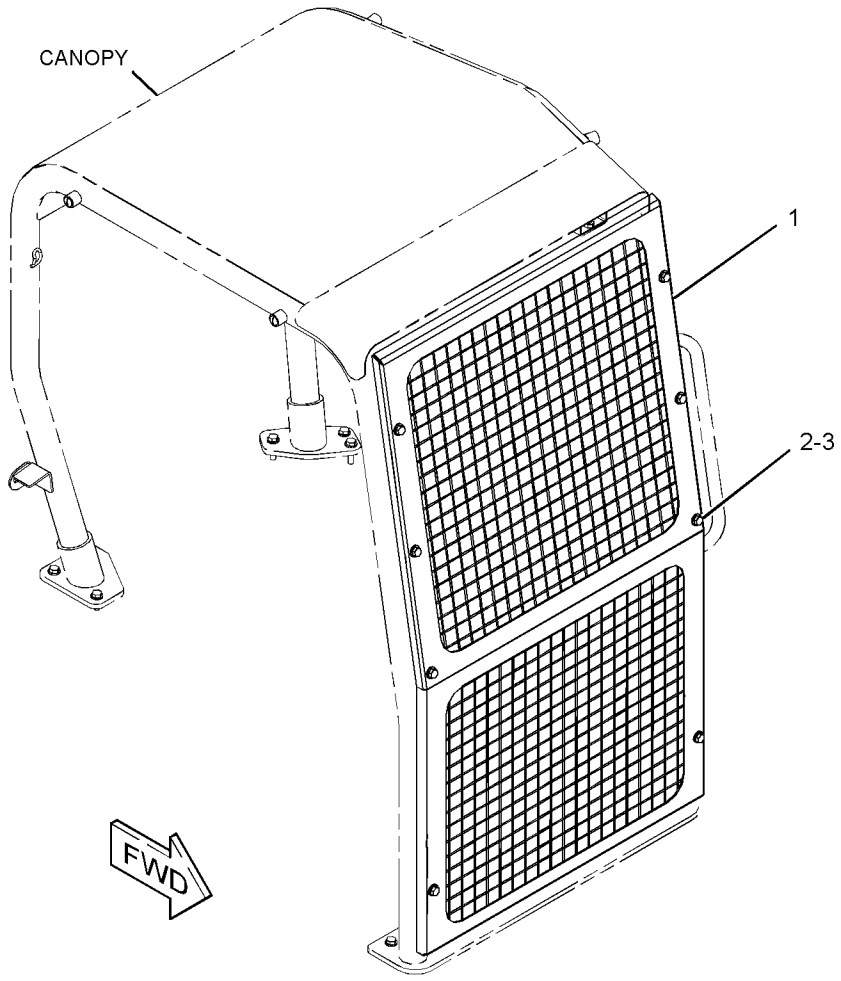

GRAPHIC #1 **<END>** g02853116

367-0918 HOOD & GUARD GP

PART OF 376-6675 CHASSIS AR

SMCS-7150, 7251 **i04824651**

NOTE	REF NO	GRAPHIC REF	PART NUMBER	QTY	PART NAME 1 2 3 4 5 6 (PRODUCT LEVEL)	SEE PAGE
	1	1	**3B-4610**	1	PIN-COTTER	
	2	1	**265-8405**	1	HINGE AS-HOOD	
	3	1	**265-8407**	2	HINGE AS (RH)	
	4	1	**265-8409**	1	BRACKET	
	5	1	**265-8463**	1	STUD-BALL	
B	6	1	**270-9557**	2	SHIM (3-MM THK)	
B	7	1	**270-9558**	2	SHIM (1-MM THK)	
	8	1	**276-9257**	1	PLATE AS	
B	9	1	**276-9258**	1	SHIM (3-MM THK)	
	10	1	**285-7703**	1	PLATE AS	
	11	1	**296-0219**	1	COVER	
	12	1	**377-7814**	1	COVER AS-CENTER	
		1	**378-1240**	1	INSULATION	
	13	1	**377-7864**	1	STRIKER AS	
Y	14	1	**377-7881**	1	HOOD GP	156
Y	15	1	**377-7883**	1	COVER GP-ACCESS (LH)	134
	16	1	**377-7885**	1	COVER AS-CENTER	
M		1	**8T-3490**	1	NUT-WELD (M10X1.5-THD)	
		1	**377-7940**	1	FOAM	
		1	**379-6415**	1	INSULATION	
		1	**379-6416**	1	INSULATION	
	17	1	**377-7929**	1	SPRING AS-GAS (LOCKABLE)	
	18	1	**377-7930**	1	STRIKER AS-HOOD	
M	19	1	**5C-7261**	3	NUT (M8X1.25-THD)	
	20	1	**5P-4116**	1	WASHER-HARD (8.8X20.5X2-MM THK)	
	21	1	**7X-0579**	1	WASHER-HARD (8.8X25.5X2-MM THK)	
	22	1	**377-7874**	1	SPACER-RUBBER	
	23	1	**7X-7729**	29	WASHER (11X25X3-MM THK)	
M	24	1	**8T-4136**	20	BOLT (M10X1.5X25-MM)	
M	25	1	**8T-4137**	7	BOLT (M10X1.5X20-MM)	
M	26	1	**8T-4195**	6	BOLT (M10X1.5X30-MM)	
	27	1	**8T-4222**	1	WASHER-PLATED (11X32X2.5-MM THK)	
	28	1	**8T-4224**	2	WASHER-HARD (8.8X16X2-MM THK)	
M	29	1	**8T-7547**	1	BOLT (M8X1.25X30-MM)	

B - USE AS REQUIRED
M - METRIC PART
Y - SEPARATE ILLUSTRATION

367-0918 **HOOD & GUARD GP (*contd.*)** **i04824651**

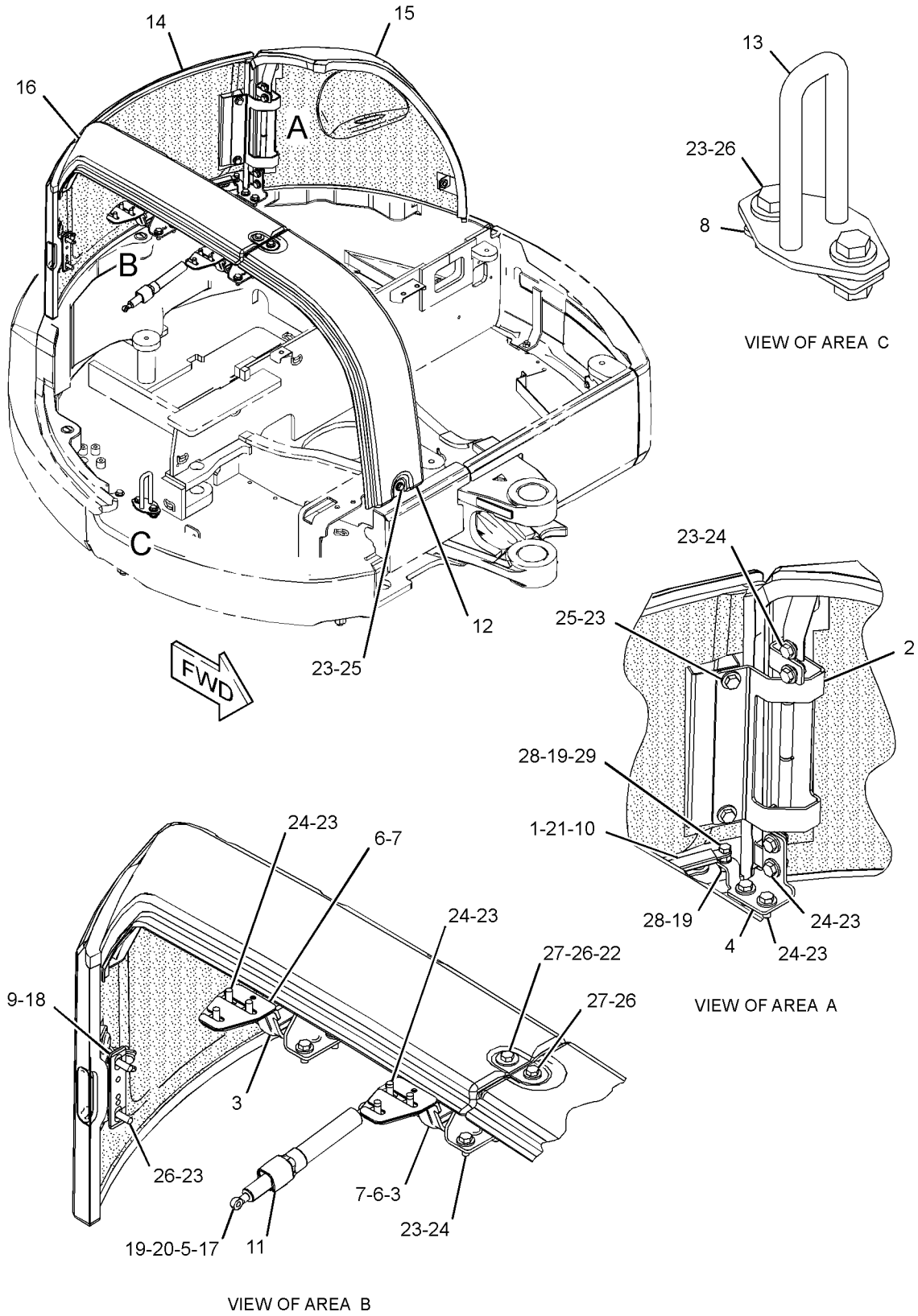

GRAPHIC #1 **<END>** g02799259

377-7882 HOOD & GUARD GP

PART OF 379-6418 SUPPRESSION AR-SOUND

AN ATTACHMENT

SMCS-7150, 7251 **i04629090**

NOTE	REF NO	GRAPHIC REF	PART NUMBER	QTY	PART NAME 1 2 3 4 5 6 (PRODUCT LEVEL)	SEE PAGE
	1	1	**265-8463**	1	STUD-BALL	
	2	1	**276-9254**	3	BUMPER	
	3	1	**334-0257**	2	BUMPER	
	4	1	**377-7862**	1	LATCH AS	
		1	**191-0348**	1	GROMMET	
	5	1	**377-7889**	1	COVER AS (RH)	
M		1	**8T-3490**	10	NUT-WELD (M10X1.5-THD)	
		1	**381-4596**	1	INSULATION	
		1	**381-4597**	1	INSULATION	
		1	**381-4598**	1	INSULATION	
M	6	1	**5C-7261**	1	NUT (M8X1.25-THD)	
	7	1	**5P-4116**	1	WASHER-HARD (8.8X20.5X2-MM THK)	
	8	1	**7X-7729**	4	WASHER (11X25X3-MM THK)	
M	9	1	**8T-4133**	2	NUT (M10X1.5-THD)	
M	10	1	**8T-4136**	2	BOLT (M10X1.5X25-MM)	
D	11	1	**5P-7483**		SEAL (0.5-M)	
J	12	1	**214-8827**		SEAL (7.3-DM)	
J	12A	1	**214-8827**		SEAL (8.7-DM)	
J	12B	1	**214-8827**		SEAL (19.7-DM)	

D - ORDER BY THE METER
J - ORDER BY THE DECIMETER
M - METRIC PART

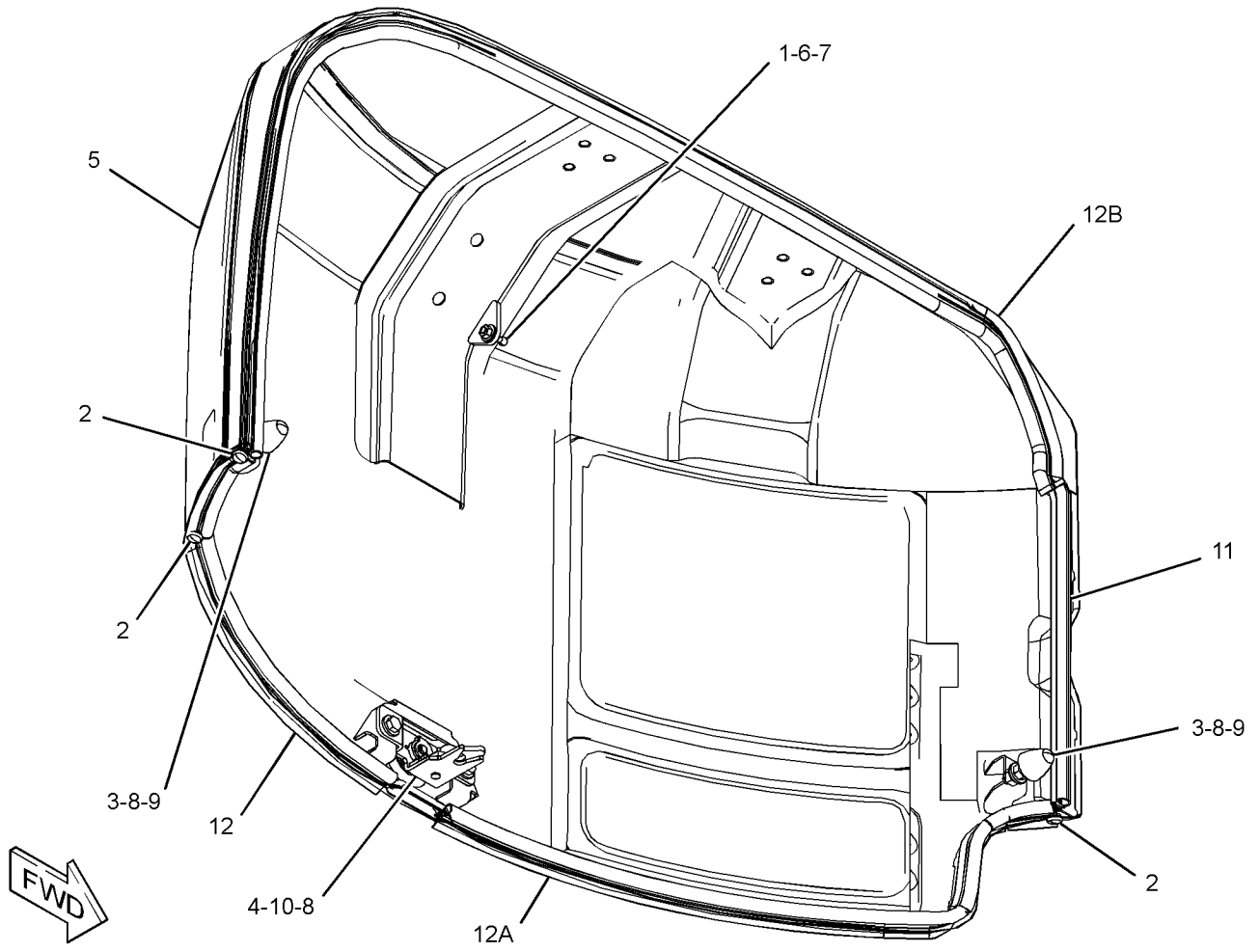

GRAPHIC #1 **<END>** g02798869

377-7887 HOOD AS

PART OF 377-7881 HOOD GP

SMCS-7251 **i04629829**

NOTE	REF NO	GRAPHIC REF	PART NUMBER	QTY	PART NAME 1 2 3 4 5 6 (PRODUCT LEVEL)	SEE PAGE
	1	1	**341-0449**	1	FOAM	
	2	1	*377-7891*	1	HOOD AS	
M		1	**8T-3490**	4	NUT-WELD (M10X1.5-THD)	
	3	1	**377-7934**	1	FOAM	
	4	1	**377-7935**	1	FOAM	
	5	1	**377-7936**	1	FOAM	
	6	1	**379-6412**	1	INSULATION	

M - METRIC PART

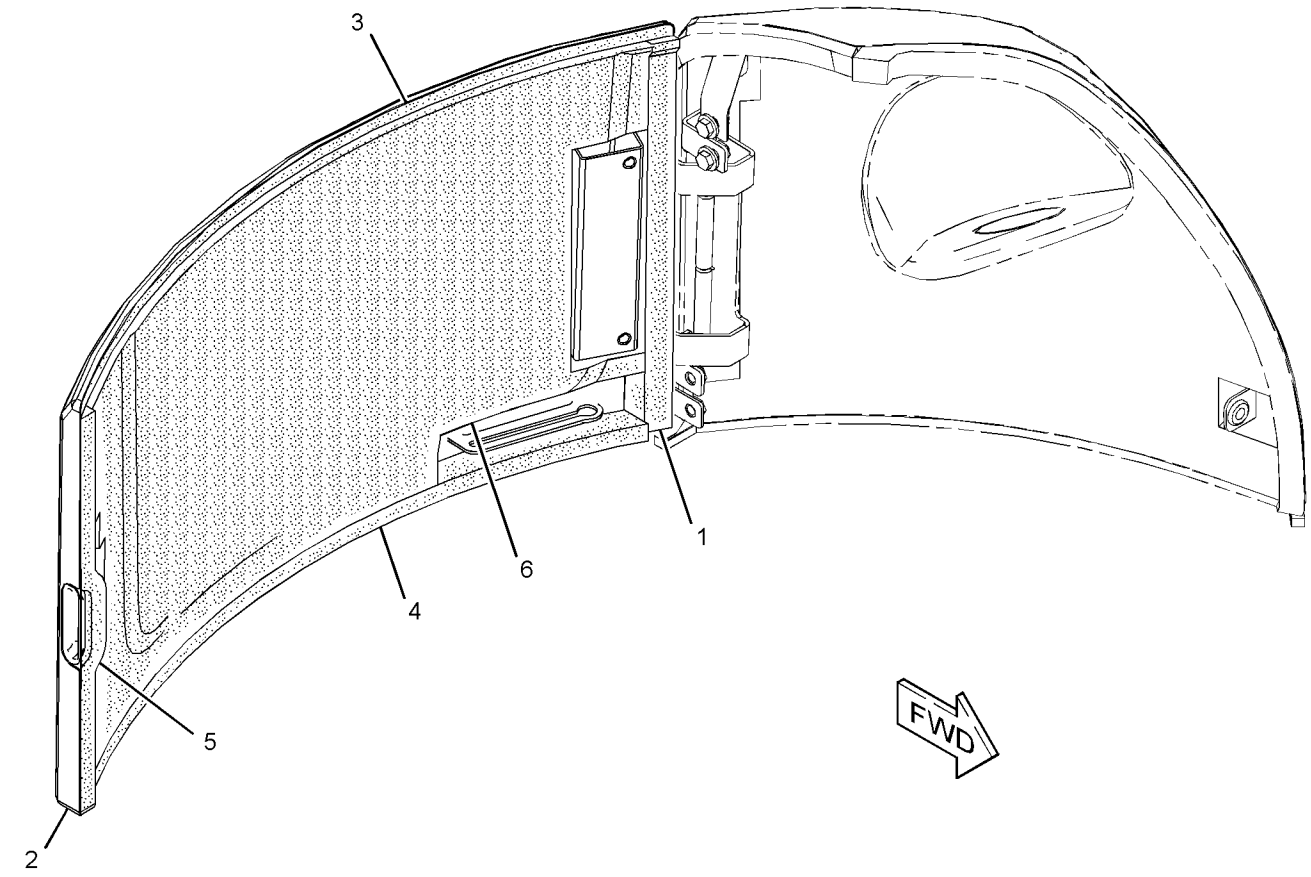

GRAPHIC #1 **<END>** g02798406

377-7881 HOOD GP

PART OF 367-0918 HOOD & GUARD GP

SMCS-7251 **i04629828**

NOTE	REF NO	GRAPHIC REF	PART NUMBER	QTY	PART NAME 1 2 3 4 5 6 (PRODUCT LEVEL)	SEE PAGE
	1	1	**285-7702**	1	COVER-LATCH	
	2	1	**369-3699**	1	LATCH AS	
		1	**191-0348**	1	GROMMET	
Y	3	1	*377-7887*	1	HOOD AS	155
	4	1	**7X-7729**	2	WASHER (11X25X3-MM THK)	
M	5	1	**8T-4136**	2	BOLT (M10X1.5X25-MM)	

M - METRIC PART
Y - SEPARATE ILLUSTRATION

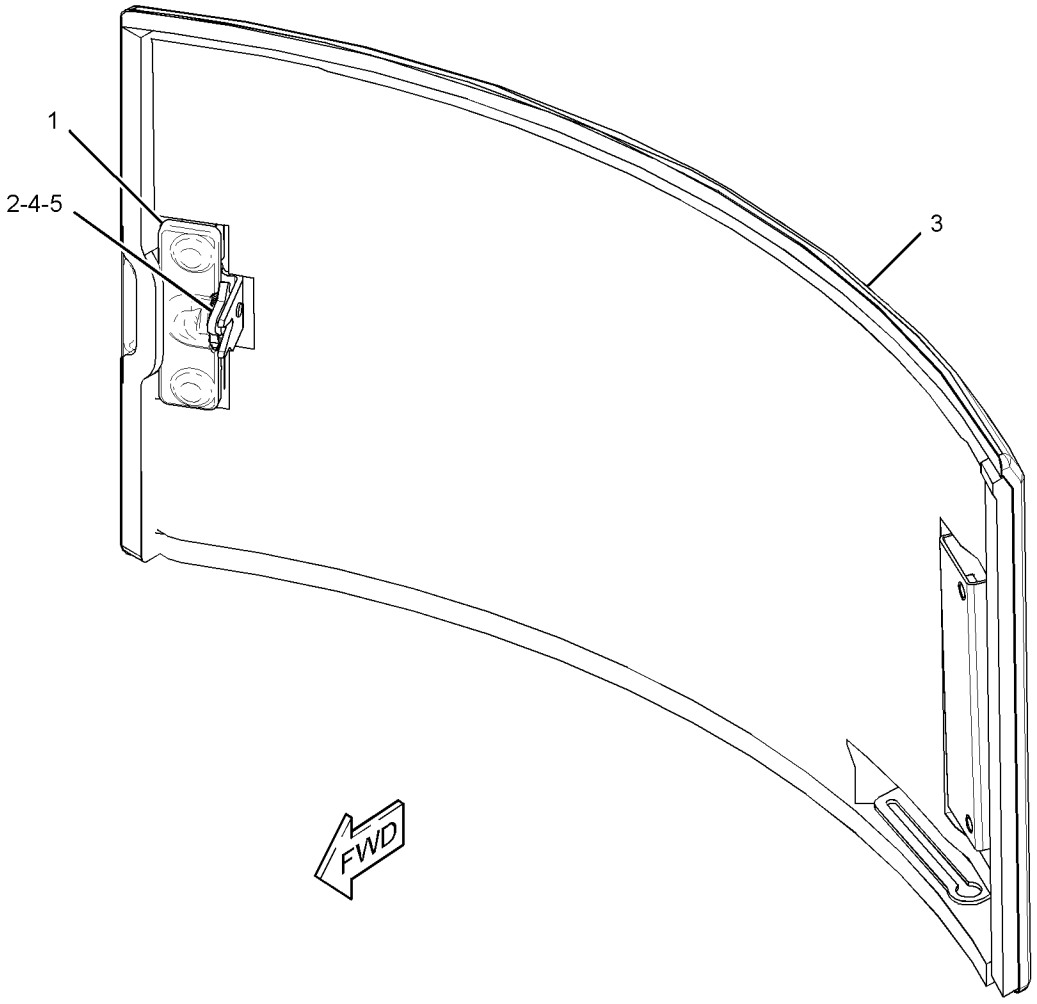

GRAPHIC #1 **<END>** g02800997

379-4691 LINES GP-GREASE

PART OF 376-6675 CHASSIS AR

SMCS-7510 **i04629836**

NOTE	REF NO	GRAPHIC REF	PART NUMBER	QTY	PART NAME 1 2 3 4 5 6 (PRODUCT LEVEL)	SEE PAGE
	1	1	**3B-8489**	3	FITTING-GREASE	
	2	1	**3S-2093**	1	STRAP-CABLE	
	3	1	**7K-1181**	5	STRAP-CABLE	
	4	1	**002-0639**	2	ADAPTER-PIPE	
	5	1	**4P-7581**	1	CLIP	
	6	1	**5P-4423**	6	ELBOW	
	7	1	**8T-4121**	1	WASHER-HARD (11X21X2.5-MM THK)	
M	8	1	**8T-4137**	1	BOLT (M10X1.5X20-MM)	
L	9	1	**205-6079**		TUBE (14.5-DM)	
L	9A	1	**205-6079**		TUBE (8.2-DM)	
L	9B	1	**205-6079**		TUBE (7.6-DM)	

L - ORDER BY THE DECIMETER
M - METRIC PART

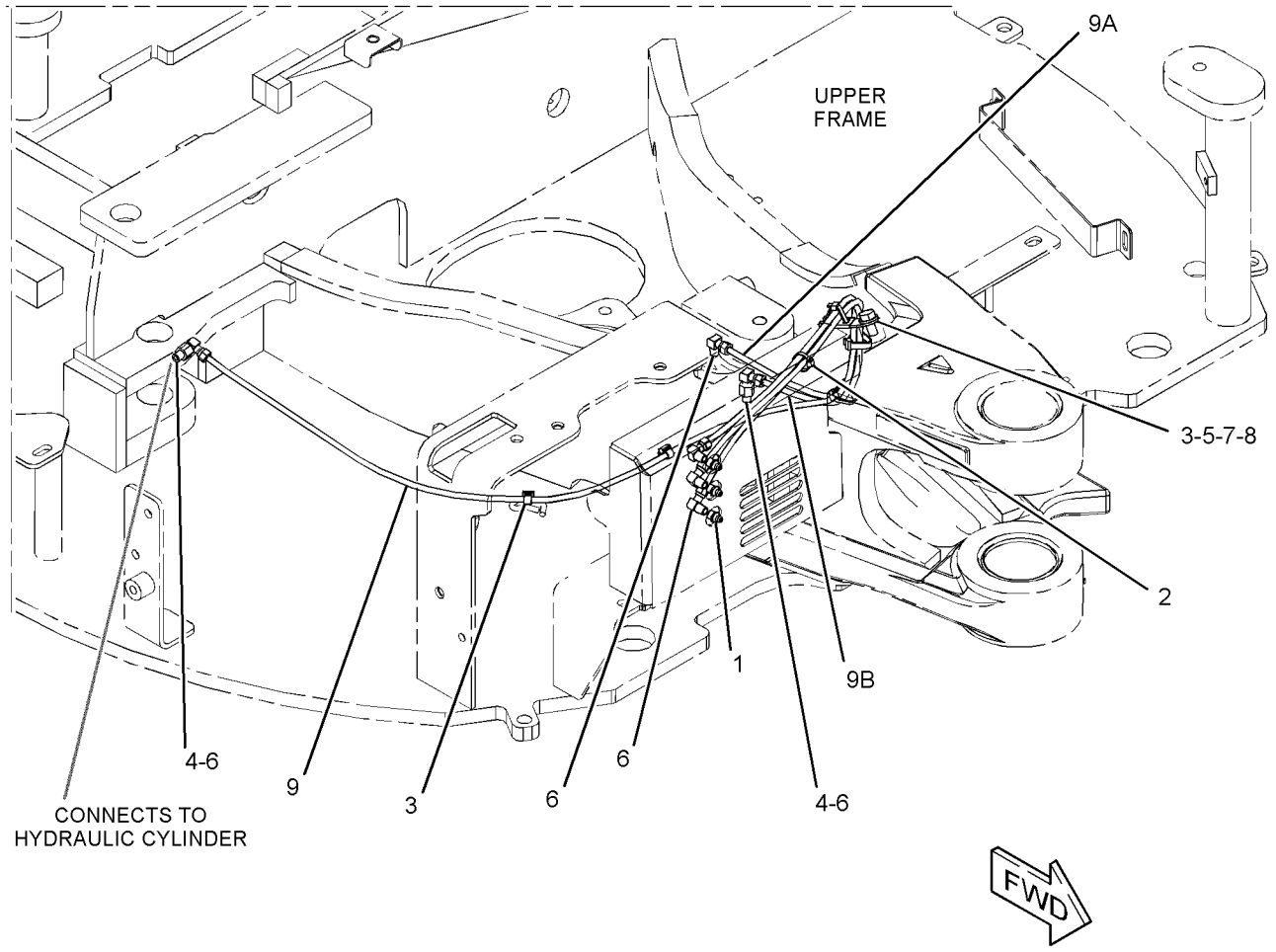

GRAPHIC #1 **<END>** g02798896

377-5096 PLATE AS

PART OF 377-5062 FRAME GP-REAR

AN ATTACHMENT

SMCS-7262 **i04678649**

NOTE	REF NO	GRAPHIC REF	PART NUMBER	QTY	PART NAME 1 2 3 4 5 6 (PRODUCT LEVEL)	SEE PAGE
	1	1	**377-5098**	1	FOAM	
	2	1	**377-5100**	1	FOAM	
	3	1	**377-5101**	1	FOAM	
	4	1	**377-5102**	1	FOAM	
	5	1	**377-5103**	1	FOAM	

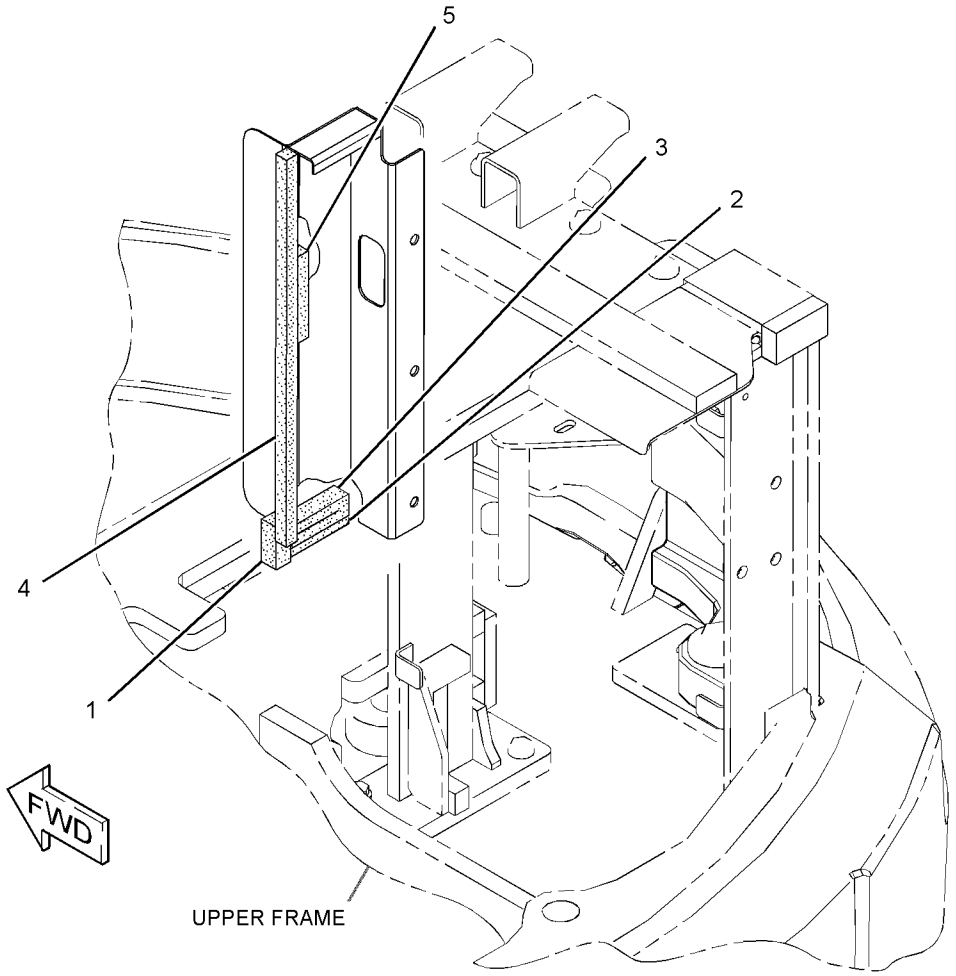

GRAPHIC #1 **<END>** g02799557

281-1020 STOP GP-SWING–BOOM

FIELD INSTALLATION

SMCS-6544 **i04019718**

NOTE	REF NO	GRAPHIC REF	PART NUMBER	QTY	PART NAME 1 2 3 4 5 6 (PRODUCT LEVEL)	SEE PAGE
	1	1	**284-6393**	1	STOP AS	
M	2	1	**8T-4183**	3	BOLT (M12X1.75X40-MM)	
	3	1	**8T-4223**	3	WASHER-HARD (13.5X25.5X3-MM THK)	

M - METRIC PART

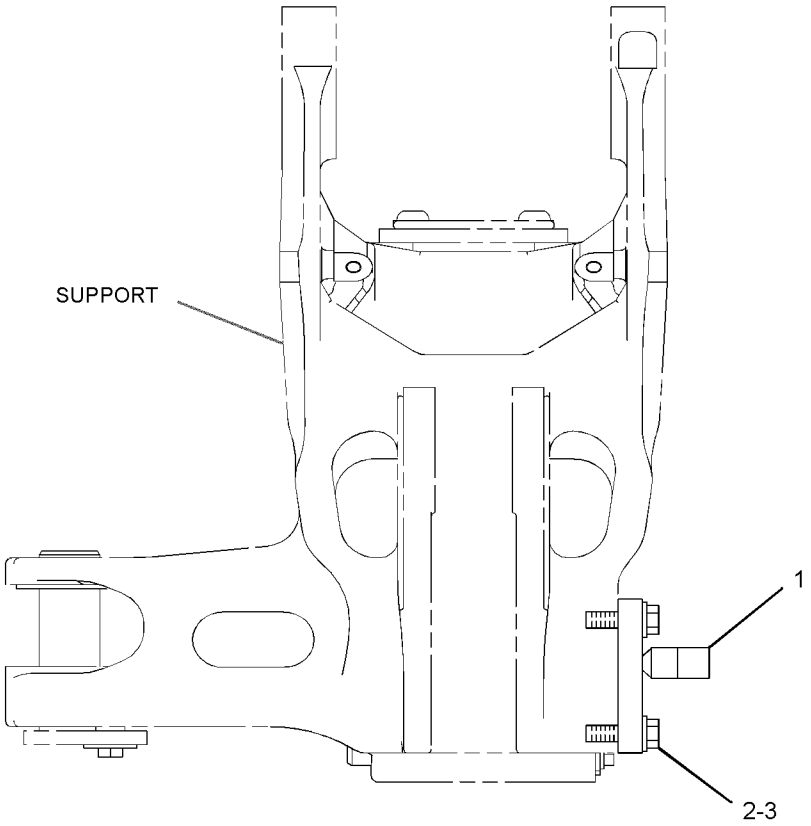

FRONT VIEW

GRAPHIC #1 **<END>** g01223108

379-6418 SUPPRESSION AR-SOUND—EUROPEAN MARKET

CANNOT BE USED WITH 379-6419—PAGE: 160

AN ATTACHMENT

SMCS-1801 **i04629184**

NOTE	PART NUMBER	QTY	PART NAME 1 2 3 4 5 6 (PRODUCT LEVEL)	SEE PAGE
Y	**377-7882**	1	HOOD & GUARD GP	154
Y	*381-4595*	1	SUPPRESSION GP-SOUND	161

Y - SEPARATE ILLUSTRATION

<END>

379-6419 SUPPRESSION AR-SOUND—HIGH AMBIENT

CANNOT BE USED WITH 379-6418—PAGE: 160

AN ATTACHMENT

SMCS-1801 **i04629185**

NOTE	PART NUMBER	QTY	PART NAME 1 2 3 4 5 6 (PRODUCT LEVEL)	SEE PAGE
Y	**377-7886**	1	COVER GP-ACCESS (RH)	135

Y - SEPARATE ILLUSTRATION

<END>

381-4595 SUPPRESSION GP-SOUND

PART OF 379-6418 SUPPRESSION AR-SOUND

AN ATTACHMENT

SMCS-7076 **i04629192**

NOTE	REF NO	GRAPHIC REF	PART NUMBER	QTY	PART NAME 1 2 3 4 5 6 (PRODUCT LEVEL)	SEE PAGE
	1	1	**381-4582**	1	INSULATION	
	2	1	**381-4583**	1	INSULATION	

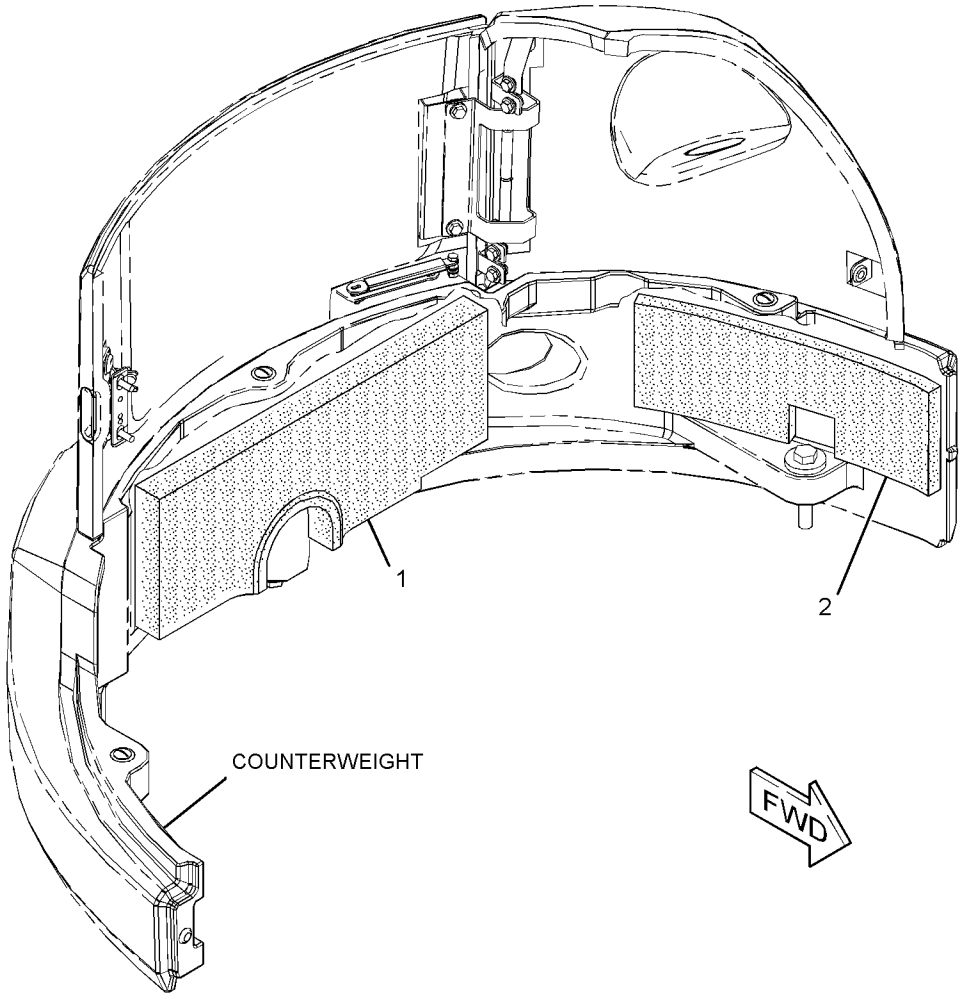

GRAPHIC #1 **<END>** g02789115

377-1179 FRAME GP-UNDERCARRIAGE

PART OF 380-8798 UNDERCARRIAGE AR

SMCS-7050 **i05350991**

NOTE	REF NO	GRAPHIC REF	PART NUMBER	QTY	PART NAME 1 2 3 4 5 6 (PRODUCT LEVEL)	SEE PAGE
E	1	1	**3E-8299**		SEAL (6-CM EACH)	
E	1A	1	**3E-8299**		SEAL (5.5-CM EACH)	
	2	1	**266-8792**	2	COVER	
	3	1	**377-1180**	1	FRAME AS-UNDERCARRIAGE	
	4	1	**8T-4121**	6	WASHER-HARD (11X21X2.5-MM THK)	
M	5	1	**8T-4137**	6	BOLT (M10X1.5X20-MM)	

E - ORDER BY THE CENTIMETER
M - METRIC PART

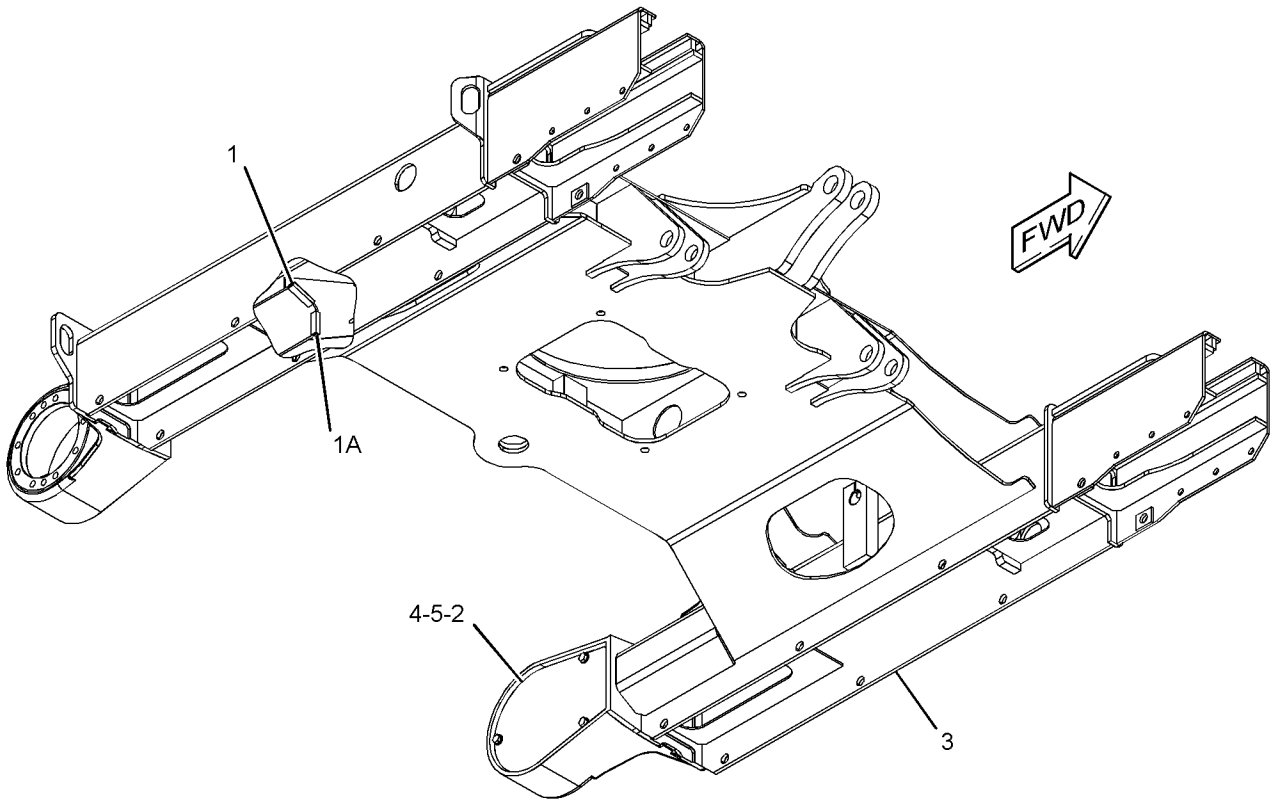

GRAPHIC #1 **<END>** g03397317

380-9952 GEAR & BEARING GP-SWING

PART OF 380-8798 UNDERCARRIAGE AR

SMCS-7063 **i04629856**

NOTE	REF NO	GRAPHIC REF	PART NUMBER	QTY	PART NAME 1 2 3 4 5 6 (PRODUCT LEVEL)	SEE PAGE
	1	1	**260-6348**	1	BEARING AS	
E		1	**225-5851**		SEAL (180-CM)	
E		1	**225-5852**		SEAL (180-CM)	
M	2	1	**8T-4910**	44	BOLT (M12X1.75X60-MM)	
	3	1	**140-4986**	2	DOWEL	
	4	1	**5P-1076**	20	WASHER-HARD (13.5X30X4-MM THK)	

E - ORDER BY THE CENTIMETER
M - METRIC PART

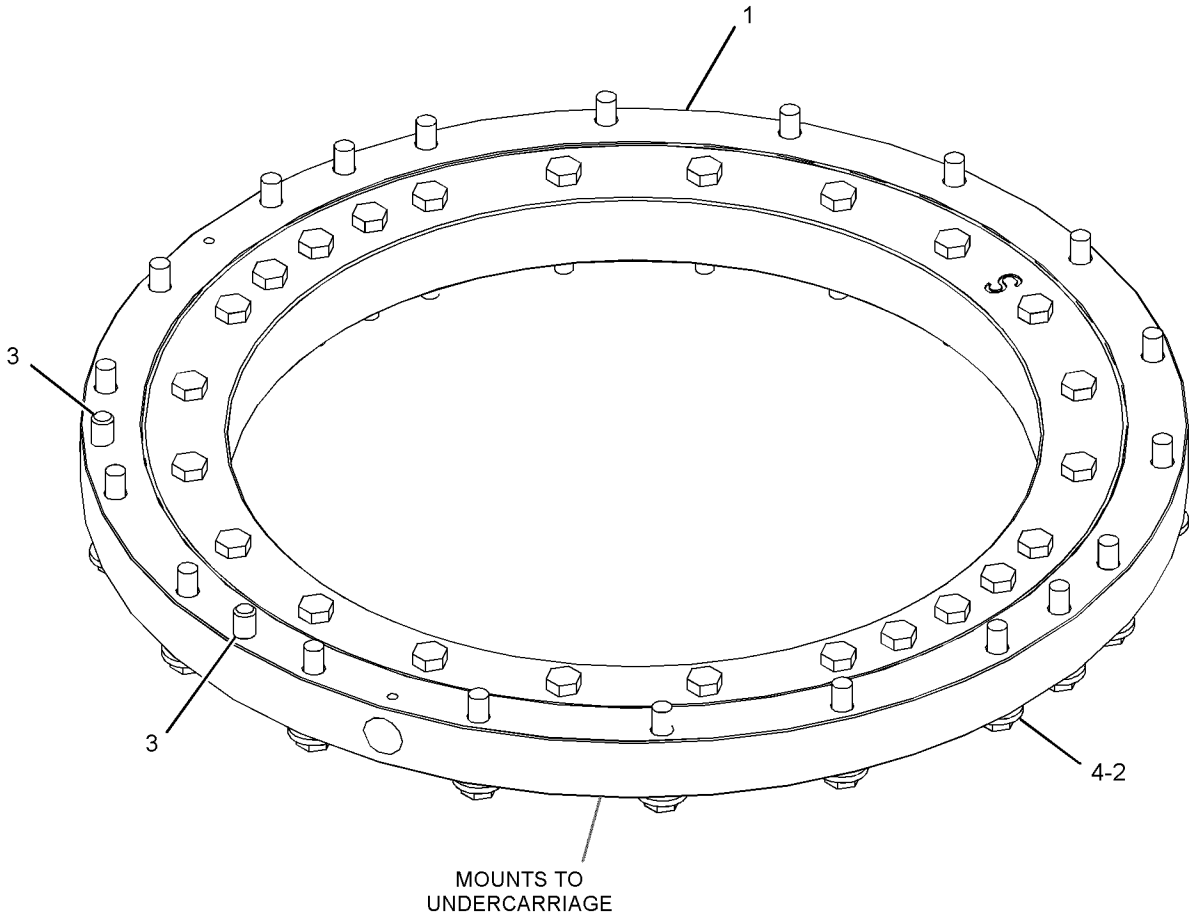

GRAPHIC #1 **<END>** g02798962

399-9396 GUARD GP-TRACK GUIDE

PART OF 382-4922 TRACK GP

AN ATTACHMENT

SMCS-4177 **i05015952**

NOTE	REF NO	GRAPHIC REF	PART NUMBER	QTY	PART NAME 1 2 3 4 5 6 (PRODUCT LEVEL)	SEE PAGE
	1	1	**399-9397**	1	GUARD AS (LH)	
	2	1	**399-9398**	1	GUARD AS (RH)	
M	3	1	**8T-4139**	6	BOLT (M12X1.75X30-MM)	
	4	1	**8T-4223**	6	WASHER-HARD (13.5X25.5X3-MM THK)	

M - METRIC PART

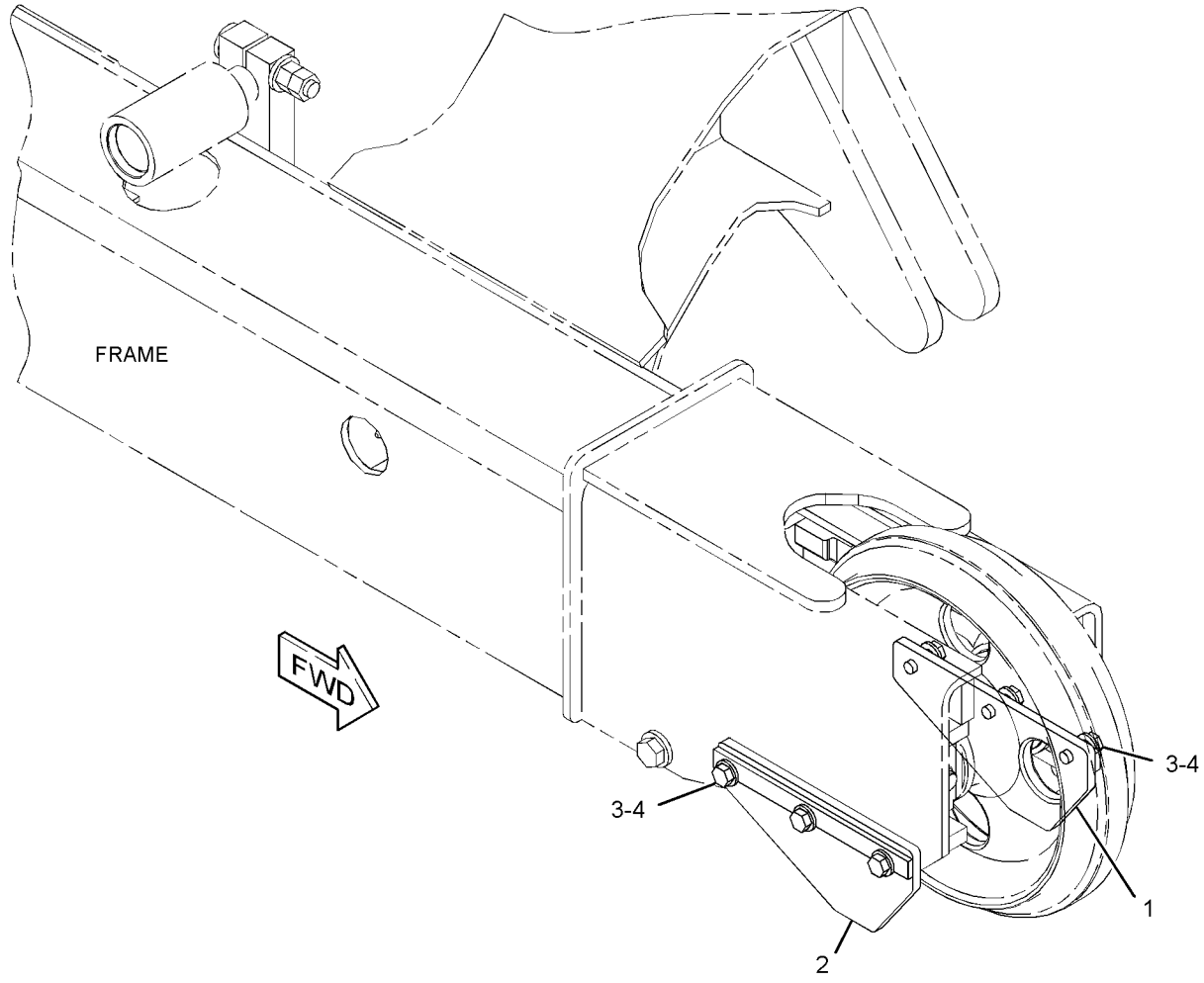

GRAPHIC #1 **<END>** g03213143

265-8734 IDLER GP-FRONT

S/N: TTN324-UP

PART OF 380-8798 UNDERCARRIAGE AR

SMCS-4159 **i05357866**

NOTE	REF NO	GRAPHIC REF	PART NUMBER	QTY	PART NAME 1 2 3 4 5 6 (PRODUCT LEVEL)	SEE PAGE
CY	1	1	*392-7373*	1	IDLER GP-FRONT (LH)	171
CY	2	1	*392-7374*	1	IDLER GP-FRONT (RH)	173

C - CHANGE FROM PREVIOUS TYPE
Y - SEPARATE ILLUSTRATION

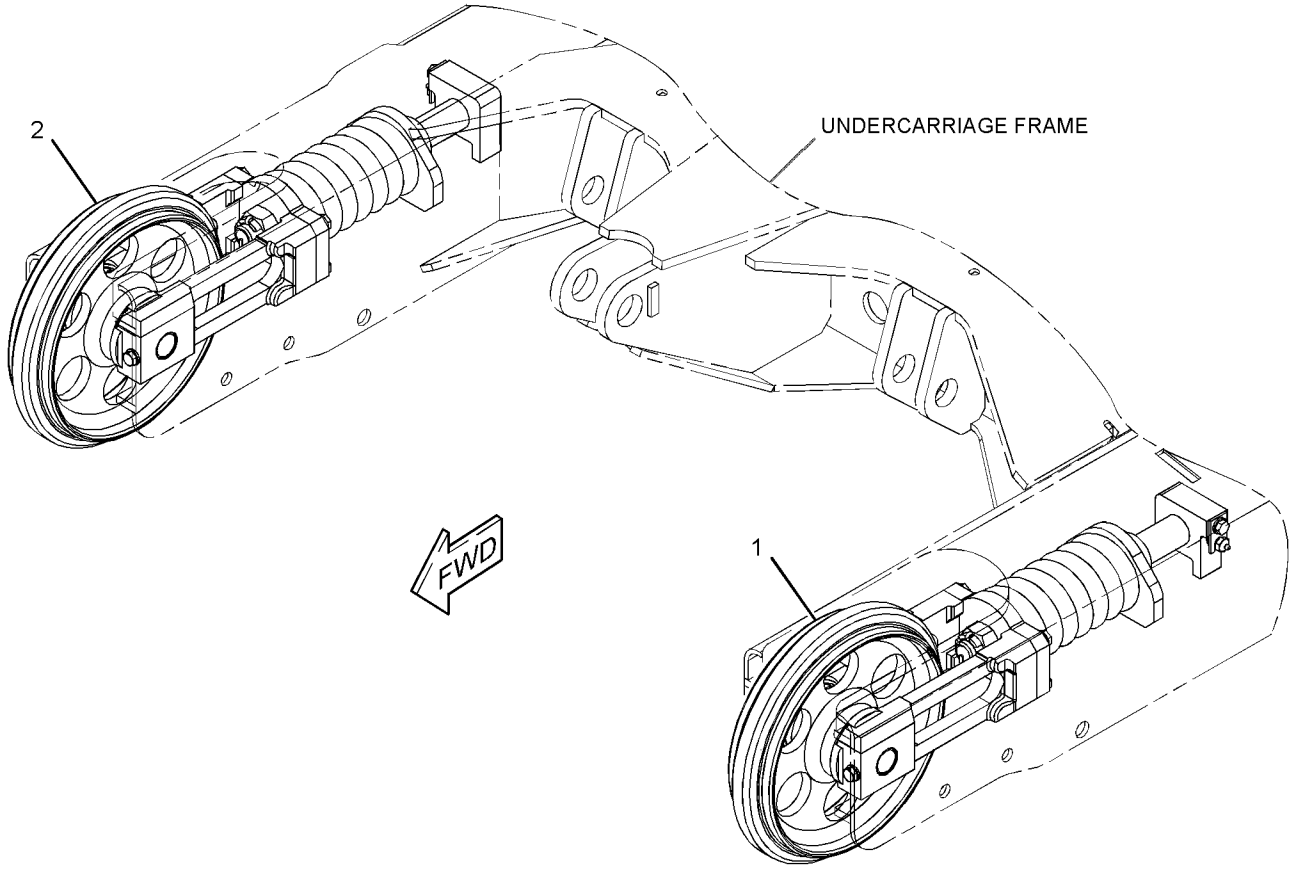

GRAPHIC #1 **<END>** g01220459

265-8734 IDLER GP-FRONT

S/N: TTN1-323

PART OF 380-8798 UNDERCARRIAGE AR

SMCS-4159 **i04019615**

NOTE	REF NO	GRAPHIC REF	PART NUMBER	QTY	PART NAME 1 2 3 4 5 6 (PRODUCT LEVEL)	SEE PAGE
Y	1	1	*267-4827*	1	IDLER GP-FRONT (LH)	167
Y	2	1	*267-4828*	1	IDLER GP-FRONT (RH)	169

Y - SEPARATE ILLUSTRATION

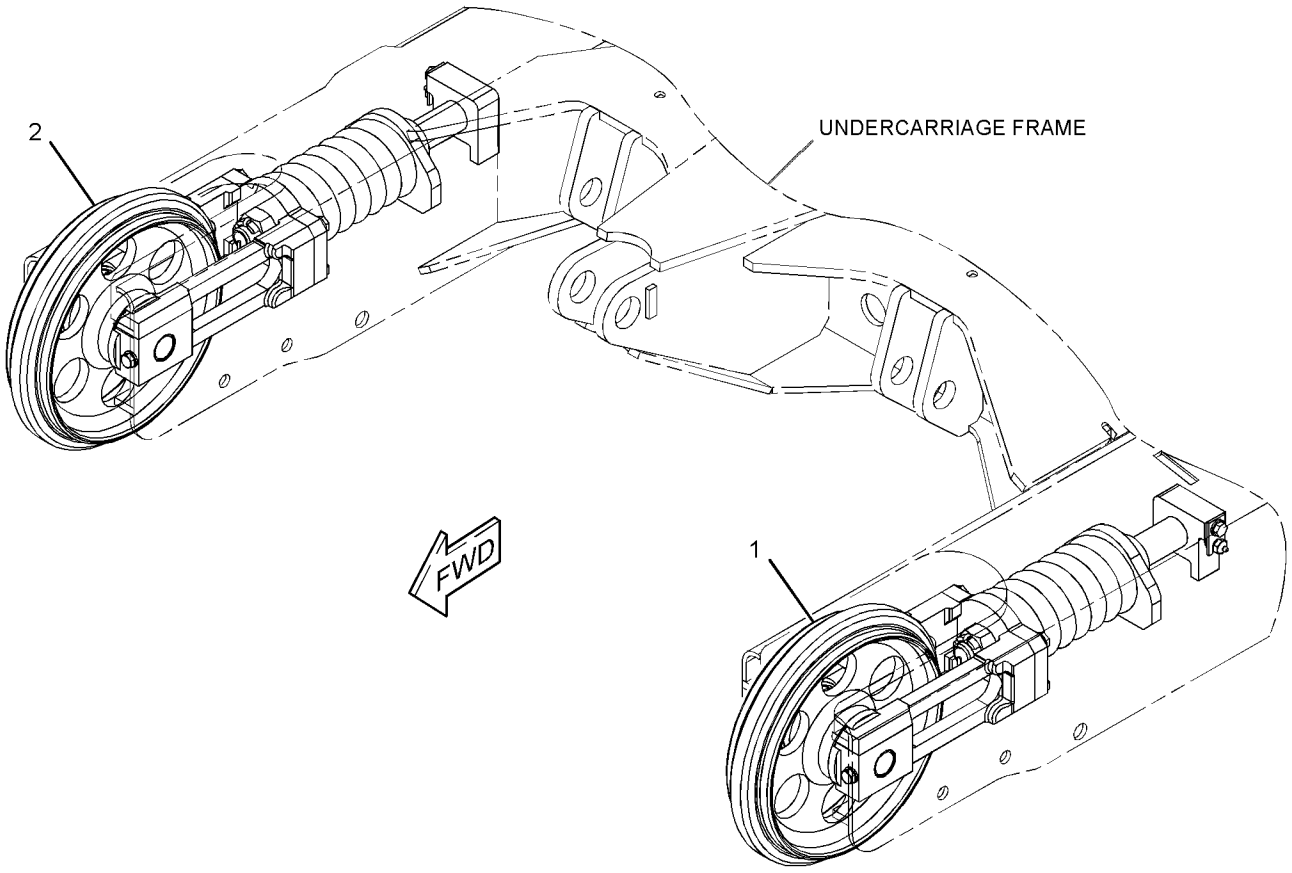

GRAPHIC #1 **<END>** g01220459

267-4827 IDLER GP-FRONT–LH

S/N: TTN1-323

PART OF 265-8734 IDLER GP-FRONT

SMCS-4159 **i04775399**

NOTE	REF NO	GRAPHIC REF	PART NUMBER	QTY	PART NAME 1 2 3 4 5 6 (PRODUCT LEVEL)	SEE PAGE
	1	1	**267-4829**	1	IDLER & BEARING AS	
	1A	1	**154-2233**	2	BUSHING	
	2	1	**267-4831**	1	SHAFT-TRACK IDLER	
	3	1	**267-4832**	1	SUPPORT	
	4	1	**234-8984**	2	SEAL GP-DUO-CONE	
	5	1	**095-1595**	2	SEAL-O-RING	
	6	1	**154-2235**	2	BOLT (M10X1.25X45-MM)	
	7	1	**154-2236**	3	WASHER (10.2X22X3.2-MM THK)	
	8	1	**267-4833**	1	CYLINDER AS	
	9	1	**095-1604**	1	SEAL-O-RING	
	10	1	**095-1794**	1	RING-BACKUP	
	11	1	**120-4664**	1	SEAL-DUST	
	12	1	**274-8127**	1	ROD AS-PISTON (LH)	
	13	1	**232-7692**	1	FITTING-GREASE	
	14	1	**274-5381**	1	PLATE-LOCK	
M	15	1	**8T-4137**	1	BOLT (M10X1.5X20-MM)	
	16	1	**267-4835**	1	SPRING	
	17	1	**267-4836**	1	PLATE	
	18	1	**120-4636**	1	NUT (M30X3-THD)	
	19	1	**3B-4639**	1	PIN-COTTER	
M	20	1	**8T-4194**	4	BOLT (M12X1.75X50-MM)	
	21	1	**8T-4223**	4	WASHER-HARD (13.5X25.5X3-MM THK)	
	22	1	**381-7474**	1	SUPPORT	
	23	1	**190-4896**	1	PLUG	

M - METRIC PART

267-4827 **IDLER GP-FRONT (*contd.*)** **i04775399**

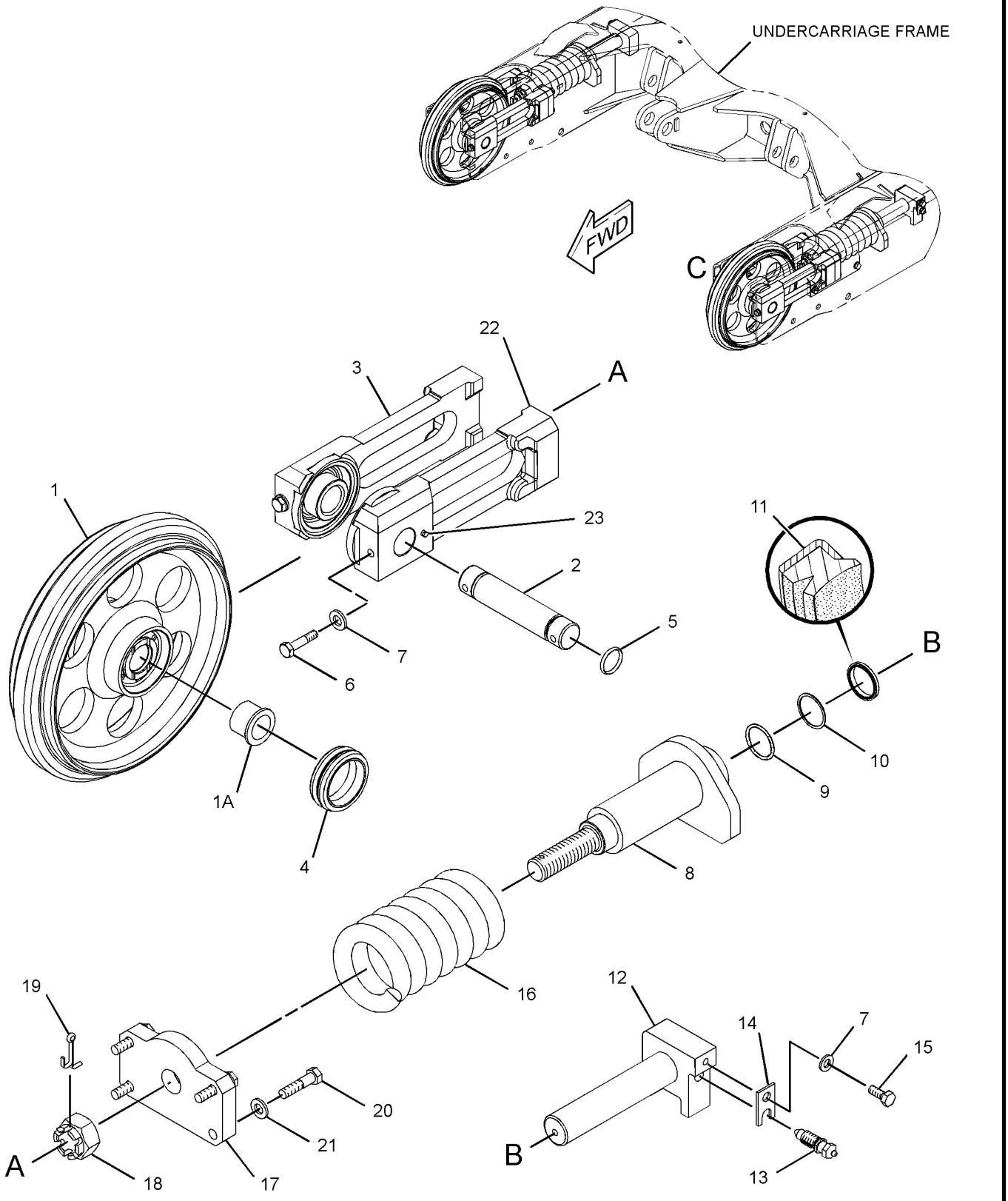

VIEW OF AREA C
(EXPLODED)

GRAPHIC #1

<END>

g02890516

267-4828 IDLER GP-FRONT—RH

S/N: TTN1-323

PART OF 265-8734 IDLER GP-FRONT

SMCS-4159 **i04775393**

NOTE	REF NO	GRAPHIC REF	PART NUMBER	QTY	PART NAME 1 2 3 4 5 6 (PRODUCT LEVEL)	SEE PAGE
	1	1	**267-4829**	1	IDLER & BEARING AS	
	1A	1	**154-2233**	2	BUSHING	
	2	1	**267-4831**	1	SHAFT-TRACK IDLER	
	3	1	**267-4832**	1	SUPPORT	
	4	1	**234-8984**	2	SEAL GP-DUO-CONE	
	5	1	**095-1595**	2	SEAL-O-RING	
	6	1	**154-2235**	2	BOLT (M10X1.25X45-MM)	
	7	1	**154-2236**	3	WASHER (10.2X22X3.2-MM THK)	
	8	1	**267-4833**	1	CYLINDER AS	
	9	1	**095-1604**	1	SEAL-O-RING	
	10	1	**095-1794**	1	RING-BACKUP	
	11	1	**120-4664**	1	SEAL-DUST	
	12	1	**274-8128**	1	ROD AS-PISTON (RH)	
	13	1	**232-7692**	1	FITTING-GREASE	
	14	1	**274-5381**	1	PLATE-LOCK	
M	15	1	**8T-4137**	1	BOLT (M10X1.5X20-MM)	
	16	1	**267-4835**	1	SPRING	
	17	1	**267-4836**	1	PLATE	
	18	1	**120-4636**	1	NUT (M30X3-THD)	
	19	1	**3B-4639**	1	PIN-COTTER	
M	20	1	**8T-4194**	4	BOLT (M12X1.75X50-MM)	
	21	1	**8T-4223**	4	WASHER-HARD (13.5X25.5X3-MM THK)	
	22	1	**381-7474**	1	SUPPORT	
	23	1	**190-4896**	1	PLUG	

M - METRIC PART

267-4828 **IDLER GP-FRONT (*contd.*)** **i04775393**

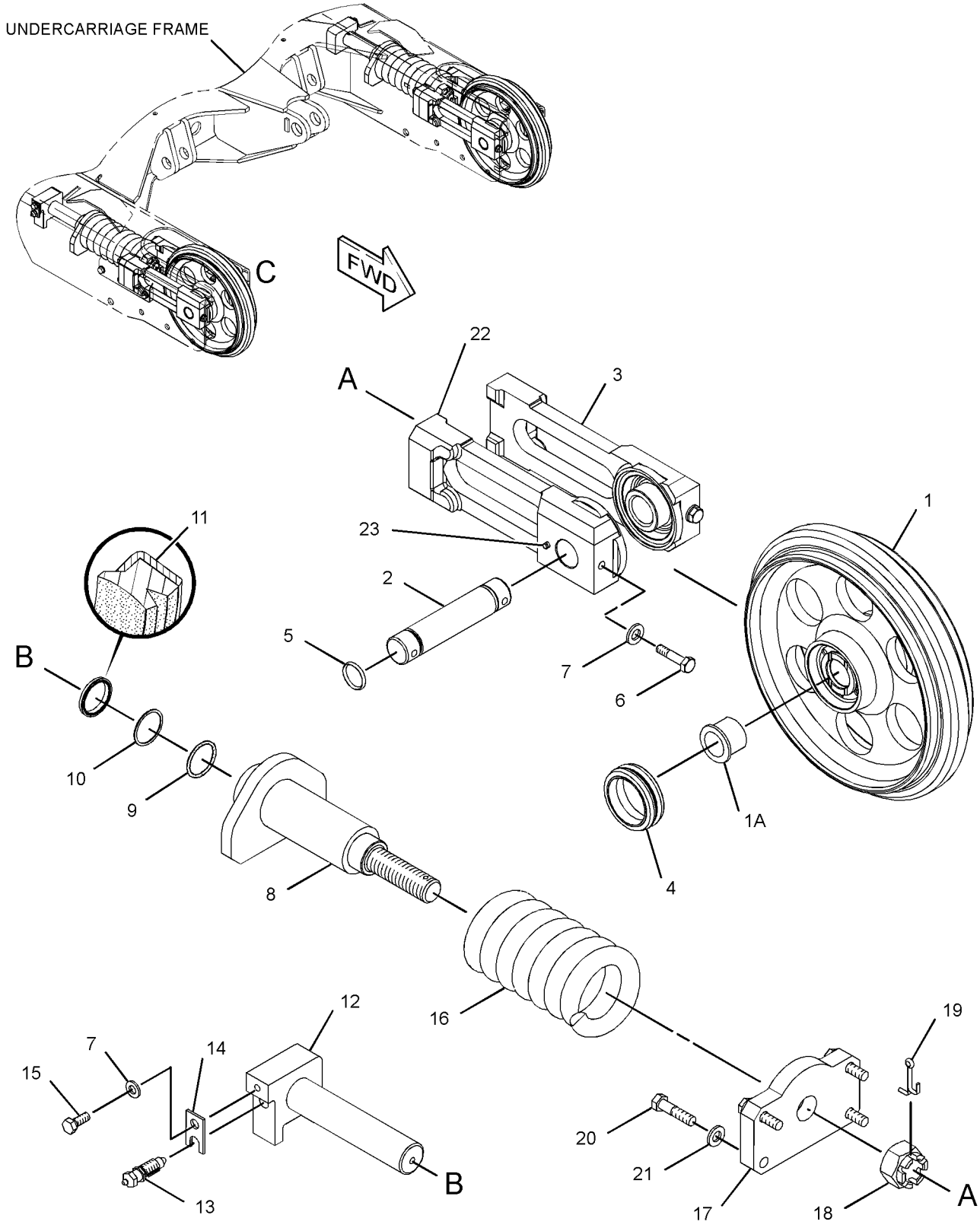

VIEW OF AREA C
(EXPLODED)

GRAPHIC #1 **<END>** g02893624

392-7373 IDLER GP-FRONT–LH

S/N: TTN324-UP

PART OF 265-8734 IDLER GP-FRONT

SMCS-4159 **i05357867**

NOTE	REF NO	GRAPHIC REF	PART NUMBER	QTY	PART NAME 1 2 3 4 5 6 (PRODUCT LEVEL)	SEE PAGE
	1	1	**267-4829**	1	IDLER & BEARING AS	
	1A	1	**154-2233**	2	BUSHING	
	2	1	**267-4831**	1	SHAFT-TRACK IDLER	
	3	1	**267-4832**	1	SUPPORT	
	4	1	**234-8984**	2	SEAL GP-DUO-CONE	
	5	1	**095-1595**	2	SEAL-O-RING	
	6	1	**154-2235**	2	BOLT (M10X1.25X45-MM)	
	7	1	**154-2236**	3	WASHER (10.2X22X3.2-MM THK)	
	8	1	**267-4833**	1	CYLINDER AS	
	9	1	**095-1604**	1	SEAL-O-RING	
	10	1	**095-1794**	1	RING-BACKUP	
	11	1	**120-4664**	1	SEAL-DUST	
	12	1	**274-8127**	1	ROD AS-PISTON (LH)	
	13	1	**232-7692**	1	FITTING-GREASE	
	14	1	**274-5381**	1	PLATE-LOCK	
M	15	1	**8T-4137**	1	BOLT (M10X1.5X20-MM)	
	16	1	**267-4835**	1	SPRING	
	17	1	**267-4836**	1	PLATE	
	18	1	**120-4636**	1	NUT (M30X3-THD)	
	19	1	**3B-4639**	1	PIN-COTTER	
M	20	1	**8T-4194**	4	BOLT (M12X1.75X50-MM)	
	21	1	**8T-4223**	4	WASHER-HARD (13.5X25.5X3-MM THK)	
	22	1	**381-7474**	1	SUPPORT	
	23	1	**190-4896**	1	PLUG	

M - METRIC PART

392-7373 **IDLER GP-FRONT (*contd.*)** **i05357867**

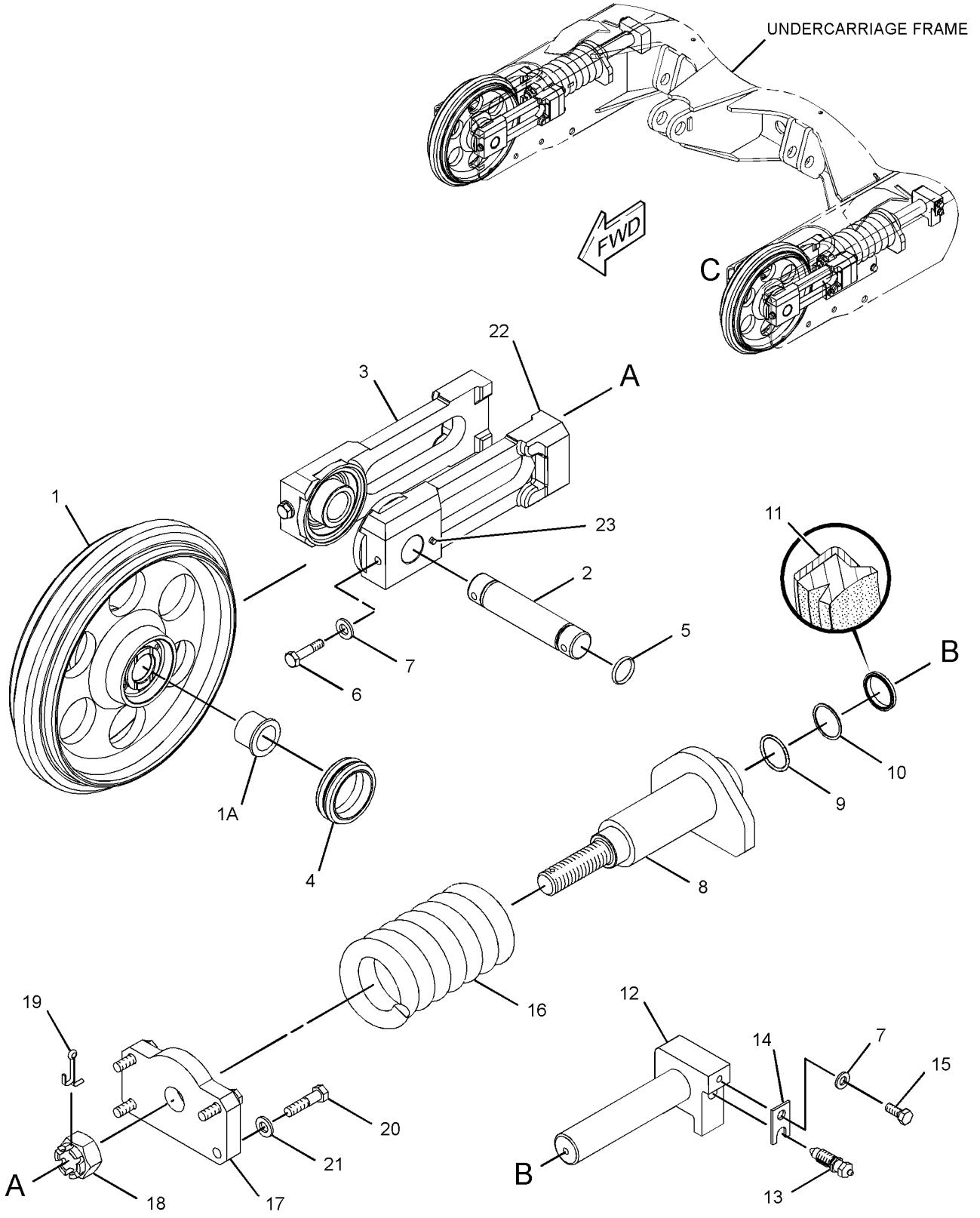

VIEW OF AREA C
(EXPLODED)

GRAPHIC #1

<END>

g02890516

392-7374 IDLER GP-FRONT–RH

S/N: TTN324-UP

PART OF 265-8734 IDLER GP-FRONT

SMCS-4159 **i05357868**

NOTE	REF NO	GRAPHIC REF	PART NUMBER	QTY	PART NAME 1 2 3 4 5 6 (PRODUCT LEVEL)	SEE PAGE
	1	1	**267-4829**	1	IDLER & BEARING AS	
	1A	1	**154-2233**	2	BUSHING	
	2	1	**267-4831**	1	SHAFT-TRACK IDLER	
	3	1	**267-4832**	1	SUPPORT	
	4	1	**234-8984**	2	SEAL GP-DUO-CONE	
	5	1	**095-1595**	2	SEAL-O-RING	
	6	1	**154-2235**	2	BOLT (M10X1.25X45-MM)	
	7	1	**154-2236**	3	WASHER (10.2X22X3.2-MM THK)	
	8	1	**267-4833**	1	CYLINDER AS	
	9	1	**095-1604**	1	SEAL-O-RING	
	10	1	**095-1794**	1	RING-BACKUP	
	11	1	**120-4664**	1	SEAL-DUST	
	12	1	**274-8128**	1	ROD AS-PISTON (RH)	
	13	1	**232-7692**	1	FITTING-GREASE	
	14	1	**274-5381**	1	PLATE-LOCK	
M	15	1	**8T-4137**	1	BOLT (M10X1.5X20-MM)	
	16	1	**267-4835**	1	SPRING	
	17	1	**267-4836**	1	PLATE	
	18	1	**120-4636**	1	NUT (M30X3-THD)	
	19	1	**3B-4639**	1	PIN-COTTER	
M	20	1	**8T-4194**	4	BOLT (M12X1.75X50-MM)	
	21	1	**8T-4223**	4	WASHER-HARD (13.5X25.5X3-MM THK)	
	22	1	**381-7474**	1	SUPPORT	
	23	1	**190-4896**	1	PLUG	

M - METRIC PART

392-7374 **IDLER GP-FRONT (*contd.*)** **i05357868**

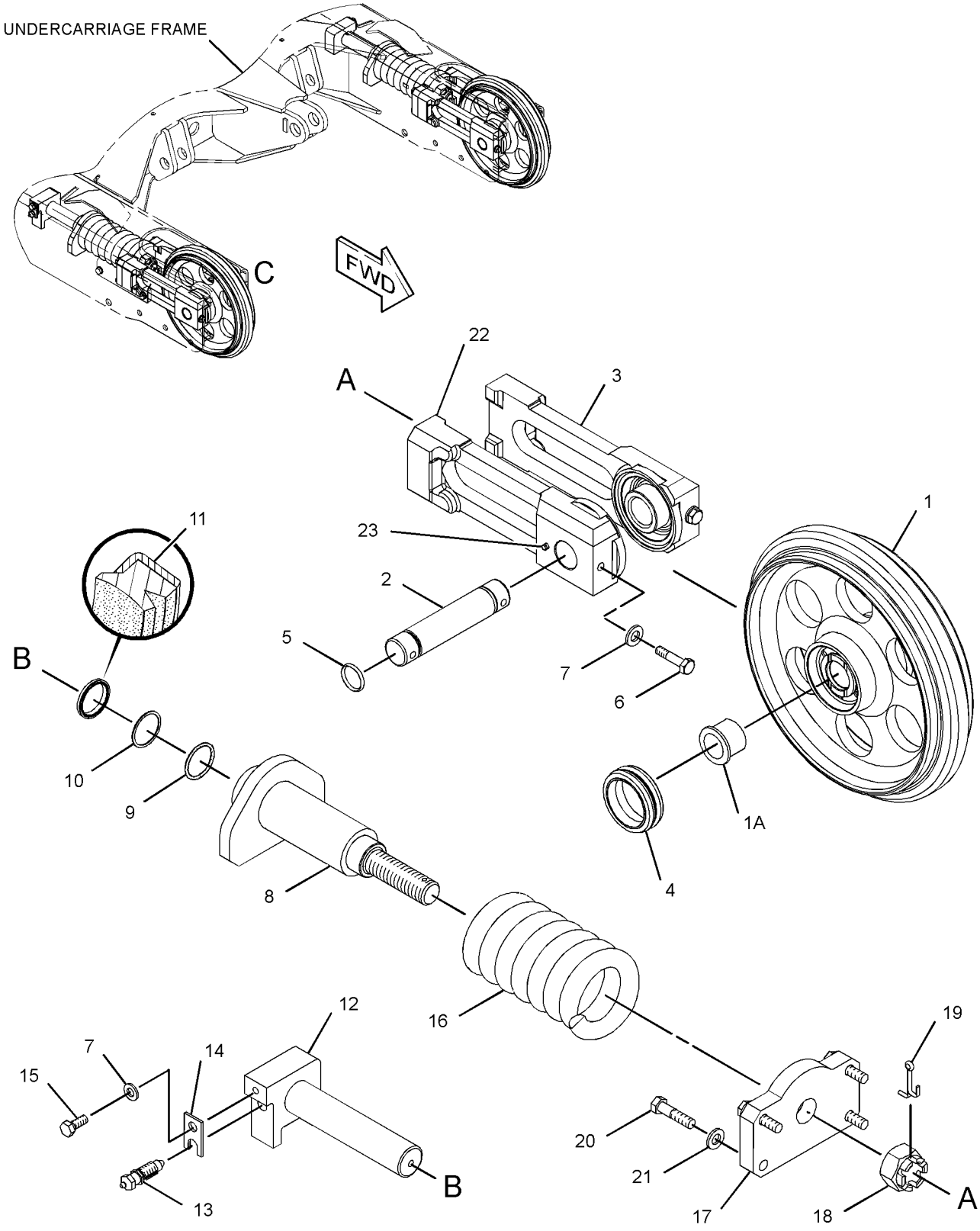

VIEW OF AREA C
(EXPLODED)

GRAPHIC #1 **<END>** g02893624

396-6224 LINK AS-TRACK

PART OF 396-6223 TRACK GP

AN ATTACHMENT

SMCS-4169, 4171 **i05015956**

NOTE	REF NO	GRAPHIC REF	PART NUMBER	QTY	PART NAME 1 2 3 4 5 6 (PRODUCT LEVEL)	SEE PAGE
	1	1	**396-6225**	45	LINK-TRACK (RH)	
	2	1	**396-6226**	45	LINK-TRACK (LH)	
	3	1	**396-6227**	1	LINK-TRACK MASTER	
	4	1	**396-6228**	1	LINK-TRACK MASTER	
	5	1	**396-6229**	46	BUSHING-TRACK	
	6	1	**396-6230**	45	PIN-TRACK	
	7	1	**396-6231**	1	PIN-TRACK MASTER	
	8	1	**396-6232**	1	PIN-COTTER	

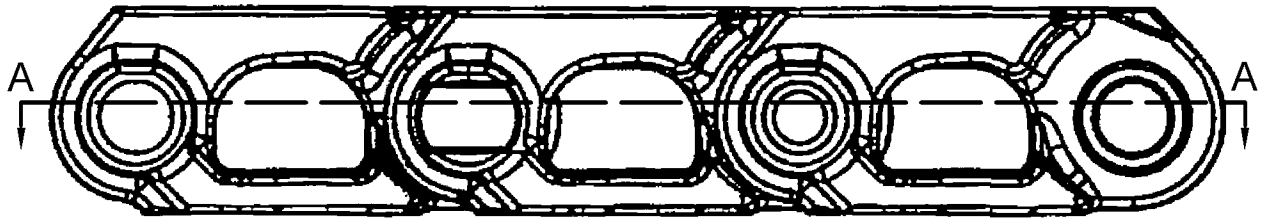

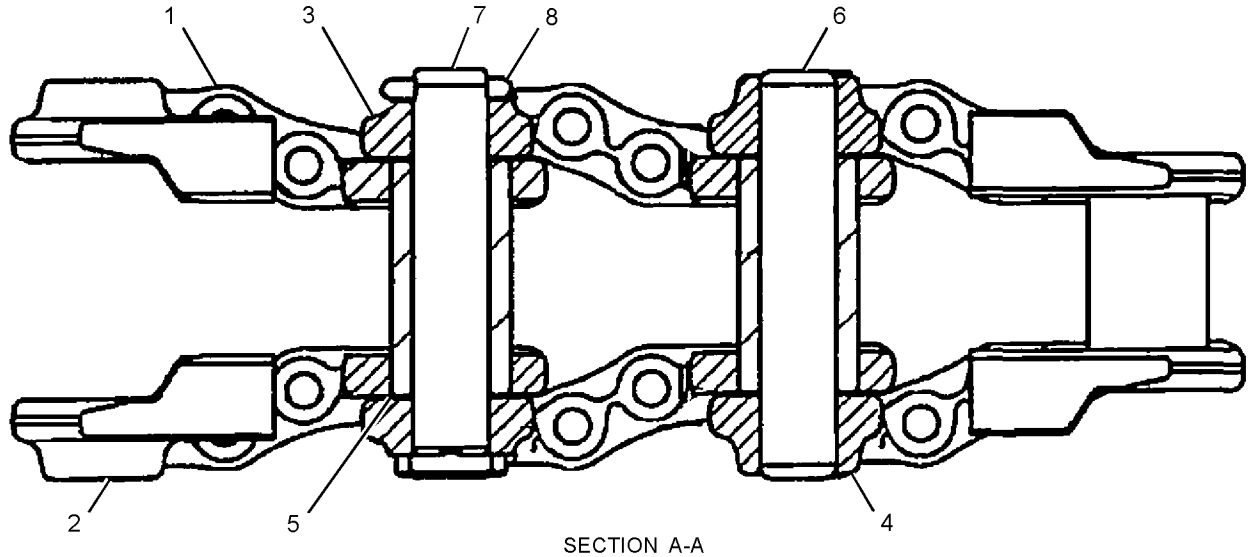

SECTION A-A

GRAPHIC #1 **<END>** g03216377

260-6342 ROLLER AR-TRACK & CARRIER

PART OF 380-8798 UNDERCARRIAGE AR

SMCS-4154, 4180 **i05090830**

NOTE	REF NO	GRAPHIC REF	PART NUMBER	QTY	PART NAME 1 2 3 4 5 6 (PRODUCT LEVEL)	SEE PAGE
Y	1	1	**266-8793**	8	ROLLER GP-TRACK-CENTER FLANGE	178
Y	2	1	**266-8794**	2	ROLLER GP-TRACK CARRIER	177
	3	1	**7X-0515**	20	WASHER-HARD (17X35X5-MM THK)	
M	4	1	**8T-4132**	4	NUT (M16X2-THD)	
M	5	1	**8T-4173**	2	BOLT (M16X2X110-MM)	
M	6	1	**8T-7338**	16	BOLT (M16X2X45-MM)	

M - METRIC PART
Y - SEPARATE ILLUSTRATION

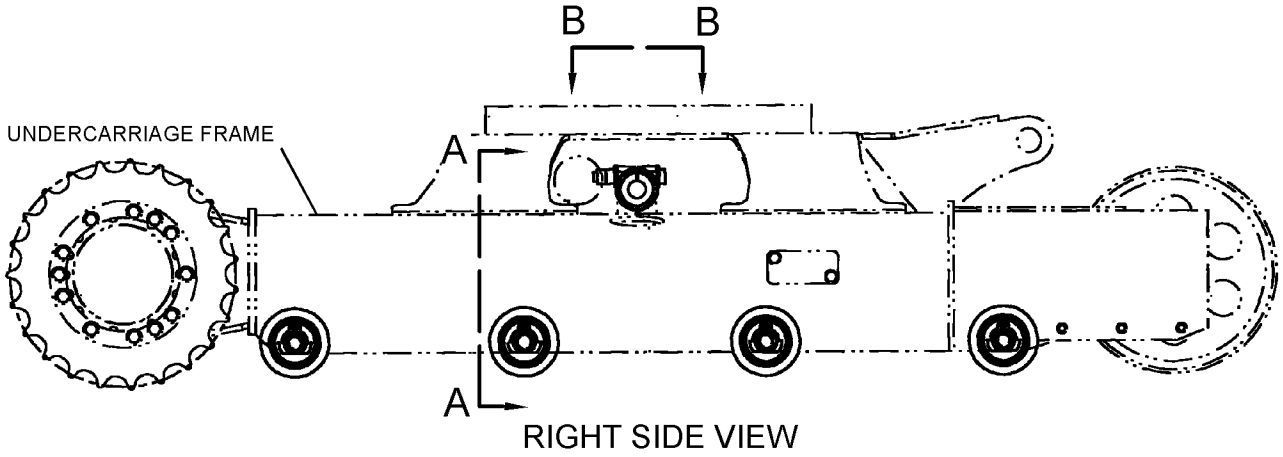

RIGHT SIDE VIEW

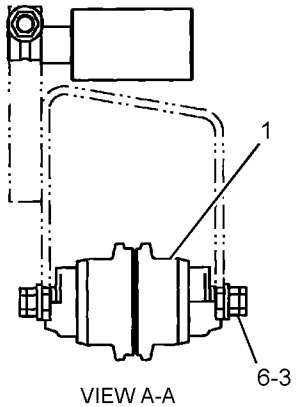

VIEW A-A

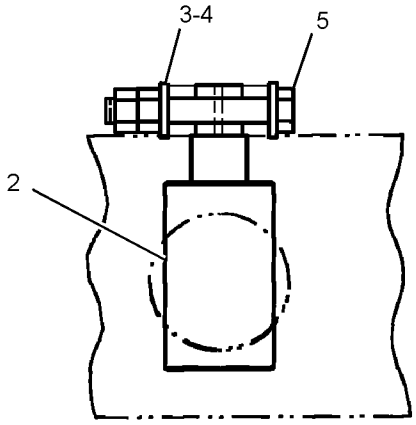

VIEW B-B

GRAPHIC #1 **<END>** g01220066

266-8794 ROLLER GP-TRACK CARRIER

PART OF 260-6342 ROLLER AR-TRACK & CARRIER

SMCS-4154 **i04019612**

NOTE	REF NO	GRAPHIC REF	PART NUMBER	QTY	PART NAME 1 2 3 4 5 6 (PRODUCT LEVEL)	SEE PAGE
	1	1	**277-4196**	1	SEAL AS	
	2	1	**277-4197**	1	CAP AS	
	3	1	**6V-7644**	1	RING-RETAINING	
	4	1	**6B-1124**	2	BALL BEARING	

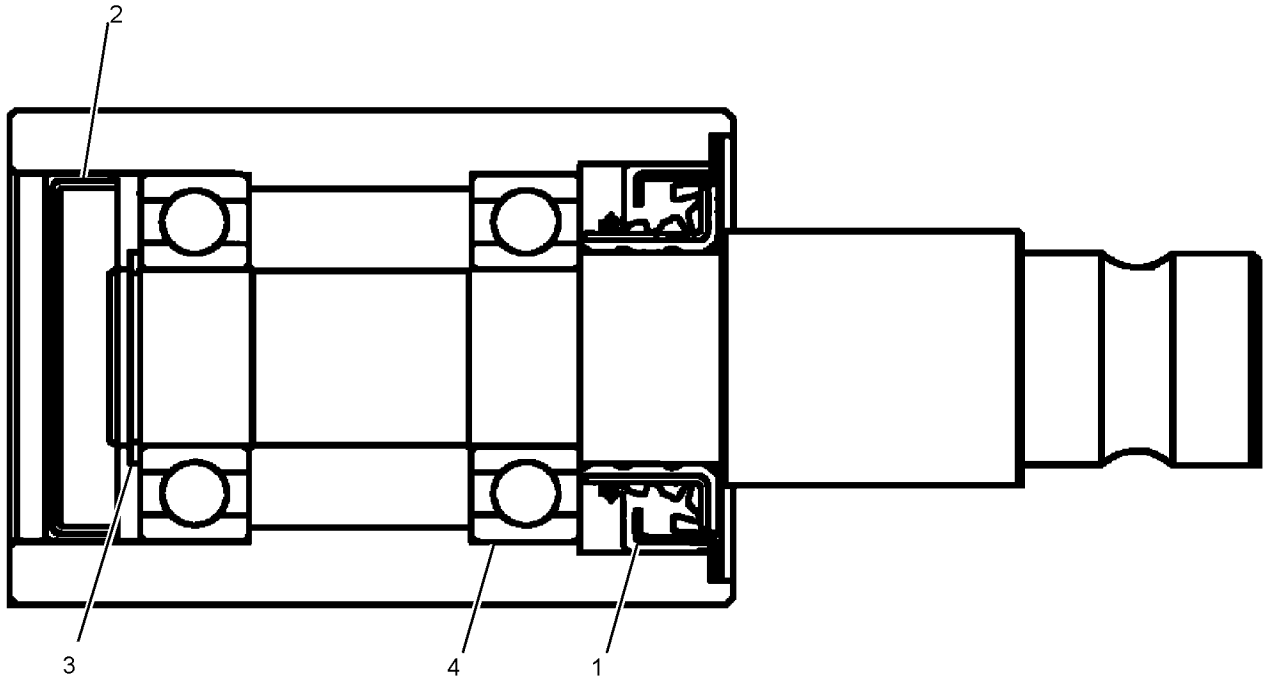

GRAPHIC #1 **<END>** g01220094

266-8793 ROLLER GP-TRACK-CENTER FLANGE

PART OF 260-6342 ROLLER AR-TRACK & CARRIER

SMCS-4180 **i04652822**

NOTE	REF NO	GRAPHIC REF	PART NUMBER	QTY	PART NAME 1 2 3 4 5 6 (PRODUCT LEVEL)	SEE PAGE
	1	1	**279-9095**	1	ROLLER & BEARING AS	
		1	**234-8956**	2	BUSHING	
	2	1	**234-8958**	1	COLLAR-TRACK ROLLER	
	3	1	**280-2313**	1	SHAFT AS-TRACK ROLLER	
	4	1	**234-8962**	1	RING-RETAINING	
	5	1	**234-8959**	2	SEAL GP-METAL FACE	
	6	1	**095-1657**	1	SEAL-O-RING	
	7	1	**8T-6757**	1	PLUG-PIPE	

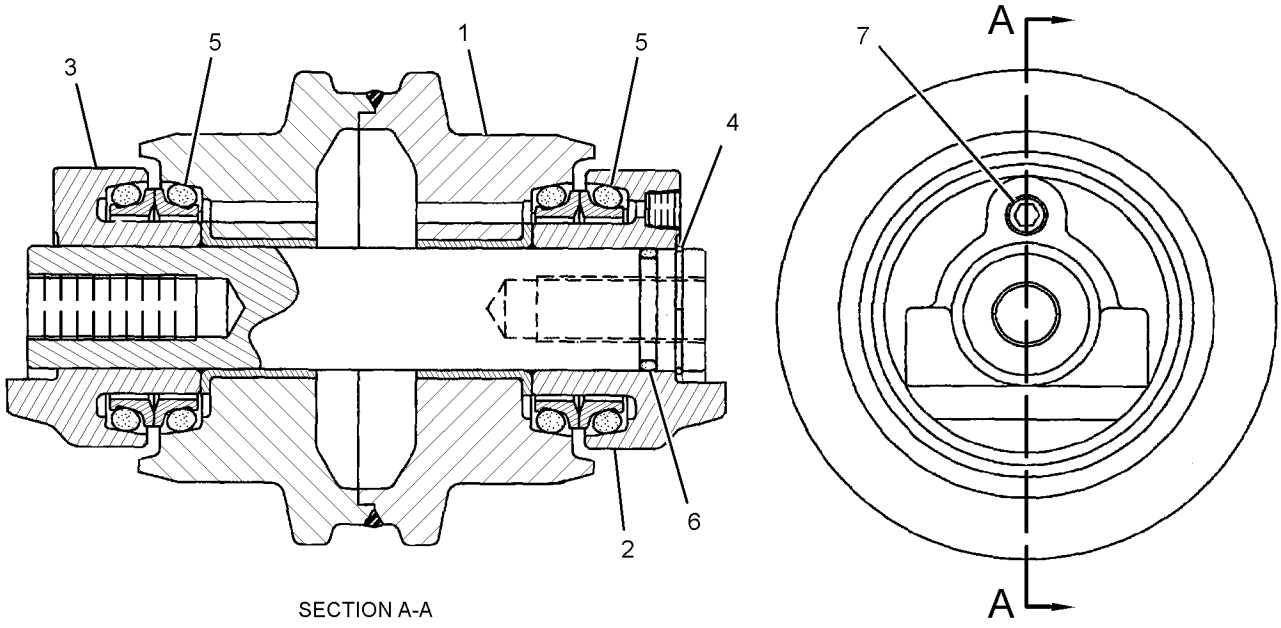

SECTION A-A

GRAPHIC #1 **<END>** g01220065

379-4717 TRACK GP—RUBBER BELT

350-MM (13.8-IN)
AN ATTACHMENT

SMCS-4170, 4198 **i04629176**

NOTE	PART NUMBER	QTY	PART NAME 1 2 3 4 5 6 (PRODUCT LEVEL)	SEE PAGE
	381-9191	1	TRACK AS	

<END>

382-4922 TRACK GP

AN ATTACHMENT

SMCS-4170, 4198 **i05015986**

NOTE	PART NUMBER	QTY	PART NAME 1 2 3 4 5 6 (PRODUCT LEVEL)	SEE PAGE
Y	*399-9396*	1	GUARD GP-TRACK GUIDE	164
Y	**396-6223**	1	TRACK GP (STEEL)	180

Y - SEPARATE ILLUSTRATION

<END>

396-6223 TRACK GP–STEEL

PART OF 382-4922 TRACK GP

AN ATTACHMENT

SMCS-4170, 4198 **i05015957**

NOTE	REF NO	GRAPHIC REF	PART NUMBER	QTY	PART NAME 1 2 3 4 5 6 (PRODUCT LEVEL)	SEE PAGE
Y	1	1	**396-6224**	1	LINK AS-TRACK	175
	2	1	**396-6233**	46	SHOE-TRACK	
	3	1	**396-9400**	184	BOLT (M10X1.25X30-MM)	
	4	1	**396-9401**	184	NUT (M10X1.25-THD)	

Y - SEPARATE ILLUSTRATION

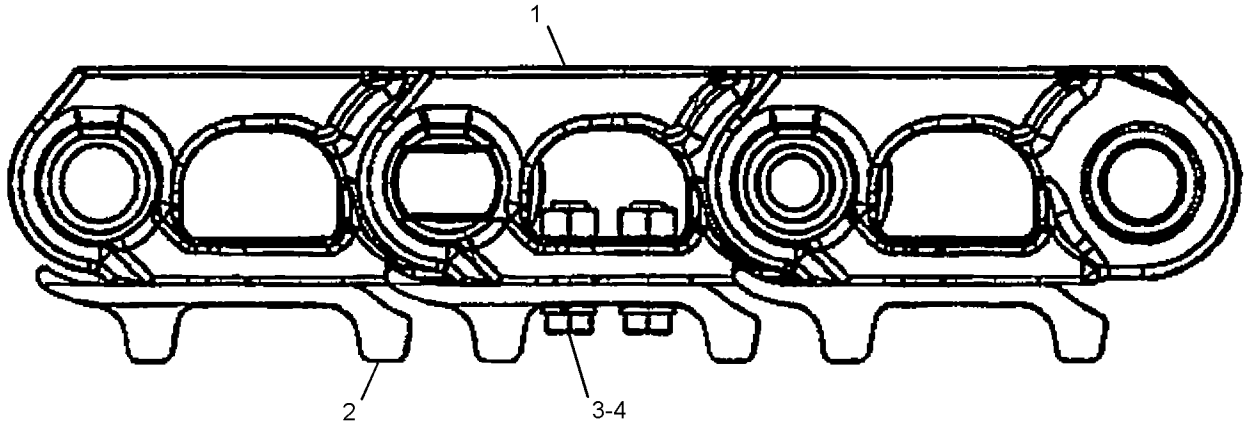

GRAPHIC #1 **<END>** g03216258

380-8798 UNDERCARRIAGE AR

PART OF 376-6671 COMMON AR

SMCS-4150 **i04629855**

NOTE	PART NUMBER	QTY	PART NAME 1 2 3 4 5 6 (PRODUCT LEVEL)	SEE PAGE
Y	*377-1179*	1	FRAME GP-UNDERCARRIAGE	162
Y	*380-9952*	1	GEAR & BEARING GP-SWING	163
Y	*265-8734*	1	IDLER GP-FRONT	165
Y	*260-6342*	1	ROLLER AR-TRACK & CARRIER	176

Y - SEPARATE ILLUSTRATION

<END>

4I-1536 ACCUMULATOR GP-HYDRAULIC—CHARGED

PART OF 087-4456 ACCUMULATOR GP-HYDRAULIC
AN ATTACHMENT

SMCS-5077 **i01220551**

NOTE	REF NO	GRAPHIC REF	PART NUMBER	QTY	PART NAME 1 2 3 4 5 6 (PRODUCT LEVEL)	SEE PAGE
	1	1	**4I-5862**	1	CAP	
	2	1	**4I-1539**	1	CORE	

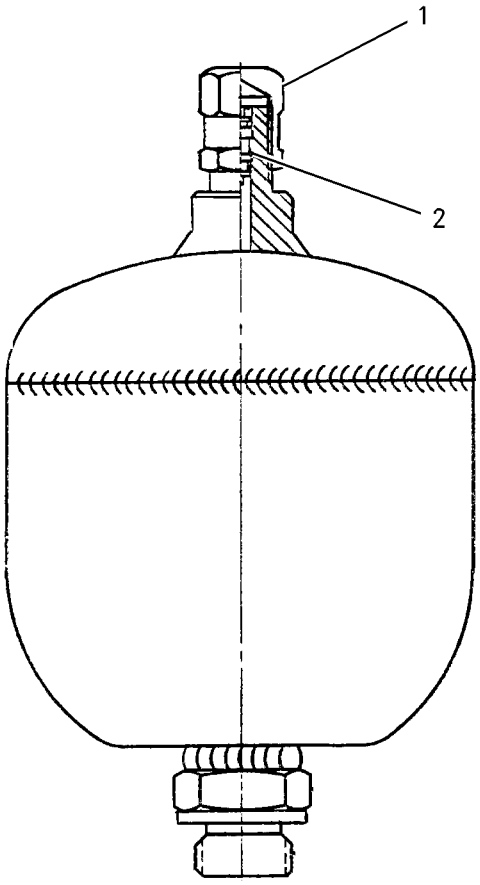

GRAPHIC #1 **<END>** g00654351

5I-8416 ACCUMULATOR GP-HYDRAULIC–CHARGED

PART OF 087-4456 ACCUMULATOR GP-HYDRAULIC
AN ATTACHMENT

SMCS-5077 **i02062425**

NOTE	REF NO	GRAPHIC REF	PART NUMBER	QTY	PART NAME 1 2 3 4 5 6 (PRODUCT LEVEL)	SEE PAGE
	1	1	**4I-8267**	1	CAP	
Y	2	1	*087-4454*	1	ACCUMULATOR GP-HYDRAULIC (CHARGED)	184

Y - SEPARATE ILLUSTRATION

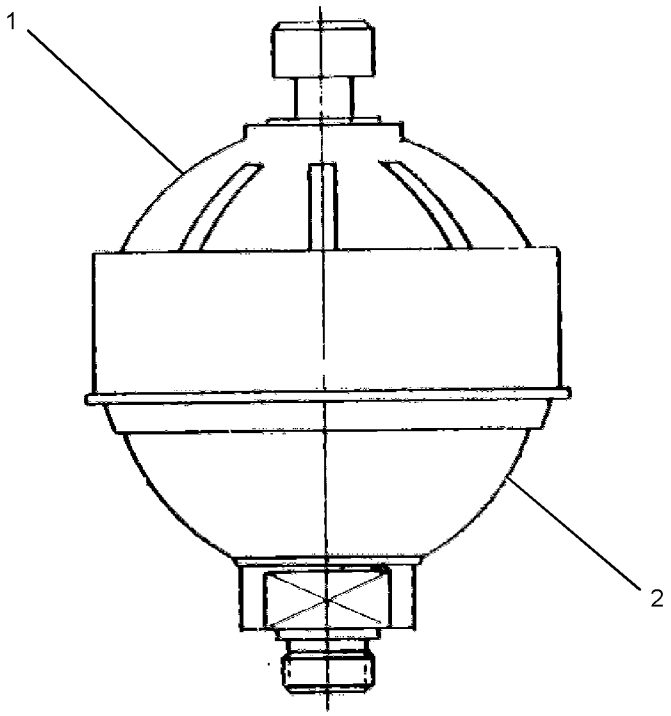

GRAPHIC #1 **<END>** g01056827

087-4454 ACCUMULATOR GP-HYDRAULIC—CHARGED

PART OF 5I-8416 ACCUMULATOR GP-HYDRAULIC
AN ATTACHMENT

SMCS-5077 **i02062433**

NOTE	REF NO	GRAPHIC REF	PART NUMBER	QTY	PART NAME 1 2 3 4 5 6 (PRODUCT LEVEL)	SEE PAGE
	1	1	**087-4575**	1	CORE	
	2	1	**087-4576**	1	CAP	
	3	1	**087-4577**	1	SEAL	

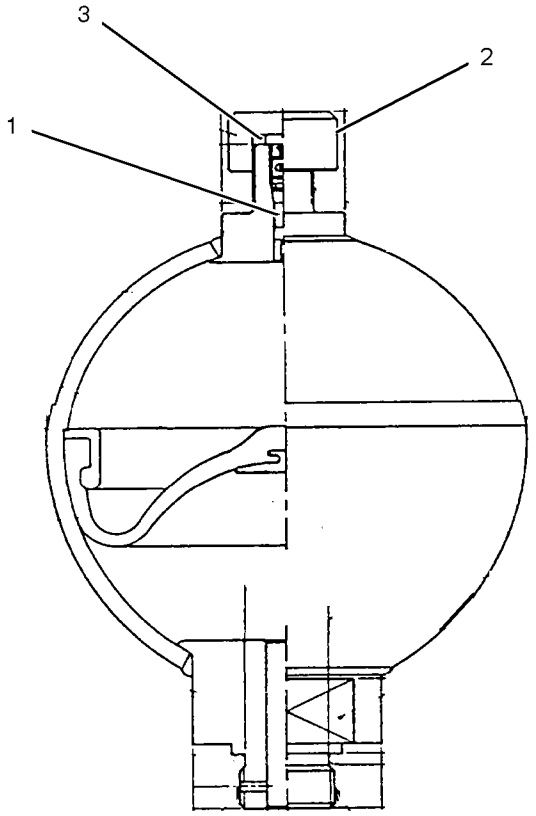

GRAPHIC #1 **<END>** g01056847

087-4456 ACCUMULATOR GP-HYDRAULIC—CHARGED

PART OF 378-7478 ACCUMULATOR GP-HYDRAULIC
AN ATTACHMENT

SMCS-5077 **i01866518**

NOTE	PART NUMBER	QTY	PART NAME 1 2 3 4 5 6 (PRODUCT LEVEL)	SEE PAGE
Y	*4I-1536*	1	ACCUMULATOR GP-HYDRAULIC (CHARGED)	182
			—OR—	
Y	*5I-8416*	1	ACCUMULATOR GP-HYDRAULIC (CHARGED)	183

Y - SEPARATE ILLUSTRATION

<END>

227-8807 ACCUMULATOR GP-HYDRAULIC—UNCHARGED

FIELD REPLACEMENT FOR 087-4456—PAGE: 185

SMCS-5077 **i04644930**

NOTE	REF NO	GRAPHIC REF	PART NUMBER	QTY	PART NAME 1 2 3 4 5 6 (PRODUCT LEVEL)	SEE PAGE
					(NO SERVICED PARTS)	

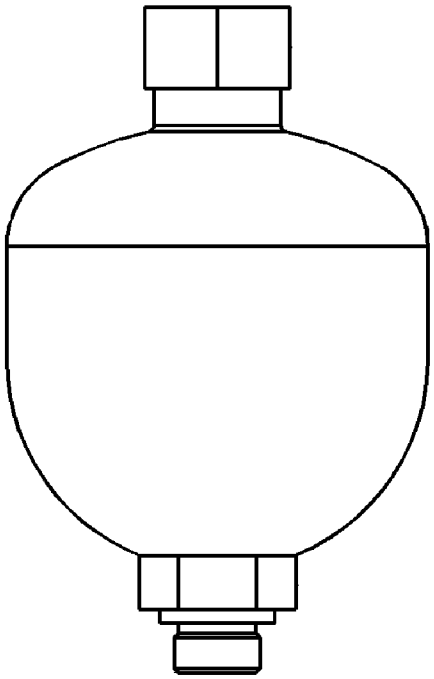

GRAPHIC #1 **<END>** g01423820

335-0517 ACCUMULATOR GP-HYDRAULIC—CHARGED

PART OF 378-7480 ACCUMULATOR GP-HYDRAULIC
AN ATTACHMENT

SMCS-5077 **i03970912**

NOTE	REF NO	GRAPHIC REF	PART NUMBER	QTY	PART NAME 1 2 3 4 5 6 (PRODUCT LEVEL)	SEE PAGE
	1	1	**159-4700**	1	FILM-WARNING (HIGH PRESSURE CYLINDER)	

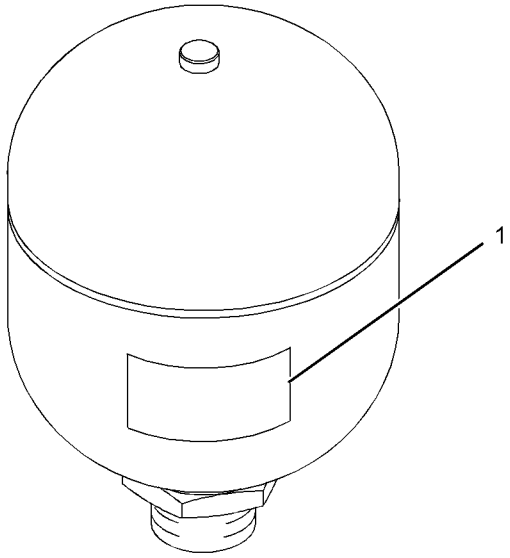

GRAPHIC #1 **<END>** g01135721

378-7478 ACCUMULATOR GP-HYDRAULIC

CANNOT BE USED WITH 378-7480—PAGE: 188
PART OF 379-5264 ACCUMULATOR GP-HYDRAULIC
AN ATTACHMENT

SMCS-5077 **i04559501**

NOTE	PART NUMBER	QTY	PART NAME 1 2 3 4 5 6 (PRODUCT LEVEL)	SEE PAGE
Y	*087-4456*	1	ACCUMULATOR GP-HYDRAULIC (CHARGED)	185
	3K-0360	1	SEAL-O-RING	

Y - SEPARATE ILLUSTRATION

<END>

378-7480 ACCUMULATOR GP-HYDRAULIC

CANNOT BE USED WITH 378-7478—PAGE: 188
PART OF 379-5265 ACCUMULATOR GP-HYDRAULIC
AN ATTACHMENT

SMCS-5077 **i04559502**

NOTE	PART NUMBER	QTY	PART NAME 1 2 3 4 5 6 (PRODUCT LEVEL)	SEE PAGE
Y	*335-0517*	1	ACCUMULATOR GP-HYDRAULIC (CHARGED)	187
	3K-0360	1	SEAL-O-RING	

Y - SEPARATE ILLUSTRATION

<END>

379-5264 ACCUMULATOR GP-HYDRAULIC

CANNOT BE USED WITH 379-5265—PAGE: 188
AN ATTACHMENT

SMCS-5077 **i04629178**

NOTE	PART NUMBER	QTY	PART NAME 1 2 3 4 5 6 (PRODUCT LEVEL)	SEE PAGE
Y	*378-7478*	1	ACCUMULATOR GP-HYDRAULIC	188

Y - SEPARATE ILLUSTRATION

<END>

379-5265 ACCUMULATOR GP-HYDRAULIC—CANADA

CANNOT BE USED WITH 379-5264—PAGE: 188
AN ATTACHMENT

SMCS-5077 **i04629179**

NOTE	PART NUMBER	QTY	PART NAME 1 2 3 4 5 6 (PRODUCT LEVEL)	SEE PAGE
Y	*378-7480*	1	ACCUMULATOR GP-HYDRAULIC	188

Y - SEPARATE ILLUSTRATION

<END>

379-4680 CONTROL AR-AUXILIARY

PART OF 376-6671 COMMON AR

SMCS-5051 **i04629835**

NOTE	PART NUMBER	QTY	PART NAME 1 2 3 4 5 6 (PRODUCT LEVEL)	SEE PAGE
Y	*377-9707*	1	FILM GP (AUXILIARY)	546
Y	*269-8939*	1	LINES GP-AUXILIARY HYDRAULIC (BOOM)	219
Y	*379-4698*	1	LINES GP-FRONT	248
Y	*380-4661*	1	LINES GP-PILOT	268
Y	*377-8861*	1	VALVE & MTG GP-CONTROL (AUXILIARY, BOOM SWING)	311

Y - SEPARATE ILLUSTRATION

<END>

379-4683 CONTROL AR-AUXILIARY—SWING BOOM

CANNOT BE USED WITH 379-4684—PAGE: 189, 379-4685—PAGE: 190
PART OF 383-1706, 383-1707, 383-1717, 383-1718 STICK AR
AN ATTACHMENT

SMCS-5051 **i04623141**

NOTE	PART NUMBER	QTY	PART NAME 1 2 3 4 5 6 (PRODUCT LEVEL)	SEE PAGE
Y	*379-4704*	1	LINES GP-SWING CYLINDER (BOOM)	276

Y - SEPARATE ILLUSTRATION

<END>

379-4684 CONTROL AR-AUXILIARY—2ND AUXILIARY, STANDARD STICK

CANNOT BE USED WITH 379-4683—PAGE: 189, 379-4685—PAGE: 190
PART OF 383-1708, 383-1719 STICK AR
AN ATTACHMENT

SMCS-5051 **i04623143**

NOTE	PART NUMBER	QTY	PART NAME 1 2 3 4 5 6 (PRODUCT LEVEL)	SEE PAGE
Y	*356-7138*	1	FASTENER GP-LINES (BOOM)	215
Y	*377-9708*	1	FILM GP (2ND AUXILIARY)	548
Y	*292-8309*	1	LINES GP-AUXILIARY HYDRAULIC (2ND AUXILIARY, STANDARD STICK)	221
Y	*380-2455*	1	LINES GP-AUXILIARY HYDRAULIC (2ND AUXILIARY, BOOM)	225
Y	*379-4705*	1	LINES GP-SWING CYLINDER (2ND AUXILIARY)	277
Y	*387-6390*	1	WIRING GP-RELAY PANEL (2ND AUXILIARY)	122

Y - SEPARATE ILLUSTRATION

<END>

379-4685 CONTROL AR-AUXILIARY—2ND AUXILIARY, LONG STICK

CANNOT BE USED WITH 379-4683—PAGE: 189, 379-4684—PAGE: 189
PART OF 383-1709, 383-1720 STICK AR
AN ATTACHMENT

SMCS-5051 **i04623144**

NOTE	PART NUMBER	QTY	PART NAME 1 2 3 4 5 6 (PRODUCT LEVEL)	SEE PAGE
Y	*356-7138*	1	FASTENER GP-LINES (BOOM)	215
Y	*377-9708*	1	FILM GP (2ND AUXILIARY)	548
Y	*292-8311*	1	LINES GP-AUXILIARY HYDRAULIC (2ND AUXILIARY, LONG STICK)	222
Y	*380-2455*	1	LINES GP-AUXILIARY HYDRAULIC (2ND AUXILIARY, BOOM)	225
Y	*379-4705*	1	LINES GP-SWING CYLINDER (2ND AUXILIARY)	277
Y	*387-6390*	1	WIRING GP-RELAY PANEL (2ND AUXILIARY)	122

Y - SEPARATE ILLUSTRATION

<END>

379-4687 CONTROL AR-AUXILIARY—2-WAY

CANNOT BE USED WITH 379-4686—PAGE: 195
AN ATTACHMENT

SMCS-5051 **i04623146**

NOTE	PART NUMBER	QTY	PART NAME 1 2 3 4 5 6 (PRODUCT LEVEL)	SEE PAGE
Y	*377-9709*	1	FILM GP (2-WAY)	549
Y	*377-8874*	1	LINES GP-PILOT (JOYSTICK, 2-WAY)	257
Y	*379-4707*	1	LINES GP-PILOT (2-WAY)	265
Y	*377-8876*	1	VALVE & MTG GP-CONTROL (2-WAY)	313
Y	*387-6389*	1	WIRING GP-RELAY PANEL (PATTERN CHANGE)	121

Y - SEPARATE ILLUSTRATION

<END>

382-2545 CONTROL AR-COUPLER—STANDARD STICK

CANNOT BE USED WITH 382-2546—PAGE: 191
AN ATTACHMENT

SMCS-6129 **i04629205**

NOTE	PART NUMBER	QTY	PART NAME 1 2 3 4 5 6 (PRODUCT LEVEL)	SEE PAGE
Y	*365-2799*	1	LINES GP-COUPLER (STANDARD STICK)	242
Y	*382-2554*	1	LINES GP-FRONT (QUICK COUPLER)	251
Y	*381-9235*	1	WIRING GP-QUICK COUPLER	120

Y - SEPARATE ILLUSTRATION

<END>

382-2546 CONTROL AR-COUPLER—LONG STICK

CANNOT BE USED WITH 382-2545—PAGE: 190

AN ATTACHMENT

SMCS-6129 **i04629207**

NOTE	PART NUMBER	QTY	PART NAME 1 2 3 4 5 6 (PRODUCT LEVEL)	SEE PAGE
Y	*365-2801*	1	LINES GP-COUPLER (LONG STICK)	244
Y	*382-2554*	1	LINES GP-FRONT (QUICK COUPLER)	251
Y	*381-9235*	1	WIRING GP-QUICK COUPLER	120

Y - SEPARATE ILLUSTRATION

<END>

384-5013 CONTROL AR-COUPLER

AN ATTACHMENT

SMCS-6129 **i04782418**

NOTE	REF NO	GRAPHIC REF	PART NUMBER	QTY	PART NAME 1 2 3 4 5 6 (PRODUCT LEVEL)	SEE PAGE
	1	1	**7K-1181**	8	STRAP-CABLE	
	2	1	*164-5546*	1	TEE AS	
		1	**3E-7410**	1	TEE-O-RING	
		1	**3J-1907**	1	SEAL-O-RING	
	3	1	*267-4048*	1	ELBOW AS	
		1	**3J-1907**	1	SEAL-O-RING	
		1	**4J-5477**	1	SEAL-O-RING	
		1	**267-4047**	1	ELBOW	
	4	1	**268-4530**	1	FILM-WARNING (CRUSH HAZARD, READ OMM, U.S.)	
	5	1	**268-8872**	1	FILM-WARNING (CRUSH HAZARD, READ OMM, U.S.)	
	6	1	**279-4735**	3	STRAP-CABLE (ORANGE)	
	7	1	**279-4737**	3	STRAP-CABLE (GREEN)	
	8	1	**279-4738**	3	STRAP-CABLE (PURPLE)	
Y	9	1	**358-2091**	1	VALVE GP-SOLENOID & MANIFOLD (QUICK COUPLER)	364
	10	1	**365-6912**	1	GROMMET	
	11	1	**365-6918**	1	BRACKET	
	12	1	**365-6919**	1	BRACKET	
I	13	1	**373-2363**	3	HOSE AS	
I	14	1	**381-0002**	1	HOSE AS	
	15	1	**381-2053**	1	BRACKET	
	16	1	**381-9236**	1	HARNESS AS-QUICK COUPLER	
		1	**8T-8729**	2	PIN-CONNECTOR (16-GA TO 18-GA)	
		1	**9W-0852**	1	PIN-CONNECTOR (14-GA TO 16-GA)	
		1	**155-2270**	2	KIT-CONNECTING PLUG (2-PIN)	
					(EACH INCLUDES PLUG AS, WEDGE & INTERFACE SEAL)	
		1	**8T-8737**	1	PLUG-SEAL	
		1	**243-4507**	1	RECEPTACLE AS-CONNECTOR (4-PIN)	
		1	**8T-8730**	4	SOCKET-CONNECTOR (16-GA TO 18-GA)	
E		1	**125-7874**		TUBE-HEAT SHRINK (5.72-MM DIA) (5-CM)	
I	17	1	**382-9365**	1	HOSE AS	
	18	1	**067-2551**	3	CLIP	
	19	1	**124-2111**	6	COUPLING-PERMANENT	
	20	1	*148-8325*	4	CONNECTOR AS	
					(EACH INCLUDES)	
		1	**3J-1907**	1	SEAL-O-RING	
		1	**4J-5477**	1	SEAL-O-RING	
		1	**6V-8641**	1	CONNECTOR	
	21	1	*148-8368*	2	ELBOW AS	
					(EACH INCLUDES)	
		1	**3J-1907**	1	SEAL-O-RING	
		1	**4J-5477**	1	SEAL-O-RING	
		1	**6V-8627**	1	ELBOW	
	22	1	*150-4052*	6	UNION AS	
					(EACH INCLUDES)	
		1	**4J-5477**	2	SEAL-O-RING	
		1	**6V-8993**	1	UNION	
	23	1	**2J-1020**	2	SPACER (13.9X21.34X35-MM THK)	
	24	1	**2P-1279**	6	LOCKNUT (9/16-18-THD)	
	25	1	**3S-2093**	6	STRAP-CABLE	
	26	1	**4D-7733**	3	CLIP	
	27	1	**6V-9828**	3	CAP AS	
	28	1	**7S-3916**	3	CLIP (TAB)	
	29	1	**7S-3919**	3	CLIP (SLOT)	
	30	1	**7V-6571**	3	GROMMET	
	31	1	**8T-4121**	10	WASHER-HARD (11X21X2.5-MM THK)	
M	32	1	**8T-4137**	2	BOLT (M10X1.5X20-MM)	
M	33	1	**8T-4185**	8	BOLT (M10X1.5X50-MM)	
M	34	1	**8T-4189**	2	BOLT (M8X1.25X20-MM)	

384-5013 **CONTROL AR-COUPLER (*contd.*)** **i04782418**

NOTE	REF NO	GRAPHIC REF	PART NUMBER	QTY	PART NAME 1 2 3 4 5 6 (PRODUCT LEVEL)	SEE PAGE
	35	1	**8T-4223**	2	WASHER-HARD (13.5X25.5X3-MM THK)	
	36	1	**8T-4224**	2	WASHER-HARD (8.8X16X2-MM THK)	
M	37	1	**8T-4648**	1	BOLT (M12X1.75X70-MM)	
M	38	1	**8T-4910**	1	BOLT (M12X1.75X60-MM)	

E - ORDER BY THE CENTIMETER
I - REFER TO HYDRAULIC INFORMATION SYSTEM
M - METRIC PART
Y - SEPARATE ILLUSTRATION

384-5013 **CONTROL AR-COUPLER (*contd.*)** **i04782418**

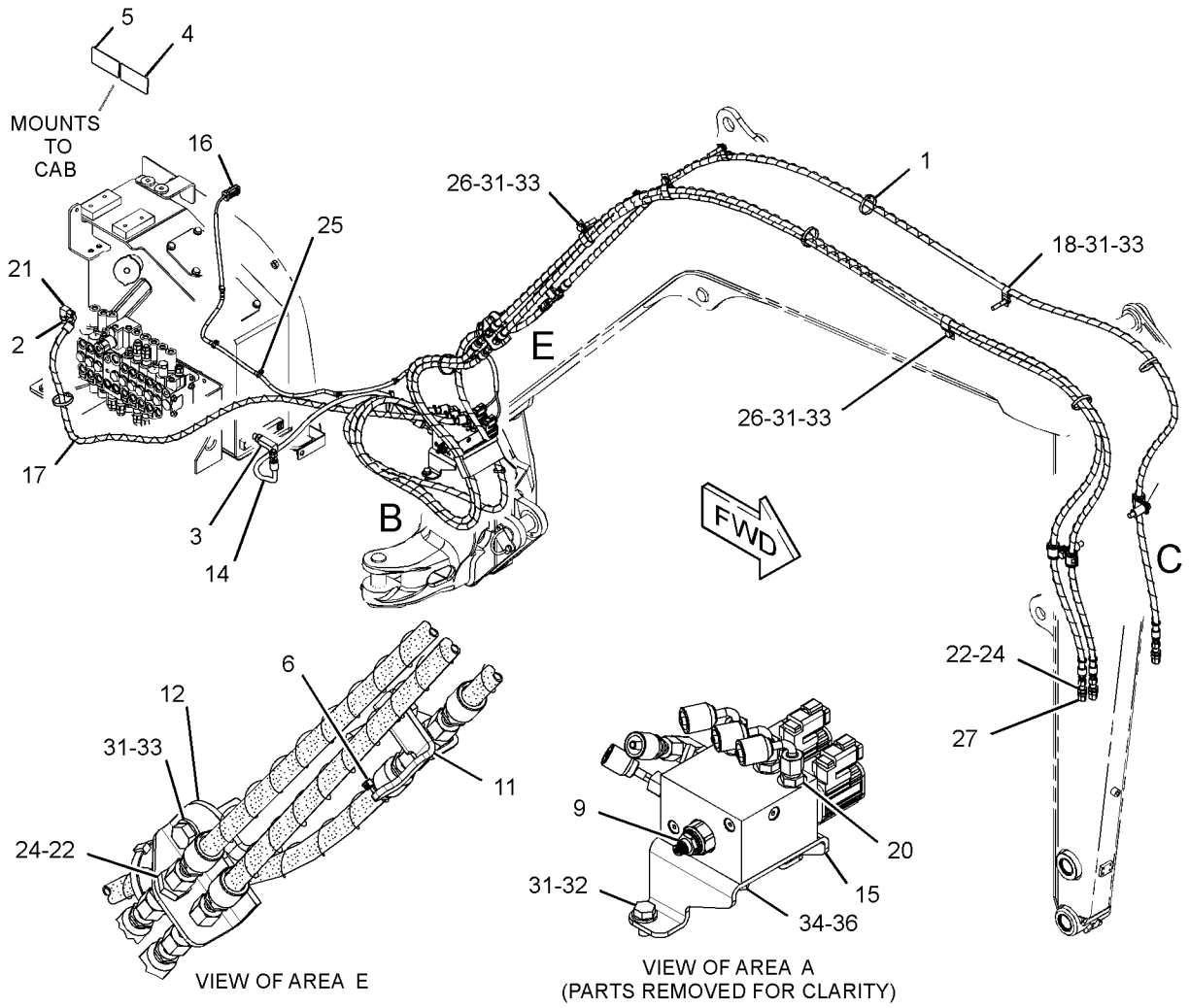

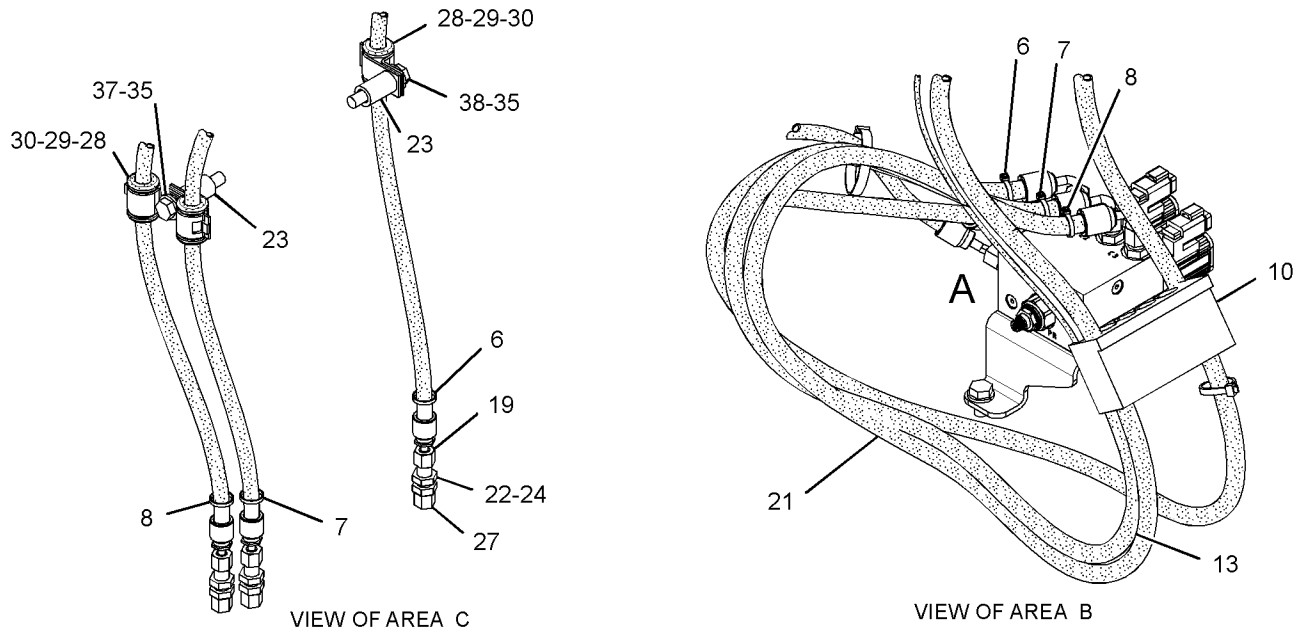

GRAPHIC #1 **<END>** g02904888

378-2500 CONTROL AR-HYDRAULIC—2ND AUXILIARY

PART OF 383-1708, 383-1709, 383-1719, 383-1720 STICK AR
AN ATTACHMENT

SMCS-5050, 5051, 5057, 5059, 5705 **i04611686**

NOTE	PART NUMBER	QTY	PART NAME 1 2 3 4 5 6 (PRODUCT LEVEL)	SEE PAGE
Y	*378-2497*	1	CONTROL GP-PILOT OPERATED HYD (2ND AUXILIARY)	489

Y - SEPARATE ILLUSTRATION

<END>

378-2501 CONTROL AR-HYDRAULIC—STANDARD JOYSTICK

PART OF 383-1706, 383-1707, 383-1717, 383-1718 STICK AR
AN ATTACHMENT

SMCS-5050, 5051, 5057, 5059, 5705 **i04611692**

NOTE	PART NUMBER	QTY	PART NAME 1 2 3 4 5 6 (PRODUCT LEVEL)	SEE PAGE
Y	*378-2495*	1	CONTROL GP-PILOT OPERATED HYD	488

Y - SEPARATE ILLUSTRATION

<END>

379-4686 CONTROL AR-PILOT HYDRAULIC—STANDARD

CANNOT BE USED WITH 379-4687—PAGE: 190
AN ATTACHMENT

SMCS-1329, 5057 **i04623145**

NOTE	PART NUMBER	QTY	PART NAME 1 2 3 4 5 6 (PRODUCT LEVEL)	SEE PAGE
Y	*377-8872*	1	LINES GP-PILOT (JOYSTICK)	255
Y	*379-4706*	1	LINES GP-PILOT (STANDARD)	262

Y - SEPARATE ILLUSTRATION

<END>

266-6979 CYLINDER GP-BLADE–RAISE, LOWER

PART OF 377-8928 BLADE AR-ANGLING, 377-8915 BLADE AR-STRAIGHT AN ATTACHMENT

SMCS-5102, 7164 **i04015134**

NOTE	REF NO	GRAPHIC REF	PART NUMBER	QTY	PART NAME 1 2 3 4 5 6 (PRODUCT LEVEL)	SEE PAGE
	1	1	**265-8716**	2	BUSHING	
	2	1	**278-9474**	1	CYLINDER AS	
	3	1	**278-9475**	1	ROD AS	
	4	1	**294-7869**	1	HEAD	
	5	1	**237-8377**	1	BUSHING	
	6	1	**146-3916**	1	RING	
	7	1	**146-1086**	1	RING	
	8	1	**095-1709**	1	SEAL-O-RING	
	9	1	**237-6124**	1	RING	
	10	1	**095-1710**	1	SEAL-O-RING	
	11	1	**237-6135**	1	PISTON	
	12	1	**146-3923**	1	SEAL AS	
	13	1	**237-6136**	2	RING	
	14	1	**216-7643**	1	SETSCREW (M8X1.25X8-MM)	
	15	1	**146-3969**	1	BALL	
	16	1	**192-0638**	1	SEAL	
	17	1	**3B-8489**	1	FITTING-GREASE	
	18	1	**3B-8488**	1	FITTING-GREASE	
F			**294-7868**	1	HEAD AS	
F			**237-7086**	1	PISTON AS	
					AVAILABLE REPAIR KIT(S):	
			278-8641	1	KIT-SEAL (BLADE CYLINDER)	

F - NOT SHOWN

266-6979 **CYLINDER GP-BLADE (*contd.*)** **i04015134**

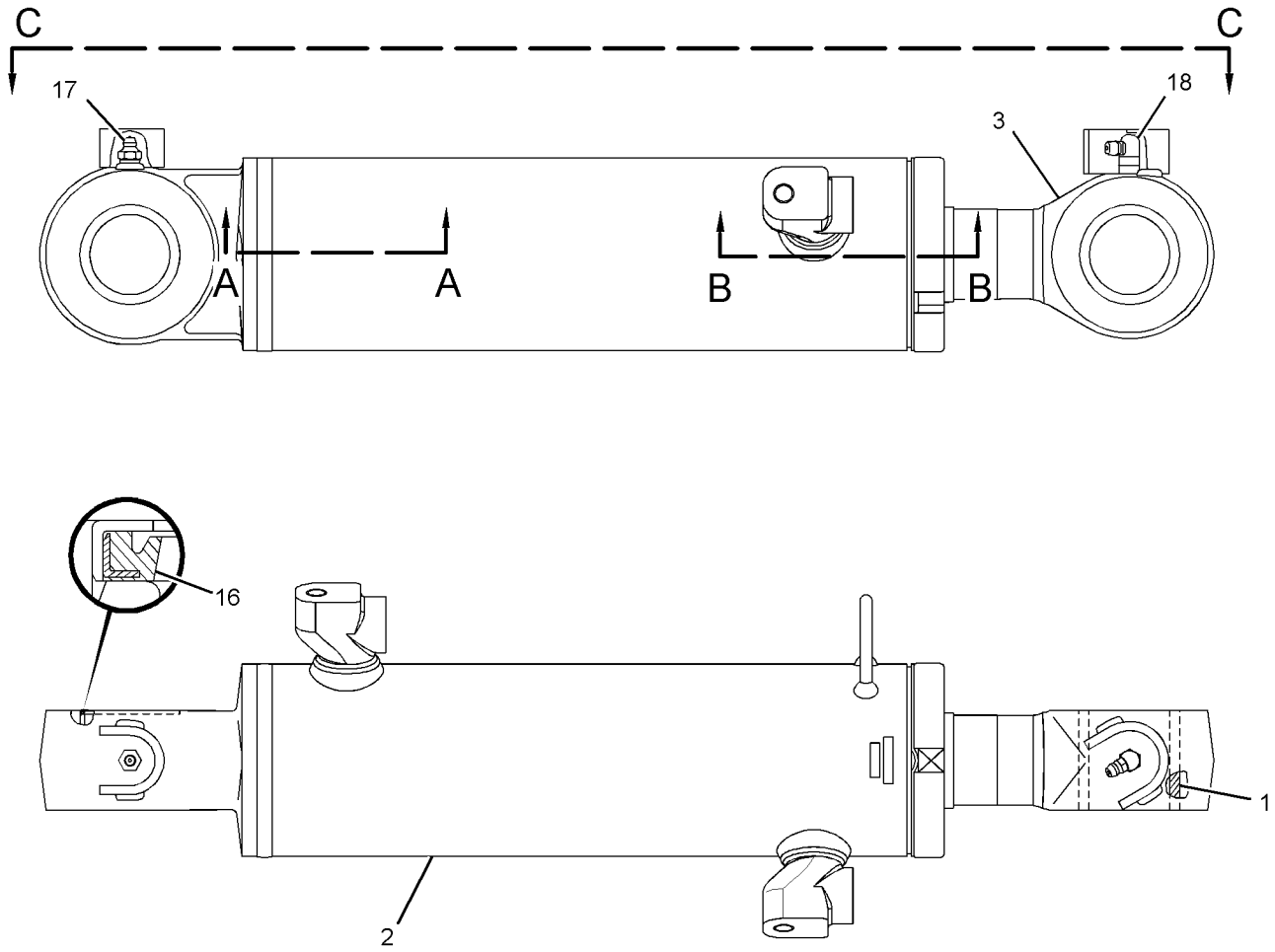

VIEW C-C

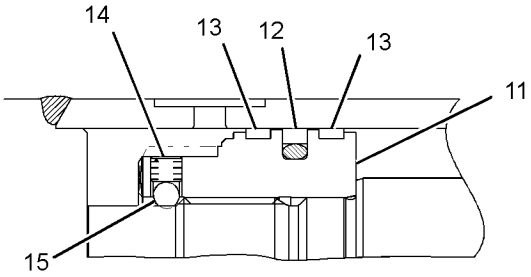

SECTION A-A

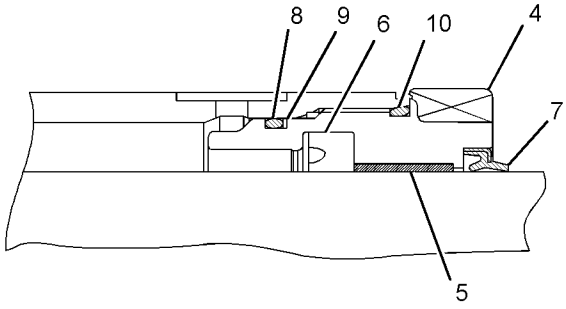

SECTION B-B

GRAPHIC #1 **<END>** g01345811

286-6384 CYLINDER GP-BLADE–ANGLE

PART OF 377-8928 BLADE AR-ANGLING
AN ATTACHMENT

SMCS-5102, 7164 **i04015469**

NOTE	REF NO	GRAPHIC REF	PART NUMBER	QTY	PART NAME 1 2 3 4 5 6 (PRODUCT LEVEL)	SEE PAGE
	1	1	**286-7323**	1	CYLINDER AS (BLADE)	
		1	**3B-8488**	1	FITTING-GREASE	
		1	**140-5169**	1	BUSHING	
		1	**175-4723**	2	SEAL	
	2	1	**286-7324**	1	ROD AS	
		1	**3B-8489**	1	FITTING-GREASE	
		1	**140-5169**	1	BUSHING	
		1	**175-4723**	2	SEAL	
	3	1	**283-9117**	1	HEAD AS (CYLINDER)	
	3A	1	**095-1707**	1	SEAL-O-RING	
	3B	1	**095-1710**	1	SEAL-O-RING	
	3C	1	**140-4934**	1	RING	
	3D	1	**203-2343**	1	BUSHING	
	3E	1	**203-2344**	1	RING	
	3F	1	**237-7901**	1	RING	
	3G	1	**283-9118**	1	HEAD	
	4	1	**283-9119**	1	PISTON AS (CYLINDER)	
	4A	1	**140-3750**	1	RING AS	
	4B	1	**192-0633**	1	BALL	
	4C	1	**237-7904**	2	RING	
	4D	1	**283-9120**	1	PISTON	
	4E	1	**283-9121**	1	SCREW (M6X1X6-MM)	
					AVAILABLE REPAIR KIT(S):	
			283-9122	1	KIT-SEAL (BLADE)	
					(INCLUDES SEALS & RINGS)	

286-6384 **CYLINDER GP-BLADE (*contd.*)** **i04015469**

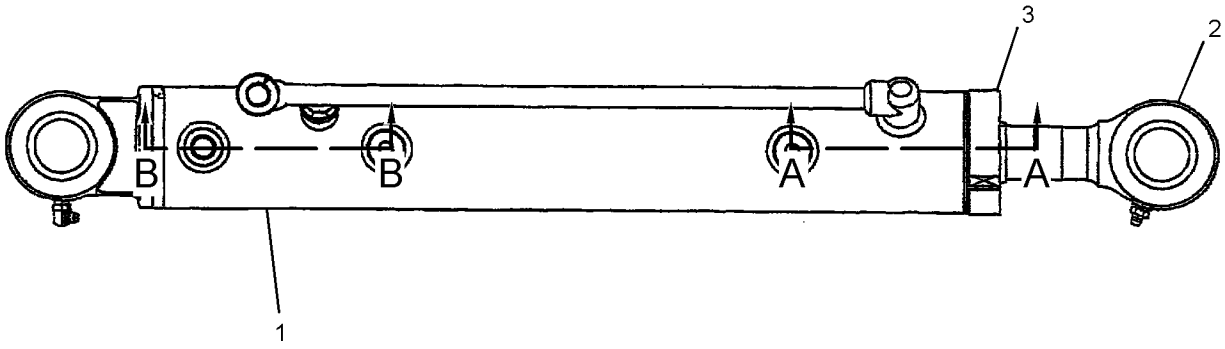

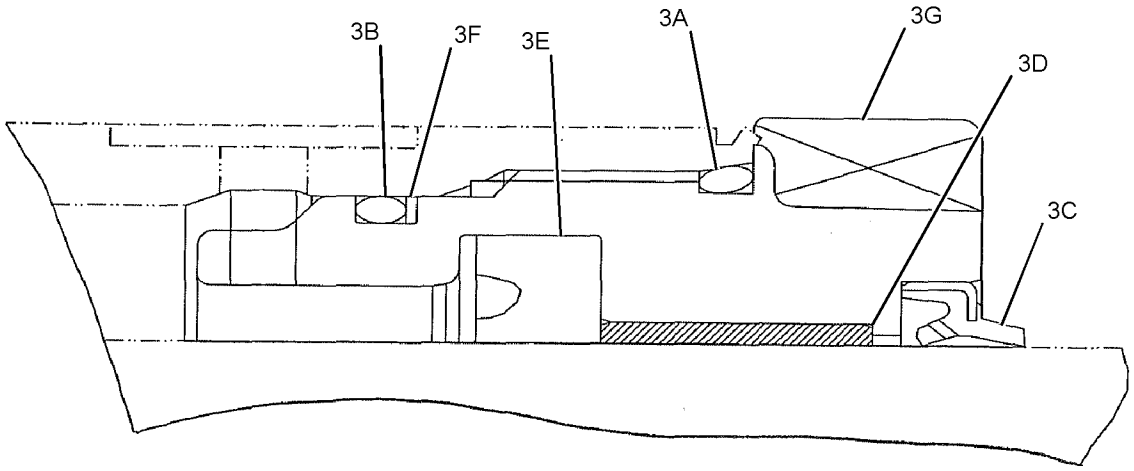

SECTION A-A

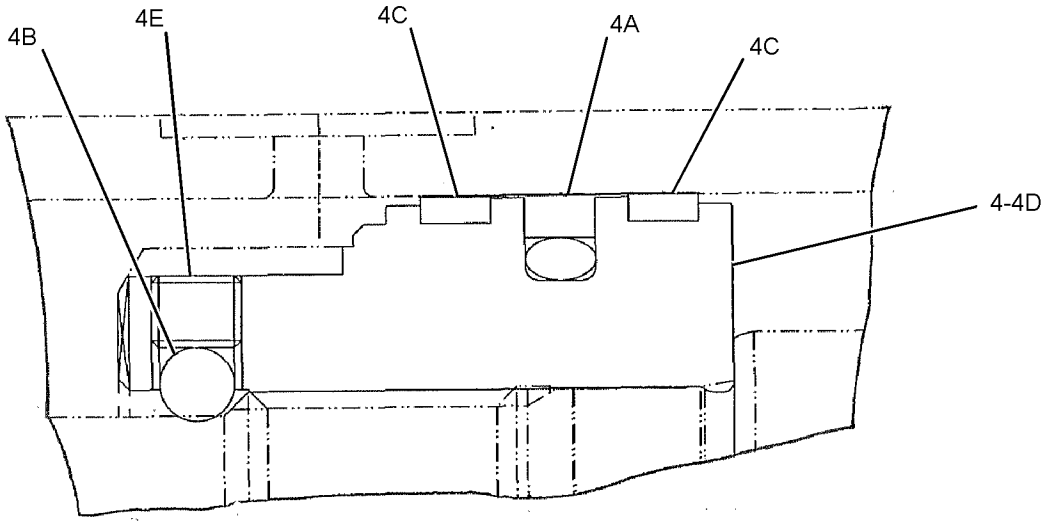

SECTION B-B

GRAPHIC #1 **<END>** g01390873

284-3369 CYLINDER GP-BOOM

PART OF 376-6679 BOOM AR

SMCS-5456 **i04019719**

NOTE	REF NO	GRAPHIC REF	PART NUMBER	QTY	PART NAME 1 2 3 4 5 6 (PRODUCT LEVEL)	SEE PAGE
	1	1	**265-8717**	2	BUSHING	
C	2	1	**301-6893**	1	CYLINDER AS-HYDRAULIC	
	3	1	**281-2317**	1	ROD AS	
	4	1	**309-5902**	1	HEAD	
	5	1	**311-1031**	1	BUSHING	
J	6	1	**146-3957**	1	RING	
J	7	1	**146-3958**	1	RING	
J	8	1	**095-1710**	2	SEAL-O-RING	
J	9	1	**237-8378**	1	RING	
J	10	1	**095-1711**	1	SEAL-O-RING	
	11	1	**281-2306**	1	HOLDER	
	12	1	**281-2324**	1	SPACER	
	13	1	**281-2320**	1	SEAL	
	14	1	**281-2297**	1	COLLAR	
J	15	1	**281-2314**	1	RING	
	16	1	**278-1985**	1	PISTON	
J	17	1	**146-3968**	1	SEAL AS	
J	18	1	**278-1986**	2	RING	
	19	1	**216-7643**	1	SETSCREW (M8X1.25X8-MM)	
	20	1	**146-3969**	1	BALL	
	21	1	**281-2296**	1	BEARING	
C	22	1	**301-6894**	1	TUBE AS	
C	23	1	**304-3525**	1	PLUG	
C	24	1	**304-3526**	2	SEAL	
C	25	1	**304-3527**	1	BOLT	
C	26	1	**199-1148**	1	HOLDER	
	27	1	**192-0638**	4	SEAL	
	28	1	**3B-8489**	1	FITTING-GREASE	
	29	1	**3B-8488**	1	FITTING-GREASE	
F			**309-5903**	1	HEAD AS-END	
F			**281-2307**	1	HOLDER AS	
F			**278-1988**	1	PISTON AS	
CF			**304-3524**	1	PLUG AS	
					AVAILABLE REPAIR KIT(S):	
J			**281-2321**	1	KIT-SEAL	

C - CHANGE FROM PREVIOUS TYPE
F - NOT SHOWN
J - KIT MARKED J SERVICES PART(S) MARKED J

284-3369 **CYLINDER GP-BOOM (*contd.*)** **i04019719**

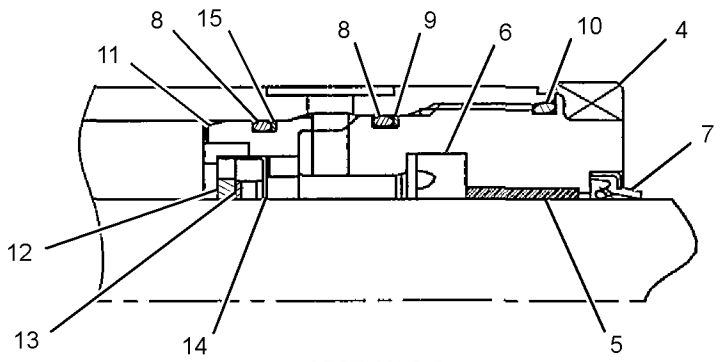

SECTION C-C

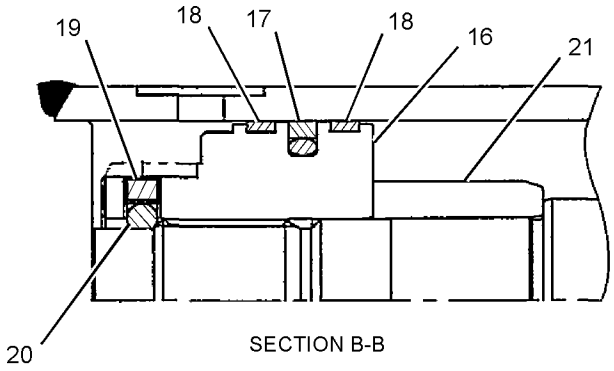

SECTION B-B

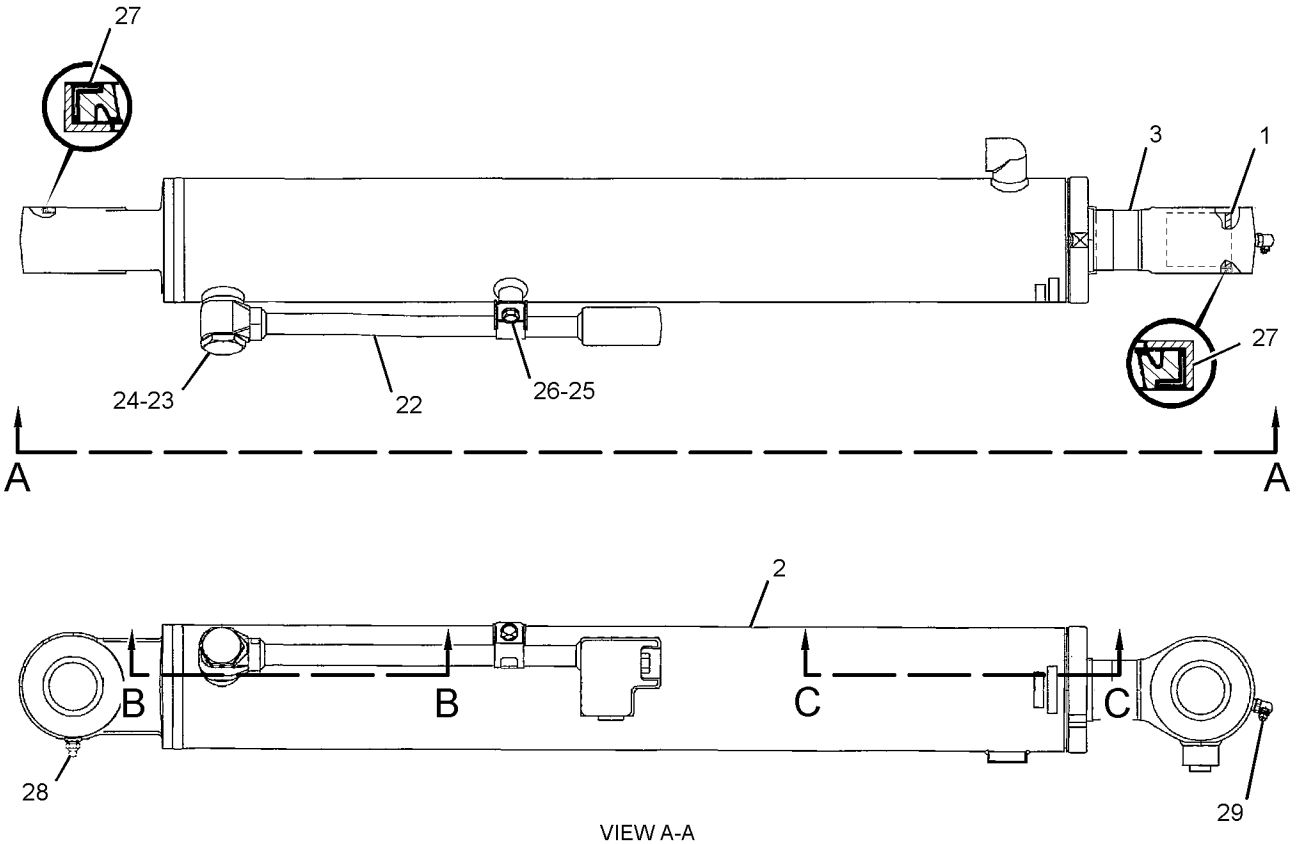

VIEW A-A

GRAPHIC #1 **<END>** g01820794

277-9900 CYLINDER GP-BUCKET

75-MM (2.95-IN) BORE X 497-MM (19.57-IN) STROKE
PART OF 377-8913, 377-8914, 418-1567 LINKAGE AR-BUCKET
AN ATTACHMENT

SMCS-5457 **i05034738**

NOTE	REF NO	GRAPHIC REF	PART NUMBER	QTY	PART NAME 1 2 3 4 5 6 (PRODUCT LEVEL)	SEE PAGE
	1	1	**265-8716**	2	BUSHING	
	2	1	**301-6901**	1	CYLINDER AS	
	3	1	**281-2319**	1	ROD AS	
	4	1	**304-3537**	1	HEAD	
	5	1	**237-8377**	1	BUSHING	
	6	1	**146-3916**	1	RING	
	7	1	**146-1086**	1	RING	
	8	1	**095-1708**	1	SEAL-O-RING	
	9	1	**281-2316**	1	RING	
	10	1	**095-1709**	1	SEAL-O-RING	
	11	1	**281-2312**	1	PISTON	
	12	1	**192-0684**	1	SEAL AS	
	13	1	**281-2315**	2	RING	
	14	1	**216-7643**	1	SETSCREW (M8X1.25X8-MM)	
	15	1	**146-3969**	1	BALL	
	16	1	**301-6903**	1	PIPE AS	
	17	1	**304-3525**	1	PLUG	
	18	1	**304-3526**	2	SEAL	
	19	1	**304-3527**	1	BOLT	
	20	1	**199-1148**	1	HOLDER	
	21	1	**192-0638**	4	SEAL	
	22	1	**3B-8489**	1	FITTING-GREASE	
	23	1	**3B-8488**	1	FITTING-GREASE	
F			**304-3538**	1	HEAD AS	
F			**281-2313**	1	PISTON AS	
F			**304-3524**	1	PLUG AS	
					AVAILABLE REPAIR KIT(S):	
			281-2322	1	KIT-SEAL (BUCKET CYLINDER)	

F - NOT SHOWN

277-9900 **CYLINDER GP-BUCKET (*contd.*)** **i05034738**

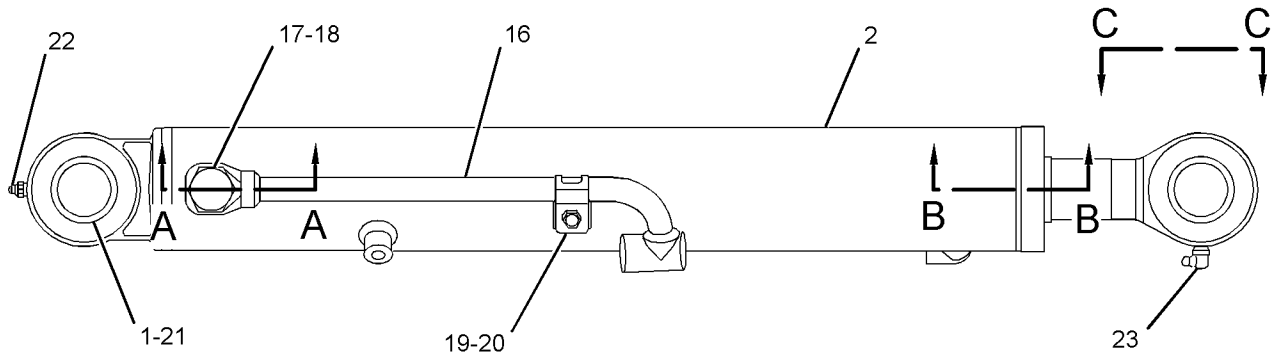

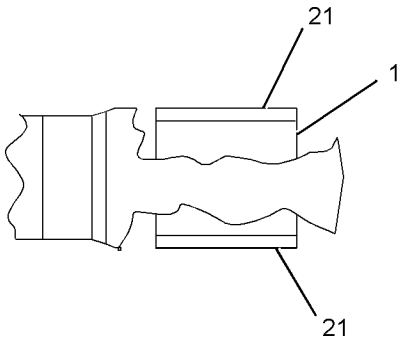

VIEW C-C

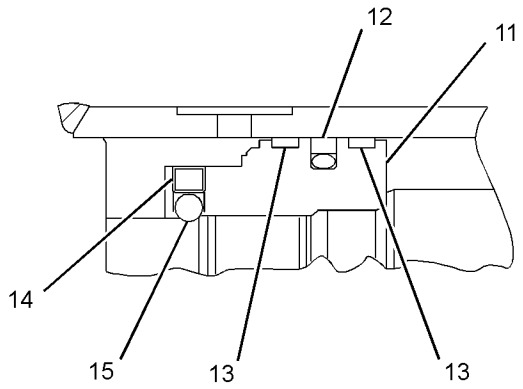

SECTION A-A

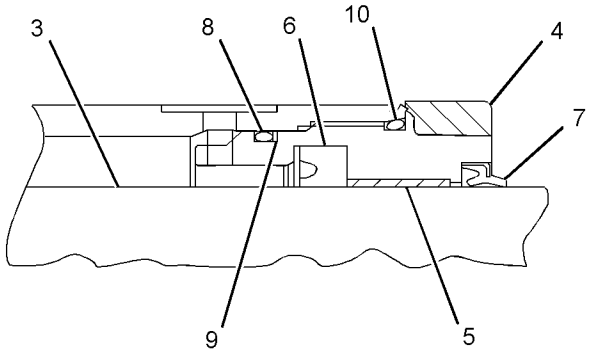

SECTION B-B

GRAPHIC #1 **<END>** g02207234

268-8224 CYLINDER GP-HYDRAULIC

63.5-MM (2.5-IN) BORE X 431.8-MM (17-IN) STROKE
PART OF 309-1917, 309-1938 THUMB GP
AN ATTACHMENT

SMCS-4303, 5105, 5362, 7562 **i05455910**

NOTE	REF NO	GRAPHIC REF	PART NUMBER	QTY	PART NAME 1 2 3 4 5 6 (PRODUCT LEVEL)	SEE PAGE
	1	1	**3B-8489**	2	FITTING-GREASE	
	2	1	**5D-1986**	1	LOCKNUT (7/8-14-THD)	
	3	1	**233-8447**	2	BUSHING	
	4	1	*244-3712*	2	PLUG AS	
					(EACH INCLUDES)	
		1	**9S-4191**	1	PLUG	
		1	**214-7568**	1	SEAL-O-RING	
	5	1	**278-2246**	1	PISTON	
	6	1	**278-2248**	1	BUSHING	
	7	1	**278-2254**	1	ROD AS-PISTON	
	8	1	**278-2256**	1	SEAL	
					AVAILABLE REPAIR KIT(S):	
			278-2257	1	KIT-PACKING (HYDRAULIC CYLINDER)	

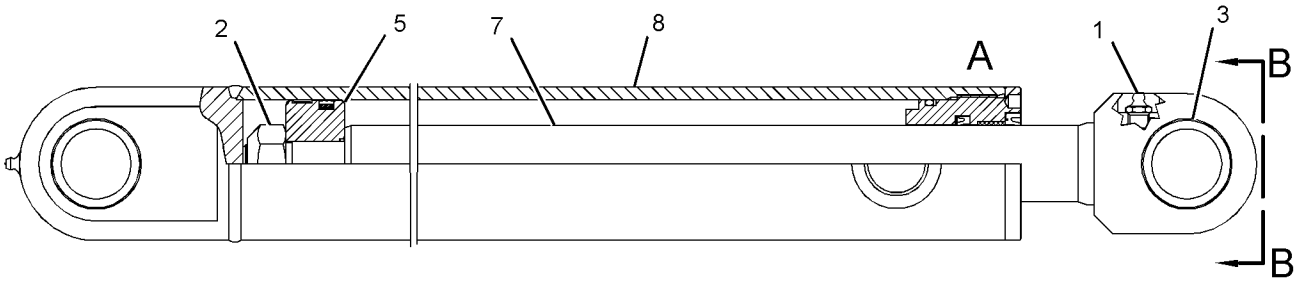

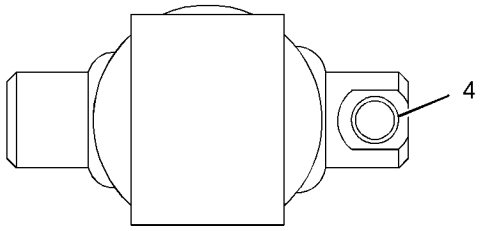

VIEW B-B

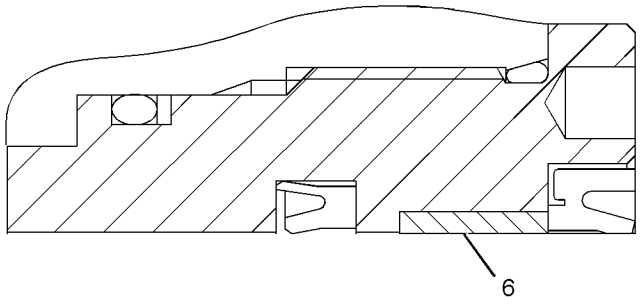

VIEW OF AREA A

GRAPHIC #1 **<END>** g03449736

361-1125 CYLINDER GP-HYDRAULIC

PART OF 361-1123 LOCK GP-QUICK COUPLER
AN ATTACHMENT

SMCS-4303, 5105, 5362, 7562 **i05437847**

NOTE	REF NO	GRAPHIC REF	PART NUMBER	QTY	PART NAME 1 2 3 4 5 6 (PRODUCT LEVEL)	SEE PAGE
	1	1	**361-1078**	1	KIT-SEAL	
					(INCLUDES O-RINGS & SEALS)	
	2	1	**361-1127**	1	ROD AS	
	3	1	**361-1128**	1	SEAL	
	4	1	**361-1129**	1	PISTON	
	5	1	**361-1156**	1	PISTON	
Y	6	1	**361-1132**	1	VALVE GP-CHECK (HYDRAULIC CONTROL LOCK)	320
	7	1	**3J-1907**	1	SEAL-O-RING	
	8	1	**9S-8004**	1	PLUG-O-RING	

Y - SEPARATE ILLUSTRATION

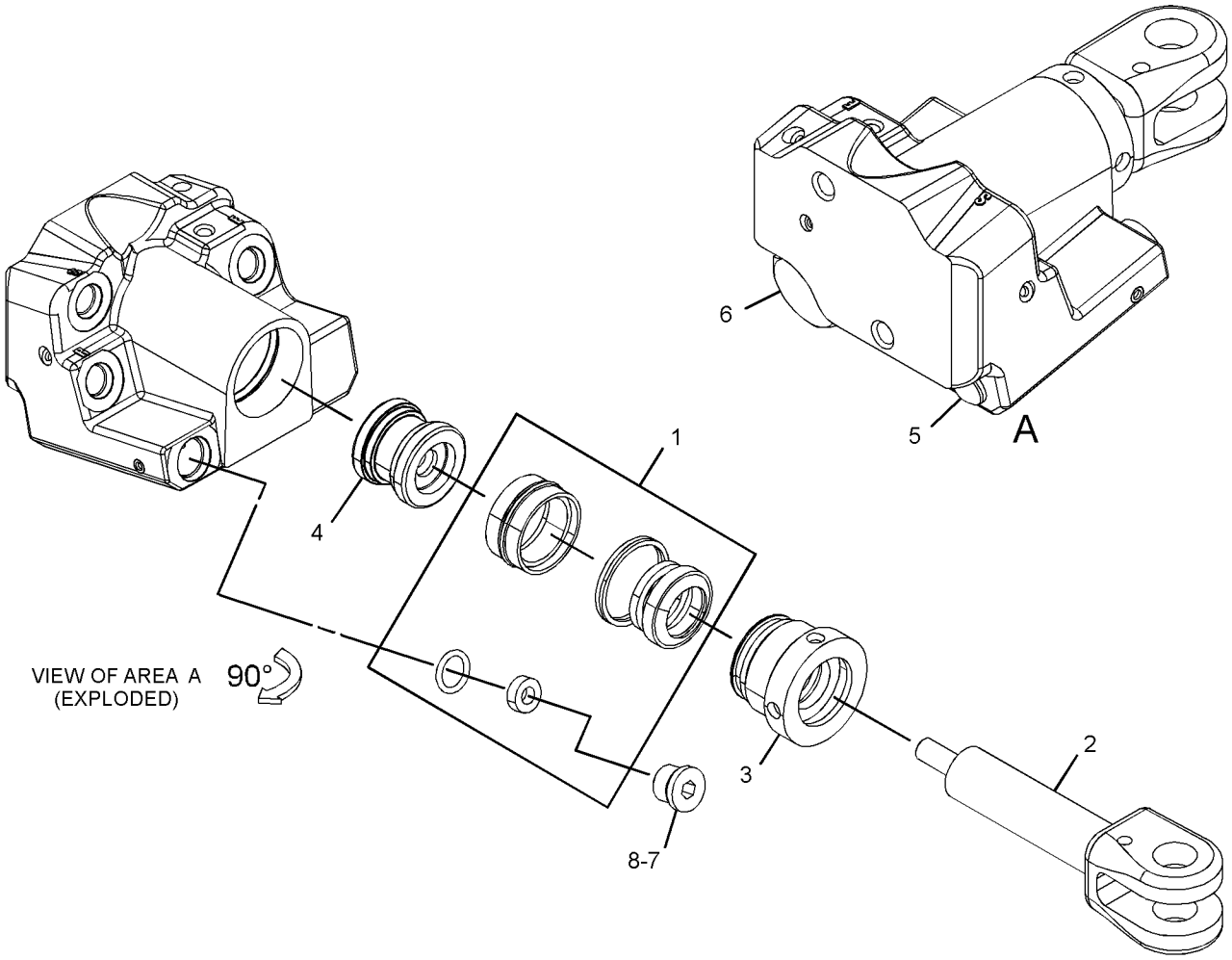

GRAPHIC #1 **<END>** g02913286

284-0883 CYLINDER GP-STICK

80-MM (3.15-IN) BORE X 597-MM (23.5-IN) STROKE
PART OF 379-4679, 421-8464 STICK AR
AN ATTACHMENT

SMCS-5458 **i04019579**

NOTE	REF NO	GRAPHIC REF	PART NUMBER	QTY	PART NAME 1 2 3 4 5 6 (PRODUCT LEVEL)	SEE PAGE
	1	1	**265-8717**	2	BUSHING	
	2	1	**284-0884**	1	CYLINDER AS-STICK	
	3	1	**281-2318**	1	ROD AS	
	4	1	**237-6120**	1	HEAD	
	5	1	**237-6121**	1	BUSHING	
J	6	1	**146-3957**	1	RING	
J	7	1	**146-3958**	1	RING	
J	8	1	**095-1709**	1	SEAL-O-RING	
J	9	1	**237-6124**	1	RING	
J	10	1	**095-1710**	1	SEAL-O-RING	
	11	1	**237-6135**	1	PISTON	
J	12	1	**146-3923**	1	SEAL AS	
J	13	1	**237-6136**	2	RING	
	14	1	**216-7643**	1	SETSCREW (M8X1.25X8-MM)	
	15	1	**146-3969**	1	BALL	
	16	1	**278-9127**	1	BEARING	
	17	1	**278-9128**	1	SEAL	
	18	1	**278-9129**	2	STOP	
	19	1	**278-9130**	1	RING	
	20	1	**192-0638**	4	SEAL	
	21	1	**3B-8488**	2	FITTING-GREASE	
F			**278-9126**	1	CUSHION AS	
F			**237-6134**	1	PISTON AS	
F			**237-6119**	1	HEAD AS	
					AVAILABLE REPAIR KIT(S):	
J			**281-2323**	1	KIT-SEAL	

F - NOT SHOWN
J - KIT MARKED J SERVICES PART(S) MARKED J

284-0883 **CYLINDER GP-STICK (*contd.*)** **i04019579**

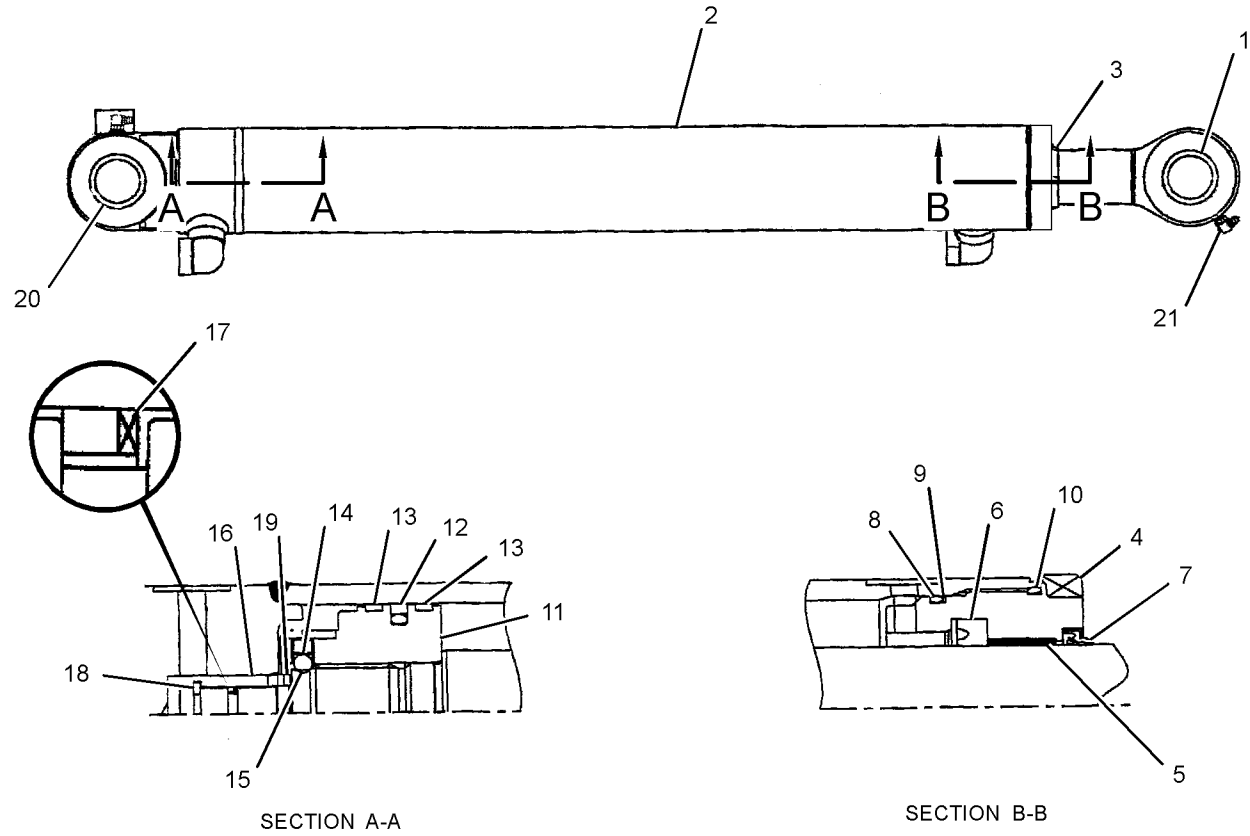

GRAPHIC #1 **<END>** g01235814

376-0171 CYLINDER GP-SWING BOOM

85-MM (3.3-IN) BORE X 483-MM (19-IN) STROKE

PART OF 376-6679 BOOM AR

SMCS-5105 **i04775401**

NOTE	REF NO	GRAPHIC REF	PART NUMBER	QTY	PART NAME 1 2 3 4 5 6 (PRODUCT LEVEL)	SEE PAGE
	1	1	**265-8717**	2	BUSHING	
	2	1	**382-1147**	1	CYLINDER AS-SWING BOOM	
	3	1	**278-1983**	1	ROD AS	
P	4	1	**309-5902**	1	HEAD	
P	5	1	**311-1031**	1	BUSHING	
JP	6	1	**146-3957**	1	RING	
JP	7	1	**146-3958**	1	RING	
JP	8	1	**095-1710**	1	SEAL-O-RING	
JP	9	1	**237-8378**	1	RING	
JP	10	1	**095-1711**	1	SEAL-O-RING	
N	11	1	**278-1985**	1	PISTON	
JN	12	1	**146-3968**	1	SEAL AS	
JN	13	1	**278-1986**	2	RING	
N	14	1	**216-7643**	1	SETSCREW (M8X1.25X8-MM)	
N	15	1	**146-3969**	1	BALL	
	16	1	**192-0638**	4	SEAL	
	17	1	**3B-8489**	1	FITTING-GREASE	
FP			**309-5903**	1	HEAD AS-END	
			170-8794	1	RING	
			278-1990	1	SEAL	
FN			**278-1988**	1	PISTON AS	
					AVAILABLE REPAIR KIT(S):	
J			**279-0639**	1	KIT-SEAL (SWING BOOM CYLINDER)	

F - NOT SHOWN
J - KIT MARKED J SERVICES PARTS MARKED J
N - KIT MARKED N SERVICES PARTS MARKED N
P - KIT MARKED P SERVICES PARTS MARKED P

376-0171 **CYLINDER GP-SWING BOOM (*contd.*)** **i04775401**

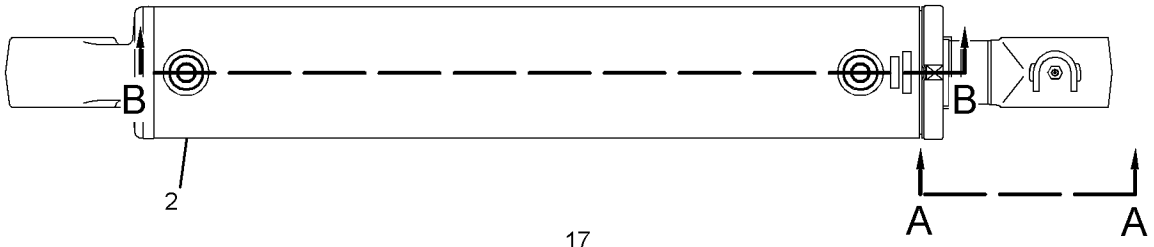

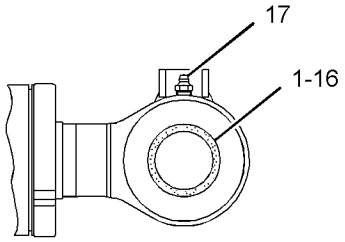

VIEW A-A

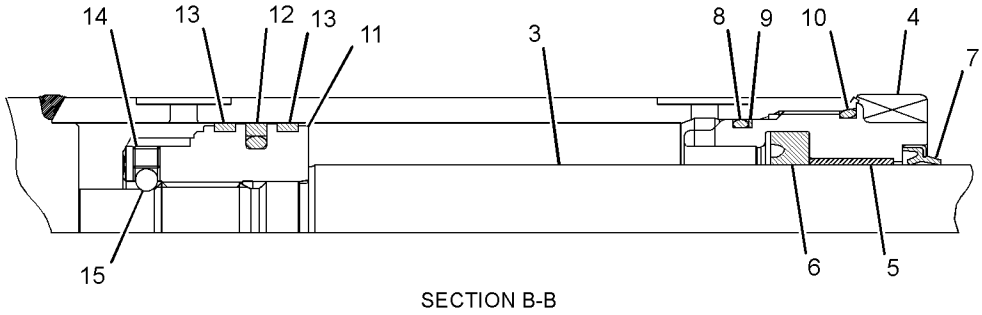

SECTION B-B

GRAPHIC #1 **<END>** g02799208

246-0192 CYLINDER GP-TILT

76.2-MM (3-IN) BORE X 120-MM (4.7-IN) STROKE
PART OF 279-4325 BUCKET AR-TILTABLE
AN ATTACHMENT

SMCS-5104 **i05426576**

NOTE	REF NO	GRAPHIC REF	PART NUMBER	QTY	PART NAME 1 2 3 4 5 6 (PRODUCT LEVEL)	SEE PAGE
	1	1	**1H-7339**	1	SEAL-O-RING	
	2	1	**6E-0122**	1	HEAD	
J	3	1	**6J-1972**	1	SEAL AS	
J	4	1	**6J-5733**	1	RING-WEAR	
	5	1	**9T-2212**	1	PISTON	
J	6	1	**167-2186**	1	SEAL AS-BUFFER	
J	7	1	**167-2294**	1	SEAL-U-CUP	
J	8	1	**226-8202**	1	SEAL-WIPER	
	9	1	**249-4175**	1	ROD AS	
	9A	1	**9T-4007**	2	BEARING	
Z	10	1		1	CYLINDER AS	
J	11	1	**4T-6780**	1	RING-WEAR	
	12	1	**5P-8250**	1	WASHER (28X49X5-MM THK)	
	13	1	**6F-7037**	1	BOLT (1-14X3.25-IN)	
J	14	1	**8J-2574**	1	RING-BACKUP	
					AVAILABLE REPAIR KIT(S):	
J			**235-0354**		KIT-SEAL (HYDRAULIC CYLINDER)	
					'(ALSO INCLUDES BACKUP RING & O-RING SEAL)	

J - (KIT MARKED J SERVICES PART(S) MARKED J
Z - NOT SERVICED SEPARATELY

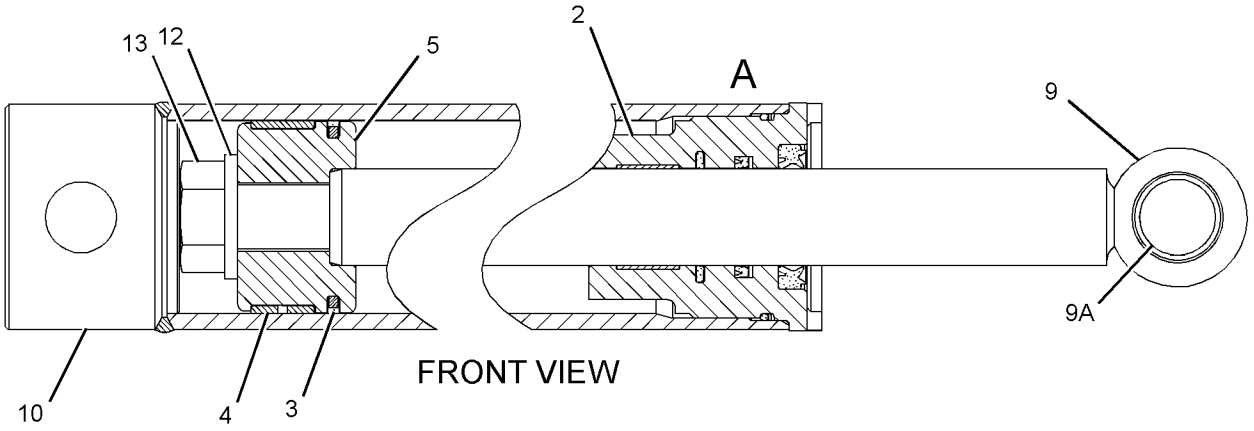

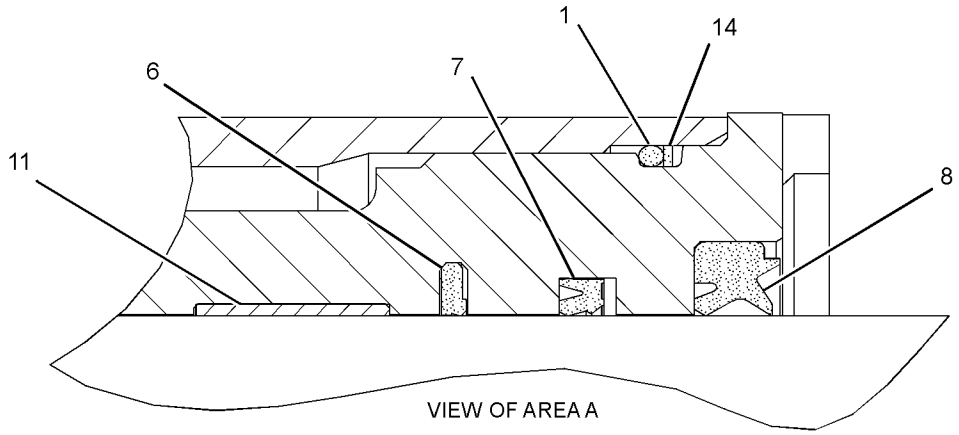

GRAPHIC #1 **<END>** g01158069

379-4689 DRAIN GP-OIL—HYDRAULIC TANK, STANDARD
AN ATTACHMENT

SMCS-5056 **i04629149**

NOTE	PART NUMBER	QTY	PART NAME 1 2 3 4 5 6 (PRODUCT LEVEL)	SEE PAGE
Y	*379-4709*	1	DRAIN GP-OIL	212

Y - SEPARATE ILLUSTRATION

<END>

379-4709 DRAIN GP-OIL—HYDRAULIC TANK, STANDARD

PART OF 379-4689 DRAIN GP-OIL
AN ATTACHMENT

SMCS-5056 **i04678810**

NOTE	REF NO	GRAPHIC REF	PART NUMBER	QTY	PART NAME 1 2 3 4 5 6 (PRODUCT LEVEL)	SEE PAGE
	1	1	*148-8411*	1	PLUG AS	
		1	**3K-0360**	1	SEAL-O-RING	
		1	**9S-4185**	1	PLUG-O-RING	
	2	1	*194-2903*	1	ELBOW AS	
		1	**3K-0360**	1	SEAL-O-RING	
		1	**8T-0119**	1	ELBOW	

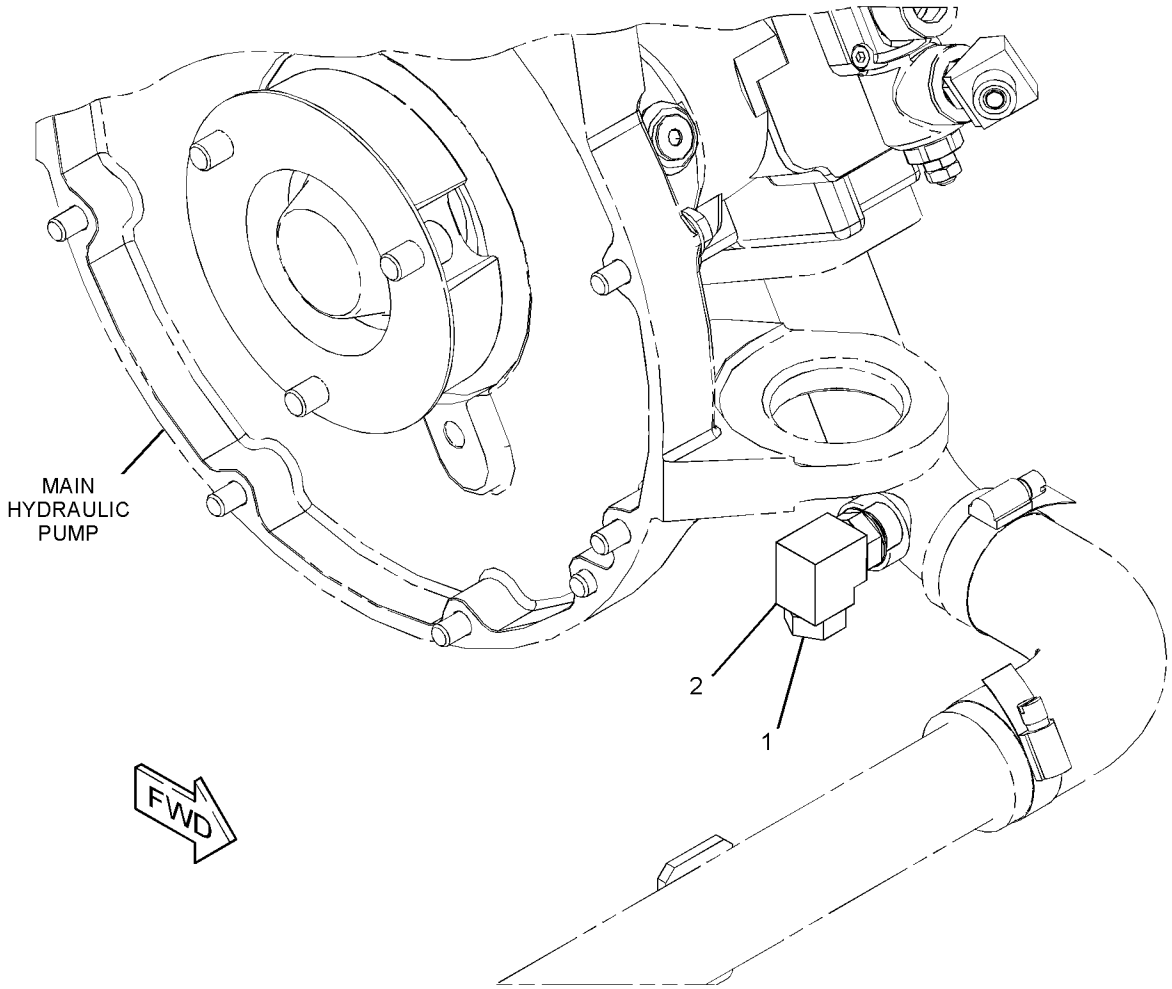

GRAPHIC #1 **<END>** g02798464

266-6396 DRIVE GP-SWING

PART OF 265-8752 MOTOR & MTG GP-SWING

SMCS-5459 **i04019569**

NOTE	REF NO	GRAPHIC REF	PART NUMBER	QTY	PART NAME 1 2 3 4 5 6 (PRODUCT LEVEL)	SEE PAGE
Y	1	1	**280-2355**	1	PLANETARY GP-SWING DRIVE	295
Y	2	1	**281-3052**	1	MOTOR GP-SWING	293

Y - SEPARATE ILLUSTRATION

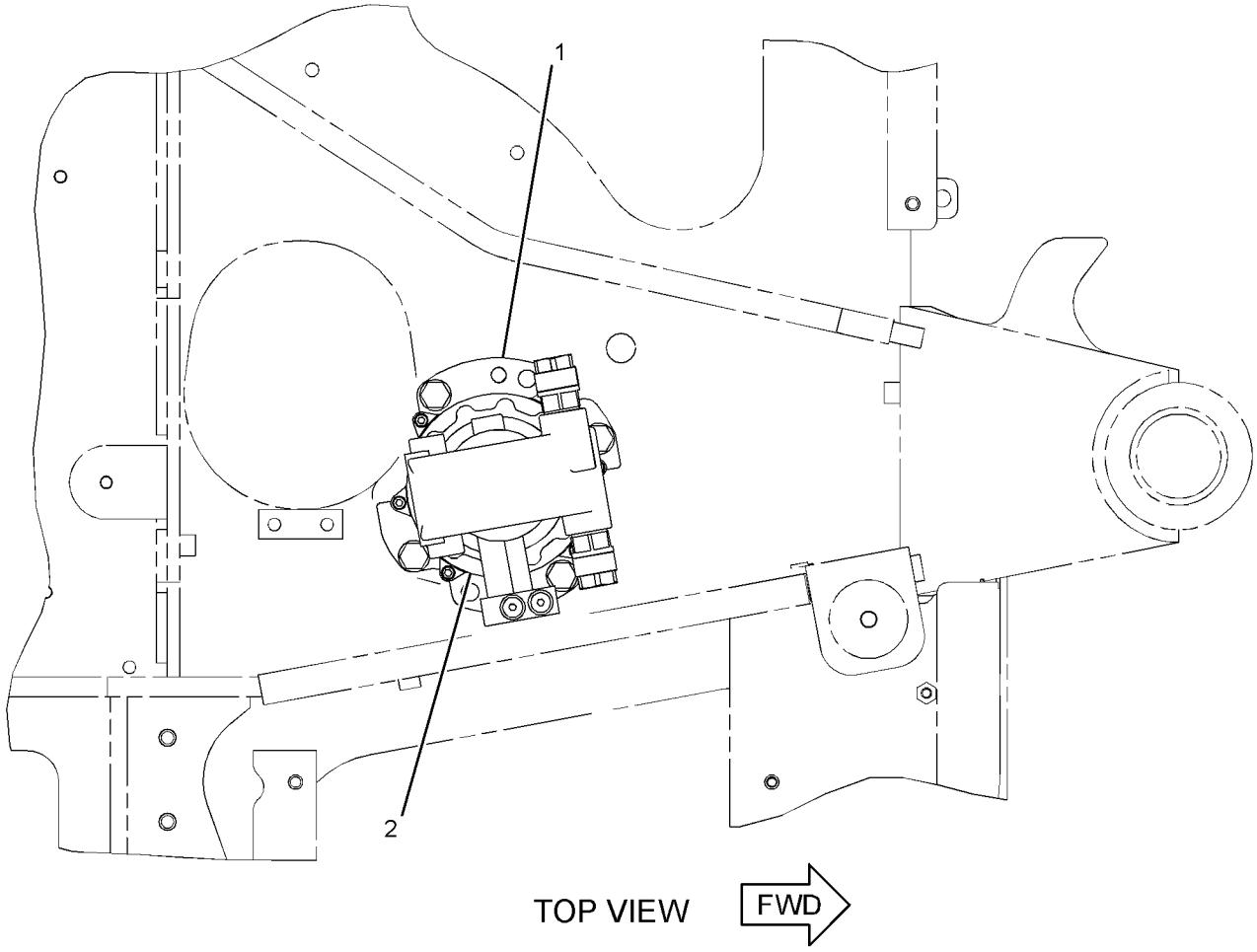

GRAPHIC #1 **<END>** g01235869

272-1326 FASTENER GP-LINES–STICK

PART OF 379-4679, 421-8464 STICK AR
AN ATTACHMENT

SMCS-5057 **i04019577**

NOTE	REF NO	GRAPHIC REF	PART NUMBER	QTY	PART NAME 1 2 3 4 5 6 (PRODUCT LEVEL)	SEE PAGE
	1	1	**278-0819**	4	CLAMP	
M	2	1	**7X-2537**	4	BOLT (M8X1.25X35-MM)	
	3	1	**8T-4224**	4	WASHER-HARD (8.8X16X2-MM THK)	

M - METRIC PART

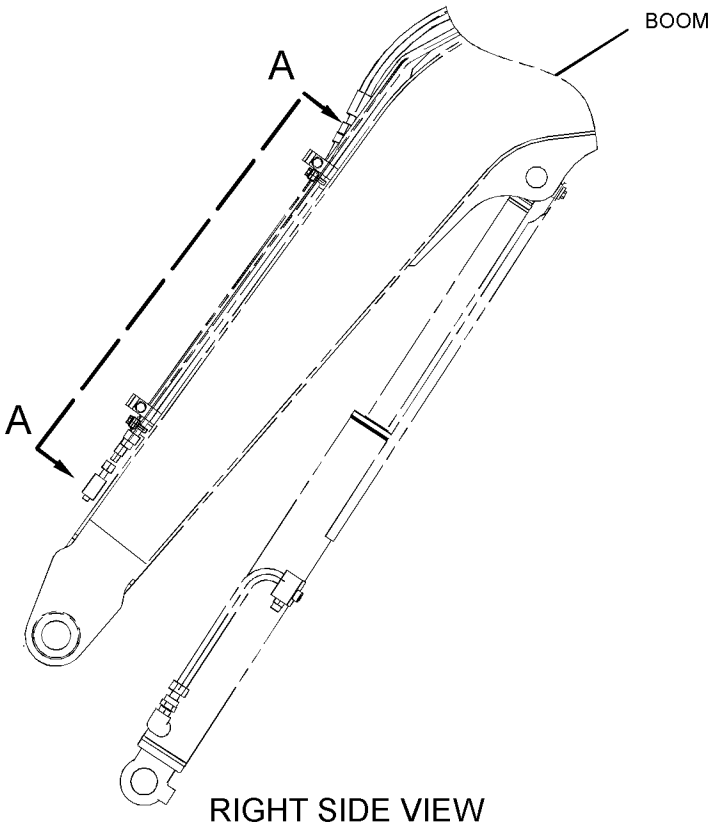

RIGHT SIDE VIEW

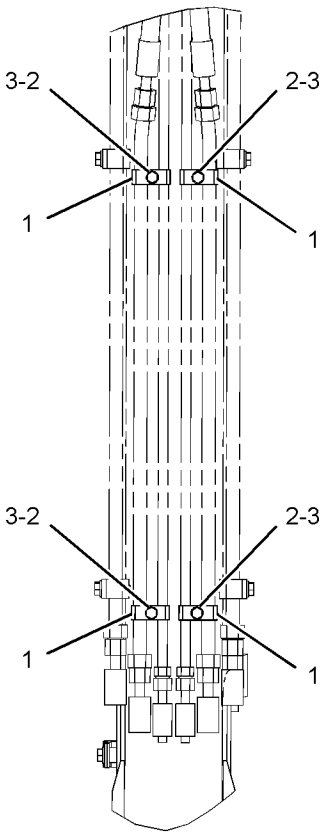

VIEW A-A

GRAPHIC #1 **<END>** g01235528

356-7138 FASTENER GP-LINES

PART OF 379-4684, 379-4685 CONTROL AR-AUXILIARY AN ATTACHMENT

SMCS-5057 **i04021064**

NOTE	REF NO	GRAPHIC REF	PART NUMBER	QTY	PART NAME 1 2 3 4 5 6 (PRODUCT LEVEL)	SEE PAGE
	1	1	**093-1294**	4	CLAMP	
	2	1	**274-6552**	2	CLAMP	
	3	1	**278-0797**	2	PLATE	
	4	1	**356-7139**	4	PLATE	
M	5	1	**7X-0818**	4	BOLT (M8X1.25X45-MM)	
M	6	1	**7X-2537**	2	BOLT (M8X1.25X35-MM)	
	7	1	**8T-4121**	4	WASHER-HARD (11X21X2.5-MM THK)	
M	8	1	**8T-4182**	2	BOLT (M10X1.5X45-MM)	
M	9	1	**8T-4186**	2	BOLT (M10X1.5X40-MM)	
	10	1	**8T-4224**	6	WASHER-HARD (8.8X16X2-MM THK)	

M - METRIC PART

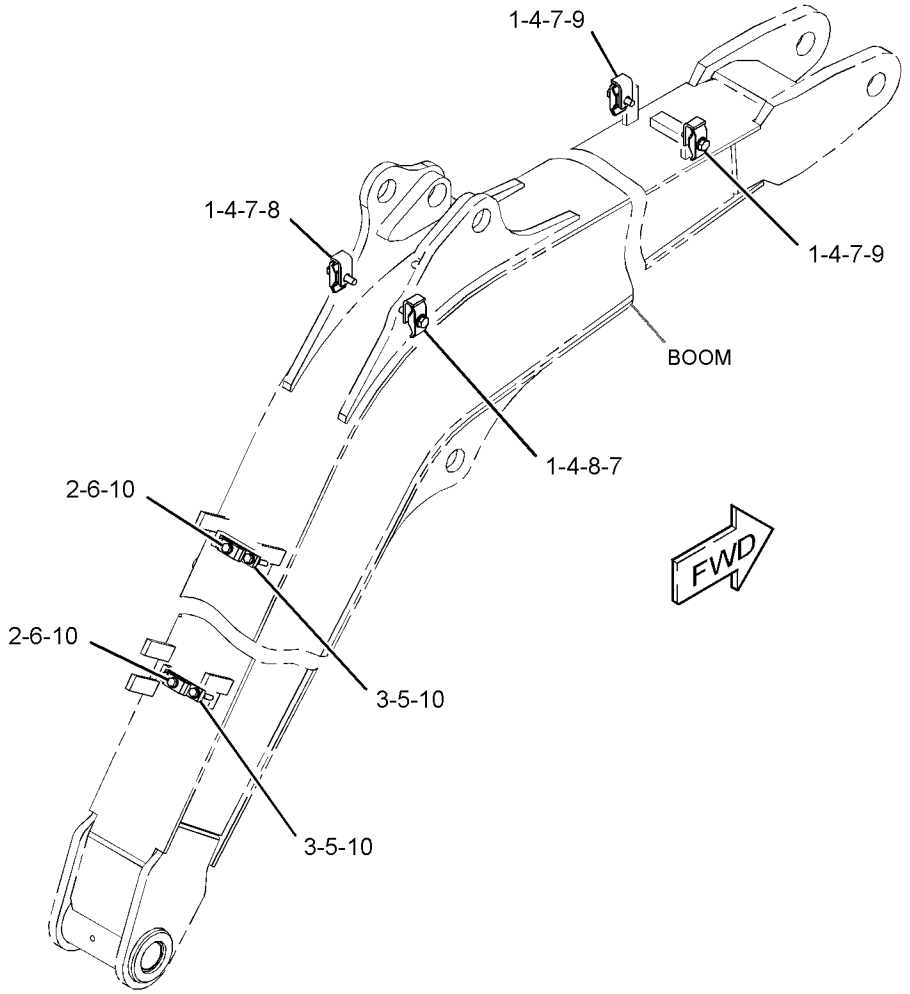

GRAPHIC #1 **<END>** g02210936

347-6081 GAUGE GP-SIGHT–HYDRAULIC OIL LEVEL

PART OF 367-1050 TANK & FILTER GP-HYDRAULIC

SMCS-7479 **i04177750**

NOTE	REF NO	GRAPHIC REF	PART NUMBER	QTY	PART NAME 1 2 3 4 5 6 (PRODUCT LEVEL)	SEE PAGE
	1	1	**347-6082**	2	BLOCK	
M	2	1	**236-3259**	2	BOLT-SPECIAL	
	3	1	**236-3257**	1	PIPE	
	4	1	**6F-6672**	4	SEAL-O-RING	
	5	1	**6F-4855**	4	SEAL-O-RING	

M - METRIC PART

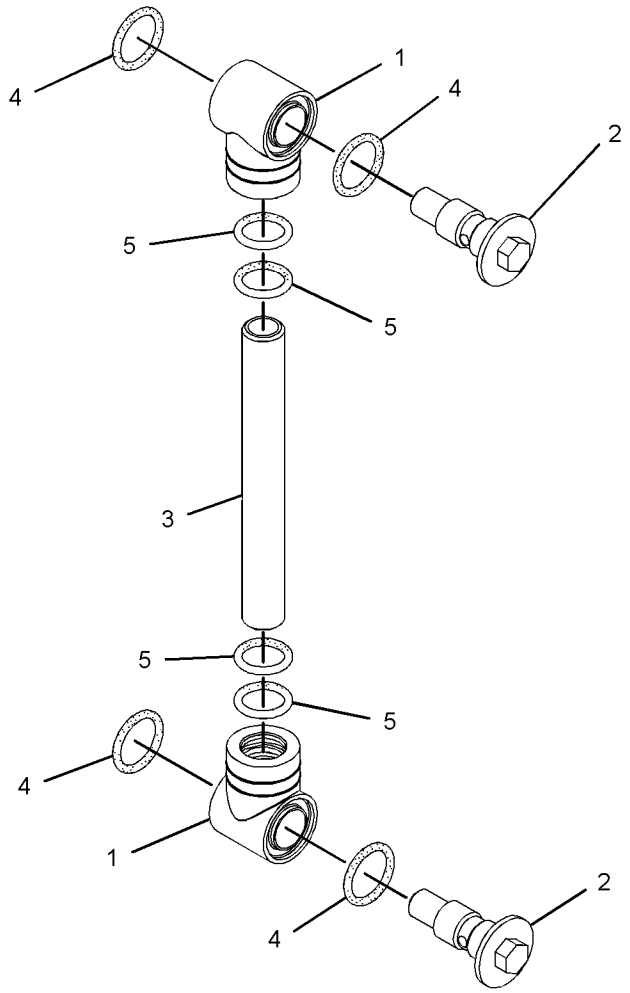

GRAPHIC #1 **<END>** g02270933

379-4678 HYDRAULIC AR

PART OF 376-6671 COMMON AR

SMCS-5050 **i04629833**

NOTE	PART NUMBER	QTY	PART NAME 1 2 3 4 5 6 (PRODUCT LEVEL)	SEE PAGE
Y	*379-4695*	1	LINES GP-FRONT	246
Y	*379-4693*	1	LINES GP-HYDRAULIC PUMP	253
Y	*379-4694*	1	LINES GP-PILOT	259
Y	*376-2013*	1	PUMP & MTG GP-MAIN HYDRAULIC	296
Y	*367-0936*	1	TANK & MTG GP-HYDRAULIC	307

Y - SEPARATE ILLUSTRATION

<END>

379-4681 LINES AR-BOOM

AN ATTACHMENT

SMCS-5057 **i04611688**

NOTE	PART NUMBER	QTY	PART NAME 1 2 3 4 5 6 (PRODUCT LEVEL)	SEE PAGE
Y	*379-4699*	1	LINES GP-FRONT (BOOM CYLINDER)	250

Y - SEPARATE ILLUSTRATION

<END>

379-4682 LINES AR-BOOM—CHECK VALVE

AN ATTACHMENT

SMCS-5057 **i05376432**

NOTE	PART NUMBER	QTY	PART NAME 1 2 3 4 5 6 (PRODUCT LEVEL)	SEE PAGE
Y	*382-0560*	1	FILM GP (OVERLOAD WARNING)	552
Y	*379-4700*	1	LINES GP-BOOM CHECK VALVE	228
Y	*422-2948*	1	WIRING GP-OVERLOAD WARNING	119

Y - SEPARATE ILLUSTRATION

<END>

382-1314 LINES AR-BUCKET

CANNOT BE USED WITH 382-1315—PAGE: 218

PART OF 383-1706, 383-1708, 383-1717, 383-1719 STICK AR

AN ATTACHMENT

SMCS-5057 **i04629201**

NOTE	PART NUMBER	QTY	PART NAME 1 2 3 4 5 6 (PRODUCT LEVEL)	SEE PAGE
Y	*269-8935*	1	LINES GP-BUCKET	233

Y - SEPARATE ILLUSTRATION

<END>

382-1315 LINES AR-BUCKET—LONG STICK

CANNOT BE USED WITH 382-1314—PAGE: 217

PART OF 383-1707, 383-1709, 383-1718, 383-1720 STICK AR

AN ATTACHMENT

SMCS-5057 **i04629203**

NOTE	PART NUMBER	QTY	PART NAME 1 2 3 4 5 6 (PRODUCT LEVEL)	SEE PAGE
Y	*269-8936*	1	LINES GP-BUCKET (LONG STICK)	235

Y - SEPARATE ILLUSTRATION

<END>

269-8939 LINES GP-AUXILIARY HYDRAULIC–BOOM

PART OF 379-4680 CONTROL AR-AUXILIARY

SMCS-5057 **i04013692**

NOTE	REF NO	GRAPHIC REF	PART NUMBER	QTY	PART NAME 1 2 3 4 5 6 (PRODUCT LEVEL)	SEE PAGE
	1	1	**093-1290**	8	CLAMP	
	2	1	**283-5359**	1	TUBE AS	
	3	1	**283-5360**	1	TUBE AS	
	4	1	**6V-8398**	4	SEAL-O-RING	
	5	1	**8T-4121**	8	WASHER-HARD (11X21X2.5-MM THK)	
M	6	1	**8T-4182**	4	BOLT (M10X1.5X45-MM)	
M	7	1	**8T-4186**	4	BOLT (M10X1.5X40-MM)	

M - METRIC PART

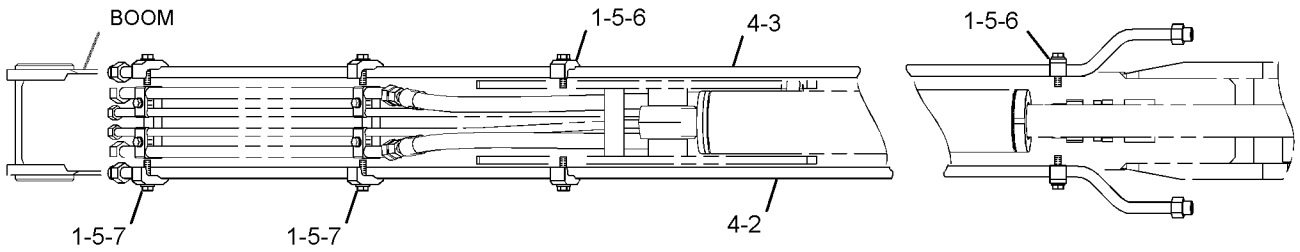

TOP VIEW FWD

GRAPHIC #1 **<END>** g01234662

269-8947 LINES GP-AUXILIARY HYDRAULIC—STANDARD STICK

PART OF 355-4740 LINES GP-AUXILIARY HYDRAULIC
AN ATTACHMENT

SMCS-5057 **i04716909**

NOTE	REF NO	GRAPHIC REF	PART NUMBER	QTY	PART NAME 1 2 3 4 5 6 (PRODUCT LEVEL)	SEE PAGE
	1	1	**152-5717**	1	CAP-DUST	
	2	1	**152-5718**	1	CAP-DUST	
	3	1	**153-2994**	1	COUPLING (FEMALE)	
	4	1	**153-2995**	1	COUPLING (MALE)	
	5	1	*190-5236*	2	UNION AS	
					(EACH INCLUDES)	
		1	**2M-9780**	1	SEAL-O-RING	
		1	**6V-8398**	1	SEAL-O-RING	
		1	**163-7050**	1	CONNECTOR	
I	6	1	**292-8351**	2	HOSE AS	
	7	1	**365-6920**	1	BRACKET	
	8	1	**365-6921**	1	BRACKET	
	9	1	**6V-9169**	2	NUT (13/16-16-THD)	
M	10	1	**8T-4179**	4	BOLT (M12X1.75X20-MM)	
	11	1	**8T-4223**	4	WASHER-HARD (13.5X25.5X3-MM THK)	

I - REFER TO HYDRAULIC INFORMATION SYSTEM
M - METRIC PART

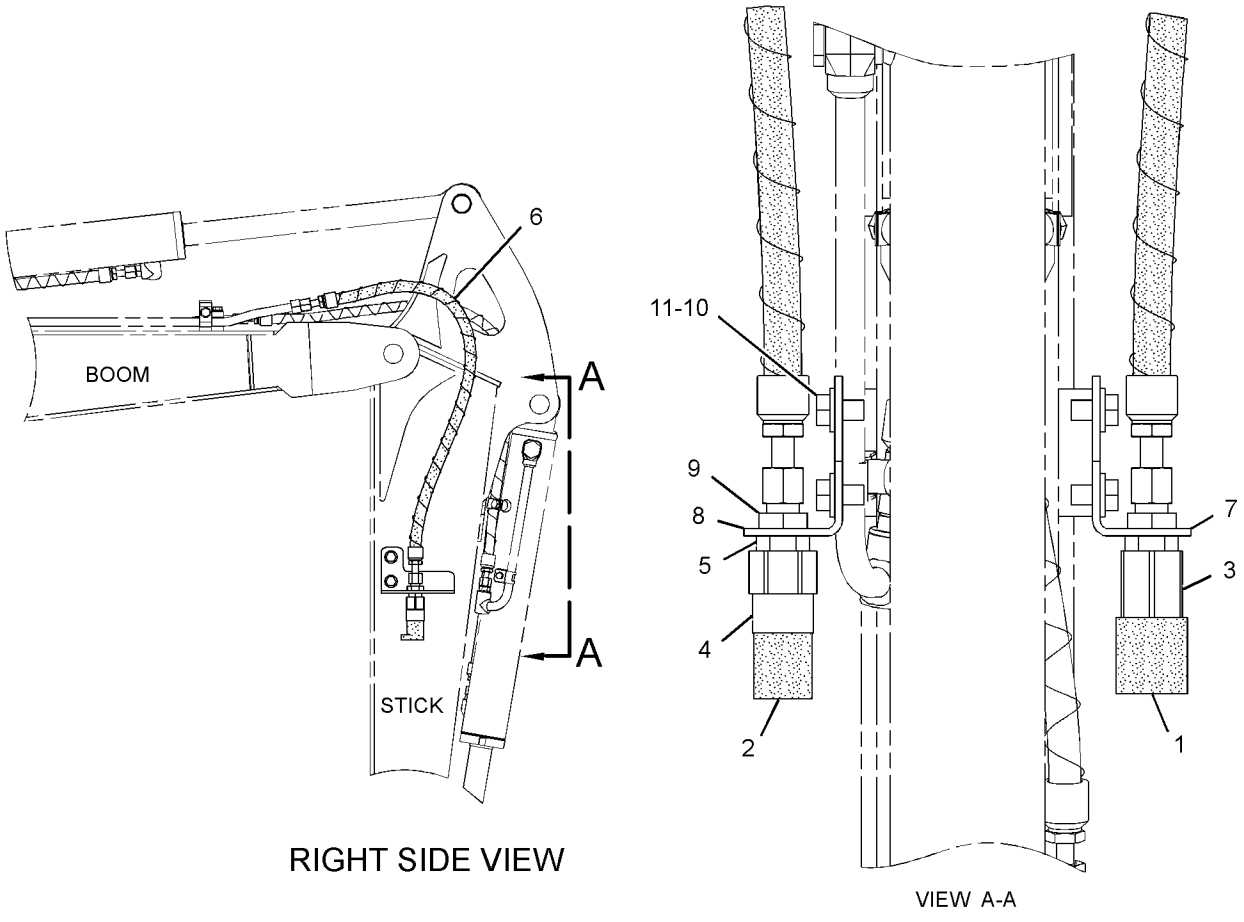

GRAPHIC #1 **<END>** g02819717

292-8309 LINES GP-AUXILIARY HYDRAULIC–2ND AUXILIARY, STANDARD STICK

PART OF 379-4684 CONTROL AR-AUXILIARY AN ATTACHMENT

SMCS-5057 **i04018513**

NOTE	REF NO	GRAPHIC REF	PART NUMBER	QTY	PART NAME 1 2 3 4 5 6 (PRODUCT LEVEL)	SEE PAGE
	1	1	**153-2996**	1	FITTING AS (QUICK DISCONNECT, MALE)	
	2	1	**153-2997**	1	FITTING AS (QUICK DISCONNECT, FEMALE)	
	3	1	**161-2560**	1	CAP-DUST	
	4	1	**161-2561**	1	CAP-DUST	
	5	1	**267-4159**	2	CONNECTOR-BULKHEAD	
I	6	1	**292-8365**	2	HOSE AS	
	7	1	**3K-0360**	2	SEAL-O-RING	
	8	1	**6V-8397**	2	SEAL-O-RING	
	9	1	**6V-9168**	2	NUT (11/16-16-THD)	

I - REFER TO HYDRAULIC INFORMATION SYSTEM

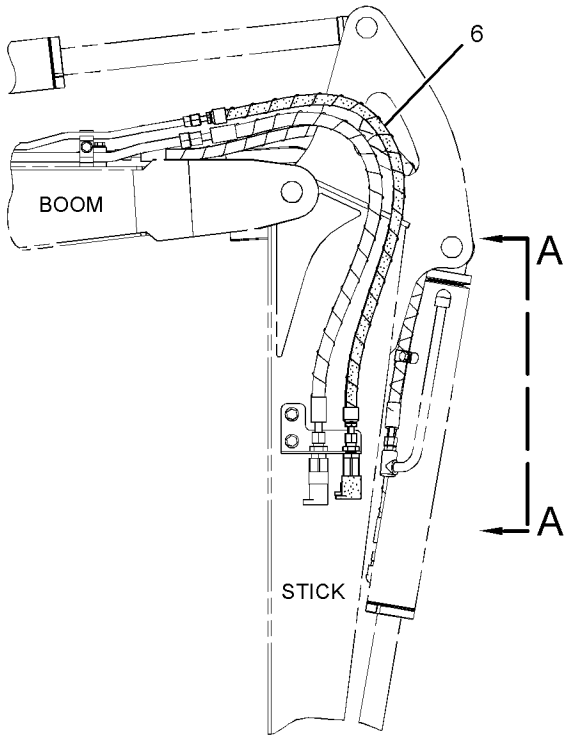

RIGHT SIDE VIEW

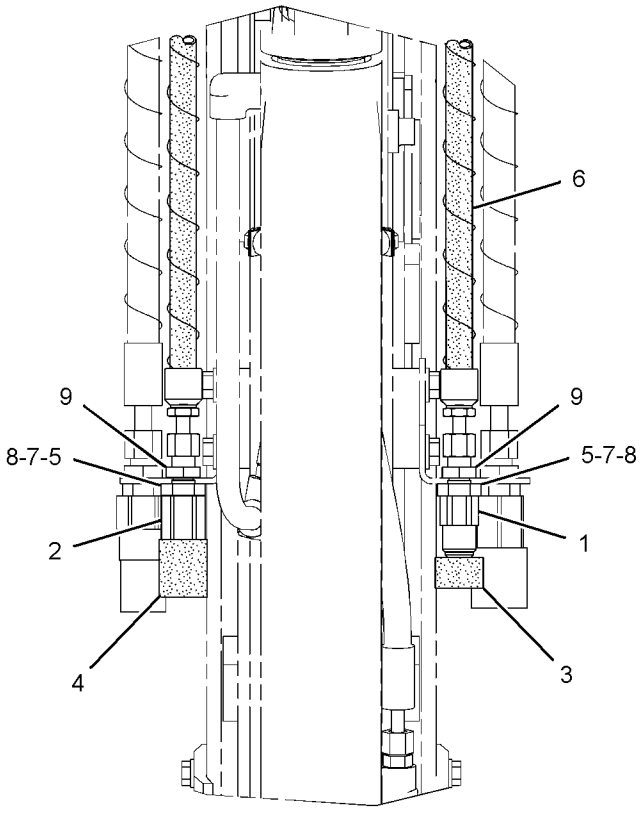

VIEW A-A

GRAPHIC #1 **<END>** g01311797

292-8311 LINES GP-AUXILIARY HYDRAULIC–2ND AUXILIARY, LONG STICK

PART OF 379-4685 CONTROL AR-AUXILIARY AN ATTACHMENT

SMCS-5057 **i04018540**

NOTE	REF NO	GRAPHIC REF	PART NUMBER	QTY	PART NAME 1 2 3 4 5 6 (PRODUCT LEVEL)	SEE PAGE
	1	1	**153-2996**	1	FITTING AS (QUICK DISCONNECT, MALE)	
	2	1	**153-2997**	1	FITTING AS (QUICK DISCONNECT, FEMALE)	
	3	1	**161-2560**	1	CAP-DUST	
	4	1	**161-2561**	1	CAP-DUST	
	5	1	**267-4159**	2	CONNECTOR-BULKHEAD	
I	6	1	**292-8367**	2	HOSE AS	
	7	1	**3K-0360**	2	SEAL-O-RING	
	8	1	**5P-7462**	2	CLIP (SLOT)	
	9	1	**5P-7463**	2	CLIP (TAB)	
	10	1	**6V-0683**	2	GROMMET	
	11	1	**6V-8397**	2	SEAL-O-RING	
	12	1	**6V-9168**	2	NUT (11/16-16-THD)	

I - REFER TO HYDRAULIC INFORMATION SYSTEM

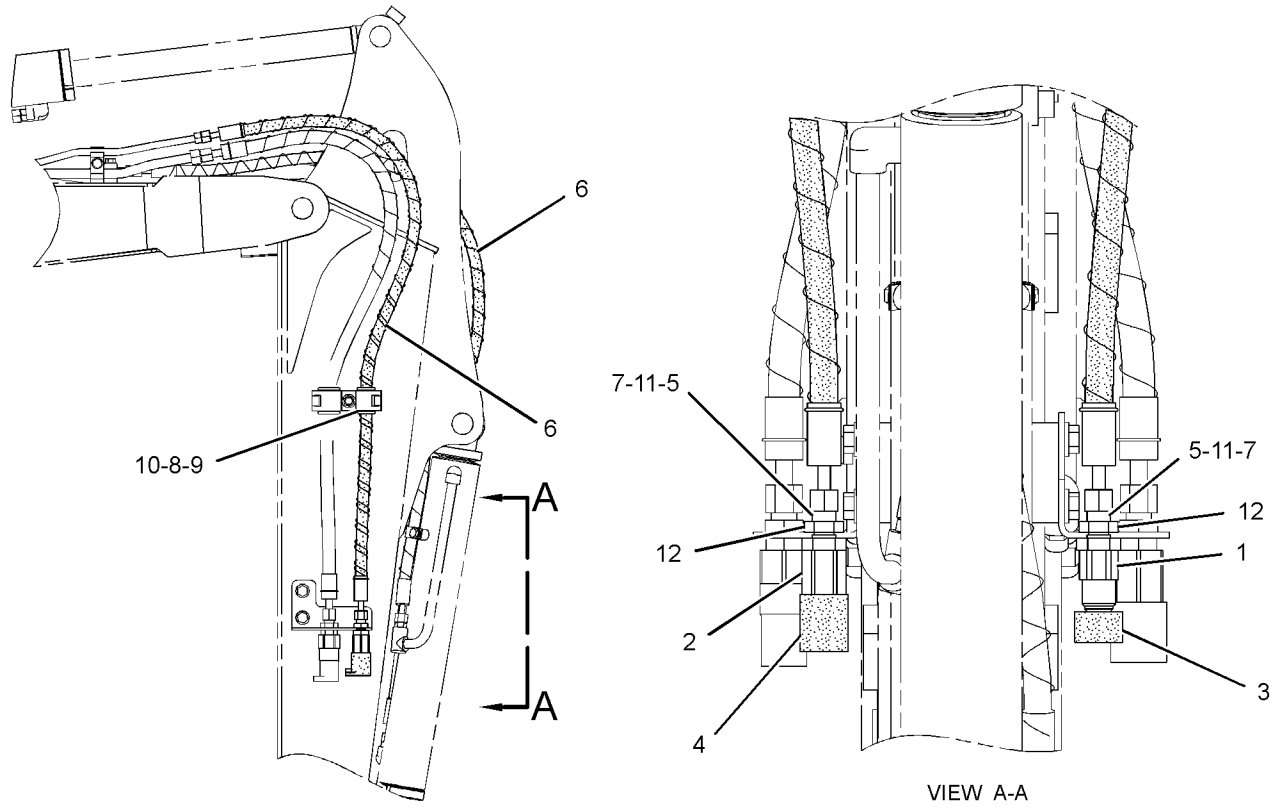

GRAPHIC #1 **<END>** g01234469

355-4740 LINES GP-AUXILIARY HYDRAULIC—STANDARD STICK

PART OF 383-1706, 383-1708, 383-1717, 383-1719 STICK AR
AN ATTACHMENT

SMCS-5057 **i04006595**

NOTE	PART NUMBER	QTY	PART NAME 1 2 3 4 5 6 (PRODUCT LEVEL)	SEE PAGE
Y	*269-8947*	1	LINES GP-AUXILIARY HYDRAULIC (STANDARD STICK)	220

Y - SEPARATE ILLUSTRATION

<END>

379-4688 LINES GP-AUXILIARY HYDRAULIC—LONG STICK

CANNOT BE USED WITH 355-4740—PAGE: 223
PART OF 383-1707, 383-1709, 383-1718, 383-1720 STICK AR
AN ATTACHMENT

SMCS-5057 **i04629129**

NOTE	PART NUMBER	QTY	PART NAME 1 2 3 4 5 6 (PRODUCT LEVEL)	SEE PAGE
Y	*379-4708*	1	LINES GP-AUXILIARY HYDRAULIC (LONG STICK)	224

Y - SEPARATE ILLUSTRATION

<END>

379-4708 LINES GP-AUXILIARY HYDRAULIC—LONG STICK

PART OF 379-4688 LINES GP-AUXILIARY HYDRAULIC
AN ATTACHMENT

SMCS-5057 **i04704310**

NOTE	REF NO	GRAPHIC REF	PART NUMBER	QTY	PART NAME 1 2 3 4 5 6 (PRODUCT LEVEL)	SEE PAGE
	1	1	**152-5717**	1	CAP-DUST	
	2	1	**152-5718**	1	CAP-DUST	
	3	1	**153-2994**	1	COUPLING (FEMALE)	
	4	1	**153-2995**	1	COUPLING (MALE)	
	5	1	*190-5236*	2	UNION AS	
					(EACH INCLUDES)	
		1	**2M-9780**	1	SEAL-O-RING	
		1	**6V-8398**	1	SEAL-O-RING	
		1	**163-7050**	1	CONNECTOR	
I	6	1	**292-8355**	2	HOSE AS	
	7	1	**365-6920**	1	BRACKET	
	8	1	**365-6921**	1	BRACKET	
	9	1	**6V-1249**	2	GROMMET (22-MM ID)	
	10	1	**6V-9169**	2	NUT (13/16-16-THD)	
	11	1	**8C-7534**	2	CLIP	
M	12	1	**8T-4179**	4	BOLT (M12X1.75X20-MM)	
	13	1	**8T-4223**	6	WASHER-HARD (13.5X25.5X3-MM THK)	
M	14	1	**8T-4956**	2	BOLT (M12X1.75X35-MM)	

I - REFER TO HYDRAULIC INFORMATION SYSTEM
M - METRIC PART

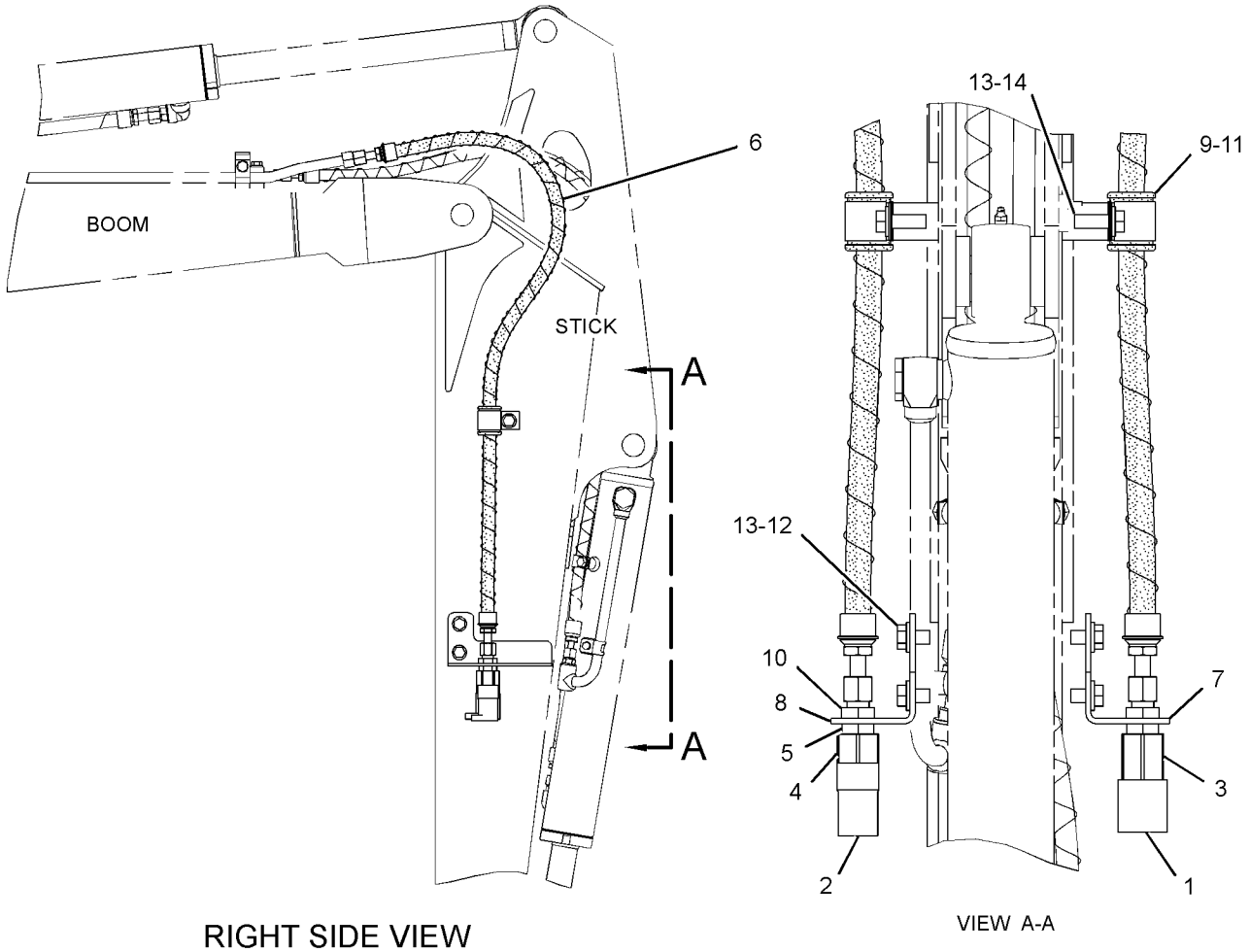

RIGHT SIDE VIEW

VIEW A-A

GRAPHIC #1 **<END>** g02808958

380-2455 LINES GP-AUXILIARY HYDRAULIC–2ND AUXILIARY, BOOM

PART OF 379-4684, 379-4685 CONTROL AR-AUXILIARY AN ATTACHMENT

SMCS-5057 **i04623157**

NOTE	REF NO	GRAPHIC REF	PART NUMBER	QTY	PART NAME 1 2 3 4 5 6 (PRODUCT LEVEL)	SEE PAGE
	1	1	**283-5368**	1	TUBE AS	
	2	1	**375-8118**	1	TUBE AS	
	3	1	**6V-8397**	4	SEAL-O-RING	

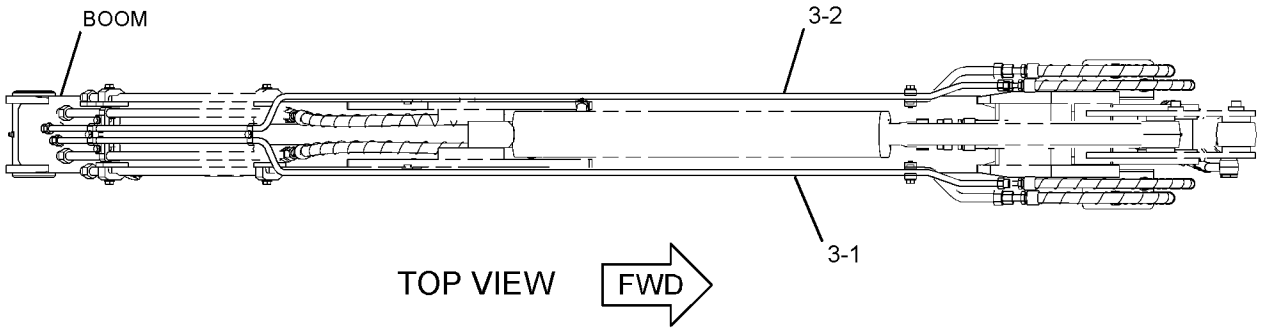

GRAPHIC #1 **<END>** g02801080

280-7609 LINES GP-BLADE–ANGLE

PART OF 377-8928 BLADE AR-ANGLING
AN ATTACHMENT

SMCS-5057 **i04015432**

NOTE	REF NO	GRAPHIC REF	PART NUMBER	QTY	PART NAME 1 2 3 4 5 6 (PRODUCT LEVEL)	SEE PAGE
	1	1	*148-8353*	1	ELBOW AS	
		1	**3J-1907**	1	SEAL-O-RING	
		1	**6V-8397**	1	SEAL-O-RING	
		1	**6V-9001**	1	ELBOW	
	2	1	*148-8378*	3	ELBOW AS	
					(EACH INCLUDES)	
		1	**3J-1907**	1	SEAL-O-RING	
		1	**6V-8397**	1	SEAL-O-RING	
		1	**6V-8724**	1	ELBOW	
I	3	1	**294-7850**	1	HOSE AS	
I	4	1	**294-7851**	1	HOSE AS	

I - REFER TO HYDRAULIC INFORMATION SYSTEM

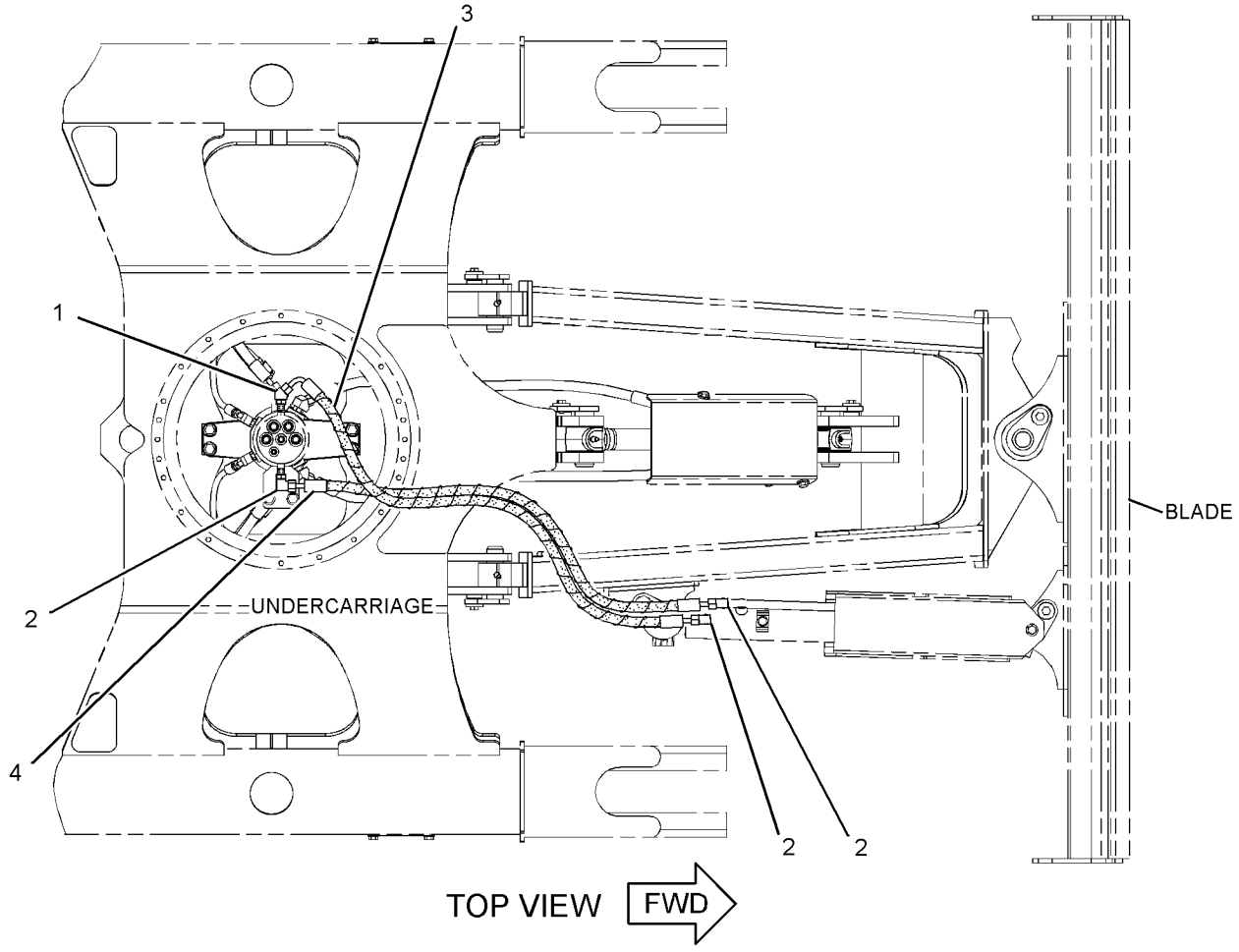

GRAPHIC #1 **<END>** g01354626

292-8290 LINES GP-BLADE–RAISE, LOWER

PART OF 377-8928 BLADE AR-ANGLING, 377-8915 BLADE AR-STRAIGHT AN ATTACHMENT

SMCS-5057 **i04015471**

NOTE	REF NO	GRAPHIC REF	PART NUMBER	QTY	PART NAME 1 2 3 4 5 6 (PRODUCT LEVEL)	SEE PAGE
	1	1	**267-4279**	1	COVER	
I	2	1	**292-8335**	1	HOSE AS	
I	3	1	**292-8336**	1	HOSE AS	
	4	1	*148-8336*	1	CONNECTOR AS	
		1	**3J-1907**	1	SEAL-O-RING	
		1	**6V-8397**	1	SEAL-O-RING	
		1	**6V-8636**	1	CONNECTOR	
	5	1	*148-8353*	3	ELBOW AS	
					(EACH INCLUDES)	
		1	**3J-1907**	1	SEAL-O-RING	
		1	**6V-8397**	1	SEAL-O-RING	
		1	**6V-9001**	1	ELBOW	
	6	1	**7X-7729**	2	WASHER (11X25X3-MM THK)	
M	7	1	**8T-4137**	2	BOLT (M10X1.5X20-MM)	

I - REFER TO HYDRAULIC INFORMATION SYSTEM
M - METRIC PART

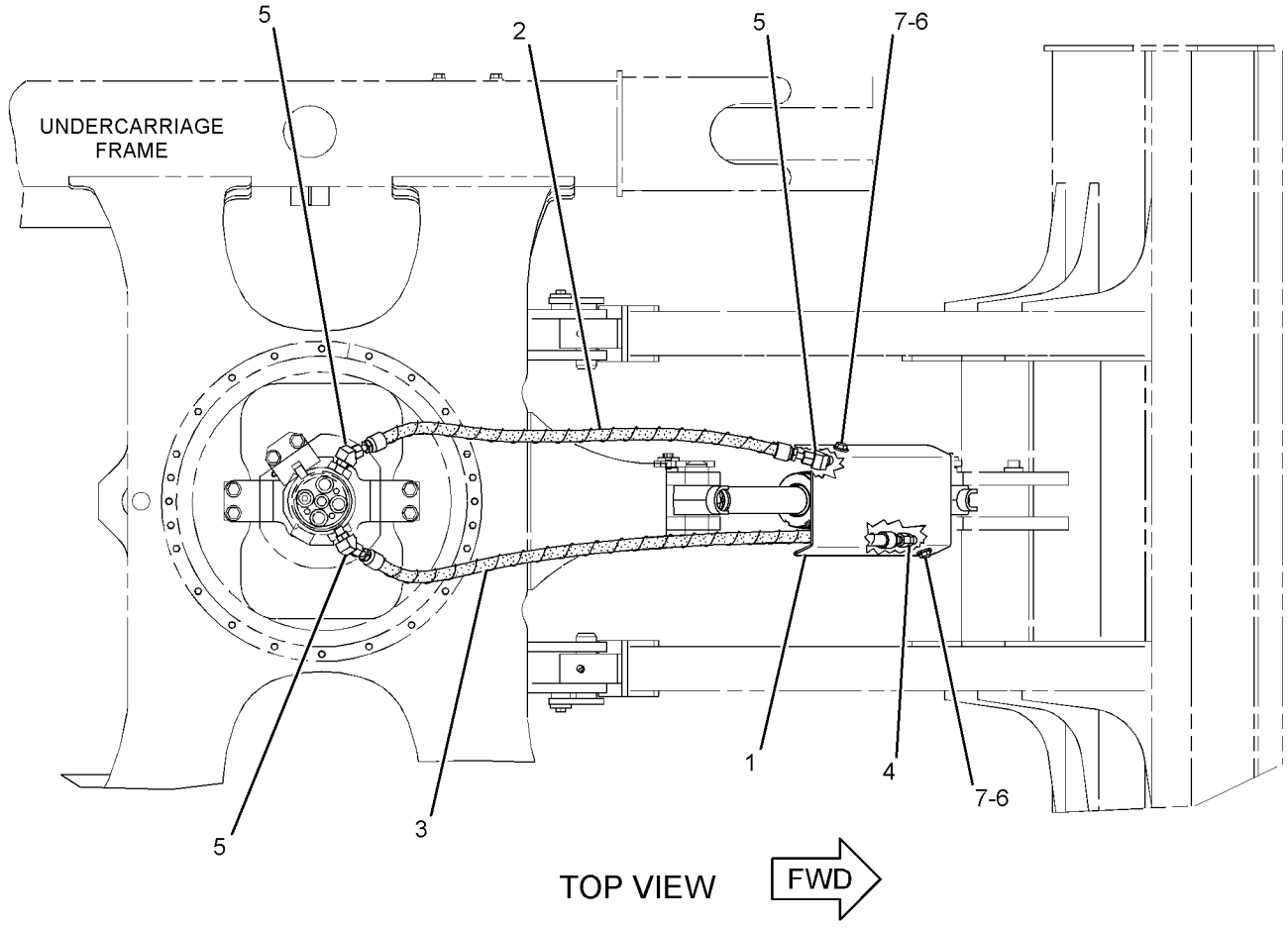

GRAPHIC #1 **<END>** g01348156

379-4700 LINES GP-BOOM CHECK VALVE

S/N: TTN1-884
PART OF 379-4682 LINES AR-BOOM
AN ATTACHMENT

SMCS-5057, 5453 **i05426580**

NOTE	REF NO	GRAPHIC REF	PART NUMBER	QTY	PART NAME 1 2 3 4 5 6 (PRODUCT LEVEL)	SEE PAGE
	1	1	**7K-1181**	4	STRAP-CABLE	
	2	1	**9F-2167**	1	SCREW-PURGE (3/8-24X1.164-IN)	
	3	1	**093-1290**	1	CLAMP	
	4	1	**278-0800**	1	TUBE AS	
	5	1	**279-4737**	1	STRAP-CABLE (GREEN)	
	6	1	**279-4738**	1	STRAP-CABLE (PURPLE)	
J	7	1	**288-8570**	1	VALVE GP-LOAD CONTROL (BOOM LOWERING)	
	8	1	**307-8151**	1	PLATE AS	
	9	1	**307-8156**	1	TUBE AS	
	10	1	**308-4578**	1	SUPPORT AS	
	11	1	**308-5532**	2	SUPPORT AS	
M	12	1	**8T-6466**	2	BOLT (M10X1.5X60-MM)	
I	13	1	**397-6699**	1	HOSE AS	
I	14	1	**381-0565**	1	HOSE AS	
I	15	1	**397-6742**	1	HOSE AS	
	16	1	*148-8328*	1	CONNECTOR AS	
		1	**3D-2824**	1	SEAL-O-RING	
		1	**6V-8398**	1	SEAL-O-RING	
		1	**6V-8633**	1	CONNECTOR	
	17	1	*148-8336*	2	CONNECTOR AS	
					(EACH INCLUDES)	
		1	**3J-1907**	1	SEAL-O-RING	
		1	**6V-8397**	1	SEAL-O-RING	
		1	**6V-8636**	1	CONNECTOR	
	18	1	*148-8340*	1	CONNECTOR AS	
		1	**3K-0360**	1	SEAL-O-RING	
		1	**6V-8398**	1	SEAL-O-RING	
		1	**6V-8639**	1	CONNECTOR	
	19	1	*148-8368*	1	ELBOW AS	
		1	**3J-1907**	1	SEAL-O-RING	
		1	**4J-5477**	1	SEAL-O-RING	
		1	**6V-8627**	1	ELBOW	
	20	1	*150-4029*	1	TEE AS	
		1	**3J-7354**	1	SEAL-O-RING	
		1	**4J-5477**	2	SEAL-O-RING	
		1	**6V-8780**	1	TEE-FACE SEAL	
	21	1	**152-3411**	1	ELBOW	
	22	1	*164-9869*	1	CONNECTOR AS	
		1	**3J-1907**	1	SEAL-O-RING	
		1	**6V-8397**	1	SEAL-O-RING	
		1	**9X-2297**	1	CONNECTOR	
	23	1	**208-0616**	1	TEE	
	24	1	**3D-2824**	1	SEAL-O-RING	
	25	1	**4S-1962**	1	CLIP	
	26	1	**6V-8397**	2	SEAL-O-RING	
	27	1	**8T-4121**	10	WASHER-HARD (11X21X2.5-MM THK)	
M	28	1	**8T-4133**	2	NUT (M10X1.5-THD)	
M	29	1	**8T-4137**	3	BOLT (M10X1.5X20-MM)	
M	30	1	**8T-4182**	1	BOLT (M10X1.5X45-MM)	
M	31	1	**8T-4196**	2	BOLT (M10X1.5X35-MM)	
					AVAILABLE REPAIR KIT(S):	
J			**170-4635**	1	KIT-SEAL (LOAD CONTROL VALVE)	

I - REFER TO HYDRAULIC INFORMATION SYSTEM
J - KIT MARKED J SERVICES PART MARKED J
M - METRIC PART

379-4700 **LINES GP-BOOM CHECK VALVE (*contd.*)** **i05426580**

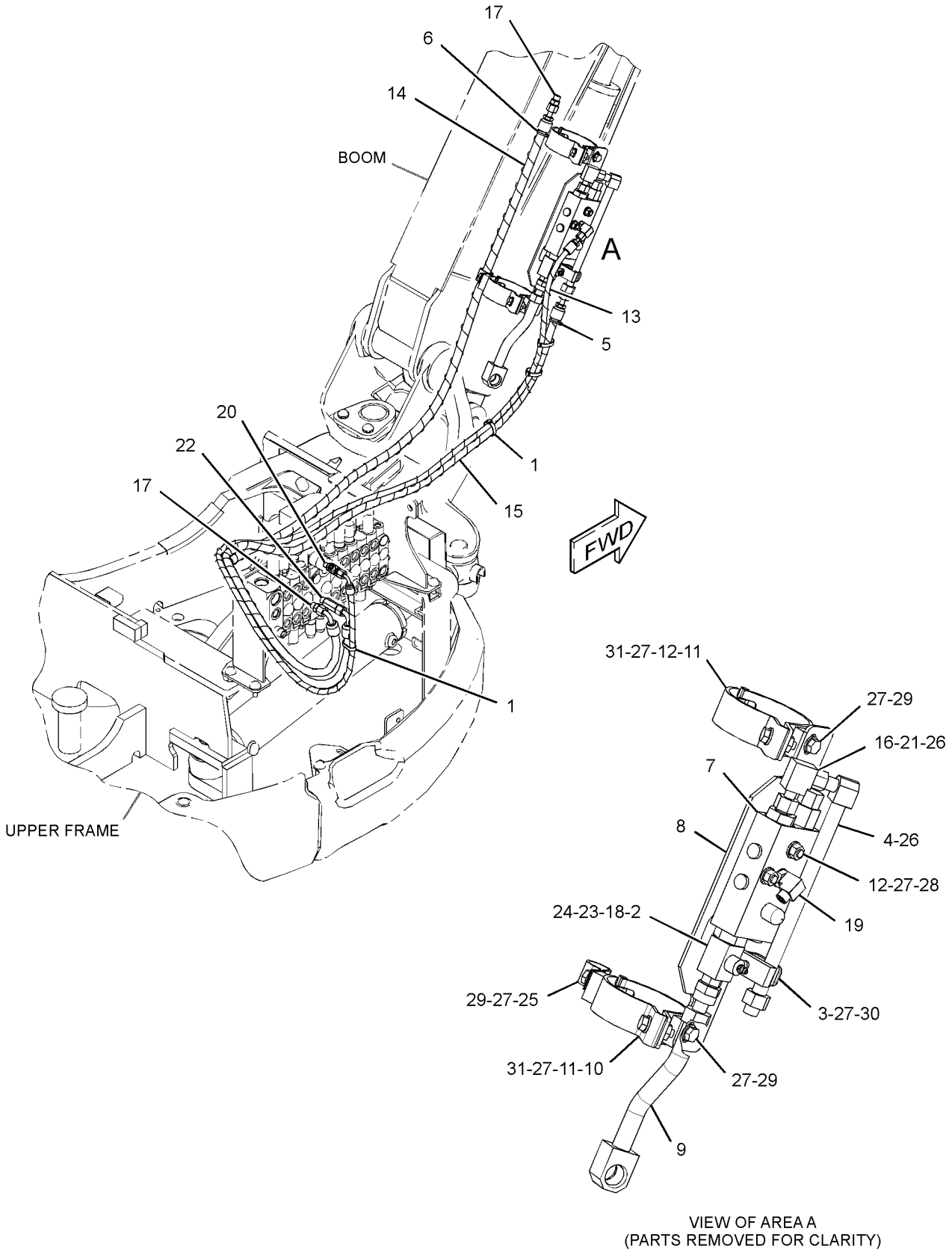

VIEW OF AREA A
(PARTS REMOVED FOR CLARITY)

GRAPHIC #1 **<END>** g03410587

379-4700 LINES GP-BOOM CHECK VALVE

S/N: TTN885-UP
PART OF 379-4682 LINES AR-BOOM
AN ATTACHMENT

SMCS-5057, 5453 **i05435066**

NOTE	REF NO	GRAPHIC REF	PART NUMBER	QTY	PART NAME 1 2 3 4 5 6 (PRODUCT LEVEL)	SEE PAGE
	1	1	**7K-1181**	4	STRAP-CABLE	
	2	1	**9F-2167**	1	SCREW-PURGE (3/8-24X1.164-IN)	
	3	1	**093-1290**	1	CLAMP	
	4	1	**278-0800**	1	TUBE AS	
	5	1	**279-4737**	1	STRAP-CABLE (GREEN)	
	6	1	**279-4738**	1	STRAP-CABLE (PURPLE)	
	7	1	**307-8151**	1	PLATE AS	
	8	1	**308-4578**	1	SUPPORT AS	
		1	**087-5841**	1	PLATE	
C	10	1	**344-7391**	1	SENSOR GP-PRESSURE (BOWL CYLINDER, ROD END)	
I	11	1	**381-0565**	1	HOSE AS	
I	12	1	**397-6699**	1	HOSE AS	
I	13	1	**397-6742**	1	HOSE AS	
C	14	1	**417-1094**	1	VALVE GP-CHECK (PILOT OPERATED)	
C	15	1	**426-0195**	1	TUBE AS	
C	16	1	**426-0197**	2	SUPPORT AS	
	17	1	*148-8328*	1	CONNECTOR AS	
		1	**3D-2824**	1	SEAL-O-RING	
		1	**6V-8398**	1	SEAL-O-RING	
		1	**6V-8633**	1	CONNECTOR	
	18	1	*148-8336*	2	CONNECTOR AS	
					(EACH INCLUDES)	
		1	**3J-1907**	1	SEAL-O-RING	
		1	**6V-8397**	1	SEAL-O-RING	
		1	**6V-8636**	1	CONNECTOR	
	19	1	*148-8340*	1	CONNECTOR AS	
		1	**3K-0360**	1	SEAL-O-RING	
		1	**6V-8398**	1	SEAL-O-RING	
		1	**6V-8639**	1	CONNECTOR	
	20	1	*148-8368*	1	ELBOW AS	
		1	**3J-1907**	1	SEAL-O-RING	
		1	**4J-5477**	1	SEAL-O-RING	
		1	**6V-8627**	1	ELBOW	
	21	1	*150-4029*	1	TEE AS	
		1	**3J-7354**	1	SEAL-O-RING	
		1	**4J-5477**	2	SEAL-O-RING	
		1	**6V-8780**	1	TEE-FACE SEAL	
	22	1	**152-3411**	1	ELBOW	
	23	1	*164-9869*	1	CONNECTOR AS	
		1	**3J-1907**	1	SEAL-O-RING	
		1	**6V-8397**	1	SEAL-O-RING	
		1	**9X-2297**	1	CONNECTOR	
	24	1	**208-0616**	1	TEE	
C	25	1	*241-6215*	1	ELBOW AS	
		1	**3J-1907**	1	SEAL-O-RING	
		1	**6V-8076**	1	ELBOW	
	26	1	**3D-2824**	1	SEAL-O-RING	
C	27	1	**3J-1907**	1	SEAL-O-RING	
	28	1	**4S-1962**	1	CLIP	
	29	1	**6V-8397**	2	SEAL-O-RING	
	30	1	**8T-4121**	10	WASHER-HARD (11X21X2.5-MM THK)	
M	31	1	**8T-4133**	2	NUT (M10X1.5-THD)	
M	32	1	**8T-4137**	3	BOLT (M10X1.5X20-MM)	
M	33	1	**8T-4182**	1	BOLT (M10X1.5X45-MM)	
M	34	1	**8T-4196**	2	BOLT (M10X1.5X35-MM)	
M	35	1	**8T-6466**	2	BOLT (M10X1.5X60-MM)	

379-4700 **LINES GP-BOOM CHECK VALVE (*contd.*)** **i05435066**

NOTE	REF NO	GRAPHIC REF	PART NUMBER	QTY	PART NAME 1 2 3 4 5 6 (PRODUCT LEVEL)	SEE PAGE

C - CHANGE FROM PREVIOUS TYPE
I - REFER TO HYDRAULIC INFORMATION SYSTEM
M - METRIC PART

379-4700 **LINES GP-BOOM CHECK VALVE (*contd.*)** **i05435066**

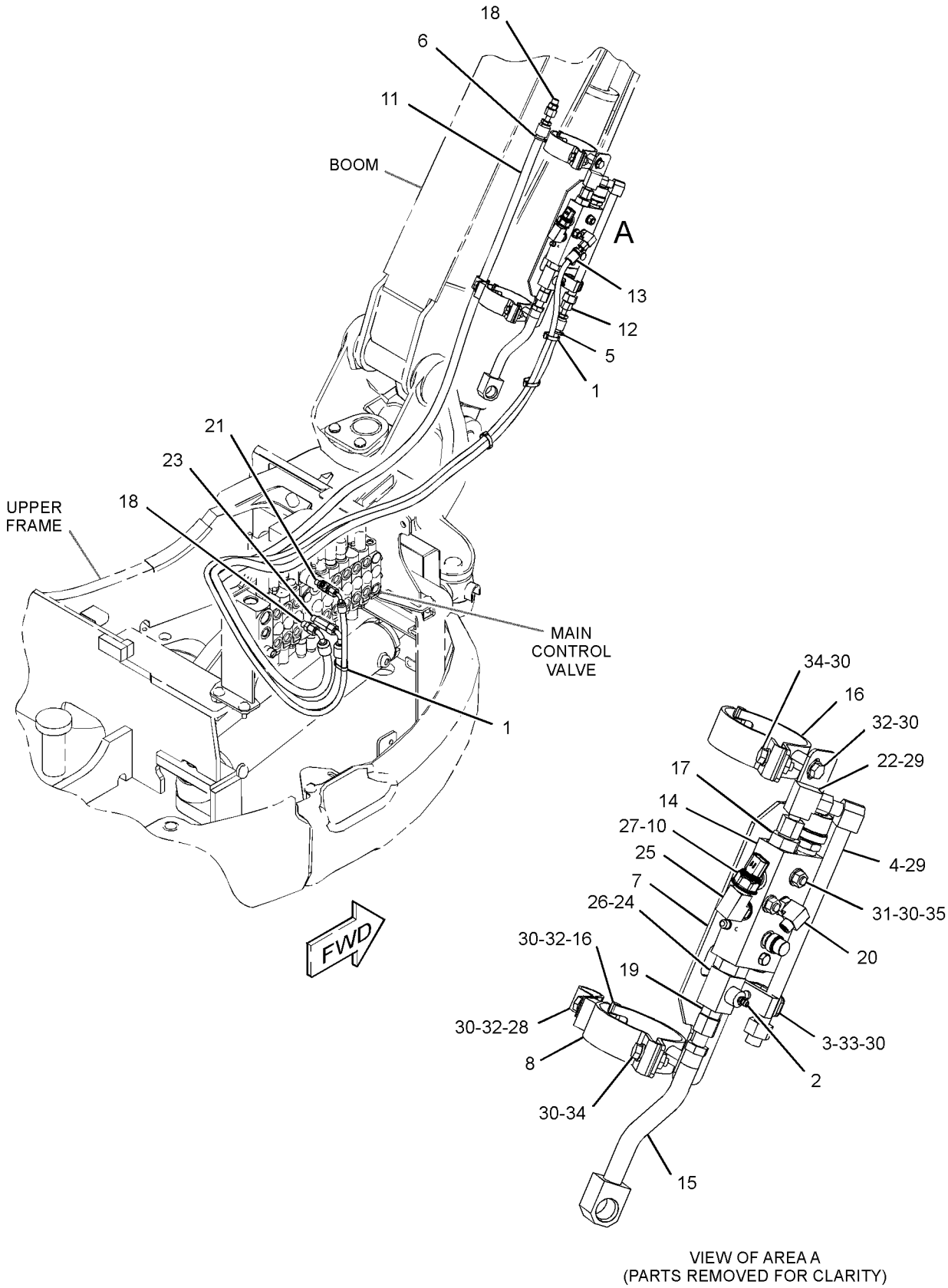

VIEW OF AREA A
(PARTS REMOVED FOR CLARITY)

GRAPHIC #1 **<END>** g03531259

269-8935 LINES GP-BUCKET

PART OF 382-1314 LINES AR-BUCKET

AN ATTACHMENT

SMCS-5057 **i04155684**

NOTE	REF NO	GRAPHIC REF	PART NUMBER	QTY	PART NAME 1 2 3 4 5 6 (PRODUCT LEVEL)	SEE PAGE
	1	1	**093-1294**	1	CLAMP	
I	2	1	**292-8376**	1	HOSE AS	
I	3	1	**292-8375**	1	HOSE AS	
	4	1	**291-9353**	1	TUBE AS	
	5	1	**283-5358**	1	TUBE AS	
	6	1	*148-8336*	2	CONNECTOR AS	
					(EACH INCLUDES)	
		1	**3J-1907**	1	SEAL-O-RING	
		1	**6V-8397**	1	SEAL-O-RING	
		1	**6V-8636**	1	CONNECTOR	
	7	1	**1S-0994**	2	CLIP	
	8	1	**6V-8397**	4	SEAL-O-RING	
	9	1	**8T-4121**	3	WASHER-HARD (11X21X2.5-MM THK)	
M	10	1	**8T-4137**	2	BOLT (M10X1.5X20-MM)	
M	11	1	**8T-4196**	1	BOLT (M10X1.5X35-MM)	

I - REFER TO HYDRAULIC INFORMATION SYSTEM
M - METRIC PART

269-8935 **LINES GP-BUCKET (*contd.*)** **i04155684**

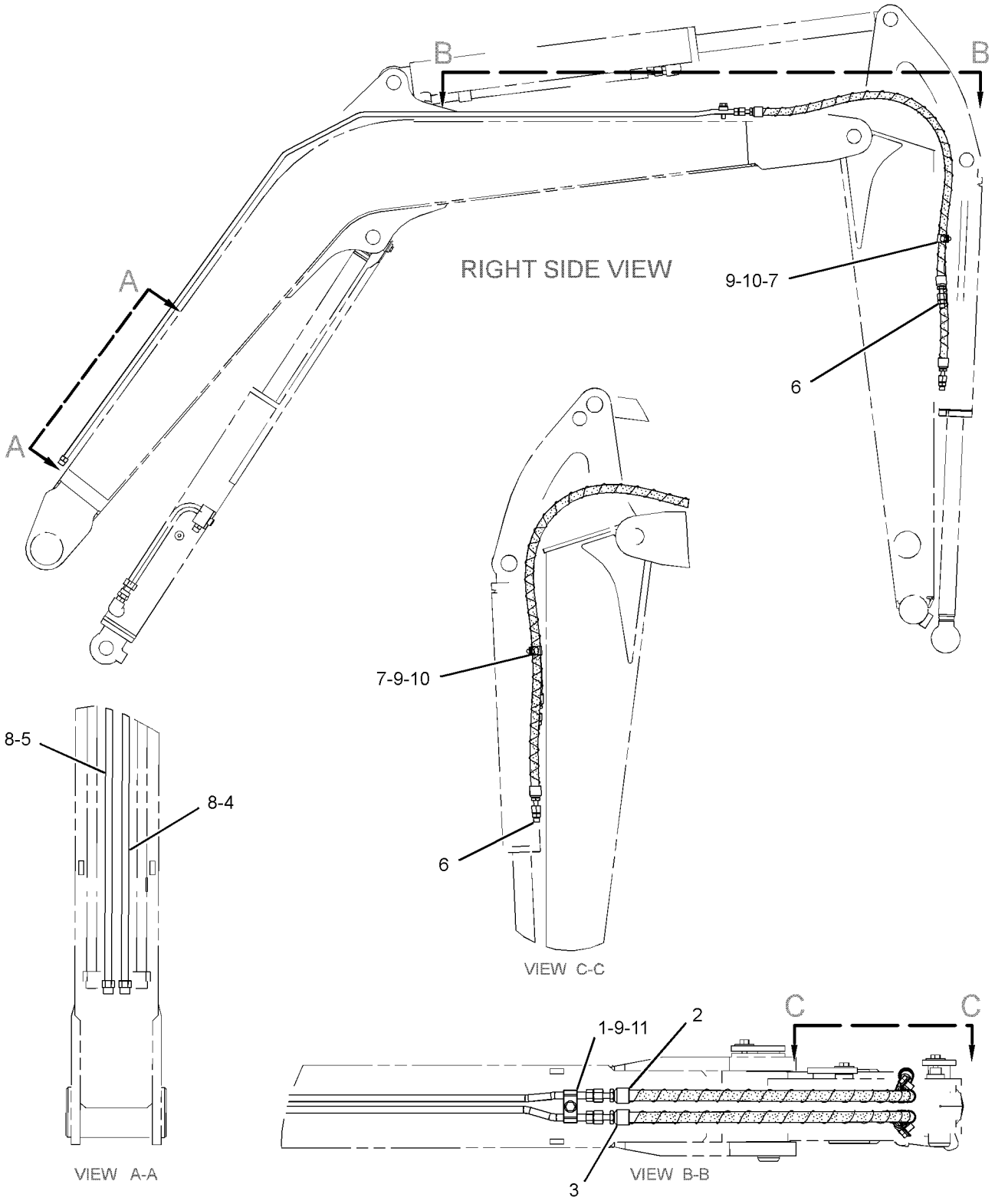

GRAPHIC #1 **<END>** g02174214

269-8936 LINES GP-BUCKET—LONG STICK

PART OF 382-1315 LINES AR-BUCKET

AN ATTACHMENT

SMCS-5057 **i04155686**

NOTE	REF NO	GRAPHIC REF	PART NUMBER	QTY	PART NAME 1 2 3 4 5 6 (PRODUCT LEVEL)	SEE PAGE
	1	1	**093-1294**	1	CLAMP	
I	2	1	**292-8378**	1	HOSE AS	
I	3	1	**292-8377**	1	HOSE AS	
	4	1	**291-9353**	1	TUBE AS	
	5	1	**283-5358**	1	TUBE AS	
	6	1	*148-8336*	2	CONNECTOR AS	
					(EACH INCLUDES)	
		1	**3J-1907**	1	SEAL-O-RING	
		1	**6V-8397**	1	SEAL-O-RING	
		1	**6V-8636**	1	CONNECTOR	
	7	1	**1S-0994**	2	CLIP	
	8	1	**6V-8397**	4	SEAL-O-RING	
	9	1	**8T-4121**	3	WASHER-HARD (11X21X2.5-MM THK)	
M	10	1	**8T-4137**	2	BOLT (M10X1.5X20-MM)	
M	11	1	**8T-4196**	1	BOLT (M10X1.5X35-MM)	

I - REFER TO HYDRAULIC INFORMATION SYSTEM
M - METRIC PART

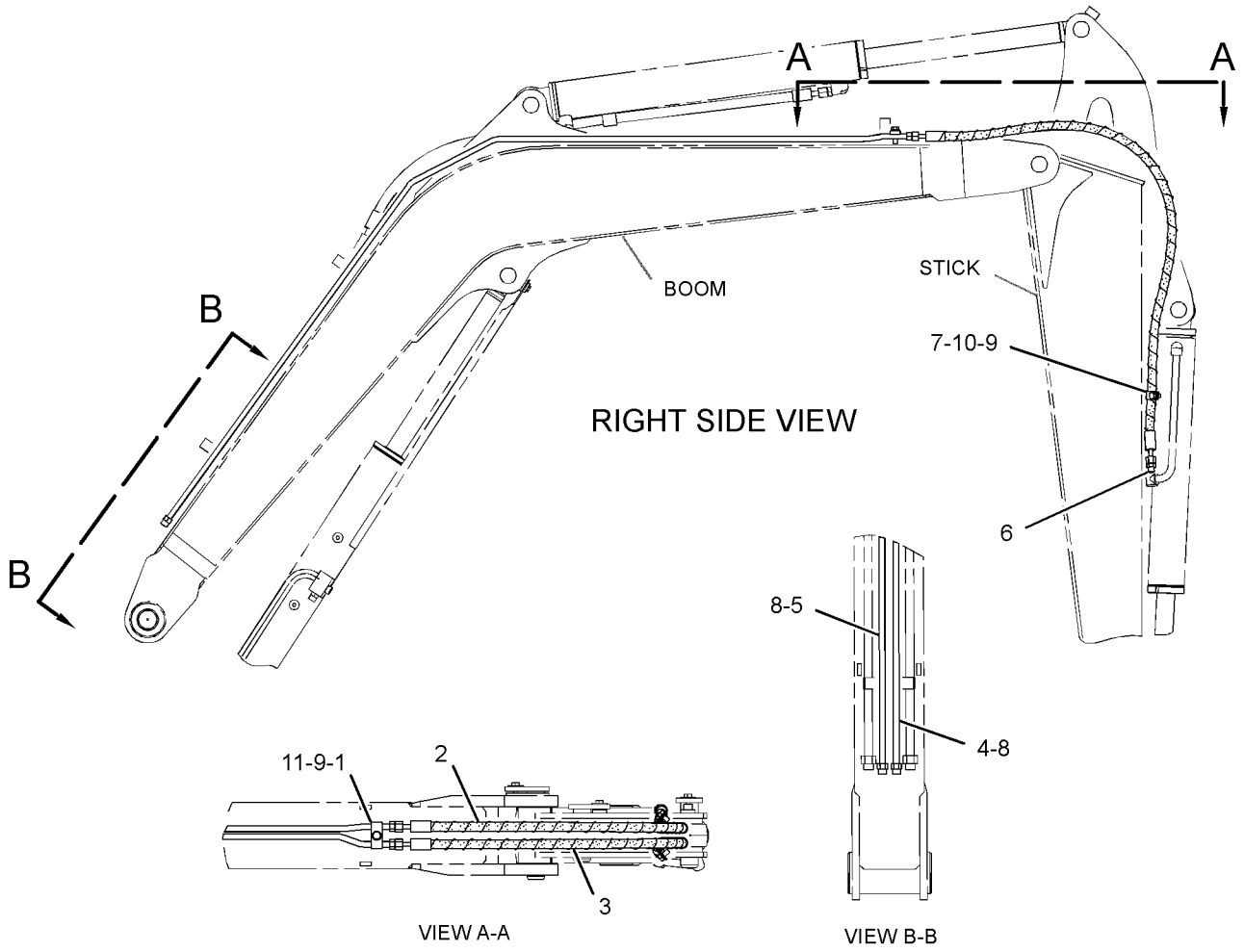

GRAPHIC #1 **<END>** g01235294

252-6793 LINES GP-BUCKET CYLINDER

PART OF 279-4325 BUCKET AR-TILTABLE

AN ATTACHMENT

SMCS-5057, 5457 **i02595096**

NOTE	REF NO	GRAPHIC REF	PART NUMBER	QTY	PART NAME 1 2 3 4 5 6 (PRODUCT LEVEL)	SEE PAGE
	1	1	**5P-1404**	2	ADAPTER	
	2	1	**7K-1181**	1	STRAP-CABLE	
	3	1	**151-4841**	1	BLOCK	
	4	1	**153-2995**	1	COUPLING (MALE)	
	5	1	*164-9639*	2	CONNECTOR AS	
					(EACH INCLUDES)	
		1	**3J-1907**	1	SEAL-O-RING	
		1	**4J-5477**	1	SEAL-O-RING	
		1	**148-7925**	1	CONNECTOR	
I	6	1	**251-2025**	1	HOSE AS	
I	7	1	**251-2026**	1	HOSE AS	
	8	1	**153-2994**	1	COUPLING (FEMALE)	
	9	1	**1S-0994**	2	CLIP	
	10	1	**2M-9780**	2	SEAL-O-RING	
	11	1	**6V-8398**	2	SEAL-O-RING	
	12	1	**8T-4121**	1	WASHER-HARD (11X21X2.5-MM THK)	
M	13	1	**8T-4137**	1	BOLT (M10X1.5X20-MM)	

I - REFER TO HYDRAULIC INFORMATION SYSTEM
M - METRIC PART

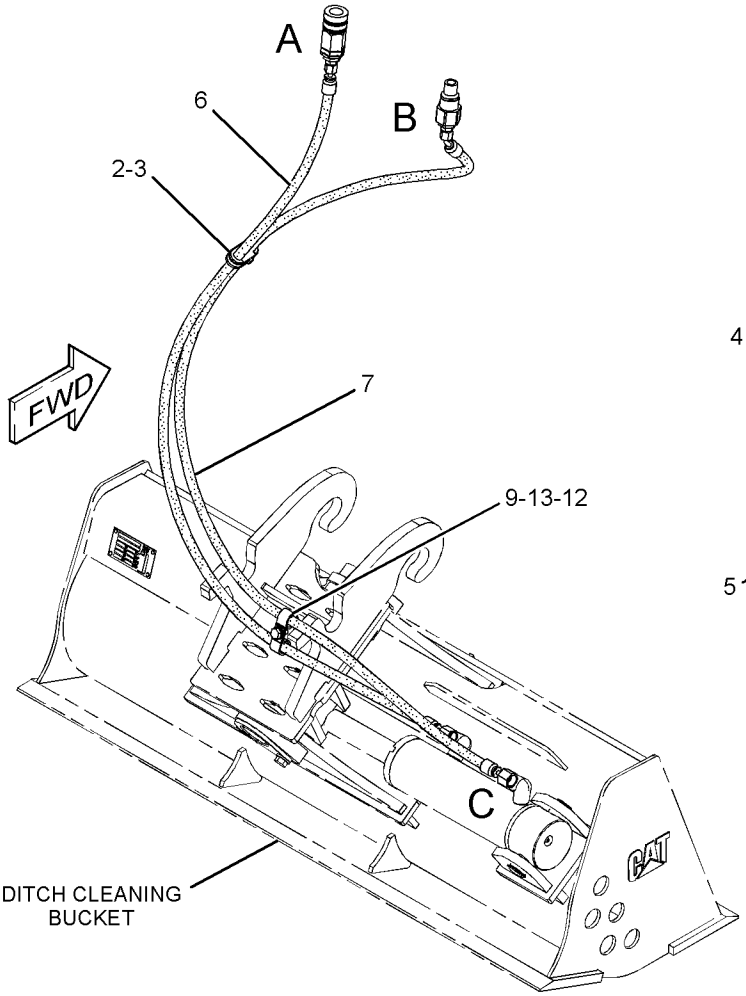

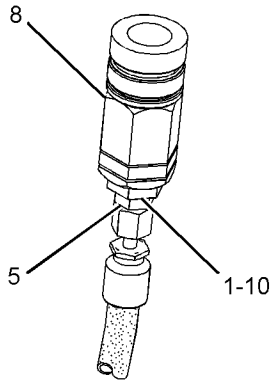

VIEW OF AREA A

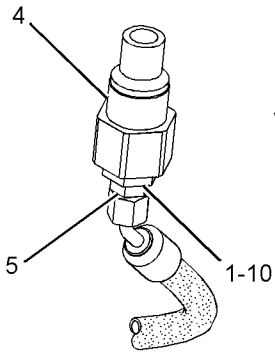

VIEW OF AREA B

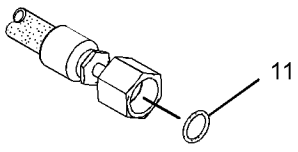

VIEW OF AREA C

GRAPHIC #1 **<END>** g01296148

421-9101 LINES GP-CHECK VALVE

PART OF 421-8464 STICK AR
AN ATTACHMENT

SMCS-5057, 5067 **i05383012**

NOTE	REF NO	GRAPHIC REF	PART NUMBER	QTY	PART NAME 1 2 3 4 5 6 (PRODUCT LEVEL)	SEE PAGE
	1	1	**7K-1181**	11	STRAP-CABLE	
	2	1	**096-6079**	1	TAPE (WHITE)	
	3	1	*169-4274*	1	TEE AS	
		1	**3J-7354**	1	SEAL-O-RING	
		1	**4J-5477**	1	SEAL-O-RING	
		1	**8T-3313**	1	TEE-O-RING	
	4	1	**274-5472**	1	ELBOW	
	5	1	**280-3049**	1	HOSE AS	
	6	1	**283-5365**	2	TUBE AS	
I	7	1	**292-3401**	1	HOSE AS	
	9	1	**417-1106**	1	VALVE GP-CHECK (PILOT OPERATED)	
	10	1	**422-1353**	1	BRACKET AS	
I	11	1	**422-1358**	1	HOSE AS	
I	12	1	**422-1359**	1	HOSE AS	
	13	1	**422-1360**	1	BRACKET	
	14	1	**422-1362**	1	GROMMET	
	15	1	*148-8340*	3	CONNECTOR AS	
					(EACH INCLUDES)	
		1	**3K-0360**	1	SEAL-O-RING	
		1	**6V-8398**	1	SEAL-O-RING	
		1	**6V-8639**	1	CONNECTOR	
	16	1	*148-8346*	1	ELBOW AS	
		1	**3K-0360**	1	SEAL-O-RING	
		1	**6V-8398**	1	SEAL-O-RING	
		1	**8T-1686**	1	ELBOW	
	17	1	*148-8368*	1	ELBOW AS	
		1	**3J-1907**	1	SEAL-O-RING	
		1	**4J-5477**	1	SEAL-O-RING	
		1	**6V-8627**	1	ELBOW	
	18	1	**149-7738**	1	CLIP	
	19	1	*150-4052*	1	UNION AS	
		1	**4J-5477**	2	SEAL-O-RING	
		1	**6V-8993**	1	UNION	
	20	1	**2P-1279**	1	LOCKNUT (9/16-18-THD)	
	21	1	**6V-8398**	4	SEAL-O-RING	
	22	1	**8T-4121**	3	WASHER-HARD (11X21X2.5-MM THK)	
M	23	1	**8T-4136**	1	BOLT (M10X1.5X25-MM)	
M	24	1	**8T-4185**	1	BOLT (M10X1.5X50-MM)	
M	25	1	**8T-4196**	1	BOLT (M10X1.5X35-MM)	
	26	1	**8T-4224**	2	WASHER-HARD (8.8X16X2-MM THK)	
M	27	1	**8T-7329**	2	BOLT (M8X1.25X55-MM)	

I - REFER TO HYDRAULIC INFORMATION SYSTEM
M - METRIC PART

421-9101 **LINES GP-CHECK VALVE (*contd.*)** **i05383012**

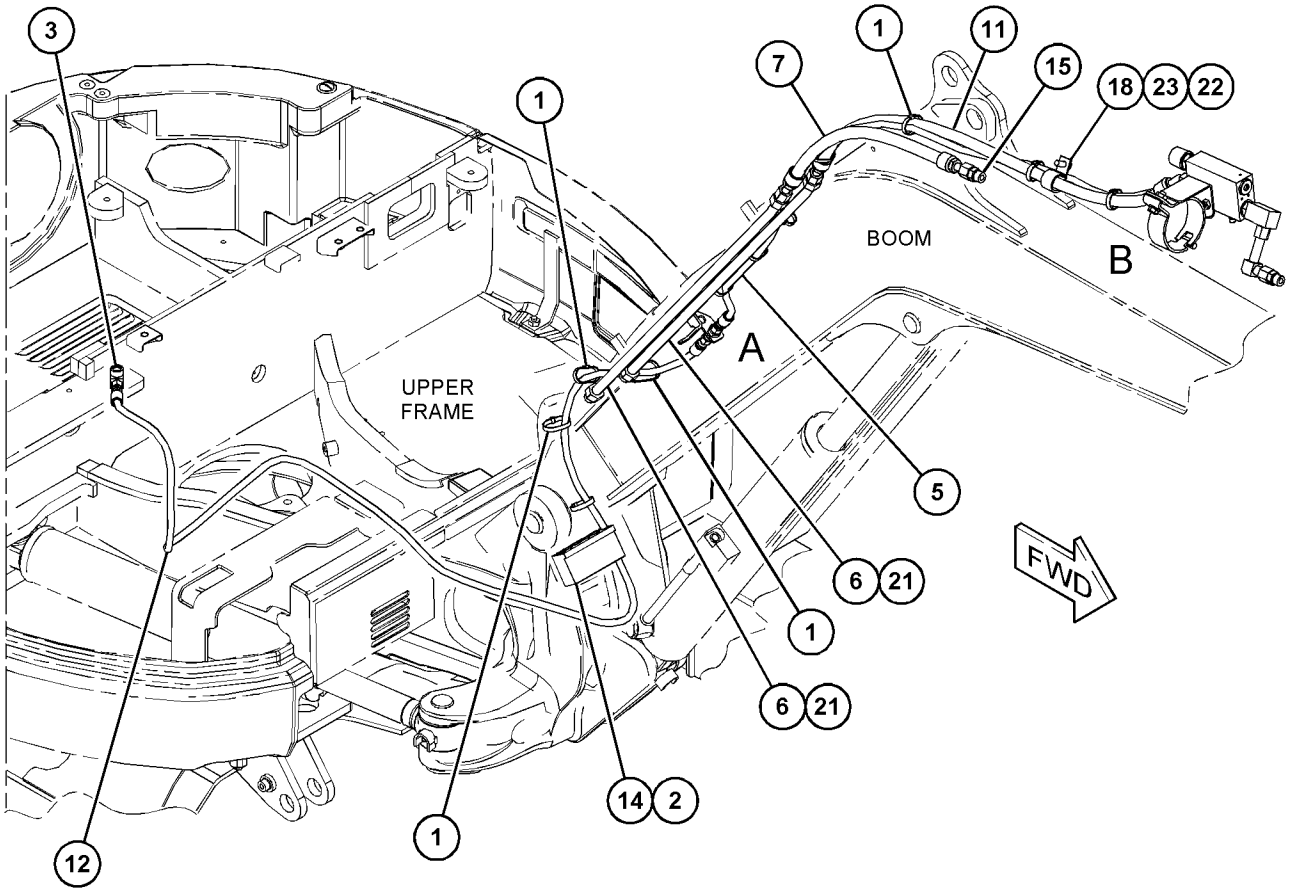

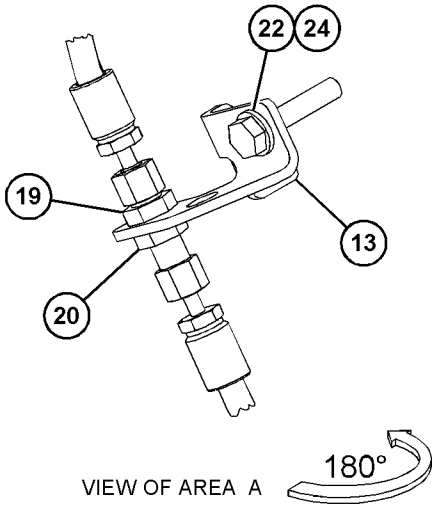

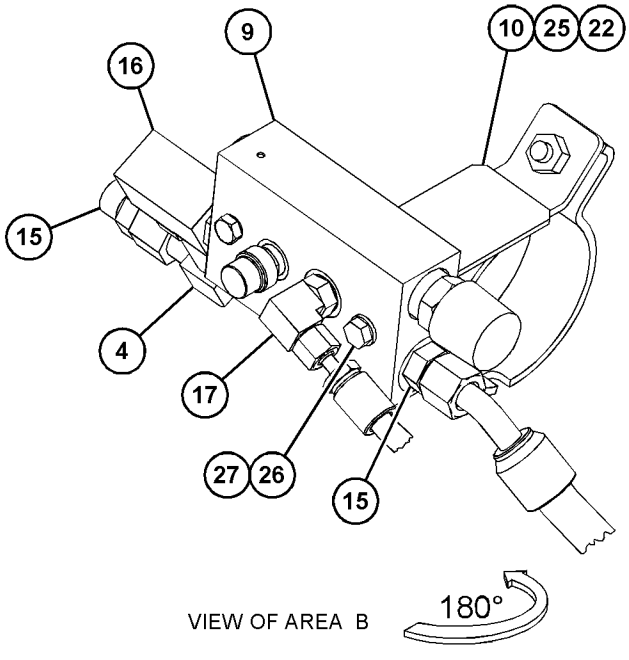

GRAPHIC #1 **<END>** g03406722

359-6059 LINES GP-CONNECTING–RH

PART OF 309-1917, 309-1938 THUMB GP
AN ATTACHMENT

SMCS-5057 **i05426582**

NOTE	REF NO	GRAPHIC REF	PART NUMBER	QTY	PART NAME 1 2 3 4 5 6 (PRODUCT LEVEL)	SEE PAGE
	1	1	**280-2652**	1	VALVE-BALL (HYDRAULIC OIL)	
	2	1	**359-5545**	1	BRACKET	
	3	1	**359-5548**	1	BRACKET	
I	4	1	**361-5149**	1	HOSE AS	
	5	1	**3J-1907**	1	SEAL-O-RING	
	6	1	**3K-0360**	2	SEAL-O-RING	
	7	1	**6V-1889**	1	CLIP	
M	8	1	**6V-3668**	2	BOLT (M12X1.75X30-MM)	
	9	1	**6V-8398**	5	SEAL-O-RING	
	10	1	**6V-8639**	1	CONNECTOR	
	11	1	**6V-9837**	1	TEE-SWIVEL	
	12	1	**6V-9851**	1	ELBOW	
	13	1	**6V-9873**	1	CONNECTOR	
	14	1	**7X-3164**	1	ADAPTER-SWIVEL	
	15	1	**8T-4121**	2	WASHER-HARD (11X21X2.5-MM THK)	
M	16	1	**8T-4133**	1	NUT (M10X1.5-THD)	
M	17	1	**8T-4136**	1	BOLT (M10X1.5X25-MM)	
	18	1	**8T-4223**	2	WASHER-HARD (13.5X25.5X3-MM THK)	

I - REFER TO HYDRAULIC INFORMATION SYSTEM
M - METRIC PART

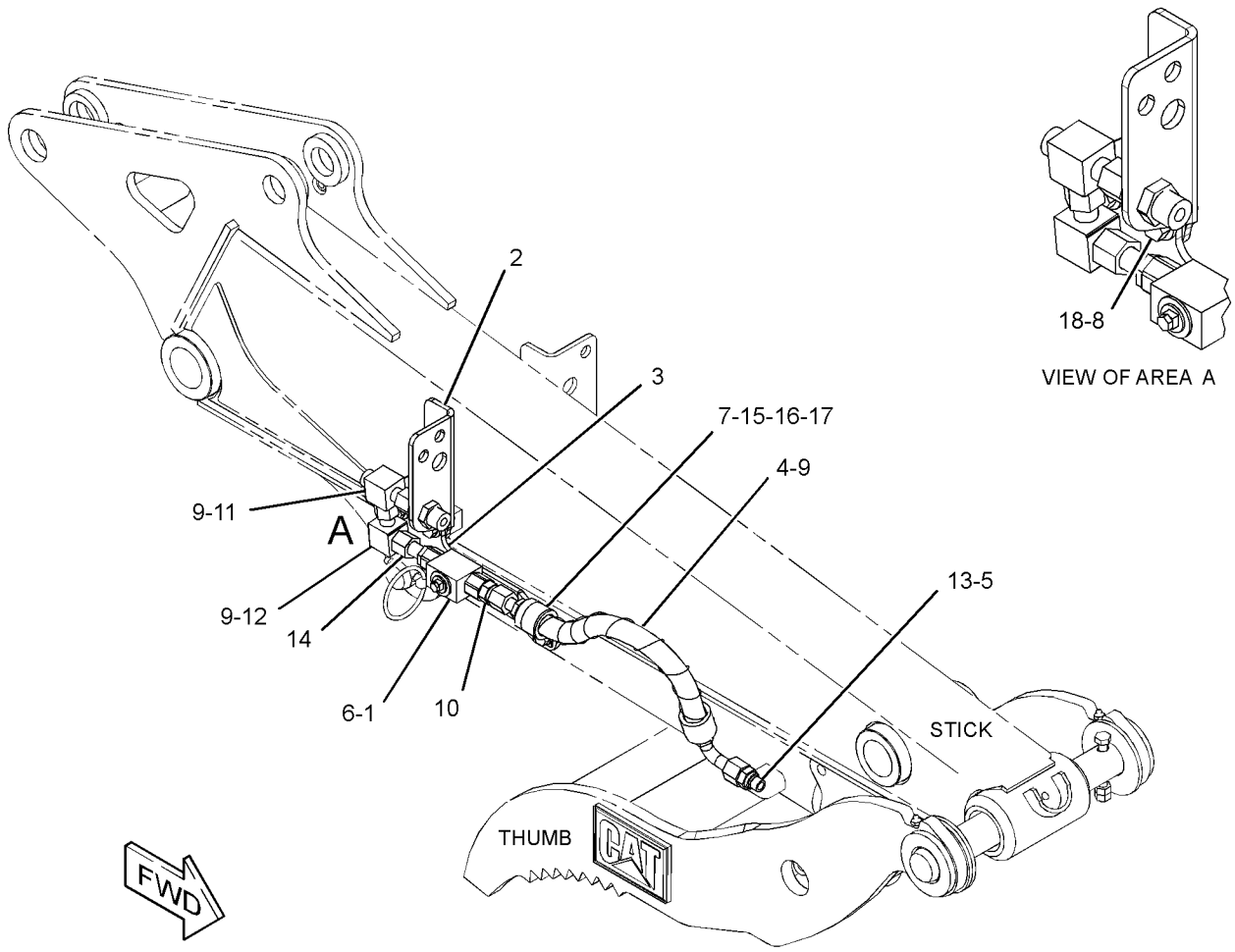

GRAPHIC #1 **<END>** g03401074

369-3693 LINES GP-CONNECTING—LH

PART OF 309-1917, 309-1938 THUMB GP
AN ATTACHMENT

SMCS-5057 **i05426587**

NOTE	REF NO	GRAPHIC REF	PART NUMBER	QTY	PART NAME 1 2 3 4 5 6 (PRODUCT LEVEL)	SEE PAGE
	1	1	**280-2652**	1	VALVE-BALL (HYDRAULIC OIL)	
	2	1	**359-5544**	1	BRACKET	
	3	1	**359-5547**	1	BRACKET	
I	4	1	**361-5148**	1	HOSE AS	
	5	1	**3J-1907**	1	SEAL-O-RING	
	6	1	**3K-0360**	2	SEAL-O-RING	
	7	1	**6V-1889**	1	CLIP	
M	8	1	**6V-3668**	2	BOLT (M12X1.75X30-MM)	
	9	1	**6V-8398**	5	SEAL-O-RING	
	10	1	**6V-8639**	1	CONNECTOR	
	11	1	**6V-9837**	1	TEE-SWIVEL	
	12	1	**6V-9851**	1	ELBOW	
	13	1	**6V-9873**	1	CONNECTOR	
	14	1	**7X-3164**	1	ADAPTER-SWIVEL	
	15	1	**8T-4121**	2	WASHER-HARD (11X21X2.5-MM THK)	
M	16	1	**8T-4133**	1	NUT (M10X1.5-THD)	
M	17	1	**8T-4136**	1	BOLT (M10X1.5X25-MM)	
	18	1	**8T-4223**	2	WASHER-HARD (13.5X25.5X3-MM THK)	

I - REFER TO HYDRAULIC INFORMATION SYSTEM
M - METRIC PART

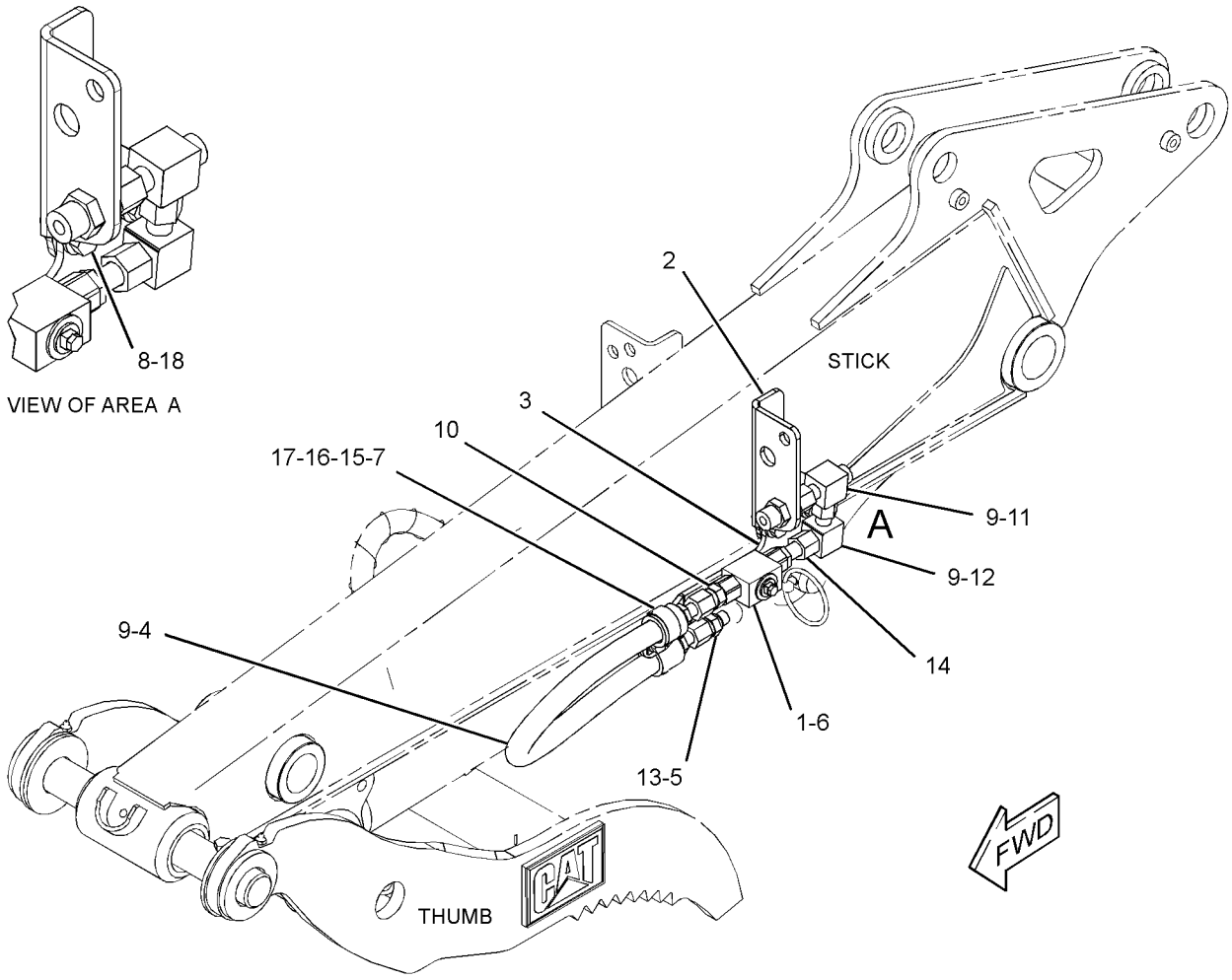

GRAPHIC #1 **<END>** g03401117

361-1090 LINES GP-COUPLER

PART OF 361-1095 COUPLER AR-QUICK

AN ATTACHMENT

SMCS-5057, 5133 **i04404126**

NOTE	REF NO	GRAPHIC REF	PART NUMBER	QTY	PART NAME 1 2 3 4 5 6 (PRODUCT LEVEL)	SEE PAGE
	1	1	**7K-1181**	4	STRAP-CABLE	
	2	1	**166-1579**	1	CLIP	
	3	1	**204-2281**	1	STRAP-CABLE	
	4	1	**260-2659**	1	BOLT	
	5	1	**361-1115**	1	HOSE AS	
	6	1	**361-1116**	1	HOSE AS	
	7	1	**361-1117**	1	HOSE AS	
	8	1	**361-1207**	1	STRAP-CABLE	
	9	1	**361-1208**	2	CLIP-HOSE	
	10	1	**371-8268**	4	SCREW-SOCKET HEAD (M6X1X10-MM)	
	11	1	*148-8351*	1	ELBOW AS	
		1	**4J-5477**	1	SEAL-O-RING	
		1	**6V-9849**	1	ELBOW	
	12	1	*169-7393*	3	CONNECTOR AS	
					(EACH INCLUDES)	
		1	**3J-7352**	1	CONNECTOR	
		1	**3J-7354**	1	SEAL-O-RING	
	13	1	**8T-4121**	1	WASHER-HARD (11X21X2.5-MM THK)	
M	14	1	**8T-4138**	1	BOLT (M6X1X20-MM)	
	15	1	**9X-8256**	1	WASHER (6.6X12X2-MM THK)	

M - METRIC PART

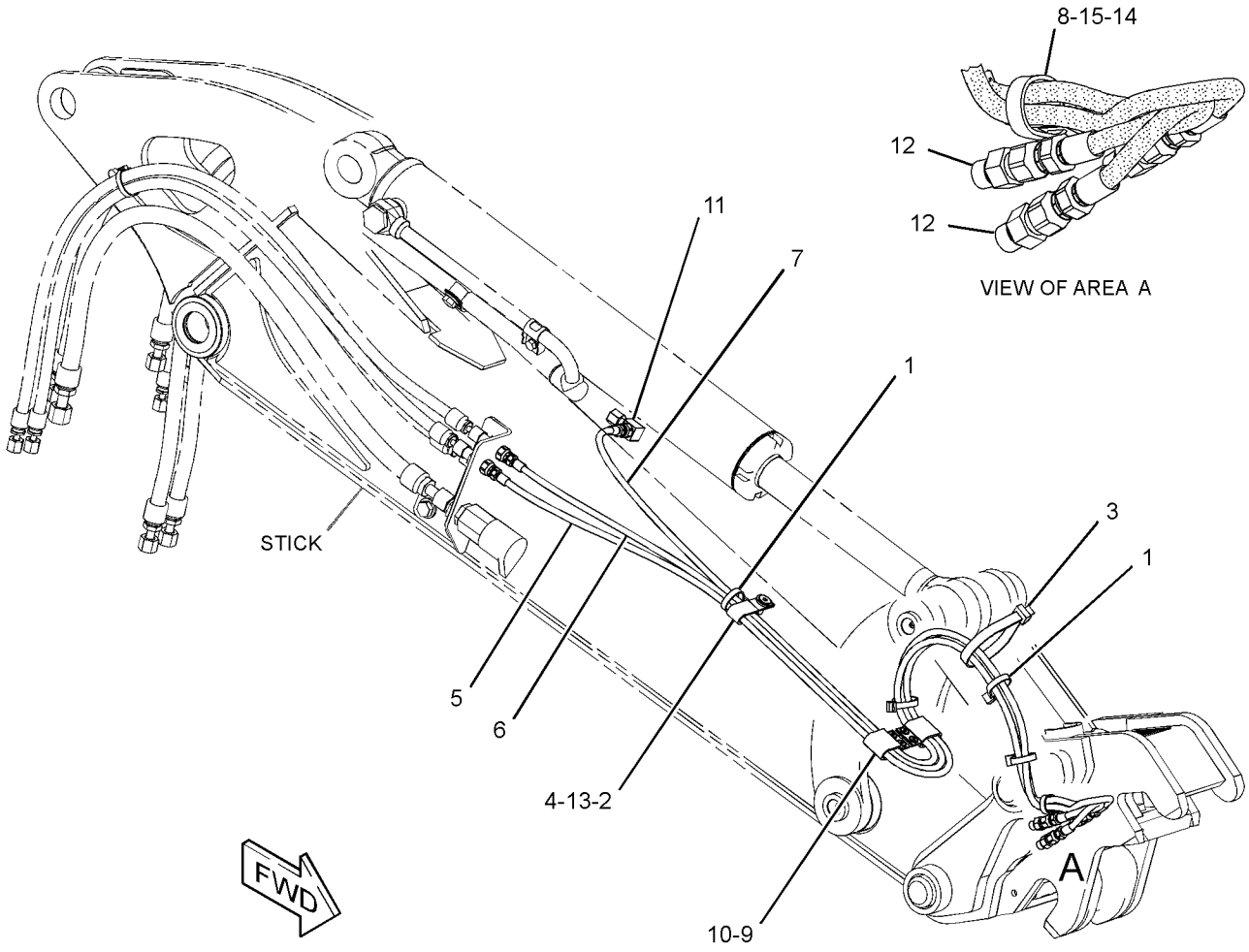

GRAPHIC #1 **<END>** g02913116

365-2799 LINES GP-COUPLER—STANDARD STICK

PART OF 382-2545 CONTROL AR-COUPLER

AN ATTACHMENT

SMCS-5057, 5133 **i05376423**

NOTE	REF NO	GRAPHIC REF	PART NUMBER	QTY	PART NAME 1 2 3 4 5 6 (PRODUCT LEVEL)	SEE PAGE
	1	1	**7K-1181**	2	STRAP-CABLE	
	2	1	**279-4735**	1	STRAP-CABLE (ORANGE)	
	3	1	**279-4737**	1	STRAP-CABLE (GREEN)	
	4	1	**279-4738**	1	STRAP-CABLE (PURPLE)	
	5	1	**422-1360**	1	BRACKET	
	6	1	**365-6919**	1	BRACKET	
	7	1	**365-6972**	1	TUBE AS	
	8	1	**365-6973**	1	TUBE AS	
	9	1	**365-6974**	1	TUBE AS	
I	10	1	**365-6975**	1	HOSE AS	
I	11	1	**365-6976**	2	HOSE AS	
	12	1	**119-5708**	1	CLIP	
	13	1	*150-4052*	3	UNION AS	
					(EACH INCLUDES)	
		1	**4J-5477**	2	SEAL-O-RING	
		1	**6V-8993**	1	UNION	
	14	1	**2P-1279**	6	LOCKNUT (9/16-18-THD)	
	15	1	**4J-5477**	6	SEAL-O-RING	
	16	1	**5P-9297**	8	CLIP	
	17	1	**6V-9828**	3	CAP AS	
	18	1	**8T-4121**	8	WASHER-HARD (11X21X2.5-MM THK)	
M	19	1	**8T-4185**	8	BOLT (M10X1.5X50-MM)	

I - REFER TO HYDRAULIC INFORMATION SYSTEM
M - METRIC PART

365-2799 **LINES GP-COUPLER (*contd.*)** **i05376423**

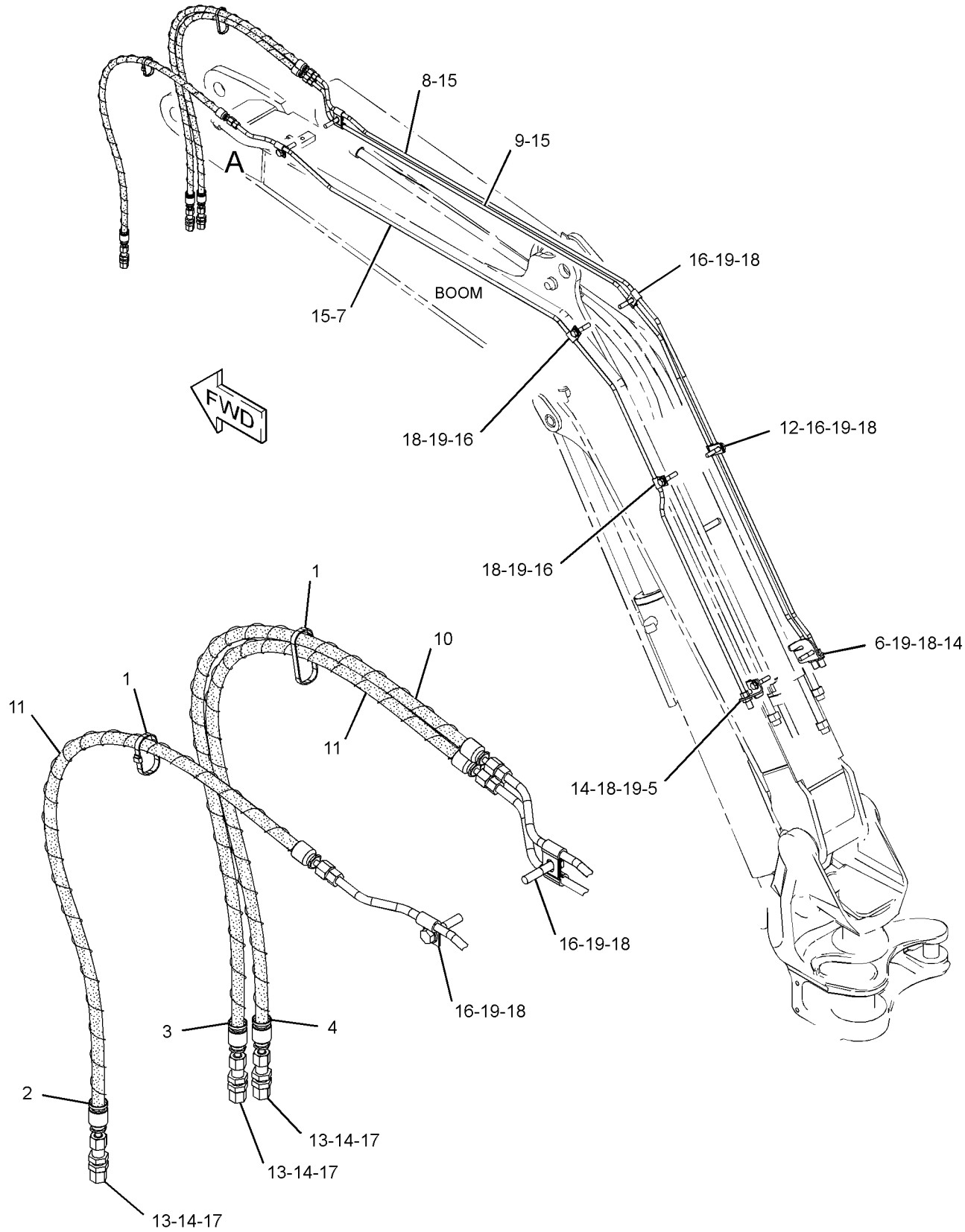

VIEW OF AREA A

GRAPHIC #1 **<END>** g02801316

365-2801 LINES GP-COUPLER—LONG STICK

PART OF 382-2546 CONTROL AR-COUPLER

AN ATTACHMENT

SMCS-5057, 5133 **i05376422**

NOTE	REF NO	GRAPHIC REF	PART NUMBER	QTY	PART NAME 1 2 3 4 5 6 (PRODUCT LEVEL)	SEE PAGE
	1	1	**7K-1181**	2	STRAP-CABLE	
	2	1	**279-4735**	1	STRAP-CABLE (ORANGE)	
	3	1	**279-4737**	1	STRAP-CABLE (GREEN)	
	4	1	**279-4738**	1	STRAP-CABLE (PURPLE)	
	5	1	**422-1360**	1	BRACKET	
	6	1	**365-6919**	1	BRACKET	
	7	1	**365-6972**	1	TUBE AS	
	8	1	**365-6973**	1	TUBE AS	
	9	1	**365-6974**	1	TUBE AS	
I	10	1	**365-6977**	1	HOSE AS	
I	11	1	**365-7004**	2	HOSE AS	
	12	1	**119-5708**	1	CLIP	
	13	1	*150-4052*	3	UNION AS	
					(EACH INCLUDES)	
		1	**4J-5477**	2	SEAL-O-RING	
		1	**6V-8993**	1	UNION	
	14	1	**2J-1020**	2	SPACER (13.9X21.34X35-MM THK)	
	15	1	**2P-1279**	6	LOCKNUT (9/16-18-THD)	
	16	1	**4J-5477**	6	SEAL-O-RING	
	17	1	**5P-9297**	8	CLIP	
	18	1	**6V-9828**	3	CAP AS	
	19	1	**7S-3916**	3	CLIP (TAB)	
	20	1	**7S-3919**	3	CLIP (SLOT)	
	21	1	**7V-6571**	3	GROMMET	
	22	1	**8T-4121**	8	WASHER-HARD (11X21X2.5-MM THK)	
M	23	1	**8T-4185**	8	BOLT (M10X1.5X50-MM)	
	24	1	**8T-4223**	2	WASHER-HARD (13.5X25.5X3-MM THK)	
M	25	1	**8T-6868**	2	BOLT (M12X1.75X80-MM)	

I - REFER TO HYDRAULIC INFORMATION SYSTEM
M - METRIC PART

365-2801 **LINES GP-COUPLER (*contd.*)** **i05376422**

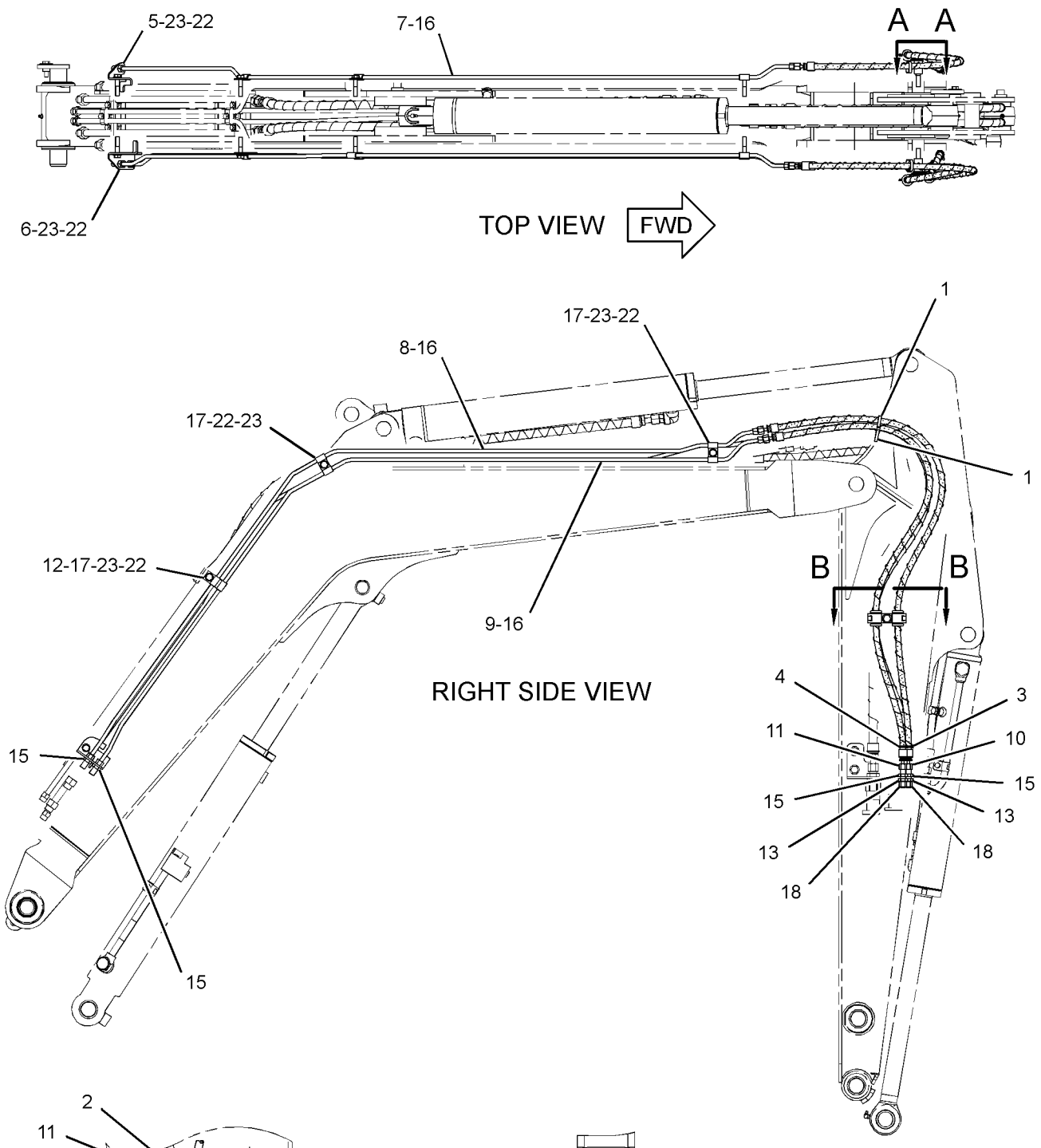

GRAPHIC #1

<END>

g02803137

379-4695 LINES GP-FRONT—BUCKET, STICK CYLINDER

PART OF 379-4678 HYDRAULIC AR

SMCS-5057 **i04629840**

NOTE	REF NO	GRAPHIC REF	PART NUMBER	QTY	PART NAME 1 2 3 4 5 6 (PRODUCT LEVEL)	SEE PAGE
	1	1	**096-6079**	4	TAPE (WHITE)	
	2	1	**136-0207**	2	STRAP-CABLE	
	3	1	**267-4229**	1	PLATE	
	4	1	**279-4731**	1	STRAP-CABLE (RED)	
	5	1	**279-4732**	1	STRAP-CABLE (YELLOW)	
	6	1	**279-4733**	1	STRAP-CABLE (BLUE)	
	7	1	**279-4735**	1	STRAP-CABLE (ORANGE)	
	8	1	**357-6425**	1	GROMMET	
	9	1	**357-6426**	1	GROMMET	
I	10	1	**381-0552**	1	HOSE AS	
I	11	1	**381-0553**	1	HOSE AS	
I	12	1	**381-0554**	1	HOSE AS	
I	13	1	**381-0555**	1	HOSE AS	
	14	1	*148-8336*	1	CONNECTOR AS	
		1	**3J-1907**	1	SEAL-O-RING	
		1	**6V-8397**	1	SEAL-O-RING	
		1	**6V-8636**	1	CONNECTOR	
	15	1	*150-4043*	1	CONNECTOR AS	
		1	**3J-1907**	1	SEAL-O-RING	
		1	**6V-8398**	1	SEAL-O-RING	
		1	**6V-9873**	1	CONNECTOR	
	16	1	*153-6258*	1	CONNECTOR AS	
		1	**3J-1907**	1	SEAL-O-RING	
		1	**6V-8398**	1	SEAL-O-RING	
		1	**8T-5050**	1	CONNECTOR	
	17	1	*164-9869*	1	CONNECTOR AS	
		1	**3J-1907**	1	SEAL-O-RING	
		1	**6V-8397**	1	SEAL-O-RING	
		1	**9X-2297**	1	CONNECTOR	
	18	1	**8T-4121**	2	WASHER-HARD (11X21X2.5-MM THK)	
M	19	1	**8T-4182**	2	BOLT (M10X1.5X45-MM)	
	20	1	**8T-7934**	2	WASHER-HARD (11X21X5-MM THK)	
E	21	1	**310-4984**		SLEEVE (30-CM)	
E	21A	1	**310-4984**		SLEEVE (20-CM)	

E - ORDER BY THE CENTIMETER
I - REFER TO HYDRAULIC INFORMATION SYSTEM
M - METRIC PART

379-4695 **LINES GP-FRONT (*contd.*)** **i04629840**

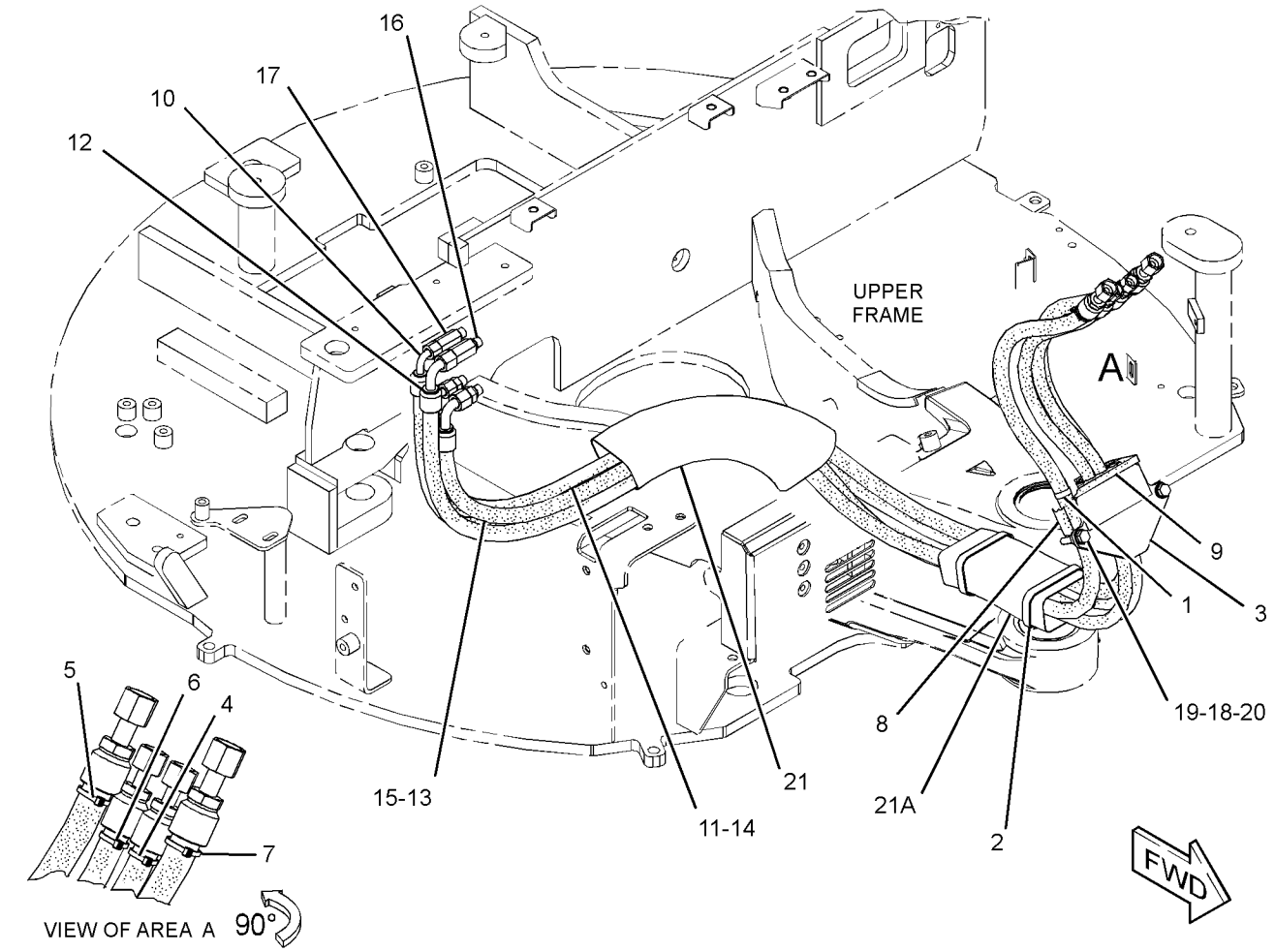

GRAPHIC #1 **<END>** g02798948

379-4698 LINES GP-FRONT–AUXILIARY

PART OF 379-4680 CONTROL AR-AUXILIARY

SMCS-5057 **i04629848**

NOTE	REF NO	GRAPHIC REF	PART NUMBER	QTY	PART NAME 1 2 3 4 5 6 (PRODUCT LEVEL)	SEE PAGE
	1	1	**096-6079**	2	TAPE (WHITE)	
	2	1	*267-4050*	1	TEE AS	
		1	**3J-1907**	1	SEAL-O-RING	
		1	**6V-8398**	2	SEAL-O-RING	
		1	**267-4049**	1	TEE	
	3	1	**279-4734**	1	STRAP-CABLE (BROWN)	
	4	1	**8L-8413**	1	STRAP-CABLE	
	5	1	**362-1008**	1	VALVE AS-BALL (1-WAY, 2-WAY FLOW)	
		1	**134-7113**	1	HANDLE	
M		1	**134-7114**	1	BOLT-SPECIAL	
		1	**134-7115**	1	PLATE	
		1	**195-0090**	1	PLATE-DETENT	
I	6	1	**381-0561**	1	HOSE AS	
I	7	1	**381-0562**	1	HOSE AS	
I	8	1	**381-0563**	1	HOSE AS	
	9	1	*148-8340*	1	CONNECTOR AS	
		1	**3K-0360**	1	SEAL-O-RING	
		1	**6V-8398**	1	SEAL-O-RING	
		1	**6V-8639**	1	CONNECTOR	
	10	1	*150-4043*	1	CONNECTOR AS	
		1	**3J-1907**	1	SEAL-O-RING	
		1	**6V-8398**	1	SEAL-O-RING	
		1	**6V-9873**	1	CONNECTOR	
	11	1	*171-6728*	1	ELBOW AS	
		1	**3K-0360**	1	SEAL-O-RING	
		1	**8T-0249**	1	ELBOW	

I - REFER TO HYDRAULIC INFORMATION SYSTEM
M - METRIC PART

379-4698 **LINES GP-FRONT (*contd.*)** **i04629848**

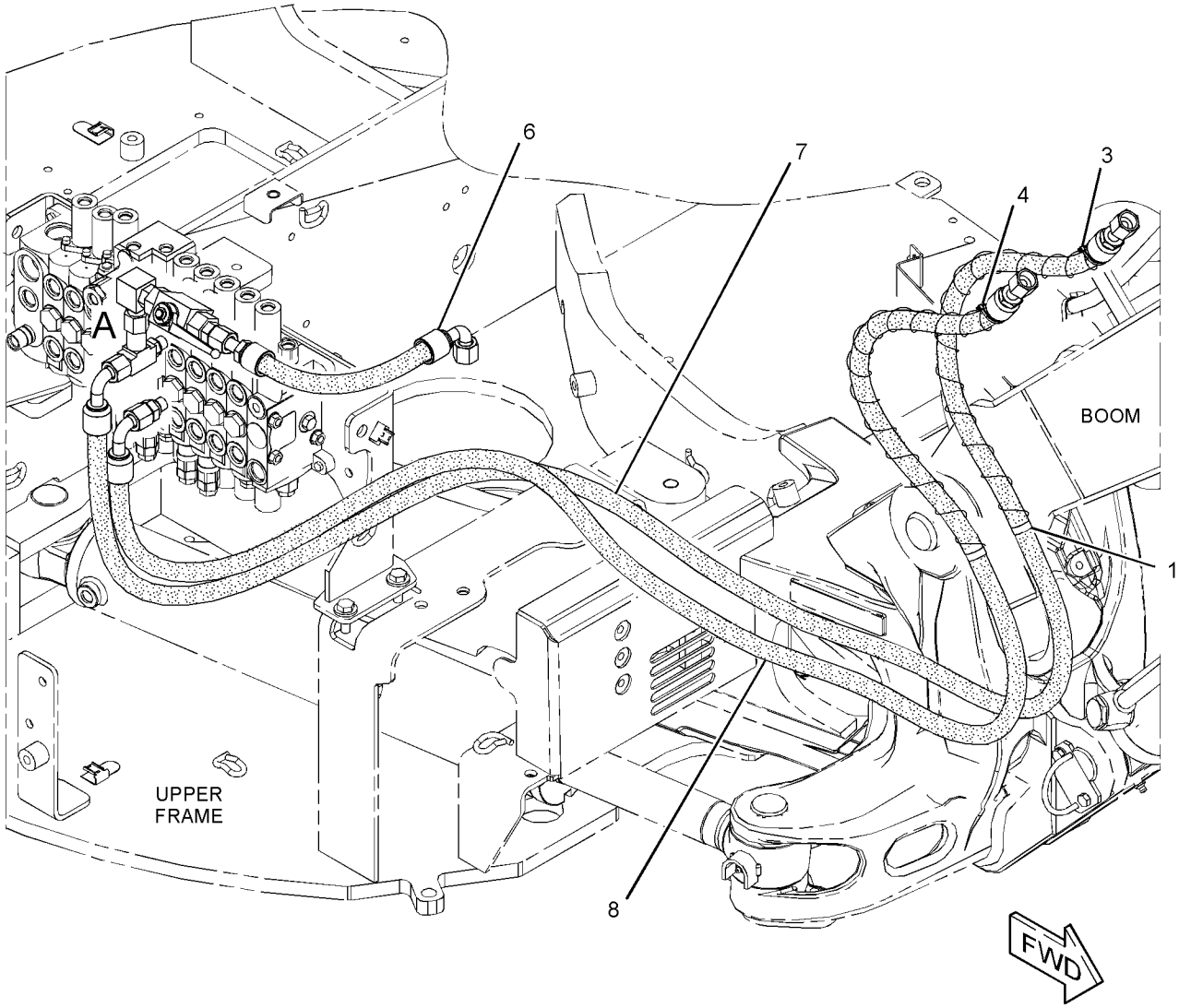

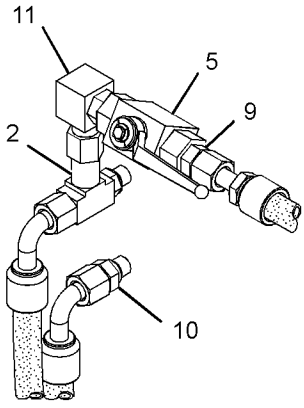

VIEW OF AREA A

GRAPHIC #1 **<END>** g02798950

379-4699 LINES GP-FRONT–BOOM CYLINDER

PART OF 379-4681 LINES AR-BOOM

AN ATTACHMENT

SMCS-5057 **i04611689**

NOTE	REF NO	GRAPHIC REF	PART NUMBER	QTY	PART NAME 1 2 3 4 5 6 (PRODUCT LEVEL)	SEE PAGE
	1	1	**9F-2167**	1	SCREW-PURGE (3/8-24X1.164-IN)	
	2	1	**279-4737**	1	STRAP-CABLE (GREEN)	
	3	1	**279-4738**	1	STRAP-CABLE (PURPLE)	
I	4	1	**381-0564**	1	HOSE AS	
I	5	1	**381-0565**	1	HOSE AS	
	6	1	*148-8336*	3	CONNECTOR AS	
					(EACH INCLUDES)	
		1	**3J-1907**	1	SEAL-O-RING	
		1	**6V-8397**	1	SEAL-O-RING	
		1	**6V-8636**	1	CONNECTOR	
	7	1	*164-9869*	1	CONNECTOR AS	
		1	**3J-1907**	1	SEAL-O-RING	
		1	**6V-8397**	1	SEAL-O-RING	
		1	**9X-2297**	1	CONNECTOR	

I - REFER TO HYDRAULIC INFORMATION SYSTEM

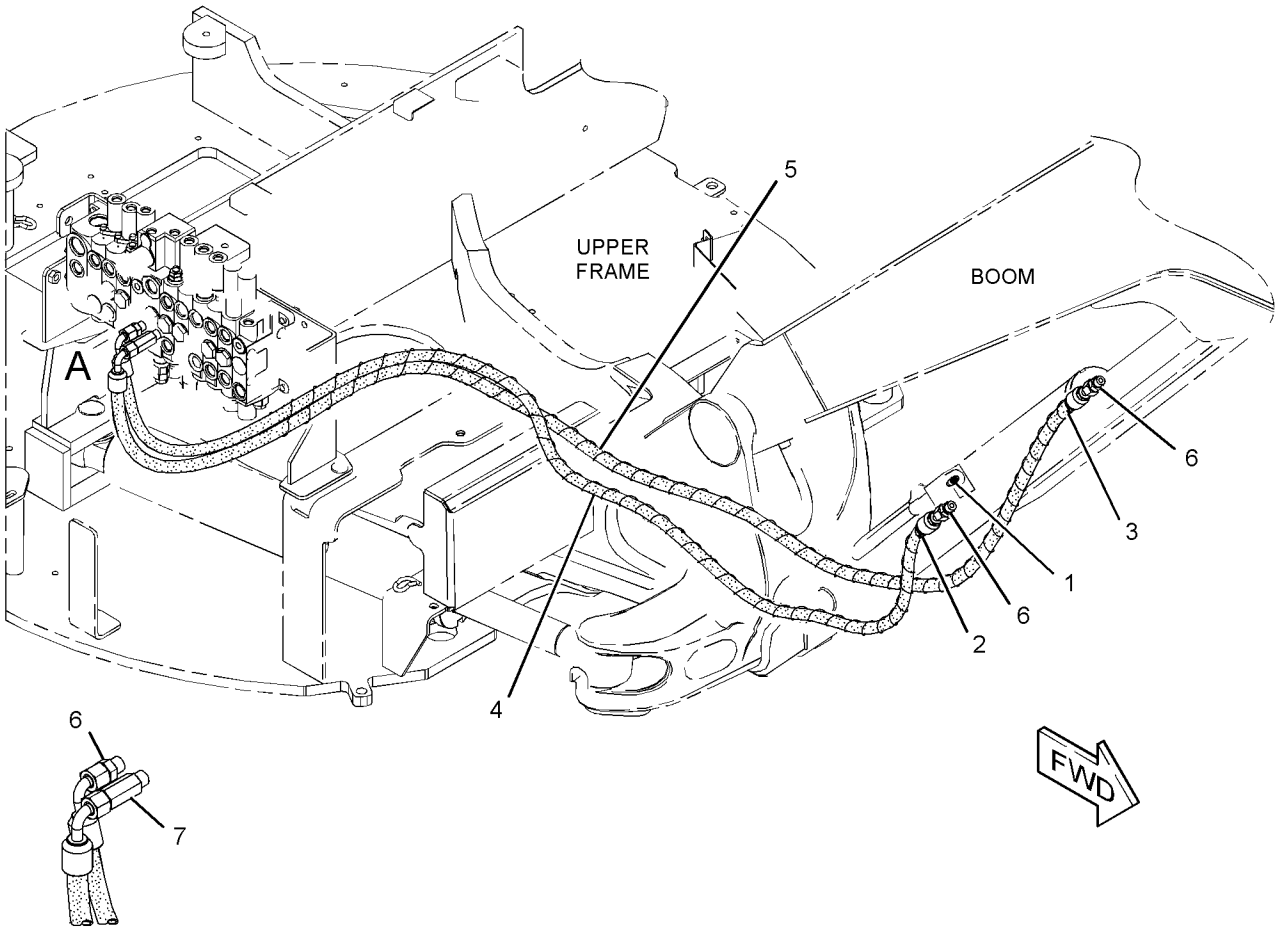

VIEW OF AREA A

GRAPHIC #1 **<END>** g02798919

382-2554 LINES GP-FRONT–QUICK COUPLER

PART OF 382-2545, 382-2546 CONTROL AR-COUPLER

AN ATTACHMENT

SMCS-5057 **i05221682**

NOTE	REF NO	GRAPHIC REF	PART NUMBER	QTY	PART NAME 1 2 3 4 5 6 (PRODUCT LEVEL)	SEE PAGE
	1	1	**7K-1181**	5	STRAP-CABLE	
	2	1	**096-6079**	3	TAPE (WHITE)	
	3	1	*164-5546*	1	TEE AS	
		1	**3E-7410**	1	TEE-O-RING	
		1	**3J-1907**	1	SEAL-O-RING	
	4	1	**210-0686**	1	SHEET-RUBBER	
	5	1	*267-4048*	2	ELBOW AS	
					(EACH INCLUDES)	
		1	**3J-1907**	1	SEAL-O-RING	
		1	**4J-5477**	1	SEAL-O-RING	
		1	**267-4047**	1	ELBOW	
	6	1	**279-4735**	2	STRAP-CABLE (ORANGE)	
	7	1	**279-4737**	2	STRAP-CABLE (GREEN)	
	8	1	**279-4738**	2	STRAP-CABLE (PURPLE)	
Y	9	1	**358-2091**	1	VALVE GP-SOLENOID & MANIFOLD (QUICK COUPLER)	364
	10	1	**422-1362**	1	GROMMET	
I	11	1	**381-0002**	1	HOSE AS	
	12	1	**381-2053**	1	BRACKET	
I	13	1	**382-9365**	1	HOSE AS	
I	14	1	**387-6381**	1	HOSE AS	
I	15	1	**387-6382**	1	HOSE AS	
I	16	1	**387-6383**	1	HOSE AS	
	17	1	*148-8310*	1	ADAPTER AS	
		1	**3J-1907**	1	SEAL-O-RING	
		1	**8T-0151**	1	ADAPTER	
	18	1	*148-8325*	1	CONNECTOR AS	
		1	**3J-1907**	1	SEAL-O-RING	
		1	**4J-5477**	1	SEAL-O-RING	
		1	**6V-8641**	1	CONNECTOR	
	19	1	*148-8368*	4	ELBOW AS	
					(EACH INCLUDES)	
		1	**3J-1907**	1	SEAL-O-RING	
		1	**4J-5477**	1	SEAL-O-RING	
		1	**6V-8627**	1	ELBOW	
	20	1	*150-3065*	1	ELBOW AS	
		1	**3J-1907**	1	SEAL-O-RING	
		1	**6V-0484**	1	ELBOW	
	21	1	**8T-4121**	2	WASHER-HARD (11X21X2.5-MM THK)	
M	22	1	**8T-4137**	2	BOLT (M10X1.5X20-MM)	
M	23	1	**8T-4189**	2	BOLT (M8X1.25X20-MM)	
	24	1	**8T-4224**	2	WASHER-HARD (8.8X16X2-MM THK)	

I - REFER TO HYDRAULIC INFORMATION SYSTEM
M - METRIC PART
Y - SEPARATE ILLUSTRATION

382-2554 **LINES GP-FRONT (*contd.*)** **i05221682**

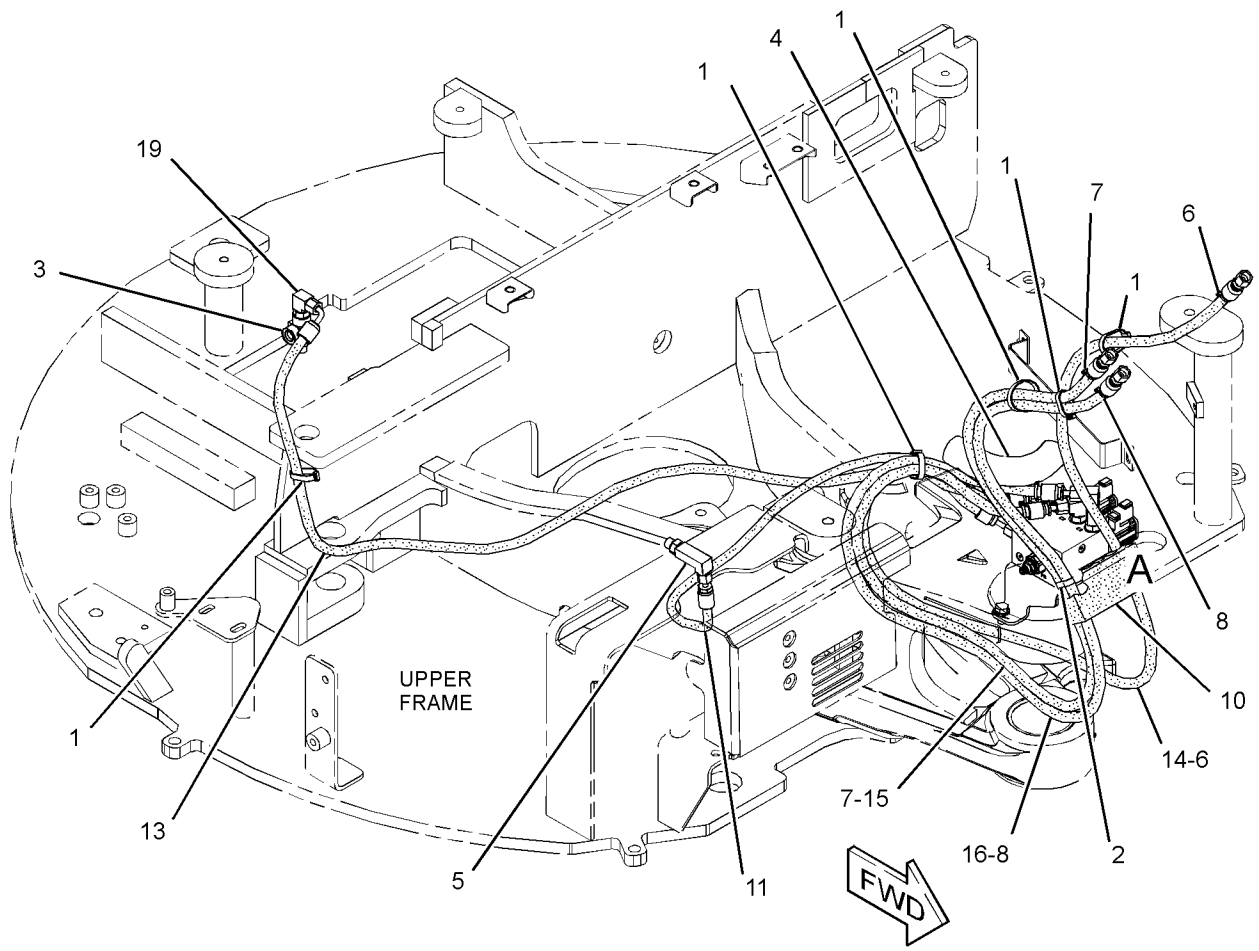

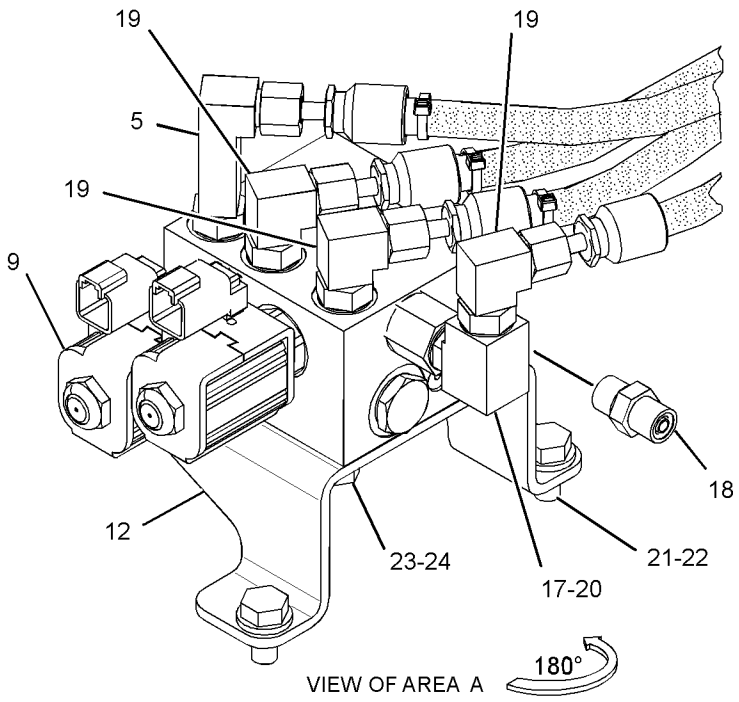

GRAPHIC #1 **<END>** g02799177

379-4693 LINES GP-HYDRAULIC PUMP

PART OF 379-4678 HYDRAULIC AR

SMCS-5057 **i04629843**

NOTE	REF NO	GRAPHIC REF	PART NUMBER	QTY	PART NAME 1 2 3 4 5 6 (PRODUCT LEVEL)	SEE PAGE
	1	1	**5P-0597**	4	CLAMP-HOSE	
	2	1	**7K-1181**	2	STRAP-CABLE	
	3	1	*267-4042*	1	CONNECTOR AS	
		1	**3J-1907**	1	SEAL-O-RING	
		1	**4J-5477**	1	SEAL-O-RING	
		1	**267-4041**	1	CONNECTOR	
	4	1	*346-8792*	1	TEE AS	
		1	**4K-1388**	1	SEAL-O-RING	
		1	**6V-9746**	1	SEAL-O-RING	
		1	**346-8791**	1	TEE	
I	5	1	**380-7207**	1	HOSE AS	
I	6	1	**380-7208**	1	HOSE AS	
I	7	1	**380-7209**	1	HOSE AS	
	8	1	**380-7210**	1	TUBE AS	
	9	1	**380-7213**	1	TUBE AS	
	10	1	**380-7215**	1	PLATE	
	11	1	**380-7216**	2	PLATE	
	12	1	**380-9992**	1	GROMMET	
	13	1	**380-9993**	2	GROMMET	
	14	1	**380-9994**	1	HOSE	
	15	1	**380-9995**	1	HOSE	
	16	1	**380-9996**	1	INSULATION	
	17	1	*148-8336*	1	CONNECTOR AS	
		1	**3J-1907**	1	SEAL-O-RING	
		1	**6V-8397**	1	SEAL-O-RING	
		1	**6V-8636**	1	CONNECTOR	
	18	1	*148-8353*	1	ELBOW AS	
		1	**3J-1907**	1	SEAL-O-RING	
		1	**6V-8397**	1	SEAL-O-RING	
		1	**6V-9001**	1	ELBOW	
	19	1	*148-8392*	1	ELBOW AS	
		1	**6V-9746**	1	SEAL-O-RING	
		1	**6V-9853**	1	ELBOW	
	20	1	*150-3033*	1	ELBOW AS	
		1	**3J-1907**	1	SEAL-O-RING	
		1	**4J-5477**	1	SEAL-O-RING	
		1	**8T-0164**	1	ELBOW	
	21	1	*150-3065*	1	ELBOW AS	
		1	**3J-1907**	1	SEAL-O-RING	
		1	**6V-0484**	1	ELBOW	
	22	1	*153-6237*	1	ELBOW AS	
		1	**3D-2824**	1	SEAL-O-RING	
		1	**6V-9004**	1	ELBOW	
		1	**6V-9746**	1	SEAL-O-RING	
	23	1	*164-5567*	1	COUPLER AS-QUICK DISCONNECT (MALE)	
		1	**6V-3965**	1	FITTING (QUICK DISCONNECT)	
		1	**214-7568**	1	SEAL-O-RING	
	24	1	**4J-0524**	1	SEAL-O-RING	
	25	1	**6V-0852**	1	CAP-DUST	
M	26	1	**7X-2621**	2	BOLT (M10X1.5X12-MM)	
	27	1	**7X-7729**	2	WASHER (11X25X3-MM THK)	
	28	1	**8T-4121**	6	WASHER-HARD (11X21X2.5-MM THK)	
M	29	1	**8T-4136**	2	BOLT (M10X1.5X25-MM)	
M	30	1	**8T-4137**	6	BOLT (M10X1.5X20-MM)	
M	31	1	**8T-4183**	4	BOLT (M12X1.75X40-MM)	
	32	1	**8T-4223**	4	WASHER-HARD (13.5X25.5X3-MM THK)	

I - REFER TO HYDRAULIC INFORMATION SYSTEM
M - METRIC PART

379-4693 **LINES GP-HYDRAULIC PUMP (*contd.*)** **i04629843**

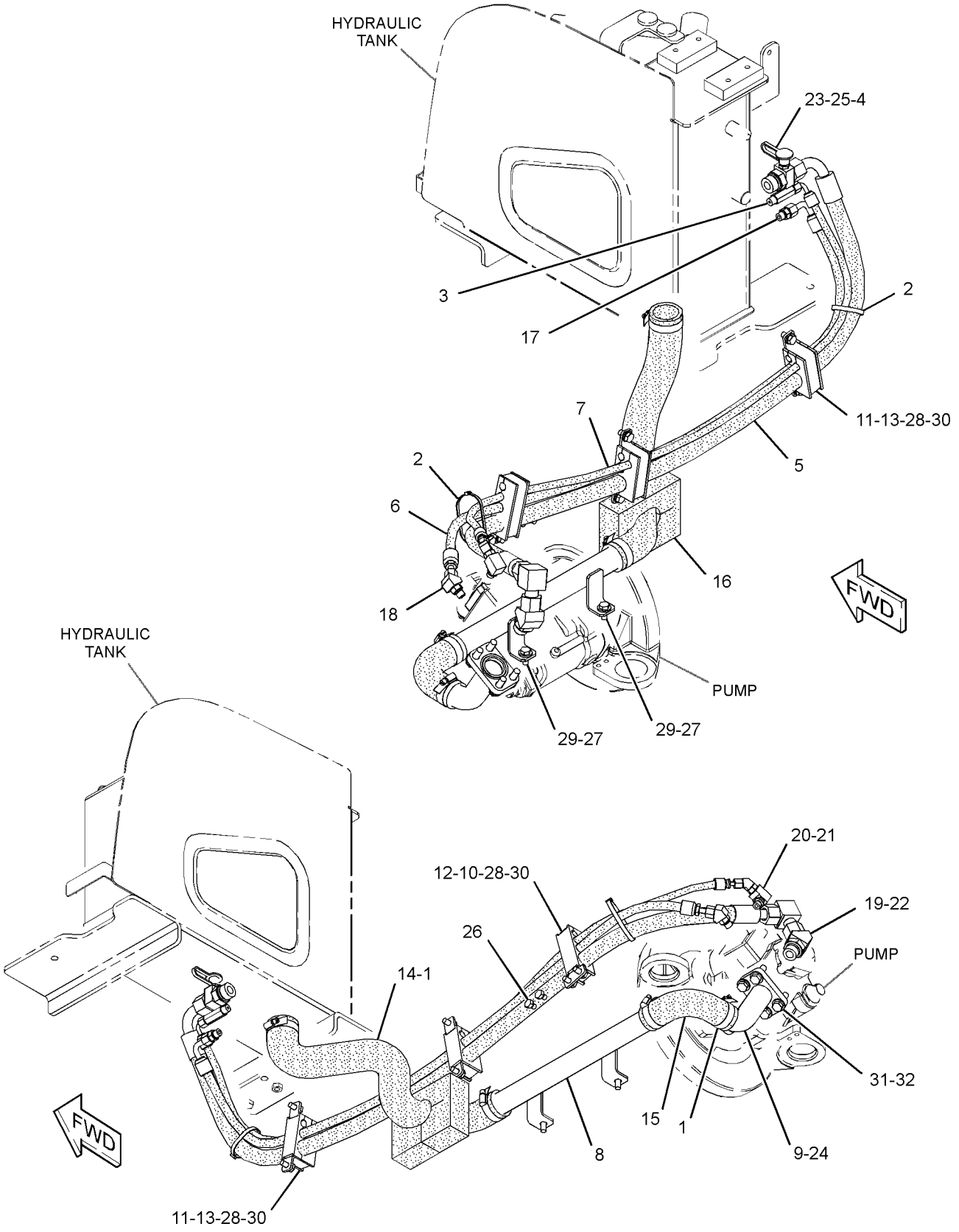

GRAPHIC #1 **<END>** g02799316

377-8872 LINES GP-PILOT—JOYSTICK

PART OF 379-4686 CONTROL AR-PILOT HYDRAULIC
AN ATTACHMENT

SMCS-5057, 5059 **i04707629**

NOTE	REF NO	GRAPHIC REF	PART NUMBER	QTY	PART NAME 1 2 3 4 5 6 (PRODUCT LEVEL)	SEE PAGE
	1	1	**4I-9531**	2	BAND-MARKER (RED)	
	2	1	**4I-9532**	2	BAND-MARKER (YELLOW)	
	3	1	**4I-9533**	2	BAND-MARKER (BLUE)	
	4	1	**4I-9534**	2	BAND-MARKER (BROWN)	
	5	1	**4I-9535**	2	BAND-MARKER (ORANGE)	
	6	1	**4I-9536**	2	BAND-MARKER (WHITE)	
	7	1	**4I-9537**	2	BAND-MARKER (GREEN)	
	8	1	**4I-9538**	2	BAND-MARKER (PURPLE)	
	9	1	**7K-1181**	5	STRAP-CABLE	
	10	1	**096-6079**	4	TAPE (WHITE)	
I	11	1	**163-9768**	2	HOSE AS	
	12	1	*164-9640*	1	CONNECTOR AS	
		1	**3J-1907**	1	SEAL-O-RING	
		1	**4J-5477**	1	SEAL-O-RING	
		1	**145-2237**	1	CONNECTOR	
	13	1	*267-4038*	1	CONNECTOR AS	
		1	**3J-1907**	1	SEAL-O-RING	
		1	**4J-5477**	1	SEAL-O-RING	
		1	**267-4037**	1	CONNECTOR-FILTER	
	14	1	*267-4051*	1	CONNECTOR AS	
		1	**3J-1907**	1	SEAL-O-RING	
		1	**4J-5477**	1	SEAL-O-RING	
		1	**156-8845**	1	CONNECTOR	
	15	1	*267-4093*	1	CONNECTOR AS	
		1	**3J-1907**	1	SEAL-O-RING	
		1	**4J-5477**	1	SEAL-O-RING	
		1	**216-3247**	1	CONNECTOR	
I	16	1	**267-4096**	2	HOSE AS	
	17	1	**314-4242**	1	HOSE AS	
	18	1	**317-9220**	2	HOSE AS	
	19	1	**349-2709**	2	HOSE AS	
	20	1	**377-9064**	1	HOSE AS	
	21	1	**377-9065**	2	HOSE AS	
	22	1	**377-9066**	1	PLATE	
	23	1	**377-9068**	1	SHEET-RUBBER	
	24	1	*148-8325*	8	CONNECTOR AS	
					(EACH INCLUDES)	
		1	**3J-1907**	1	SEAL-O-RING	
		1	**4J-5477**	1	SEAL-O-RING	
		1	**6V-8641**	1	CONNECTOR	
	25	1	**5P-4116**	3	WASHER-HARD (8.8X20.5X2-MM THK)	
	26	1	**7D-7233**	4	CLIP	
	27	1	**8T-4121**	1	WASHER-HARD (11X21X2.5-MM THK)	
M	28	1	**8T-4191**	1	BOLT (M10X1.5X16-MM)	
M	29	1	**8T-4199**	2	BOLT (M8X1.25X12-MM)	
M	30	1	**8T-4200**	3	BOLT (M8X1.25X16-MM)	
	31	1	**8T-4224**	2	WASHER-HARD (8.8X16X2-MM THK)	
G	32	1	**160-2252**		SLEEVE-ABRASION (14.6-IN)	
G	32A	1	**160-2252**		SLEEVE-ABRASION (21.5-IN)	
E	33	1	**379-4566**		SLEEVE (10-CM)	

E - ORDER BY THE CENTIMETER
G - ORDER BY THE INCH
I - REFER TO HYDRAULIC INFORMATION SYSTEM
M - METRIC PART

377-8872 **LINES GP-PILOT (*contd.*)** **i04707629**

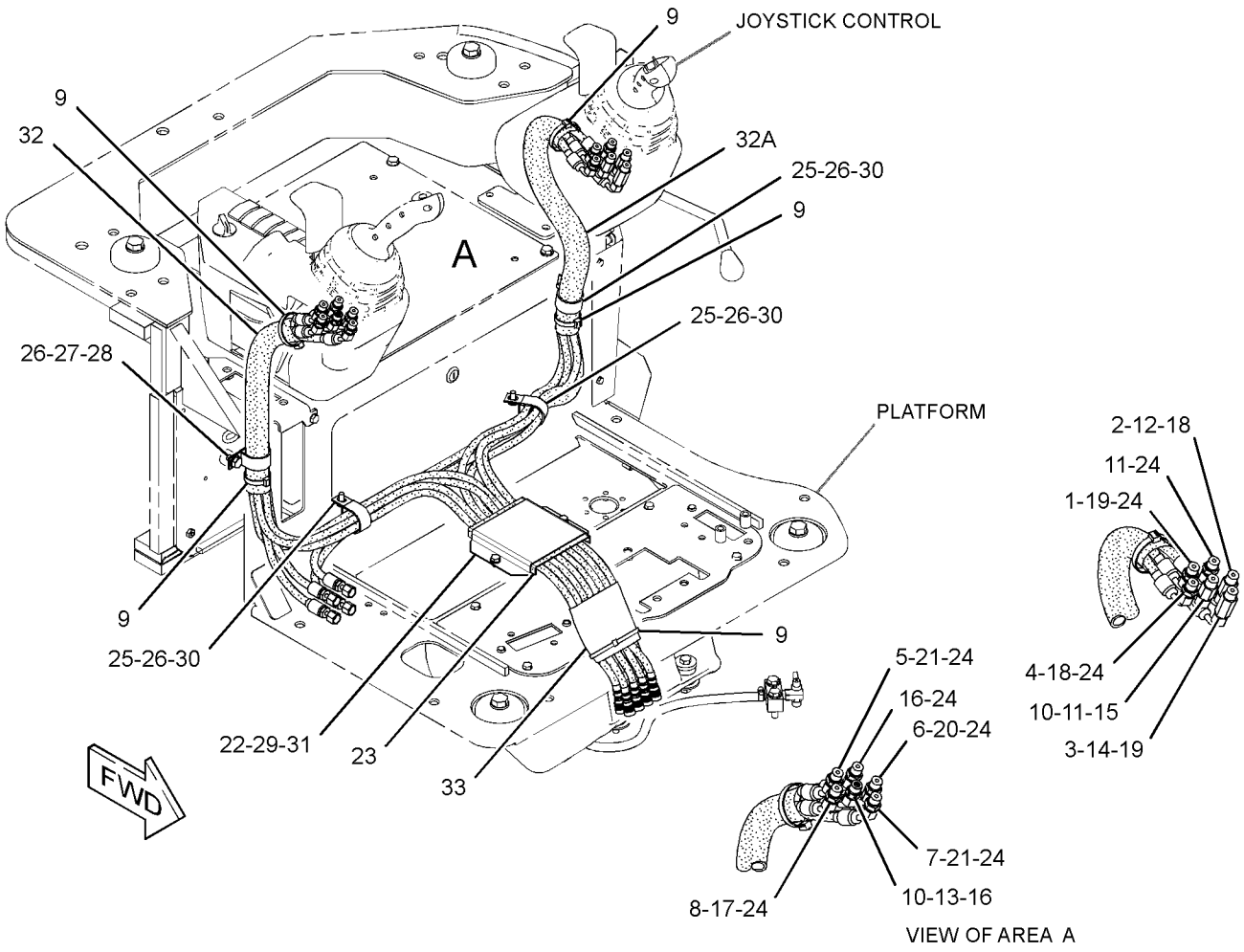

GRAPHIC #1 **<END>** g02808836

377-8874 LINES GP-PILOT—JOYSTICK, 2-WAY

PART OF 379-4687 CONTROL AR-AUXILIARY

AN ATTACHMENT

SMCS-5057, 5059 **i04559392**

NOTE	REF NO	GRAPHIC REF	PART NUMBER	QTY	PART NAME 1 2 3 4 5 6 (PRODUCT LEVEL)	SEE PAGE
	1	1	**4I-9531**	2	BAND-MARKER (RED)	
	2	1	**4I-9532**	2	BAND-MARKER (YELLOW)	
	3	1	**4I-9533**	2	BAND-MARKER (BLUE)	
	4	1	**4I-9534**	2	BAND-MARKER (BROWN)	
	5	1	**4I-9535**	2	BAND-MARKER (ORANGE)	
	6	1	**4I-9536**	2	BAND-MARKER (WHITE)	
	7	1	**4I-9537**	2	BAND-MARKER (GREEN)	
	8	1	**4I-9538**	2	BAND-MARKER (PURPLE)	
	9	1	**7K-1181**	4	STRAP-CABLE	
	10	1	**096-6079**	4	TAPE (WHITE)	
I	11	1	**163-9768**	2	HOSE AS	
	12	1	*164-9640*	1	CONNECTOR AS	
		1	**3J-1907**	1	SEAL-O-RING	
		1	**4J-5477**	1	SEAL-O-RING	
		1	**145-2237**	1	CONNECTOR	
I	13	1	**214-1324**	1	HOSE AS	
	14	1	*267-4038*	1	CONNECTOR AS	
		1	**3J-1907**	1	SEAL-O-RING	
		1	**4J-5477**	1	SEAL-O-RING	
		1	**267-4037**	1	CONNECTOR-FILTER	
	15	1	*267-4051*	1	CONNECTOR AS	
		1	**3J-1907**	1	SEAL-O-RING	
		1	**4J-5477**	1	SEAL-O-RING	
		1	**156-8845**	1	CONNECTOR	
	16	1	*267-4093*	1	CONNECTOR AS	
		1	**3J-1907**	1	SEAL-O-RING	
		1	**4J-5477**	1	SEAL-O-RING	
		1	**216-3247**	1	CONNECTOR	
I	17	1	**267-4096**	2	HOSE AS	
	18	1	**314-4242**	1	HOSE AS	
	19	1	**317-9220**	2	HOSE AS	
	20	1	**377-9064**	1	HOSE AS	
	21	1	**377-9066**	1	PLATE	
	22	1	**377-9068**	1	SHEET-RUBBER	
I	23	1	**378-9508**	1	HOSE AS	
I	24	1	**378-9509**	2	HOSE AS	
	25	1	*148-8325*	8	CONNECTOR AS	
					(EACH INCLUDES)	
		1	**3J-1907**	1	SEAL-O-RING	
		1	**4J-5477**	1	SEAL-O-RING	
		1	**6V-8641**	1	CONNECTOR	
	26	1	**5P-4116**	3	WASHER-HARD (8.8X20.5X2-MM THK)	
	27	1	**7D-7233**	4	CLIP	
	28	1	**8T-4121**	1	WASHER-HARD (11X21X2.5-MM THK)	
M	29	1	**8T-4191**	1	BOLT (M10X1.5X16-MM)	
M	30	1	**8T-4199**	2	BOLT (M8X1.25X12-MM)	
M	31	1	**8T-4200**	3	BOLT (M8X1.25X16-MM)	
	32	1	**8T-4224**	2	WASHER-HARD (8.8X16X2-MM THK)	
G	33	1	**160-2252**		SLEEVE-ABRASION (14.6-IN)	
G	33A	1	**160-2252**		SLEEVE-ABRASION (21.5-IN)	
E	34	1	**379-4566**		SLEEVE (10-CM)	

E - ORDER BY THE CENTIMETER
G - ORDER BY THE INCH
I - REFER TO HYDRAULIC INFORMATION SYSTEM
M - METRIC PART

377-8874 **LINES GP-PILOT (*contd.*)** **i04559392**

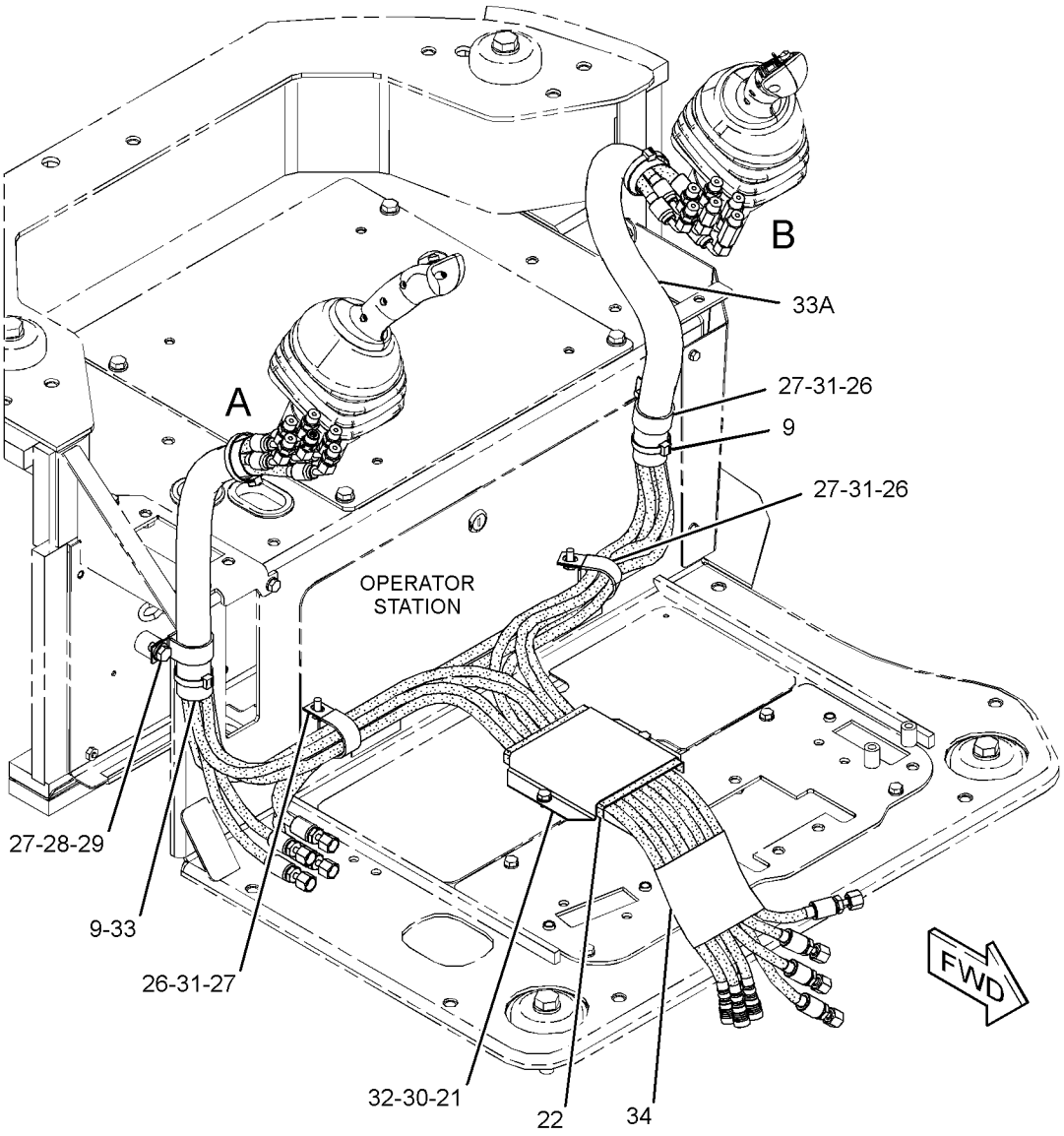

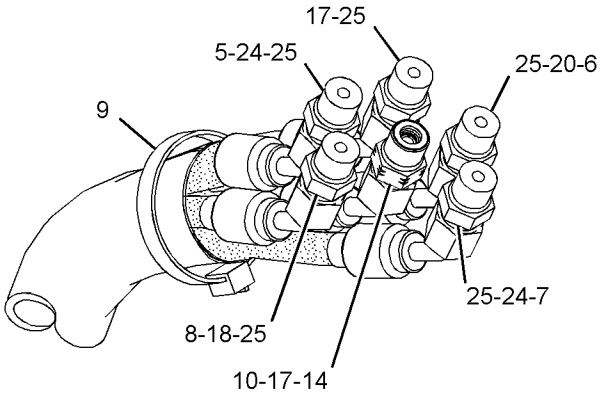

VIEW OF AREA A

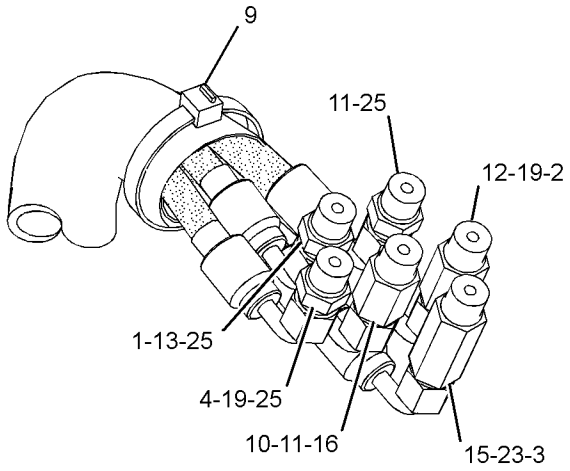

VIEW OF AREA B

GRAPHIC #1 **<END>** g02777576

379-4694 LINES GP-PILOT

PART OF 379-4678 HYDRAULIC AR

SMCS-5057, 5059 **i05658186**

NOTE	REF NO	GRAPHIC REF	PART NUMBER	QTY	PART NAME 1 2 3 4 5 6 (PRODUCT LEVEL)	SEE PAGE
	1	1	**3S-2093**	1	STRAP-CABLE	
	2	1	**7K-1181**	7	STRAP-CABLE	
	3	1	**096-1366**	1	CLAMP-HOSE	
	4	1	**096-6079**	2	TAPE (WHITE)	
	5	1	*148-8443*	1	TEE AS	
		1	**3J-1907**	1	SEAL-O-RING	
		1	**6V-8397**	1	SEAL-O-RING	
		1	**7X-2459**	1	TEE-O-RING	
I	6	1	**163-9772**	1	HOSE AS	
I	7	1	**393-8686**	2	HOSE AS	
I	8	1	**325-4870**	1	HOSE AS	
	9	1	**217-2456**	1	FILTER ELEMENT AS-OIL (HYDRAULIC, PILOT)	
		1	**3J-1907**	1	SEAL-O-RING	
I	10	1	**240-2590**	1	HOSE AS	
	11	1	**245-8595**	1	SHEET-RUBBER	
I	12	1	**255-3727**	2	HOSE AS	
	13	1	**266-7379**	1	STRAP-CABLE	
	14	1	*267-4036*	2	UNION AS-CROSS	
					(EACH INCLUDES)	
		1	**4J-5477**	3	SEAL-O-RING	
		1	**267-4035**	1	FITTING-CROSS	
	15	1	*267-4046*	1	ELBOW AS	
		1	**3J-7354**	1	SEAL-O-RING	
		1	**4J-5477**	1	SEAL-O-RING	
		1	**267-4045**	1	ELBOW	
	16	1	*267-4048*	1	ELBOW AS	
		1	**3J-1907**	1	SEAL-O-RING	
		1	**4J-5477**	1	SEAL-O-RING	
		1	**267-4047**	1	ELBOW	
	17	1	*267-4093*	1	CONNECTOR AS	
		1	**3J-1907**	1	SEAL-O-RING	
		1	**4J-5477**	1	SEAL-O-RING	
		1	**216-3247**	1	CONNECTOR	
Y	18	1	**274-4199**	1	MANIFOLD GP-CONTROL	290
	19	1	*288-0266*	1	ELBOW AS	
		1	**4J-5477**	1	SEAL-O-RING	
		1	**288-0267**	1	ELBOW	
I	20	1	**365-6895**	2	HOSE AS	
	21	1	*377-9033*	1	BLOCK GP-HYDRAULIC (PILOT CONTROL)	
		1	**2P-1279**	2	LOCKNUT (9/16-18-THD)	
		1	**6V-9168**	2	NUT (11/16-16-THD)	
		1	**293-9743**	2	MANIFOLD	
		1	**377-9034**	1	BRACKET AS	
M		1	**8T-3490**	2	NUT-WELD (M10X1.5-THD)	
I	22	1	**381-0556**	1	HOSE AS	
I	23	1	**381-0557**	1	HOSE AS	
I	24	1	**381-0558**	1	HOSE AS	
I	25	1	**379-0559**	1	HOSE AS	
I	26	1	**381-9194**	1	HOSE AS	
I	27	1	**385-2812**	1	HOSE AS	
	28	1	*148-8316*	1	CONNECTOR AS	
		1	**3J-7354**	1	SEAL-O-RING	
		1	**4J-5477**	1	SEAL-O-RING	
		1	**6V-8647**	1	CONNECTOR	
	29	1	*148-8325*	4	CONNECTOR AS	
					(EACH INCLUDES)	
		1	**3J-1907**	1	SEAL-O-RING	
		1	**4J-5477**	1	SEAL-O-RING	
		1	**6V-8641**	1	CONNECTOR	
	30	1	*148-8336*	3	CONNECTOR AS	

379-4694 **LINES GP-PILOT (*contd.*)** **i05658186**

NOTE	REF NO	GRAPHIC REF	PART NUMBER	QTY	PART NAME 1 2 3 4 5 6 (PRODUCT LEVEL)	SEE PAGE
					(EACH INCLUDES)	
		1	**3J-1907**	1	SEAL-O-RING	
		1	**6V-8397**	1	SEAL-O-RING	
		1	**6V-8636**	1	CONNECTOR	
	31	1	*148-8351*	2	ELBOW AS	
					(EACH INCLUDES)	
		1	**4J-5477**	1	SEAL-O-RING	
		1	**6V-9849**	1	ELBOW	
	32	1	*148-8361*	1	ELBOW AS	
		1	**3J-7354**	1	SEAL-O-RING	
		1	**6V-8397**	1	SEAL-O-RING	
		1	**6V-9200**	1	ELBOW	
	33	1	*148-8363*	1	ELBOW AS	
		1	**3K-0360**	1	SEAL-O-RING	
		1	**6V-8397**	1	SEAL-O-RING	
		1	**6V-9876**	1	ELBOW	
	34	1	*148-8367*	1	ELBOW AS	
		1	**6V-8397**	1	SEAL-O-RING	
		1	**6V-9850**	1	ELBOW	
	35	1	*148-8368*	2	ELBOW AS	
					(EACH INCLUDES)	
		1	**3J-1907**	1	SEAL-O-RING	
		1	**4J-5477**	1	SEAL-O-RING	
		1	**6V-8627**	1	ELBOW	
	36	1	*148-8369*	1	ELBOW AS	
		1	**3J-7354**	1	SEAL-O-RING	
		1	**4J-5477**	1	SEAL-O-RING	
		1	**6V-8628**	1	ELBOW	
	37	1	*148-8407*	1	PLUG AS	
		1	**3J-1907**	1	SEAL-O-RING	
		1	**9S-4191**	1	PLUG	
	38	1	*150-3036*	1	ELBOW AS	
		1	**3J-1907**	1	SEAL-O-RING	
		1	**6V-8397**	1	SEAL-O-RING	
		1	**8T-1905**	1	ELBOW	
	39	1	*150-3065*	1	ELBOW AS	
		1	**3J-1907**	1	SEAL-O-RING	
		1	**6V-0484**	1	ELBOW	
	40	1	*150-4047*	1	ADAPTER AS	
		1	**3J-7354**	1	SEAL-O-RING	
		1	**8T-2353**	1	ADAPTER	
	41	1	*150-5968*	1	TEE AS	
		1	**4J-5477**	2	SEAL-O-RING	
		1	**6V-9835**	1	TEE-SWIVEL	
	42	1	*165-7014*	1	TEE AS	
		1	**3J-1907**	1	SEAL-O-RING	
		1	**4J-5477**	1	SEAL-O-RING	
		1	**8C-3309**	1	TEE	
	43	1	*187-2120*	1	ELBOW AS	
		1	**4J-5477**	1	SEAL-O-RING	
		1	**8C-8408**	1	ELBOW	
	44	1	**3J-1907**	1	SEAL-O-RING	
	45	1	**4J-5477**	8	SEAL-O-RING	
	46	1	**6V-0852**	1	CAP-DUST	
	47	1	**6V-3965**	1	FITTING (QUICK DISCONNECT)	
	48	1	**6V-8397**	2	SEAL-O-RING	
	49	1	**7X-7729**	2	WASHER (11X25X3-MM THK)	
	50	1	**8T-4121**	2	WASHER-HARD (11X21X2.5-MM THK)	
M	51	1	**8T-4136**	2	BOLT (M10X1.5X25-MM)	
M	52	1	**8T-4137**	2	BOLT (M10X1.5X20-MM)	

I - REFER TO HYDRAULIC INFORMATION SYSTEM
M - METRIC PART
Y - SEPARATE ILLUSTRATION

379-4694 **LINES GP-PILOT (*contd.*)** **i05658186**

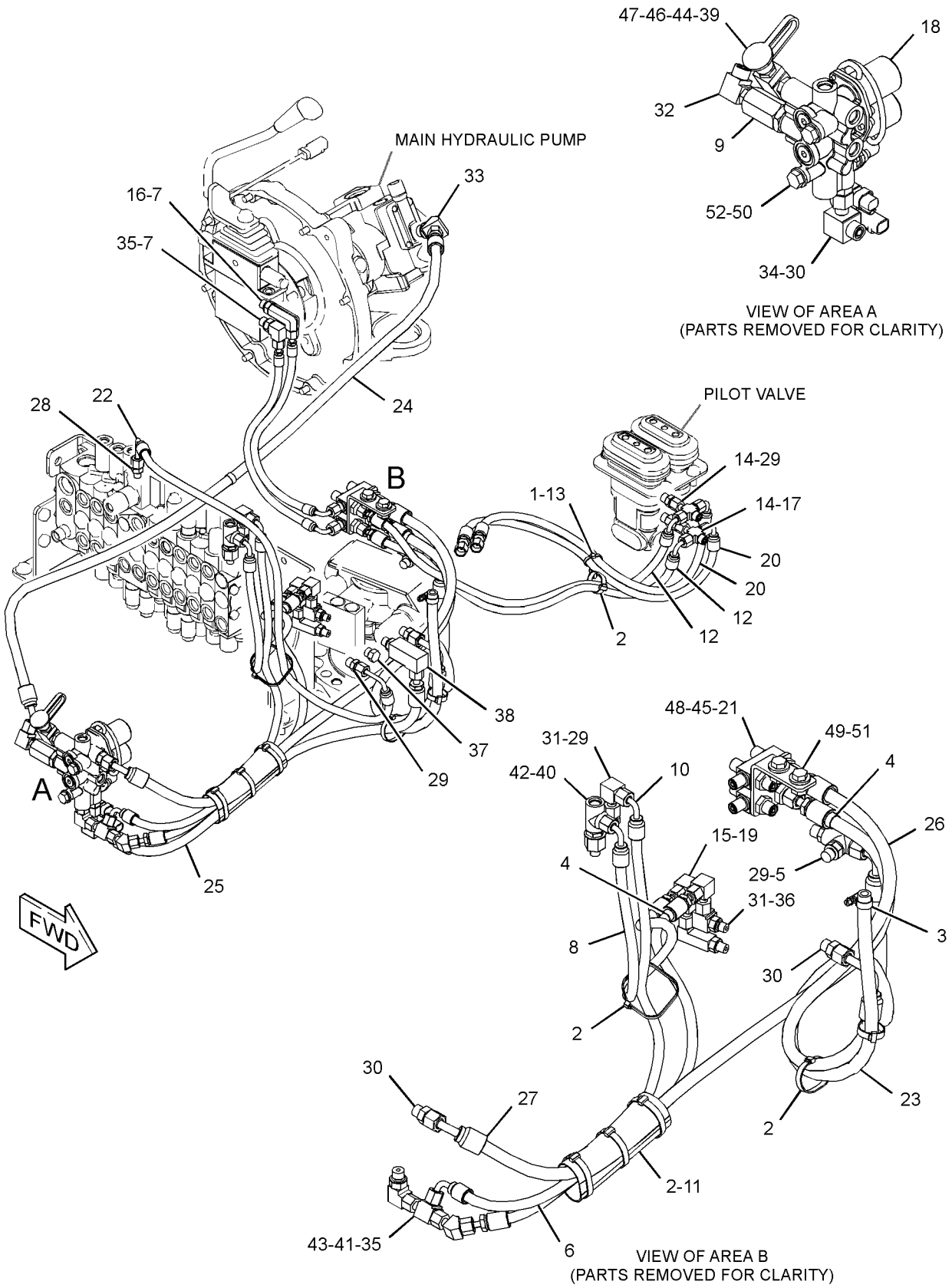

GRAPHIC #1 **<END>** g03587916

379-4706 LINES GP-PILOT–STANDARD

PART OF 379-4686 CONTROL AR-PILOT HYDRAULIC

AN ATTACHMENT

SMCS-5057, 5059 **i04623154**

NOTE	REF NO	GRAPHIC REF	PART NUMBER	QTY	PART NAME 1 2 3 4 5 6 (PRODUCT LEVEL)	SEE PAGE
	1	1	**4I-9531**	1	BAND-MARKER (RED)	
	2	1	**4I-9532**	2	BAND-MARKER (YELLOW)	
	3	1	**4I-9533**	1	BAND-MARKER (BLUE)	
	4	1	**4I-9534**	2	BAND-MARKER (BROWN)	
	5	1	**4I-9535**	1	BAND-MARKER (ORANGE)	
	6	1	**4I-9536**	1	BAND-MARKER (WHITE)	
	7	1	**4I-9537**	1	BAND-MARKER (GREEN)	
	8	1	**4I-9538**	1	BAND-MARKER (PURPLE)	
	9	1	**7K-1181**	10	STRAP-CABLE	
	10	1	**096-6078**	1	TAPE (PURPLE)	
	11	1	**096-6079**	1	TAPE (WHITE)	
	12	1	**096-6080**	1	TAPE (BLUE)	
	13	1	**096-6081**	2	TAPE (ORANGE)	
	14	1	**096-6083**	1	TAPE (GREEN)	
	15	1	**146-5009**	1	RUBBER	
I	16	1	**196-3895**	1	HOSE AS	
I	17	1	**208-0164**	1	HOSE AS	
	18	1	**210-0686**	1	SHEET-RUBBER	
I	19	1	**214-1324**	1	HOSE AS	
	20	1	**239-3781**	1	HOSE AS	
I	21	1	**280-3035**	1	HOSE AS	
	22	1	**283-2847**	2	VALVE GP-REDUCING (SLOW RETURN)	
	23	1	**311-3072**	2	CONNECTOR AS	
	24	1	**320-3430**	1	HOSE AS	
	25	1	**326-7184**	1	HOSE AS	
	26	1	**330-5698**	1	HOSE AS	
I	27	1	**377-9071**	1	HOSE AS	
	28	1	**381-2048**	2	HOSE AS	
	29	1	**381-2049**	1	HOSE AS	
	30	1	**381-2050**	1	HOSE AS	
	31	1	**381-2051**	2	HOSE AS	
	32	1	**381-2052**	1	HOSE AS	
	33	1	**381-9195**	1	HOSE AS	
	34	1	*148-8316*	9	CONNECTOR AS	
					(EACH INCLUDES)	
		1	**3J-7354**	1	SEAL-O-RING	
		1	**4J-5477**	1	SEAL-O-RING	
		1	**6V-8647**	1	CONNECTOR	
	35	1	*148-8351*	1	ELBOW AS	
		1	**4J-5477**	1	SEAL-O-RING	
		1	**6V-9849**	1	ELBOW	
	36	1	*148-8368*	4	ELBOW AS	
					(EACH INCLUDES)	
		1	**3J-1907**	1	SEAL-O-RING	
		1	**4J-5477**	1	SEAL-O-RING	
		1	**6V-8627**	1	ELBOW	
	37	1	*148-8369*	1	ELBOW AS	
		1	**3J-7354**	1	SEAL-O-RING	
		1	**4J-5477**	1	SEAL-O-RING	
		1	**6V-8628**	1	ELBOW	
	38	1	*148-8385*	3	ELBOW AS	
					(EACH INCLUDES)	
		1	**3J-7354**	1	SEAL-O-RING	
		1	**4J-5477**	1	SEAL-O-RING	
		1	**6V-9000**	1	ELBOW	
	39	1	*150-4042*	1	CONNECTOR AS	
		1	**3J-7354**	1	SEAL-O-RING	
		1	**4J-5477**	1	SEAL-O-RING	

379-4706 **LINES GP-PILOT (*contd.*)** **i04623154**

NOTE	REF NO	GRAPHIC REF	PART NUMBER	QTY	PART NAME 1 2 3 4 5 6 (PRODUCT LEVEL)	SEE PAGE
		1	**6V-9010**	1	CONNECTOR-PORT	
	40	1	*150-4047*	2	ADAPTER AS	
					(EACH INCLUDES)	
		1	**3J-7354**	1	SEAL-O-RING	
		1	**8T-2353**	1	ADAPTER	
	41	1	*150-5968*	1	TEE AS	
		1	**4J-5477**	2	SEAL-O-RING	
		1	**6V-9835**	1	TEE-SWIVEL	
	42	1	*166-4057*	1	CONNECTOR AS	
		1	**3J-7354**	1	SEAL-O-RING	
		1	**4J-5477**	1	SEAL-O-RING	
		1	**9X-2067**	1	CONNECTOR	
	43	1	*187-2120*	1	ELBOW AS	
		1	**4J-5477**	1	SEAL-O-RING	
		1	**8C-8408**	1	ELBOW	
	44	1	**277-1873**	1	CLIP	
	45	1	**3J-1907**	2	SEAL-O-RING	
	46	1	**4J-5477**	2	SEAL-O-RING	
	47	1	**8T-4121**	1	WASHER-HARD (11X21X2.5-MM THK)	
M	48	1	**8T-4137**	1	BOLT (M10X1.5X20-MM)	

I - REFER TO HYDRAULIC INFORMATION SYSTEM
M - METRIC PART

379-4706 **LINES GP-PILOT (*contd.*)** **i04623154**

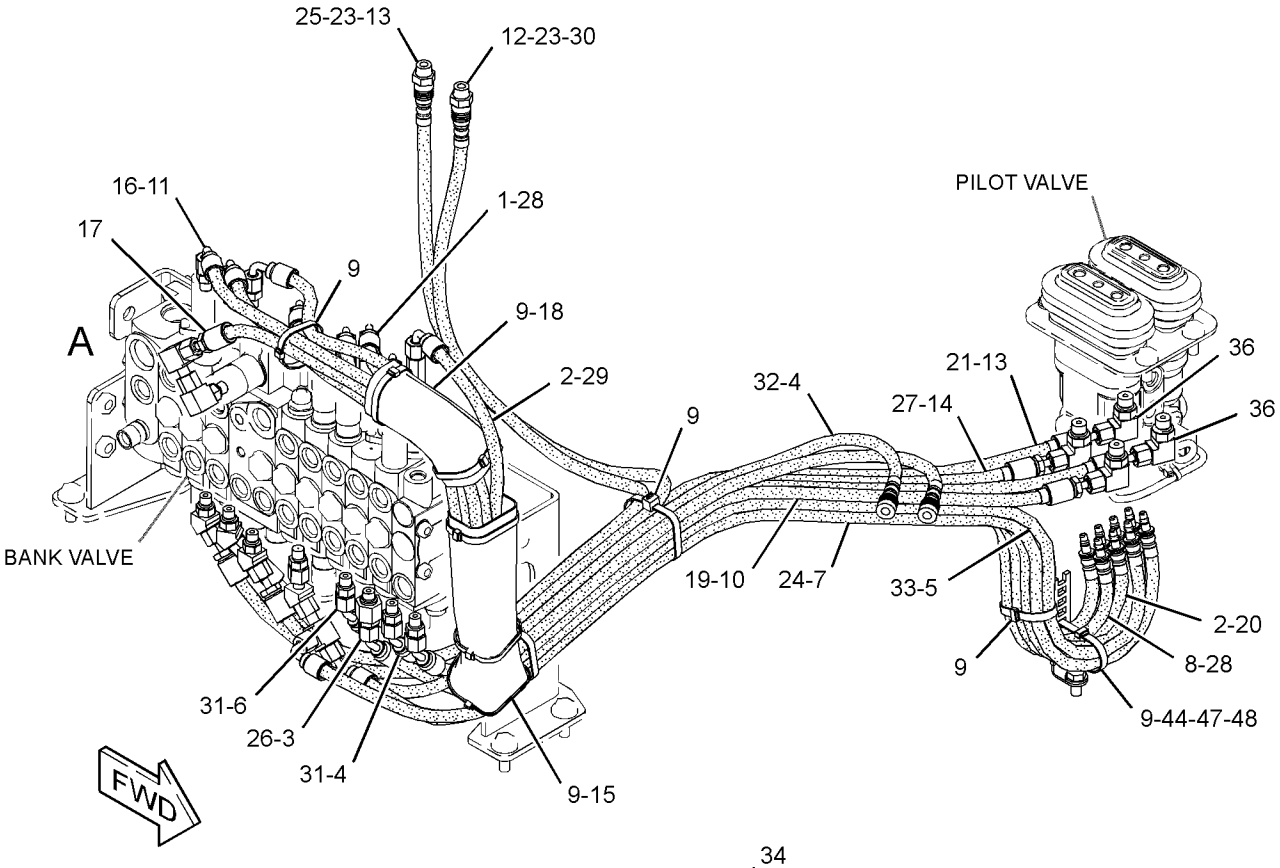

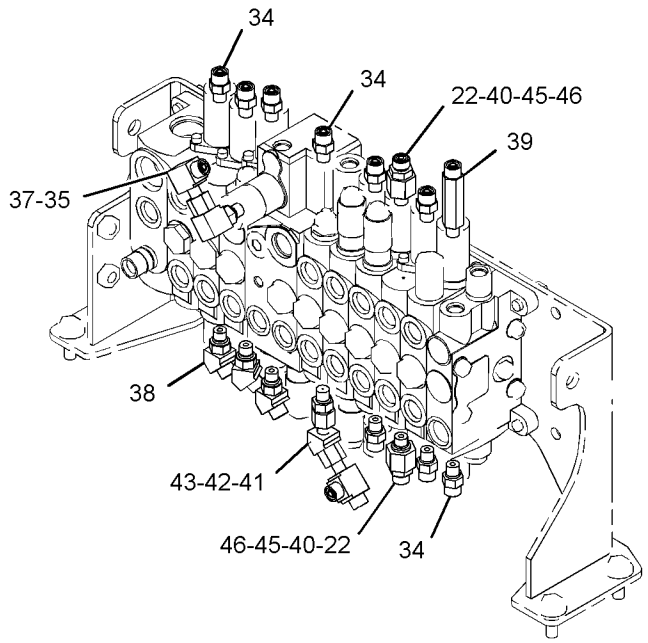

VIEW OF AREA A
(HOSES REMOVED FOR CLARITY)

GRAPHIC #1 **<END>** g02800824

379-4707 LINES GP-PILOT–2-WAY

PART OF 379-4687 CONTROL AR-AUXILIARY

AN ATTACHMENT

SMCS-5057, 5059 **i04623155**

NOTE	REF NO	GRAPHIC REF	PART NUMBER	QTY	PART NAME 1 2 3 4 5 6 (PRODUCT LEVEL)	SEE PAGE
	1	1	**4I-9531**	1	BAND-MARKER (RED)	
	2	1	**4I-9532**	2	BAND-MARKER (YELLOW)	
	3	1	**4I-9533**	1	BAND-MARKER (BLUE)	
	4	1	**4I-9534**	2	BAND-MARKER (BROWN)	
	5	1	**4I-9535**	1	BAND-MARKER (ORANGE)	
	6	1	**4I-9536**	1	BAND-MARKER (WHITE)	
	7	1	**4I-9537**	1	BAND-MARKER (GREEN)	
	8	1	**4I-9538**	1	BAND-MARKER (PURPLE)	
	9	1	**7K-1181**	12	STRAP-CABLE	
	10	1	**096-6078**	1	TAPE (PURPLE)	
	11	1	**096-6079**	1	TAPE (WHITE)	
	12	1	**096-6080**	1	TAPE (BLUE)	
	13	1	**096-6081**	2	TAPE (ORANGE)	
	14	1	**096-6083**	1	TAPE (GREEN)	
	15	1	**146-5009**	1	RUBBER	
I	16	1	**196-3895**	1	HOSE AS	
I	17	1	**208-0164**	1	HOSE AS	
	18	1	**210-0686**	2	SHEET-RUBBER	
I	19	1	**214-1324**	1	HOSE AS	
	20	1	**239-3781**	1	HOSE AS	
I	21	1	**267-4109**	1	HOSE AS	
I	22	1	**280-3035**	1	HOSE AS	
	23	1	**283-2847**	2	VALVE GP-REDUCING (SLOW RETURN)	
I	24	1	**304-0121**	1	HOSE AS	
	25	1	**311-3072**	2	CONNECTOR AS	
	26	1	**326-7184**	1	HOSE AS	
I	27	1	**377-9071**	1	HOSE AS	
	28	1	**381-2048**	1	HOSE AS	
	29	1	**381-2049**	1	HOSE AS	
	30	1	**381-2050**	1	HOSE AS	
	31	1	**381-2051**	2	HOSE AS	
	32	1	**381-2052**	1	HOSE AS	
I	33	1	**381-2054**	1	HOSE AS	
I	34	1	**381-2055**	1	HOSE AS	
	35	1	*148-8316*	9	CONNECTOR AS	
					(EACH INCLUDES)	
		1	**3J-7354**	1	SEAL-O-RING	
		1	**4J-5477**	1	SEAL-O-RING	
		1	**6V-8647**	1	CONNECTOR	
	36	1	*148-8351*	1	ELBOW AS	
		1	**4J-5477**	1	SEAL-O-RING	
		1	**6V-9849**	1	ELBOW	
	37	1	*148-8368*	4	ELBOW AS	
					(EACH INCLUDES)	
		1	**3J-1907**	1	SEAL-O-RING	
		1	**4J-5477**	1	SEAL-O-RING	
		1	**6V-8627**	1	ELBOW	
	38	1	*148-8369*	1	ELBOW AS	
		1	**3J-7354**	1	SEAL-O-RING	
		1	**4J-5477**	1	SEAL-O-RING	
		1	**6V-8628**	1	ELBOW	
	39	1	*148-8385*	3	ELBOW AS	
					(EACH INCLUDES)	
		1	**3J-7354**	1	SEAL-O-RING	
		1	**4J-5477**	1	SEAL-O-RING	
		1	**6V-9000**	1	ELBOW	
	40	1	*150-4042*	1	CONNECTOR AS	
		1	**3J-7354**	1	SEAL-O-RING	

379-4707 **LINES GP-PILOT (*contd.*)** **i04623155**

NOTE	REF NO	GRAPHIC REF	PART NUMBER	QTY	PART NAME 1 2 3 4 5 6 (PRODUCT LEVEL)	SEE PAGE
		1	**4J-5477**	1	SEAL-O-RING	
		1	**6V-9010**	1	CONNECTOR-PORT	
	41	1	*150-4047*	2	ADAPTER AS	
					(EACH INCLUDES)	
		1	**3J-7354**	1	SEAL-O-RING	
		1	**8T-2353**	1	ADAPTER	
	42	1	*150-5968*	1	TEE AS	
		1	**4J-5477**	2	SEAL-O-RING	
		1	**6V-9835**	1	TEE-SWIVEL	
	43	1	*166-4057*	1	CONNECTOR AS	
		1	**3J-7354**	1	SEAL-O-RING	
		1	**4J-5477**	1	SEAL-O-RING	
		1	**9X-2067**	1	CONNECTOR	
	44	1	*187-2120*	1	ELBOW AS	
		1	**4J-5477**	1	SEAL-O-RING	
		1	**8C-8408**	1	ELBOW	
	45	1	**277-1873**	1	CLIP	
	46	1	**3J-1907**	2	SEAL-O-RING	
	47	1	**4J-5477**	2	SEAL-O-RING	
	48	1	**8T-4121**	1	WASHER-HARD (11X21X2.5-MM THK)	
M	49	1	**8T-4137**	1	BOLT (M10X1.5X20-MM)	

I - REFER TO HYDRAULIC INFORMATION SYSTEM
M - METRIC PART

379-4707 **LINES GP-PILOT (*contd.*)** **i04623155**

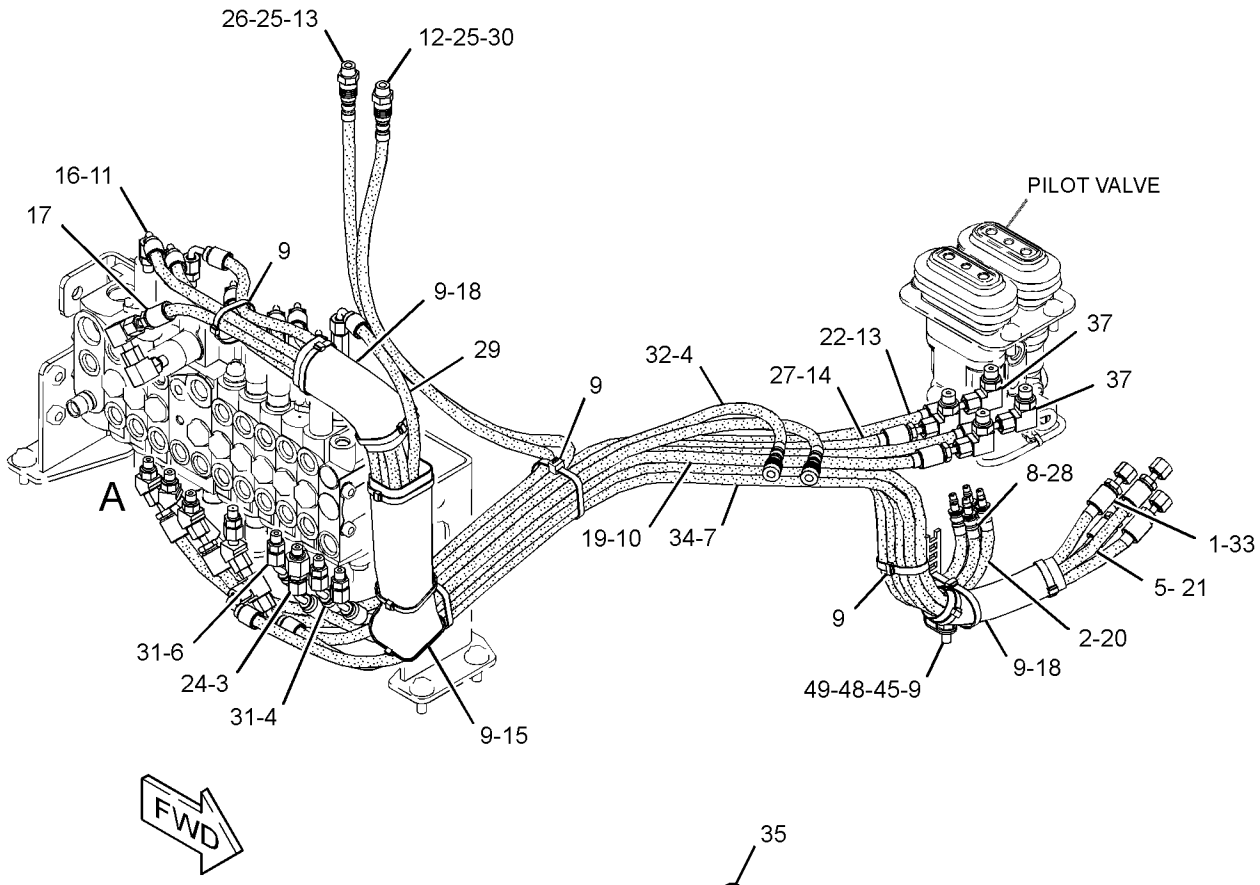

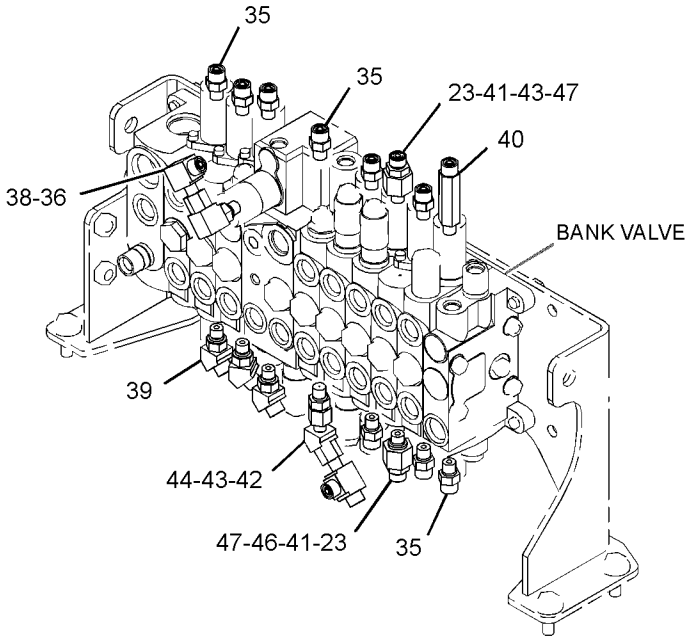

VIEW OF AREA A
(HOSES REMOVED FOR CLARITY)

GRAPHIC #1 **<END>** g02802297

380-4661 LINES GP-PILOT–AUXILIARY

PART OF 379-4680 CONTROL AR-AUXILIARY

SMCS-5057, 5059 **i04629842**

NOTE	REF NO	GRAPHIC REF	PART NUMBER	QTY	PART NAME 1 2 3 4 5 6 (PRODUCT LEVEL)	SEE PAGE
	1	1	**7K-1181**	1	STRAP-CABLE	
	2	1	**096-6080**	1	TAPE (BLUE)	
	3	1	**096-6085**	1	TAPE (RED)	
I	4	1	**377-9042**	1	HOSE AS	
I	5	1	**377-9043**	2	HOSE AS	
I	6	1	**381-0559**	1	HOSE AS	
	7	1	*148-8316*	2	CONNECTOR AS	
					(EACH INCLUDES)	
		1	**3J-7354**	1	SEAL-O-RING	
		1	**4J-5477**	1	SEAL-O-RING	
		1	**6V-8647**	1	CONNECTOR	

I - REFER TO HYDRAULIC INFORMATION SYSTEM

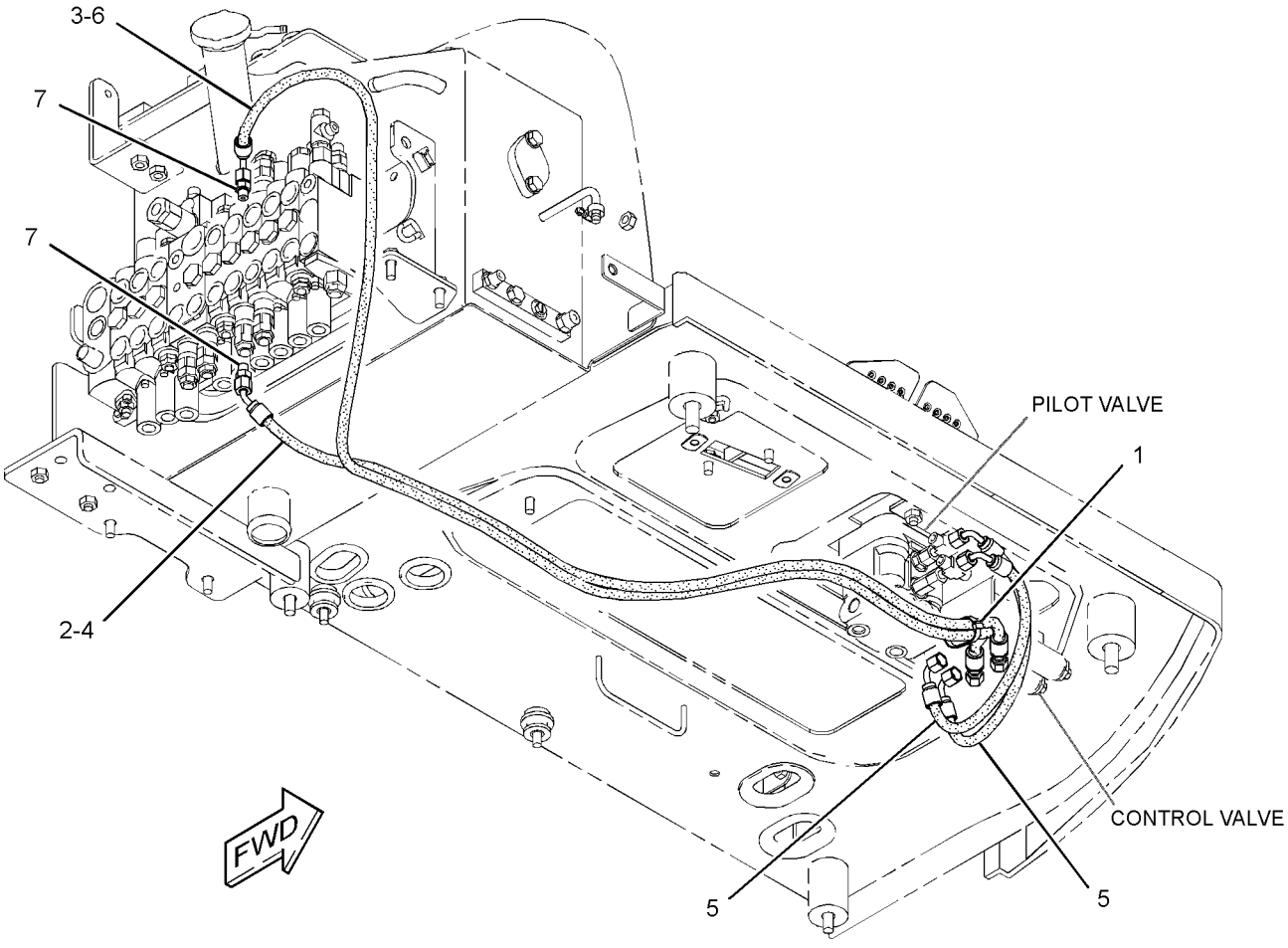

GRAPHIC #1 **<END>** g02801722

385-2796 LINES GP-PILOT—BLADE ANGLE

PART OF 377-8928 BLADE AR-ANGLING
AN ATTACHMENT

SMCS-5057, 5059 **i05033721**

NOTE	REF NO	GRAPHIC REF	PART NUMBER	QTY	PART NAME 1 2 3 4 5 6 (PRODUCT LEVEL)	SEE PAGE
	1	1	**3S-2093**	2	STRAP-CABLE	
	2	1	**7K-1181**	1	STRAP-CABLE	
	3	1	**096-6078**	1	TAPE (PURPLE)	
	4	1	**096-6082**	1	TAPE (YELLOW)	
	5	1	*150-4027*	1	TEE AS	
		1	**3E-2310**	1	TEE	
		1	**3J-1907**	1	SEAL-O-RING	
		1	**6V-8397**	1	SEAL-O-RING	
Y	6	1	**282-9318**	1	VALVE GP-SOLENOID (BLADE)	362
	7	1	**385-2803**	1	BRACKET AS	
I	8	1	**385-2806**	1	HOSE AS	
	9	1	**385-2808**	1	HOSE AS	
	10	1	**385-2809**	1	HOSE AS	
	11	1	**385-2811**	1	HOSE AS	
	12	1	*148-8316*	2	CONNECTOR AS	
					(EACH INCLUDES)	
		1	**3J-7354**	1	SEAL-O-RING	
		1	**4J-5477**	1	SEAL-O-RING	
		1	**6V-8647**	1	CONNECTOR	
	13	1	*148-8325*	1	CONNECTOR AS	
		1	**3J-1907**	1	SEAL-O-RING	
		1	**4J-5477**	1	SEAL-O-RING	
		1	**6V-8641**	1	CONNECTOR	
	14	1	*148-8369*	1	ELBOW AS	
		1	**3J-7354**	1	SEAL-O-RING	
		1	**4J-5477**	1	SEAL-O-RING	
		1	**6V-8628**	1	ELBOW	
	15	1	*148-8378*	1	ELBOW AS	
		1	**3J-1907**	1	SEAL-O-RING	
		1	**6V-8397**	1	SEAL-O-RING	
		1	**6V-8724**	1	ELBOW	
	16	1	*150-4047*	2	ADAPTER AS	
					(EACH INCLUDES)	
		1	**3J-7354**	1	SEAL-O-RING	
		1	**8T-2353**	1	ADAPTER	
	17	1	*165-4931*	1	ELBOW AS	
		1	**3J-1907**	1	SEAL-O-RING	
		1	**6V-8077**	1	ELBOW	
	18	1	*165-7014*	1	TEE AS	
		1	**3J-1907**	1	SEAL-O-RING	
		1	**4J-5477**	1	SEAL-O-RING	
		1	**8C-3309**	1	TEE	
	19	1	*180-9933*	1	ADAPTER AS	
		1	**3J-7354**	1	SEAL-O-RING	
		1	**135-9941**	1	ADAPTER	
	20	1	*183-7263*	2	PLUG AS	
					(EACH INCLUDES)	
		1	**3J-7354**	1	SEAL-O-RING	
		1	**9S-8002**	1	PLUG-O-RING	
	21	1	**311-3072**	3	CONNECTOR AS	
	22	1	**8T-4121**	2	WASHER-HARD (11X21X2.5-MM THK)	
M	23	1	**8T-4195**	2	BOLT (M10X1.5X30-MM)	
M	24	1	**8T-4200**	4	BOLT (M8X1.25X16-MM)	
	25	1	**8T-4224**	4	WASHER-HARD (8.8X16X2-MM THK)	
G	26	1	**160-2243**		SLEEVE-ABRASION (21.7-IN)	
G	26A	1	**160-2243**		SLEEVE-ABRASION (15-IN)	

G - ORDER BY THE INCH
I - REFER TO HYDRAULIC INFORMATION SYSTEM
M - METRIC PART
Y - SEPARATE ILLUSTRATION

385-2796 **LINES GP-PILOT (*contd.*)** **i05033721**

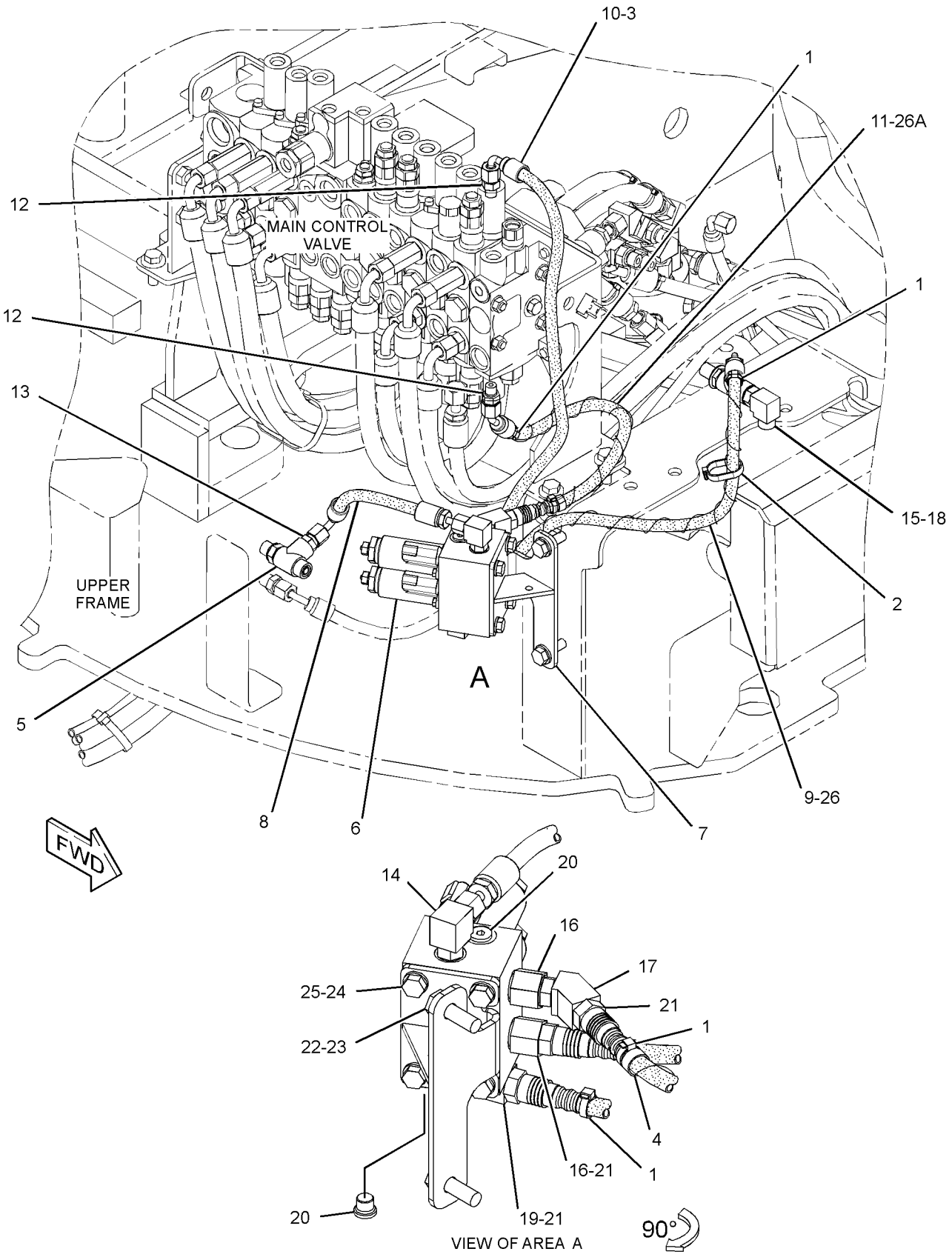

GRAPHIC #1

<END>

g02813837

379-4701 LINES GP-RETURN

PART OF 377-8915 BLADE AR-STRAIGHT

AN ATTACHMENT

SMCS-5057 **i04623148**

NOTE	REF NO	GRAPHIC REF	PART NUMBER	QTY	PART NAME 1 2 3 4 5 6 (PRODUCT LEVEL)	SEE PAGE
	1	1	**3S-2093**	1	STRAP-CABLE	
	2	1	**8C-3451**	1	CAP-DUST	
	3	1	**8K-4739**	1	ADAPTER	
	4	1	**095-1388**	3	CLAMP-HOSE	
	5	1	**095-1390**	2	CLAMP-HOSE	
	6	1	**196-4745**	1	HOSE	
	7	1	**266-7379**	1	STRAP-CABLE	
	8	1	*267-4044*	1	ELBOW AS	
		1	**2M-9780**	1	SEAL-O-RING	
		1	**6V-8397**	1	SEAL-O-RING	
		1	**267-4043**	1	ELBOW	
I	9	1	**381-0589**	1	HOSE AS	
	10	1	**381-0590**	1	TUBE AS	
	11	1	**381-0592**	1	TUBE AS	
	12	1	**095-1701**	1	SEAL-O-RING	
	13	1	*165-4927*	1	CONNECTOR AS	
		1	**2T-2991**	1	CONNECTOR	
		1	**4K-1388**	1	SEAL-O-RING	
		1	**6V-9746**	1	SEAL-O-RING	
	14	1	**2M-9780**	1	SEAL-O-RING	
	15	1	**3J-7354**	1	SEAL-O-RING	
	16	1	**4S-1962**	1	CLIP	
	17	1	**6V-8398**	1	SEAL-O-RING	
	18	1	**6V-9746**	1	SEAL-O-RING	
	19	1	**8C-3446**	1	VALVE-FLUID SAMPLING (COOLANT)	
	20	1	**8T-4121**	3	WASHER-HARD (11X21X2.5-MM THK)	
M	21	1	**8T-4136**	1	BOLT (M10X1.5X25-MM)	
M	22	1	**8T-4195**	2	BOLT (M10X1.5X30-MM)	
E	23	1	**5P-0743**		HOSE (64-CM)	

E - ORDER BY THE CENTIMETER
I - REFER TO HYDRAULIC INFORMATION SYSTEM
M - METRIC PART

379-4701 **LINES GP-RETURN (*contd.*)** **i04623148**

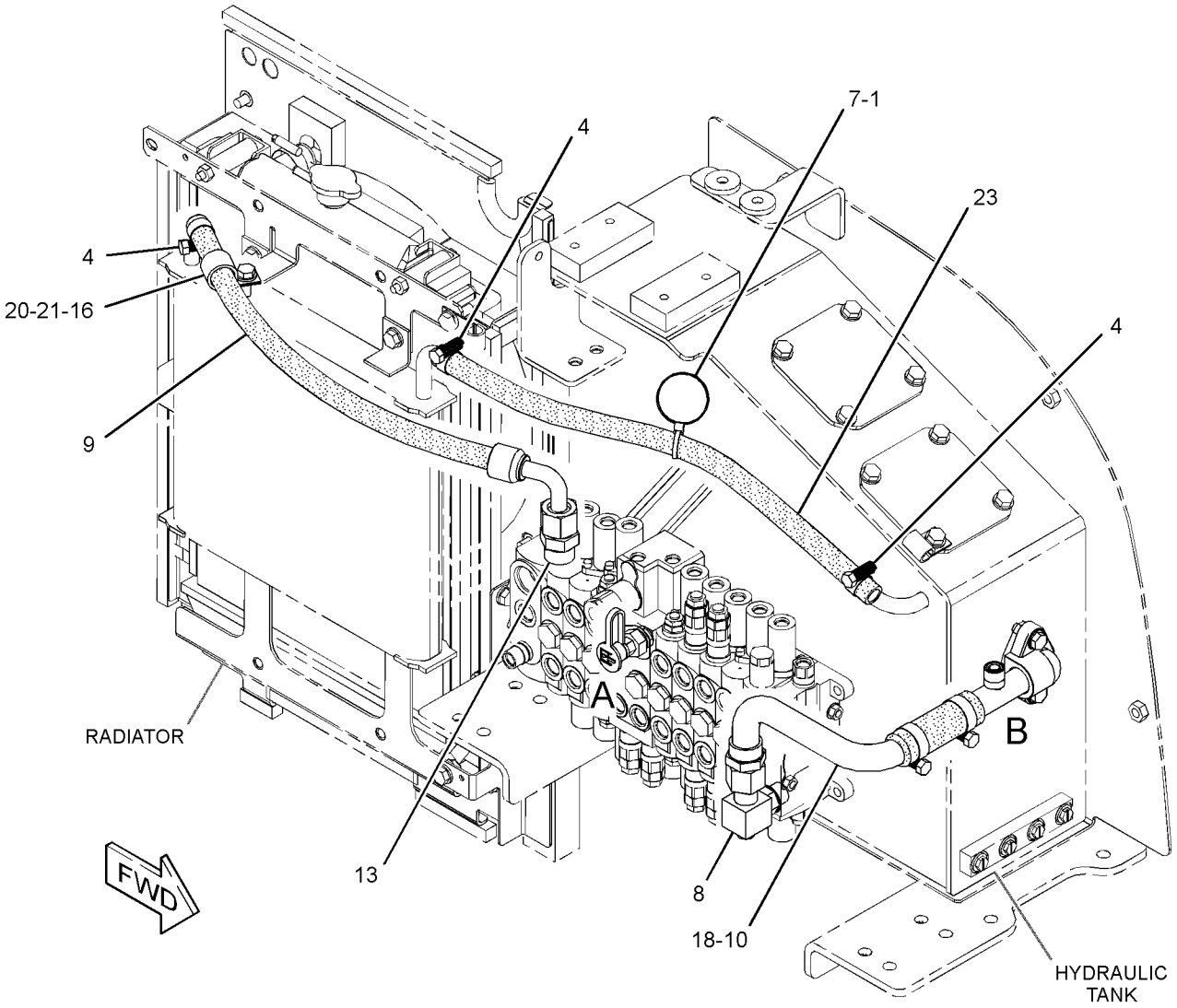

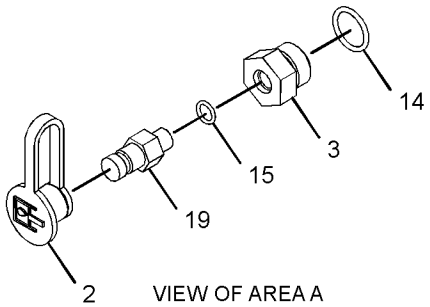

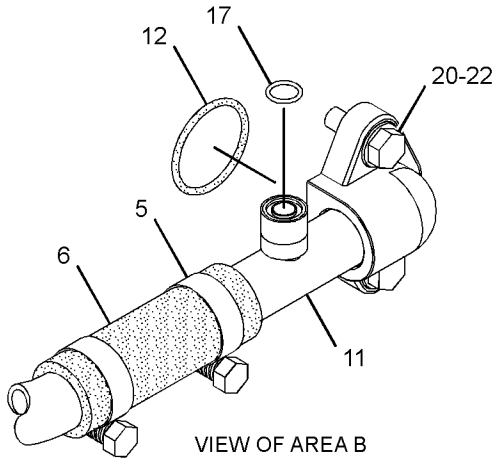

GRAPHIC #1 **<END>** g02799678

385-2797 LINES GP-RETURN–BLADE

PART OF 377-8928 BLADE AR-ANGLING

AN ATTACHMENT

SMCS-5057 **i04658615**

NOTE	REF NO	GRAPHIC REF	PART NUMBER	QTY	PART NAME 1 2 3 4 5 6 (PRODUCT LEVEL)	SEE PAGE
	1	1	**3S-2093**	1	STRAP-CABLE	
	2	1	**8C-3451**	1	CAP-DUST	
	3	1	**8K-4739**	1	ADAPTER	
	4	1	**095-1388**	3	CLAMP-HOSE	
	5	1	**095-1390**	2	CLAMP-HOSE	
	6	1	**196-4745**	1	HOSE	
	7	1	**266-7379**	1	STRAP-CABLE	
	8	1	*267-4044*	1	ELBOW AS	
		1	**2M-9780**	1	SEAL-O-RING	
		1	**6V-8397**	1	SEAL-O-RING	
		1	**267-4043**	1	ELBOW	
I	9	1	**381-0589**	1	HOSE AS	
	10	1	**381-0592**	1	TUBE AS	
	11	1	**385-2800**	1	PIPE AS	
	12	1	**095-1701**	1	SEAL-O-RING	
	13	1	*165-4927*	1	CONNECTOR AS	
		1	**2T-2991**	1	CONNECTOR	
		1	**4K-1388**	1	SEAL-O-RING	
		1	**6V-9746**	1	SEAL-O-RING	
	14	1	**2M-9780**	1	SEAL-O-RING	
	15	1	**3J-7354**	1	SEAL-O-RING	
	16	1	**4S-1962**	1	CLIP	
	17	1	**6V-8398**	1	SEAL-O-RING	
	18	1	**6V-9746**	1	SEAL-O-RING	
	19	1	**8C-3446**	1	VALVE-FLUID SAMPLING (COOLANT)	
	20	1	**8T-4121**	3	WASHER-HARD (11X21X2.5-MM THK)	
M	21	1	**8T-4136**	1	BOLT (M10X1.5X25-MM)	
M	22	1	**8T-4195**	2	BOLT (M10X1.5X30-MM)	
E	23	1	**5P-0743**		HOSE (64-CM)	

E - ORDER BY THE CENTIMETER
I - REFER TO HYDRAULIC INFORMATION SYSTEM
M - METRIC PART

385-2797 **LINES GP-RETURN (*contd.*)** **i04658615**

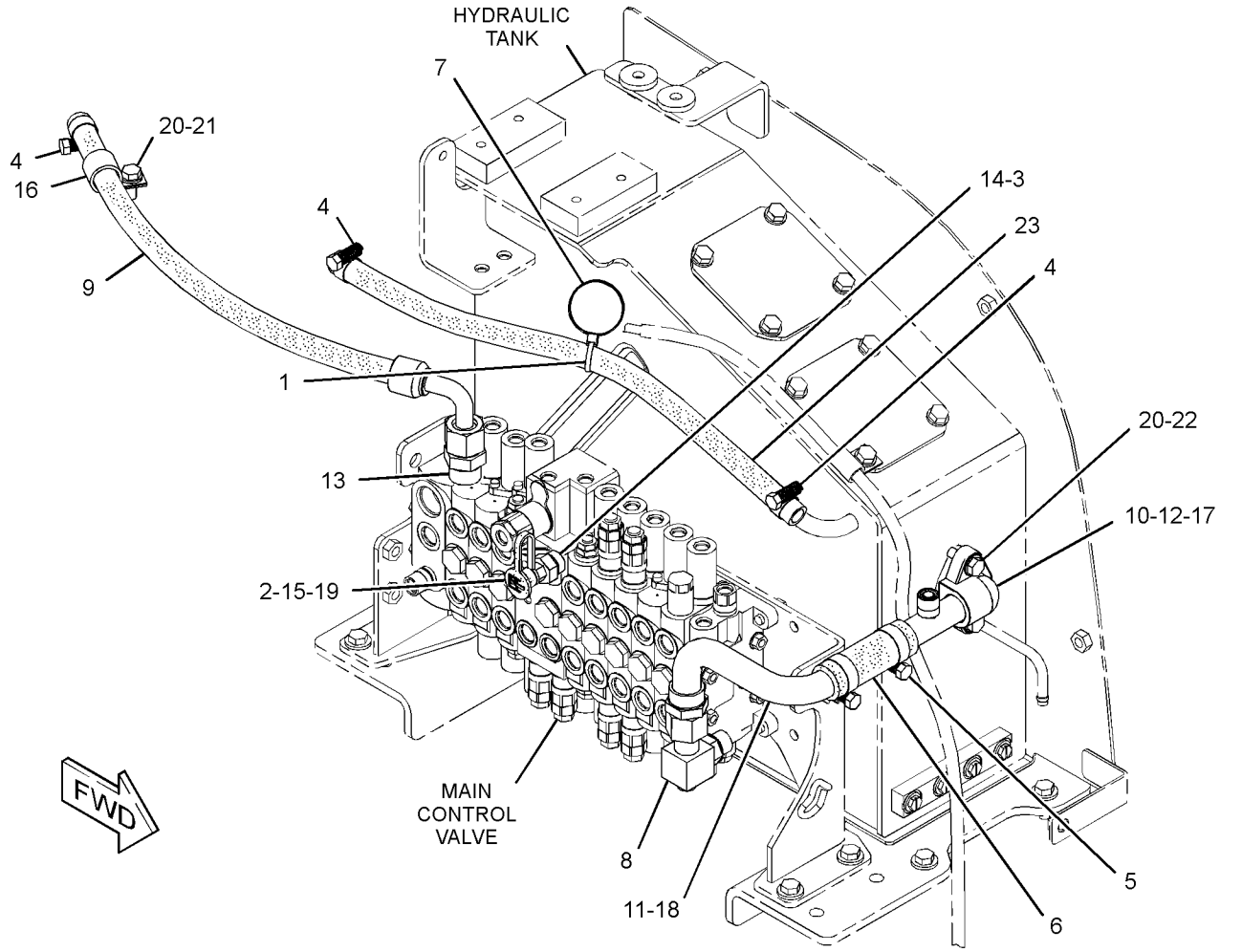

GRAPHIC #1 **<END>** g02801220

292-8287 LINES GP-STICK

PART OF 379-4679 STICK AR
AN ATTACHMENT

SMCS-5057, 5458, 6502 **i04019578**

NOTE	REF NO	GRAPHIC REF	PART NUMBER	QTY	PART NAME 1 2 3 4 5 6 (PRODUCT LEVEL)	SEE PAGE
	1	1	**283-5365**	2	TUBE AS	
I	2	1	**292-3401**	1	HOSE AS	
I	3	1	**292-8332**	1	HOSE AS	
	4	1	*148-8340*	2	CONNECTOR AS	
					(EACH INCLUDES)	
		1	**3K-0360**	1	SEAL-O-RING	
		1	**6V-8398**	1	SEAL-O-RING	
		1	**6V-8639**	1	CONNECTOR	
	5	1	**149-7738**	1	CLIP	
	6	1	**6V-8398**	4	SEAL-O-RING	
	7	1	**8T-4121**	1	WASHER-HARD (11X21X2.5-MM THK)	
M	8	1	**8T-4136**	1	BOLT (M10X1.5X25-MM)	

I - REFER TO HYDRAULIC INFORMATION SYSTEM
M - METRIC PART

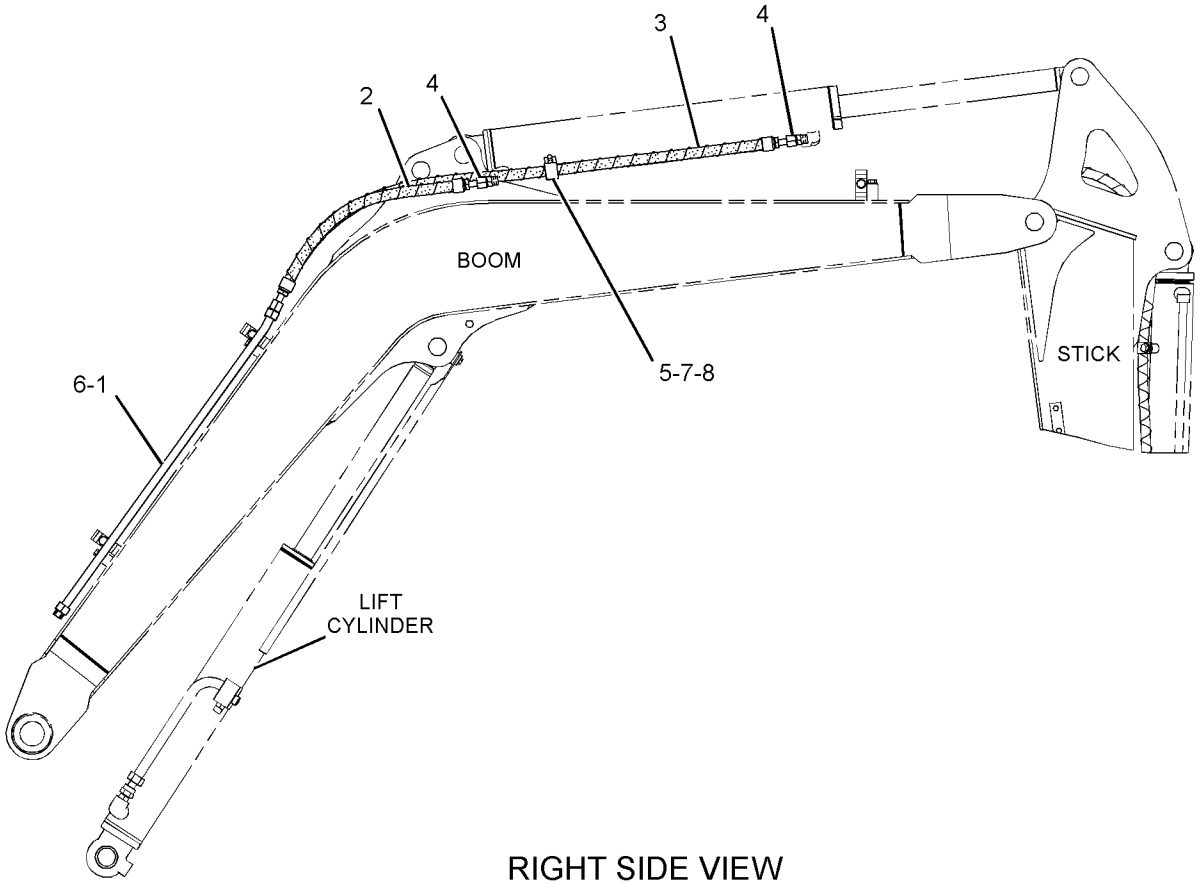

RIGHT SIDE VIEW

GRAPHIC #1 **<END>** g01312411

379-4704 LINES GP-SWING CYLINDER—BOOM

PART OF 379-4683 CONTROL AR-AUXILIARY
AN ATTACHMENT

SMCS-5057, 5105, 6544 **i04623152**

NOTE	REF NO	GRAPHIC REF	PART NUMBER	QTY	PART NAME 1 2 3 4 5 6 (PRODUCT LEVEL)	SEE PAGE
I	1	1	**381-1545**	1	HOSE AS	
I	2	1	**381-1546**	1	HOSE AS	
	3	1	*148-8336*	1	CONNECTOR AS	
		1	**3J-1907**	1	SEAL-O-RING	
		1	**6V-8397**	1	SEAL-O-RING	
		1	**6V-8636**	1	CONNECTOR	
	4	1	*148-8378*	2	ELBOW AS	
					(EACH INCLUDES)	
		1	**3J-1907**	1	SEAL-O-RING	
		1	**6V-8397**	1	SEAL-O-RING	
		1	**6V-8724**	1	ELBOW	
	5	1	*164-9869*	1	CONNECTOR AS	
		1	**3J-1907**	1	SEAL-O-RING	
		1	**6V-8397**	1	SEAL-O-RING	
		1	**9X-2297**	1	CONNECTOR	

I - REFER TO HYDRAULIC INFORMATION SYSTEM

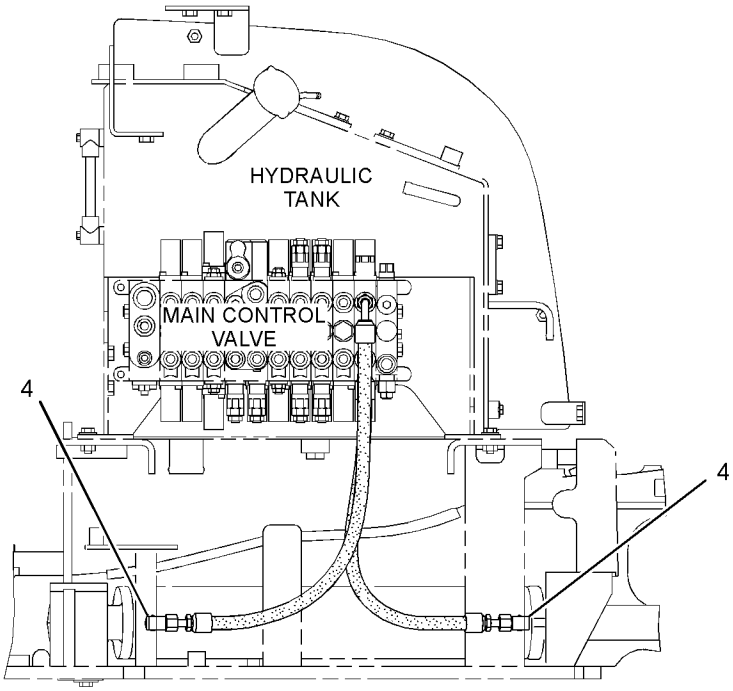

RIGHT SIDE VIEW

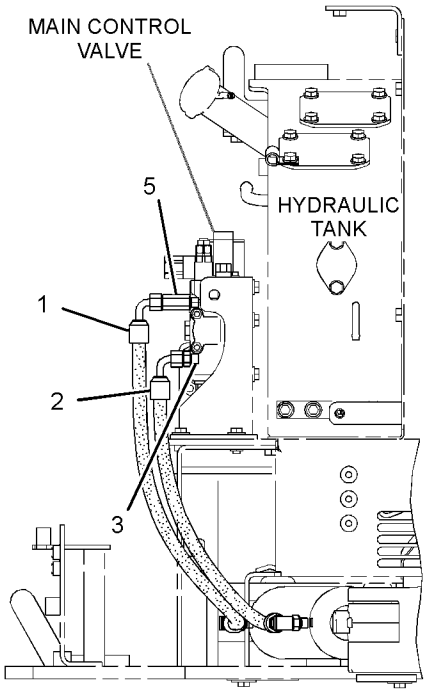

FRONT VIEW

GRAPHIC #1 **<END>** g02798813

379-4705 LINES GP-SWING CYLINDER—2ND AUXILIARY

PART OF 379-4684, 379-4685 CONTROL AR-AUXILIARY
AN ATTACHMENT

SMCS-5057, 5105, 6544 **i05041795**

NOTE	REF NO	GRAPHIC REF	PART NUMBER	QTY	PART NAME 1 2 3 4 5 6 (PRODUCT LEVEL)	SEE PAGE
	1	1	**096-6079**	2	TAPE (WHITE)	
	2	1	*148-8367*	1	ELBOW AS	
		1	**6V-8397**	1	SEAL-O-RING	
		1	**6V-9850**	1	ELBOW	
	3	1	*148-8383*	2	ELBOW AS	
					(EACH INCLUDES)	
		1	**3K-0360**	1	SEAL-O-RING	
		1	**6V-8397**	1	SEAL-O-RING	
		1	**8T-1683**	1	ELBOW	
	4	1	**279-4730**	3	STRAP-CABLE (BLACK)	
	5	1	**372-9897**	1	VALVE GP-CONTROL (SWING BOOM, WORK TOOL)	
J		1	**385-4235**	1	KIT-SEAL	
					(INCLUDES SEALS)	
J		1	**385-4233**	1	BLOCK	
		1	**385-4234**	1	COIL AS	
	6	1	**381-1547**	1	BRACKET AS	
M		1	**8T-3612**	2	NUT-WELD (M8X1.25-THD)	
I	7	1	**417-9823**	1	HOSE AS	
I	8	1	**381-1550**	1	HOSE AS	
I	9	1	**381-1551**	1	HOSE AS	
I	10	1	**381-1552**	1	HOSE AS	
I	11	1	**381-1553**	1	HOSE AS	
I	12	1	**381-1555**	1	HOSE AS	
	13	1	*148-8336*	1	CONNECTOR AS	
		1	**3J-1907**	1	SEAL-O-RING	
		1	**6V-8397**	1	SEAL-O-RING	
		1	**6V-8636**	1	CONNECTOR	
	14	1	*148-8374*	4	ELBOW AS	
					(EACH INCLUDES)	
		1	**3K-0360**	1	SEAL-O-RING	
		1	**6V-8397**	1	SEAL-O-RING	
		1	**6V-8723**	1	ELBOW	
	15	1	*148-8378*	2	ELBOW AS	
					(EACH INCLUDES)	
		1	**3J-1907**	1	SEAL-O-RING	
		1	**6V-8397**	1	SEAL-O-RING	
		1	**6V-8724**	1	ELBOW	
	16	1	*164-9869*	1	CONNECTOR AS	
		1	**3J-1907**	1	SEAL-O-RING	
		1	**6V-8397**	1	SEAL-O-RING	
		1	**9X-2297**	1	CONNECTOR	
M	17	1	**6V-8213**	2	BOLT-SOCKET HEAD (M8X1.25X70-MM)	
	18	1	**8T-4121**	2	WASHER-HARD (11X21X2.5-MM THK)	
M	19	1	**8T-4137**	2	BOLT (M10X1.5X20-MM)	

I - REFER TO HYDRAULIC INFORMATION SYSTEM
J - KIT MARKED J SERVICES PART MARKED J
M - METRIC PART

379-4705 **LINES GP-SWING CYLINDER (*contd.*)** **i05041795**

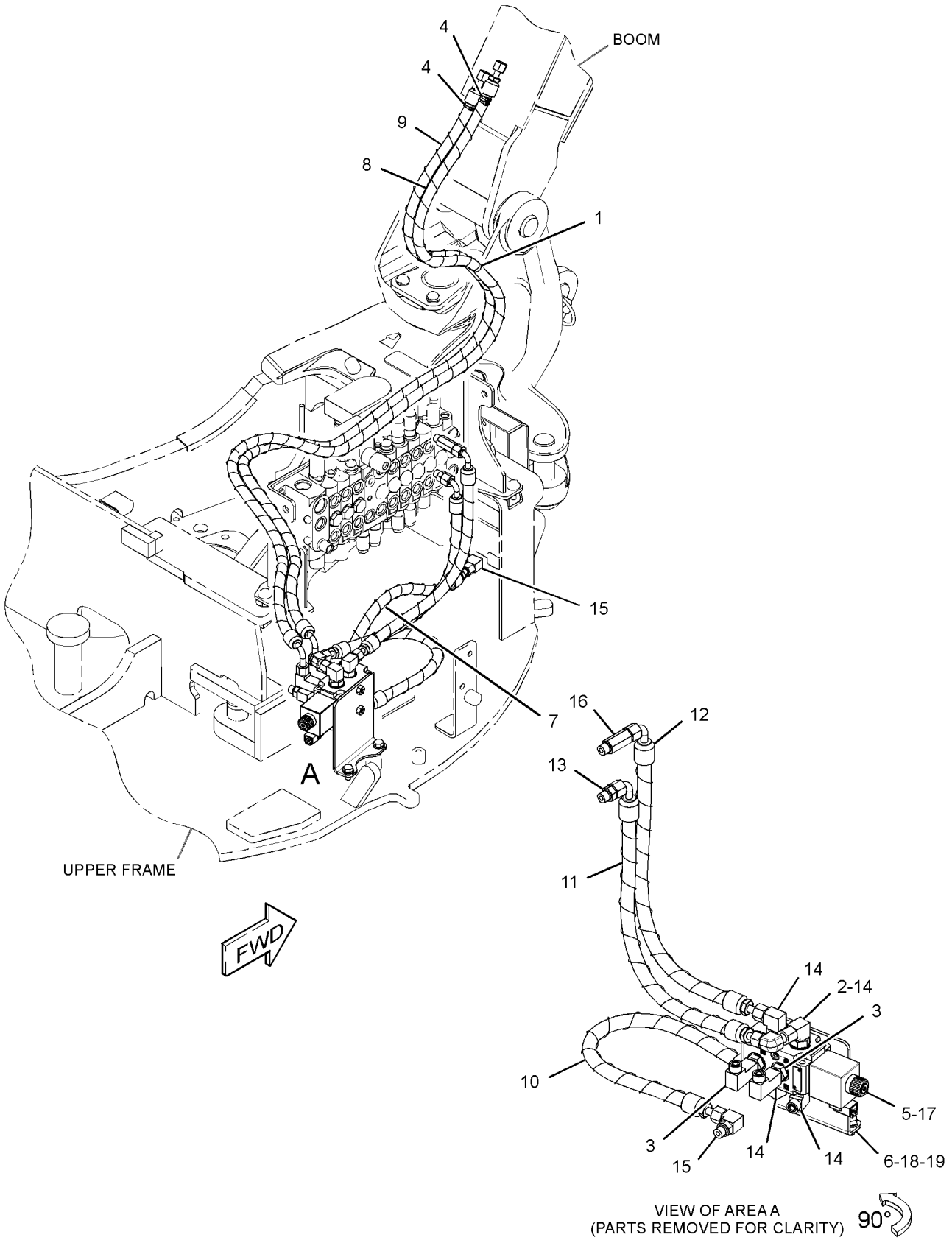

GRAPHIC #1 **<END>** g03312737

379-4702 LINES GP-SWING MOTOR–STANDARD

PART OF 377-8915 BLADE AR-STRAIGHT

AN ATTACHMENT

SMCS-5057, 5058, 5105 **i04623149**

NOTE	REF NO	GRAPHIC REF	PART NUMBER	QTY	PART NAME 1 2 3 4 5 6 (PRODUCT LEVEL)	SEE PAGE
	1	1	**7K-1181**	2	STRAP-CABLE	
	2	1	**096-6084**	1	TAPE (BROWN)	
	3	1	*267-4063*	1	CONNECTOR AS	
		1	**3J-1907**	1	SEAL-O-RING	
		1	**4J-5477**	1	SEAL-O-RING	
		1	**156-8801**	1	CONNECTOR	
	4	1	**279-4730**	1	STRAP-CABLE (BLACK)	
	5	1	**279-4731**	1	STRAP-CABLE (RED)	
	6	1	**279-4732**	1	STRAP-CABLE (YELLOW)	
	7	1	**279-4733**	1	STRAP-CABLE (BLUE)	
	8	1	**279-4734**	1	STRAP-CABLE (BROWN)	
	9	1	**279-4735**	1	STRAP-CABLE (ORANGE)	
	10	1	**279-4736**	1	STRAP-CABLE (WHITE)	
	11	1	**279-4737**	1	STRAP-CABLE (GREEN)	
	12	1	**279-4738**	1	STRAP-CABLE (PURPLE)	
I	13	1	**304-0121**	1	HOSE AS	
I	14	1	**381-0578**	1	HOSE AS	
I	15	1	**381-0579**	1	HOSE AS	
I	16	1	**381-0580**	1	HOSE AS	
I	17	1	**381-0581**	1	HOSE AS	
I	18	1	**381-0582**	1	HOSE AS	
I	19	1	**381-0583**	1	HOSE AS	
I	20	1	**381-0584**	1	HOSE AS	
I	21	1	**381-0585**	1	HOSE AS	
I	22	1	**381-0586**	1	HOSE AS	
I	23	1	**381-0587**	1	HOSE AS	
	24	1	*148-8318*	1	CONNECTOR AS	
		1	**3K-0360**	1	SEAL-O-RING	
		1	**6V-8397**	1	SEAL-O-RING	
		1	**6V-8634**	1	CONNECTOR	
	25	1	*148-8325*	1	CONNECTOR AS	
		1	**3J-1907**	1	SEAL-O-RING	
		1	**4J-5477**	1	SEAL-O-RING	
		1	**6V-8641**	1	CONNECTOR	
	26	1	*148-8336*	5	CONNECTOR AS	
					(EACH INCLUDES)	
		1	**3J-1907**	1	SEAL-O-RING	
		1	**6V-8397**	1	SEAL-O-RING	
		1	**6V-8636**	1	CONNECTOR	
	27	1	*148-8351*	1	ELBOW AS	
		1	**4J-5477**	1	SEAL-O-RING	
		1	**6V-9849**	1	ELBOW	
	28	1	*148-8353*	1	ELBOW AS	
		1	**3J-1907**	1	SEAL-O-RING	
		1	**6V-8397**	1	SEAL-O-RING	
		1	**6V-9001**	1	ELBOW	
	29	1	*148-8363*	3	ELBOW AS	
					(EACH INCLUDES)	
		1	**3K-0360**	1	SEAL-O-RING	
		1	**6V-8397**	1	SEAL-O-RING	
		1	**6V-9876**	1	ELBOW	
	30	1	*148-8367*	2	ELBOW AS	
					(EACH INCLUDES)	
		1	**6V-8397**	1	SEAL-O-RING	
		1	**6V-9850**	1	ELBOW	
	31	1	*148-8369*	1	ELBOW AS	
		1	**3J-7354**	1	SEAL-O-RING	
		1	**4J-5477**	1	SEAL-O-RING	
		1	**6V-8628**	1	ELBOW	

379-4702 **LINES GP-SWING MOTOR (*contd.*)** **i04623149**

NOTE	REF NO	GRAPHIC REF	PART NUMBER	QTY	PART NAME 1 2 3 4 5 6 (PRODUCT LEVEL)	SEE PAGE
	32	1	*148-8371*	1	ELBOW AS	
		1	**6V-8397**	1	SEAL-O-RING	
		1	**8C-8988**	1	ELBOW	
	33	1	*148-8378*	3	ELBOW AS	
					(EACH INCLUDES)	
		1	**3J-1907**	1	SEAL-O-RING	
		1	**6V-8397**	1	SEAL-O-RING	
		1	**6V-8724**	1	ELBOW	
	34	1	*150-3065*	1	ELBOW AS	
		1	**3J-1907**	1	SEAL-O-RING	
		1	**6V-0484**	1	ELBOW	
	35	1	*164-9869*	1	CONNECTOR AS	
		1	**3J-1907**	1	SEAL-O-RING	
		1	**6V-8397**	1	SEAL-O-RING	
		1	**9X-2297**	1	CONNECTOR	
	36	1	**166-3032**	3	CONNECTOR	
	37	1	**3J-1907**	3	SEAL-O-RING	
	38	1	**6V-8397**	3	SEAL-O-RING	
E	39	1	**310-4984**		SLEEVE (24-CM)	

E - ORDER BY THE CENTIMETER
I - REFER TO HYDRAULIC INFORMATION SYSTEM

379-4702 **LINES GP-SWING MOTOR (*contd.*)** **i04623149**

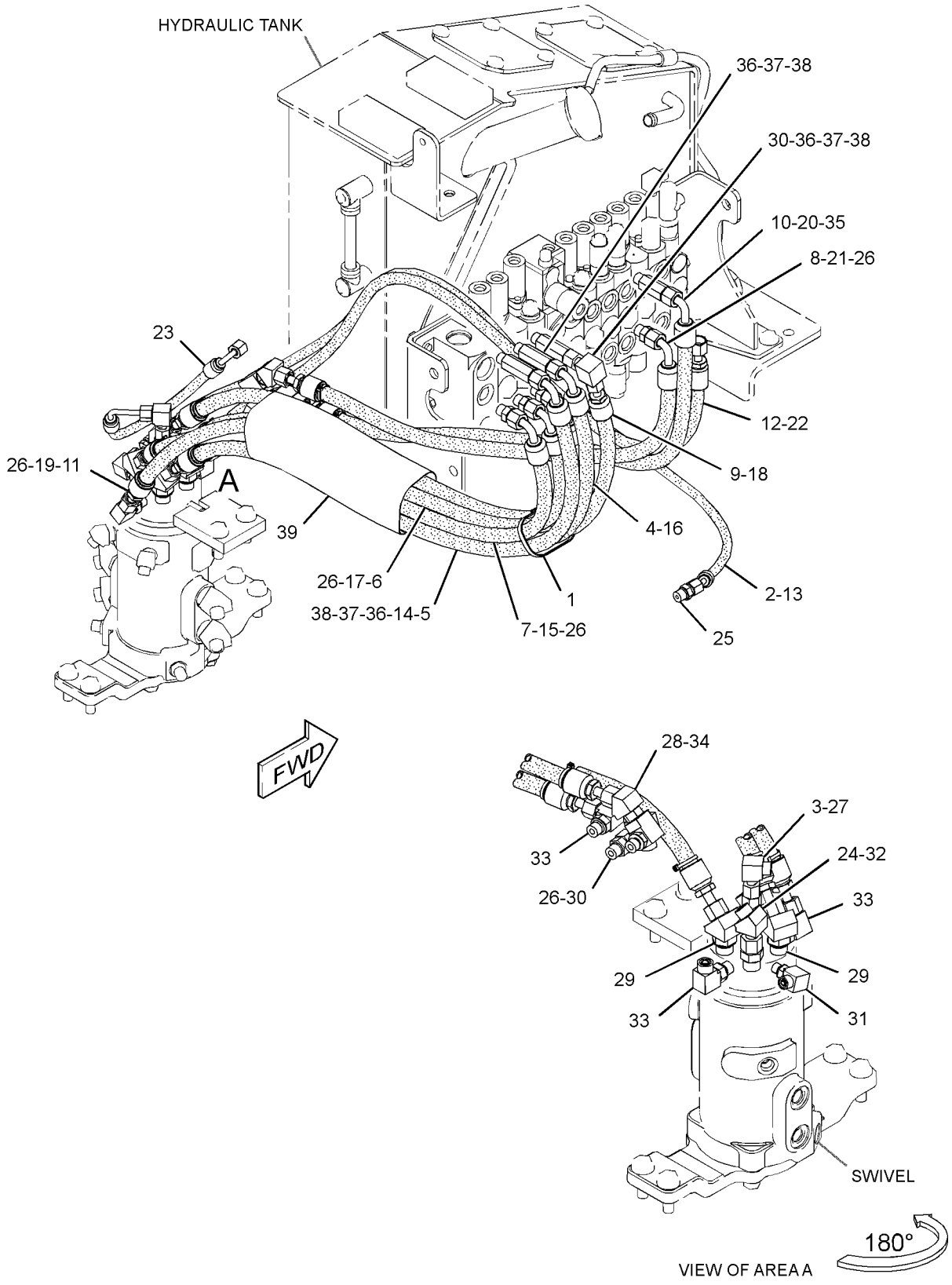

GRAPHIC #1 **<END>** g02799188

385-2795 LINES GP-SWING MOTOR

PART OF 377-8928 BLADE AR-ANGLING
AN ATTACHMENT

SMCS-5057, 5058, 5105 **i04658613**

NOTE	REF NO	GRAPHIC REF	PART NUMBER	QTY	PART NAME 1 2 3 4 5 6 (PRODUCT LEVEL)	SEE PAGE
	1	1	**7K-1181**	3	STRAP-CABLE	
	2	1	**096-6078**	1	TAPE (PURPLE)	
	3	1	**096-6082**	1	TAPE (YELLOW)	
	4	1	**096-6084**	1	TAPE (BROWN)	
	5	1	*267-4048*	1	ELBOW AS	
		1	**3J-1907**	1	SEAL-O-RING	
		1	**4J-5477**	1	SEAL-O-RING	
		1	**267-4047**	1	ELBOW	
I	6	1	**275-9724**	1	HOSE AS	
	7	1	**279-4730**	1	STRAP-CABLE (BLACK)	
	8	1	**279-4731**	1	STRAP-CABLE (RED)	
	9	1	**279-4732**	1	STRAP-CABLE (YELLOW)	
	10	1	**279-4733**	1	STRAP-CABLE (BLUE)	
	11	1	**279-4734**	1	STRAP-CABLE (BROWN)	
	12	1	**279-4735**	1	STRAP-CABLE (ORANGE)	
	13	1	**8L-8413**	1	STRAP-CABLE	
	14	1	**279-4737**	1	STRAP-CABLE (GREEN)	
	15	1	**279-4738**	1	STRAP-CABLE (PURPLE)	
I	16	1	**377-9053**	2	HOSE AS	
I	17	1	**381-0580**	1	HOSE AS	
I	18	1	**381-0581**	1	HOSE AS	
I	19	1	**381-0583**	1	HOSE AS	
I	20	1	**381-0584**	1	HOSE AS	
I	21	1	**381-0585**	1	HOSE AS	
I	22	1	**385-2813**	1	HOSE AS	
I	23	1	**385-2814**	1	HOSE AS	
I	24	1	**385-2815**	1	HOSE AS	
I	25	1	**385-2816**	1	HOSE AS	
I	26	1	**389-8800**	1	HOSE AS	
	27	1	*148-8318*	2	CONNECTOR AS	
					(EACH INCLUDES)	
		1	**3K-0360**	1	SEAL-O-RING	
		1	**6V-8397**	1	SEAL-O-RING	
		1	**6V-8634**	1	CONNECTOR	
	28	1	*148-8325*	1	CONNECTOR AS	
		1	**3J-1907**	1	SEAL-O-RING	
		1	**4J-5477**	1	SEAL-O-RING	
		1	**6V-8641**	1	CONNECTOR	
	29	1	*148-8336*	7	CONNECTOR AS	
					(EACH INCLUDES)	
		1	**3J-1907**	1	SEAL-O-RING	
		1	**6V-8397**	1	SEAL-O-RING	
		1	**6V-8636**	1	CONNECTOR	
	30	1	*148-8353*	2	ELBOW AS	
					(EACH INCLUDES)	
		1	**3J-1907**	1	SEAL-O-RING	
		1	**6V-8397**	1	SEAL-O-RING	
		1	**6V-9001**	1	ELBOW	
	31	1	*148-8367*	1	ELBOW AS	
		1	**6V-8397**	1	SEAL-O-RING	
		1	**6V-9850**	1	ELBOW	
	32	1	*148-8369*	1	ELBOW AS	
		1	**3J-7354**	1	SEAL-O-RING	
		1	**4J-5477**	1	SEAL-O-RING	
		1	**6V-8628**	1	ELBOW	
	33	1	*148-8371*	4	ELBOW AS	
					(EACH INCLUDES)	
		1	**6V-8397**	1	SEAL-O-RING	

385-2795 **LINES GP-SWING MOTOR (*contd.*)** **i04658613**

NOTE	REF NO	GRAPHIC REF	PART NUMBER	QTY	PART NAME 1 2 3 4 5 6 (PRODUCT LEVEL)	SEE PAGE
		1	**8C-8988**	1	ELBOW	
	34	1	*148-8378*	3	ELBOW AS	
					(EACH INCLUDES)	
		1	**3J-1907**	1	SEAL-O-RING	
		1	**6V-8397**	1	SEAL-O-RING	
		1	**6V-8724**	1	ELBOW	
	35	1	*150-3065*	2	ELBOW AS	
					(EACH INCLUDES)	
		1	**3J-1907**	1	SEAL-O-RING	
		1	**6V-0484**	1	ELBOW	
	36	1	*164-5605*	2	CONNECTOR AS	
					(EACH INCLUDES)	
		1	**3K-0360**	1	SEAL-O-RING	
		1	**6V-8397**	1	SEAL-O-RING	
		1	**8T-0076**	1	CONNECTOR	
	37	1	*164-9869*	2	CONNECTOR AS	
					(EACH INCLUDES)	
		1	**3J-1907**	1	SEAL-O-RING	
		1	**6V-8397**	1	SEAL-O-RING	
		1	**9X-2297**	1	CONNECTOR	
	38	1	**166-3032**	3	CONNECTOR	
	39	1	**3J-1907**	3	SEAL-O-RING	
	40	1	**6V-8397**	3	SEAL-O-RING	
E	41	1	**310-4984**		SLEEVE (24-CM)	

E - ORDER BY THE CENTIMETER
I - REFER TO HYDRAULIC INFORMATION SYSTEM

385-2795 **LINES GP-SWING MOTOR (*contd.*)** **i04658613**

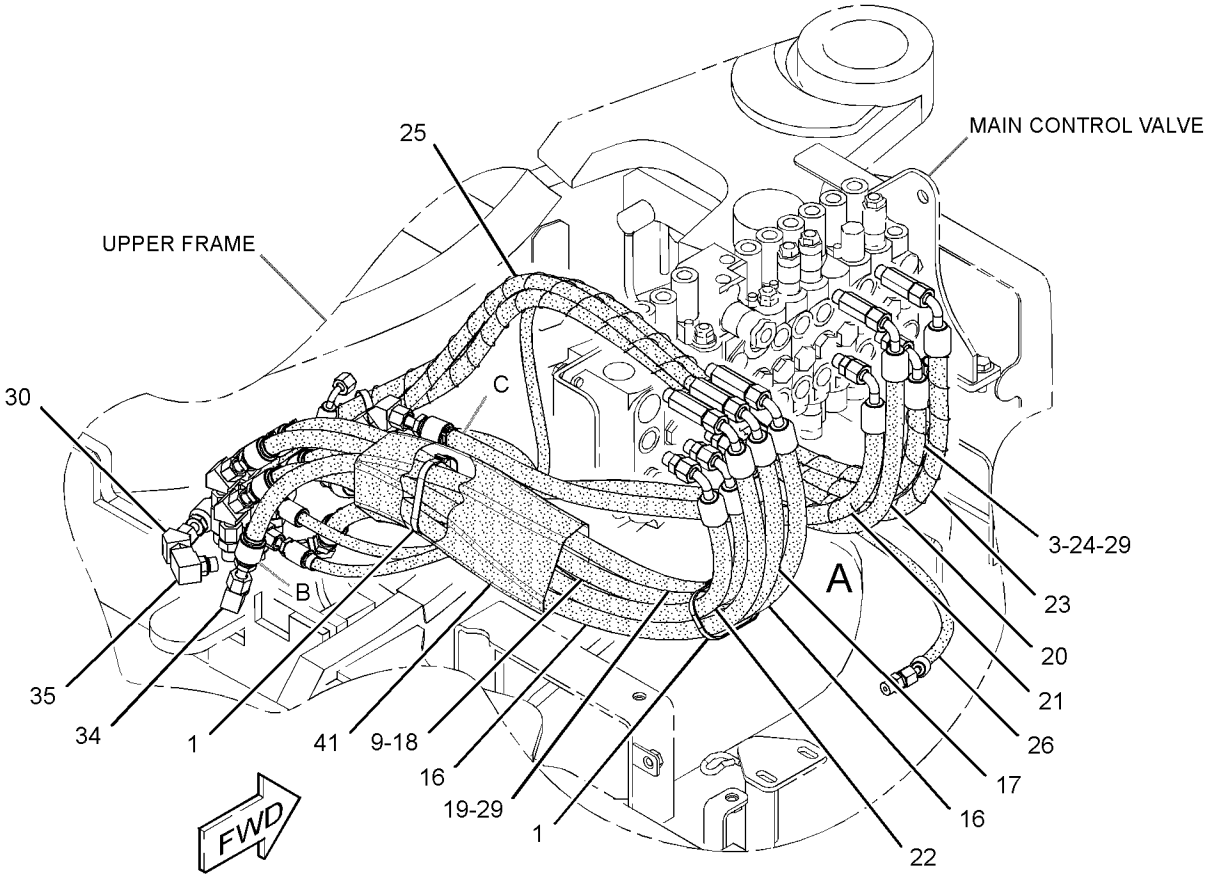

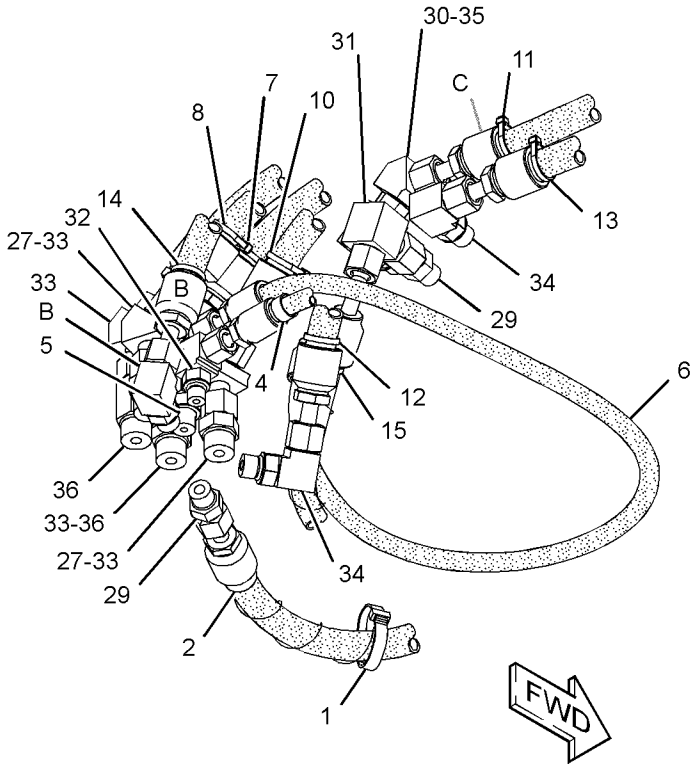

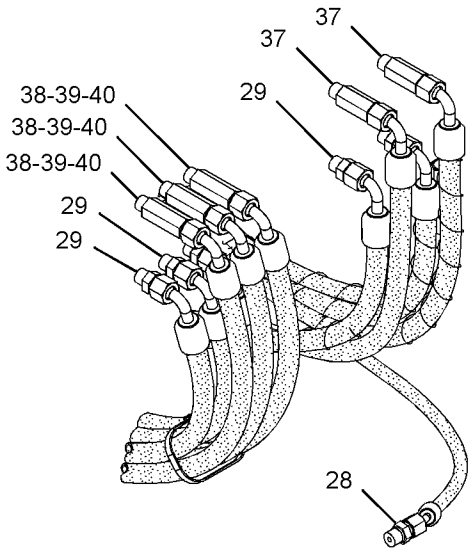

VIEW OF AREA A

GRAPHIC #1 **<END>** g02806078

344-8863 LINES GP-TRAVEL MOTOR

PART OF 377-8915 BLADE AR-STRAIGHT

AN ATTACHMENT

SMCS-4351 **i05384918**

NOTE	REF NO	GRAPHIC REF	PART NUMBER	QTY	PART NAME 1 2 3 4 5 6 (PRODUCT LEVEL)	SEE PAGE
	1	1	**3S-2093**	2	STRAP-CABLE	
	2	1	**7K-1181**	2	STRAP-CABLE	
Y	3	1	**191-7516**	1	SWIVEL GP	301
	4	1	**267-8100**	1	PLATE	
	5	1	**304-0250**	2	HOSE AS	
I	6	1	**347-9976**	2	HOSE AS	
I	7	1	**347-9977**	4	HOSE AS	
	8	1	*148-8318*	4	CONNECTOR AS	
					(EACH INCLUDES)	
		1	**3K-0360**	1	SEAL-O-RING	
		1	**6V-8397**	1	SEAL-O-RING	
		1	**6V-8634**	1	CONNECTOR	
	9	1	*148-8325*	4	CONNECTOR AS	
					(EACH INCLUDES)	
		1	**3J-1907**	1	SEAL-O-RING	
		1	**4J-5477**	1	SEAL-O-RING	
		1	**6V-8641**	1	CONNECTOR	
	10	1	*148-8363*	4	ELBOW AS	
					(EACH INCLUDES)	
		1	**3K-0360**	1	SEAL-O-RING	
		1	**6V-8397**	1	SEAL-O-RING	
		1	**6V-9876**	1	ELBOW	
	11	1	*148-8385*	2	ELBOW AS	
					(EACH INCLUDES)	
		1	**3J-7354**	1	SEAL-O-RING	
		1	**4J-5477**	1	SEAL-O-RING	
		1	**6V-9000**	1	ELBOW	
	12	1	**4J-5477**	2	SEAL-O-RING	
	13	1	**7Y-4528**	2	GROMMET	
M	14	1	**8T-4183**	6	BOLT (M12X1.75X40-MM)	
	15	1	**8T-4223**	10	WASHER-HARD (13.5X25.5X3-MM THK)	
	16	1	**8L-8413**	2	STRAP-CABLE	
M	17	1	**8T-4139**	4	BOLT (M12X1.75X30-MM)	
	18	1	**394-2887**	1	COVER	

I - REFER TO HYDRAULIC INFORMATION SYSTEM
M - METRIC PART
Y - SEPARATE ILLUSTRATION

344-8863 **LINES GP-TRAVEL MOTOR (*contd.*)** **i05384918**

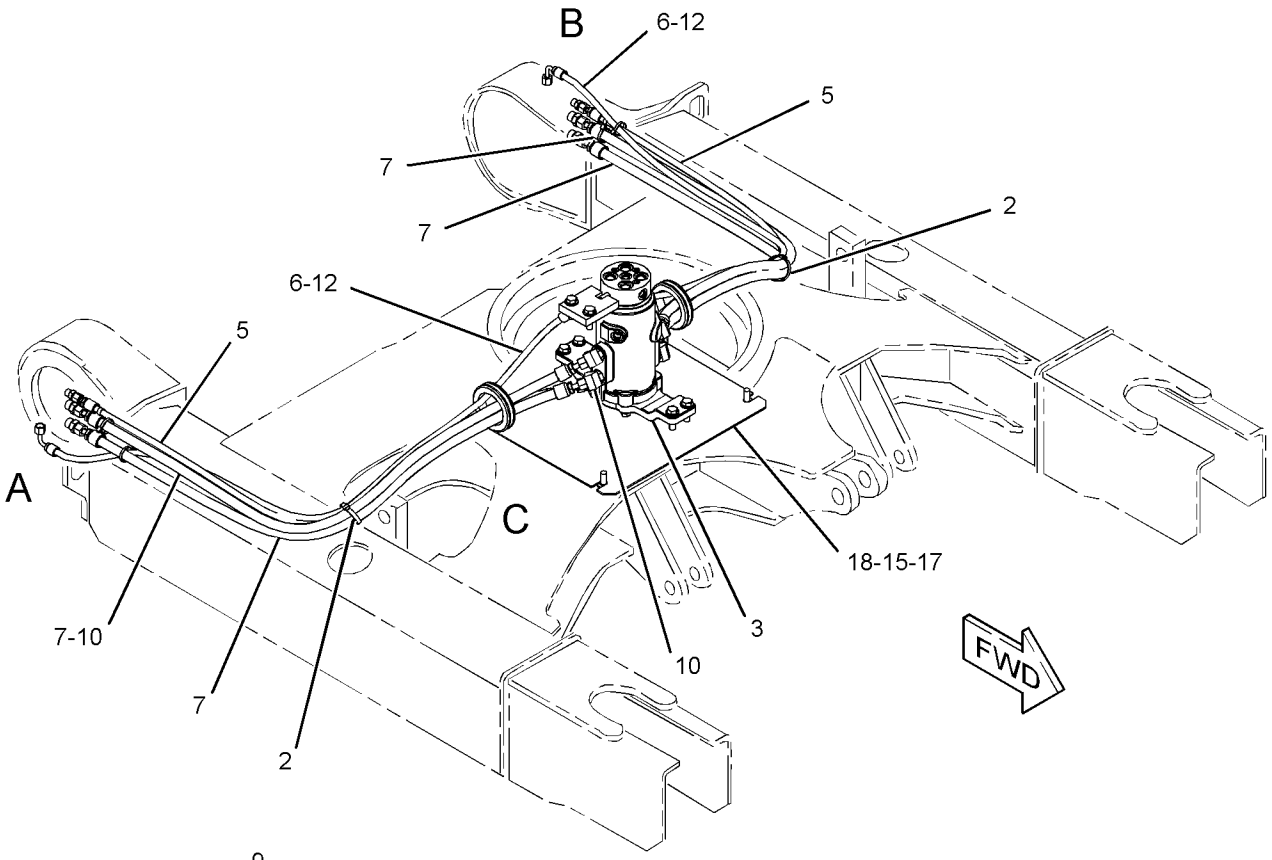

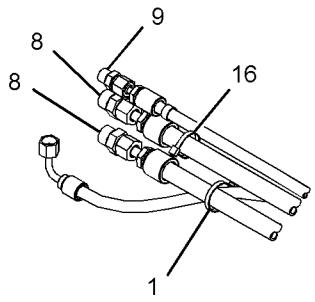

VIEW OF AREA A

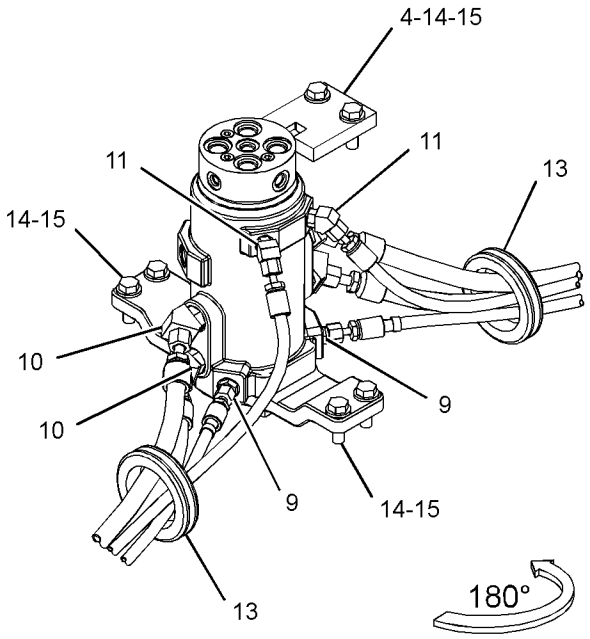

VIEW OF AREA C

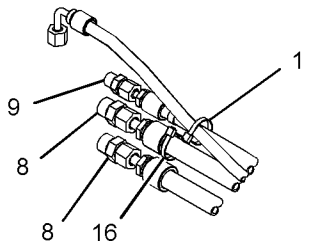

VIEW OF AREA B

GRAPHIC #1 **<END>** g03407081

344-8864 LINES GP-TRAVEL MOTOR

PART OF 377-8928 BLADE AR-ANGLING

AN ATTACHMENT

SMCS-4351 **i05384919**

NOTE	REF NO	GRAPHIC REF	PART NUMBER	QTY	PART NAME 1 2 3 4 5 6 (PRODUCT LEVEL)	SEE PAGE
	1	1	**3S-2093**	2	STRAP-CABLE	
	2	1	**7K-1181**	2	STRAP-CABLE	
	3	1	**213-7638**	1	COVER AS-ACCESS	
Y	4	1	**266-6836**	1	SWIVEL GP	303
	5	1	**267-8100**	1	PLATE	
	6	1	**304-0250**	2	HOSE AS	
I	7	1	**347-9976**	2	HOSE AS	
I	8	1	**347-9977**	4	HOSE AS	
	9	1	*148-8318*	4	CONNECTOR AS	
					(EACH INCLUDES)	
		1	**3K-0360**	1	SEAL-O-RING	
		1	**6V-8397**	1	SEAL-O-RING	
		1	**6V-8634**	1	CONNECTOR	
	10	1	*148-8325*	2	CONNECTOR AS	
					(EACH INCLUDES)	
		1	**3J-1907**	1	SEAL-O-RING	
		1	**4J-5477**	1	SEAL-O-RING	
		1	**6V-8641**	1	CONNECTOR	
	11	1	*148-8363*	4	ELBOW AS	
					(EACH INCLUDES)	
		1	**3K-0360**	1	SEAL-O-RING	
		1	**6V-8397**	1	SEAL-O-RING	
		1	**6V-9876**	1	ELBOW	
	12	1	*148-8385*	4	ELBOW AS	
					(EACH INCLUDES)	
		1	**3J-7354**	1	SEAL-O-RING	
		1	**4J-5477**	1	SEAL-O-RING	
		1	**6V-9000**	1	ELBOW	
	13	1	*155-3624*	2	PLUG AS	
					(EACH INCLUDES)	
		1	**3J-7354**	1	SEAL-O-RING	
		1	**9S-4182**	1	PLUG-O-RING	
	14	1	**4J-5477**	2	SEAL-O-RING	
	15	1	**7Y-4528**	2	GROMMET	
M	16	1	**8T-4183**	6	BOLT (M12X1.75X40-MM)	
	17	1	**8T-4223**	10	WASHER-HARD (13.5X25.5X3-MM THK)	
	18	1	**8L-8413**	2	STRAP-CABLE	
M	19	1	**8T-4139**	4	BOLT (M12X1.75X30-MM)	

I - REFER TO HYDRAULIC INFORMATION SYSTEM
M - METRIC PART
Y - SEPARATE ILLUSTRATION

344-8864 **LINES GP-TRAVEL MOTOR (*contd.*)** **i05384919**

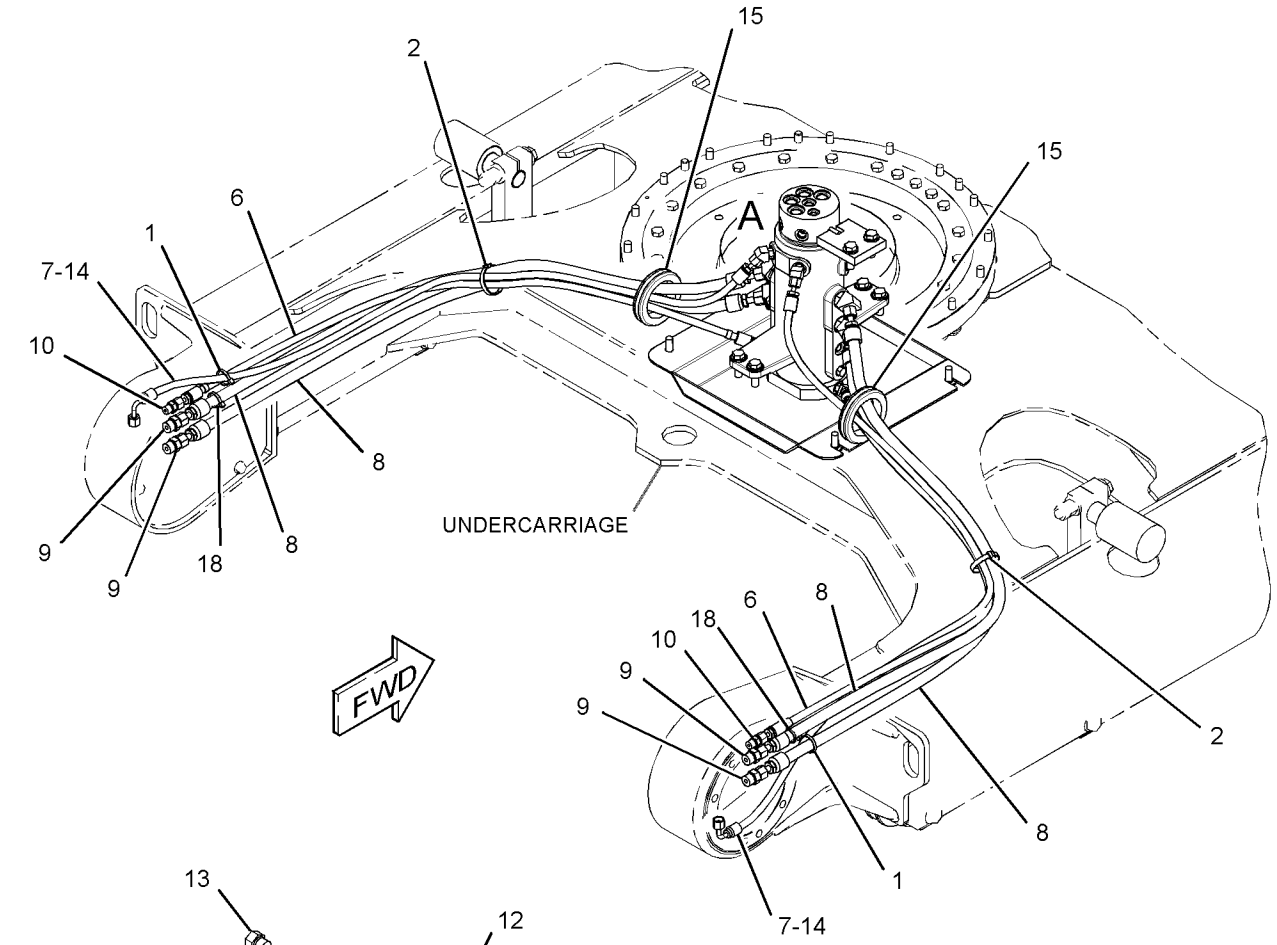

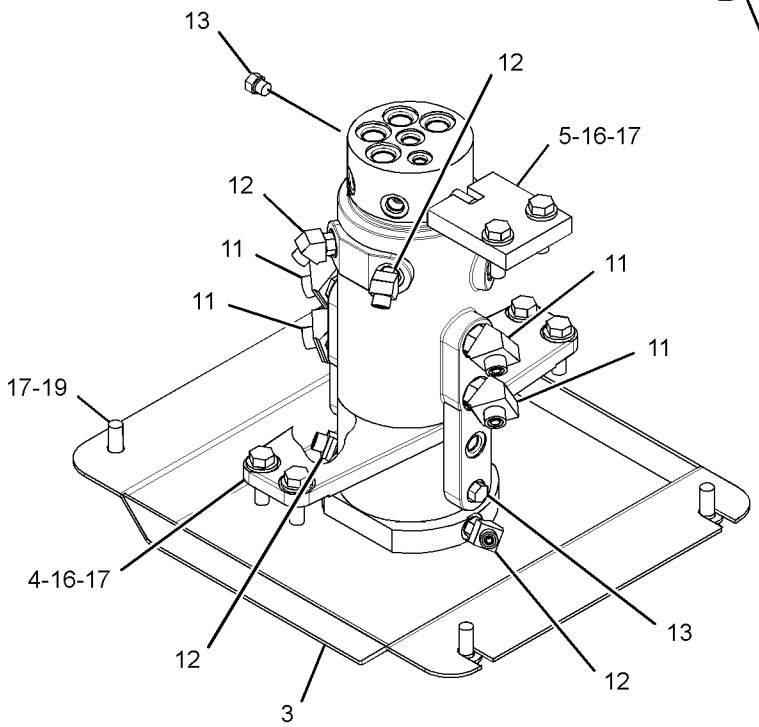

VIEW OF AREA A
(PARTS REMOVED FOR CLARITY)

GRAPHIC #1 **<END>** g03408588

267-0424 MANIFOLD & SOLENOID GP-CONTROL–AUXILIARY, BOOM SWING

PART OF 377-8861 VALVE & MTG GP-CONTROL

SMCS-5264, 5479

i03971110

NOTE	REF NO	GRAPHIC REF	PART NUMBER	QTY	PART NAME 1 2 3 4 5 6 (PRODUCT LEVEL)	SEE PAGE
M	1	1	**7I-2272**	4	BOLT (M5X0.8X12-MM)	
Y	2	1	**269-2299**	2	VALVE GP-SOLENOID (AUXILIARY, BOOM SWING)	361

M - METRIC PART
Y - SEPARATE ILLUSTRATION

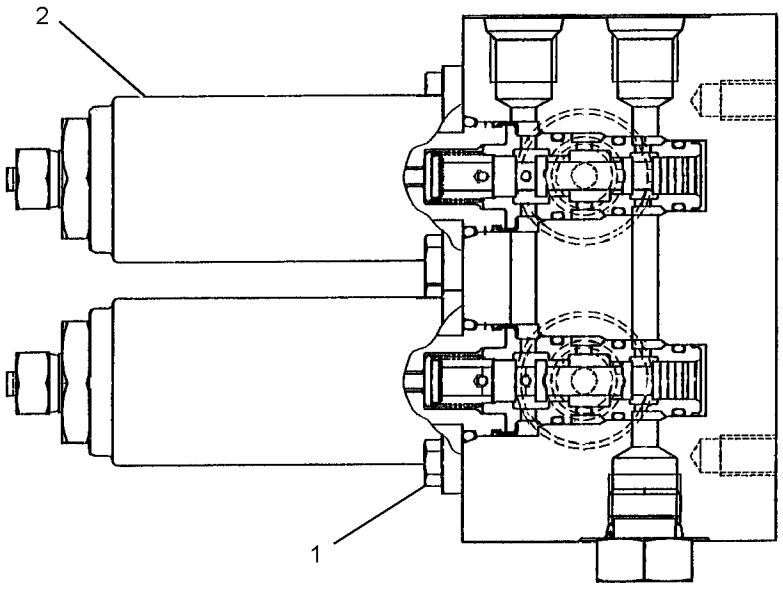

GRAPHIC #1

<END>

g01222759

274-4199 MANIFOLD GP-CONTROL

PART OF 379-4694 LINES GP-PILOT

SMCS-5264 **i03970909**

NOTE	REF NO	GRAPHIC REF	PART NUMBER	QTY	PART NAME 1 2 3 4 5 6 (PRODUCT LEVEL)	SEE PAGE
	1	1	**169-1169**	1	SHIM	
	2	1	**169-1170**	1	SHIM	
	3	1	**198-8418**	1	PLUNGER	
	4	1	**198-8419**	1	SPRING	
	5	1	**198-8420**	1	PLUG	
	6	1	**7I-7403**	2	SPRING	
	7	1	**169-1172**	1	PLUNGER	
	8	1	**198-8421**	1	SPRING	
	9	1	**9S-8004**	1	PLUG-O-RING	
	10	1	**274-4201**	1	SOLENOID (SPEED SELECT)	
	11	1	**274-4202**	1	SOLENOID (HYDRAULIC LOCKOUT)	
	12	1	**276-3883**	1	COVER	
	13	1	**198-8423**	2	PLUG	
M	14	1	**099-2374**	4	BOLT-SOCKET HEAD (M5X0.8X12-MM)	
M	15	1	**096-4833**	2	BOLT-SOCKET HEAD (M5X0.8X20-MM)	
	16	1	**095-1519**	2	SEAL-O-RING	
	17	1	**095-1578**	1	SEAL-O-RING	
	18	1	**095-1579**	2	SEAL-O-RING	
	19	1	**095-1586**	1	SEAL-O-RING	
	20	1	**3J-1907**	1	SEAL-O-RING	

M - METRIC PART

274-4199 **MANIFOLD GP-CONTROL (*contd.*)** **i03970909**

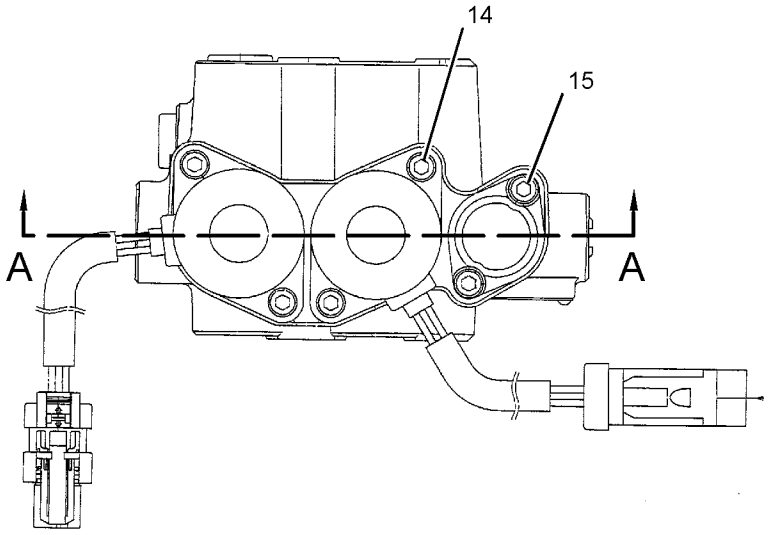

VIEW E-E

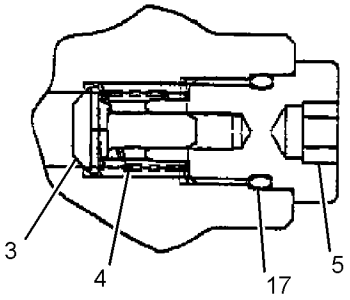

SECTION B-B

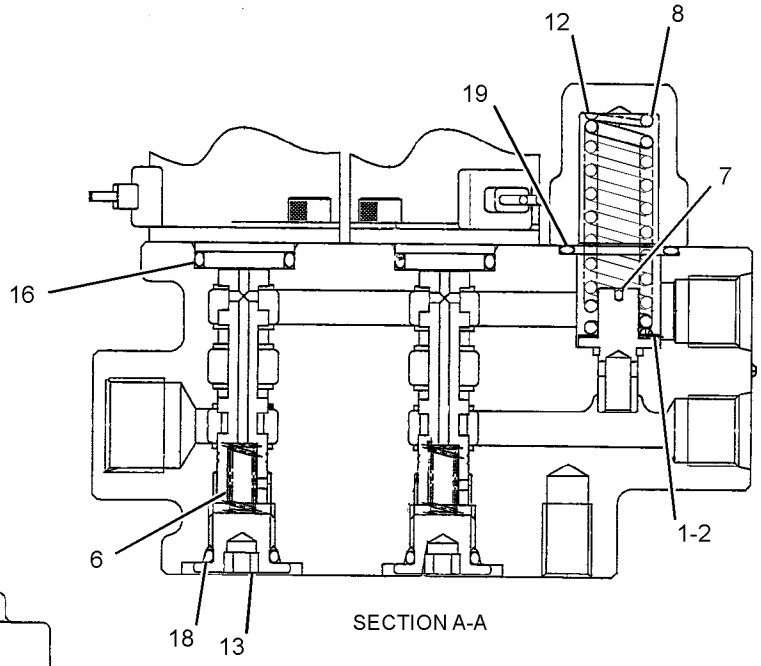

SECTION A-A

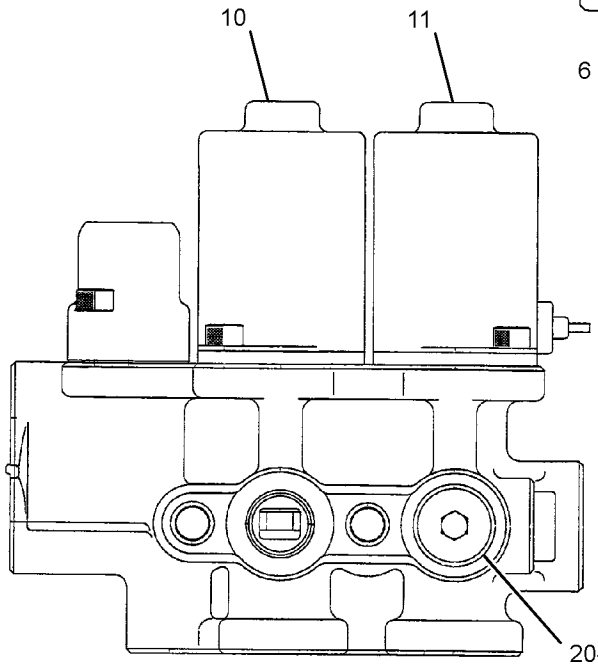

VIEW C-C

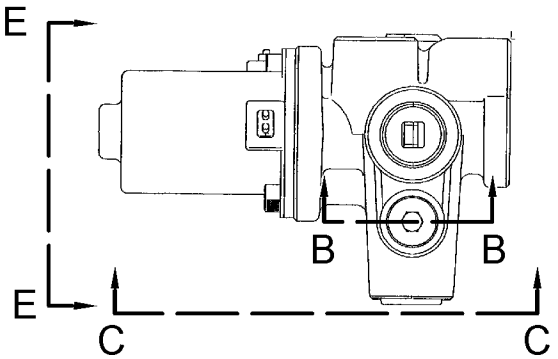

RIGHT SIDE VIEW

GRAPHIC #1 **<END>** g01204402

265-8752 MOTOR & MTG GP-SWING

PART OF 264-8384 POWER TRAIN AR

SMCS-5058 **i04019567**

NOTE	REF NO	GRAPHIC REF	PART NUMBER	QTY	PART NAME 1 2 3 4 5 6 (PRODUCT LEVEL)	SEE PAGE
Y	1	1	**266-6396**	1	DRIVE GP-SWING	213
M	2	1	**8T-4140**	4	BOLT (M16X2X60-MM)	
	3	1	**9X-8257**	4	WASHER (17.5X30X3.5-MM THK)	

M - METRIC PART
Y - SEPARATE ILLUSTRATION

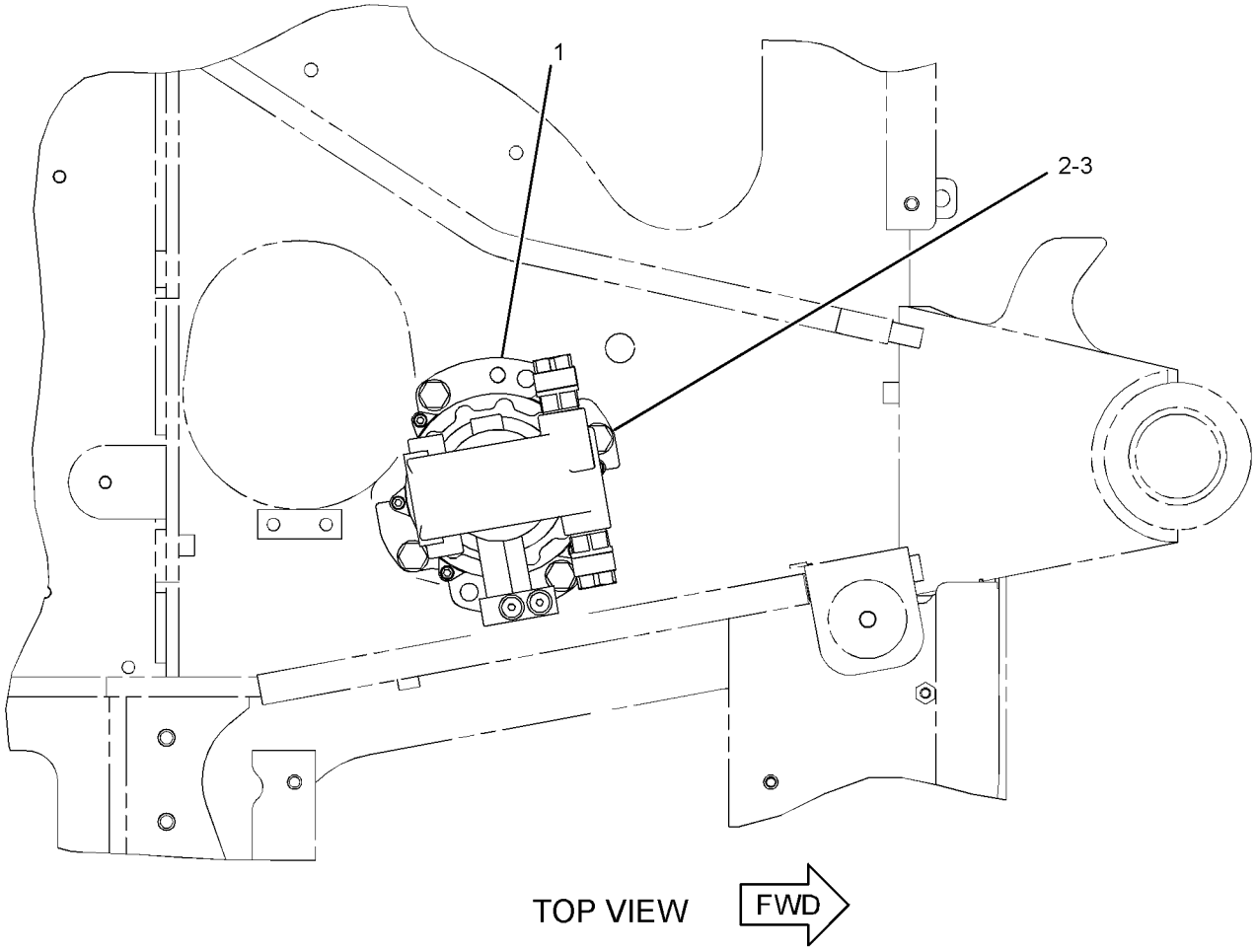

GRAPHIC #1 **<END>** g01234714

281-3052 MOTOR GP-SWING

PART OF 266-6396 DRIVE GP-SWING

SMCS-5058 **i05426594**

NOTE	REF NO	GRAPHIC REF	PART NUMBER	QTY	PART NAME 1 2 3 4 5 6 (PRODUCT LEVEL)	SEE PAGE
	1	1	**153-6087**	1	SCREEN (HYDRAULIC OIL)	
	2	1	**280-2364**	1	BEARING	
	3	1	**6B-5328**	1	BEARING	
	4	1	**8C-3312**	1	RING-RETAINING	
M	5	1	**5A-3604**	12	BOLT-SOCKET HEAD (M8X1.25X25-MM)	
	6	1	**095-0880**	1	PIN	
L	7	1	**280-2365**	1	PIN	
H	8	1	**095-1716**	1	SEAL-O-RING	
H	9	1	**095-1719**	1	SEAL-O-RING	
Y	10	1	**274-9034**	1	VALVE GP-CONTROL (SWING BRAKE)	321
M	11	1	**8T-8442**	4	BOLT-SOCKET HEAD (M6X1X30-MM)	
Y	12	1	**281-3053**	2	VALVE GP-RELIEF	358
J	13	1	**095-1579**	2	SEAL-O-RING	
J	14	1	**280-2367**	1	KIT-PUMP (SWING MOTOR)	
					(ALSO INCLUDES BODY, BEARING, PIN SPRING, CHECK VALVES, SPRINGS & PLUGS)	
H	15	1	**280-2368**	1	KIT-BARREL (SWING MOTOR)	
					(ALSO INCLUDES SHOES, PISTONS, SHOE HOLDER, BARREL HOLDER, PINS, BARREL, RETAINERS, SPRING, VALVE PLATE & RING RETAINER	
L	16	1	**280-2369**	1	KIT-SWASHPLATE (SWING MOTOR)	
	17	1	**280-2405**	3	PIN	

H - KIT MARKED H SERVICES PARTS MARKED H
J - KIT MARKED J SERVICES PARTS MARKED J
L - KIT MARKED L SERVICES PARTS MARKED L
M - METRIC PART
Y - SEPARATE ILLUSTRATION

281-3052 **MOTOR GP-SWING (*contd.*)** **i05426594**

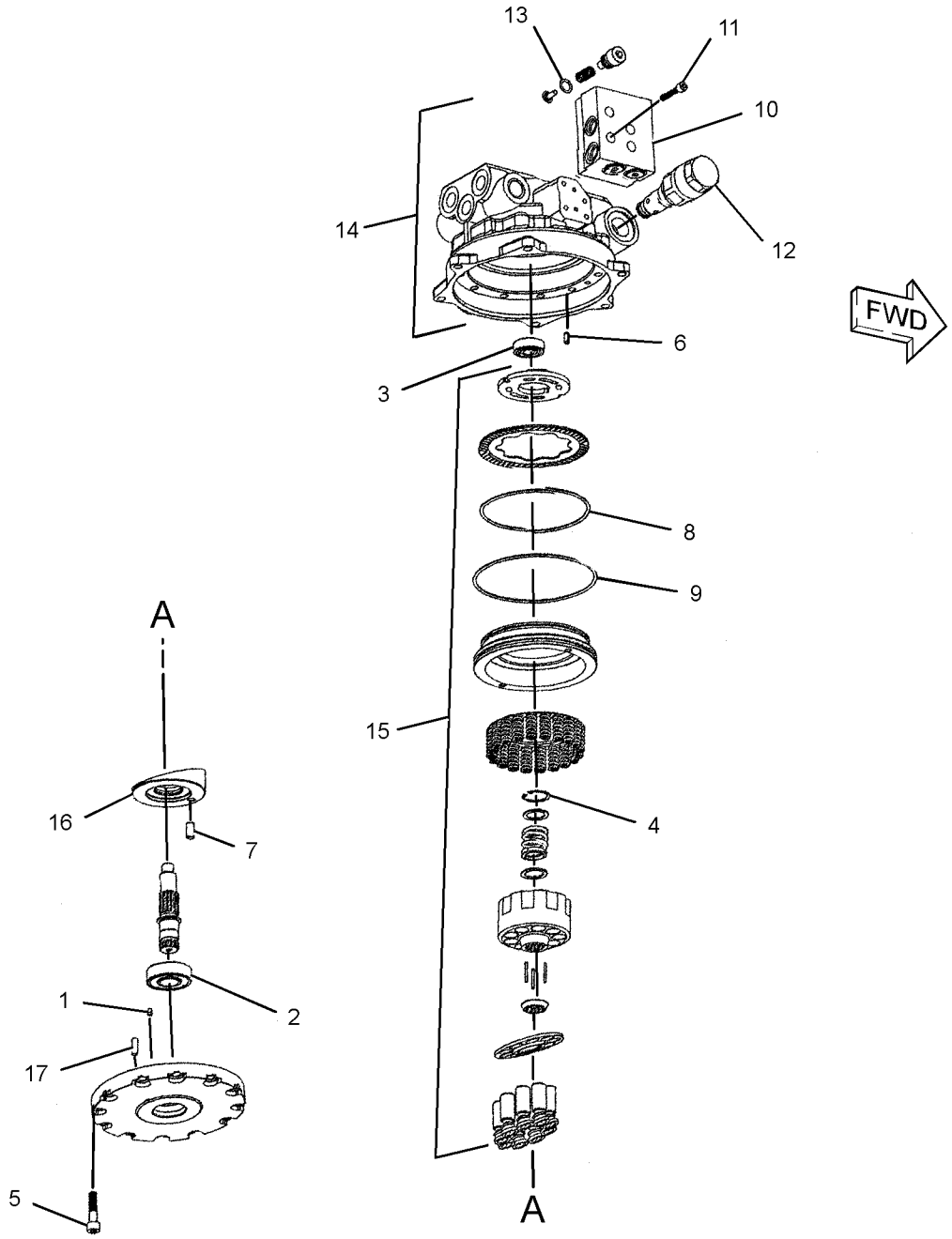

GRAPHIC #1 **<END>** g01235762

280-2355 PLANETARY GP-SWING DRIVE

PART OF 266-6396 DRIVE GP-SWING

SMCS-3301, 5459 **i05426610**

NOTE	REF NO	GRAPHIC REF	PART NUMBER	QTY	PART NAME 1 2 3 4 5 6 (PRODUCT LEVEL)	SEE PAGE
	1	1	**280-2357**	1	GEAR	
	2	1	**280-2358**	1	GEAR	
	3	1	**280-2359**	1	SEAL	
J	4	1	**6V-5587**	4	RING-RETAINING	
M	5	1	**5A-3604**	6	BOLT-SOCKET HEAD (M8X1.25X25-MM)	
	6	1	**280-2360**	1	RING	
	7	1	**280-2361**	1	KIT-PINION	
					(INCLUDES PINION SHAFT, RING SEAL, BEARINGS, BODY, SEAL, COLLARS, GEAR & PINS)	
J	8	1	**280-2362**	1	KIT-CARRIER	
					(ALSO INCLUDES CARRIER, THRUST WASHERS, RINGS, NEEDLES, GEARS & THRUST PLATE)	
	9	1	**280-2363**	1	KIT-CARRIER	
					(ALSO INCLUDES CARRIER, THRUST WASHERS, RINGS, NEEDLES, GEARS & THRUST PLATE)	

J - KIT MARKED J SERVICES PARTS MARKED J
M - METRIC PART

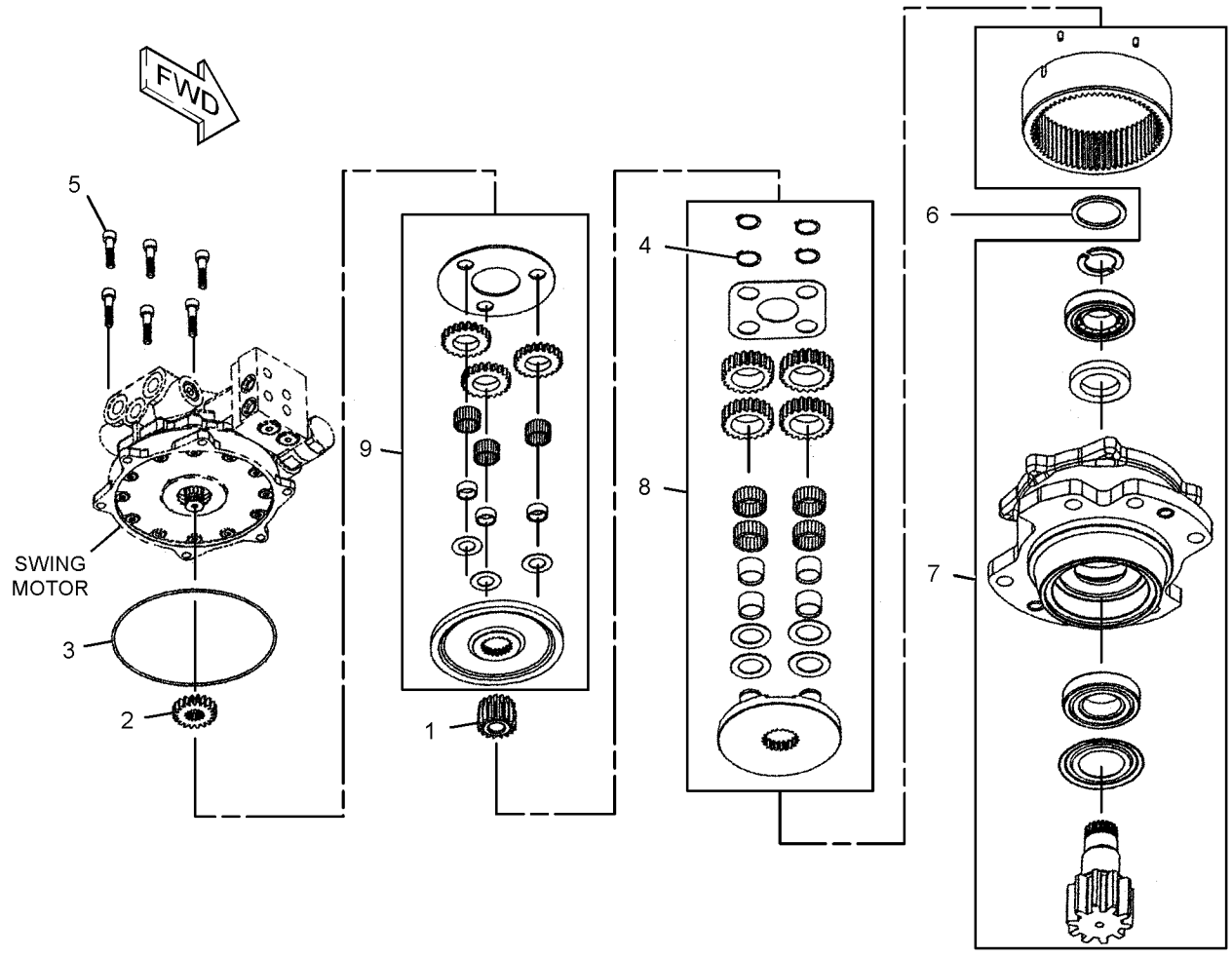

GRAPHIC #1 **<END>** g01222490

376-2013 PUMP & MTG GP-MAIN HYDRAULIC

PART OF 379-4678 HYDRAULIC AR

SMCS-5070 **i05049592**

NOTE	REF NO	GRAPHIC REF	PART NUMBER	QTY	PART NAME 1 2 3 4 5 6 (PRODUCT LEVEL)	SEE PAGE
	1	1	**388-6412**	8	BOLT (M10X1.25X50-MM)	
	2	1	**267-1082**	1	COUPLING-PUMP	
Y	3	1	**416-5057**	1	PUMP GP-PISTON (MAIN HYDRAULIC)	298
	4	1	**380-6357**	1	HOUSING AS-FLYWHEEL	
		1	**387-3788**	2	PIN	
M	5	1	**191-7503**	3	BOLT (M12X1.75X16-MM)	
	6	1	**8T-4121**	7	WASHER-HARD (11X21X2.5-MM THK)	
M	7	1	**8T-4183**	2	BOLT (M12X1.75X40-MM)	
	8	1	**8T-4223**	2	WASHER-HARD (13.5X25.5X3-MM THK)	
	9	1	**9X-2027**	1	WASHER (11X18X2-MM THK)	

M - METRIC PART
Y - SEPARATE ILLUSTRATION

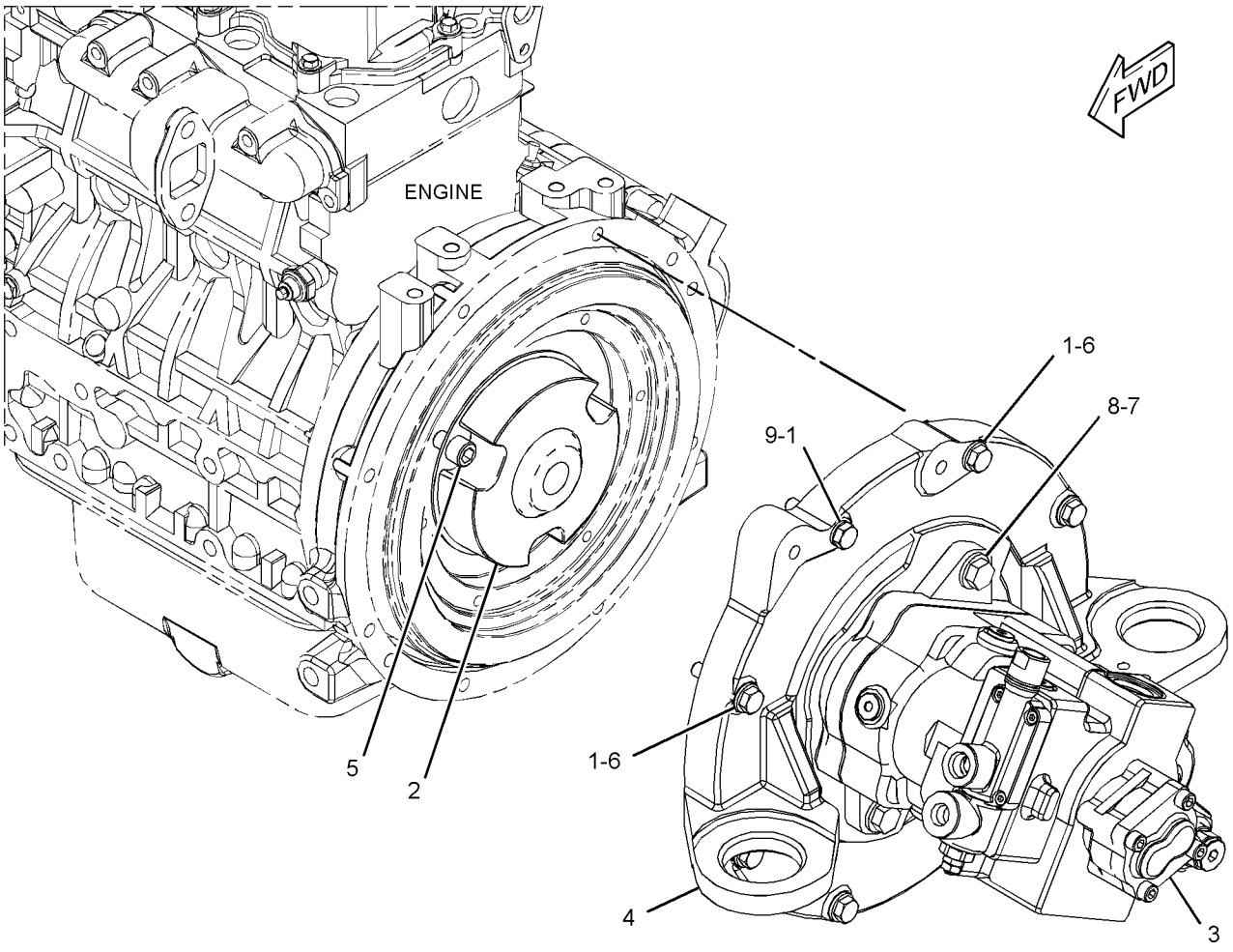

GRAPHIC #1 **<END>** g02802317

279-4699 PUMP GP-GEAR–PILOT

PART OF 416-5057 PUMP GP-PISTON

SMCS-5073, 5473

i03997884

NOTE	PART NUMBER	QTY	PART NAME 1 2 3 4 5 6 (PRODUCT LEVEL)	SEE PAGE
			(NO SERVICED PARTS)	

<END>

416-5057 PUMP GP-PISTON—MAIN HYDRAULIC

PART OF 376-2013 PUMP & MTG GP-MAIN HYDRAULIC

SMCS-5070 **i05426615**

NOTE	REF NO	GRAPHIC REF	PART NUMBER	QTY	PART NAME 1 2 3 4 5 6 (PRODUCT LEVEL)	SEE PAGE
	1	1	**280-4441**	1	BEARING	
	2	1	**191-3925**	1	BEARING	
	3	1	**279-4684**	1	SEAL	
	4	1	**6V-7723**	1	RING-RETAINING	
	5	1	**280-4442**	1	STOP	
	6	1	**280-4443**	1	SHAFT	
	7	1	**191-3918**	1	WASHER	
	8	1	**191-3920**	1	WASHER	
	9	1	**280-4444**	1	GASKET	
	10	1,2	**279-4687**	3	PIN	
	11	1	**095-1571**	1	SEAL-O-RING	
	12	2	**390-9455**	2	BUSHING	
	13	2	**139-7355**	2	SCREW	
	14	1	**280-4446**	1	PLATE	
	15	1	**279-4692**	1	STOPPER	
	16	1	**379-3533**	1	PIN	
J	17	1,2	**095-1575**	8	SEAL-O-RING	
	18	1	**279-4691**	1	ORIFICE	
	19	2	**416-5058**	1	SPRING	
	20	2	**416-5059**	1	SPRING	
	21	2	**280-4450**	2	SEAT	
	22	2	**095-1587**	1	SEAL-O-RING	
	23	2	**099-7197**	1	PLUG	
	24	2	**095-1582**	1	SEAL-O-RING	
	25	2	**279-4698**	1	NUT	
Y	26	1	**279-4699**	1	PUMP GP-GEAR (PILOT)	297
	27	1	**303-4492**	2	BOLT	
	28	1	**8T-4224**	2	WASHER-HARD (8.8X16X2-MM THK)	
M	29	1	**6V-8200**	4	BOLT-SOCKET HEAD (M12X1.75X35-MM)	
	30	1,2	**279-4706**	3	PLUG	
	31	2	**095-1584**	1	SEAL-O-RING	
J	32	1,2	**3J-1907**	4	SEAL-O-RING	
M	33	1	**6V-5683**	4	BOLT (M6X1X16-MM)	
	34	2	**279-4693**	1	PIN	
J	35	1	**279-4705**	1	SEAL-O-RING	
J	36	1	**279-4701**	1	SEAL-O-RING	
	37	1	**279-4704**	1	ORIFICE	
J	38	1	**279-4703**	1	SEAL-O-RING	
	39	2	**280-4451**	1	PIN	
	40	2	**279-4697**	1	VALVE AS-PUMP (MAIN HYDRAULIC)	
		2	**095-1575**	1	SEAL-O-RING	
		2	**095-1582**	1	SEAL-O-RING	
		2	**095-1587**	1	SEAL-O-RING	
		2	**099-7197**	1	PLUG	
	41	1	**280-4458**	1	KIT-SWASHPLATE (PISTON PUMP)	
	42	1	**280-4459**	1	KIT-BARREL (PISTON PUMP)	
Y	43	1	**332-1293**	1	VALVE GP-PUMP CONTROL (303.5C CR) (MAIN HYDRAULIC)	357
					AVAILABLE REPAIR KIT(S):	
J			**279-4707**	1	KIT-SEAL (MAIN HYDRAULIC PUMP)	

J - KIT MARKED J SERVICES PARTS MARKED J
M - METRIC PART
Y - SEPARATE ILLUSTRATION

416-5057 **PUMP GP-PISTON (*contd.*)** **i05426615**

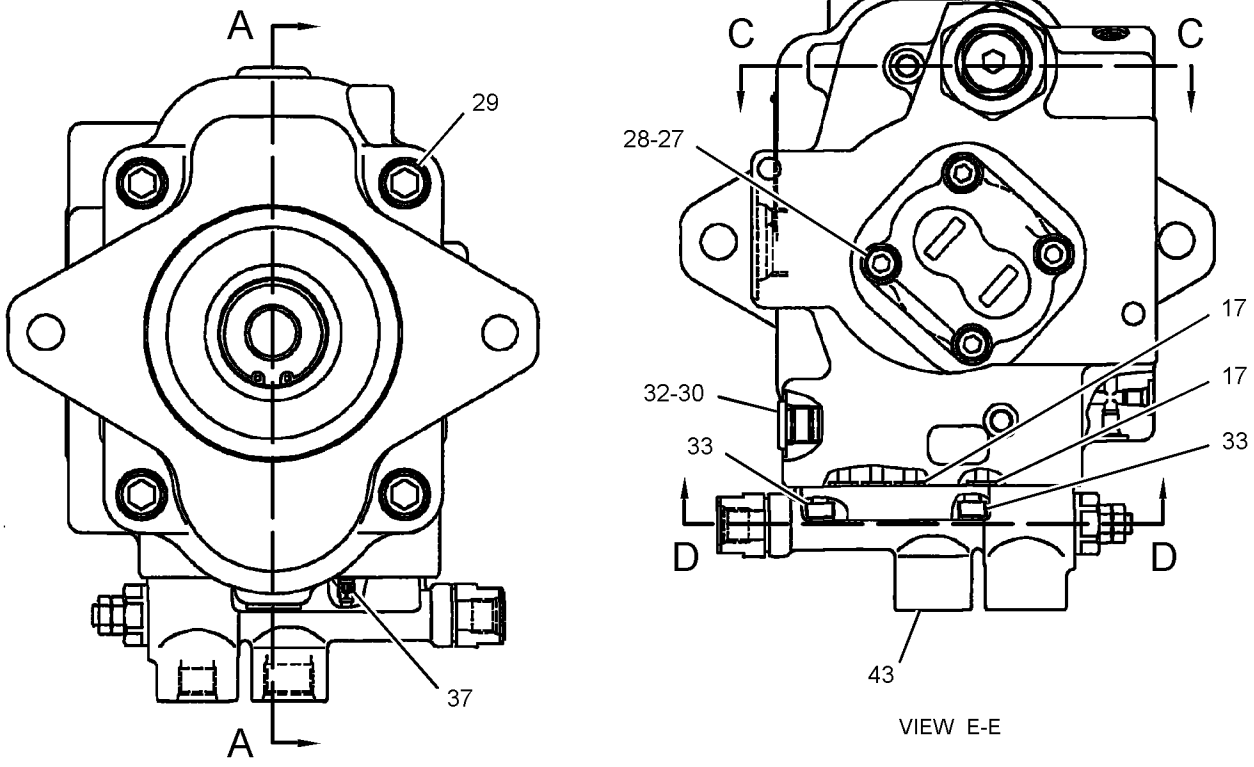

GRAPHIC #1

g03228077

416-5057 **PUMP GP-PISTON (*contd.*)** **i05426615**

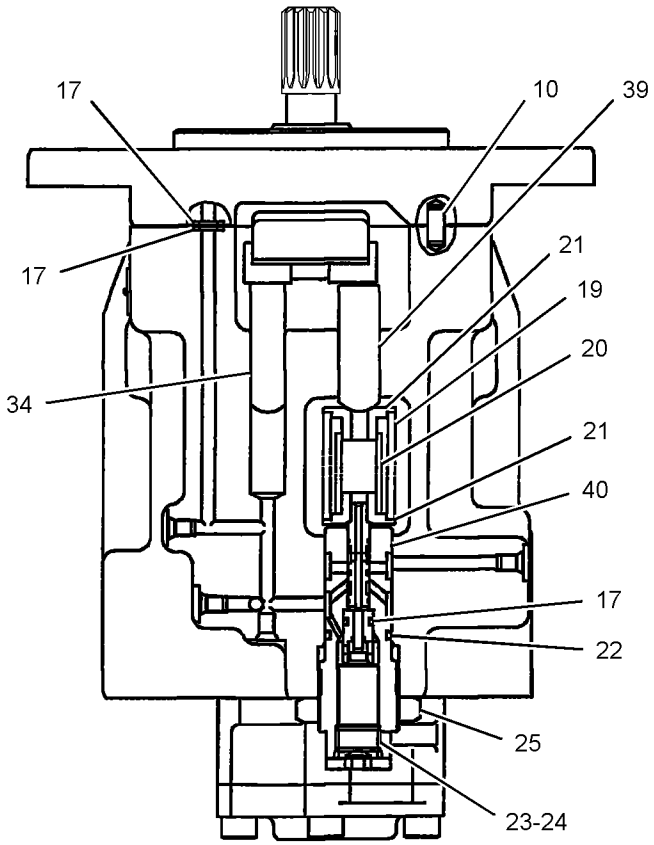

SECTION C-C

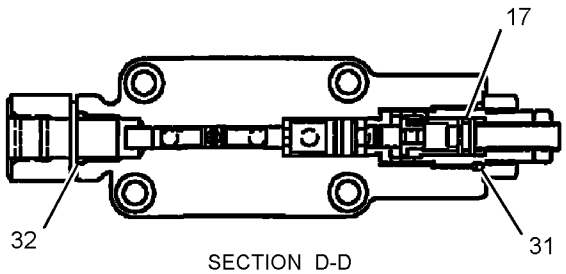

SECTION D-D

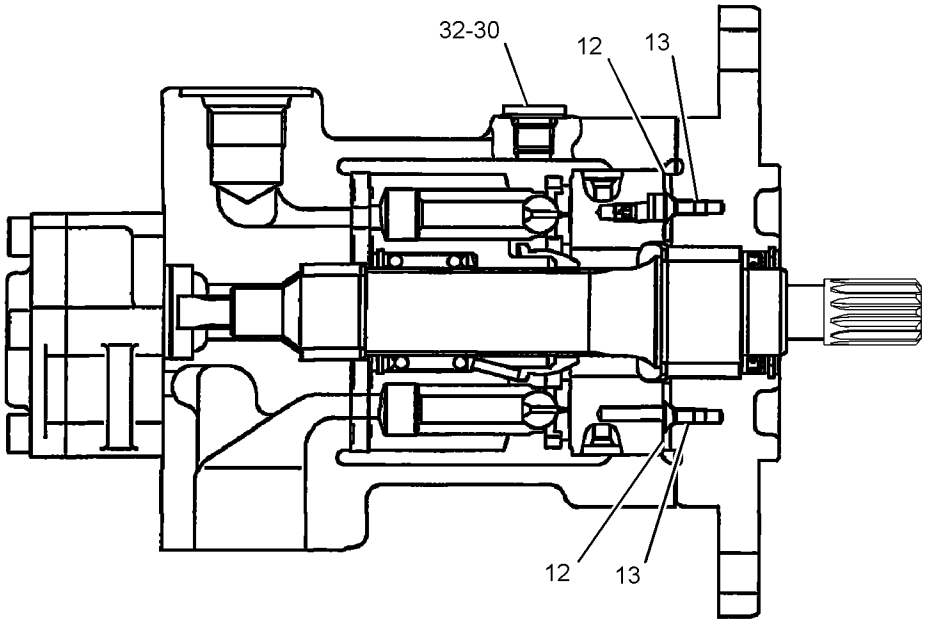

SECTION B-B

GRAPHIC #2 **<END>** g03228078

191-7516 SWIVEL GP

PART OF 344-8863 LINES GP-TRAVEL MOTOR
AN ATTACHMENT

SMCS-5060 **i02145735**

NOTE	REF NO	GRAPHIC REF	PART NUMBER	QTY	PART NAME 1 2 3 4 5 6 (PRODUCT LEVEL)	SEE PAGE
	1	1	**095-8051**	3	PLUG	
	2	1	**146-4875**	1	SEAL-BACK UP	
	3	1	**146-4877**	1	SEAL-DUST	
	4	1	**169-1134**	1	FLANGE	
	5	1	**169-1135**	1	RING	
	6	1	**193-5330**	7	SEAL AS	
	7	1	**221-0936**	1	SHAFT	
	8	1	**221-0937**	1	HOUSING	
	9	1	**221-0938**	1	PIN	
	10	1	**095-1623**	1	SEAL-O-RING	
	11	1	**095-1710**	1	SEAL-O-RING	
	12	1	**095-1713**	1	SEAL-O-RING	
	13	1	**095-7951**	1	RING-RETAINING	
	14	1	**095-9397**	4	LOCKWASHER	
M	15	1	**8T-4195**	4	BOLT (M10X1.5X30-MM)	

M - METRIC PART

191-7516 **SWIVEL GP (*contd.*)** **i02145735**

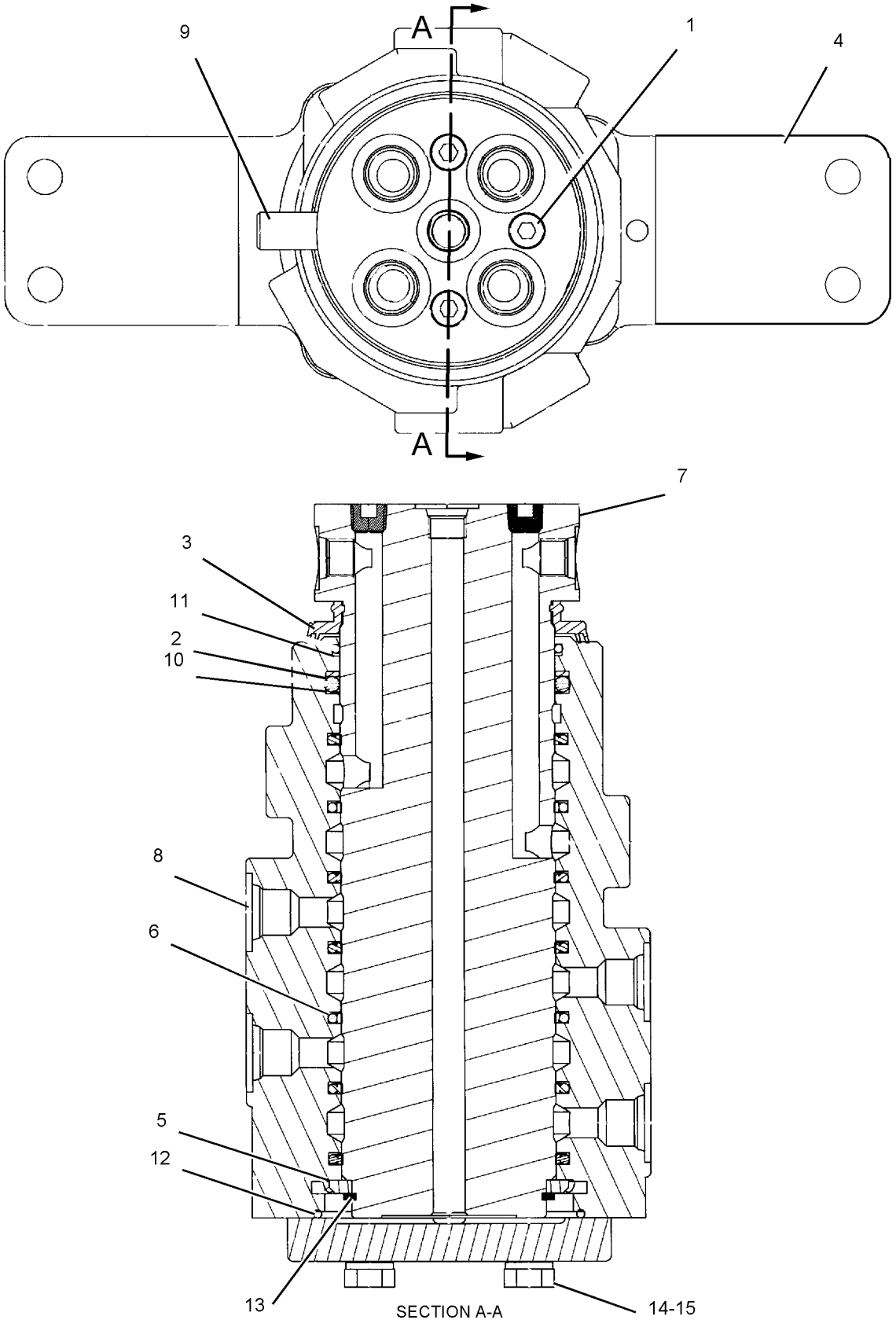

SECTION A-A

GRAPHIC #1

<END>

g01089083

266-6836 SWIVEL GP

PART OF 344-8864 LINES GP-TRAVEL MOTOR
AN ATTACHMENT

SMCS-5060 **i03971153**

NOTE	REF NO	GRAPHIC REF	PART NUMBER	QTY	PART NAME 1 2 3 4 5 6 (PRODUCT LEVEL)	SEE PAGE
	1	1	**274-3344**	1	SHAFT	
	2	1	**274-3346**	1	HOUSING	
	3	1	**294-1868**	1	COVER	
	4	1	**274-3349**	1	SPACER	
	5	1	**169-1136**	1	PIN	
	6	1	**274-3351**	6	SEAL AS	
	7	1	**193-5330**	4	SEAL AS	
	8	1	**095-1623**	1	SEAL-O-RING	
	9	1	**095-1713**	2	SEAL-O-RING	
	10	1	**8T-5376**	1	SEAL-O-RING	
	11	1	**146-4875**	1	SEAL-BACK UP	
	12	1	**146-4877**	1	SEAL-DUST	
	13	1	**095-0929**	1	RING-RETAINING	
M	14	1	**9X-6032**	4	BOLT-SOCKET HEAD (M10X1.5X30-MM)	
	15	1	**095-0966**	5	PLUG	

M - METRIC PART

266-6836 **SWIVEL GP (*contd.*)** **i03971153**

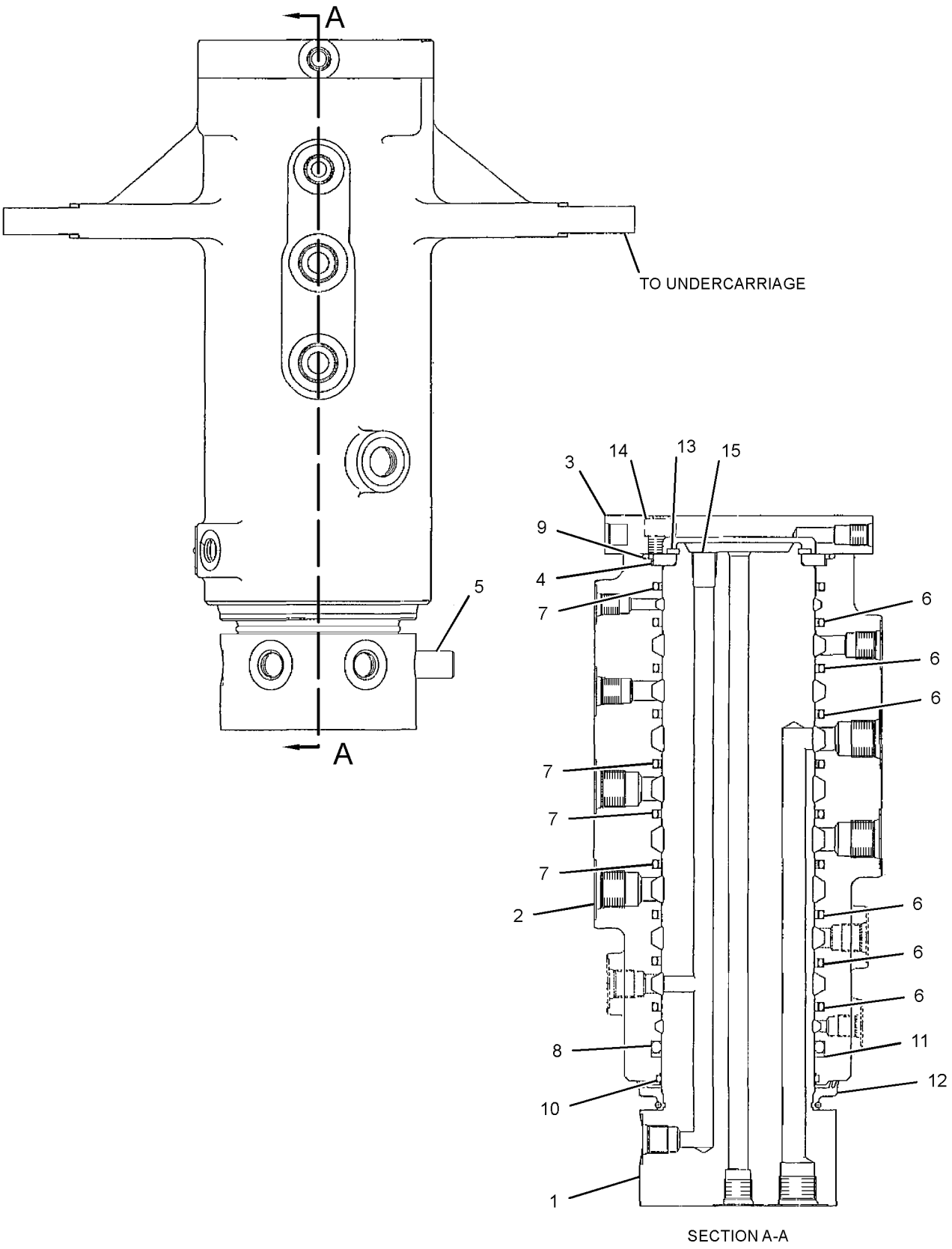

GRAPHIC #1 **<END>** g01367777

367-1050 TANK & FILTER GP-HYDRAULIC

PART OF 367-0936 TANK & MTG GP-HYDRAULIC

SMCS-5056, 5068 **i04629815**

NOTE	REF NO	GRAPHIC REF	PART NUMBER	QTY	PART NAME 1 2 3 4 5 6 (PRODUCT LEVEL)	SEE PAGE
	1	2	**4I-3745**	1	CAP-PRESSURE (HYDRAULIC TANK)	
	2	2	**093-5537**	1	VALVE AS-CHECK (HYDRAULIC TANK)	
	3	2	**225-3697**	1	SPRING	
	4	2	**265-8631**	1	COVER AS	
	5	2	**265-8632**	1	COVER	
	6	2	**265-8677**	1	VALVE AS-PRESSURE (HYDRAULIC OIL)	
	7	2	**285-1951**	1	STRAINER-SUCTION (HYDRAULIC TANK)	
	8	2	**304-7196**	1	FILTER ELEMENT-OIL (HYDRAULIC)	
Y	9	2	**347-6081**	1	GAUGE GP-SIGHT (HYDRAULIC OIL LEVEL)	216
	10	2	**367-1051**	1	TANK AS-HYDRAULIC	
	11	2	**095-1717**	2	SEAL-O-RING	
	12	2	*148-8410*	1	PLUG AS	
		2	**2M-9780**	1	SEAL-O-RING	
		2	**9S-4190**	1	PLUG-O-RING	
	13	2	**6D-3479**	1	CLIP	
	14	2	**8T-4121**	8	WASHER-HARD (11X21X2.5-MM THK)	
M	15	2	**8T-4136**	8	BOLT (M10X1.5X25-MM)	
E	16	2	**7Y-1976**		HOSE-WATER (108-CM)	

E - ORDER BY THE CENTIMETER
M - METRIC PART
Y - SEPARATE ILLUSTRATION

REFER TO ALL ILLUSTRATIONS OF THIS GROUP FOR AUXILIARY VIEWS

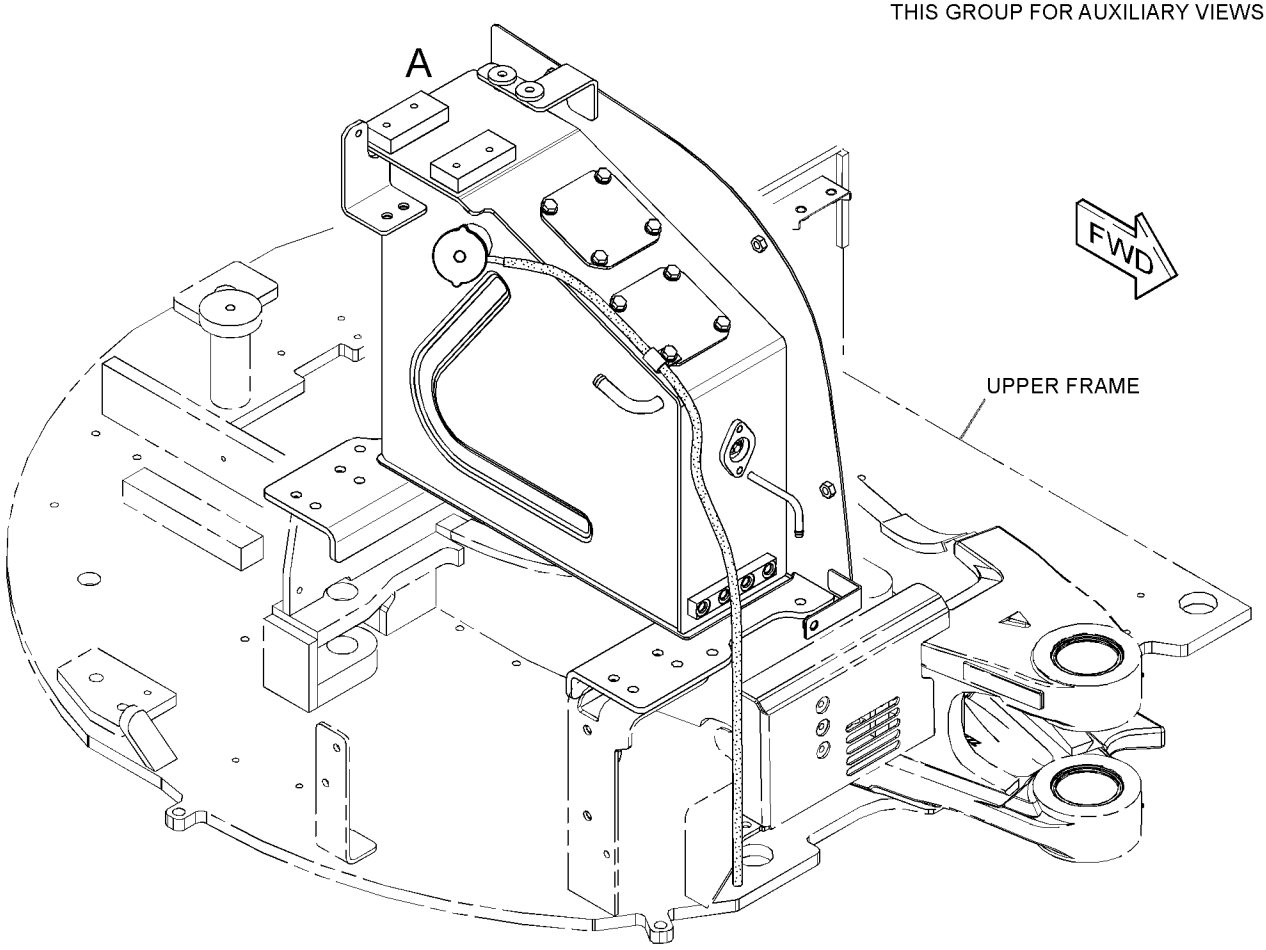

GRAPHIC #1 g02798929

367-1050 **TANK & FILTER GP-HYDRAULIC (*contd.*)** **i04629815**

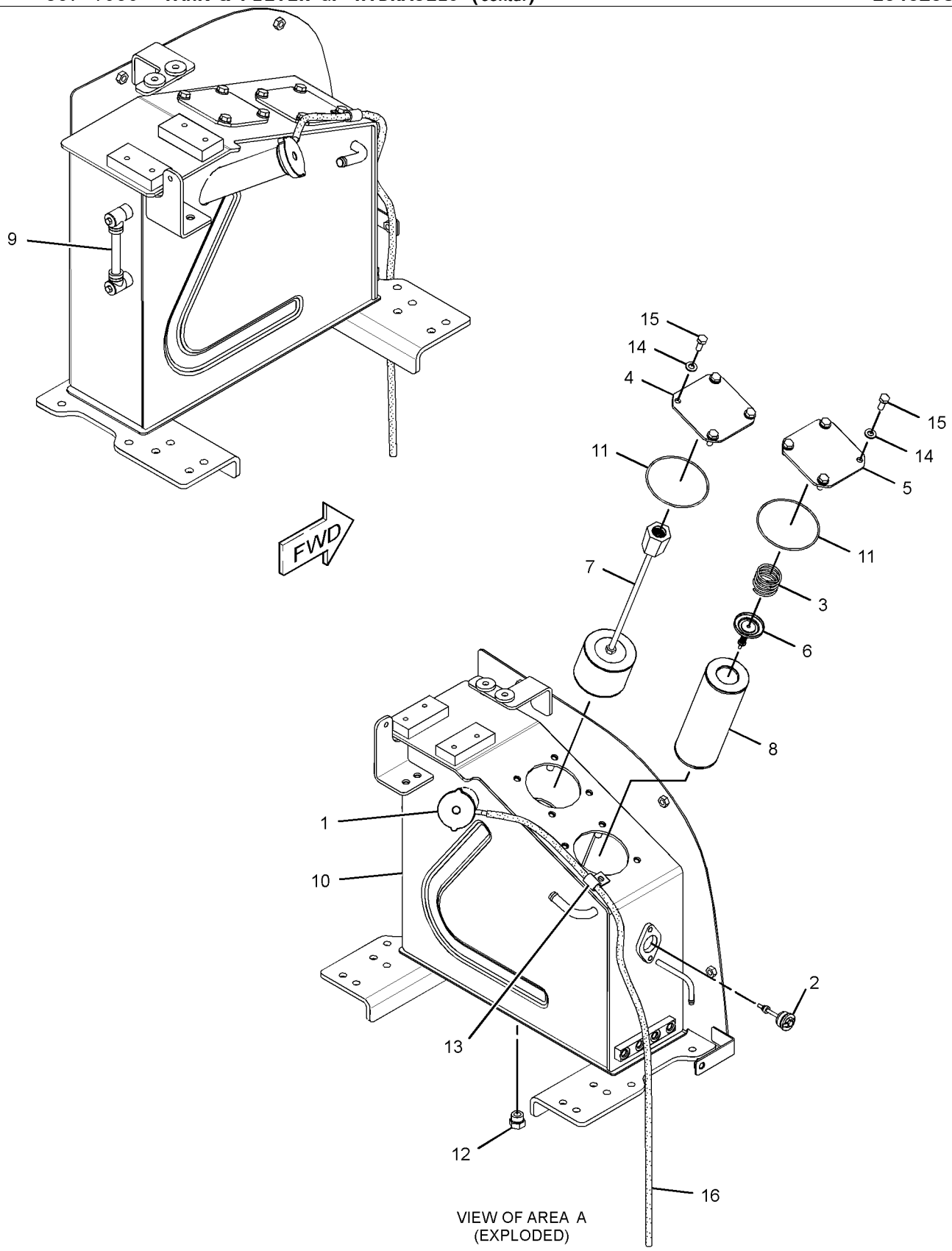

VIEW OF AREA A
(EXPLODED)

GRAPHIC #2 **<END>** g02798931

367-0936 TANK & MTG GP-HYDRAULIC

PART OF 379-4678 HYDRAULIC AR

SMCS-5056 **i04629813**

NOTE	REF NO	GRAPHIC REF	PART NUMBER	QTY	PART NAME 1 2 3 4 5 6 (PRODUCT LEVEL)	SEE PAGE
Y	1	1	*367-1050*	1	TANK & FILTER GP-HYDRAULIC	305
	2	1	**7X-7729**	4	WASHER (11X25X3-MM THK)	
M	3	1	**8T-4195**	4	BOLT (M10X1.5X30-MM)	

M - METRIC PART
Y - SEPARATE ILLUSTRATION

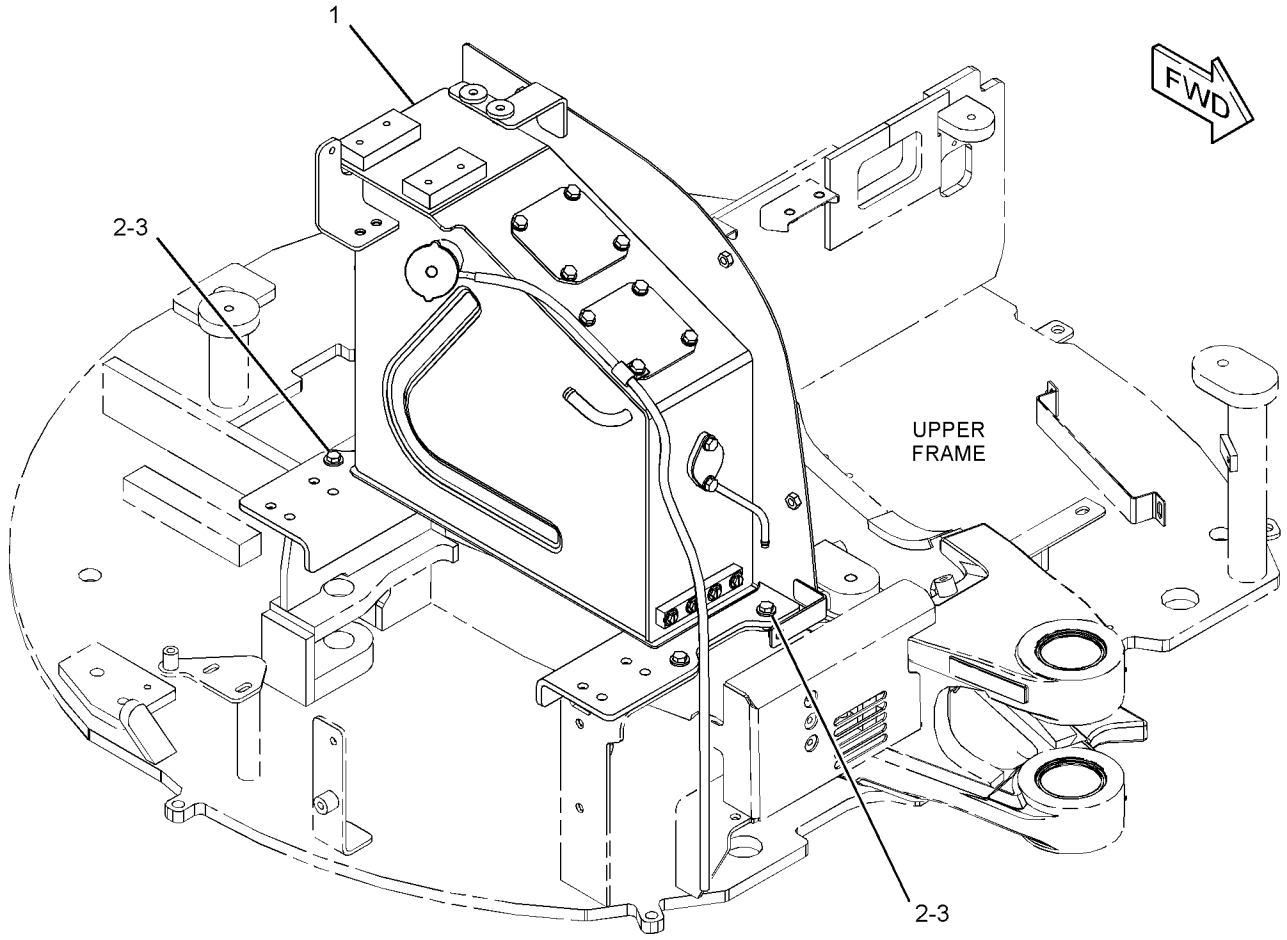

GRAPHIC #1 **<END>** g02798447

421-2717 VALVE & MOUNTING GP–CANOPY

S/N: TTN907-UP

PART OF 383-5926 CANOPY AR, 377-8932 CANOPY AR-OPEN ROPS AN ATTACHMENT

SMCS-5051 **i05023351**

NOTE	REF NO	GRAPHIC REF	PART NUMBER	QTY	PART NAME 1 2 3 4 5 6 (PRODUCT LEVEL)	SEE PAGE
	1	1	**276-9309**	2	FOAM	
	2	1	**417-1093**	1	VALVE GP-PILOT (CANOPY)	
M	3	1	**101-7404**	2	BOLT-SOCKET HEAD (M10X1.5X30-MM)	

M - METRIC PART

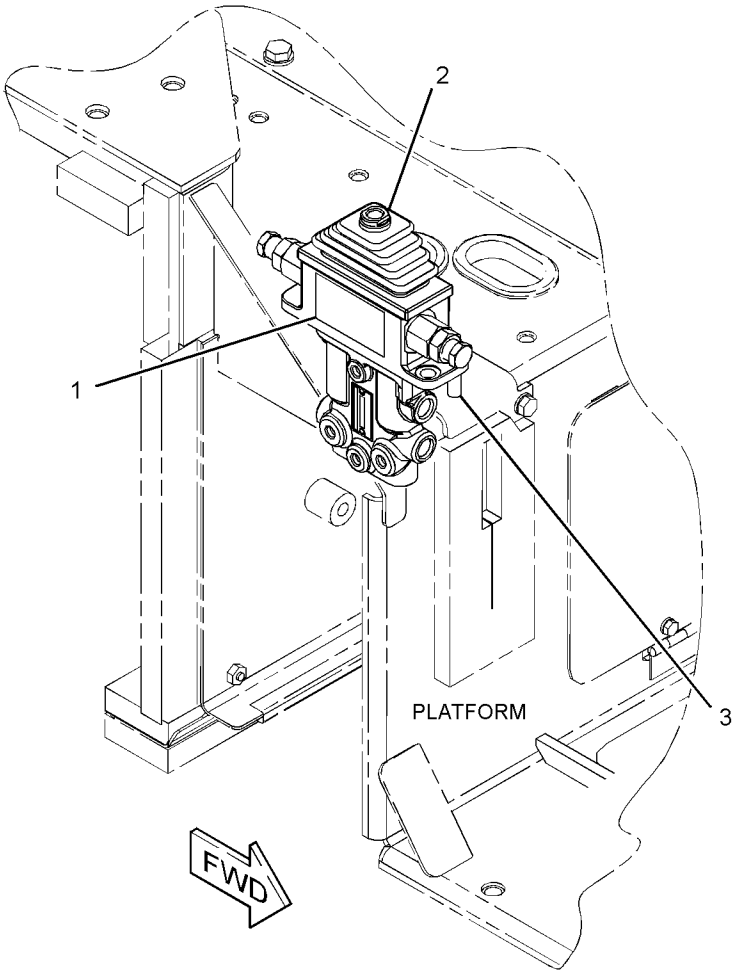

GRAPHIC #1 **<END>** g03201062

379-4703 VALVE & MTG GP-BANK

S/N: TTN1-307
PART OF 377-8915 BLADE AR-STRAIGHT
AN ATTACHMENT

SMCS-5051, 5057 **i04623151**

NOTE	REF NO	GRAPHIC REF	PART NUMBER	QTY	PART NAME 1 2 3 4 5 6 (PRODUCT LEVEL)	SEE PAGE
Y	1	1	**379-0417**	1	VALVE GP-MAIN CONTROL	342
	2	1	**381-1119**	1	SUPPORT AS	
		1	**7T-1099**	1	LINK	
M		1	**8T-3490**	2	NUT-WELD (M10X1.5-THD)	
	3	1	**7X-7729**	4	WASHER (11X25X3-MM THK)	
	4	1	**8T-4121**	5	WASHER-HARD (11X21X2.5-MM THK)	
M	5	1	**8T-4136**	4	BOLT (M10X1.5X25-MM)	
M	6	1	**8T-4191**	1	BOLT (M10X1.5X16-MM)	
M	7	1	**8T-4195**	4	BOLT (M10X1.5X30-MM)	

M - METRIC PART
Y - SEPARATE ILLUSTRATION

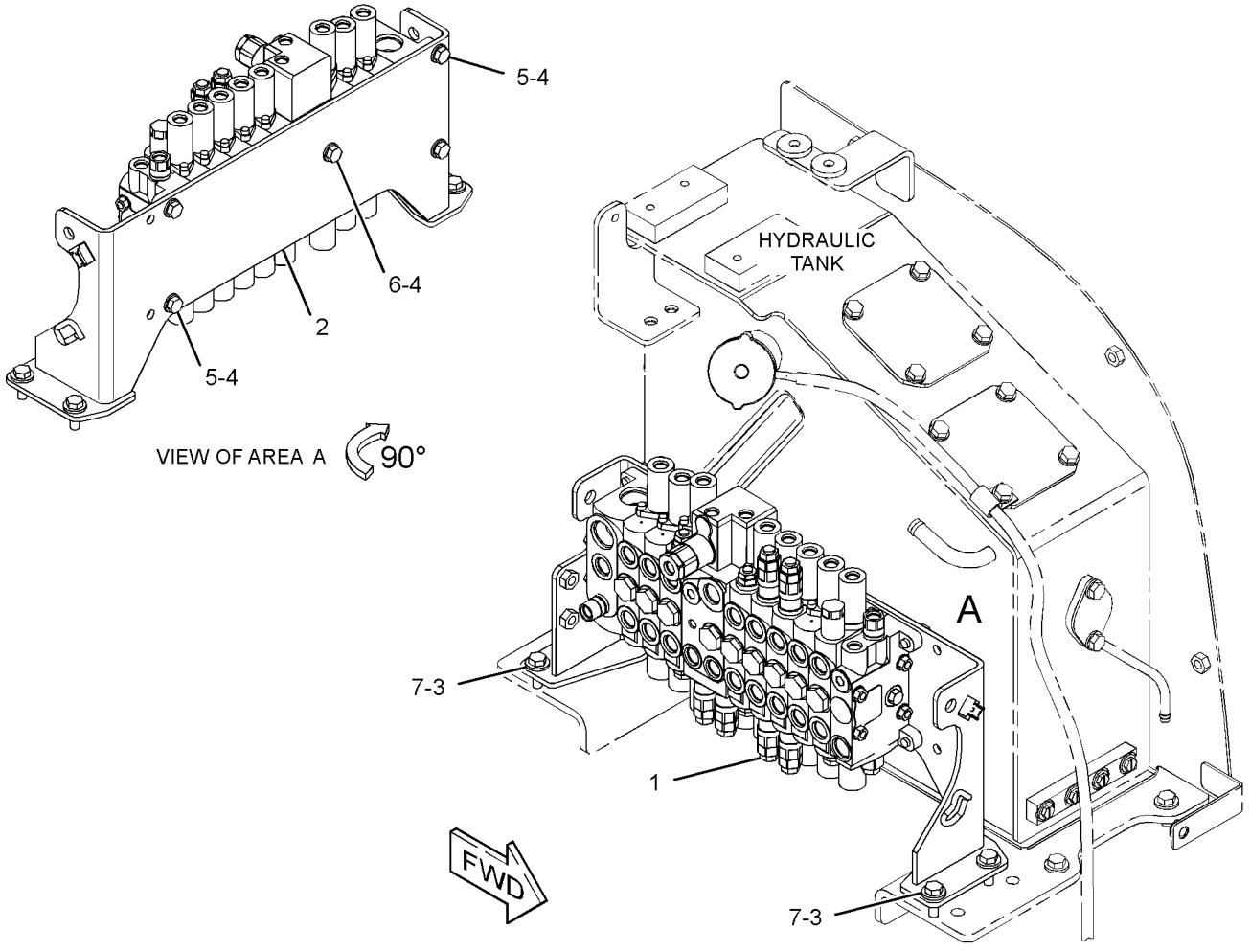

GRAPHIC #1 **<END>** g02798377

379-4703 VALVE & MTG GP-BANK

S/N: TTN308-UP
PART OF 377-8915 BLADE AR-STRAIGHT
AN ATTACHMENT

SMCS-5051, 5057 **i05349284**

NOTE	REF NO	GRAPHIC REF	PART NUMBER	QTY	PART NAME 1 2 3 4 5 6 (PRODUCT LEVEL)	SEE PAGE
CY	1	1	**393-7632**	1	VALVE GP-MAIN CONTROL	345
	2	1	**381-1119**	1	SUPPORT AS	
		1	**7T-1099**	1	LINK	
M		1	**8T-3490**	2	NUT-WELD (M10X1.5-THD)	
	3	1	**7X-7729**	4	WASHER (11X25X3-MM THK)	
	4	1	**8T-4121**	5	WASHER-HARD (11X21X2.5-MM THK)	
M	5	1	**8T-4136**	4	BOLT (M10X1.5X25-MM)	
M	6	1	**8T-4191**	1	BOLT (M10X1.5X16-MM)	
M	7	1	**8T-4195**	4	BOLT (M10X1.5X30-MM)	

C - CHANGE FROM PREVIOUS TYPE
M - METRIC PART
Y - SEPARATE ILLUSTRATION

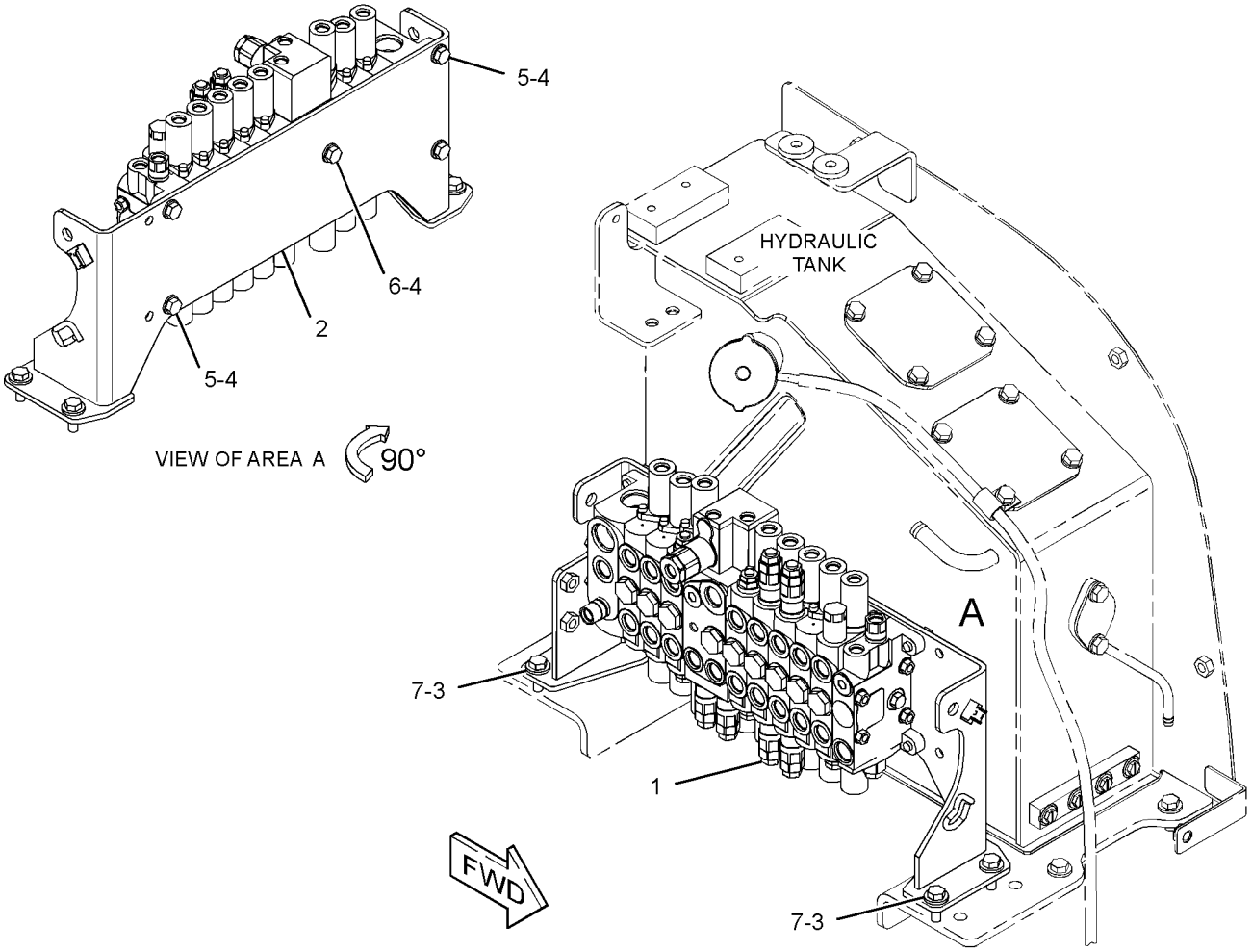

GRAPHIC #1 **<END>** g02798377

377-8861 VALVE & MTG GP-CONTROL—AUXILIARY, BOOM SWING

PART OF 379-4680 CONTROL AR-AUXILIARY

SMCS-5051 **i05437176**

NOTE	REF NO	GRAPHIC REF	PART NUMBER	QTY	PART NAME 1 2 3 4 5 6 (PRODUCT LEVEL)	SEE PAGE
Y	1	1	**267-0424**	2	MANIFOLD & SOLENOID GP-CONTROL (AUXILIARY, BOOM SWING)	289
	2	1	**282-2310**	1	BRACKET AS	
M		1	**8T-3490**	2	NUT-WELD (M10X1.5-THD)	
	3	1	**353-4402**	2	ADAPTER AS	
	4	1	**379-2000**	1	BRACKET AS	
M		1	**8T-3490**	2	NUT-WELD (M10X1.5-THD)	
	5	1	*148-8325*	3	CONNECTOR AS	
					(EACH INCLUDES)	
		1	**3J-1907**	1	SEAL-O-RING	
		1	**4J-5477**	1	SEAL-O-RING	
		1	**6V-8641**	1	CONNECTOR	
	6	1	*148-8351*	1	ELBOW AS	
		1	**4J-5477**	1	SEAL-O-RING	
		1	**6V-9849**	1	ELBOW	
	7	1	*148-8368*	3	ELBOW AS	
					(EACH INCLUDES)	
		1	**3J-1907**	1	SEAL-O-RING	
		1	**4J-5477**	1	SEAL-O-RING	
		1	**6V-8627**	1	ELBOW	
	8	1	**8T-4121**	4	WASHER-HARD (11X21X2.5-MM THK)	
M	9	1	**8T-4137**	4	BOLT (M10X1.5X20-MM)	
M	10	1	**8T-4200**	4	BOLT (M8X1.25X16-MM)	
	11	1	**8T-4224**	4	WASHER-HARD (8.8X16X2-MM THK)	

M - METRIC PART
Y - SEPARATE ILLUSTRATION

377-8861 **VALVE & MTG GP-CONTROL (*contd.*)** **i05437176**

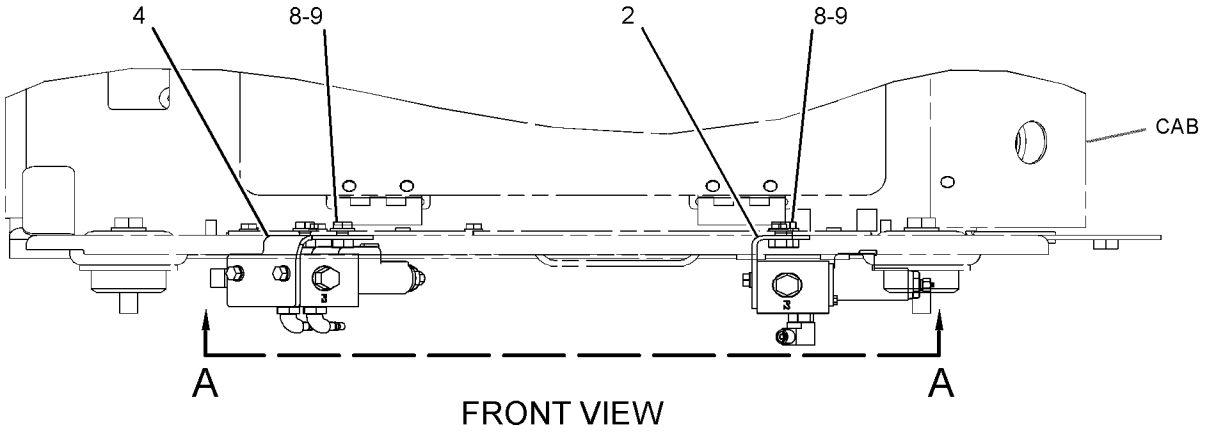

FRONT VIEW

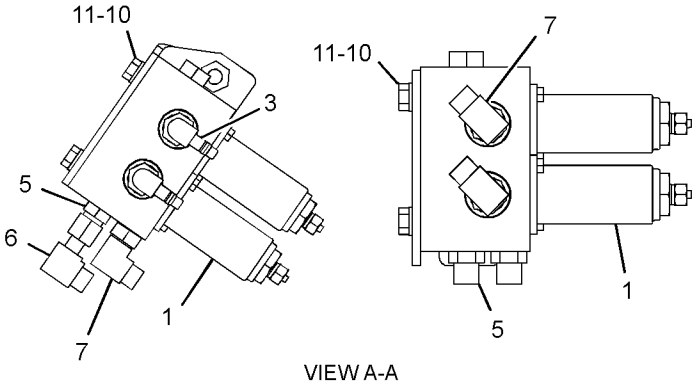

VIEW A-A

GRAPHIC #1 **<END>** g02765398

377-8876 VALVE & MTG GP-CONTROL–2-WAY

PART OF 379-4687 CONTROL AR-AUXILIARY

AN ATTACHMENT

SMCS-5051 **i05437177**

NOTE	REF NO	GRAPHIC REF	PART NUMBER	QTY	PART NAME 1 2 3 4 5 6 (PRODUCT LEVEL)	SEE PAGE
Y	1	1	**372-9898**	1	VALVE GP-SOLENOID (FLOW CONTROL) (2-WAY)	363
	2	1	**378-9748**	1	BRACKET AS	
M		1	**8T-3612**	2	NUT-WELD (M8X1.25-THD)	
	3	1	*148-8325*	2	CONNECTOR AS	
					(EACH INCLUDES)	
		1	**3J-1907**	1	SEAL-O-RING	
		1	**4J-5477**	1	SEAL-O-RING	
		1	**6V-8641**	1	CONNECTOR	
	4	1	*148-8351*	2	ELBOW AS	
					(EACH INCLUDES)	
		1	**4J-5477**	1	SEAL-O-RING	
		1	**6V-9849**	1	ELBOW	
	5	1	*148-8368*	4	ELBOW AS	
					(EACH INCLUDES)	
		1	**3J-1907**	1	SEAL-O-RING	
		1	**4J-5477**	1	SEAL-O-RING	
		1	**6V-8627**	1	ELBOW	
	6	1	*150-3033*	2	ELBOW AS	
					(EACH INCLUDES)	
		1	**3J-1907**	1	SEAL-O-RING	
		1	**4J-5477**	1	SEAL-O-RING	
		1	**8T-0164**	1	ELBOW	
	7	1	*187-2120*	1	ELBOW AS	
		1	**4J-5477**	1	SEAL-O-RING	
		1	**8C-8408**	1	ELBOW	
	8	1	**8T-4121**	2	WASHER-HARD (11X21X2.5-MM THK)	
M	9	1	**8T-4136**	2	BOLT (M10X1.5X25-MM)	
	10	1	**8T-4224**	2	WASHER-HARD (8.8X16X2-MM THK)	
M	11	1	**8T-6870**	2	BOLT (M8X1.25X70-MM)	

M - METRIC PART
Y - SEPARATE ILLUSTRATION

377-8876 **VALVE & MTG GP-CONTROL (*contd.*)** **i05437177**

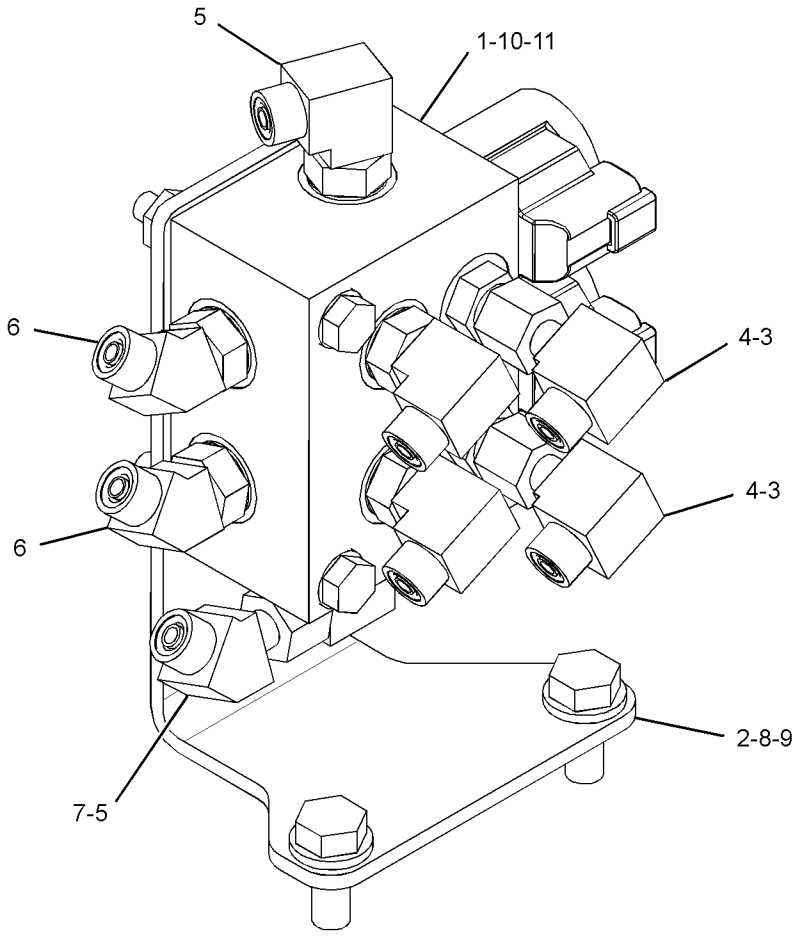

GRAPHIC #1 **<END>** g02767697

385-2798 VALVE & MTG GP-MAIN CONTROL—BLADE ANGLE

S/N: TTN1-409
PART OF 377-8928 BLADE AR-ANGLING
AN ATTACHMENT

SMCS-5051 **i05236133**

NOTE	REF NO	GRAPHIC REF	PART NUMBER	QTY	PART NAME 1 2 3 4 5 6 (PRODUCT LEVEL)	SEE PAGE
	1	1	**381-1119**	1	SUPPORT AS	
		1	**7T-1099**	1	LINK	
M		1	**8T-3490**	2	NUT-WELD (M10X1.5-THD)	
Y	2	1	**381-6746**	1	VALVE GP-MAIN CONTROL	343
	3	1	**7X-7729**	4	WASHER (11X25X3-MM THK)	
	4	1	**8T-4121**	5	WASHER-HARD (11X21X2.5-MM THK)	
M	5	1	**8T-4136**	4	BOLT (M10X1.5X25-MM)	
M	6	1	**8T-4191**	1	BOLT (M10X1.5X16-MM)	
M	7	1	**8T-4195**	4	BOLT (M10X1.5X30-MM)	

M - METRIC PART
Y - SEPARATE ILLUSTRATION

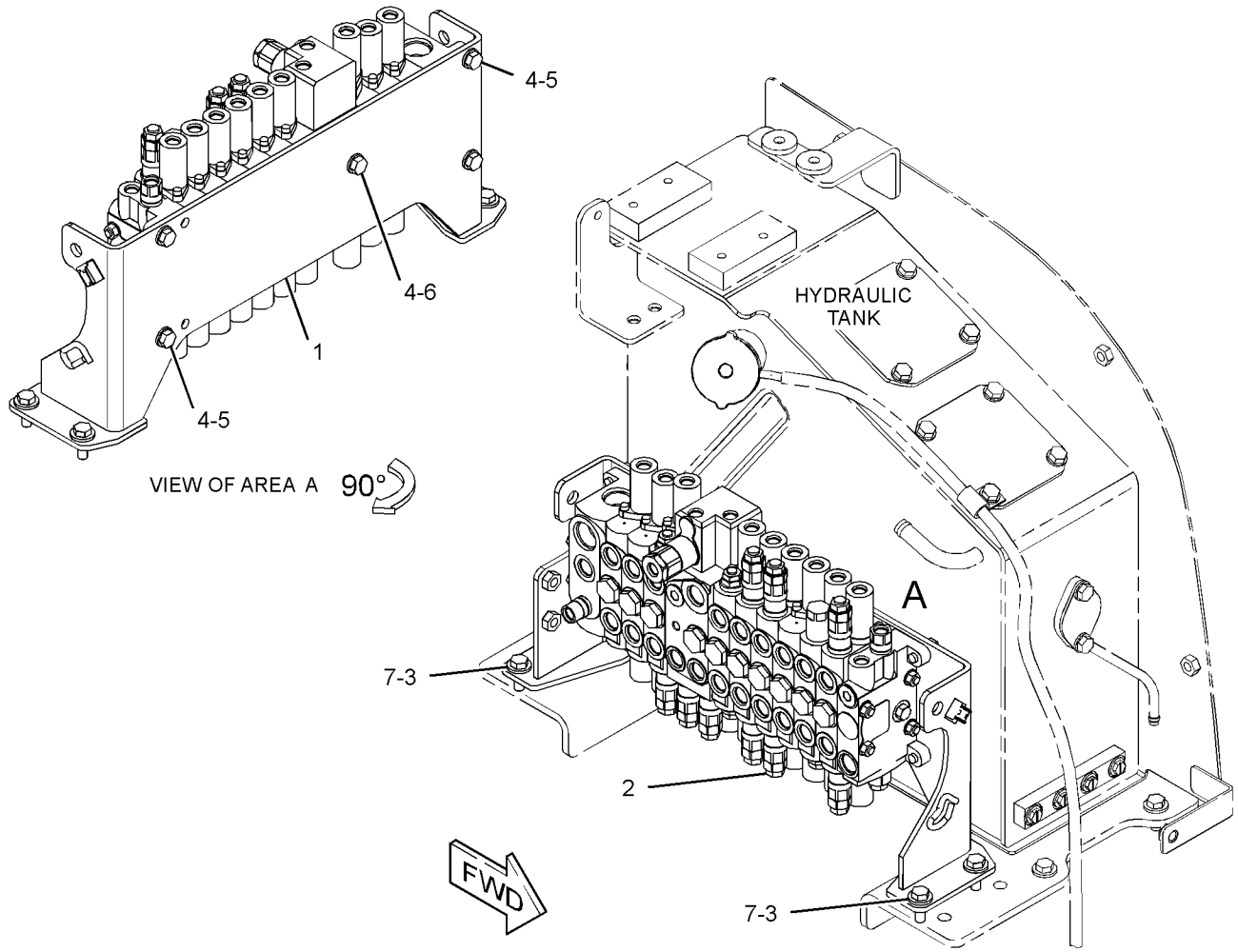

GRAPHIC #1 **<END>** g02801420

385-2798 VALVE & MTG GP-MAIN CONTROL–BLADE ANGLE

S/N: TTN410-UP
PART OF 377-8928 BLADE AR-ANGLING
AN ATTACHMENT

SMCS-5051 **i05236109**

NOTE	REF NO	GRAPHIC REF	PART NUMBER	QTY	PART NAME 1 2 3 4 5 6 (PRODUCT LEVEL)	SEE PAGE
	1	1	**381-1119**	1	SUPPORT AS	
		1	**7T-1099**	1	LINK	
M		1	**8T-3490**	2	NUT-WELD (M10X1.5-THD)	
CY	2	1	**393-7633**	1	VALVE GP-MAIN CONTROL (ANGLE BLADE)	346
	3	1	**7X-7729**	4	WASHER (11X25X3-MM THK)	
	4	1	**8T-4121**	5	WASHER-HARD (11X21X2.5-MM THK)	
M	5	1	**8T-4136**	4	BOLT (M10X1.5X25-MM)	
M	6	1	**8T-4191**	1	BOLT (M10X1.5X16-MM)	
M	7	1	**8T-4195**	4	BOLT (M10X1.5X30-MM)	

C - CHANGE FROM PREVIOUS TYPE
M - METRIC PART
Y - SEPARATE ILLUSTRATION

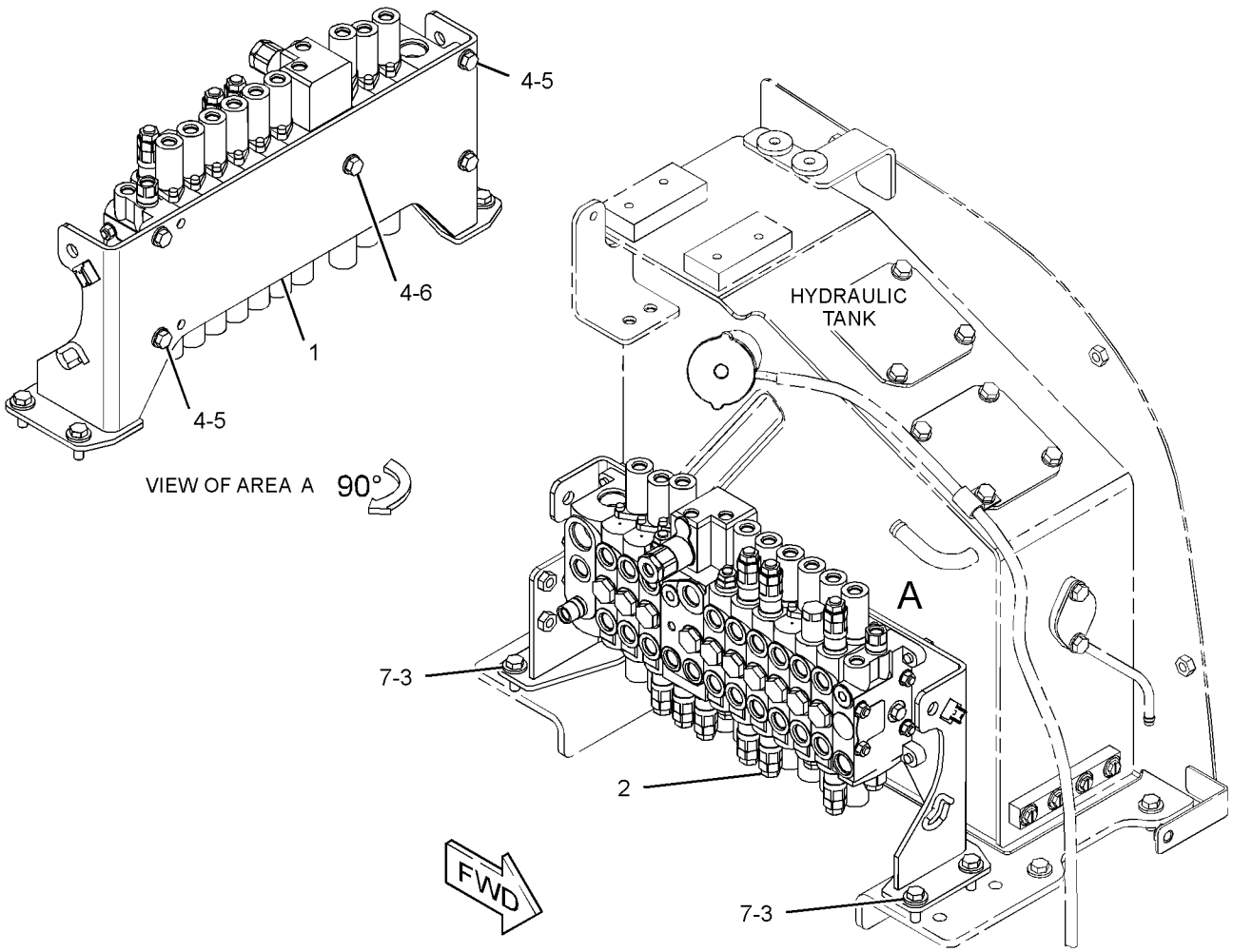

GRAPHIC #1 **<END>** g02801420

356-4545 VALVE & MTG GP-PILOT–TRAVEL

S/N: TTN1-1091
PART OF 377-8921, 377-8922 CONTROL AR-GOVERNOR
AN ATTACHMENT

SMCS-5059 **i04019552**

NOTE	REF NO	GRAPHIC REF	PART NUMBER	QTY	PART NAME 1 2 3 4 5 6 (PRODUCT LEVEL)	SEE PAGE
Y	1	1	**356-3823**	1	VALVE GP-PILOT (WITH SHUTTLE) (TRAVEL)	351
	2	1	**8T-4121**	4	WASHER-HARD (11X21X2.5-MM THK)	
M	3	1	**8T-4136**	4	BOLT (M10X1.5X25-MM)	

M - METRIC PART
Y - SEPARATE ILLUSTRATION

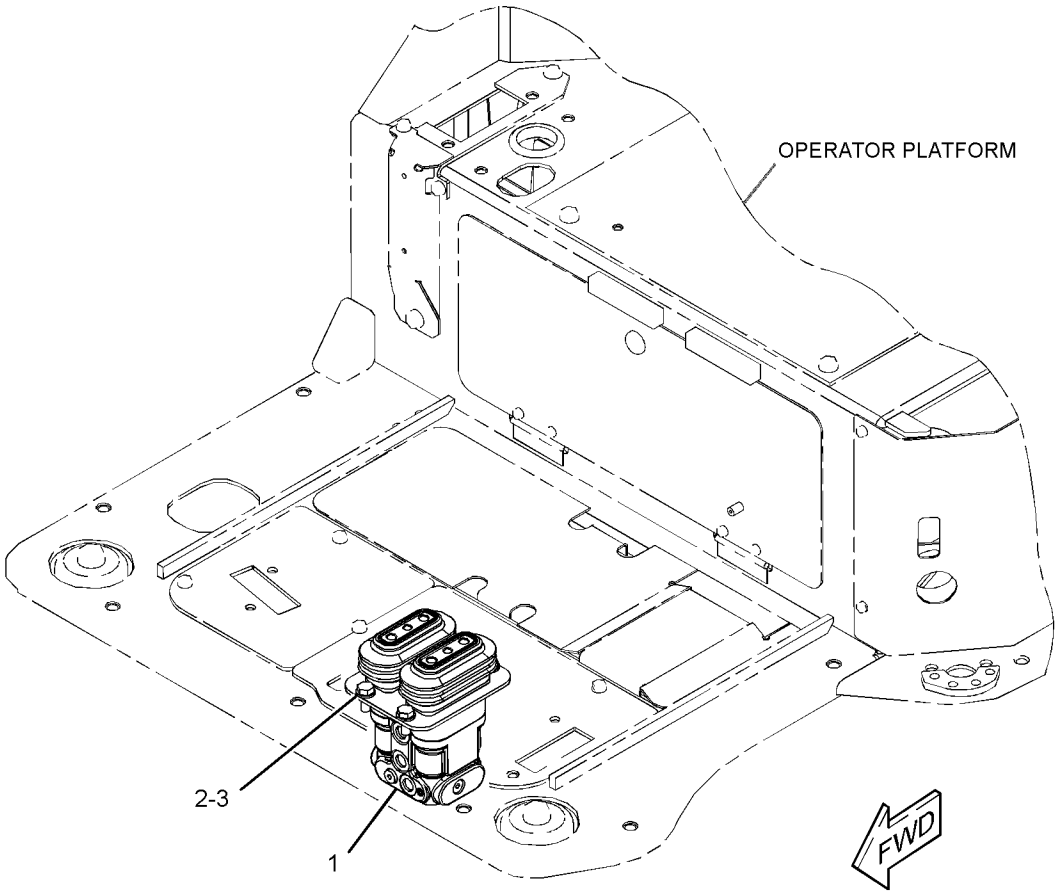

GRAPHIC #1 **<END>** g02204702

356-4545 VALVE & MTG GP-PILOT–TRAVEL

S/N: TTN1092-UP
PART OF 377-8921, 377-8922 CONTROL AR-GOVERNOR
AN ATTACHMENT

SMCS-5059 **i05357679**

NOTE	REF NO	GRAPHIC REF	PART NUMBER	QTY	PART NAME 1 2 3 4 5 6 (PRODUCT LEVEL)	SEE PAGE
CY	1	1	**416-2294**	1	VALVE GP-PILOT (TRAVEL)	355
	2	1	**8T-4121**	4	WASHER-HARD (11X21X2.5-MM THK)	
M	3	1	**8T-4136**	4	BOLT (M10X1.5X25-MM)	

C - CHANGE FROM PREVIOUS TYPE
M - METRIC PART
Y - SEPARATE ILLUSTRATION

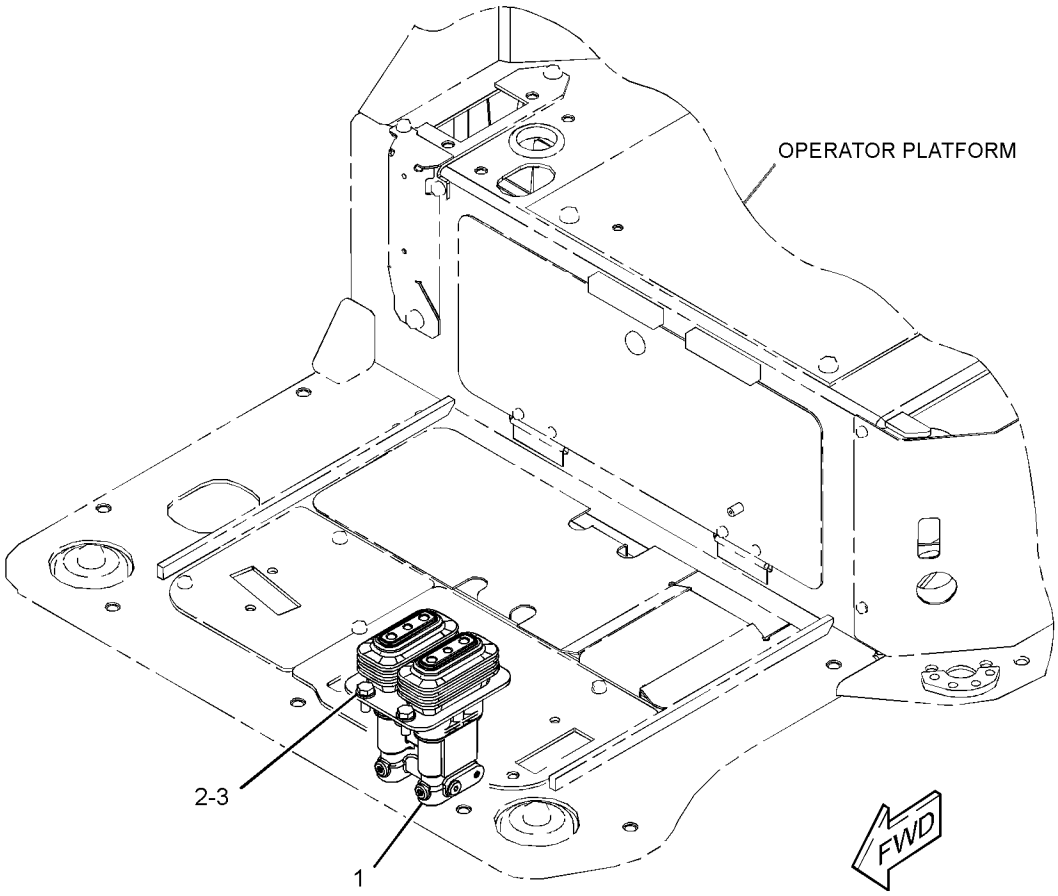

GRAPHIC #1 **<END>** g03401369

421-2718 VALVE & MTG GP-PILOT–CAB

S/N: TTN908-UP

PART OF 376-6691, 376-6695, 383-5924, 383-5925 CAB AR

AN ATTACHMENT

SMCS-5059 **i05031518**

NOTE	REF NO	GRAPHIC REF	PART NUMBER	QTY	PART NAME 1 2 3 4 5 6 (PRODUCT LEVEL)	SEE PAGE
Y	1	1	**393-7501**	1	VALVE GP-PILOT (BLADE CONTROL)	353
M	2	1	**101-7404**	2	BOLT-SOCKET HEAD (M10X1.5X30-MM)	

M - METRIC PART
Y - SEPARATE ILLUSTRATION

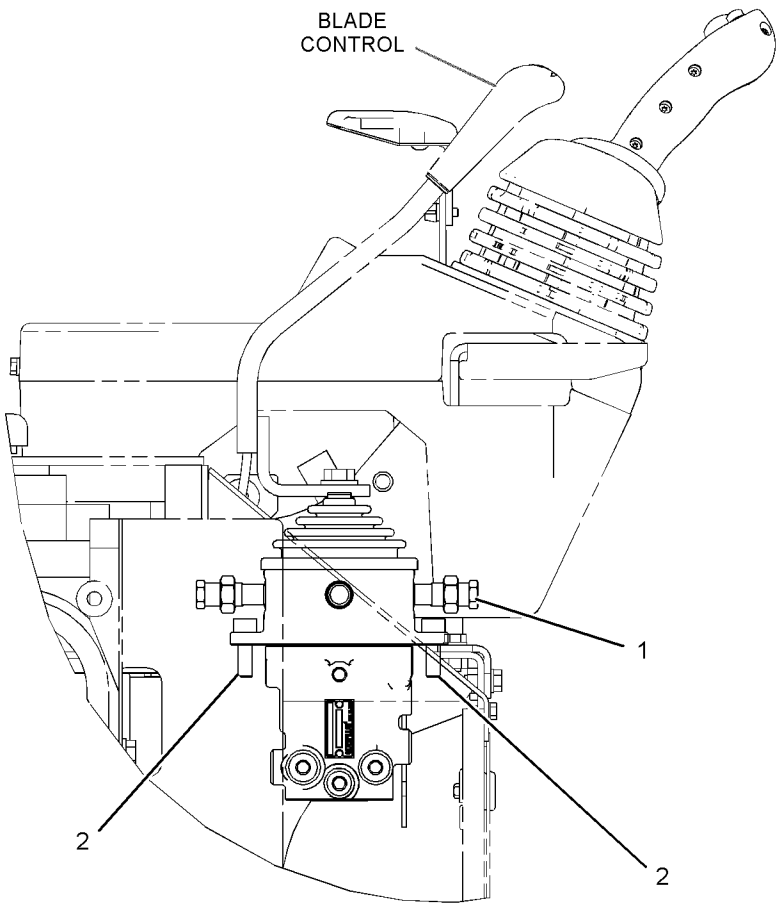

RIGHT SIDE VIEW

GRAPHIC #1 **<END>** g03202979

361-1132 VALVE GP-CHECK–HYDRAULIC CONTROL LOCK

PART OF 361-1125 CYLINDER GP-HYDRAULIC

AN ATTACHMENT

SMCS-5067 **i04404022**

NOTE	REF NO	GRAPHIC REF	PART NUMBER	QTY	PART NAME 1 2 3 4 5 6 (PRODUCT LEVEL)	SEE PAGE
	1	1	**215-3277**	1	SEAL-O-RING	
	2	1	**214-7654**	1	SEAL-O-RING	
		1	**180-8424**	1	SEAL-O-RING	
	3	1	**112-5282**	1	SEAL-O-RING	

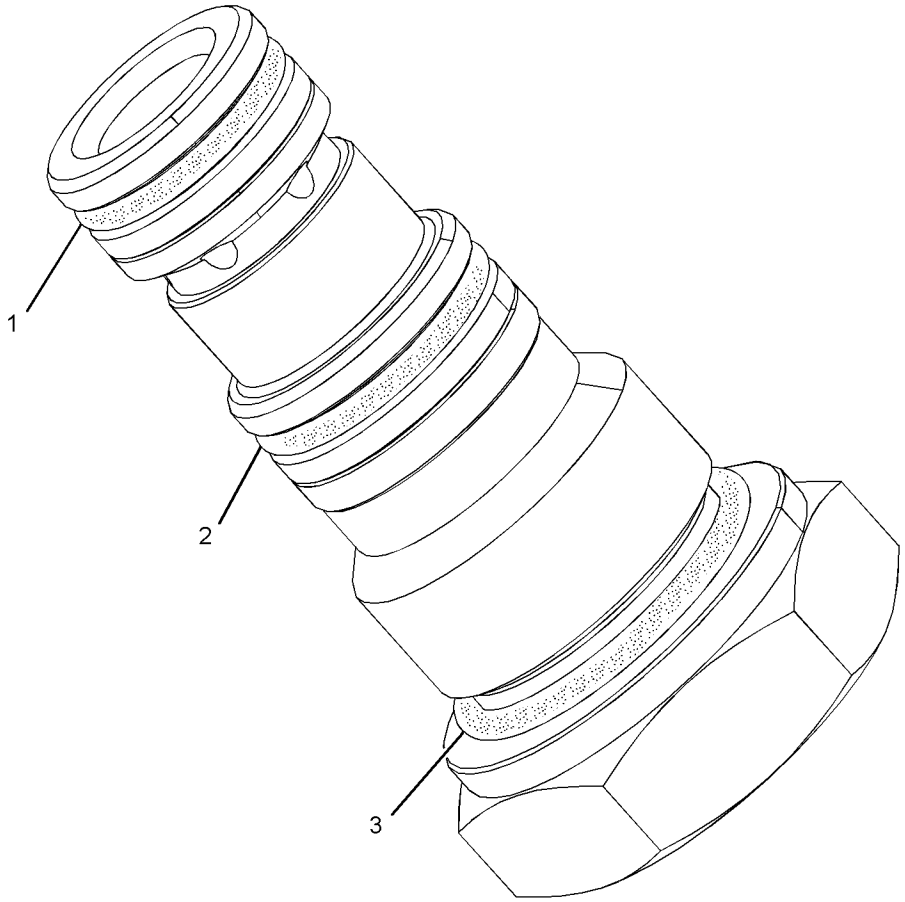

GRAPHIC #1 **<END>** g02598836

274-9034 VALVE GP-CONTROL

PART OF 281-3052 MOTOR GP-SWING

SMCS-5051 **i02503218**

NOTE	REF NO	GRAPHIC REF	PART NUMBER	QTY	PART NAME 1 2 3 4 5 6 (PRODUCT LEVEL)	SEE PAGE
	1	1	**169-1130**	4	PLUG	
	2	1	**095-1579**	4	SEAL-O-RING	
	3	1	**095-1574**	2	SEAL-O-RING	
	4	1	**169-1116**	1	PLUG	
					PARTS SHOWN IN GRAPHIC WITHOUT A REFERENCE NUMBER ARE NOT SERVICED SEPARATELY	

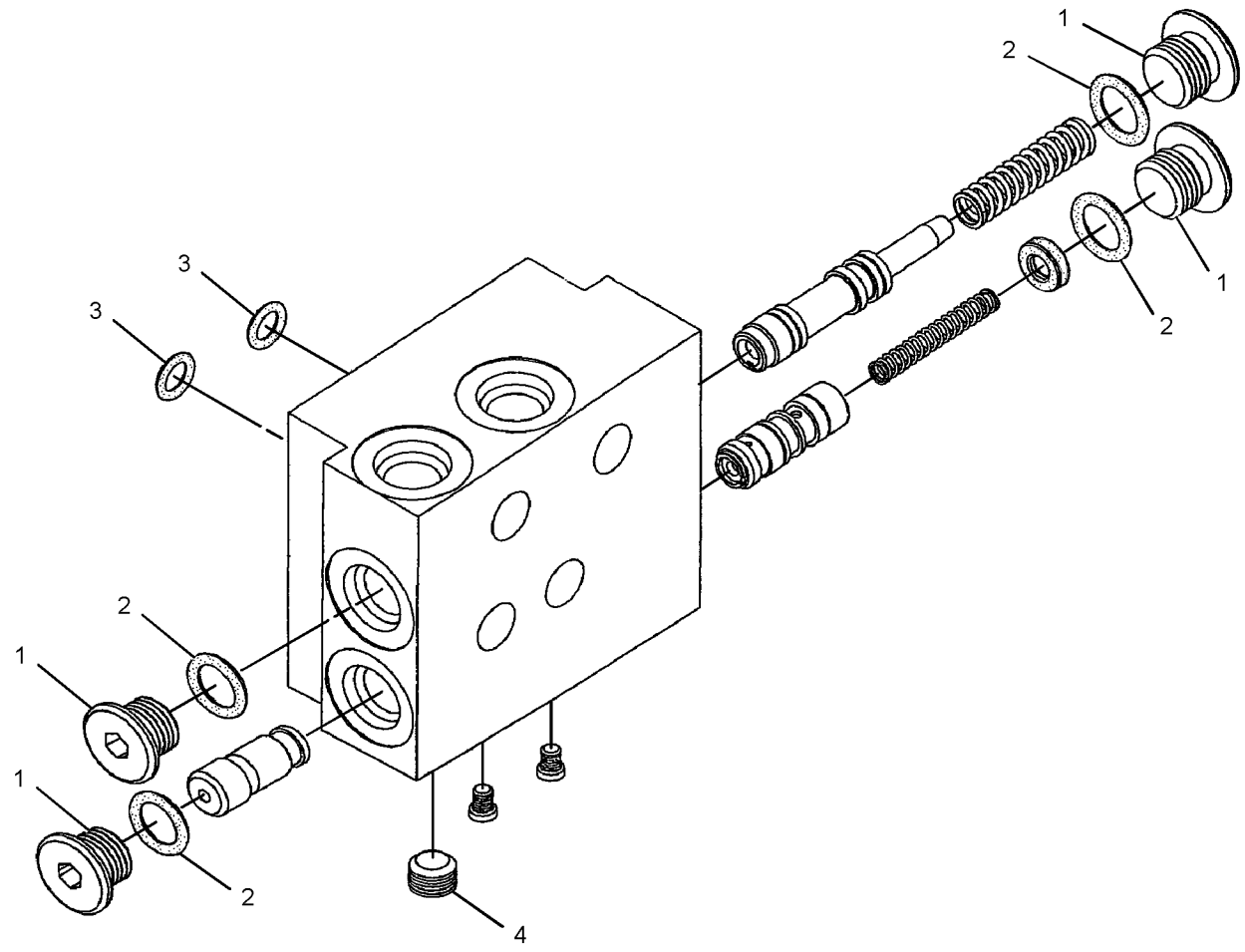

GRAPHIC #1 **<END>** g01252434

281-2326 VALVE GP-CONTROL–INLET

PART OF 379-0417, 381-6746, 393-7632, 393-7633 VALVE GP-MAIN CONTROL
AN ATTACHMENT

SMCS-5051 **i04046739**

NOTE	REF NO	GRAPHIC REF	PART NUMBER	QTY	PART NAME 1 2 3 4 5 6 (PRODUCT LEVEL)	SEE PAGE
	1	1	**281-2952**	1	SPRING	
	2	1	**281-2953**	1	SPACER	
	3	1	**281-2954**	1	SEAL	
	4	1	**281-2955**	1	WASHER	
	5	1	**281-2956**	1	FLANGE	
	6	1	**281-2957**	1	SCREW	
	7	1	**281-2958**	1	NUT	
	8	1	**281-2959**	2	BOLT	
	9	1	**281-2960**	1	SEAL	
	10	1	**150-6355**	1	PLUG	
	11	1	**281-2961**	2	SEAL	
	12	1	**281-2962**	1	ORIFICE	
	13	1	**281-2963**	1	RING	
	14	1	**356-1597**	1	PLUG	
	15	1	**150-6367**	1	SEAL-O-RING	
	16	1	**150-0885**	1	SEAL	
	17	1	**281-2965**	1	RING	

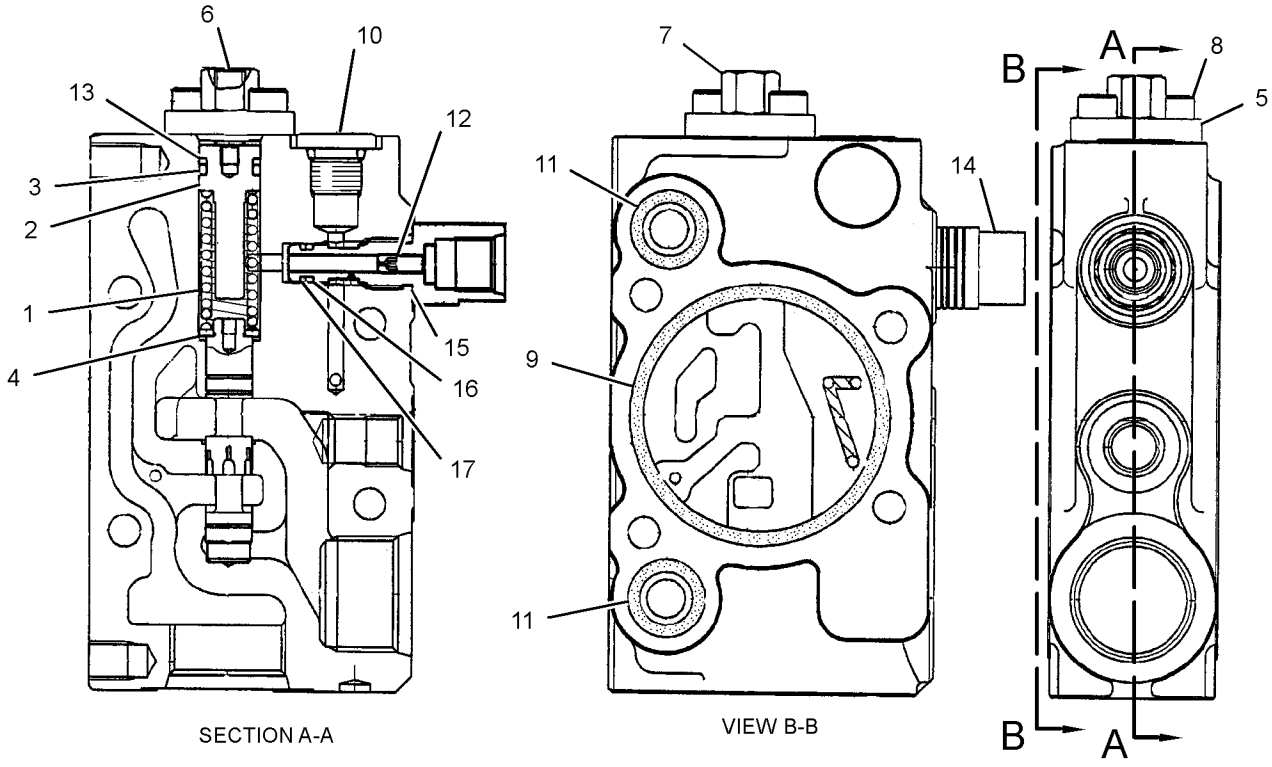

GRAPHIC #1 **<END>** g01222085

281-2336 VALVE GP-CONTROL–OUTLET

PART OF 379-0417, 381-6746, 393-7632, 393-7633 VALVE GP-MAIN CONTROL AN ATTACHMENT

SMCS-5051 **i05426621**

NOTE	REF NO	GRAPHIC REF	PART NUMBER	QTY	PART NAME 1 2 3 4 5 6 (PRODUCT LEVEL)	SEE PAGE
	1	1	**279-4810**	1	PLUG AS	
	2	1	**150-6355**	1	PLUG	
	3	1	**279-4786**	1	VALVE GP-RELIEF (OUTLET)	

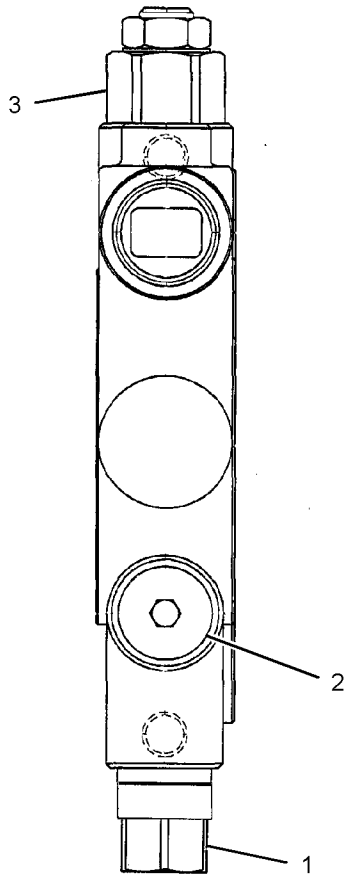

GRAPHIC #1 **<END>** g01222276

291-1671 VALVE GP-CONTROL–BLADE

PART OF 379-0417, 393-7632 VALVE GP-MAIN CONTROL

AN ATTACHMENT

SMCS-5051 **i04015377**

NOTE	REF NO	GRAPHIC REF	PART NUMBER	QTY	PART NAME 1 2 3 4 5 6 (PRODUCT LEVEL)	SEE PAGE
	1	1	**281-2972**	2	SEAT	
	2	1	**281-2983**	1	SPRING	
	3	1	**281-2974**	2	SEAT	
	4	1	**281-2975**	2	CAP	
	5	1	**281-2976**	2	SEAL	
	6	1	**281-2984**	4	BOLT	
	7	1	**281-2978**	1	SPRING	
	8	1	**281-2979**	1	PLUG	
	9	1	**250-8771**	1	SEAL	
	10	1	**281-2960**	1	SEAL	
	11	1	**281-2985**	2	PLUNGER	
	12	1	**281-2986**	2	SPRING	
	13	1	**281-2961**	2	SEAL	
	14	1	**279-4796**	1	PLATE	
	15	1	**281-2987**	2	SPACER	
	16	1	**150-6346**	2	SEAL	
	17	1	**288-9388**	1	SPRING	

291-1671 **VALVE GP-CONTROL (*contd.*)** **i04015377**

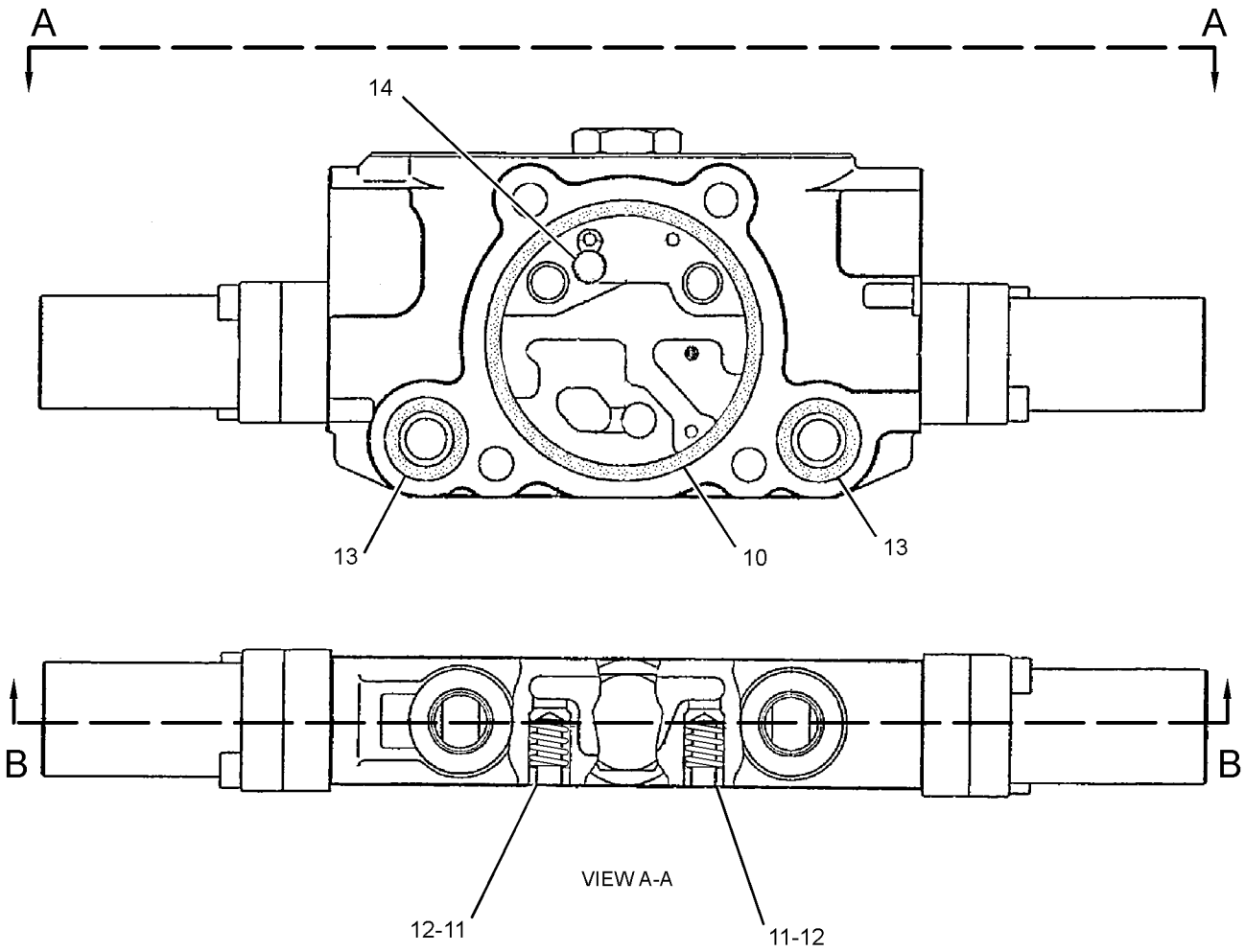

GRAPHIC #1 **<END>** g01322972

292-0185 VALVE GP-CONTROL–BUCKET

PART OF 379-0417, 381-6746, 393-7632, 393-7633 VALVE GP-MAIN CONTROL AN ATTACHMENT

SMCS-5051 **i04015353**

NOTE	REF NO	GRAPHIC REF	PART NUMBER	QTY	PART NAME 1 2 3 4 5 6 (PRODUCT LEVEL)	SEE PAGE
	1	1	**281-2972**	2	SEAT	
	2	1	**281-2973**	2	SPRING	
	3	1	**281-2974**	2	SEAT	
	4	1	**281-2975**	2	CAP	
	5	1	**281-2976**	2	SEAL	
	6	1	**281-2977**	4	BOLT	
	7	1	**281-2978**	1	SPRING	
	8	1	**281-2979**	1	PLUG	
	9	1	**250-8771**	1	SEAL	
	10	1	**281-2960**	1	SEAL	
	11	1	**281-2985**	2	PLUNGER	
	12	1	**281-2986**	2	SPRING	
	13	1	**281-2961**	2	SEAL	
	14	1	**279-4796**	1	PLATE	

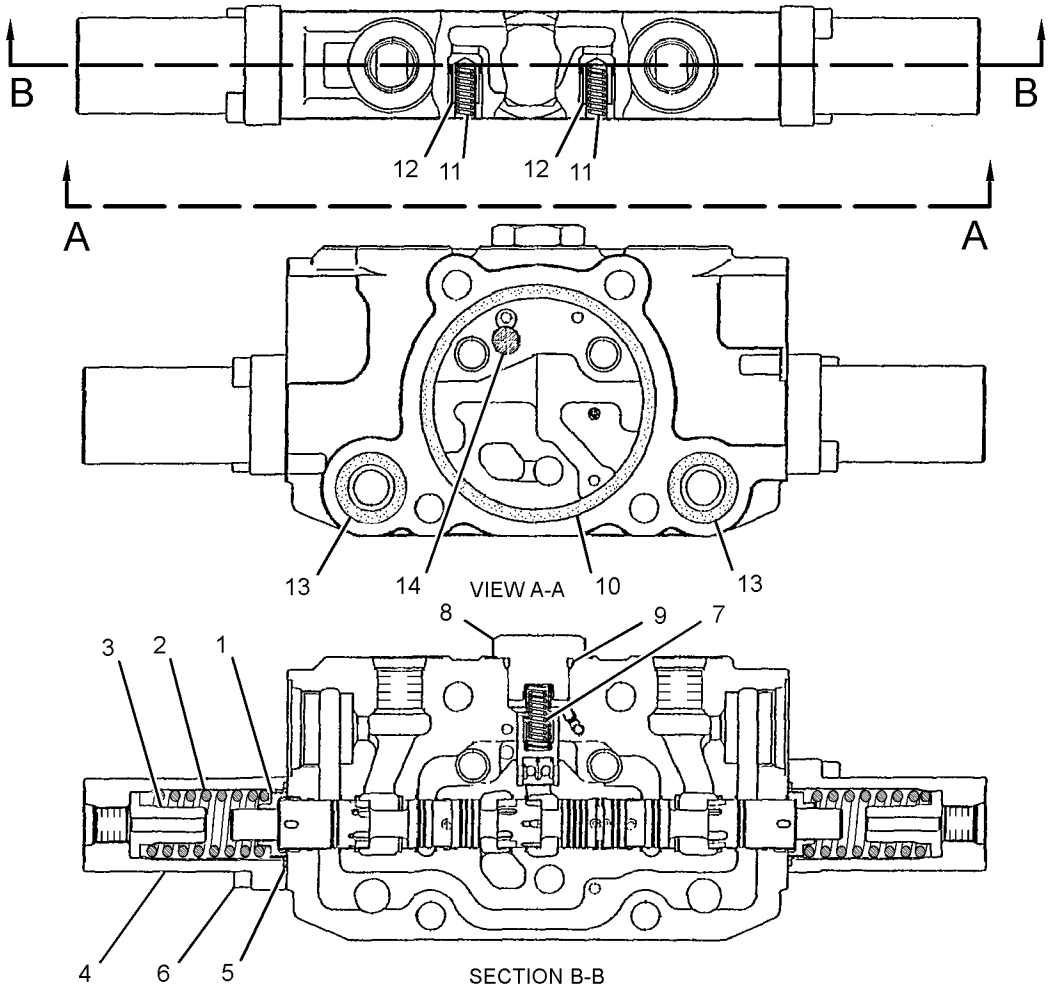

GRAPHIC #1 **<END>** g01415561

292-0187 VALVE GP-CONTROL–SWING

PART OF 379-0417, 381-6746, 393-7632, 393-7633 VALVE GP-MAIN CONTROL
AN ATTACHMENT

SMCS-5051 **i04015354**

NOTE	REF NO	GRAPHIC REF	PART NUMBER	QTY	PART NAME 1 2 3 4 5 6 (PRODUCT LEVEL)	SEE PAGE
	1	1	**281-2972**	2	SEAT	
	2	1	**281-2973**	2	SPRING	
	3	1	**281-2974**	2	SEAT	
	4	1	**281-2975**	2	CAP	
	5	1	**281-2976**	2	SEAL	
	6	1	**281-2977**	4	BOLT	
	7	1	**281-2978**	1	SPRING	
	8	1	**281-2979**	1	PLUG	
	9	1	**250-8771**	1	SEAL	
	10	1	**281-2960**	1	SEAL	
	11	1	**281-2985**	2	PLUNGER	
	12	1	**281-2986**	2	SPRING	
	13	1	**281-2961**	2	SEAL	
	14	1	**279-4796**	1	PLATE	

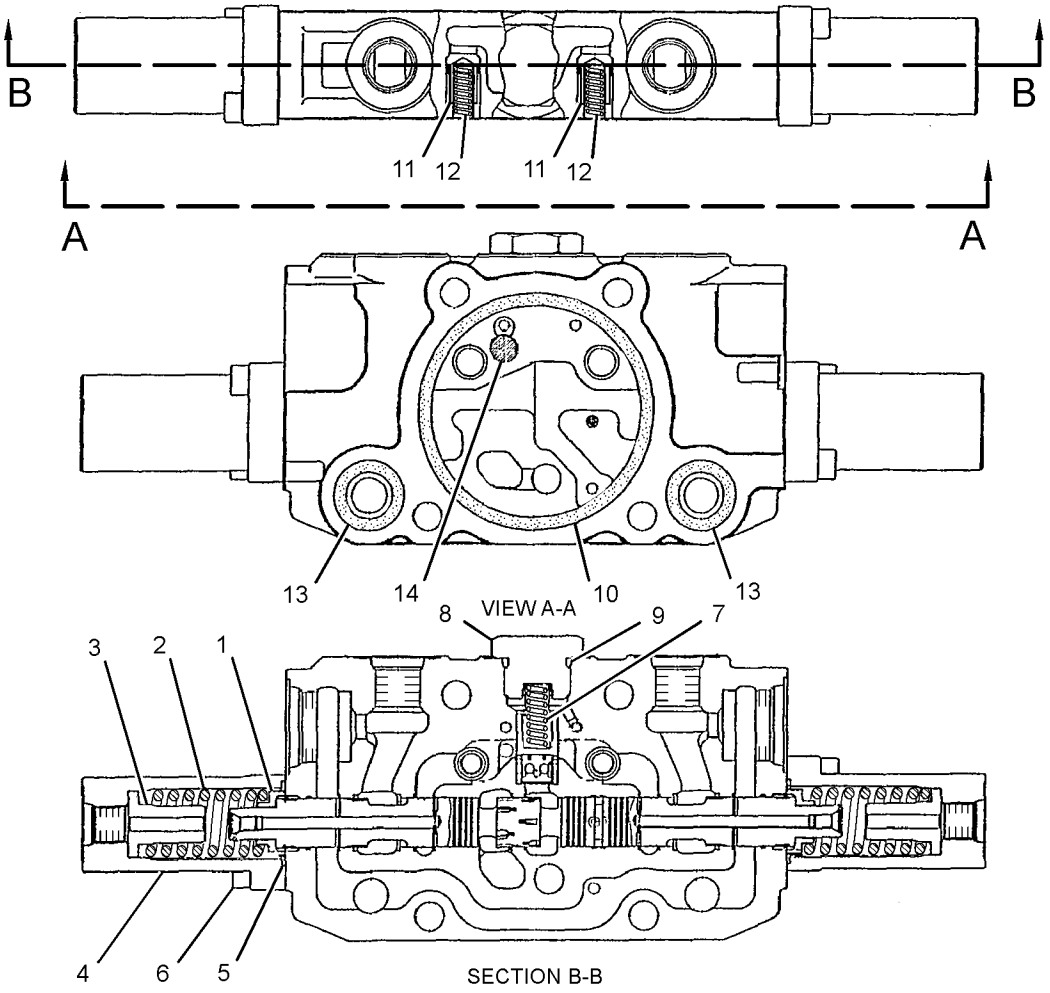

GRAPHIC #1

<END>

g01421856

292-0188 VALVE GP-CONTROL–BOOM SWING

PART OF 379-0417, 381-6746, 393-7632, 393-7633 VALVE GP-MAIN CONTROL AN ATTACHMENT

SMCS-5051 **i04015355**

NOTE	REF NO	GRAPHIC REF	PART NUMBER	QTY	PART NAME 1 2 3 4 5 6 (PRODUCT LEVEL)	SEE PAGE
	1	1	**281-2972**	2	SEAT	
	2	1	**281-2973**	2	SPRING	
	3	1	**281-2974**	2	SEAT	
	4	1	**281-2975**	2	CAP	
	5	1	**281-2976**	2	SEAL	
	6	1	**281-2977**	4	BOLT	
	7	1	**281-2978**	1	SPRING	
	8	1	**281-2979**	1	PLUG	
	9	1	**250-8771**	1	SEAL	
	10	1	**281-2960**	1	SEAL	
	11	1	**281-2985**	2	PLUNGER	
	12	1	**281-2986**	2	SPRING	
	13	1	**281-2961**	2	SEAL	

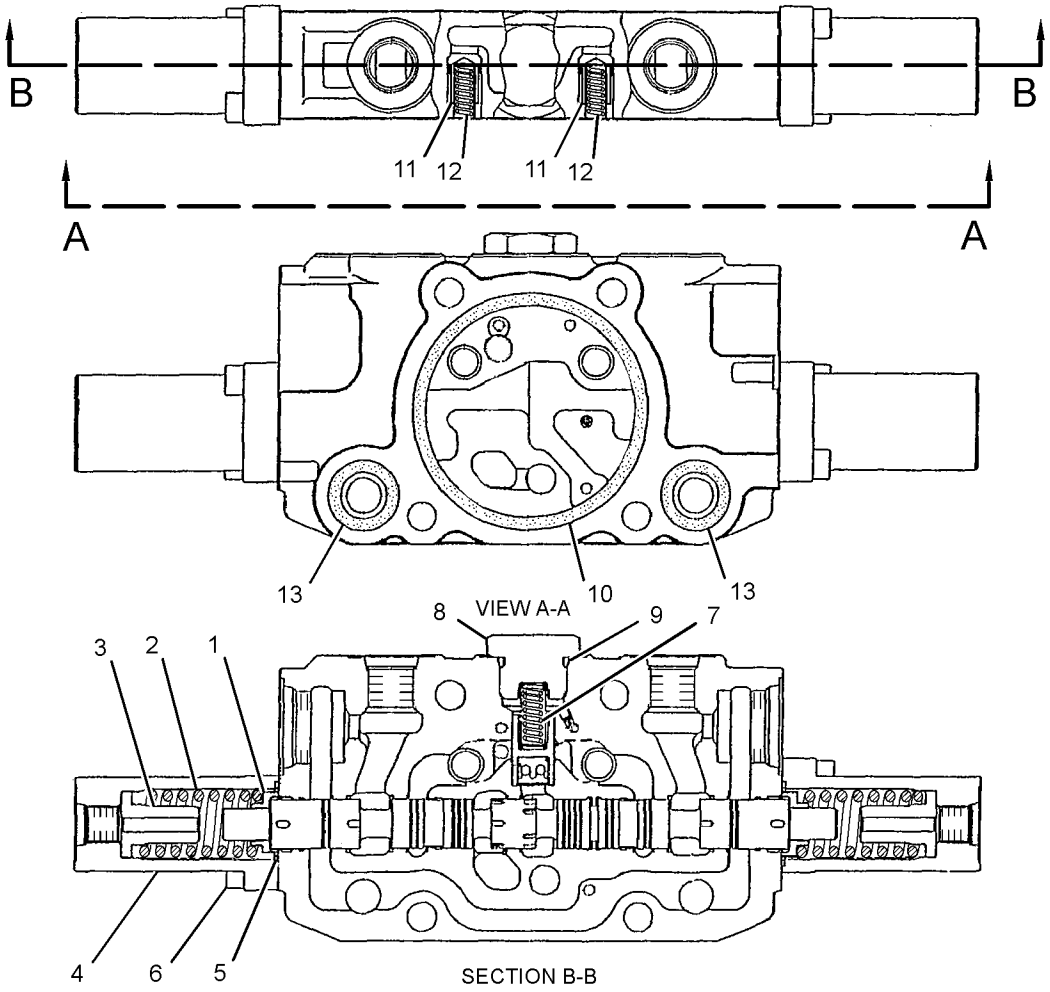

GRAPHIC #1

<END>

g01423282

326-8530 VALVE GP-CONTROL–ANGLE

PART OF 381-6746, 393-7633 VALVE GP-MAIN CONTROL
AN ATTACHMENT

SMCS-5051 **i04016751**

NOTE	REF NO	GRAPHIC REF	PART NUMBER	QTY	PART NAME 1 2 3 4 5 6 (PRODUCT LEVEL)	SEE PAGE
	1	1	**281-2972**	2	SEAT	
	2	1	**281-2973**	2	SPRING	
	3	1	**281-2974**	2	SEAT	
	4	1	**281-2975**	2	CAP	
	5	1	**281-2976**	2	SEAL	
	6	1	**281-2977**	4	BOLT	
	7	1	**281-2978**	1	SPRING	
	8	1	**281-2979**	1	PLUG	
	9	1	**250-8771**	1	SEAL	
	10	1	**281-2960**	1	SEAL	
	11	1	**281-2985**	2	PLUNGER	
	12	1	**281-2986**	2	SPRING	
	13	1	**281-2961**	2	SEAL	

326-8530 **VALVE GP-CONTROL (*contd.*)** **i04016751**

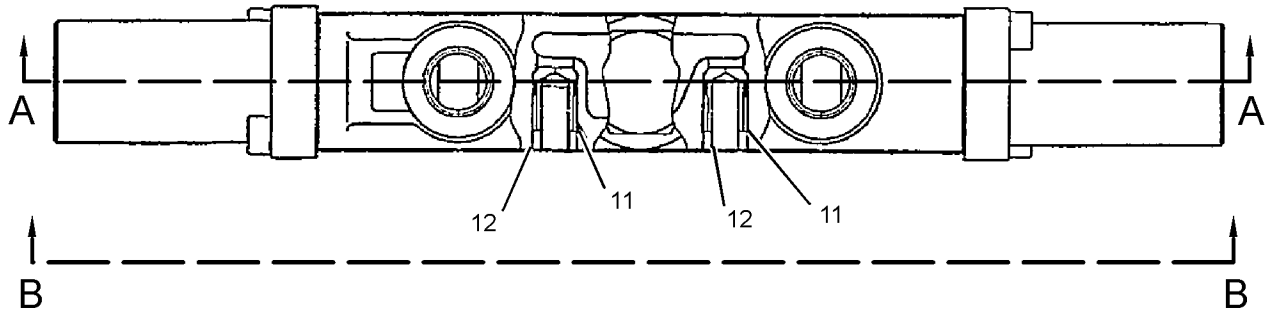

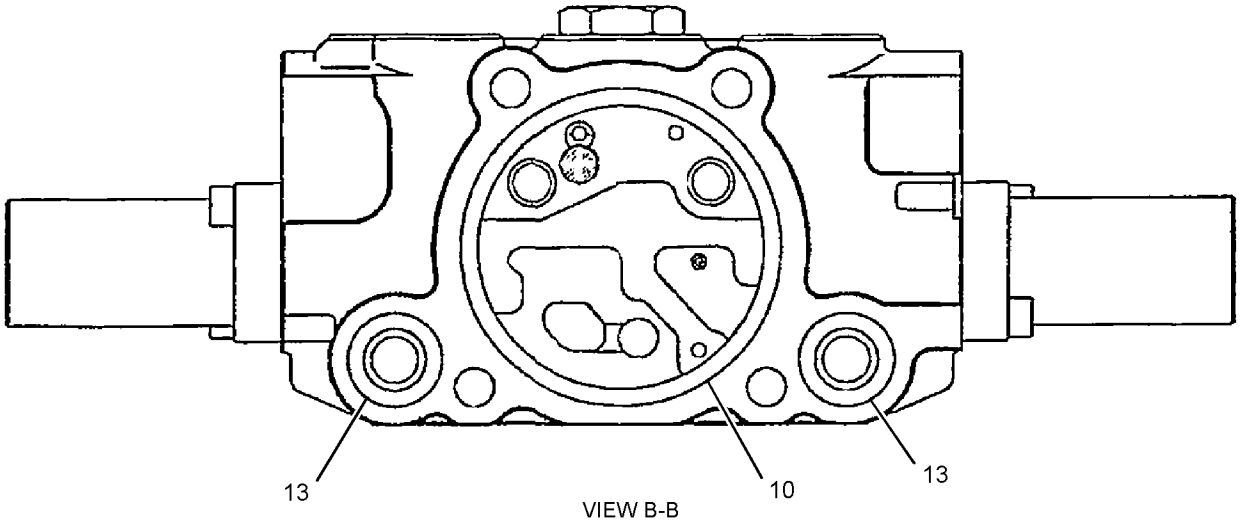

VIEW B-B

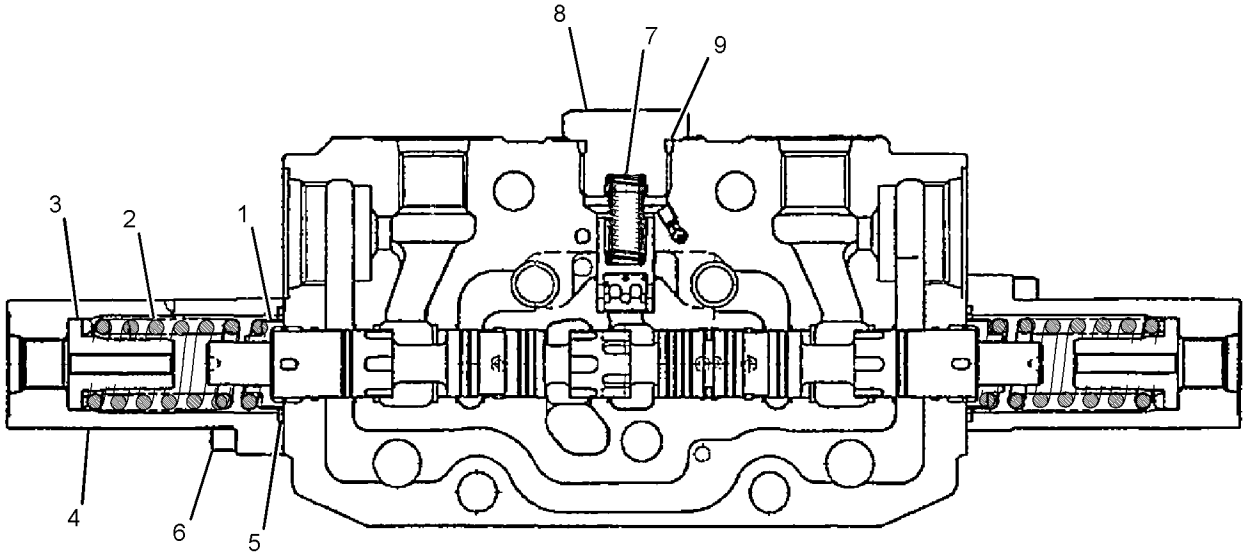

SECTION A-A

GRAPHIC #1 **<END>** g01954780

329-8369 VALVE GP-CONTROL–AUXILIARY

PART OF 379-0417, 381-6746, 393-7632, 393-7633 VALVE GP-MAIN CONTROL AN ATTACHMENT

SMCS-5051 **i04015356**

NOTE	REF NO	GRAPHIC REF	PART NUMBER	QTY	PART NAME 1 2 3 4 5 6 (PRODUCT LEVEL)	SEE PAGE
	1	1	**281-2972**	2	SEAT	
	2	1	**281-2983**	2	SPRING	
	3	1	**281-2974**	2	SEAT	
	4	1	**281-2975**	2	CAP	
	5	1	**281-2976**	2	SEAL	
	6	1	**281-2977**	4	BOLT	
	7	1	**281-2978**	1	SPRING	
	8	1	**281-2979**	1	PLUG	
	9	1	**250-8771**	1	SEAL	
	10	1	**281-2960**	1	SEAL	
	11	1	**281-2985**	2	PLUNGER	
	12	1	**281-2986**	2	SPRING	
	13	1	**281-2961**	2	SEAL	
	14	1	**279-4796**	1	PLATE	

329-8369 **VALVE GP-CONTROL (*contd.*)** **i04015356**

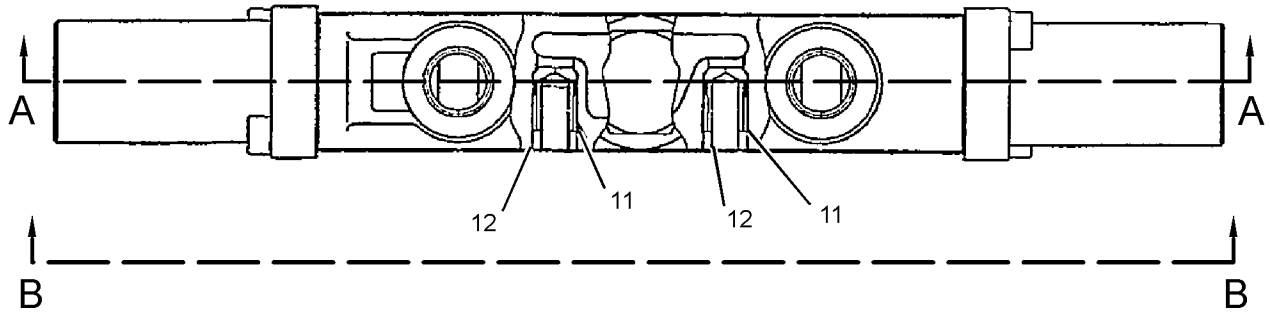

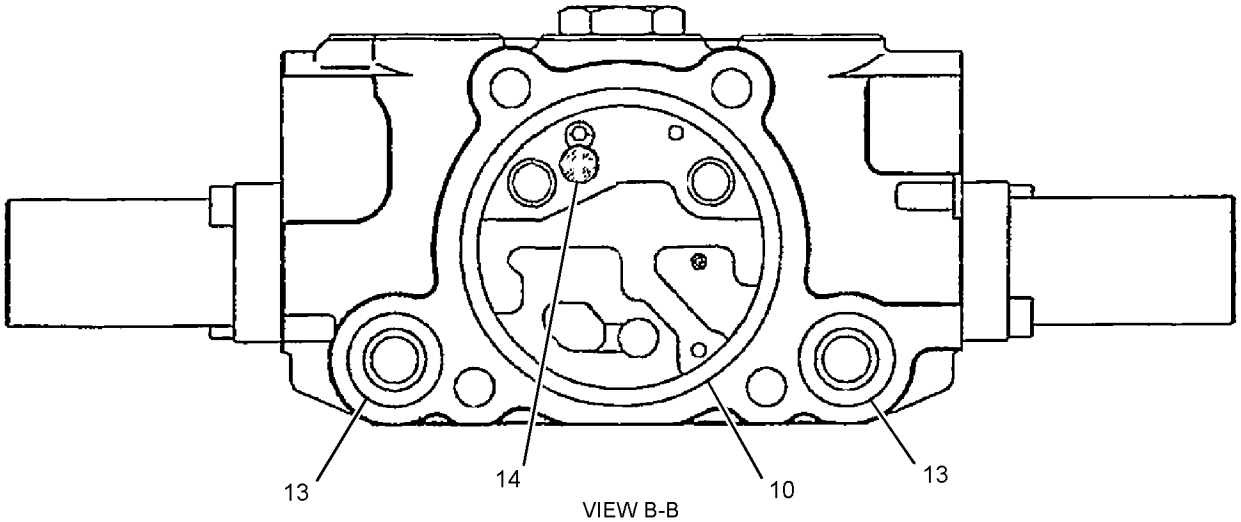

VIEW B-B

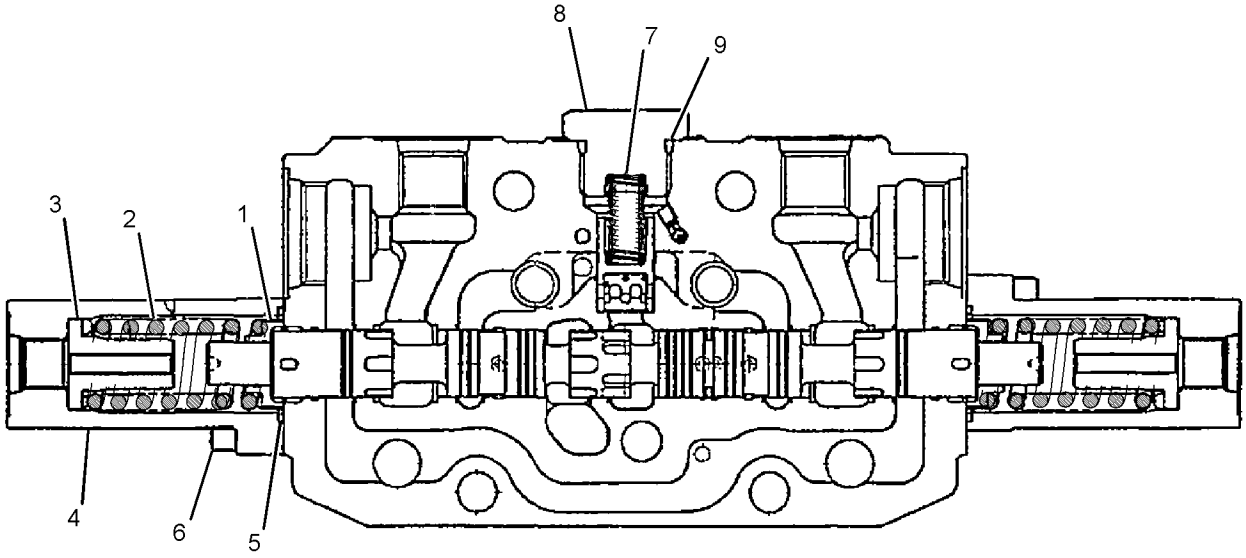

SECTION A-A

GRAPHIC #1 **<END>** g01954685

356-1594 VALVE GP-CONTROL–BOOM

PART OF 379-0417, 381-6746, 393-7632, 393-7633 VALVE GP-MAIN CONTROL
AN ATTACHMENT

SMCS-5051 **i04015375**

NOTE	REF NO	GRAPHIC REF	PART NUMBER	QTY	PART NAME 1 2 3 4 5 6 (PRODUCT LEVEL)	SEE PAGE
	1	1	**281-2972**	2	SEAT	
	2	1	**281-2973**	2	SPRING	
	3	1	**281-2974**	2	SEAT	
	4	1	**281-2975**	1	CAP	
	5	1	**281-2976**	2	SEAL	
	6	1	**281-2977**	2	BOLT	
	7	1	**281-2978**	1	SPRING	
	8	1	**281-2979**	1	PLUG	
	9	1	**250-8771**	1	SEAL	
	10	1	**281-2960**	1	SEAL	
	11	1	**281-2985**	2	PLUNGER	
	12	1	**281-2986**	2	SPRING	
	13	1	**281-2961**	2	SEAL	
	14	1	**279-4796**	1	PLATE	
	15	1	**150-6367**	1	SEAL-O-RING	
	16	1	**281-2990**	1	PLUNGER	
	17	1	**281-2991**	1	SPRING	
	18	1	**281-2992**	1	SPACER	
	19	1	**281-2993**	1	RING	
	20	1	**281-2994**	1	VALVE AS (BOOM CONTROL)	
	21	1	**150-6355**	1	PLUG	
	22	1	**281-2995**	5	BOLT	

356-1594 **VALVE GP-CONTROL (*contd.*)** **i04015375**

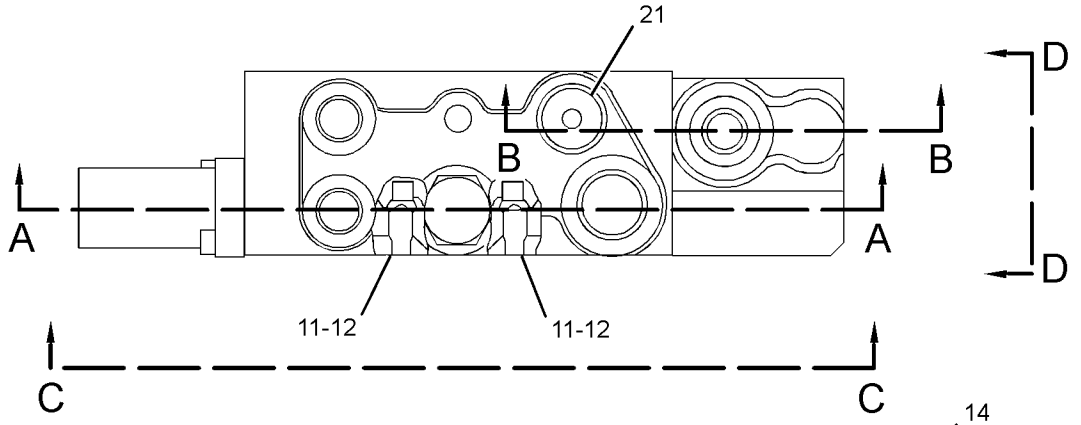

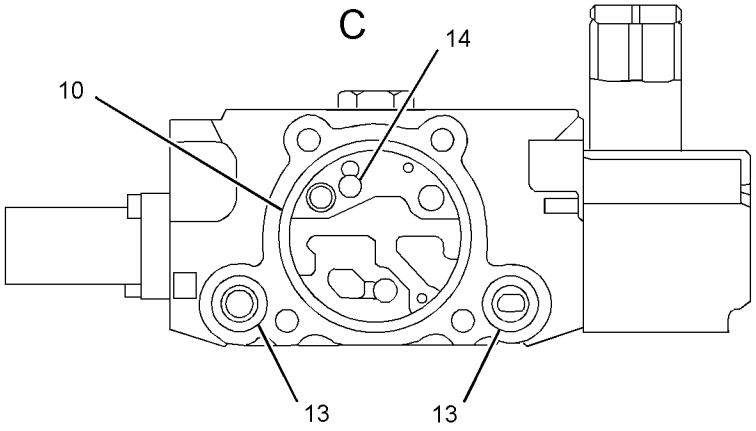

VIEW C-C

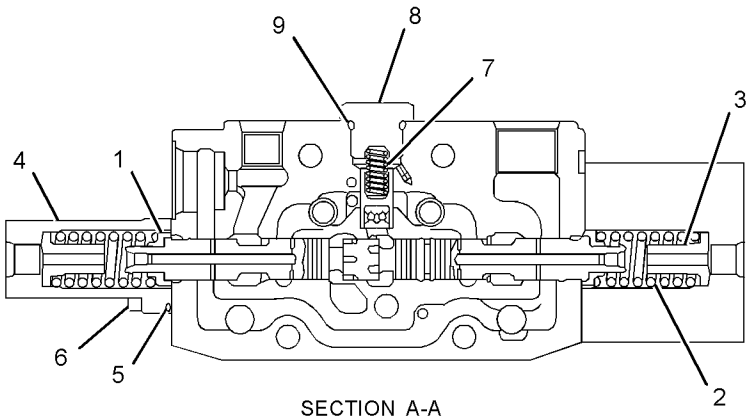

SECTION A-A

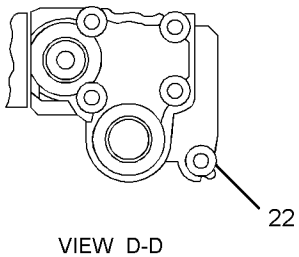

VIEW D-D

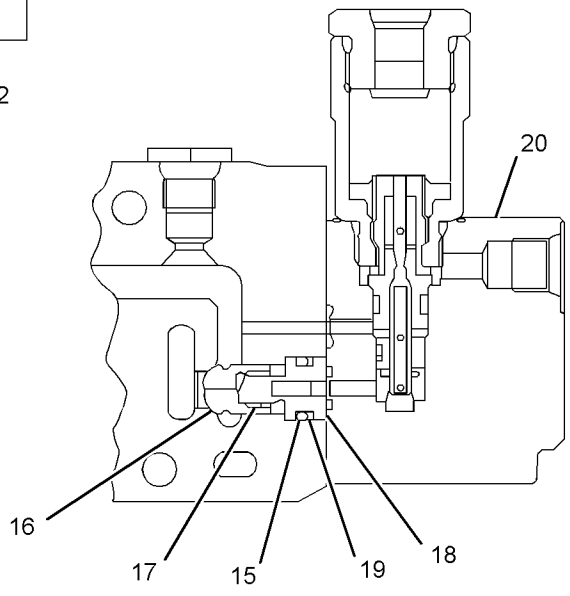

SECTION B-B

GRAPHIC #1 **<END>** g02199175

357-5889 VALVE GP-CONTROL–BLADE

PART OF 381-6746, 393-7633 VALVE GP-MAIN CONTROL
AN ATTACHMENT

SMCS-5051 **i04016792**

NOTE	REF NO	GRAPHIC REF	PART NUMBER	QTY	PART NAME 1 2 3 4 5 6 (PRODUCT LEVEL)	SEE PAGE
	1	1	**281-2972**	2	SEAT	
	2	1	**281-2983**	1	SPRING	
	3	1	**281-2974**	2	SEAT	
	4	1	**281-2975**	2	CAP	
	5	1	**281-2976**	2	SEAL	
	6	1	**281-2984**	4	BOLT	
	7	1	**281-2978**	1	SPRING	
	8	1	**281-2979**	1	PLUG	
	9	1	**250-8771**	1	SEAL	
	10	1	**281-2960**	1	SEAL	
	11	1	**281-2985**	2	PLUNGER	
	12	1	**281-2986**	2	SPRING	
	13	1	**281-2961**	2	SEAL	
	14	1	**279-4796**	1	PLATE	
	15	1	**281-2987**	2	SPACER	
	16	1	**150-6346**	2	SEAL	
	17	1	**288-9388**	1	SPRING	

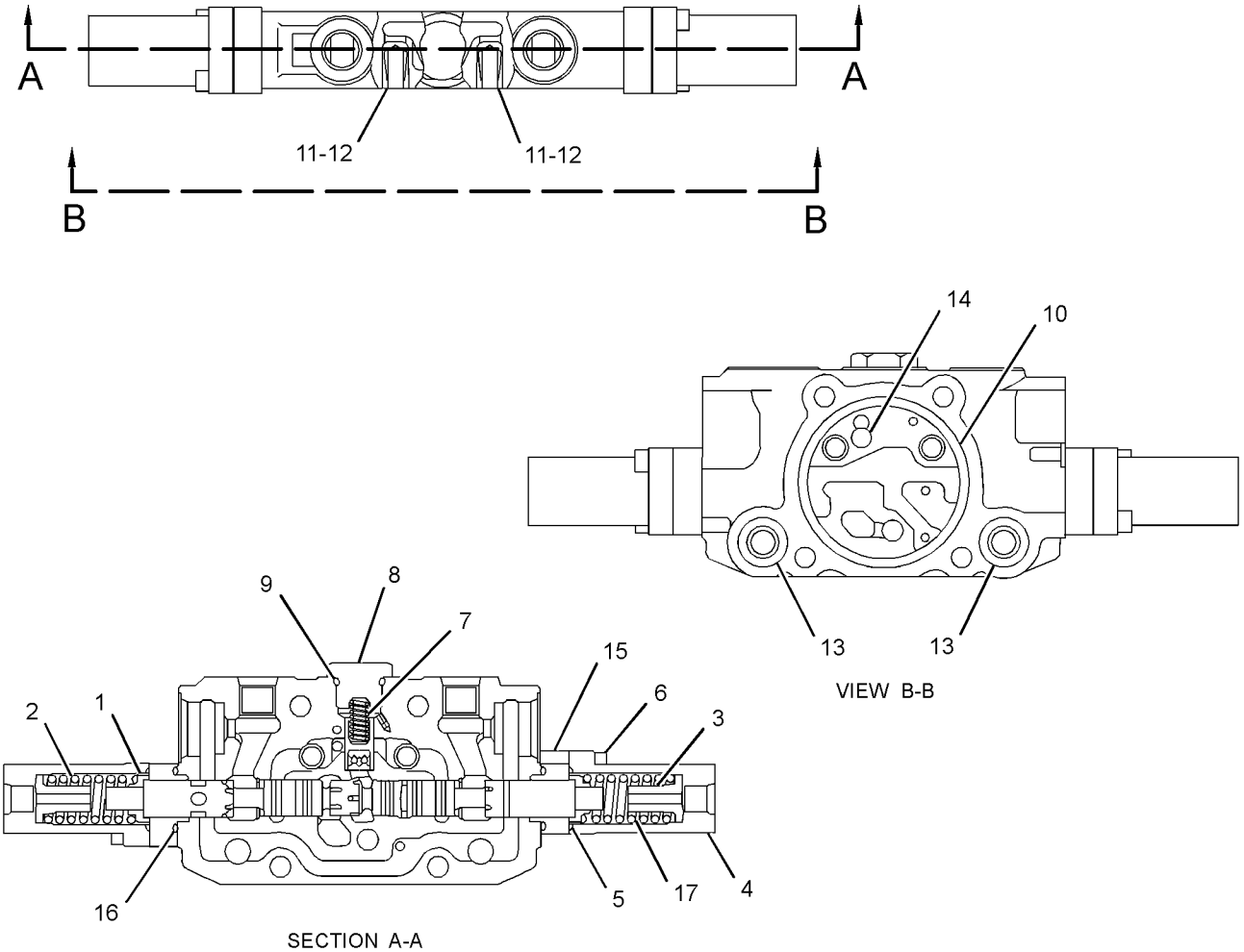

GRAPHIC #1 **<END>** g02196333

359-4428 VALVE GP-CONTROL–STICK

S/N: TTN1-409

PART OF 379-0417, 381-6746 VALVE GP-MAIN CONTROL

AN ATTACHMENT

SMCS-5051 **i04935886**

NOTE	REF NO	GRAPHIC REF	PART NUMBER	QTY	PART NAME 1 2 3 4 5 6 (PRODUCT LEVEL)	SEE PAGE
	1	1	**281-2972**	2	SEAT	
	2	1	**366-9776**	2	SPRING	
	3	1	**281-2974**	2	SEAT	
	4	1	**281-2975**	2	CAP	
	5	1	**281-2976**	2	SEAL	
	6	1	**281-2977**	4	BOLT	
	7	1	**281-2978**	1	SPRING	
	8	1	**281-2979**	1	PLUG	
	9	1	**250-8771**	1	SEAL	
	10	1	**281-2960**	1	SEAL	
	11	1	**281-2985**	2	PLUNGER	
	12	1	**281-2986**	2	SPRING	
	13	1	**281-2961**	2	SEAL	
	14	1	**279-4796**	1	PLATE	

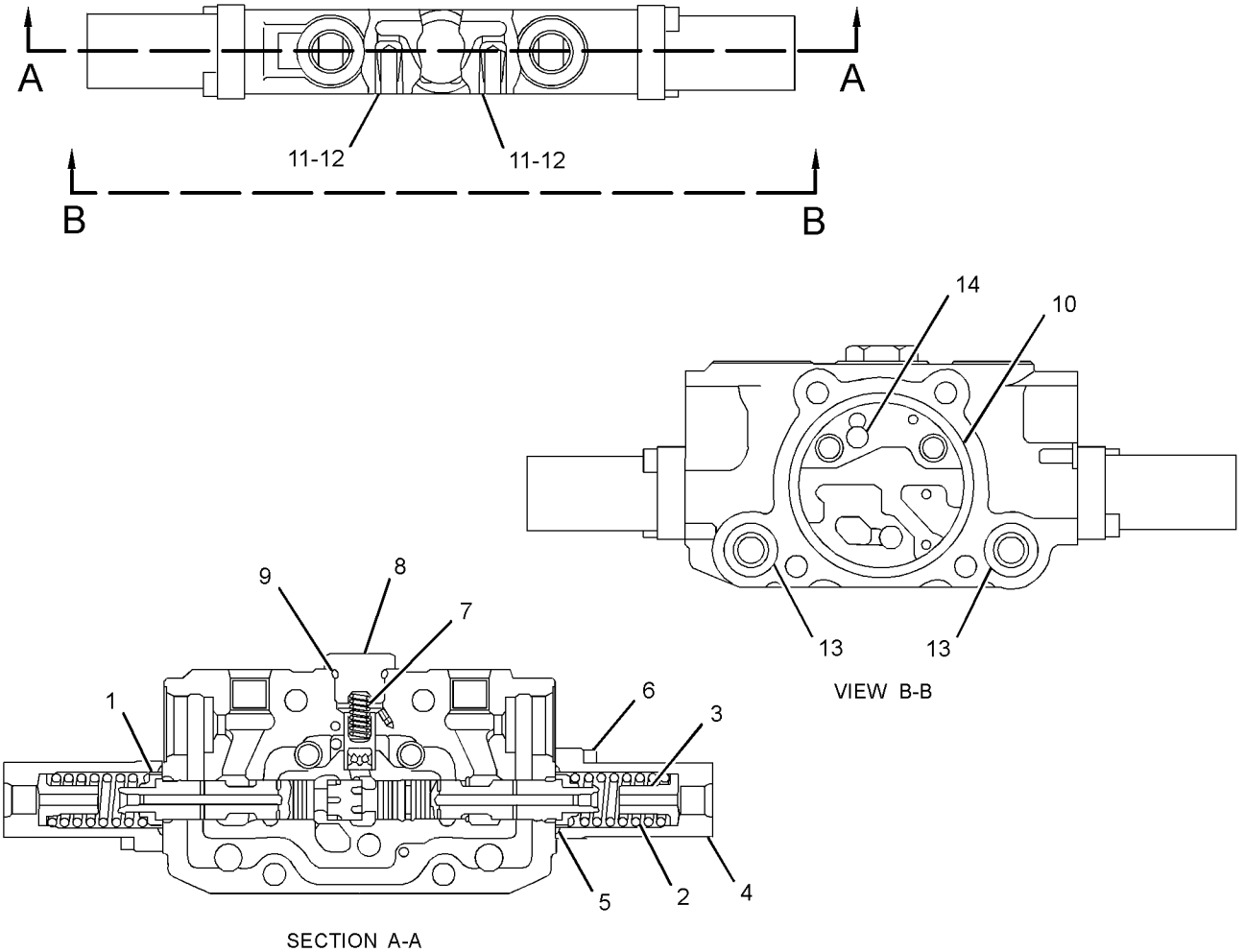

GRAPHIC #1 **<END>** g02196353

364-5228 VALVE GP-CONTROL–STICK

PART OF 379-0417, 381-6746, 393-7632, 393-7633 VALVE GP-MAIN CONTROL
AN ATTACHMENT

SMCS-5051 **i05376420**

NOTE	REF NO	GRAPHIC REF	PART NUMBER	QTY	PART NAME 1 2 3 4 5 6 (PRODUCT LEVEL)	SEE PAGE
	1	1	**281-2972**	2	SEAT	
	2	1	**281-2973**	2	SPRING	
	3	1	**281-2974**	2	SEAT	
	4	1	**281-2975**	2	CAP	
	5	1	**281-2976**	2	SEAL	
	6	1	**281-2977**	4	BOLT	
	7	1	**281-2978**	1	SPRING	
	8	1	**281-2979**	1	PLUG	
	9	1	**250-8771**	1	SEAL	
	10	1	**281-2960**	1	SEAL	
	11	1	**281-2961**	2	SEAL	
	12	1	**279-4796**	1	PLATE	
	13	1	**281-2980**	1	ORIFICE	

364-5228 **VALVE GP-CONTROL (*contd.*)** **i05376420**

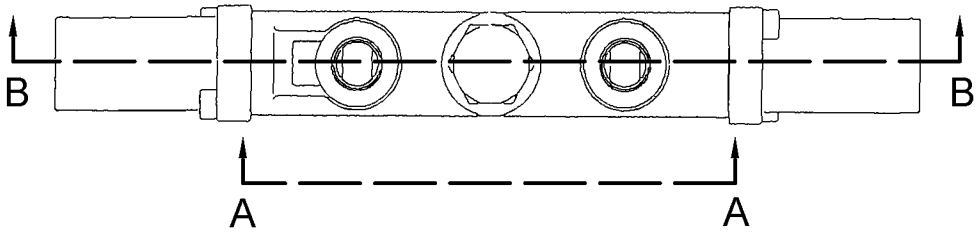

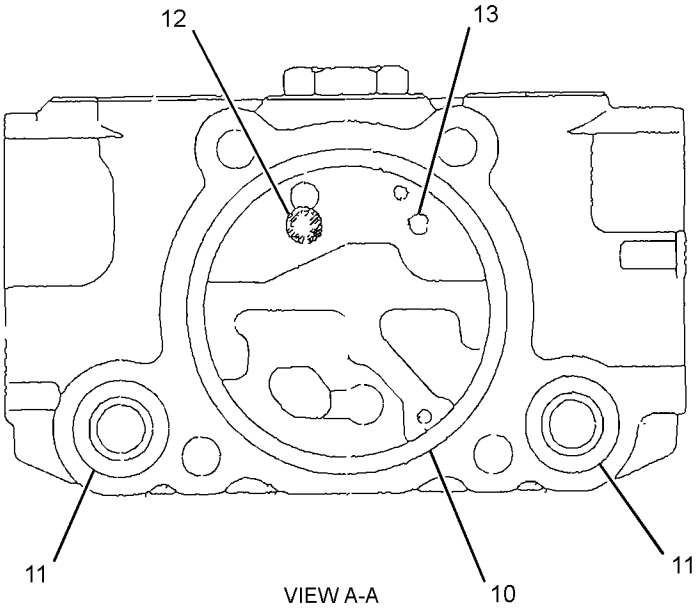

VIEW A-A

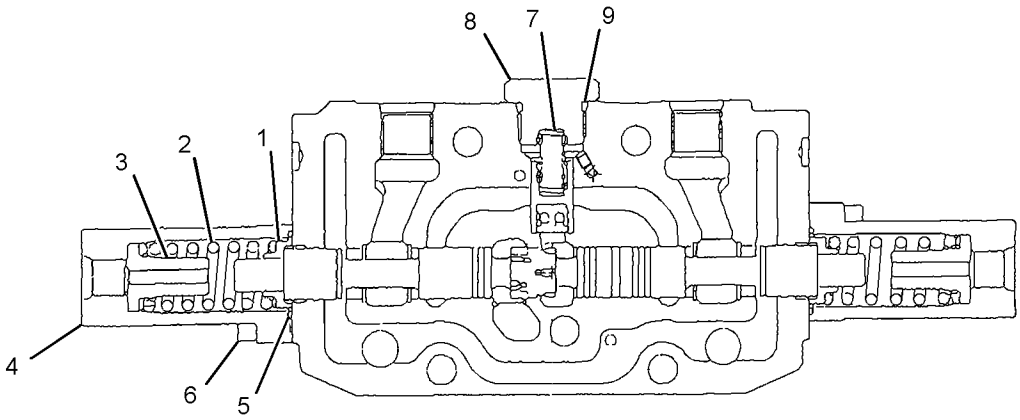

SECTION B-B

GRAPHIC #1 **<END>** g03403207

364-5229 VALVE GP-CONTROL—TRAVEL RIGHT

PART OF 379-0417, 381-6746, 393-7632, 393-7633 VALVE GP-MAIN CONTROL AN ATTACHMENT

SMCS-5051 **i05376425**

NOTE	REF NO	GRAPHIC REF	PART NUMBER	QTY	PART NAME 1 2 3 4 5 6 (PRODUCT LEVEL)	SEE PAGE
	1	1	**281-2972**	2	SEAT	
	2	1	**281-2973**	2	SPRING	
	3	1	**281-2974**	2	SEAT	
	4	1	**281-2975**	2	CAP	
	5	1	**281-2976**	2	SEAL	
	6	1	**281-2977**	4	BOLT	
	7	1	**281-2978**	1	SPRING	
	8	1	**281-2979**	1	PLUG	
	9	1	**250-8771**	1	SEAL	
	10	1	**281-2960**	1	SEAL	
	11	1	**281-2961**	2	SEAL	
	12	1	**279-4796**	1	PLATE	
	13	1	**281-2980**	1	ORIFICE	

364-5229 **VALVE GP-CONTROL (*contd.*)** **i05376425**

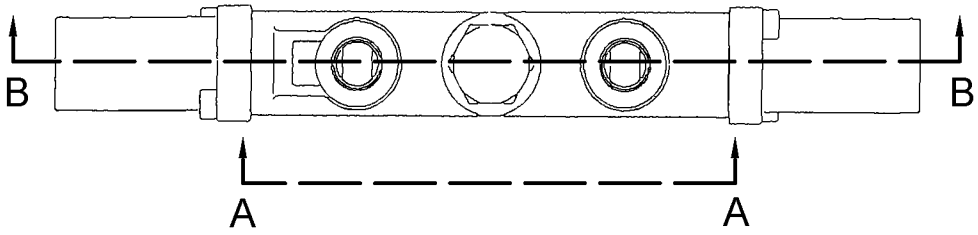

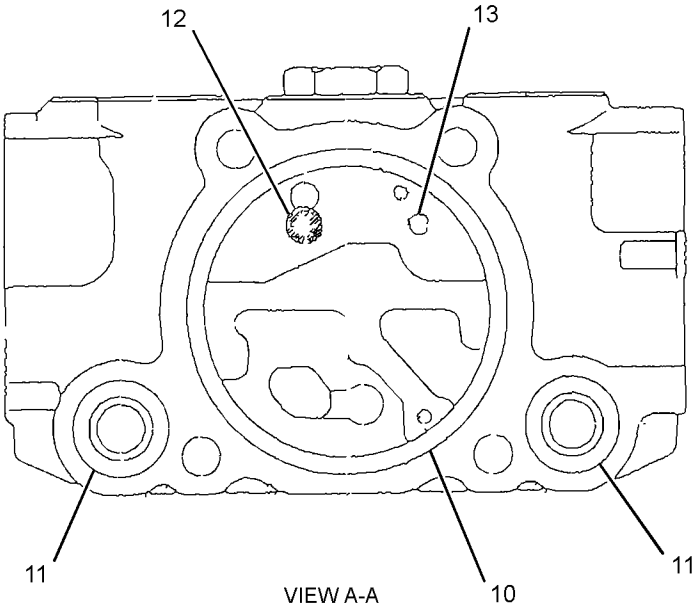

VIEW A-A

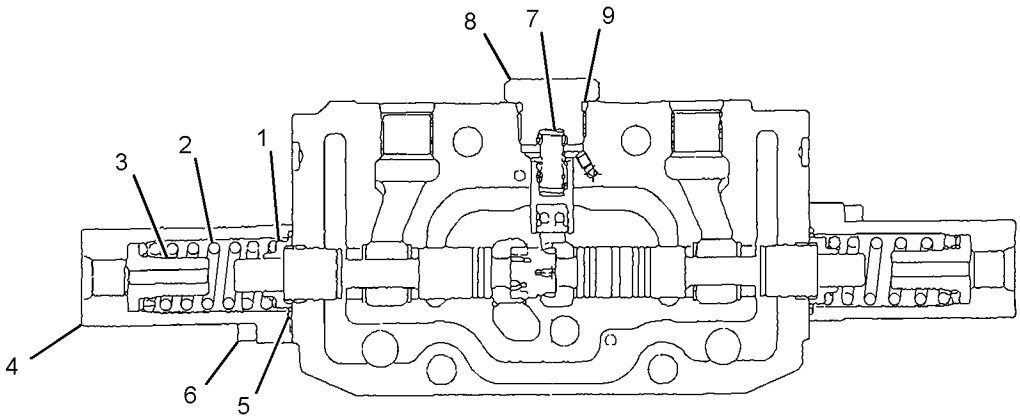

SECTION B-B

GRAPHIC #1 **<END>** g03403708

393-8225 VALVE GP-CONTROL–STICK

S/N: TTN308-UP

PART OF 393-7632, 393-7633 VALVE GP-MAIN CONTROL

AN ATTACHMENT

SMCS-5051 **i05038070**

NOTE	REF NO	GRAPHIC REF	PART NUMBER	QTY	PART NAME 1 2 3 4 5 6 (PRODUCT LEVEL)	SEE PAGE
	1	1	**281-2972**	2	SEAT	
	2	1	**366-9776**	2	SPRING	
	3	1	**281-2974**	2	SEAT	
	4	1	**281-2975**	2	CAP	
	5	1	**281-2976**	2	SEAL	
	6	1	**281-2977**	4	BOLT	
	7	1	**281-2978**	1	SPRING	
	8	1	**281-2979**	1	PLUG	
	9	1	**250-8771**	1	SEAL	
	10	1	**281-2960**	1	SEAL	
	11	1	**281-2985**	2	PLUNGER	
	12	1	**281-2986**	2	SPRING	
	13	1	**281-2961**	2	SEAL	
	14	1	**279-4796**	1	PLATE	
	15	1	**393-7635**	1	SPOOL	

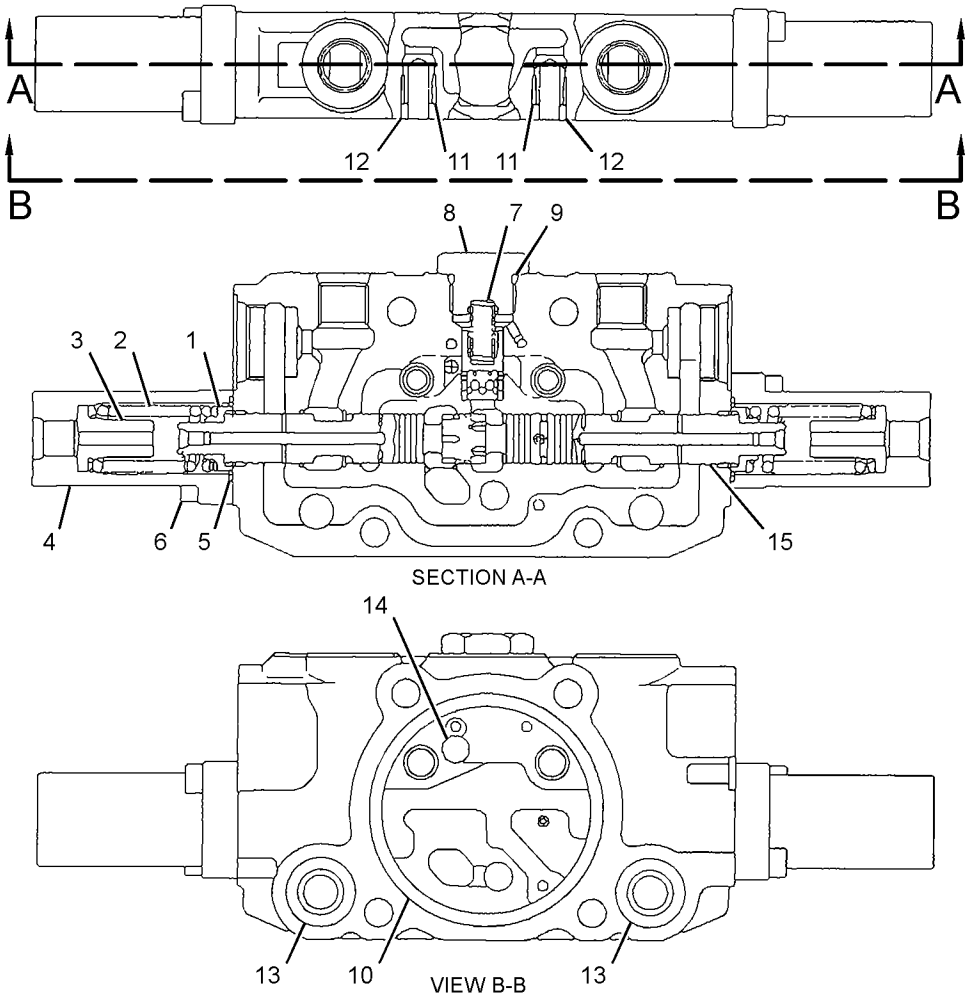

GRAPHIC #1

<END>

g03213285

379-0417 VALVE GP-MAIN CONTROL–STANDARD

S/N: TTN1-307
PART OF 379-4703 VALVE & MTG GP-BANK
AN ATTACHMENT

SMCS-5051 **i05426627**

NOTE	REF NO	GRAPHIC REF	PART NUMBER	QTY	PART NAME 1 2 3 4 5 6 (PRODUCT LEVEL)	SEE PAGE
	1	1	**104-8081**	1	PLUG AS	
	2	1	**185-0555**	5	VALVE AS-MANUAL (SHUTOFF)	
	3	1	**200-4856**	8	NUT	
	4	1	**222-2631**	1	VALVE AS-CHECK (BOOM SWING)	
	5	1	**272-7832**	6	VALVE AS-RELIEF (LINE)	
					(EACH INCLUDES)	
		1	**2M-9780**	1	SEAL-O-RING	
	6	1	**281-2325**	4	ROD	
Y	7	1	**281-2326**	1	VALVE GP-CONTROL (INLET)	322
Y	8	1	**281-2336**	1	VALVE GP-CONTROL (OUTLET)	323
Y	9	1	**291-1671**	1	VALVE GP-CONTROL (BLADE)	324
Y	10	1	**292-0185**	1	VALVE GP-CONTROL (BUCKET)	326
Y	11	1	**292-0187**	1	VALVE GP-CONTROL (SWING)	327
Y	12	1	**292-0188**	1	VALVE GP-CONTROL (BOOM SWING)	328
Y	13	1	**329-8369**	1	VALVE GP-CONTROL (AUXILIARY)	331
Y	14	1	**356-1594**	1	VALVE GP-CONTROL (BOOM)	333
Y	15	1	**359-4428**	1	VALVE GP-CONTROL (STICK)	336
Y	16	1	**364-5228**	1	VALVE GP-CONTROL (TRAVEL LEFT)	337
Y	17	1	**364-5229**	1	VALVE GP-CONTROL (TRAVEL RIGHT)	339

Y - SEPARATE ILLUSTRATION

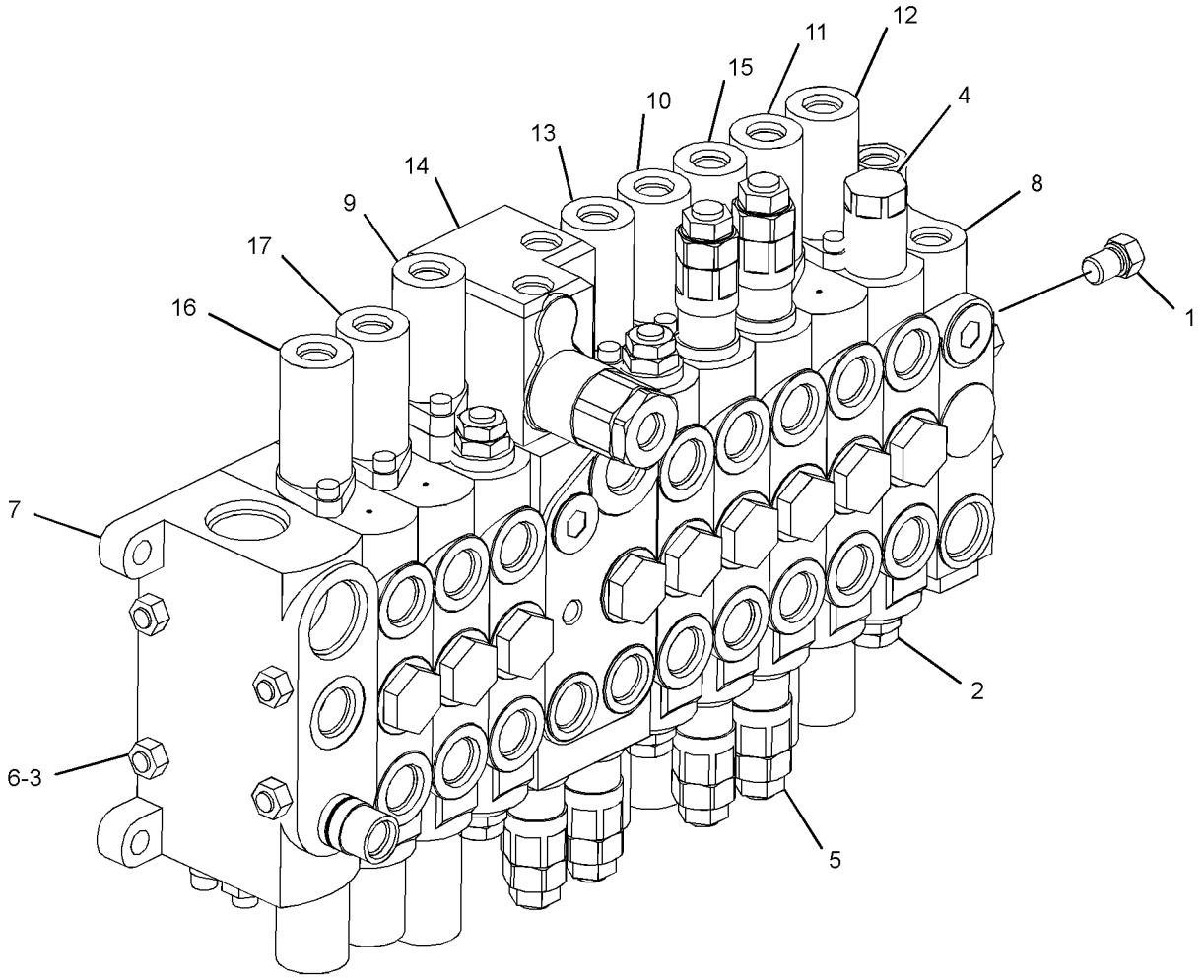

GRAPHIC #1 **<END>** g02799141

381-6746 VALVE GP-MAIN CONTROL–12-BANK

S/N: TTN1-409

PART OF 385-2798 VALVE & MTG GP-MAIN CONTROL

AN ATTACHMENT

SMCS-5051 **i05236129**

NOTE	REF NO	GRAPHIC REF	PART NUMBER	QTY	PART NAME 1 2 3 4 5 6 (PRODUCT LEVEL)	SEE PAGE
	1	1	**104-8081**	1	PLUG AS	
	2	1	**185-0555**	4	VALVE AS-MANUAL (SHUTOFF)	
	3	1	**200-4856**	8	NUT	
	4	1	**222-2631**	1	VALVE AS-CHECK (BOOM SWING)	
	5	1	**272-7832**	7	VALVE AS-RELIEF (LINE)	
					(EACH INCLUDES)	
		1	**2M-9780**	1	SEAL-O-RING	
Y	6	1	**281-2326**	1	VALVE GP-CONTROL (INLET)	322
Y	7	1	**281-2336**	1	VALVE GP-CONTROL (OUTLET)	323
Y	8	1	**292-0185**	1	VALVE GP-CONTROL (BUCKET)	326
Y	9	1	**292-0187**	1	VALVE GP-CONTROL (SWING)	327
Y	10	1	**292-0188**	1	VALVE GP-CONTROL (BOOM SWING)	328
	11	1	**324-8994**	4	ROD	
Y	12	1	**326-8530**	1	VALVE GP-CONTROL (ANGLE)	329
Y	13	1	**329-8369**	1	VALVE GP-CONTROL (AUXILIARY)	331
	14	1	**336-0683**	2	VALVE AS-RELIEF (ANGLE BLADE)	
					(EACH INCLUDES)	
		1	**2M-9780**	1	SEAL-O-RING	
Y	15	1	**356-1594**	1	VALVE GP-CONTROL (BOOM)	333
Y	16	1	**357-5889**	1	VALVE GP-CONTROL (BLADE)	335
Y	17	1	**359-4428**	1	VALVE GP-CONTROL (STICK)	336
Y	18	1	**364-5228**	1	VALVE GP-CONTROL (TRAVEL LEFT)	337
Y	19	1	**364-5229**	1	VALVE GP-CONTROL (TRAVEL RIGHT)	339

Y - SEPARATE ILLUSTRATION

381-6746 **VALVE GP-MAIN CONTROL (*contd.*)** **i05236129**

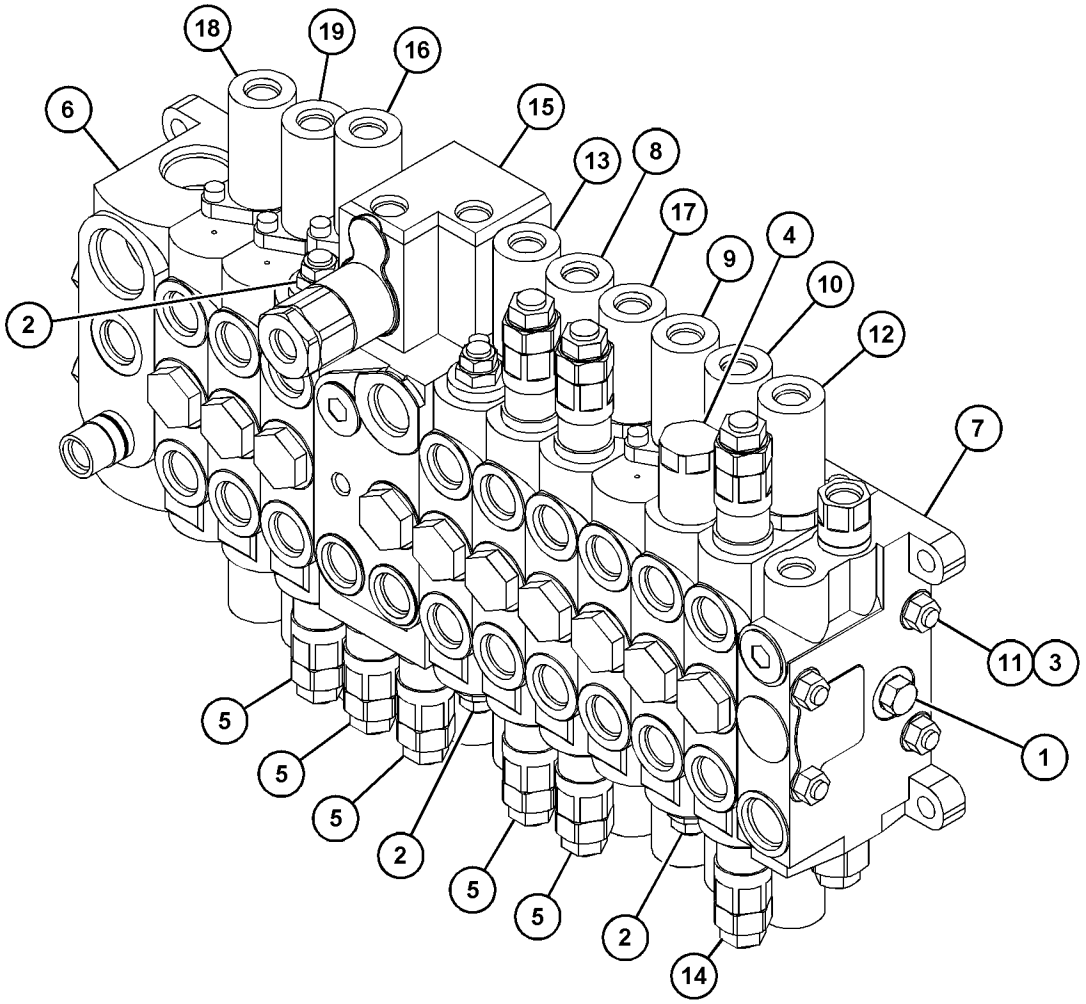

GRAPHIC #1 **<END>** g03403478

393-7632 VALVE GP-MAIN CONTROL

S/N: TTN308-UP
PART OF 379-4703 VALVE & MTG GP-BANK
AN ATTACHMENT

SMCS-5051 **i05237890**

NOTE	REF NO	GRAPHIC REF	PART NUMBER	QTY	PART NAME 1 2 3 4 5 6 (PRODUCT LEVEL)	SEE PAGE
	1	1	**104-8081**	1	PLUG AS	
	2	1	**185-0555**	5	VALVE AS-MANUAL (SHUTOFF)	
	3	1	**200-4856**	8	NUT	
	4	1	**222-2631**	1	VALVE AS-CHECK (ANGLE BLADE)	
	5	1	**272-7832**	6	VALVE AS-RELIEF (LINE)	
					(EACH INCLUDES)	
		1	**2M-9780**	1	SEAL-O-RING	
	6	1	**281-2325**	4	ROD	
Y	7	1	**281-2326**	1	VALVE GP-CONTROL (INLET)	322
Y	8	1	**281-2336**	1	VALVE GP-CONTROL (OUTLET)	323
Y	9	1	**291-1671**	1	VALVE GP-CONTROL (BLADE)	324
Y	10	1	**292-0185**	1	VALVE GP-CONTROL (BUCKET)	326
Y	11	1	**292-0187**	1	VALVE GP-CONTROL (SWING)	327
Y	12	1	**292-0188**	1	VALVE GP-CONTROL (BOOM SWING)	328
Y	13	1	**329-8369**	1	VALVE GP-CONTROL (AUXILIARY)	331
Y	14	1	**356-1594**	1	VALVE GP-CONTROL (BOOM)	333
Y	15	1	**364-5228**	1	VALVE GP-CONTROL (TRAVEL LEFT)	337
Y	16	1	**364-5229**	1	VALVE GP-CONTROL (TRAVEL RIGHT)	339
Y	17	1	**393-8225**	1	VALVE GP-CONTROL (STICK)	341

Y - SEPARATE ILLUSTRATION

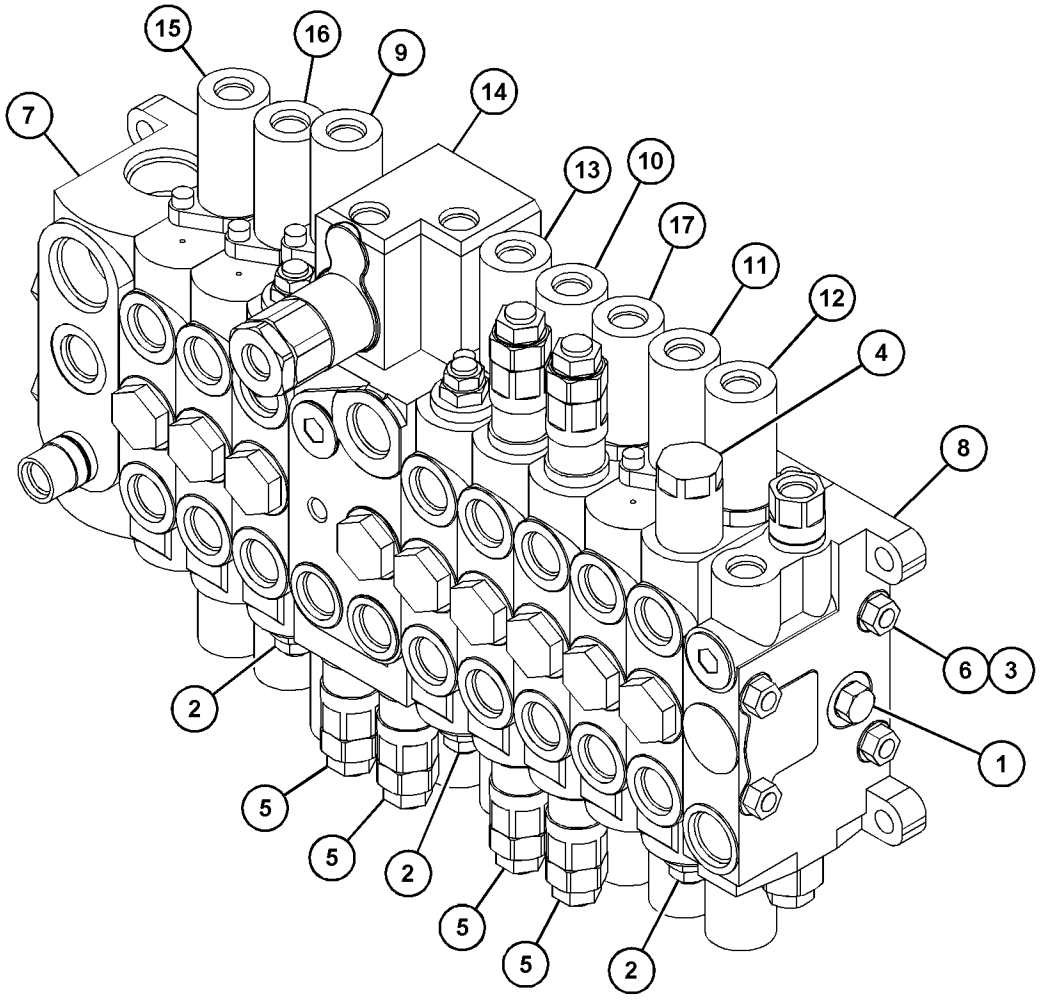

GRAPHIC #1 **<END>** g03403598

393-7633 VALVE GP-MAIN CONTROL—ANGLE BLADE

S/N: TTN410-UP

PART OF 385-2798 VALVE & MTG GP-MAIN CONTROL

AN ATTACHMENT

SMCS-5051 **i05234835**

NOTE	REF NO	GRAPHIC REF	PART NUMBER	QTY	PART NAME 1 2 3 4 5 6 (PRODUCT LEVEL)	SEE PAGE
	1	1	**104-8081**	1	PLUG AS	
	2	1	**185-0555**	4	VALVE AS-MANUAL (SHUTOFF)	
	3	1	**200-4856**	8	NUT	
	4	1	**222-2631**	1	VALVE AS-CHECK (SWING)	
	5	1	**272-7832**	7	VALVE AS-RELIEF (LINE)	
					(EACH INCLUDES)	
		1	**2M-9780**	1	SEAL-O-RING	
Y	6	1	**281-2326**	1	VALVE GP-CONTROL (INLET)	322
Y	7	1	**281-2336**	1	VALVE GP-CONTROL (OUTLET)	323
Y	8	1	**292-0185**	1	VALVE GP-CONTROL (BUCKET)	326
Y	9	1	**292-0187**	1	VALVE GP-CONTROL (SWING)	327
Y	10	1	**292-0188**	1	VALVE GP-CONTROL (BOOM SWING)	328
	11	1	**324-8994**	4	ROD	
Y	12	1	**326-8530**	1	VALVE GP-CONTROL (ANGLE)	329
Y	13	1	**329-8369**	1	VALVE GP-CONTROL (AUXILIARY)	331
	14	1	**336-0683**	2	VALVE AS-RELIEF (ANGLE BLADE)	
					(EACH INCLUDES)	
		1	**2M-9780**	1	SEAL-O-RING	
Y	15	1	**356-1594**	1	VALVE GP-CONTROL (BOOM)	333
Y	16	1	*357-5889*	1	VALVE GP-CONTROL (BLADE)	335
Y	17	1	**364-5228**	1	VALVE GP-CONTROL (TRAVEL LEFT)	337
Y	18	1	**364-5229**	1	VALVE GP-CONTROL (TRAVEL RIGHT)	339
Y	19	1	**393-8225**	1	VALVE GP-CONTROL (STICK)	341

Y - SEPARATE ILLUSTRATION

393-7633 **VALVE GP-MAIN CONTROL (*contd.*)** **i05234835**

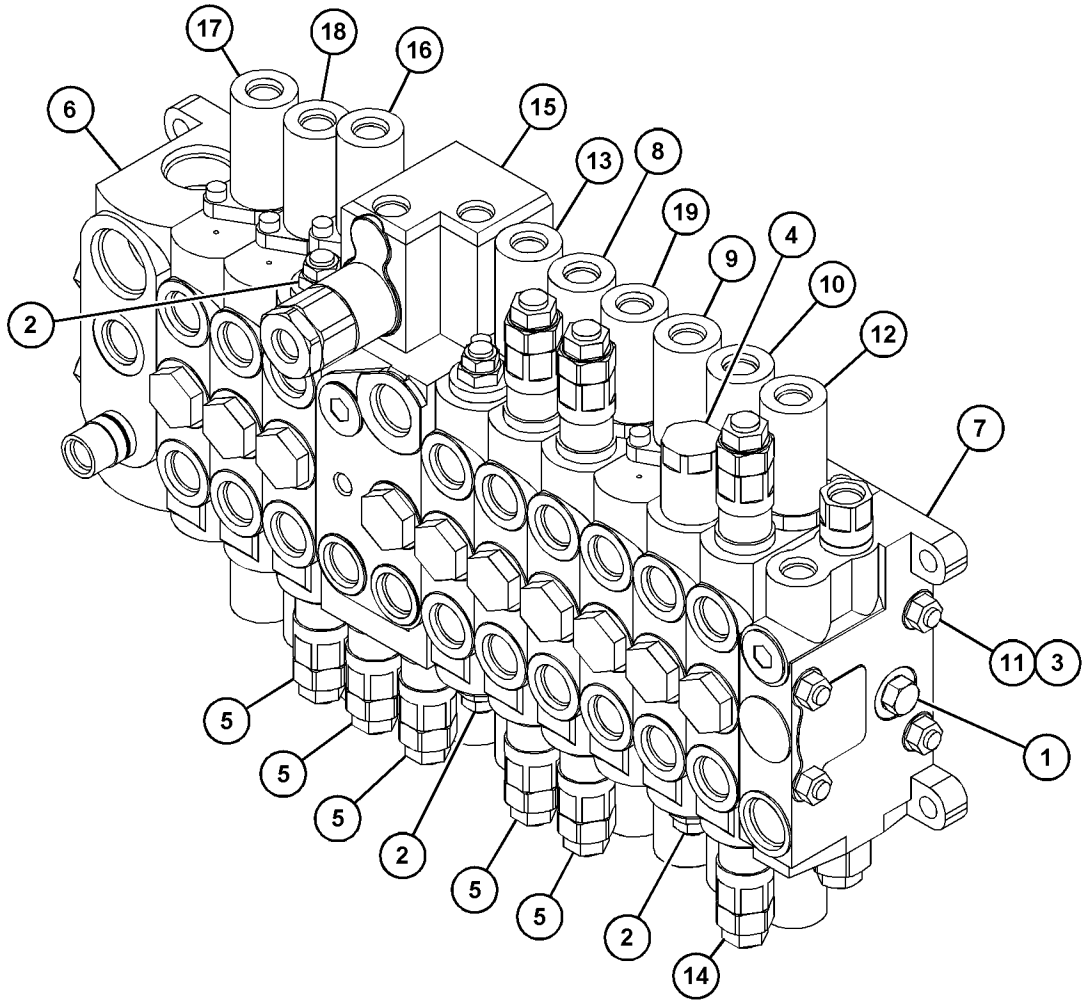

GRAPHIC #1 **<END>** g03403580

267-0420 VALVE GP-PILOT–JOYSTICK

PART OF 376-9494, 376-9495, 379-2010 CONTROL GP-JOYSTICK

AN ATTACHMENT

SMCS-5059, 5465, 5466 **i03966939**

NOTE	REF NO	GRAPHIC REF	PART NUMBER	QTY	PART NAME 1 2 3 4 5 6 (PRODUCT LEVEL)	SEE PAGE
	1	1	**165-9438**	1	PLATE	
	2	1	**096-1628**	4	PLUG	
	3	1	**132-7711**	4	ROD	
	4	1	**094-0876**	4	SEAL	
	5	1	**095-1586**	4	SEAL-O-RING	
	6	1	**251-4408**	4	SEAT	
	7	1	**099-6137**	4	WASHER (6.1X9X0.2-MM THK)	
	8	1	**194-0784**	4	SPRING	
	9	1	**244-8495**	4	SPRING	
	10	1	**4I-6365**	1	JOINT	
	11	1	**165-9431**	1	PLATE	
	12	1	**212-0522**	1	NUT	
	13	1	**171-0087**	1	BELLOWS	

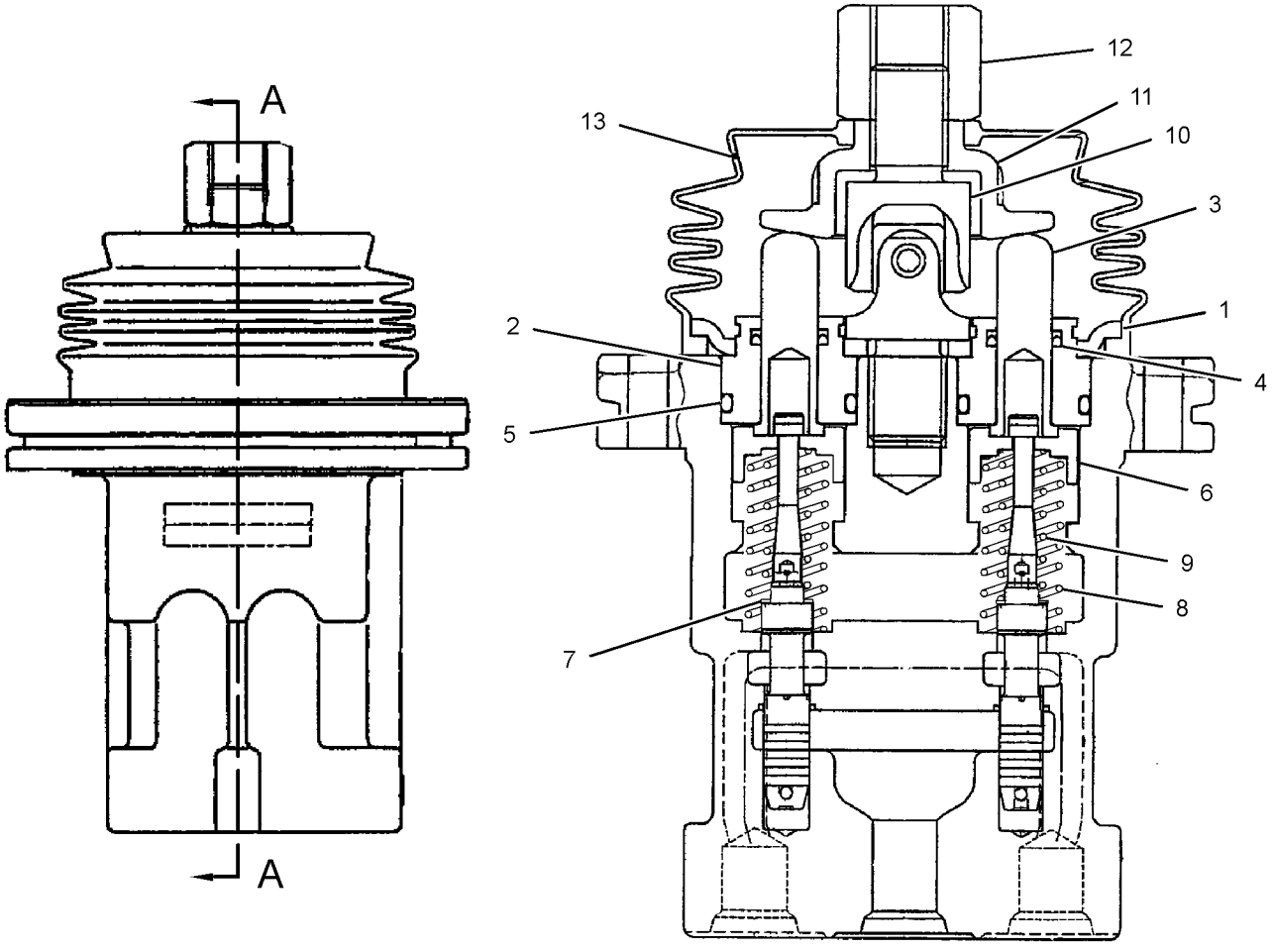

SECTION A-A

GRAPHIC #1 **<END>** g01201633

320-6540 VALVE GP-PILOT–BLADE CONTROL

S/N: TTN1-907

PART OF 377-5958, 382-0522 CONTROL GP-PILOT OPERATED HYD AN ATTACHMENT

SMCS-5059, 5465, 5466 **i03971151**

NOTE	REF NO	GRAPHIC REF	PART NUMBER	QTY	PART NAME 1 2 3 4 5 6 (PRODUCT LEVEL)	SEE PAGE
	1	1	**6I-6911**	2	SHIM	
	2	1	**6I-6912**	2	SHIM	
	3	1	**198-7543**	2	GUIDE	
	4	1	**198-8153**	2	SCREW	
	5	1	**198-8154**	2	SPRING	
	6	1	**096-4535**	2	SLEEVE	
	7	1	**099-0361**	2	SHIM	
	8	1	**132-9046**	2	SHIM (0.1-MM THK)	
	9	1	**198-8156**	1	BOOT	
	10	1	**204-1974**	1	PIN	
	11	1	**198-8159**	2	SLEEVE	
	12	1	**198-8160**	1	COLLAR	
	13	1	**198-8161**	2	SPRING	
	14	1	**198-8162**	2	HOLDER	
	15	1	**198-8163**	1	SPRING	
	16	1	**198-8164**	1	SPRING	
	17	1	**326-7782**	1	CAM	
	18	1	**198-8165**	1	BOLT	
M	19	1	**8T-8442**	2	BOLT-SOCKET HEAD (M6X1X30-MM)	
M	20	1	**8T-1158**	2	BOLT-SOCKET HEAD (M8X1.25X20-MM)	
	21	1	**096-4543**	1	BOLT	
M	22	1	**095-1260**	1	SETSCREW-SOCKET (M6X1X6-MM)	
	23	1	**198-8166**	2	WASHER	
	24	1	**198-8167**	2	NUT	
	25	1	**198-8168**	2	BALL	
	26	1	**095-1578**	2	SEAL-O-RING	
	27	1	**095-1585**	2	SEAL-O-RING	
	28	1	**204-1976**	1	LEVER AS	
	29	1	**198-8176**	2	ROD AS	
	30	1	**198-8169**	1	BODY AS	
	31	1	**204-1979**	1	COVER AS	

M - METRIC PART

320-6540 **VALVE GP-PILOT (*contd.*)** **i03971151**

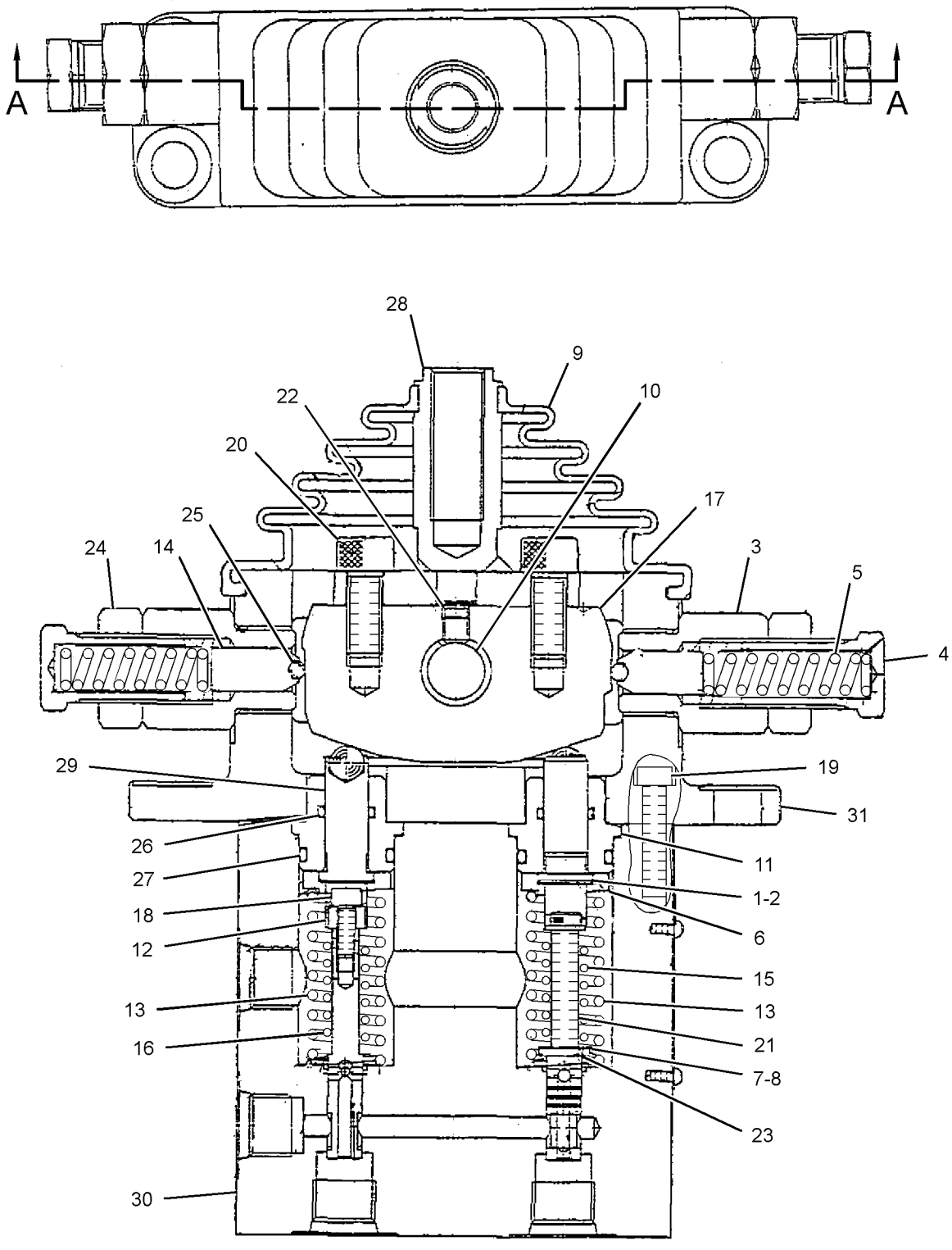

SECTION A-A

GRAPHIC #1 **<END>** g01508855

356-3823 VALVE GP-PILOT—WITH SHUTTLE

S/N: TTN1-1091
PART OF 356-4545 VALVE & MTG GP-PILOT
AN ATTACHMENT

SMCS-5059, 5465, 5466

i04019553

NOTE	REF NO	GRAPHIC REF	PART NUMBER	QTY	PART NAME 1 2 3 4 5 6 (PRODUCT LEVEL)	SEE PAGE
	1	1	**8T-6759**	4	PLUG-PIPE	
	2	1	**196-3784**	3	PLUG	
M	3	1	**8T-1158**	2	BOLT-SOCKET HEAD (M8X1.25X20-MM)	
	4	1	**310-0422**	3	SEAT	
	5	1	**310-0421**	3	BUSHING	
	6	1	**3Y-9267**	3	BALL	
	7	1	**165-9463**	2	COVER	
	8	1	**165-9554**	4	PLUG	
	9	1	**119-5388**	4	CAP	
	10	1	**165-9553**	1	COVER	
	11	1	**119-5389**	4	PACKING	
	12	1	**095-1575**	5	SEAL-O-RING	
	13	1	**6V-8400**	4	SEAL-O-RING	
	14	1	**310-0420**	4	SEAL-O-RING	
	15	1	**364-6127**	4	ROD	
	16	1	**099-6137**	4	WASHER (6.1X9X0.2-MM THK)	
	17	1	**119-5391**	4	SEAT	
M	18	1	**8C-6965**	2	BOLT-SOCKET HEAD (M6X1X45-MM)	
	19	1	**296-1942**	4	PISTON	
	20	1	**153-5223**	12	BALL	
M	21	1	**095-0673**	2	BOLT-SOCKET HEAD (M12X1.75X60-MM)	
	22	1	**331-9872**	4	SEAT	
	23	1	**185-0522**	4	SEAT	
	24	1	**364-6126**	4	SPRING	
	25	1	**331-9873**	4	SPRING	
	26	1	**126-1865**	4	SPRING	
	27	1	**126-1866**	4	SPRING	
	28	1	**099-6144**	4	BUSHING-TERMINAL	
	29	1	**099-6145**	2	CAMSHAFT	
	30	1	**364-6125**	2	CAM	
M	31	1	**095-1260**	2	SETSCREW-SOCKET (M6X1X6-MM)	
M	32	1	**087-4710**	4	SETSCREW (M10X21-MM)	
M	33	1	**8T-4133**	4	NUT (M10X1.5-THD)	
	34	1	**147-4131**	2	BOOT-PROTECTION	

M - METRIC PART

356-3823 **VALVE GP-PILOT (*contd.*)** **i04019553**

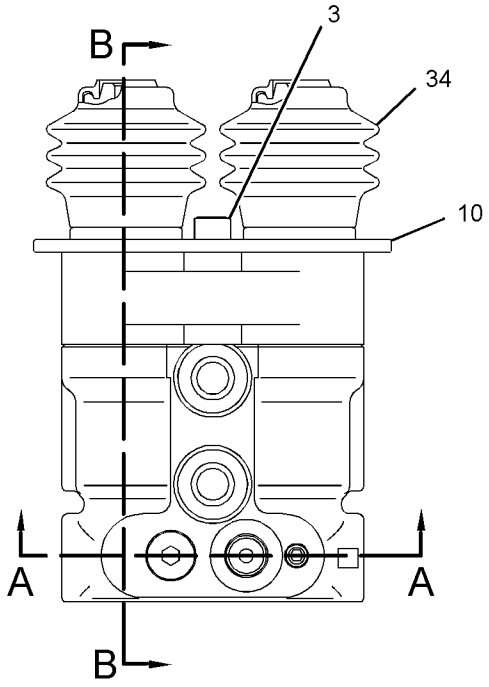

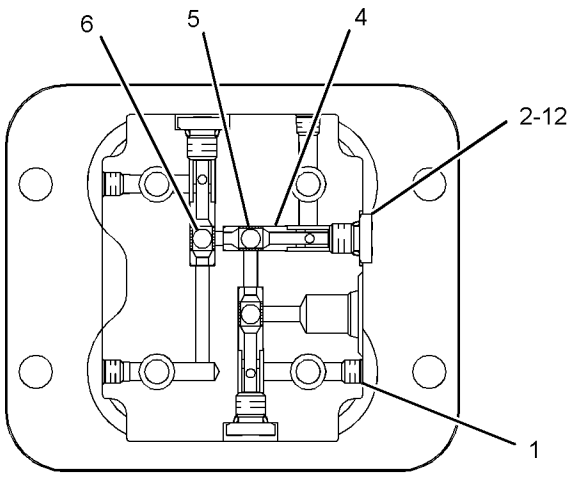

SECTION A-A

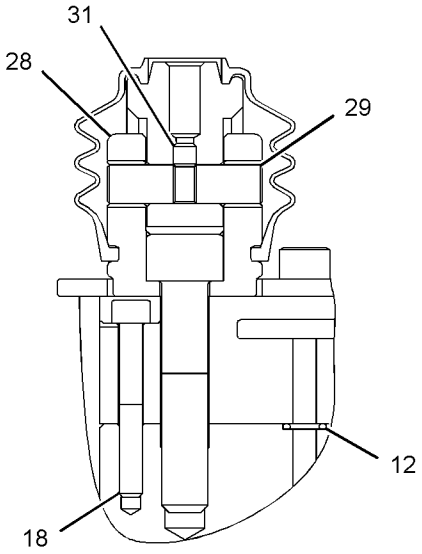

SECTION C-C

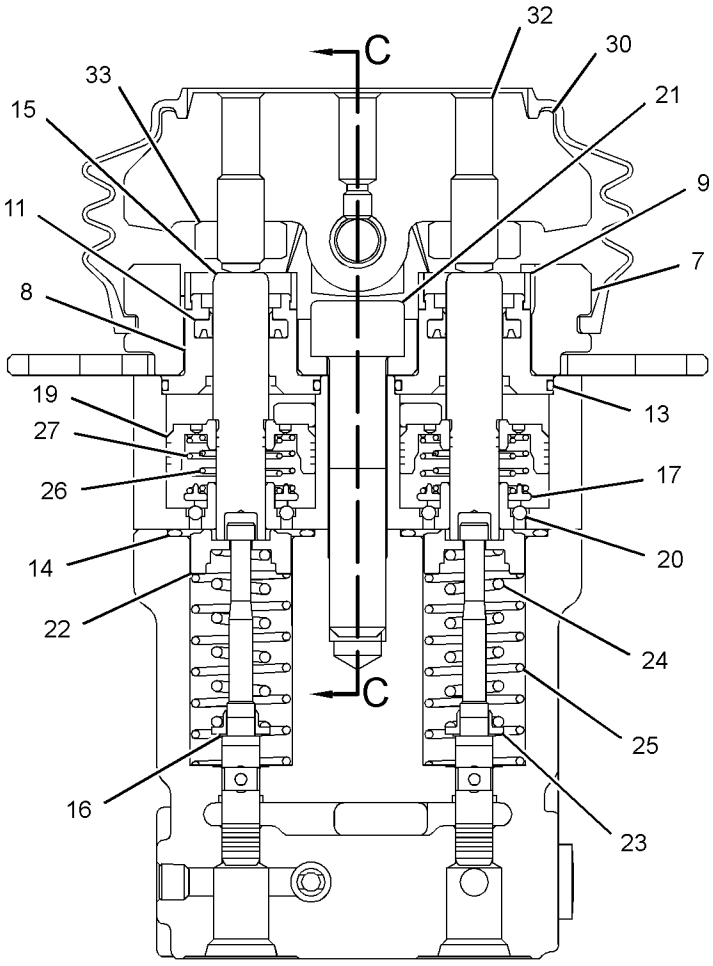

SECTION B-B

GRAPHIC #1 **<END>** g02211279

393-7501 VALVE GP-PILOT—BLADE CONTROL

S/N: TTN908-UP

PART OF 421-2718 VALVE & MTG GP-PILOT

AN ATTACHMENT

SMCS-5059, 5465, 5466 **i05031519**

NOTE	REF NO	GRAPHIC REF	PART NUMBER	QTY	PART NAME 1 2 3 4 5 6 (PRODUCT LEVEL)	SEE PAGE
	1	1	**6I-6911**	2	SHIM	
	2	1	**6I-6912**	2	SHIM	
	3	1	**198-7543**	2	GUIDE	
	4	1	**198-8153**	2	SCREW	
	5	1	**198-8154**	2	SPRING	
	6	1	**096-4535**	2	SLEEVE	
	7	1	**099-0361**	2	SHIM	
	8	1	**132-9046**	2	SHIM (0.1-MM THK)	
	9	1	**198-8156**	1	BOOT	
	10	1	**204-1974**	1	PIN	
	11	1	**198-8159**	2	SLEEVE	
	12	1	**198-8160**	1	COLLAR	
	13	1	**198-8161**	2	SPRING	
	14	1	**198-8162**	2	HOLDER	
	15	1	**198-8163**	1	SPRING	
	16	1	**198-8164**	1	SPRING	
	17	1	**326-7782**	1	CAM	
	18	1	**198-8165**	1	BOLT	
M	19	1	**8T-8442**	2	BOLT-SOCKET HEAD (M6X1X30-MM)	
M	20	1	**8T-1158**	2	BOLT-SOCKET HEAD (M8X1.25X20-MM)	
	21	1	**096-4543**	1	BOLT	
M	22	1	**095-1260**	1	SETSCREW-SOCKET (M6X1X6-MM)	
	23	1	**198-8166**	2	WASHER	
	24	1	**198-8167**	2	NUT	
	25	1	**198-8168**	2	BALL	
	26	1	**095-1578**	2	SEAL-O-RING	
	27	1	**095-1585**	2	SEAL-O-RING	
	28	1	**204-1976**	1	LEVER AS	
	29	1	**198-8176**	2	ROD AS	
	30	1	**394-5921**	1	BODY	
	31	1	**204-1979**	1	COVER AS	

M - METRIC PART

393-7501 **VALVE GP-PILOT (*contd.*)** **i05031519**

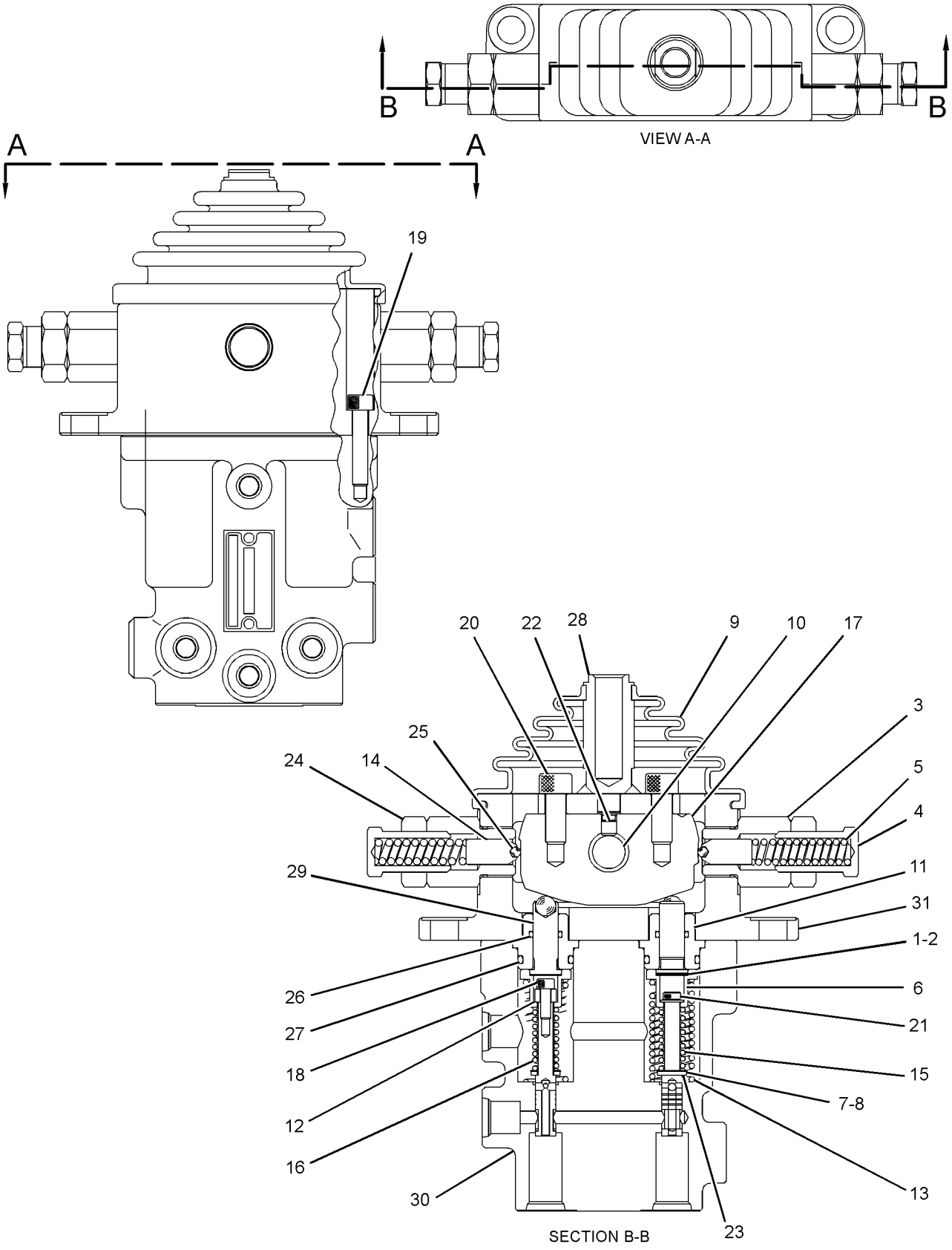

GRAPHIC #1 **<END>** g03202872

416-2294 VALVE GP-PILOT—WITH SHUTTLE

S/N: TTN1092-UP

PART OF 356-4545 VALVE & MTG GP-PILOT

AN ATTACHMENT

SMCS-5059, 5465, 5466 **i05365862**

NOTE	REF NO	GRAPHIC REF	PART NUMBER	QTY	PART NAME 1 2 3 4 5 6 (PRODUCT LEVEL)	SEE PAGE
					(NO BREAKDOWN OF SERVICEABLE PARTS AVAILABLE AT TIME OF PUBLICATION)	

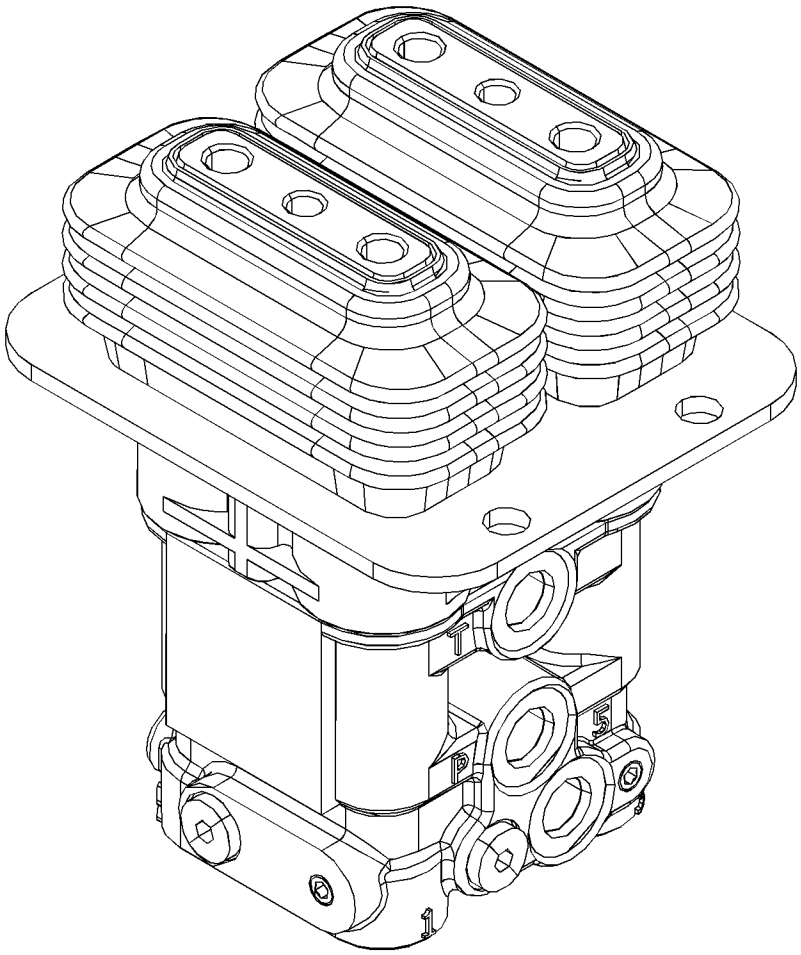

GRAPHIC #1 **<END>** g03401496

279-4712 VALVE GP-PUMP CONTROL

PART OF 332-1293 VALVE GP-PUMP CONTROL

SMCS-5455 **i03970812**

NOTE	REF NO	GRAPHIC REF	PART NUMBER	QTY	PART NAME 1 2 3 4 5 6 (PRODUCT LEVEL)	SEE PAGE
	1	1	**095-1575**	1	SEAL-O-RING	
	2	1	**095-1584**	1	SEAL-O-RING	
	3	1	**3J-1907**	1	SEAL-O-RING	
	4	1	**279-4704**	1	ORIFICE	

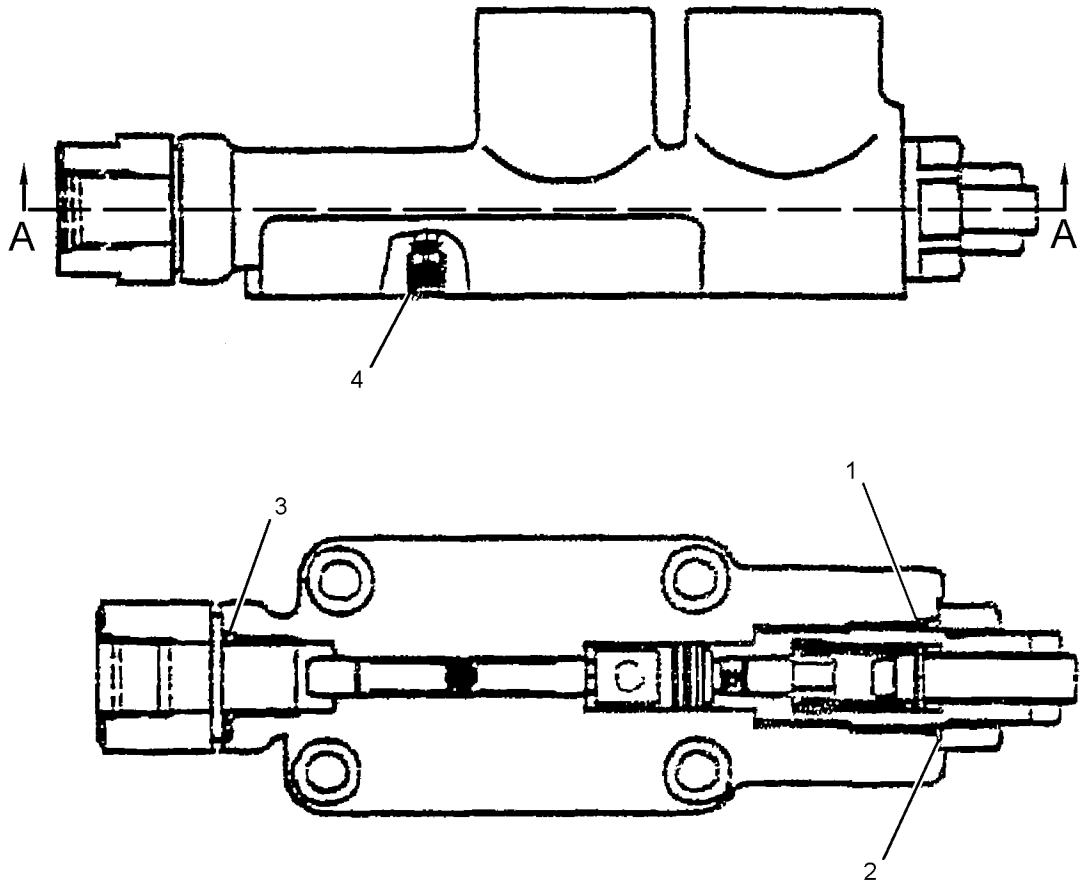

SECTION A-A

GRAPHIC #1 **<END>** g01576158

332-1293 VALVE GP-PUMP CONTROL

PART OF 416-5057 PUMP GP-PISTON

SMCS-5455 **i04020269**

NOTE	REF NO	GRAPHIC REF	PART NUMBER	QTY	PART NAME 1 2 3 4 5 6 (PRODUCT LEVEL)	SEE PAGE
Y	1	1	**279-4712**	1	VALVE GP-PUMP CONTROL	356
	2	1	**095-1575**	4	SEAL-O-RING	
	3	1	**279-4703**	1	SEAL-O-RING	

Y - SEPARATE ILLUSTRATION

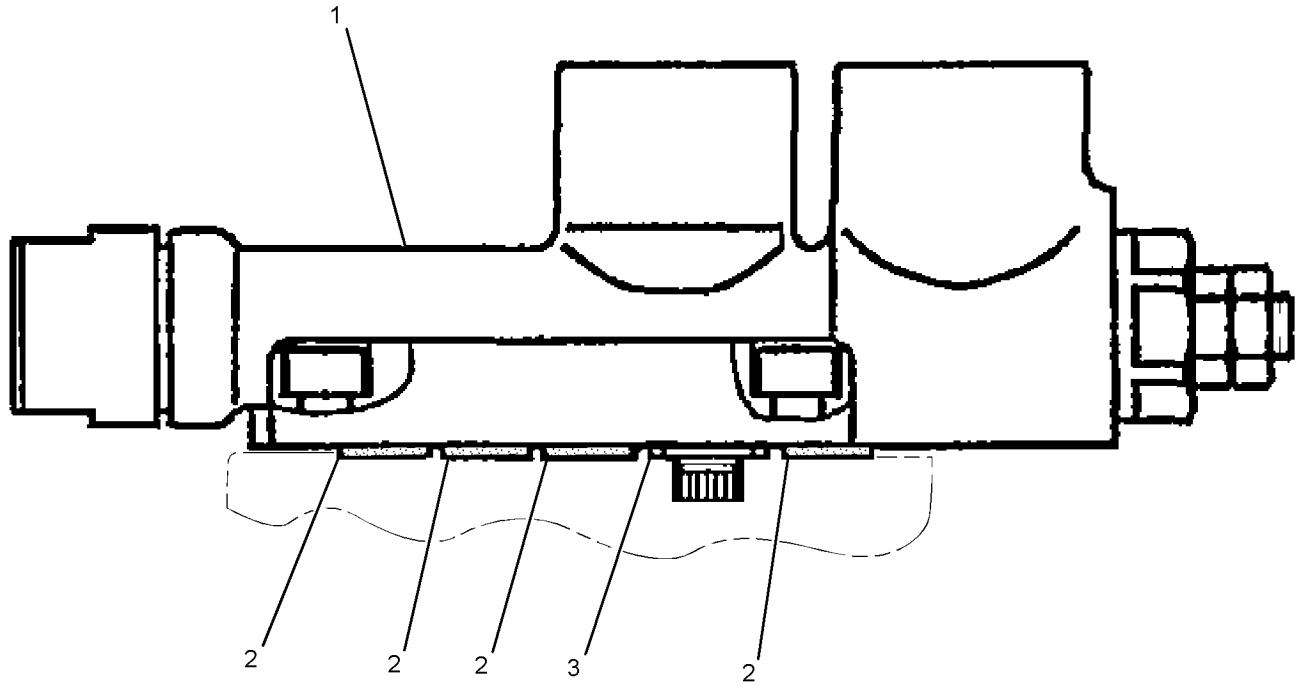

GRAPHIC #1 **<END>** g01623613

281-3053 VALVE GP-RELIEF

PART OF 281-3052 MOTOR GP-SWING

SMCS-5069, 5117 **i04019573**

NOTE	REF NO	GRAPHIC REF	PART NUMBER	QTY	PART NAME 1 2 3 4 5 6 (PRODUCT LEVEL)	SEE PAGE
	1	1	**095-1582**	1	SEAL-O-RING	
	2	1	**095-1585**	1	SEAL-O-RING	
	3	1	**095-1590**	1	SEAL-O-RING	
	4	1	**095-1595**	1	SEAL-O-RING	
	5	1	**095-1781**	2	RING	

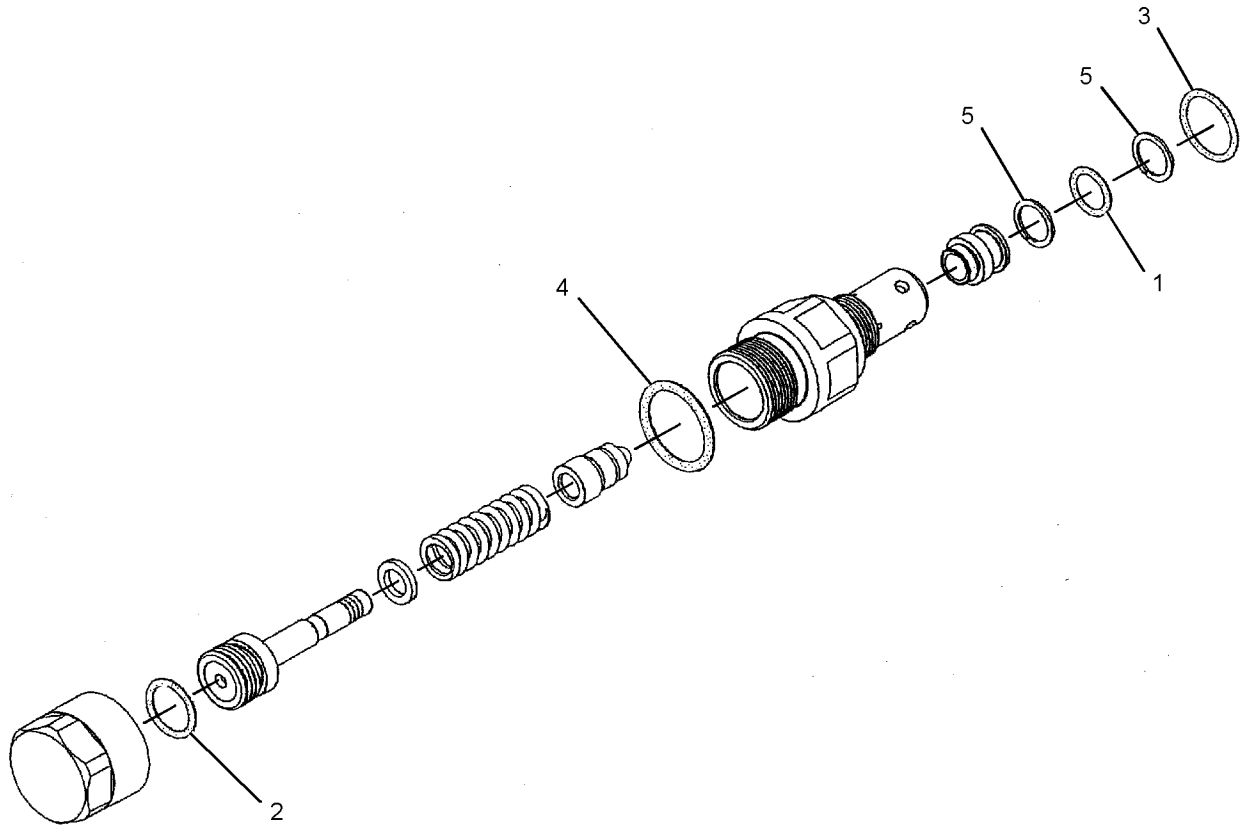

GRAPHIC #1 **<END>** g01235790

288-0849 VALVE GP-RELIEF–LINE, THUMB

PART OF 377-8911, 377-8912 STICK AR-HOE
AN ATTACHMENT

SMCS-5069, 5117 **i05349126**

NOTE	REF NO	GRAPHIC REF	PART NUMBER	QTY	PART NAME 1 2 3 4 5 6 (PRODUCT LEVEL)	SEE PAGE
	1	1	**272-7832**	2	VALVE AS-RELIEF (LINE)	
					(EACH INCLUDES)	
		1	**2M-9780**	1	SEAL-O-RING	

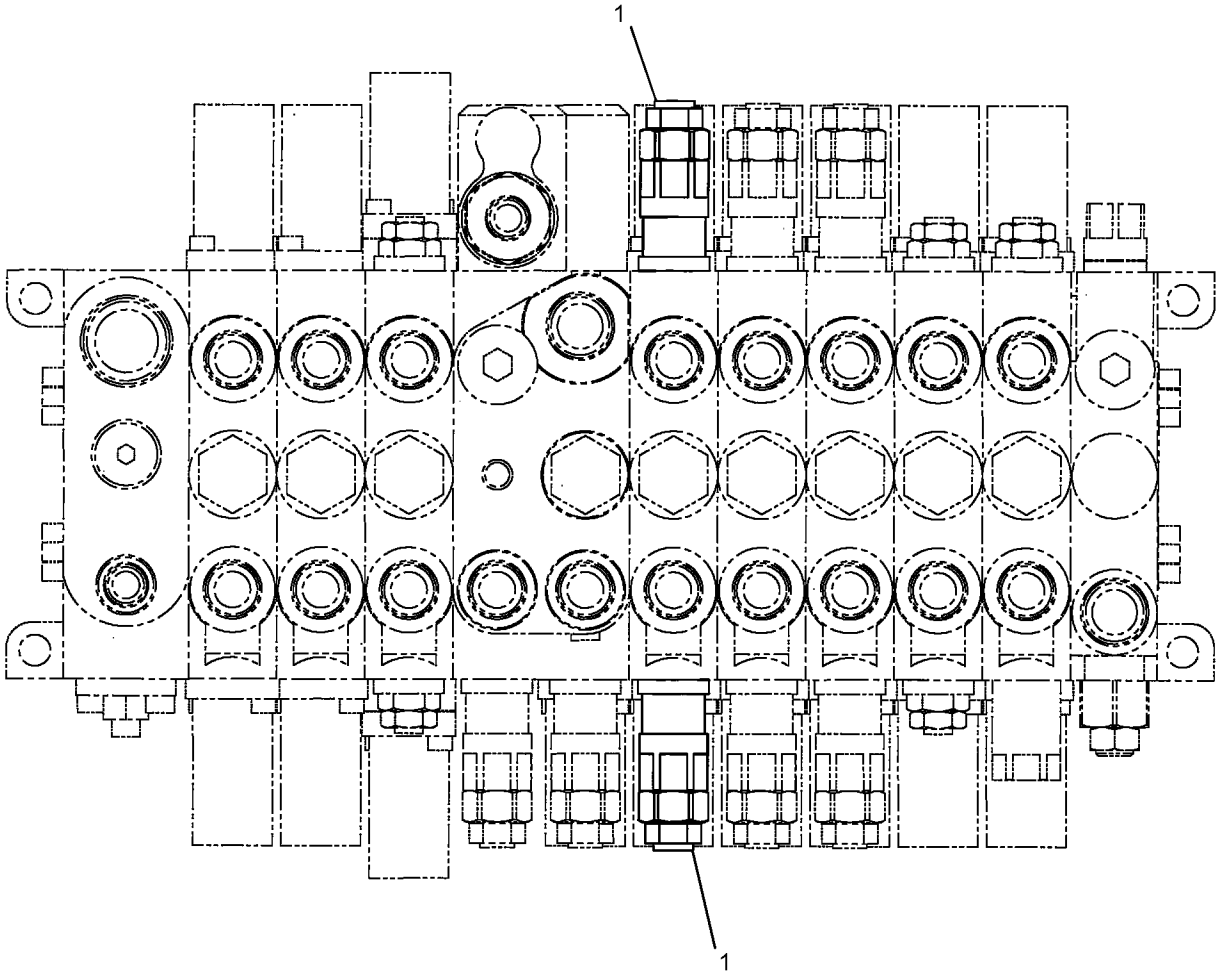

GRAPHIC #1 **<END>** g03403621

169-1181 VALVE GP-SOLENOID

PART OF 282-9318 VALVE GP-SOLENOID

AN ATTACHMENT

SMCS-5479 **i03971129**

NOTE	REF NO	GRAPHIC REF	PART NUMBER	QTY	PART NAME 1 2 3 4 5 6 (PRODUCT LEVEL)	SEE PAGE
	1	1	**095-1750**	1	SEAL-O-RING	
	2	1	**6V-8398**	1	SEAL-O-RING	
	3	1	**095-1751**	1	SEAL-O-RING	
M	4	1	**114-0623**	1	NUT AS (M6X1-THD)	
	5	1	**095-1586**	1	SEAL-O-RING	

M - METRIC PART

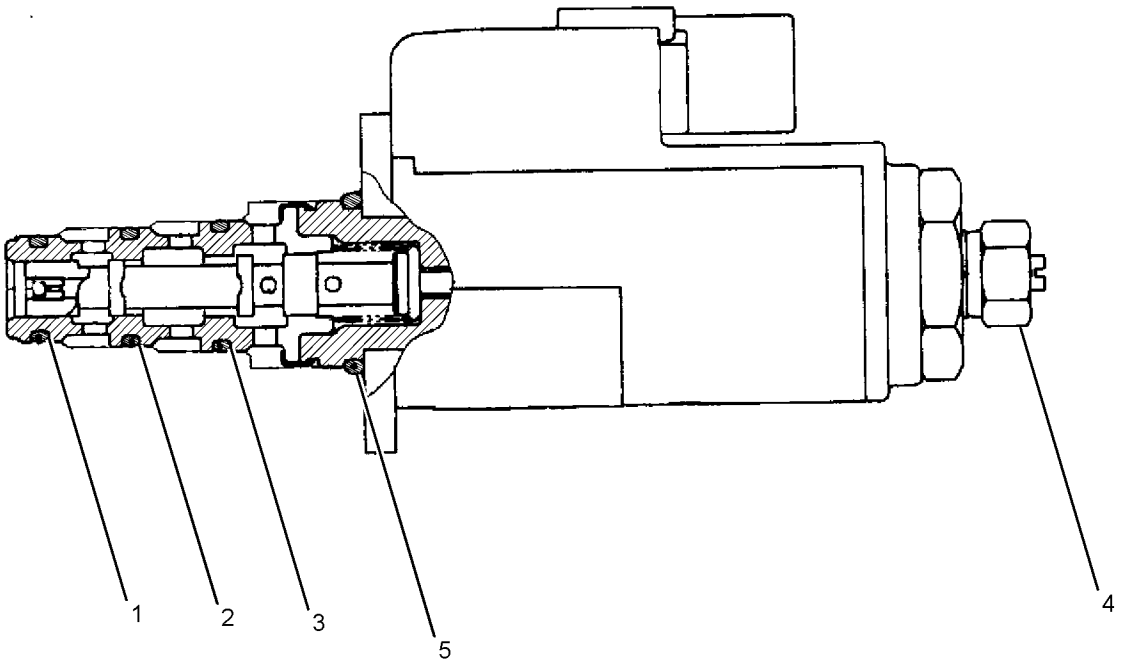

GRAPHIC #1 **<END>** g01369550

269-2299 VALVE GP-SOLENOID

PART OF 267-0424 MANIFOLD & SOLENOID GP-CONTROL

SMCS-5479 **i03971113**

NOTE	REF NO	GRAPHIC REF	PART NUMBER	QTY	PART NAME 1 2 3 4 5 6 (PRODUCT LEVEL)	SEE PAGE
	1	1	**095-1750**	1	SEAL-O-RING	
	2	1	**6V-8398**	1	SEAL-O-RING	
	3	1	**095-1751**	1	SEAL-O-RING	
M	4	1	**114-0623**	1	NUT AS (M6X1-THD)	
	5	1	**095-1586**	1	SEAL-O-RING	

M - METRIC PART

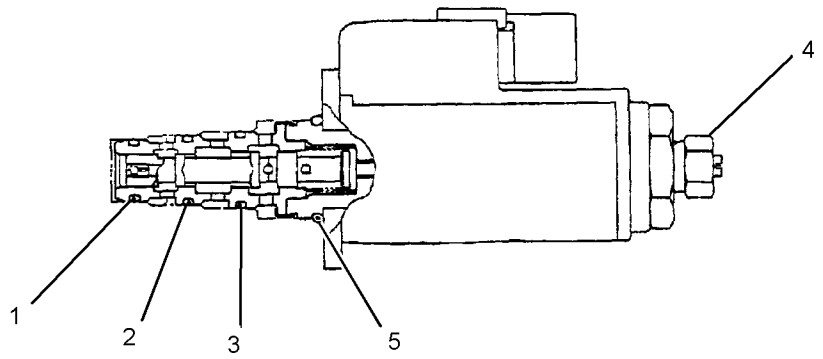

GRAPHIC #1 **<END>** g01210437

282-9318 VALVE GP-SOLENOID

PART OF 385-2796 LINES GP-PILOT
AN ATTACHMENT

SMCS-5479 **i03971128**

NOTE	REF NO	GRAPHIC REF	PART NUMBER	QTY	PART NAME 1 2 3 4 5 6 (PRODUCT LEVEL)	SEE PAGE
Y	1	1	**169-1181**	2	VALVE GP-SOLENOID (BLADE)	360
	2	1	**291-0152**	1	BLOCK	
M	3	1	**8T-0288**	4	BOLT (M5X0.8X12-MM)	

M - METRIC PART
Y - SEPARATE ILLUSTRATION

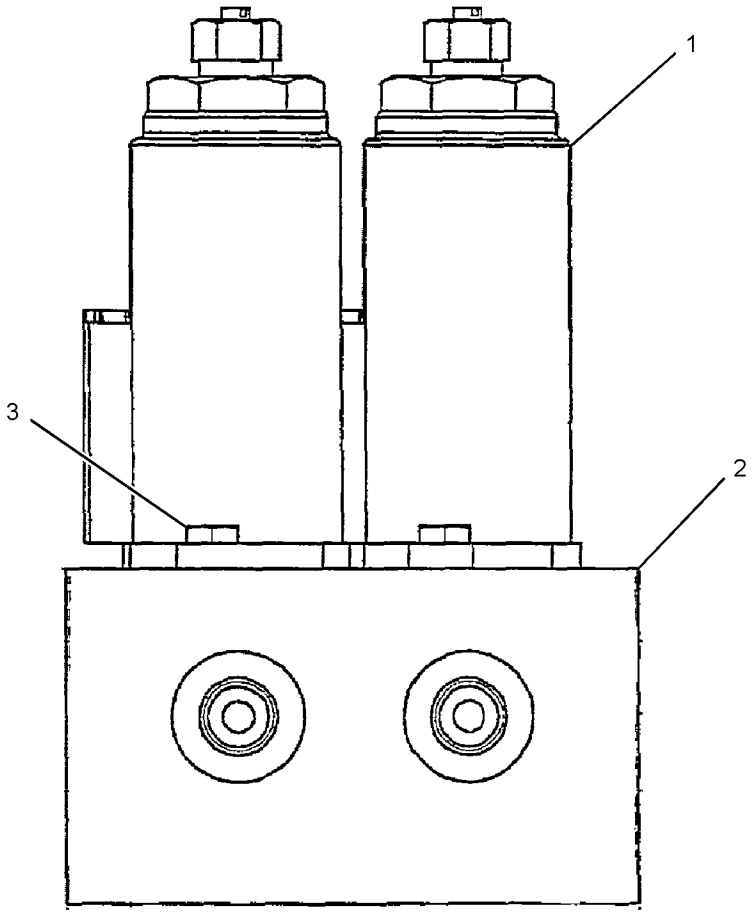

GRAPHIC #1 **<END>** g01359556

372-9898 VALVE GP-SOLENOID

PART OF 377-8876 VALVE & MTG GP-CONTROL
AN ATTACHMENT

SMCS-5479 **i04559358**

NOTE	REF NO	GRAPHIC REF	PART NUMBER	QTY	PART NAME 1 2 3 4 5 6 (PRODUCT LEVEL)	SEE PAGE
	1	1	**274-8039**	2	VALVE GP-SOLENOID (12-VOLT) (FLOW CONTROL)	
					(EACH INCLUDES)	
		1	**274-8034**	1	COIL AS (12-VOLT)	

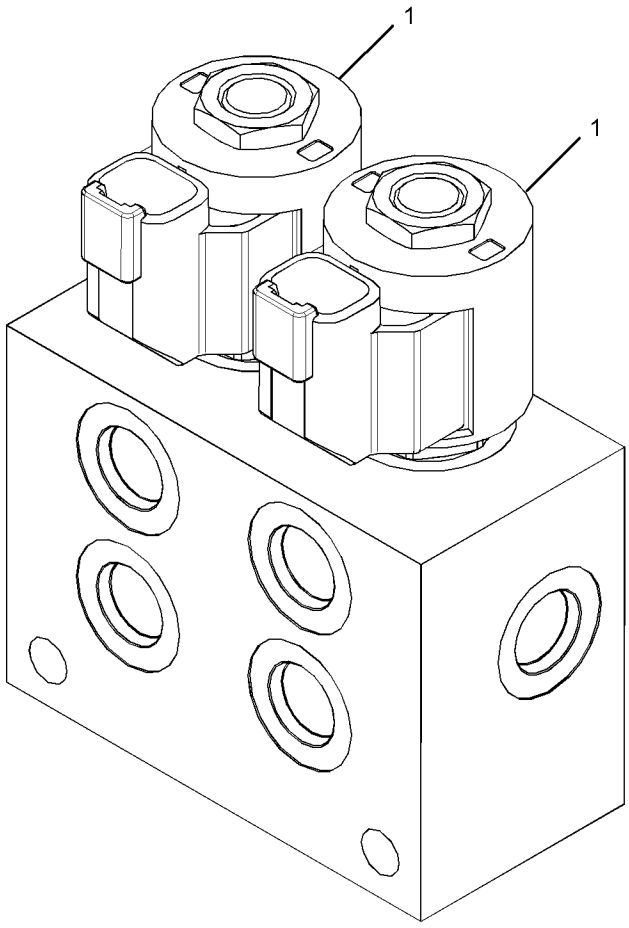

GRAPHIC #1 **<END>** g02765216

358-2091 VALVE GP-SOLENOID & MANIFOLD—QUICK COUPLER

PART OF 384-5013 CONTROL AR-COUPLER, 382-2554 LINES GP-FRONT AN ATTACHMENT

SMCS-5264, 5479 **i05426637**

NOTE	REF NO	GRAPHIC REF	PART NUMBER	QTY	PART NAME 1 2 3 4 5 6 (PRODUCT LEVEL)	SEE PAGE
	1	1	**384-1039**	1	VALVE GP-CHECK (QUICK COUPLER)	
	2	1	**368-1278**	2	VALVE GP-SOLENOID (12-VOLT) (QUICK COUPLER)	
	3	1	**368-1279**	1	VALVE GP-PRESSURE REDUCING (QUICK COUPLER)	
	4	1	**244-1540**	1	PLUG-ORIFICE	
	5	1	**4J-7533**	5	SEAL-O-RING	
	6	1	**9S-4180**	5	PLUG	

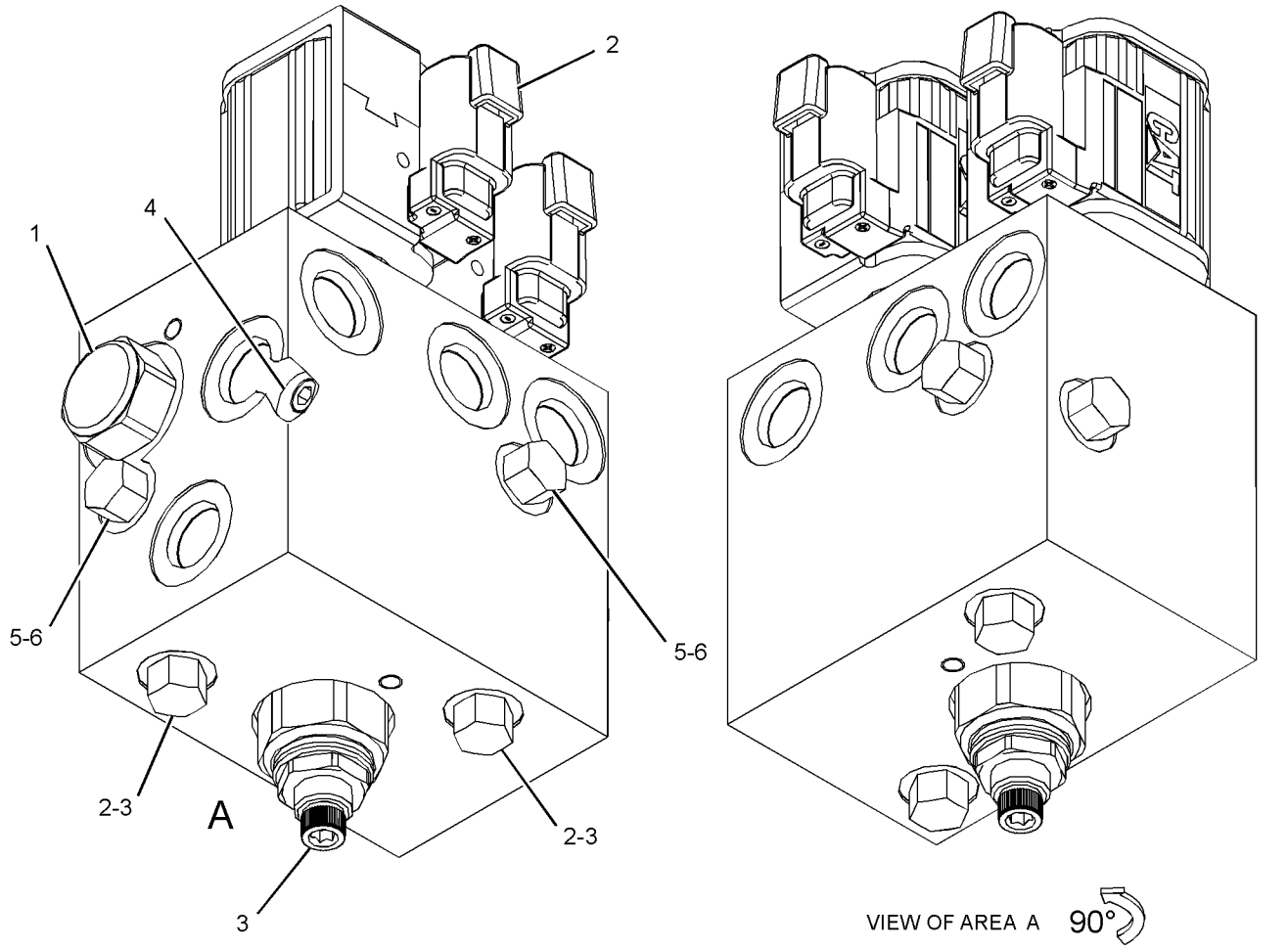

GRAPHIC #1 **<END>** g02879259

376-6679 BOOM AR

PART OF 376-6671 COMMON AR

SMCS-6501 **i04629846**

NOTE	PART NUMBER	QTY	PART NAME 1 2 3 4 5 6 (PRODUCT LEVEL)	SEE PAGE
Y	*379-8733*	1	BOOM GP	366
Y	**284-3369**	1	CYLINDER GP-BOOM	200
Y	**376-0171**	1	CYLINDER GP-SWING BOOM	208
Y	*270-6520*	1	FRAME GP-SWING (BOOM)	145
Y	*270-6515*	1	GUARD GP-CYLINDER (BOOM)	148
Y	*292-5739*	1	LIGHTING GP-FLOOD (BOOM)	95
Y	*370-5333*	1	WIRING GP-LIGHTING (BOOM)	117

Y - SEPARATE ILLUSTRATION

<END>

379-8733 BOOM GP

PART OF 376-6679 BOOM AR

SMCS-6501 **i05376426**

NOTE	REF NO	GRAPHIC REF	PART NUMBER	QTY	PART NAME 1 2 3 4 5 6 (PRODUCT LEVEL)	SEE PAGE
	1	1	**093-1430**	2	SEAL-LIP TYPE	
B	2	1	**175-1794**	2	SHIM (0.5-MM THK)	
B	3	1	**175-1795**	4	SHIM (1-MM THK)	
B	4	1	**176-8464**	1	SHIM (0.5-MM THK)	
B	5	1	**176-8465**	1	SHIM (1-MM THK)	
	6	1	**266-3872**	1	BOSS (M20X1.5-THD)	
	7	1	**266-4104**	1	PIN AS	
	8	1	**266-4106**	1	PIN AS	
	9	1	**422-1381**	1	PLATE AS	
	10	1	**422-1378**	1	PLATE AS	
	11	1	**284-6255**	1	PIN	
	12	1	**379-8734**	1	BOOM & BEARING AS	
	12A	1	**265-8720**	2	BUSHING	
		1	**5I-3272**	1	BOSS (M12X1.75X20-MM)	
		1	**7T-1099**	1	LINK	
M		1	**9R-2613**	1	BOSS-WELD (M10X1.5X25-MM)	
M		1	**9R-2672**	1	BOSS-THREADED (M10X1.5-THD)	
	13	1	**3B-8489**	1	FITTING-GREASE	
	14	1	**6V-8513**	2	WASHER-HARD (11X35X2.5-MM THK)	
M	15	1	**8T-4137**	1	BOLT (M10X1.5X20-MM)	
M	16	1	**127-2170**	4	SCREW-TRUSS HEAD (M8X1.25X20-MM)	
M	17	1	**8T-4196**	1	BOLT (M10X1.5X35-MM)	
	18	1	**8T-4224**	4	WASHER-HARD (8.8X16X2-MM THK)	

B - USE AS REQUIRED
M - METRIC PART

379-8733 **BOOM GP** (*contd.*) **i05376426**

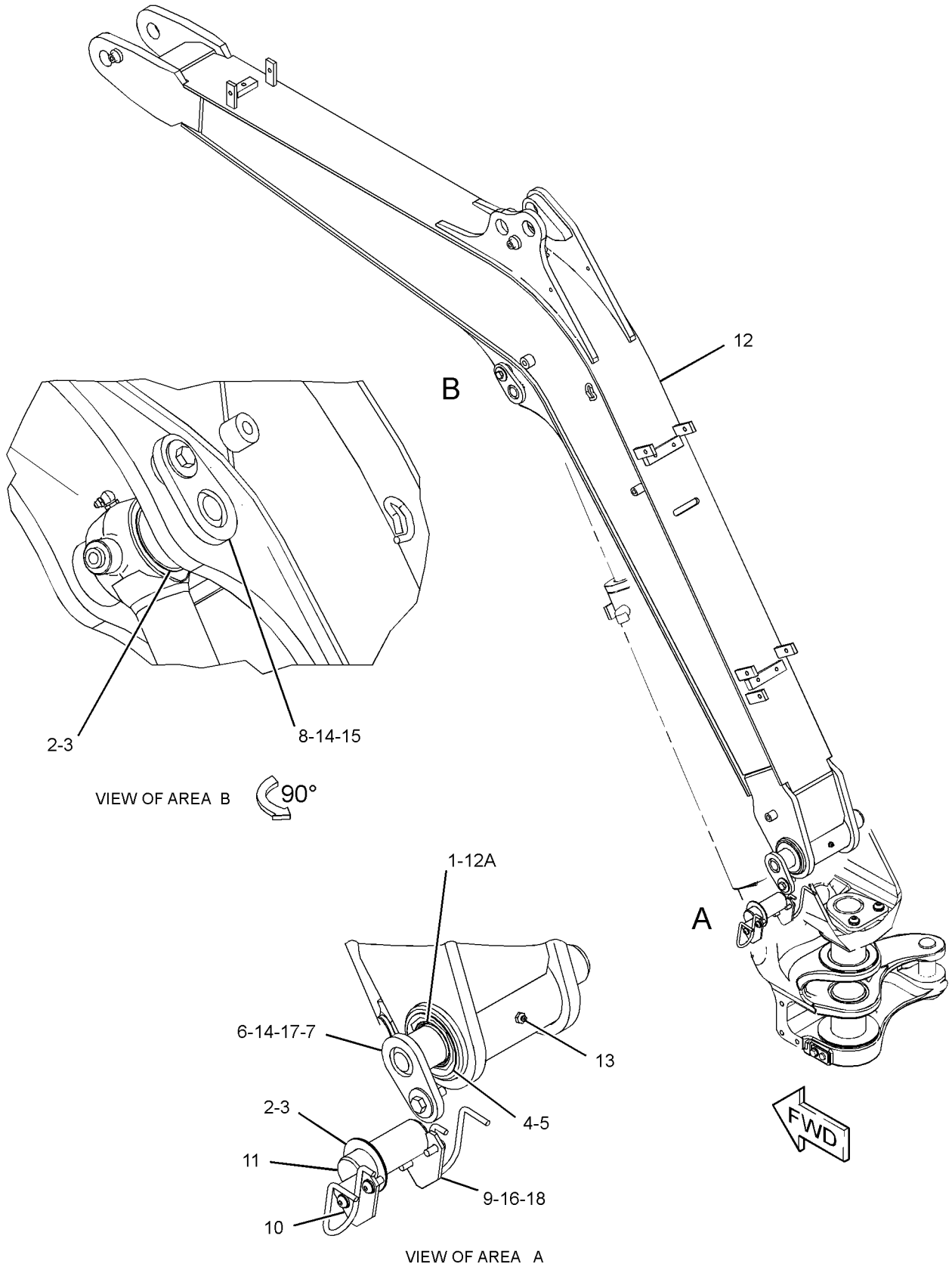

GRAPHIC #1 **<END>** g03221776

282-1712 BRACKET GP-MOUNTING—BUCKET

PART OF 279-4325 BUCKET AR-TILTABLE

AN ATTACHMENT

SMCS-6700, 7079 **i05395259**

NOTE	REF NO	GRAPHIC REF	PART NUMBER	QTY	PART NAME 1 2 3 4 5 6 (PRODUCT LEVEL)	SEE PAGE
	1	1	**246-0175**	2	BEARING	
	2	1	**282-1713**	1	BRACKET AS-MOUNTING	

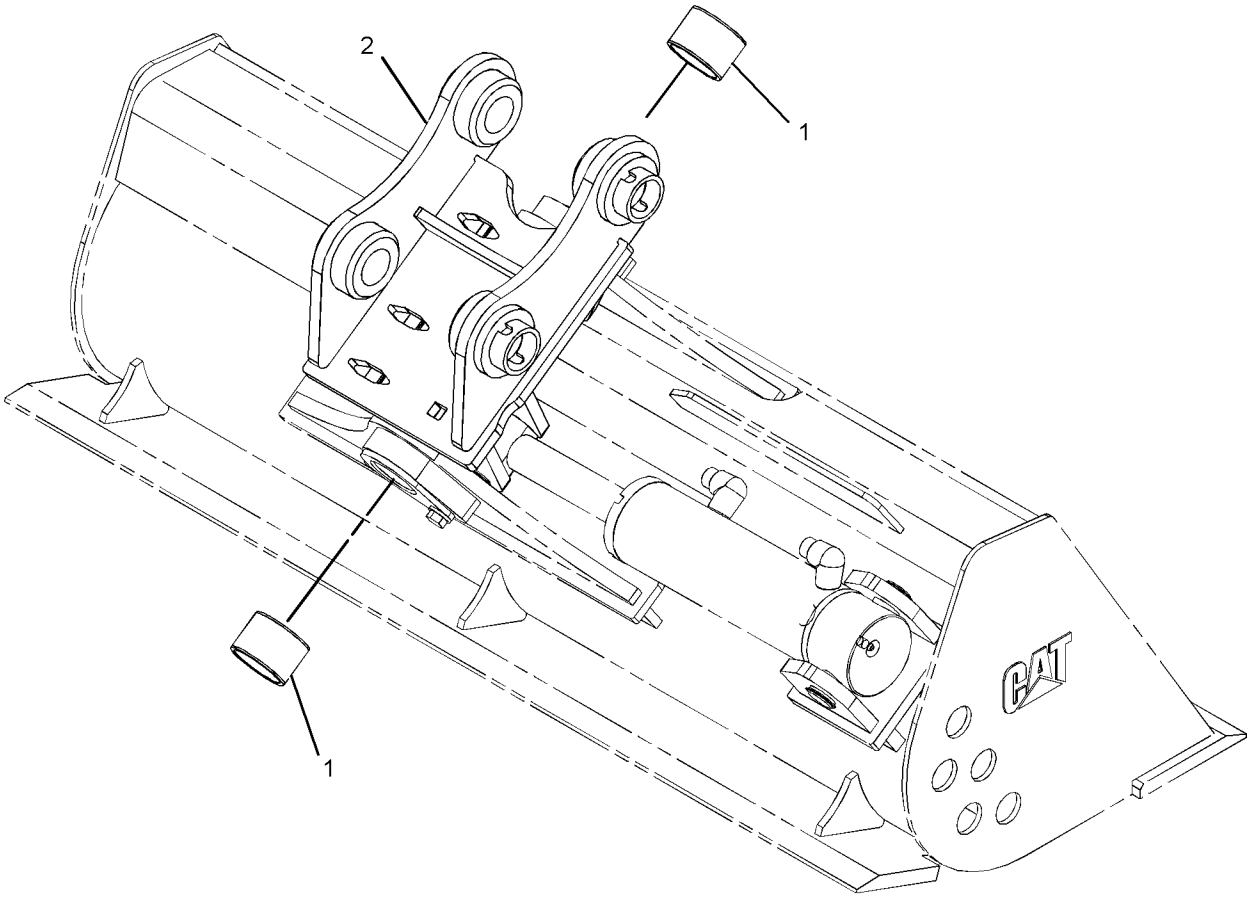

GRAPHIC #1 **<END>** g01243498

426-0242 KIT-BOOM–BOOM LOWERING
AN ATTACHMENT

SMCS-6501 **i05519799**

NOTE	REF NO	GRAPHIC REF	PART NUMBER	QTY	PART NAME 1 2 3 4 5 6 (PRODUCT LEVEL)	SEE PAGE
	1	1,2	**7K-1181**	4	STRAP-CABLE	
	2	2	**9F-2167**	1	SCREW-PURGE (3/8-24X1.164-IN)	
	3	2	**093-1290**	1	CLAMP	
	4	2	**278-0800**	1	TUBE AS	
	5	2	**279-4737**	1	STRAP-CABLE (GREEN)	
	6	2	**279-4738**	1	STRAP-CABLE (PURPLE)	
	7	2	**307-8151**	1	PLATE AS	
	8	2	**308-4578**	1	SUPPORT AS	
	10	2	**344-7391**	1	SENSOR GP-PRESSURE (BOOM CYL, HEAD END)	
I	12	1	**397-6699**	1	HOSE AS	
I	13	1	**397-6742**	1	HOSE AS	
	14	2	**417-1094**	1	VALVE GP-CHECK	
	15	2	**426-0195**	1	TUBE AS	
	16	2	**426-0197**	2	SUPPORT AS	
	17	2	*148-8328*	1	CONNECTOR AS	
		2	**3D-2824**	1	SEAL-O-RING	
		2	**6V-8398**	1	SEAL-O-RING	
		2	**6V-8633**	1	CONNECTOR	
	19	2	*148-8340*	1	CONNECTOR AS	
		2	**3K-0360**	1	SEAL-O-RING	
		2	**6V-8398**	1	SEAL-O-RING	
		2	**6V-8639**	1	CONNECTOR	
	20	2	*148-8368*	1	ELBOW AS	
		2	**3J-1907**	1	SEAL-O-RING	
		2	**4J-5477**	1	SEAL-O-RING	
		2	**6V-8627**	1	ELBOW	
	21	1	*150-4029*	1	TEE AS	
		1	**3J-7354**	1	SEAL-O-RING	
		1	**4J-5477**	2	SEAL-O-RING	
		1	**6V-8780**	1	TEE-FACE SEAL	
	22	2	**152-3411**	1	ELBOW	
	24	2	**208-0616**	1	TEE	
	25	2	*241-6215*	1	ELBOW AS	
		2	**3J-1907**	1	SEAL-O-RING	
		2	**6V-8076**	1	ELBOW	
	26	2	**3D-2824**	1	SEAL-O-RING	
	27	2	**3J-1907**	1	SEAL-O-RING	
	28	2	**4S-1962**	1	CLIP	
	29	2	**6V-8397**	2	SEAL-O-RING	
B	30	1,2	**8T-4121**	11	WASHER-HARD (11X21X2.5-MM THK)	
M	31	2	**8T-4133**	2	NUT (M10X1.5-THD)	
BM	32	1,2	**8T-4137**	5	BOLT (M10X1.5X20-MM)	
M	33	2	**8T-4182**	1	BOLT (M10X1.5X45-MM)	
M	34	2	**8T-4196**	2	BOLT (M10X1.5X35-MM)	
M	35	2	**8T-6466**	2	BOLT (M10X1.5X60-MM)	
	36	1	**3S-2093**	7	STRAP-CABLE	
	37	1	**4K-8302**	1	CLIP	
	38	1	**4P-7581**	1	CLIP	
	39	1	**7X-7729**	1	WASHER (11X25X3-MM THK)	
	42	1	**204-1611**	1	STRAP (DUAL)	
	43	1	**277-1873**	1	CLIP	
	44	1	**379-0817**	1	SWITCH AS-ROCKER (OVERLOAD WARNING)	
		1	**111-7899**	1	GASKET	
Y	45	1	**422-2949**	1	HARNESS AS-SENSOR	88
	46	1	**322-4582**	1	FILM-WARNING (TIPPING HAZARD, READ OMM)	

B - USE AS REQUIRED
I - REFER TO HYDRAULIC INFORMATION SYSTEM
M - METRIC PART
Y - SEPARATE ILLUSTRATION

426-0242 **KIT-BOOM (*contd.*)** **i05519799**

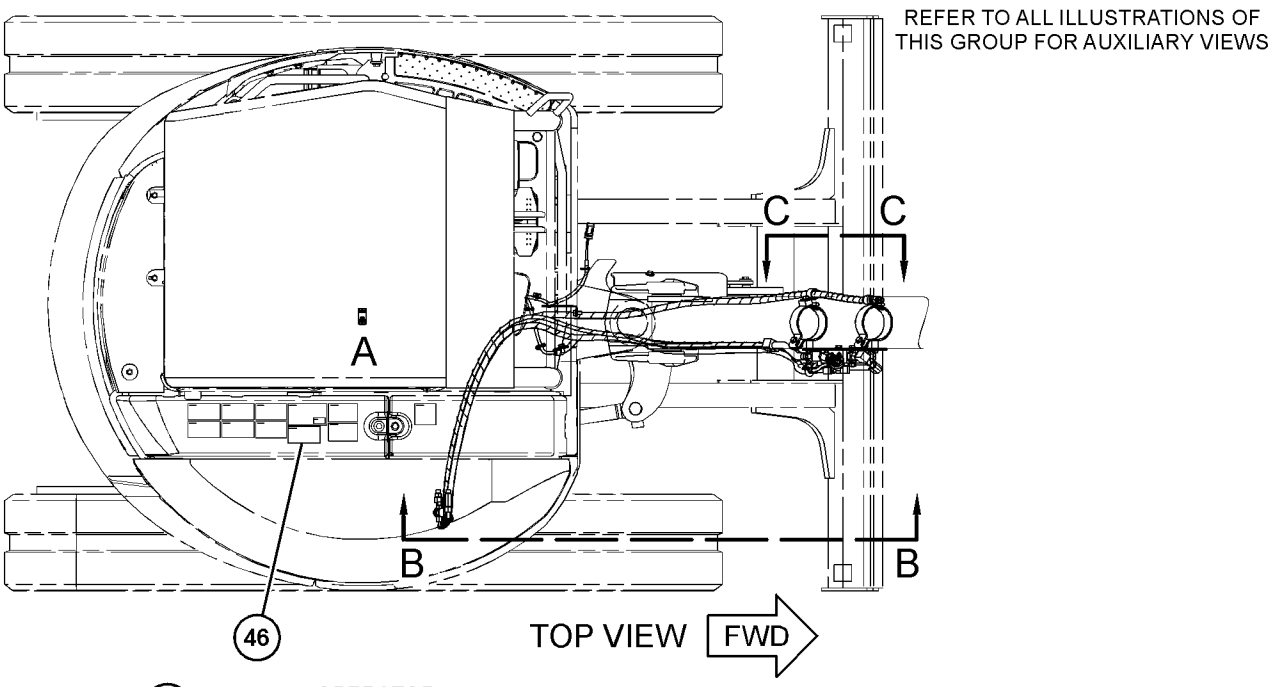

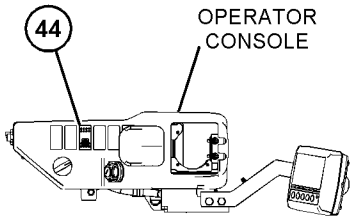

VIEW OF AREA A

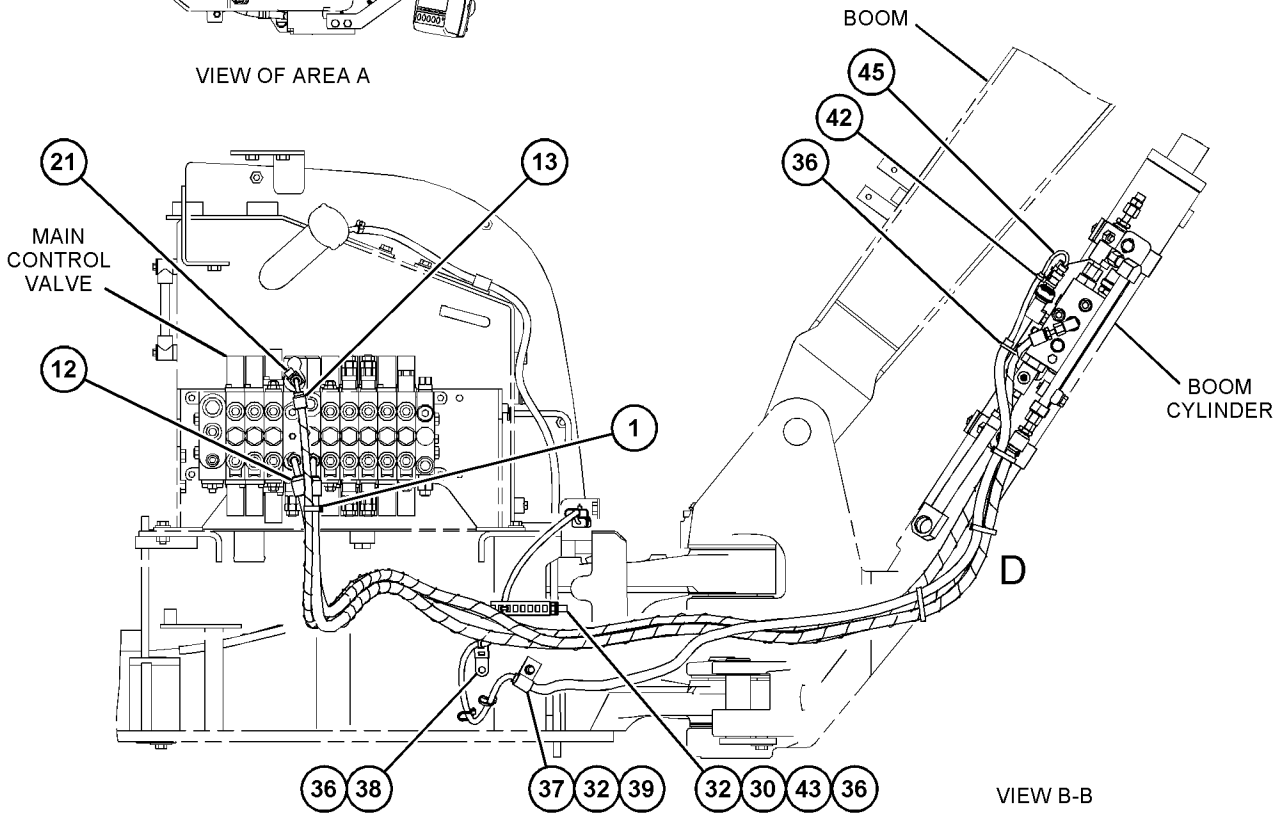

VIEW B-B

GRAPHIC #1 g03498696

426-0242 **KIT-BOOM (*contd.*)** **i05519799**

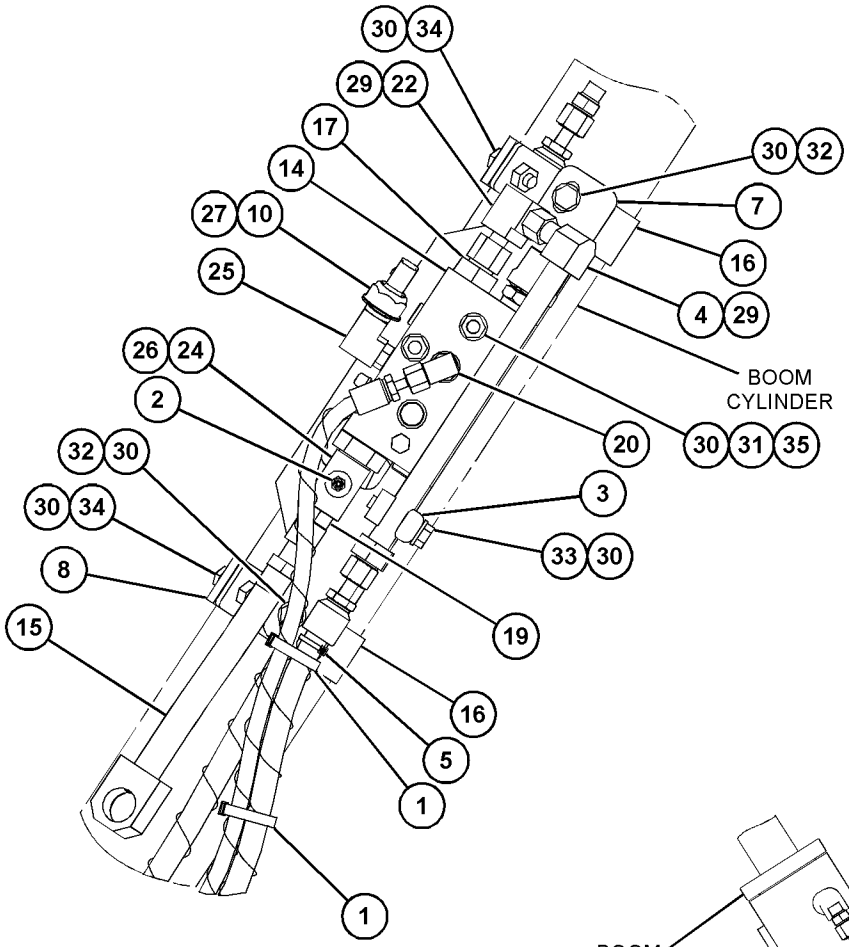

VIEW OF AREA D
(WIRING REMOVED
FOR CLARITY)

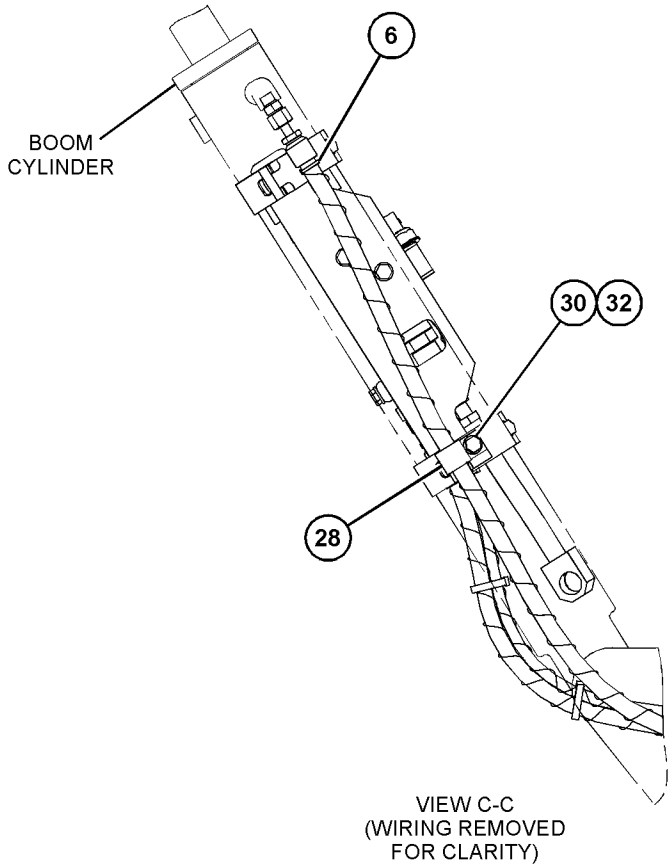

VIEW C-C
(WIRING REMOVED
FOR CLARITY)

GRAPHIC #2 **<END>** g03498697

377-8913 LINKAGE AR-BUCKET—WITHOUT LIFTING EYE

AN ATTACHMENT

SMCS-6513 **i04623116**

NOTE	PART NUMBER	QTY	PART NAME 1 2 3 4 5 6 (PRODUCT LEVEL)	SEE PAGE
Y	**277-9900**	1	CYLINDER GP-BUCKET	202
Y	*277-4378*	1	LINKAGE GP-BUCKET (WITH LIFTING EYE)	374

Y - SEPARATE ILLUSTRATION

<END>

377-8914 LINKAGE AR-BUCKET—WITH LIFTING EYE

PART OF 383-1706, 383-1707, 383-1708, 383-1709 STICK AR

AN ATTACHMENT

SMCS-6513 **i04623133**

NOTE	PART NUMBER	QTY	PART NAME 1 2 3 4 5 6 (PRODUCT LEVEL)	SEE PAGE
Y	**277-9900**	1	CYLINDER GP-BUCKET	202
Y	*278-9937*	1	LINKAGE GP-BUCKET (WITH LIFTING EYE)	376

Y - SEPARATE ILLUSTRATION

<END>

418-1567 LINKAGE AR-BUCKET—WITH LIFTING EYE

AN ATTACHMENT

SMCS-6513 **i05210408**

NOTE	PART NUMBER	QTY	PART NAME 1 2 3 4 5 6 (PRODUCT LEVEL)	SEE PAGE
Y	**277-9900**	1	CYLINDER GP-BUCKET	202
Y	*420-1391*	1	LINKAGE GP-BUCKET	378

Y - SEPARATE ILLUSTRATION

<END>

418-1571 LINKAGE AR-BUCKET—WITHOUT LIFTING EYE

AN ATTACHMENT

SMCS-6513 **i05210416**

NOTE	PART NUMBER	QTY	PART NAME 1 2 3 4 5 6 (PRODUCT LEVEL)	SEE PAGE
M	**8T-4172**	2	BOLT (M10X1.5X80-MM)	
	3B-8489	3	FITTING-GREASE	
	277-4382	1	LINK	
	281-0865	1	LINK & BEARING AS	
	093-1429	6	SEAL-LIP TYPE	
	265-8715	2	BUSHING	
	266-4051	2	BUSHING	
	277-4381	1	LINK AS	
M	**8T-4133**	4	NUT (M10X1.5-THD)	
	228-2856	2	PIN AS	
	277-4383	2	PIN AS	
	095-0868	2	PIN-COTTER	
	175-1794	5	SHIM (0.5-MM THK)	
	175-1795	3	SHIM (1-MM THK)	

M - METRIC PART

<END>

418-1572 LINKAGE AR-BUCKET—WITHOUT LIFTING EYE

AN ATTACHMENT

SMCS-6513 **i05210415**

NOTE	PART NUMBER	QTY	PART NAME 1 2 3 4 5 6 (PRODUCT LEVEL)	SEE PAGE
M	**8T-4172**	2	BOLT (M10X1.5X80-MM)	
	3B-8489	3	FITTING-GREASE	
	277-4382	1	LINK	
	278-9938	1	LINK & BEARING AS	
	093-1429	6	SEAL-LIP TYPE	
	265-8715	2	BUSHING	
	266-4051	2	BUSHING	
	277-4381	1	LINK AS	
M	**8T-4133**	4	NUT (M10X1.5-THD)	
	228-2856	2	PIN AS	
	277-4383	2	PIN AS	
	095-0868	2	PIN-COTTER	
	175-1794	5	SHIM (0.5-MM THK)	
	175-1795	3	SHIM (1-MM THK)	

M - METRIC PART

<END>

277-4378 LINKAGE GP-BUCKET

PART OF 377-8913 LINKAGE AR-BUCKET

AN ATTACHMENT

SMCS-6513 **i04019531**

NOTE	REF NO	GRAPHIC REF	PART NUMBER	QTY	PART NAME 1 2 3 4 5 6 (PRODUCT LEVEL)	SEE PAGE
	1	1	**3B-8489**	3	FITTING-GREASE	
B	2	1	**175-1794**	7	SHIM (0.5-MM THK)	
B	3	1	**175-1795**	4	SHIM (1-MM THK)	
	4	1	**228-2856**	2	PIN AS	
	5	1	**266-4064**	1	PIN AS	
	6	1	**277-4381**	1	LINK AS	
	7	1	**277-4382**	1	LINK	
	8	1	**277-4383**	2	PIN AS	
	9	1	**281-0865**	1	LINK & BEARING AS	
		1	**093-1429**	6	SEAL-LIP TYPE	
		1	**265-8715**	2	BUSHING	
		1	**266-4051**	2	BUSHING	
	10	1	**095-0868**	2	PIN-COTTER	
	11	1	**6V-8513**	1	WASHER-HARD (11X35X2.5-MM THK)	
M	12	1	**8T-4133**	4	NUT (M10X1.5-THD)	
M	13	1	**8T-4137**	1	BOLT (M10X1.5X20-MM)	
M	14	1	**8T-4172**	2	BOLT (M10X1.5X80-MM)	

B - USE AS REQUIRED
M - METRIC PART

277-4378 **LINKAGE GP-BUCKET (*contd.*)** **i04019531**

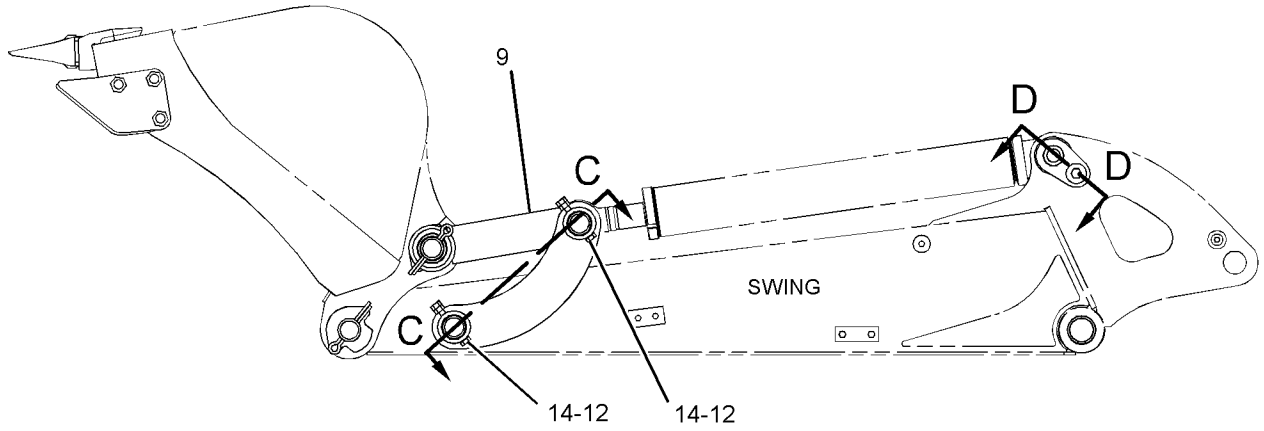

LEFT SIDE VIEW

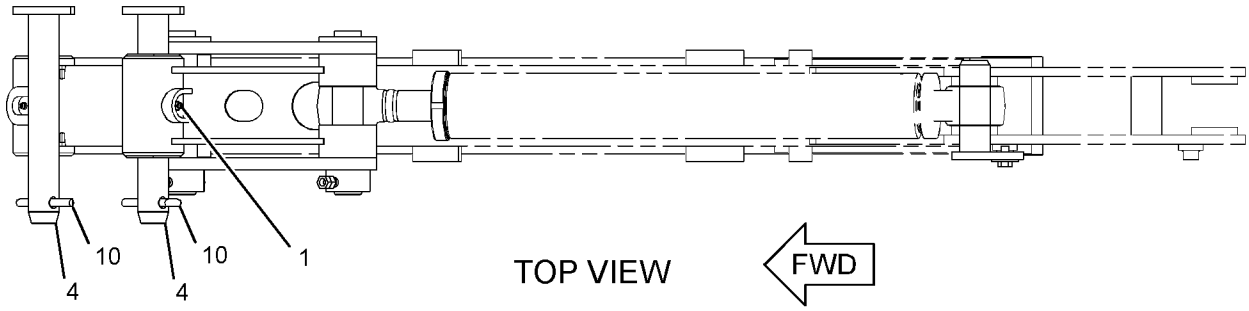

TOP VIEW

FWD

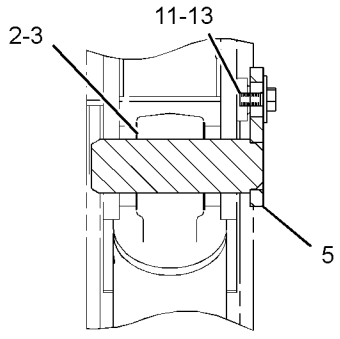

SECTION D-D

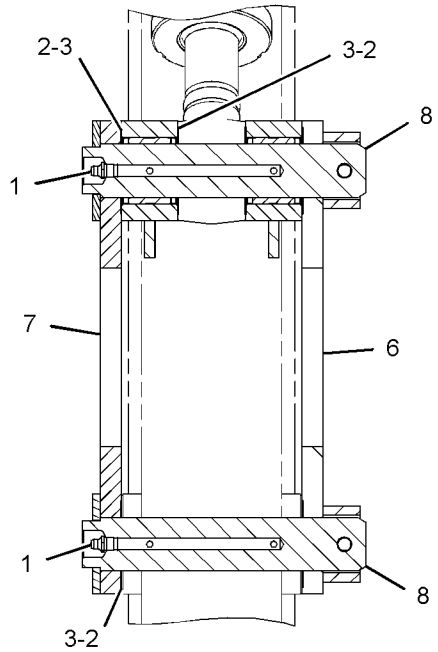

SECTION C-C

GRAPHIC #1 **<END>** g01223179

278-9937 LINKAGE GP-BUCKET—WITH LIFTING EYE

PART OF 377-8914 LINKAGE AR-BUCKET

AN ATTACHMENT

SMCS-6513 **i04006592**

NOTE	REF NO	GRAPHIC REF	PART NUMBER	QTY	PART NAME 1 2 3 4 5 6 (PRODUCT LEVEL)	SEE PAGE
	1	1	**3B-8489**	3	FITTING-GREASE	
	2	1	**175-1794**	7	SHIM (0.5-MM THK)	
	3	1	**175-1795**	4	SHIM (1-MM THK)	
	4	1	**228-2856**	2	PIN AS	
	5	1	**266-4064**	1	PIN AS	
	6	1	**277-4381**	1	LINK AS	
	7	1	**277-4382**	1	LINK	
	8	1	**277-4383**	2	PIN AS	
	9	1	**278-9938**	1	LINK & BEARING AS	
		1	**093-1429**	6	SEAL-LIP TYPE	
		1	**265-8715**	2	BUSHING	
		1	**266-4051**	2	BUSHING	
	10	1	**095-0868**	2	PIN-COTTER	
	11	1	**6V-8513**	1	WASHER-HARD (11X35X2.5-MM THK)	
M	12	1	**8T-4133**	4	NUT (M10X1.5-THD)	
M	13	1	**8T-4137**	1	BOLT (M10X1.5X20-MM)	
M	14	1	**8T-4172**	2	BOLT (M10X1.5X80-MM)	

M - METRIC PART

278-9937 **LINKAGE GP-BUCKET (*contd.*)** **i04006592**

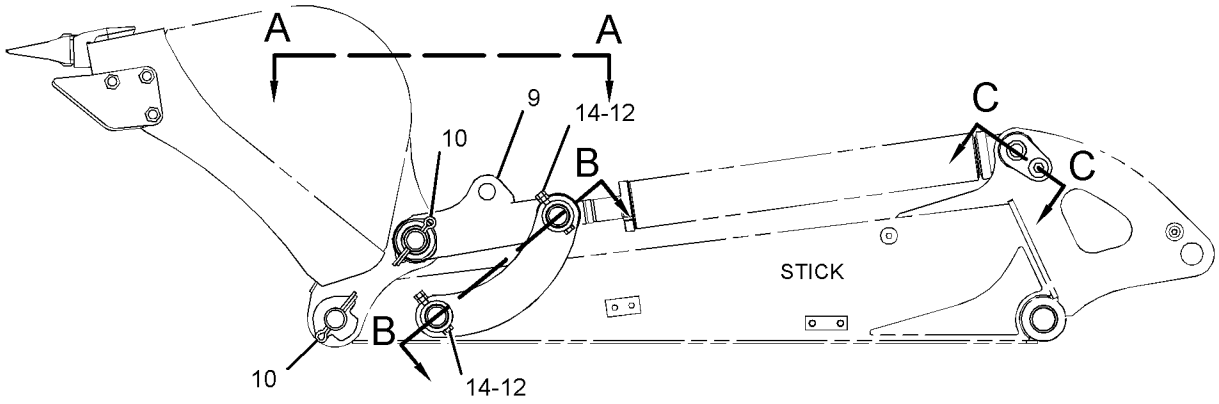

LEFT SIDE VIEW

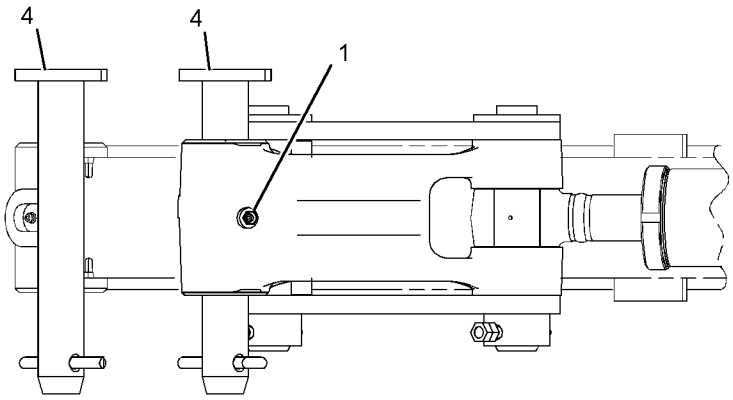

VIEW A-A

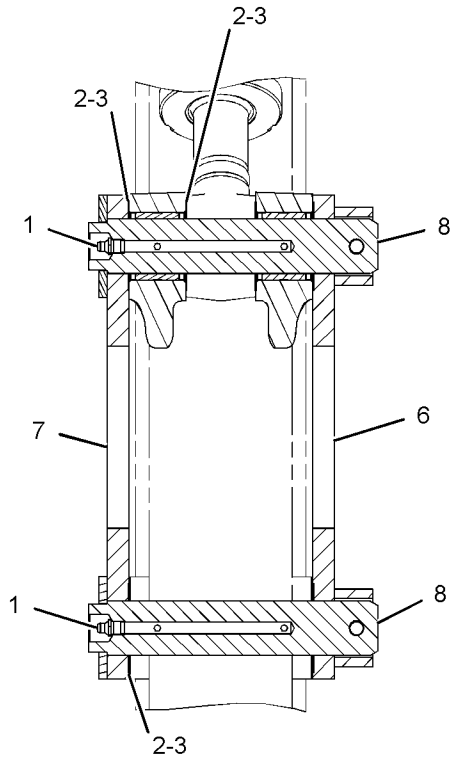

SECTION B-B

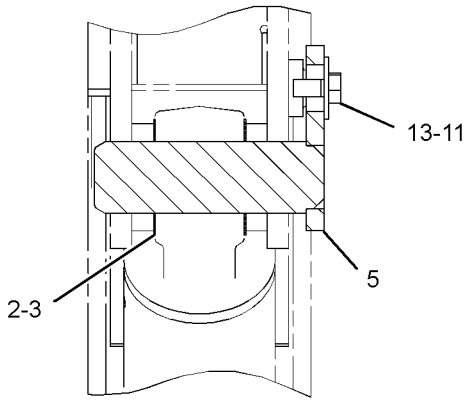

SECTION C-C

GRAPHIC #1 **<END>** g01221404

420-1391 LINKAGE GP-BUCKET

PART OF 418-1567 LINKAGE AR-BUCKET

AN ATTACHMENT

SMCS-6513 **i05210409**

NOTE	REF NO	GRAPHIC REF	PART NUMBER	QTY	PART NAME 1 2 3 4 5 6 (PRODUCT LEVEL)	SEE PAGE
	1	1	**175-1794**	2	SHIM (0.5-MM THK)	
	2	1	**175-1795**	1	SHIM (1-MM THK)	
	3	1	**266-4064**	1	PIN AS	
	4	1	**6V-8513**	1	WASHER-HARD (11X35X2.5-MM THK)	
M	5	1	**8T-4137**	1	BOLT (M10X1.5X20-MM)	

M - METRIC PART

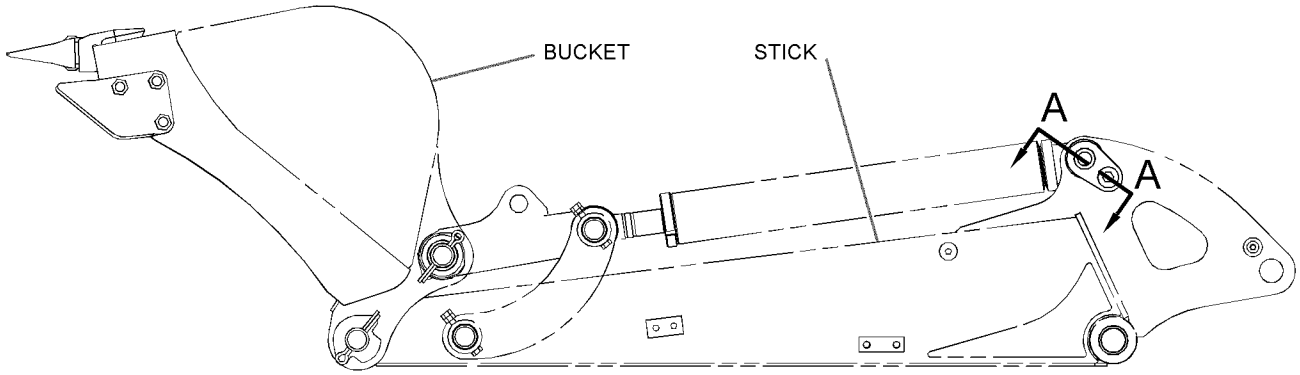

LEFT SIDE VIEW

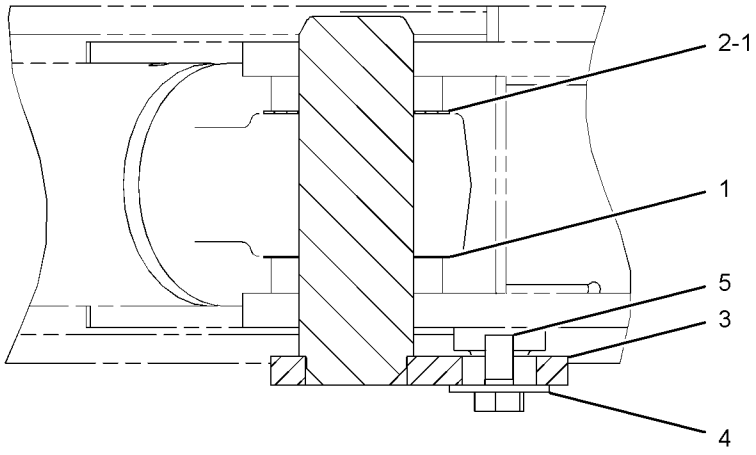

SECTION A-A

GRAPHIC #1 **<END>** g03342159

379-4679 STICK AR

AN ATTACHMENT

SMCS-6502 **i04629834**

NOTE	PART NUMBER	QTY	PART NAME 1 2 3 4 5 6 (PRODUCT LEVEL)	SEE PAGE
Y	**284-0883**	1	CYLINDER GP-STICK	206
Y	*272-1326*	1	FASTENER GP-LINES (STICK)	214
Y	*292-8287*	1	LINES GP-STICK	275

Y - SEPARATE ILLUSTRATION

<END>

383-1706 STICK AR—LONG

AN ATTACHMENT

SMCS-6502 **i04629209**

NOTE	PART NUMBER	QTY	PART NAME 1 2 3 4 5 6 (PRODUCT LEVEL)	SEE PAGE
Y	*379-4683*	1	CONTROL AR-AUXILIARY (SWING BOOM)	189
Y	*378-2501*	1	CONTROL AR-HYDRAULIC	195
Y	*382-1314*	1	LINES AR-BUCKET	217
Y	*355-4740*	1	LINES GP-AUXILIARY HYDRAULIC	223
Y	*377-8914*	1	LINKAGE AR-BUCKET	372
Y	*377-8911*	1	STICK AR-HOE	381

Y - SEPARATE ILLUSTRATION

<END>

383-1707 STICK AR—LONG

AN ATTACHMENT

SMCS-6502 **i04629210**

NOTE	PART NUMBER	QTY	PART NAME 1 2 3 4 5 6 (PRODUCT LEVEL)	SEE PAGE
Y	*379-4683*	1	CONTROL AR-AUXILIARY (SWING BOOM)	189
Y	*378-2501*	1	CONTROL AR-HYDRAULIC	195
Y	*382-1315*	1	LINES AR-BUCKET	218
Y	*379-4688*	1	LINES GP-AUXILIARY HYDRAULIC	223
Y	*377-8914*	1	LINKAGE AR-BUCKET	372
Y	*377-8912*	1	STICK AR-HOE	381

Y - SEPARATE ILLUSTRATION

<END>

383-1708 STICK AR—2ND AUXILIARY, STANDARD

AN ATTACHMENT

SMCS-6502 **i04629213**

NOTE	PART NUMBER	QTY	PART NAME 1 2 3 4 5 6 (PRODUCT LEVEL)	SEE PAGE
Y	*379-4684*	1	CONTROL AR-AUXILIARY	189
Y	*378-2500*	1	CONTROL AR-HYDRAULIC	195
Y	*382-1314*	1	LINES AR-BUCKET	217
Y	*355-4740*	1	LINES GP-AUXILIARY HYDRAULIC	223
Y	*377-8914*	1	LINKAGE AR-BUCKET	372
Y	*377-8911*	1	STICK AR-HOE	381

Y - SEPARATE ILLUSTRATION

<END>

383-1709 STICK AR–2ND AUXILIARY, LONG

AN ATTACHMENT

SMCS-6502 **i04629214**

NOTE	PART NUMBER	QTY	PART NAME 1 2 3 4 5 6 (PRODUCT LEVEL)	SEE PAGE
Y	*379-4685*	1	CONTROL AR-AUXILIARY	190
Y	*378-2500*	1	CONTROL AR-HYDRAULIC	195
Y	*382-1315*	1	LINES AR-BUCKET	218
Y	*379-4688*	1	LINES GP-AUXILIARY HYDRAULIC	223
Y	*377-8914*	1	LINKAGE AR-BUCKET	372
Y	*377-8912*	1	STICK AR-HOE	381

Y - SEPARATE ILLUSTRATION

<END>

383-1717 STICK AR–LONG

AN ATTACHMENT

SMCS-6502 **i04629211**

NOTE	PART NUMBER	QTY	PART NAME 1 2 3 4 5 6 (PRODUCT LEVEL)	SEE PAGE
Y	*379-4683*	1	CONTROL AR-AUXILIARY (SWING BOOM)	189
Y	*378-2501*	1	CONTROL AR-HYDRAULIC (STANDARD JOYSTICK)	195
Y	*382-1314*	1	LINES AR-BUCKET	217
Y	*355-4740*	1	LINES GP-AUXILIARY HYDRAULIC	223
Y	*379-6230*	1	STICK AR-HOE (STANDARD)	382

Y - SEPARATE ILLUSTRATION

<END>

383-1718 STICK AR–LONG

AN ATTACHMENT

SMCS-6502 **i04629212**

NOTE	PART NUMBER	QTY	PART NAME 1 2 3 4 5 6 (PRODUCT LEVEL)	SEE PAGE
Y	*379-4683*	1	CONTROL AR-AUXILIARY (SWING BOOM)	189
Y	*378-2501*	1	CONTROL AR-HYDRAULIC	195
Y	*382-1315*	1	LINES AR-BUCKET (LONG STICK)	218
Y	*379-4688*	1	LINES GP-AUXILIARY HYDRAULIC (LONG STICK)	223
Y	*379-6239*	1	STICK AR-HOE (HEAVY-DUTY, LONG)	382

Y - SEPARATE ILLUSTRATION

<END>

383-1719 STICK AR–2ND AUXILIARY, STANDARD

AN ATTACHMENT

SMCS-6502 **i04629215**

NOTE	PART NUMBER	QTY	PART NAME 1 2 3 4 5 6 (PRODUCT LEVEL)	SEE PAGE
Y	*379-4684*	1	CONTROL AR-AUXILIARY (2ND AUXILIARY, STANDARD STICK)	189
Y	*378-2500*	1	CONTROL AR-HYDRAULIC (2ND AUXILIARY)	195
Y	*382-1314*	1	LINES AR-BUCKET	217
Y	*355-4740*	1	LINES GP-AUXILIARY HYDRAULIC	223
Y	*379-6230*	1	STICK AR-HOE (STANDARD)	382

Y - SEPARATE ILLUSTRATION

<END>

383-1720 STICK AR—2ND AUXILIARY, LONG

AN ATTACHMENT

SMCS-6502 **i04629216**

NOTE	PART NUMBER	QTY	PART NAME 1 2 3 4 5 6 (PRODUCT LEVEL)	SEE PAGE
Y	*379-4685*	1	CONTROL AR-AUXILIARY (2ND AUXILIARY, LONG STICK)	190
Y	*378-2500*	1	CONTROL AR-HYDRAULIC (2ND AUXILIARY)	195
Y	*382-1315*	1	LINES AR-BUCKET (LONG STICK)	218
Y	*379-4688*	1	LINES GP-AUXILIARY HYDRAULIC (LONG STICK)	223
Y	*379-6239*	1	STICK AR-HOE (HEAVY-DUTY, LONG)	382

Y - SEPARATE ILLUSTRATION

<END>

421-8464 STICK AR—CHECK VALVE

CANNOT BE USED WITH 379-4679—PAGE: 379

AN ATTACHMENT

SMCS-6502 **i05383011**

NOTE	PART NUMBER	QTY	PART NAME 1 2 3 4 5 6 (PRODUCT LEVEL)	SEE PAGE
Y	**284-0883**	1	CYLINDER GP-STICK	206
Y	*272-1326*	1	FASTENER GP-LINES (STICK)	214
Y	*421-9101*	1	LINES GP-CHECK VALVE	237

Y - SEPARATE ILLUSTRATION

<END>

377-8911 STICK AR-HOE—STANDARD, THUMB

PART OF 383-1706, 383-1708 STICK AR

AN ATTACHMENT

SMCS-6502 **i04611682**

NOTE	PART NUMBER	QTY	PART NAME 1 2 3 4 5 6 (PRODUCT LEVEL)	SEE PAGE
Y	*379-6251*	1	STICK GP-HOE (STANDARD, THUMB)	388
Y	*288-0849*	1	VALVE GP-RELIEF (LINE, THUMB)	359

Y - SEPARATE ILLUSTRATION

<END>

377-8912 STICK AR-HOE—LONG, THUMB

PART OF 383-1707, 383-1709 STICK AR

AN ATTACHMENT

SMCS-6502 **i04611683**

NOTE	PART NUMBER	QTY	PART NAME 1 2 3 4 5 6 (PRODUCT LEVEL)	SEE PAGE
Y	*379-6248*	1	STICK GP-HOE (LONG, THUMB)	386
Y	*288-0849*	1	VALVE GP-RELIEF (LINE, THUMB)	359

Y - SEPARATE ILLUSTRATION

<END>

379-6230 STICK AR-HOE—STANDARD

PART OF 383-1717, 383-1719 STICK AR

AN ATTACHMENT

SMCS-6502 **i04629180**

NOTE	PART NUMBER	QTY	PART NAME 1 2 3 4 5 6 (PRODUCT LEVEL)	SEE PAGE
Y	*379-6231*	1	STICK GP-HOE	383

Y - SEPARATE ILLUSTRATION

<END>

379-6239 STICK AR-HOE—HEAVY-DUTY, LONG

PART OF 383-1718, 383-1720 STICK AR

AN ATTACHMENT

SMCS-6502 **i04629191**

NOTE	PART NUMBER	QTY	PART NAME 1 2 3 4 5 6 (PRODUCT LEVEL)	SEE PAGE
Y	*379-6240*	1	STICK GP-HOE	385

Y - SEPARATE ILLUSTRATION

<END>

379-6231 STICK GP-HOE—STANDARD

PART OF 379-6230 STICK AR-HOE

AN ATTACHMENT

SMCS-6502 **i04629181**

NOTE	REF NO	GRAPHIC REF	PART NUMBER	QTY	PART NAME 1 2 3 4 5 6 (PRODUCT LEVEL)	SEE PAGE
	1	1	**093-1429**	6	SEAL-LIP TYPE	
B	2	1	**175-1794**	3	SHIM (0.5-MM THK)	
B	3	1	**175-1795**	3	SHIM (1-MM THK)	
	4	1	**266-4064**	1	PIN AS	
	5	1	**266-4080**	1	PIN AS	
	6	1	**266-4106**	1	PIN AS	
	7	1	**379-6232**	1	STICK & BEARING AS	
	7A	1	**265-8715**	6	BUSHING	
	8	1	**3B-8489**	2	FITTING-GREASE	
	9	1	**6V-8513**	3	WASHER-HARD (11X35X2.5-MM THK)	
M	10	1	**8T-4137**	3	BOLT (M10X1.5X20-MM)	

B - USE AS REQUIRED
M - METRIC PART

379-6231 **STICK GP-HOE** (*contd.*) **i04629181**

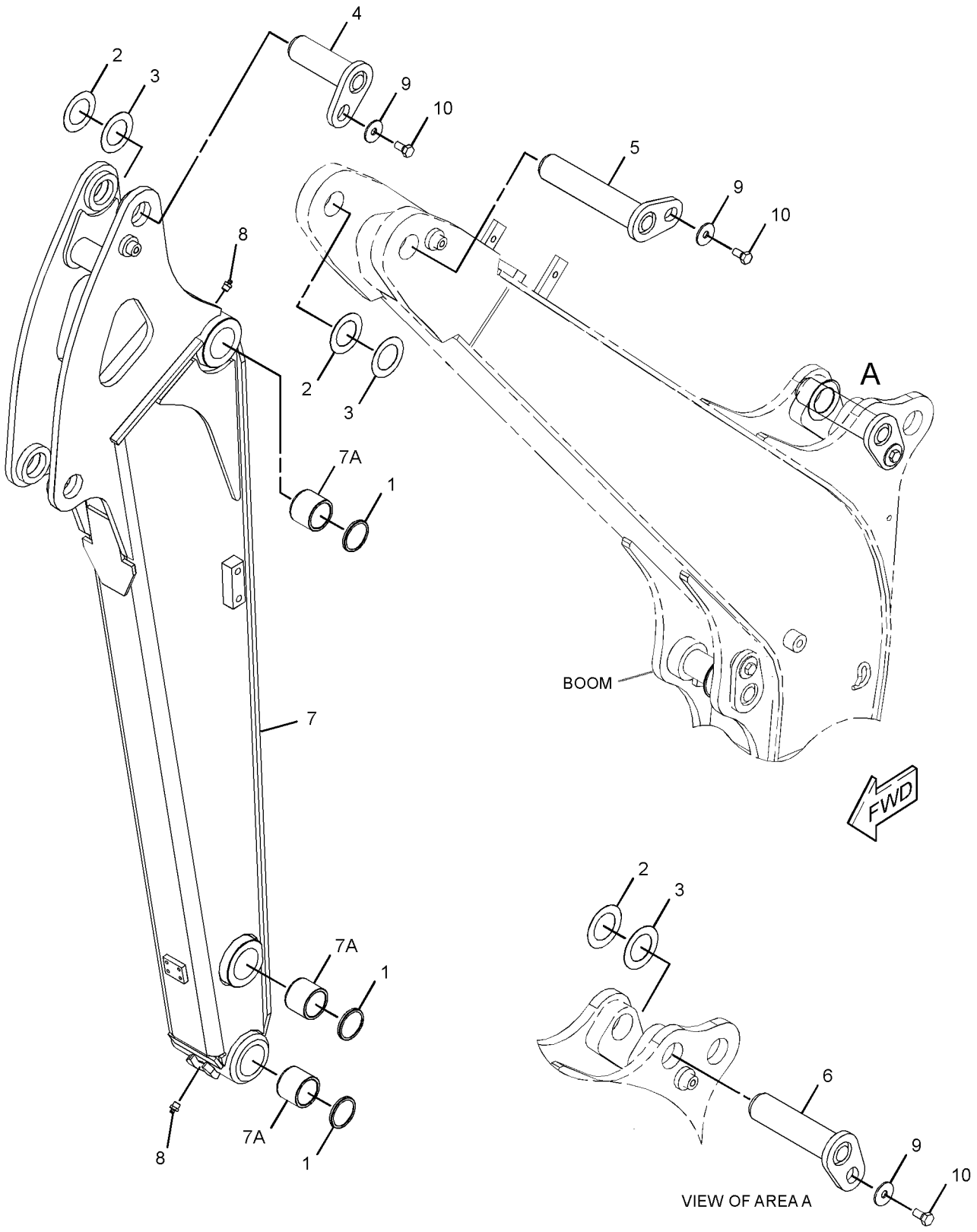

GRAPHIC #1 **<END>** g02803500

379-6240 STICK GP-HOE—HEAVY-DUTY, LONG

PART OF 379-6239 STICK AR-HOE

AN ATTACHMENT

SMCS-6502 **i04629225**

NOTE	REF NO	GRAPHIC REF	PART NUMBER	QTY	PART NAME 1 2 3 4 5 6 (PRODUCT LEVEL)	SEE PAGE
	1	1	**093-1429**	6	SEAL-LIP TYPE	
B	2	1	**175-1794**	3	SHIM (0.5-MM THK)	
B	3	1	**175-1795**	3	SHIM (1-MM THK)	
	4	1	**266-4064**	1	PIN AS	
	5	1	**266-4080**	1	PIN AS	
	6	1	**266-4106**	1	PIN AS	
	7	1	**379-6241**	1	STICK & BEARING AS	
	7A	1	**265-8715**	6	BUSHING	
	8	1	**3B-8489**	2	FITTING-GREASE	
	9	1	**6V-8513**	3	WASHER-HARD (11X35X2.5-MM THK)	
M	10	1	**8T-4137**	3	BOLT (M10X1.5X20-MM)	

B - USE AS REQUIRED
M - METRIC PART

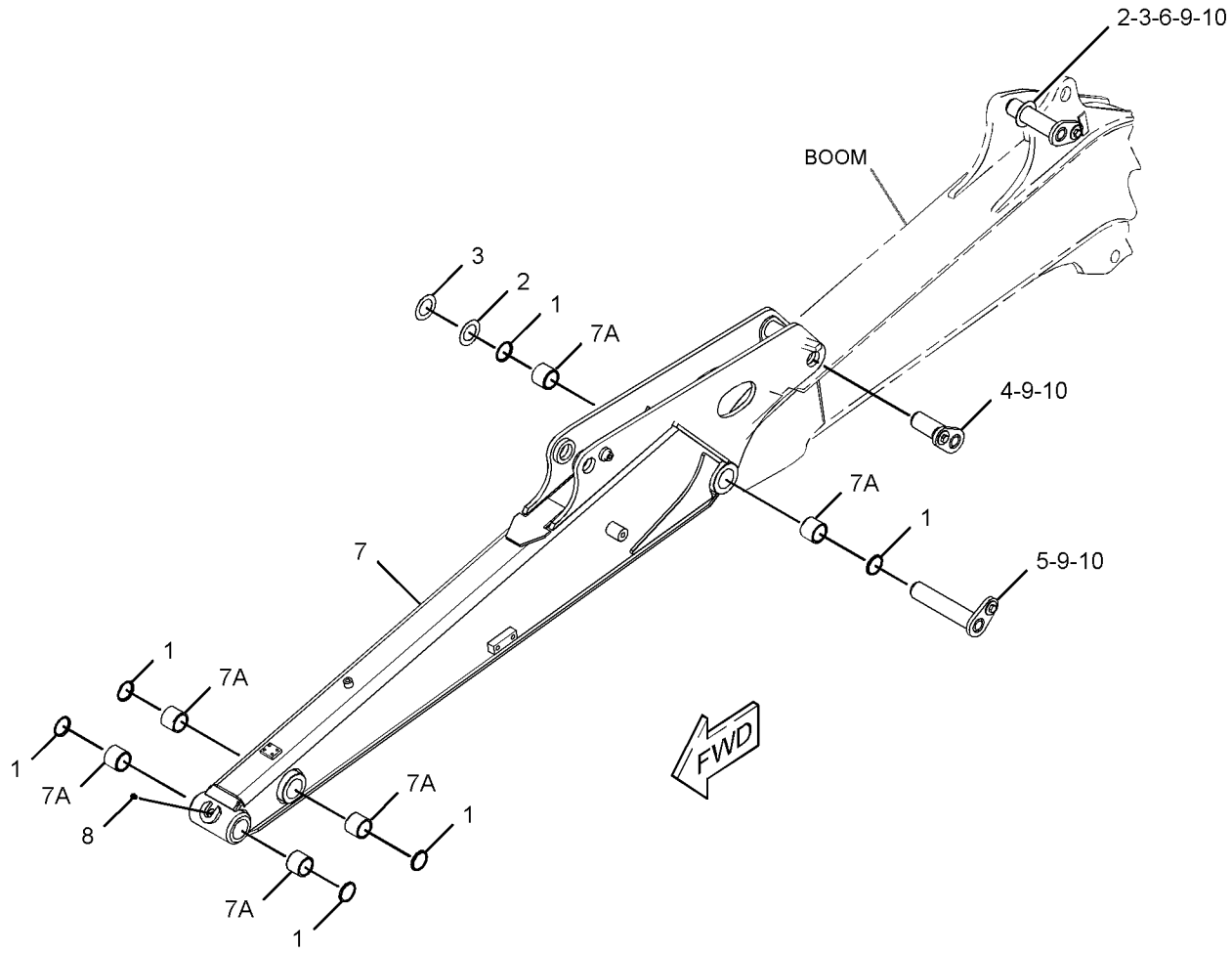

GRAPHIC #1 **<END>** g02800818

379-6248 STICK GP-HOE—LONG, THUMB

PART OF 377-8912 STICK AR-HOE

AN ATTACHMENT

SMCS-6502 **i04611690**

NOTE	REF NO	GRAPHIC REF	PART NUMBER	QTY	PART NAME 1 2 3 4 5 6 (PRODUCT LEVEL)	SEE PAGE
	1	1	**093-1429**	6	SEAL-LIP TYPE	
B	2	1	**175-1794**	3	SHIM (0.5-MM THK)	
B	3	1	**175-1795**	3	SHIM (1-MM THK)	
	4	1	**266-4064**	1	PIN AS	
	5	1	**266-4080**	1	PIN AS	
	6	1	**266-4106**	1	PIN AS	
	7	1	**379-6249**	1	STICK & BEARING AS	
	7A	1	**265-8715**	6	BUSHING	
	8	1	**3B-8489**	2	FITTING-GREASE	
	9	1	**6V-8513**	3	WASHER-HARD (11X35X2.5-MM THK)	
M	10	1	**8T-4137**	3	BOLT (M10X1.5X20-MM)	

B - USE AS REQUIRED
M - METRIC PART

379-6248 **STICK GP-HOE (*contd.*)** **i04611690**

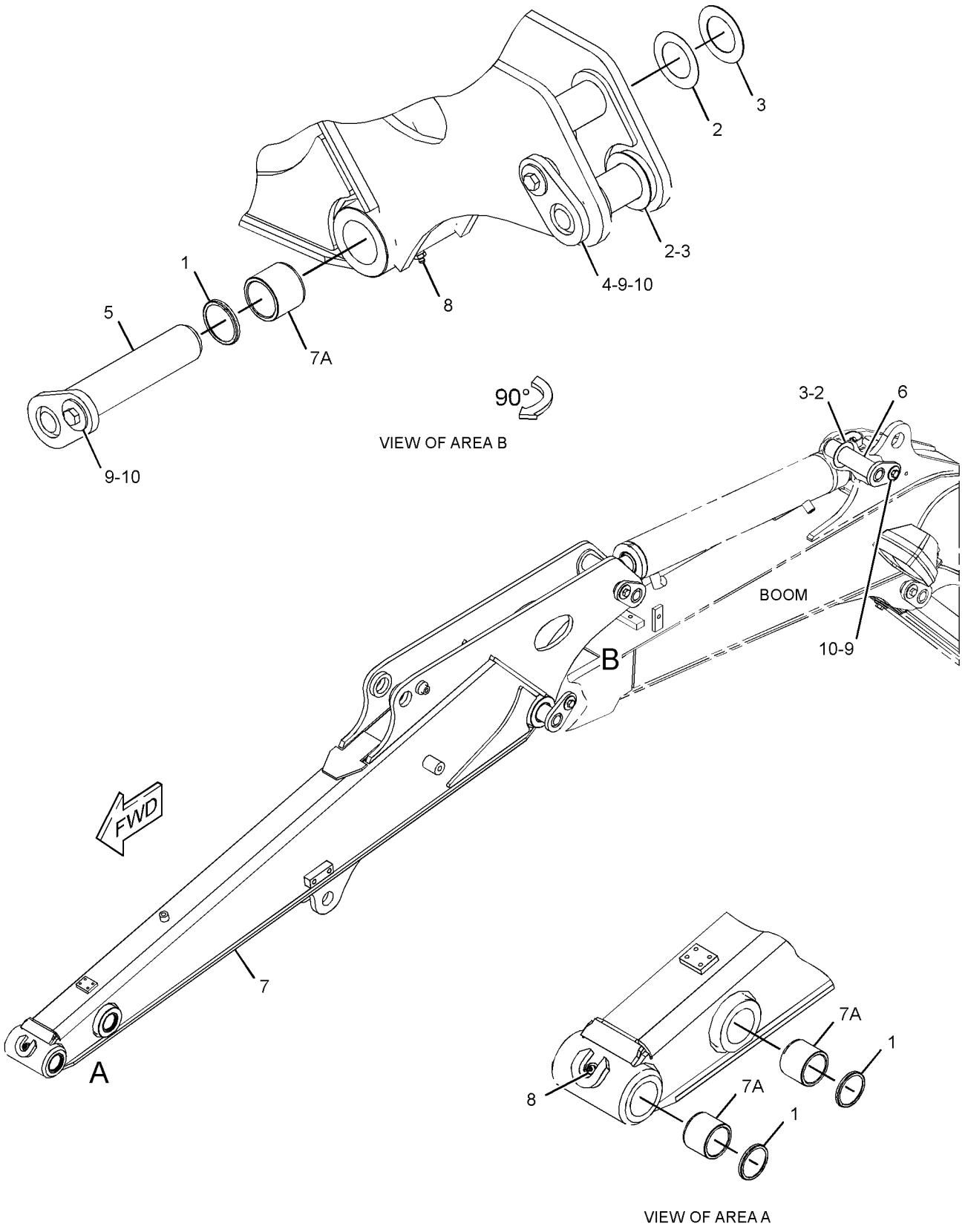

GRAPHIC #1 **<END>** g02802597

379-6251 STICK GP-HOE—STANDARD, THUMB

PART OF 377-8911 STICK AR-HOE

AN ATTACHMENT

SMCS-6502 **i04611691**

NOTE	REF NO	GRAPHIC REF	PART NUMBER	QTY	PART NAME 1 2 3 4 5 6 (PRODUCT LEVEL)	SEE PAGE
	1	1	**093-1429**	6	SEAL-LIP TYPE	
	2	1	**266-4064**	1	PIN AS	
	3	1	**266-4080**	1	PIN AS	
	4	1	**266-4106**	1	PIN AS	
	5	1	**379-6252**	1	STICK & BEARING AS	
	5A	1	**265-8715**	6	BUSHING	
	6	1	**175-1794**	3	SHIM (0.5-MM THK)	
	7	1	**175-1795**	3	SHIM (1-MM THK)	
	8	1	**3B-8489**	2	FITTING-GREASE	
	9	1	**6V-8513**	3	WASHER-HARD (11X35X2.5-MM THK)	
M	10	1	**8T-4137**	3	BOLT (M10X1.5X20-MM)	

M - METRIC PART

379-6251 **STICK GP-HOE (*contd.*)** **i04611691**

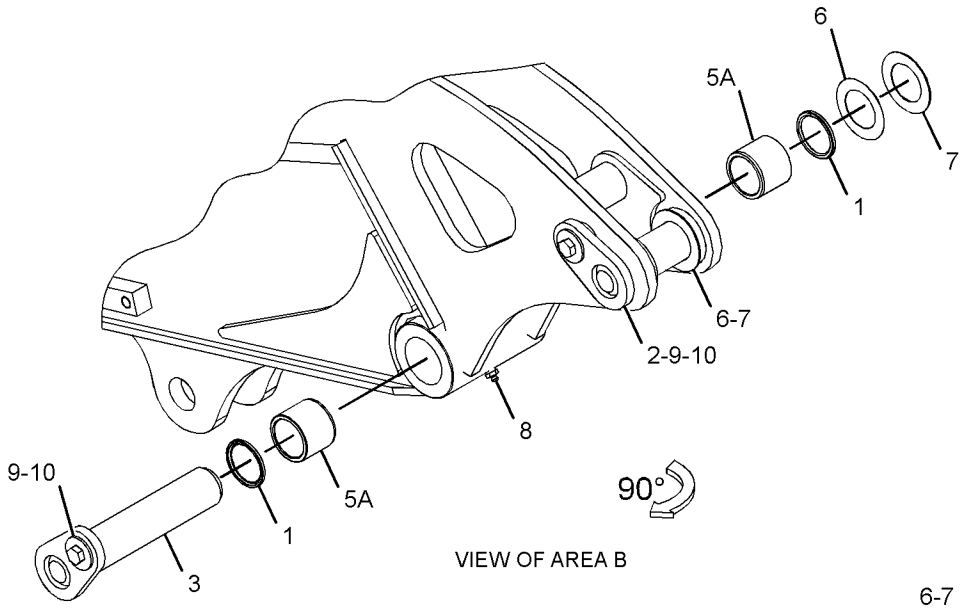

VIEW OF AREA B

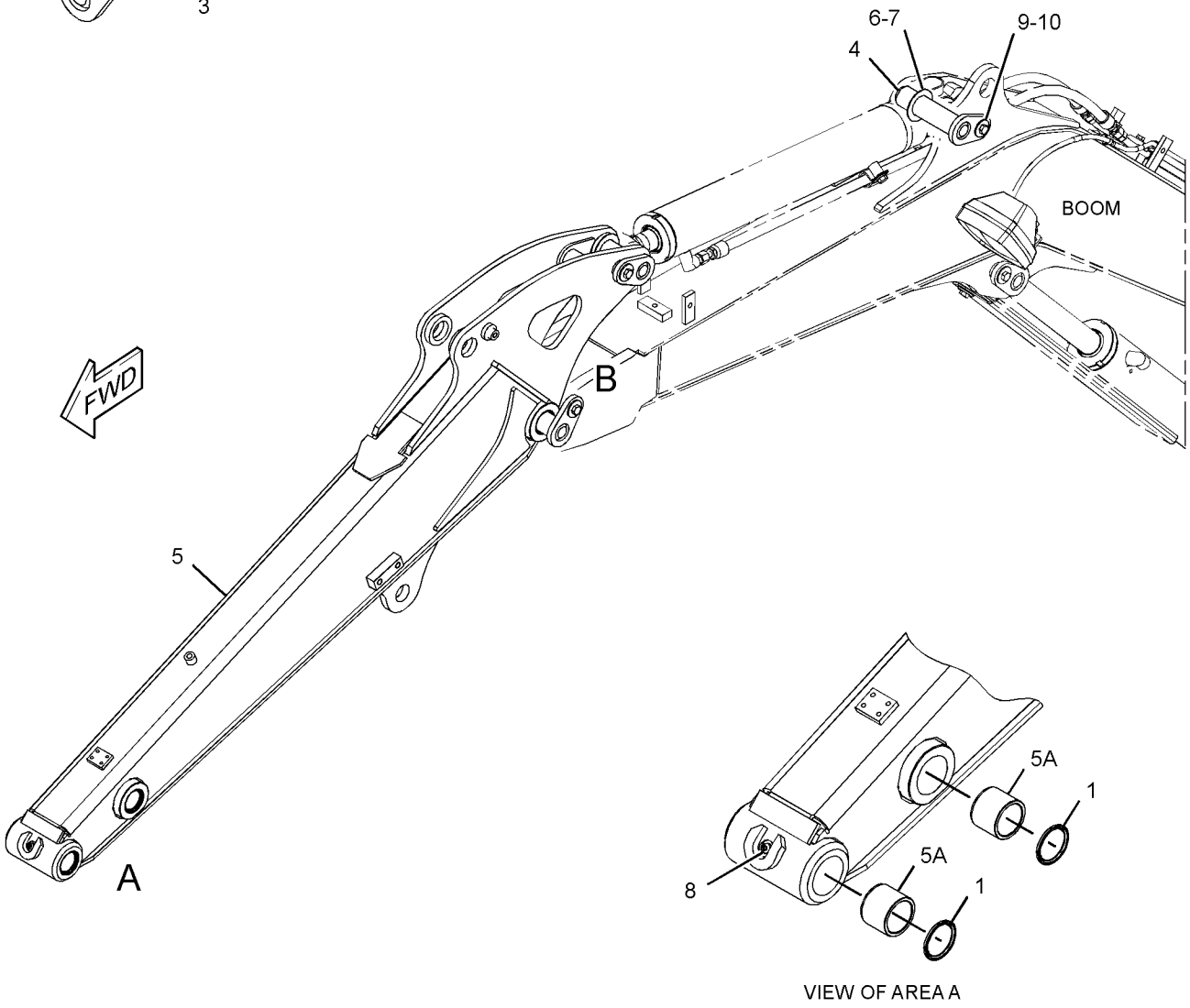

VIEW OF AREA A

GRAPHIC #1 **<END>** g02799277

433-3890 BLADE & BEARING AS

S/N: TTN1053-UP
PART OF 433-3889 BLADE GP-STRAIGHT
AN ATTACHMENT

SMCS-5254, 6060 **i05380452**

NOTE	REF NO	GRAPHIC REF	PART NUMBER	QTY	PART NAME 1 2 3 4 5 6 (PRODUCT LEVEL)	SEE PAGE
	1	1	**265-8713**	2	BUSHING	
	2	1	*433-3891*	1	BLADE AS	
	2A	1	**344-8052**	1	EDGE	

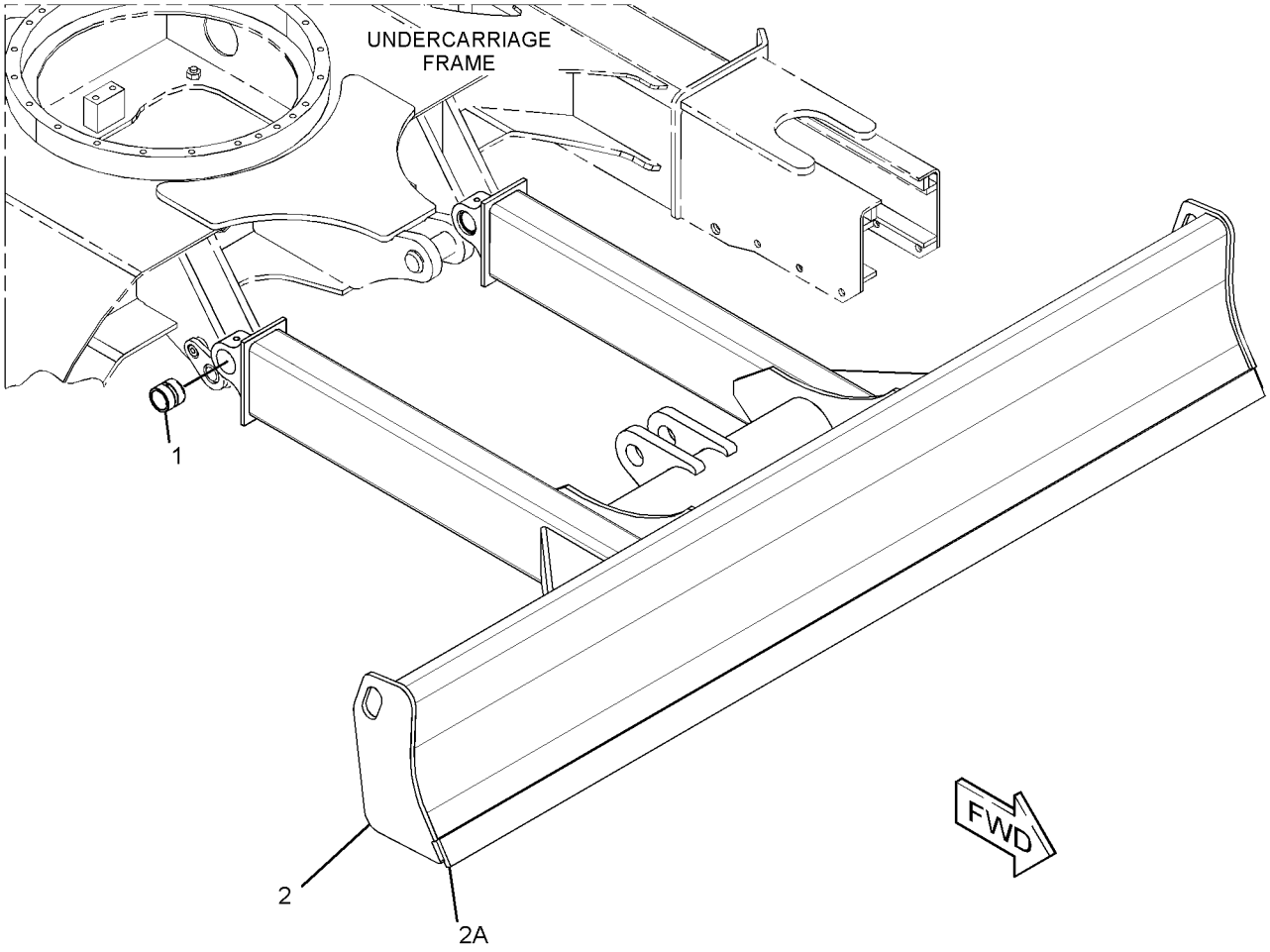

GRAPHIC #1 **<END>** g03408752

344-3682 BLADE & MOUNTING GP–POWER ANGLE

PART OF 377-8928 BLADE AR-ANGLING

AN ATTACHMENT

SMCS-6060, 6151 **i04016797**

NOTE	REF NO	GRAPHIC REF	PART NUMBER	QTY	PART NAME 1 2 3 4 5 6 (PRODUCT LEVEL)	SEE PAGE
B	1	1	**158-4800**	2	SHIM (0.5-MM THK)	
B	2	1	**158-4801**	2	SHIM (1.0-MM THK)	
	3	1	**218-4681**	2	PIN AS	
	4	1	**260-6314**	2	PIN AS	
	5	1	**266-4763**	1	PIN AS	
	6	1	**266-4765**	1	PIN AS	
	7	1	**287-0030**	1	PIN AS	
	8	1	**351-1020**	1	BLADE AS-ANGLING	
Y	9	1	*352-7765*	1	C-FRAME GP-POWER ANGLING	131
	10	1	**6V-8513**	7	WASHER-HARD (11X35X2.5-MM THK)	
M	11	1	**8T-4137**	7	BOLT (M10X1.5X20-MM)	

B - USE AS REQUIRED
M - METRIC PART
Y - SEPARATE ILLUSTRATION

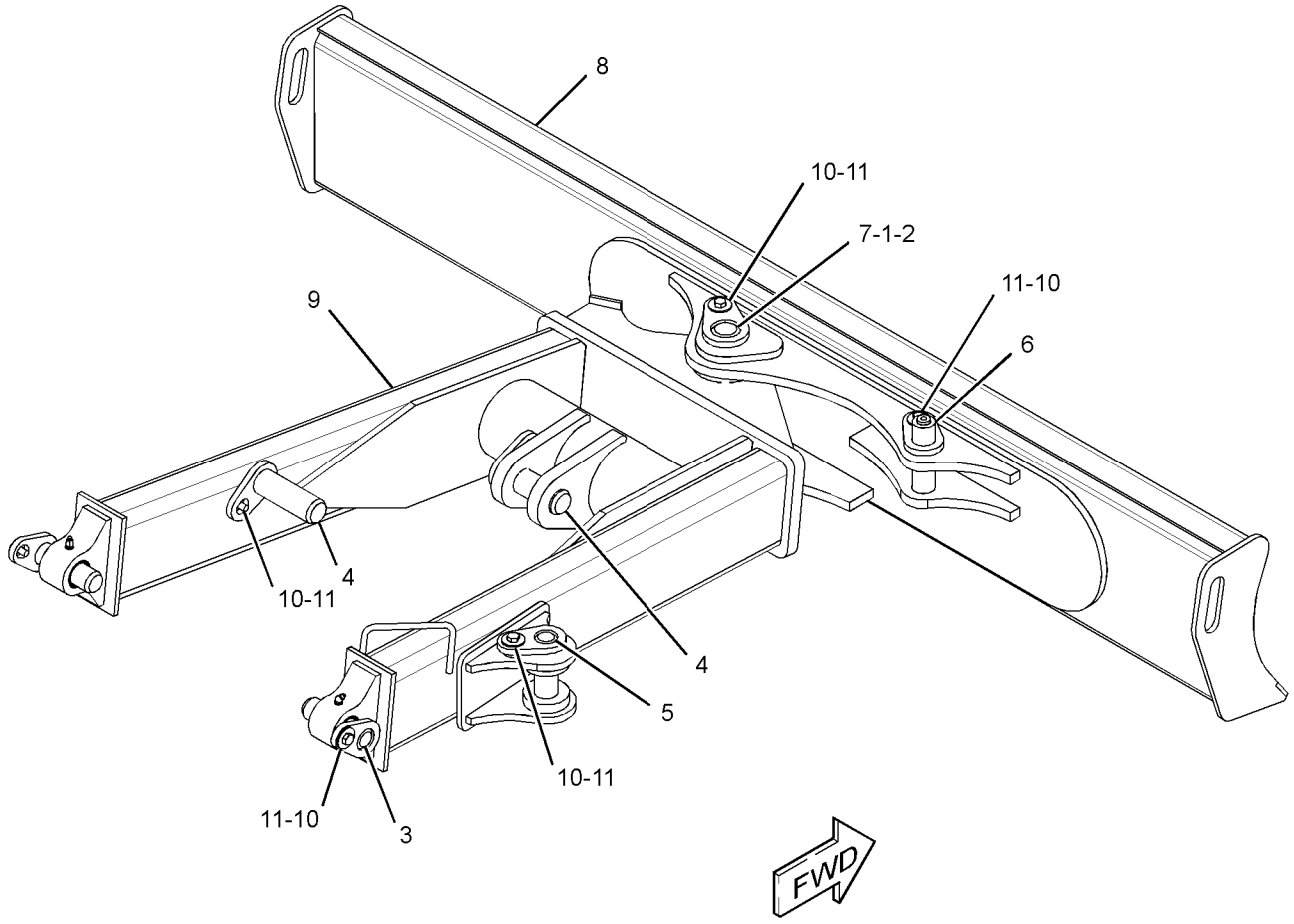

GRAPHIC #1 **<END>** g02195734

376-3985 BLADE & MOUNTING GP

S/N: TTN1-1052
PART OF 377-8915 BLADE AR-STRAIGHT
AN ATTACHMENT

SMCS-6060, 6151 **i04623113**

NOTE	REF NO	GRAPHIC REF	PART NUMBER	QTY	PART NAME 1 2 3 4 5 6 (PRODUCT LEVEL)	SEE PAGE
	1	1	**218-4681**	2	PIN AS	
	2	1	**260-6314**	2	PIN AS	
Y	3	1	*376-3984*	1	BLADE GP-STRAIGHT	395
	4	1	**6V-8513**	4	WASHER-HARD (11X35X2.5-MM THK)	
M	5	1	**8T-4137**	4	BOLT (M10X1.5X20-MM)	

M - METRIC PART
Y - SEPARATE ILLUSTRATION

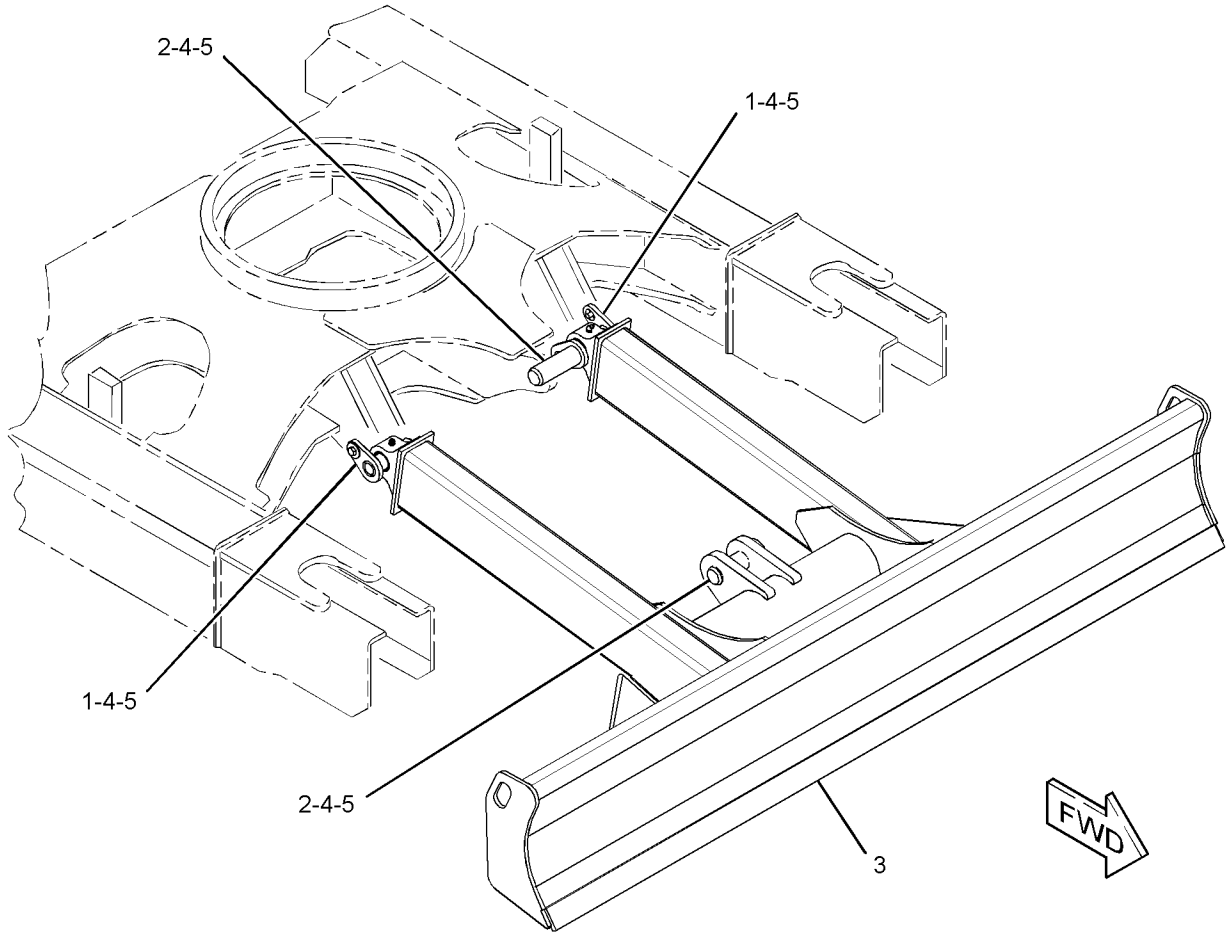

GRAPHIC #1 **<END>** g02809017

376-3985 BLADE & MOUNTING GP

S/N: TTN1053-UP
PART OF 377-8915 BLADE AR-STRAIGHT
AN ATTACHMENT

SMCS-6060, 6151 **i05357801**

NOTE	REF NO	GRAPHIC REF	PART NUMBER	QTY	PART NAME 1 2 3 4 5 6 (PRODUCT LEVEL)	SEE PAGE
	1	1	**218-4681**	2	PIN AS	
	2	1	**260-6314**	2	PIN AS	
CY	3	1	*433-3889*	1	BLADE GP-STRAIGHT	396
	4	1	**6V-8513**	4	WASHER-HARD (11X35X2.5-MM THK)	
M	5	1	**8T-4137**	4	BOLT (M10X1.5X20-MM)	

C - CHANGE FROM PREVIOUS TYPE
M - METRIC PART
Y - SEPARATE ILLUSTRATION

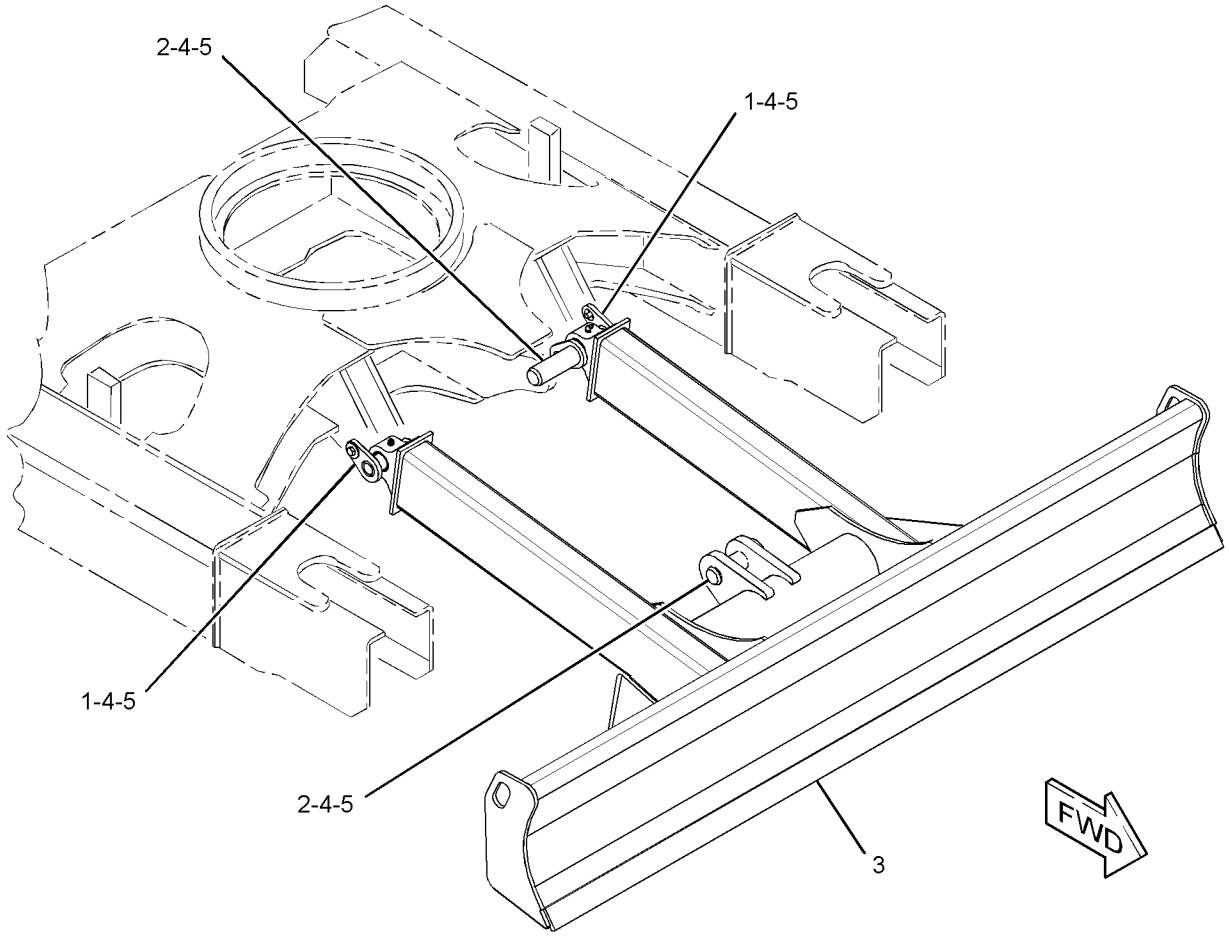

GRAPHIC #1 **<END>** g02809017

377-8928 BLADE AR-ANGLING

AN ATTACHMENT

SMCS-6060, 6701 **i05357713**

NOTE	PART NUMBER	QTY	PART NAME 1 2 3 4 5 6 (PRODUCT LEVEL)	SEE PAGE
Y	*344-3682*	1	BLADE & MOUNTING GP (POWER ANGLE)	391
Y	*382-0522*	1	CONTROL GP-PILOT OPERATED HYD (BLADE)	490
			S/N: TTN1-907	
Y	*419-1204*	1	CONTROL GP-PILOT OPERATED HYD (BLADE)	491
			S/N: TTN908-UP	
Y	**266-6979**	1	CYLINDER GP-BLADE (RAISE, LOWER)	196
Y	**286-6384**	1	CYLINDER GP-BLADE (ANGLE)	198
Y	*386-6058*	1	FILM GP (ANGLE BLADE)	553
Y	*290-8287*	1	GUARD GP-CYLINDER (POWER ANGLE)	149
Y	*280-7609*	1	LINES GP-BLADE (ANGLE)	226
Y	*292-8290*	1	LINES GP-BLADE (RAISE, LOWER)	227
Y	*385-2796*	1	LINES GP-PILOT (BLADE ANGLE)	269
Y	*385-2797*	1	LINES GP-RETURN (BLADE)	273
Y	*385-2795*	1	LINES GP-SWING MOTOR	282
Y	*344-8864*	1	LINES GP-TRAVEL MOTOR	287
Y	*385-1277*	1	MOUNTING GP-ELECTRONIC CONTROL	98
Y	*385-2798*	1	VALVE & MTG GP-MAIN CONTROL (BLADE ANGLE)	315
Y	*383-3163*	1	WIRING GP-CONSOLE (POWER ANGLE)	114

Y - SEPARATE ILLUSTRATION

<END>

377-8915 BLADE AR-STRAIGHT

AN ATTACHMENT

SMCS-6051, 6060 **i05384924**

NOTE	PART NUMBER	QTY	PART NAME 1 2 3 4 5 6 (PRODUCT LEVEL)	SEE PAGE
Y	*376-3985*	1	BLADE & MOUNTING GP	392
Y	*377-5958*	1	CONTROL GP-PILOT OPERATED HYD (BLADE)	487
			S/N: TTN1-907	
Y	*421-2716*	1	CONTROL GP-PILOT OPERATED HYD (BLADE)	492
			S/N: TTN908-UP	
Y	**266-6979**	1	CYLINDER GP-BLADE (RAISE, LOWER)	196
Y	*377-9706*	1	FILM GP (STRAIGHT BLADE)	545
Y	*292-8290*	1	LINES GP-BLADE (RAISE, LOWER)	227
Y	*379-4701*	1	LINES GP-RETURN	271
Y	*379-4702*	1	LINES GP-SWING MOTOR	279
Y	*344-8863*	1	LINES GP-TRAVEL MOTOR	285
Y	*377-0325*	1	CONTROL & MTG GP-ELECTRONIC	81
Y	*379-4703*	1	VALVE & MTG GP-BANK	309

Y - SEPARATE ILLUSTRATION

<END>

376-3984 BLADE GP-STRAIGHT

S/N: TTN1-1052
PART OF 376-3985 BLADE & MOUNTING GP
AN ATTACHMENT

SMCS-6051, 6060 **i04623112**

NOTE	REF NO	GRAPHIC REF	PART NUMBER	QTY	PART NAME 1 2 3 4 5 6 (PRODUCT LEVEL)	SEE PAGE
	1	1	**376-3983**	1	BLADE & BEARING AS	
	1A	1	**265-8713**	2	BUSHING	
	2	1	**140-3734**	4	SEAL-DUST	
	3	1	**3B-8485**	2	FITTING-GREASE	

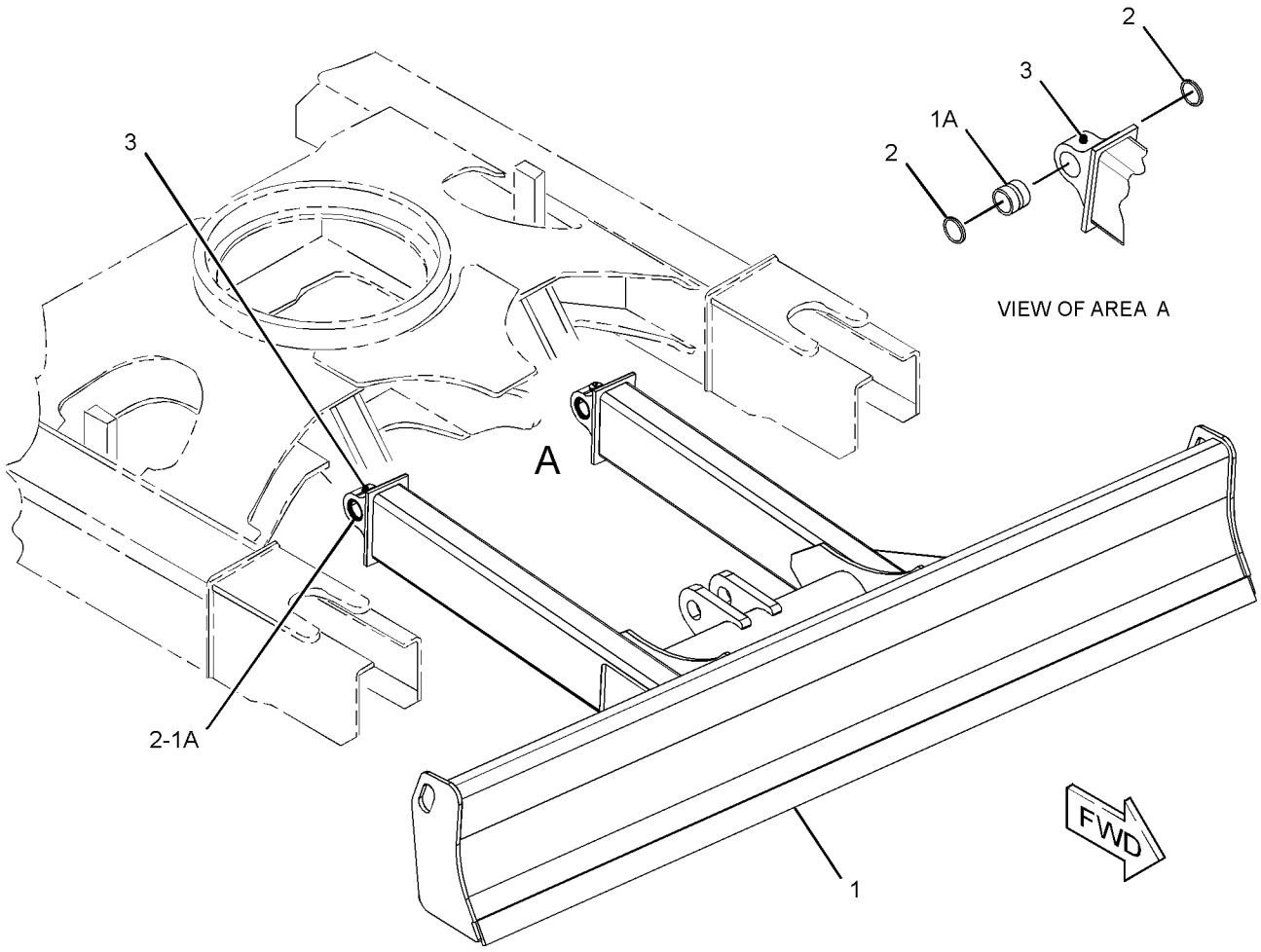

GRAPHIC #1 **<END>** g02795476

433-3889 BLADE GP-STRAIGHT

S/N: TTN1053-UP
PART OF 376-3985 BLADE & MOUNTING GP
AN ATTACHMENT

SMCS-6051, 6060 **i05357813**

NOTE	REF NO	GRAPHIC REF	PART NUMBER	QTY	PART NAME 1 2 3 4 5 6 (PRODUCT LEVEL)	SEE PAGE
	1	1	**3B-8485**	2	FITTING-GREASE	
	2	1	**140-3734**	4	SEAL-DUST	
Y	3	1	**433-3890**	1	BLADE & BEARING AS	390

Y - SEPARATE ILLUSTRATION

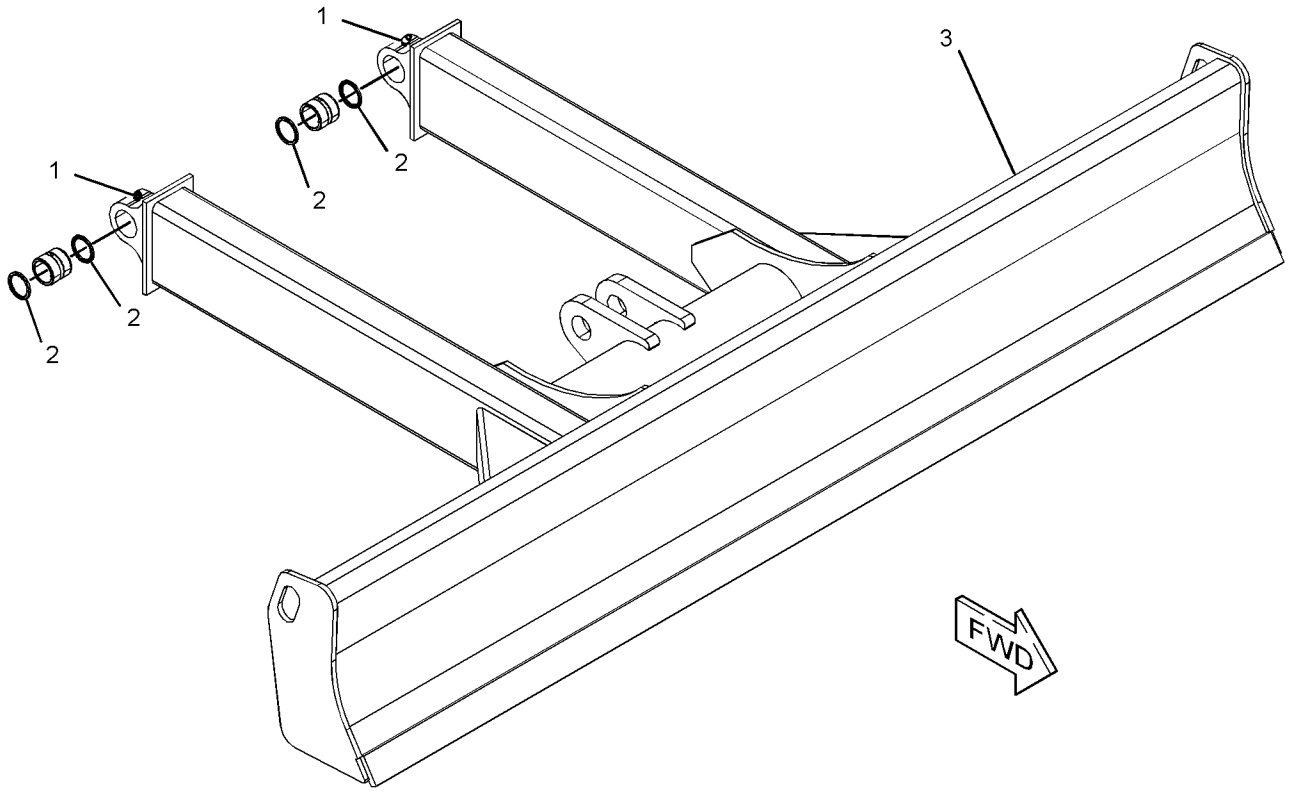

GRAPHIC #1 **<END>** g03404387

231-8571 BUCKET AR-GENERAL PURPOSE

460-MM (18-IN) WIDE
AN ATTACHMENT

SMCS-6101, 6803, 6805, 6822 **i05352930**

NOTE	REF NO	GRAPHIC REF	PART NUMBER	QTY	PART NAME 1 2 3 4 5 6 (PRODUCT LEVEL)	SEE PAGE
	1	1	**154-2704**	1	PLATE-INSTRUCTION (BUCKET SPECIFICATIONS)	
	2	1	**168-8389**	4	TACK-FASTENER (METAL)	
	3	1	*233-2885*	3	TOOTH GP	
					(EACH INCLUDES)	
M		1	**8T-4244**	2	NUT (M12X1.75-THD)	
M		1	**145-1893**	2	BOLT (M12X1.75X40-MM)	
		1	**231-3999**	1	TOOTH	
Y	4	1	*233-2905*	1	BUCKET AS-GENERAL PURPOSE (QUICK COUPLER)	403

M - METRIC PART
Y - SEPARATE ILLUSTRATION

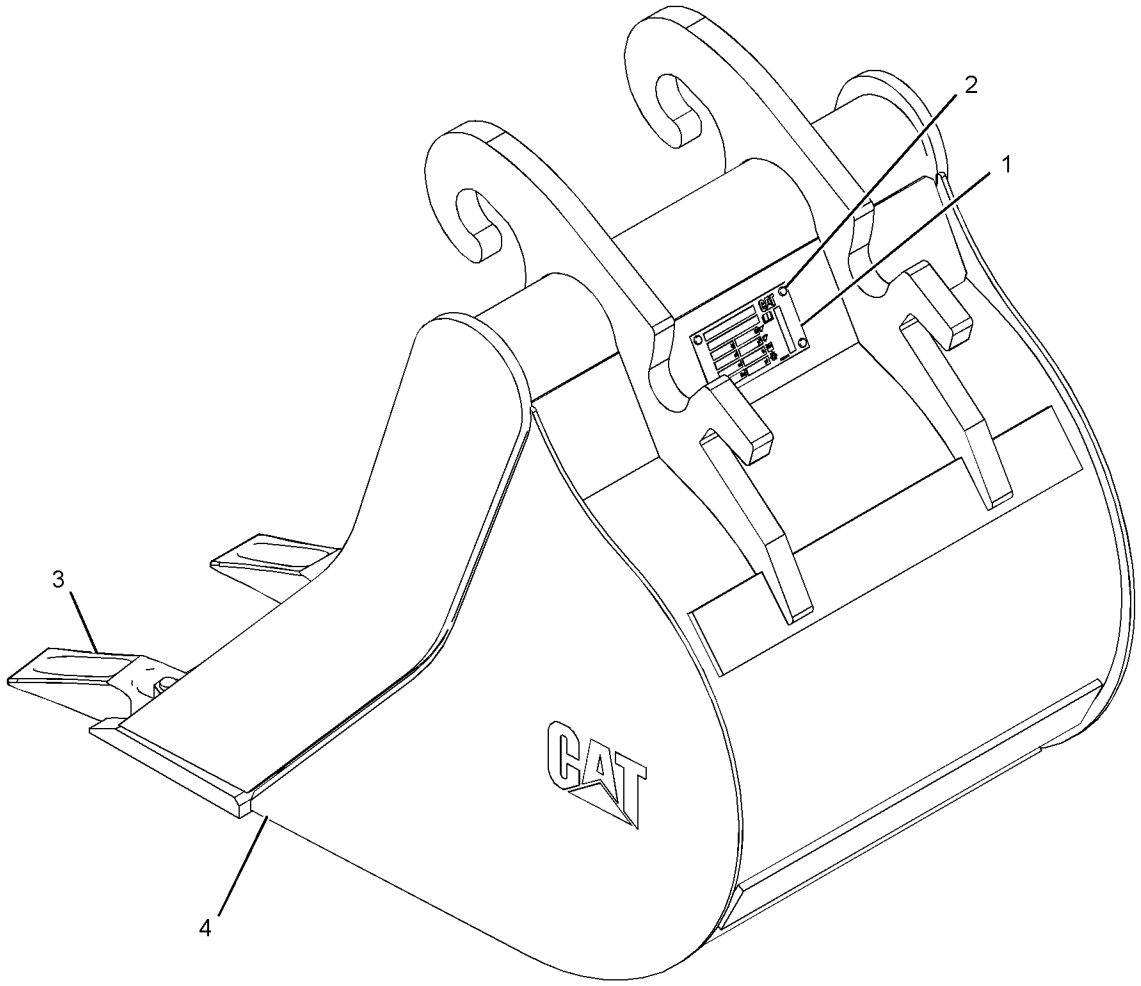

GRAPHIC #1 **<END>** g01194755

279-4325 BUCKET AR-TILTABLE

1200-MM (47.24-IN) WIDE X 0.167-CU M (0.218-CU YD) CAPACITY
AN ATTACHMENT

SMCS-6540 **i05358712**

NOTE	REF NO	GRAPHIC REF	PART NUMBER	QTY	PART NAME 1 2 3 4 5 6 (PRODUCT LEVEL)	SEE PAGE
	1	1	**8T-4223**	1	WASHER-HARD (13.5X25.5X3-MM THK)	
	2	1	**168-8389**	4	TACK-FASTENER (METAL)	
	3	1	**246-0176**	1	PIN AS	
	4	1	**246-0187**	1	PIN	
	5	1	**246-0188**	1	PIN	
Y	6	1	**246-0192**	1	CYLINDER GP-TILT (BUCKET)	210
Y	7	1	*252-6793*	1	LINES GP-BUCKET CYLINDER	236
Y	8	1	*282-1712*	1	BRACKET GP-MOUNTING (BUCKET)	368
	9	1	**3B-8489**	3	FITTING-GREASE	
	10	1	**4M-5285**	4	RING-RETAINING (EXTERNAL)	
M	11	1	**8T-4139**	1	BOLT (M12X1.75X30-MM)	

M - METRIC PART
Y - SEPARATE ILLUSTRATION

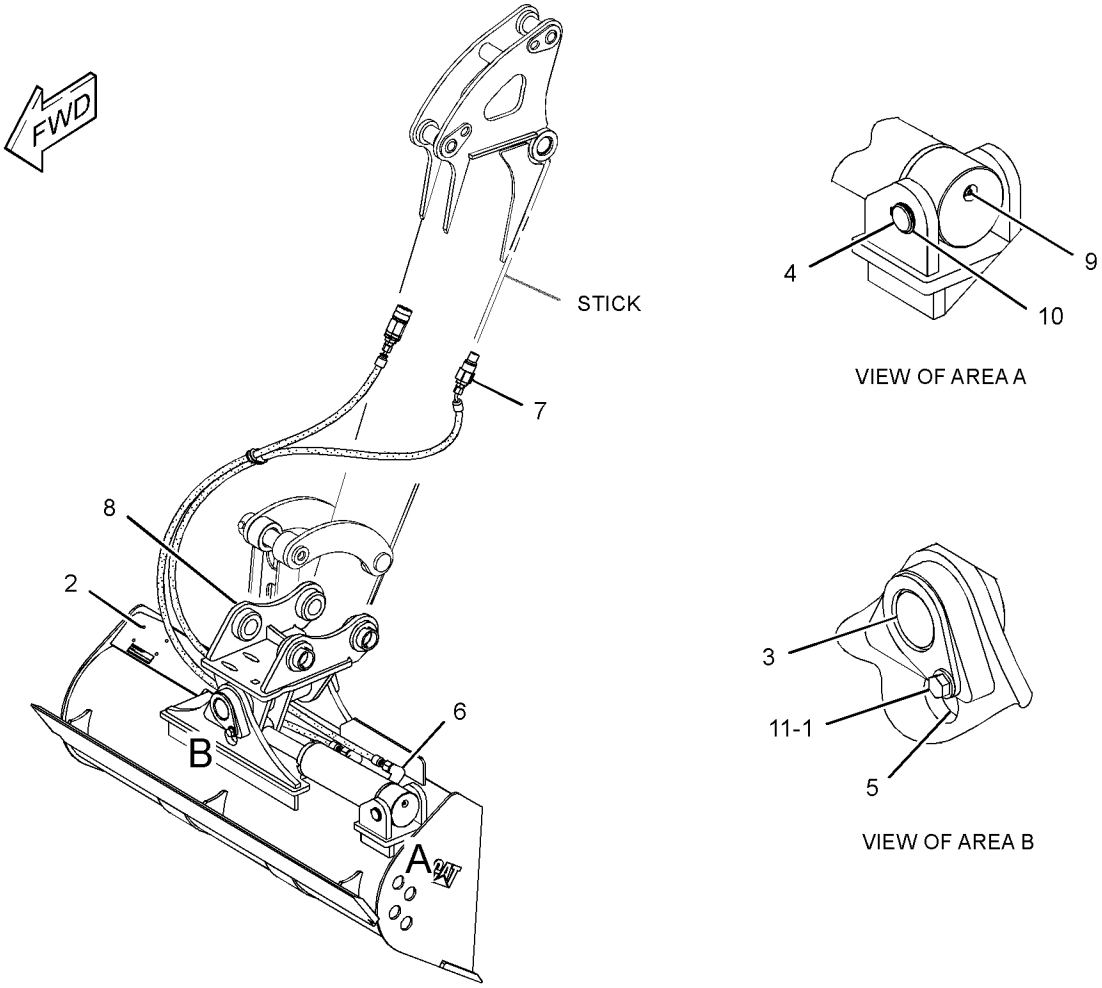

GRAPHIC #1 **<END>** g03062516

247-4112 BUCKET AS-DITCH CLEANING

1200-MM (47.2-IN) WIDE

AN ATTACHMENT

SMCS-6526 **i05353497**

NOTE	REF NO	GRAPHIC REF	PART NUMBER	QTY	PART NAME 1 2 3 4 5 6 (PRODUCT LEVEL)	SEE PAGE
	1	1	**153-7880**	1	EDGE	
	2	1	**154-2704**	1	PLATE-INSTRUCTION (BUCKET SPECIFICATIONS)	
	3	1	**168-8389**	4	TACK-FASTENER (METAL)	

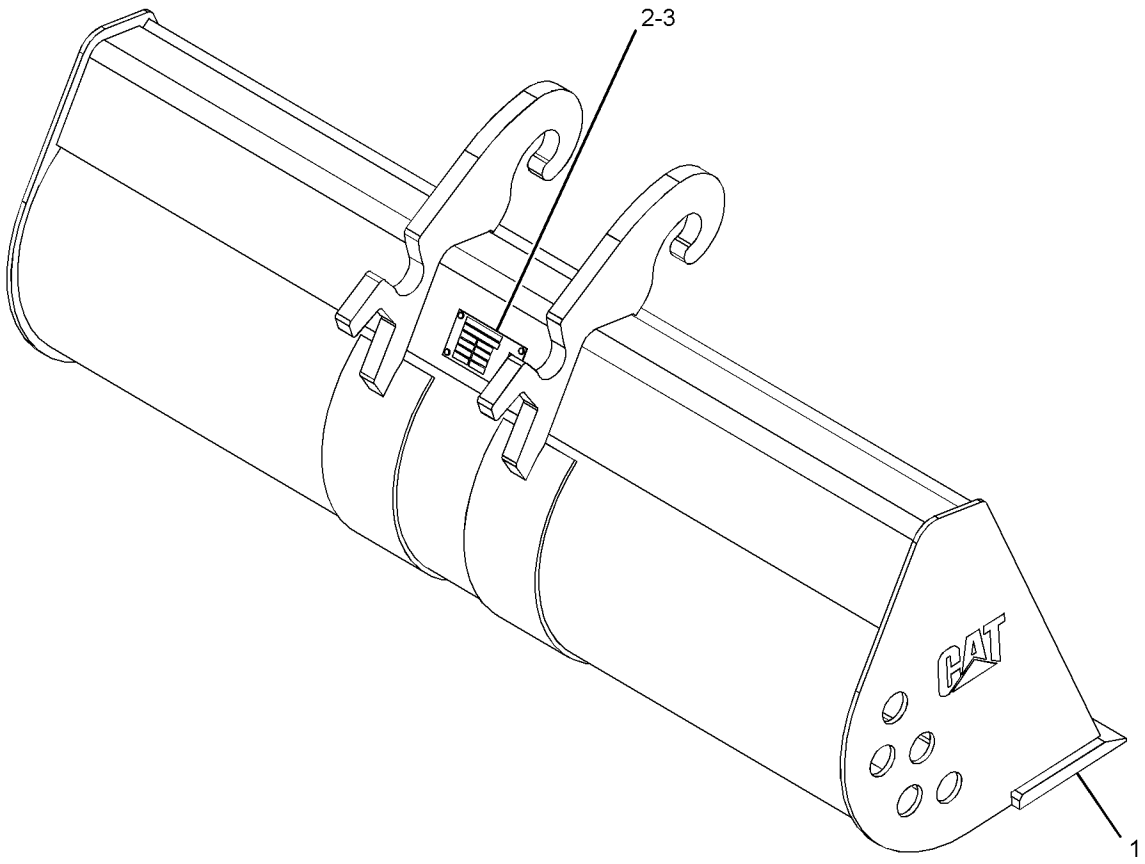

GRAPHIC #1 **<END>** g03401177

279-4322 BUCKET AS-DITCH CLEANING

1000-MM (39.4-IN) WIDE X 0.14-CU M (0.18-CU YD) CAPACITY
AN ATTACHMENT

SMCS-6526 **i05357822**

NOTE	REF NO	GRAPHIC REF	PART NUMBER	QTY	PART NAME 1 2 3 4 5 6 (PRODUCT LEVEL)	SEE PAGE
	1	1	**154-2704**	1	PLATE-INSTRUCTION (BUCKET SPECIFICATIONS)	
	2	1	**168-8389**	4	TACK-FASTENER (METAL)	

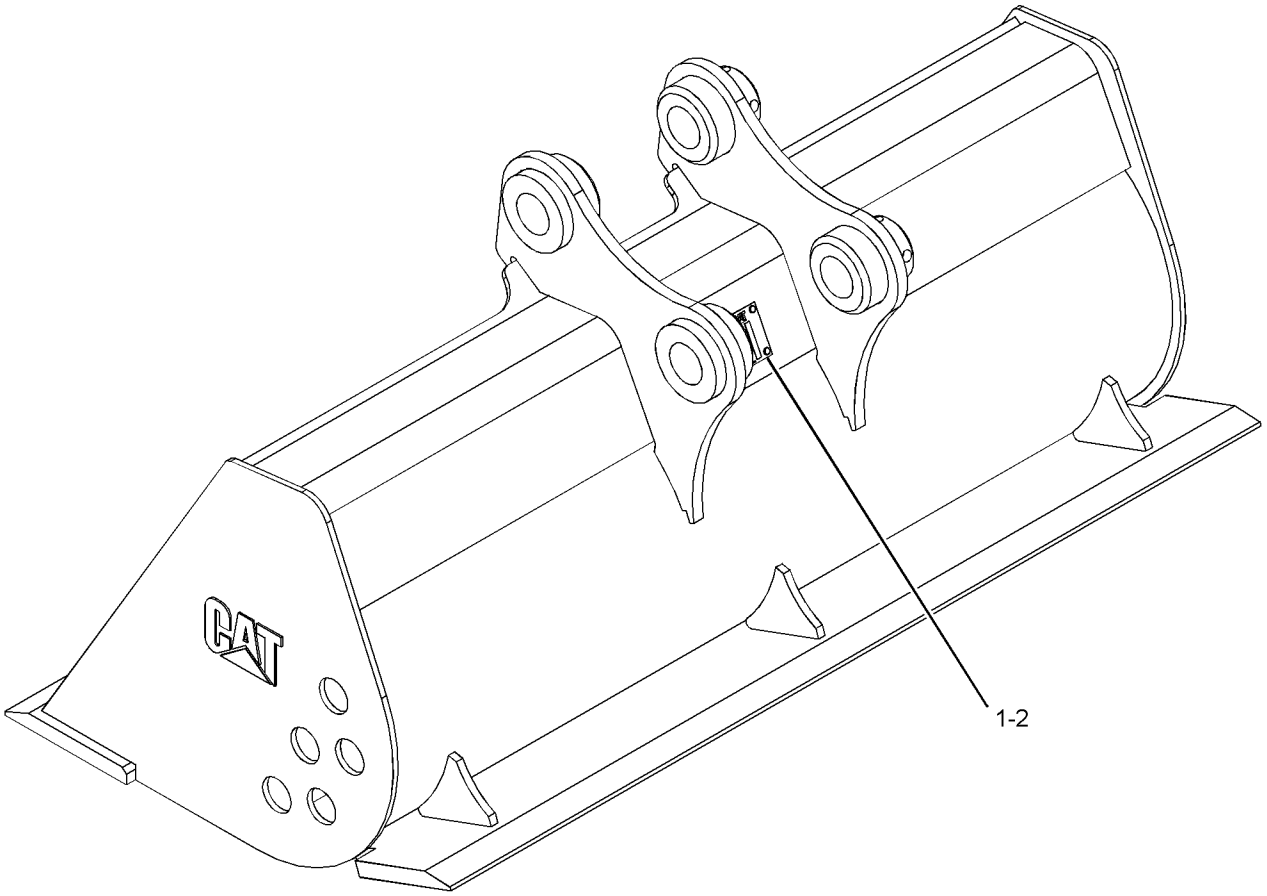

GRAPHIC #1 **<END>** g01224351

279-4323 BUCKET AS-DITCH CLEANING

1200-MM (47.2-IN) WIDE X 0.17-CU M (0.22-CU YD) CAPACITY
AN ATTACHMENT

SMCS-6526 **i05358614**

NOTE	REF NO	GRAPHIC REF	PART NUMBER	QTY	PART NAME 1 2 3 4 5 6 (PRODUCT LEVEL)	SEE PAGE
	1	1	**154-2704**	1	PLATE-INSTRUCTION (BUCKET SPECIFICATIONS)	
	2	1	**168-8389**	4	TACK-FASTENER (METAL)	

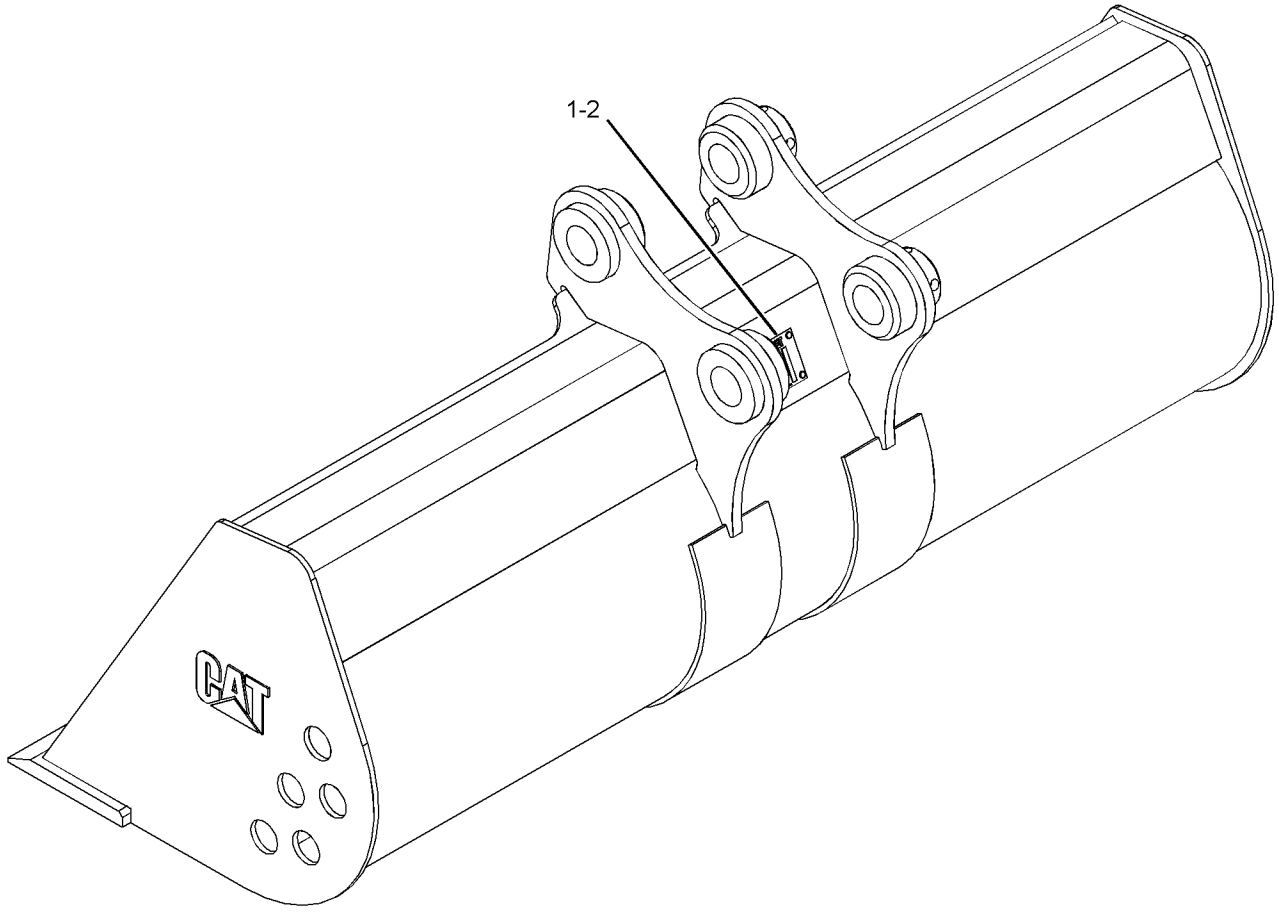

GRAPHIC #1 **<END>** g01224482

282-9315 BUCKET AS-DITCH CLEANING

1400-MM (55.1-IN) X 0.2-CU M (0.3-CU YD) CAPACITY
AN ATTACHMENT

SMCS-6526 **i05368245**

NOTE	REF NO	GRAPHIC REF	PART NUMBER	QTY	PART NAME 1 2 3 4 5 6 (PRODUCT LEVEL)	SEE PAGE
	1	1	**154-2704**	1	PLATE-INSTRUCTION (BUCKET SPECIFICATIONS)	
	2	1	**168-8389**	4	TACK-FASTENER (METAL)	

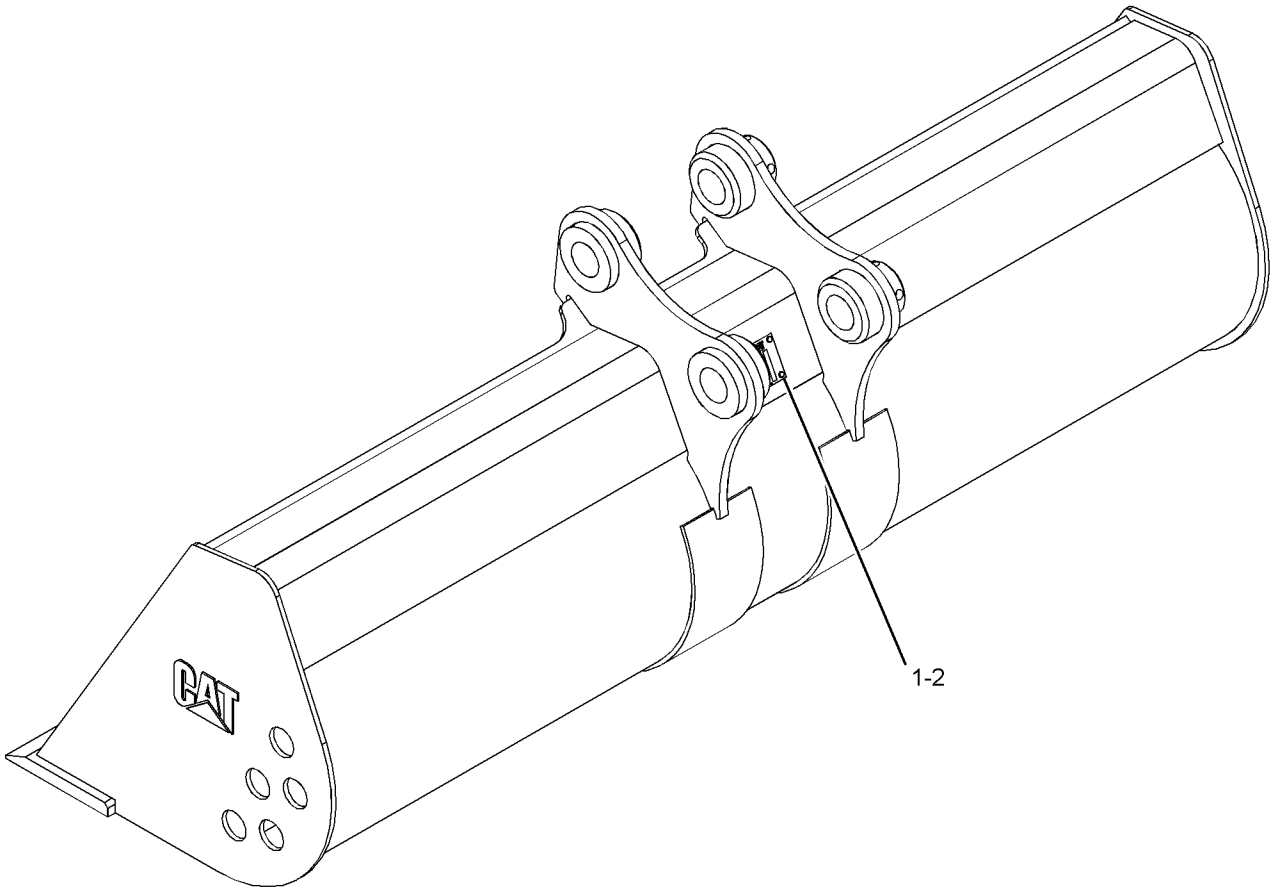

GRAPHIC #1 **<END>** g01224325

233-2905 BUCKET AS-GENERAL PURPOSE

460-MM (18.1-IN) WIDE
PART OF 231-8571 BUCKET AR-GENERAL PURPOSE
AN ATTACHMENT

SMCS-6101, 6803, 6805, 6822

i05368218

NOTE	REF NO	GRAPHIC REF	PART NUMBER	QTY	PART NAME 1 2 3 4 5 6 (PRODUCT LEVEL)	SEE PAGE
	1	1	**233-2877**	1	EDGE	
	2	1	**233-2898**	1	PLATE	
	3	1	**233-2910**	6	PLATE	

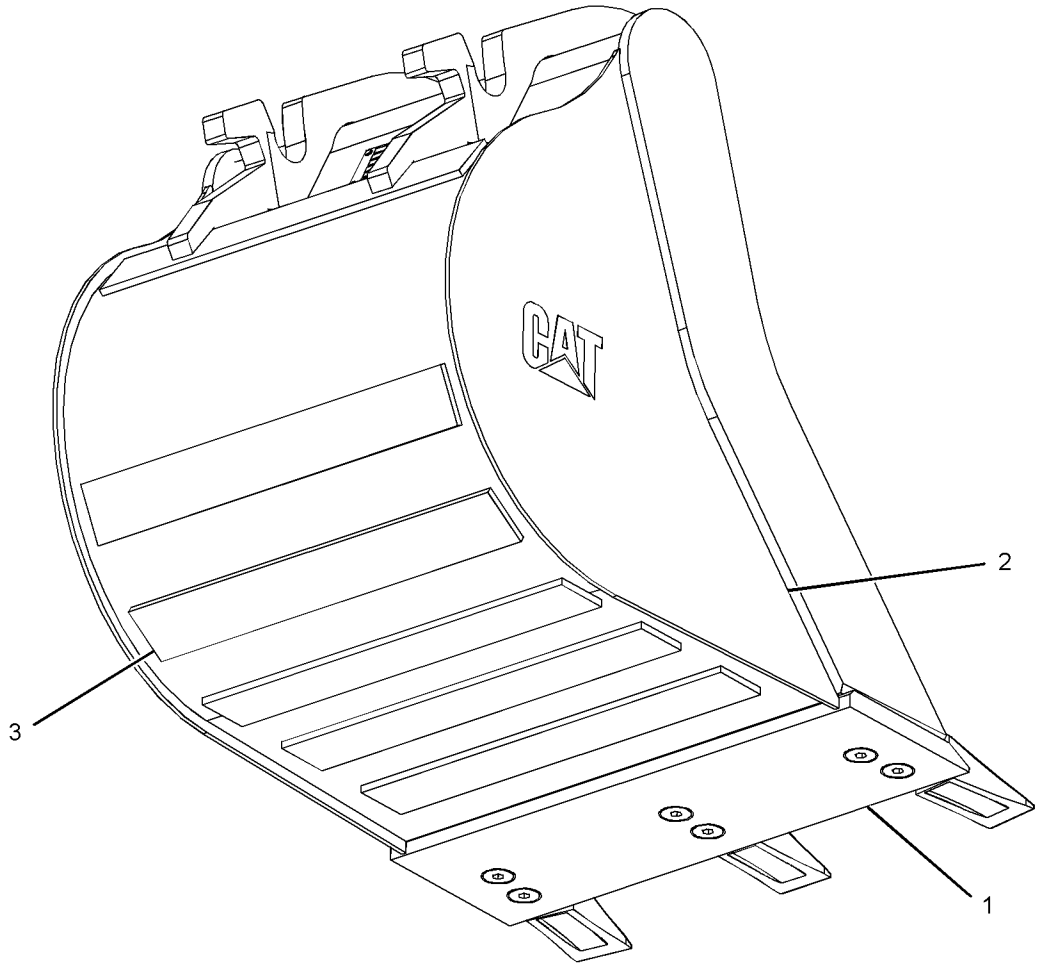

GRAPHIC #1

<END>

g03401083

279-4311 BUCKET AS-GENERAL PURPOSE

300-MM (12-IN) WIDE X 0.05-CU M (0.065-CU YD) CAPACITY
PART OF 279-4312 BUCKET GP-GENERAL PURPOSE
AN ATTACHMENT

SMCS-6101, 6803, 6805, 6822 **i05357680**

NOTE	REF NO	GRAPHIC REF	PART NUMBER	QTY	PART NAME 1 2 3 4 5 6 (PRODUCT LEVEL)	SEE PAGE
	1	1	**174-2141**	1	EDGE	

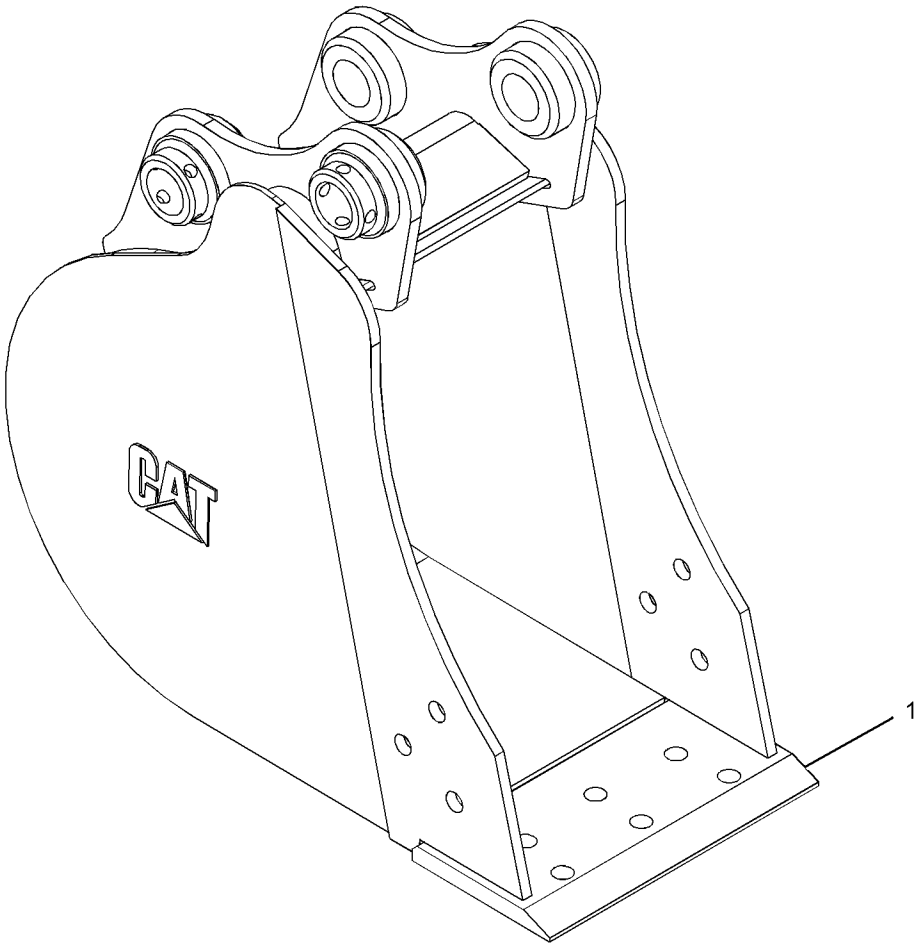

GRAPHIC #1 **<END>** g03404879

281-3815 BUCKET AS-GENERAL PURPOSE

750-MM (30-IN) WIDE X 0.16-CU M (0.209-CU YD) CAPACITY
PART OF 279-4321 BUCKET GP-GENERAL PURPOSE
AN ATTACHMENT

SMCS-6101, 6803, 6805, 6822 **i05357752**

NOTE	REF NO	GRAPHIC REF	PART NUMBER	QTY	PART NAME 1 2 3 4 5 6 (PRODUCT LEVEL)	SEE PAGE
	1	1	**279-4308**	2	EDGE	
	2	1	**281-3818**	1	EDGE	

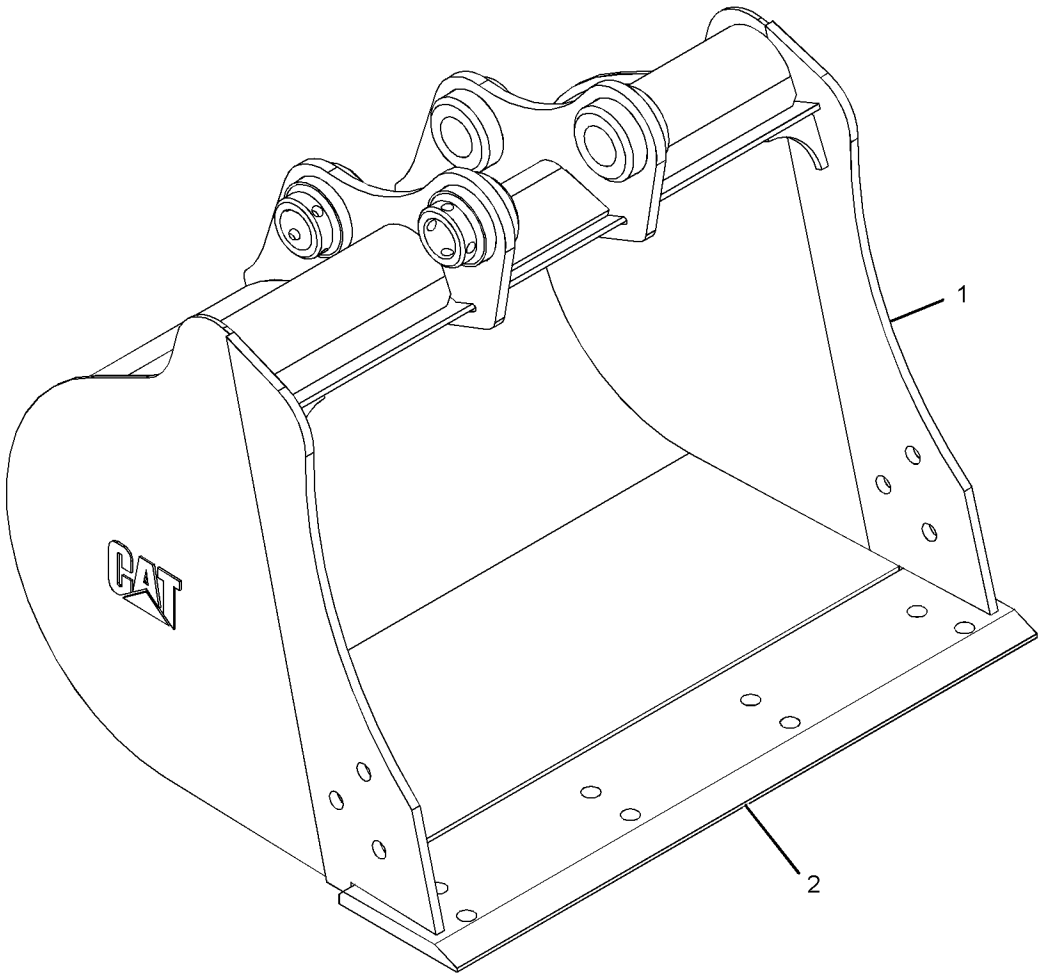

GRAPHIC #1 **<END>** g03397759

303-1358 BUCKET AS-HOE

304-MM (12-IN) WIDE X 0.05-CU M (0.06-CU YD) CAPACITY
PART OF 303-1324 BUCKET GP-HOE
AN ATTACHMENT

SMCS-6503 **i05354377**

NOTE	REF NO	GRAPHIC REF	PART NUMBER	QTY	PART NAME 1 2 3 4 5 6 (PRODUCT LEVEL)	SEE PAGE
	1	1	**306-5658**	1	EDGE AS	
	1A	1	**119-3205**	3	ADAPTER-STRAP (TWO)	
	1B	1	**255-3410**	1	EDGE	
	2	1	**303-6249**	1	EDGE-LH	
	3	1	**303-6248**	1	EDGE-RH	

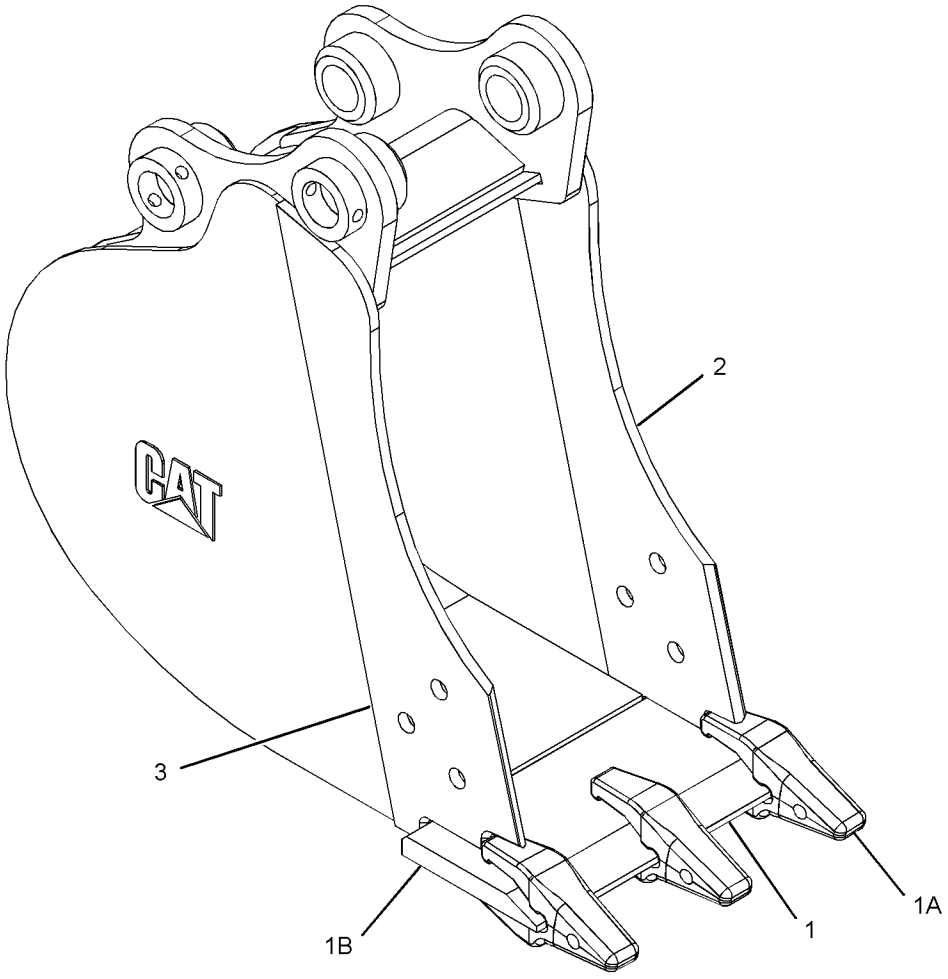

GRAPHIC #1 **<END>** g03397740

303-1359 BUCKET AS-HOE

406-MM (16-IN) WIDE X 0.07-CU M (0.09-CU YD) CAPACITY
PART OF 303-1325 BUCKET GP-HOE
AN ATTACHMENT

SMCS-6503 **i05354386**

NOTE	REF NO	GRAPHIC REF	PART NUMBER	QTY	PART NAME 1 2 3 4 5 6 (PRODUCT LEVEL)	SEE PAGE
	1	1	**290-2943**	1	EDGE AS	
	1A	1	**119-3205**	3	ADAPTER-STRAP (TWO)	
	1B	1	**255-3402**	1	EDGE	
	2	1	**303-6248**	1	EDGE-RH	
	3	1	**303-6249**	1	EDGE-LH	

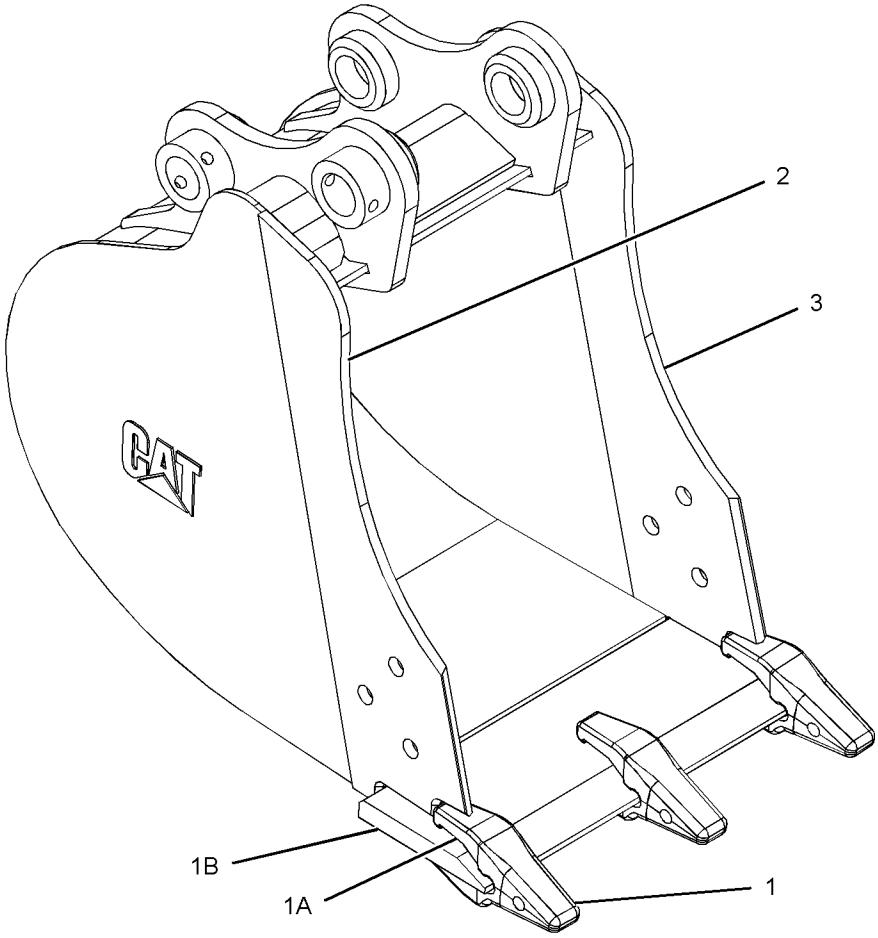

GRAPHIC #1 **<END>** g03396931

303-1360 BUCKET AS-HOE

457-MM (18-IN) WIDE X 0.08-CU M (0.11-CU YD) CAPACITY
PART OF 303-1326 BUCKET GP-HOE
AN ATTACHMENT

SMCS-6503 **i05355792**

NOTE	REF NO	GRAPHIC REF	PART NUMBER	QTY	PART NAME 1 2 3 4 5 6 (PRODUCT LEVEL)	SEE PAGE
	1	1	**290-2944**	1	EDGE AS	
		1	**119-3205**	4	ADAPTER-STRAP (TWO)	
		1	**219-9487**	1	EDGE	
	2	1	**303-6248**	1	EDGE-RH	
	3	1	**303-6249**	1	EDGE-LH	

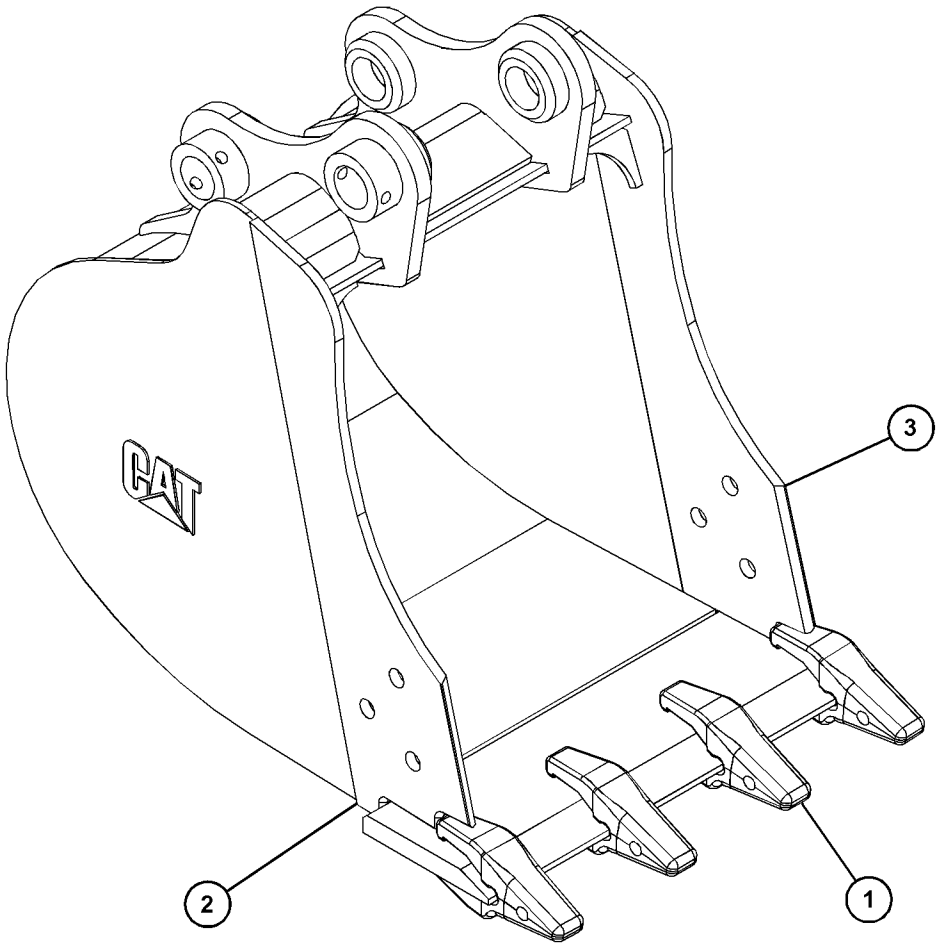

GRAPHIC #1 **<END>** g03397343

303-1362 BUCKET AS-HOE

508-MM (20-IN) WIDE X 0.09-CU M (0.2-CU YD) CAPACITY
PART OF 303-1327 BUCKET GP-HOE
AN ATTACHMENT

SMCS-6503 **i05355794**

NOTE	REF NO	GRAPHIC REF	PART NUMBER	QTY	PART NAME 1 2 3 4 5 6 (PRODUCT LEVEL)	SEE PAGE
	1	1	*290-2945*	1	EDGE AS	
	1A	1	**119-3205**	5	ADAPTER-STRAP (TWO)	
	1B	1	**252-2627**	1	EDGE	
	2	1	**303-6248**	1	EDGE-RH	
	3	1	**303-6249**	1	EDGE-LH	

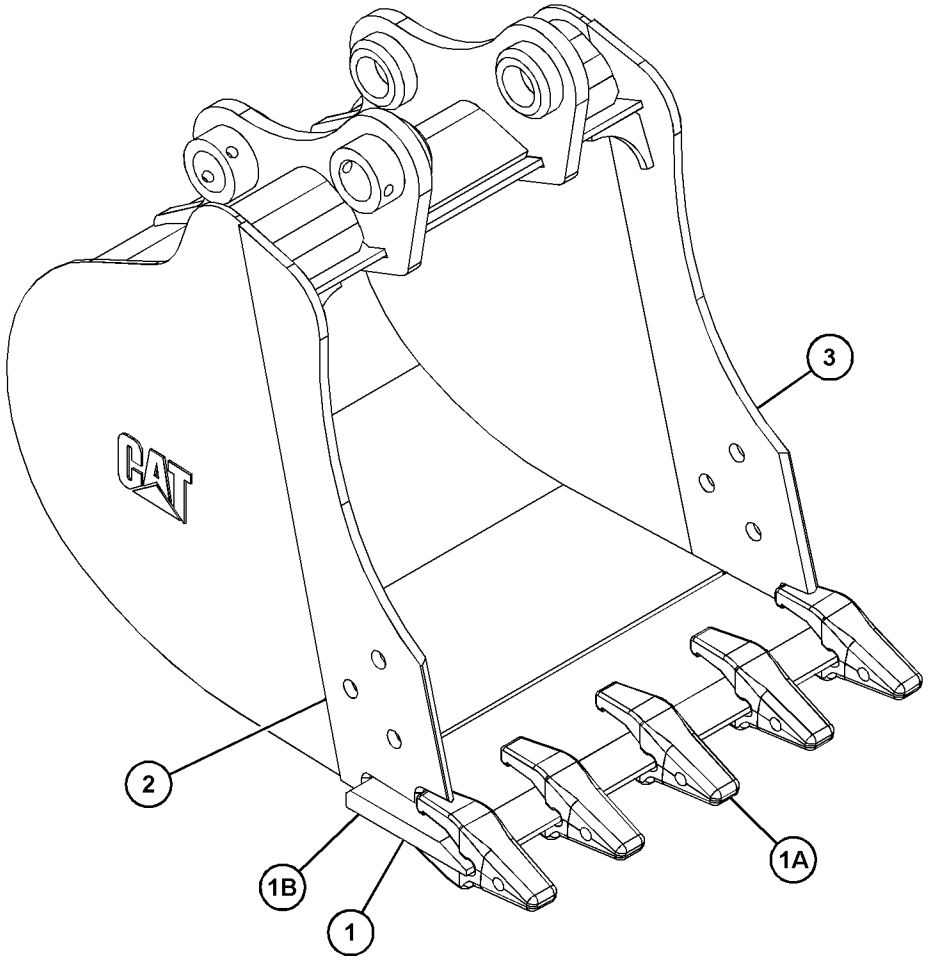

GRAPHIC #1 **<END>** g03402100

303-1363 BUCKET AS-HOE

609-MM (24-IN) WIDE X 0.12-CU M (0.15-CU YD) CAPACITY
PART OF 303-1328 BUCKET GP-HOE
AN ATTACHMENT

SMCS-6503 **i05355893**

NOTE	REF NO	GRAPHIC REF	PART NUMBER	QTY	PART NAME 1 2 3 4 5 6 (PRODUCT LEVEL)	SEE PAGE
	1	1	**290-2946**	1	EDGE AS	
		1	**119-3205**	5	ADAPTER-STRAP (TWO)	
		1	**219-9488**	1	EDGE	
	2	1	**303-6248**	1	EDGE-RH	
	3	1	**303-6249**	1	EDGE-LH	

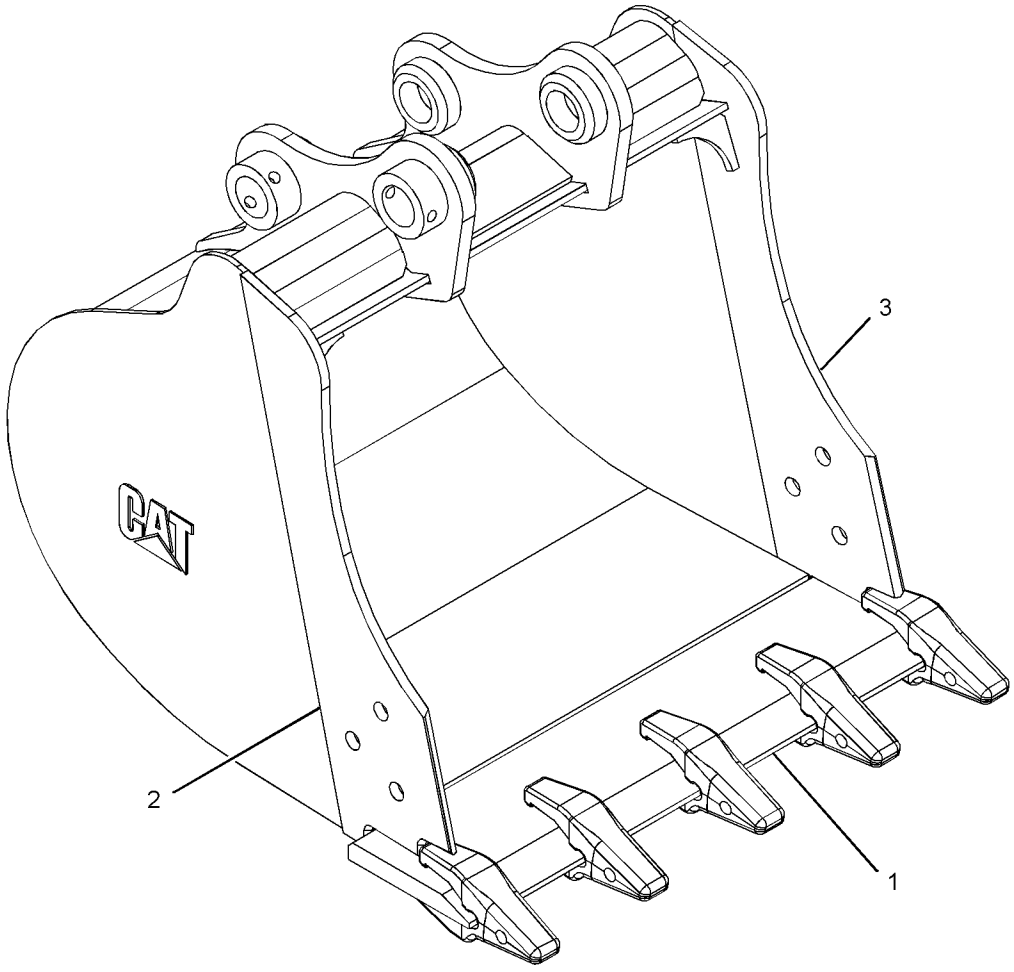

GRAPHIC #1 **<END>** g03397760

303-1364 BUCKET AS-HOE

762-MM (30-IN) WIDE X 0.16-CU M (0.20-CU YD) CAPACITY
PART OF 303-1329 BUCKET GP-HOE
AN ATTACHMENT

SMCS-6503 **i05355777**

NOTE	REF NO	GRAPHIC REF	PART NUMBER	QTY	PART NAME 1 2 3 4 5 6 (PRODUCT LEVEL)	SEE PAGE
	1	1	*303-1308*	1	EDGE AS	
	1A	1	**119-3205**	5	ADAPTER-STRAP (TWO)	
	1B	1	**219-9489**	1	EDGE	
	2	1	**303-6248**	1	EDGE-RH	
	3	1	**303-6249**	1	EDGE-LH	

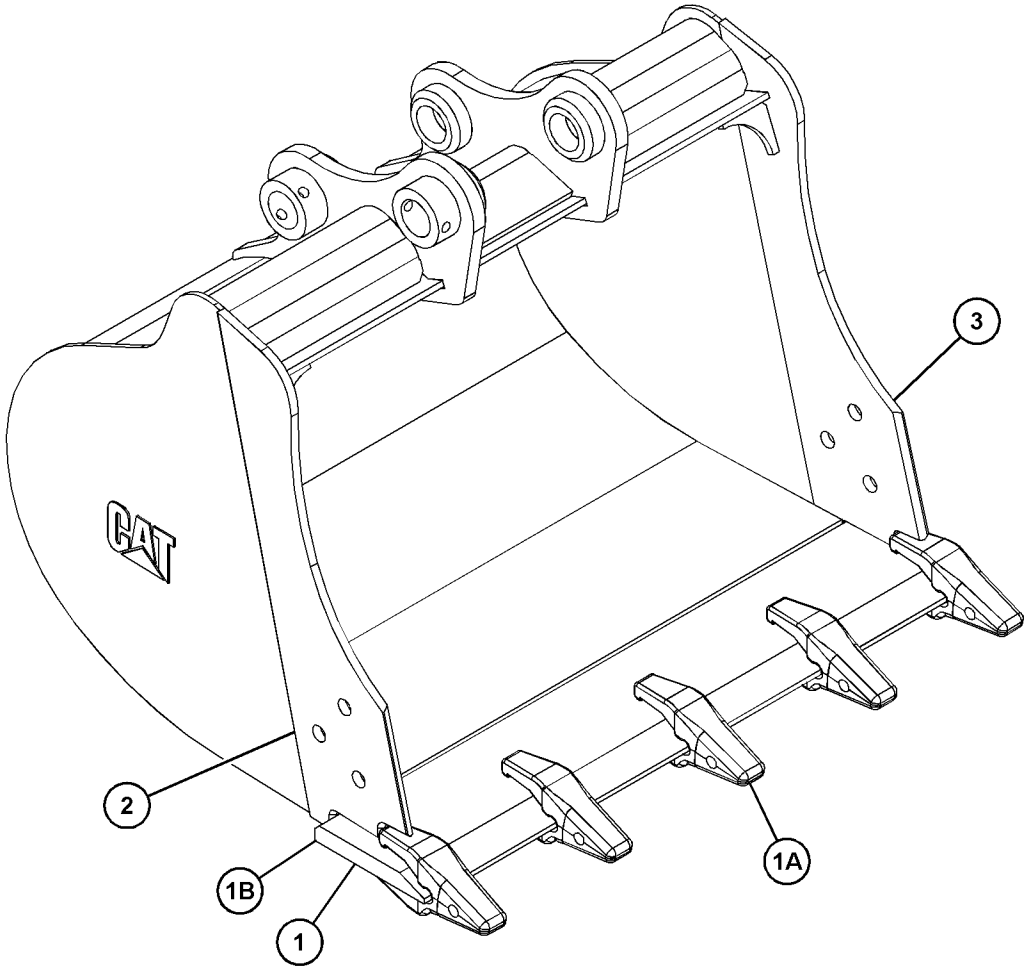

GRAPHIC #1 **<END>** g03403699

386-7523 BUCKET AS-HOE—HEAVY-DUTY

914.4-MM (36-IN) WIDE
PART OF 386-7524 BUCKET GP-HOE
AN ATTACHMENT

SMCS-6503 **i05346199**

NOTE	REF NO	GRAPHIC REF	PART NUMBER	QTY	PART NAME 1 2 3 4 5 6 (PRODUCT LEVEL)	SEE PAGE
	1	1	*303-1309*	1	EDGE AS	
	1A	1	**119-3205**	6	ADAPTER-STRAP (TWO)	
	1B	1	**219-9490**	1	EDGE	
	2	1	**303-6248**	1	EDGE-RH	
	3	1	**303-6249**	1	EDGE-LH	

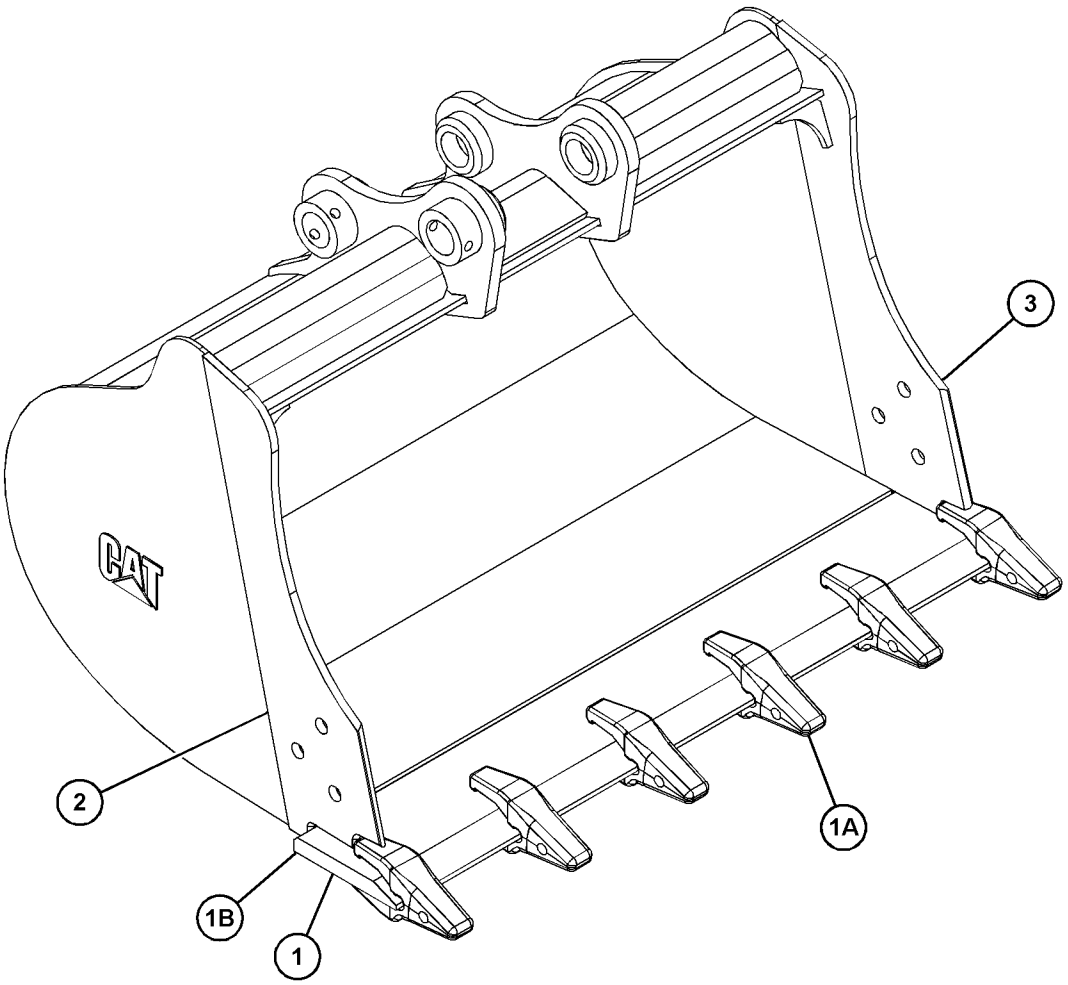

GRAPHIC #1 **<END>** g03403703

187-8812 BUCKET GP-EXCAVATION

300-MM (11.81-IN) WIDE X 60-L CAPACITY
AN ATTACHMENT

SMCS-6523, 6803, 6805, 6822 **i01990415**

NOTE	PART NUMBER	QTY	PART NAME 1 2 3 4 5 6 (PRODUCT LEVEL)	SEE PAGE
M	**145-1893**	6	BOLT (M12X1.75X40-MM)	
M	**8T-4244**	6	NUT (M12X1.75-THD)	
	231-3999	3	TOOTH	

M - METRIC PART

<END>

187-8813 BUCKET GP-EXCAVATION

400-MM (15.75-IN) WIDE X 85-L CAPACITY
AN ATTACHMENT

SMCS-6523, 6803, 6805, 6822 **i01990412**

NOTE	PART NUMBER	QTY	PART NAME 1 2 3 4 5 6 (PRODUCT LEVEL)	SEE PAGE
M	**145-1893**	6	BOLT (M12X1.75X40-MM)	
M	**8T-4244**	6	NUT (M12X1.75-THD)	
	231-3999	3	TOOTH	

M - METRIC PART

<END>

187-8814 BUCKET GP-EXCAVATION

500-MM (19.69-IN) WIDE X 115-L CAPACITY
AN ATTACHMENT

SMCS-6523, 6803, 6805, 6822 **i01990410**

NOTE	PART NUMBER	QTY	PART NAME 1 2 3 4 5 6 (PRODUCT LEVEL)	SEE PAGE
M	**145-1893**	8	BOLT (M12X1.75X40-MM)	
M	**8T-4244**	8	NUT (M12X1.75-THD)	
	231-3999	4	TOOTH	

M - METRIC PART

<END>

187-8815 BUCKET GP-EXCAVATION

600-MM (23.62-IN) WIDE X 145-L CAPACITY
AN ATTACHMENT

SMCS-6523, 6803, 6805, 6822 **i01990391**

NOTE	PART NUMBER	QTY	PART NAME 1 2 3 4 5 6 (PRODUCT LEVEL)	SEE PAGE
M	**145-1893**	8	BOLT (M12X1.75X40-MM)	
M	**8T-4244**	8	NUT (M12X1.75-THD)	
	231-3999	4	TOOTH	

M - METRIC PART

<END>

187-8816 BUCKET GP-EXCAVATION

700-MM (27.56-IN) WIDE X 170-L CAPACITY

AN ATTACHMENT

SMCS-6523, 6803, 6805, 6822 **i01990388**

NOTE	PART NUMBER	QTY	PART NAME 1 2 3 4 5 6 (PRODUCT LEVEL)	SEE PAGE
M	**145-1893**	10	BOLT (M12X1.75X40-MM)	
M	**8T-4244**	10	NUT (M12X1.75-THD)	
	231-3999	5	TOOTH	

M - METRIC PART

<END>

279-4312 BUCKET GP-GENERAL PURPOSE

AN ATTACHMENT

SMCS-6101, 6803, 6805, 6822 **i05357655**

NOTE	REF NO	GRAPHIC REF	PART NUMBER	QTY	PART NAME 1 2 3 4 5 6 (PRODUCT LEVEL)	SEE PAGE
	1	1	*153-7881*	3	TOOTH GP-UNI	
					(EACH INCLUDES)	
M		1	**8T-4778**	2	LOCKNUT (M16X2-THD)	
		1	**135-9390**	1	TOOTH-UNI	
M		1	**159-8839**	2	SCREW-FLAT HEAD (M16X2X60-MM)	
	2	1	**154-2704**	1	PLATE-INSTRUCTION (BUCKET SPECIFICATIONS)	
	3	1	**168-8389**	4	TACK-FASTENER (METAL)	
Y	4	1	*279-4311*	1	BUCKET AS-GENERAL PURPOSE	404

M - METRIC PART
Y - SEPARATE ILLUSTRATION

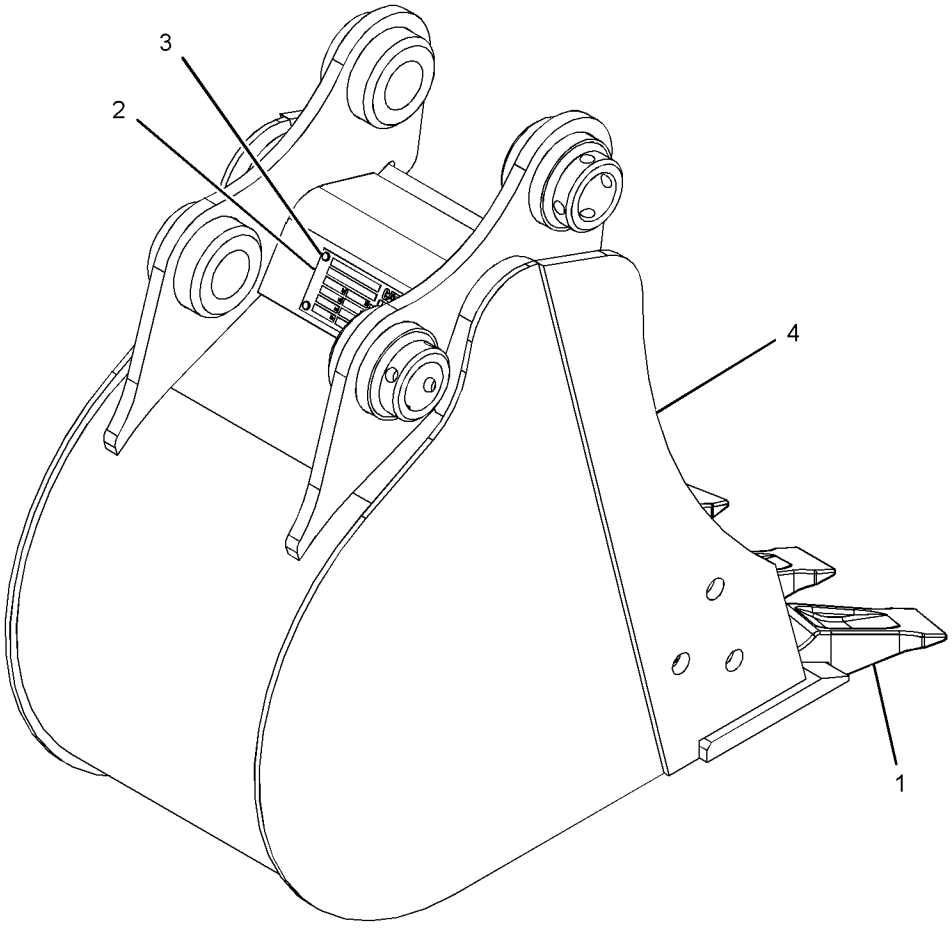

GRAPHIC #1 **<END>** g03393463

279-4313 BUCKET GP-GENERAL PURPOSE

500-MM (19.7-IN) WIDE X 0.09-CU M (0.12-CU YD) CAPACITY
AN ATTACHMENT

SMCS-6101, 6803, 6805, 6822 **i05357693**

NOTE	REF NO	GRAPHIC REF	PART NUMBER	QTY	PART NAME 1 2 3 4 5 6 (PRODUCT LEVEL)	SEE PAGE
	1	1	*153-7881*	4	TOOTH GP-UNI	
					(EACH INCLUDES)	
M		1	**8T-4778**	2	LOCKNUT (M16X2-THD)	
		1	**135-9390**	1	TOOTH-UNI	
M		1	**159-8839**	2	SCREW-FLAT HEAD (M16X2X60-MM)	
	2	1	**154-2704**	1	PLATE-INSTRUCTION (BUCKET SPECIFICATIONS)	
	3	1	**168-8389**	4	TACK-FASTENER (METAL)	

M - METRIC PART

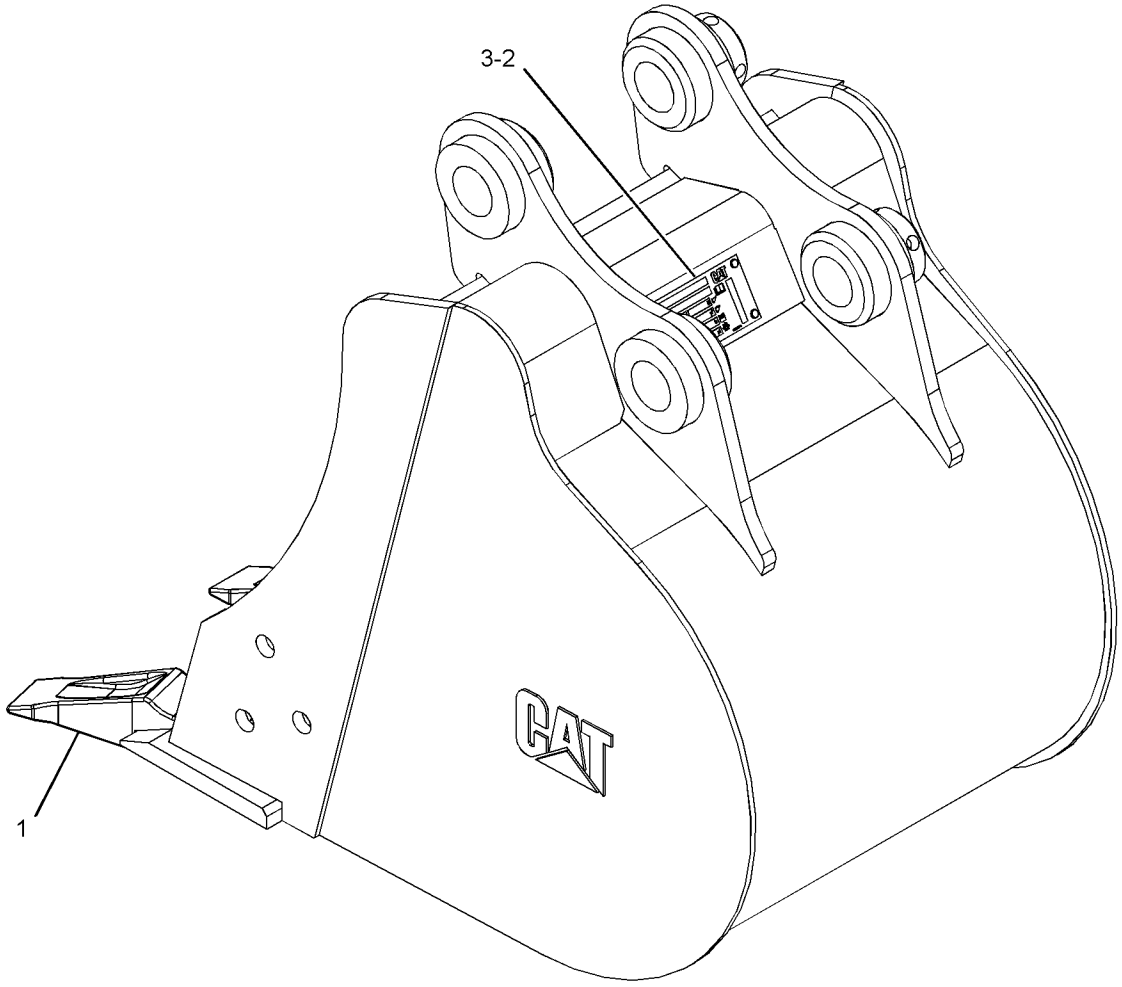

GRAPHIC #1 **<END>** g03408776

279-4320 BUCKET GP-GENERAL PURPOSE

460-MM (18.11-IN) WIDE X 0.084-CU M (0.11-CU YD)CAPACITY
AN ATTACHMENT

SMCS-6101, 6803, 6805, 6822 **i05357710**

NOTE	REF NO	GRAPHIC REF	PART NUMBER	QTY	PART NAME 1 2 3 4 5 6 (PRODUCT LEVEL)	SEE PAGE
	1	1	*153-7881*	3	TOOTH GP-UNI	
					(EACH INCLUDES)	
M		1	**8T-4778**	2	LOCKNUT (M16X2-THD)	
		1	**135-9390**	1	TOOTH-UNI	
M		1	**159-8839**	2	SCREW-FLAT HEAD (M16X2X60-MM)	
	2	1	**154-2704**	1	PLATE-INSTRUCTION (BUCKET SPECIFICATIONS)	
	3	1	**168-8389**	4	TACK-FASTENER (METAL)	

M - METRIC PART

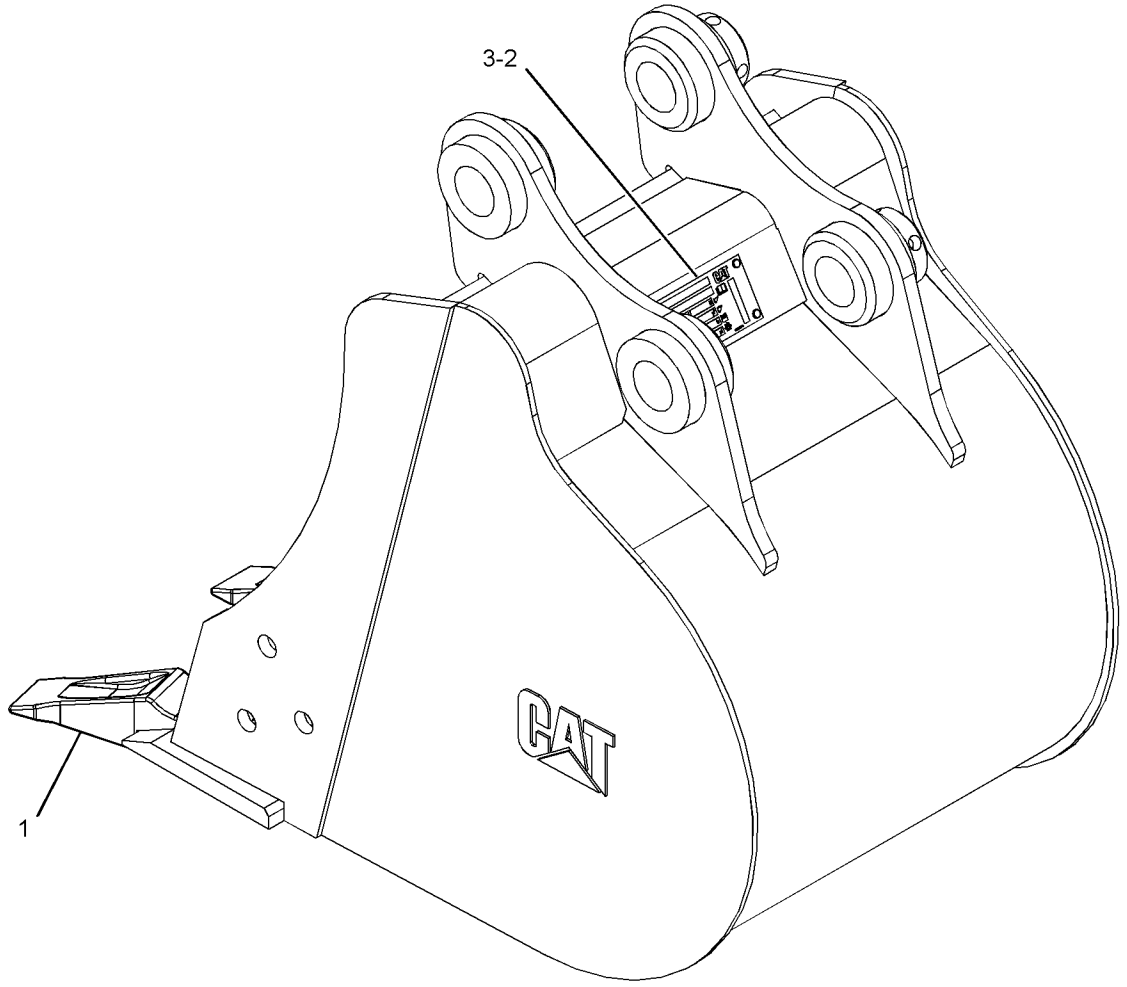

GRAPHIC #1 **<END>** g03408777

279-4321 BUCKET GP-GENERAL PURPOSE

AN ATTACHMENT

SMCS-6101, 6803, 6805, 6822 **i05357726**

NOTE	REF NO	GRAPHIC REF	PART NUMBER	QTY	PART NAME 1 2 3 4 5 6 (PRODUCT LEVEL)	SEE PAGE
	1	1	*153-7881*	4	TOOTH GP-UNI	
					(EACH INCLUDES)	
M		1	**8T-4778**	2	LOCKNUT (M16X2-THD)	
		1	**135-9390**	1	TOOTH-UNI	
M		1	**159-8839**	2	SCREW-FLAT HEAD (M16X2X60-MM)	
	2	1	**154-2704**	1	PLATE-INSTRUCTION (BUCKET SPECIFICATIONS)	
	3	1	**168-8389**	4	TACK-FASTENER (METAL)	
Y	4	1	*281-3815*	1	BUCKET AS-GENERAL PURPOSE	405

M - METRIC PART
Y - SEPARATE ILLUSTRATION

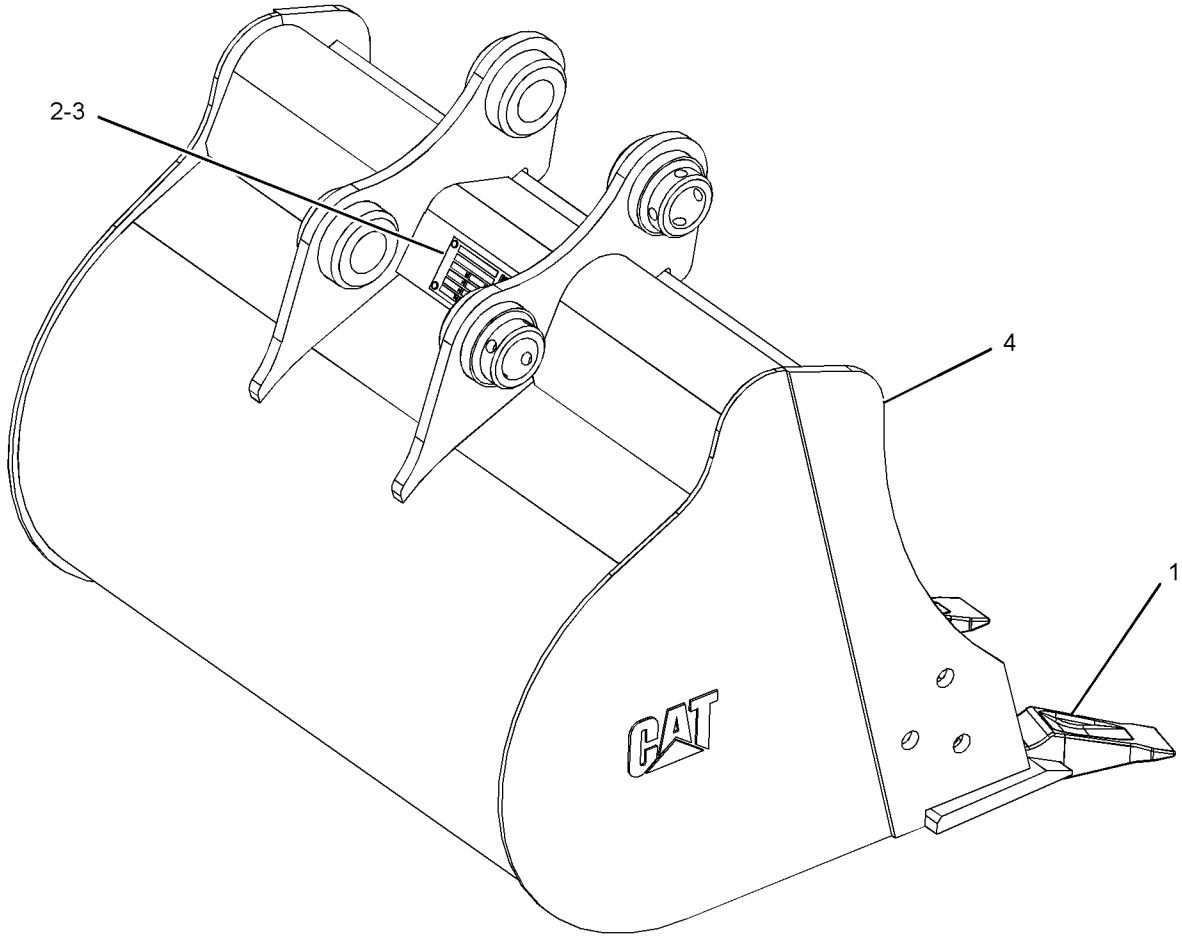

GRAPHIC #1 **<END>** g03397293

281-1551 BUCKET GP-GENERAL PURPOSE

600-MM (23.62-IN) WIDE X 0.113-CU M (0.15-CU YD) CAPACITY

AN ATTACHMENT

SMCS-6101, 6803, 6805, 6822 **i05399075**

NOTE	REF NO	GRAPHIC REF	PART NUMBER	QTY	PART NAME 1 2 3 4 5 6 (PRODUCT LEVEL)	SEE PAGE
	1	1	*153-7881*	4	TOOTH GP-UNI	
					(EACH INCLUDES)	
		1	**135-9390**	1	TOOTH-UNI	
M		1	**159-8839**	2	SCREW-FLAT HEAD (M16X2X60-MM)	
M		1	**8T-4778**	2	LOCKNUT (M16X2-THD)	
	2	1	**154-2704**	1	PLATE-INSTRUCTION (BUCKET SPECIFICATIONS)	
	3	1	**168-8389**	4	TACK-FASTENER (METAL)	

M - METRIC PART

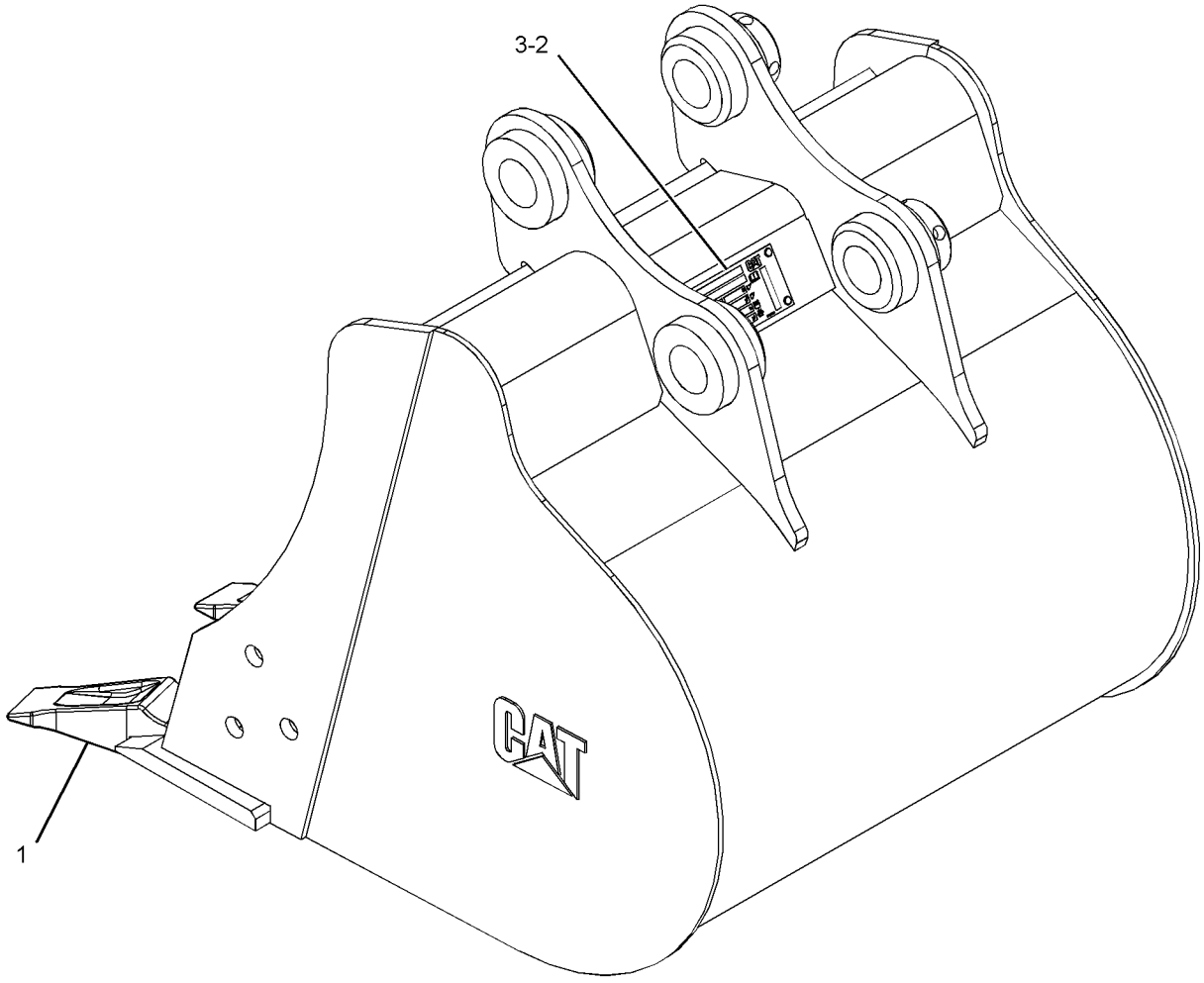

GRAPHIC #1 **<END>** g03411976

281-3824 BUCKET GP-GENERAL PURPOSE

400-MM (16-IN) WIDE X 0.07-CU M (0.09-CU YD) CAPACITY
AN ATTACHMENT

SMCS-6101, 6803, 6805, 6822 **i05399082**

NOTE	REF NO	GRAPHIC REF	PART NUMBER	QTY	PART NAME 1 2 3 4 5 6 (PRODUCT LEVEL)	SEE PAGE
	1	1	*153-7881*	3	TOOTH GP-UNI	
					(EACH INCLUDES)	
		1	**135-9390**	1	TOOTH-UNI	
M		1	**159-8839**	2	SCREW-FLAT HEAD (M16X2X60-MM)	
M		1	**8T-4778**	2	LOCKNUT (M16X2-THD)	
	2	1	**154-2704**	1	PLATE-INSTRUCTION (BUCKET SPECIFICATIONS)	
	3	1	**168-8389**	4	TACK-FASTENER (METAL)	

M - METRIC PART

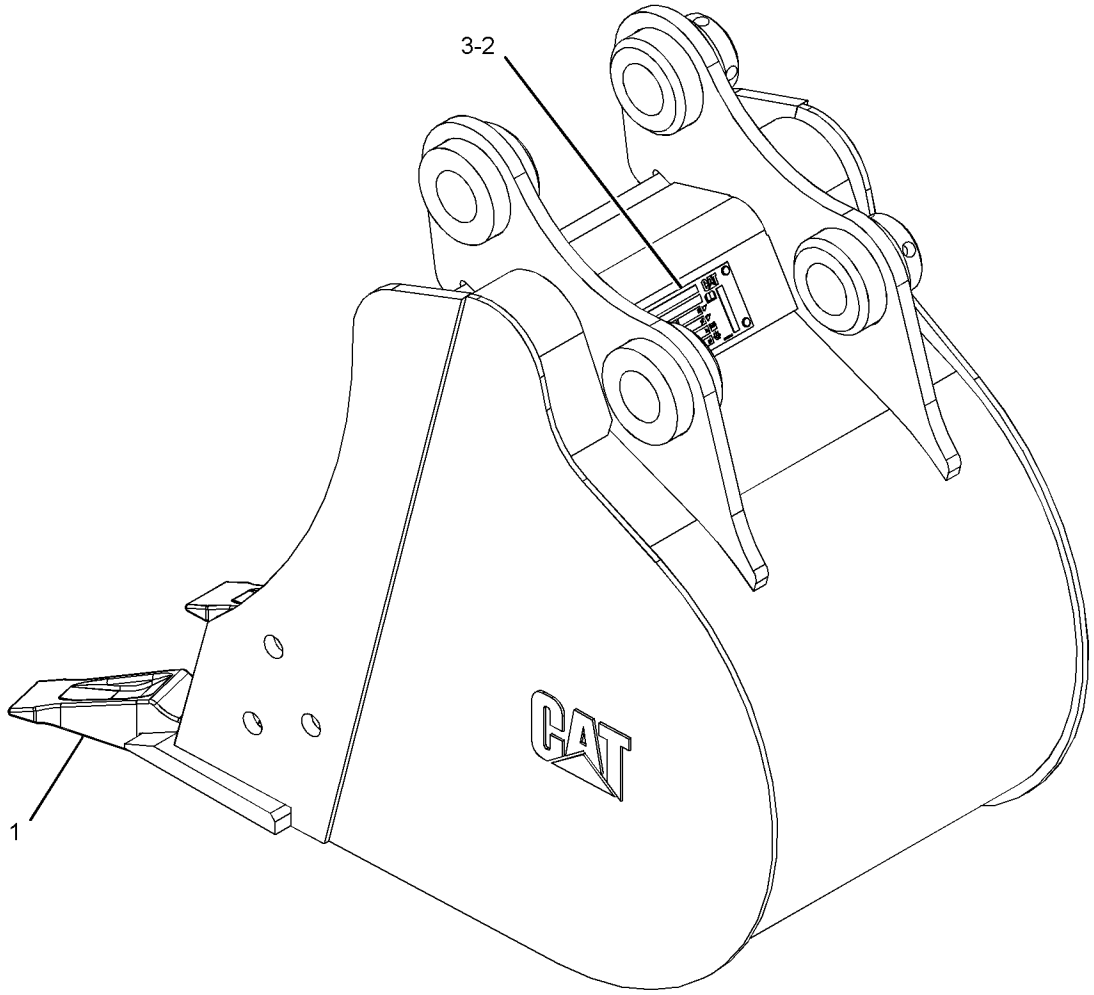

GRAPHIC #1 **<END>** g03411967

303-1324 BUCKET GP-HOE–HEAVY-DUTY
AN ATTACHMENT

SMCS-6503 **i05353915**

NOTE	REF NO	GRAPHIC REF	PART NUMBER	QTY	PART NAME 1 2 3 4 5 6 (PRODUCT LEVEL)	SEE PAGE
	1	1	*3G-6127*	3	TIP GP-LONG	
					(EACH INCLUDES)	
		1	**1U-3202**	1	TIP-LONG	
		1	**8E-6208**	1	PIN	
		1	**8E-6209**	1	RETAINER AS	
	2	1	**154-2704**	1	PLATE-INSTRUCTION (BUCKET SPECIFICATIONS)	
	3	1	**168-8389**	4	TACK-FASTENER (METAL)	
Y	4	1	*303-1358*	1	BUCKET AS-HOE	406

Y - SEPARATE ILLUSTRATION

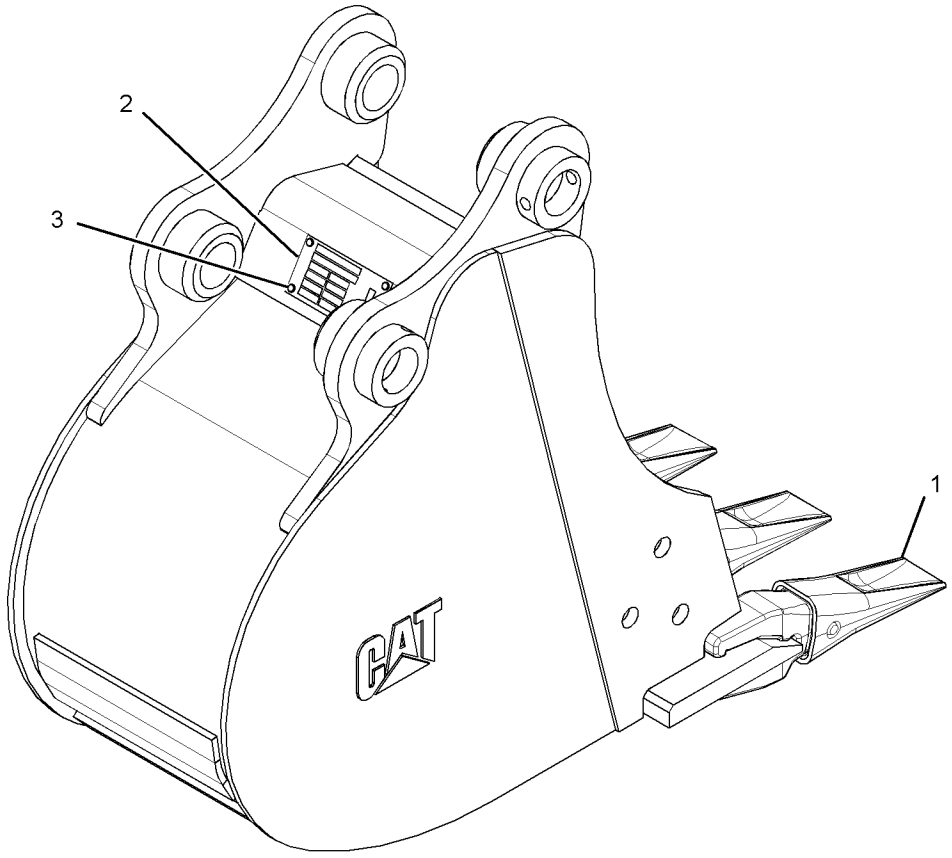

GRAPHIC #1 **<END>** g01425996

303-1325 BUCKET GP-HOE—HEAVY-DUTY

AN ATTACHMENT

SMCS-6503 **i05353916**

NOTE	REF NO	GRAPHIC REF	PART NUMBER	QTY	PART NAME 1 2 3 4 5 6 (PRODUCT LEVEL)	SEE PAGE
	1	1	*3G-6127*	3	TIP GP-LONG	
					(EACH INCLUDES)	
		1	**1U-3202**	1	TIP-LONG	
		1	**8E-6208**	1	PIN	
		1	**8E-6209**	1	RETAINER AS	
	2	1	**154-2704**	1	PLATE-INSTRUCTION (BUCKET SPECIFICATIONS)	
	3	1	**168-8389**	4	TACK-FASTENER (METAL)	
Y	4	1	*303-1359*	1	BUCKET AS-HOE	407

Y - SEPARATE ILLUSTRATION

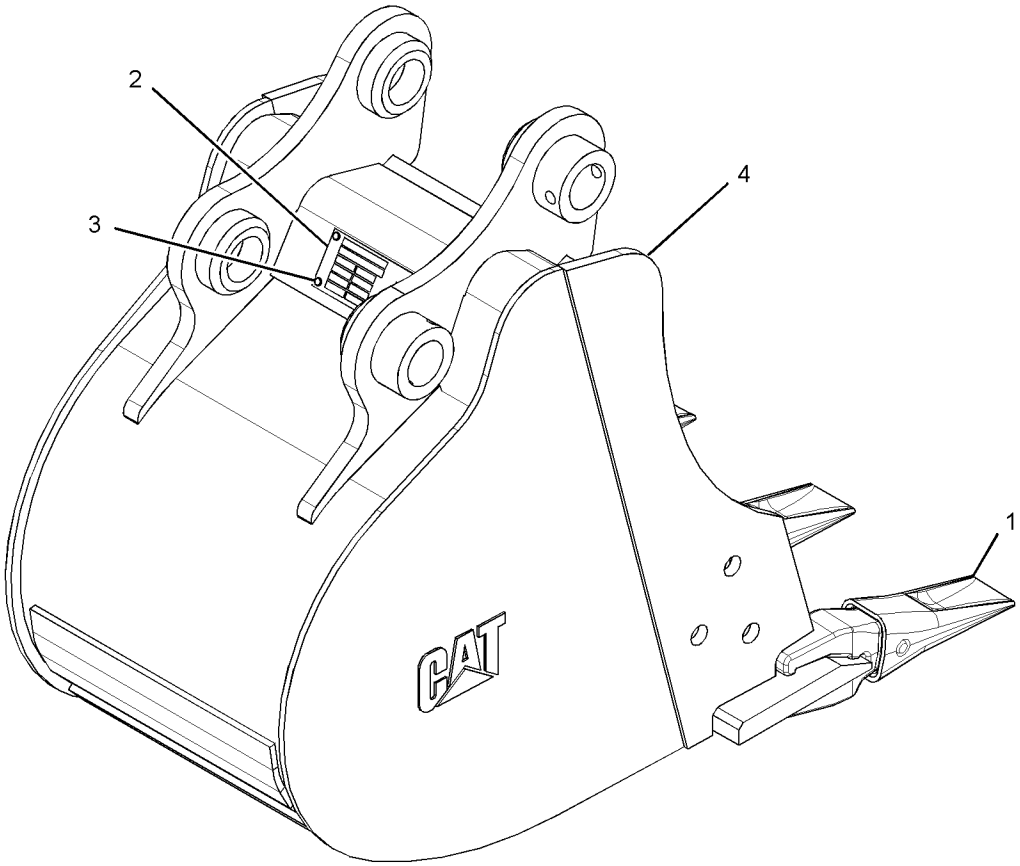

GRAPHIC #1 **<END>** g03397737

303-1326 BUCKET GP-HOE

AN ATTACHMENT

SMCS-6503 **i05353921**

NOTE	REF NO	GRAPHIC REF	PART NUMBER	QTY	PART NAME 1 2 3 4 5 6 (PRODUCT LEVEL)	SEE PAGE
	1	1	*3G-6127*	4	TIP GP-LONG	
					(EACH INCLUDES)	
		1	**1U-3202**	1	TIP-LONG	
		1	**8E-6208**	1	PIN	
		1	**8E-6209**	1	RETAINER AS	
	2	1	**154-2704**	1	PLATE-INSTRUCTION (BUCKET SPECIFICATIONS)	
	3	1	**168-8389**	4	TACK-FASTENER (METAL)	
Y	4	1	*303-1360*	1	BUCKET AS-HOE	408

Y - SEPARATE ILLUSTRATION

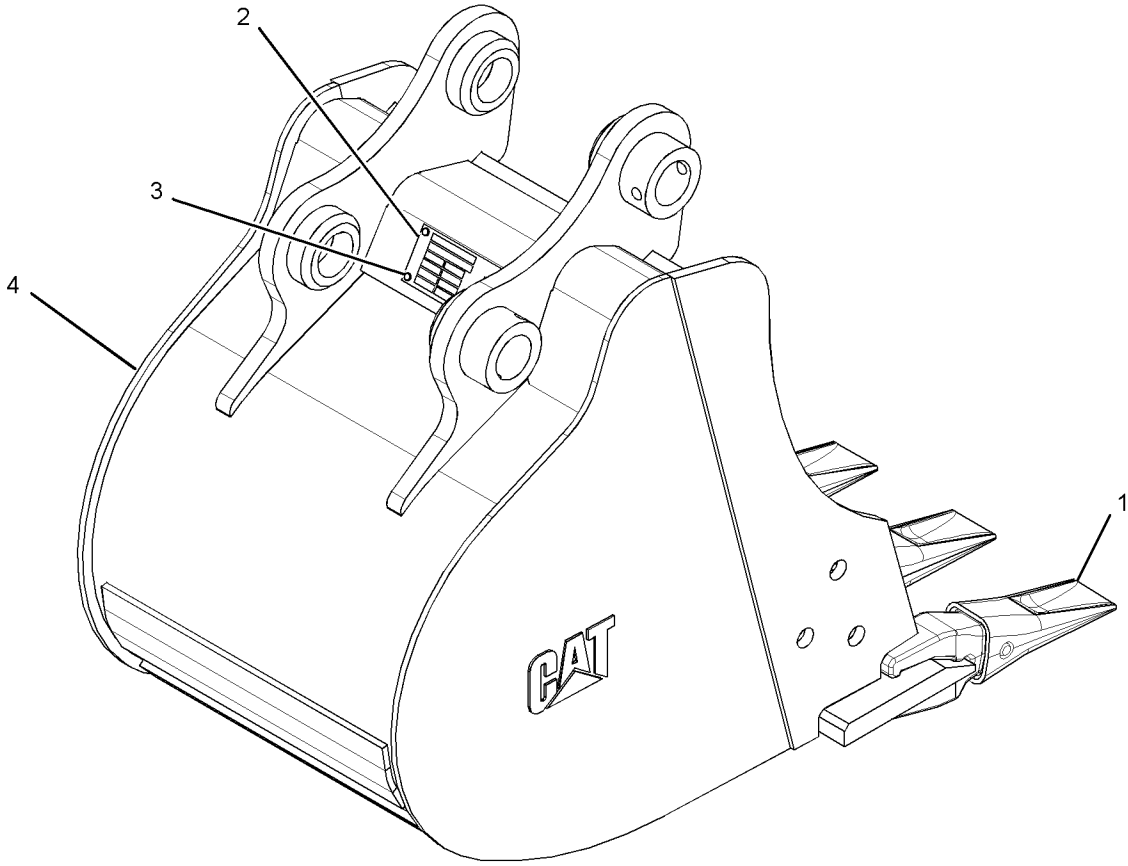

GRAPHIC #1 **<END>** g03403220

303-1327 BUCKET GP-HOE

AN ATTACHMENT

SMCS-6503 **i05353917**

NOTE	REF NO	GRAPHIC REF	PART NUMBER	QTY	PART NAME 1 2 3 4 5 6 (PRODUCT LEVEL)	SEE PAGE
	1	1	*3G-6127*	5	TIP GP-LONG	
					(EACH INCLUDES)	
		1	**1U-3202**	1	TIP-LONG	
		1	**8E-6208**	1	PIN	
		1	**8E-6209**	1	RETAINER AS	
	2	1	**154-2704**	1	PLATE-INSTRUCTION (BUCKET SPECIFICATIONS)	
	3	1	**168-8389**	4	TACK-FASTENER (METAL)	
Y	4	1	*303-1362*	1	BUCKET AS-HOE	409

Y - SEPARATE ILLUSTRATION

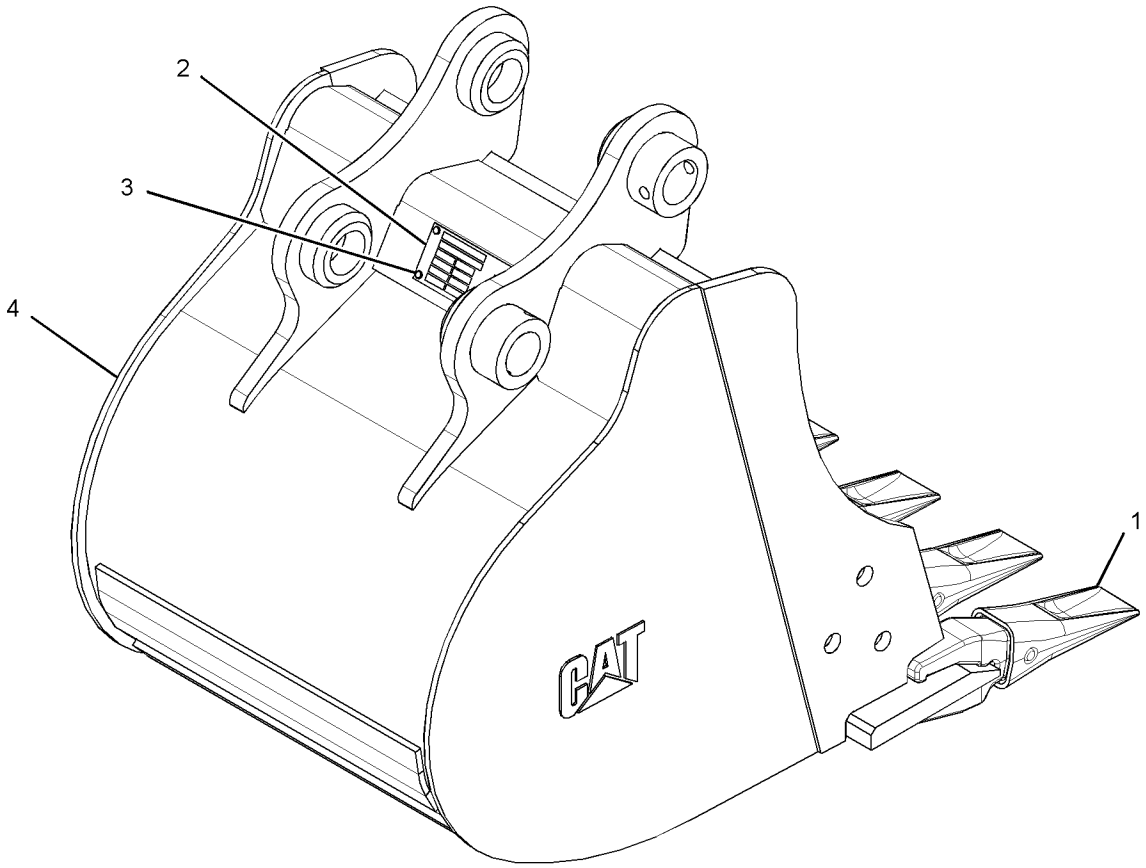

GRAPHIC #1 **<END>** g03403318

303-1328 BUCKET GP-HOE

AN ATTACHMENT

SMCS-6503 **i05353919**

NOTE	REF NO	GRAPHIC REF	PART NUMBER	QTY	PART NAME 1 2 3 4 5 6 (PRODUCT LEVEL)	SEE PAGE
	1	1	*3G-6127*	5	TIP GP-LONG	
					(EACH INCLUDES)	
		1	**1U-3202**	1	TIP-LONG	
		1	**8E-6208**	1	PIN	
		1	**8E-6209**	1	RETAINER AS	
	2	1	**154-2704**	1	PLATE-INSTRUCTION (BUCKET SPECIFICATIONS)	
	3	1	**168-8389**	4	TACK-FASTENER (METAL)	
Y	4	1	*303-1363*	1	BUCKET AS-HOE	410

Y - SEPARATE ILLUSTRATION

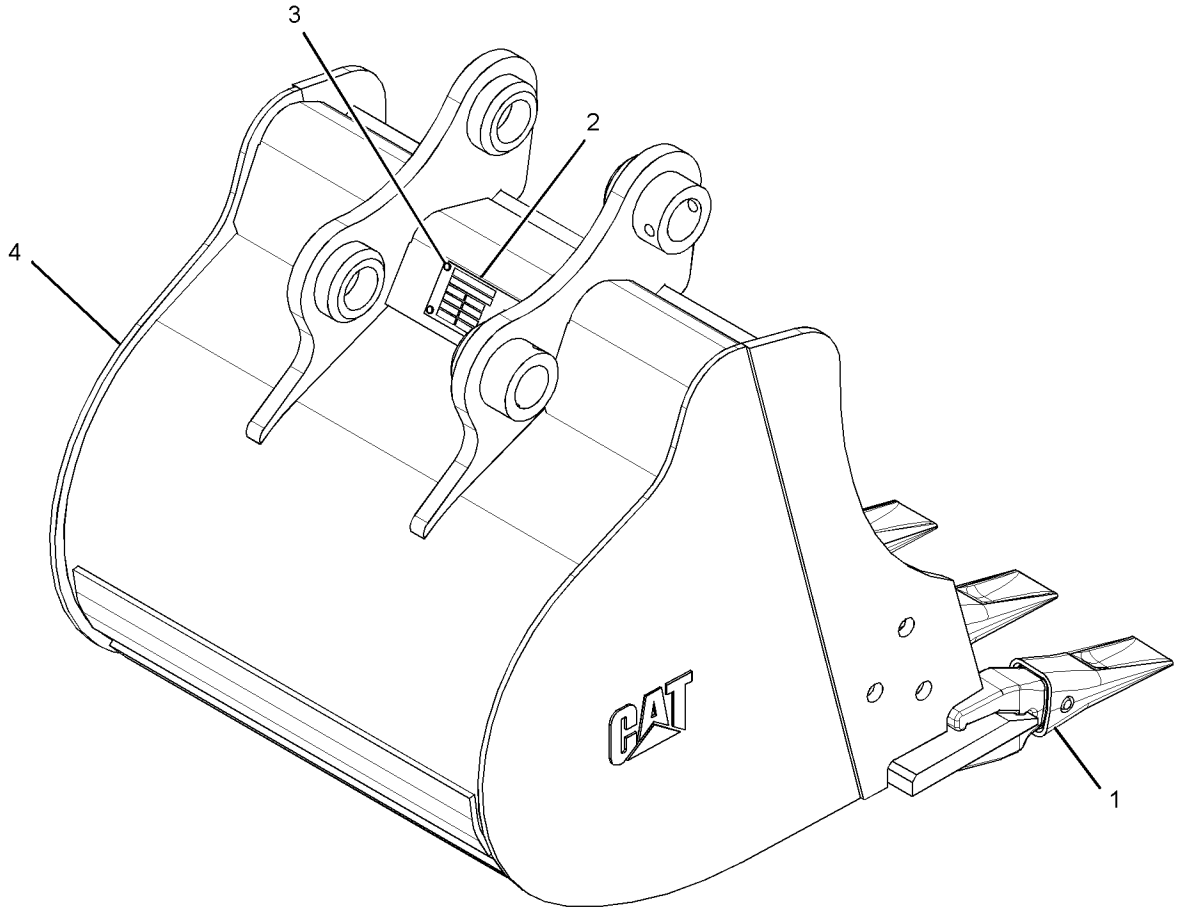

GRAPHIC #1 **<END>** g03403349

303-1329 BUCKET GP-HOE

AN ATTACHMENT

SMCS-6503 **i05353920**

NOTE	REF NO	GRAPHIC REF	PART NUMBER	QTY	PART NAME 1 2 3 4 5 6 (PRODUCT LEVEL)	SEE PAGE
	1	1	*3G-6127*	5	TIP GP-LONG	
					(EACH INCLUDES)	
		1	**1U-3202**	1	TIP-LONG	
		1	**8E-6208**	1	PIN	
		1	**8E-6209**	1	RETAINER AS	
	2	1	**154-2704**	1	PLATE-INSTRUCTION (BUCKET SPECIFICATIONS)	
	3	1	**168-8389**	4	TACK-FASTENER (METAL)	
Y	4	1	*303-1364*	1	BUCKET AS-HOE	411

Y - SEPARATE ILLUSTRATION

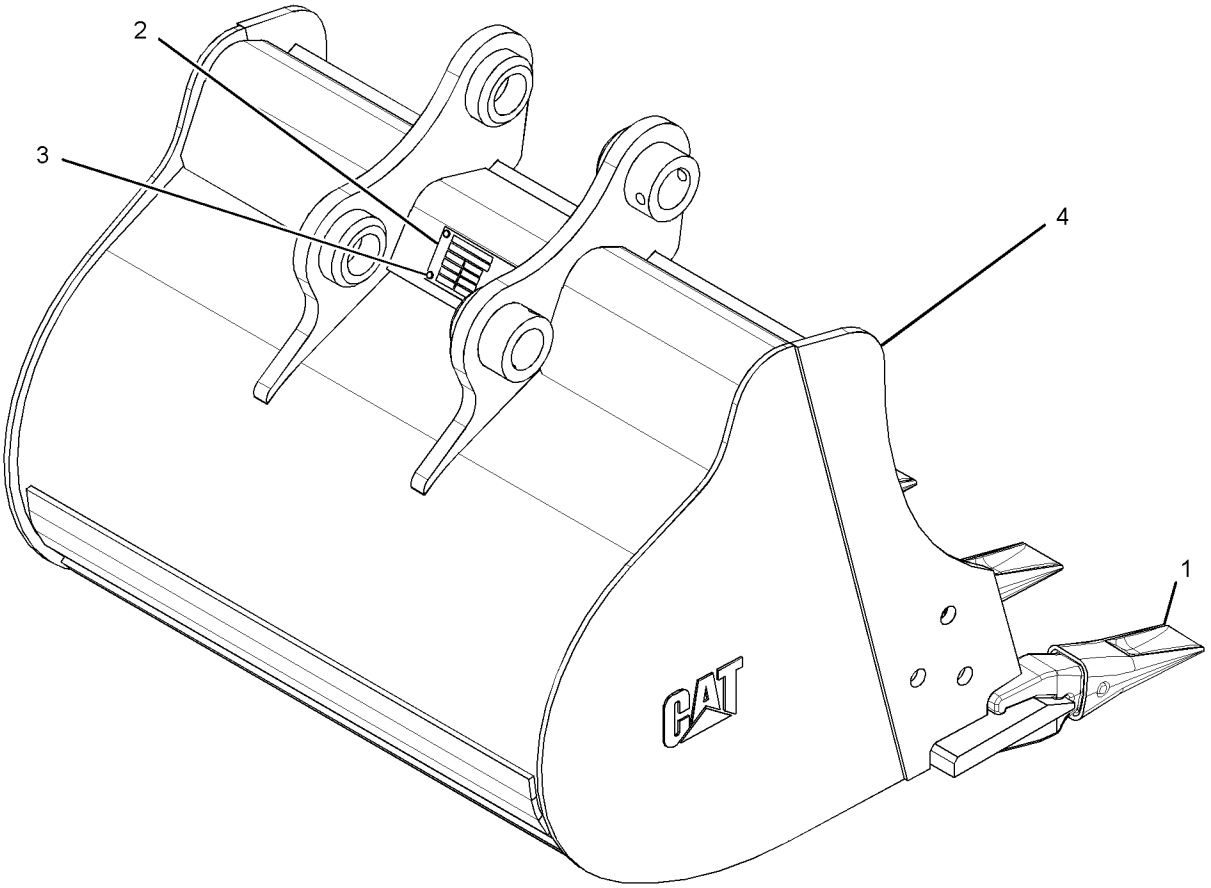

GRAPHIC #1 **<END>** g03403352

386-7524 BUCKET GP-HOE—HEAVY-DUTY
AN ATTACHMENT

SMCS-6503 **i05346192**

NOTE	REF NO	GRAPHIC REF	PART NUMBER	QTY	PART NAME 1 2 3 4 5 6 (PRODUCT LEVEL)	SEE PAGE
	1	1	*3G-6127*	6	TIP GP-LONG	
					(EACH INCLUDES)	
		1	**1U-3202**	1	TIP-LONG	
		1	**8E-6208**	1	PIN	
		1	**8E-6209**	1	RETAINER AS	
	2	1	**154-2704**	1	PLATE-INSTRUCTION (BUCKET SPECIFICATIONS)	
	3	1	**168-8389**	4	TACK-FASTENER (METAL)	
Y	4	1	*386-7523*	1	BUCKET AS-HOE	412

Y - SEPARATE ILLUSTRATION

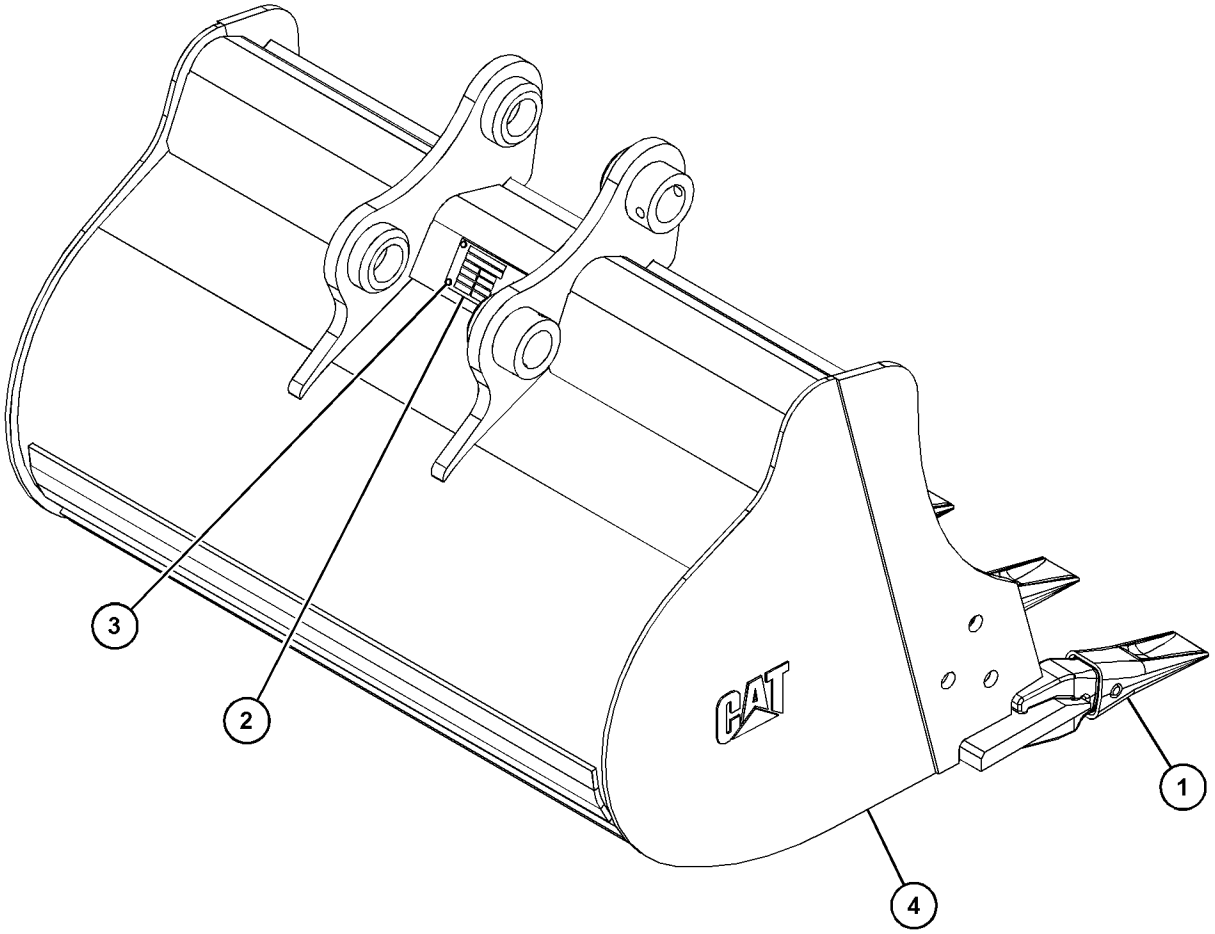

GRAPHIC #1 **<END>** g03403700

361-1094 COUPLER AR-QUICK

AN ATTACHMENT

SMCS-6129 **i04503950**

NOTE	REF NO	GRAPHIC REF	PART NUMBER	QTY	PART NAME 1 2 3 4 5 6 (PRODUCT LEVEL)	SEE PAGE
	1	1	**248-8832**	1	WRENCH	
	2	1	**361-1072**	2	PIN	
Y	3	1	*361-1081*	1	COUPLER GP-QUICK	431
	4	1	**3B-5322**	2	PIN-COTTER	

Y - SEPARATE ILLUSTRATION

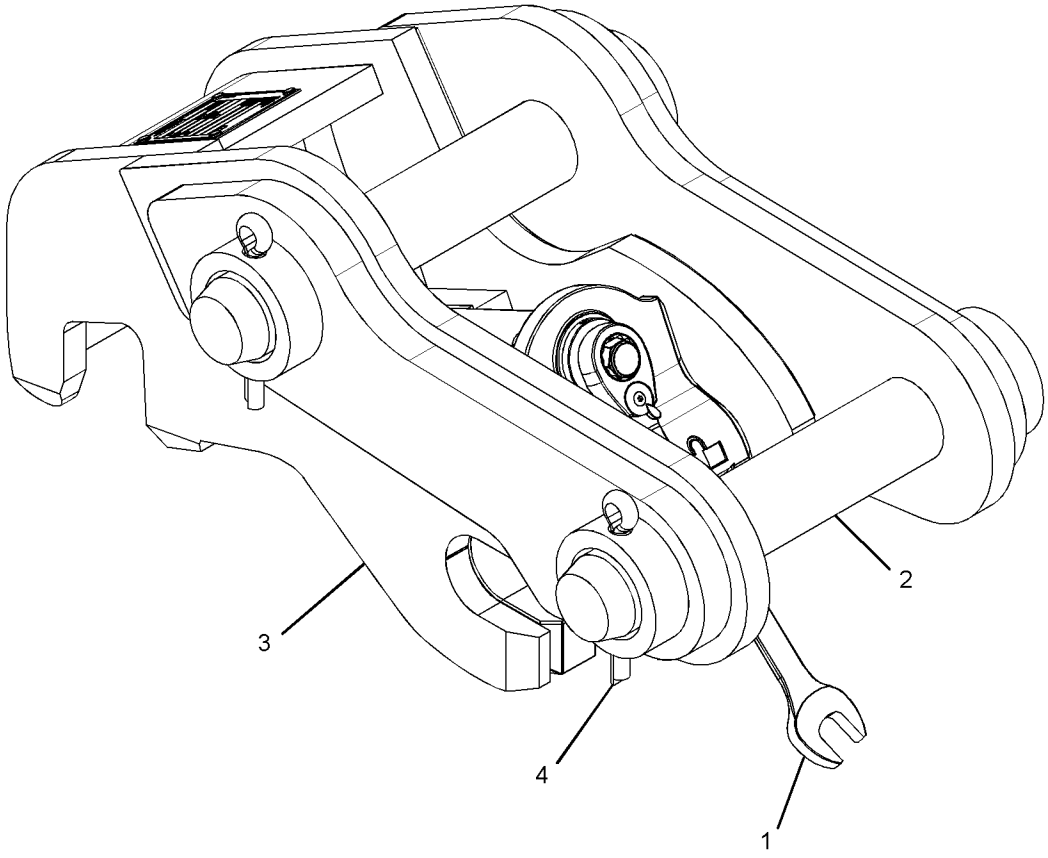

GRAPHIC #1 **<END>** g02705708

361-1095 COUPLER AR-QUICK

FOR USE WITH CONTROL AR-COUPLER, FILM GP
PART OF 441-6279 COUPLER AR-QUICK
AN ATTACHMENT

SMCS-6129 **i04404113**

NOTE	REF NO	GRAPHIC REF	PART NUMBER	QTY	PART NAME 1 2 3 4 5 6 (PRODUCT LEVEL)	SEE PAGE
	1	1	**361-1072**	2	PIN	
Y	2	1	*361-1090*	1	LINES GP-COUPLER	241
Y	3	1	*361-1121*	1	COUPLER GP-QUICK	432
	4	1	**3B-5322**	2	PIN-COTTER	

Y - SEPARATE ILLUSTRATION

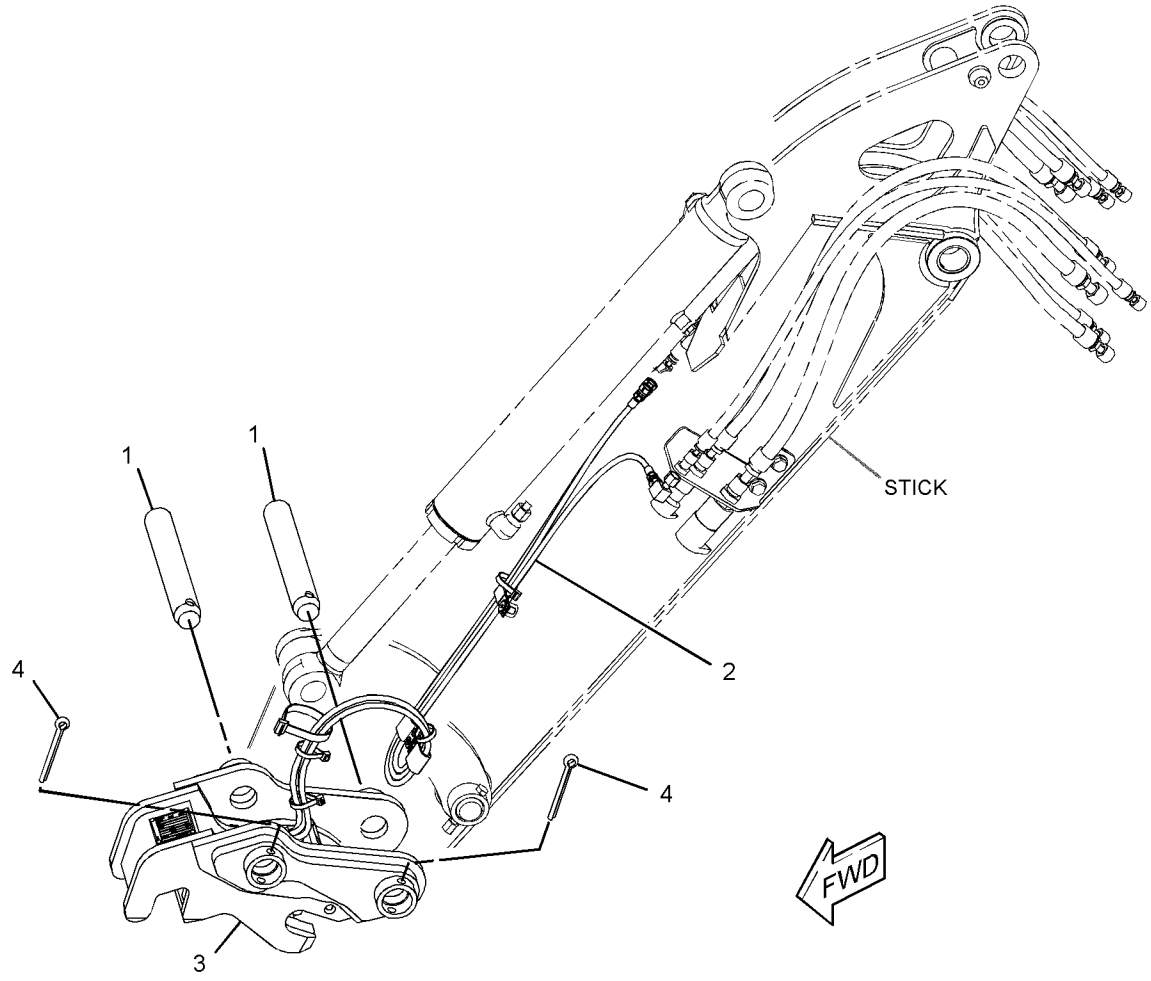

GRAPHIC #1 **<END>** g02919698

441-6279 COUPLER AR-QUICK

AN ATTACHMENT

SMCS-6129 **i05354362**

NOTE	PART NUMBER	QTY	PART NAME 1 2 3 4 5 6 (PRODUCT LEVEL)	SEE PAGE
Y	**361-1095**	1	COUPLER AR-QUICK	429

Y - SEPARATE ILLUSTRATION

<END>

361-1081 COUPLER GP-QUICK

PART OF 361-1094 COUPLER AR-QUICK

AN ATTACHMENT

SMCS-6129 **i05363401**

NOTE	REF NO	GRAPHIC REF	PART NUMBER	QTY	PART NAME 1 2 3 4 5 6 (PRODUCT LEVEL)	SEE PAGE
	1	1	**168-8389**	4	TACK-FASTENER (METAL)	
Y	2	1	*361-1083*	1	LOCK GP-QUICK COUPLER	433
	3	1	**361-1088**	1	SHAFT	
	4	1	**9H-3771**	1	FITTING-GREASE	
	5	1	**361-1210**	1	PLATE-IDENTIFICATION (SERIAL NUMBER)	
	6	1	**361-1069**	1	RETAINER-SPRING	
	7	1	**361-1082**	1	COUPLER AS	
	8	1	**361-1087**	1	LOCK GP-MECHANICAL	

Y - SEPARATE ILLUSTRATION

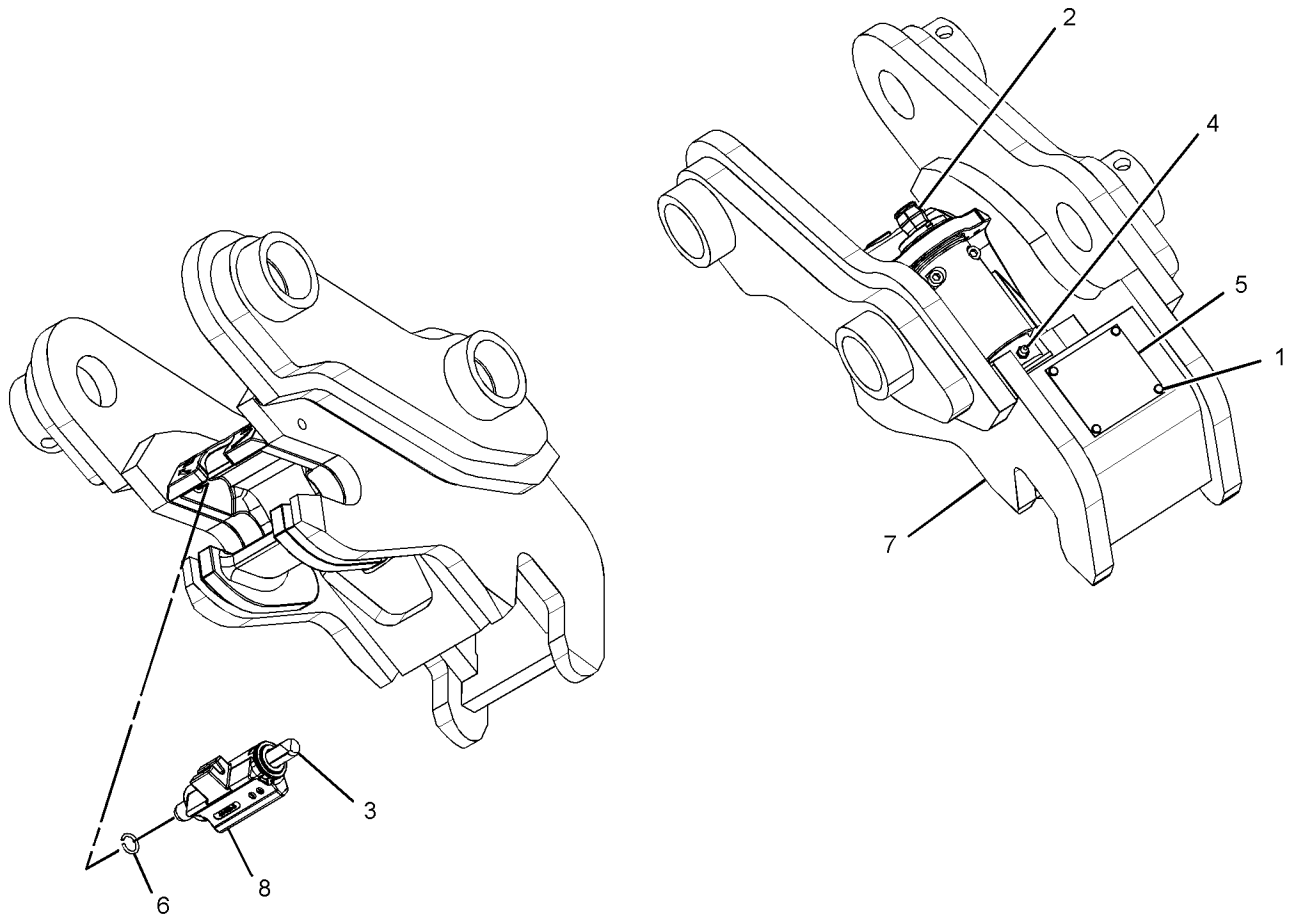

GRAPHIC #1 **<END>** g03403707

361-1121 COUPLER GP-QUICK

PART OF 361-1095 COUPLER AR-QUICK

AN ATTACHMENT

SMCS-6129 **i05411073**

NOTE	REF NO	GRAPHIC REF	PART NUMBER	QTY	PART NAME 1 2 3 4 5 6 (PRODUCT LEVEL)	SEE PAGE
	1	1	**168-8389**	4	TACK-FASTENER (METAL)	
Y	2	1	*361-1123*	1	LOCK GP-QUICK COUPLER	434
	3	1	**361-1209**	1	PLATE-IDENTIFICATION (WORK TOOL)	
	4	1	**9H-3771**	1	FITTING-GREASE	
	5	1	**361-1069**	1	RETAINER-SPRING	
	6	1	**361-1122**	1	COUPLER AS	
	7	1	**361-1157**	1	LOCK GP-MECHANICAL	
	8	1	**361-1134**	1	SHAFT	

Y - SEPARATE ILLUSTRATION

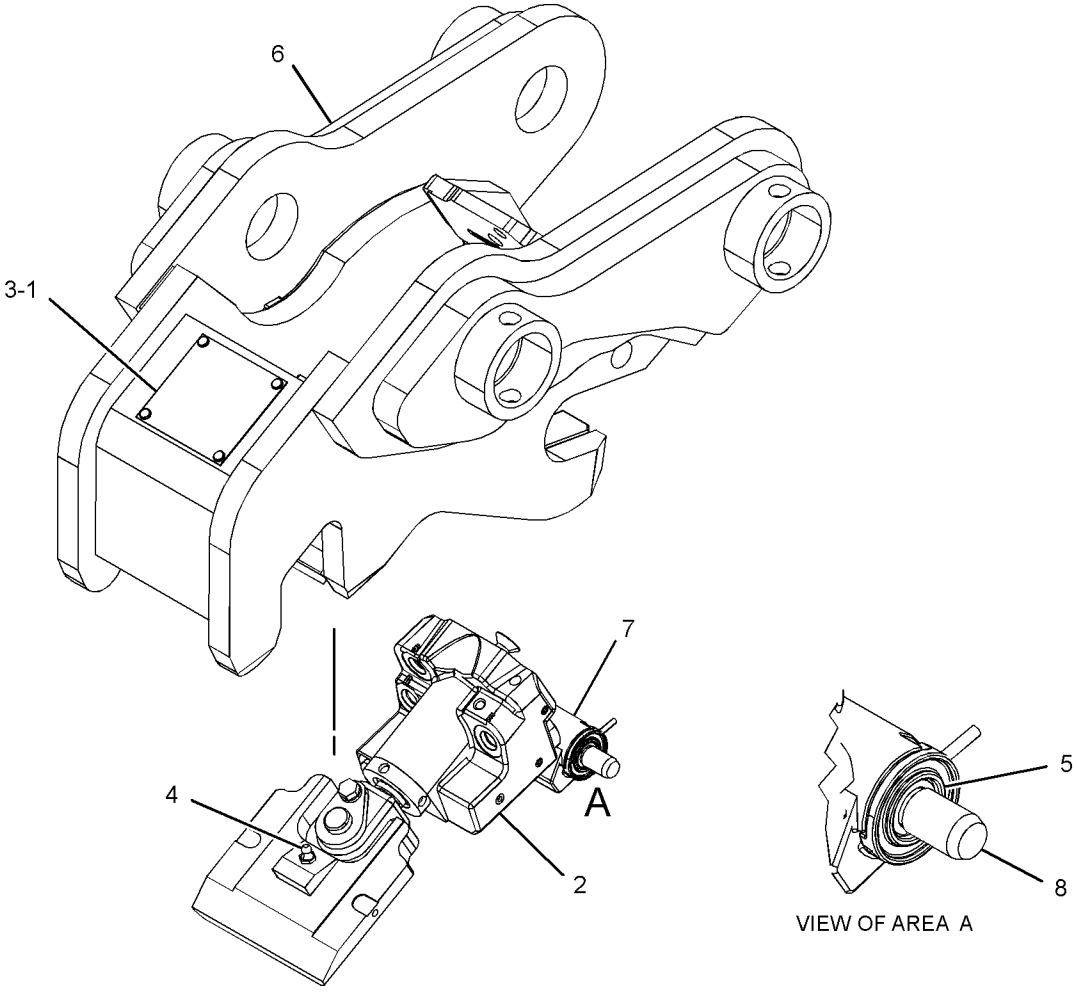

GRAPHIC #1 **<END>** g03418119

361-1083 LOCK GP-QUICK COUPLER

PART OF 361-1081 COUPLER GP-QUICK

AN ATTACHMENT

SMCS-6129 **i04503953**

NOTE	REF NO	GRAPHIC REF	PART NUMBER	QTY	PART NAME 1 2 3 4 5 6 (PRODUCT LEVEL)	SEE PAGE
	1	1	**361-1071**	1	BUSHING	
	2	1	**361-1084**	1	WEDGE AS	
	3	1	**361-1085**	1	SCREW-ADJUSTING	
	4	1	**361-1086**	1	COLLAR-SPLIT	
	5	1	**179-9013**	1	SEAL-O-RING	
	6	1	**7K-0897**	2	WASHER (27.4X44.45X1.47-MM THK)	
M	7	1	**8T-0269**	2	BOLT-SOCKET HEAD (M6X1X20-MM)	

M - METRIC PART

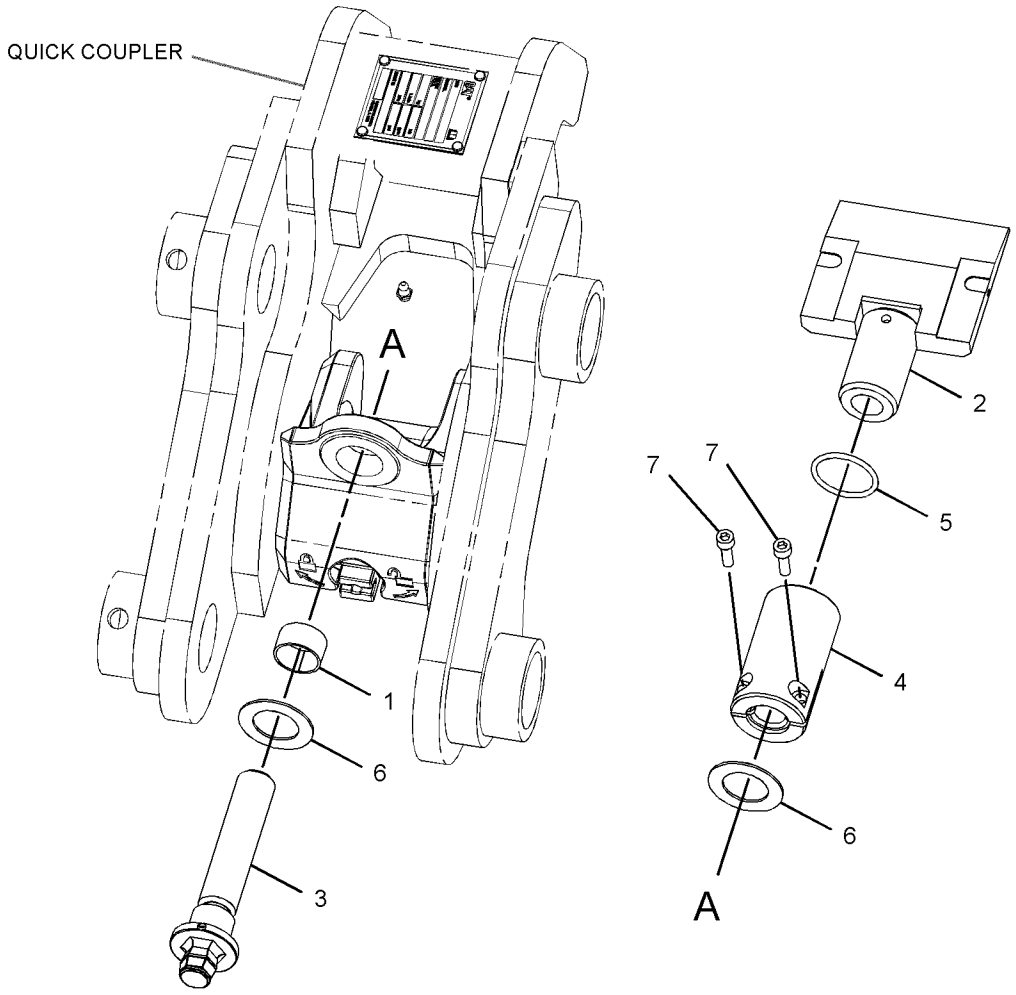

GRAPHIC #1 **<END>** g02706059

361-1123 LOCK GP-QUICK COUPLER

PART OF 361-1121 COUPLER GP-QUICK

AN ATTACHMENT

SMCS-6129 **i04404135**

NOTE	REF NO	GRAPHIC REF	PART NUMBER	QTY	PART NAME 1 2 3 4 5 6 (PRODUCT LEVEL)	SEE PAGE
	1	1	**361-1124**	1	WEDGE AS	
Y	2	1	**361-1125**	1	CYLINDER GP-HYDRAULIC	205
	3	1	**361-1126**	1	PIN AS	
M	4	1	**188-9644**	2	SCREW-FLAT HEAD (M8X1.25X25-MM)	
M	5	1	**5C-9553**	1	BOLT (M6X1X16-MM)	
	6	1	**9X-8256**	1	WASHER (6.6X12X2-MM THK)	

M - METRIC PART
Y - SEPARATE ILLUSTRATION

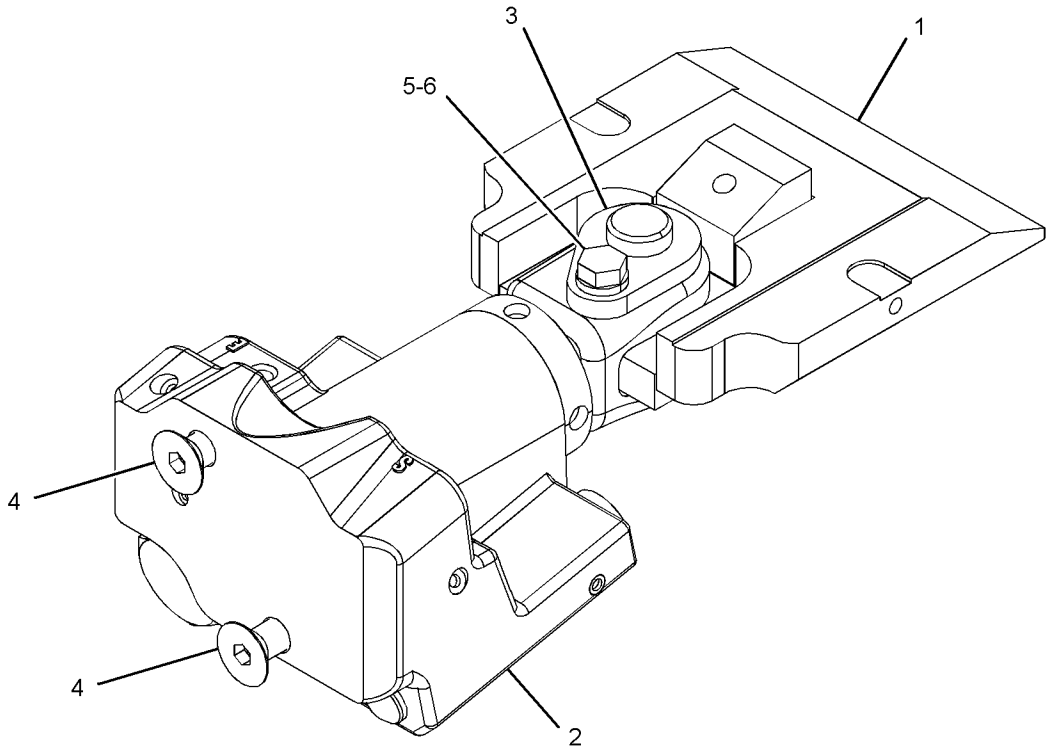

GRAPHIC #1 **<END>** g02913779

154-2638 MOUNTING GP-BUCKET
AN ATTACHMENT

SMCS-6101, 6523 **i02141990**

NOTE	REF NO	GRAPHIC REF	PART NUMBER	QTY	PART NAME 1 2 3 4 5 6 (PRODUCT LEVEL)	SEE PAGE
	1	1	**237-5096**	2	PIN AS	
	2	1	**095-0868**	2	PIN-COTTER	
F			**3B-8489**	2	FITTING-GREASE	

F - NOT SHOWN

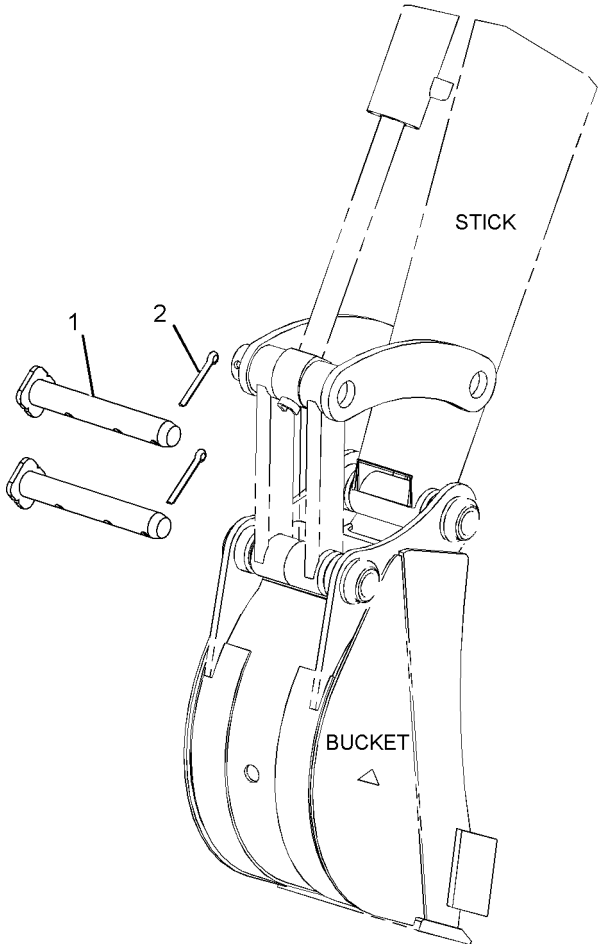

GRAPHIC #1 **<END>** g01088226

220-0858 MOUNTING GP-BUCKET

PART OF 364-1693 MOUNTING GP-BUCKET

AN ATTACHMENT

SMCS-6101, 6523 **i02141989**

NOTE	REF NO	GRAPHIC REF	PART NUMBER	QTY	PART NAME 1 2 3 4 5 6 (PRODUCT LEVEL)	SEE PAGE
	1	1	**228-2856**	2	PIN AS	
	2	1	**095-0868**	2	PIN-COTTER	

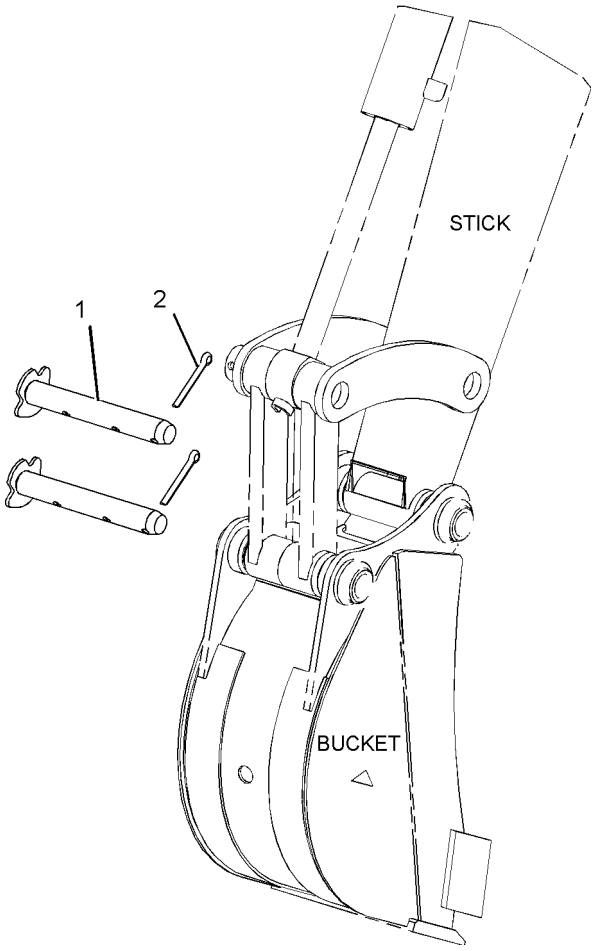

GRAPHIC #1 **<END>** g01087584

364-1693 MOUNTING GP-BUCKET

AN ATTACHMENT

SMCS-6101, 6523 **i04006709**

NOTE	PART NUMBER	QTY	PART NAME 1 2 3 4 5 6 (PRODUCT LEVEL)	SEE PAGE
Y	*220-0858*	1	MOUNTING GP-BUCKET	436

Y - SEPARATE ILLUSTRATION

<END>

309-1917 THUMB GP

AN ATTACHMENT

SMCS-6547 **i05353487**

NOTE	REF NO	GRAPHIC REF	PART NUMBER	QTY	PART NAME 1 2 3 4 5 6 (PRODUCT LEVEL)	SEE PAGE
Y	1	1	**268-8224**	1	CYLINDER GP-HYDRAULIC	204
M	2	1	**8T-4172**	1	BOLT (M10X1.5X80-MM)	
M	3	1	**8T-4133**	2	NUT (M10X1.5-THD)	
	4	1	**309-6024**	1	FRAME AS	
	4A	1	**204-4961**	2	BUSHING	
	4B	1	**161-4130**	2	PLATE-IDENTIFICATION (CAT)	
Y	5	1	*359-6059*	1	LINES GP-CONNECTING (RH)	239
Y	6	1	*369-3693*	1	LINES GP-CONNECTING (LH)	240
	7	1	**162-7120**	4	PIN	
	8	1	**204-4976**	3	SPACER (42X90X5-MM THK)	
	9	1	**267-9485**	2	PIN	
	10	1	**280-8984**	1	PIN	
	11	1	**312-5694**	1	SETSCREW (1/4-20X0.25-IN)	
	12	1	**3B-8489**	2	FITTING-GREASE	
F			**294-0973**	1	TOOL	

F - NOT SHOWN
M - METRIC PART
Y - SEPARATE ILLUSTRATION

309-1917 **THUMB GP (*contd.*)** **i05353487**

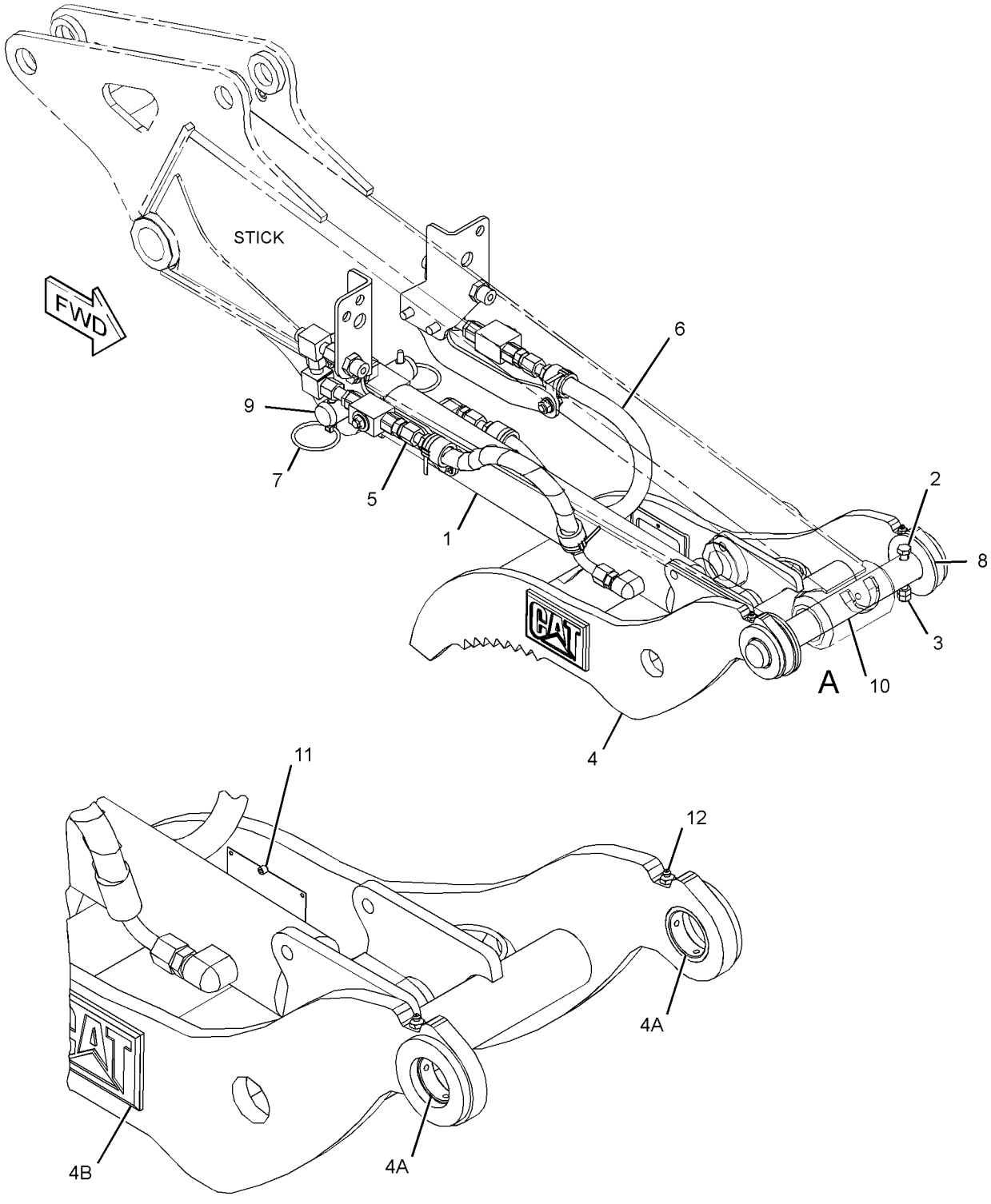

VIEW OF AREA A
(PARTS REMOVED FOR CLARITY)

GRAPHIC #1 **<END>** g03400793

309-1938 THUMB GP

AN ATTACHMENT

SMCS-6547 **i05353488**

NOTE	REF NO	GRAPHIC REF	PART NUMBER	QTY	PART NAME 1 2 3 4 5 6 (PRODUCT LEVEL)	SEE PAGE
	1	1	**204-4976**	3	SPACER (42X90X5-MM THK)	
	2	1	**267-9485**	2	PIN	
Y	3	1	**268-8224**	1	CYLINDER GP-HYDRAULIC	204
M	4	1	**8T-4172**	1	BOLT (M10X1.5X80-MM)	
	5	1	**280-8984**	1	PIN	
M	6	1	**8T-4133**	2	NUT (M10X1.5-THD)	
	7	1	**309-6778**	1	FRAME AS	
	7A	1	**204-4961**	2	BUSHING	
Y	8	1	*359-6059*	1	LINES GP-CONNECTING (RH)	239
Y	9	1	*369-3693*	1	LINES GP-CONNECTING (LH)	240
	10	1	**162-7120**	4	PIN	
	11	1	**312-5694**	1	SETSCREW (1/4-20X0.25-IN)	
	12	1	**3B-8489**	2	FITTING-GREASE	
F			**294-0973**	1	TOOL	

F - NOT SHOWN
M - METRIC PART
Y - SEPARATE ILLUSTRATION

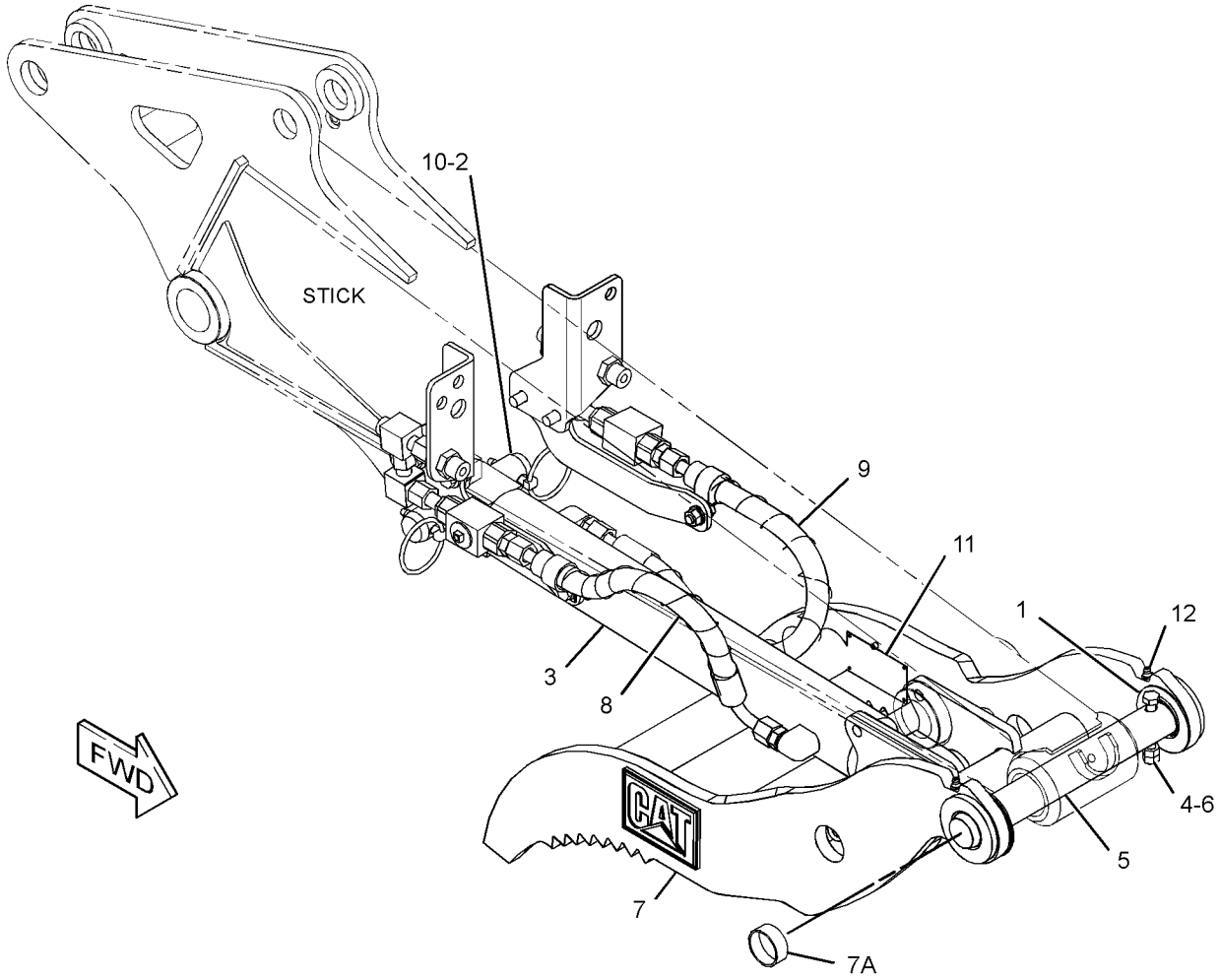

GRAPHIC #1 **<END>** g03407157

282-9307 AIR CONDITIONER & MOUNTING GP

PART OF 377-5876 AIR CONDITIONER GP

AN ATTACHMENT

SMCS-7320 **i05437185**

NOTE	REF NO	GRAPHIC REF	PART NUMBER	QTY	PART NAME 1 2 3 4 5 6 (PRODUCT LEVEL)	SEE PAGE
	1	1	**3S-2093**	1	STRAP-CABLE	
	2	1	**258-6257**	1	TUBE	
Y	3	1	**273-1445**	1	AIR CONDITIONER GP	442
	4	1	**278-7613**	1	PANEL AS-CONTROL (BLOWER, TEMPERATURE)	
	5	1	**278-7614**	1	CABLE AS	
	6	1	**278-7615**	1	CABLE AS	
	7	1	**278-8557**	1	HARNESS AS-HEATER & AIR COND (CAB)	
	8	1	**301-6875**	6	SPACER (10X16X9.5-MM THK)	
	9	1	**095-0912**	1	CLIP	
	10	1	**7X-0579**	6	WASHER-HARD (8.8X25.5X2-MM THK)	
M	11	1	**7Y-3173**	2	SCREW-BUTTON HEAD (M4X0.7X12-MM)	
M	12	1	**8T-4171**	1	BOLT (M6X1X12-MM)	
M	13	1	**8T-4908**	6	BOLT (M8X1.25X25-MM)	
	14	1	**9X-8256**	1	WASHER (6.6X12X2-MM THK)	

M - METRIC PART
Y - SEPARATE ILLUSTRATION

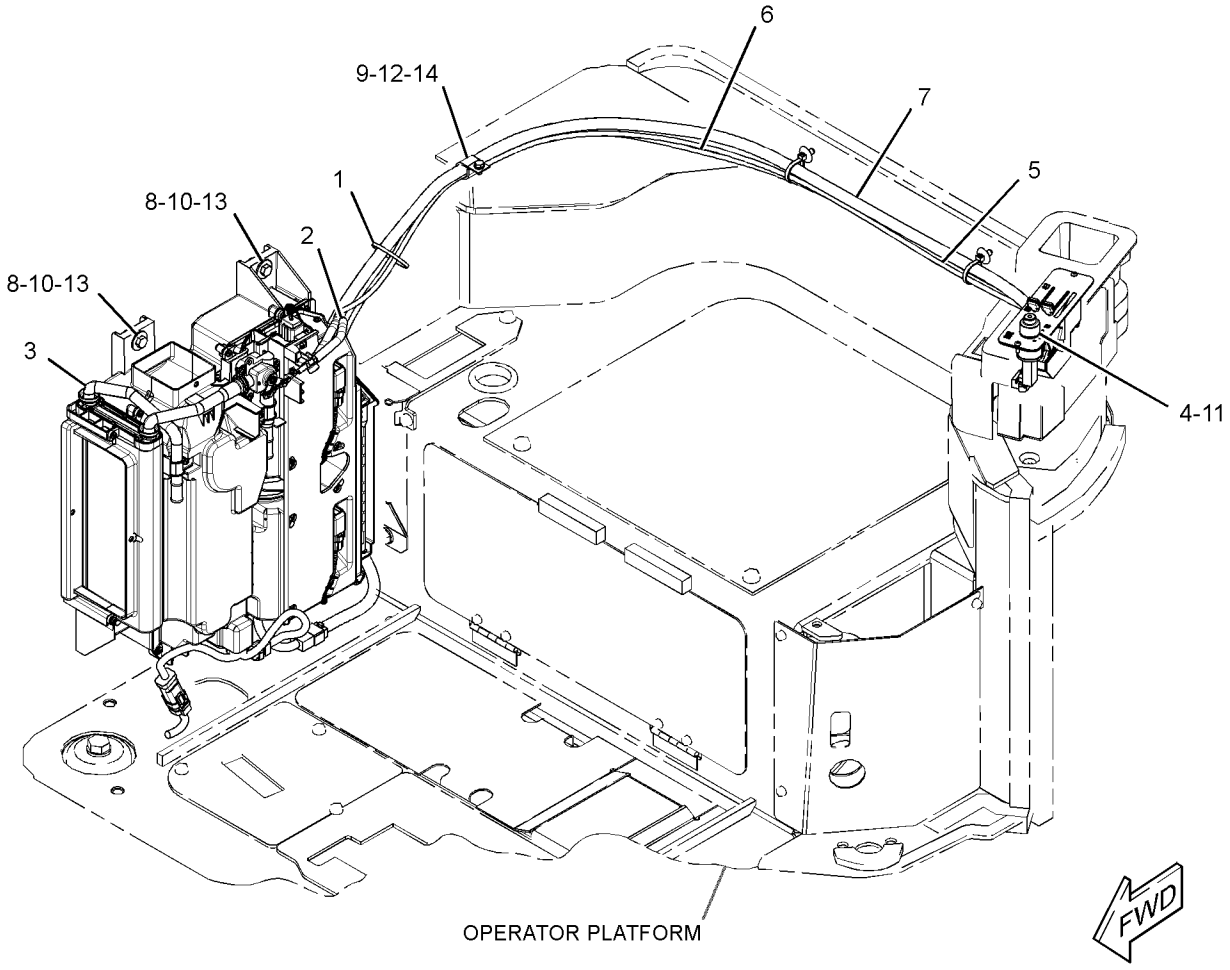

GRAPHIC #1 **<END>** g02168853

273-1445 AIR CONDITIONER GP

PART OF 282-9307 AIR CONDITIONER & MOUNTING GP

AN ATTACHMENT

SMCS-7320 **i03967576**

NOTE	REF NO	GRAPHIC REF	PART NUMBER	QTY	PART NAME 1 2 3 4 5 6 (PRODUCT LEVEL)	SEE PAGE
	1	1	**296-2602**	1	MOTOR AS-BLOWER	
	3	1	**296-2604**	1	FAN	
	6	1	**296-2605**	1	CORE AS-HEATER	
	7	1	**296-2620**	1	RELAY AS (BLOWER MOTOR)	
	9	1	**296-2607**	1	RESISTOR	
	10	1	**296-2608**	1	DOOR AS	
	11	1	**296-2621**	1	HARNESS AS-HEATER & AIR COND	
	13	1	**296-2611**	1	LEVER	
	14	1	**296-2612**	2	CLAMP	
	15	1	**185-8300**	41	SCREW-TAPPING	
	16	1	**296-2615**	2	NUT-FLANGE (M5X0.8-THD)	
	17	1	**296-2616**	2	WASHER	
	18	1	**296-2617**	2	SEAL	
	19	1	**296-2614**	2	LOCK	
	21	1	**336-9693**	1	CASE	
	22	1	**336-9696**	1	CASE-AIR CONDITIONER	
	23	1	**336-9697**	1	CASE-AIR CONDITIONER	
F			**296-2603**	1	FAN	
F			**296-2618**	1	COIL GP-EVAPORATOR	
			296-2622	1	VALVE	
F			**296-2619**	1	SENSOR-TEMPERATURE (REFRIGERANT)	
F			**298-4948**	2	RELAY AS (BLOWER FAN)	
F			**284-5686**	1	FILTER ELEMENT-CAB AIR	
F			**245-7819**	2	CLIP	

F - NOT SHOWN

273-1445 **AIR CONDITIONER GP (*contd.*)** **i03967576**

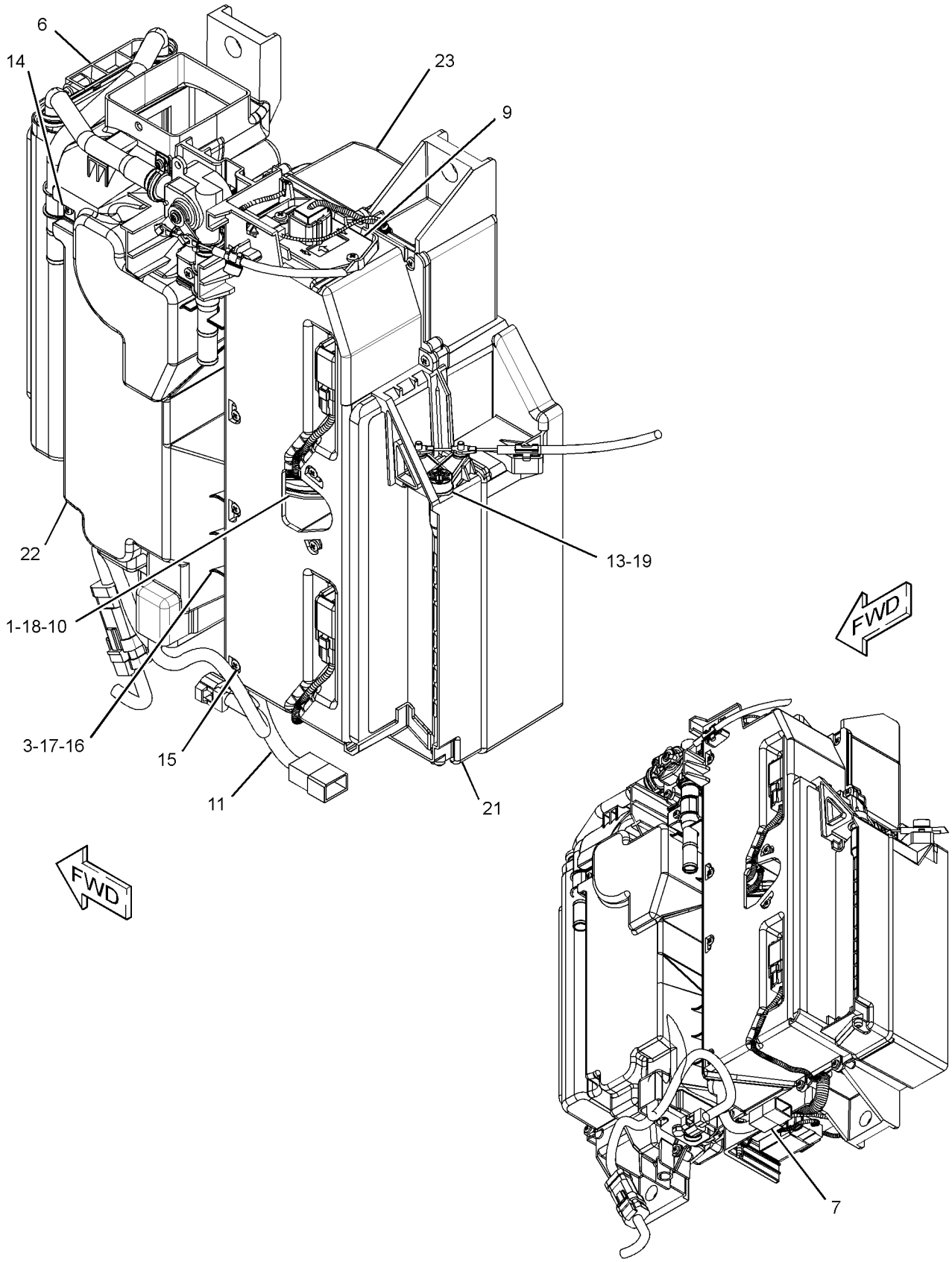

GRAPHIC #1 **<END>** g01945185

377-5876 AIR CONDITIONER GP—WITH AIR DUCT

PART OF 376-6691, 383-5924 CAB AR

AN ATTACHMENT

SMCS-7320 **i04565446**

NOTE	PART NUMBER	QTY	PART NAME 1 2 3 4 5 6 (PRODUCT LEVEL)	SEE PAGE
Y	*282-9307*	1	AIR CONDITIONER & MOUNTING GP	441
Y	*377-5865*	1	DUCT GP-CAB AIR	497

Y - SEPARATE ILLUSTRATION

<END>

376-6691 CAB AR—WITH AIR CONDITIONER

AN ATTACHMENT

SMCS-7301 **i05384928**

NOTE	PART NUMBER	QTY	PART NAME 1 2 3 4 5 6 (PRODUCT LEVEL)	SEE PAGE
Y	*377-5876*	1	AIR CONDITIONER GP (WITH AIR DUCT)	444
Y	*370-5343*	1	BATTERY & WIRING GP (CAB)	72
Y	*377-5107*	1	CAB GP	447
Y	*378-1272*	1	COMPRESSOR GP-REFRIGERANT	472
Y	*380-6389*	1	CONDENSER & MTG GP-REFRIGERANT	473
Y	*367-0950*	1	COVER GP-CAB (TOP)	494
Y	*380-6393*	1	GUARD GP-FAN	22
Y	*379-4711*	1	LINES GP-AIR CONDITIONER	508
Y	*378-2136*	1	MOUNTING GP-ENGINE	26
Y	*377-9714*	1	PLATE & FILM GP (CAB)	568
Y	*379-3625*	1	PLATFORM GP-OPERATOR (CAB)	530
Y	*421-2718*	1	VALVE & MTG GP-PILOT (CAB)	319
			S/N: TTN908-UP	
Y	*379-3626*	1	WASHER GP-WINDOW	541
Y	*370-5349*	1	WIRING GP-CONSOLE (CAB)	102
Y	*370-5348*	1	WIRING GP-ENGINE (REFRIGERANT COMPRESSOR)	116
	384-5671	1	FLOOR MAT	
	377-5934	1	FLOOR MAT	

Y - SEPARATE ILLUSTRATION

<END>

OPERATOR STATION

376-6695 CAB AR—WITH HEATER

AN ATTACHMENT

SMCS-7301 **i05384932**

NOTE	PART NUMBER	QTY	PART NAME 1 2 3 4 5 6 (PRODUCT LEVEL)	SEE PAGE
Y	*370-5343*	1	BATTERY & WIRING GP (CAB)	72
Y	*377-5107*	1	CAB GP	447
Y	*367-0950*	1	COVER GP-CAB (TOP)	494
Y	*377-9715*	1	FILM GP (CAB HEATER)	550
Y	*380-6393*	1	GUARD GP-FAN	22
Y	*378-1293*	1	HEATER AR-CAB (WITH AIR DUCT)	503
Y	*379-4712*	1	LINES GP-HEATER	512
Y	*379-0801*	1	MOUNTING GP-ENGINE	28
Y	*379-3625*	1	PLATFORM GP-OPERATOR (CAB)	530
Y	*421-2718*	1	VALVE & MTG GP-PILOT (CAB)	319
			S/N: TTN908-UP	
Y	*379-3626*	1	WASHER GP-WINDOW	541
Y	*370-5349*	1	WIRING GP-CONSOLE (CAB)	102
	384-5671	1	FLOOR MAT	
	377-5934	1	FLOOR MAT	

Y - SEPARATE ILLUSTRATION

<END>

383-5924 CAB AR—WITH AIR CONDITIONER

AN ATTACHMENT

SMCS-7301 **i05384935**

NOTE	PART NUMBER	QTY	PART NAME 1 2 3 4 5 6 (PRODUCT LEVEL)	SEE PAGE
Y	*377-5876*	1	AIR CONDITIONER GP (WITH AIR DUCT)	444
Y	*370-5343*	1	BATTERY & WIRING GP (CAB)	72
Y	*389-8690*	1	CAB GP	455
Y	*378-1272*	1	COMPRESSOR GP-REFRIGERANT	472
Y	*380-6389*	1	CONDENSER & MTG GP-REFRIGERANT	473
Y	*367-0950*	1	COVER GP-CAB (TOP)	494
Y	*389-8776*	1	FILM GP (FRONT GUARD)	554
Y	*380-6393*	1	GUARD GP-FAN	22
Y	*379-4711*	1	LINES GP-AIR CONDITIONER	508
Y	*334-1186*	1	MIRROR GP-REAR VIEW (CAB, WITH FRONT GUARD)	519
Y	*378-2136*	1	MOUNTING GP-ENGINE	26
Y	*377-9714*	1	PLATE & FILM GP (CAB)	568
Y	*379-3625*	1	PLATFORM GP-OPERATOR (CAB)	530
Y	*421-2718*	1	VALVE & MTG GP-PILOT	319
			S/N: TTN908-UP	
Y	*379-3626*	1	WASHER GP-WINDOW	541
Y	*370-5349*	1	WIRING GP-CONSOLE (CAB)	102
Y	*370-5348*	1	WIRING GP-ENGINE (REFRIGERANT COMPRESSOR)	116
	377-5934	1	FLOOR MAT	
	384-5671	1	FLOOR MAT	

Y - SEPARATE ILLUSTRATION

<END>

OPERATOR STATION

383-5925 CAB AR—WITH HEATER

AN ATTACHMENT

SMCS-7301 **i05384938**

NOTE	PART NUMBER	QTY	PART NAME 1 2 3 4 5 6 (PRODUCT LEVEL)	SEE PAGE
Y	*370-5343*	1	BATTERY & WIRING GP (CAB)	72
Y	*389-8690*	1	CAB GP	455
Y	*367-0950*	1	COVER GP-CAB (TOP)	494
Y	*377-9715*	1	FILM GP (CAB HEATER)	550
Y	*389-8776*	1	FILM GP (FRONT GUARD)	554
Y	*380-6393*	1	GUARD GP-FAN	22
Y	*378-1293*	1	HEATER AR-CAB	503
Y	*379-4712*	1	LINES GP-HEATER	512
Y	*334-1186*	1	MIRROR GP-REAR VIEW (CAB, WITH FRONT GUARD)	519
Y	*379-0801*	1	MOUNTING GP-ENGINE	28
Y	*379-3625*	1	PLATFORM GP-OPERATOR (CAB)	530
Y	*421-2718*	1	VALVE & MTG GP-PILOT	319
			S/N: TTN908-UP	
Y	*379-3626*	1	WASHER GP-WINDOW	541
Y	*370-5349*	1	WIRING GP-CONSOLE (CAB)	102
	377-5934	1	FLOOR MAT	
	384-5671	1	FLOOR MAT	

Y - SEPARATE ILLUSTRATION

<END>

377-5107 CAB GP

S/N: TTN1-604
PART OF 376-6691, 376-6695 CAB AR
AN ATTACHMENT

SMCS-7301 **i04637990**

NOTE	REF NO	GRAPHIC REF	PART NUMBER	QTY	PART NAME 1 2 3 4 5 6 (PRODUCT LEVEL)	SEE PAGE
	1	1	**178-7539**	1	RECEPTACLE AS (POWER SUPPLY)	
	2	1	**276-9997**	1	SEAL	
	3	1	**282-9679**	5	SEAL	
	4	1	**283-7333**	1	INSULATION	
	5	1	**283-7365**	1	INSULATION	
Y	6	1	**377-5108**	1	CAB GP	453
	7	1	**379-1946**	1	COVER	
	8	1	**379-2026**	1	HOLDER	
	9	1	**379-2027**	1	BRACKET AS	
M		1	**6V-9632**	2	NUT-WELD (M6X1-THD)	
M		1	**9X-2032**	2	NUT-WELD (M4X0.7-THD)	
		1	**379-2028**	1	BRACKET	
	10	1	**387-4695**	1	INSULATION	
M	11	1	**8T-4176**	3	BOLT (M12X1.75X90-MM)	
M	12	1	**8T-4199**	2	BOLT (M8X1.25X12-MM)	
M	13	1	**8T-4200**	2	BOLT (M8X1.25X16-MM)	
	14	1	**8T-4223**	12	WASHER-HARD (13.5X25.5X3-MM THK)	
	15	1	**8T-4224**	4	WASHER-HARD (8.8X16X2-MM THK)	
M	16	1	**8T-4956**	9	BOLT (M12X1.75X35-MM)	
M	17	1	**9X-2042**	2	SCREW-TRUSS HEAD (M6X1X12-MM)	
E	18	1	**7X-7877**		STRIP-EDGING (5-CM EACH)	

E - ORDER BY THE CENTIMETER
M - METRIC PART
Y - SEPARATE ILLUSTRATION

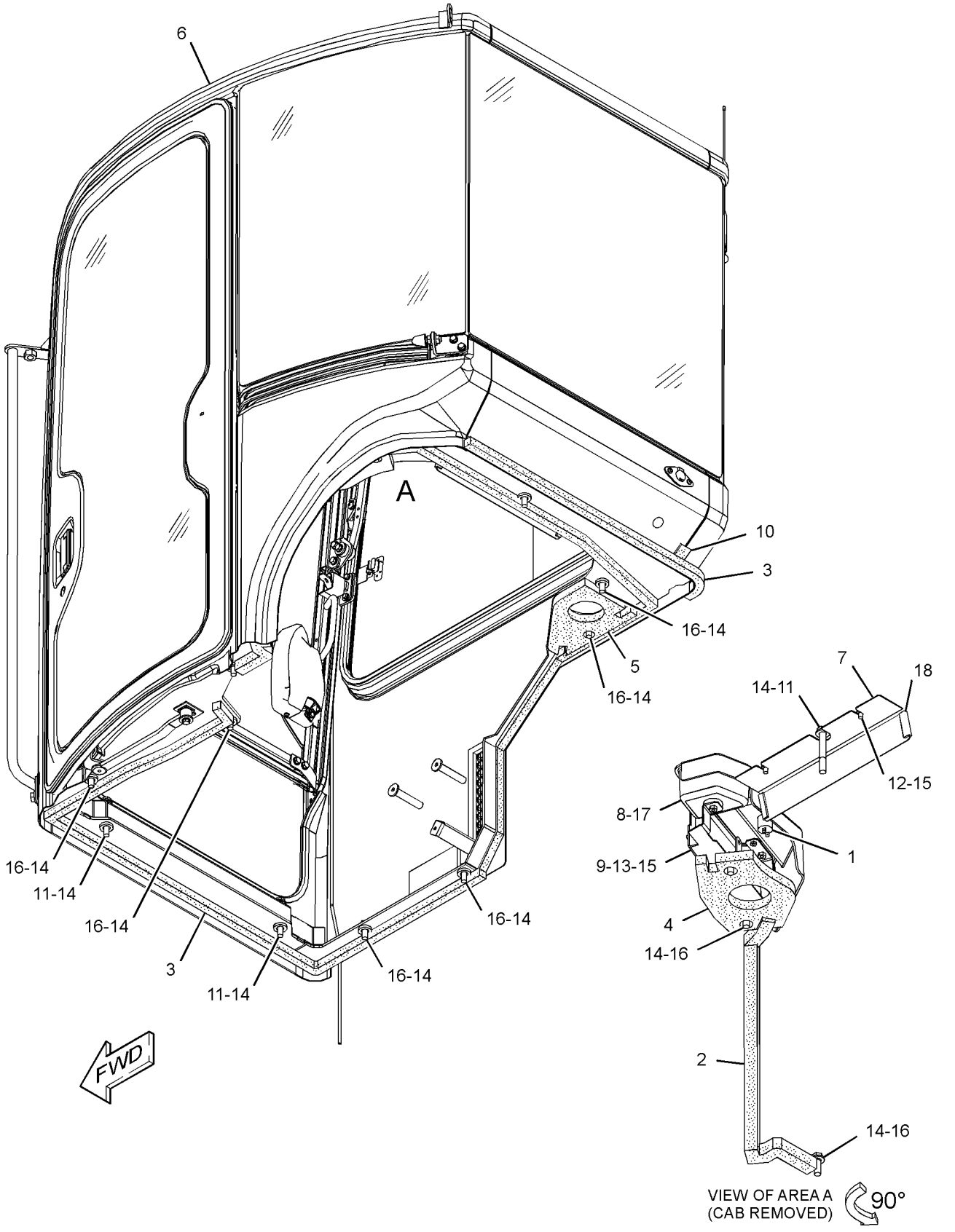

GRAPHIC #1 **<END>** g02794908

377-5107 CAB GP

S/N: TTN605-750
PART OF 376-6691, 376-6695 CAB AR
AN ATTACHMENT

SMCS-7301 **i05355900**

NOTE	REF NO	GRAPHIC REF	PART NUMBER	QTY	PART NAME 1 2 3 4 5 6 (PRODUCT LEVEL)	SEE PAGE
	1	1	**178-7539**	1	RECEPTACLE AS (POWER SUPPLY)	
	2	1	**276-9997**	1	SEAL	
	3	1	**282-9679**	5	SEAL	
	4	1	**283-7333**	1	INSULATION	
	5	1	**283-7365**	1	INSULATION	
CY	6	1	**415-6803**	1	CAB GP	460
	7	1	**379-1946**	1	COVER	
	8	1	**379-2026**	1	HOLDER	
	9	1	**379-2027**	1	BRACKET AS	
M		1	**6V-9632**	2	NUT-WELD (M6X1-THD)	
M		1	**9X-2032**	2	NUT-WELD (M4X0.7-THD)	
		1	**379-2028**	1	BRACKET	
	10	1	**387-4695**	1	INSULATION	
M	11	1	**8T-4176**	3	BOLT (M12X1.75X90-MM)	
M	12	1	**8T-4199**	2	BOLT (M8X1.25X12-MM)	
M	13	1	**8T-4200**	2	BOLT (M8X1.25X16-MM)	
	14	1	**8T-4223**	12	WASHER-HARD (13.5X25.5X3-MM THK)	
	15	1	**8T-4224**	4	WASHER-HARD (8.8X16X2-MM THK)	
M	16	1	**8T-4956**	9	BOLT (M12X1.75X35-MM)	
M	17	1	**9X-2042**	2	SCREW-TRUSS HEAD (M6X1X12-MM)	
E	18	1	**7X-7877**		STRIP-EDGE (5-CM EACH)	

C - CHANGE FROM PREVIOUS TYPE
E - ORDER BY THE CENTIMETER
M - METRIC PART
Y - SEPARATE ILLUSTRATION

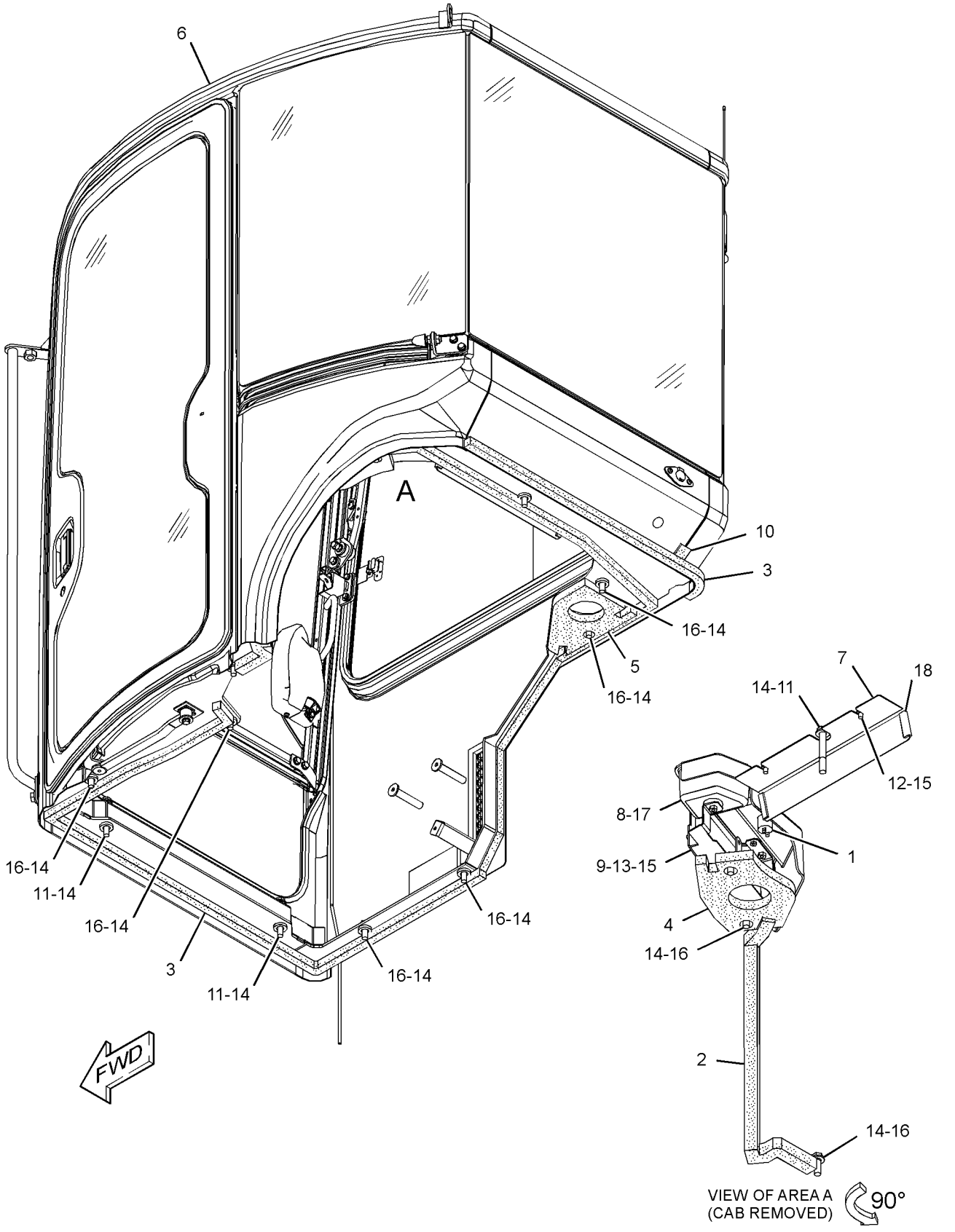

GRAPHIC #1 **<END>** g02794908

377-5107 CAB GP

S/N: TTN751-UP
PART OF 376-6691, 376-6695 CAB AR
AN ATTACHMENT

SMCS-7301 **i05378256**

NOTE	REF NO	GRAPHIC REF	PART NUMBER	QTY	PART NAME 1 2 3 4 5 6 (PRODUCT LEVEL)	SEE PAGE
	1	1	**178-7539**	1	RECEPTACLE AS (POWER SUPPLY)	
	2	1	**276-9997**	1	SEAL	
	3	1	**282-9679**	5	SEAL	
	4	1	**283-7333**	1	INSULATION	
	5	1	**283-7365**	1	INSULATION	
CY	6	1	**419-1237**	1	CAB GP	467
	7	1	**379-1946**	1	COVER	
	8	1	**379-2026**	1	HOLDER	
	9	1	**379-2027**	1	BRACKET AS	
M		1	**6V-9632**	2	NUT-WELD (M6X1-THD)	
M		1	**9X-2032**	2	NUT-WELD (M4X0.7-THD)	
		1	**379-2028**	1	BRACKET	
	10	1	**387-4695**	1	INSULATION	
M	11	1	**8T-4176**	3	BOLT (M12X1.75X90-MM)	
M	12	1	**8T-4199**	2	BOLT (M8X1.25X12-MM)	
M	13	1	**8T-4200**	2	BOLT (M8X1.25X16-MM)	
	14	1	**8T-4223**	12	WASHER-HARD (13.5X25.5X3-MM THK)	
	15	1	**8T-4224**	4	WASHER-HARD (8.8X16X2-MM THK)	
M	16	1	**8T-4956**	9	BOLT (M12X1.75X35-MM)	
M	17	1	**9X-2042**	2	SCREW-TRUSS HEAD (M6X1X12-MM)	
E	18	1	**7X-7877**		STRIP-EDGE (5-CM EACH)	

C - CHANGE FROM PREVIOUS TYPE
E - ORDER BY THE CENTIMETER
M - METRIC PART
Y - SEPARATE ILLUSTRATION

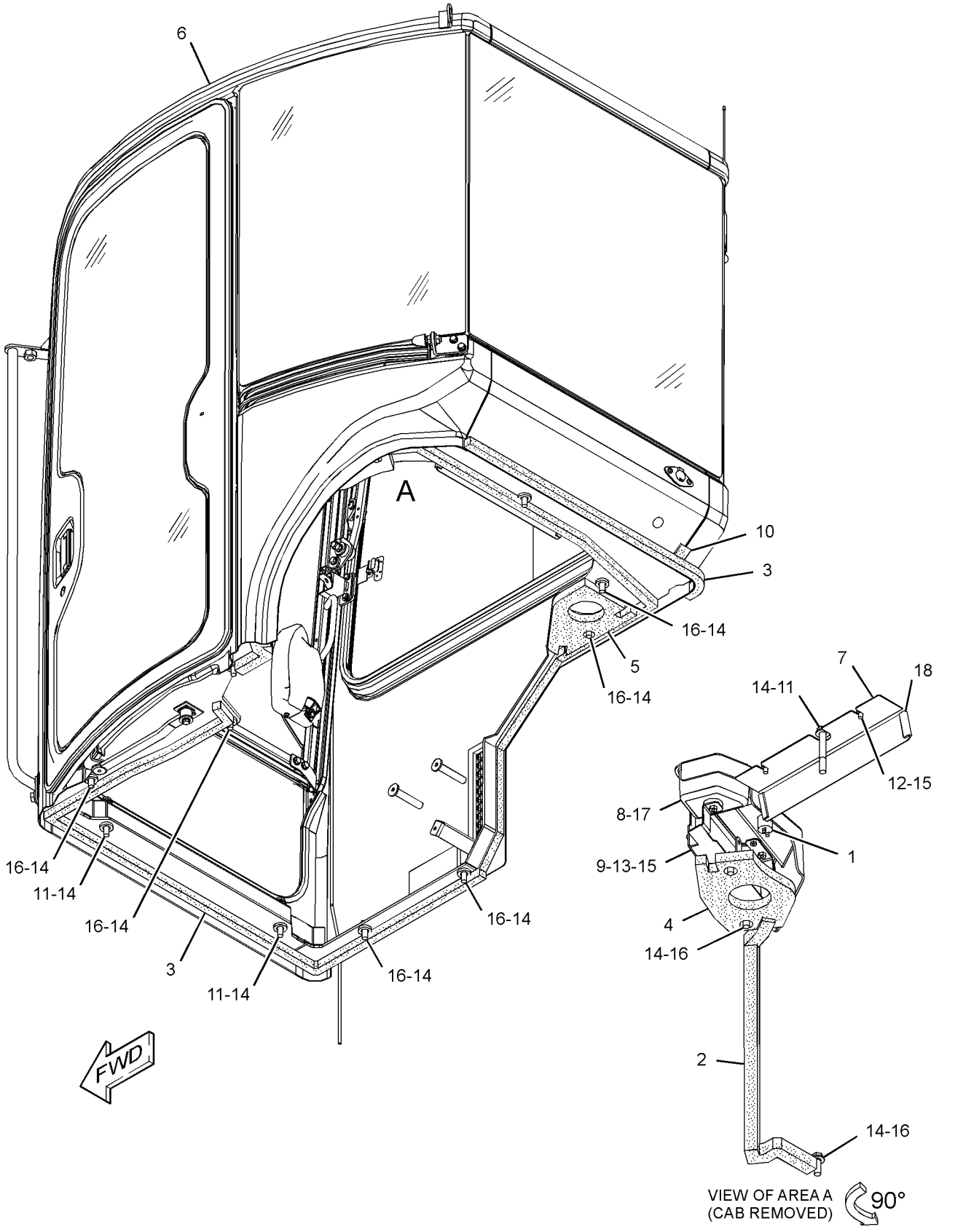

GRAPHIC #1 **<END>** g02794908

OPERATOR STATION

377-5108 CAB GP

S/N: TTN1-604
PART OF 377-5107, 389-8701 CAB GP
AN ATTACHMENT

SMCS-7301 **i05437187**

NOTE	PART NUMBER	QTY	PART NAME 1 2 3 4 5 6 (PRODUCT LEVEL)	SEE PAGE
Y	*281-1195*	1	DOOR GP-CAB	495
Y	*281-1186*	1	LINK GP-WINDOW	514
Y	*280-0421*	1	WINDOW GP-CAB	542
Y	**281-4451**	1	WINDOW GP-SLIDING	544
	324-5828	1	ANTENNA AS	
	280-8625	1	ARM AS (RH)	
	280-8626	1	ARM AS (LH)	
M	**8T-4137**	1	BOLT (M10X1.5X20-MM)	
	280-0407	10	BOLT	
	280-0408	10	BOLT	
	281-5483	3	BOLT	
	281-5485	2	BOLT	
	281-5487	7	BOLT	
	281-5488	2	BOLT	
	196-1550	1	BRACKET AS	
	127-3947	1	BUMPER	
	280-8603	4	BUSHING	
	379-3627	1	CAB AS	
	380-7148	8	CLIP	
	380-7149	1	COVER AS	
	281-3653	1	CUSHION	
	281-3654	1	CUSHION	
	214-3962	2	DAMPER	
	281-1155	1	GLASS (LH)	
	281-1149	1	GLASS-FRONT (LOWER)	
	281-1154	1	GLASS-REAR	
	281-1164	2	GRILL	
	127-4006	1	GROMMET	
	280-8618	1	HAMMER	
	284-6176	1	HANDLE	
	379-3629	1	HARNESS AS-CAB	
	285-4408	1	HARNESS AS-WIRING (WIPER MOTOR)	
	277-6028	1	HOLDER	
	277-6029	1	HOLDER	
	288-1386	2	HOLDER	
	4I-4270	1	HOLDER-GLASS	
	127-3925	1	HOOK	
	281-3658	1	HOSE	
	281-1159	1	LAMP AS (12-VOLT, 5-WATT)	
	303-9236	1	LAMP (12-VOLT, 5-WATT)	
	379-3630	1	LINER	
	305-5848	1	LINK AS	
	127-3926	1	NOZZLE	
M	**8T-4133**	4	NUT (M10X1.5-THD)	
M	**095-1207**	4	NUT (M12X1.75-THD)	
	281-5497	3	NUT	
	280-8590	1	PLATE	
	280-8611	1	PLATE	
	281-1162	1	PLATE	
	281-9614	1	PLATE	
	285-6278	1	PLATE	
	332-4162	1	PLATE	
	280-8598	1	RAIL	
	281-5479	8	SCREW	
	281-5480	2	SCREW	
	281-5492	4	SCREW	
	281-5508	2	SCREW	
	281-5509	1	SCREW	

377-5108 **CAB GP (*contd.*)** **i05437187**

NOTE	PART NUMBER	QTY	PART NAME 1 2 3 4 5 6 (PRODUCT LEVEL)	SEE PAGE
	282-2725	4	SCREW	
	263-3003	2	SCREW (M6X1X16-MM)	
M	**6V-9672**	2	SCREW-MACHINE (M4X0.7X16-MM)	
M	**8T-6411**	3	SCREW-MACHINE (M6X1X12-MM)	
M	**3E-8020**	2	SCREW-TRUSS HEAD (M6X1X25-MM)	
M	**7Y-5292**	6	SCREW-TRUSS HEAD (SELF-TAPPING)	
M	**9X-2042**	8	SCREW-TRUSS HEAD (M6X1X12-MM)	
M	**9X-2043**	5	SCREW-TRUSS HEAD (M6X1X14-MM)	
	280-8599	1	SEAL	
	281-3651	1	SEAL	
	281-3660	1	SEAL	
	281-3661	1	SEAL	
	281-3662	1	SEAL	
	281-4452	1	SEAL	
	281-4453	1	SEAL	
	284-6179	1	SEAL	
	285-4493	1	SEAL	
	380-7163	2	SHIM (1.6-MM THK)	
	207-1686	1	SOCKET	
	281-1153	10	SPACER	
	203-4455	2	SPEAKER	
	127-3987	2	STOP	
	280-8597	2	STOP	
	281-6196	1	STOP	
	288-1388	1	STOP	
	288-1389	1	STOP	
	214-3956	1	STRAP	
	281-7860	9	STRAP	
	8L-8413	4	STRAP-CABLE	
	196-1479	2	STRIKER	
	280-8595	2	STRIKER	
	280-8604	1	STRIKER	
	280-8605	1	STRIKER	
	280-8607	2	STRIKER	
	127-3927	1	STRIP	
	207-0236	1	TAPE-ADHESIVE	
	214-3968	3	WASHER (8.5X30X3.2-MM THK)	
	214-3969	2	WASHER (16X26X0.5-MM THK)	
	280-8588	1	WASHER (11.5X40X4.5-MM THK)	
	281-5496	4	WASHER	
	281-5507	1	WASHER	
	8T-4223	4	WASHER-HARD (13.5X25.5X3-MM THK)	
	8T-4224	3	WASHER-HARD (8.8X16X2-MM THK)	
	8T-4222	2	WASHER-PLATED (11X32X2.5-MM THK)	
	271-5317	1	WINDOW-ROOF	

M - METRIC PART
Y - SEPARATE ILLUSTRATION

<END>

OPERATOR STATION

389-8690 CAB GP

PART OF 383-5924, 383-5925 CAB AR

AN ATTACHMENT

SMCS-7301 **i04633252**

NOTE	REF NO	GRAPHIC REF	PART NUMBER	QTY	PART NAME 1 2 3 4 5 6 (PRODUCT LEVEL)	SEE PAGE
	1	1	**178-7539**	1	RECEPTACLE AS (POWER SUPPLY)	
	2	1	**276-9997**	1	SEAL	
	3	1	**282-9679**	5	SEAL	
	4	1	**283-7333**	1	INSULATION	
	5	1	**283-7365**	1	INSULATION	
Y	6	1	*389-8701*	1	CAB GP	457
	7	1	**379-1946**	1	COVER	
	8	1	**379-2026**	1	HOLDER	
	9	1	**379-2027**	1	BRACKET AS	
M		1	**6V-9632**	2	NUT-WELD (M6X1-THD)	
M		1	**9X-2032**	2	NUT-WELD (M4X0.7-THD)	
		1	**379-2028**	1	BRACKET	
	10	1	**387-4695**	1	INSULATION	
M	11	1	**8T-4176**	3	BOLT (M12X1.75X90-MM)	
M	12	1	**8T-4199**	2	BOLT (M8X1.25X12-MM)	
M	13	1	**8T-4200**	2	BOLT (M8X1.25X16-MM)	
	14	1	**8T-4223**	12	WASHER-HARD (13.5X25.5X3-MM THK)	
	15	1	**8T-4224**	4	WASHER-HARD (8.8X16X2-MM THK)	
M	16	1	**8T-4956**	9	BOLT (M12X1.75X35-MM)	
M	17	1	**9X-2042**	2	SCREW-TRUSS HEAD (M6X1X12-MM)	
E	18	1	**7X-7877**		STRIP-EDGING (10-CM)	

E - ORDER BY THE CENTIMETER
M - METRIC PART
Y - SEPARATE ILLUSTRATION

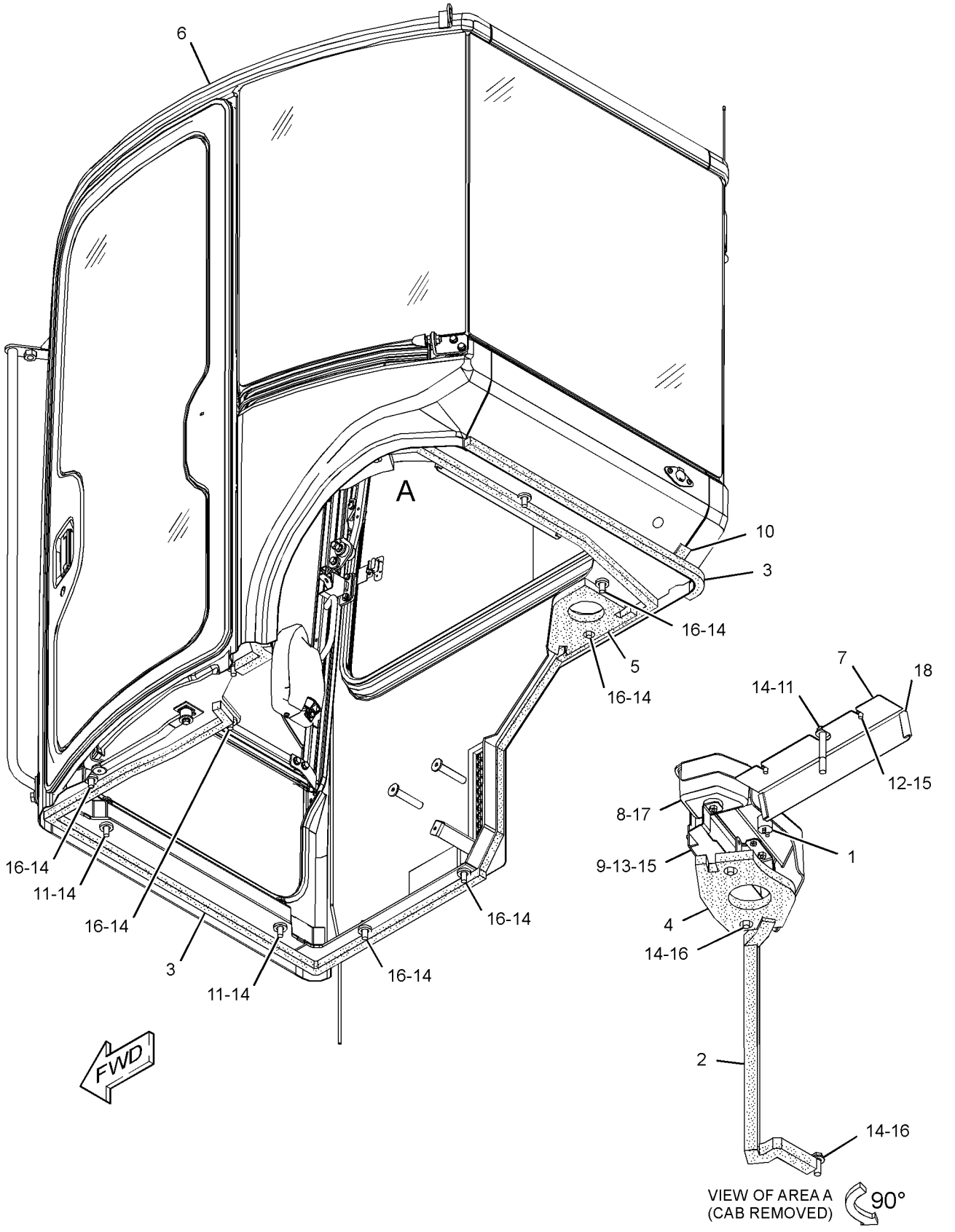

GRAPHIC #1 **<END>** g02794908

389-8701 CAB GP—WITH FRONT GUARD

S/N: TTN1-604
PART OF 389-8690 CAB GP
AN ATTACHMENT

SMCS-7301 **i04633254**

NOTE	PART NUMBER	QTY	PART NAME 1 2 3 4 5 6 (PRODUCT LEVEL)	SEE PAGE
Y	**377-5108**	1	CAB GP	453
Y	*389-8702*	1	GUARD GP-FRONT (CAB)	150
	281-5487	2	BOLT	
	389-8703	2	BOSS	

Y - SEPARATE ILLUSTRATION

<END>

389-8701 CAB GP—WITH FRONT GUARD

S/N: TTN605-750
PART OF 389-8690 CAB GP
AN ATTACHMENT

SMCS-7301 **i05351591**

NOTE	REF NO	GRAPHIC REF	PART NUMBER	QTY	PART NAME 1 2 3 4 5 6 (PRODUCT LEVEL)	SEE PAGE
	1	1	**281-5487**	2	BOLT	
Y	2	1	*389-8702*	1	GUARD GP-FRONT (CAB)	150
CY	3	1	*415-6803*	1	CAB GP	460

C - CHANGE FROM PREVIOUS TYPE
Y - SEPARATE ILLUSTRATION

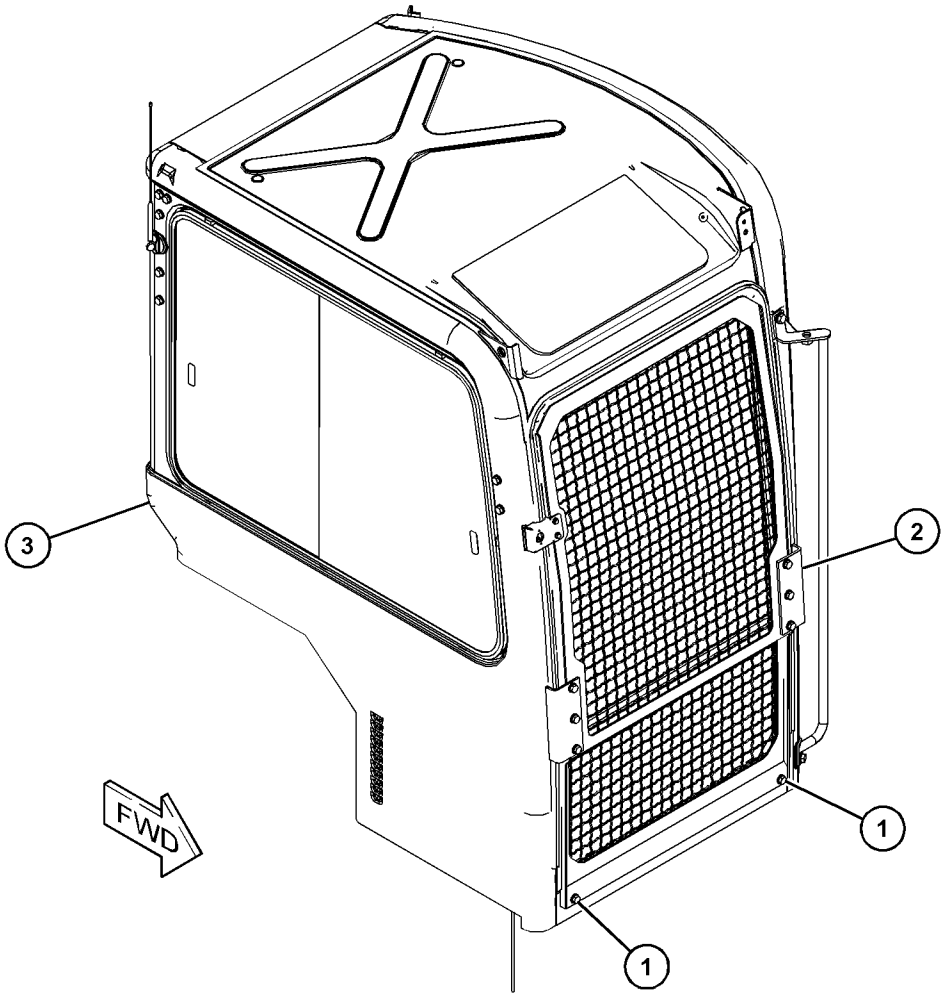

GRAPHIC #1 **<END>** g03397261

389-8701 CAB GP—WITH FRONT GUARD

S/N: TTN751-UP
PART OF 389-8690 CAB GP
AN ATTACHMENT

SMCS-7301 **i05409771**

NOTE	REF NO	GRAPHIC REF	PART NUMBER	QTY	PART NAME 1 2 3 4 5 6 (PRODUCT LEVEL)	SEE PAGE
CY	1	1	*419-1237*	1	CAB GP	467
Y	2	1	*389-8702*	1	GUARD GP-FRONT (CAB)	150

C - CHANGE FROM PREVIOUS TYPE
Y - SEPARATE ILLUSTRATION

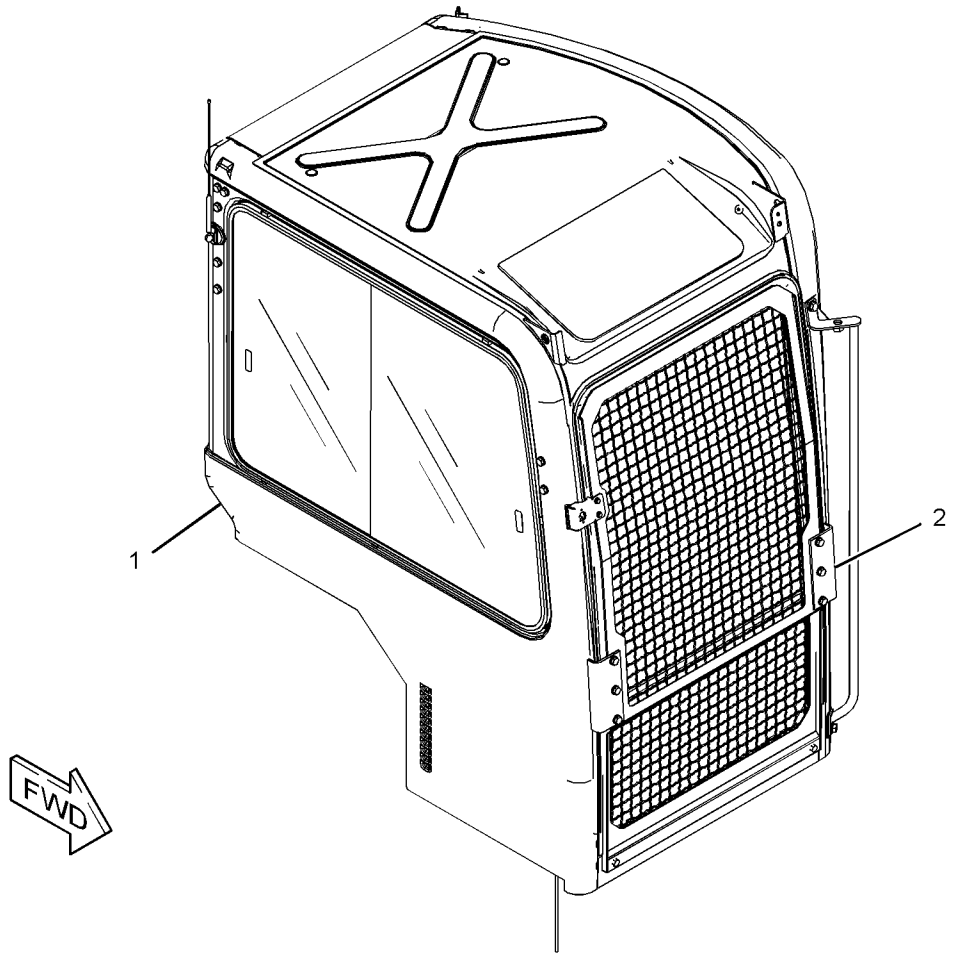

GRAPHIC #1 **<END>** g03417679

OPERATOR STATION

415-6803 CAB GP

S/N: TTN605-750
FIELD REPLACEMENT ORDER 419-1237—PAGE: 467
PART OF 377-5107, 389-8701 CAB GP
AN ATTACHMENT

SMCS-7301 **i05437188**

NOTE	REF NO	GRAPHIC REF	PART NUMBER	QTY	PART NAME 1 2 3 4 5 6 (PRODUCT LEVEL)	SEE PAGE
	1	3	**281-9614**	1	PLATE	
Y	2	1	*281-1195*	1	DOOR GP-CAB	495
Y	3	1	*280-0421*	1	WINDOW GP-CAB	542
	4	3	**281-4450**	1	LINK AS	
	5	3	**280-8588**	1	WASHER (11.5X40X4.5-MM THK)	
	6	2,3	**214-3968**	3	WASHER (8.5X30X3.2-MM THK)	
Y	7	3	*281-1186*	1	LINK GP-WINDOW	514
	8	3	**280-8590**	1	PLATE	
	9	3	**127-3947**	1	BUMPER	
M	10	3	**095-1207**	4	NUT (M12X1.75-THD)	
	11	3	**196-1479**	2	STRIKER	
	12	3	**280-8595**	2	STRIKER	
	13	1,3	**280-8597**	2	STOP	
	14	3	**280-8598**	1	RAIL	
	15	3	**280-8599**	1	SEAL	
	16	2	**280-8625**	1	ARM AS (RH)	
	17	3	**280-8626**	1	ARM AS (LH)	
	18	2,3	**214-3969**	4	WASHER (16X26X0.5-MM THK)	
	19	2,3	**214-3962**	2	DAMPER	
	20	2,3	**280-8603**	4	BUSHING	
	21	3	**280-8604**	1	STRIKER	
	22	2	**280-8605**	1	STRIKER	
	23	4	**127-3987**	2	STOP	
	24	2,3	**280-8607**	2	STRIKER	
	25	1	**281-3661**	1	SEAL	
	26	4	**281-3660**	1	SEAL	
	27	1	**281-3662**	1	SEAL	
	28	1	**281-1149**	1	GLASS-FRONT (LOWER)	
	29	1	**288-1386**	2	HOLDER	
	30	1	**281-1150**	2	SEAL	
	31	3	**4I-4270**	1	HOLDER-GLASS	
	32	3	**196-1550**	1	BRACKET AS	
	33	3	**277-6028**	1	HOLDER	
	34	3	**277-6029**	1	HOLDER	
	35	3	**207-0236**	1	TAPE-ADHESIVE	
Y	36	2	**281-4451**	1	WINDOW GP-SLIDING	544
	37	2	**281-4452**	1	SEAL	
	38	2	**281-3651**	1	SEAL	
	39	2	**281-1153**	7	SPACER	
	40	4	**281-1154**	1	GLASS-REAR	
	41	4	**281-3654**	1	CUSHION	
	42	3	**281-1155**	1	GLASS (LH)	
	43	3	**281-3653**	1	CUSHION	
	44	5	**271-5317**	1	WINDOW-ROOF	
	45	5	**281-4453**	1	SEAL	
	47	2	**281-5507**	1	WASHER	
	48	2	**285-4408**	1	HARNESS AS-WIRING (WIPER MOTOR)	
	49	2,3	**281-7860**	10	STRAP	
	51	3	**281-1159**	1	LAMP AS (12-VOLT, 5-WATT)	
		3	**303-9236**	1	LAMP (12-VOLT, 5-WATT)	
	53	2	**281-5508**	2	SCREW	
	56	5	**281-1162**	1	PLATE	
	57	4	**203-4455**	2	SPEAKER	
	58	4	**281-1164**	2	GRILL	
	59	1	**127-3927**	1	STRIP	
	60	1	**127-3926**	1	NOZZLE	

415-6803 **CAB GP (*contd.*)** **i05437188**

NOTE	REF NO	GRAPHIC REF	PART NUMBER	QTY	PART NAME 1 2 3 4 5 6 (PRODUCT LEVEL)	SEE PAGE
	61	1	**281-3658**	1	HOSE	
	62	4	**207-1686**	1	SOCKET	
	63	4	**280-8611**	1	PLATE	
	66	2	**284-6176**	1	HANDLE	
	68	2	**127-3925**	1	HOOK	
	69	3	**280-8618**	1	HAMMER	
	70	3	**281-5509**	1	SCREW	
M	72	3	**9X-2043**	5	SCREW-TRUSS HEAD (M6X1X14-MM)	
M	73	3	**3E-8020**	2	SCREW-TRUSS HEAD (M6X1X25-MM)	
M	74	3	**8T-4137**	1	BOLT (M10X1.5X20-MM)	
	75	4	**281-5479**	8	SCREW	
M	76	3	**6V-9672**	2	SCREW-MACHINE (M4X0.7X16-MM)	
	77	1	**281-5480**	2	SCREW	
M	78	2,4	**8T-6411**	3	SCREW-MACHINE (M6X1X12-MM)	
	80	2,3	**280-0407**	10	BOLT	
	81	3	**281-5485**	2	BOLT	
	82	2,3	**280-0408**	10	BOLT	
	83	2	**281-5487**	7	BOLT	
	84	2	**281-5488**	2	BOLT	
	85	3	**281-5492**	4	SCREW	
M	86	1,2,3	**7Y-5292**	6	SCREW-TRUSS HEAD (SELF-TAPPING)	
	87	3	**281-5496**	4	WASHER	
M	88	1,3,4	**8T-4133**	4	NUT (M10X1.5-THD)	
	89	3	**281-5497**	3	NUT	
	91	3	**8T-4224**	3	WASHER-HARD (8.8X16X2-MM THK)	
	92	3	**8T-4223**	4	WASHER-HARD (13.5X25.5X3-MM THK)	
	93	5	**127-4006**	1	GROMMET	
	96	3	**281-6196**	1	STOP	
	99	5	**214-3956**	1	STRAP	
	100	2	**284-6179**	1	SEAL	
	101	2	**284-6180**	1	SEAL	
	102	2	**285-4493**	1	SEAL	
	103	4	**285-6278**	1	PLATE	
F			**324-5828**	1	ANTENNA AS	
F			**418-1586**	1	CAB AS	
F			**379-3629**	1	HARNESS AS-CAB	
F			**379-3630**	1	LINER	
F			**380-7148**	8	CLIP	
F			**380-7149**	1	COVER AS	
F			**380-7163**	2	SHIM (1.6-MM THK)	
F			**8T-4222**	2	WASHER-PLATED (11X32X2.5-MM THK)	
FM			**9X-2042**	8	SCREW-TRUSS HEAD (M6X1X12-MM)	
F			**281-5483**	3	BOLT	
F			**282-2725**	4	SCREW	
F			**8L-8413**	2	STRAP-CABLE	

F - NOT SHOWN
M - METRIC PART
Y - SEPARATE ILLUSTRATION

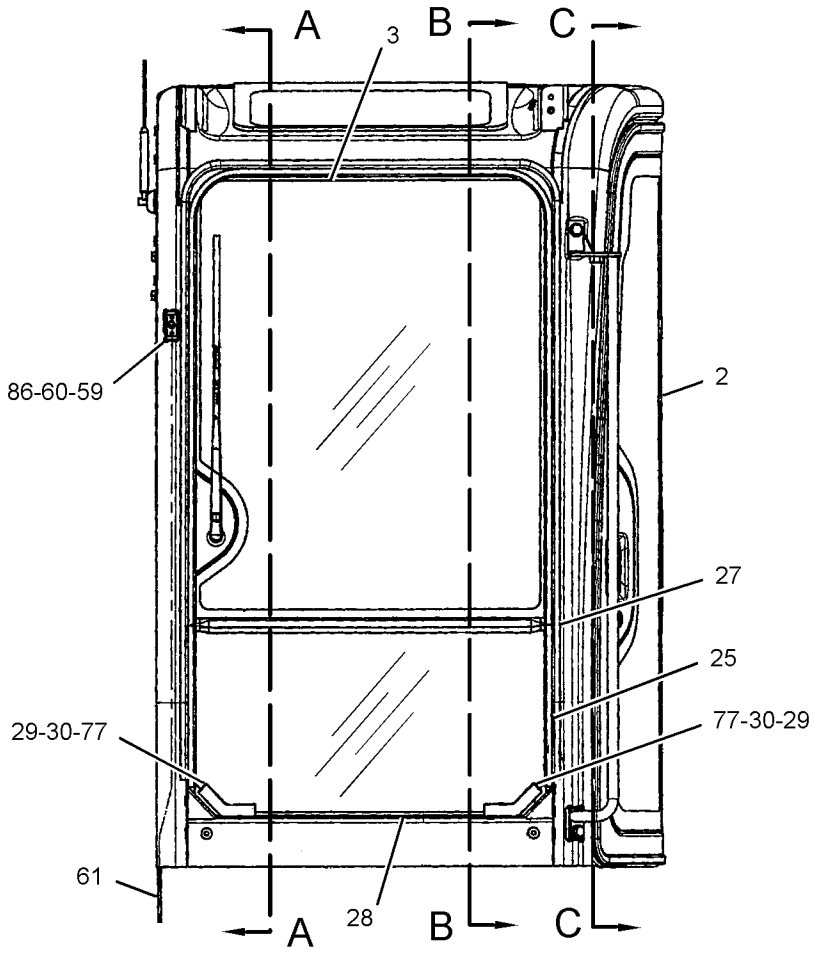

FRONT VIEW

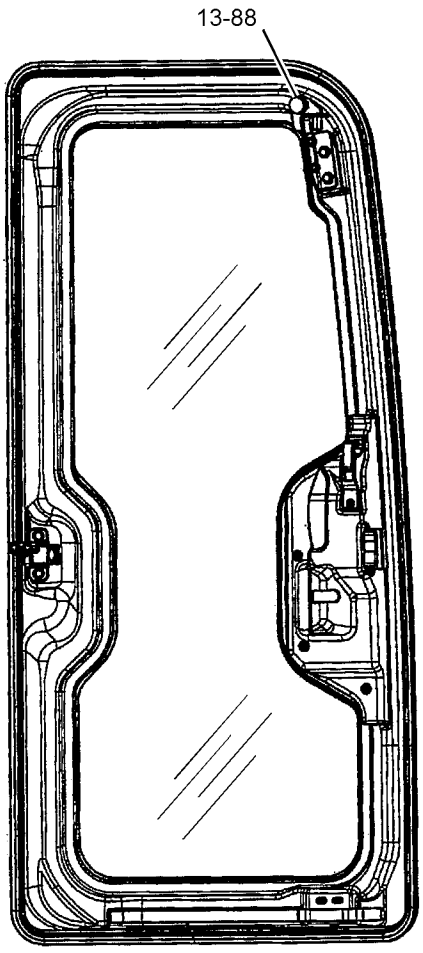

SECTION C-C

REFER TO ALL ILLUSTRATIONS OF
THIS GROUP FOR AUXILIARY VIEWS

GRAPHIC #1 g03401402

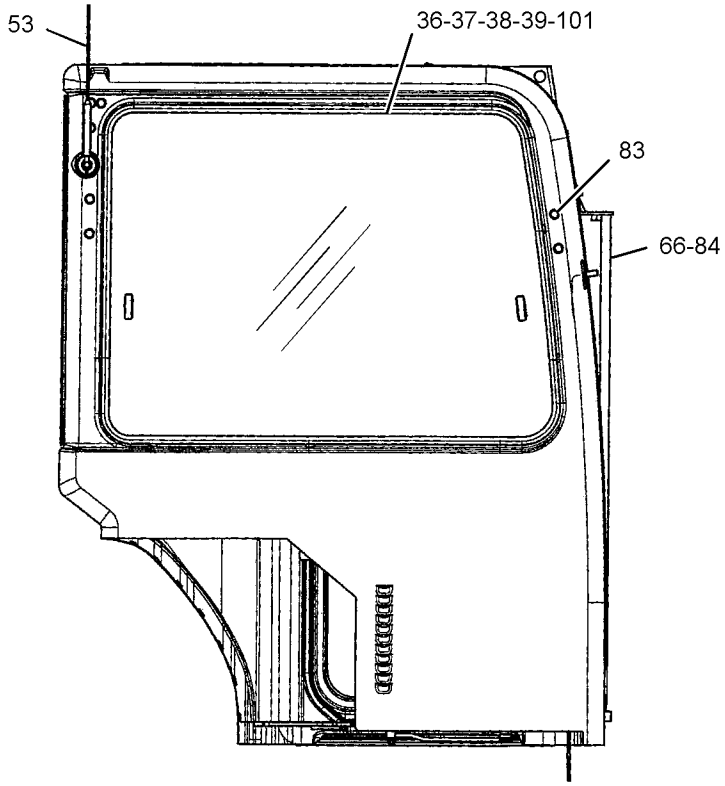

RIGHT SIDE VIEW

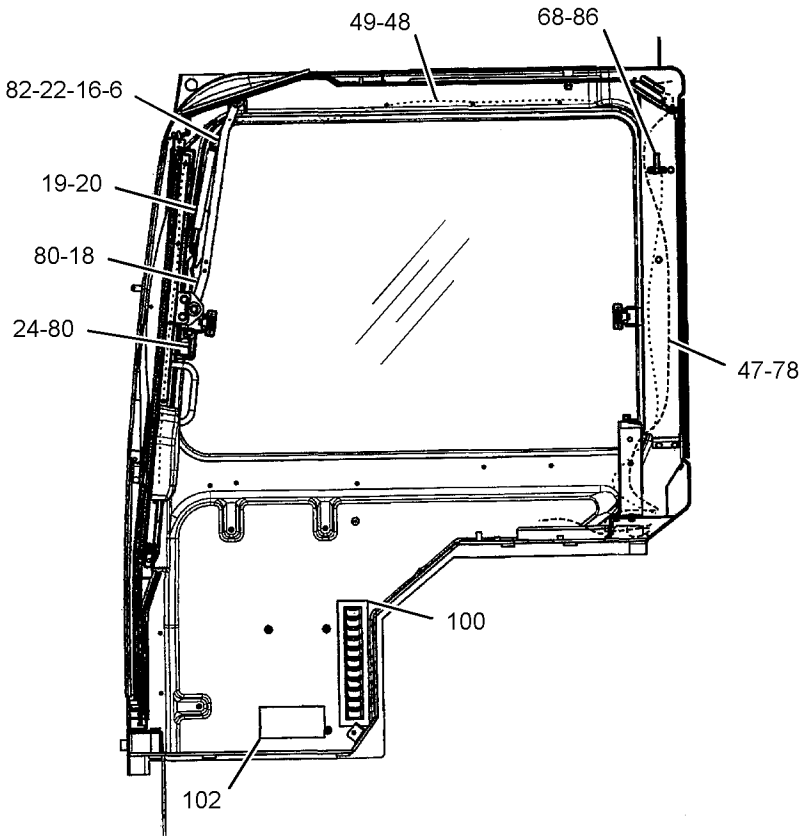

SECTION A-A

GRAPHIC #2 g03401403

415-6803 **CAB GP** (*contd.*) **i05437188**

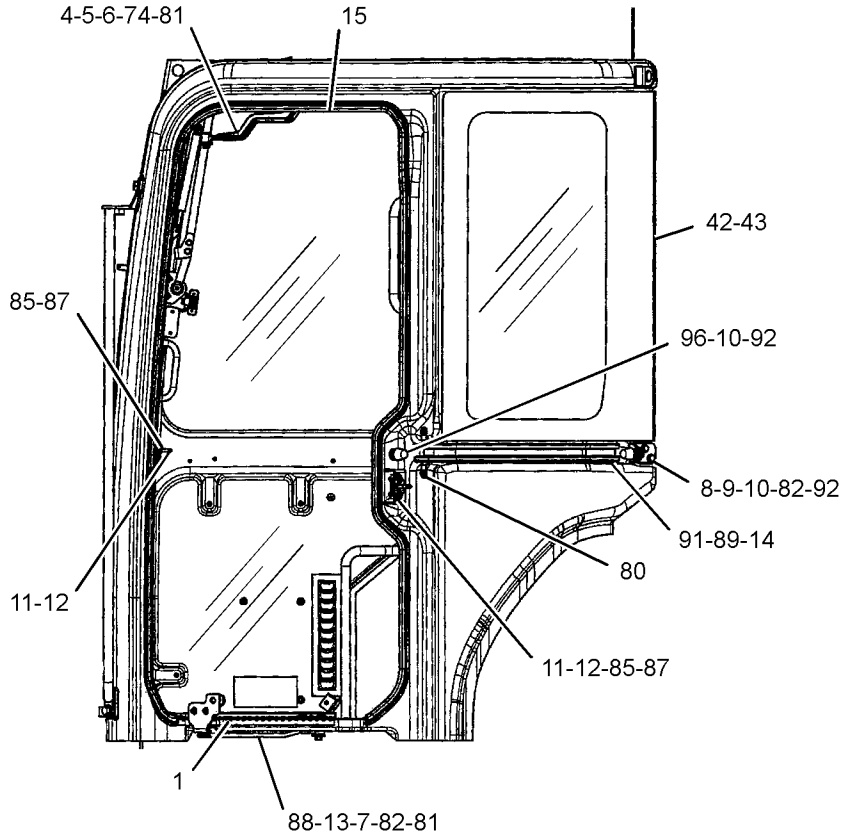

LEFT SIDE VIEW

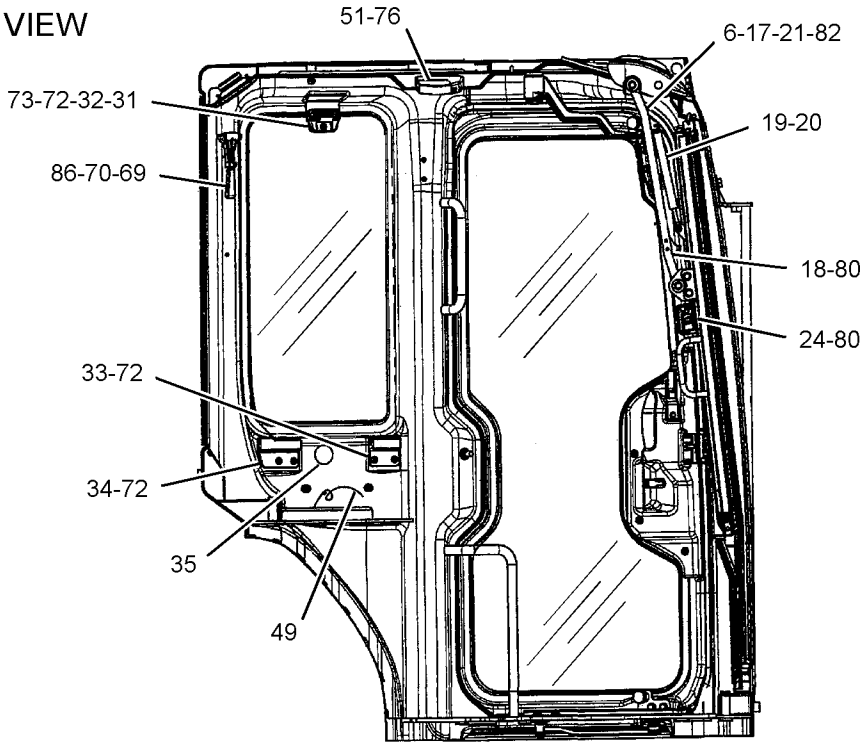

SECTION B-B

GRAPHIC #3 g03401404

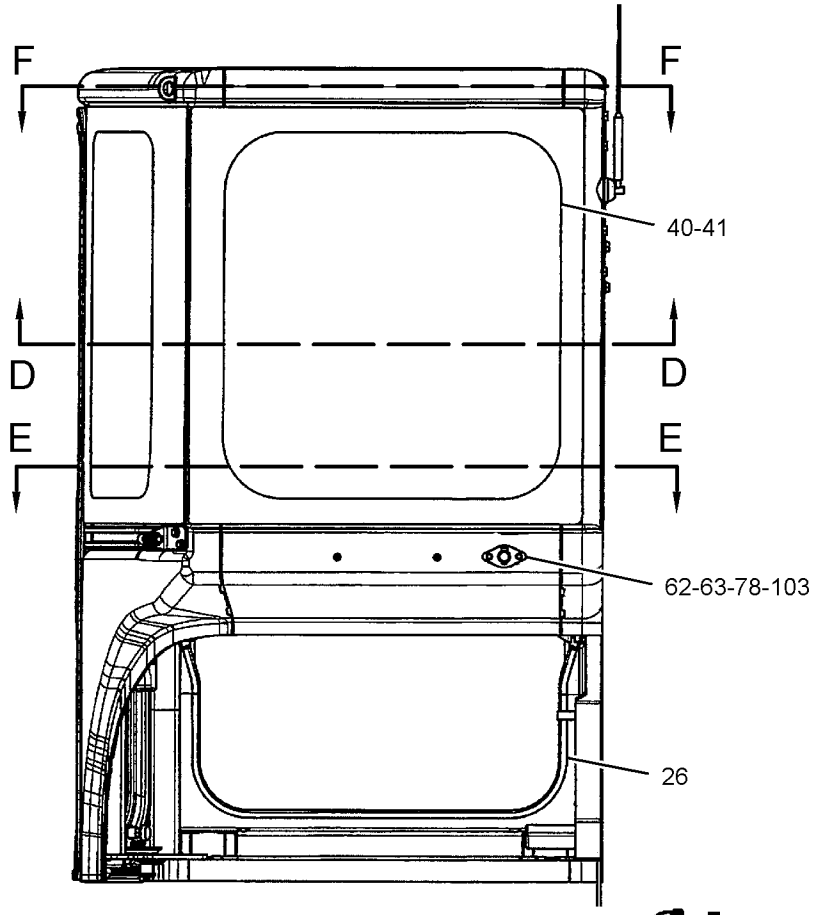

REAR VIEW

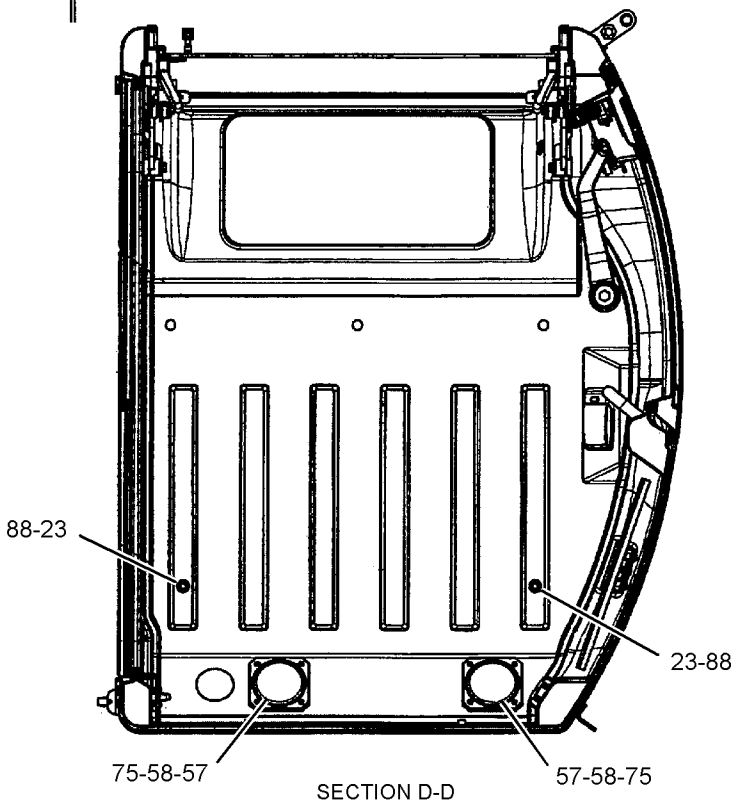

SECTION D-D

REFER TO ALL ILLUSTRATIONS OF
THIS GROUP FOR AUXILIARY VIEWS

GRAPHIC #4

g03401405

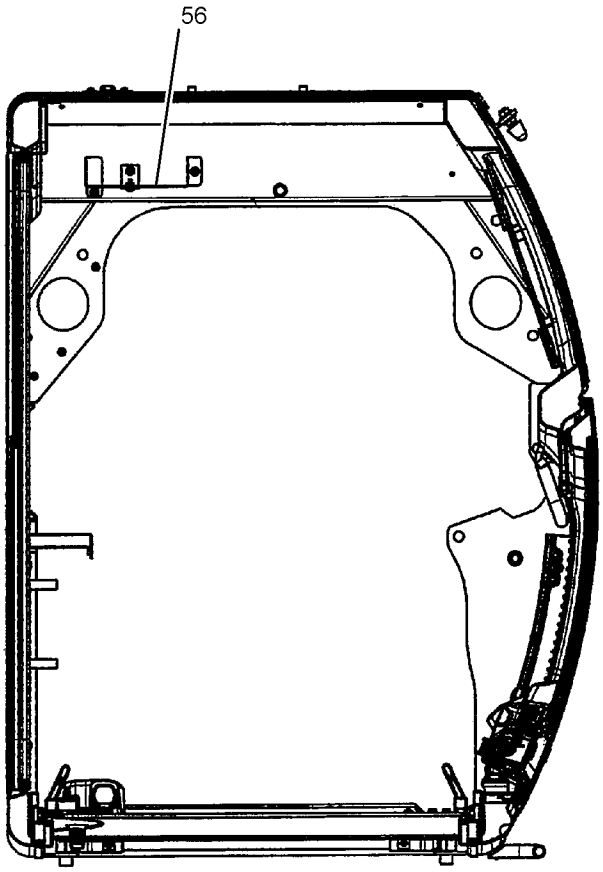

SECTION E-E

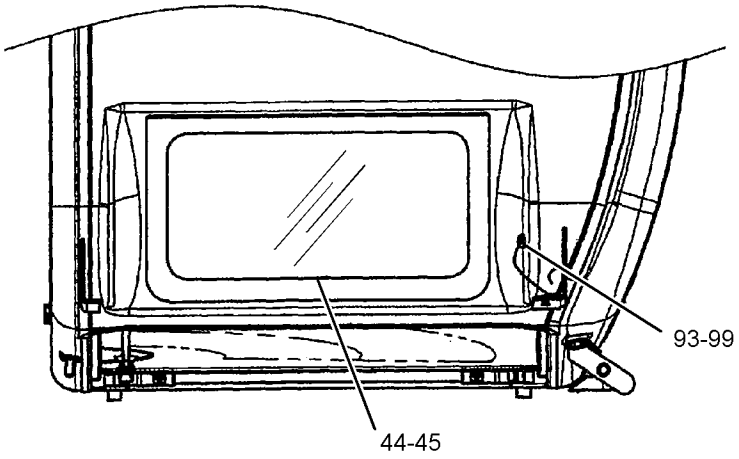

SECTION F-F

GRAPHIC #5 **<END>** g03401406

OPERATOR STATION

419-1237 CAB GP

S/N: TTN751-UP
FIELD REPLACEMENT FOR 415-6803—PAGE: 460
PART OF 377-5107, 389-8701 CAB GP
AN ATTACHMENT

SMCS-7301 **i05437189**

NOTE	PART NUMBER	QTY	PART NAME 1 2 3 4 5 6 (PRODUCT LEVEL)	SEE PAGE
Y	*281-1195*	1	DOOR GP-CAB	495
Y	*281-1186*	1	LINK GP-WINDOW	514
Y	*280-0421*	1	WINDOW GP-CAB	542
Y	**281-4451**	1	WINDOW GP-SLIDING	544
	324-5828	1	ANTENNA AS	
	280-8625	1	ARM AS (RH)	
	280-8626	1	ARM AS (LH)	
M	**8T-4137**	1	BOLT (M10X1.5X20-MM)	
	280-0407	10	BOLT	
	280-0408	10	BOLT	
	281-5483	3	BOLT	
	281-5485	2	BOLT	
	281-5487	9	BOLT	
	281-5488	2	BOLT	
	196-1550	1	BRACKET AS	
	127-3947	1	BUMPER	
	280-8603	4	BUSHING	
	380-7148	8	CLIP	
	380-7149	1	COVER AS	
	281-3653	1	CUSHION	
	281-3654	1	CUSHION	
	214-3962	2	DAMPER	
	281-1155	1	GLASS (LH)	
	281-1149	1	GLASS-FRONT (LOWER)	
	281-1154	1	GLASS-REAR	
	281-1164	2	GRILL	
	127-4006	1	GROMMET	
	280-8618	1	HAMMER	
	284-6176	1	HANDLE	
	379-3629	1	HARNESS AS-CAB	
	285-4408	1	HARNESS AS-WIRING (WIPER MOTOR)	
	277-6028	1	HOLDER	
	277-6029	1	HOLDER	
	288-1386	2	HOLDER	
	4I-4270	1	HOLDER-GLASS	
	127-3925	1	HOOK	
	281-3658	1	HOSE	
	281-1159	1	LAMP AS (12-VOLT, 5-WATT)	
	303-9236	1	LAMP (12-VOLT, 5-WATT)	
	379-3630	1	LINER	
	305-5848	1	LINK AS	
	276-8684	1	LINK	
	305-5852	2	BUSHING	
	305-5853	2	BUSHING	
	127-3926	1	NOZZLE	
M	**8T-4133**	4	NUT (M10X1.5-THD)	
M	**095-1207**	4	NUT (M12X1.75-THD)	
	281-5497	3	NUT	
	280-8590	1	PLATE	
	280-8611	1	PLATE	
	281-1162	1	PLATE	
	281-9614	1	PLATE	
	285-6278	1	PLATE	
	332-4162	1	PLATE	
	280-8598	1	RAIL	
	281-5479	8	SCREW	
	281-5480	2	SCREW	

419-1237 **CAB GP (*contd.*)** **i05437189**

NOTE	PART NUMBER	QTY	PART NAME 1 2 3 4 5 6 (PRODUCT LEVEL)	SEE PAGE
	281-5492	4	SCREW	
	281-5508	2	SCREW	
	281-5509	1	SCREW	
	282-2725	4	SCREW	
	263-3003	2	SCREW (M6X1X16-MM)	
M	**6V-9672**	2	SCREW-MACHINE (M4X0.7X16-MM)	
M	**8T-6411**	3	SCREW-MACHINE (M6X1X12-MM)	
M	**3E-8020**	2	SCREW-TRUSS HEAD (M6X1X25-MM)	
M	**7Y-5292**	6	SCREW-TRUSS HEAD (SELF-TAPPING)	
M	**9X-2042**	8	SCREW-TRUSS HEAD (M6X1X12-MM)	
M	**9X-2043**	5	SCREW-TRUSS HEAD (M6X1X14-MM)	
	280-8599	1	SEAL	
	281-3651	1	SEAL	
	281-3660	1	SEAL	
	281-3661	1	SEAL	
	281-3662	1	SEAL	
	281-4452	1	SEAL	
	281-4453	1	SEAL	
	284-6179	1	SEAL	
	285-4493	1	SEAL	
	380-7163	2	SHIM (1.6-MM THK)	
	207-1686	1	SOCKET	
	281-1153	10	SPACER	
	203-4455	2	SPEAKER	
	127-3987	2	STOP	
	280-8597	2	STOP	
	281-6196	1	STOP	
	288-1388	1	STOP	
	288-1389	1	STOP	
	214-3956	1	STRAP	
	281-7860	9	STRAP	
	8L-8413	4	STRAP-CABLE	
	196-1479	2	STRIKER	
	280-8595	2	STRIKER	
	280-8604	1	STRIKER	
	280-8605	1	STRIKER	
	280-8607	2	STRIKER	
	127-3927	1	STRIP	
	207-0236	1	TAPE-ADHESIVE	
	214-3968	3	WASHER (8.5X30X3.2-MM THK)	
	214-3969	2	WASHER (16X26X0.5-MM THK)	
	280-8588	1	WASHER (11.5X40X4.5-MM THK)	
	281-5496	4	WASHER	
	281-5507	1	WASHER	
	8T-4223	4	WASHER-HARD (13.5X25.5X3-MM THK)	
	8T-4224	3	WASHER-HARD (8.8X16X2-MM THK)	
	8T-4222	2	WASHER-PLATED (11X32X2.5-MM THK)	
	271-5317	1	WINDOW-ROOF	

M - METRIC PART
Y - SEPARATE ILLUSTRATION

<END>

383-5926 CANOPY AR

AN ATTACHMENT

SMCS-7302 **i05384945**

NOTE	PART NUMBER	QTY	PART NAME 1 2 3 4 5 6 (PRODUCT LEVEL)	SEE PAGE
Y	*370-5346*	1	BATTERY & WIRING GP (CAB)	77
Y	*389-8749*	1	CANOPY GP	471
Y	*382-0501*	1	COVER GP-ACCESS	493
Y	*389-8776*	1	FILM GP (FRONT GUARD)	554
Y	*393-1257*	1	FILM GP	555
Y	*380-6386*	1	GUARD GP-FAN	21
Y	*389-8733*	1	GUARD GP-FRONT	151
Y	*382-0426*	1	HANDRAIL GP (LH)	501
Y	*379-0801*	1	MOUNTING GP-ENGINE	28
Y	*382-0400*	1	PLATFORM GP-OPERATOR	531
Y	*370-5350*	1	WIRING GP-CONSOLE (CANOPY)	108
	419-1254	1	FLOOR MAT	
	387-4694	1	FLOOR MAT	
	420-6337	1	SEAL GP	
			S/N: TTN1-907	
	276-9309	1	FOAM	
	415-8595	1	SEAL	
Y	*421-2717*	1	VALVE & MOUNTING GP	308
			S/N: TTN908-UP	

Y - SEPARATE ILLUSTRATION

<END>

377-8932 CANOPY AR-OPEN ROPS

AN ATTACHMENT

SMCS-7302, 7323 **i05384941**

NOTE	PART NUMBER	QTY	PART NAME 1 2 3 4 5 6 (PRODUCT LEVEL)	SEE PAGE
Y	*370-5346*	1	BATTERY & WIRING GP (CAB)	77
Y	*382-0406*	1	CANOPY GP	470
Y	*382-0501*	1	COVER GP-ACCESS	493
Y	*393-1257*	1	FILM GP	555
Y	*380-6386*	1	GUARD GP-FAN	21
Y	*382-0426*	1	HANDRAIL GP (LH)	501
Y	*379-0801*	1	MOUNTING GP-ENGINE	28
Y	*382-0400*	1	PLATFORM GP-OPERATOR	531
Y	*421-2717*	1	VALVE & MOUNTING GP (CANOPY)	308
			S/N: TTN908-UP	
Y	*370-5350*	1	WIRING GP-CONSOLE (CANOPY)	108
	382-0542	1	FLOOR MAT	
			S/N: TTN1-907	
	419-1254	1	FLOOR MAT	
			S/N: TTN908-UP	
	387-4694	1	FLOOR MAT	
	420-6337	1	SEAL GP	
			S/N: TTN1-907	
	276-9309	1	FOAM	
	415-8595	1	SEAL	

Y - SEPARATE ILLUSTRATION

<END>

382-0406 CANOPY GP

PART OF 377-8932 CANOPY AR-OPEN ROPS

AN ATTACHMENT

SMCS-7302 **i05035494**

NOTE	REF NO	GRAPHIC REF	PART NUMBER	QTY	PART NAME 1 2 3 4 5 6 (PRODUCT LEVEL)	SEE PAGE
	1	1	**4H-0407**	2	PLUG-PROTECTION	
	2	1	**332-1810**	4	PLUG	
	3	1	**382-0407**	1	CANOPY AS	
		1	**7T-1099**	10	LINK	
M		1	**8T-3490**	1	NUT-WELD (M10X1.5-THD)	
M		1	**8T-3612**	1	NUT-WELD (M8X1.25-THD)	
M	4	1	**8T-4139**	4	BOLT (M12X1.75X30-MM)	
M	5	1	**8T-4173**	1	BOLT (M16X2X110-MM)	
M	6	1	**8T-4194**	3	BOLT (M12X1.75X50-MM)	
	7	1	**8T-4223**	10	WASHER-HARD (13.5X25.5X3-MM THK)	
M	8	1	**8T-4956**	3	BOLT (M12X1.75X35-MM)	
	9	1	**9X-8257**	1	WASHER (17.5X30X3.5-MM THK)	

M - METRIC PART

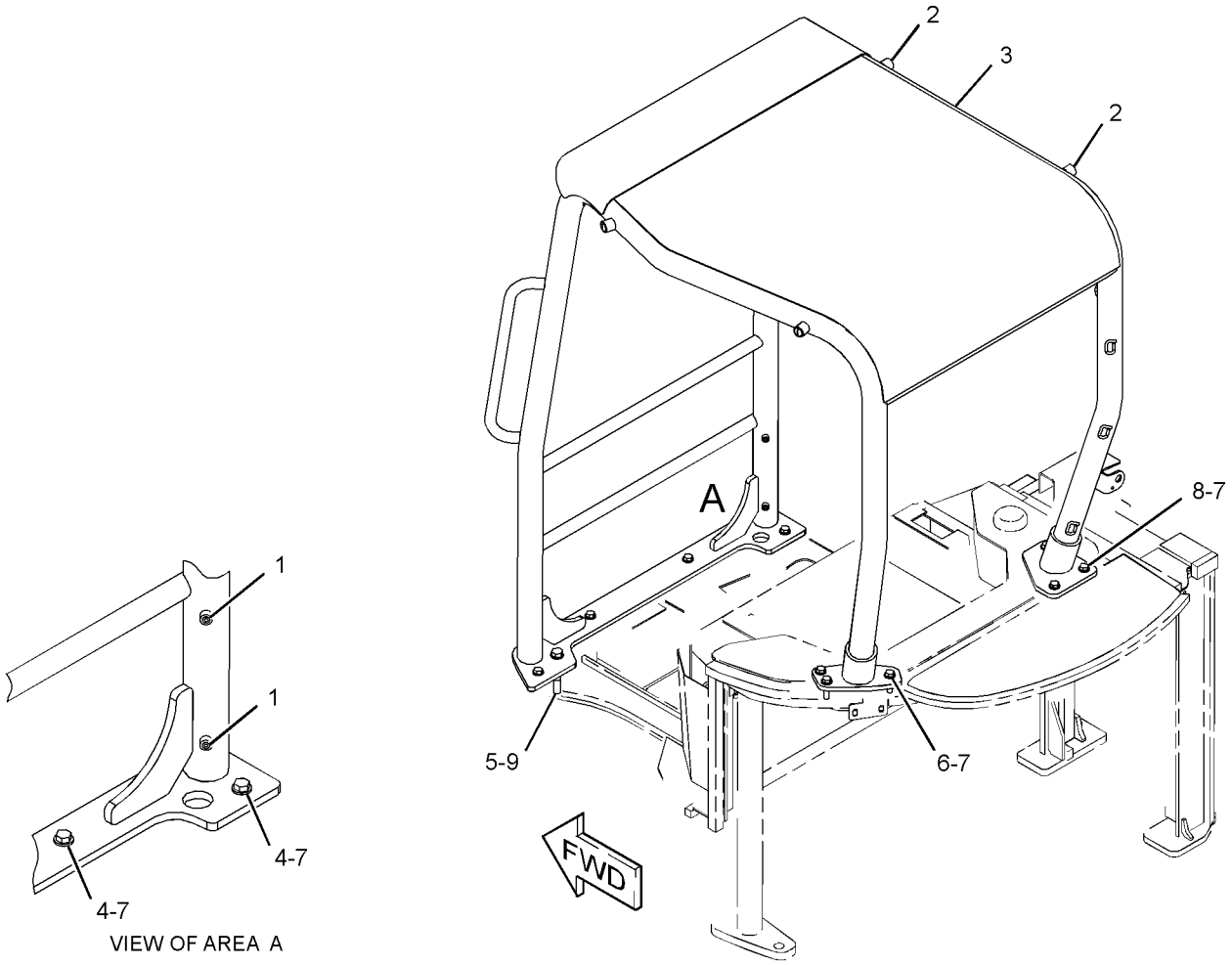

VIEW OF AREA A

GRAPHIC #1 **<END>** g02799173

OPERATOR STATION

389-8749 CANOPY GP

PART OF 383-5926 CANOPY AR

AN ATTACHMENT

SMCS-7302 **i04728122**

NOTE	REF NO	GRAPHIC REF	PART NUMBER	QTY	PART NAME 1 2 3 4 5 6 (PRODUCT LEVEL)	SEE PAGE
	1	1	**4H-0407**	2	PLUG-PROTECTION	
	2	1	**332-1810**	4	PLUG	
	3	1	**389-8737**	1	CANOPY AS	
M		1	**8T-3490**	1	NUT-WELD (M10X1.5-THD)	
M		1	**8T-3612**	1	NUT-WELD (M8X1.25-THD)	
M	4	1	**8T-4139**	4	BOLT (M12X1.75X30-MM)	
M	5	1	**8T-4173**	1	BOLT (M16X2X110-MM)	
M	6	1	**8T-4194**	3	BOLT (M12X1.75X50-MM)	
	7	1	**8T-4223**	10	WASHER-HARD (13.5X25.5X3-MM THK)	
M	8	1	**8T-4956**	3	BOLT (M12X1.75X35-MM)	
	9	1	**9X-8257**	1	WASHER (17.5X30X3.5-MM THK)	

M - METRIC PART

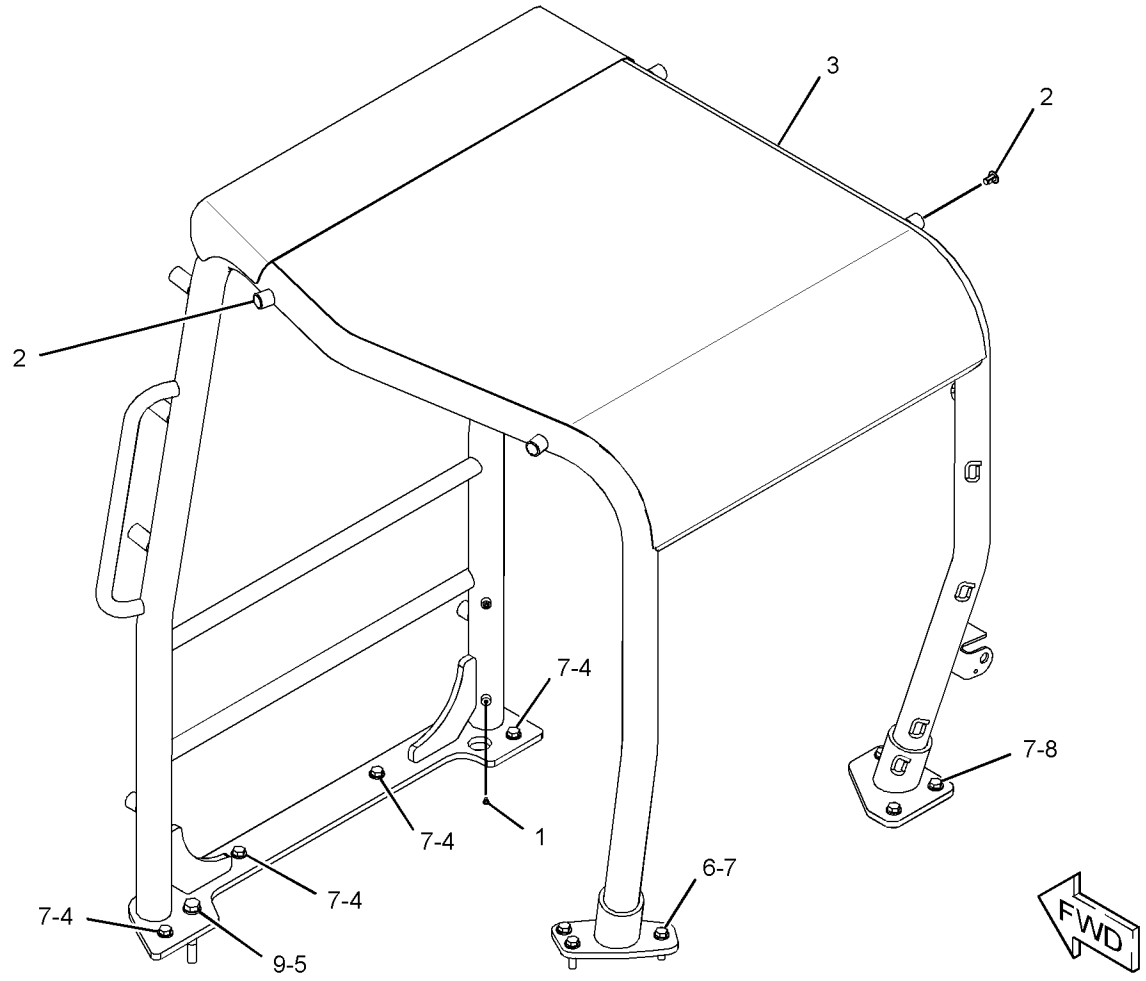

GRAPHIC #1 **<END>** g02858417

378-1272 COMPRESSOR GP-REFRIGERANT

PART OF 376-6691, 383-5924 CAB AR
AN ATTACHMENT

SMCS-1802 **i04565460**

NOTE	REF NO	GRAPHIC REF	PART NUMBER	QTY	PART NAME 1 2 3 4 5 6 (PRODUCT LEVEL)	SEE PAGE
	1	1	**272-7877**	1	PULLEY AS-IDLER	
	2	1	**272-7881**	1	V-BELT (AIR CONDITIONER COMPRESSOR)	
	3	1	**283-4170**	1	COMPRESSOR GP-REFRIGERANT	
	4	1	**304-2819**	1	BOLT (M8X1.25X100-MM)	
	5	1	**5P-4116**	2	WASHER-HARD (8.8X20.5X2-MM THK)	
	6	1	**7N-9070**	1	SPACER	
M	7	1	**7X-2537**	1	BOLT (M8X1.25X35-MM)	
	8	1	**8T-4224**	2	WASHER-HARD (8.8X16X2-MM THK)	
M	9	1	**8T-4908**	2	BOLT (M8X1.25X25-MM)	

M - METRIC PART

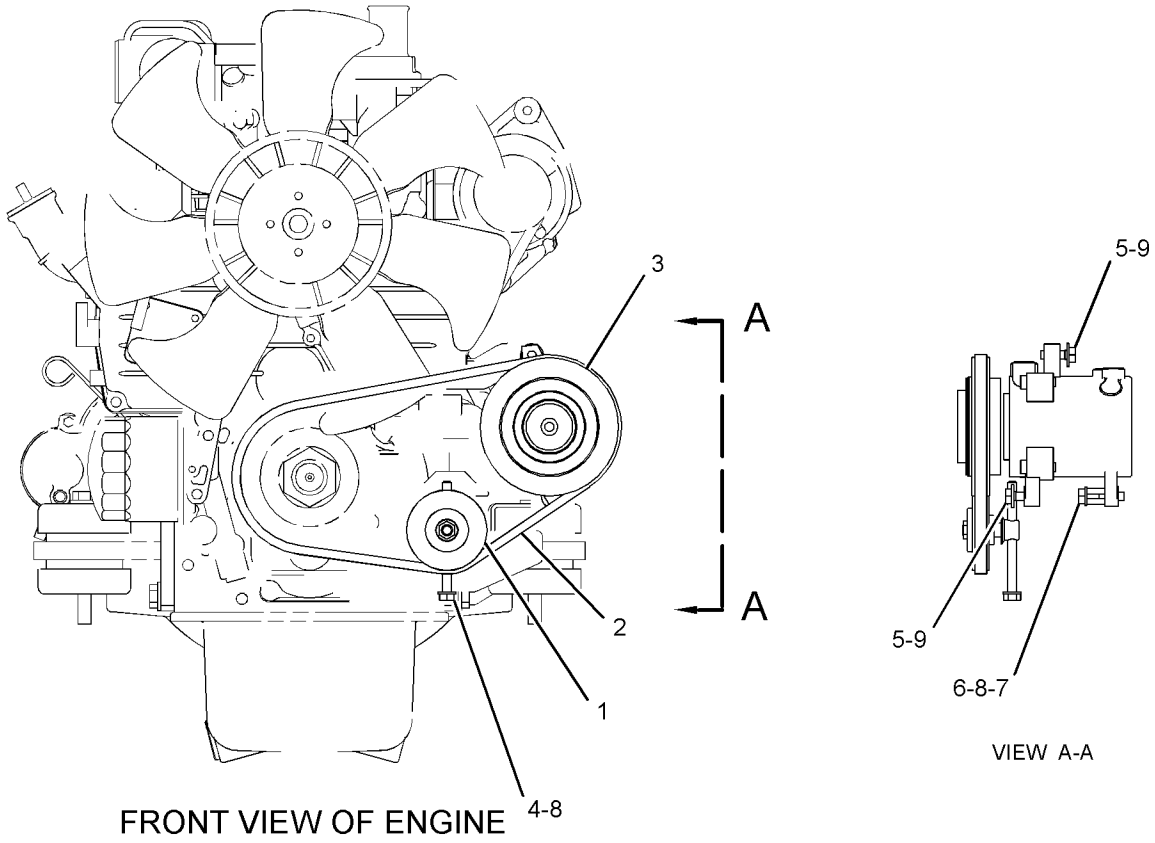

FRONT VIEW OF ENGINE

VIEW A-A

GRAPHIC #1 **<END>** g02784642

380-6389 CONDENSER & MTG GP-REFRIGERANT

PART OF 376-6691, 383-5924 CAB AR
AN ATTACHMENT

SMCS-1805 **i04617856**

NOTE	REF NO	GRAPHIC REF	PART NUMBER	QTY	PART NAME 1 2 3 4 5 6 (PRODUCT LEVEL)	SEE PAGE
M	1	1	**245-7903**	8	BOLT AS	
	2	1	**354-6977**	1	CONDENSER AS-REFRIGERANT	
	3	1	**354-6978**	4	BRACKET	
	4	1	**354-6980**	4	BUSHING	
	5	1	**354-6981**	4	GROMMET	
	6	1	**380-6390**	1	BRACKET AS	
M		1	**6V-9632**	2	NUT-WELD (M6X1-THD)	
M		1	**8T-3612**	2	NUT-WELD (M8X1.25-THD)	
	7	1	**380-6391**	1	BRACKET AS	
M		1	**6V-9632**	2	NUT-WELD (M6X1-THD)	
	8	1	**380-6392**	1	BRACKET AS	
M		1	**8T-3612**	2	NUT-WELD (M8X1.25-THD)	
	9	1	**8T-4121**	4	WASHER-HARD (11X21X2.5-MM THK)	
M	10	1	**8T-4137**	4	BOLT (M10X1.5X20-MM)	
M	11	1	**8T-4189**	2	BOLT (M8X1.25X20-MM)	
	12	1	**8T-4224**	2	WASHER-HARD (8.8X16X2-MM THK)	
M	13	1	**8T-4971**	4	BOLT (M6X1X30-MM)	
	14	1	**9X-6165**	4	WASHER (6.5X22X2.5-MM THK)	

M - METRIC PART

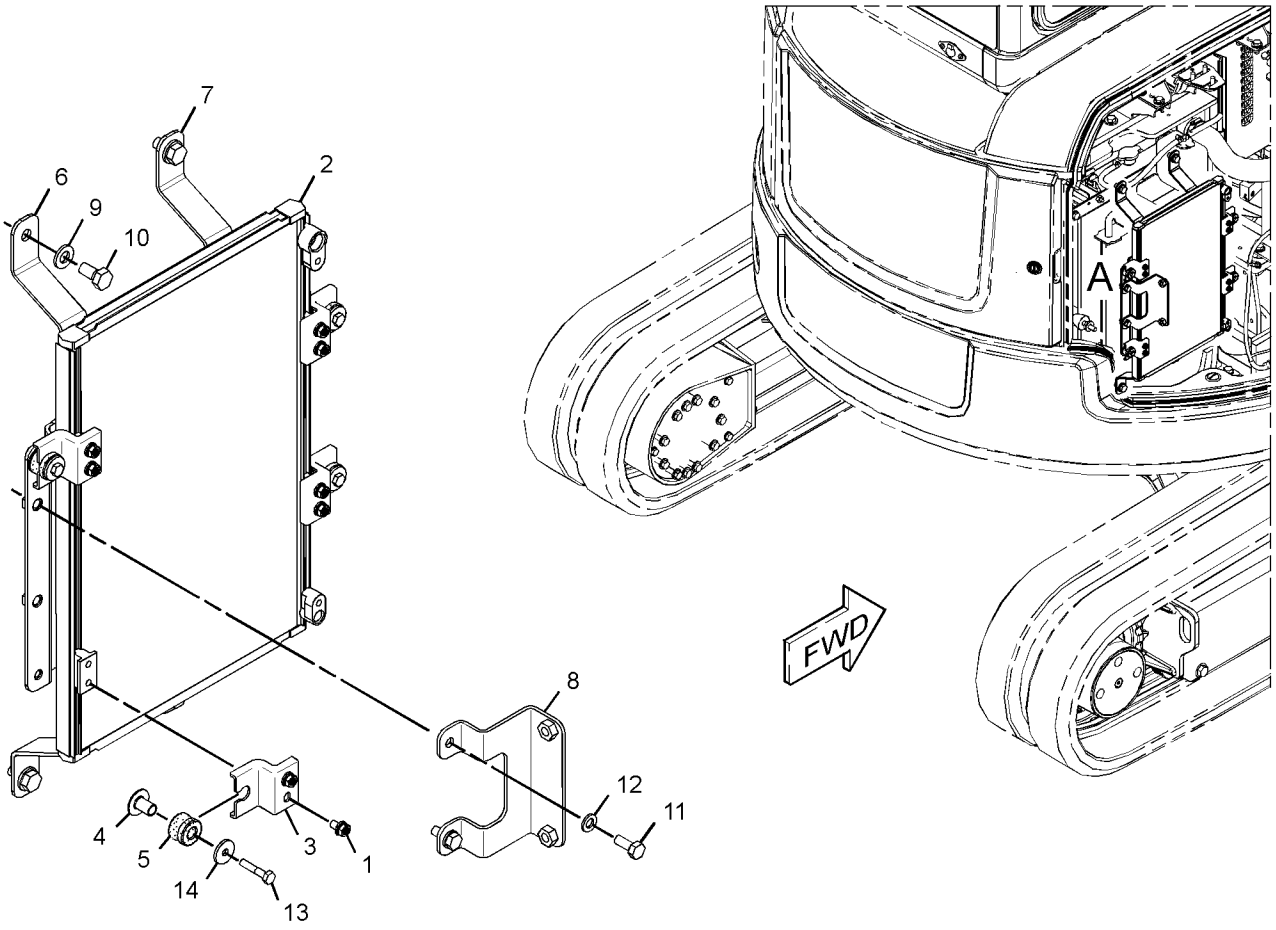

VIEW OF AREA A
(EXPLODED)

GRAPHIC #1 **<END>** g02799496

OPERATOR STATION

379-3597 CONSOLE GP-OPERATOR

PART OF 379-3624 OPERATOR AR

SMCS-5258, 7451 **i05033863**

NOTE	REF NO	GRAPHIC REF	PART NUMBER	QTY	PART NAME 1 2 3 4 5 6 (PRODUCT LEVEL)	SEE PAGE
	1	1	**274-8781**	1	BUMPER	
Y	2	1	*379-3598*	1	CONSOLE GP-OPERATOR (RH)	475
Y	3	1	*379-3599*	1	CONSOLE GP-OPERATOR (LH)	476
	4	1	**379-3618**	1	BRACKET AS	
		1	**7T-1099**	2	LINK	
M	5	1	**5C-7261**	1	NUT (M8X1.25-THD)	
	6	1	**8T-4121**	5	WASHER-HARD (11X21X2.5-MM THK)	
M	7	1	**8T-4136**	4	BOLT (M10X1.5X25-MM)	
M	8	1	**8T-4196**	1	BOLT (M10X1.5X35-MM)	
M	9	1	**127-2170**	2	SCREW-TRUSS HEAD (M8X1.25X20-MM)	

M - METRIC PART
Y - SEPARATE ILLUSTRATION

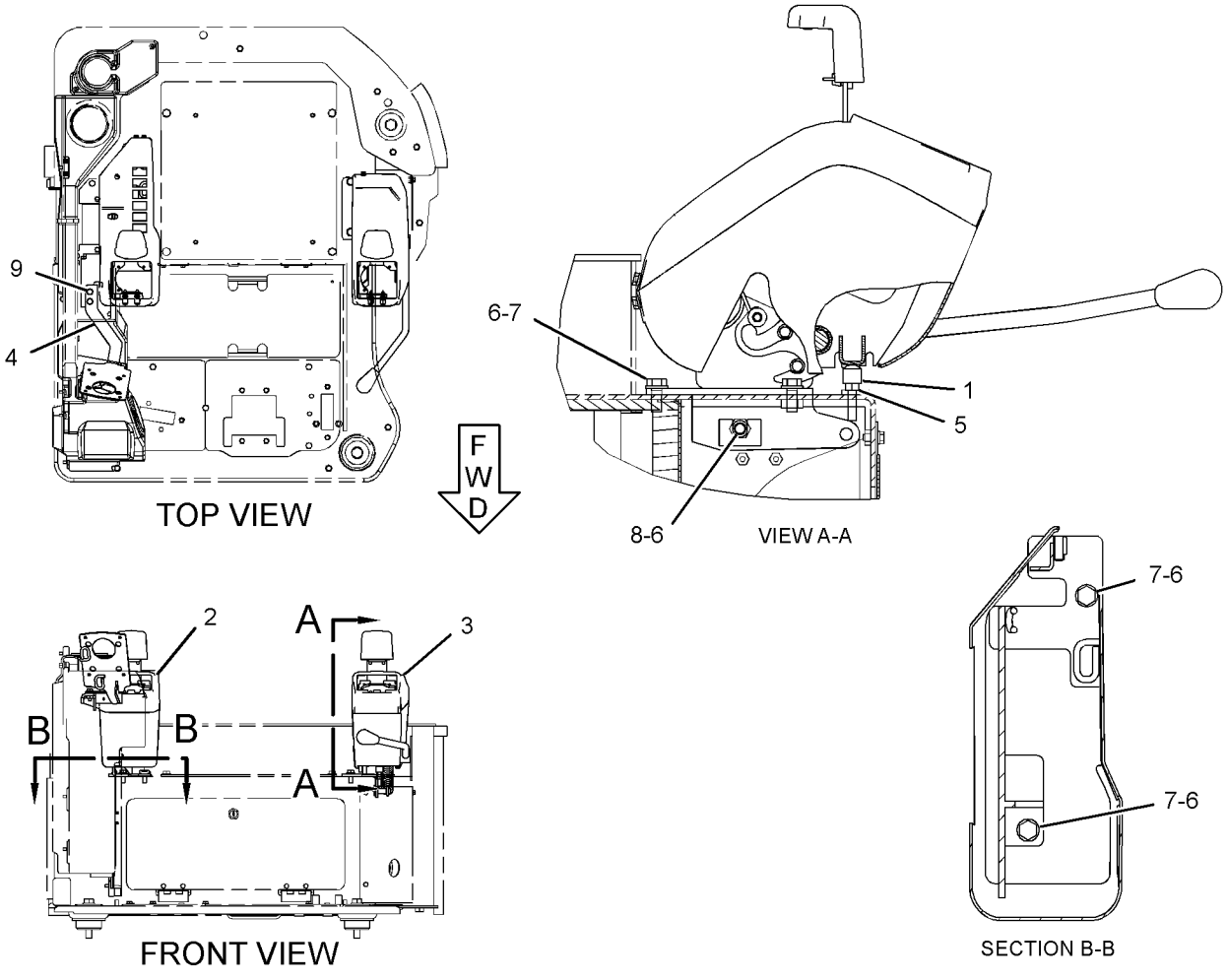

GRAPHIC #1 **<END>** g03315456

379-3598 CONSOLE GP-OPERATOR–RH

PART OF 379-3597 CONSOLE GP-OPERATOR

SMCS-5258, 7451 **i05263283**

NOTE	REF NO	GRAPHIC REF	PART NUMBER	QTY	PART NAME 1 2 3 4 5 6 (PRODUCT LEVEL)	SEE PAGE
	1	1	**222-0668**	2	WASHER (6.5X13X1-MM THK)	
	2	1	**284-0850**	2	SCREW	
	3	1	**379-3600**	1	FRAME AS (RH)	
	4	1	**379-3608**	1	PLATE	
	5	1	**389-8764**	1	ARMREST	
	6	1	**379-3611**	1	COVER-UPPER	
	7	1	**379-3612**	1	COVER-LOWER	
	8	1	**389-8762**	1	PLATE	
M	9	1	**096-4034**	2	BOLT-WING (M6X1X15-MM)	
M	10	1	**1R-5396**	2	BOLT (M6X1X35-MM)	
M	11	1	**5C-9553**	4	BOLT (M6X1X16-MM)	
	12	1	**9X-8256**	6	WASHER (6.6X12X2-MM THK)	

M - METRIC PART

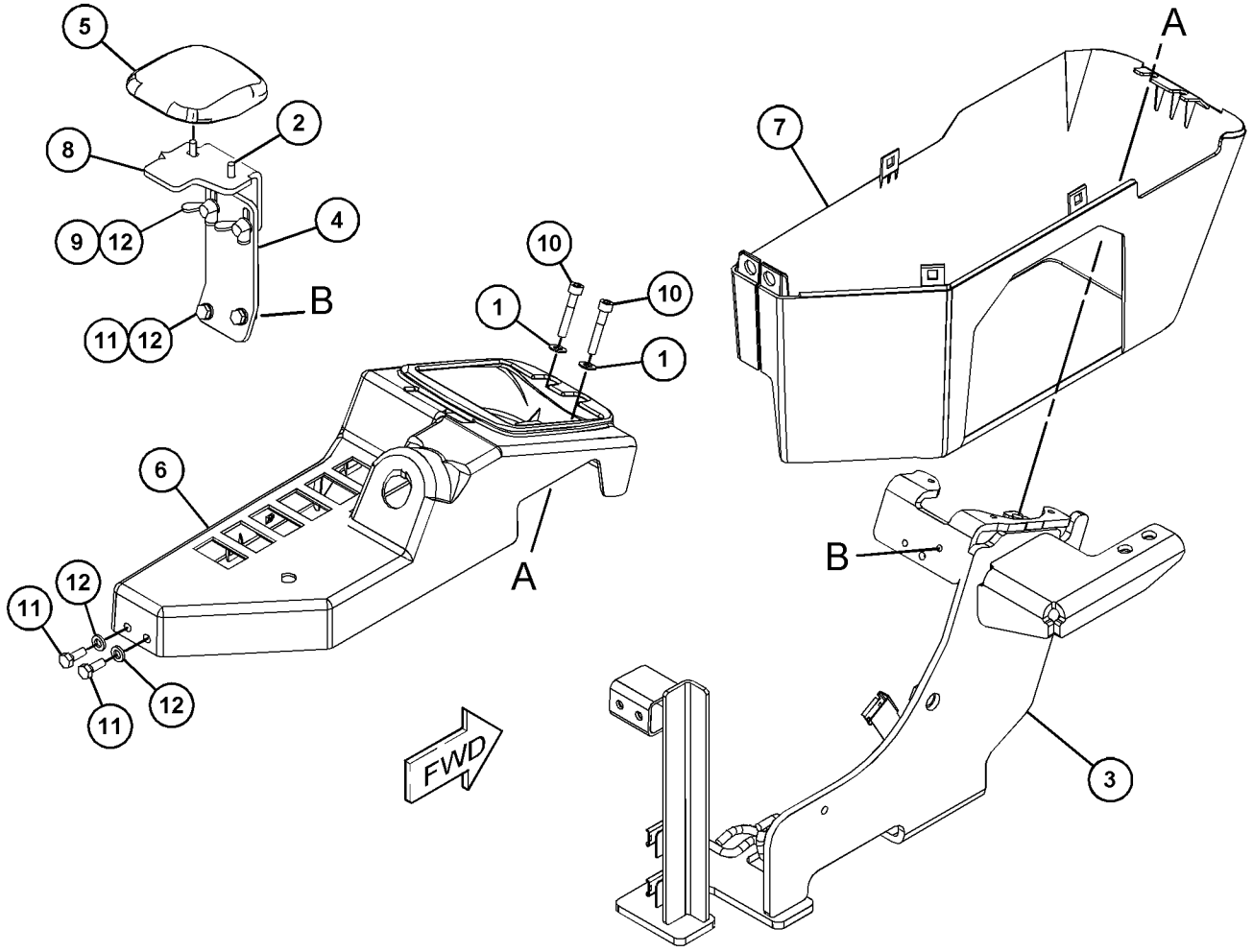

GRAPHIC #1 **<END>** g03403683

379-3599 CONSOLE GP-OPERATOR–LH

PART OF 379-3597 CONSOLE GP-OPERATOR

SMCS-5258, 7451 **i04589463**

NOTE	REF NO	GRAPHIC REF	PART NUMBER	QTY	PART NAME 1 2 3 4 5 6 (PRODUCT LEVEL)	SEE PAGE
	1	1	**207-0785**	1	LOCKWASHER	
	2	1	**207-0797**	3	BUSHING	
	3	1	**207-0799**	2	BUSHING	
	4	1	**207-0800**	2	BUSHING	
	5	1	**211-7455**	1	KNOB	
	6	1	**222-0668**	2	WASHER (6.5X13X1-MM THK)	
	7	1	**281-8618**	1	PLATE AS	
	8	1	**281-8619**	1	LEVER AS	
	9	1	**281-8630**	1	SPRING	
	10	1	**281-8631**	1	SPRING	
	11	1	**284-0838**	1	BUSHING	
	12	1	**284-0839**	1	CLIP	
	13	1	**284-0840**	1	NUT	
	14	1	**284-0850**	2	SCREW	
	15	1	**327-1749**	2	RING	
	16	1	**379-3608**	1	PLATE	
	17	1	**379-3610**	1	PAD	
	18	1	**379-3613**	1	FRAME AS	
	19	1	**379-3614**	1	COVER-UPPER	
	20	1	**379-3615**	1	COVER-LOWER	
	21	1	**379-3616**	1	SUPPORT AS	
	22	1	**9X-8256**	6	WASHER (6.6X12X2-MM THK)	
M	23	1	**096-4034**	2	BOLT-WING (M6X1X15-MM)	
M	24	1	**1R-5396**	2	BOLT (M6X1X35-MM)	
M	25	1	**5C-9553**	4	BOLT (M6X1X16-MM)	
M	26	1	**8T-4189**	1	BOLT (M8X1.25X20-MM)	
	27	1	**379-3623**	1	PLATE	

M - METRIC PART

379-3599 **CONSOLE GP-OPERATOR (*contd.*)** **i04589463**

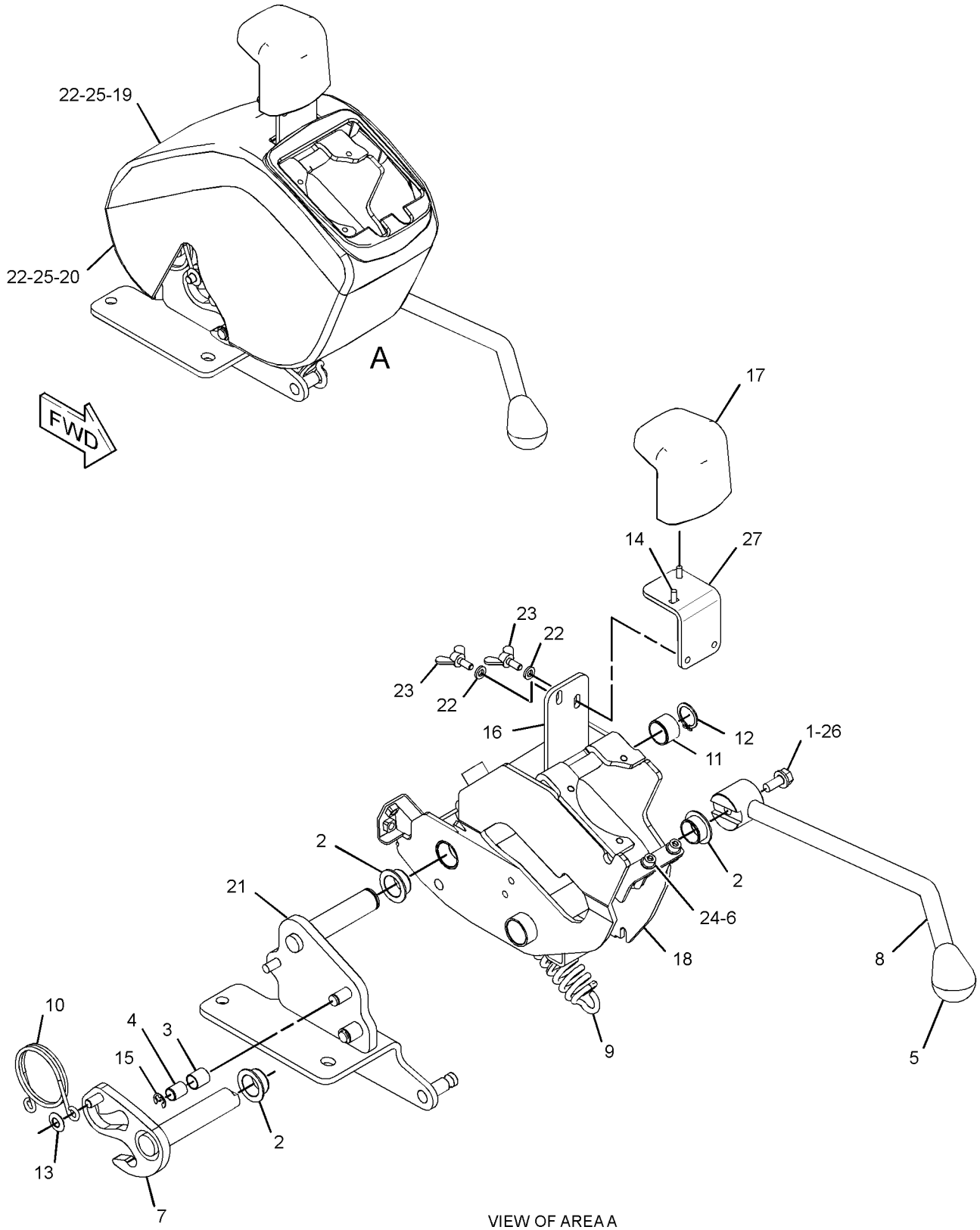

VIEW OF AREA A
(COVERS REMOVED FOR CLARITY)

GRAPHIC #1 **<END>** g02797063

272-0474 CONTROL & MTG GP-PEDAL–TRAVEL

PART OF 355-3393 CONTROL & MTG GP-PEDAL

SMCS-5051, 5063, 5462 **i03965115**

NOTE	REF NO	GRAPHIC REF	PART NUMBER	QTY	PART NAME 1 2 3 4 5 6 (PRODUCT LEVEL)	SEE PAGE
	1	1	**275-0773**	1	PEDAL AS (LH)	
	2	1	**275-0774**	1	PEDAL AS (RH)	
	3	1	**2S-0736**	4	WASHER-HARD (17X27X3.5-MM THK)	
	4	1	**8T-4121**	4	WASHER-HARD (11X21X2.5-MM THK)	
M	5	1	**8T-4137**	4	BOLT (M10X1.5X20-MM)	

M - METRIC PART

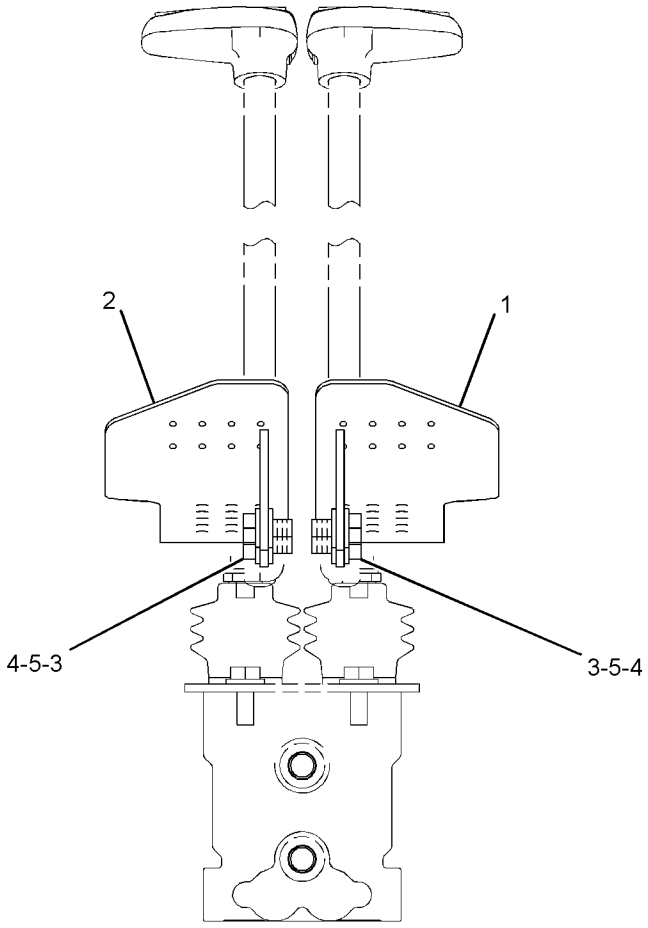

FRONT VIEW

GRAPHIC #1 **<END>** g01367791

355-3393 CONTROL & MTG GP-PEDAL–TRAVEL

PART OF 376-6671 COMMON AR

SMCS-5051, 5063, 5462

i04006630

NOTE	PART NUMBER	QTY	PART NAME 1 2 3 4 5 6 (PRODUCT LEVEL)	SEE PAGE
Y	*272-0474*	1	CONTROL & MTG GP-PEDAL (TRAVEL)	478

Y - SEPARATE ILLUSTRATION

<END>

285-8286 CONTROL GP-HYDRAULIC HAND–TRAVEL

PART OF 379-3624 OPERATOR AR

SMCS-5063, 5462 **i04019583**

NOTE	REF NO	GRAPHIC REF	PART NUMBER	QTY	PART NAME 1 2 3 4 5 6 (PRODUCT LEVEL)	SEE PAGE
	1	1	**142-5546**	2	KNOB	
	2	1	**275-0775**	1	LEVER AS (LH)	
	3	1	**275-0776**	1	LEVER AS (RH)	
M	4	1	**8T-0337**	2	SCREW-MACHINE (M4X0.7X12-MM)	
	5	1	**096-6166**	2	WASHER-HARD (4.5X9X1-MM THK)	
	6	1	**8T-4121**	4	WASHER-HARD (11X21X2.5-MM THK)	
M	7	1	**8T-4191**	4	BOLT (M10X1.5X16-MM)	

M - METRIC PART

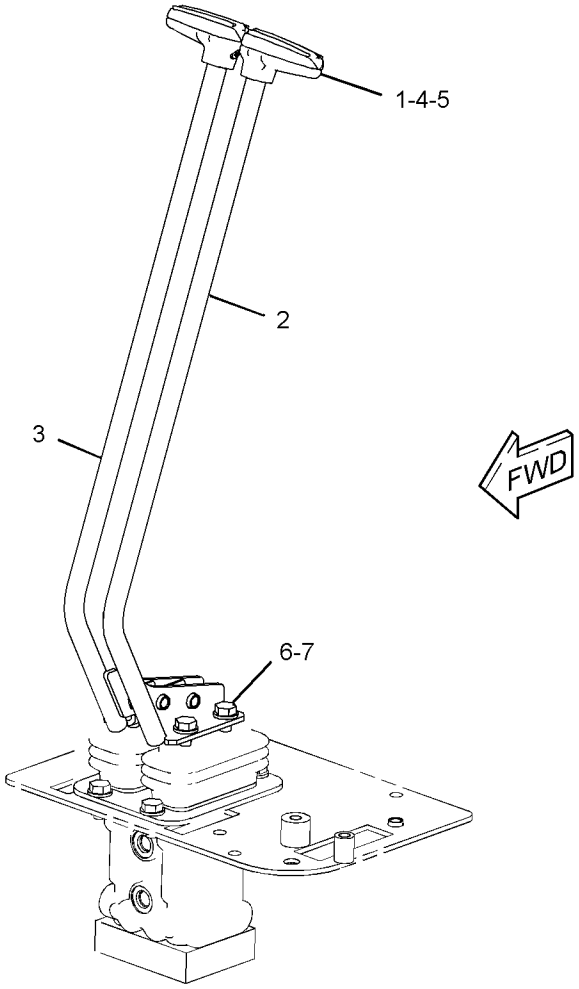

GRAPHIC #1 **<END>** g01240115

376-8851 CONTROL GP-JOYSTICK–LH

PART OF 379-2010 CONTROL GP-JOYSTICK

AN ATTACHMENT

SMCS-5063, 5705, 6107 **i04559360**

NOTE	REF NO	GRAPHIC REF	PART NUMBER	QTY	PART NAME 1 2 3 4 5 6 (PRODUCT LEVEL)	SEE PAGE
	1	1	**376-8852**	1	CONTROL GP-HANDLE (LH)	
		1	**8T-8729**	4	PIN-CONNECTOR (16-GA TO 18-GA)	
		1	**8T-8737**	2	PLUG-SEAL	
		1	**102-8805**	1	KIT-RECEPTACLE (6-PIN)	
					(INCLUDES RECEPTACLE AS & WEDGE)	
	2	1	**376-8853**	1	BOOT	
	3	1	**376-8854**	1	ADAPTER (LH)	

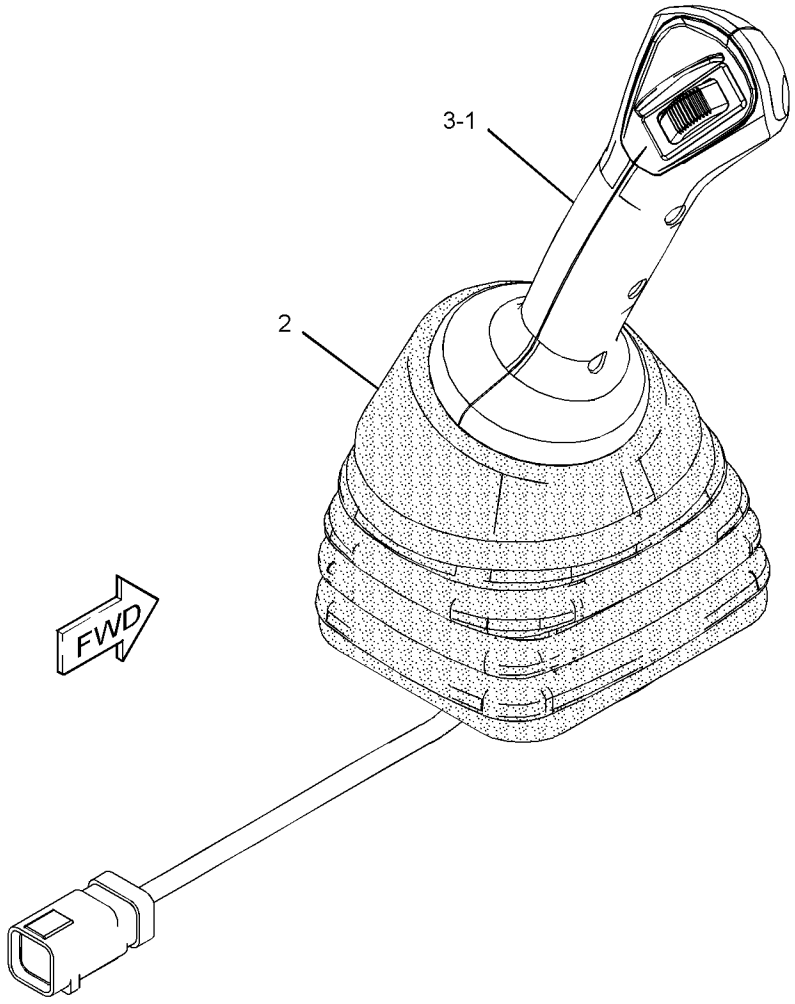

GRAPHIC #1 **<END>** g02767957

376-8855 CONTROL GP-JOYSTICK–LH

PART OF 376-9494 CONTROL GP-JOYSTICK

AN ATTACHMENT

SMCS-5063, 5705, 6107 **i04559361**

NOTE	REF NO	GRAPHIC REF	PART NUMBER	QTY	PART NAME 1 2 3 4 5 6 (PRODUCT LEVEL)	SEE PAGE
	1	1	**376-8856**	1	CONTROL GP-HANDLE (LH)	
		1	**8T-8729**	6	PIN-CONNECTOR (16-GA TO 18-GA)	
		1	**102-8805**	1	KIT-RECEPTACLE (6-PIN)	
					(INCLUDES RECEPTACLE AS & WEDGE)	
	2	1	**376-8853**	1	BOOT	
	3	1	**376-8854**	1	ADAPTER (LH)	

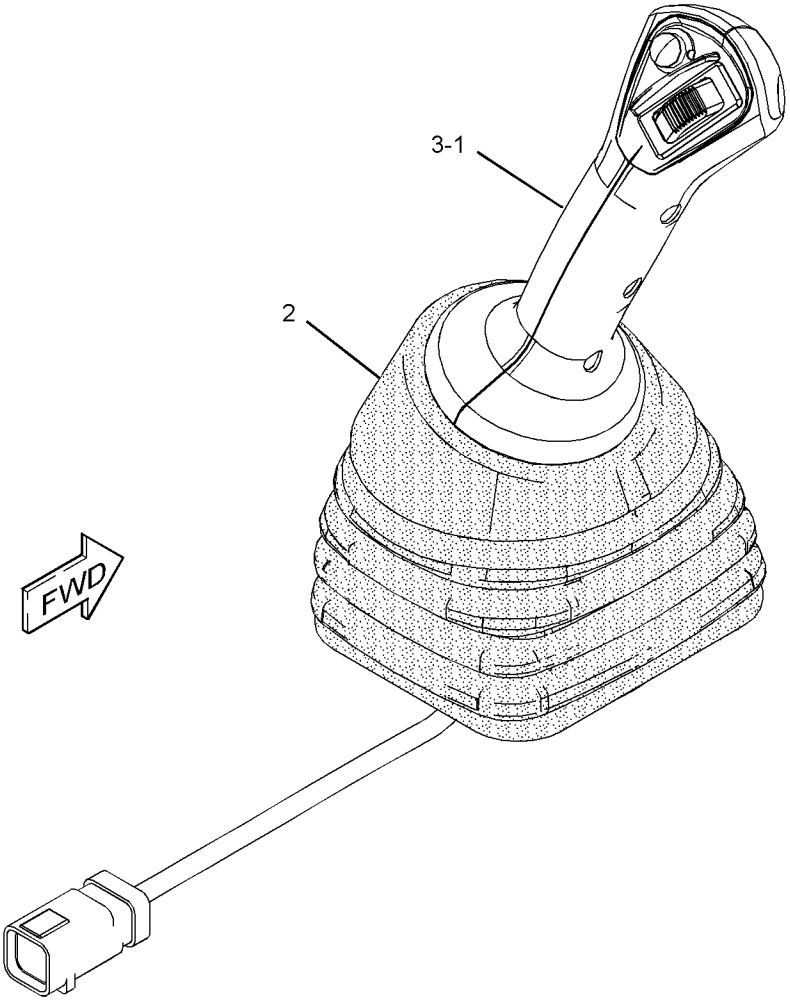

GRAPHIC #1 **<END>** g02768100

376-9483 CONTROL GP-JOYSTICK–RH

PART OF 376-9495 CONTROL GP-JOYSTICK
AN ATTACHMENT

SMCS-5063, 5705, 6107 **i04559362**

NOTE	REF NO	GRAPHIC REF	PART NUMBER	QTY	PART NAME 1 2 3 4 5 6 (PRODUCT LEVEL)	SEE PAGE
	1	1	**376-9484**	1	CONTROL GP-HANDLE (RH)	
		1	**8T-8729**	6	PIN-CONNECTOR (16-GA TO 18-GA)	
		1	**102-8805**	1	KIT-RECEPTACLE (6-PIN)	
					(INCLUDES RECEPTACLE AS & WEDGE)	
	2	1	**376-9485**	1	BOOT	
	3	1	**376-9486**	1	ADAPTER (RH)	

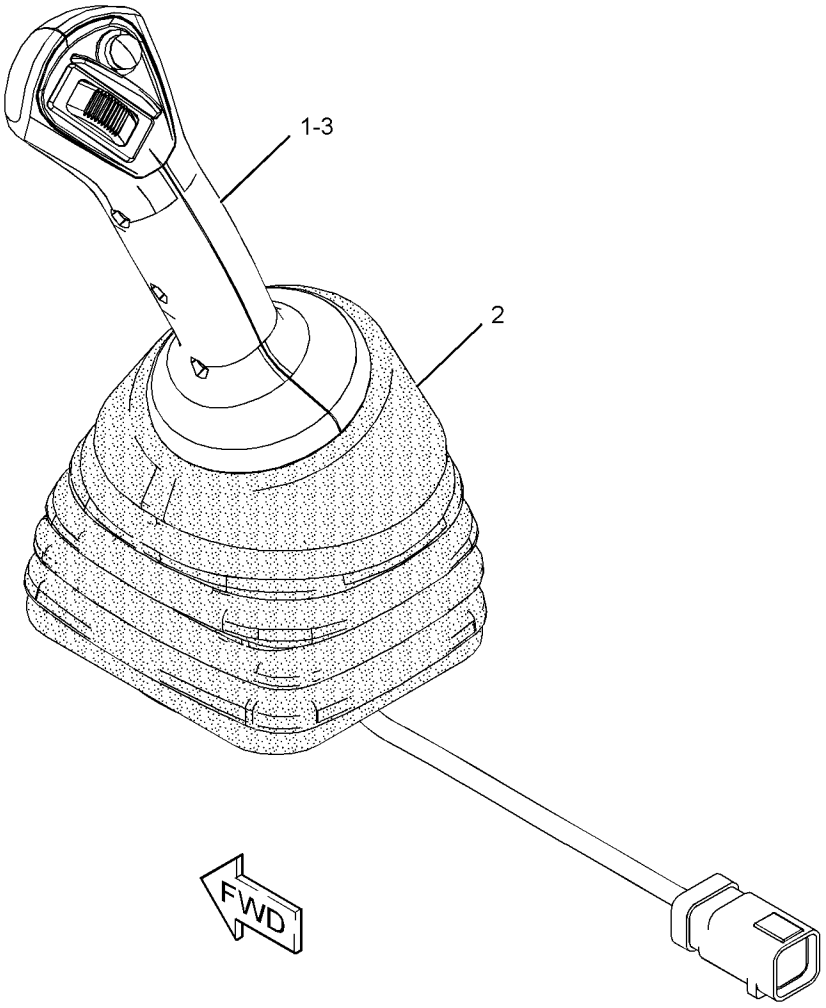

GRAPHIC #1 **<END>** g02768176

376-9494 CONTROL GP-JOYSTICK–LH

PART OF 378-2497 CONTROL GP-PILOT OPERATED HYD

AN ATTACHMENT

SMCS-5063, 5705, 6107 **i04559363**

NOTE	REF NO	GRAPHIC REF	PART NUMBER	QTY	PART NAME 1 2 3 4 5 6 (PRODUCT LEVEL)	SEE PAGE
M	1	1	**096-4876**	1	NUT (M14X2-THD)	
Y	2	1	**267-0420**	1	VALVE GP-PILOT (JOYSTICK)	348
Y	3	1	**376-8855**	1	CONTROL GP-JOYSTICK (LH)	482

M - METRIC PART
Y - SEPARATE ILLUSTRATION

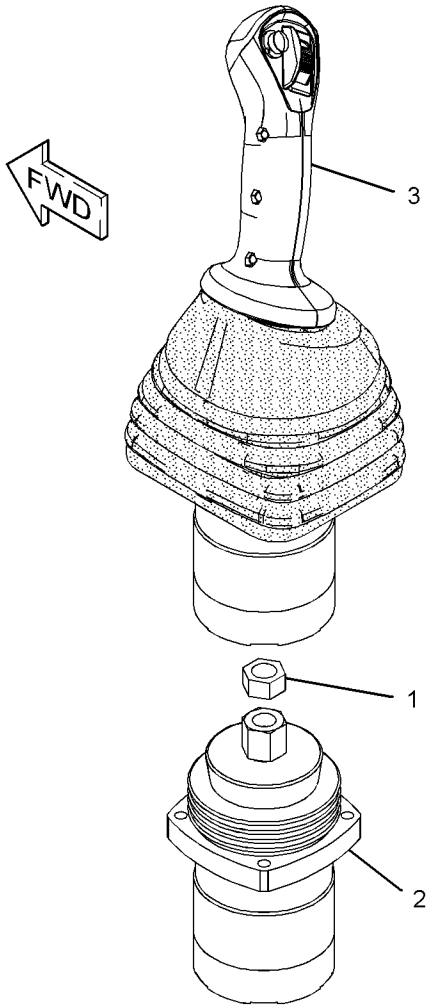

GRAPHIC #1 **<END>** g02768217

376-9495 CONTROL GP-JOYSTICK–RH

PART OF 378-2495, 378-2497 CONTROL GP-PILOT OPERATED HYD AN ATTACHMENT

SMCS-5063, 5705, 6107 **i04559364**

NOTE	REF NO	GRAPHIC REF	PART NUMBER	QTY	PART NAME 1 2 3 4 5 6 (PRODUCT LEVEL)	SEE PAGE
M	1	1	**096-4876**	1	NUT (M14X2-THD)	
Y	2	1	**267-0420**	1	VALVE GP-PILOT (JOYSTICK)	348
Y	3	1	**376-9483**	1	CONTROL GP-JOYSTICK (RH)	483

M - METRIC PART
Y - SEPARATE ILLUSTRATION

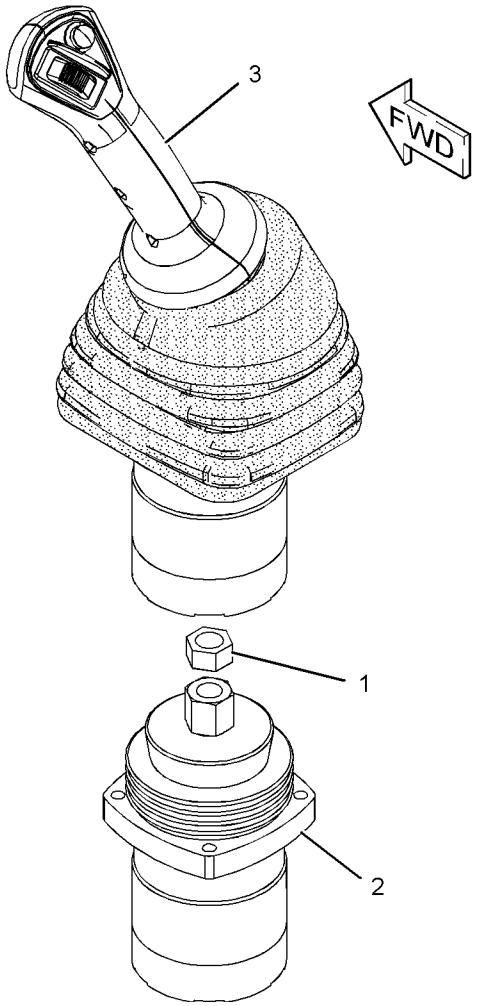

GRAPHIC #1 **<END>** g02768256

379-2010 CONTROL GP-JOYSTICK–LH

PART OF 378-2495 CONTROL GP-PILOT OPERATED HYD

AN ATTACHMENT

SMCS-5063, 5705, 6107 **i04559504**

NOTE	REF NO	GRAPHIC REF	PART NUMBER	QTY	PART NAME 1 2 3 4 5 6 (PRODUCT LEVEL)	SEE PAGE
M	1	1	**096-4876**	1	NUT (M14X2-THD)	
Y	2	1	**267-0420**	1	VALVE GP-PILOT (JOYSTICK)	348
Y	3	1	**376-8851**	1	CONTROL GP-JOYSTICK (LH)	481

M - METRIC PART
Y - SEPARATE ILLUSTRATION

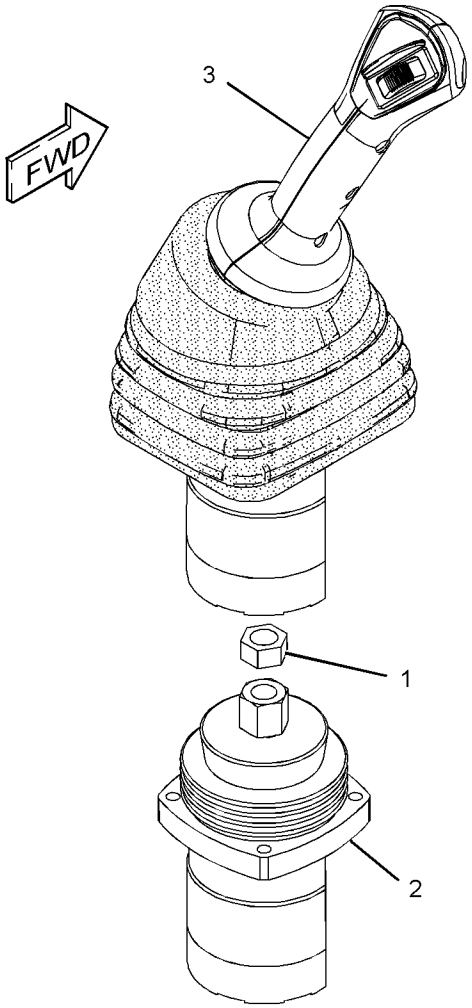

GRAPHIC #1 **<END>** g02768297

377-5958 CONTROL GP-PILOT OPERATED HYD—BLADE

S/N: TTN1-907
PART OF 377-8915 BLADE AR-STRAIGHT
AN ATTACHMENT

SMCS-5059, 5705 **i04560857**

NOTE	REF NO	GRAPHIC REF	PART NUMBER	QTY	PART NAME 1 2 3 4 5 6 (PRODUCT LEVEL)	SEE PAGE
Y	1	1	**320-6540**	1	VALVE GP-PILOT (BLADE CONTROL)	349
	2	1	**376-8857**	1	LEVER AS	
		1	**102-8802**	1	KIT-RECEPTACLE (2-PIN)	
					(INCLUDES RECEPTACLE AS & WEDGE)	
		1	**376-9493**	1	GROMMET	
M	3	1	**101-7404**	2	BOLT-SOCKET HEAD (M10X1.5X30-MM)	
M	4	1	**8T-4192**	1	BOLT (M12X1.75X25-MM)	
	5	1	**8T-4223**	1	WASHER-HARD (13.5X25.5X3-MM THK)	

M - METRIC PART
Y - SEPARATE ILLUSTRATION

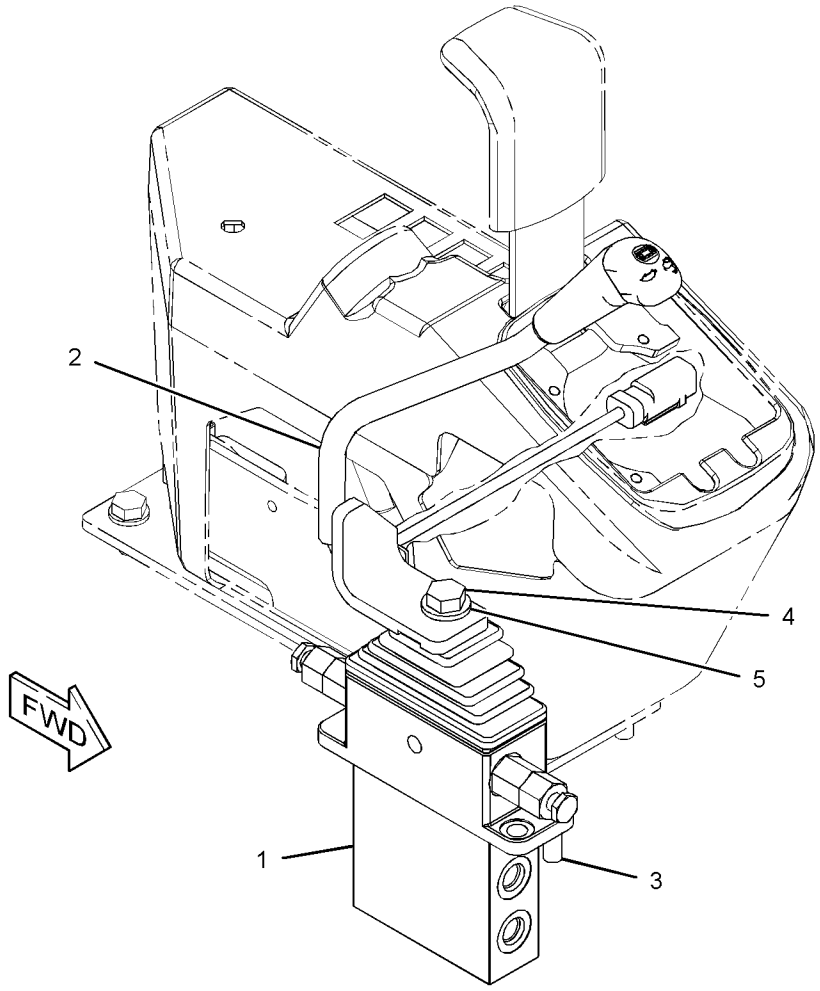

GRAPHIC #1 **<END>** g02767539

378-2495 CONTROL GP-PILOT OPERATED HYD

PART OF 378-2501 CONTROL AR-HYDRAULIC
AN ATTACHMENT

SMCS-5059, 5705 **i04559494**

NOTE	REF NO	GRAPHIC REF	PART NUMBER	QTY	PART NAME 1 2 3 4 5 6 (PRODUCT LEVEL)	SEE PAGE
Y	1	1	*376-9495*	1	CONTROL GP-JOYSTICK (RH)	485
Y	2	1	*379-2010*	1	CONTROL GP-JOYSTICK (LH)	486
M	3	1	**3T-0849**	6	BOLT-SOCKET HEAD (M6X1X25-MM)	

M - METRIC PART
Y - SEPARATE ILLUSTRATION

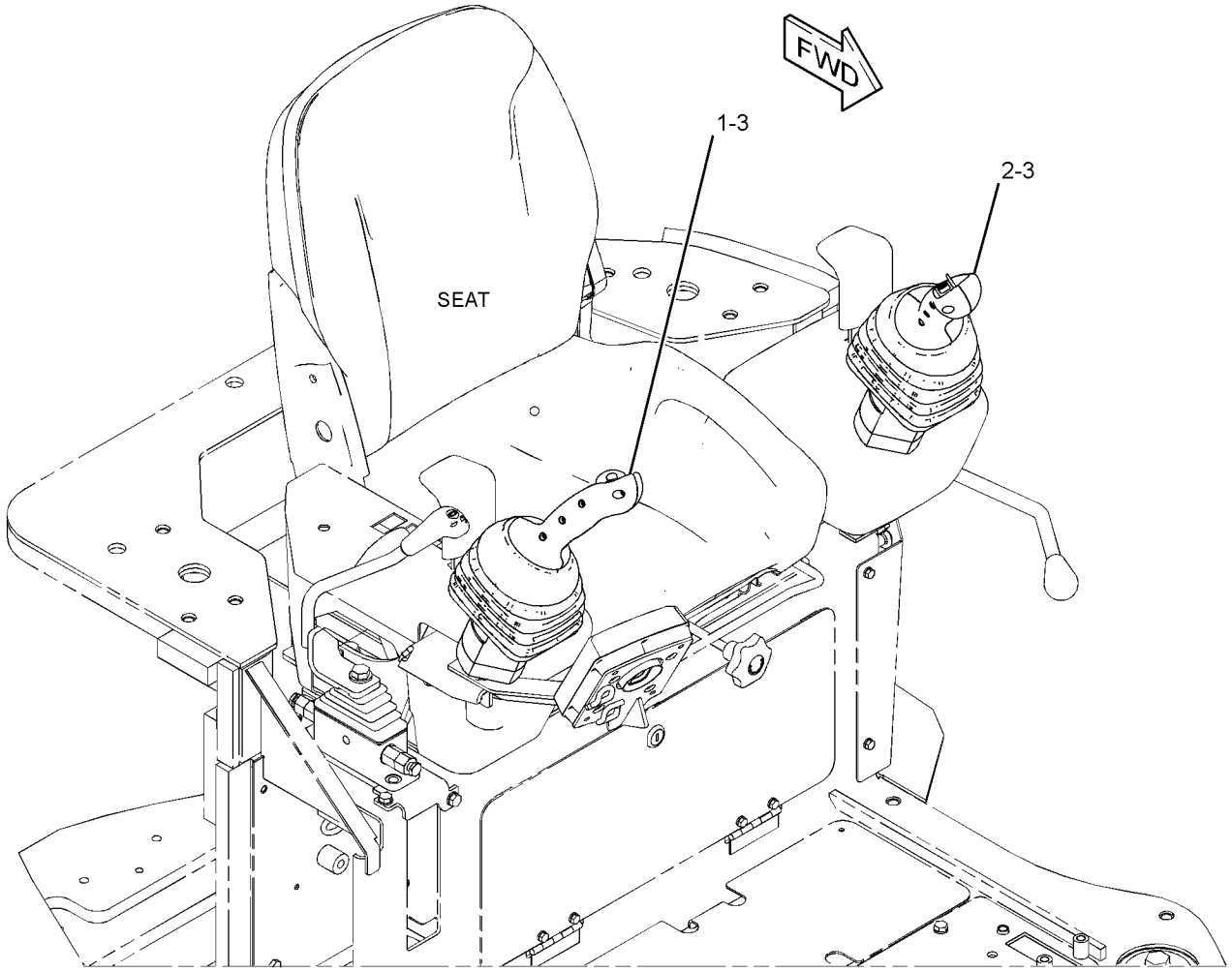

GRAPHIC #1 **<END>** g02765916

378-2497 CONTROL GP-PILOT OPERATED HYD–2ND AUXILIARY

PART OF 378-2500 CONTROL AR-HYDRAULIC

AN ATTACHMENT

SMCS-5059, 5705 **i04559496**

NOTE	REF NO	GRAPHIC REF	PART NUMBER	QTY	PART NAME 1 2 3 4 5 6 (PRODUCT LEVEL)	SEE PAGE
Y	1	1	*376-9494*	1	CONTROL GP-JOYSTICK (LH)	484
Y	2	1	*376-9495*	1	CONTROL GP-JOYSTICK (RH)	485
M	3	1	**3T-0849**	6	BOLT-SOCKET HEAD (M6X1X25-MM)	

M - METRIC PART
Y - SEPARATE ILLUSTRATION

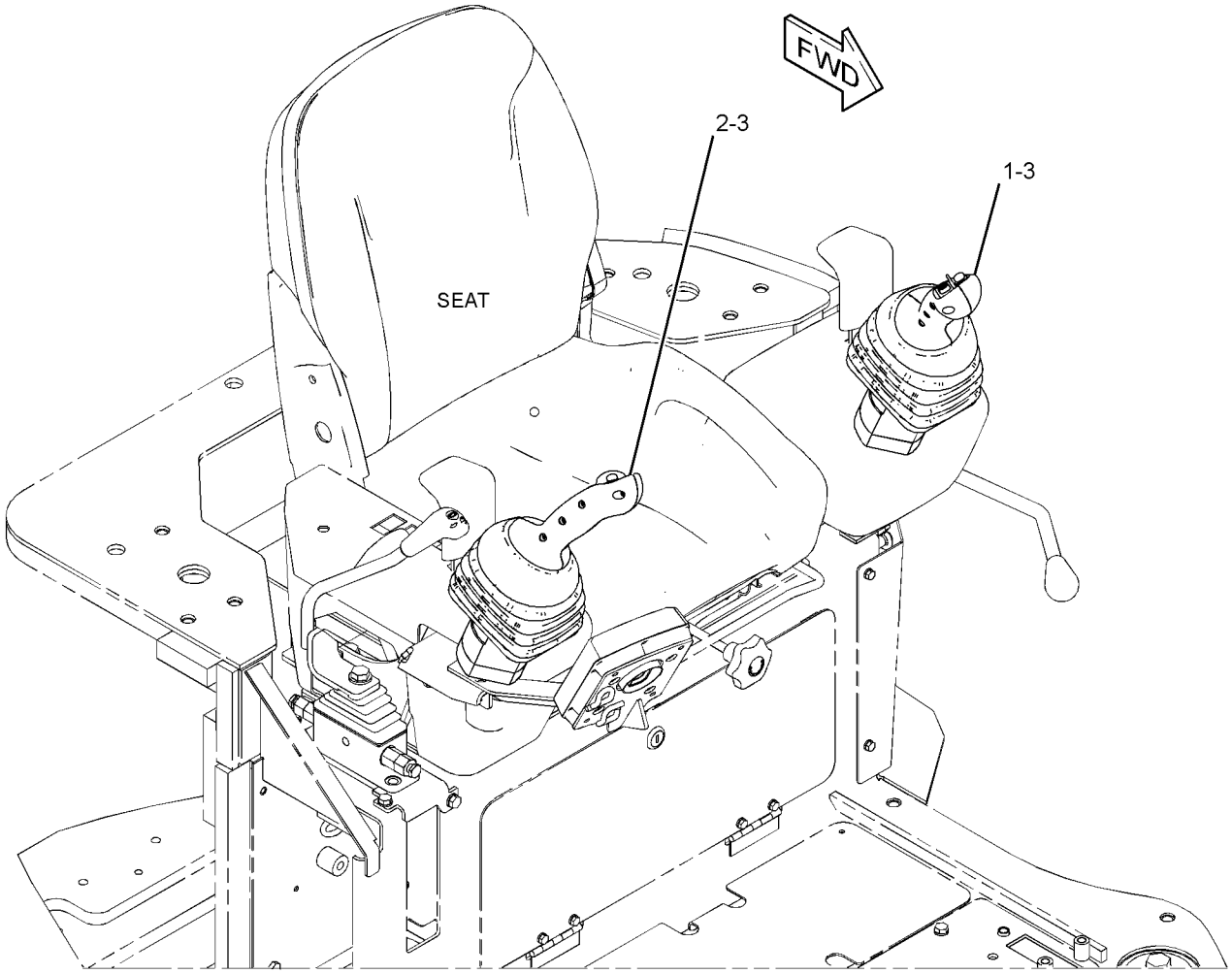

GRAPHIC #1 **<END>** g02765779

382-0522 CONTROL GP-PILOT OPERATED HYD–BLADE

S/N: TTN1-907
PART OF 377-8928 BLADE AR-ANGLING
AN ATTACHMENT

SMCS-5059, 5705 **i04658611**

NOTE	REF NO	GRAPHIC REF	PART NUMBER	QTY	PART NAME 1 2 3 4 5 6 (PRODUCT LEVEL)	SEE PAGE
Y	1	1	**320-6540**	1	VALVE GP-PILOT (BLADE CONTROL)	349
	2	1	**8T-4223**	1	WASHER-HARD (13.5X25.5X3-MM THK)	
M	3	1	**101-7404**	2	BOLT-SOCKET HEAD (M10X1.5X30-MM)	
M	4	1	**8T-4192**	1	BOLT (M12X1.75X25-MM)	
	5	1	**385-1276**	1	LEVER AS (ANGLE BLADE)	
		1	**102-8802**	1	KIT-RECEPTACLE (2-PIN)	
		1	**102-8804**	1	KIT-RECEPTACLE (4-PIN)	
					(EACH RECEPTACLE KIT INCLUDES RECEPTACLE AS & WEDGE)	
		1	**376-9493**	1	GROMMET	

M - METRIC PART
Y - SEPARATE ILLUSTRATION

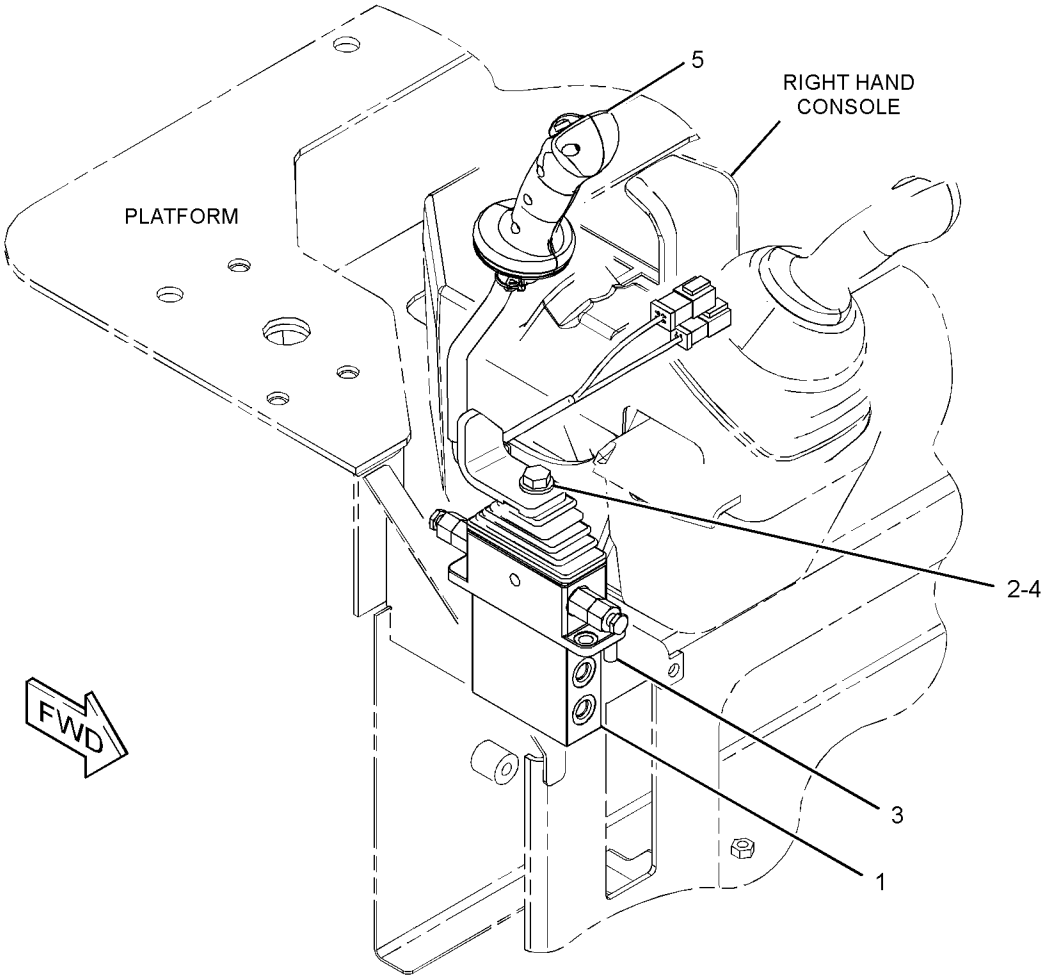

GRAPHIC #1 **<END>** g02808996

419-1204 CONTROL GP-PILOT OPERATED HYD

S/N: TTN908-UP
PART OF 377-8928 BLADE AR-ANGLING
AN ATTACHMENT

SMCS-5059, 5705

i05357761

NOTE	REF NO	GRAPHIC REF	PART NUMBER	QTY	PART NAME 1 2 3 4 5 6 (PRODUCT LEVEL)	SEE PAGE
	1	1	**385-1276**	1	LEVER AS (ANGLE BLADE)	
		1	**102-8802**	1	KIT-RECEPTACLE (2-PIN)	
		1	**102-8804**	1	KIT-RECEPTACLE (4-PIN)	
					(EACH RECEPTACLE KIT INCLUDES RECEPTACE AS & WEDGE)	
M	2	1	**8T-4192**	1	BOLT (M12X1.75X25-MM)	
	3	1	**8T-4223**	1	WASHER-HARD (13.5X25.5X3-MM THK)	

M - METRIC PART

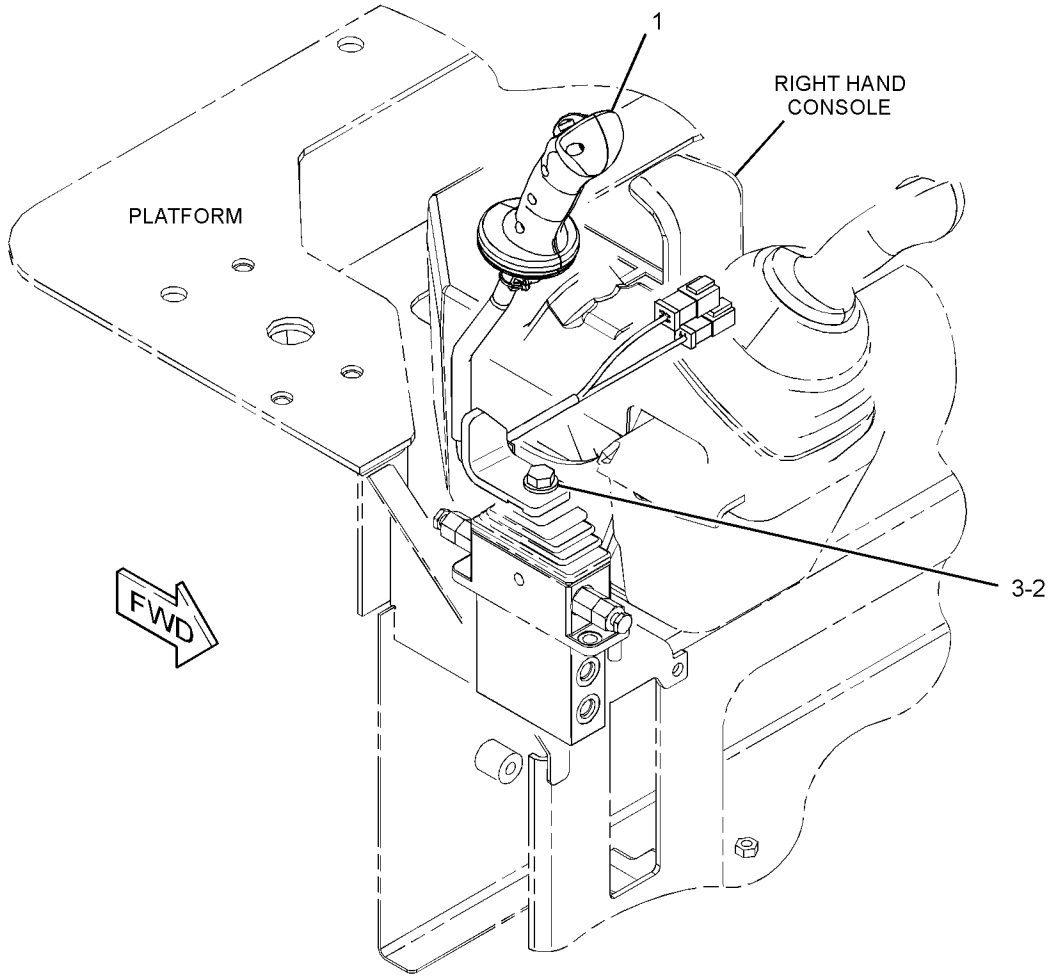

GRAPHIC #1

<END>

g03404593

421-2716 CONTROL GP-PILOT OPERATED HYD–BLADE

S/N: TTN908-UP
PART OF 377-8915 BLADE AR-STRAIGHT
AN ATTACHMENT

SMCS-5059, 5705 **i05270706**

NOTE	REF NO	GRAPHIC REF	PART NUMBER	QTY	PART NAME 1 2 3 4 5 6 (PRODUCT LEVEL)	SEE PAGE
	1	1	**376-8857**	1	LEVER AS	
		1	**102-8802**	1	KIT-RECEPTACLE (2-PIN)	
					(INCLUDES RECEPTACLE AS & WEDGE)	
M	2	1	**8T-4192**	1	BOLT (M12X1.75X25-MM)	
	3	1	**8T-4223**	1	WASHER-HARD (13.5X25.5X3-MM THK)	

M - METRIC PART

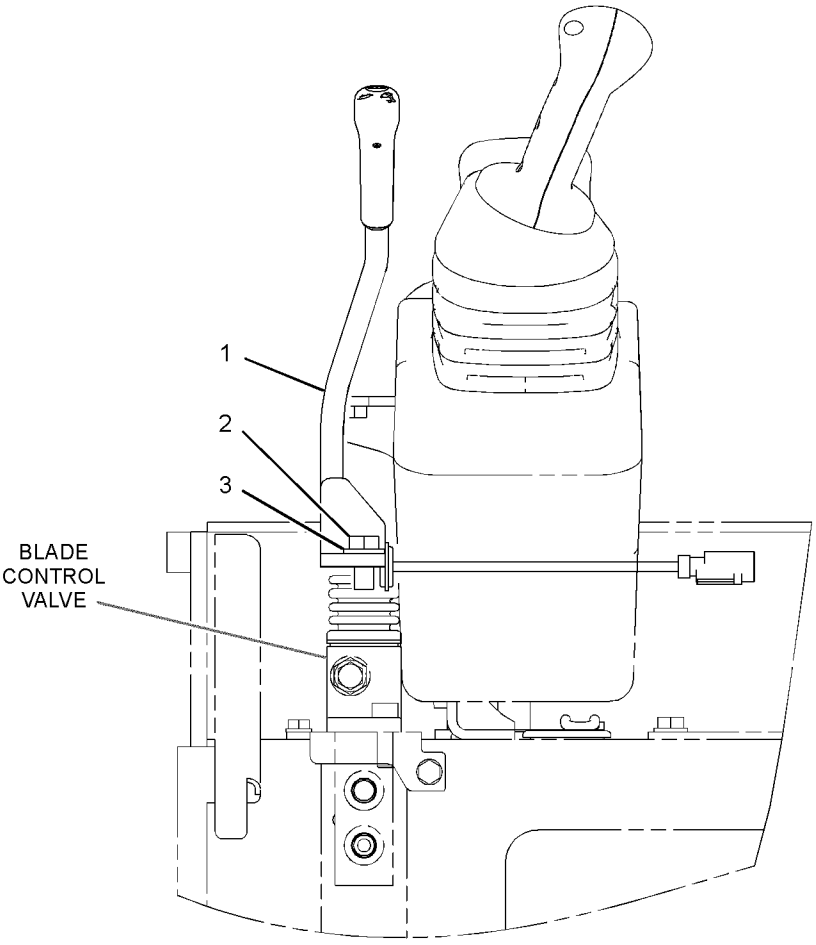

FRONT VIEW

GRAPHIC #1 **<END>** g03411556

382-0501 COVER GP-ACCESS

PART OF 383-5926 CANOPY AR, 377-8932 CANOPY AR-OPEN ROPS
AN ATTACHMENT

SMCS-726A, 7451 **i04824662**

NOTE	REF NO	GRAPHIC REF	PART NUMBER	QTY	PART NAME 1 2 3 4 5 6 (PRODUCT LEVEL)	SEE PAGE
	1	1	**332-1809**	1	PLUG	
	2	1	*389-8753*	1	COVER AS-ACCESS	
		1	**382-0502**	1	COVER	
		1	**382-0503**	1	SEAL	
		1	**382-6315**	1	SEAL	
	3	1	**8T-4224**	1	WASHER-HARD (8.8X16X2-MM THK)	
	4	1	**382-0543**	1	HOLDER-CUP	
M	5	1	**8T-7547**	1	BOLT (M8X1.25X30-MM)	
	6	1	**8T-4121**	2	WASHER-HARD (11X21X2.5-MM THK)	
M	7	1	**8T-4137**	2	BOLT (M10X1.5X20-MM)	

M - METRIC PART

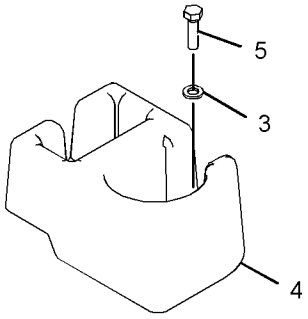

VIEW OF AREA A
(EXPLODE)

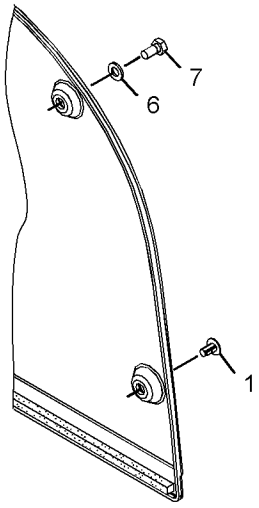

VIEW OF AREA B
(EXPLODE)

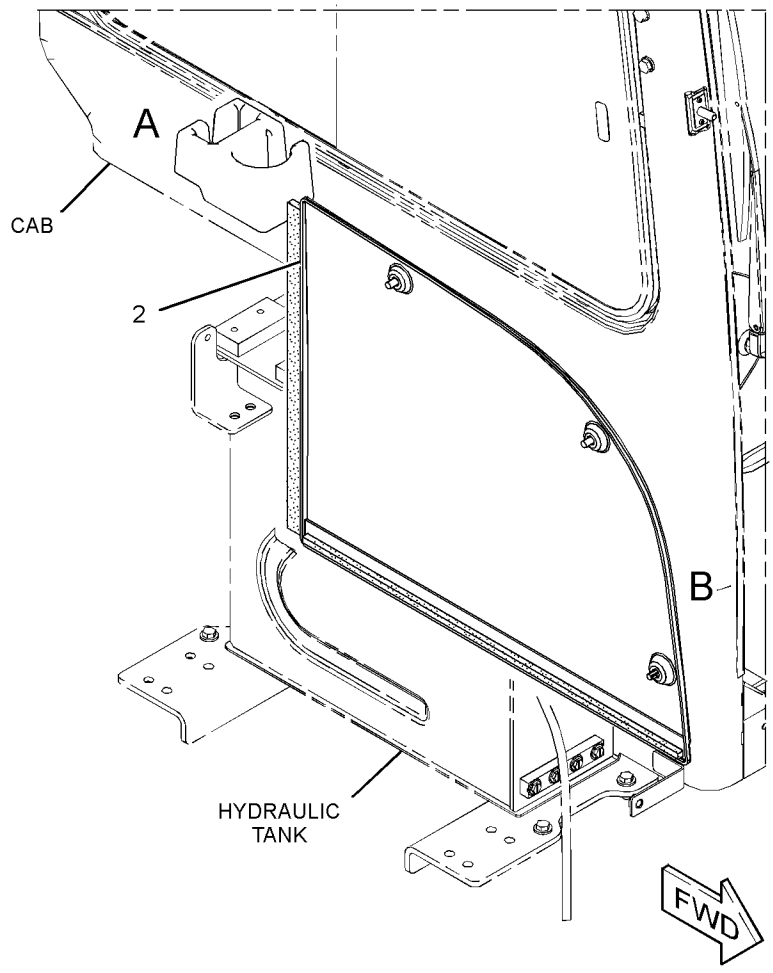

GRAPHIC #1 **<END>** g02959380

367-0950 COVER GP-CAB—TOP

PART OF 376-6691, 376-6695, 383-5924, 383-5925 CAB AR
AN ATTACHMENT

SMCS-7301 **i04617849**

NOTE	REF NO	GRAPHIC REF	PART NUMBER	QTY	PART NAME 1 2 3 4 5 6 (PRODUCT LEVEL)	SEE PAGE
	1	1	**377-7942**	1	COVER AS-TOP	
		1	**377-7944**	1	FOAM	
		1	**379-6417**	1	INSULATION	
	2	1	**7X-7729**	3	WASHER (11X25X3-MM THK)	
M	3	1	**8T-4137**	1	BOLT (M10X1.5X20-MM)	
M	4	1	**8T-4196**	2	BOLT (M10X1.5X35-MM)	

M - METRIC PART

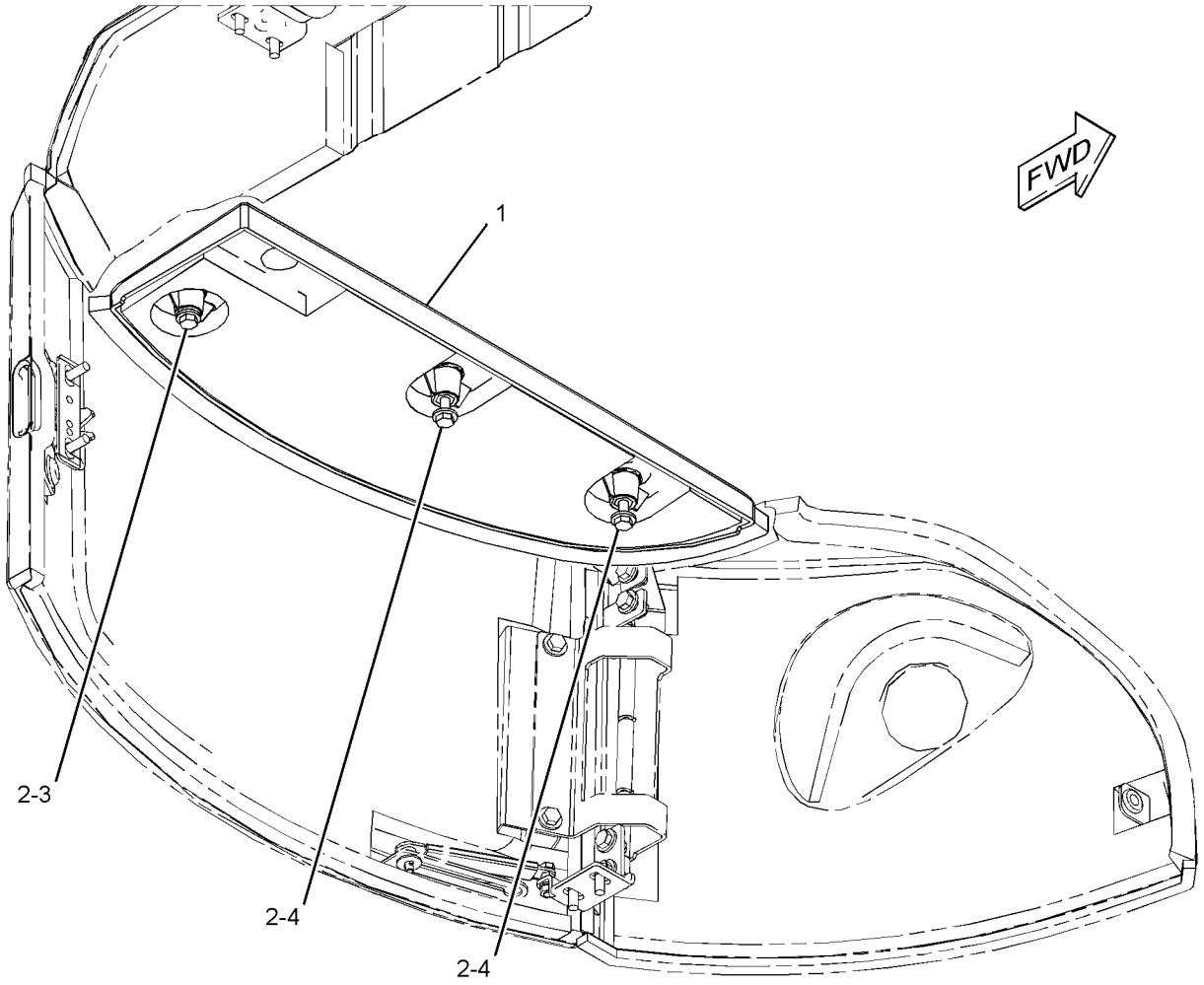

GRAPHIC #1 **<END>** g02789131

281-1195 DOOR GP-CAB

PART OF 377-5108, 415-6803, 419-1237 CAB GP

AN ATTACHMENT

SMCS-7308 **i03965395**

NOTE	REF NO	GRAPHIC REF	PART NUMBER	QTY	PART NAME 1 2 3 4 5 6 (PRODUCT LEVEL)	SEE PAGE
	1	1	**281-1196**	1	DOOR AS-CAB	
	2	1	**280-7544**	1	HANDLE	
M	3	1	**5C-2890**	2	NUT (M6X1-THD)	
	4	1	**196-1441**	1	LOCK AS	
	5	1	**132-7625**	1	LOCK AS	
	6	1	**280-7548**	1	LOCK AS	
M	7	1	**8T-4171**	4	BOLT (M6X1X12-MM)	
	8	1	**277-6030**	1	HANDLE	
	9	1	**281-6262**	2	SCREW (M5X0.8X20-MM)	
	10	1	**277-6031**	1	HANDLE	
	11	1	**281-6263**	2	SCREW (M3X16-MM)	
	12	1	**281-1200**	2	LOCKNUT (M3X0.5-THD)	
	13	1	**293-3116**	1	ROD AS	
M	14	1	**095-0742**	2	SCREW-MACHINE (M6X1X16-MM)	
	15	1	**281-6264**	2	BOLT (M8X16-MM)	
	16	1	**280-7552**	1	COVER	
	17	1	**281-3650**	1	SEAL	
	18	1	**277-6032**	1	COVER	
	19	1	**280-7554**	3	WASHER-CONICAL (6.5X15.8X5.4-MM THK)	
	20	1	**281-6265**	3	SCREW (M6X16-MM)	
	21	1	**281-5481**	1	SCREW (M6X16-MM)	
	22	1	**281-1199**	1	BRACKET-ROLLER	
	23	1	**280-0408**	6	BOLT	
	24	1	**280-7555**	1	BRACKET	
	25	1	**280-7559**	1	BRACKET	
	26	1	**280-7561**	1	GLASS (LH)	
	27	1	**281-3655**	1	CUSHION	
	28	1	**280-7562**	1	SEAL	
	29	1	**280-8624**	1	SEAL	

M - METRIC PART

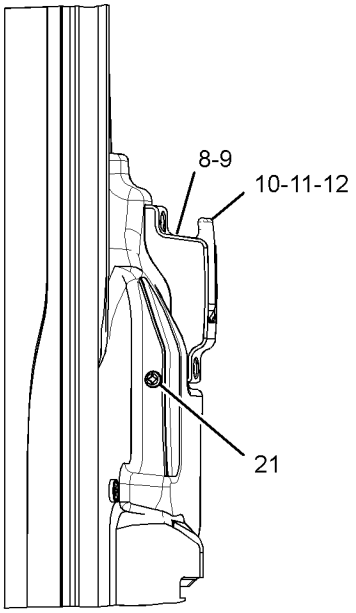

VIEW A-A

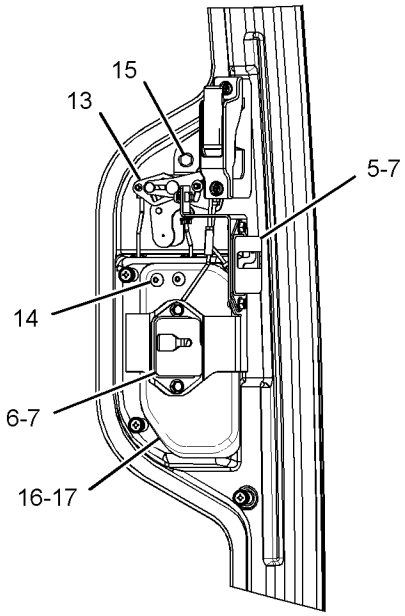

VIEW OF AREA B

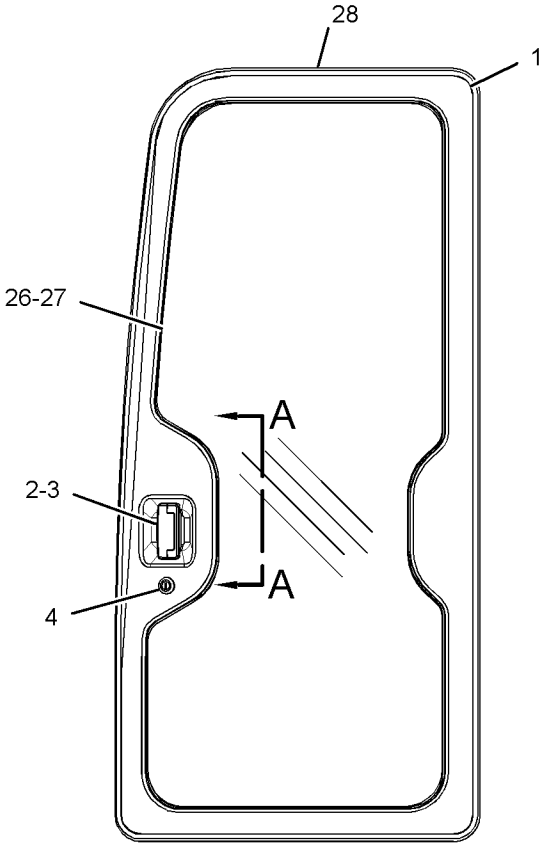

LEFT SIDE VIEW

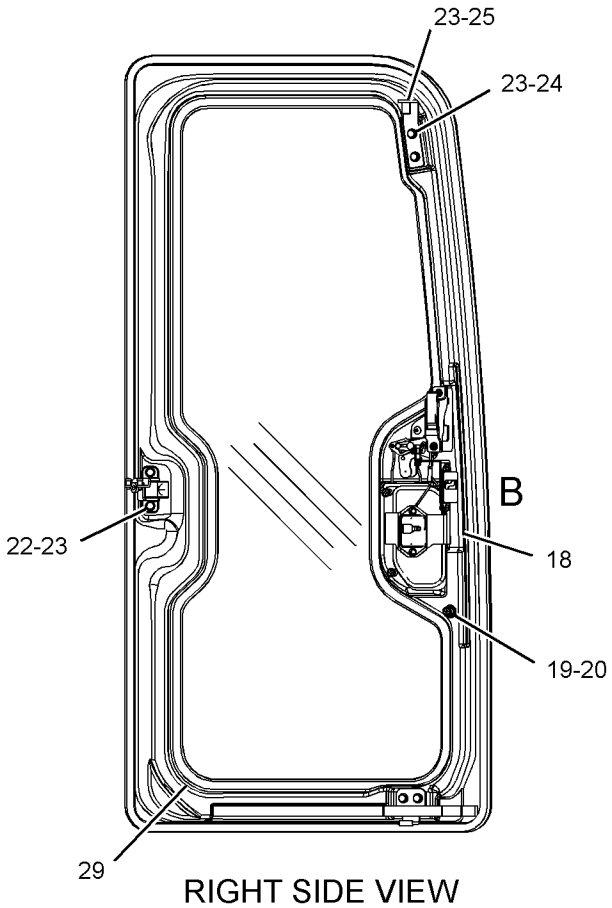

RIGHT SIDE VIEW
(INSIDE CAB)

GRAPHIC #1 **<END>** g01288327

377-5865 DUCT GP-CAB AIR

PART OF 377-5876 AIR CONDITIONER GP

AN ATTACHMENT

SMCS-734D **i04565445**

NOTE	REF NO	GRAPHIC REF	PART NUMBER	QTY	PART NAME 1 2 3 4 5 6 (PRODUCT LEVEL)	SEE PAGE
	1	1	**8Y-6967**	2	LOUVER AS-VENT	
	2	1	**171-4046**	2	LOUVER AS-VENT	
M	3	1	**225-3322**	3	SCREW-TRUSS HEAD (M6X1X10-MM)	
	4	1	**377-5866**	1	DUCT AS-FRONT	
		1	**377-5868**	1	INSULATION	
		1	**377-5869**	1	INSULATION	
	5	1	**377-5870**	1	DUCT AS-REAR	
	6	1	**377-5871**	1	DUCT AS	
		1	**377-5868**	1	INSULATION	
		1	**377-5873**	1	INSULATION	
	7	1	**377-5874**	1	HOLDER-CUP	
	8	1	**377-5875**	1	COVER	
	9	1	**104-2091**	8	SCREW-FLAT HEAD (6-20X0.5-IN)	
M	10	1	**128-2135**	6	SCREW-TRUSS HEAD (M6X1X13-MM)	
M	11	1	**9X-2042**	1	SCREW-TRUSS HEAD (M6X1X12-MM)	
M	12	1	**9X-2044**	2	SCREW-TRUSS HEAD (M6X1X16-MM)	

M - METRIC PART

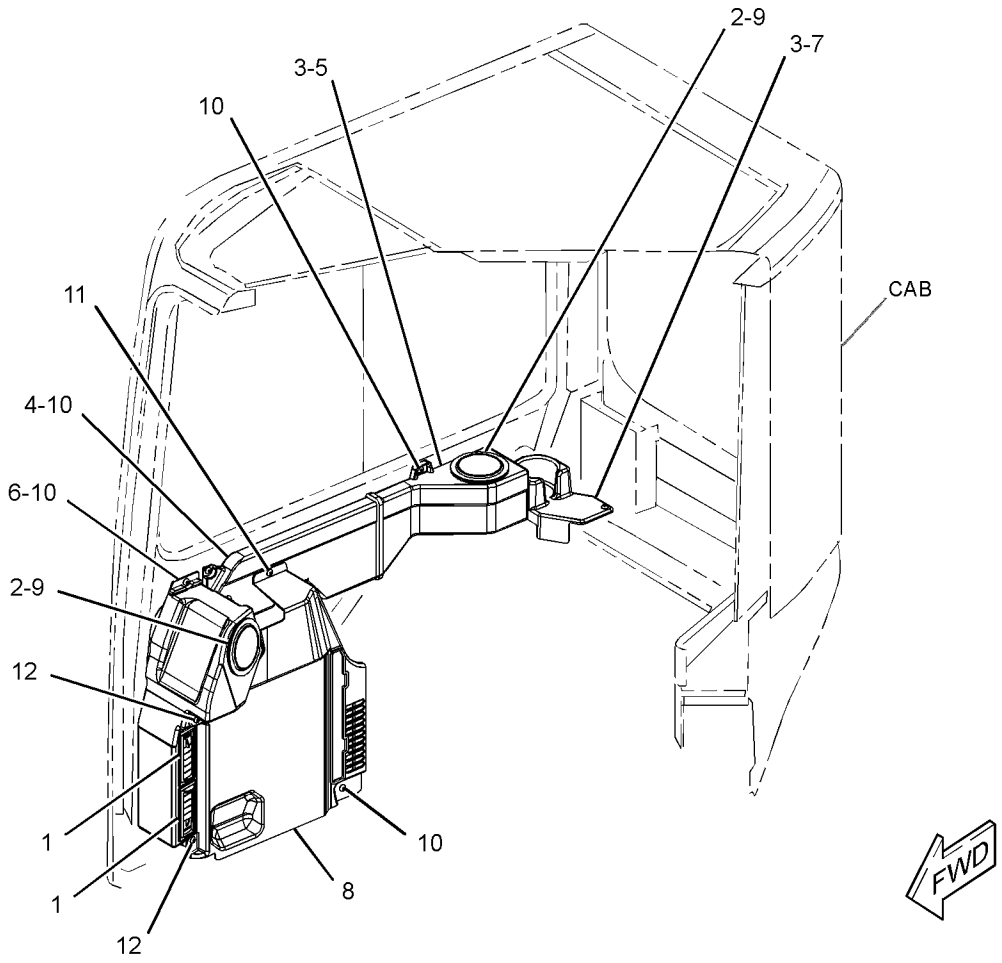

GRAPHIC #1 **<END>** g02784646

378-2493 DUCT GP-CAB AIR

PART OF 378-1293 HEATER AR-CAB

AN ATTACHMENT

SMCS-734D **i04565464**

NOTE	REF NO	GRAPHIC REF	PART NUMBER	QTY	PART NAME 1 2 3 4 5 6 (PRODUCT LEVEL)	SEE PAGE
	1	1	**8Y-6967**	2	LOUVER AS-VENT	
	2	1	**171-4046**	1	LOUVER AS-VENT	
M	3	1	**225-3322**	3	SCREW-TRUSS HEAD (M6X1X10-MM)	
	4	1	**377-5871**	1	DUCT AS	
		1	**377-5868**	1	INSULATION	
		1	**377-5873**	1	INSULATION	
	5	1	**377-5875**	1	COVER	
	6	1	**378-2511**	1	DUCT AS	
		1	**377-5869**	1	INSULATION	
	7	1	**379-2996**	1	HOLDER-CUP	
	8	1	**104-2091**	4	SCREW-FLAT HEAD (6-20X0.5-IN)	
M	9	1	**128-2135**	5	SCREW-TRUSS HEAD (M6X1X13-MM)	
M	10	1	**9X-2042**	1	SCREW-TRUSS HEAD (M6X1X12-MM)	
M	11	1	**9X-2044**	2	SCREW-TRUSS HEAD (M6X1X16-MM)	

M - METRIC PART

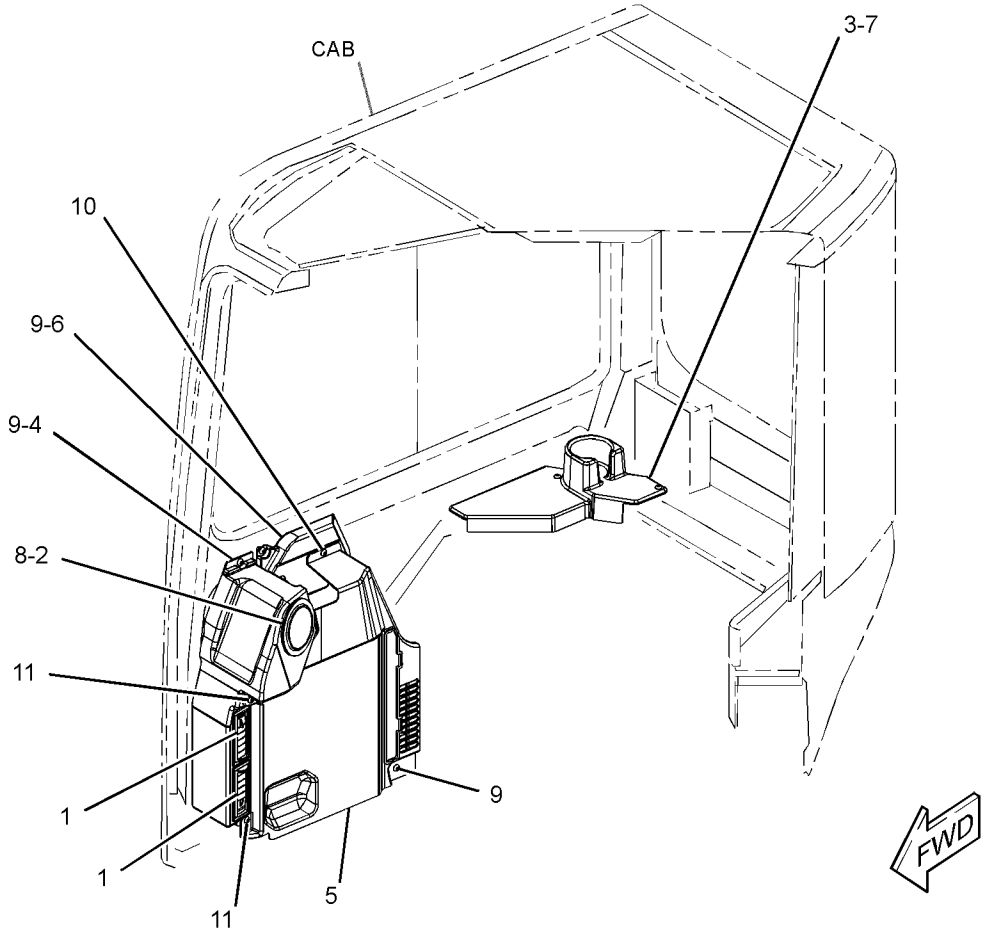

GRAPHIC #1 **<END>** g02784367

417-1289 GUARD GP-VANDALISM

PART OF 419-5871 GUARD GP-VANDALISM

AN ATTACHMENT

SMCS-7315 **i05350312**

NOTE	REF NO	GRAPHIC REF	PART NUMBER	QTY	PART NAME 1 2 3 4 5 6 (PRODUCT LEVEL)	SEE PAGE
	1	1	**246-2641**	1	PADLOCK GP	
		1	**5P-8500**	1	KEY	
	2	1	**417-1267**	1	COVER AS	
		1	**417-1272**	1	INSULATION	
		1	**417-1273**	1	INSULATION	
		1	**417-1274**	2	INSULATION	
	3	1	**9X-8256**	2	WASHER (6.6X12X2-MM THK)	
M	4	1	**5C-9553**	2	BOLT (M6X1X16-MM)	

M - METRIC PART

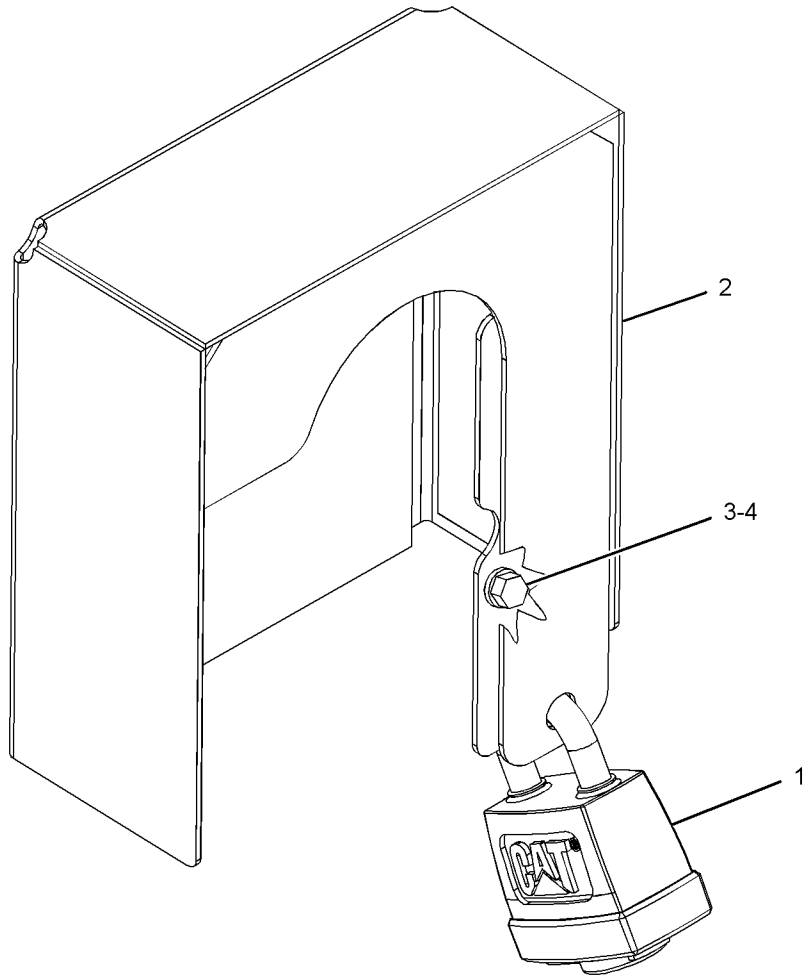

GRAPHIC #1 **<END>** g03397000

OPERATOR STATION

419-5871 GUARD GP-VANDALISM

AN ATTACHMENT

SMCS-7315 **i05350311**

NOTE	PART NUMBER	QTY	PART NAME 1 2 3 4 5 6 (PRODUCT LEVEL)	SEE PAGE
Y	*417-1289*	1	GUARD GP-VANDALISM	499

Y - SEPARATE ILLUSTRATION

<END>

382-0426 HANDRAIL GP

PART OF 383-5926 CANOPY AR, 377-8932 CANOPY AR-OPEN ROPS
AN ATTACHMENT

SMCS-7256 **i04638094**

NOTE	REF NO	GRAPHIC REF	PART NUMBER	QTY	PART NAME 1 2 3 4 5 6 (PRODUCT LEVEL)	SEE PAGE
	1	1	**382-0427**	1	HANDRAIL AS	
	2	1	**7X-7729**	1	WASHER (11X25X3-MM THK)	
M	3	1	**8T-4137**	1	BOLT (M10X1.5X20-MM)	
M	4	1	**8T-4139**	3	BOLT (M12X1.75X30-MM)	
	5	1	**8T-4223**	3	WASHER-HARD (13.5X25.5X3-MM THK)	

M - METRIC PART

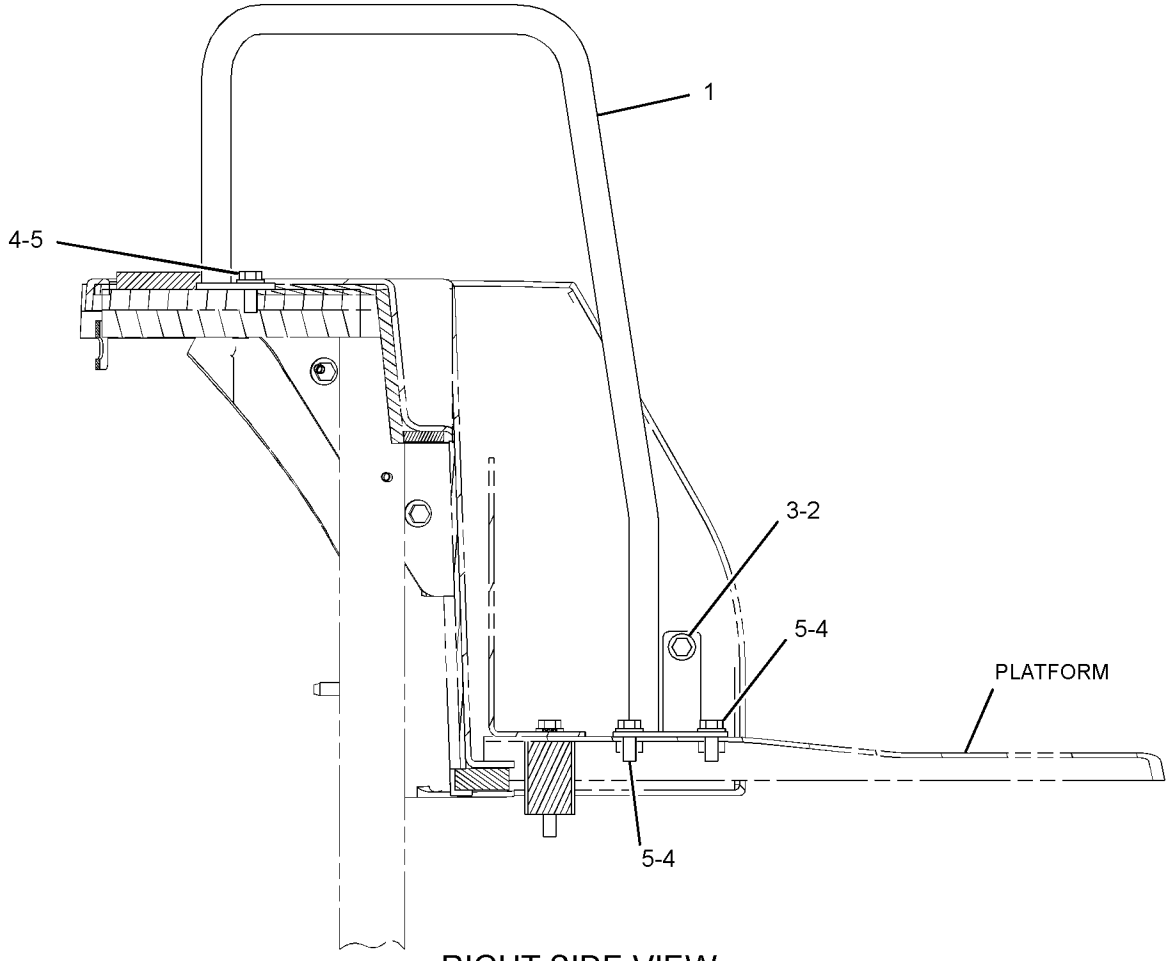

RIGHT SIDE VIEW

GRAPHIC #1 **<END>** g02801724

282-9311 HEATER & MTG GP-CAB

PART OF 378-1293 HEATER AR-CAB

AN ATTACHMENT

SMCS-7304 **i05437186**

NOTE	REF NO	GRAPHIC REF	PART NUMBER	QTY	PART NAME 1 2 3 4 5 6 (PRODUCT LEVEL)	SEE PAGE
	1	1	**3S-2093**	1	STRAP-CABLE	
	2	1	**9X-8256**	1	WASHER (6.6X12X2-MM THK)	
	3	1	**258-6257**	1	TUBE	
Y	4	1	**273-1450**	1	HEATER GP-CAB	504
	5	1	**301-6875**	6	SPACER (10X16X9.5-MM THK)	
	6	1	**278-7614**	1	CABLE AS	
	7	1	**278-8557**	1	HARNESS AS-HEATER & AIR COND (CAB)	
	8	1	**278-8558**	1	PANEL AS-CONTROL (BLOWER, TEMPERATURE)	
	9	1	**095-0912**	1	CLIP	
M	10	1	**7Y-3173**	2	SCREW-BUTTON HEAD (M4X0.7X12-MM)	
M	11	1	**8T-4171**	1	BOLT (M6X1X12-MM)	
	12	1	**7X-0579**	6	WASHER-HARD (8.8X25.5X2-MM THK)	
M	13	1	**8T-4908**	6	BOLT (M8X1.25X25-MM)	
	14	1	**278-7615**	1	CABLE AS	

M - METRIC PART
Y - SEPARATE ILLUSTRATION

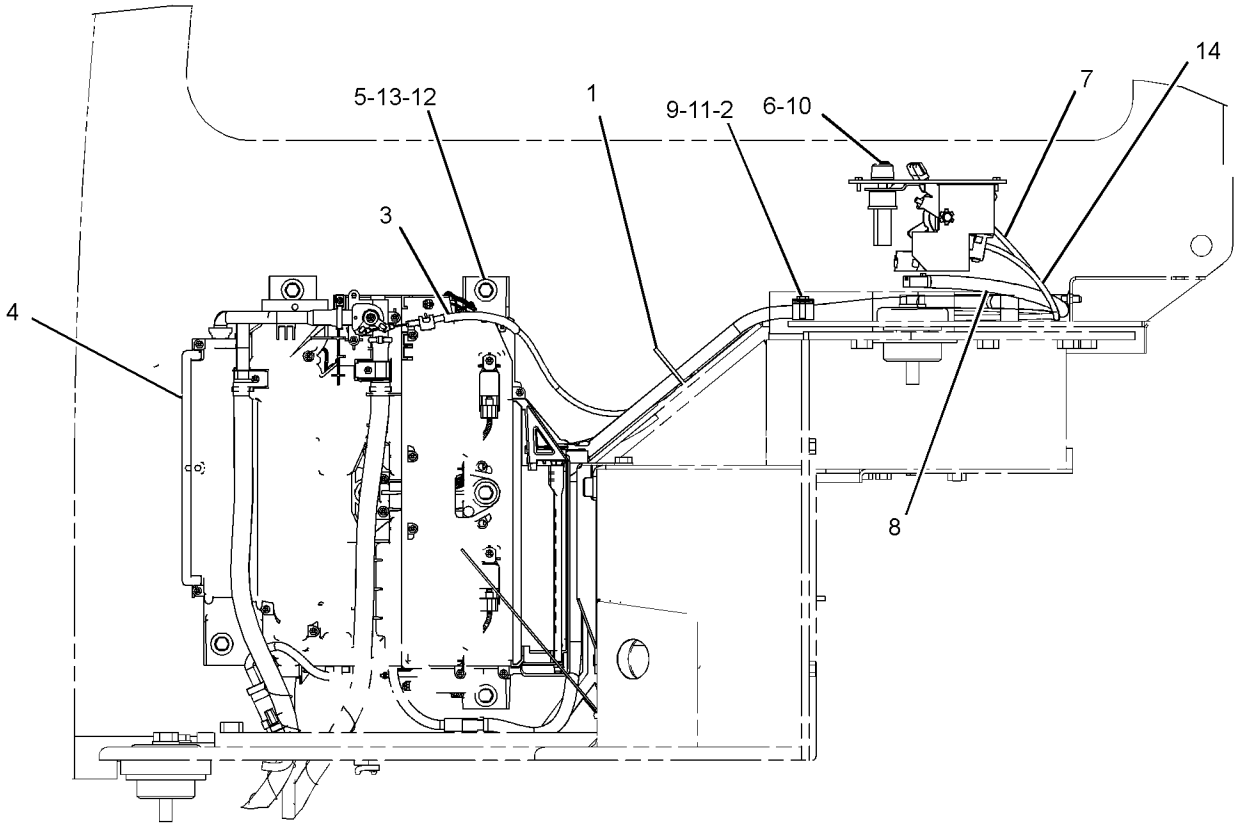

LEFT SIDE VIEW

GRAPHIC #1 **<END>** g02164435

378-1293 HEATER AR-CAB

PART OF 376-6695, 383-5925 CAB AR

AN ATTACHMENT

SMCS-1380, 1408, 7304

i04565462

NOTE	PART NUMBER	QTY	PART NAME 1 2 3 4 5 6 (PRODUCT LEVEL)	SEE PAGE
Y	*378-2493*	1	DUCT GP-CAB AIR	498
Y	*282-9311*	1	HEATER & MTG GP-CAB	502

Y - SEPARATE ILLUSTRATION

<END>

273-1450 HEATER GP-CAB

PART OF 282-9311 HEATER & MTG GP-CAB

AN ATTACHMENT

SMCS-7304 **i05437183**

NOTE	REF NO	GRAPHIC REF	PART NUMBER	QTY	PART NAME 1 2 3 4 5 6 (PRODUCT LEVEL)	SEE PAGE
	1	1	**296-2602**	1	MOTOR AS-BLOWER	
	2	1	**296-2603**	1	FAN	
	3	1	**296-2604**	1	FAN	
	4	1	**296-2605**	1	CORE AS-HEATER	
	5	1	**296-2606**	1	RELAY AS (AIR CONDITIONER COMPRESSOR)	
	6	1	**296-2607**	1	RESISTOR	
	7	1	**296-2608**	1	DOOR AS	
	8	1	**296-2609**	1	HARNESS AS-HEATER	
	9	1	**284-5686**	1	FILTER ELEMENT-CAB AIR	
	10	1	**296-2611**	1	LEVER	
	11	1	**296-2612**	2	CLAMP	
	12	1	**185-8300**	40	SCREW-TAPPING	
	13	1	**296-2614**	2	LOCK	
	14	1	**296-2615**	2	NUT-FLANGE (M5X0.8-THD)	
	15	1	**296-2616**	2	WASHER	
	16	1	**296-2617**	2	SEAL	
	17	1	**336-9693**	1	CASE	
	18	1	**336-9694**	1	CASE-HEATER	
	19	1	**336-9695**	1	CASE-HEATER	

273-1450 **HEATER GP-CAB (*contd.*)** **i05437183**

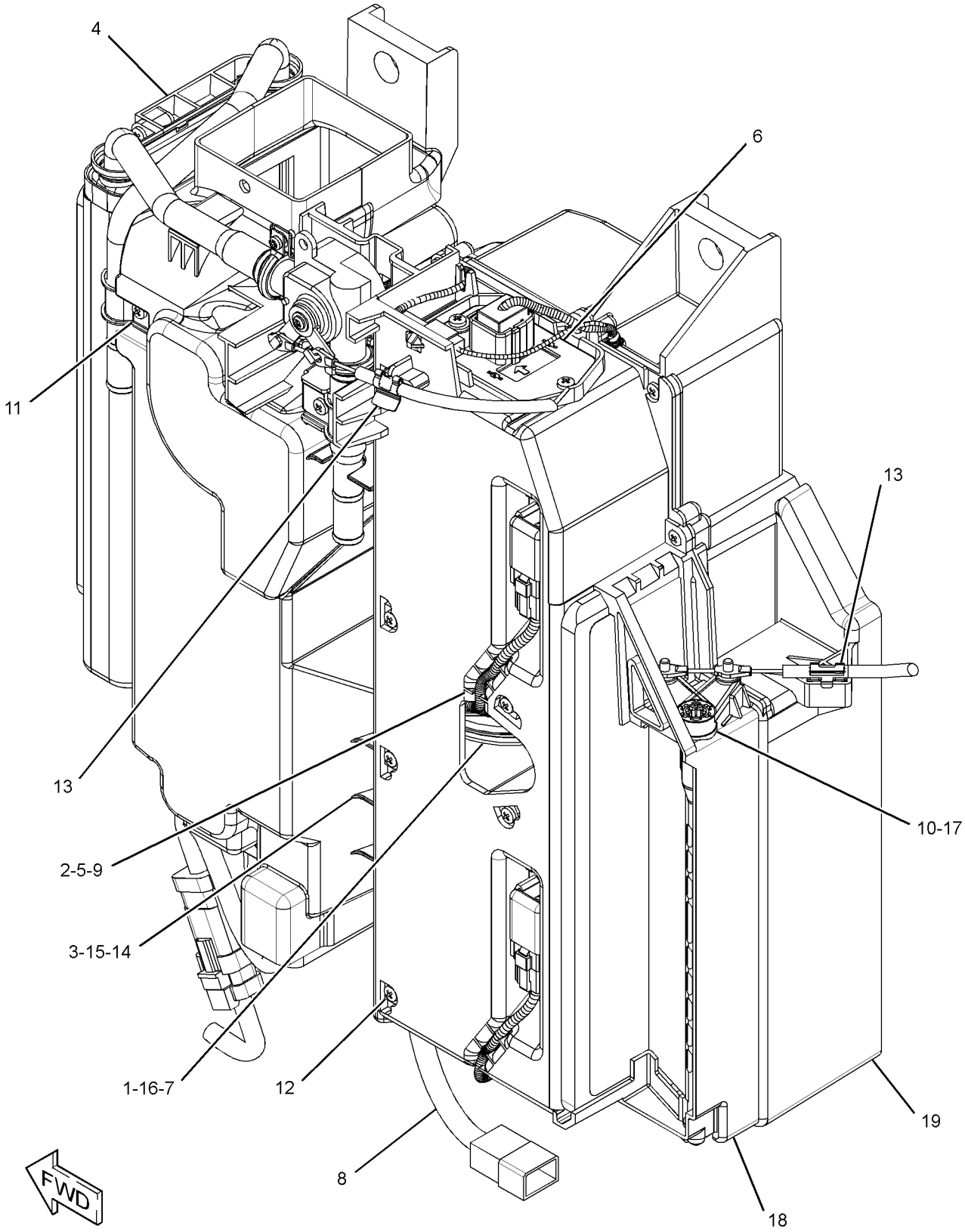

GRAPHIC #1 **<END>** g01945177

266-6835 HORN GP-ELECTRIC

PART OF 376-6675 CHASSIS AR
ALSO AN ATTACHMENT

SMCS-7402 **i03969234**

NOTE	REF NO	GRAPHIC REF	PART NUMBER	QTY	PART NAME 1 2 3 4 5 6 (PRODUCT LEVEL)	SEE PAGE
	1	1	**245-9398**	1	HORN AS (12-VOLT)	
M	2	1	**8T-4200**	1	BOLT (M8X1.25X16-MM)	
	3	1	**8T-4224**	1	WASHER-HARD (8.8X16X2-MM THK)	

M - METRIC PART

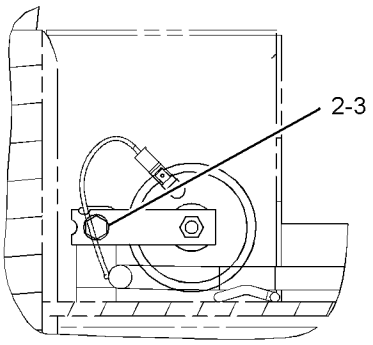

VIEW A-A

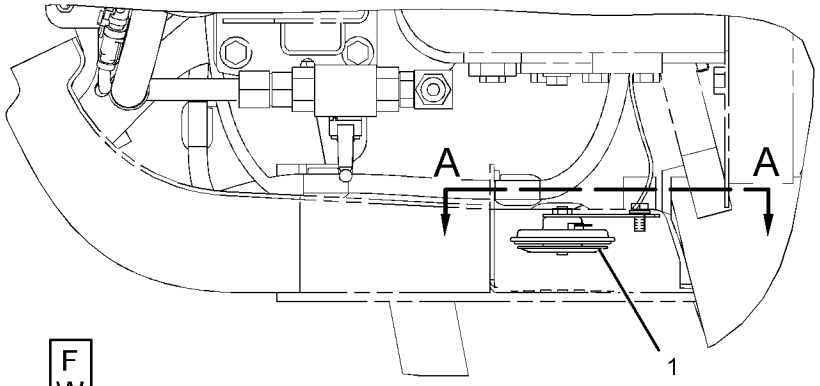

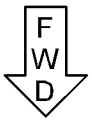

TOP VIEW

GRAPHIC #1 **<END>** g01202053

430-8640 KIT-GUARD–CANOPY

PART OF 430-9229 KIT-GUARD

AN ATTACHMENT

SMCS-7165, 7182, 7310 **i05354413**

NOTE	PART NUMBER	QTY	PART NAME 1 2 3 4 5 6 (PRODUCT LEVEL)	SEE PAGE
M	**8T-4192**	8	BOLT (M12X1.75X25-MM)	
	389-8775	1	FILM-CERTIFICATION (FRONT GUARD, READ OMM)	
	389-9183	1	FILM-WARNING (NO WELD, NO DRILL, READ OMM)	
	389-8734	1	FRAME AS	
	8T-4223	8	WASHER-HARD (13.5X25.5X3-MM THK)	

M - METRIC PART

<END>

430-9229 KIT-GUARD–CANOPY

AN ATTACHMENT

SMCS-7165, 7182, 7310 **i05354412**

NOTE	PART NUMBER	QTY	PART NAME 1 2 3 4 5 6 (PRODUCT LEVEL)	SEE PAGE
Y	**430-8640**	1	KIT-GUARD (CANOPY) (FRONT)	507

Y - SEPARATE ILLUSTRATION

<END>

379-4711 LINES GP-AIR CONDITIONER

PART OF 376-6691, 383-5924 CAB AR

AN ATTACHMENT

SMCS-1808 **i04617855**

NOTE	REF NO	GRAPHIC REF	PART NUMBER	QTY	PART NAME 1 2 3 4 5 6 (PRODUCT LEVEL)	SEE PAGE
	1	1	**3S-2093**	1	STRAP-CABLE	
	2	1,2	**7K-1181**	8	STRAP-CABLE	
	3	2	**095-1387**	2	CLAMP-HOSE	
	4	2	**130-0252**	1	HOSE-DRAIN	
	5	2	*148-8367*	1	ELBOW AS	
		2	**6V-8397**	1	SEAL-O-RING	
		2	**6V-9850**	1	ELBOW	
	6	2	**176-1902**	1	DRYER-REFRIGERANT (RECEIVER) (AIR CONDITIONER)	
	7	2	**204-1611**	1	STRAP (DUAL)	
	8	2	**235-8891**	1	PLATE	
	9	1	**266-7379**	1	STRAP-CABLE	
	10	2	**277-9073**	1	JOINT	
	11	1	**277-9412**	2	CLIP	
	12	1	**298-0663**	1	CLIP	
	13	1	**377-9081**	1	GROMMET	
	14	1	**380-9997**	1	HOSE AS	
		1	**121-7137**	2	SEAL-O-RING	
		1	**245-7850**	1	CAP	
	15	2	**380-9998**	1	HOSE AS	
	16	1	**380-9999**	1	HOSE AS	
					(EACH HOSE AS INCLUDES)	
		1	**121-7138**	2	SEAL-O-RING	
	17	2	**381-0000**	1	HOSE AS	
		2	**121-7136**	2	SEAL-O-RING	
		2	**245-7850**	1	CAP	
	18	1	**381-0001**	1	HOSE AS	
		1	**121-7136**	1	SEAL-O-RING	
	19	2	**121-7098**	1	BRACKET AS	
M		2	**8T-4138**	2	BOLT (M6X1X20-MM)	
		2	**9X-8256**	2	WASHER (6.6X12X2-MM THK)	
	20	1	**132-5789**	1	CLIP	
	21	2	**226-2560**	1	CONNECTOR	
	22	2	**287-7257**	1	ELBOW	
	23	1	**5P-2369**	1	CLIP	
	24	1	**6D-1641**	2	CLIP	
	25	1	**6D-3479**	1	CLIP	
	26	1	**6V-2235**	1	CLIP	
M	27	2	**6V-7357**	4	BOLT (M6X1X25-MM)	
	28	2	**6V-8397**	1	SEAL-O-RING	
	29	1	**8T-4121**	7	WASHER-HARD (11X21X2.5-MM THK)	
M	30	1	**8T-4136**	1	BOLT (M10X1.5X25-MM)	
M	31	1	**8T-4137**	6	BOLT (M10X1.5X20-MM)	
M	32	2	**8T-4200**	2	BOLT (M8X1.25X16-MM)	
	33	2	**8T-4224**	2	WASHER-HARD (8.8X16X2-MM THK)	
M	34	1	**8T-4971**	3	BOLT (M6X1X30-MM)	
	35	1,2	**9X-8256**	7	WASHER (6.6X12X2-MM THK)	
D	36	1	**8T-3425**		CHANNEL-TRIM (0.2-M)	
E	37	1	**7I-7439**		GUARD (98-CM)	
E	38	1	**7I-1024**		GUARD-HOSE (66-CM)	
E	38A	1	**7I-1024**		GUARD-HOSE (58-CM)	
E	38B	1	**7I-1024**		GUARD-HOSE (50-CM)	
E	38C	1	**7I-1024**		GUARD-HOSE (243-CM)	
E	38D	1	**7I-1024**		GUARD-HOSE (236-CM)	
E	39	1	**9X-2133**		HOSE (329-CM)	
E	39A	1	**9X-2133**		HOSE (332-CM)	
E	40	2	**7X-7898**		TRIM (36-CM)	
	41	1	**096-6079**	3	TAPE (WHITE)	
	42	1	**096-6085**	3	TAPE (RED)	

379-4711 **LINES GP-AIR CONDITIONER (*contd.*)** **i04617855**

NOTE	REF NO	GRAPHIC REF	PART NUMBER	QTY	PART NAME 1 2 3 4 5 6 (PRODUCT LEVEL)	SEE PAGE
D - ORDER BY THE METER E - ORDER BY THE CENTIMETER M - METRIC PART						

REFER TO ALL ILLUSTRATIONS OF
THIS GROUP FOR AUXILIARY VIEWS

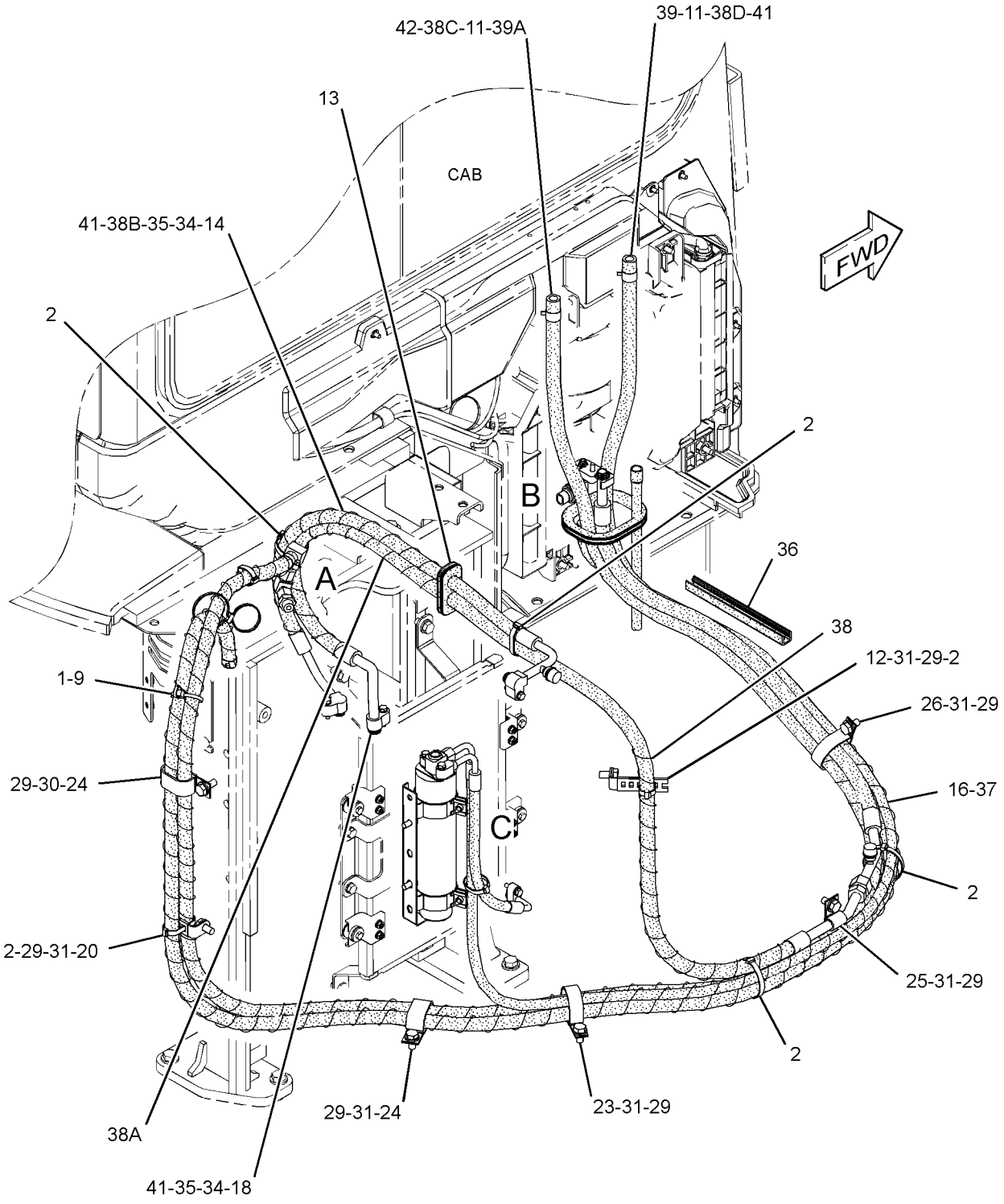

GRAPHIC #1 g02799128

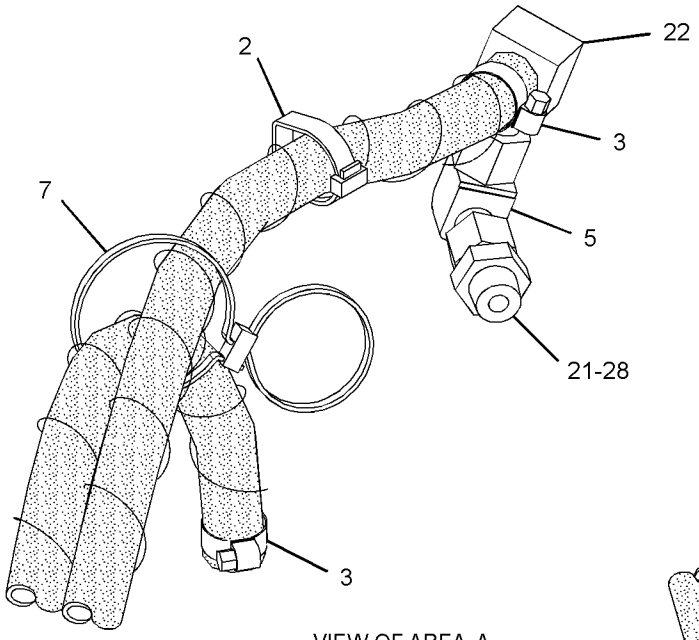

VIEW OF AREA A
(PARTS REMOVED FOR CLARITY)

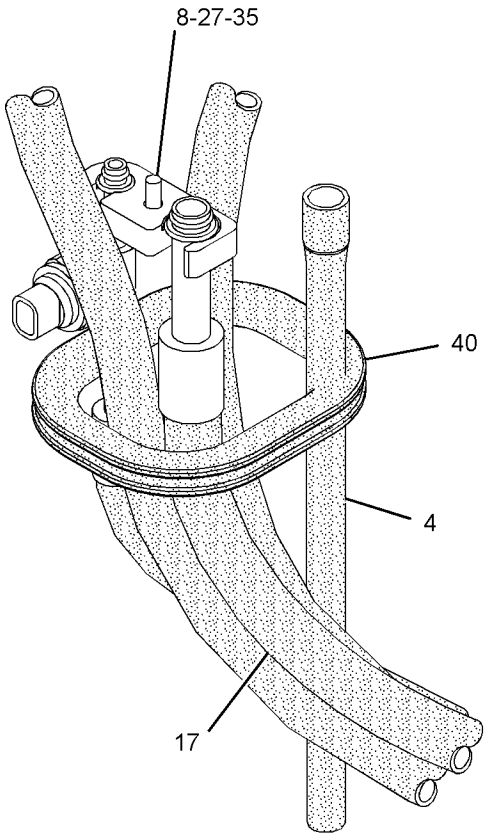

VIEW OF AREA B

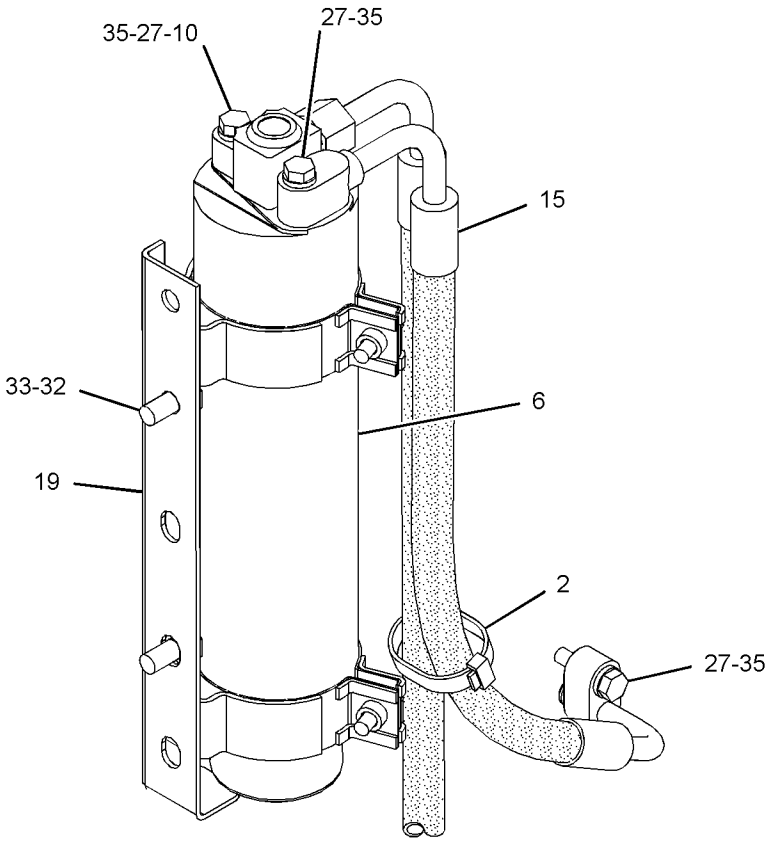

VIEW OF AREA C

GRAPHIC #2 **<END>** g02799129

379-4712 LINES GP-HEATER

PART OF 376-6695, 383-5925 CAB AR

AN ATTACHMENT

SMCS-7304 **i04623156**

NOTE	REF NO	GRAPHIC REF	PART NUMBER	QTY	PART NAME 1 2 3 4 5 6 (PRODUCT LEVEL)	SEE PAGE
	1	1	**3S-2093**	1	STRAP-CABLE	
	2	1	**7K-1181**	4	STRAP-CABLE	
	3	1	**095-1387**	2	CLAMP-HOSE	
	4	1	*148-8367*	1	ELBOW AS	
		1	**6V-8397**	1	SEAL-O-RING	
		1	**6V-9850**	1	ELBOW	
	5	1	**204-1611**	1	STRAP (DUAL)	
	6	1	**266-7379**	1	STRAP-CABLE	
	7	1	**277-9412**	2	CLIP	
	8	1	**379-8770**	1	GROMMET	
	9	1	**132-5789**	1	CLIP	
	10	1	**226-2560**	1	CONNECTOR	
	11	1	**287-7257**	1	ELBOW	
	12	1	**6D-1641**	5	CLIP	
	13	1	**6V-8397**	1	SEAL-O-RING	
	14	1	**8T-4121**	6	WASHER-HARD (11X21X2.5-MM THK)	
M	15	1	**8T-4136**	1	BOLT (M10X1.5X25-MM)	
M	16	1	**8T-4137**	5	BOLT (M10X1.5X20-MM)	
M	17	1	**8T-4200**	1	BOLT (M8X1.25X16-MM)	
	18	1	**8T-4224**	1	WASHER-HARD (8.8X16X2-MM THK)	
D	19	1	**8T-3425**		CHANNEL-TRIM (0.2-M)	
E	20	1	**7I-1024**		GUARD-HOSE (233-CM)	
E	20A	1	**7I-1024**		GUARD-HOSE (244-CM)	
E	21	1	**9X-2133**		HOSE (325-CM)	
E	21A	1	**9X-2133**		HOSE (335-CM)	
E	22	1	**7X-7898**		TRIM (36-CM)	
	23	1	**096-6079**	1	TAPE (WHITE)	
	24	1	**096-6085**	3	TAPE (RED)	

D - ORDER BY THE METER
E - ORDER BY THE CENTIMETER
M - METRIC PART

379-4712 **LINES GP-HEATER (*contd.*)** **i04623156**

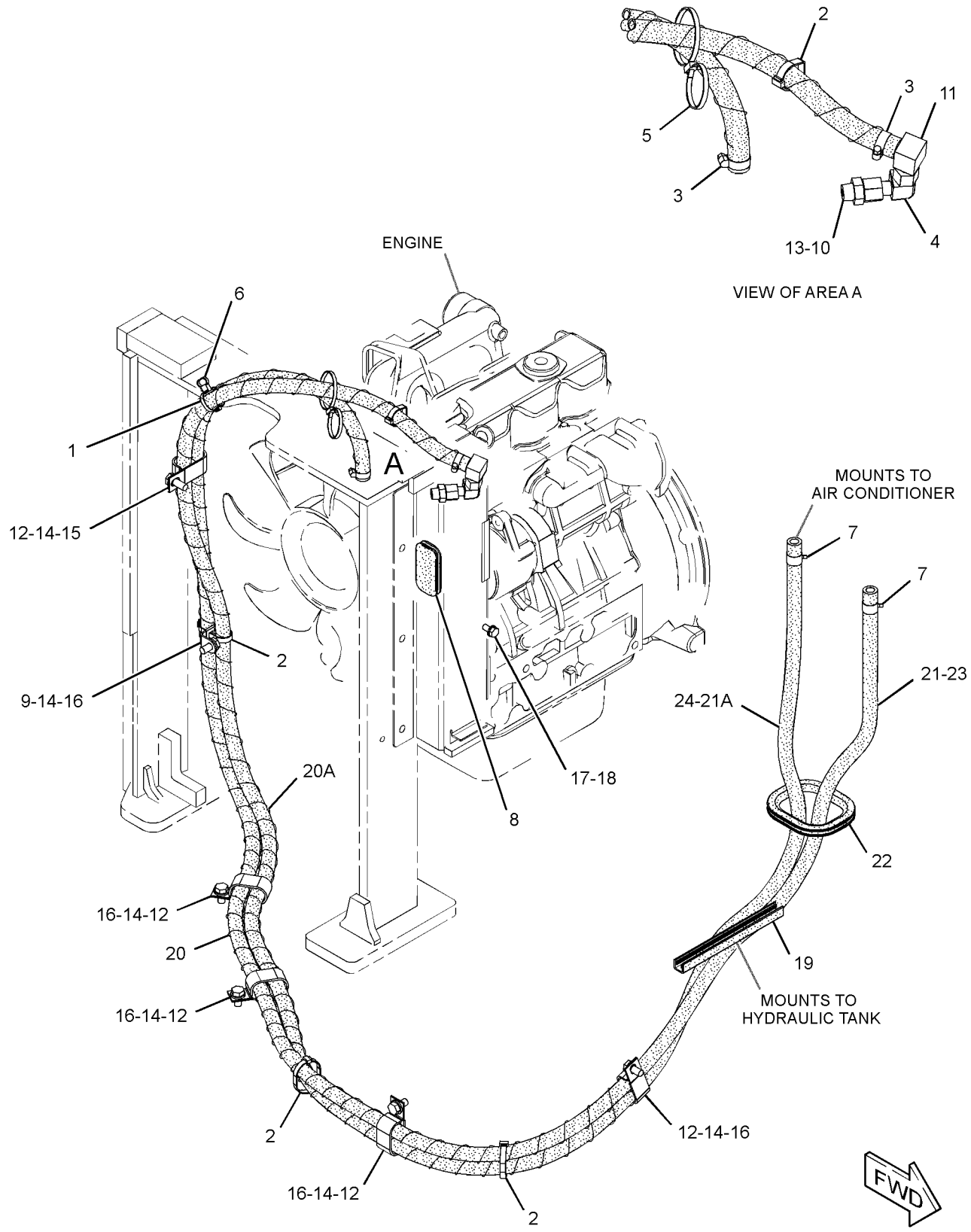

GRAPHIC #1 **<END>** g02799197

281-1186 LINK GP-WINDOW

PART OF 377-5108, 415-6803, 419-1237 CAB GP

AN ATTACHMENT

SMCS-7340 **i03965392**

NOTE	REF NO	GRAPHIC REF	PART NUMBER	QTY	PART NAME 1 2 3 4 5 6 (PRODUCT LEVEL)	SEE PAGE
	1	1	**281-1187**	1	LINK AS-LOWER	
	2	1	**281-1190**	1	BRACKET AS	
	3	1	**281-1193**	1	WASHER	
	4	1	**281-1194**	1	BOSS	
	5	1	**214-3969**	4	WASHER (16X26X0.5-MM THK)	
	6	1	**214-3968**	1	WASHER (8.5X30X3.2-MM THK)	
	7	1	**281-6199**	1	SCREW	
	8	1	**281-5485**	1	BOLT	

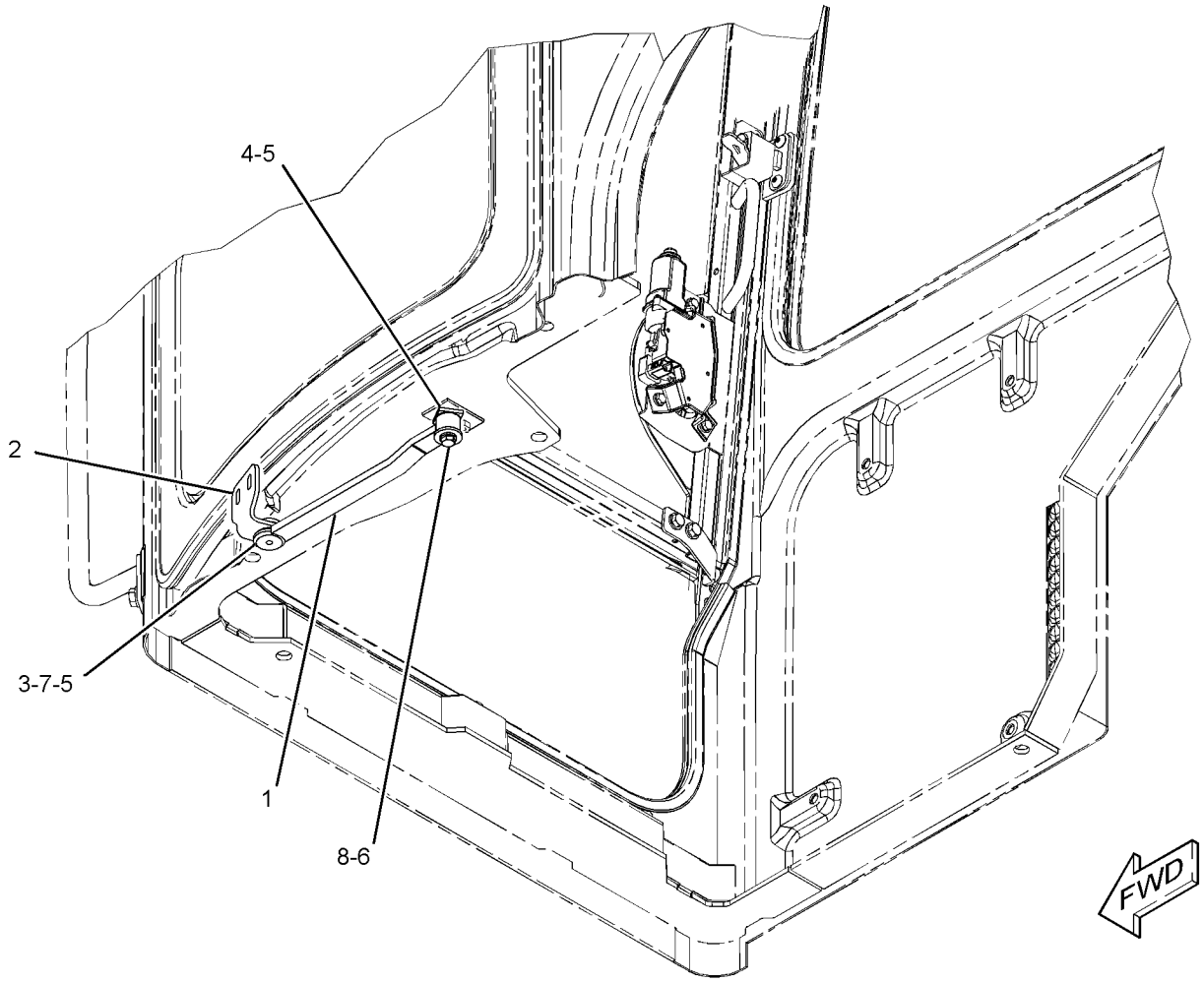

GRAPHIC #1 **<END>** g01213850

267-4371 MIRROR GP-DOWN VIEW—EXTERIOR, REAR, RH

PART OF 355-3420 MIRROR GP-DOWN VIEW
AN ATTACHMENT

SMCS-7319 **i03998800**

NOTE	REF NO	GRAPHIC REF	PART NUMBER	QTY	PART NAME 1 2 3 4 5 6 (PRODUCT LEVEL)	SEE PAGE
	1	1	**342-3327**	1	SUPPORT AS	
	2	1	**4Y-3307**	1	MIRROR-CONVEX	
	3	1	**8T-4121**	3	WASHER-HARD (11X21X2.5-MM THK)	
M	4	1	**8T-4137**	3	BOLT (M10X1.5X20-MM)	

M - METRIC PART

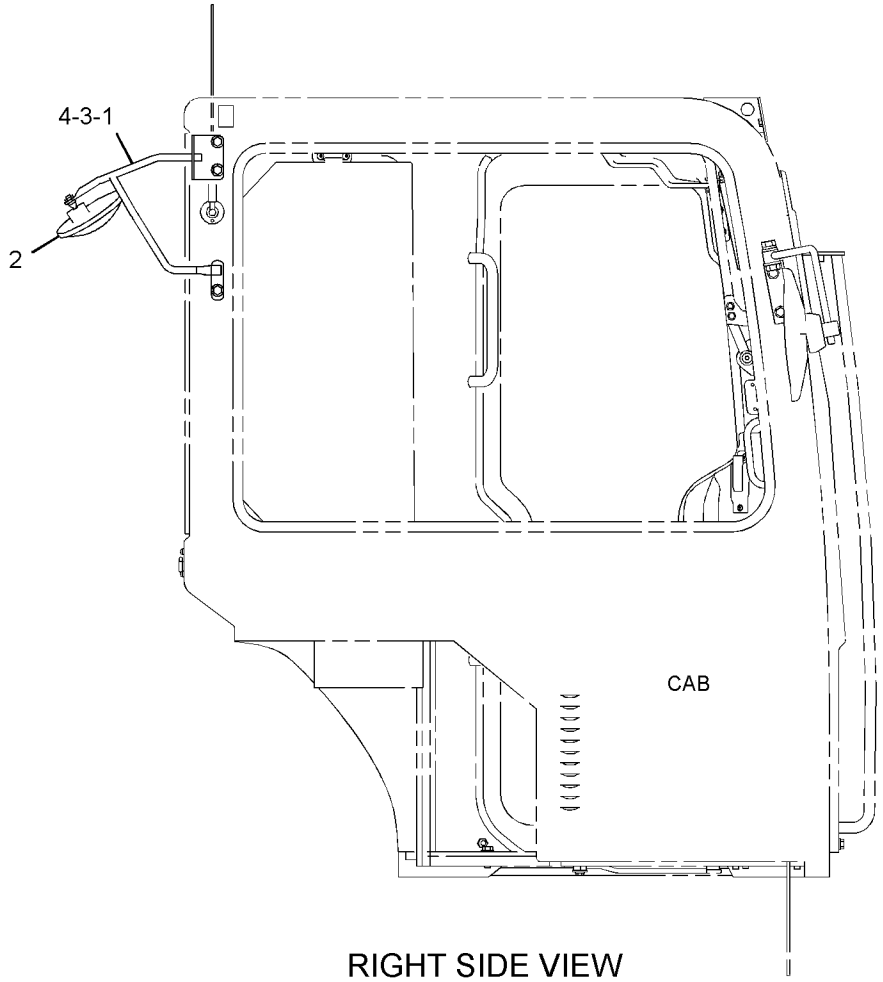

RIGHT SIDE VIEW

GRAPHIC #1 **<END>** g01309124

355-3420 MIRROR GP-DOWN VIEW–CAB

AN ATTACHMENT

SMCS-7319 **i04006680**

NOTE	PART NUMBER	QTY	PART NAME 1 2 3 4 5 6 (PRODUCT LEVEL)	SEE PAGE
Y	*267-4371*	1	MIRROR GP-DOWN VIEW (EXTERIOR, REAR, RH)	515

Y - SEPARATE ILLUSTRATION

<END>

267-4366 MIRROR GP-REAR VIEW—EXTERIOR, LH

PART OF 355-3416 MIRROR GP-REAR VIEW
AN ATTACHMENT

SMCS-7319 **i03965210**

NOTE	REF NO	GRAPHIC REF	PART NUMBER	QTY	PART NAME 1 2 3 4 5 6 (PRODUCT LEVEL)	SEE PAGE
Y	1	1	**286-9482**	1	MOUNTING GP-MIRROR	524
	2	1	**156-6617**	1	MIRROR	
M	3	1	**8T-4779**	1	BOLT (M16X2X35-MM)	
	4	1	**9X-8257**	1	WASHER (17.5X30X3.5-MM THK)	

M - METRIC PART
Y - SEPARATE ILLUSTRATION

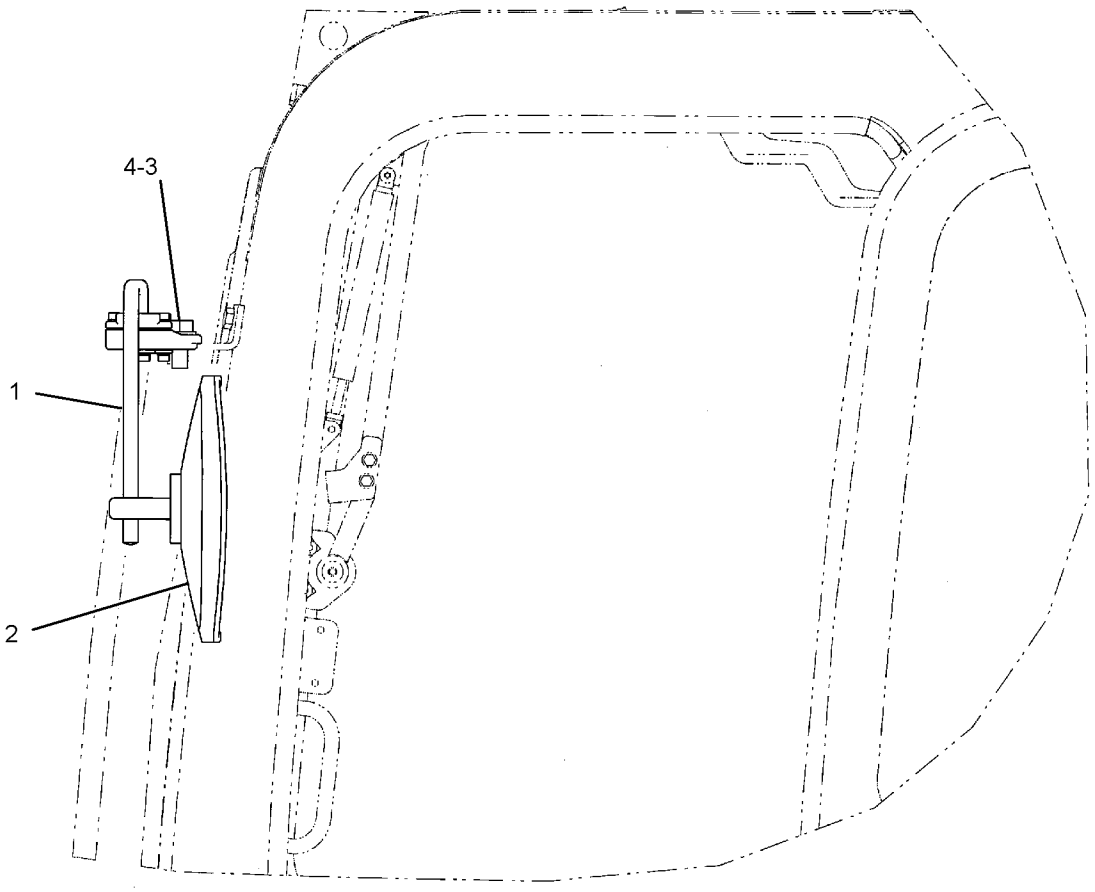

LEFT SIDE VIEW

GRAPHIC #1 **<END>** g01207728

267-4367 MIRROR GP-REAR VIEW—EXTERIOR, RH

PART OF 355-3417 MIRROR GP-REAR VIEW

AN ATTACHMENT

SMCS-7319 **i05437181**

NOTE	REF NO	GRAPHIC REF	PART NUMBER	QTY	PART NAME 1 2 3 4 5 6 (PRODUCT LEVEL)	SEE PAGE
	1	1	**156-6617**	1	MIRROR	
	2	1	**156-6618**	1	SUPPORT AS	
	3	1	**275-6285**	1	BRACKET AS	
M		1	**9X-6269**	1	NUT-WELD (M16X2-THD)	
	4	1	**3B-4510**	1	LOCKWASHER	
	5	1	**8T-4121**	2	WASHER-HARD (11X21X2.5-MM THK)	
M	6	1	**8T-4137**	2	BOLT (M10X1.5X20-MM)	
M	7	1	**8T-4193**	1	BOLT (M16X2X50-MM)	
	8	1	**9X-8257**	1	WASHER (17.5X30X3.5-MM THK)	

M - METRIC PART

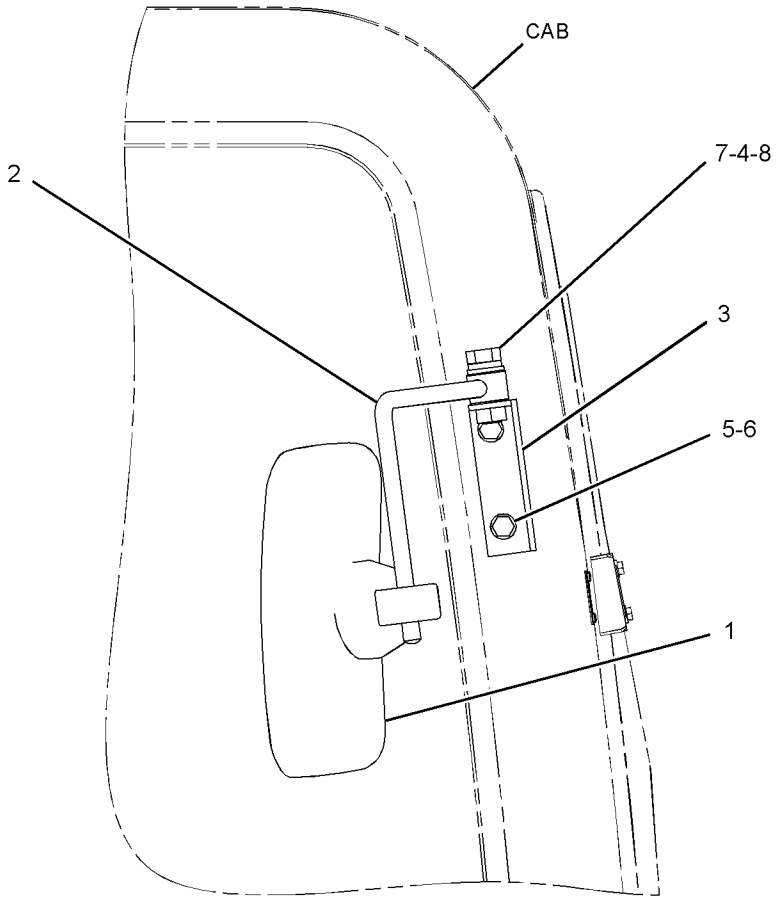

RIGHT SIDE VIEW

GRAPHIC #1 **<END>** g01627690

334-1186 MIRROR GP-REAR VIEW—CAB, WITH FRONT GUARD

PART OF 383-5924, 383-5925 CAB AR

AN ATTACHMENT

SMCS-7319 **i04019526**

NOTE	REF NO	GRAPHIC REF	PART NUMBER	QTY	PART NAME 1 2 3 4 5 6 (PRODUCT LEVEL)	SEE PAGE
	1	1	**156-6617**	1	MIRROR	
	2	1	**156-6618**	1	SUPPORT AS	
	3	1	**275-6285**	1	BRACKET AS	
	4	1	**3B-4510**	1	LOCKWASHER	
	5	1	**8T-4121**	2	WASHER-HARD (11X21X2.5-MM THK)	
M	6	1	**8T-4137**	2	BOLT (M10X1.5X20-MM)	
M	7	1	**8T-4193**	1	BOLT (M16X2X50-MM)	
	8	1	**9X-8257**	1	WASHER (17.5X30X3.5-MM THK)	

M - METRIC PART

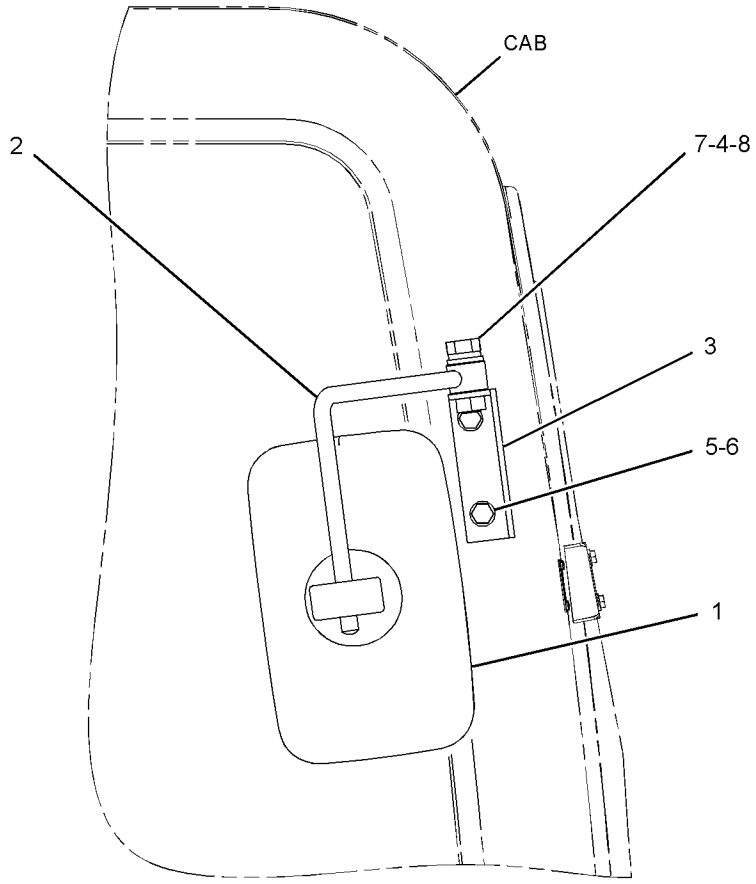

RIGHT SIDE VIEW

GRAPHIC #1 **<END>** g01627682

355-3416 MIRROR GP-REAR VIEW—EXTERIOR, LH

AN ATTACHMENT

SMCS-7319 **i04006632**

NOTE	PART NUMBER	QTY	PART NAME 1 2 3 4 5 6 (PRODUCT LEVEL)	SEE PAGE
Y	*267-4366*	1	MIRROR GP-REAR VIEW (EXTERIOR, LH)	517

Y - SEPARATE ILLUSTRATION

<END>

355-3417 MIRROR GP-REAR VIEW—EXTERIOR, RH

AN ATTACHMENT

SMCS-7319 **i04006650**

NOTE	PART NUMBER	QTY	PART NAME 1 2 3 4 5 6 (PRODUCT LEVEL)	SEE PAGE
Y	*267-4367*	1	MIRROR GP-REAR VIEW (EXTERIOR, RH)	518

Y - SEPARATE ILLUSTRATION

<END>

380-7150 MIRROR GP-REAR VIEW—EXTERIOR, LH

PART OF 382-0509 MIRROR GP-REAR VIEW
AN ATTACHMENT

SMCS-7319 **i04775391**

NOTE	REF NO	GRAPHIC REF	PART NUMBER	QTY	PART NAME 1 2 3 4 5 6 (PRODUCT LEVEL)	SEE PAGE
	1	1	**201-2638**	1	MIRROR AS	
M	2	1	**6V-7357**	1	BOLT (M6X1X25-MM)	
	3	1	**9X-8256**	1	WASHER (6.6X12X2-MM THK)	

M - METRIC PART

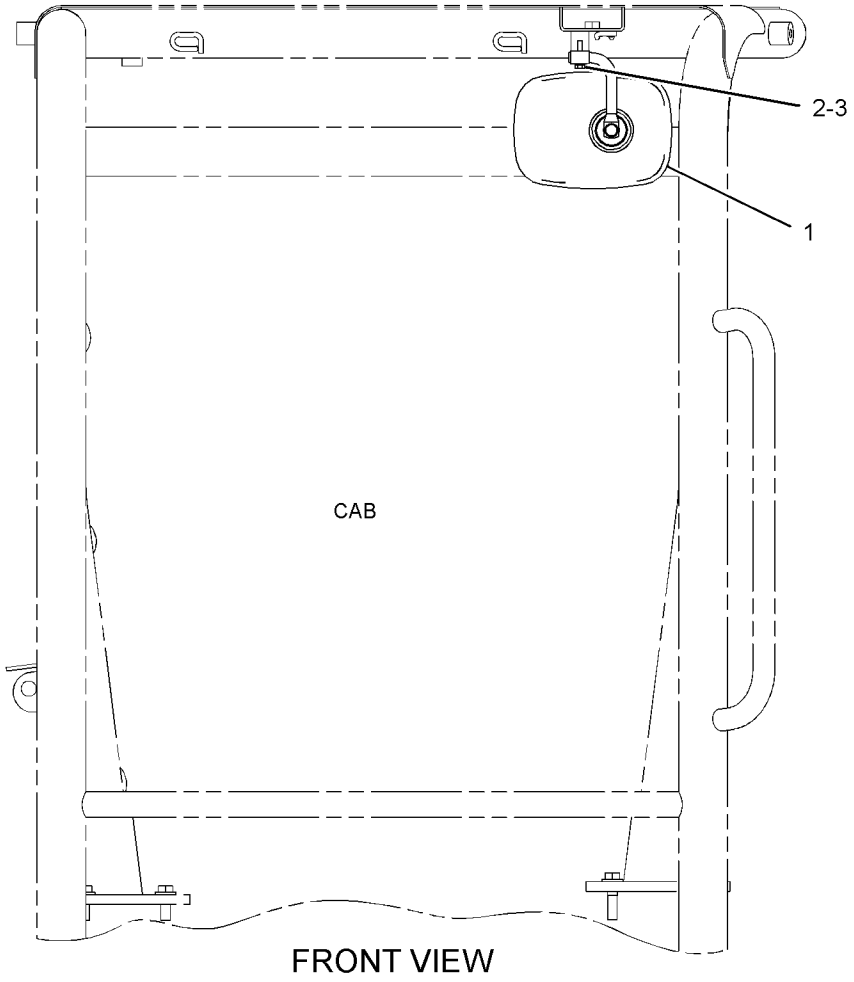

FRONT VIEW

GRAPHIC #1 **<END>** g02801468

380-7151 MIRROR GP-REAR VIEW—EXTERIOR, RH

PART OF 382-0517 MIRROR GP-REAR VIEW

AN ATTACHMENT

SMCS-7319 **i04629188**

NOTE	REF NO	GRAPHIC REF	PART NUMBER	QTY	PART NAME 1 2 3 4 5 6 (PRODUCT LEVEL)	SEE PAGE
	1	1	**281-3998**	1	MIRROR AS (REAR VIEW)	
M	2	1	**6V-7357**	1	BOLT (M6X1X25-MM)	
	3	1	**9X-8256**	1	WASHER (6.6X12X2-MM THK)	

M - METRIC PART

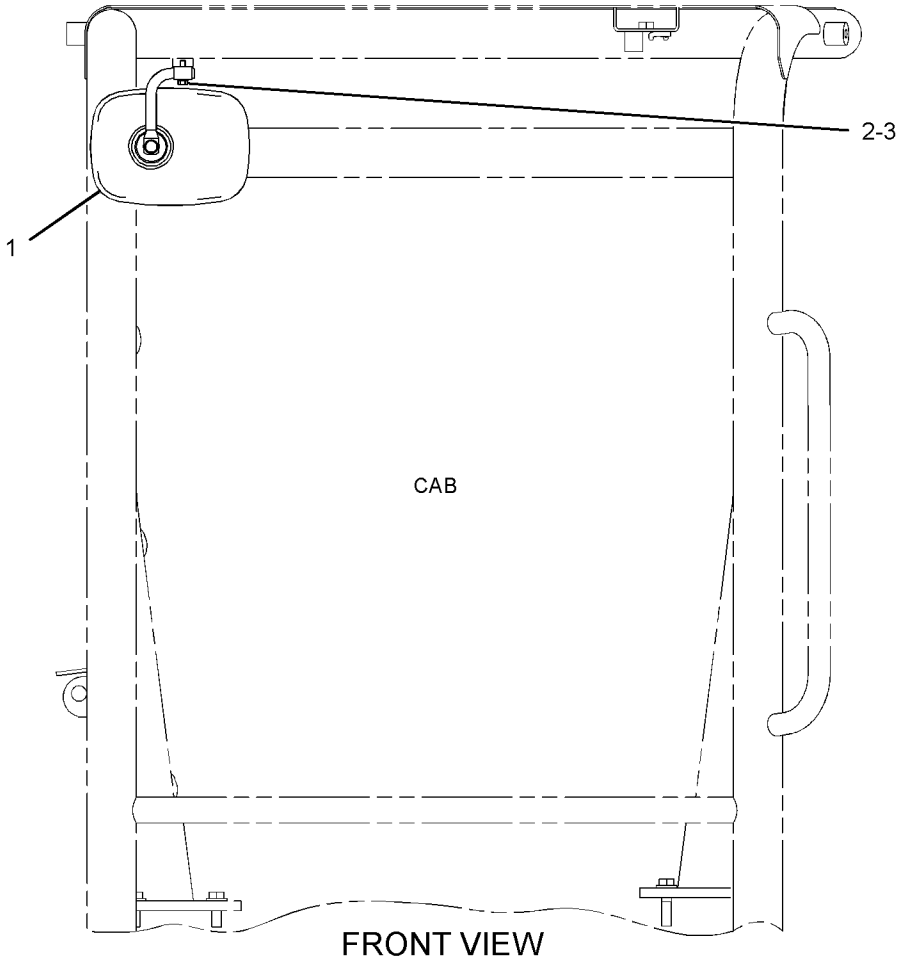

FRONT VIEW

GRAPHIC #1 **<END>** g02798348

382-0509 MIRROR GP-REAR VIEW—LH

AN ATTACHMENT

SMCS-7319 **i04629197**

NOTE	PART NUMBER	QTY	PART NAME 1 2 3 4 5 6 (PRODUCT LEVEL)	SEE PAGE
Y	*380-7150*	1	MIRROR GP-REAR VIEW (LH)	521

Y - SEPARATE ILLUSTRATION

<END>

382-0517 MIRROR GP-REAR VIEW—RH

AN ATTACHMENT

SMCS-7319 **i04629200**

NOTE	PART NUMBER	QTY	PART NAME 1 2 3 4 5 6 (PRODUCT LEVEL)	SEE PAGE
Y	*380-7151*	1	MIRROR GP-REAR VIEW (RH)	522

Y - SEPARATE ILLUSTRATION

<END>

286-9482 MOUNTING GP-MIRROR

PART OF 267-4366 MIRROR GP-REAR VIEW

AN ATTACHMENT

SMCS-7319 **i03965232**

NOTE	REF NO	GRAPHIC REF	PART NUMBER	QTY	PART NAME 1 2 3 4 5 6 (PRODUCT LEVEL)	SEE PAGE
	1	1	**2U-2552**	5	LOCKWASHER	
M	2	1	**6V-5683**	3	BOLT (M6X1X16-MM)	
M	3	1	**9X-6153**	2	BOLT (M6X1X10-MM)	

M - METRIC PART

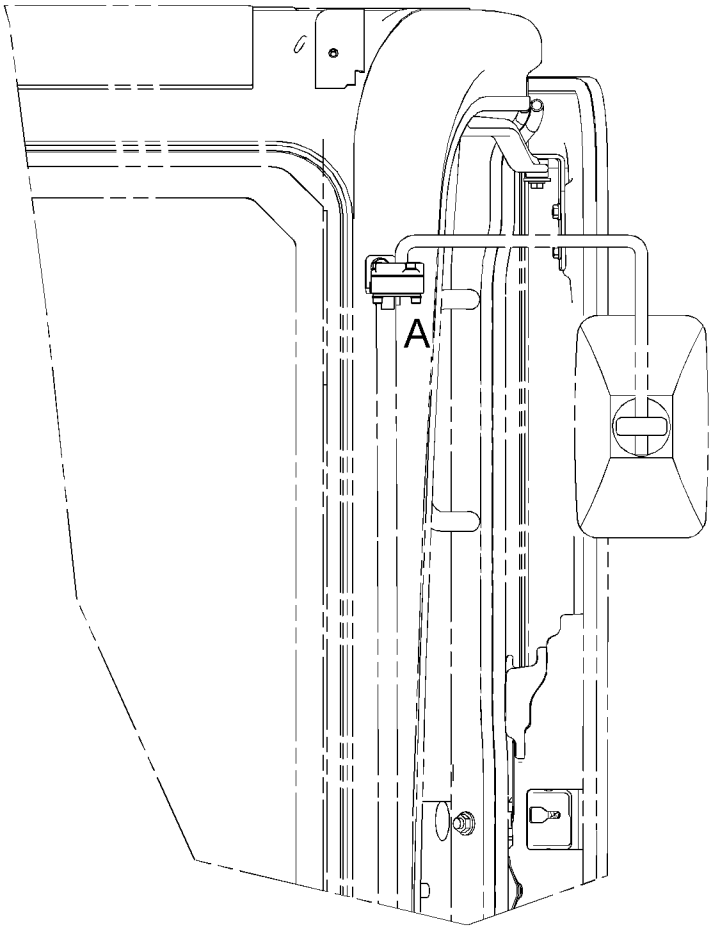

FRONT VIEW

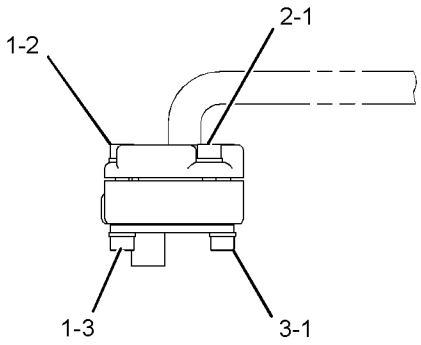

VIEW OF AREA A

GRAPHIC #1 **<END>** g01244242

379-3624 OPERATOR AR

PART OF 376-6675 CHASSIS AR

SMCS-7300, 7301

i04629832

NOTE	PART NUMBER	QTY	PART NAME 1 2 3 4 5 6 (PRODUCT LEVEL)	SEE PAGE
Y	*379-3597*	1	CONSOLE GP-OPERATOR	474
Y	*285-8286*	1	CONTROL GP-HYDRAULIC HAND (TRAVEL)	480

Y - SEPARATE ILLUSTRATION

<END>

382-0504 PLATFORM GP

PART OF 382-0400 PLATFORM GP-OPERATOR

AN ATTACHMENT

SMCS-7253, 7254 **i04638012**

NOTE	REF NO	GRAPHIC REF	PART NUMBER	QTY	PART NAME 1 2 3 4 5 6 (PRODUCT LEVEL)	SEE PAGE
	1	1	**093-2064**	2	GROMMET	
	2	1	**267-7064**	1	LOCK AS	
	3	1	**382-0505**	1	PLATFORM AS (FLOOR)	
	4	1	**382-0510**	1	PLATFORM AS (SUPPORT)	
	5	1	**382-0544**	1	PLATE AS	
M		1	**8T-3597**	1	NUT-WELD (M12X1.75-THD)	
M		1	**8T-3612**	4	NUT-WELD (M8X1.25-THD)	
	6	1	**382-0546**	1	COVER	
	7	1	**382-0547**	1	PLATE AS	
	8	1	**382-0549**	1	PLATE AS	
M		1	**8T-3490**	4	NUT-WELD (M10X1.5-THD)	
	9	1	**382-2147**	1	COVER AS	
	10	1	**382-2149**	1	COVER	
	11	1	**382-2150**	1	PLATE	
	12	1	**1S-1014**	3	GROMMET	
M	13	1	**5C-9553**	10	BOLT (M6X1X16-MM)	
	14	1	**5P-4115**	1	WASHER-HARD (7.2X19X2-MM THK)	
	15	1	**8T-4121**	8	WASHER-HARD (11X21X2.5-MM THK)	
M	16	1	**8T-4136**	4	BOLT (M10X1.5X25-MM)	
M	17	1	**8T-4137**	4	BOLT (M10X1.5X20-MM)	
M	18	1	**8T-4189**	6	BOLT (M8X1.25X20-MM)	
	19	1	**8T-4224**	6	WASHER-HARD (8.8X16X2-MM THK)	
	20	1	**9X-8256**	9	WASHER (6.6X12X2-MM THK)	
	21	1	**8T-5372**		SEAL (0.05-M EACH)	
	22	1	**7X-7898**		TRIM (27-CM EACH)	

M - METRIC PART

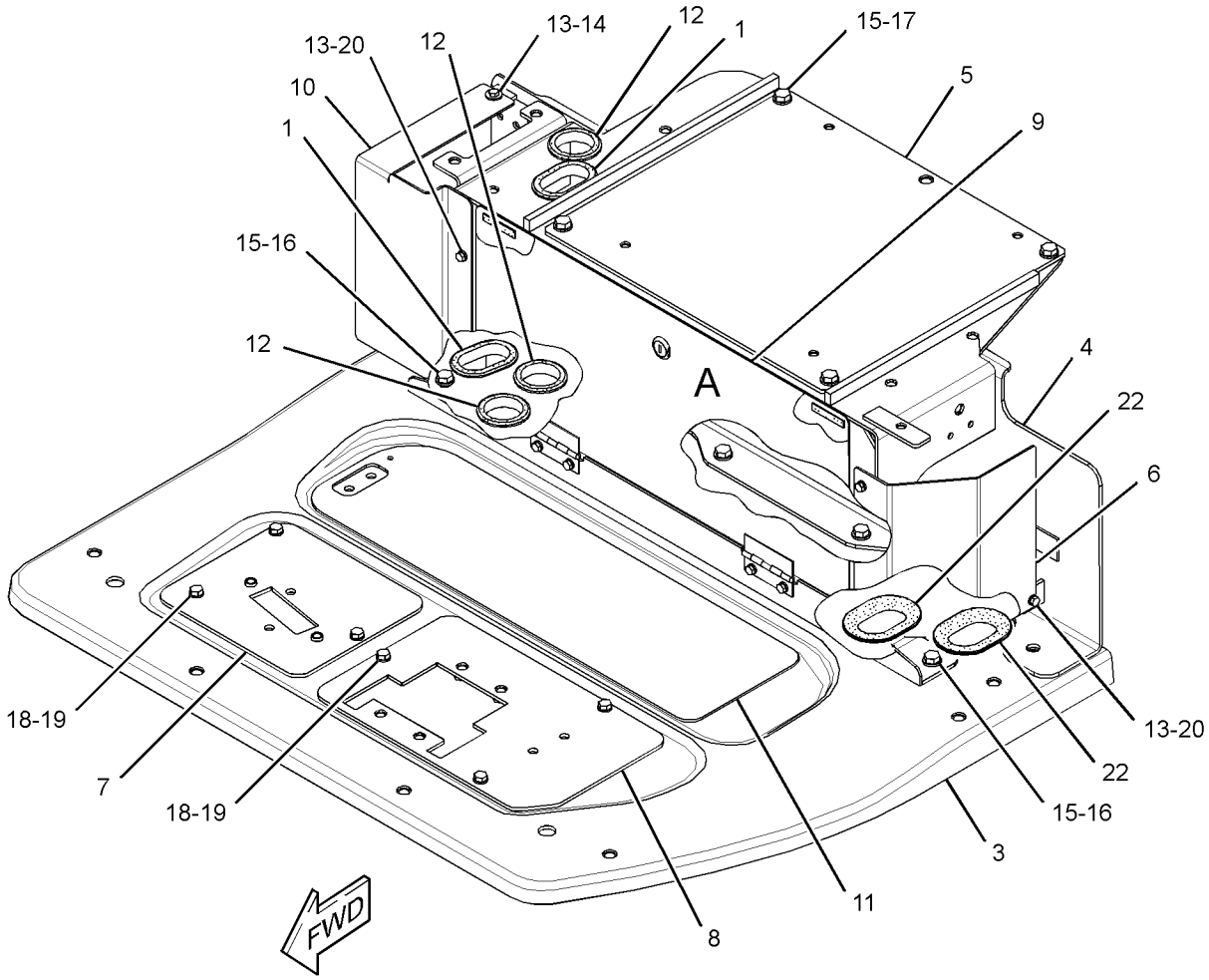

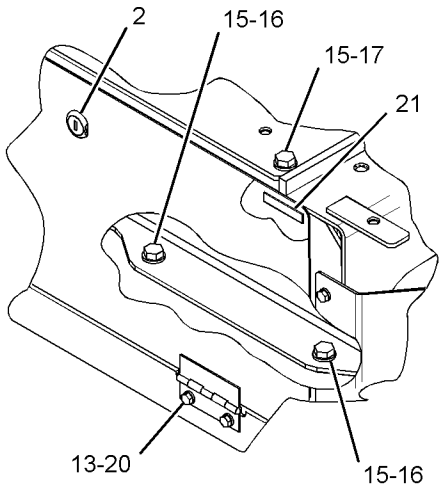

VIEW OF AREA A

GRAPHIC #1 **<END>** g02803619

378-8139 PLATFORM GP-OPERATOR

PART OF 379-3625 PLATFORM GP-OPERATOR

AN ATTACHMENT

SMCS-7253 **i04635551**

NOTE	REF NO	GRAPHIC REF	PART NUMBER	QTY	PART NAME 1 2 3 4 5 6 (PRODUCT LEVEL)	SEE PAGE
	1	1	**093-2064**	1	GROMMET	
	2	1	**267-7064**	1	LOCK AS	
	3	1	**282-9699**	1	PLATE AS	
	4	1	**283-0274**	1	TAPE	
	5	1	**353-2981**	1	COVER	
	6	1	**358-9162**	1	SEAL	
	7	1	**377-5933**	1	PLATFORM AS	
	8	1	**377-5936**	1	BRACKET AS	
M		1	**8T-3490**	2	NUT-WELD (M10X1.5-THD)	
	9	1	**377-5938**	1	PLATE AS	
	10	1	**377-5942**	1	SEAL	
	11	1	**377-5943**	1	SEAL	
	12	1	**377-5945**	1	INSULATION	
	13	1	**377-5946**	1	INSULATION	
	14	1	**377-5947**	1	INSULATION	
	15	1	**377-5948**	1	INSULATION	
	16	1	**377-5949**	1	INSULATION	
	17	1	**377-5950**	1	SEAL	
	18	1	**377-5951**	1	SEAL	
	19	1	**377-5952**	1	INSULATION	
	20	1	**377-5959**	1	COVER	
	21	1	**378-8140**	1	SEAL	
	22	1	**379-3628**	1	SEAL	
	23	1	**382-6314**	1	SEAL	
	24	1	**382-6347**	1	INSULATION	
	25	1	**384-5670**	1	COVER	
	26	1	**384-5675**	1	SEAL	
	27	1	**384-5676**	1	PLATE AS	
M		1	**8T-3490**	4	NUT-WELD (M10X1.5-THD)	
E	28	1	**7X-7898**		TRIM (27-CM EACH)	
E	29	1	**7X-7877**		STRIP-EDGING (30-CM)	
	30	1	**117-8929**	2	WASHER (6.6X22X2-MM THK)	
	31	1	**1S-1014**	1	GROMMET	
M	32	1	**5C-9553**	7	BOLT (M6X1X16-MM)	
M	33	1	**7X-2619**	2	BOLT (M6X1X10-MM)	
	34	1	**8T-4121**	4	WASHER-HARD (11X21X2.5-MM THK)	
M	35	1	**8T-4136**	4	BOLT (M10X1.5X25-MM)	
M	36	1	**8T-4189**	8	BOLT (M8X1.25X20-MM)	
	37	1	**8T-4224**	8	WASHER-HARD (8.8X16X2-MM THK)	
	38	1	**9X-8256**	7	WASHER (6.6X12X2-MM THK)	
D	39	1	**8T-5372**		SEAL (0.1-M EACH)	
D	40	1	**5P-5969**		SEAL (0.2-M EACH)	
D	40A	1	**5P-5969**		SEAL (0.3-M EACH)	

D - ORDER BY THE METER
E - ORDER BY THE CENTIMETER
M - METRIC PART

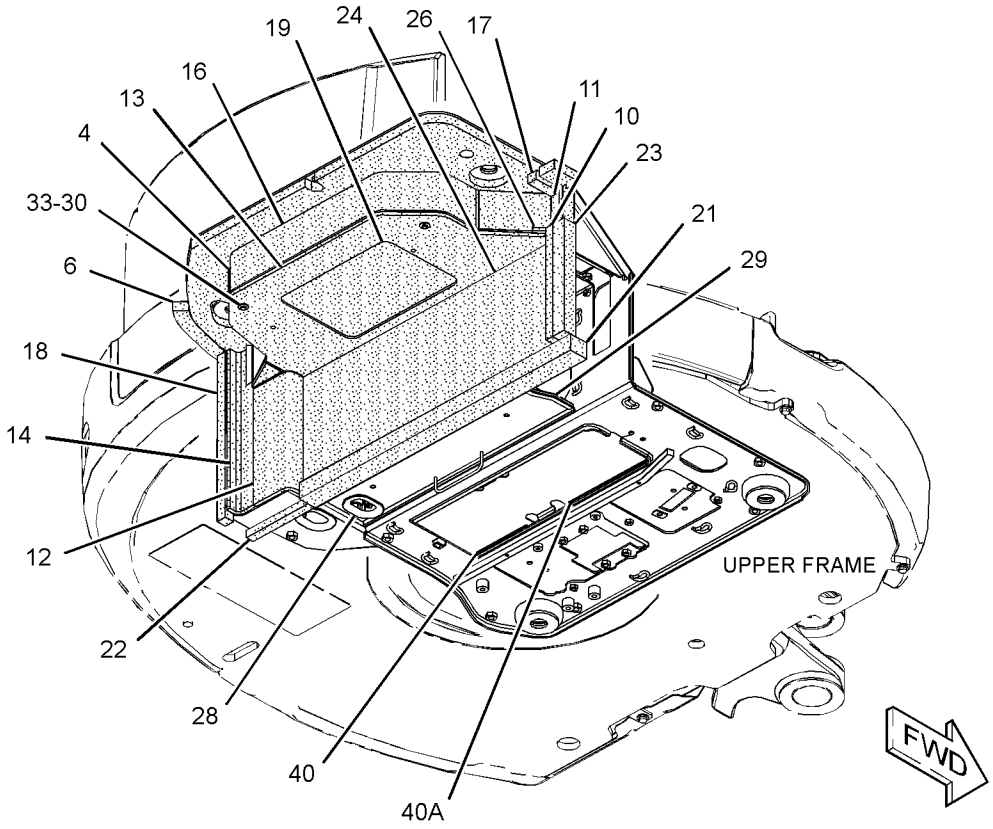

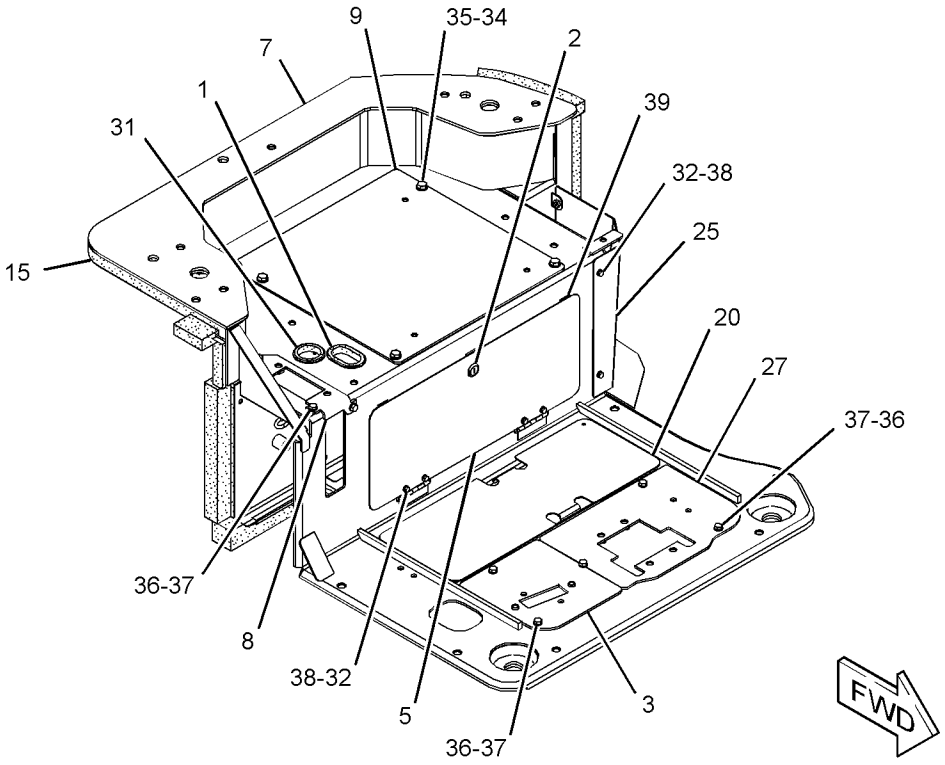

GRAPHIC #1 **<END>** g02806896

379-3625 PLATFORM GP-OPERATOR–CAB

PART OF 376-6691, 376-6695, 383-5924, 383-5925 CAB AR

AN ATTACHMENT

SMCS-7253 **i04617853**

NOTE	REF NO	GRAPHIC REF	PART NUMBER	QTY	PART NAME 1 2 3 4 5 6 (PRODUCT LEVEL)	SEE PAGE
	1	1	**267-5348**	4	MOUNT AS-PLATFORM	
	2	1	**267-5349**	4	MOUNT	
	3	1	**267-5355**	4	STOP	
Y	4	1	*377-5062*	1	FRAME GP-REAR (CAB)	140
Y	5	1	*378-8139*	1	PLATFORM GP-OPERATOR (CAB)	528
M	6	1	**8T-4175**	4	BOLT (M16X2X90-MM)	
	7	1	**9X-8257**	4	WASHER (17.5X30X3.5-MM THK)	

M - METRIC PART
Y - SEPARATE ILLUSTRATION

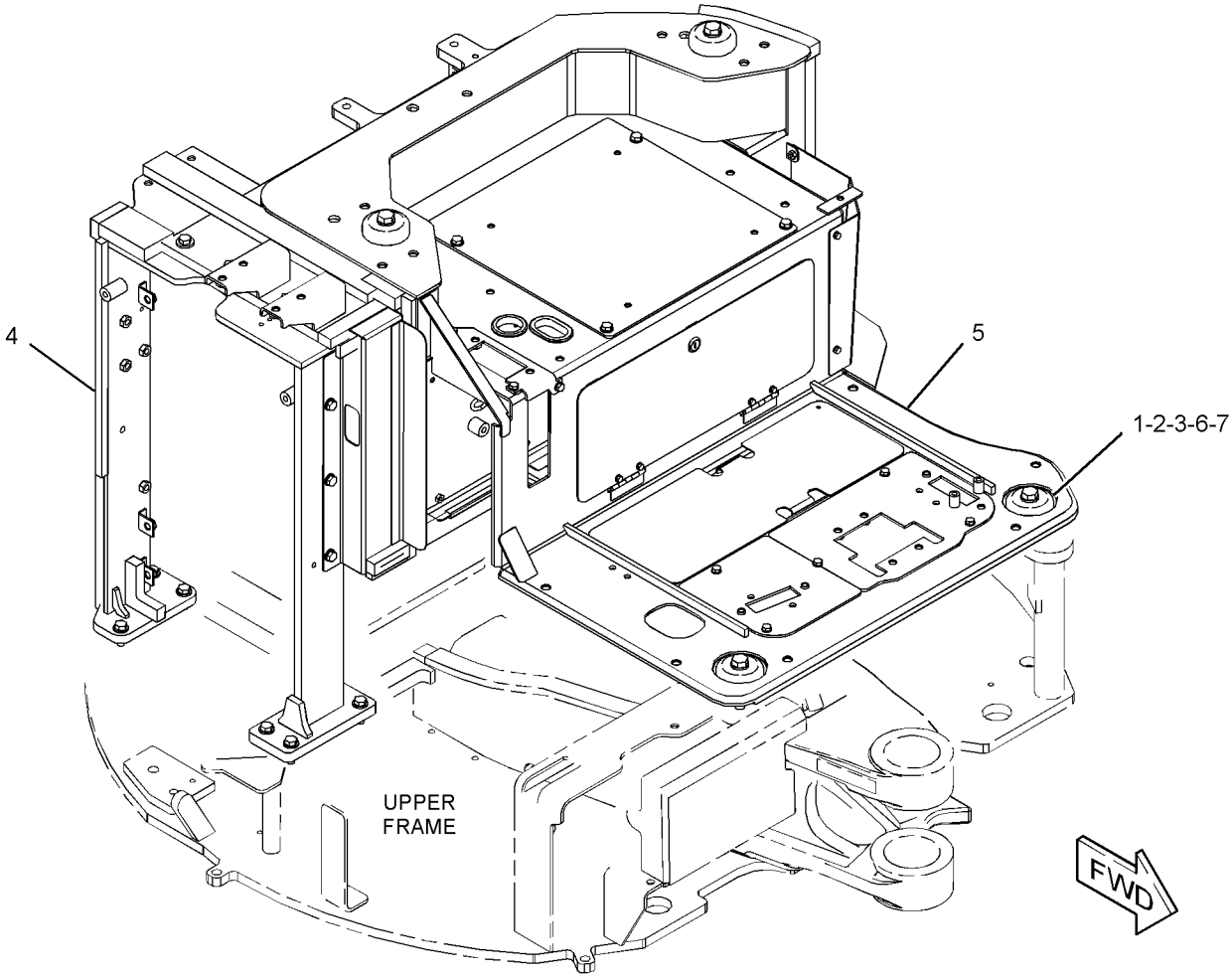

GRAPHIC #1 **<END>** g02798854

382-0400 PLATFORM GP-OPERATOR

PART OF 383-5926 CANOPY AR, 377-8932 CANOPY AR-OPEN ROPS
AN ATTACHMENT

SMCS-7253 **i04623159**

NOTE	REF NO	GRAPHIC REF	PART NUMBER	QTY	PART NAME 1 2 3 4 5 6 (PRODUCT LEVEL)	SEE PAGE
	1	1	**6N-6984**	2	MOUNT-RUBBER	
Y	2	1	*382-0401*	1	FRAME GP-REAR (CANOPY) (CANOPY)	142
Y	3	1	*382-0504*	1	PLATFORM GP (CANOPY)	526
Y	4	1	*382-2177*	1	COVER GP-SOUND SUPPRESSION	137
M	5	1	**7X-2549**	2	BOLT (M12X1.75X100-MM)	
M	6	1	**7X-2556**	1	BOLT (M16X2X100-MM)	
	7	1	**7X-7729**	3	WASHER (11X25X3-MM THK)	
M	8	1	**8T-4137**	1	BOLT (M10X1.5X20-MM)	
M	9	1	**8T-4139**	1	BOLT (M12X1.75X30-MM)	
M	10	1	**8T-4196**	4	BOLT (M10X1.5X35-MM)	
	11	1	**8T-4223**	3	WASHER-HARD (13.5X25.5X3-MM THK)	
	12	1	**8T-4224**	1	WASHER-HARD (8.8X16X2-MM THK)	
M	13	1	**8T-7547**	1	BOLT (M8X1.25X30-MM)	
	14	1	**9L-8781**	2	WASHER (0.406X1.5X0.188-IN THK)	
	15	1	**9X-8257**	1	WASHER (17.5X30X3.5-MM THK)	

M - METRIC PART
Y - SEPARATE ILLUSTRATION

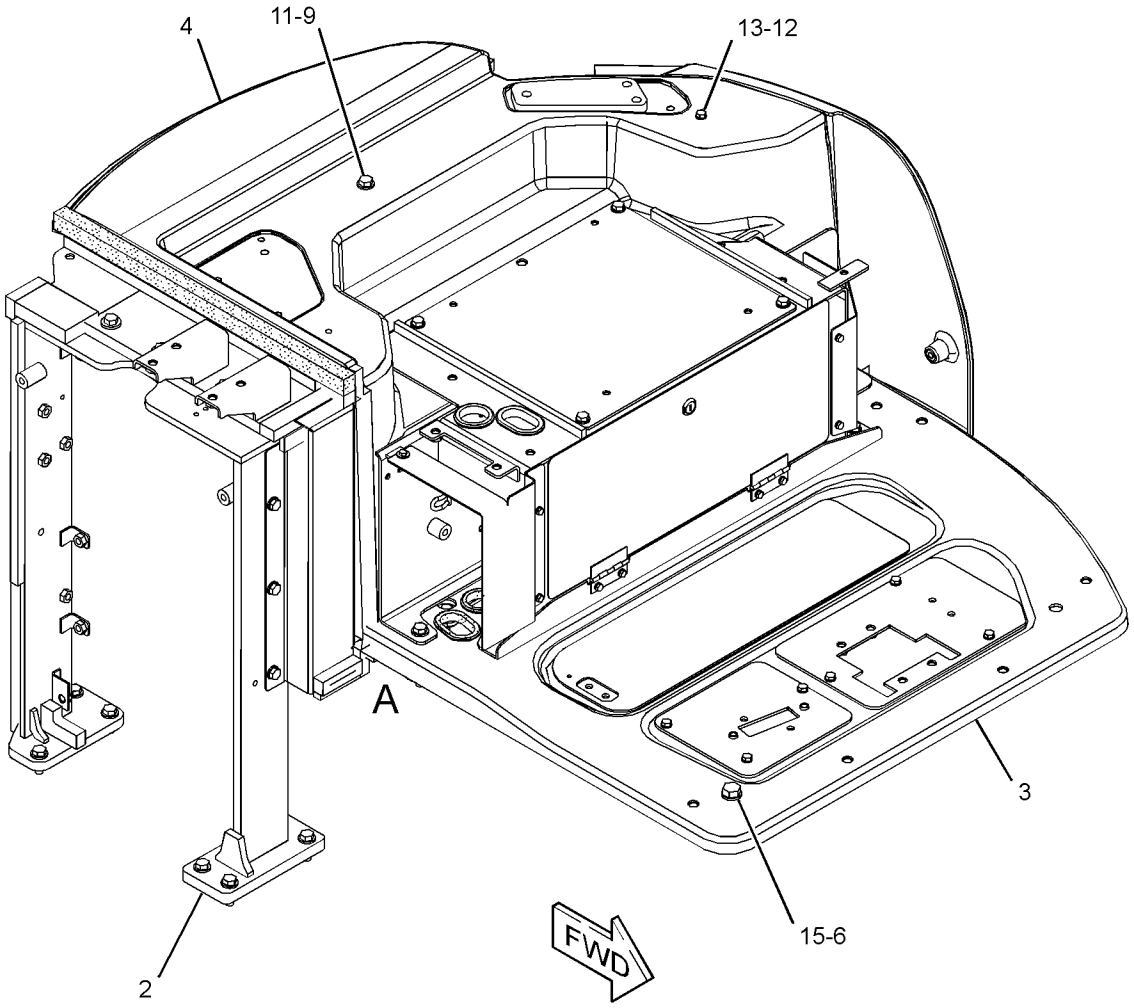

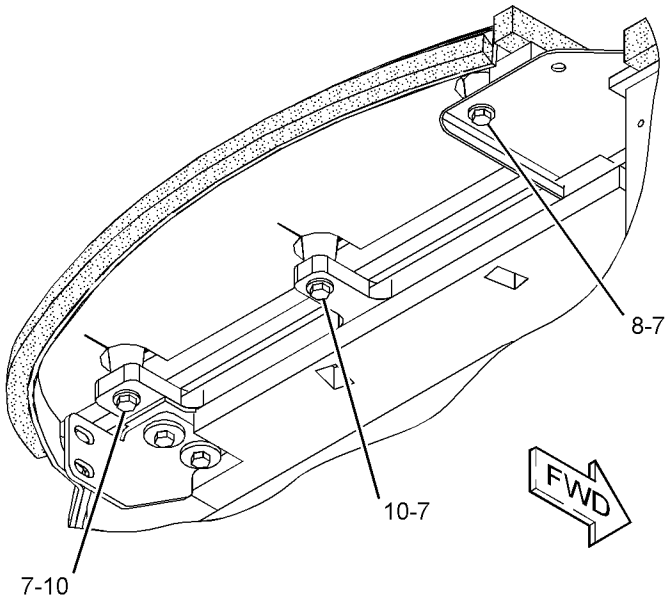

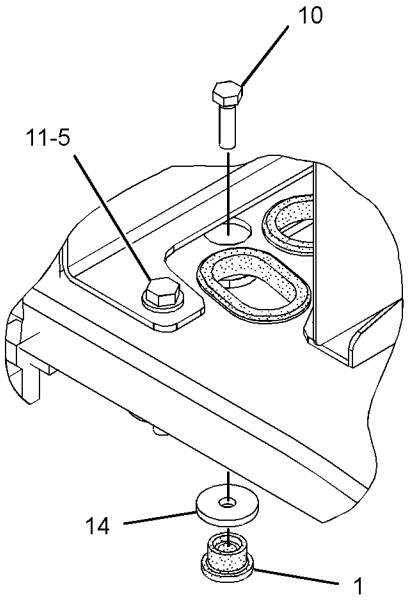

VIEW OF AREA A

GRAPHIC #1 **<END>** g02799130

267-1614 SEAT & MOUNTING GP–CLOTH, LOW BACK, SUSPENSION

PART OF 354-4628 SEAT GP-SUSPENSION

AN ATTACHMENT

SMCS-7312 **i04241469**

NOTE	REF NO	GRAPHIC REF	PART NUMBER	QTY	PART NAME 1 2 3 4 5 6 (PRODUCT LEVEL)	SEE PAGE
M	1	1	**198-3899**	4	SCREW-BUTTON HEAD (M8X1.25X20-MM)	
	2	1	**285-7837**	1	SEAT GP (CLOTH, LOW BACK, SUSPENSION)	
		1	**310-1866**	1	KNOB	
		1	**310-1867**	1	PIN	

M - METRIC PART

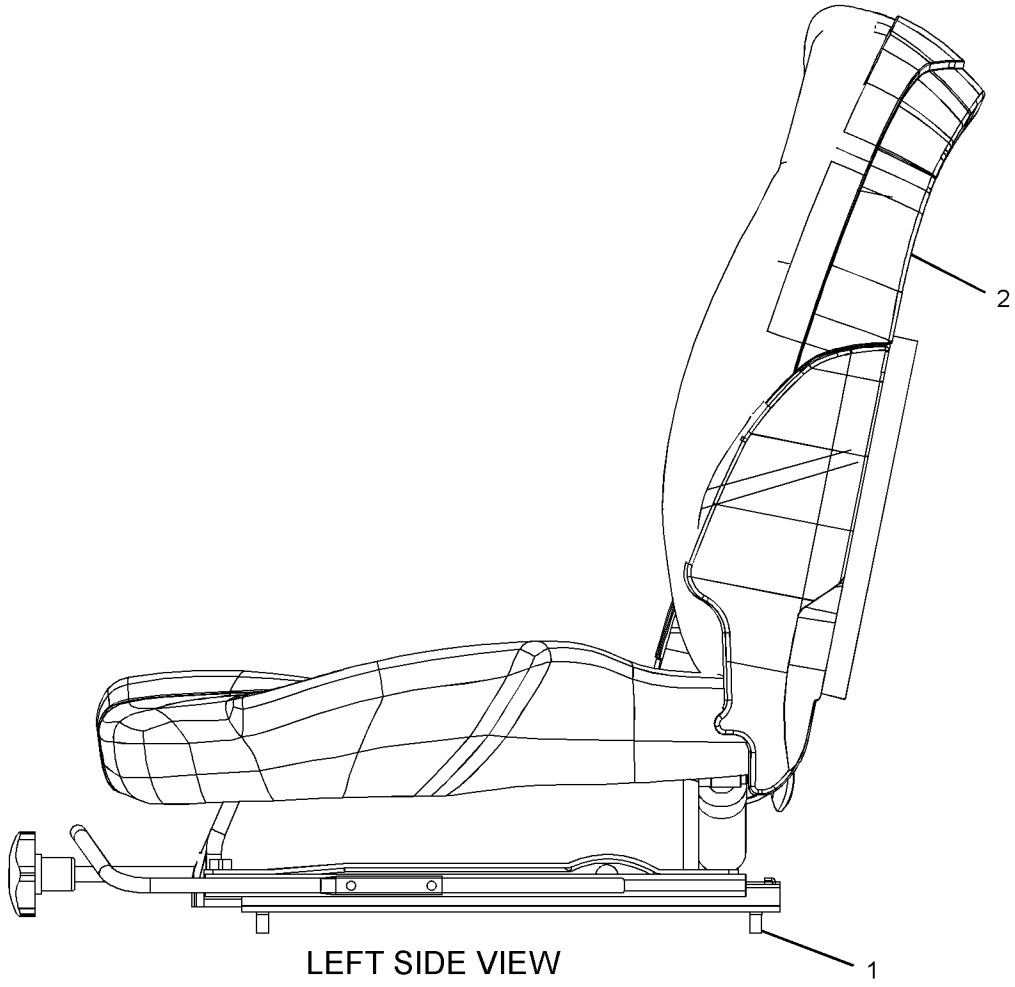

LEFT SIDE VIEW

GRAPHIC #1 **<END>** g01351992

267-1615 SEAT & MOUNTING GP—LOW BACK, SUSPENSION, VINYL

PART OF 357-9061 SEAT GP-SUSPENSION

AN ATTACHMENT

SMCS-7312 **i04241511**

NOTE	REF NO	GRAPHIC REF	PART NUMBER	QTY	PART NAME 1 2 3 4 5 6 (PRODUCT LEVEL)	SEE PAGE
M	1	1	**198-3899**	4	SCREW-BUTTON HEAD (M8X1.25X20-MM)	
	2	1	**285-7836**	1	SEAT GP (VINYL, LOW BACK, TILT)	
		1	**310-1866**	1	KNOB	
		1	**310-1867**	1	PIN	

M - METRIC PART

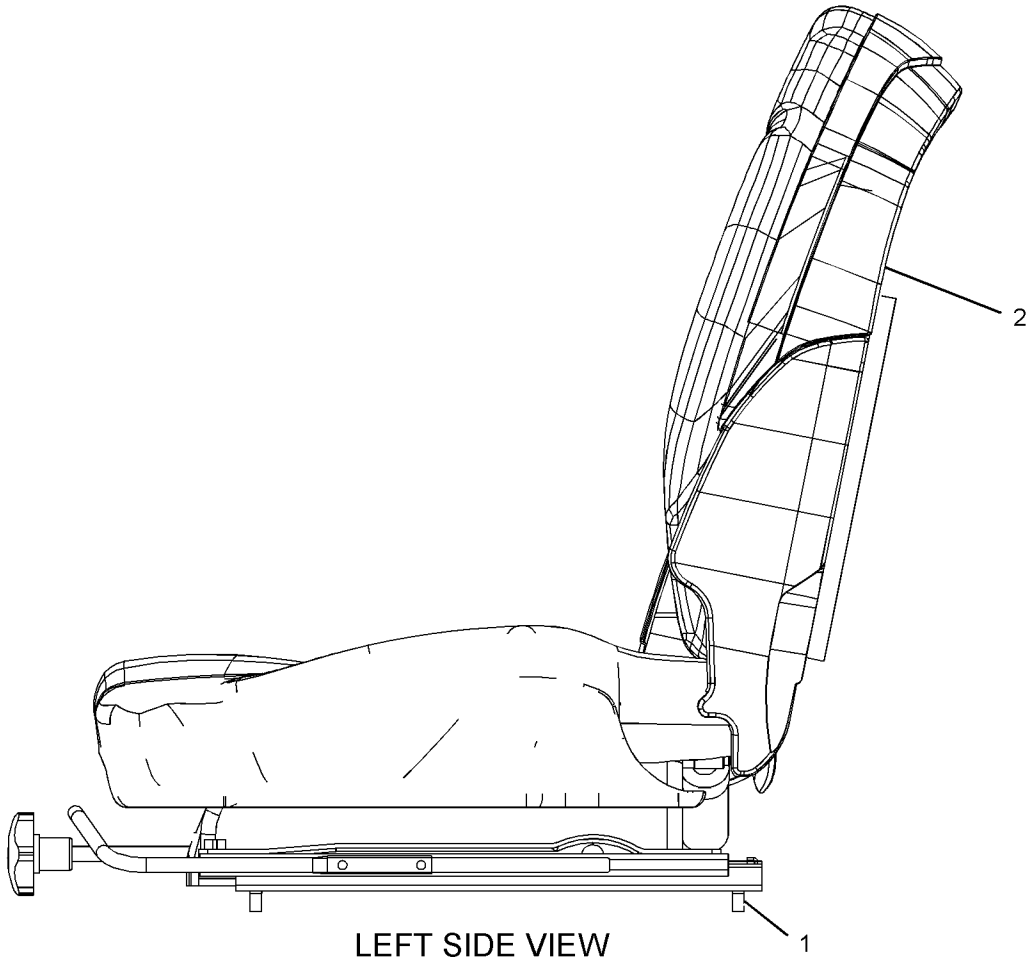

LEFT SIDE VIEW

GRAPHIC #1

<END>

g01351955

387-4682 SEAT & MOUNTING GP—HIGH BACK, CLOTH, SUSPENSION

AN ATTACHMENT

SMCS-7312 **i04629220**

NOTE	PART NUMBER	QTY	PART NAME 1 2 3 4 5 6 (PRODUCT LEVEL)	SEE PAGE
Y	*384-5673*	1	SEAT GP-SUSPENSION (CLOTH, HIGH BACK)	540

Y - SEPARATE ILLUSTRATION

<END>

378-2498 SEAT BELT GP—RETRACTABLE, 2-IN

AN ATTACHMENT

SMCS-7327 **i04623137**

NOTE	PART NUMBER	QTY	PART NAME 1 2 3 4 5 6 (PRODUCT LEVEL)	SEE PAGE
Y	*378-2506*	1	SEAT BELT GP (RETRACTABLE, 2-IN)	536

Y - SEPARATE ILLUSTRATION

<END>

378-2499 SEAT BELT GP—3-IN

AN ATTACHMENT

SMCS-7327 **i04623138**

NOTE	PART NUMBER	QTY	PART NAME 1 2 3 4 5 6 (PRODUCT LEVEL)	SEE PAGE
Y	*378-2508*	1	SEAT BELT GP (RETRACTABLE, 3-IN)	537

Y - SEPARATE ILLUSTRATION

<END>

378-2506 SEAT BELT GP–RETRACTABLE, 2-IN

PART OF 378-2498 SEAT BELT GP

AN ATTACHMENT

SMCS-7327 **i05047013**

NOTE	REF NO	GRAPHIC REF	PART NUMBER	QTY	PART NAME 1 2 3 4 5 6 (PRODUCT LEVEL)	SEE PAGE
	1	1	**208-7733**	2	BOLT (7/16-20X1.1-IN)	
	2	1	**258-4095**	1	SEAT BELT GP (RETRACTABLE, 51-MM (2-IN))	
		1	**2D-6412**	2	WASHER (7/16X15/16X1/4-IN THK)	
		1	**8S-0934**	2	LOCKNUT-FLANGE (7/16-20-THD)	
		1	**8S-4723**	2	BOLT (7/16-20X1.5-IN)	
		1	**8T-4223**	2	WASHER-HARD (13.5X25.5X3-MM THK)	

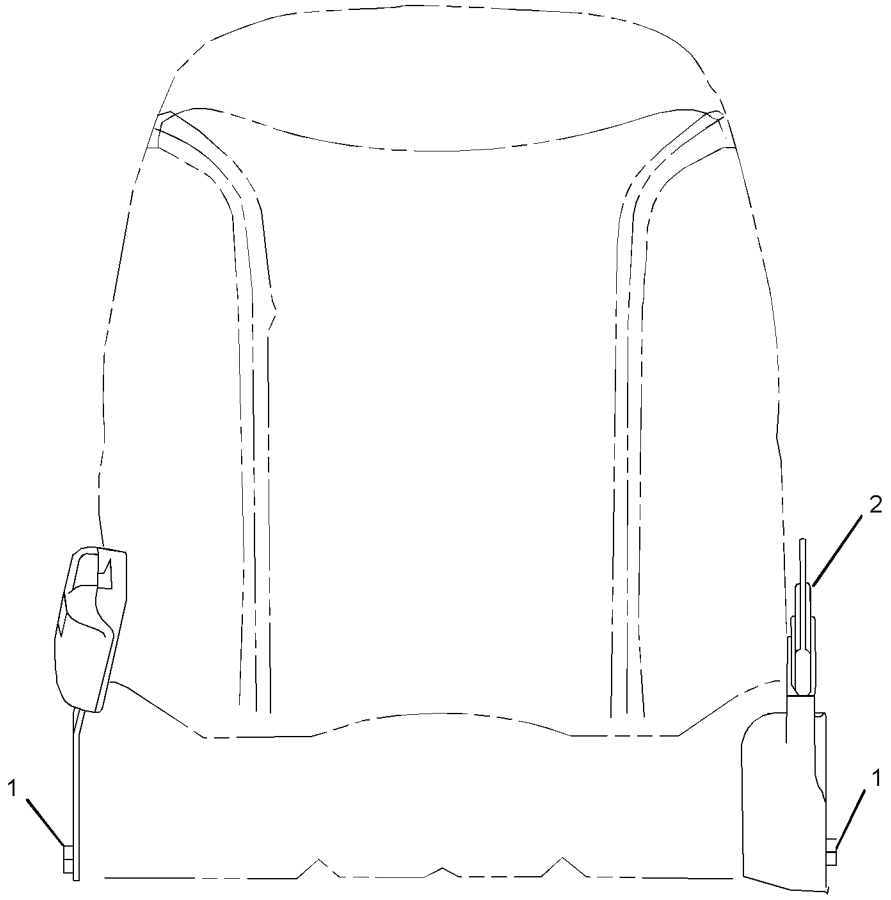

FRONT VIEW

GRAPHIC #1 **<END>** g02782277

378-2508 SEAT BELT GP—RETRACTABLE, 3-IN

PART OF 378-2499 SEAT BELT GP
AN ATTACHMENT

SMCS-7327 **i04559498**

NOTE	REF NO	GRAPHIC REF	PART NUMBER	QTY	PART NAME 1 2 3 4 5 6 (PRODUCT LEVEL)	SEE PAGE
	1	1	**208-7733**	2	BOLT (7/16-20X1.1-IN)	
	2	1	**258-4096**	1	SEAT BELT GP (RETRACTABLE, 76-MM (3-IN))	
		1	**2D-6412**	2	WASHER (7/16X15/16X1/4-IN THK)	
		1	**8S-0934**	2	LOCKNUT-FLANGE (7/16-20-THD)	
		1	**8S-4723**	2	BOLT (7/16-20X1.5-IN)	
		1	**8T-4223**	2	WASHER-HARD (13.5X25.5X3-MM THK)	

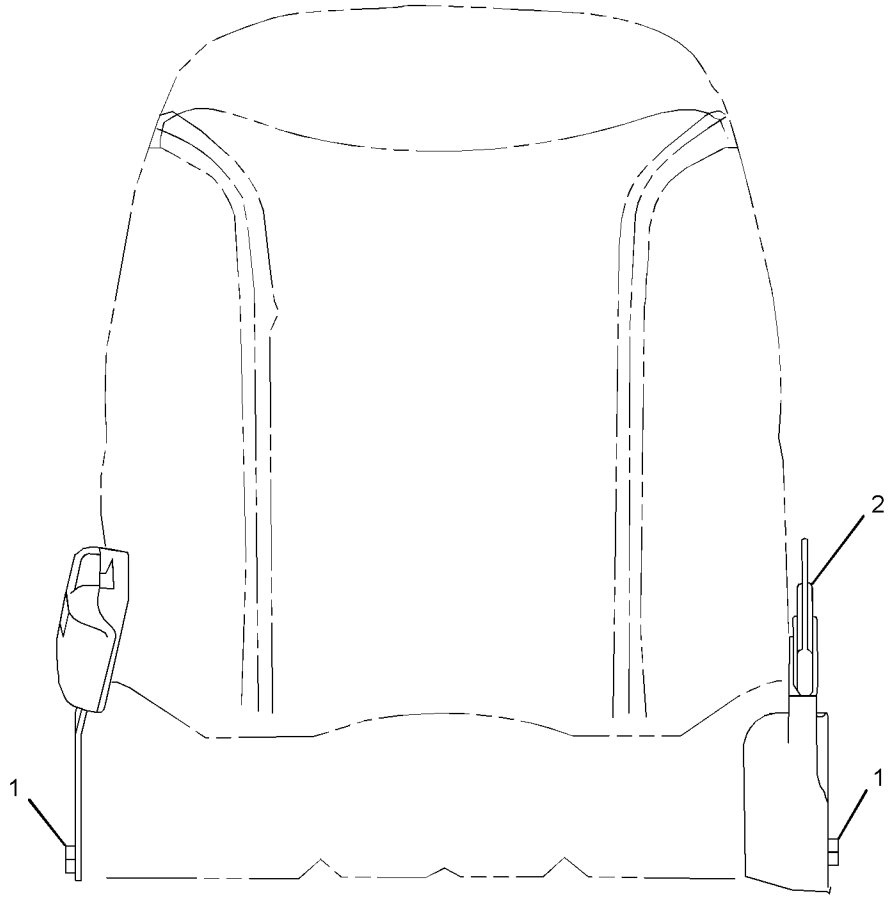

FRONT VIEW

GRAPHIC #1 **<END>** g02782236

267-1617 SEAT GP-SUSPENSION—CLOTH, HIGH BACK

PART OF 354-4629 SEAT GP-SUSPENSION

AN ATTACHMENT

SMCS-7312, 7321, 7324, 7336 **i04241518**

NOTE	REF NO	GRAPHIC REF	PART NUMBER	QTY	PART NAME 1 2 3 4 5 6 (PRODUCT LEVEL)	SEE PAGE
M	1	1	**198-3899**	4	SCREW-BUTTON HEAD (M8X1.25X20-MM)	
	2	1	**285-7838**	1	SEAT GP (HIGH BACK, TILT)	
		1	**310-1866**	1	KNOB	
		1	**310-1867**	1	PIN	

M - METRIC PART

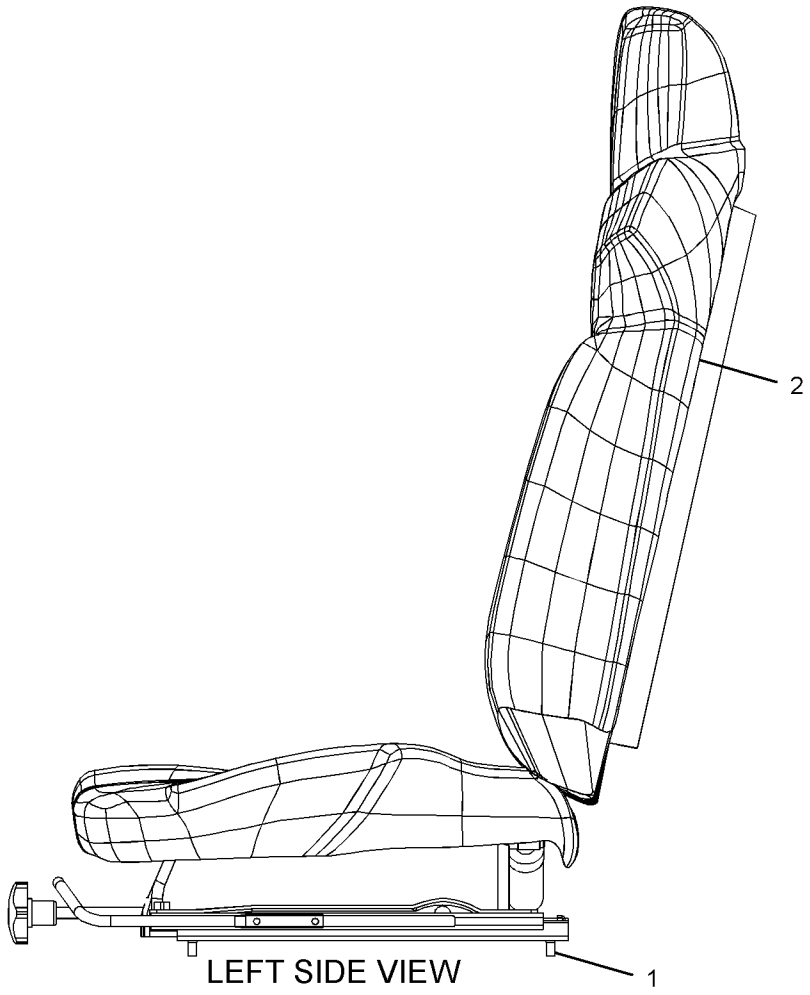

GRAPHIC #1 **<END>** g01351987

354-4628 SEAT GP-SUSPENSION—CLOTH

AN ATTACHMENT

SMCS-7312, 7321, 7324, 7336 **i05044651**

NOTE	PART NUMBER	QTY	PART NAME 1 2 3 4 5 6 (PRODUCT LEVEL)	SEE PAGE
Y	*267-1614*	1	SEAT & MOUNTING GP (CLOTH, LOW BACK, SUSPENSION)	533

Y - SEPARATE ILLUSTRATION

<END>

354-4629 SEAT GP-SUSPENSION—CLOTH

AN ATTACHMENT

SMCS-7312, 7321, 7324, 7336 **i05044652**

NOTE	PART NUMBER	QTY	PART NAME 1 2 3 4 5 6 (PRODUCT LEVEL)	SEE PAGE
Y	*267-1617*	1	SEAT GP-SUSPENSION (CLOTH, HIGH BACK)	538

Y - SEPARATE ILLUSTRATION

<END>

357-9061 SEAT GP-SUSPENSION—VINYL

AN ATTACHMENT

SMCS-7312, 7321, 7324, 7336 **i04018290**

NOTE	PART NUMBER	QTY	PART NAME 1 2 3 4 5 6 (PRODUCT LEVEL)	SEE PAGE
Y	*267-1615*	1	SEAT & MOUNTING GP (LOW BACK, SUSPENSION, VINYL)	534

Y - SEPARATE ILLUSTRATION

<END>

384-5673 SEAT GP-SUSPENSION–CLOTH, HIGH BACK

PART OF 387-4682 SEAT & MOUNTING GP

AN ATTACHMENT

SMCS-7312, 7321, 7324, 7336 **i04629219**

NOTE	REF NO	GRAPHIC REF	PART NUMBER	QTY	PART NAME 1 2 3 4 5 6 (PRODUCT LEVEL)	SEE PAGE
M	1	1	**198-3899**	4	SCREW-BUTTON HEAD (M8X1.25X20-MM)	
	2	1	**384-5674**	1	SEAT GP-SUSPENSION (CLOTH, HIGH BACK)	

M - METRIC PART

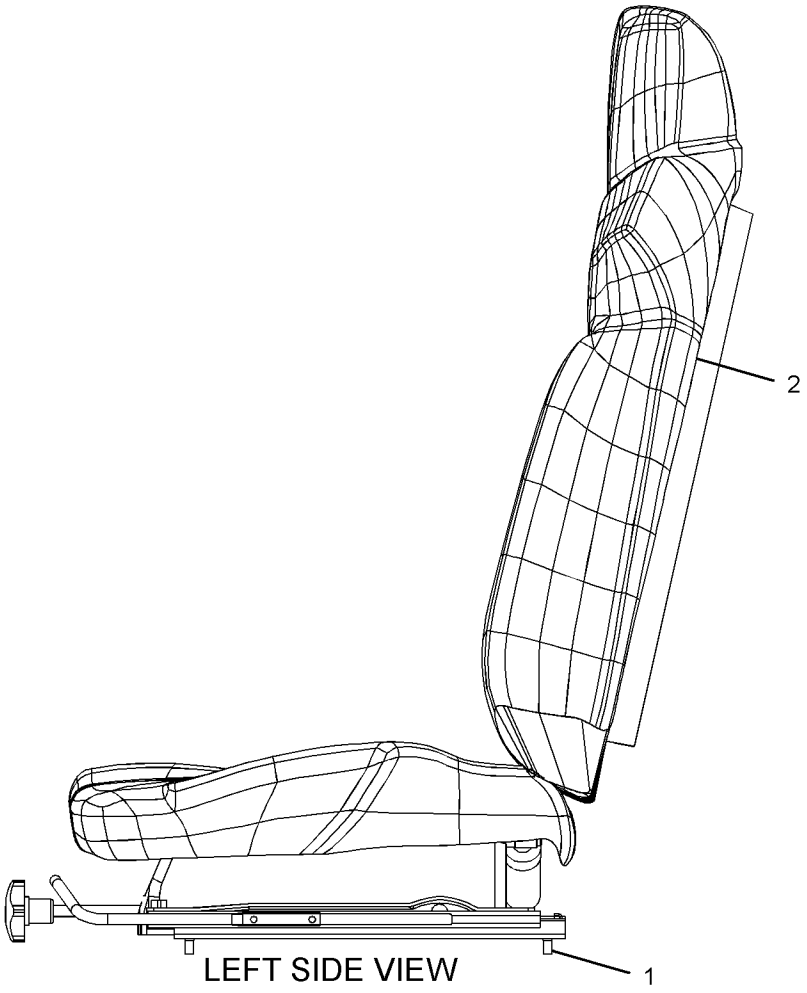

GRAPHIC #1 **<END>** g01351987

379-3626 WASHER GP-WINDOW

PART OF 376-6691, 376-6695, 383-5924, 383-5925 CAB AR
AN ATTACHMENT

SMCS-7306 **i04617854**

NOTE	REF NO	GRAPHIC REF	PART NUMBER	QTY	PART NAME 1 2 3 4 5 6 (PRODUCT LEVEL)	SEE PAGE
	1	1	**7I-2673**	10	STRAP-CABLE	
	2	1	**7Y-3474**	1	VALVE AS-CHECK (WINDOW WASHER)	
	3	1	**191-7524**	1	TANK GP-WINDOW WASHER	
M	4	1	**5C-9553**	2	BOLT (M6X1X16-MM)	
	5	1	**9X-8256**	2	WASHER (6.6X12X2-MM THK)	
E	6	1	**144-0195**		HOSE (270-CM)	

E - ORDER BY THE CENTIMETER
M - METRIC PART

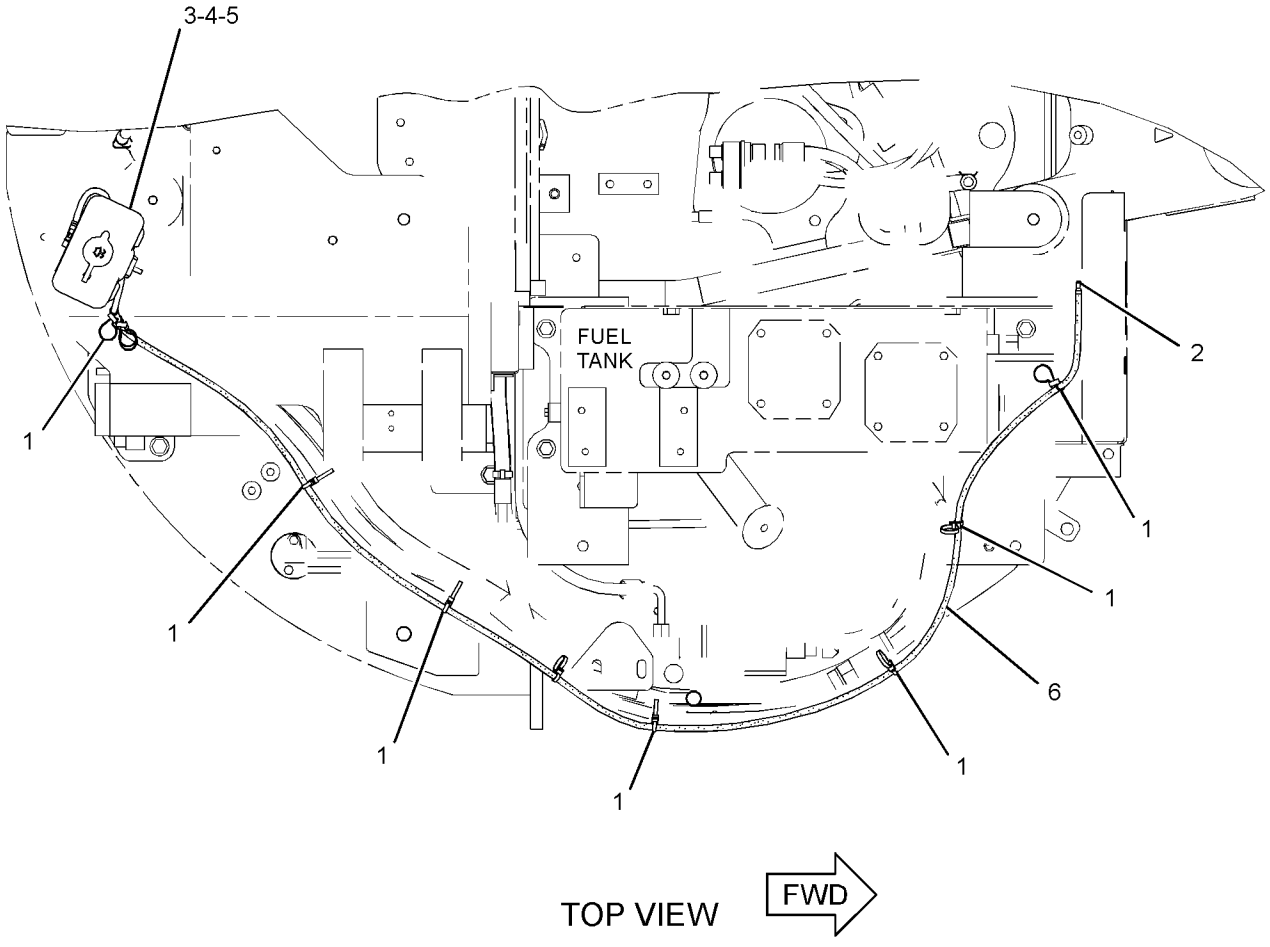

GRAPHIC #1 **<END>** g02798789

280-0421 WINDOW GP-CAB

PART OF 377-5108, 415-6803, 419-1237 CAB GP

AN ATTACHMENT

SMCS-7310 **i04432789**

NOTE	REF NO	GRAPHIC REF	PART NUMBER	QTY	PART NAME 1 2 3 4 5 6 (PRODUCT LEVEL)	SEE PAGE
	1	1	**280-0418**	1	FRAME AS-WINDOW	
	2	1	**288-6841**	1	GLASS-FRONT	
	3	1	**280-0417**	1	SEAL	
	4	1	**280-0416**	1	SEAL	
	5	1	**280-0415**	1	BRACKET AS (RH)	
	6	1	**280-0414**	1	BRACKET AS (LH)	
	7	1	**250-1639**	2	ROLLER	
	8	1	**280-0413**	1	LOCK AS	
	9	1	**280-0412**	1	LOCK AS	
	10	1	**280-0411**	1	PLATE	
	11	1	**275-8629**	1	MOTOR AS-WINDOW WIPER	
	12	1	**275-8630**	1	ARM AS-WIPER	
	13	1	**275-8631**	1	BLADE AS-WIPER (450-MM) (FRONT)	
	14	1	**280-0410**	1	PLATE	
	15	1	**280-0409**	2	SEAL	
	16	1	**280-0408**	4	BOLT	
M	17	1	**5C-7423**	4	SCREW (M6X1X16-MM)	
	18	1	**280-0407**	3	BOLT	
	19	1	**280-0406**	1	NUT	
	20	1	**275-8632**	1	COVER	
	21	1	**280-0419**	1	SCREW	

M - METRIC PART

280-0421 **WINDOW GP-CAB (*contd.*)** **i04432789**

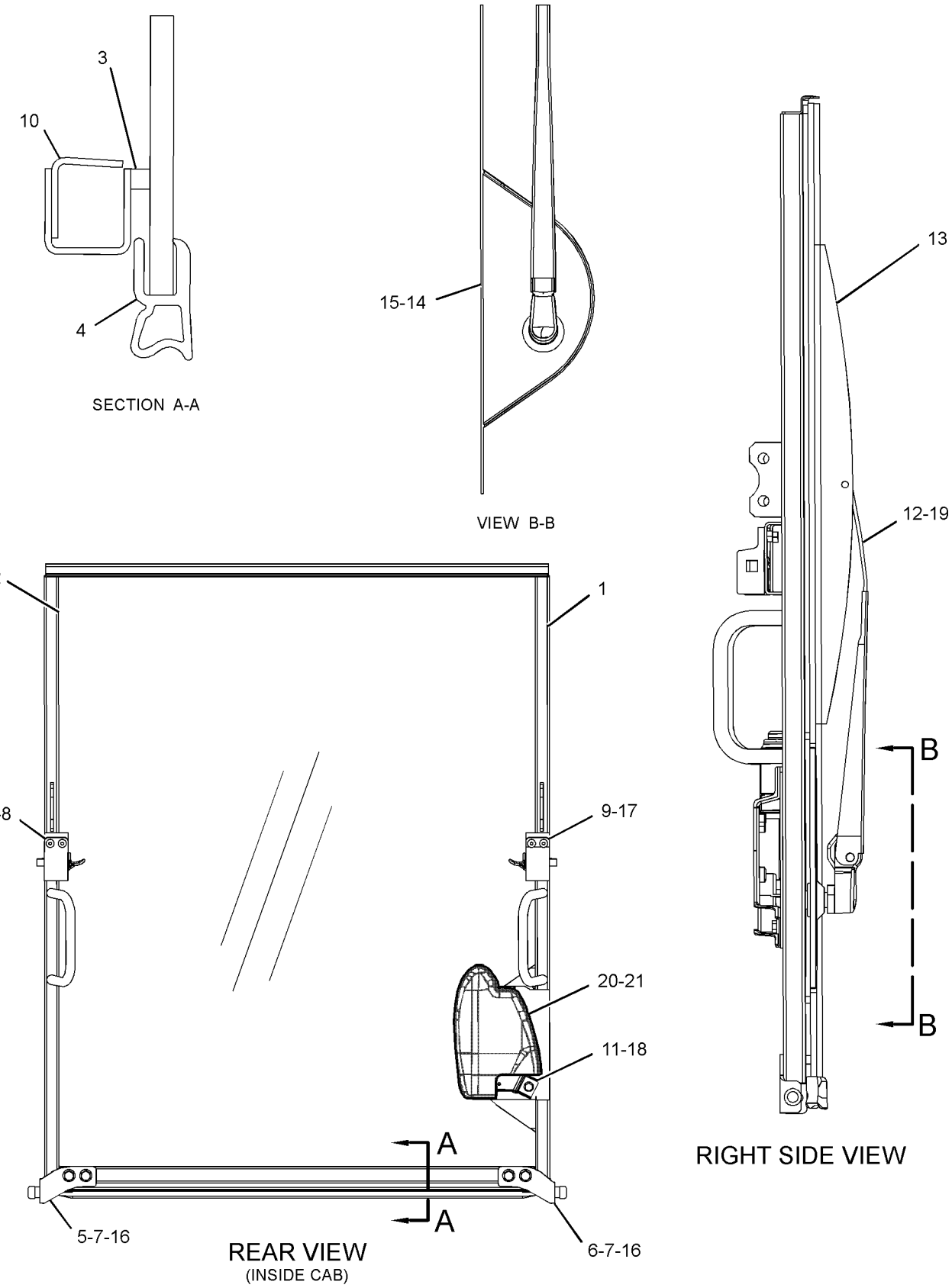

GRAPHIC #1

<END>

g01213831

281-4451 WINDOW GP-SLIDING

PART OF 377-5108, 415-6803, 419-1237 CAB GP

AN ATTACHMENT

SMCS-7310 **i03965398**

NOTE	REF NO	GRAPHIC REF	PART NUMBER	QTY	PART NAME 1 2 3 4 5 6 (PRODUCT LEVEL)	SEE PAGE
	1	1	**304-8800**	2	LOCK AS	
	2	1	**304-8801**	1	PLATE	
	3	1	**304-8802**	1	PLATE	
	4	1	**314-8292**	1	FRAME	
	5	1	**314-8294**	1	GLASS	
	6	1	**314-8295**	1	GLASS	
	7	1	**314-8296**	2	CHANNEL	
	8	1	**314-8298**	1	SEAL	
	9	1	**314-8299**	1	PLATE	
	10	1	**314-8300**	2	SEAL	

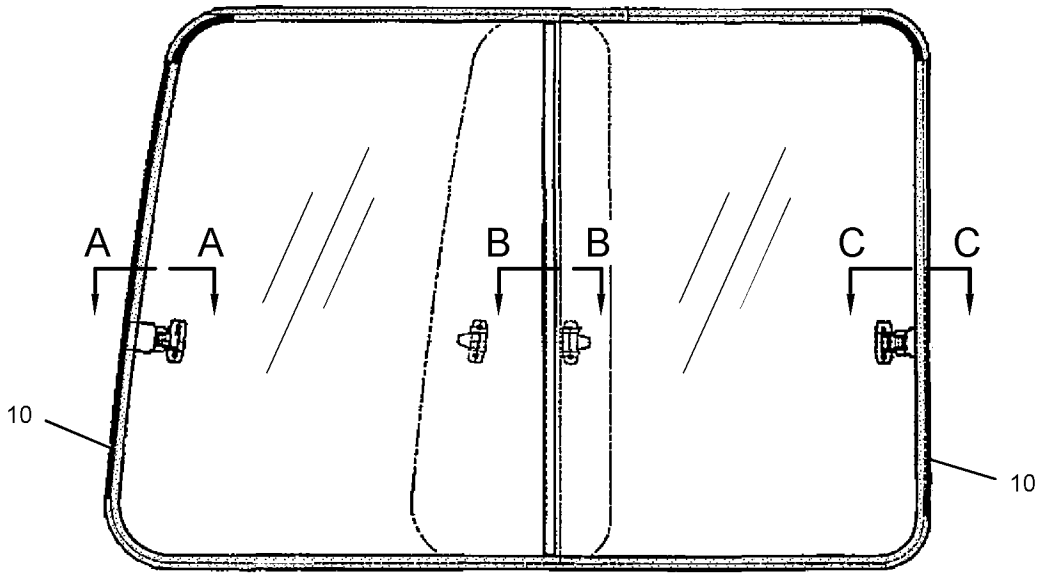

LEFT SIDE VIEW
(INSIDE CAB)

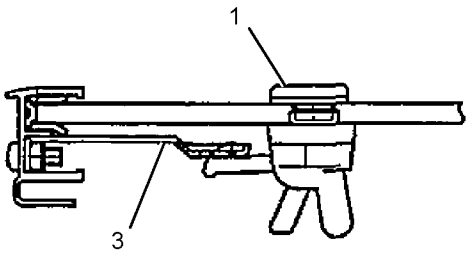

SECTION A-A

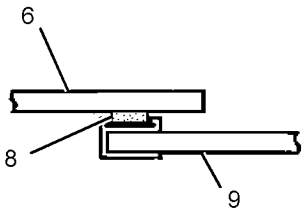

SECTION B-B

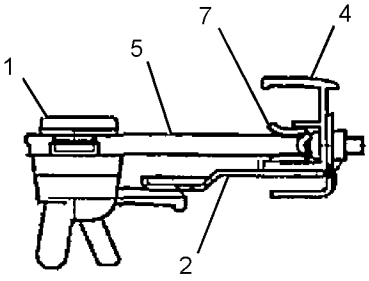

SECTION C-C

GRAPHIC #1 **<END>** g01419058

377-9706 FILM GP–STRAIGHT BLADE

PART OF 377-8915 BLADE AR-STRAIGHT

AN ATTACHMENT

SMCS-7557 **i05101629**

NOTE	REF NO	GRAPHIC REF	PART NUMBER	QTY	PART NAME 1 2 3 4 5 6 (PRODUCT LEVEL)	SEE PAGE
	1	1	**395-3419**	1	FILM-CONTROL (STRAIGHT BLADE)	

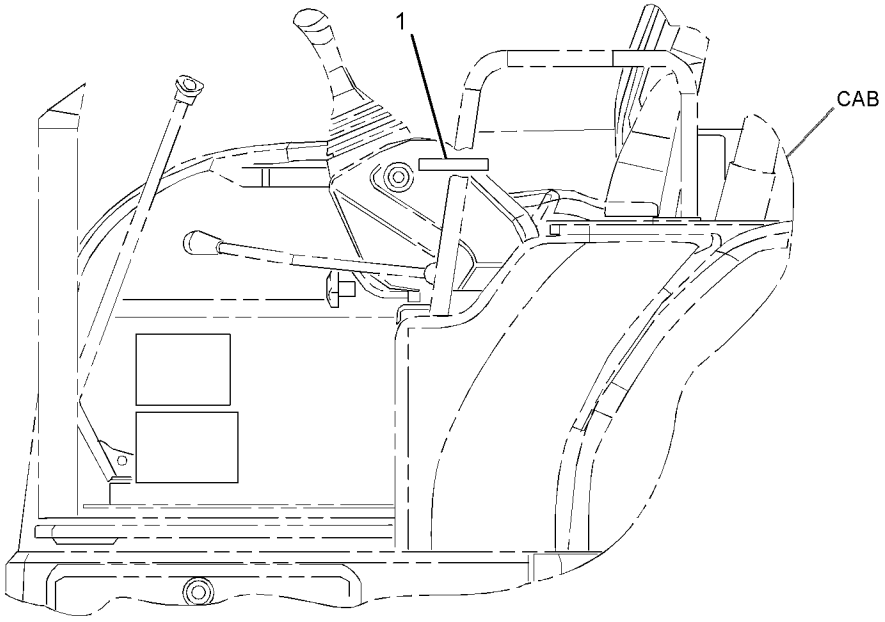

LEFT SIDE VIEW

GRAPHIC #1 **<END>** g02787418

377-9707 FILM GP–AUXILIARY

PART OF 379-4680 CONTROL AR-AUXILIARY

SMCS-7557 **i04589439**

NOTE	REF NO	GRAPHIC REF	PART NUMBER	QTY	PART NAME 1 2 3 4 5 6 (PRODUCT LEVEL)	SEE PAGE
	1	1	**377-9728**	1	FILM-INSTRUCTION (OPERATOR CONTROLS, READ OMM)	
	2	1	**377-9729**	1	FILM-INSTRUCTION (AUX BALL VALVE)	

377-9707 **FILM GP (*contd.*)** **i04589439**

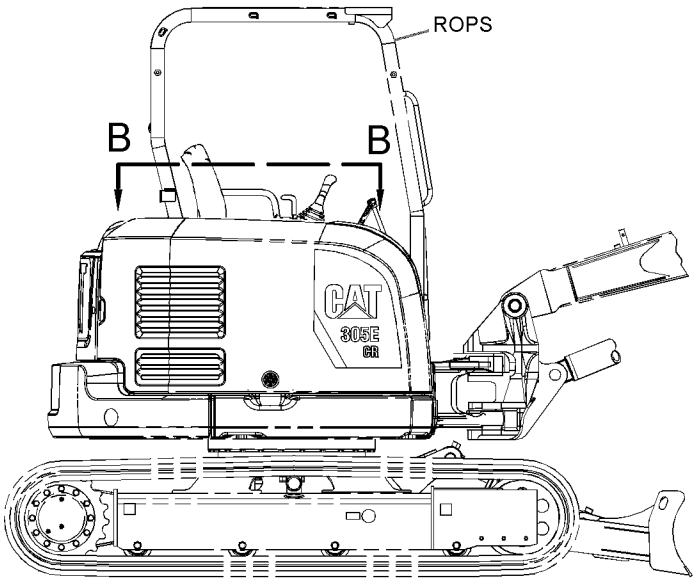

RIGHT SIDE VIEW

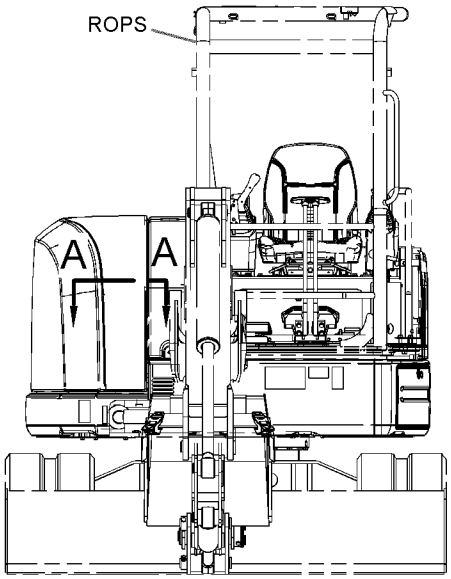

FRONT VIEW

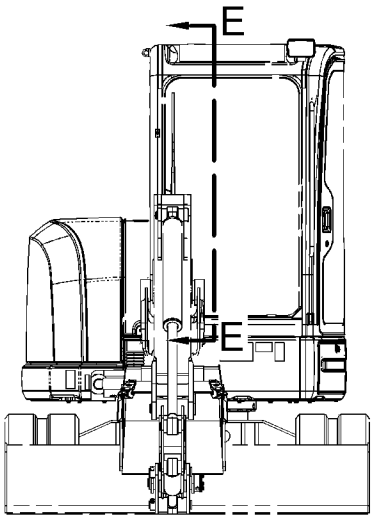

FRONT VIEW
(ALTERNATE VIEW WITH CAB)

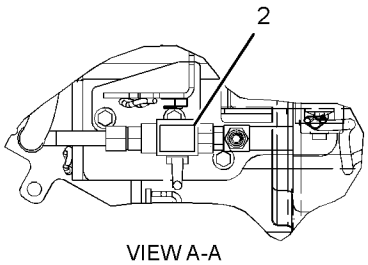

VIEW A-A

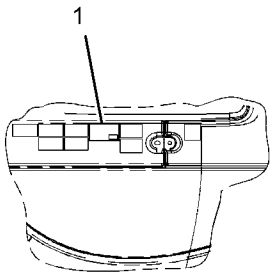

VIEW B-B

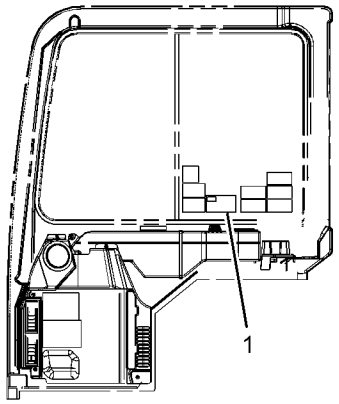

VIEW E-E
(ALTERNATE VIEW WITH CAB)

GRAPHIC #1

<END>

g02768804

377-9708 FILM GP–2ND AUXILIARY

PART OF 379-4684, 379-4685 CONTROL AR-AUXILIARY

AN ATTACHMENT

SMCS-7557 **i04559483**

NOTE	REF NO	GRAPHIC REF	PART NUMBER	QTY	PART NAME 1 2 3 4 5 6 (PRODUCT LEVEL)	SEE PAGE
	1	1	**377-9730**	1	FILM-INSTRUCTION (2ND AUXILIARY)	

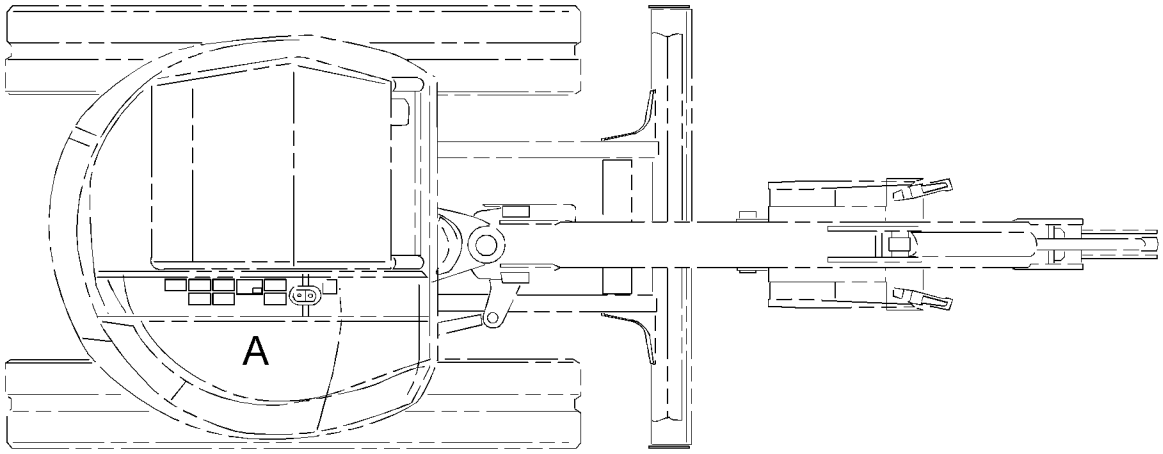

TOP VIEW

FWD

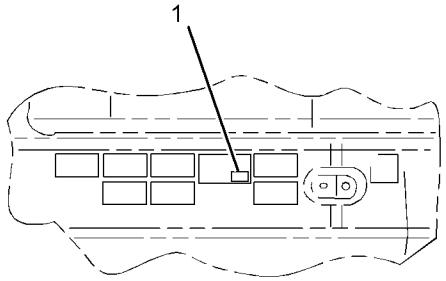

VIEW OF AREA A

GRAPHIC #1 **<END>** g02769777

377-9709 FILM GP–2-WAY

PART OF 379-4687 CONTROL AR-AUXILIARY

AN ATTACHMENT

SMCS-7557 **i04559484**

NOTE	REF NO	GRAPHIC REF	PART NUMBER	QTY	PART NAME 1 2 3 4 5 6 (PRODUCT LEVEL)	SEE PAGE
	1	1	**273-0477**	1	FILM-INSTRUCTION (OPERATOR CONTROLS, READ OMM)	

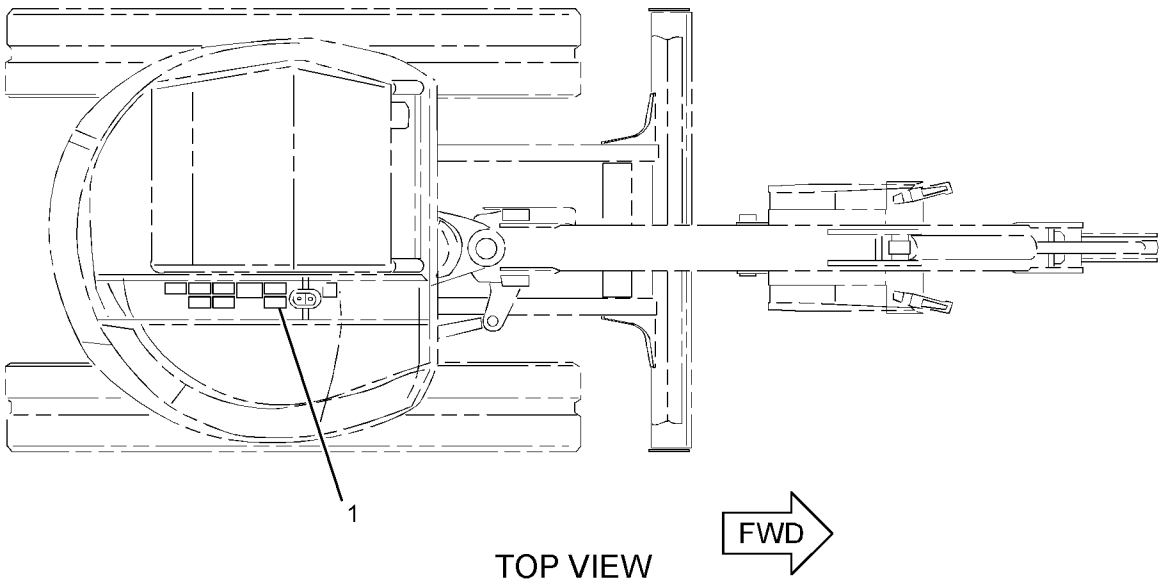

GRAPHIC #1 **<END>** g02769776

377-9715 FILM GP–CAB HEATER

PART OF 376-6695, 383-5925 CAB AR

AN ATTACHMENT

SMCS-7557 **i05356142**

NOTE	REF NO	GRAPHIC REF	PART NUMBER	QTY	PART NAME 1 2 3 4 5 6 (PRODUCT LEVEL)	SEE PAGE
	1	1	**187-9185**	1	FILM-INFORMATION (ALTERNATE EXIT)	
	2	1	**419-8301**	1	FILM-WARNING (ROPS, FOPS, OPS, READ OMM)	

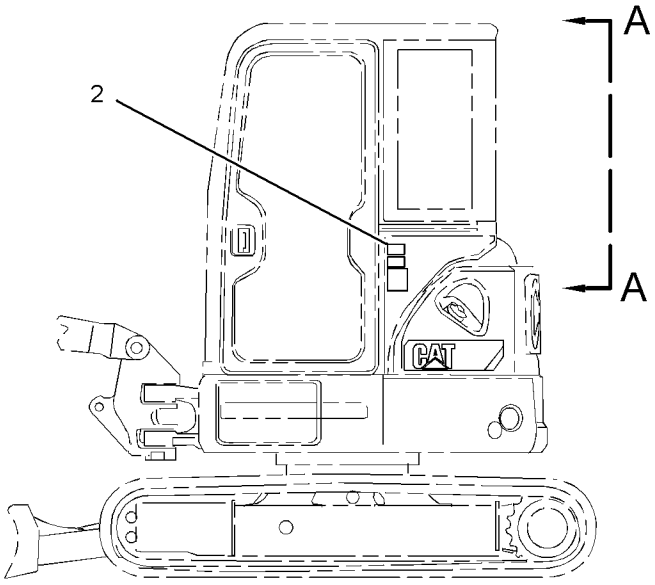

LEFT SIDE VIEW

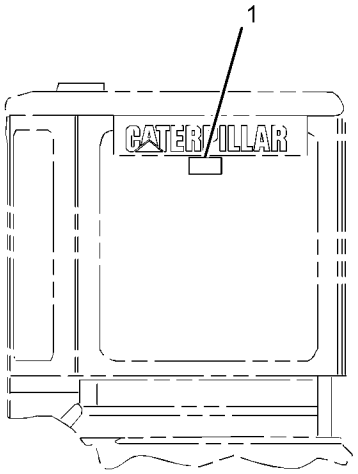

VIEW A-A

GRAPHIC #1 **<END>** g02979699

381-4576 FILM GP–COUPLER

PART OF 381-4578 FILM GP-INTERNATIONAL

AN ATTACHMENT

SMCS-7557 **i04559506**

NOTE	REF NO	GRAPHIC REF	PART NUMBER	QTY	PART NAME 1 2 3 4 5 6 (PRODUCT LEVEL)	SEE PAGE
	1	1	**269-0120**	1	FILM-WARNING (CRUSH HAZARD, READ OMM, INTL)	
	2	1	**269-0121**	1	FILM-WARNING (CRUSH HAZARD, READ OMM, INTL)	

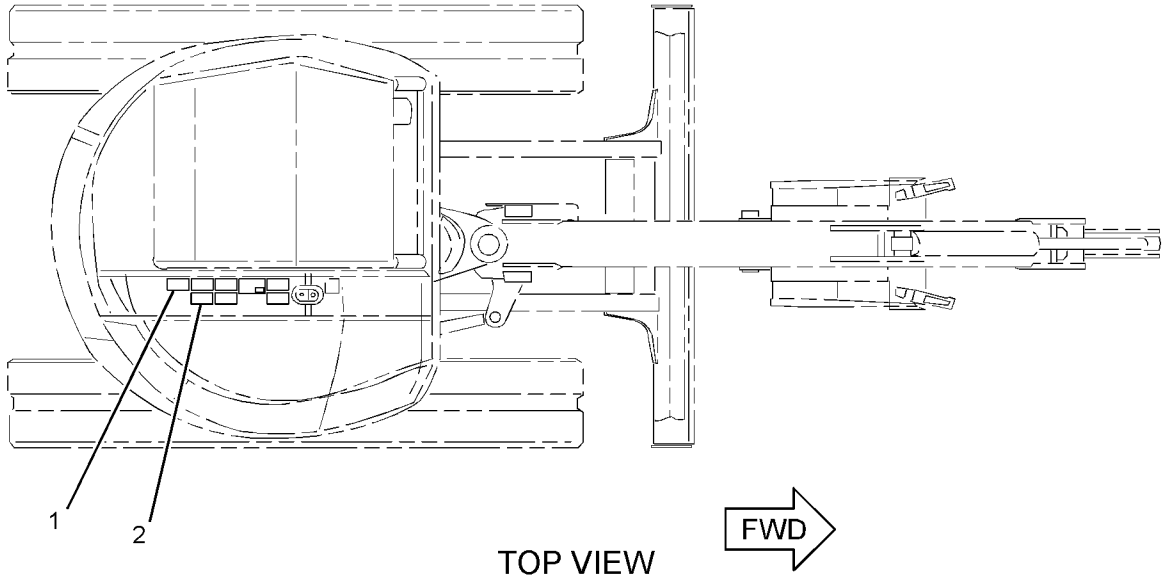

GRAPHIC #1 **<END>** g02770679

382-0560 FILM GP–2-WAY

PART OF 379-4682 LINES AR-BOOM

AN ATTACHMENT

SMCS-7557 **i04689551**

NOTE	REF NO	GRAPHIC REF	PART NUMBER	QTY	PART NAME 1 2 3 4 5 6 (PRODUCT LEVEL)	SEE PAGE
	1	1	**322-4582**	1	FILM-WARNING (TIPPING HAZARD, READ OMM)	

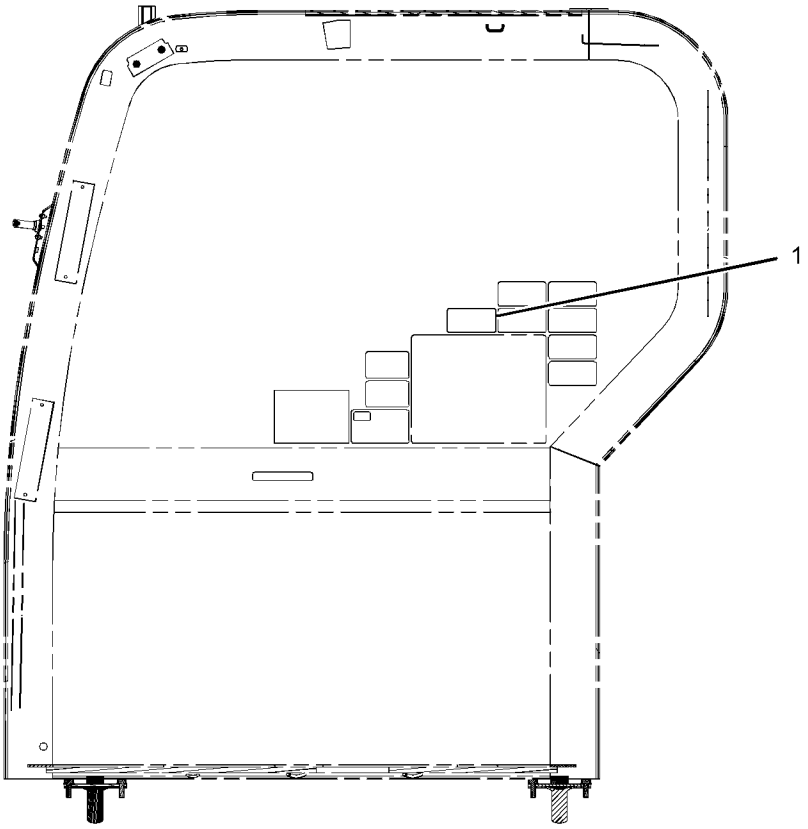

LEFT SIDE VIEW
(INSIDE CAB)

GRAPHIC #1 **<END>** g02835296

386-6058 FILM GP–ANGLE BLADE

PART OF 377-8928 BLADE AR-ANGLING

AN ATTACHMENT

SMCS-7557 **i04658616**

NOTE	REF NO	GRAPHIC REF	PART NUMBER	QTY	PART NAME 1 2 3 4 5 6 (PRODUCT LEVEL)	SEE PAGE
	1	1	**386-6073**	1	FILM-INSTRUCTION (BLADE ANGLE)	

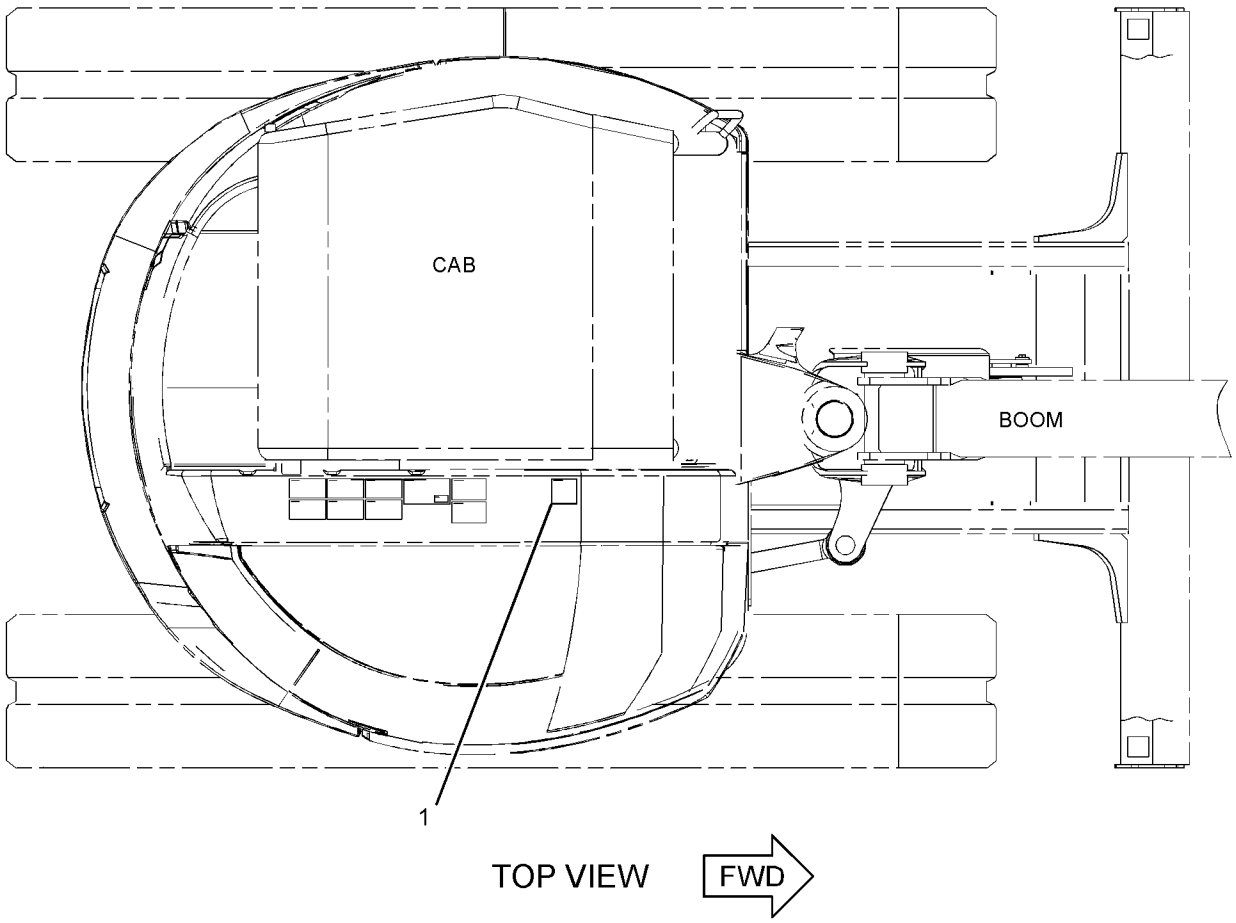

GRAPHIC #1 **<END>** g02798812

389-8776 FILM GP

FRONT GUARD

PART OF 383-5924, 383-5925 CAB AR, 383-5926 CANOPY AR

AN ATTACHMENT

SMCS-7557 **i04689389**

NOTE	REF NO	GRAPHIC REF	PART NUMBER	QTY	PART NAME 1 2 3 4 5 6 (PRODUCT LEVEL)	SEE PAGE
	1	1	**389-8775**	1	FILM-CERTIFICATION (FRONT GUARD, READ OMM)	
	2	1	**389-9183**	1	FILM-WARNING (NO WELD, NO DRILL, READ OMM)	

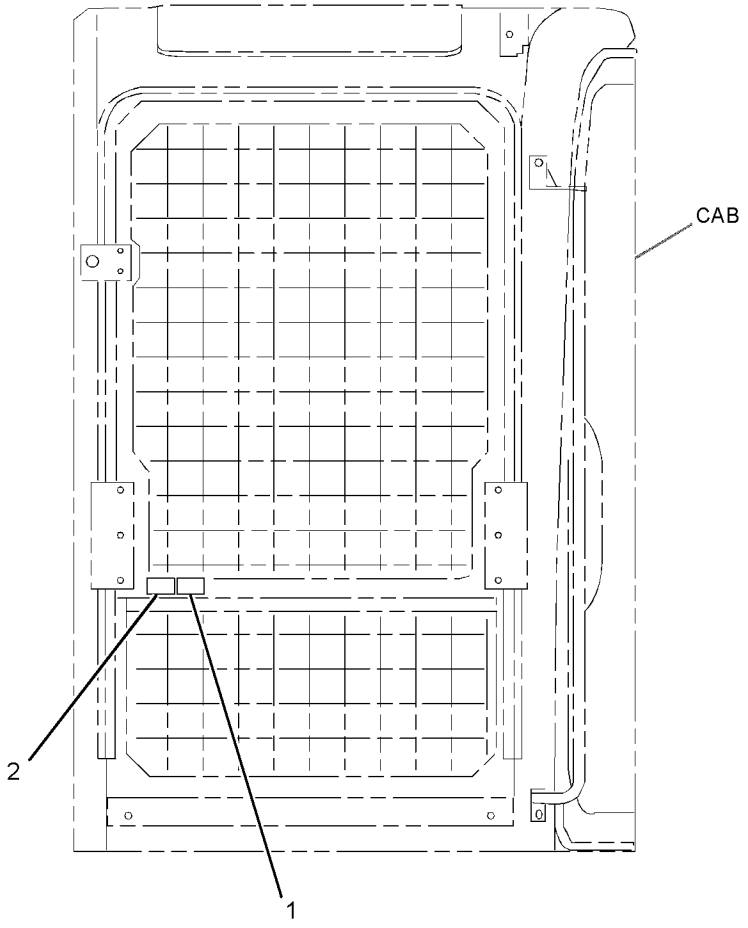

FRONT VIEW

GRAPHIC #1 **<END>** g02798968

393-1257 FILM GP–CAB HEATER

PART OF 383-5926 CANOPY AR, 377-8932 CANOPY AR-OPEN ROPS
AN ATTACHMENT

SMCS-7557 **i05260375**

NOTE	REF NO	GRAPHIC REF	PART NUMBER	QTY	PART NAME 1 2 3 4 5 6 (PRODUCT LEVEL)	SEE PAGE
	1	1	**432-1346**	1	FILM-WARNING (ROPS, FOPS, OPS, READ OMM)	

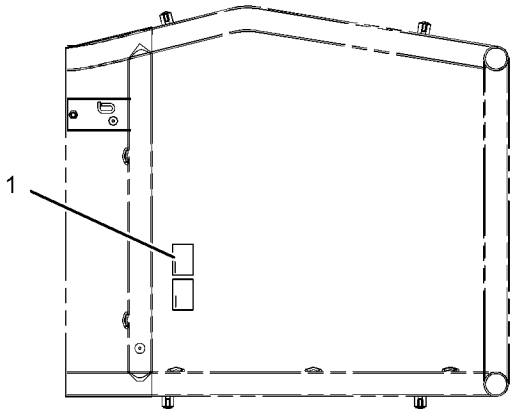

VIEW A-A

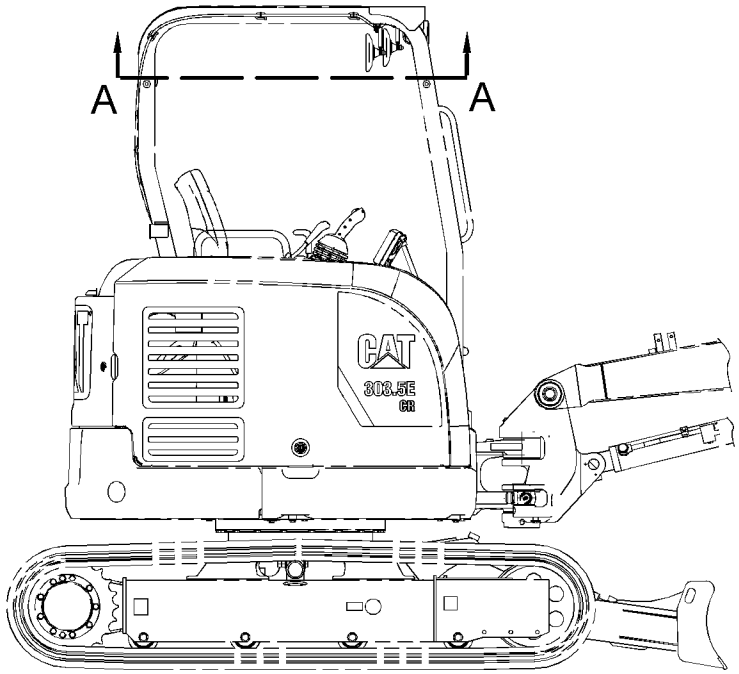

RIGHT SIDE VIEW

GRAPHIC #1 **<END>** g02881182

SERVICE EQUIPMENT AND SUPPLIES

420-1370 FILM GP

AN ATTACHMENT

SMCS-7557 **i05210581**

NOTE	REF NO	GRAPHIC REF	PART NUMBER	QTY	PART NAME 1 2 3 4 5 6 (PRODUCT LEVEL)	SEE PAGE
	1	1	**172-1241**	1	FILM-IDENTIFICATION (LIFT EYE, TIE-DOWN LOCATION)	

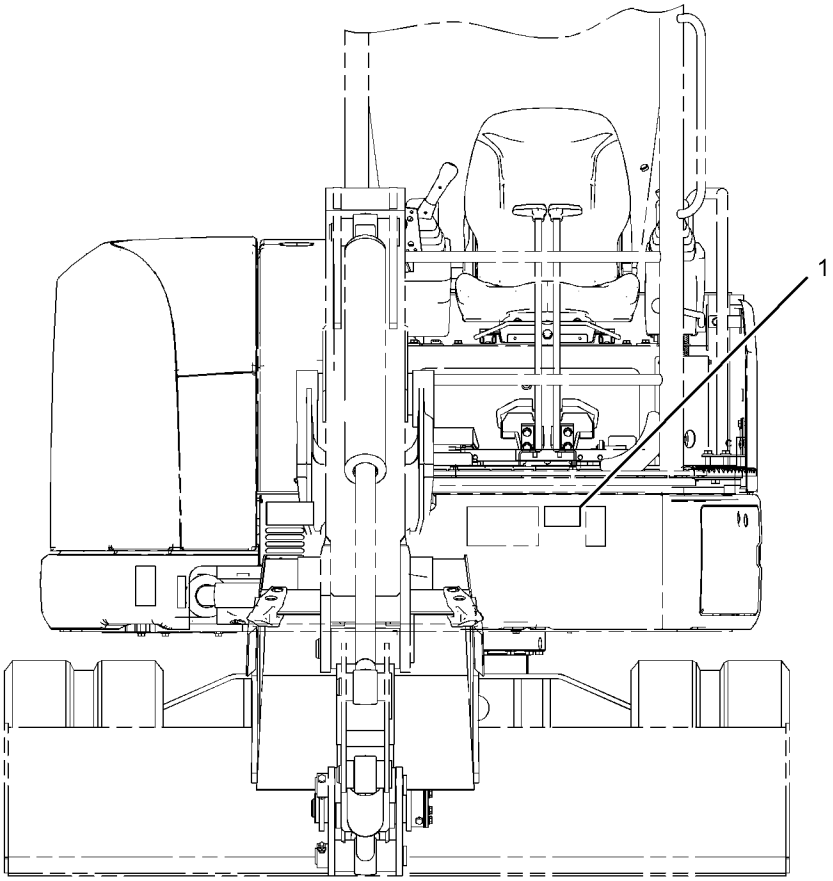

FRONT VIEW

GRAPHIC #1 **<END>** g03335604

377-9710 FILM GP-INTERNATIONAL

AN ATTACHMENT

SMCS-7405, 7557 **i04728491**

NOTE	REF NO	GRAPHIC REF	PART NUMBER	QTY	PART NAME 1 2 3 4 5 6 (PRODUCT LEVEL)	SEE PAGE
	1	2	**8C-4535**	1	FILM-IDENTIFICATION (DIESEL FUEL)	
	2	2	**221-8045**	1	FILM-WARNING (SEAT BELT, INTERNATIONAL)	
	3	2	**224-0554**	1	FILM-WARNING (UNIVERSAL, READ OMM)	
	4	2	**224-8946**	1	FILM-WARNING (NO ETHER SPRAY/AIR INTK, INTL)	
	5	2	**225-0312**	1	FILM-WARNING (JUMP START, READ OMM, INTL)	
	6	1	**228-7316**	1	FILM-WARNING (HOT SURFACE, HANDS CLEAR, INTL)	
	7	1	**228-9254**	1	FILM-WARNING (ELEC HAZARD, READ OMM, INTL)	
	8	1,2	**235-1368**	2	FILM-WARNING (RADIATOR)	
	9	1,2	**239-4991**	2	FILM-WARNING (HIGH PRESSURE CYLINDER)	
	10	2	**254-7563**	2	FILM-WARNING (CRUSH HAZARD, STAY BACK)	
	11	1	**266-5431**	1	FILM-WARNING (CRUSH HAZARD, READ OMM, INTL)	
	12	2	**298-4282**	2	FILM-WARNING (CRUSH HAZARD, STAY BACK, INTL)	
	13	1	**389-8773**	1	FILM-WARNING (CUTTING HAZARD HAND, STAY BACK)	

REFER TO ALL ILLUSTRATIONS OF THIS GROUP FOR AUXILIARY VIEWS

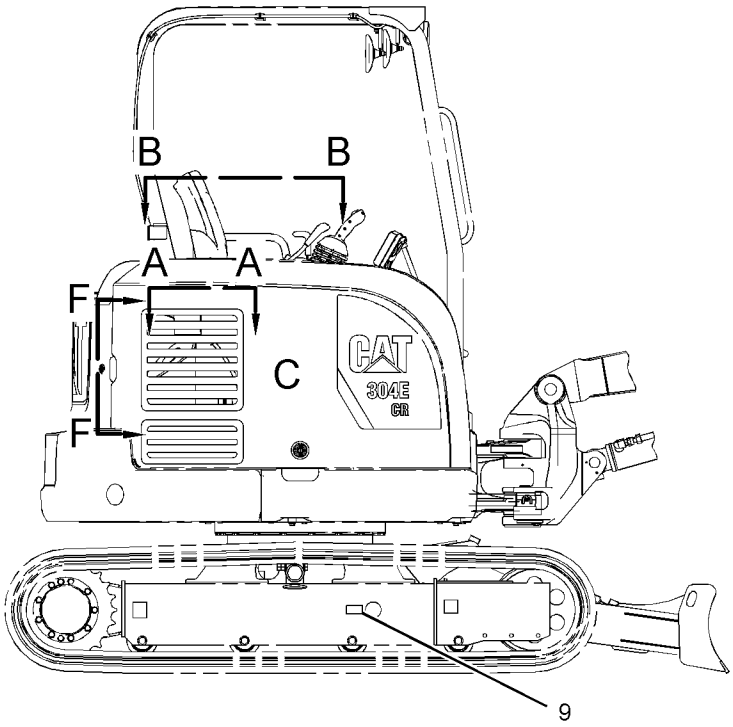

RIGHT SIDE VIEW

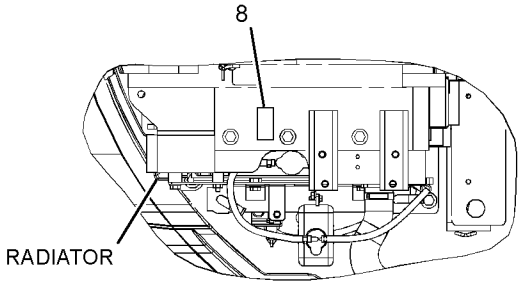

VIEW A-A

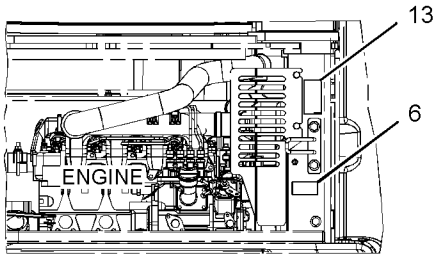

VIEW F-F

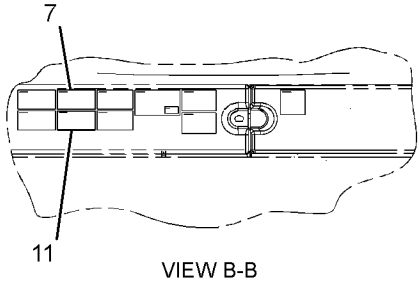

VIEW B-B

GRAPHIC #1 g02845360

377-9710 **FILM GP-INTERNATIONAL (*contd.*)** **i04728491**

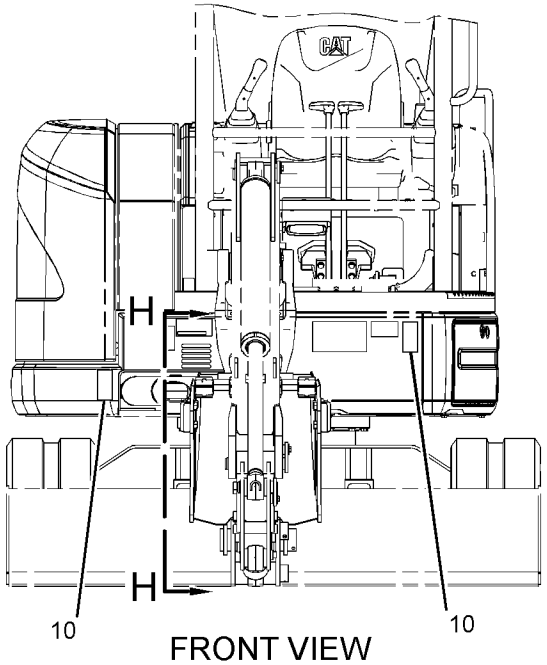

FRONT VIEW

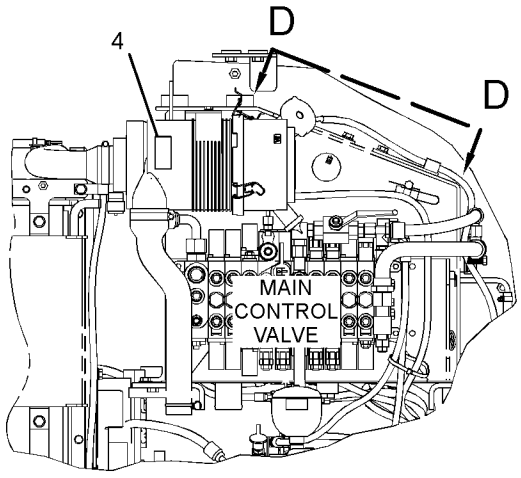

VIEW OF AREA C
(DOOR REMOVED)

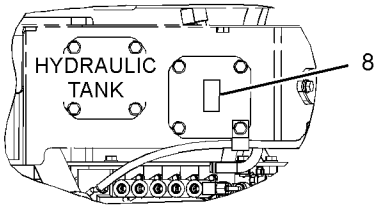

VIEW D-D

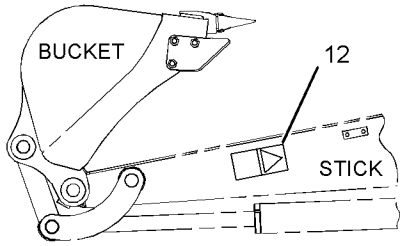

VIEW H-H

LEFT SIDE VIEW

GRAPHIC #2 **<END>** g02845361

381-4578 FILM GP-INTERNATIONAL–COUPLER

AN ATTACHMENT

SMCS-7405, 7557 **i04629189**

NOTE	PART NUMBER	QTY	PART NAME 1 2 3 4 5 6 (PRODUCT LEVEL)	SEE PAGE
Y	*381-4576*	1	FILM GP (COUPLER)	551

Y - SEPARATE ILLUSTRATION

<END>

SERVICE EQUIPMENT AND SUPPLIES

377-9711 FILM GP-U.S.

AN ATTACHMENT

SMCS-7405, 7557 **i04728490**

NOTE	REF NO	GRAPHIC REF	PART NUMBER	QTY	PART NAME 1 2 3 4 5 6 (PRODUCT LEVEL)	SEE PAGE
	1	2	**295-7340**	1	FILM-INSTRUCTION (FUEL, READ OMM)	
	2	2	**224-7717**	1	FILM-WARNING (SEAT BELT, U.S.)	
	3	2	**225-3305**	1	FILM-WARNING (UNIVERSAL, READ OMM)	
	4	2	**224-8945**	1	FILM-WARNING (DO NOT USE ETHER, U.S.)	
	5	2	**225-0313**	1	FILM-WARNING (JUMP START, READ OMM, U.S.)	
	6	1	**228-7315**	1	FILM-WARNING (HOT SURFACE, HANDS CLEAR)	
	7	1	**228-9253**	1	FILM-WARNING (ELECTRICAL HAZARD, U.S.)	
	8	1,2	**235-1365**	2	FILM-WARNING (HOT FLUID UNDER PRESSURE)	
	9	1,2	**239-4990**	2	FILM-WARNING (HIGH PRESSURE CYLINDER)	
	10	2	**255-1203**	2	FILM-WARNING (CRUSH HAZARD, STAY BACK)	
	11	1	**267-4495**	1	FILM-WARNING (CRUSH HAZARD, READ OMM, U.S.)	
	12	2	**313-2048**	2	FILM-WARNING (CRUSH HAZARD, STAY BACK, U.S.)	
	13	1	**389-8774**	1	FILM-WARNING (CUTTING HAZARD HAND, STAY BACK)	

REFER TO ALL ILLUSTRATIONS OF THIS GROUP FOR AUXILIARY VIEWS

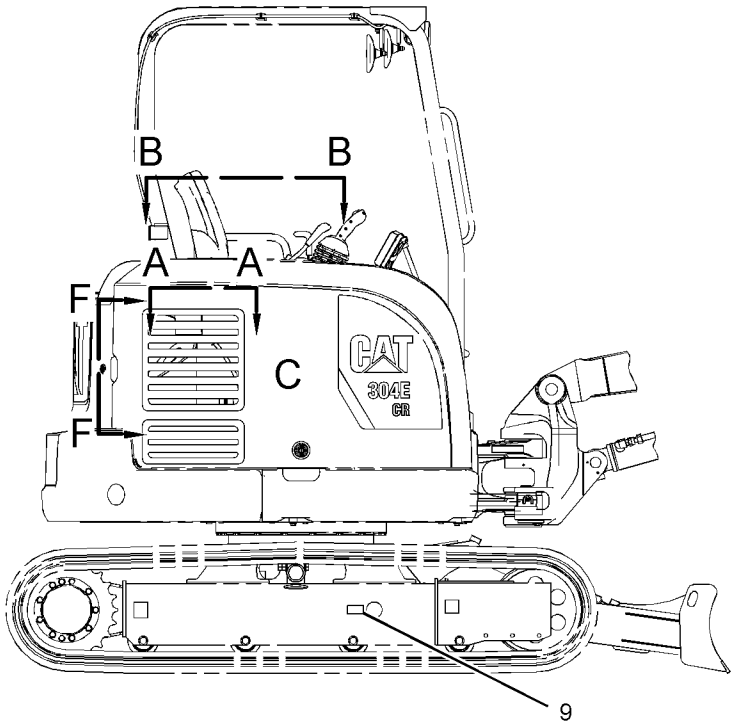

RIGHT SIDE VIEW

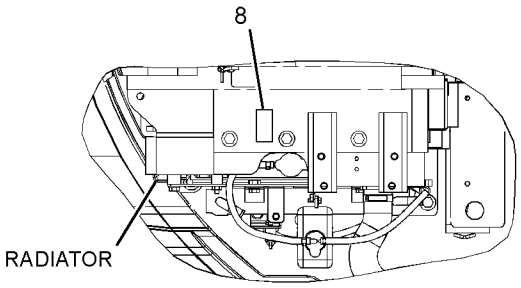

VIEW A-A

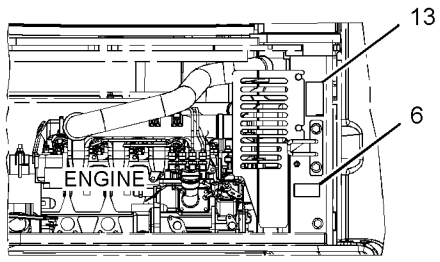

VIEW F-F

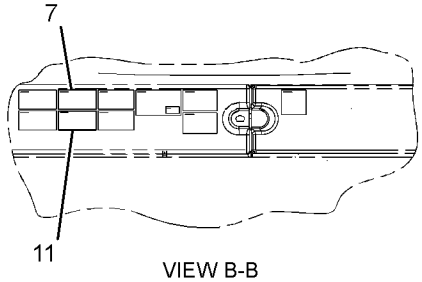

VIEW B-B

GRAPHIC #1 g02845360

377-9711 **FILM GP-U.S. (*contd.*)** **i04728490**

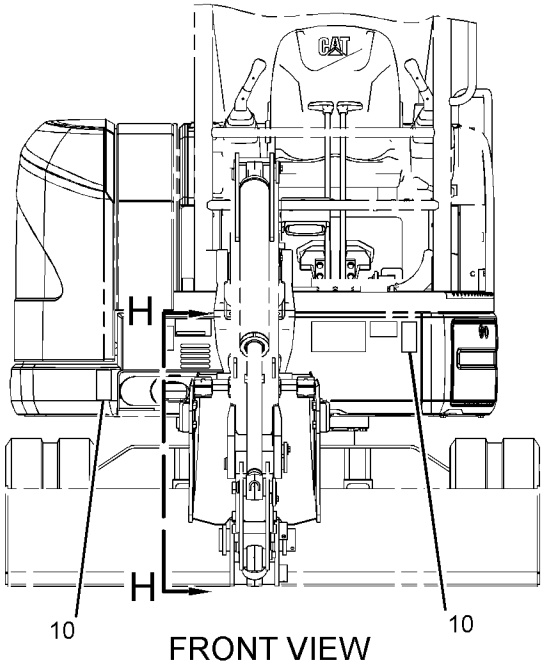

FRONT VIEW

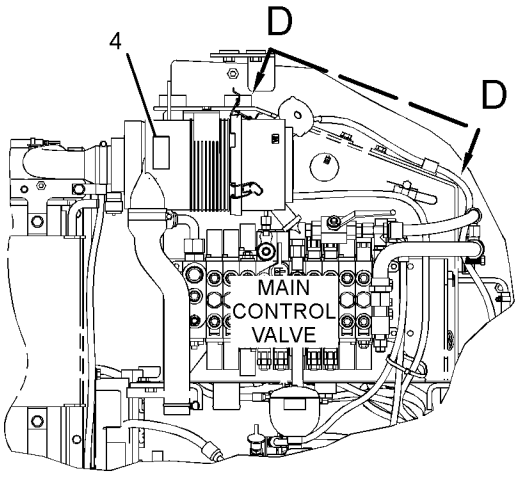

VIEW OF AREA C
(DOOR REMOVED)

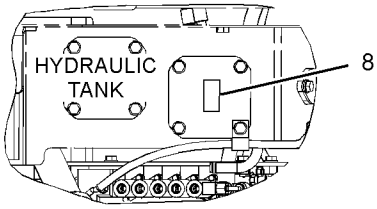

VIEW D-D

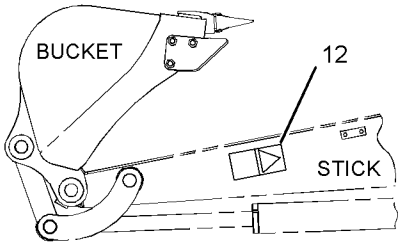

VIEW H-H

LEFT SIDE VIEW

GRAPHIC #2 **<END>** g02845361

381-4577 FILM GP-U.S.—COUPLER

PART OF 381-4579 FILM GP-U.S.

AN ATTACHMENT

SMCS-7405, 7557 **i04559507**

NOTE	REF NO	GRAPHIC REF	PART NUMBER	QTY	PART NAME 1 2 3 4 5 6 (PRODUCT LEVEL)	SEE PAGE
	1	1	**268-4530**	1	FILM-WARNING (CRUSH HAZARD, READ OMM, U.S.)	
	2	1	**268-8872**	1	FILM-WARNING (CRUSH HAZARD, READ OMM, U.S.)	

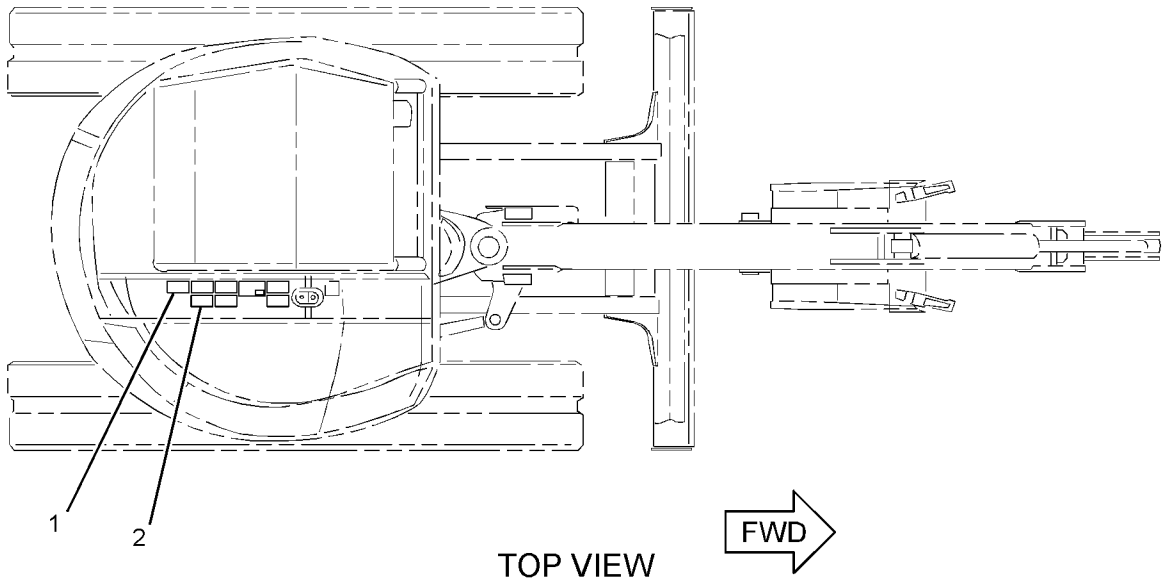

GRAPHIC #1 **<END>** g02770679

381-4579 FILM GP-U.S.–COUPLER

AN ATTACHMENT

SMCS-7405, 7557 **i04629190**

NOTE	PART NUMBER	QTY	PART NAME 1 2 3 4 5 6 (PRODUCT LEVEL)	SEE PAGE
Y	*381-4577*	1	FILM GP-U.S. (COUPLER)	562

Y - SEPARATE ILLUSTRATION

<END>

377-9699 PLATE & FILM GP

PART OF 376-6675 CHASSIS AR

SMCS-7405, 7557, 7563 **i04935889**

NOTE	REF NO	GRAPHIC REF	PART NUMBER	QTY	PART NAME 1 2 3 4 5 6 (PRODUCT LEVEL)	SEE PAGE
	1	1	**7X-3229**	2	FILM-IDENTIFICATION (LIFT EYE, TIE-DOWN LOCATION)	
	2	1,2	**7X-7644**	4	FILM-IDENTIFICATION (TIE-DOWN)	
	3	2	**126-2900**	1	FILM-INSTRUCTION (LEVER LOCK)	
	4	2	**134-7258**	1	FILM-INFORMATION (EXTENDED LIFE COOLANT)	
	5	2	**136-0199**	1	FILM-INSTRUCTION (ENGINE SPEED DIAL)	
	6	2,3	**150-8896**	2	FILM-NOTICE (LIFT EYE LOCATION)	
	7	1,2	**190-5386**	2	FILM-IDENTIFICATION (ROUND RED REFLECTIVE)	
	8	2	**379-7050**	1	FILM-INFORMATION (LIFTING CAPACITIES, READ OMM)	
	9	1	**200-5480**	1	FILM-INSTRUCTION (GREASE)	
	10	1	**219-0305**	1	FILM-WARNING (NO WELD, NO DRILL, READ OMM)	
	11	1	**239-6986**	1	PLATE-SERIAL NUMBER (MACHINE)	
	12	2	**273-0469**	1	FILM-INSTRUCTION (OPERATOR CONTROLS)	
	13	1	**273-0471**	1	FILM-WARNING (HIGH PRESSURE, READ MANUAL)	
	14	2	**279-9311**	1	FILM-INSTRUCTION (HYDRAULIC OIL, READ OMM)	
	15	2	**298-2139**	1	FILM-IDENTIFICATION (CAT, LH)	
	16	1	**298-2140**	1	FILM-IDENTIFICATION (CAT, RH)	
	17	2	**334-4603**	1	FILM-INFORMATION (HYDO ADVANCED 10)	
	18	1	**377-9722**	1	FILM-IDENTIFICATION (CAT)	
	19	2	**377-9725**	1	FILM-IDENTIFICATION (FUSE, RELAY PANEL)	
	20	1	**379-7048**	1	FILM-IDENTIFICATION (CAT, 304E CR, RH)	
	21	2	**379-7049**	1	FILM-IDENTIFICATION (CAT, 304E CR, LH)	
	22	2	**382-6356**	1	FILM-INFORMATION (LUBRICATION CHART)	
	23	3	**385-0413**	1	PLATE-IDENTIFICATION (CAT, C2.4)	
F			**5P-8500**	1	KEY	

F - NOT SHOWN

377-9699 **PLATE & FILM GP (*contd.*)** **i04935889**

REFER TO ALL ILLUSTRATIONS OF
THIS GROUP FOR AUXILIARY VIEWS

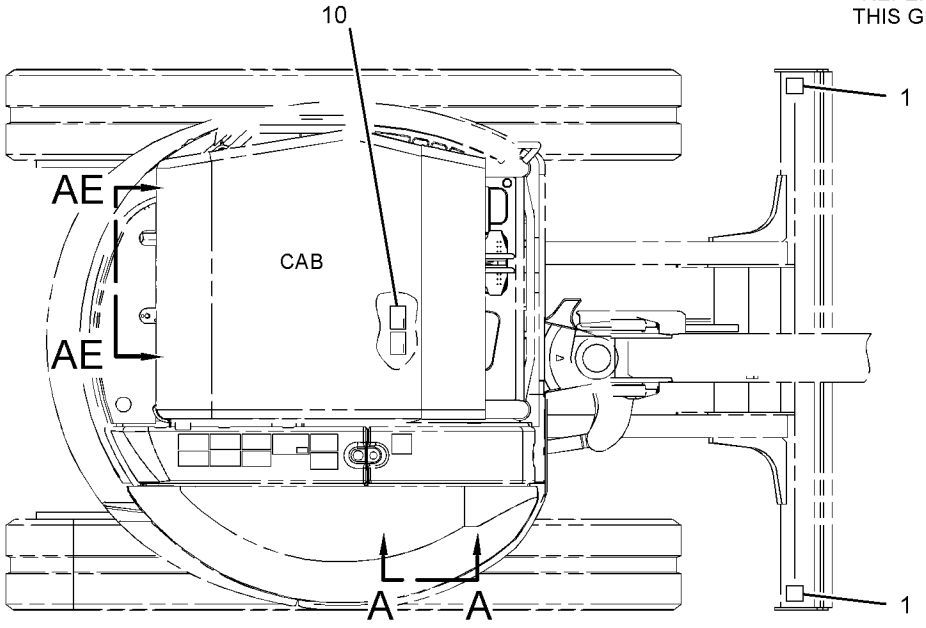

TOP VIEW FWD

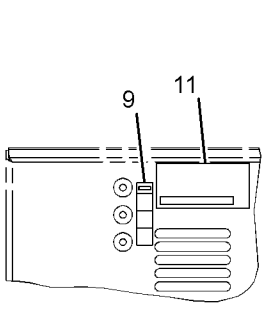

VIEW B-B

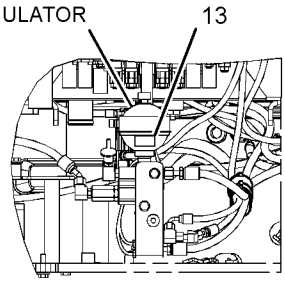

VIEW A-A

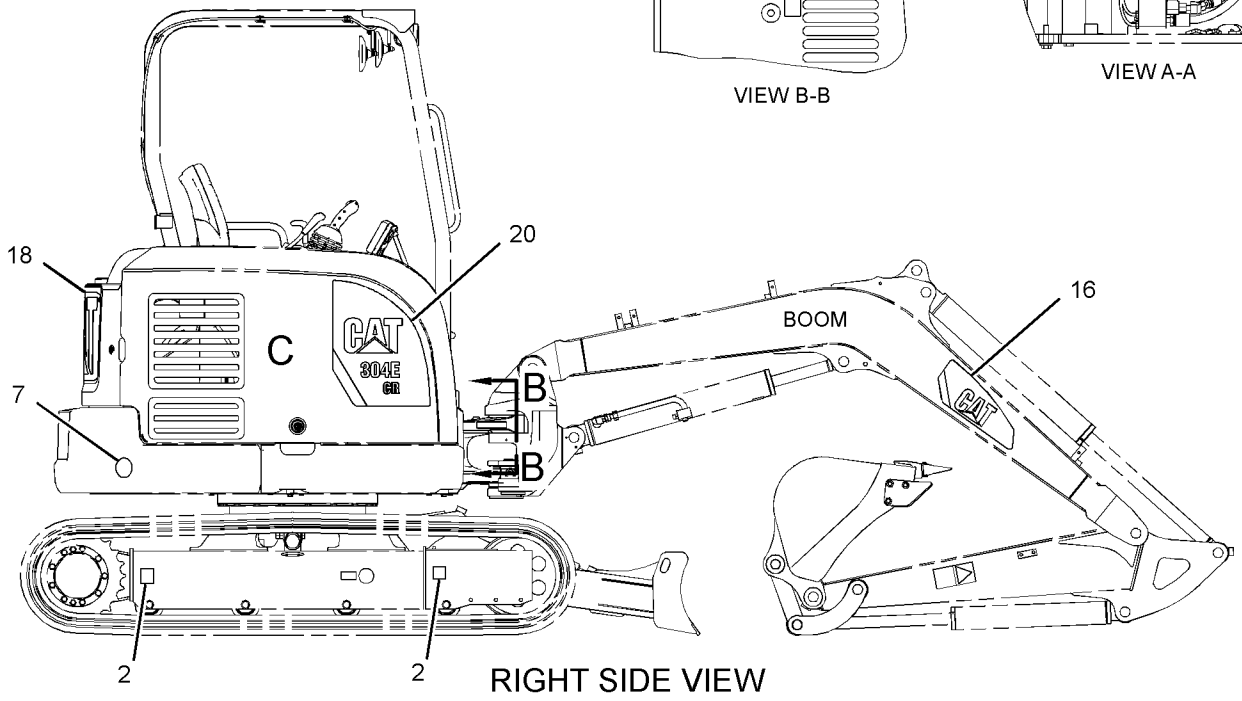

RIGHT SIDE VIEW

GRAPHIC #1 g02980018

377-9699 **PLATE & FILM GP (*contd.*)** **i04935889**

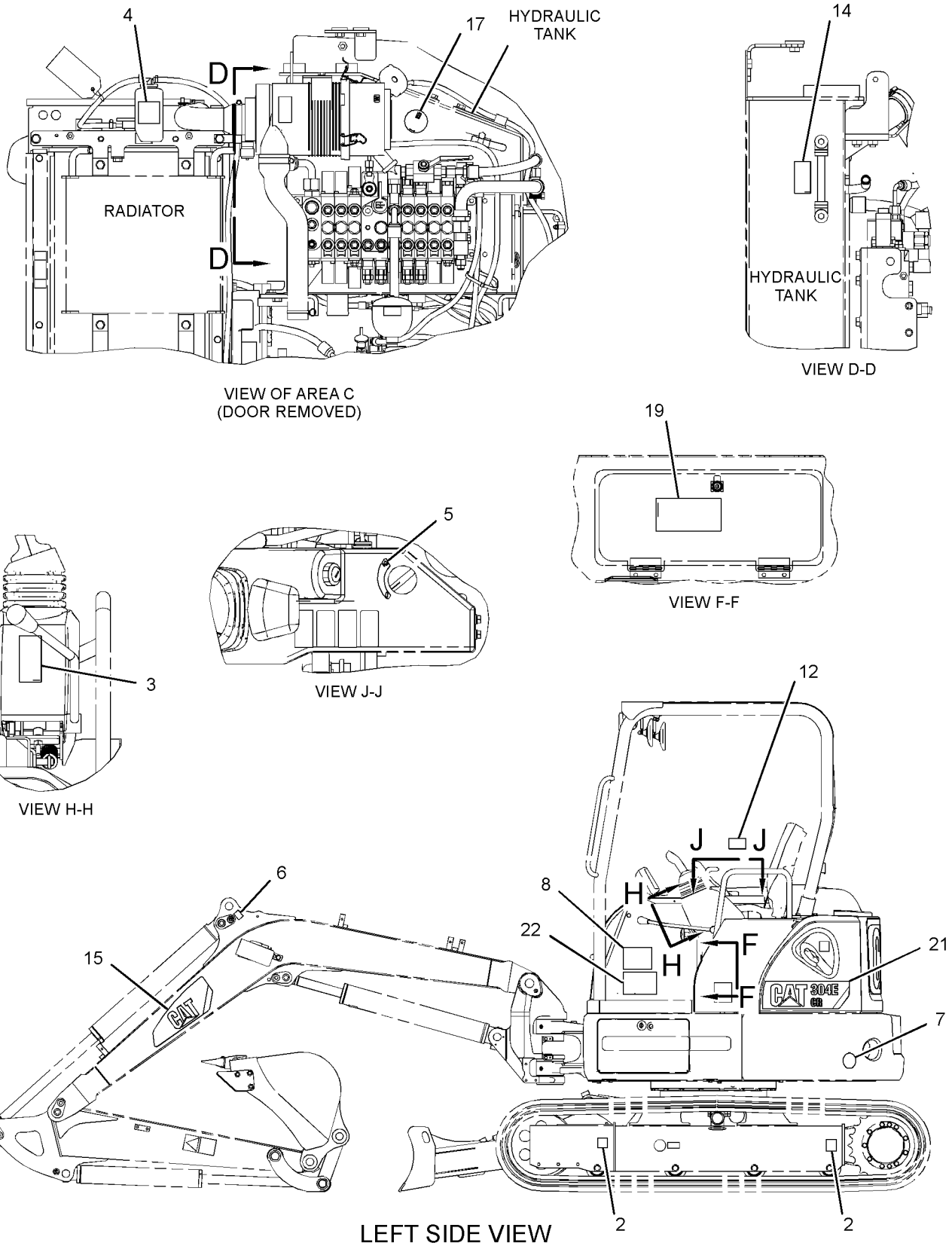

GRAPHIC #2 g02980019

377-9699 **PLATE & FILM GP (*contd.*)** **i04935889**

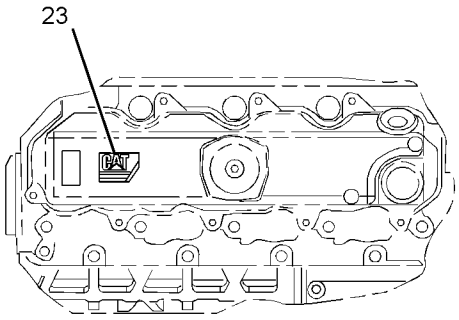

VIEW AF-AF

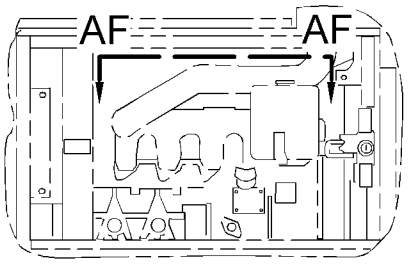

VIEW AE-AE

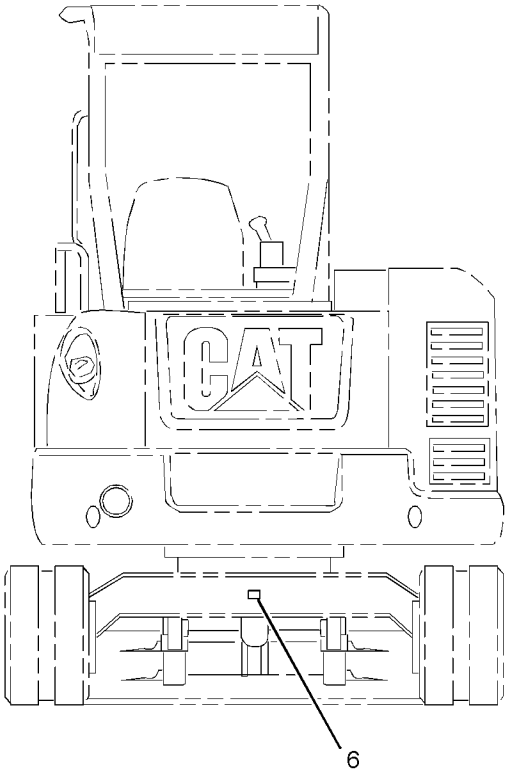

REAR VIEW

GRAPHIC #3 **<END>** g02980021

377-9714 PLATE & FILM GP–CAB

PART OF 376-6691, 383-5924 CAB AR

AN ATTACHMENT

SMCS-7405, 7557, 7563 **i05345468**

NOTE	REF NO	GRAPHIC REF	PART NUMBER	QTY	PART NAME 1 2 3 4 5 6 (PRODUCT LEVEL)	SEE PAGE
	1	1	**187-9185**	1	FILM-INFORMATION (ALTERNATE EXIT)	
	2	1	**303-2668**	1	PLATE-INSTRUCTION (AIR CONDITIONER, READ OMM)	
	3	1	**419-8301**	1	FILM-WARNING (ROPS, FOPS, OPS, READ OMM)	

377-9714 **PLATE & FILM GP (*contd.*)** **i05345468**

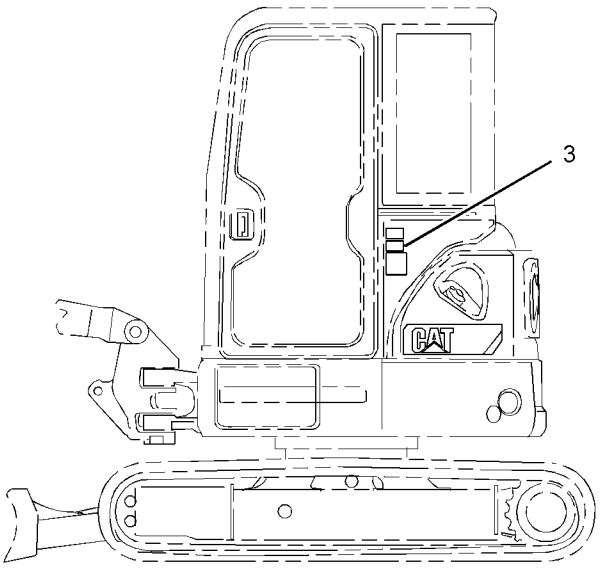

LEFT SIDE VIEW
(WITH CAB)

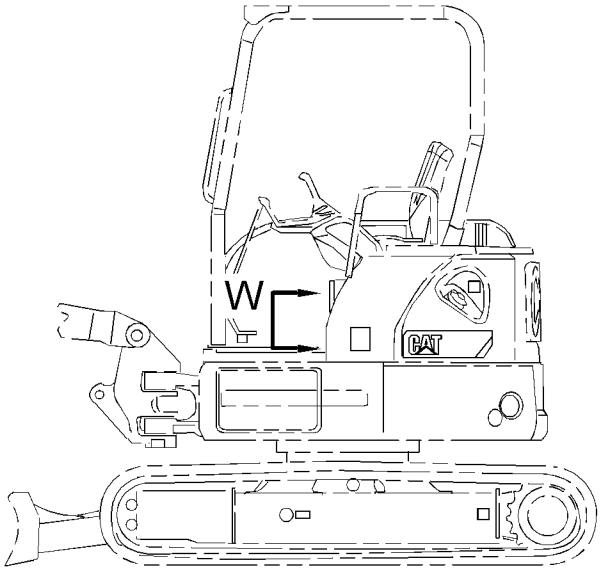

LEFT SIDE VIEW

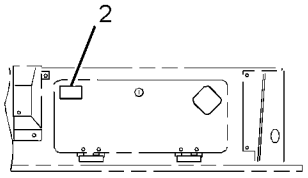

VIEW W

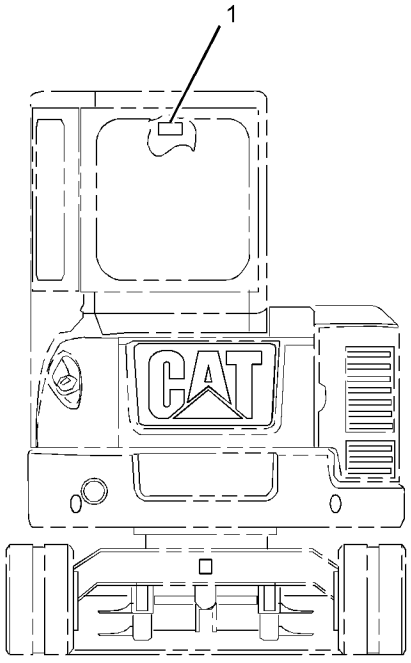

REAR VIEW

GRAPHIC #1 **<END>** g02975419

PART NUMBER INDEX

Part	Page
1	
1H-7339	210
1J-9671	59
1M-6119	73
	78
1M-6120	73
	78
1P-4278	41
	59
	67
1R-5396	475
	476
1R-5468	125
1S-0994	233
	235
	236
1S-1014	526
	528
1S-1015	74
	79
1S-1150	72
	77
1U-3202	421
	422
	423
	424
	425
	426
	427
2	
2D-6412	536
	537
2J-1020	192
	244
2L-8049	73
	78
2L-8050	73
	78
2L-8075	73
	78
	117
2L-8079	87
	103
	109
2M-3432	74
	79
2M-9780	220
	224
	236
	271
	273
	305
	342
	343
	345
	346
	359
2P-1279	192
	237
	242
	244
	259
2S-0736	478
2T-2991	271
	273
2U-2552	524
2V-1771	74
	79
3	
3B-4510	518
	519
3B-4605	139
3B-4610	152
3B-4639	167
	169
	171
	173
3B-5322	428
	429
3B-8485	131
	395
	396
3B-8488	131
	196
	198
	200
	202
	206
3B-8489	146
	157
	196
	198
	200
	202
	204
	208
	366
	372
	373
	374
	376
	383
	385
	386
	388
	398
	435
	438
	440
3D-2824	228
	230
	253
	369
3E-2310	269
3E-6600	139
3E-7410	192
	251
3E-8020	454
	461
	468
3E-8299	162
3E-9179	85
	87
	103
	109
3G-6127	421
	422
	423
	424
	425
	426
	427
3J-1907	53
	72
	77
	123
	125
	192
	205
	226
	227
	228
	230
	233
	235
	236
	237
	239
	240
	246
	248
	250
	251
	253
	255
	257
	259
	260
	262
	263
	265
	266
	269
	276
	277
	279
	280
	282
	283
	285
	287
	290
	298
	311
	313
	356
	369
3J-7352	241
3J-7354	228
	230
	237
	241
	259
	260
	262
	263
	265
	266
	268
	269
	271
	273
	279
	282
	285
	287
	369
3K-0360	18
	188
	212
	221
	222
	228
	230
	237
	239
	240
	248
	260
	275
	277
	279
	282
	283
	285
	287
	369
3K-8460	59
3S-2093	41
	48
	53
	59
	69
	72
	73
	77
	78
	85
	87
	90
	94
	95
	97
	102
	103
	106
	108
	109
	112
	114
	116
	117
	118
	119
	120
	157
	192
	259
	269
	271
	273
	285
	287
	369
	441
	502
	508
	512
3S-6049	73
	78
3S-6050	73
	78
3T-0849	488
	489
3T-4693	85
	87
	103
	109
3T-4696	85
	87
	103
	109
3Y-9267	351
4	
4B-2043	69
4B-4863	74
	79
4D-7733	192
4H-0407	470
	471
4I-1536	▶182
	185
4I-1539	182
4I-3745	305
4I-4270	453

► **PRIMARY REFERENCE**

PART NUMBER INDEX

Part	Page
	460
	467
4I-5862	182
4I-6365	348
4I-8267	183
4I-9531	255
	257
	262
	265
4I-9532	255
	257
	262
	265
4I-9533	255
	257
	262
	265
4I-9534	255
	257
	262
	265
4I-9535	255
	257
	262
	265
4I-9536	255
	257
	262
	265
4I-9537	255
	257
	262
	265
4I-9538	255
	257
	262
	265
4J-0524	253
4J-5477	192
	228
	230
	236
	237
	241
	242
	244
	251
	253
	255
	257
	259
	260
	262
	263
	265
	266
	268
	269
	279
	282
	285
	287
	311
	313
	369
4J-7533	364
4K-1388	253
	271
	273
4K-8302	117
	119
	369
4M-5285	398
4P-7581	74
	79
	114
	119
	157
	369
4P-8134	74
	79
	90
4S-1962	228
	230
	271
	273
	369
4T-6780	210
4Y-3307	515
4Y-8939	142

5

5A-3604	293
	295
5C-2890	53
	69
	74
	79
	495
5C-7261	6
	47
	74
	79
	135
	152
	154
	474
5C-7423	542
5C-9553	74
	79
	103
	106
	109
	112
	434
	475
	476
	499
	526
	528
	541
5D-1986	204
5I-3272	366
5I-4200	59
5I-8416	►183
	185
5P-0597	253
5P-0743	271
	273
5P-1076	26
	28
	95
	140
	142
	163
5P-1404	236
5P-1475	73
	78
5P-1507	59
	67
5P-2369	508
5P-4115	74
	79
	526
5P-4116	59
	74
	79
	135
	137
	139
	152
	154
	255
	257
	472
5P-4423	157
5P-4571	118
5P-5687	41
	140
	142
5P-5969	528
5P-7462	222
5P-7463	222
5P-7483	135
	154
5P-7958	66
5P-8250	210
5P-8500	499
	564
5P-9205	41
5P-9297	242
	244
5P-9299	59

6

6B-1124	177
6B-5328	293
6D-1641	508
	512
6D-3479	305
	508
6E-0122	210
6F-4855	216
6F-6672	216
6F-7037	210
6H-3592	73
	78
6I-1418	81
	98
6I-6911	349
	353
6I-6912	349
	353
6J-1972	210
6J-5733	210
6K-8178	41
	59
6N-6984	140
	142
	531
6V-0484	251
	253
	260
	280
	283
6V-0683	222
6V-0852	253
	260
6V-1249	224
6V-1889	239
	240
6V-2235	508
6V-3668	239
	240
6V-3965	253
	260
6V-5192	126
6V-5587	295
6V-5683	298
	524
6V-5839	51
6V-7238	18
6V-7357	53
	508
	521
	522
6V-7644	177
6V-7723	298
6V-8076	230
	369
6V-8077	269
6V-8200	298
6V-8213	277
6V-8397	221
	222
	225
	226
	227
	228
	230
	233
	235
	246
	250
	253
	259
	260
	269
	271
	273
	276
	277
	279
	280
	282
	283
	285
	287
	369
	508
	512
6V-8398	219
	220
	224
	228
	230
	236
	237
	239
	240
	246
	248
	271
	273
	275
	360
	361
	369
6V-8400	351
6V-8513	145
	366
	374
	376
	378
	383
	385
	386
	388
	391
	392

► PRIMARY REFERENCE

PART NUMBER INDEX

Part	Page
	393
6V-8627	192
	228
	230
	237
	251
	260
	262
	265
	311
	313
	369
6V-8628	260
	262
	265
	269
	279
	282
6V-8633	228
	230
	369
6V-8634	279
	282
	285
	287
6V-8636	227
	228
	230
	233
	235
	246
	250
	253
	260
	276
	277
	279
	282
6V-8639	228
	230
	237
	239
	240
	248
	275
	369
6V-8641	192
	251
	255
	257
	259
	269
	279
	282
	285
	287
	311
	313
6V-8647	259
	262
	265
	268
	269
6V-8723	277
6V-8724	226
	269
	276
	277
	280
	283
6V-8780	228
	230
	369
6V-8993	192
	237
	242
	244
6V-9000	262
	265
	285
	287
6V-9001	226
	227
	253
	279
	282
6V-9004	253
6V-9010	263
	266
6V-9168	221
	222
	259
6V-9169	220
	224
6V-9189	21
	22
6V-9200	260
6V-9492	92
6V-9632	22
	41
	53
	59
	73
	78
	447
	449
	451
	455
	473
6V-9672	454
	461
	468
6V-9746	253
	271
	273
6V-9828	192
	242
	244
6V-9835	260
	263
	266
6V-9837	239
	240
6V-9849	241
	260
	262
	265
	279
	282
	311
6V-9850	260
	277
	279
	282
	508
	512
6V-9851	239
	240
6V-9853	253
6V-9873	239
	240
	246
	248
6V-9876	260
	279
	285
	287
7D-7233	255
	257
7I-1024	508
	512
7I-2272	74
	79
	103
	106
	109
	112
	289
7I-2673	59
	541
7I-7403	290
7I-7439	41
	59
	508
7K-0897	433
7K-1181	59
	72
	77
	102
	106
	108
	112
	114
	117
	157
	192
	228
	230
	236
	237
	241
	242
	244
	251
	253
	255
	257
	259
	262
	265
	268
	269
	279
	282
	285
	287
	369
	508
	512
7N-5274	73
	78
7N-9070	472
7S-3916	192
	244
7S-3919	192
	244
7T-1099	53
	309
	310
	315
	316
	366
	470
	474
7T-6799	102
	106
	108
	112
7V-6571	192
	244
7X-0515	176
7X-0579	152
	441
	502
7X-0632	67
	149
7X-0818	81
	98
	215
7X-2459	259
7X-2533	59
7X-2537	214
	215
	472
7X-2549	531
7X-2550	26
	28
7X-2556	531
7X-2563	132
7X-2564	132
7X-2619	528
7X-2621	253
7X-3164	239
	240
7X-3229	564
7X-7644	564
7X-7729	51
	67
	119
	135
	136
	147
	152
	154
	156
	227
	253
	260
	307
	309
	310
	315
	316
	369
	494
	501
	531
7X-7877	447
	449
	451
	455
	528
7X-7898	508
	512
	526
	528
7Y-1976	41
	305
7Y-3173	441
	502
7Y-3474	541
7Y-3951	73
	78
7Y-3952	72
	77
7Y-3962	97
7Y-3963	97
7Y-3964	97
7Y-3965	97
7Y-3966	97
7Y-3967	97
7Y-3993	73
	78

► **PRIMARY REFERENCE**

PART NUMBER INDEX

Part	Page
7Y-3995	72
	77
7Y-3996	73
	78
7Y-4528	285
	287
7Y-5292	454
	461
	468
7Y-5458	100
7Y-5464	100
7Y-5556	73
	78
7Y-8763	142
8	
8C-3309	260
	269
8C-3312	293
8C-3446	271
	273
8C-3451	271
	273
8C-4535	557
8C-6354	84
	86
	102
	108
8C-6959	59
8C-6965	351
8C-7534	224
8C-8408	260
	263
	266
	313
8C-8451	69
8C-8988	280
	283
8E-6208	421
	422
	423
	424
	425
	426
	427
8E-6209	421
	422
	423
	424
	425
	426
	427
8J-2574	210
8K-1433	59
8K-4739	271
	273
8L-8413	73
	78
	248
	282
	285
	287
	454
	461
	468
8M-2773	74
8P-5348	139
8S-0934	536
	537
8S-4723	536
	537
8T-0076	283
8T-0119	212
8T-0151	251
8T-0164	253
	313
8T-0249	248
8T-0269	433
8T-0288	362
8T-0328	74
	79
	103
	106
	109
	112
8T-0337	480
8T-1158	349
	351
	353
8T-1683	277
8T-1686	237
8T-1905	260
8T-2353	260
	263
	266
	269
8T-2888	139
8T-3313	237
8T-3425	508
	512
8T-3490	41
	59
	67
	73
	78
	133
	135
	136
	139
	142
	152
	154
	155
	259
	309
	310
	311
	315
	316
	470
	471
	526
	528
8T-3597	142
	526
8T-3612	6
	41
	59
	73
	78
	139
	277
	313
	470
	471
	473
	526
8T-3647	6
8T-4121	41
	46
	53
	59
	67
	74
	79
	90
	94
	97
	103
	106
	110
	112
	117
	119
	140
	142
	145
	149
	157
	162
	192
	215
	219
	228
	230
	233
	235
	236
	237
	239
	240
	241
	242
	244
	246
	251
	253
	255
	257
	260
	263
	266
	269
	271
	273
	275
	277
	296
	305
	309
	310
	311
	313
	315
	316
	317
	318
	369
	473
	474
	478
	480
	493
	508
	512
	515
	518
	519
	526
	528
8T-4132	176
8T-4133	67
	135
	154
	228
	230
	239
	240
	351
	369
	372
	373
	374
	376
	438
	440
	453
	461
	467
8T-4136	46
	51
	59
	74
	79
	135
	136
	149
	152
	154
	156
	237
	239
	240
	253
	260
	271
	273
	275
	305
	309
	310
	313
	315
	316
	317
	318
	474
	508
	512
	526
	528
8T-4137	41
	53
	59
	67
	74
	79
	94
	97
	103
	106
	110
	112
	117
	119
	140
	142
	145
	147
	148
	149
	152
	157
	162
	167
	169
	171
	173
	192
	227
	228
	230
	233

PART NUMBER INDEX

Part	Page
	235
	236
	251
	253
	260
	263
	266
	277
	311
	366
	369
	374
	376
	378
	383
	385
	386
	388
	391
	392
	393
	453
	461
	467
	473
	478
	493
	494
	501
	508
	512
	515
	518
	519
	526
	531
8T-4138	41
	53
	241
	508
8T-4139	164
	285
	287
	398
	470
	471
	501
	531
8T-4140	292
8T-4171	53
	74
	79
	137
	441
	495
	502
8T-4172	372
	373
	374
	376
	438
	440
8T-4173	176
	470
	471
8T-4175	530
8T-4176	447
	449
	451
	455
8T-4177	41
8T-4179	220
	224
8T-4182	67
	215
	219
	228
	230
	246
	369
8T-4183	140
	142
	159
	253
	285
	287
	296
8T-4184	140
	142
8T-4185	192
	237
	242
	244
8T-4186	41
	136
	215
	219
8T-4189	74
	79
	97
	192
	251
	473
	476
	526
	528
8T-4191	104
	106
	110
	112
	255
	257
	309
	310
	315
	316
	480
8T-4192	95
	151
	487
	490
	491
	492
	507
8T-4193	518
	519
8T-4194	167
	169
	171
	173
	470
	471
8T-4195	41
	136
	152
	269
	271
	273
	301
	307
	309
	310
	315
	316
8T-4196	74
	79
	140
	142
	145
	228
	230
	233
	235
	237
	366
	369
	474
	494
	531
8T-4199	255
	257
	447
	449
	451
	455
8T-4200	41
	46
	48
	59
	74
	79
	104
	106
	110
	112
	137
	139
	255
	257
	269
	311
	447
	449
	451
	455
	506
	508
	512
8T-4205	41
8T-4222	41
	152
	454
	461
	468
8T-4223	26
	28
	74
	79
	92
	95
	128
	130
	140
	142
	145
	151
	159
	164
	167
	169
	171
	173
	193
	220
	224
	239
	240
	244
	253
	285
	287
	296
	398
	447
	449
	451
	454
	455
	461
	468
	470
	471
	487
	490
	491
	536
	537
8T-4224	6
	21
	22
	26
	41
	46
	47
	48
	74
	79
	81
	97
	98
	104
	106
	110
	112
	152
	193
	214
	215
	237
	251
	255
	257
	269
	298
	311
	313
	366
	447
	449
	451
	454
	455
	461
	468
	472
	473
	493
	506
	508
	512
	526
	528
	531
8T-4226	67
8T-4244	397
	413
	414
8T-4648	193
8T-4778	415
	416
	417
	418

► **PRIMARY REFERENCE**

PART NUMBER INDEX

Part	Page
	419
	420
8T-4779	517
8T-4821	26
	28
8T-4908	6
	26
	47
	74
	79
	441
	472
	502
8T-4910	163
	193
8T-4956	128
	130
	140
	142
	224
	447
	449
	451
	455
	470
	471
8T-4970	104
	106
	110
	112
8T-4971	473
	508
8T-5050	246
8T-5372	526
	528
8T-5376	303
8T-5439	132
8T-6381	132
8T-6411	454
	461
	468
8T-6466	67
	228
	230
	369
8T-6757	178
8T-6759	351
8T-6868	244
8T-6870	313
8T-7329	237
8T-7338	176
8T-7547	21
	22
	59
	152
	493
	531
8T-7934	246
8T-8442	293
	349
	353
8T-8729	72
	77
	84
	86
	88
	89
	102
	106
	108
	112
	117
	192
	481
	482
	483
8T-8730	72
	77
	84
	86
	88
	89
	97
	103
	109
	192
8T-8737	72
	77
	84
	86
	88
	89
	90
	100
	103
	109
	118
	192
	481
8T-8799	74
	79
8T-8874	73
	78
8T-9080	125
8T-9636	72
	77
8X-5804	102
	106
	108
	112
8Y-6967	497
	498

9

9D-7924	67
9F-2167	228
	230
	250
	369
9H-3771	431
	432
9L-8781	140
	142
	531
9M-5617	139
9M-7959	67
9M-8406	74
	79
	117
9N-0869	81
	98
9R-2613	366
9R-2672	366
9R-2821	41
9S-4180	364
9S-4182	287
9S-4185	212
9S-4190	305
9S-4191	204
	260
9S-8002	269
9S-8004	205
	290
9T-2212	210
9T-4007	210
9V-4924	72
	77
9W-0844	72
	77
	84
	86
	97
	103
	109
	118
9W-0852	72
	77
	84
	86
	102
	108
	117
	192
9W-1951	84
	86
	103
	109
9W-9615	88
9X-2027	296
9X-2032	73
	78
	447
	449
	451
	455
9X-2042	447
	449
	451
	454
	455
	461
	468
	497
	498
9X-2043	454
	461
	468
9X-2044	103
	106
	109
	112
	497
	498
9X-2067	263
	266
9X-2133	508
	512
9X-2297	228
	230
	246
	250
	276
	277
	280
	283
9X-3401	53
	72
	77
	84
	86
	100
	102
	108
9X-3402	72
	73
	77
	78
	85
	86
	103
	109
9X-4519	73
	78
9X-6032	303
9X-6153	524
9X-6165	59
	473
9X-6269	518
9X-8256	53
	69
	74
	79
	104
	106
	110
	112
	137
	139
	241
	434
	441
	475
	476
	499
	502
	508
	521
	522
	526
	528
	541
9X-8257	292
	470
	471
	517
	518
	519
	530
	531
9X-8488	92

0

002-0639	157
067-2551	192
086-0299	132
087-4454	183
	▶184
087-4456	▶185
	188
087-4575	184
087-4576	184
087-4577	184
087-4710	351
087-5841	230
093-0083	145
093-1290	219
	228
	230
	369
093-1294	215
	233
	235
093-1429	372
	373
	374
	376
	383
	385
	386
	388

PART NUMBER INDEX

Part	Page
093-1430	366
093-2064	526
	528
093-5537	305
094-0876	348
095-0673	351
095-0736	73
	78
095-0742	103
	106
	109
	112
	495
095-0868	372
	373
	374
	376
	435
	436
095-0880	293
095-0912	441
	502
095-0929	303
095-0966	303
095-1207	453
	460
	467
095-1260	349
	351
	353
095-1387	508
	512
095-1388	271
	273
095-1390	41
	271
	273
095-1392	48
095-1393	48
095-1519	290
095-1571	298
095-1574	125
	321
095-1575	298
	351
	356
	357
095-1578	125
	290
	349
	353
095-1579	290
	293
	321
095-1580	126
095-1582	125
	298
	358
095-1584	298
	356
095-1585	349
	353
	358
095-1586	290
	348
	360
	361
095-1587	298
095-1590	358
095-1595	167
	169
	171
	173
	358
095-1596	125
095-1604	167
	169
	171
	173
095-1623	301
	303
095-1657	178
095-1671	125
095-1674	125
095-1676	125
095-1701	271
	273
095-1707	198
095-1708	202
095-1709	196
	202
	206
095-1710	196
	198
	200
	206
	208
	301
095-1711	200
	208
095-1713	301
	303
095-1716	293
095-1717	305
095-1719	293
095-1725	123
	125
095-1750	360
	361
095-1751	360
	361
095-1781	358
095-1794	167
	169
	171
	173
095-7951	301
095-8051	301
095-9397	301
096-1366	259
096-1628	348
096-4034	475
	476
096-4177	45
096-4535	349
	353
096-4543	349
	353
096-4833	290
096-4876	484
	485
	486
096-5028	45
096-5971	123
	125
096-6078	262
	265
	269
	282
096-6079	59
	237
	246
	248
	251
	255
	257
	259
	262
	265
	277
	508
	512
096-6080	262
	265
	268
096-6081	262
	265
096-6082	269
	282
096-6083	262
	265
096-6084	279
	282
096-6085	59
	268
	508
	512
096-6166	92
	480
096-9278	103
	106
	109
	112
099-0361	349
	353
099-2374	290
099-3649	6
099-5349	125
099-6137	348
	351
099-6144	351
099-6145	351
099-7197	125
	298
1	
101-7404	308
	319
	487
	490
102-8802	73
	78
	487
	490
	491
	492
102-8803	72
	77
	84
	86
	103
	109
102-8804	490
	491
102-8805	481
	482
	483
103-2529	88
	117
103-2543	104
	106
	110
	112
104-2091	497
	498
104-8081	342
	343
	345
	346
106-0210	100
107-3134	72
	77
107-3135	73
	78
107-3136	72
	77
108-7516	72
	77
109-2356	102
	106
	108
	112
110-6109	102
	106
	108
	112
110-9198	84
	86
	103
	109
111-4837	72
	77
111-7898	84
	86
	102
	108
111-7899	69
	102
	106
	108
	112
	119
	369
112-5282	320
112-9401	55
112-9604	85
	87
	103
	109
112-9609	84
	86
	102
	108
112-9610	84
	86
	102
	108
112-9611	85
	87
	103
	109
112-9612	85
	87
	103
	109
113-5099	85
	87
	103
	109
113-5100	85
	87
	103
	109
113-8490	84
	86
	102
	108
113-8491	84
	86
	102
	108
113-8492	84
	86

► **PRIMARY REFERENCE**

PART NUMBER INDEX

Part	Page
	102
	108
114-0623	360
	361
116-0255	73
	78
116-4157	84
	86
	102
	108
116-4158	84
	86
	102
	108
116-4159	84
	86
	102
	108
116-4160	85
	87
	103
	109
116-4161	85
	87
	103
	109
116-7471	102
	106
	108
	112
117-8929	528
118-8118	55
118-8119	55
119-3205	406
	407
	408
	409
	410
	411
	412
119-3662	73
	78
119-5388	351
119-5389	351
119-5391	351
119-5708	117
	242
	244
119-9880	26
	28
	72
	77
120-4636	167
	169
	171
	173
120-4664	167
	169
	171
	173
121-3709	131
121-4480	55
121-7098	508
121-7136	508
121-7137	508
121-7138	508
122-4401	85
	87
	103
	109
124-2111	192
124-3548	84
	86
	102
	108
124-9636	84
	86
	102
	108
124-9637	84
	86
	102
	108
125-7874	73
	78
	85
	87
	88
	103
	109
	192
125-7875	73
	78
126-1767	72
	77
	84
	86
	100
	102
	108
126-1768	72
	73
	77
	78
	85
	87
	103
	109
126-1774	84
	86
	102
	108
126-1865	351
126-1866	351
126-2900	564
127-2170	366
	474
127-3925	453
	461
	467
127-3926	453
	460
	467
127-3927	454
	460
	468
127-3947	453
	460
	467
127-3987	454
	460
	468
127-4006	453
	461
	467
127-4839	51
	73
	78
128-2032	84
	86
	102
	108
128-2135	497
	498
128-8614	55
130-0252	508
131-1489	73
	78
132-5789	53
	73
	78
	103
	106
	109
	112
	508
	512
132-7551	73
	78
132-7625	495
132-7711	348
132-9046	349
	353
133-2425	145
134-7113	248
134-7114	248
134-7115	248
134-7258	564
134-8726	45
135-9390	415
	416
	417
	418
	419
	420
135-9941	269
136-0199	564
136-0207	246
139-7325	125
139-7355	298
140-2334	45
140-3201	134
140-3355	41
140-3734	131
	395
	396
140-3750	198
140-4236	41
140-4238	41
140-4741	145
140-4763	41
140-4766	41
140-4780	148
140-4934	198
140-4986	163
140-5169	198
140-9378	69
	102
	106
	108
	112
	121
	122
141-2759	84
	86
	102
	108
142-5546	480
142-9572	92
	94
	97
143-2337	125
143-2343	123
	125
143-2344	123
	125
143-2346	123
	125
143-2358	123
	125
144-0195	541
144-9962	►55
	59
145-1893	397
	413
	414
145-2237	255
	257
146-1086	196
	202
146-3916	196
	202
146-3923	196
	206
146-3957	200
	206
	208
146-3958	200
	206
	208
146-3968	200
	208
146-3969	196
	200
	202
	206
	208
146-4875	301
	303
146-4877	301
	303
146-5009	262
	265
147-1444	84
	86
	102
	108
147-4131	351
148-7925	236
148-8310	251
148-8316	259
	262
	265
	268
	269
148-8318	279
	282
	285
	287
148-8325	192
	251
	255
	257
	259
	269
	279
	282
	285
	287
	311
	313
148-8328	228
	230
	369
148-8336	227
	228
	230
	233
	235
	246
	250
	253
	259
	276
	277
	279

► PRIMARY REFERENCE

PART NUMBER INDEX

Part	Page
	282
148-8340	228
	230
	237
	248
	275
	369
148-8346	237
148-8351	241
	260
	262
	265
	279
	311
	313
148-8353	226
	227
	253
	279
	282
148-8361	260
148-8363	260
	279
	285
	287
148-8367	260
	277
	279
	282
	508
	512
148-8368	192
	228
	230
	237
	251
	260
	262
	265
	311
	313
	369
148-8369	260
	262
	265
	269
	279
	282
148-8371	280
	282
148-8374	277
148-8378	226
	269
	276
	277
	280
	283
148-8383	277
148-8385	262
	265
	285
	287
148-8392	253
148-8405	59
148-8407	260
148-8410	305
148-8411	212
148-8443	259
149-3516	55
149-7738	237
	275
150-0810	123
	125
150-0811	123
	125
150-0812	123
	125
150-0813	123
	125
150-0814	123
	125
150-0815	123
	125
150-0818	123
	125
150-0819	123
	125
150-0826	125
150-0827	125
150-0829	125
150-0832	125
150-0834	125
150-0873	125
150-0874	125
150-0885	322
150-0909	123
	125
150-3033	253
	313
150-3036	260
150-3065	251
	253
	260
	280
	283
150-4027	269
150-4029	228
	230
	369
150-4042	262
	265
150-4043	246
	248
150-4047	260
	263
	266
	269
150-4052	192
	237
	242
	244
150-4086	73
	78
150-5968	260
	263
	266
150-6346	324
	335
150-6355	322
	323
	333
150-6367	322
	333
150-8896	564
151-1975	59
151-4841	236
152-3411	228
	230
	369
152-5717	220
	224
152-5718	220
	224
153-2602	72
	77
	84
	86
	102
	108
153-2631	73
	78
	85
	87
	103
	109
153-2994	220
	224
	236
153-2995	220
	224
	236
153-2996	221
	222
153-2997	221
	222
153-5223	351
153-5656	72
	77
153-6087	293
153-6237	253
153-6258	246
153-7880	399
153-7881	415
	416
	417
	418
	419
	420
154-2233	167
	169
	171
	173
154-2235	167
	169
	171
	173
154-2236	167
	169
	171
	173
154-2302	41
154-2638	►435
154-2704	397
	399
	400
	401
	402
	415
	416
	417
	418
	419
	420
	421
	422
	423
	424
	425
	426
	427
155-0576	81
	98
155-2260	90
155-2270	72
	77
	84
	86
	88
	102
	108
	192
155-2271	89
155-2274	84
	86
	102
	108
155-3624	287
156-1200	55
156-6175	74
	79
156-6617	517
	518
	519
156-6618	518
	519
156-8801	279
156-8845	255
	257
158-4800	391
158-4801	391
158-7802	102
	106
159-4700	187
159-8049	73
	78
159-8050	73
	78
159-8839	415
	416
	417
	418
	419
	420
159-9322	84
	86
	102
160-2243	269
160-2252	255
	257
161-2539	69
161-2560	221
	222
161-2561	221
	222
161-4130	438
162-7120	438
	440
163-6795	72
	77
	97
	102
	106
	108
	112
	118
163-6838	26
	28
163-7050	220
	224
163-9768	255
	257
163-9772	259
164-5546	192
	251
164-5567	253
164-5605	283
164-9639	236
164-9640	255
	257
164-9869	228
	230
	246
	250
	276
	277
	280

► **PRIMARY REFERENCE**

PART NUMBER INDEX

Part	Page
	283
165-2273	18
165-4927	271
	273
165-4931	269
165-7014	260
	269
165-9431	348
165-9438	348
165-9463	351
165-9553	351
165-9554	351
166-1579	241
166-3032	280
	283
166-4057	263
	266
167-2186	210
167-2294	210
167-3593	85
	87
	103
	109
168-8389	397
	398
	399
	400
	401
	402
	415
	416
	417
	418
	419
	420
	421
	422
	423
	424
	425
	426
	427
	431
	432
169-1116	321
169-1130	321
169-1134	301
169-1135	301
169-1136	303
169-1169	290
169-1170	290
169-1172	290
169-1181	▶360
	362
169-4274	237
169-7393	241
170-4635	228
170-8794	208
171-0087	348
171-0689	47
	51
171-4046	497
	498
171-6728	248
172-1241	556
172-2596	148
174-2141	404
174-3016	72
	77
	84
	86
	103
	109
174-5907	79
175-1794	366
	372
	373
	374
	376
	378
	383
	385
	386
	388
175-1795	366
	372
	373
	374
	376
	378
	383
	385
	386
	388
175-4723	198
176-1902	508
176-8440	26
	28
176-8464	366
176-8465	366
178-7539	447
	449
	451
	455
179-9013	433
180-8424	320
180-9933	269
183-7263	269
185-0522	351
185-0555	342
	343
	345
	346
185-8300	442
	504
187-2120	260
	263
	266
	313
187-8812	▶413
187-8813	▶413
187-8814	▶413
187-8815	▶413
187-8816	▶414
187-9185	550
	568
188-9644	434
189-3158	116
190-4896	167
	169
	171
	173
190-5236	220
	224
190-5386	564
191-0348	135
	154
	156
191-3918	298
191-3920	298
191-3925	298
191-7503	296
191-7516	285
	▶301
191-7524	541
192-0633	123
	198
192-0638	196
	200
	202
	206
	208
192-0684	202
192-1134	123
	125
193-5330	301
	303
194-0784	348
194-2903	212
195-0090	248
195-0601	41
	42
195-8154	149
196-1441	495
196-1479	454
	460
	468
196-1550	453
	460
	467
196-3784	351
196-3895	262
	265
196-4745	271
	273
198-0852	94
	97
198-3899	533
	534
	538
	540
198-7543	349
	353
198-8153	349
	353
198-8154	349
	353
198-8156	349
	353
198-8159	349
	353
198-8160	349
	353
198-8161	349
	353
198-8162	349
	353
198-8163	349
	353
198-8164	349
	353
198-8165	349
	353
198-8166	349
	353
198-8167	349
	353
198-8168	349
	353
198-8169	349
198-8176	349
	353
198-8418	290
198-8419	290
198-8420	290
198-8421	290
198-8423	290
199-1148	200
	202
199-4803	146

2

Part	Page
200-4856	342
	343
	345
	346
200-5480	564
201-2638	521
202-7174	125
202-7187	125
203-2343	198
203-2344	198
203-4455	454
	460
	468
204-1611	59
	72
	77
	102
	106
	114
	117
	119
	369
	508
	512
204-1974	349
	353
204-1976	349
	353
204-1979	349
	353
204-2281	241
204-4961	438
	440
204-4976	438
	440
205-6079	157
207-0236	454
	460
	468
207-0785	476
207-0797	476
207-0799	476
207-0800	476
207-1686	118
	454
	461
	468
208-0164	262
	265
208-0616	228
	230
	369
208-7733	536
	537
210-0686	251
	262
	265
210-1304	41
211-7455	476
212-0522	348
213-7638	287
214-1324	257
	262
	265
214-3956	454
	461
	468
214-3962	453
	460
	467
214-3968	454
	460

PART NUMBER INDEX

Part	Page
	468
	514
214-3969	454
	460
	468
	514
214-7568	204
	253
214-7654	320
214-8827	135
	154
215-3277	320
216-1980	59
216-3247	255
	257
	259
216-7643	196
	200
	202
	206
	208
217-2456	259
218-4681	391
	392
	393
219-0305	564
219-9487	408
219-9488	410
219-9489	411
219-9490	412
220-0858	▶436
	437
221-0936	301
221-0937	301
221-0938	301
221-8045	557
222-0668	475
	476
222-2631	342
	343
	345
	346
224-0554	557
224-7717	560
224-8945	560
224-8946	557
225-0312	557
225-0313	560
225-3305	560
225-3322	497
	498
225-3697	305
225-4950	72
	77
225-5851	163
225-5852	163
226-0294	139
226-0338	139
226-2560	508
	512
226-8202	210
227-8807	▶186
228-2856	372
	373
	374
	376
	436
228-7315	560
228-7316	557
228-9253	560
228-9254	557
230-4009	72
	77
	84
	86
	103
	108
230-4011	72
	77
	84
	86
	97
	103
	109
230-4013	84
	86
	88
	109
	118
230-5008	84
	86
	89
	103
	109
230-5010	72
	77
	84
	86
	103
	109
231-3999	397
	413
	414
231-8571	▶397
232-3543	41
232-6311	73
	78
232-6314	72
	77
232-7405	72
	77
232-7692	167
	169
	171
	173
233-0099	▶92
	95
233-2877	403
233-2885	397
233-2898	403
233-2905	397
	▶403
233-2910	403
233-8447	204
234-8956	178
234-8958	178
234-8959	178
234-8962	178
234-8984	167
	169
	171
	173
235-0354	210
235-1365	560
235-1368	557
235-8891	508
236-3257	216
236-3259	216
237-5096	435
237-6119	206
237-6120	206
237-6121	206
237-6124	196
	206
237-6134	206
237-6135	196
	206
237-6136	196
	206
237-7086	196
237-7901	198
237-7904	198
237-8377	196
	202
237-8378	200
	208
239-3781	262
	265
239-4990	560
239-4991	557
239-6986	564
240-0454	48
240-2590	259
241-6215	230
	369
243-4505	53
	72
	77
	84
	86
	102
	103
	106
	108
	109
	112
	117
243-4506	84
	88
	109
243-4507	88
	102
	106
	108
	112
	192
243-4508	89
	100
243-4510	72
	77
	84
	86
	103
	109
244-1540	364
244-3712	204
244-8495	348
245-7819	442
245-7850	508
245-7903	473
245-8595	259
245-9398	506
246-0175	368
246-0176	398
246-0187	398
246-0188	398
246-0192	▶210
	398
246-2622	59
246-2641	499
247-4112	▶399
247-5086	41
248-8832	428
249-4175	210
250-1639	542
250-8771	324
	326
	327
	328
	329
	331
	333
	335
	336
	337
	339
	341
251-1391	72
	77
	90
251-2025	236
251-2026	236
251-4408	348
252-2627	409
252-6793	▶236
	398
254-7563	557
255-1203	560
255-3402	407
255-3410	406
255-3727	259
258-2111	132
258-4095	536
258-4096	537
258-6257	441
	502
260-2659	241
260-6314	391
	392
	393
260-6342	▶176
	181
260-6348	163
263-0768	59
263-3003	454
	468
264-5370	129
	▶130
264-5371	130
264-7029	72
	77
	84
	86
	97
	103
	109
264-7030	84
	86
	88
	109
	118
264-7031	84
	86
	89
	103
	109
264-7032	84
	86
	103
	109
264-7034	72
	77
	84
	86
	103
	109
264-8384	1
	▶129
265-8405	152
265-8407	152
265-8409	152
265-8463	135
	152
	154
265-8575	67
265-8577	67

PART NUMBER INDEX

Part	Page
265-8578	67
265-8579	67
265-8631	305
265-8632	305
265-8677	305
265-8713	131
	390
	395
265-8715	372
	373
	374
	376
	383
	385
	386
	388
265-8716	196
	202
265-8717	200
	206
	208
265-8720	366
265-8734	▶165
	▶166
	181
265-8752	129
	▶292
266-1404	102
	106
	108
	112
266-1406	69
266-3872	145
	366
266-4024	148
266-4050	146
266-4051	372
	373
	374
	376
266-4064	374
	376
	378
	383
	385
	386
	388
266-4078	145
266-4080	383
	385
	386
	388
266-4104	366
266-4106	366
	383
	385
	386
	388
266-4763	391
266-4765	391
266-5431	557
266-6396	▶213
	292
266-6835	1
	▶506
266-6836	287
	▶303
266-6843	▶94
	96
266-6935	72
	77
	102
	106
	108
	112
266-6979	▶196
	394
266-7379	41
	48
	53
	59
	69
	72
	77
	102
	106
	108
	112
	114
	118
	259
	271
	273
	508
	512
266-8792	162
266-8793	176
	▶178
266-8794	176
	▶177
267-0420	▶348
	484
	485
	486
267-0424	▶289
	311
267-1048	26
	28
267-1050	26
	28
267-1082	296
267-1614	▶533
	539
267-1615	▶534
	539
267-1617	▶538
	539
267-4035	259
267-4036	259
267-4037	255
	257
267-4038	255
	257
267-4041	253
267-4042	253
267-4043	271
	273
267-4044	271
	273
267-4045	259
267-4046	259
267-4047	192
	251
	259
	282
267-4048	192
	251
	259
	282
267-4049	248
267-4050	248
267-4051	255
	257
267-4063	279
267-4093	255
	257
	259
267-4096	255
	257
267-4109	265
267-4159	221
	222
267-4229	246
267-4279	227
267-4366	▶517
	520
267-4367	▶518
	520
267-4371	▶515
	516
267-4495	560
267-4767	72
	77
267-4768	72
	77
267-4827	166
	▶167
267-4828	166
	▶169
267-4829	167
	169
	171
	173
267-4831	167
	169
	171
	173
267-4832	167
	169
	171
	173
267-4833	167
	169
	171
	173
267-4835	167
	169
	171
	173
267-4836	167
	169
	171
	173
267-5348	530
267-5349	530
267-5355	530
267-7058	102
	106
	108
	112
267-7064	526
	528
267-8100	285
	287
267-9485	438
	440
268-4530	192
	562
268-8224	▶204
	438
	440
268-8872	192
	562
269-0120	551
269-0121	551
269-2299	289
	▶361
269-8935	217
	▶233
269-8936	218
	▶235
269-8939	189
	▶219
269-8947	▶220
	223
270-6515	▶148
	365
270-6520	▶145
	365
270-9557	152
270-9558	152
271-5317	454
	460
	468
271-5889	145
272-0474	▶478
	479
272-1326	▶214
	379
	381
272-6271	73
	78
272-6304	73
	78
272-7832	342
	343
	345
	346
	359
272-7877	472
272-7881	472
273-0469	564
273-0471	564
273-0477	549
273-1445	441
	▶442
273-1450	502
	▶504
274-3344	303
274-3346	303
274-3349	303
274-3351	303
274-4199	259
	▶290
274-4201	290
274-4202	290
274-5381	167
	169
	171
	173
274-5472	237
274-6552	215
274-8034	363
274-8039	363
274-8127	167
	171
274-8128	169
	173
274-8781	474
274-9034	293
	▶321
275-0773	478
275-0774	478
275-0775	480
275-0776	480
275-6285	518
	519
275-6785	84
	86
	102
	108
275-8629	542
275-8630	542
275-8631	542
275-8632	542
275-9724	282

▶ PRIMARY REFERENCE

PART NUMBER INDEX

Part	Page
276-3323	150
276-3324	150
276-3883	290
276-8684	467
276-9254	135
	154
276-9257	152
276-9258	152
276-9302	67
276-9309	308
	469
276-9997	447
	449
	451
	455
277-1873	59
	74
	79
	103
	106
	109
	112
	119
	263
	266
	369
277-4196	177
277-4197	177
277-4378	372
	▶374
277-4381	372
	373
	374
	376
277-4382	372
	373
	374
	376
277-4383	372
	373
	374
	376
277-6028	453
	460
	467
277-6029	453
	460
	467
277-6030	495
277-6031	495
277-6032	495
277-9073	508
277-9412	508
	512
277-9900	▶202
	372
278-0797	215
278-0800	228
	230
	369
278-0819	214
278-1983	208
278-1985	200
	208
278-1986	200
	208
278-1988	200
	208
278-1990	208
278-2246	204
278-2248	204
278-2254	204
278-2256	204
278-2257	204
278-7613	441
278-7614	441
	502
278-7615	441
	502
278-8557	441
	502
278-8558	502
278-8641	196
278-9126	206
278-9127	206
278-9128	206
278-9129	206
278-9130	206
278-9474	196
278-9475	196
278-9937	372
	▶376
278-9938	373
	376
279-0639	208
279-4308	405
279-4311	▶404
	415
279-4312	▶415
279-4313	▶416
279-4320	▶417
279-4321	▶418
279-4322	▶400
279-4323	▶401
279-4325	▶398
279-4684	298
279-4687	298
279-4691	298
279-4692	298
279-4693	298
279-4697	298
279-4698	298
279-4699	▶297
	298
279-4701	298
279-4703	298
	357
279-4704	298
	356
279-4705	298
279-4706	123
	125
	298
279-4707	298
279-4712	▶356
	357
279-4730	277
	279
	282
279-4731	246
	279
	282
279-4732	59
	246
	279
	282
279-4733	246
	279
	282
279-4734	248
	279
	282
279-4735	192
	242
	244
	246
	251
	279
	282
279-4736	279
279-4737	192
	228
	230
	242
	244
	250
	251
	279
	282
	369
279-4738	192
	228
	230
	242
	244
	250
	251
	279
	282
	369
279-4786	323
279-4796	324
	326
	327
	331
	333
	335
	336
	337
	339
	341
279-4810	323
279-9095	178
279-9311	564
280-0406	542
280-0407	150
	453
	461
	467
	542
280-0408	453
	461
	467
	495
	542
280-0409	542
280-0410	542
280-0411	542
280-0412	542
280-0413	542
280-0414	542
280-0415	542
280-0416	542
280-0417	542
280-0418	542
280-0419	542
280-0421	453
	460
	467
	▶542
280-2313	178
280-2355	213
	▶295
280-2357	295
280-2358	295
280-2359	295
280-2360	295
280-2361	295
280-2362	295
280-2363	295
280-2364	293
280-2365	293
280-2367	293
280-2368	293
280-2369	293
280-2405	293
280-2652	239
	240
280-3035	262
	265
280-3049	237
280-3097	▶123
	125
280-3098	123
	125
280-3100	123
	125
280-3101	123
	125
280-3102	123
	125
280-3103	123
	125
280-3104	125
280-3105	125
280-3106	125
280-3107	125
280-3108	125
280-3109	125
280-3110	125
280-3111	125
280-3112	125
280-3113	125
280-3114	125
280-3116	126
280-3118	126
280-4441	298
280-4442	298
280-4443	298
280-4444	298
280-4446	298
280-4450	298
280-4451	298
280-4458	298
280-4459	298
280-7544	495
280-7548	495
280-7552	495
280-7554	495
280-7555	495
280-7559	495
280-7561	495
280-7562	495
280-7609	▶226
	394
280-8588	454
	460
	468
280-8590	453
	460
	467
280-8595	454
	460
	468
280-8597	454
	460
	468
280-8598	453
	460
	467
280-8599	454
	460
	468
280-8603	453
	460
	467

▶ **PRIMARY REFERENCE**

PART NUMBER INDEX

Part	Page
280-8604	454
	460
	468
280-8605	454
	460
	468
280-8607	454
	460
	468
280-8611	453
	461
	467
280-8618	453
	461
	467
280-8624	495
280-8625	453
	460
	467
280-8626	453
	460
	467
280-8984	438
	440
281-0865	372
	374
281-0902	145
281-0923	145
281-0924	145
281-0925	145
281-0926	145
281-0930	145
281-0969	145
281-1020	▶159
281-1149	453
	460
	467
281-1150	460
281-1153	454
	460
	468
281-1154	453
	460
	467
281-1155	453
	460
	467
281-1159	453
	460
	467
281-1162	453
	460
	467
281-1164	453
	460
	467
281-1184	150
281-1185	150
281-1186	453
	460
	467
	▶514
281-1187	514
281-1190	514
281-1193	514
281-1194	514
281-1195	453
	460
	467
	▶495
281-1196	495
281-1199	495
281-1200	495
281-1551	▶419
281-2296	200
281-2297	200
281-2306	200
281-2307	200
281-2312	202
281-2313	202
281-2314	200
281-2315	202
281-2316	202
281-2317	200
281-2318	206
281-2319	202
281-2320	200
281-2321	200
281-2322	202
281-2323	206
281-2324	200
281-2325	342
	345
281-2326	▶322
	342
	343
	345
	346
281-2336	▶323
	342
	343
	345
	346
281-2952	322
281-2953	322
281-2954	322
281-2955	322
281-2956	322
281-2957	322
281-2958	322
281-2959	322
281-2960	322
	324
	326
	327
	328
	329
	331
	333
	335
	336
	337
	339
281-2961	322
	324
	326
	327
	328
	329
	331
	333
	335
	336
	337
	339
	341
281-2962	322
281-2963	322
281-2965	322
281-2972	324
	326
	327
	328
	329
	331
	333
	335
	336
	337
	339
	341
281-2973	326
	327
	328
	329
	331
	333
	335
	336
	337
	339
	341
281-2974	324
	326
	327
	328
	329
	331
	333
	335
	336
	337
	339
	341
281-2975	324
	326
	327
	328
	329
	331
	333
	335
	336
	337
	339
	341
281-2976	324
	326
	327
	328
	329
	331
	333
	335
	336
	337
	339
	341
281-2977	326
	327
	328
	329
	331
	333
	336
	337
	339
	341
281-2978	324
	326
	327
	328
	329
	331
	333
	335
	336
	337
	339
	341
281-2979	324
	326
	327
	328
	329
	331
	333
	335
	336
	337
	339
	341
281-2980	337
	339
281-2983	324
	331
	335
281-2984	324
	335
281-2985	324
	326
	327
	328
	329
	331
	333
	335
	336
	341
281-2986	324
	326
	327
	328
	329
	331
	333
	335
	336
	341
281-2987	324
	335
281-2990	333
281-2991	333
281-2992	333
281-2993	333
281-2994	333
281-2995	333
281-3052	213
	▶293
281-3053	293
	▶358
281-3650	495
281-3651	454
	460
	468
281-3653	453
	460
	467
281-3654	453
	460
	467
281-3655	495
281-3658	453
	461
	467
281-3660	454
	460
	468
281-3661	454
	460
	468
281-3662	454
	460
	468
281-3815	▶405
	418
281-3818	405
281-3824	▶420
281-3998	522

PART NUMBER INDEX

Part	Page
281-4450	460
281-4451	453
	460
	467
	▶544
281-4452	454
	460
	468
281-4453	454
	460
	468
281-5479	453
	461
	467
281-5480	453
	461
	467
281-5481	495
281-5483	453
	461
	467
281-5485	453
	461
	467
	514
281-5487	453
	457
	458
	461
	467
281-5488	453
	461
	467
281-5492	453
	461
	468
281-5496	454
	461
	468
281-5497	453
	461
	467
281-5507	454
	460
	468
281-5508	453
	460
	468
281-5509	453
	461
	468
281-6177	150
281-6196	454
	461
	468
281-6199	514
281-6262	495
281-6263	495
281-6264	495
281-6265	495
281-7860	454
	460
	468
281-8618	476
281-8619	476
281-8630	476
281-8631	476
281-9614	453
	460
	467
282-1712	▶368
	398
282-1713	368
282-2151	72
	77
282-2310	311
282-2725	454
	461
	468
282-9307	▶441
	444
282-9311	▶502
	503
282-9315	▶402
282-9318	269
	▶362
282-9679	447
	449
	451
	455
282-9699	528
283-0274	528
283-2847	262
	265
283-4170	472
283-5358	233
	235
283-5359	219
283-5360	219
283-5365	237
	275
283-5368	225
283-7333	447
	449
	451
	455
283-7365	447
	449
	451
	455
283-9117	198
283-9118	198
283-9119	198
283-9120	198
283-9121	198
283-9122	198
284-0838	476
284-0839	476
284-0840	476
284-0850	475
	476
284-0883	▶206
	379
	381
284-0884	206
284-3369	▶200
	365
284-3880	45
284-5686	442
	504
284-6176	453
	461
	467
284-6179	454
	461
	468
284-6180	461
284-6255	366
284-6393	159
285-1951	305
285-4408	453
	460
	467
285-4493	454
	461
	468
285-6278	453
	461
	467
285-7033	51
285-7702	156
285-7703	152
285-7836	534
285-7837	533
285-7838	538
285-8286	▶480
	525
286-6384	▶198
	394
286-7323	198
286-7324	198
286-9482	517
	▶524
287-0030	391
287-0035	131
287-7257	508
	512
288-0266	259
288-0267	259
288-0849	▶359
	381
288-1386	453
	460
	467
288-1388	454
	468
288-1389	454
	468
288-6841	542
288-6899	126
288-6900	125
288-6901	126
288-8570	228
288-9388	324
	335
290-2943	407
290-2944	408
290-2945	409
290-2946	410
290-8287	▶149
	394
290-8288	149
290-8290	149
290-8293	149
291-0152	362
291-1671	▶324
	342
	345
291-5214	26
291-9353	233
	235
291-9390	▶125
	128
292-0153	145
292-0176	▶128
	129
292-0185	▶326
	342
	343
	345
	346
292-0187	▶327
	342
	343
	345
	346
292-0188	▶328
	342
	343
	345
	346
292-3401	237
	275
292-5739	▶95
	365
292-5740	95
292-8287	▶275
	379
292-8290	▶227
	394
292-8309	189
	▶221
292-8311	190
	▶222
292-8332	275
292-8335	227
292-8336	227
292-8351	220
292-8355	224
292-8365	221
292-8367	222
292-8375	233
292-8376	233
292-8377	235
292-8378	235
292-8504	41
293-3116	495
293-9743	259
294-0973	438
	440
294-1868	303
294-3097	145
294-7850	226
294-7851	226
294-7868	196
294-7869	196
295-7340	560
296-0219	152
296-1942	351
296-2602	442
	504
296-2603	442
	504
296-2604	442
	504
296-2605	442
	504
296-2606	504
296-2607	442
	504
296-2608	442
	504
296-2609	504
296-2611	442
	504
296-2612	442
	504
296-2614	442
	504
296-2615	442
	504
296-2616	442
	504
296-2617	442
	504
296-2618	442
296-2619	442
296-2620	442
296-2621	442
296-2622	442
298-0663	59
	72
	77
	97
	508
298-2139	564

▶ **PRIMARY REFERENCE**

PART NUMBER INDEX

Part	Page
298-2140	564
298-4282	557
298-4948	442
299-3784	47
3	
301-6875	441
	502
301-6893	200
301-6894	200
301-6901	202
301-6903	202
303-1308	411
303-1309	412
303-1324	▶421
303-1325	▶422
303-1326	▶423
303-1327	▶424
303-1328	▶425
303-1329	▶426
303-1358	▶406
	421
303-1359	▶407
	422
303-1360	▶408
	423
303-1362	▶409
	424
303-1363	▶410
	425
303-1364	▶411
	426
303-2668	568
303-4492	298
303-6248	406
	407
	408
	409
	410
	411
	412
303-6249	406
	407
	408
	409
	410
	411
	412
303-9236	453
	460
	467
304-0121	265
	279
304-0250	285
	287
304-2819	6
	472
304-3524	200
	202
304-3525	200
	202
304-3526	200
	202
304-3527	200
	202
304-3537	202
304-3538	202
304-7196	305
304-8800	544
304-8801	544
304-8802	544
305-5848	453
	467
305-5852	467
305-5853	467
306-5658	406
306-9039	108
	112
307-8151	228
	230
	369
307-8156	228
308-4578	228
	230
	369
308-5532	228
309-1917	▶438
309-1938	▶440
309-5902	200
	208
309-5903	200
	208
309-6024	438
309-6778	440
310-0420	351
310-0421	351
310-0422	351
310-1866	533
	534
	538
310-1867	533
	534
	538
310-4984	246
	280
	283
311-1031	200
	208
311-3072	262
	265
	269
311-8804	73
	78
312-5694	438
	440
313-2048	560
314-4242	255
	257
314-8292	544
314-8294	544
314-8295	544
314-8296	544
314-8298	544
314-8299	544
314-8300	544
317-9220	255
	257
319-4420	▶100
	102
	106
	108
	112
320-3430	262
320-6540	▶349
	487
	490
321-6069	90
322-4582	369
	552
322-8964	102
	106
	108
	112
324-5828	453
	461
	467
324-8994	343
	346
325-4870	259
325-9922	86
326-7184	262
	265
326-7782	349
	353
326-8530	▶329
	343
	346
327-1749	476
329-8369	▶331
	342
	343
	345
	346
330-5698	262
331-9872	351
331-9873	351
332-1293	298
	▶357
332-1809	493
332-1810	470
	471
332-4162	453
	467
334-0257	135
	154
334-1186	445
	446
	▶519
334-4603	564
335-0517	▶187
	188
336-0683	343
	346
336-9693	442
	504
336-9694	504
336-9695	504
336-9696	442
336-9697	442
339-1545	139
339-1548	139
340-2566	84
	86
	103
	109
340-2567	87
	109
341-0449	155
342-3327	515
344-3682	▶391
	394
344-7391	230
	369
344-8052	390
344-8863	▶285
	394
344-8864	▶287
	394
346-8791	253
346-8792	253
347-6081	▶216
	305
347-6082	216
347-9976	285
	287
347-9977	285
	287
349-1756	72
	77
349-1812	72
	77
349-2709	255
351-1020	391
352-4708	73
	78
352-7765	▶131
	391
352-7766	131
353-2981	528
353-4402	311
354-4628	▶539
354-4629	▶539
354-6977	473
354-6978	473
354-6980	473
354-6981	473
355-3393	1
	▶479
355-3411	▶96
355-3416	▶520
355-3417	▶520
355-3420	▶516
355-4740	▶223
	379
	380
356-1594	▶333
	342
	343
	345
	346
356-1597	322
356-3823	317
	▶351
356-4545	52
	▶317
	▶318
356-7138	189
	190
	▶215
356-7139	215
357-5889	▶335
	343
	346
357-6425	246
357-6426	246
357-9061	▶539
358-2091	192
	251
	▶364
358-9162	528
359-4428	▶336
	342
	343
359-5544	240
359-5545	239
359-5547	240
359-5548	239
359-6059	▶239
	438
	440
361-1069	431
	432
361-1071	433
361-1072	428
	429
361-1078	205
361-1081	428
	▶431
361-1082	431
361-1083	431
	▶433
361-1084	433
361-1085	433

PART NUMBER INDEX

Part	Page
361-1086	433
361-1087	431
361-1088	431
361-1090	▶241
	429
361-1094	▶428
361-1095	▶429
	430
361-1115	241
361-1116	241
361-1117	241
361-1121	429
	▶432
361-1122	432
361-1123	432
	▶434
361-1124	434
361-1125	▶205
	434
361-1126	434
361-1127	205
361-1128	205
361-1129	205
361-1132	205
	▶320
361-1134	432
361-1156	205
361-1157	432
361-1207	241
361-1208	241
361-1209	432
361-1210	431
361-5148	240
361-5149	239
362-1008	248
362-3225	53
363-5745	148
363-9173	73
	78
	85
	87
	103
	109
364-1693	▶437
364-3882	102
	106
	108
	112
364-5228	▶337
	342
	343
	345
	346
364-5229	▶339
	342
	343
	345
	346
364-6125	351
364-6126	351
364-6127	351
365-2799	190
	▶242
365-2801	191
	▶244
365-6895	259
365-6912	192
365-6918	192
365-6919	192
	242
	244
365-6920	220
	224
365-6921	220
	224
365-6972	242
	244
365-6973	242
	244
365-6974	242
	244
365-6975	242
365-6976	242
365-6977	244
365-7004	244
366-4622	102
	106
	108
	112
366-9776	336
	341
367-0904	1
	▶132
367-0912	1
	▶136
367-0918	1
	▶152
367-0930	1
	▶67
367-0936	217
	▶307
367-0950	444
	445
	446
	▶494
367-0954	132
367-0964	132
367-0980	136
367-0984	136
	▶139
367-0985	139
367-1050	▶305
	307
367-1051	305
367-1089	67
367-1090	67
367-1092	67
367-1095	67
367-1096	67
367-1097	67
367-1101	132
368-1278	364
368-1279	364
369-3693	▶240
	438
	440
369-3699	156
370-4008	59
370-5333	▶117
	365
370-5338	52
	▶69
370-5340	52
	▶53
370-5343	▶72
	444
	445
	446
370-5346	▶77
	469
370-5348	▶116
	444
	445
370-5349	▶102
	▶106
	444
	445
	446
370-5350	▶108
	▶112
	469
370-5351	101
	▶118
370-5352	93
	▶97
370-5353	102
	106
	108
	112
370-5354	102
	106
	108
	112
370-5358	72
370-5361	77
370-5364	73
	78
370-5366	73
	78
370-5367	73
	78
370-5368	102
370-5369	108
370-5370	118
370-5371	97
370-5372	73
	78
370-5375	73
	78
370-5396	117
371-8268	241
372-9897	277
372-9898	313
	▶363
373-2363	192
375-8118	225
376-0171	▶208
	365
376-2013	217
	▶296
376-3983	395
376-3984	392
	▶395
376-3985	▶392
	▶393
	394
376-6206	1
	▶146
376-6207	146
376-6671	▶1
376-6675	▶1
376-6679	1
	▶365
376-6691	▶444
376-6695	▶445
376-8851	▶481
	486
376-8852	481
376-8853	481
	482
376-8854	481
	482
376-8855	▶482
	484
376-8856	482
376-8857	487
	492
376-8858	103
	106
	109
	112
376-8859	81
376-9480	73
	78
376-9483	▶483
	485
376-9484	483
376-9485	483
376-9486	483
376-9492	53
376-9493	487
	490
376-9494	▶484
	489
376-9495	▶485
	488
	489
377-0325	▶81
	394
377-0326	1
	▶82
377-1179	▶162
	181
377-1180	162
377-5062	▶140
	530
377-5063	140
377-5075	140
	142
377-5085	140
	142
377-5086	140
	142
377-5087	140
	142
377-5088	140
	142
377-5089	140
	142
377-5090	140
	142
377-5091	140
	142
377-5092	140
	142
377-5093	140
	142
377-5094	140
	142
377-5095	140
	142
377-5096	140
	▶158
377-5098	142
	158
377-5100	142
	158
377-5101	142
	158
377-5102	142
	158
377-5103	158
377-5107	444
	445
	▶447
	▶449
	▶451
377-5108	447
	▶453
	457
377-5865	444
	▶497
377-5866	497
377-5868	497
	498

▶ **PRIMARY REFERENCE**

PART NUMBER INDEX

Part	Page
377-5869	497
	498
377-5870	497
377-5871	497
	498
377-5873	497
	498
377-5874	497
377-5875	497
	498
377-5876	▶444
	445
377-5933	528
377-5934	444
	445
	446
377-5936	528
377-5938	528
377-5942	528
377-5943	528
377-5945	528
377-5946	528
377-5947	528
377-5948	528
377-5949	528
377-5950	528
377-5951	528
377-5952	528
377-5958	394
	▶487
377-5959	528
377-6969	36
377-7814	152
377-7862	135
	154
377-7864	152
377-7874	152
377-7881	152
	▶156
377-7882	▶154
	160
377-7883	▶134
	152
377-7885	152
377-7886	▶135
	160
377-7887	▶155
	156
377-7888	▶133
	134
377-7889	154
377-7891	155
377-7892	135
377-7893	133
377-7929	152
377-7930	152
377-7934	155
377-7935	155
377-7936	155
377-7937	133
377-7938	133
377-7939	133
377-7940	152
377-7942	494
377-7944	494
377-8861	189
	▶311
377-8872	195
	▶255
377-8874	190
	▶257
377-8876	190
	▶313
377-8911	379
	▶381
377-8912	379
	380
	▶381
377-8913	▶372
377-8914	▶372
	379
	380
377-8915	▶394
377-8921	▶52
377-8922	▶52
377-8928	▶394
377-8932	▶469
377-9033	259
377-9034	259
377-9042	268
377-9043	268
377-9053	282
377-9064	255
	257
377-9065	255
377-9066	255
	257
377-9068	255
	257
377-9071	262
	265
377-9081	508
377-9699	1
	▶564
377-9706	394
	▶545
377-9707	189
	▶546
377-9708	189
	190
	▶548
377-9709	190
	▶549
377-9710	▶557
377-9711	▶560
377-9714	444
	445
	▶568
377-9715	445
	446
	▶550
377-9722	564
377-9725	564
377-9728	546
377-9729	546
377-9730	548
378-1240	152
378-1264	5
	▶51
378-1265	51
378-1266	51
378-1267	44
378-1268	51
378-1272	444
	445
	▶472
378-1293	445
	446
	▶503
378-2136	▶26
	444
	445
378-2137	26
	28
378-2138	26
378-2139	26
378-2140	5
	▶66
378-2141	17
	▶19
378-2263	147
378-2493	▶498
	503
378-2495	195
	▶488
378-2497	195
	▶489
378-2498	▶535
378-2499	▶535
378-2500	▶195
	379
	380
	381
378-2501	▶195
	379
	380
378-2506	535
	▶536
378-2508	535
	▶537
378-2511	498
378-3248	1
	▶2
378-3252	2
	▶3
378-7478	▶188
378-7480	▶188
378-8105	146
378-8111	146
378-8113	146
378-8121	146
378-8125	146
378-8129	146
378-8137	140
	142
378-8139	▶528
	530
378-8140	528
378-9508	257
378-9509	257
378-9630	▶90
	91
378-9631	90
378-9748	313
379-0417	309
	▶342
379-0559	259
379-0801	▶28
	445
	446
	469
379-0803	53
379-0817	119
	369
379-0828	72
	77
379-0830	84
	86
	103
	109
379-0855	28
379-0869	44
379-1946	447
	449
	451
	455
379-2000	311
379-2007	73
	78
379-2010	▶486
	488
379-2015	44
379-2026	447
	449
	451
	455
379-2027	447
	449
	451
	455
379-2028	447
	449
	451
	455
379-2988	1
	▶147
379-2989	147
379-2996	498
379-3533	298
379-3597	▶474
	525
379-3598	474
	▶475
379-3599	474
	▶476
379-3600	475
379-3608	475
	476
379-3610	476
379-3611	475
379-3612	475
379-3613	476
379-3614	476
379-3615	476
379-3616	476
379-3618	474
379-3623	476
379-3624	1
	▶525
379-3625	444
	445
	446
	▶530
379-3626	444
	445
	▶541
379-3627	453
379-3628	528
379-3629	453
	461
	467
379-3630	453
	461
	467
379-4566	255
	257
379-4678	1
	▶217
379-4679	▶379
379-4680	1
	▶189
379-4681	▶217
379-4682	▶217
379-4683	▶189
	379
	380
379-4684	▶189
	379
	380
379-4685	▶190
	380
	381

PART NUMBER INDEX

Part	Page
379-4686	▶195
379-4687	▶190
379-4688	▶223
	379
	380
	381
379-4689	▶211
379-4690	▶17
379-4691	1
	▶157
379-4692	1
	▶59
379-4693	217
	▶253
379-4694	217
	▶259
379-4695	217
	▶246
379-4698	189
	▶248
379-4699	217
	▶250
379-4700	217
	▶228
	▶230
379-4701	▶271
	394
379-4702	▶279
	394
379-4703	▶309
	▶310
	394
379-4704	189
	▶276
379-4705	189
	190
	▶277
379-4706	195
	▶262
379-4707	190
	▶265
379-4708	223
	▶224
379-4709	211
	▶212
379-4710	17
	▶18
379-4711	444
	445
	▶508
379-4712	445
	446
	▶512
379-4717	▶179
379-5264	▶188
379-5265	▶188
379-6230	380
	▶382
379-6231	382
	▶383
379-6232	383
379-6239	380
	381
	▶382
379-6240	382
	▶385
379-6241	385
379-6248	381
	▶386
379-6249	386
379-6251	381
	▶388
379-6252	388
379-6412	155
379-6414	133
379-6415	152
379-6416	152
379-6417	494
379-6418	▶160
379-6419	▶160
379-7048	564
379-7049	564
379-7050	564
379-8733	365
	▶366
379-8734	366
379-8770	512
380-2455	189
	190
	▶225
380-2485	▶91
380-3496	41
380-4661	189
	▶268
380-5727	▶45
	46
380-6298	53
380-6357	296
380-6359	1
	▶5
380-6362	48
380-6363	48
380-6364	5
	▶41
380-6365	41
380-6366	41
380-6367	41
380-6369	41
380-6370	41
380-6371	41
380-6374	41
	146
380-6375	41
380-6376	41
380-6377	5
	▶47
380-6386	▶21
	469
380-6387	21
380-6389	444
	445
	▶473
380-6390	473
380-6391	473
380-6392	473
380-6393	▶22
	444
	445
	446
380-6394	22
380-6597	5
	▶6
380-7148	453
	461
	467
380-7149	453
	461
	467
380-7150	▶521
	523
380-7151	▶522
	523
380-7159	137
380-7160	137
380-7163	454
	461
	468
380-7205	59
380-7207	253
380-7208	253
380-7209	253
380-7210	253
380-7213	253
380-7215	253
380-7216	253
380-8798	1
	▶181
380-9952	▶163
	181
380-9992	253
380-9993	253
380-9994	253
380-9995	253
380-9996	253
380-9997	508
380-9998	508
380-9999	508
381-0000	508
381-0001	508
381-0002	192
	251
381-0552	246
381-0553	246
381-0554	246
381-0555	246
381-0556	259
381-0557	259
381-0558	259
381-0559	268
381-0561	248
381-0562	248
381-0563	248
381-0564	250
381-0565	228
	230
	250
381-0578	279
381-0579	279
381-0580	279
	282
381-0581	279
	282
381-0582	279
381-0583	279
	282
381-0584	279
	282
381-0585	279
	282
381-0586	279
381-0587	279
381-0589	271
	273
381-0590	271
381-0592	271
	273
381-1119	309
	310
	315
	316
381-1122	19
381-1123	19
381-1545	276
381-1546	276
381-1547	277
381-1550	277
381-1551	277
381-1552	277
381-1553	277
381-1555	277
381-2048	262
	265
381-2049	262
	265
381-2050	262
	265
381-2051	262
	265
381-2052	262
	265
381-2053	192
	251
381-2054	265
381-2055	265
381-4576	▶551
	559
381-4577	▶562
	563
381-4578	▶559
381-4579	▶563
381-4582	161
381-4583	161
381-4595	160
	▶161
381-4596	154
381-4597	154
381-4598	154
381-5786	6
381-6746	315
	▶343
381-7473	90
381-7474	167
	169
	171
	173
381-9191	179
381-9194	259
381-9195	262
381-9232	▶93
381-9235	▶120
	190
	191
381-9236	▶88
	120
	192
381-9239	▶101
382-0400	469
	▶531
382-0401	▶142
	531
382-0402	142
382-0404	142
382-0406	469
	▶470
382-0407	470
382-0426	469
	▶501
382-0427	501
382-0501	469
	▶493
382-0502	493
382-0503	493
382-0504	▶526
	531
382-0505	526
382-0509	▶523
382-0510	526
382-0517	▶523
382-0522	394
	▶490
382-0542	469
382-0543	493
382-0544	526
382-0546	526
382-0547	526
382-0549	526

▶ **PRIMARY REFERENCE**

PART NUMBER INDEX

Part	Page
382-0560	217
	▶552
382-1147	208
382-1314	▶217
	379
	380
382-1315	▶218
	379
	380
	381
382-2147	526
382-2149	526
382-2150	526
382-2151	137
382-2152	137
382-2153	137
382-2154	137
382-2155	137
382-2156	137
382-2158	137
382-2159	137
382-2160	137
382-2162	137
382-2163	137
382-2164	137
382-2165	137
382-2166	137
382-2167	137
382-2168	137
382-2169	137
382-2170	137
382-2171	137
382-2172	137
382-2173	137
382-2174	137
382-2175	137
382-2176	137
382-2177	▶137
	531
382-2181	142
382-2545	▶190
382-2546	▶191
382-2554	190
	191
	▶251
382-2969	41
382-2970	41
382-4808	6
382-4810	6
382-4812	6
382-4813	6
382-4815	6
382-4922	▶179
382-5689	133
382-6314	528
382-6315	493
382-6321	137
382-6347	528
382-6356	564
382-8180	41
382-9349	66
382-9365	192
	251
383-0133	2
	3
	4
	5
	▶44
383-0134	2
	3
	4
	5
	▶71
383-0136	2
	3
	4
	5
	▶12
383-0137	2
	3
	4
	5
	▶7
383-0139	2
	3
	4
	5
	▶8
383-0140	2
	3
	4
	5
	▶9
383-0141	2
	3
	4
	5
	▶36
383-0142	2
	3
	4
	5
	▶20
383-0144	2
	3
	4
	5
	▶37
383-0145	2
	3
	4
	5
	▶15
383-0146	2
	3
	4
	5
	▶25
383-0147	2
	3
	4
	5
	▶58
383-0148	2
	3
	4
	5
	▶62
383-0151	2
	3
	4
	5
	▶49
383-0152	2
	3
	4
	5
	▶50
383-0153	2
	3
	4
	5
	▶33
383-0154	2
	3
	4
	5
	▶99
383-0155	2
	3
	4
	5
	▶63
383-0156	2
	3
	4
	5
	▶30
383-0157	2
	3
	4
	5
	▶31
383-0158	2
	3
	4
	5
	▶83
383-0159	2
	3
	4
	5
	▶32
383-0160	2
	3
	4
	5
	▶64
383-0161	2
	3
	4
	5
	▶38
383-0162	2
	3
	4
	5
	▶40
383-0163	35
	40
383-0164	56
383-0165	23
383-0167	38
383-0168	56
383-0169	64
383-0170	25
383-0171	7
	9
383-0172	39
383-0173	50
383-0174	12
383-0175	12
	40
383-0176	39
383-0177	64
383-0178	71
383-0179	99
383-0180	20
	33
383-0181	99
383-0182	40
383-0185	39
383-0186	39
383-0187	36
383-0188	64
383-0189	23
	56
383-0190	23
383-0191	33
383-0192	23
383-0193	23
383-0195	71
383-0196	99
383-0197	25
	39
	40
383-0198	56
	83
383-0199	64
383-0200	83
383-0201	99
383-0202	62
383-0203	8
383-0204	25
383-0205	33
383-0206	56
	71
383-0207	20
	25
	33
	39
	40
	99
383-0208	64
383-0209	56
383-0210	9
383-0211	56
383-0212	63
383-0214	83
383-0216	36
383-0217	8
	35
383-0218	11
383-0219	11
383-0220	11
	23
383-0221	11
383-0222	56
383-0223	56
383-0224	33
383-0225	38
383-0226	64
383-0227	7
	32
383-0228	9
383-0229	12
383-0230	23
383-0231	7
	9
383-0232	64
383-0233	64
383-0234	23
383-0250	2
	3
	4
	5
	▶35
383-0252	58
383-0255	33
383-0256	12
383-0257	39
383-0259	14
383-0260	11
383-0261	11
383-0262	14
383-0263	15
383-0264	15
383-0265	15
383-0266	15
383-0267	33
383-0268	33
383-0269	33
383-0270	7
383-0271	9
383-0273	38
383-0274	64

PART NUMBER INDEX

Part	Page
383-0275	64
383-0276	56
383-0277	56
383-0278	56
	83
383-0279	39
	64
383-0280	64
383-0281	23
383-0282	58
383-0283	14
383-0284	58
383-0287	64
383-0288	64
383-0292	9
383-0293	38
383-0300	25
383-0302	23
383-0303	11
383-0304	11
383-0305	12
383-0306	33
383-0308	56
383-0309	64
383-0310	33
383-0314	64
383-0315	49
383-0317	56
383-0319	62
383-0320	62
383-0321	8
	35
383-0323	71
383-0330	71
383-0335	39
383-0336	23
383-0337	11
383-0340	25
383-0341	64
383-0342	73
	78
383-0344	71
383-0345	20
383-0346	49
383-0347	12
383-0355	56
383-0356	39
383-0358	11
383-0360	14
383-0361	14
383-0374	31
383-0375	31
383-0382	8
	23
	50
383-0385	11
383-0386	12
383-0387	15
383-0388	64
383-0389	64
383-0390	64
383-0391	32
383-0392	9
383-0393	9
383-0396	39
383-0397	31
383-0398	9
383-0399	9
383-0400	9
383-0401	9
383-0402	23
383-0403	38
383-0404	35
383-0406	56
383-0407	56
383-0409	56
383-0412	83
383-0416	56
383-0418	56
383-0419	83
383-0420	20
383-0421	39
383-0423	23
383-0425	39
383-0426	23
383-0427	23
	39
383-0429	56
383-0430	12
383-0431	12
383-0432	12
383-0433	40
383-0435	40
383-0437	37
383-0438	23
383-0439	39
383-0440	23
383-0446	12
383-0447	12
383-0451	12
383-0457	12
383-0458	12
383-0459	12
383-0460	49
383-0461	49
383-0463	33
383-0464	33
383-0465	7
383-0467	9
383-0468	12
383-0469	9
383-0470	9
383-0472	39
383-0473	14
383-0474	58
383-0475	63
383-0479	31
383-0481	35
383-0484	56
383-0486	23
383-0487	64
383-0488	▶11
	12
383-0489	37
383-0491	50
383-0492	23
383-0493	15
383-0494	15
383-0495	15
383-0496	15
383-0497	15
383-0498	50
383-0499	8
383-0502	31
383-0503	2
	3
	4
	5
	▶23
383-0506	23
383-0507	64
383-0508	62
383-0509	62
383-0510	62
383-0511	62
383-0512	56
383-0513	56
383-0515	9
383-0517	▶14
	15
383-0519	63
383-0520	56
383-0521	56
383-0523	83
383-0524	8
383-0528	31
383-0530	23
383-0531	36
383-0532	12
383-0533	9
383-0534	15
383-0535	15
383-0536	64
383-0537	63
383-0538	83
383-0540	7
383-0541	64
383-0544	63
383-0546	64
383-0547	64
383-0550	64
383-0551	23
383-0553	12
383-0554	15
383-0555	14
383-0556	33
383-0557	12
383-0558	38
383-0559	58
383-0560	64
383-0561	64
383-0562	64
383-0563	8
383-0565	8
383-0567	58
383-0568	63
383-0570	2
	3
	4
	5
	▶56
383-0571	56
383-0574	8
383-0575	56
383-0576	20
383-0577	64
383-0579	31
383-0583	56
383-0584	56
383-0585	56
383-0586	56
383-0587	9
383-0588	64
383-0589	99
383-0591	56
383-0592	71
383-0595	23
383-0598	20
383-0604	49
383-1706	▶379
383-1707	▶379
383-1708	▶379
383-1709	▶380
383-1717	▶380
383-1718	▶380
383-1719	▶380
383-1720	▶381
383-3158	▶89
	114
383-3160	53
383-3163	▶114
	394
383-3164	▶88
	114
383-4984	41
383-4985	41
383-5924	▶445
383-5925	▶446
383-5926	▶469
383-6388	146
383-8499	5
	▶46
383-8501	46
383-8502	48
383-8503	48
384-1039	364
384-5013	▶192
384-5670	528
384-5671	444
	445
	446
384-5673	535
	▶540
384-5674	540
384-5675	528
384-5676	528
385-0413	564
385-1276	490
	491
385-1277	▶98
	394
385-2795	▶282
	394
385-2796	▶269
	394
385-2797	▶273
	394
385-2798	▶315
	▶316
	394
385-2800	273
385-2803	269
385-2806	269
385-2808	269
385-2809	269
385-2811	269
385-2812	259
385-2813	282
385-2814	282
385-2815	282
385-2816	282
385-4233	277
385-4234	277
385-4235	277
385-5059	2
	3
	4
	5
	▶39
386-4792	32
386-6058	394
	▶553
386-6073	553
386-6918	30
386-6919	30
386-6938	20
386-7523	▶412
	427
386-7524	▶427
387-3558	5
	▶48
387-3788	296
387-4682	▶535
387-4694	469
387-4695	447
	449

▶ **PRIMARY REFERENCE**

PART NUMBER INDEX

Part	Page
	451
	455
387-5260	73
	78
387-6381	251
387-6382	251
387-6383	251
387-6389	▶121
	190
387-6390	▶122
	189
	190
387-9910	36
387-9912	39
388-6412	296
389-0705	71
389-0724	9
389-0725	9
389-0726	9
389-0727	9
389-0728	9
389-0729	9
389-1587	32
389-1588	32
389-1589	32
389-1590	32
389-1591	39
389-1592	8
389-1593	8
389-1594	31
389-1595	31
389-1596	31
389-1597	31
389-1607	31
389-2307	30
389-2308	30
389-2309	25
389-2314	20
389-8671	137
389-8672	137
389-8673	137
389-8690	445
	446
	▶455
389-8701	455
	▶457
	458
	459
389-8702	▶150
	457
	458
	459
389-8703	457
389-8733	▶151
	469
389-8734	151
	507
389-8737	471
389-8749	469
	▶471
389-8753	493
389-8762	475
389-8764	475
389-8773	557
389-8774	560
389-8775	507
	554
389-8776	445
	446
	469
	▶554
389-8800	282
389-9183	507
	554
390-9455	298
392-0266	39
392-4128	2
	▶4
392-4759	1
	▶82
392-4768	82
	103
	106
	109
	112
392-7373	165
	▶171
392-7374	165
	▶173
393-1257	469
	▶555
393-7501	319
	▶353
393-7502	9
393-7632	310
	▶345
393-7633	316
	▶346
393-7635	341
393-8225	▶341
	345
	346
393-8686	259
394-2887	285
394-5921	353
395-3381	15
395-3419	545
396-6223	179
	▶180
396-6224	▶175
	180
396-6225	175
396-6226	175
396-6227	175
396-6228	175
396-6229	175
396-6230	175
396-6231	175
396-6232	175
396-6233	180
396-9400	180
396-9401	180
397-6699	228
	230
	369
397-6742	228
	230
	369
399-9396	▶164
	179
399-9397	164
399-9398	164
415-6803	449
	458
	▶460
415-8595	469
416-2294	318
	▶355
416-4255	82
416-5057	296
	▶298
416-5058	298
416-5059	298
416-6082	▶5
417-1093	308
417-1094	230
	369
417-1106	237
417-1267	499
417-1272	499
417-1273	499
417-1274	499
417-1289	▶499
	500
417-9823	277
418-1567	▶372
418-1571	▶372
418-1572	▶373
418-1586	461
419-1204	394
	▶491
419-1237	451
	459
	▶467
419-1254	469
419-5871	▶500
419-8301	550
	568
420-1370	▶556
420-1391	372
	▶378
420-6337	469
421-2716	394
	▶492
421-2717	▶308
	469
421-2718	▶319
	444
	445
	446
421-8464	▶381
421-9101	▶237
	381
422-1353	237
422-1358	237
422-1359	237
422-1360	237
	242
	244
422-1362	237
	251
422-1378	366
422-1381	366
422-2948	▶119
	217
422-2949	▶88
	119
	369
425-7013	▶84
	112
425-7014	▶86
	106
426-0195	230
	369
426-0197	230
	369
426-0242	▶369
430-8640	▶507
430-9229	▶507
431-6154	▶2
431-6157	▶2
432-1346	555
433-3889	393
	▶396
433-3890	▶390
	396
433-3891	390
433-5569	82
441-6279	▶430

4

► PRIMARY REFERENCE



©2014 Caterpillar
All Rights Reserved

Printed in Japan

CAT, CATERPILLAR, their respective logos, “Caterpillar Yellow”, and the POWER EDGE trade dress as well as corporate and product identity used herein, are trademarks of Caterpillar and may not be used without permission.