3054 D16D PERKINS INGLESS P/ CATERPILLAR

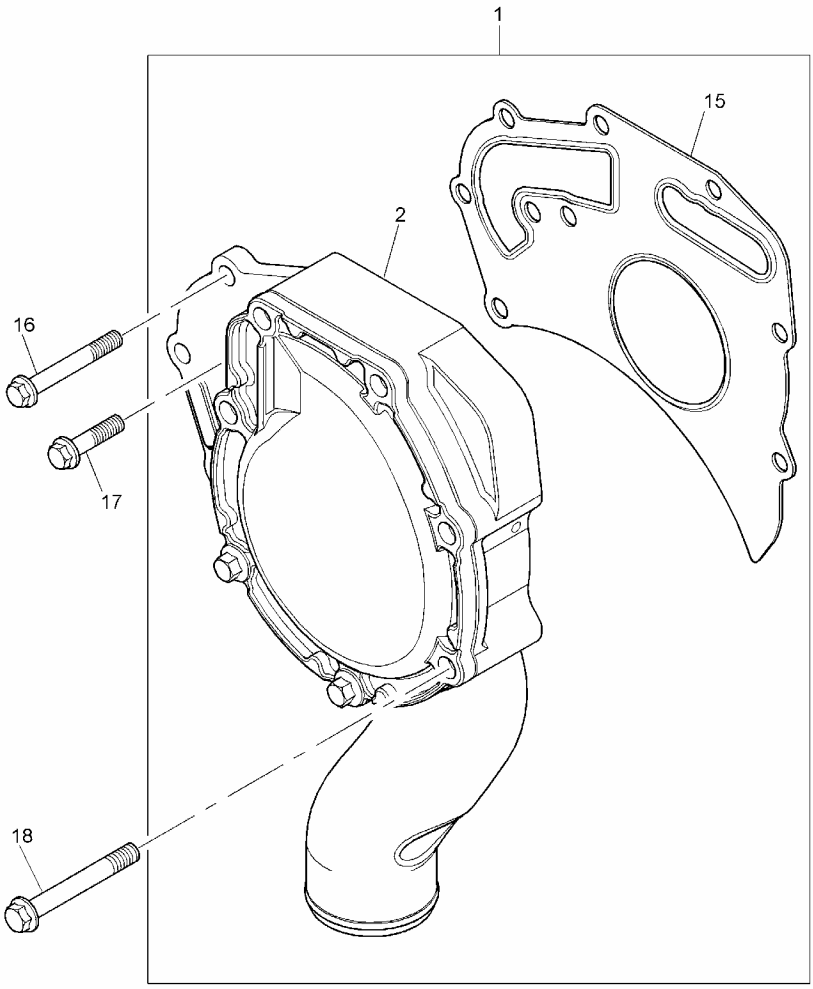

Item	Parts No.	Qty.	Latest Part No.	Description	Cut Out	Cut In	Comment
1	U5MW0194	1	U5MW0194	WATER PUMP KIT			
16	2314K164	2	2314K164	SCREW			
17	2314H005	2	2314H005	SCREW			
18	2314H012	5	2314H012	SCREW			

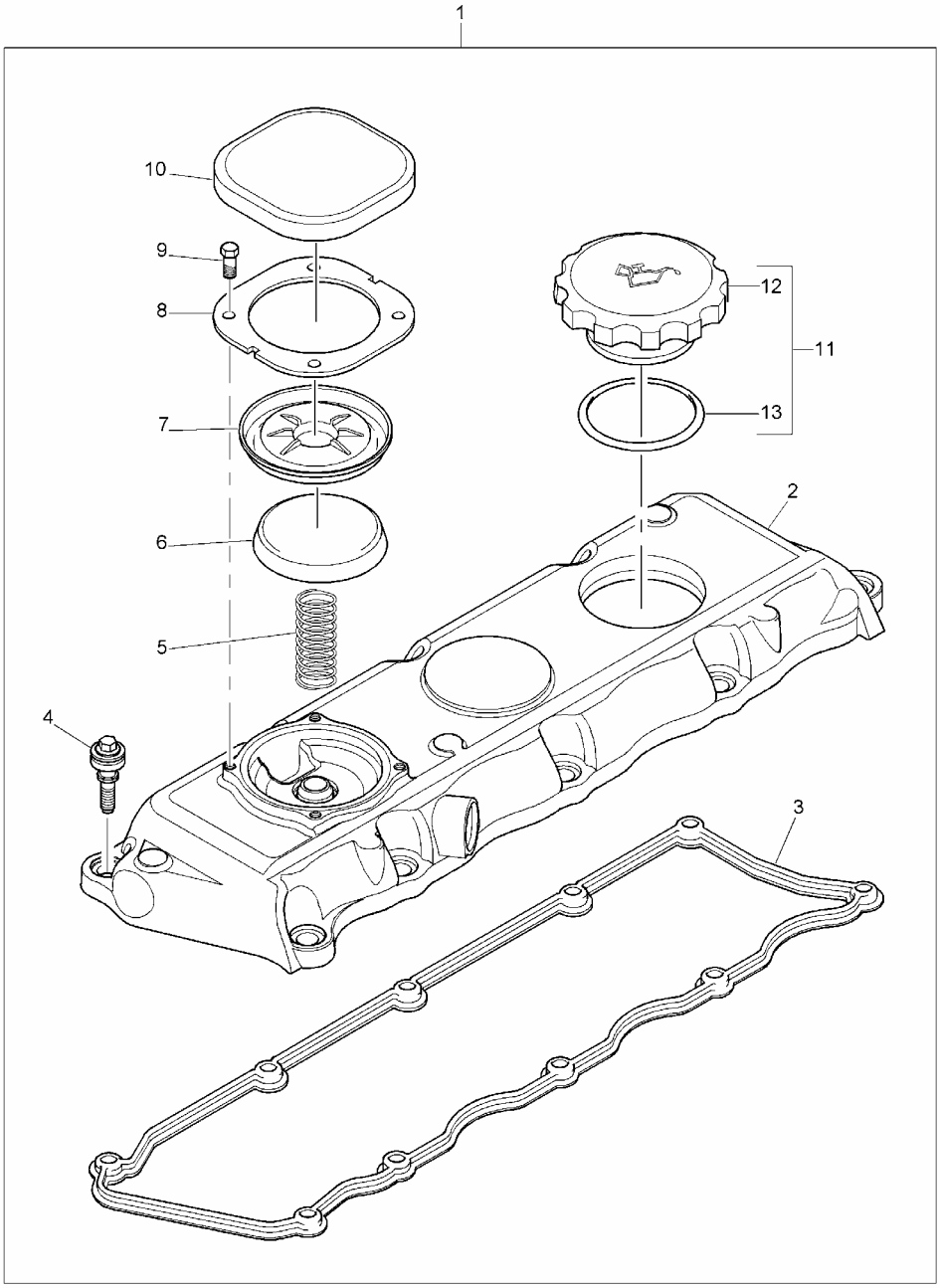
1
10
9
8
7
6
5
4
12
11
13
2
3

Item	Parts No.	Qty.	Latest Part No.	Description	Cut Out	Cut In	Comment
1	4142X293	1	4142X313	CYLINDER HEAD COVER ASSY			

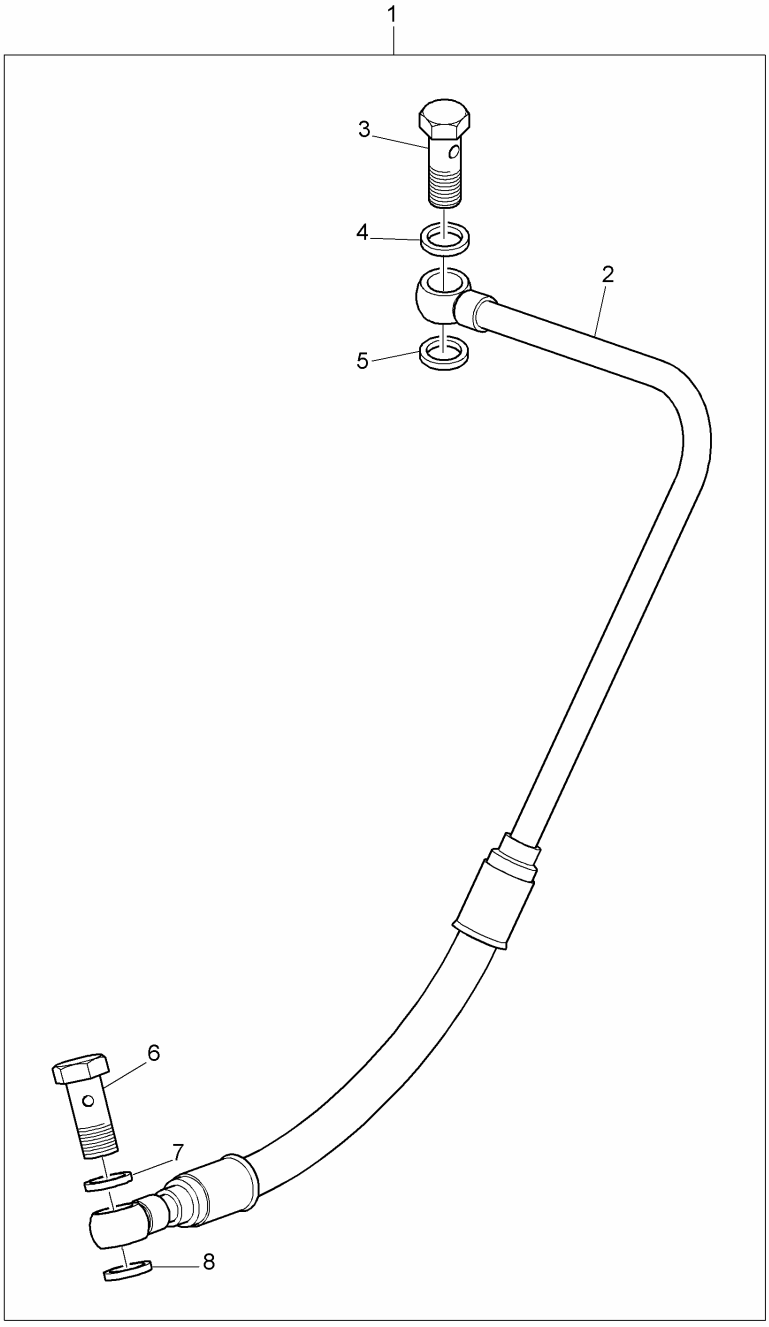
1
3
4
2
5
6
7
8

Item	Parts No.	Qty.	Latest Part No.	Description	Cut Out	Cut In	Comment
1	4128A027	1	4128A027	PIPE - TURBO OIL FEED			
3	3218R036	1	3218R036	BANJO BOLT			
4	2131A506	1	2131A506	WASHER			
5	2131A506	1	2131A506	WASHER			
6	3218R036	1	3218R036	BANJO BOLT			
7	2131A506	1	2131A506	WASHER			
8	2131A506	1	2131A506	WASHER			

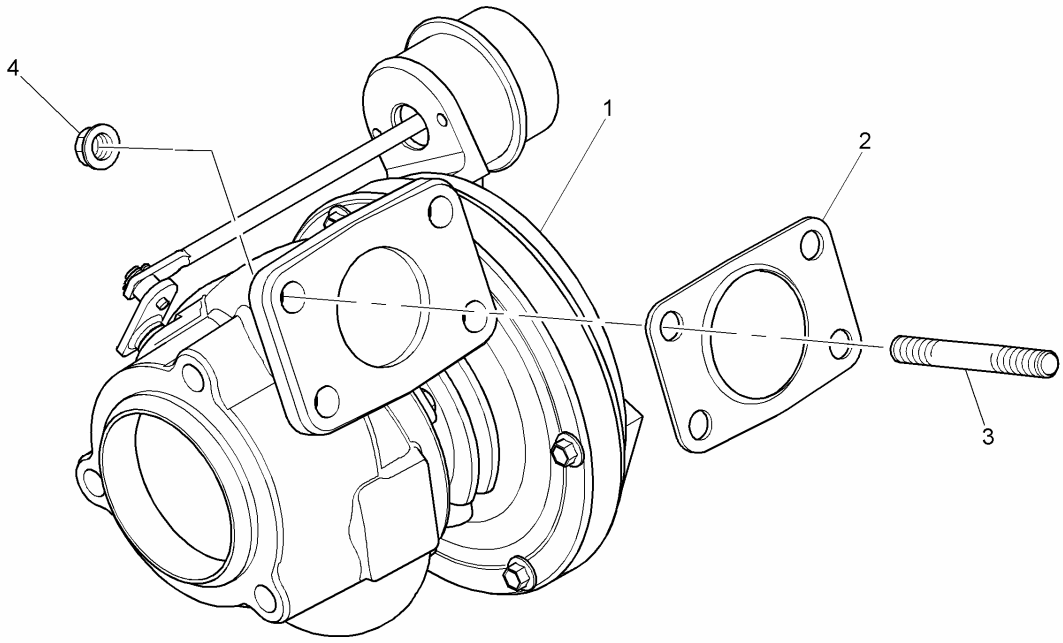
4
1
2
3

Item	Parts No.	Qty.	Latest Part No.	Description	Cut Out	Cut In	Comment
1	2674A403	1	2674A403	TURBOCHARGER			
2	3688A029	1	3688A029	JOINT			
3	2313M377	4	2313M377	STUD			
4	2318A634	4	2318A634	NUT			

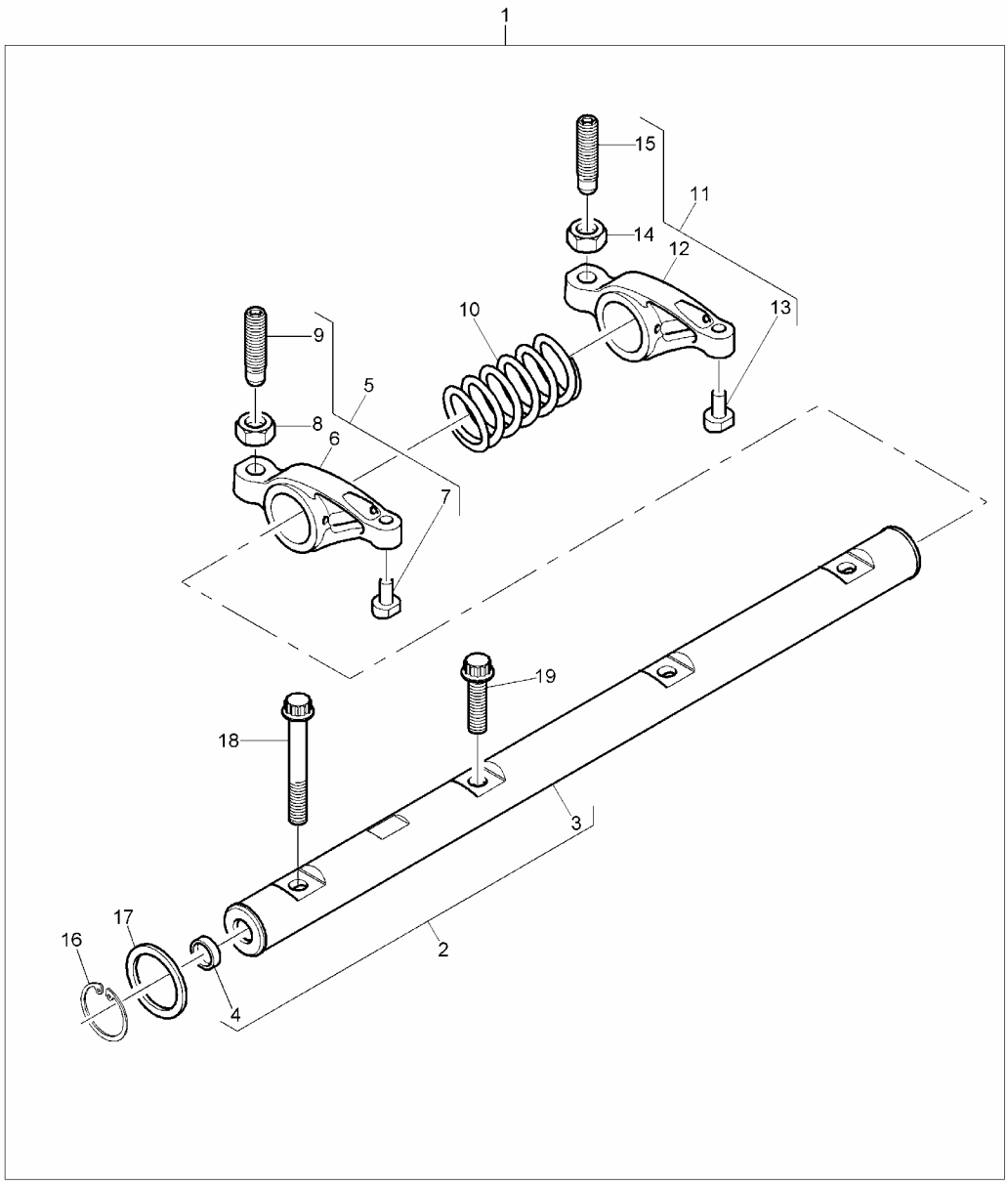
1
15
11
14
12
10
13
9
5
8
6
7
19
18
3
17
16
2
4

Item	Parts No.	Qty.	Latest Part No.	Description	Cut Out	Cut In	Comment
1	4115R612	1	4115R612	ROCKER SHAFT ASSEMBLY			

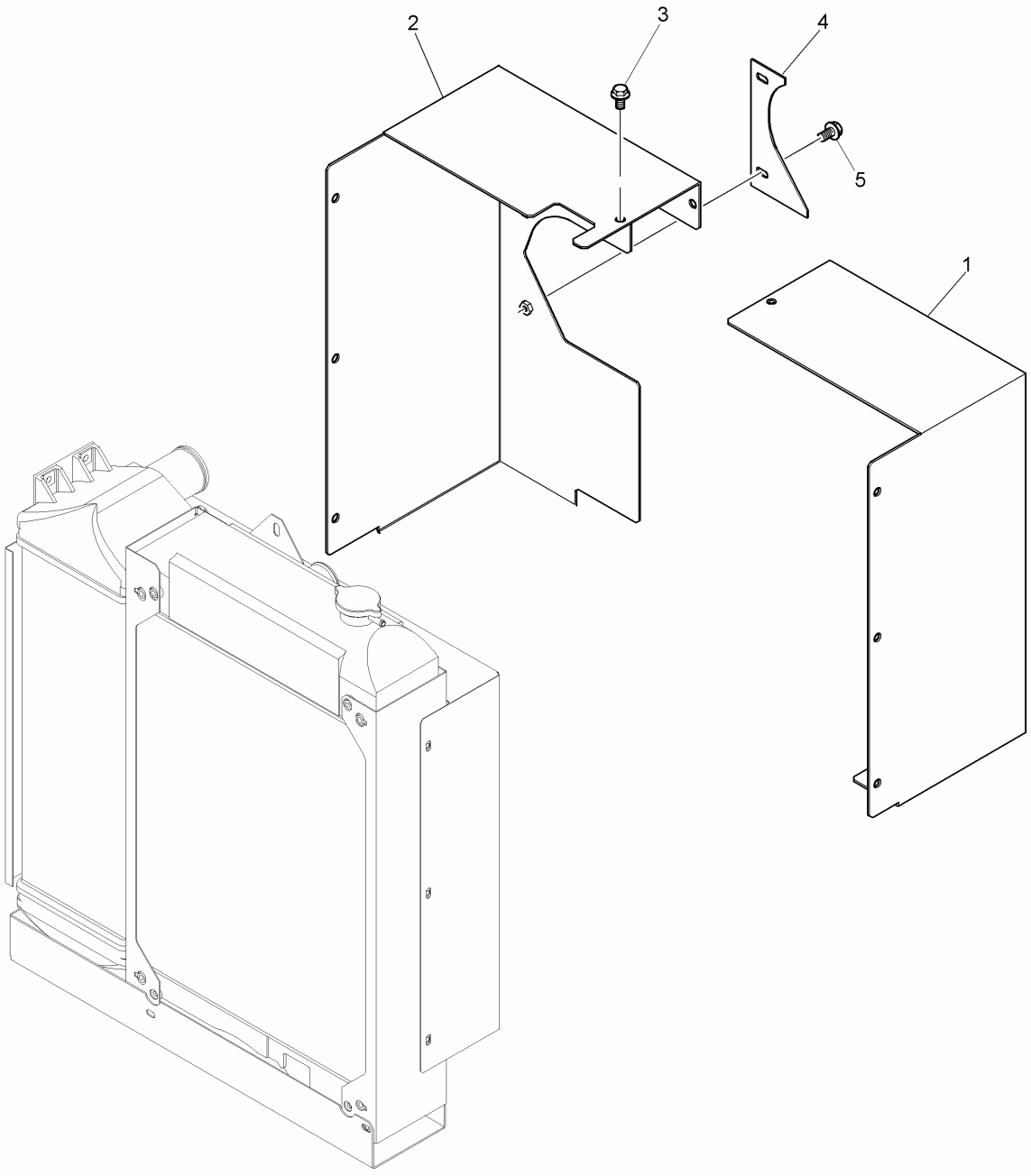
2
3
4
5
1

Item	Parts No.	Qty.	Latest Part No.	Description	Cut Out	Cut In	Comment
1	3756V085	1	3756V085	RADIATOR GUARD			
2	3756V084	1	3756V084	RADIATOR GUARD			
3	2314H001	2	2314H001	SCREW			
4	3756V079	1	3756V079	RADIATOR GUARD			
5	2314H001	2	2314H001	SCREW			

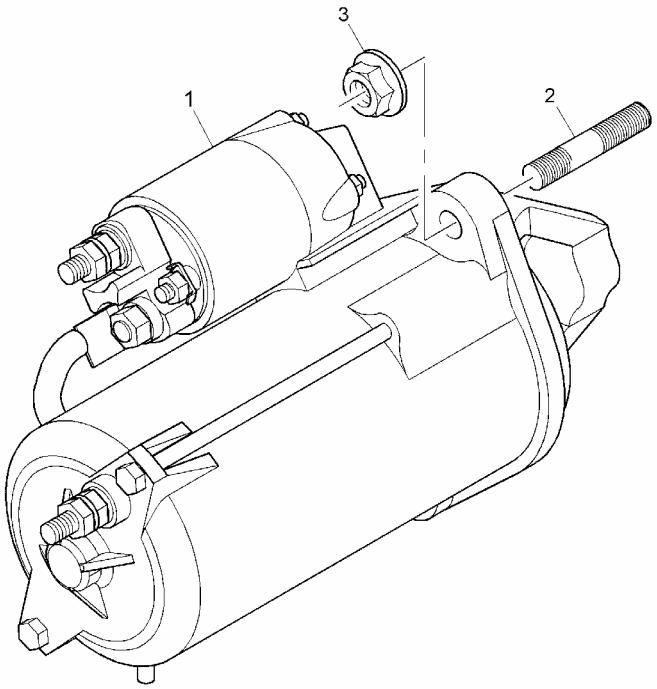
3
1
2

Item	Parts No.	Qty.	Latest Part No.	Description	Cut Out	Cut In	Comment
1	2873K404	1	2873K404	STARTER MOTOR			
2	2313C078	3	2313C078	STUD			
3	2318A604	3	2318A604	NUT			

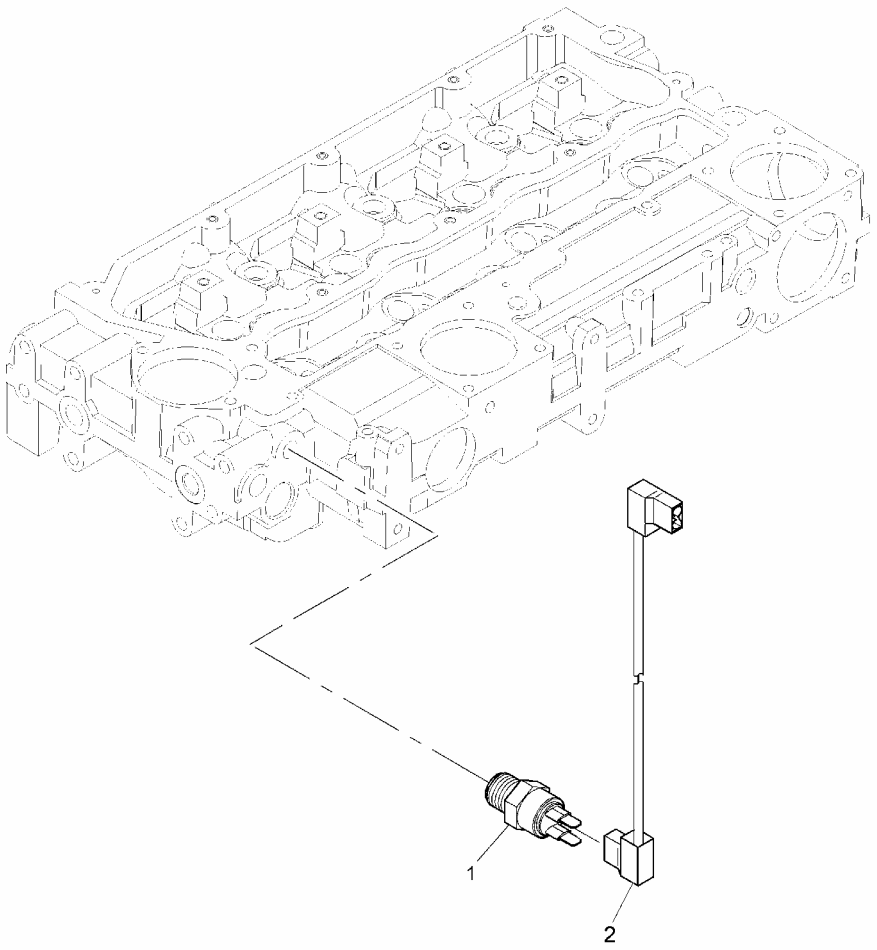
1
2

Item	Parts No.	Qty.	Latest Part No.	Description	Cut Out	Cut In	Comment
1	2848A127	1	2848A127	WATER TEMPERATURE SENSOR			
2	3161C017	1	3161C017	CABLE			

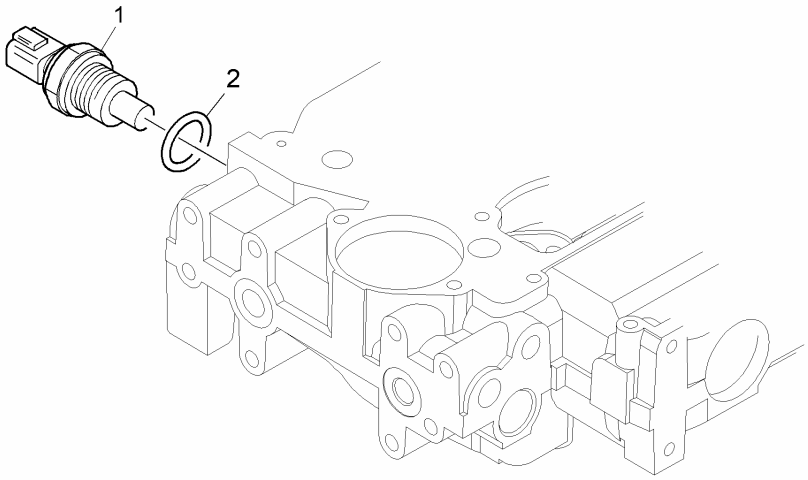
1
2

Item	Parts No.	Qty.	Latest Part No.	Description	Cut Out	Cut In	Comment
1	2846A101	1	2846A101	SENDER			
2	2415H003	1	2415H003	SEAL - SENSOR			

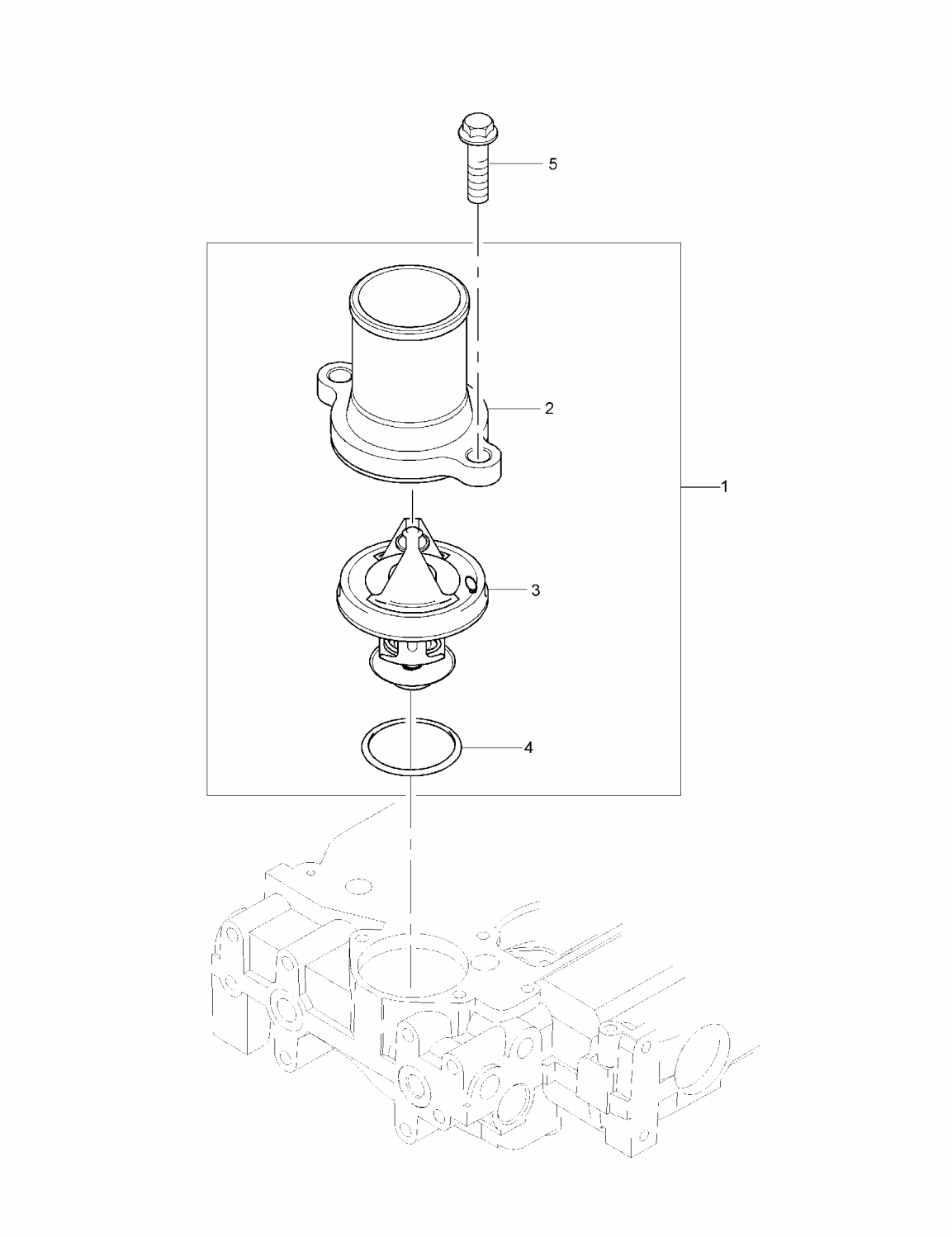

Item	Parts No.	Qty.	Latest Part No.	Description	Cut Out	Cut In
	Comment					
1	4133L507	1	4133L507	CONNECTION		
5	2314H004	2	2314H004	SCREW		

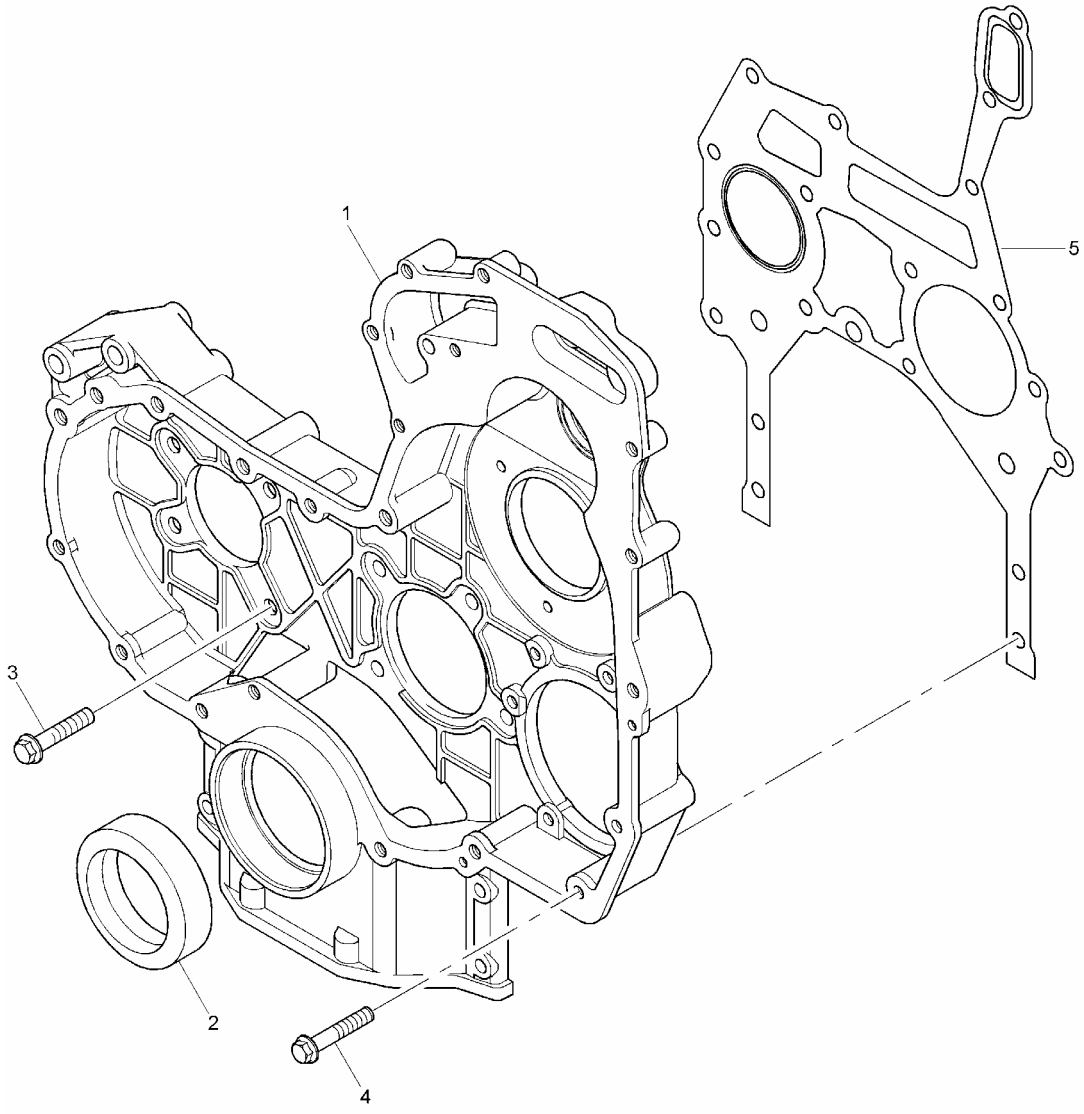
1
2
3
4
5

Item	Parts No.	Qty.	Latest Part No.	Description	Cut Out	Cut In	Comment
1	3716C471	1	3716C471	TIMING CASE			
2	2418F437	1	2418F437	FRONT OIL SEAL			
3	2314H003	8	2314H003	SCREW			
4	2314H034	4	2314H034	SCREW			
5	3681P053	1	3681P053	GASKET - TIMING CASE			

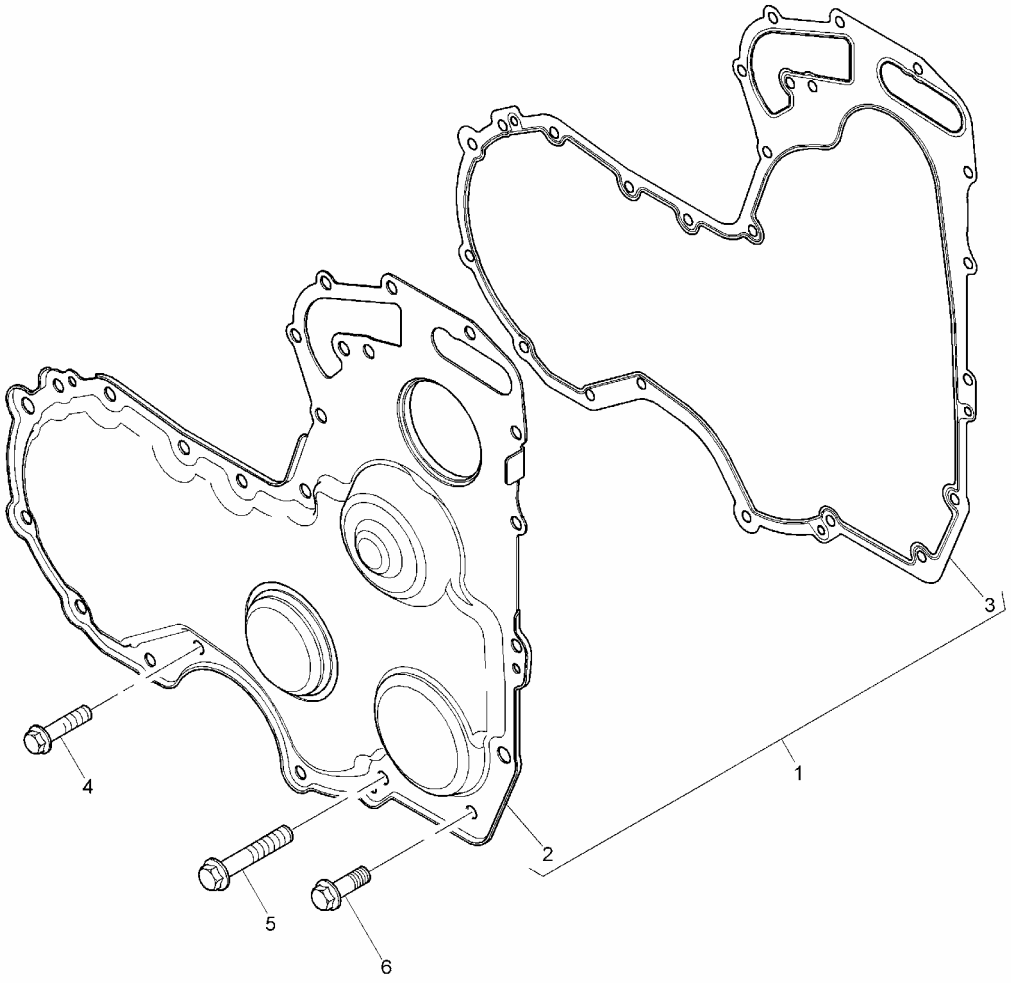
1
2
3
4
5
6

Item	Parts No.	Qty.	Latest Part No.	Description	Cut Out	Cut In	Comment
1	4142A504	1	4142A504	TIMINGGEAR COVER			
4	2314H002	9	2314H002	SCREW			
5	2314H012	5	2314H012	SCREW			
6	2314J002	1	2314J002	SCREW			

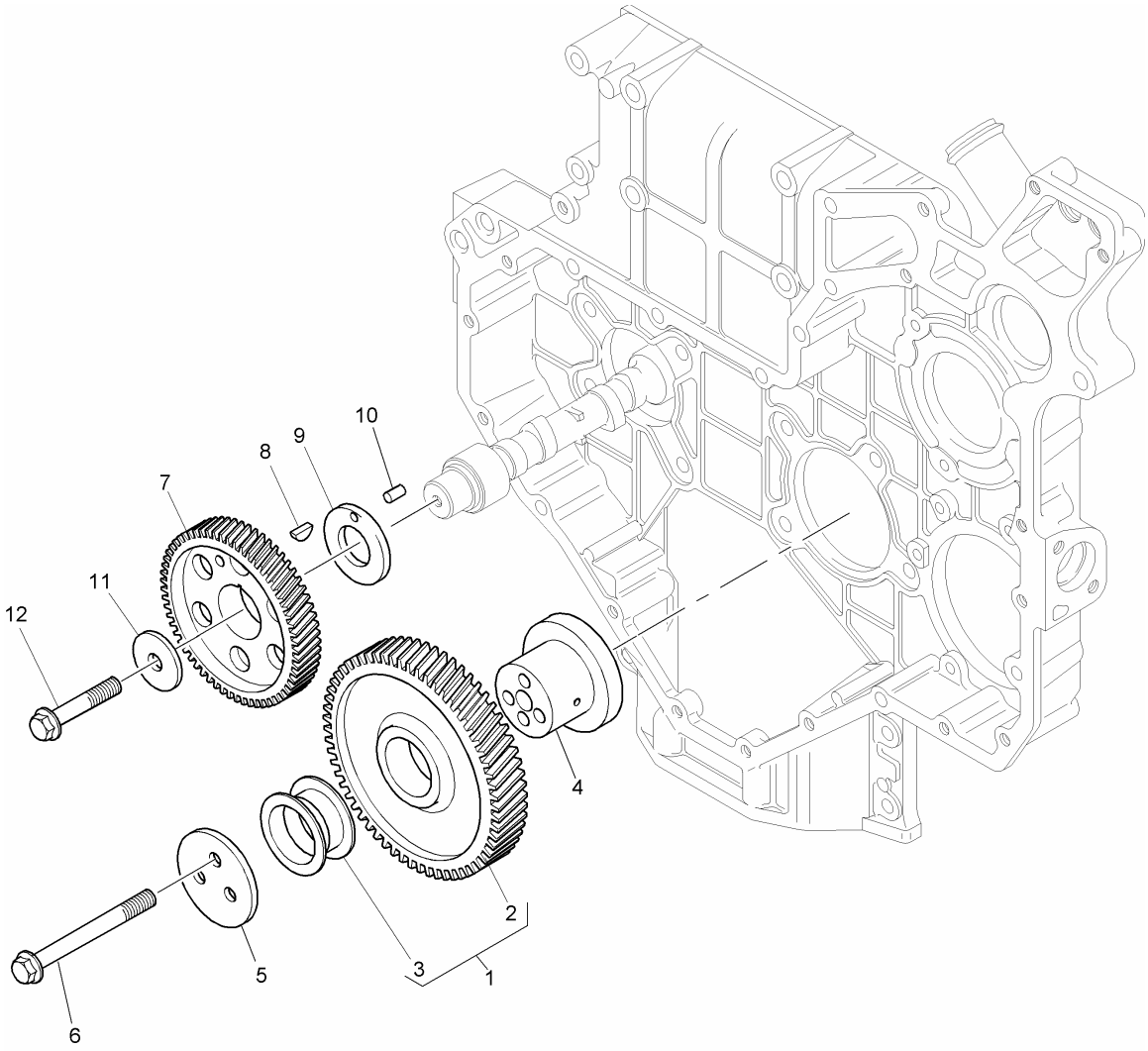

Item	Parts No.	Qty.	Latest Part No.	Description	Cut Out	Cut In
	Comment					
1	4111A034	1	4111A034	IDLER GEAR		
1	4111A034	1	4111A034	IDLER GEAR		
4	3272A041	1	3272A041	HUB		
5	3241A021	1	3241A021	PLATE		
6	2314J011	3	2314J011	SCREW		
7	3117N001	1	3117N001	CAMSHAFT GEAR		
8	0500012	1	0500012	WOODRUFF KEY		
9	3112X011	1	3112X011	THRUST WASHER		
10	2116053	1	2116053	DOWEL		
11	3321A003	1	3321A003	WASHER		
12	2314J606	1	2314J606	SCREW		



Item	Parts No.	Qty.	Latest Part No.	Description	Cut Out	Cut In	Comment
1	U5LT0350	1	U5LT0357	TOP JOINT AND GASKET KIT			
2	3681E051	1	3681E051	GASKET - CYLINDER HEAD			
3	3681A055	1	3681A055	GASKET - CYL. HEAD COVER			
4	2415H008	1	2415H008	SEAL - WATER OUTLET			
5	3681V512	1	3681V512	GASKET - EXHAUST MANIFOLD			
6	3684N503	1	3684N503	GASKET			
7	3688A035	1	3688A035	GASKET			
8	3688A029	1	3688A029	JOINT			
9	L311FF02	4	L311FF02	INJECTOR WASHER			
10	3688A036	1	3688A036	GASKET			
11	2418M514	4	2418M514	SEAL - VALVE STEM			
12	2418M519	4	2418M519	SEAL - VALVE STEM			

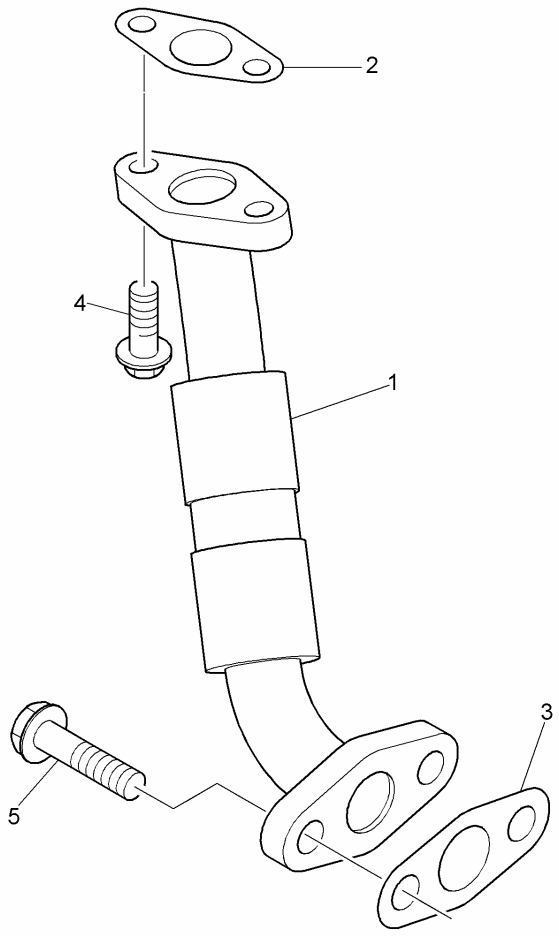
2
4
1
3
5

Item	Parts No.	Qty.	Latest Part No.	Description	Cut Out	Cut In	Comment
1	3584A001	1	3584A001	PIPE - TURBO OIL DRAIN			
2	3688A035	1	3688A035	GASKET			
3	3688A036	1	3688A036	GASKET			
4	2314F004	2	2314F004	SCREW			
5	2314H003	2	2314H003	SCREW			

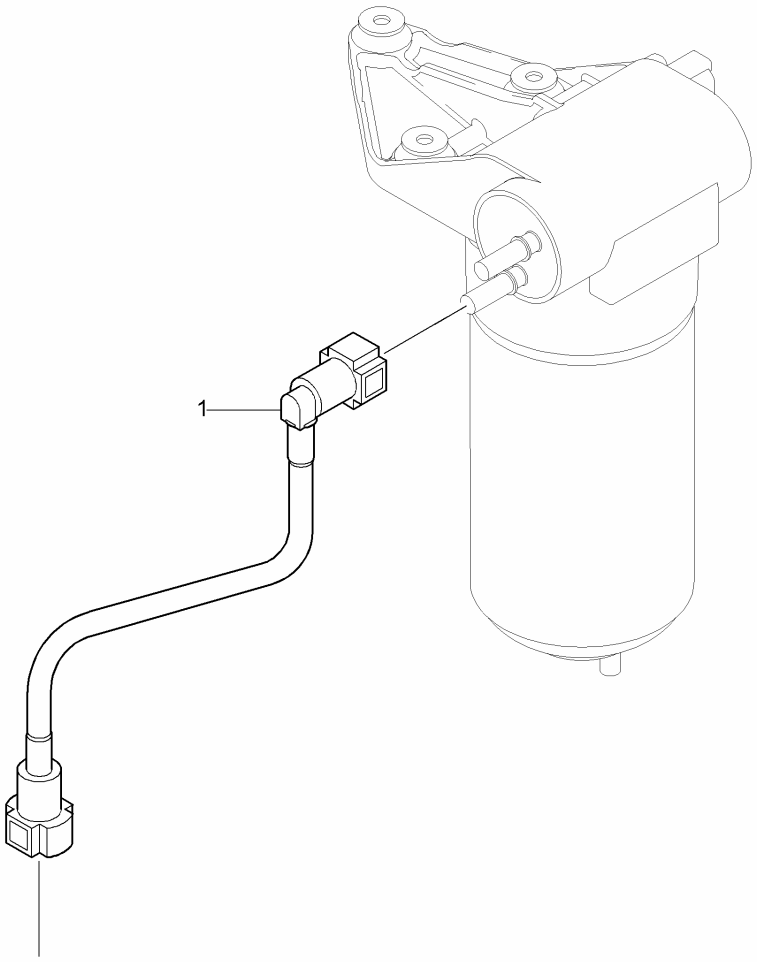
1

Item	Parts No.	Qty.	Latest Part No.	Description	Cut Out	Cut In	Comment
1	2646F001	1	2646F001	FUEL PIPE			

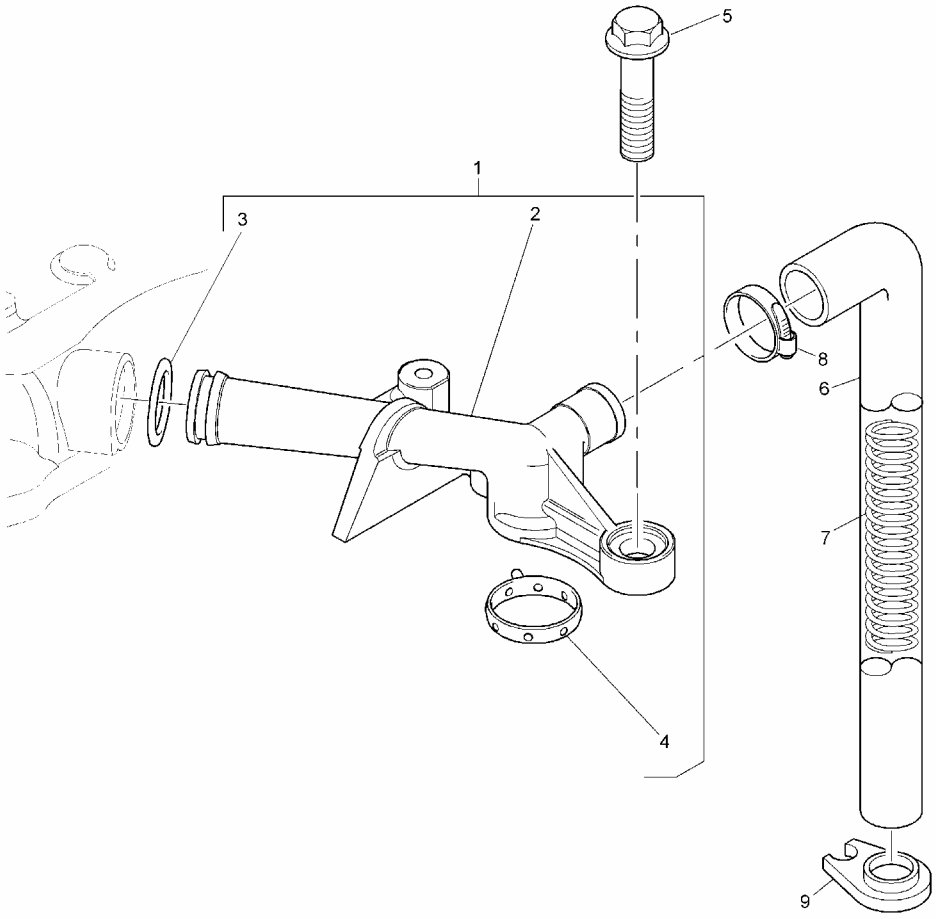
5
1
3
2
8
6
7
4
9

Item	Parts No.	Qty.	Latest Part No.	Description	Cut Out	Cut In	Comment
1	4134K022	1	4134K022	PIPE - BREATHER			
5	2314F005	2	2314F005	SCREW			
6	33872632	1	33872632	HOSE			
7	3175P003	1	3175P003	SPRING			
8	2481877	1	2481877	HOSE CLIP			
9	36241123	1	36241123	SUPPORT BRACKET			

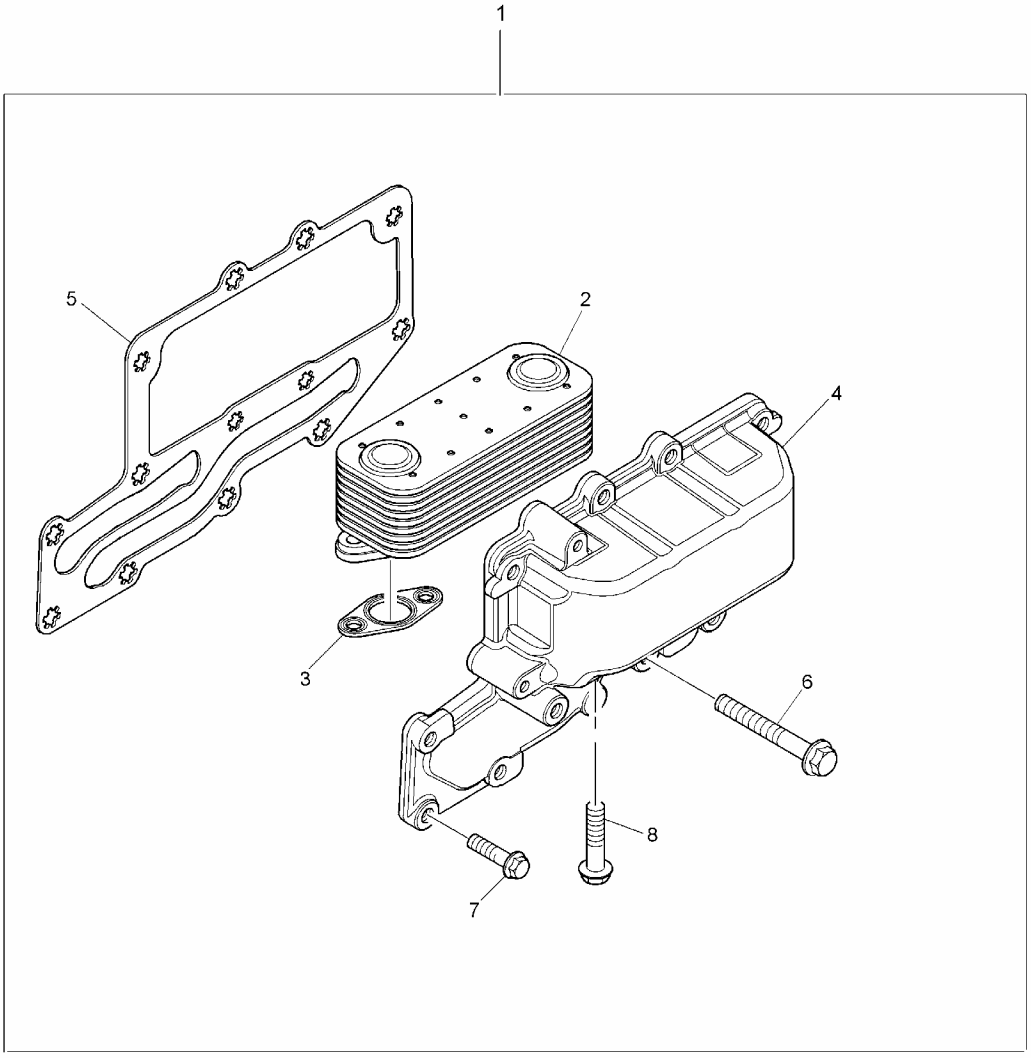
1
5
2
4
3
6
8
7

Item	Parts No.	Qty.	Latest Part No.	Description	Cut Out	Cut In	Comment
2	2486A217	1	2486A217	OIL COOLER			
3	3685A025	2	3685A025	GASKET - OIL COOLER			
4		1		COOLER			
5	3685A033	1	3685A033	GASKET - OIL COOLER			
6	2314K161	3	2314K161	SCREW			
7	2314H004	10	2314H004	SCREW			
8	2314H006	4	2314H006	SCREW			

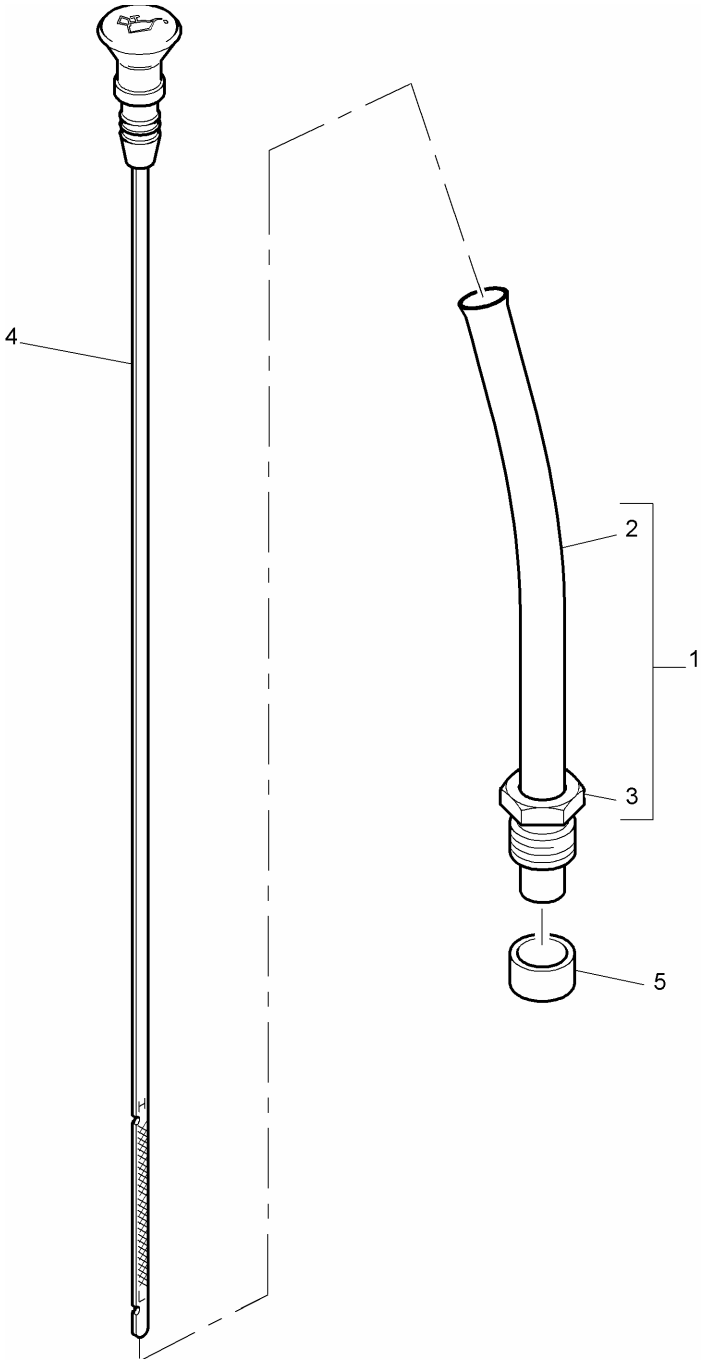

Item	Parts No.	Qty.	Latest Part No.	Description	Cut Out	Cut In
	Comment					
1	3577A125	1	3577A125	TUBE ASSEMBLY		
4	3178C088	1	3178C088	DIPSTICK		
5	33812116	1	33812116	OLIVE		

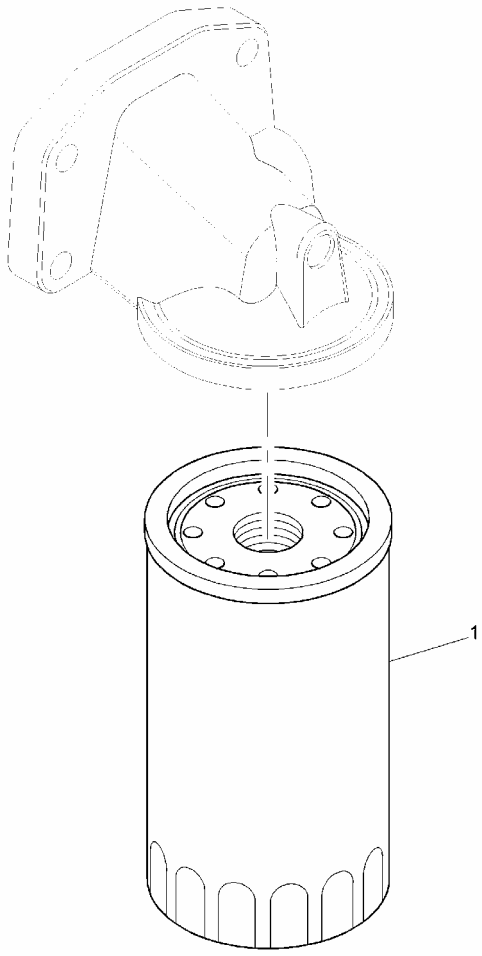
1

Item	Parts No.	Qty.	Latest Part No.	Description	Cut Out	Cut In	Comment
1	2654407	1	2654407	OIL FILTER			

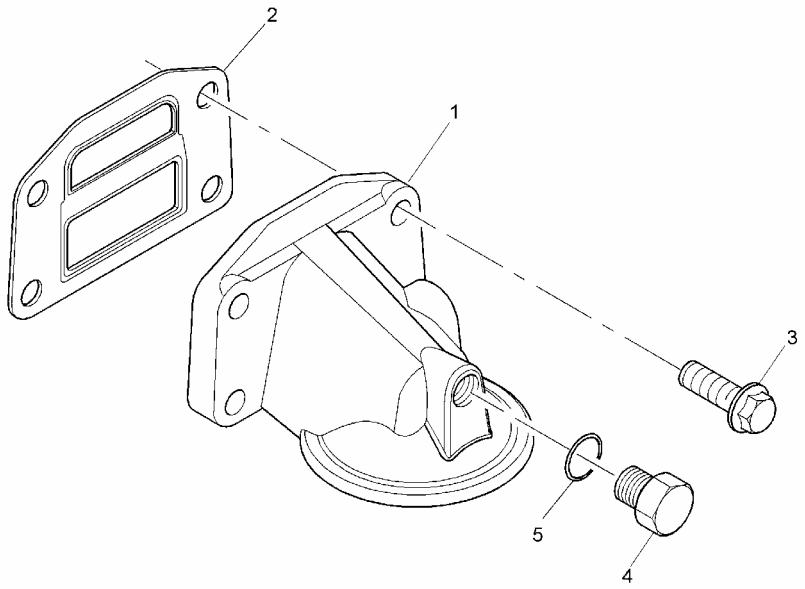
2
1
3
5
4

Item	Parts No.	Qty.	Latest Part No.	Description	Cut Out	Cut In
1	3773A061	1	3773A061	OIL FILTER HEAD		
2	3688A039	1	3688A039	GASKET - OIL FILTER HEAD		
3	2314H034	4	2314H034	SCREW		
4	3278A007	1	3278A007	PLUG		
5	2415H009	1	2415H009	SEAL - O RING		

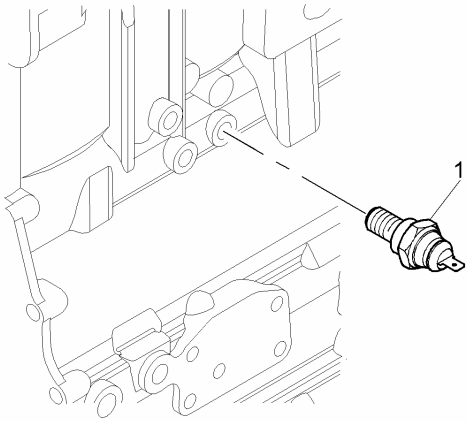
1

Item	Parts No.	Qty.	Latest Part No.	Description	Cut Out	Cut In	Comment
1	2848062	1	2848062	OIL PRESSURE SWITCH			

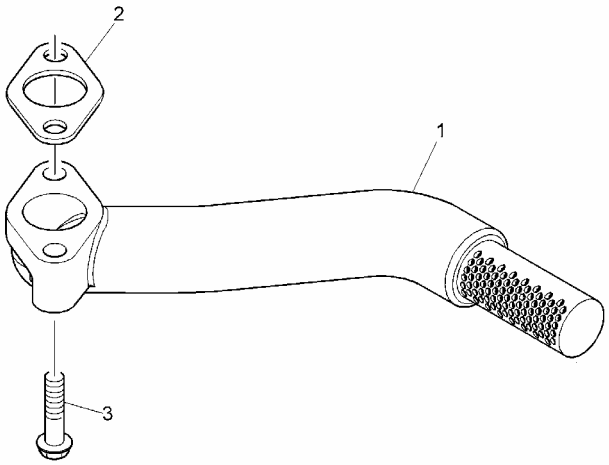
2
1
3

Item	Parts No.	Qty.	Latest Part No.	Description	Cut Out	Cut In	Comment
1	3765A101	1	3765A101	OIL SUCTION STRAINER			
2	36832137	1	36832137	JOINT			
3	2314H006	2	2314H006	SCREW			

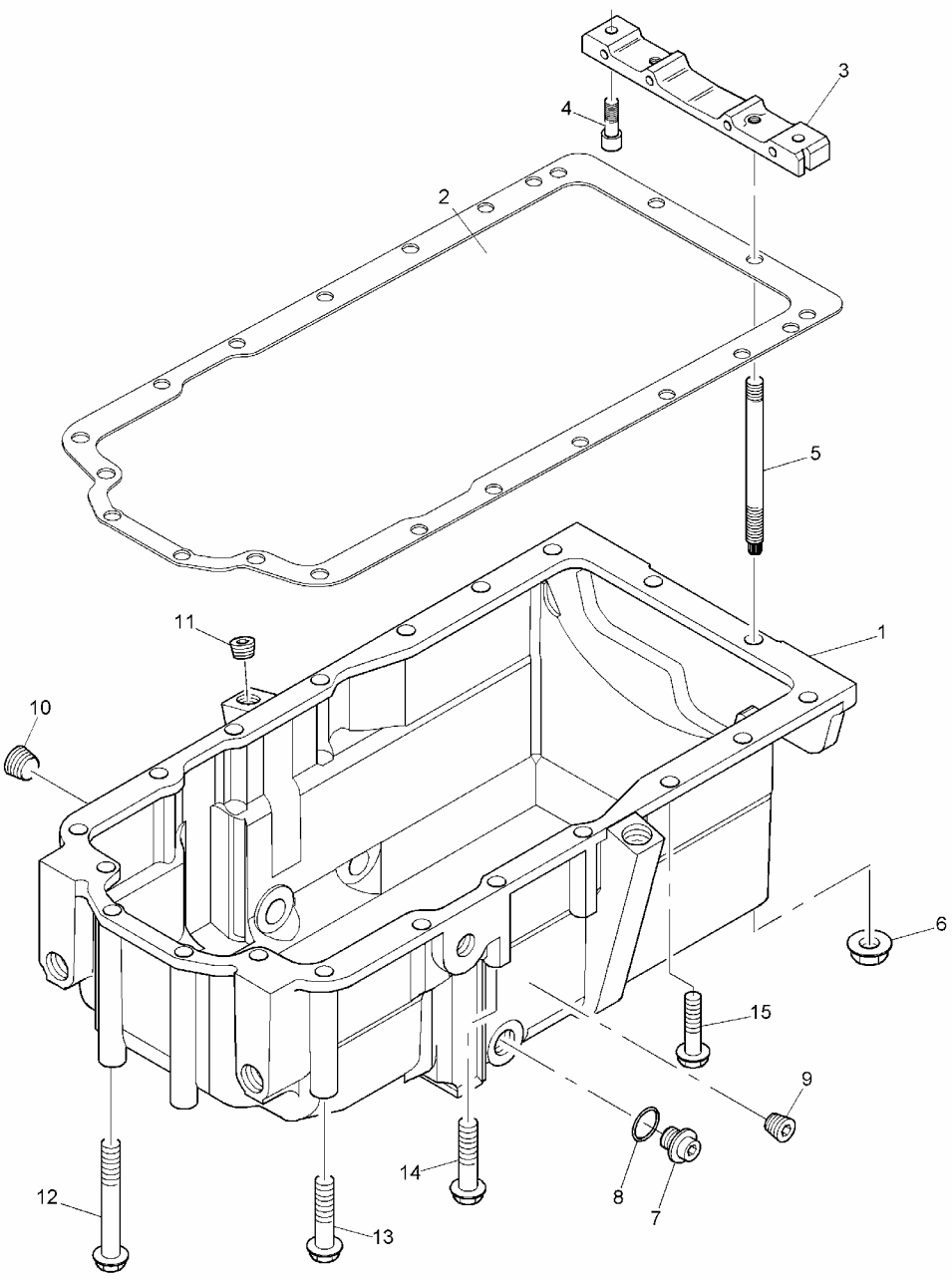
3
4
2
5
11
1
10
6
15
9
12
14
8
7
13

Item	Parts No.	Qty.	Latest Part No.	Description	Cut Out	Cut In	Comment
1	3717E241	1	3717E241	SUMP			
2	3681K037	1	3681K037	GASKET - SUMP			
3	3627P041	1	3627P041	BRIDGE PIECE			
4	2311D039	2	2311D039	SCREW			
5	3211P013	2	3211P013	STUD			
6	2318A603	2	2318A603	NUT			
7	32186405	2	32186405	PLUG			
8	2415715	2	2415715	O RING			
9	2431154	1	2431154	PLUG			
10	2431154	1	2431154	PLUG			
11	2431A016	1	2431A016	PLUG			
12	2314H023	2	2314H023	SCREW			
13	2314H759	4	2314H759	SCREW			
14	2314H015	4	2314H015	SCREW			
15	2314H003	8	2314H003	SCREW			

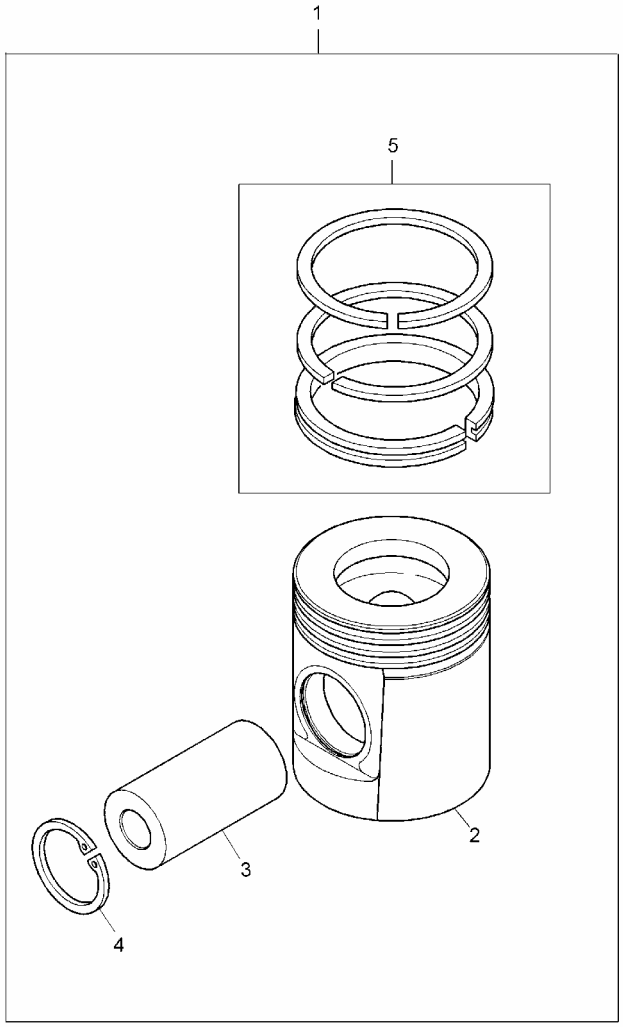
1
5
2
3
4

Item	Parts No.	Qty.	Latest Part No.	Description	Cut Out	Cut In	Comment
1	4115P015	4	4115P015	PISTON AND RING KIT			
(1)	4115P016	4	4115P016	PISTON AND RING KIT			
(1)	4115P017	4	4115P017	PISTON AND RING KIT			

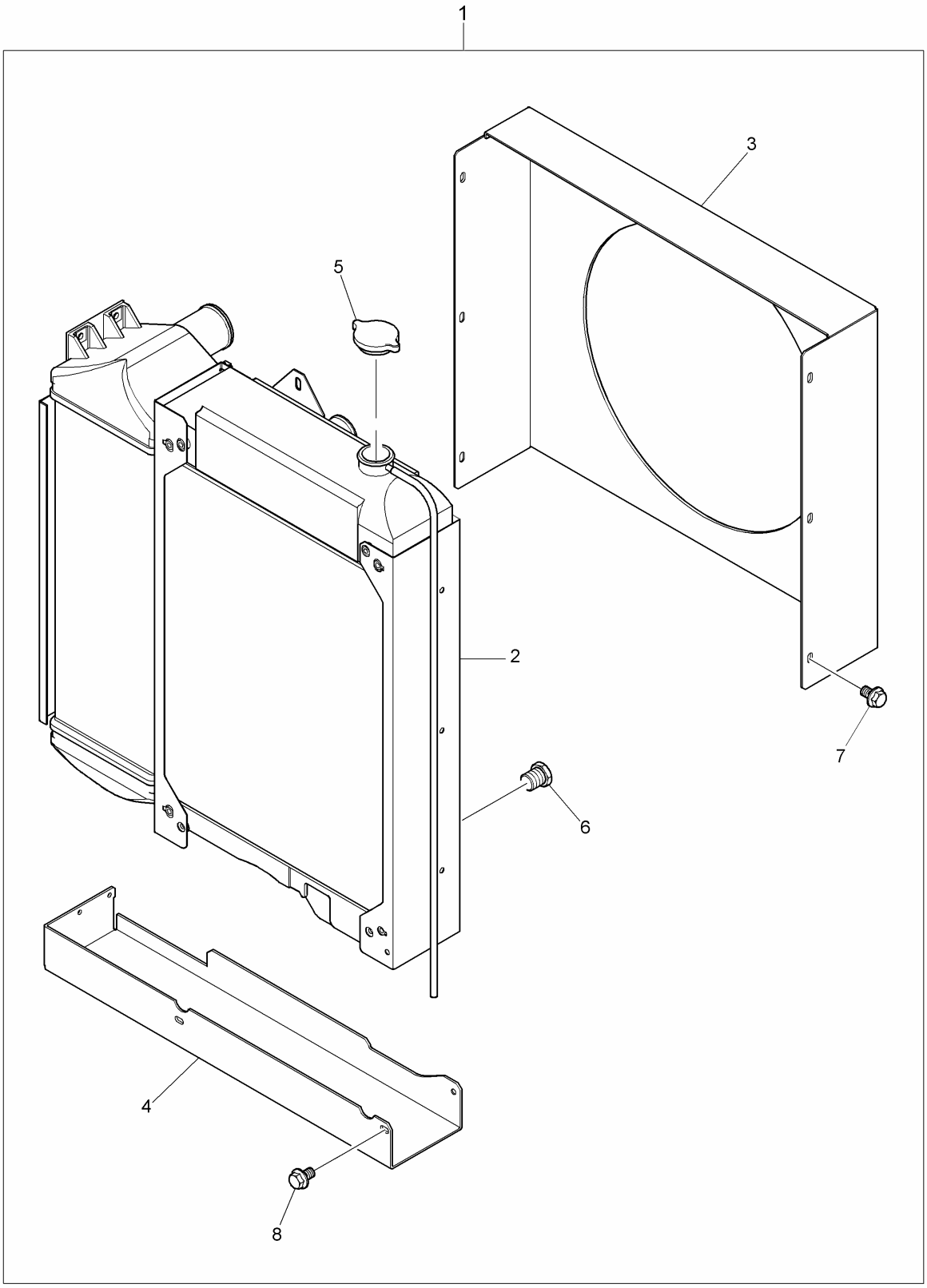
1
3
5
2
7
6
4
8

Item	Parts No.	Qty.	Latest Part No.	Description	Cut Out	Cut In	Comment
1	2486F102	1	2486F102	RADIATOR			
3	24850074	1	24850074	COWL			
4	24850076	1	24850076	MOUNTING BRACKET			
5	24850073	1	24850073	RADIATOR CAP			
6	24850077	1	24850077	DRAIN PLUG			
7	2314H102	6	2314H102	SCREW			
8	2314H102	6	2314H102	SCREW			

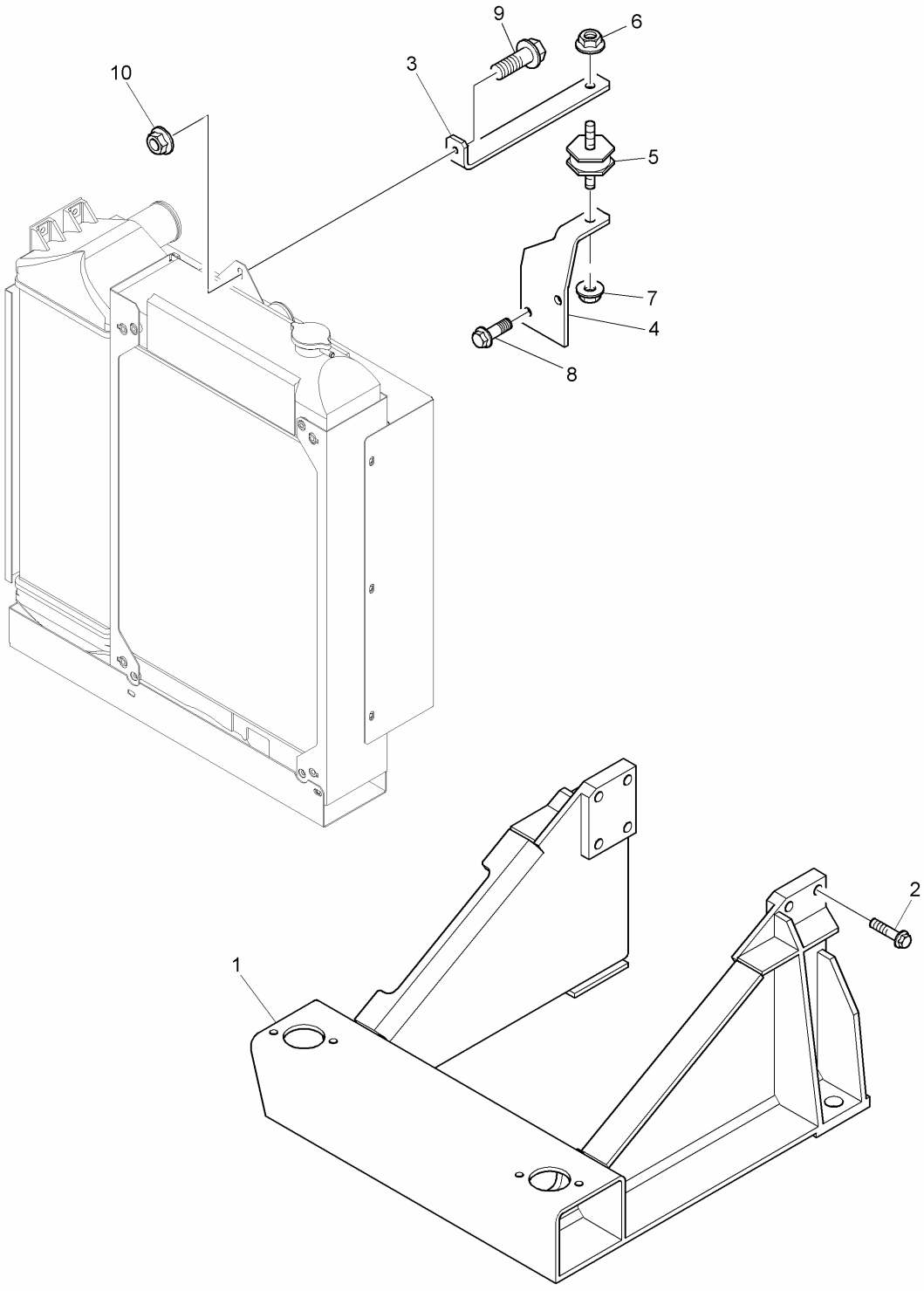
9
6
10
3
5
7
4
8
2
1

Item	Parts No.	Qty.	Latest Part No.	Description	Cut Out
Cut In	Comment				
1	3827A017	1	3827A017	BRACKET	
2	2314J634	8	2314J634	SCREW	
3	3644A018	1	3644A018	BRACKET	
4	3651A018	1	3651A018	BRACKET	
5	2634A115	1	2634A115	MOUNTING	
6	2318A604	2	2318A604	NUT	
7	2318A604	1	2318A604	NUT	
8	2314J002	2	2314J002	SCREW	
9	2314H004	1	2314H004	SCREW	
10	2318A603	1	2318A603	NUT	

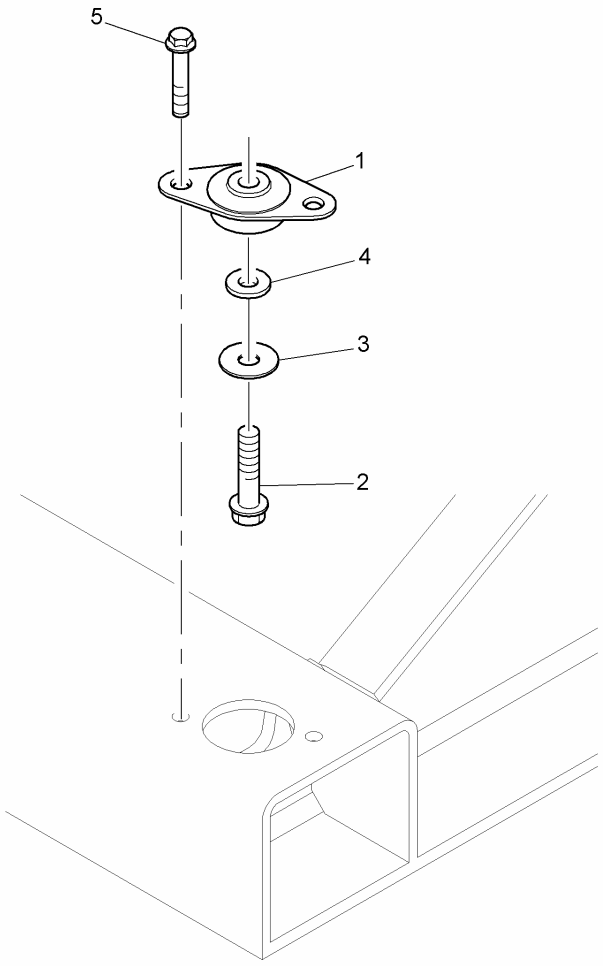
5
1
4
3
2

Item	Parts No.	Qty.	Latest Part No.	Description	Cut Out	Cut In	Comment
1	33546	2	33546	RUBBER			
2	2314J008	2	2314J008	SCREW			
3	0920471	2	0920471	WASHER			
4	33115117	2	33115117	SPACER			
5	2311F055	4	2311F055	SCREW			

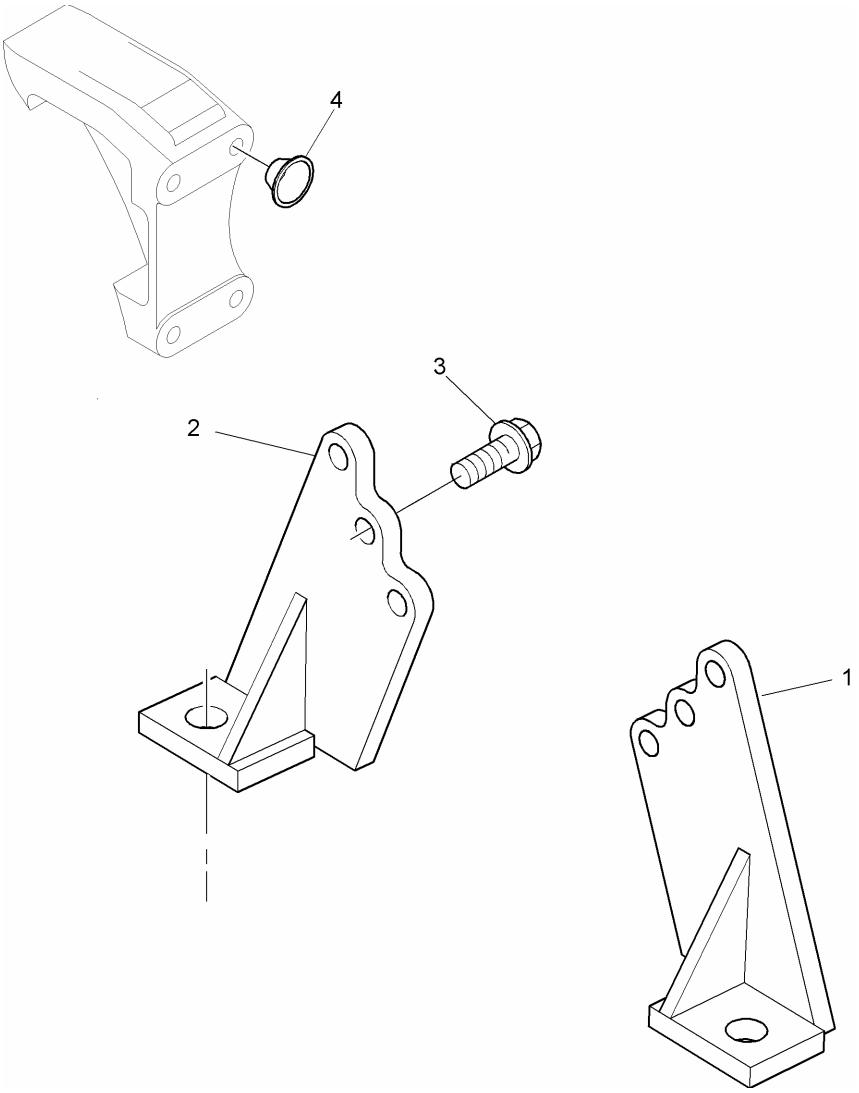
4
3
2
1

Item	Parts No.	Qty.	Latest Part No.	Description	Cut Out	Cut In	Comment
1	3821M003	1	3821M003	BRACKET			
2	3821M004	1	3821M004	BRACKET			
3	2314J603	6	2314J603	SCREW			
4	2487207	4	2487207	PLUG			

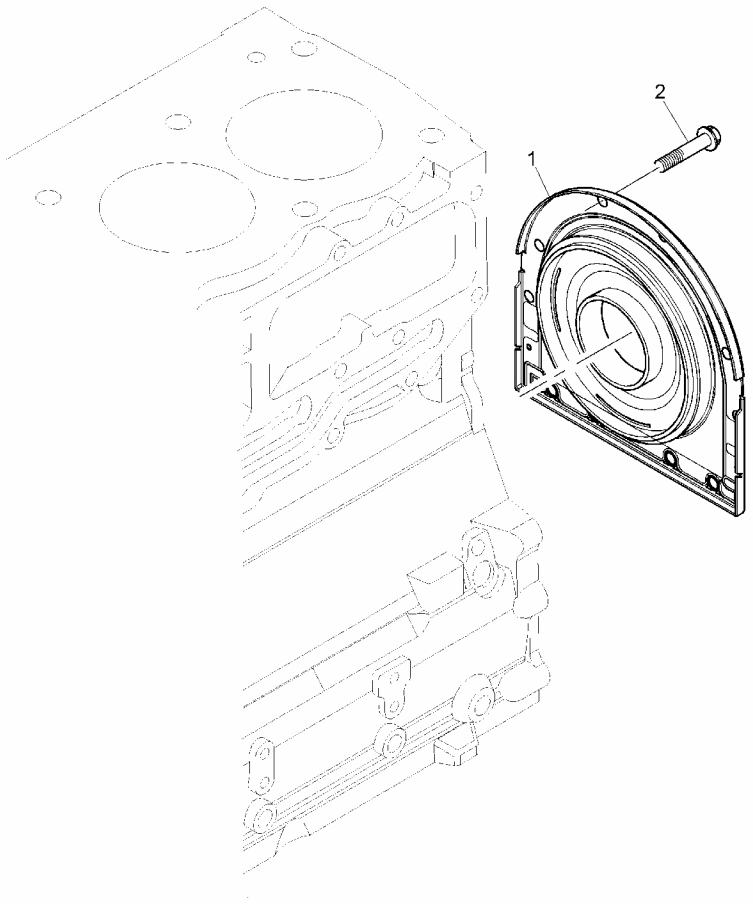
2
1

Item	Parts No.	Qty.	Latest Part No.	Description	Cut Out	Cut In	Comment
1	2418F704	1	2418F704	SEAL - REOS HOUSING			
2	3211C002	10	3211C002	METRIC BOLT			

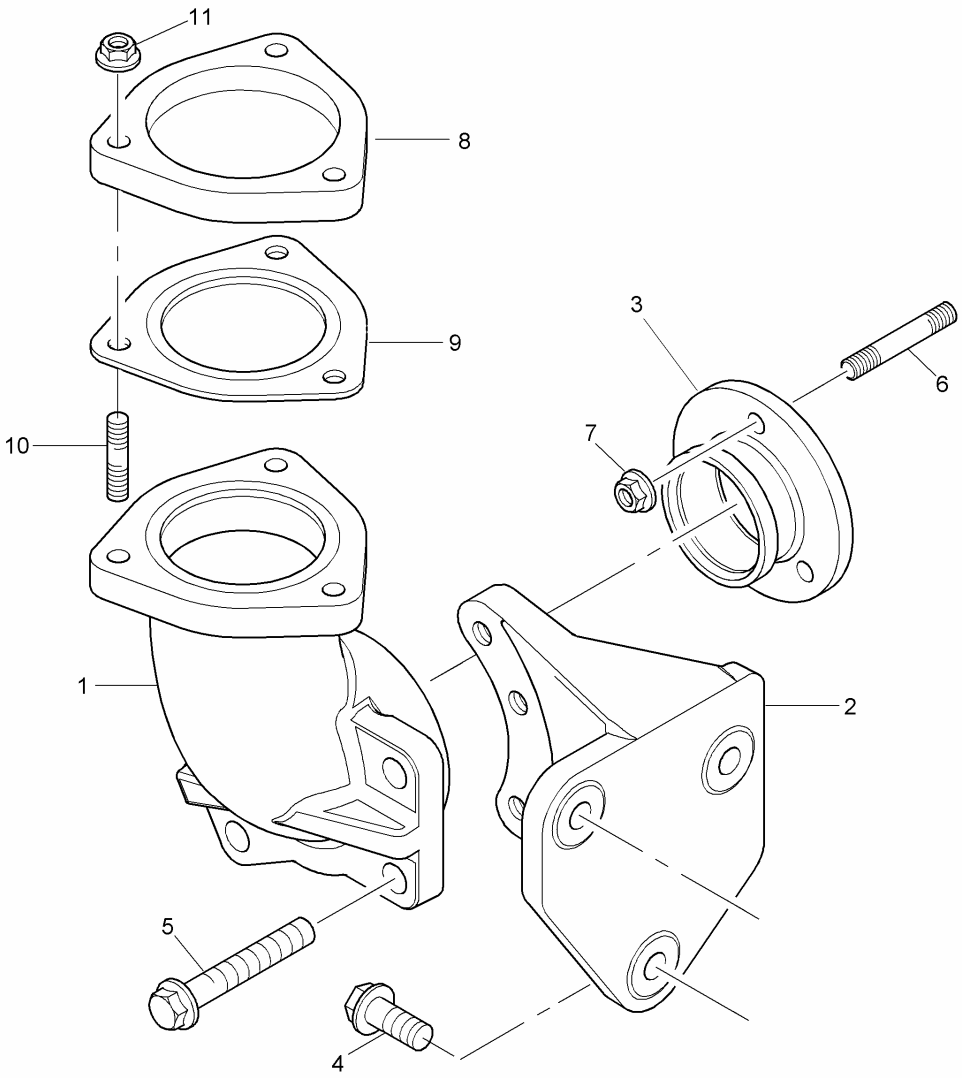
11
8
9
10
3
6
7
1
2
5
4

Item	Parts No.	Qty.	Latest Part No.	Description	Cut Out	Cut In	Comment
1	3766A131	1	3766A131	EXHAUST ELBOW			
2	3823A051	1	3823A051	BRACKET			
3	3347A041	1	3347A041	ADAPTOR			
4	2314J003	3	2314J003	SCREW			
5	2314J004	2	2314J004	SCREW			
6	2313M377	2	2313M377	STUD			
7	2318A634	3	2318A634	NUT			
8	3623E006	1	3623E006	FLANGE			
9	3688C018	1	3688C018	JOINT			
10	2313C077	3	2313C077	STUD			
11	2318A634	3	2318A634	NUT			

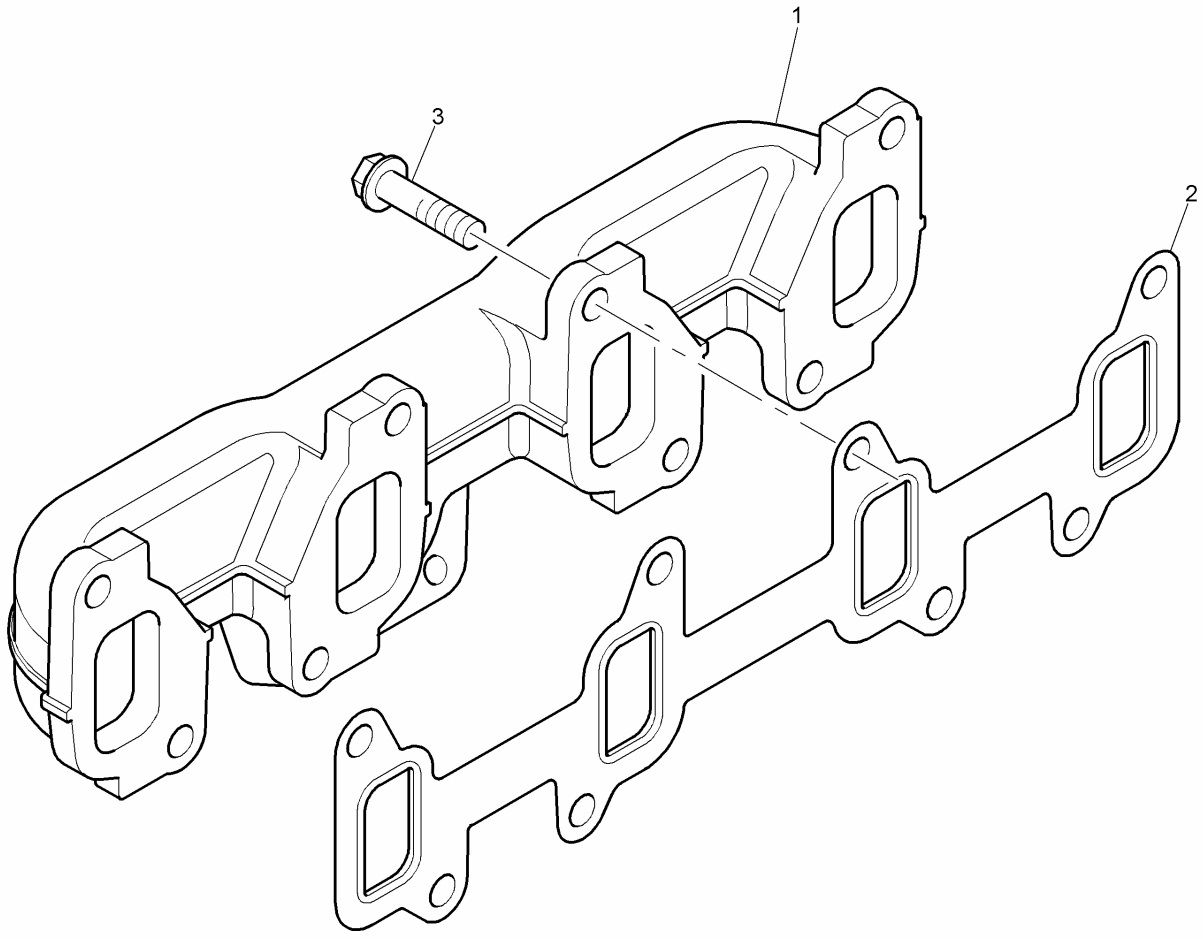
1
2
3

Item	Parts No.	Qty.	Latest Part No.	Description	Cut Out	Cut In	Comment
1	3778E203	1	3778E203	EXHAUST MANIFOLD			
2	3681V512	1	3681V512	GASKET - EXHAUST MANIFOLD			
3	3218J013	8	3218J013	SCREW			

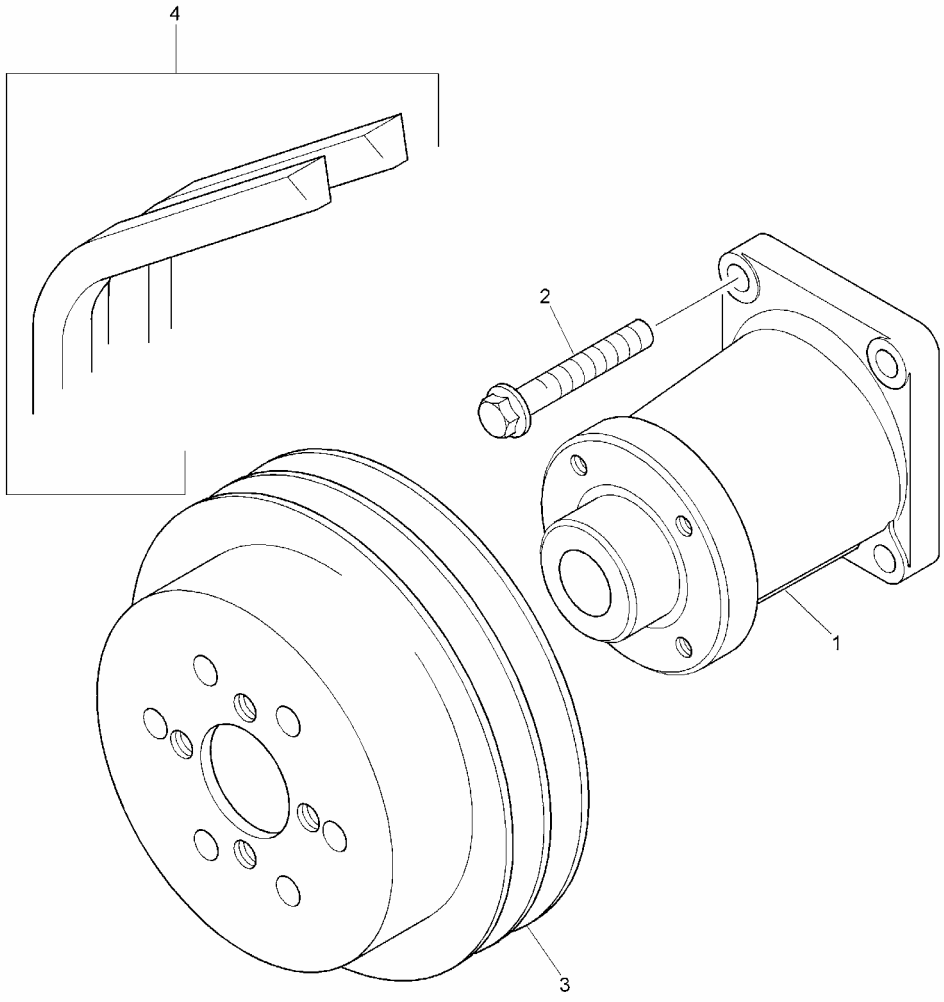
4
2
1
3

Item	Parts No.	Qty.	Latest Part No.	Description	Cut Out	Cut In	Comment
1	4113K005	1	4113K005	FAN DRIVE HOUSING			
2	2314J005	4	2314J005	SCREW			
3	3115C111	1	3115C111	FAN DRIVE PULLEY			
4	2614B656	1	2614B656	FANBELT			

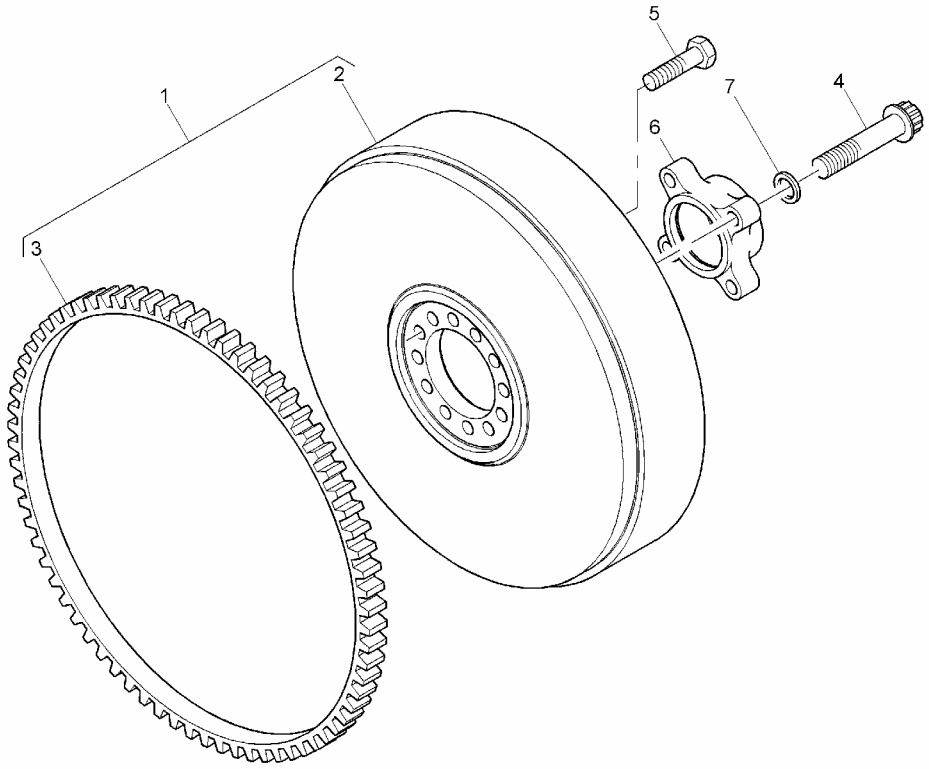
1
2
3
4
5
6
7

Item	Parts No.	Qty.	Latest Part No.	Description	Cut Out	Cut In	Comment
1	4111D128	1	4111D128	FLYWHEEL ASSEMBLY			
4	2172175	4	2172175	SCREW			
5	0096803	6	0096803	SCREW			
6	3743H011	1	3743H011	HOUSING			
7	33117127	6	33117127	WASHER			

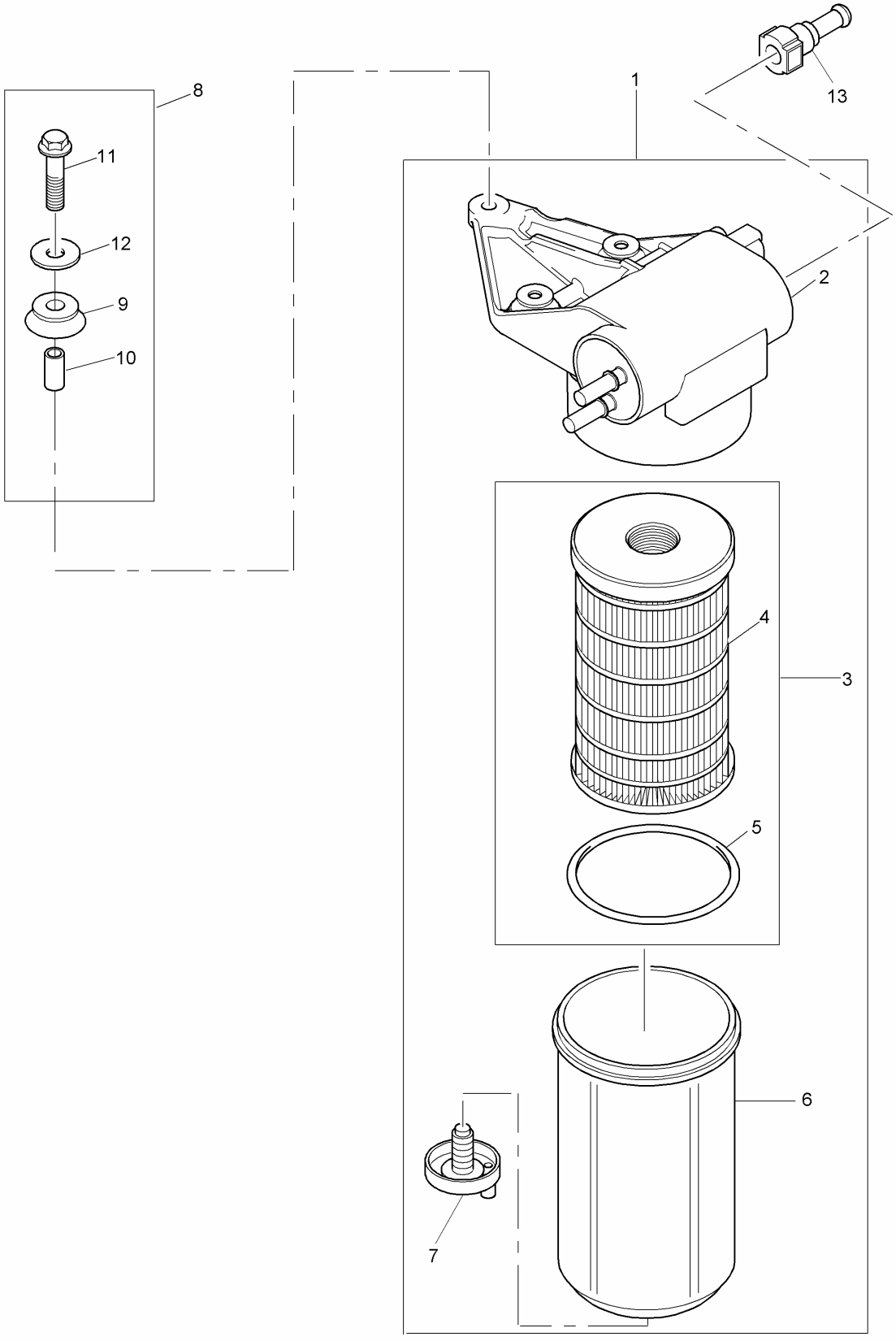
1
2
3
4
5
6
7
8
9
10
11
12
13

Item	Parts No.	Qty.	Latest Part No.	Description	Cut Out	Cut In	Comment
1	4132A014	1	4132A014	LIFT PUMP			
2		1		LIFT PUMP			
3	26560201	1	26560201	FUEL FILTER			
6	2656F837	1	2656F837	BOWL			
7	2656F836	1	2656F836	DRAIN PLUG			
8	U5MK0696	1	U5MK0696	MOUNTING KIT			
13	3763A046	1	3763A046	CONNECTION			

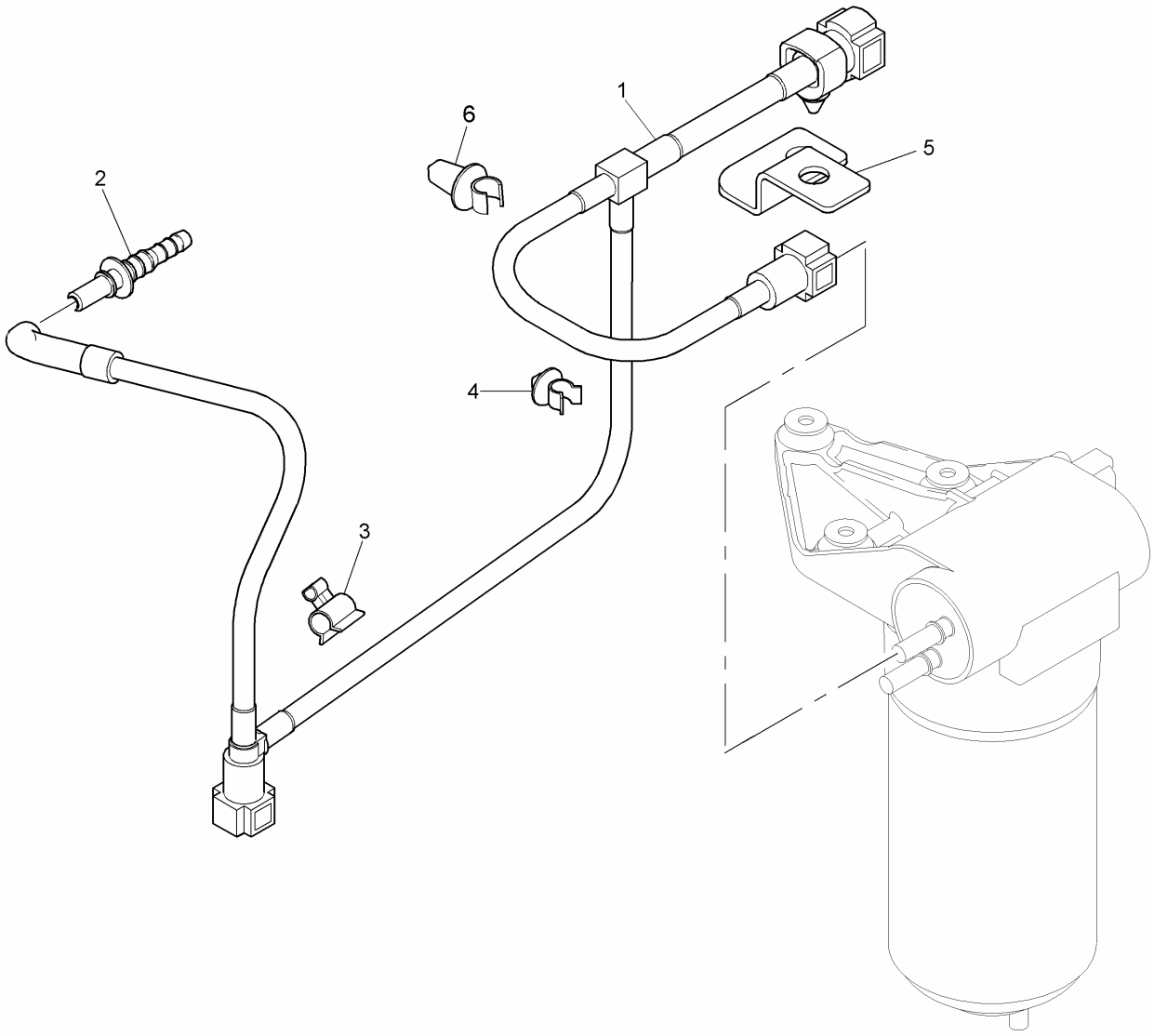
1
2
3
4
5
6

Item	Parts No.	Qty.	Latest Part No.	Description	Cut Out	Cut In	Comment
1	2646F009	1	2646F009	FUEL PIPE			
2	3763A045	1	3763A045	CONNECTION			
3	K138AF02	1	K138AF02	CLIP			
4	2481D456	1	2481D456	CLIP			
5	3733A011	1	3733A011	BRACKET			
6	2481D558	2	2481D558	CLIP			

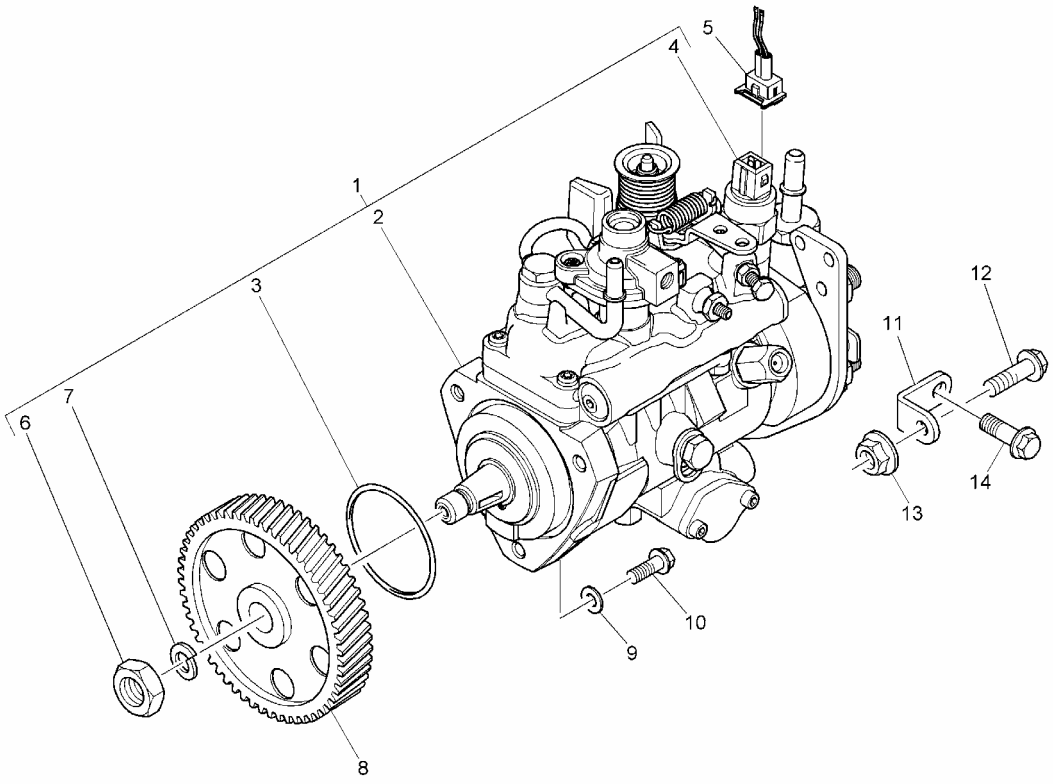
1
2
3
4
5
6
7
8
9
10
11
12
13
14

Item	Parts No.	Qty.	Latest Part No.	Description	Cut Out	Cut In	Comment
1	2644H042	1	Check History	FUEL INJECTION PUMP			
8	3117L261	1	3117L261	INJECTION PUMP GEAR			
9	2411D008	3	2411D008	WASHER			
10	2314H004	3	2314H004	SCREW			
11	3641A007	1	3641A007	BRACKET			
12	2314H003	1	2314H003	SCREW			
13	2318A603	1	2318A603	NUT			
14	2314J002	1	2314J002	SCREW			

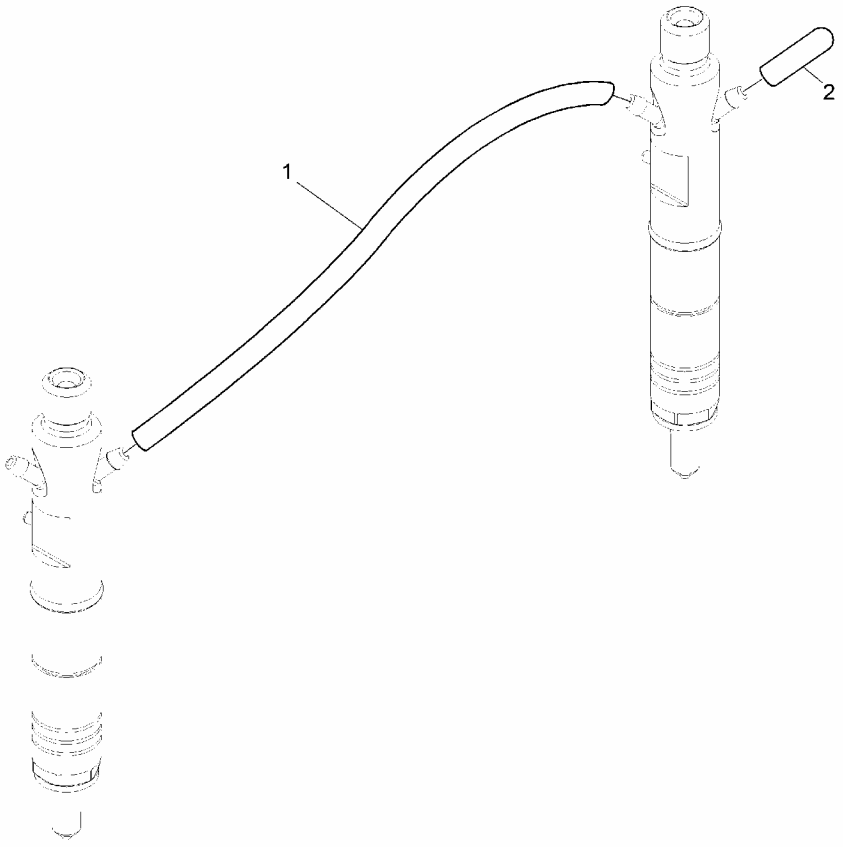
1
2

Item	Parts No.	Qty.	Latest Part No.	Description	Cut Out	Cut In	Comment
1	2646F501	3	2646F501	HOSE			
2	2646E501	1	2646E501	CAP			

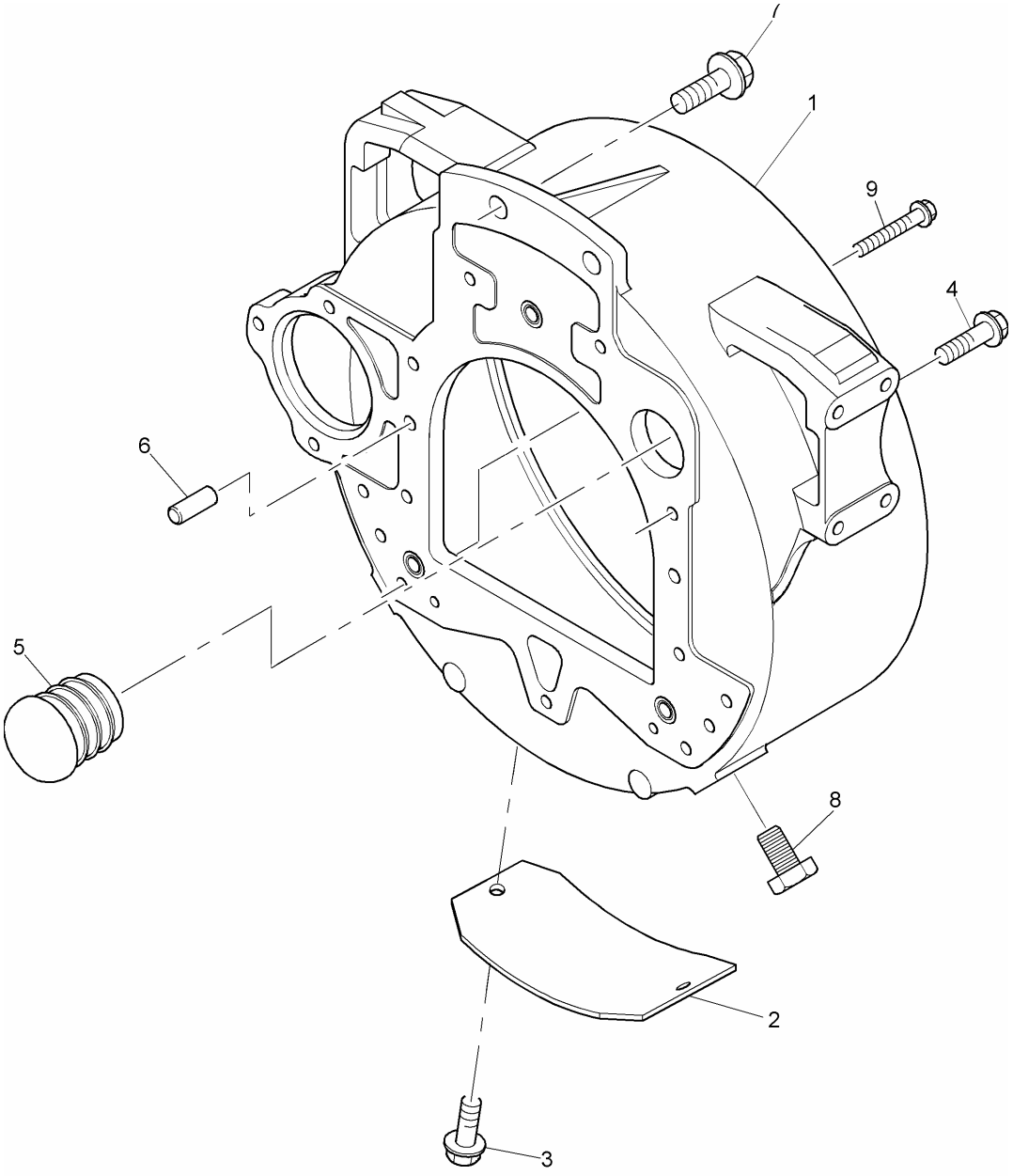
1
9
4
6
5
8
2
3

Item	Parts No.	Qty.	Latest Part No.	Description	Cut Out	Cut In	Comment
1	3713M049	1	3713M049	FLYWHEEL HOUSING			
2	36212132	1	36212132	PLATE			
3	2314H102	2	2314H102	SCREW			
4	2314J204	1	2314J204	SCREW			
5	2487A452	1	2487A452	BLANKING PLUG			
6	0350025	2	3245A011	DOWEL			
7	2314J603	2	2314J603	SCREW			
8	2487Y005	2	2487Y005	PLUG			
9	2314J004	3	2314J004	SCREW			

Item	Parts No.	Qty.	Latest Part No.	Description	Cut Out	Cut In	Comment
1	2666A016	4	2666A016	GLOWPLUG			
2	3161C019	1	3161C054	BAR			

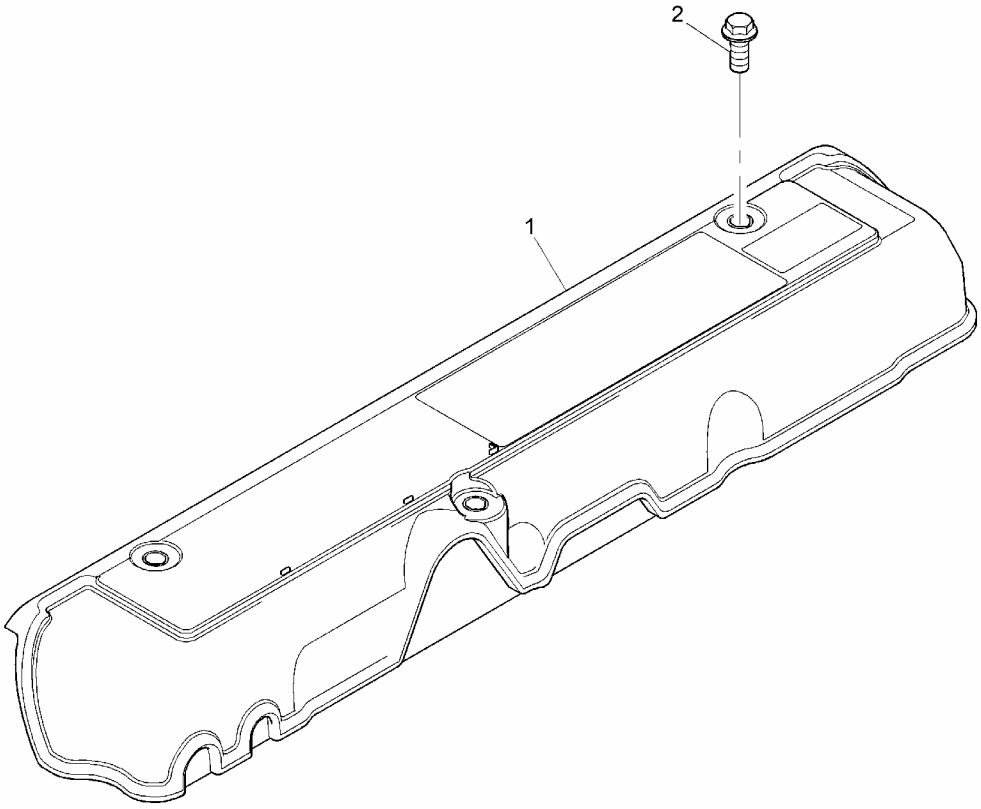
2
1

Item	Parts No.	Qty.	Latest Part No.	Description	Cut Out	Cut In	Comment
1	3788N003	1	3788N003	COVER			
2	2314F003	3	2314F003	SCREW			

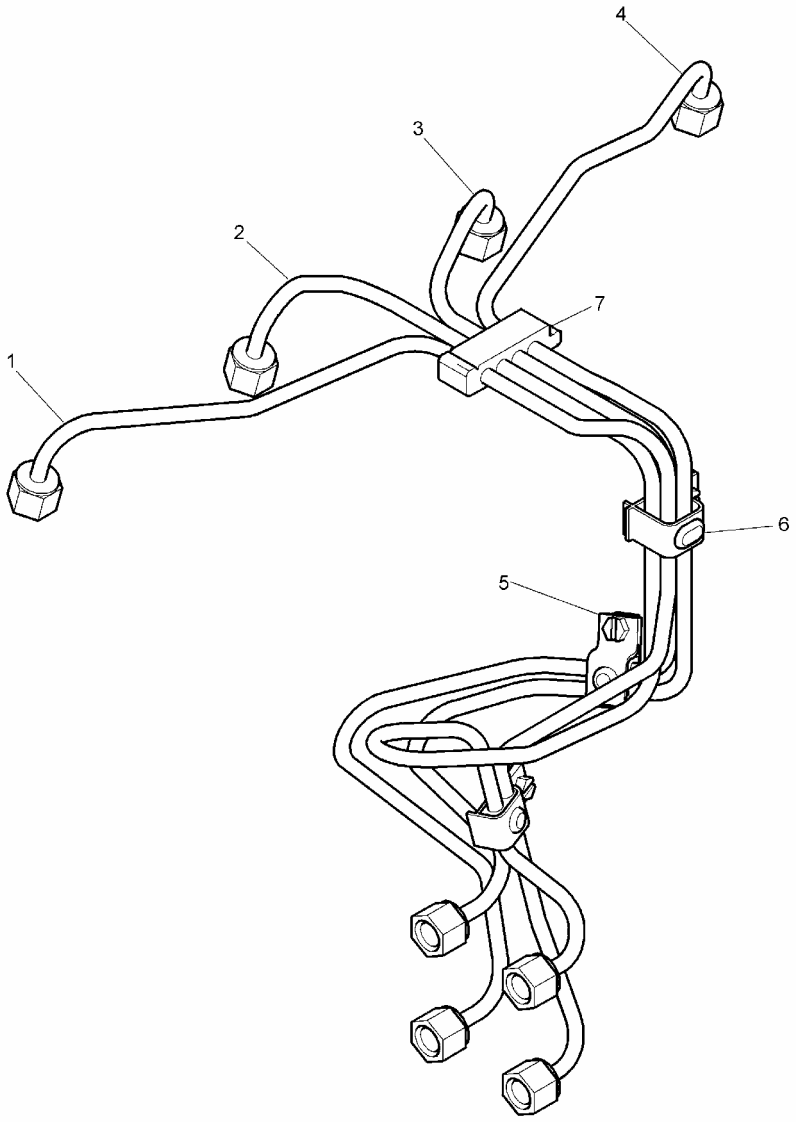
4
3
2
7
1
6
5

Item	Parts No.	Qty.	Latest Part No.	Description	Cut Out	Cut In	Comment
1	3525A101	1	3525A101	PIPE - FUEL INJ NO 1 CYL			
2	3525A102	1	3525A102	PIPE - FUEL INJ NO 2 CYL			
3	3525A103	1	3525A103	PIPE - FUEL INJ NO 3 CYL			
4	3525A104	1	3525A104	PIPE - FUEL INJ NO 4 CYL			
5	2481Y011	1	2481Y011	CLIP			
6	2481Y012	1	2481Y012	CLIP			
7	2646E019	1	2646E019	CLIP			

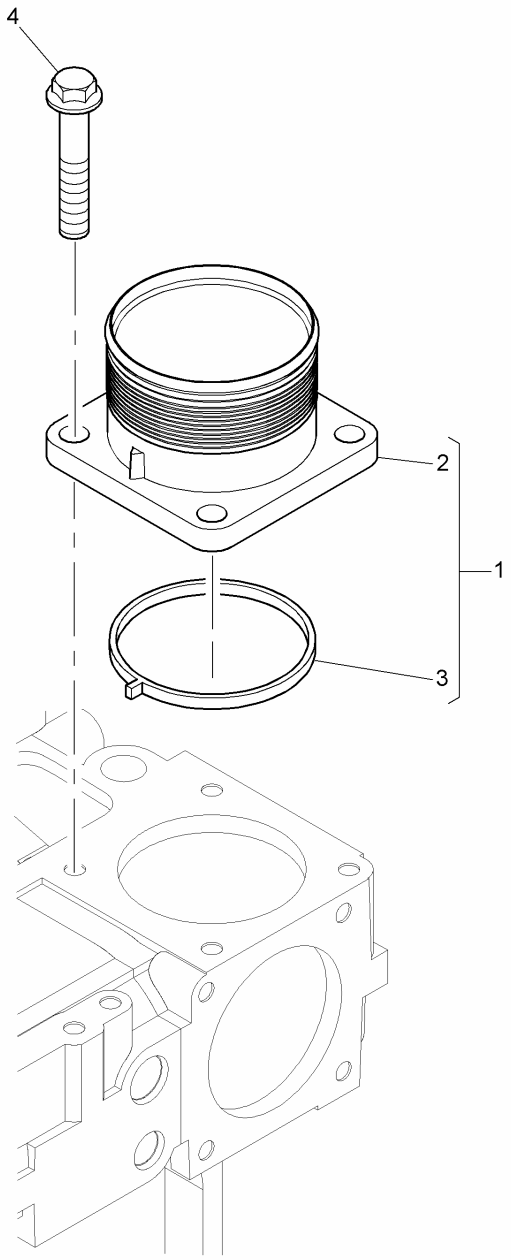
4
2
1
3

Item	Parts No.	Qty.	Latest Part No.	Description	Cut Out	Cut In	Comment
1	4148K007	1	4148K007	CONNECTION			
4	2314H034	4	2314H034	SCREW			

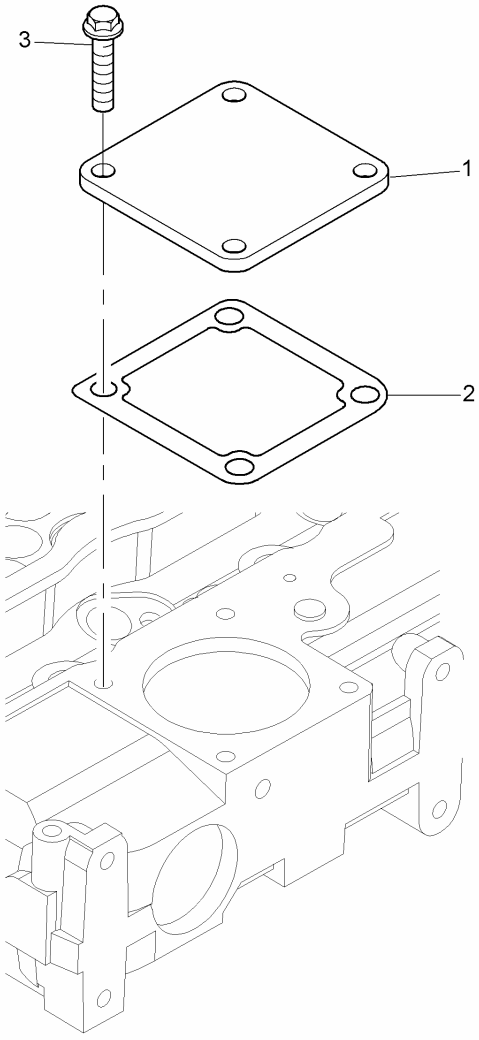
3
1
2

Item	Parts No.	Qty.	Latest Part No.	Description	Cut Out	Cut In	Comment
1	3611M006	1	3611M006	PLATE			
2	3684N503	1	3684N503	GASKET			
3	2314H033	4	2314H033	SCREW			

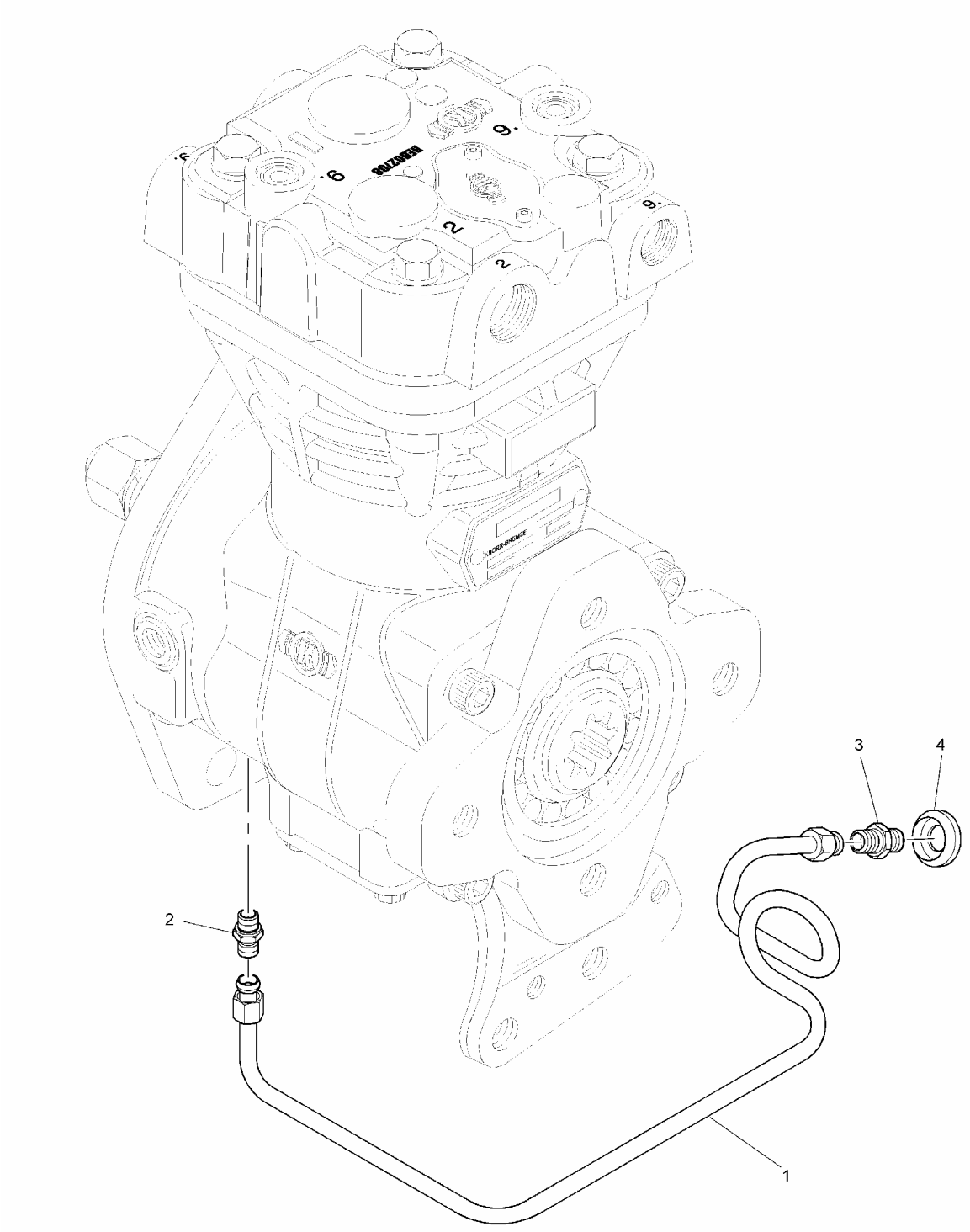
3
4
2
1

Item	Parts No.	Qty.	Latest Part No.	Description	Cut Out	Cut In	Comment
1	3524A003	1	3524A003	PIPE - OIL			
2	0206002	1	0206002	UNION			
3	3355M005	1	3355M005	ADAPTOR			
4	2415D053	1	2415D053	PLAIN WASHER			

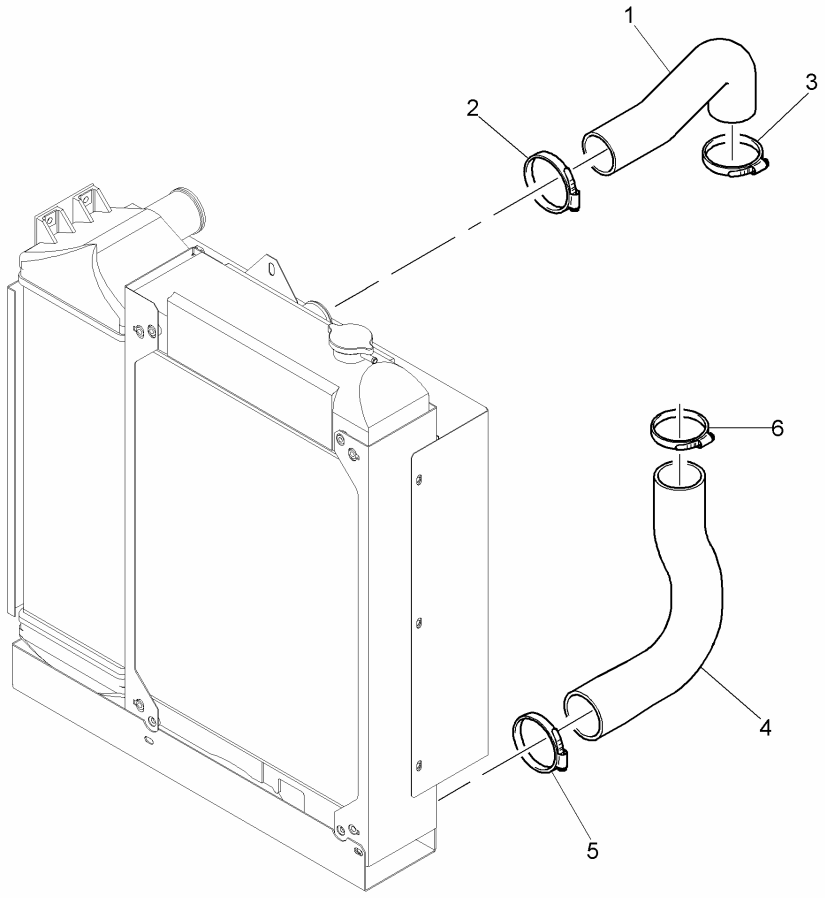
1
2
3
4
5
6

Item	Parts No.	Qty.	Latest Part No.	Description	Cut Out	Cut In	Comment
1	3383A029	1	3383A029	HOSE			
2	2481D074	1	2481D074	HOSE CLIP			
3	2481D074	1	2481D074	HOSE CLIP			
4	3383A031	1	3383A031	HOSE			
5	2481D074	1	2481D074	HOSE CLIP			
6	2481D074	1	2481D074	HOSE CLIP			

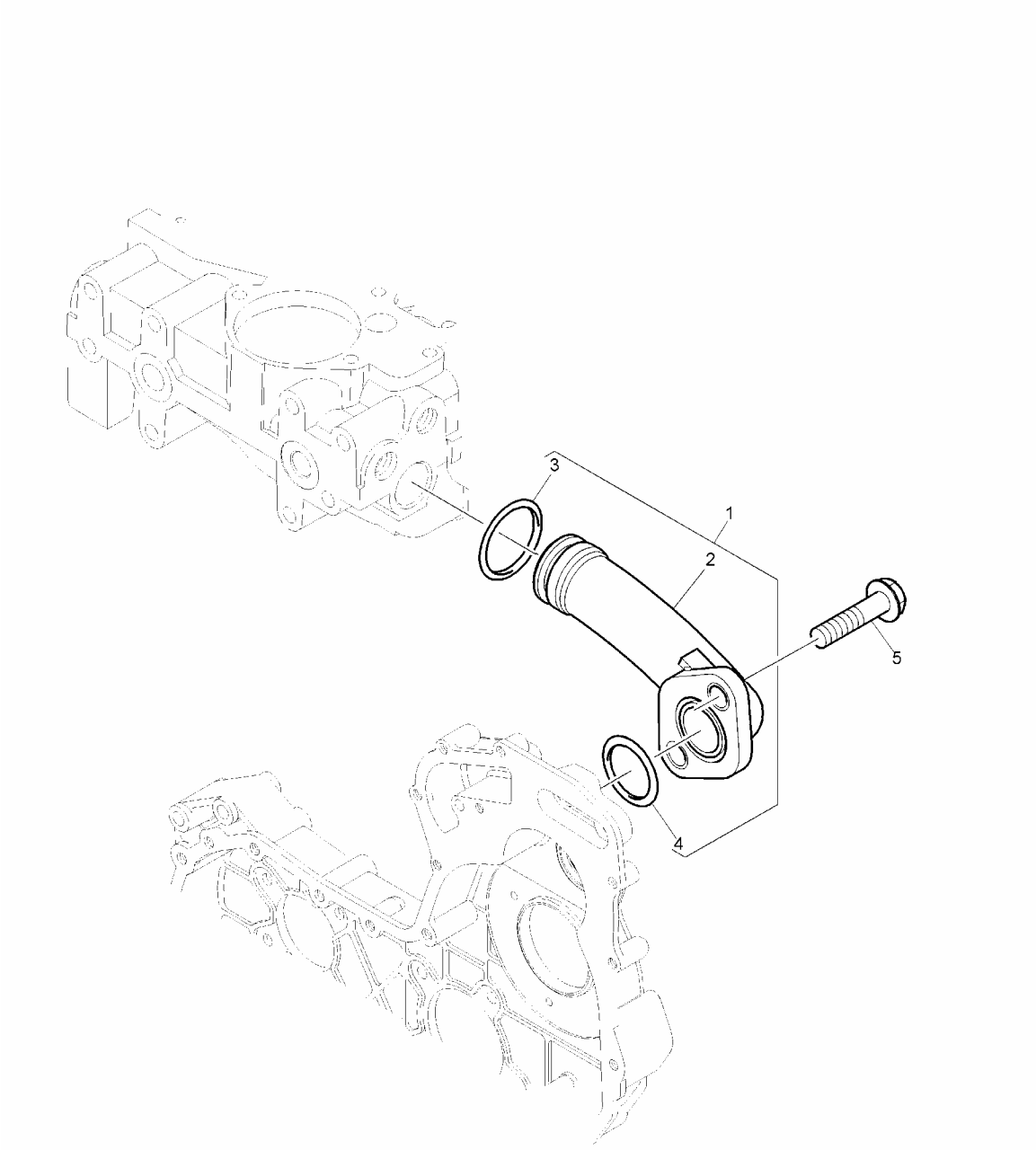

Item	Parts No.	Qty.	Latest Part No.	Description	Cut Out	Cut In
	Comment					
1	4133L048	1	4133L048	CONNECTION		
5	2314H003	2	2314H003	SCREW		

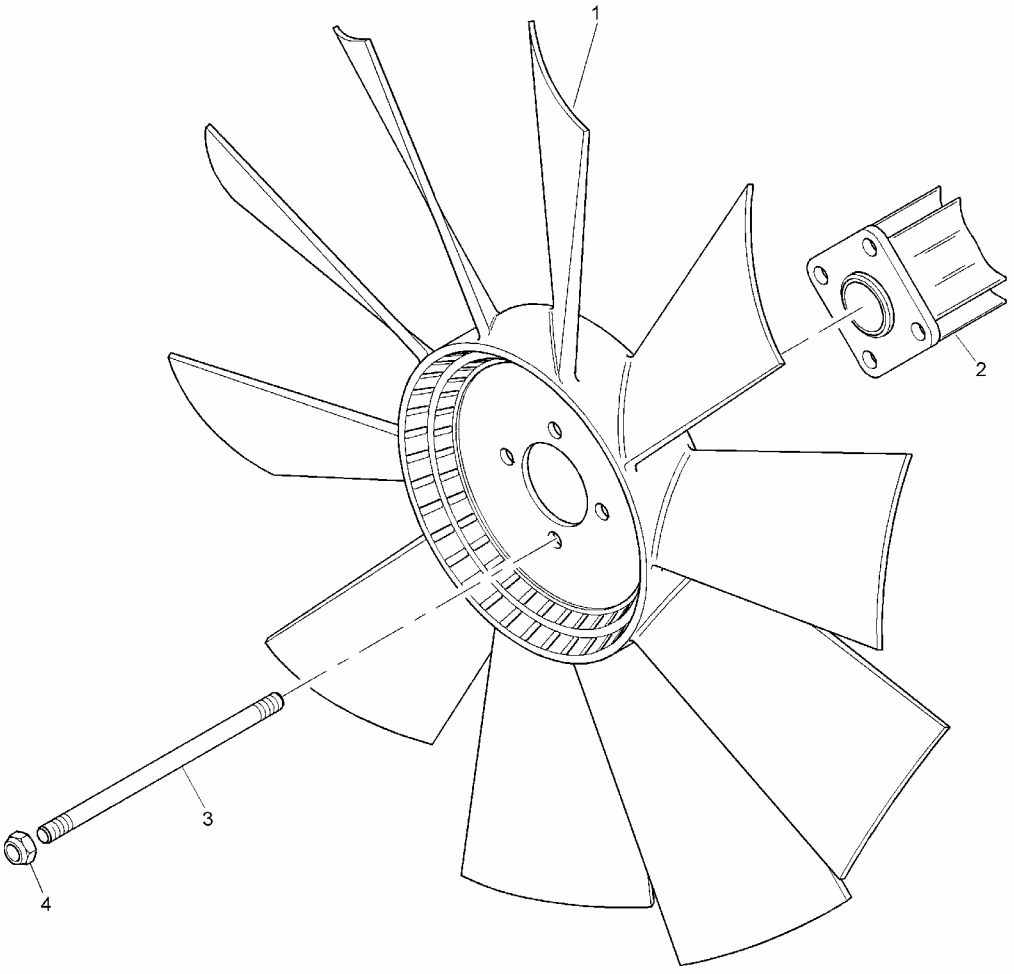
1
2
3
4

Item	Parts No.	Qty.	Latest Part No.	Description	Cut Out	Cut In	Comment
1	2485C514	1	2485C514	PUSHER FAN			
2	3748W212	1	3748W212	EXTENSION			
3	2313H236	4	2313H236	STUD			
4	2318D208	4	2318D208	NUT			

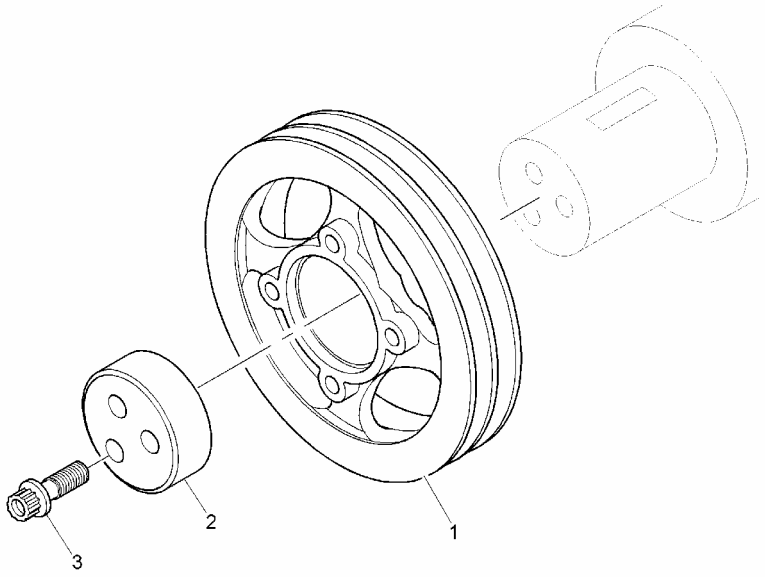
1
2
3

Item	Parts No.	Qty.	Latest Part No.	Description	Cut Out	Cut In	Comment
1	3115T051	1	3115T051	CRANKSHAFT PULLEY			
2	3241N001	1	3241N001	BLOCK			
3	32186137	3	32186137	BOLT			

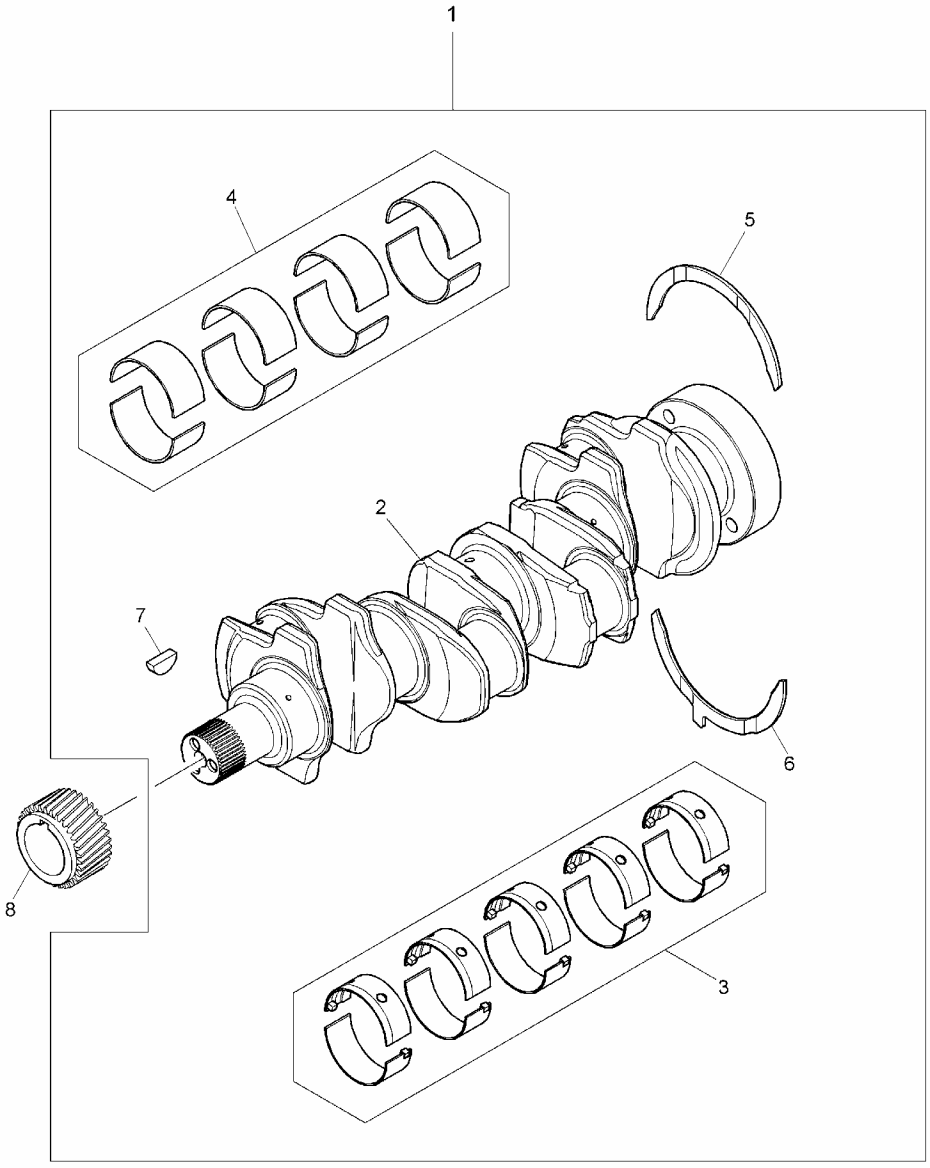
1
4
5
2
7
6
8
3

Item	Parts No.	Qty.	Latest Part No.	Description	Cut Out	Cut In	Comment
1	ZZ90222	1	ZZ90222	CRANKSHAFT KIT			
8	3117C221	1	3117C221	CRANKSHAFT GEAR			

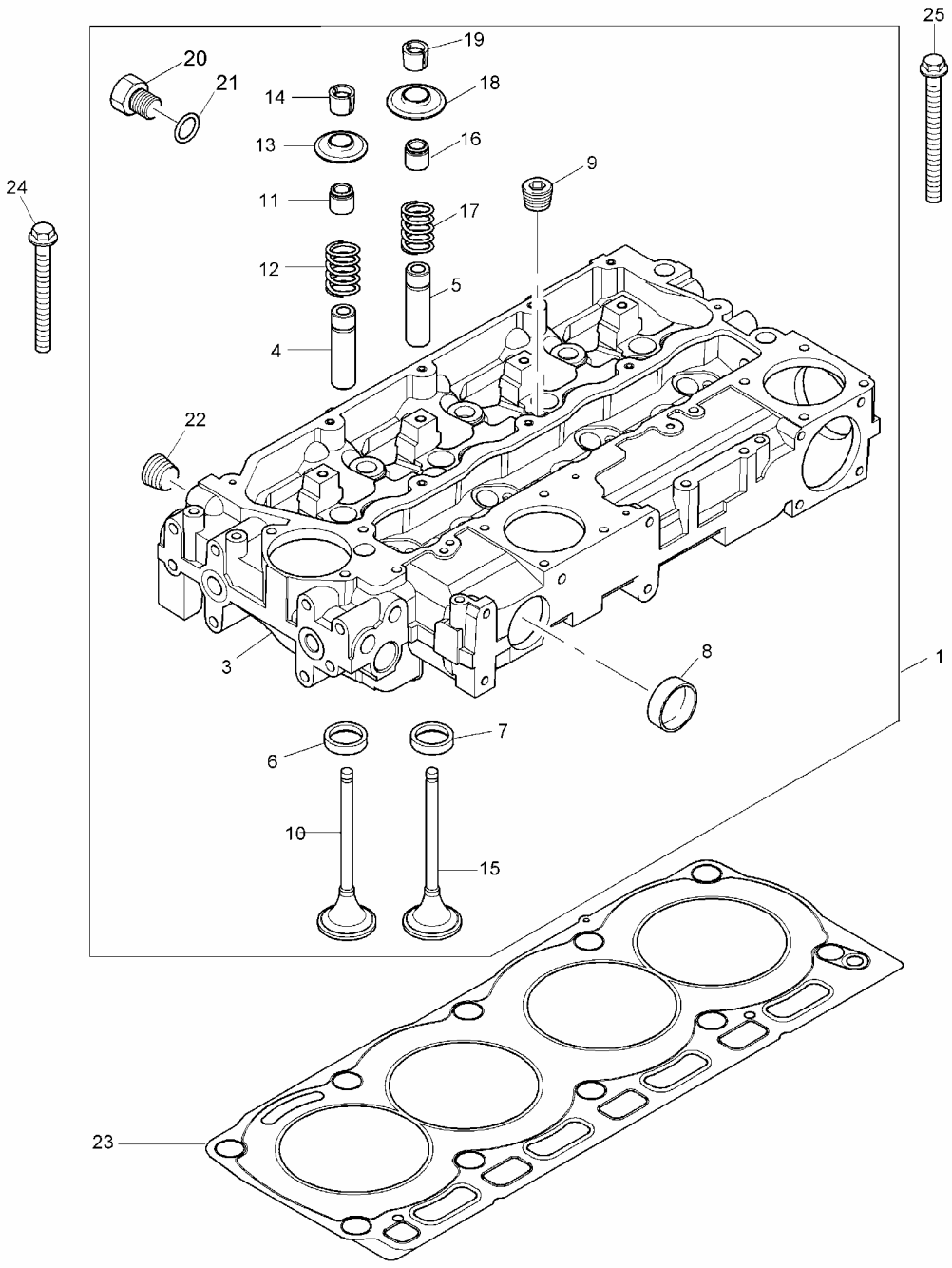
25
19
20
21
14
18
13
16
9
24
11
17
12
5
4
22
3
8
1
6
7
10
15
23

Item	Parts No.	Qty.	Latest Part No.	Description	Cut Out	Cut In	Comment
3		1		CYLINDER HEAD			
4	3313E021	4	3313A012	VALVE GUIDE			
5	3313E021	4	3313A012	VALVE GUIDE			
6	3314A151	4	3314A151	VALVE SEAT INSERT			
7	3314A161	4	3314A161	VALVE SEAT INSERT			
8	32416117	2	32416117	PLUG			
9	0650588	4	0650588	PLUG			

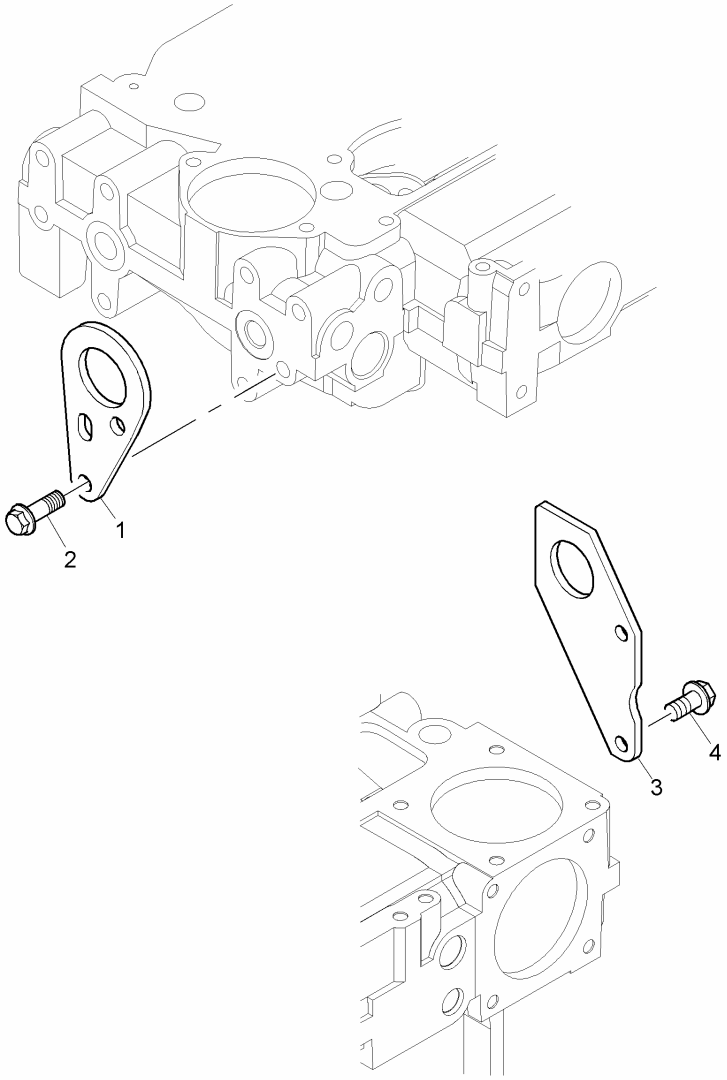
1
2
3
4

Item	Parts No.	Qty.	Latest Part No.	Description	Cut Out	Cut In	Comment
1	3617A015	1	3617A015	LIFTING BRACKET			
2	2314J002	2	2314J002	SCREW			
3	3624A016	1	3624A016	LIFTING BRACKET			
4	2314J002	2	2314J002	SCREW			

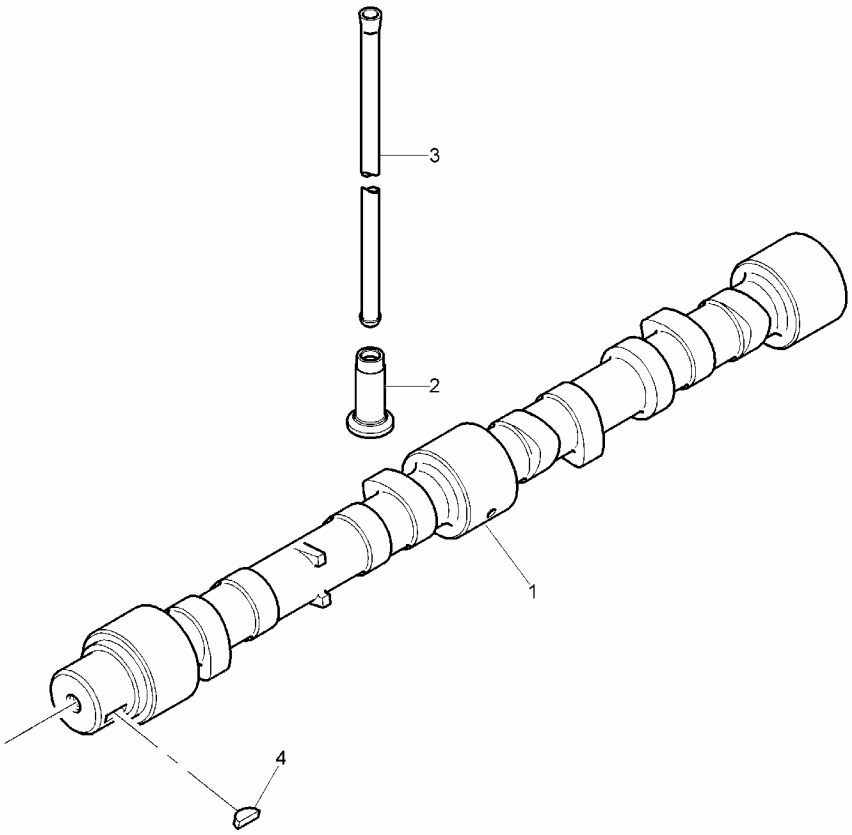
3
2
1
4

Item	Parts No.	Qty.	Latest Part No.	Description	Cut Out	Cut In	Comment
1	3141D222	1	3141D222	CAMSHAFT			
2	3142U031	8	3142U031	TAPPET			
3	31434307	8	31434307	PUSHROD			
4	0500012	1	0500012	WOODRUFF KEY			

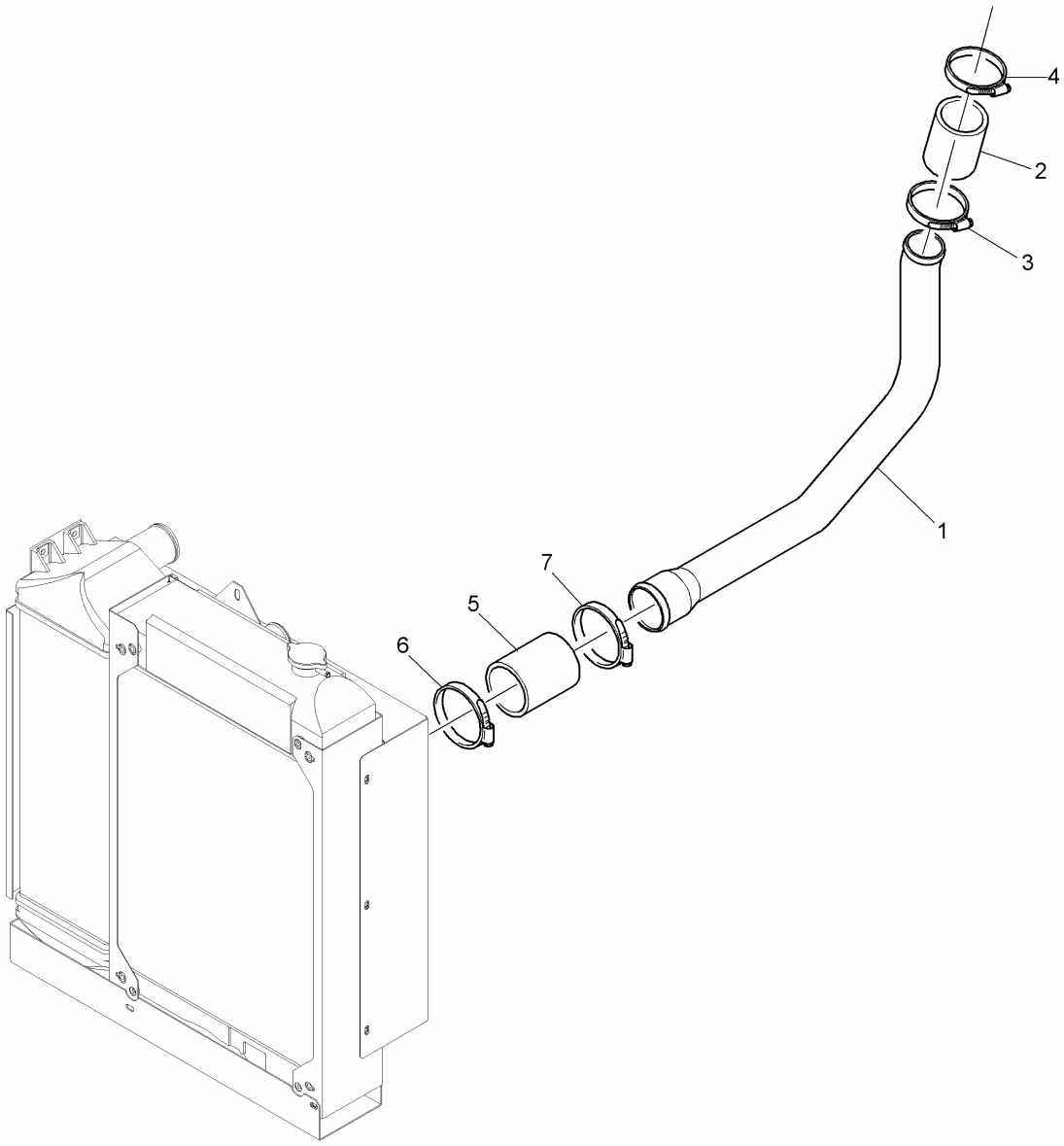
4
2
3
1
7
5
6

Item	Parts No.	Qty.	Latest Part No.	Description	Cut Out	Cut In	Comment
1	3477A002	1	3477A002	PIPE			
2	3383A032	1	3383A032	HOSE			
3	2481D074	1	2481D074	HOSE CLIP			
4	2481D074	1	2481D074	HOSE CLIP			
5	3383A034	1	3383A034	HOSE			
6	2481D075	1	2481D075	HOSE CLIP			
7	2481D075	1	2481D075	HOSE CLIP			

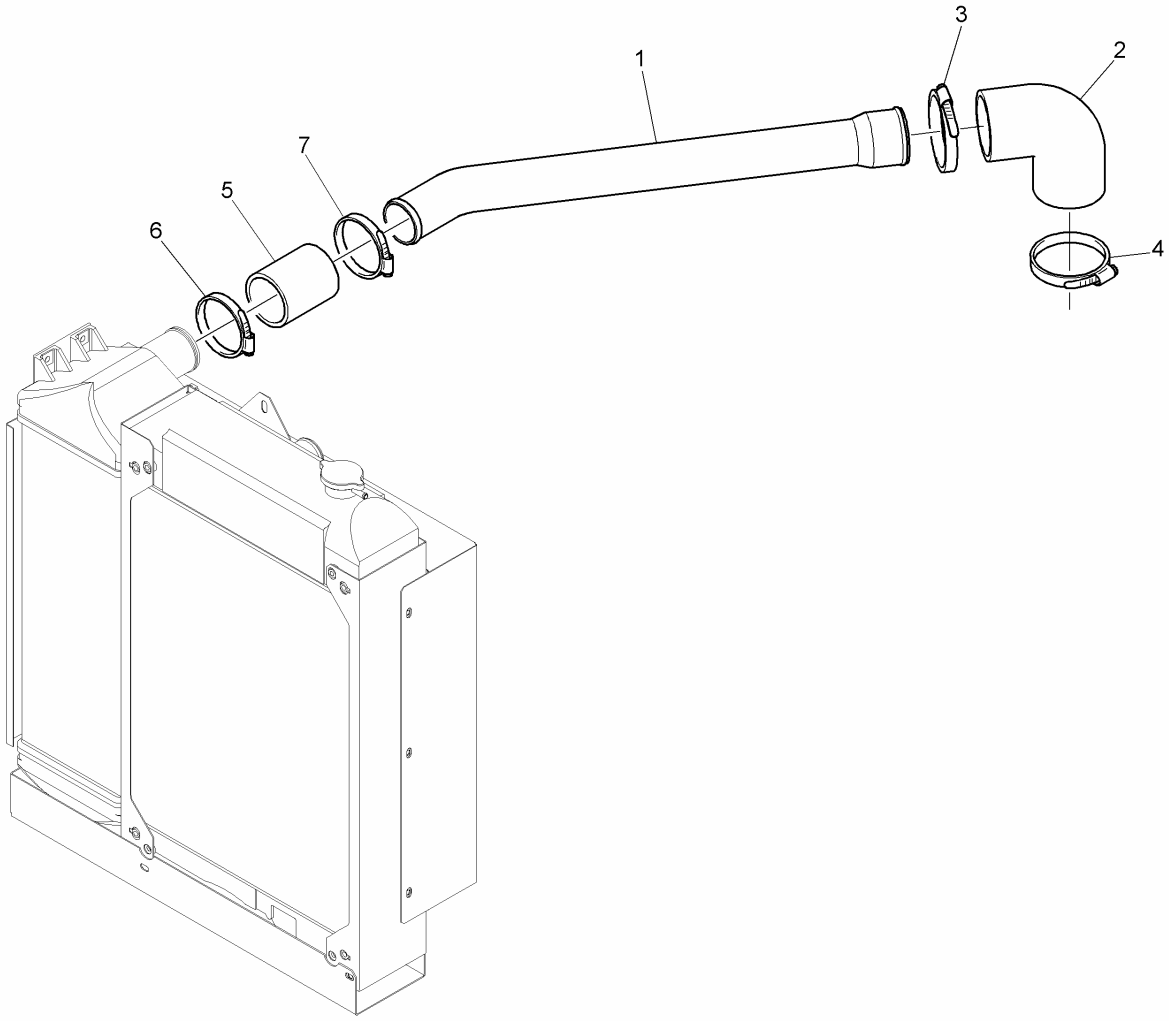
1
2
3
4
5
6
7

Item	Parts No.	Qty.	Latest Part No.	Description	Cut Out	Cut In	Comment
1	3427A013	1	3427A013	PIPE			
2	3783N001	1	3783N001	HOSE			
3	2481D076	1	2481D076	HOSE CLIP			
4	2481D076	1	2481D076	HOSE CLIP			
5	3383A034	1	3383A034	HOSE			
6	2481D075	1	2481D075	HOSE CLIP			
7	2481D075	1	2481D075	HOSE CLIP			

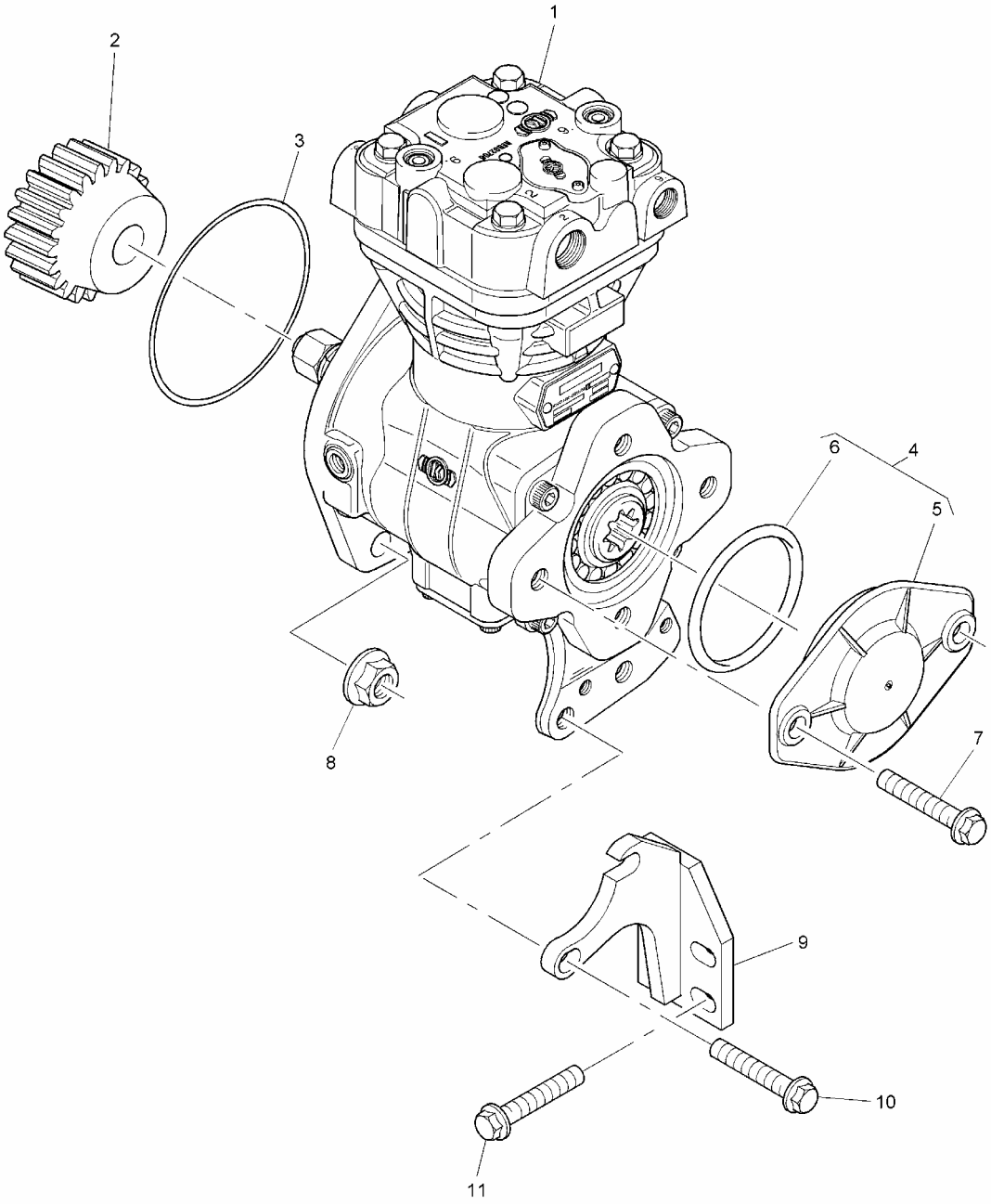
1
2
3
4
5
6
7
8
9
10
11

Item	Parts No.	Qty.	Latest Part No.	Description	Cut Out	Cut In	Comment
1	2488A293	1	2488A293	COMPRESSOR			
2	3117C331	1	3117C331	POWER TAKE OFF GEAR			
3	2415H461	1	2415H461	SEAL - O RING			
4	4148K001	1	4148K001	BLANKING PLATE			
7	2314J001	2	2314J001	SCREW			
8	2318A605	2	2318A605	NUT			
9	3823A059	1	3823A059	BRACKET			
10	2314H004	2	2314H004	SCREW			
11	2314H004	2	2314H004	SCREW			

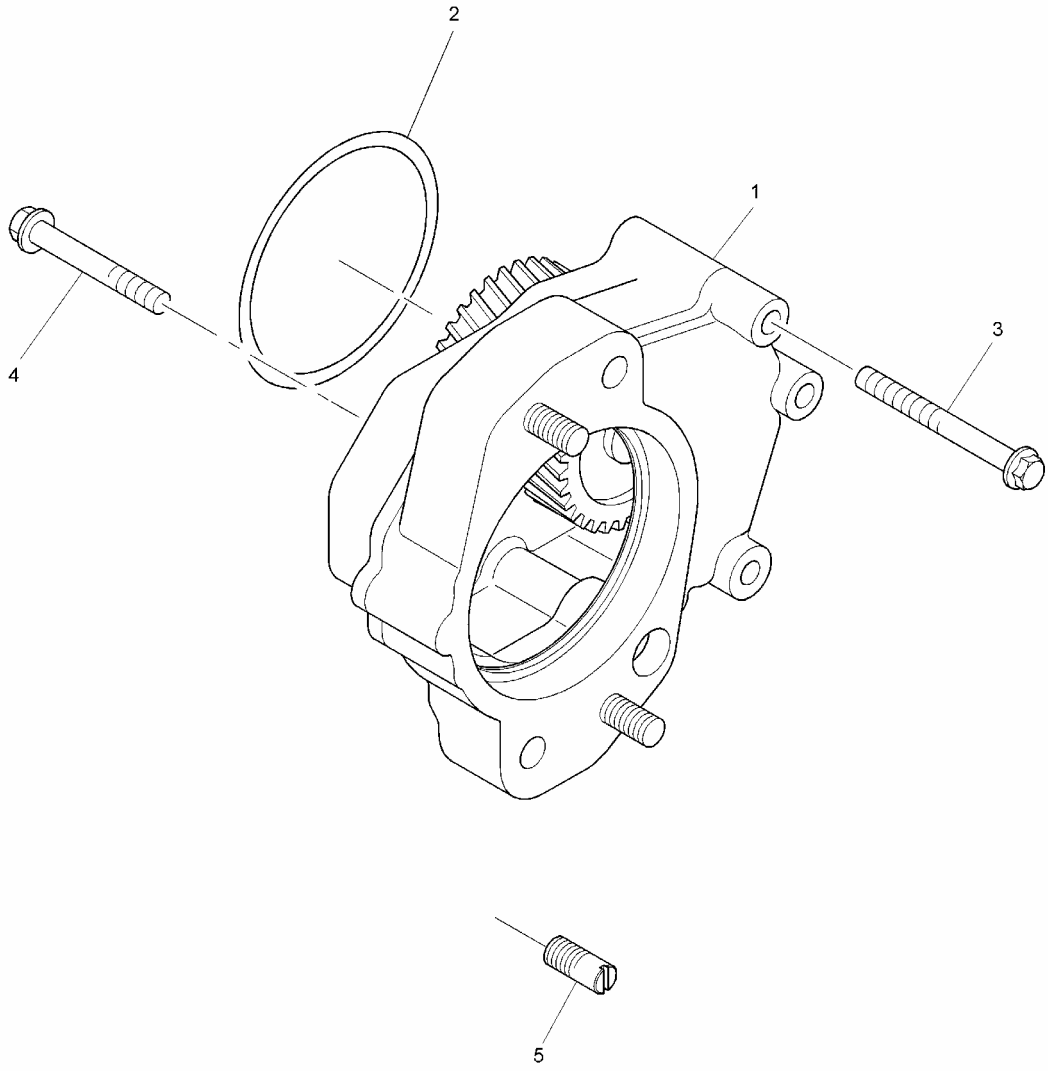
2
1
3
4
5

Item	Parts No.	Qty.	Latest Part No.	Description	Cut Out	Cut In	Comment
1	2488A297	1	2488A299	ADAPTOR			
2	2415B167	1	2415B167	O RING			
3	2314H045	4	2314H045	SCREW			
4	2314H042	1	2314H042	SCREW			
5	3211C001	1	3211C001	PIN			

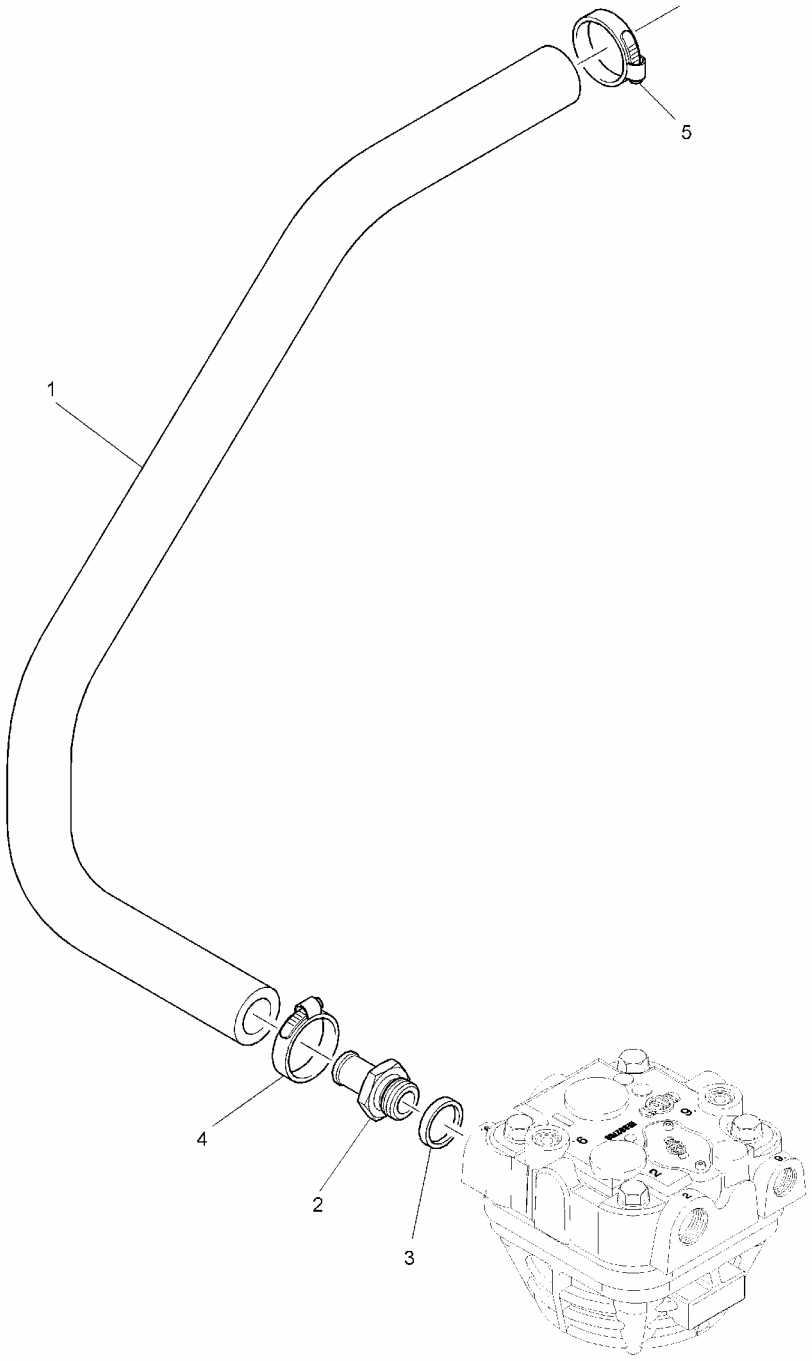
1
2
3
4
5

Item	Parts No.	Qty.	Latest Part No.	Description	Cut Out	Cut In	Comment
1	3482V096	1	3482V096	HOSE			
2	3355A017	1	3355A017	ADAPTOR			
3	2411D016	1	2411D016	WASHER			
4	2481877	1	2481877	HOSE CLIP			
5	2481877	1	2481877	HOSE CLIP			

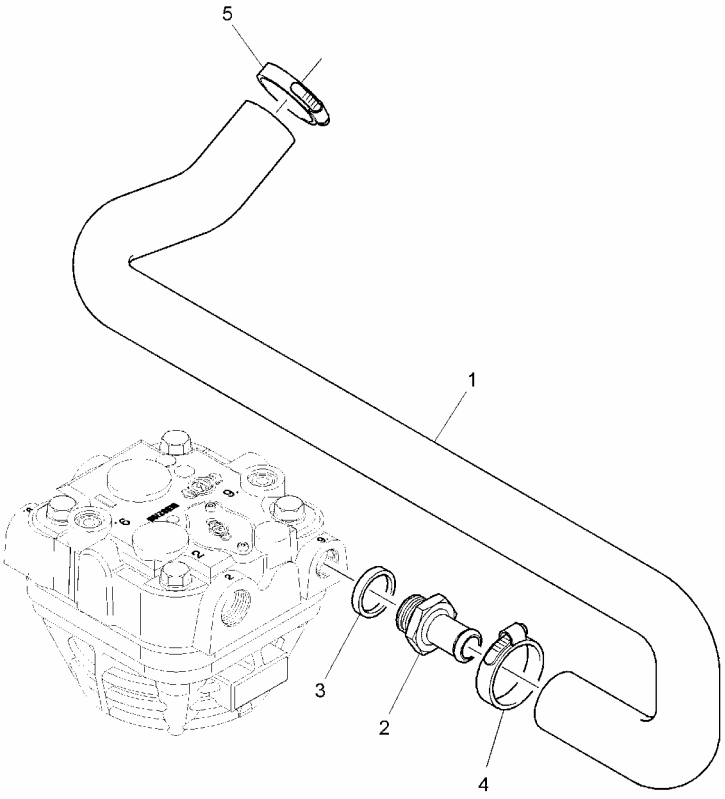
5
1
3
2
4

Item	Parts No.	Qty.	Latest Part No.	Description	Cut Out	Cut In	Comment
1	3482V099	1	3482V099	HOSE			
2	3355A017	1	3355A017	ADAPTOR			
3	2411D016	1	2411D016	WASHER			
4	2481877	1	2481877	HOSE CLIP			
5	2481877	1	2481877	HOSE CLIP			

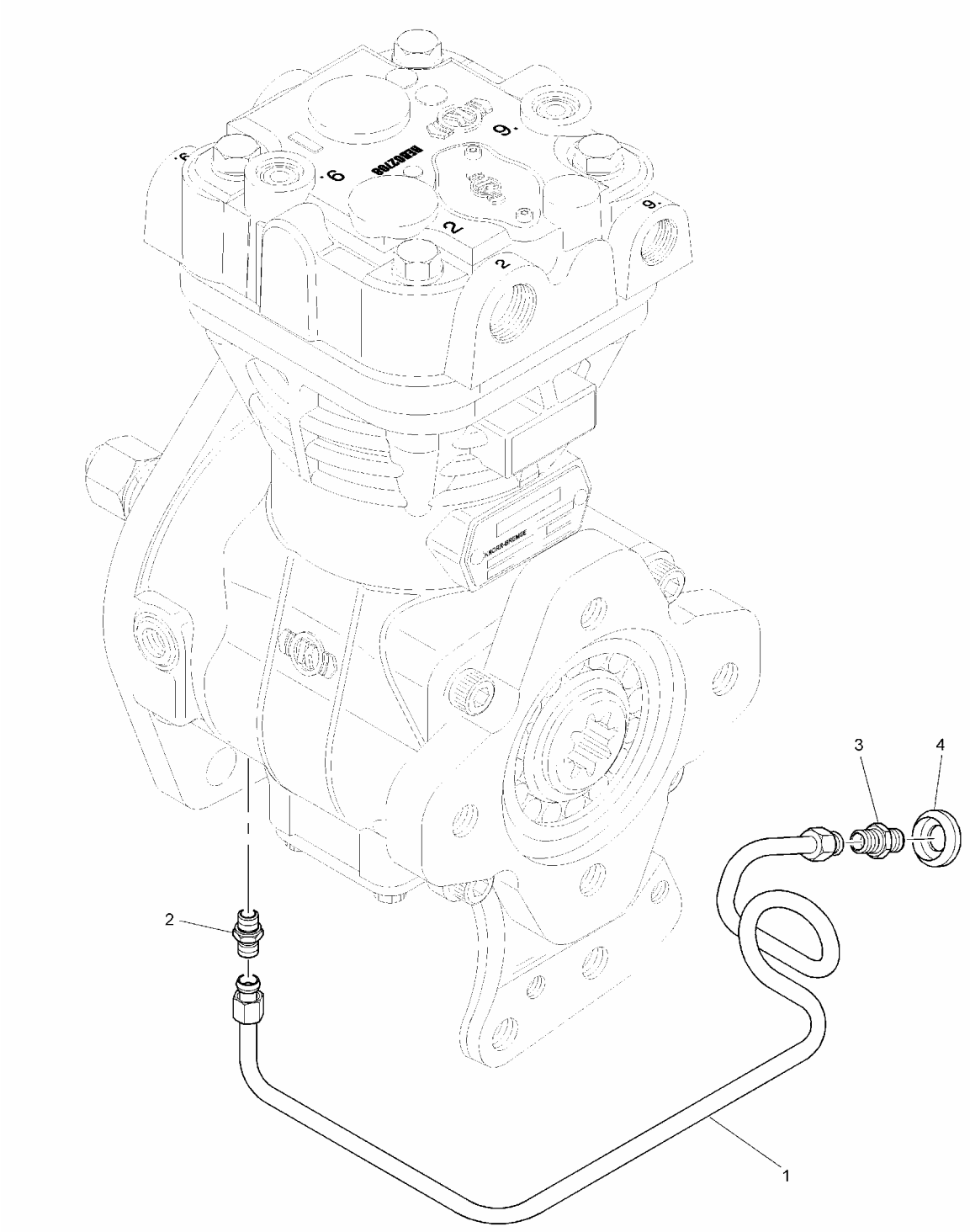
3
4
2
1

Item	Parts No.	Qty.	Latest Part No.	Description	Cut Out	Cut In	Comment
1	3524A003	1	3524A003	PIPE - OIL			
2	0206002	1	0206002	UNION			
3	3355M005	1	3355M005	ADAPTOR			
4	2415D053	1	2415D053	PLAIN WASHER			

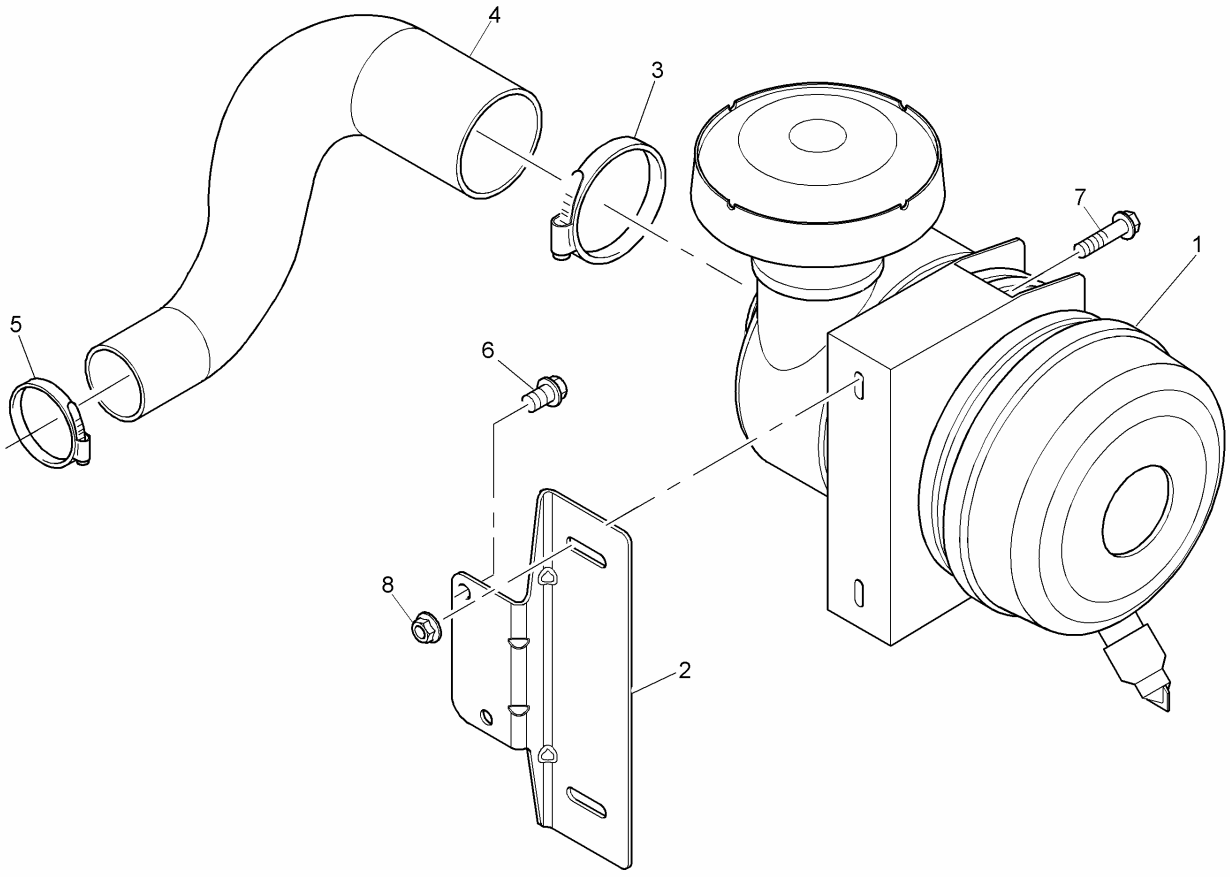
4
3
7
1
5
6
8
2

Item	Parts No.	Qty.	Latest Part No.	Description	Cut Out	Cut In	Comment
1	2652C201	1	2652C201	AIR FILTER ASSEMBLY			
2	3653A051	1	3653A051	BRACKET			
3	2481D088	1	2481D088	HOSE CLIP			
4	3783R007	1	3783R007	HOSE			
5	2481D075	1	2481D075	HOSE CLIP			
6	2314J002	2	2314J002	SCREW			
7	2314H005	2	2314H005	SCREW			
8	2318A603	2	2318A603	NUT			

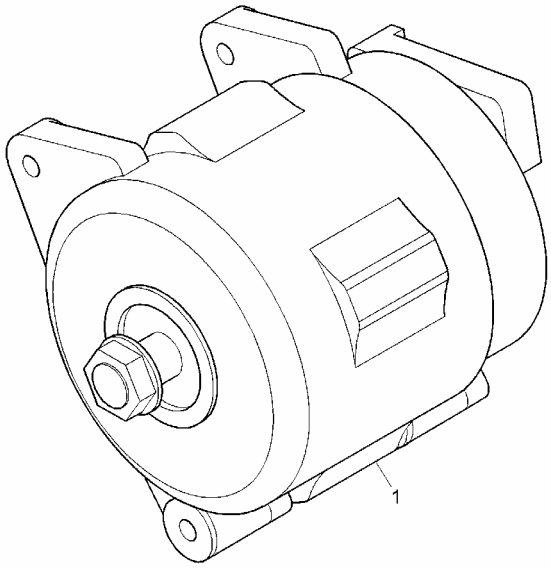

Item	Parts No.	Qty.	Latest Part No.	Description	Cut Out	Cut In	Comment
1	2871A301	1	2871A301	ALTERNATOR			

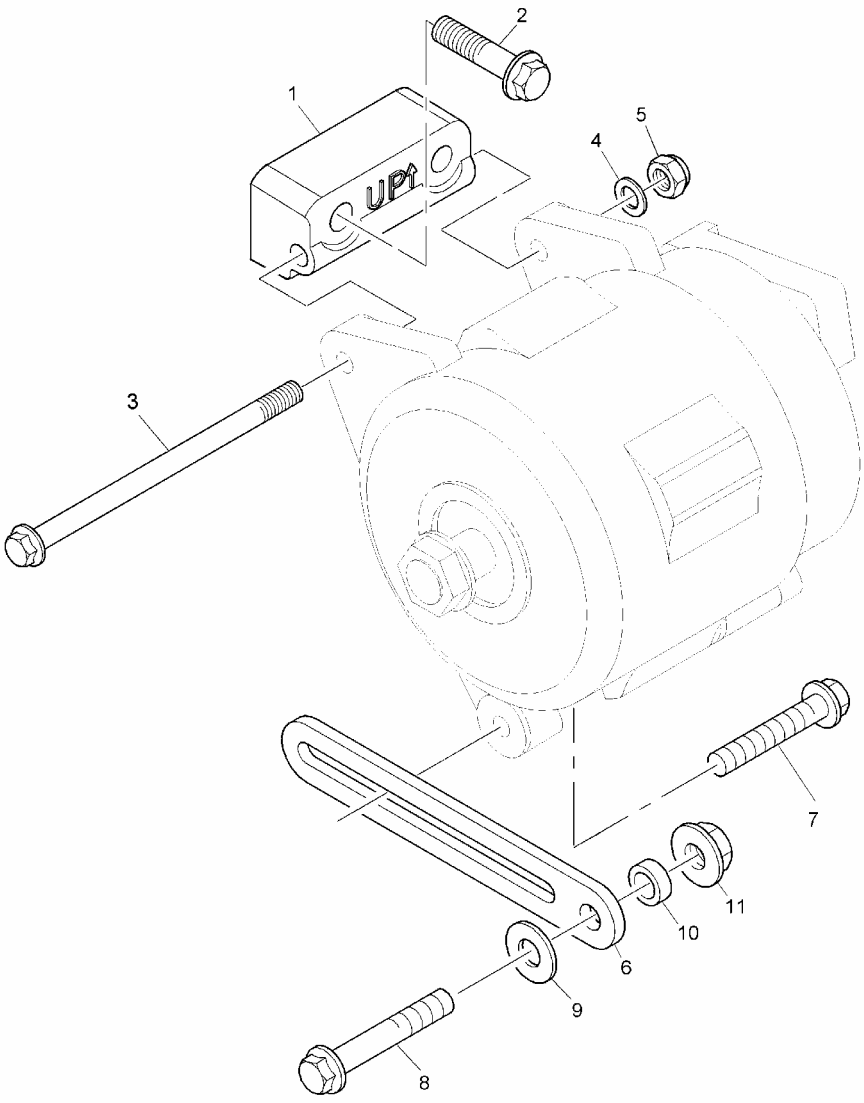
2
1
5
4
3
7
11
10
6
9
8

Item	Parts No.	Qty.	Latest Part No.	Description	Cut Out	Cut In	Comment
1	3824A071	1	3824A071	ALTERNATOR BRACKET			
2	2314J007	2	2314J007	SCREW			
3	2314H052	1	2314H052	SCREW			
4	2131A008	1	2131A008	WASHER			
5	2318D208	1	2318D208	NUT			
6	36155429	1	36155429	LEVER			
7	2314H004	1	2314H004	SCREW			
8	2314J012	1	2314J012	SCREW			
9	0920497	1	0920497	WASHER			
10	0920465	1	0920465	SPACER			
11	2318A604	1	2318A604	NUT			

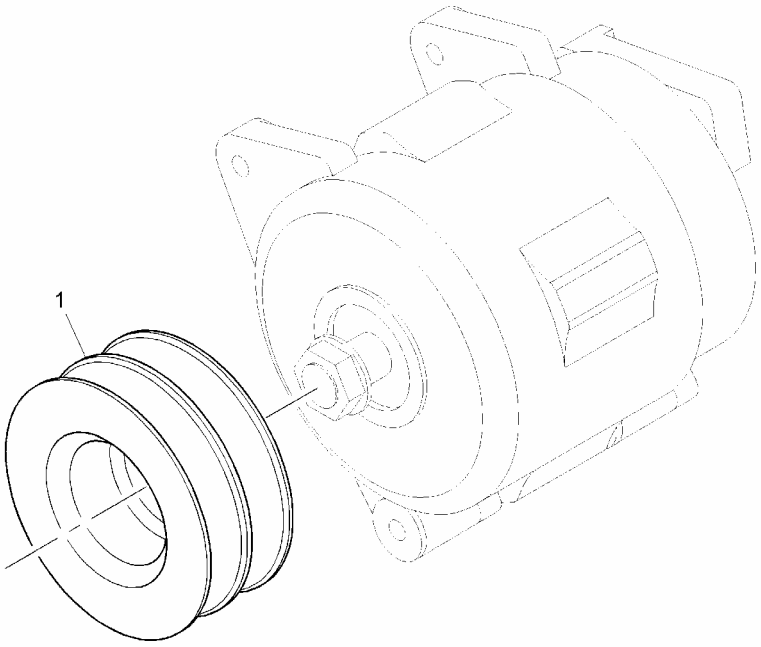

Item	Parts No.	Qty.	Latest Part No.	Description	Cut Out	Cut In	Comment
1	3115A049	1	3115A049	2 GROOVE ALTERNATOR PULLEY			

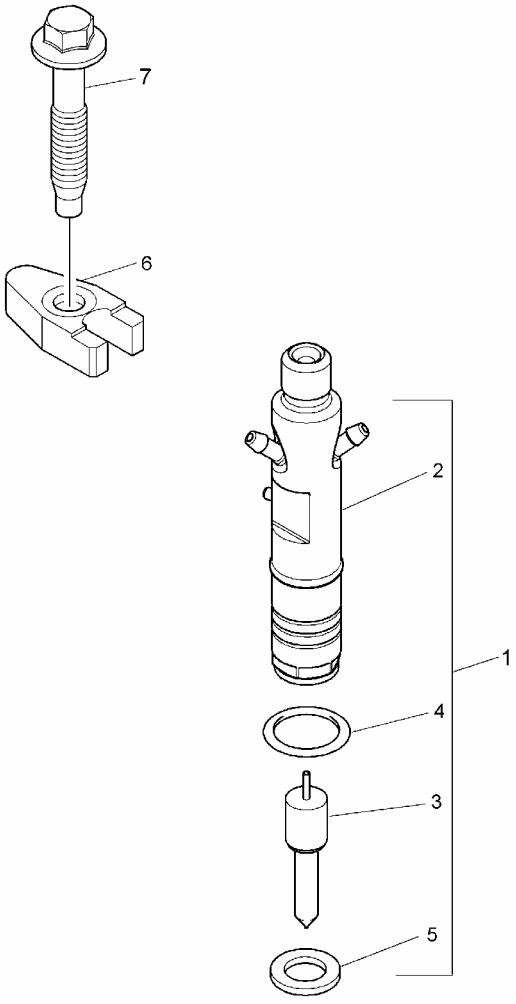
7
6
2
1
4
3
5

Item	Parts No.	Qty.	Latest Part No.	Description	Cut Out	Cut In	Comment
1	2645K012	4	2645K012	INJECTOR			
6	3751A241	4	3751A241	INJECTOR CLAMP			
7	2314W009	4	2314W009	SCREW			

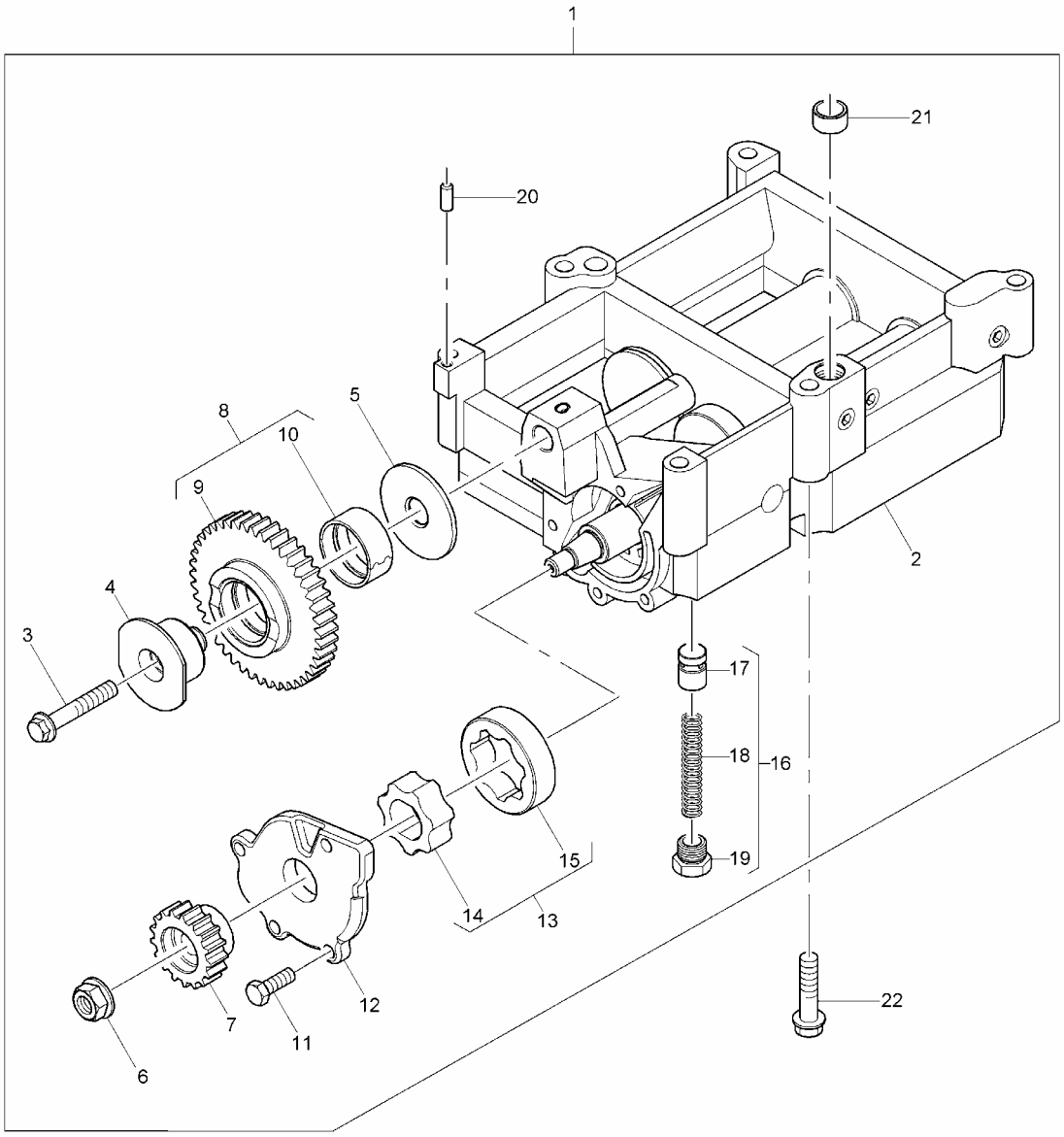
1
21
20
8
10
5
9
4
3
2
17
18
16
19
15
14
13
12
7
11
6
22

Item	Parts No.	Qty.	Latest Part No.	Description	Cut Out	Cut In	Comment
1	4111K073	1	4111K073	BALANCER			
1	4111K073	1	4111K073	BALANCER			
22	2314J012	6	2314J012	SCREW			
2		1		FRAME			
3	2314H951	1	2314H951	BOLT			
4	3272A022	1	3272A022	SHAFT			
5	3321A006	1	3321A006	THRUST WASHER			
6	2318F605	1	2318F605	NUT			
7	3117A101	1	3117A101	BALANCER GEAR			
8	4111A029	1	4111A029	BALANCER GEAR			
11	2314C945	5	2314C945	SCREW			
12	3753R351	1	3753R351	COVER			
13	4111K068	1	4111K068	ROTOR			
16	U5MK0695	1	U5MK0695	RELIEF VALVE			
20	3244A013	1	3244A013	DOWEL			
21	33137409	1	33137409	THIMBLE			

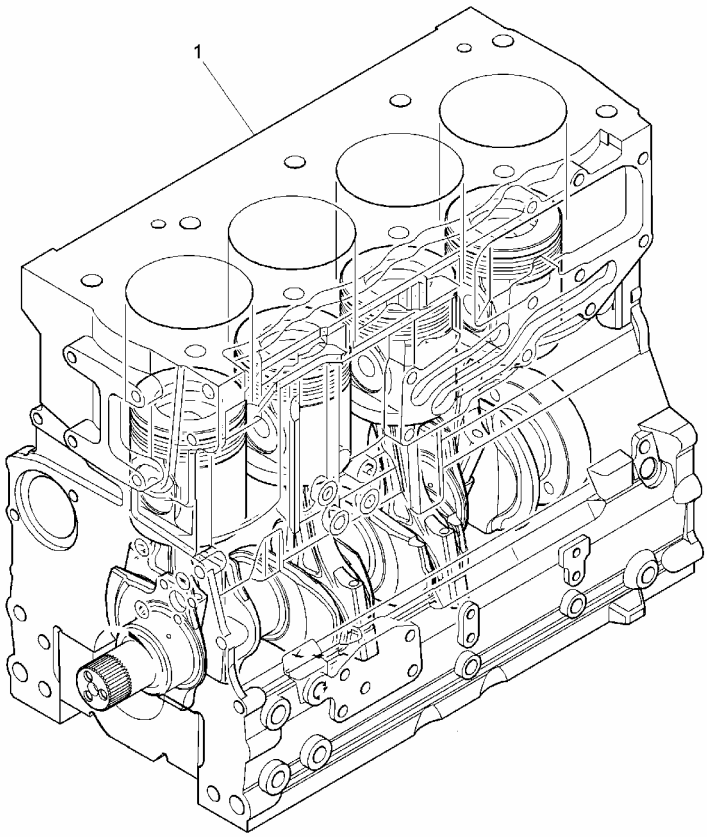

Item	Parts No.	Qty.	Latest Part No.	Description	Cut Out	Cut In	Comment
1	RG40004	1	RG40004	SHORT ENGINE - ASSEMBLY			

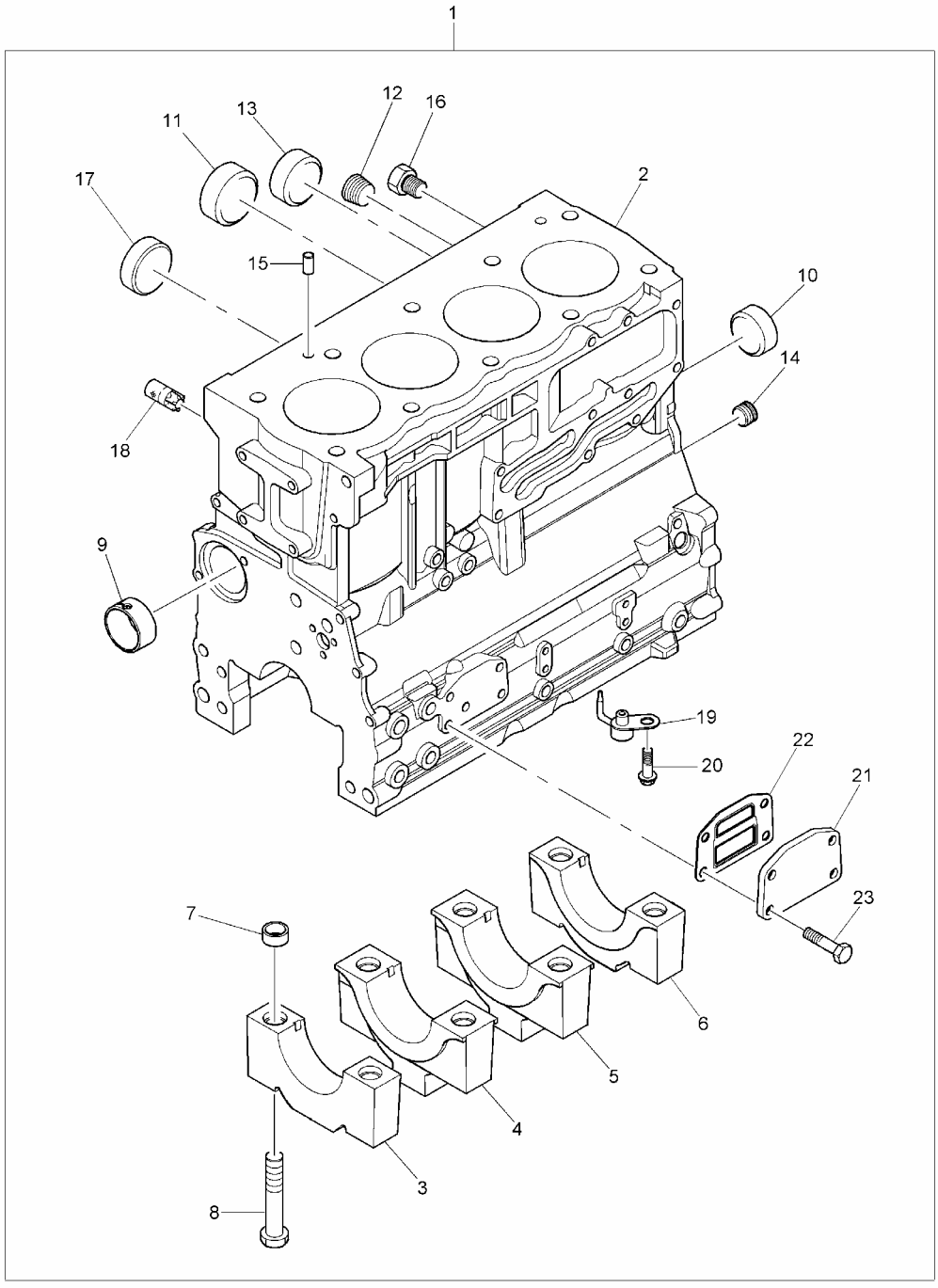
1
2
3
4
5
6
7
8
9
10
11
12
13
14
15
16
17
18
19
20
21
22
23

Item	Parts No.	Qty.	Latest Part No.	Description	Cut Out	Cut In	Comment
2		1		CYLINDER BLOCK			
3		1		BEARING CAP			
4		2		BEARING CAP			
5		1		BEARING CAP			
6		1		BEARING CAP			
7	33142111	10	33142111	THIMBLE			
8	32166329	10	32166329	SCREW			
9	3112D071	1	3112D071	CAMSHAFT BUSH			
10	3241A012	1	3241A012	PLUG			
11	3241A011	2	3241A011	PLUG			
12	0650588	1	0650588	PLUG			
13	0650710	1	0650710	PLUG			
14	3212P008	1	3212P008	PLUG			
15	3244A009	2	3244A009	DOWEL			
16	32141316	2	32141316	PLUG			
17	2485A108	1	2485A108	PLUG			
18	3212V006	1	3212V006	PLUG			
19	2113A003	4	2113A003	PISTON COOLING JET			
20	2314F001	4	2314F001	SCREW			
21	3623A009	1	3623A009	BLANKING PLATE			
22	3688A039	1	3688A039	GASKET - OIL FILTER HEAD			
23	2314H033	4	2314H033	SCREW			

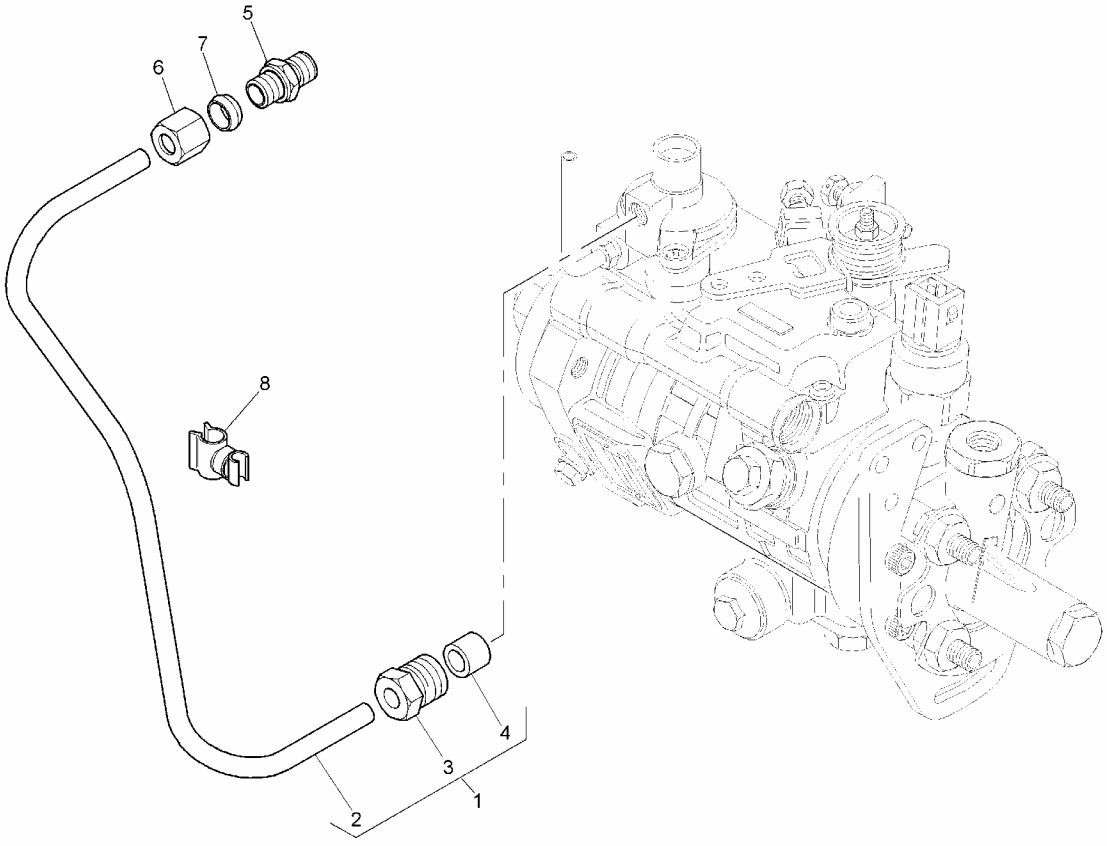
5
7
6
8
4
3
2
1

Item	Parts No.	Qty.	Latest Part No.	Description	Cut Out	Cut In	Comment
1	4121A063	1	4121A063	PIPE - BOOST			
5	0206002	1	0206002	UNION			
6	0576111	1	0576111	NUT			
7	0566002	1	0566002	OLIVE			
8	K138AF02	1	K138AF02	CLIP			

Item	Parts No.	Qty.	Latest Part No.	Description	Cut Out	Cut In	Comment
1	U5LB0381	1	U5LB0381	GASKET KIT - BOTTOM			
2	2415715	1	2415715	O RING			
3	36832137	1	36832137	JOINT			
4	3617V015	1	3617V015	GASKET - TIMING CASE			
5	3617V016	1	3617V016	GASKET - TIMING CASE			
6	3681P047	1	3681P047	GASKET - TIMING CASE COVER			
7	26420348	1	26420348	SEAL - O RING			
8	3688A041	1	3688A041	GASKET - OIL FILTER HEAD			
9	3688A039	1	3688A039	GASKET - OIL FILTER HEAD			
10	3682A011	1	3682A011	GASKET - WATER PUMP			
11	3688A035	1	3688A035	GASKET			
12	3685A033	1	3685A033	GASKET - OIL COOLER			
13	3685A025	1	3685A025	GASKET - OIL COOLER			
14	3681K037	1	3681K037	GASKET - SUMP			

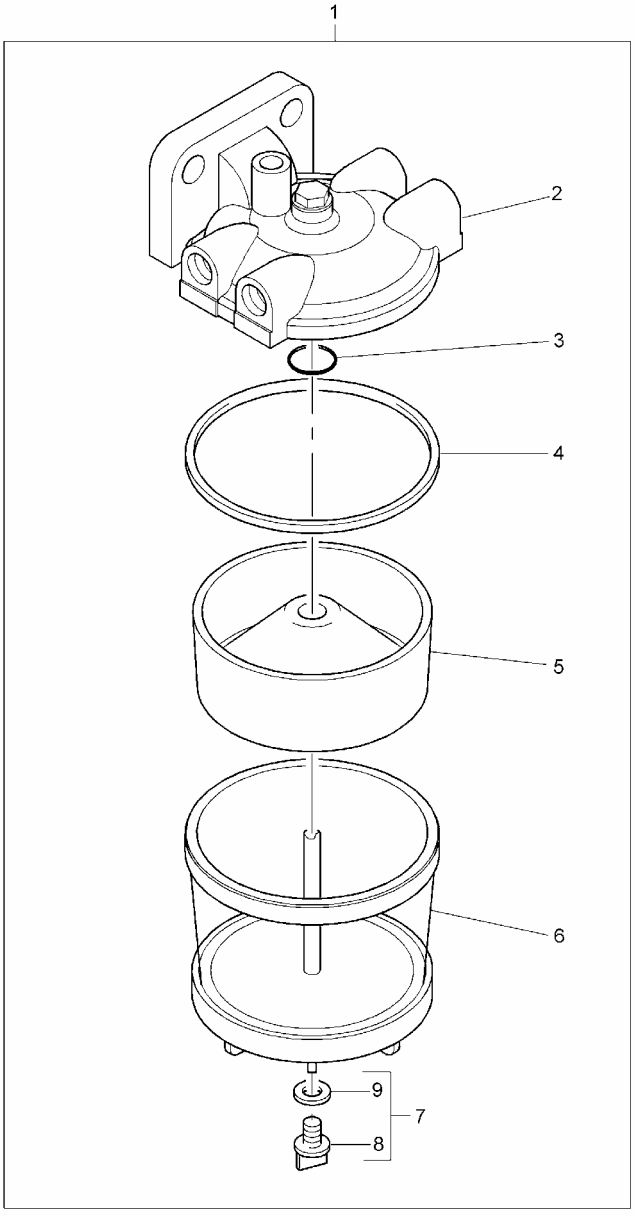
1
2
3
4
5
6
9
7
8

Item	Parts No.	Qty.	Latest Part No.	Description	Cut Out	Cut In	Comment
1	2656086	1	2656086	FUEL FILTER			
3	26560016	1	26560016	WASHER			
4	0490786	2	0490786	O RING			
5	26560156	1	26560156	SEPARATOR			
6	26560075	1	26560075	CONTAINER			
7	26560614	1	26560614	PLUG			