CATERPILLAR®

SEBP3643
November 2002

RUTHZIL TRATOR COMERCIAL DE PEÇAS LTDA 11 97083-6812 ROLANDO

Parts Manual



See "General Information" for New Parts Manual Features.

3056E Industrial Engine 924G

3561-Up (Engine)

Product and Dealer Information

Note: For product identification plate locations, see the section “Product Identification Information” in the Operation and Maintenance Manual.

Delivery Date: _____

Product Information

Model: _____

Product Identification Number: _____

Engine Serial Number: _____

Transmission Serial Number: _____

Generator Serial Number: _____

Attachment Serial Numbers: _____

Attachment Information: _____

Customer Equipment Number: _____

Dealer Equipment Number: _____

Dealer Information

Name: _____ Branch: _____

Address: _____

_____

_____

	Dealer Contact	Phone Number	Hours
Sales:	_____	_____	_____
Parts:	_____	_____	_____
Service:	_____	_____	_____

MEMORANDA

TABLE OF CONTENTS

Name	Page
GENERAL INFORMATION	A2
REPAIR ALTERNATIVES	A4
SUPPLEMENTAL COOLANT ADDITIVES	A5
MAINTENANCE PARTS	A6
INDEX	A8
ENGINE ARRANGEMENT	1
ENGINE AR-CORE	1
ENGINE AR-PRIMARY	2
BASIC ENGINE	4
AIR COMPRESSOR GP	4
CAMSHAFT GP	12
COVER GP-ENGINE	13
COVER GP-VALVE MECHANISM	14
CRANKSHAFT GP	26
CYLINDER BLOCK GP	27
CYLINDER HEAD GP	30
DRIVE GP-ACCESSORY	32
DRIVE GP-FAN	34
FLYWHEEL GP	35
GEAR GP-FRONT	37
HOUSING GP-FLYWHEEL	38
HOUSING GP-FRONT	40
LIFTING GP-ENGINE	44
MOUNTING GP-ENGINE	46
PAN GP-OIL	48
PISTON & ROD GP	60
PLUG GP-CYLINDER BLOCK	61
PLUG GP-FLYWHEEL HOUSING	63
PULLEY GP-CRANKSHAFT	66
PULLEY GP-FAN DRIVE	67
ROCKER ARM GP	68
VALVE MECHANISM GP	69
LUBRICATION SYSTEM	70
FILTER GP-ENGINE OIL	70
PUMP GP-ENGINE OIL	73
COOLING SYSTEM	74
CONNECTION GP-HEATER	74
CONNECTION GP-WATER	75
COOLER GP-FLTR BASE & ENG OIL	78
PUMP GP-WATER	86
AIR INLET AND EXHAUST SYSTEM	92
ELBOW GP-AIR INLET	92
ELBOW GP-EXHAUST	93
TURBOCHARGER GP	94
FUEL SYSTEM	107
FILTER GP-FUEL	107
PUMP GP-FUEL INJECTION	108
PUMP GP-FUEL TRANSFER	116
SEPARATOR GP-WATER	127
ELECTRICAL AND STARTING SYSTEM	130
ALTERNATOR GP-CHARGING	130
HEATER GP-STARTING AID	132
STARTING AID GP	134
LINES GP-STARTING AID	135
STARTING MOTOR GP-ELECTRIC	138
WIRING GP-ELECTRONIC CONTROL	140
WIRING GP-ENGINE	144
PRIME PACKAGE	146
FASTENER GP	146
PART NUMBER INDEX	B1

GENERAL INFORMATION

1. ENGINE IDENTIFICATION

Caterpillar engines are identified with Serial Numbers and Arrangement Numbers. In some cases, Modification Numbers are also used. The serial number plate which shows these numbers is mounted on the engine.

Caterpillar dealers need this information to determine which components were included on the engine when it was assembled at the factory. This permits accurate identification of replacement part numbers.

2. ORDERING PARTS

⚠ WARNING

When replacement parts are required for this product Caterpillar recommends using Caterpillar replacement parts or parts with equivalent specifications including, but not limited to, physical dimensions, type, strength and material.

Failure to heed this warning can lead to premature failures, product damage, personal injury or death.

Quality Caterpillar replacement parts are available from Caterpillar dealers throughout the world. Their parts inventories are up to date and include all parts normally required to protect your investment in Caterpillar Engines. Dealers may offer repair kits or remanufactured parts to allow selection of the most effective repair alternative for a particular situation. When ordering parts, your order should specify the quantity, part number, part name, and the serial number/product identification number of the engine for which the parts are needed.

3. PARTS MANUAL ORGANIZATION

Product information in this manual is presented as "information elements" that represent all of the components for the specific model. An Engine Arrangement is an example of an information element. The information elements are organized alphabetically by part name and secondarily by part number within each major section of the manual.

4. TABLE OF CONTENTS

SIS ***New Feature***

A table of contents (TOC) is found at the beginning of the manual. The TOC lists each section of the manual with a complete list of all information elements organized as they appear in the manual. Page numbers are provided for quick reference to detailed parts identification illustrations and serviceable consist lists.

5. MAINTENANCE PARTS INDEX

The Maintenance Parts Index, located near the beginning of the manual, references most frequently used maintenance part numbers, providing description, quantity, usage and page number. This information is organized alphabetically by part description.

6. INDEX

The index located near the front of the manual is an alphabetical listing of all information elements included in the manual. Page numbers are provided for quick reference to detailed parts identification illustrations and serviceable consist lists.

7. PART NUMBER INDEX

A numerical index listing all part numbers and the corresponding page number(s) appears at the back of the manual.

8. CAPTIONS

Captions located at the top of each page of an information element identify the part number and part name along with additional descriptive information. S/N information found in each caption should be used to select correct information for a specific engine. Field replacement options, identification of optional attachment components, and where used ("part of") information is also provided.

SIS ***New Feature***

The first line of a caption is shown in larger type font to indicate the beginning of an information element. Captions for additional pages that may be required to illustrate an information element will be shown in standard type font and will include the term *(contd.)*

.

9. NON-SERVICED PARTS

SIS *New Feature*

In some instances it is necessary to display non-serviced parts that are a link to lower level serviceable consist lists. These non-serviced part numbers are shown in *italic* type indicating that they are not available. All consist lists have not been converted to reflect this enhancement.

10. PARTS LIST REFERENCE NUMBERS

SIS *New Feature*

Numbers shown in the Ref No column correspond to numbers used in the associated graphic(s). An alphabetic suffix may be added to a reference number to identify lower level consist items. Numbers shown in the Graphic Ref column refer to the graphic number identifier displayed in the lower left corner of each illustration. The Graphic Ref number may be used in combination with the item Ref No to determine the correct part number. There may be intentional omission of a Ref No in a consist list as information is updated to reflect the latest serviceable part numbers.

11. INDENTED PART NAMES

When a part name is indented in a parts list, it is part of (included in) the group or assembly under which it is indented.

12. ILLUSTRATION REFERENCE LETTERS

When necessary, illustrations contain reference letters (A, B, C etc.) that are intended to track lines and harnesses from one point to another. They are also used to show where to reconnect illustrations that have been separated.

13. ABBREVIATIONS AND SYMBOLS

O.D. – Outside Diameter
I.D. – Inside Diameter
A – Not Part Of This Group
B – Use As Required
C – Change From Previous Type
D – Order By The Meter
E – Order By The Centimeter
F – Not Shown
G – Order By The Inch
I – See Hose Fabrication Guide
M – Metric Part
R – Remfg Part May Be Available
Y – Separate Illustration
Z – Not Serviced Separately

NOTE:

Continuing improvement and advancement of product design may cause changes to your engine which may not be included in this publication. Whenever a question arises regarding your Caterpillar product or this publication, please consult your Caterpillar dealer for the latest available information.

REPAIR ALTERNATIVES

REMANUFACTURED COMPONENTS

As an option when making repairs consider Caterpillar Remanufactured Components. Components that are available through the Caterpillar Remanufactured Program are identified three ways in the parts book:

- with the letter R in the note field of the parts list
- with an R* at the beginning of the first line of the caption
- with an *R at the end of the first line of the caption

Typical components included in the Remanufacturing Program include:

ALTERNATORS
CONNECTING RODS
CRANKSHAFTS - UNDERSIZE
CRANKSHAFTS - UPGRADE TO NEW
CYLINDER HEADS
ELECTRONIC CONTROL MODULES (ECM)
ELECTRONIC SENSORS
FUEL INJECTORS
FUEL NOZZLES
FUEL PUMPS
GOVERNORS
OIL PUMPS
PISTONS
SHORT BLOCKS
STARTERS
TURBOCHARGERS - COMPLETE
TURBOCHARGER CARTRIDGES
WATER PUMPS

Caterpillar Remanufactured engines for many engine arrangements are also available.

SUPPLEMENTAL COOLANT ADDITIVES

CUSTOMER BENEFITS:

Protects against cavitation, foam, erosion, corrosion, and scale buildup in cooling systems.

- Provides measured coolant conditioner.

DESCRIPTION:

Additives deplete from the coolant with normal operation. For this reason, Supplemental Coolant Additives (SCA) must be added to all heavy duty coolants at regular intervals. In addition, when not using a fully formulated, pre-charged antifreeze, like Caterpillar's DEAC, an initial charge of SCA must be added to the cooling system. The amount of SCA added to the system is dependent on the capacity of the system.

The SCA for initial fill is provided as a liquid. SCA's for maintenance intervals are available in liquid form and as a spin-on element. (No Spin-on available for 3600 Family of Engines)

NOTE:

The amount of SCA added at initial fill is not the same as the amount added at maintenance intervals.

The coolant additive elements can be used with any ethylene or propylene glycol type antifreeze which meets ASTM D4985 or ASTM D5345 Specifications.

NOTE:

For use with standard heavy duty coolant only, not for use with Extended Life Coolant.

PARTS NEEDED:

Cooling System Capacity		Liquid SCA at Initial Fill	Liquid SCA at Maintenance*	Spin-on SCA Maintenance Element*
Liters	Gallons			
22-30	(6-8)	3P-2044 (1)	6V-3542 (1)	111-2370 (1)
30-38	(8-10)	3P-2044 (1) 6V-3542 (1)	111-2372 (1)	111-2369 (1)
38-49	(10-13)	3P-2044 (1) 8T-1589 (1)	111-2372 (1)	111-2369 (1)
49-64	(13-17)	3P-2044 (2)	8T-1589 (1)	9N-3368 (1)
64-83	(17-22)	3P-2044 (2) 8T-1589 (1)	111-2372 (1) 6V-3542 (1)	111-2371 (1)
83-114	(22-30)	3P-2044 (3) 8T-1589 (1)	3P-2044 (1)	9N-3718 (1)
114-163	(30-43)	3P-2044 (5)	3P-2044 (1) 6V-3542 (1)	111-2371 (2)
163-242	(43-64)	3P-2044 (8)	3P-2044 (2)	9N-3718 (2)

** Normal maintenance period is 250 hrs. See your Operation and Maintenance Manual for complete coolant maintenance instructions.*

( ) Indicates quantity required.

MAINTENANCE PARTS

DESCRIPTION	PART NUMBER	QTY	WHERE USED	PAGE
BASIC ENGINE				
CAP AS (OIL FILLER)	130-9888	1	COVER GP-VALVE MECHANISM	16
		1	COVER GP-VALVE MECHANISM	18
		1	COVER GP-VALVE MECHANISM	20
		1	COVER GP-VALVE MECHANISM	22
	136-3608	1	COVER GP-VALVE MECHANISM	24
	130-9888	1	COVER GP-VALVE MECHANISM	14
FILTER-BREATHER (CRANKCASE)	229-3555	1	COVER GP-VALVE MECHANISM	20
		1	COVER GP-VALVE MECHANISM	22
		1	COVER GP-VALVE MECHANISM	14
GASKET (VALVE COVER)	216-9604	1	COVER GP-VALVE MECHANISM	16
		1	COVER GP-VALVE MECHANISM	18
		1	COVER GP-VALVE MECHANISM	20
		1	COVER GP-VALVE MECHANISM	22
		1	COVER GP-VALVE MECHANISM	24
		1	COVER GP-VALVE MECHANISM	14
HOSE (BREATHER)	198-8645	1	COVER GP-VALVE MECHANISM	24
HOSE-DISPOSAL (FUMES)	191-5049	1	COVER GP-VALVE MECHANISM	16
		1	COVER GP-VALVE MECHANISM	18
HOSE (LOWER FUMES DISPOSAL)	216-9617	1	COVER GP-VALVE MECHANISM	14
		1	COVER GP-VALVE MECHANISM	20
		1	COVER GP-VALVE MECHANISM	22
HOSE (UPPER FUMES DISPOSAL)	216-9614	1	COVER GP-VALVE MECHANISM	14
		1	COVER GP-VALVE MECHANISM	20
		1	COVER GP-VALVE MECHANISM	22
PLUG-SUMP DRAIN	7C-0351	2	PAN GP-OIL	48
		2	PAN GP-OIL	50
		2	PAN GP-OIL	52
		2	PAN GP-OIL	54
		2	PAN GP-OIL	56
		2	PAN GP-OIL	58
SEAL-O-RING (CRANKCASE BREATHER)	229-3556	1	COVER GP-VALVE MECHANISM	14
		1	COVER GP-VALVE MECHANISM	20
		1	COVER GP-VALVE MECHANISM	22
SEAL-O-RING (OIL DRAIN PLUG)	5P-6718	2	PAN GP-OIL	50
		2	PAN GP-OIL	52
		2	PAN GP-OIL	54
		2	PAN GP-OIL	56
		2	PAN GP-OIL	58
		2	PAN GP-OIL	48
SPRING (BREATHER HOSE)	162-1565	1	COVER GP-VALVE MECHANISM	16
		1	COVER GP-VALVE MECHANISM	24
		1	COVER GP-VALVE MECHANISM	18
V-BELT SET (INCLUDES 2 BELTS)	4W-6025	1	DRIVE GP-FAN	34

MAINTENANCE PARTS

DESCRIPTION	PART NUMBER	QTY	WHERE USED	PAGE
COOLING SYSTEM				
CAP-VALVE (OIL CHECK VALVE)	216-9634	1	COOLER GP-FLTR BASE & ENG OIL	78
REGULATOR-WATER TEMPERATURE	216-9737	1	CONNECTION GP-WATER	75
		1	CONNECTION GP-WATER	76
		1	CONNECTION GP-WATER	77
SEAL-O-RING (REGULATOR)	140-7515	1	CONNECTION GP-WATER	75
		1	CONNECTION GP-WATER	76
		1	CONNECTION GP-WATER	77
SEAL (REGULATOR HOUSING)	141-6188	1	CONNECTION GP-WATER	75
		1	CONNECTION GP-WATER	76
		1	CONNECTION GP-WATER	77
FUEL SYSTEM				
ELEMENT-WATER SEPARATOR	138-3100	1	SEPARATOR GP-WATER	127
FILTER ELEMENT-FUEL	145-4501	1	FILTER GP-FUEL	107
SEAL (WATER SEPARATOR BASE)	101-3953	1	SEPARATOR GP-WATER	127
SEAL (WATER SEPARATOR CONNECTION)	101-3955	1	SEPARATOR GP-WATER	127
LUBRICATION SYSTEM				
FILTER AS-ENGINE OIL	1R-0739	1	FILTER GP-ENGINE OIL	71
	7W-2327	2	FILTER GP-ENGINE OIL	70
		1	FILTER GP-ENGINE OIL	72

INDEX

Name	Page
A	
AIR COMPRESSOR GP	4, 6, 8, 10
ALTERNATOR GP-CHARGING	130
C	
CAMSHAFT GP	12
CAP AS (OIL FILLER)	14, 16, 18, 20, 22, 24
CAP-VALVE (OIL CHECK VALVE)	78
CONNECTION GP-HEATER	74
CONNECTION GP-WATER	75, 76, 77
CONTROL GP-VOLTAGE (LOAD PROTECTION)	112
CONTROL GP-VOLTAGE (24 VOLT) (LOAD PROTECTION)	108
COOLER GP-FLTR BASE & ENG OIL	78, 80, 82, 84
COVER GP-ENGINE	13
COVER GP-VALVE MECHANISM	14, 16, 18, 20, 22, 24
CRANKSHAFT GP	26
CYLINDER BLOCK GP	27, 28
CYLINDER HEAD GP	30, 31
D	
DRIVE GP-ACCESSORY	32
DRIVE GP-FAN	34
E	
ELBOW GP-AIR INLET	92
ELBOW GP-EXHAUST	93
ELEMENT-WATER SEPARATOR	127
ENGINE AR-CORE	1
ENGINE AR-PRIMARY	2
F	
FASTENER GP	146
FILTER AS-ENGINE OIL	70, 71, 72
FILTER BASE & ENG OIL COOLER	78, 80, 82, 84
FILTER-BREATHER (CRANKCASE)	14, 20, 22
FILTER ELEMENT-FUEL	107
FILTER GP-ENGINE OIL	70, 71, 72
FILTER GP-FUEL	107
FLYWHEEL GP	35, 36
G	
GASKET (VALVE COVER)	16, 18
GASKET (VALVE COVER)	14, 20, 22, 24
GEAR GP-FRONT	37
H	
HEATER GP-STARTING AID	132, 133
HOSE (BREATHER)	24
HOSE-DISPOSAL (FUMES)	16, 18
HOSE (LOWER FUMES DISPOSAL)	14, 20, 22
HOSE (UPPER FUMES DISPOSAL)	14, 20, 22
HOUSING GP-FLYWHEEL	38
HOUSING GP-FRONT	40, 42
K	
KIT-BOWL (WATER SEPARATOR)	127
KIT-CLAMP (REGULATOR HOUSING)	90
KIT-HOSE (WATER) (REGULATOR HOUSING)	86, 88

INDEX

Name	Page
KIT-RECEPTACLE (4 PIN)	108 112
KIT-REPAIR (AIR COMPRESSOR RING)	10
KIT-REPAIR (AIR COMPRESSOR VALVE)	10
KIT-REPAIR (OIL COOLER)	80 82 84
KIT-SEAL (COMPRESSOR) (AIR)	10
KIT-WATER PUMP	86 88 90

L

LIFTING GP-ENGINE	44 45
LINES GP-STARTING AID	135 136

M

MOUNTING GP-ENGINE	46

P

PAN GP-OIL	48 50 52 54 56 58
PISTON & ROD GP	60
PLUG GP-CYLINDER BLOCK	61 62
PLUG GP-FLYWHEEL HOUSING	63 64 65
PLUG-SUMP DRAIN	48 50 52 54 56 58
PULLEY GP-CRANKSHAFT	66
PULLEY GP-FAN DRIVE	67
PUMP GP-ENGINE OIL	73
PUMP GP-FUEL INJECTION	108 112
PUMP GP-FUEL TRANSFER	116 120 124
PUMP GP-WATER	86 88 90

R

REGULATOR-WATER TEMPERATURE	75 76 77
ROCKER ARM GP	68

S

SEAL-O-RING (CRANKCASE BREATHER)	14 20 22
SEAL-O-RING (OIL DRAIN PLUG)	48 50 52 54 56 58
SEAL-O-RING (REGULATOR)	75 76 77
SEAL (REGULATOR HOUSING)	75 76 77
SEAL (WATER SEPARATOR BASE)	127
SEAL (WATER SEPARATOR CONNECTION)	127
SENSOR GP-PRESSURE (BOOST)	108 112
SENSOR GP-PRESSURE (ENGINE OIL)	108 112
SENSOR GP-SPEED (TIMING)	108 112
SENSOR GP-TEMPERATURE (AIR INLET)	108 112
SENSOR GP-TEMPERATURE (ENGINE COOLANT)	108
SEPARATOR GP-WATER	127 128
SPRING (BREATHER HOSE)	16 18 24
STARTING AID GP	134
STARTING MOTOR GP-ELECTRIC	138 139

T

TURBOCHARGER GP	94 96 98 100 104

INDEX

Name	Page	Name	Page

V

V-BELT SET (INCLUDES 2 BELTS) 34
VALVE MECHANISM GP 69

W

WIRING GP-ELECTRONIC CONTROL 140
142
WIRING GP-ENGINE 144

ENGINE ARRANGEMENT

228-6941 ENGINE AR-CORE

SMCS-1000 **i01827619**

NOTE	PART NUMBER	QTY	PART NAME 1 2 3 4 5 6 (PRODUCT LEVEL)	SEE PAGE
Y	*216-8620*	1	CAMSHAFT GP	12
Y	*216-8316*	1	CRANKSHAFT GP	26
Y	*216-8231*	1	CYLINDER BLOCK GP	27
Y	*216-8343*	1	CYLINDER HEAD GP	31
Y	*217-1499*	1	GEAR GP-FRONT	37
Y	*216-8324*	1	PISTON & ROD GP	60
Y	*216-8619*	1	VALVE MECHANISM GP	69

Y-SEPARATE ILLUSTRATION

ENGINE ARRANGEMENT

221-3284 ENGINE AR-PRIMARY

112 BRAKE KW (150 BHP) AT 2500 RPM

SMCS-1000 **i01836427**

NOTE	PART NUMBER	QTY	PART NAME 1 2 3 4 5 6 (PRODUCT LEVEL)	SEE PAGE
Y	*228-7403*	1	AIR COMPRESSOR GP	10
Y	*228-7392*	1	ALTERNATOR GP-CHARGING	130
Y	*228-7387*	1	CONNECTION GP-WATER	77
Y	*228-7917*	1	CONNECTION GP-HEATER	74
Y	*219-2210*	1	COOLER GP-FLTR BASE & ENG OIL	80
Y	*228-7371*	1	COVER GP-VALVE MECHANISM	24
Y	*228-7361*	1	DRIVE GP-FAN	34
Y	*217-0594*	1	ELBOW GP-AIR INLET	92
	229-2962	1	ELECTRONICS GP-ENGINE RATINGS	
Y	*228-6941*	1	ENGINE AR-CORE	1
Y	*228-7418*	1	FASTENER GP	146
Y	*228-8523*	1	FILTER GP-ENGINE OIL	72
Y	*217-0640*	1	FILTER GP-FUEL	107
Y	*228-7331*	1	FLYWHEEL GP	36
Y	*228-7461*	1	HEATER GP-STARTING AID	133
Y	*228-7326*	1	HOUSING GP-FLYWHEEL	38
Y	*228-7395*	1	HOUSING GP-FRONT	42
Y	*228-7462*	1	LIFTING GP-ENGINE	45
Y	*219-1855*	1	LINES GP-STARTING AID	135
Y	*228-7363*	1	PAN GP-OIL	58
Y	*228-7465*	1	PLUG GP-FLYWHEEL HOUSING	65
Y	*228-7470*	1	PLUG GP-CYLINDER BLOCK	62
Y	*147-5524*	1	PLUG GP-CYLINDER BLOCK	61
Y	*226-3523*	1	PULLEY GP-CRANKSHAFT	66
Y	*183-4733*	1	PULLEY GP-FAN DRIVE	67
Y	*219-1852*	1	PUMP GP-ENGINE OIL	73
Y	*228-8965*	1	PUMP GP-FUEL INJECTION	112
Y	*219-2455*	1	PUMP GP-FUEL TRANSFER	120
Y	*221-5369*	1	PUMP GP-WATER	88
Y	*228-9407*	1	SEPARATOR GP-WATER	128
Y	*228-7333*	1	STARTING MOTOR GP-ELECTRIC	139
Y	*226-3578*	1	TURBOCHARGER GP	100
Y	*228-7487*	1	WIRING GP-ENGINE	144
			AVAILABLE GASKET KIT(S):	
	216-9612	1	KIT-GASKET (TOP)	
	216-9616	1	KIT-GASKET (BOTTOM)	

Y-SEPARATE ILLUSTRATION

MEMORANDA

BASIC ENGINE

214-4029 AIR COMPRESSOR GP

AN ATTACHMENT

SMCS-1803 **i01756048**

NOTE	REF NO	GRAPHIC REF	PART NUMBER	QTY	PART NAME 1 2 3 4 5 6 (PRODUCT LEVEL)	SEE PAGE
	1	1	**5D-1026**	4	CLAMP-HOSE	
	2	1	**6I-0217**	1	BOLT (M8X1.25X20MM)	
	3	1	**6I-0233**	3	NUT (M12)	
	4	1	**6I-0646**	1	BOLT (M10X1.5X14MM)	
	5	1	**6I-4200**	1	BOLT (M10X1.5X16MM)	
	6	1	**7M-7410**	1	PLUG (3/8-18 NPTF)	
	7	1	**035-8017**	2	UNION	
	8	1	**067-6045**	2	WASHER (5/8 IN)	
	9	1	**100-4461**	1	BOLT (M10X50MM)	
	10	1	**100-4830**	1	BOLT (M10X1.5X20MM)	
	11	1	**113-4616**	2	CONNECTOR	
	12	1	**124-3815**	3	BOLT (M8X16X1.25MM)	
	13	1	**126-3205**	1	BRACKET	
	14	1	**126-3206**	1	HUB	
	15	1	**126-3207**	1	SEAL-O-RING	
	16	1	**126-3208**	1	BEARING	
	17	1	**126-3210**	1	PLATE	
	18	1	**126-3211**	3	BOLT	
	19	1	**126-3212**	4	BOLT	
	20	1	**126-3216**	1	STUD	
	21	1	**126-3217**	1	STUD	
	22	1	**126-3219**	1	SEAL-O-RING	
	23	1	**166-5255**	1	AIR COMPRESSOR GP	
	24	1	**166-5262**	1	BRACKET	
	25	1	**166-5263**	1	PIPE AS	
	25A	1	**105-3154**	1	CLIP	
	26	1	**166-5264**	1	HOSE	
	27	1	**198-8262**	1	COVER AS	
	27A	1	**198-8263**	1	SEAL-O-RING	
	28	1	**209-6824**	1	HOSE	
	29	1	**209-6825**	2	ADAPTER	
	30	1	**214-3203**	1	WASHER	
	31	1	**214-3204**	1	GEAR-IDLER	
	32	1	**214-3205**	1	SPACER	
	33	1	**214-3206**	1	GEAR	

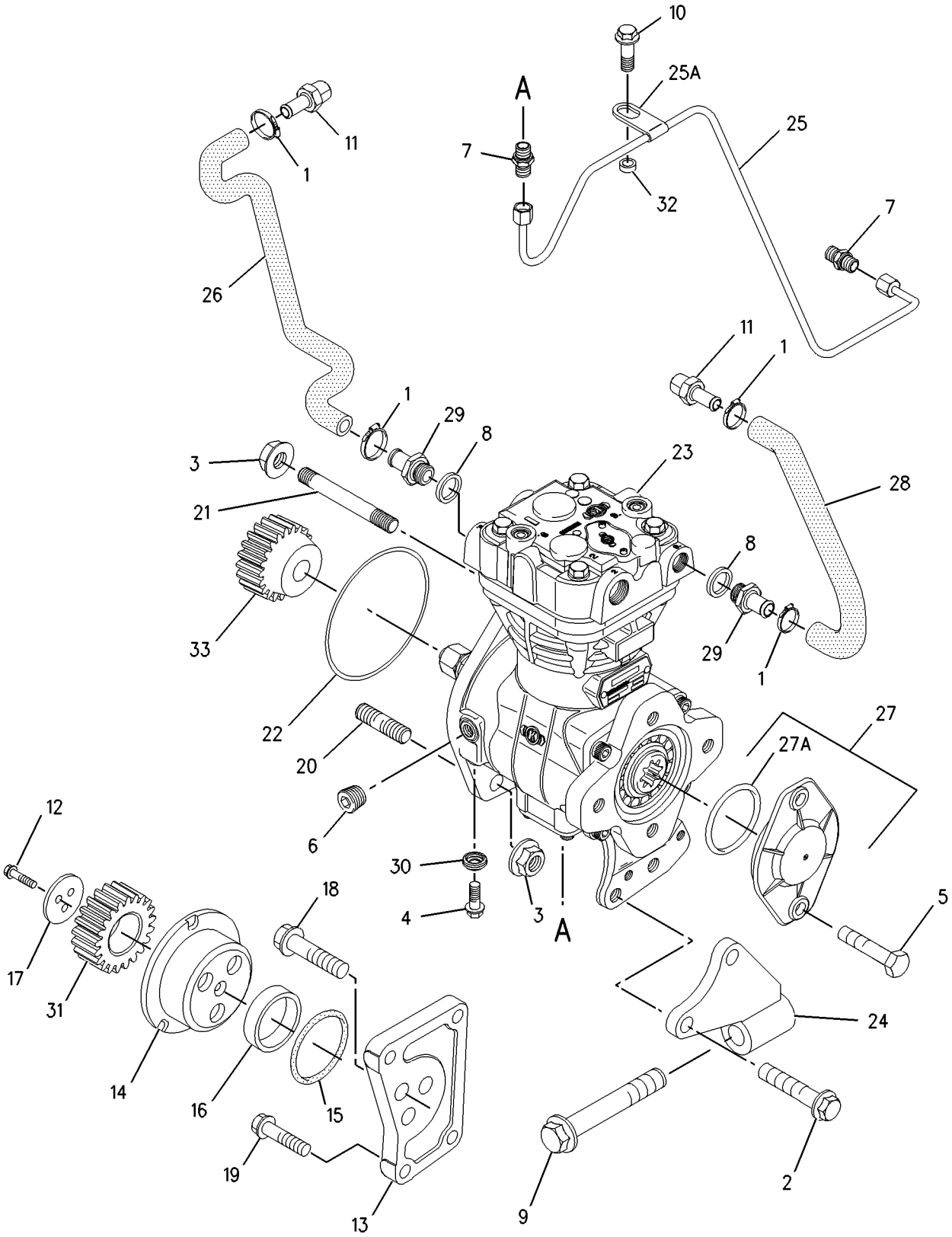

GRAPHIC #1 g00899359

BASIC ENGINE

216-4093 AIR COMPRESSOR GP

AN ATTACHMENT

SMCS-1803 **i01756055**

NOTE	REF NO	GRAPHIC REF	PART NUMBER	QTY	PART NAME 1 2 3 4 5 6 (PRODUCT LEVEL)	SEE PAGE
	1	1	**5D-1026**	4	CLAMP-HOSE	
	2	1	**6I-0217**	2	BOLT (M8X1.25X20MM)	
	3	1	**6I-4200**	1	BOLT (M10X1.5X16MM)	
	4	1	**035-8017**	2	UNION	
	5	1	**067-6045**	2	WASHER (5/8 IN)	
	6	1	**100-4461**	1	BOLT (M10X50MM)	
	7	1	**100-4830**	1	BOLT (M10X1.5X20MM)	
	8	1	**113-4616**	2	CONNECTOR	
	9	1	**126-3219**	1	SEAL-O-RING	
	10	1	**166-5255**	1	AIR COMPRESSOR GP	
	11	1	**166-5262**	1	BRACKET	
	12	1	**166-5263**	1	PIPE AS	
	12A	1	**105-3154**	1	CLIP	
	13	1	**166-5264**	1	HOSE	
	14	1	**198-8262**	1	COVER AS	
	14A	1	**198-8263**	1	SEAL-O-RING	
	15	1	**209-6824**	1	HOSE	
	16	1	**209-6825**	2	ADAPTER	
	17	1	**214-3205**	1	SPACER	
	18	1	**214-3206**	1	GEAR	

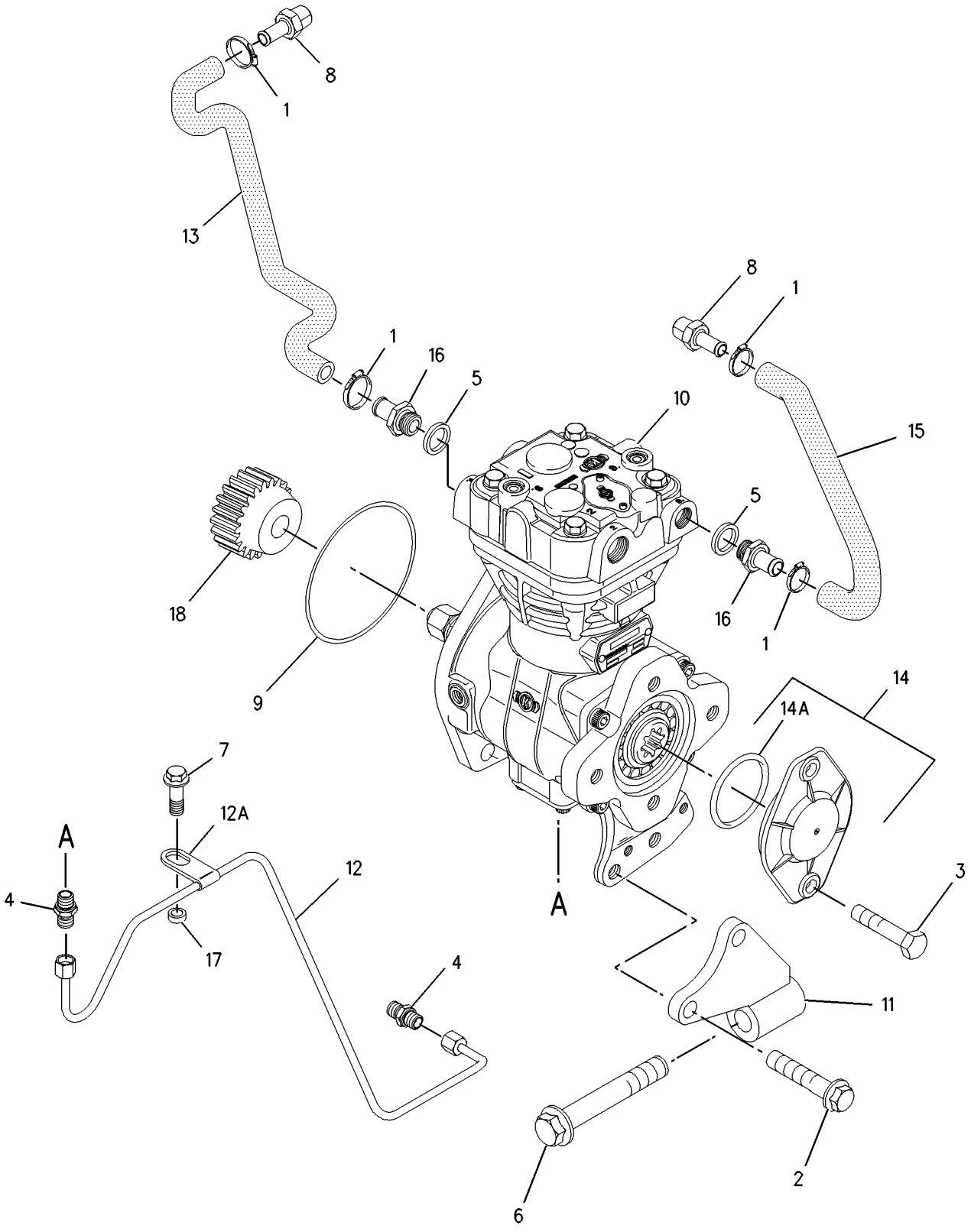

GRAPHIC #1 g00899428

BASIC ENGINE

226-3558 AIR COMPRESSOR GP

AN ATTACHMENT

SMCS-1803 **i01773225**

NOTE	REF NO	GRAPHIC REF	PART NUMBER	QTY	PART NAME 1 2 3 4 5 6 (PRODUCT LEVEL)	SEE PAGE
	1	1	**2B-0858**	1	PLUG-PIPE	
	2	1	**6I-0233**	3	NUT (M12)	
	3	1	**6I-0646**	1	BOLT (M10X1.5X14MM)	
	4	1	**035-8063**	1	PLUG (1/8)	
	5	1	**124-3815**	3	BOLT (M8X16X1.25MM)	
	6	1	**126-3205**	1	BRACKET	
	7	1	**126-3206**	1	HUB	
	8	1	**126-3207**	1	SEAL-O-RING	
	9	1	**126-3208**	1	BEARING	
	10	1	**126-3210**	1	PLATE	
	11	1	**126-3211**	3	BOLT	
	12	1	**126-3212**	4	BOLT	
	13	1	**126-3216**	1	STUD	
	14	1	**126-3217**	1	STUD	
	15	1	**126-3219**	1	SEAL-O-RING	
	16	1	**186-0667**	1	COVER	
	17	1	**214-3203**	1	WASHER	
	18	1	**214-3204**	1	GEAR-IDLER	

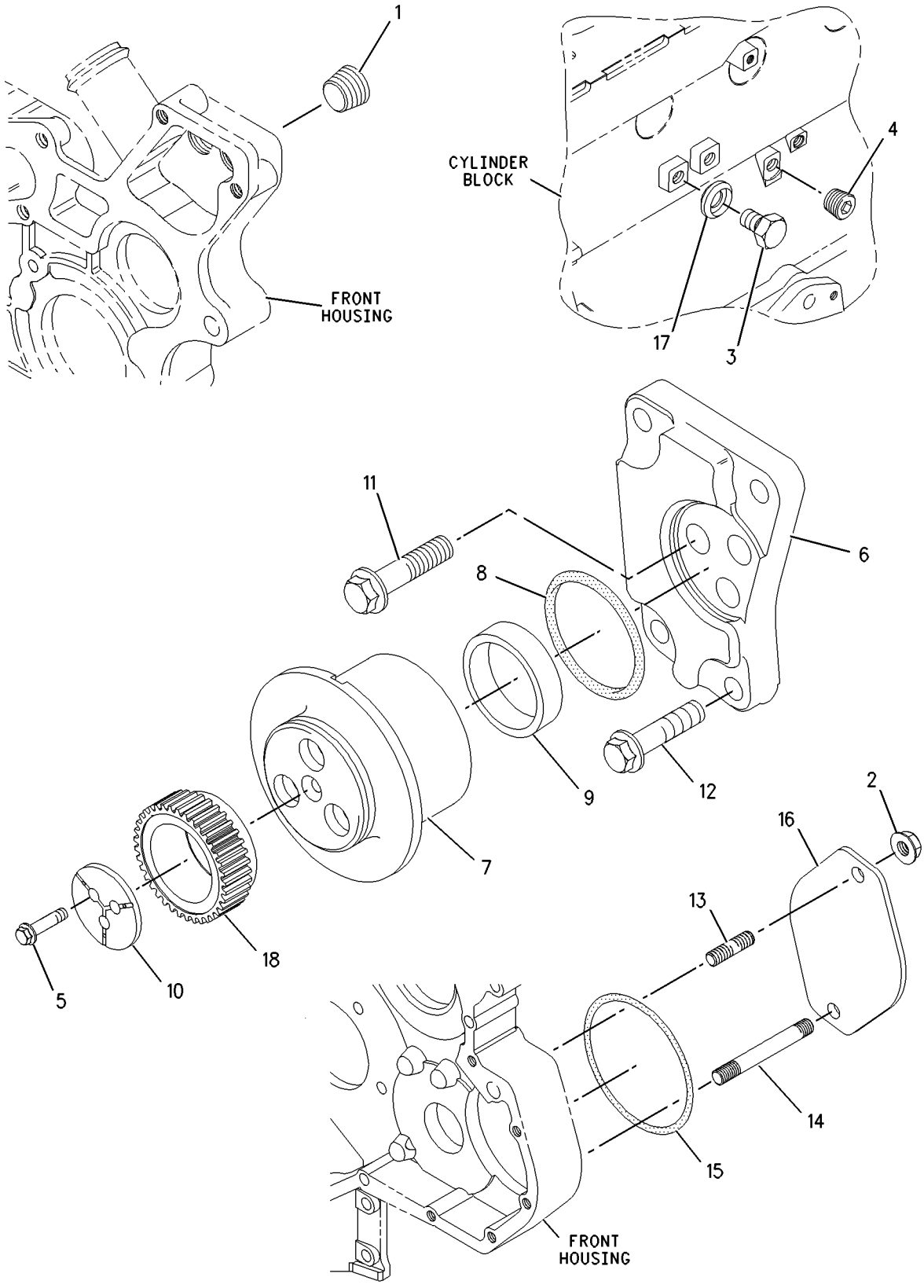

GRAPHIC #1 g00909741

228-7403 AIR COMPRESSOR GP

ALSO AN ATTACHMENT

SMCS-1803 **i01843792**

NOTE	REF NO	GRAPHIC REF	PART NUMBER	QTY	PART NAME 1 2 3 4 5 6 (PRODUCT LEVEL)	SEE PAGE
	1	1	**5D-1026**	2	CLAMP-HOSE	
	2	1	**6B-0933**	1	SPACER (10.31X19.05X6.35MM THK)	
	3	1	**6I-0217**	1	BOLT (M8X1.25X20MM)	
	4	1	**6I-0233**	1	NUT (M12)	
	5	1	**6I-0646**	1	BOLT (M10X1.5X14MM)	
	6	1	**6I-4200**	1	BOLT (M10X1.5X16MM)	
	7	1	**7M-7410**	1	PLUG	
	8	1	**035-8017**	1	UNION	
	9	1	**067-6045**	1	WASHER (5/8 IN)	
	10	1	**100-4461**	1	BOLT (M10X50MM)	
	11	1	**100-4830**	1	BOLT (M10X1.5X20MM)	
	12	1	**113-4616**	1	CONNECTOR	
	13	1	**124-3815**	3	BOLT (M8X16X1.25MM)	
	14	1	**126-3204**	1	GEAR (28 TEETH)	
	15	1	**126-3205**	1	BRACKET	
	16	1	**126-3206**	1	HUB	
	17	1	**126-3207**	1	SEAL-O-RING	
	18	1	**126-3208**	1	BEARING	
	19	1	**126-3209**	1	GEAR (32 TEETH)	
	20	1	**126-3210**	1	PLATE	
	21	1	**126-3211**	3	BOLT	
	22	1	**126-3212**	4	BOLT	
	23	1	**126-3216**	1	STUD	
	24	1	**126-3217**	1	STUD	
	25	1	**126-3219**	1	SEAL-O-RING	
	26	1	**166-5261**	1	CRANKSHAFT	
	27	1	**166-5262**	1	BRACKET	
	28	1	**166-5263**	1	PIPE AS	
	28A	1	**105-3154**	1	CLIP	
	29	1	**198-8262**	1	COVER AS	
	29A	1	**198-8263**	1	SEAL-O-RING	
	30	1	**209-6824**	1	HOSE	
	31	1	**209-6825**	1	ADAPTER	
	32	1	**214-3203**	1	WASHER	
	33	1	**228-7398**	1	AIR COMPRESSOR GP	
					AVAILABLE REPAIR KIT(S):	
			209-6881	1	KIT-SEAL (COMPRESSOR) (AIR)	
			209-6883	1	KIT-REPAIR (AIR COMPRESSOR VALVE)	
			209-6884	1	KIT-REPAIR (AIR COMPRESSOR RING)	

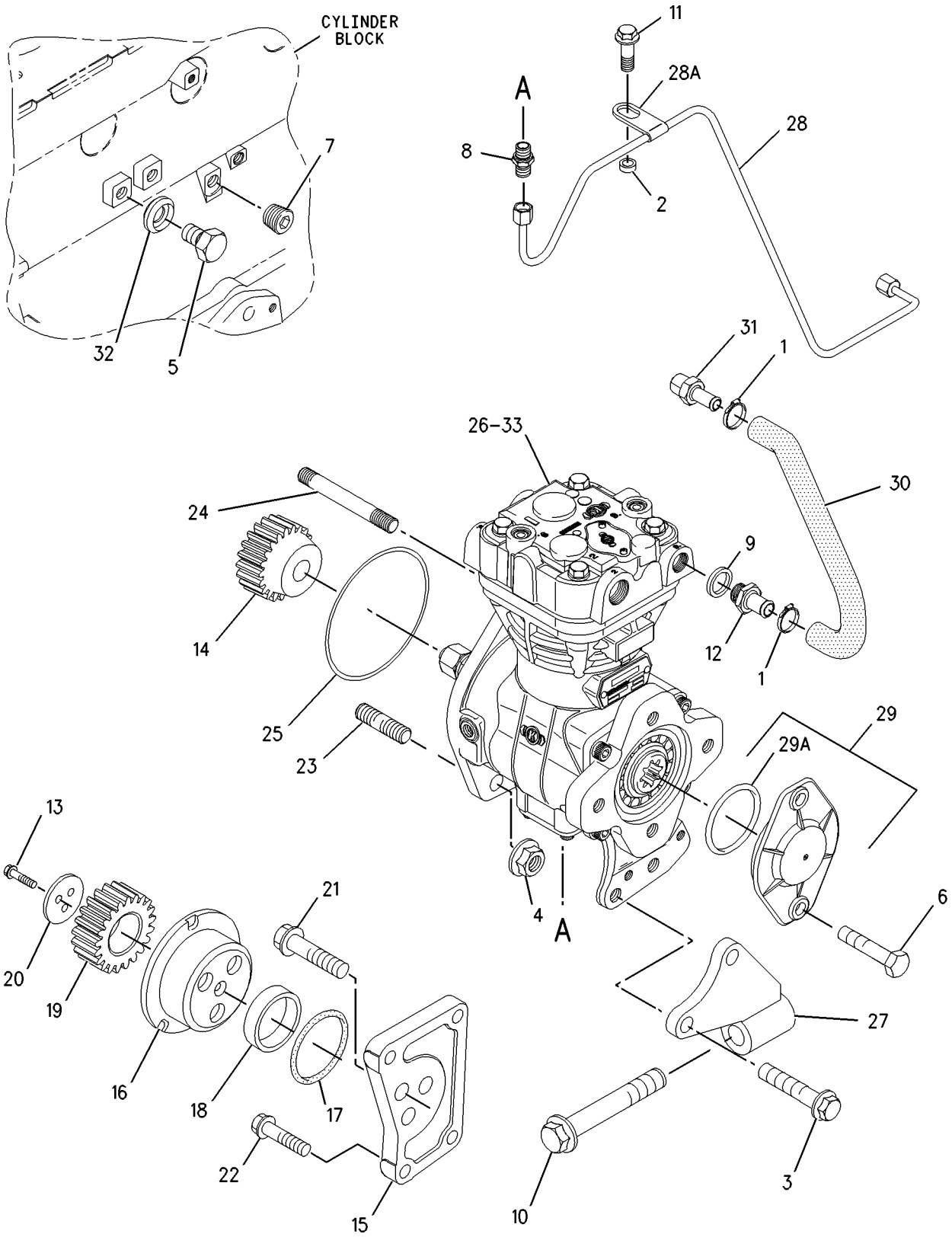

GRAPHIC #1 g00933582

BASIC ENGINE

216-8620 CAMSHAFT GP

SMCS-1210 **i01801877**

NOTE	REF NO	GRAPHIC REF	PART NUMBER	QTY	PART NAME 1 2 3 4 5 6 (PRODUCT LEVEL)	SEE PAGE
	1	1	**154-8056**	1	CAMSHAFT	

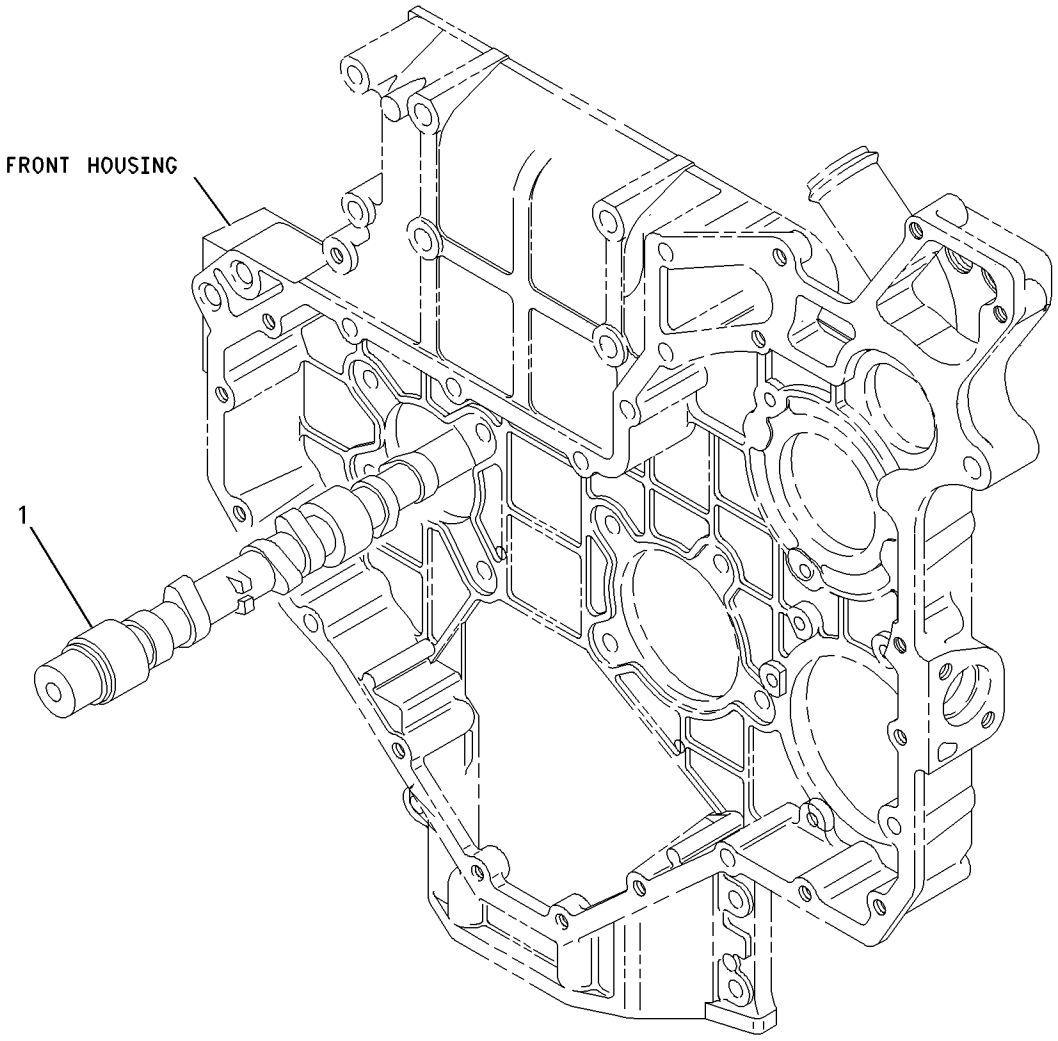

GRAPHIC #1 g00922202

BASIC ENGINE

221-6858 COVER GP-ENGINE

PTO

AN ATTACHMENT

SMCS-1000 **i01770747**

NOTE	REF NO	GRAPHIC REF	PART NUMBER	QTY	PART NAME 1 2 3 4 5 6 (PRODUCT LEVEL)	SEE PAGE
	1	1	**2B-0858**	1	PLUG-PIPE	
	2	1	**6I-0593**	1	BOLT (M10X1.5X30MM)	
	3	1	**6I-0646**	1	BOLT (M10X1.5X14MM)	
	5	1	**100-4830**	1	BOLT (M10X1.5X20MM)	
	6	1	**111-8222**	5	BOLT	
	7	1	**209-5502**	1	COVER AS (TIMING GEAR)	
	8	1	**209-5503**	1	SEAL-COVER	
	9	1	**214-3203**	1	WASHER	

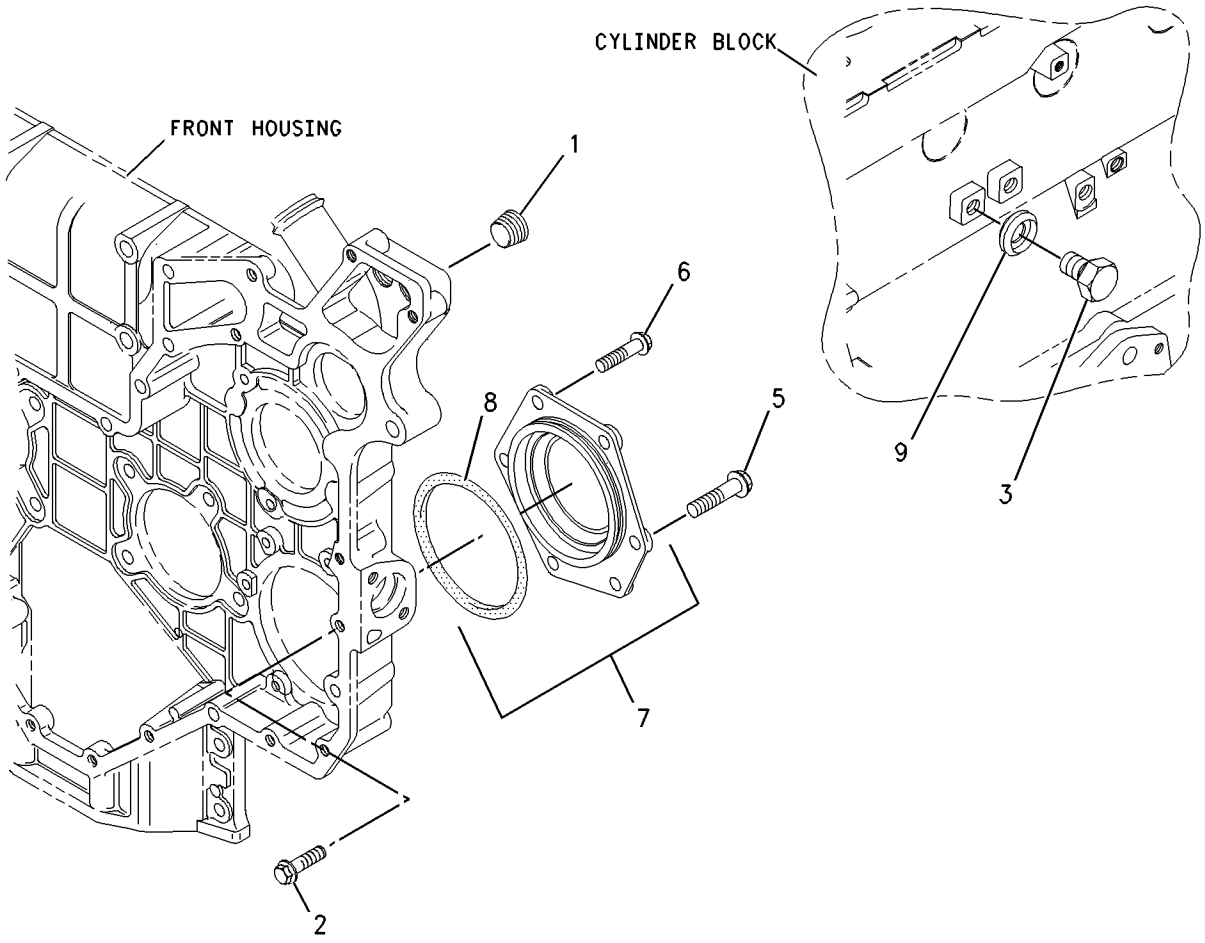

GRAPHIC #1 g00905241

216-9625 COVER GP-VALVE MECHANISM

AN ATTACHMENT

SMCS-1107 **i01848425**

NOTE	REF NO	GRAPHIC REF	PART NUMBER	QTY	PART NAME 1 2 3 4 5 6 (PRODUCT LEVEL)	SEE PAGE
	1	1	**2S-3440**	2	CLAMP-HOSE	
	2	1	**5D-1026**	2	CLAMP-HOSE	
	3	1	**6I-0217**	2	BOLT (M8X1.25X20MM)	
	4	1	**6I-0260**	2	BOLT (M8X1.25X25MM)	
	5	1	**100-4104**	1	GASKET	
	6	1	**112-7704**	2	BOLT	
	7	1	**197-5015**	1	PLATE AS	
	8	1	**113-1505**	1	SEAL-O-RING	
	9	1	**216-9554**	1	FILLER AS-OIL	
	10	1	**130-9888**	1	CAP AS (OIL FILLER)	
	11	1	**113-1504**	1	SEAL-O-RING	
	12	1	**216-9553**	1	SEAL-O-RING	
	13	1	**216-9606**	1	COVER AS (VALVE)	
	13A	1	**229-3557**	1	SEAL-O-RING	
	14	1	**229-3558**	1	BOLT	
	15	1	**216-9600**	8	BOLT	
	16	1	**216-9602**	1	BREATHER AS (CRANKCASE)	
	17	1	**216-9604**	1	GASKET (VALVE COVER)	
	18	1	**216-9608**	1	BREATHER (CRANKCASE) (CRANKCASE)	
	18A	1	**229-3555**	1	FILTER-BREATHER (CRANKCASE)	
	18B	1	**229-3556**	1	SEAL-O-RING (CRANKCASE BREATHER)	
	19	1	**216-9611**	1	BRACKET	
	20	1	**216-9614**	1	HOSE (UPPER FUMES DISPOSAL)	
	21	1	**216-9617**	1	HOSE (LOWER FUMES DISPOSAL)	
	22	1	**216-9618**	1	VALVE	
	23	1	**216-9620**	1	ELBOW	
	24	1	**216-9623**	1	ADAPTER	

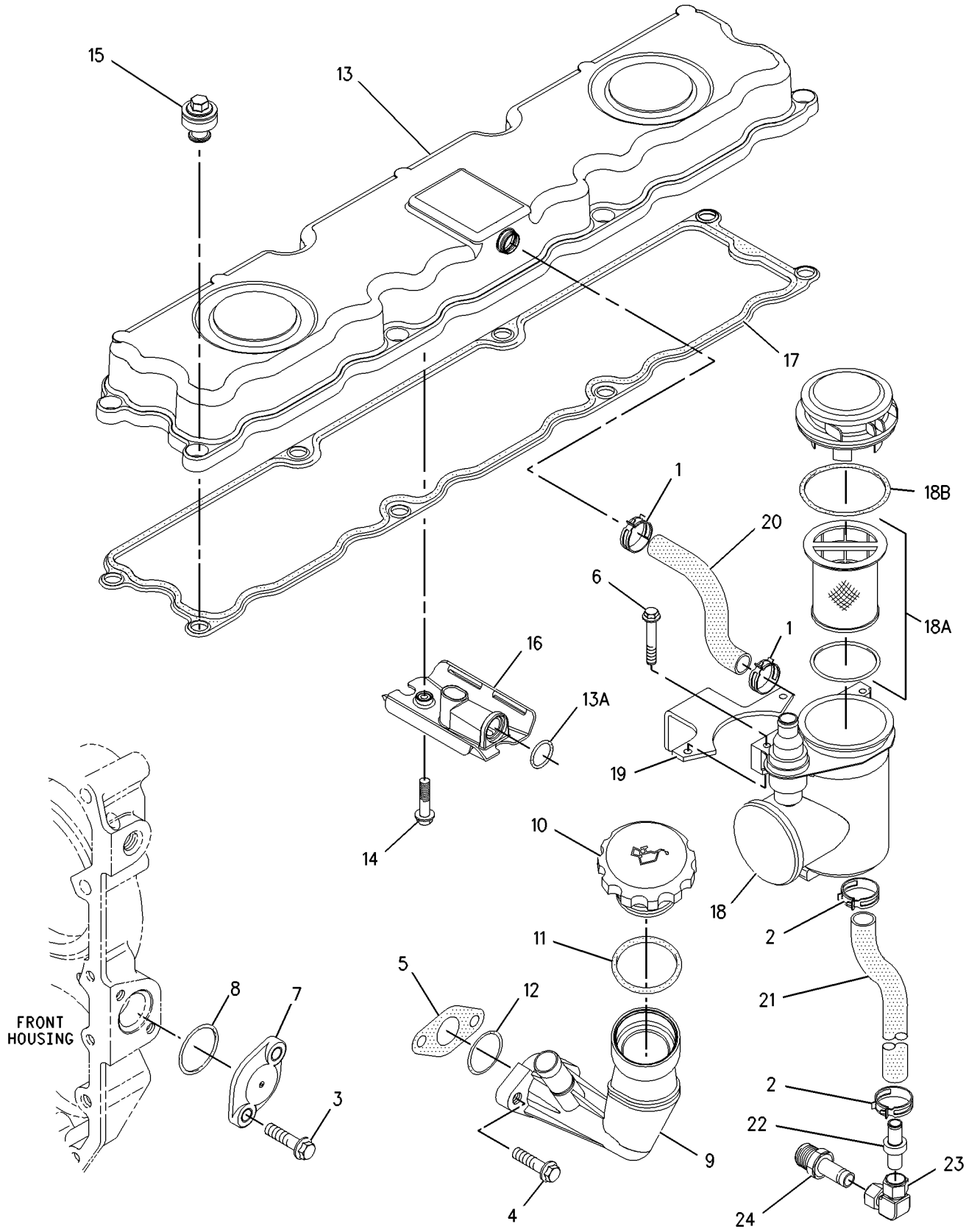

GRAPHIC #1

g00936733

220-6106 COVER GP-VALVE MECHANISM

AN ATTACHMENT

SMCS-1107 **i01843789**

NOTE	REF NO	GRAPHIC REF	PART NUMBER	QTY	PART NAME 1 2 3 4 5 6 (PRODUCT LEVEL)	SEE PAGE
	1	1	**6I-0217**	2	BOLT (M8X1.25X20MM)	
	2	1	**6I-0456**	1	BOLT (M8X1.25X45MM)	
	3	1	**6I-4374**	1	BOLT	
	4	1	**7C-1281**	1	BRACKET	
	5	1	**100-4104**	1	GASKET	
	6	1	**160-6988**	1	FILLER AS-OIL	
	7	1	**113-1505**	1	SEAL-O-RING	
	8	1	**130-9888**	1	CAP AS (OIL FILLER)	
	9	1	**113-1504**	1	SEAL-O-RING	
	10	1	**162-1565**	1	SPRING (BREATHER HOSE)	
	11	1	**191-5049**	1	HOSE-DISPOSAL (FUMES)	
	12	1	**216-9606**	1	COVER AS (VALVE)	
	13	1	**203-9203**	1	SCREW	
	14	1	**216-9600**	8	BOLT	
	15	1	**216-9602**	1	BREATHER AS (CRANKCASE)	
	16	1	**216-9604**	1	GASKET (VALVE COVER)	
	17	1	**219-1803**	1	TUBE	
	18	1	**7M-7410**	1	PLUG	

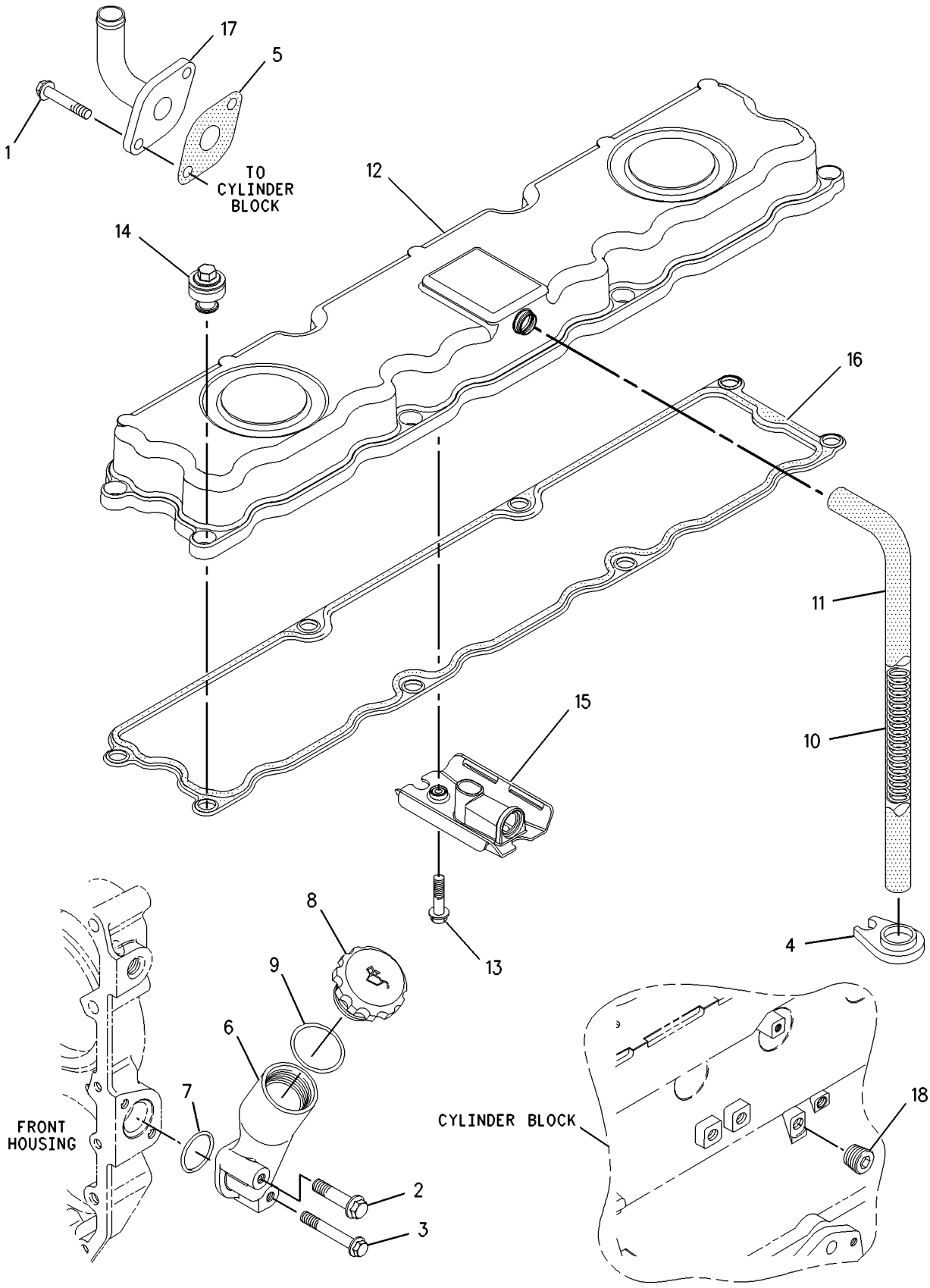

GRAPHIC #1 g00900183

BASIC ENGINE

221-1241 COVER GP-VALVE MECHANISM

AN ATTACHMENT

SMCS-1107 **i01834981**

NOTE	REF NO	GRAPHIC REF	PART NUMBER	QTY	PART NAME 1 2 3 4 5 6 (PRODUCT LEVEL)	SEE PAGE
	1	1	**6I-0217**	2	BOLT (M8X1.25X20MM)	
	2	1	**6I-0456**	1	BOLT (M8X1.25X45MM)	
	3	1	**6I-4374**	1	BOLT	
	4	1	**7C-1281**	1	BRACKET	
	5	1	**100-4104**	1	GASKET	
	6	1	**160-6988**	1	FILLER AS-OIL	
	7	1	**113-1505**	1	SEAL-O-RING	
	8	1	**130-9888**	1	CAP AS (OIL FILLER)	
	9	1	**113-1504**	1	SEAL-O-RING	
	10	1	**162-1565**	1	SPRING (BREATHER HOSE)	
	11	1	**191-5049**	1	HOSE-DISPOSAL (FUMES)	
	12	1	**216-9606**	1	COVER AS (VALVE)	
	13	1	**203-9203**	1	SCREW	
	14	1	**216-9600**	8	BOLT	
	15	1	**216-9602**	1	BREATHER AS (CRANKCASE)	
	16	1	**216-9604**	1	GASKET (VALVE COVER)	
	17	1	**219-1803**	1	TUBE	
	18	1	**7M-7410**	1	PLUG	

221-1241 **COVER GP-VALVE MECHANISM** *(contd.)* **i01834981**

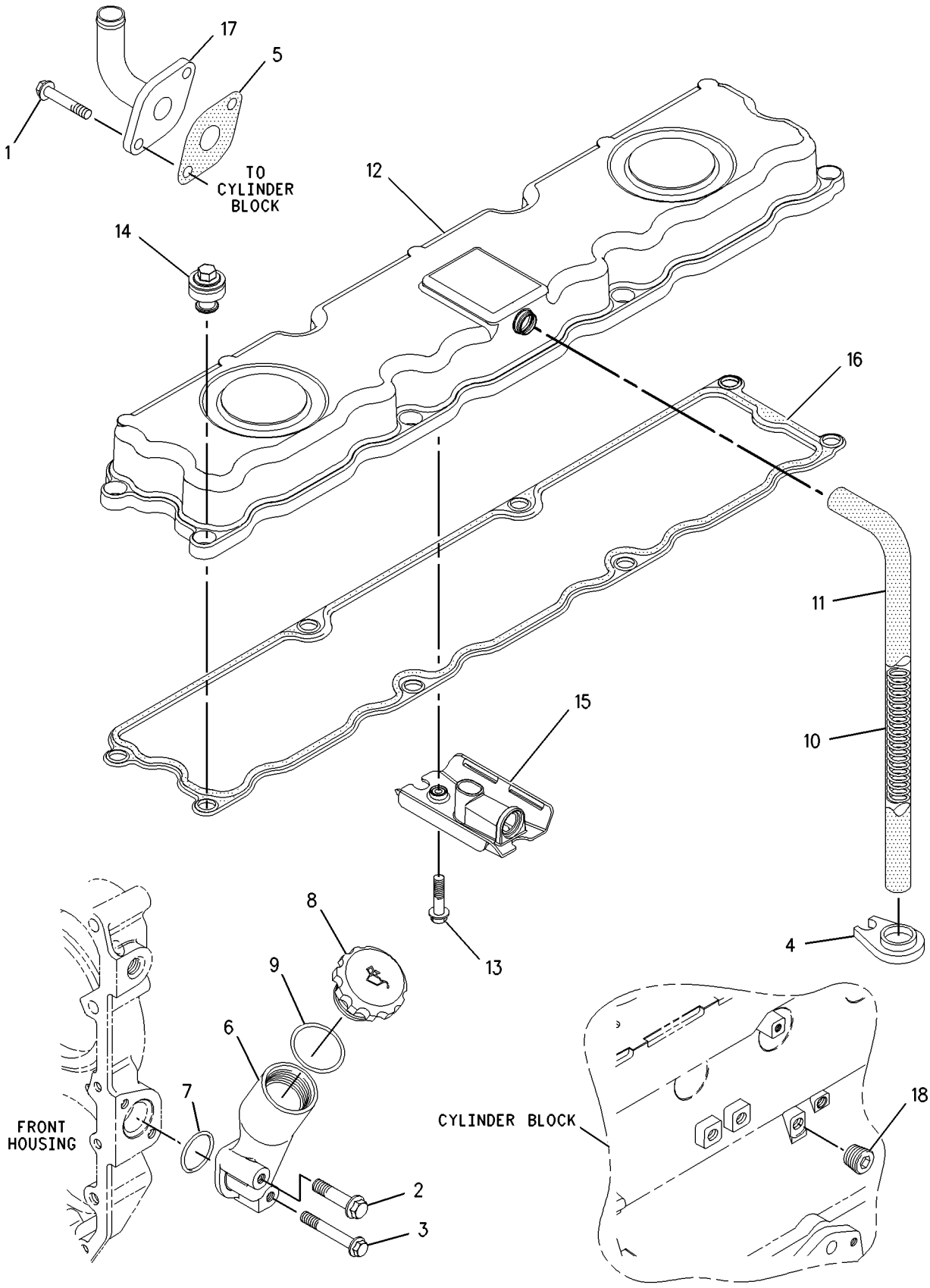

GRAPHIC #1 g00900183

BASIC ENGINE

221-7115 COVER GP-VALVE MECHANISM

AN ATTACHMENT

SMCS-1107 **i01843791**

NOTE	REF NO	GRAPHIC REF	PART NUMBER	QTY	PART NAME 1 2 3 4 5 6 (PRODUCT LEVEL)	SEE PAGE
	1	1	**2S-3440**	2	CLAMP-HOSE	
	2	1	**5D-1026**	2	CLAMP-HOSE	
	3	1	**6I-0217**	2	BOLT (M8X1.25X20MM)	
	4	1	**6I-0456**	1	BOLT (M8X1.25X45MM)	
	5	1	**6I-4374**	1	BOLT	
	6	1	**100-4104**	1	GASKET	
	7	1	**112-7704**	2	BOLT	
	8	1	**160-6988**	1	FILLER AS-OIL	
	9	1	**113-1505**	1	SEAL-O-RING	
	10	1	**130-9888**	1	CAP AS (OIL FILLER)	
	11	1	**113-1504**	1	SEAL-O-RING	
	12	1	**216-9606**	1	COVER AS (VALVE)	
	12A	1	**229-3557**	1	SEAL-O-RING	
	13	1	**229-3558**	1	BOLT	
	14	1	**216-9600**	8	BOLT	
	15	1	**216-9602**	1	BREATHER AS (CRANKCASE)	
	16	1	**216-9604**	1	GASKET (VALVE COVER)	
	17	1	**216-9608**	1	BREATHER (CRANKCASE)	
	17A	1	**229-3555**	1	FILTER-BREATHER (CRANKCASE)	
	17B	1	**229-3556**	1	SEAL-O-RING (CRANKCASE BREATHER)	
	18	1	**216-9611**	1	BRACKET	
	19	1	**216-9614**	1	HOSE (UPPER FUMES DISPOSAL)	
	20	1	**216-9617**	1	HOSE (LOWER FUMES DISPOSAL)	
	21	1	**216-9618**	1	VALVE	
	22	1	**216-9620**	1	ELBOW	
	23	1	**216-9623**	1	ADAPTER	
	24	1	**219-1803**	1	TUBE	

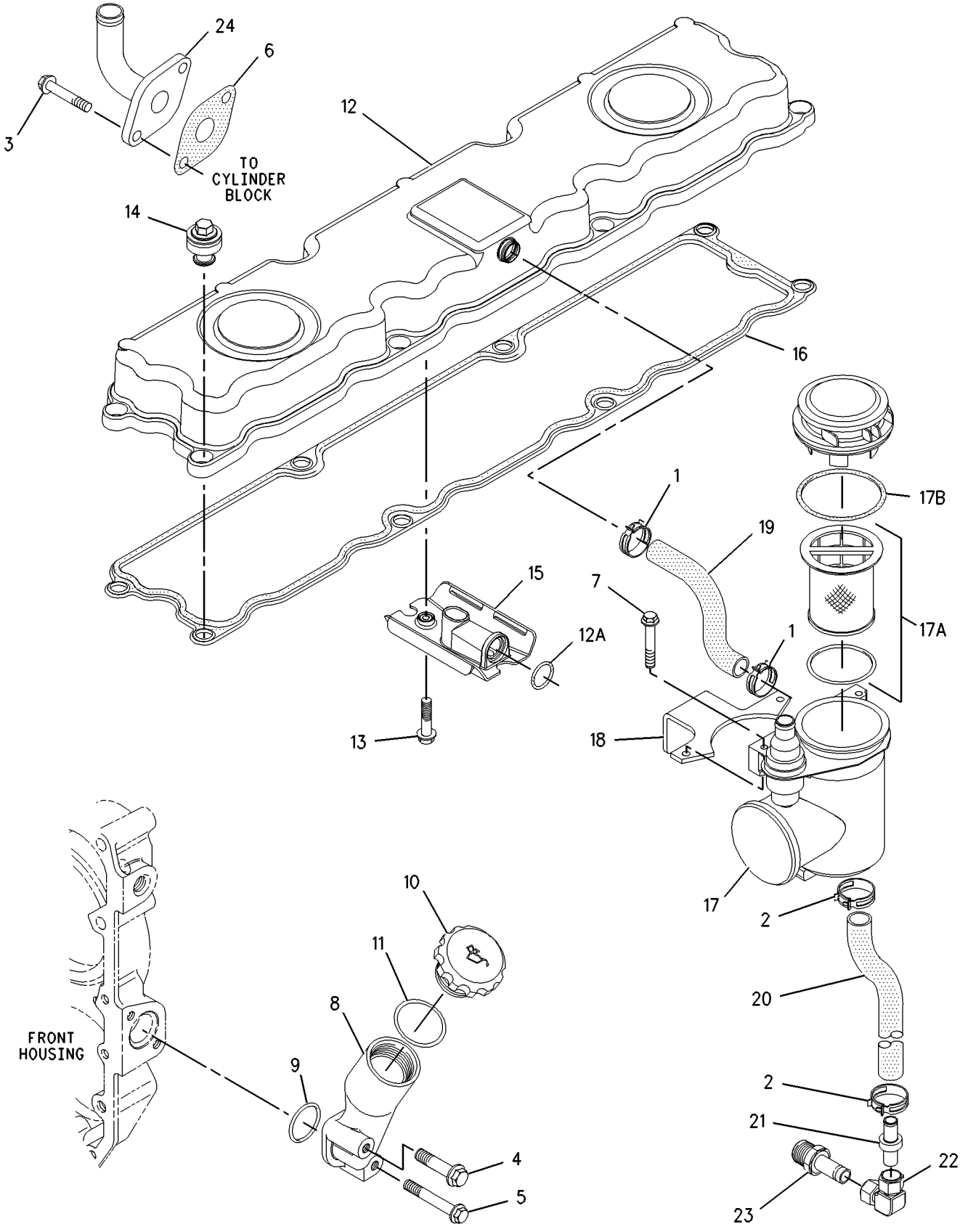

GRAPHIC #1

g00936683

226-3771 COVER GP-VALVE MECHANISM

AN ATTACHMENT

SMCS-1107 **i01848427**

NOTE	REF NO	GRAPHIC REF	PART NUMBER	QTY	PART NAME 1 2 3 4 5 6 (PRODUCT LEVEL)	SEE PAGE
	1	1	**2S-3440**	2	CLAMP-HOSE	
	2	1	**5D-1026**	2	CLAMP-HOSE	
	3	1	**6I-0217**	4	BOLT (M8X1.25X20MM)	
	4	1	**6I-0512**	1	GASKET	
	5	1	**6I-0839**	1	BOLT (M8X1.25X70MM)	
	6	1	**100-4104**	1	GASKET	
	7	1	**101-3771**	1	BOLT	
	8	1	**112-7704**	2	BOLT	
	9	1	**160-6988**	1	FILLER AS-OIL	
	10	1	**113-1505**	1	SEAL-O-RING	
	11	1	**130-9888**	1	CAP AS (OIL FILLER)	
	12	1	**113-1504**	1	SEAL-O-RING	
	13	1	**193-3311**	1	SPACER	
	14	1	**197-5015**	1	PLATE AS	
	15	1	**113-1505**	1	SEAL-O-RING	
	16	1	**216-9606**	1	COVER AS (VALVE)	
	16A	1	**229-3557**	1	SEAL-O-RING	
	17	1	**229-3558**	1	BOLT	
	18	1	**216-9600**	8	BOLT	
	19	1	**216-9602**	1	BREATHER AS (CRANKCASE)	
	20	1	**216-9604**	1	GASKET (VALVE COVER)	
	21	1	**216-9608**	1	BREATHER (CRANKCASE)	
	21A	1	**229-3555**	1	FILTER-BREATHER (CRANKCASE)	
	21B	1	**229-3556**	1	SEAL-O-RING (CRANKCASE BREATHER)	
	22	1	**216-9611**	1	BRACKET	
	23	1	**216-9614**	1	HOSE (UPPER FUMES DISPOSAL)	
	24	1	**216-9617**	1	HOSE (LOWER FUMES DISPOSAL)	
	25	1	**216-9618**	1	VALVE	
	26	1	**216-9620**	1	ELBOW	
	27	1	**216-9623**	1	ADAPTER	
	28	1	**219-1803**	1	TUBE	

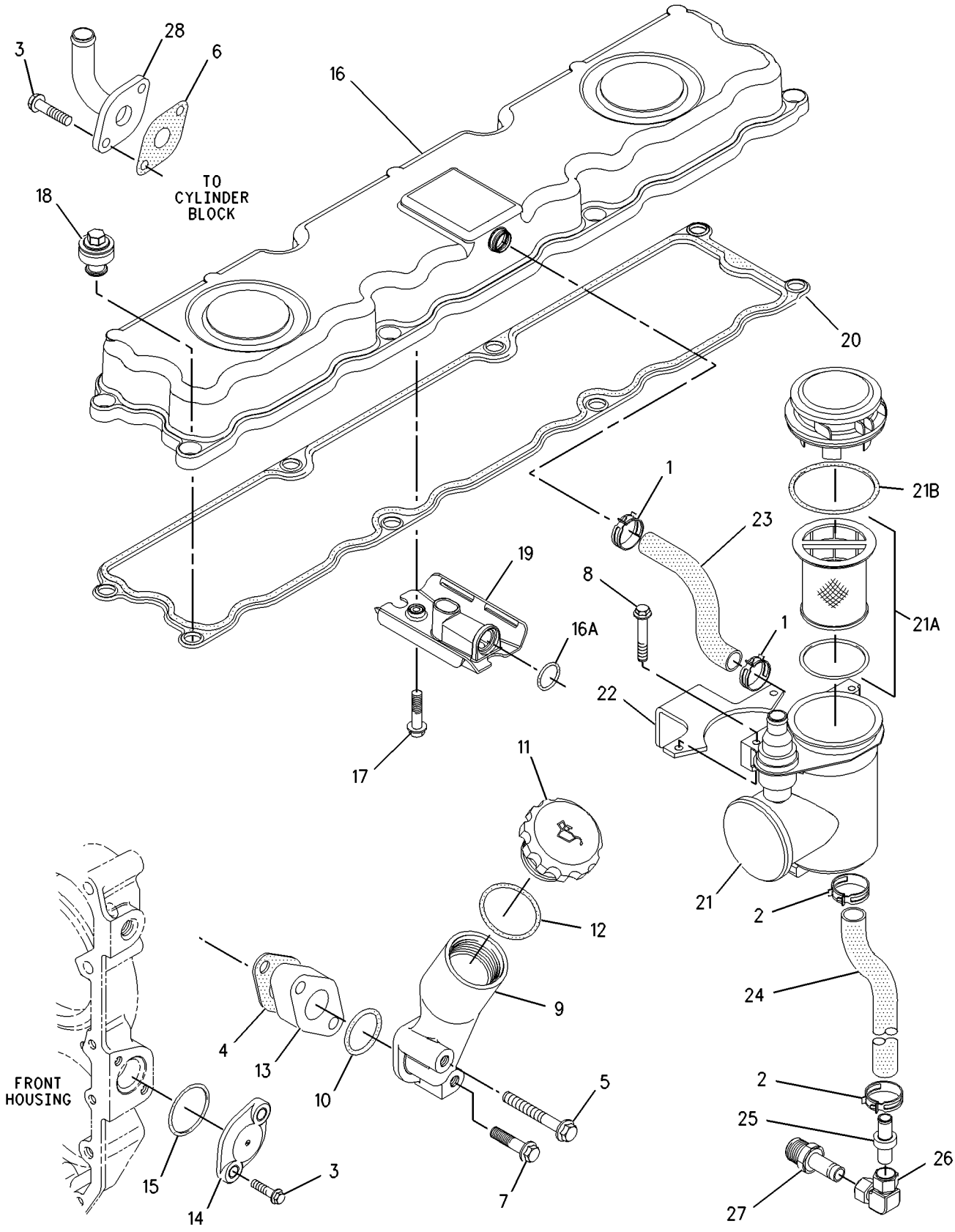

GRAPHIC #1

g00936568

BASIC ENGINE

228-7371 COVER GP-VALVE MECHANISM

ALSO AN ATTACHMENT

SMCS-1107 **i01843785**

NOTE	REF NO	GRAPHIC REF	PART NUMBER	QTY	PART NAME 1 2 3 4 5 6 (PRODUCT LEVEL)	SEE PAGE
	1	1	**5D-1026**	1	CLAMP-HOSE	
	2	1	**6I-0217**	4	BOLT (M8X1.25X20MM)	
	3	1	**7C-1281**	1	BRACKET	
	4	1	**7M-7410**	1	PLUG	
	5	1	**100-4104**	1	GASKET	
	6	1	**162-1565**	1	SPRING (BREATHER HOSE)	
	7	1	**197-5015**	1	PLATE AS	
	8	1	**113-1505**	1	SEAL-O-RING	
	9	1	**219-1787**	1	COVER AS-VALVE	
	9A	1	**136-3608**	1	CAP AS (OIL FILLER)	
	9B	1	**124-0506**	1	SEAL	
	9C	1	**199-9252**	1	SEAL-O-RING	
	9D	1	**203-9203**	1	SCREW	
	9E	1	**216-9600**	8	BOLT	
	9F	1	**216-9602**	1	BREATHER AS (CRANKCASE)	
	9G	1	**216-9604**	1	GASKET (VALVE COVER)	
	10	1	**219-1803**	1	TUBE	
	11	1	**198-8645**	1	HOSE (BREATHER)	

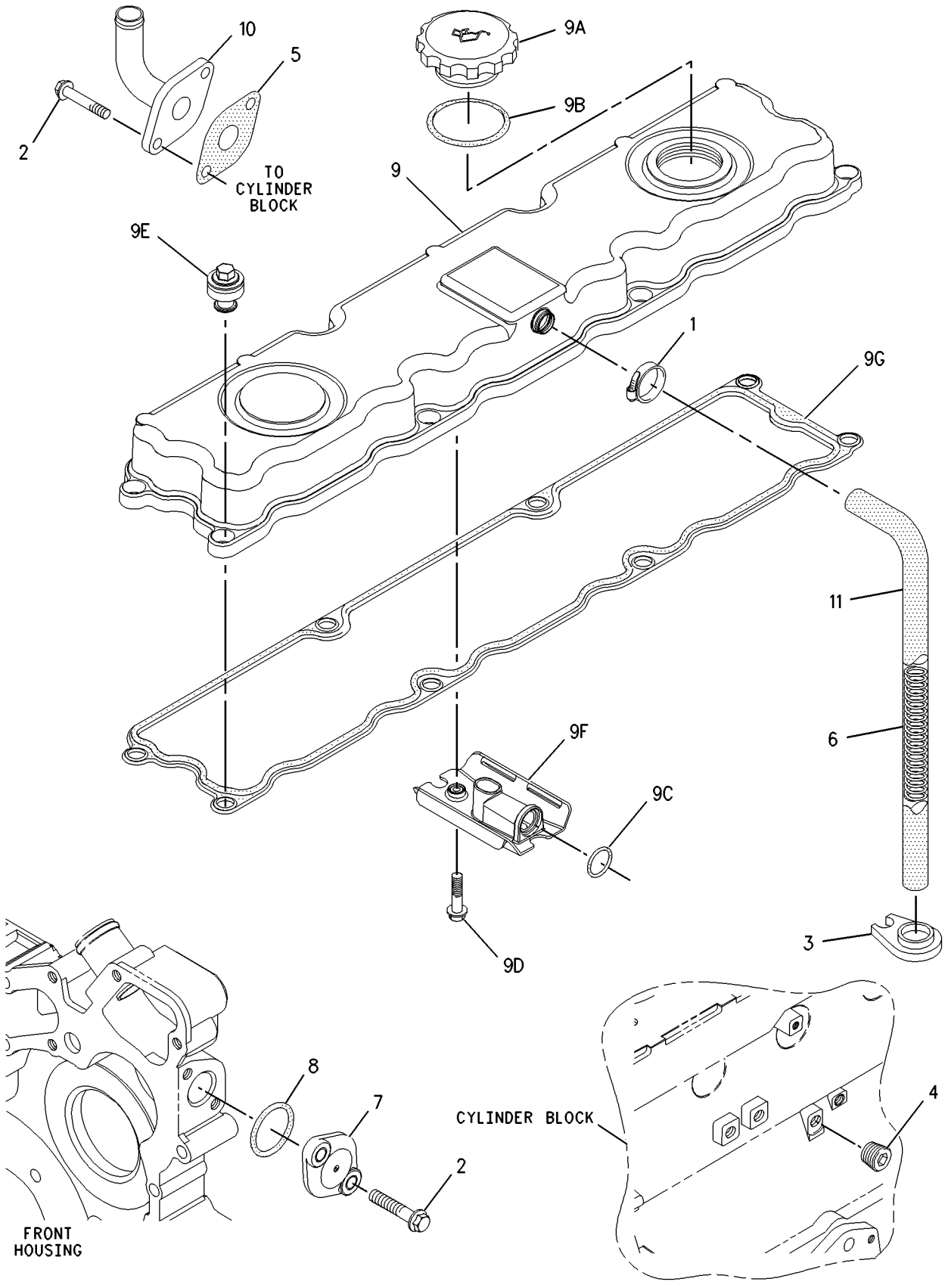

GRAPHIC #1

g00933469

BASIC ENGINE

216-8316 CRANKSHAFT GP

SMCS-1202 **i01777306**

NOTE	REF NO	GRAPHIC REF	PART NUMBER	QTY	PART NAME 1 2 3 4 5 6 (PRODUCT LEVEL)	SEE PAGE
	1	1	**1B-8736**	1	KEY-WOODRUFF	
	2	1	**216-8314**	1	GEAR-CRANKSHAFT (34 TEETH)	
	3	1	**216-8315**	1	CRANKSHAFT GP	
B	4	1	**7W-4589**	1	BEARING SET-MAIN (.18MM O.S.)	
B		1	**7W-4590**	1	SET-BEARING (0.25 US ID)	
B		1	**7W-4591**	1	SET-BEARING (0.51 US ID)	
B	5	1	**7W-4592**	1	SET-BEARING (0.76 US ID) (STANDARD)	
B		1	**7W-4816**	1	BEARING SET-ROD	
B		1	**7W-4817**	1	SET-BEARING (0.25 US ID)	
B		1	**7W-4818**	1	SET-BEARING (0.51 US ID)	
B		1	**7W-4819**	1	SET-BEARING (0.76 US ID)	
B	6	1	**032-9090**	2	WASHER-THRUST (STANDARD-UPPER)	
B		1	**067-6873**	2	WASHER-THRUST (.18MM OS)	
B	7	1	**032-9091**	2	WASHER-THRUST (STANDARD-LOWER)	
B		1	**067-6874**	2	WASHER-THRUST (.18MM OS)	

B-USE AS REQUIRED

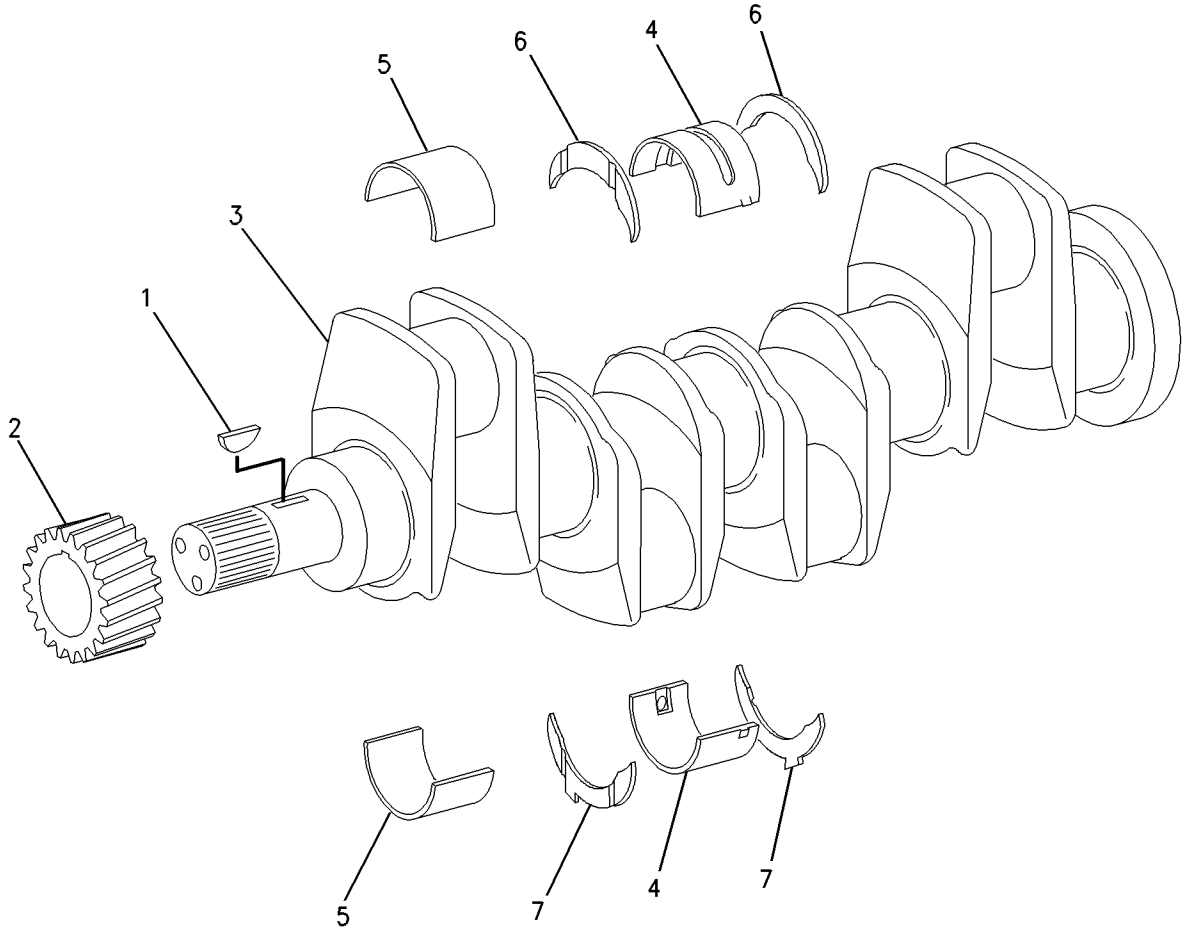

GRAPHIC #1 g00887896

BASIC ENGINE

216-8231 CYLINDER BLOCK GP

SMCS-1201 **i01777340**

NOTE	REF NO	GRAPHIC REF	PART NUMBER	QTY	PART NAME 1 2 3 4 5 6 (PRODUCT LEVEL)	SEE PAGE
Y	1	1	**216-8235**	1	CYLINDER BLOCK GP	28
	2	1	**209-9219**	10	BOLT (M8X1.25X16MM)	
	3	1	**209-9218**	1	HOUSING AS	
	3A	1	**219-2512**	1	SLEEVE	

Y-SEPARATE ILLUSTRATION

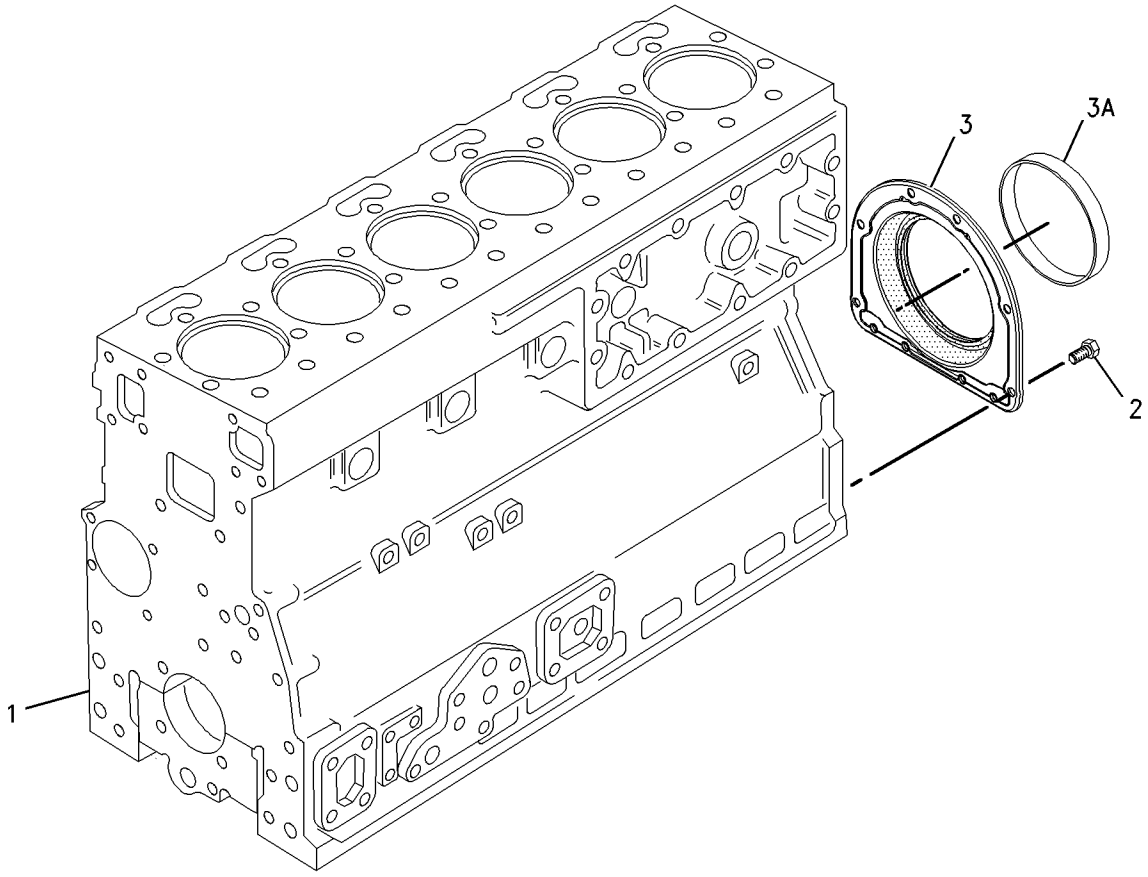

GRAPHIC #1 g00830579

216-8235 CYLINDER BLOCK GP

PART OF 216-8231 CYLINDER BLOCK GP

SMCS-1201 **i01775681**

NOTE	REF NO	GRAPHIC REF	PART NUMBER	QTY	PART NAME 1 2 3 4 5 6 (PRODUCT LEVEL)	SEE PAGE
	1	1	**1N-3762**	12	PLUG-CUP	
	2	1	**6I-1074**	6	VALVE AS (OIL JET)	
					(EACH INCLUDES)	
	3	1	**6I-0686**	1	SPRING	
	4	1	**6I-1075**	1	BALL	
	5	1	**6I-1076**	1	RETAINER	
	6	1	**6I-4354**	1	DOWEL	
	7	1	**7W-2501**	1	PLUG	
	8	1	**9Y-5015**	1	PLUG-FREEZE	
	9	1	**035-8068**	14	BOLT	
	10	1	**036-5802**	1	BEARING	
	11	1	**067-6002**	14	DOWEL	
	12	1	**067-6805**	1	PLUG	
	13	1	**067-6808**	1	PLUG	
	14	1	**111-1815**	6	LINER	
	15	1	**127-3294**	1	SHAFT	
	16	1	**148-3026**	6	JET AS-PISTON COOLING	
	17	1	**214-1668**	1	WASHER-SPECIAL	
	18	1	**215-2103**	6	PLUG	

216-8235 **CYLINDER BLOCK GP** *(contd.)* **i01775681**

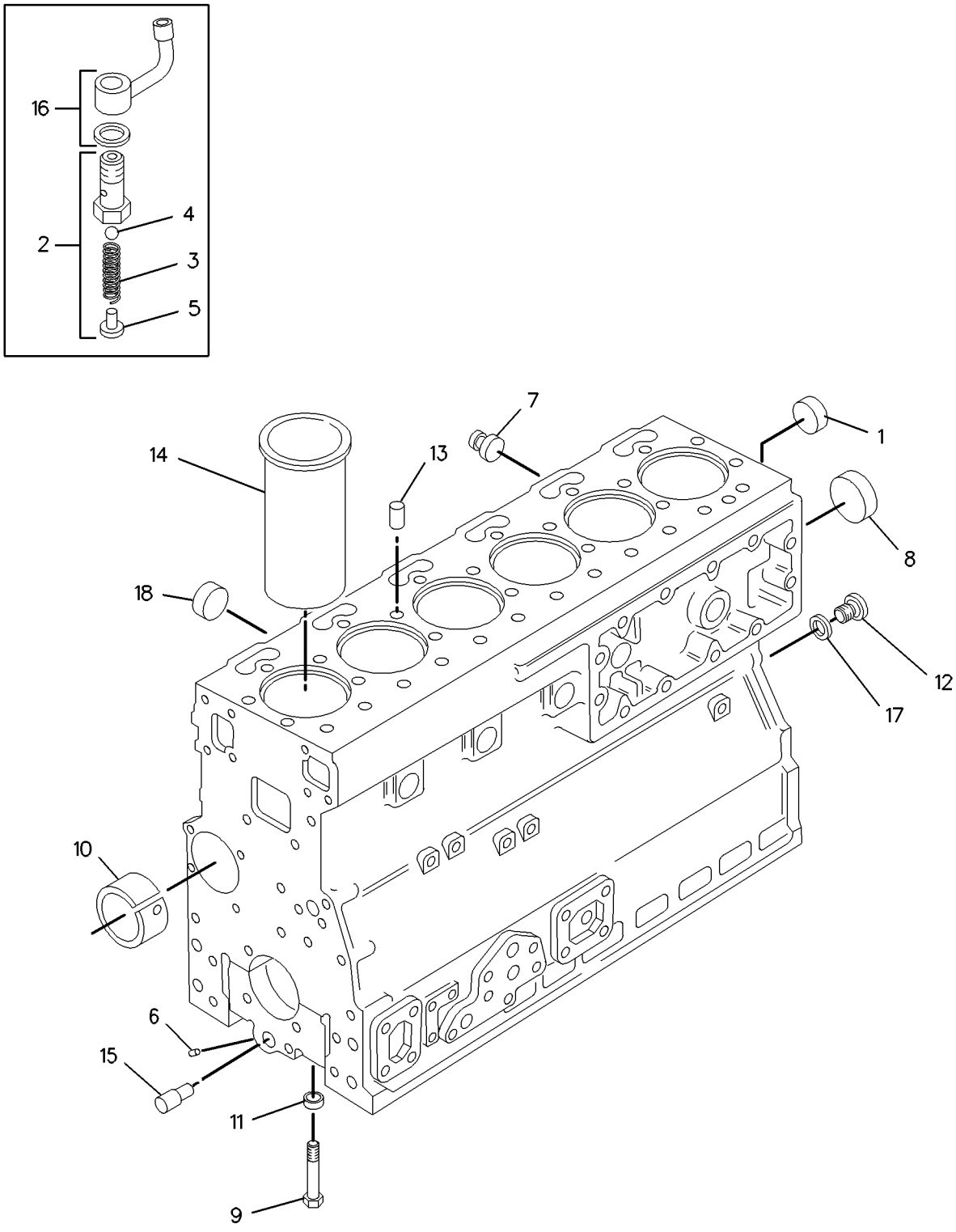

GRAPHIC #1 g00863044

216-8335 CYLINDER HEAD GP

PART OF 216-8343 CYLINDER HEAD GP

SMCS-1100 **i01834988**

NOTE	REF NO	GRAPHIC REF	PART NUMBER	QTY	PART NAME 1 2 3 4 5 6 (PRODUCT LEVEL)	SEE PAGE
	1	1	**1N-3762**	1	PLUG-CUP	
	2	1	**7M-7410**	6	PLUG	
	3	1	**067-6043**	3	PLUG-SIDE	
	4	1	**138-2050**	6	VALVE-EXHAUST	
	5	1	**138-2060**	12	CAP	
	6	1	**145-6855**	6	VALVE-INLET	
	7	1	**145-6856**	6	SEAL (INLET)	
	8	1	**145-6858**	6	SEAL (EXHAUST)	
	9	1	**147-1979**	24	RETAINER	
	10	1	**163-9256**	6	GUIDE-VALVE (EXHAUST)	
	11	1	**185-0882**	6	GUIDE-VALVE (INTAKE)	
	12	1	**206-4127**	12	SPRING-VALVE	
	13	1	**216-8332**	6	INSERT-VALVE (INLET)	
	14	1	**216-8333**	6	INSERT-VALVE (EXHAUST)	

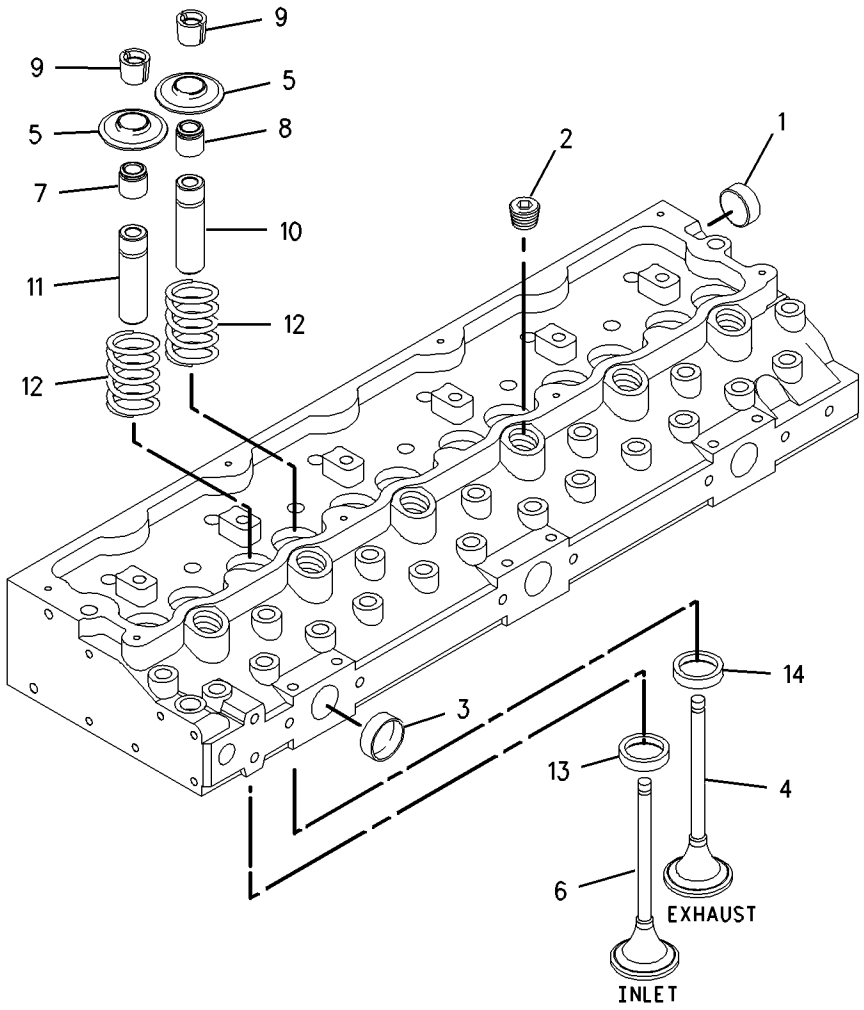

GRAPHIC #1 g00860247

BASIC ENGINE

216-8343 CYLINDER HEAD GP

SMCS-1100 **i01777355**

NOTE	REF NO	GRAPHIC REF	PART NUMBER	QTY	PART NAME 1 2 3 4 5 6 (PRODUCT LEVEL)	SEE PAGE
	1	1	**7W-2518**	12	BOLT (1/2-20X3.63IN)	
	2	1	**7W-2519**	18	BOLT (1/2-20X4.25IN)	
	3	1	**7W-2520**	2	BOLT (1/2-20X5.09IN)	
	4	1	**156-4173**	1	GASKET-CYLINDER HEAD	
	5	1	**161-9820**	2	PIN	
Y	6	1	**216-8335**	1	CYLINDER HEAD GP	30

Y-SEPARATE ILLUSTRATION

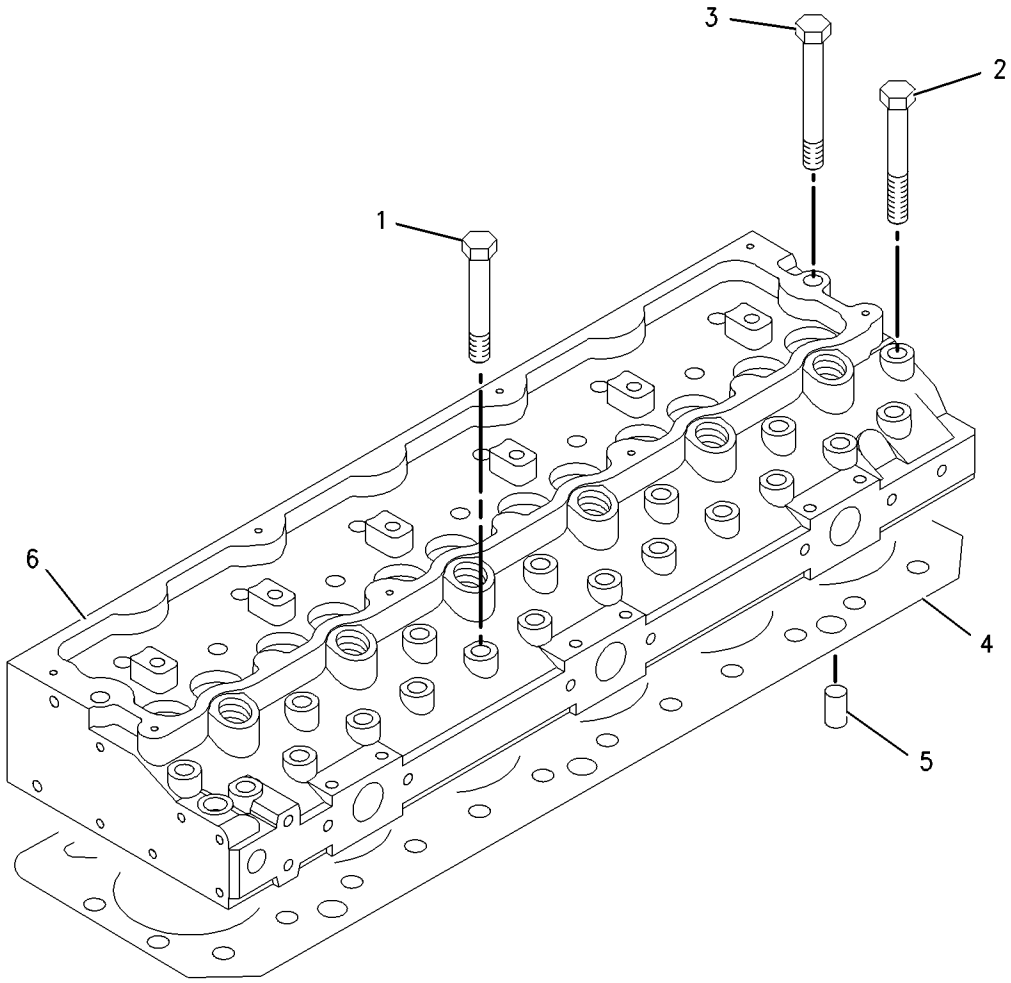

GRAPHIC #1 g00889681

BASIC ENGINE

217-7875 DRIVE GP-ACCESSORY

AN ATTACHMENT

SMCS-1207 **i01836320**

NOTE	REF NO	GRAPHIC REF	PART NUMBER	QTY	PART NAME 1 2 3 4 5 6 (PRODUCT LEVEL)	SEE PAGE
	1	1	**2B-0858**	2	PLUG-PIPE	
	2	1	**6I-0593**	1	BOLT (M10X1.5X30MM)	
	3	1	**6I-0646**	1	BOLT (M10X1.5X14MM)	
	5	1	**102-2073**	1	SEAL-O-RING	
	6	1	**102-2078**	1	BOLT (M10X1.5X25MM)	
	7	1	**102-2079**	5	BOLT (M8X1.25X20MM)	
	8	1	**214-3203**	1	WASHER	
	9	1	**222-8625**	1	ADAPTER AS	
	10	1	**6H-3957**	1	BALL BEARING	
	11	1	**102-2076**	1	CLIP	
	12	1	**217-7877**	1	GEAR	
	13	1	**217-7878**	1	BEARING	

217-7875 **DRIVE GP-ACCESSORY** *(contd.)* **i01836320**

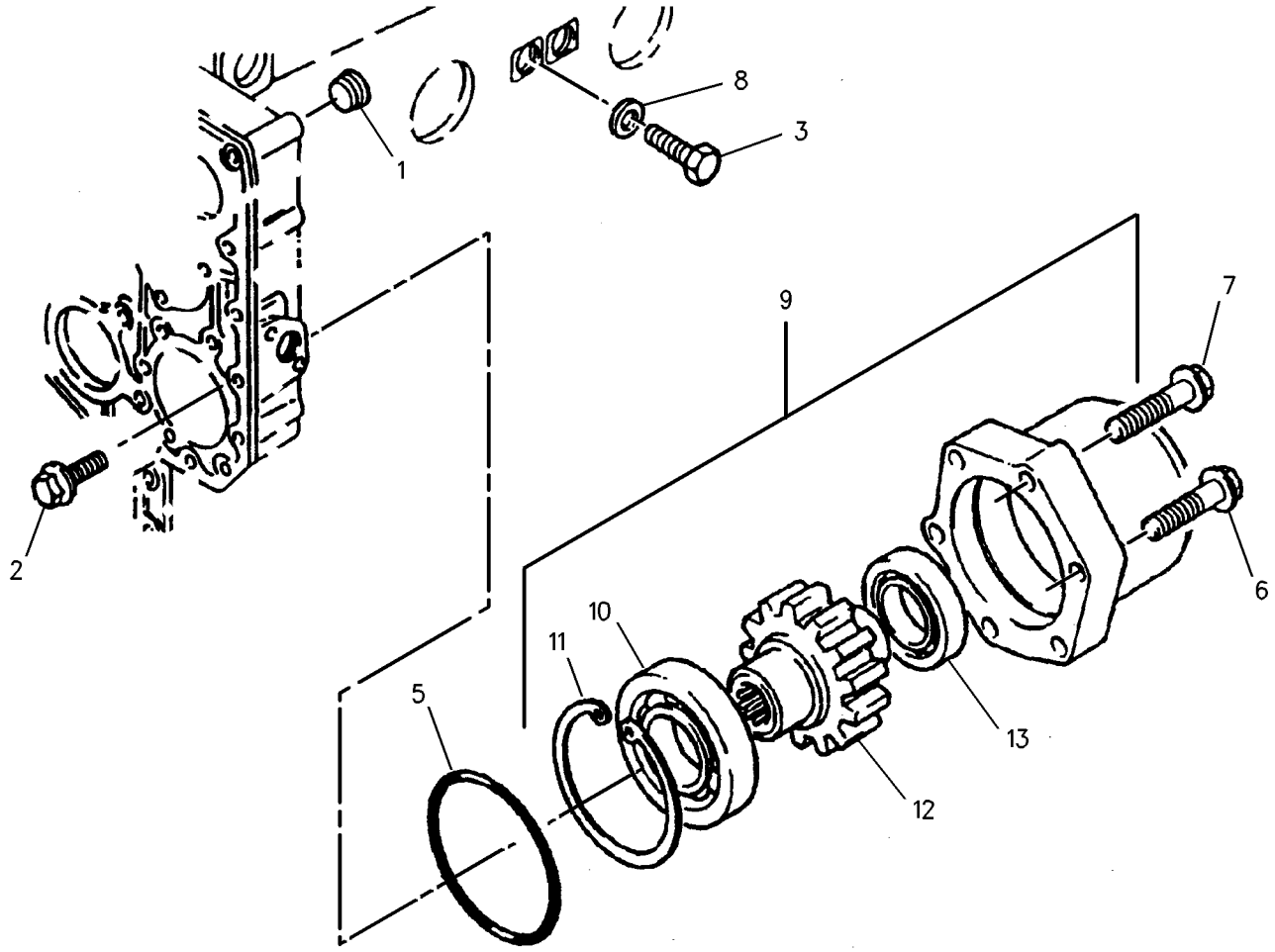

GRAPHIC #1 g00916625

BASIC ENGINE

228-7361 DRIVE GP-FAN

ALSO AN ATTACHMENT

SMCS-1359 **i01827913**

NOTE	REF NO	GRAPHIC REF	PART NUMBER	QTY	PART NAME 1 2 3 4 5 6 (PRODUCT LEVEL)	SEE PAGE
	1	1	**132-8239**	1	HOUSING AS	
	2	1	**100-4463**	1	BOLT (M10X1.5X80MM)	
	3	1	**130-3879**	1	PULLEY-FAN DRIVE	
	4	1	**4W-6025**	1	V-BELT SET (INCLUDES 2 BELTS)	

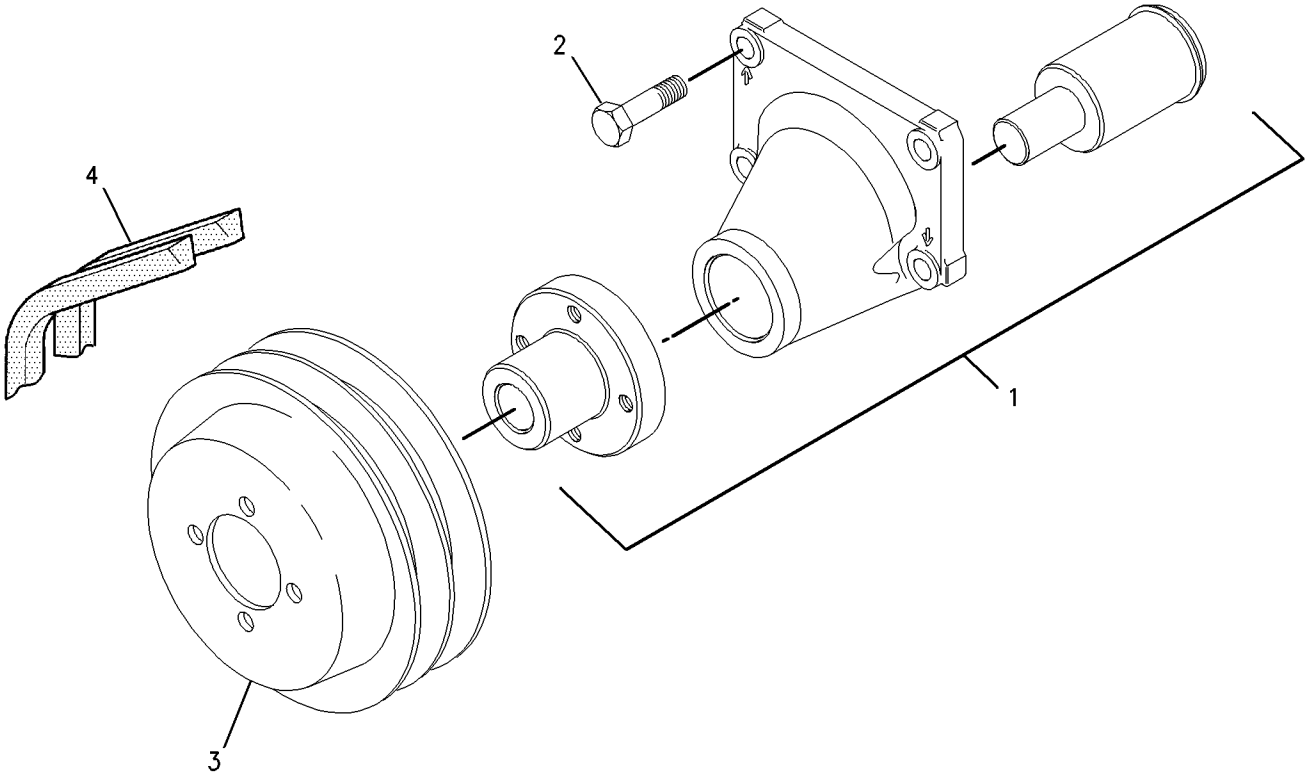

GRAPHIC #1 g00890564

221-6990 FLYWHEEL GP

AN ATTACHMENT

SMCS-1156 **i01724912**

NOTE	REF NO	GRAPHIC REF	PART NUMBER	QTY	PART NAME 1 2 3 4 5 6 (PRODUCT LEVEL)	SEE PAGE
	1	1	**113-7543**	1	FLYWHEEL AS	
	2	1	**033-7687**	1	RING-STARTING MOTOR (126 TEETH)	
	3	1	**4K-7502**	12	BOLT (1/2-20X1.375IN)	
	4	1	**5P-8245**	12	WASHER-HARD (13.5X25.5X3MM THK)	

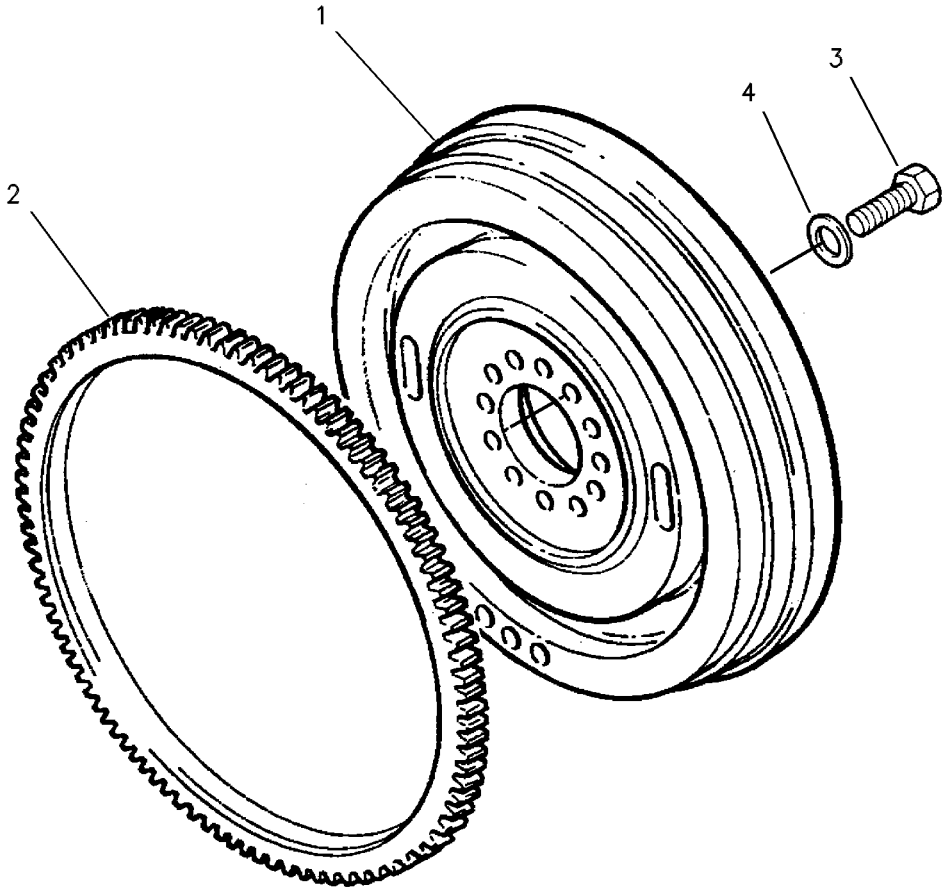

GRAPHIC #1 g00241149

BASIC ENGINE

228-7331 FLYWHEEL GP

ALSO AN ATTACHMENT

SMCS-1156 **i01827915**

NOTE	REF NO	GRAPHIC REF	PART NUMBER	QTY	PART NAME 1 2 3 4 5 6 (PRODUCT LEVEL)	SEE PAGE
	1	1	**0S-1603**	12	BOLT (1/2-20X1.5IN)	
	2	1	**5P-8245**	12	WASHER-HARD (13.5X25.5X3MM THK)	
	3	1	**226-6578**	1	FLYWHEEL AS	
	3A	1	**033-7687**	1	RING (126 TEETH)	

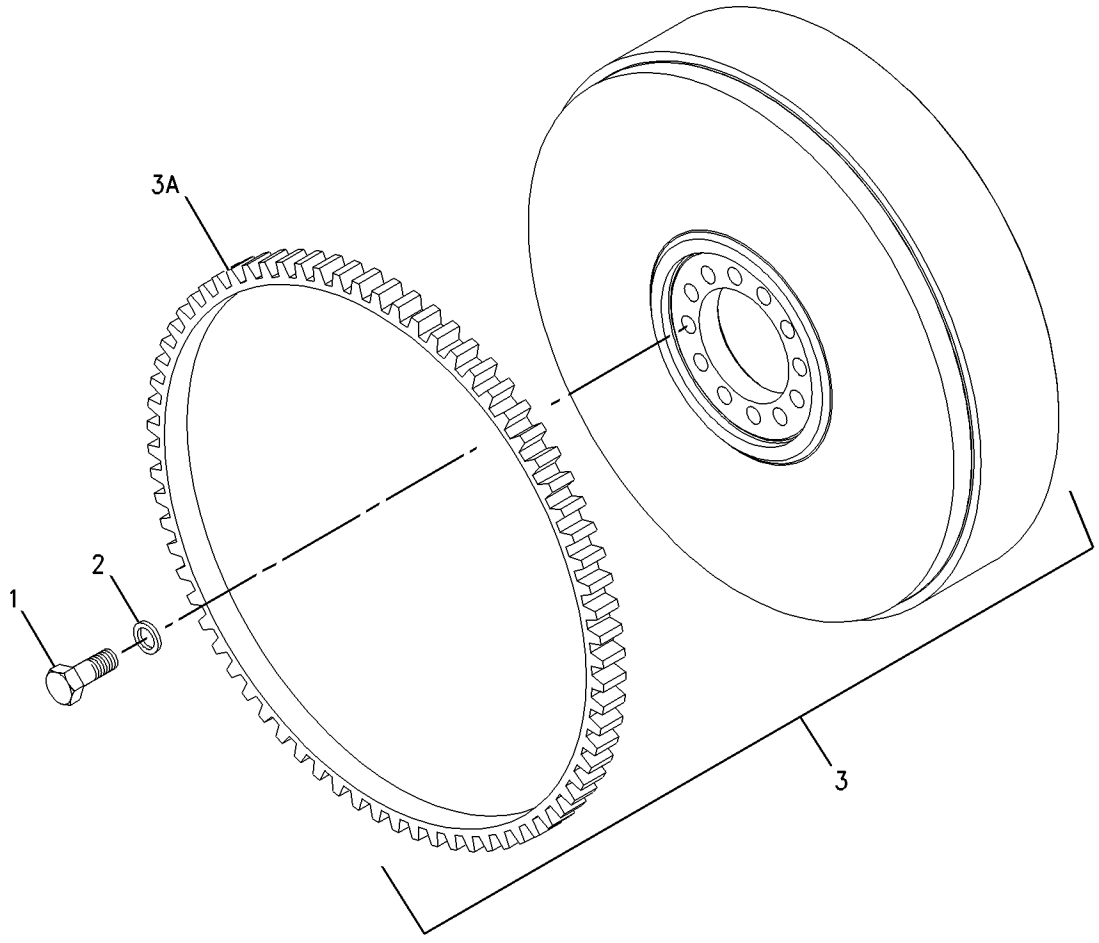

GRAPHIC #1 g00933389

217-1499 GEAR GP-FRONT

ALSO AN ATTACHMENT

SMCS-1206 **i01819089**

NOTE	REF NO	GRAPHIC REF	PART NUMBER	QTY	PART NAME 1 2 3 4 5 6 (PRODUCT LEVEL)	SEE PAGE
	1	1	**6I-0256**	1	WASHER	
	2	1	**067-6928**	1	CLIP	
	3	1	**216-8348**	1	GEAR AS-IDLER (31 TEETH)	
	4	1	**067-6927**	1	BUSHING-TERMINAL	

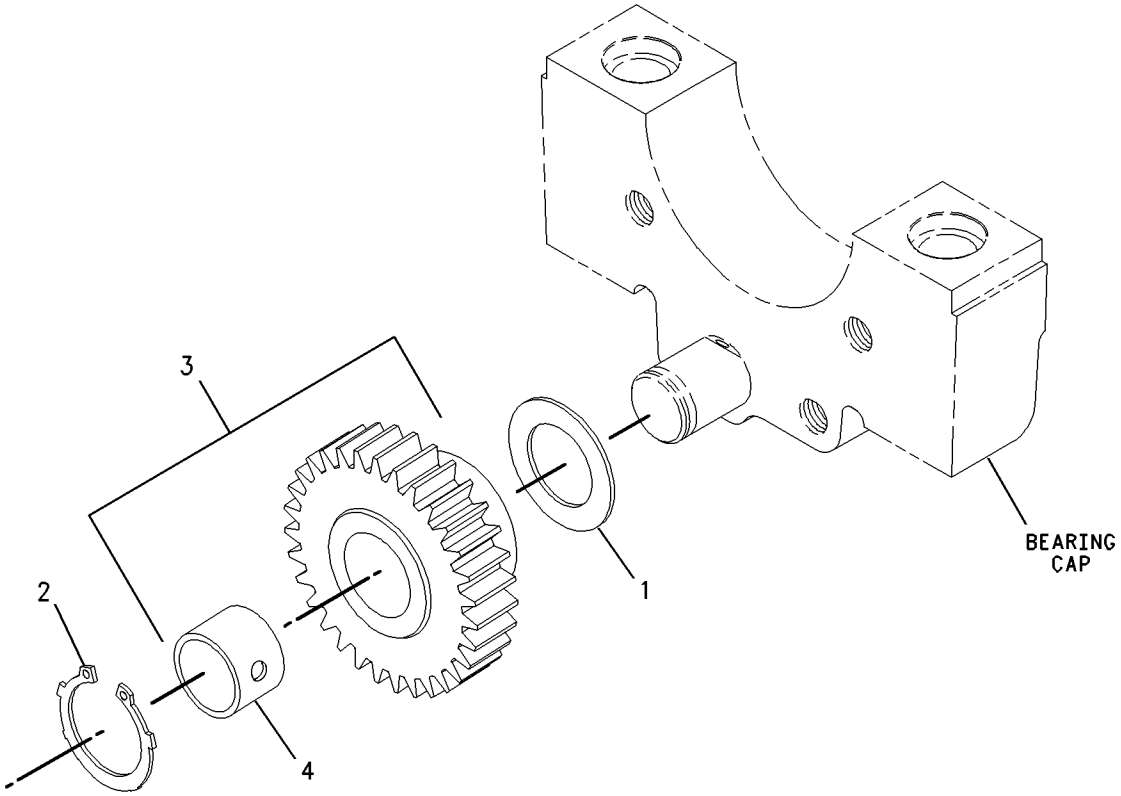

GRAPHIC #1 g00860185

BASIC ENGINE

228-7326 HOUSING GP-FLYWHEEL

ALSO AN ATTACHMENT

SMCS-1157 **i01827933**

NOTE	REF NO	GRAPHIC REF	PART NUMBER	QTY	PART NAME 1 2 3 4 5 6 (PRODUCT LEVEL)	SEE PAGE
	1	1	**6I-0423**	2	BOLT (M12X1.75X30MM)	
	2	1	**6I-0847**	1	PLUG	
	3	1	**7W-1176**	1	PLATE-COVER	
	4	1	**7W-4642**	1	SHIELD-DUST	
	5	1	**067-6123**	2	DOWEL	
	6	1	**114-4363**	2	BOLT (M8X1.25X12MM)	
	7	1	**101-3617**	3	PLUG	
	8	1	**121-0883**	6	BOLT (M10X1.5X30MM)	
	9	1	**220-8631**	1	HOUSING-FLYWHEEL	

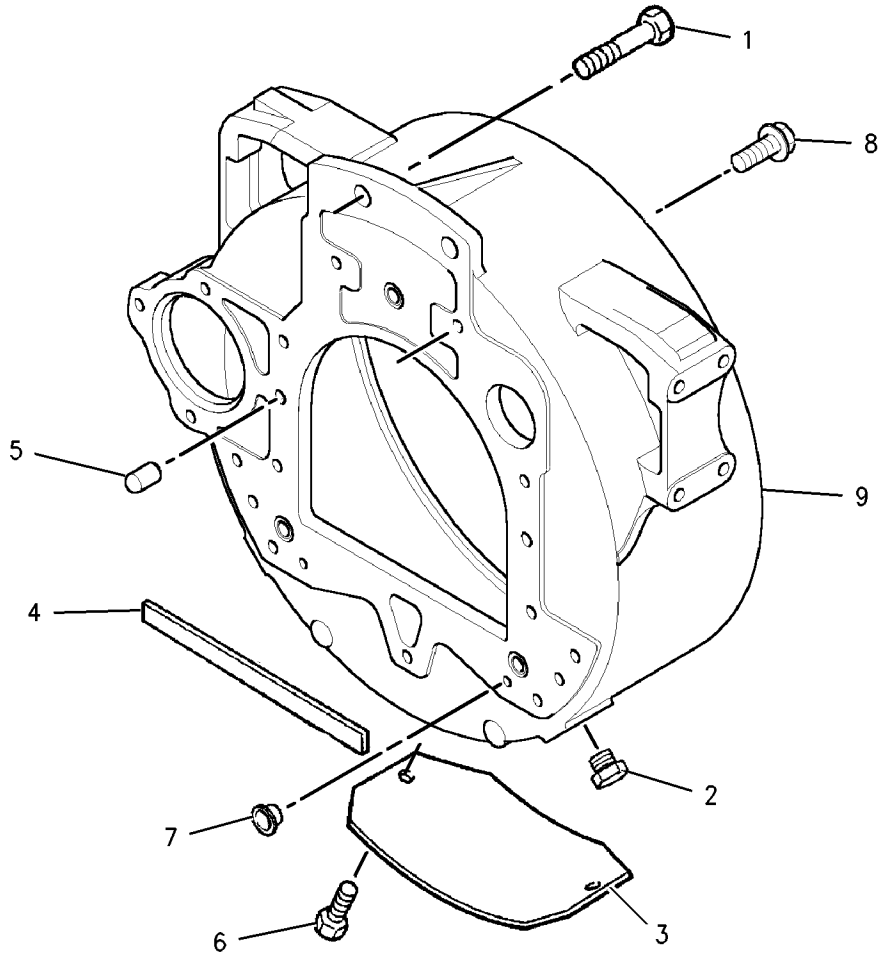

GRAPHIC #1 g00902549

MEMORANDA

BASIC ENGINE

226-3556 HOUSING GP-FRONT

AN ATTACHMENT

SMCS-1151, 1162 **i01801880**

NOTE	REF NO	GRAPHIC REF	PART NUMBER	QTY	PART NAME 1 2 3 4 5 6 (PRODUCT LEVEL)	SEE PAGE
	1	1	**1B-8736**	1	KEY-WOODRUFF	
	2	1	**6I-0217**	8	BOLT (M8X1.25X20MM)	
	3	1	**6I-0254**	5	BOLT (M8X1.25X30MM)	
	4	1	**6I-0260**	8	BOLT (M8X1.25X25MM)	
	5	1	**6I-0645**	1	BOLT (M8X1.25X25MM)	
	6	1	**6I-0789**	3	BOLT (M10X1.5X60MM)	
	7	1	**6I-0839**	6	BOLT (M8X1.25X70MM)	
	8	1	**7C-4616**	1	BOLT (M12X1.75X45MM)	
	9	1	**067-6178**	1	WASHER	
	10	1	**067-6179**	1	DOWEL	
	11	1	**067-6897**	1	HUB-IDLER GEAR	
	12	1	**067-6900**	1	PLATE-RETAINING	
	13	1	**133-1011**	1	WASHER	
	14	1	**160-3510**	1	GASKET	
	15	1	**162-8597**	1	GASKET-COVER	
	16	1	**162-9081**	1	COVER AS-HOUSING	
	17	1	**4W-5359**	1	SEAL-CRANKSHAFT	
	18	1	**167-2153**	1	SLEEVE-CRANKSHAFT	
	19	1	**216-8633**	1	GEAR AS-IDLER (73 TEETH)	
	20	1	**067-6899**	2	BUSHING-IDLER GEAR	
	21	1	**216-8634**	1	GEAR-CAMSHAFT (68 TEETH)	
	22	1	**226-3552**	1	HOUSING-FRONT	

226-3556 **HOUSING GP-FRONT** *(contd.)* **i01801880**

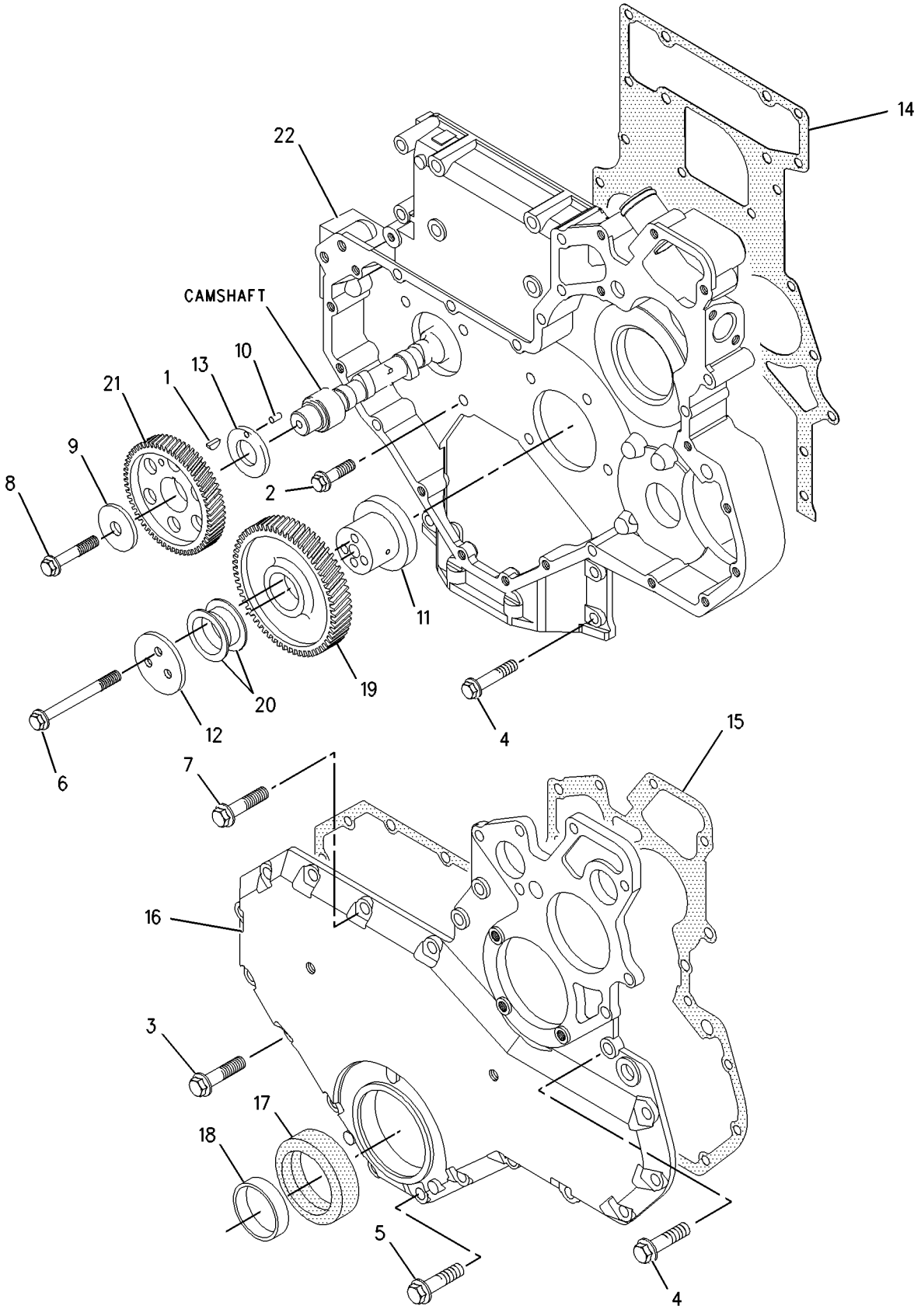

GRAPHIC #1 g00922305

BASIC ENGINE

228-7395 HOUSING GP-FRONT

ALSO AN ATTACHMENT

SMCS-1151, 1162 **i01827934**

NOTE	REF NO	GRAPHIC REF	PART NUMBER	QTY	PART NAME 1 2 3 4 5 6 (PRODUCT LEVEL)	SEE PAGE
	1	1	**1B-8736**	1	KEY-WOODRUFF	
	2	1	**6I-0217**	8	BOLT (M8X1.25X20MM)	
	3	1	**6I-0254**	7	BOLT (M8X1.25X30MM)	
	4	1	**6I-0260**	5	BOLT (M8X1.25X25MM)	
	5	1	**6I-0291**	2	NUT (M8X1.25)	
	6	1	**6I-0789**	3	BOLT (M10X1.5X60MM)	
	7	1	**6I-0839**	6	BOLT (M8X1.25X70MM)	
	8	1	**6I-0840**	2	STUD (M8X20MM)	
	9	1	**7C-4616**	1	BOLT (M12X1.75X45MM)	
	10	1	**067-6178**	1	WASHER	
	11	1	**067-6179**	1	DOWEL	
	12	1	**067-6897**	1	HUB-IDLER GEAR	
	13	1	**067-6900**	1	PLATE-RETAINING	
	14	1	**133-1011**	1	WASHER	
	15	1	**160-3510**	1	GASKET	
	16	1	**162-8597**	1	GASKET-COVER	
	17	1	**162-9081**	1	COVER AS-HOUSING	
	17A	1	**4W-5359**	1	SEAL-CRANKSHAFT	
	17B	1	**167-2153**	1	SLEEVE-CRANKSHAFT	
	18	1	**216-8633**	1	GEAR AS-IDLER (73 TEETH)	
	19	1	**067-6899**	2	BUSHING-IDLER GEAR	
	20	1	**216-8634**	1	GEAR-CAMSHAFT (68 TEETH)	
	21	1	**226-3552**	1	HOUSING-FRONT	

228-7395 **HOUSING GP-FRONT** *(contd.)* **i01827934**

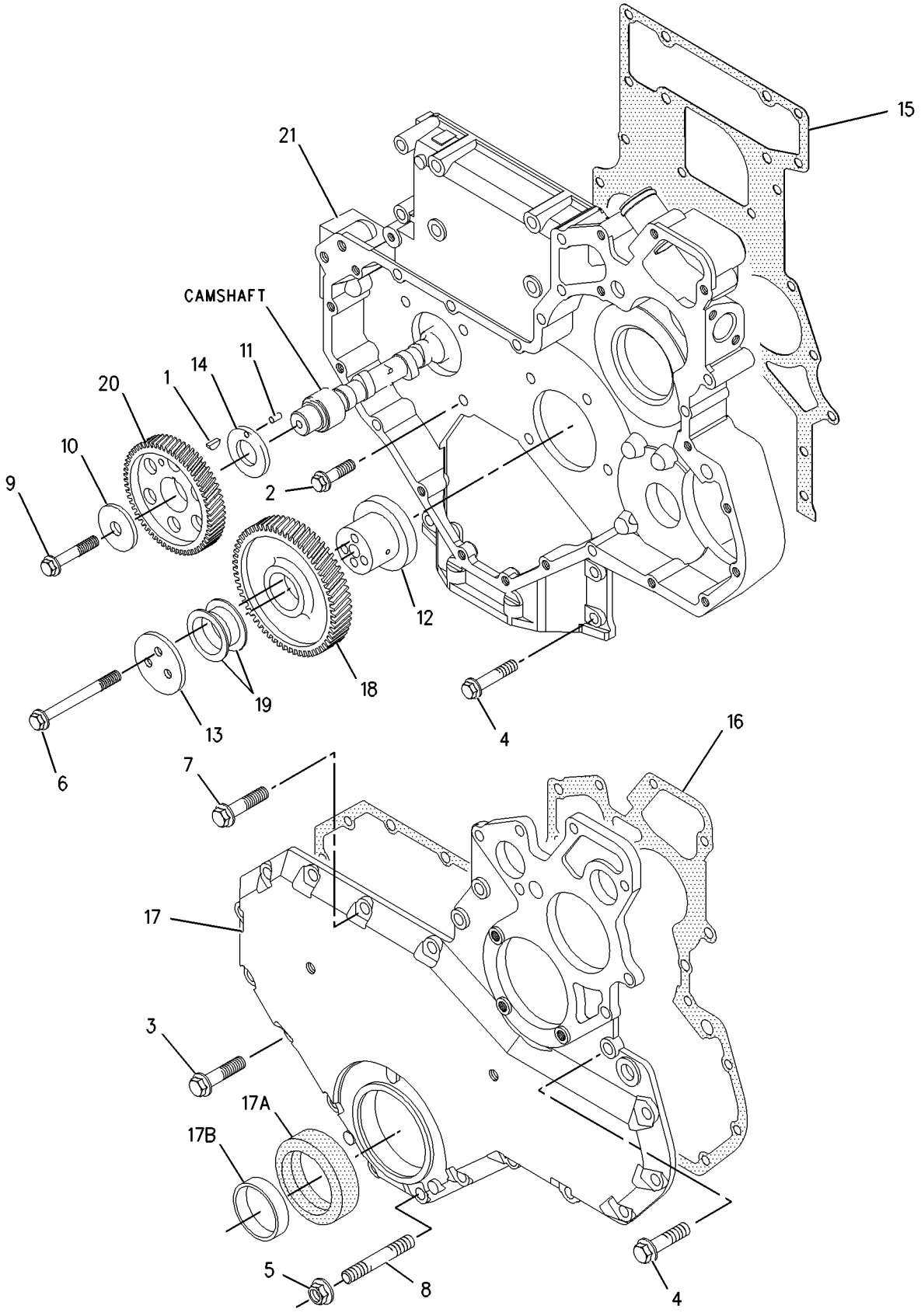

GRAPHIC #1 g00932999

BASIC ENGINE

221-6875 LIFTING GP-ENGINE

AN ATTACHMENT

SMCS-1122 **i01725113**

NOTE	REF NO	GRAPHIC REF	PART NUMBER	QTY	PART NAME 1 2 3 4 5 6 (PRODUCT LEVEL)	SEE PAGE
	1	1	**6I-0654**	4	BOLT (M10X1.5X25MM)	
	2	1	**221-6872**	2	PLATE	

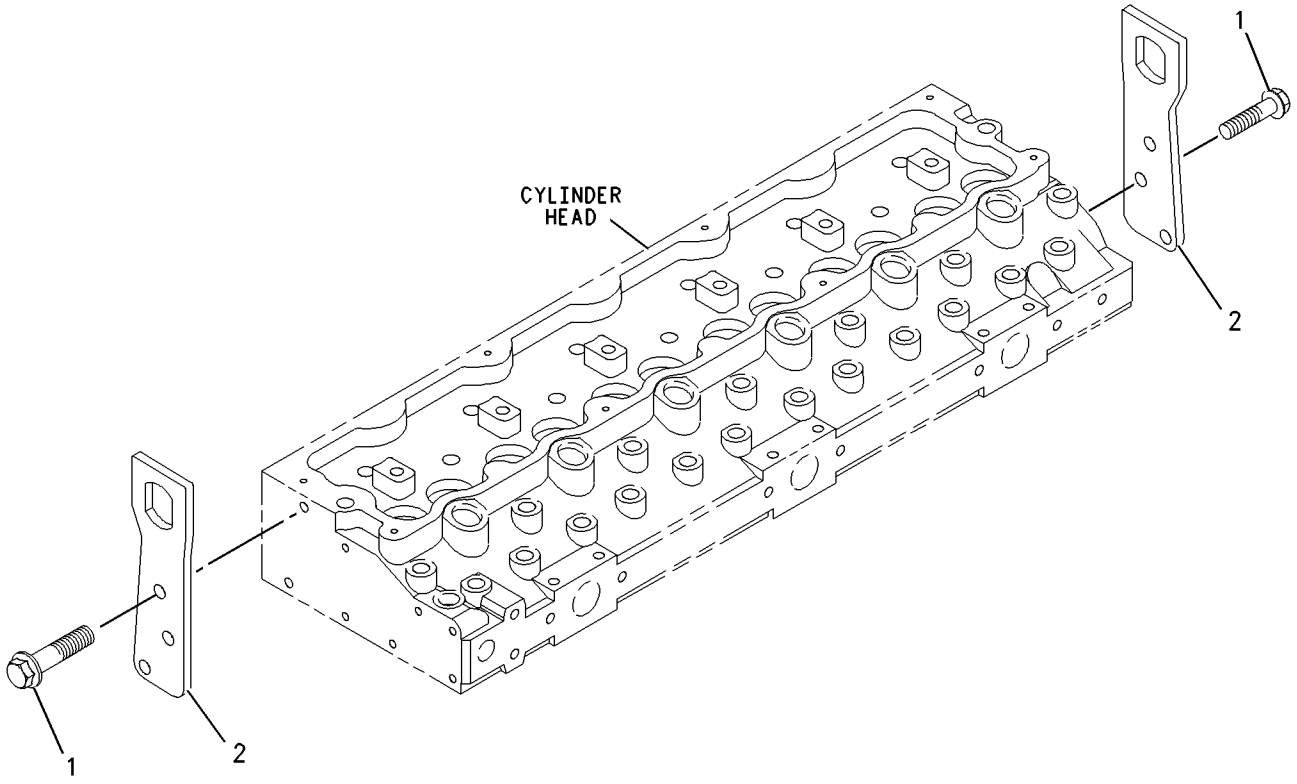

GRAPHIC #1 g00889453

228-7462 LIFTING GP-ENGINE

ALSO AN ATTACHMENT

SMCS-1122 **i01827919**

NOTE	REF NO	GRAPHIC REF	PART NUMBER	QTY	PART NAME 1 2 3 4 5 6 (PRODUCT LEVEL)	SEE PAGE
	1	1	**6I-0654**	4	BOLT (M10X1.5X25MM)	
	2	1	**140-8953**	1	PLATE	
	3	1	**142-0349**	1	PLATE-LIFTING	

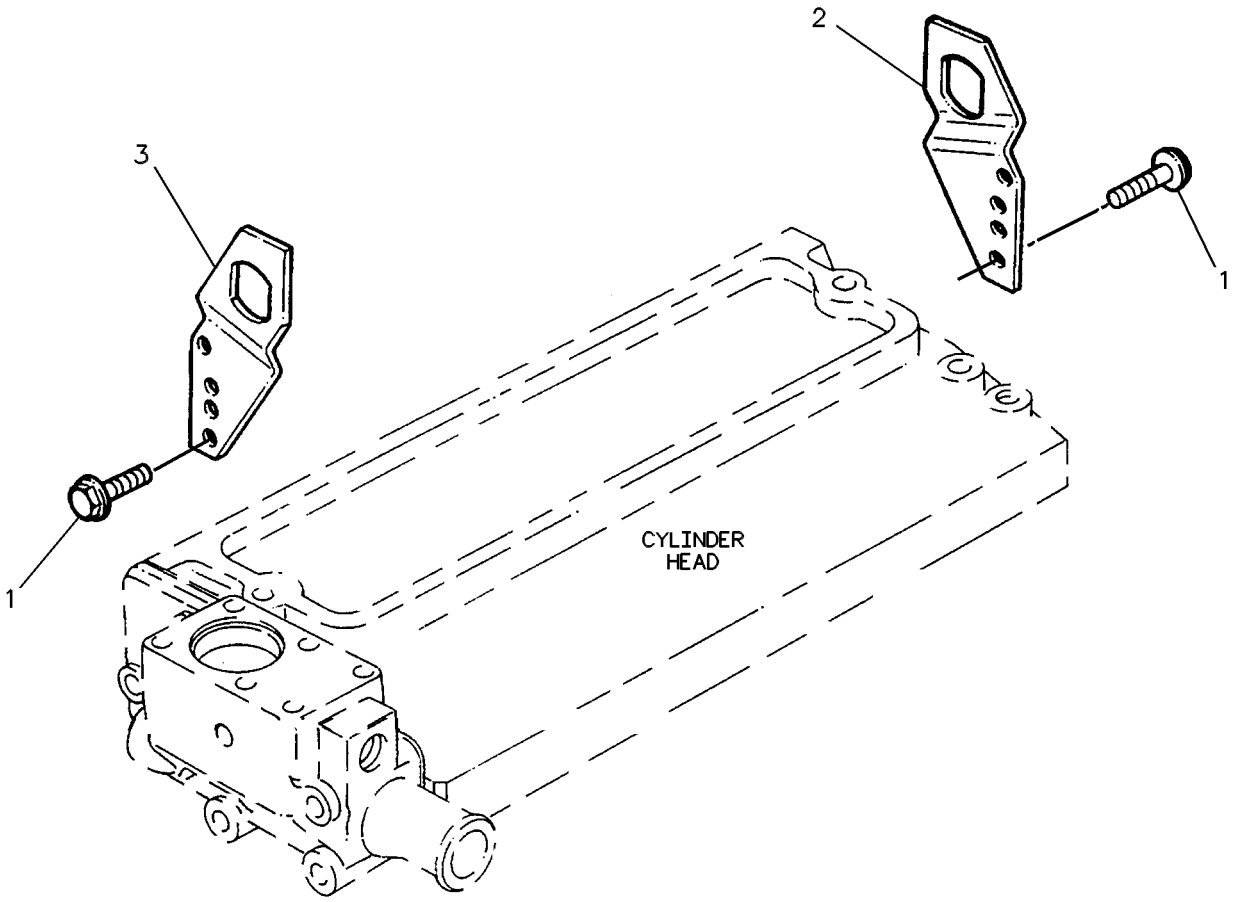

GRAPHIC #1 g00272676

BASIC ENGINE

226-3586 MOUNTING GP-ENGINE

AN ATTACHMENT

SMCS-1152 **i01773221**

NOTE	REF NO	GRAPHIC REF	PART NUMBER	QTY	PART NAME 1 2 3 4 5 6 (PRODUCT LEVEL)	SEE PAGE
	1	1	**6H-3616**	4	PLUG-PROTECTION	
	2	1	**101-2987**	6	PLUG	
	3	1	**102-9460**	3	PLUG	
	4	1	**113-7913**	3	STUD	
	5	1	**171-1411**	4	STUD	

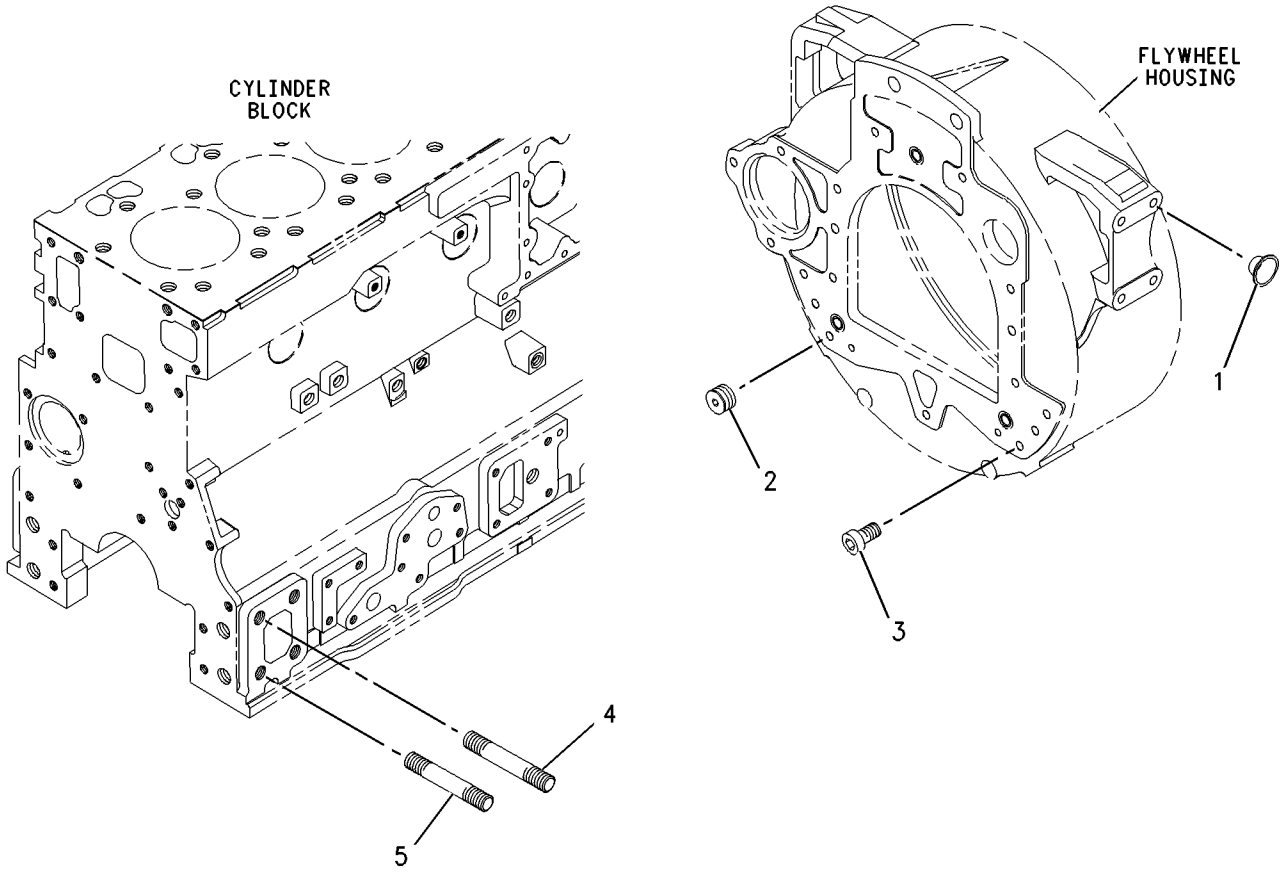

GRAPHIC #1 g00908235

MEMORANDA

BASIC ENGINE

216-9551 PAN GP-OIL

AN ATTACHMENT

SMCS-1302 **i01843783**

NOTE	REF NO	GRAPHIC REF	PART NUMBER	QTY	PART NAME 1 2 3 4 5 6 (PRODUCT LEVEL)	SEE PAGE
	1	1	**4P-3838**	1	GAUGE AS (OIL LEVEL) (DIPSTICK)	
	2	1	**177-7845**	1	TUBE AS	
	3	1	**5P-6718**	2	SEAL-O-RING (OIL DRAIN PLUG)	
	4	1	**6I-0217**	23	BOLT (M8X1.25X20MM)	
	5	1	**6I-0260**	4	BOLT (M8X1.25X25MM)	
	6	1	**6I-0289**	1	PLUG	
	7	1	**6I-0291**	4	NUT (M8X1.25)	
	8	1	**6I-0363**	2	BOLT (M6X1.0X20MM)	
	9	1	**6I-0572**	2	BOLT (M8X1.25.20MM)	
	10	1	**6I-1497**	1	SEAL	
	11	1	**6I-4681**	1	GASKET	
	12	1	**6I-4709**	5	BOLT (M8X1.25X100MM)	
	13	1	**6I-4710**	1	GASKET	
	14	1	**7C-0351**	2	PLUG-SUMP DRAIN	
	15	1	**113-8127**	1	TUBE AS	
	16	1	**113-8129**	1	BOLT (M8X75MM)	
	17	1	**113-8130**	1	CLIP	
	18	1	**113-8131**	1	BRACKET	
	19	1	**113-8133**	1	BRACKET	
	20	1	**113-8134**	1	PLATE	
	21	1	**124-7702**	1	TUBE AS	
	22	1	**6I-4079**	1	NUT	
	23	1	**211-0067**	1	BRIDGE	
	24	1	**216-9546**	1	PAN AS-OIL	
	25	1	**7C-1224**	1	INSERT	
	26	1	**216-9626**	1	PLUG-SEALING	
	27	1	**217-0212**	1	WASHER	

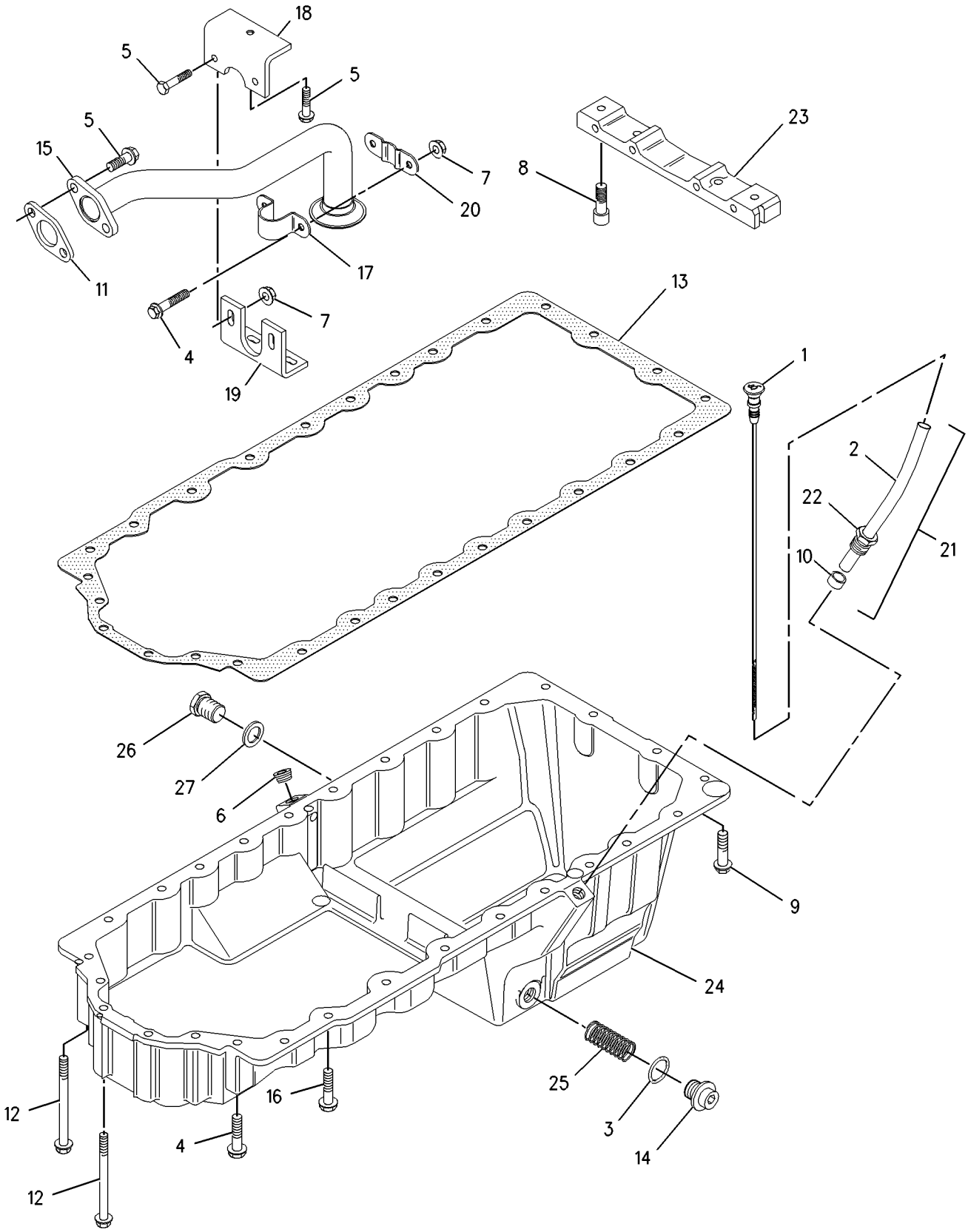

GRAPHIC #1 g00861341

BASIC ENGINE

220-6103 PAN GP-OIL

AN ATTACHMENT

SMCS-1302 **i01843788**

NOTE	REF NO	GRAPHIC REF	PART NUMBER	QTY	PART NAME 1 2 3 4 5 6 (PRODUCT LEVEL)	SEE PAGE
	1	1	**4P-3838**	1	GAUGE AS (OIL LEVEL)	
	1A	1	**177-7845**	1	TUBE AS	
	2	1	**5P-6718**	2	SEAL-O-RING (OIL DRAIN PLUG)	
	3	1	**6I-0217**	22	BOLT (M8X1.25X20MM)	
	4	1	**6I-0260**	2	BOLT (M8X1.25X25MM)	
	5	1	**6I-0289**	1	PLUG	
	6	1	**6I-0291**	2	NUT (M8X1.25)	
	7	1	**6I-0363**	2	BOLT (M6X1.0X20MM)	
	8	1	**6I-0572**	2	BOLT (M8X1.25.20MM)	
	9	1	**6I-1497**	1	SEAL	
	10	1	**6I-4681**	1	GASKET	
	11	1	**6I-4709**	6	BOLT (M8X1.25X100MM)	
	12	1	**6I-4710**	1	GASKET	
	13	1	**7C-0351**	2	PLUG-SUMP DRAIN	
	14	1	**113-5280**	1	PAN AS-OIL	
	14A	1	**7C-1224**	1	INSERT	
	15	1	**113-5281**	1	TUBE AS	
	16	1	**113-5282**	1	BRACKET	
	17	1	**113-8130**	1	CLIP	
	18	1	**113-8231**	1	SUPPORT	
	19	1	**124-3815**	1	BOLT (M8X16X1.25MM)	
	20	1	**124-7702**	1	TUBE AS	
	20A	1	**6I-4079**	1	NUT	
	21	1	**195-3761**	1	SPACER	
	22	1	**211-0067**	1	BRIDGE	

220-6103 **PAN GP-OIL** *(contd.)* **i01843788**

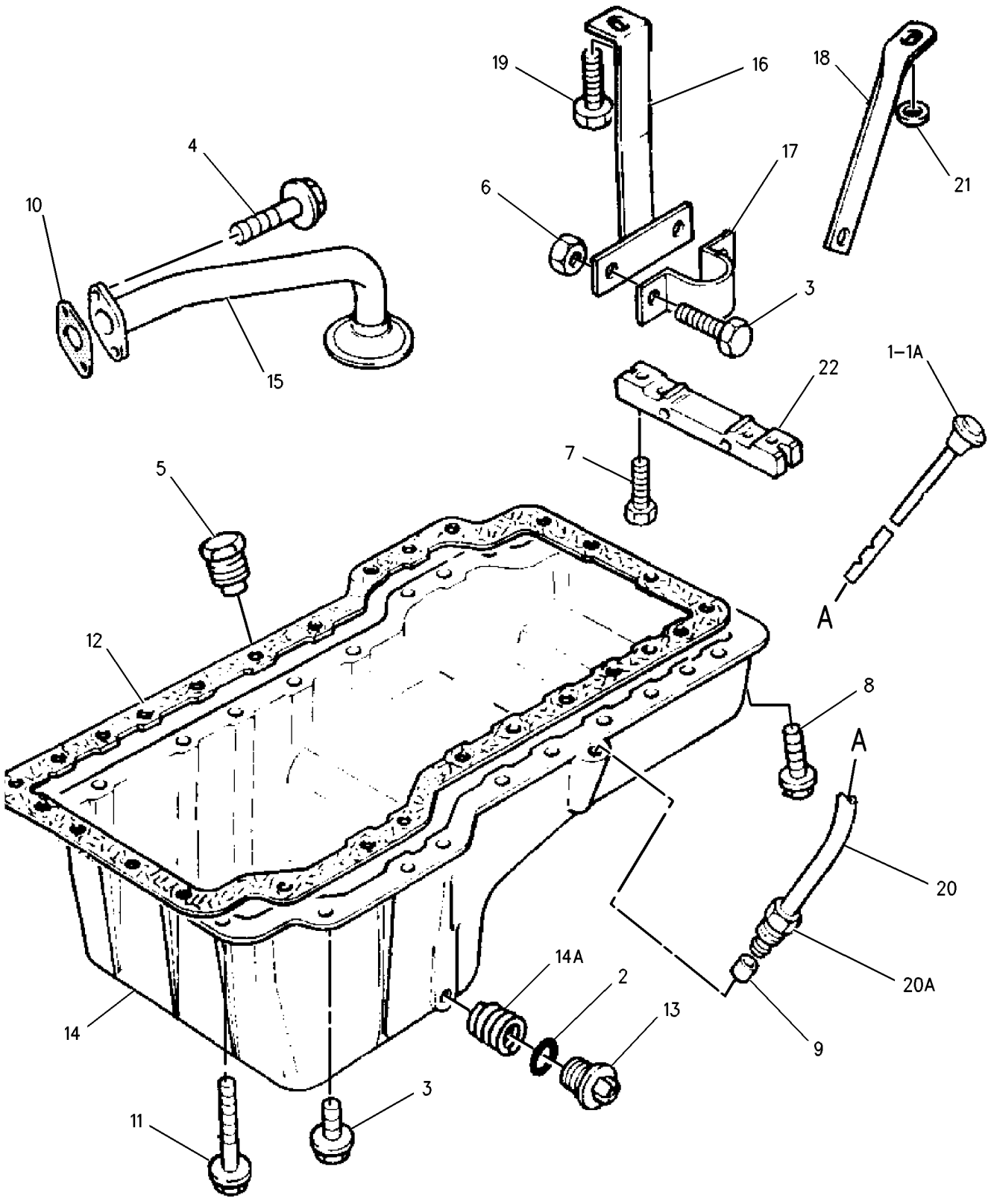

GRAPHIC #1 g00892189

BASIC ENGINE

221-2959 PAN GP-OIL

AN ATTACHMENT

SMCS-1302 **i01843782**

NOTE	REF NO	GRAPHIC REF	PART NUMBER	QTY	PART NAME 1 2 3 4 5 6 (PRODUCT LEVEL)	SEE PAGE
	1	1	**113-5280**	1	PAN AS-OIL	
	2	1	**7C-1224**	1	INSERT	
	3	1	**195-3761**	1	SPACER	
	4	1	**7C-0351**	2	PLUG-SUMP DRAIN	
	5	1	**5P-6718**	2	SEAL-O-RING (OIL DRAIN PLUG)	
	6	1	**6I-4709**	6	BOLT (M8X1.25X100MM)	
	7	1	**6I-0217**	22	BOLT (M8X1.25X20MM)	
	8	1	**211-0067**	1	BRIDGE	
	9	1	**6I-0363**	2	BOLT (M6X1.0X20MM)	
	10	1	**6I-4710**	1	GASKET	
	11	1	**113-5281**	1	TUBE AS	
	12	1	**6I-4681**	1	GASKET	
	13	1	**6I-0260**	2	BOLT (M8X1.25X25MM)	
	14	1	**6I-0289**	1	PLUG	
	15	1	**6I-0572**	2	BOLT (M8X1.25.20MM)	
	16	1	**113-5282**	1	BRACKET	
	17	1	**113-8130**	1	CLIP	
	19	1	**6I-0291**	2	NUT (M8X1.25)	
	20	1	**124-3815**	1	BOLT (M8X16X1.25MM)	
	21	1	**113-8231**	1	SUPPORT	

221-2959 **PAN GP-OIL** *(contd.)* **i01843782**

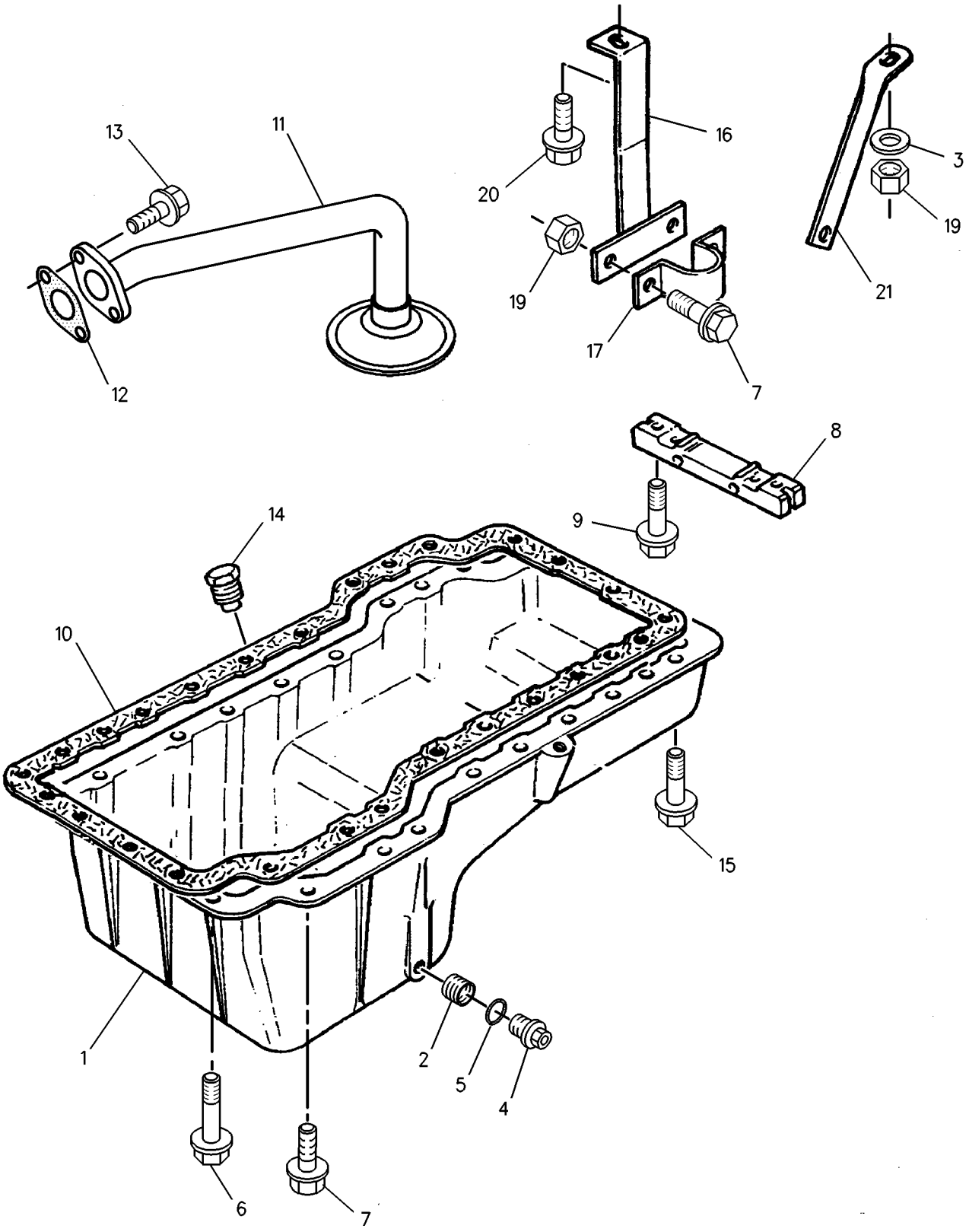

GRAPHIC #1 g00886975

221-6989 PAN GP-OIL

AN ATTACHMENT

SMCS-1302 **i01843781**

NOTE	REF NO	GRAPHIC REF	PART NUMBER	QTY	PART NAME 1 2 3 4 5 6 (PRODUCT LEVEL)	SEE PAGE
	1	1	**5P-6718**	2	SEAL-O-RING (OIL DRAIN PLUG)	
	2	1	**6I-0254**	19	BOLT (M8X1.25X30MM)	
	4	1	**6I-0289**	2	PLUG	
	5	1	**6I-0291**	3	NUT (M8X1.25)	
	6	1	**6I-0363**	2	BOLT (M6X1.0X20MM)	
	7	1	**6I-0456**	2	BOLT (M8X1.25X45MM)	
	8	1	**6I-4681**	1	GASKET	
	9	1	**6I-4709**	4	BOLT (M8X1.25X100MM)	
	10	1	**7C-0351**	2	PLUG-SUMP DRAIN	
	11	1	**100-3751**	1	BOLT (M8X1.25X65MM)	
	12	1	**113-8955**	2	STUD	
	13	1	**113-8957**	1	BRACKET	
	14	1	**124-3815**	2	BOLT (M8X16X1.25MM)	
	15	1	**127-5660**	1	STRAINER	
	16	1	**6I-0260**	2	BOLT (M8X1.25X25MM)	
	17	1	**127-5661**	1	PAN-OIL	
	18	1	**127-5662**	1	PLUG	
	19	1	**128-3792**	1	WASHER	
	20	1	**211-0067**	1	BRIDGE	
	21	1	**213-9710**	1	GASKET	

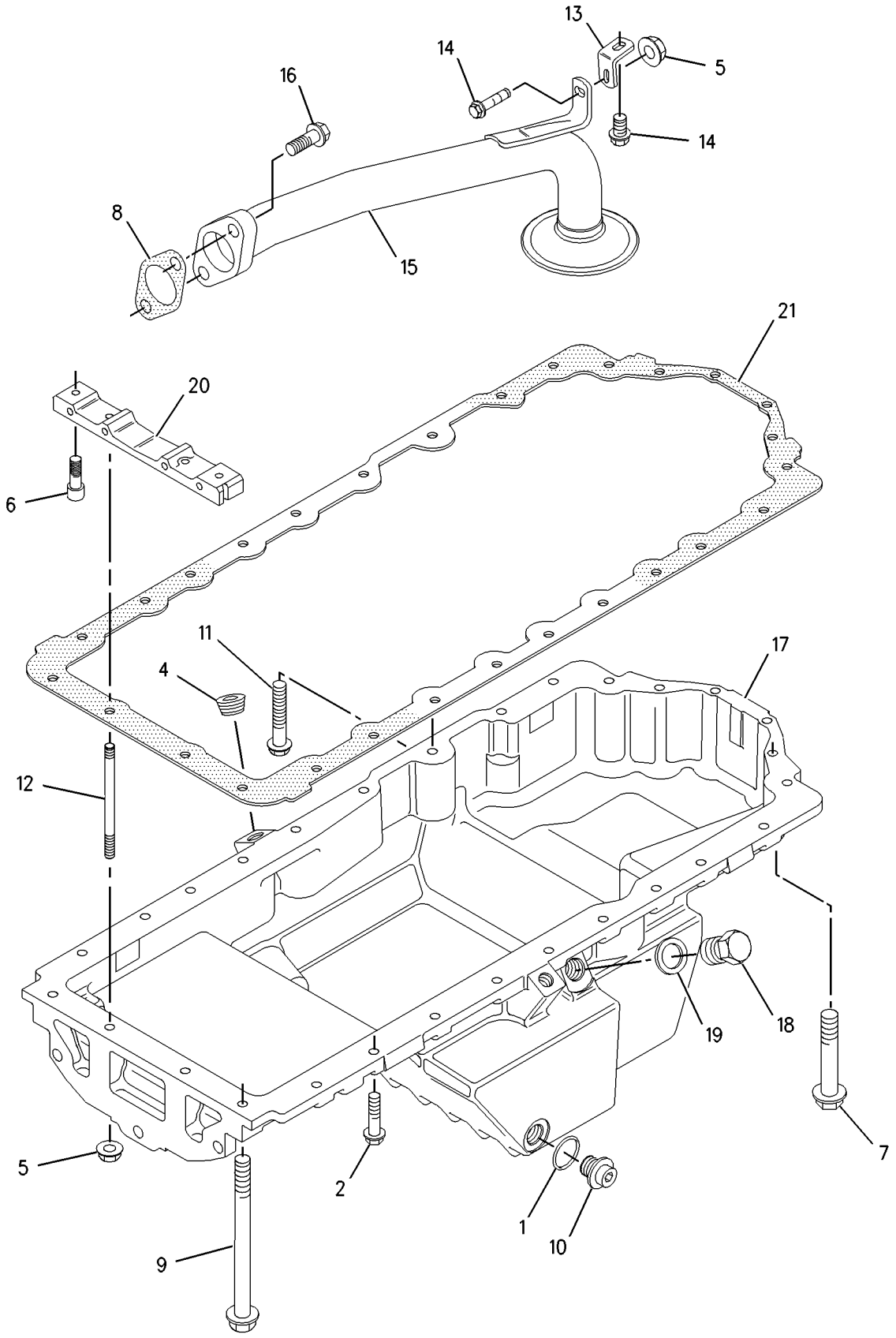

GRAPHIC #1 g00900146

BASIC ENGINE

226-3517 PAN GP-OIL

AN ATTACHMENT

SMCS-1302 **i01843780**

NOTE	REF NO	GRAPHIC REF	PART NUMBER	QTY	PART NAME 1 2 3 4 5 6 (PRODUCT LEVEL)	SEE PAGE
	1	1	**5P-6718**	2	SEAL-O-RING (OIL DRAIN PLUG)	
	2	1	**6I-0217**	23	BOLT (M8X1.25X20MM)	
	3	1	**6I-0260**	4	BOLT (M8X1.25X25MM)	
	4	1	**6I-0289**	1	PLUG	
	5	1	**6I-0291**	4	NUT (M8X1.25)	
	6	1	**6I-0363**	2	BOLT (M6X1.0X20MM)	
	7	1	**6I-0572**	2	BOLT (M8X1.25.20MM)	
	8	1	**6I-1497**	1	SEAL	
	9	1	**124-7702**	1	TUBE AS	
	10	1	**6I-4079**	1	NUT	
	11	1	**6I-4681**	1	GASKET	
	12	1	**6I-4709**	5	BOLT (M8X1.25X100MM)	
	13	1	**6I-4710**	1	GASKET	
	14	1	**7C-0351**	2	PLUG-SUMP DRAIN	
	15	1	**211-0067**	1	BRIDGE	
	16	1	**113-8126**	1	PAN AS-OIL	
	17	1	**7C-1224**	2	INSERT	
	18	1	**113-8127**	1	TUBE AS	
	19	1	**113-8129**	1	BOLT (M8X75MM)	
	20	1	**113-8130**	1	CLIP	
	21	1	**113-8131**	1	BRACKET	
	22	1	**113-8133**	1	BRACKET	
	23	1	**113-8134**	1	PLATE	
	24	1	**4P-3838**	1	GAUGE AS (OIL LEVEL)	

226-3517 **PAN GP-OIL** *(contd.)* **i01843780**

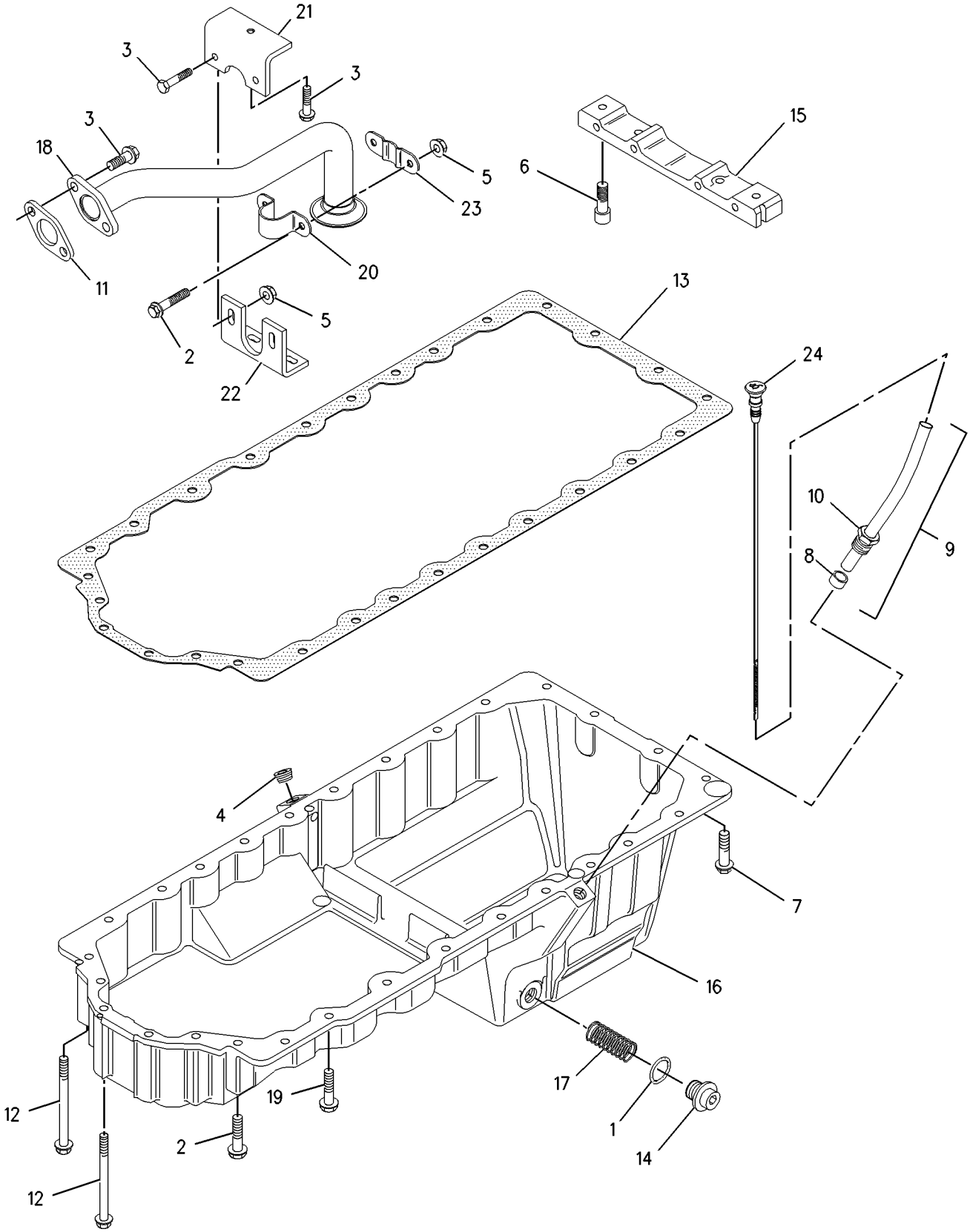

GRAPHIC #1 g00908298

BASIC ENGINE

228-7363 PAN GP-OIL

ALSO AN ATTACHMENT

SMCS-1302 **i01843779**

NOTE	REF NO	GRAPHIC REF	PART NUMBER	QTY	PART NAME 1 2 3 4 5 6 (PRODUCT LEVEL)	SEE PAGE
	1	1	**5P-6718**	2	SEAL-O-RING (OIL DRAIN PLUG)	
	2	1	**6I-0217**	23	BOLT (M8X1.25X20MM)	
	3	1	**6I-0260**	2	BOLT (M8X1.25X25MM)	
	4	1	**6I-0289**	1	PLUG	
	5	1	**6I-0291**	2	NUT (M8X1.25)	
	6	1	**6I-0363**	2	BOLT (M6X1.0X20MM)	
	7	1	**6I-0572**	2	BOLT (M8X1.25.20MM)	
	8	1	**6I-1497**	1	SEAL	
	9	1	**6I-4200**	1	BOLT (M10X1.5X16MM)	
	10	1	**6I-4376**	1	TUBE AS	
	11	1	**6I-4681**	1	GASKET	
	12	1	**6I-4709**	4	BOLT (M8X1.25X100MM)	
	13	1	**6I-4710**	1	GASKET	
	14	1	**7C-0351**	2	PLUG-SUMP DRAIN	
	15	1	**124-3815**	2	BOLT (M8X16X1.25MM)	
	16	1	**132-8848**	1	WASHER	
	17	1	**187-0548**	1	GAUGE AS-OIL LEVEL (DIPSTICK)	
	18	1	**211-0067**	1	BRIDGE	
	19	1	**213-4814**	1	PAN AS-OIL	
	20	1	**7C-1224**	2	INSERT	
	21	1	**219-1064**	1	BRACKET	
	22	1	**228-7362**	1	TUBE AS	
	22A	1	**6I-4079**	1	NUT	
	22B	1	**187-0555**	1	CLIP	
	23	1	**214-5974**	1	BRACKET	

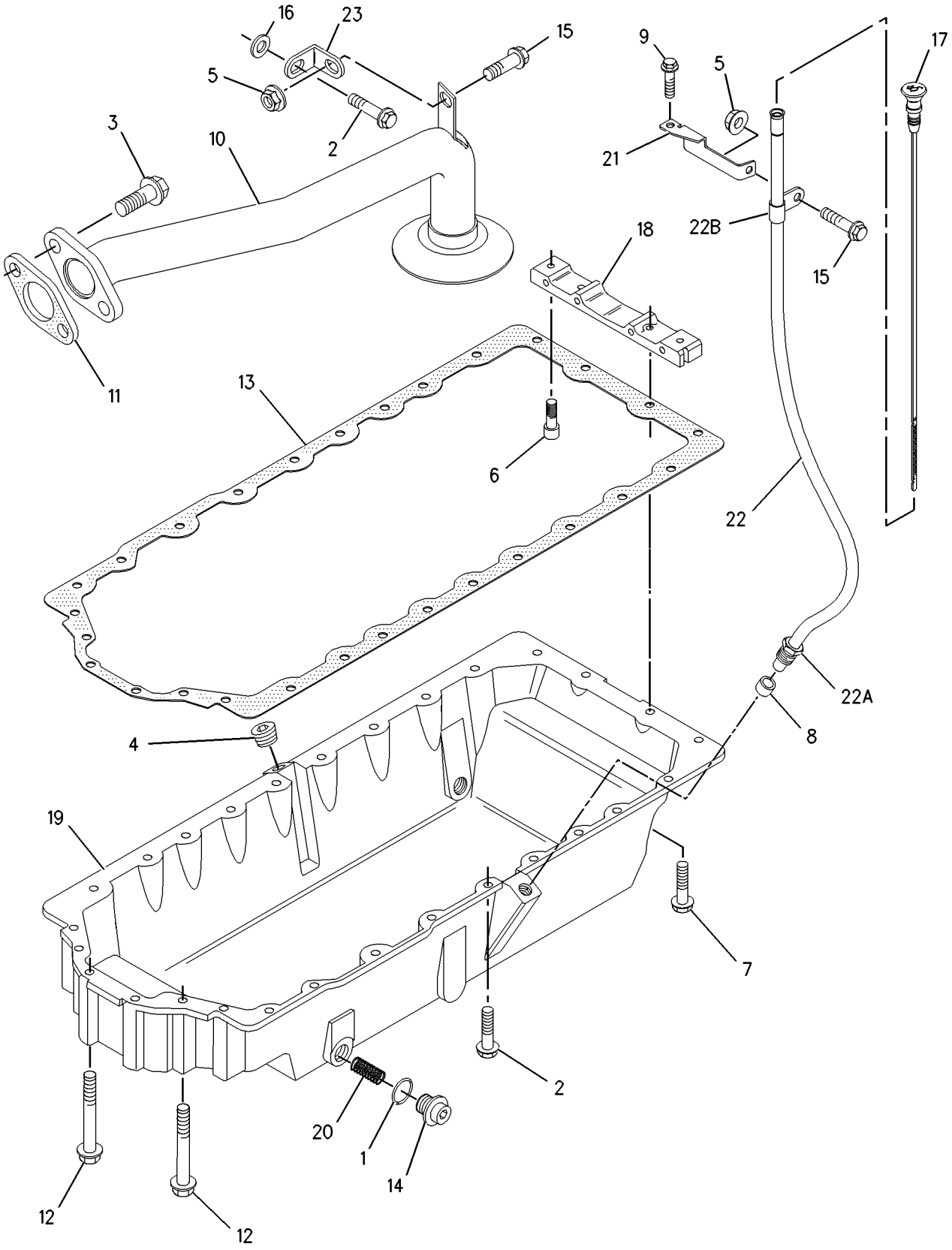

GRAPHIC #1 g00933527

BASIC ENGINE

216-8324 PISTON & ROD GP

SMCS-1225 **i01812010**

NOTE	REF NO	GRAPHIC REF	PART NUMBER	QTY	PART NAME 1 2 3 4 5 6 (PRODUCT LEVEL)	SEE PAGE
	1	1	**216-8323**	6	PISTON AS	
					(EACH INCLUDES)	
		1	**124-3536**	1	RING-RETAINING	
	2	1	**217-1573**	1	KIT-PISTON RING	
J	3	1	**160-6493**	6	ROD AS (H)	
					—OR—	
J		1	**160-6494**	6	ROD AS (J)	
					—OR—	
J		1	**160-6495**	6	ROD AS (K)	
					—OR—	
J		1	**160-6496**	6	ROD AS (L)	
					(EACH ROD AS INCLUDES)	
	4	1	**7W-2505**	2	NUT-CONNECTING ROD	
	5	1	**067-6883**	2	BOLT-ROD CAP	
	6	1	**138-2048**	1	BUSHING	
	7	1	**194-2466**	2	DOWEL	

J-ENSURE THAT THE CORRECT ROD LENGTH IS FITTED.

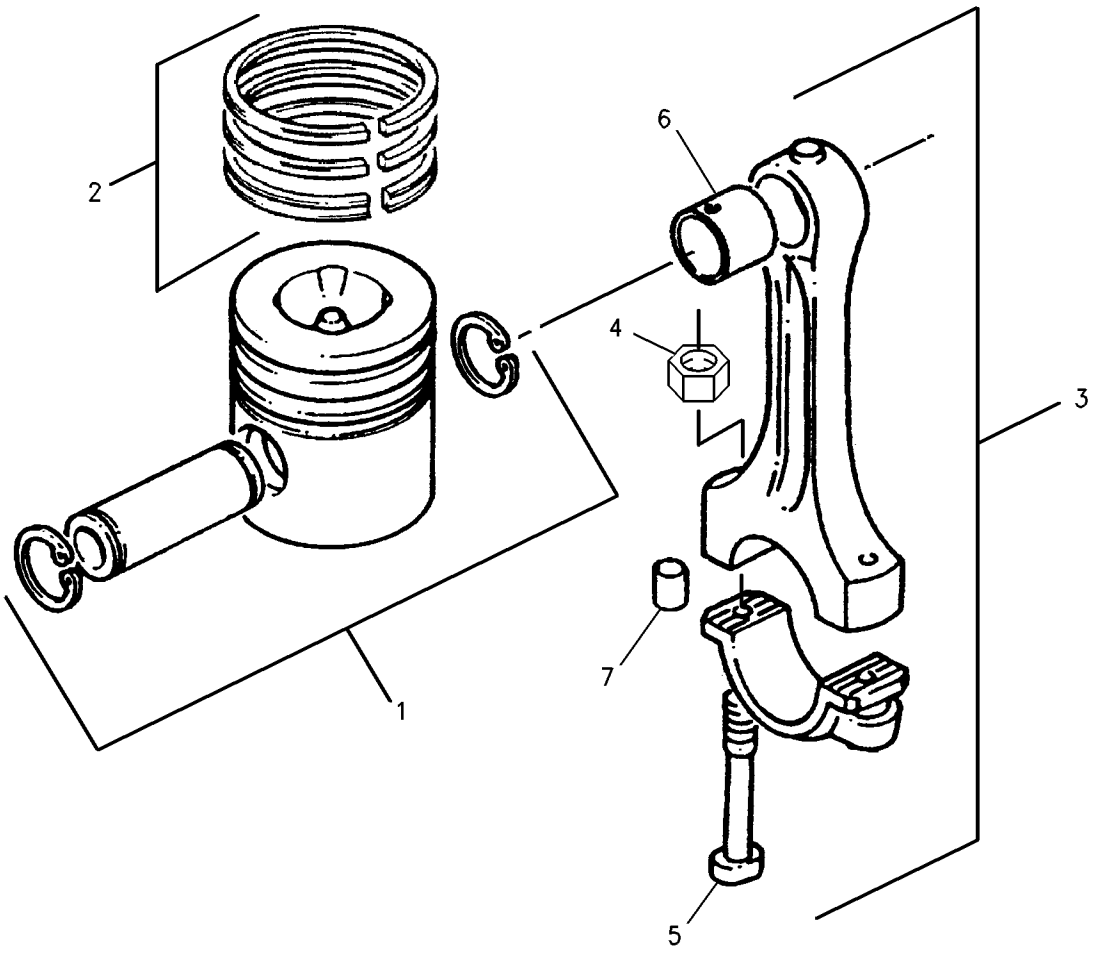

GRAPHIC #1 g00716867

BASIC ENGINE

147-5524 PLUG GP-CYLINDER BLOCK

SMCS-1201 **i01834989**

NOTE	REF NO	GRAPHIC REF	PART NUMBER	QTY	PART NAME 1 2 3 4 5 6 (PRODUCT LEVEL)	SEE PAGE
	1	1	**069-1124**	2	PLUG	

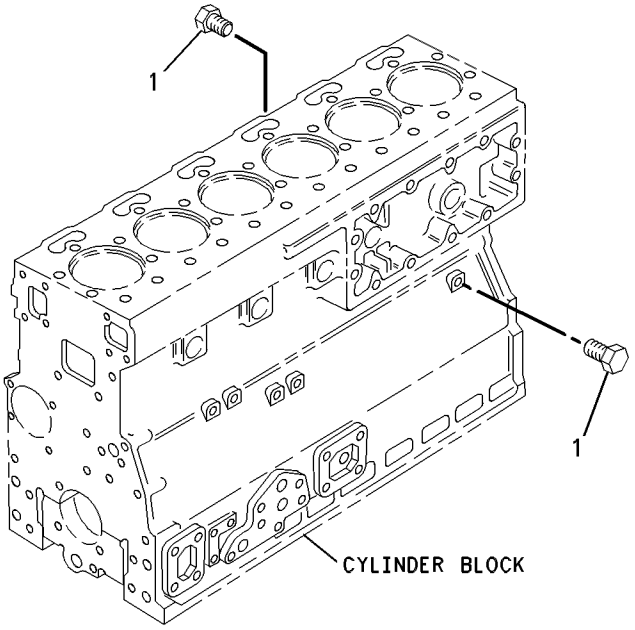

GRAPHIC #1 g00282502

BASIC ENGINE

228-7470 PLUG GP-CYLINDER BLOCK

ALSO AN ATTACHMENT

SMCS-1201 **i01827904**

NOTE	REF NO	GRAPHIC REF	PART NUMBER	QTY	PART NAME 1 2 3 4 5 6 (PRODUCT LEVEL)	SEE PAGE
	1	1	**035-8063**	1	PLUG (1/8)	

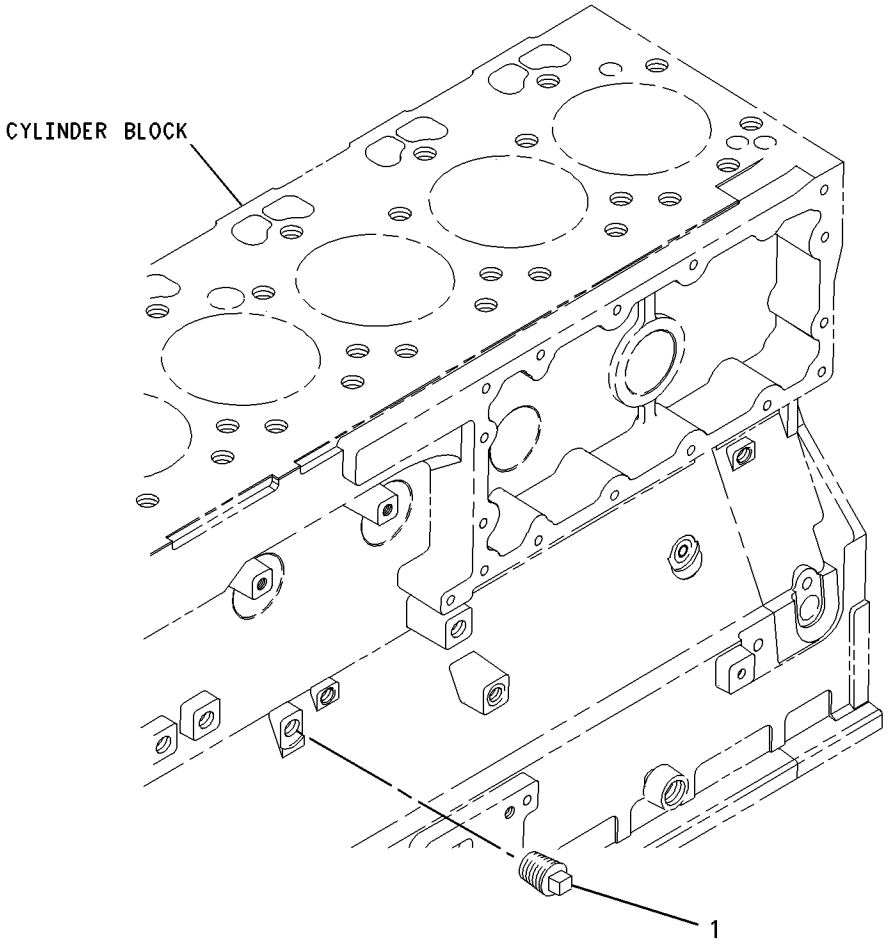

GRAPHIC #1 g00934899

217-7888 PLUG GP-FLYWHEEL HOUSING

AN ATTACHMENT

SMCS-1157 **i01756044**

NOTE	REF NO	GRAPHIC REF	PART NUMBER	QTY	PART NAME 1 2 3 4 5 6 (PRODUCT LEVEL)	SEE PAGE
	1	1	**101-2987**	6	PLUG	
	2	1	**102-9460**	3	PLUG	
	3	1	**133-8470**	4	PLUG	

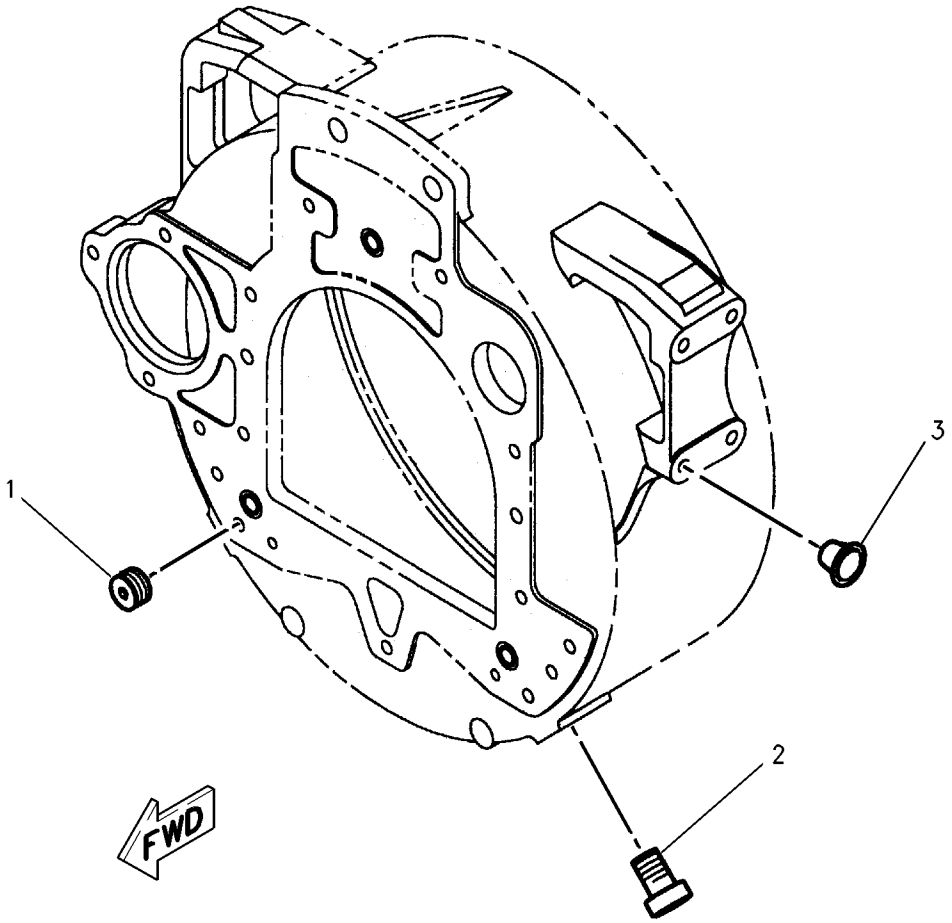

GRAPHIC #1 g00878680

BASIC ENGINE

220-6152 PLUG GP-FLYWHEEL HOUSING

AN ATTACHMENT

SMCS-1157 **i01725124**

NOTE	REF NO	GRAPHIC REF	PART NUMBER	QTY	PART NAME 1 2 3 4 5 6 (PRODUCT LEVEL)	SEE PAGE
	1	1	**101-2987**	6	PLUG	
	2	1	**102-9460**	1	PLUG	
	3	1	**113-7913**	3	STUD	
	4	1	**171-1411**	4	STUD	
	5	1	**6H-3616**	4	PLUG-PROTECTION	

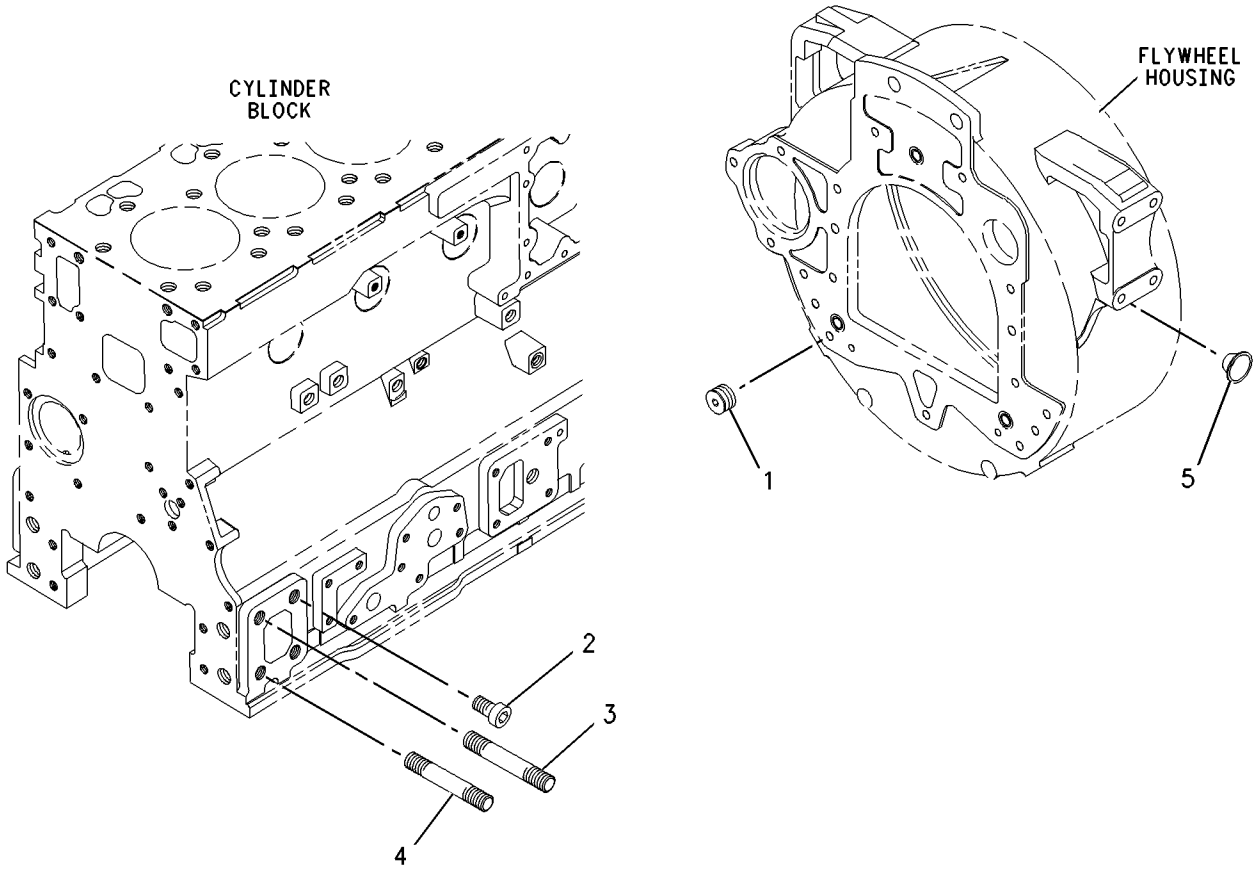

GRAPHIC #1 g00889353

BASIC ENGINE

228-7465 PLUG GP-FLYWHEEL HOUSING

ALSO AN ATTACHMENT

SMCS-1157 **i01827907**

NOTE	REF NO	GRAPHIC REF	PART NUMBER	QTY	PART NAME 1 2 3 4 5 6 (PRODUCT LEVEL)	SEE PAGE
	1	1	**6H-3616**	4	PLUG-PROTECTION	
	2	1	**101-2987**	6	PLUG	
	3	1	**102-9460**	4	PLUG	

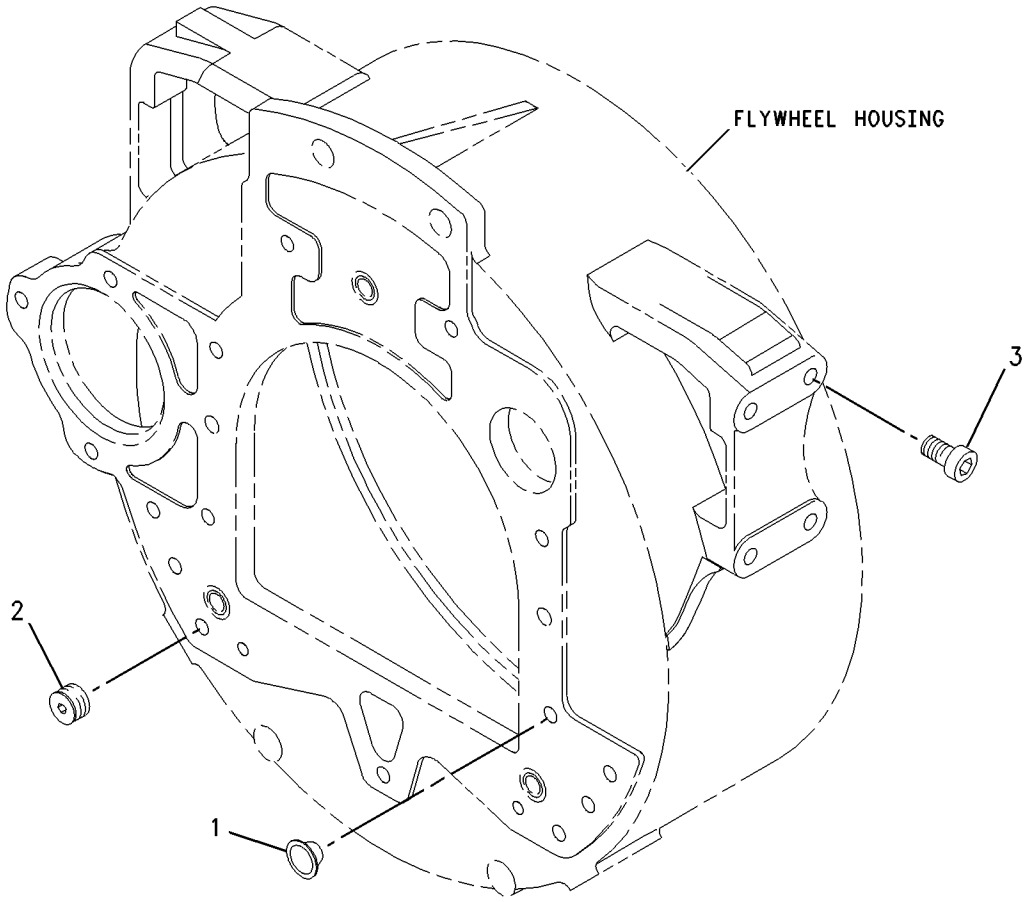

GRAPHIC #1 g00934911

226-3523 PULLEY GP-CRANKSHAFT

ALSO AN ATTACHMENT

SMCS-1205 **i01776346**

NOTE	REF NO	GRAPHIC REF	PART NUMBER	QTY	PART NAME 1 2 3 4 5 6 (PRODUCT LEVEL)	SEE PAGE
	1	1	**115-7465**	1	PULLEY	
	2	1	**6I-4714**	1	SPACER	
	4	1	**7D-8048**	1	SEAL-O-RING	
	5	1	**7W-4632**	1	LOCK-SPLIT	
	6	1	**7W-4634**	3	BOLT (7/16-20X1.5IN)	
	7	1	**7W-4635**	1	BLOCK-THRUST	
	8	1	**148-0199**	1	DAMPER	
	9	1	**102-9941**	8	BOLT (M12X1.75X25MM)	

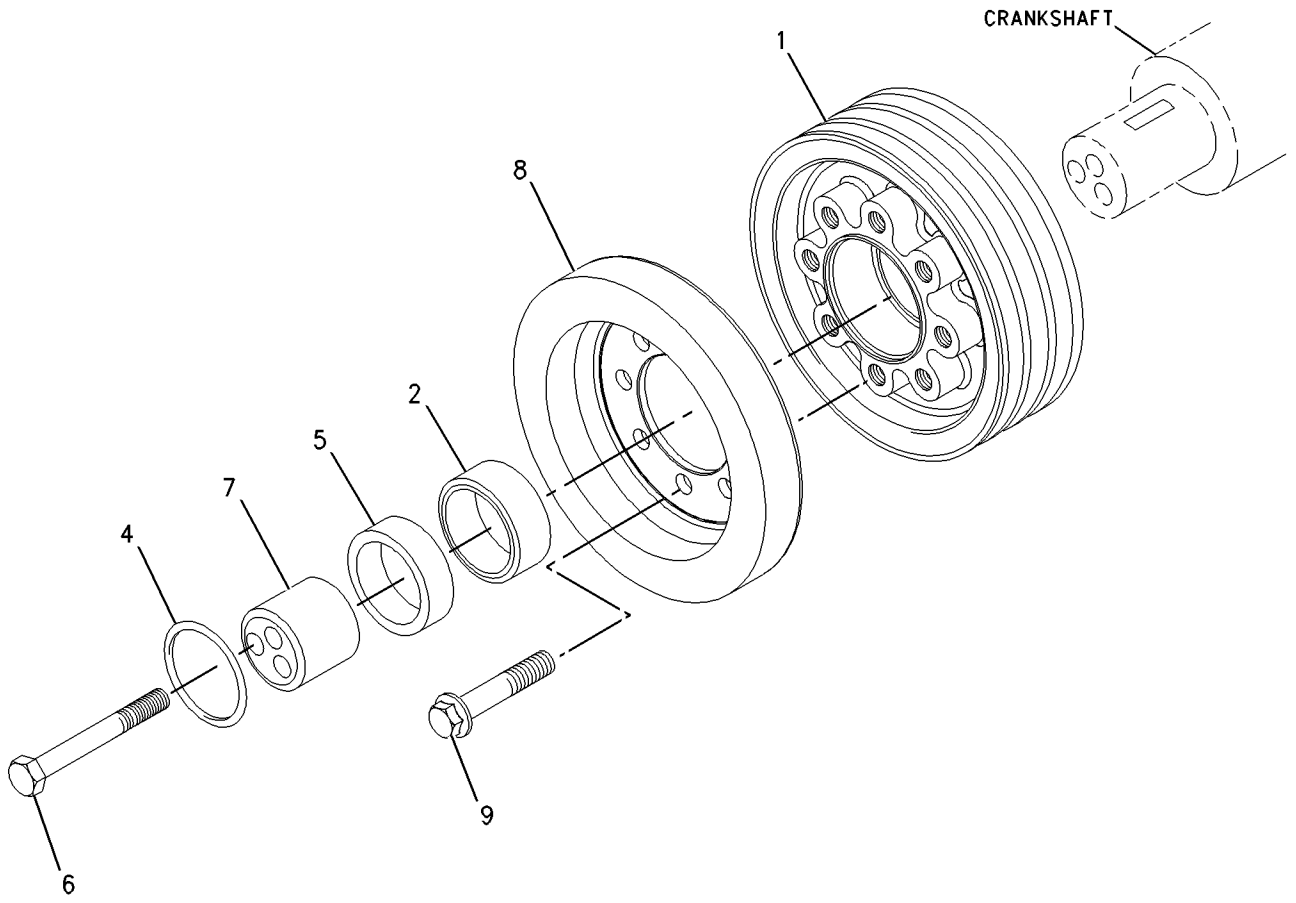

GRAPHIC #1 g00908745

BASIC ENGINE

183-4733 PULLEY GP-FAN DRIVE

SMCS-1359 **i01392306**

NOTE	REF NO	GRAPHIC REF	PART NUMBER	QTY	PART NAME 1 2 3 4 5 6 (PRODUCT LEVEL)	SEE PAGE
	1	1	**130-3881**	1	PULLEY-FAN	

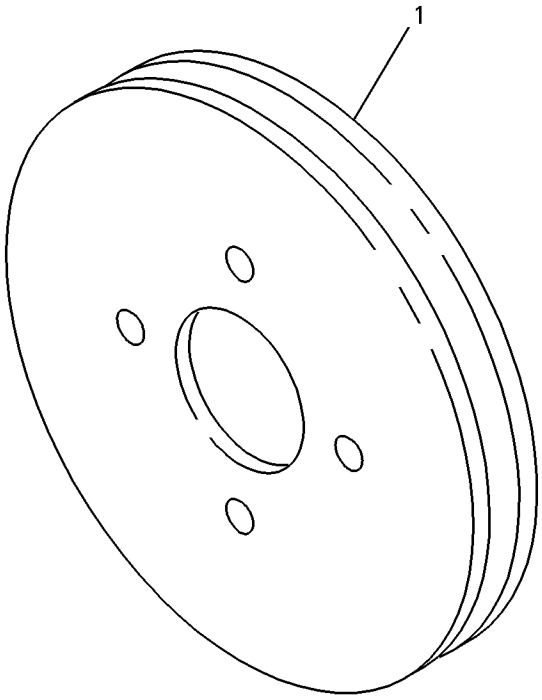

GRAPHIC #1 g00734082

BASIC ENGINE

146-8956 ROCKER ARM GP

PART OF 216-8619 VALVE MECHANISM GP

SMCS-1123 **i01548267**

NOTE	REF NO	GRAPHIC REF	PART NUMBER	QTY	PART NAME 1 2 3 4 5 6 (PRODUCT LEVEL)	SEE PAGE
	1	1	**6I-1206**	6	BRACKET-SHAFT	
	2	1	**6I-3717**	1	BOLT (NO.10X12.7MM)	
	3	1	**6I-3718**	1	CONNECTION-FEED	
	4	1	**6V-8183**	12	NUT-FULL (3/8-24 THD)	
B	5	1	**195-7004**	2	SHIM	
	6	1	**006-8606**	2	RING-RETAINING	
	7	1	**067-6087**	4	SPRING-SHAFT	
	8	1	**067-6088**	2	SPRING-SHAFT	
	9	1	**185-1546**	8	SCREW	
	10	1	**138-2054**	2	WASHER	
	11	1	**209-0091**	6	LEVER AS (LH)	
					(EACH INCLUDES)	
	12	1	**139-5514**	1	BUSHING-LEVER	
	13	1	**209-0092**	6	LEVER AS (RH)	
					(EACH INCLUDES)	
	14	1	**139-5514**	1	BUSHING-LEVER	
	15	1	**146-8957**	1	SHAFT AS	
	16	1	**067-6083**	2	PLUG-SHAFT END	
	17	1	**129-3493**	1	FERRULE	

B-USE AS REQUIRED

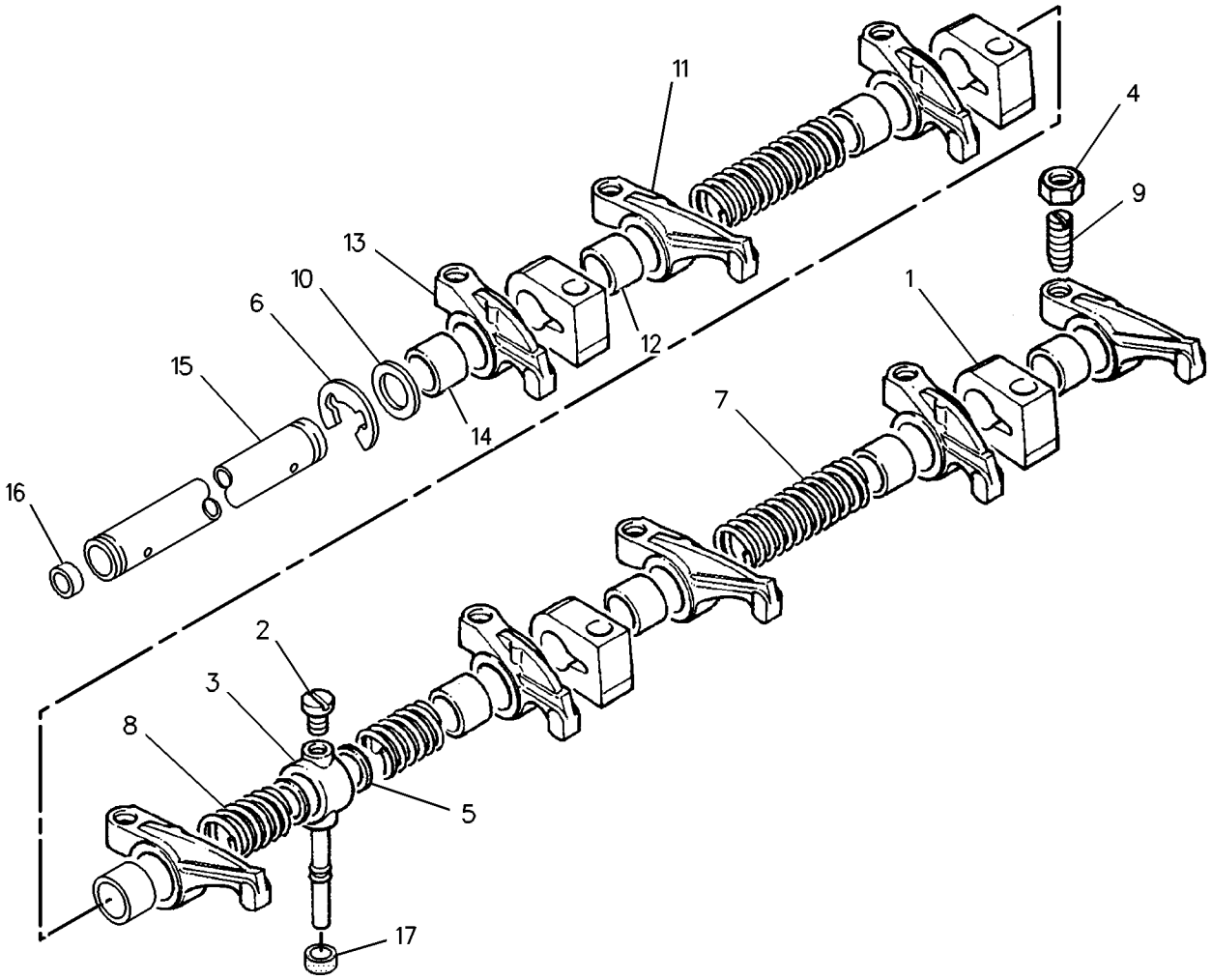

GRAPHIC #1 g00735390

BASIC ENGINE

216-8619 VALVE MECHANISM GP

SMCS-1102, 1121, 1123 **i01725018**

NOTE	REF NO	GRAPHIC REF	PART NUMBER	QTY	PART NAME 1 2 3 4 5 6 (PRODUCT LEVEL)	SEE PAGE
	1	1	**6I-0235**	6	BOLT (M12X1.75X50MM)	
	2	1	**067-6095**	12	ROD	
	3	1	**138-2053**	12	TAPPET	
Y	4	1	**146-8956**	1	ROCKER ARM GP	68

Y-SEPARATE ILLUSTRATION

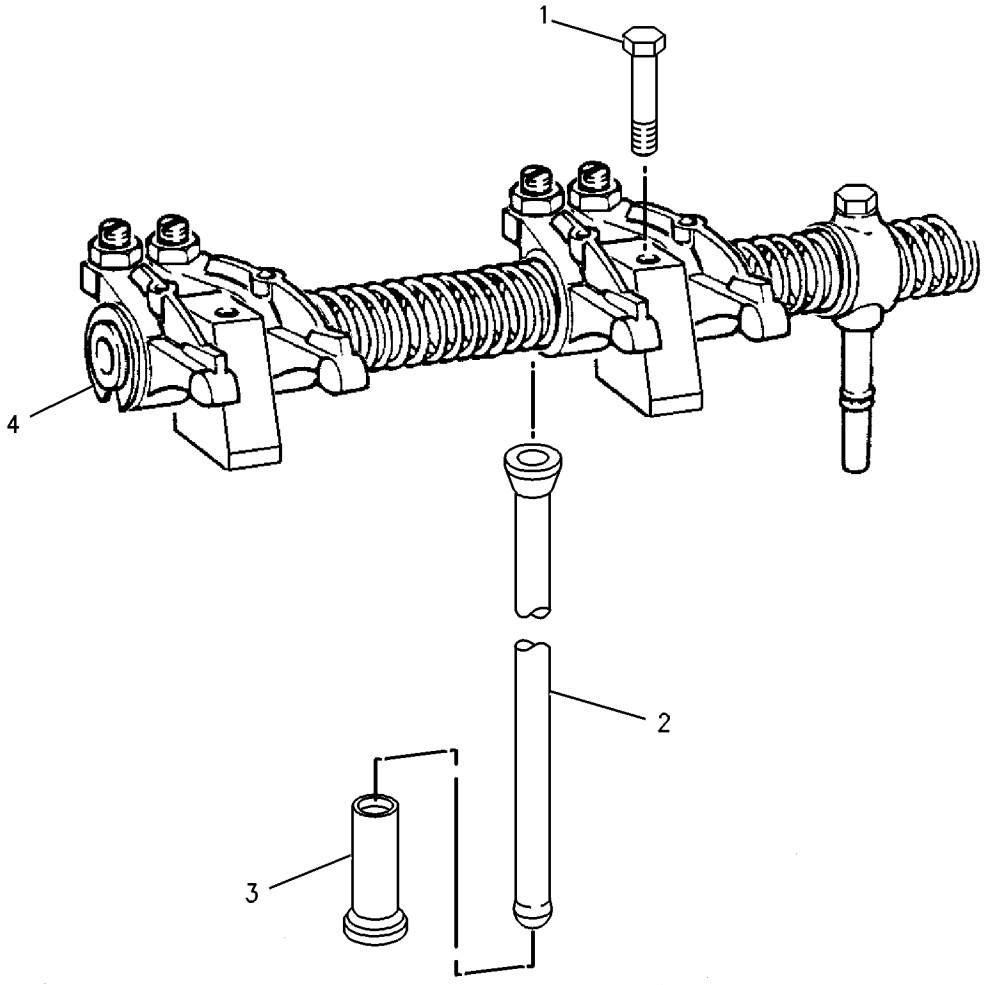

GRAPHIC #1 g00887556

LUBRICATION SYSTEM

216-9683 FILTER GP-ENGINE OIL

AN ATTACHMENT

SMCS-1306, 1308 **i01755992**

NOTE	REF NO	GRAPHIC REF	PART NUMBER	QTY	PART NAME 1 2 3 4 5 6 (PRODUCT LEVEL)	SEE PAGE
	1	1	**7W-2327**	2	FILTER AS-ENGINE OIL	

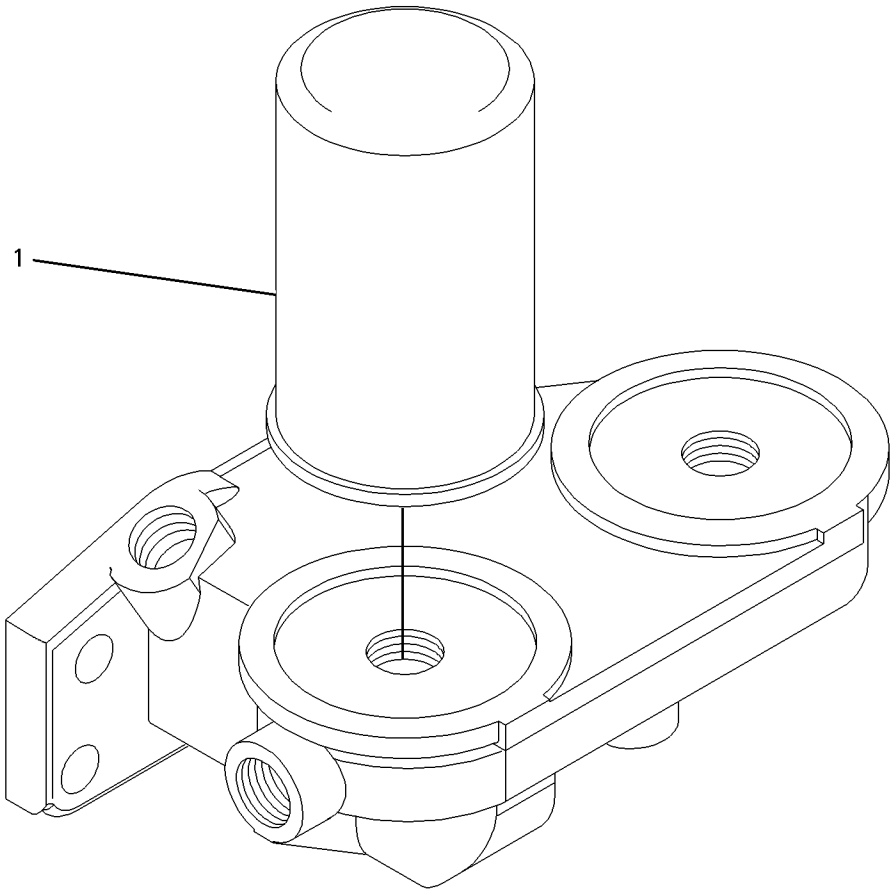

GRAPHIC #1 g00861958

LUBRICATION SYSTEM

221-5290 FILTER GP-ENGINE OIL

AN ATTACHMENT

SMCS-1306, 1308 **i01725106**

NOTE	REF NO	GRAPHIC REF	PART NUMBER	QTY	PART NAME 1 2 3 4 5 6 (PRODUCT LEVEL)	SEE PAGE
	1	1	**1R-0739**	1	FILTER AS-ENGINE OIL	

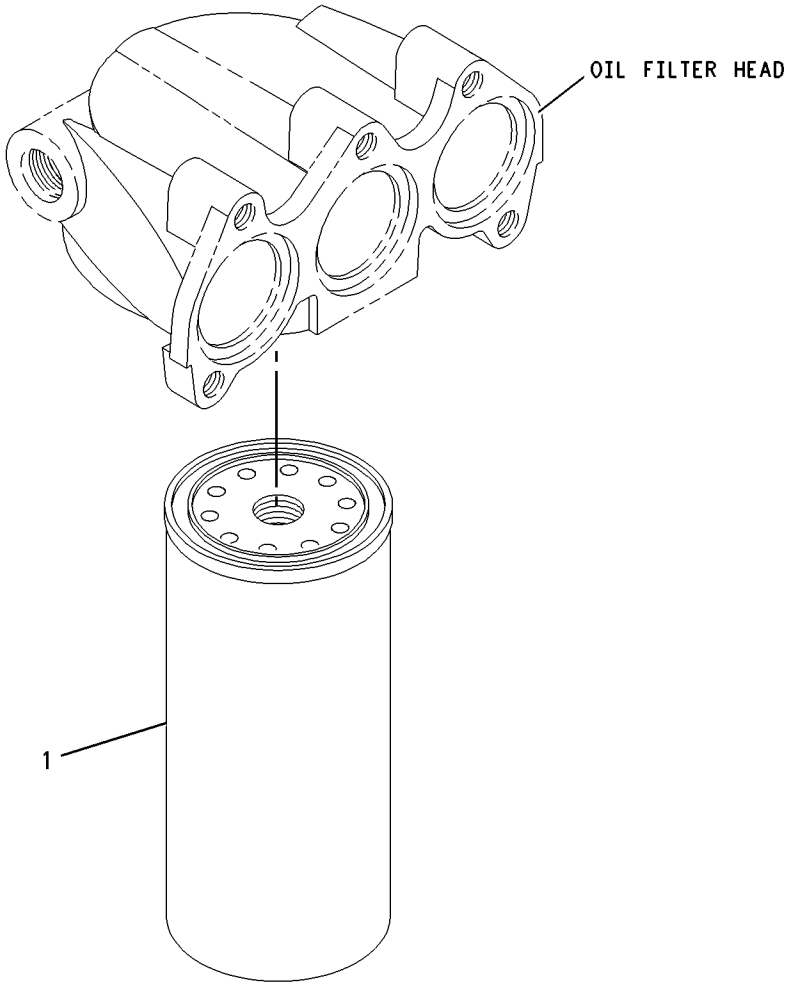

GRAPHIC #1 g00887435

LUBRICATION SYSTEM

228-8523 FILTER GP-ENGINE OIL

ALSO AN ATTACHMENT

SMCS-1306, 1308 **i01827920**

NOTE	REF NO	GRAPHIC REF	PART NUMBER	QTY	PART NAME 1 2 3 4 5 6 (PRODUCT LEVEL)	SEE PAGE
	1	1	**7W-2327**	1	FILTER AS-ENGINE OIL	

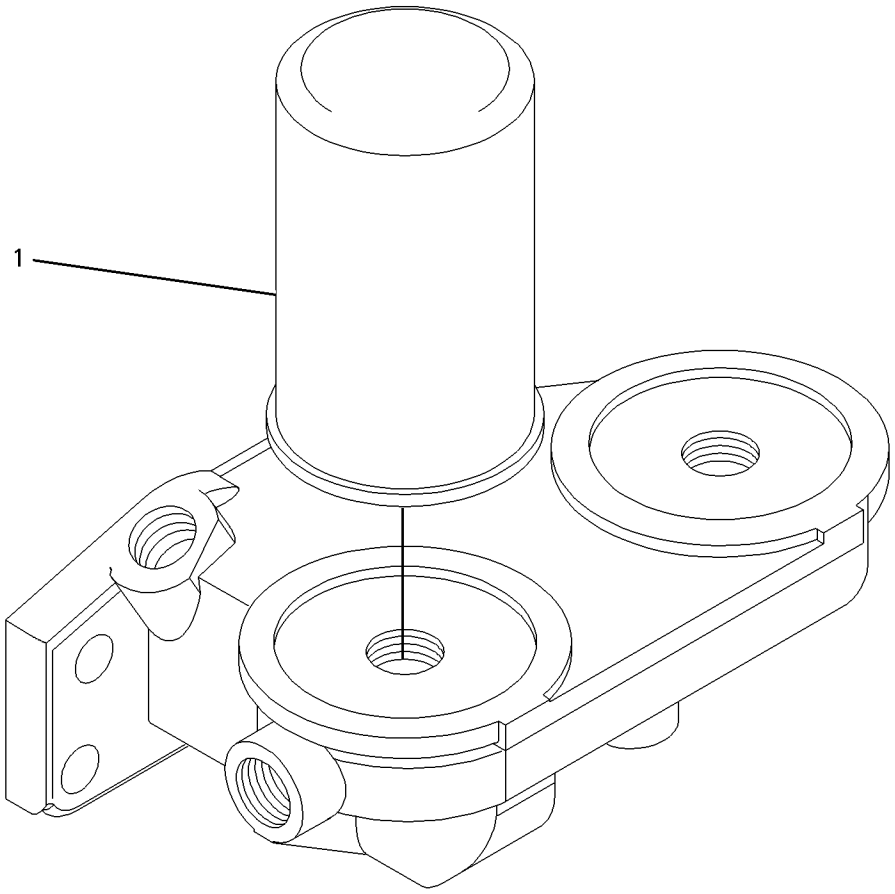

GRAPHIC #1 g00861958

LUBRICATION SYSTEM

219-1852 PUMP GP-ENGINE OIL

SMCS-1304, 1315 **i01827742**

NOTE	REF NO	GRAPHIC REF	PART NUMBER	QTY	PART NAME 1 2 3 4 5 6 (PRODUCT LEVEL)	SEE PAGE
	1	1	**6I-0260**	3	BOLT (M8X1.25X25MM)	
	2	1	**6I-4373**	1	HOUSING AS	
	3	1	**6I-0787**	1	RING-RETAINING	
	4	1	**7W-4648**	1	SEAT-SPRING	
	5	1	**7W-4650**	1	SPRING	
	6	1	**7W-4782**	1	PLUNGER	
	7	1	**6I-4374**	1	BOLT	
	8	1	**124-3815**	1	BOLT (M8X16X1.25MM)	
	9	1	**183-6318**	1	TUBE AS	
	10	1	**189-5601**	1	SEAL-O-RING	
	11	1	**216-8625**	1	PUMP GP-GEROTOR	

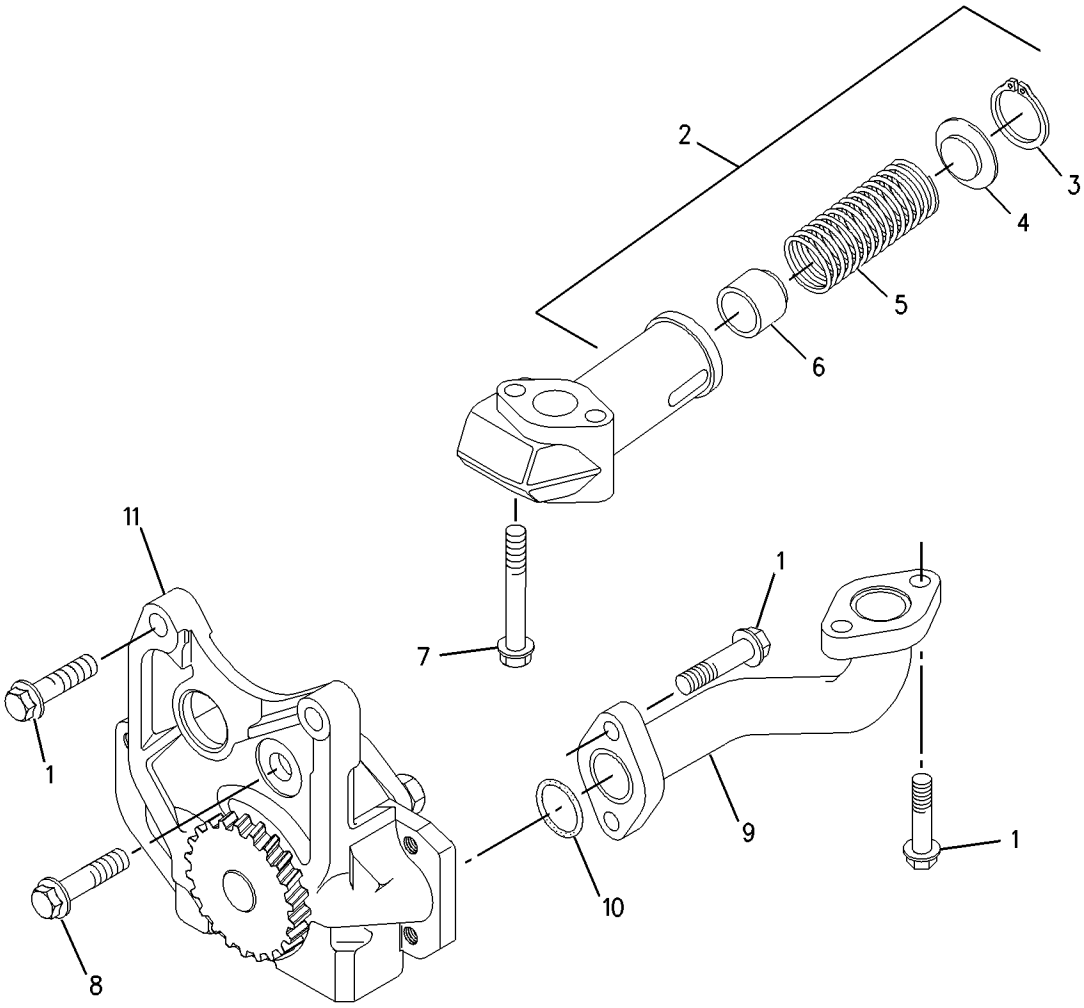

GRAPHIC #1 g00907637

COOLING SYSTEM

228-7917 CONNECTION GP-HEATER

ALSO AN ATTACHMENT

SMCS-1333, 1380, 1383 **i01827925**

NOTE	REF NO	GRAPHIC REF	PART NUMBER	QTY	PART NAME 1 2 3 4 5 6 (PRODUCT LEVEL)	SEE PAGE
	1	1	**7W-4669**	2	ADAPTER	

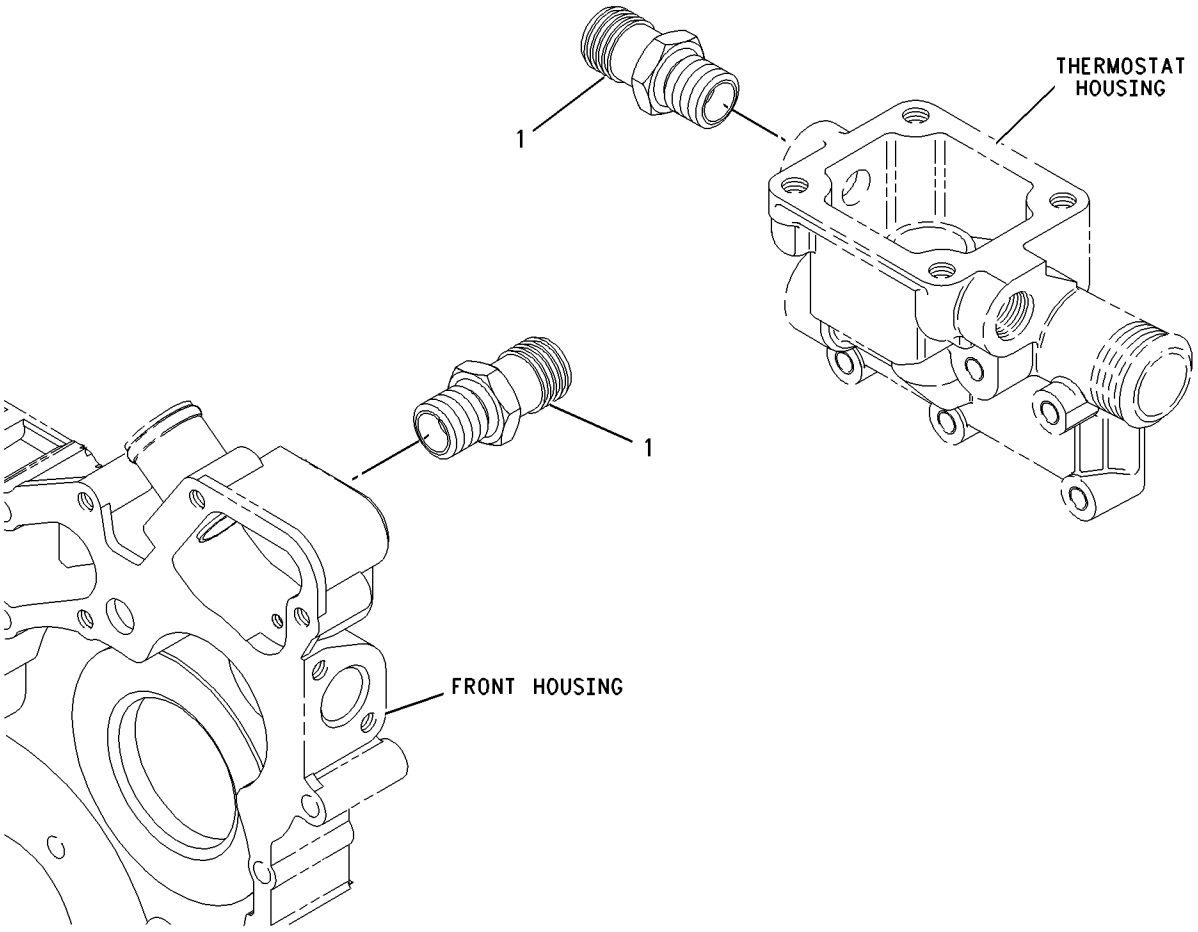

GRAPHIC #1 g00934887

COOLING SYSTEM

216-9740 CONNECTION GP-WATER

AN ATTACHMENT

SMCS-1380 **i01843776**

NOTE	REF NO	GRAPHIC REF	PART NUMBER	QTY	PART NAME 1 2 3 4 5 6 (PRODUCT LEVEL)	SEE PAGE
	1	1	**6I-0260**	1	BOLT (M8X1.25X25MM)	
	2	1	**6I-4374**	1	BOLT	
	3	1	**216-9743**	1	CONNECTION AS	
	4	1	**140-7515**	1	SEAL-O-RING (REGULATOR)	
	5	1	**141-6188**	1	SEAL (REGULATOR HOUSING)	
	6	1	**162-0236**	1	RING	
	7	1	**162-0237**	1	PLUG (M8X25MM)	
	8	1	**216-9737**	1	REGULATOR-WATER TEMPERATURE	
	9	1	**171-1078**	1	SPACER	

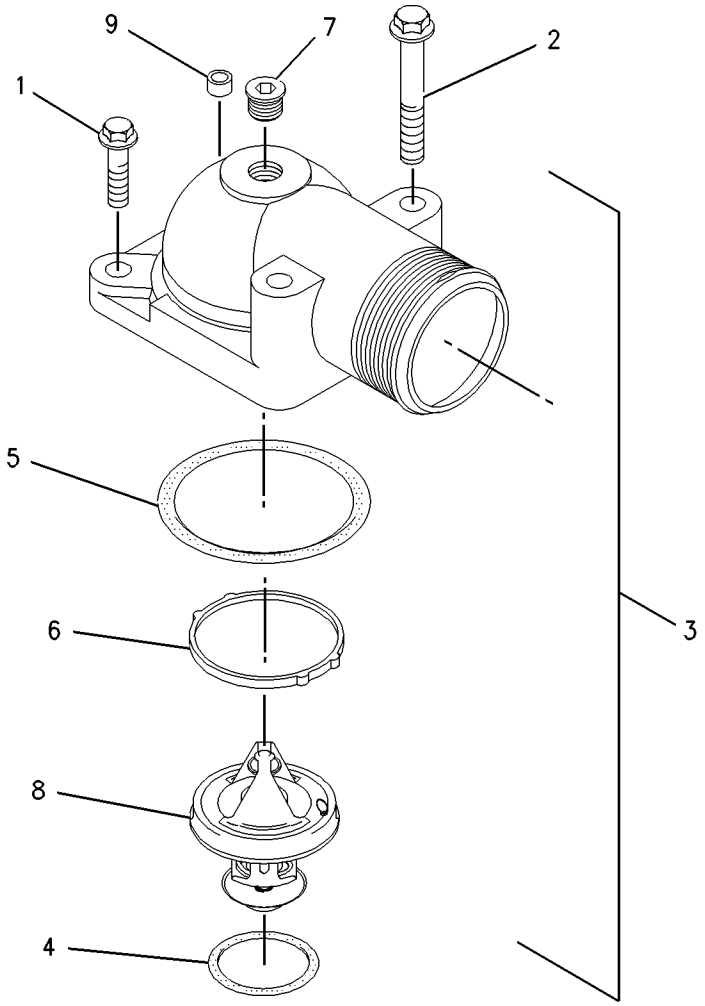

GRAPHIC #1 g00861524

220-6144 CONNECTION GP-WATER

AN ATTACHMENT

SMCS-1380 **i01843778**

NOTE	REF NO	GRAPHIC REF	PART NUMBER	QTY	PART NAME 1 2 3 4 5 6 (PRODUCT LEVEL)	SEE PAGE
	1	1	**6I-0260**	1	BOLT (M8X1.25X25MM)	
	2	1	**6I-4374**	1	BOLT	
	3	1	**216-9743**	1	CONNECTION AS	
	4	1	**140-7515**	1	SEAL-O-RING (REGULATOR)	
	5	1	**141-6188**	1	SEAL (REGULATOR HOUSING)	
	6	1	**162-0236**	1	RING	
	7	1	**162-0237**	1	PLUG (M8X25MM)	
	8	1	**216-9737**	1	REGULATOR-WATER TEMPERATURE	

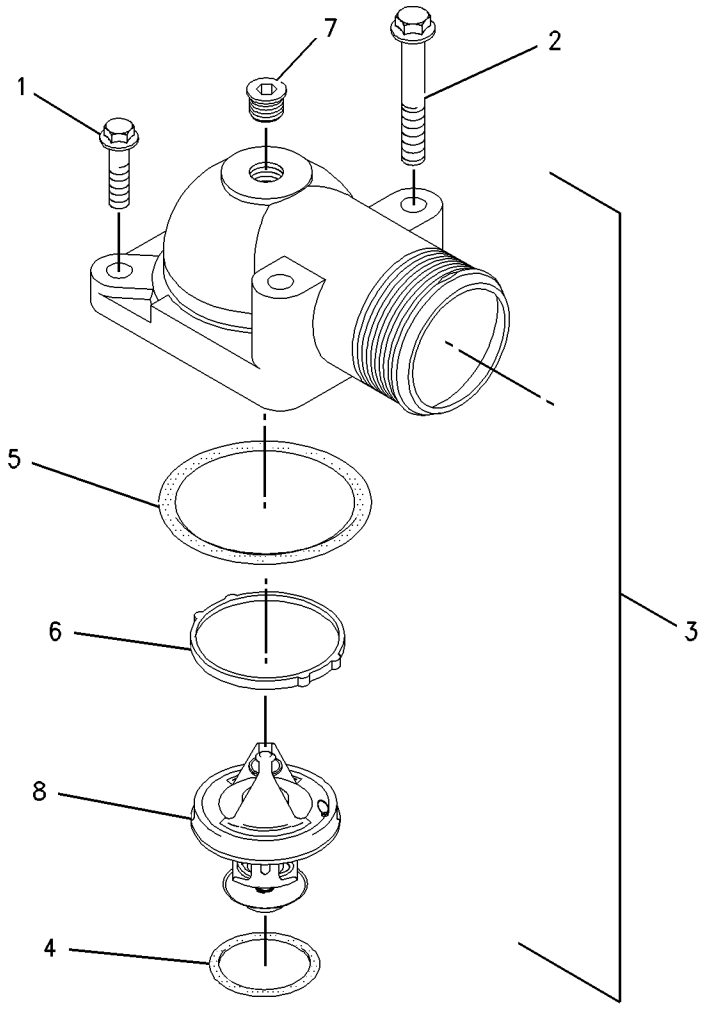

GRAPHIC #1 g00899163

COOLING SYSTEM

228-7387 CONNECTION GP-WATER

ALSO AN ATTACHMENT

SMCS-1380 **i01843777**

NOTE	REF NO	GRAPHIC REF	PART NUMBER	QTY	PART NAME 1 2 3 4 5 6 (PRODUCT LEVEL)	SEE PAGE
	1	1	**6I-0260**	2	BOLT (M8X1.25X25MM)	
	2	1	**6I-4374**	2	BOLT	
	3	1	**216-9743**	1	CONNECTION AS	
	3A	1	**140-7515**	1	SEAL-O-RING (REGULATOR)	
	3B	1	**141-6188**	1	SEAL (REGULATOR HOUSING)	
	3C	1	**162-0236**	1	RING	
	3D	1	**162-0237**	1	PLUG (M8X25MM)	
	3E	1	**216-9737**	1	REGULATOR-WATER TEMPERATURE	

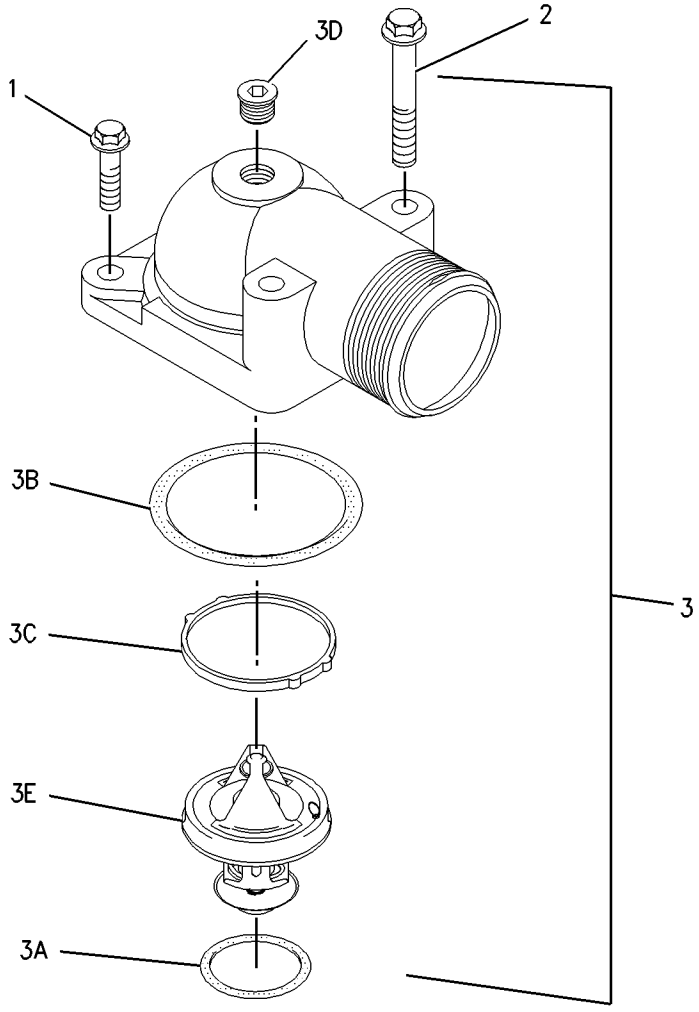

GRAPHIC #1 g00932676

COOLING SYSTEM

216-9648 COOLER GP-FLTR BASE & ENG OIL

AN ATTACHMENT

SMCS-1306, 1378 **i01815788**

NOTE	REF NO	GRAPHIC REF	PART NUMBER	QTY	PART NAME 1 2 3 4 5 6 (PRODUCT LEVEL)	SEE PAGE
	1	1	**6I-0260**	1	BOLT (M8X1.25X25MM)	
	2	1	**6I-0291**	1	NUT (M8X1.25)	
	3	1	**6I-0298**	1	GASKET	
	4	1	**6I-0593**	4	BOLT (M10X1.5X30MM)	
	5	1	**6I-0654**	5	BOLT (M10X1.5X25MM)	
	6	1	**6I-4786**	1	GASKET	
	7	1	**111-8222**	1	BOLT	
	8	1	**146-1704**	1	ADAPTER	
	9	1	**162-0757**	1	SEAL	
	10	1	**162-0761**	2	FLANGE	
	11	1	**162-9754**	1	SEAL	
	12	1	**175-3915**	1	COOLER-OIL	
	13	1	**216-9627**	1	HEAD AS	
	14	1	**118-9145**	2	CONNECTOR	
	15	1	**216-9633**	1	VALVE-CHECK (OIL)	
	16	1	**216-9634**	1	CAP-VALVE (OIL CHECK VALVE)	
	17	1	**216-9637**	1	HOUSING	
	18	1	**216-9638**	1	GASKET	
	19	1	**216-9641**	1	TUBE	
	20	1	**216-9643**	2	GASKET	
	21	1	**216-9645**	1	TUBE	

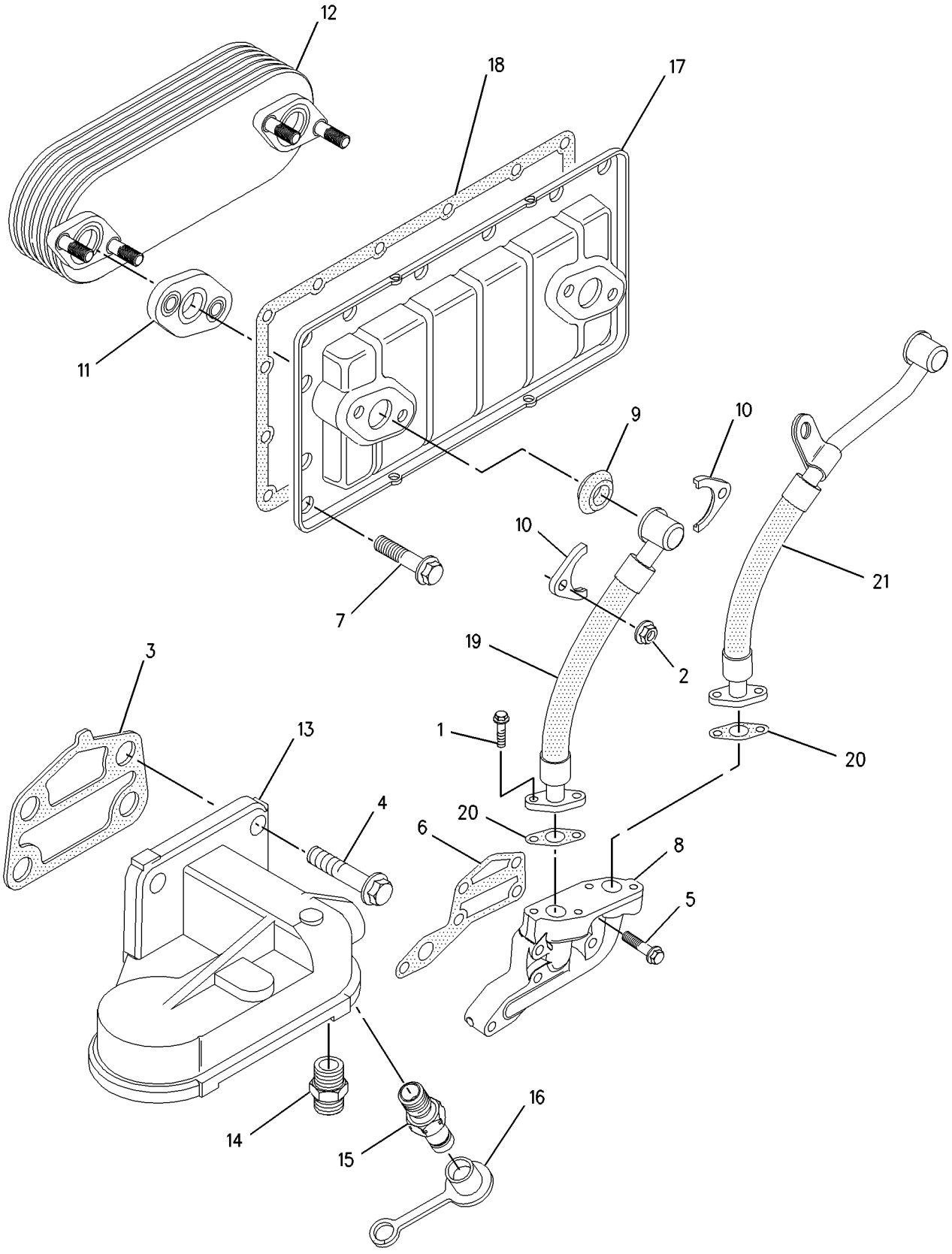

GRAPHIC #1 g00888626

COOLING SYSTEM

219-2210 COOLER GP-FLTR BASE & ENG OIL

SMCS-1306, 1378 **i01848428**

NOTE	REF NO	GRAPHIC REF	PART NUMBER	QTY	PART NAME 1 2 3 4 5 6 (PRODUCT LEVEL)	SEE PAGE
	1	1	**6I-0260**	3	BOLT (M8X1.25X25MM)	
	2	1	**6I-0291**	4	NUT (M8X1.25)	
	3	1	**6I-0298**	1	GASKET	
	4	1	**6I-0654**	8	BOLT (M10X1.5X25MM)	
	5	1	**6I-4786**	1	GASKET	
J	6	1	**6I-4800**	1	GASKET	
	7	1	**111-8222**	14	BOLT	
	8	1	**121-3415**	1	HEAD AS-OIL FILTER	
	9	1	**140-8783**	1	BOLT (M10X45MM)	
J	10	1	**162-0757**	2	SEAL	
	11	1	**162-0761**	4	FLANGE	
J	12	1	**162-9754**	2	SEAL	
	13	1	**175-3915**	1	COOLER-OIL	
	14	1	**216-9637**	1	HOUSING	
J	15	1	**216-9638**	1	GASKET	
	16	1	**219-1816**	1	TUBE	
	17	1	**219-1817**	1	LINE	
	18	1	**219-2198**	1	ADAPTER	
	19	1	**219-1818**	1	CONNECTION	
					AVAILABLE REPAIR KIT(S):	
J			**219-2172**	1	KIT-REPAIR (OIL COOLER)	

J-KIT MARKED J INCLUDES PARTS MARKED J

219-2210 **COOLER GP-FLTR BASE & ENG OIL** *(contd.)* **i01848428**

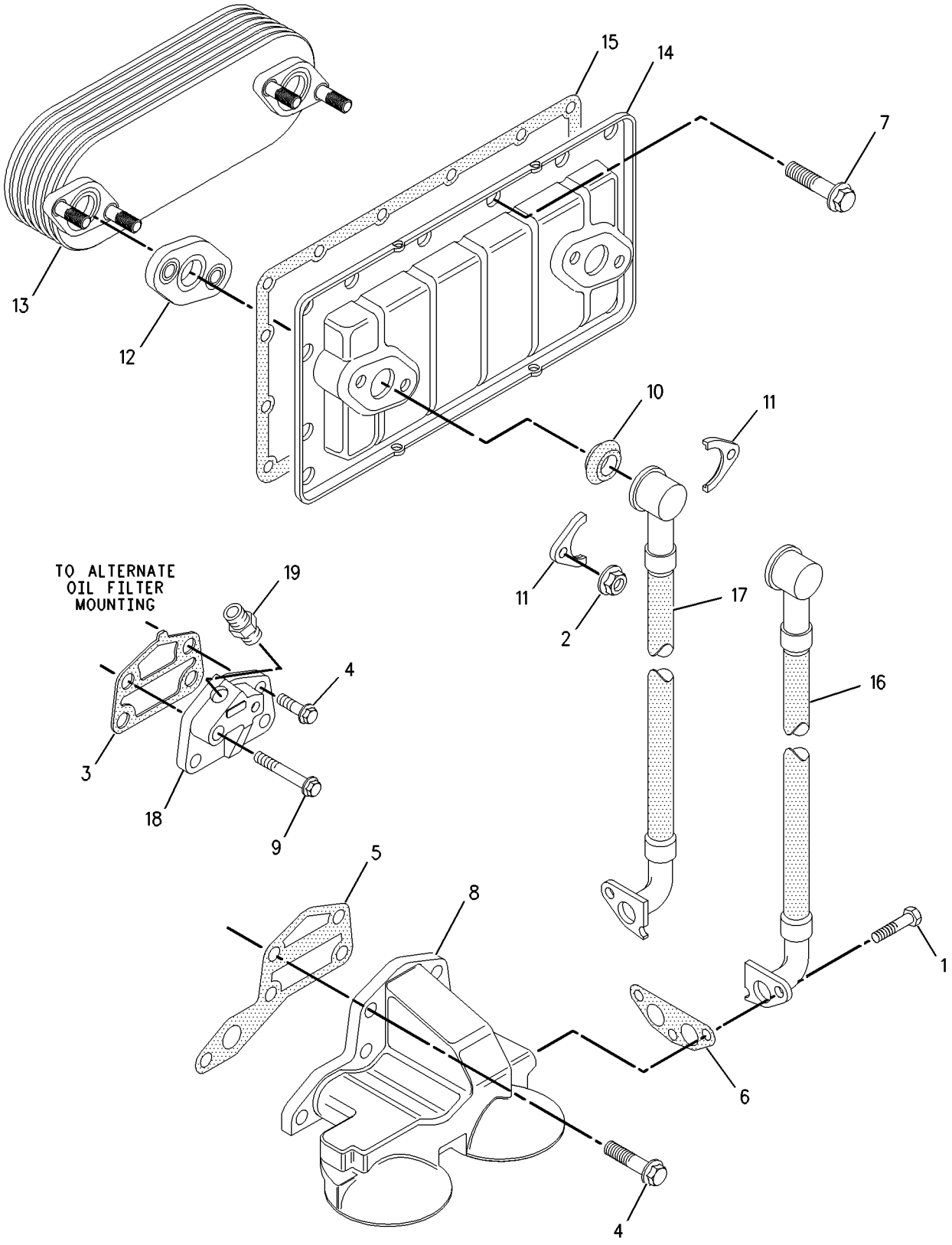

GRAPHIC #1 g00907657

COOLING SYSTEM

220-7172 COOLER GP-FLTR BASE & ENG OIL

AN ATTACHMENT

SMCS-1306, 1378 **i01848429**

NOTE	REF NO	GRAPHIC REF	PART NUMBER	QTY	PART NAME 1 2 3 4 5 6 (PRODUCT LEVEL)	SEE PAGE
	1	1	**6I-0260**	4	BOLT (M8X1.25X25MM)	
	2	1	**6I-0291**	4	NUT (M8X1.25)	
	3	1	**6I-0298**	1	GASKET	
	4	1	**6I-0593**	1	BOLT (M10X1.5X30MM)	
	5	1	**6I-4786**	1	GASKET	
	6	1	**124-3815**	14	BOLT (M8X16X1.25MM)	
	7	1	**140-8783**	4	BOLT (M10X45MM)	
J	8	1	**162-0757**	2	SEAL	
	9	1	**162-0761**	4	FLANGE	
J	10	1	**162-9754**	2	SEAL	
	11	1	**175-3915**	1	COOLER-OIL	
	12	1	**216-9637**	1	HOUSING	
J	13	1	**216-9638**	1	GASKET	
	14	1	**216-9641**	1	TUBE	
J	15	1	**216-9643**	2	GASKET	
	16	1	**216-9645**	1	TUBE	
	17	1	**220-6127**	1	HEAD AS	
	18	1	**7M-7410**	1	PLUG	
	19	1	**118-9145**	2	CONNECTOR	
	20	1	**219-1818**	1	CONNECTION	
	21	1	**220-7171**	1	ADAPTER-HOUSING	
					AVAILABLE REPAIR KIT(S):	
J			**219-2172**	1	KIT-REPAIR (OIL COOLER)	

J-KIT MARKED J INCLUDES PARTS MARKED J

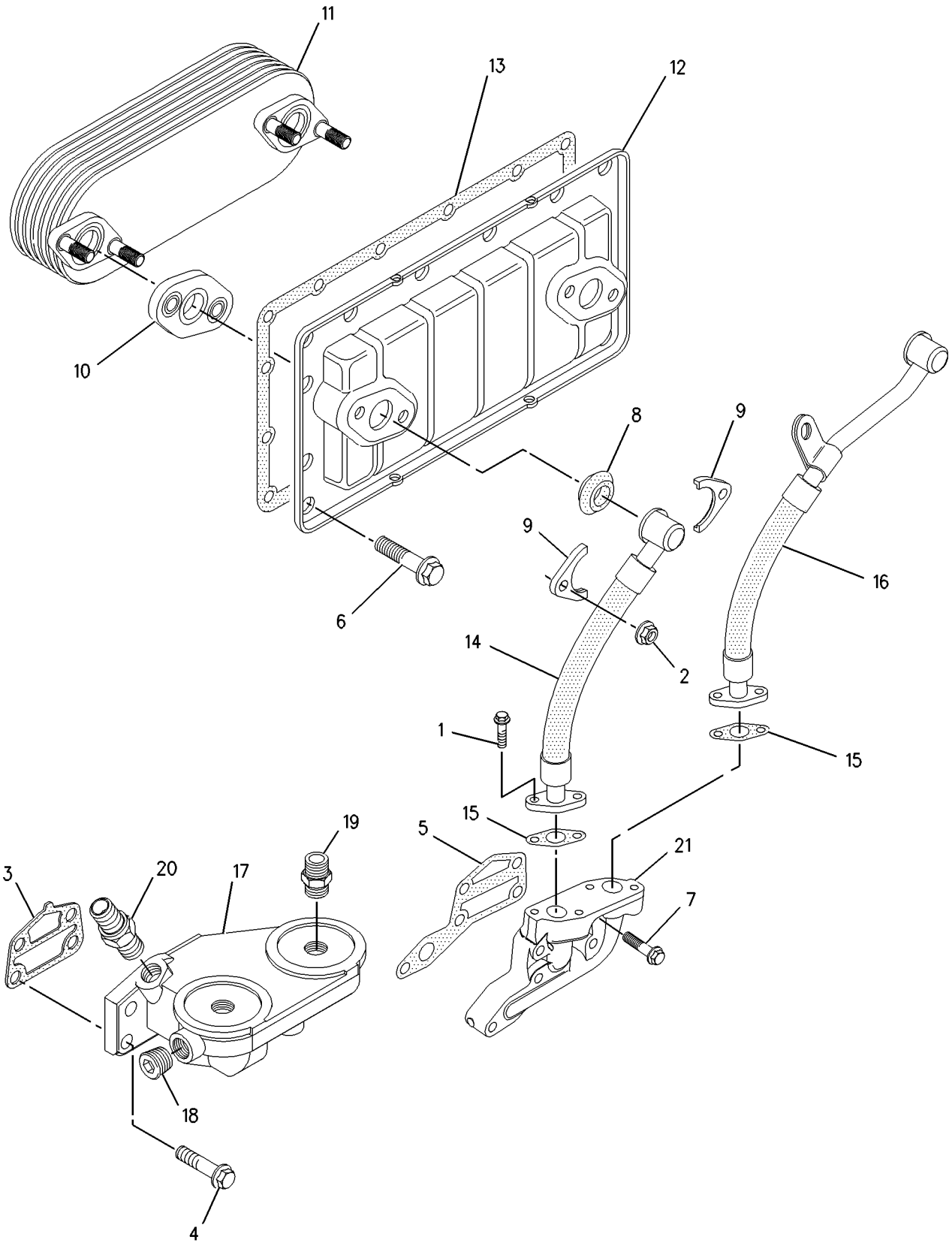

GRAPHIC #1 g00900434

COOLING SYSTEM

221-5285 COOLER GP-FLTR BASE & ENG OIL

AN ATTACHMENT

SMCS-1306, 1378 **i01848430**

NOTE	REF NO	GRAPHIC REF	PART NUMBER	QTY	PART NAME 1 2 3 4 5 6 (PRODUCT LEVEL)	SEE PAGE
	1	1	**2M-9780**	1	SEAL-O-RING	
	2	1	**5F-9657**	3	SEAL-O-RING	
M	3	1	**5P-8196**	1	PLUG	
	4	1	**6I-0260**	6	BOLT (M8X1.25X25MM)	
	5	1	**6I-0291**	4	NUT (M8X1.25)	
	6	1	**6I-4786**	1	GASKET	
	7	1	**7C-1493**	1	VALVE AS-BYPASS (OIL FILTER)	
	8	1	**7W-9028**	1	BASE AS-OIL FILTER	
	8A	1	**2P-2537**	1	STUD-HOLLOW	
	9	1	**9L-9188**	1	SPRING-VALVE	
	10	1	**100-4461**	6	BOLT (M10X50MM)	
M	11	1	**101-3895**	3	BOLT (M8X1.25X35MM)	
	12	1	**124-3815**	14	BOLT (M8X16X1.25MM)	
	13	1	**140-8783**	4	BOLT (M10X45MM)	
J	14	1	**162-0757**	2	SEAL	
	15	1	**162-0761**	4	FLANGE	
J	16	1	**162-9754**	2	SEAL	
	17	1	**175-3915**	1	COOLER-OIL	
	18	1	**216-9637**	1	HOUSING	
J	19	1	**216-9638**	1	GASKET	
	20	1	**216-9641**	1	TUBE	
J	21	1	**216-9643**	2	GASKET	
	22	1	**216-9645**	1	TUBE	
	23	1	**220-7171**	1	ADAPTER-HOUSING	
	24	1	**221-5278**	1	HEAD AS	
	25	1	**219-1818**	1	CONNECTION	
	26	1	**221-4520**	1	GASKET	
					AVAILABLE REPAIR KIT(S):	
J			**219-2172**	1	KIT-REPAIR (OIL COOLER)	

J-KIT MARKED J INCLUDES PARTS MARKED J
M-METRIC PART

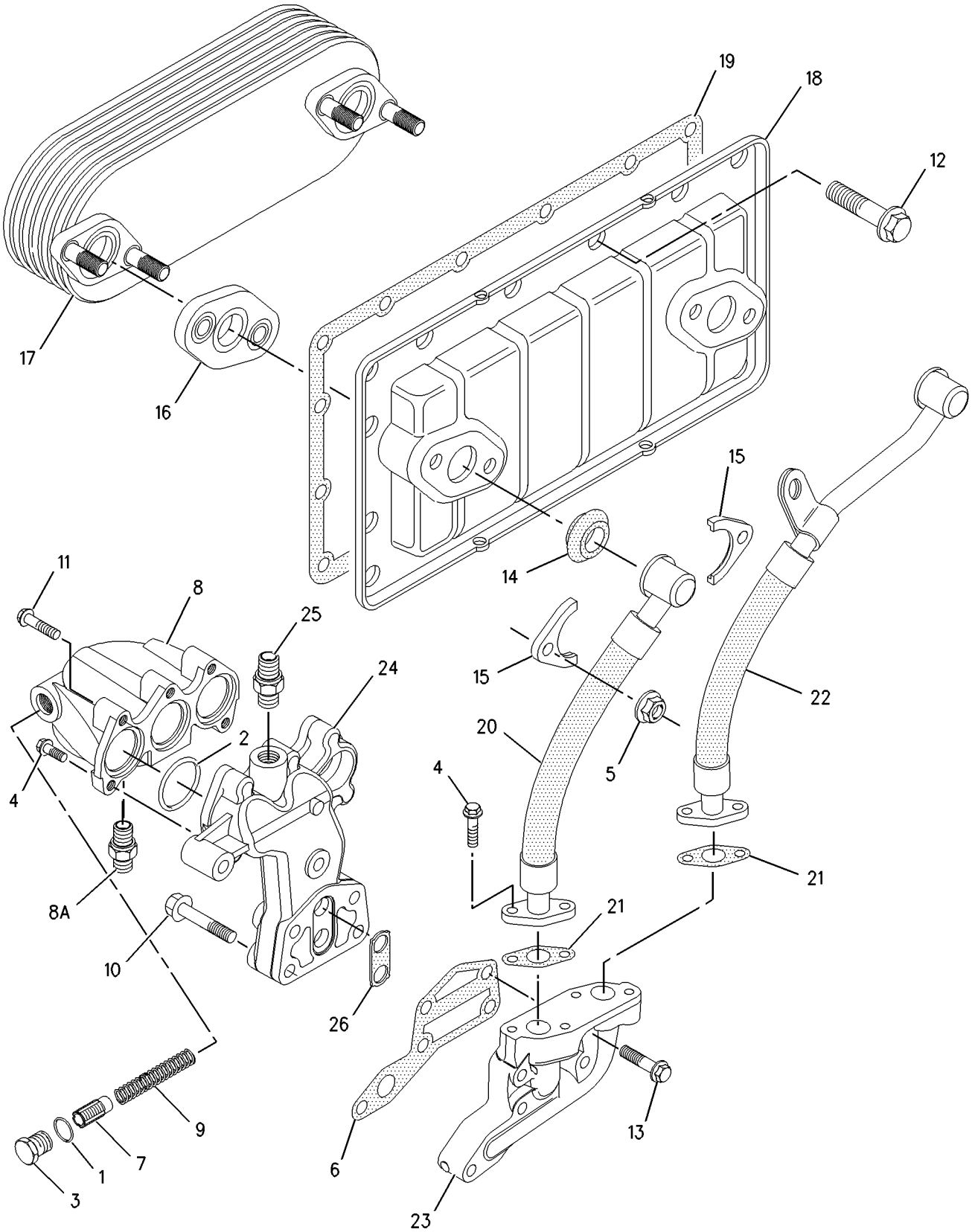

GRAPHIC #1 g00887831

COOLING SYSTEM

216-9735 PUMP GP-WATER

AN ATTACHMENT

SMCS-1361 **i01848431**

NOTE	REF NO	GRAPHIC REF	PART NUMBER	QTY	PART NAME 1 2 3 4 5 6 (PRODUCT LEVEL)	SEE PAGE
	1	1	**6I-0456**	3	BOLT (M8X1.25X45MM)	
	2	1	**6I-0645**	3	BOLT (M8X1.25X25MM)	
	3	1	**6I-4374**	3	BOLT	
	4	1	**6I-4793**	1	BOLT	
	5	1	**100-3751**	2	BOLT (M8X1.25X65MM)	
	6	1	**101-3771**	1	BOLT	
	7	1	**101-3805**	3	BOLT (M8X1.25X90MM)	
	8	1	**140-7505**	1	COVER	
	9	1	**140-7506**	1	GASKET-COVER	
	10	1	**140-7512**	1	KIT-HOSE (WATER) (REGULATOR HOUSING)	
	11	1	**2S-3440**	2	CLAMP-HOSE	
	12	1	**171-1076**	1	HOUSING AS (REGULATOR)	
	13	1	**172-4844**	1	SEAL-O-RING	
	14	1	**216-9734**	1	PUMP GP-WATER	
	15	1	**201-8745**	1	GASKET (WATER PUMP)	
					AVAILABLE REPAIR KIT(S):	
			177-8782	1	KIT-WATER PUMP	

216-9735 **PUMP GP-WATER** ***(contd.)*** **i01848431**

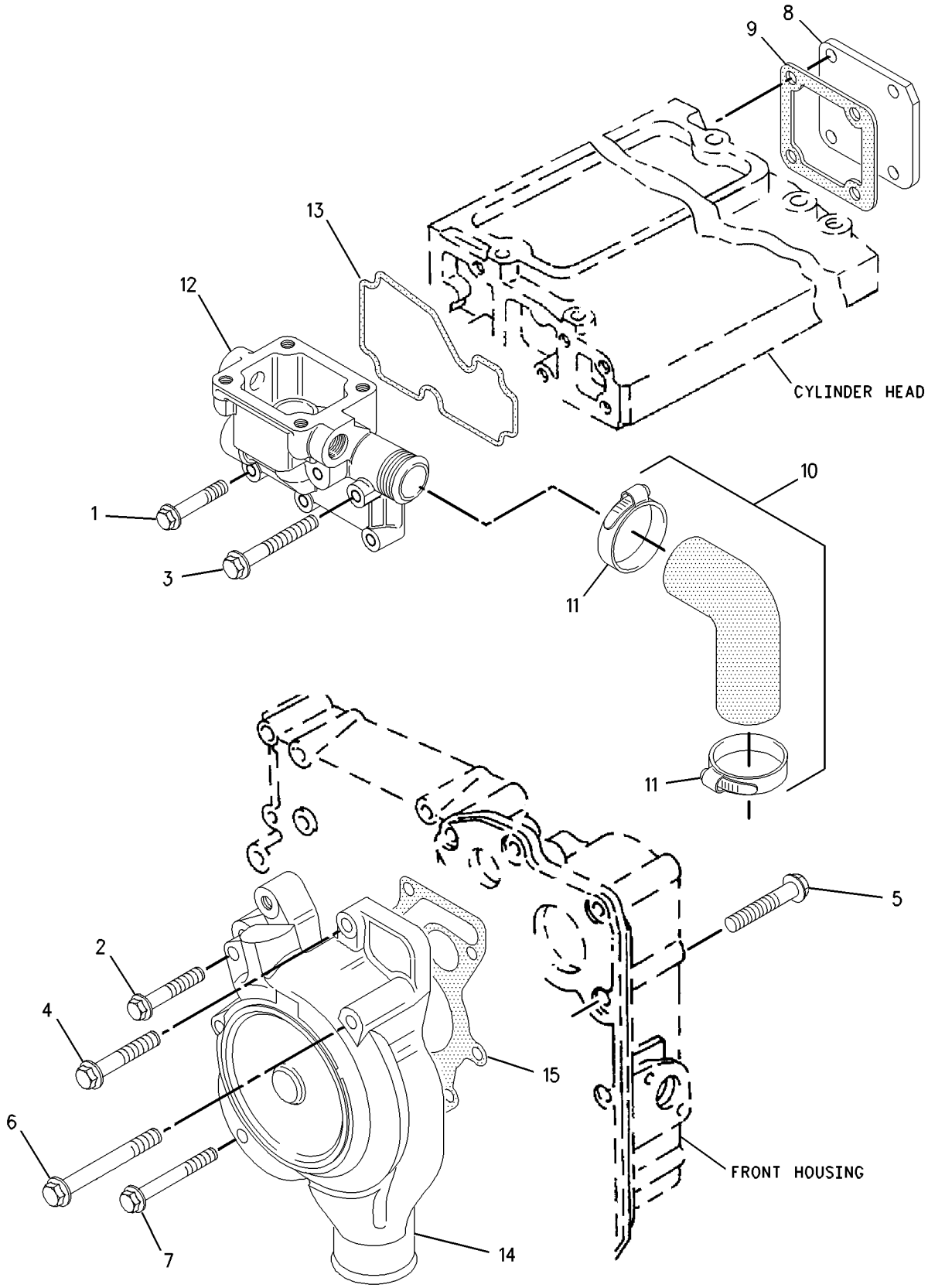

GRAPHIC #1 g00861478

COOLING SYSTEM

221-5369 PUMP GP-WATER

ALSO AN ATTACHMENT

SMCS-1361 **i01843790**

NOTE	REF NO	GRAPHIC REF	PART NUMBER	QTY	PART NAME 1 2 3 4 5 6 (PRODUCT LEVEL)	SEE PAGE
	1	1	**6I-0456**	3	BOLT (M8X1.25X45MM)	
	2	1	**6I-0645**	3	BOLT (M8X1.25X25MM)	
	3	1	**6I-4374**	3	BOLT	
	4	1	**6I-4793**	1	BOLT	
	5	1	**100-3751**	2	BOLT (M8X1.25X65MM)	
	6	1	**101-3771**	1	BOLT	
	7	1	**101-3805**	3	BOLT (M8X1.25X90MM)	
	8	1	**201-8745**	1	GASKET (WATER PUMP)	
	9	1	**140-7505**	1	COVER	
	10	1	**140-7506**	1	GASKET-COVER	
	11	1	**140-7512**	1	KIT-HOSE (WATER) (REGULATOR HOUSING)	
	12	1	**127-8286**	2	CLAMP-HOSE	
	13	1	**171-1076**	1	HOUSING AS (REGULATOR)	
	14	1	**172-4844**	1	SEAL-O-RING	
	15	1	**216-9734**	1	PUMP GP-WATER	
					AVAILABLE REPAIR KIT(S):	
			177-8782	1	KIT-WATER PUMP	

221-5369 **PUMP GP-WATER** ***(contd.)*** **i01843790**

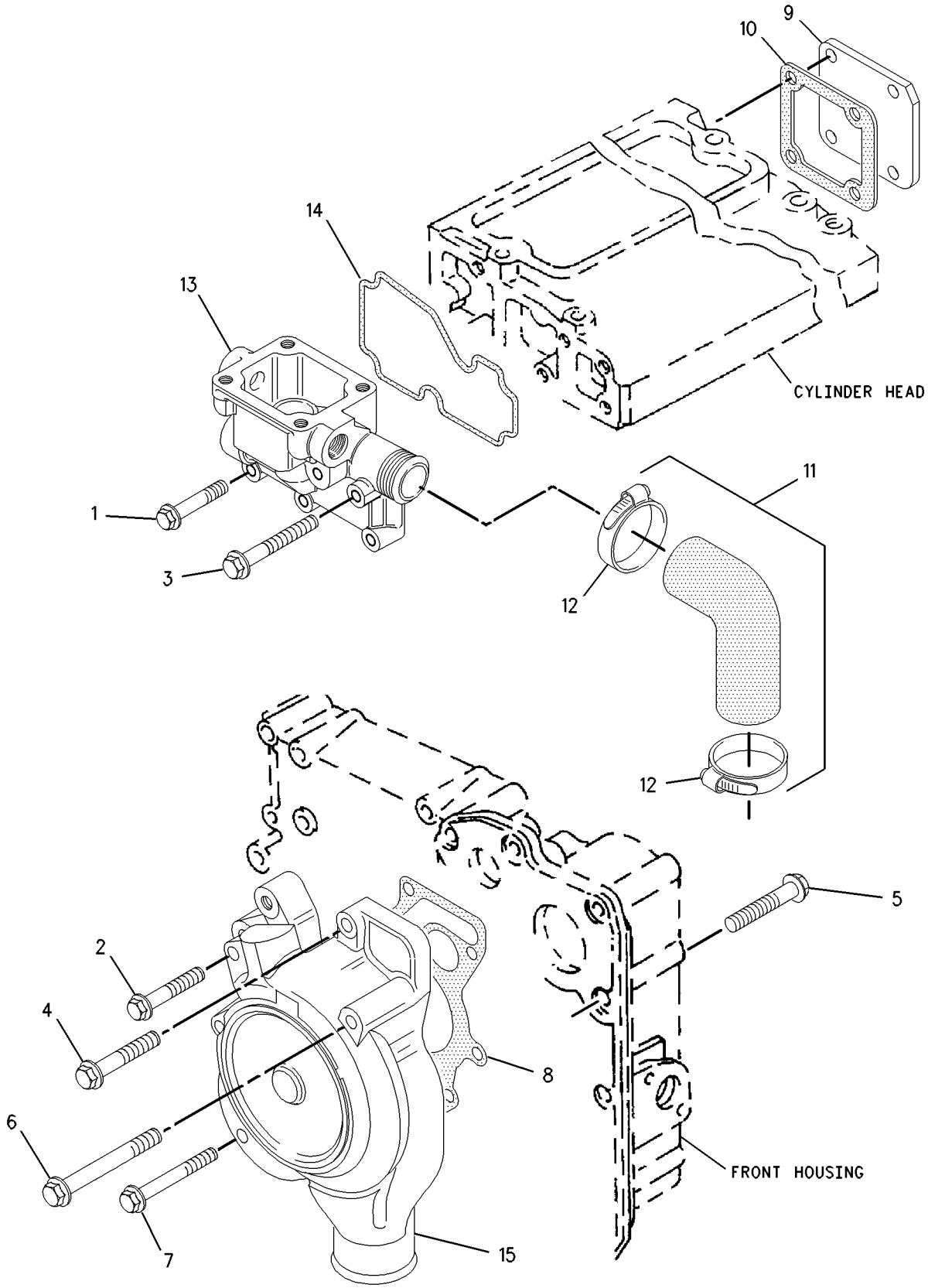

GRAPHIC #1 g00887152

COOLING SYSTEM

226-3557 PUMP GP-WATER

AN ATTACHMENT

SMCS-1361 **i01839459**

NOTE	REF NO	GRAPHIC REF	PART NUMBER	QTY	PART NAME 1 2 3 4 5 6 (PRODUCT LEVEL)	SEE PAGE
	1	1	**2B-0858**	2	PLUG-PIPE	
	2	1	**6I-0455**	1	BOLT (M8X1.25X55MM)	
	3	1	**6I-0456**	5	BOLT (M8X1.25X45MM)	
	4	1	**6I-0645**	3	BOLT (M8X1.25X25MM)	
	5	1	**6I-4793**	1	BOLT	
	6	1	**100-3751**	2	BOLT (M8X1.25X65MM)	
	7	1	**101-3771**	1	BOLT	
	8	1	**101-3805**	3	BOLT (M8X1.25X90MM)	
	9	1	**140-7505**	1	COVER	
	10	1	**140-7506**	1	GASKET-COVER	
	12	1	**216-9734**	1	PUMP GP-WATER	
	13	1	**201-8745**	1	GASKET (WATER PUMP)	
	14	1	**226-3542**	1	HOUSING	
	15	1	**226-3544**	1	GASKET (HOUSING)	
	16	1	**226-3545**	1	KIT-CLAMP (REGULATOR HOUSING)	
	17	1	**8T-4983**	2	CLAMP-HOSE	
					AVAILABLE REPAIR KIT(S):	
			177-8782	1	KIT-WATER PUMP	

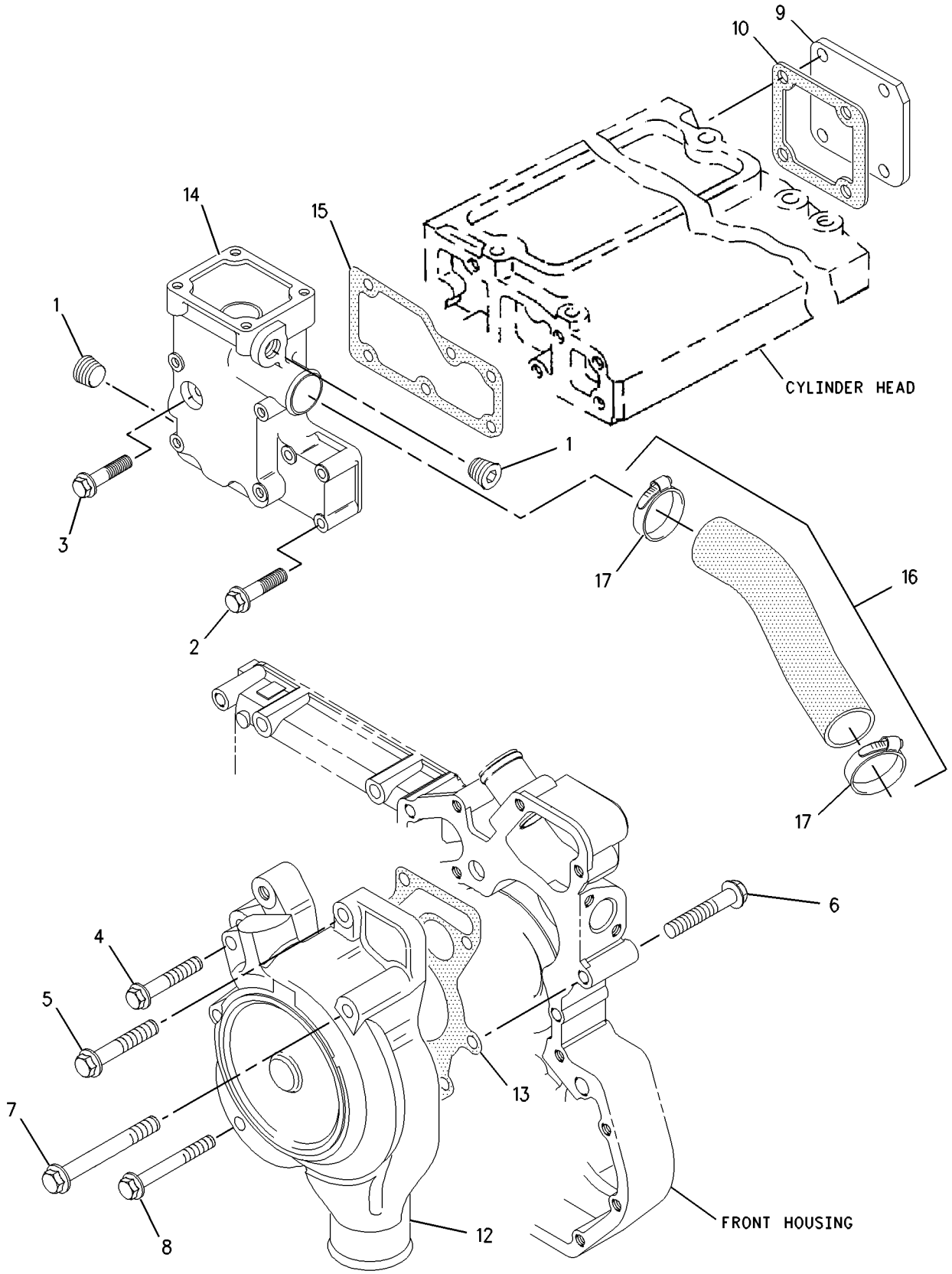

GRAPHIC #1 g00908884

AIR INLET AND EXHAUST SYSTEM

217-0594 ELBOW GP-AIR INLET

ALSO AN ATTACHMENT

SMCS-1087 **i01725034**

NOTE	REF NO	GRAPHIC REF	PART NUMBER	QTY	PART NAME 1 2 3 4 5 6 (PRODUCT LEVEL)	SEE PAGE
	1	1	**6I-0260**	4	BOLT (M8X1.25X25MM)	
	2	1	**217-0595**	1	CONNECTOR	
	3	1	**217-0596**	1	GASKET	

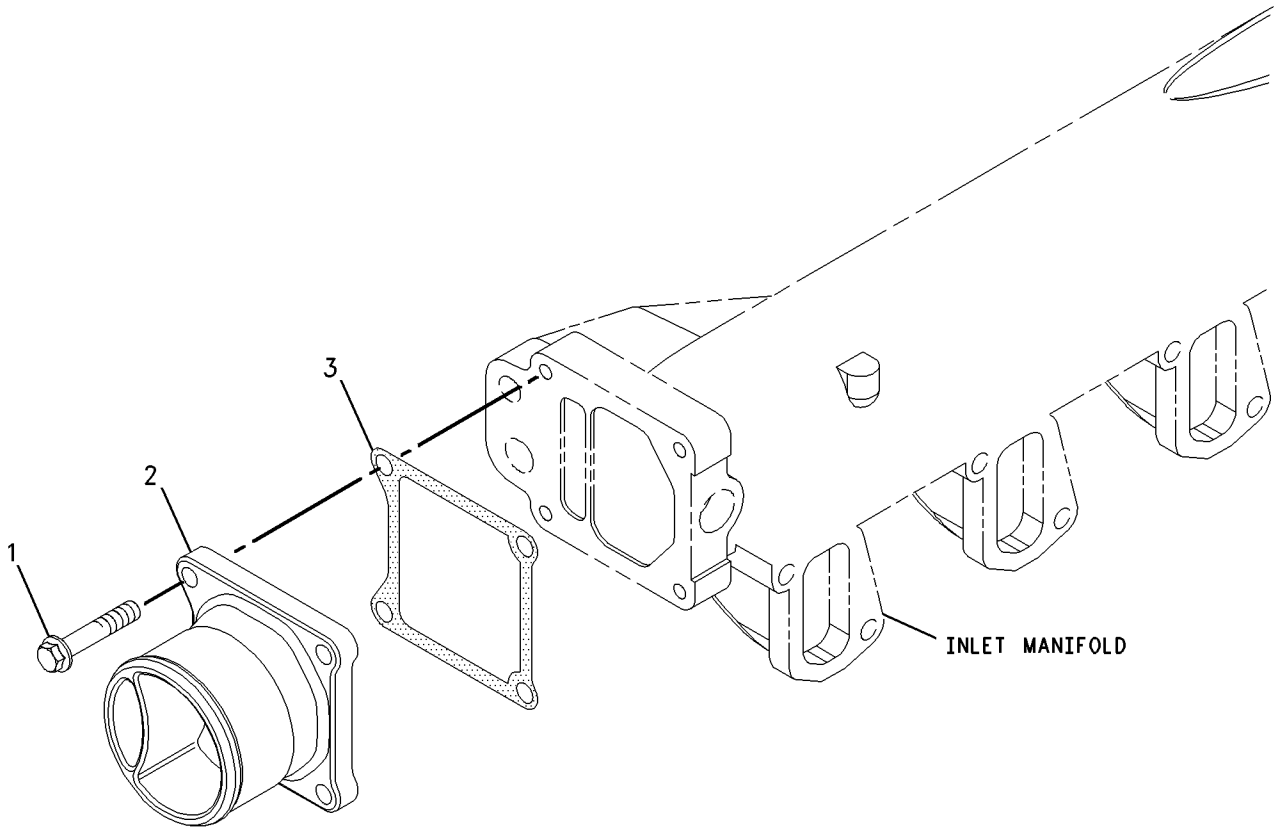

GRAPHIC #1 g00859961

AIR INLET AND EXHAUST SYSTEM

226-3585 ELBOW GP-EXHAUST

AN ATTACHMENT

SMCS-1061 **i01802442**

NOTE	REF NO	GRAPHIC REF	PART NUMBER	QTY	PART NAME 1 2 3 4 5 6 (PRODUCT LEVEL)	SEE PAGE
	1	1	**6I-0260**	4	BOLT (M8X1.25X25MM)	
	2	1	**217-0596**	1	GASKET	
	3	1	**226-3583**	1	ELBOW	

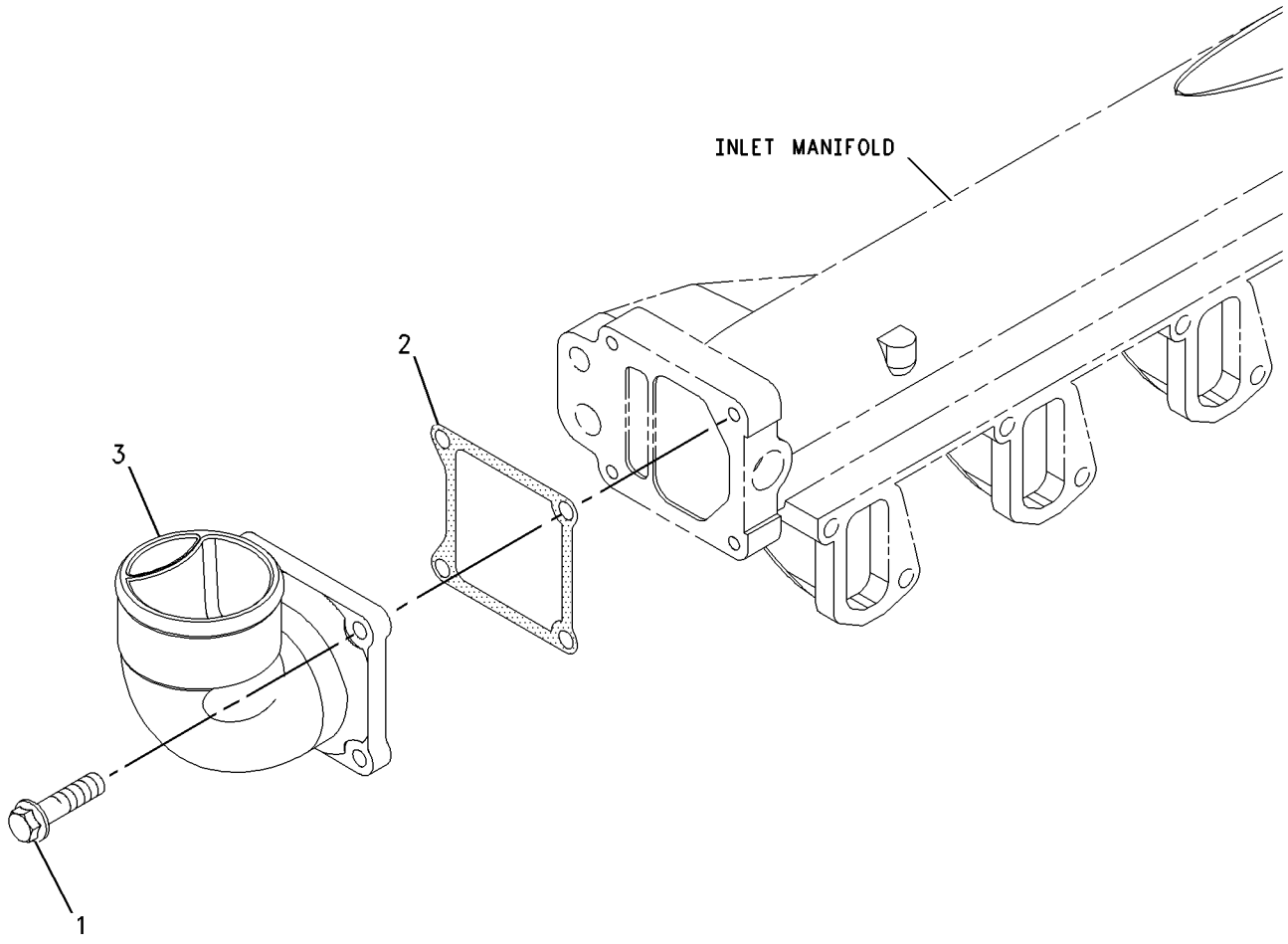

GRAPHIC #1 g00922584

AIR INLET AND EXHAUST SYSTEM

216-8713 TURBOCHARGER GP

AN ATTACHMENT

SMCS-1052 **i01756038**

NOTE	REF NO	GRAPHIC REF	PART NUMBER	QTY	PART NAME 1 2 3 4 5 6 (PRODUCT LEVEL)	SEE PAGE
	1	1	**6I-0217**	4	BOLT (M8X1.25X20MM)	
	2	1	**6I-1132**	1	GASKET	
	3	1	**7W-2628**	1	NUT	
	4	1	**7W-2634**	1	UNION	
	5	1	**032-8048**	1	FITTING-BRASS	
	6	1	**100-4453**	6	STUD	
	7	1	**100-4466**	1	GASKET	
	8	1	**5D-1026**	2	CLAMP-HOSE	
	9	1	**124-3815**	3	BOLT (M8X16X1.25MM)	
	10	1	**138-2042**	4	NUT	
	11	1	**141-8589**	1	GASKET-TURBOCHARGER	
	12	1	**141-9777**	1	HEAT SHIELD	
	13	1	**146-1841**	18	BOLT	
	14	1	**147-5553**	4	STUD	
	15	1	**160-0149**	1	HOSE	
	16	1	**162-1504**	6	BOLT	
	17	1	**216-8685**	1	TURBOCHARGER GP	
	18	1	**216-8686**	1	TUBE AS	
	19	1	**216-8690**	1	TUBE AS	
	20	1	**216-8699**	1	MANIFOLD-INLET	
	21	1	**216-8703**	2	GASKET-MANIFOLD	
	22	1	**216-8705**	6	BOLT	
	23	1	**216-8708**	1	MANIFOLD-EXHAUST	
	24	1	**216-8709**	1	MANIFOLD-EXHAUST	
	25	1	**216-8710**	1	MANIFOLD-EXHAUST	
	26	1	**216-8712**	2	GASKET-MANIFOLD	

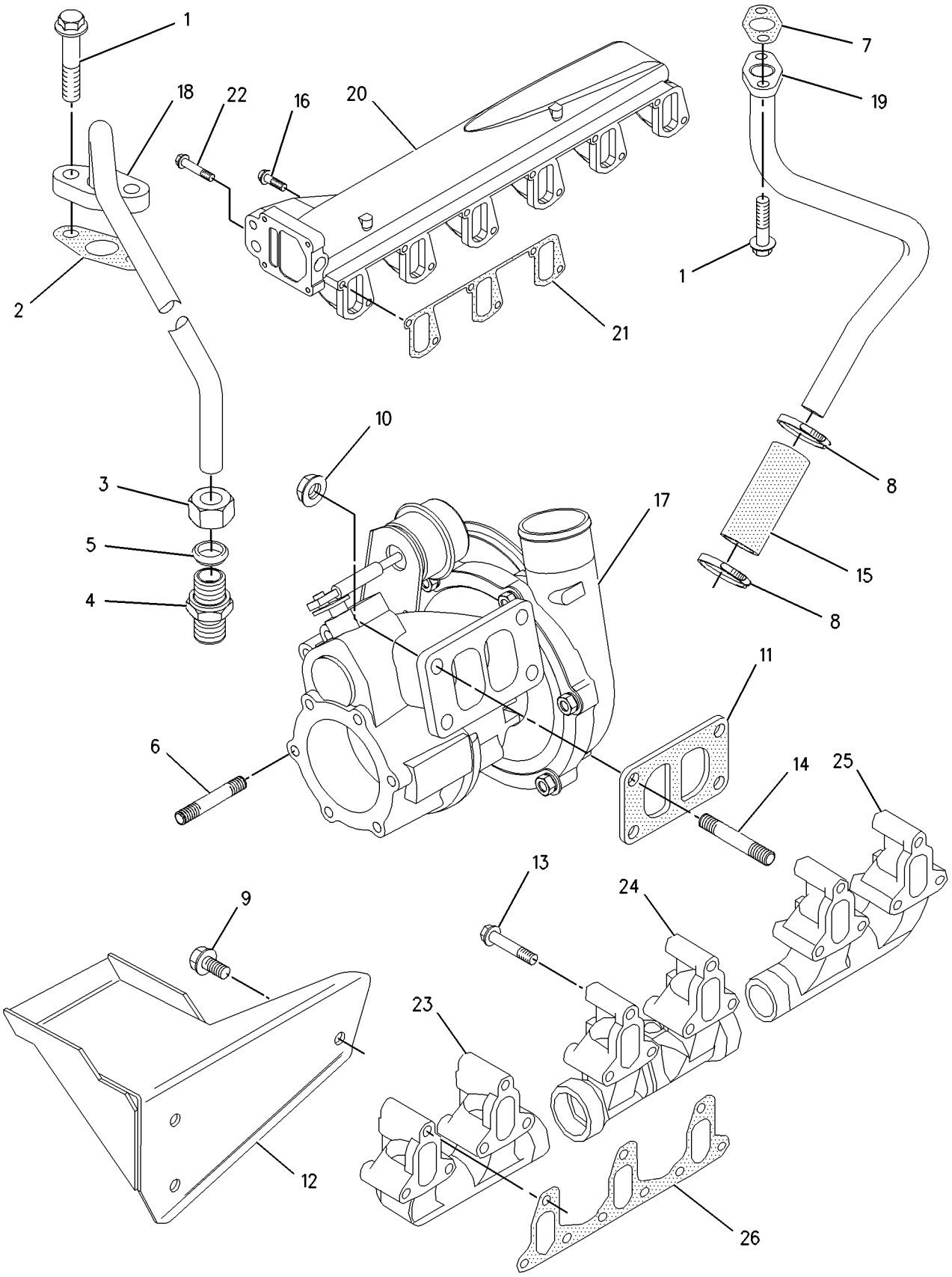

GRAPHIC #1 g00863629

AIR INLET AND EXHAUST SYSTEM

220-7116 TURBOCHARGER GP

AN ATTACHMENT

SMCS-1052 **i01838511**

NOTE	REF NO	GRAPHIC REF	PART NUMBER	QTY	PART NAME 1 2 3 4 5 6 (PRODUCT LEVEL)	SEE PAGE
	1	1	**5D-1026**	2	CLAMP-HOSE	
	2	1	**6I-0217**	4	BOLT (M8X1.25X20MM)	
	3	1	**6I-1132**	1	GASKET	
	4	1	**7W-2628**	1	NUT	
	5	1	**032-8048**	1	FITTING-BRASS	
	6	1	**100-4453**	6	STUD	
	7	1	**100-4466**	1	GASKET	
	8	1	**106-8916**	3	BOLT (M6X16MM)	
	9	1	**114-4363**	2	BOLT (M8X1.25X12MM)	
	10	1	**138-2042**	4	NUT	
	11	1	**141-8589**	1	GASKET-TURBOCHARGER	
	12	1	**147-5553**	4	STUD	
	13	1	**216-8703**	2	GASKET-MANIFOLD	
	14	1	**216-8705**	6	BOLT	
	15	1	**216-8712**	2	GASKET-MANIFOLD	
	16	1	**6I-0631**	2	BOLT (M6X1.0X12MM)	
	17	1	**222-9127**	1	TUBE AS	
	18	1	**222-9129**	1	CLIP	
	19	1	**222-9126**	1	TUBE AS	
	20	1	**222-9128**		CLIP	
	21	1	**220-7104**	1	HOSE-DRAIN	
	22	1	**220-7106**	1	MANIFOLD-INLET	
	23	1	**220-7107**	6	BOLT	
	24	1	**220-7110**	1	SHIELD-HEAT	
	25	1	**220-7111**	1	SHIELD-HEAT	
	26	1	**220-7112**	1	MANIFOLD-EXHAUST	
	27	1	**220-7113**	1	MANIFOLD-EXHAUST	
	28	1	**220-7114**	18	BOLT	
	29	1	**220-8182**	1	TURBOCHARGER GP	

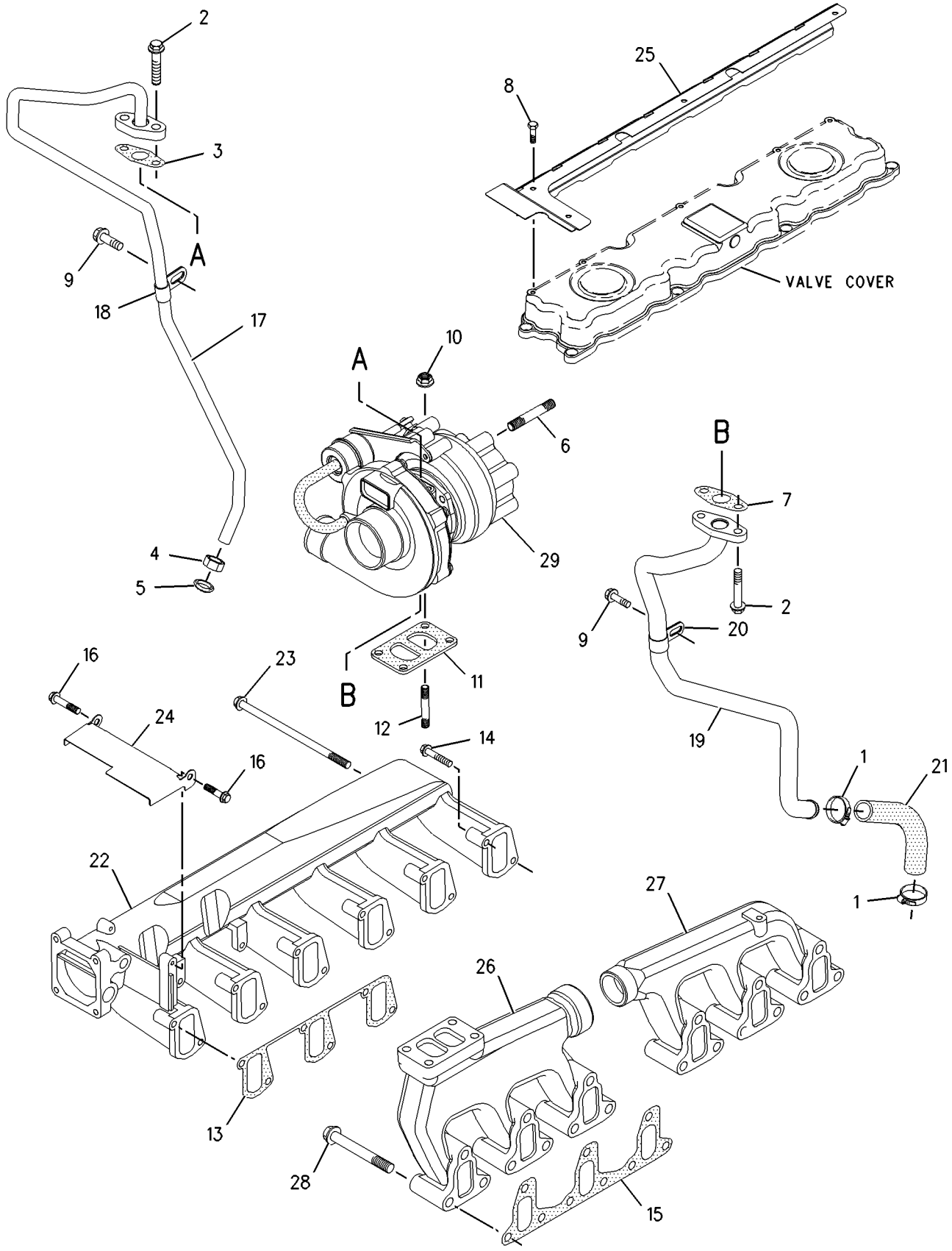

GRAPHIC #1 g00900955

AIR INLET AND EXHAUST SYSTEM

221-6866 TURBOCHARGER GP

AN ATTACHMENT

SMCS-1052 **i01725172**

NOTE	REF NO	GRAPHIC REF	PART NUMBER	QTY	PART NAME 1 2 3 4 5 6 (PRODUCT LEVEL)	SEE PAGE
	1	1	**5D-1026**	2	CLAMP-HOSE	
	2	1	**6I-0217**	2	BOLT (M8X1.25X20MM)	
	3	1	**6I-1132**	1	GASKET	
	4	1	**7W-2628**	1	NUT	
	5	1	**7W-2634**	1	UNION	
	6	1	**032-8048**	1	FITTING-BRASS	
	7	1	**100-4453**	2	STUD	
	8	1	**100-4454**	6	NUT	
	9	1	**100-4466**	1	GASKET	
	10	1	**124-3815**	3	BOLT (M8X16X1.25MM)	
	11	1	**138-2042**	4	NUT	
	12	1	**141-8589**	1	GASKET-TURBOCHARGER	
	13	1	**141-8597**	1	GASKET	
	14	1	**141-8599**	4	STUD	
	15	1	**141-9777**	1	HEAT SHIELD	
	16	1	**146-1841**	18	BOLT	
	17	1	**147-5553**	4	STUD	
	18	1	**160-0149**	1	HOSE	
	19	1	**162-1504**	6	BOLT	
	20	1	**216-2892**	1	BOLT-SOCKET HEAD	
	21	1	**216-8685**	1	TURBOCHARGER GP	
	22	1	**216-8690**	1	TUBE AS	
	23	1	**216-8699**	1	MANIFOLD-INLET	
	24	1	**216-8703**	2	GASKET-MANIFOLD	
	25	1	**216-8705**	6	BOLT	
	26	1	**216-8708**	1	MANIFOLD-EXHAUST	
	27	1	**216-8709**	1	MANIFOLD-EXHAUST	
	28	1	**216-8710**	1	MANIFOLD-EXHAUST	
	29	1	**216-8712**	2	GASKET-MANIFOLD	
	30	1	**221-6863**	1	TUBE AS	
	31	1	**221-6864**	1	ELBOW	

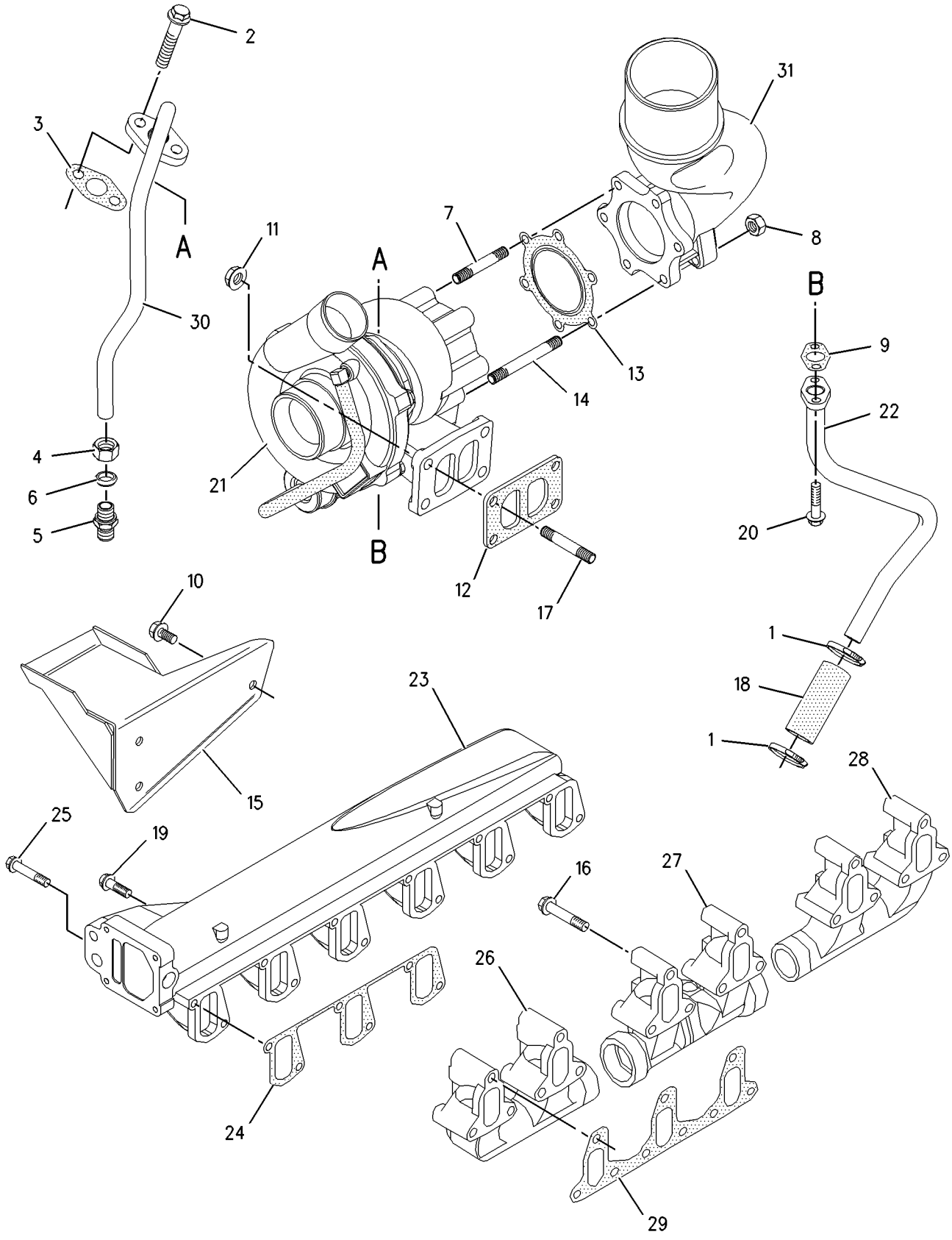

GRAPHIC #1 g00888802

AIR INLET AND EXHAUST SYSTEM

226-3578 TURBOCHARGER GP

ALSO AN ATTACHMENT

SMCS-1052 **i01801889**

NOTE	REF NO	GRAPHIC REF	PART NUMBER	QTY	PART NAME 1 2 3 4 5 6 (PRODUCT LEVEL)	SEE PAGE
	1	2	**226-3577**	1	MANIFOLD-EXHAUST	
	2	1	**5D-1026**	2	CLAMP-HOSE	
	3	1	**6I-0217**	4	BOLT (M8X1.25X20MM)	
	4	1	**6I-1132**	1	GASKET	
	5	1	**226-3575**	1	TUBE AS	
	6	1	**7W-2628**	1	NUT	
	7	1	**032-8048**	1	FITTING-BRASS	
	8	1	**226-3574**	1	TUBE AS	
	9	1	**226-3572**	1	TURBOCHARGER GP	
	10	2	**216-8712**	2	GASKET-MANIFOLD	
	11	1	**100-4466**	1	GASKET	
	12	2	**216-8710**	1	MANIFOLD-EXHAUST	
	13	2	**216-8708**	1	MANIFOLD-EXHAUST	
	14	1	**124-3815**	3	BOLT (M8X16X1.25MM)	
	15	2	**216-8705**	6	BOLT	
	16	1	**138-2042**	4	NUT	
	17	1	**141-8589**	1	GASKET-TURBOCHARGER	
	18	2	**216-8703**	2	GASKET-MANIFOLD	
	19	2	**216-8699**	1	MANIFOLD-INLET	
	20	1	**141-9777**	1	HEAT SHIELD	
	21	2	**146-1841**	18	BOLT	
	22	1	**147-5553**	4	STUD	
	23	2	**162-1504**	6	BOLT	
	24	1	**160-0149**	1	HOSE	

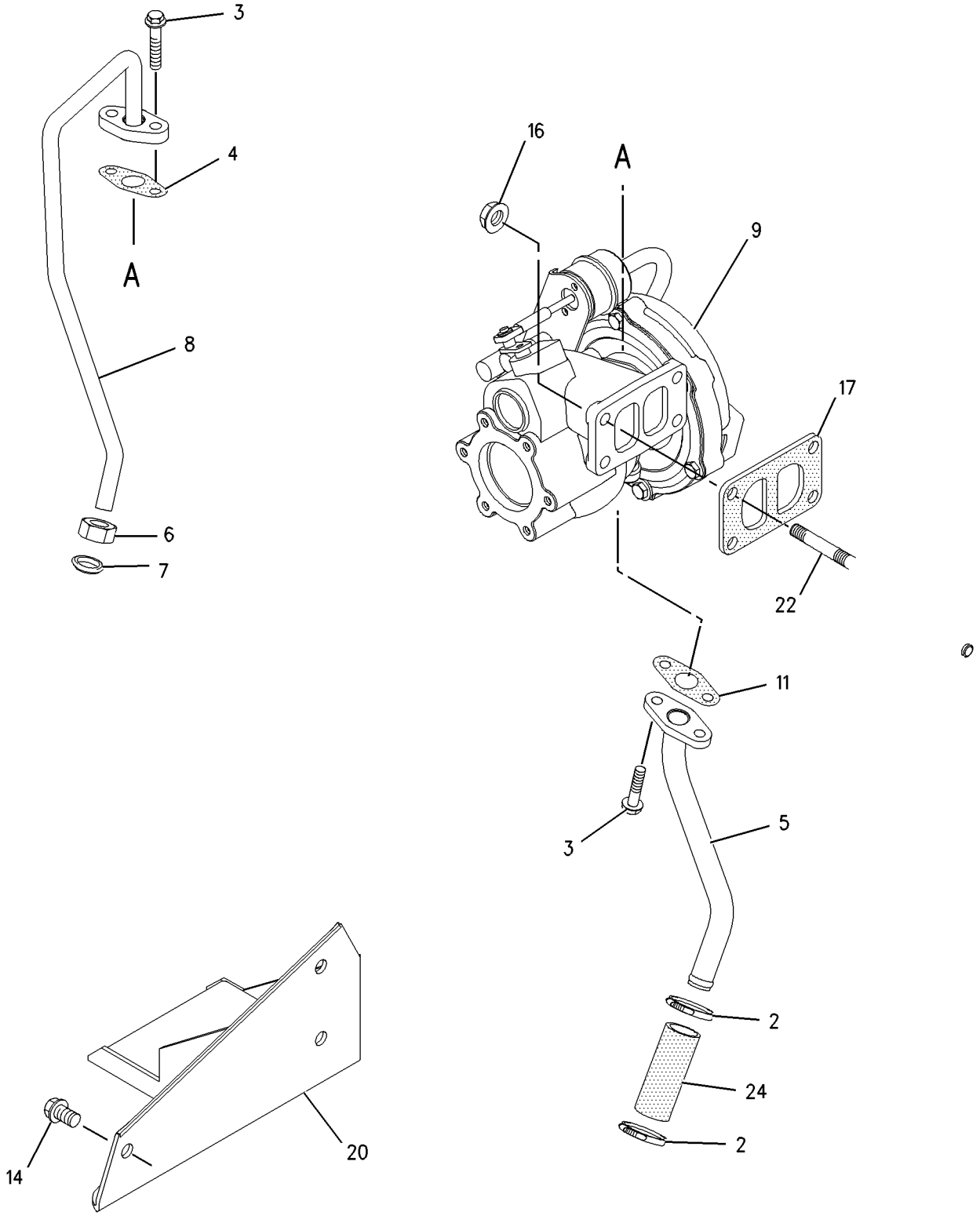

GRAPHIC #1 g00922212

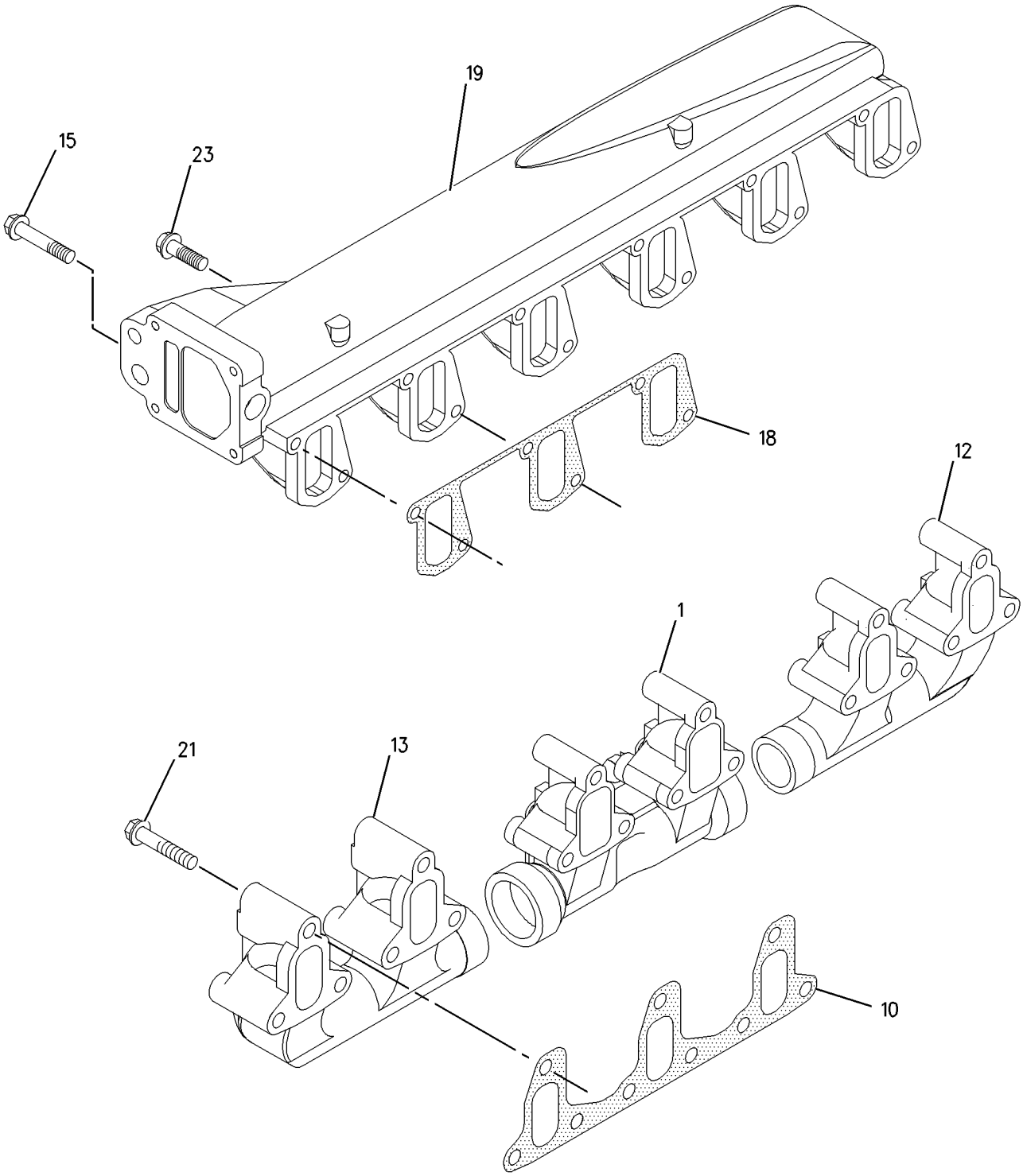

GRAPHIC #2 g00922210

MEMORANDA

AIR INLET AND EXHAUST SYSTEM

230-2385 TURBOCHARGER GP

AN ATTACHMENT

SMCS-1052 **i01836323**

NOTE	REF NO	GRAPHIC REF	PART NUMBER	QTY	PART NAME 1 2 3 4 5 6 (PRODUCT LEVEL)	SEE PAGE
	1	2	**226-3577**	1	MANIFOLD-EXHAUST	
	2	1	**5D-1026**	2	CLAMP-HOSE	
	3	1	**6I-0217**	4	BOLT (M8X1.25X20MM)	
	4	1	**6I-1132**	1	GASKET	
	5	1	**226-3575**	1	TUBE AS	
	6	1	**7W-2628**	1	NUT	
	7	1	**032-8048**	1	FITTING-BRASS	
	8	1	**226-3574**	1	TUBE AS	
	9	1	**226-3572**	1	TURBOCHARGER GP	
	10	2	**216-8712**	2	GASKET-MANIFOLD	
	11	1	**100-4466**	1	GASKET	
	12	2	**216-8710**	1	MANIFOLD-EXHAUST	
	13	2	**216-8708**	1	MANIFOLD-EXHAUST	
	14	1	**124-3815**	3	BOLT (M8X16X1.25MM)	
	15	2	**216-8705**	6	BOLT	
	16	1	**138-2042**	4	NUT	
	17	1	**141-8589**	1	GASKET-TURBOCHARGER	
	18	2	**216-8703**	2	GASKET-MANIFOLD	
	19	2	**216-8699**	1	MANIFOLD-INLET	
	20	1	**141-9777**	1	HEAT SHIELD	
	21	2	**146-1841**	18	BOLT	
	22	1	**147-5553**	4	STUD	
	23	2	**162-1504**	6	BOLT	
	24	1	**160-0149**	1	HOSE	

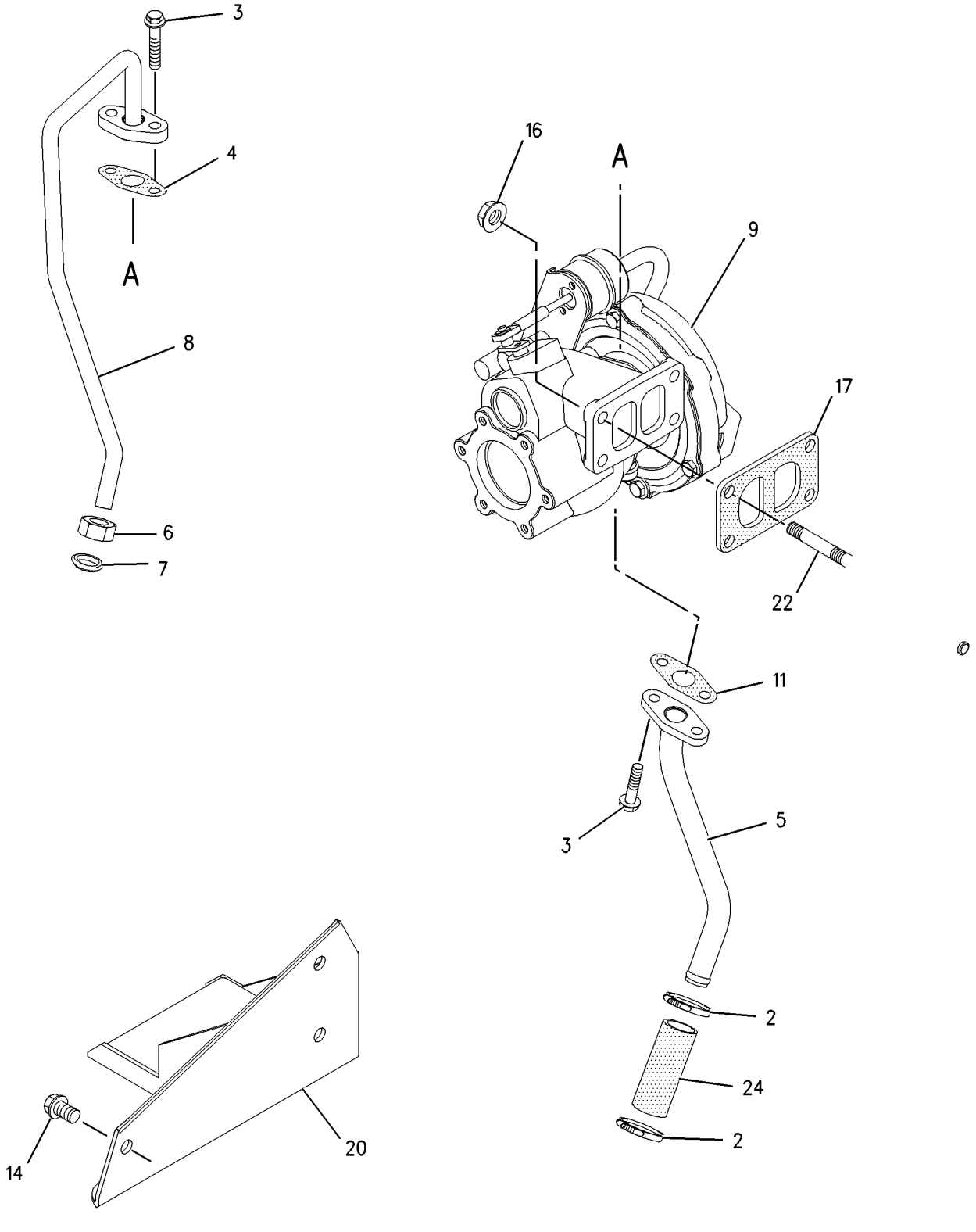

GRAPHIC #1 g00922212

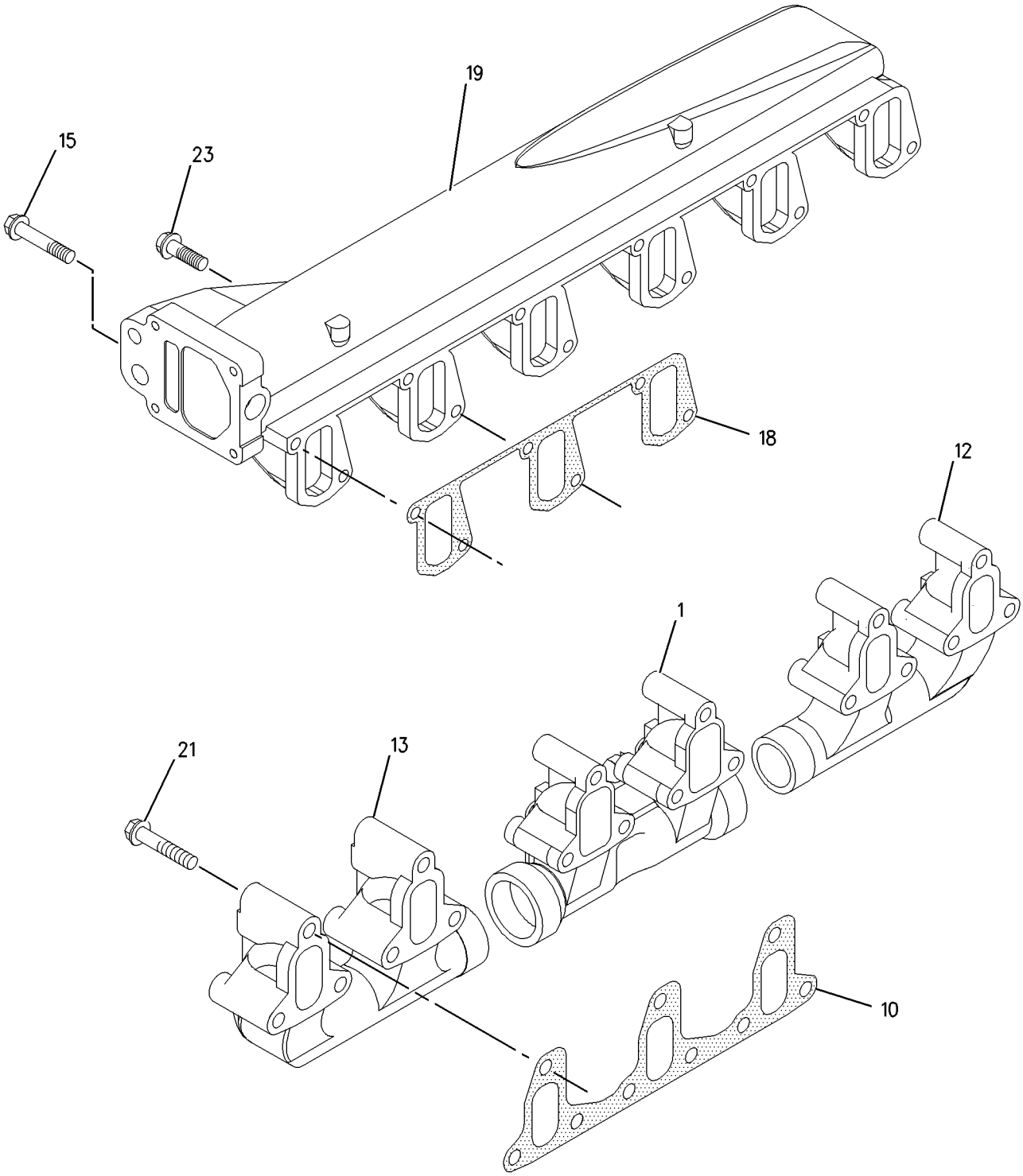

GRAPHIC #2 g00922210

217-0640 FILTER GP-FUEL

ALSO AN ATTACHMENT

SMCS-1261 **i01725043**

NOTE	REF NO	GRAPHIC REF	PART NUMBER	QTY	PART NAME 1 2 3 4 5 6 (PRODUCT LEVEL)	SEE PAGE
	1	1	**6I-0593**	2	BOLT (M10X1.5X30MM)	
	2	1	**141-7844**	1	FILTER ELEMENT AS-FUEL	
	3	1	**145-4501**	1	FILTER ELEMENT-FUEL	

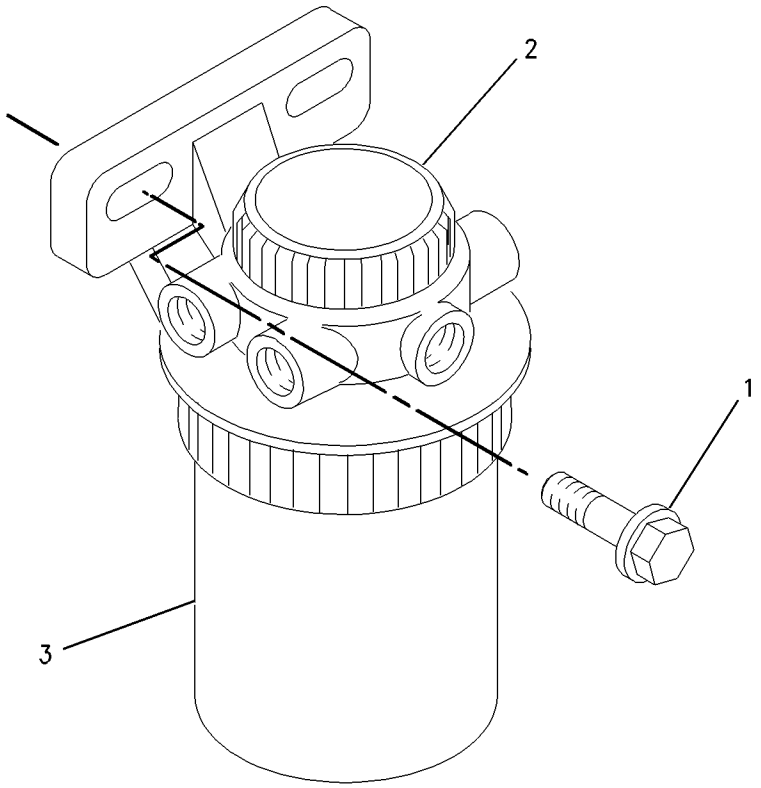

GRAPHIC #1 g00889605

FUEL SYSTEM

217-0109 PUMP GP-FUEL INJECTION

AN ATTACHMENT

SMCS-1251 **i01839438**

NOTE	REF NO	GRAPHIC REF	PART NUMBER	QTY	PART NAME 1 2 3 4 5 6 (PRODUCT LEVEL)	SEE PAGE
	1	1	**4B-4277**	1	WASHER (8.8X17.5X1.6MM THK)	
	2	1	**6I-0217**	1	BOLT (M8X1.25X20MM)	
	3	1	**6I-0291**	8	NUT (M8X1.25)	
	4	1	**133-7668**	1	STUD	
	5	1	**228-8960**	1	CLIP	
	6	1	**228-8963**	2	STUD	
	7	2	**7M-7410**	1	PLUG	
	8	1	**100-4830**	1	BOLT (M10X1.5X20MM)	
	9	1	**124-3708**	3	CLIP	
	10	1	**228-8943**	1	BRACKET	
	11	1	**228-8956**	1	BRACKET	
	12	1	**145-8327**	1	SEAL-O-RING	
	13	2	**149-2091**	1	SEAL-O-RING	
	14	1	**101-3877**	3	STUD	
	15	1	**162-9992**	3	CLIP	
	16	1	**164-3207**	6	WASHER	
	17	1	**221-1018**	1	CONTROL GP-ENGINE ELECTRONIC	
M	18	1	**6V-5217**	4	BOLT (M8X1.25X20MM)	
	19	1	**141-8599**	1	STUD	
	20	1,2	**114-4363**	3	BOLT (M8X1.25X12MM)	
	22	2	**216-3448**	1	SENSOR GP-PRESSURE (ENGINE OIL)	
	23	2	**216-3436**	1	SENSOR GP-TEMPERATURE (ENGINE COOLANT)	
	24	2	**216-3436**	1	SENSOR GP-TEMPERATURE (AIR INLET)	
	25	2	**216-3446**	1	SENSOR GP-SPEED (TIMING)	
	27	2	**199-9252**	1	SEAL-O-RING	
	28	2	**199-9267**	1	SEAL-O-RING	
	29	2	**199-9751**	2	SEAL-O-RING	
	30	2	**216-3450**	1	SENSOR GP-PRESSURE (BOOST)	
	33	1	**216-9786**	6	INJECTOR AS-FUEL	
	35	1	**216-9790**	1	GEAR (FUEL PUMP)	
	37	1	**216-9824**	1	PUMP GP-FUEL INJECTION	
	38	1	**216-9826**	1	TUBE AS (CYL NO.1)	
	39	1	**216-9828**	1	TUBE AS (CYL NO.2)	
	40	1	**216-9830**	1	TUBE AS (CYL NO.3)	
	41	1	**216-9831**	1	TUBE AS (CYL NO.4)	
	42	1	**216-9834**	1	TUBE AS (CYL NO.5)	
	43	1	**216-9835**	1	TUBE AS (CYL NO.6)	
	44	1	**155-0576**	8	MOUNT-ISOLATION	
	45	1	**217-0099**	7	SPACER	
	46	1	**217-0100**	4	SPACER	
	50	1	**215-9430**	4	CONTROL GP-VOLTAGE (24 VOLT) (LOAD PROTECTION)	
		1	**1S-9593**	2	STRAP-CABLE	
		1	**7T-0093**	4	PIN-CONNECTOR	
		1	**177-9653**	1	KIT-RECEPTACLE (4 PIN)	

M-METRIC PART

217-0109 **PUMP GP-FUEL INJECTION** *(contd.)* **i01839438**

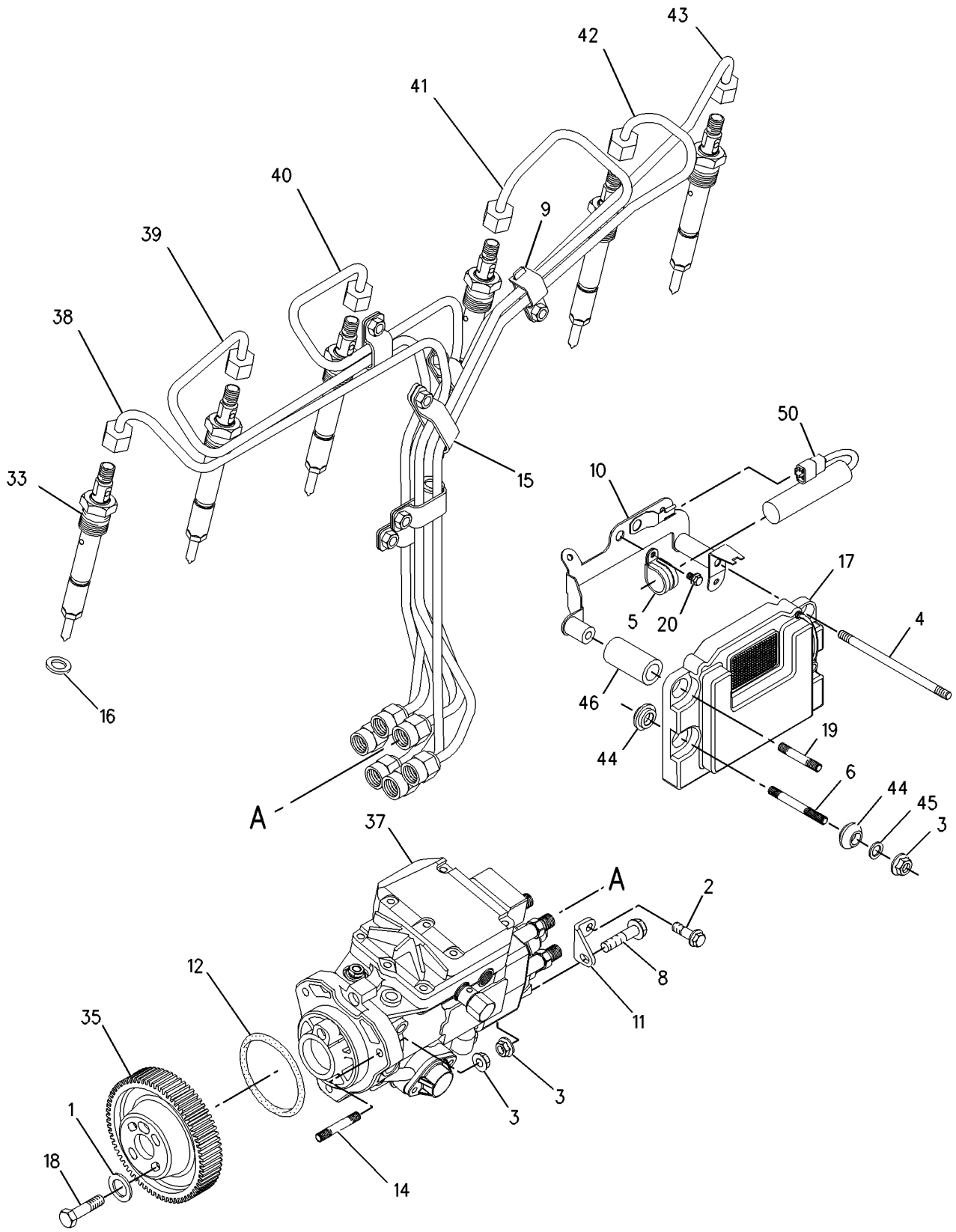

GRAPHIC #1 g00936420

217-0109 **PUMP GP-FUEL INJECTION** *(contd.)* **i01839438**

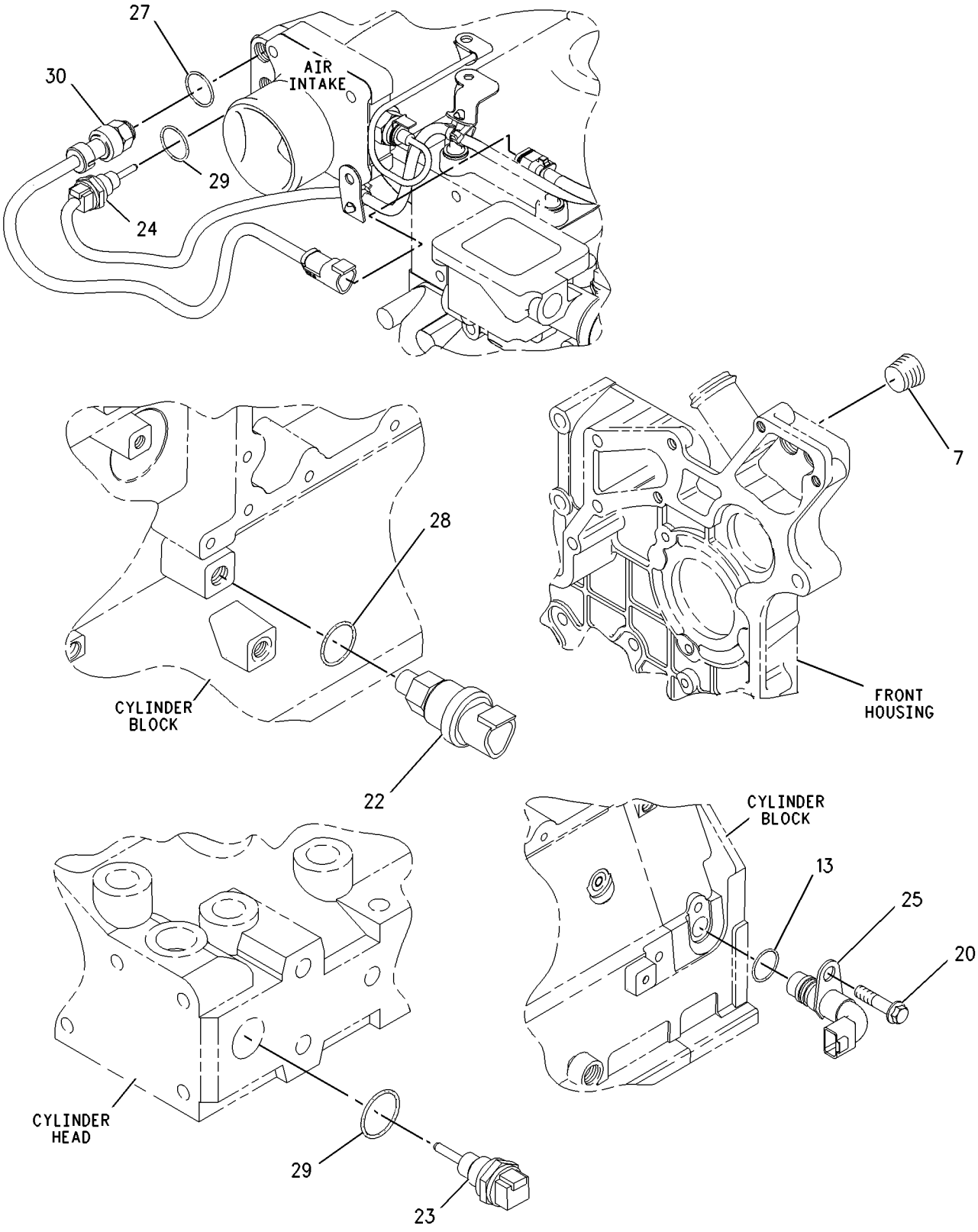

GRAPHIC #2 g00936421

MEMORANDA

FUEL SYSTEM

228-8965 PUMP GP-FUEL INJECTION

ALSO AN ATTACHMENT

SMCS-1251 **i01848434**

NOTE	REF NO	GRAPHIC REF	PART NUMBER	QTY	PART NAME 1 2 3 4 5 6 (PRODUCT LEVEL)	SEE PAGE
	1	1	**4B-4277**	4	WASHER (8.8X17.5X1.6MM THK)	
	2	1	**6I-0217**	1	BOLT (M8X1.25X20MM)	
	3	1	**6I-0291**	8	NUT (M8X1.25)	
	4	2	**7M-7410**	1	PLUG	
	5	1	**100-4830**	1	BOLT (M10X1.5X20MM)	
	6	1	**101-3877**	3	STUD	
	7	1,2	**114-4363**	2	BOLT (M8X1.25X12MM)	
	8	1	**124-3708**	3	CLIP	
	9	1	**133-7668**	1	STUD	
	10	1	**141-8599**	1	STUD	
	11	1	**145-8327**	1	SEAL-O-RING	
	12	2	**149-2091**	1	SEAL-O-RING	
	13	1	**155-0576**	5	MOUNT-ISOLATION	
	14	1	**162-9992**	3	CLIP	
	15	1	**164-3207**	6	WASHER	
M	16	1	**6V-5217**	4	BOLT (M8X1.25X20MM)	
	17	2	**216-3448**	1	SENSOR GP-PRESSURE (ENGINE OIL)	
	18	2	**216-3446**	1	SENSOR GP-SPEED (TIMING)	
	19	2	**199-9252**	1	SEAL-O-RING	
	20	2	**199-9267**	1	SEAL-O-RING	
	21	2	**199-9751**	2	SEAL-O-RING	
	22	2	**216-3450**	1	SENSOR GP-PRESSURE (BOOST)	
	23	1	**216-2621**	1	CONTROL GP-VOLTAGE (LOAD PROTECTION)	
		1	**1S-9593**	2	STRAP-CABLE	
		1	**177-9653**		KIT-RECEPTACLE (4 PIN)	
	24	2	**216-3436**	2	SENSOR GP-TEMPERATURE (AIR INLET)	
	25	1	**216-9786**	6	INJECTOR AS-FUEL	
	26	1	**216-9790**	1	GEAR (FUEL PUMP)	
	27	1	**216-9826**	1	TUBE AS (CYL NO.1)	
	28	1	**216-9828**	1	TUBE AS (CYL NO.2)	
	29	1	**216-9830**	1	TUBE AS (CYL NO.3)	
	30	1	**216-9831**	1	TUBE AS (CYL NO.4)	
	31	1	**216-9834**	1	TUBE AS (CYL NO.5)	
	32	1	**216-9835**	1	TUBE AS (CYL NO.6)	
	33	1	**217-0099**	7	SPACER	
	34	1	**217-0100**	4	SPACER	
	35	1	**221-1018**	1	CONTROL GP-ENGINE ELECTRONIC	
		1	**7X-6315**	1	STRAP AS-GROUND	
		1	**134-4126**	1	WASHER (4.52X8.28X.76MM THK)	
		1	**200-7941**	1	HOUSING	
		1	**201-9076**	1	SCREW	
	36	1	**228-8943**	1	BRACKET	
	37	1	**228-8953**	1	PUMP GP-FUEL INJECTION	
	38	1	**228-8956**	1	BRACKET	
	39	1	**228-8960**	1	CLIP	
	40	1	**228-8963**	2	STUD	

M-METRIC PART

228-8965 **PUMP GP-FUEL INJECTION** *(contd.)* **i01848434**

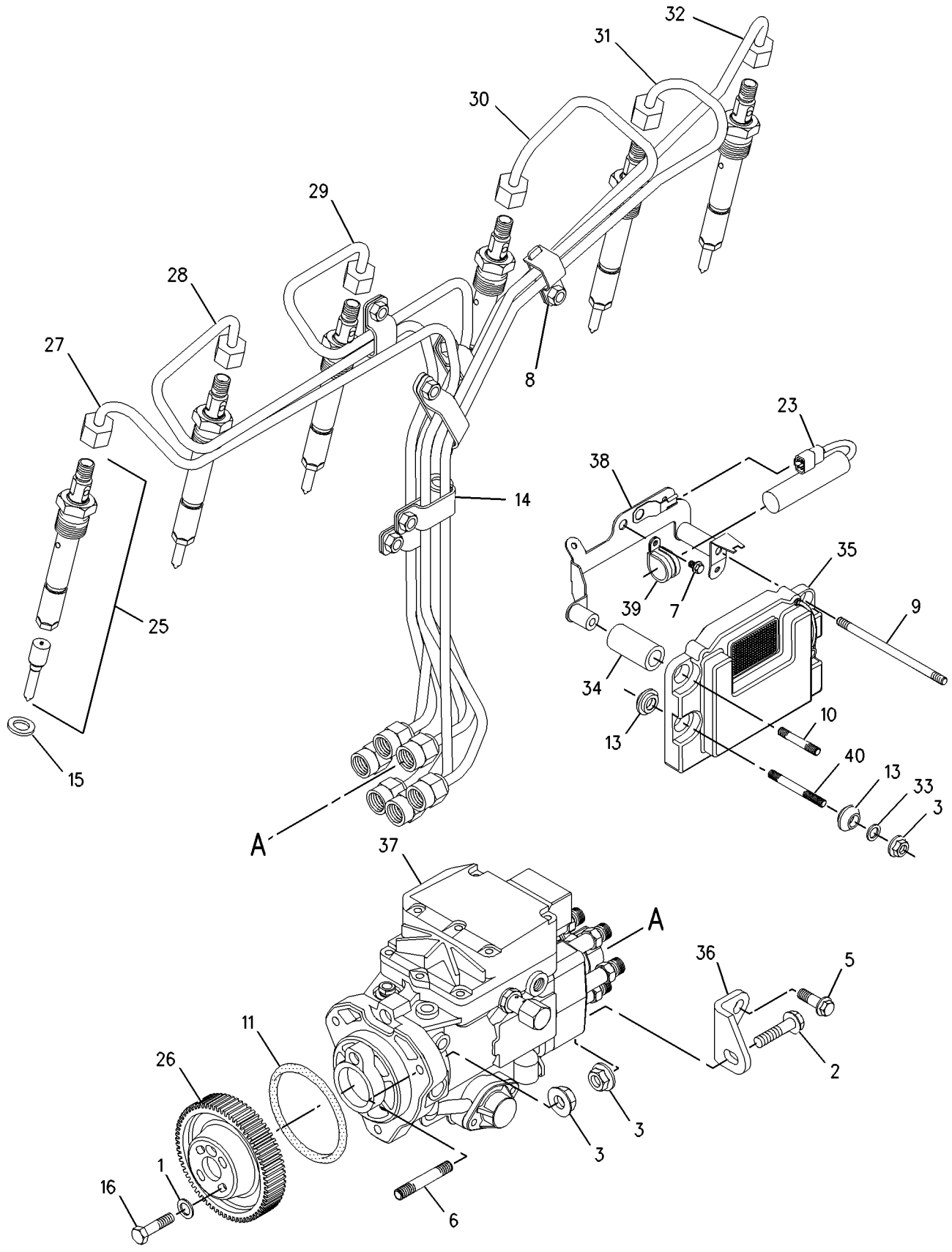

GRAPHIC #1 g00935269

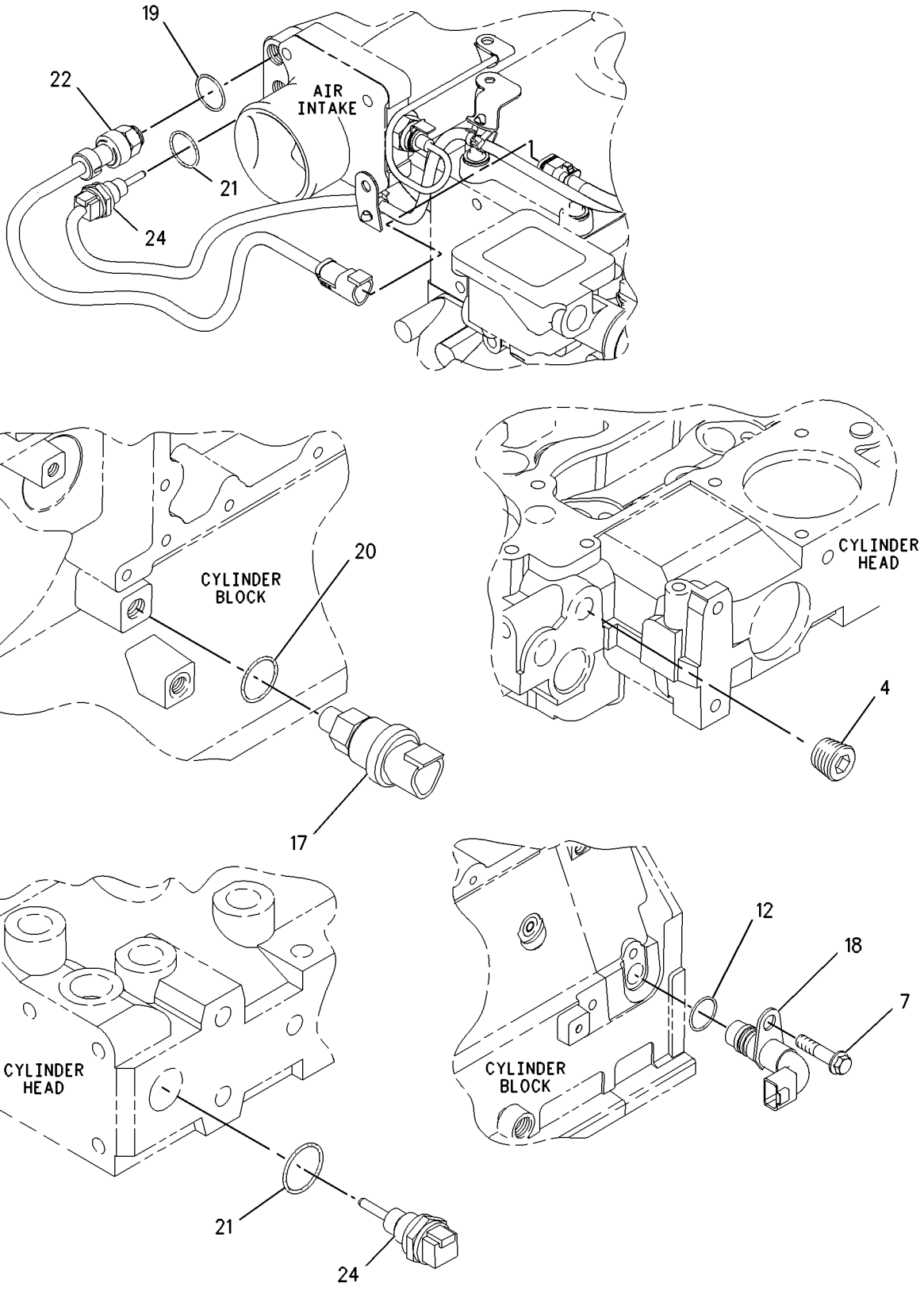

GRAPHIC #2 g00935270

MEMORANDA

FUEL SYSTEM

216-9131 PUMP GP-FUEL TRANSFER

AN ATTACHMENT

SMCS-1256 **i01836317**

NOTE	REF NO	GRAPHIC REF	PART NUMBER	QTY	PART NAME 1 2 3 4 5 6 (PRODUCT LEVEL)	SEE PAGE
	1	2	**5C-1777**	3	NUT	
	2	1	**5C-1809**	1	SPACER (8X19X6.5MM)	
	3	1	**6I-0217**	1	BOLT (M8X1.25X20MM)	
	4	1	**6I-0254**	4	BOLT (M8X1.25X30MM)	
	5	1	**8N-7983**	1	FITTING	
	6	1,2	**033-7849**	3	PLUG	
	7	2	**067-6269**	3	FITTING (5/16IN)	
	8	1	**067-6998**	1	NUT	
	9	1	**067-6999**	1	FERRULE	
	10	2	**100-4461**	1	BOLT (M10X50MM)	
	11	1	**100-4830**	1	BOLT (M10X1.5X20MM)	
	12	1	**101-3906**	1	BOLT	
	13	1,2	**101-3907**	4	WASHER	
	14	2	**101-7178**	1	BOLT (M10X55MM)	
	15	2	**127-8162**	2	CLIP	
	16	2	**133-9467**	1	BOLT	
	17	2	**133-9472**	1	CONNECTION	
	18	1	**160-7197**	1	CLIP	
	19	1,2	**162-2000**	4	WASHER	
	20	2	**186-0790**	1	SPACER	
	21	1	**216-9043**	1	PUMP AS-FUEL PRIMING	
	22	1	**7W-4553**	1	GASKET-FUEL PUMP	
	23	2	**216-9053**	1	CONNECTOR	
	24	1	**216-9055**	1	BRACKET	
	25	1	**216-9056**	1	TUBE AS	
	26	1	**102-9987**	1	CLIP	
	27	2	**216-9066**	1	TUBE AS	
	28	2	**149-6117**	1	CLIP	
	29	2	**216-9086**	1	SPACER	
	30	2	**216-9092**	2	CONNECTOR	
	31	1	**216-9093**	1	TUBE AS	
	32	1	**102-9986**	2	CLIP	
	33	1	**216-9109**	1	LINE AS-FUEL	
	34	1	**7W-4539**	1	CLIP	
	35	1	**103-0173**	1	CLIP	
	36	2	**216-9110**	1	TUBE AS	
	37	2	**102-9986**	1	CLIP	
	38	2	**216-9752**	4	WASHER	
	39	1	**216-9767**	2	BOLT-FLANGED	
	40	2	**217-0721**	1	BOLT	

216-9131 **PUMP GP-FUEL TRANSFER** *(contd.)* **i01836317**

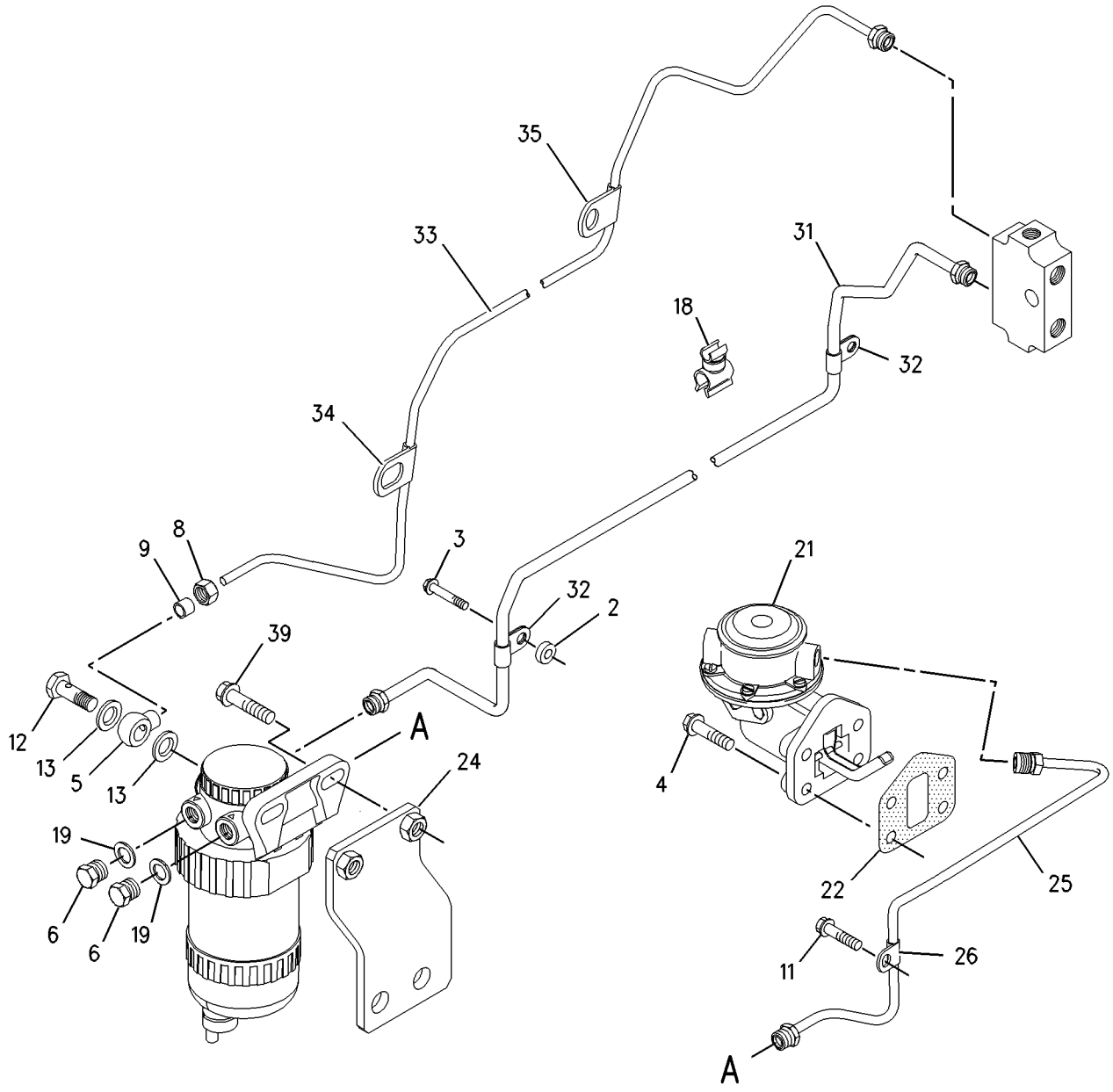

GRAPHIC #1 g00860885

216-9131 **PUMP GP-FUEL TRANSFER** *(contd.)* **i01836317**

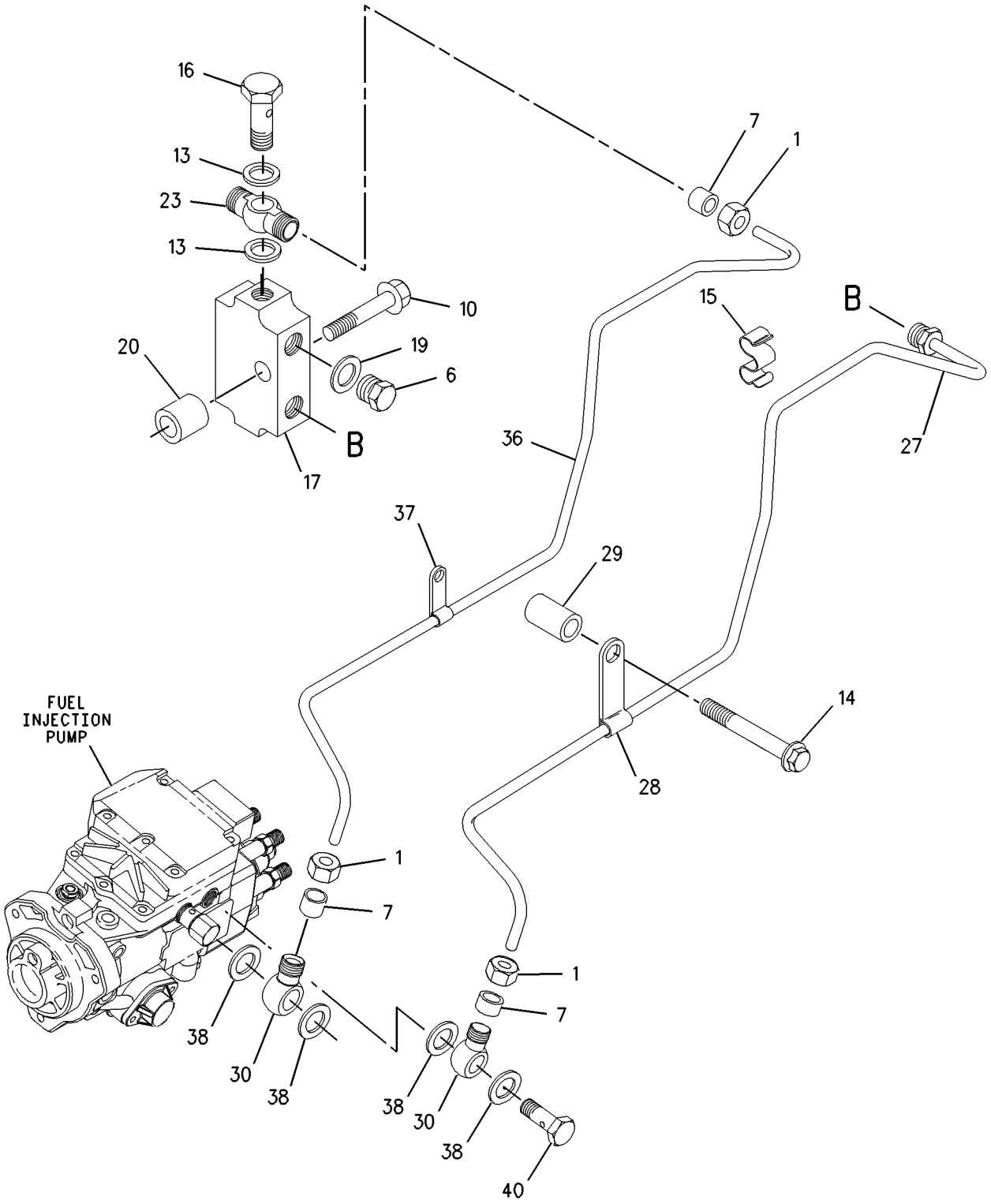

GRAPHIC #2 g00860888

MEMORANDA

FUEL SYSTEM

219-2455 PUMP GP-FUEL TRANSFER

SMCS-1256 **i01773938**

NOTE	REF NO	GRAPHIC REF	PART NUMBER	QTY	PART NAME 1 2 3 4 5 6 (PRODUCT LEVEL)	SEE PAGE
	1	1	**5C-1777**	5	NUT	
	2	2	**6I-0217**	1	BOLT (M8X1.25X20MM)	
	3	2	**6I-0254**	4	BOLT (M8X1.25X30MM)	
	4	1	**6I-1090**	1	BOLT (M8X1.25X40MM)	
	5	2	**033-7849**	1	PLUG	
	6	1	**067-6269**	4	FITTING (5/16IN)	
	7	2	**100-4830**	3	BOLT (M10X1.5X20MM)	
	8	2	**101-3906**	1	BOLT	
	9	2	**101-3907**	2	WASHER	
	10	1	**101-7178**	1	BOLT (M10X55MM)	
	11	2	**102-9988**	1	SPACER	
	12	1	**127-8162**	1	CLIP	
	13	2	**162-2000**	1	WASHER	
	14	2	**216-9043**	1	PUMP AS-FUEL PRIMING	
	15	2	**7W-4553**	1	GASKET-FUEL PUMP	
	16	2	**216-9053**	1	CONNECTOR	
	17	1	**216-9086**	1	SPACER	
	18	1	**216-9092**	1	CONNECTOR	
	19	1	**216-9752**	4	WASHER	
	20	1	**217-0721**	1	BOLT	
	21	2	**219-2442**	1	TUBE AS	
	22	2	**102-9986**	1	CLIP	
	23	2	**102-9987**	1	CLIP	
	24	1	**219-2443**	1	TUBE AS	
	25	1	**102-9986**	1	CLIP	
	26	2	**219-2450**	1	BRACKET	
	27	1	**219-2451**	1	CONNECTION	
	28	1	**219-2452**	1	BALL	
	29	1	**219-2453**	1	TUBE AS	
	30	1	**149-6117**	1	CLIP	

219-2455 **PUMP GP-FUEL TRANSFER** *(contd.)* **i01773938**

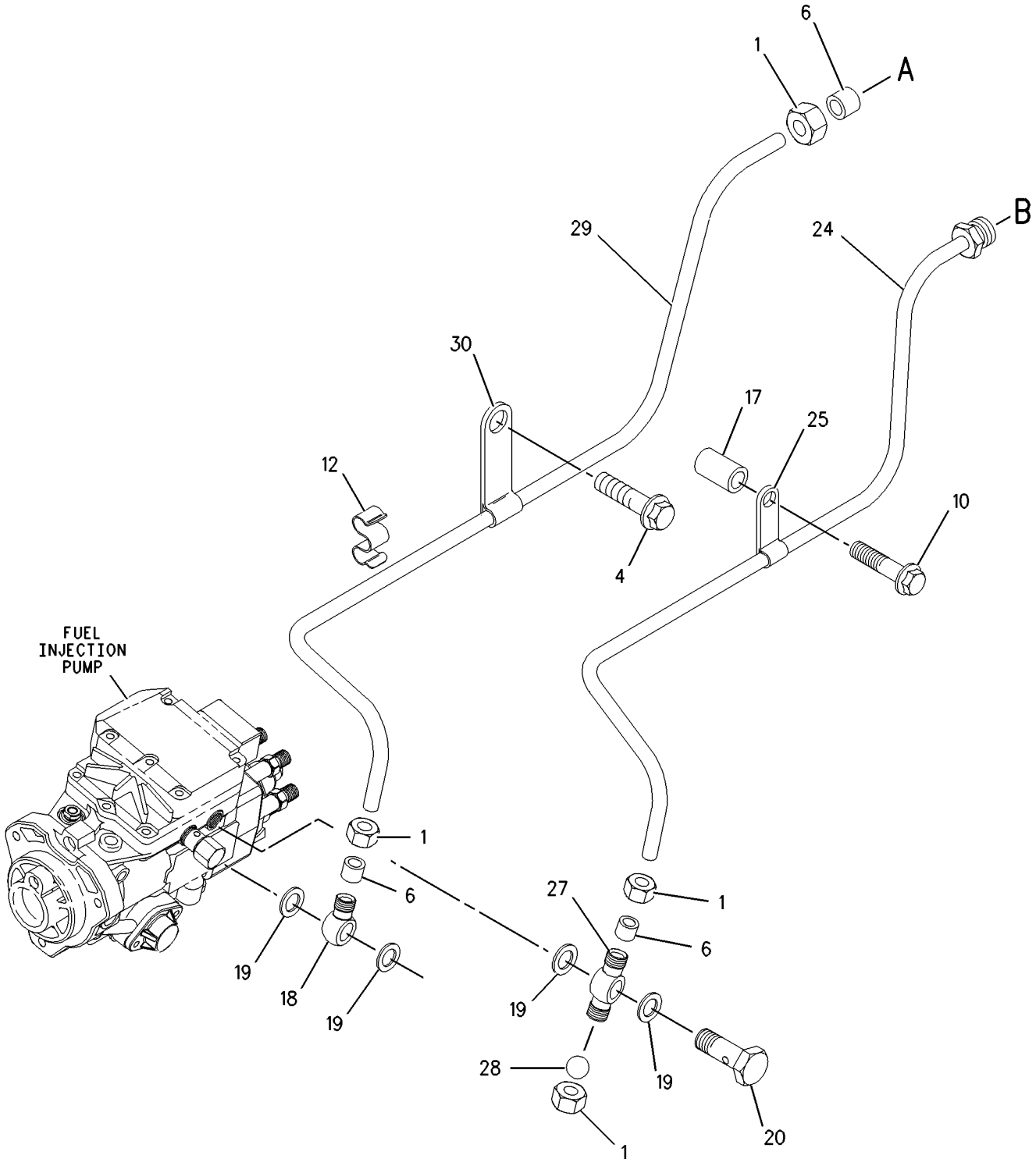

GRAPHIC #1 g00891374

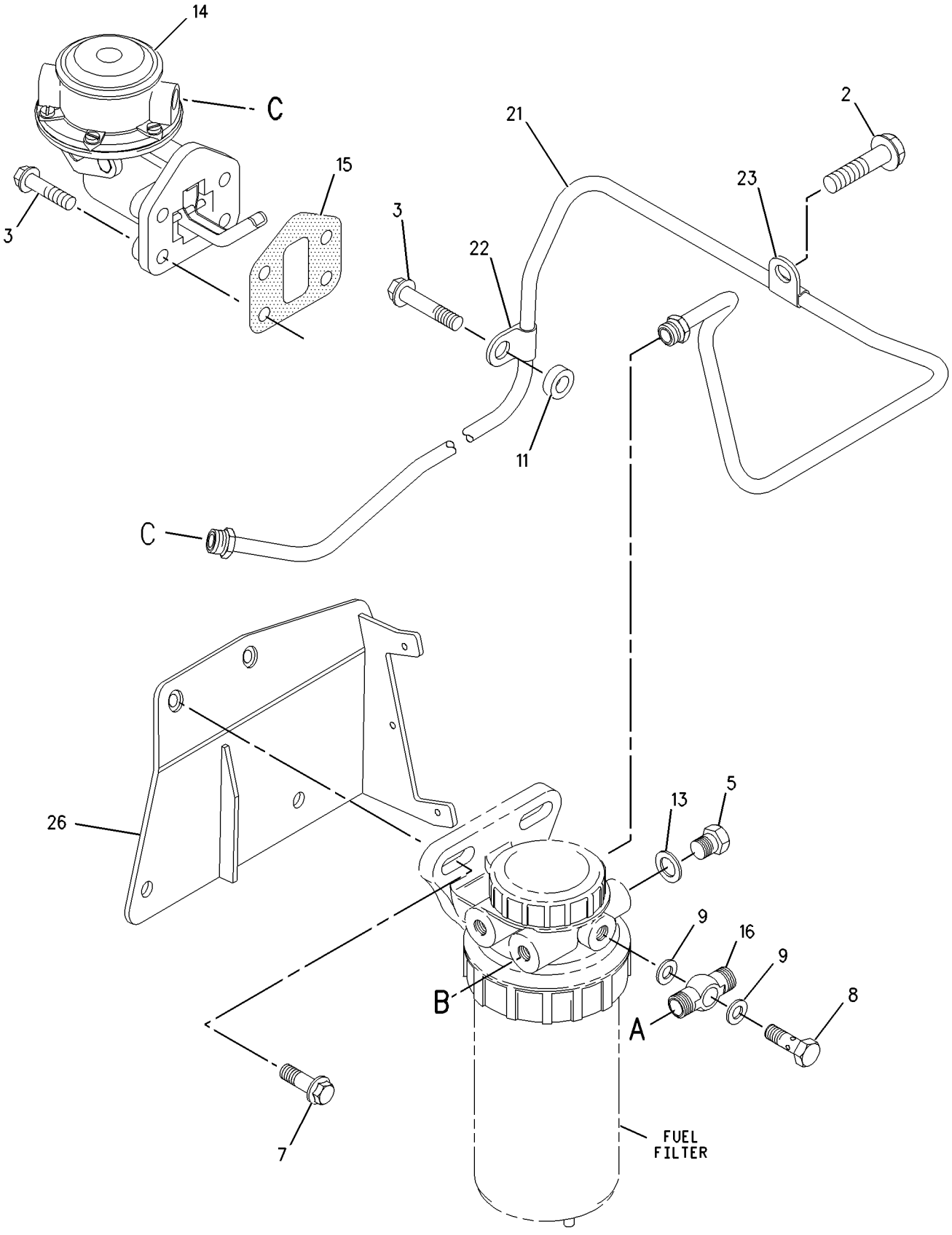

GRAPHIC #2 g00891375

MEMORANDA

FUEL SYSTEM

220-7165 PUMP GP-FUEL TRANSFER

AN ATTACHMENT

SMCS-1256 **i01755850**

NOTE	REF NO	GRAPHIC REF	PART NUMBER	QTY	PART NAME 1 2 3 4 5 6 (PRODUCT LEVEL)	SEE PAGE
	1	1	**5C-1777**	6	NUT	
	2	2	**6I-0217**	1	BOLT (M8X1.25X20MM)	
	3	2	**6I-0254**	7	BOLT (M8X1.25X30MM)	
	4	1	**6I-1090**	1	BOLT (M8X1.25X40MM)	
	5	1	**067-6269**	4	FITTING (5/16IN)	
	6	2	**101-3906**	1	BOLT	
	7	2	**101-3907**	2	WASHER	
	8	1	**101-7178**	1	BOLT (M10X55MM)	
	9	2	**102-9988**	1	SPACER	
	10	1	**127-8162**	1	CLIP	
	11	2	**216-9043**	1	PUMP AS-FUEL PRIMING	
	12	2	**7W-4553**	1	GASKET-FUEL PUMP	
	13	2	**216-9053**	1	CONNECTOR	
	14	1	**216-9086**	1	SPACER	
	15	1	**216-9092**	1	CONNECTOR	
	16	1	**216-9752**	4	WASHER	
	17	1	**217-0721**	1	BOLT-BANJO	
	18	1	**219-2443**	1	TUBE AS	
	21	1	**102-9986**	1	CLIP	
	22	1	**219-2451**	1	CONNECTION	
	23	1	**219-2452**	1	BALL	
	24	1	**219-2453**	1	TUBE AS	
	25	1	**149-6117**	1	CLIP	
	26	2	**220-7162**	1	TUBE AS	
	29	2	**102-9987**	1	CLIP	
	30	2	**220-7163**	1	CLIP	

220-7165 **PUMP GP-FUEL TRANSFER** *(contd.)* **i01755850**

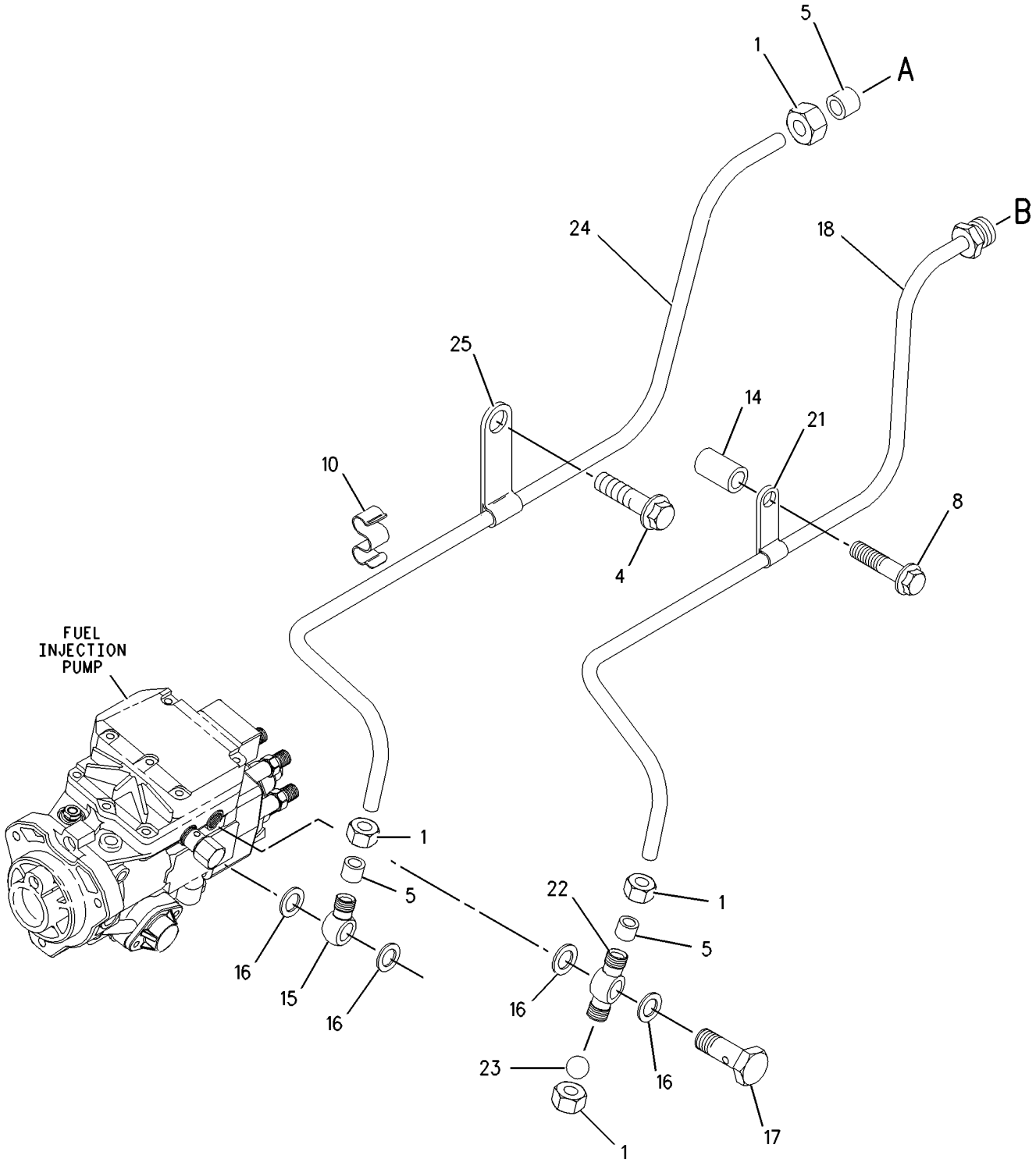

GRAPHIC #1 g00899663

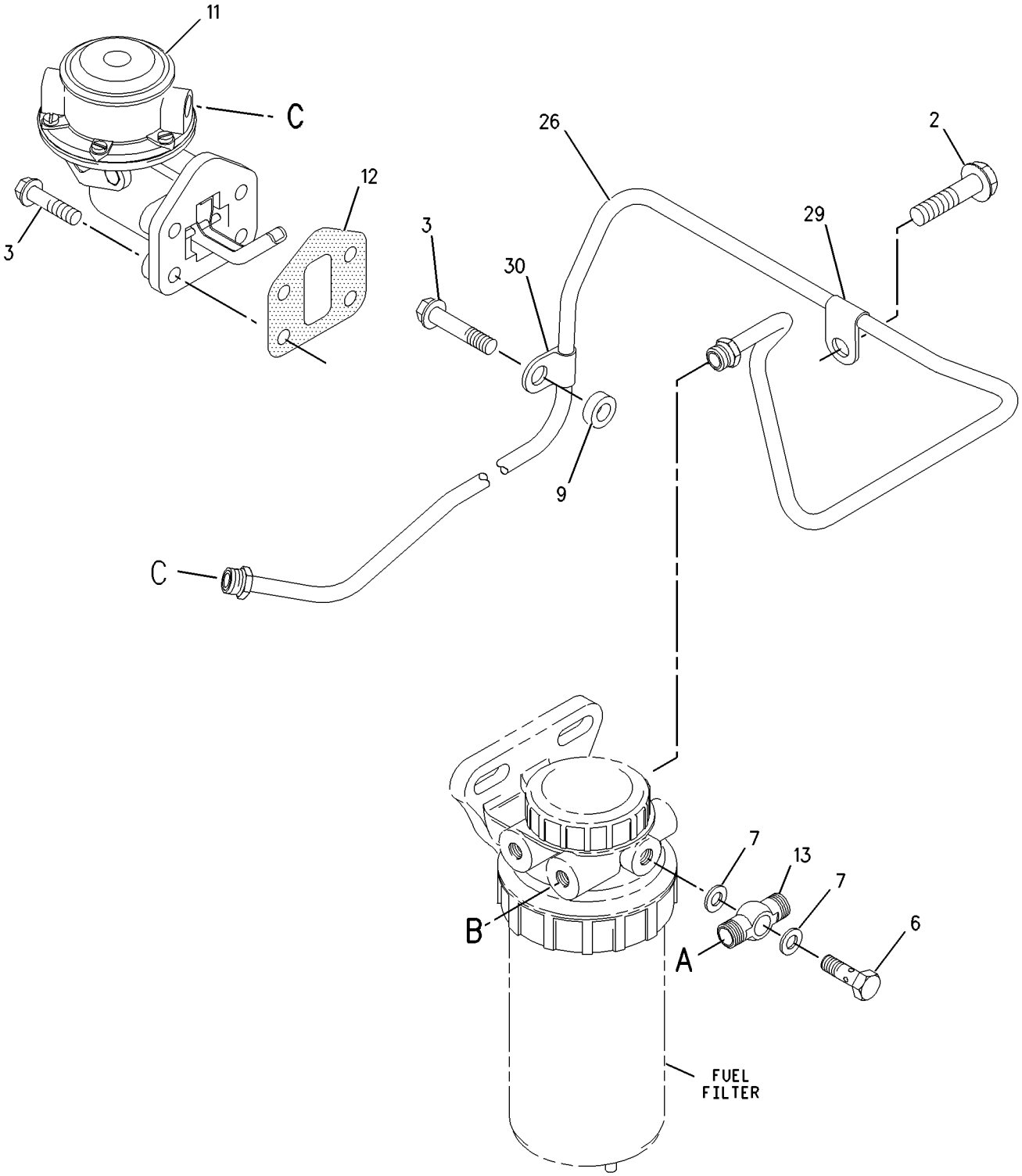

GRAPHIC #2 g00899664

138-3097 SEPARATOR GP-WATER

PART OF 228-9407 SEPARATOR GP-WATER
ALSO AN ATTACHMENT

SMCS-1263 **i01839387**

NOTE	REF NO	GRAPHIC REF	PART NUMBER	QTY	PART NAME 1 2 3 4 5 6 (PRODUCT LEVEL)	SEE PAGE
	1	1	**101-3912**	1	WASHER	
	2	1	**101-3949**	1	SEAL	
	3	1	**101-3953**	1	SEAL (WATER SEPARATOR BASE)	
	4	1	**101-3955**	1	SEAL (WATER SEPARATOR CONNECTION)	
	5	1	**138-3100**	1	ELEMENT-WATER SEPARATOR	
					AVAILABLE REPLACEMENT PART(S):	
			118-5637	1	KIT-BOWL (WATER SEPARATOR)	

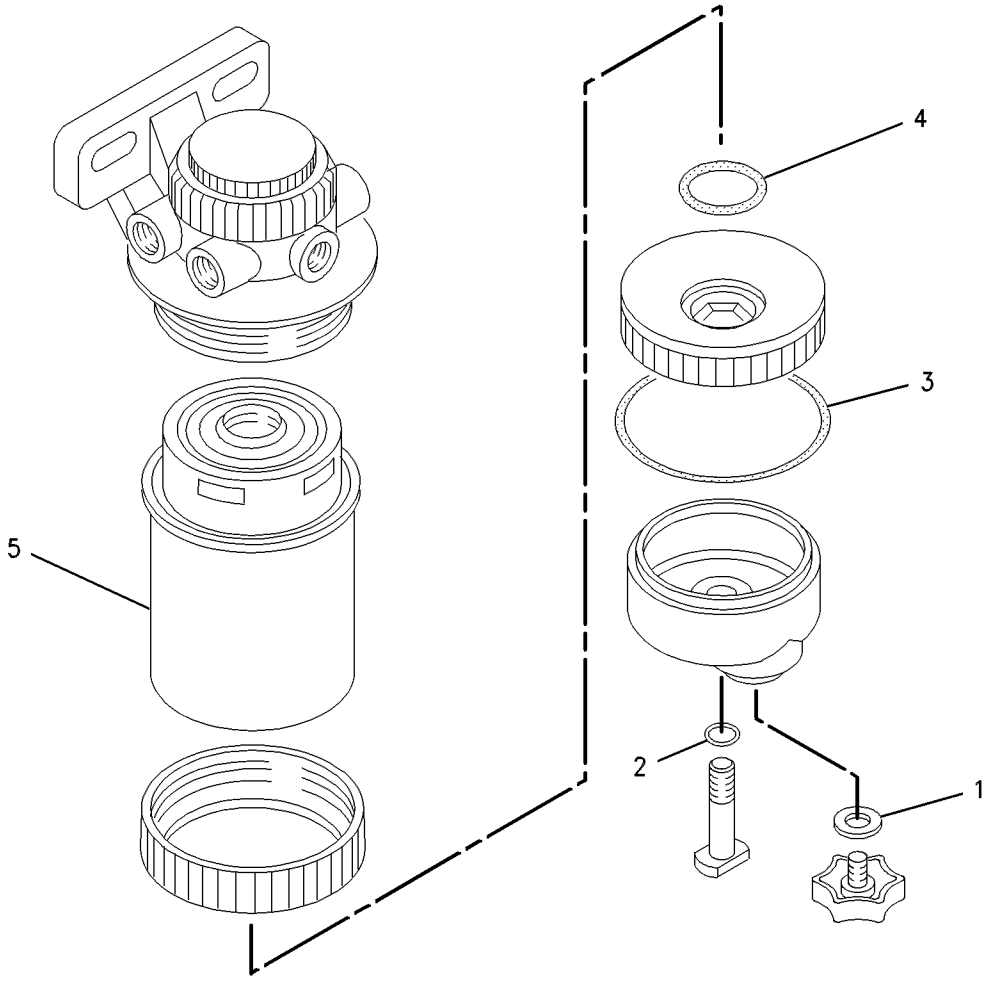

GRAPHIC #1 g00482159

228-9407 SEPARATOR GP-WATER

ALSO AN ATTACHMENT

SMCS-1263 **i01827935**

NOTE	REF NO	GRAPHIC REF	PART NUMBER	QTY	PART NAME 1 2 3 4 5 6 (PRODUCT LEVEL)	SEE PAGE
Y	1	1	**138-3097**	1	SEPARATOR GP-WATER	127
	2	1	**032-8100**	2	WASHER (.064MM THK)	
	3	1	**033-7849**	2	PLUG	
	4	1	**067-6268**	2	NUT-FUEL LINE	
	5	1	**224-8978**	2	FITTING-COMPRESSION	

Y-SEPARATE ILLUSTRATION

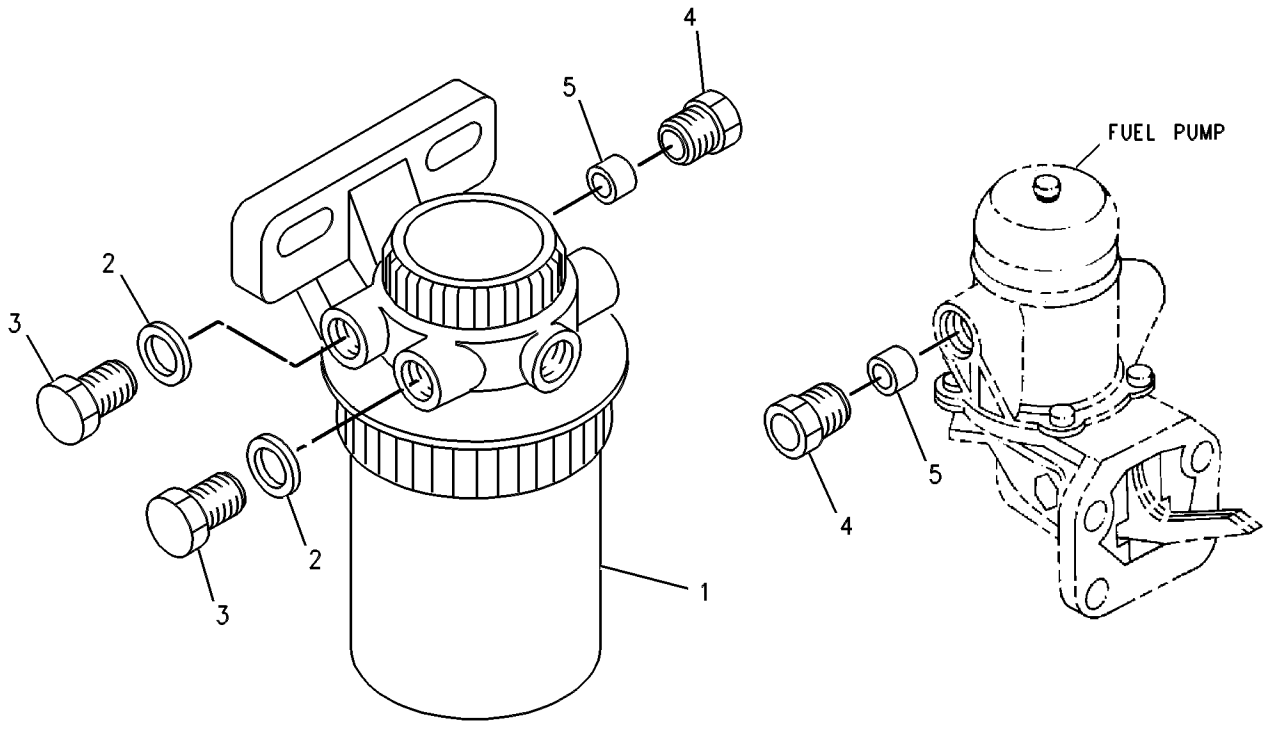

GRAPHIC #1 g00653110

MEMORANDA

ELECTRICAL AND STARTING SYSTEM

228-7392 ALTERNATOR GP-CHARGING

ALSO AN ATTACHMENT

SMCS-1405 **i01827932**

NOTE	REF NO	GRAPHIC REF	PART NUMBER	QTY	PART NAME 1 2 3 4 5 6 (PRODUCT LEVEL)	SEE PAGE
	1	1	**6I-0254**	2	BOLT (M8X1.25X30MM)	
	2	1	**6I-0260**	1	BOLT (M8X1.25X25MM)	
	3	1	**6I-0423**	1	BOLT (M12X1.75X30MM)	
	4	1	**6I-0456**	1	BOLT (M8X1.25X45MM)	
	5	1	**6I-0654**	1	BOLT (M10X1.5X25MM)	
	6	1	**6I-0839**	3	BOLT (M8X1.25X70MM)	
	7	1	**6I-1090**	1	BOLT (M8X1.25X40MM)	
	8	1	**7W-2632**	2	WASHER (8.5X16.8X1.6MM THK)	
	9	1	**8T-4223**	1	WASHER-HARD (13.5X25.5X3MM THK)	
	10	1	**113-6349**	2	NUT	
	11	1	**124-3815**	4	BOLT (M8X16X1.25MM)	
	12	1	**140-9793**	1	BRACKET	
	13	1	**140-9794**	1	BRACKET	
	14	1	**140-9795**	1	STRAP	
	15	1	**225-3145**	1	ALTERNATOR GP-CHARGING	
	16	1	**228-7391**	1	PULLEY-ALTERNATOR	

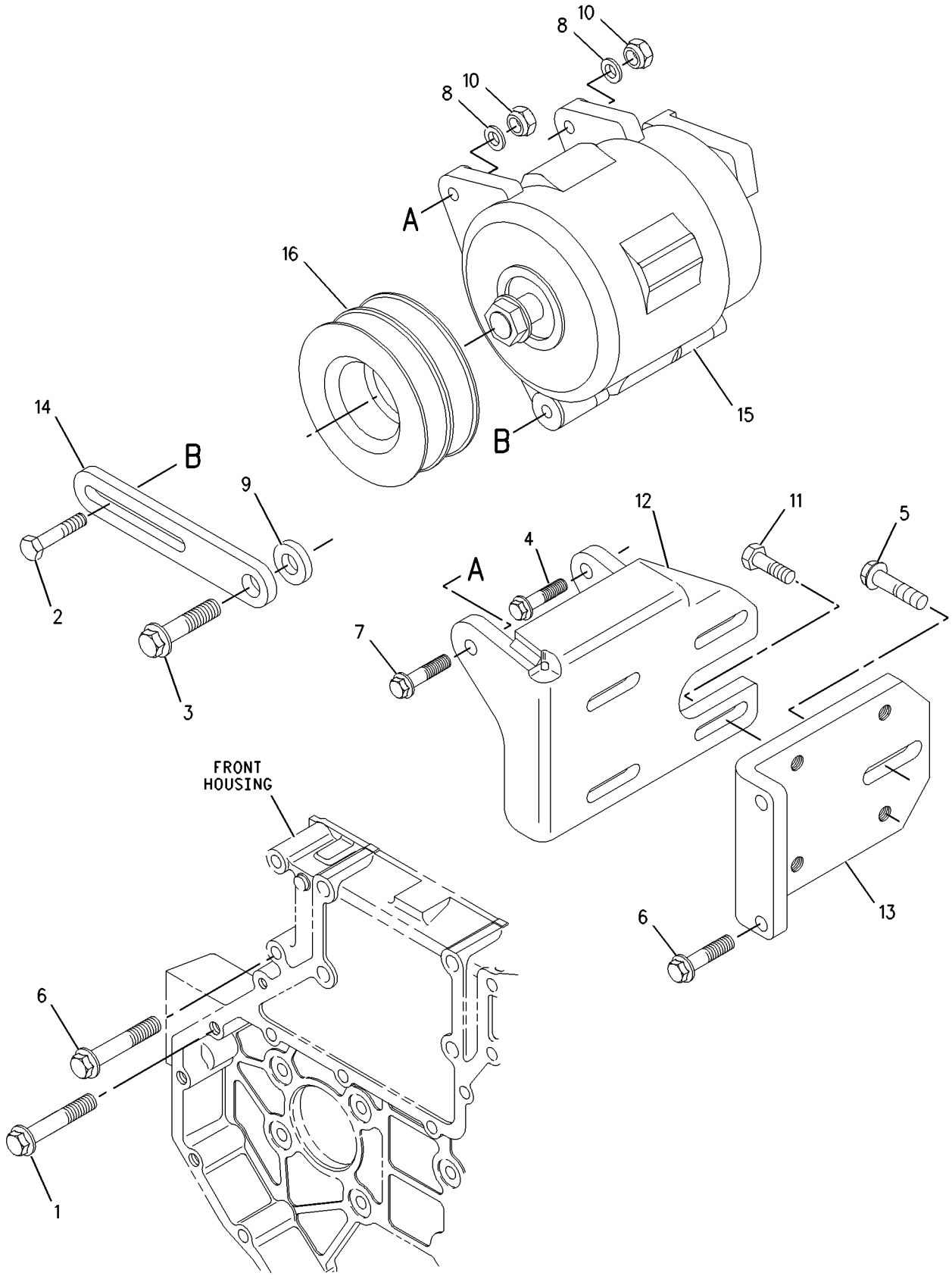

GRAPHIC #1 g00933155

216-9780 HEATER GP-STARTING AID

12 VOLT

AN ATTACHMENT

SMCS-1090, 1296 **i01755848**

NOTE	REF NO	GRAPHIC REF	PART NUMBER	QTY	PART NAME 1 2 3 4 5 6 (PRODUCT LEVEL)	SEE PAGE
	1	1	**186-4272**	1	HEATER (AIR INLET)	

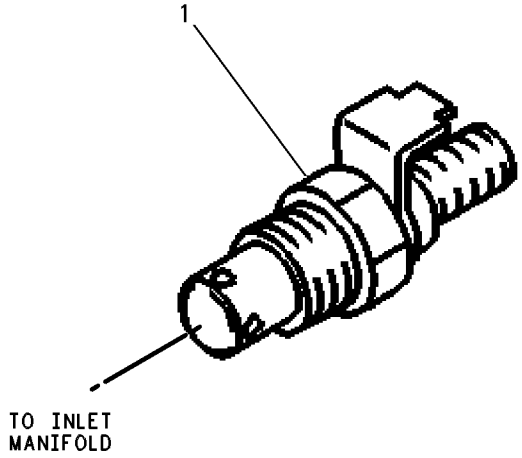

GRAPHIC #1 g00131680

228-7461 HEATER GP-STARTING AID

12 VOLT

ALSO AN ATTACHMENT

SMCS-1090, 1296 **i01827921**

NOTE	REF NO	GRAPHIC REF	PART NUMBER	QTY	PART NAME 1 2 3 4 5 6 (PRODUCT LEVEL)	SEE PAGE
	1	1	**186-4272**	1	HEATER (AIR INLET)	

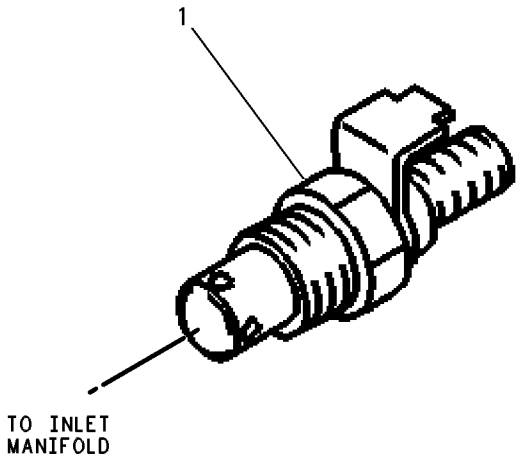

GRAPHIC #1 g00131680

217-5883 STARTING AID GP

AN ATTACHMENT

SMCS-1090, 1296 **i01755853**

NOTE	REF NO	GRAPHIC REF	PART NUMBER	QTY	PART NAME 1 2 3 4 5 6 (PRODUCT LEVEL)	SEE PAGE
	1	1	**6I-0217**	1	BOLT (M8X1.25X20MM)	
	2	1	**8N-7983**	1	FITTING	
	3	1	**067-6998**	2	NUT	
	4	1	**067-6999**	2	FERRULE	
	5	1	**101-3907**	2	WASHER	
	6	1	**124-3815**	2	BOLT (M8X16X1.25MM)	
	7	1	**133-9467**	1	BOLT	
	8	1	**217-7897**	1	LINE AS-FUEL	
	9	1	**101-3927**	2	CLIP	
	10	1	**101-3985**	1	CLIP	

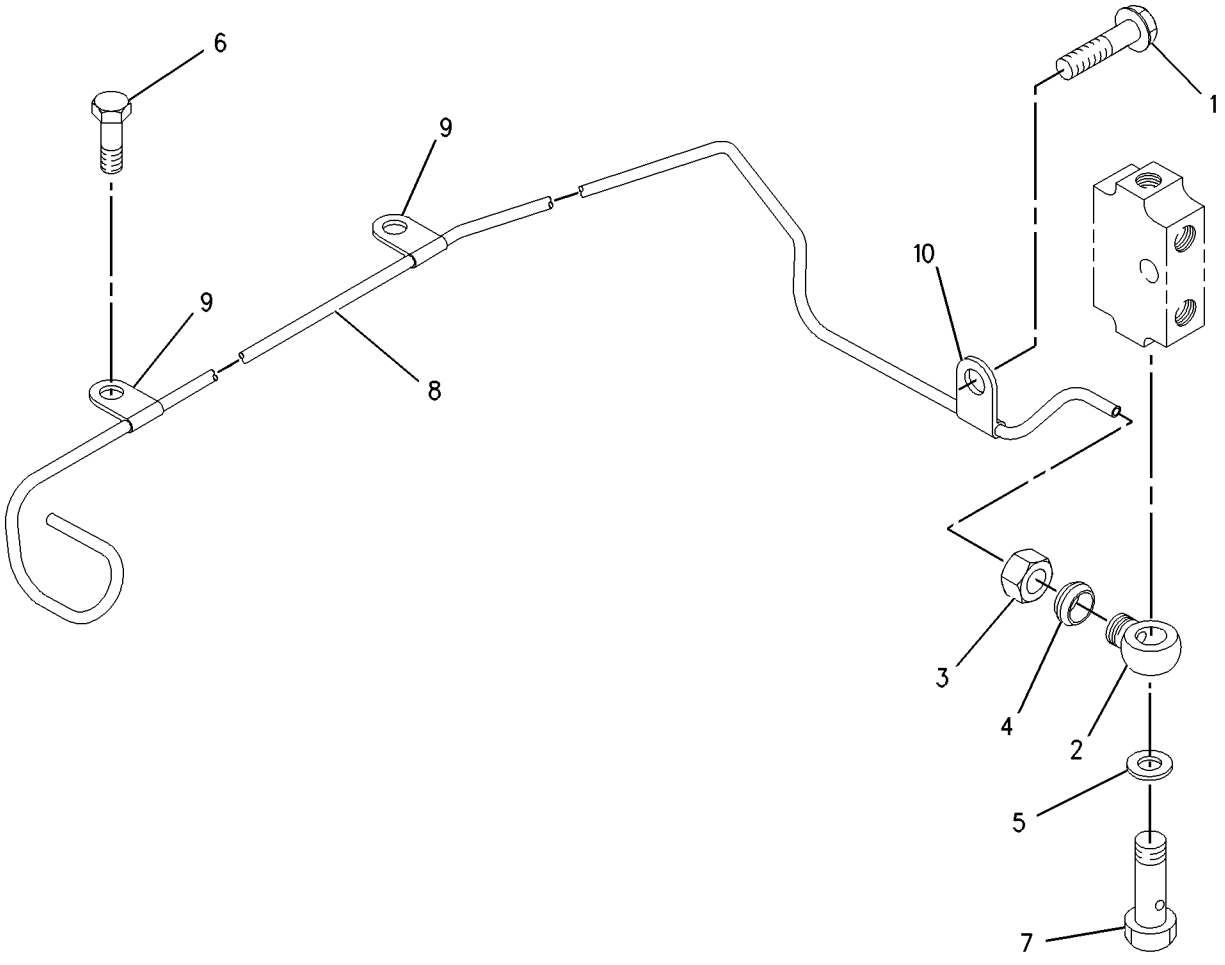

GRAPHIC #1 g00873231

ELECTRICAL AND STARTING SYSTEM

219-1855 LINES GP-STARTING AID

SMCS-1090, 1296 **i01725062**

NOTE	REF NO	GRAPHIC REF	PART NUMBER	QTY	PART NAME 1 2 3 4 5 6 (PRODUCT LEVEL)	SEE PAGE
	1	1	**067-6998**	1	NUT	
	2	1	**067-6999**	1	FERRULE	
	3	1	**114-4363**	2	BOLT (M8X1.25X12MM)	
	4	1	**219-1856**	1	LINE AS-FUEL	
	5	1	**101-3927**	3	CLIP	
	6	1	**101-3983**	1	NUT (3/16)	
	7	1	**101-3984**	1	FERRULE	

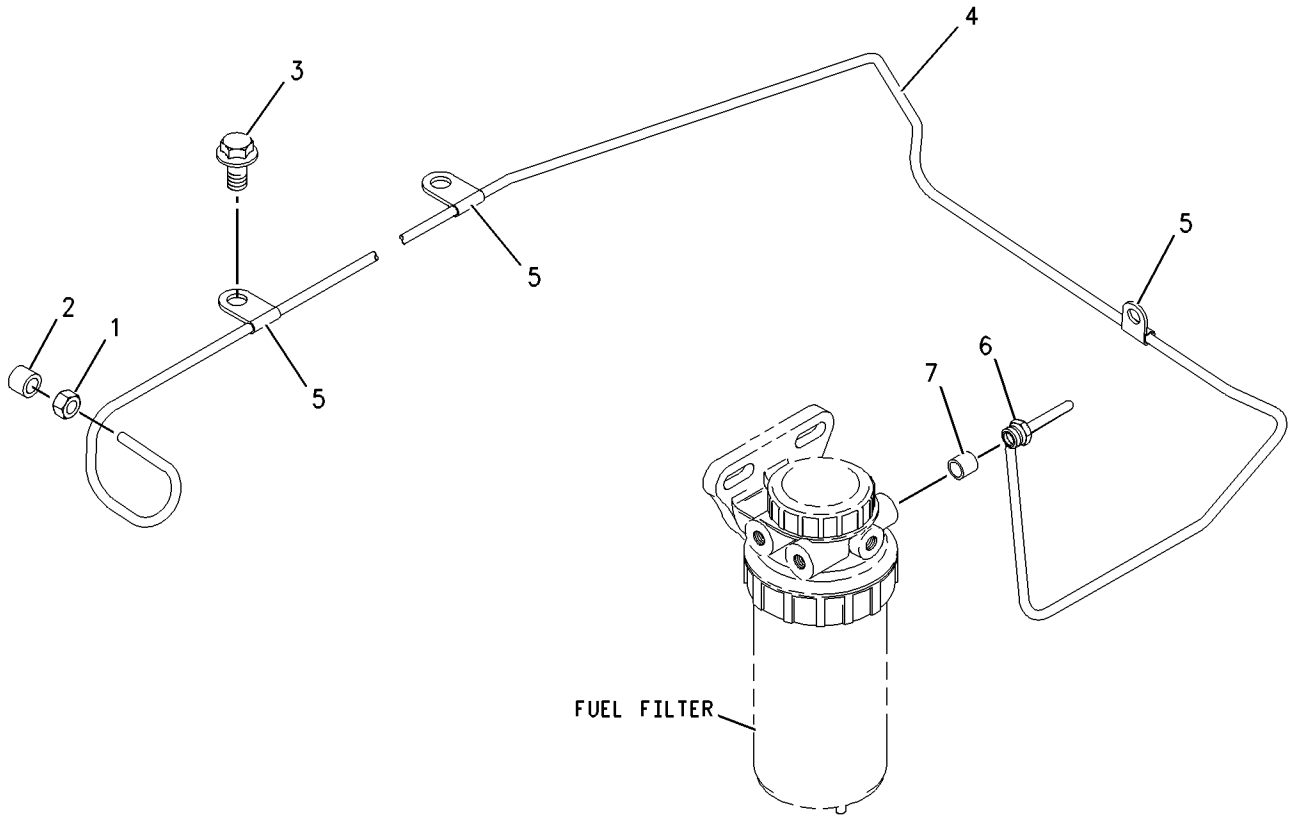

GRAPHIC #1 g00888975

ELECTRICAL AND STARTING SYSTEM

220-6340 LINES GP-STARTING AID

AN ATTACHMENT

SMCS-1090, 1296 **i01755849**

NOTE	REF NO	GRAPHIC REF	PART NUMBER	QTY	PART NAME 1 2 3 4 5 6 (PRODUCT LEVEL)	SEE PAGE
	1	1	**2W-8076**	1	CONNECTOR	
	2	1	**6I-0455**	1	BOLT (M8X1.25X55MM)	
	3	1	**067-6998**	3	NUT	
	4	1	**067-6999**	3	FERRULE	
	5	1	**114-4363**	2	BOLT (M8X1.25X12MM)	
	6	1	**160-6200**	1	SPACER	
	7	1	**160-7197**	2	CLIP	
	8	1	**220-6339**	1	LINE AS-FUEL	
	8A	1	**101-3927**	2	CLIP	
	8B	1	**101-3985**	1	CLIP	
	9	1	**220-6341**	1	LINE AS-FUEL	
	10	1	**7W-4539**	1	CLIP	
	10A	1	**101-3983**	1	NUT (3/16)	
	10B	1	**101-3984**	1	FERRULE	

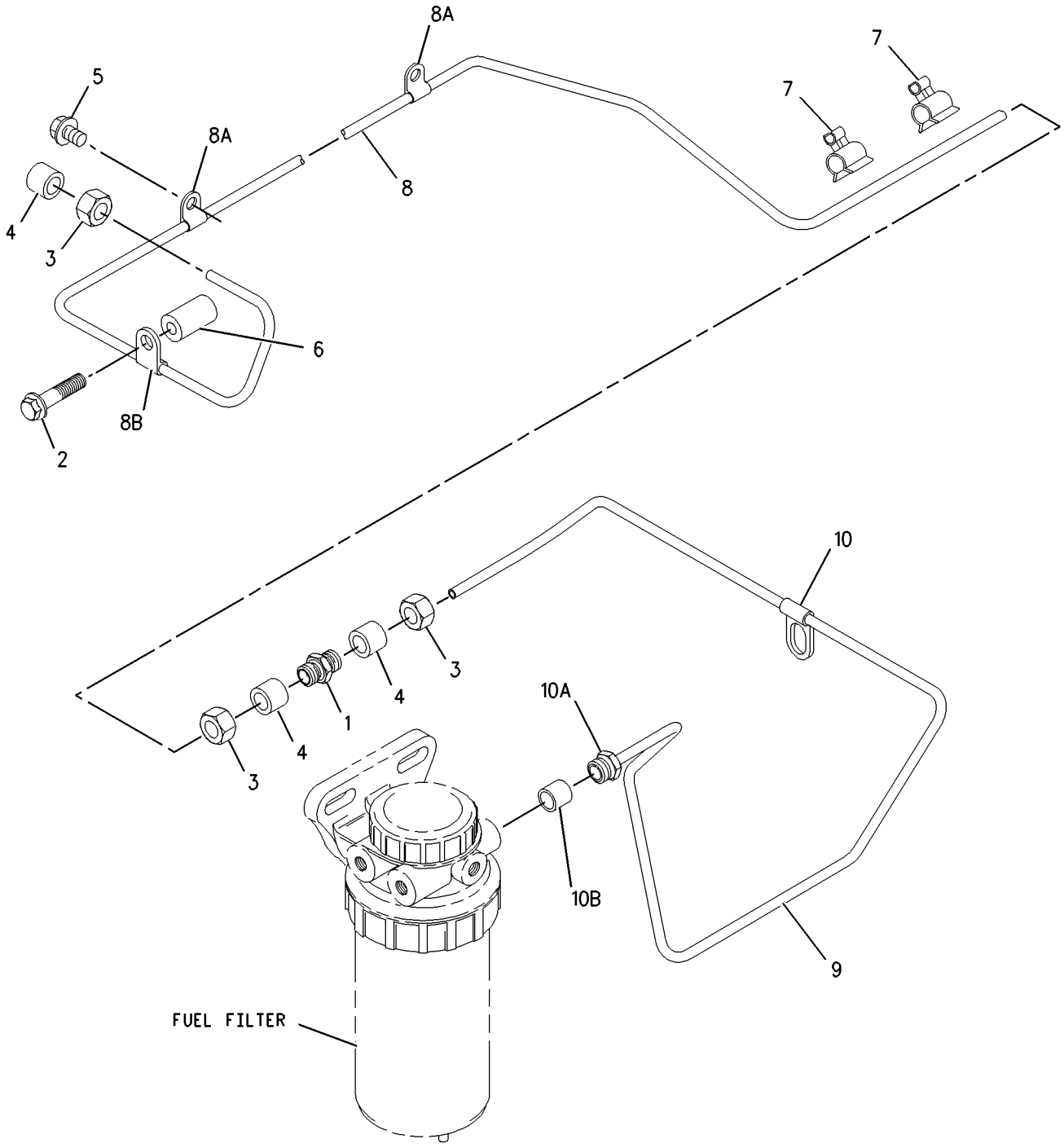

GRAPHIC #1 g00899815

226-3490 STARTING MOTOR GP-ELECTRIC

24 VOLT

AN ATTACHMENT

SMCS-1453 **i01773228**

NOTE	REF NO	GRAPHIC REF	PART NUMBER	QTY	PART NAME 1 2 3 4 5 6 (PRODUCT LEVEL)	SEE PAGE
	1	1	**6I-0594**	3	NUT (M10X1.5)	
	2	1	**6I-4012**	3	STUD	
R	3	1	**109-2361**	1	STARTING MOTOR GP-ELECTRIC	
	4	1	**113-8085**	1	RING	

R-REMFG PART MAY BE AVAILABLE

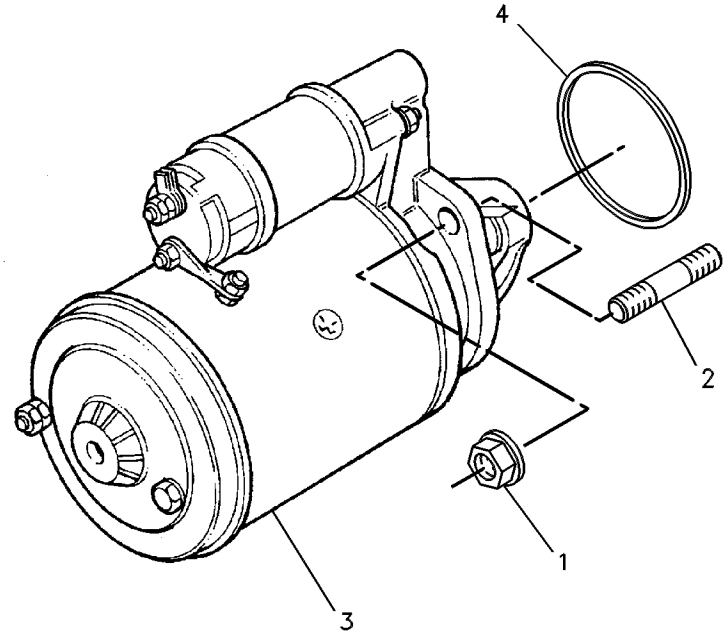

GRAPHIC #1 g00238555

228-7333 STARTING MOTOR GP-ELECTRIC

24 VOLT
ALSO AN ATTACHMENT

SMCS-1453 **i01827937**

NOTE	REF NO	GRAPHIC REF	PART NUMBER	QTY	PART NAME 1 2 3 4 5 6 (PRODUCT LEVEL)	SEE PAGE
	1	1	**6I-0364**	3	STUD (M10X1.5X30MM)	
	2	1	**6I-0594**	3	NUT (M10X1.5)	
	3	1	**225-3150**	1	STARTING MOTOR GP-ELECTRIC	

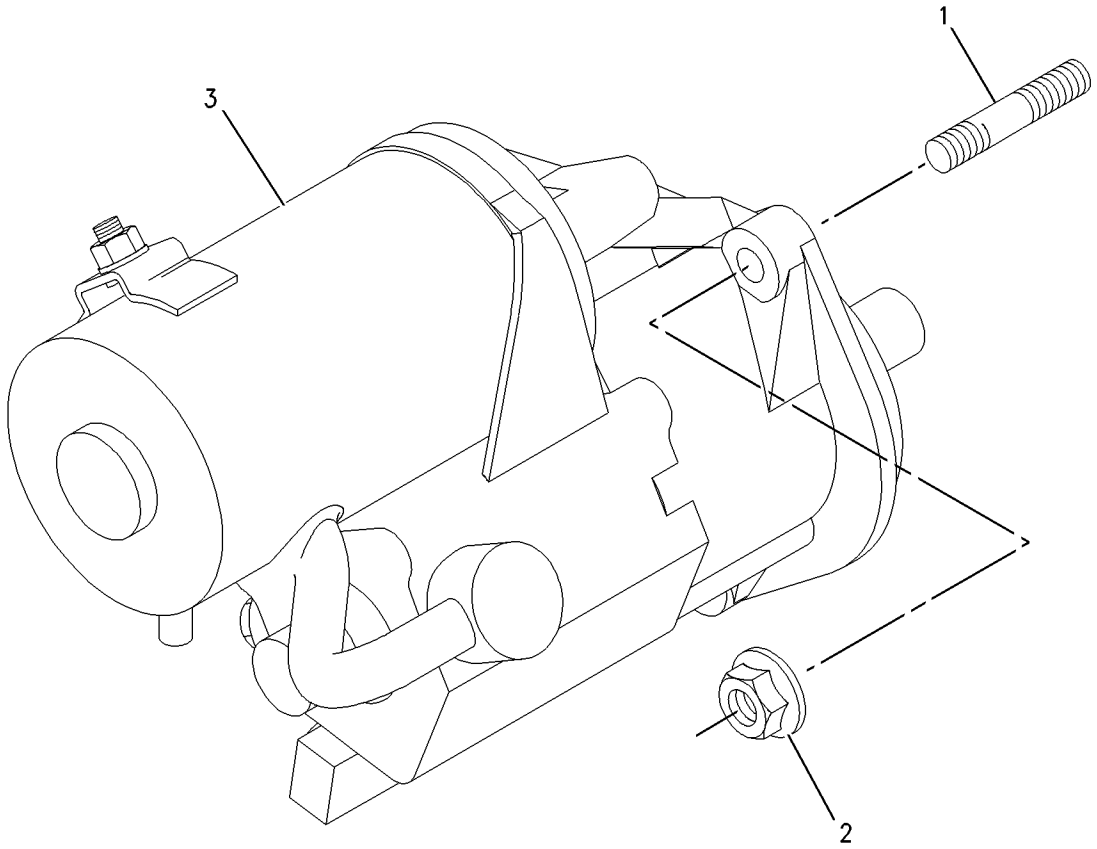

GRAPHIC #1 g00933413

217-9151 WIRING GP-ELECTRONIC CONTROL

AN ATTACHMENT

SMCS-1408, 1900 **i01755854**

NOTE	REF NO	GRAPHIC REF	PART NUMBER	QTY	PART NAME 1 2 3 4 5 6 (PRODUCT LEVEL)	SEE PAGE
	1	1	**100-4458**	3	BOLT (M8X1.25X14MM)	
	2	1	**100-4830**	2	BOLT (M10X1.5X20MM)	
	3	1	**140-8783**	1	BOLT (M10X45MM)	
	4	1	**217-8413**	1	HARNESS AS-ENGINE	
	5	1	**217-8477**	5	CLIP	
	6	1	**217-8478**	1	CLIP	
	7	1	**217-9038**	3	BOLT	
	8	1	**217-9039**	2	STRAP-CABLE	
	9	1	**217-9040**	1	CLIP	
	10	1	**217-9041**	1	BRACKET-MOUNTING	
	11	1	**217-9059**	2	SPACER	
	12	1	**217-9150**	1	BOLT-FLANGED	

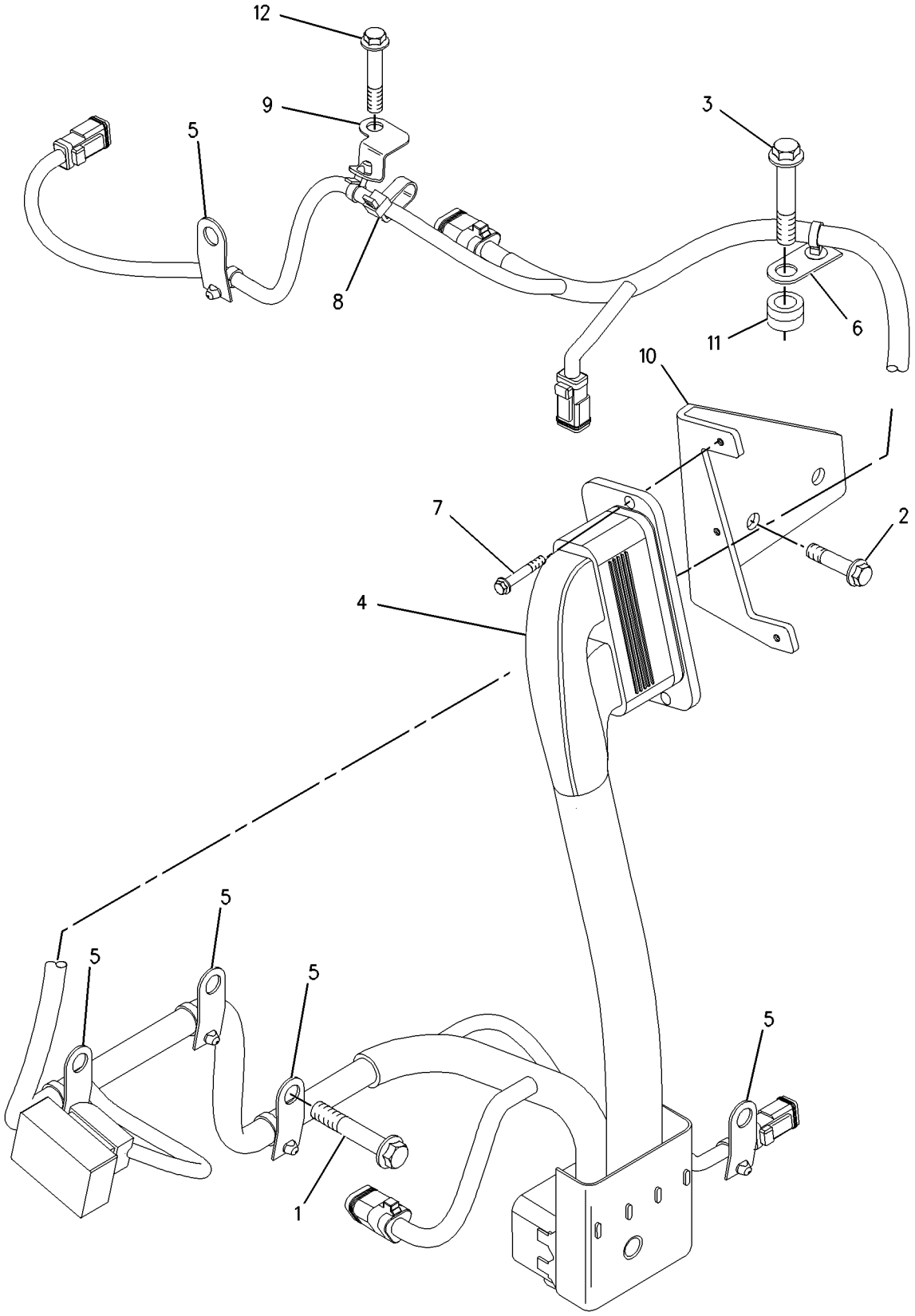

GRAPHIC #1 g00876439

220-6344 WIRING GP-ELECTRONIC CONTROL

AN ATTACHMENT

SMCS-1408, 1900 **i01755852**

NOTE	REF NO	GRAPHIC REF	PART NUMBER	QTY	PART NAME 1 2 3 4 5 6 (PRODUCT LEVEL)	SEE PAGE
	1	1	**100-4458**	1	BOLT (M8X1.25X14MM)	
	2	1	**100-4830**	1	BOLT (M10X1.5X20MM)	
	3	1	**140-8783**	1	BOLT (M10X45MM)	
	4	1	**217-8477**	4	CLIP	
	5	1	**217-8478**	2	CLIP	
	6	1	**217-9038**	1	BOLT	
	7	1	**217-9039**	1	STRAP-CABLE	
	8	1	**217-9059**	1	SPACER	
	9	1	**220-6343**	1	HARNESS AS	

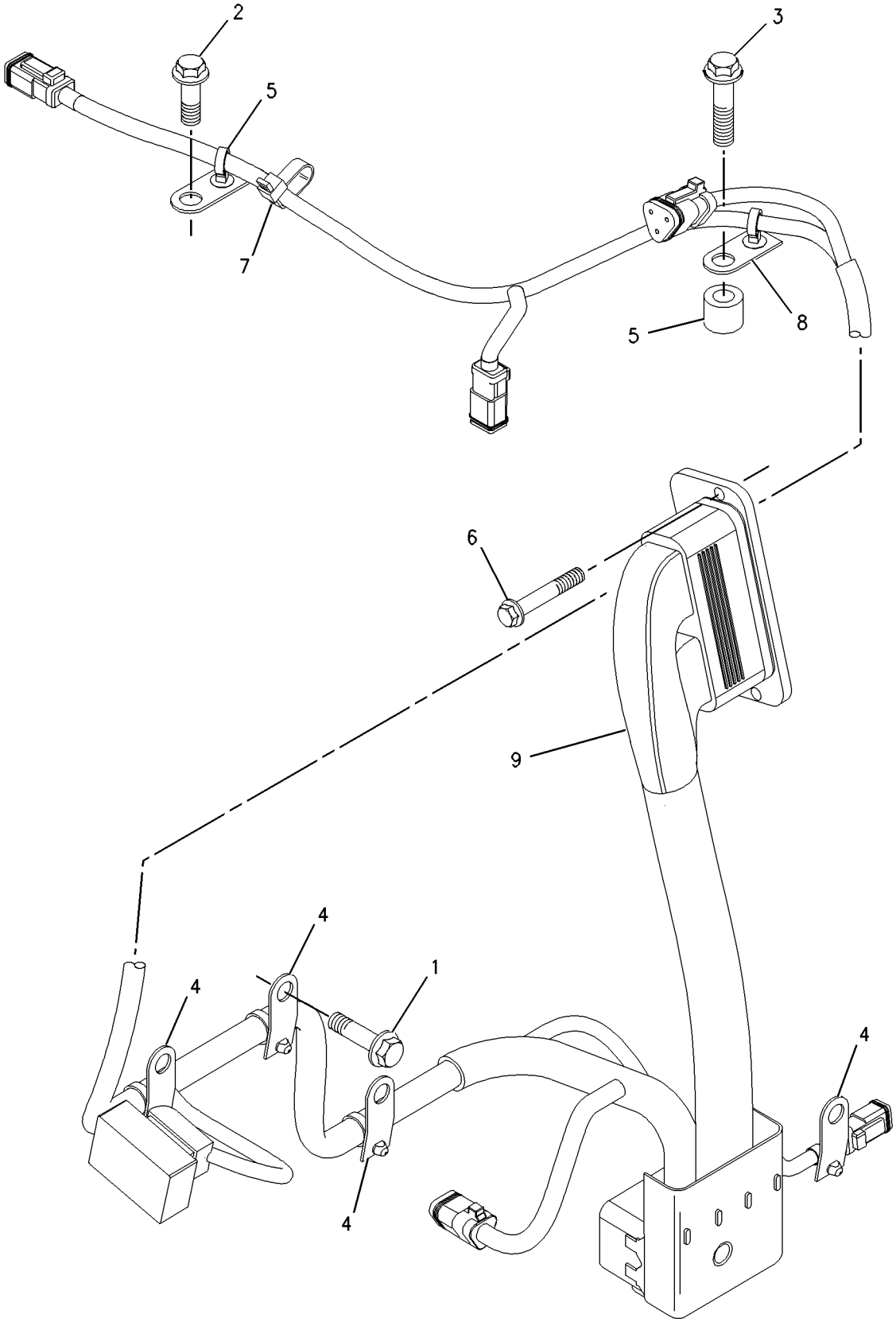

GRAPHIC #1 g00899724

228-7487 WIRING GP-ENGINE

ALSO AN ATTACHMENT

SMCS-1000, 1408 **i01827929**

NOTE	REF NO	GRAPHIC REF	PART NUMBER	QTY	PART NAME 1 2 3 4 5 6 (PRODUCT LEVEL)	SEE PAGE
	1	1	**100-4458**	3	BOLT (M8X1.25X14MM)	
	2	1	**114-4363**	1	BOLT (M8X1.25X12MM)	
	3	1	**140-8783**	1	BOLT (M10X45MM)	
	4	1	**216-9086**	1	SPACER	
	5	1	**217-8477**	3	CLIP	
	6	1	**217-9038**	1	BOLT	
	7	1	**217-9039**	1	STRAP-CABLE	
	8	1	**224-8636**	1	HARNESS AS	
	9	1	**226-8778**	1	BRACKET	
	10	1	**226-8780**	1	BRACKET	
	11	1	*228-7477*	1	CLIP	

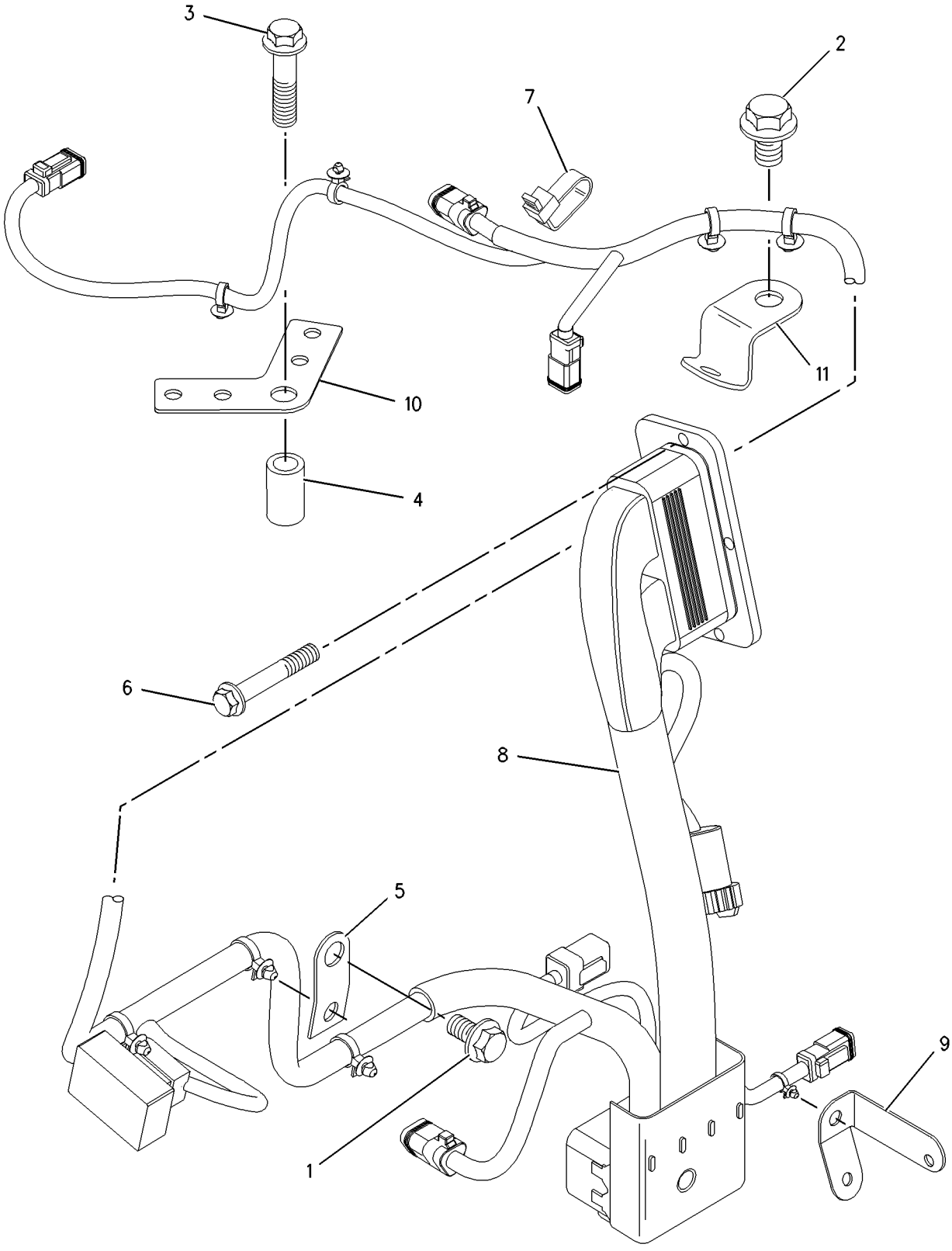

GRAPHIC #1 g00936509

PRIME PACKAGE

228-7418 FASTENER GP

REAR CYLINDER HEAD COVER PLATE
ALSO AN ATTACHMENT

SMCS-7000 **i01827911**

NOTE	REF NO	GRAPHIC REF	PART NUMBER	QTY	PART NAME 1 2 3 4 5 6 (PRODUCT LEVEL)	SEE PAGE
	1	1	**124-3815**	3	BOLT (M8X16X1.25MM)	

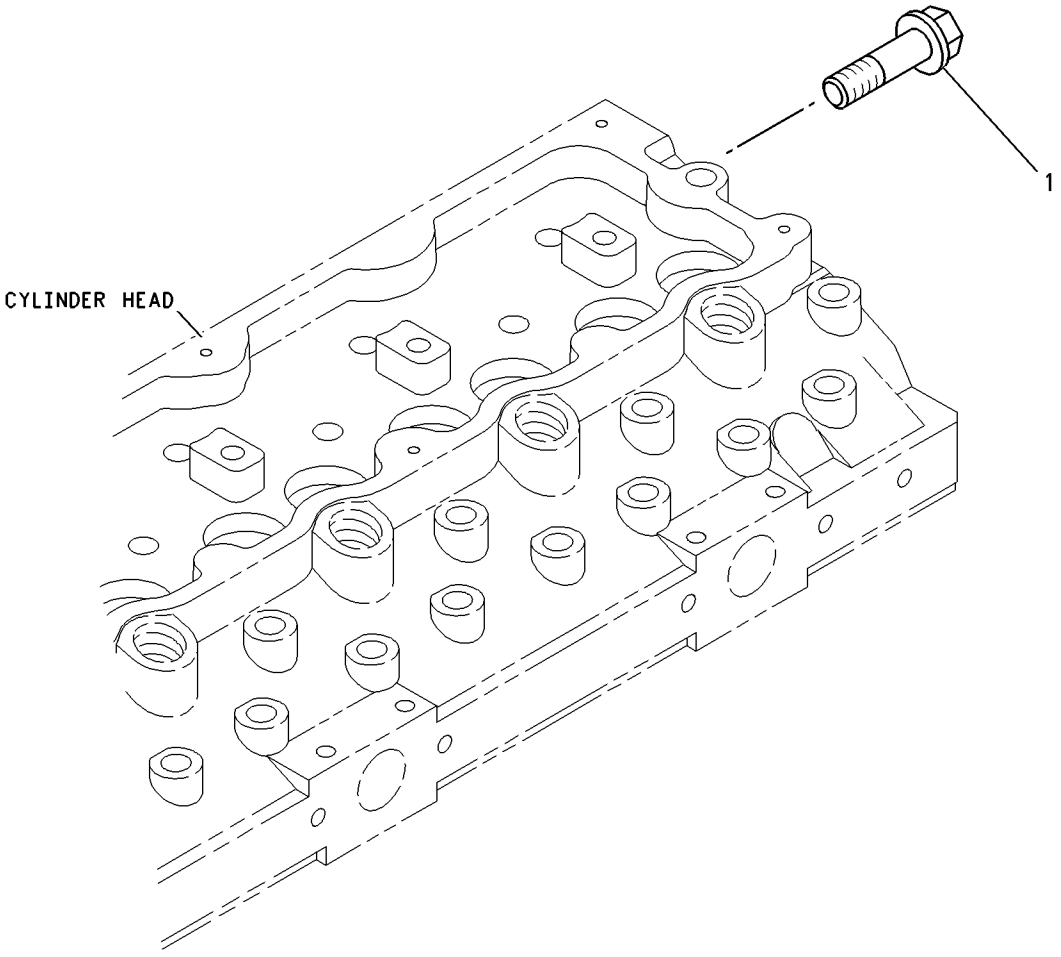

GRAPHIC #1 g00932820

PART NUMBER INDEX

Part	Page
0	
0S-1603	36
1	
1B-8736	26
	40
	42
1N-3762	28
	30
1R-0739	71
1S-9593	108
	112
2	
2B-0858	8
	13
	32
	90
2M-9780	84
2P-2537	84
2S-3440	14
	20
	22
	86
2W-8076	136
4	
4B-4277	108
	112
4K-7502	35
4P-3838	48
	50
	56
4W-5359	40
	42
4W-6025	34
5	
5C-1777	116
	120
	124
5C-1809	116
5D-1026	4
	6
	10
	14
	20
	22
	24
	94
	96
	98
	100
	104
5F-9657	84
5P-6718	48
	50
	52
	54
	56
	58
5P-8196	84
5P-8245	35
	36
6	
6B-0933	10
6H-3616	46
	64
	65
6H-3957	32
6I-0217	4
	6
	10
	14
	16
	18
	20
	22
	24
	40
	42
	48
	50
	52
	56
	58
	94
	96
	98
	100
	104
	108
	112
	116
	120
	124
	134
6I-0233	4
	8
	10
6I-0235	69
6I-0254	40
	42
	54
	116
	120
	124
	130
6I-0256	37
6I-0260	14
	40
	42
	48
	50
	52
	54
	56
	58
	73
	75
	76
	77
	78
	80
	82
	84
	92
	93
	130
6I-0289	48
	50
	52
	54
	56
	58
6I-0291	42
	48
	50
	52
	54
	56
	58
	78
	80
	82
	84
	108
	112
6I-0298	78
	80
	82
6I-0363	48
	50
	52
	54
	56
	58
	94
	96
	98
	100
	104
	108
	112
6I-0364	139
6I-0423	38
	130
6I-0455	90
	136
6I-0456	16
	18
	20
	54
	86
	88
	90
	130
6I-0512	22
6I-0572	48
	50
	52
	56
	58
6I-0593	13
	32
	78
	82
	107
6I-0594	138
	139
6I-0631	96
6I-0645	40
	86
	88
	90
6I-0646	4
	8
	10
	13
	32
6I-0654	44
	45
	78
	80
	130
6I-0686	28
6I-0787	73
6I-0789	40
	42
6I-0839	22
	40
	42
	130
6I-0840	42
6I-0847	38
6I-1074	28
6I-1075	28
6I-1076	28
6I-1090	120
	124
	130
6I-1132	94
	96
	98
	100
	104
6I-1206	68
6I-1497	48
	50
	56
	58
6I-3717	68
6I-3718	68
6I-4012	138
6I-4079	48
	50
	56
	58
6I-4200	4
	6
	10
	58
6I-4354	28
6I-4373	73
6I-4374	16
	18
	20
	73
	75
	76
	77
	86
	88
6I-4376	58
6I-4681	48
	50

► **PRIMARY REFERENCE**

PART NUMBER INDEX

Part	Page
	52
	54
	56
	58
6I-4709	48
	50
	52
	54
	56
	58
6I-4710	48
	50
	52
	56
	58
6I-4714	66
6I-4786	78
	80
	82
	84
6I-4793	86
	88
	90
6I-4800	80
6V-5217	108
	112
6V-8183	68
7	
7C-0351	48
	50
	52
	54
	56
	58
7C-1224	48
	50
	52
	56
	58
7C-1281	16
	18
	24
7C-1493	84
7C-4616	40
	42
7D-8048	66
7M-7410	4
	10
	16
	18
	24
	30
	82
	108
	112
7T-0093	108
7W-1176	38
7W-2327	70
	72
7W-2501	28
7W-2505	60
7W-2518	31
7W-2519	31
7W-2520	31
7W-2628	94
	96
	98
	100
	104
7W-2632	130
7W-2634	94
	98
7W-4539	116
	136
7W-4553	116
	120
	124
7W-4589	26
7W-4590	26
7W-4591	26
7W-4592	26
7W-4632	66
7W-4634	66
7W-4635	66
7W-4642	38
7W-4648	73
7W-4650	73
7W-4669	74
7W-4782	73
7W-4816	26
7W-4817	26
7W-4818	26
7W-4819	26
7W-9028	84
7X-6315	112
8	
8N-7983	116
	134
8T-4223	130
8T-4983	90
9	
9L-9188	84
9Y-5015	28
0	
006-8606	68
032-8048	94
	96
	98
	100
	104
032-8100	128
032-9090	26
032-9091	26
033-7687	35
	36
033-7849	116
	120
	128
035-8017	4
	6
	10
035-8063	8
	62
035-8068	28
036-5802	28
067-6002	28
067-6043	30
067-6045	4
	6
	10
067-6083	68
067-6087	68
067-6088	68
067-6095	69
067-6123	38
067-6178	40
	42
067-6179	40
	42
067-6268	128
067-6269	116
	120
	124
067-6805	28
067-6808	28
067-6873	26
067-6874	26
067-6883	60
067-6897	40
	42
067-6899	40
	42
067-6900	40
	42
067-6927	37
067-6928	37
067-6998	116
	134
	135
	136
067-6999	116
	134
	135
	136
069-1124	61
1	
100-3751	54
	86
	88
	90
100-4104	14
	16
	18
	20
	22
	24
100-4453	94
	96
	98
100-4454	98
100-4458	140
	142
	144
100-4461	4
	6
	10
	84
	116
100-4463	34
100-4466	94
	96
	98
	100
	104
100-4830	4
	6
	10
	13
	108
	112
	116
	120
	140
	142
101-2987	46
	63
	64
	65
101-3617	38
101-3771	22
	86
	88
	90
101-3805	86
	88
	90
101-3877	108
	112
101-3895	84
101-3906	116
	120
	124
101-3907	116
	120
	124
	134
101-3912	127
101-3927	134
	135
	136
101-3949	127
101-3953	127
101-3955	127
101-3983	135
	136
101-3984	135
	136
101-3985	134
	136
101-7178	116
	120
	124
102-2073	32
102-2076	32
102-2078	32
102-2079	32

► **PRIMARY REFERENCE**

PART NUMBER INDEX

Part	Page
102-9460	46
	63
	64
	65
102-9941	66
102-9986	116
	120
	124
102-9987	116
	120
	124
102-9988	120
	124
103-0173	116
105-3154	4
	6
	10
106-8916	96
109-2361	138
111-1815	28
111-8222	13
	78
	80
112-7704	14
	20
	22
113-1504	14
	16
	18
	20
	22
113-1505	14
	16
	18
	20
	22
	24
113-4616	4
	6
	10
113-5280	50
	52
113-5281	50
	52
113-5282	50
	52
113-6349	130
113-7543	35
113-7913	46
	64
113-8085	138
113-8126	56
113-8127	48
	56
113-8129	48
	56
113-8130	48
	50
	52
	56
113-8131	48
	56
113-8133	48
	56
113-8134	48
	56
113-8231	50
	52
113-8955	54
113-8957	54
114-4363	38
	96
	108
	112
	135
	136
	144
115-7465	66
118-5637	127
118-9145	78
	82
121-0883	38
121-3415	80
124-0506	24
124-3536	60
124-3708	108
	112
124-3815	4
	8
	10
	50
	52
	54
	58
	73
	82
	84
	94
	98
	100
	104
	130
	134
	146
124-7702	48
	50
	56
126-3204	10
126-3205	4
	8
	10
126-3206	4
	8
	10
126-3207	4
	8
	10
126-3208	4
	8
	10
126-3209	10
126-3210	4
	8
	10
126-3211	4
	8
	10
126-3212	4
	8
	10
126-3216	4
	8
	10
126-3217	4
	8
	10
126-3219	4
	6
	8
	10
127-3294	28
127-5660	54
127-5661	54
127-5662	54
127-8162	116
	120
	124
127-8286	88
128-3792	54
129-3493	68
130-3879	34
130-3881	67
130-9888	14
	16
	18
	20
	22
132-8239	34
132-8848	58
133-1011	40
	42
133-7668	108
	112
133-8470	63
133-9467	116
	134
133-9472	116
134-4126	112
136-3608	24
138-2042	94
	96
	98
	100
	104
138-2048	60
138-2050	30
138-2053	69
138-2054	68
138-2060	30
138-3097	▶127
	128
138-3100	127
139-5514	68
140-7505	86
	88
	90
140-7506	86
	88
	90
140-7512	86
	88
140-7515	75
	76
	77
140-8783	80
140-8953	45
140-9793	130
140-9794	130
140-9795	130
141-6188	75
	76
	77
141-7844	107
141-8589	94
	96
	98
	100
	104
141-8597	98
141-8599	98
	108
	112
141-9777	94
	98
	100
	104
142-0349	45
145-4501	107
145-6855	30
145-6856	30
145-6858	30
145-8327	108
	112
146-1704	78
146-1841	94
	98
	100
	104
146-8956	▶68
	69
146-8957	68
147-1979	30
147-5524	2
	▶61
147-5553	94
	96
	98
	100
	104
148-0199	66
148-3026	28
149-2091	108
	112
149-6117	116
	120
	124
154-8056	12
155-0576	108
	112
156-4173	31
160-0149	94
	98
	100
	104
160-3510	40

▶ **PRIMARY REFERENCE**

PART NUMBER INDEX

Part	Page
	42
160-6200	136
160-6493	60
160-6494	60
160-6495	60
160-6496	60
160-6988	16
	18
	20
	22
160-7197	116
	136
161-9820	31
162-0236	75
	76
	77
162-0237	75
	76
	77
162-0757	78
	80
	82
	84
162-0761	78
	80
	82
	84
162-1504	94
	98
	100
	104
162-1565	16
	18
	24
162-2000	116
	120
162-8597	40
	42
162-9081	40
	42
162-9754	78
	80
	82
	84
162-9992	108
	112
163-9256	30
164-3207	108
	112
166-5255	4
	6
166-5261	10
166-5262	4
	6
	10
166-5263	4
	6
	10
166-5264	4
	6
167-2153	40
	42
171-1076	86
	88
171-1078	75
171-1411	46
	64
172-4844	86
	88
175-3915	78
	80
	82
	84
177-7845	48
	50
177-8782	86
	88
	90
177-9653	108
	112
183-4733	2
	▶67
183-6318	73
185-0882	30
185-1546	68
186-0667	8
186-0790	116
186-4272	132
	133
187-0548	58
187-0555	58
189-5601	73
191-5049	16
	18
193-3311	22
194-2466	60
195-3761	50
	52
195-7004	68
197-5015	14
	22
	24
198-8262	4
	6
	10
198-8263	4
	6
	10
198-8645	24
199-9252	24
	108
	112
199-9267	108
	112
199-9751	108
	112
200-7941	112
201-8745	86
	88
	90
201-9076	112
203-9203	16
	18
	24
206-4127	30
209-0091	68
209-0092	68
209-5502	13
209-5503	13
209-6824	4
	6
	10
209-6825	4
	6
	10
209-6881	10
209-6883	10
209-6884	10
209-9218	27
209-9219	27
211-0067	48
	50
	52
	54
	56
	58
213-4814	58
213-9710	54
214-1668	28
214-3203	4
	8
	10
	13
	32
214-3204	4
	8
214-3205	4
	6
214-3206	4
	6
214-4029	▶4
214-5974	58
215-2103	28
215-9430	108
216-2621	112
216-2892	98
216-3436	108
	112
216-3446	108
	112
216-3448	108
	112
216-3450	108
	112
216-4093	▶6
216-8231	1
	▶27
216-8235	27
	▶28
216-8314	26
216-8315	26
216-8316	1
	▶26
216-8323	60
216-8324	1
	▶60
216-8332	30
216-8333	30
216-8335	▶30
	31
216-8343	1
	▶31
216-8348	37
216-8619	1
	▶69
216-8620	1
	▶12
216-8625	73
216-8633	40
	42
216-8634	40
	42
216-8685	94
	98
216-8686	94
216-8690	94
	98
216-8699	94
	98
	100
	104
216-8703	94
	96
	98
	100
216-8705	94
	96
	98
	100
	104
216-8708	94
	98
	100
	104
216-8709	94
	98
216-8710	94
	98
	100
	104
216-8712	94
	96
	98
	100
	104
216-8713	▶94
216-9043	116
	120
	124
216-9053	116
	120
	124
216-9055	116
216-9056	116
216-9066	116
216-9086	116
	120
	124
	144
216-9092	116
	120
	124
216-9093	116
216-9109	116
216-9110	116

2

▶ **PRIMARY REFERENCE**

PART NUMBER INDEX

Part	Page
216-9131	▶116
216-9546	48
216-9551	▶48
216-9553	14
216-9554	14
216-9600	14
	16
	18
	20
	22
	24
216-9602	14
	16
	18
	20
	22
	24
216-9604	14
	16
	18
	20
	22
	24
216-9606	14
	16
	18
	20
	22
216-9608	14
	20
	22
216-9611	14
	20
	22
216-9612	2
216-9614	14
	20
	22
216-9616	2
216-9617	14
	20
	22
216-9618	14
	20
	22
216-9620	14
	20
	22
216-9623	14
	20
	22
216-9625	▶14
216-9626	48
216-9627	78
216-9633	78
216-9634	78
216-9637	78
	80
	82
	84
216-9638	78
	80
	82
	84
216-9641	78
	82
	84
216-9643	78
	82
	84
216-9645	78
	82
	84
216-9648	▶78
216-9683	▶70
216-9734	86
	88
	90
216-9735	▶86
216-9737	75
	76
	77
216-9740	▶75
216-9743	75
	76
	77
216-9752	116
	120
	124
216-9767	116
216-9780	▶132
216-9786	108
	112
216-9790	108
	112
216-9824	108
216-9826	108
	112
216-9828	108
	112
216-9830	108
	112
216-9831	108
	112
216-9834	108
	112
216-9835	108
	112
217-0099	108
	112
217-0100	108
	112
217-0109	▶108
217-0212	48
217-0594	2
	▶92
217-0595	92
217-0596	92
	93
217-0640	2
	▶107
217-0721	116
	120
	124
217-1499	1
	▶37
217-1573	60
217-5883	▶134
217-7875	▶32
217-7877	32
217-7878	32
217-7888	▶63
217-7897	134
217-8413	140
217-8477	140
	142
	144
217-8478	140
	142
217-9038	140
	142
	144
217-9039	140
	142
	144
217-9040	140
217-9041	140
217-9059	140
	142
217-9150	140
217-9151	▶140
219-1064	58
219-1787	24
219-1803	16
	18
	20
	22
	24
219-1816	80
219-1817	80
219-1818	80
	82
	84
219-1852	2
	▶73
219-1855	2
	▶135
219-1856	135
219-2172	80
	82
	84
219-2198	80
219-2210	2
	▶80
219-2442	120
219-2443	120
	124
219-2450	120
219-2451	120
	124
219-2452	120
	124
219-2453	120
	124
219-2455	2
	▶120
219-2512	27
220-6103	▶50
220-6106	▶16
220-6127	82
220-6144	▶76
220-6152	▶64
220-6339	136
220-6340	▶136
220-6341	136
220-6343	142
220-6344	▶142
220-7104	96
220-7106	96
220-7107	96
220-7110	96
220-7111	96
220-7112	96
220-7113	96
220-7114	96
220-7116	▶96
220-7162	124
220-7163	124
220-7165	▶124
220-7171	82
	84
220-7172	▶82
220-8182	96
220-8631	38
221-1018	108
	112
221-1241	▶18
221-2959	▶52
221-3284	▶2
221-4520	84
221-5278	84
221-5285	▶84
221-5290	▶71
221-5369	2
	▶88
221-6858	▶13
221-6863	98
221-6864	98
221-6866	▶98
221-6872	44
221-6875	▶44
221-6989	▶54
221-6990	▶35
221-7115	▶20
222-8625	32
222-9126	96
222-9127	96
222-9128	96
222-9129	96
224-8636	144
224-8978	128
225-3145	130
225-3150	139
226-3490	▶138
226-3517	▶56
226-3523	2
	▶66
226-3542	90
226-3544	90
226-3545	90
226-3552	40
226-3556	▶40
226-3557	▶90
226-3558	▶8
226-3572	100
	104
226-3574	100
	104
226-3575	100

▶ **PRIMARY REFERENCE**

PART NUMBER INDEX

Part	Page
	104
226-3577	100
	104
226-3578	2
	▶100
226-3583	93
226-3585	▶93
226-3586	▶46
226-3771	▶22
226-6578	36
226-8778	144
226-8780	144
228-6941	▶1
	2
228-7326	2
	▶38
228-7331	2
	▶36
228-7333	2
	▶139
228-7361	2
	▶34
228-7362	58
228-7363	2
	▶58
228-7371	2
	▶24
228-7387	2
	▶77
228-7391	130
228-7392	2
	▶130
228-7395	2
	▶42
228-7398	10
228-7403	2
	▶10
228-7418	2
	▶146
228-7461	2
	▶133
228-7462	2
	▶45
228-7465	2
	▶65
228-7470	2
	▶62
228-7477	144
228-7487	2
	▶144
228-7917	2
	▶74
228-8523	2
	▶72
228-8943	108
	112
228-8953	112
228-8956	108
	112
228-8960	108
	112
228-8963	108
	112
228-8965	2
	▶112
228-9407	2
	▶128
229-2962	2
229-3555	14
	20
	22
229-3556	14
	20
	22
229-3557	14
	20
	22
229-3558	14
	20
	22
230-2385	▶104

▶ **PRIMARY REFERENCE**



© 2002 Caterpillar
All Rights Reserved

Printed in U.S.A.