CATERPILLAR®

XEBP7473-03

RUTHZIL TRATOR COMERCIAL DE PEÇAS LTDA 11 97083-6812 ROLANDO

Parts Manual

305 CR
MINI HYDRAULIC EXCAVATOR

Powered by K4N Engine

SERIAL NUMBERS:
BMW00001-BMW01639 [Vehicle]

XEBP7473-03

305 CR
MINI HYDRAULIC EXCAVATOR

Powered by K4N Engine

SERIAL NUMBERS:
BMW00001-BMW01639 [Vehicle]

PUBLISHED 11-2005

MACHINE IDENTIFICATION Caterpillar machines are identified with SERIAL NUMBERS. Serial numbers are assigned to the chassis and to the engine. The chassis and the engine also carry ARRANGEMENT NUMBERS and in some cases MODIFICATION NUMBERS. These numbers are shown on serial number plates and on the master plate in the operator's compartment.

Caterpillar dealers need these numbers to determine which components were included on the machine when it was assembled at the factory. This permits accurate identification of replacement part numbers.

ORDERING PARTS Quality Caterpillar Replacement parts are available from Caterpillar dealers throughout the world. Their parts stocks are up-to-date and include all parts normally required to protect your investment in Caterpillar machines. When ordering parts, your order should specify the quantity, part number, part name and the serial number, arrangement number and any modification numbers of the machine for which the parts are needed. If in doubt about the part number, please provide your dealer with a complete description of the needed item.

HOW TO USE THE PARTS BOOK Caterpillar Parts Books include illustration of the groups or assemblies which make up the machine. These illustrations show the standard components plus many of the attachments available for the machine.

The alphabetical index located in the front part of the book should be used to determine the page number on which specific illustrations are shown. Reference to those pages will identify each of the individual serviceable parts.

Captions The caption under each illustration identifies the part number and name of the group or assembly shown. If more than one illustration is included for any group, the caption identifies the specific machine serial numbers to which each illustration applies. In some cases it is not possible to determine the specific machine serial numbers to which different illustrations are applicable. In those cases the caption identifies the illustration as "First Type", "Second Type", etc. Reference to the actual group or assembly is necessary in those cases to determine which illustration should be used.

Captions provide additional information such as page numbers where illustrations of sub assemblies are shown, information regarding quantities used and other information intended to assist the user in determining parts needs.

Indented Part Names Within each illustration is a parts list identifying each serviceable part in the illustration. When a part name is indented in this list, it means that serviceable item is a part of the serviceable item under which it is indented.

Abbreviations and Symbols

LH	Left Hand	Refers to the side of the machine as viewed from the operator's compartment.
RH	Right Hand	
A	Not Part of this Group	
B	Use as Required	
C	Indicates changes from the previous illustration of the same group or assembly.	
D	Order by the m	
E	Order by the cm	
F	Not shown	
G	Order by the Inch	
Y	See Separate Illustration	
Z	Not Serviced Separately	
O.D.	Outside Diameter	
I.D.	Inside Diameter	
N/S	Not Serviced	
AS	Assembly	
in.	Inch	
cm	Centimetre	
dm	Decimetre	

Note: Continuing improvement and advancement of product design may cause changes to your machine which may not be included in this publication. Each publication is reviewed and revised, as required, to update and include these changes in later editions.
Whenever a question arises regarding your Caterpillar product, or this publication, please consult your Caterpillar dealer for the latest available information.

ALWAYS GIVE SERIAL NUMBER WHEN ORDERING PARTS

ONLY "CATERPILLAR" PARTS GIVE "CATERPILLAR" PERFORANCE

COLOR ABBREVIATION

RD	RED
WH	WHITE
OR	ORANGE
YL	YELLOW
PK	PINK
BK	BLACK
GY	GRAY
PU	PURPLE
BR	BROWN
GN	GREEN
BU	BLUE
T	TAN
DK/BU	DARK BLUE
DK/GN	DARK GREEN
LT/BU	LIGHT BLUE
LT/GN	LIGHT GREEN

MAINTENANCE PARTS

DESCRIPTION	PART NO.	PAGE NO.
V-BELT	191-9025	634
	206-0659	61
ELEMENT	146-7472	30
	146-7472	30
	146-7473	30
	5I-7951	40
ELEMENT ASSEMBLY	233-7761	54
FILTER	120-0664	17
	150-2128	633
FILTER ASSEMBLY	120-8757	307
	120-8757	309
	120-8757	310

INDEX

2

NAME PAGE

2 SPEED VALVE GROUP ····· 423

A

ACCUMULATOR ····· 342～343
AIR CLEANER ····· 28～29
AIR CLEANER GROUP ····· 30
AIR CONDITIONER GROUP ····· 632～633
AIR LINES ····· 27
ANGLE CYLINDER GROUP ····· 439
AUXILIARY LINES ····· 406～417

B

BATTERY AND WIRING ····· 86～113
BEARING AND GEAR ····· 281
BLADE CONTROL ····· 302～304
BLADE CYLINDER GROUP ····· 433～435
BLADE LINES ····· 427～428,456
BLOCK ASSEMBLY ····· 316～327
BOOM ····· 482～484
BOOM ARRANGEMENT ····· 457
BOOM CYLINDER GROUP ····· 430～431
BOOM CYLINDER GUARD ····· 485～486
BOOM CYLINDER LINES ····· 450
BOOM LIGHTING ····· 118
BOOM LINES ····· 344
BOOM SENSOR AND MOUNTING ····· 487
BOTTOM GUARD ····· 238～241
BUCKET ····· 502～505
BUCKET ADJUSTER ····· 501
BUCKET AND ADJUSTER ····· 499
BUCKET ASSEMBLY ····· 506
BUCKET CYLINDER GROUP ····· 436～437
BUCKET LINES ····· 348～351
BUCKET LINKAGE ····· 488～493
BUCKET LINKAGE ARRANGEMENT ····· 460

C

CAB ····· 535～537
CAB ARRANGEMENT ····· 527～528
CAB GROUP ····· 538～553
CAB LIGHTING ····· 120～121
CAB SIDE COVER ····· 250～251
CAMSHAFT ····· 10
CANOPY ····· 533～534
CANOPY ARRANGEMENT ····· 526
CHARGING ALTERNATOR ····· 60～61
CHASSIS ARRANGEMENT ····· 184～189
CHASSIS LIGHTING ····· 117
CLUSTER GAUGE GROUP ····· 147
CONDENSER AND MOUNTING ····· 625
CONDITIONER AND MOUNTING ····· 626～631

NAME PAGE

CONNECTING ROD AND PISTON ····· 7
CONSOLE ····· 585～595
CONSOLE WIRING ····· 62～85
CONTROL ASSEMBLY ····· 40
CONTROL PATTERN CHANGE ARRANGEMENT ····· 298
CONTROL VALVE GROUP ····· 314～315
COUNTERWEIGHT ····· 264～268
CRANKSHAFT ····· 8
CRANKSHAFT PULLEY ····· 9
CYLINDER BLOCK ····· 6
CYLINDER HEAD ····· 11
CYLINDER LINES ····· 454～455

D

DOOR GROUP ····· 559～560
DUCT ASSEMBLY ····· 636

E

ELECTRIC HORN ····· 615～616
ELECTRIC STARTING MOTOR ····· 58～59
ENGINE ARRANGEMENT ····· 4～5
ENGINE MOUNTING ····· 15
ENGINE OIL PUMP ····· 16～17
EXHAUST EXTENSION ····· 32
EXHAUST MANIFOLD ····· 31

F

FENDER COVER ····· 244～249
FILM ····· 650～652,654
FILMS ····· 638～649,653,655～660
FINAL DRIVE ····· 179
FIREWALL ····· 254～263
FLOOD LAMP GROUP ····· 119
FLYWHEEL ····· 14
FLYWHEEL HOUSING ····· 14
FRONT DOOR ASSEMBLY ····· 558
FRONT DOOR GROUP ····· 556～557
FRONT GUARD ····· 523
FRONT HOUSING ····· 13
FRONT IDLER ····· 282
FRONT LINES ····· 352～357
FRONT POWER TAKE OFF CONTROL ARRANGEMENT ····· 301
FRONT WIRING ····· 114～116
FUEL FILTER GROUP ····· 40
FUEL FILTER LINES ····· 50～53
FUEL INJECTION PUMP ····· 41
FUEL LINES ····· 44～47
FUEL TANK ····· 57
FUEL TANK AND MOUNTING ····· 55～56

INDEX

G

NAME PAGE

GENERAL ARRANGEMENT ····· 1～2
GLOW PLUG ····· 175
GOVERNOR ····· 48～49
GOVERNOR CONTROL ····· 37～39
GRAPPLE ····· 508
GRAPPLE GROUP ····· 509
GREASE LINES ····· 295～296
GUARD ····· 475

H

HAMMER ARRANGEMENT ····· 498
HANDLE ····· 596～597
HEAT START SWITCH GROUP ····· 148
HEATER AND COOLER ARRANGEMENT ····· 617
HEATER AND COOLER LINES ····· 620～623
HEATER AND MOUNTING ····· 624
HEATER LINES ····· 618～619
HOOD AND GUARD ····· 194～225, 242～243
HOOD GROUP ····· 228～233
HOSE GUARD ····· 418
HYDRAULIC ARRANGEMENT ····· 297～298
HYDRAULIC HAMMER ····· 496～497
HYDRAULIC TANK AND FILTER ····· 309～310
HYDRAULIC TANK AND MOUNTING ····· 307～308

I

IDLER ASSEMBLY ····· 283～284
INJECTION PUMP ASSEMBLY ····· 42～43
INLET MANIFOLD ····· 31
INSTALLATION ARRANGEMENT ····· 3

J

JUMPER LINES ····· 440

L

LINK ASSEMBLY ····· 292
LOWER FRAME LINER ····· 278

M

MAIN PUMP GROUP ····· 312
MANIFOLD VALVE GROUP ····· 426
MIRROR ARRANGEMENT ····· 598
MONITOR ····· 525
MONITOR AND MOUNTING ····· 524
MUFFLER ····· 34～36

O

OFFSET CONTROL ····· 332
OIL PAN ····· 9
OPERATOR ARRANGEMENT ····· 529～532
OPERATOR CONSOLE ····· 579～584

NAME PAGE

OPERATOR PLATFORM ····· 562～577
OPERATOR PLATFORM LINER ····· 578

P

PANEL ASSEMBLY ····· 635
PATO LIGHTING ····· 122～123
PEDAL CONTROL AND MOUNTING ····· 333～334
PILOT CONTROL ····· 331～332
PILOT LINES ····· 374～405
PILOT VALVE GROUP ····· 305～306, 328～329, 335～340
POWER ANGLE AND TILT BLADE ····· 469～474
POWER ANGLE AND TILT BLADE ARRANGEMENT ···· 510～511
POWER ANGLE AND TILT WIRING ····· 512～513
POWER TAKE OFF CONTROL ····· 341
POWER TRAIN ARRANGEMENT ····· 177
PRESSURE REDUCING SOLENOID VALVE GROUP ····· 420
PUMP AND MOUNTING ····· 311
PUMP LINES ····· 372～373

Q

QUICK COUPLER ····· 494
QUICK COUPLER GROUP ····· 495

R

RADIATOR ····· 20～25
RADIATOR COVER GROUP ····· 234～237
REFRIGERANT COMPRESSOR ····· 634
RETURN LINES ····· 368～371
RUBBER PAD ····· 291

S

SEAT ····· 601
SEAT BELT GROUP ····· 614
SEAT SUPPORT ····· 602
SEAT SUPPORT ASSEMBLY ····· 604～613
SHUTOFF VALVE ARRANGEMENT ····· 301
SLIDE DOOR GROUP ····· 554～555
SOLENOID VALVE GROUP ····· 423
SPECIAL ARRANGEMENT ····· 514～521
SPROCKET ····· 177
START SWITCH GROUP ····· 148
STICK ····· 477～481
STICK ARRANGEMENT ····· 458～459
STICK CYLINDER GROUP ····· 429
STICK CYLINDER LINES ····· 449
STICK LINES ····· 345～347
STICK SENSOR AND MOUNTING ····· 487
STRAIGHT BLADE ····· 464～468
STRAIGHT BLADE ARRANGEMENT ····· 461
SUCTION FAN ····· 26
SUPER SOUND SUPPRESSION ARRANGEMENT ····· 190～193
SWING BOOM LOCK ····· 522

INDEX

NAME PAGE

SWING CYLINDER GROUP ····· 432
SWING DRIVE ····· 178
SWING FRAME ····· 252～253
SWING MOTOR GROUP ····· 180～181
SWING MOTOR LINES ····· 364～367,452～453
SWING STOP ····· 269
SWIVEL GROUP ····· 421～422

T

TANK COVER ASSEMBLY ····· 226
TANK COVER GROUP ····· 227
TILT CYLINDER GROUP ····· 438
TOOL GROUP ····· 661
TRACK ····· 287,293
TRACK AND CARRIER ROLLER ····· 285
TRACK ARRANGEMENT ····· 288
TRACK ASSEMBLY ····· 291
TRACK GROUP ····· 290
TRACK GUIDING GUARD ····· 294
TRACK MOTOR LINES ····· 358～363,451
TRACK ROLLER ASSEMBLY ····· 286
TRAVEL ALARM ····· 442～445
TRAVEL ALARM ARRANGEMENT ····· 441
TRAVEL MOTOR GROUP ····· 182～183

U

UNDERCARRIAGE ARRANGEMENT ····· 279
UNDERCARRIAGE FRAME ····· 280
UPPER FRAME ····· 270～276
UPPER FRAME LINER ····· 277
UPPER MUFFLER ARRANGEMENT ····· 33

V

VALVE AND MOUNTING ····· 313
VALVE MECHANISM ····· 12
VALVE MECHANISM COVER ····· 10
VALVE MOUNTING ····· 330

W

WATER PUMP ····· 18～19
WATER SEDIMENTER ····· 54
WINDSHIELD WASHER ····· 599～600
WIRING ····· 150～169

MODEL VIEW

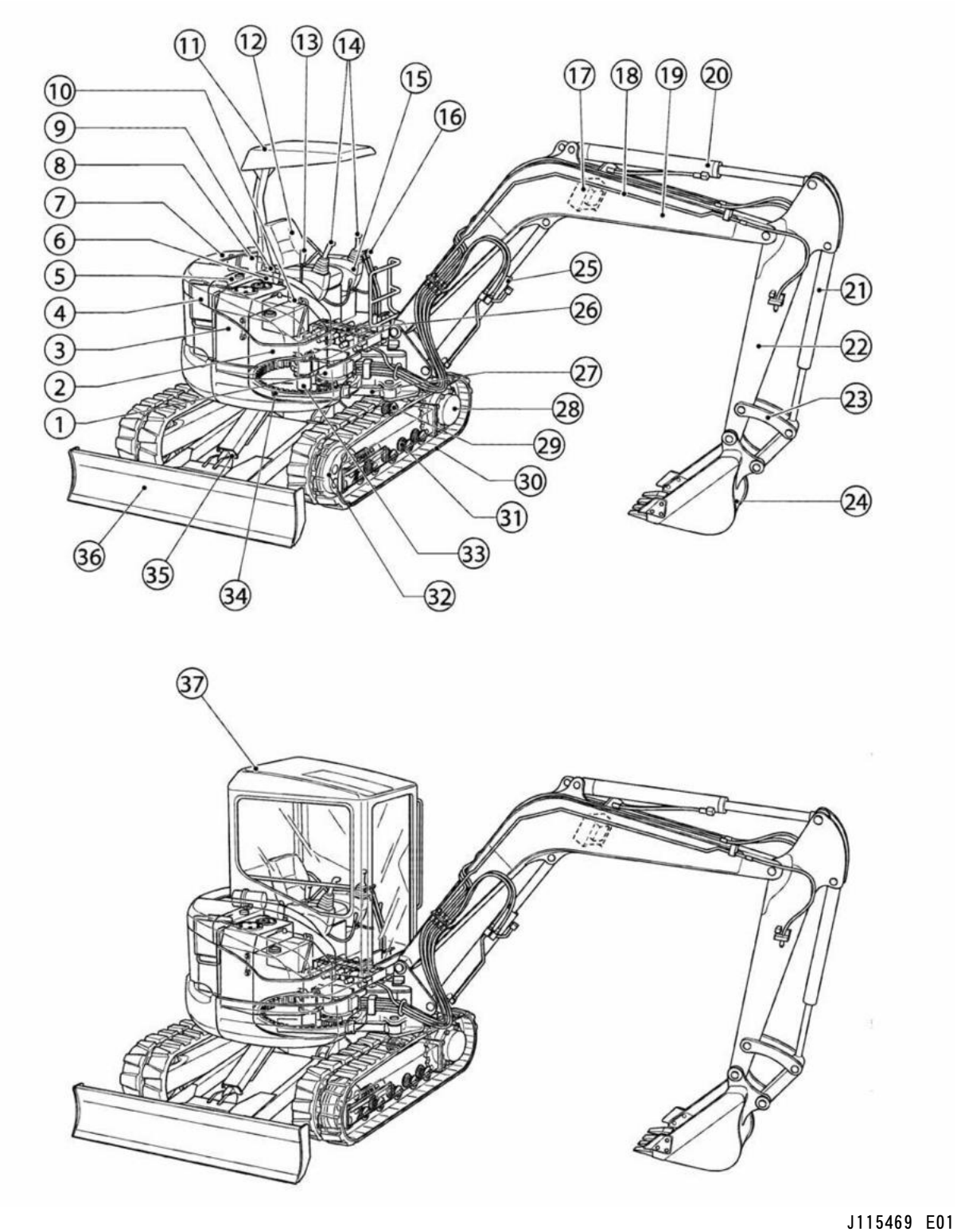

MODEL VIEW

MODEL VIEW

CONSISTS OF :

			PAGE
1	191-3860	SWING DRIVE GROUP	178
2	191-2516	FUEL TANK AND MOUNTING GROUP	55
3	191-2559	HYDRAULIC TANK AND MOUNTING GROUP	307
4	191-3885	RADIATOR GROUP	20
5	191-3312	ENGINE ARRANGEMENT	4
6	191-3871	PUMP AND MOUNTING GROUP	311
7	191-0181	HOOD AND GUARD GROUP	194
8	191-3886	AIR CLEANER GROUP	28
9	191-3888	MUFFLER GROUP	34
10	191-3847	BATTERY AND WIRING GROUP	86
11	191-0244	CANOPY GROUP	533
12	191-3826	SEAT GROUP	601
13	191-3821	BLADE CONTROL GROUP	302
14	191-3824	PILOT CONTROL GROUP	331
15	191-3823	OPERATOR CONSOLE GROUP	579
16	203-3602	PEDAL CONTROL AND MOUNTING GROUP	333
17	195-9040	BOOM LIGHTING GROUP	118
18	199-3589	AUXILIARY LINES GROUP	406
19	191-3875	BOOM GROUP	482
20	191-1959	STICK CYLINDER GROUP	429
21	191-1960	BUCKET CYLINDER GROUP	436
22	192-3547	STICK GROUP	477
23	192-5225	BUCKET LINKAGE GROUP	488
24	194-5830	BUCKET AND ADJUSTER GROUP	499
25	191-1957	BOOM CYLINDER GROUP	430
26	191-3862	VALVE AND MOUNTING GROUP	313
27	191-1961	SWING CYLINDER GROUP	432
28	191-3861	FINAL DRIVE GROUP	179
29	191-3832	CARRIER ROLLER GROUP	285
30	203-3643	TRACK GROUP(RUBBER BELT)	293
31	158-4765	TRACK ROLLER ASSEMBLY	286
32	191-3831	FRONT IDLER GROUP	282
33	191-7516	SWIVEL GROUP	421
34	191-3833	BEARING AND GEAR GROUP	281
35	191-1962	BLADE CYLINDER GROUP	433
36	191-3819	STRAIGHT BLADE GROUP	464
37	201-4570	CAB GROUP	527

J115469 E01

LIST OF ATTACHMENT

CONSISTS OF :

PAGE

STICK
- 200-6572 STICK(1.43m)(HEAVY DUTY) ····· 459
- 200-6575 STICK(1.83m)(LONG)(HEAVY DUTY) ····· 458

COUNTERWEIGHT
- 191-0262 COUNTERWEIGHT ····· 267

CAB
- 201-4570 CAB ····· 527

QUICK COUPLER
- 199-4083 QUICK COUPLER ····· 494

COOLER
- 191-3842 COOLER ····· 617

CONTROL PATTERN QUICK CHANGER
- 191-3877 CONTROL PATTERN QUICK CHANGE ····· 298
- 217-7959 CONTROL PATTERN CHANGE (CANOPY) ····· 299

TRACK
- 203-3646 400mm WIDTH SEGMENT RUBBER SHOE ····· 288
- 203-3644 400mm WIDTH TRIPLE GROUSER SHOE ····· 287
- 203-3645 400mm WIDTH RUBBER PAD SHOE ····· 287
- 212-5125 400mm WIDTH RUBBER PAD SHOE ····· 288

TRAVEL ALARM
- 199-0744 TRAVEL ALARM ····· 441

BUCKET AND ADJUSTER
- 201-0463 400mm WIDTH-0.08m³ ····· 500
- 201-0462 500mm WIDTH-0.11m³ ····· 500
- 201-0461 700mm WIDTH-0.18m³ ····· 499

PILOT LINES
- 201-9185 PILOT LINES(4 WAYS)(SHOVEL CRANE) ····· 400

HYDRAULIC SYSTEM
- 200-2854 FRONT POWER TAKE OFF CONTROL ARRANGEMENT ····· 301

MIRROR
- 155-6859 MIRROR(REAR VIEW) ····· 598

LIGHT
- 198-0851 LIGHT(CAB) ····· 120
- 209-2213 CHASSIS LIGHTING ····· 117

J135716 X01

LIST OF ATTACHMENT

CONSISTS OF :

PAGE

BLADE

201-4352 STRAIGHT BLADE ····· 463

210-1884 POWER ANGLE AND TILT BLADE ····· 510

FORK

201-8161 FORK ····· 508

MUFFLER

191-0344 UPPER MUFFLER ····· 33

HAMMER

165-1095 HAMMER ····· 498

SHOVEL CRANE

201-9165 NEW SHOVEL CRANE(CAB/STANDARD STICK) ····· 518

206-7624 NEW SHOVEL CRANE(CAB/LONG STICK) ····· 520

206-7605 NEW SHOVEL CRANE(CANOPY/STANDARD STICK) ····· 514

206-7635 NEW SHOVEL CRANE(CANOPY/LONG STICK) ····· 516

J135717 X01

MACHINE ARRANGEMENT

CONSISTS OF :

			PAGE
1	191-3313	INSTALLATION ARRANGEMENT(ENGINE)	3
1	191-3312	ENGINE ARRANGEMENT	4
1	191-3359	POWER TRAIN ARRANGEMENT	177
1	191-3352	UNDERCARRIAGE ARRANGEMENT	279
1	191-3351	CHASSIS ARRANGEMENT	184
1	191-3357	HYDRAULIC ARRANGEMENT	297
1	191-3353	BOOM ARRANGEMENT	457
1	191-3356	STRAIGHT BLADE ARRANGEMENT	461
1	191-3355	BUCKET LINKAGE ARRANGEMENT	460

J107574 E02

GENERAL ARRANGEMENT (191-0178 N/S)
EFFECTIVE WITH SERIAL NO. BMW00001-BMW01095

MACHINE ARRANGEMENT

CONSISTS OF :

			PAGE
1	191-3313	INSTALLATION ARRANGEMENT(ENGINE)	3
1	191-3312	ENGINE ARRANGEMENT	4
1	191-3359	POWER TRAIN ARRANGEMENT	177
1	191-3352	UNDERCARRIAGE ARRANGEMENT	279
1	191-3351	CHASSIS ARRANGEMENT	184
1	191-3357	HYDRAULIC ARRANGEMENT	297
1	191-3353	BOOM ARRANGEMENT	457
1	209-1671	STRAIGHT BLADE ARRANGEMENT	462
1	191-3355	BUCKET LINKAGE ARRANGEMENT	460

J115344 E04

GENERAL ARRANGEMENT (191-0178 N/S)
EFFECTIVE WITH SERIAL NO. BMW01096-

ENGINE ARRANGEMENT

CONSISTS OF :

			PAGE
1	191-3883	ENGINE MOUNTING GROUP	15
1	191-3885	RADIATOR GROUP	20
1	191-3886	AIR CLEANER GROUP	28
1	191-3884	AIR LINES GROUP	27
1	191-3887	EXHAUST EXTENSION GROUP	32
1	191-3888	MUFFLER GROUP	34

J106453 XO2

INSTALLATION ARRANGEMENT (191-3313 N/S) -ENGINE
EFFECTIVE WITH SERIAL NO. BMW00001-BMW01327
PART OF 191-0178-Page 1,2

CONSISTS OF :

			PAGE
1	191-3883	ENGINE MOUNTING GROUP	15
1	191-3885	RADIATOR GROUP	20
1	191-3886	AIR CLEANER GROUP	28
1	191-3884	AIR LINES GROUP	27
1	191-3887	EXHAUST EXTENSION GROUP	32
1	216-5589	MUFFLER GROUP	35

J126648 XO3

INSTALLATION ARRANGEMENT (191-3313 N/S) -ENGINE
EFFECTIVE WITH SERIAL NO. BMW01328-
PART OF 191-0178-Page 1,2

ENGINE ARRANGEMENT

CONSISTS OF :

PAGE

CENTRAL STRUCTURE

1 196-8303 CYLINDER BLOCK GROUP ····· 6

4 196-8304 CONNECTING ROD AND PISTON GROUP ····· 7

1 196-8305 CRANKSHAFT GROUP ····· 8

1 196-8307 CAMSHAFT GROUP ····· 10

UPPER STRUCTURE

1 196-8308 CYLINDER HEAD GROUP ····· 11

1 196-8309 VALVE MECHANISM COVER GROUP ····· 10

1 196-8310 VALVE MECHANISM GROUP ····· 12

FRONT STRUCTURE

1 196-8306 CRANKSHAFT PULLEY GROUP ····· 9

1 196-8311 FRONT HOUSING GROUP ····· 13

REAR STRUCTURE

1 196-8312 FLYWHEEL HOUSING GROUP ····· 14

1 196-8313 FLYWHEEL GROUP ····· 14

LOWER STRUCTURE

1 196-8314 OIL PAN GROUP ····· 9

J106545 X02

191-3312 ENGINE ARRANGEMENT -PART 1 OF 2
PART OF 191-0178-Page 1,2

ENGINE ARRANGEMENT

CONSISTS OF :

PAGE

LUBRICATION SYSTEM

1 196-8315 ENGINE OIL PUMP GROUP ····· 16

COOLING SYSTEM

1 196-8316 WATER PUMP GROUP ····· 18

INTAKE AND EXHAUST SYSTEM

1 196-8317 INLET MANIFOLD GROUP ····· 31

1 196-8318 EXHAUST MANIFOLD GROUP ····· 31

FUEL SYSTEM AND GOVERNOR

1 5I-7954 FUEL FILTER GROUP ····· 40

1 196-8319 FUEL INJECTION PUMP GROUP ····· 41

1 196-8320 FUEL LINES GROUP ····· 44

1 196-8321 GOVERNOR GROUP ····· 48

ELECTRICAL SYSTEM

1 196-8322 STARTING MOTOR GROUP ····· 58

1 196-8323 GLOW PLUG GROUP ····· 175

1 196-8324 CHARGING ALTERNATOR GROUP ····· 60

ACCESSORY

1 196-8325 SUCTION FAN GROUP ····· 26

J106546 X02

191-3312 ENGINE ARRANGEMENT -PART 2 OF 2
PART OF 191-0178-Page 1,2

BASIC ENGINE

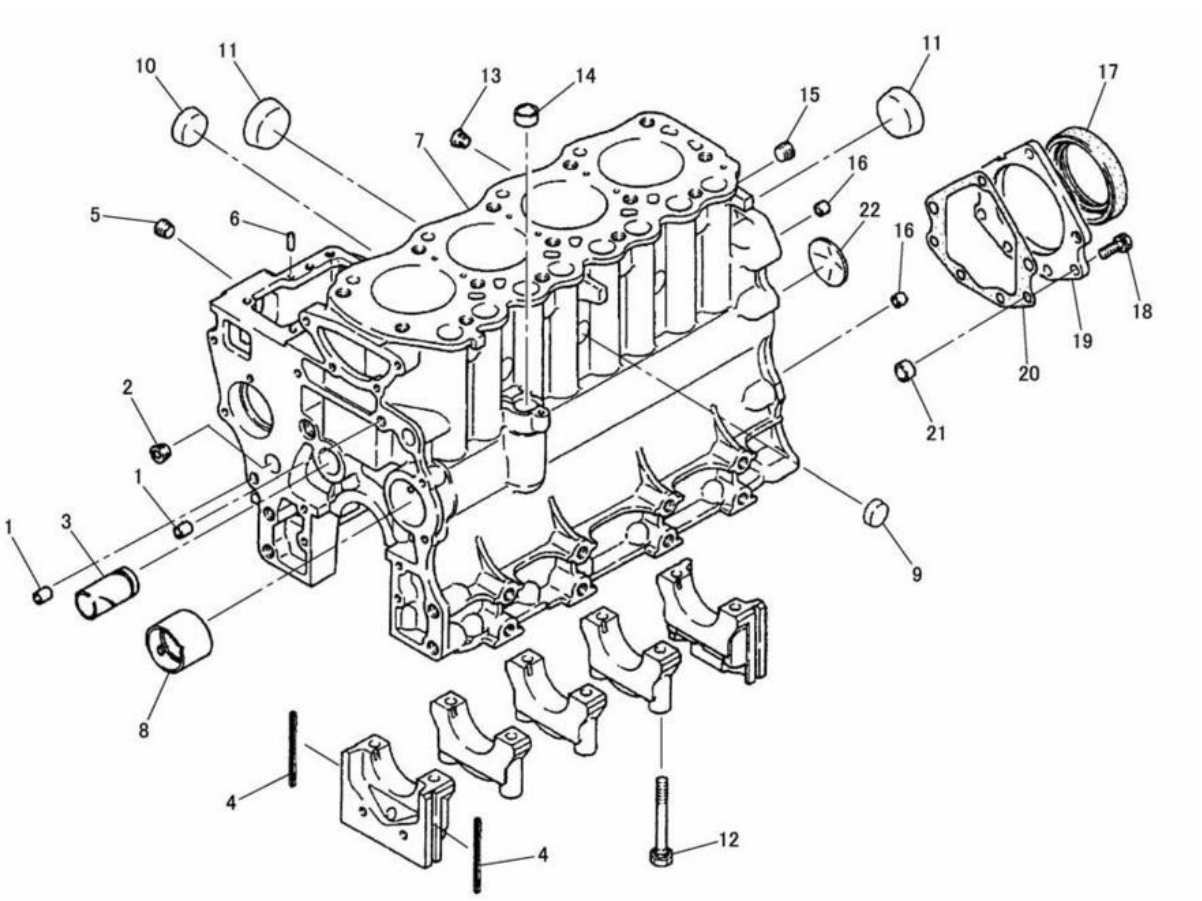

NOTE	No.	PART NO.	QTY.	PART NAME	NOTE	No.	PART NO.	QTY.	PART NAME
	1	195-8209	2	BUSHING		21	195-8210	2	BUSHING
	2	195-8203	1	PLUG		22	195-8204	1	PLUG
	3	195-8206	1	SHAFT					
	4	195-8213	4	SEAL					
	5	195-8212	1	PLUG					
	6	195-8205	2	PIN					
	7	195-8223	1	BLOCK AS					
	8	195-8228	1	BUSHING					
	9	195-8225	3	CAP					
	10	195-8224	1	CAP					
	11	195-8226	3	CAP					
	12	195-8227	10	BOLT(M10×1.25)					
	13	195-8220	1	PLUG					
	14	195-8225	1	CAP					
	15	095-0967	1	PLUG					
	16	195-8208	2	BUSHING					
	17	195-8219	1	SEAL					
	18	195-8222	7	BOLT(M8×1.25)					
	19	195-8217	1	CASE					
	20	195-8218	1	GASKET					

J136076 X02

CYLINDER BLOCK (196-8303 N/S)
PART OF 191-3312-Page 4

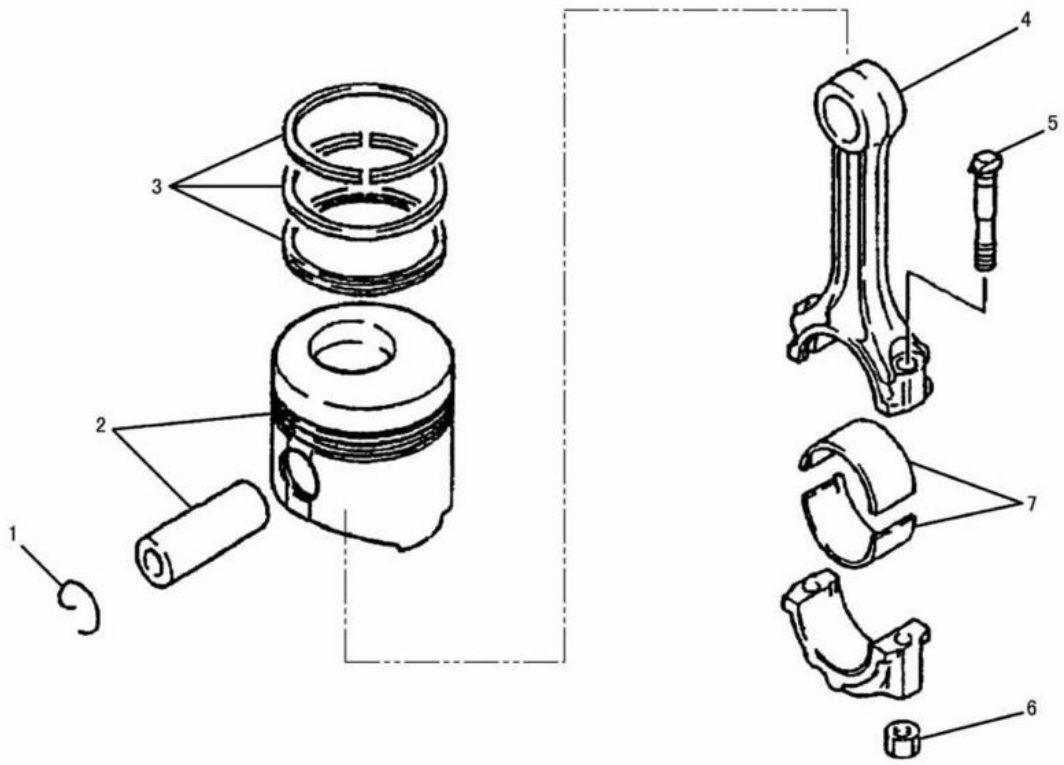

NOTE	No.	PART NO.	QTY.	PART NAME	NOTE	No.	PART NO.	QTY.	PART NAME
	1	195-8297	2	CLIP		7	195-8298	1	BEARING(STANDARD)
	2	195-8291	1	PISTON AS(STANDARD)	AB		195-8299	1	BEARING
AB		195-8292	1	PISTON AS					(0.25mm UNDERSIZE)
				(0.25mm OVERSIZE)	AB		195-8300	1	BEARING
AB		195-8293	1	PISTON AS					(0.5mm UNDERSIZE)
				(0.5mm OVERSIZE)	AB		195-8301	1	BEARING
	3	195-8294	1	RING SET(STANDARD)					(0.75mm UNDERSIZE)
AB		195-8295	1	RING SET					
				(0.25mm OVERSIZE)					
AB		195-8296	1	RING SET					
				(0.5mm OVERSIZE)					
	4	195-8302	1	CONNECTING ROD AS					
	5	195-8307	8	BOLT(M9×1.0)					
	6	195-8303	8	NUT(M9×1.0)					

A-NOT PART OF THIS GROUP
B-USE AS REQUIRED

J115213 X01

CONNECTING ROD AND PISTON (196-8304 N/S)
PART OF 191-3312-Page 4

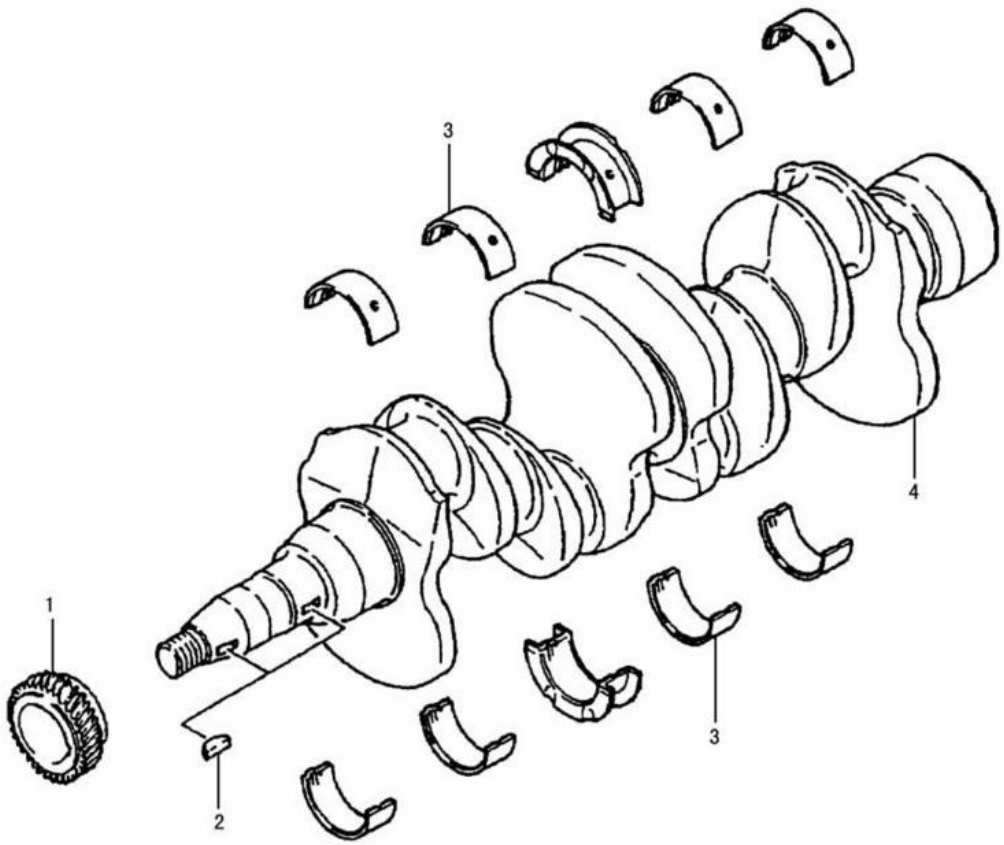

NOTE	No.	PART NO.	QTY.	PART NAME	NOTE	No.	PART NO.	QTY.	PART NAME
	1	195-8310	1	GEAR					
	2	195-8345	1	KEY					
	3	195-8230	1	BEARING SET(STANDARD)					
AB		195-8231	1	BEARING SET (0.25mm UNDERSIZE)					
AB		195-8232	1	BEARING SET (0.5mm UNDERSIZE)					
AB		195-8233	1	BEARING SET (0.75mm UNDERSIZE)					
	4	195-8308	1	CRANKSHAFT					

A-NOT PART OF THIS GROUP
B-USE AS REQUIRED

J115203 X02

CRANKSHAFT (196-8305 N/S)
PART OF 191-3312-Page 4

BASIC ENGINE

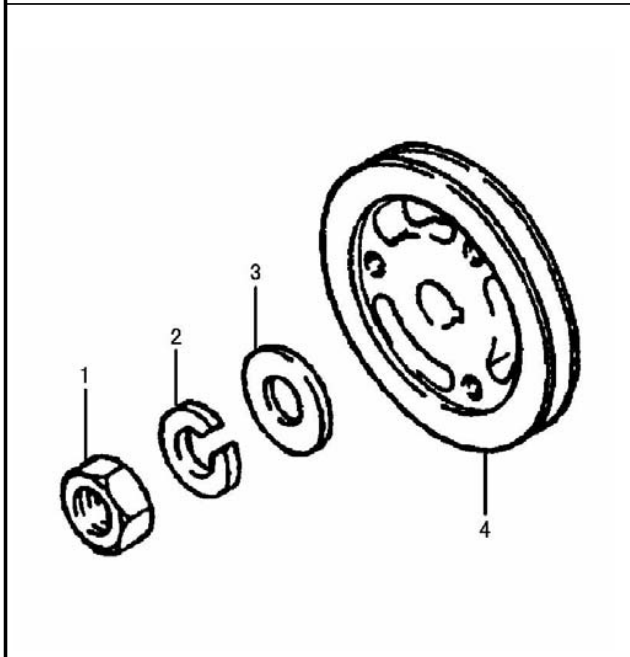

NOTE	No.	PART NO.	QTY.	PART NAME
	1	195-8311	1	NUT(M20×1.5)
	2	195-8313	1	WASHER
	3	195-8312	1	WASHER
	4	195-8309	1	PULLEY

J115405 X01

CRANKSHAFT PULLEY (196-8306 N/S)
PART OF 191-3312-Page 4

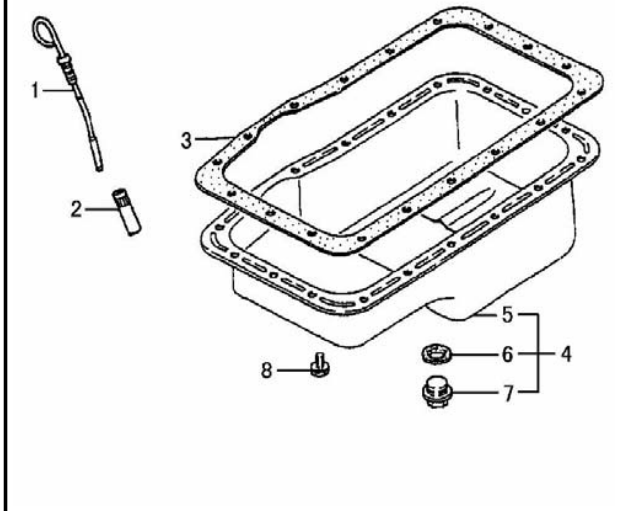

NOTE	No.	PART NO.	QTY.	PART NAME
	1	195-8245	1	GAUGE
	2	195-8207	1	TUBE
	3	195-8269	1	GASKET
	4	195-8265	1	PAN AS
	5	195-8268	1	PAN
	6	195-8266	1	GASKET
	7	195-8267	1	PLUG
	8	199-2205	18	BOLT(M8×1.25)

J115212 X01

OIL PAN (196-8314 N/S)
PART OF 191-3312-Page 4

BASIC ENGINE

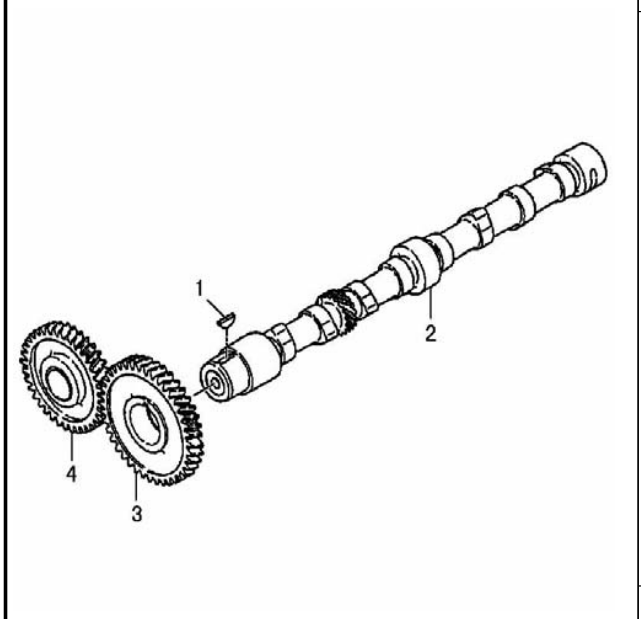

NOTE	No.	PART NO.	QTY.	PART NAME
	1	195-8345	1	KEY
	2	195-8343	1	CAMSHAFT
	3	195-8344	1	GEAR
	4	195-8349	1	GEAR AS

J115201 X01

CAMSHAFT (196-8307 N/S)
PART OF 191-3312-Page 4

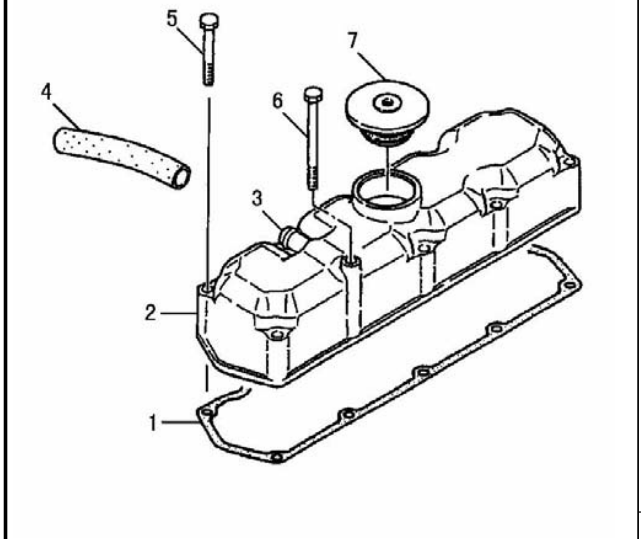

NOTE	No.	PART NO.	QTY.	PART NAME
	1	195-8288	1	GASKET
	2	195-8284	1	COVER AS
	3	195-8285	1	NIPPLE
	4	195-8290	1	HOSE
	5	5I-5010	9	BOLT(M8×1.25)
	6	195-8287	1	BOLT(M8×1.25)
	7	195-8289	1	CAP

J115202 X01

VALVE MECHANISM COVER (196-8309 N/S)
PART OF 191-3312-Page 4

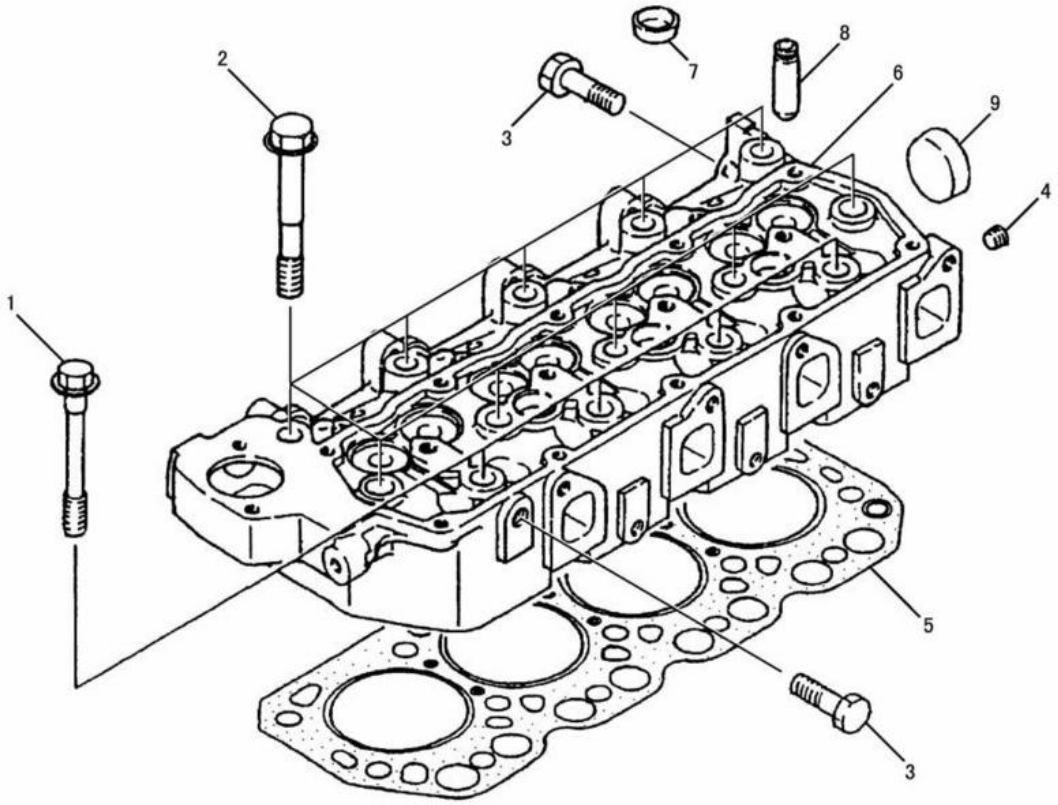

NOTE	No.	PART NO.	QTY.	PART NAME	NOTE	No.	PART NO.	QTY.	PART NAME
	1	195-8271	4	BOLT(M12×1.25)					
	2	195-8272	10	BOLT(M14×1.5)					
	3	195-8273	2	BOLT(M10×1.25)					
	4	51-7505	1	PLUG					
	5	195-8278	1	GASKET					
	6	195-8279	1	HEAD AS					
	7	103-9011	3	CAP					
	8	195-8282	8	GUIDE					
	9	195-8280	1	CAP					

J115206 X01

CYLINDER HEAD (196-8308 N/S)
PART OF 191-3312-Page 4

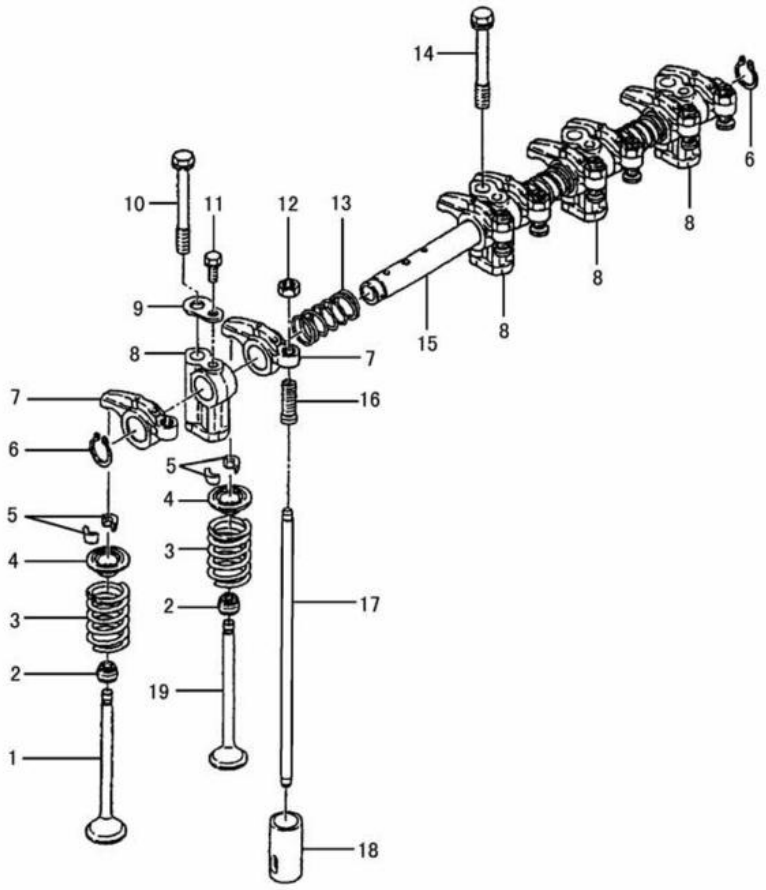

NOTE	No.	PART NO.	QTY.	PART NAME	NOTE	No.	PART NO.	QTY.	PART NAME
	1	195-8329	4	VALVE(INLET)					
	2	195-8338	8	SEAL					
	3	195-8332	8	SPRING					
	4	195-8333	8	RETAINER					
	5	195-8337	16	COTTER					
	6	195-8324	2	RING					
	7	195-8327	8	ARM					
	8	195-8326	4	SUPPORT					
	9	195-8328	2	WASHER					
	10	195-8341	2	BOLT(M10×1.25)					
	11	5C-9553	2	BOLT(M6×1)					
		2U-2552	2	LOCKWASHER					
	12	101-6544	8	NUT					
	13	195-8321	3	SPRING					
	14	195-8342	2	BOLT(M10×1.25)					
	15	195-8319	1	SHAFT AS					
	16	195-8320	8	SCREW(M10×1.25)					
	17	195-8340	8	ROD					
	18	195-8339	8	TAPPET					
	19	195-8330	4	VALVE(EXHAUST)					

J126665 X02

VALVE MECHANISM (196-8310 N/S)
PART OF 191-3312-Page 4

BASIC ENGINE

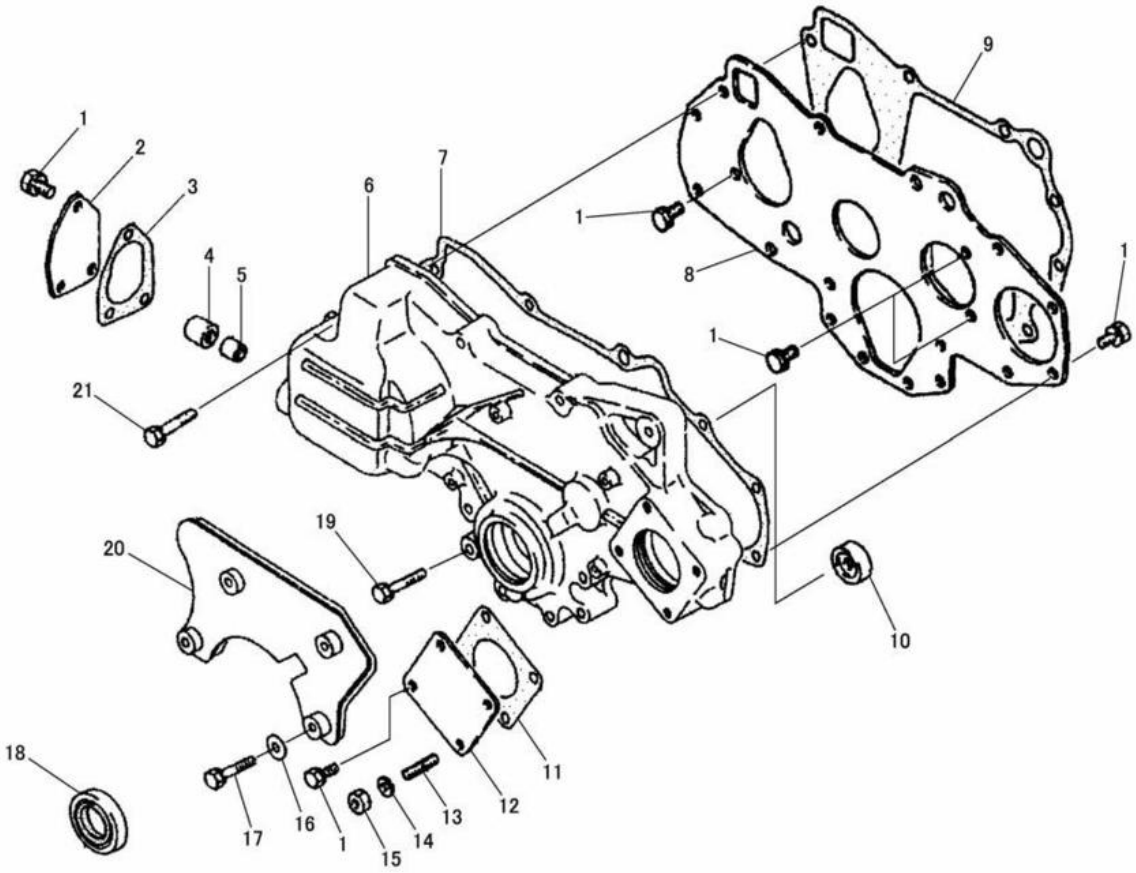

NOTE	No.	PART NO.	QTY.	PART NAME	NOTE	No.	PART NO.	QTY.	PART NAME
	1	199-2205	15	BOLT(M8×1.25)		21	195-8258	1	BOLT(M8×1.25)
	2	195-8246	1	COVER					
	3	195-8247	1	GASKET					
	4	195-8249	1	BEARING					
	5	195-8248	1	BEARING					
	6	195-8251	1	CASE					
	7	195-8252	1	GASKET					
	8	195-8214	1	PLATE					
	9	195-8215	1	GASKET					
	10	195-8250	1	PLUG					
	11	195-8255	1	GASKET					
	12	195-8254	1	COVER					
	13	195-8259	1	STUD(M8×1.25)					
	14	095-8638	1	WASHER					
	15	195-8260	1	NUT(M8×1.25)					
	16	195-8264	4	WASHER					
	17	199-2212	4	BOLT(M6×1)					
	18	195-8253	1	SEAL					
	19	195-8256	9	BOLT(M8×1.25)					
	20	195-8262	1	COVER					

J128840 X01

FRONT HOUSING (196-8311 N/S)
PART OF 191-3312-Page 4

BASIC ENGINE

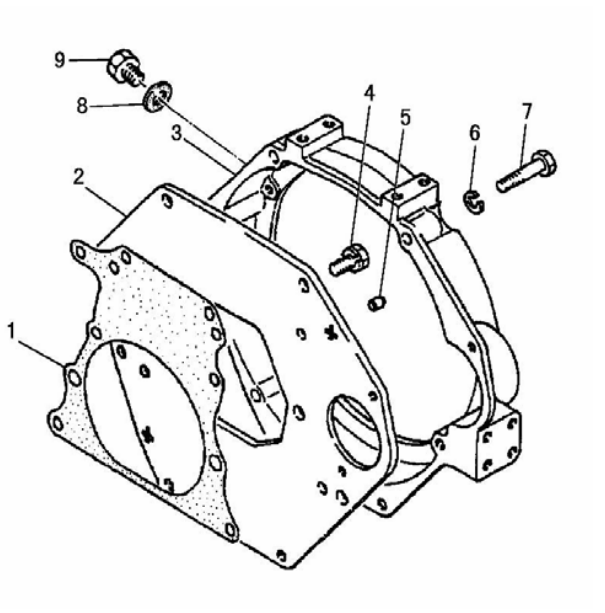

NOTE	No.	PART NO.	QTY.	PART NAME
	1	195-8235	1	GASKET
	2	195-8234	1	PLATE
	3	195-8236	1	HOUSING
	4	199-2225	11	BOLT(M12×1.25)
	5	195-8237	2	PIN
	6	096-2501	2	WASHER
	7	195-8256	2	BOLT(M8×1.25)
	8	5I-7628	1	GASKET
	9	5I-8056	1	PLUG

J126663 X04

FLYWHEEL HOUSING (196-8312 N/S)

PART OF 191-3312-Page 4

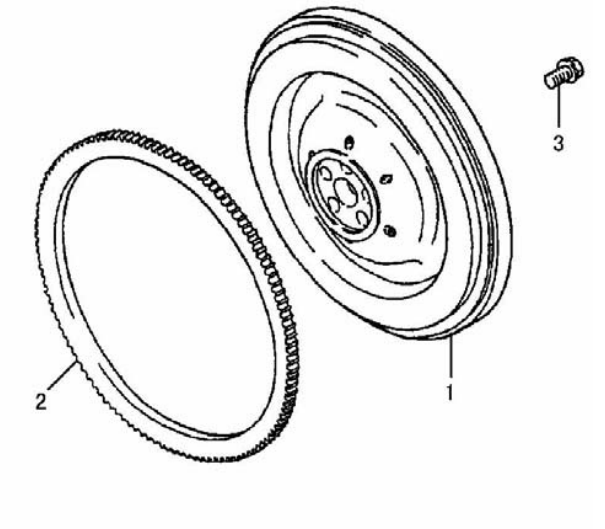

NOTE	No.	PART NO.	QTY.	PART NAME
	1	195-8315	1	FLYWHEEL AS
	2	195-8316	1	GEAR
	3	195-8317	5	BOLT(M12×1.25)

J115204 X01

FLYWHEEL (196-8313 N/S)

PART OF 191-3312-Page 4

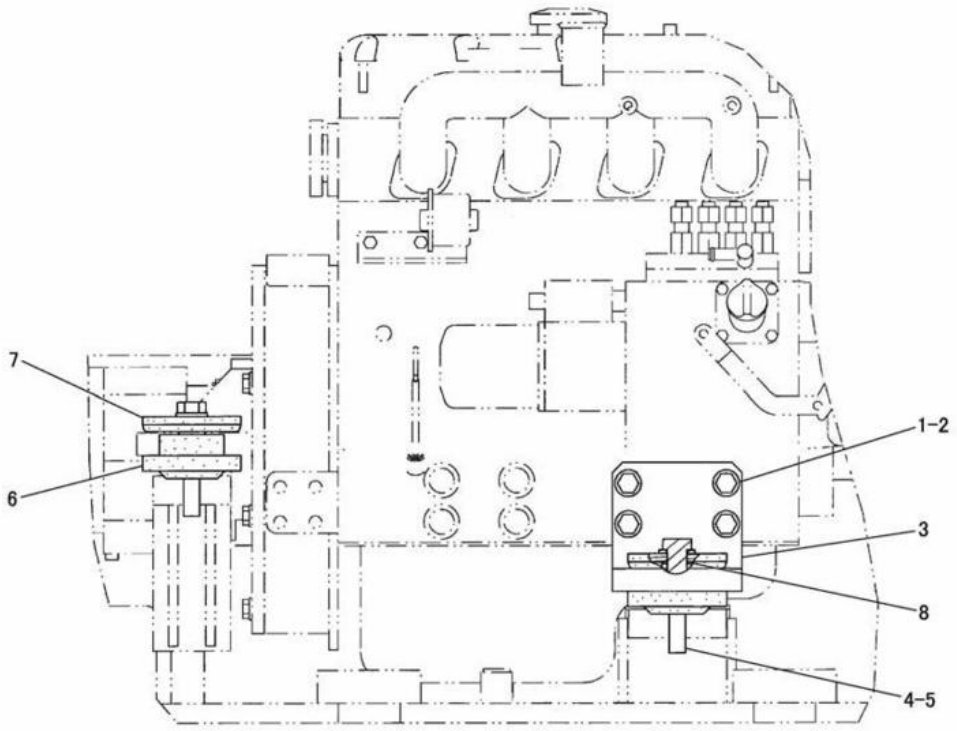

NOTE	No.	PART NO.	QTY.	PART NAME	NOTE	No.	PART NO.	QTY.	PART NAME
	1	119-9880	8	BOLT(M12×1.25)					
	2	8T-4223	8	WASHER					
	3	191-7540	2	SUPPORT AS					
	4	7X-2556	4	BOLT(M16×2)					
	5	9X-8257	4	WASHER					
	6	096-6662	4	MOUNT					
	7	096-6661	4	MOUNT					
	8	091-1745	4	WASHER					

J132909 X03

ENGINE MOUNTING (191-3883 N/S)
PART OF 191-3313-Page 3

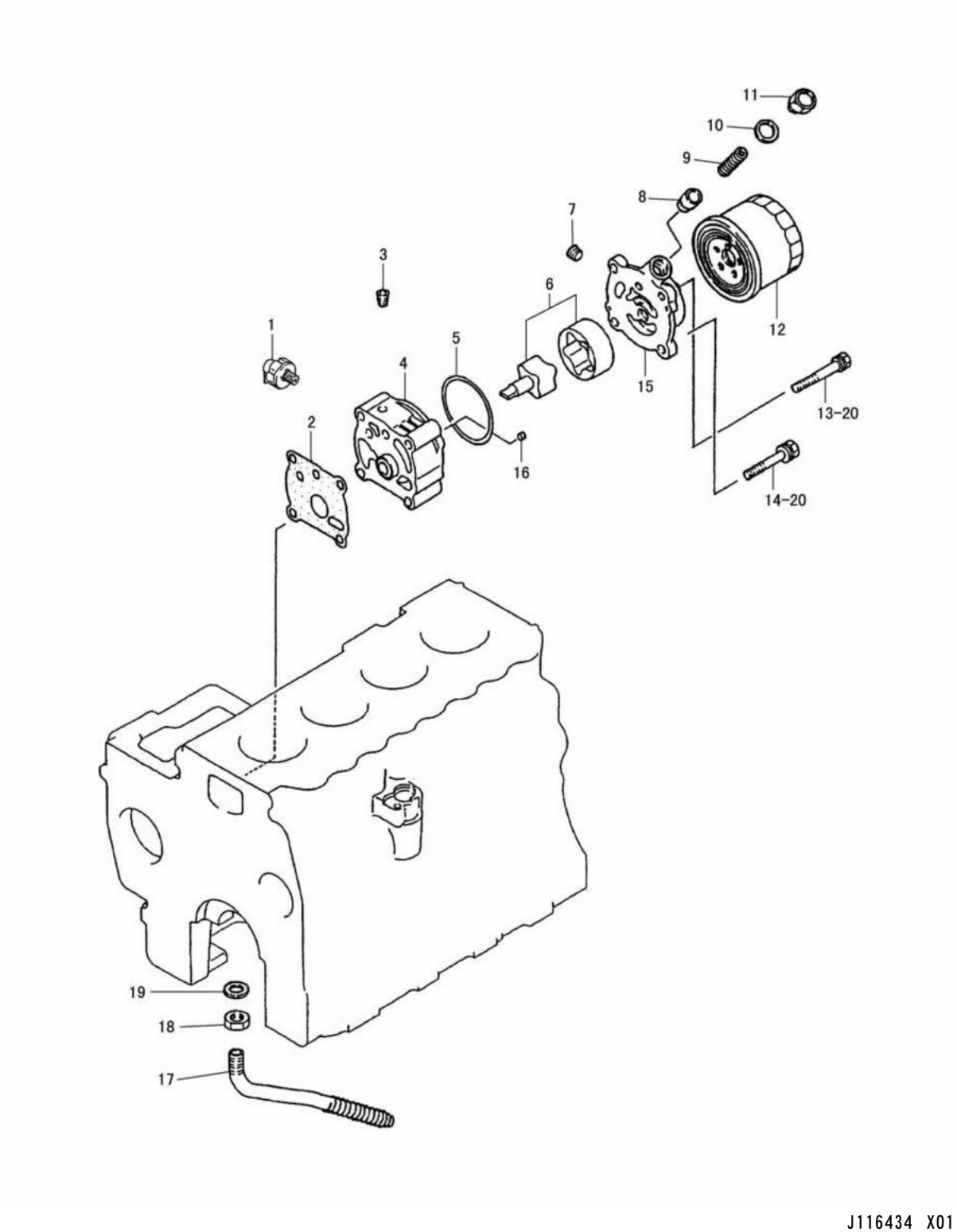

ENGINE OIL PUMP (196-8315 N/S)
PART OF 191-3312-Page 5

LUBRICATION SYSTEM

NOTE	No.	PART NO.	QTY.	PART NAME	NOTE	No.	PART NO.	QTY.	PART NAME
	1	195-8453	1	SWITCH AS					
	2	195-8447	1	GASKET					
	3	195-8445	1	PLUG					
	4	195-8444	1	BODY					
	5	195-8436	1	O-RING					
	6	195-8441	1	ROTOR AS					
	7	195-8446	1	PLUG					
	8	195-8439	1	PLUNGER					
	9	195-8442	1	SPRING					
	10	094-7036	1	GASKET					
	11	195-8440	1	PLUG					
	12	120-0664	1	FILTER					
	13	8T-3647	1	BOLT(M8×1.25)					
	14	5I-5010	3	BOLT(M8×1.25)					
	15	195-8443	1	COVER					
	16	195-8437	2	PIN					
	17	195-8450	1	SCREEN AS					
	18	195-8451	1	NUT(M16×1.5)					
	19	195-8452	1	GASKET					
	20	3B-4505	4	WASHER					
		8T-4224	4	WASHER					

J116434 X01

ENGINE OIL PUMP (196-8315 N/S)
PART OF 191-3312-Page 5

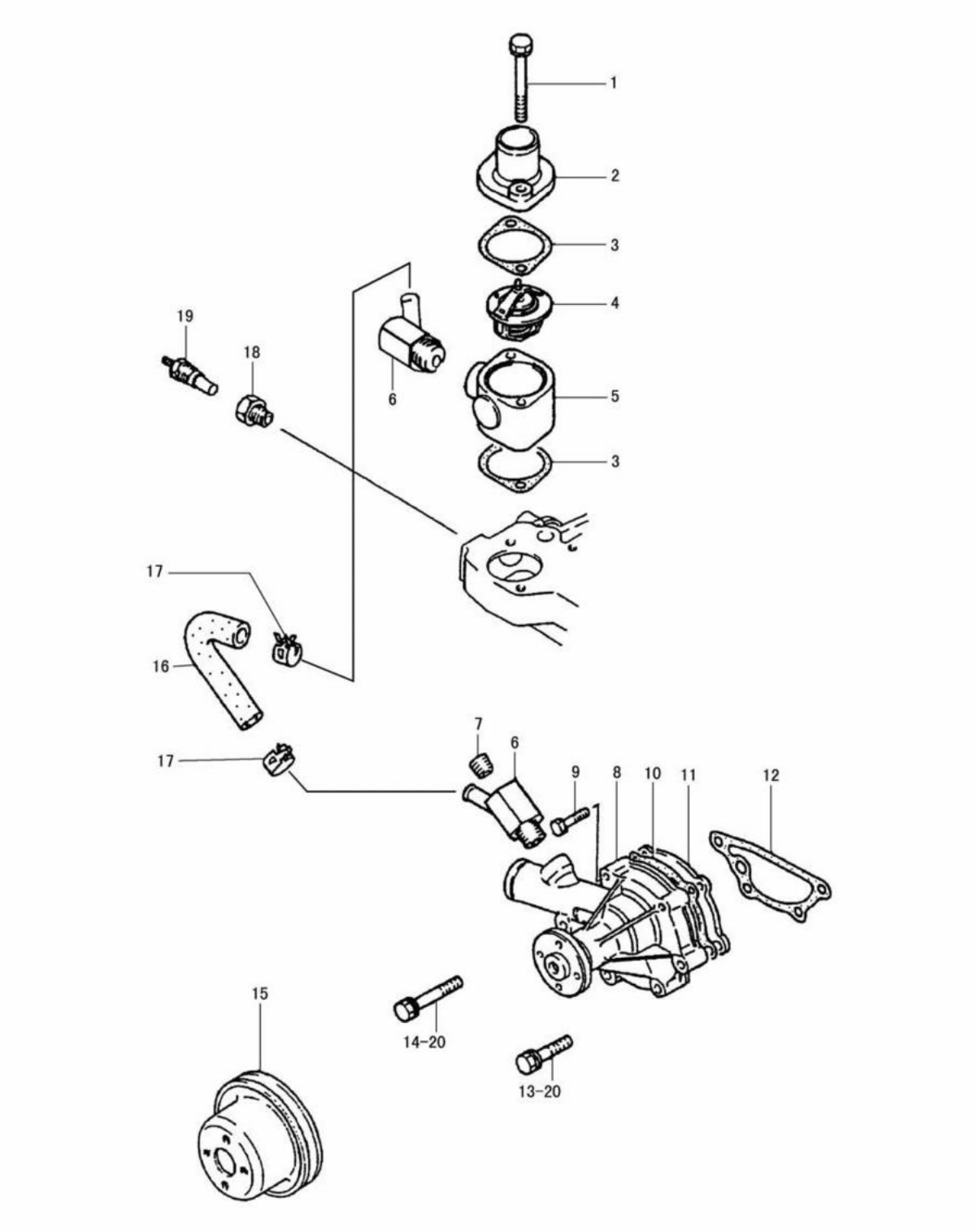

WATER PUMP (196-8316 N/S)
PART OF 191-3312-Page 5

COOLING SYSTEM

NOTE	No.	PART NO.	QTY.	PART NAME	NOTE	No.	PART NO.	QTY.	PART NAME
	1	199-2263	2	BOLT(M8×1.25)					
	2	195-8465	1	FITTING					
	3	195-8468	2	GASKET					
	4	195-8473	1	REGULATOR					
	5	195-8464	1	FITTING					
	6	195-8459	2	JOINT AS					
	7	195-8460	1	PLUG					
	8	195-8455	1	PUMP AS					
	9	199-2241	2	BOLT					
	10	195-8457	1	GASKET					
	11	195-8458	1	PLATE					
	12	195-8461	1	GASKET					
	13	7X-0818	3	BOLT(M8×1.25)					
	14	8T-6869	1	BOLT(M8×1.25)					
	15	206-0650	1	PULLEY					
	16	195-8474	1	HOSE AS					
	17	196-8277	2	CLAMP					
	18	195-8476	1	JOINT					
	19	195-8477	1	THERMO UNIT					
	20	3B-4505	4	WASHER					
		8T-4224	4	WASHER					

J129276 X02

WATER PUMP (196-8316 N/S)
PART OF 191-3312-Page 5

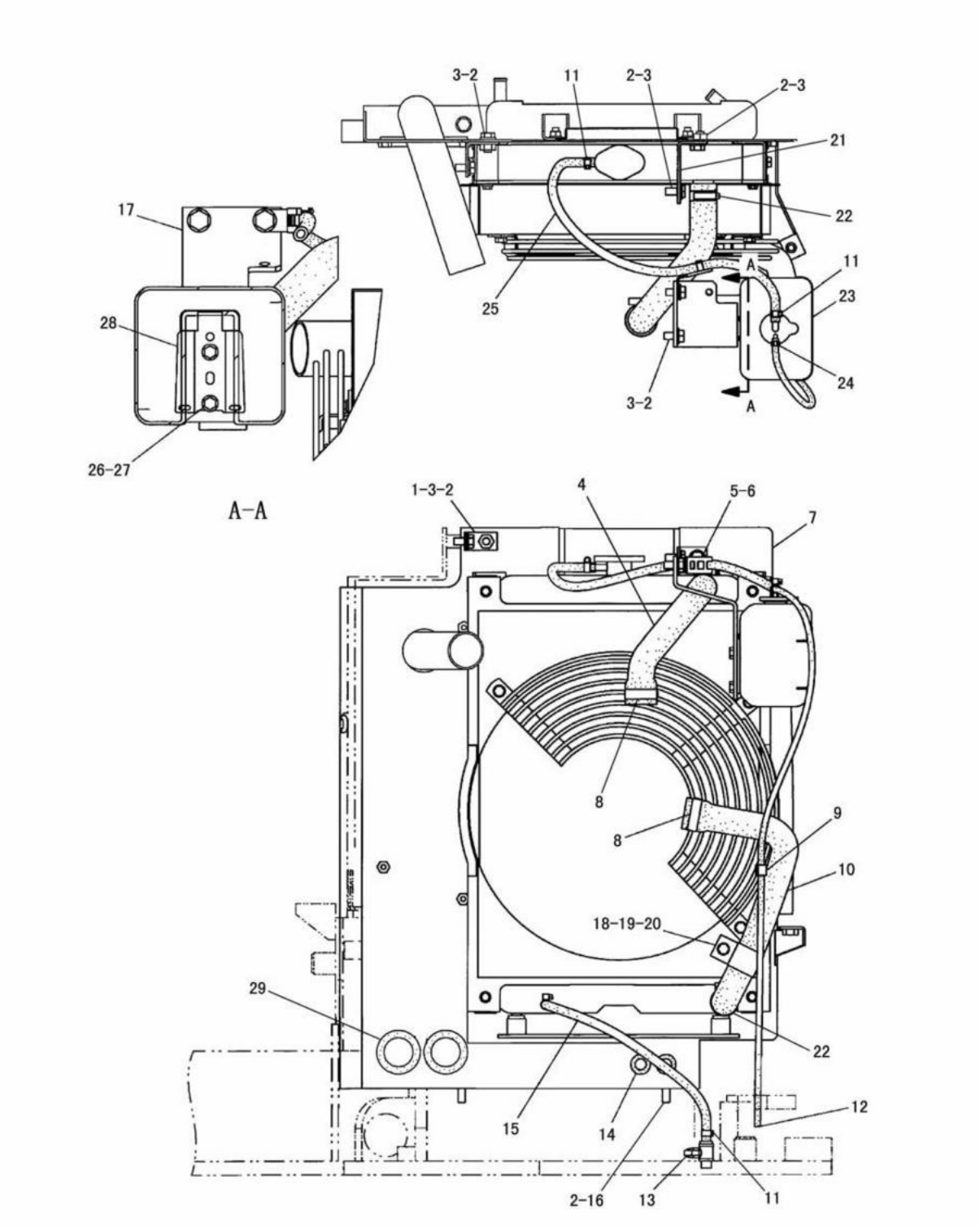

RADIATOR (191-3885 N/S)
PART OF 191-3313-Page 3

COOLING SYSTEM

NOTE	No.	PART NO.	QTY.	PART NAME	NOTE	No.	PART NO.	QTY.	PART NAME
	1	193-4240	1	PLATE AS					
		8T-3490	1	NUT(M10×1.5)(WELD)					
	2	8T-4121	8	WASHER					
	3	8T-4137	6	BOLT(M10×1.5)					
	4	191-7552	1	HOSE					
	5	3S-2093	1	STRAP					
	6	4P-8134	1	CLIP					
Y	7	191-7543	1	RADIATOR GROUP					
	8	095-9785	2	CLAMP					
	9	2V-3216	1	CLIP					
	10	191-7553	1	HOSE					
	11	1P-4278	4	CLAMP					
	12	171-0494	1	HOSE					
	13	175-4614	1	VALVE AS					
	14	7Y-8172	2	GROMMET					
E	15	7Y-1976		HOSE---34cm					
	16	8T-4136	2	BOLT(M10×1.5)					
	17	191-7551	1	BRACKET AS					
		6V-9632	2	NUT(M6×1)(WELD)					
	18	4D-7388	1	CLIP					
	19	8T-4200	1	BOLT(M8×1.25)					
	20	8T-4224	1	WASHER					
	21	200-1352	1	PLATE					
	22	095-1390	2	CLAMP					
	23	086-1713	1	TANK					
	24	140-4763	1	CLAMP					
E	25	7Y-1976		HOSE---50cm					
	26	8T-4205	2	WASHER					
	27	8T-4970	2	BOLT(M6×1)					
	28	096-3288	1	BRACKET					
	29	140-3895	2	GROMMET					

E-ORDER BY THE cm
Y-SEE SEPARATE ILLUSTRATION

J126887 X05

RADIATOR (191-3885 N/S)
PART OF 191-3313-Page 3
191-7543-Page 24

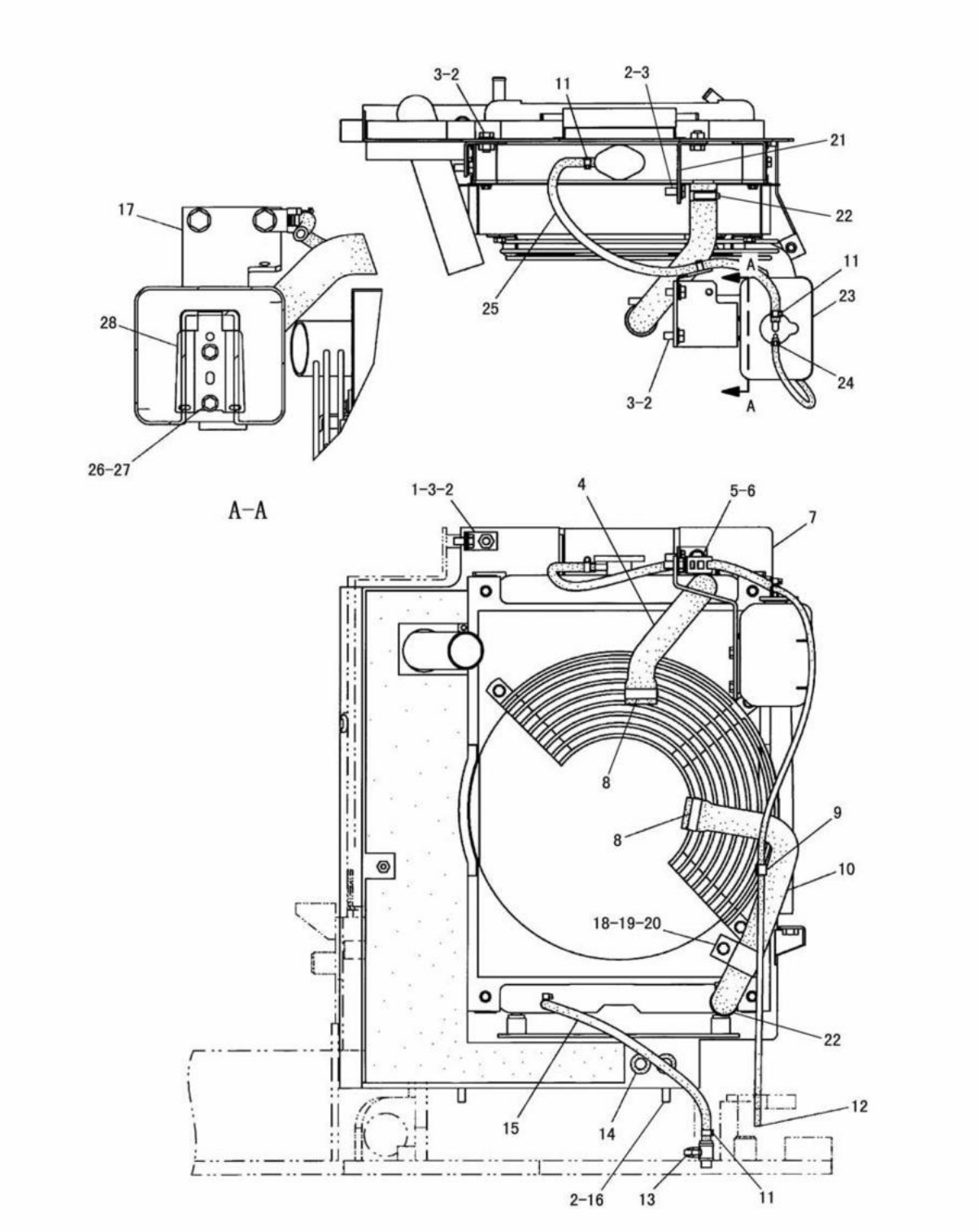

RADIATOR (216-5588 N/S)
PART OF 216-8062-Page 190,191,216-8063-Page 192,193
AN ATTACHMENT

COOLING SYSTEM

NOTE	No.	PART NO.	QTY.	PART NAME	NOTE	No.	PART NO.	QTY.	PART NAME
	1	193-4240	1	PLATE AS					
		8T-3490	1	NUT(M10×1.5)(WELD)					
	2	8T-4121	8	WASHER					
	3	8T-4137	6	BOLT(M10×1.5)					
	4	191-7552	1	HOSE					
	5	3S-2093	1	STRAP					
	6	4P-8134	1	CLIP					
Y	7	216-9900	1	RADIATOR GROUP					
	8	095-9785	2	CLAMP					
	9	2V-3216	1	CLIP					
	10	191-7553	1	HOSE					
	11	1P-4278	4	CLAMP					
	12	171-0494	1	HOSE					
	13	175-4614	1	VALVE AS					
	14	7Y-8172	2	GROMMET					
E	15	7Y-1976		HOSE---34cm					
	16	8T-4136	2	BOLT(M10×1.5)					
	17	191-7551	1	BRACKET AS					
		6V-9632	2	NUT(M6×1)(WELD)					
	18	4D-7388	1	CLIP					
	19	8T-4200	1	BOLT(M8×1.25)					
	20	8T-4224	1	WASHER					
	21	200-1352	1	PLATE					
	22	095-1390	2	CLAMP					
	23	086-1713	1	TANK					
	24	140-4763	1	CLAMP					
E	25	7Y-1976		HOSE---50cm					
	26	8T-4205	2	WASHER					
	27	8T-4970	2	BOLT(M6×1)					
	28	096-3288	1	BRACKET					

E-ORDER BY THE cm
Y-SEE SEPARATE ILLUSTRATION

J126888 X00

RADIATOR (216-5588 N/S)
PART OF 216-8062-Page 190,191,216-8063-Page 192,193
216-9900-Page 25
AN ATTACHMENT

COOLING SYSTEM

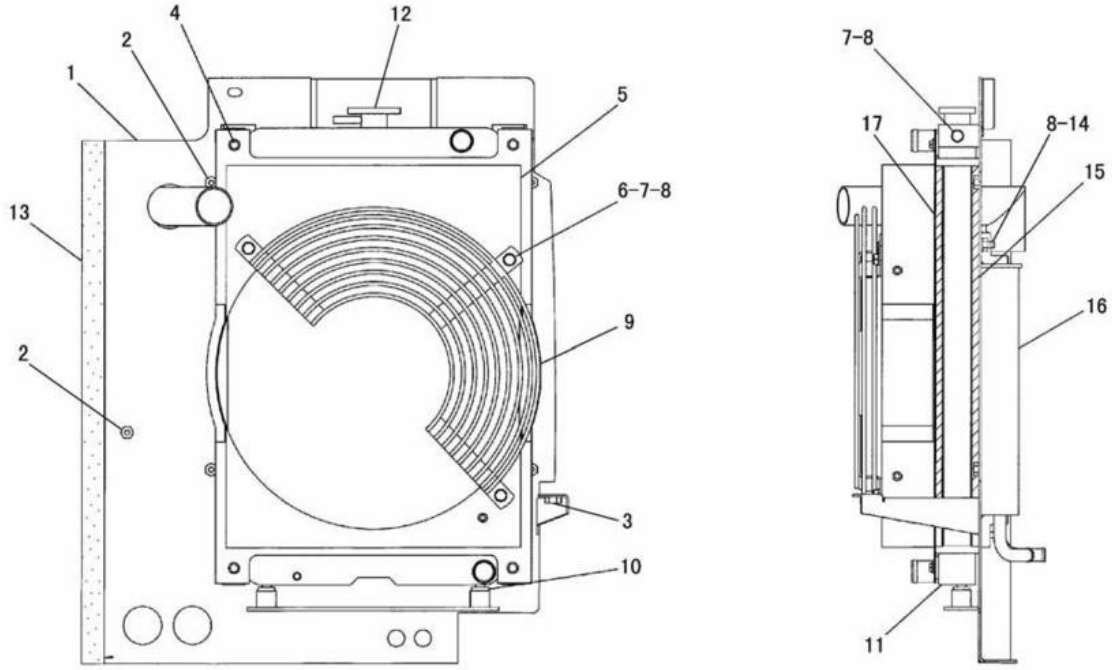

NOTE	No.	PART NO.	QTY.	PART NAME	NOTE	No.	PART NO.	QTY.	PART NAME
	1	191-7548	1	SUPPORT AS					
	2	8T-3612	5	NUT(M8×1.25)(WELD)					
	3	8T-3490	1	NUT(M10×1.5)(WELD)					
	4	8T-4205	4	WASHER					
		5C-9553	4	BOLT(M6×1)					
	5	191-7549	1	SHROUD AS					
	6	8T-3612	6	NUT(M8×1.25)(WELD)					
	7	8T-4200	5	BOLT(M8×1.25)					
	8	8T-4224	9	WASHER					
	9	191-7550	1	GUARD AS					
	10	160-8950	2	CUSHION					
	11	191-7544	1	RADIATOR GROUP					
	12	191-7546	1	CAP					
E	13	146-0414		SEAL---69cm					
	14	5C-7261	4	NUT(M8×1.25)					
E	15	195-0601		SEAL---50cm(RH-REAR)					
E		195-0601		SEAL---50cm(LH-REAR)					
	16	191-7547	1	CORE AS					
E	17	195-0601		SEAL---50cm(RH-FRONT)					
E		195-0601		SEAL---50cm(LH-FRONT)					

E-ORDER BY THE cm

J129277 X03

RADIATOR (191-7543 N/S)

PART OF 191-3885-Page 21

COOLING SYSTEM

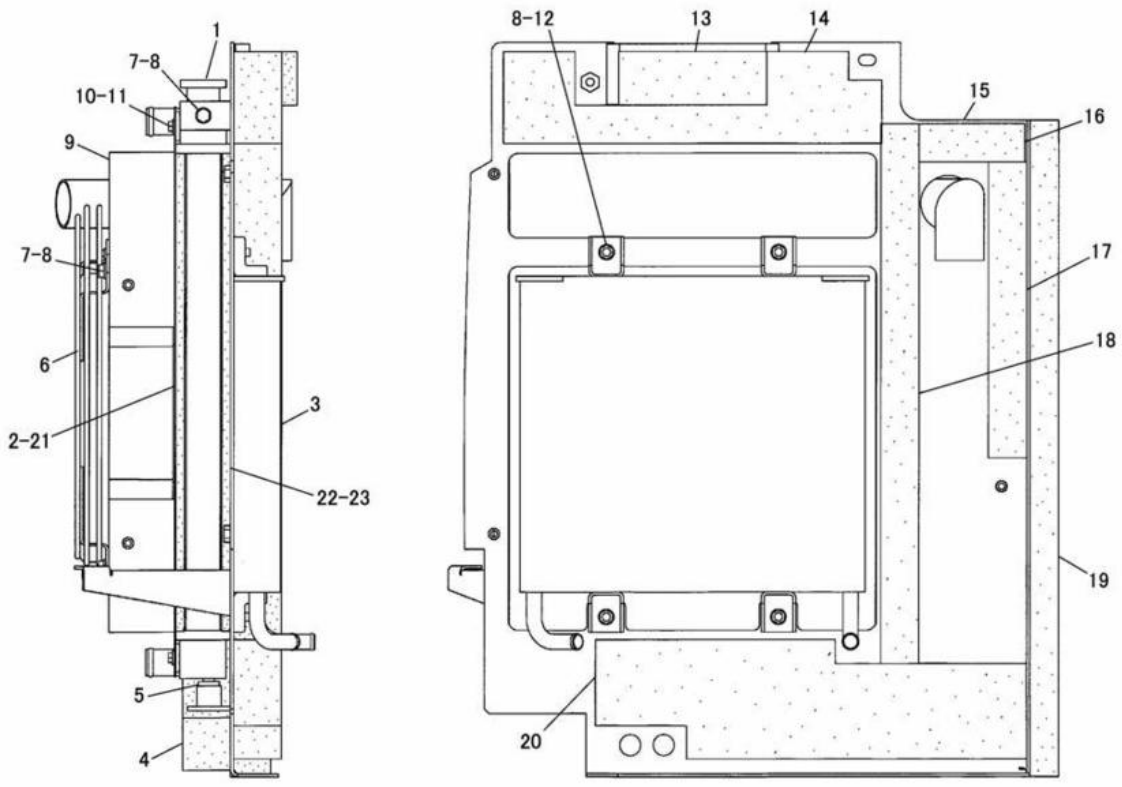

REAR VIEW

NOTE	No.	PART NO.	QTY.	PART NAME	NOTE	No.	PART NO.	QTY.	PART NAME
	1	191-7544	1	RADIATOR GROUP		17	216-9904	1	INSULATION
		191-7546	1	CAP		18	216-9898	1	INSULATION
E	2	195-0601		SEAL---50cm(RH)	E	19	146-0414		SEAL---68.7cm
	3	191-7547	1	CORE AS		20	216-9899	1	INSULATION
	4	216-9895	1	INSULATION	E	21	195-0601		SEAL---50cm(LH)
	5	160-8950	2	CUSHION	E	22	195-0601		SEAL---50cm(RH)
	6	191-7550	1	GUARD AS	E	23	195-0601		SEAL---50cm(LH)
	7	8T-4200	5	BOLT(M8×1.25)					
	8	8T-4224	9	WASHER					
	9	191-7549	1	SHROUD AS					
		8T-3612	6	NUT(M8×1.25)(WELD)					
	10	5C-9553	4	BOLT(M6×1)					
	11	8T-4205	4	WASHER					
	12	5C-7261	4	NUT(M8×1.25)					
	13	216-9896	1	INSULATION					
	14	216-9897	1	INSULATION					
	15	191-7548	1	SUPPORT AS					
		8T-3490	2	NUT(M10×1.5)(WELD)					
		8T-3612	5	NUT(M8×1.25)(WELD)					
	16	216-9903	1	INSULATION					

E-ORDER BY THE cm

J126889 X01

RADIATOR (216-9900 N/S)
PART OF 216-5588-Page 23
AN ATTACHMENT

COOLING SYSTEM

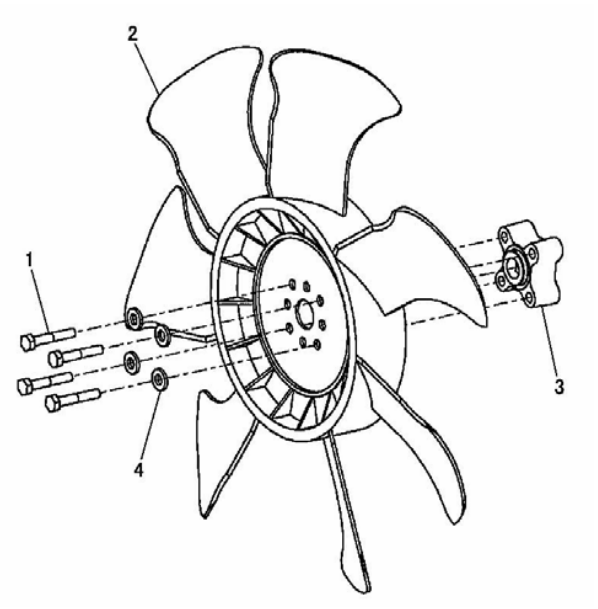

NOTE	No.	PART NO.	QTY.	PART NAME
	1	7X-2533	4	BOLT(M6×1)
	2	196-8404	1	FAN
	3	196-8367	1	SPACER
	4	8T-4205	4	WASHER

J128740 X02

SUCTION FAN (196-8325 N/S)
PART OF 191-3312-Page 5

AIR INLET AND EXHAUST SYSTEM

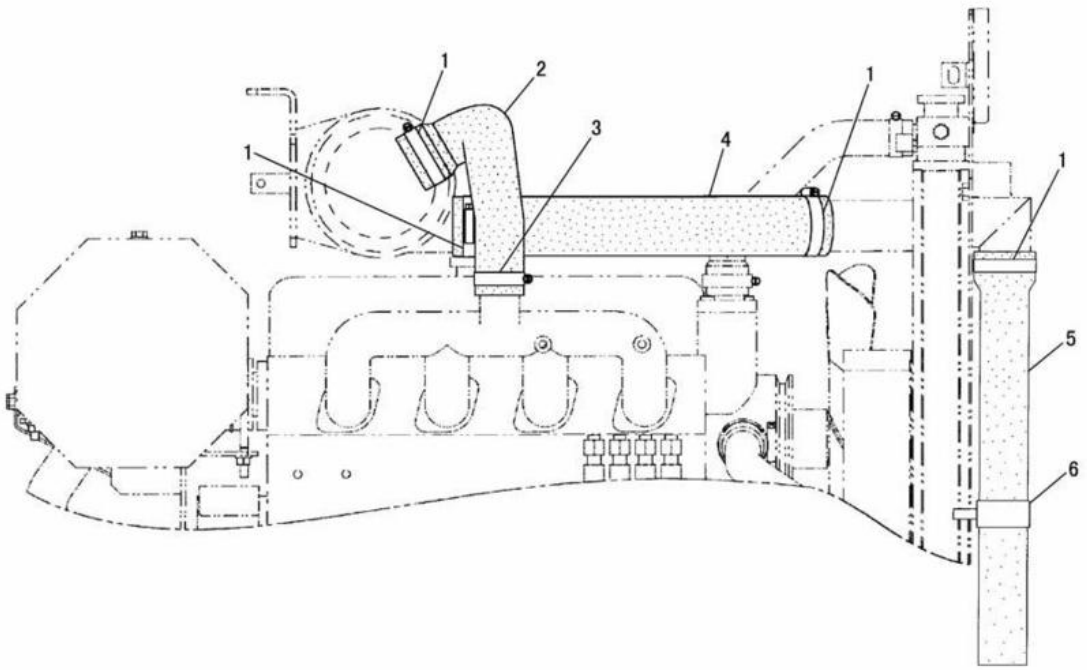

NOTE	No.	PART NO.	QTY.	PART NAME	NOTE	No.	PART NO.	QTY.	PART NAME
	1	095-1392	4	CLAMP					
	2	191-7542	1	HOSE					
	3	095-9785	1	CLAMP					
	4	191-7541	1	HOSE					
	5	197-7767	1	HOSE					
	6	7D-1553	1	CLIP					
		8T-4189	1	BOLT(M8×1.25)					
		8T-4116	1	WASHER					

J117464 X04

AIR LINES (191-3884 N/S)
PART OF 191-3313-Page 3

AIR INLET AND EXHAUST SYSTEM

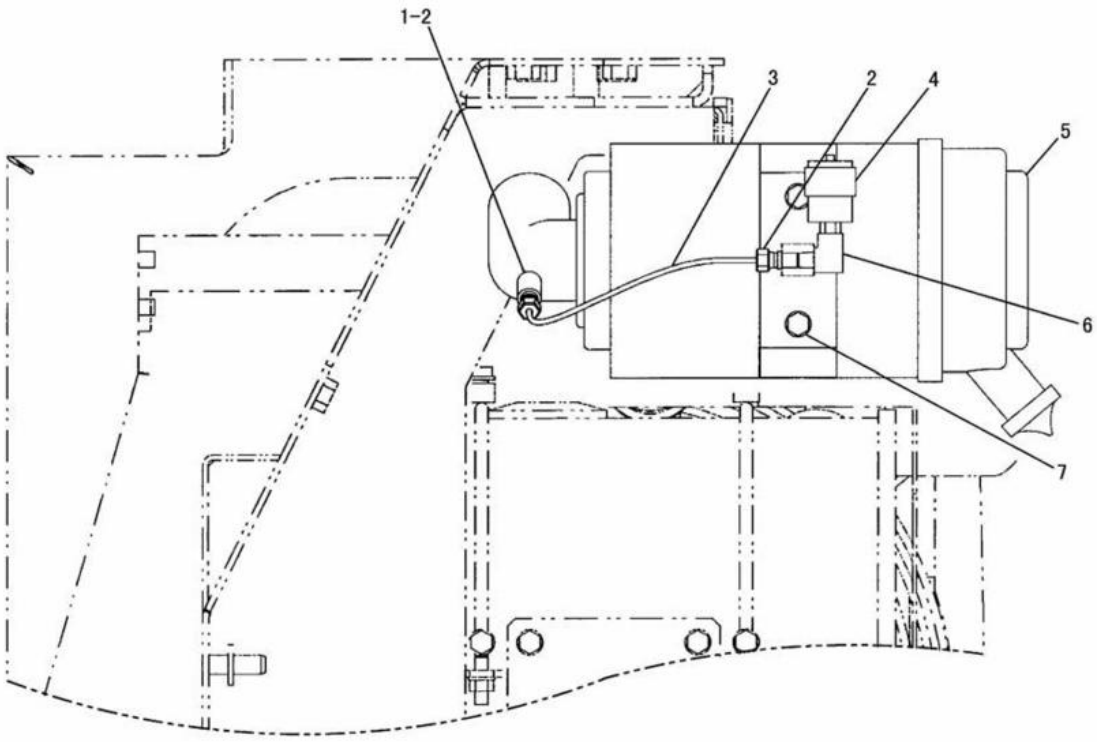

NOTE	No.	PART NO.	QTY.	PART NAME	NOTE	No.	PART NO.	QTY.	PART NAME
	1	3B-6487	1	COUPLING					
	2	5P-2948	2	CONNECTOR					
		4K-9821	1	SLEEVE					
		4K-9822	1	NUT(5/16-24)					
D	3	5P-5630		TUBE---0.2m					
	4	096-5028	1	INDICATOR					
Y	5	191-7554	1	AIR CLEANER GROUP					
	6	3B-6552	1	ELBOW					
		0A-2926	1	NIPPLE					
	7	8T-4200	2	BOLT(M8×1.25)					
		8T-4224	2	WASHER					

D-ORDER BY THE m
Y-SEE SEPARATE ILLUSTRATION

J128711 X03

AIR CLEANER (191-3886 N/S)
PART OF 191-3313-Page 3
191-7554-Page 30

AIR INLET AND EXHAUST SYSTEM

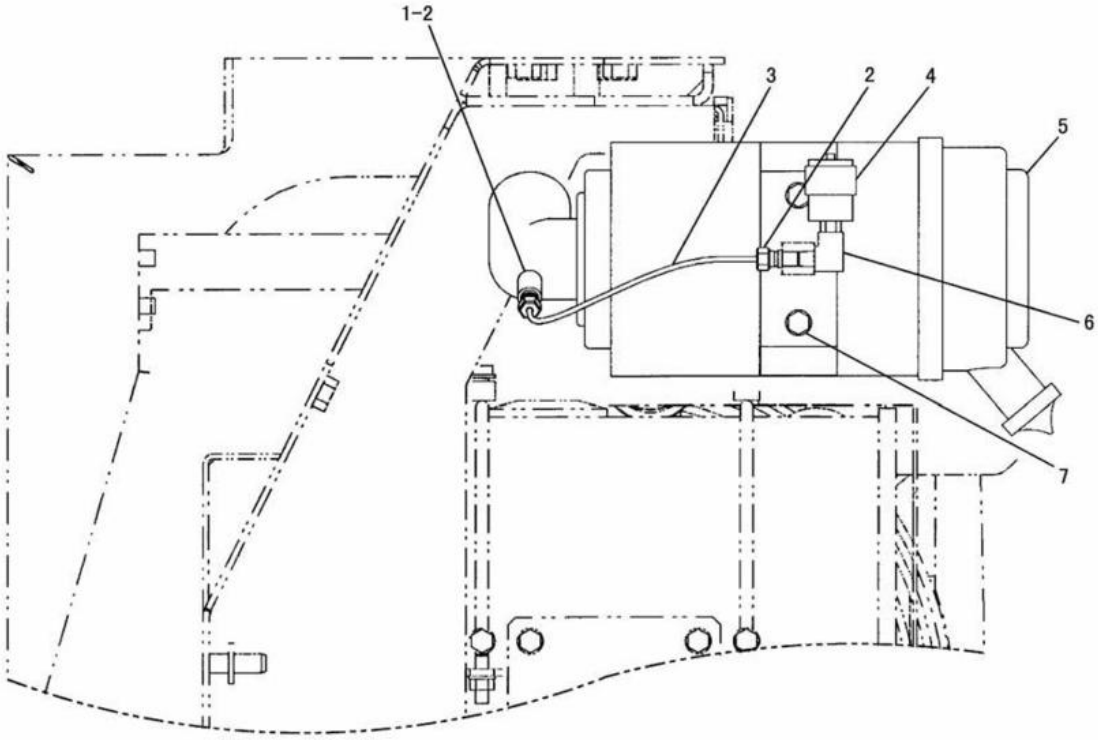

NOTE	No.	PART NO.	QTY.	PART NAME	NOTE	No.	PART NO.	QTY.	PART NAME
	1	3B-6487	1	COUPLING					
	2	5P-2948	2	CONNECTOR					
		4K-9821	1	SLEEVE					
		4K-9822	1	NUT(5/16-24)					
D	3	5P-5630		TUBE---0.2m					
	4	096-5028	1	INDICATOR					
Y	5	199-2923	1	AIR CLEANER GROUP					
	6	3B-6552	1	ELBOW					
		0A-2926	1	NIPPLE					
	7	8T-4200	2	BOLT(M8×1.25)					
		8T-4224	2	WASHER					

D-ORDER BY THE m
Y-SEE SEPARATE ILLUSTRATION

J128714 X00

AIR CLEANER (208-1092 N/S)

PART OF 216-8062-Page 190,191,216-8063-Page 192,193
199-2923-Page 30
AN ATTACHMENT

AIR INLET AND EXHAUST SYSTEM

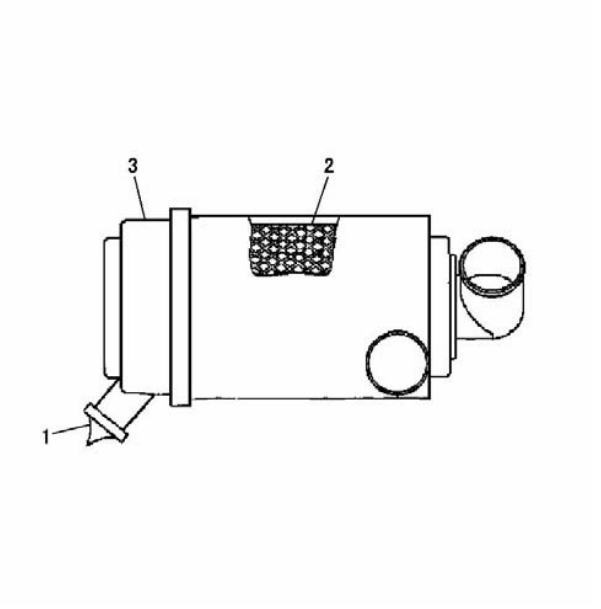

NOTE	No.	PART NO.	QTY.	PART NAME
	1	096-4177	1	VALVE
	2	146-7472	1	ELEMENT
	3	195-8201	1	COVER AS

J128712 X01

191-7554 AIR CLEANER GROUP
PART OF 191-3886-Page 28

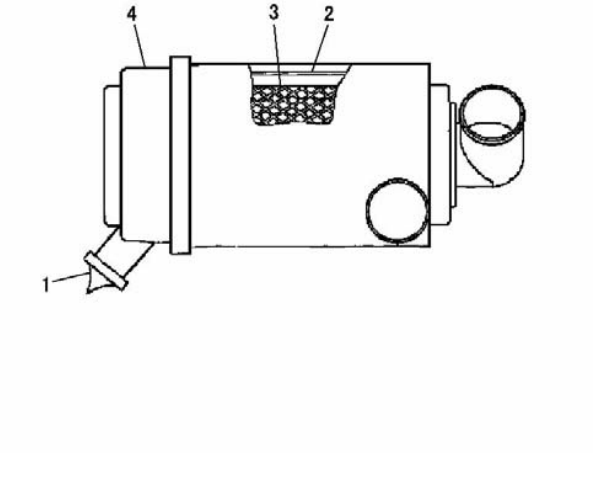

NOTE	No.	PART NO.	QTY.	PART NAME
	1	096-4177	1	VALVE
	2	146-7472	1	ELEMENT(PRIMARY)
	3	146-7473	1	ELEMENT(SECONDARY)
	4	195-8200	1	COVER AS

J128713 X02

199-2923 AIR CLEANER GROUP
PART OF 208-1092-Page 29
AN ATTACHMENT

AIR INLET AND EXHAUST SYSTEM

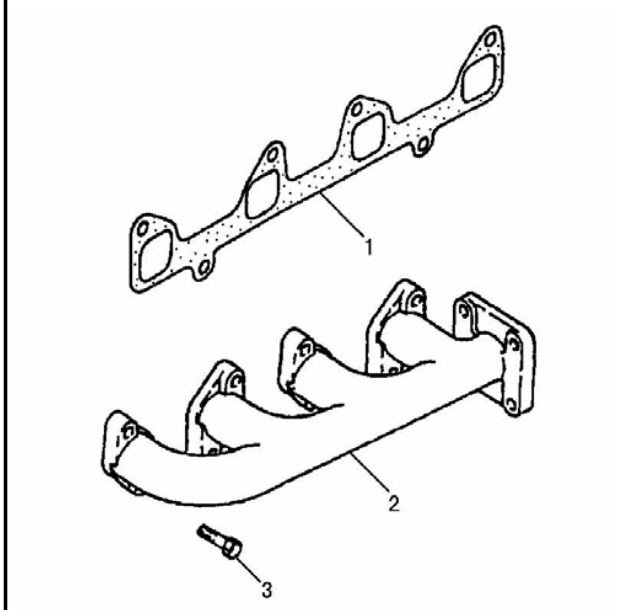

NOTE	No.	PART NO.	QTY.	PART NAME
	1	151-4715	1	GASKET
	2	195-8485	1	MANIFOLD
	3	196-8368	6	BOLT(M10×1.25)

J115403 X01

EXHAUST MANIFOLD (196-8318 N/S)
PART OF 191-3312-Page 5

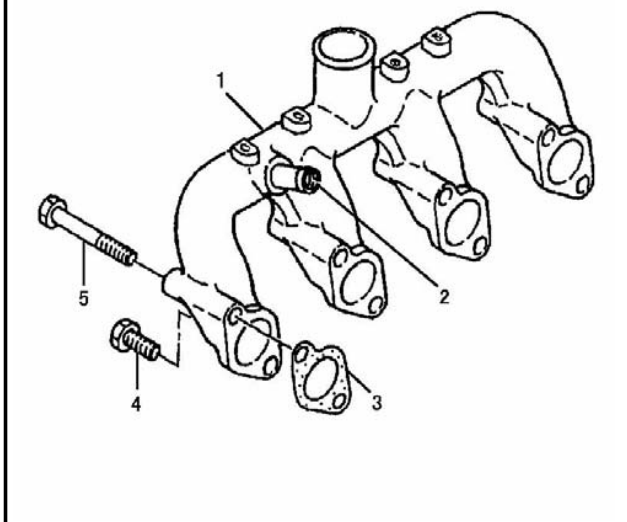

NOTE	No.	PART NO.	QTY.	PART NAME
	1	195-8480	1	MANIFOLD AS
	2	195-8285	1	NIPPLE
	3	195-8482	4	GASKET
	4	195-8483	4	BOLT(M10×1.25)
	5	5I-4969	4	BOLT(M10×1.25)

J115404 X01

INLET MANIFOLD (196-8317 N/S)
PART OF 191-3312-Page 5

AIR INLET AND EXHAUST SYSTEM

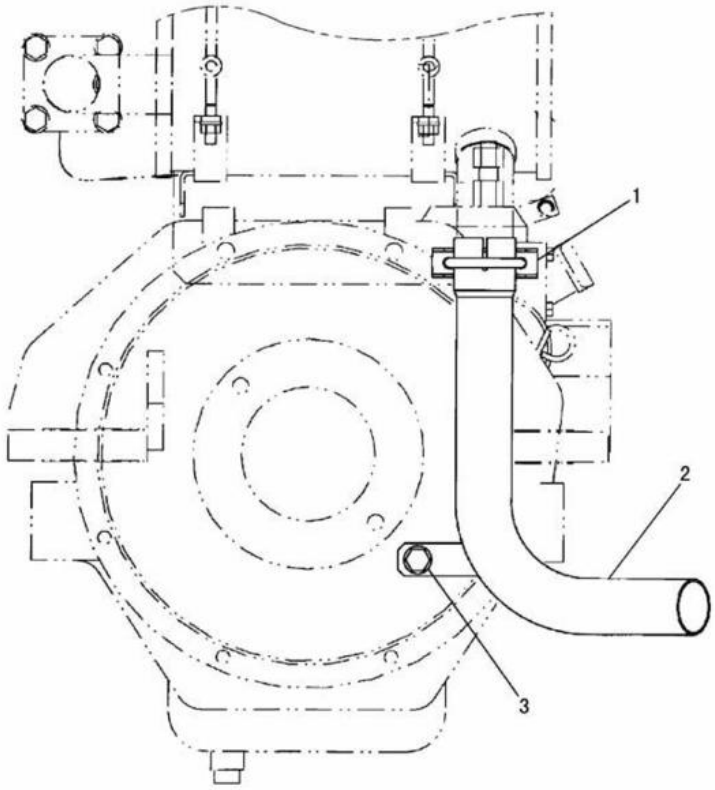

NOTE	No.	PART NO.	QTY.	PART NAME	NOTE	No.	PART NO.	QTY.	PART NAME
	1	171-0689	1	CLAMP AS					
		5C-7261	2	NUT(M8×1.25)					
		8T-4224	2	WASHER					
	2	191-7555	1	PIPE AS					
	3	7X-2543	1	BOLT(M10×1.5)					
		8T-4121	1	WASHER					

J117466 X02

EXHAUST EXTENSION (191-3887 N/S)
PART OF 191-3313-Page 3

AIR INLET AND EXHAUST SYSTEM

CONSISTS OF :

			PAGE
1	202-7193	MUFFLER GROUP ·····	36
1	191-0350	HOOD AND GUARD GROUP ·····	242
1	191-0356	FILM GROUP ·····	650

J115507 E00

UPPER MUFFLER ARRANGEMENT (191-0344 N/S)
AN ATTACHMENT

AIR INLET AND EXHAUST SYSTEM

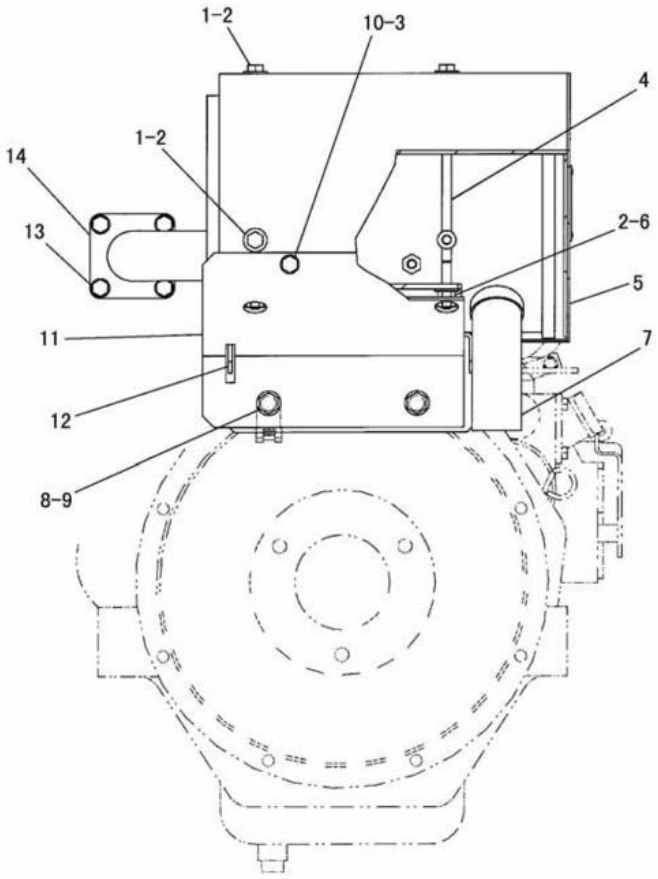

NOTE	No.	PART NO.	QTY.	PART NAME	NOTE	No.	PART NO.	QTY.	PART NAME
	1	8T-4199	4	BOLT(M8×1.25)		13	9M-1974	8	WASHER
	2	5P-4116	8	WASHER			5P-7970	4	NUT(M8×1.25)
	3	8T-4224	2	WASHER			6V-5219	4	BOLT(M8×1.25)
	4	191-7558	2	U-BOLT AS(M8×1.25)		14	119-9903	1	GASKET
		8R-3857	2	BOSS(M8×1.25)					
	5	193-1761	1	PLATE AS					
		172-4951	1	PLATE					
		203-6214	1	INSULATOR					
		4S-8264	4	RIVET					
		8T-3612	2	NUT(M8×1.25)(WELD)					
	6	5C-7261	8	NUT(M8×1.25)					
	7	191-7556	1	MUFFLER AS					
	8	128-7747	2	BOLT(M10×1.25)					
	9	8T-7934	2	WASHER					
	10	8T-4200	2	BOLT(M8×1.25)					
	11	210-7944	1	PLATE AS					
		210-7946	1	INSULATOR					
	12	191-7557	1	BRACKET AS					

J115441 X13

MUFFLER (191-3888 N/S)
EFFECTIVE WITH SERIAL NO. BMW00001-BMW01327
PART OF 191-3313-Page 3

AIR INLET AND EXHAUST SYSTEM

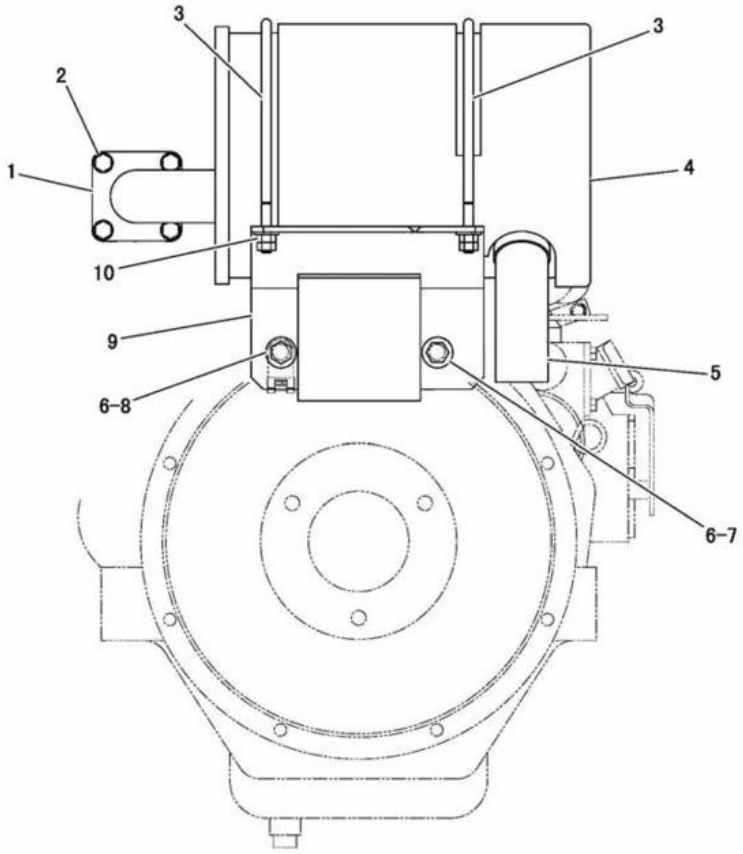

NOTE	No.	PART NO.	QTY.	PART NAME	NOTE	No.	PART NO.	QTY.	PART NAME
	1	119-9903	1	GASKET					
	2	6V-5219	4	BOLT(M8×1.25)					
		9M-1974	8	WASHER					
		5P-7970	4	NUT(M8×1.25)					
	3	209-3451	2	U-BOLT(M8×1.25)					
	4	214-1489	1	COVER					
	5	191-7556	1	MUFFLER AS					
	6	7X-7729	2	WASHER					
	7	9X-8912	1	BOLT(M10×1.25)					
	8	128-7747	1	BOLT(M10×1.25)					
	9	216-9894	1	BRACKET AS					
	10	5C-7261	8	NUT(M8×1.25)					
		5P-4116	4	WASHER					

J114571 X01

MUFFLER (216-5589 N/S)

EFFECTIVE WITH SERIAL NO. BMW01328-(STD),BMW00001-(ATT)
PART OF 191-3313-Page 3,216-8062-Page 190,191,216-8063-Page 192,193

AIR INLET AND EXHAUST SYSTEM

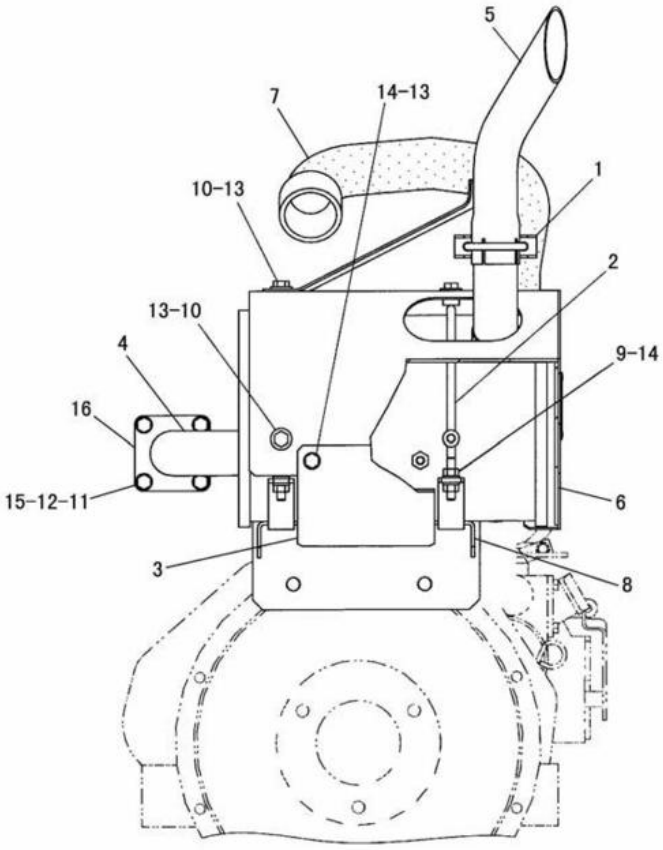

NOTE	No.	PART NO.	QTY.	PART NAME	NOTE	No.	PART NO.	QTY.	PART NAME
	1	171-0689	1	CLAMP AS		14	8T-4224	10	WASHER
		5C-7261	2	NUT(M8×1.25)		15	9M-1974	8	WASHER
		8T-4224	2	WASHER		16	119-9903	1	GASKET
	2	191-7558	2	U-BOLT AS(M8×1.25)					
		8R-3857	2	BOSS(M8×1.25)					
	3	193-2090	1	PLATE					
	4	202-7194	1	MUFFLER AS					
	5	204-6880	1	PIPE AS					
	6	204-6881	1	COVER AS					
		203-6214	1	INSULATOR					
		172-4951	1	PLATE					
		4S-8264	4	RIVET					
		8T-3612	2	NUT(M8×1.25)(WELD)					
	7	204-6923	1	HOSE					
	8	205-5070	1	BRACKET AS					
	9	5C-7261	8	NUT(M8×1.25)					
	10	5P-4116	4	WASHER					
	11	5P-7970	4	NUT(M8×1.25)					
	12	6V-5219	4	BOLT(M8×1.25)					
	13	8T-4199	6	BOLT(M8×1.25)					

J136075 X00

MUFFLER (202-7193 N/S) -UPPER EXHAUST
PART OF 191-0344-Page 33
AN ATTACHMENT

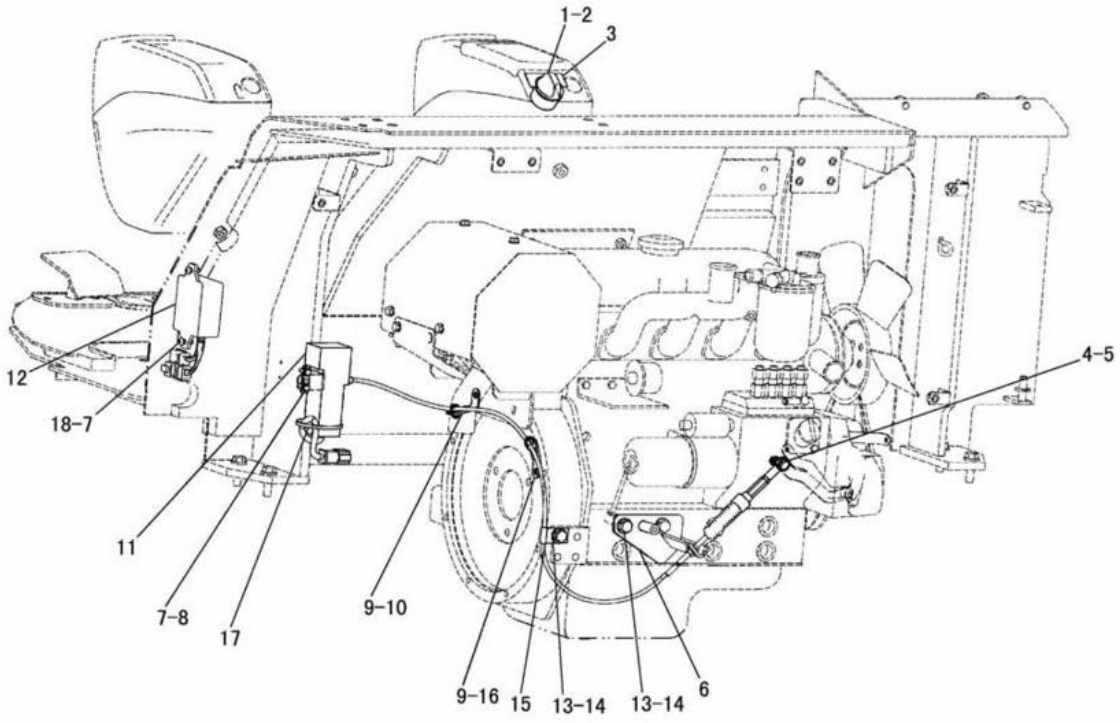

NOTE	No.	PART NO.	QTY.	PART NAME	NOTE	No.	PART NO.	QTY.	PART NAME
	1	195-2658	1	SWITCH AS		15	4D-8948	1	CLIP
		102-8802	1	RECEPTACLE KIT(2P)		16	4P-7581	1	CLIP
		186-3735	3	PIN		17	6K-0806	1	STRAP
	2	150-0597	1	KNOB AS		18	203-7894	2	SCREW(M6×1)
		150-0598	1	SEAL			203-7895	2	WASHER
	3	136-0199	1	FILM			5C-2890	2	NUT(M6×1)
	4	5C-7261	1	NUT(M8×1.25)					
	5	8T-4224	2	WASHER					
	6	195-2821	1	PLATE AS					
	7	9X-8256	5	WASHER					
	8	8T-4138	3	BOLT(M6×1)					
	9	3S-2093	2	STRAP					
	10	4P-8134	1	CLIP					
	11	191-6227	1	MOTOR ASEEM.					
		102-8802	1	RECEPTACLE KIT(2P)					
		186-3735	5	PIN					
		8T-8737	1	PLUG					
Y	12	155-7553	1	CONTROL AS					
	13	150-3715	3	BOLT(M12×1.25)					
	14	8T-4223	3	WASHER					

Y-SEE SEPARATE ILLUSTRATION

J129278 X06

GOVERNOR CONTROL (191-3846 N/S)

EFFECTIVE WITH SERIAL NO. BMW00001-BMW01252
PART OF 191-3351-Page 184,185,186,187
155-7553-Page 40

FUEL SYSTEM

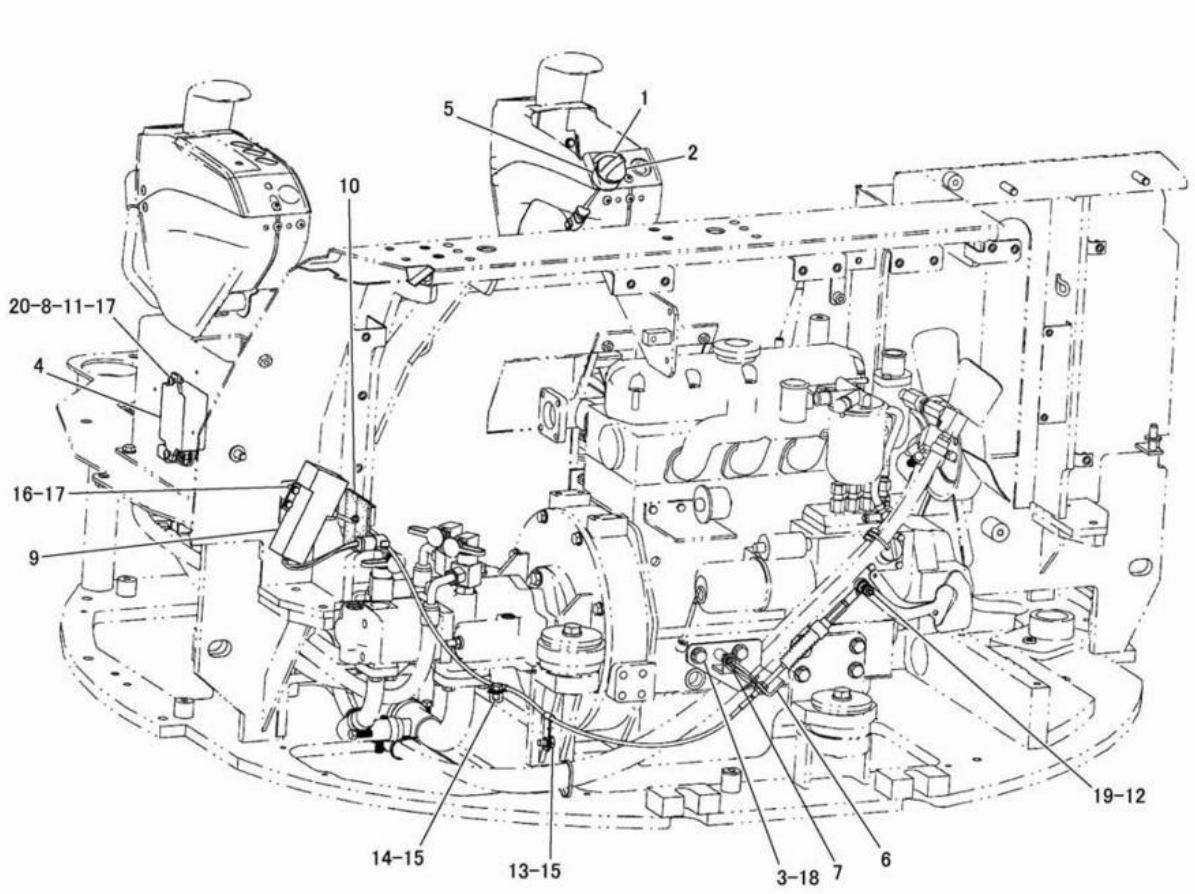

NOTE	No.	PART NO.	QTY.	PART NAME	NOTE	No.	PART NO.	QTY.	PART NAME
	1	136-0199	1	FILM		15	8T-4191	2	BOLT(M10×1.5)
	2	150-0597	1	KNOB AS			8T-4121	2	WASHER
		150-0598	1	SEAL		16	8T-4138	3	BOLT(M6×1)
	3	150-3715	2	BOLT(M12×1.25)		17	9X-8256	5	WASHER
Y	4	155-7553	1	CONTROL AS		18	8T-4223	2	WASHER
	5	195-2658	1	SWITCH AS		19	8T-4224	2	WASHER
		102-8802	1	RECEPTACLE KIT(2P)		20	203-7894	2	SCREW(M6×1)
		186-3735	3	PIN					
	6	195-2821	1	PLATE AS					
	7	8T-3612	1	NUT(M8×1.25)(WELD)					
	8	203-7895	2	WASHER					
	9	215-3347	1	MOTOR AS					
		102-8805	1	RECEPTACLE KIT(6P)					
		186-3735	1	PIN					
		8T-8737	3	PLUG					
	10	215-3746	1	SEAL					
	11	5C-2890	2	NUT(M6×1)					
	12	5C-7261	1	NUT(M8×1.25)					
	13	7D-1728	1	CLIP					
	14	8M-2772	1	CLIP					

Y-SEE SEPARATE ILLUSTRATION

J128725 X02

GOVERNOR CONTROL (215-3348 N/S)

EFFECTIVE WITH SERIAL NO. BMW01253-BMW01340
PART OF 191-3351-Page 188,189
155-7553-Page 40

FUEL SYSTEM

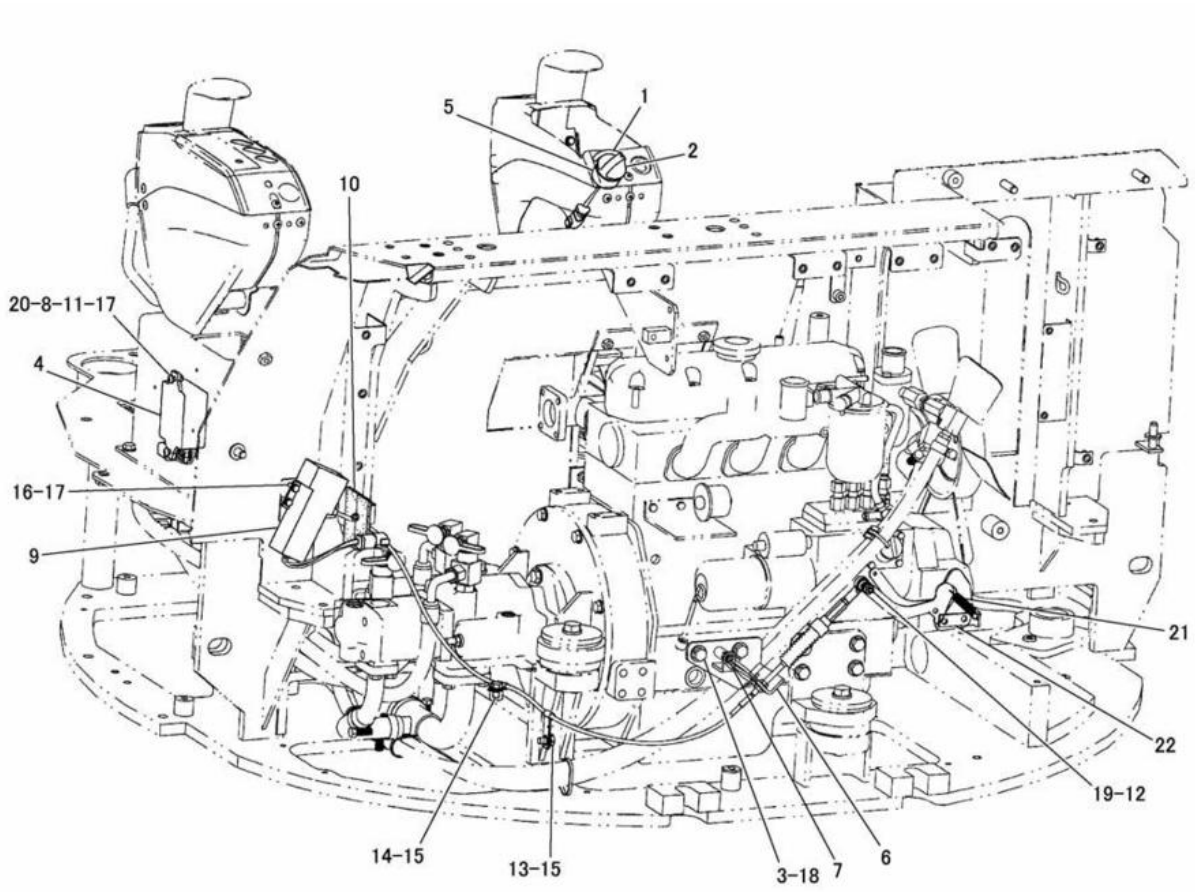

NOTE	No.	PART NO.	QTY.	PART NAME	NOTE	No.	PART NO.	QTY.	PART NAME
	1	136-0199	1	FILM		15	8T-4191	2	BOLT(M10×1.5)
	2	150-0597	1	KNOB AS			8T-4121	2	WASHER
	3	150-3715	2	BOLT(M12×1.25)		16	8T-4138	3	BOLT(M6×1)
Y	4	155-7553	1	CONTROL AS		17	9X-8256	5	WASHER
	5	195-2658	1	SWITCH AS		18	8T-4223	2	WASHER
		102-8802	1	RECEPTACLE KIT(2P)		19	8T-4224	2	WASHER
		186-3735	3	PIN		20	203-7894	2	SCREW(M6×1)
	6	195-2821	1	PLATE AS	C	21	194-6383	1	SPRING
	7	8T-3612	1	NUT(M8×1.25)(WELD)	C	22	243-4455	1	BRACKET
	8	203-7895	2	WASHER					
	9	215-3347	1	MOTOR AS					
		102-8805	1	RECEPTACLE KIT(6P)					
		186-3735	1	PIN					
		8T-8737	3	PLUG					
	10	215-3746	1	SEAL					
	11	5C-2890	2	NUT(M6×1)					
	12	5C-7261	1	NUT(M8×1.25)					
	13	7D-1728	1	CLIP					
	14	8M-2772	1	CLIP					

C-INDICATES CHANGE
Y-SEE SEPARATE ILLUSTRATION

J132078 X03

GOVERNOR CONTROL (215-3348 N/S)

EFFECTIVE WITH SERIAL NO. BMW01341-
PART OF 191-3351-Page 188,189
155-7553-Page 40

FUEL SYSTEM

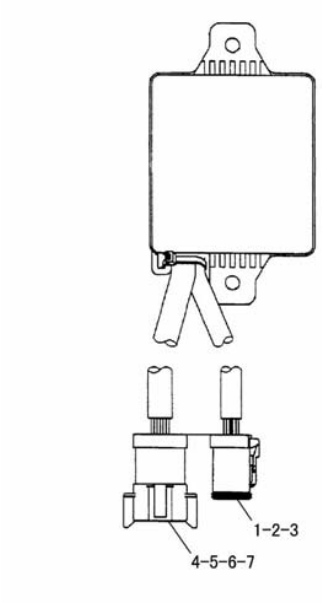

NOTE	No.	PART NO.	QTY.	PART NAME
	1	186-3736	6	SOCKET
	2	155-2274	1	PLUG KIT(6P)
		102-8815	1	SEAL
	3	3E-3380	1	WEDGE
	4	102-8806	1	RECEPTACLE KIT(8P)
	5	3E-3389	1	WEDGE
	6	186-3735	7	PIN
	7	8T-8737	1	PLUG

J106507 X04

155-7553 CONTROL ASSEMBLY
PART OF 191-3846-Page 37,215-3348-Page 38,39

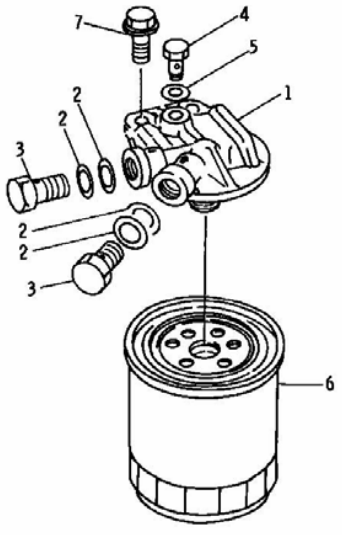

NOTE	No.	PART NO.	QTY.	PART NAME
	1	094-7998	1	HEAD
	2	096-9013	4	GASKET
	3	094-9726	2	BOLT(M14×1.5)
	4	094-9725	1	PLUG
	5	096-9014	1	GASKET
	6	5I-7951	1	ELEMENT
	7	096-5101	2	BOLT(M10×1.25)

J128474 E00

5I-7954 FUEL FILTER GROUP
PART OF 191-3312-Page 5

FUEL SYSTEM

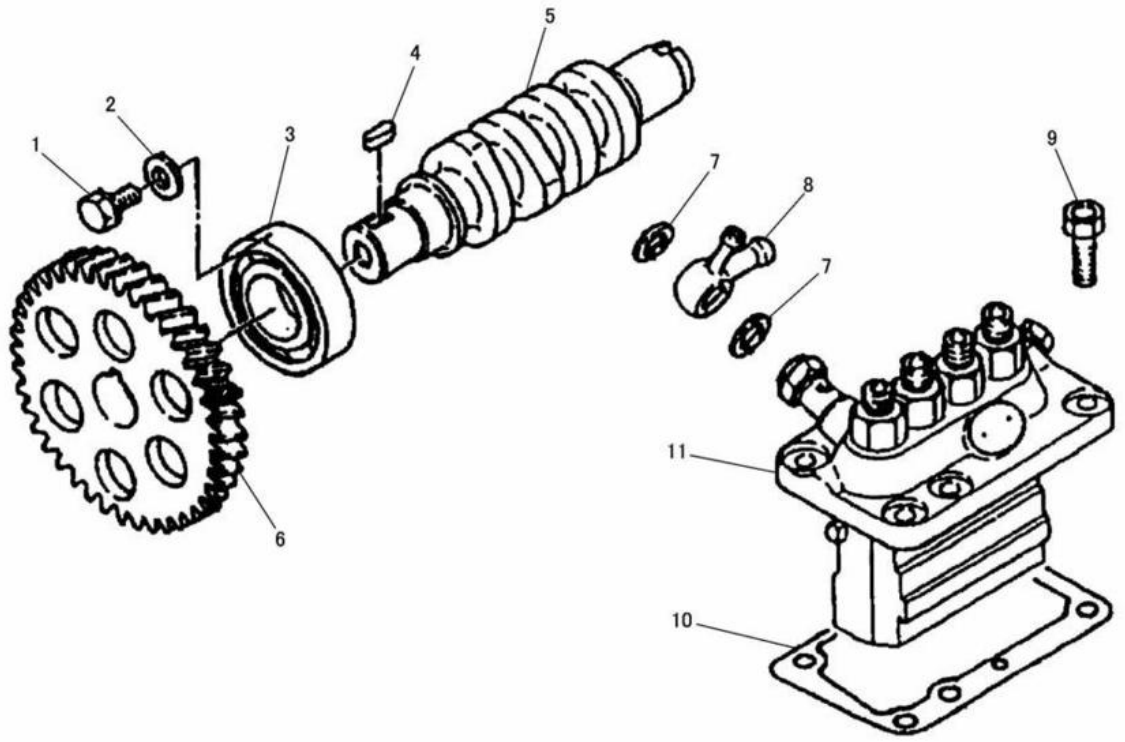

NOTE	No.	PART NO.	QTY.	PART NAME	NOTE	No.	PART NO.	QTY.	PART NAME
	1	6V-7357	1	BOLT(M6×1)					
		2U-2552	1	LOCKWASHER					
	2	195-8347	1	WASHER					
	3	195-8350	1	BEARING					
	4	195-8352	1	KEY					
	5	195-8346	1	SHAFT					
	6	195-8348	1	GEAR					
	7	195-8373	2	WASHER					
	8	195-8384	1	COLLAR					
	9	195-8383	6	BOLT(M8×1.25)					
B	10	195-8374	1	SHIM(0.2mm THICK)					
B		195-8375	1	SHIM(0.3mm THICK)					
B		195-8376	1	SHIM(0.4mm THICK)					
B		195-8377	1	SHIM(0.5mm THICK)					
B		195-8378	1	SHIM(0.6mm THICK)					
B		195-8379	1	SHIM(0.7mm THICK)					
B		195-8380	1	SHIM(0.8mm THICK)					
B		195-8381	1	SHIM(0.9mm THICK)					
B		195-8382	1	SHIM(1.0mm THICK)					
Y	11	196-8327	1	PUMP AS					

B-USE AS REQUIRED
Y-SEE SEPARATE ILLUSTRATION

J127492 X01

FUEL INJECTION PUMP (196-8319 N/S)

PART OF 191-3312-Page 5
196-8327-Page 42, 43

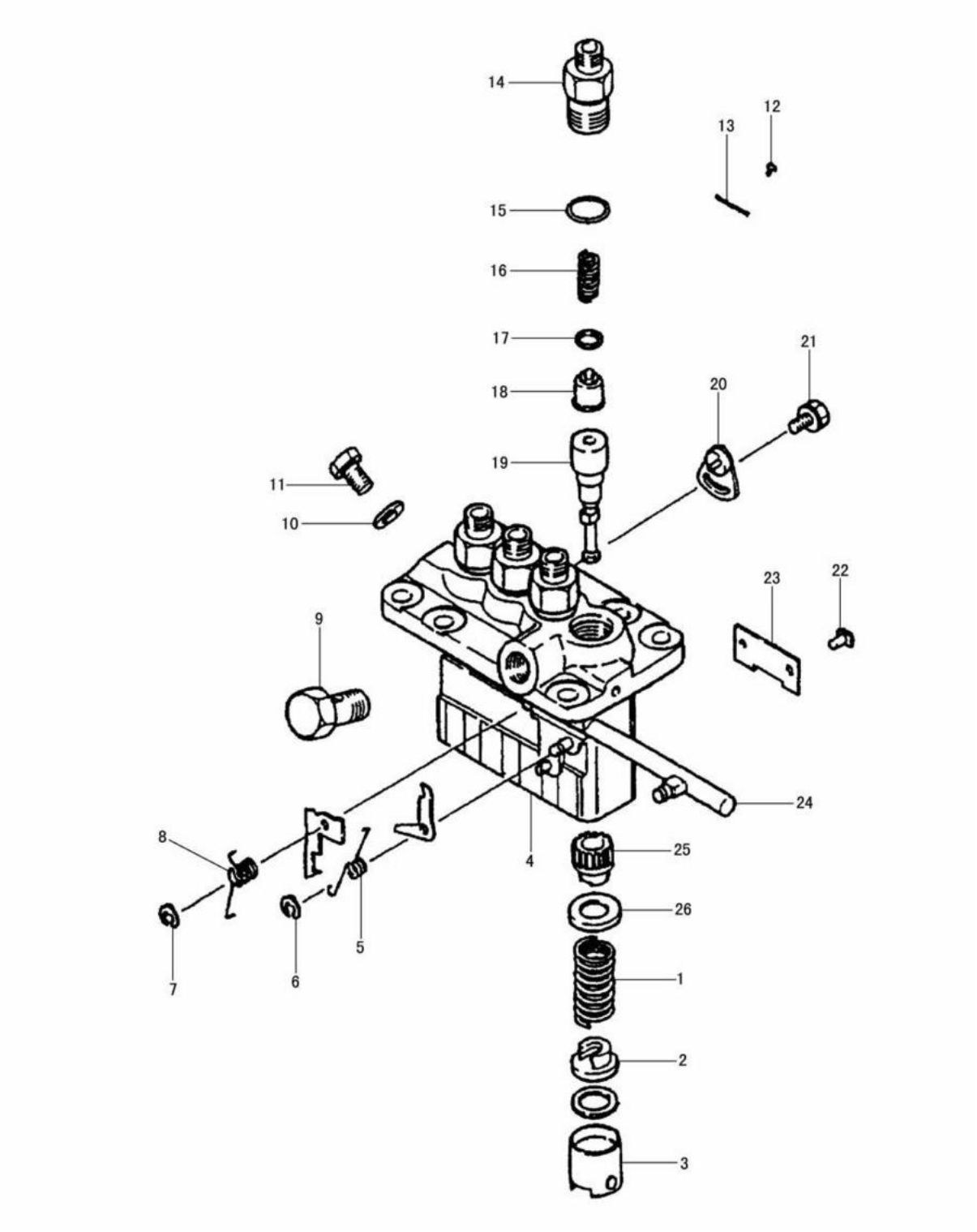

196-8327 INJECTION PUMP ASSEMBLY
PART OF 196-8319-Page 41

FUEL SYSTEM

NOTE	No.	PART NO.	QTY.	PART NAME	NOTE	No.	PART NO.	QTY.	PART NAME
	1	196-8336	4	SPRING					
	2	196-8339	4	SEAT					
	3	196-8337	4	TAPPET AS					
	4	196-8328	1	HOUSING AS					
	5	210-9852	1	SPRING					
	6	118-4779	1	RING					
	7	196-8349	1	RING					
	8	210-9840	1	SPRING					
	9	196-8346	1	SCREW					
	10	118-4825	1	WASHER					
	11	196-8345	1	SCREW					
	12	196-8353	2	RIVET					
	13	196-8352	1	PLATE					
	14	196-8329	4	HOLDER					
	15	196-8340	4	RING					
	16	196-8330	4	SPRING					
	17	196-8331	4	GASKET					
	18	196-8332	4	VALVE AS					
	19	210-9818	4	ELEMENT AS					
	20	196-8343	3	PLATE					
	21	196-8344	3	BOLT					
	22	196-8341	4	PIN					
	23	196-8342	2	PLATE					
	24	196-8338	1	RACK AS					
	25	196-8334	4	SLEEVE					
	26	196-8335	4	SEAT					

J127493 X03

196-8327 INJECTION PUMP ASSEMBLY

PART OF 196-8319-Page 41

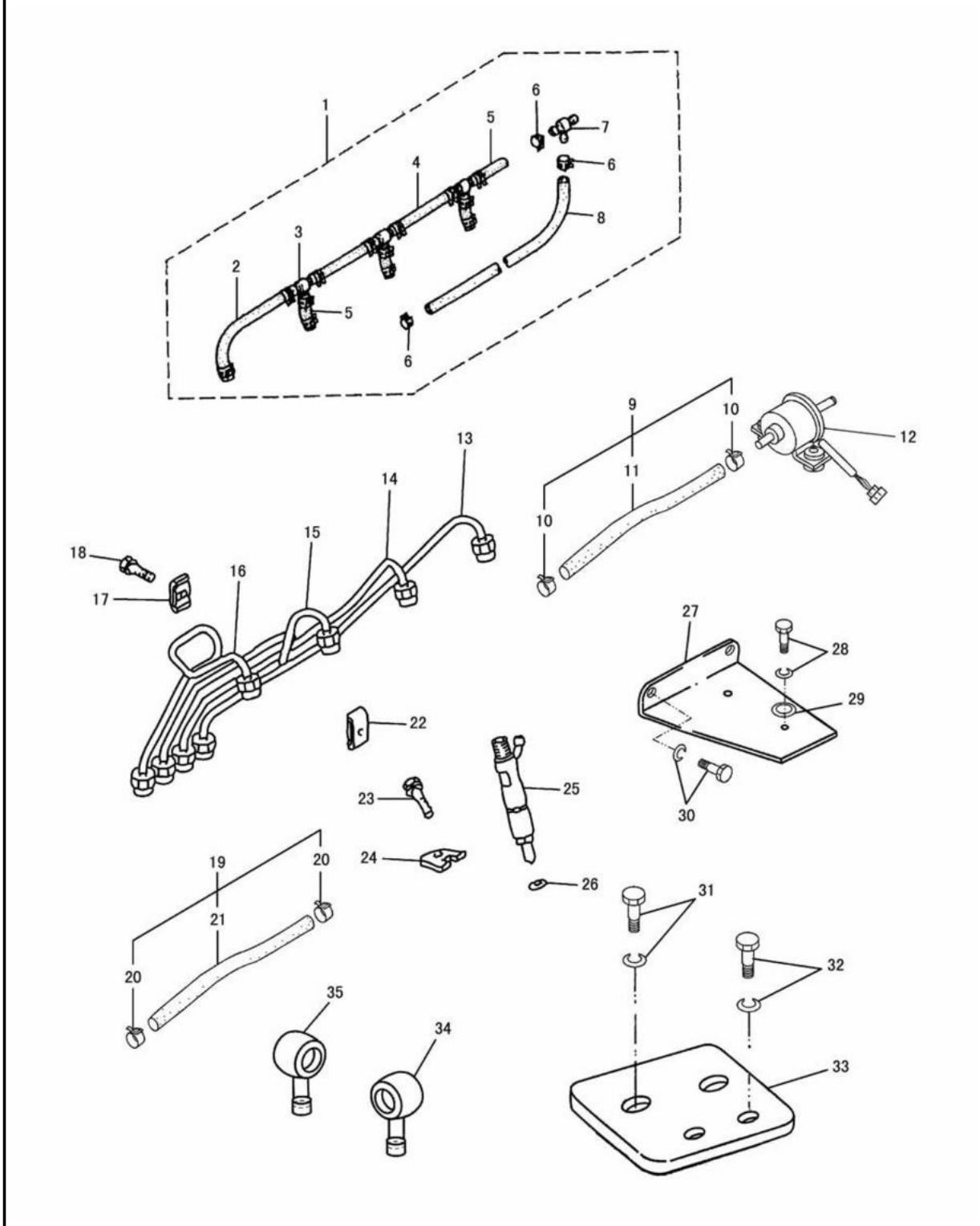

FUEL LINES (196-8320 N/S)
EFFECTIVE WITH SERIAL NO. BMW00001-BMW00955
PART OF 191-3312-Page 5

FUEL SYSTEM

NOTE	No.	PART NO.	QTY.	PART NAME	NOTE	No.	PART NO.	QTY.	PART NAME
	1	195-8365	1	PIPE AS					
	2	195-8370	1	HOSE					
	3	195-8369	3	JOINT					
	4	195-8367	2	HOSE					
	5	195-8368	4	HOSE					
	6	195-8372	16	CLIP					
	7	195-8366	1	JOINT					
	8	195-8371	1	HOSE					
	9	196-8357	1	HOSE AS					
	10	196-8356	2	CLIP					
	11	196-8358	1	HOSE					
	12	139-6482	1	PUMP AS					
	13	195-8361	1	TUBE AS					
	14	195-8360	1	TUBE AS					
	15	195-8359	1	TUBE AS					
	16	195-8358	1	TUBE AS					
	17	122-8948	3	CLAMP					
	18	195-8364	3	BOLT					
	19	215-5065	1	HOSE AS					
	20	196-8356	2	CLIP					
	21	215-5066	1	HOSE					
	22	122-8949	3	CLAMP					
	23	195-8356	4	BOLT					
	24	195-8354	4	SUPPORT					
	25	210-9994	4	NOZZLE AS					
	26	195-8355	4	GASKET					
	27	196-8360	1	BRACKET					
	28	196-8361	2	BOLT(M6×1)					
	29	196-8362	2	WASHER					
	30	195-8351	2	BOLT(M6×1)					
	31	196-8366	2	BOLT					
	32	195-8490	2	BOLT(M10×1.25)					
	33	196-8365	1	PLATE					
	34	196-8363	1	COLLAR					
	35	196-8364	1	COLLAR					

J126890 X02

FUEL LINES (196-8320 N/S)
EFFECTIVE WITH SERIAL NO. BMW00001-BMW00955
PART OF 191-3312-Page 5

FUEL SYSTEM

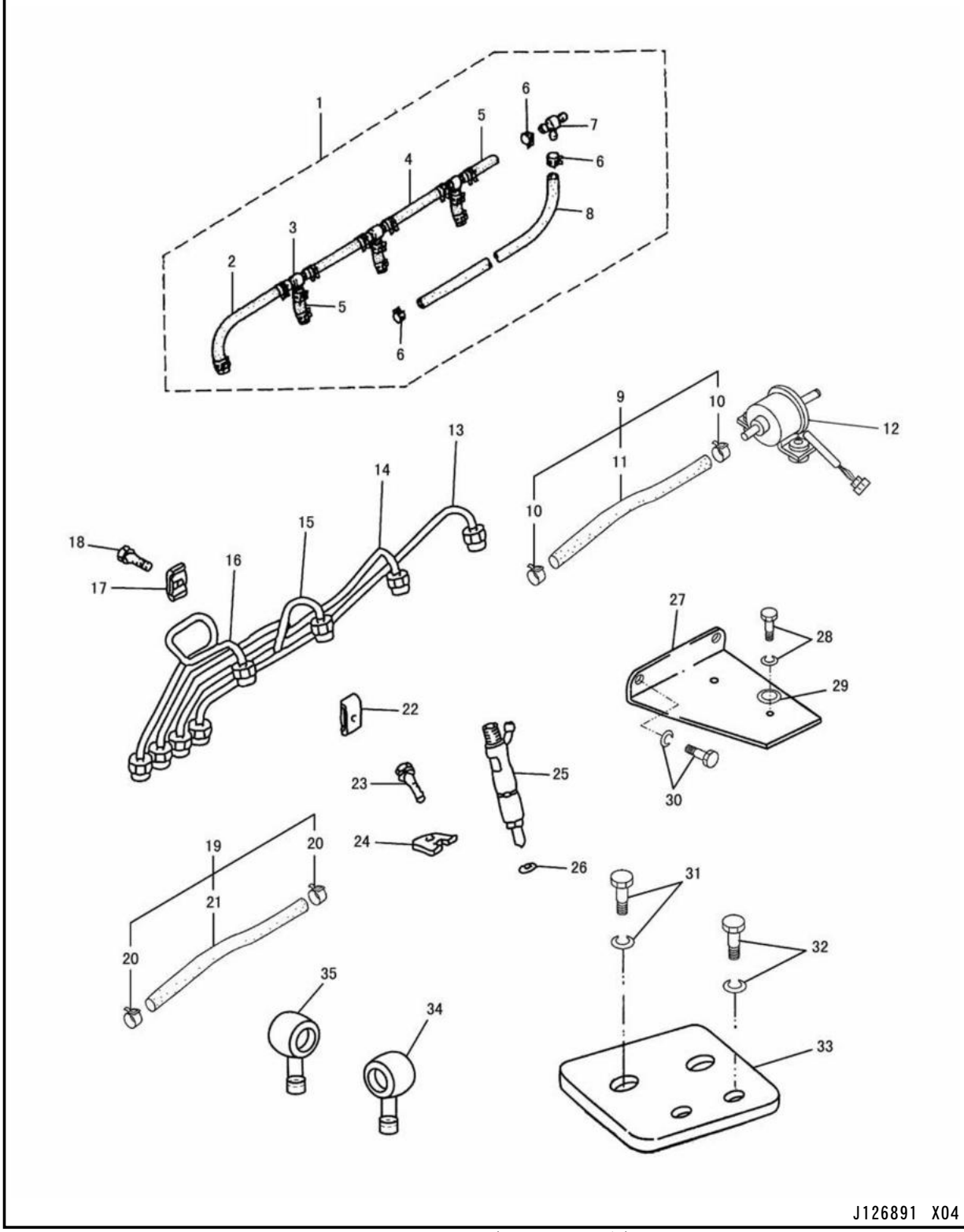

FUEL LINES (196-8320 N/S)
EFFECTIVE WITH SERIAL NO. BMW00956-
PART OF 191-3312-Page 5

FUEL SYSTEM

NOTE	No.	PART NO.	QTY.	PART NAME	NOTE	No.	PART NO.	QTY.	PART NAME
	1	195-8365	1	PIPE AS					
	2	195-8370	1	HOSE					
	3	195-8369	3	JOINT					
	4	195-8367	2	HOSE					
	5	195-8368	4	HOSE					
	6	195-8372	16	CLIP					
	7	195-8366	1	JOINT					
	8	195-8371	1	HOSE					
	9	196-8357	1	HOSE AS					
	10	196-8356	2	CLIP					
	11	196-8358	1	HOSE					
	12	139-6482	1	PUMP AS					
	13	195-8361	1	TUBE AS					
	14	195-8360	1	TUBE AS					
	15	195-8359	1	TUBE AS					
	16	195-8358	1	TUBE AS					
	17	122-8948	3	CLAMP					
	18	195-8364	3	BOLT					
	19	215-5065	1	HOSE AS					
	20	196-8356	2	CLIP					
	21	215-5066	1	HOSE					
	22	122-8949	3	CLAMP					
	23	195-8356	4	BOLT					
C	24	113-0363	4	SUPPORT					
	25	210-9994	4	NOZZLE AS					
	26	195-8355	4	GASKET					
	27	196-8360	1	BRACKET					
C	28	199-2417	2	BOLT(M6×1)					
	29	196-8362	2	WASHER					
	30	195-8351	2	BOLT(M6×1)					
	31	196-8366	2	BOLT					
C	32	199-2354	2	BOLT(M10×1.25)					
	33	196-8365	1	PLATE					
	34	196-8363	1	COLLAR					
	35	196-8364	1	COLLAR					

C-INDICATES CHANGE

J126891 X04

FUEL LINES (196-8320 N/S)
EFFECTIVE WITH SERIAL NO. BMW00956-
PART OF 191-3312-Page 5

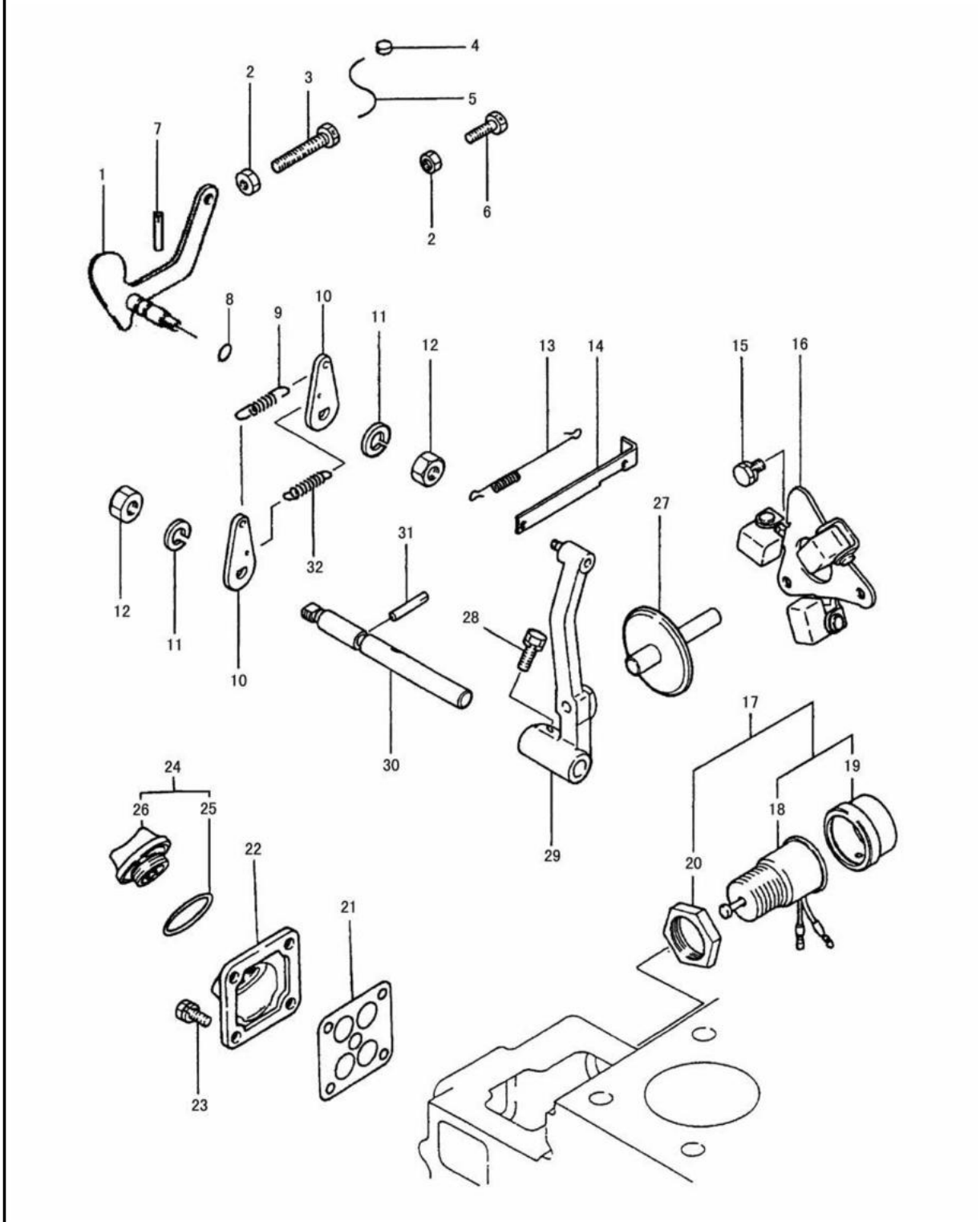

GOVERNOR (196-8321 N/S)
PART OF 191-3312-Page 5

FUEL SYSTEM

NOTE	No.	PART NO.	QTY.	PART NAME	NOTE	No.	PART NO.	QTY.	PART NAME
	1	218-4171	1	LEVER AS					
	2	195-8404	2	NUT(M6×1)					
	3	195-8388	1	BOLT					
	4	195-8386	1	METAL					
	5	195-8387	1	WIRE					
	6	195-8389	1	BOLT(M6×1)					
	7	195-8399	1	PIN					
	8	195-8407	1	O-RING					
	9	195-8390	1	SPRING					
	10	195-8396	2	LEVER					
	11	095-8638	2	WASHER					
	12	091-3474	2	NUT(M8×1.25)					
	13	195-8398	1	SPRING					
	14	195-8393	1	ROD					
	15	195-8401	3	BOLT(M6×1)					
	16	195-8391	1	WEIGHT AS					
	17	195-8411	1	SOLENOID AS					
	18	195-8412	1	SOLENOID AS					
	19	195-8413	1	CAP					
	20	195-8414	1	NUT					
	21	195-8410	1	PROTECTOR					
	22	195-8409	1	FILLER					
	23	199-2212	4	BOLT(M6×1)					
	24	195-8415	1	CAP AS					
	25	195-8418	1	O-RING					
	26	195-8426	1	CAP					
	27	195-8392	1	SHAFT AS					
	28	195-8403	1	BOLT(M6×1)					
	29	195-8394	1	LEVER AS					
	30	195-8395	1	SHAFT					
	31	195-8400	1	PIN					
	32	195-8408	1	SPRING					

J126662 X02

GOVERNOR (196-8321 N/S)
PART OF 191-3312-Page 5

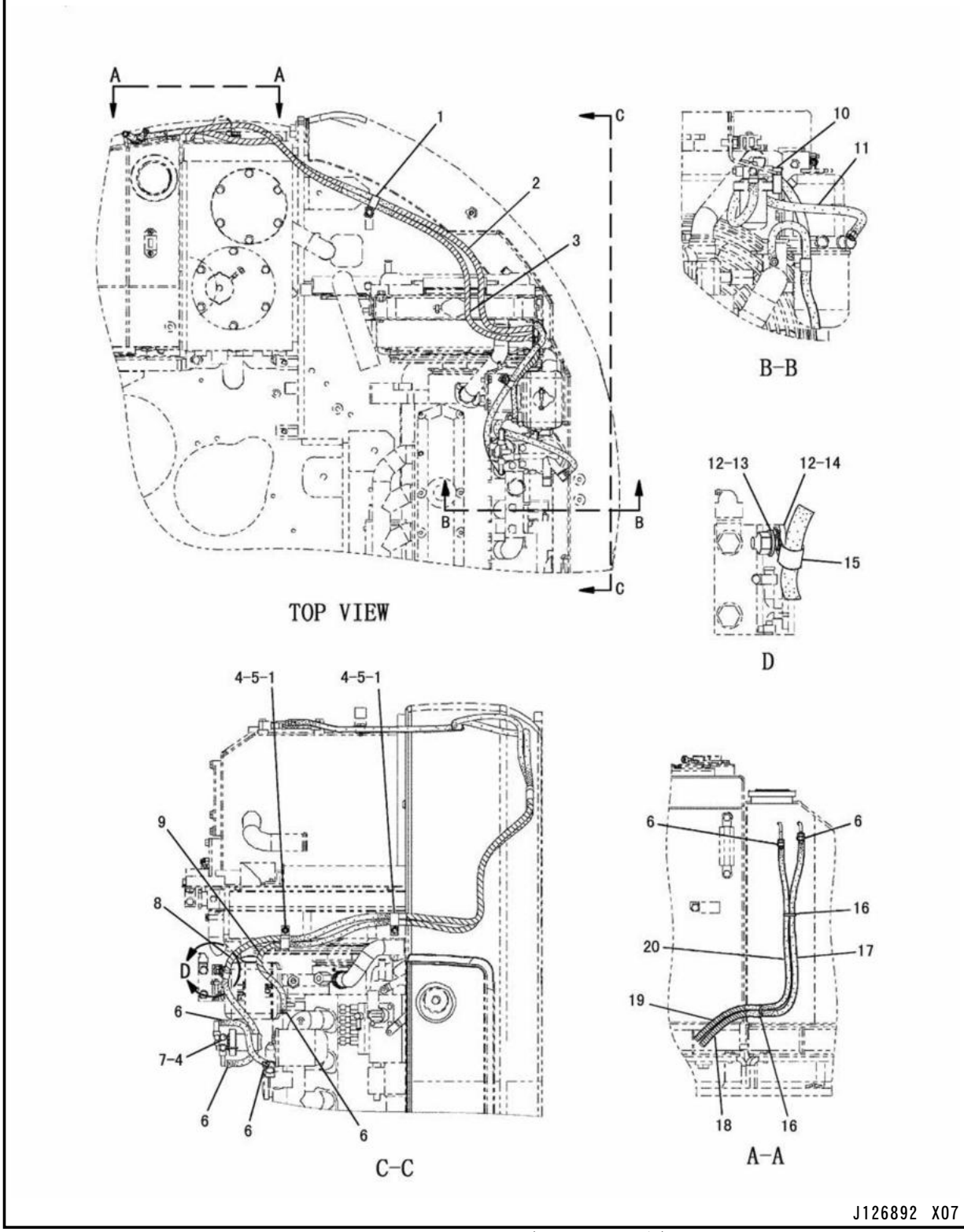

FUEL FILTER LINES (191-3882 N/S)
EFFECTIVE WITH SERIAL NO. BMW00001-BMW01252
PART OF 191-3351-Page 184,185,186,187,188,189

FUEL SYSTEM

NOTE	No.	PART NO.	QTY.	PART NAME	NOTE	No.	PART NO.	QTY.	PART NAME
	1	4D-6466	3	CLIP					
E	2	7I-7439		GUARD---75cm					
E	3	7I-7439		GUARD---75cm					
	4	8T-4224	3	WASHER					
	5	8T-4200	2	BOLT(M8×1.25)					
	6	1P-4278	6	CLAMP					
	7	8T-6869	1	BOLT(M8×1.25)					
E	8	7I-7439		GUARD---15cm					
E	9	7I-7439		GUARD---15cm					
Y	10	119-9899	1	WATER SEDIMENTER					
E	11	5P-1420		HOSE---26.5cm					
	12	5P-4116	2	WASHER					
	13	5C-7261	1	NUT(M8×1.25)					
	14	8T-4189	1	BOLT(M8×1.25)					
	15	4K-8864	1	CLIP					
	16	3S-2093	2	STRAP					
E	17	5P-1420		HOSE---275cm					
E	18	7I-7439		GUARD---55cm					
E	19	7I-7439		GUARD---55cm					
E	20	5P-6442		HOSE---245cm					

E-ORDER BY THE cm
Y-SEE SEPARATE ILLUSTRATION

J126892 X07

FUEL FILTER LINES (191-3882 N/S)

EFFECTIVE WITH SERIAL NO. BMW00001-BMW01252
PART OF 191-3351-Page 184,185,186,187,188,189
119-9899-Page 54

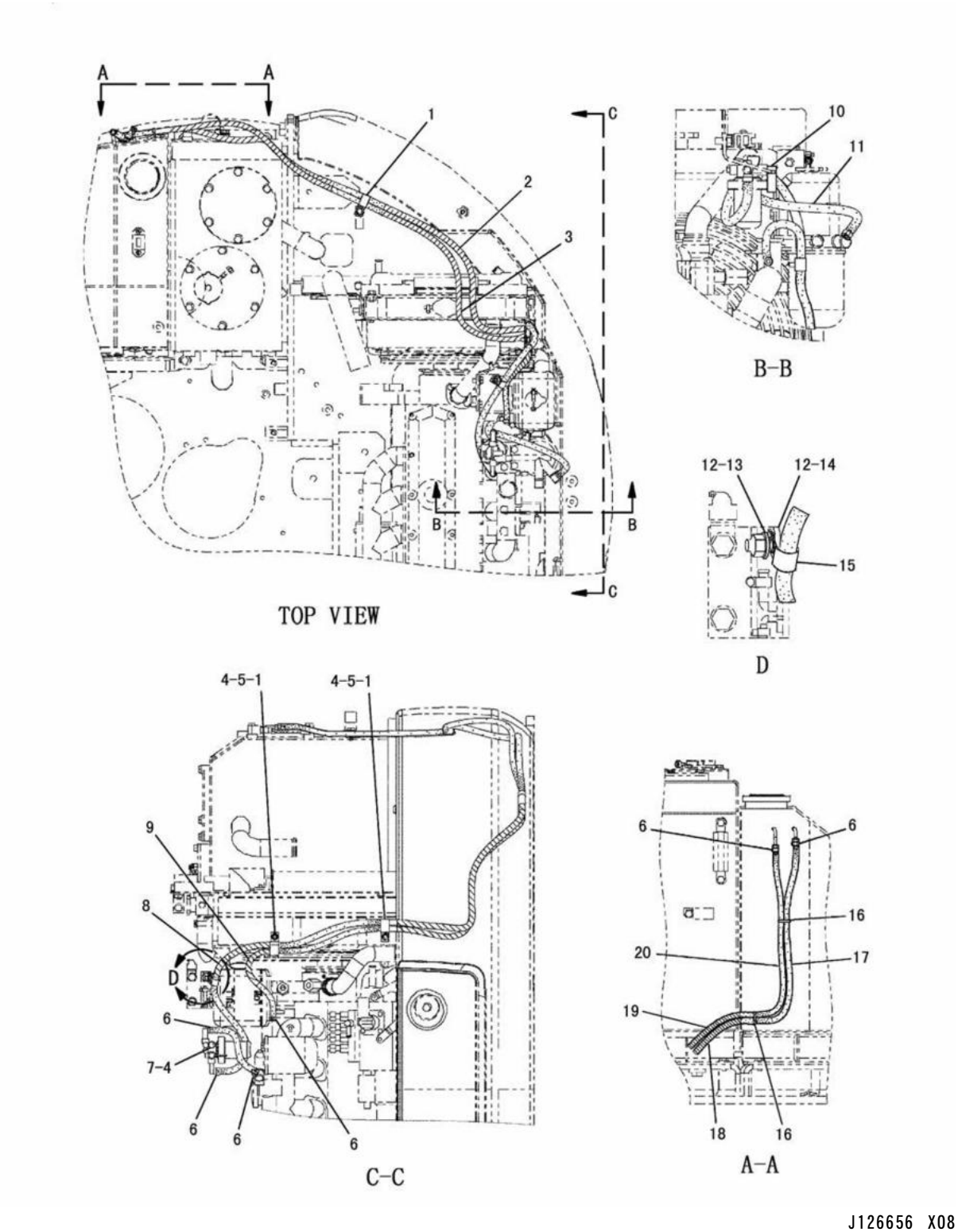

FUEL FILTER LINES (191-3882 N/S)
EFFECTIVE WITH SERIAL NO. BMW01253-
PART OF 191-3351-Page 184,185,186,187,188,189

FUEL SYSTEM

NOTE	No.	PART NO.	QTY.	PART NAME	NOTE	No.	PART NO.	QTY.	PART NAME
	1	4D-6466	3	CLIP					
E	2	7I-7439		GUARD---75cm					
E	3	7I-7439		GUARD---75cm					
	4	8T-4224	3	WASHER					
	5	8T-4200	2	BOLT(M8×1.25)					
	6	1P-4278	6	CLAMP					
	7	8T-6869	1	BOLT(M8×1.25)					
E	8	7I-7439		GUARD---15cm					
E	9	7I-7439		GUARD---15cm					
Y	10	119-9899	1	WATER SEDIMENTER					
EC	11	5P-1420		HOSE---28cm					
	12	5P-4116	2	WASHER					
	13	5C-7261	1	NUT(M8×1.25)					
	14	8T-4189	1	BOLT(M8×1.25)					
	15	4K-8864	1	CLIP					
	16	3S-2093	2	STRAP					
E	17	5P-1420		HOSE---275cm					
E	18	7I-7439		GUARD---55cm					
E	19	7I-7439		GUARD---55cm					
E	20	5P-6442		HOSE---245cm					

C-INDICATES CHANGE
E-ORDER BY THE cm
Y-SEE SEPARATE ILLUSTRATION

J126656 X08

FUEL FILTER LINES (191-3882 N/S)

EFFECTIVE WITH SERIAL NO. BMW01253-
PART OF 191-3351-Page 184,185,186,187,188,189
119-9899-Page 54

FUEL SYSTEM

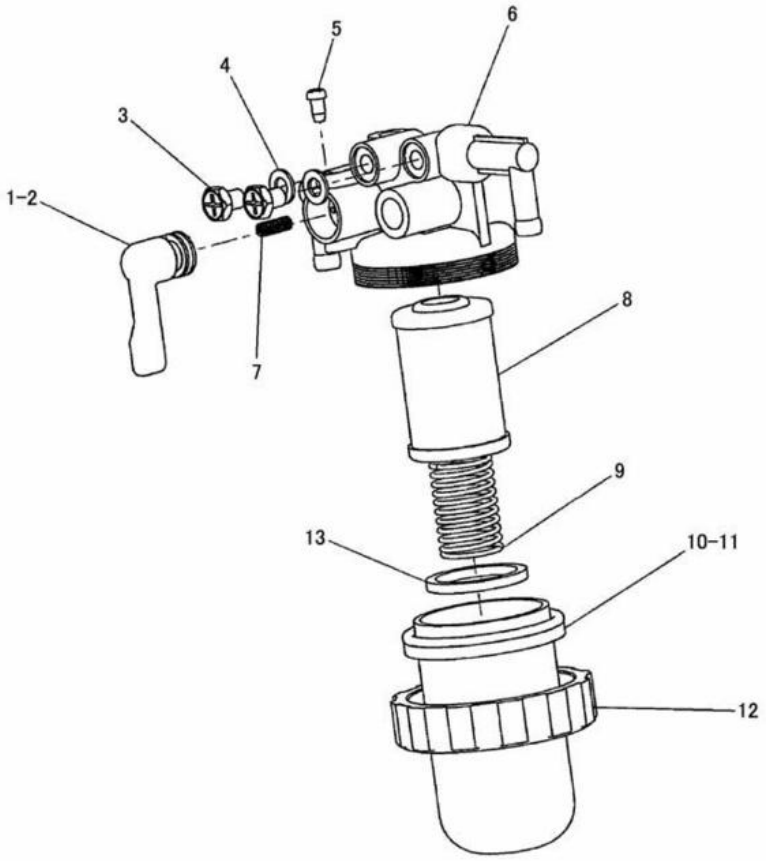

NOTE	No.	PART NO.	QTY.	PART NAME	NOTE	No.	PART NO.	QTY.	PART NAME
	1	233-7741	1	O-RING					
	2	233-7756	1	LEVER					
	3	233-7760	2	SCREW(M6×1)					
	4	233-7757	2	PACKING					
	5	233-7742	1	SCREW(M4×0.7)					
	6	233-7754	1	BODY AS					
	7	233-7740	1	SPRING					
	8	233-7761	1	ELEMENT AS					
	9	233-7762	1	SPRING					
	10	233-7738	1	CUP					
	11	233-7744	1	O-RING					
	12	233-7743	1	NUT					
	13	233-7763	1	FLOAT					

J125844 X02

119-9899 WATER SEDIMENTER
PART OF 191-3882-Page 51,53

FUEL SYSTEM

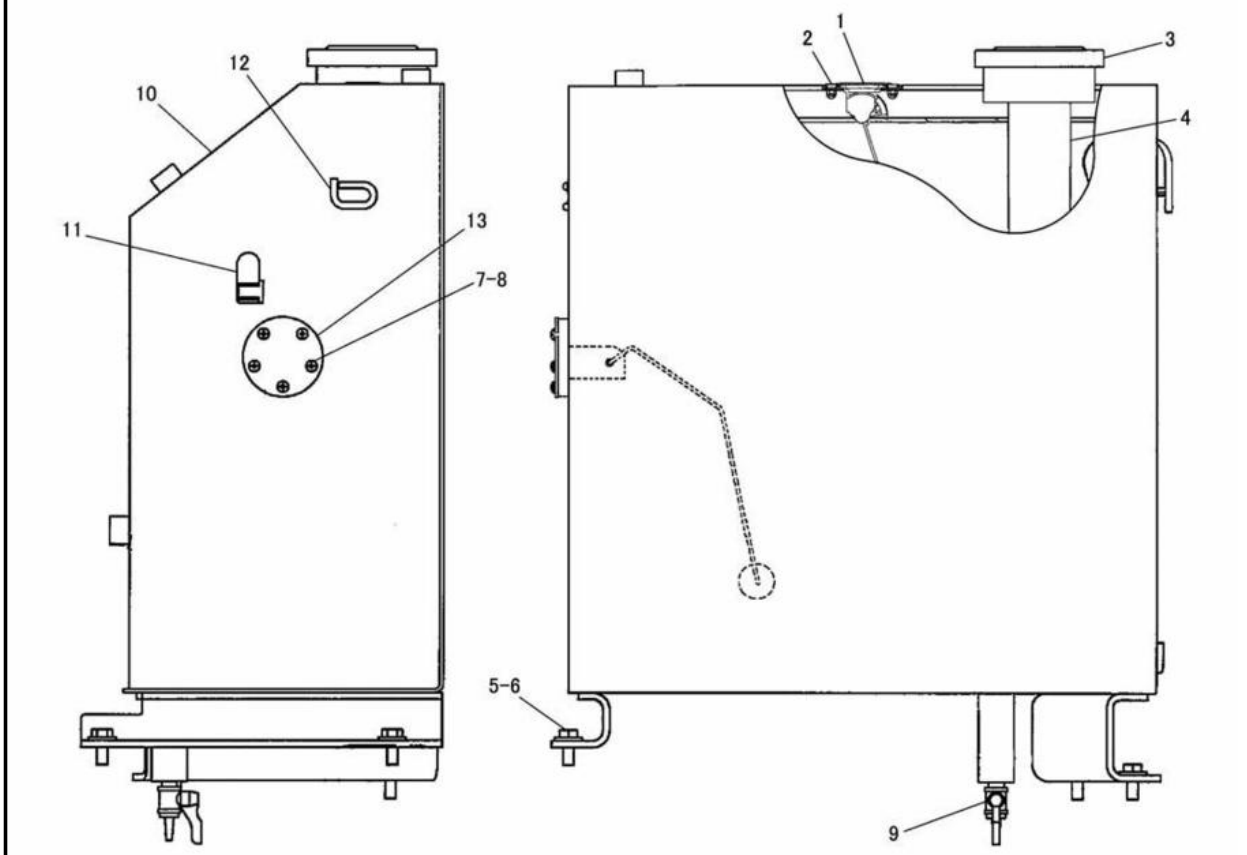

NOTE	No.	PART NO.	QTY.	PART NAME	NOTE	No.	PART NO.	QTY.	PART NAME
	1	154-2241	1	GAUGE AS					
	2	154-2240	2	SCREW(M5×0.8)					
	3	140-3921	1	CAP					
	4	095-9254	1	STRAINER					
	5	7X-7729	4	WASHER					
	6	8T-4136	4	BOLT(M10×1.5)					
	7	095-0736	5	SCREW(M5×0.8)					
	8	8T-0328	5	WASHER					
	9	174-6719	1	VALVE					
	10	191-2536	1	FUEL TANK AS					
	11	121-1029	1	CLIP					
	12	7T-1099	3	LINK					
	13	191-6228	1	SENSOR AS					
		102-8802	1	RECEPTACLE KIT(2P)					
		186-3735	2	PIN					
		4I-0378	1	PACKING					

J126660 X05

FUEL TANK AND MOUNTING (191-2516 N/S)
EFFECTIVE WITH SERIAL NO. BMW00001-BMW01340
PART OF 191-3351-Page 184,185,186,187,188

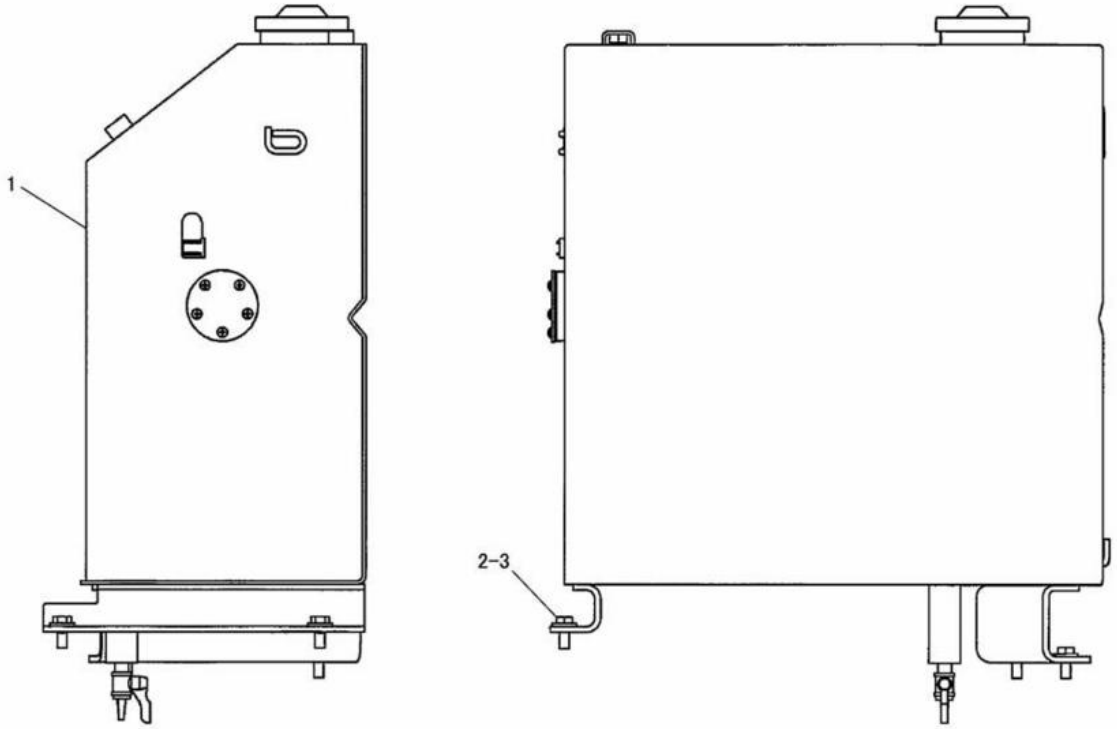

NOTE	No.	PART NO.	QTY.	PART NAME	NOTE	No.	PART NO.	QTY.	PART NAME
Y	1	240-7601	1	TANK GROUP					
	2	7X-7729	4	WASHER					
	3	8T-4136	4	BOLT(M10×1.5)					

Y-SEE SEPARATE ILLUSTRATION

J125884 E00

FUEL TANK AND MOUNTING (240-7600 N/S)

EFFECTIVE WITH SERIAL NO. BMW01341-

PART OF 191-3351-Page 189
240-7601-Page 57

FUEL SYSTEM

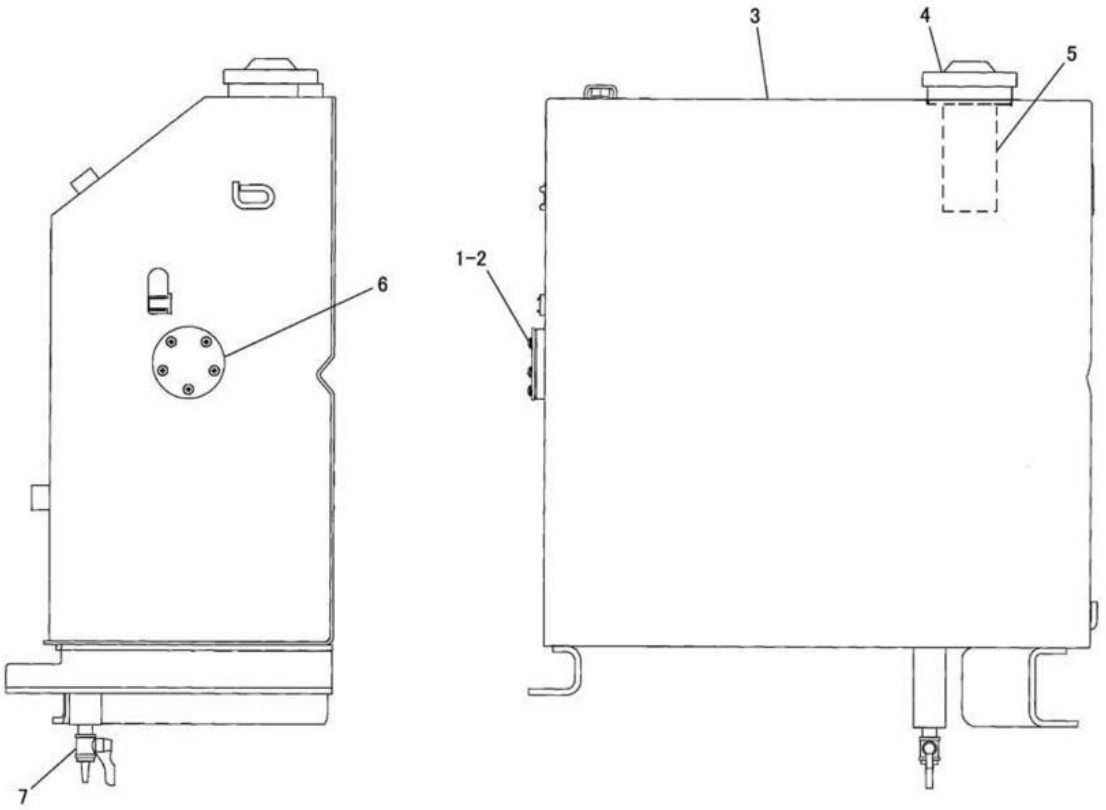

NOTE	No.	PART NO.	QTY.	PART NAME	NOTE	No.	PART NO.	QTY.	PART NAME
	1	8T-0328	5	WASHER					
	2	095-0736	5	SCREW(M5×0.8)					
	3	240-7602	1	TANK AS					
	4	120-8838	1	CAP AS					
	5	120-8839	1	STRAINER					
	6	191-6228	1	SENSOR AS(FUEL LEVEL)					
		102-8802	1	RECEPTACLE KIT(2P)					
		186-3735	2	PIN					
		4I-0378	1	PACKING					
	7	174-6719	1	VALVE					

J125885 E00

FUEL TANK (240-7601 N/S) -62 LITERS
EFFECTIVE WITH SERIAL NO. BMW01341-
PART OF 240-7600-Page 56

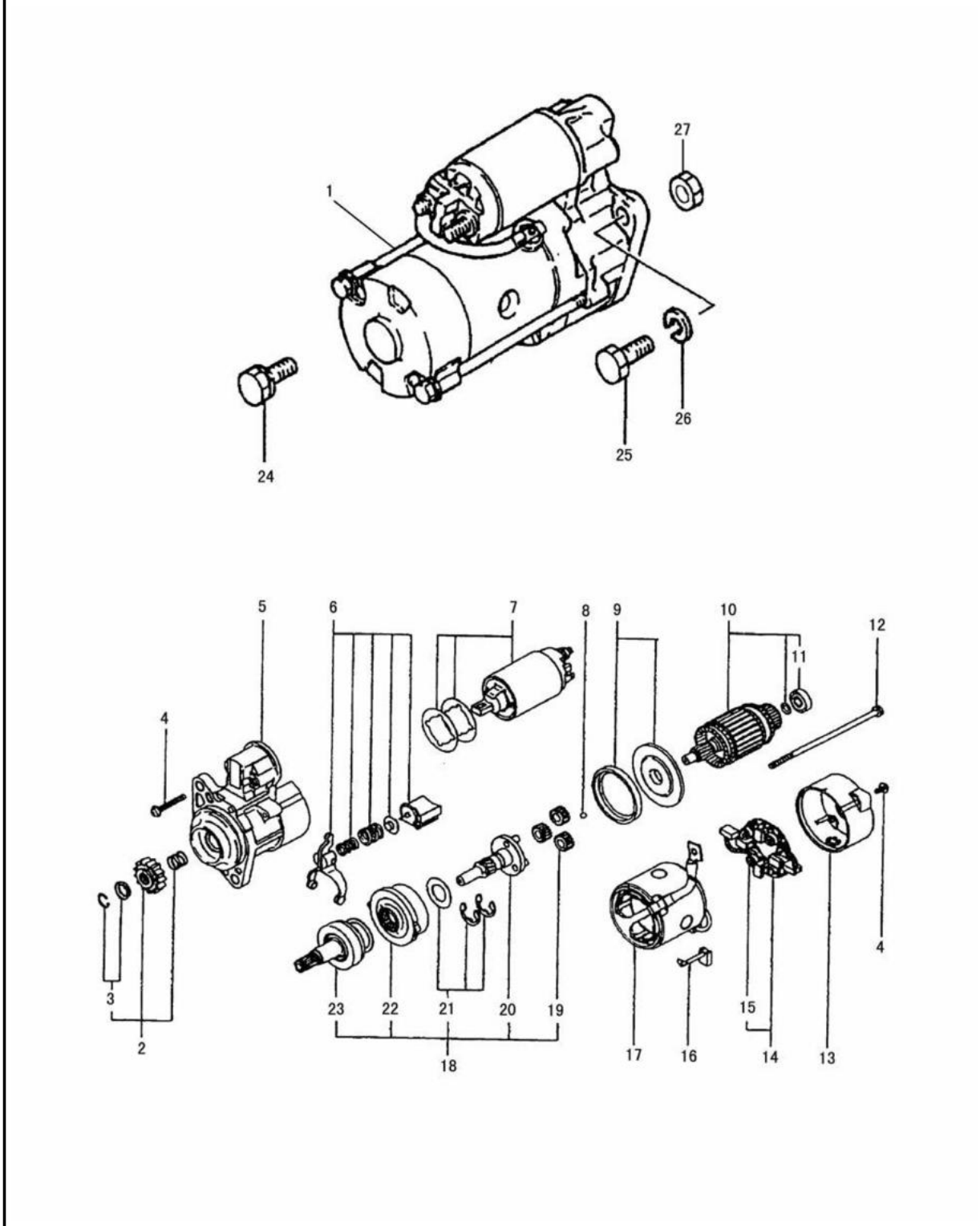

ELECTRIC STARTING MOTOR (196-8322 N/S)
PART OF 191-3312-Page 5

ELECTRICAL SYSTEM

NOTE	No.	PART NO.	QTY.	PART NAME	NOTE	No.	PART NO.	QTY.	PART NAME
	1	195-8486	1	MOTOR AS					
	2	196-8378	1	PINION SET					
	3	196-8379	1	STOPPER SET					
	4	196-8369	1	SCREW SET					
	5	196-8370	1	BRACKET AS					
	6	196-8371	1	LEVER AS					
	7	196-8372	1	SWITCH AS					
	8	127-5948	1	BALL					
	9	127-5949	1	PACKING SET					
	10	196-8375	1	ARMATURE SET					
	11	196-8376	1	BEARING					
	12	196-8377	1	BOLT SET					
	13	196-8390	1	BRACKET AS					
	14	196-8388	1	HOLDER AS					
	15	196-8389	2	SPRING					
	16	196-8387	2	BRUSH					
	17	196-8386	1	YOKE AS					
	18	196-8380	1	SHAFT AS					
	19	196-8385	3	GEAR AS					
	20	196-8384	1	SHAFT AS					
	21	196-8383	1	WASHER SET					
	22	196-8382	1	GEAR AS					
	23	196-8381	1	CLUTCH					
	24	140-5217	1	BOLT(M10×1.25)					
		7X-0796	1	WASHER					
	25	195-8488	1	BOLT					
	26	7X-0796	1	WASHER					
	27	195-8240	1	NUT(M10×1.25)					

J115211 X01

ELECTRIC STARTING MOTOR (196-8322 N/S)
PART OF 191-3312-Page 5

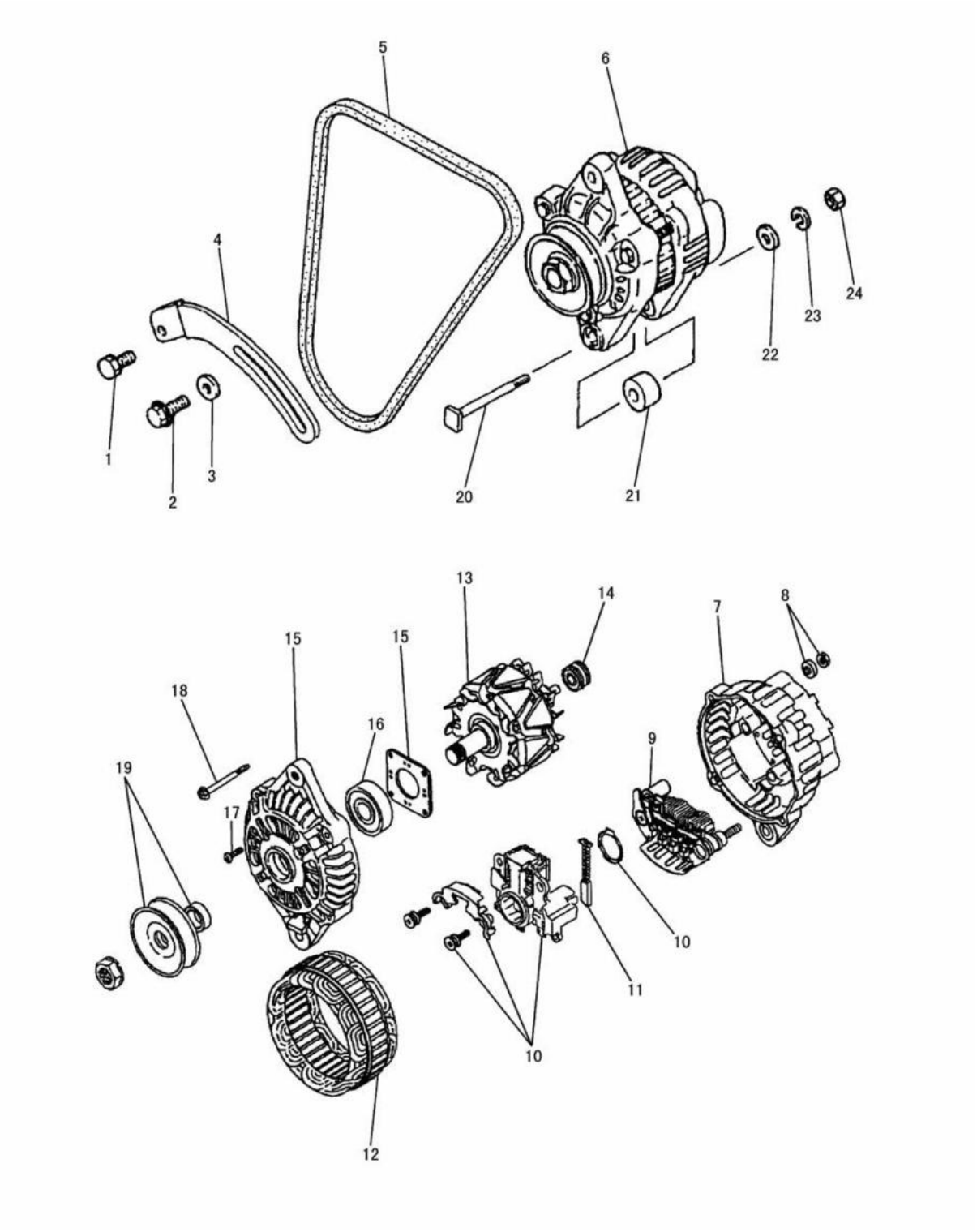

CHARGING ALTERNATOR (196-8324 N/S)
PART OF 191-3312-Page 5

ELECTRICAL SYSTEM

NOTE	No.	PART NO.	QTY.	PART NAME	NOTE	No.	PART NO.	QTY.	PART NAME
	1	6V-7357	1	BOLT(M6×1)					
		2U-2552	1	LOCKWASHER					
	2	195-8498	1	BOLT(M8×1.25)					
	3	195-8497	1	WASHER					
	4	195-8494	1	PLATE					
	5	206-0659	1	V-BELT					
	6	126-4794	1	ALTERNATOR AS					
	7	196-8393	1	BRACKET AS					
	8	085-9429	1	NUT SET					
	9	196-8396	1	RECTIFIER AS					
	10	196-8394	1	REGULATOR SET					
	11	196-8395	2	BRUSH SET					
	12	196-8403	1	STATOR AS					
	13	196-8401	1	ROTOR AS					
	14	196-8400	1	BEARING					
	15	196-8398	1	BRACKET AS					
	16	196-8400	1	BEARING					
	17	196-8399	1	SCREW SET					
	18	196-8392	1	BOLT SET					
	19	196-8391	1	PULLEY AS					
	20	195-8496	1	BOLT					
	21	195-8495	1	SPACER					
	22	195-8502	1	WASHER					
	23	095-8638	1	WASHER					
	24	195-8260	1	NUT(M8×1.25)					

J115399 X02

CHARGING ALTERNATOR (196-8324 N/S)
PART OF 191-3312-Page 5

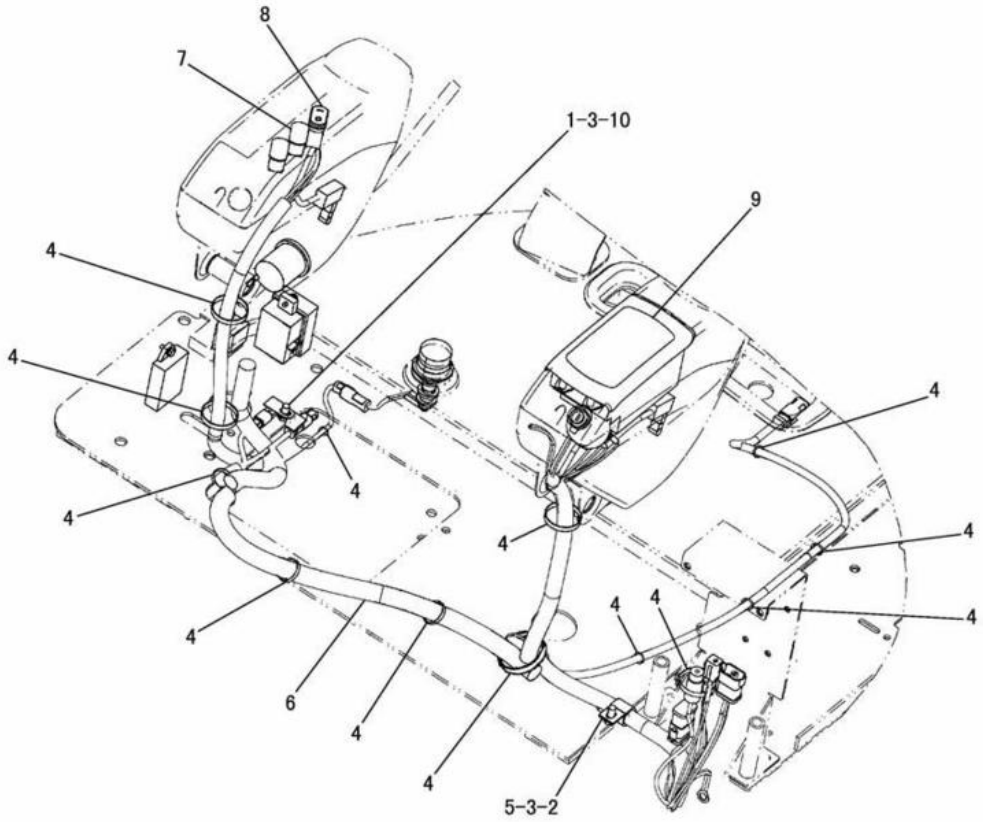

NOTE	No.	PART NO.	QTY.	PART NAME	NOTE	No.	PART NO.	QTY.	PART NAME
	1	116-0118	2	CLIP					
	2	8T-4137	1	BOLT(M10×1.5)					
	3	8T-4121	2	WASHER					
	4	7K-1181	13	STRAP					
	5	4S-1962	1	CLIP					
Y	6	191-4772	1	HARNESS AS					
	7	143-1632	2	PLUG					
	8	195-2670	1	SWITCH AS					
		186-3735	4	PIN					
		102-8804	1	RECEPTACLE KIT(4P)					
Y	9	191-6226	1	CLUSTER GAUGE GROUP					
	10	8T-4191	1	BOLT(M10×1.5)					

Y-SEE SEPARATE ILLUSTRATION

J116734 X06

CONSOLE WIRING (191-3844 N/S) -PART 1 OF 2

EFFECTIVE WITH SERIAL NO. BMW00001-BMW01239

PART OF 191-3822-Page 529,530

191-4772-Page 128～131 191-6226-Page 147

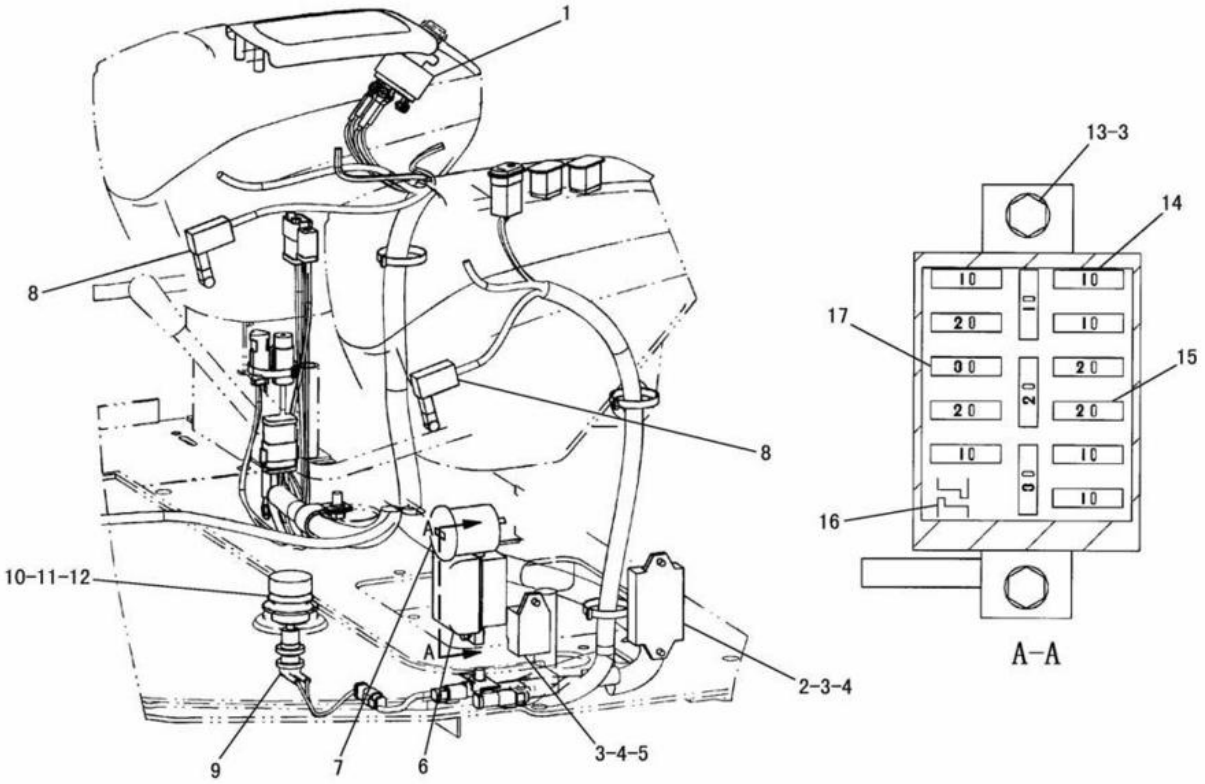

NOTE	No.	PART NO.	QTY.	PART NAME	NOTE	No.	PART NO.	QTY.	PART NAME
Y	1	194-7808	1	SWITCH GROUP		17	8T-9636	2	FUSE(30A)
	2	175-4621	1	CONTROL TIMER UNIT					
	3	9X-8256	5	WASHER					
	4	5C-9553	3	BOLT(M6×1)					
	5	119-9896	1	GLOW TIMER					
	6	096-6142	1	COVER					
	7	9W-1494	1	SERVICE METER KIT					
	8	195-3204	2	SWITCH AS					
		102-8802	1	RECEPTACLE KIT(2P)					
		186-3735	2	PIN					
	9	198-9101	1	SWITCH AS					
		102-8802	1	RECEPTACLE KIT(2P)					
		186-3735	2	PIN					
	10	144-2321	1	PLATE					
	11	144-2320	1	SHAFT					
	12	144-2317	1	BOOT					
	13	8T-4138	2	BOLT(M6×1)					
	14	9W-1442	7	FUSE(10A)					
	15	9W-1446	5	FUSE(20A)					
	16	096-6145	1	TOOL					

Y-SEE SEPARATE ILLUSTRATION

J116735 X06

CONSOLE WIRING (191-3844 N/S) -PART 2 OF 2
EFFECTIVE WITH SERIAL NO. BMW00001-BMW01239
PART OF 191-3822-Page 529,530
194-7808-Page 148

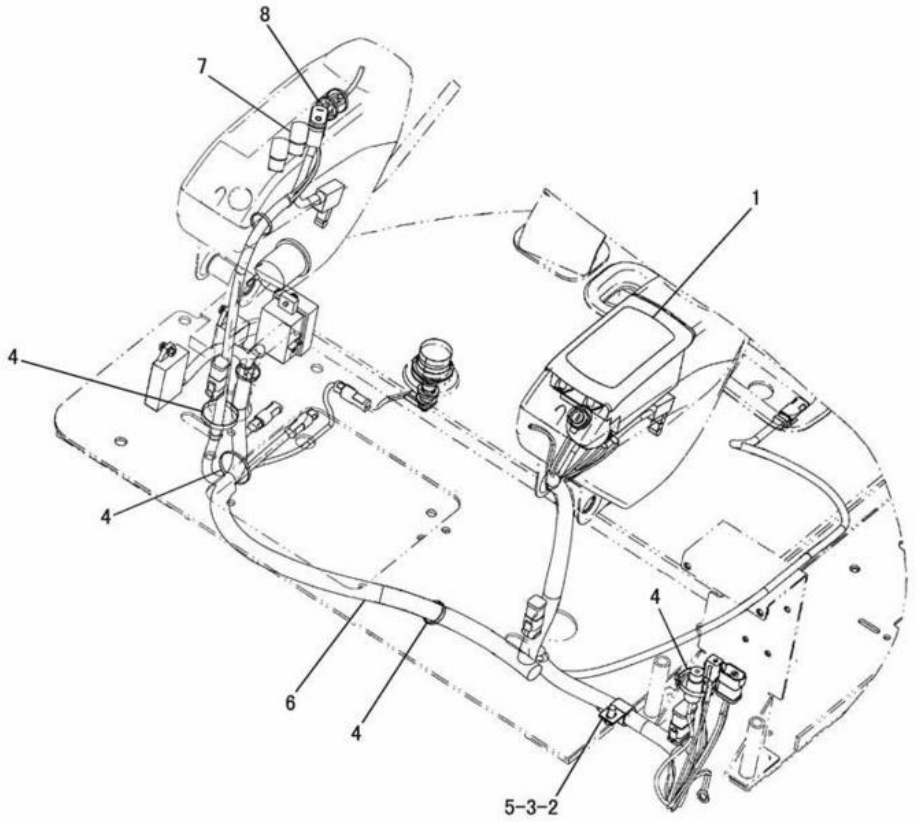

NOTE	No.	PART NO.	QTY.	PART NAME	NOTE	No.	PART NO.	QTY.	PART NAME
Y	1	191-6226	1	CLUSTER GAUGE GROUP					
	2	8T-4137	1	BOLT(M10×1.5)					
C	3	8T-4121	1	WASHER					
C	4	7K-1181	6	STRAP					
	5	4S-1962	1	CLIP					
Y	6	191-4772	1	HARNESS AS					
	7	143-1632	2	PLUG					
	8	195-2670	1	SWITCH AS					
		186-3735	4	PIN					
		102-8804	1	RECEPTACLE KIT(4P)					

C-INDICATES CHANGE
Y-SEE SEPARATE ILLUSTRATION

J115388 X08

CONSOLE WIRING (191-3844 N/S) -PART 1 OF 2
EFFECTIVE WITH SERIAL NO. BMW01240-BMW01248
PART OF 191-3822-Page 529,530
191-6226-Page 147 191-4772-Page 128～131

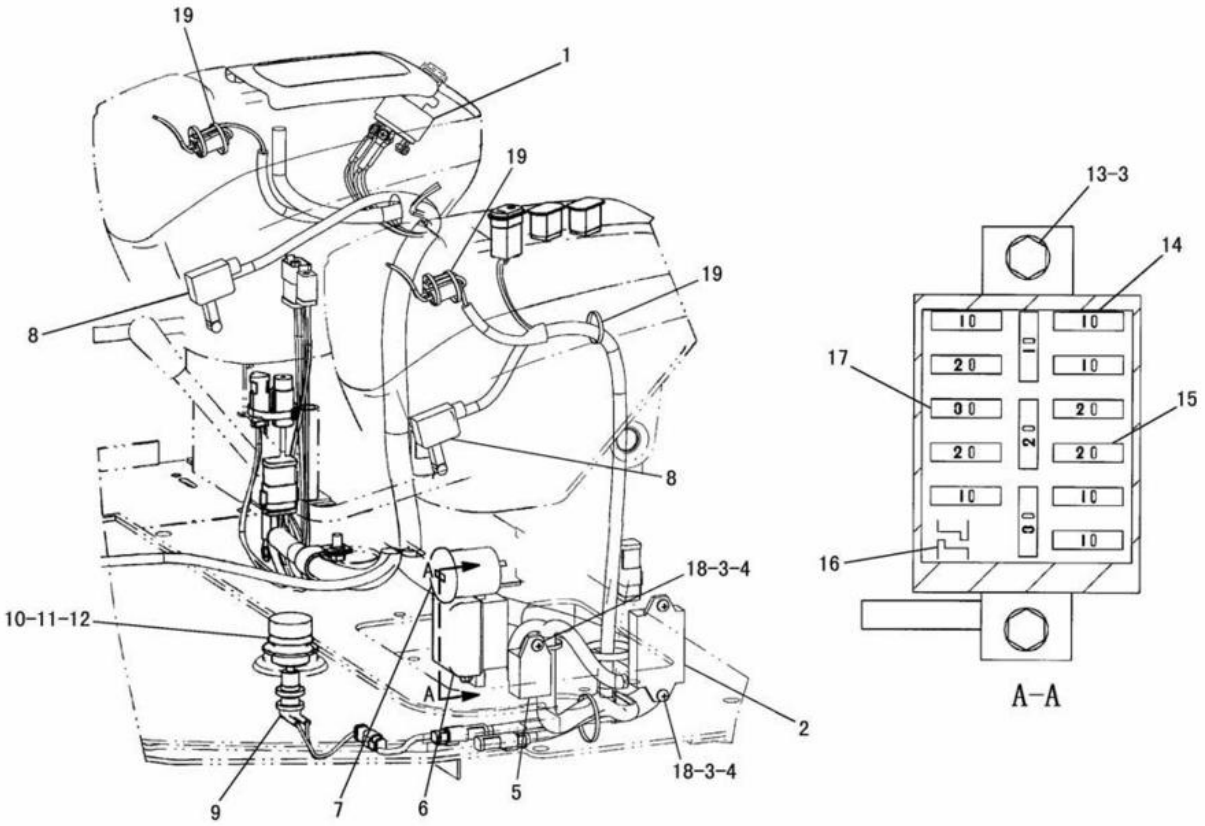

NOTE	No.	PART NO.	QTY.	PART NAME	NOTE	No.	PART NO.	QTY.	PART NAME
YC	1	222-6862	1	SWITCH GROUP		17	8T-9636	2	FUSE(30A)
	2	175-4621	1	CONTROL TIMER UNIT	C	18	5C-2890	3	NUT(M6×1)
	3	9X-8256	5	WASHER	C		203-7895	3	WASHER
C	4	203-7894	3	SCREW(M6×1)	C	19	3S-2093	13	STRAP
	5	119-9896	1	GLOW TIMER					
	6	096-6142	1	COVER					
	7	9W-1494	1	SERVICE METER KIT					
	8	195-3204	2	SWITCH AS					
		102-8802	1	RECEPTACLE KIT(2P)					
		186-3735	2	PIN					
	9	198-9101	1	SWITCH AS					
		102-8802	1	RECEPTACLE KIT(2P)					
		186-3735	2	PIN					
	10	144-2321	1	PLATE					
	11	144-2320	1	SHAFT					
	12	144-2317	1	BOOT					
	13	8T-4138	2	BOLT(M6×1)					
	14	9W-1442	7	FUSE(10A)					
	15	9W-1446	5	FUSE(20A)					
	16	096-6145	1	TOOL					

C-INDICATES CHANGE
Y-SEE SEPARATE ILLUSTRATION

J115389 X08

CONSOLE WIRING (191-3844 N/S) -PART 2 OF 2

EFFECTIVE WITH SERIAL NO. BMW01240-BMW01248
PART OF 191-3822-Page 529,530
222-6862-Page 148

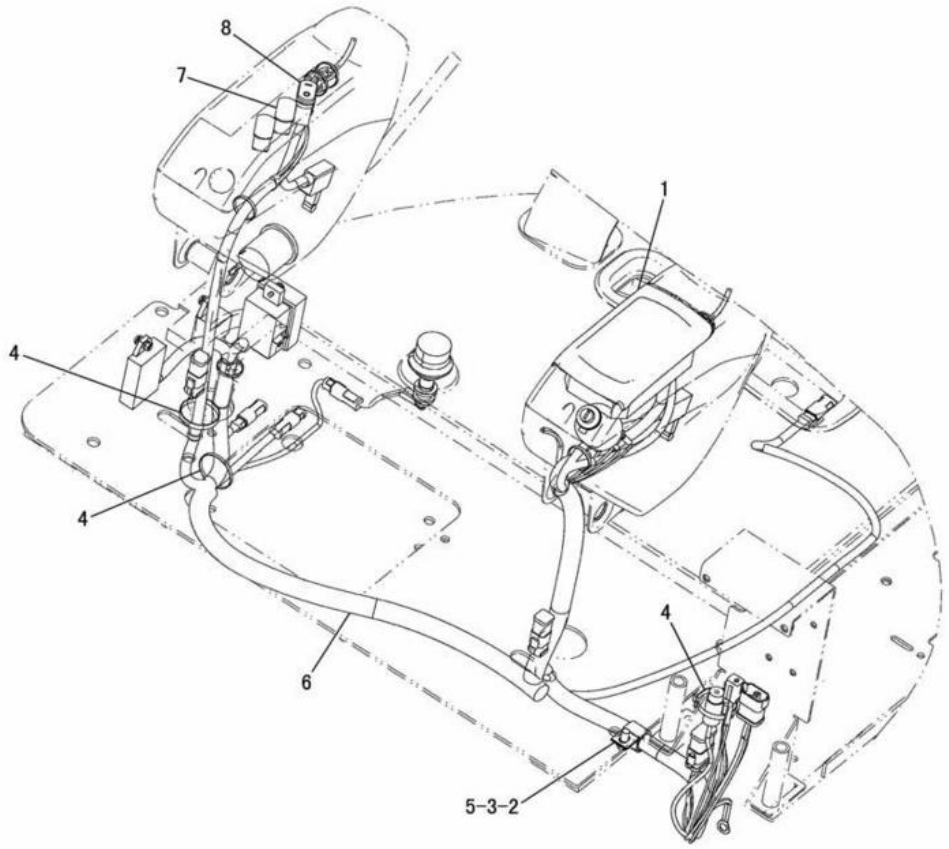

NOTE	No.	PART NO.	QTY.	PART NAME	NOTE	No.	PART NO.	QTY.	PART NAME
Y	1	191-6226	1	CLUSTER GAUGE GROUP					
	2	8T-4137	1	BOLT(M10×1.5)					
	3	8T-4121	1	WASHER					
	4	7K-1181	6	STRAP					
	5	4S-1962	1	CLIP					
Y	6	191-4772	1	HARNESS AS					
	7	143-1632	2	PLUG					
	8	195-2670	1	SWITCH AS					
		186-3735	4	PIN					
		102-8804	1	RECEPTACLE KIT(4P)					

Y-SEE SEPARATE ILLUSTRATION

J126658 X11

CONSOLE WIRING (191-3844 N/S) -PART 1 OF 2

EFFECTIVE WITH SERIAL NO. BMW01249-BMW01358

PART OF 191-3822-Page 529,530

191-6226-Page 147 191-4772-Page 128～131

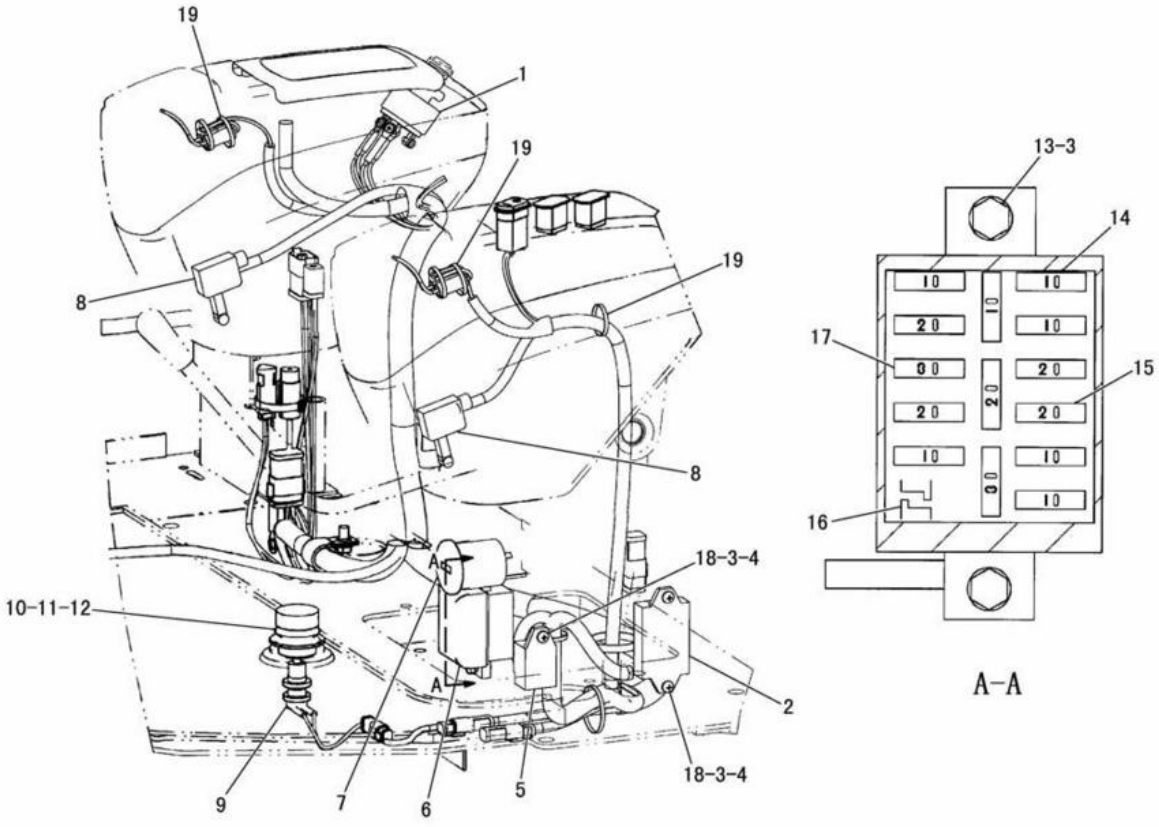

NOTE	No.	PART NO.	QTY.	PART NAME	NOTE	No.	PART NO.	QTY.	PART NAME
YC	1	237-3530	1	SWITCH GROUP		17	8T-9636	2	FUSE(30A)
	2	175-4621	1	CONTROL TIMER UNIT		18	5C-2890	3	NUT(M6×1)
	3	9X-8256	5	WASHER			203-7895	3	WASHER
	4	203-7894	3	SCREW(M6×1)		19	3S-2093	13	STRAP
	5	119-9896	1	GLOW TIMER					
	6	096-6142	1	COVER					
	7	9W-1494	1	SERVICE METER KIT					
	8	195-3204	2	SWITCH AS					
		102-8802	1	RECEPTACLE KIT(2P)					
		186-3735	2	PIN					
	9	198-9101	1	SWITCH AS					
		102-8802	1	RECEPTACLE KIT(2P)					
		186-3735	2	PIN					
	10	144-2321	1	PLATE					
	11	144-2320	1	SHAFT					
	12	144-2317	1	BOOT					
	13	8T-4138	2	BOLT(M6×1)					
	14	9W-1442	7	FUSE(10A)					
	15	9W-1446	5	FUSE(20A)					
	16	096-6145	1	TOOL					

C-INDICATES CHANGE
Y-SEE SEPARATE ILLUSTRATION

J126659 X11

CONSOLE WIRING (191-3844 N/S) -PART 2 OF 2

EFFECTIVE WITH SERIAL NO. BMW01249-BMW01358
PART OF 191-3822-Page 529,530
237-3530-Page 149

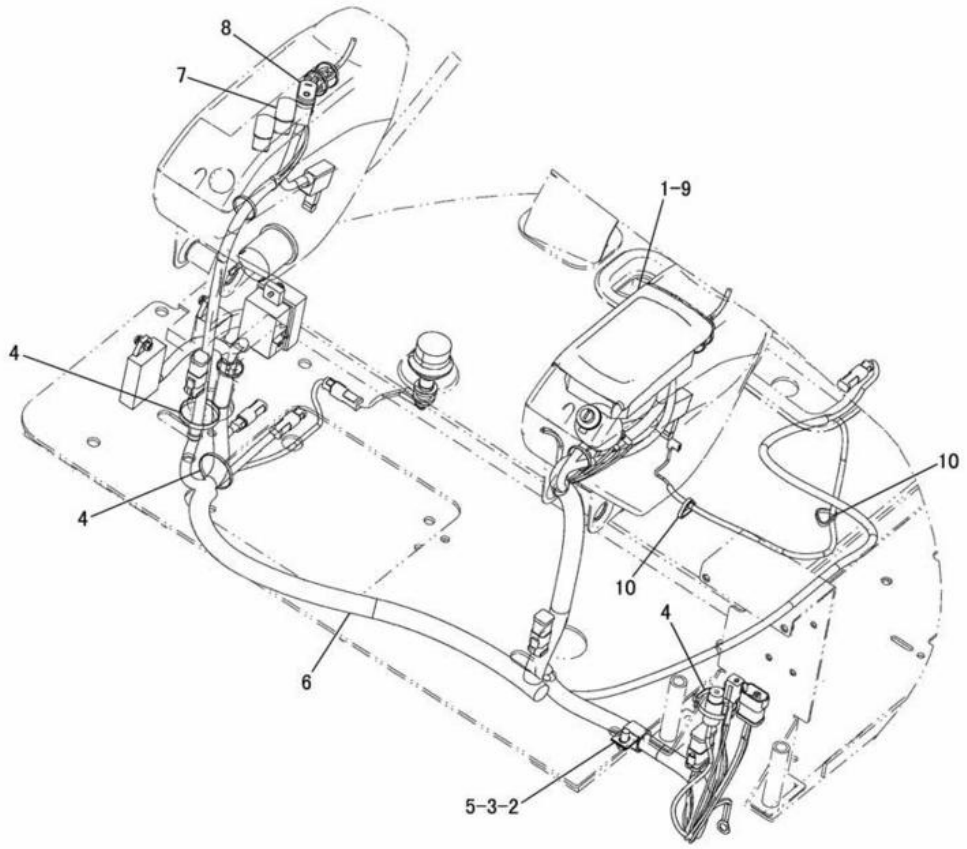

NOTE	No.	PART NO.	QTY.	PART NAME	NOTE	No.	PART NO.	QTY.	PART NAME
Y	1	191-6226	1	CLUSTER GAUGE GROUP					
	2	8T-4137	1	BOLT(M10×1.5)					
	3	8T-4121	1	WASHER					
	4	7K-1181	6	STRAP					
	5	4S-1962	1	CLIP					
CY	6	241-3597	1	HARNESS AS					
	7	143-1632	2	PLUG					
	8	195-2670	1	SWITCH AS					
		186-3735	4	PIN					
		102-8804	1	RECEPTACLE KIT(4P)					
C	9	207-0782	4	SCREW					
C	10	3S-2093	2	STRAP					

C-INDICATES CHANGE
Y-SEE SEPARATE ILLUSTRATION

J128734 X12

CONSOLE WIRING (191-3844 N/S) -PART 1 OF 2
EFFECTIVE WITH SERIAL NO. BMW01359-BMW01449
PART OF 191-3822-Page 529,530
191-6226-Page 147 241-3597-Page 132, 133

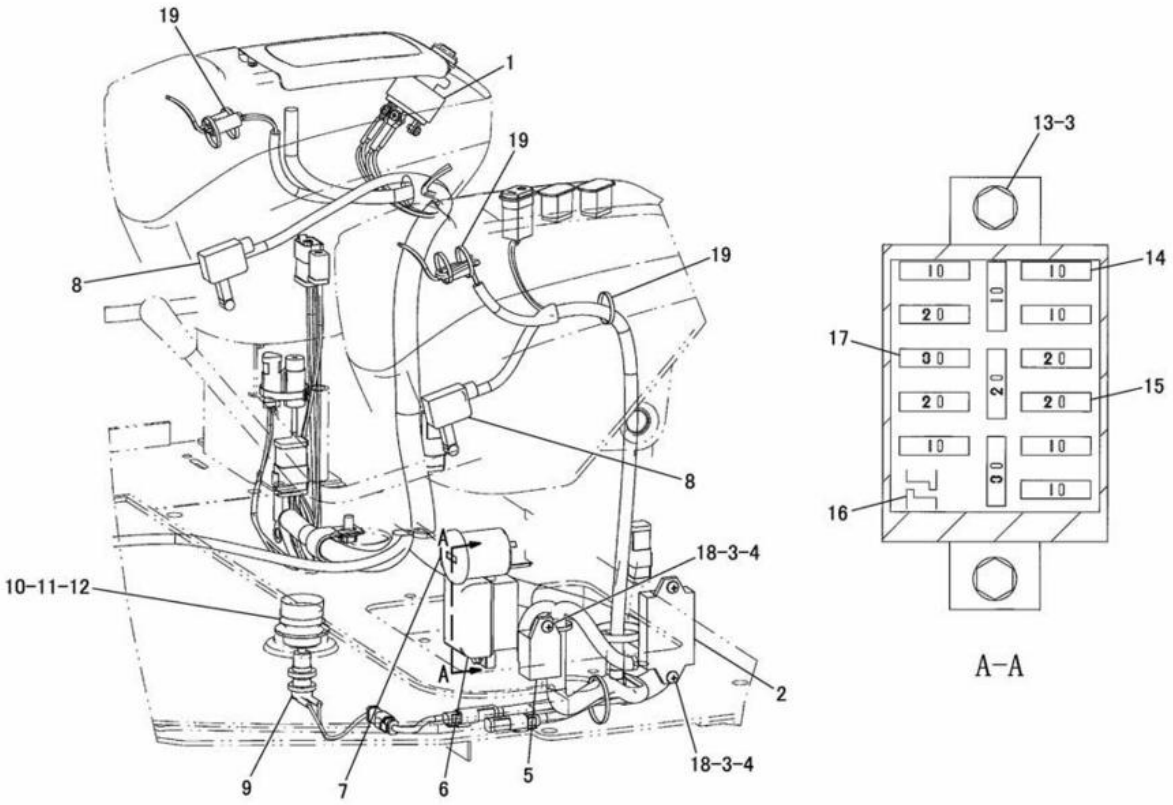

NOTE	No.	PART NO.	QTY.	PART NAME	NOTE	No.	PART NO.	QTY.	PART NAME
Y	1	237-3530	1	SWITCH GROUP		17	8T-9636	2	FUSE(30A)
	2	175-4621	1	CONTROL TIMER UNIT		18	5C-2890	3	NUT(M6×1)
	3	9X-8256	5	WASHER			203-7895	3	WASHER
	4	203-7894	3	SCREW(M6×1)		19	3S-2093	13	STRAP
	5	119-9896	1	GLOW TIMER					
	6	096-6142	1	COVER					
	7	9W-1494	1	SERVICE METER KIT					
	8	195-3204	2	SWITCH AS					
		102-8802	1	RECEPTACLE KIT(2P)					
		186-3735	2	PIN					
	9	198-9101	1	SWITCH AS					
		102-8802	1	RECEPTACLE KIT(2P)					
		186-3735	2	PIN					
	10	144-2321	1	PLATE					
	11	144-2320	1	SHAFT					
	12	144-2317	1	BOOT					
	13	8T-4138	2	BOLT(M6×1)					
	14	9W-1442	7	FUSE(10A)					
	15	9W-1446	5	FUSE(20A)					
	16	096-6145	1	TOOL					

Y-SEE SEPARATE ILLUSTRATION

J128735 X12

CONSOLE WIRING (191-3844 N/S) -PART 2 OF 2
EFFECTIVE WITH SERIAL NO. BMW01359-BMW01449
PART OF 191-3822-Page 529,530
237-3530-Page 149

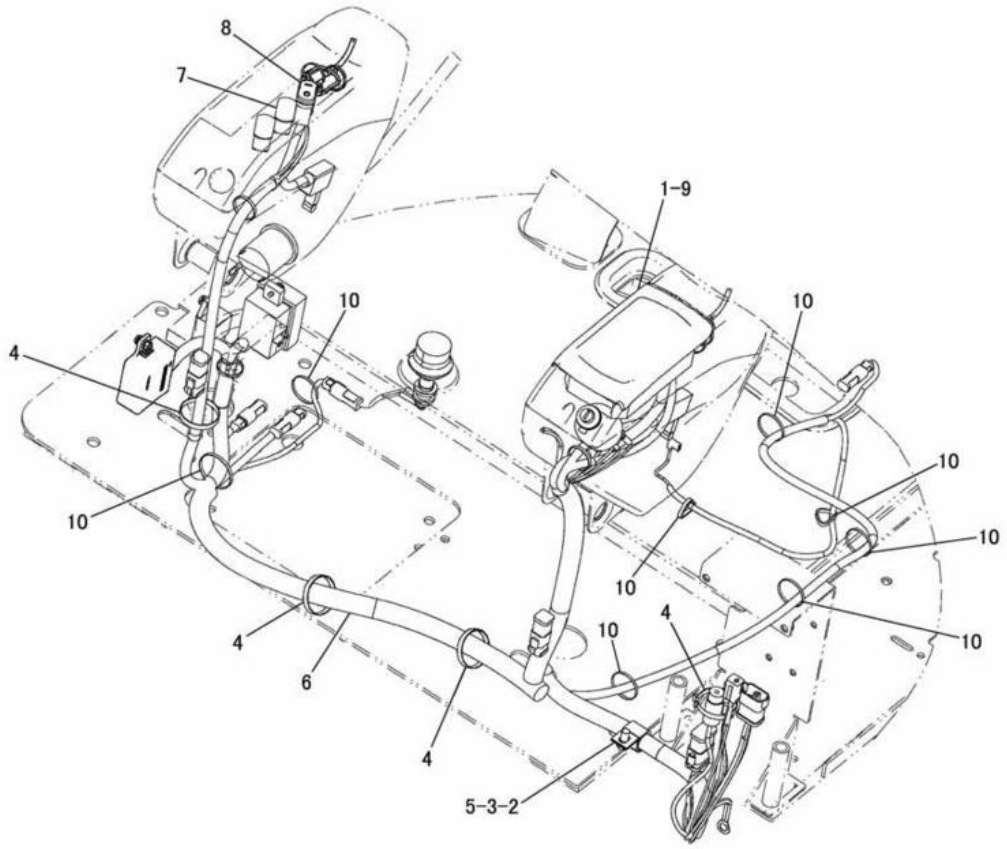

NOTE	No.	PART NO.	QTY.	PART NAME	NOTE	No.	PART NO.	QTY.	PART NAME
CY	1	248-3862	1	CLUSTER GAUGE GROUP					
	2	8T-4137	1	BOLT(M10×1.5)					
	3	8T-4121	1	WASHER					
	4	7K-1181	6	STRAP					
	5	4S-1962	1	CLIP					
CY	6	246-6428	1	HARNESS AS					
	7	143-1632	2	PLUG					
C	8	236-6782	1	SWITCH AS					
		186-3735	4	PIN					
		102-8804	1	RECEPTACLE KIT(4P)					
	9	207-0782	4	SCREW(M4×0.7)					
	10	3S-2093	8	STRAP					

C-INDICATES CHANGE
Y-SEE SEPARATE ILLUSTRATION

J131120 X15

CONSOLE WIRING (191-3844 N/S) -PART 1 OF 2
EFFECTIVE WITH SERIAL NO. BMW01450-BMW01588
PART OF 191-3822-Page 529,530
248-3862-Page 147 246-6428-Page 134, 135

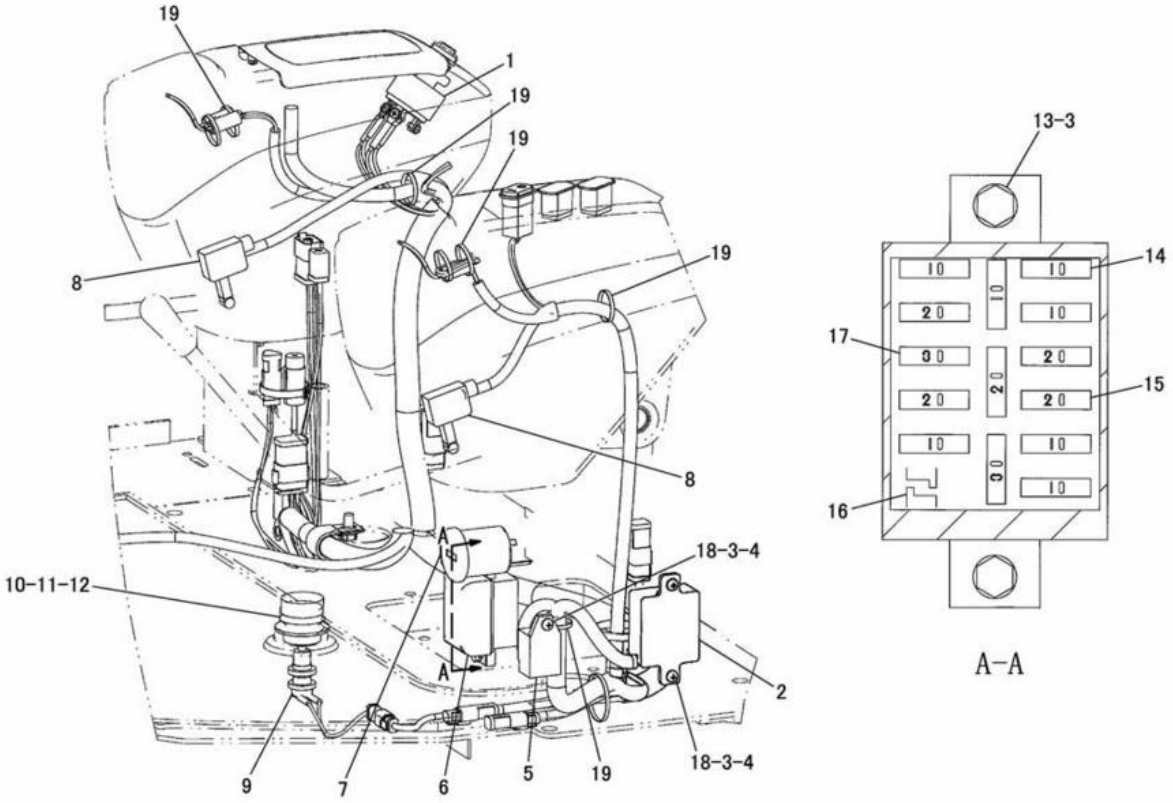

NOTE	No.	PART NO.	QTY.	PART NAME	NOTE	No.	PART NO.	QTY.	PART NAME
Y	1	237-3530	1	SWITCH GROUP		17	8T-9636	2	FUSE(30A)
C	2	231-7928	1	CONTROL AS		18	5C-2890	3	NUT(M6×1)
	3	9X-8256	5	WASHER			203-7895	3	WASHER
	4	203-7894	3	SCREW(M6×1)		19	3S-2093	7	STRAP
	5	119-9896	1	GLOW TIMER					
	6	096-6142	1	COVER					
	7	9W-1494	1	SERVICE METER KIT					
	8	195-3204	2	SWITCH AS					
		102-8802	1	RECEPTACLE KIT(2P)					
		186-3735	2	PIN					
C	9	244-5728	1	SWITCH AS					
		102-8802	1	RECEPTACLE KIT(2P)					
		186-3735	2	PIN					
	10	144-2321	1	PLATE					
	11	144-2320	1	SHAFT					
	12	144-2317	1	BOOT					
	13	8T-4138	2	BOLT(M6×1)					
	14	9W-1442	7	FUSE(10A)					
	15	9W-1446	5	FUSE(20A)					
	16	096-6145	1	TOOL					

C-INDICATES CHANGE
Y-SEE SEPARATE ILLUSTRATION

J131121 X15

CONSOLE WIRING (191-3844 N/S) -PART 2 OF 2

EFFECTIVE WITH SERIAL NO. BMW01450-BMW01588
PART OF 191-3822-Page 529,530
237-3530-Page 149

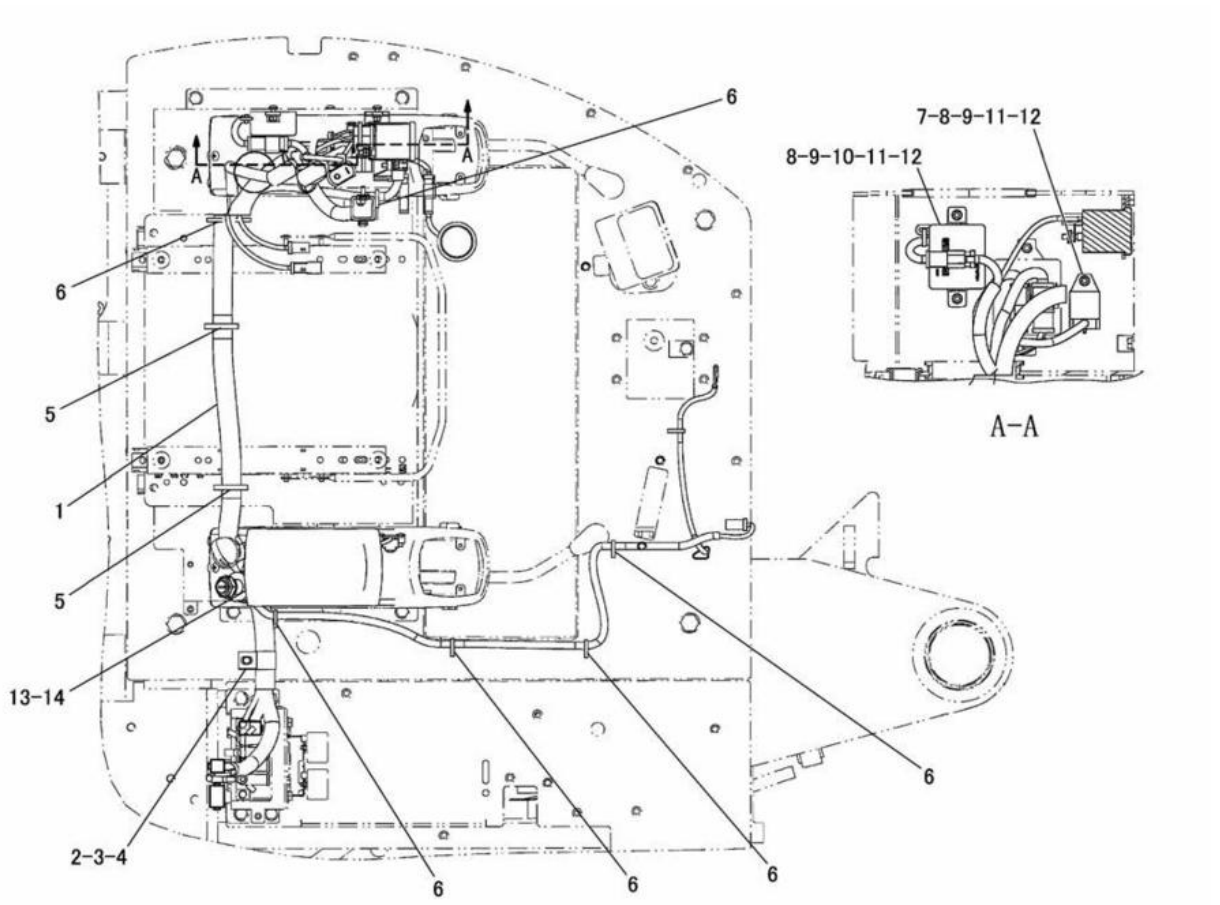

NOTE	No.	PART NO.	QTY.	PART NAME	NOTE	No.	PART NO.	QTY.	PART NAME
CY	1	248-1988	1	HARNESS AS					
	2	4S-1962	1	CLIP					
	3	8T-4121	1	WASHER					
	4	8T-4137	1	BOLT(M10×1.5)					
C	5	7K-1181	2	STRAP					
	6	3S-2093	6	STRAP					
	7	119-9896	1	GLOW TIMER					
	8	203-7894	3	SCREW(M6×1)					
	9	203-7895	3	WASHER					
	10	231-7928	1	CONTROL AS					
		102-8805	1	RECEPTACLE KIT(6P)					
		186-3735	5	PIN					
		8T-8737	1	PLUG					
	11	5C-2890	3	NUT(M6×1)					
	12	9X-8256	3	WASHER					
	13	207-0782	4	SCREW(M4×0.7)					
Y	14	248-3862	1	CLUSTER GAUGE GROUP					

C-INDICATES CHANGE
Y-SEE SEPARATE ILLUSTRATION

J132096 X16

CONSOLE WIRING (191-3844 N/S) -PART 1 OF 4

EFFECTIVE WITH SERIAL NO. BMW01589-
PART OF 191-3822-Page 529,530
248-1988-Page 136, 137 248-3862-Page 147

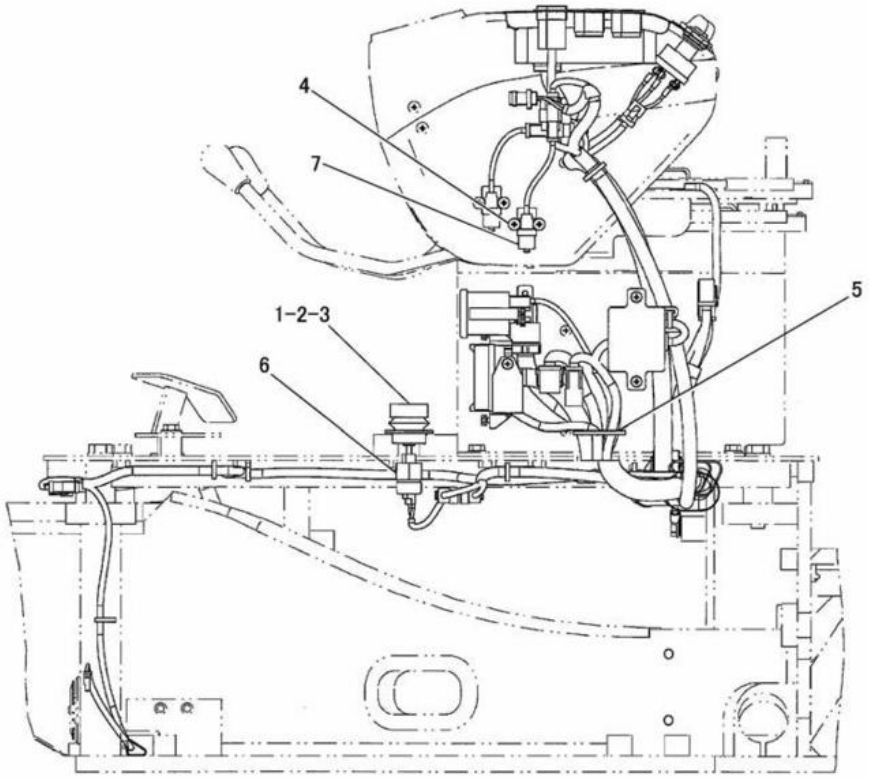

LEFT SIDE VIEW

NOTE	No.	PART NO.	QTY.	PART NAME	NOTE	No.	PART NO.	QTY.	PART NAME
	1	144-2317	1	BOOT					
	2	144-2320	1	SHAFT					
	3	144-2321	1	PLATE					
C	4	158-4781	2	SCREW(M6×1)					
	5	3S-2093	1	STRAP					
	6	244-5728	1	SWITCH AS					
		102-8802	1	RECEPTACLE KIT(2P)					
		186-3735	2	PIN					
C	7	250-0989	1	SWITCH AS					
		102-8802	1	RECEPTACLE KIT(2P)					
		186-3735	2	PIN					

C-INDICATES CHANGE

J132097 X16

CONSOLE WIRING (191-3844 N/S) -PART 2 OF 4
EFFECTIVE WITH SERIAL NO. BMW01589-
PART OF 191-3822-Page 529,530

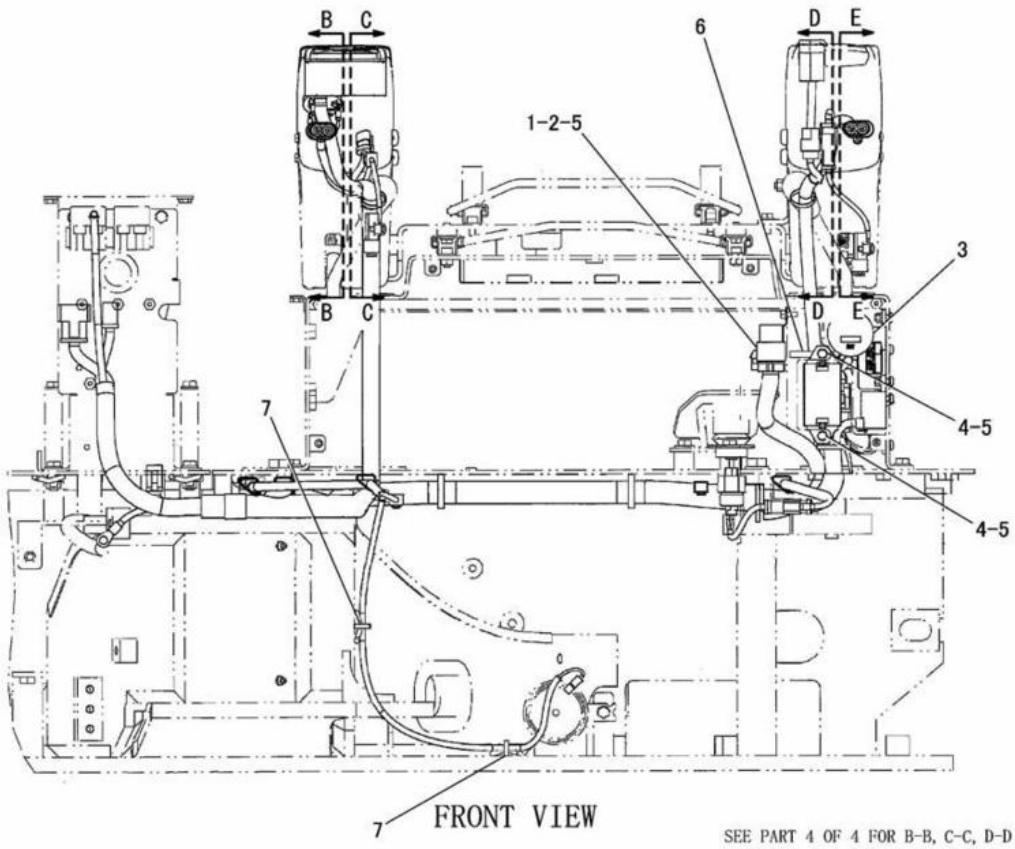

NOTE	No.	PART NO.	QTY.	PART NAME	NOTE	No.	PART NO.	QTY.	PART NAME
C	1	115-1615	1	RELAY AS					
C	2	5C-9553	1	BOLT(M6×1)					
	3	7T-1914	1	SERVICE METER					
	4	8T-4138	2	BOLT(M6×1)					
C	5	9X-8256	3	WASHER					
C	6	7K-1181	1	STRAP					
	7	3S-2093	2	STRAP					

C-INDICATES CHANGE

J132362 X16

CONSOLE WIRING (191-3844 N/S) -PART 3 OF 4
EFFECTIVE WITH SERIAL NO. BMW01589-
PART OF 191-3822-Page 529,530

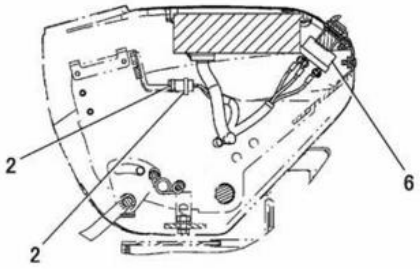

B-B

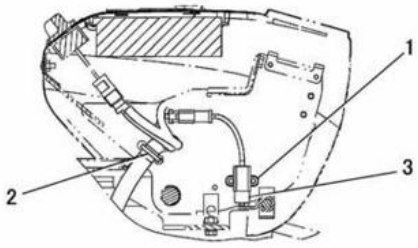

C-C

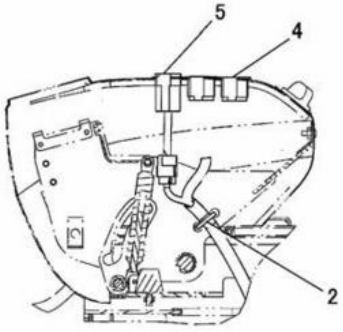

D-D

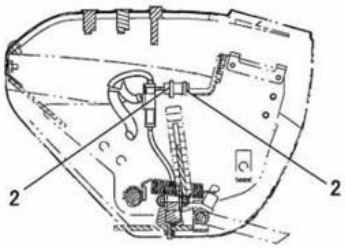

E-E

NOTE	No.	PART NO.	QTY.	PART NAME	NOTE	No.	PART NO.	QTY.	PART NAME
C	1	158-4781	2	SCREW(M6×1)					
	2	3S-2093	6	STRAP					
C	3	250-0989	1	SWITCH AS					
		102-8802	1	RECEPTACLE KIT(2P)					
		186-3735	2	PIN					
	4	143-1632	2	PLUG					
	5	236-6782	1	SWITCH AS					
		120-7724	1	CONNECTOR					
		7Y-3950	4	TERMINAL					
CY	6	9G-7641	1	START SWITCH GROUP					

C-INDICATES CHANGE
Y-SEE SEPARATE ILLUSTRATION

J132363 X16

CONSOLE WIRING (191-3844 N/S) -PART 4 OF 4
EFFECTIVE WITH SERIAL NO. BMW01589-
PART OF 191-3822-Page 529,530
9G-7641-Page 149

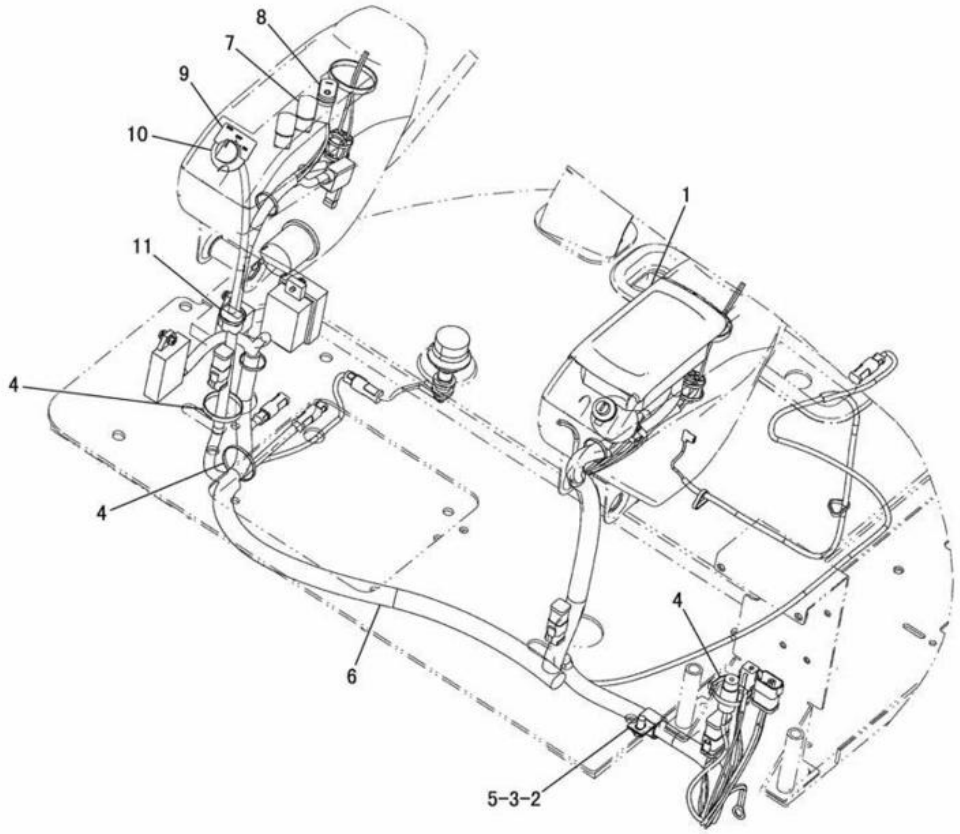

NOTE	No.	PART NO.	QTY.	PART NAME	NOTE	No.	PART NO.	QTY.	PART NAME
Y	1	191-6226	1	CLUSTER GAUGE GROUP					
	2	8T-4137	1	BOLT(M10×1.5)					
	3	8T-4121	1	WASHER					
	4	7K-1181	4	STRAP					
	5	4S-1962	1	CLIP					
Y	6	209-8173	1	HARNESS AS					
	7	143-1632	2	PLUG					
	8	195-2670	1	SWITCH AS					
		186-3735	4	PIN					
		102-8804	1	RECEPTACLE KIT(4P)					
	9	222-2622	1	FILM					
	10	222-9363	1	SWITCH AS					
	11	3S-2093	1	STRAP					

Y-SEE SEPARATE ILLUSTRATION

J126695 X06

CONSOLE WIRING (215-2865 N/S) -CAB-PART 1 OF 2
EFFECTIVE WITH SERIAL NO. BMW01249-BMW01358
PART OF 201-4573-Page 531,532
191-6226-Page 147 209-8173-Page 138, 139
AN ATTACHMENT

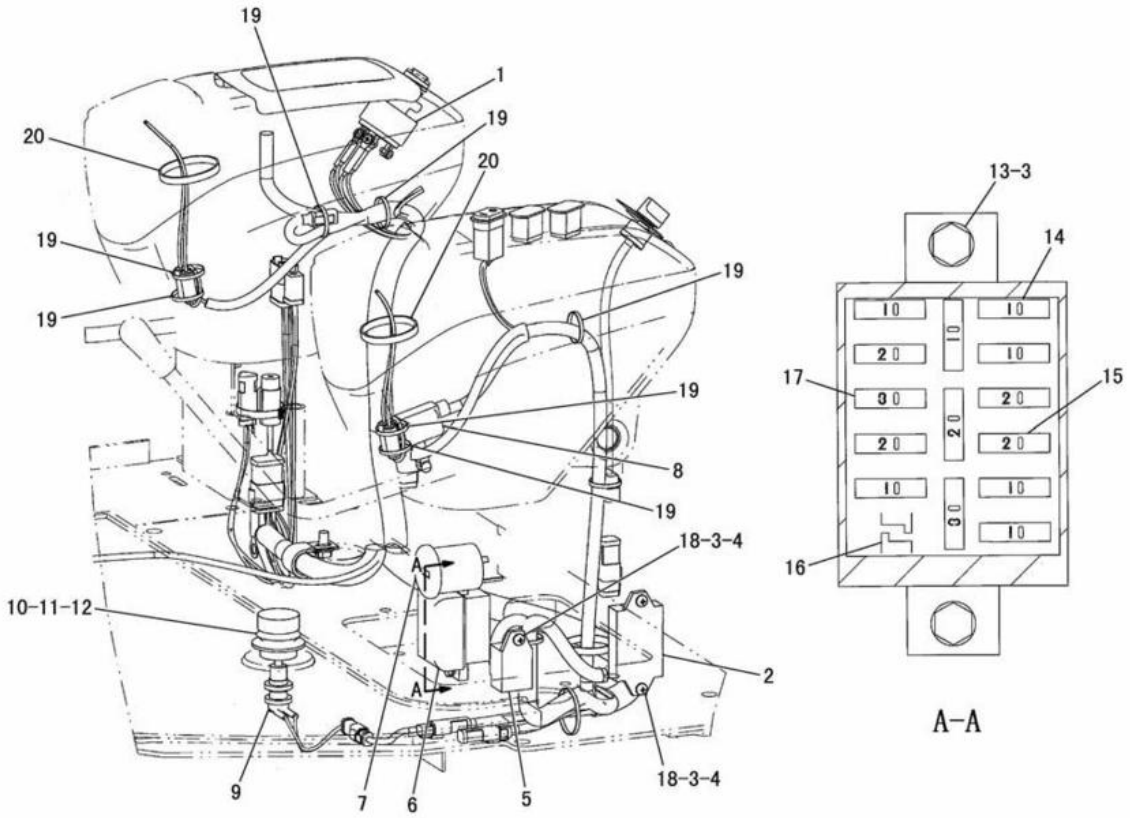

NOTE	No.	PART NO.	QTY.	PART NAME	NOTE	No.	PART NO.	QTY.	PART NAME
Y	1	237-3530	1	SWITCH GROUP		17	8T-9636	2	FUSE(30A)
	2	175-4621	1	CONTROL TIMER UNIT		18	5C-2890	3	NUT(M6×1)
	3	9X-8256	5	WASHER			203-7895	3	WASHER
	4	203-7894	3	SCREW(M6×1)		19	3S-2093	16	STRAP
	5	119-9896	1	GLOW TIMER		20	7K-1181	2	STRAP
	6	096-6142	1	COVER					
	7	9W-1494	1	SERVICE METER KIT					
	8	195-3204	1	SWITCH AS					
		102-8802	1	RECEPTACLE KIT(2P)					
		186-3735	2	PIN					
	9	198-9101	1	SWITCH AS					
		102-8802	1	RECEPTACLE KIT(2P)					
		186-3735	2	PIN					
	10	144-2321	1	PLATE					
	11	144-2320	1	SHAFT					
	12	144-2317	1	BOOT					
	13	8T-4138	2	BOLT(M6×1)					
	14	9W-1442	7	FUSE(10A)					
	15	9W-1446	5	FUSE(20A)					
	16	096-6145	1	TOOL					

Y-SEE SEPARATE ILLUSTRATION

J126696 X06

CONSOLE WIRING (215-2865 N/S) -CAB-PART 2 OF 2
EFFECTIVE WITH SERIAL NO. BMW01249-BMW01358
PART OF 201-4573-Page 531,532
237-3530-Page 149
AN ATTACHMENT

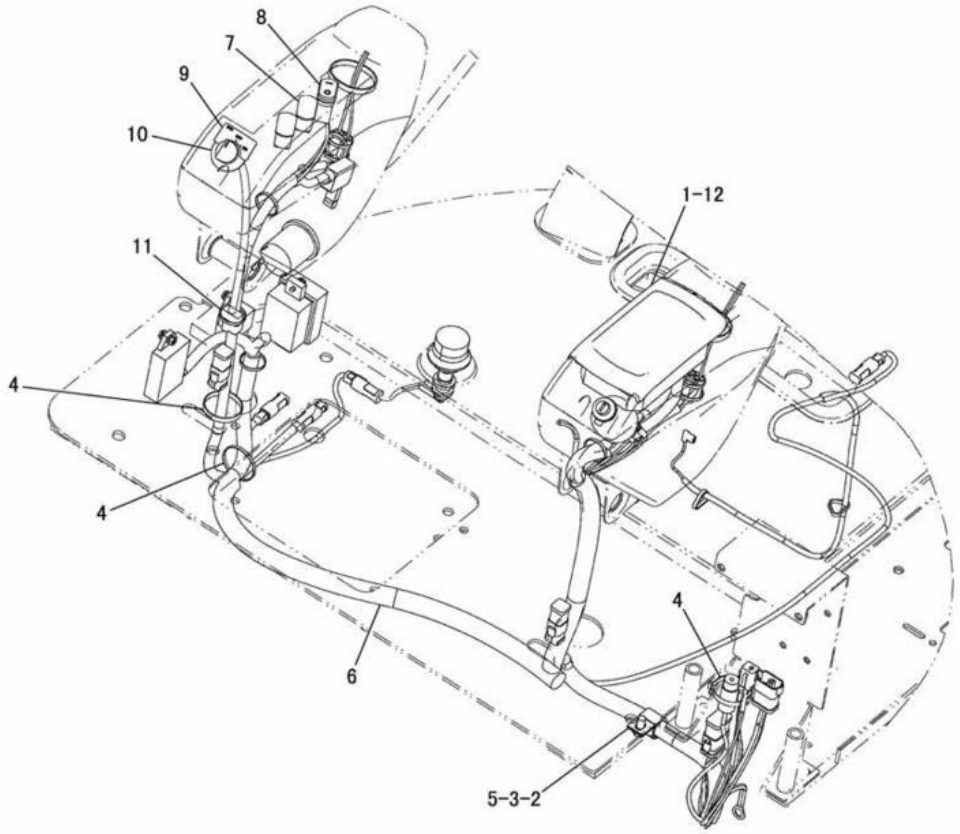

NOTE	No.	PART NO.	QTY.	PART NAME	NOTE	No.	PART NO.	QTY.	PART NAME
Y	1	191-6226	1	CLUSTER GAUGE GROUP					
	2	8T-4137	1	BOLT(M10×1.5)					
	3	8T-4121	1	WASHER					
	4	7K-1181	4	STRAP					
	5	4S-1962	1	CLIP					
CY	6	241-3597	1	HARNESS AS					
	7	143-1632	2	PLUG					
	8	195-2670	1	SWITCH AS					
		186-3735	4	PIN					
		102-8804	1	RECEPTACLE KIT(4P)					
	9	222-2622	1	FILM					
	10	222-9363	1	SWITCH AS					
	11	3S-2093	1	STRAP					
C	12	207-0782	4	SCREW					

C-INDICATES CHANGE
Y-SEE SEPARATE ILLUSTRATION

J128775 X07

CONSOLE WIRING (215-2865 N/S) -CAB-PART 1 OF 2

EFFECTIVE WITH SERIAL NO. BMW01359-BMW01449
PART OF 201-4573-Page 531,532
191-6226-Page 147 241-3597-Page 132, 133
AN ATTACHMENT

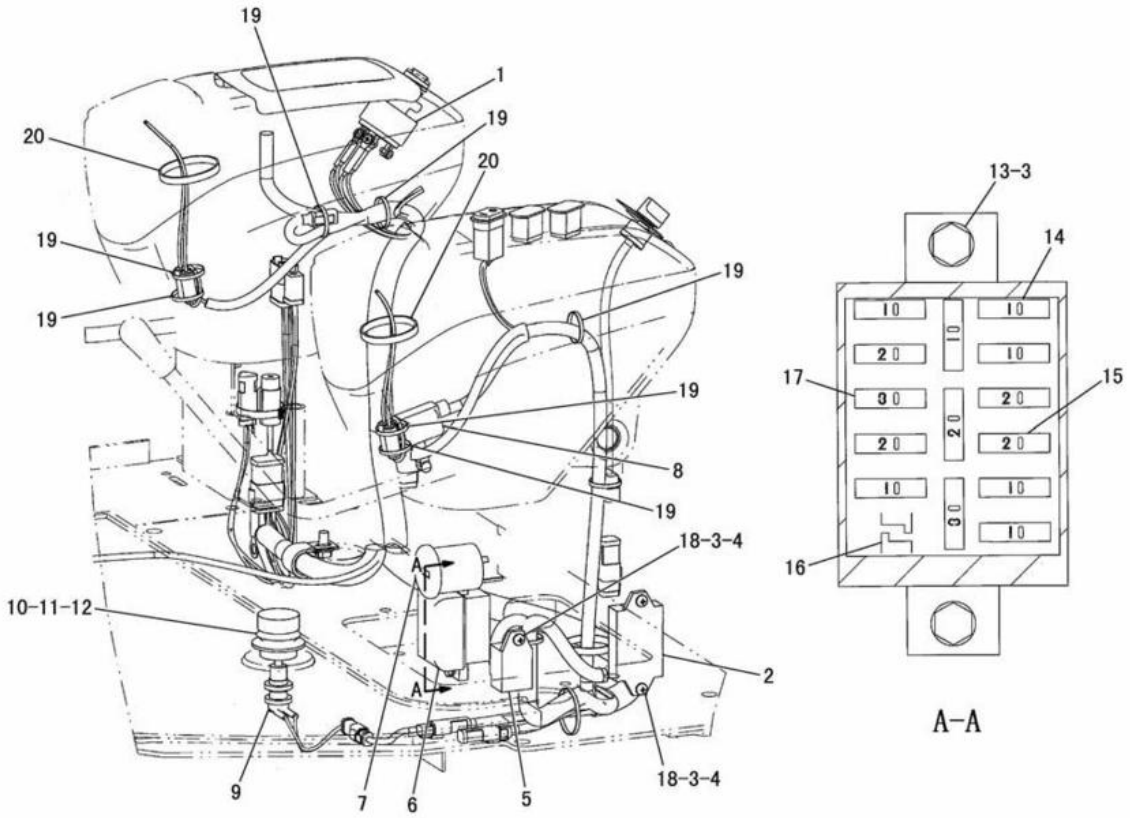

NOTE	No.	PART NO.	QTY.	PART NAME	NOTE	No.	PART NO.	QTY.	PART NAME
Y	1	237-3530	1	SWITCH GROUP		17	8T-9636	2	FUSE(30A)
	2	175-4621	1	CONTROL TIMER UNIT		18	5C-2890	3	NUT(M6×1)
	3	9X-8256	5	WASHER			203-7895	3	WASHER
	4	203-7894	3	SCREW(M6×1)		19	3S-2093	16	STRAP
	5	119-9896	1	GLOW TIMER		20	7K-1181	2	STRAP
	6	096-6142	1	COVER					
	7	9W-1494	1	SERVICE METER KIT					
	8	195-3204	1	SWITCH AS					
		102-8802	1	RECEPTACLE KIT(2P)					
		186-3735	2	PIN					
	9	198-9101	1	SWITCH AS					
		102-8802	1	RECEPTACLE KIT(2P)					
		186-3735	2	PIN					
	10	144-2321	1	PLATE					
	11	144-2320	1	SHAFT					
	12	144-2317	1	BOOT					
	13	8T-4138	2	BOLT(M6×1)					
	14	9W-1442	7	FUSE(10A)					
	15	9W-1446	5	FUSE(20A)					
	16	096-6145	1	TOOL					

Y-SEE SEPARATE ILLUSTRATION

J128776 X07

CONSOLE WIRING (215-2865 N/S) -CAB-PART 2 OF 2
EFFECTIVE WITH SERIAL NO. BMW01359-BMW01449
PART OF 201-4573-Page 531,532
237-3530-Page 149
AN ATTACHMENT

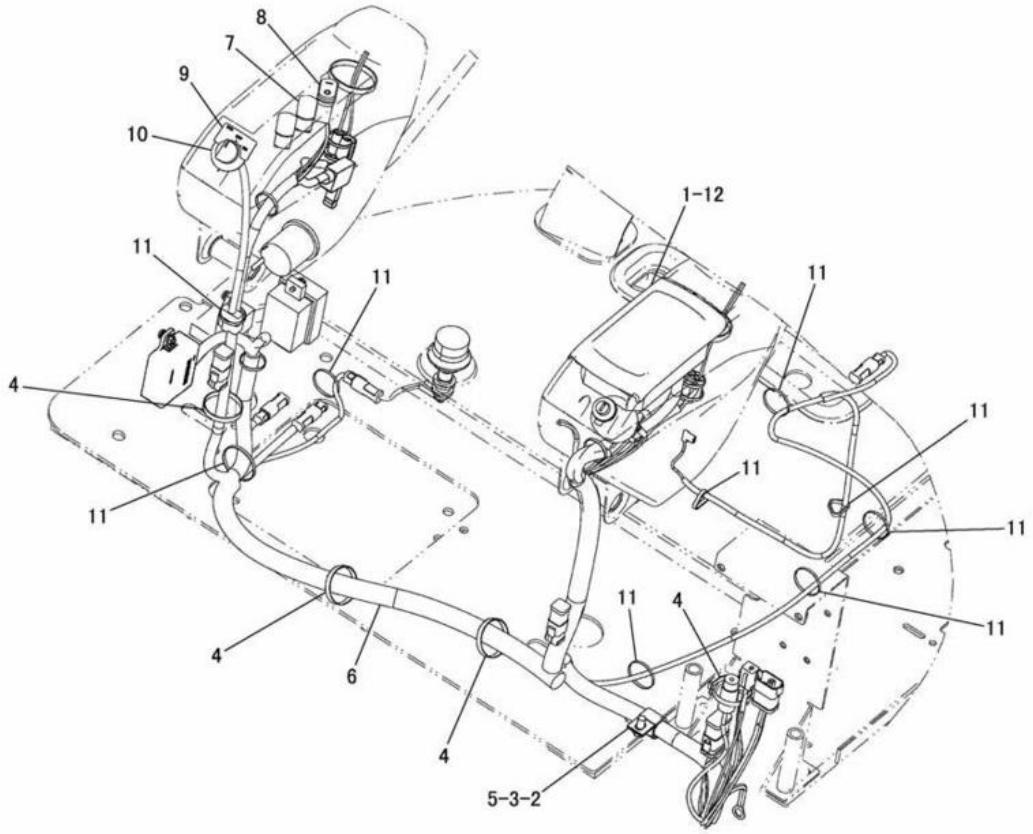

NOTE	No.	PART NO.	QTY.	PART NAME	NOTE	No.	PART NO.	QTY.	PART NAME
CY	1	248-3862	1	CLUSTER GAUGE GROUP					
	2	8T-4137	1	BOLT(M10×1.5)					
	3	8T-4121	1	WASHER					
	4	7K-1181	4	STRAP					
	5	4S-1962	1	CLIP					
CY	6	246-6428	1	HARNESS AS					
	7	143-1632	2	PLUG					
C	8	236-6782	1	SWITCH AS					
		186-3735	4	PIN					
		102-8804	1	RECEPTACLE KIT(4P)					
	9	222-2622	1	FILM					
	10	222-9363	1	SWITCH AS					
	11	3S-2093	9	STRAP					
	12	207-0782	4	SCREW(M4×0.7)					

C-INDICATES CHANGE
Y-SEE SEPARATE ILLUSTRATION

J131122 X10

CONSOLE WIRING (215-2865 N/S) -CAB-PART 1 OF 2
EFFECTIVE WITH SERIAL NO. BMW01450-BMW01588
PART OF 201-4573-Page 531,532
248-3862-Page 147 246-6428-Page 134, 135
AN ATTACHMENT

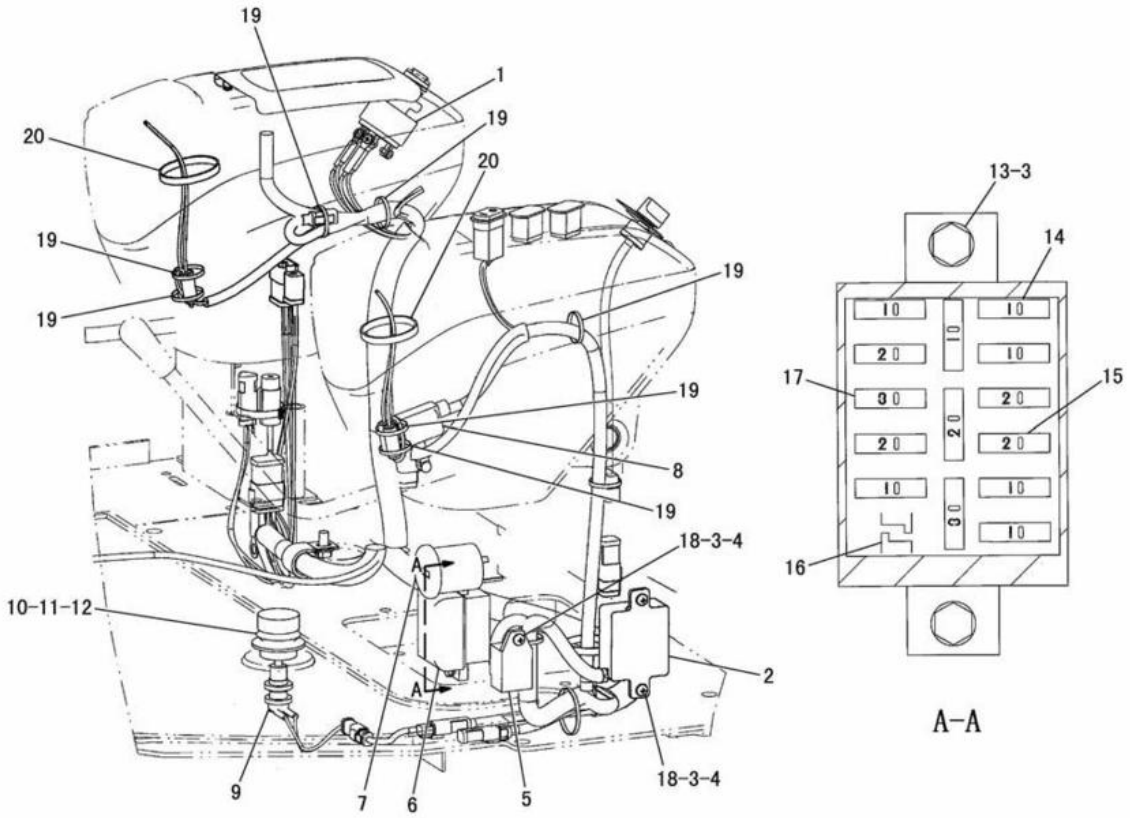

NOTE	No.	PART NO.	QTY.	PART NAME	NOTE	No.	PART NO.	QTY.	PART NAME
Y	1	237-3530	1	SWITCH GROUP		17	8T-9636	2	FUSE(30A)
C	2	231-7928	1	CONTROL AS		18	5C-2890	3	NUT(M6×1)
	3	9X-8256	5	WASHER			203-7895	3	WASHER
	4	203-7894	3	SCREW(M6×1)		19	3S-2093	8	STRAP
	5	119-9896	1	GLOW TIMER		20	7K-1181	2	STRAP
	6	096-6142	1	COVER					
	7	7T-1914	1	SERVICE METER					
	8	195-3204	1	SWITCH AS					
		102-8802	1	RECEPTACLE KIT(2P)					
		186-3735	2	PIN					
C	9	244-5728	1	SWITCH AS					
		102-8802	1	RECEPTACLE KIT(2P)					
		186-3735	2	PIN					
	10	144-2321	1	PLATE					
	11	144-2320	1	SHAFT					
	12	144-2317	1	BOOT					
	13	8T-4138	2	BOLT(M6×1)					
	14	9W-1442	7	FUSE(10A)					
	15	9W-1446	5	FUSE(20A)					
	16	096-6145	1	TOOL					

C-INDICATES CHANGE
Y-SEE SEPARATE ILLUSTRATION

J131123 X10

CONSOLE WIRING (215-2865 N/S) -CAB-PART 2 OF 2

EFFECTIVE WITH SERIAL NO. BMW01450-BMW01588
PART OF 201-4573-Page 531,532
237-3530-Page 149
AN ATTACHMENT

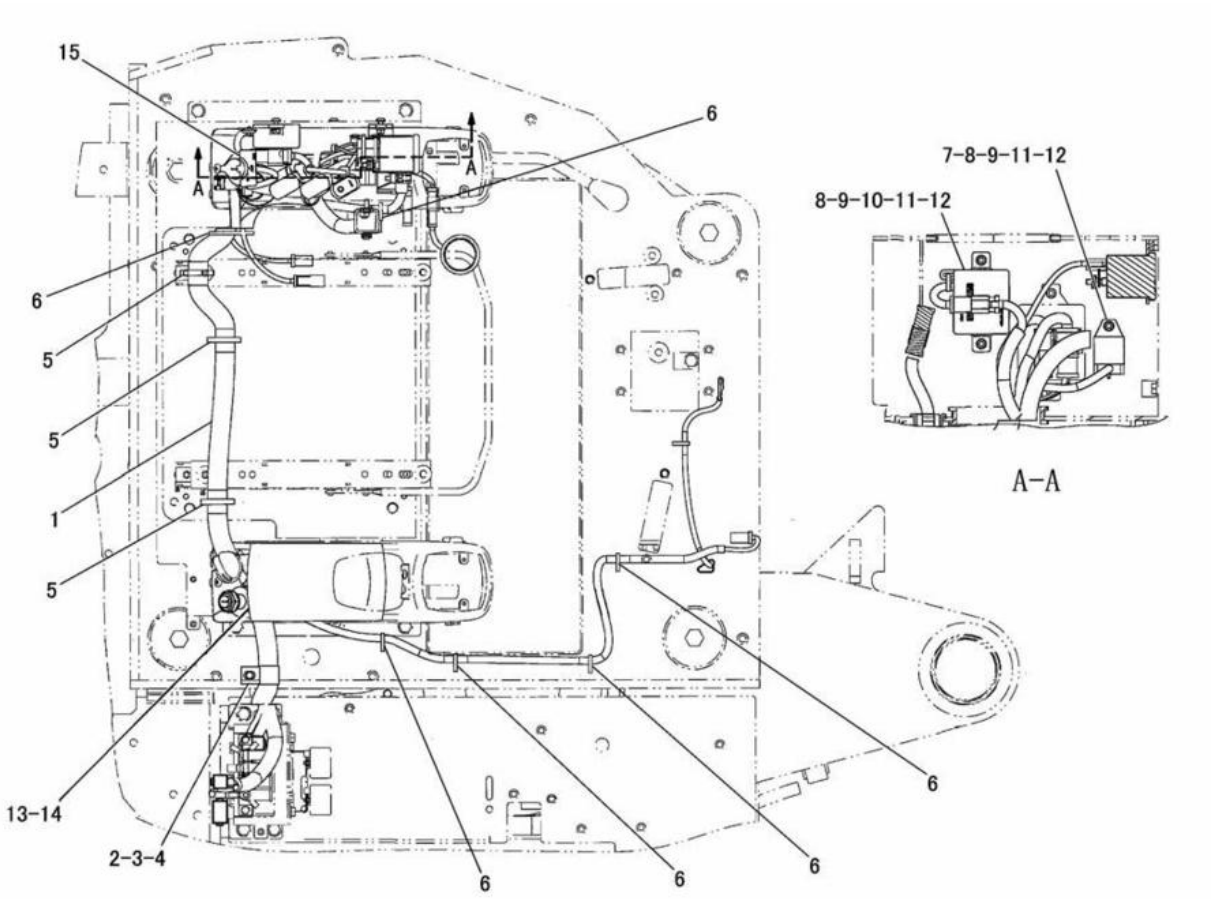

NOTE	No.	PART NO.	QTY.	PART NAME	NOTE	No.	PART NO.	QTY.	PART NAME
CY	1	248-1987	1	HARNESS AS					
	2	4S-1962	1	CLIP					
	3	8T-4121	1	WASHER					
	4	8T-4137	1	BOLT(M10×1.5)					
C	5	7K-1181	3	STRAP					
	6	3S-2093	6	STRAP					
	7	119-9896	1	GLOW TIMER					
	8	203-7894	3	SCREW(M6×1)					
	9	203-7895	3	WASHER					
	10	231-7928	1	CONTROL AS					
		102-8805	1	RECEPTACLE KIT(6P)					
		186-3735	5	PIN					
		8T-8737	1	PLUG					
	11	5C-2890	3	NUT(M6×1)					
	12	9X-8256	3	WASHER					
	13	207-0782	4	SCREW(M4×0.7)					
Y	14	248-3862	1	CLUSTER GAUGE GROUP					
	15	222-2622	1	FILM					

C-INDICATES CHANGE
Y-SEE SEPARATE ILLUSTRATION

J132169 X11

CONSOLE WIRING (215-2865 N/S) -CAB-PART 1 OF 4
EFFECTIVE WITH SERIAL NO. BMW01589-
PART OF 201-4573-Page 531,532
248-1987-Page 140, 141 248-3862-Page 147
AN ATTACHMENT

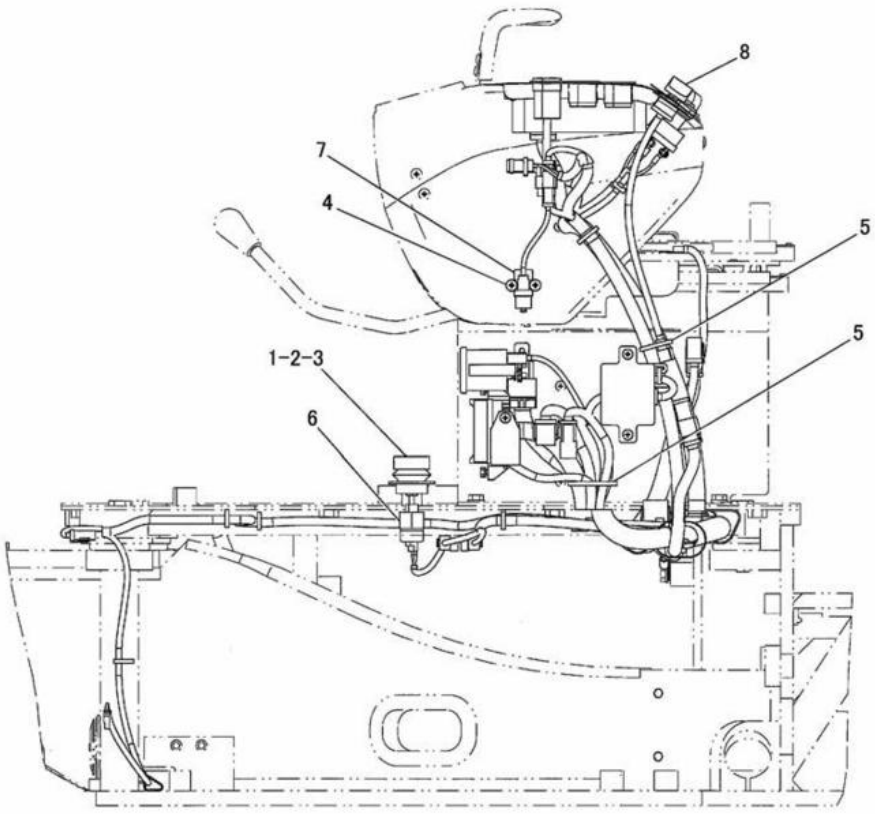

LEFT SIDE VIEW

NOTE	No.	PART NO.	QTY.	PART NAME	NOTE	No.	PART NO.	QTY.	PART NAME
	1	144-2317	1	BOOT					
	2	144-2320	1	SHAFT					
	3	144-2321	1	PLATE					
C	4	158-4781	2	SCREW(M6×1)					
	5	3S-2093	2	STRAP					
	6	244-5728	1	SWITCH AS					
		102-8802	1	RECEPTACLE KIT(2P)					
		186-3735	2	PIN					
C	7	250-0989	1	SWITCH AS					
		102-8802	1	RECEPTACLE KIT(2P)					
		186-3735	2	PIN					
	8	222-9363	1	SWITCH AS					
		167-3448	1	CONNECTOR					
		7Y-3950	5	TERMINAL					

C-INDICATES CHANGE

J132170 X11

CONSOLE WIRING (215-2865 N/S) -CAB-PART 2 OF 4
EFFECTIVE WITH SERIAL NO. BMW01589-
PART OF 201-4573-Page 531,532
AN ATTACHMENT

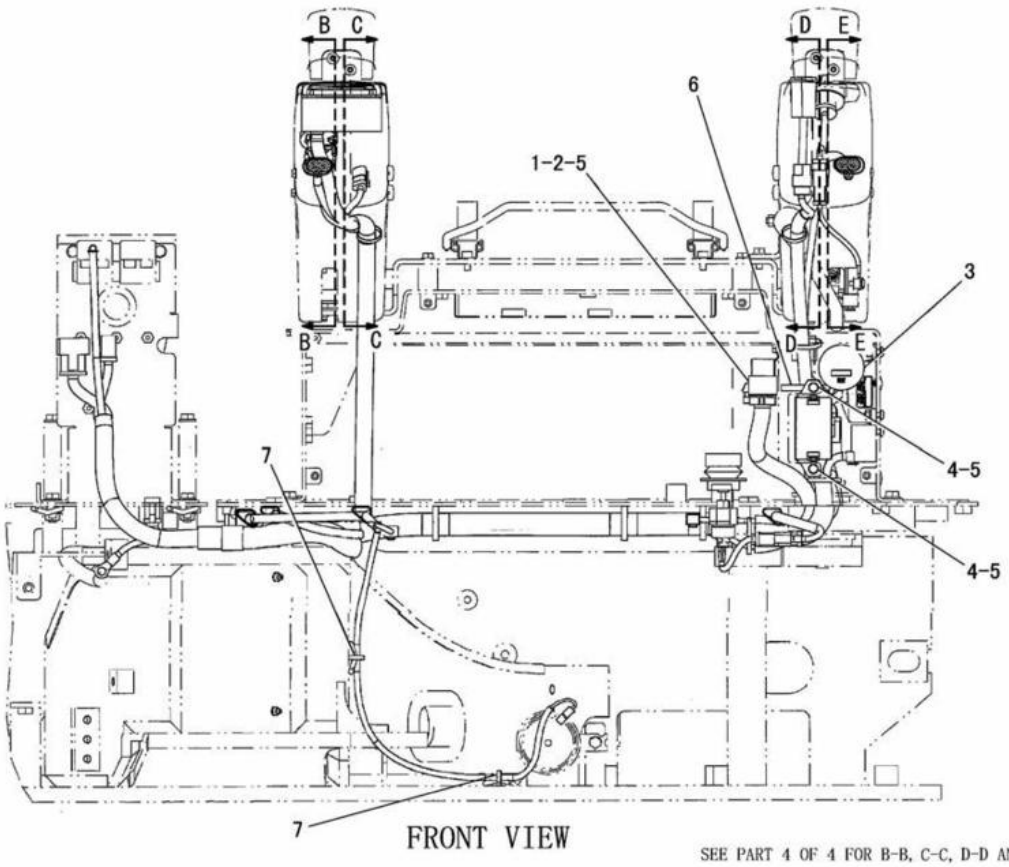

NOTE	No.	PART NO.	QTY.	PART NAME	NOTE	No.	PART NO.	QTY.	PART NAME
C	1	115-1615	1	RELAY AS					
C	2	5C-9553	1	BOLT(M6×1)					
	3	7T-1914	1	SERVICE METER					
	4	8T-4138	2	BOLT(M6×1)					
C	5	9X-8256	3	WASHER					
C	6	7K-1181	1	STRAP					
	7	3S-2093	2	STRAP					

C-INDICATES CHANGE

J132364 X11

CONSOLE WIRING (215-2865 N/S) -CAB-PART 3 OF 4
EFFECTIVE WITH SERIAL NO. BMW01589-
PART OF 201-4573-Page 531,532
AN ATTACHMENT

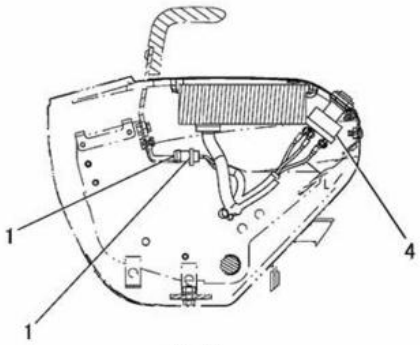

B-B

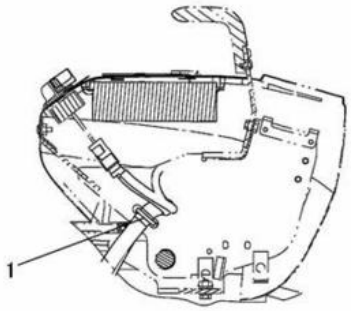

C-C

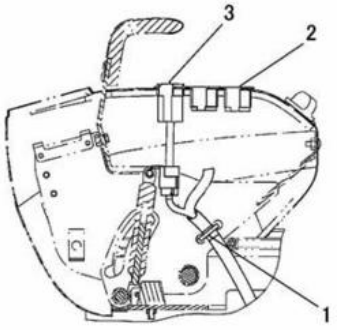

D-D

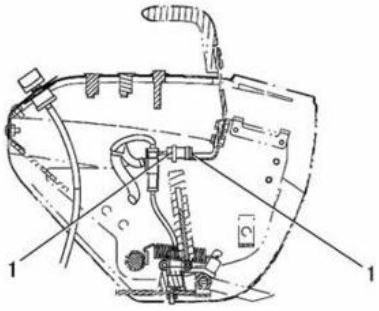

E-E

NOTE	No.	PART NO.	QTY.	PART NAME	NOTE	No.	PART NO.	QTY.	PART NAME
C	1	3S-2093	6	STRAP					
	2	143-1632	2	PLUG					
	3	236-6782	1	SWITCH AS					
		120-7724	1	CONNECTOR					
		7Y-3950	4	TERMINAL					
CY	4	9G-7641	1	START SWITCH GROUP					

C-INDICATES CHANGE
Y-SEE SEPARATE ILLUSTRATION

J132365 X11

CONSOLE WIRING (215-2865 N/S) -CAB-PART 4 OF 4
EFFECTIVE WITH SERIAL NO. BMW01589-
PART OF 201-4573-Page 531,532
9G-7641-Page 149
AN ATTACHMENT

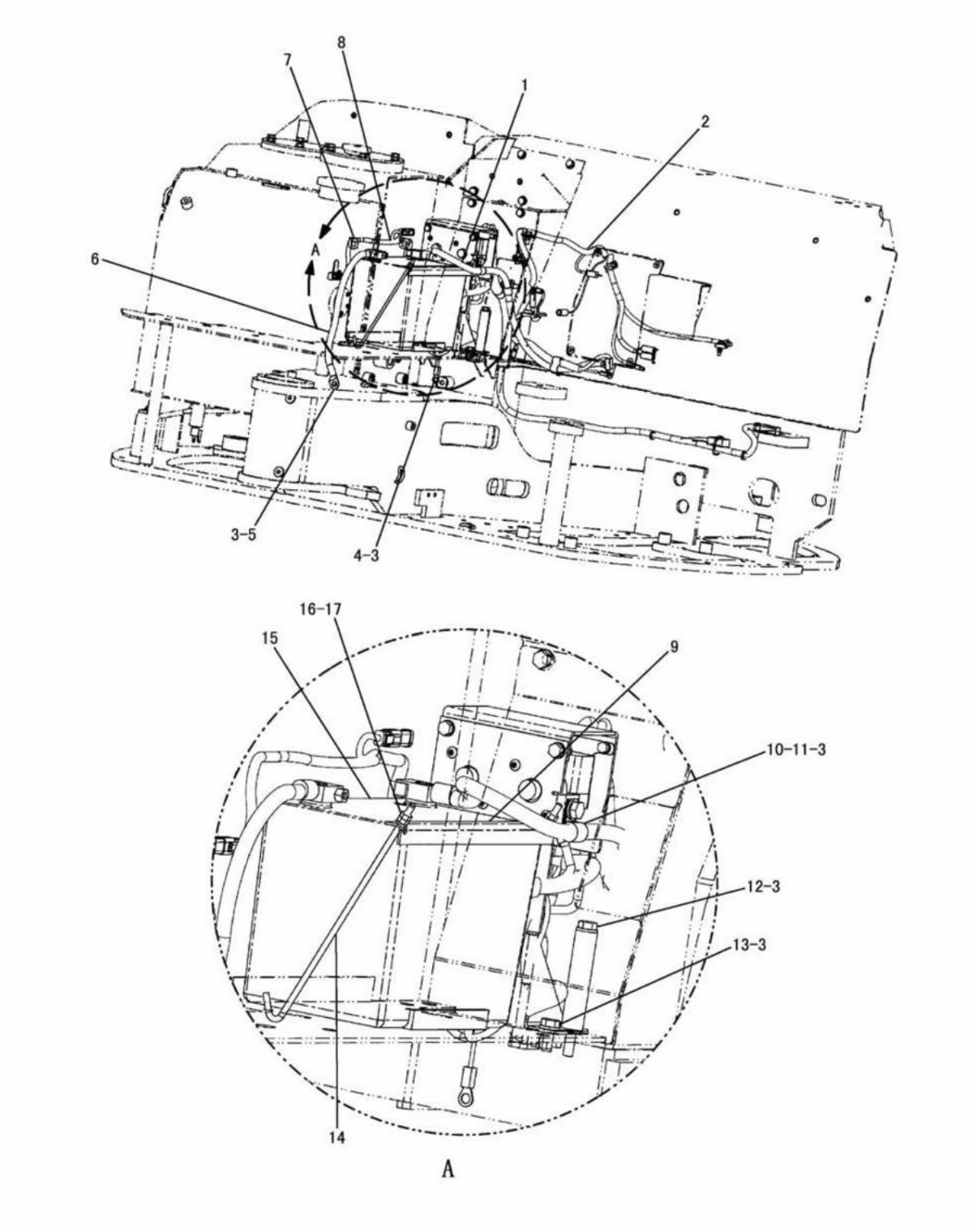

BATTERY AND WIRING (191-3847 N/S) -PART 1 OF 4
EFFECTIVE WITH SERIAL NO. BMW00001-BMW00886
PART OF 191-3351-Page 184,185

ELECTRICAL SYSTEM

NOTE	No.	PART NO.	QTY.	PART NAME	NOTE	No.	PART NO.	QTY.	PART NAME
	1	191-6235	1	CABLE AS					
		3S-6049	1	TERMINAL AS(+)					
		1M-6119	1	BOLT(5/16-18)					
		1M-6120	1	NUT(5/16-18)					
		8N-1725	1	COVER(RED)					
		8S-3020	1	TERMINAL					
		9X-9120	1	BOOT					
Y	2	191-4769	1	HARNESS AS					
	3	8T-4121	7	WASHER					
	4	8T-4137	1	BOLT(M10×1.5)					
	5	8T-4133	1	NUT(M10×1.5)					
	6	191-6236	1	CABLE AS					
		3S-6050	1	TERMINAL AS(-)					
		1M-6119	1	BOLT(5/16-18)					
		1M-6120	1	NUT(5/16-18)					
		7N-5274	1	COVER(BLACK)					
		1S-7251	1	TERMINAL					
	7	3S-2093	2	STRAP					
Y	8	191-4771	1	HARNESS AS					
	9	169-1223	1	CLAMP					
	10	6K-8178	1	CLIP					
	11	8T-4191	1	BOLT(M10×1.5)					
	12	8T-5436	2	BOLT(M10×1.5)					
	13	8T-4136	2	BOLT(M10×1.5)					
	14	197-7175	2	ROD					
	15	153-5656	1	BATTERY(650A)					
	16	9X-8256	2	WASHER					
	17	5C-2890	4	NUT(M6×1)					

Y-SEE SEPARATE ILLUSTRATION

J117467 X04

BATTERY AND WIRING (191-3847 N/S) -PART 1 OF 4

EFFECTIVE WITH SERIAL NO. BMW00001-BMW00886

PART OF 191-3351-Page 184,185

191-4769-Page 124, 125 191-4771-Page 142

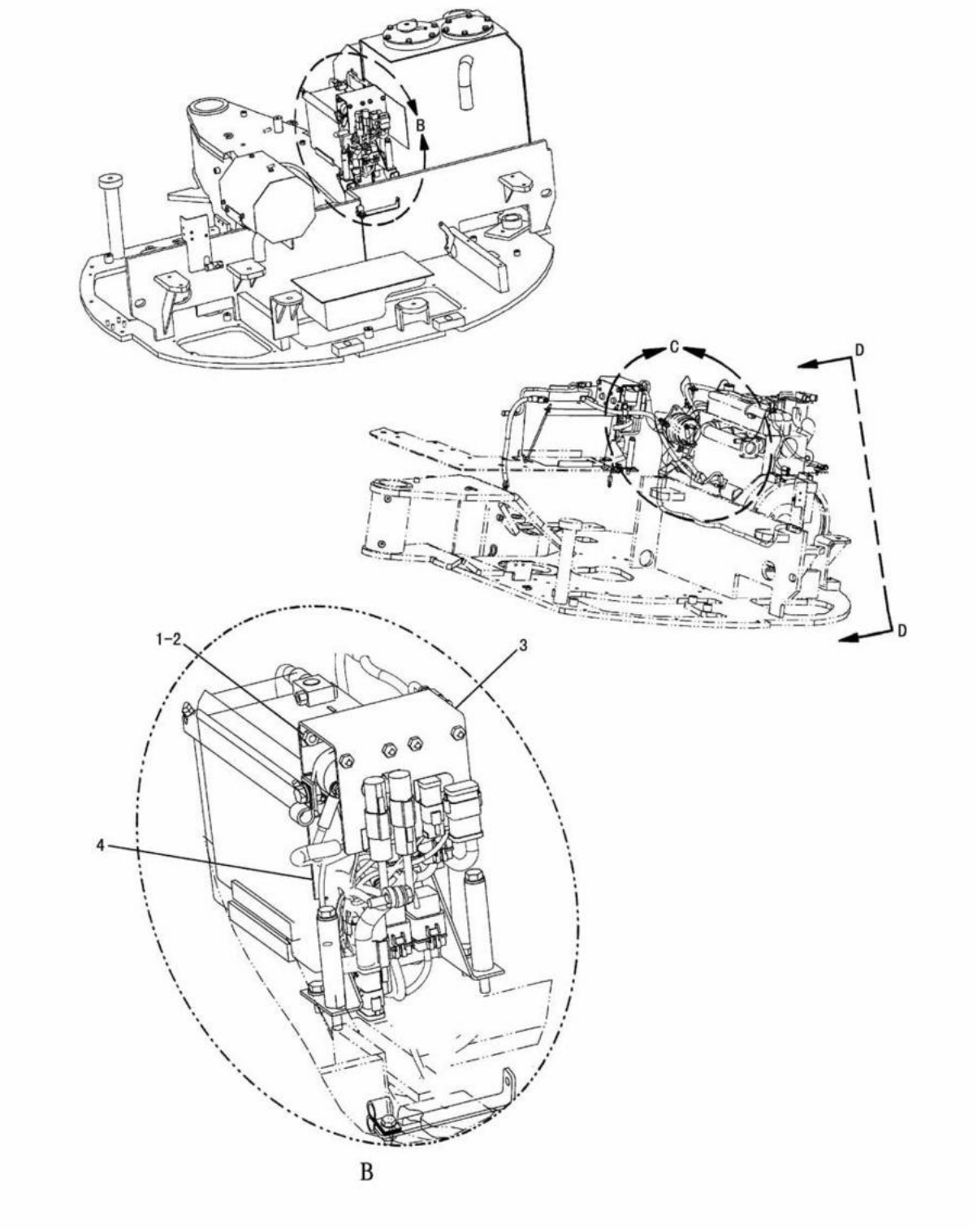

J117468 X04

BATTERY AND WIRING (191-3847 N/S) -PART 2 OF 4
EFFECTIVE WITH SERIAL NO. BMW00001-BMW00886
PART OF 191-3351-Page 184,185

ELECTRICAL SYSTEM

NOTE	No.	PART NO.	QTY.	PART NAME	NOTE	No.	PART NO.	QTY.	PART NAME
	1	8T-4224	2	WASHER					
	2	8T-4200	2	BOLT(M8×1.25)					
	3	191-7502	1	BRACKET AS					
		121-1029	4	CLIP					
		6V-9632	4	NUT(M6×1)(WELD)					
		8T-3612	2	NUT(M8×1.25)(WELD)					
	4	192-4416	1	BRACKET AS					
		8T-3490	1	NUT(M10×1.5)(WELD)					
		121-1029	1	CLIP					
		6V-9632	6	NUT(M6×1)(WELD)					

J117468 X04

BATTERY AND WIRING (191-3847 N/S) -PART 2 OF 4
EFFECTIVE WITH SERIAL NO. BMW00001-BMW00886
PART OF 191-3351-Page 184,185

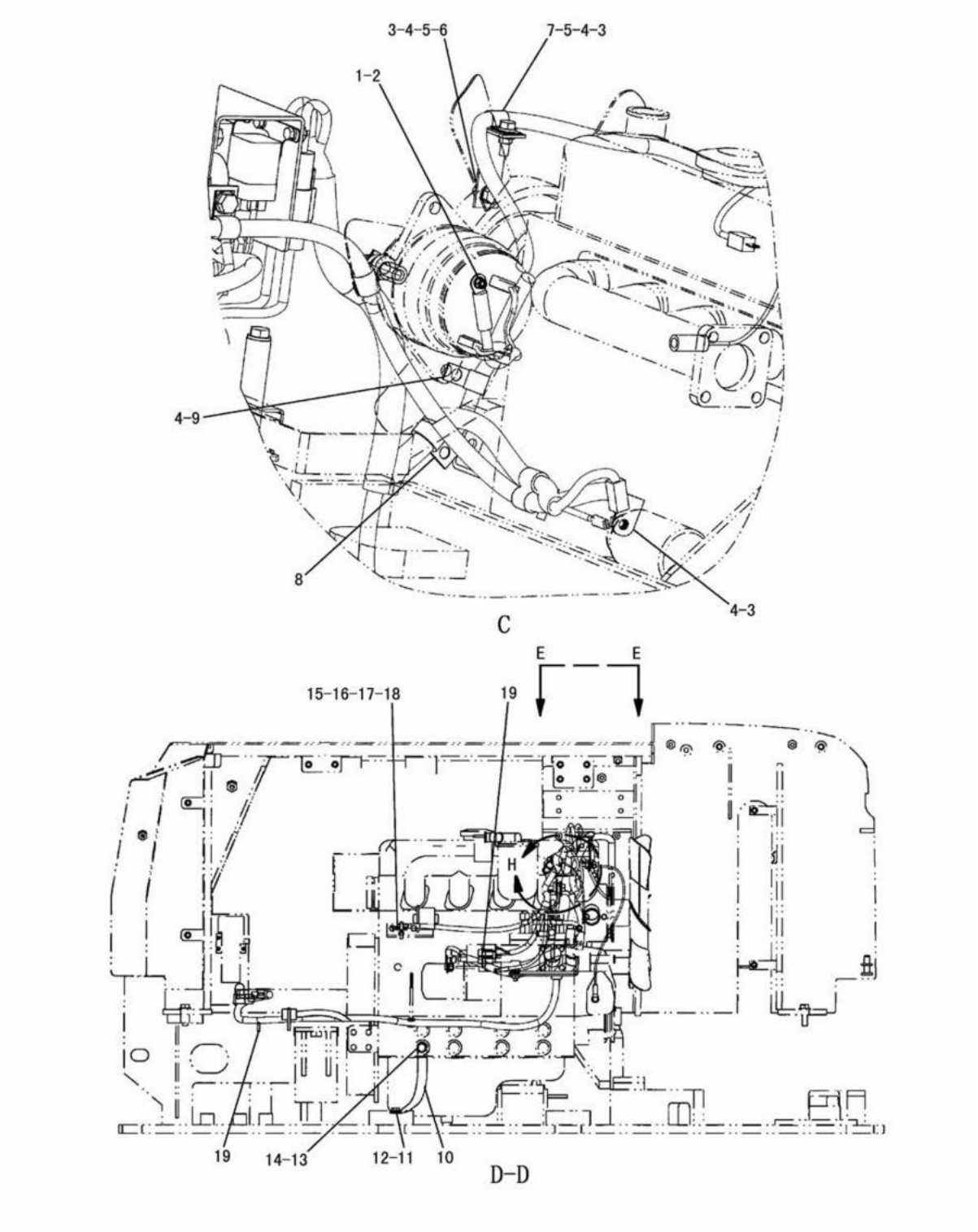

J117469 X04

BATTERY AND WIRING (191-3847 N/S) -PART 3 OF 4
EFFECTIVE WITH SERIAL NO. BMW00001-BMW00886
PART OF 191-3351-Page 184,185

ELECTRICAL SYSTEM

NOTE	No.	PART NO.	QTY.	PART NAME	NOTE	No.	PART NO.	QTY.	PART NAME
	1	8T-0328	2	WASHER					
	2	5C-2874	1	NUT(M5×0.8)					
	3	8T-4224	5	WASHER					
	4	5C-7261	4	NUT(M8×1.25)					
	5	8T-4908	2	BOLT(M8×1.25)					
	6	3V-0778	1	BRACKET					
	7	8M-2770	1	CLIP					
	8	9X-8250	1	CLIP					
	9	4K-8864	1	CLIP					
	10	171-0498	1	CABLE AS					
		1M-4986	2	TERMINAL					
	11	8T-4137	1	BOLT(M10×1.5)					
	12	8T-4121	1	WASHER					
	13	125-3984	1	BOLT(M12×1.25)					
	14	8T-4223	1	WASHER					
	15	111-4836	1	CLIP					
	16	5C-9553	1	BOLT(M6×1)					
	17	9X-8256	2	WASHER					
	18	5C-2890	1	NUT(M6×1)					
	19	3S-2093	4	STRAP					

J117469 X04

BATTERY AND WIRING (191-3847 N/S) -PART 3 OF 4
EFFECTIVE WITH SERIAL NO. BMW00001-BMW00886
PART OF 191-3351-Page 184,185

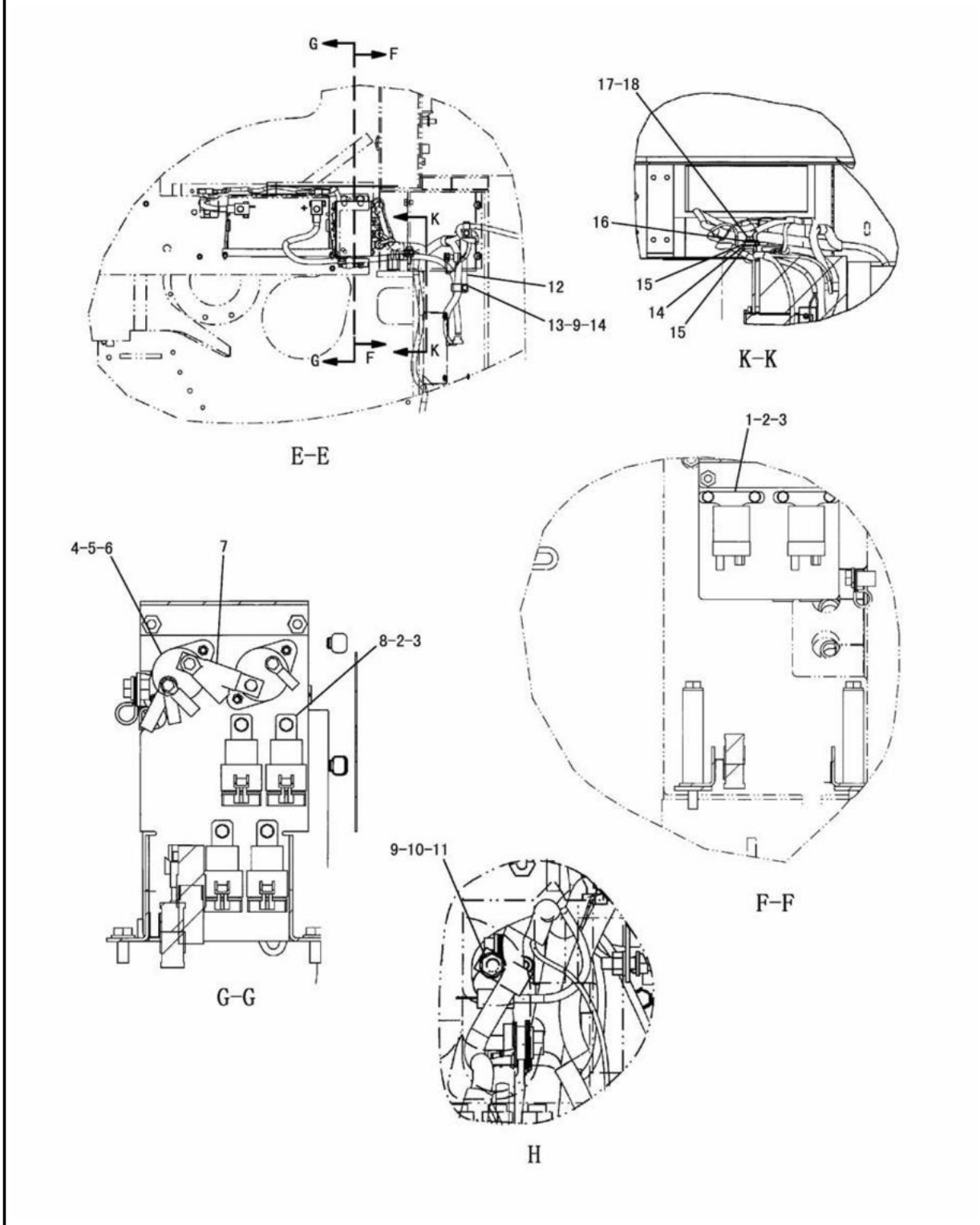

BATTERY AND WIRING (191-3847 N/S) -PART 4 OF 4
EFFECTIVE WITH SERIAL NO. BMW00001-BMW00886
PART OF 191-3351-Page 184,185

ELECTRICAL SYSTEM

NOTE	No.	PART NO.	QTY.	PART NAME	NOTE	No.	PART NO.	QTY.	PART NAME
	1	119-9895	2	GLOW RELAY					
	2	5C-9553	8	BOLT(M6×1)					
	3	9X-8256	8	WASHER					
	4	8T-0328	4	WASHER					
	5	6V-5645	4	SCREW(No.10-32)					
	6	9S-0174	2	BREAKER AS(60A)					
		6V-8365	2	SCREW(1/4-28)					
		1H-3244	2	LOCKWASHER					
	7	7V-9275	1	STRAP					
	8	115-1615	4	RELAY AS					
	9	8T-4224	2	WASHER					
	10	8T-4200	1	BOLT(M8×1.25)					
	11	4D-7794	1	CLIP					
	12	200-3435	1	BRACKET AS					
		8T-3612	1	NUT(M8×1.25)(WELD)					
	13	8T-4908	1	BOLT(M8×1.25)					
	14	9M-8406	3	CLIP					
	15	4H-1225	2	WASHER					
	16	1S-0994	1	CLIP					
	17	8T-4121	1	WASHER					
	18	8T-4186	1	BOLT(M10×1.5)					

J117470 X04

BATTERY AND WIRING (191-3847 N/S) -PART 4 OF 4
EFFECTIVE WITH SERIAL NO. BMW00001-BMW00886
PART OF 191-3351-Page 184,185

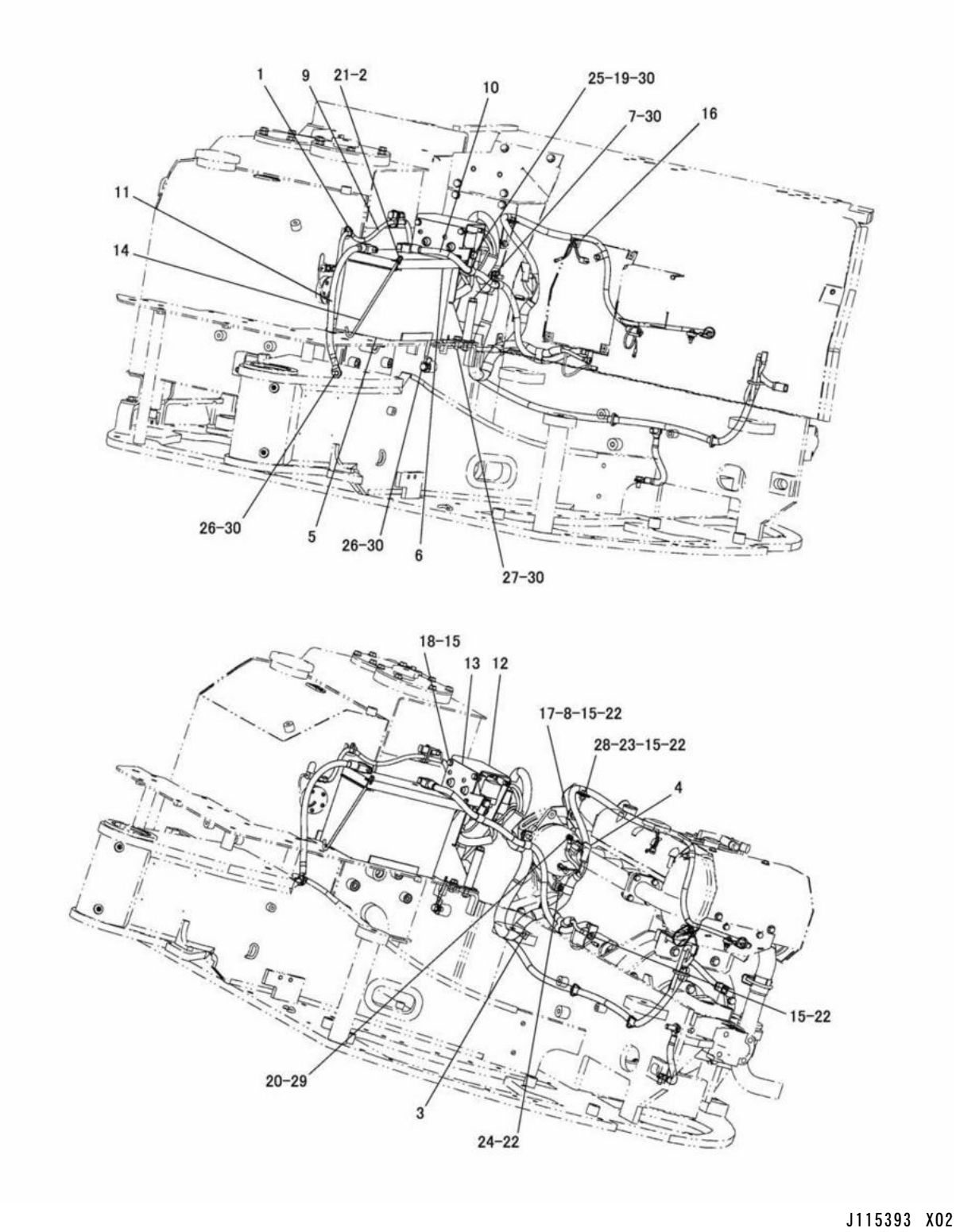

BATTERY AND WIRING (209-8171 N/S) -PART 1 OF 2
EFFECTIVE WITH SERIAL NO. BMW00887-BMW01340
PART OF 191-3351-Page 186,187,188,189

ELECTRICAL SYSTEM

NOTE	No.	PART NO.	QTY.	PART NAME	NOTE	No.	PART NO.	QTY.	PART NAME
	1	3S-2093	2	STRAP					
	2	9X-8256	2	WASHER					
	3	9X-8250	1	CLIP					
	4	8T-8799	1	BOOT					
	5	153-5656	1	BATTERY(650A)					
	6	169-1223	1	CLAMP					
	7	8T-5436	2	BOLT(M10×1.5)					
	8	8T-4908	1	BOLT(M8×1.25)					
Y	9	191-4771	1	HARNESS AS					
	10	191-6235	1	CABLE AS					
		3S-6049	1	TERMINAL AS(+)					
		1M-6119	1	BOLT(5/16-18)					
		1M-6120	1	NUT(5/16-18)					
		8N-1725	1	COVER(RED)					
		8S-3020	1	TERMINAL					
		9X-9120	1	BOOT					
	11	191-6236	1	CABLE AS					
		3S-6050	1	TERMINAL AS(-)					
		1M-6119	1	BOLT(5/16-18)					
		1M-6120	1	NUT(5/16-18)					
		7N-5274	1	COVER(BLACK)					
		1S-7251	1	TERMINAL					
	12	191-7502	1	BRACKET AS					
		6V-9632	4	NUT(M6×1)(WELD)					
		8T-3612	2	NUT(M8×1.25)(WELD)					
	13	192-4416	1	BRACKET AS					
		6V-9632	6	NUT(M6×1)(WELD)					
		8T-3490	1	NUT(M10×1.5)(WELD)					
	14	197-7175	2	ROD					
	15	8T-4224	7	WASHER					
Y	16	209-8172	1	HARNESS AS					
	17	3V-0778	1	BRACKET					
	18	8T-4200	2	BOLT(M8×1.25)					
	19	8T-4191	1	BOLT(M10×1.5)					
	20	5C-2874	1	NUT(M5×0.8)					
	21	5C-2890	4	NUT(M6×1)					
	22	5C-7261	4	NUT(M8×1.25)					
	23	8T-4189	1	BOLT(M8×1.25)					
	24	6D-4246	1	CLIP					
	25	6K-8178	1	CLIP					
	26	8T-4137	2	BOLT(M10×1.5)					
	27	8T-4136	2	BOLT(M10×1.5)					
	28	8M-2770	1	CLIP					
	29	8T-0328	2	WASHER					
	30	8T-4121	7	WASHER					

Y-SEE SEPARATE ILLUSTRATION

J115393 X02

BATTERY AND WIRING (209-8171 N/S) -PART 1 OF 2

EFFECTIVE WITH SERIAL NO. BMW00887-BMW01340

PART OF 191-3351-Page 186,187,188,189

191-4771-Page 142 209-8172-Page 126

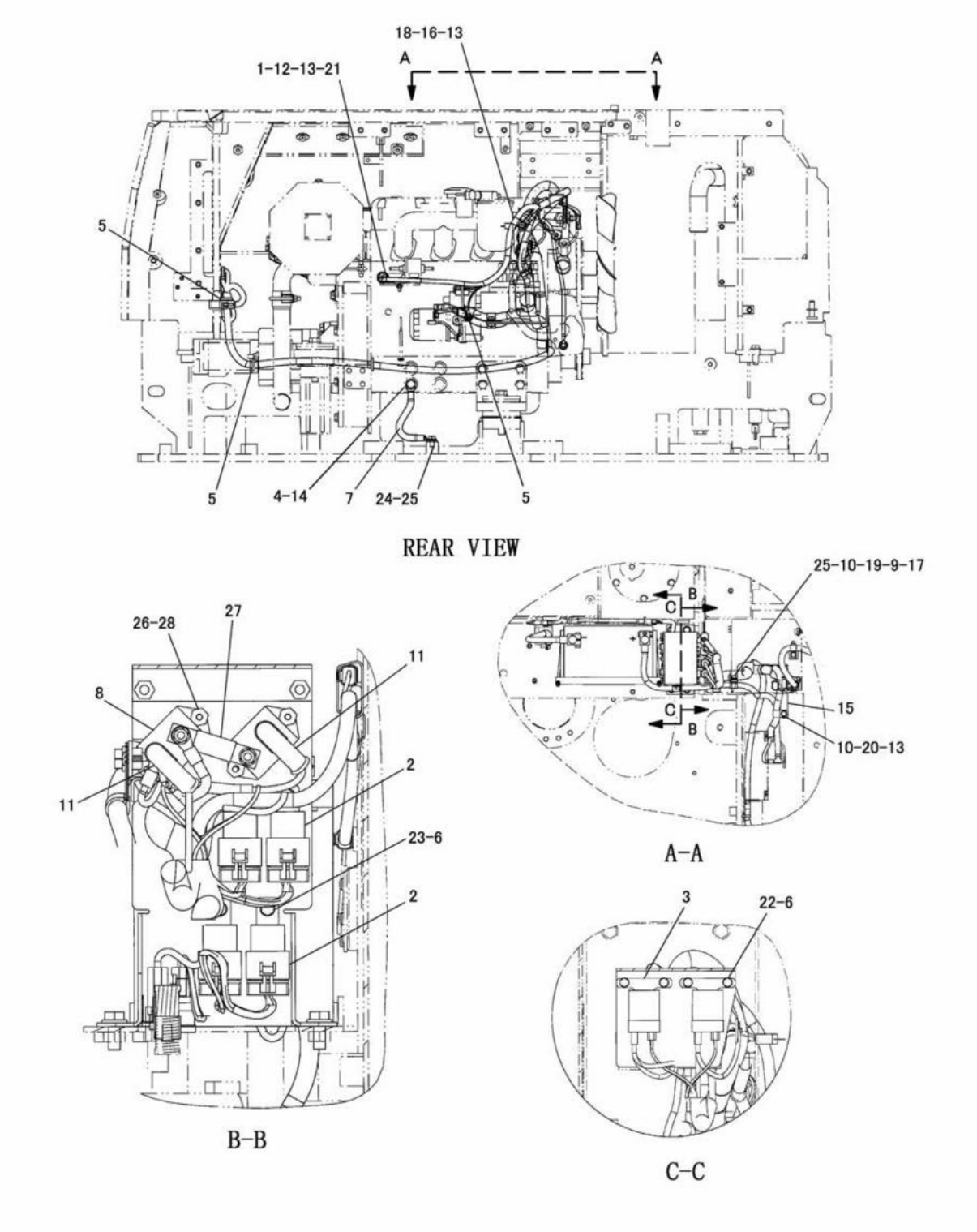

BATTERY AND WIRING (209-8171 N/S) -PART 2 OF 2
EFFECTIVE WITH SERIAL NO. BMW00887-BMW01340
PART OF 191-3351-Page 186,187,188,189

ELECTRICAL SYSTEM

NOTE	No.	PART NO.	QTY.	PART NAME	NOTE	No.	PART NO.	QTY.	PART NAME
	1	111-4836	1	CLIP					
	2	115-1615	4	RELAY AS					
	3	119-9895	2	GLOW RELAY					
	4	125-3984	1	BOLT					
	5	3S-2093	4	STRAP					
	6	9X-8256	8	WASHER					
	7	171-0498	1	CABLE AS					
		1M-4986	2	TERMINAL					
	8	171-2208	2	BREAKER AS(60A)					
		1H-3244	2	LOCKWASHER					
		6V-8187	2	NUT(1/4-28)					
		8T-4205	2	WASHER					
	9	9X-8250	1	CLIP					
	10	9M-8406	3	CLIP					
	11	8T-8799	2	BOOT					
	12	8T-4971	1	BOLT(M6×1)					
	13	8T-4224	4	WASHER					
	14	8T-4223	1	WASHER					
	15	200-3435	1	BRACKET AS					
		8T-3612	1	NUT(M8×1.25)(WELD)					
	16	8T-4200	1	BOLT(M8×1.25)					
	17	8T-4195	1	BOLT(M10×1.5)					
	18	4D-7794	1	CLIP					
	19	4H-1225	1	WASHER					
	20	8T-4189	1	BOLT(M8×1.25)					
	21	5C-2890	1	NUT(M6×1)					
	22	8T-4171	4	BOLT(M6×1)					
	23	5C-9553	4	BOLT(M6×1)					
	24	8T-4137	1	BOLT(M10×1.5)					
	25	8T-4121	1	WASHER					
	26	6V-5645	4	SCREW(No.10-32)					
	27	7V-9275	1	STRAP					
	28	8T-0328	4	WASHER					

J115394 X02

BATTERY AND WIRING (209-8171 N/S) -PART 2 OF 2
EFFECTIVE WITH SERIAL NO. BMW00887-BMW01340
PART OF 191-3351-Page 186,187,188,189

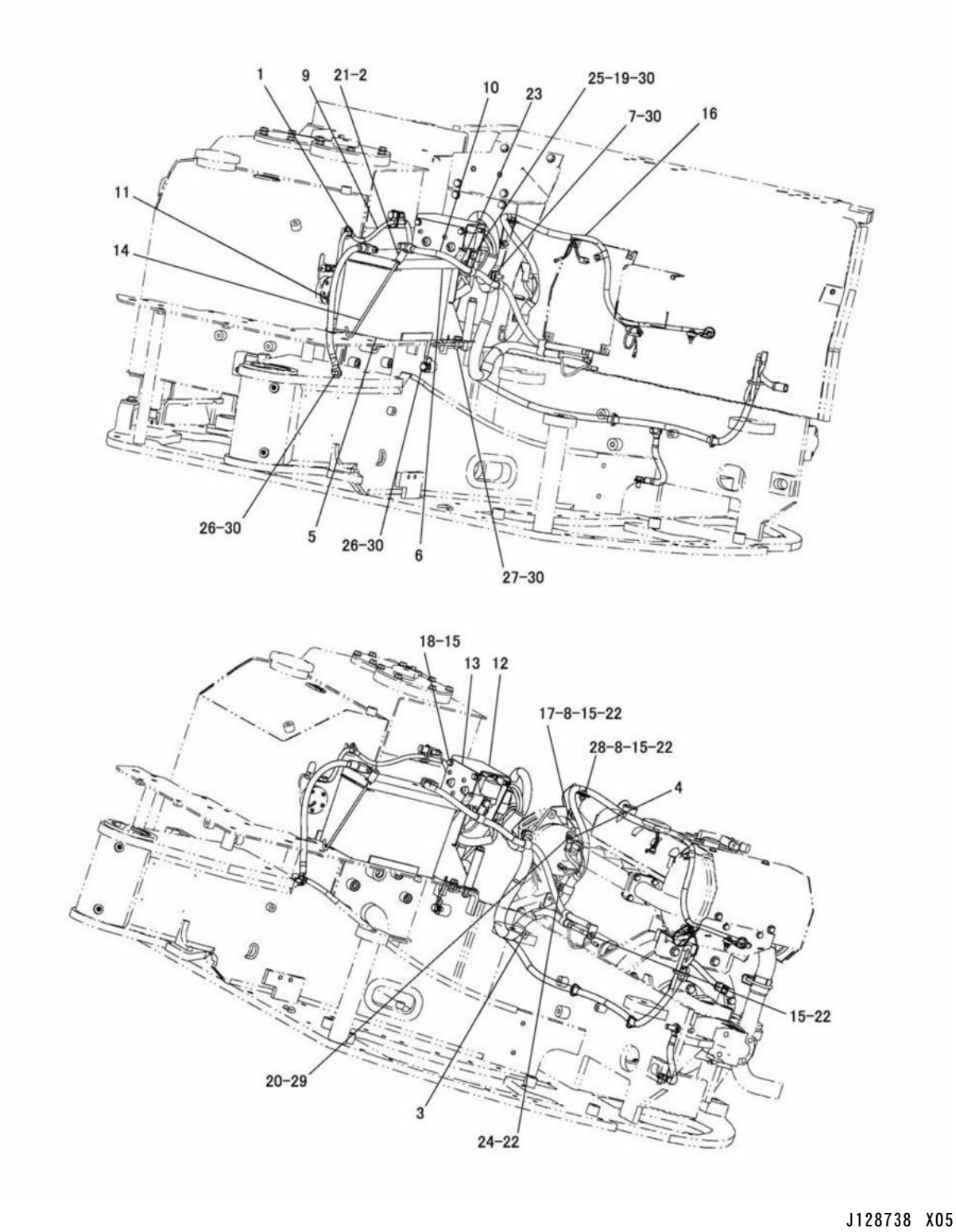

BATTERY AND WIRING (209-8171 N/S) -PART 1 OF 2
EFFECTIVE WITH SERIAL NO. BMW01341-BMW01588
PART OF 191-3351-Page 186,187,188,189

ELECTRICAL SYSTEM

NOTE	No.	PART NO.	QTY.	PART NAME	NOTE	No.	PART NO.	QTY.	PART NAME
	1	3S-2093	2	STRAP					
	2	9X-8256	2	WASHER					
	3	9X-8250	1	CLIP					
	4	8T-8799	1	BOOT					
	5	153-5656	1	BATTERY(650A)					
	6	169-1223	1	CLAMP					
	7	8T-5436	2	BOLT(M10×1.5)					
C	8	8T-4908	2	BOLT(M8×1.25)					
Y	9	191-4771	1	HARNESS AS					
	10	191-6235	1	CABLE AS					
		3S-6049	1	TERMINAL AS(+)					
		1M-6119	1	BOLT(5/16-18)					
		1M-6120	1	NUT(5/16-18)					
		8N-1725	1	COVER(RED)					
		8S-3020	1	TERMINAL					
		9X-9120	1	BOOT					
	11	191-6236	1	CABLE AS					
		3S-6050	1	TERMINAL AS(-)					
		1M-6119	1	BOLT(5/16-18)					
		1M-6120	1	NUT(5/16-18)					
		7N-5274	1	COVER(BLACK)					
		1S-7251	1	TERMINAL					
	12	191-7502	1	BRACKET AS					
		6V-9632	4	NUT(M6×1)(WELD)					
		8T-3612	2	NUT(M8×1.25)(WELD)					
	13	192-4416	1	BRACKET AS					
		6V-9632	6	NUT(M6×1)(WELD)					
		8T-3490	1	NUT(M10×1.5)(WELD)					
C	14	243-1342	2	ROD					
	15	8T-4224	7	WASHER					
Y	16	209-8172	1	HARNESS AS					
	17	3V-0778	1	BRACKET					
	18	8T-4200	2	BOLT(M8×1.25)					
	19	8T-4191	1	BOLT(M10×1.5)					
	20	5C-2874	1	NUT(M5×0.8)					
	21	5C-2890	4	NUT(M6×1)					
	22	5C-7261	4	NUT(M8×1.25)					
CE	23	103-2529		HOSE---6cm					
	24	6D-4246	1	CLIP					
	25	6K-8178	1	CLIP					
	26	8T-4137	2	BOLT(M10×1.5)					
	27	8T-4136	2	BOLT(M10×1.5)					
	28	8M-2770	1	CLIP					
	29	8T-0328	2	WASHER					
	30	8T-4121	7	WASHER					

C-INDICATES CHANGE
E-ORDER BY THE cm
Y-SEE SEPARATE ILLUSTRATION

J128738 X05

BATTERY AND WIRING (209-8171 N/S) -PART 1 OF 2

EFFECTIVE WITH SERIAL NO. BMW01341-BMW01588
PART OF 191-3351-Page 186,187,188,189
191-4771-Page 142 209-8172-Page 126

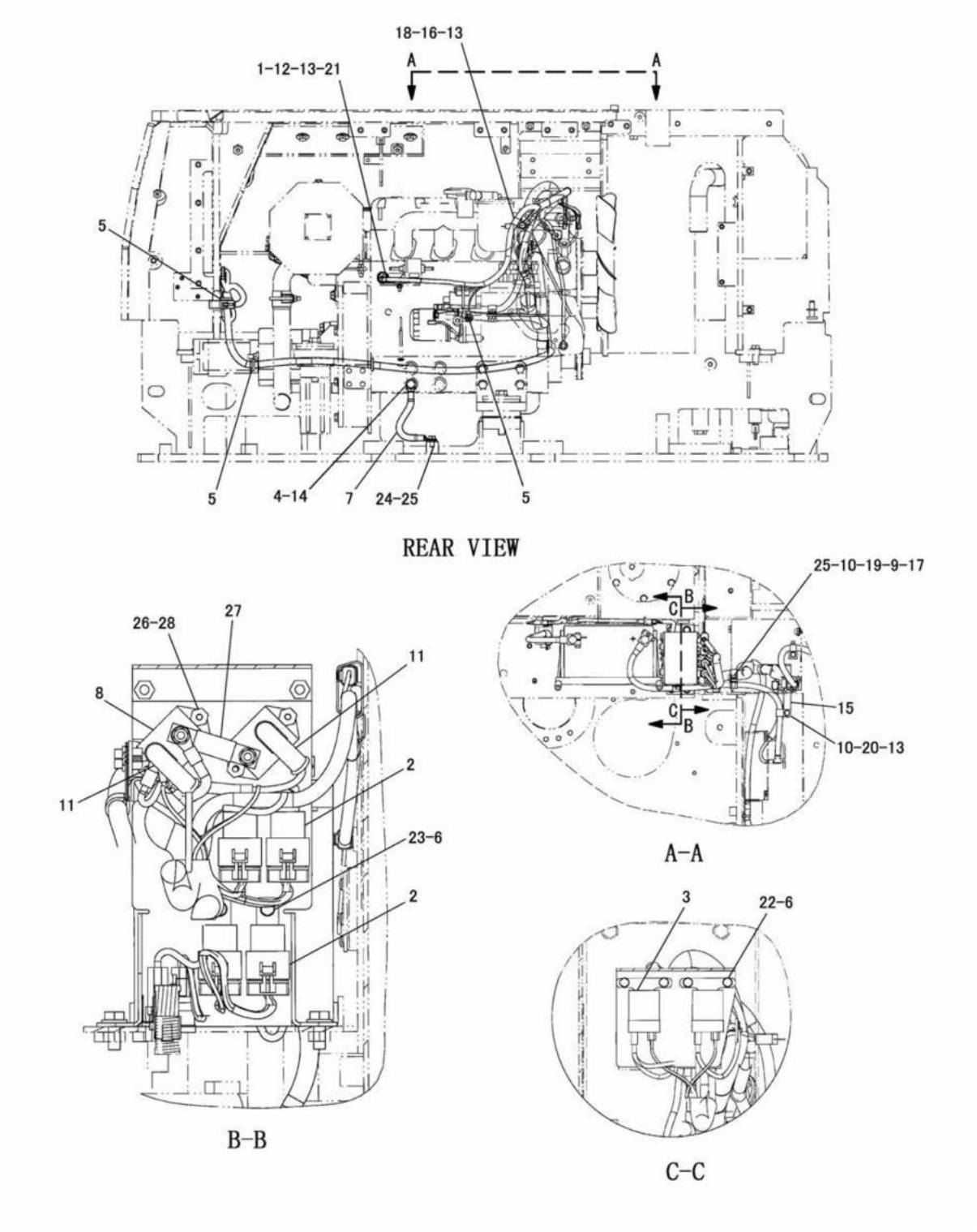

BATTERY AND WIRING (209-8171 N/S) -PART 2 OF 2
EFFECTIVE WITH SERIAL NO. BMW01341-BMW01588
PART OF 191-3351-Page 186,187,188,189

ELECTRICAL SYSTEM

NOTE	No.	PART NO.	QTY.	PART NAME	NOTE	No.	PART NO.	QTY.	PART NAME
	1	111-4836	1	CLIP					
	2	115-1615	4	RELAY AS					
	3	119-9895	2	GLOW RELAY					
C	4	150-3714	1	BOLT					
	5	3S-2093	4	STRAP					
	6	9X-8256	8	WASHER					
	7	171-0498	1	CABLE AS					
		1M-4986	2	TERMINAL					
	8	171-2208	2	BREAKER AS(60A)					
		1H-3244	2	LOCKWASHER					
		6V-8187	2	NUT(1/4-28)					
		8T-4205	2	WASHER					
	9	9X-8250	1	CLIP					
	10	9M-8406	3	CLIP					
	11	8T-8799	2	BOOT					
	12	8T-4971	1	BOLT(M6×1)					
	13	8T-4224	4	WASHER					
	14	8T-4223	1	WASHER					
	15	200-3435	1	BRACKET AS					
		8T-3612	1	NUT(M8×1.25)(WELD)					
	16	8T-4200	1	BOLT(M8×1.25)					
	17	8T-4195	1	BOLT(M10×1.5)					
	18	4D-7794	1	CLIP					
	19	4H-1225	1	WASHER					
C	20	8T-4908	1	BOLT(M8×1.25)					
	21	5C-2890	1	NUT(M6×1)					
	22	8T-4171	4	BOLT(M6×1)					
	23	5C-9553	4	BOLT(M6×1)					
	24	8T-4137	1	BOLT(M10×1.5)					
	25	8T-4121	1	WASHER					
	26	6V-5645	4	SCREW(No.10-32)					
	27	7V-9275	1	STRAP					
	28	8T-0328	4	WASHER					

C-INDICATES CHANGE

J128739 X05

BATTERY AND WIRING (209-8171 N/S) -PART 2 OF 2
EFFECTIVE WITH SERIAL NO. BMW01341-BMW01588
PART OF 191-3351-Page 186,187,188,189

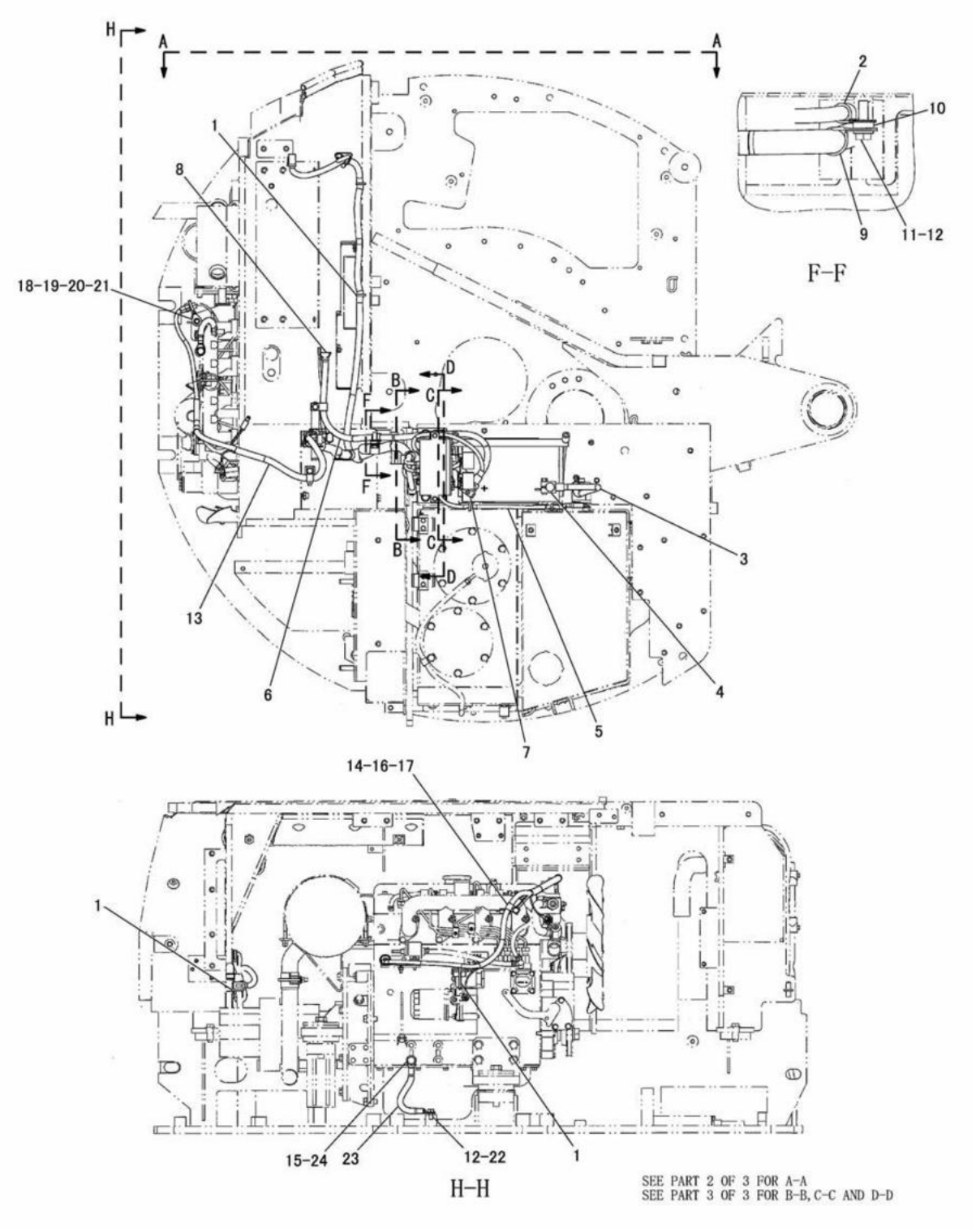

J133732 X06

BATTERY AND WIRING (209-8171 N/S) -PART 1 OF 3
EFFECTIVE WITH SERIAL NO. BMW01589-BMW01618
PART OF 191-3351-Page 186,187,188,189

ELECTRICAL SYSTEM

NOTE	No.	PART NO.	QTY.	PART NAME	NOTE	No.	PART NO.	QTY.	PART NAME
	1	3S-2093	4	STRAP					
	2	9M-8406	1	CLIP					
	3	191-6236	1	CABLE AS					
		1S-7251	1	TERMINAL					
	4	3S-6050	1	TERMINAL AS(-)					
		1M-6119	1	BOLT(5/16-18)					
		1M-6120	1	NUT(5/16-18)					
		7N-5274	1	COVER(BLACK)					
CY	5	248-1982	1	HARNESS AS					
C	6	250-2051	1	CABLE AS					
		2L-8067	1	TERMINAL					
	7	3S-6049	1	TERMINAL AS(+)					
		1M-6119	1	BOLT(5/16-18)					
		1M-6120	1	NUT(5/16-18)					
		8N-1725	1	COVER(RED)					
	8	8S-3020	1	TERMINAL					
		9X-9120	1	BOOT					
C	9	6D-4636	1	CLIP					
	10	4H-1225	1	WASHER					
C	11	8T-4196	1	BOLT(M10×1.5)					
	12	8T-4121	2	WASHER					
CY	13	248-1986	1	HARNESS AS					
	14	4D-7794	1	CLIP					
	15	8T-4223	1	WASHER					
	16	8T-4200	1	BOLT(M8×1.25)					
C	17	8T-4224	1	WASHER					
	18	111-4836	1	CLIP					
	19	5C-2890	1	NUT(M6×1)					
C	20	8T-4205	2	WASHER					
	21	8T-4971	1	BOLT(M6×1)					
	22	8T-4137	1	BOLT(M10×1.5)					
	23	171-0498	1	CABLE AS					
		1M-4986	2	TERMINAL					
	24	150-3715	1	BOLT(M12×1.25)					

C-INDICATES CHANGE
Y-SEE SEPARATE ILLUSTRATION

J133732 X06

BATTERY AND WIRING (209-8171 N/S) -PART 1 OF 3

EFFECTIVE WITH SERIAL NO. BMW01589-BMW01618
PART OF 191-3351-Page 186,187,188,189
248-1982-Page 143 248-1986-Page 127

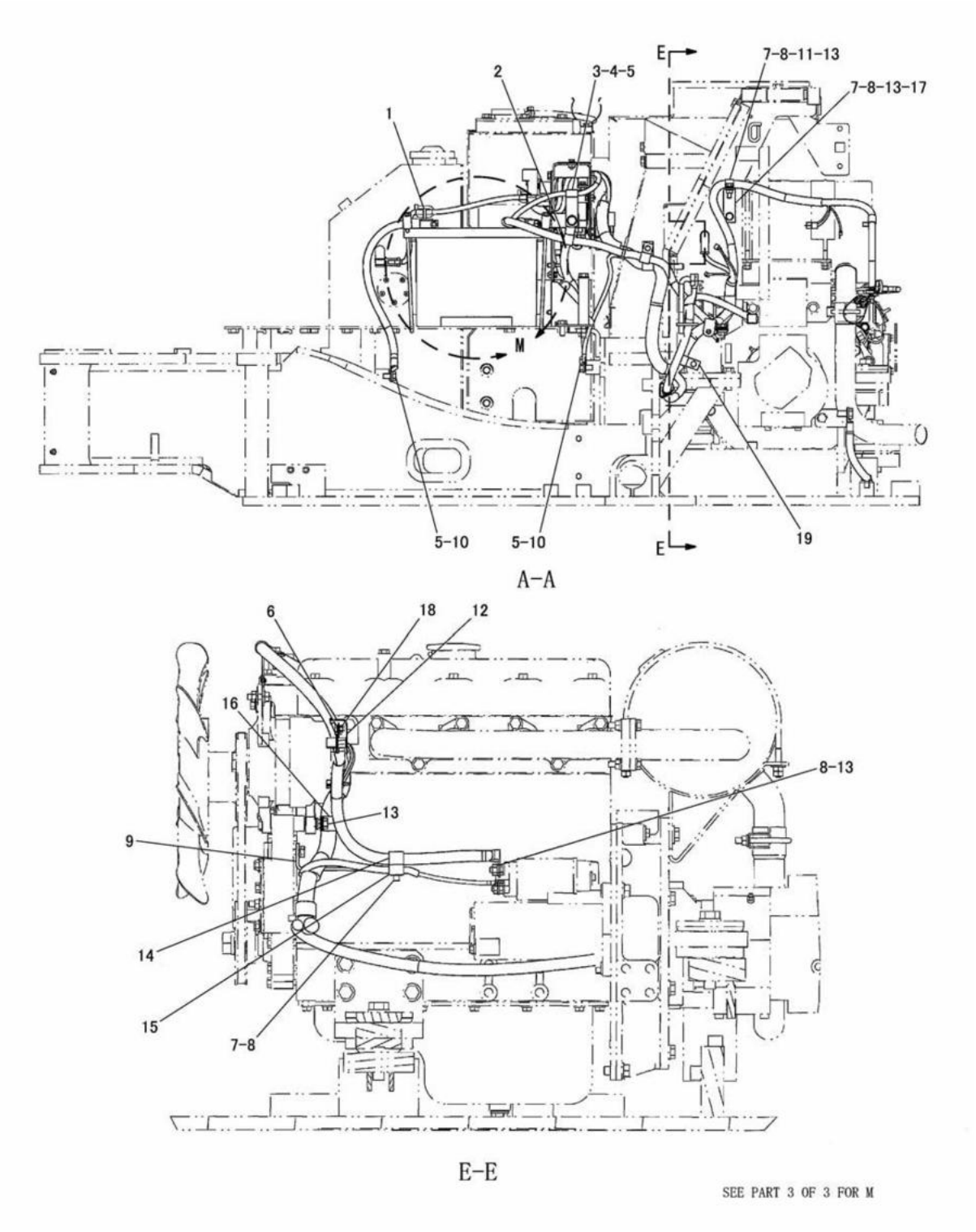

BATTERY AND WIRING (209-8171 N/S) -PART 2 OF 3
EFFECTIVE WITH SERIAL NO. BMW01589-BMW01618
PART OF 191-3351-Page 186,187,188,189

ELECTRICAL SYSTEM

NOTE	No.	PART NO.	QTY.	PART NAME	NOTE	No.	PART NO.	QTY.	PART NAME
	1	3S-2093	2	STRAP					
	2	6K-8178	1	CLIP					
C	3	6V-7383	1	CLIP					
C	4	8T-4136	1	BOLT(M10×1.5)					
	5	8T-4121	3	WASHER					
C	6	8T-0328	2	WASHER					
	7	8T-4908	3	BOLT(M8×1.25)					
C	8	8T-4224	6	WASHER					
	9	200-3435	1	BRACKET AS					
		8T-3612	1	NUT(M8×1.25)(WELD)					
	10	8T-4137	2	BOLT(M10×1.5)					
	11	8M-2770	1	CLIP					
	12	8T-8799	1	BOOT					
	13	5C-7261	4	NUT(M8×1.25)					
C	14	9M-8406	1	CLIP					
C	15	5P-9085	1	CLIP					
	16	6D-4246	1	CLIP					
	17	3V-0778	1	BRACKET					
	18	5C-2874	1	NUT(M5×0.8)					
C	19	6D-4244	1	CLIP					

C-INDICATES CHANGE

J133962 X06

BATTERY AND WIRING (209-8171 N/S) -PART 2 OF 3

EFFECTIVE WITH SERIAL NO. BMW01589-BMW01618

PART OF 191-3351-Page 186,187,188,189

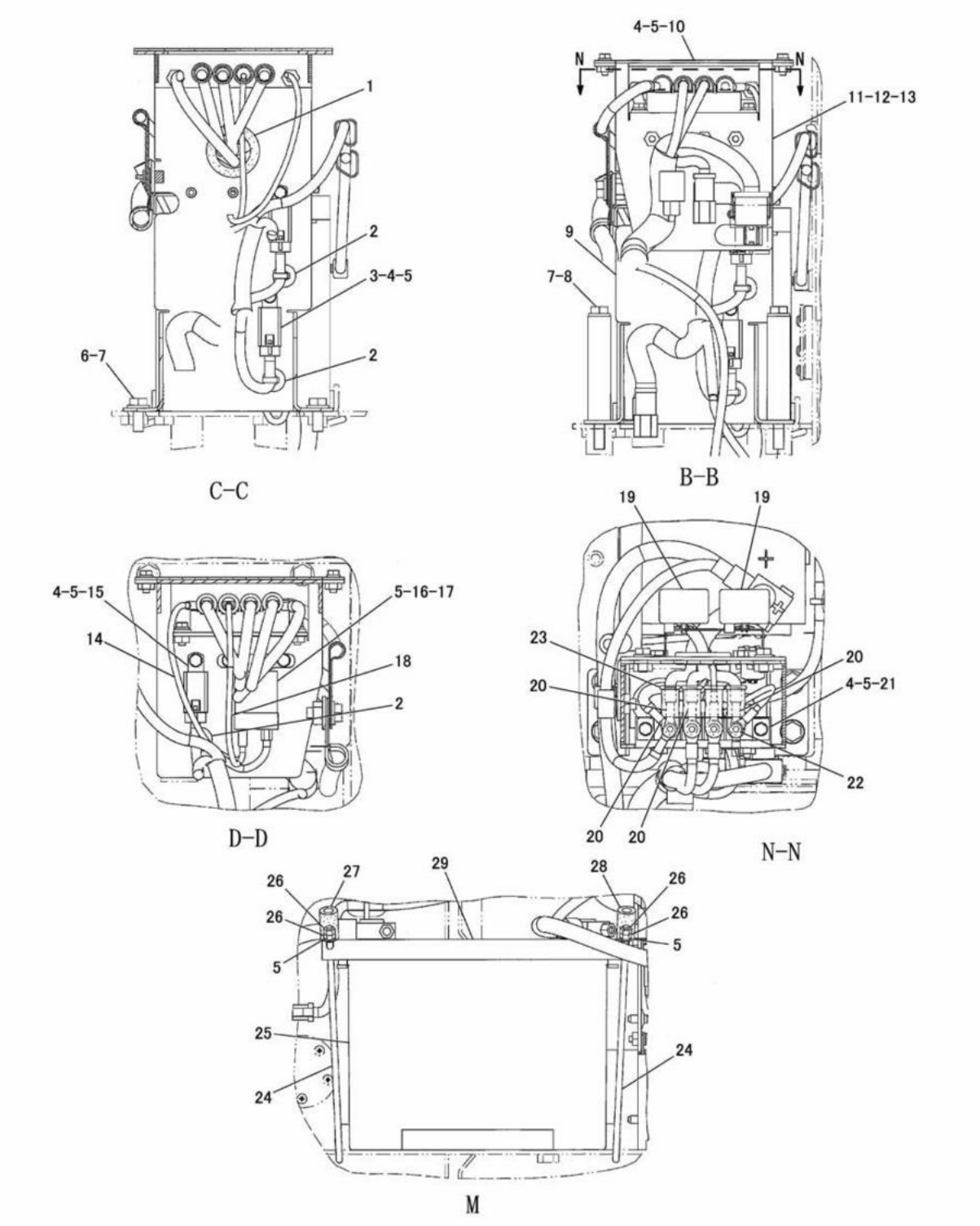

J133963 X06

BATTERY AND WIRING (209-8171 N/S) -PART 3 OF 3
EFFECTIVE WITH SERIAL NO. BMW01589-BMW01618
PART OF 191-3351-Page 186,187,188,189

ELECTRICAL SYSTEM

NOTE	No.	PART NO.	QTY.	PART NAME	NOTE	No.	PART NO.	QTY.	PART NAME
C	1	3H-2900	1	GROMMET					
C	2	163-6795	3	STRAP					
C	3	239-1182	2	RELAY AS					
C	4	5C-9553	7	BOLT(M6×1)					
C	5	9X-8256	11	WASHER					
	6	8T-4136	2	BOLT(M10×1.5)					
	7	8T-4121	4	WASHER					
	8	8T-5436	2	BOLT(M10×1.5)					
C	9	250-2049	1	BRACKET AS					
		121-1029	1	CLIP					
		6V-9632	4	NUT(M6×1)(WELD)					
		8T-3490	1	NUT(M10×1.5)(WELD)					
C	10	252-5942	1	PLATE					
C	11	250-2050	1	BRACKET AS					
		121-1029	2	CLIP					
		6V-9632	7	NUT(M6×1)(WELD)					
		8T-3612	2	NUT(M8×1.25)(WELD)					
	12	8T-4200	2	BOLT(M8×1.25)					
	13	8T-4224	2	WASHER					
C	14	250-2044	1	WIRE AS					
		2L-8067	1	TERMINAL					
		192-0615	1	CONNECTOR					
		192-0614	1	TERMINAL					
C	15	250-2048	1	RELAY AS					
C	16	119-9895	1	GLOW RELAY					
C	17	8T-4171	2	BOLT(M6×1)					
C	18	250-2047	1	WIRE AS					
		2L-8067	1	TERMINAL					
		192-0615	1	CONNECTOR					
		192-0614	1	TERMINAL					
C	19	250-3109	2	BOX AS					
		233-8366	1	FUSE HOLDER AS					
		233-8700	4	TERMINAL					
		233-0098	2	FUSE(50A)					
	20	2L-8067	2	TERMINAL					
C	21	7Y-5499	1	BLOCK AS					
C	22	5C-7883	4	BOLT(M6×1)					
C	23	8T-8799	4	BOOT					
	24	243-1342	2	ROD AS					
	25	153-5656	1	BATTERY(650A)					
	26	5C-2890	4	NUT(M6×1)					
E	27	103-2529		HOSE---3cm					
E	28	103-2529		HOSE---3cm					
	29	169-1223	1	CLAMP					

C-INDICATES CHANGE
E-ORDER BY THE cm

J133963 X06

BATTERY AND WIRING (209-8171 N/S) -PART 3 OF 3
EFFECTIVE WITH SERIAL NO. BMW01589-BMW01618
PART OF 191-3351-Page 186,187,188,189

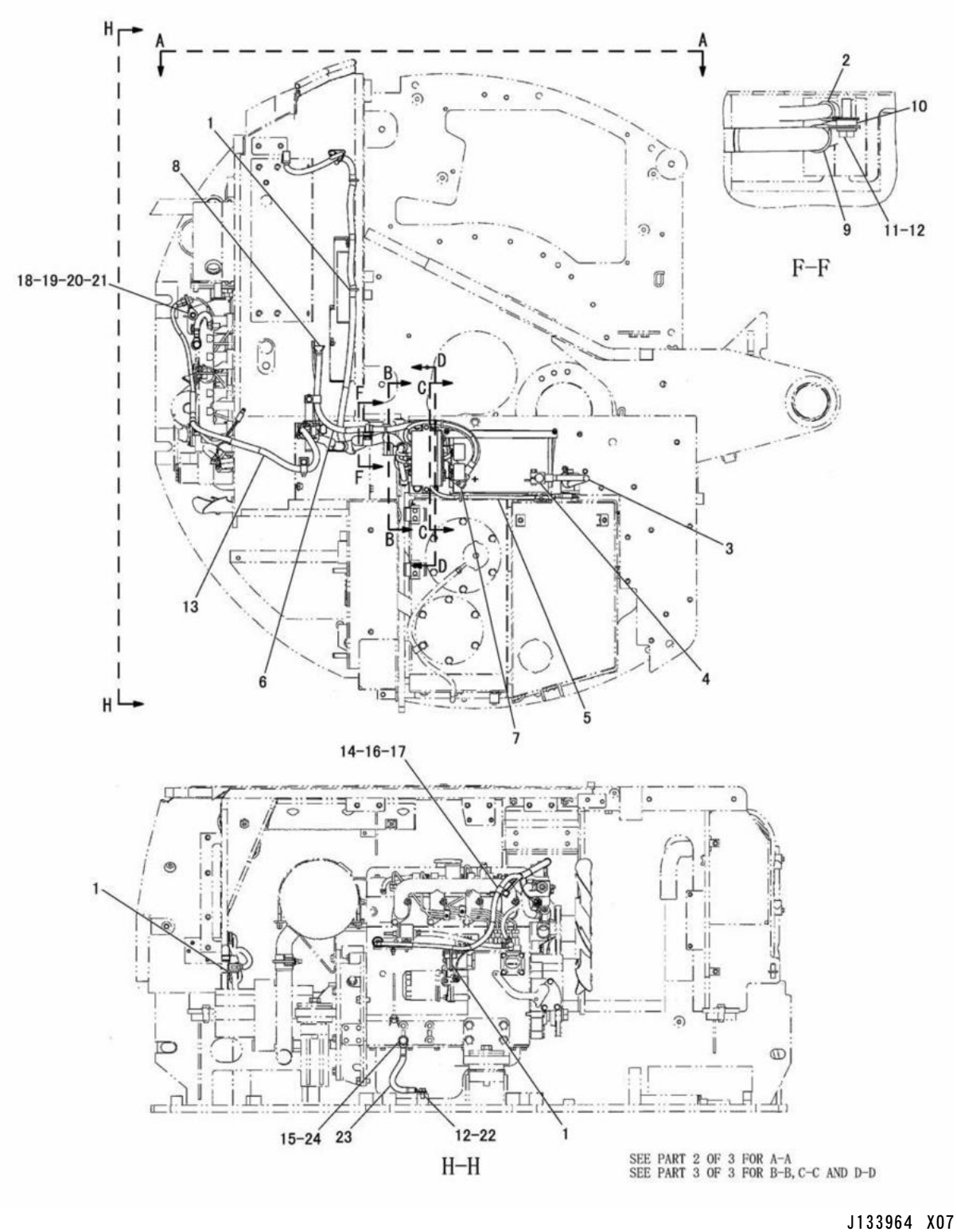

BATTERY AND WIRING (209-8171 N/S) -PART 1 OF 3
EFFECTIVE WITH SERIAL NO. BMW01619-
PART OF 191-3351-Page 186,187,188,189

ELECTRICAL SYSTEM

NOTE	No.	PART NO.	QTY.	PART NAME	NOTE	No.	PART NO.	QTY.	PART NAME
	1	3S-2093	4	STRAP					
	2	9M-8406	1	CLIP					
	3	191-6236	1	CABLE AS					
		1S-7251	1	TERMINAL					
	4	3S-6050	1	TERMINAL AS(-)					
		1M-6119	1	BOLT(5/16-18)					
		1M-6120	1	NUT(5/16-18)					
		7N-5274	1	COVER(BLACK)					
Y	5	248-1982	1	HARNESS AS					
C	6	262-2661	1	CABLE AS					
		2L-8067	1	TERMINAL					
	7	3S-6049	1	TERMINAL AS(+)					
		1M-6119	1	BOLT(5/16-18)					
		1M-6120	1	NUT(5/16-18)					
		8N-1725	1	COVER(RED)					
	8	8S-3020	1	TERMINAL					
		9X-9120	1	BOOT					
	9	6D-4636	1	CLIP					
	10	4H-1225	1	WASHER					
	11	8T-4196	1	BOLT(M10×1.5)					
	12	8T-4121	2	WASHER					
Y	13	248-1986	1	HARNESS AS					
	14	4D-7794	1	CLIP					
	15	8T-4223	1	WASHER					
	16	8T-4200	1	BOLT(M8×1.25)					
	17	8T-4224	1	WASHER					
	18	111-4836	1	CLIP					
	19	5C-2890	1	NUT(M6×1)					
	20	8T-4205	2	WASHER					
	21	8T-4971	1	BOLT(M6×1)					
	22	8T-4137	1	BOLT(M10×1.5)					
	23	171-0498	1	CABLE AS					
		1M-4986	2	TERMINAL					
	24	150-3715	1	BOLT(M12×1.25)					

C-INDICATES CHANGE
Y-SEE SEPARATE ILLUSTRATION

J133964 X07

BATTERY AND WIRING (209-8171 N/S) -PART 1 OF 3

EFFECTIVE WITH SERIAL NO. BMW01619-
PART OF 191-3351-Page 186,187,188,189
248-1982-Page 143 248-1986-Page 127

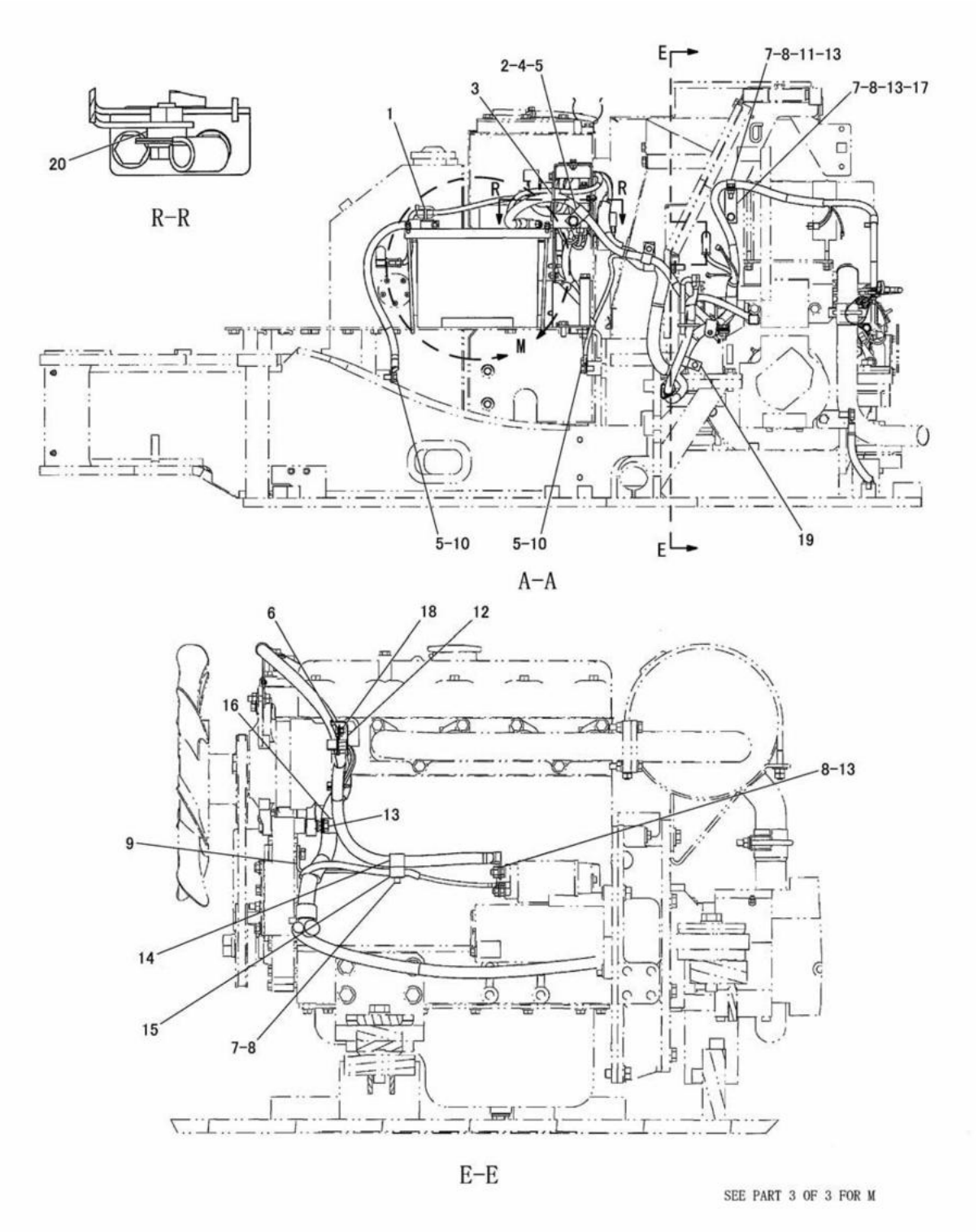

J133965 XO7

BATTERY AND WIRING (209-8171 N/S) -PART 2 OF 3
EFFECTIVE WITH SERIAL NO. BMW01619-
PART OF 191-3351-Page 186,187,188,189

ELECTRICAL SYSTEM

NOTE	No.	PART NO.	QTY.	PART NAME	NOTE	No.	PART NO.	QTY.	PART NAME
	1	3S-2093	2	STRAP					
C	2	6D-3479	1	CLIP					
C	3	7I-2673	1	STRAP					
	4	8T-4136	1	BOLT(M10×1.5)					
	5	8T-4121	3	WASHER					
	6	8T-0328	2	WASHER					
	7	8T-4908	3	BOLT(M8×1.25)					
	8	8T-4224	6	WASHER					
	9	200-3435	1	BRACKET AS					
		8T-3612	1	NUT(M8×1.25)(WELD)					
	10	8T-4137	2	BOLT(M10×1.5)					
	11	8M-2770	1	CLIP					
	12	8T-8799	1	BOOT					
	13	5C-7261	4	NUT(M8×1.25)					
	14	9M-8406	1	CLIP					
	15	5P-9085	1	CLIP					
	16	6D-4246	1	CLIP					
	17	3V-0778	1	BRACKET					
	18	5C-2874	1	NUT(M5×0.8)					
	19	6D-4244	1	CLIP					
C	20	4H-1225	1	WASHER					

C-INDICATES CHANGE

J133965 X07

BATTERY AND WIRING (209-8171 N/S) -PART 2 OF 3

EFFECTIVE WITH SERIAL NO. BMW01619-

PART OF 191-3351-Page 186,187,188,189

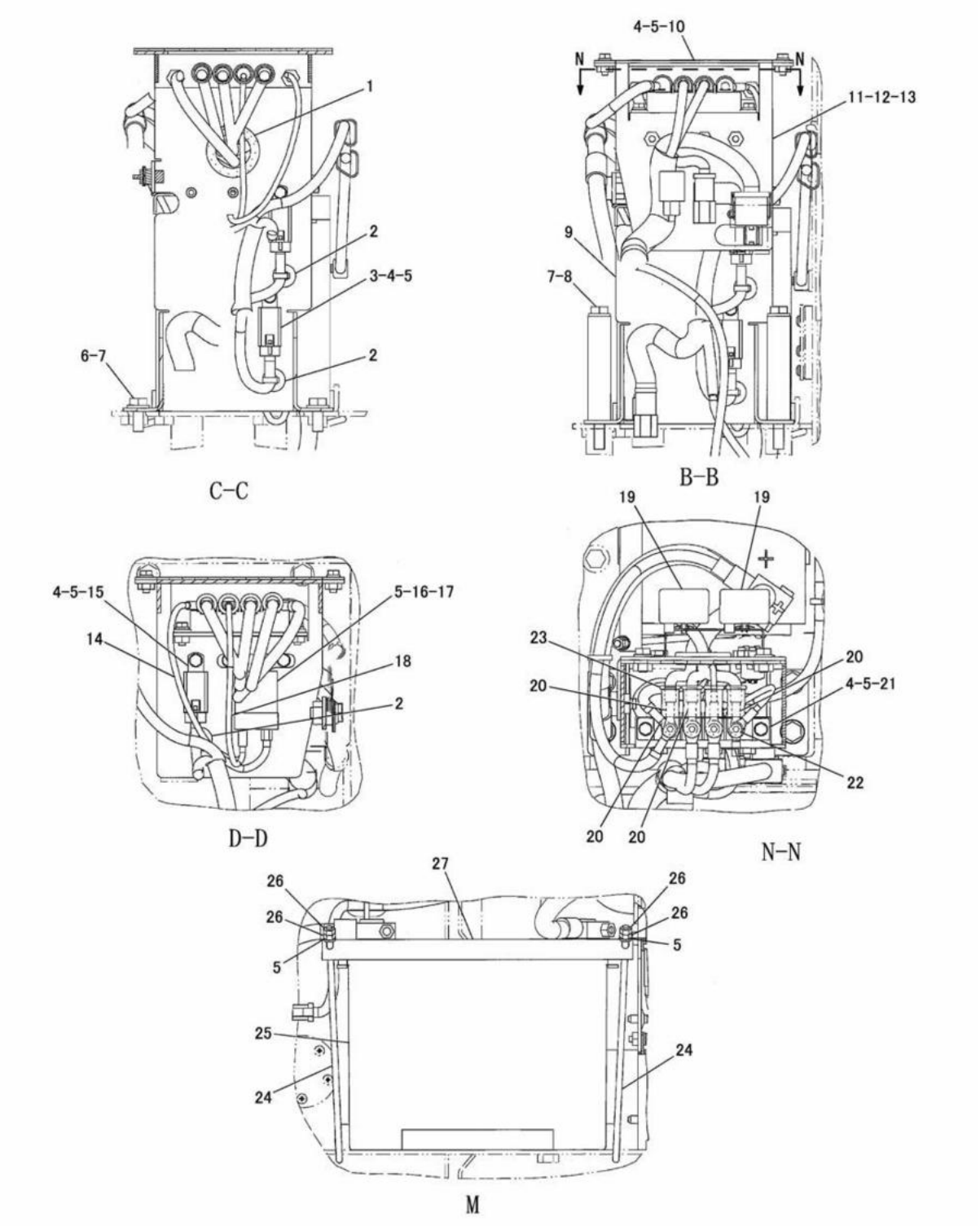

BATTERY AND WIRING (209-8171 N/S) -PART 3 OF 3
EFFECTIVE WITH SERIAL NO. BMW01619-
PART OF 191-3351-Page 186,187,188,189

ELECTRICAL SYSTEM

NOTE	No.	PART NO.	QTY.	PART NAME	NOTE	No.	PART NO.	QTY.	PART NAME
	1	3H-2900	1	GROMMET					
	2	163-6795	3	STRAP					
	3	239-1182	2	RELAY AS					
	4	5C-9553	7	BOLT(M6×1)					
	5	9X-8256	11	WASHER					
	6	8T-4136	2	BOLT(M10×1.5)					
	7	8T-4121	4	WASHER					
	8	8T-5436	2	BOLT(M10×1.5)					
	9	250-2049	1	BRACKET AS					
		121-1029	1	CLIP					
		6V-9632	4	NUT(M6×1)(WELD)					
		8T-3490	1	NUT(M10×1.5)(WELD)					
	10	252-5942	1	PLATE					
	11	250-2050	1	BRACKET AS					
		121-1029	2	CLIP					
		6V-9632	7	NUT(M6×1)(WELD)					
		8T-3612	2	NUT(M8×1.25)(WELD)					
	12	8T-4200	2	BOLT(M8×1.25)					
	13	8T-4224	2	WASHER					
	14	250-2044	1	WIRE AS					
		2L-8067	1	TERMINAL					
		192-0615	1	CONNECTOR					
		192-0614	1	TERMINAL					
	15	250-2048	1	RELAY AS					
	16	119-9895	1	GLOW RELAY					
	17	8T-4171	2	BOLT(M6×1)					
	18	250-2047	1	WIRE AS					
		2L-8067	1	TERMINAL					
		192-0615	1	CONNECTOR					
		192-0614	1	TERMINAL					
	19	250-3109	2	BOX AS					
		233-8366	1	FUSE HOLDER AS					
		233-8700	4	TERMINAL					
		233-0098	2	FUSE(50A)					
	20	2L-8067	2	TERMINAL					
	21	7Y-5499	1	BLOCK AS					
	22	5C-7883	4	BOLT(M6×1)					
	23	8T-8799	4	BOOT					
	24	243-1342	2	ROD AS					
	25	153-5656	1	BATTERY(650A)					
	26	5C-2890	4	NUT(M6×1)					
	27	169-1223	1	CLAMP					

J134418 X07

BATTERY AND WIRING (209-8171 N/S) -PART 3 OF 3
EFFECTIVE WITH SERIAL NO. BMW01619-
PART OF 191-3351-Page 186,187,188,189

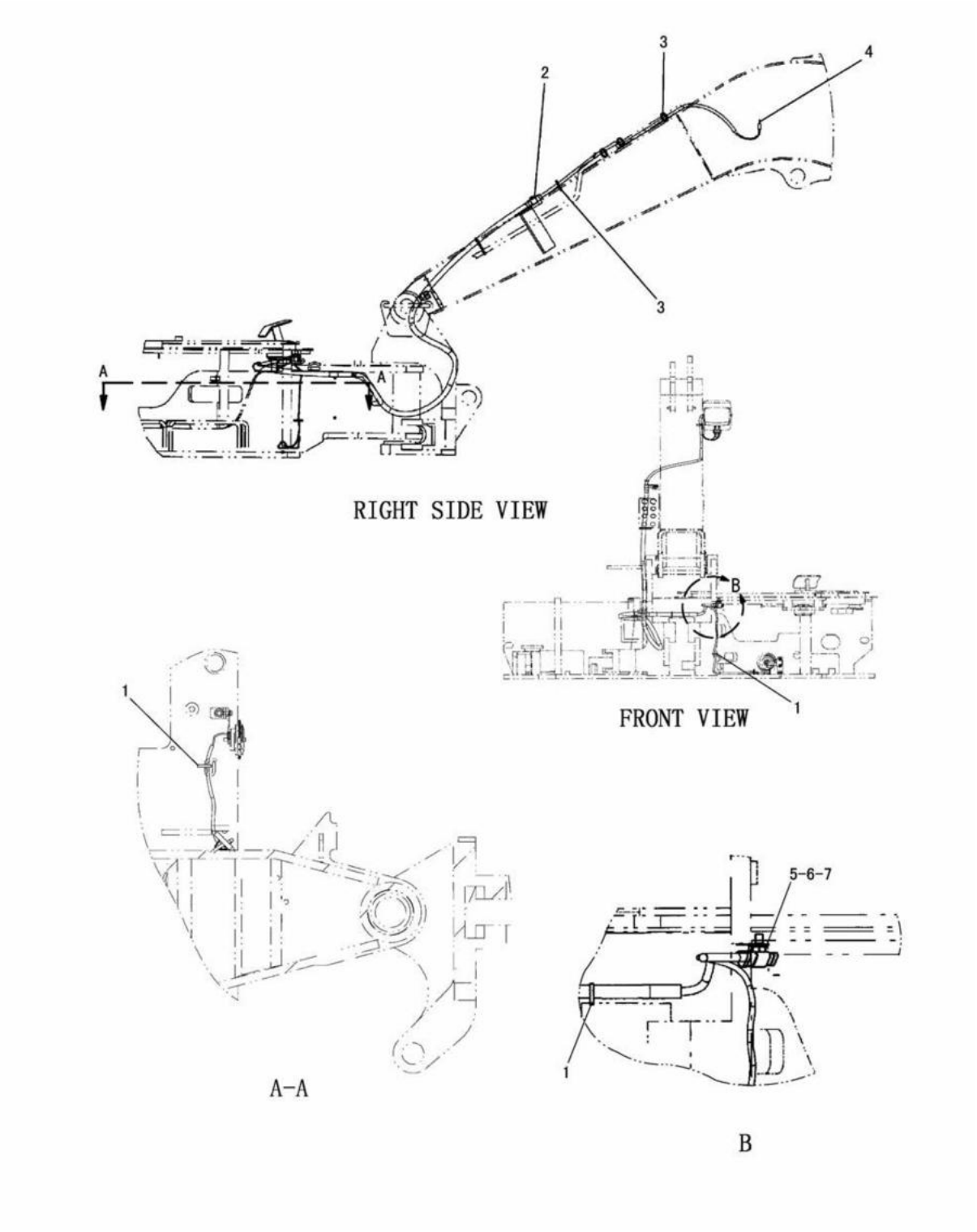

FRONT WIRING (191-3852 N/S)
EFFECTIVE WITH SERIAL NO. BMW00001-BMW01358
PART OF 191-3353-Page 457

ELECTRICAL SYSTEM

NOTE	No.	PART NO.	QTY.	PART NAME	NOTE	No.	PART NO.	QTY.	PART NAME
	1	3S-2093	3	STRAP					
	2	6K-8178	1	CLIP					
	3	7I-2673	6	STRAP					
Y	4	191-4770	1	HARNESS AS					
	5	116-0118	1	CLIP					
	6	8T-4191	1	BOLT(M10×1.5)					
	7	8T-4121	1	WASHER					

Y-SEE SEPARATE ILLUSTRATION

J136074 X07

FRONT WIRING (191-3852 N/S)
EFFECTIVE WITH SERIAL NO. BMW00001-BMW01358
PART OF 191-3353-Page 457
191-4770-Page 144

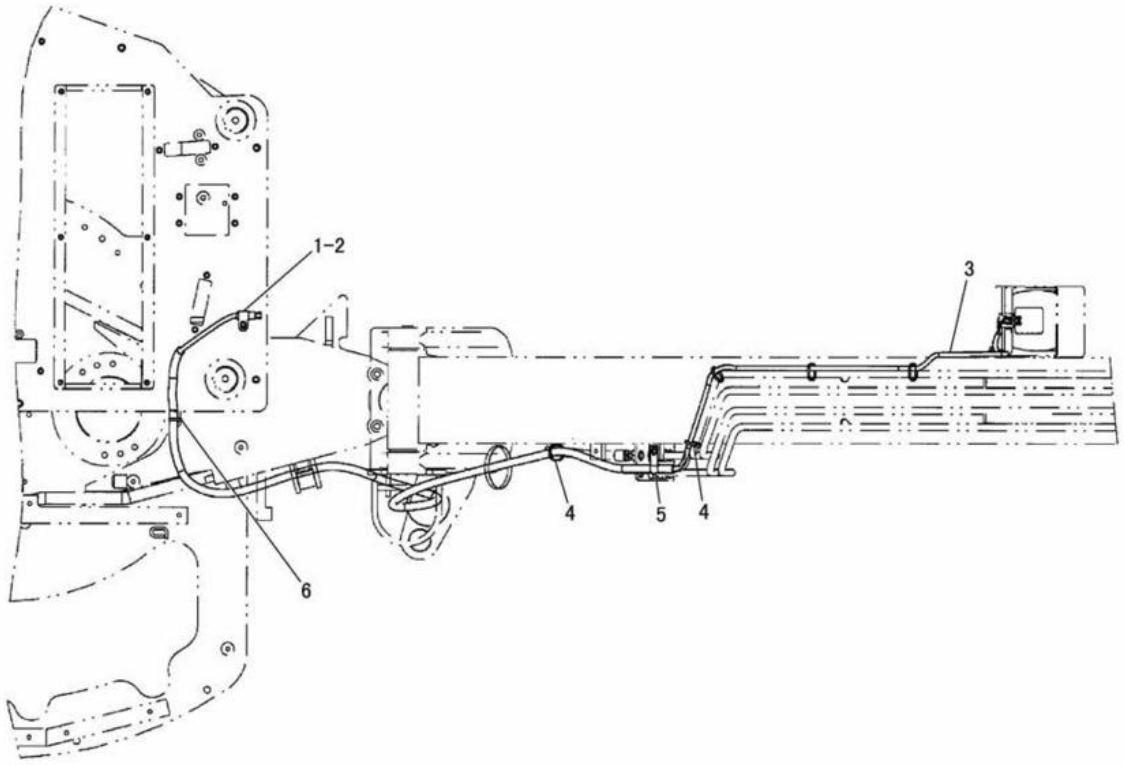

NOTE	No.	PART NO.	QTY.	PART NAME	NOTE	No.	PART NO.	QTY.	PART NAME
	1	116-0118	1	CLIP					
	2	8T-4191	1	BOLT(M10×1.5)					
		8T-4121	1	WASHER					
Y	3	209-8170	1	HARNESS AS					
	4	7I-2673	5	STRAP					
	5	6K-8178	1	CLIP					
	6	3S-2093	1	STRAP					

Y-SEE SEPARATE ILLUSTRATION

J111303 X03

FRONT WIRING (209-8169 N/S)

EFFECTIVE WITH SERIAL NO. BMW01359-(STD),BMW01261-(ATT)
PART OF 191-3353-Page 457,201-4570-Page 527
209-8170-Page 145

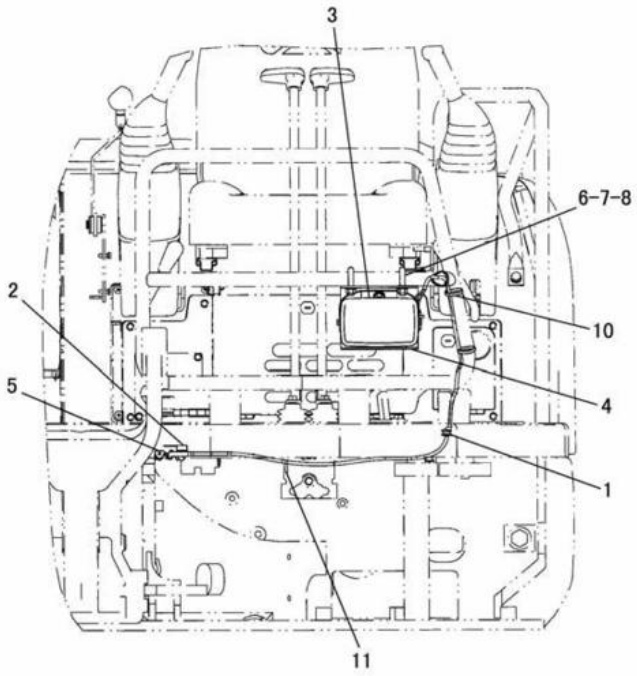

FRONT VIEW

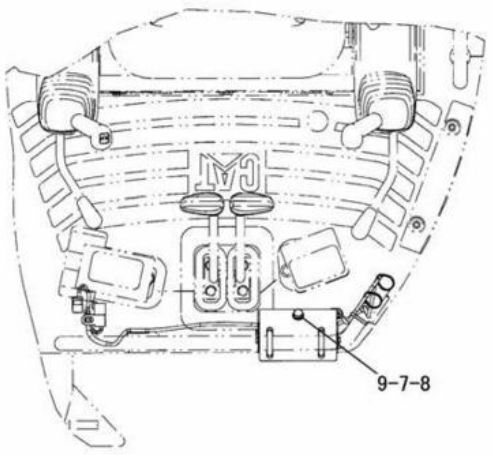

TOP VIEW

NOTE	No.	PART NO.	QTY.	PART NAME	NOTE	No.	PART NO.	QTY.	PART NAME
	1	011-7960	1	GROMMET					
	2	116-0118	1	CLIP					
	3	198-0852	1	LAMP GROUP					
		142-9572	1	BULB(12V,55W)					
	4	209-2214	1	COVER					
Y	5	209-2215	1	HARNESS AS					
	6	4Y-8003	2	U-BOLT(M10×1.5)					
	7	8T-4121	6	WASHER					
	8	8T-4133	5	NUT(M10×1.5)					
	9	8T-4137	1	BOLT(M10×1.5)					
	10	3S-2093	4	STRAP					
	11	7I-2673	1	STRAP					

Y-SEE SEPARATE ILLUSTRATION

J129279 X01

CHASSIS LIGHTING (209-2213 N/S)

209-2215-Page 146

AN ATTACHMENT

ELECTRICAL SYSTEM

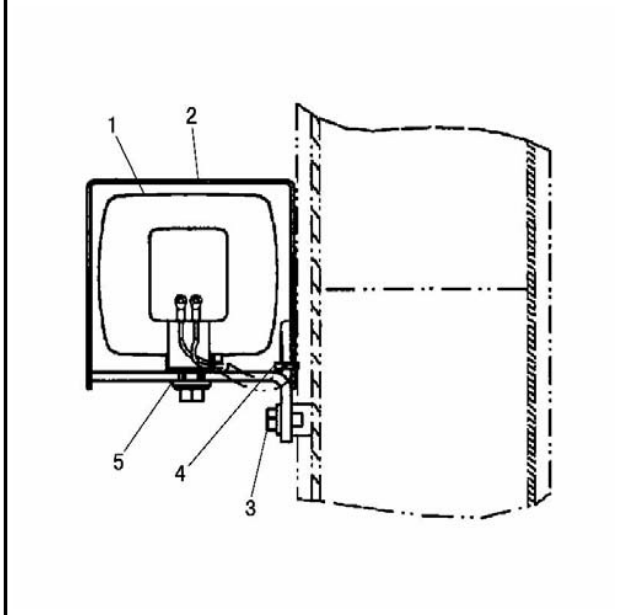

NOTE	No.	PART NO.	QTY.	PART NAME
Y	1	191-4819	1	LAMP GROUP
	2	192-3560	1	BRACKET AS
	3	8T-4179	1	BOLT(M12×1.75)
		8T-4223	1	WASHER
	4	3S-2093	1	STRAP
	5	5P-1076	1	WASHER

Y-SEE SEPARATE ILLUSTRATION

J112878 X03

BOOM LIGHTING (195-9040 N/S) -1 LAMP
EFFECTIVE WITH SERIAL NO. BMW00001-BMW01424
PART OF 191-3353-Page 457
191-4819-Page 119

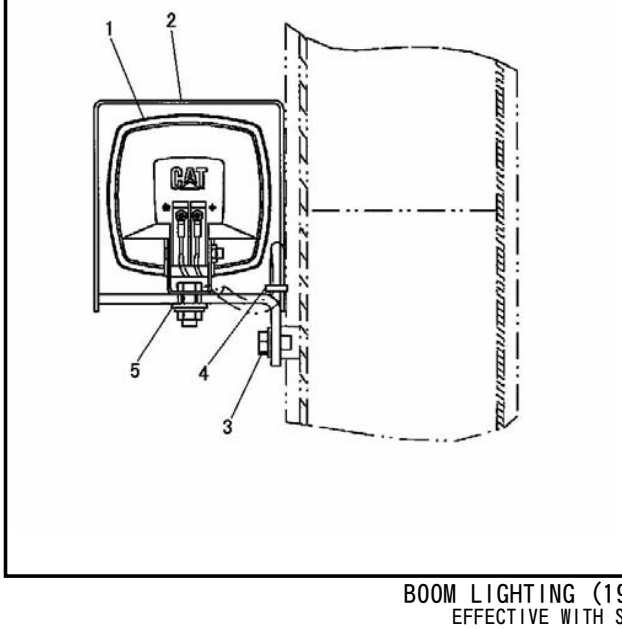

NOTE	No.	PART NO.	QTY.	PART NAME
YC	1	233-0099	1	FLOOD LAMP GROUP
	2	192-3560	1	BRACKET AS
	3	8T-4179	1	BOLT(M12×1.75)
		8T-4223	1	WASHER
	4	3S-2093	1	STRAP
	5	5P-1076	1	WASHER

C-INDICATES CHANGE
Y-SEE SEPARATE ILLUSTRATION

J130327 X04

BOOM LIGHTING (195-9040 N/S) -1 LAMP
EFFECTIVE WITH SERIAL NO. BMW01425-
PART OF 191-3353-Page 457
233-0099-Page 119

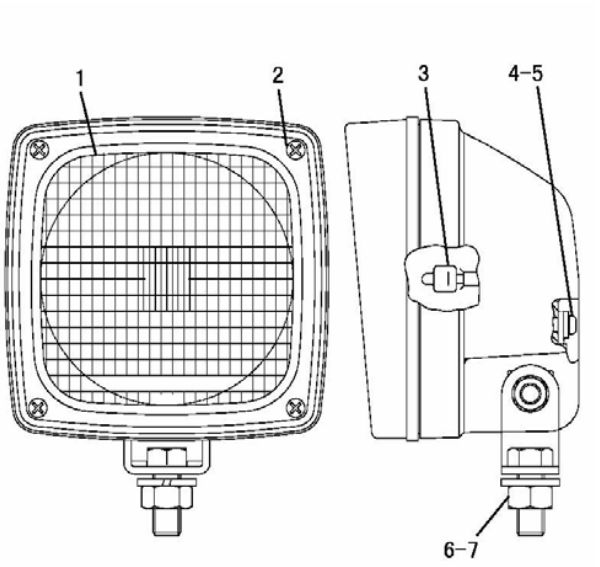

NOTE	No.	PART NO.	QTY.	PART NAME
	1	170-8965	1	LENS AS
	2	170-8964	4	SCREW(No.4×25)
	3	142-9572	1	BULB(12V,55W)
	4	8C-7581	2	SCREW(M4×0.7)
	5	096-6166	2	WASHER
	6	9X-8488	1	NUT(M12×1.5)
	7	8T-4223	1	WASHER

J107688 X02

191-4819 FLOOD LAMP GROUP
EFFECTIVE WITH SERIAL NO. BMW00001-BMW01424
PART OF 195-9040-Page 118

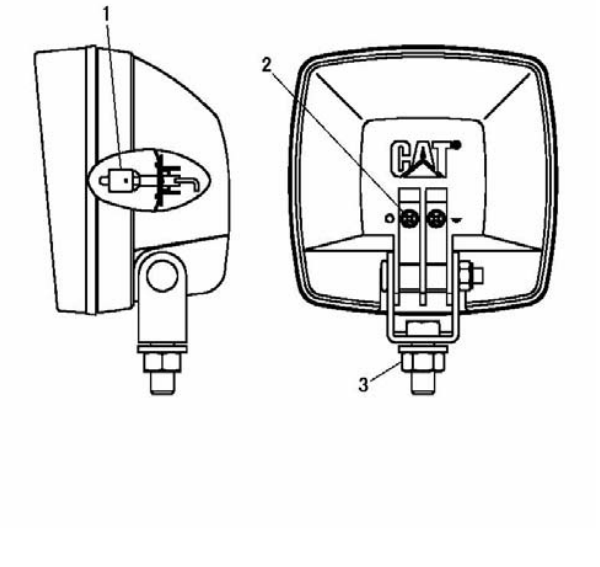

NOTE	No.	PART NO.	QTY.	PART NAME
	1	142-9572	1	BULB(12V,55W)
	2	6V-9492	2	SCREW(M4×0.7)
		096-6166	2	WASHER
	3	8T-4223	1	WASHER
		9X-8488	1	NUT(M12×1.5)

J122664 E00

233-0099 FLOOD LAMP GROUP
EFFECTIVE WITH SERIAL NO. BMW01425-
PART OF 195-9040-Page 118

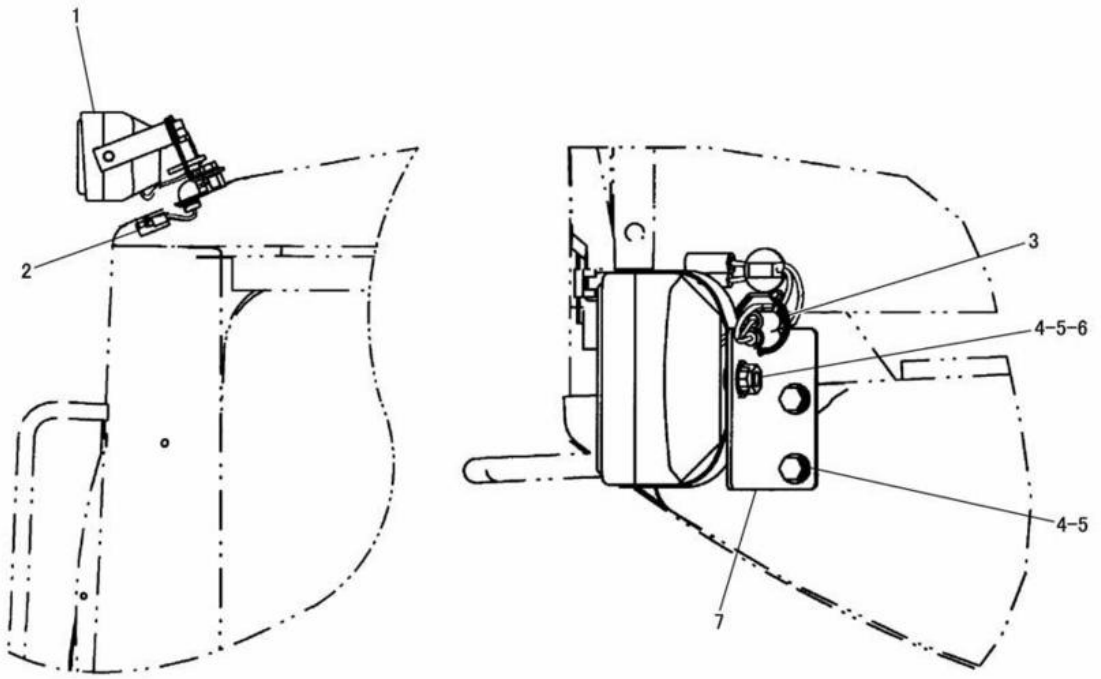

TOP VIEW

NOTE	No.	PART NO.	QTY.	PART NAME	NOTE	No.	PART NO.	QTY.	PART NAME
	1	198-0852	1	FLOOD LAMP GROUP					
		142-9572	1	BULB(12V,55W)					
	2	186-4575	1	HARNESS AS					
		7Y-3962	1	TERMINAL					
		7Y-3964	1	TUBE					
		7Y-3963	1	TERMINAL					
		7Y-3965	1	TUBE					
	3	3S-2093	1	STRAP					
	4	8T-4137	3	BOLT(M10×1.5)					
	5	8T-4121	4	WASHER					
	6	8T-4133	1	NUT(M10×1.5)					
	7	198-0853	1	ANGLE					

J128852 X01

CAB LIGHTING (198-0851 N/S)
EFFECTIVE WITH SERIAL NO. BMW00001-BMW01239
AN ATTACHMENT

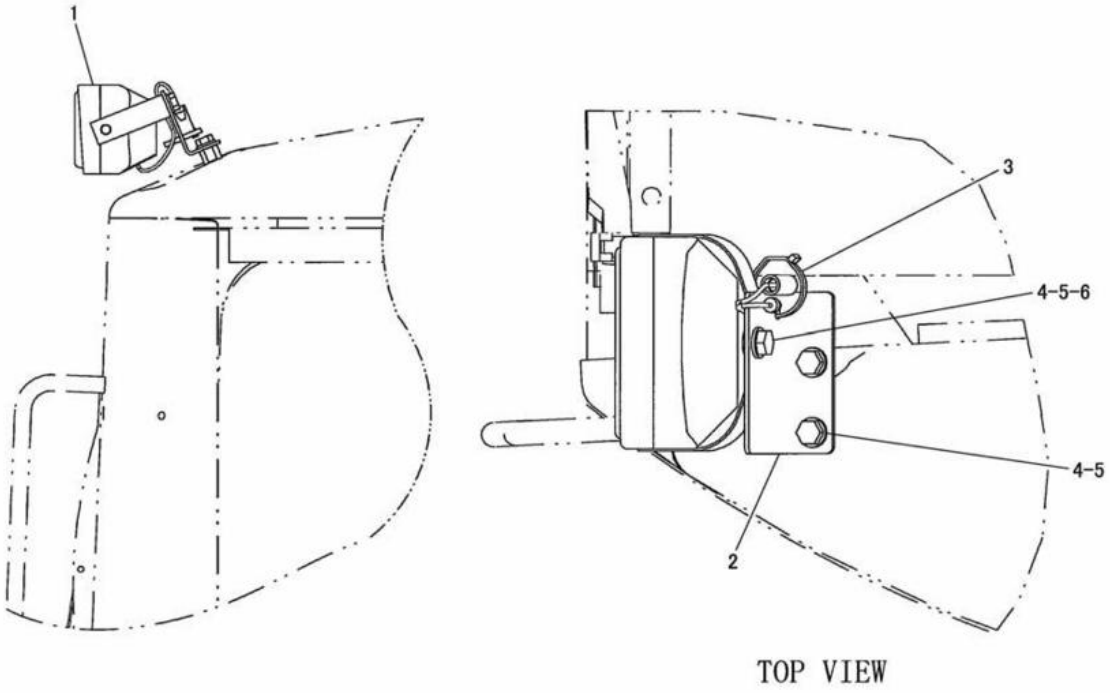

TOP VIEW

NOTE	No.	PART NO.	QTY.	PART NAME	NOTE	No.	PART NO.	QTY.	PART NAME
	1	198-0852	1	FLOOD LAMP GROUP					
		142-9572	1	BULB(12V,55W)					
	2	198-0853	1	ANGLE					
	3	3S-2093	1	STRAP					
	4	8T-4137	3	BOLT(M10×1.5)					
	5	8T-4121	4	WASHER					
	6	8T-4133	1	NUT(M10×1.5)					

J128853 X02

CAB LIGHTING (198-0851 N/S)
EFFECTIVE WITH SERIAL NO. BMW01240-
AN ATTACHMENT

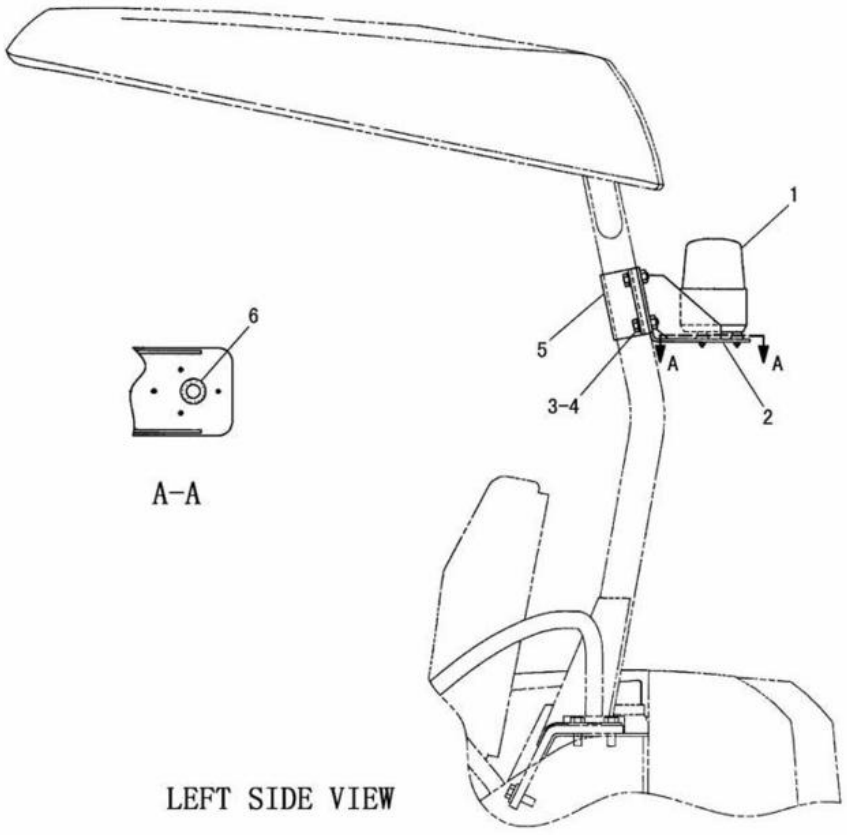

NOTE	No.	PART NO.	QTY.	PART NAME	NOTE	No.	PART NO.	QTY.	PART NAME
	1	199-5189	1	PATO LIGHT					
	2	206-7612	1	SUPPORT AS					
		8T-3490	4	NUT(M10×1.5)(WELD)					
	3	8T-4195	4	BOLT(M10×1.5)					
	4	8T-4121	4	WASHER					
	5	206-7613	1	SUPPORT					
	6	093-2069	1	GROMMET					

J127204 X00

PATO LIGHTING (206-7611 N/S) -CANOPY
EFFECTIVE WITH SERIAL NO. BMW00684-
PART OF 206-7605-Page 514,515,206-7635-Page 516,517
AN ATTACHMENT

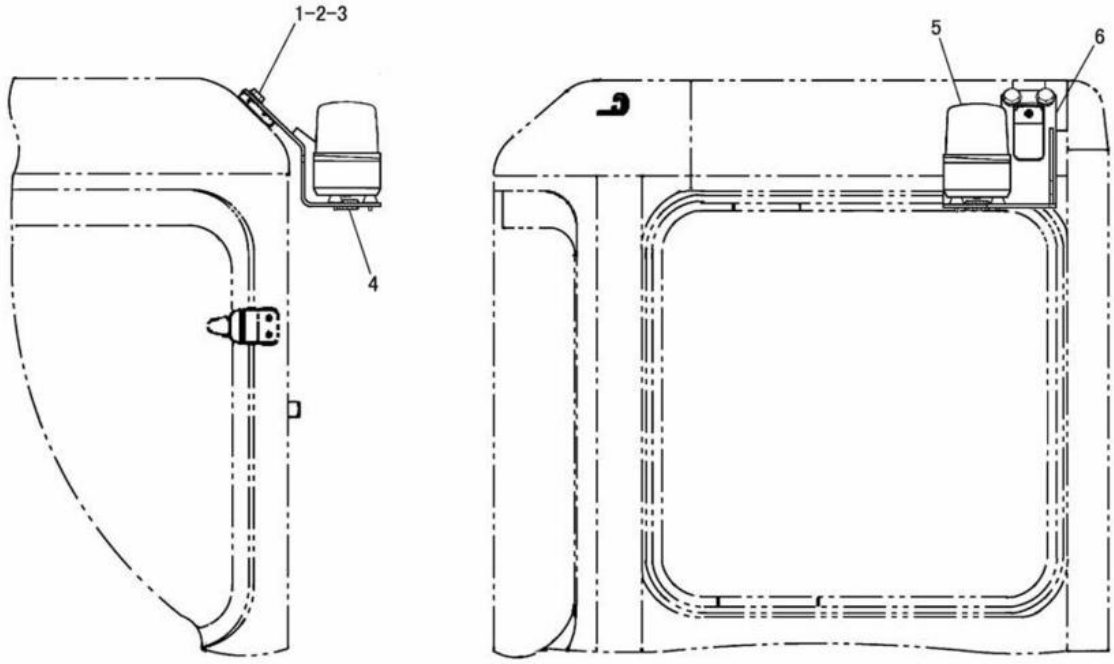

REAR VIEW

NOTE	No.	PART NO.	QTY.	PART NAME	NOTE	No.	PART NO.	QTY.	PART NAME
	1	8T-4137	2	BOLT(M10×1.5)					
	2	8T-4121	2	WASHER					
	3	8T-4223	2	WASHER					
	4	093-2069	1	GROMMET					
	5	199-5189	1	PATO LIGHT					
	6	199-5197	1	SUPPORT AS					

J127202 X00

PATO LIGHTING (199-5185 N/S) -CAB
EFFECTIVE WITH SERIAL NO. BMW00204-
PART OF 201-9165-Page 518,519,206-7624-Page 520,521
AN ATTACHMENT

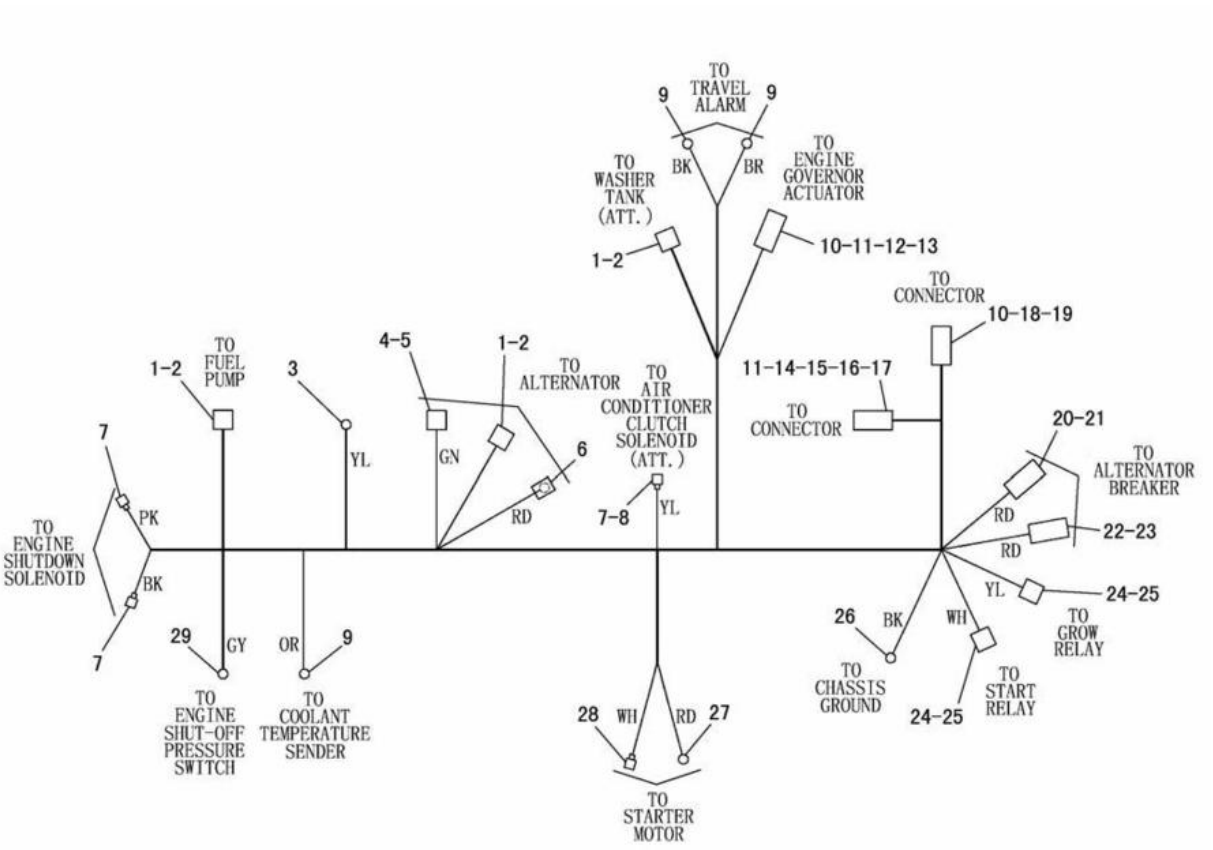

NOTE	No.	PART NO.	QTY.	PART NAME	NOTE	No.	PART NO.	QTY.	PART NAME
	1	7Y-3951	6	TERMINAL		20	127-5483	1	PLUG AS(1P)
	2	7Y-3952	3	CONNECTOR		21	8N-1547	1	SOCKET
	3	5P-1477	1	TERMINAL		22	127-5484	1	RECEPTACLE AS(1P)
	4	7Y-3995	1	CONNECTOR		23	8N-1546	1	PIN
	5	7Y-3996	1	TERMINAL		24	192-0615	2	CONNECTOR
	6	2L-8050	1	TERMINAL		25	192-0614	2	TERMINAL
	7	7Y-3963	3	TERMINAL		26	2L-8079	1	TERMINAL
		7Y-3965	3	TUBE		27	2L-8051	1	TERMINAL
	8	3S-2093	1	STRAP		28	4K-5120	1	TERMINAL
	9	2L-8076	3	TERMINAL		29	2L-8075	1	TERMINAL
	10	186-3736	17	SOCKET					
	11	8T-8737	2	PLUG					
	12	155-2274	1	PLUG KIT(6P)					
	13	3E-3380	1	WEDGE					
	14	9W-0852	1	PIN					
	15	102-8805	1	RECEPTACLE KIT(6P)					
	16	3E-3383	1	WEDGE					
	17	186-3735	4	PIN					
	18	155-2255	1	PLUG KIT(12P)					
	19	3E-5177	1	WEDGE					

J117471 X04

191-4769 HARNESS ASSEMBLY-ENGINE
EFFECTIVE WITH SERIAL NO. BMW00001-BMW00746
PART OF 191-3847-Page 87

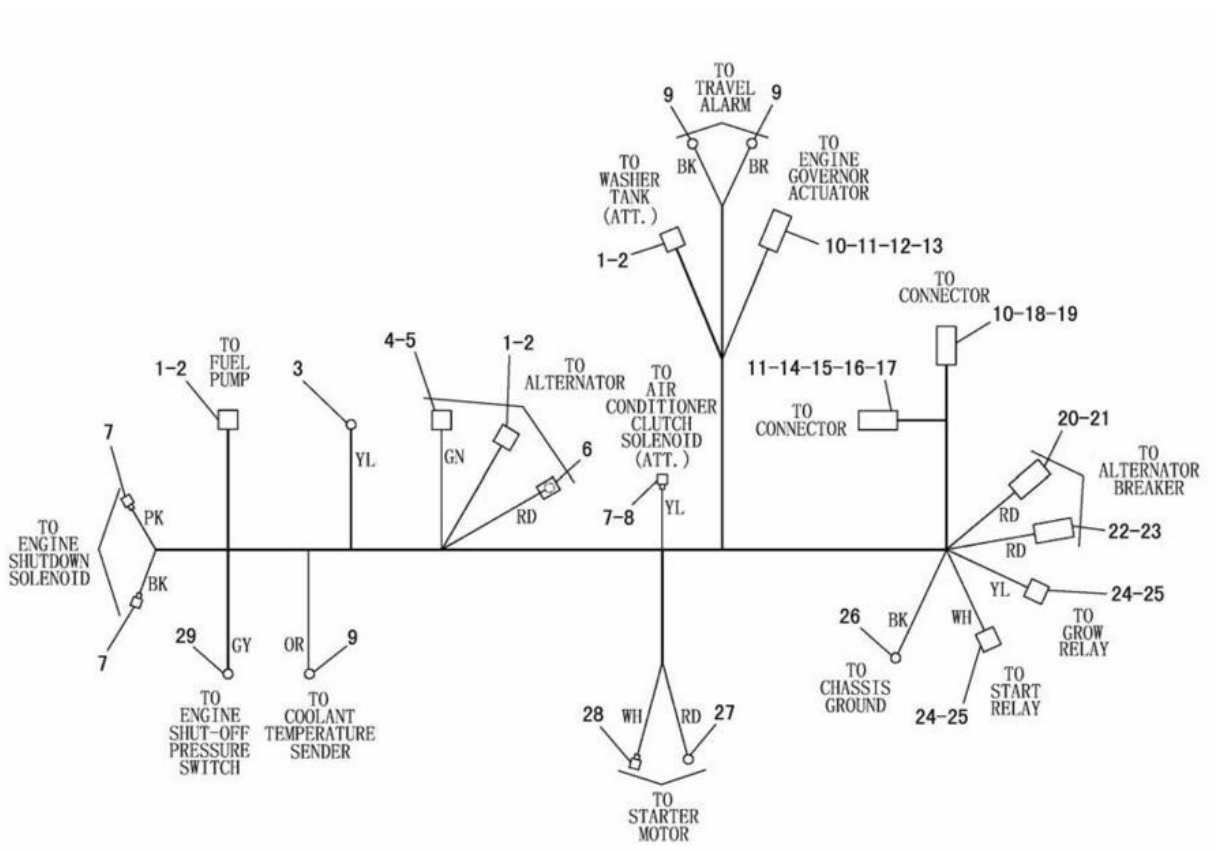

NOTE	No.	PART NO.	QTY.	PART NAME	NOTE	No.	PART NO.	QTY.	PART NAME
	1	7Y-3951	6	TERMINAL		20	127-5483	1	PLUG AS(1P)
	2	7Y-3952	3	CONNECTOR		21	8N-1547	1	SOCKET
	3	5P-1477	1	TERMINAL		22	127-5484	1	RECEPTACLE AS(1P)
	4	7Y-3995	1	CONNECTOR		23	8N-1546	1	PIN
	5	7Y-3996	1	TERMINAL		24	192-0615	2	CONNECTOR
	6	2L-8050	1	TERMINAL		25	192-0614	2	TERMINAL
	7	7Y-3963	3	TERMINAL		26	2L-8079	1	TERMINAL
		7Y-3965	3	TUBE		27	2L-8051	1	TERMINAL
	8	3S-2093	1	STRAP	C	28	205-7461	1	TERMINAL
	9	2L-8076	3	TERMINAL	C		205-7460	1	CONNECTOR
	10	186-3736	17	SOCKET		29	2L-8075	1	TERMINAL
	11	8T-8737	2	PLUG					
	12	155-2274	1	PLUG KIT(6P)					
	13	3E-3380	1	WEDGE					
	14	9W-0852	1	PIN					
	15	102-8805	1	RECEPTACLE KIT(6P)					
	16	3E-3383	1	WEDGE					
	17	186-3735	4	PIN					
	18	155-2255	1	PLUG KIT(12P)					
	19	3E-5177	1	WEDGE					

C-INDICATES CHANGE

J115397 X05

191-4769 HARNESS ASSEMBLY-ENGINE

EFFECTIVE WITH SERIAL NO. BMW00747-BMW00886

PART OF 191-3847-Page 87

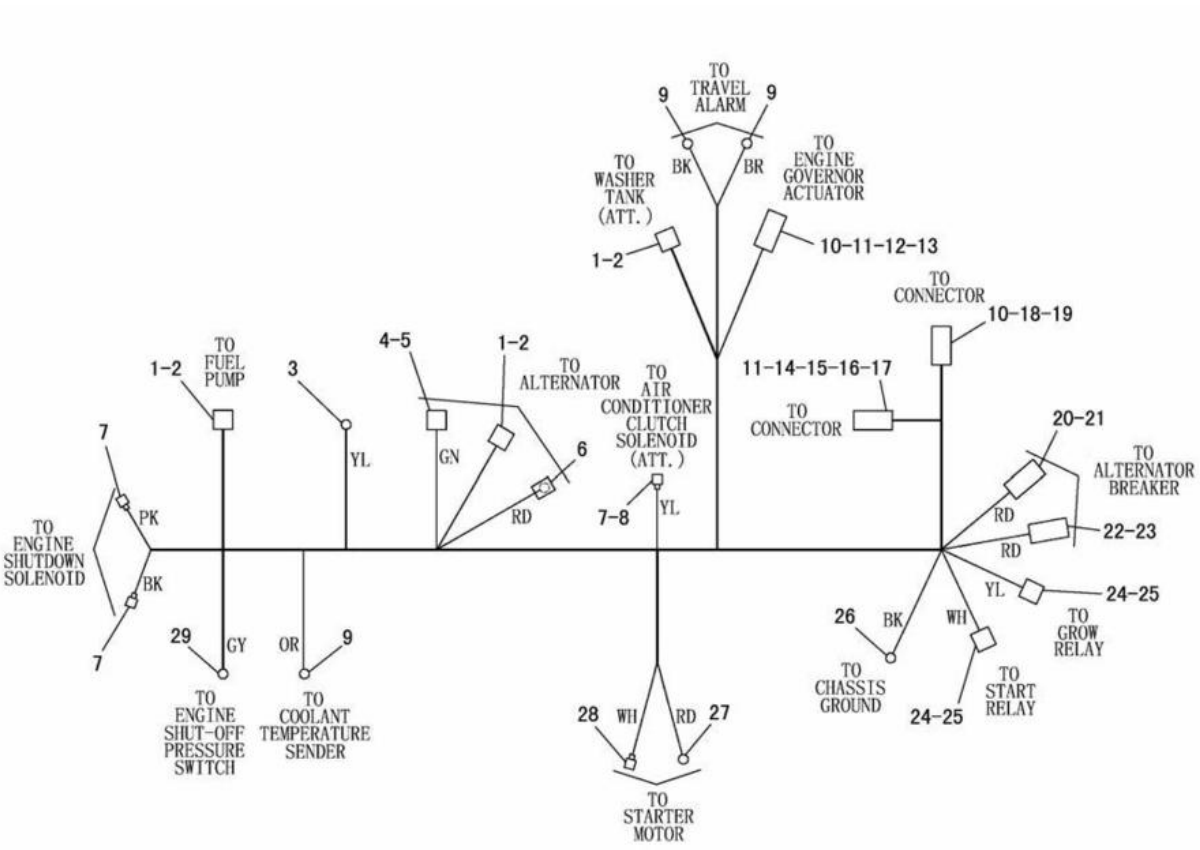

NOTE	No.	PART NO.	QTY.	PART NAME	NOTE	No.	PART NO.	QTY.	PART NAME
	1	7Y-3951	6	TERMINAL		20	127-5483	1	PLUG AS(1P)
	2	7Y-3952	3	CONNECTOR		21	8N-1547	1	SOCKET
	3	5P-1477	1	TERMINAL		22	127-5484	1	RECEPTACLE AS(1P)
	4	7Y-3995	1	CONNECTOR		23	8N-1546	1	PIN
	5	7Y-3996	1	TERMINAL		24	192-0615	2	CONNECTOR
	6	2L-8050	1	TERMINAL		25	192-0614	2	TERMINAL
	7	7Y-3963	3	TERMINAL		26	2L-8079	1	TERMINAL
		7Y-3965	3	TUBE		27	2L-8051	1	TERMINAL
	8	3S-2093	1	STRAP		28	205-7461	1	TERMINAL
	9	2L-8076	3	TERMINAL			205-7460	1	CONNECTOR
	10	186-3736	17	SOCKET		29	2L-8075	1	TERMINAL
	11	8T-8737	2	PLUG					
	12	155-2274	1	PLUG KIT(6P)					
	13	3E-3380	1	WEDGE					
	14	9W-0852	1	PIN					
	15	102-8805	1	RECEPTACLE KIT(6P)					
	16	3E-3383	1	WEDGE					
	17	186-3735	4	PIN					
	18	155-2255	1	PLUG KIT(12P)					
	19	3E-5177	1	WEDGE					

J115398 X02

209-8172 HARNESS ASSEMBLY-ENGINE

EFFECTIVE WITH SERIAL NO. BMW00887-BMW01588

PART OF 209-8171-Page 95,99

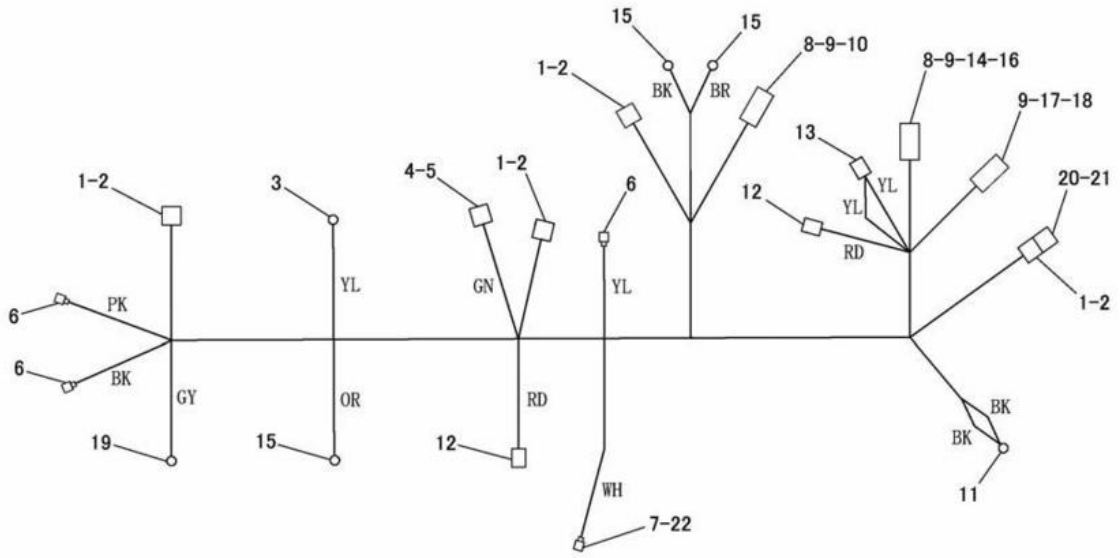

NOTE	No.	PART NO.	QTY.	PART NAME	NOTE	No.	PART NO.	QTY.	PART NAME
	1	7Y-3951	8	TERMINAL		20	185-1290	1	FUSE HOLDER
	2	7Y-3952	4	CONNECTOR		21	139-5345	1	FUSE(5A)
	3	2L-8049	1	TERMINAL		22	205-7460	1	CONNECTOR
	4	7Y-3995	1	CONNECTOR					
	5	7Y-3996	1	TERMINAL					
	6	7Y-3963	3	TERMINAL					
		7Y-3965	3	TUBE					
	7	205-7461	1	TERMINAL					
	8	9W-0844	8	SOCKET					
	9	8T-8737	3	PLUG					
	10	155-2273	1	PLUG AS(6P)					
	11	2L-8069	1	TERMINAL					
	12	2L-8050	2	TERMINAL					
	13	9G-4343	1	TERMINAL					
	14	155-2255	1	PLUG KIT(12P)					
	15	2L-8076	3	TERMINAL					
	16	186-3736	8	SOCKET					
	17	9W-0852	5	PIN					
	18	102-8805	1	RECEPTACLE KIT(6P)					
	19	2L-8075	1	TERMINAL					

J136072 E00

248-1986 HARNESS ASSEMBLY-ENGINE

EFFECTIVE WITH SERIAL NO. BMW01589-
PART OF 209-8171-Page 103,109

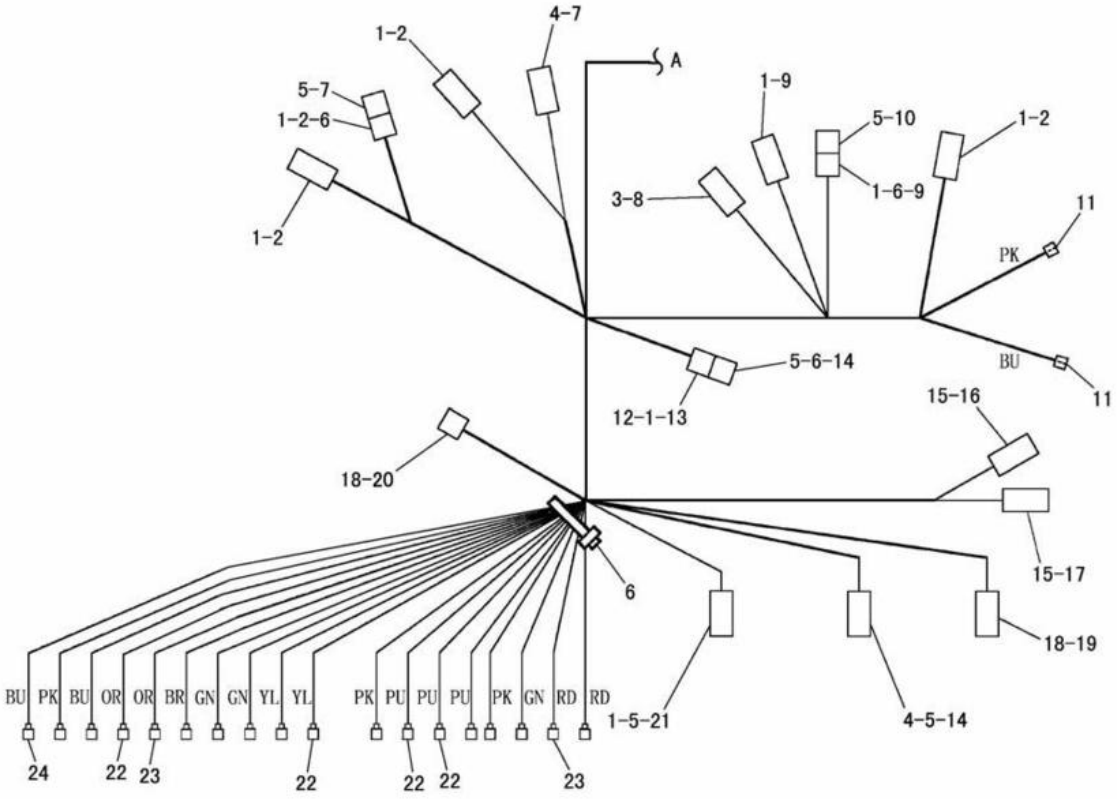

NOTE	No.	PART NO.	QTY.	PART NAME	NOTE	No.	PART NO.	QTY.	PART NAME
	1	186-3736	27	SOCKET		20	7Y-3952	1	CONNECTOR
	2	155-2270	4	PLUG KIT(2P)		21	155-2265	1	PLUG KIT(8P)
	3	7Y-3954	1	CONNECTOR		22	105-9871	4	TERMINAL
	4	186-3735	7	PIN		23	105-9873	2	TERMINAL
	5	8T-8737	14	PLUG		24	105-9872	12	TERMINAL
	6	3S-2093	4	STRAP					
	7	102-8802	2	RECEPTACLE KIT(2P)					
	8	7Y-5556	3	TERMINAL					
	9	155-2271	2	PLUG KIT(4P)					
	10	102-8804	1	RECEPTACLE KIT(4P)					
	11	7Y-3963	2	TERMINAL					
		7Y-3965	2	TUBE					
	12	155-2274	1	PLUG KIT(6P)					
	13	9W-0844	2	SOCKET					
	14	102-8805	2	RECEPTACLE KIT(6P)					
	15	7Y-3950	6	TERMINAL					
	16	7Y-3955	1	CONNECTOR					
	17	120-7724	1	CONNECTOR					
	18	7Y-3951	6	TERMINAL					
	19	7Y-3958	1	CONNECTOR					

J135929 X05

191-4772 HARNESS ASSEMBLY-MAIN -PART 1 OF 2
EFFECTIVE WITH SERIAL NO. BMW00001-BMW00786
PART OF 191-3844-Page 62,64,66

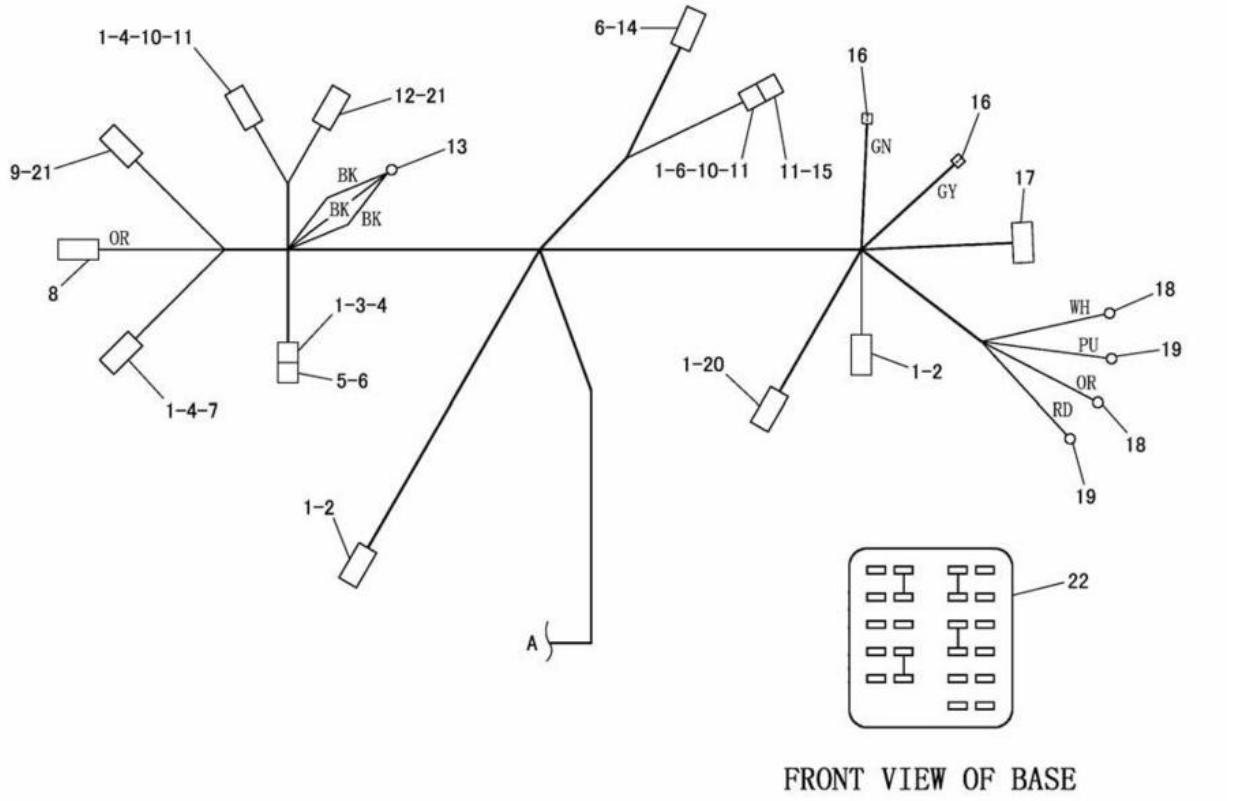

FRONT VIEW OF BASE

NOTE	No.	PART NO.	QTY.	PART NAME	NOTE	No.	PART NO.	QTY.	PART NAME
	1	186-3736	30	SOCKET		17	163-6659	1	CONNECTOR
	2	155-2260	2	PLUG KIT(3P)			163-6790	11	TERMINAL
	3	155-2271	1	PLUG KIT(4P)		18	2L-8077	2	TERMINAL
	4	9W-0844	4	SOCKET		19	2L-8067	2	TERMINAL
	5	102-8804	1	RECEPTACLE KIT(4P)		20	155-2270	1	PLUG KIT(2P)
	6	3S-2093	3	STRAP		21	186-3735	14	PIN
	7	155-2255	1	PLUG KIT(12P)		22	5I-9888	1	BASE
	8	127-5486	1	RECEPTACLE AS(1P)					
		8N-1542	1	PIN					
	9	102-8803	1	RECEPTACLE KIT(3P)					
		9W-0852	1	PIN					
	10	155-2274	2	PLUG KIT(6P)					
	11	8T-8737	11	PLUG					
	12	102-8801	1	RECEPTACLE KIT(12P)					
	13	3T-4696	1	TERMINAL					
	14	7Y-3954	1	CONNECTOR					
		7Y-3951	3	TERMINAL					
	15	102-8805	1	RECEPTACLE KIT(6P)					
	16	7Y-3963	2	TERMINAL					
		7Y-3965	2	TUBE					

J135930 X05

191-4772 HARNESS ASSEMBLY-MAIN -PART 2 OF 2
EFFECTIVE WITH SERIAL NO. BMW00001-BMW00786
PART OF 191-3844-Page 62,64,66

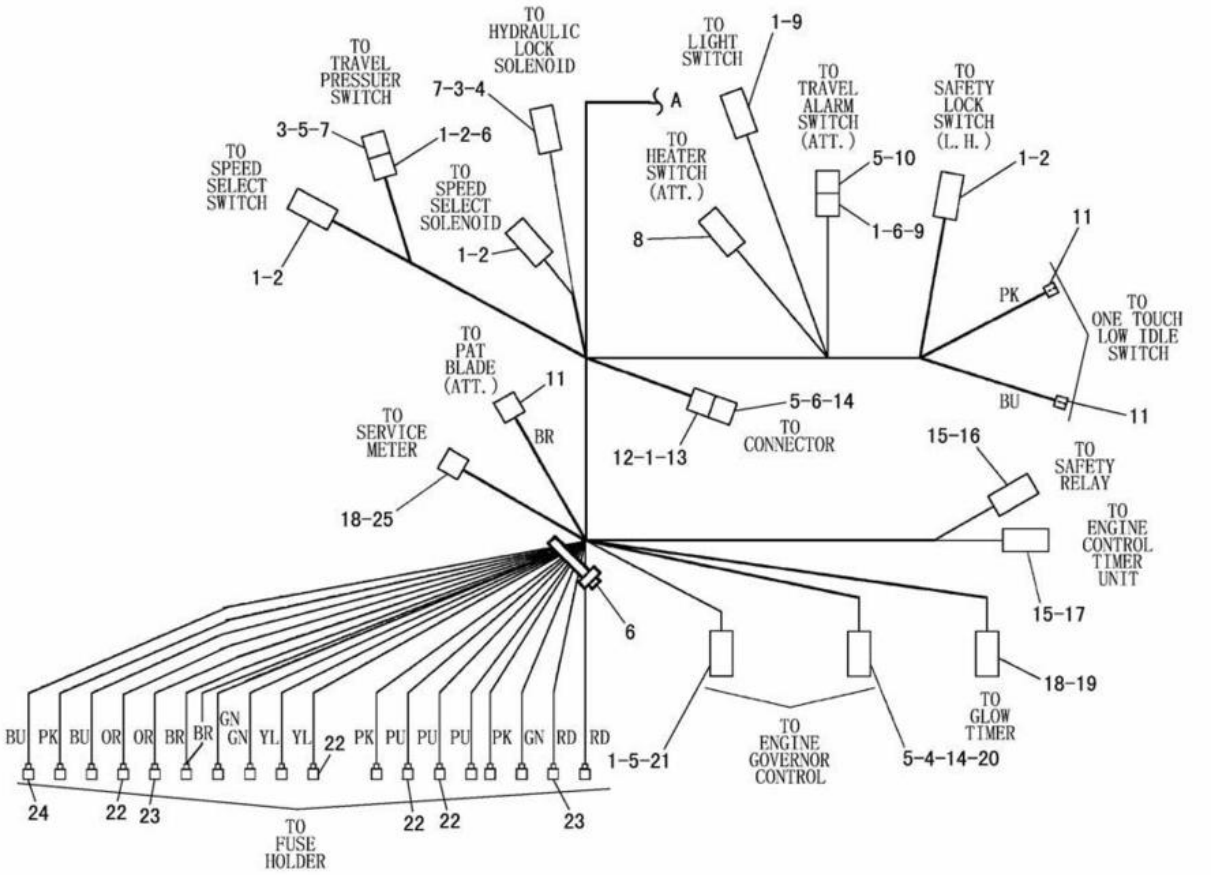

NOTE	No.	PART NO.	QTY.	PART NAME	NOTE	No.	PART NO.	QTY.	PART NAME
	1	186-3736	27	SOCKET		19	7Y-3958	1	CONNECTOR
	2	155-2270	4	PLUG KIT(2P)		20	3E-3383	1	WEDGE
	3	3E-3365	2	WEDGE		21	155-2265	1	PLUG KIT(8P)
	4	186-3735	7	PIN		22	105-9871	4	TERMINAL
	5	8T-8737	14	PLUG		23	105-9873	2	TERMINAL
	6	3S-2093	4	STRAP		24	105-9872	12	TERMINAL
	7	102-8802	2	RECEPTACLE KIT(2P)		25	7Y-3952	1	CONNECTOR
	8	7Y-5556	3	TERMINAL					
		7Y-3954	1	CONNECTOR					
	9	155-2271	2	PLUG KIT(4P)					
	10	102-8804	1	RECEPTACLE KIT(4P)					
C	11	7Y-3963	3	TERMINAL					
C		7Y-3965	3	TUBE					
	12	155-2274	1	PLUG KIT(6P)					
	13	9W-0844	2	SOCKET					
	14	102-8805	2	RECEPTACLE KIT(6P)					
	15	7Y-3950	6	TERMINAL					
	16	7Y-3955	1	CONNECTOR					
	17	120-7724	1	CONNECTOR					
	18	7Y-3951	6	TERMINAL					

C-INDICATES CHANGE

J115390 X06

191-4772 HARNESS ASSEMBLY-MAIN -PART 1 OF 2
EFFECTIVE WITH SERIAL NO. BMW00787-BMW01358
PART OF 191-3844-Page 62,64,66

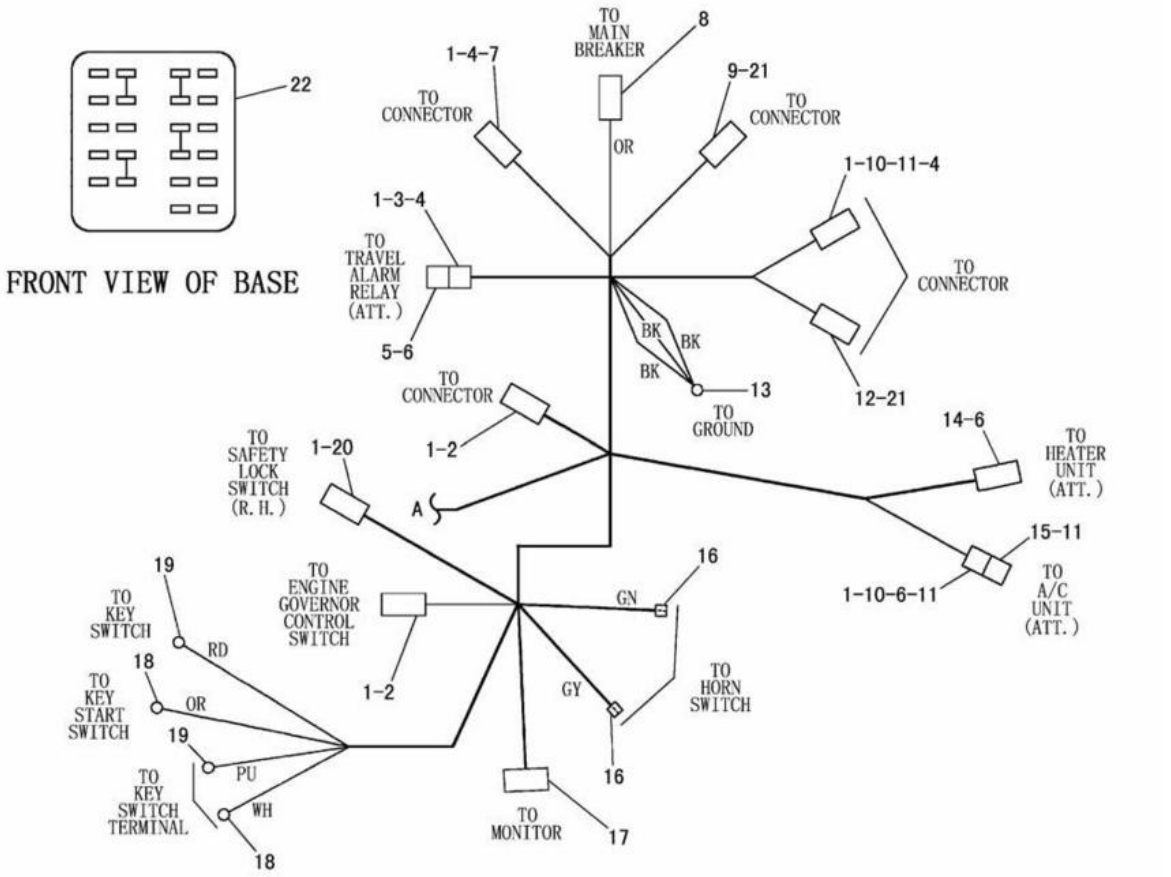

NOTE	No.	PART NO.	QTY.	PART NAME	NOTE	No.	PART NO.	QTY.	PART NAME
	1	186-3736	30	SOCKET		17	163-6659	1	CONNECTOR
	2	155-2260	2	PLUG KIT(3P)			163-6790	11	TERMINAL
	3	155-2271	1	PLUG KIT(4P)		18	2L-8077	2	TERMINAL
	4	9W-0844	4	SOCKET		19	2L-8067	2	TERMINAL
	5	102-8804	1	RECEPTACLE KIT(4P)		20	155-2270	1	PLUG KIT(2P)
	6	3S-2093	3	STRAP		21	186-3735	14	PIN
	7	155-2255	1	PLUG KIT(12P)		22	5I-9888	1	BASE
	8	127-5486	1	RECEPTACLE AS(1P)					
		8N-1542	1	PIN					
	9	102-8803	1	RECEPTACLE KIT(3P)					
		9W-0852	1	PIN					
	10	155-2274	2	PLUG KIT(6P)					
	11	8T-8737	11	PLUG					
	12	102-8801	1	RECEPTACLE KIT(12P)					
	13	3T-4696	1	TERMINAL					
	14	7Y-3954	1	CONNECTOR					
		7Y-3951	3	TERMINAL					
	15	102-8805	1	RECEPTACLE KIT(6P)					
	16	7Y-3963	2	TERMINAL					
		7Y-3965	2	TUBE					

J115391 X06

191-4772 HARNESS ASSEMBLY-MAIN -PART 2 OF 2
EFFECTIVE WITH SERIAL NO. BMW00787-BMW01358
PART OF 191-3844-Page 62,64,66

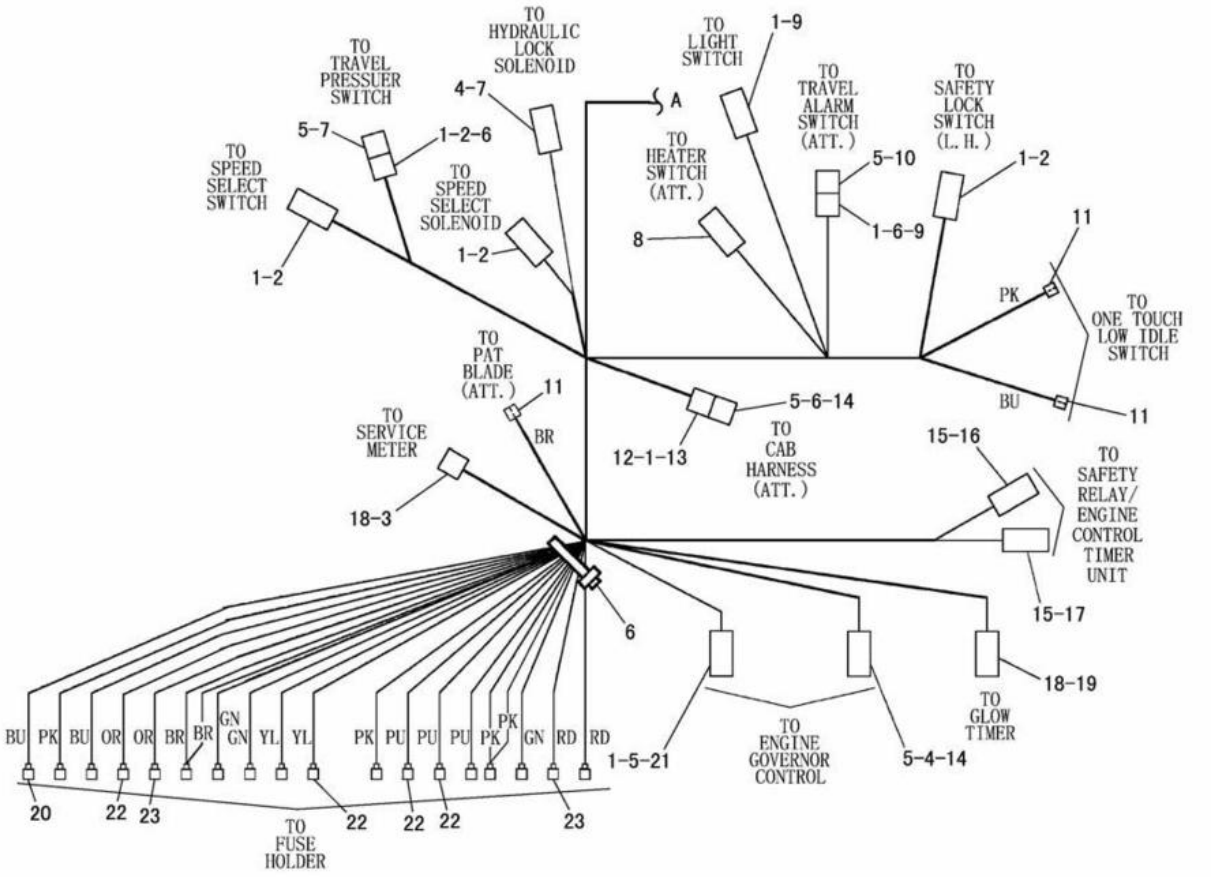

NOTE	No.	PART NO.	QTY.	PART NAME	NOTE	No.	PART NO.	QTY.	PART NAME
	1	186-3736	27	SOCKET		19	7Y-3958	1	CONNECTOR
	2	155-2270	4	PLUG KIT(2P)		20	105-9872	12	TERMINAL
	3	7Y-3952	1	CONNECTOR		21	155-2265	1	PLUG KIT(8P)
	4	186-3735	7	PIN		22	105-9871	4	TERMINAL
	5	8T-8737	14	PLUG		23	105-9873	2	TERMINAL
	6	3S-2093	4	STRAP					
	7	102-8802	2	RECEPTACLE KIT(2P)					
	8	7Y-5556	3	TERMINAL					
		7Y-3954	1	CONNECTOR					
	9	155-2271	2	PLUG KIT(4P)					
	10	102-8804	1	RECEPTACLE KIT(4P)					
	11	7Y-3963	3	TERMINAL					
		7Y-3965	3	TUBE					
	12	155-2274	1	PLUG KIT(6P)					
	13	9W-0844	1	SOCKET					
	14	102-8805	2	RECEPTACLE KIT(6P)					
	15	7Y-3950	6	TERMINAL					
	16	7Y-3955	1	CONNECTOR					
	17	120-7724	1	CONNECTOR					
	18	7Y-3951	6	TERMINAL					

J128736 E00

241-3597 HARNESS ASSEMBLY-MAIN -PART 1 OF 2
EFFECTIVE WITH SERIAL NO. BMW01359-BMW01449
PART OF 191-3844-Page 68,215-2865-Page 78

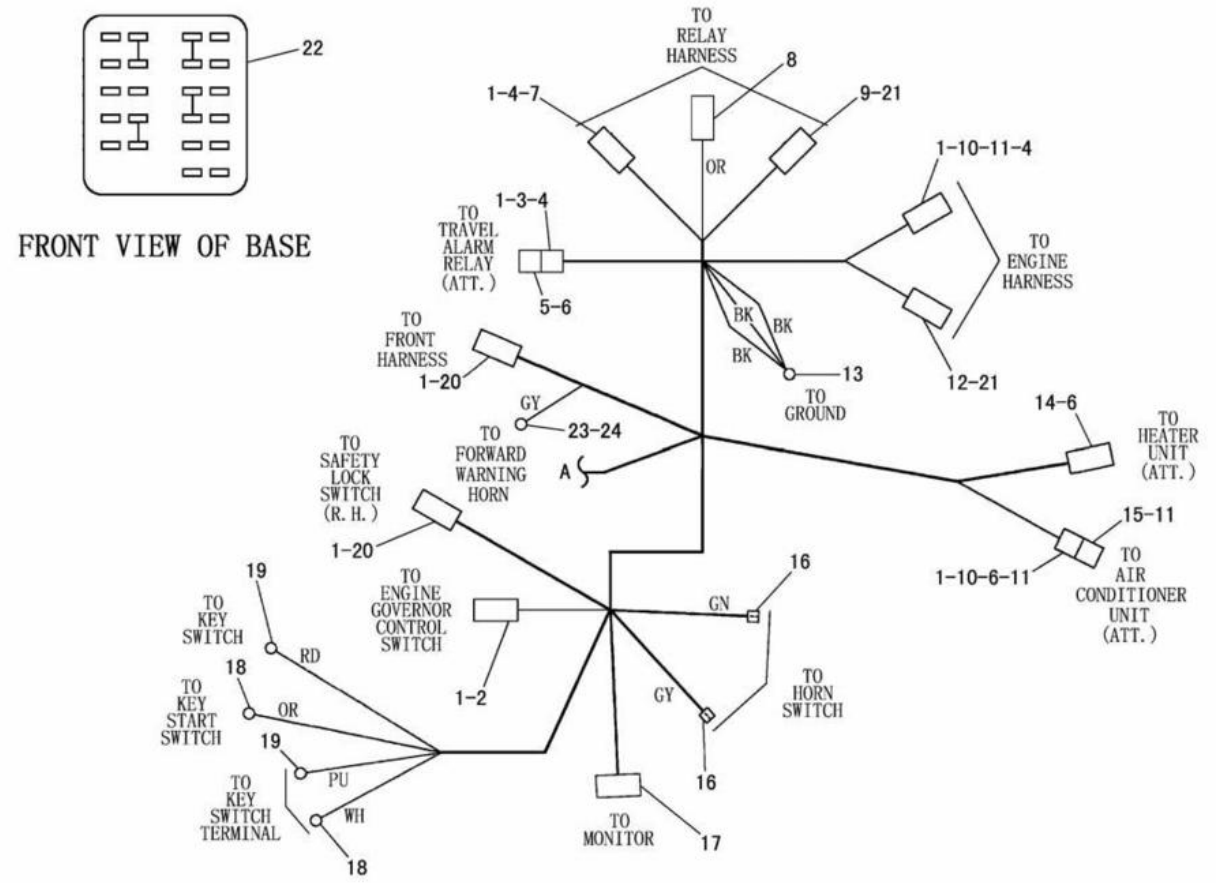

NOTE	No.	PART NO.	QTY.	PART NAME	NOTE	No.	PART NO.	QTY.	PART NAME
	1	1 8 6 − 3 7 3 6	29	SOCKET		17	1 6 3 − 6 6 5 9	1	CONNECTOR
	2	1 5 5 − 2 2 6 0	2	PLUG KIT(3P)			1 6 3 − 6 7 9 0	11	TERMINAL
	3	1 5 5 − 2 2 7 1	1	PLUG KIT(4P)		18	2 L − 8 0 7 7	2	TERMINAL
	4	9 W − 0 8 4 4	3	SOCKET		19	2 L − 8 0 6 7	2	TERMINAL
	5	1 0 2 − 8 8 0 4	1	RECEPTACLE KIT(4P)		20	1 5 5 − 2 2 7 0	1	PLUG KIT(2P)
	6	3 S − 2 0 9 3	3	STRAP		21	1 8 6 − 3 7 3 5	14	PIN
	7	1 5 5 − 2 2 5 5	1	PLUG KIT(12P)		22	5 I − 9 8 8 8	1	BASE
	8	1 2 7 − 5 4 8 6	1	RECEPTACLE AS(1P)		23	1 5 3 − 2 6 3 1	1	TERMINAL
		8 N − 1 5 4 2	1	PIN		24	1 5 3 − 2 6 0 2	1	CONNECTOR
	9	1 0 2 − 8 8 0 3	1	RECEPTACLE KIT(3P)					
		9 W − 0 8 5 2	1	PIN					
	10	1 5 5 − 2 2 7 4	2	PLUG KIT(6P)					
	11	8 T − 8 7 3 7	8	PLUG					
	12	1 0 2 − 8 8 0 1	1	RECEPTACLE KIT(12P)					
	13	3 T − 4 6 9 6	1	TERMINAL					
	14	7 Y − 3 9 5 4	1	CONNECTOR					
		7 Y − 3 9 5 1	3	TERMINAL					
	15	1 0 2 − 8 8 0 5	1	RECEPTACLE KIT(6P)					
	16	7 Y − 3 9 6 3	2	TERMINAL					
		7 Y − 3 9 6 5	2	TUBE					

J128737 E00

241-3597 HARNESS ASSEMBLY-MAIN -PART 2 OF 2

EFFECTIVE WITH SERIAL NO. BMW01359-BMW01449

PART OF 191-3844-Page 68,215-2865-Page 78

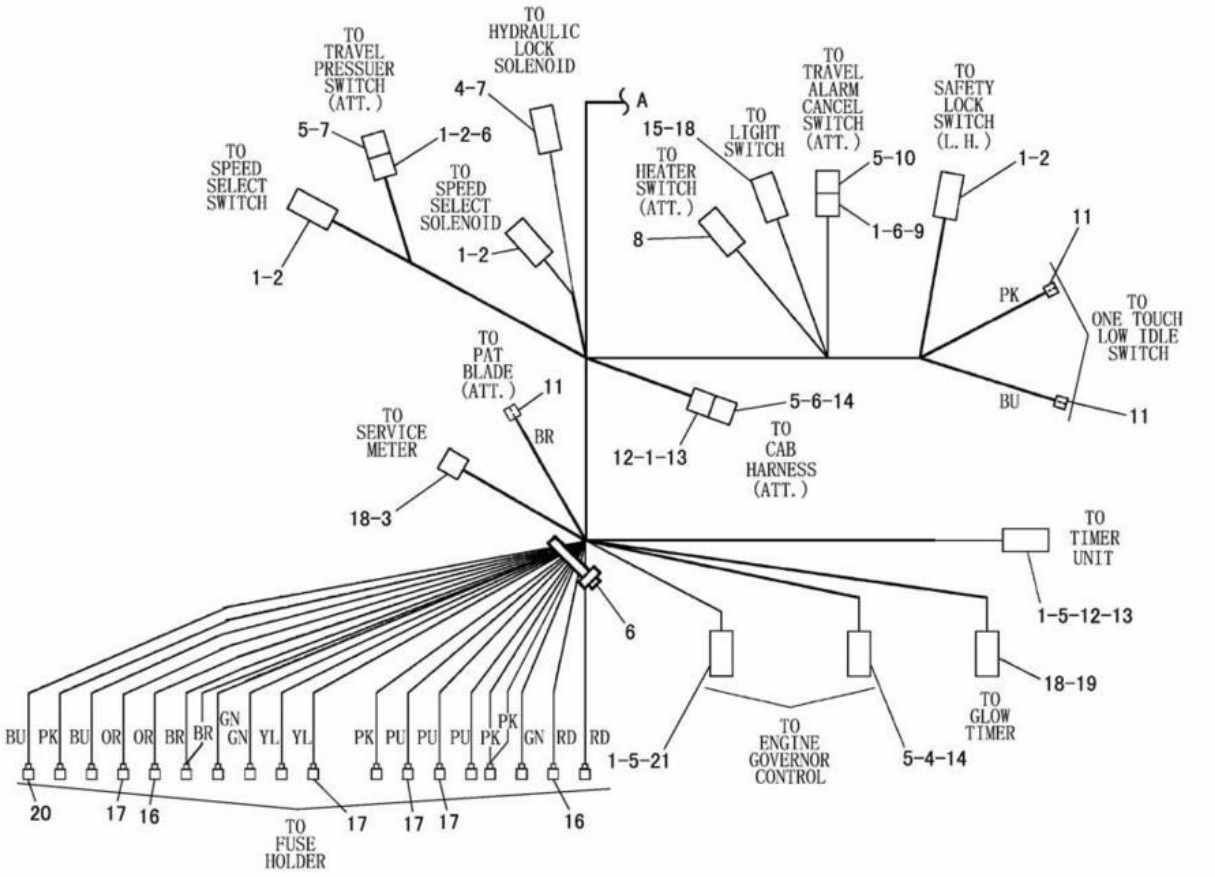

NOTE	No.	PART NO.	QTY.	PART NAME	NOTE	No.	PART NO.	QTY.	PART NAME
	1	186-3736	27	SOCKET		19	7Y-3958	1	CONNECTOR
	2	155-2270	4	PLUG KIT(2P)		20	105-9872	12	TERMINAL
	3	7Y-3952	1	CONNECTOR		21	155-2265	1	PLUG KIT(8P)
	4	186-3735	7	PIN					
	5	8T-8737	15	PLUG					
	6	3S-2093	4	STRAP					
	7	102-8802	2	RECEPTACLE KIT(2P)					
	8	7Y-5556	3	TERMINAL					
		7Y-3954	1	CONNECTOR					
	9	155-2271	1	PLUG KIT(4P)					
	10	102-8804	1	RECEPTACLE KIT(4P)					
	11	7Y-3963	3	TERMINAL					
		7Y-3965	3	TUBE					
	12	155-2274	2	PLUG KIT(6P)					
	13	9W-0844	2	SOCKET					
	14	102-8805	2	RECEPTACLE KIT(6P)					
	15	7Y-3957	1	CONNECTOR					
	16	105-9873	2	TERMINAL					
	17	105-9871	4	TERMINAL					
	18	7Y-3951	10	TERMINAL					

J131118 E00

246-6428 HARNESS ASSEMBLY-MAIN -PART 1 OF 2
EFFECTIVE WITH SERIAL NO. BMW01450-BMW01588
PART OF 191-3844-Page 70,215-2865-Page 80

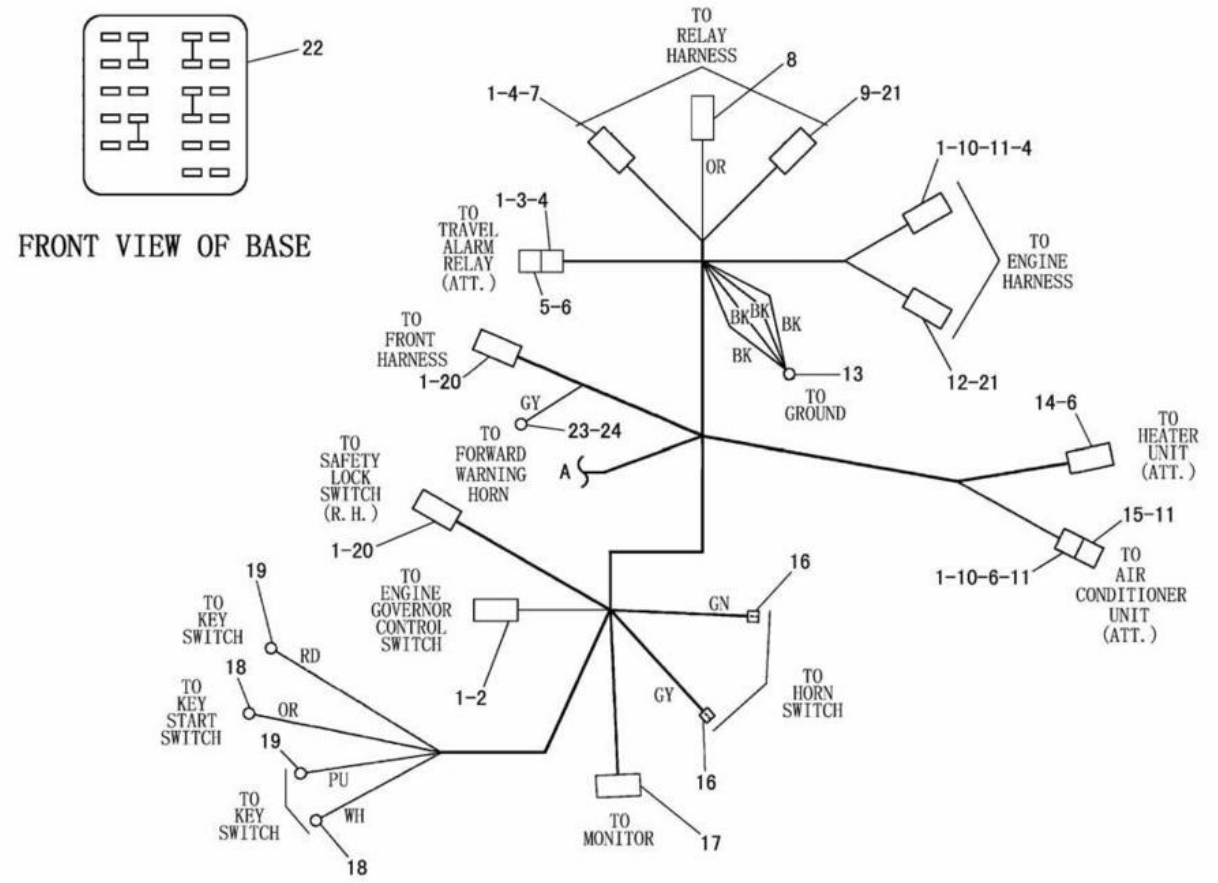

NOTE	No.	PART NO.	QTY.	PART NAME	NOTE	No.	PART NO.	QTY.	PART NAME
	1	186-3736	29	SOCKET		17	163-6659	1	CONNECTOR
	2	155-2260	1	PLUG KIT(3P)			163-6790	11	TERMINAL
	3	155-2271	1	PLUG KIT(4P)		18	2L-8077	2	TERMINAL
	4	9W-0844	3	SOCKET		19	2L-8067	2	TERMINAL
	5	102-8804	1	RECEPTACLE KIT(4P)		20	155-2270	2	PLUG KIT(2P)
	6	3S-2093	3	STRAP		21	186-3735	14	PIN
	7	155-2255	1	PLUG KIT		22	5I-9888	1	BASE
	8	127-5486	1	RECEPTACLE AS(1P)		23	153-2631	1	TERMINAL
		8N-1542	1	PIN		24	153-2602	1	CONNECTOR
	9	102-8803	1	RECEPTACLE KIT(3P)					
		9W-0852	1	PIN					
	10	155-2274	2	PLUG KIT(6P)					
	11	8T-8737	8	PLUG					
	12	102-8801	1	RECEPTACLE KIT(12P)					
	13	3T-4696	1	TERMINAL					
	14	7Y-3954	1	CONNECTOR					
		7Y-3951	3	TERMINAL					
	15	102-8805	1	RECEPTACLE KIT(6P)					
	16	7Y-3963	2	TERMINAL					
		7Y-3965	2	TUBE					

J131119 E00

246-6428 HARNESS ASSEMBLY-MAIN -PART 2 OF 2
EFFECTIVE WITH SERIAL NO. BMW01450-BMW01588
PART OF 191-3844-Page 70,215-2865-Page 80

ELECTRICAL SYSTEM

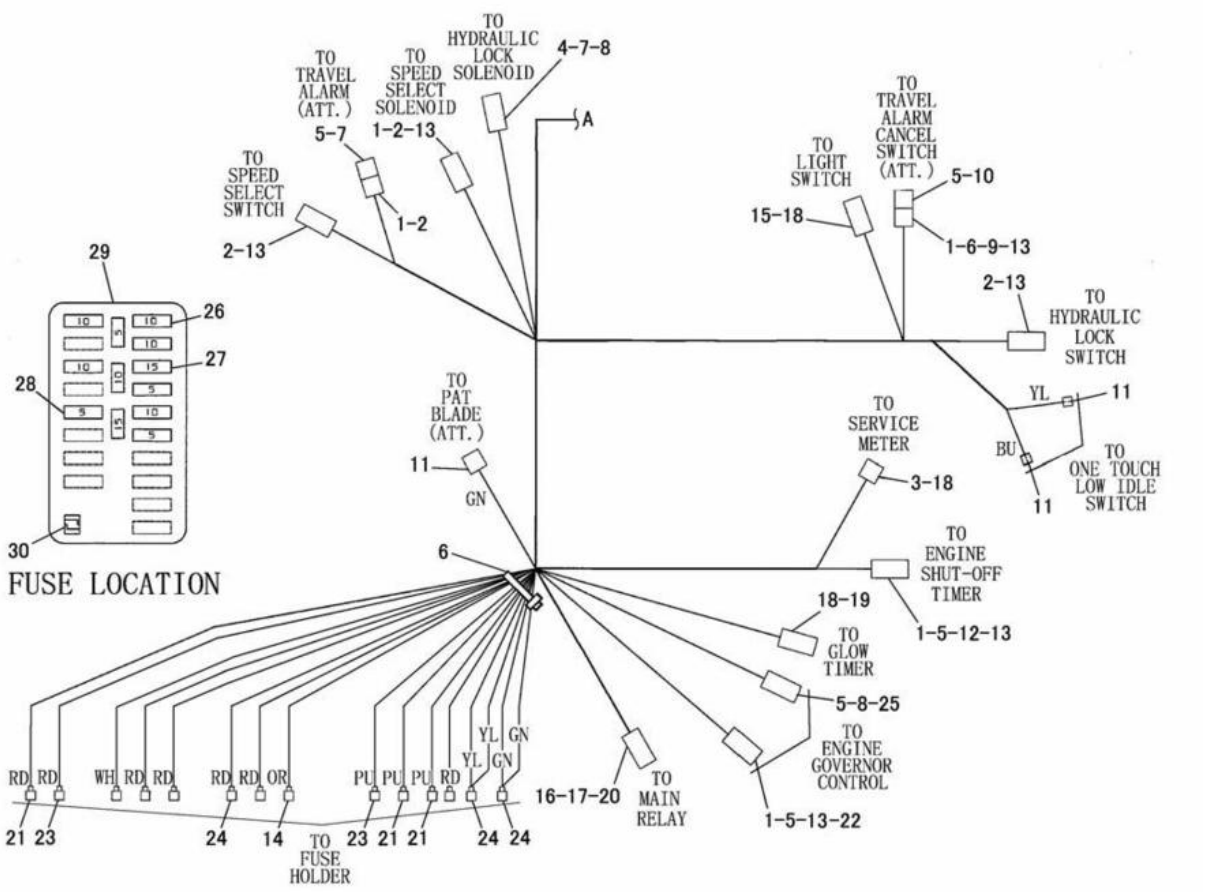

NOTE	No.	PART NO.	QTY.	PART NAME	NOTE	No.	PART NO.	QTY.	PART NAME
	1	186-3736	11	SOCKET		20	9X-1054	1	PLUG AS(4P)
	2	155-2270	4	PLUG KIT(2P)		21	233-8701	3	TERMINAL
	3	7Y-3952	1	CONNECTOR		22	155-2265	1	PLUG KIT(8P)
	4	186-3735	1	PIN		23	233-8702	2	TERMINAL
	5	8T-8737	9	PLUG		24	249-6899	3	TERMINAL
	6	3S-2093	2	STRAP		25	102-8805	1	RECEPTACLE KIT(6P)
	7	102-8802	2	RECEPTACLE KIT(2P)		26	113-8490	6	FUSE(10A)
	8	9W-0852	6	PIN		27	113-8491	2	FUSE(15A)
	9	155-2271	1	PLUG KIT(4P)		28	141-2759	4	FUSE(5A)
	10	102-8804	1	RECEPTACLE KIT(4P)		29	231-7924	1	FUSE BOX AS
	11	7Y-3963	3	TERMINAL			231-7925	1	COVER
		7Y-3965	3	TUBE			231-9122	1	BASE
	12	155-2274	1	PLUG KIT(6P)		30	231-7926	1	TOOL
	13	9W-0844	13	SOCKET					
	14	233-8699	6	TERMINAL					
	15	7Y-3957	1	CONNECTOR					
	16	9X-1056	2	TERMINAL					
	17	100-5041	2	TERMINAL					
	18	7Y-3951	10	TERMINAL					
	19	7Y-3958	1	CONNECTOR					

J132098 E00

248-1988 HARNESS ASSEMBLY-MAIN -PART 1 OF 2
EFFECTIVE WITH SERIAL NO. BMW01589-
PART OF 191-3844-Page 72

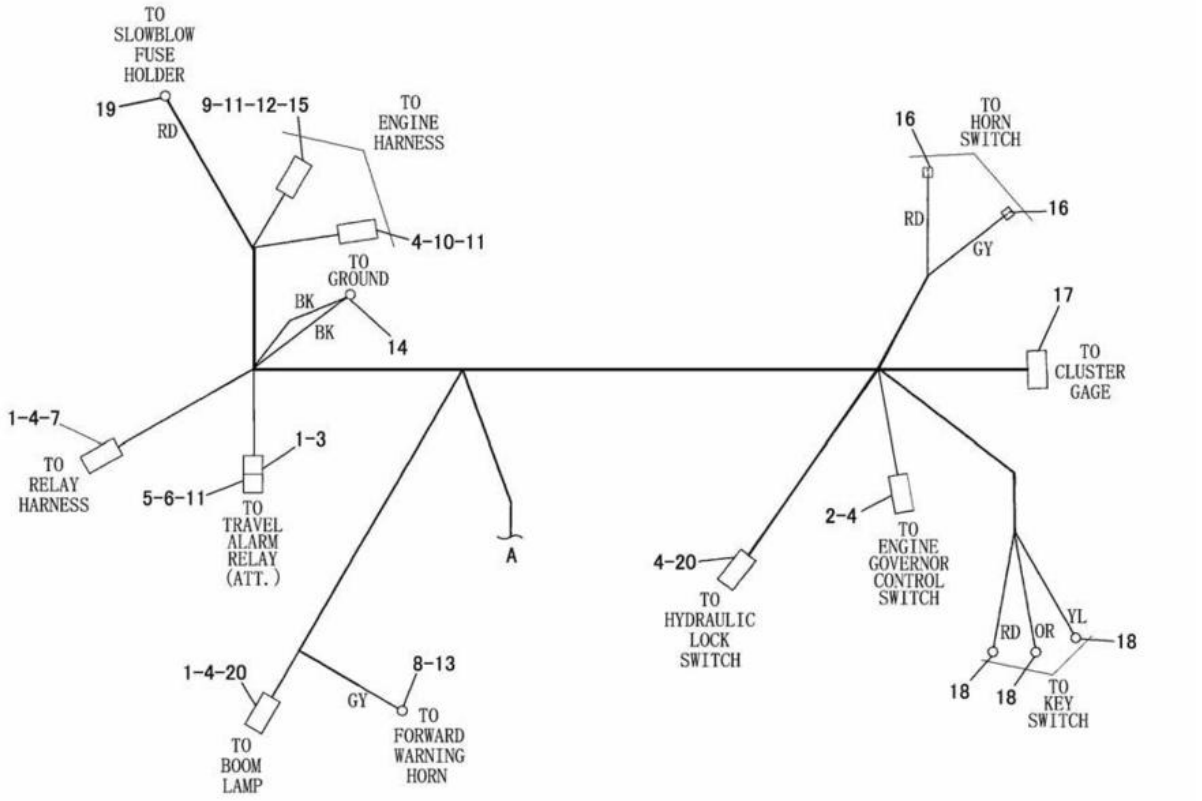

NOTE	No.	PART NO.	QTY.	PART NAME	NOTE	No.	PART NO.	QTY.	PART NAME
	1	186-3736	10	SOCKET		18	2L-8075	3	TERMINAL
	2	155-2260	1	PLUG KIT(3P)		19	2L-8067	1	TERMINAL
	3	155-2271	1	PLUG KIT(4P)		20	155-2270	2	PLUG KIT(2P)
	4	9W-0844	18	SOCKET					
	5	102-8804	1	RECEPTACLE KIT(4P)					
	6	3S-2093	1	STRAP					
	7	155-2255	1	PLUG KIT					
	8	153-2602	1	CONNECTOR					
	9	9W-0852	3	PIN					
	10	155-2274	1	PLUG KIT(6P)					
	11	8T-8737	8	PLUG					
	12	102-8801	1	RECEPTACLE KIT(12P)					
	13	153-2631	1	TERMINAL					
	14	2L-8052	1	TERMINAL					
		2L-8060	1	TERMINAL					
	15	186-3735	6	PIN					
	16	7Y-3963	2	TERMINAL					
		7Y-3965	2	TUBE					
	17	163-6659	1	CONNECTOR					
		163-6790	9	TERMINAL					

J132099 E00

248-1988 HARNESS ASSEMBLY-MAIN -PART 2 OF 2
EFFECTIVE WITH SERIAL NO. BMW01589-
PART OF 191-3844-Page 72

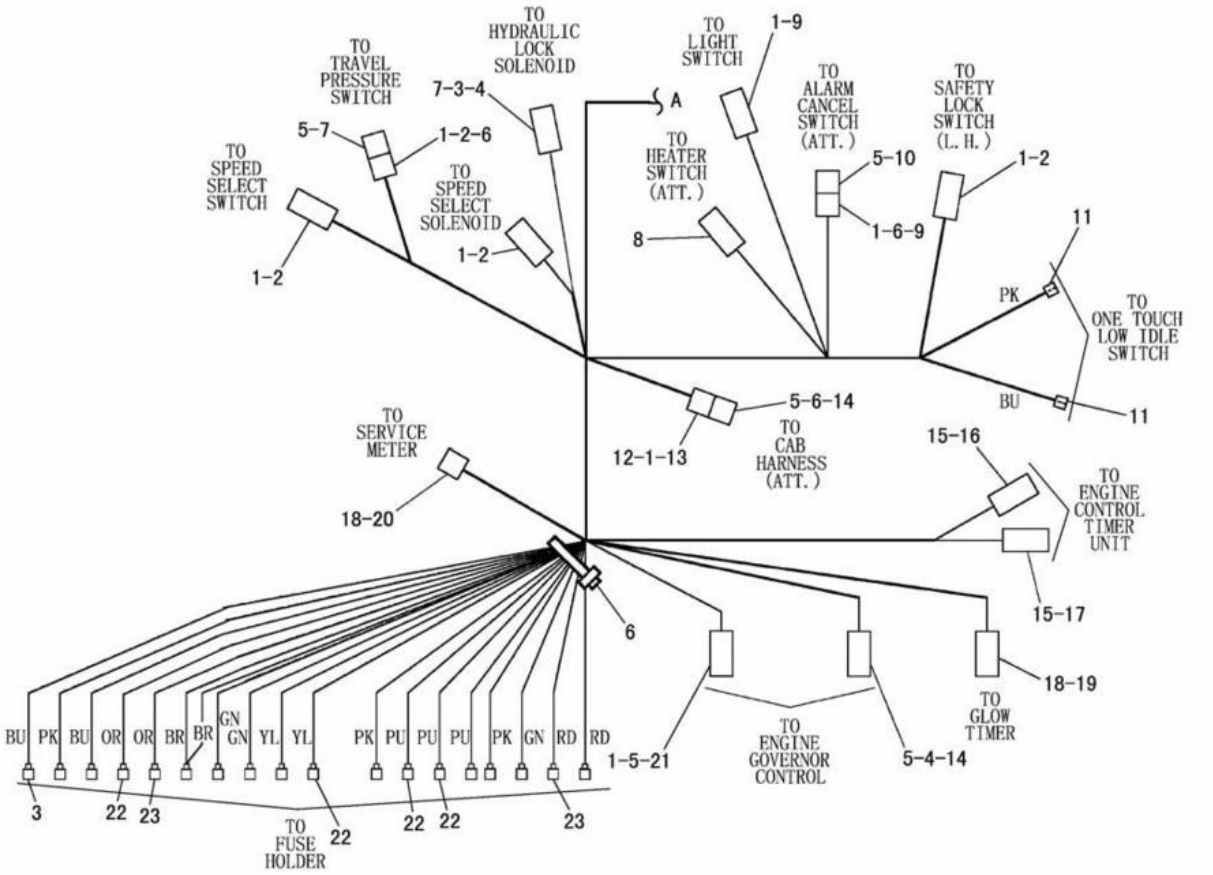

NOTE	No.	PART NO.	QTY.	PART NAME	NOTE	No.	PART NO.	QTY.	PART NAME
	1	186-3736	27	SOCKET		19	7Y-3958	1	CONNECTOR
	2	155-2270	4	PLUG KIT(2P)		20	7Y-3952	1	CONNECTOR
	3	105-9872	12	TERMINAL		21	155-2265	1	PLUG KIT(8P)
	4	186-3735	7	PIN		22	105-9871	4	TERMINAL
	5	8T-8737	14	PLUG		23	105-9873	2	TERMINAL
	6	3S-2093	4	STRAP					
	7	102-8802	2	RECEPTACLE KIT(2P)					
	8	7Y-5556	3	TERMINAL					
		7Y-3954	1	CONNECTOR					
	9	155-2271	2	PLUG KIT(4P)					
	10	102-8804	1	RECEPTACLE KIT(4P)					
	11	7Y-3963	3	TERMINAL					
		7Y-3965	3	TUBE					
	12	155-2274	1	PLUG KIT(6P)					
	13	9W-0844	2	SOCKET					
	14	102-8805	2	RECEPTACLE KIT(6P)					
	15	7Y-3950	6	TERMINAL					
	16	7Y-3955	1	CONNECTOR					
	17	120-7724	1	CONNECTOR					
	18	7Y-3951	6	TERMINAL					

J126698 X02

209-8173 HARNESS ASSEMBLY-MAIN -PART 1 OF 2
EFFECTIVE WITH SERIAL NO. BMW01249-BMW01358
PART OF 215-2865-Page 76
AN ATTACHMENT

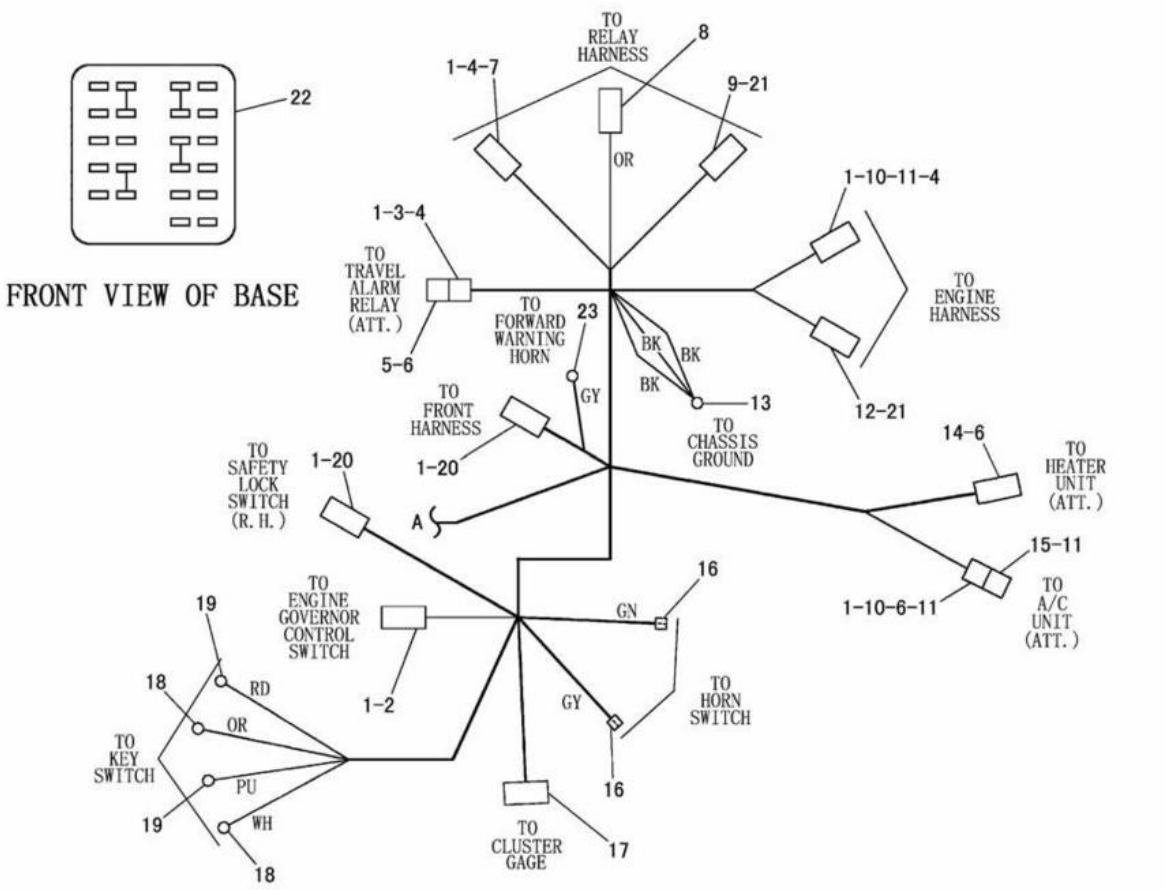

NOTE	No.	PART NO.	QTY.	PART NAME	NOTE	No.	PART NO.	QTY.	PART NAME
	1	186-3736	29	SOCKET		17	163-6659	1	CONNECTOR
	2	155-2260	1	PLUG KIT(3P)			163-6790	11	TERMINAL
	3	155-2271	1	PLUG KIT(4P)		18	2L-8077	2	TERMINAL
	4	9W-0844	4	SOCKET		19	2L-8067	2	TERMINAL
	5	102-8804	1	RECEPTACLE KIT(4P)		20	155-2270	2	PLUG KIT(2P)
	6	3S-2093	3	STRAP		21	186-3735	14	PIN
	7	155-2255	1	PLUG KIT(12P)		22	5I-9888	1	BASE
	8	127-5486	1	RECEPTACLE AS(1P)		23	153-2631	1	TERMINAL
		8N-1542	1	PIN			153-2602	1	CONNECTOR
	9	102-8803	1	RECEPTACLE KIT(3P)					
		9W-0852	1	PIN					
	10	155-2274	2	PLUG KIT(6P)					
	11	8T-8737	8	PLUG					
	12	102-8801	1	RECEPTACLE KIT(12P)					
	13	3T-4696	1	TERMINAL					
	14	7Y-3954	1	CONNECTOR					
		7Y-3951	3	TERMINAL					
	15	102-8805	1	RECEPTACLE KIT(6P)					
	16	7Y-3963	2	TERMINAL					
		7Y-3965	2	TUBE					

J126699 X02

209-8173 HARNESS ASSEMBLY-MAIN -PART 2 OF 2
EFFECTIVE WITH SERIAL NO. BMW01249-BMW01358
PART OF 215-2865-Page 76
AN ATTACHMENT

ELECTRICAL SYSTEM

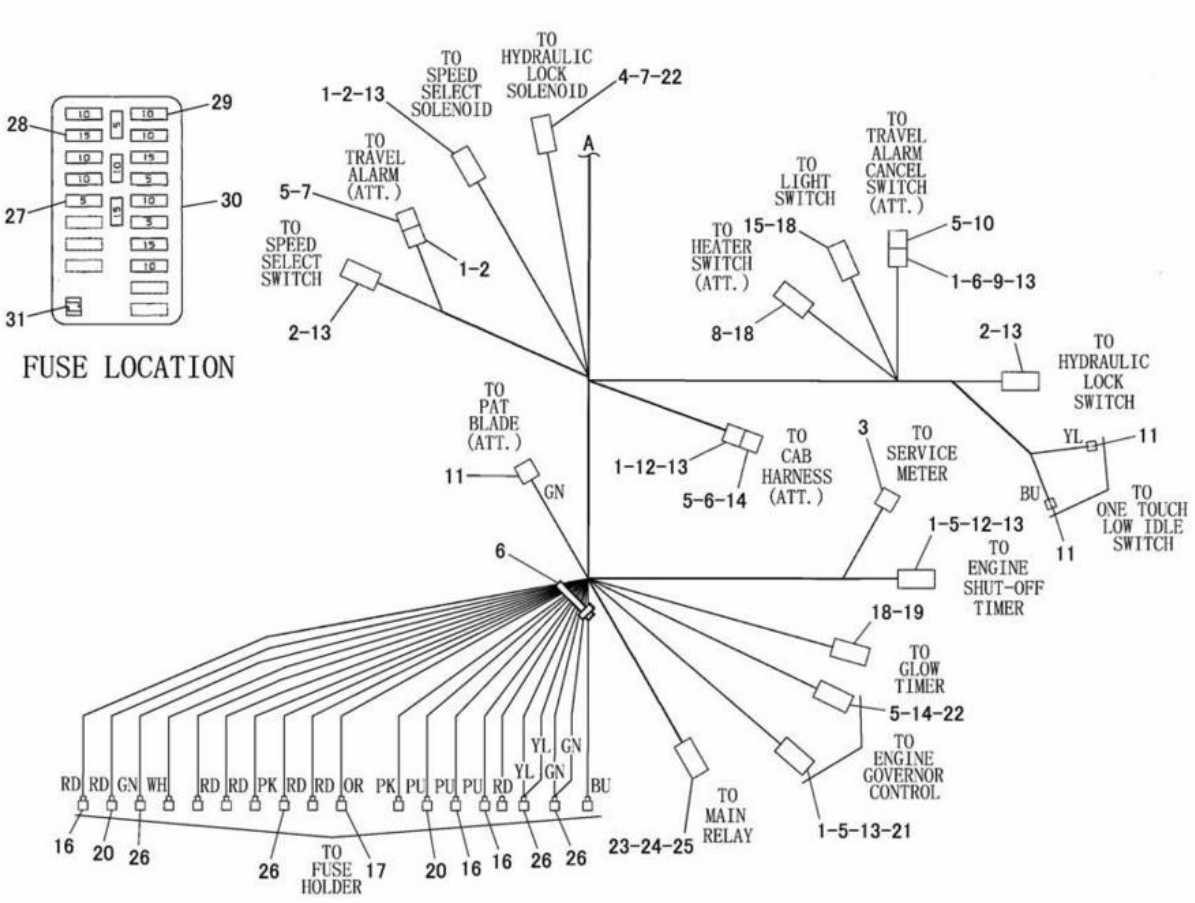

NOTE	No.	PART NO.	QTY.	PART NAME	NOTE	No.	PART NO.	QTY.	PART NAME
	1	186-3736	13	SOCKET		20	233-8702	2	TERMINAL
	2	155-2270	4	PLUG KIT(2P)		21	155-2265	1	PLUG KIT(8P)
	3	7Y-3952	1	CONNECTOR		22	9W-0852	6	PIN
	4	186-3735	1	PIN		23	9X-1054	1	PLUG AS(4P)
	5	8T-8737	15	PLUG		24	9X-1056	2	TERMINAL
	6	3S-2093	3	STRAP		25	100-5041	2	TERMINAL
	7	102-8802	2	RECEPTACLE KIT(2P)		26	249-6899	4	TERMINAL
	8	7Y-3954	1	CONNECTOR		27	141-2759	4	FUSE(5A)
	9	155-2271	1	PLUG KIT(4P)		28	113-8491	4	FUSE(15A)
	10	102-8804	1	RECEPTACLE KIT(4P)		29	113-8490	8	FUSE(10A)
	11	7Y-3963	3	TERMINAL		30	231-7924	1	FUSE BOX AS
		7Y-3965	3	TUBE			231-7925	1	COVER
	12	155-2274	2	PLUG KIT(6P)			231-9122	1	BASE
	13	9W-0844	17	SOCKET		31	231-7926	1	TOOL
	14	102-8805	2	RECEPTACLE KIT(6P)					
	15	7Y-3957	1	CONNECTOR					
	16	233-8701	3	TERMINAL					
	17	233-8699	9	TERMINAL					
	18	7Y-3951	13	TERMINAL					
	19	7Y-3958	1	CONNECTOR					

J130768 E00

248-1987 HARNESS ASSEMBLY-MAIN -PART 1 OF 2
EFFECTIVE WITH SERIAL NO. BMW01589-
PART OF 215-2865-Page 82
AN ATTACHMENT

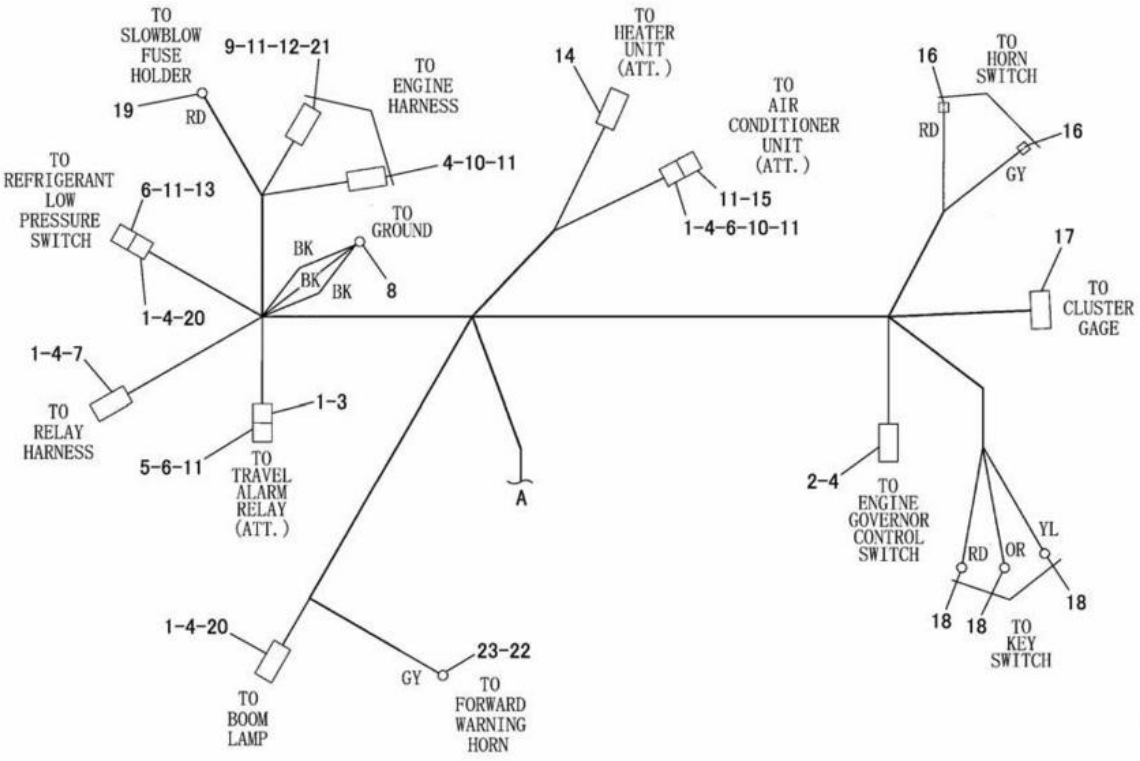

NOTE	No.	PART NO.	QTY.	PART NAME	NOTE	No.	PART NO.	QTY.	PART NAME
	1	186-3736	13	SOCKET		18	2L-8075	3	TERMINAL
	2	155-2260	1	PLUG KIT(3P)		19	2L-8067	1	TERMINAL
	3	155-2271	1	PLUG KIT(4P)		20	155-2270	2	PLUG KIT(2P)
	4	9W-0844	20	SOCKET		21	186-3735	8	PIN
	5	102-8804	1	RECEPTACLE KIT(4P)		22	153-2602	1	CONNECTOR
	6	3S-2093	3	STRAP		23	153-2631	1	TERMINAL
	7	155-2255	1	PLUG KIT(12P)					
	8	2L-8052	1	TERMINAL					
	9	9W-0852	3	PIN					
	10	155-2274	2	PLUG KIT(6P)					
	11	8T-8737	15	PLUG					
	12	102-8801	1	RECEPTACLE KIT(12P)					
	13	102-8802	1	RECEPTACLE KIT(2P)					
	14	7Y-3954	1	CONNECTOR					
		7Y-3951	3	TERMINAL					
	15	102-8805	1	RECEPTACLE KIT(6P)					
	16	7Y-3963	2	TERMINAL					
		7Y-3965	2	TUBE					
	17	163-6659	1	CONNECTOR					
		163-6790	9	TERMINAL					

J130769 E00

248-1987 HARNESS ASSEMBLY-MAIN -PART 2 OF 2
EFFECTIVE WITH SERIAL NO. BMW01589-
PART OF 215-2865-Page 82
AN ATTACHMENT

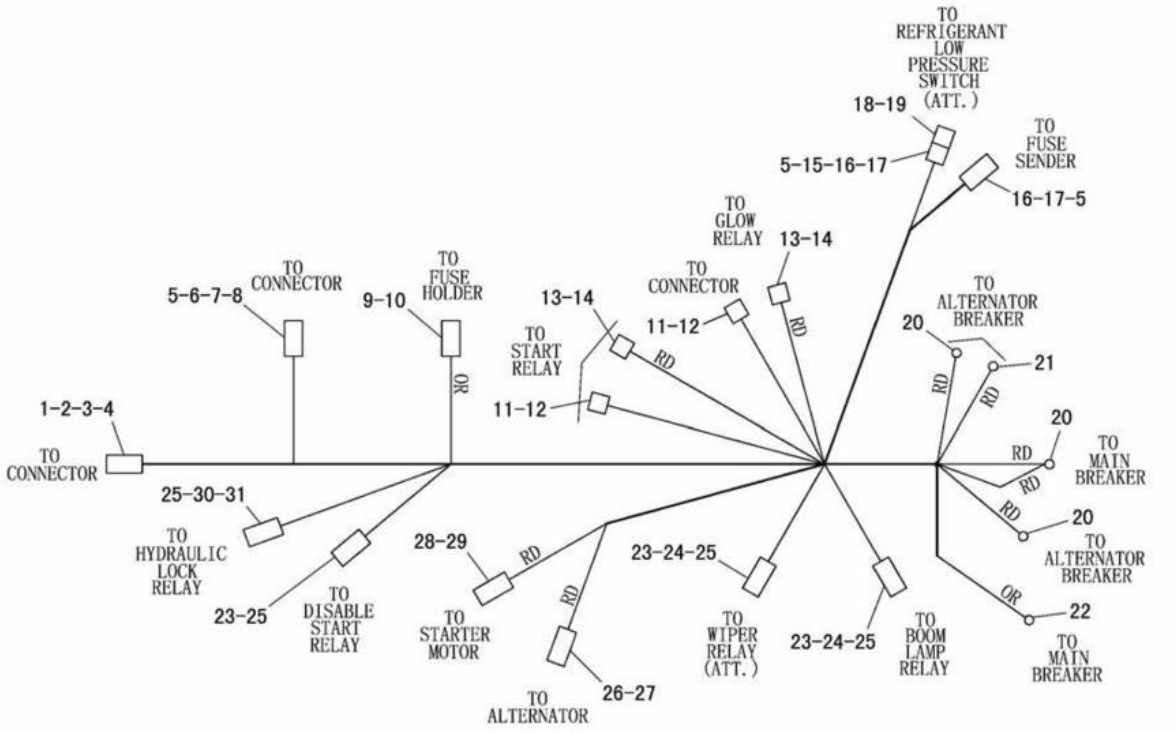

NOTE	No.	PART NO.	QTY.	PART NAME	NOTE	No.	PART NO.	QTY.	PART NAME
	1	102-8801	1	RECEPTACLE KIT(12P)		21	2L-8077	1	TERMINAL
	2	3E-5180	1	WEDGE		22	2L-8067	1	TERMINAL
	3	186-3735	10	PIN		23	9X-1054	3	PLUG AS(4P)
	4	9W-0852	2	PIN		24	9X-1056	4	TERMINAL
	5	186-3736	6	SOCKET		25	100-5041	12	TERMINAL
	6	9W-0844	1	SOCKET		26	8N-1547	1	SOCKET
	7	155-2260	1	PLUG KIT(3P)		27	127-5483	1	PLUG AS(1P)
	8	3E-3368	1	WEDGE		28	127-5484	1	RECEPTACLE AS(1P)
	9	127-5485	1	PLUG AS(1P)		29	8N-1546	1	PIN
	10	8N-1543	1	SOCKET		30	7G-7918	1	PLUG
	11	7Y-3951	4	TERMINAL		31	3E-5519	1	PLUG AS
	12	7Y-3952	2	CONNECTOR					
	13	192-0614	2	TERMINAL					
	14	192-0615	2	CONNECTOR					
	15	3S-2093	1	STRAP					
	16	155-2270	2	PLUG KIT(2P)					
	17	3E-3362	2	WEDGE					
	18	102-8802	1	RECEPTACLE KIT(2P)					
	19	8T-8737	2	PLUG					
	20	2L-8050	3	TERMINAL					

J117473 X06

191-4771 HARNESS ASSEMBLY-RELAY

EFFECTIVE WITH SERIAL NO. BMW00001-BMW01588

PART OF 191-3847-Page 87,209-8171-Page 95,99

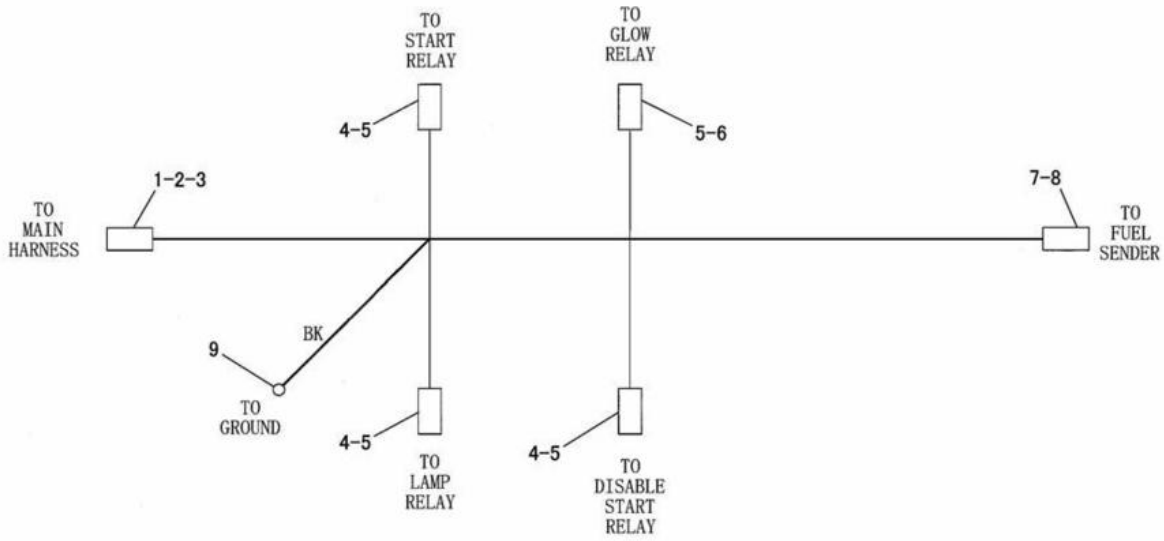

NOTE	No.	PART NO.	QTY.	PART NAME	NOTE	No.	PART NO.	QTY.	PART NAME
	1	102-8801	1	RECEPTACLE KIT(12P)					
	2	186-3735	5	PIN					
	3	9W-0852	7	PIN					
	4	7Y-3957	3	CONNECTOR					
	5	7Y-3951	14	TERMINAL					
	6	7Y-3952	1	CONNECTOR					
	7	155-2270	1	PLUG KIT(2P)					
	8	186-3736	2	SOCKET					
	9	2L-8079	1	TERMINAL					

J132103 E00

248-1982 HARNESS ASSEMBLY-RELAY
EFFECTIVE WITH SERIAL NO. BMW01589-
PART OF 209-8171-Page 103,109

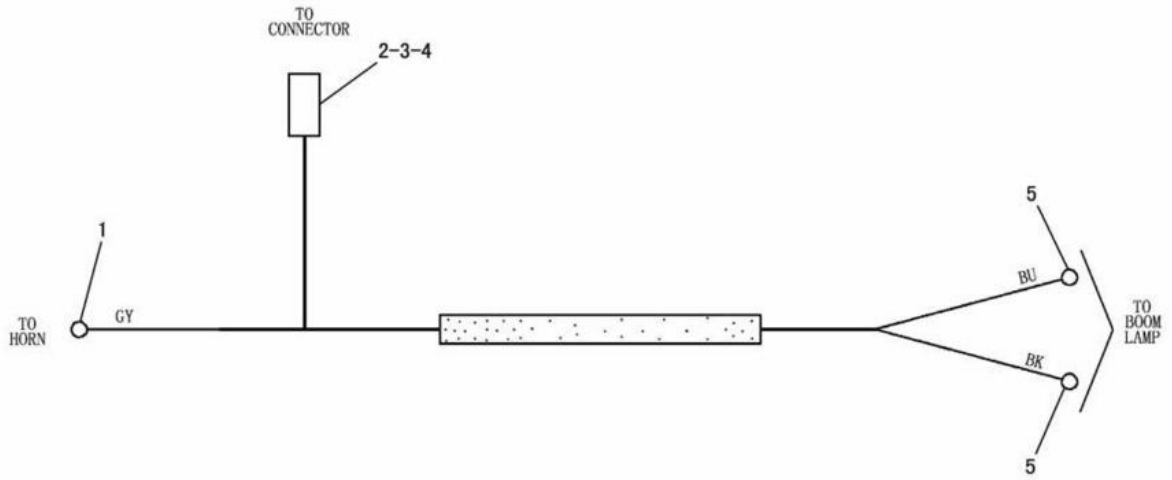

NOTE	No.	PART NO.	QTY.	PART NAME	NOTE	No.	PART NO.	QTY.	PART NAME
	1	153-2631	1	TERMINAL					
		153-2602	1	CONNECTOR					
	2	102-8803	1	RECEPTACLE KIT(3P)					
	3	3E-3371	1	WEDGE					
	4	186-3735	3	PIN					
	5	2L-8025	2	TERMINAL KIT					

J115364 X03

191-4770 HARNESS ASSEMBLY-FRONT

EFFECTIVE WITH SERIAL NO. BMW00001-BMW01358

PART OF 191-3852-Page 115

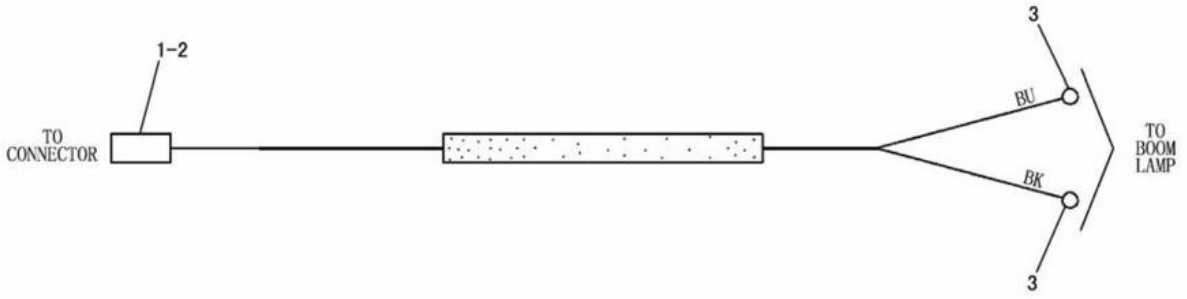

NOTE	No.	PART NO.	QTY.	PART NAME	NOTE	No.	PART NO.	QTY.	PART NAME
	1	102-8802	1	RECEPTACLE KIT(2P)					
	2	186-3735	2	PIN					
	3	2L-8075	2	TERMINAL					

J111304 X03

209-8170 HARNESS ASSEMBLY-FRONT

EFFECTIVE WITH SERIAL NO. BMW01359-(STD),BMW01261-(ATT)

PART OF 209-8169-Page 116

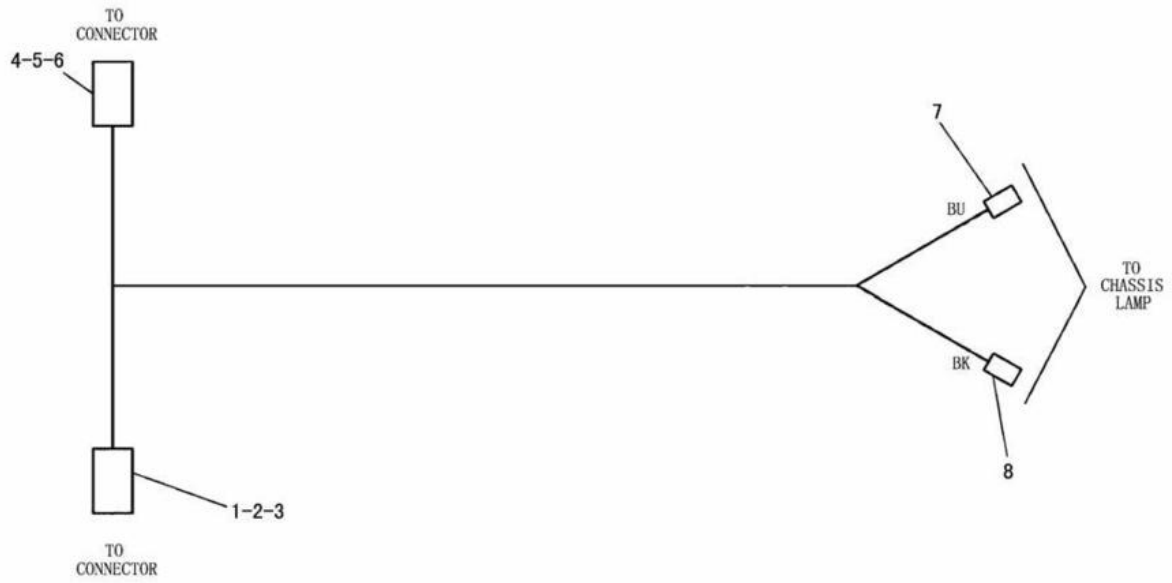

NOTE	No.	PART NO.	QTY.	PART NAME	NOTE	No.	PART NO.	QTY.	PART NAME
	1	102-8803	1	RECEPTACLE KIT(3P)					
	2	3E-3371	1	WEDGE					
	3	186-3735	3	PIN					
	4	155-2260	1	PLUG KIT(3P)					
	5	3E-3368	1	WEDGE					
	6	186-3736	3	SOCKET					
	7	7Y-3963	1	TERMINAL					
		7Y-3965	1	TUBE					
	8	7Y-3962	1	TERMINAL					
		7Y-3964	1	TUBE					

J115501 X00

209-2215 HARNESS ASSEMBLY
PART OF 209-2213-Page 117
AN ATTACHMENT

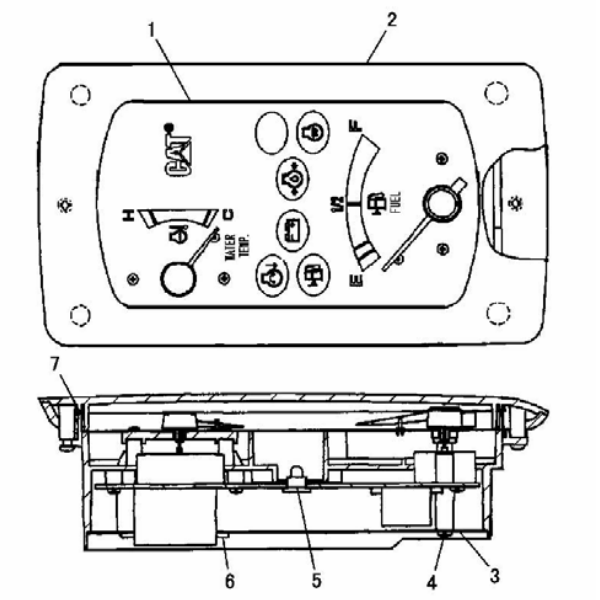

NOTE	No.	PART NO.	QTY.	PART NAME
	1	212-9588	1	BOARD AS
	2	212-9589	1	COVER
	3	212-9590	1	BOARD
	4	095-0723	6	SCREW(M3×0.5)
	5	212-9593	8	LAMP AS
	6	212-9592	1	SEAL
	7	212-9591	1	SEAL

J130887 X02

191-6226 CLUSTER GAUGE GROUP

EFFECTIVE WITH SERIAL NO. BMW00001-BMW01449
PART OF 191-3844-Page 62,64,66,68,215-2865-Page 76,78

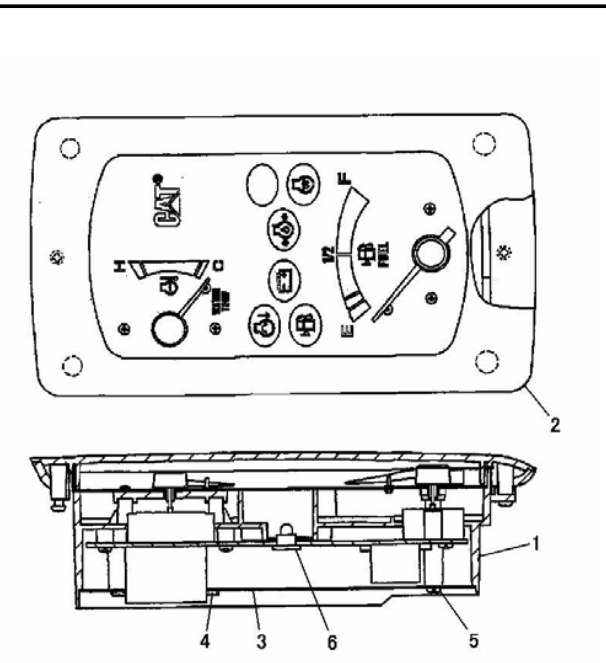

NOTE	No.	PART NO.	QTY.	PART NAME
	1	250-0074	1	BOARD AS
	2	212-9589	1	COVER
	3	212-9590	1	BOARD
	4	212-9592	1	SEAL
	5	095-0723	4	SCREW(M3×0.5)
	6	212-9593	8	LAMP AS

J129051 E00

248-3862 CLUSTER GAUGE GROUP

EFFECTIVE WITH SERIAL NO. BMW01450-
PART OF 191-3844-Page 70,72,215-2865-Page 80,82

ELECTRICAL SYSTEM

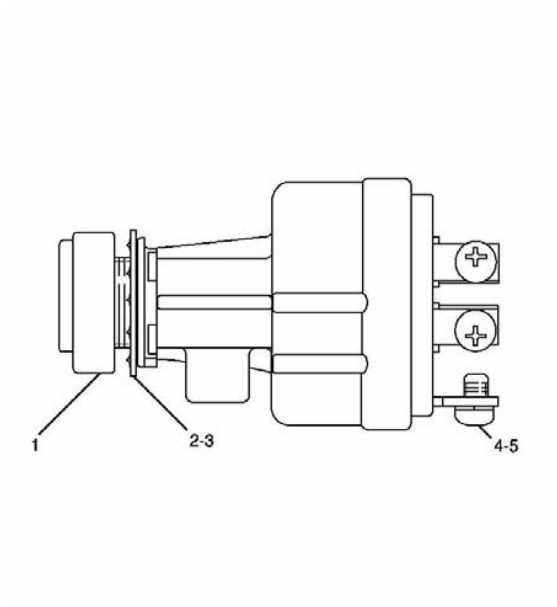

NOTE	No.	PART NO.	QTY.	PART NAME
	1	5I-8276	1	NUT
	2	5I-8275	1	LOCKWASHER
	3	5I-8274	1	WASHER
	4	095-0735	5	SCREW(M5×0.8)
	5	096-0192	5	LOCKWASHER

J106623 X00

194-7808 HEAT START SWITCH GROUP
EFFECTIVE WITH SERIAL NO. BMW00001-BMW01239
PART OF 191-3844-Page 63

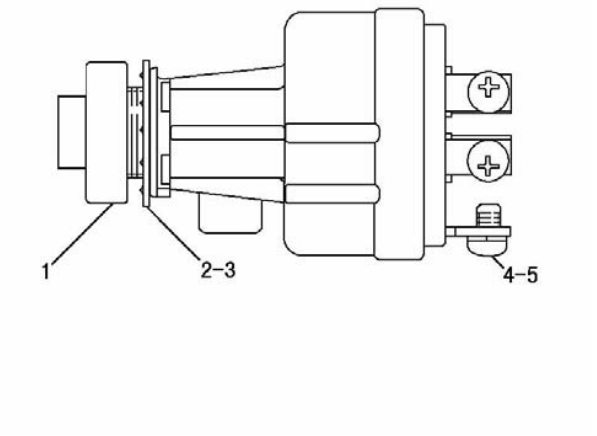

NOTE	No.	PART NO.	QTY.	PART NAME
	1	229-1680	1	NUT
	2	5I-8275	1	LOCKWASHER
	3	5I-8274	1	WASHER
	4	095-0735	5	SCREW(M5×0.8)
	5	096-0192	5	LOCKWASHER

J117896 E03

222-6862 START SWITCH GROUP
EFFECTIVE WITH SERIAL NO. BMW01240-BMW01248
PART OF 191-3844-Page 65

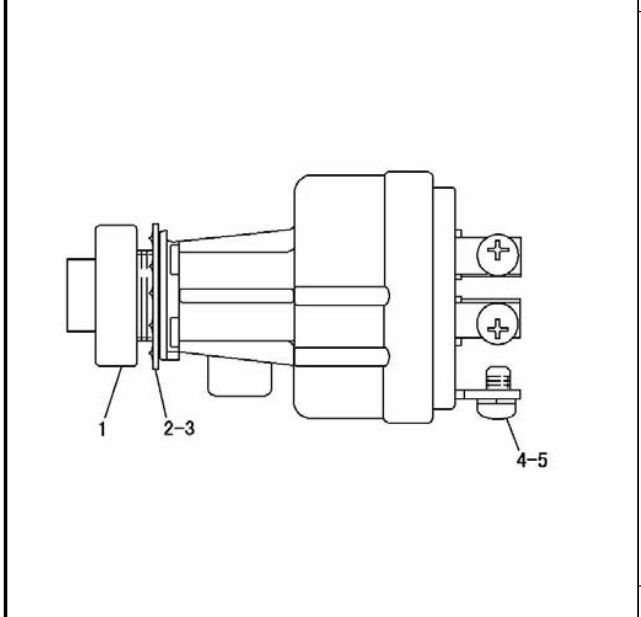

NOTE	No.	PART NO.	QTY.	PART NAME
	1	229-1680	1	NUT
	2	5I-8275	1	LOCKWASHER
	3	5I-8274	1	WASHER
	4	095-0735	5	SCREW(M5×0.8)
	5	096-0192	5	LOCKWASHER

J125935 E00

237-3530 START SWITCH GROUP

EFFECTIVE WITH SERIAL NO. BMW01249-BMW01588
PART OF 191-3844-Page 67,69,71,215-2865-Page 77,79,81

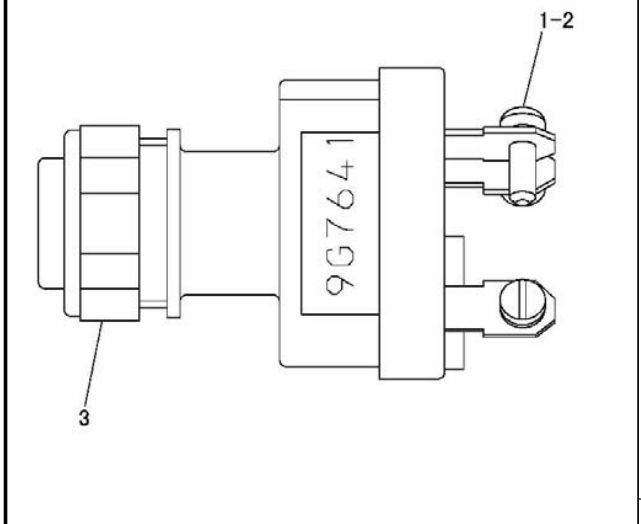

NOTE	No.	PART NO.	QTY.	PART NAME
	1	6V-8362	4	SCREW(No.8-32)
	2	9B-7233	4	LOCKWASHER
	3	7T-6799	1	NUT(1-32)

J117143 X06

9G-7641 START SWITCH GROUP

EFFECTIVE WITH SERIAL NO. BMW01589-
PART OF 191-3844-Page 75,215-2865-Page 85

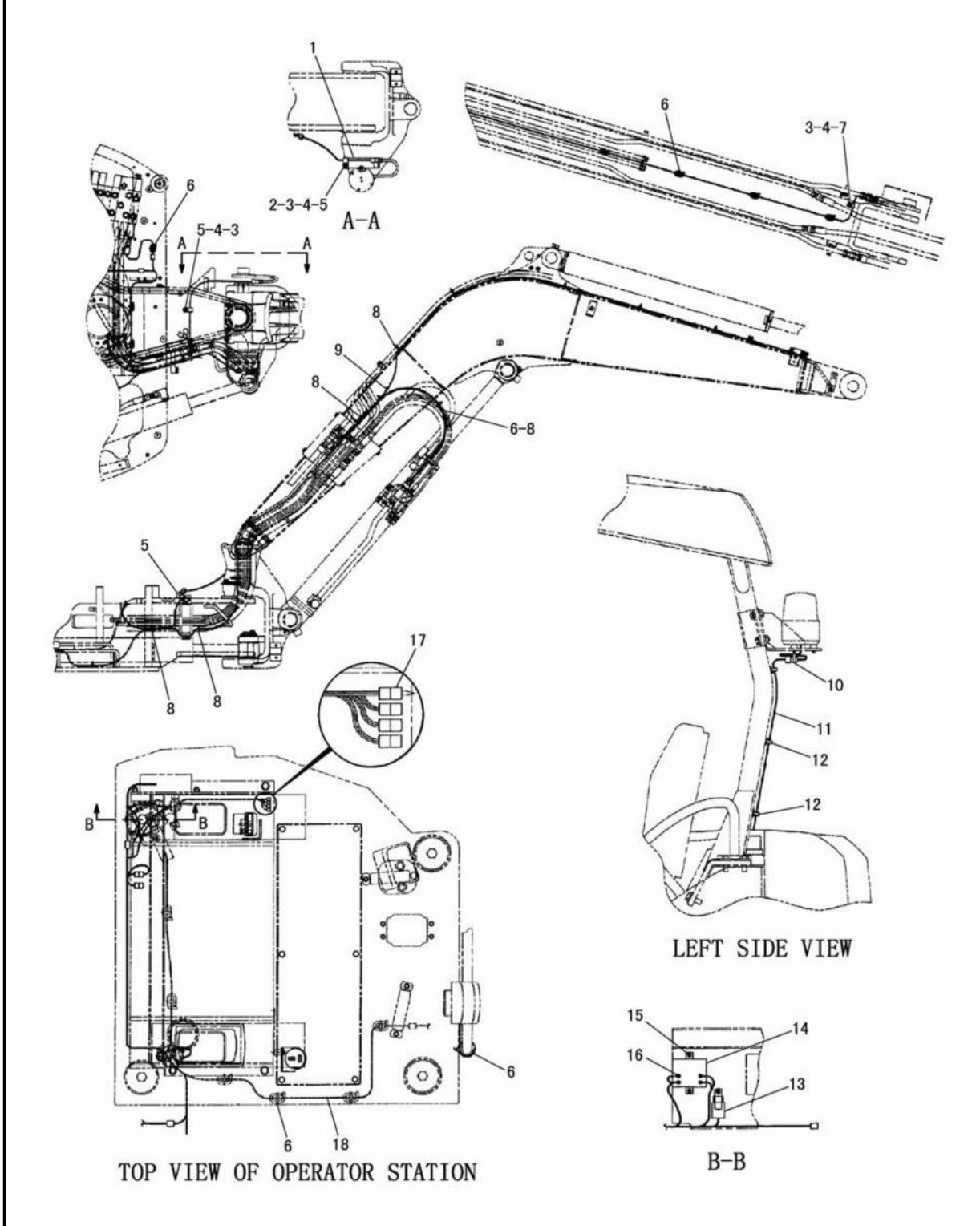

J126807 X00

WIRING (206-7621 N/S) -CANOPY-STANDARD STICK
EFFECTIVE WITH SERIAL NO. BMW00684-BMW00955
PART OF 206-7605-Page 514,515
AN ATTACHMENT

ELECTRICAL SYSTEM

NOTE	No.	PART NO.	QTY.	PART NAME	NOTE	No.	PART NO.	QTY.	PART NAME
	1	201-9138	1	PLATE AS					
		121-1029	1	CLIP					
	2	5C-7261	1	NUT(M8×1.25)					
	3	8T-4224	3	WASHER					
	4	8T-4200	3	BOLT(M8×1.25)					
	5	6D-4246	3	CLIP					
B	6	3S-2093	17	STRAP					
	7	4N-9170	1	CLIP					
	8	7I-2673	7	STRAP					
Y	9	201-9167	1	HARNESS AS					
	10	163-6795	1	STRAP					
	11	200-4589	1	HARNESS AS					
		186-3735	2	PIN					
		102-8802	1	RECEPTACLE KIT(2P)					
		187-6417	1	CONNECTOR					
		187-6421	2	TERMINAL					
		117-1878	2	SEAL					
	12	5I-6959	6	CLAMP					
	13	155-7583	1	SWITCH AS					
	14	155-7585	1	RESISTOR AS					
	15	5C-2890	3	NUT(M6×1)					
		9X-8256	3	WASHER					
	16	095-0735	4	SCREW(M5×0.8)					
	17	206-7623	1	CONNECTOR AS					
		102-8805	1	RECEPTACLE KIT(6P)					
		186-3735	3	PIN					
		8T-8737	3	PLUG					
Y	18	206-7622	1	HARNESS AS					

B-USE AS REQUIRED
Y-SEE SEPARATE ILLUSTRATION

J126807 X00

WIRING (206-7621 N/S) -CANOPY-STANDARD STICK

EFFECTIVE WITH SERIAL NO. BMW00684-BMW00955
PART OF 206-7605-Page 514,515
201-9167-Page 174 206-7622-Page 172, 173
AN ATTACHMENT

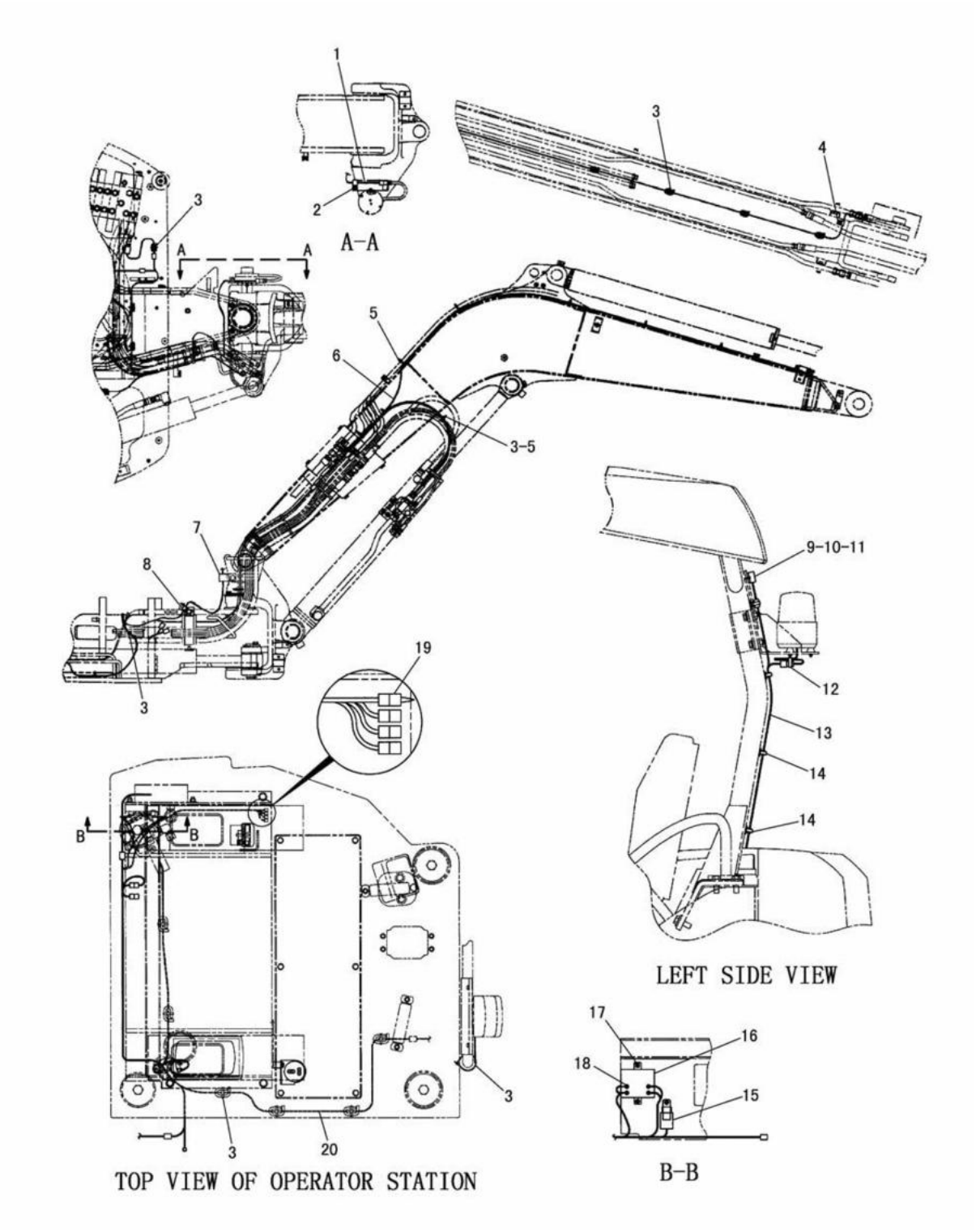

WIRING (206-7621 N/S) -CANOPY-STANDARD STICK
EFFECTIVE WITH SERIAL NO. BMW00956-BMW01031
PART OF 206-7605-Page 514,515
AN ATTACHMENT

ELECTRICAL SYSTEM

NOTE	No.	PART NO.	QTY.	PART NAME	NOTE	No.	PART NO.	QTY.	PART NAME
	1	201-9138	1	PLATE AS					
		121-1029	1	CLIP					
C	2	4K-8864	1	CLIP					
C		8T-4200	1	BOLT(M8×1.25)					
C		8T-4224	1	WASHER					
		5C-7261	1	NUT(M8×1.25)					
BC	3	3S-2093	18	STRAP					
C	4	8M-2772	1	CLIP					
C		8T-4191	1	BOLT(M10×1.5)					
C		8T-4121	1	WASHER					
	5	7I-2673	7	STRAP					
Y	6	201-9167	1	HARNESS AS					
C	7	4S-1936	1	CLIP					
C	8	6D-4246	1	CLIP					
C	9	125-5213	1	BUZZER AS					
C	10	125-5292	2	SCREW(M2.3×0.4)					
C	11	125-5298	2	WASHER					
	12	163-6795	1	STRAP					
YC	13	206-7657	1	HARNESS AS					
C	14	5I-6959	7	CLAMP					
	15	155-7583	1	SWITCH AS					
	16	155-7585	1	RESISTOR AS					
	17	9X-8256	3	WASHER					
		5C-2890	3	NUT(M6×1)					
	18	095-0735	4	SCREW(M5×0.8)					
	19	206-7623	1	CONNECTOR AS					
		102-8805	1	RECEPTACLE KIT(6P)					
		186-3735	3	PIN					
		8T-8737	3	PLUG					
Y	20	206-7622	1	HARNESS AS					

B-USE AS REQUIRED
C-INDICATES CHANGE
Y-SEE SEPARATE ILLUSTRATION

J126810 X03

WIRING (206-7621 N/S) -CANOPY-STANDARD STICK

EFFECTIVE WITH SERIAL NO. BMW00956-BMW01031
PART OF 206-7605-Page 514,515
201-9167-Page 174 206-7657-Page 175 206-7622-Page 172, 173
AN ATTACHMENT

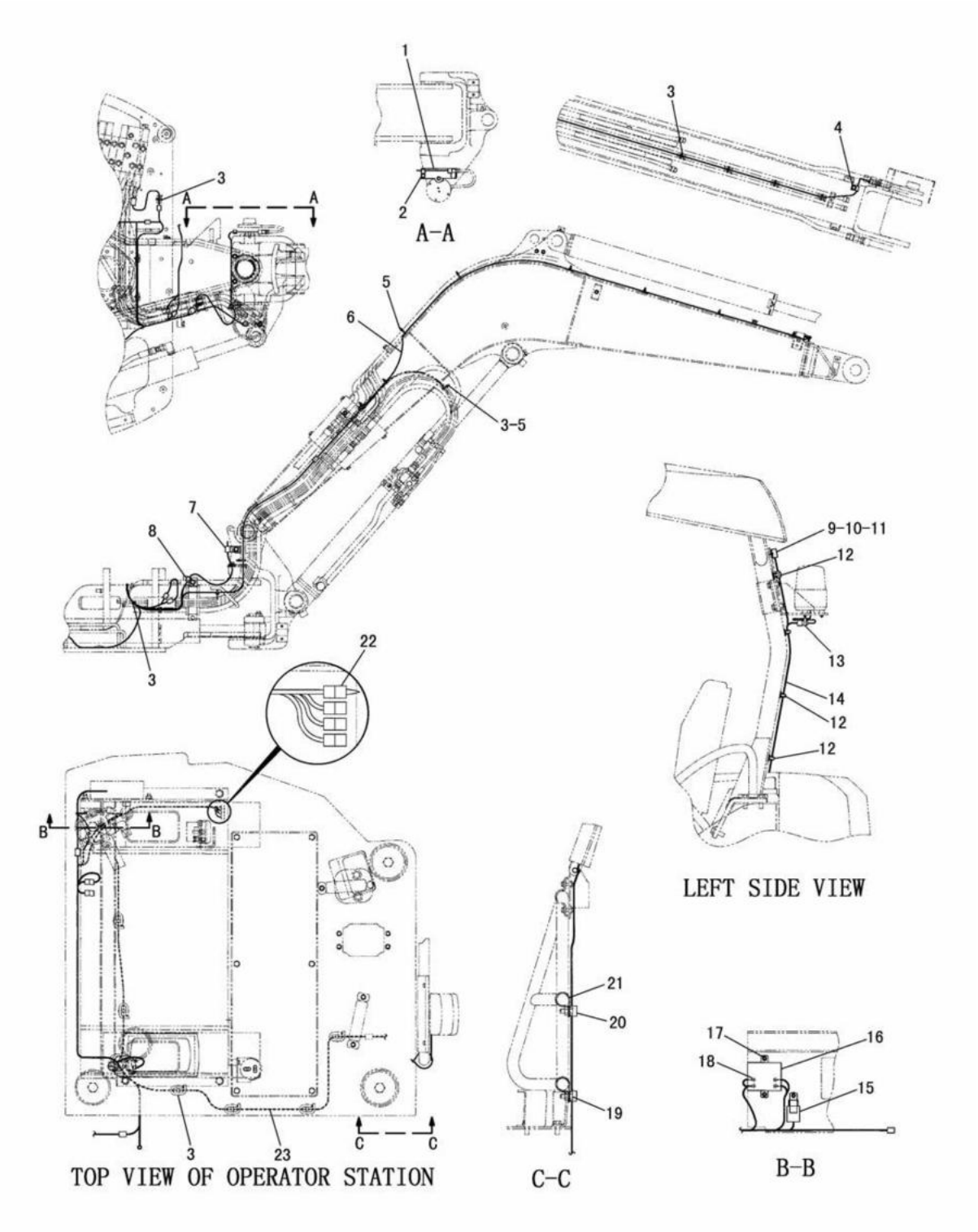

J132811 X05

WIRING (206-7621 N/S) -CANOPY-STANDARD STICK
EFFECTIVE WITH SERIAL NO. BMW01032-
PART OF 206-7605-Page 514,515
AN ATTACHMENT

ELECTRICAL SYSTEM

NOTE	No.	PART NO.	QTY.	PART NAME	NOTE	No.	PART NO.	QTY.	PART NAME
	1	201-9138	1	PLATE AS					
		121-1029	1	CLIP					
	2	4K-8864	1	CLIP					
		8T-4200	1	BOLT(M8×1.25)					
		8T-4224	1	WASHER					
		5C-7261	1	NUT(M8×1.25)					
BC	3	3S-2093	16	STRAP					
	4	8M-2772	1	CLIP					
		8T-4191	1	BOLT(M10×1.5)					
		8T-4121	1	WASHER					
	5	7I-2673	7	STRAP					
Y	6	201-9167	1	HARNESS AS					
	7	4S-1936	1	CLIP					
	8	5D-4246	1	CLIP					
	9	125-5213	1	BUZZER AS					
	10	125-5292	2	SCREW(M2.3×0.4)					
	11	125-5298	2	WASHER					
C	12	5I-6959	8	CLAMP					
	13	163-6795	1	STRAP					
Y	14	206-7657	1	HARNESS AS					
	15	155-7583	1	SWITCH AS					
	16	155-7585	1	RESISTOR AS					
	17	9X-8256	3	WASHER					
		5C-2890	3	NUT(M6×1)					
	18	095-0735	4	SCREW(M5×0.8)					
C	19	8T-4192	2	BOLT(M12×1.75)					
C		8T-4223	2	WASHER					
C		8T-4244	2	NUT(M12×1.75)					
C	20	4K-8302	2	CLIP					
C	21	8T-7529	2	CLIP					
	22	206-7623	1	CONNECTOR AS					
		102-8805	1	RECEPTACLE KIT(6P)					
		186-3735	3	PIN					
		8T-8737	3	PLUG					
Y	23	206-7622	1	HARNESS AS					

B-USE AS REQUIRED
C-INDICATES CHANGE
Y-SEE SEPARATE ILLUSTRATION

J132811 X05

WIRING (206-7621 N/S) -CANOPY-STANDARD STICK

EFFECTIVE WITH SERIAL NO. BMW01032-
PART OF 206-7605-Page 514,515
201-9167-Page 174 206-7657-Page 175 206-7622-Page 172, 173
AN ATTACHMENT

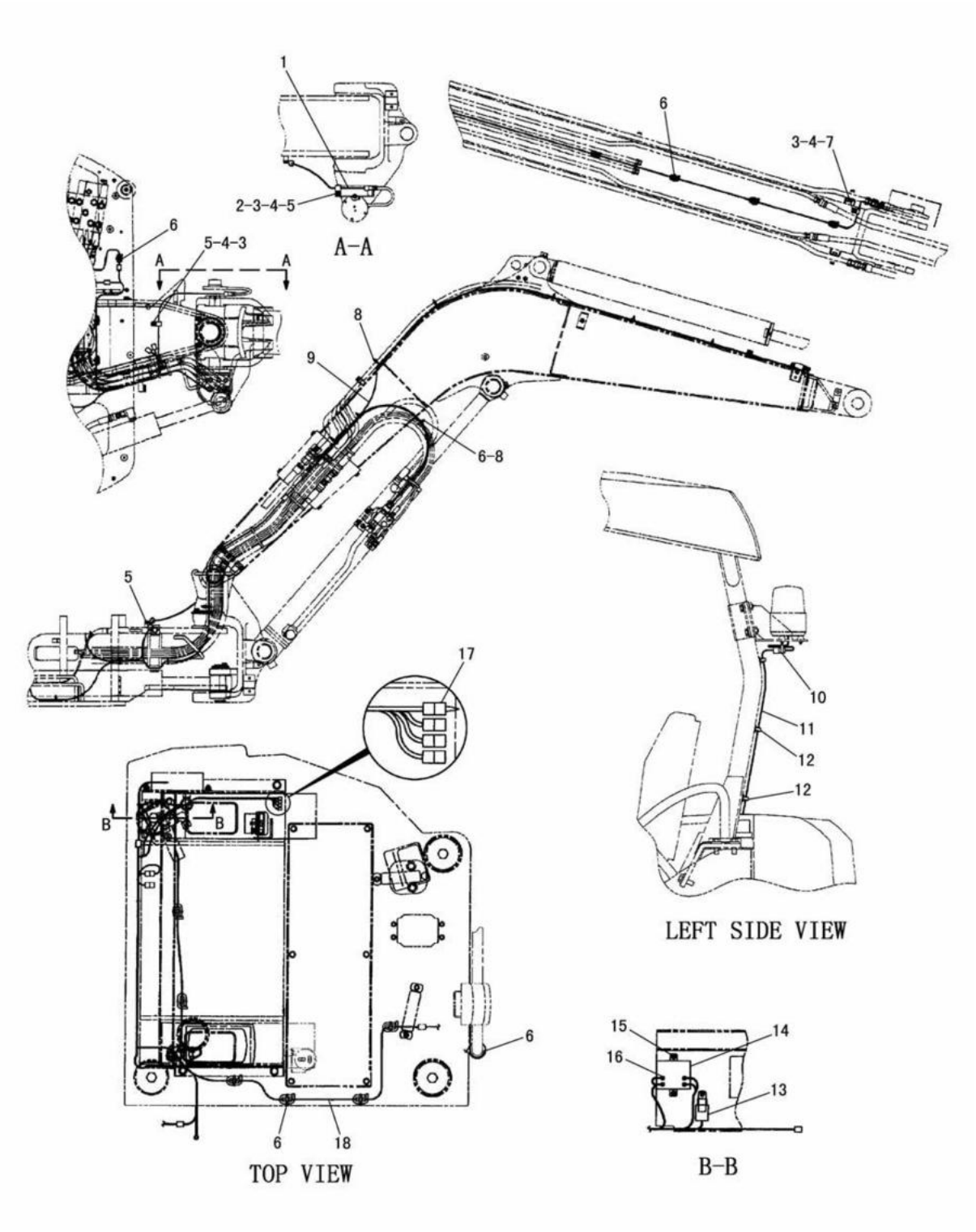

WIRING (206-7640 N/S) -CANOPY-LONG STICK
EFFECTIVE WITH SERIAL NO. BMW00684-BMW00955
PART OF 206-7635-Page 516,517
AN ATTACHMENT

ELECTRICAL SYSTEM

NOTE	No.	PART NO.	QTY.	PART NAME	NOTE	No.	PART NO.	QTY.	PART NAME
	1	201-9138	1	PLATE AS					
		121-1029	1	CLIP					
	2	5C-7261	1	NUT(M8×1.25)					
	3	8T-4224	3	WASHER					
	4	8T-4200	3	BOLT(M8×1.25)					
	5	6D-4246	3	CLIP					
B	6	3S-2093	17	STRAP					
	7	4N-9170	1	CLIP					
	8	7I-2673	7	STRAP					
Y	9	201-9167	1	HARNESS AS					
	10	163-6795	1	STRAP					
	11	200-4589	1	HARNESS AS					
		186-3735	2	PIN					
		102-8802	1	RECEPTACLE KIT(2P)					
		187-6417	1	CONNECTOR					
		187-6421	2	TERMINAL					
		117-1878	2	SEAL					
	12	5I-6959	6	CLAMP					
	13	155-7583	1	SWITCH AS					
	14	155-7585	1	RESISTOR AS					
	15	9X-8256	3	WASHER					
		5C-2890	3	NUT(M6×1)					
	16	095-0735	4	SCREW(M5×0.8)					
	17	206-7641	1	CONNECTOR AS					
		102-8805	1	RECEPTACLE KIT(6P)					
		186-3735	4	PIN					
		8T-8737	2	PLUG					
Y	18	206-7622	1	HARNESS AS					

B-USE AS REQUIRED
Y-SEE SEPARATE ILLUSTRATION

J126783 X00

WIRING (206-7640 N/S) -CANOPY-LONG STICK

EFFECTIVE WITH SERIAL NO. BMW00684-BMW00955
PART OF 206-7635-Page 516,517
201-9167-Page 174 206-7622-Page 172, 173
AN ATTACHMENT

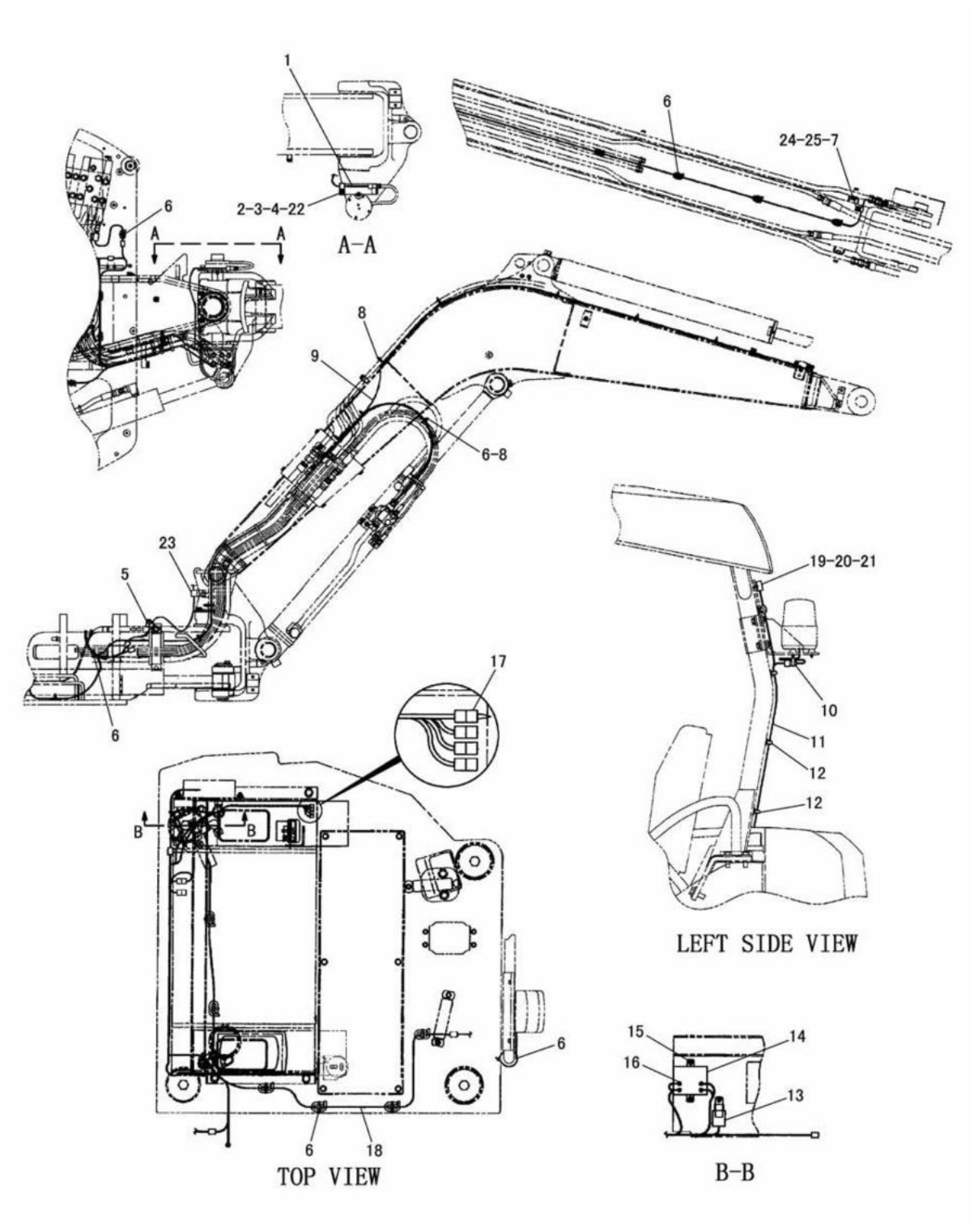

WIRING (206-7640 N/S) -CANOPY-LONG STICK
EFFECTIVE WITH SERIAL NO. BMW00956-BMW01031
PART OF 206-7635-Page 516,517
AN ATTACHMENT

ELECTRICAL SYSTEM

NOTE	No.	PART NO.	QTY.	PART NAME	NOTE	No.	PART NO.	QTY.	PART NAME
	1	201-9138	1	PLATE AS					
		121-1029	1	CLIP					
	2	5C-7261	1	NUT(M8×1.25)					
C	3	8T-4224	1	WASHER					
C	4	8T-4200	1	BOLT(M8×1.25)					
C	5	6D-4246	1	CLIP					
BC	6	3S-2093	18	STRAP					
C	7	8M-2772	1	CLIP					
	8	7I-2673	7	STRAP					
Y	9	201-9167	1	HARNESS AS					
	10	163-6795	1	STRAP					
YC	11	206-7657	1	HARNESS AS					
C	12	5I-6959	7	CLAMP					
	13	155-7583	1	SWITCH AS					
	14	155-7585	1	RESISTOR AS					
	15	9X-8256	3	WASHER					
		5C-2890	3	NUT(M6×1)					
	16	095-0735	4	SCREW(M5×0.8)					
	17	206-7641	1	CONNECTOR AS					
		102-8805	1	RECEPTACLE KIT(6P)					
		186-3735	4	PIN					
		8T-8737	2	PLUG					
Y	18	206-7622	1	HARNESS AS					
C	19	125-5213	1	BUZZER AS					
C	20	125-5292	2	SCREW(M2.3×0.4)					
C	21	125-5298	2	WASHER					
C	22	4K-8864	1	CLIP					
C	23	4S-1936	1	CLIP					
C	24	8T-4191	1	BOLT(M10×1.5)					
C	25	8T-4121	1	WASHER					

B-USE AS REQUIRED
C-INDICATES CHANGE
Y-SEE SEPARATE ILLUSTRATION

J126786 X03

WIRING (206-7640 N/S) -CANOPY-LONG STICK

EFFECTIVE WITH SERIAL NO. BMW00956-BMW01031
PART OF 206-7635-Page 516,517
201-9167-Page 174 206-7657-Page 175 206-7622-Page 172, 173
AN ATTACHMENT

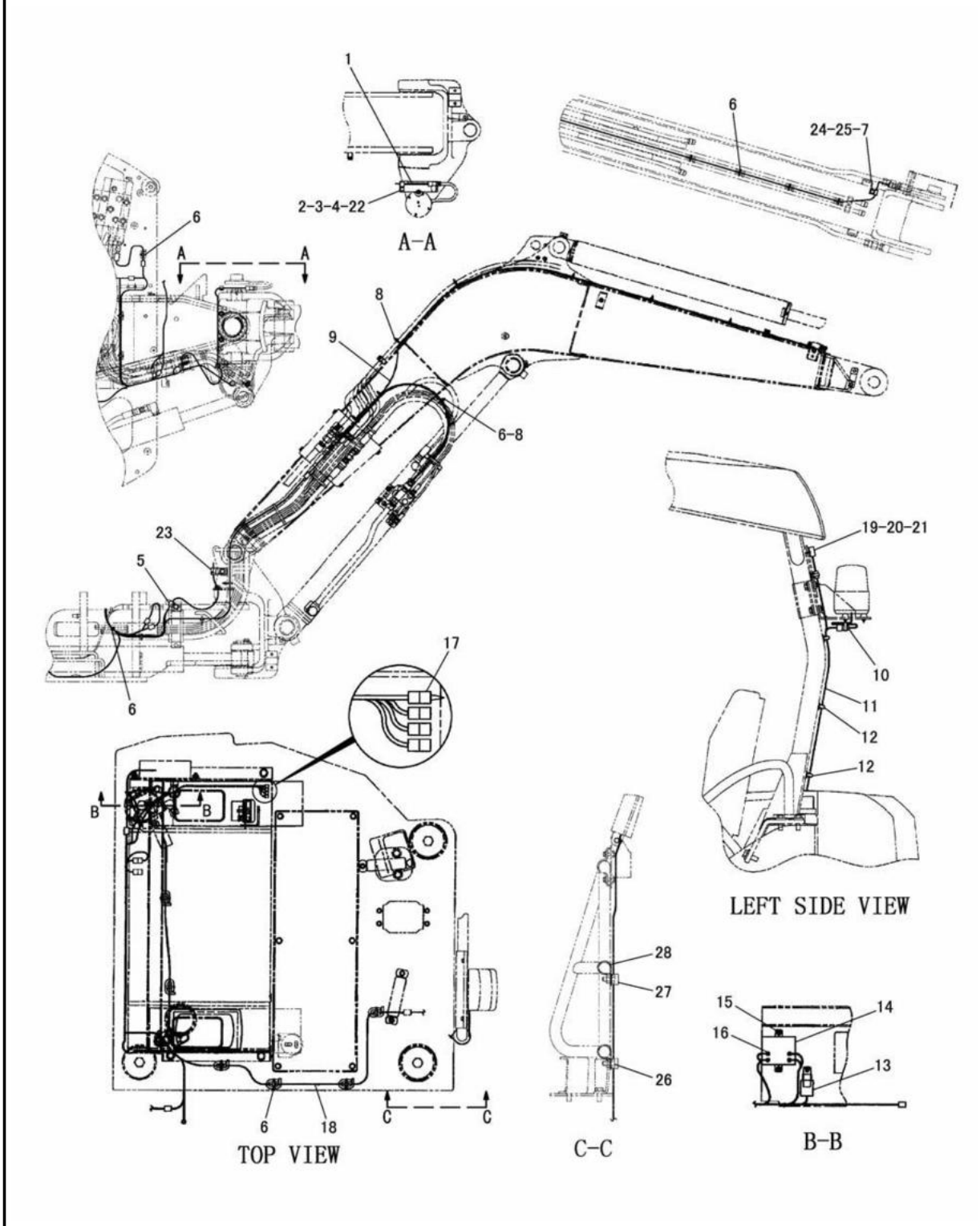

WIRING (206-7640 N/S) -CANOPY-LONG STICK
EFFECTIVE WITH SERIAL NO. BMW01032-
PART OF 206-7635-Page 516,517
AN ATTACHMENT

ELECTRICAL SYSTEM

NOTE	No.	PART NO.	QTY.	PART NAME	NOTE	No.	PART NO.	QTY.	PART NAME
	1	201-9138	1	PLATE AS					
		121-1029	1	CLIP					
	2	5C-7261	1	NUT(M8×1.25)					
	3	8T-4224	1	WASHER					
	4	8T-4200	1	BOLT(M8×1.25)					
	5	6D-4246	1	CLIP					
C	6	3S-2093	16	STRAP					
	7	8M-2772	1	CLIP					
	8	7I-2673	7	STRAP					
Y	9	201-9167	1	HARNESS AS					
	10	163-6795	1	STRAP					
Y	11	206-7657	1	HARNESS AS					
C	12	5I-6959	8	CLAMP					
	13	155-7583	1	SWITCH AS					
	14	155-7585	1	RESISTOR AS					
	15	9X-8256	3	WASHER					
		5C-2890	3	NUT(M6×1)					
	16	095-0735	4	SCREW(M5×0.8)					
	17	206-7641	1	CONNECTOR AS					
		102-8805	1	RECEPTACLE KIT(6P)					
		186-3735	4	PIN					
		8T-8737	2	PLUG					
Y	18	206-7622	1	HARNESS AS					
	19	125-5213	1	BUZZER AS					
	20	125-5292	2	SCREW(M2.3×0.4)					
	21	125-5298	2	WASHER					
	22	4K-8864	1	CLIP					
	23	4S-1936	1	CLIP					
	24	8T-4191	1	BOLT(M10×1.5)					
	25	8T-4121	1	WASHER					
C	26	8T-4192	2	BOLT(M12×1.75)					
C		8T-4223	2	WASHER					
C		8T-4244	2	NUT(M12×1.75)					
C	27	4K-8302	2	CLIP					
C	28	8T-7529	2	CLIP					

C-INDICATES CHANGE
Y-SEE SEPARATE ILLUSTRATION

J132812 X05

WIRING (206-7640 N/S) -CANOPY-LONG STICK

EFFECTIVE WITH SERIAL NO. BMW01032-
PART OF 206-7635-Page 516,517
201-9167-Page 174 206-7657-Page 175 206-7622-Page 172, 173
AN ATTACHMENT

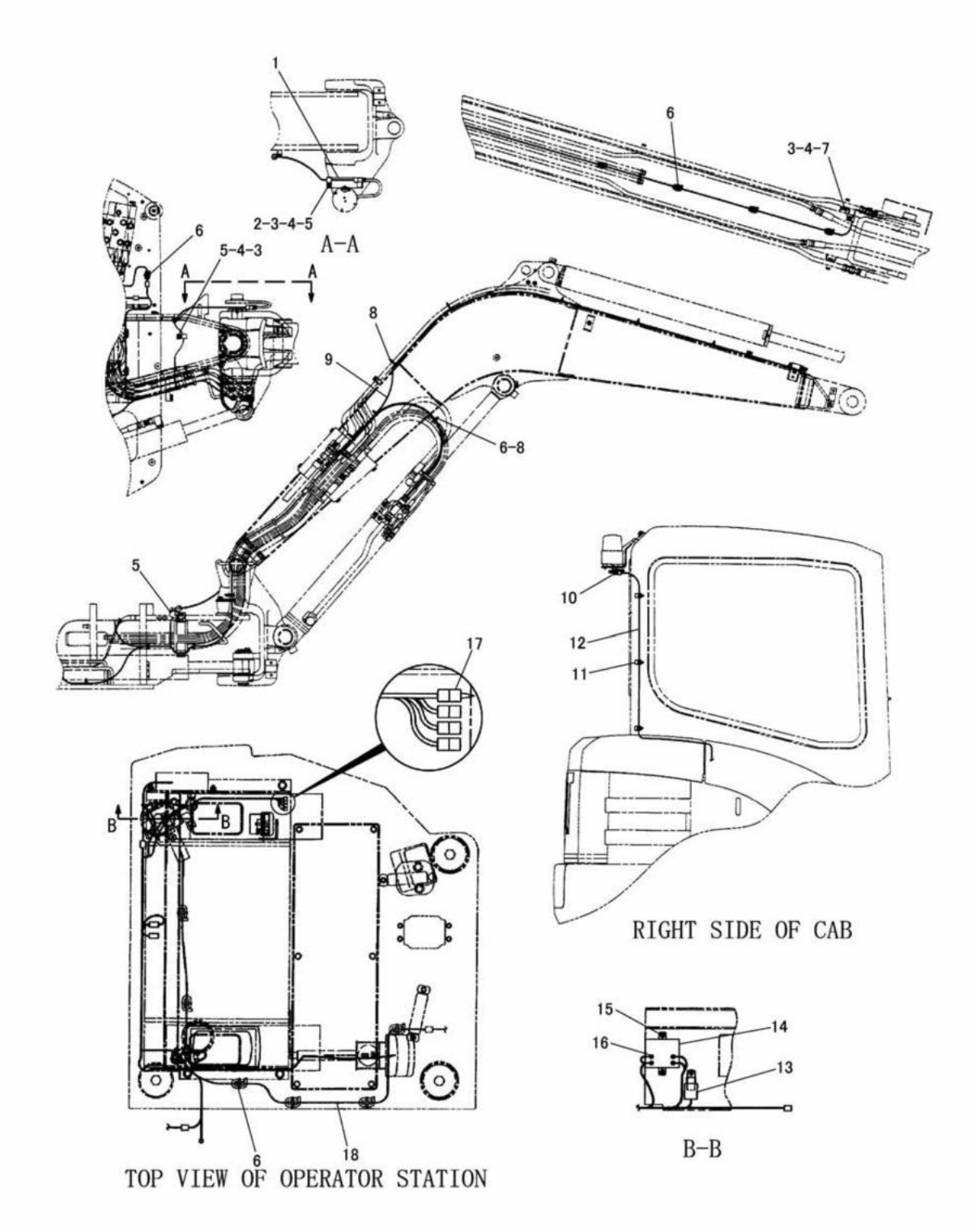

J126799 X02

WIRING (201-9158 N/S) -CAB-STANDARD STICK
EFFECTIVE WITH SERIAL NO. BMW00204-BMW00955
PART OF 201-9165-Page 518,519
AN ATTACHMENT

ELECTRICAL SYSTEM

NOTE	No.	PART NO.	QTY.	PART NAME	NOTE	No.	PART NO.	QTY.	PART NAME
	1	201-9138	1	PLATE AS					
		121-1029	1	CLIP					
	2	5C-7261	1	NUT(M8×1.25)					
	3	8T-4224	3	WASHER					
	4	8T-4200	3	BOLT(M8×1.25)					
	5	6D-4246	3	CLIP					
B	6	3S-2093	16	STRAP					
	7	4N-9170	1	CLIP					
	8	7I-2673	7	STRAP					
Y	9	201-9167	1	HARNESS AS					
	10	163-6795	1	STRAP					
	11	5I-6959	6	CLAMP					
	12	200-4589	1	HARNESS AS					
		102-8802	1	RECEPTACLE KIT(2P)					
		186-3735	2	PIN					
		117-1878	2	SEAL					
		187-6417	1	CONNECTOR					
		187-6421	2	TERMINAL					
	13	155-7583	1	SWITCH AS					
	14	155-7585	1	RESISTOR AS					
	15	9X-8256	3	WASHER					
		5C-2890	3	NUT(M6×1)					
	16	095-0735	4	SCREW(M5×0.8)					
	17	200-4590	1	CONNECTOR AS					
		102-8805	1	RECEPTACLE KIT(6P)					
		186-3735	2	PIN					
		8T-8737	4	PLUG					
Y	18	201-9166	1	HARNESS AS					

B-USE AS REQUIRED
Y-SEE SEPARATE ILLUSTRATION

J126799 X02

WIRING (201-9158 N/S) -CAB-STANDARD STICK

EFFECTIVE WITH SERIAL NO. BMW00204-BMW00955
PART OF 201-9165-Page 518,519
201-9167-Page 174 201-9166-Page 170, 171
AN ATTACHMENT

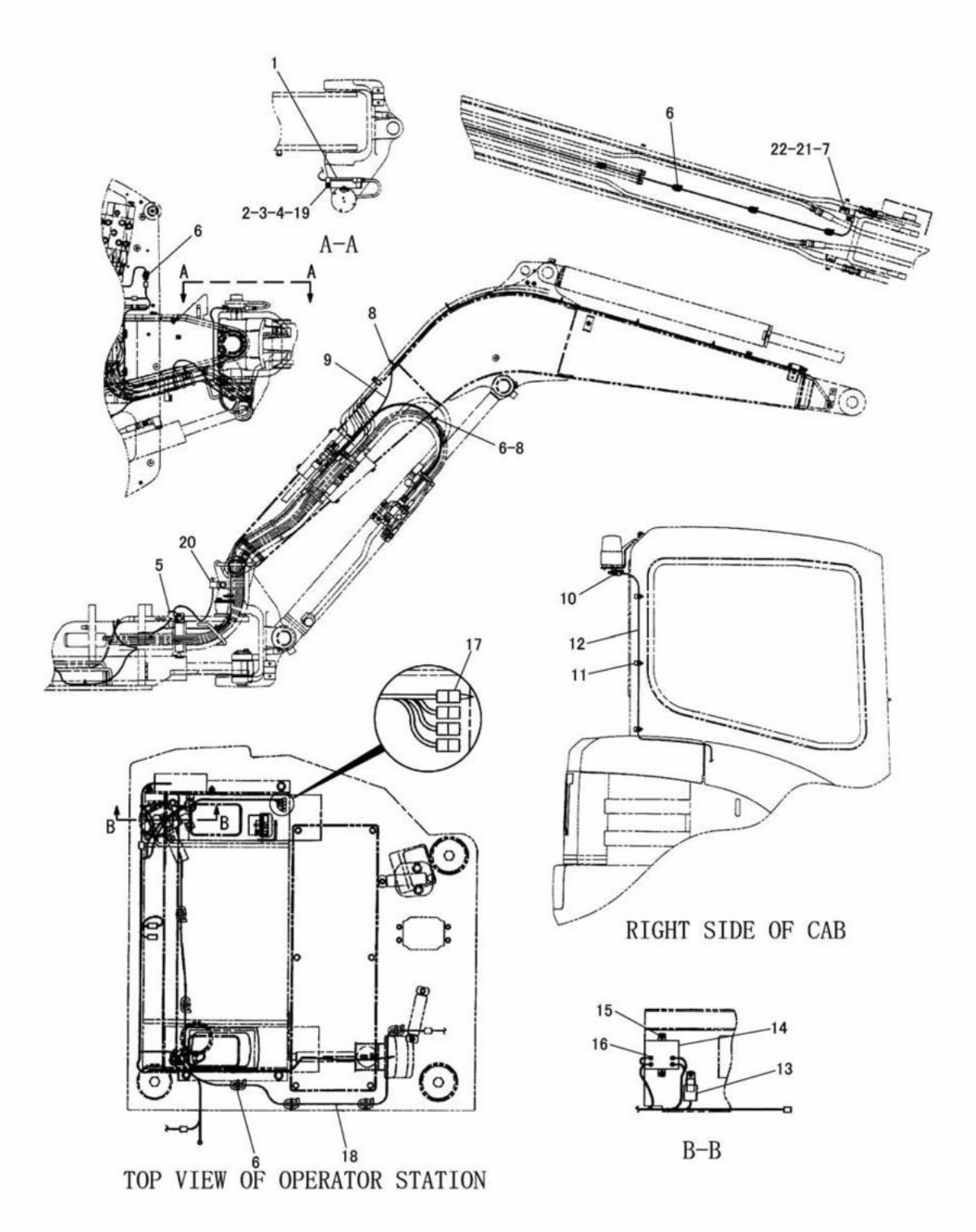

J126802 X04

WIRING (201-9158 N/S) -CAB-STANDARD STICK
EFFECTIVE WITH SERIAL NO. BMW00956-
PART OF 201-9165-Page 518,519
AN ATTACHMENT

ELECTRICAL SYSTEM

NOTE	No.	PART NO.	QTY.	PART NAME	NOTE	No.	PART NO.	QTY.	PART NAME
	1	201-9138	1	PLATE AS					
		121-1029	1	CLIP					
	2	5C-7261	1	NUT(M8×1.25)					
C	3	8T-4224	1	WASHER					
C	4	8T-4200	1	BOLT(M8×1.25)					
C	5	6D-4246	1	CLIP					
B	6	3S-2093	16	STRAP					
C	7	8M-2772	1	CLIP					
	8	7I-2673	7	STRAP					
Y	9	201-9167	1	HARNESS AS					
	10	163-6795	1	STRAP					
	11	5I-6959	6	CLAMP					
	12	200-4589	1	HARNESS AS					
		102-8802	1	RECEPTACLE KIT(2P)					
		186-3735	2	PIN					
		117-1878	2	SEAL					
		187-6417	1	CONNECTOR					
		187-6421	2	TERMINAL					
	13	155-7583	1	SWITCH AS					
	14	155-7585	1	RESISTOR AS					
	15	9X-8256	3	WASHER					
		5C-2890	3	NUT(M6×1)					
	16	095-0735	4	SCREW(M5×0.8)					
	17	200-4590	1	CONNECTOR AS					
		102-8805	1	RECEPTACLE KIT(6P)					
		186-3735	2	PIN					
		8T-8737	4	PLUG					
Y	18	201-9166	1	HARNESS AS					
C	19	4K-8864	1	CLIP					
C	20	4S-1936	1	CLIP					
C	21	8T-4191	1	BOLT(M10×1.5)					
C	22	8T-4121	1	WASHER					

B-USE AS REQUIRED
C-INDICATES CHANGE
Y-SEE SEPARATE ILLUSTRATION

J126802 X04

WIRING (201-9158 N/S) -CAB-STANDARD STICK

EFFECTIVE WITH SERIAL NO. BMW00956-
PART OF 201-9165-Page 518,519
201-9167-Page 174 201-9166-Page 170, 171
AN ATTACHMENT

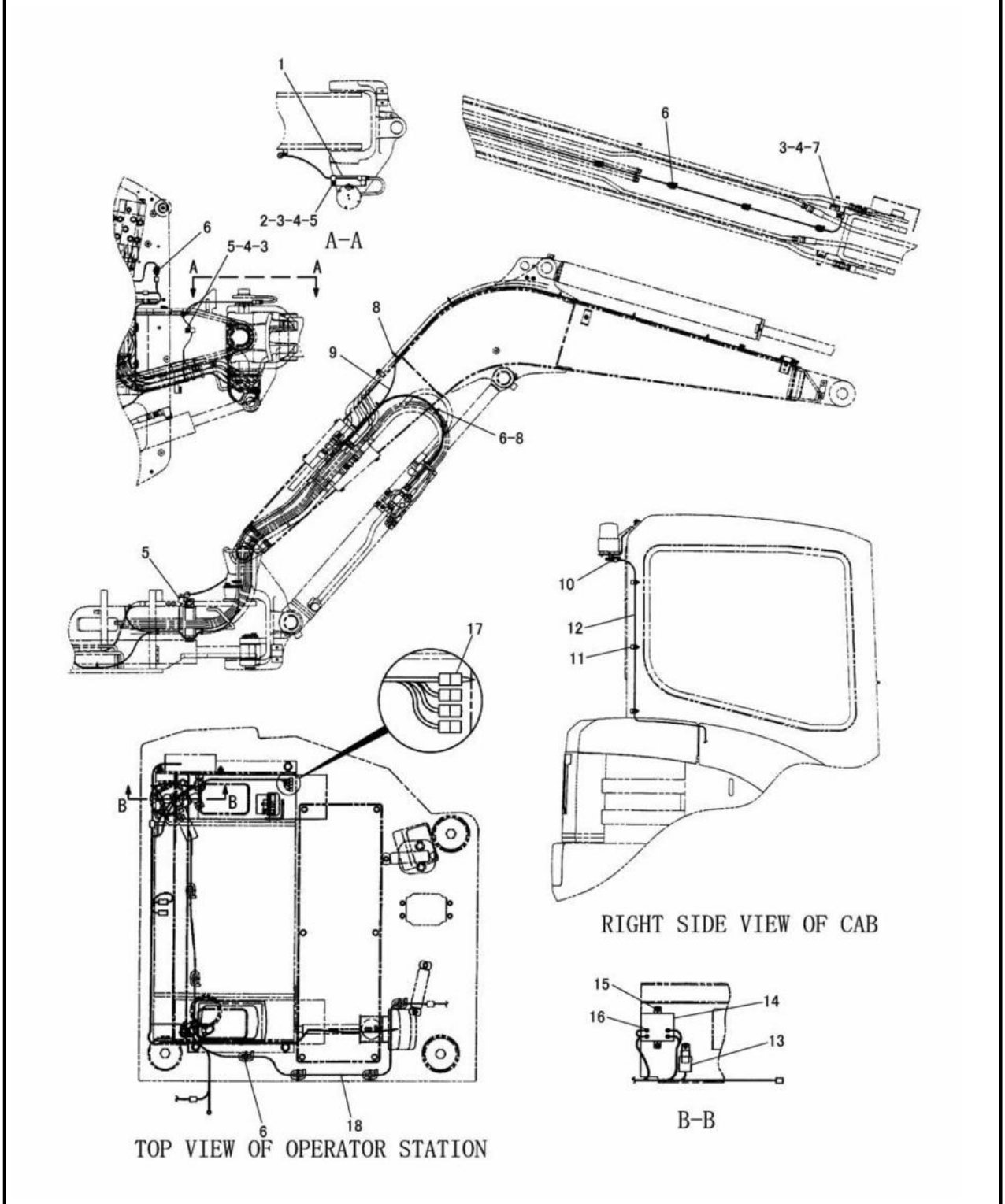

J126817 X00

WIRING (206-7633 N/S) -CAB-LONG STICK
EFFECTIVE WITH SERIAL NO. BMW00684-BMW00955
PART OF 206-7624-Page 520,521
AN ATTACHMENT

ELECTRICAL SYSTEM

NOTE	No.	PART NO.	QTY.	PART NAME	NOTE	No.	PART NO.	QTY.	PART NAME
	1	201-9138	1	PLATE AS					
		121-1029	1	CLIP					
	2	5C-7261	1	NUT(M8×1.25)					
	3	8T-4224	3	WASHER					
	4	8T-4200	3	BOLT(M8×1.25)					
	5	6D-4246	3	CLIP					
B	6	3S-2093	16	STRAP					
	7	4N-9170	1	CLIP					
	8	7I-2673	7	STRAP					
Y	9	201-9167	1	HARNESS AS					
	10	163-6795	1	STRAP					
	11	5I-6959	6	CLAMP					
	12	200-4589	1	HARNESS AS					
		102-8802	1	RECEPTACLE KIT(2P)					
		186-3735	2	PIN					
		117-1878	2	SEAL					
		187-6417	1	CONNECTOR					
		187-6421	2	TERMINAL					
	13	155-7583	1	SWITCH AS					
	14	155-7585	1	RESISTOR AS					
	15	9X-8256	3	WASHER					
		5C-2890	3	NUT(M6×1)					
	16	095-0735	4	SCREW(M5×0.8)					
	17	206-7634	1	CONNECTOR AS					
		102-8805	1	RECEPTACLE KIT(6P)					
		186-3735	2	PIN					
		8T-8737	4	PLUG					
Y	18	201-9166	1	HARNESS AS					

B-USE AS REQUIRED
Y-SEE SEPARATE ILLUSTRATION

J126817 X00

WIRING (206-7633 N/S) -CAB-LONG STICK

EFFECTIVE WITH SERIAL NO. BMW00684-BMW00955
PART OF 206-7624-Page 520,521
201-9167-Page 174 201-9166-Page 170, 171
AN ATTACHMENT

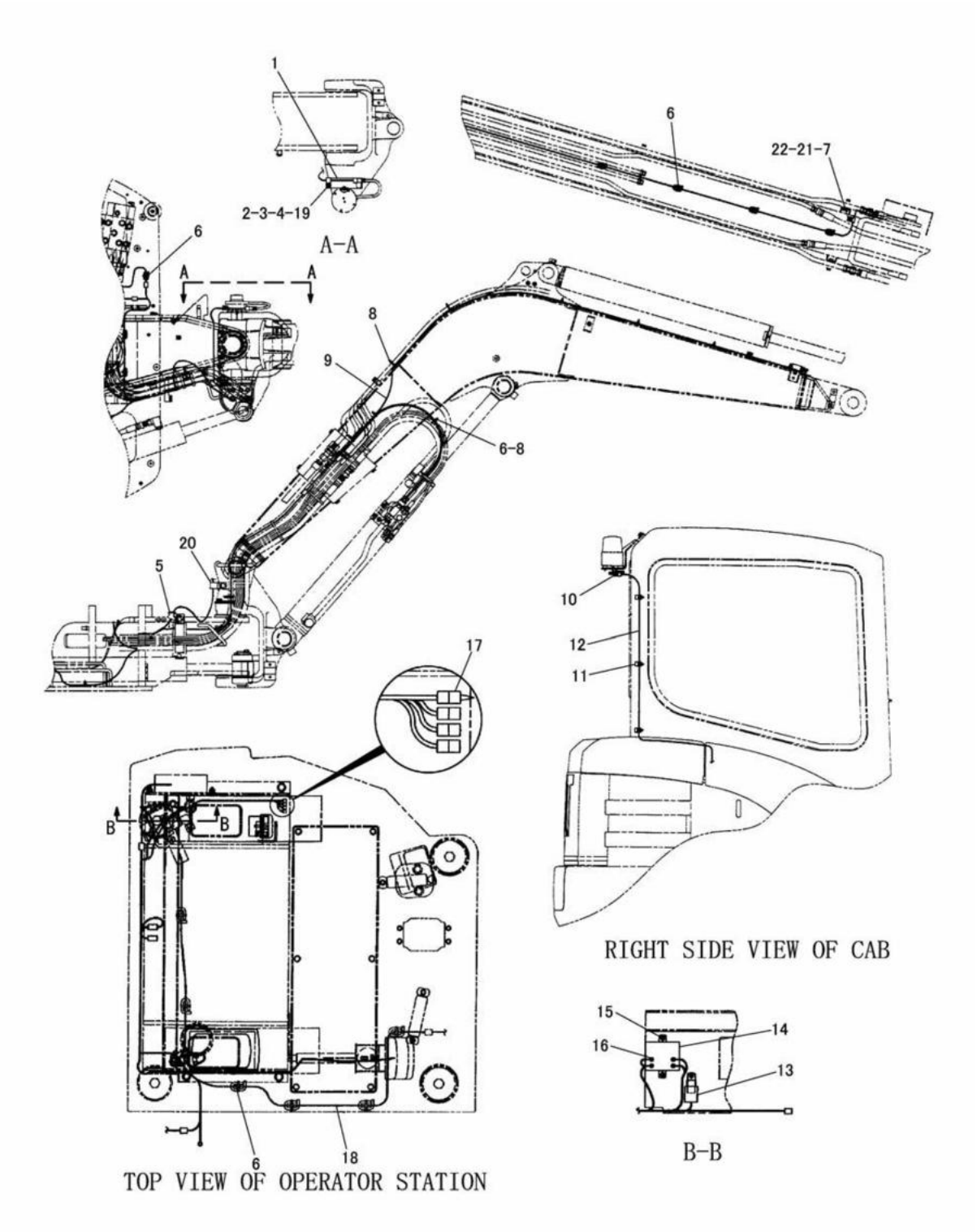

J126820 X02

WIRING (206-7633 N/S) -CAB-LONG STICK
EFFECTIVE WITH SERIAL NO. BMW00956-
PART OF 206-7624-Page 520,521
AN ATTACHMENT

ELECTRICAL SYSTEM

NOTE	No.	PART NO.	QTY.	PART NAME	NOTE	No.	PART NO.	QTY.	PART NAME
	1	201-9138	1	PLATE AS					
		121-1029	1	CLIP					
	2	5C-7261	1	NUT(M8×1.25)					
C	3	8T-4224	1	WASHER					
C	4	8T-4200	1	BOLT(M8×1.25)					
C	5	6D-4246	1	CLIP					
B	6	3S-2093	16	STRAP					
C	7	8M-2772	1	CLIP					
	8	7I-2673	7	STRAP					
Y	9	201-9167	1	HARNESS AS					
	10	163-6795	1	STRAP					
	11	5I-6959	6	CLAMP					
	12	200-4589	1	HARNESS AS					
		102-8802	1	RECEPTACLE KIT(2P)					
		186-3735	2	PIN					
		117-1878	2	SEAL					
		187-6417	1	CONNECTOR					
		187-6421	2	TERMINAL					
	13	155-7583	1	SWITCH AS					
	14	155-7585	1	RESISTOR AS					
	15	9X-8256	3	WASHER					
		5C-2890	3	NUT(M6×1)					
	16	095-0735	4	SCREW(M5×0.8)					
	17	206-7634	1	CONNECTOR AS					
		102-8805	1	RECEPTACLE KIT(6P)					
		186-3735	2	PIN					
		8T-8737	4	PLUG					
Y	18	201-9166	1	HARNESS AS					
C	19	4K-8864	1	CLIP					
C	20	4S-1936	1	CLIP					
C	21	8T-4191	1	BOLT(M10×1.5)					
C	22	8T-4121	1	WASHER					

B-USE AS REQUIRED
C-INDICATES CHANGE
Y-SEE SEPARATE ILLUSTRATION

J126820 X02

WIRING (206-7633 N/S) -CAB-LONG STICK

EFFECTIVE WITH SERIAL NO. BMW00956-
PART OF 206-7624-Page 520,521
201-9167-Page 174 201-9166-Page 170, 171
AN ATTACHMENT

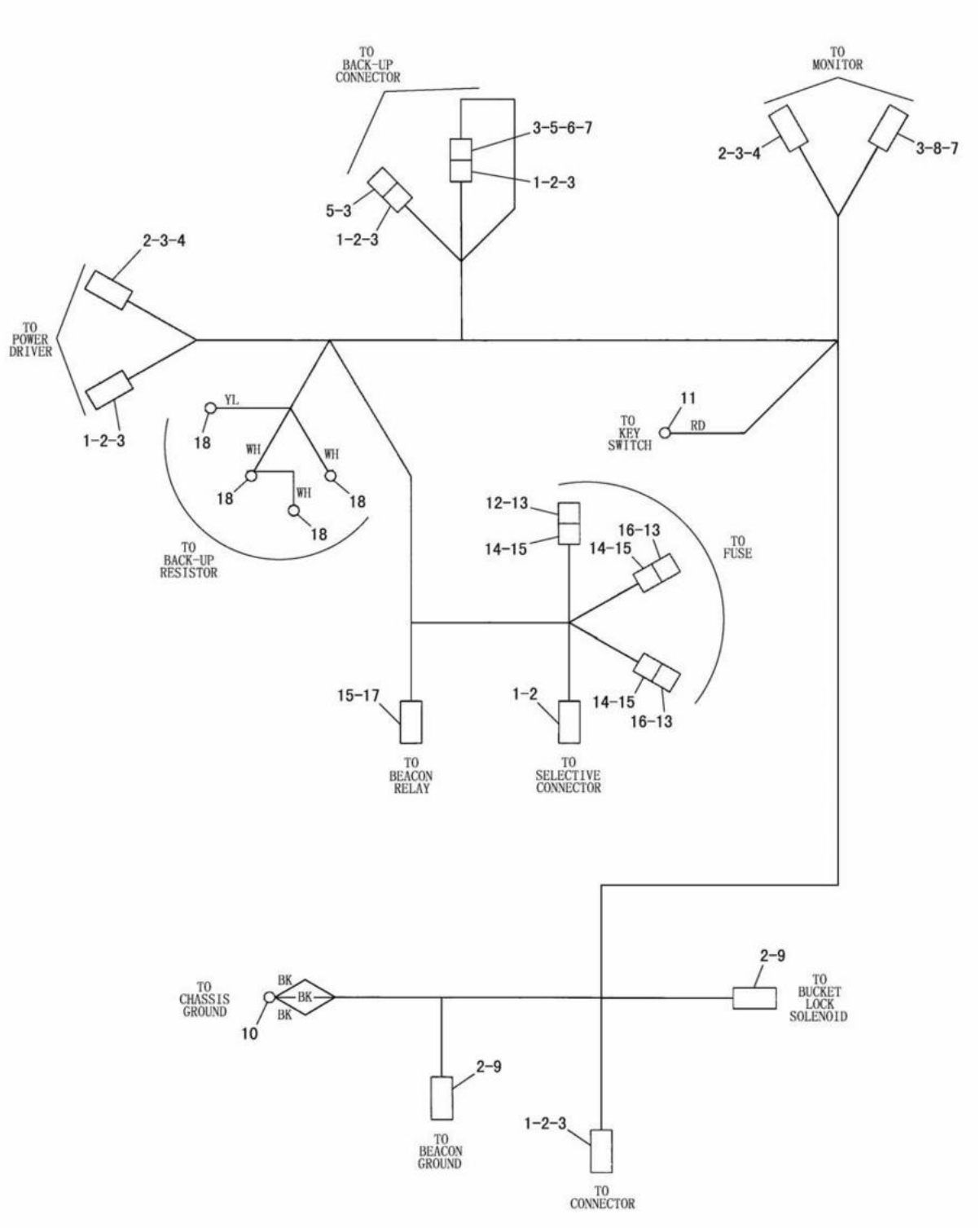

201-9166 HARNESS ASSEMBLY
EFFECTIVE WITH SERIAL NO. BMW00204-
PART OF 201-9158-Page 163,165,206-7633-Page 167,169
AN ATTACHMENT

ELECTRICAL SYSTEM

NOTE	No.	PART NO.	QTY.	PART NAME	NOTE	No.	PART NO.	QTY.	PART NAME
	1	155-2274	5	PLUG KIT(6P)					
	2	186-3736	47	SOCKET					
	3	8T-8737	27	PLUG					
	4	155-2255	2	PLUG KIT(12P)					
	5	102-8805	2	RECEPTACLE KIT(6P)					
	6	3E-3383	1	WEDGE					
	7	186-8735	14	PIN					
	8	102-8801	1	RECEPTACLE KIT(12P)					
	9	155-2270	2	PLUG KIT(2P)					
	10	3T-4696	1	TERMINAL					
	11	2L-8067	1	TERMINAL					
	12	9W-1442	1	FUSE(10A)					
	13	185-1290	3	FUSE HOLDER					
	14	7Y-3952	3	CONNECTOR					
	15	7Y-3951	10	TERMINAL					
	16	139-5345	2	FUSE(5A)					
	17	7Y-3957	1	CONNECTOR					
	18	2L-8077	4	TERMINAL					

J112121 X01

201-9166 HARNESS ASSEMBLY

EFFECTIVE WITH SERIAL NO. BMW00204-
PART OF 201-9158-Page 163,165,206-7633-Page 167,169
AN ATTACHMENT

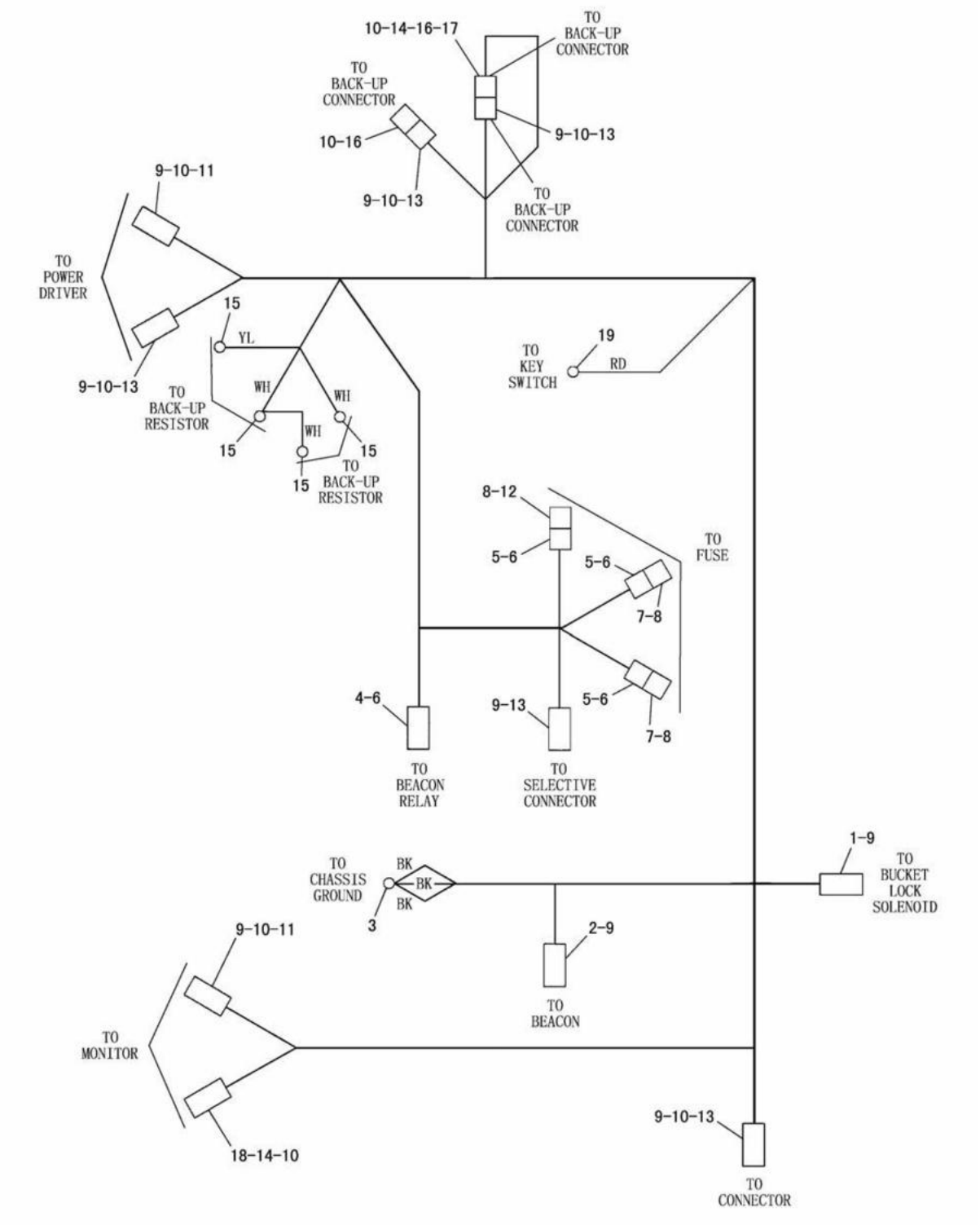

206-7622 HARNESS ASSEMBLY
EFFECTIVE WITH SERIAL NO. BMW00684-
PART OF 206-7621-Page 151,153,155,206-7640-Page 157,159,161
AN ATTACHMENT

ELECTRICAL SYSTEM

NOTE	No.	PART NO.	QTY.	PART NAME	NOTE	No.	PART NO.	QTY.	PART NAME
	1	155-2270	1	PLUG KIT(2P)					
	2	155-2271	1	PLUG KIT(4P)					
	3	3T-4696	1	TERMINAL					
	4	7Y-3957	1	CONNECTOR					
	5	7Y-3952	3	CONNECTOR					
	6	7Y-3951	10	TERMINAL					
	7	139-5345	2	FUSE(5A)					
	8	185-1290	3	FUSE HOLDER					
	9	186-3736	49	SOCKET					
	10	8T-8737	26	PLUG					
	11	155-2255	2	PLUG KIT(12P)					
	12	9W-1442	1	FUSE(10A)					
	13	155-2274	5	PLUG KIT(6P)					
	14	186-3735	15	PIN					
	15	2L-8077	4	TERMINAL					
	16	102-8805	2	RECEPTACLE KIT(6P)					
	17	3E-3383	1	WEDGE					
	18	102-8801	1	RECEPTACLE KIT(12P)					
	19	2L-8067	1	TERMINAL					

J113092 X03

206-7622 HARNESS ASSEMBLY

EFFECTIVE WITH SERIAL NO. BMW00684-
PART OF 206-7621-Page 151,153,155,206-7640-Page 157,159,161
AN ATTACHMENT

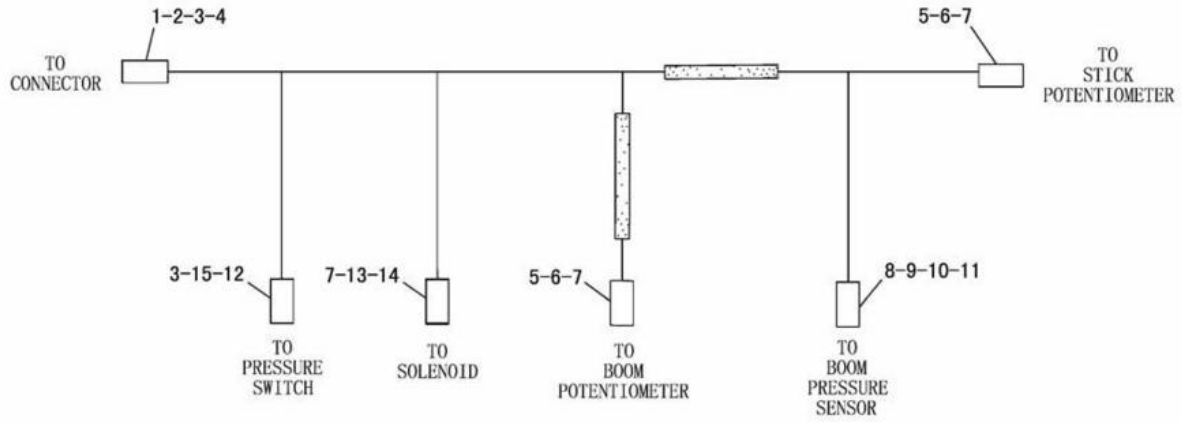

NOTE	No.	PART NO.	QTY.	PART NAME	NOTE	No.	PART NO.	QTY.	PART NAME
	1	102-8801	1	RECEPTACLE KIT(12P)					
	2	3E-5180	1	WEDGE					
	3	186-3735	12	PIN					
	4	8T-8737	2	PLUG					
	5	3E-3368	2	WEDGE					
	6	155-2260	2	PLUG KIT(3P)					
	7	186-3736	8	SOCKET					
	8	187-6419	1	CONNECTOR					
	9	187-6424	1	WEDGE					
	10	187-6421	3	TERMINAL					
	11	117-1878	3	SEAL					
	12	3E-3365	1	WEDGE					
	13	3E-3362	1	WEDGE					
	14	155-2270	1	PLUG KIT(2P)					
	15	102-8802	1	RECEPTACLE KIT(2P)					

J113091 X02

201-9167 HARNESS ASSEMBLY

EFFECTIVE WITH SERIAL NO. BMW00204-
PART OF 201-9158-Page 163,165,206-7621-Page 151,153,155,206-7633-Page 167,169
206-7640-Page 157,159,161
AN ATTACHMENT

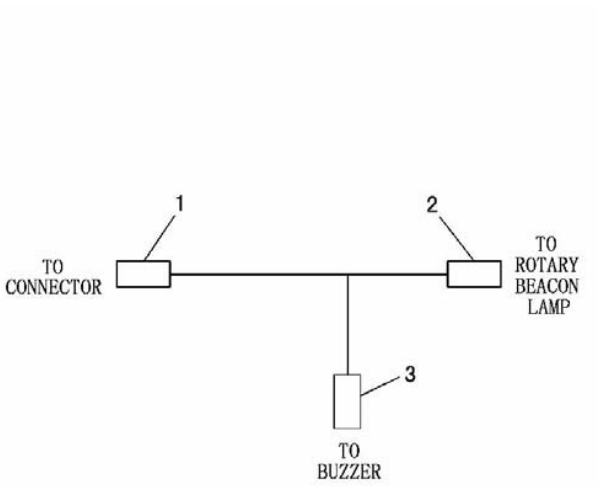

NOTE	No.	PART NO.	QTY.	PART NAME
	1	102-8804	1	RECEPTACLE KIT(4P)
		186-3735	4	PIN
	2	187-6417	1	CONNECTOR
		187-6421	2	TERMINAL
		117-1878	2	SEAL
	3	207-7154	1	CONNECTOR
		207-7156	2	TERMINAL
		207-7157	2	SEAL

J113093 X01

206-7657 HARNESS ASSEMBLY
EFFECTIVE WITH SERIAL NO. BMW00956-
PART OF 206-7621-Page 153,155,206-7640-Page 159,161
AN ATTACHMENT

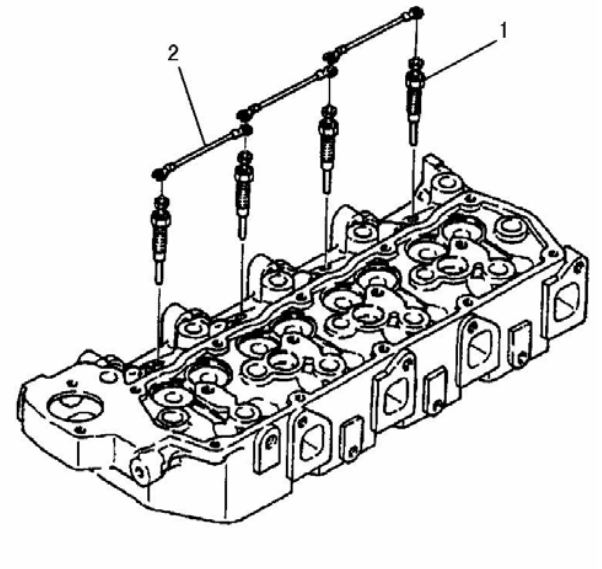

NOTE	No.	PART NO.	QTY.	PART NAME
	1	120-0665	4	GLOW PLUG
	2	195-8492	3	WIRE

J115214 X01

GLOW PLUG (196-8323 N/S)
PART OF 191-3312-Page 5

MEMORANDUM

POWER TRAIN

CONSISTS OF :

			PAGE
2	163-9997	SPROCKET GROUP	177
1	191-3861	FINAL DRIVE GROUP	179
1	191-3860	SWING DRIVE GROUP	178

J106544 X01

POWER TRAIN ARRANGEMENT (191-3359 N/S)
PART OF 191-0178-Page 1,2

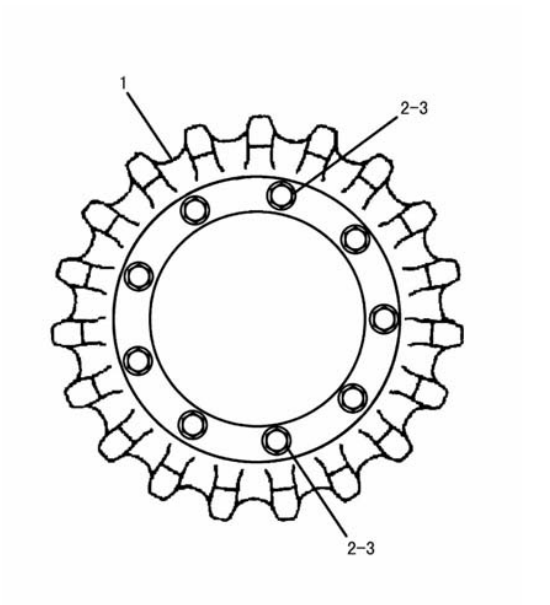

NOTE	No.	PART NO.	QTY.	PART NAME
	1	158-4795	1	SPROKET
	2	085-9768	9	BOLT(M14×2)
	3	7X-0570	9	WASHER

J106543 X01

SPROCKET (163-9997 N/S)
PART OF 191-3359-Page 177

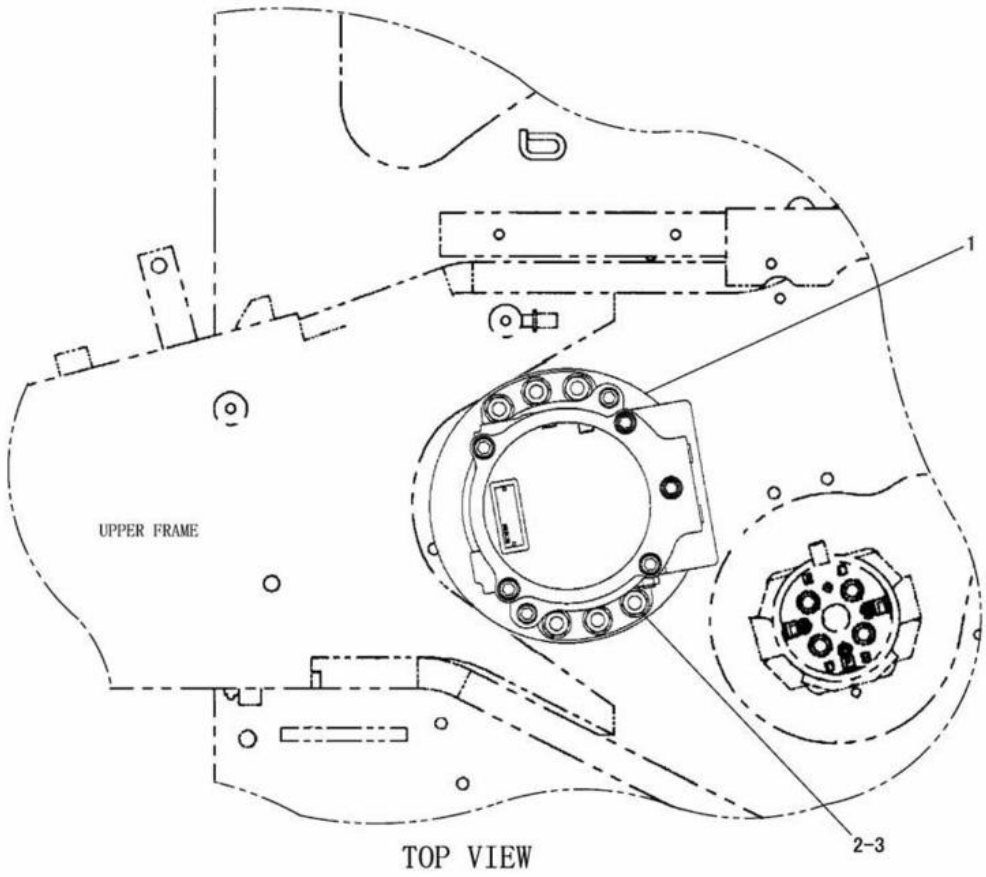

TOP VIEW

NOTE	No.	PART NO.	QTY.	PART NAME	NOTE	No.	PART NO.	QTY.	PART NAME
Y	1	191-1385	1	SWING MOTOR GROUP					
	2	085-9768	6	BOLT(M14×2)					
	3	7X-0510	6	WASHER					

Y-SEE SEPARATE ILLUSTRATION

J129284 X03

SWING DRIVE (191-3860 N/S)

PART OF 191-3359-Page 177
191-1385-Page 180, 181

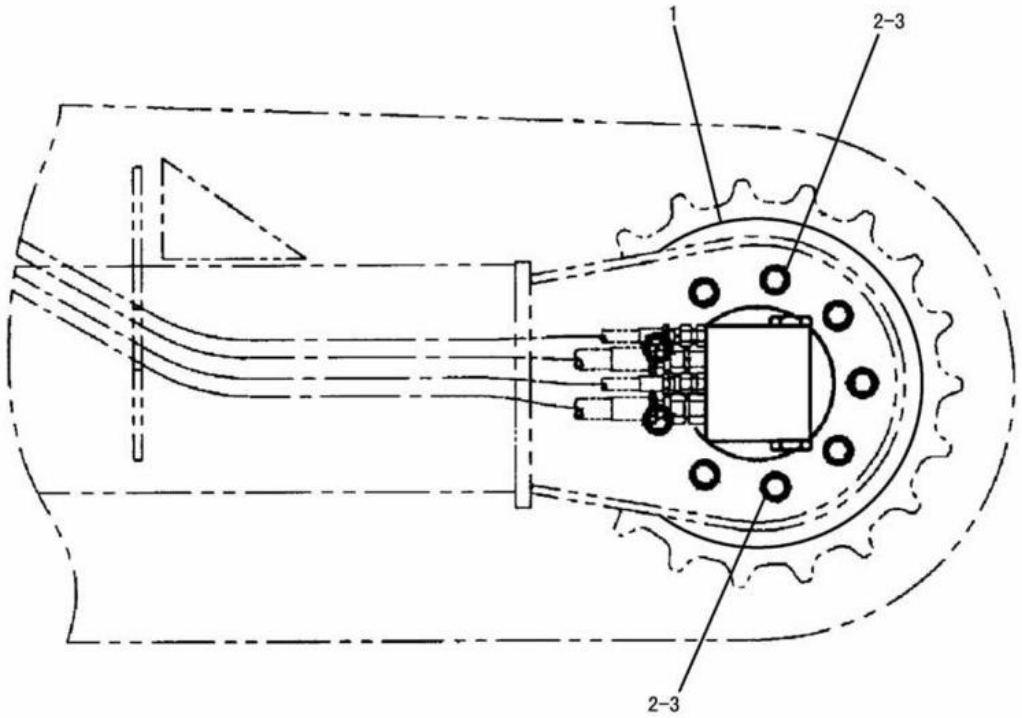

NOTE	No.	PART NO.	QTY.	PART NAME	NOTE	No.	PART NO.	QTY.	PART NAME
Y	1	191-1384	2	TRAVEL MOTOR GROUP					
	2	085-9768	18	BOLT(M14×2)					
	3	7X-0510	18	WASHER					

Y-SEE SEPARATE ILLUSTRATION

J106542 X01

FINAL DRIVE (191-3861 N/S)

PART OF 191-3359-Page 177
191-1384-Page 182, 183

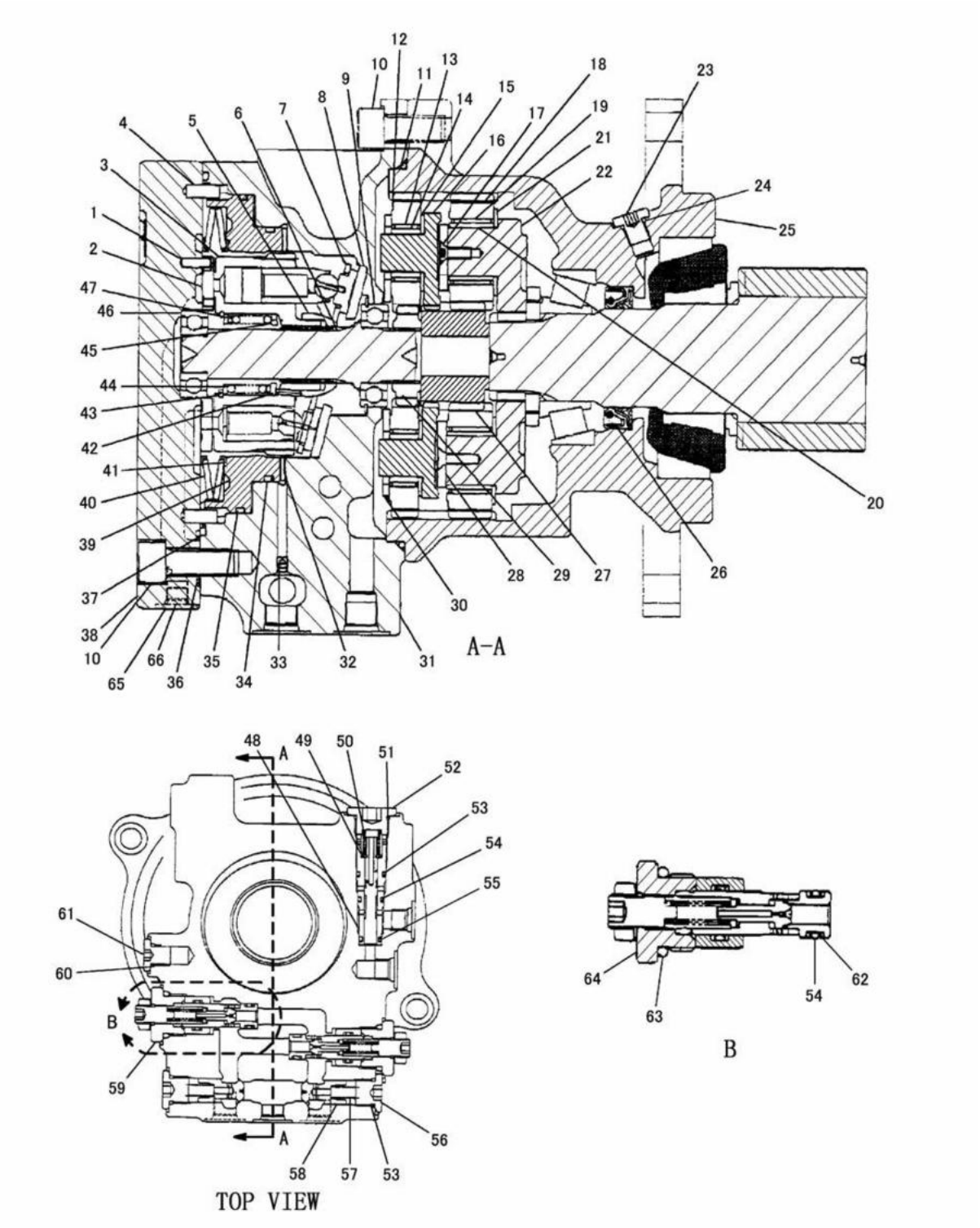

J126607 X03

191-1385 SWING MOTOR GROUP
PART OF 191-3860-Page 178

POWER TRAIN

NOTE	No.	PART NO.	QTY.	PART NAME
	1	139-7325	1	PIN
	2	150-0865	1	PLATE
	3	191-1316	1	BLOCK KIT
	4	198-7062	2	PIN
	5	139-7315	1	HOLDER
	6	198-7056	1	SHAFT
	7	191-1321	1	PLATE
	8	139-7316	1	PLATE
	9	198-7055	1	BEARING
	10	8T-3957	7	BOLT(M12×1.75)
JK	11	6F-4718	1	SEAL
	12	198-7051	4	GEAR
	13	198-7050	4	BEARING
	14	198-7049	4	RACE
	15	151-4676	4	WASHER
	16	198-7048	1	HOLDER
	17	139-7355	4	SCREW
	18	198-7044	4	GEAR
	19	198-7043	4	BEARING
	20	198-7042	4	RACE
	21	139-7350	4	WASHER
	22	198-9446	1	HOLDER
K	23	139-7308	1	PLUG
JK	24	095-1575	1	SEAL
	25	198-7069	1	HOUSING AS
				(INCLUDES PARTS MARKED K)
K	26	150-6372	1	SEAL
	27	151-4674	1	GEAR
	28	198-7045	1	PLATE
	29	198-7052	1	GEAR
	30	198-7068	1	PLATE KIT
	31	198-7054	1	CASE
	32	198-7057	1	DISK
	33	198-7063	1	ORIFICE
J	34	095-1716	1	SEAL
J	35	095-1721	1	SEAL
J	36	095-1587	2	SEAL
J	37	188-4056	1	SEAL
	38	198-7061	1	COVER
	39	198-7058	1	PISTON
	40	198-7060	1	SPRING
	41	198-7059	2	SEAT
	42	139-7319	3	PIN
	43	6V-5588	1	RING
	44	139-7322	1	WASHER
	45	139-7320	1	COLLAR
	46	139-7318	1	BEARING
	47	139-7321	1	SPRING
	48	198-7064	1	VALVE AS
				(INCLUDES PARTS MARKED L)
	49	9X-8256	1	WASHER
	50	198-7065	1	SPRING
J	51	095-1585	1	SEAL
	52	137-3687	1	PLUG
JL	53	095-1582	3	SEAL
JLN	54	095-1580	3	SEAL
JL	55	095-1577	1	SEAL
	56	099-7197	2	PLUG
	57	139-7304	2	SPRING
	58	139-7303	2	VALVE
	59	198-7066	2	VALVE AS
				(INCLUDES PARTS MARKED N)
J	60	3J-7354	1	SEAL
	61	191-1342	1	PLUG
JN	62	095-9258	4	RING
JN	63	095-1592	2	SEAL
JN	64	095-1578	2	SEAL
	65	191-1311	2	PLUG
J	66	7J-0204	2	SEAL
				AVAILABLE REPAIR KIT(S):
		198-7067	1	REPAIR KIT
				(INCLUDES PARTS MARKED J)

J126607 X03

191-1385 SWING MOTOR GROUP

PART OF 191-3860-Page 178

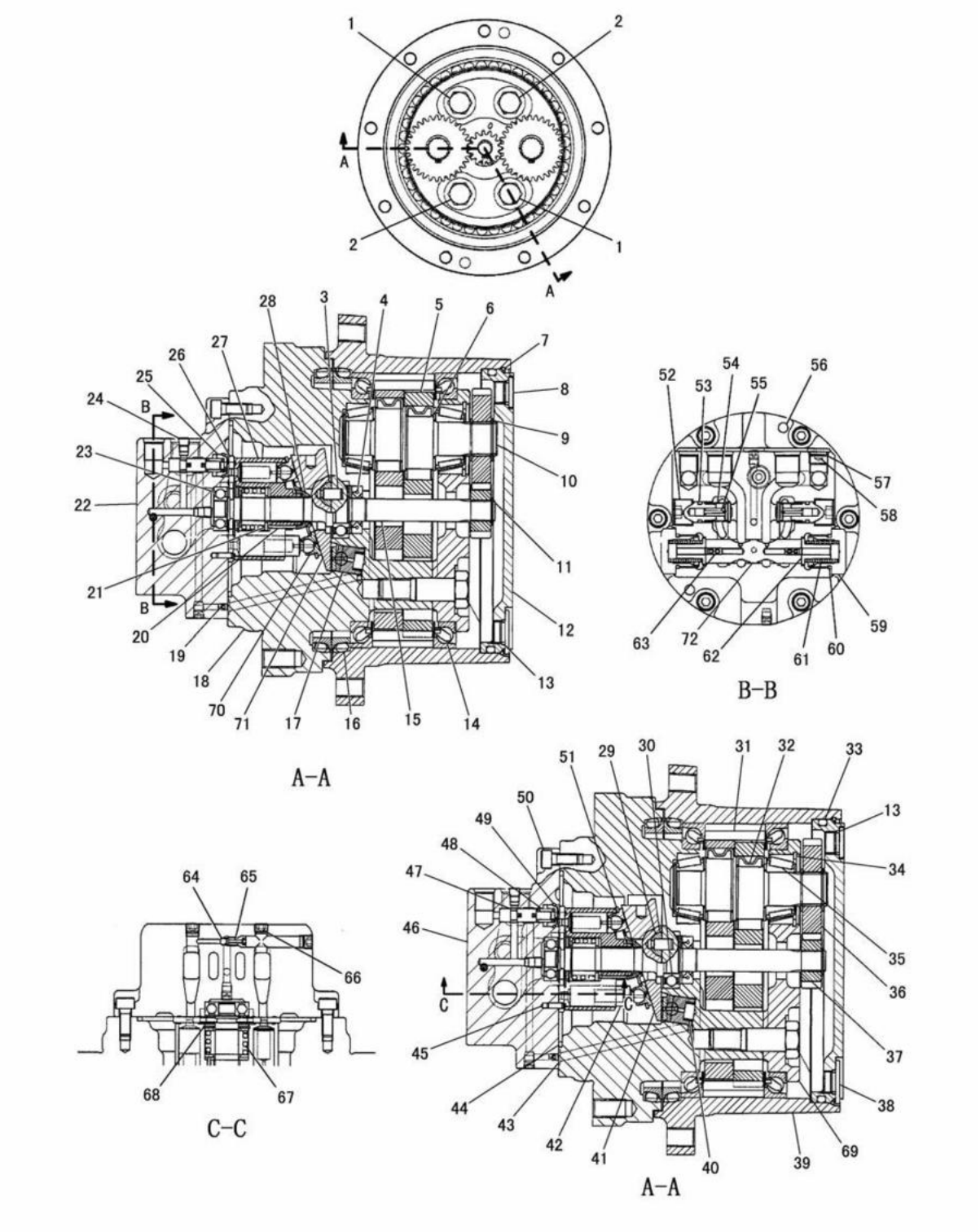

191-1384 TRAVEL MOTOR GROUP
PART OF 191-3861-Page 179

POWER TRAIN

NOTE	No.	PART NO.	QTY.	PART NAME
	1	154-7864	2	BOLT(M16×2)
	2	198-5009	2	BOLT(M16×2)
	3	198-5032	2	PIN
	4	154-1537	1	SEAL
J	5	198-5011	2	GEAR
J	6	7I-2317	4	SPACER
	7	154-7879	1	RING
	8	198-5022	2	PLUG
	9	6V-8754	4	RING
J	10	171-9334	2	SHAFT
	11	154-7892	1	RING
	12	198-5016	1	COVER
	13	095-1582	3	SEAL
	14	198-5018	2	BEARING
	15	198-5023	1	SHAFT
T	16	198-5021	2	SEAL
U	17	198-5030	1	PISTON
P	18	198-5007	1	SPINDLE
	19	198-5044	1	ORIFICE
	20	194-0756	3	ROLLER
	21	154-1528	2	WASHER
S	22	198-5035	1	FLANGE
	23	154-7851	1	BEARING
	24	154-1520	3	PLUG
	25	154-7855	1	STOPPER
	26	198-5028	1	PLATE
	27	154-1523	1	BLOCK
	28	154-1526	1	BALL
	29	154-7858	2	PIVOT
	30	194-0755	1	BEARING
	31	198-5017	28	PIN
J	32	171-9336	4	BEARING
	33	095-1689	1	SEAL
	34	096-8788	2	RING KIT
J	35	198-5012	4	BEARING
N	36	198-5015	2	GEAR
	37	198-5013	1	GEAR
	38	171-9342	1	PLUG
	39	198-5005	1	HUB
	40	198-5033	1	SPRING
	41	198-5024	1	PLATE
Q	42	198-5026	9	PISTON
	43	095-1575	1	SEAL
	44	5F-3999	1	SEAL
	45	154-7846	2	PIN
	46	114-0496	1	PLATE
	47	194-5431	1	VALVE
	48	194-0758	1	SPRING
	49	154-7856	1	RING
	50	8T-1158	6	BOLT(M8×1.25)
	51	154-1525	1	PLATE
	52	154-1533	2	PLUG
	53	095-1580	2	SEAL
	54	154-1536	2	SPRING
	55	154-1534	2	VALVE
	56	154-7860	2	PIN
	57	3J-1907	1	SEAL
	58	169-1188	1	PLUG
	59	198-5037	2	PLUG
	60	095-1590	2	SEAL
	61	198-5039	2	SPRING
	62	198-5038	2	STOPPER
	63	198-5043	2	ORIFICE
	64	198-5041	1	BALL
	65	179-9758	1	PLUG
	66	169-1186	5	PLUG
	67	154-1529	1	SPRING
	68	154-7849	1	RING
P	69	198-5008	1	FLANGE
Q	70	198-5027	9	SHOE
U	71	198-5031	1	SHOE
S	72	198-5036	1	SPOOL
				AVAILABLE REPAIR KIT(S):
		198-5010	1	GEAR AS
				(INCLUDES PARTS MARKED J)
		198-5014	1	GEAR KIT
				(INCLUDE PARTS MARKED N)
		198-5006	1	SPINDLE KIT
				(INCLUDES PARTS MARKED P)
		198-5025	1	PISTON KIT
				(INCLUDES PARTS MARKED Q)
		198-5029	1	PISTON AS
				(INCLUDES PARTS MARKED U)
		198-5034	1	FLANGE AS
				(INCLUDES PARTS MARKED S)
		198-5020	1	SEAL KIT
				(INCLUDE PARTS MARKED T)

J129286 X05

191-1384 TRAVEL MOTOR GROUP

PART OF 191-3861-Page 179

FRAME AND BODY

CONSISTS OF :

			PAGE
1	191-3882	FUEL FILTER LINES GROUP	50
1	191-3846	GOVERNOR CONTROL GROUP	37
1	191-2516	FUEL TANK AND MOUNTING GROUP	55
1	191-3847	BATTERY AND WIRING GROUP	86
1	191-0181	HOOD AND GUARD GROUP	194
1	191-3845	FIREWALL GROUP	254
1	191-0180	FENDER COVER GROUP	244
1	191-3829	BOTTOM GUARD GROUP	238
1	191-0179	COUNTERWEIGHT GROUP	264
1	191-3895	UPPER FRAME GROUP	270
1	191-3822	OPERATOR ARRANGEMENT	529
1	191-3848	ELECTRIC HORN GROUP	615
1	191-3830	GREASE LINES GROUP	295
1	191-0296	FILM GROUP	638

J106492 X02

CHASSIS ARRANGEMENT (191-3351 N/S)
EFFECTIVE WITH SERIAL NO. BMW00001-BMW00850
PART OF 191-0178-Page 1,2

FRAME AND BODY

CONSISTS OF :

			PAGE
1	191-3882	FUEL FILTER LINES GROUP	50
1	191-3846	GOVERNOR CONTROL GROUP	37
1	191-2516	FUEL TANK AND MOUNTING GROUP	55
1	191-3847	BATTERY AND WIRING GROUP	86
1	191-0181	HOOD AND GUARD GROUP	194
1	191-3845	FIREWALL GROUP	254
1	191-0180	FENDER COVER GROUP	244
1	191-3829	BOTTOM GUARD GROUP	238
1	191-0179	COUNTERWEIGHT GROUP	264
1	208-2156	UPPER FRAME GROUP	272
1	191-3822	OPERATOR ARRANGEMENT	529
1	191-3848	ELECTRIC HORN GROUP	615
1	191-3830	GREASE LINES GROUP	295
1	191-0296	FILM GROUP	638

J115350 X03

CHASSIS ARRANGEMENT (191-3351 N/S)
EFFECTIVE WITH SERIAL NO. BMW00851-BMW00886
PART OF 191-0178-Page 1,2

FRAME AND BODY

CONSISTS OF :

			PAGE
1	191-3882	FUEL FILTER LINES GROUP	50
1	191-3846	GOVERNOR CONTROL GROUP	37
1	191-2516	FUEL TANK AND MOUNTING GROUP	55
1	209-8171	BATTERY AND WIRING GROUP	94
1	191-0181	HOOD AND GUARD GROUP	194
1	191-3845	FIREWALL GROUP	254
1	191-0180	FENDER COVER GROUP	244
1	191-3829	BOTTOM GUARD GROUP	238
1	191-0179	COUNTERWEIGHT GROUP	264
1	208-2156	UPPER FRAME GROUP	272
1	191-3822	OPERATOR ARRANGEMENT	529
1	191-3848	ELECTRIC HORN GROUP	615
1	191-3830	GREASE LINES GROUP	295
1	191-0296	FILM GROUP	638

J115351 X03

CHASSIS ARRANGEMENT (191-3351 N/S)
EFFECTIVE WITH SERIAL NO. BMW00887-BMW00911
PART OF 191-0178-Page 1,2

FRAME AND BODY

CONSISTS OF :

			PAGE
1	191-3882	FUEL FILTER LINES GROUP	50
1	191-3846	GOVERNOR CONTROL GROUP	37
1	191-2516	FUEL TANK AND MOUNTING GROUP	55
1	209-8171	BATTERY AND WIRING GROUP	94
1	191-0181	HOOD AND GUARD GROUP	194
1	208-2141	FIREWALL GROUP	256
1	191-0180	FENDER COVER GROUP	244
1	191-3829	BOTTOM GUARD GROUP	238
1	191-0179	COUNTERWEIGHT GROUP	264
1	208-2156	UPPER FRAME GROUP	272
1	191-3822	OPERATOR ARRANGEMENT	529
1	191-3848	ELECTRIC HORN GROUP	615
1	191-3830	GREASE LINES GROUP	295
1	191-0296	FILM GROUP	638

J115352 X03

CHASSIS ARRANGEMENT (191-3351 N/S)
EFFECTIVE WITH SERIAL NO. BMW00912-BMW01252
PART OF 191-0178-Page 1,2

FRAME AND BODY

CONSISTS OF :

			PAGE
1	191-3882	FUEL FILTER LINES GROUP	50
1	215-3348	GOVERNOR CONTROL GROUP	38
1	191-2516	FUEL TANK AND MOUNTING GROUP	55
1	209-8171	BATTERY AND WIRING GROUP	94
1	191-0181	HOOD AND GUARD GROUP	194
1	227-8562	FIREWALL GROUP	258
1	191-0180	FENDER COVER GROUP	244
1	191-3829	BOTTOM GUARD GROUP	238
1	191-0179	COUNTERWEIGHT GROUP	264
1	208-2156	UPPER FRAME GROUP	272
1	191-3822	OPERATOR ARRANGEMENT	529
1	191-3848	ELECTRIC HORN GROUP	615
1	191-3830	GREASE LINES GROUP	295
1	191-0296	FILM GROUP	638

J126647 X04

CHASSIS ARRANGEMENT (191-3351 N/S)
EFFECTIVE WITH SERIAL NO. BMW01253-BMW01340
PART OF 191-0178-Page 1,2

FRAME AND BODY

CONSISTS OF :

			PAGE
1	191-3882	FUEL FILTER LINES GROUP	50
1	215-3348	GOVERNOR CONTROL GROUP	38
1	240-7600	FUEL TANK AND MOUNTING GROUP	56
1	209-8171	BATTERY AND WIRING GROUP	94
1	191-0181	HOOD AND GUARD GROUP	194
1	227-8562	FIREWALL GROUP	258
1	191-0180	FENDER COVER GROUP	244
1	191-3829	BOTTOM GUARD GROUP	238
1	191-0179	COUNTERWEIGHT GROUP	264
1	208-2156	UPPER FRAME GROUP	272
1	191-3822	OPERATOR ARRANGEMENT	529
1	191-3848	ELECTRIC HORN GROUP	615
1	191-3830	GREASE LINES GROUP	295
1	191-0296	FILM GROUP	638

J128723 X05

CHASSIS ARRANGEMENT (191-3351 N/S)
EFFECTIVE WITH SERIAL NO. BMW01341-
PART OF 191-0178-Page 1,2

FRAME AND BODY

CONSISTS OF :

			PAGE
1	216-5588	RADIATOR GROUP	22
1	208-1092	AIR CLEANER GROUP	29
1	216-5589	MUFFLER GROUP	35
1	216-8439	BOTTOM GUARD GROUP	240
1	200-5484	HOOD AND GUARD GROUP	206
1	200-5485	FENDER COVER GROUP	248
1	200-5483	COUNTERWEIGHT GROUP	268
1	215-7896	FIREWALL GROUP	260
1	221-1501	LOWER FRAME LINER GROUP	278
1	216-8437	UPPER FRAME LINER GROUP	277
1	216-8438	OPERATOR PLATFORM LINER GROUP	576

J114579 X02

SUPER SOUND SUPPRESSION ARRANGEMENT (216-8062 N/S) -CANOPY
EFFECTIVE WITH SERIAL NO. BMW000001-BMW01252
AN ATTACHMENT

FRAME AND BODY

CONSISTS OF :

			PAGE
1	216-5588	RADIATOR GROUP	22
1	208-1092	AIR CLEANER GROUP	29
1	216-5589	MUFFLER GROUP	35
1	216-8439	BOTTOM GUARD GROUP	240
1	200-5484	HOOD AND GUARD GROUP	206
1	200-5485	FENDER COVER GROUP	248
1	200-5483	COUNTERWEIGHT GROUP	268
1	227-8564	FIREWALL GROUP	262
1	221-1501	LOWER FRAME LINER GROUP	278
1	216-8437	UPPER FRAME LINER GROUP	277
1	216-8438	OPERATOR PLATFORM LINER GROUP	576

J126709 X03

SUPER SOUND SUPPRESSION ARRANGEMENT (216-8062 N/S) -CANOPY
EFFECTIVE WITH SERIAL NO. BMW01253-
AN ATTACHMENT

FRAME AND BODY

CONSISTS OF :

			PAGE
1	216-8440	CAB ARRANGEMENT	528
1	216-5588	RADIATOR GROUP	22
1	208-1092	AIR CLEANER GROUP	29
1	216-5589	MUFFLER GROUP	35
1	216-8439	BOTTOM GUARD GROUP	240
1	200-5486	HOOD AND GUARD GROUP	218
1	200-5483	COUNTERWEIGHT GROUP	268
1	215-7896	FIREWALL GROUP	260
1	221-1501	LOWER FRAME LINER GROUP	278
1	216-8437	UPPER FRAME LINER GROUP	277
1	216-8438	OPERATOR PLATFORM LINER GROUP	576

J114564 X02

SUPER SOUND SUPPRESSION ARRANGEMENT (216-8063 N/S) -CAB
EFFECTIVE WITH SERIAL NO. BMW00001-BMW01252
AN ATTACHMENT

FRAME AND BODY

CONSISTS OF :

			PAGE
1	216-8440	CAB ARRANGEMENT	528
1	216-5588	RADIATOR GROUP	22
1	208-1092	AIR CLEANER GROUP	29
1	216-5589	MUFFLER GROUP	35
1	216-8439	BOTTOM GUARD GROUP	240
1	200-5486	HOOD AND GUARD GROUP	218
1	200-5483	COUNTERWEIGHT GROUP	268
1	227-8564	FIREWALL GROUP	262
1	221-1501	LOWER FRAME LINER GROUP	278
1	216-8437	UPPER FRAME LINER GROUP	277
1	216-8438	OPERATOR PLATFORM LINER GROUP	576

J126754 X03

SUPER SOUND SUPPRESSION ARRANGEMENT (216-8063 N/S) -CAB
EFFECTIVE WITH SERIAL NO. BMW01253-
AN ATTACHMENT

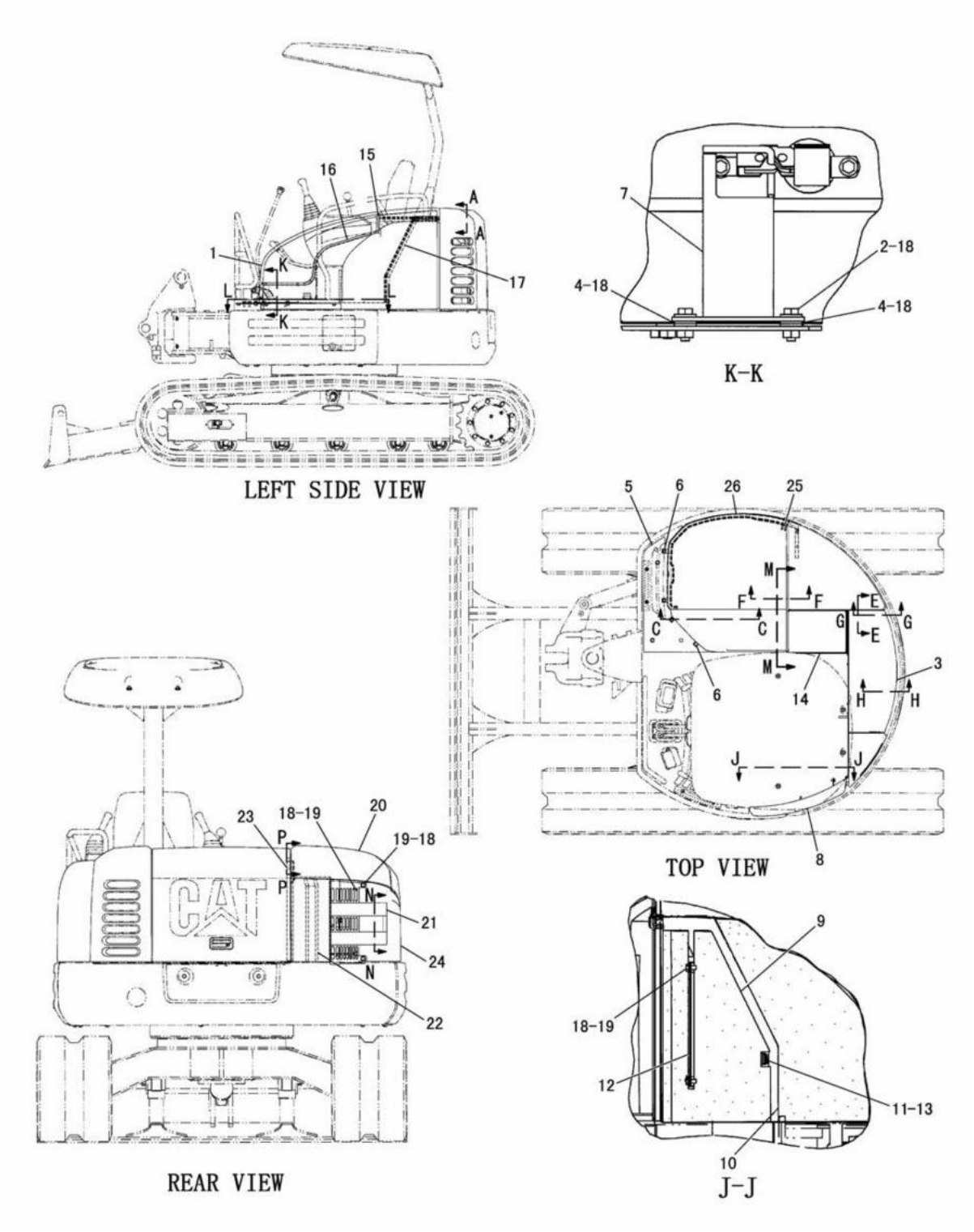

HOOD AND GUARD (191-0181 N/S) -PART 1 OF 2
EFFECTIVE WITH SERIAL NO. BMW00001-BMW01358
PART OF 191-3351-Page 184,185,186,187,188,189

FRAME AND BODY

NOTE	No.	PART NO.	QTY.	PART NAME
Y	1	191-0198	1	COVER AS
	2	8T-4195	2	BOLT(M10×1.5)
Y	3	191-0196	1	HOOD GROUP
B	4	7X-7729	4	WASHER(3mm THICK)
	5	191-0245	1	PLATE AS
	6	8T-3490	13	NUT(M10×1.5)(WELD)
	7	191-0233	1	STRIKER AS
	8	191-0299	1	COVER AS
D		5P-7483		SEAL---0.6m
	9	200-5525	1	INSULATION
	10	200-5526	1	INSULATION
	11	140-3201	1	GROMMET
	12	191-0297	1	BRACKET
	13	191-0298	1	BRACKET
	14	191-0202	1	COVER AS
D	15	5P-5643		SEAL---0.322m
D	16	5P-5643		SEAL---0.955m
D	17	5P-8309		SEAL---1.309m
	18	7X-7729	12	WASHER
	19	8T-4137	6	BOLT(M10×1.5)
Y	20	191-0206	1	COVER GROUP
	21	191-0208	1	COVER AS
	22	191-0239	1	INSULATION
D	23	5P-5643		SEAL---0.7m
	24	191-0200	1	COVER AS
		8T-3490	4	NUT(M10×1.5)(WELD)
	25	140-3201	1	GROMMET
E	26	3E-6600		SEAL---121.5cm

B-USE AS REQUIRED
D-ORDER BY THE m
E-ORDER BY THE cm

Y-SEE SEPARATE ILLUSTRATION

J128907 E08

HOOD AND GUARD (191-0181 N/S) -PART 1 OF 2

EFFECTIVE WITH SERIAL NO. BMW00001-BMW01358
PART OF 191-3351-Page 184,185,186,187,188,189
191-0198-Page 226 191-0196-Page 228, 229 191-0206-Page 234, 235

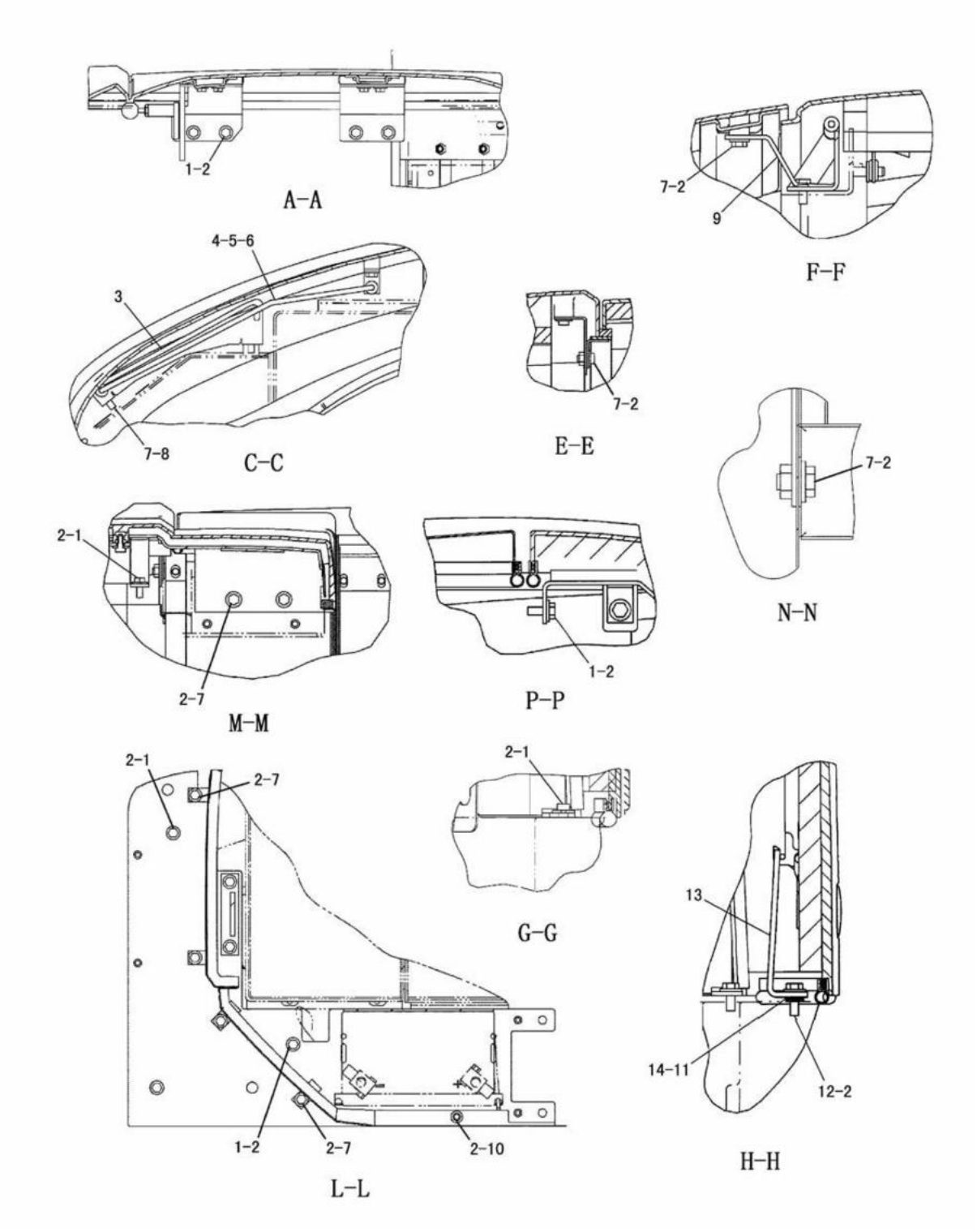

HOOD AND GUARD (191-0181 N/S) -PART 2 OF 2
EFFECTIVE WITH SERIAL NO. BMW000001-BMW01358
PART OF 191-3351-Page 184,185,186,187,188,189

FRAME AND BODY

NOTE	No.	PART NO.	QTY.	PART NAME	NOTE	No.	PART NO.	QTY.	PART NAME
	1	8T-4136	11	BOLT(M10×1.5)					
	2	7X-7729	25	WASHER					
	3	191-0234	1	PLATE					
	4	5P-4116	2	WASHER					
	5	3B-4610	2	PIN					
	6	191-0235	1	ROD AS					
	7	8T-4137	13	BOLT(M10×1.5)					
	8	8T-4121	2	WASHER					
	9	223-6156	1	HINGE AS					
	10	7X-0474	1	BOLT(M10×1.5)					
	11	191-0359	3	SHIM(1.6mm THICK)					
	12	8T-4195	2	BOLT(M10×1.5)					
	13	191-0232	1	HOOK AS					
B	14	191-0359	2	SHIM(1.6mm THICK)					

B-USE AS REQUIRED

J128908 E08

HOOD AND GUARD (191-0181 N/S) -PART 2 OF 2
EFFECTIVE WITH SERIAL NO. BMW00001-BMW01358
PART OF 191-3351-Page 184,185,186,187,188,189

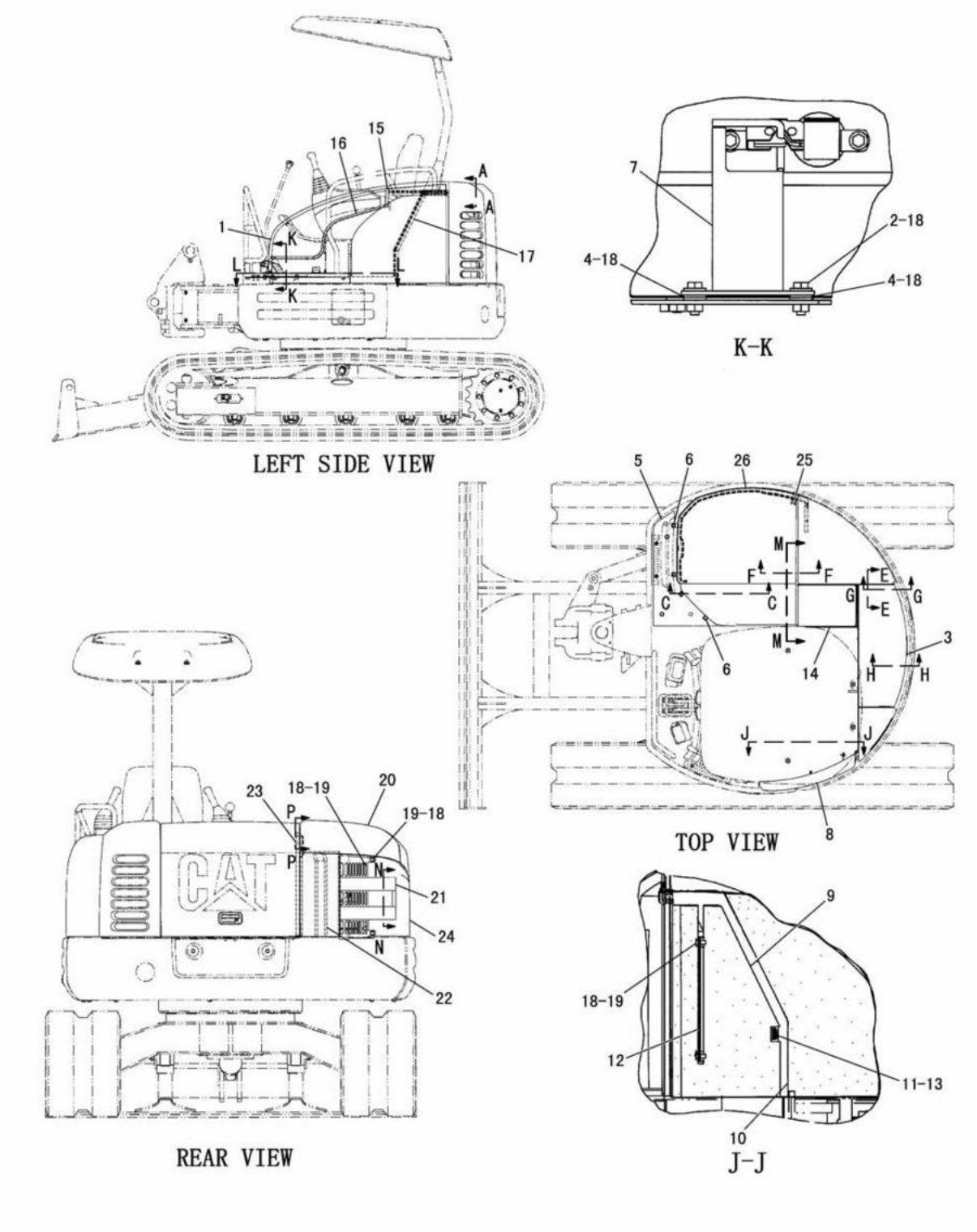

HOOD AND GUARD (191-0181 N/S) -PART 1 OF 2
EFFECTIVE WITH SERIAL NO. BMW01359-BMW01471
PART OF 191-3351-Page 184,185,186,187,188,189

FRAME AND BODY

NOTE	No.	PART NO.	QTY.	PART NAME	NOTE	No.	PART NO.	QTY.	PART NAME
Y	1	191-0198	1	COVER AS					
	2	8T-4195	2	BOLT(M10×1.5)					
CY	3	240-7590	1	HOOD GROUP					
B	4	7X-7729	4	WASHER(3mm THICK)					
	5	191-0245	1	PLATE AS					
	6	8T-3490	13	NUT(M10×1.5)(WELD)					
	7	191-0233	1	STRIKER AS					
	8	191-0299	1	COVER AS					
D		5P-7483		SEAL---0.6m					
	9	200-5525	1	INSULATION					
	10	200-5526	1	INSULATION					
	11	140-3201	1	GROMMET					
	12	191-0297	1	BRACKET					
	13	191-0298	1	BRACKET					
	14	191-0202	1	COVER AS					
D	15	5P-5643		SEAL---0.322m					
D	16	5P-5643		SEAL---0.955m					
D	17	5P-8309		SEAL---1.309m					
	18	7X-7729	12	WASHER					
	19	8T-4137	6	BOLT(M10×1.5)					
Y	20	191-0206	1	COVER GROUP					
	21	191-0208	1	COVER AS					
	22	191-0239	1	INSULATION					
D	23	5P-5643		SEAL---0.7m					
	24	191-0200	1	COVER AS					
		8T-3490	4	NUT(M10×1.5)(WELD)					
	25	140-3201	1	GROMMET					
E	26	3E-6600		SEAL---121.5cm					

B-USE AS REQUIRED
C-INDICATES CHANGE
D-ORDER BY THE m
E-ORDER BY THE cm
Y-SEE SEPARATE ILLUSTRATION

J128726 E09

HOOD AND GUARD (191-0181 N/S) -PART 1 OF 2

EFFECTIVE WITH SERIAL NO. BMW01359-BMW01471
PART OF 191-3351-Page 184,185,186,187,188,189
191-0198-Page 226 240-7590-Page 230 191-0206-Page 234, 235

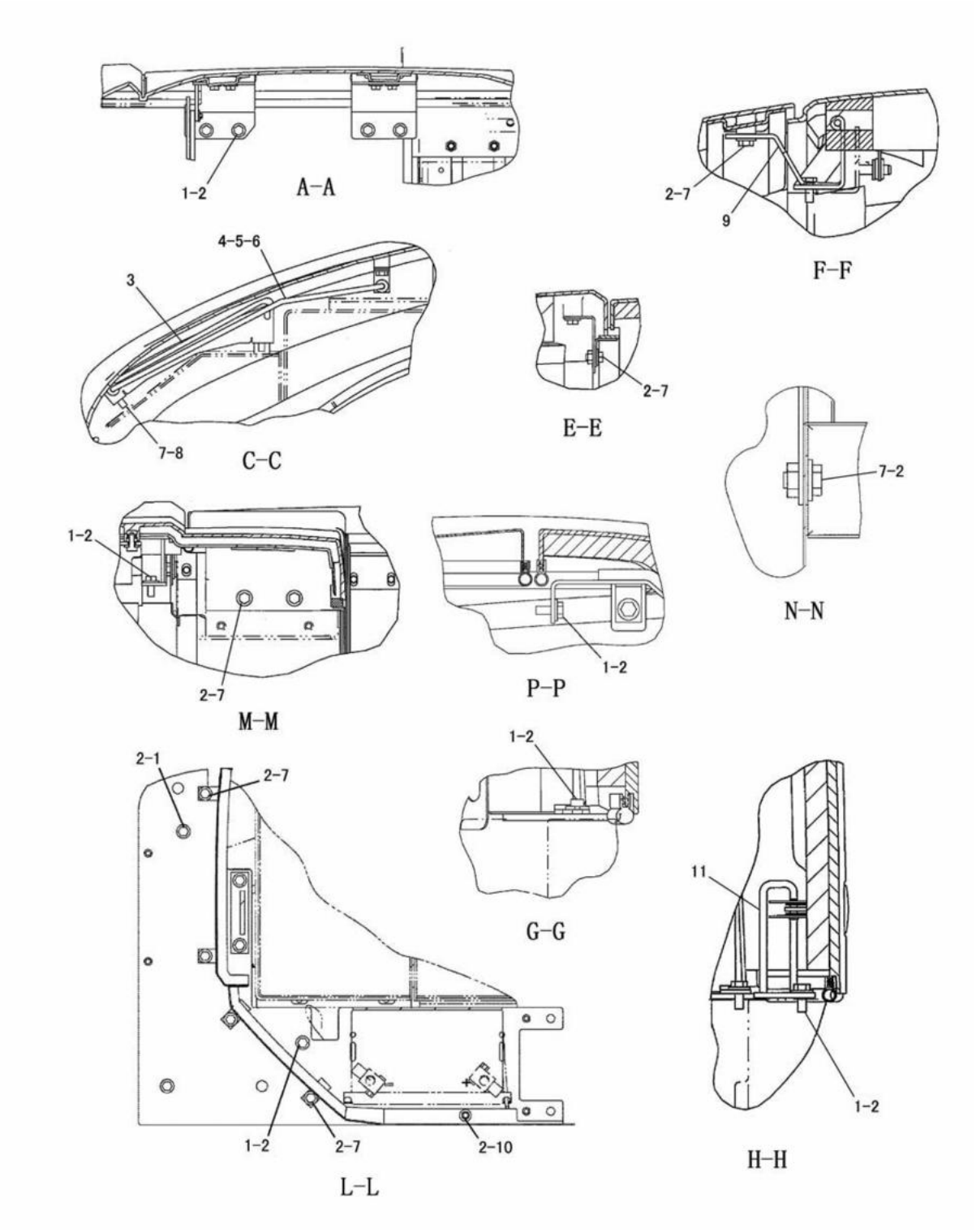

J128727 E09

HOOD AND GUARD (191-0181 N/S) -PART 2 OF 2
EFFECTIVE WITH SERIAL NO. BMW01359-BMW01471
PART OF 191-3351-Page 184,185,186,187,188,189

FRAME AND BODY

NOTE	No.	PART NO.	QTY.	PART NAME	NOTE	No.	PART NO.	QTY.	PART NAME
C	1	8T-4136	13	BOLT(M10×1.5)					
	2	7X-7729	25	WASHER					
	3	191-0234	1	PLATE					
	4	5P-4116	2	WASHER					
	5	3B-4610	2	PIN					
	6	191-0235	1	ROD AS					
	7	8T-4137	13	BOLT(M10×1.5)					
	8	8T-4121	2	WASHER					
C	9	240-8772	1	HINGE AS					
	10	7X-0474	1	BOLT(M10×1.5)					
C	11	240-7591	1	STRIKER AS					

C-INDICATES CHANGE

J128727 E09

HOOD AND GUARD (191-0181 N/S) -PART 2 OF 2
EFFECTIVE WITH SERIAL NO. BMW01359-BMW01471
PART OF 191-3351-Page 184,185,186,187,188,189

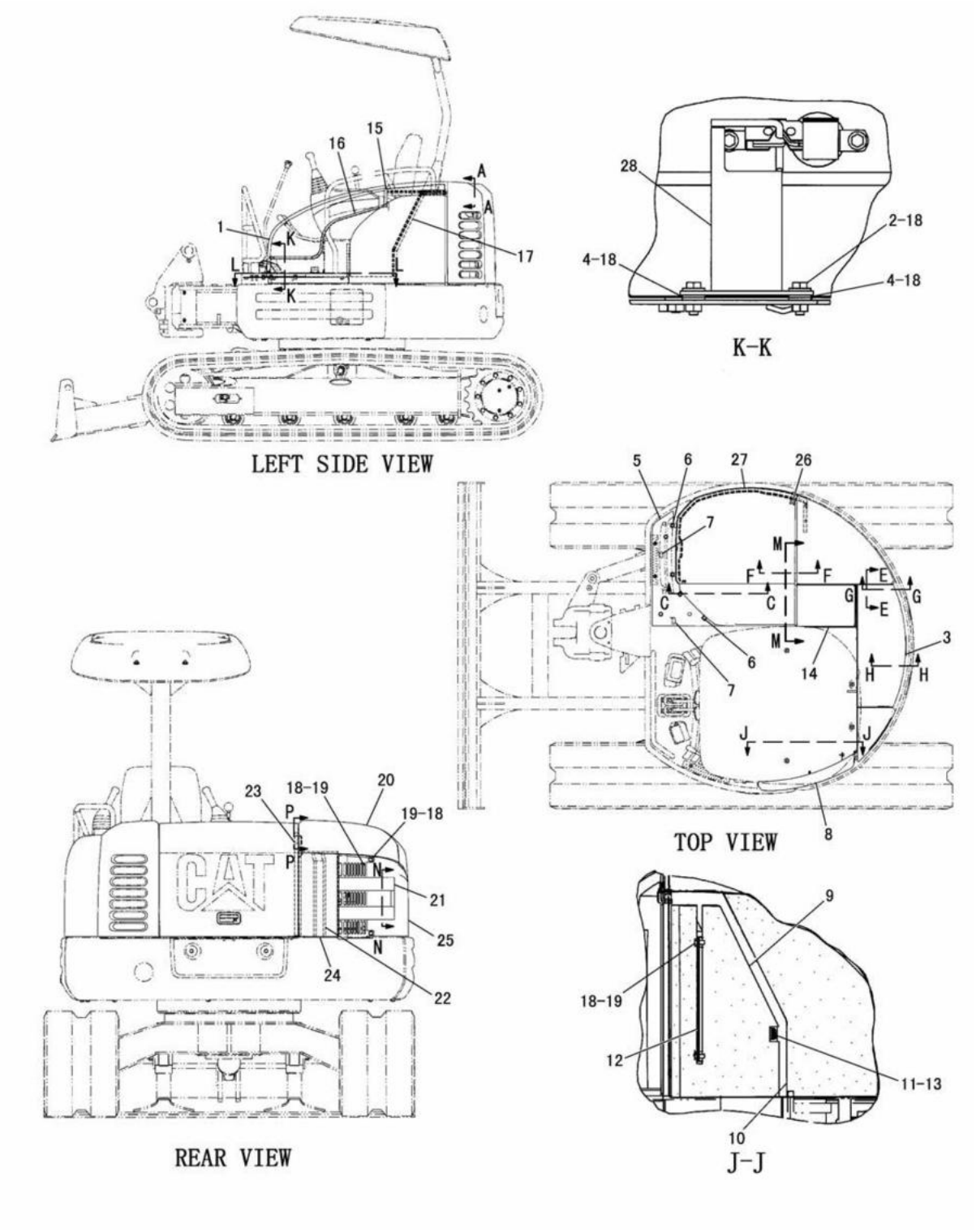

HOOD AND GUARD (191-0181 N/S) -PART 1 OF 2
EFFECTIVE WITH SERIAL NO. BMW01472-
PART OF 191-3351-Page 184,185,186,187,188,189

FRAME AND BODY

NOTE	No.	PART NO.	QTY.	PART NAME
Y	1	191-0198	1	COVER AS
	2	8T-4195	2	BOLT(M10×1.5)
Y	3	240-7590	1	HOOD GROUP
B	4	7X-7729	4	WASHER(3mm THICK)
	5	191-0245	1	PLATE AS
	6	8T-3490	13	NUT(M10×1.5)(WELD)
C	7	7T-1099	3	LINK
C	8	200-5459	1	COVER AS
D		5P-7483		SEAL---0.556m
	9	200-5525	1	INSULATION
C	10	200-5527	1	INSULATION
	11	140-3201	1	GROMMET
	12	191-0297	1	BRACKET
	13	191-0298	1	BRACKET
	14	191-0202	1	COVER AS
D	15	5P-5643		SEAL---0.322m
D	16	5P-5643		SEAL---0.955m
D	17	5P-8309		SEAL---1.309m
	18	7X-7729	12	WASHER
	19	8T-4137	6	BOLT(M10×1.5)
Y	20	191-0206	1	COVER GROUP
	21	191-0208	1	COVER AS
	22	191-0239	1	INSULATION
D	23	5P-5643		SEAL---0.61m
CD	24	5P-5672		SEAL---0.02m
	25	191-0200	1	COVER AS
		8T-3490	4	NUT(M10×1.5)(WELD)
	26	140-3201	1	GROMMET
E	27	3E-6600		SEAL---121.5cm
	28	191-0233	1	STRIKER AS

NOTE	No.	PART NO.	QTY.	PART NAME

B-USE AS REQUIRED
C-INDICATES CHANGE
D-ORDER BY THE m
E-ORDER BY THE cm
Y-SEE SEPARATE ILLUSTRATION

J133371 E10

HOOD AND GUARD (191-0181 N/S) -PART 1 OF 2

EFFECTIVE WITH SERIAL NO. BMW01472-
PART OF 191-3351-Page 184,185,186,187,188,189
191-0198-Page 226 240-7590-Page 230 191-0206-Page 234, 235

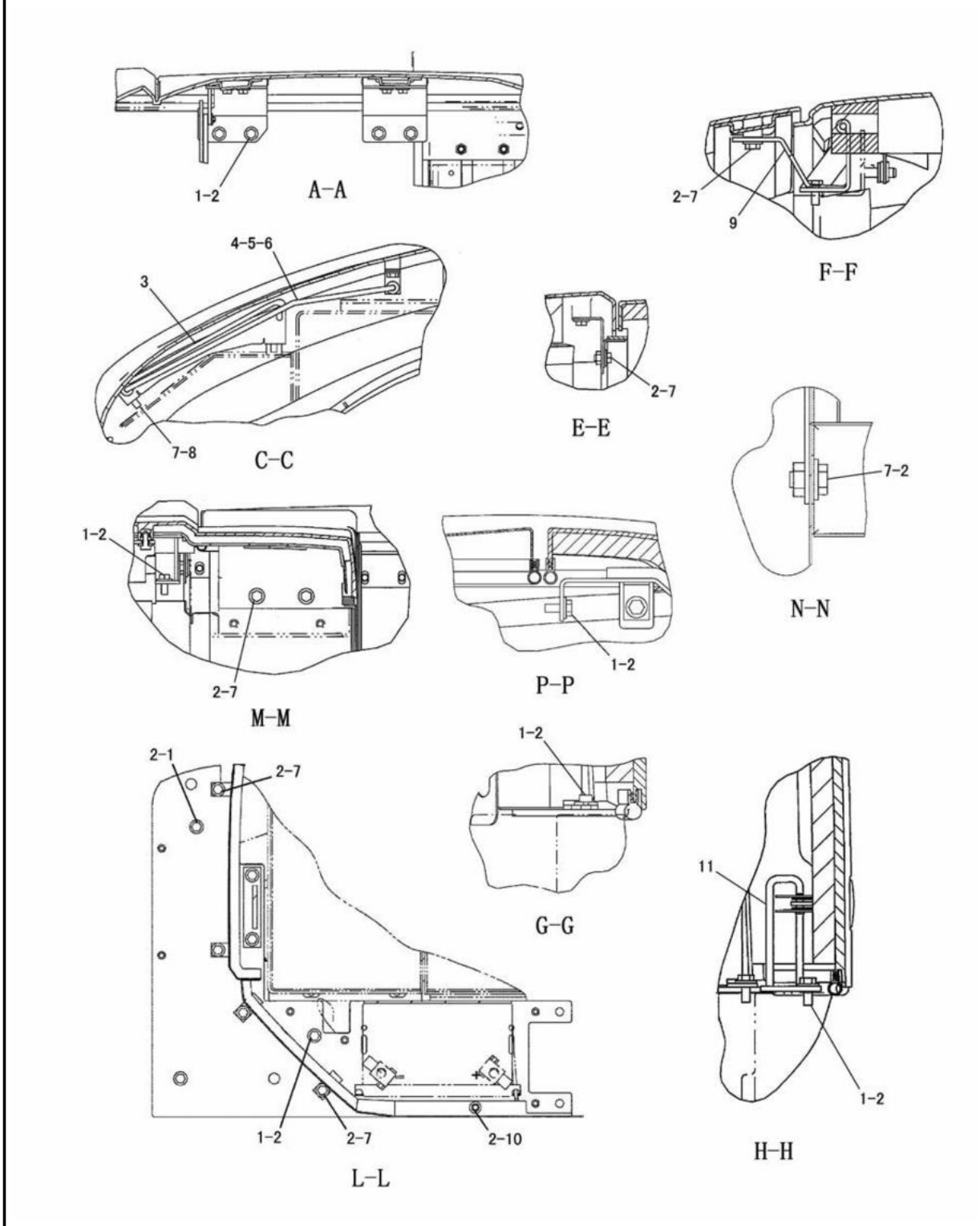

HOOD AND GUARD (191-0181 N/S) -PART 2 OF 2
EFFECTIVE WITH SERIAL NO. BMW01472-
PART OF 191-3351-Page 184,185,186,187,188,189

FRAME AND BODY

NOTE	No.	PART NO.	QTY.	PART NAME	NOTE	No.	PART NO.	QTY.	PART NAME
	1	8T-4136	13	BOLT(M10×1.5)					
	2	7X-7729	25	WASHER					
	3	191-0234	1	PLATE					
	4	5P-4116	2	WASHER					
	5	3B-4610	2	PIN					
	6	191-0235	1	ROD AS					
	7	8T-4137	13	BOLT(M10×1.5)					
	8	8T-4121	2	WASHER					
	9	240-8772	1	HINGE AS					
	10	7X-0474	1	BOLT(M10×1.5)					
	11	240-7591	1	STRIKER AS					

J133372 E10

HOOD AND GUARD (191-0181 N/S) -PART 2 OF 2
EFFECTIVE WITH SERIAL NO. BMW01472-
PART OF 191-3351-Page 184,185,186,187,188,189

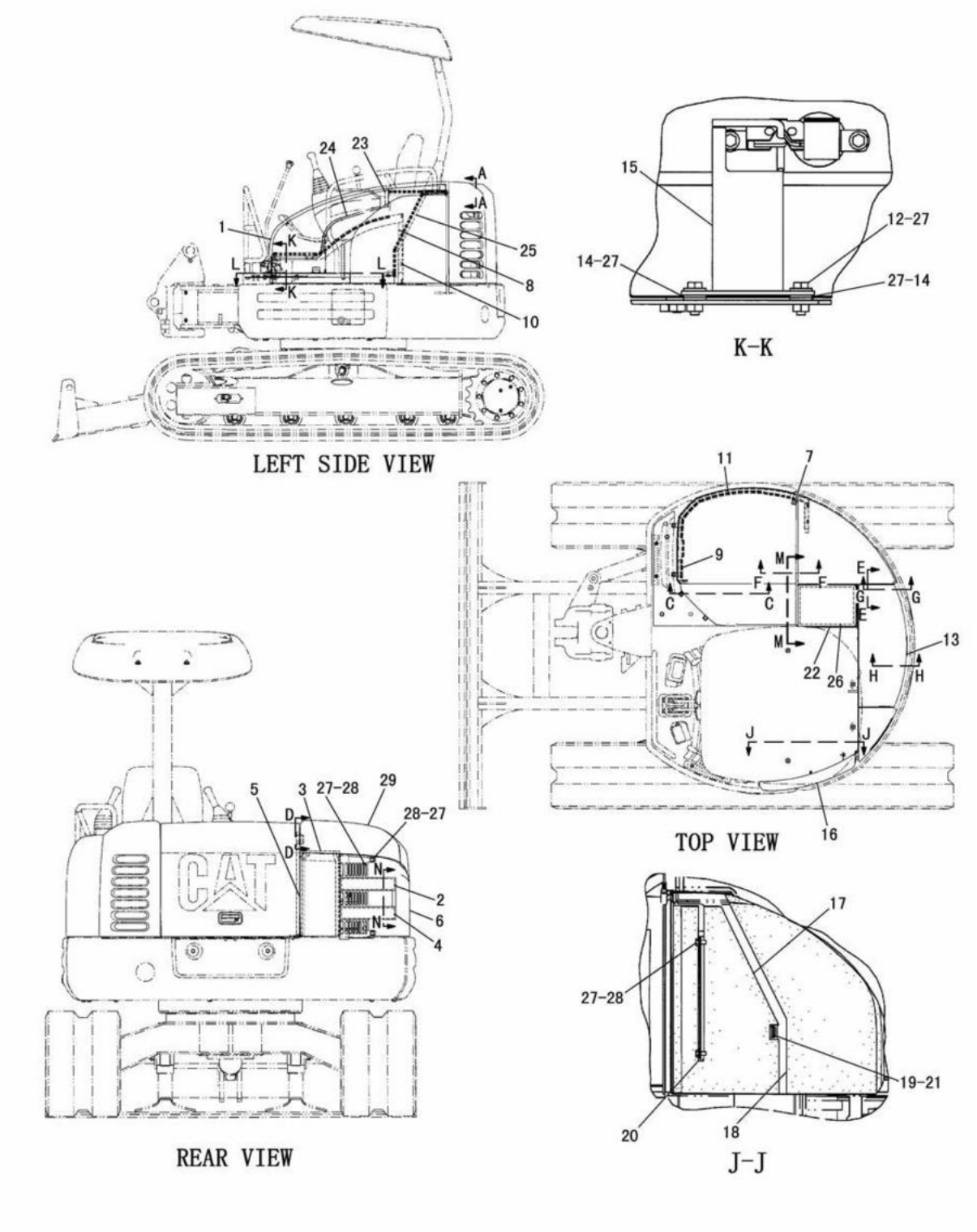

HOOD AND GUARD (200-5484 N/S) -SOUND SUPPRESSION-PART 1 OF 2
EFFECTIVE WITH SERIAL NO. BMW00001-BMW01358
PART OF 216-8062-Page 190,191
AN ATTACHMENT

FRAME AND BODY

NOTE	No.	PART NO.	QTY.	PART NAME	NOTE	No.	PART NO.	QTY.	PART NAME
Y	1	200-5494	1	COVER GROUP					
	2	200-5498	1	COVER AS					
	3	200-5511	1	INSULATION					
	4	200-5543	2	INSULATION					
D	5	5P-5643		SEAL---0.674m					
	6	200-5495	1	COVER AS(FRONT)					
	7	140-3201	1	GROMMET					
	8	200-5505	1	INSULATION					
	9	200-5506	1	INSULATION					
	10	8T-3490	4	NUT(M10×1.5)(WELD)					
E	11	3E-6600		SEAL---121.5cm					
	12	8T-4195	2	BOLT(M10×1.5)					
Y	13	200-5493	1	HOOD GROUP					
B	14	7X-7729	4	WASHER(3mm THICK)					
	15	191-0233	1	STRIKER AS					
	16	191-0299	1	COVER AS(LH)					
D		5P-7483		SEAL---0.6m					
	17	200-5525	1	INSULATION					
	18	200-5526	1	INSULATION					
	19	140-3201	1	GROMMET					
	20	191-0297	1	BRACKET					
	21	191-0298	1	BRACKET					
	22	200-5496	1	COVER AS					
D	23	5P-5643		SEAL---0.322m					
D	24	5P-5643		SEAL---0.955m					
D	25	5P-8309		SEAL---1.309m					
	26	200-5507	1	INSULATION					
	27	7X-7729	12	WASHER					
	28	8T-4137	6	BOLT(M10×1.5)					
Y	29	200-5497	1	COVER GROUP					

B-USE AS REQUIRED
D-ORDER BY THE m
E-ORDER BY THE cm

Y-SEE SEPARATE ILLUSTRATION

J126711 E01

HOOD AND GUARD (200-5484 N/S) -SOUND SUPPRESSION-PART 1 OF 2

EFFECTIVE WITH SERIAL NO. BMW00001-BMW01358
PART OF 216-8062-Page 190,191
200-5494-Page 227 200-5493-Page 231, 232 200-5497-Page 236, 237
AN ATTACHMENT

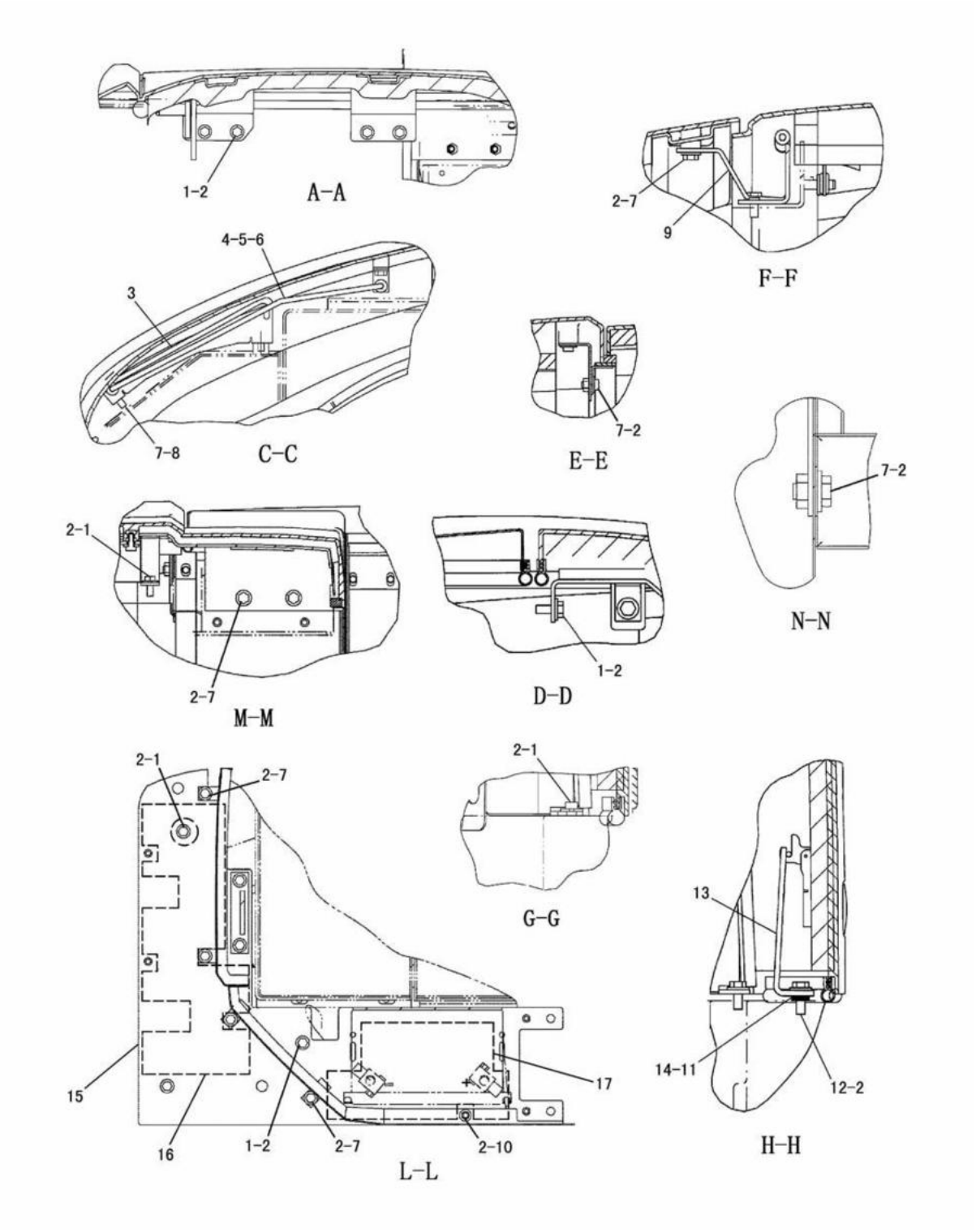

J126712 E01

HOOD AND GUARD (200-5484 N/S) -SOUND SUPPRESSION-PART 2 OF 2
EFFECTIVE WITH SERIAL NO. BMW00001-BMW01358
PART OF 216-8062-Page 190,191
AN ATTACHMENT

FRAME AND BODY

NOTE	No.	PART NO.	QTY.	PART NAME	NOTE	No.	PART NO.	QTY.	PART NAME
	1	8T-4136	11	BOLT(M10×1.5)					
	2	7X-7729	25	WASHER					
	3	191-0234	1	PLATE					
	4	5P-4116	2	WASHER					
	5	3B-4610	2	PIN					
	6	191-0235	1	ROD AS					
	7	8T-4137	13	BOLT(M10×1.5)					
	8	8T-4121	2	WASHER					
	9	223-6156	1	HINGE AS					
	10	7X-0474	1	BOLT(M10×1.5)					
	11	191-0359	3	SHIM(1.6mm THICK)					
	12	8T-4195	2	BOLT(M10×1.5)					
	13	191-0232	1	HOOK AS					
B	14	191-0359	2	SHIM(1.6mm THICK)					
	15	200-5500	1	PLATE AS					
		191-0245	1	PLATE AS					
		8T-3490	13	NUT(M10×1.5)(WELD)					
	16	200-5513	1	INSULATION					
	17	200-5514	1	INSULATION					

B-USE AS REQUIRED

J126712 E01

HOOD AND GUARD (200-5484 N/S) -SOUND SUPPRESSION-PART 2 OF 2
EFFECTIVE WITH SERIAL NO. BMW00001-BMW01358
PART OF 216-8062-Page 190,191
AN ATTACHMENT

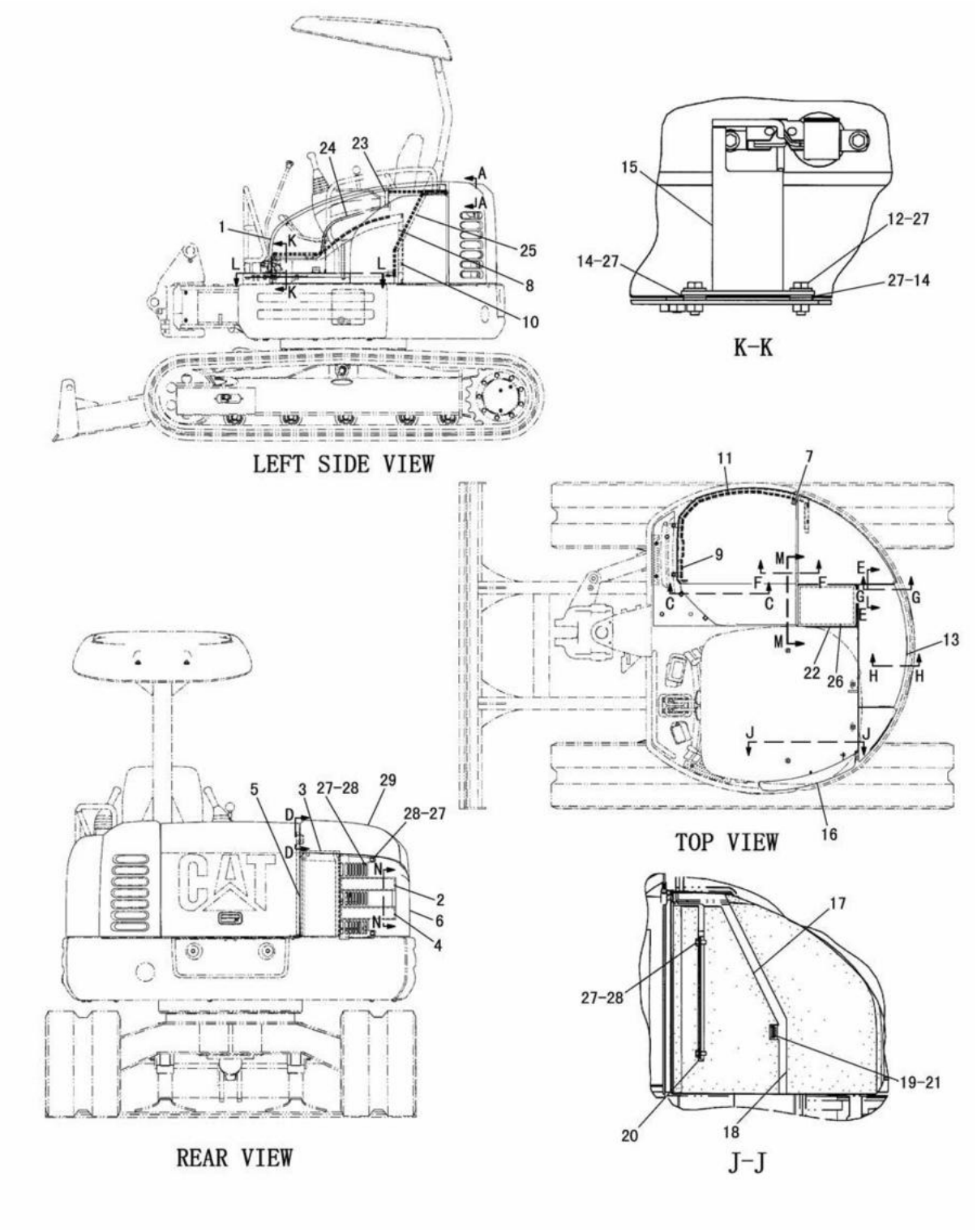

HOOD AND GUARD (200-5484 N/S) -SOUND SUPPRESSION-PART 1 OF 2
EFFECTIVE WITH SERIAL NO. BMW01359-BMW01424
PART OF 216-8062-Page 190,191
AN ATTACHMENT

FRAME AND BODY

NOTE	No.	PART NO.	QTY.	PART NAME
Y	1	200-5494	1	COVER GROUP
	2	200-5498	1	COVER AS
	3	200-5511	1	INSULATION
	4	200-5543	2	INSULATION
D	5	5P-5643		SEAL---0.674m
	6	200-5495	1	COVER AS(FRONT)
	7	140-3201	1	GROMMET
	8	200-5505	1	INSULATION
	9	200-5506	1	INSULATION
	10	8T-3490	4	NUT(M10×1.5)(WELD)
E	11	3E-6600		SEAL---121.5cm
	12	8T-4195	2	BOLT(M10×1.5)
CY	13	240-7592	1	HOOD GROUP
B	14	7X-7729	4	WASHER(3mm THICK)
	15	191-0233	1	STRIKER AS
	16	191-0299	1	COVER AS(LH)
D		5P-7483		SEAL---0.6m
	17	200-5525	1	INSULATION
	18	200-5526	1	INSULATION
	19	140-3201	1	GROMMET
	20	191-0297	1	BRACKET
	21	191-0298	1	BRACKET
	22	200-5496	1	COVER AS
D	23	5P-5643		SEAL---0.322m
D	24	5P-5643		SEAL---0.955m
D	25	5P-8309		SEAL---1.309m
	26	200-5507	1	INSULATION
	27	7X-7729	12	WASHER
	28	8T-4137	6	BOLT(M10×1.5)
Y	29	200-5497	1	COVER GROUP

B-USE AS REQUIRED
C-INDICATES CHANGE
D-ORDER BY THE m
E-ORDER BY THE cm
Y-SEE SEPARATE ILLUSTRATION

J128777 E02

HOOD AND GUARD (200-5484 N/S) -SOUND SUPPRESSION-PART 1 OF 2

EFFECTIVE WITH SERIAL NO. BMW01359-BMW01424
PART OF 216-8062-Page 190,191
200-5494-Page 227 240-7592-Page 233 200-5497-Page 236, 237
AN ATTACHMENT

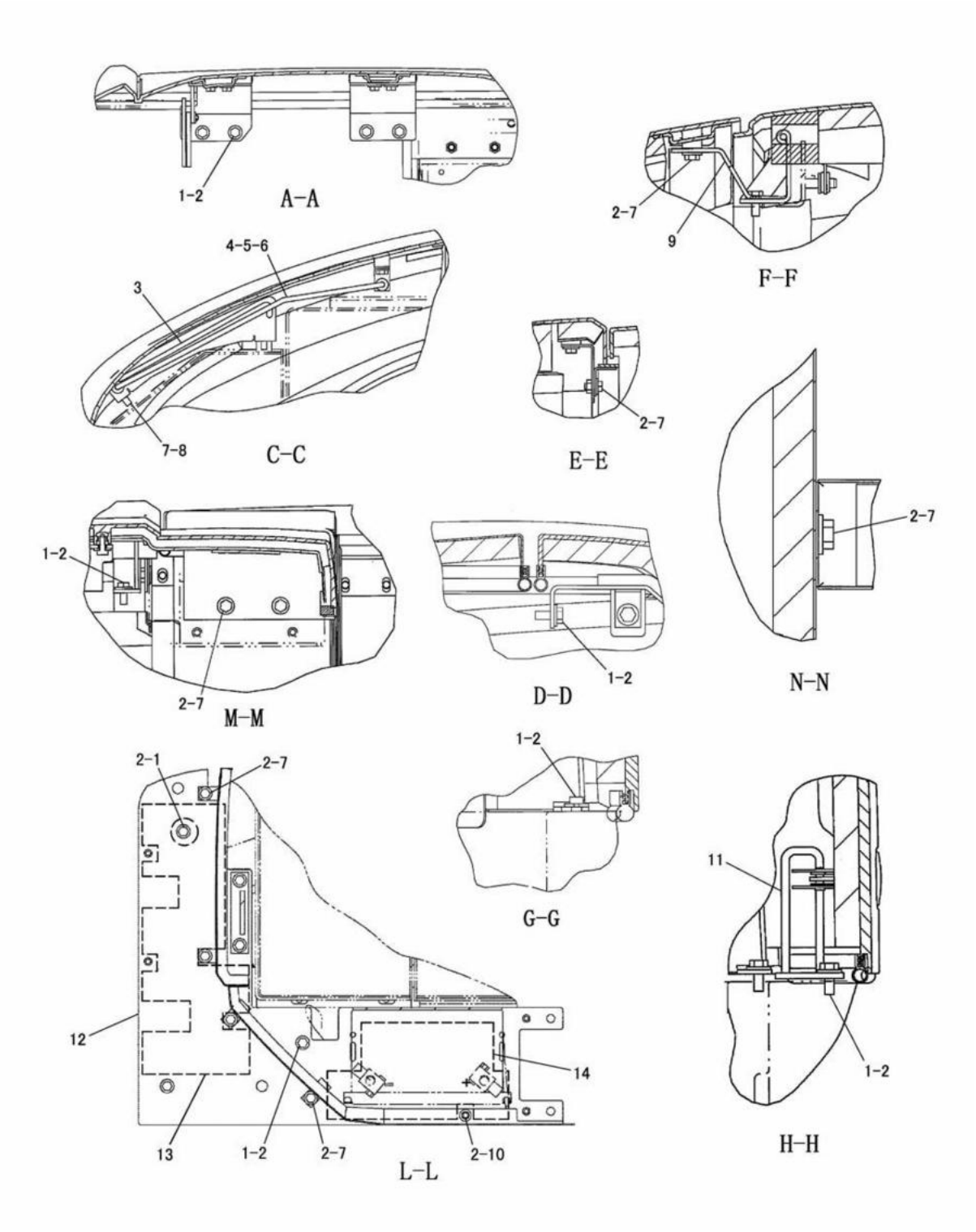

J128778 E02

HOOD AND GUARD (200-5484 N/S) -SOUND SUPPRESSION-PART 2 OF 2
EFFECTIVE WITH SERIAL NO. BMW01359-BMW01424
PART OF 216-8062-Page 190,191
AN ATTACHMENT

FRAME AND BODY

NOTE	No.	PART NO.	QTY.	PART NAME	NOTE	No.	PART NO.	QTY.	PART NAME
C	1	8T-4136	13	BOLT(M10×1.5)					
	2	7X-7729	25	WASHER					
	3	191-0234	1	PLATE					
	4	5P-4116	2	WASHER					
	5	3B-4610	2	PIN					
	6	191-0235	1	ROD AS					
	7	8T-4137	13	BOLT(M10×1.5)					
	8	8T-4121	2	WASHER					
C	9	240-8772	1	HINGE AS					
	10	7X-0474	1	BOLT(M10×1.5)					
C	11	240-7591	1	STRIKER AS					
	12	200-5500	1	PLATE AS					
		191-0245	1	PLATE AS					
		8T-3490	13	NUT(M10×1.5)(WELD)					
	13	200-5513	1	INSULATION					
	14	200-5514	1	INSULATION					

C-INDICATES CHANGE

J128778 E02

HOOD AND GUARD (200-5484 N/S) -SOUND SUPPRESSION-PART 2 OF 2
EFFECTIVE WITH SERIAL NO. BMW01359-BMW01424
PART OF 216-8062-Page 190,191
AN ATTACHMENT

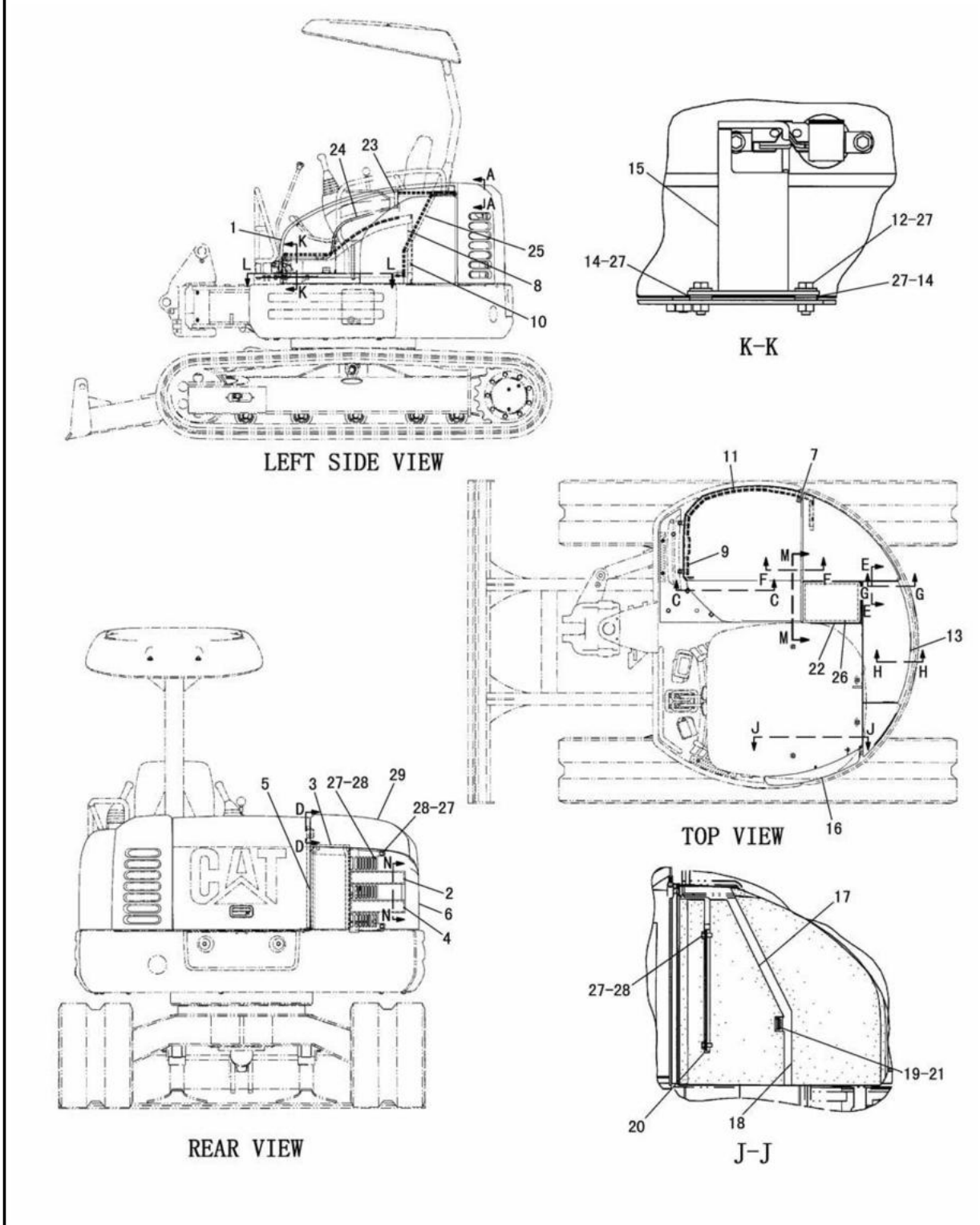

HOOD AND GUARD (200-5484 N/S) -SOUND SUPPRESSION-PART 1 OF 2
EFFECTIVE WITH SERIAL NO. BMW01425-
PART OF 216-8062-Page 190,191
AN ATTACHMENT

FRAME AND BODY

NOTE	No.	PART NO.	QTY.	PART NAME	NOTE	No.	PART NO.	QTY.	PART NAME
Y	1	200-5494	1	COVER GROUP					
	2	200-5498	1	COVER AS					
	3	200-5511	1	INSULATION					
	4	200-5543	2	INSULATION					
D	5	5P-5643		SEAL---0.674m					
	6	200-5495	1	COVER AS(FRONT)					
	7	140-3201	1	GROMMET					
	8	200-5505	1	INSULATION					
	9	200-5506	1	INSULATION					
	10	8T-3490	4	NUT(M10×1.5)(WELD)					
E	11	3E-6600		SEAL---121.5cm					
	12	8T-4195	2	BOLT(M10×1.5)					
Y	13	240-7592	1	HOOD GROUP					
B	14	7X-7729	4	WASHER(3mm THICK)					
	15	191-0233	1	STRIKER AS					
C	16	200-5459	1	COVER AS					
D		5P-7483		SEAL---0.6m					
	17	200-5525	1	INSULATION					
	18	200-5526	1	INSULATION					
	19	140-3201	1	GROMMET					
	20	191-0297	1	BRACKET					
	21	191-0298	1	BRACKET					
	22	200-5496	1	COVER AS					
D	23	5P-5643		SEAL---0.322m					
D	24	5P-5643		SEAL---0.955m					
D	25	5P-8309		SEAL---1.309m					
	26	200-5507	1	INSULATION					
	27	7X-7729	12	WASHER					
	28	8T-4137	6	BOLT(M10×1.5)					
Y	29	200-5497	1	COVER GROUP					

B-USE AS REQUIRED
C-INDICATES CHANGE
D-ORDER BY THE m
E-ORDER BY THE cm
Y-SEE SEPARATE ILLUSTRATION

J131071 E03

HOOD AND GUARD (200-5484 N/S) -SOUND SUPPRESSION-PART 1 OF 2

EFFECTIVE WITH SERIAL NO. BMW01425-
PART OF 216-8062-Page 190,191
200-5494-Page 227 240-7592-Page 233 200-5497-Page 236, 237
AN ATTACHMENT

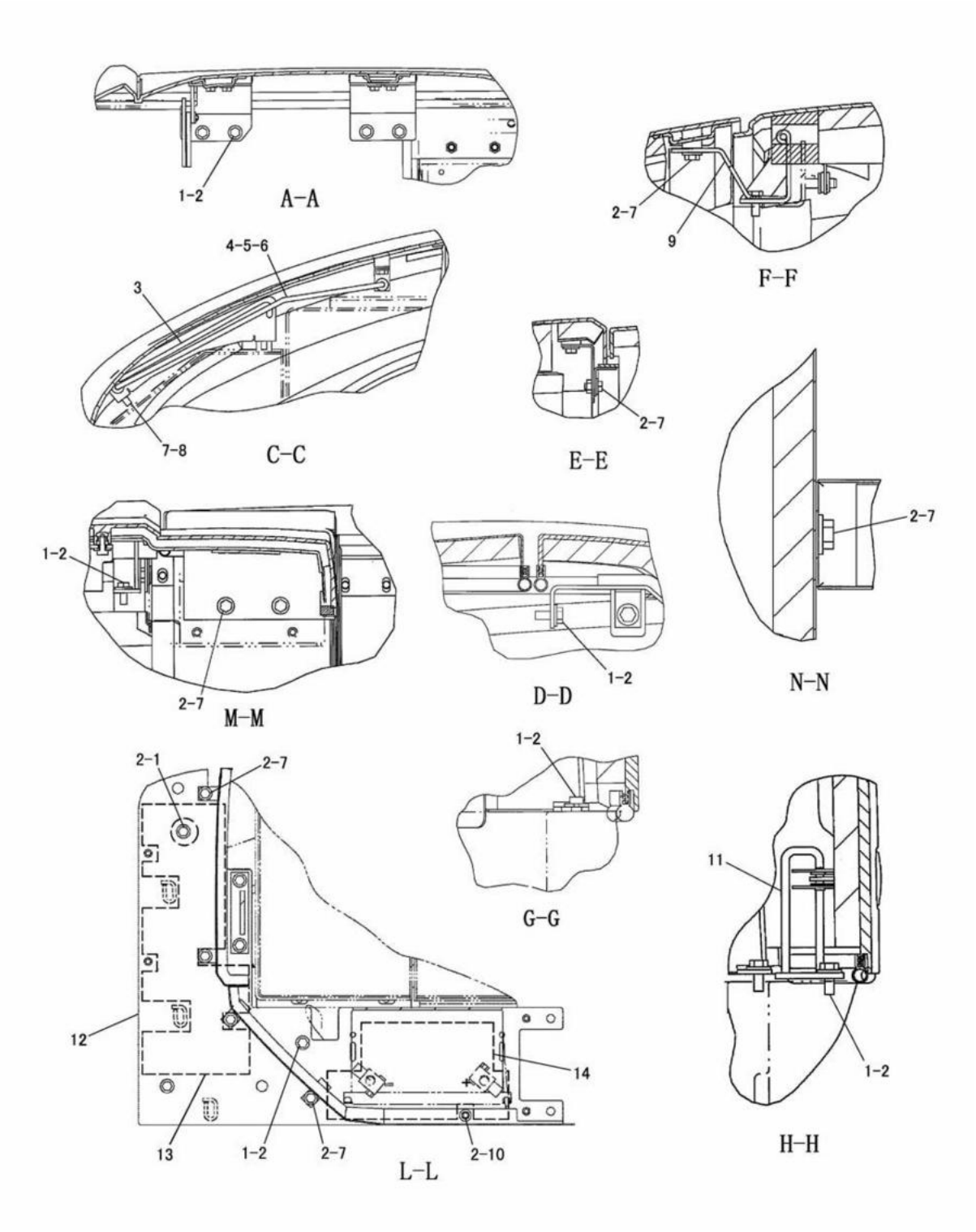

HOOD AND GUARD (200-5484 N/S) -SOUND SUPPRESSION-PART 2 OF 2
EFFECTIVE WITH SERIAL NO. BMW01425-
PART OF 216-8062-Page 190,191
AN ATTACHMENT

FRAME AND BODY

NOTE	No.	PART NO.	QTY.	PART NAME
	1	8T-4136	13	BOLT(M10×1.5)
	2	7X-7729	25	WASHER
	3	191-0234	1	PLATE
	4	5P-4116	2	WASHER
	5	3B-4610	2	PIN
	6	191-0235	1	ROD AS
	7	8T-4137	13	BOLT(M10×1.5)
	8	8T-4121	2	WASHER
	9	240-8772	1	HINGE AS
	10	7X-0474	1	BOLT(M10×1.5)
	11	240-7591	1	STRIKER AS
	12	200-5500	1	PLATE AS
		191-0245	1	PLATE AS
		8T-3490	13	NUT(M10×1.5)(WELD)
		7T-1099	3	LINK
	13	200-5513	1	INSULATION
	14	200-5514	1	INSULATION

J131072 E03

HOOD AND GUARD (200-5484 N/S) -SOUND SUPPRESSION-PART 2 OF 2
EFFECTIVE WITH SERIAL NO. BMW01425-
PART OF 216-8062-Page 190,191
AN ATTACHMENT

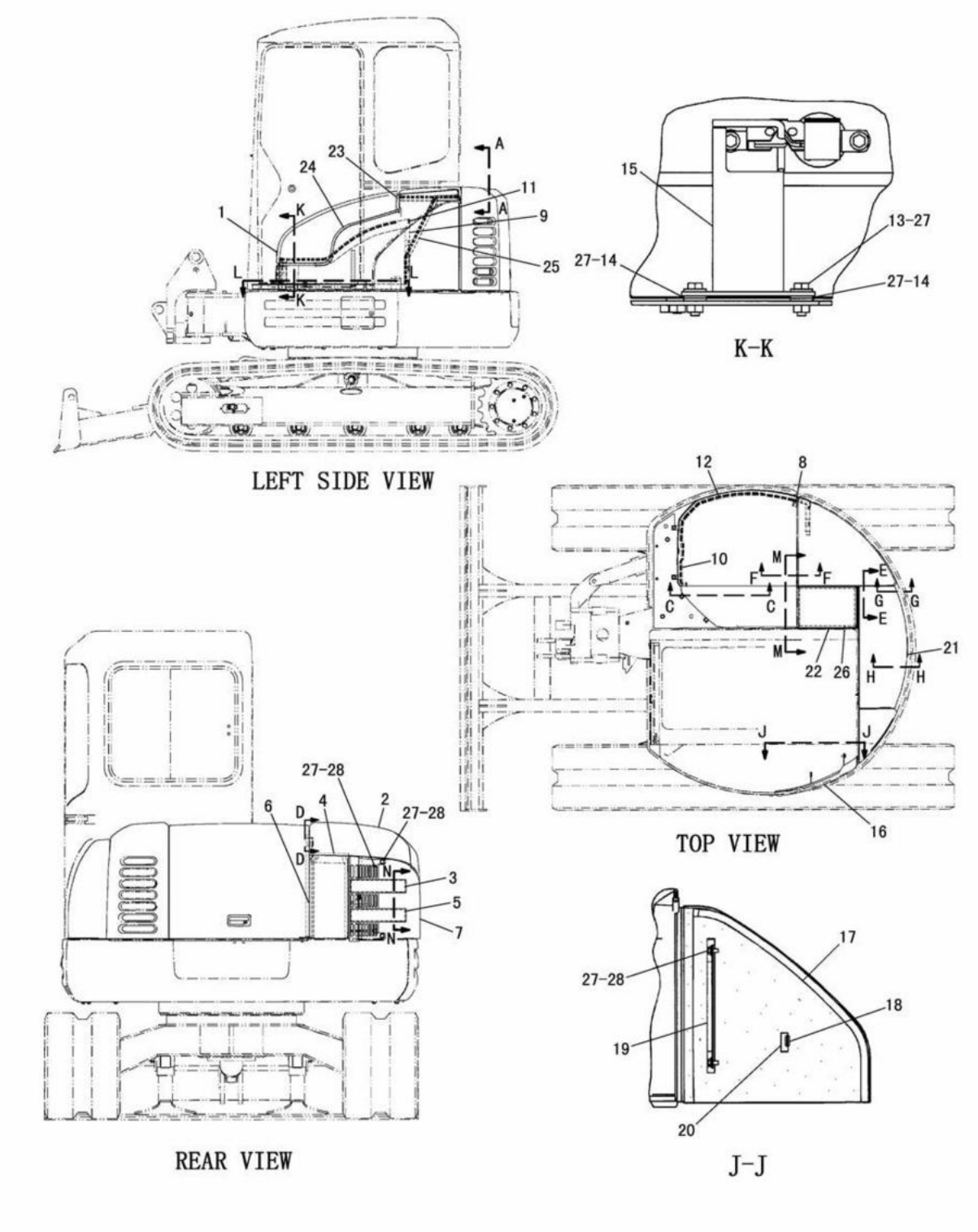

HOOD AND GUARD (200-5486 N/S) -SOUND SUPPRESSION-PART 1 OF 2
EFFECTIVE WITH SERIAL NO. BMW00001-BMW01358
PART OF 216-8063-Page 192,193
AN ATTACHMENT

FRAME AND BODY

NOTE	No.	PART NO.	QTY.	PART NAME	NOTE	No.	PART NO.	QTY.	PART NAME
Y	1	200-5494	1	COVER GROUP					
Y	2	200-5497	1	COVER GROUP					
	3	200-5498	1	COVER AS					
	4	200-5511	1	INSULATION					
	5	200-5543	2	INSULATION					
D	6	5P-5643		SEAL---0.674m					
	7	200-5495	1	COVER AS(FRONT)					
	8	140-3201	1	GROMMET					
	9	200-5505	1	INSULATION					
	10	200-5506	1	INSULATION					
	11	8T-3490	4	NUT(M10×1.5)(WELD)					
E	12	3E-6600		SEAL---121.5cm					
	13	8T-4195	2	BOLT(M10×1.5)					
B	14	7X-7729	4	WASHER(3mm THICK)					
	15	191-0233	1	STRIKER AS					
	16	200-5515	1	COVER AS(LH)					
D		5P-7483		SEAL---0.6m					
	17	200-5516	1	INSULATION					
	18	140-3201	1	GROMMET					
	19	191-0304	1	BRACKET					
	20	191-0305	1	BRACKET					
Y	21	200-5493	1	HOOD GROUP					
	22	200-5496	1	COVER AS					
D	23	5P-5643		SEAL---0.322m					
D	24	5P-5643		SEAL---0.955m					
D	25	5P-8309		SEAL---1.309m					
	26	200-5507	1	INSULATION					
	27	7X-7729	12	WASHER					
	28	8T-4137	6	BOLT(M10×1.5)					

B-USE AS REQUIRED
D-ORDER BY THE m
E-ORDER BY THE cm

Y-SEE SEPARATE ILLUSTRATION

J126755 E01

HOOD AND GUARD (200-5486 N/S) -SOUND SUPPRESSION-PART 1 OF 2

EFFECTIVE WITH SERIAL NO. BMW00001-BMW01358
PART OF 216-8063-Page 192,193
200-5494-Page 227 200-5497-Page 236, 237 200-5493-Page 231, 232
AN ATTACHMENT

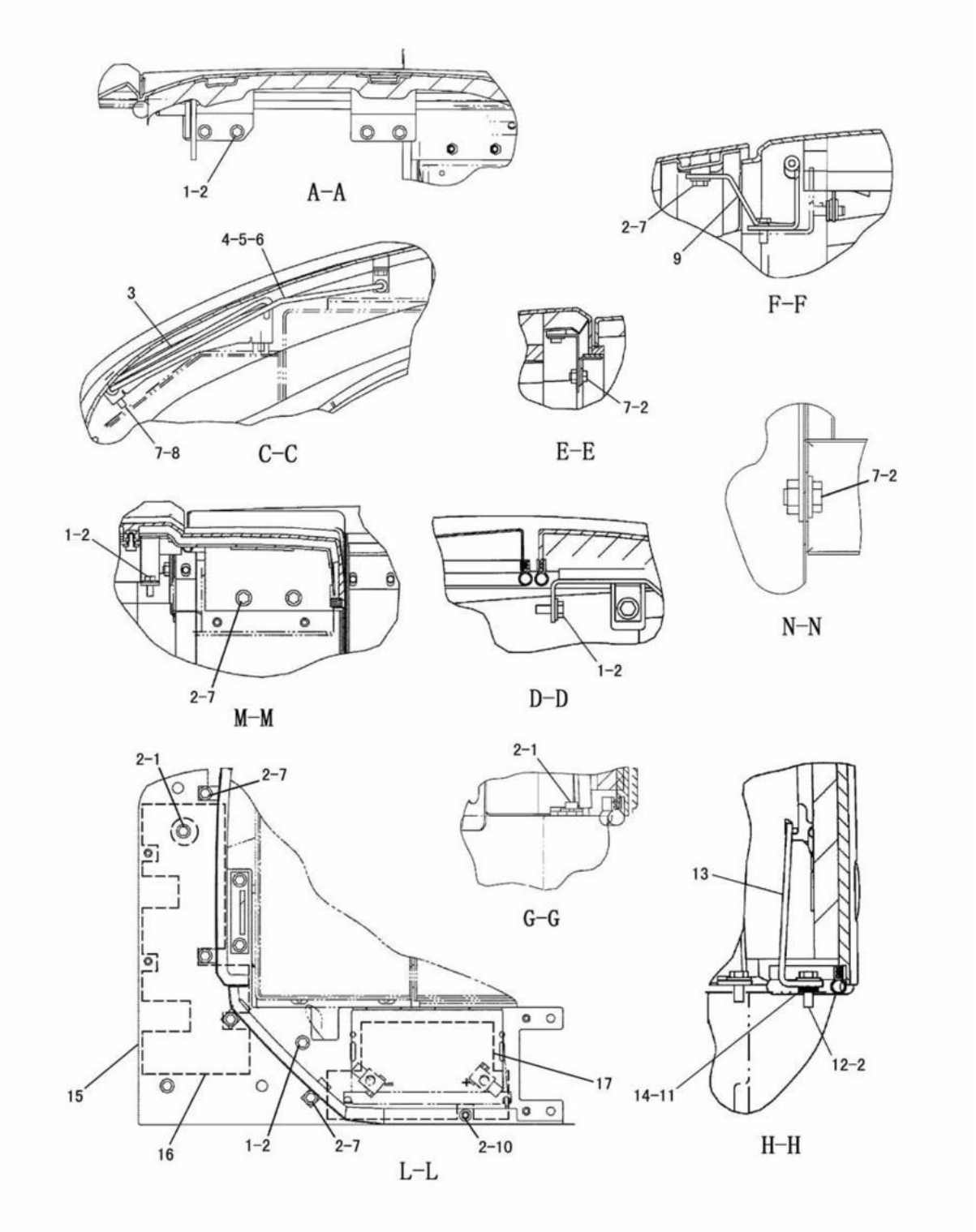

J126756 E01

HOOD AND GUARD (200-5486 N/S) -SOUND SUPPRESSION-PART 2 OF 2
EFFECTIVE WITH SERIAL NO. BMW00001-BMW01358
PART OF 216-8063-Page 192,193
AN ATTACHMENT

FRAME AND BODY

NOTE	No.	PART NO.	QTY.	PART NAME	NOTE	No.	PART NO.	QTY.	PART NAME
	1	8T-4136	11	BOLT(M10×1.5)					
	2	7X-7729	25	WASHER					
	3	191-0234	1	PLATE					
	4	5P-4116	2	WASHER					
	5	3B-4610	2	PIN					
	6	191-0235	1	ROD AS					
	7	8T-4137	13	BOLT(M10×1.5)					
	8	8T-4121	2	WASHER					
	9	223-6156	1	HINGE AS					
	10	7X-0474	1	BOLT(M10×1.5)					
	11	191-0359	3	SHIM(1.6mm THICK)					
	12	8T-4195	2	BOLT(M10×1.5)					
	13	191-0232	1	HOOK AS					
B	14	191-0359	2	SHIM(1.6mm THICK)					
	15	200-5500	1	PLATE AS					
		191-0245	1	PLATE AS					
		8T-3490	13	NUT(M10×1.5)(WELD)					
	16	200-5513	1	INSULATION					
	17	200-5514	1	INSULATION					

B-USE AS REQUIRED

J126756 E01

HOOD AND GUARD (200-5486 N/S) -SOUND SUPPRESSION-PART 2 OF 2
EFFECTIVE WITH SERIAL NO. BMW00001-BMW01358
PART OF 216-8063-Page 192,193
AN ATTACHMENT

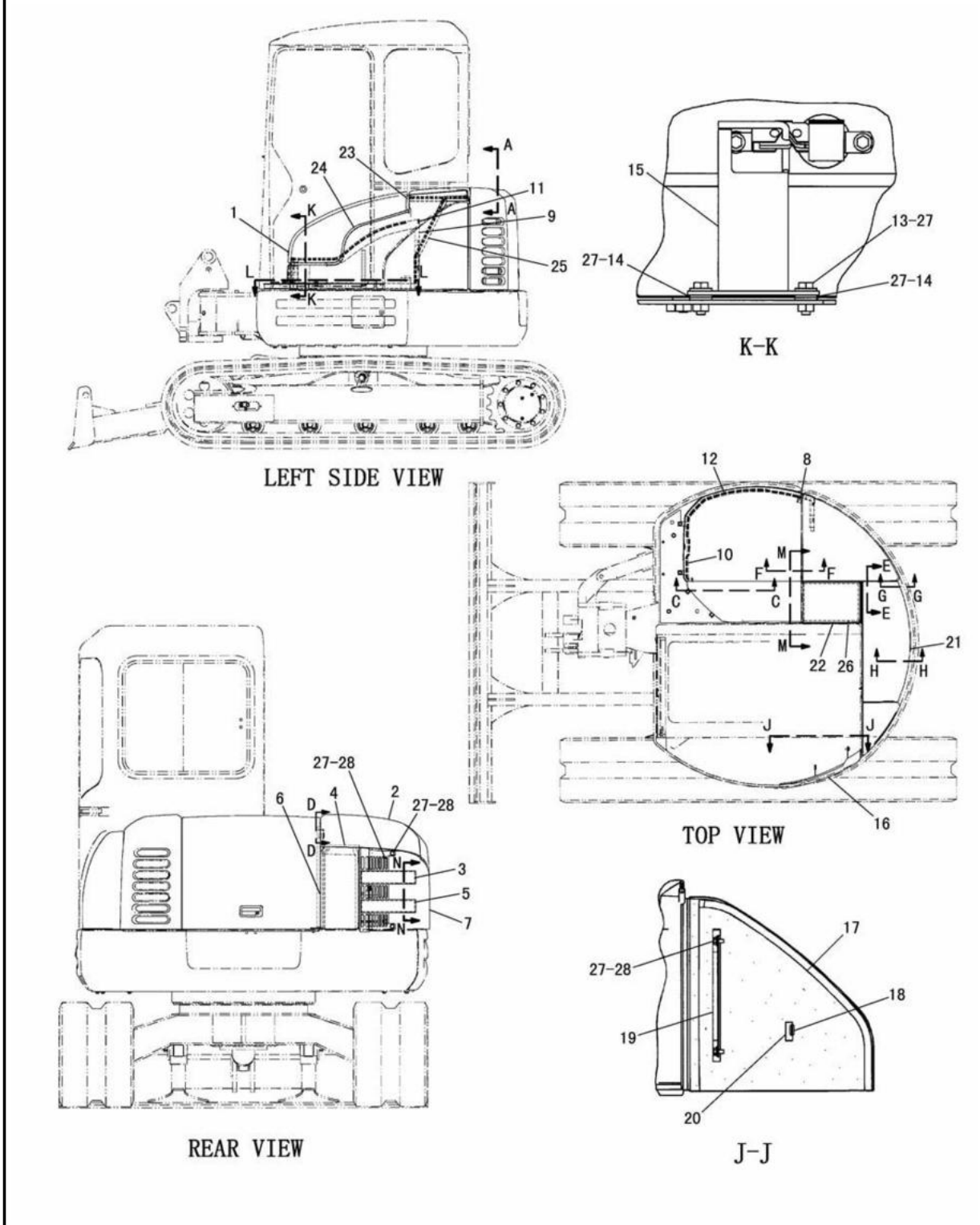

HOOD AND GUARD (200-5486 N/S) -SOUND SUPPRESSION-PART 1 OF 2
EFFECTIVE WITH SERIAL NO. BMW01359-
PART OF 216-8063-Page 192,193
AN ATTACHMENT

FRAME AND BODY

NOTE	No.	PART NO.	QTY.	PART NAME	NOTE	No.	PART NO.	QTY.	PART NAME
Y	1	200-5494	1	COVER GROUP					
Y	2	200-5497	1	COVER GROUP					
	3	200-5498	1	COVER AS					
	4	200-5511	1	INSULATION					
	5	200-5543	2	INSULATION					
D	6	5P-5643		SEAL---0.674m					
	7	200-5495	1	COVER AS(FRONT)					
	8	140-3201	1	GROMMET					
	9	200-5505	1	INSULATION					
	10	200-5506	1	INSULATION					
	11	8T-3490	4	NUT(M10×1.5)(WELD)					
E	12	3E-6600		SEAL---121.5cm					
	13	8T-4195	2	BOLT(M10×1.5)					
B	14	7X-7729	4	WASHER(3mm THICK)					
	15	191-0233	1	STRIKER AS					
	16	200-5515	1	COVER AS(LH)					
D		5P-7483		SEAL---0.6m					
	17	200-5516	1	INSULATION					
	18	140-3201	1	GROMMET					
	19	191-0304	1	BRACKET					
	20	191-0305	1	BRACKET					
CY	21	240-7592	1	HOOD GROUP					
	22	200-5496	1	COVER AS					
D	23	5P-5643		SEAL---0.322m					
D	24	5P-5643		SEAL---0.955m					
D	25	5P-8309		SEAL---1.309m					
	26	200-5507	1	INSULATION					
	27	7X-7729	12	WASHER					
	28	8T-4137	6	BOLT(M10×1.5)					

B-USE AS REQUIRED
C-INDICATES CHANGE
D-ORDER BY THE m
E-ORDER BY THE cm
Y-SEE SEPARATE ILLUSTRATION

J128780 E02

HOOD AND GUARD (200-5486 N/S) -SOUND SUPPRESSION-PART 1 OF 2

EFFECTIVE WITH SERIAL NO. BMW01359-
PART OF 216-8063-Page 192,193
200-5494-Page 227 200-5497-Page 236, 237 240-7592-Page 233
AN ATTACHMENT

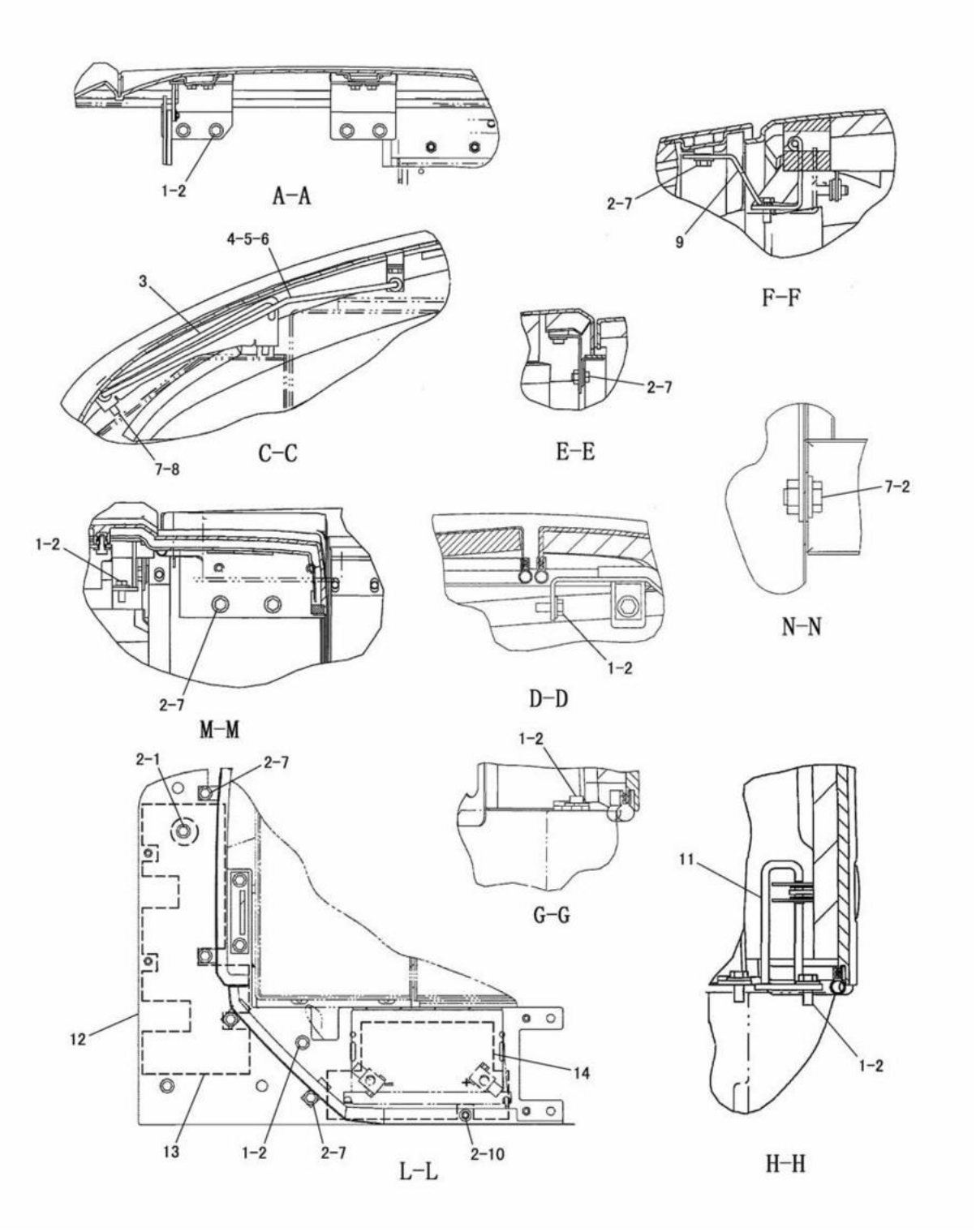

HOOD AND GUARD (200-5486 N/S) -SOUND SUPPRESSION-PART 2 OF 2
EFFECTIVE WITH SERIAL NO. BMW01359-
PART OF 216-8063-Page 192,193
AN ATTACHMENT

FRAME AND BODY

NOTE	No.	PART NO.	QTY.	PART NAME	NOTE	No.	PART NO.	QTY.	PART NAME
C	1	8T-4136	13	BOLT(M10×1.5)					
	2	7X-7729	25	WASHER					
	3	191-0234	1	PLATE					
	4	5P-4116	2	WASHER					
	5	3B-4610	2	PIN					
	6	191-0235	1	ROD AS					
	7	8T-4137	13	BOLT(M10×1.5)					
	8	8T-4121	2	WASHER					
C	9	240-8772	1	HINGE AS					
	10	7X-0474	1	BOLT(M10×1.5)					
C	11	240-7591	1	STRIKER AS					
	12	200-5500	1	PLATE AS					
		191-0245	1	PLATE AS					
		8T-3490	13	NUT(M10×1.5)(WELD)					
	13	200-5513	1	INSULATION					
	14	200-5514	1	INSULATION					

C-INDICATES CHANGE

J128781 E02

HOOD AND GUARD (200-5486 N/S) -SOUND SUPPRESSION-PART 2 OF 2
EFFECTIVE WITH SERIAL NO. BMW01359-
PART OF 216-8063-Page 192,193
AN ATTACHMENT

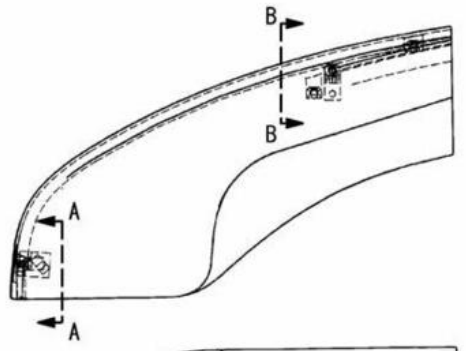

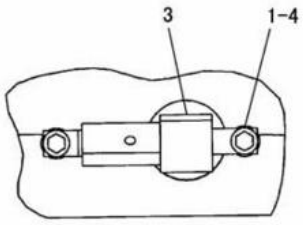

A-A

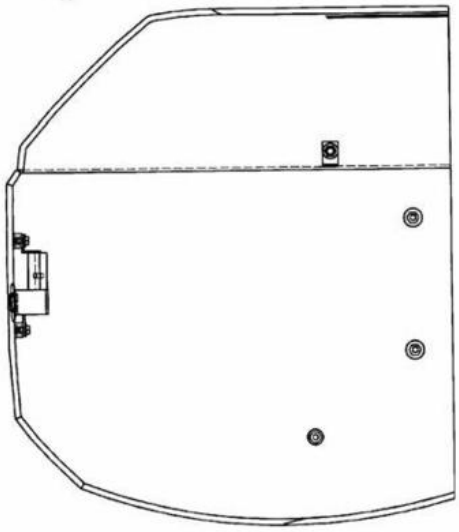

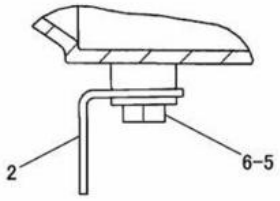

B-B

NOTE	No.	PART NO.	QTY.	PART NAME	NOTE	No.	PART NO.	QTY.	PART NAME
	1	8T-4199	2	BOLT(M8×1.25)					
	2	191-0212	1	BRACKET					
	3	191-0237	1	LATCH AS					
		191-0347	1	LATCH					
		191-0348	1	GROMMET					
	4	5P-4116	2	WASHER					
	5	7X-7729	1	WASHER					
	6	8T-4137	1	BOLT(M10×1.5)					

J126843 E02

191-0198 TANK COVER ASSEMBLY -SUB
PART OF 191-0181-Page 195,199,203

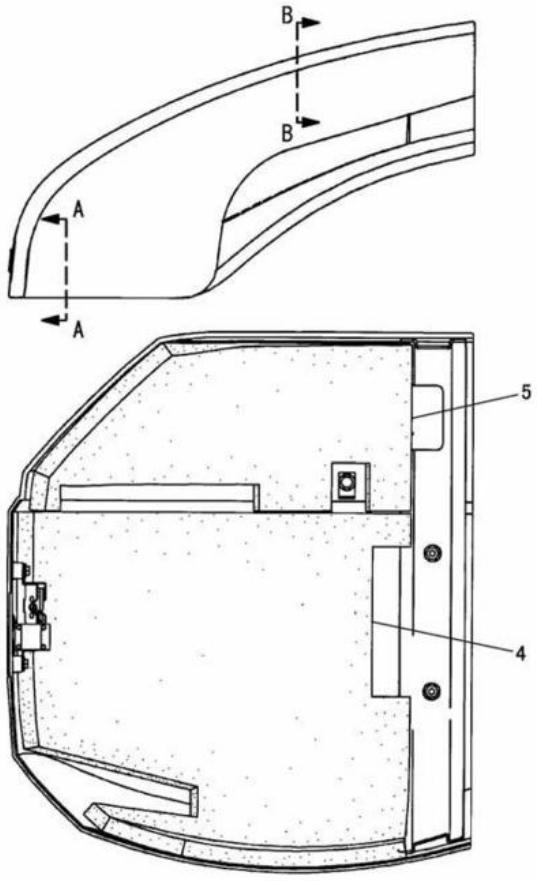

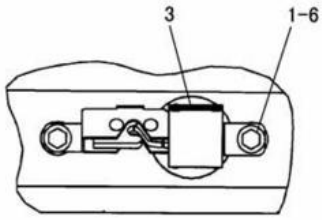

A-A

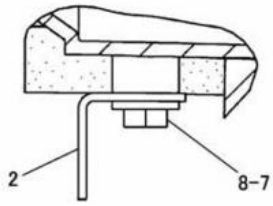

B-B

NOTE	No.	PART NO.	QTY.	PART NAME	NOTE	No.	PART NO.	QTY.	PART NAME
	1	8T-4199	2	BOLT(M8×1.25)					
	2	191-0212	1	BRACKET					
	3	191-0237	1	LATCH AS					
	4	200-5503	1	INSULATION					
	5	200-5504	1	INSULATION					
	6	5P-4116	2	WASHER					
	7	7X-7729	1	WASHER					
	8	8T-4137	1	BOLT(M10×1.5)					

J126697 E00

200-5494 TANK COVER GROUP -SUB

PART OF 200-5484-Page 207,211,215,200-5486-Page 219,223
AN ATTACHMENT

FRAME AND BODY

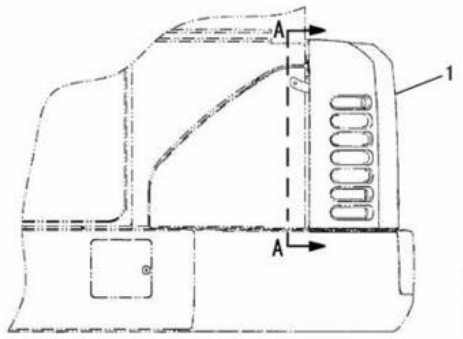

RIGHT SIDE VIEW

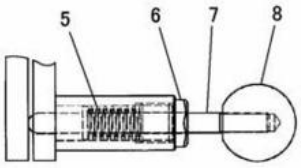

B-B

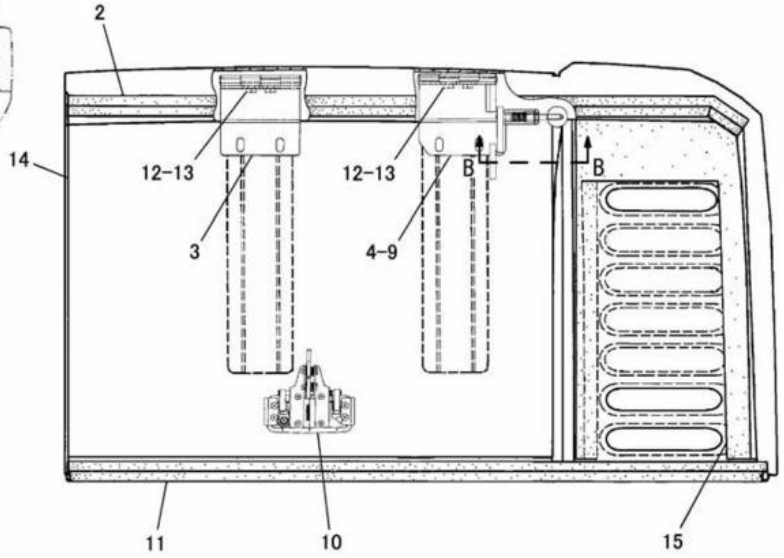

A-A

NOTE	No.	PART NO.	QTY.	PART NAME	NOTE	No.	PART NO.	QTY.	PART NAME
	1	191-0197	1	HOOD					
D	2	5P-8309		SEAL---1.035m					
	3	191-0306	1	HINGE AS					
	4	191-0307	1	HINGE AS					
	5	122-3882	1	SPRING					
	6	191-0312	1	PLUG					
	7	191-0310	1	PIN					
	8	096-2320	1	KNOB					
	9	191-0309	1	HINGE AS					
	10	216-0056	1	LATCH AS					
		145-9628	1	SEAL					
		226-3701	2	PLATE					
		226-3702	4	SCREW(M5×0.8)					
D	11	5P-8309		SEAL---1.15m					
	12	7X-7729	4	WASHER					
	13	8T-4137	4	BOLT(M10×1.5)					
	14	191-0210	1	INSULATION					
	15	191-0211	1	INSULATION					

D-ORDER BY THE m

J126561 E03

191-0196 HOOD GROUP

EFFECTIVE WITH SERIAL NO. BMW00001-BMW00980

PART OF 191-0181-Page 195

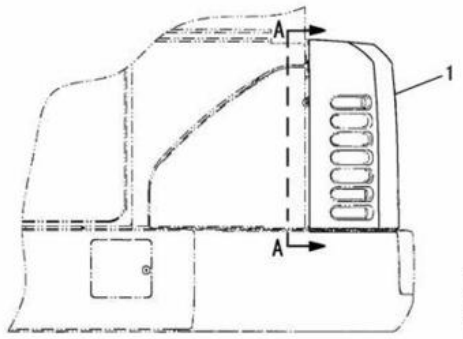

RIGHT SIDE VIEW

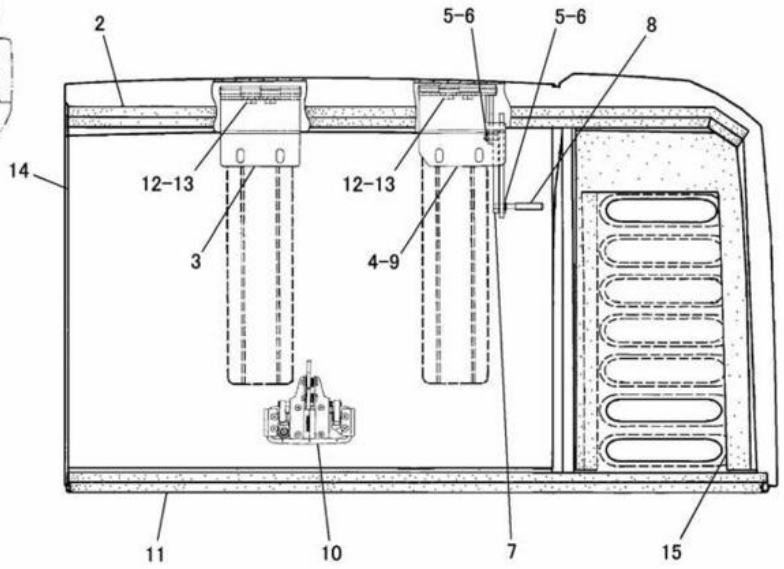

A-A

NOTE	No.	PART NO.	QTY.	PART NAME	NOTE	No.	PART NO.	QTY.	PART NAME
	1	191-0197	1	HOOD					
D	2	5P-8309		SEAL---1.035m					
	3	191-0306	1	HINGE AS					
C	4	200-5538	1	HINGE GROUP					
	5	3B-4610	2	COTTER PIN					
	6	5P-4116	2	WASHER					
	7	200-5540	1	PLATE AS					
	8	200-5541	1	CAP					
	9	200-5539	1	HINGE AS					
	10	216-0056	1	LATCH AS					
		145-9628	1	SEAL					
		226-3701	2	PLATE					
		226-3702	4	SCREW(M5×0.8)					
D	11	5P-8309		SEAL---1.15m					
	12	7X-7729	4	WASHER					
	13	8T-4137	4	BOLT(M10×1.5)					
	14	191-0210	1	INSULATION					
	15	191-0211	1	INSULATION					

C-INDICATES CHANGE
D-ORDER BY THE m

J126562 E04

191-0196 HOOD GROUP
EFFECTIVE WITH SERIAL NO. BMW00981-BMW01358
PART OF 191-0181-Page 195

FRAME AND BODY

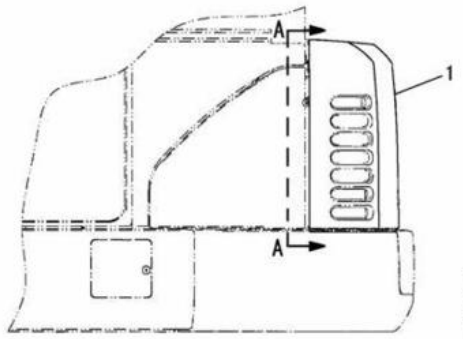

RIGHT SIDE VIEW

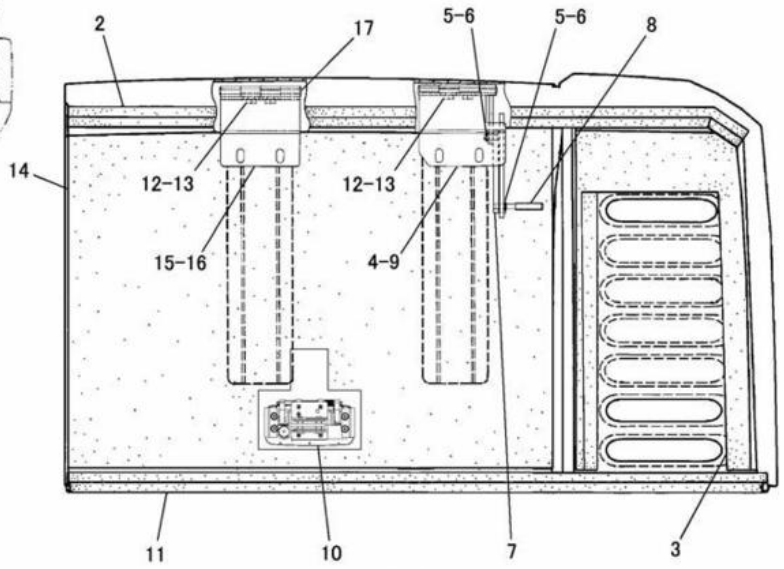

A-A

NOTE	No.	PART NO.	QTY.	PART NAME	NOTE	No.	PART NO.	QTY.	PART NAME
	1	191-0197	1	HOOD		15	191-0306	1	HINGE AS
D	2	5P-8309		SEAL---1.035m			246-6811	1	PLATE
	3	191-0211	1	INSULATION		16	246-6810	1	PLATE
	4	200-5538	1	HINGE AS		17	3B-4610	2	COTTER PIN
	5	3B-4610	2	COTTER PIN			246-6812	1	PIN
	6	5P-4116	2	WASHER			8T-4224	2	WASHER
	7	200-5540	1	PLATE AS					
	8	200-5541	1	CAP					
	9	200-5539	1	HINGE AS					
	10	231-9694	1	LATCH AS					
		145-9628	1	SEAL					
		226-3701	2	PLATE					
		226-3702	4	SCREW(M5×0.8)					
D	11	5P-8309		SEAL---1.15m					
	12	7X-7729	4	WASHER					
	13	8T-4137	4	BOLT(M10×1.5)					
	14	191-0210	1	INSULATION					

D-ORDER BY THE m

J132803 E00

240-7590 HOOD GROUP

EFFECTIVE WITH SERIAL NO. BMW01359-
PART OF 191-0181-Page 199,203

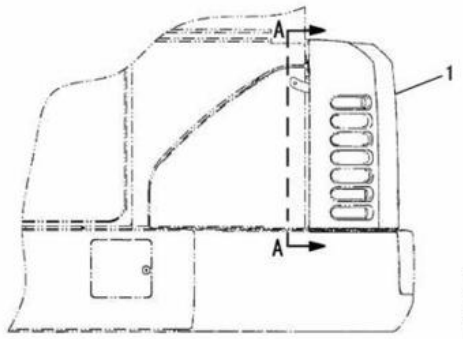

LEFT SIDE VIEW

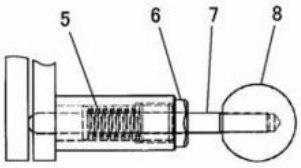

B-B

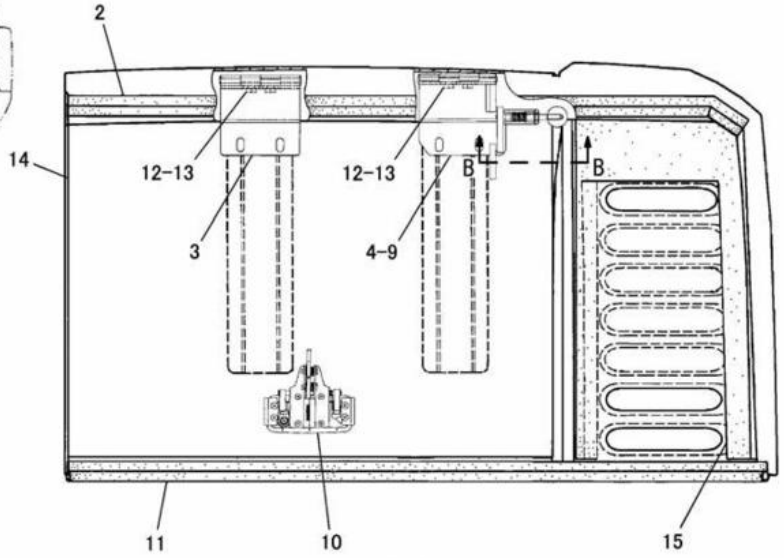

A-A

NOTE	No.	PART NO.	QTY.	PART NAME	NOTE	No.	PART NO.	QTY.	PART NAME
	1	191-0197	1	HOOD					
D	2	5P-8309		SEAL---1.035m					
	3	191-0306	1	HINGE AS					
	4	191-0307	1	HINGE AS					
	5	122-3882	1	SPRING					
	6	191-0312	1	PLUG					
	7	191-0310	1	PIN					
	8	096-2320	1	KNOB					
	9	191-0309	1	HINGE AS					
	10	216-0056	1	LATCH AS					
		145-9628	1	SEAL					
		226-3701	2	PLATE					
		226-3702	4	SCREW(M5×0.8)					
D	11	5P-8309		SEAL---1.15m					
	12	7X-7729	4	WASHER					
	13	8T-4137	4	BOLT(M10×1.5)					
	14	200-5501	1	INSULATION					
	15	200-5502	1	INSULATION					

D-ORDER BY THE m

J126837 E00

200-5493 HOOD GROUP -SUB-SOUND SUPPRESSION
EFFECTIVE WITH SERIAL NO. BMW00001-BMW00980
PART OF 200-5484-Page 207,200-5486-Page 219
AN ATTACHMENT

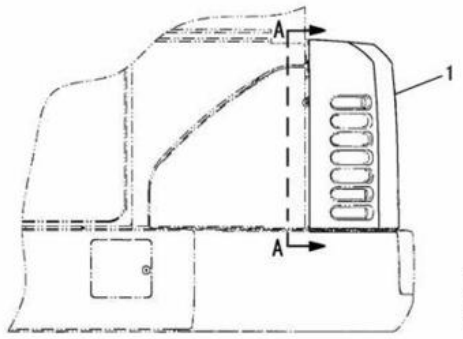

LEFT SIDE VIEW

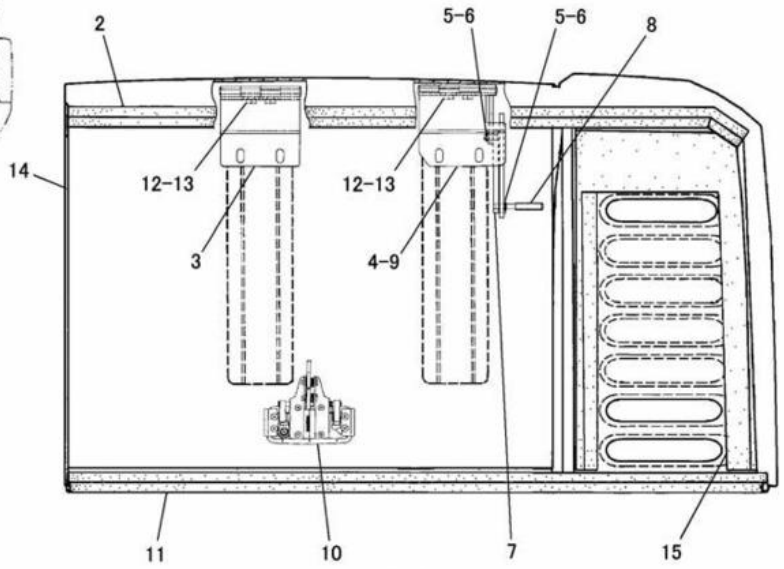

A-A

NOTE	No.	PART NO.	QTY.	PART NAME	NOTE	No.	PART NO.	QTY.	PART NAME
	1	191-0197	1	HOOD					
D	2	5P-8309		SEAL---1.035m					
	3	191-0306	1	HINGE AS					
C	4	200-5538	1	HINGE GROUP					
	5	3B-4610	2	COTTER PIN					
	6	5P-4116	2	WASHER					
	7	200-5540	1	PLATE AS					
	8	200-5541	1	CAP					
	9	200-5539	1	HINGE AS					
	10	216-0056	1	LATCH AS					
		145-9628	1	SEAL					
		226-3701	2	PLATE					
		226-3702	4	SCREW(M5×0.8)					
D	11	5P-8309		SEAL---1.15m					
	12	7X-7729	4	WASHER					
	13	8T-4137	4	BOLT(M10×1.5)					
	14	200-5501	1	INSULATION					
	15	200-5502	1	INSULATION					

C-INDICATES CHANGE
D-ORDER BY THE m

J126838 E01

200-5493 HOOD GROUP -SUB-SOUND SUPPRESSION

EFFECTIVE WITH SERIAL NO. BMW00981-BMW01358
PART OF 200-5484-Page 207,200-5486-Page 219
AN ATTACHMENT

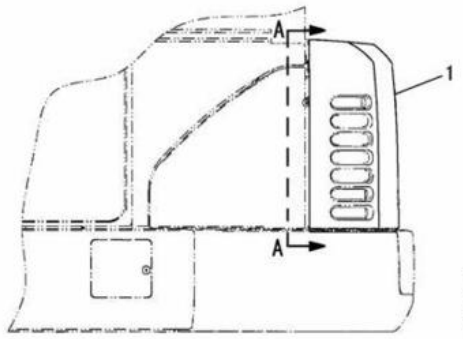

LEFT SIDE VIEW

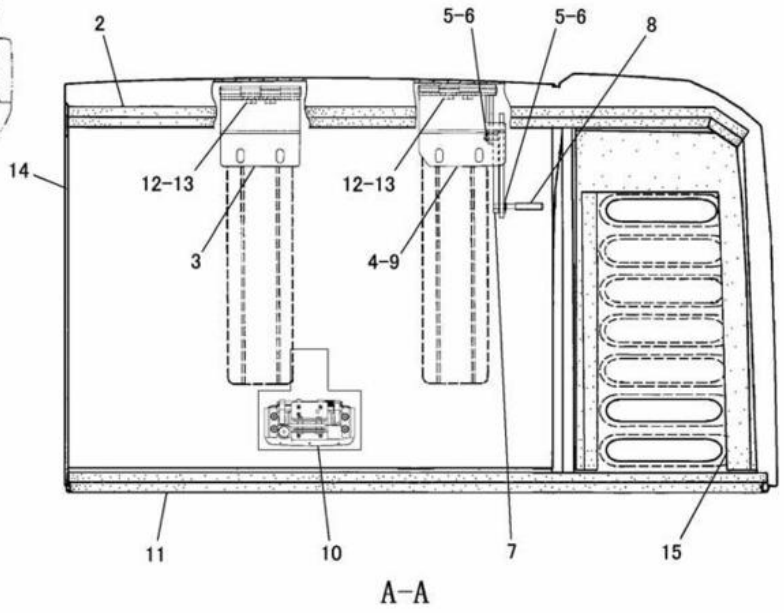

A-A

NOTE	No.	PART NO.	QTY.	PART NAME	NOTE	No.	PART NO.	QTY.	PART NAME
	1	191-0197	1	HOOD					
D	2	5P-8309		SEAL---1.035m					
	3	191-0306	1	HINGE AS					
	4	200-5538	1	HINGE GROUP					
	5	3B-4610	2	COTTER PIN					
	6	5P-4116	2	WASHER					
	7	200-5540	1	PLATE AS					
	8	200-5541	1	CAP					
	9	200-5539	1	HINGE AS					
	10	231-9694	1	LATCH AS					
		145-9628	1	SEAL					
		226-3701	2	PLATE					
		226-3702	4	SCREW(M5×0.8)					
D	11	5P-8309		SEAL---1.15m					
	12	7X-7729	4	WASHER					
	13	8T-4137	4	BOLT(M10×1.5)					
	14	200-5501	1	INSULATION					
	15	200-5502	1	INSULATION					

D-ORDER BY THE m

J128779 E00

240-7592 HOOD GROUP -SUB-SOUND SUPPRESSION
EFFECTIVE WITH SERIAL NO. BMW01359-
PART OF 200-5484-Page 211,215,200-5486-Page 223
AN ATTACHMENT

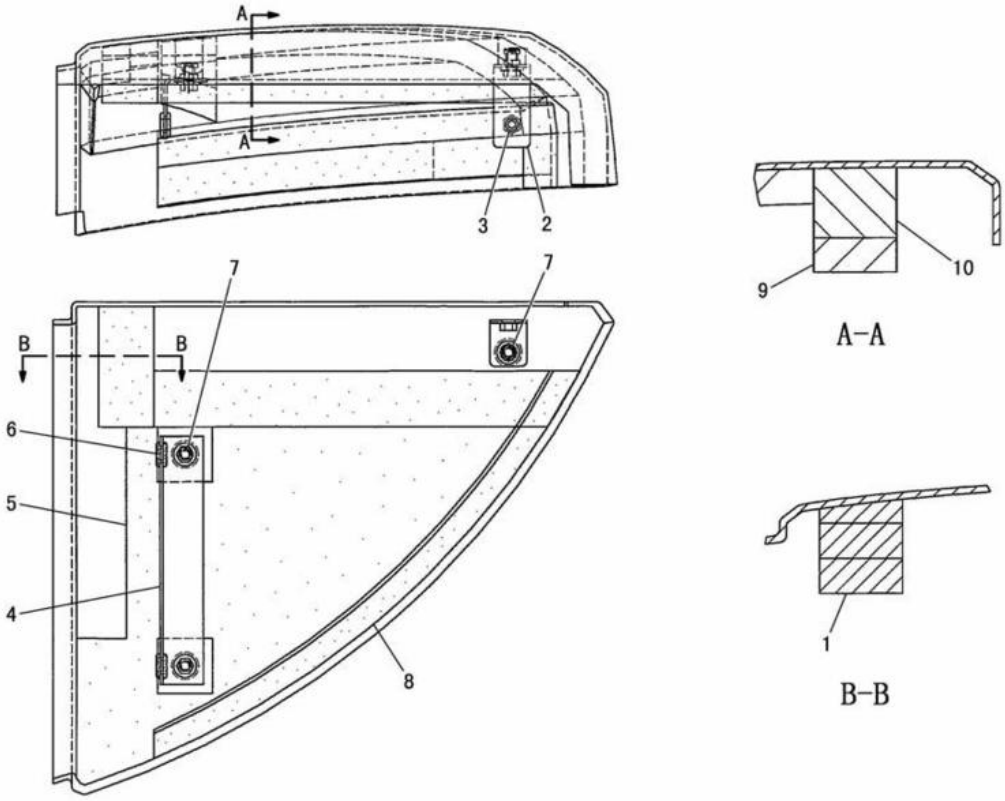

NOTE	No.	PART NO.	QTY.	PART NAME	NOTE	No.	PART NO.	QTY.	PART NAME
	1	191-0349	3	INSULATION					
	2	191-0224	1	BRACKET AS					
	3	8T-3490	1	NUT(M10×1.5)(WELD)					
	4	191-0223	1	BRACKET					
	5	191-0325	1	INSULATION					
	6	140-3201	2	GROMMET					
	7	8T-4137	3	BOLT(M10×1.5)					
		7X-7729	3	WASHER					
	8	191-0326	1	INSULATION					
	9	191-0225	1	INSULATION					
	10	191-0258	1	INSULATION					

J127388 E07

191-0206 RADIATOR COVER GROUP -TOP

EFFECTIVE WITH SERIAL NO. BMW00001-BMW01248

PART OF 191-0181-Page 195,199,203

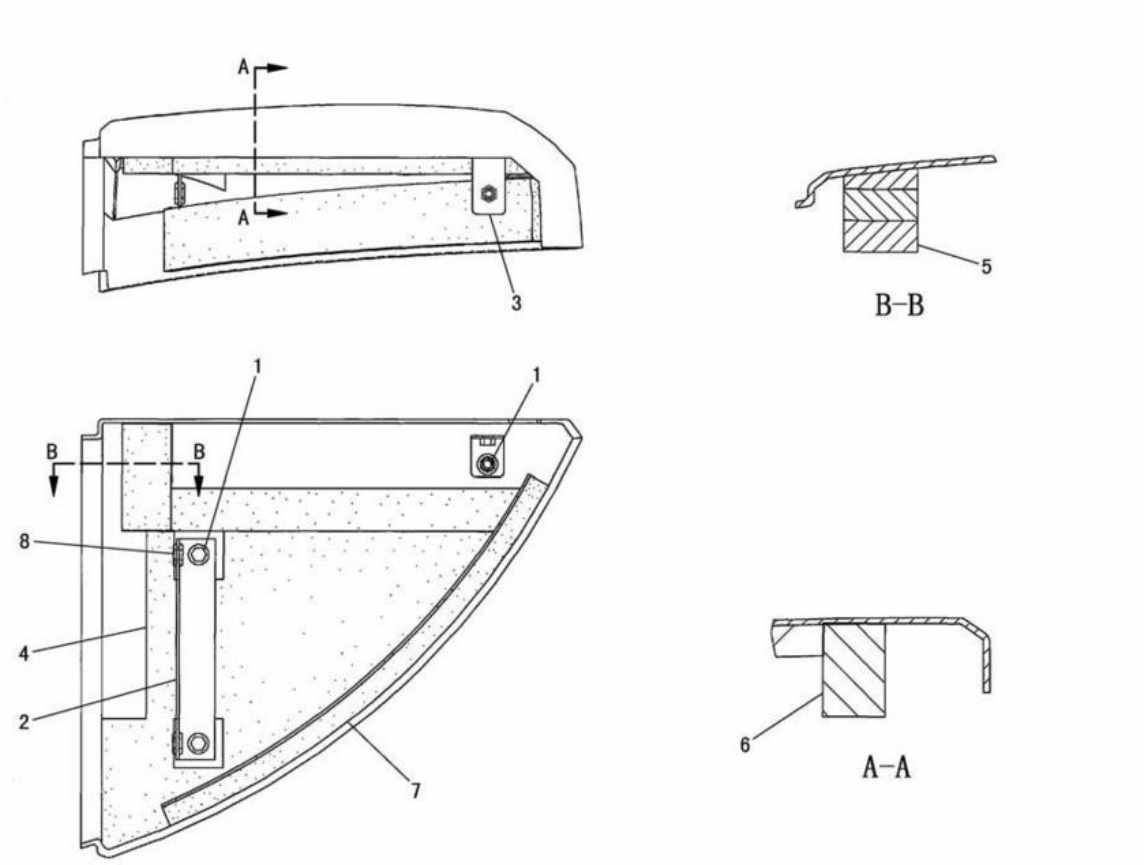

NOTE	No.	PART NO.	QTY.	PART NAME	NOTE	No.	PART NO.	QTY.	PART NAME
	1	8T-4137	3	BOLT(M10×1.5)					
		7X-7729	3	WASHER					
	2	191-0223	1	BRACKET					
	3	191-0224	1	BRACKET AS					
		8T-3490	1	NUT(M10×1.5)(WELD)					
	4	191-0325	1	INSULATION					
	5	191-0349	3	INSULATION					
C	6	235-0435	1	FOAM					
C	7	235-0436	1	INSULATION					
	8	140-3201	2	GROMMET					

C-INDICATES CHANGE

J126560 E09

191-0206 RADIATOR COVER GROUP -TOP

EFFECTIVE WITH SERIAL NO. BMW01249-

PART OF 191-0181-Page 195,199,203

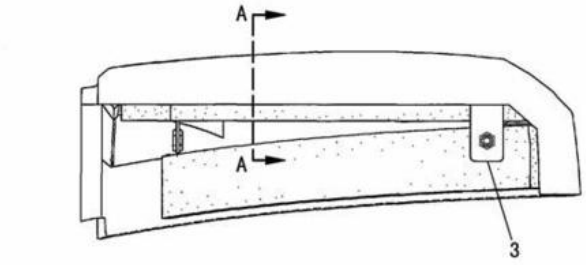

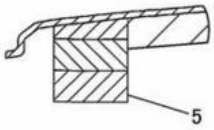

B-B

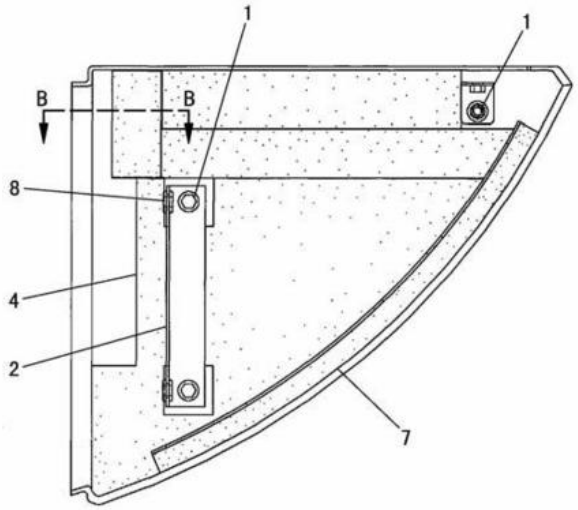

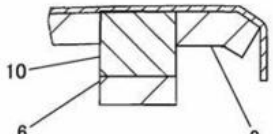

A-A

NOTE	No.	PART NO.	QTY.	PART NAME	NOTE	No.	PART NO.	QTY.	PART NAME
	1	8T-4137	3	BOLT(M10×1.5)					
		7X-7729	3	WASHER					
	2	191-0223	1	BRACKET					
	3	191-0224	1	BRACKET AS					
		8T-3490	1	NUT(M10×1.5)(WELD)					
	4	191-0325	1	INSULATION					
	5	191-0349	3	INSULATION					
	6	191-0225	1	INSULATION					
	7	191-0326	1	INSULATION					
	8	140-3201	2	GROMMET					
	9	200-5510	1	INSULATION					
	10	191-0258	1	INSULATION					

J126839 E02

200-5497 RADIATOR COVER GROUP -TOP
EFFECTIVE WITH SERIAL NO. BMW00001-BMW01248
PART OF 200-5484-Page 207,211,215,200-5486-Page 219,223
AN ATTACHMENT

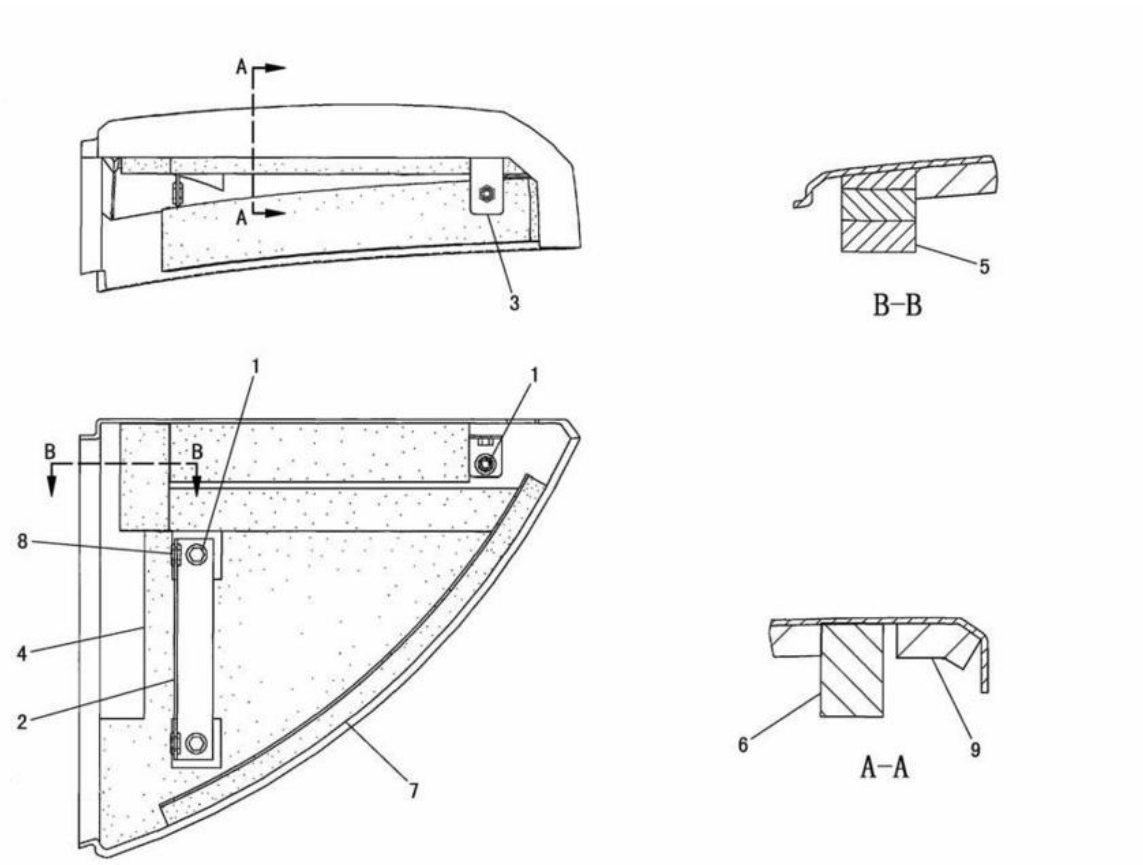

NOTE	No.	PART NO.	QTY.	PART NAME	NOTE	No.	PART NO.	QTY.	PART NAME
	1	8T-4137	3	BOLT(M10×1.5)					
		7X-7729	3	WASHER					
	2	191-0223	1	BRACKET					
	3	191-0224	1	BRACKET AS					
		8T-3490	1	NUT(M10×1.5)(WELD)					
	4	191-0325	1	INSULATION					
	5	191-0349	3	INSULATION					
C	6	235-0435	1	FOAM					
C	7	235-0436	1	INSULATION					
	8	140-3201	2	GROMMET					
	9	200-5510	1	INSULATION					

C-INDICATES CHANGE

J126840 E03

200-5497 RADIATOR COVER GROUP -TOP

EFFECTIVE WITH SERIAL NO. BMW01249-
PART OF 200-5484-Page 207,211,215,200-5486-Page 219,223
AN ATTACHMENT

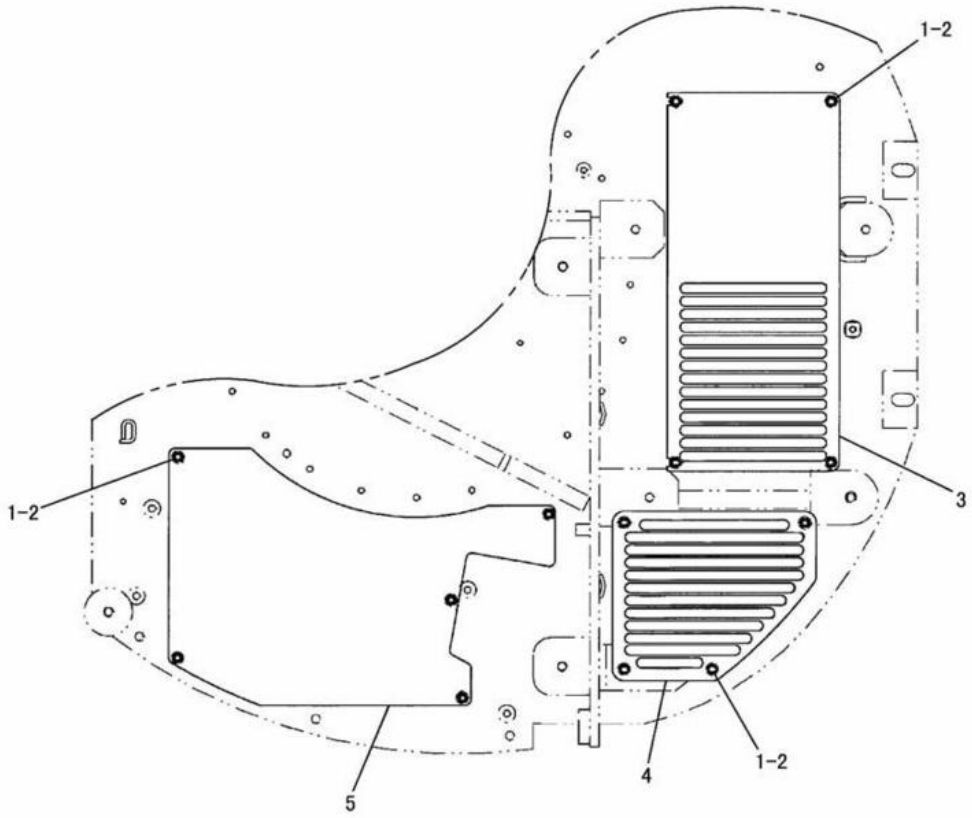

NOTE	No.	PART NO.	QTY.	PART NAME	NOTE	No.	PART NO.	QTY.	PART NAME
	1	8T-4121	13	WASHER					
	2	8T-4137	13	BOLT(M10×1.5)					
	3	199-7467	1	COVER					
	4	192-3556	1	COVER					
	5	193-4252	1	COVER					

J106461 X03

BOTTOM GUARD (191-3829 N/S)
EFFECTIVE WITH SERIAL NO. BMW00001-BMW01327
PART OF 191-3351-Page 184,185,186,187,188,189

FRAME AND BODY

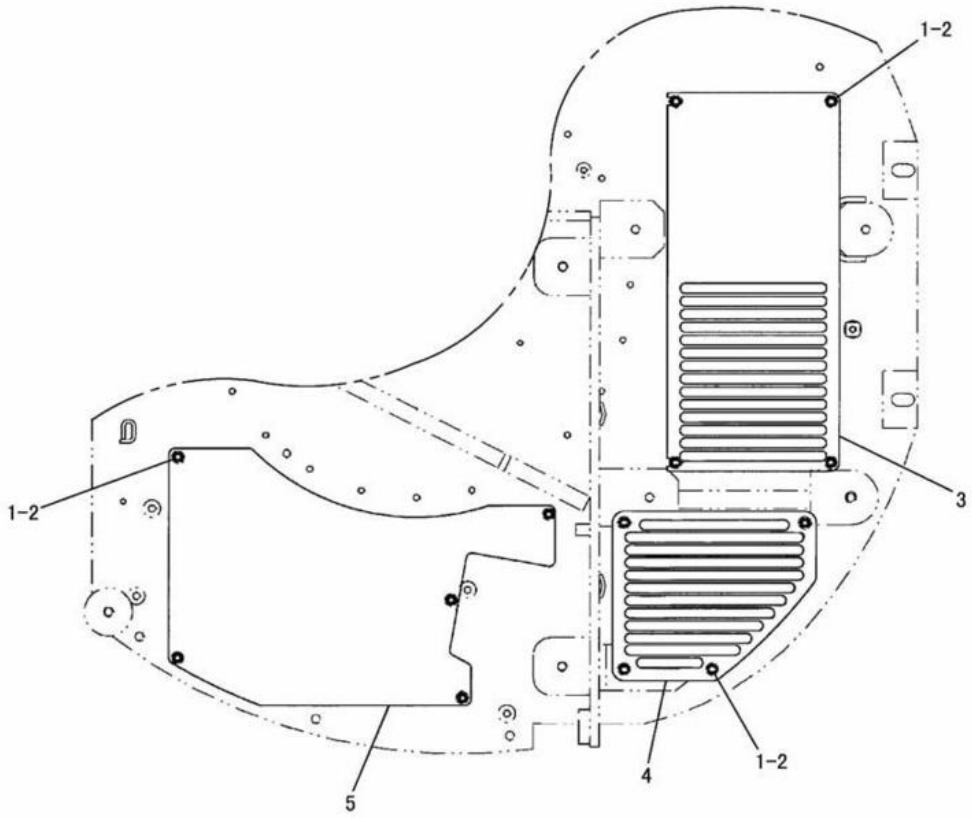

NOTE	No.	PART NO.	QTY.	PART NAME	NOTE	No.	PART NO.	QTY.	PART NAME
	1	8T-4121	13	WASHER					
	2	8T-4137	13	BOLT(M10×1.5)					
C	3	240-0482	1	COVER					
C	4	240-0481	1	COVER					
	5	193-4252	1	COVER					

C-INDICATES CHANGE

J126655 X04

BOTTOM GUARD (191-3829 N/S)

EFFECTIVE WITH SERIAL NO. BMW01328-
PART OF 191-3351-Page 184,185,186,187,188,189

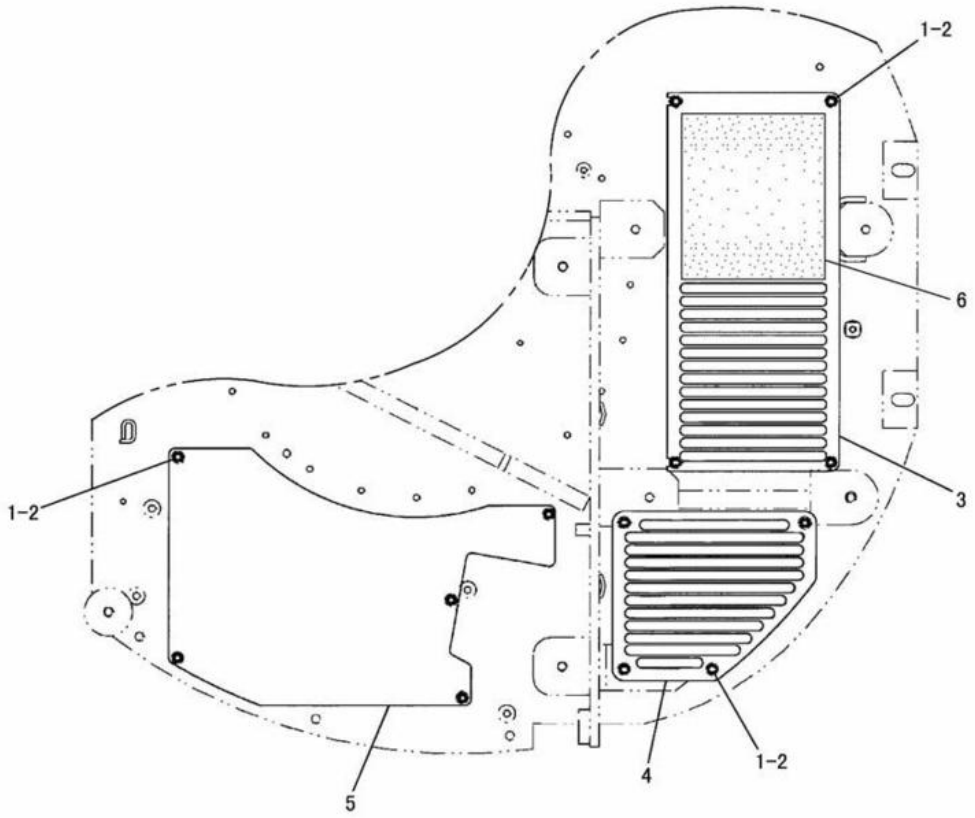

NOTE	No.	PART NO.	QTY.	PART NAME	NOTE	No.	PART NO.	QTY.	PART NAME
	1	8T-4121	13	WASHER					
	2	8T-4137	13	BOLT(M10×1.5)					
	3	199-7467	1	COVER					
	4	192-3556	1	COVER					
	5	193-4252	1	COVER					
	6	217-0987	1	INSULATION					

J114575 X00

BOTTOM GUARD (216-8439 N/S)
EFFECTIVE WITH SERIAL NO. BMW0001-BMW01327
PART OF 216-8062-Page 190,191,216-8063-Page 192,193
AN ATTACHMENT

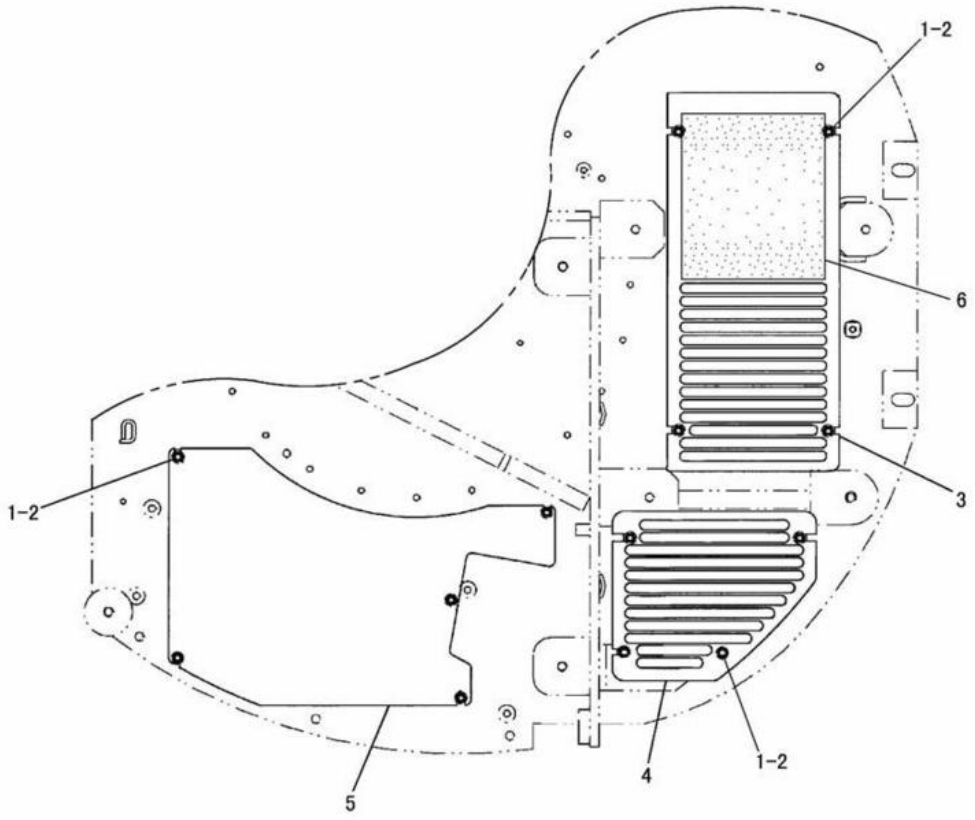

NOTE	No.	PART NO.	QTY.	PART NAME	NOTE	No.	PART NO.	QTY.	PART NAME
	1	8T-4121	13	WASHER					
	2	8T-4137	13	BOLT(M10×1.5)					
C	3	240-0482	1	COVER					
C	4	240-0481	1	COVER					
	5	193-4252	1	COVER					
	6	217-0987	1	INSULATION					

C-INDICATES CHANGE

J126753 X01

BOTTOM GUARD (216-8439 N/S)
EFFECTIVE WITH SERIAL NO. BMW01328-
PART OF 216-8062-Page 190,191,216-8063-Page 192,193
AN ATTACHMENT

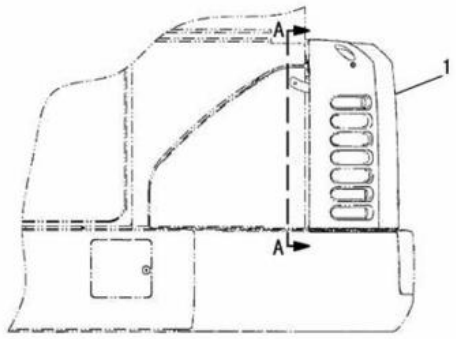

RIGHT SIDE VIEW

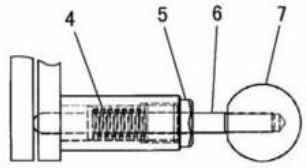

B-B

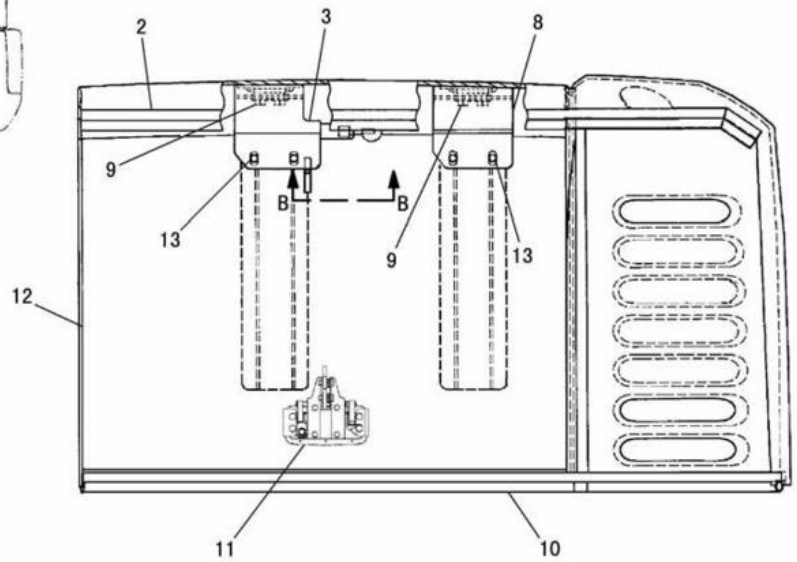

A-A

NOTE	No.	PART NO.	QTY.	PART NAME	NOTE	No.	PART NO.	QTY.	PART NAME
	1	191-0351	1	HOOD AS					
D	2	5P-8309		SEAL---1.035m					
	3	191-0307	1	HINGE AS					
	4	122-3882	1	SPRING					
	5	191-0312	1	PLUG					
	6	191-0310	1	PIN					
	7	096-2320	1	KNOB					
	8	191-0353	1	HINGE AS					
	9	8T-4137	4	BOLT(M10×1.5)					
		7X-7729	4	WASHER					
D	10	5P-8309		SEAL---1.15m					
	11	144-6816	1	LATCH AS					
	12	191-0210	1	INSULATION					
	13	8T-4136	4	BOLT(M10×1.5)					
		7X-7729	4	WASHER					

D-ORDER BY THE m

J111808 E00

HOOD AND GUARD (191-0350 N/S) -UPPER EXHAUST
EFFECTIVE WITH SERIAL NO. BMW00001-BMW01358
PART OF 191-0344-Page 33
AN ATTACHMENT

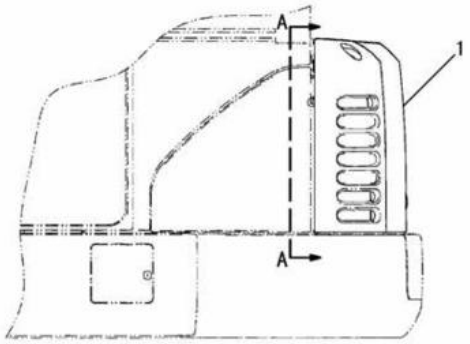

RIGHT SIDE VIEW

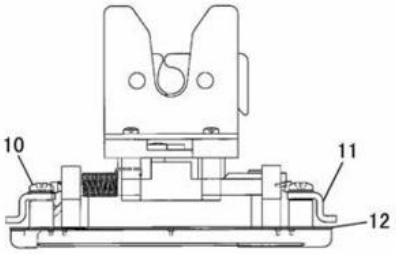

B-B

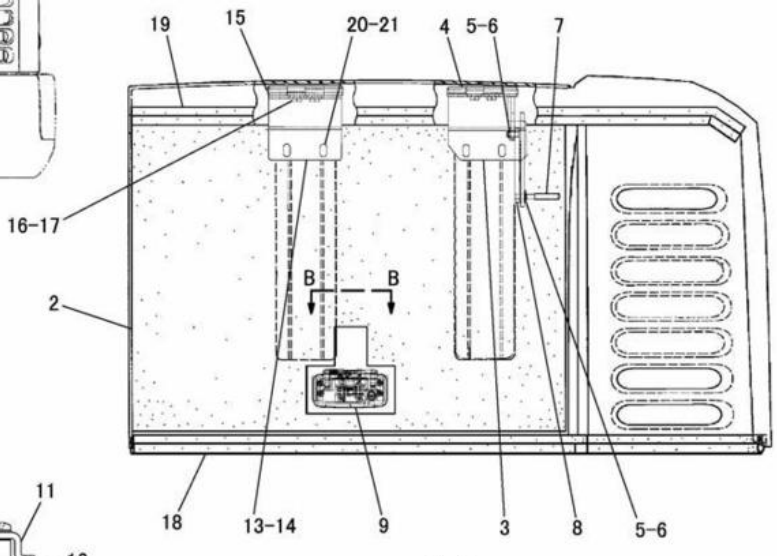

A-A

NOTE	No.	PART NO.	QTY.	PART NAME	NOTE	No.	PART NO.	QTY.	PART NAME
C	1	240-7593	1	HOOD GROUP		20	8T-4136	4	BOLT(M10×1.5)
	2	191-0210	1	INSULATION		21	7X-7729	4	WASHER
	3	200-5538	1	HINGE AS					
	4	200-5539	1	HINGE AS					
	5	3B-4610	2	COTTER PIN					
	6	5P-4116	2	WASHER					
	7	200-5541	1	CAP					
	8	200-5540	1	PLATE AS					
	9	231-9694	1	LATCH AS					
	10	226-3702	4	SCREW(M5×0.8)					
	11	226-3701	2	PLATE					
	12	145-9628	1	SEAL					
	13	191-0306	1	HINGE AS					
		246-6811	1	PLATE					
	14	246-6810	1	PLATE					
	15	3B-4610	2	COTTER PIN					
		246-6812	1	PIN					
		8T-4224	2	WASHER					
	16	8T-4137	4	BOLT(M10×1.5)					
	17	7X-7729	4	WASHER					
D	18	5P-8309		SEAL---1.15m					
D	19	5P-8309		SEAL---1.035m					

C-INDICATES CHANGE
D-ORDER BY THE m

J136087 E01

HOOD AND GUARD (191-0350 N/S) -UPPER EXHAUST
EFFECTIVE WITH SERIAL NO. BMW01359-
PART OF 191-0344-Page 33
AN ATTACHMENT

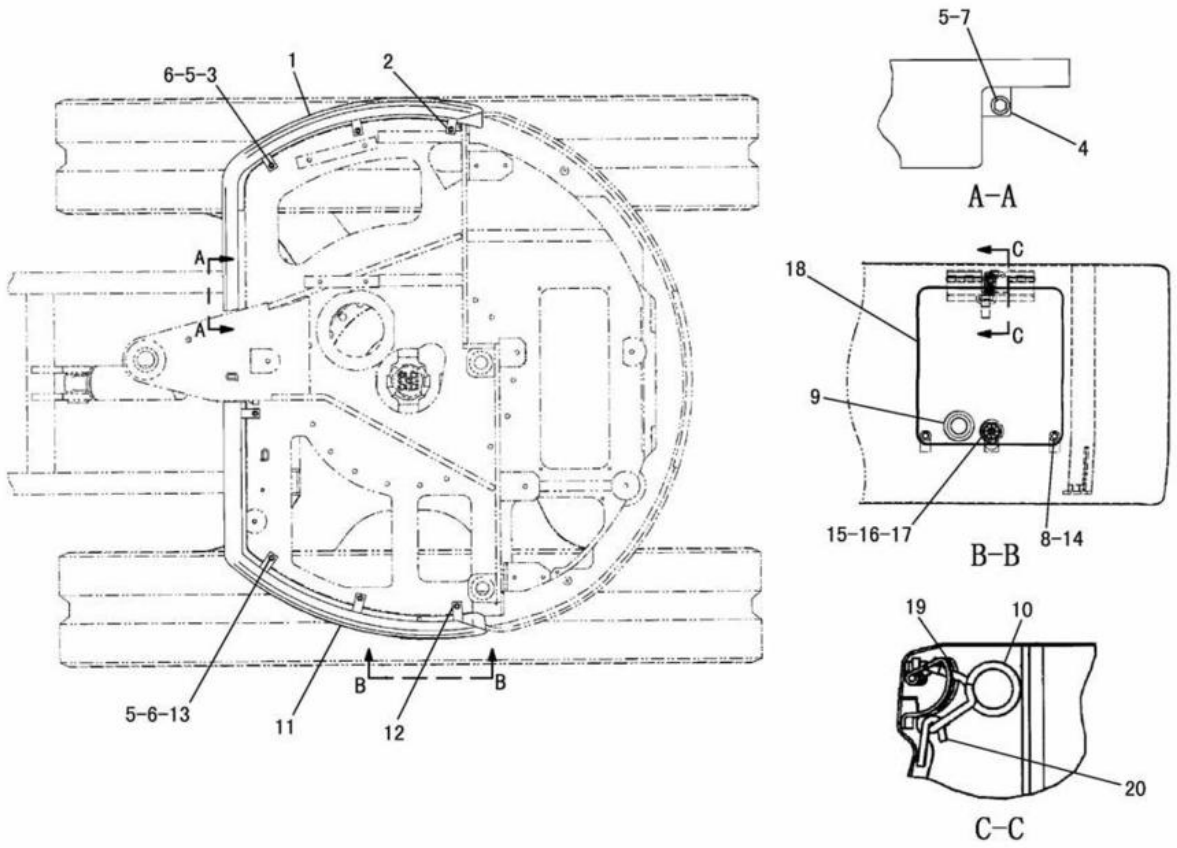

NOTE	No.	PART NO.	QTY.	PART NAME	NOTE	No.	PART NO.	QTY.	PART NAME
	1	191-0184	1	FENDER AS(RH)		11	191-0185	1	FENDER AS(LH)
		191-0189	3	PLATE			191-0191	2	PLATE
	2	191-0188	3	PLATE			191-0285	1	PLATE
	3	8T-3490	3	NUT(M10)(WELD)			191-0291	1	CLIP
	4	191-0190	1	BRACKET		12	191-0188	4	PLATE
	5	7X-7729	8	WASHER		13	8T-3490	4	NUT(M10)(WELD)
	6	8T-4186	7	BOLT(M10)		14	191-0194	2	PLATE
	7	8T-4136	1	BOLT(M10)		15	8T-2894	1	LOCK AS(RH)
	8	8K-1115	2	BUMPER			8T-5004	1	SCREW(1/4-28)
	9	8P-5348	1	GROMMET			7F-9223	1	LOCKWASHER
	10	1K-8850	1	SPRING		16	191-0286	1	WASHER
						17	191-0195	1	PLATE
						18	191-0289	1	COVER
						19	191-0290	1	HUNGE
						20	191-0292	1	CLIP

J106458 E02

FENDER COVER (191-0180 N/S)

EFFECTIVE WITH SERIAL NO. BMW00001-BMW00980
PART OF 191-3351-Page 184,185,186,187,188,189

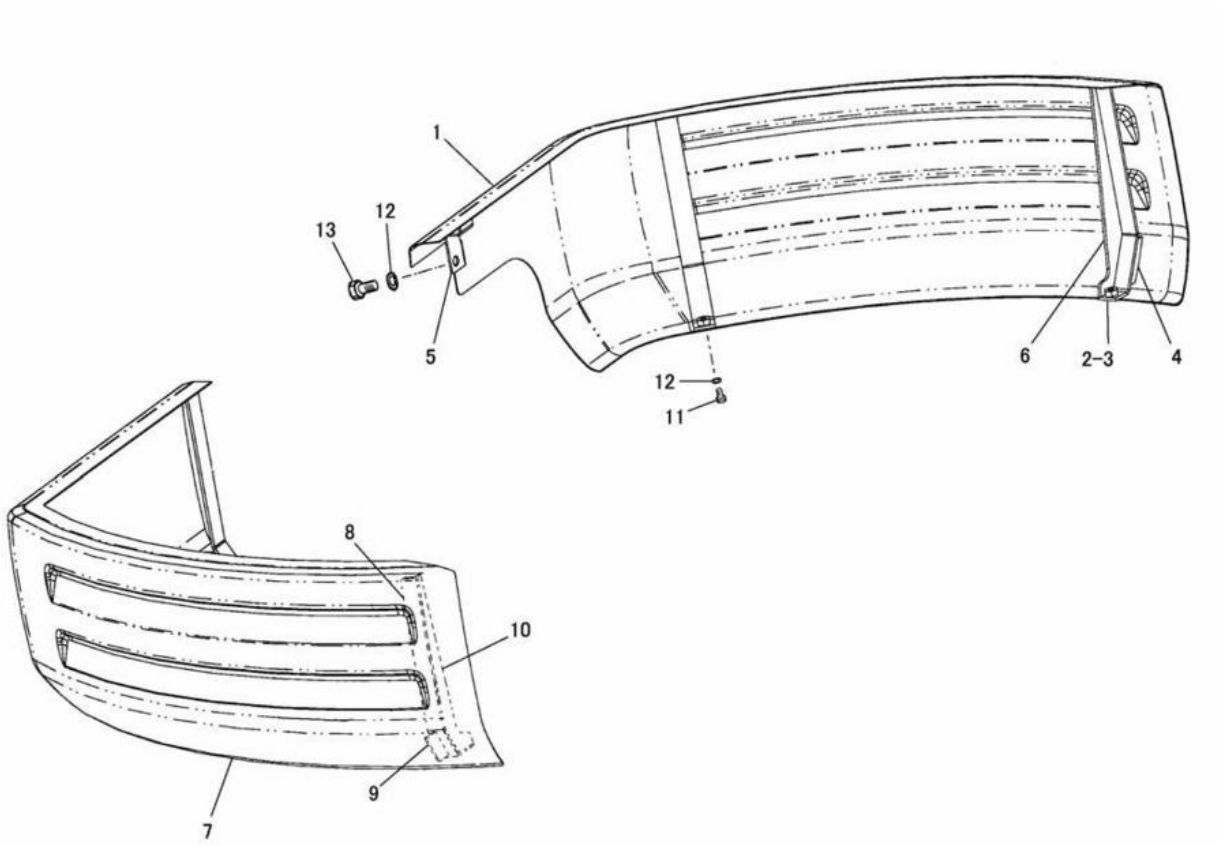

NOTE	No.	PART NO.	QTY.	PART NAME	NOTE	No.	PART NO.	QTY.	PART NAME
	1	191-0184	1	FENDER AS(RH)					
	2	8T-3490	2	NUT(M10×1.5)(WELD)					
	3	191-0188	2	PLATE					
	4	191-0189	2	PLATE					
	5	191-0190	1	BRACKET					
	6	191-0341	1	PLATE					
C	7	200-5533	1	FENDER AS(LH)					
		8T-3490	3	NUT(M10×1.5)(WELD)					
	8	191-0188	3	PLATE					
	9	191-0191	3	PLATE					
	10	191-0341	1	PLATE					
C	11	8T-4186	5	BOLT(M10×1.5)					
C	12	7X-7729	6	WASHER					
	13	8T-4136	1	BOLT(M10×1.5)					

C-INDICATES CHANGE

J126872 E04

FENDER COVER (191-0180 N/S)

EFFECTIVE WITH SERIAL NO. BMW00981-
PART OF 191-3351-Page 184,185,186,187,188,189

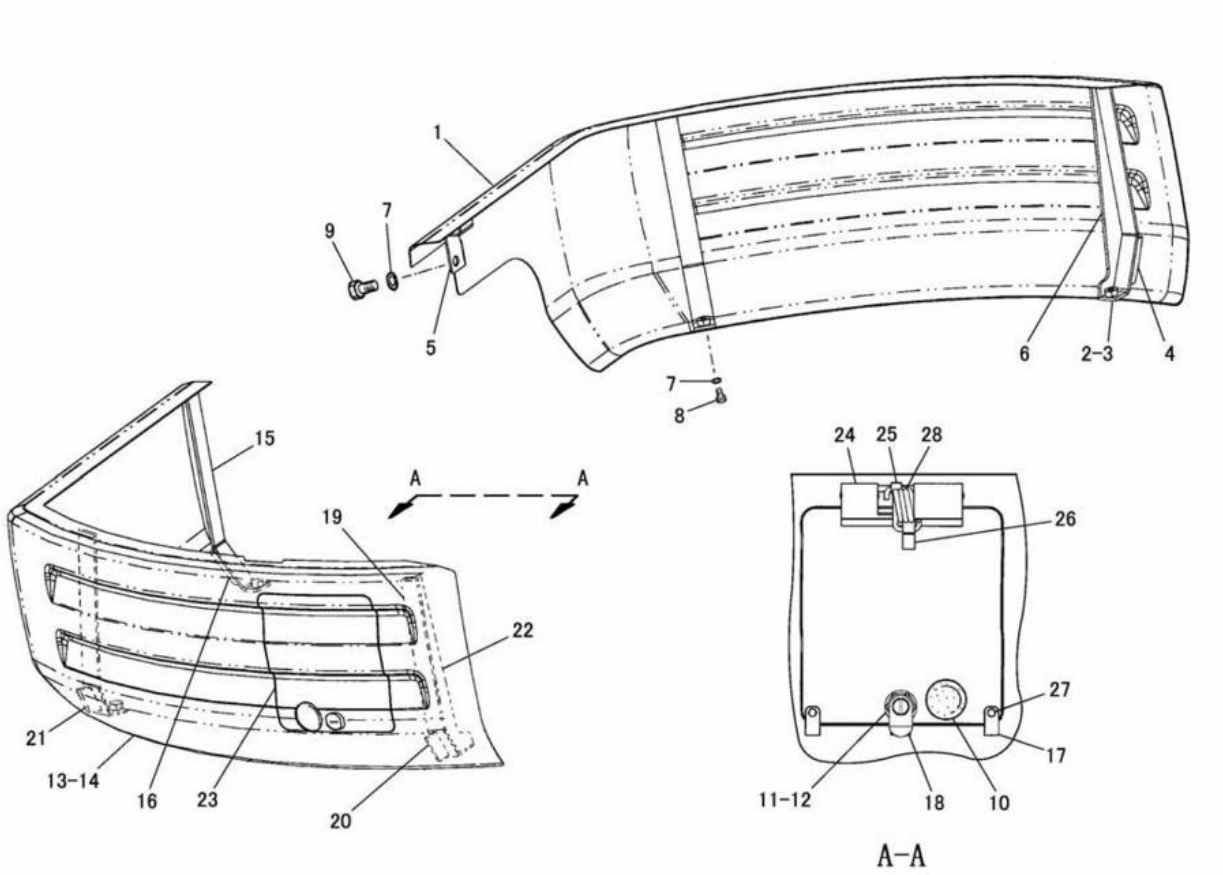

NOTE	No.	PART NO.	QTY.	PART NAME	NOTE	No.	PART NO.	QTY.	PART NAME
	1	191-0184	1	FENDER AS(RH)		13	191-0294	1	FENDER AS(LH)
	2	8T-3490	2	NUT(M10×1.5)(WELD)		14	191-0281	1	FENDER AS(LH)
	3	191-0188	2	PLATE			8T-3490	3	NUT(M10×1.5)(WELD)
	4	191-0189	2	PLATE		15	191-0188	1	PLATE
	5	191-0190	1	BRACKET		16	191-0191	1	PLATE
	6	191-0341	1	PLATE		17	191-0194	2	PLATE
	7	7X-7729	6	WASHER		18	191-0195	1	PLATE
	8	8T-4186	5	BOLT(M10×1.5)		19	191-0283	2	PLATE
	9	8T-4136	1	BOLT(M10×1.5)		20	191-0284	1	PLATE
	10	8P-5348	1	GROMMET		21	191-0285	1	PLATE
	11	191-0286	1	WASHER		22	191-0342	1	PLATE
J	12	8T-2894	1	LOCK AS(RH)		23	191-0289	1	COVER
		8T-5004	1	SCREW(1/4-28)		24	191-0290	1	HINGE
		7F-9223	1	LOCKWASHER		25	191-0291	1	CLIP
						26	191-0292	1	CLIP
						27	8K-1115	2	BUMPER
						28	1K-8850	1	SPRING

J-FOR USE WITH 5P-8500 KEY

J126873 E03

FENDER COVER (191-0280 N/S) -CAB

PART OF 201-4570-Page 527

AN ATTACHMENT

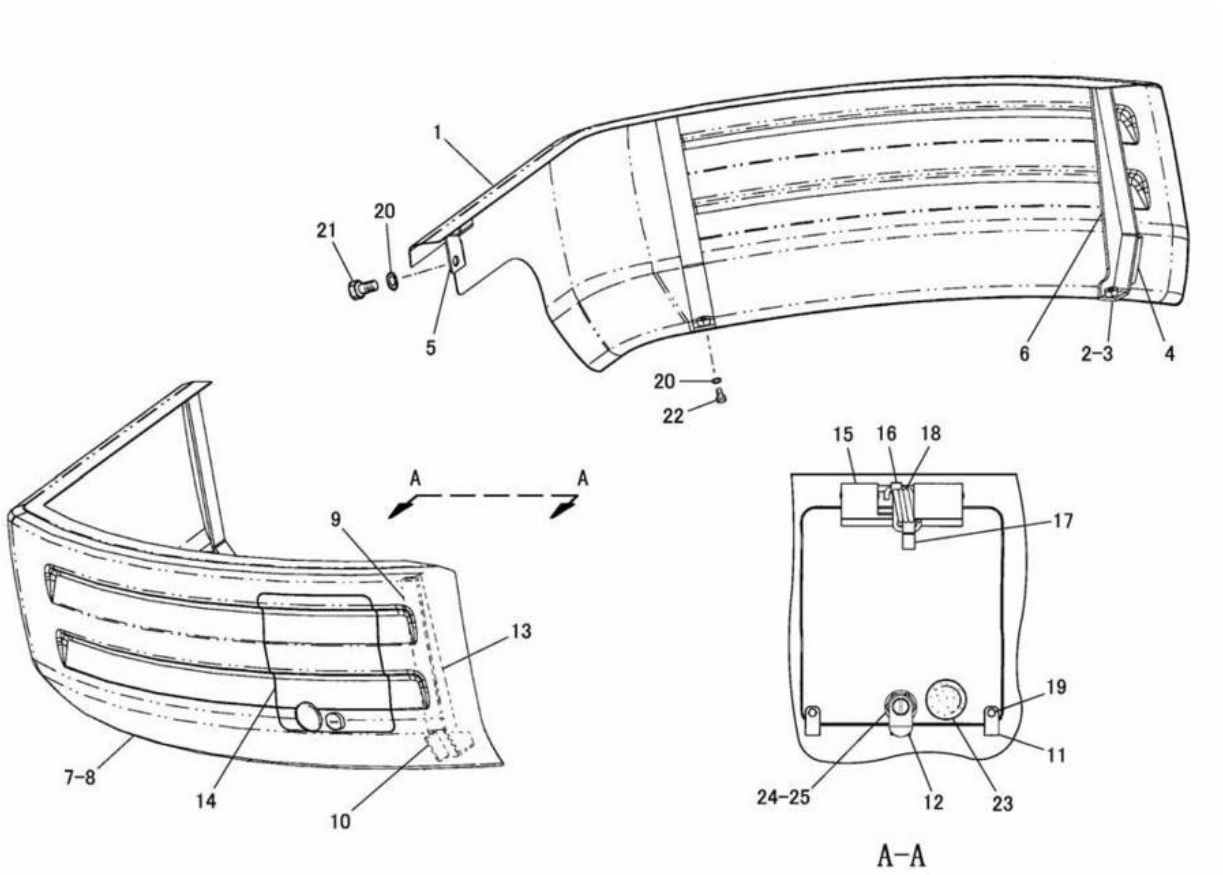

NOTE	No.	PART NO.	QTY.	PART NAME	NOTE	No.	PART NO.	QTY.	PART NAME
	1	191-0184	1	FENDER AS(RH)		20	7X-7729	6	WASHER
	2	8T-3490	2	NUT(M10×1.5)(WELD)		21	8T-4136	1	BOLT(M10×1.5)
	3	191-0188	2	PLATE		22	8T-4186	5	BOLT(M10×1.5)
	4	191-0189	2	PLATE		23	8P-5348	1	GROMMET
	5	191-0190	1	BRACKET	J	24	8T-2894	1	LOCK AS(RH)
	6	191-0341	1	PLATE			8T-5004	1	SCREW(1/4-28)
	7	191-0293	1	FENDER AS(LH)			7F-9223	1	LOCKWASHER
	8	191-0185	1	FENDER AS(LH)		25	191-0286	1	WASHER
		8T-3490	3	NUT(M10×1.5)(WELD)					
	9	191-0188	3	PLATE					
	10	191-0191	3	PLATE					
	11	191-0194	2	PLATE					
	12	191-0195	1	PLATE					
	13	191-0341	1	PLATE					
	14	191-0289	1	COVER					
	15	191-0290	1	HINGE					
	16	191-0291	1	CLIP					
	17	191-0292	1	CLIP					
	18	1K-8850	1	SPRING					
	19	8K-1115	2	BUMPER					

J-FOR USE WITH 5P-8500 KEY

J126874 E00

FENDER COVER (200-5532 N/S) -CANOPY

EFFECTIVE WITH SERIAL NO. BMW00981-
PART OF 217-7959-Page 299,228-6290-Page 300
AN ATTACHMENT

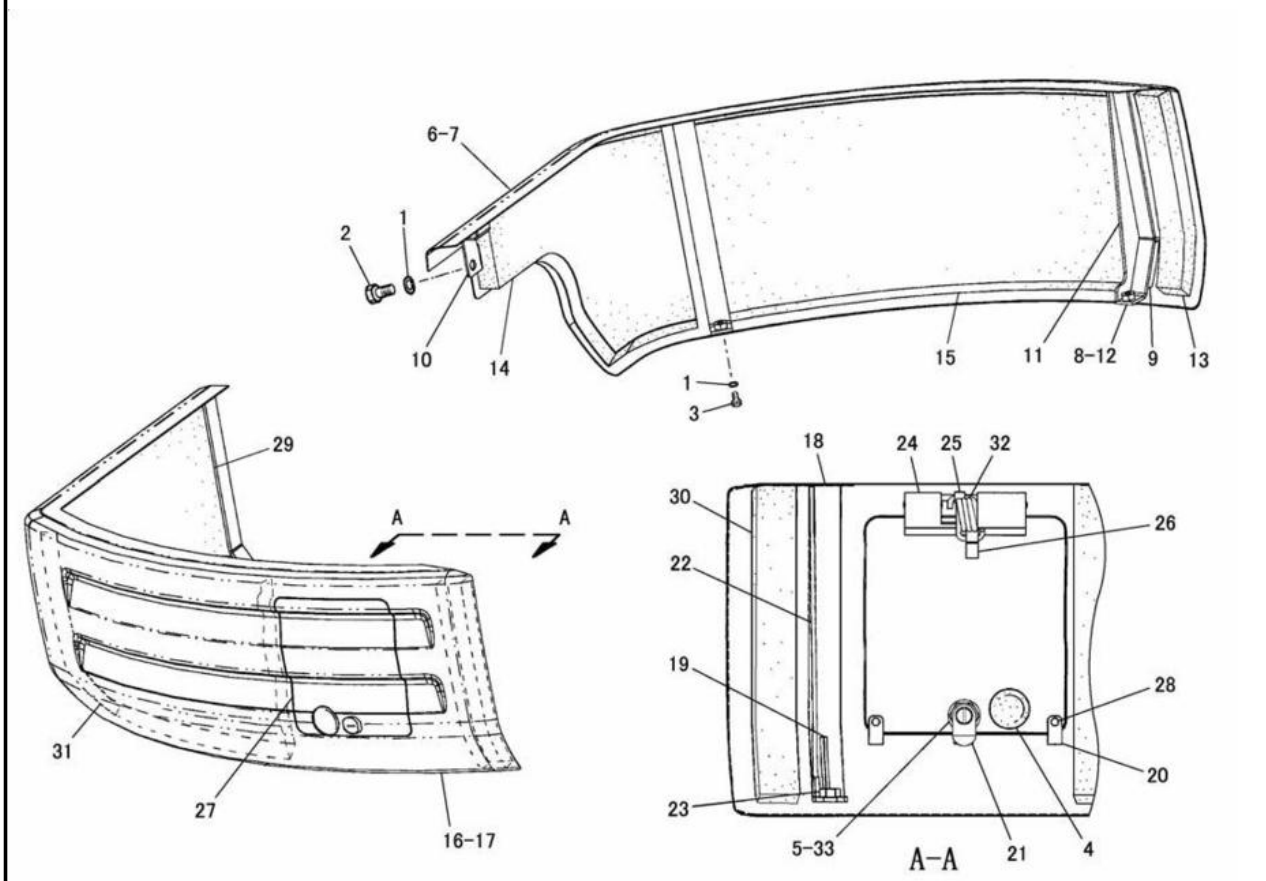

NOTE	No.	PART NO.	QTY.	PART NAME	NOTE	No.	PART NO.	QTY.	PART NAME
	1	7X-7729	6	WASHER		16	200-5518	1	FENDER AS(LH)
	2	8T-4136	1	BOLT(M10×1.5)		17	191-0185	1	FENDER AS(LH)
	3	8T-4186	5	BOLT(M10×1.5)		18	191-0188	3	PLATE
	4	8P-5348	1	GROMMET		19	191-0191	3	PLATE
	5	8T-2894	1	LOCK AS(RH)		20	191-0194	2	PLATE
		8T-5004	1	SCREW(1/4-28)		21	191-0195	1	PLATE
		7F-9223	1	LOCKWASHER		22	191-0341	1	PLATE
	6	200-5517	1	FENDER AS(RH)		23	8T-3490	3	NUT(M10×1.5)(WELD)
	7	191-0184	1	FENDER AS(RH)		24	191-0290	1	HINGE
	8	191-0188	2	PLATE		25	191-0291	1	CLIP
	9	191-0189	2	PLATE		26	191-0292	1	CLIP
	10	191-0190	1	BRACKET		27	191-0289	1	COVER
	11	191-0341	1	PLATE		28	8K-1115	2	BUMPER
	12	8T-3490	2	NUT(M10×1.5)(WELD)		29	200-5522	1	INSULATION
	13	200-5544	1	INSULATION		30	200-5544	1	INSULATION
	14	200-5521	1	INSULATION		31	200-5536	1	INSULATION
	15	200-5535	1	INSULATION		32	1K-8850	1	SPRING
						33	191-0286	1	WASHER

J126876 E01

FENDER COVER (200-5485 N/S) -SOUND SUPPRESSION

PART OF 216-8062-Page 190,191
AN ATTACHMENT

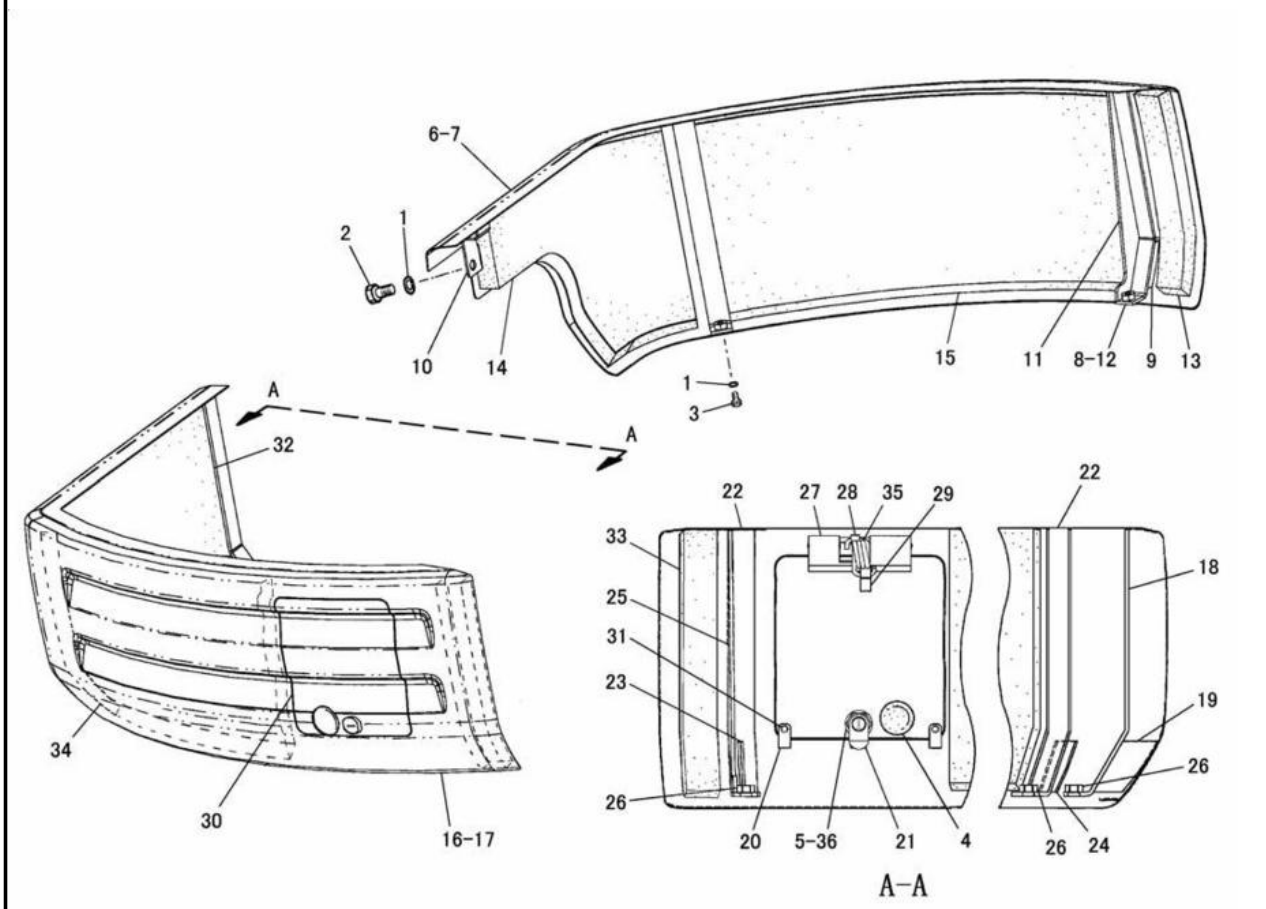

NOTE	No.	PART NO.	QTY.	PART NAME	NOTE	No.	PART NO.	QTY.	PART NAME
	1	7X-7729	6	WASHER		16	200-5519	1	FENDER AS(LH)
	2	8T-4136	1	BOLT(M10×1.5)		17	191-0281	1	FENDER AS(LH)
	3	8T-4186	5	BOLT(M10×1.5)		18	191-0188	1	PLATE
	4	8P-5348	1	GROMMET		19	191-0191	1	PLATE
	5	8T-2894	1	LOCK AS(RH)		20	191-0194	2	PLATE
		8T-5004	1	SCREW(1/4-28)		21	191-0195	1	PLATE
		7F-9223	1	LOCKWASHER		22	191-0283	2	PLATE
	6	200-5517	1	FENDER AS(RH)		23	191-0284	1	PLATE
	7	191-0184	1	FENDER AS(RH)		24	191-0285	1	PLATE
	8	191-0188	2	PLATE		25	191-0342	1	PLATE
	9	191-0189	2	PLATE		26	8T-3490	3	NUT(M10×1.5)(WELD)
	10	191-0190	1	BRACKET		27	191-0290	1	HINGE
	11	191-0341	1	PLATE		28	191-0291	1	CLIP
	12	8T-3490	2	NUT(M10×1.5)(WELD)		29	191-0292	1	CLIP
	13	200-5544	1	INSULATION		30	191-0289	1	COVER
	14	200-5521	1	INSULATION		31	8K-1115	2	BUMPER
	15	200-5535	1	INSULATION		32	200-5524	1	INSULATION
						33	200-5544	1	INSULATION
						34	200-5536	1	INSULATION
						35	1K-8850	1	SPRING
						36	191-0286	1	WASHER

J126877 E01

FENDER COVER (200-5487 N/S) -SOUND SUPPRESSION
PART OF 216-8440-Page 528
AN ATTACHMENT

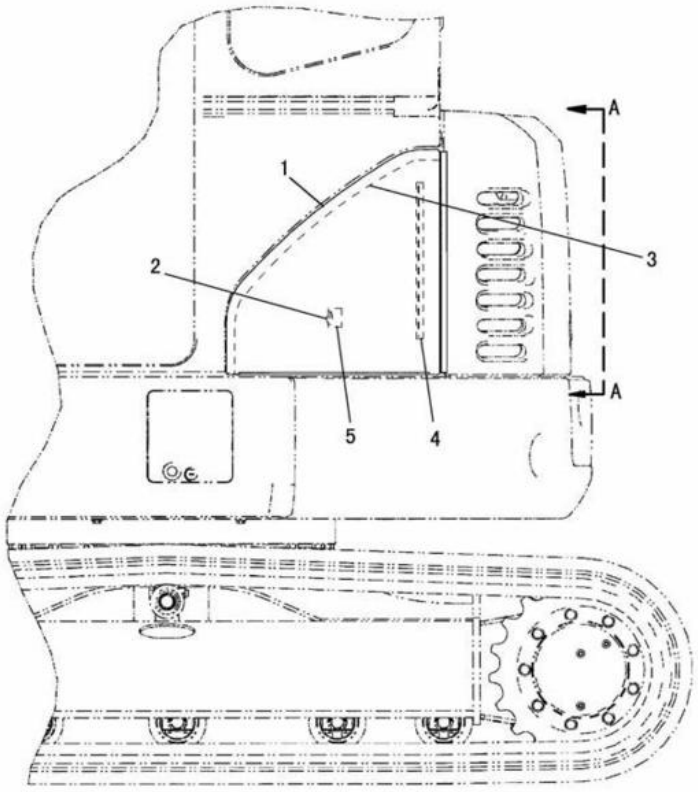

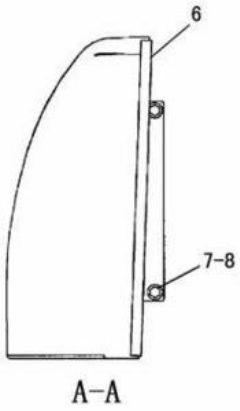

NOTE	No.	PART NO.	QTY.	PART NAME	NOTE	No.	PART NO.	QTY.	PART NAME
	1	191-0301	1	COVER AS(LH)					
	2	140-3201	1	GROMMET					
	3	200-5528	1	INSULATION					
	4	191-0304	1	BRACKET					
	5	191-0305	1	BRACKET					
D	6	5P-7483		SEAL---0.515m					
	7	7X-7729	2	WASHER					
	8	8T-4137	2	BOLT(M10×1.5)					

D-ORDER BY THE m

J126563 E02

CAB SIDE COVER (191-0300 N/S)
EFFECTIVE WITH SERIAL NO. BMW00001-BMW01404
PART OF 201-4570-Page 527
AN ATTACHMENT

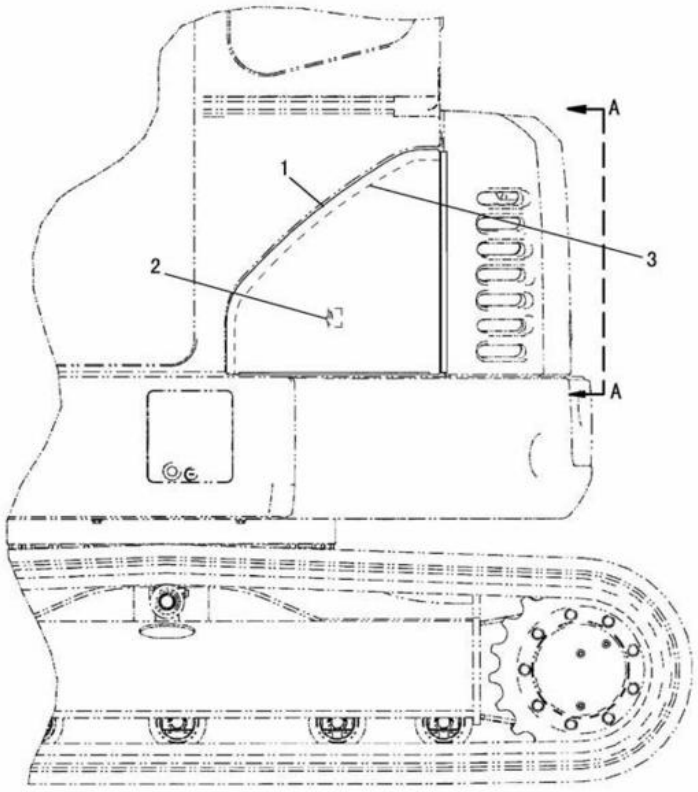

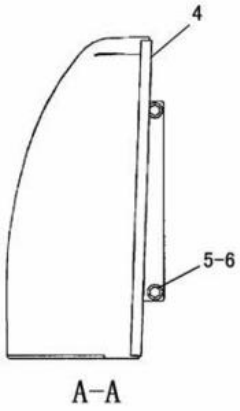

NOTE	No.	PART NO.	QTY.	PART NAME	NOTE	No.	PART NO.	QTY.	PART NAME
	1	191-0301	1	COVER AS(LH)					
	2	140-3201	1	GROMMET					
	3	200-5528	1	INSULATION					
D	4	5P-7483		SEAL---0.515m					
	5	7X-7729	2	WASHER					
	6	8T-4137	2	BOLT(M10×1.5)					

D-ORDER BY THE m

J133370 E03

CAB SIDE COVER (191-0300 N/S)
EFFECTIVE WITH SERIAL NO. BMW01405-
PART OF 201-4570-Page 527
AN ATTACHMENT

FRAME AND BODY

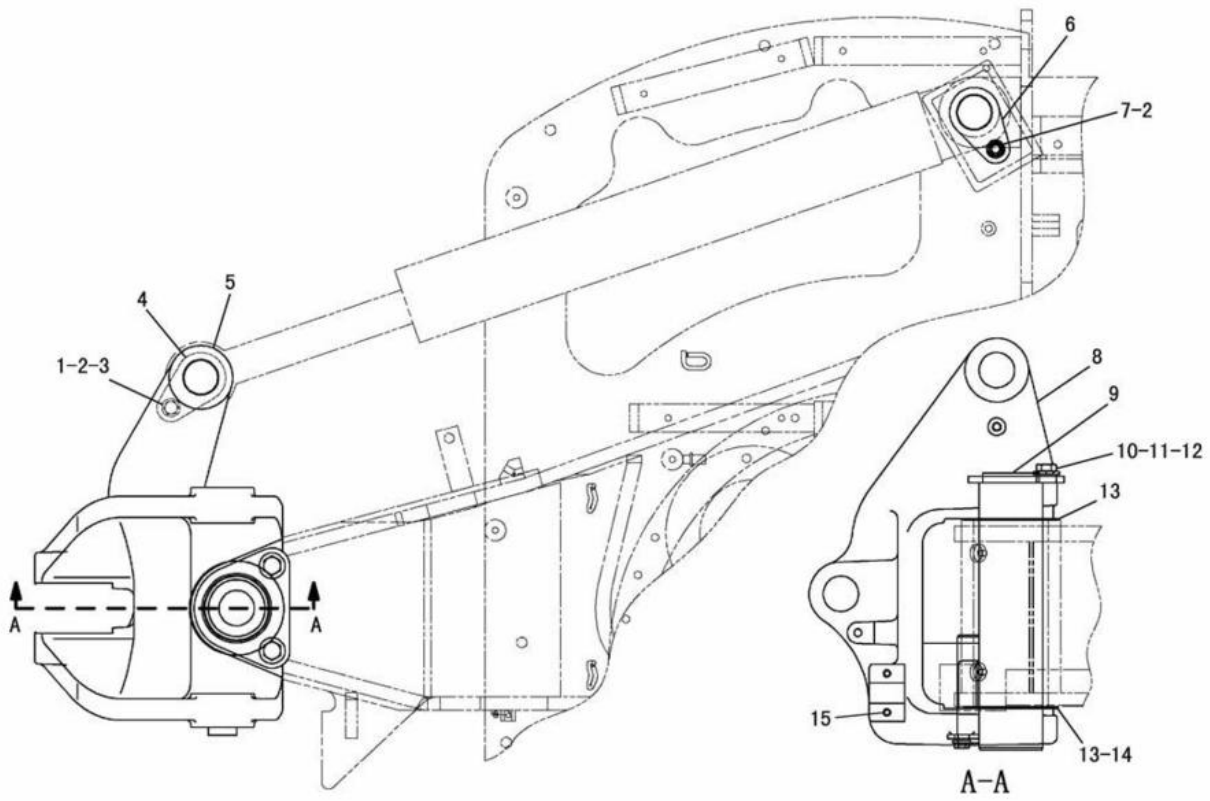

NOTE	No.	PART NO.	QTY.	PART NAME	NOTE	No.	PART NO.	QTY.	PART NAME
	1	8T-4196	1	BOLT(M10×1.5)					
	2	6V-8513	2	WASHER					
	3	200-0019	1	BOSS					
	4	200-0159	2	PIN AS					
	5	150-5689	2	SHIM(1mm THICK)					
	6	201-1717	1	PIN AS					
	7	8T-4137	1	BOLT(M10×1.5)					
	8	199-9601	1	SUPPORT					
	9	192-3550	1	PIN AS					
	10	8T-4193	2	BOLT(M16×2)					
	11	8T-4994	2	WASHER					
	12	200-4948	2	BOSS					
	13	8D-3269	2	WASHER					
	14	9W-0632	1	SPACER					
	15	7X-2548	2	BOLT(M12×1.75)					

J107605 X10

SWING FRAME (191-3835 N/S)
EFFECTIVE WITH SERIAL NO. BMW00001-BMW00980
PART OF 191-3353-Page 457

FRAME AND BODY

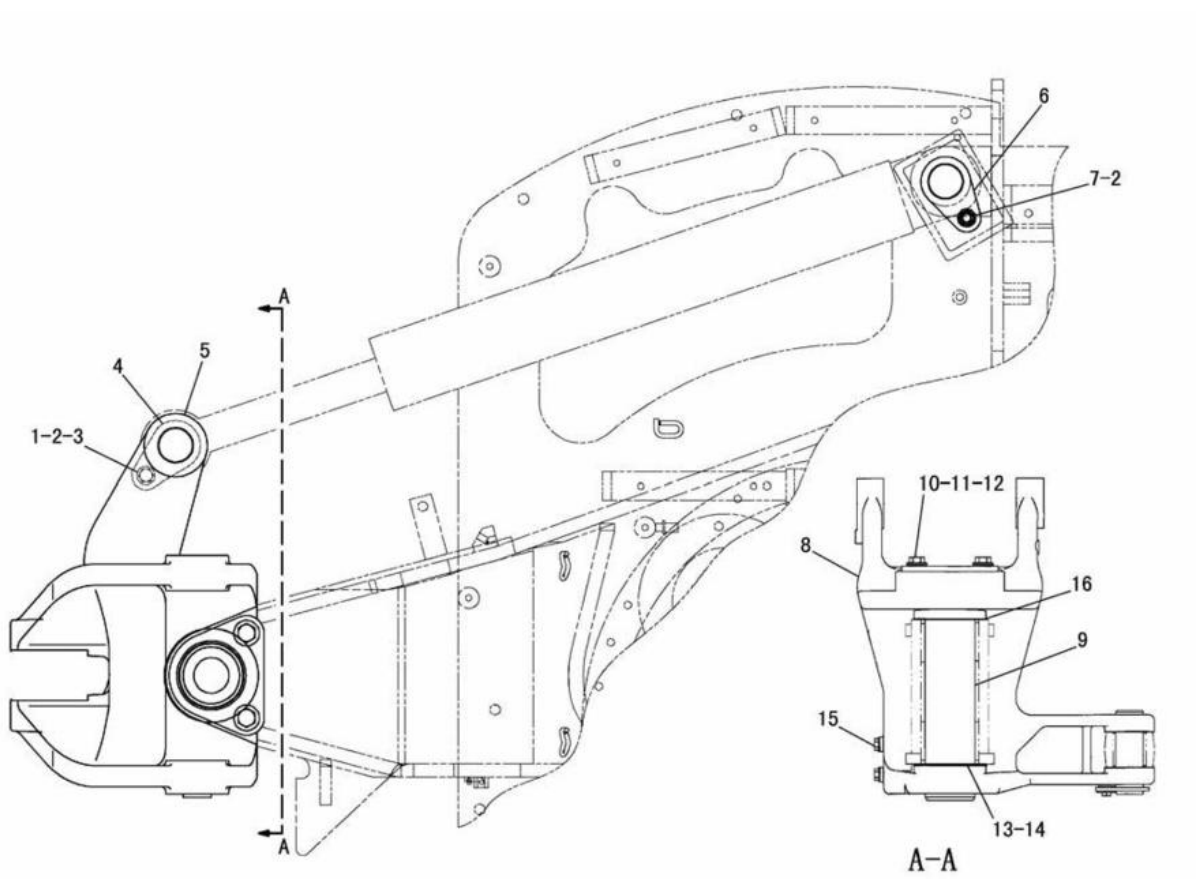

NOTE	No.	PART NO.	QTY.	PART NAME	NOTE	No.	PART NO.	QTY.	PART NAME
	1	8T-4196	1	BOLT(M10×1.5)					
	2	6V-8513	2	WASHER					
	3	200-0019	1	BOSS					
C	4	223-4115	1	PIN AS					
B	5	150-5689	2	SHIM(1mm THICK)					
C	6	223-4114	1	PIN AS					
	7	8T-4137	1	BOLT(M10×1.5)					
C	8	215-6531	1	SUPPORT					
	9	192-3550	1	PIN AS					
	10	8T-4193	2	BOLT(M16×2)					
	11	8T-4994	2	WASHER					
	12	200-4948	2	BOSS					
BC	13	203-8115	2	SPACER(1mm THICK)					
BC	14	218-9377	1	SHIM(0.5mm THICK)					
	15	7X-2548	2	BOLT(M12×1.75)					
	16	8D-3269	1	WASHER					

B-USE AS REQUIRED
C-INDICATES CHANGE

J125878 X14

SWING FRAME (191-3835 N/S)

EFFECTIVE WITH SERIAL NO. BMW00981-
PART OF 191-3353-Page 457

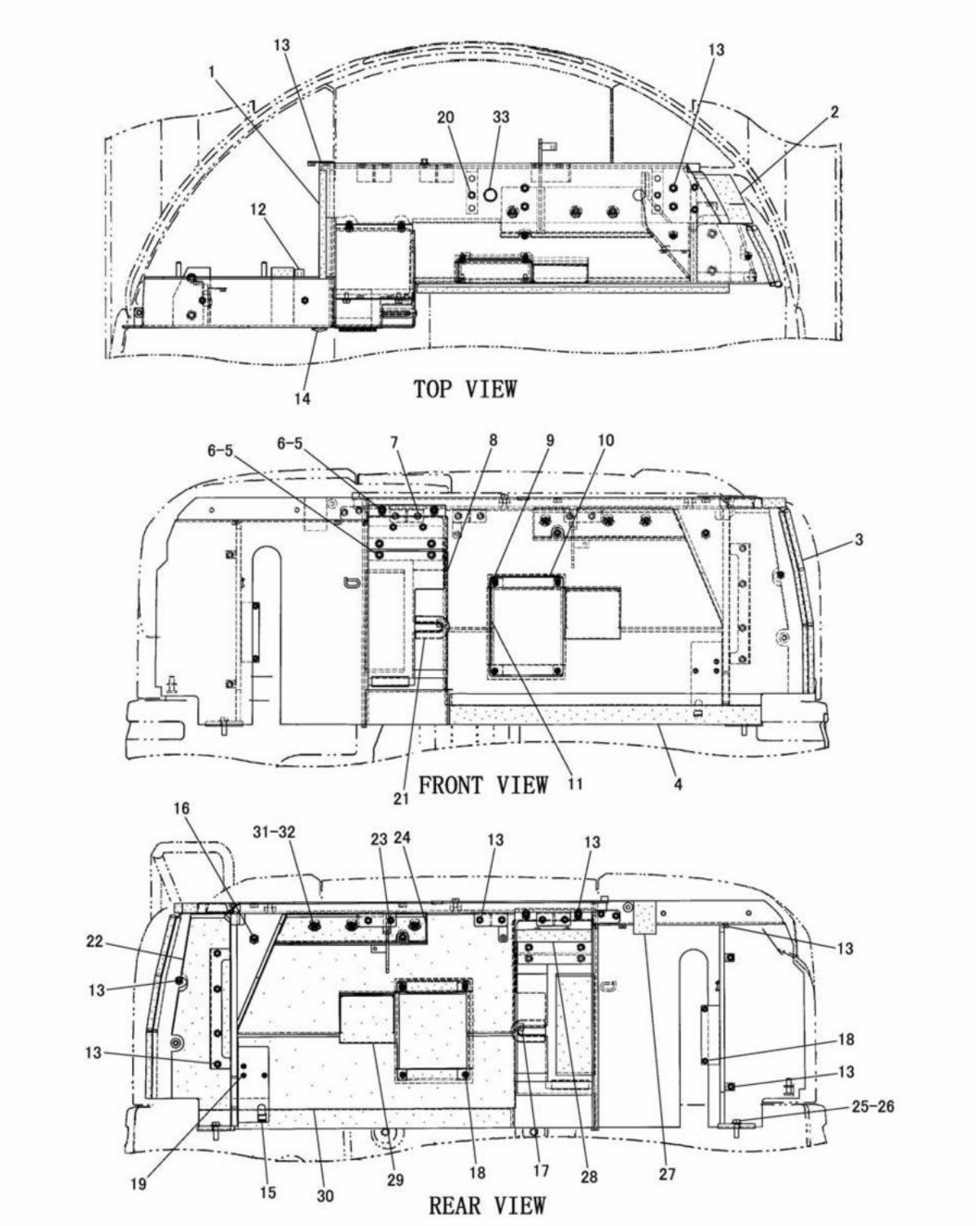

FIREWALL (191-3845 N/S)
EFFECTIVE WITH SERIAL NO. BMW00001-BMW00911
PART OF 191-3351-Page 184,185,186

FRAME AND BODY

NOTE	No.	PART NO.	QTY.	PART NAME	NOTE	No.	PART NO.	QTY.	PART NAME
D	1	5P-5643		SEAL---0.293m					
	2	199-6382	1	SEAL					
D	3	5P-8309		SEAL---0.53m					
	4	195-1795	1	SEAL					
	5	8T-4121	6	WASHER					
	6	8T-4137	6	BOLT(M10×1.5)					
	7	192-6548	1	COVER AS					
		8T-3490	2	NUT(M10×1.5)(WELD)					
	8	192-6541	1	COVER AS					
		192-6544	1	SEAL					
	9	095-7934	4	SCREW(M8×1.25)					
	10	192-6545	1	COVER AS					
		192-6547	1	SEAL					
	11	192-5196	1	FIREWALL AS					
	12	9R-3924	1	BOSS(M10×1.5)					
	13	8T-3490	19	NUT(M10×1.5)(WELD)					
	14	7T-1099	2	LINK					
	15	121-1029	1	CLIP					
	16	8T-3597	6	NUT(M12×1.75)(WELD)					
	17	9R-3142	1	BOSS(M10×1.5)					
	18	8T-3612	6	NUT(M8×1.25)(WELD)					
	19	6V-9632	3	NUT(M6×1)(WELD)					
	20	7X-2548	1	BOLT(M12×1.75)					
D	21	5P-5901		SEAL---0.165m					
	22	192-6554	1	SEAL					
	23	195-0536	1	SEAL					
	24	195-0535	1	SEAL					
	25	8T-4183	4	BOLT(M12×1.75)					
	26	8T-4223	4	WASHER					
	27	199-8525	1	SEAL					
	28	199-8524	1	SEAL					
	29	199-8523	1	SEAL					
	30	192-6553	1	SEAL					
	31	7X-2621	3	BOLT(M10×1.5)					
	32	7X-0578	3	WASHER					
	33	092-4924	1	PLUG					

D-ORDER BY THE m

J126893 X07

FIREWALL (191-3845 N/S)
EFFECTIVE WITH SERIAL NO. BMW00001-BMW00911
PART OF 191-3351-Page 184,185,186

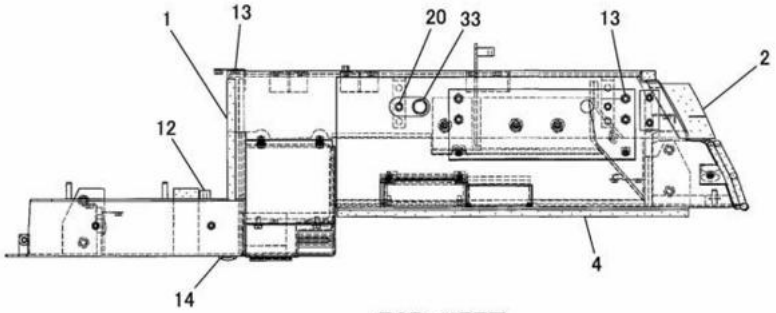

TOP VIEW

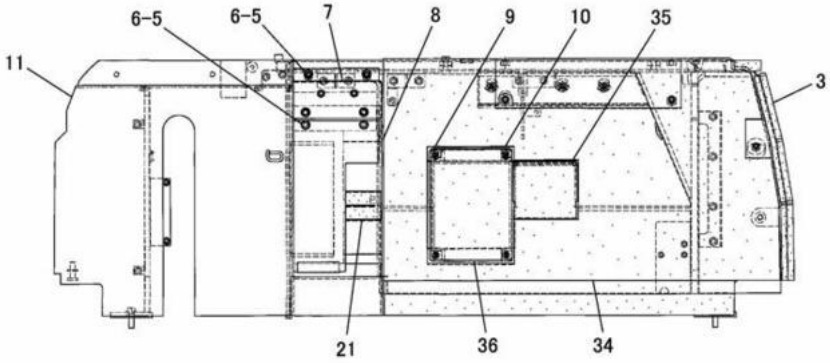

FRONT VIEW

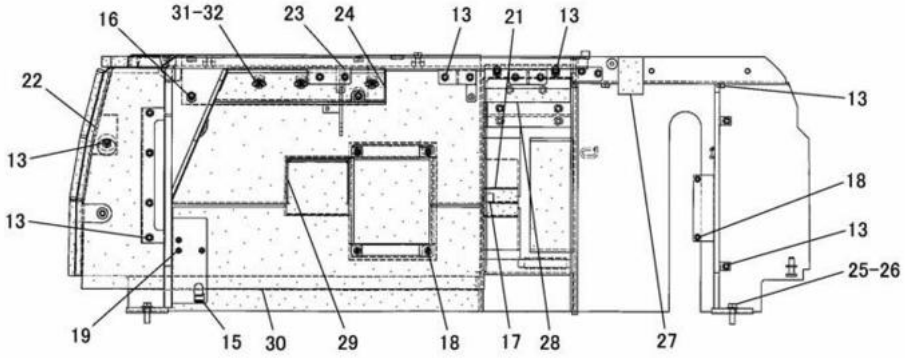

REAR VIEW

J129290 X03

FIREWALL (208-2141 N/S)
EFFECTIVE WITH SERIAL NO. BMW00912-BMW01252
PART OF 191-3351-Page 187

FRAME AND BODY

NOTE	No.	PART NO.	QTY.	PART NAME	NOTE	No.	PART NO.	QTY.	PART NAME
D	1	5P-5643		SEAL---0.293m					
	2	199-6382	1	SEAL					
D	3	5P-8309		SEAL---0.53m					
	4	195-1795	1	SEAL					
	5	8T-4121	6	WASHER					
	6	8T-4137	6	BOLT(M10×1.5)					
	7	192-6548	1	COVER AS					
		8T-3490	2	NUT(M10×1.5)(WELD)					
	8	192-6541	1	COVER AS					
		192-6544	1	SEAL					
	9	095-7934	4	SCREW(M8×1.25)					
	10	192-6545	1	COVER AS					
		192-6547	1	SEAL					
	11	209-1687	1	FIREWALL AS					
	12	9R-3924	1	BOSS(M10×1.5)					
	13	8T-3490	21	NUT(M10×1.5)(WELD)					
	14	7T-1099	2	LINK					
	15	121-1029	1	CLIP					
	16	8T-3597	6	NUT(M12×1.75)(WELD)					
	17	9R-3142	1	BOSS(M10×1.5)					
	18	8T-3612	6	NUT(M8×1.25)(WELD)					
	19	6V-9632	3	NUT(M6×1)(WELD)					
	20	7X-2548	1	BOLT(M12×1.75)					
	21	215-4369	2	SEAL					
	22	215-7923	1	SEAL					
	23	195-0536	1	SEAL					
	24	195-0535	1	SEAL					
	25	8T-4183	4	BOLT(M12×1.75)					
	26	8T-4223	4	WASHER					
	27	199-8525	1	SEAL					
	28	199-8524	1	SEAL					
	29	199-8523	1	SEAL					
	30	192-6553	1	SEAL					
	31	7X-2621	3	BOLT(M10×1.5)					
	32	7X-0578	3	WASHER					
	33	092-4924	1	PLUG					
	34	223-0812	1	SEAL					
	35	223-0813	1	SEAL					
	36	223-0814	1	SEAL					

D-ORDER BY THE m

J129290 X03

FIREWALL (208-2141 N/S)
EFFECTIVE WITH SERIAL NO. BMW00912-BMW01252
PART OF 191-3351-Page 187

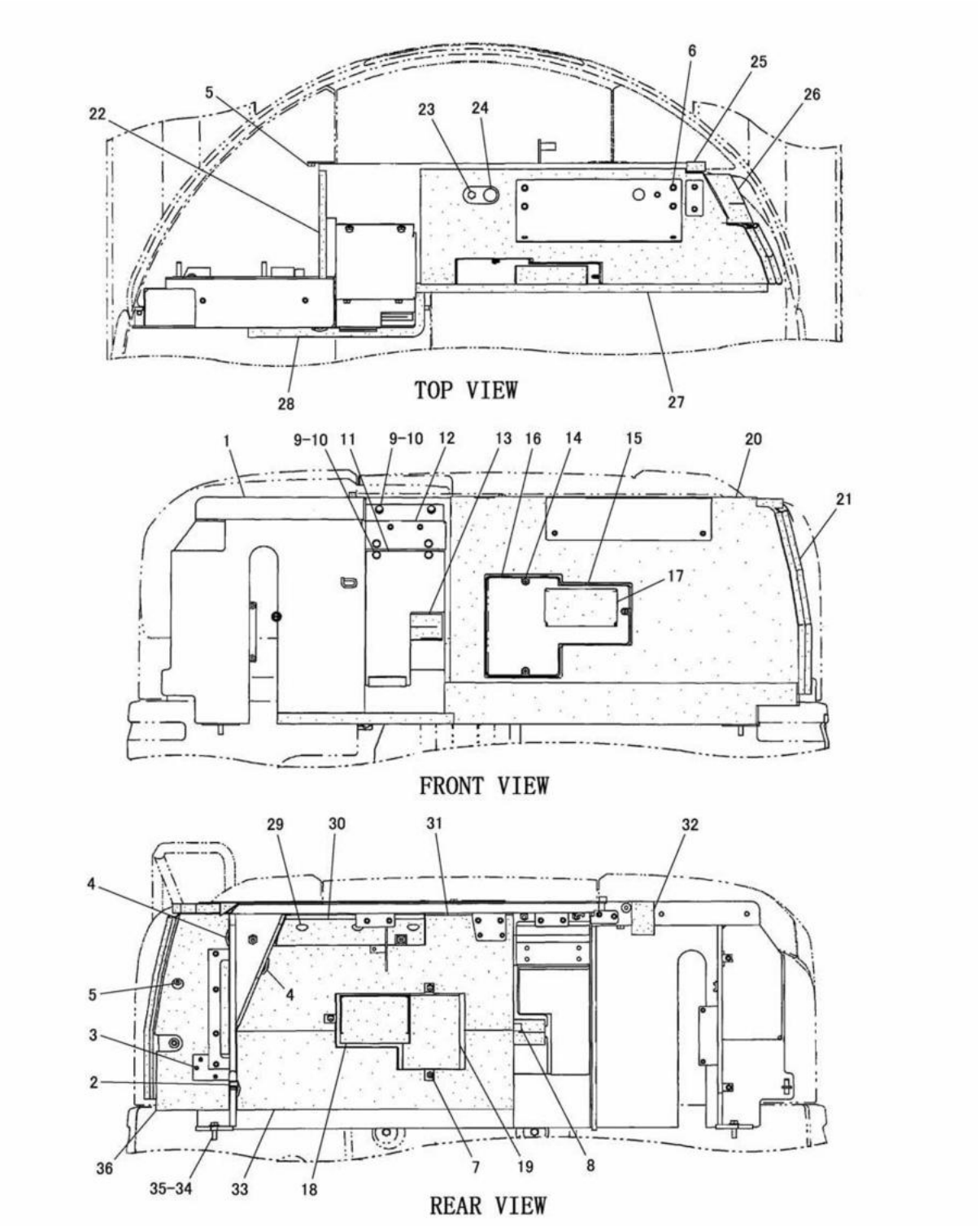

J125881 E01

FIREWALL (227-8562 N/S)
EFFECTIVE WITH SERIAL NO. BMW01253-
PART OF 191-3351-Page 188,189

FRAME AND BODY

NOTE	No.	PART NO.	QTY.	PART NAME	NOTE	No.	PART NO.	QTY.	PART NAME
	1	227-8565	1	FIREWALL AS					
	2	121-1029	1	CLIP					
	3	6V-9632	3	NUT(M6×1)(WELD)					
	4	7T-1099	6	LINK					
	5	8T-3490	21	NUT(M10×1.5)(WELD)					
	6	8T-3597	6	NUT(M12×1.75)(WELD)					
	7	8T-3612	7	NUT(M8×1.25)(WELD)					
	8	9R-2613	1	BOSS(M10×1.5)					
	9	8T-4121	6	WASHER					
	10	8T-4137	6	BOLT(M10×1.5)					
	11	227-8578	1	COVER AS					
		227-8585	1	INSULATION					
	12	227-8579	1	COVER AS					
		227-8586	1	INSULATION					
	13	215-4369	2	SEAL					
	14	095-7934	3	SCREW(M8×1.25)					
	15	227-8577	1	COVER AS					
	16	220-6409	1	SEAL					
	17	220-6410	1	SEAL					
	18	209-6511	1	SEAL					
	19	220-4600	1	SEAL					
	20	227-8600	1	INSULATION					
D	21	5P-8309		SEAL---0.53m					
D	22	5P-5643		SEAL---0.293m					
	23	7X-2548	1	BOLT(M12×1.75)					
	24	092-4924	1	PLUG					
	25	215-7888	1	SEAL					
	26	199-6382	1	SEAL					
	27	218-4210	1	SEAL					
	28	218-4190	1	SEAL					
	29	233-2854	3	CAP					
	30	227-8583	1	INSULATION					
	31	220-4602	1	LINER					
	32	218-4269	1	SEAL					
	33	220-4601	1	LINER					
	34	8T-4183	4	BOLT(M12×1.75)					
	35	8T-4223	4	WASHER					
	36	227-8582	1	INSULATION					

D-ORDER BY THE m

J125881 E01

FIREWALL (227-8562 N/S)
EFFECTIVE WITH SERIAL NO. BMW01253-
PART OF 191-3351-Page 188,189

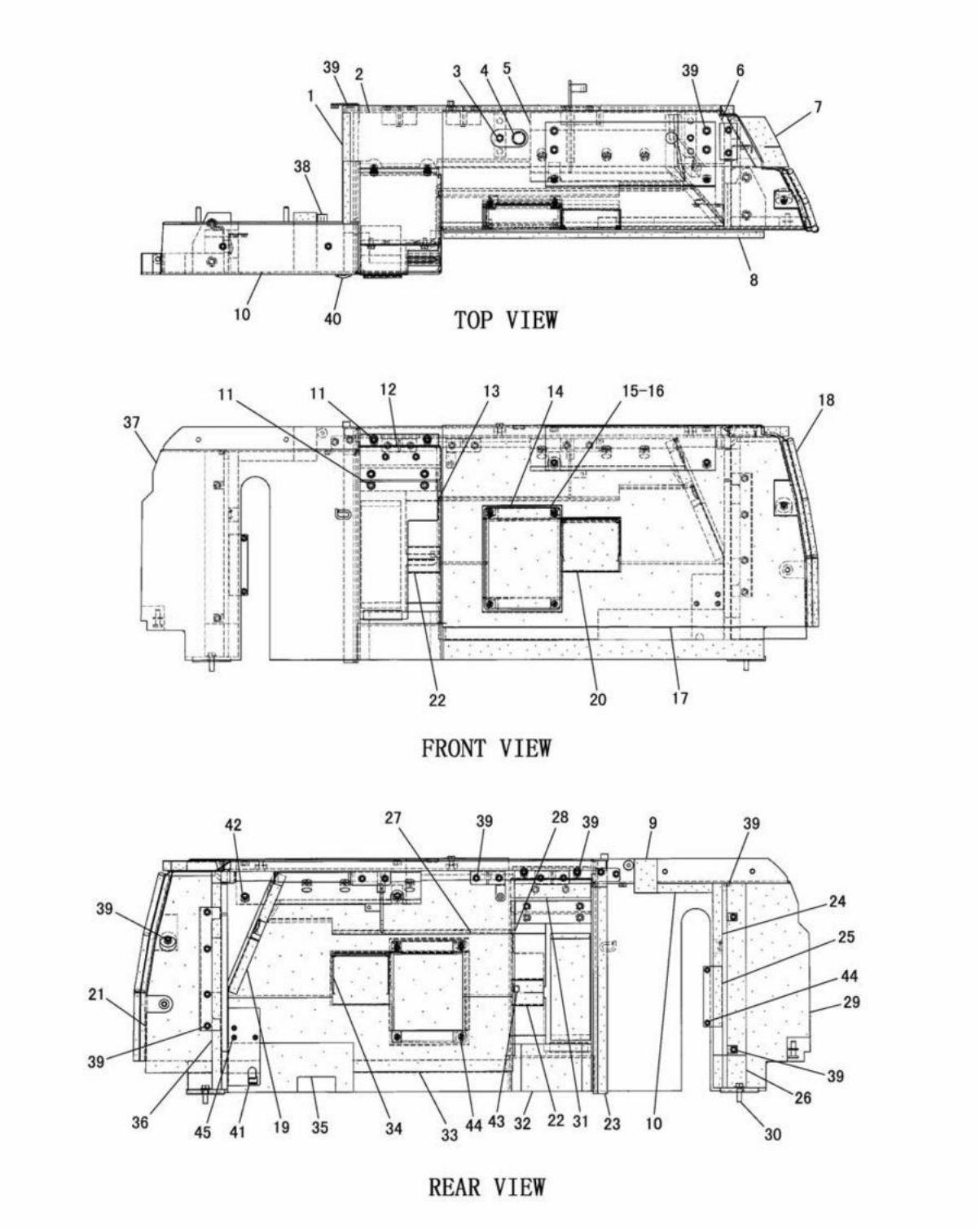

J126713 X02

FIREWALL (215-7896 N/S) -SOUND SUPPRESSION
EFFECTIVE WITH SERIAL NO. BMW00001-BMW01252
PART OF 216-8062-Page 190,216-8063-Page 192
AN ATTACHMENT

FRAME AND BODY

NOTE	No.	PART NO.	QTY.	PART NAME	NOTE	No.	PART NO.	QTY.	PART NAME
D	1	5P-5643		SEAL---0.293m					
	2	216-3211	1	SEAL					
	3	7X-2548	1	BOLT(M12×1.75)					
	4	092-4924	1	PLUG					
	5	216-3210	1	SEAL					
	6	216-3209	1	SEAL					
	7	199-6382	1	SEAL					
	8	195-1795	1	SEAL					
	9	199-8525	1	SEAL					
	10	216-3197	1	SEAL					
	11	8T-4137	6	BOLT(M10×1.5)					
		8T-4121	6	WASHER					
	12	192-6548	1	COVER AS					
		8T-3490	2	NUT(M10×1.5)(WELD)					
	13	217-1631	1	COVER AS					
		217-1632	1	SEAL					
	14	223-0814	1	SEAL					
	15	095-7934	4	SCREW(M8×1.25)					
	16	192-6545	1	COVER AS					
		192-6547	1	SEAL					
	17	223-0812	1	SEAL					
D	18	5P-8309		SEAL---0.53m					
	19	216-3207	1	SEAL					
	20	223-0813	1	SEAL					
	21	215-7923	1	SEAL					
	22	215-4369	2	SEAL					
	23	216-3198	1	SEAL					
	24	216-3194	1	SEAL					
	25	216-3195	1	SEAL					
	26	216-3193	1	SEAL					
	27	216-3200	1	SEAL					
	28	216-3202	1	SEAL					
	29	216-3192	1	SEAL					
	30	8T-4183	4	BOLT(M12×1.75)					
		8T-4223	4	WASHER					
	31	221-2140	1	SEAL					
	32	216-3199	1	SEAL					
	33	216-3203	1	SEAL					
	34	199-8523	1	SEAL					
	35	216-3204	1	SEAL					
	36	216-3208	1	SEAL					
	37	209-1687	1	FIREWALL AS					
	38	9R-3924	1	BOSS(M10×1.5)					
	39	8T-3490	21	NUT(M10×1.5)(WELD)					
	40	7T-1099	2	LINK					
	41	121-1029	1	CLIP					
	42	8T-3597	6	NUT(M12×1.75)(WELD)					
	43	9R-3142	1	BOSS(M10×1.5)					
	44	8T-3612	6	NUT(M8×1.25)(WELD)					
	45	6V-9632	3	NUT(M6×1)(WELD)					

D-ORDER BY THE m

J126713 X02

FIREWALL (215-7896 N/S) -SOUND SUPPRESSION
EFFECTIVE WITH SERIAL NO. BMW00001-BMW01252
PART OF 216-8062-Page 190,216-8063-Page 192
AN ATTACHMENT

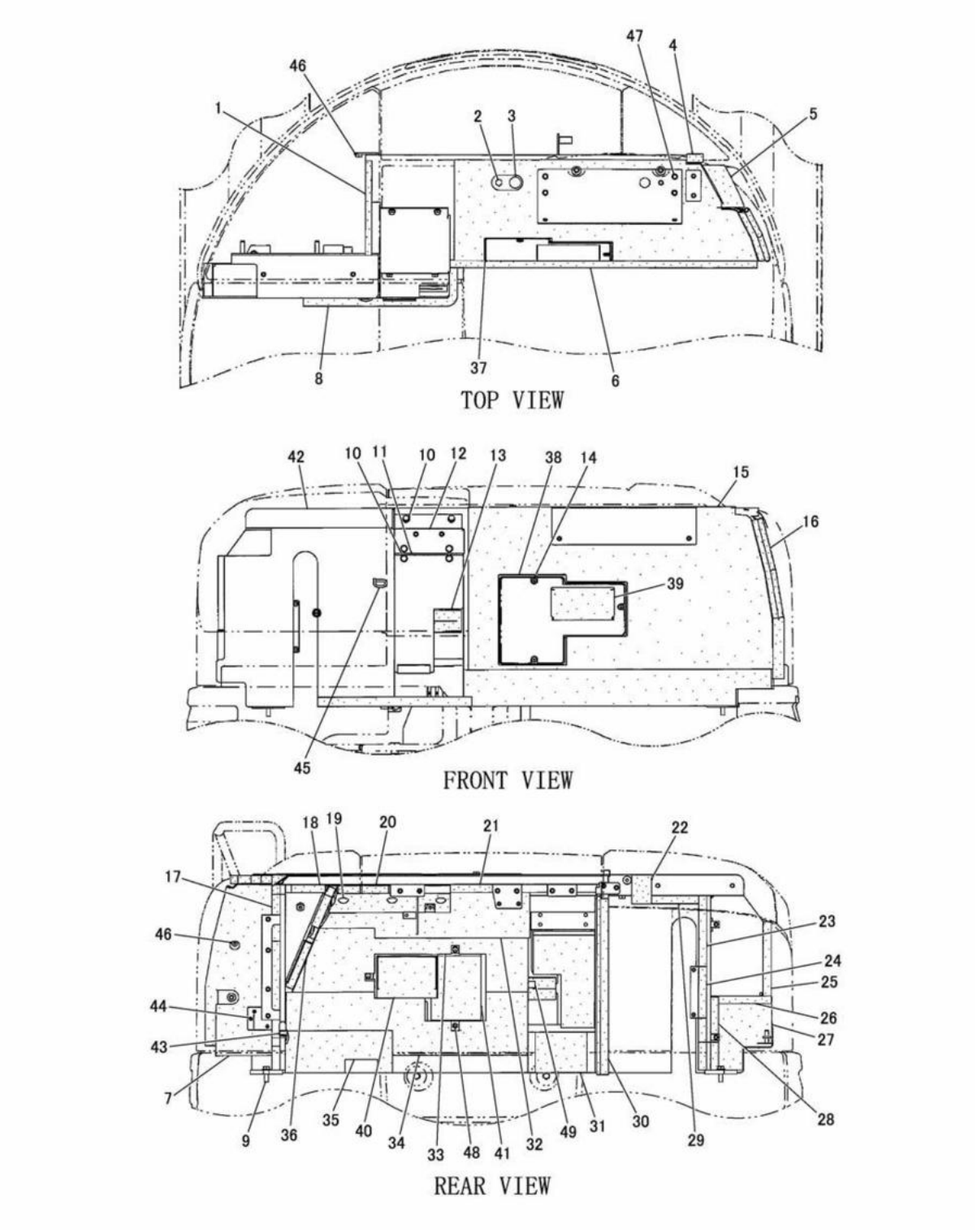

J126752 E01

FIREWALL (227-8564 N/S) -SOUND SUPPRESSION
EFFECTIVE WITH SERIAL NO. BMW01253-
PART OF 216-8062-Page 191,216-8063-Page 193
AN ATTACHMENT

FRAME AND BODY

NOTE	No.	PART NO.	QTY.	PART NAME	NOTE	No.	PART NO.	QTY.	PART NAME
E	1	233-2852		SEAL---29.3cm					
	2	7X-2548	1	BOLT(M12×1.75)					
	3	092-4924	1	PLUG					
	4	215-7888	1	SEAL					
	5	199-6382	1	SEAL					
	6	218-4210	1	SEAL					
	7	227-8582	1	INSULATION					
	8	218-4190	1	SEAL					
	9	8T-4183	4	BOLT(M12×1.75)					
		8T-4223	4	WASHER					
	10	8T-4137	6	BOLT(M10×1.5)					
		8T-4121	6	WASHER					
	11	227-8587	1	COVER AS					
		227-8597	1	INSULATION					
	12	227-8588	1	COVER AS					
		227-8598	1	INSULATION					
	13	215-4369	2	SEAL					
	14	095-7934	3	SCREW(M8×1.25)					
	15	227-8600	1	INSULATION					
E	16	233-2853		SEAL---53cm					
	17	227-8593	1	INSULATION					
	18	216-3209	1	SEAL					
	19	233-2854	3	CAP					
	20	227-8594	1	INSULATION					
	21	216-3211	1	SEAL					
	22	218-4269	1	SEAL					
	23	216-3194	1	SEAL					
	24	216-3195	1	SEAL					
	25	227-8595	1	INSULATION					
	26	227-8596	1	INSULATION					
	27	227-8589	1	INSULATION					
	28	227-8590	1	INSULATION					
	29	216-3197	1	SEAL					
	30	216-3198	1	SEAL					
	31	216-3199	1	SEAL					
	32	216-3202	1	SEAL					
	33	227-8591	1	INSULATION					
	34	227-8592	1	INSULATION					
	35	216-3204	1	SEAL					
	36	216-3207	1	SEAL					
	37	227-8577	1	COVER AS					
	38	220-6409	1	SEAL					
	39	220-6410	1	SEAL					
	40	209-6511	1	SEAL					
	41	220-4600	1	SEAL					
	42	227-8565	1	FIREWALL AS					
	43	121-1029	1	CLIP					
	44	6V-9632	3	NUT(M6×1)(WELD)					
	45	7T-1099	6	LINK					
	46	8T-3490	21	NUT(M10×1.5)(WELD)					
	47	8T-3597	6	NUT(M12×1.75)(WELD)					
	48	8T-3612	7	NUT(M8×1.25)(WELD)					
	49	9R-2613	1	BOSS(M10×1.5)					

E-ORDER BY THE cm

J126752 E01

FIREWALL (227-8564 N/S) -SOUND SUPPRESSION
EFFECTIVE WITH SERIAL NO. BMW01253-
PART OF 216-8062-Page 191,216-8063-Page 193
AN ATTACHMENT

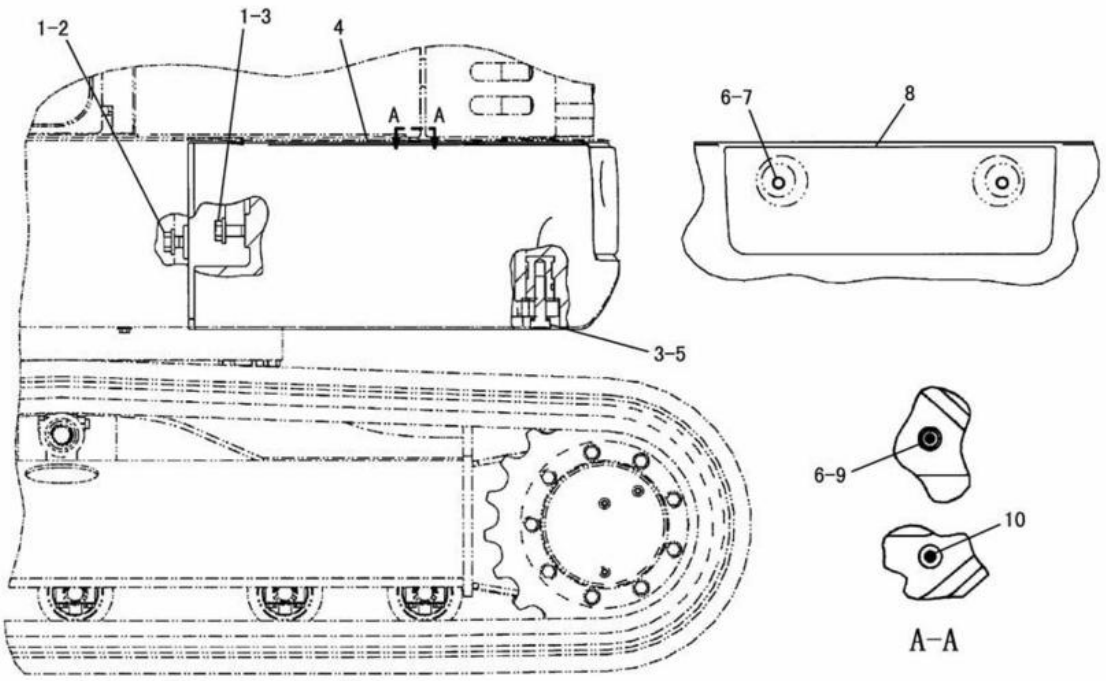

NOTE	No.	PART NO.	QTY.	PART NAME	NOTE	No.	PART NO.	QTY.	PART NAME
	1	8T-5439	2	WASHER					
	2	7X-2563	1	BOLT(M20×2.5)					
	3	8T-4187	3	BOLT(M20×2.5)					
	4	191-0182	1	COUNTERWEIGHT AS					
	5	8T-4123	2	WASHER					
	6	8T-4121	3	WASHER					
	7	8T-4191	2	BOLT(M10×1.5)					
	8	191-0183	1	COVER					
	9	124-8100	1	SCREW(M10×1.5)					
	10	6H-3615	1	PLUG					

J107582 E05

COUNTERWEIGHT (191-0179 N/S)
EFFECTIVE WITH SERIAL NO. BMW00001-BMW00746
PART OF 191-3351-Page 184,185,186,187,188,189

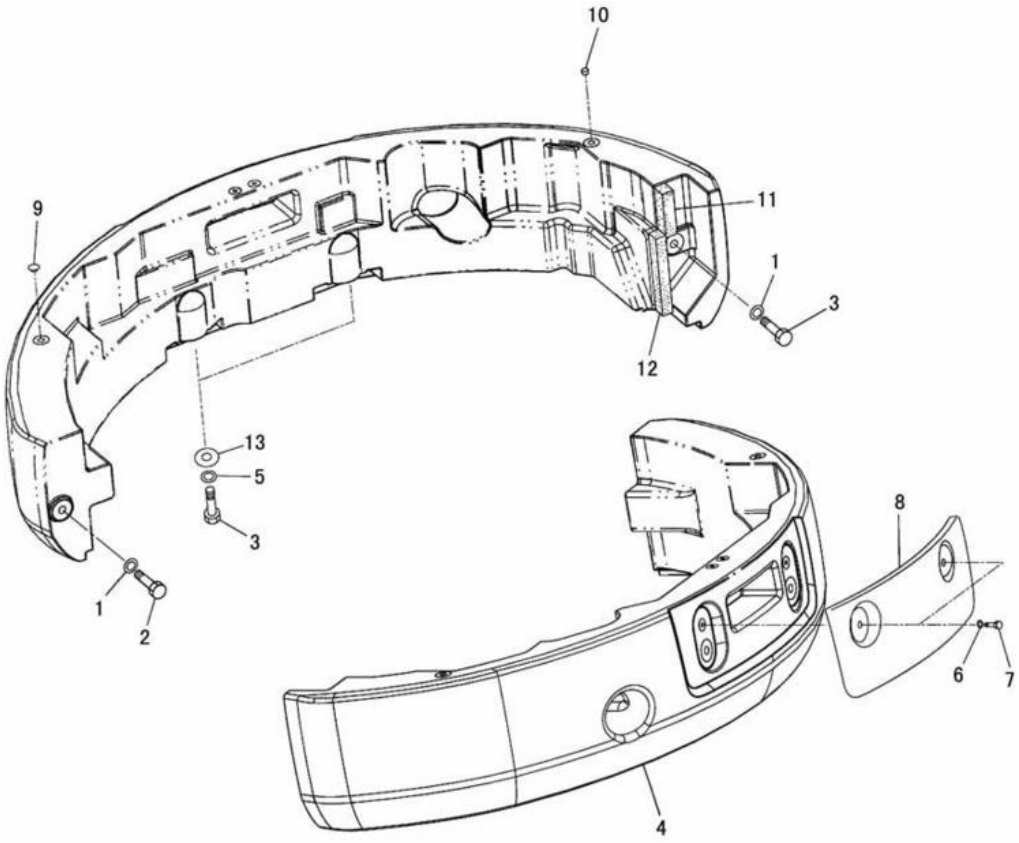

NOTE	No.	PART NO.	QTY.	PART NAME	NOTE	No.	PART NO.	QTY.	PART NAME
	1	8T-5439	2	WASHER					
	2	7X-2563	1	BOLT(M20×2.5)					
	3	8T-4187	3	BOLT(M20×2.5)					
C	4	200-5444	1	COUNTERWEIGHT AS					
	5	8T-4123	2	WASHER					
	6	8T-4121	2	WASHER					
	7	8T-4191	2	BOLT(M10×1.5)					
	8	191-0183	1	COVER					
C	9	144-9397	1	CAP					
C	10	8C-5224	1	PLUG					
C	11	200-5529	1	INSULATION					
C	12	200-5530	1	INSULATION					
CB	13	1R-7128	4	SHIM(1.0mm THICK)					
CB		7I-0676	4	SHIM(1.6mm THICK)					

B-USE AS REQUIRED
C-INDICATES CHANGE

J115366 E10

COUNTERWEIGHT (191-0179 N/S)

EFFECTIVE WITH SERIAL NO. BMW00747-BMW01374
PART OF 191-3351-Page 184,185,186,187,188,189

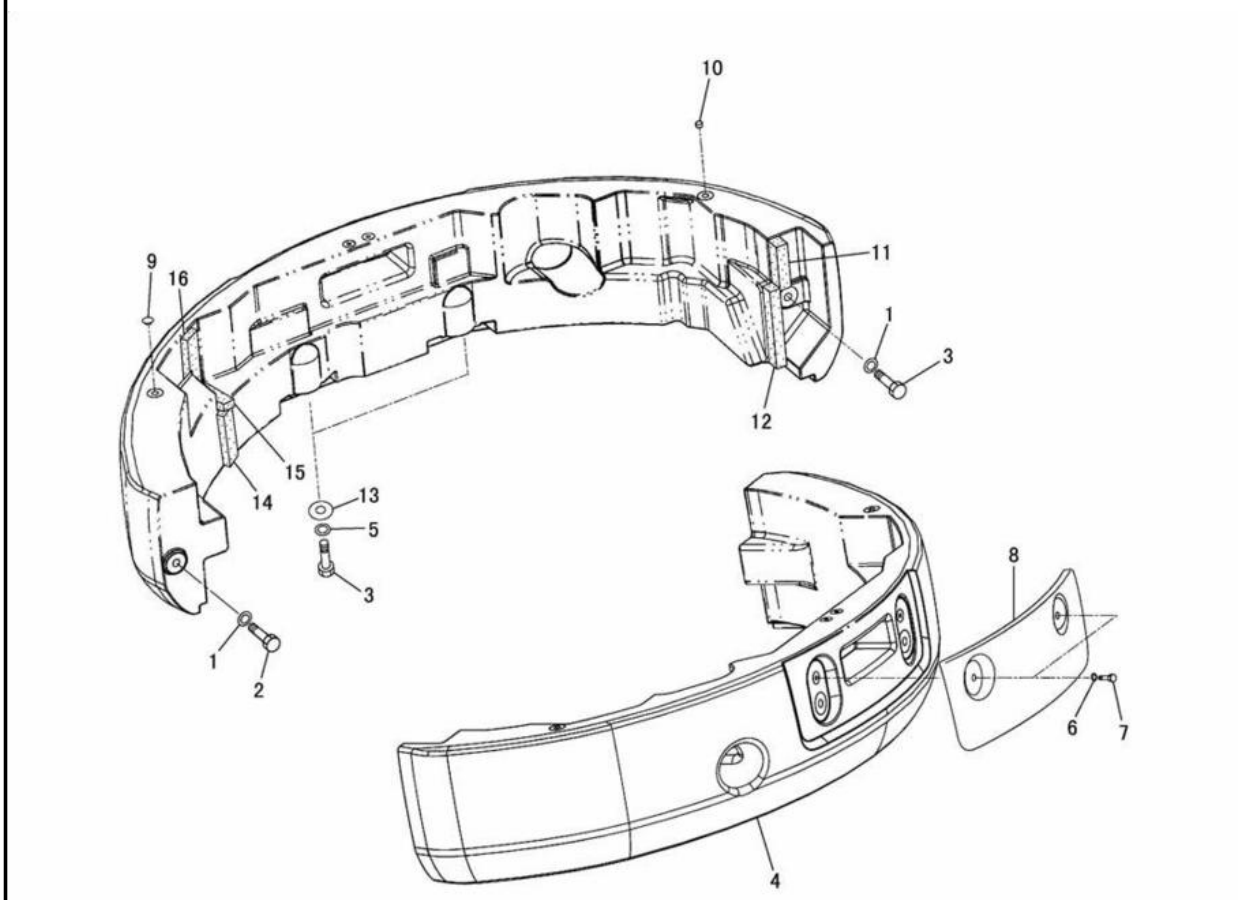

NOTE	No.	PART NO.	QTY.	PART NAME	NOTE	No.	PART NO.	QTY.	PART NAME
	1	8T-5439	2	WASHER					
	2	7X-2563	1	BOLT(M20×2.5)					
	3	8T-4187	3	BOLT(M20×2.5)					
	4	200-5444	1	COUNTERWEIGHT AS					
	5	8T-4123	2	WASHER					
	6	8T-4121	2	WASHER					
	7	8T-4191	2	BOLT(M10×1.5)					
	8	191-0183	1	COVER					
	9	144-9397	1	CAP					
	10	8C-5224	1	PLUG					
	11	200-5529	1	INSULATION					
	12	200-5530	1	INSULATION					
B	13	1R-7128	4	SHIM(1.0mm THICK)					
B		7I-0676	4	SHIM(1.6mm THICK)					
C	14	246-6764	1	INSULATION					
C	15	246-6766	1	INSULATION					
C	16	246-6767	1	INSULATION					

B-USE AS REQUIRED
C-INDICATES CHANGE

J128729 E11

COUNTERWEIGHT (191-0179 N/S)

EFFECTIVE WITH SERIAL NO. BMW01375-
PART OF 191-3351-Page 184,185,186,187,188,189

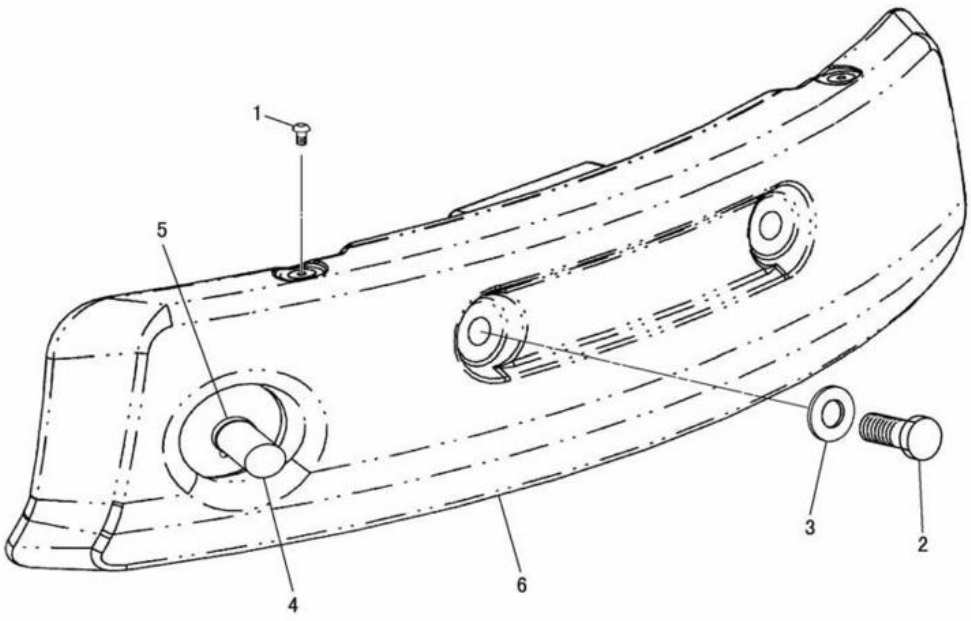

NOTE	No.	PART NO.	QTY.	PART NAME	NOTE	No.	PART NO.	QTY.	PART NAME
	1	214-6197	2	PLUG					
	2	8T-6381	2	BOLT(M20×2.5)					
	3	8T-5439	2	WASHER					
	4	201-7867	1	PIPE(EXHAUST)					
	5	5P-2230	1	CLAMP					
	6	191-0263	1	COUNTERWEIGHT AS					

J126050 E03

COUNTERWEIGHT (191-0262 N/S) -190kg
AN ATTACHMENT

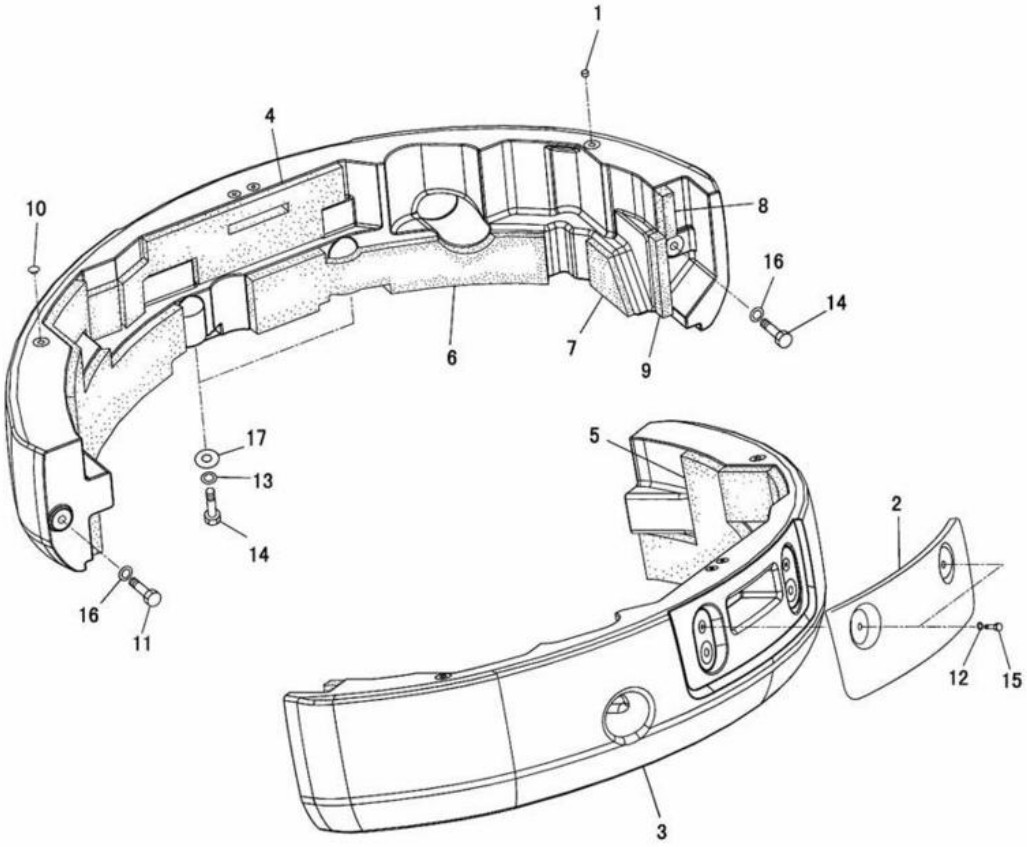

NOTE	No.	PART NO.	QTY.	PART NAME	NOTE	No.	PART NO.	QTY.	PART NAME
	1	8C-5224	1	PLUG					
	2	191-0183	1	COVER					
	3	200-5444	1	COUNTERWEIGHT AS					
	4	200-5489	1	INSULATION					
	5	200-5490	1	INSULATION					
	6	200-5491	1	INSULATION					
	7	200-5492	1	INSULATION					
	8	200-5529	1	INSULATION					
	9	200-5530	1	INSULATION					
	10	144-9397	1	CAP					
	11	7X-2563	1	BOLT(M20×2.5)					
	12	8T-4121	2	WASHER					
	13	8T-4123	2	WASHER					
	14	8T-4187	3	BOLT(M20×2.5)					
	15	8T-4191	2	BOLT(M10×1.5)					
	16	8T-5439	2	WASHER					
B	17	1R-7128	4	SHIM(1.0mm THICK)					
B		7I-0676	4	SHIM(1.6mm THICK)					

B-USE AS REQUIRED

J126710 E01

COUNTERWEIGHT (200-5483 N/S) -601.6kg-SOUND SUPPRESSION
PART OF 216-8062-Page 190,191,216-8063-Page 192,193
AN ATTACHMENT

FRAME AND BODY

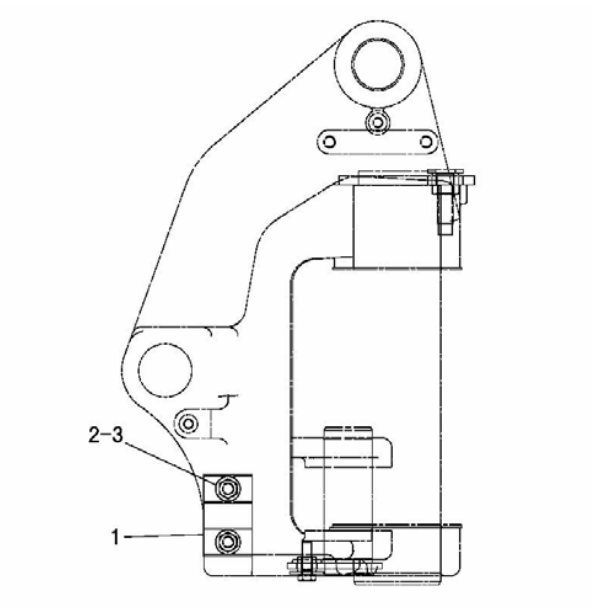

NOTE	No.	PART NO.	QTY.	PART NAME
	1	194-0757	1	PLATE
	2	8T-4183	2	BOLT(M12×1.75)
	3	8T-4223	2	WASHER

J111785 X02

SWING STOP (194-6442 N/S)
PART OF 201-4570-Page 527,216-8440-Page 528
AN ATTACHMENT

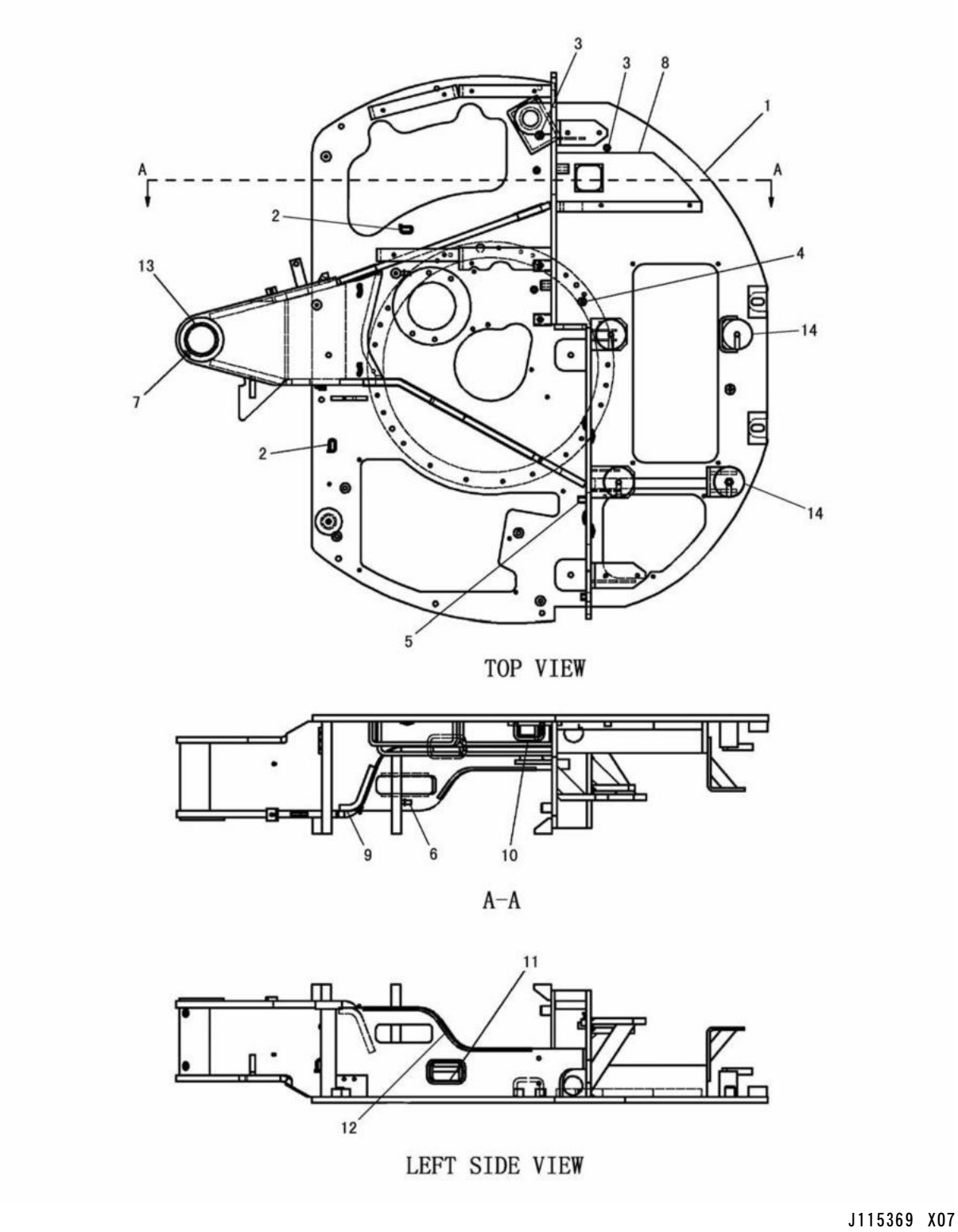

UPPER FRAME (191-3895 N/S)
EFFECTIVE WITH SERIAL NO. BMW00001-BMW00850
PART OF 191-3351-Page 184

FRAME AND BODY

NOTE	No.	PART NO.	QTY.	PART NAME	NOTE	No.	PART NO.	QTY.	PART NAME
	1	192-0608	1	FRAME AS					
	2	7T-1099	7	LINK					
	3	9R-2821	5	BOSS(M10×1.5)					
	4	9R-3924	1	BOSS(M10×1.5)					
	5	9R-2613	1	BOSS(M10×1.5)					
	6	3E-4309	1	STUD(M10×1.5)(WELD)					
	7	3B-8489	2	FITTING					
	8	199-7468	1	INSULATION					
E	9	195-3237		SEAL---20cm					
E	10	195-3238		SEAL---15cm					
E	11	195-3238		SEAL---31cm					
E	12	195-3238		SEAL---60cm					
	13	192-2379	2	BEARING					
		199-1110	2	SEAL					
B	14	7Y-3118	4	SHIM(1.2mm THICK)					
B		7Y-3127	2	SHIM(0.6mm THICK)					

B-USE AS REQUIRED
E-ORDER BY THE cm

J115369 X07

UPPER FRAME (191-3895 N/S)
EFFECTIVE WITH SERIAL NO. BMW00001-BMW00850
PART OF 191-3351-Page 184

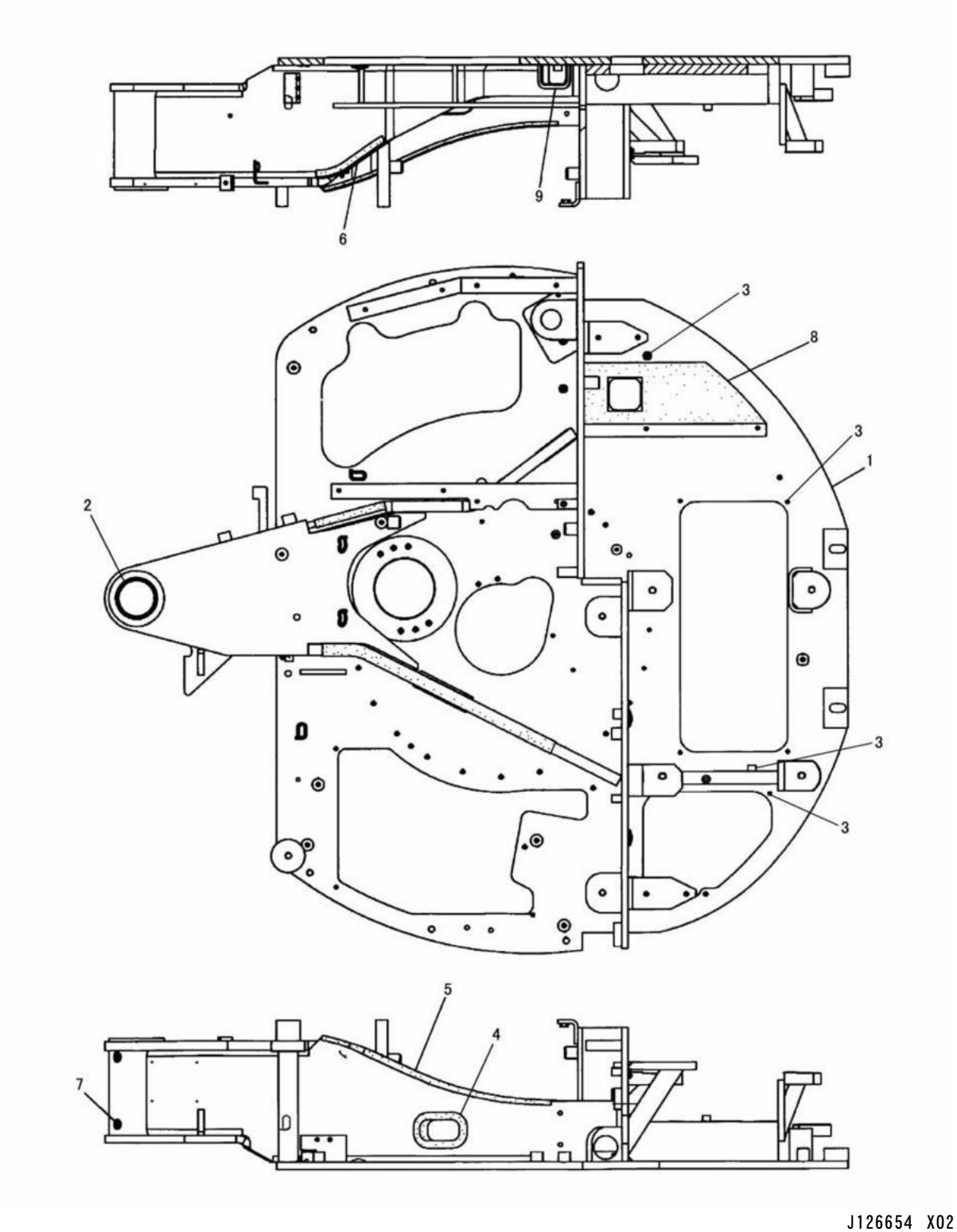

UPPER FRAME (208-2156 N/S)
EFFECTIVE WITH SERIAL NO. BMW00851-BMW01374
PART OF 191-3351-Page 185,186,187,188,189

FRAME AND BODY

NOTE	No.	PART NO.	QTY.	PART NAME	NOTE	No.	PART NO.	QTY.	PART NAME
	1	209-9631	1	FRAME AS					
	2	192-2379	2	BEARING					
		199-1110	2	SEAL					
	3	9R-2821	12	BOSS(M10×1.5)					
	4	4I-6039	1	GROMMET					
E	5	195-3238		SEAL---60cm					
E	6	195-3237		SEAL---20cm					
	7	3B-8489	2	FITTING					
	8	199-7468	1	INSULATION					
E	9	195-3238		SEAL---15cm					

E-ORDER BY THE cm

J126654 X02

UPPER FRAME (208-2156 N/S)
EFFECTIVE WITH SERIAL NO. BMW00851-BMW01374
PART OF 191-3351-Page 185,186,187,188,189

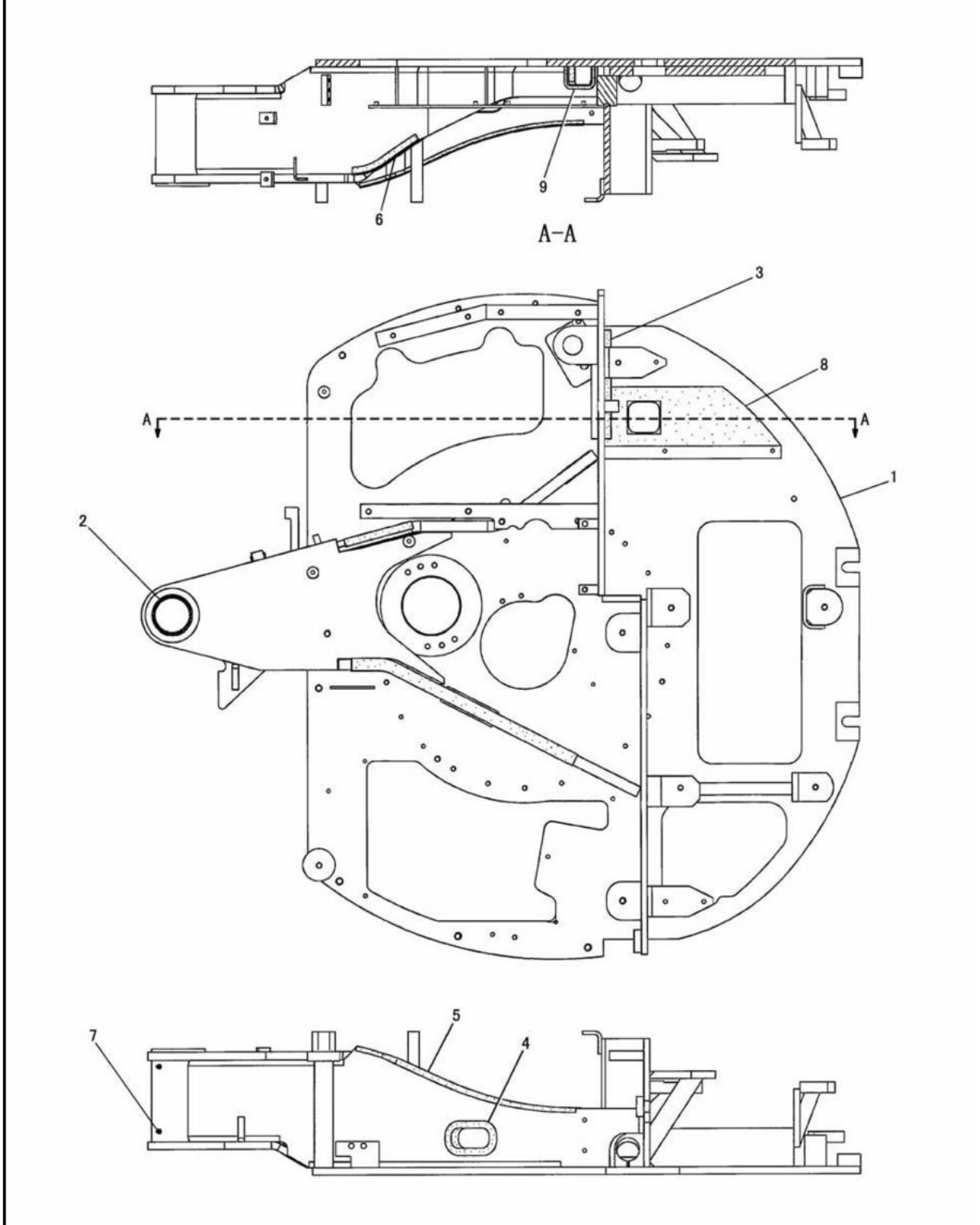

UPPER FRAME (208-2156 N/S)
EFFECTIVE WITH SERIAL NO. BMW01375-
PART OF 191-3351-Page 185,186,187,188,189

FRAME AND BODY

NOTE	No.	PART NO.	QTY.	PART NAME	NOTE	No.	PART NO.	QTY.	PART NAME
	1	209-9631	1	FRAME AS					
	2	192-2379	2	BEARING					
		199-1110	2	SEAL					
C	3	250-2703	1	LINER					
	4	4I-6039	1	GROMMET					
E	5	195-3238		SEAL---60cm					
E	6	195-3237		SEAL---20cm					
	7	3B-8489	2	FITTING					
	8	199-7468	1	INSULATION					
E	9	195-3238		SEAL---15cm					

C-INDICATES CHANGE
E-ORDER BY THE cm

J132079 X03

UPPER FRAME (208-2156 N/S)

EFFECTIVE WITH SERIAL NO. BMW01375-
PART OF 191-3351-Page 185,186,187,188,189

FRAME AND BODY

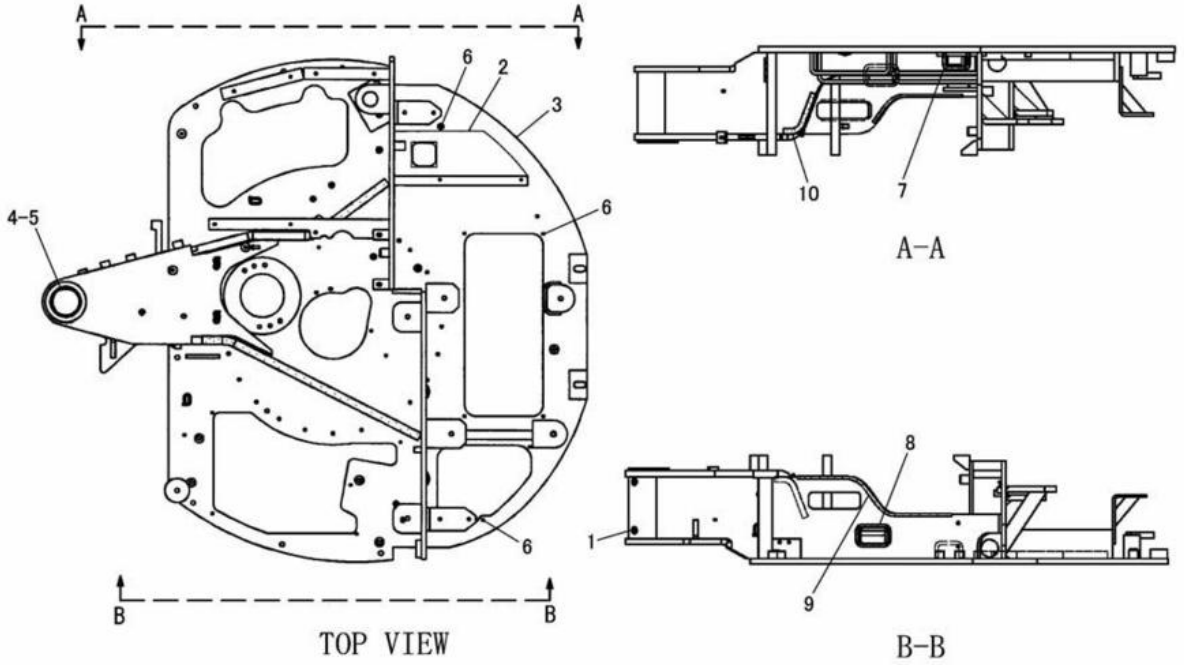

NOTE	No.	PART NO.	QTY.	PART NAME	NOTE	No.	PART NO.	QTY.	PART NAME
	1	3B-8489	2	FITTING					
	2	199-7468	1	INSULATION					
	3	201-9155	1	FRAME AS					
	4	192-2379	2	BEARING					
	5	199-1110	2	SEAL					
	6	9R-2821	12	BOSS(M10×1.5)					
E	7	195-3238		SEAL---15cm					
E	8	195-3238		SEAL---31cm					
E	9	195-3238		SEAL---60cm					
E	10	195-3237		SEAL---20cm					

E-ORDER BY THE cm

J126770 X02

UPPER FRAME (201-9154 N/S)

EFFECTIVE WITH SERIAL NO. BMW00204-
PART OF 201-9165-Page 518,519,206-7605-Page 514,515,206-7624-Page 520,521,206-7635-Page 516,517
AN ATTACHMENT

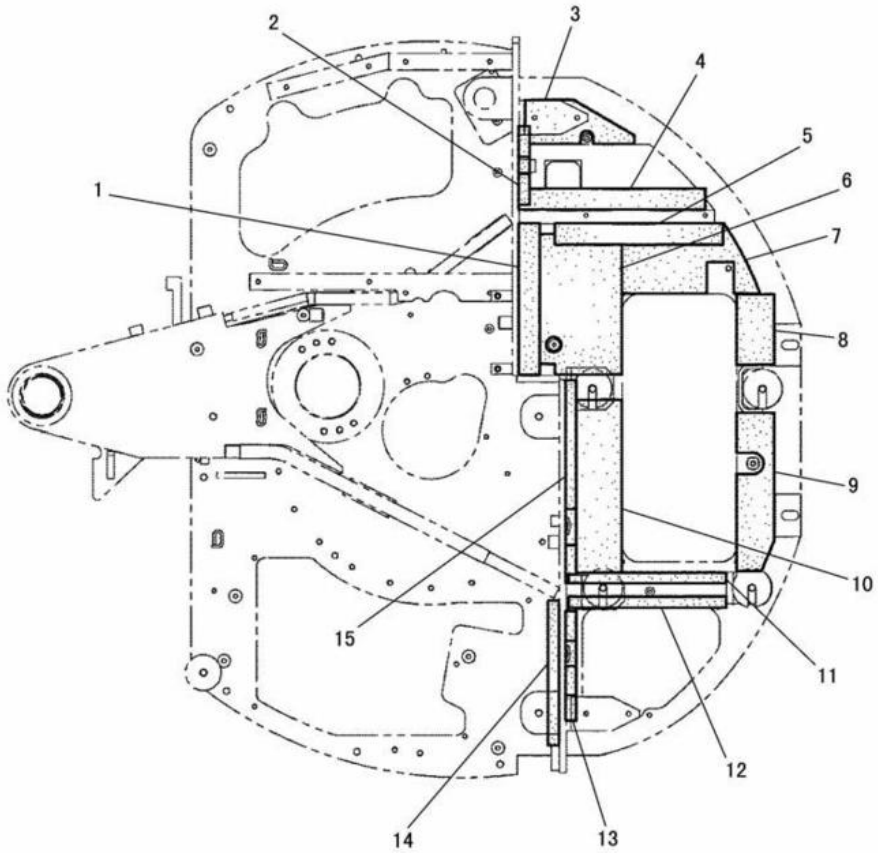

NOTE	No.	PART NO.	QTY.	PART NAME	NOTE	No.	PART NO.	QTY.	PART NAME
	1	217-0977	1	INSULATION					
	2	217-0973	1	INSULATION					
	3	217-0972	1	INSULATION					
	4	217-0974	1	INSULATION					
	5	217-0978	1	INSULATION					
	6	217-0975	1	INSULATION					
	7	217-0976	1	INSULATION					
	8	217-0986	1	INSULATION					
	9	217-0985	1	INSULATION					
	10	217-0979	1	INSULATION					
	11	217-0981	1	INSULATION					
	12	217-0982	1	INSULATION					
	13	217-0983	1	INSULATION					
	14	217-0984	1	INSULATION					
	15	217-0980	1	INSULATION					

J114572 X01

UPPER FRAME LINER (216-8437 N/S) -SOUND SUPPRESSION
PART OF 216-8062-Page 190,191,216-8063-Page 192,193
AN ATTACHMENT

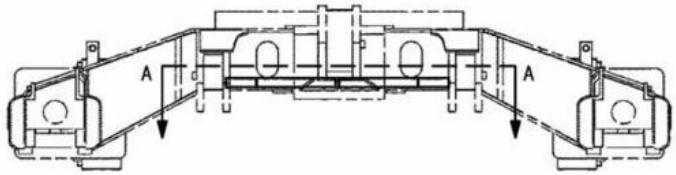

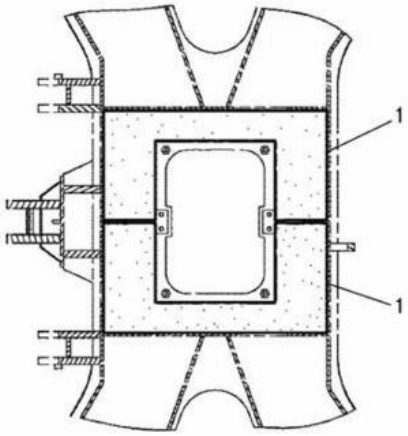

A-A

NOTE	No.	PART NO.	QTY.	PART NAME	NOTE	No.	PART NO.	QTY.	PART NAME
	1	220-0305	2	INSULATION					

J114577 X00

LOWER FRAME LINER (221-1501 N/S) -SOUND SUPPRESSION
PART OF 216-8062-Page 190,191,216-8063-Page 192,193
AN ATTACHMENT

FRAME AND BODY

CONSISTS OF :

			PAGE
1	191-3833	BEARING AND GEAR GROUP	281
1	191-4629	UNDERCARRIAGE FRAME GROUP	280
1	191-3831	FRONT IDLER GROUP	282
1	191-3832	TRACK AND CARRIER ROLLER GROUP	285

J106504 X02

UNDERCARRIAGE ARRANGEMENT (191-3352 N/S)
PART OF 191-0178-Page 1,2

FRAME AND BODY

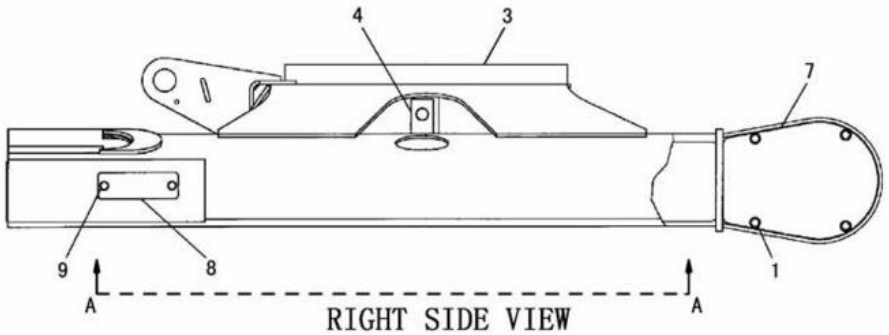

RIGHT SIDE VIEW

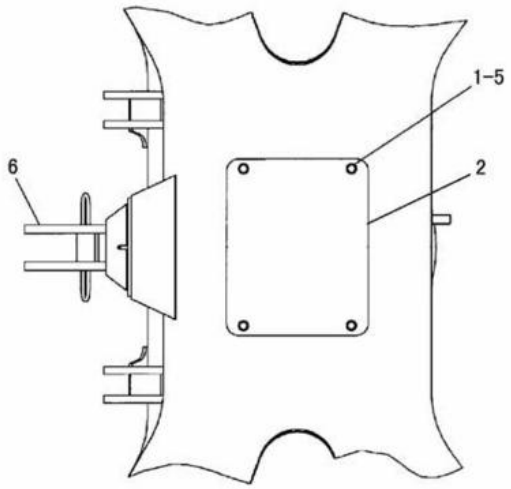

A-A

NOTE	No.	PART NO.	QTY.	PART NAME	NOTE	No.	PART NO.	QTY.	PART NAME
	1	8T-4139	12	BOLT(M12×1.75)					
		8T-4223	12	WASHER					
	2	191-4631	1	COVER					
	3	191-4630	1	FRAME AS					
	4	150-0584	2	BRACKET					
	5	8T-3597	4	NUT(M12×1.75)(WELD)					
	6	158-4754	1	BRACKET AS					
	7	158-4707	2	COVER					
	8	158-4706	2	COVER					
	9	8T-4121	4	WASHER					
		8T-4137	4	BOLT(M10×1.5)					

J117474 X01

UNDERCARRIAGE FRAME (191-4629 N/S)

PART OF 191-3352-Page 279

FRAME AND BODY

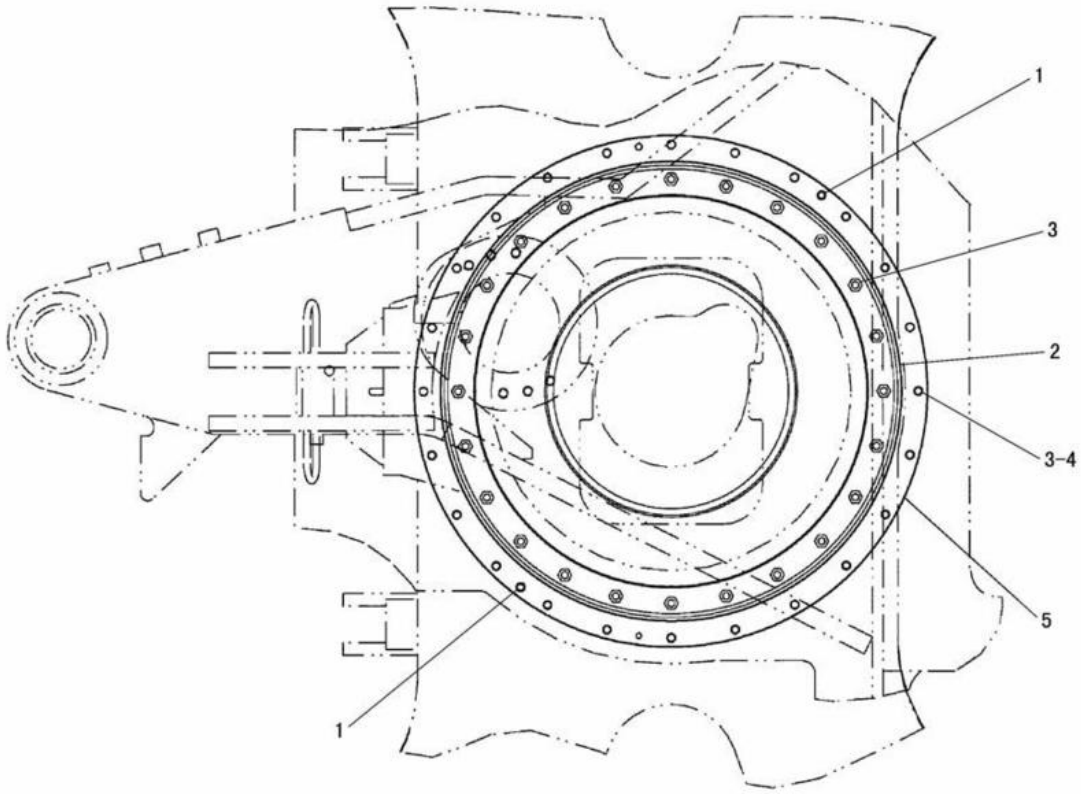

NOTE	No.	PART NO.	QTY.	PART NAME	NOTE	No.	PART NO.	QTY.	PART NAME
	1	140-4986	2	DOWEL					
	2	163-9969	1	PLATE AS					
	3	8T-6868	48	BOLT(M12×1.75)					
	4	8T-4223	24	WASHER					
	5	198-0856	1	SWING BEARING AS					

J132183 X03

BEARING AND GEAR (191-3833 N/S)
PART OF 191-3352-Page 279

FRAME AND BODY

CONSISTS OF :

			PAGE
1	155-6790	FRONT IDLER GROUP	282

J106605 X01

FRONT IDLER (191-3831 N/S)

PART OF 191-3352-Page 279

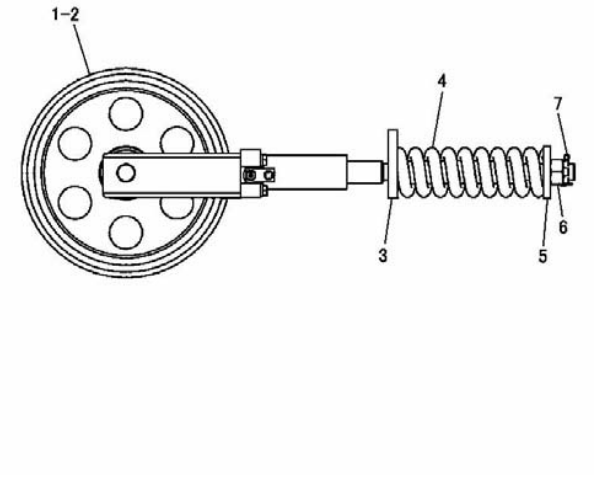

NOTE	No.	PART NO.	QTY.	PART NAME
Y	1	240-6302	1	IDLER AS(LH)
Y	2	240-6303	1	IDLER AS(RH)
	3	120-4654	2	SUPPORT AS
	4	120-4652	2	SPRING
	5	120-4653	2	SUPPORT
	6	120-4636	2	NUT(M30×3)
	7	3B-4639	2	COTTER PIN

Y-SEE SEPARATE ILLUSTRATION

J126675 X04

FRONT IDLER (155-6790 N/S)

PART OF 191-3831-Page 282
240-6302-Page 283 240-6303-Page 284

FRAME AND BODY

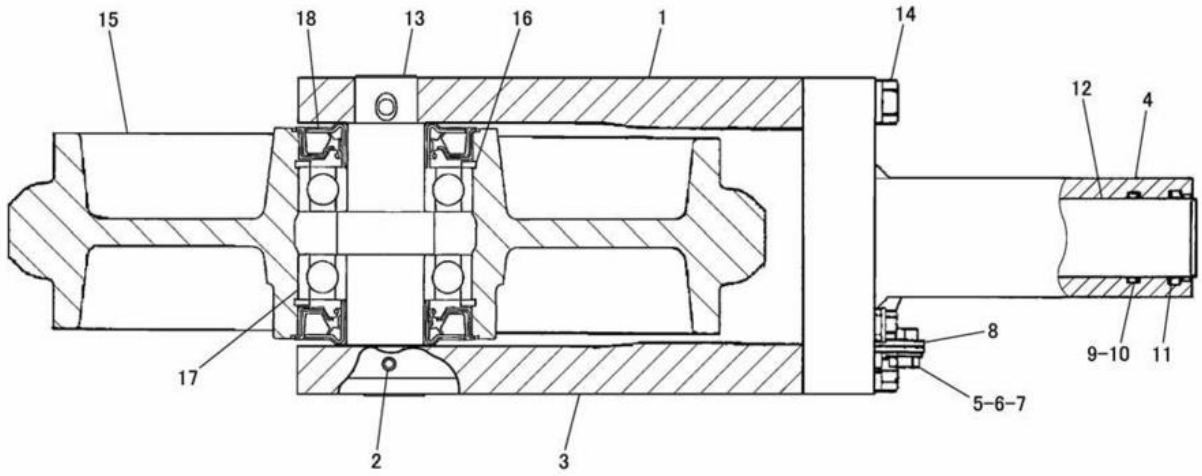

NOTE	No.	PART NO.	QTY.	PART NAME	NOTE	No.	PART NO.	QTY.	PART NAME
	1	240-6308	1	SUPPORT(INNER)		15	240-6304	1	IDLER AS
	2	095-0892	2	PIN			240-6306	1	IDLER
	3	240-6307	1	SUPPORT(OUTER)		16	8T-0707	2	RING
	4	185-9232	1	CYLINDER AS(LH)		17	095-0990	2	BEARING
		185-9231	1	CYLINDER(LH)		18	120-4660	2	SEAL
		154-2237	1	VALVE					
	5	126-4685	1	PLATE					
	6	8T-4200	3	BOLT(M8×1.25)					
	7	8T-4224	3	WASHER					
	8	139-6275	1	BRACKET					
	9	095-1604	1	SEAL					
	10	095-1794	1	RING					
	11	120-4664	1	SEAL					
	12	120-4663	1	PISTON					
	13	240-6305	1	SHAFT					
	14	8T-4910	4	BOLT(M12×1.75)					
		8T-4223	4	WASHER					

J128285 X00

240-6302 IDLER ASSEMBLY -LH

PART OF 155-6790-Page 282

FRAME AND BODY

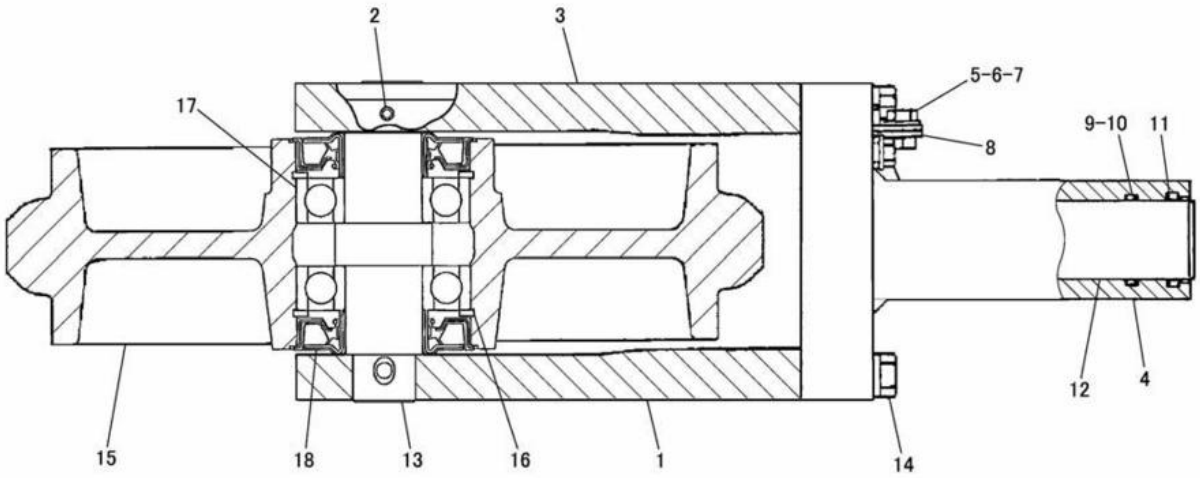

NOTE	No.	PART NO.	QTY.	PART NAME	NOTE	No.	PART NO.	QTY.	PART NAME
	1	240-6307	1	SUPPORT(INNER)		15	240-6304	1	IDLER AS
	2	095-0892	2	PIN			240-6306	1	IDLER
	3	240-6308	1	SUPPORT(OUTER)		16	8T-0707	2	RING
	4	185-9233	1	CYLINDER AS(RH)		17	095-0990	2	BEARING
		185-9230	1	CYLINDER(RH)		18	120-4660	2	SEAL
		154-2237	1	VALVE					
	5	126-4685	1	PLATE					
	6	8T-4200	3	BOLT(M8×1.25)					
	7	8T-4224	3	WASHER					
	8	139-6275	1	BRACKET					
	9	095-1604	1	SEAL					
	10	095-1794	1	RING					
	11	120-4664	1	SEAL					
	12	120-4663	1	PISTON					
	13	240-6305	1	SHAFT					
	14	8T-4190	4	BOLT(M12×1.75)					
		8T-4223	4	WASHER					

J128286 X00

240-6303 IDLER ASSEMBLY -RH

PART OF 155-6790-Page 282

FRAME AND BODY

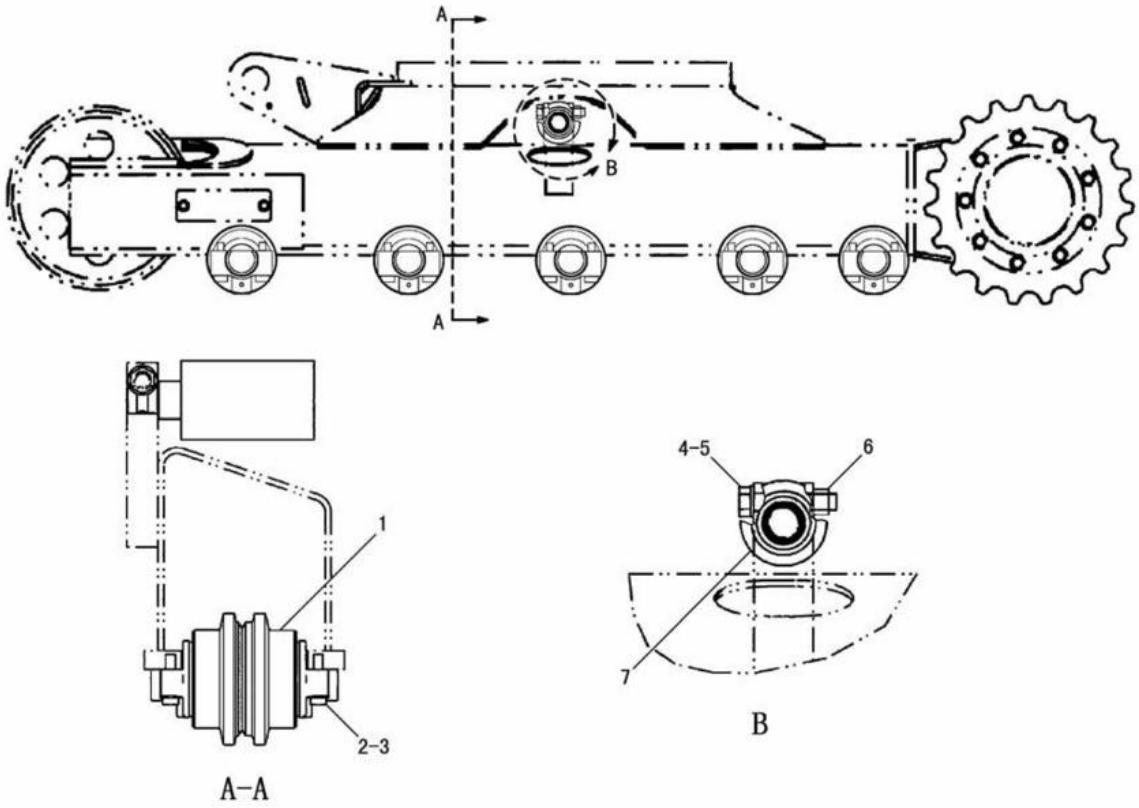

NOTE	No.	PART NO.	QTY.	PART NAME	NOTE	No.	PART NO.	QTY.	PART NAME
Y	1	158-4765	10	TRACK ROLLER AS					
	2	8T-4182	40	BOLT(M10×1.5)					
	3	8T-4121	40	WASHER					
	4	9X-8257	2	WASHER					
	5	7X-2555	2	BOLT(M16×2)					
	6	8T-4132	2	NUT(M16×2)					
	7	172-1764	2	CARRIER ROLLER AS					

Y-SEE SEPARATE ILLUSTRATION

J132813 X02

TRACK AND CARRIER ROLLER (191-3832 N/S)

PART OF 191-3352-Page 279
158-4765-Page 286

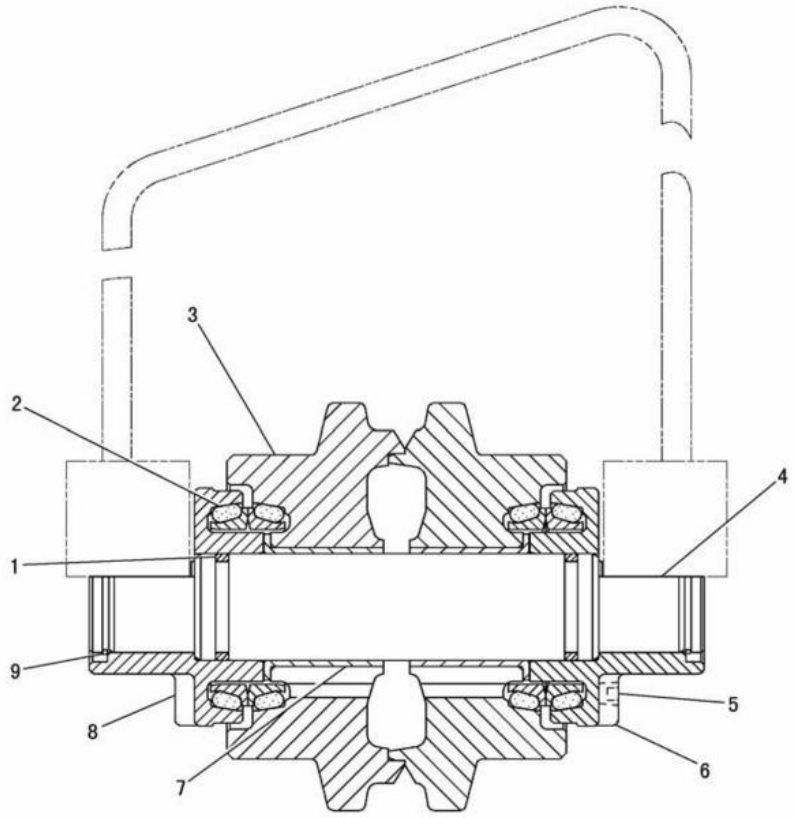

NOTE	No.	PART NO.	QTY.	PART NAME	NOTE	No.	PART NO.	QTY.	PART NAME
	1	158-4713	2	SEAL					
	2	158-4712	2	SEAL AS					
	3	158-4716	1	RIM AS					
	4	158-4710	1	SHAFT					
	5	3D-4603	1	PLUG					
	6	158-4711	1	COLLAR					
	7	158-4714	2	BUSHING					
	8	158-4715	1	COLLAR					
	9	234-8962	2	RING					

J131481 X01

158-4765 TRACK ROLLER ASSEMBLY
PART OF 191-3832-Page 285

CONSISTS OF :

			PAGE
1	155-6844	TRACK GROUP ·····	290
1	155-6845	TRACK GUIDING GUARD GROUP ·····	294

J108528 X00

TRACK (203-3644 N/S) -400mm TRIPLE GROUSER SHOE
AN ATTACHMENT

CONSISTS OF :

			PAGE
1	163-7147	TRACK GROUP ·····	290
1	155-6845	TRACK GUIDING GUARD GROUP ·····	294

J108529 X00

TRACK (203-3645 N/S) -400mm RUBBER PAD SHOE
AN ATTACHMENT

FRAME AND BODY

CONSISTS OF :

			PAGE
1	156-8691	TRACK ASSEMBLY	291
1	155-6845	TRACK GUIDING GUARD GROUP	294

J108530 X00

TRACK (203-3646 N/S) -400mm SEGMENT RUBBER SHOE
AN ATTACHMENT

CONSISTS OF :

			PAGE
2	155-6845	TRACK GUIDING GUARD GROUP	294
1	212-5126	TRACK GROUP(LH)	289
1	212-5127	TRACK GROUP(RH)	289

J126055 X01

TRACK ARRANGEMENT (212-5125 N/S) -400mm RUBBER PAD SHOE
AN ATTACHMENT

CONSISTS OF :

			PAGE
1	155-6844	TRACK GROUP ·····	290
1	212-5128	RUBBER PAD GROUP ·····	291

J126056 X00

TRACK (212-5126 N/S) -400mm RUBBER PAD SHOE-LH
PART OF 212-5125-Page 288
AN ATTACHMENT

CONSISTS OF :

			PAGE
1	155-6844	TRACK GROUP ·····	290
1	212-5128	RUBBER PAD GROUP ·····	291

J126057 X00

TRACK (212-5127 N/S) -400mm RUBBER PAD SHOE-RH
PART OF 212-5125-Page 288
AN ATTACHMENT

FRAME AND BODY

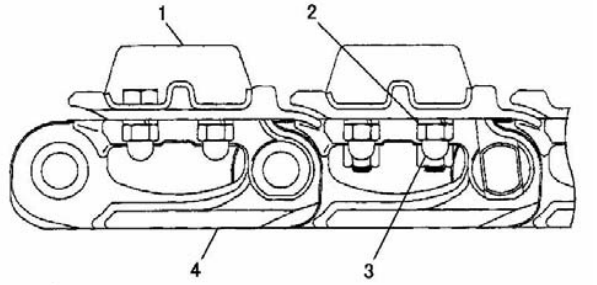

NOTE	No.	PART NO.	QTY.	PART NAME
	1	163-7093	38	CITY PAT
	2	163-7094	152	WASHER
	3	139-6411	152	NUT(M12)
Y	4	155-6844	1	TRACK GROUP

Y-SEE SEPARATE ILLUSTRATION

J126565 X00

163-7147 TRACK GROUP -RUBBER PAD
PART OF 203-3645-Page 287
155-6844-Page 290
AN ATTACHMENT

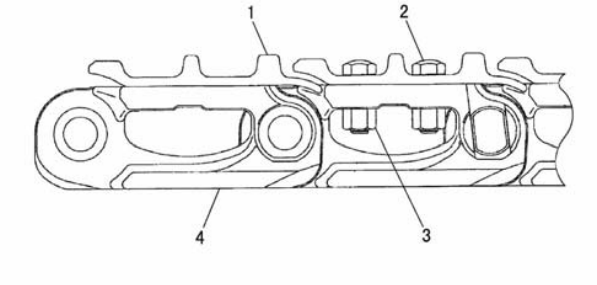

NOTE	No.	PART NO.	QTY.	PART NAME
	1	158-4777	38	SHOE
	2	158-4775	152	BOLT(M12×1.25)
	3	158-4776	152	NUT(M12×1.25)
Y	4	158-4766	1	LINK AS

Y-SEE SEPARATE ILLUSTRATION

J106707 X00

155-6844 TRACK GROUP -400mm TRIPLE GROUSER SHOE
PART OF 163-7147-Page 290,203-3644-Page 287,212-5126-Page 289,212-5127-Page 289
158-4766-Page 292
AN ATTACHMENT

FRAME AND BODY

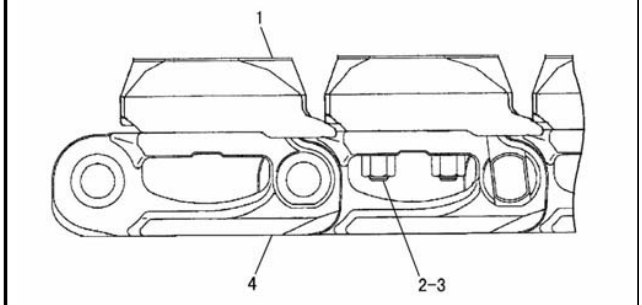

NOTE	No.	PART NO.	QTY.	PART NAME
	1	156-8695	38	SHOE
	2	158-4775	152	BOLT(M12×1.25)
	3	158-4776	152	NUT(M12×1.25)
Y	4	158-4766	1	LINK AS

Y-SEE SEPARATE ILLUSTRATION

J106955 X01

156-8691 TRACK ASSEMBLY -SEGMENT RUBBER SHOE
PART OF 203-3646-Page 288
158-4766-Page 292
AN ATTACHMENT

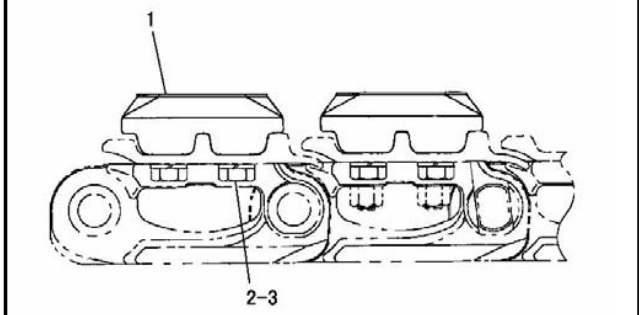

NOTE	No.	PART NO.	QTY.	PART NAME
	1	212-5129	38	PAD AS
	2	212-5119	76	BOLT(M12×1.75)
	3	212-5120	76	WASHER

J126058 X00

RUBBER PAD (212-5128 N/S) -400mm
PART OF 212-5126-Page 289,212-5127-Page 289
AN ATTACHMENT

FRAME AND BODY

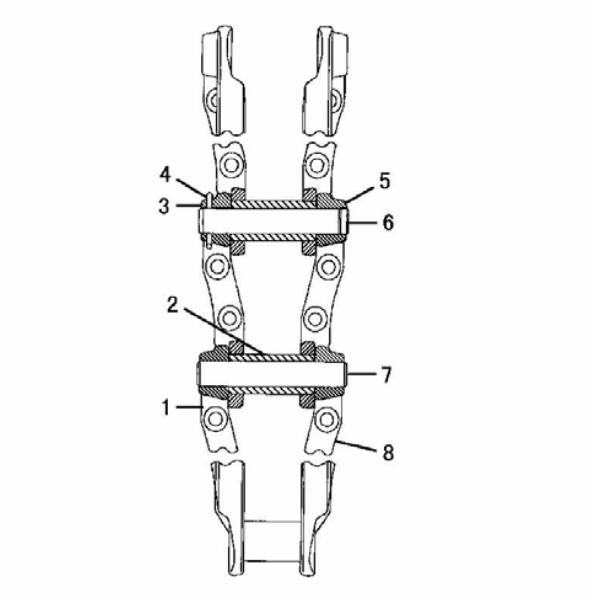

NOTE	No.	PART NO.	QTY.	PART NAME
	1	158-4767	37	LINK(RH)
	2	158-4771	38	BUSHING
	3	158-4769	1	LINK(MASTER)(RH)
	4	158-4774	1	COTTER PIN
	5	158-4770	1	LINK(MASTER)(LH)
	6	158-4773	1	PIN(MASTER)
	7	158-4772	37	PIN
	8	158-4768	37	LINK(LH)

J106708 X00

158-4766 LINK ASSEMBLY
PART OF 155-6844-Page 290,156-8691-Page 291
AN ATTACHMENT

FRAME AND BODY

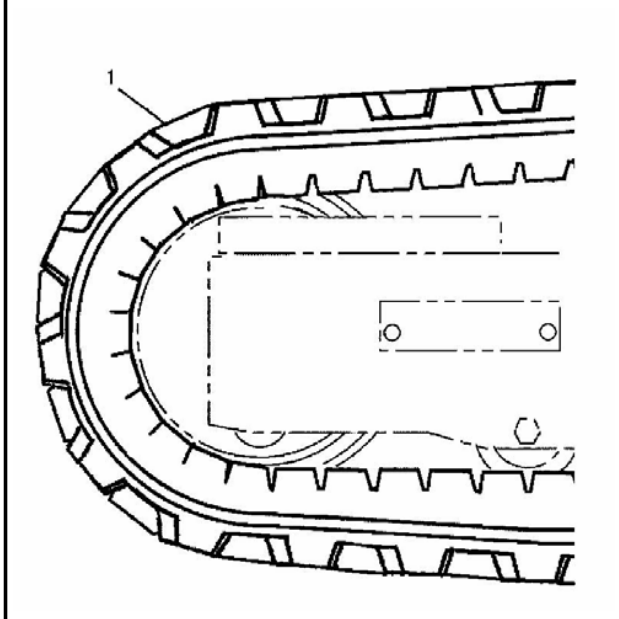

NOTE	No.	PART NO.	QTY.	PART NAME
	1	153-5981	1	TRACK AS

J136119 X00

TRACK (203-3643 N/S) -400mm RUBBER BELT

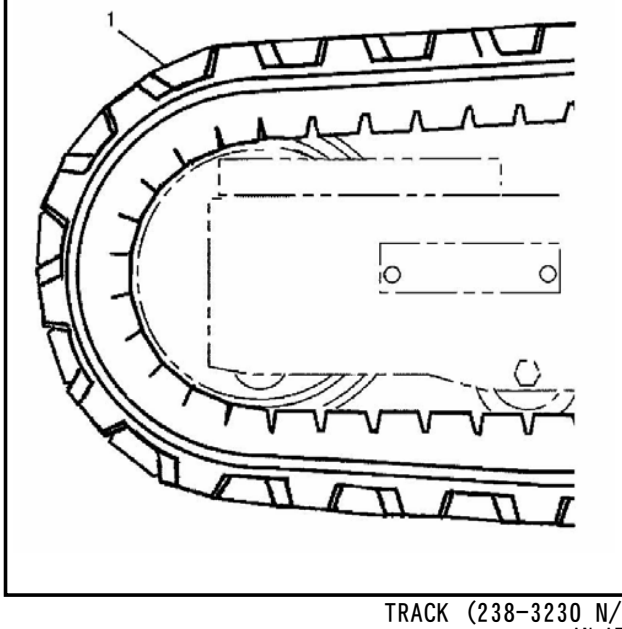

NOTE	No.	PART NO.	QTY.	PART NAME
	1	238-3231	1	TRACK AS

J126708 E00

TRACK (238-3230 N/S) -400mm RUBBER BELT
AN ATTACHMENT

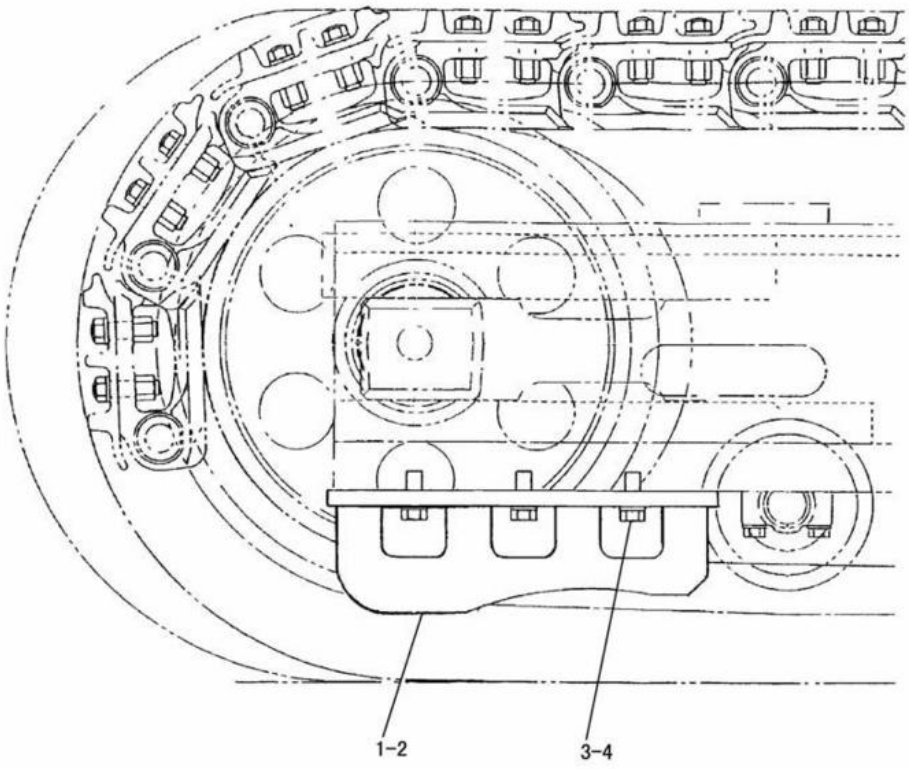

NOTE	No.	PART NO.	QTY.	PART NAME	NOTE	No.	PART NO.	QTY.	PART NAME
	1	163-7187	1	GUARD AS(RH)					
	2	163-7188	1	GUARD AS(LH)					
	3	8T-4139	6	BOLT(M12×1.75)					
	4	8T-4223	6	WASHER					

J106950 X00

TRACK GUIDING GUARD (155-6845 N/S)
PART OF 203-3644-Page 287,203-3645-Page 287,203-3646-Page 288,212-5125-Page 288
AN ATTACHMENT

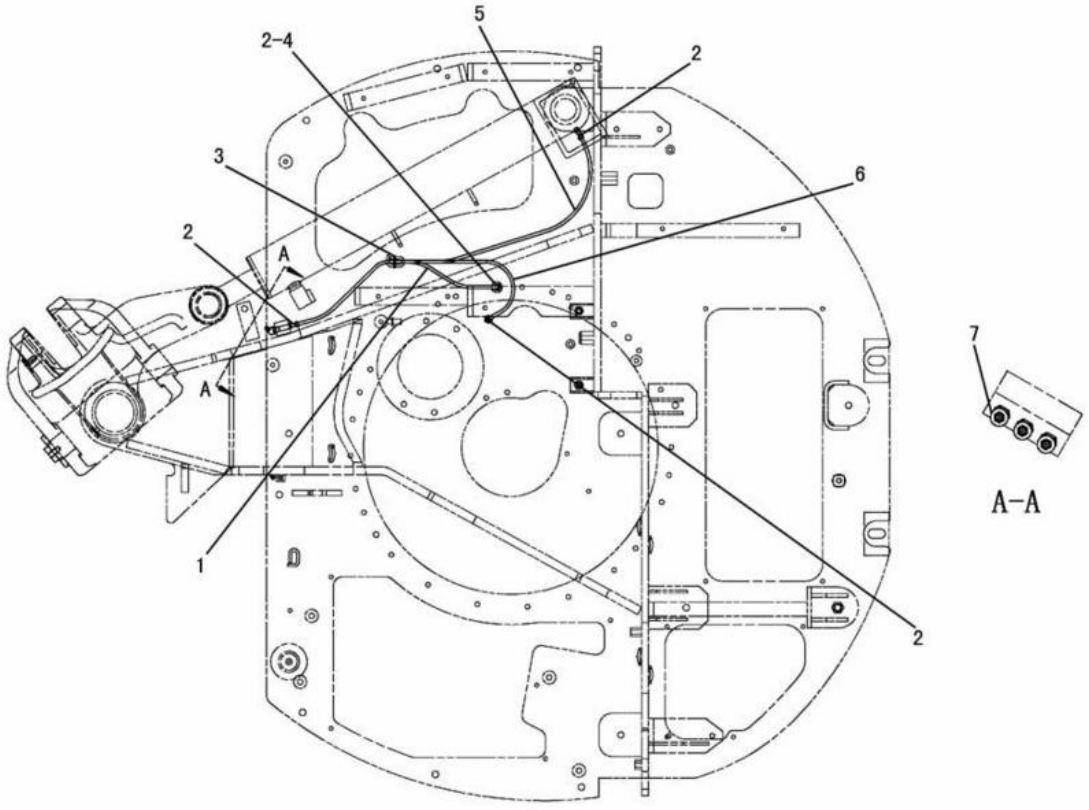

NOTE	No.	PART NO.	QTY.	PART NAME	NOTE	No.	PART NO.	QTY.	PART NAME
D	1	5P-6011		TUBE---0.63m					
	2	5P-4400	6	CONNECTOR					
	3	3S-2093	1	STRAP					
	4	126-2565	1	ADAPTER					
D	5	5P-6011		TUBE---0.9m					
D	6	5P-6011		TUBE---0.7m					
	7	3B-8485	3	FITTING					

D-ORDER BY THE m

J106462 X03

GREASE LINES (191-3830 N/S)
EFFECTIVE WITH SERIAL NO. BMW00001-BMW00980
PART OF 191-3351-Page 184,185,186,187,188,189

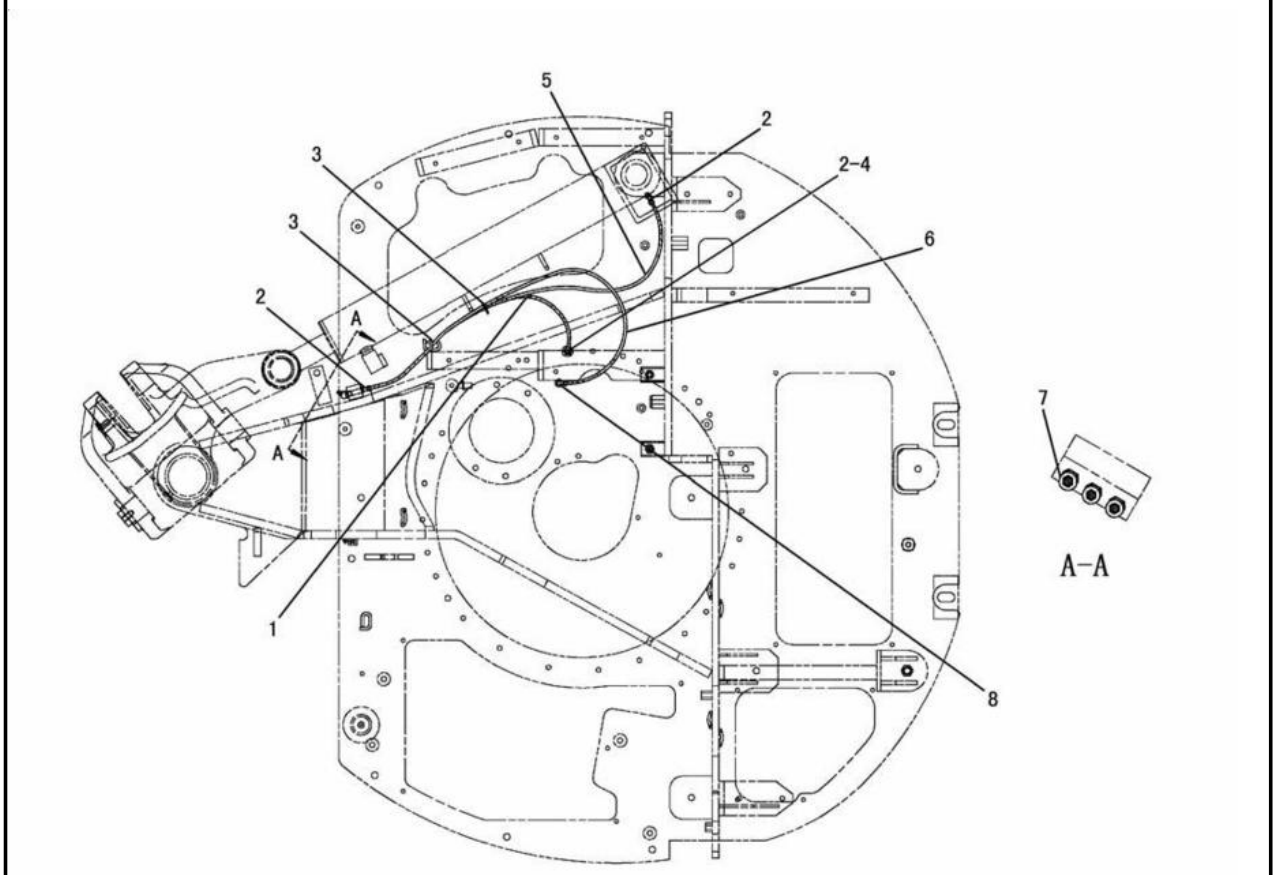

NOTE	No.	PART NO.	QTY.	PART NAME	NOTE	No.	PART NO.	QTY.	PART NAME
D	1	205-6079		TUBE---0.63m					
C	2	5P-4400	5	CONNECTOR					
C	3	3S-2093	2	STRAP					
	4	126-2565	1	ADAPTER					
D	5	205-6079		TUBE---0.9m					
DC	6	205-6079		TUBE---1.02m					
	7	3B-8485	3	FITTING					
C	8	5P-4423	1	ELBOW					

C-INDICATES CHANGE
D-ORDER BY THE m

J132186 X06

GREASE LINES (191-3830 N/S)
EFFECTIVE WITH SERIAL NO. BMW00981-
PART OF 191-3351-Page 184,185,186,187,188,189

HYDRAULIC SYSTEM

CONSISTS OF :

			PAGE
1	191-2559	HYDRAULIC TANK AND MOUNTING GROUP	307
1	191-3871	PUMP AND MOUNTING GROUP	311
1	191-3863	TRACK MOTOR LINES GROUP	358
1	191-3868	PUMP LINES GROUP	372
1	191-3869	PILOT LINES GROUP	374
1	191-3870	PILOT LINES GROUP	378
1	191-3855	FRONT LINES GROUP	352
1	191-3866	RETURN LINES GROUP	368
1	191-3865	SWING MOTOR LINES GROUP	364
1	191-3862	VALVE AND MOUNTING GROUP	313

J106540 X01

HYDRAULIC ARRANGEMENT (191-3357 N/S)
EFFECTIVE WITH SERIAL NO. BMW00001-BMW01109
PART OF 191-0178-Page 1,2

CONSISTS OF :

			PAGE
1	191-2559	HYDRAULIC TANK AND MOUNTING GROUP	307
1	191-3871	PUMP AND MOUNTING GROUP	311
1	191-3863	TRACK MOTOR LINES GROUP	358
1	191-3868	PUMP LINES GROUP	372
1	191-3869	PILOT LINES GROUP	374
1	191-3870	PILOT LINES GROUP	378
1	191-3855	FRONT LINES GROUP	352
1	208-0651	RETURN LINES GROUP	370
1	210-0363	SWING MOTOR LINES GROUP	366
1	191-3862	VALVE AND MOUNTING GROUP	313

J115353 X03

HYDRAULIC ARRANGEMENT (191-3357 N/S)
EFFECTIVE WITH SERIAL NO. BMW01110-BMW01340
PART OF 191-0178-Page 1,2

HYDRAULIC SYSTEM

CONSISTS OF :

			PAGE
1	241-7451	HYDRAULIC TANK AND MOUNTING GROUP	308
1	191-3871	PUMP AND MOUNTING GROUP	311
1	191-3863	TRACK MOTOR LINES GROUP	358
1	191-3868	PUMP LINES GROUP	372
1	191-3869	PILOT LINES GROUP	374
1	191-3870	PILOT LINES GROUP	378
1	191-3855	FRONT LINES GROUP	352
1	208-0651	RETURN LINES GROUP	370
1	210-0363	SWING MOTOR LINES GROUP	366
1	191-3862	VALVE AND MOUNTING GROUP	313

J128724 X04

HYDRAULIC ARRANGEMENT (191-3357 N/S)
EFFECTIVE WITH SERIAL NO. BMW01341-
PART OF 191-0178-Page 1,2

CONSISTS OF :

			PAGE
1	191-1391	PILOT VALVE GROUP	328
1	191-3872	PILOT LINES GROUP(4 WAYS)	384
1	191-3873	VALVE MOUNTING GROUP	330
1	194-7444	FILM GROUP	651

J111792 X02

CONTROL PATTERN CHANGE ARRANGEMENT (191-3877 N/S)
EFFECTIVE WITH SERIAL NO. BMW00001-BMW00980
AN ATTACHMENT

HYDRAULIC SYSTEM

CONSISTS OF :

			PAGE
1	216-7279	PILOT VALVE GROUP	329
1	191-3872	PILOT LINES GROUP(4 WAYS)	384
1	191-3873	VALVE MOUNTING GROUP	330
1	194-7444	FILM GROUP	651

J113448 X03

CONTROL PATTERN CHANGE ARRANGEMENT (191-3877 N/S)
EFFECTIVE WITH SERIAL NO. BMW00981-
AN ATTACHMENT

CONSISTS OF :

			PAGE
1	216-7279	PILOT VALVE GROUP	329
1	191-3872	PILOT LINES GROUP(4 WAYS)	384
1	191-3873	VALVE MOUNTING GROUP	330
1	200-5532	FENDER COVER GROUP	247
1	194-7444	FILM GROUP	651

J112888 X01

CONTROL PATTERN CHANGE ARRANGEMENT (217-7959 N/S) -CANOPY
EFFECTIVE WITH SERIAL NO. BMW00981-
AN ATTACHMENT

HYDRAULIC SYSTEM

CONSISTS OF :

			PAGE
1	201-9185	PILOT LINES GROUP	400

J129166 E00

CONTROL PATTERN CHANGE ARRANGEMENT (228-6291 N/S) -SHOVEL CRANE-CAB
EFFECTIVE WITH SERIAL NO. BMW00981-
AN ATTACHMENT

CONSISTS OF :

			PAGE
1	200-5532	FENDER COVER GROUP	247
1	201-9185	PILOT LINES GROUP	400

J129163 E00

CONTROL PATTERN CHANGE ARRANGEMENT (228-6290 N/S) -SHOVEL CRANE-CANOPY
EFFECTIVE WITH SERIAL NO. BMW00981-
AN ATTACHMENT

HYDRAULIC SYSTEM

CONSISTS OF :

			PAGE
1	199-3589	AUXILIARY LINES GROUP ·····	406
1	191-4776	PILOT LINES GROUP(POWER TAKE OFF) ·····	380
1	154-2215	POWER TAKE OFF CONTROL GROUP ·····	341
1	194-7445	FILM GROUP ·····	652
1	201-8713	VALVE ASSEMBLY	
1	2M-9780	SEAL	

J115461 X02

FRONT POWER TAKE OFF CONTROL ARRANGEMENT (200-2854 N/S)
AN ATTACHMENT

CONSISTS OF :

			PAGE
1	241-3948	PILOT LINES GROUP ·····	404
1	224-8406	FILM GROUP ·····	654

J126061 E00

SHUTOFF VALVE ARRANGEMENT (241-3943 N/S) -SECURITY
EFFECTIVE WITH SERIAL NO. BMW01311-
AN ATTACHMENT

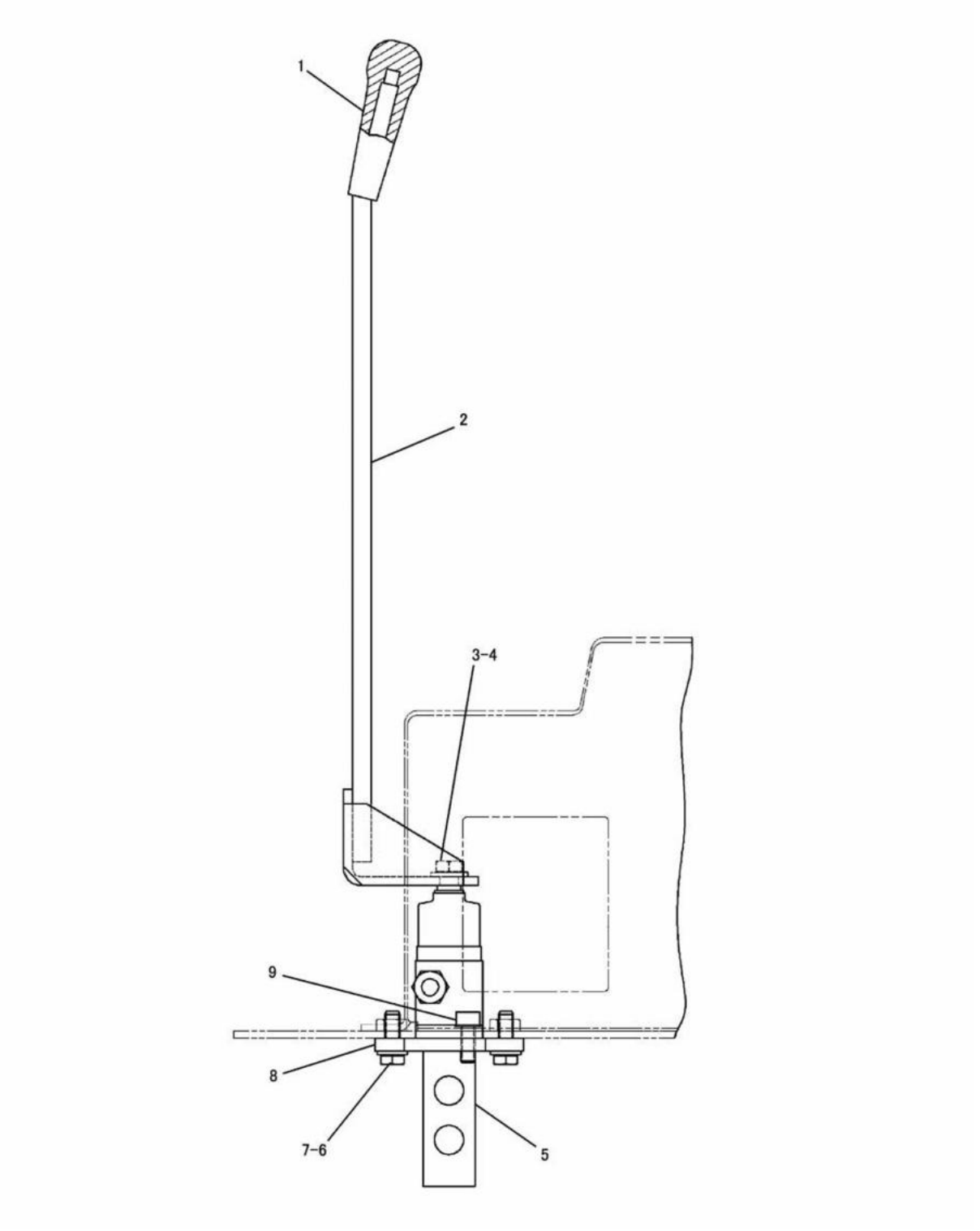

BLADE CONTROL (191-3821 N/S)
PART OF 191-3356-Page 461,201-4352-Page 463,208-0641-Page 463,209-1671-Page 462

HYDRAULIC SYSTEM

NOTE	No.	PART NO.	QTY.	PART NAME	NOTE	No.	PART NO.	QTY.	PART NAME
	1	110-5602	1	KNOB					
	2	202-5298	1	LEVER AS					
	3	8T-4192	1	BOLT(M12×1.75)					
	4	8T-4223	1	WASHER					
Y	5	191-1392	1	VALVE GROUP					
	6	8T-4195	3	BOLT(M10×1.5)					
	7	8T-4121	3	WASHER					
	8	202-8827	1	SUPPORT					
	9	6V-3938	2	BOLT(M10×1.5)					

Y-SEE SEPARATE ILLUSTRATION

J107611 X05

BLADE CONTROL (191-3821 N/S)

PART OF 191-3356-Page 461,201-4352-Page 463,208-0641-Page 463,209-1671-Page 462
191-1392-Page 305, 306

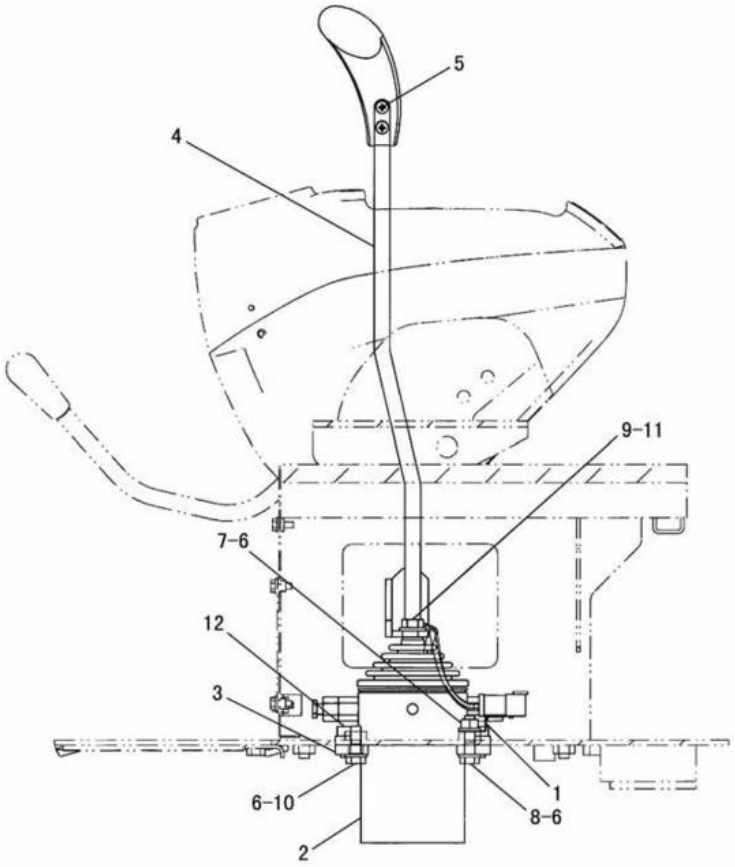

NOTE	No.	PART NO.	QTY.	PART NAME	NOTE	No.	PART NO.	QTY.	PART NAME
	1	171-0340	1	CLIP					
Y	2	191-1392	1	PILOT VALVE GROUP					
	3	202-8827	1	SUPPORT					
	4	210-4759	1	LEVER AS					
	5	8T-6411	2	SCREW(M6×1)					
		9X-8256	2	WASHER					
	6	8T-4121	4	WASHER					
	7	8T-4133	1	NUT(M10×1.5)					
	8	8T-4186	1	BOLT(M10×1.5)					
	9	8T-4192	1	BOLT(M12×1.75)					
	10	8T-4195	2	BOLT(M10×1.5)					
	11	8T-4223	1	WASHER					
	12	6V-3938	2	BOLT(M10×1.5)					

Y-SEE SEPARATE ILLUSTRATION

J117286 X00

BLADE CONTROL (210-1897 N/S)
EFFECTIVE WITH SERIAL NO. BMW00787-
PART OF 210-1884-Page 510,511
191-1392-Page 305, 306
AN ATTACHMENT

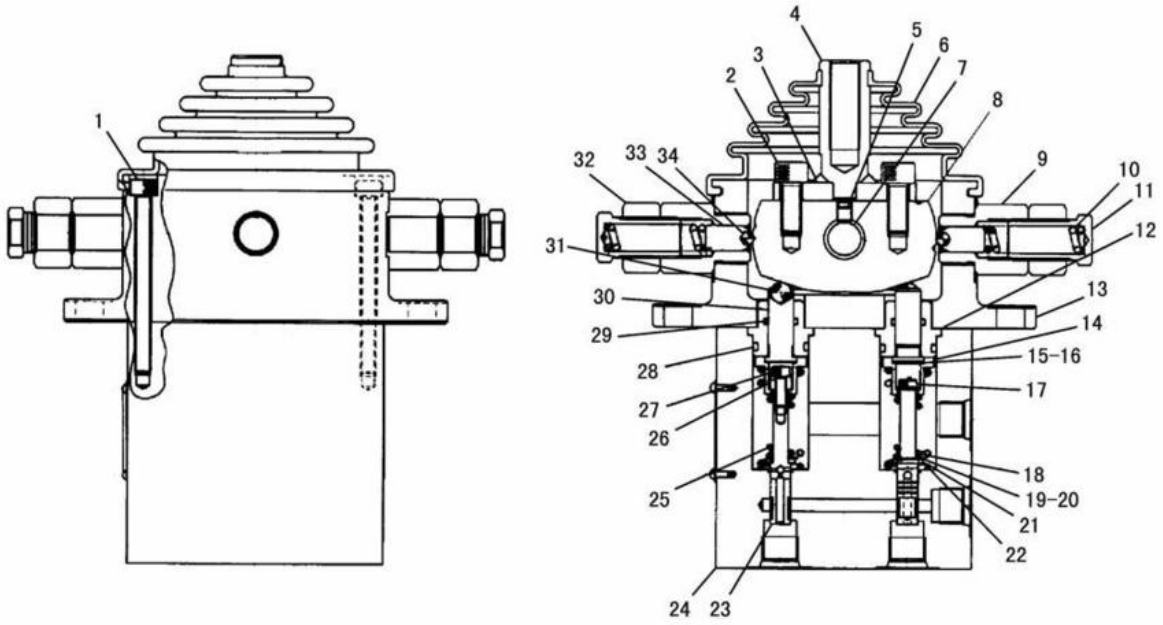

NOTE	No.	PART NO.	QTY.	PART NAME	NOTE	No.	PART NO.	QTY.	PART NAME
	1	9X-2537	2	BOLT(M6×1)		21	198-8166	2	WASHER
	2	8T-1158	2	BOLT(M8×1.25)		22	198-8161	2	SPRING
	3	198-8175	1	PLATE		23	198-8170	2	SPOOL
	4	198-8174	1	LEVER		24	198-8171	1	BODY
	5	095-1260	1	SETSCREW(M6×1)		25	198-8164	1	SPRING
	6	198-8156	1	BOOT		26	198-8160	1	COLLAR
	7	198-8158	1	PIN		27	198-8165	1	BOLT
	8	198-8157	1	CAMDRIVE		28	8T-0211	2	SEAL
	9	198-7543	2	GUIDE		29	095-1578	2	SEAL
	10	198-8154	2	SPRING		30	198-8177	2	ROD
	11	198-8153	2	SCREW		31	198-8178	2	BALL
	12	198-8159	2	SLEEVE		32	198-8167	2	NUT
	13	198-8155	1	COVER		33	198-8162	2	HOLDER
	14	096-4535	2	SLEEVE		34	198-8168	2	BALL
	15	6I-6911	2	SHIM					
	16	6I-6912	2	SHIM					
	17	096-4543	1	BOLT					
	18	198-8163	1	SPRING					
	19	099-0361	2	SHIM					
	20	132-9046	2	SHIM					

J106696 X02

191-1392 PILOT VALVE GROUP

EFFECTIVE WITH SERIAL NO. BMW00001-BMW00499

PART OF 191-3821-Page 303,210-1897-Page 304

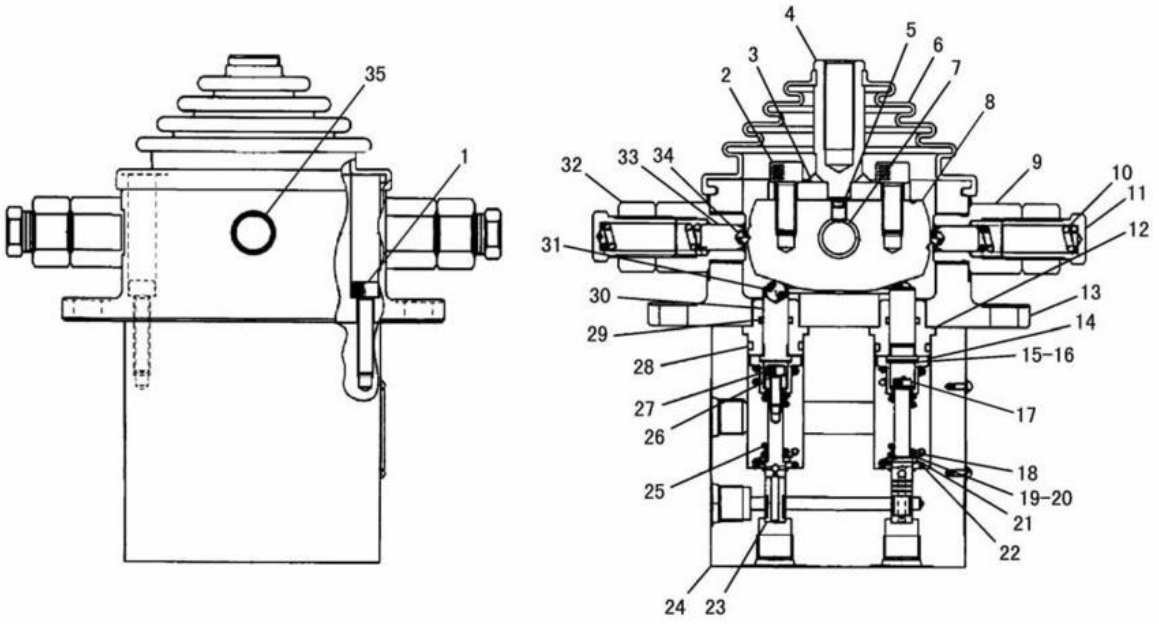

NOTE	No.	PART NO.	QTY.	PART NAME	NOTE	No.	PART NO.	QTY.	PART NAME
C	1	8T-8442	2	BOLT(M6×1)		21	198-8166	2	WASHER
	2	8T-1158	2	BOLT(M8×1.25)		22	198-8161	2	SPRING
C	3	204-1978	1	PLATE		23	198-8170	2	SPOOL
C	4	204-1977	1	LEVER		24	198-8171	1	BODY
	5	095-1260	1	SETSCREW(M6×1)		25	198-8164	1	SPRING
	6	198-8156	1	BOOT		26	198-8160	1	COLLAR
C	7	204-1974	1	PIN		27	198-8165	1	BOLT
C	8	204-1975	1	CAMDRIVE		28	8T-0211	2	SEAL
	9	198-7543	2	GUIDE		29	095-1578	2	SEAL
	10	198-8154	2	SPRING		30	198-8177	2	ROD
	11	198-8153	2	SCREW		31	198-8178	2	BALL
	12	198-8159	2	SLEEVE		32	198-8167	2	NUT
C	13	204-1980	1	COVER		33	198-8162	2	HOLDER
	14	096-4535	2	SLEEVE		34	198-8168	2	BALL
	15	6I-6911	2	SHIM	C	35	204-1981	2	BUSH
	16	6I-6912	2	SHIM					
	17	096-4543	1	BOLT					
	18	198-8163	1	SPRING					
	19	099-0361	2	SHIM					
	20	132-9046	2	SHIM					

C-INDICATES CHANGE

J112886 X03

191-1392 PILOT VALVE GROUP

EFFECTIVE WITH SERIAL NO. BMW00500-

PART OF 191-3821-Page 303,210-1897-Page 304

HYDRAULIC SYSTEM

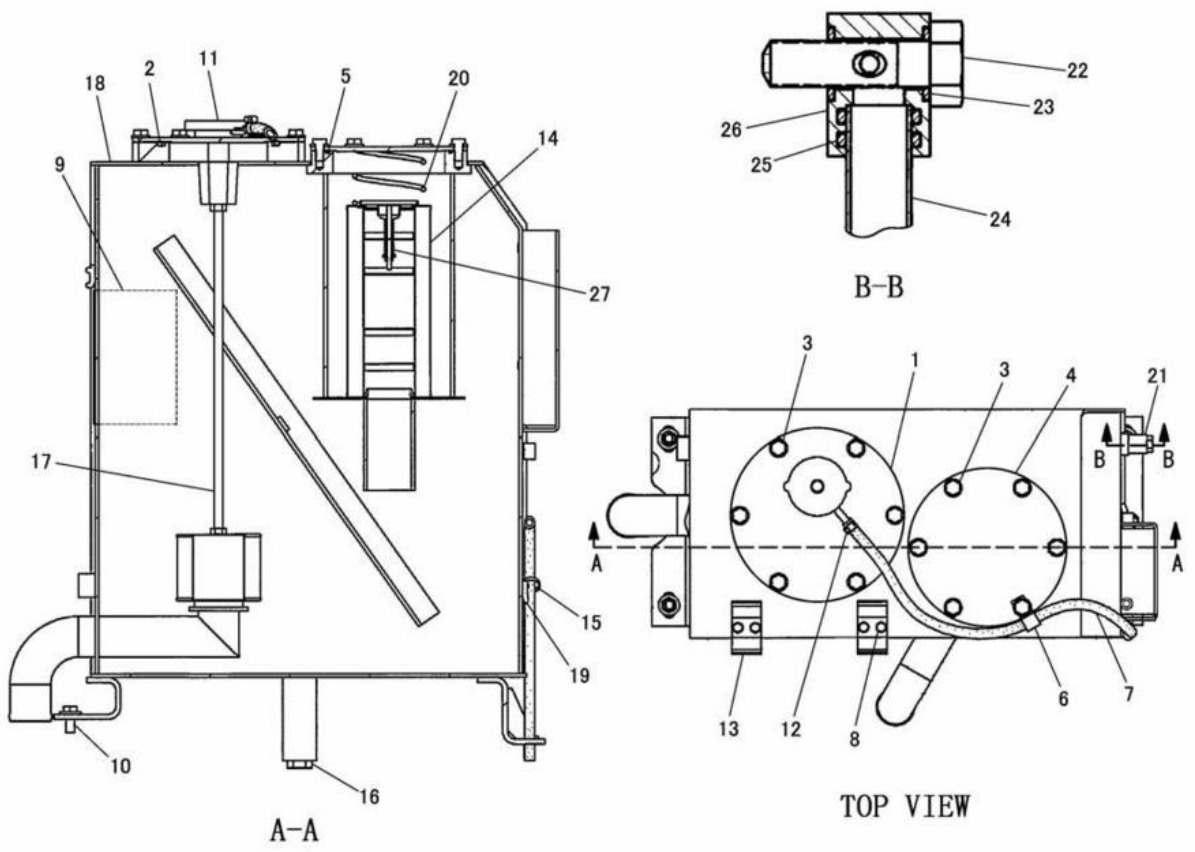

NOTE	No.	PART NO.	QTY.	PART NAME	NOTE	No.	PART NO.	QTY.	PART NAME
	1	192-1674	1	COVER AS		16	2M-9780	1	SEAL
		4I-3743	1	FILLER AS			9S-4190	1	PLUG
	2	095-1725	1	SEAL		17	120-8755	1	STRAINER
	3	8T-4137	12	BOLT(M10×1.5)		18	191-2567	1	TANK AS
		8T-4121	12	WASHER		19	7T-1099	2	LINK
	4	103-8240	1	COVER		20	220-4014	1	SPRING
	5	095-1723	1	SEAL		21	094-3245	1	GAUGE AS
	6	8M-2770	1	CLIP		22	094-3247	2	BOLT(M10×1.5)
E	7	7Y-1976		HOSE---120cm		23	095-1514	4	SEAL
	8	7X-2619	4	BOLT(M6×1)		24	096-4754	1	PIPE
		9X-8256	4	WASHER		25	095-1517	4	SEAL
	9	158-4670	1	FORM		26	7Y-4754	2	BLOCK
	10	8T-4136	4	BOLT(M10×1.5)		27	120-8758	1	VALVE
		7X-7729	4	WASHER					
	11	4I-3745	1	CAP					
	12	1P-4278	1	CLAMP					
	13	239-6387	2	CLAMP					
	14	120-8757	1	FILTER AS					
	15	3S-2093	1	STRAP					

E-ORDER BY THE cm

J126669 X08

HYDRAULIC TANK AND MOUNTING (191-2559 N/S)

EFFECTIVE WITH SERIAL NO. BMK00001-BMW01340

PART OF 191-3357-Page 297

HYDRAULIC SYSTEM

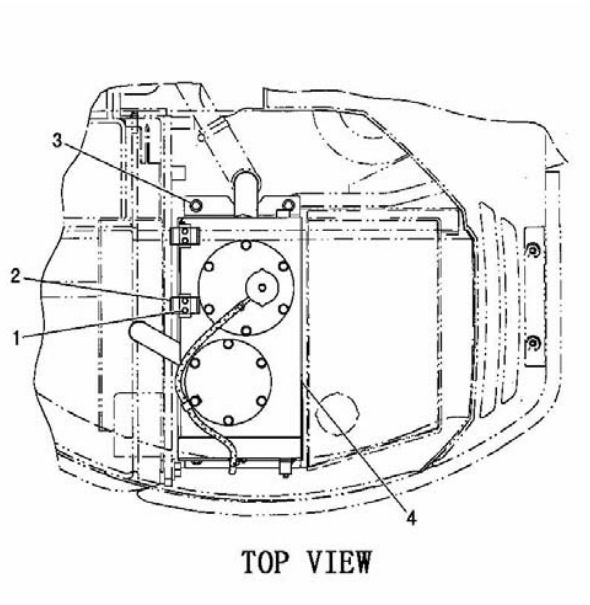

TOP VIEW

NOTE	No.	PART NO.	QTY.	PART NAME
	1	8T-4171	4	BOLT(M6×1)
		9X-8256	4	WASHER
	2	239-6387	2	CLAMP
	3	8T-4136	4	BOLT(M10×1.5)
		7X-7729	4	WASHER
Y	4	241-7452	1	TANK GROUP

Y-SEE SEPARATE ILLUSTRATION

J127277 E00

HYDRAULIC TANK AND MOUNTING (241-7451 N/S)

EFFECTIVE WITH SERIAL NO. BMW01341-
PART OF 191-3357-Page 298
241-7452-Page 309, 310

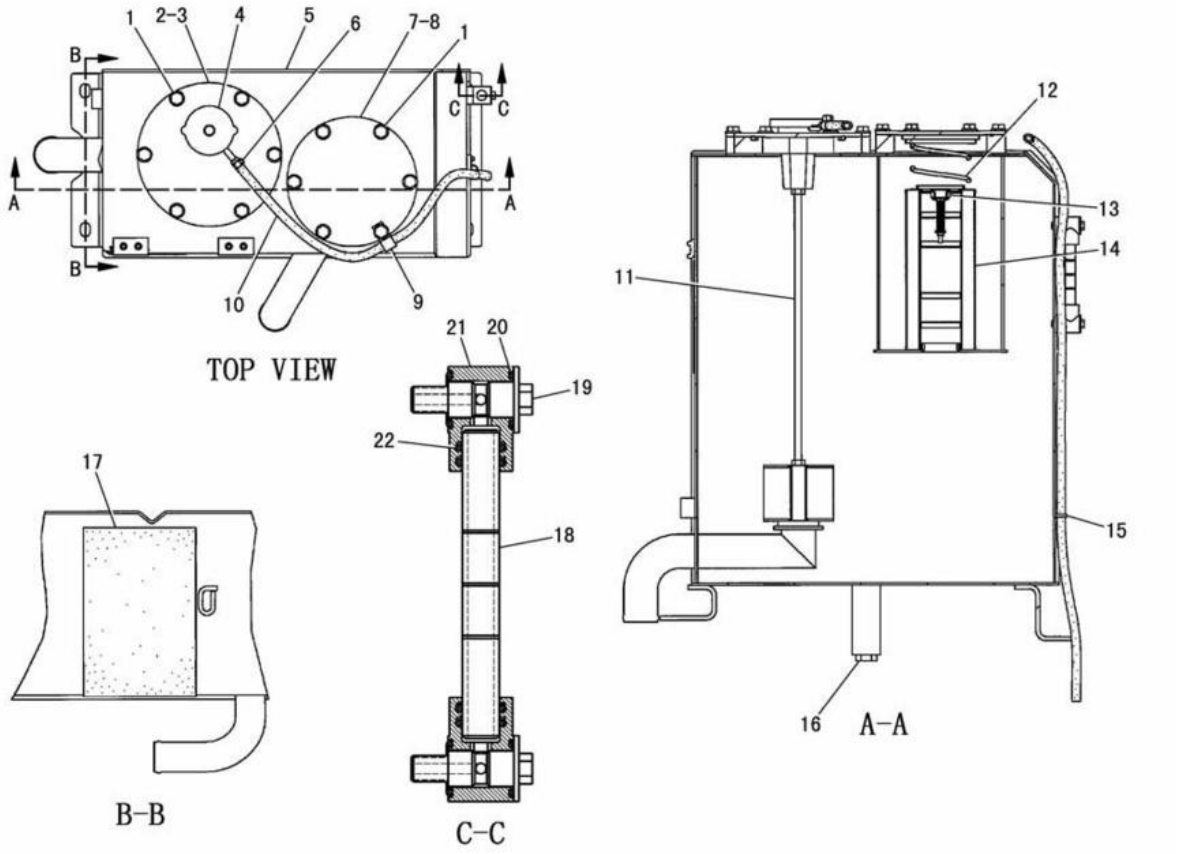

NOTE	No.	PART NO.	QTY.	PART NAME	NOTE	No.	PART NO.	QTY.	PART NAME
	1	8T-4137	12	BOLT(M10×1.5)		16	9S-4190	1	PLUG
		8T-4121	12	WASHER			2M-9780	1	SEAL
	2	192-1674	1	COVER AS		17	158-4670	1	FORM
		4I-3743	1	FILLER AS		18	227-0620	1	GAUGE AS
	3	095-1725	1	SEAL			236-3257	1	PIPE
	4	4I-3745	1	CAP		19	236-3259	2	BOLT(M10×1.5)
	5	241-7453	1	HYDRAULIC TANK AS		20	095-1519	4	SEAL
		7T-1099	2	LINK		21	236-3258	2	BLOCK
		6V-9632	4	NUT(M6×1)(WELD)		22	6F-4855	4	SEAL
	6	1P-4278	1	CLAMP					
	7	248-0493	1	PLATE AS					
	8	095-1723	1	SEAL					
	9	8M-2770	1	CLIP					
E	10	7Y-1976		HOSE---120cm					
	11	120-8755	1	SCREEN AS					
	12	220-4014	1	SPRING					
	13	120-8758	1	VALVE					
	14	120-8757	1	FILTER AS					
	15	3S-2093	1	STRAP					

E-ORDER BY THE cm

J128741 E01

HYDRAULIC TANK AND FILTER (241-7452 N/S)
EFFECTIVE WITH SERIAL NO. BMW01341-BMW01387
PART OF 241-7451-Page 308

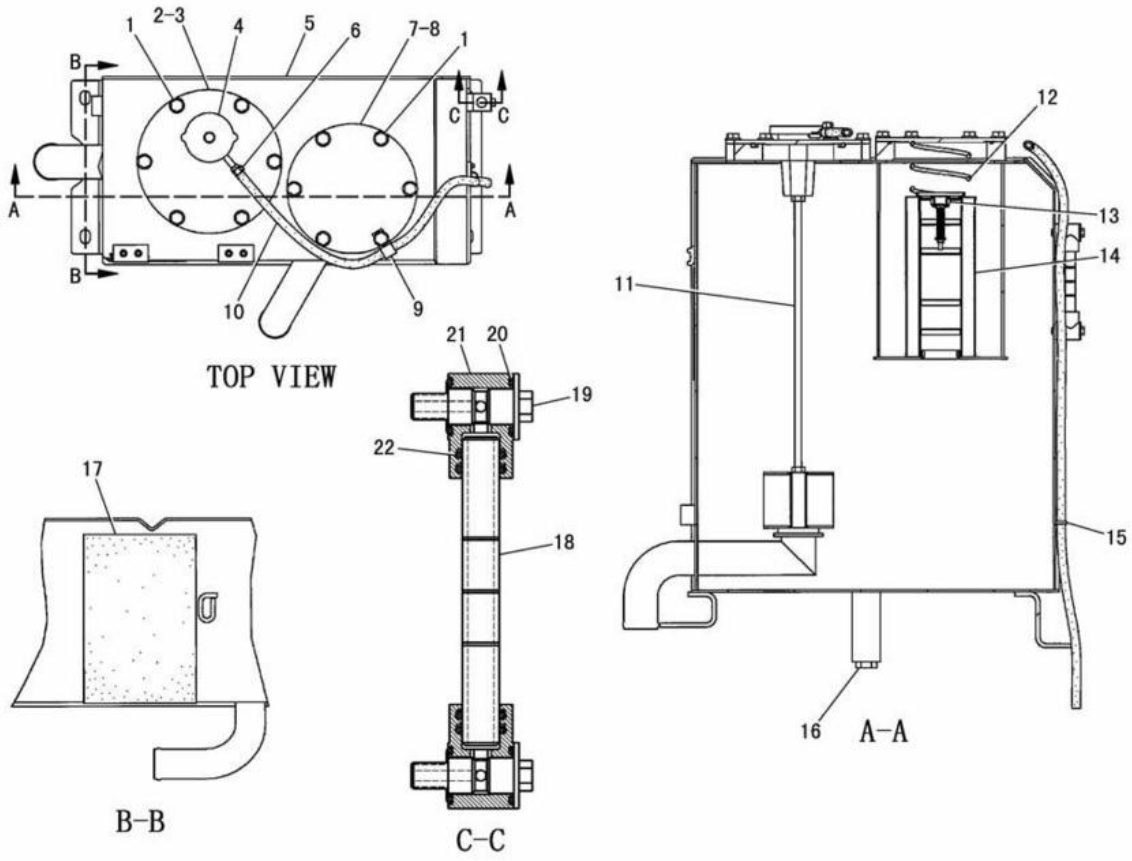

NOTE	No.	PART NO.	QTY.	PART NAME	NOTE	No.	PART NO.	QTY.	PART NAME
	1	8T-4137	12	BOLT(M10×1.5)		16	9S-4190	1	PLUG
		8T-4121	12	WASHER			2M-9780	1	SEAL
	2	192-1674	1	COVER AS		17	158-4670	1	FORM
		4I-3743	1	FILLER AS		18	227-0620	1	GAUGE AS
	3	095-1725	1	SEAL			236-3257	1	PIPE
	4	4I-3745	1	CAP		19	236-3259	2	BOLT(M10×1.5)
	5	241-7453	1	HYDRAULIC TANK AS		20	095-1519	4	SEAL
		7T-1099	2	LINK		21	236-3258	2	BLOCK
		6V-9632	4	NUT(M6×1)(WELD)		22	6F-4855	4	SEAL
	6	1P-4278	1	CLAMP					
C	7	103-8240	1	COVER					
	8	095-1723	1	SEAL					
	9	8M-2770	1	CLIP					
E	10	7Y-1976		HOSE---120cm					
	11	120-8755	1	SCREEN AS					
C	12	246-5339	1	SPRING					
	13	120-8758	1	VALVE					
	14	120-8757	1	FILTER AS					
	15	3S-2093	1	STRAP					

C-INDICATES CHANGE
E-ORDER BY THE cm

J128742 E02

HYDRAULIC TANK AND FILTER (241-7452 N/S)
EFFECTIVE WITH SERIAL NO. BMW01388-
PART OF 241-7451-Page 308

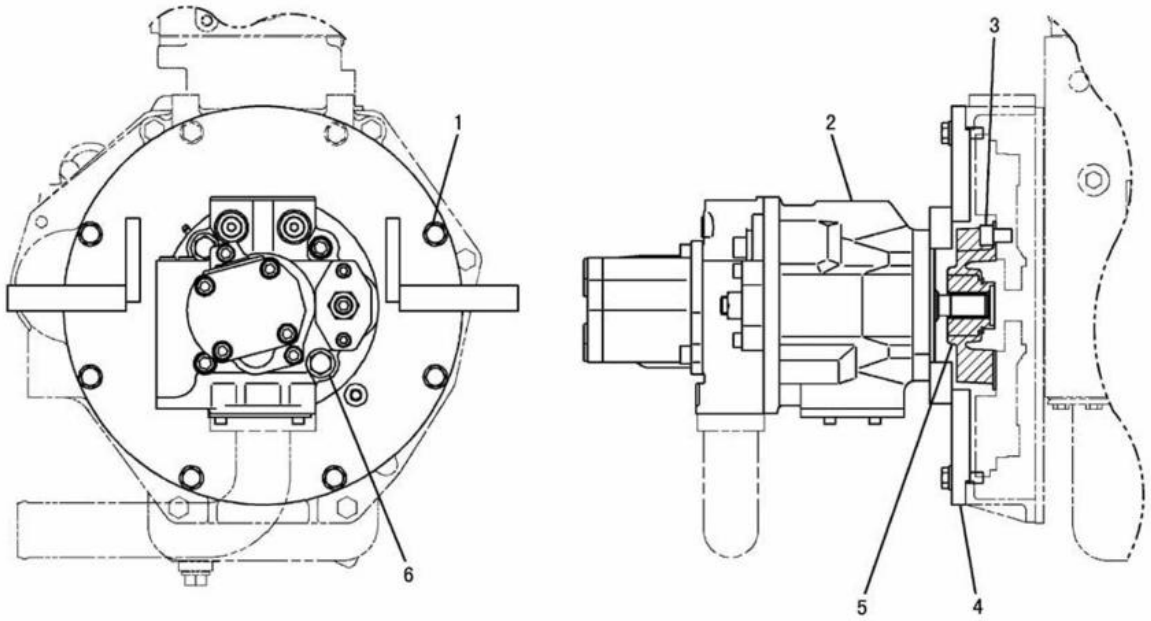

NOTE	No.	PART NO.	QTY.	PART NAME	NOTE	No.	PART NO.	QTY.	PART NAME
	1	9X-8912	6	BOLT(M10×1.25)					
		8T-4121	6	WASHER					
Y	2	191-1383	1	MAIN PUMP GROUP					
	3	191-7503	3	BOLT(M12×1.75)					
	4	191-7504	1	PLATE AS					
		5G-7065	1	BOSS(M10×1.5)					
	5	191-6933	1	COUPLING					
	6	8T-4956	2	BOLT(M12×1.75)					
		8T-4223	2	WASHER					

Y-SEE SEPARATE ILLUSTRATION

J129291 X03

PUMP AND MOUNTING (191-3871 N/S)

PART OF 191-3357-Page 297,298
191-1383-Page 312

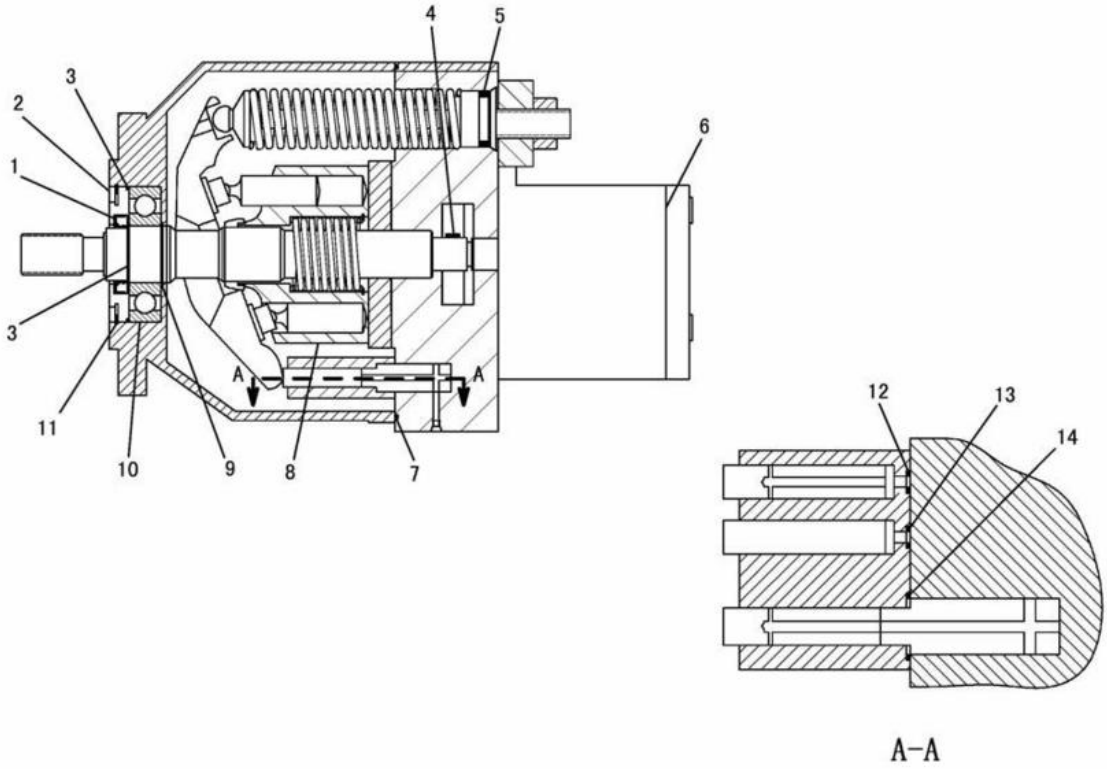

NOTE	No.	PART NO.	QTY.	PART NAME	NOTE	No.	PART NO.	QTY.	PART NAME
	1	194-4631	1	SEAL					
	2	197-3817	1	SEALCASE					
	3	153-6117	2	RING					
	4	197-3816	1	KEY					
	5	095-1543	1	SEAL					
	6	197-3815	1	GEAR PUMP GROUP					
	7	9X-7725	1	SEAL					
	8	153-6123	1	ROTARY AS					
	9	153-6118	1	RING					
	10	153-6116	1	BEARING					
	11	095-0942	1	RING					
	12	8C-3085	1	SEAL					
	13	3G-1209	1	SEAL					
	14	7J-9108	1	SEAL					

J106539 X01

191-1383 MAIN PUMP GROUP
PART OF 191-3871-Page 311

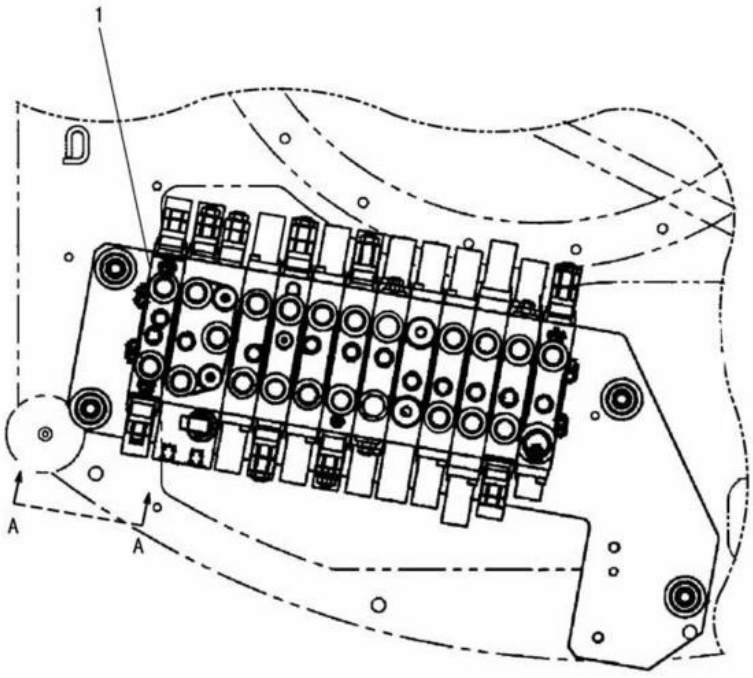

TOP VIEW

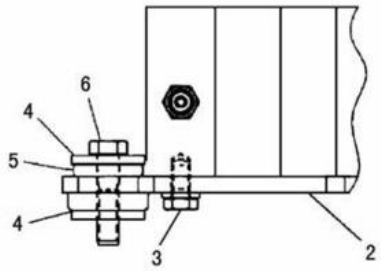

A-A

NOTE	No.	PART NO.	QTY.	PART NAME	NOTE	No.	PART NO.	QTY.	PART NAME
Y	1	191-1386	1	VALVE GROUP					
	2	191-4743	1	PLATE					
	3	8T-4137	4	BOLT(M10×1.5)					
		8T-4121	4	WASHER					
	4	7X-0618	8	WASHER					
	5	8D-3786	4	MOUNTING					
	6	8T-4194	4	BOLT(M12×1.75)					

Y-SEE SEPARATE ILLUSTRATION

J107614 X04

VALVE AND MOUNTING (191-3862 N/S)

PART OF 191-3357-Page 297,298
191-1386-Page 314

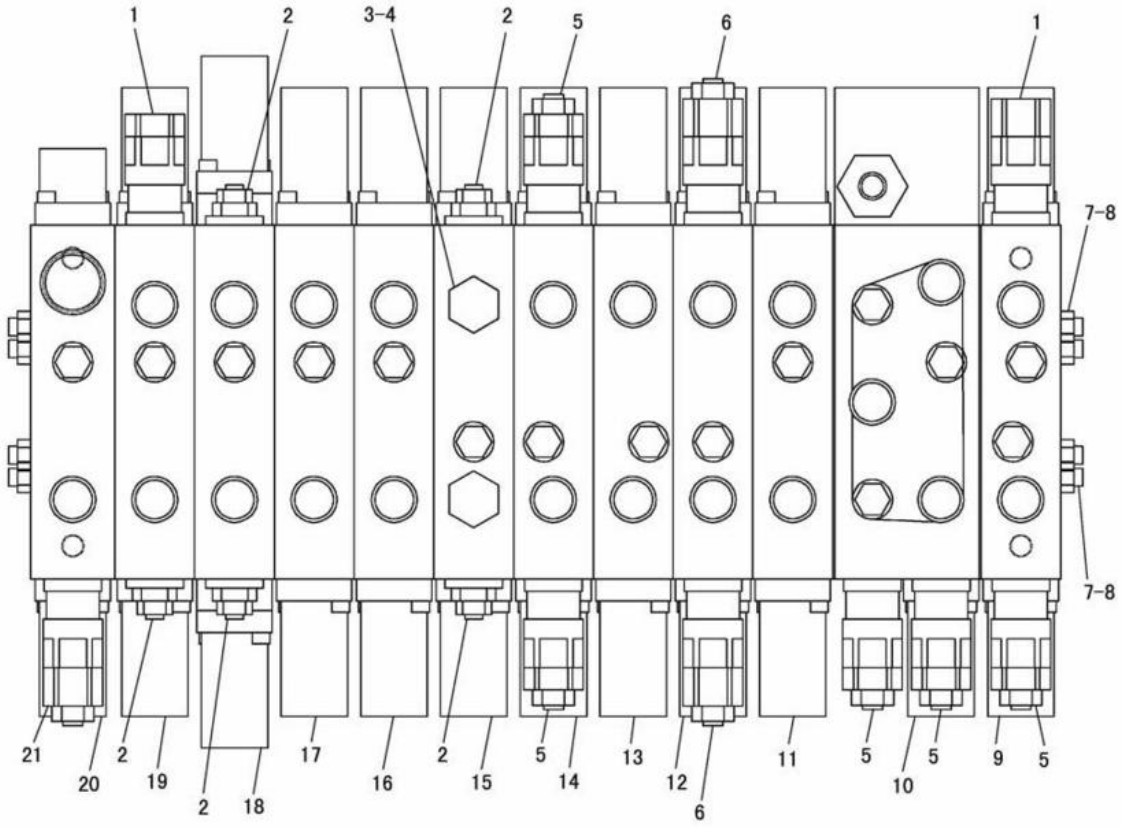

NOTE	No.	PART NO.	QTY.	PART NAME	NOTE	No.	PART NO.	QTY.	PART NAME
	1	200-4871	2	VALVE AS		21	170-8898	1	VALVE
	2	185-0555	5	VALVE GROUP					
	3	9S-4185	2	PLUG					
	4	3K-0360	2	SEAL					
	5	200-4870	5	VALVE AS					
	6	204-3923	2	VALVE AS					
	7	200-4856	8	NUT					
	8	200-4857	4	ROD					
Y	9	200-4858	1	BLOCK AS					
Y	10	200-4859	1	BLOCK AS					
Y	11	200-4860	1	BLOCK AS					
Y	12	200-4861	1	BLOCK AS					
Y	13	200-4862	1	BLOCK AS					
Y	14	200-4863	1	BLOCK AS					
Y	15	200-4864	1	BLOCK AS					
Y	16	200-4865	1	BLOCK AS					
Y	17	200-4866	1	BLOCK AS					
Y	18	200-4867	1	BLOCK AS					
Y	19	200-4868	1	BLOCK AS					
Y	20	200-4869	1	BLOCK AS					

Y-SEE SEPARATE ILLUSTRATION

J115421 X06

191-1386 CONTROL VALVE GROUP

PART OF 191-3862-Page 313
200-4858-Page 316 200-4859-Page 317 200-4860-Page 318 200-4861-Page 319 200-4862-Page 320
200-4863-Page 321 200-4864-Page 322 200-4865-Page 323 200-4866-Page 324 200-4867-Page 325
200-4868-Page 326 200-4869-Page 327

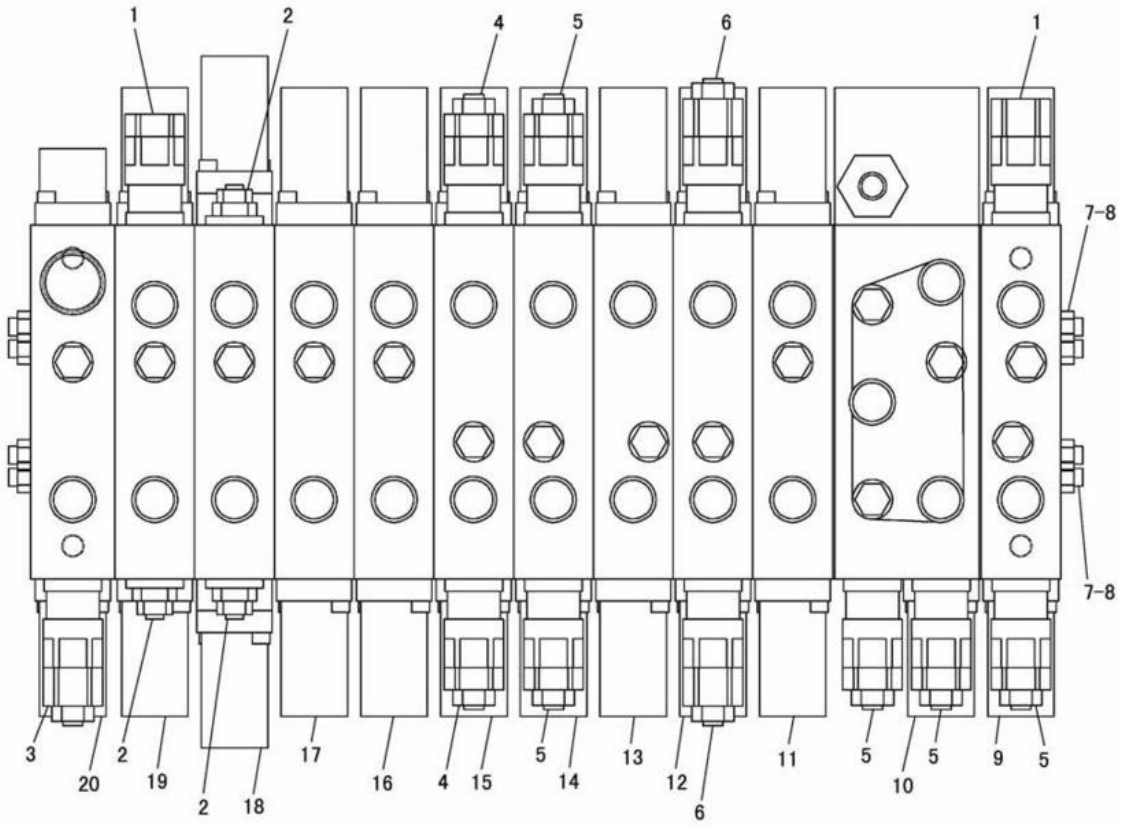

NOTE	No.	PART NO.	QTY.	PART NAME	NOTE	No.	PART NO.	QTY.	PART NAME
	1	200-4871	2	VALVE AS					
	2	185-0555	3	VALVE GROUP					
	3	170-8898	1	VALVE					
	4	210-1308	2	VALVE AS					
	5	200-4870	5	VALVE AS					
	6	204-3923	2	VALVE AS					
	7	200-4856	8	NUT					
	8	200-4857	4	ROD					
Y	9	200-4858	1	BLOCK AS					
Y	10	200-4859	1	BLOCK AS					
Y	11	200-4860	1	BLOCK AS					
Y	12	200-4861	1	BLOCK AS					
Y	13	200-4862	1	BLOCK AS					
Y	14	200-4863	1	BLOCK AS					
	15	210-3569	1	BLOCK AS					
Y	16	200-4865	1	BLOCK AS					
Y	17	200-4866	1	BLOCK AS					
Y	18	200-4867	1	BLOCK AS					
Y	19	200-4868	1	BLOCK AS					
Y	20	200-4869	1	BLOCK AS					

Y-SEE SEPARATE ILLUSTRATION

J126687 X01

210-1289 CONTROL VALVE GROUP

EFFECTIVE WITH SERIAL NO. BMW00787-
PART OF 210-1884-Page 510,511
200-4858-Page 316 200-4859-Page 317 200-4860-Page 318 200-4861-Page 319 200-4862-Page 320
200-4863-Page 321 200-4865-Page 323 200-4866-Page 324 200-4867-Page 325 200-4868-Page 326
200-4869-Page 327
AN ATTACHMENT

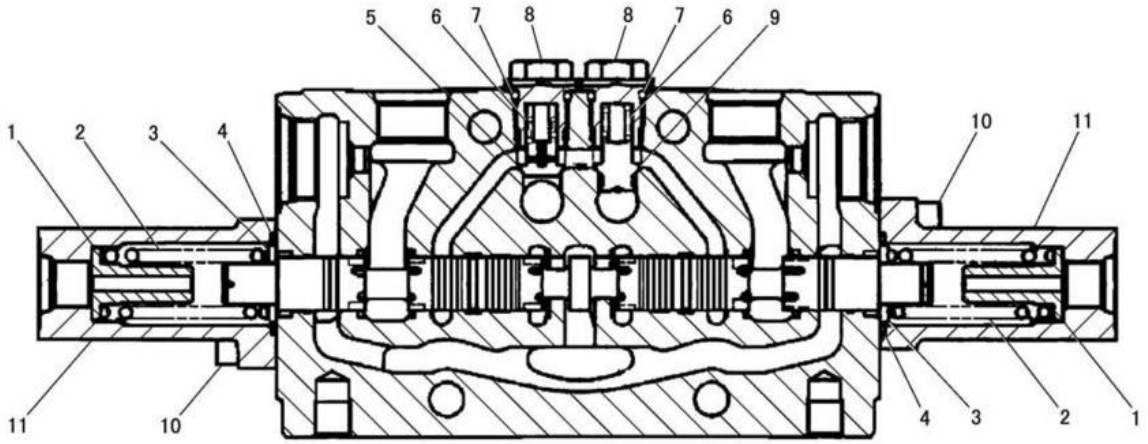

NOTE	No.	PART NO.	QTY.	PART NAME	NOTE	No.	PART NO.	QTY.	PART NAME
	1	200-4941	2	SEAT					
	2	200-4942	2	SPRING					
	3	104-8130	2	SEAT					
H	4	150-6339	2	SEAL					
	5	200-4943	1	VALVE					
	6	200-4945	2	SPRING					
H	7	200-4947	2	SEAL					
	8	200-4946	2	PLUG					
	9	200-4944	1	VALVE					
	10	132-7705	4	BOLT(M6×1)					
	11	200-4940	2	CAP					
				AVAILABLE REPAIR KIT(S):					
		200-4975	1	SEAL KIT (INCLUDES PARTS MARKED H)					

J132911 X00

200-4858 BLOCK ASSEMBLY

PART OF 191-1386-Page 314,210-1289-Page 315

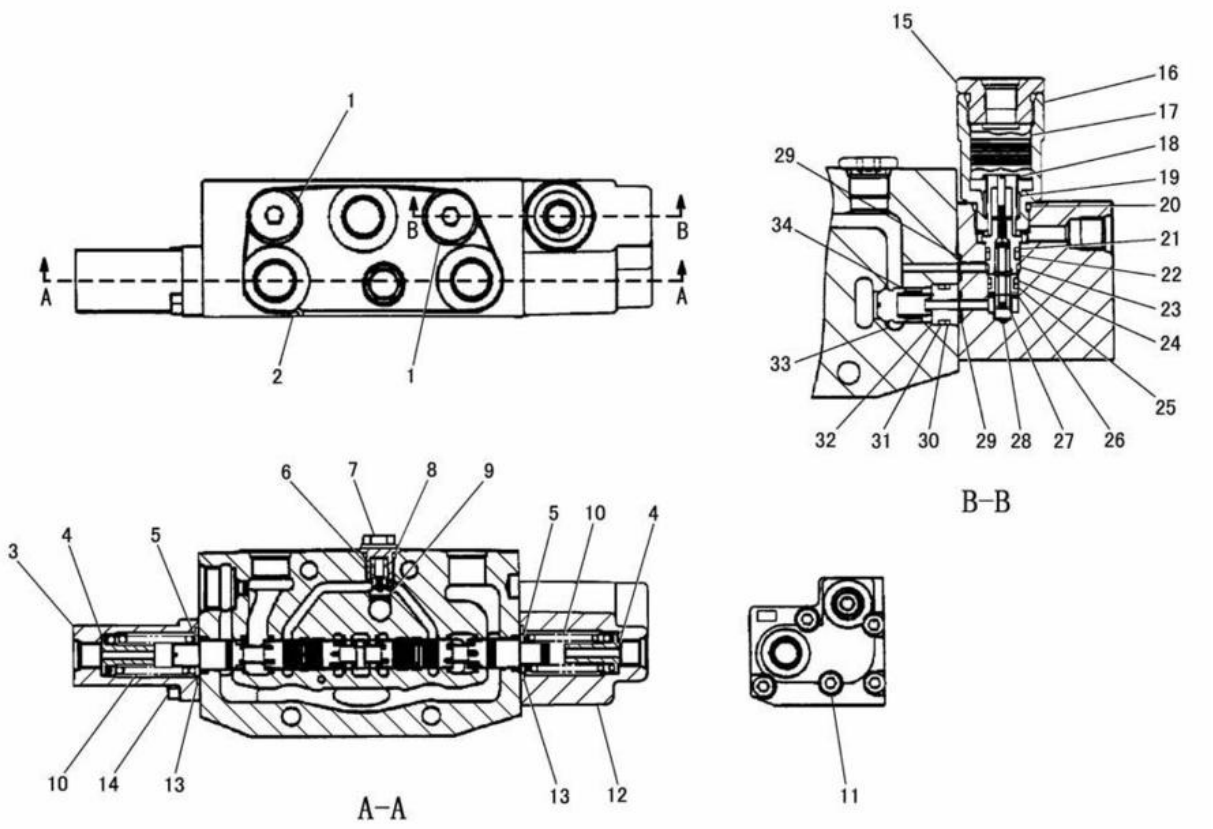

NOTE	No.	PART NO.	QTY.	PART NAME	NOTE	No.	PART NO.	QTY.	PART NAME
	1	185-0560	2	PLUG AS	H	21	200-4969	1	SEAL
H	2	200-4953	1	SEAL	H	22	200-4968	1	SEAL
	3	200-4940	1	CAP		23	200-4964	1	SLEEVE
	4	200-4941	2	SEAT	H	24	200-4967	1	SEAL
	5	104-8130	2	SEAT	H	25	200-4970	1	SEAL
	6	200-4945	1	SPRING		26	200-4972	1	SEAT
	7	200-4946	1	PLUG		27	200-4966	1	SPRING
H	8	200-4947	1	SEAL		28	200-4960	1	VALVE
	9	200-4943	1	VALVE	H	29	150-0885	2	SEAL
	10	200-4942	2	SPRING	H	30	200-4959	1	RING
	11	200-4973	5	BOLT	H	31	200-4958	1	SEAL
	12	200-4952	1	BODY		32	185-0549	1	SPACER
H	13	150-6339	2	SEAL		33	200-4955	1	VALVE
	14	132-7705	2	BOLT(M6×1)		34	200-4956	1	SPRING
	15	200-4971	1	PLUG AS					AVAILABLE REPAIR KIT(S):
	16	200-4961	1	PLUG			200-4974	1	SEAL KIT
	17	200-4962	1	PISTON					(INCLUDES PARTS MARKED H)
	18	200-4963	1	SPOOL					
	19	200-4965	1	SPRING					
H	20	093-3328	1	SEAL					

J132913 X01

200-4859 BLOCK ASSEMBLY

PART OF 191-1386-Page 314,210-1289-Page 315

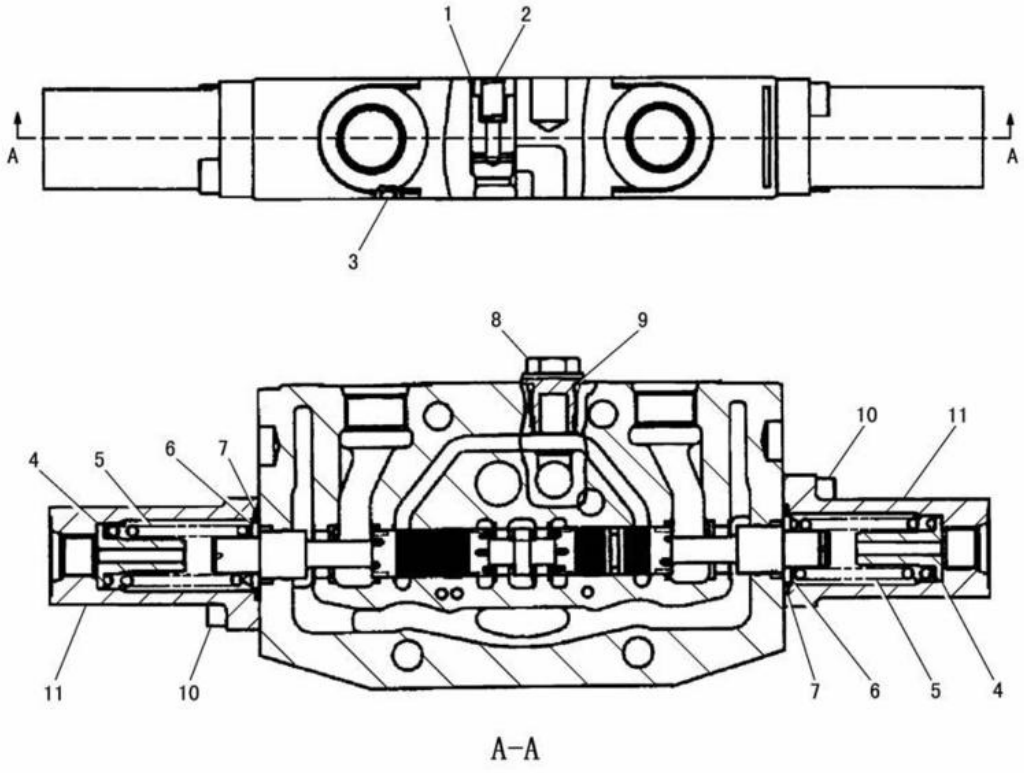

A-A

NOTE	No.	PART NO.	QTY.	PART NAME	NOTE	No.	PART NO.	QTY.	PART NAME
	1	150-6408	1	POPPET					
	2	095-6623	1	SPRING					
H	3	200-4953	1	SEAL					
	4	200-4941	2	SEAT					
	5	200-4942	2	SPRING					
	6	104-8130	2	SEAT					
H	7	150-6339	2	SEAL					
	8	200-4946	1	PLUG					
H	9	200-4947	1	SEAL					
	10	132-7705	4	BOLT(M6×1)					
	11	200-4940	2	CAP					
				AVAILABLE REPAIR KIT(S):					
		200-4938	1	SEAL KIT (INCLUDES PARTS MARKED H)					

J132914 X00

200-4860 BLOCK ASSEMBLY

PART OF 191-1386-Page 314,210-1289-Page 315

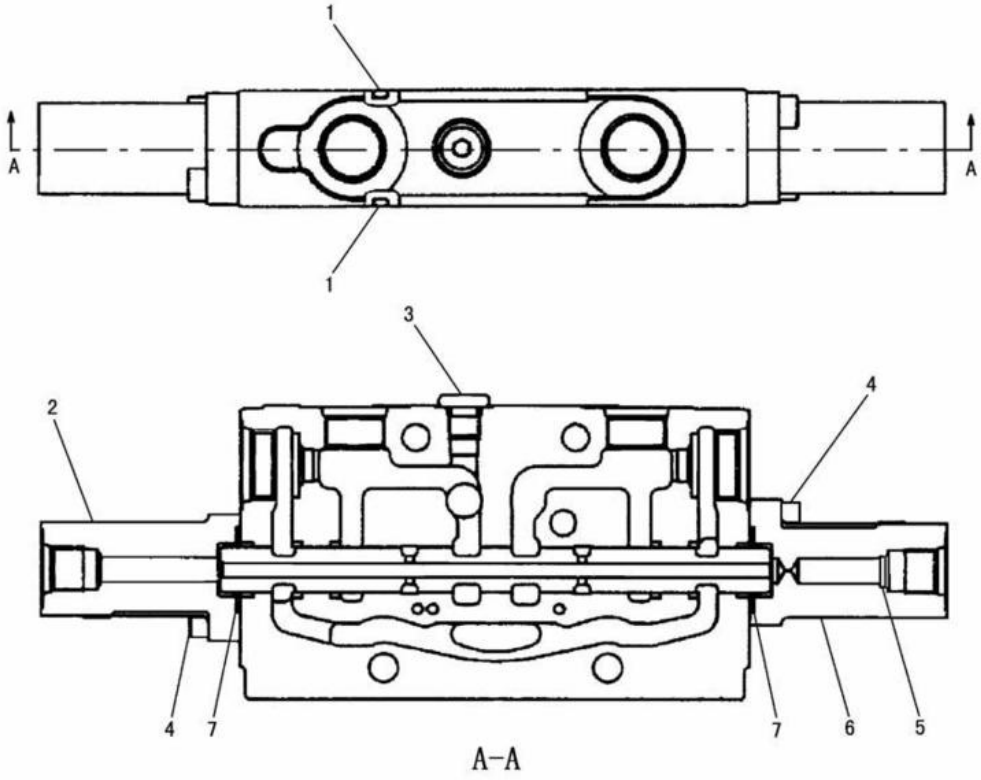

A-A

NOTE	No.	PART NO.	QTY.	PART NAME	NOTE	No.	PART NO.	QTY.	PART NAME
H	1	200-4853	2	SEAL					
	2	200-5626	1	CAP					
	3	147-4245	1	PLUG AS					
	4	132-7705	4	BOLT(M6×1)					
	5	200-5627	1	FILTER					
	6	200-5625	1	CAP					
H	7	150-6339	2	SEAL					
				AVAILABLE REPAIR KIT(S):					
		200-4939	1	SEAL KIT (INCLUDES PARTS MARKED H)					

J107671 X00

200-4861 BLOCK ASSEMBLY

PART OF 191-1386-Page 314,210-1289-Page 315

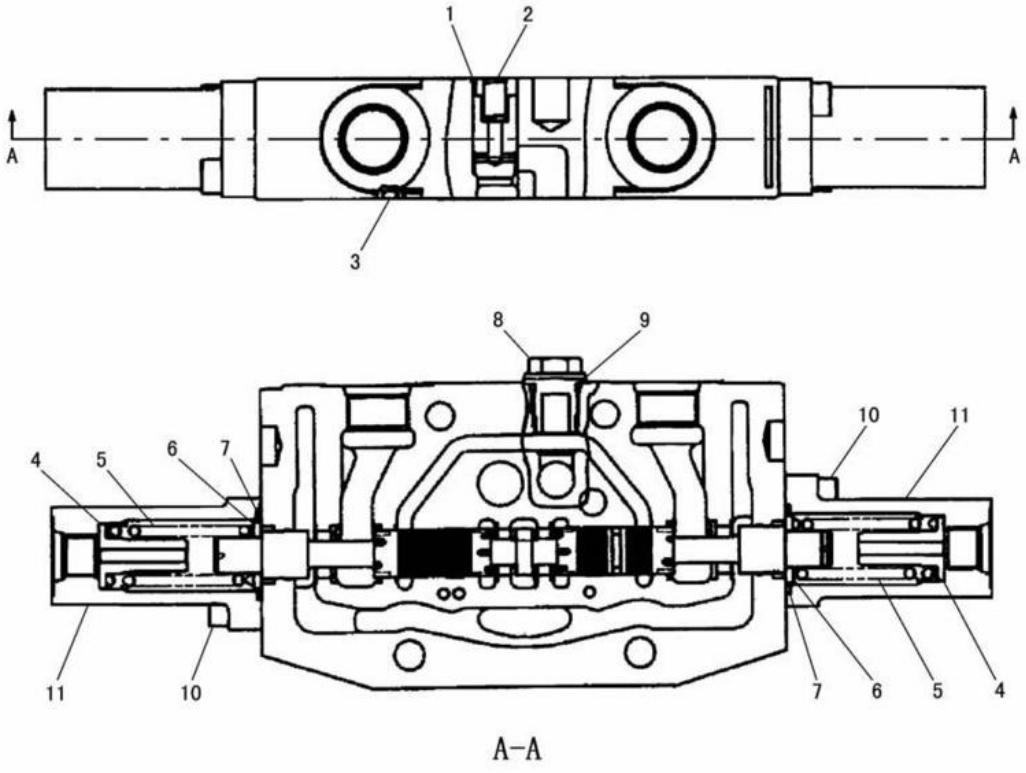

A-A

NOTE	No.	PART NO.	QTY.	PART NAME	NOTE	No.	PART NO.	QTY.	PART NAME
	1	150-6408	1	POPPET					
	2	095-6623	1	SPRING					
H	3	200-4953	1	SEAL					
	4	200-4941	2	SEAT					
	5	200-4942	2	SPRING					
	6	104-8130	2	SEAT					
H	7	150-6339	2	SEAL					
	8	200-4946	1	PLUG					
H	9	200-4947	1	SEAL					
	10	132-7705	4	BOLT(M6×1)					
	11	200-4940	2	CAP					
				AVAILABLE REPAIR KIT(S):					
		200-4938	1	SEAL KIT (INCLUDES PARTS MARKED H)					

J107672 X00

200-4862 BLOCK ASSEMBLY

PART OF 191-1386-Page 314,210-1289-Page 315

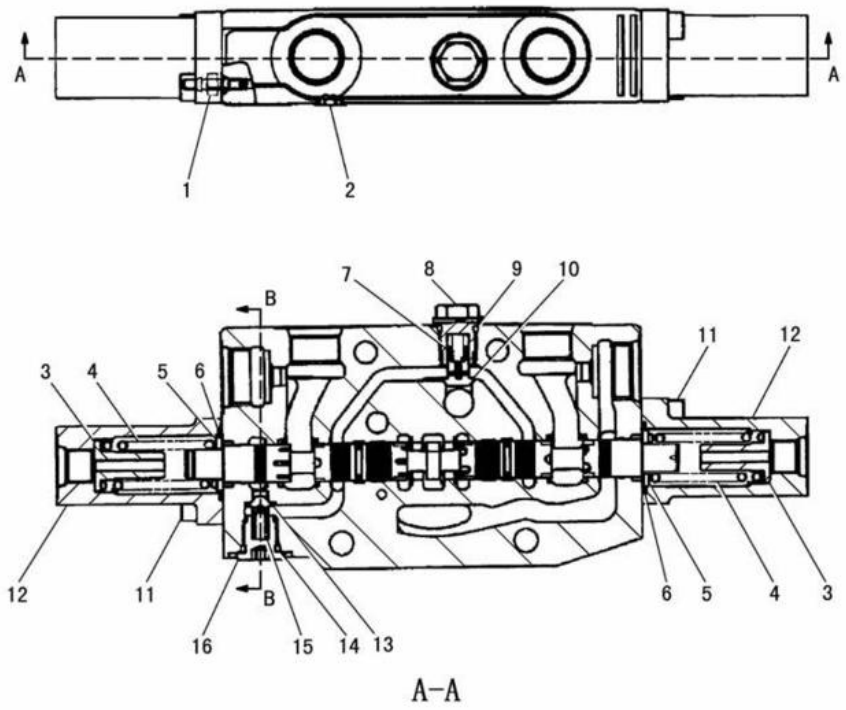

NOTE	No.	PART NO.	QTY.	PART NAME	NOTE	No.	PART NO.	QTY.	PART NAME
	1	200-5633	1	PLUG					AVAILABLE REPAIR KIT(S):
H	2	200-4953	1	SEAL			200-4950	1	SEAL KIT
	3	200-5629	2	SEAT					(INCLUDES PARTS MARKED H)
	4	200-4842	2	SPRING					
	5	104-8130	2	SEAT					
H	6	150-6339	2	SEAL					
	7	200-4945	1	SPRING					
	8	200-4946	1	PLUG					
H	9	200-4947	1	SEAL					
	10	200-4943	1	VALVE					
	11	132-7705	4	BOLT(M6×1)					
	12	200-4940	2	CAP					
	13	200-5630	1	VALVE					
H	14	150-6367	1	SEAL					
	15	150-6418	1	SPRING					
	16	200-5631	1	PLUG					
H	17	150-0886	1	SEAL					
H	18	200-5632	1	SEAL					

J132912 X00

200-4863 BLOCK ASSEMBLY
PART OF 191-1386-Page 314,210-1289-Page 315

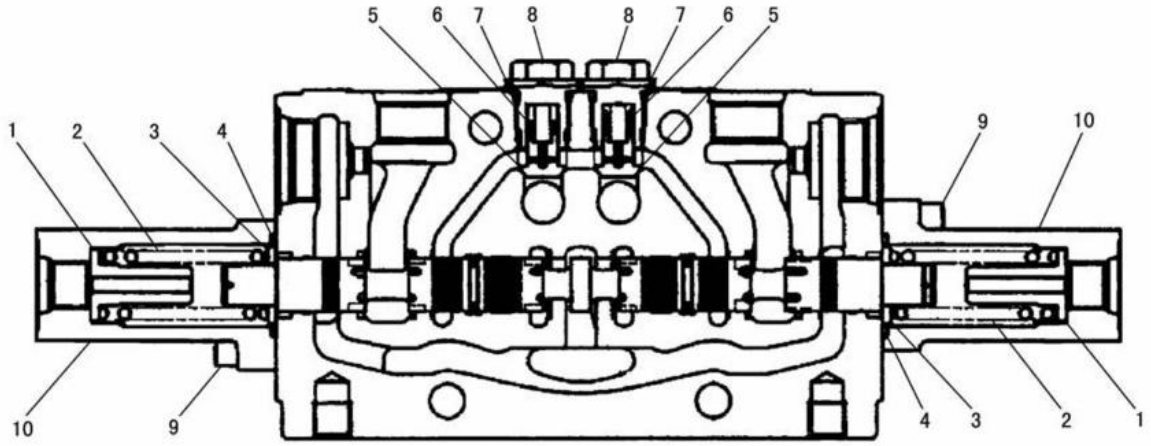

NOTE	No.	PART NO.	QTY.	PART NAME	NOTE	No.	PART NO.	QTY.	PART NAME
	1	200-4941	2	SEAT					
	2	200-4942	2	SPRING					
	3	104-8130	2	SEAT					
H	4	150-6339	2	SEAL					
	5	200-4943	2	VALVE					
	6	200-4945	2	SPRING					
H	7	200-4947	2	SEAL					
	8	200-4946	2	PLUG					
	9	132-7705	4	BOLT(M6×1)					
	10	200-4940	2	CAP					
				AVAILABLE REPAIR KIT(S):					
		221-4135	1	SEAL KIT (INCLUDES PARTS MARKED H)					

J115422 X01

200-4864 BLOCK ASSEMBLY
PART OF 191-1386-Page 314

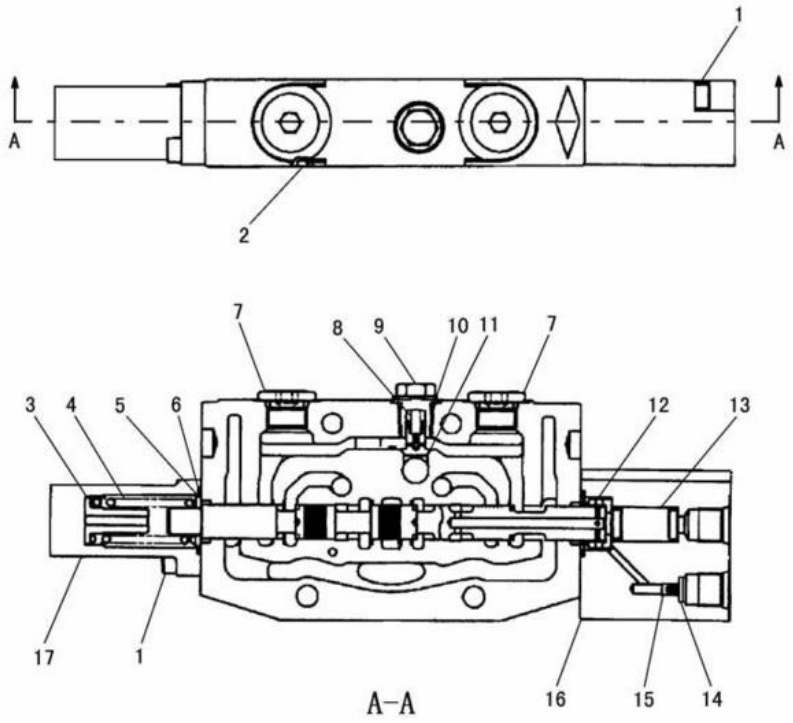

NOTE	No.	PART NO.	QTY.	PART NAME	NOTE	No.	PART NO.	QTY.	PART NAME
	1	132-7705	4	BOLT(M6×1)					AVAILABLE REPAIR KIT(S):
H	2	200-4953	1	SEAL			221-4133	1	SEAL KIT
	3	200-4941	1	SEAT					(INCLUDES PARTS MARKED H)
	4	200-5635	1	SPRING					
	5	104-8130	1	SEAT					
H	6	150-6339	2	SEAL					
	7	185-0560	2	PLUG AS					
	8	200-4945	1	SPRING					
	9	200-4946	1	PLUG					
H	10	200-4947	1	SEAL					
	11	200-4943	1	VALVE					
	12	200-5639	1	SPACER					
	13	200-5638	1	PISTON					
	14	200-5627	1	FILTER					
	15	200-5637	1	PLUG					
	16	217-5958	1	CAP					
	17	200-5634	1	CAP					

J115424 X02

200-4865 BLOCK ASSEMBLY

PART OF 191-1386-Page 314,210-1289-Page 315

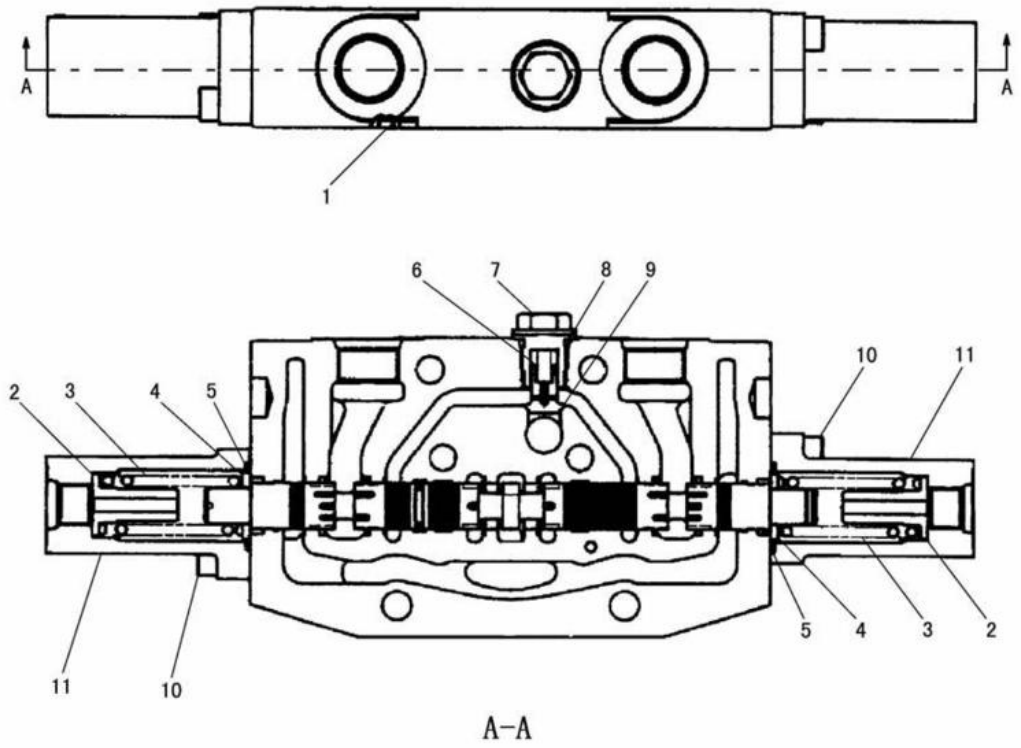

A-A

NOTE	No.	PART NO.	QTY.	PART NAME	NOTE	No.	PART NO.	QTY.	PART NAME
H	1	200-4953	1	SEAL					
	2	200-4941	2	SEAT					
	3	200-4942	2	SPRING					
	4	104-8130	2	SEAT					
H	5	150-6339	2	SEAL					
	6	200-4945	1	SPRING					
	7	200-4946	1	PLUG					
H	8	200-4947	1	SEAL					
	9	200-4943	1	VALVE					
	10	132-7705	4	BOLT(M6×1)					
	11	200-4940	2	CAP					
				AVAILABLE REPAIR KIT(S):					
		221-4134	1	SEAL KIT (INCLUDES PARTS MARKED H)					

J115425 X01

200-4866 BLOCK ASSEMBLY

PART OF 191-1386-Page 314,210-1289-Page 315

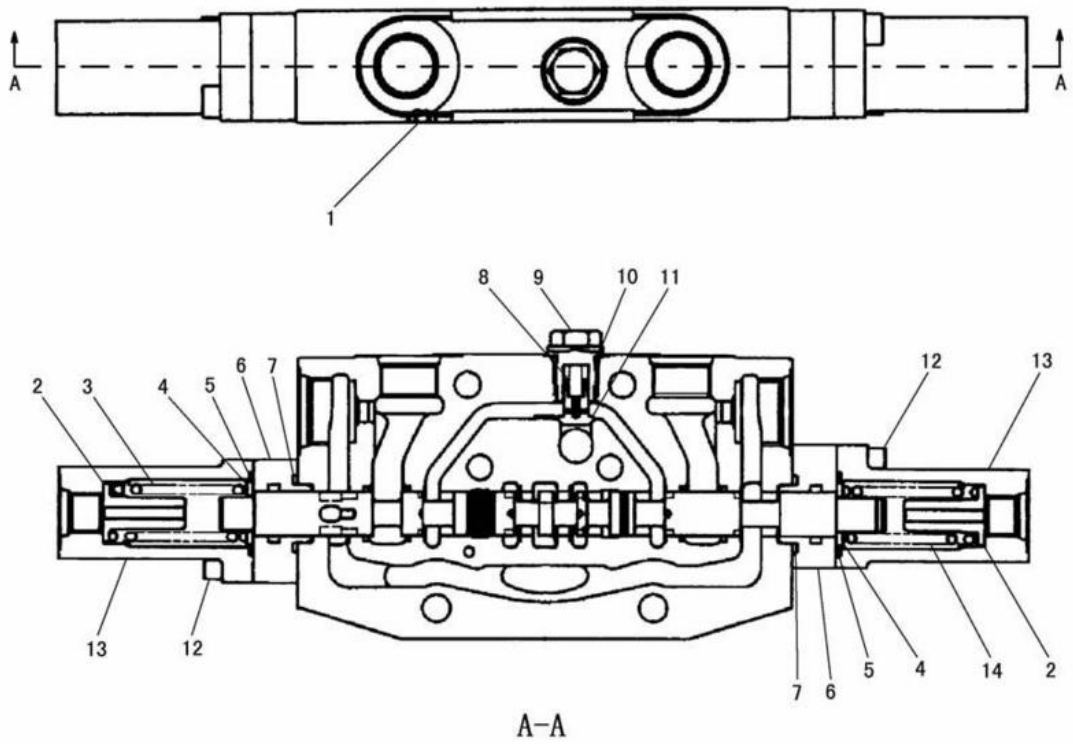

A-A

NOTE	No.	PART NO.	QTY.	PART NAME	NOTE	No.	PART NO.	QTY.	PART NAME
H	1	200-4953	1	SEAL					
	2	200-4941	2	SEAT					
	3	200-5640	1	SPRING					
	4	104-8130	2	SEAT					
H	5	150-6339	2	SEAL					
	6	096-2434	2	ADAPTER					
H	7	150-6346	2	SEAL					
	8	200-4945	1	SPRING					
	9	200-4946	1	PLUG					
H	10	200-4947	1	SEAL					
	11	200-4943	1	VALVE					
	12	111-5422	4	BOLT(M6×1)					
	13	200-4940	2	CAP					
	14	200-4942	1	SPRING					
				AVAILABLE REPAIR KIT(S):					
		200-4951	1	SEAL KIT					
				(INCLUDES PARTS MARKED H)					

J107677 X00

200-4867 BLOCK ASSEMBLY

PART OF 191-1386-Page 314,210-1289-Page 315

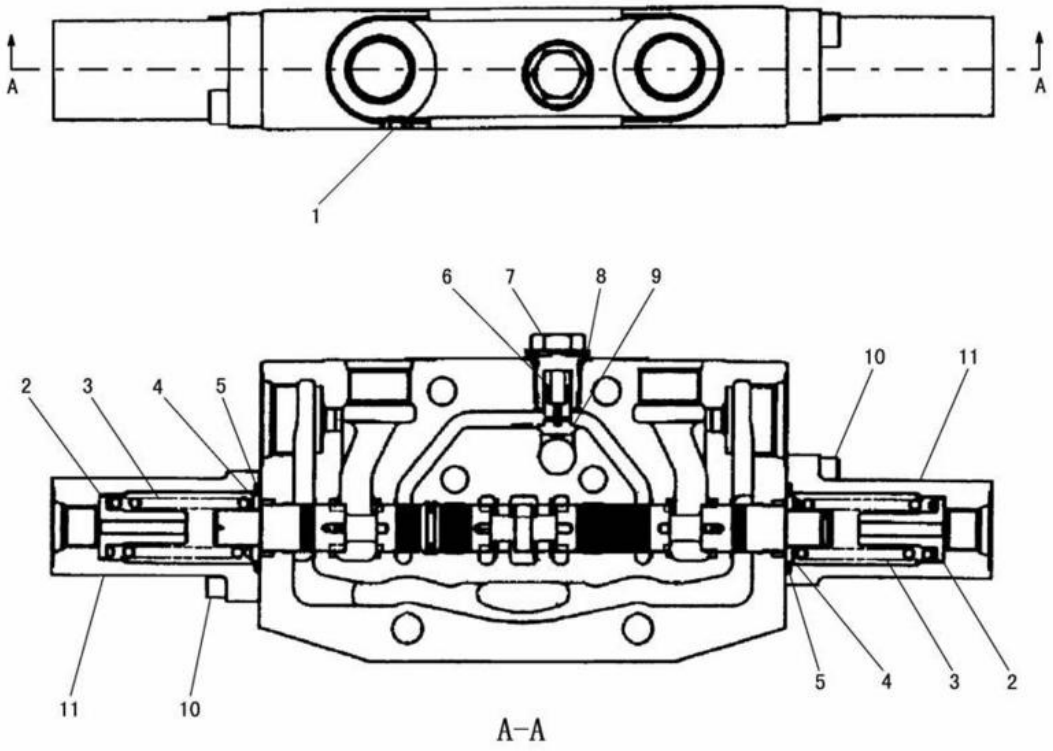

NOTE	No.	PART NO.	QTY.	PART NAME	NOTE	No.	PART NO.	QTY.	PART NAME
H	1	200-4953	1	SEAL					
	2	200-4941	2	SEAT					
	3	200-4942	2	SPRING					
	4	104-8130	2	SEAT					
H	5	150-6339	2	SEAL					
	6	200-4945	1	SPRING					
	7	200-4946	1	PLUG					
H	8	200-4947	1	SEAL					
	9	200-4943	1	VALVE					
	10	132-7705	4	BOLT(M6×1)					
	11	200-4940	2	CAP					
				AVAILABLE REPAIR KIT(S):					
		221-4134	1	SEAL KIT (INCLUDES PARTS MARKED H)					

J115426 X01

200-4868 BLOCK ASSEMBLY
PART OF 191-1386-Page 314,210-1289-Page 315

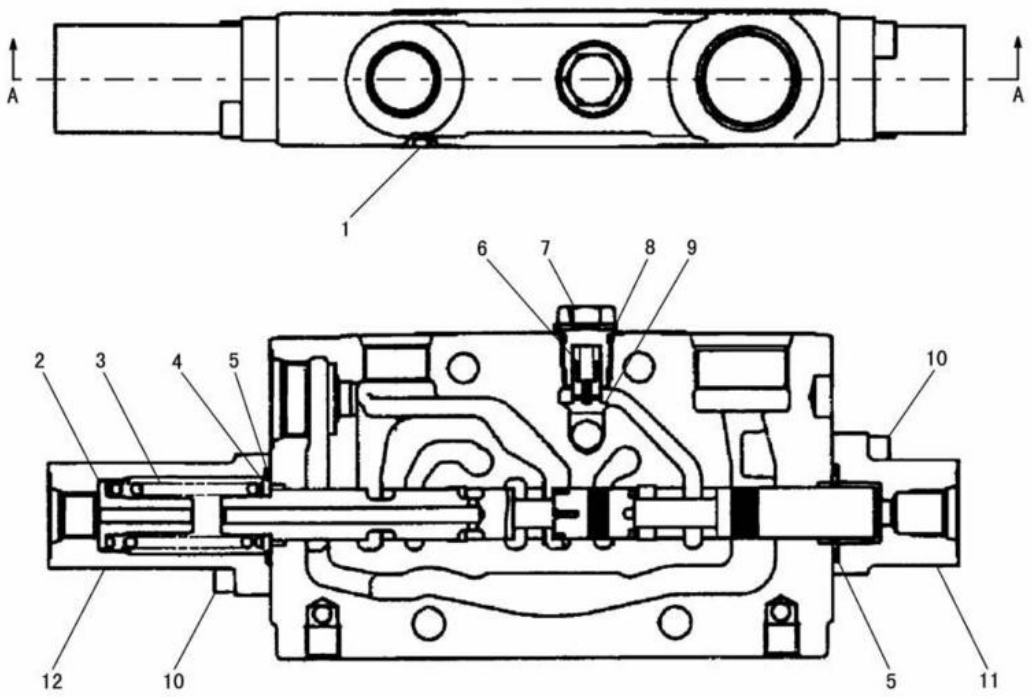

A-A

NOTE	No.	PART NO.	QTY.	PART NAME	NOTE	No.	PART NO.	QTY.	PART NAME
H	1	200-4953	1	SEAL					
	2	200-4941	1	SEAT					
	3	200-4942	1	SPRING					
	4	104-8130	1	SEAT					
H	5	150-6339	2	SEAL					
	6	200-4945	1	SPRING					
	7	200-4946	1	PLUG					
H	8	200-4947	1	SEAL					
	9	200-4943	1	VALVE					
	10	132-7705	4	BOLT(M6×1)					
	11	200-5642	1	CAP					
	12	200-4940	1	CAP					
				AVAILABLE REPAIR KIT(S):					
		221-4134	1	SEAL KIT					
				(INCLUDES PARTS MARKED H)					

J115427 X01

200-4869 BLOCK ASSEMBLY

PART OF 191-1386-Page 314,210-1289-Page 315

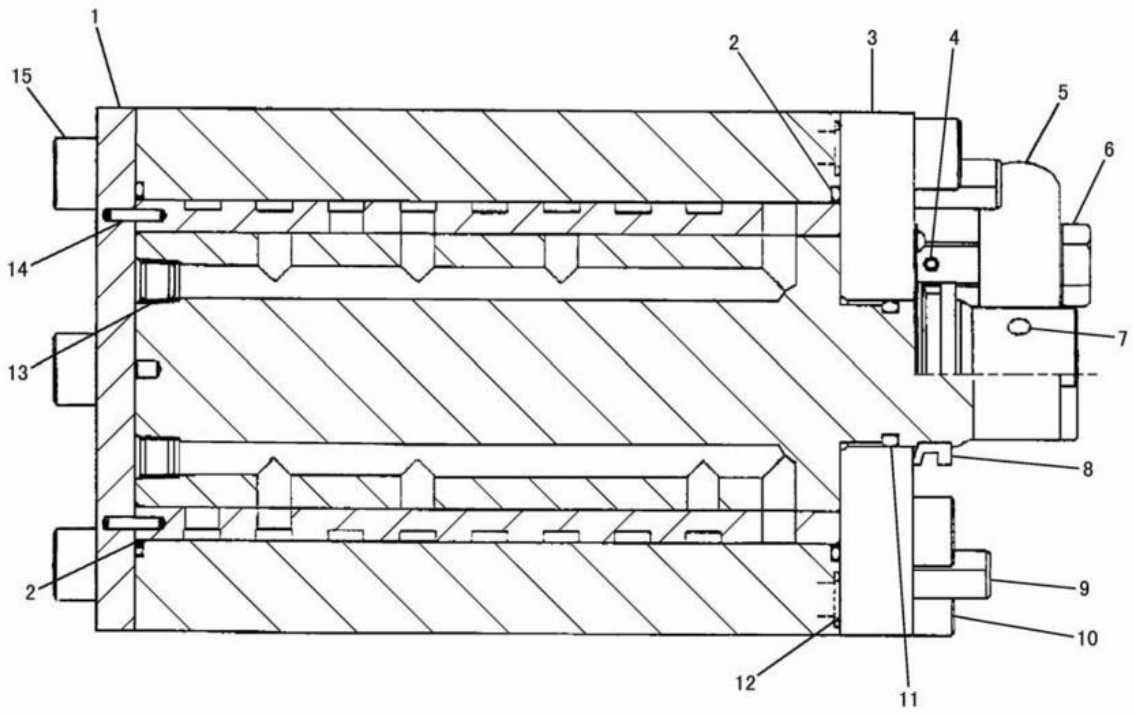

NOTE	No.	PART NO.	QTY.	PART NAME	NOTE	No.	PART NO.	QTY.	PART NAME
	1	198-9044	1	COVER					
	2	169-1176	2	RING					
	3	198-9046	1	COVER					
	4	169-1165	1	PIN					
	5	198-9045	1	LEVER					
	6	169-1161	1	BOLT					
	7	085-7083	1	PIN					
	8	6I-6923	1	SEAL					
	9	169-1164	2	PIN					
	10	5A-3604	6	BOLT(M8×1.25)					
	11	095-1590	1	SEAL					
	12	169-1177	8	RING					
	13	8T-6759	8	PLUG					
	14	085-7081	4	NEEDLE					
	15	6V-8202	6	BOLT(M8×1.25)					

J119387 X04

191-1391 PILOT VALVE GROUP

EFFECTIVE WITH SERIAL NO. BMW00001-BMW00980
PART OF 191-3877-Page 298
AN ATTACHMENT

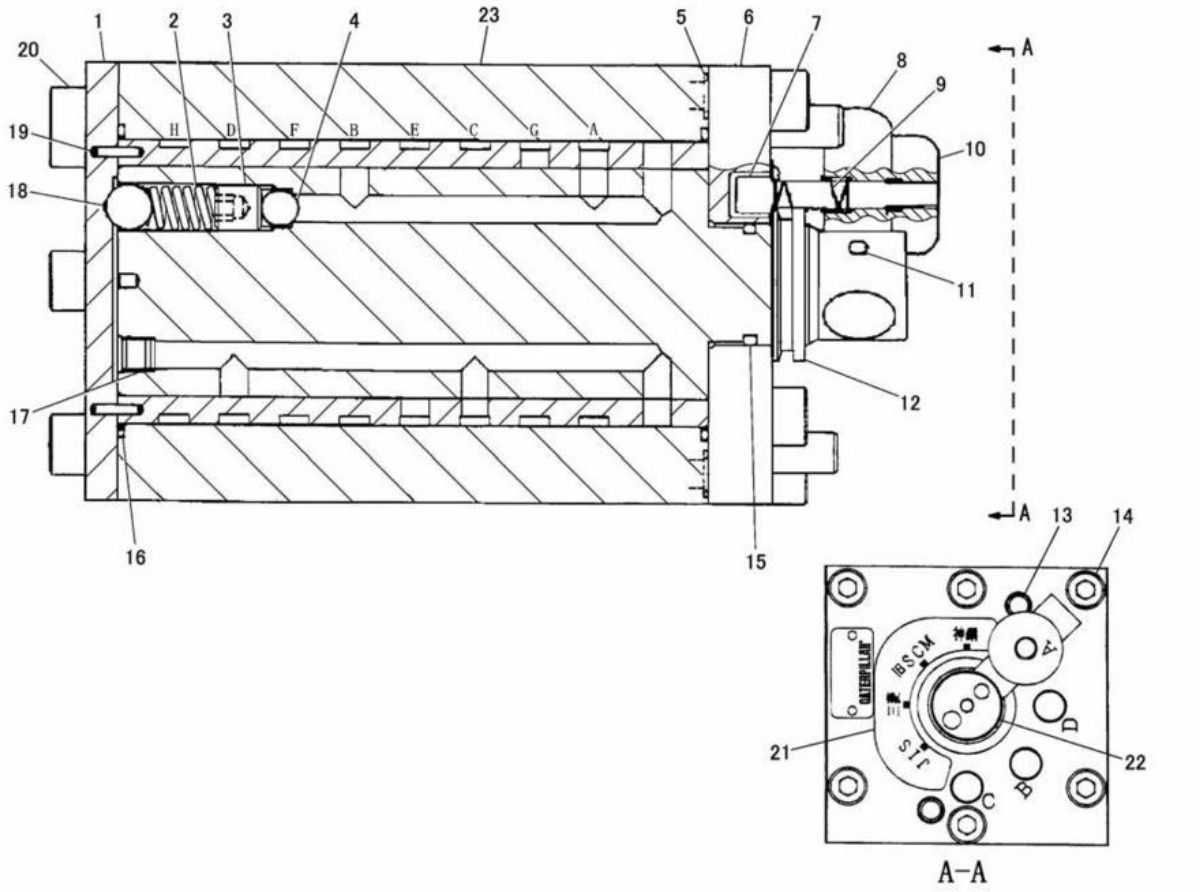

NOTE	No.	PART NO.	QTY.	PART NAME	NOTE	No.	PART NO.	QTY.	PART NAME
	1	217-9454	1	COVER		21	252-1086	1	FILM
	2	125-1912	1	SPRING		22	202-9228	1	FILM
	3	6V-7613	1	SETSCREW(M10×1.5)		23	252-1087	1	BODY AS
	4	085-7085	1	BALL(SMALL)					
	5	169-1177	8	RING					
	6	252-1088	1	COVER					
	7	217-9451	1	PIN					
	8	217-9456	1	LEVER					
	9	217-9453	1	SPRING					
	10	217-9452	1	KNOB					
	11	085-7083	1	PIN(SPRING)					
	12	6I-6923	1	SEAL					
	13	169-1164	2	PIN					
	14	5A-3604	6	BOLT(M8×1.25)					
	15	7J-9933	1	SEAL					
	16	169-1176	2	RING					
	17	8T-6759	7	PLUG					
	18	006-6803	1	BALL(LARGE)					
	19	085-7081	4	NEEDLE					
	20	6V-8202	6	BOLT(M8×1.25)					

J131523 X01

216-7279 PILOT VALVE GROUP

EFFECTIVE WITH SERIAL NO. BMW00981-
PART OF 191-3877-Page 299,201-9185-Page 401,217-7959-Page 299
AN ATTACHMENT

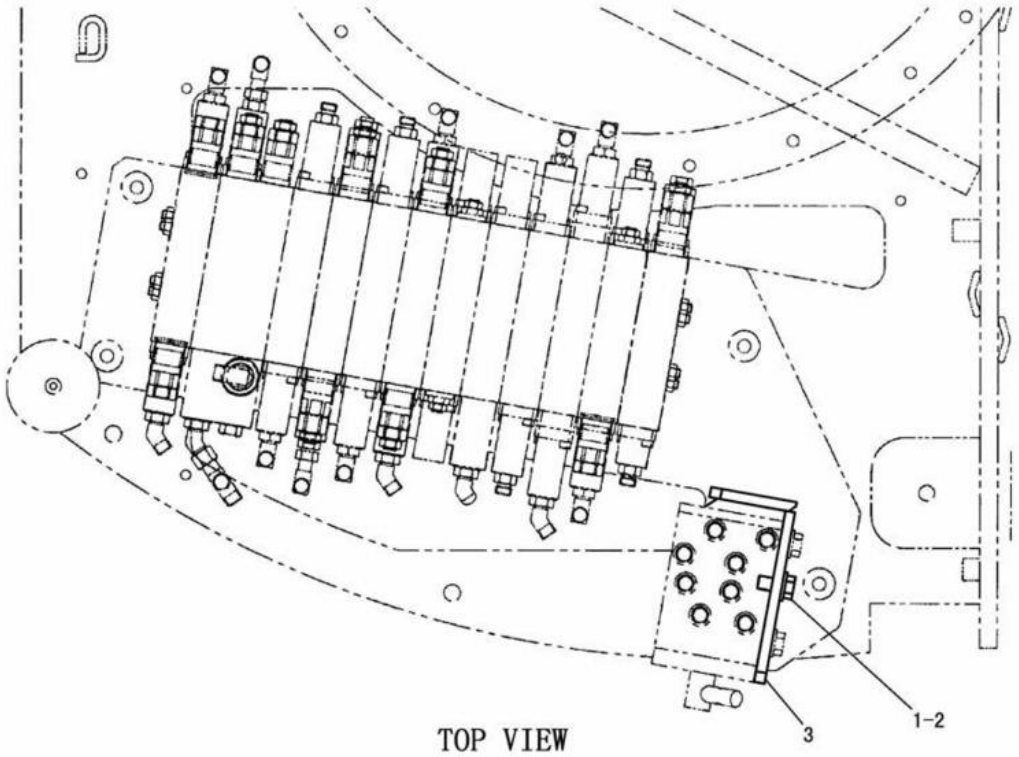

TOP VIEW

NOTE	No.	PART NO.	QTY.	PART NAME	NOTE	No.	PART NO.	QTY.	PART NAME
	1	8T-4223	1	WASHER					
	2	8T-4139	1	BOLT(M12×1.75)					
	3	192-1701	1	BRACKET AS					

J107690 X02

VALVE MOUNTING (191-3873 N/S)
PART OF 191-3877-Page 298,299,217-7959-Page 299
AN ATTACHMENT

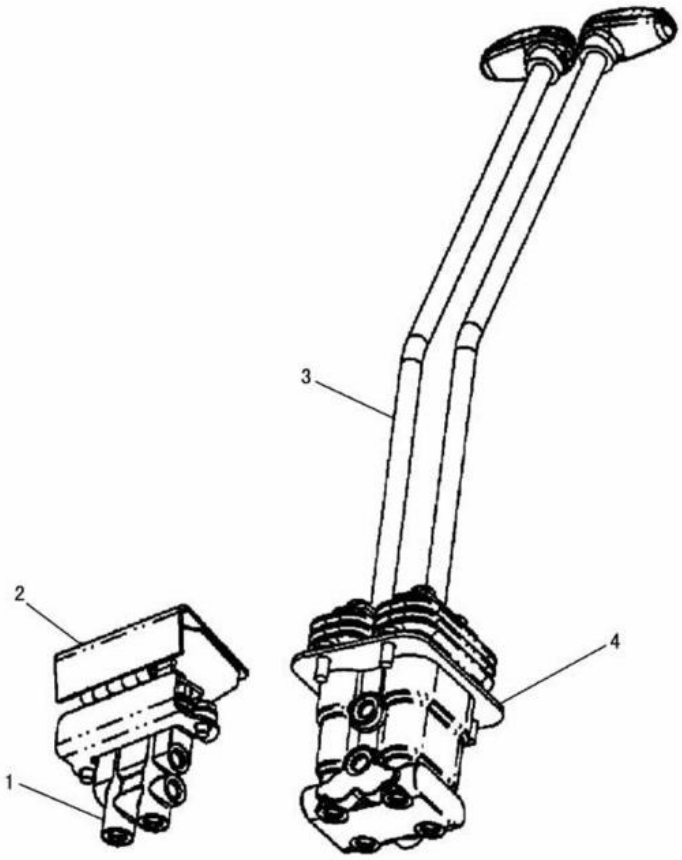

NOTE	No.	PART NO.	QTY.	PART NAME	NOTE	No.	PART NO.	QTY.	PART NAME
Y	1	162-4578	1	PILOT VALVE GROUP					
Y	2	154-2198	1	OFFSET CONTROL GROUP					
Y	3	203-3602	1	CONTROL AND MOUNTING GROUP					
Y	4	165-9522	1	PILOT VALVE GROUP					

Y-SEE SEPARATE ILLUSTRATION

J115381 X07

PILOT CONTROL (191-3824 N/S)

PART OF 191-3822-Page 529,530

162-4578-Page 335 154-2198-Page 332 203-3602-Page 333 165-9522-Page 338, 339

HYDRAULIC SYSTEM

CONSISTS OF :

			PAGE
1	194-6416	PEDAL CONTROL AND MOUNTING GROUP	334

J104930 X00

PILOT CONTROL (194-6415 N/S)
AN ATTACHMENT

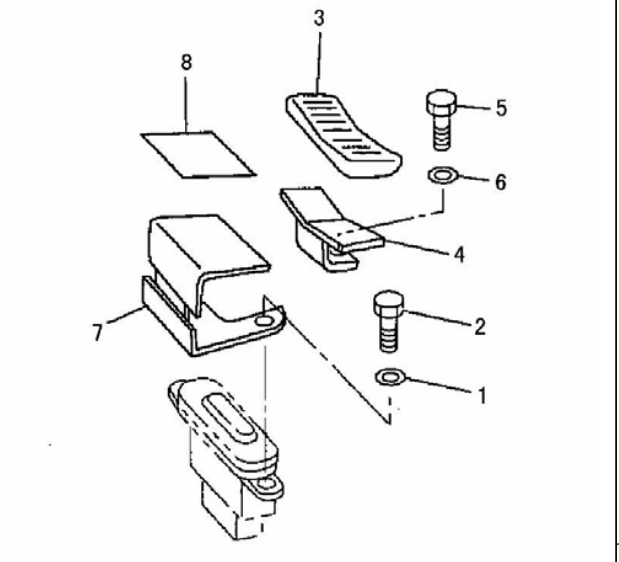

NOTE	No.	PART NO.	QTY.	PART NAME
	1	8T-4121	2	WASHER
	2	8T-4137	2	BOLT(M10×1.5)
	3	125-7358	1	PEDAL
	4	154-2277	1	PEDAL AS
	5	8T-4200	2	BOLT(M8×1.25)
	6	8T-4224	2	WASHER
	7	199-7926	1	COVER AS
	8	124-9156	1	TREAD

J115148 X05

OFFSET CONTROL (154-2198 N/S)
PART OF 191-3824-Page 331

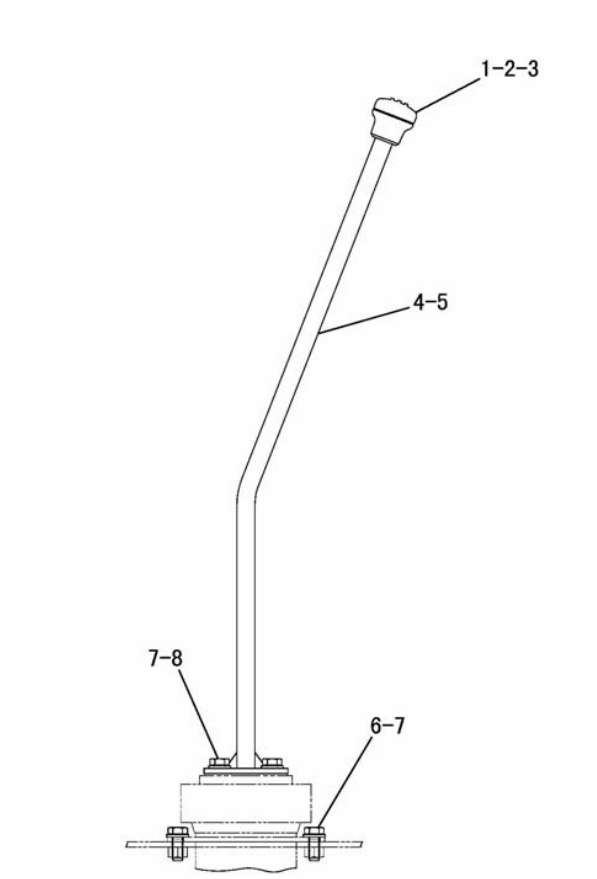

NOTE	No.	PART NO.	QTY.	PART NAME	NOTE	No.	PART NO.	QTY.	PART NAME
	1	142-5546	2	KNOB					
	2	095-0728	2	SCREW(M4×0.7)					
	3	096-6166	2	WASHER					
	4	203-2887	1	LEVER AS(RH)					
	5	203-2888	1	LEVER AS(LH)					
	6	8T-4136	4	BOLT(M10×1.5)					
	7	8T-4121	8	WASHER					
	8	8T-4191	4	BOLT(M10×1.5)					

J107596 X01

PEDAL CONTROL AND MOUNTING (203-3602 N/S)

PART OF 191-3824-Page 331

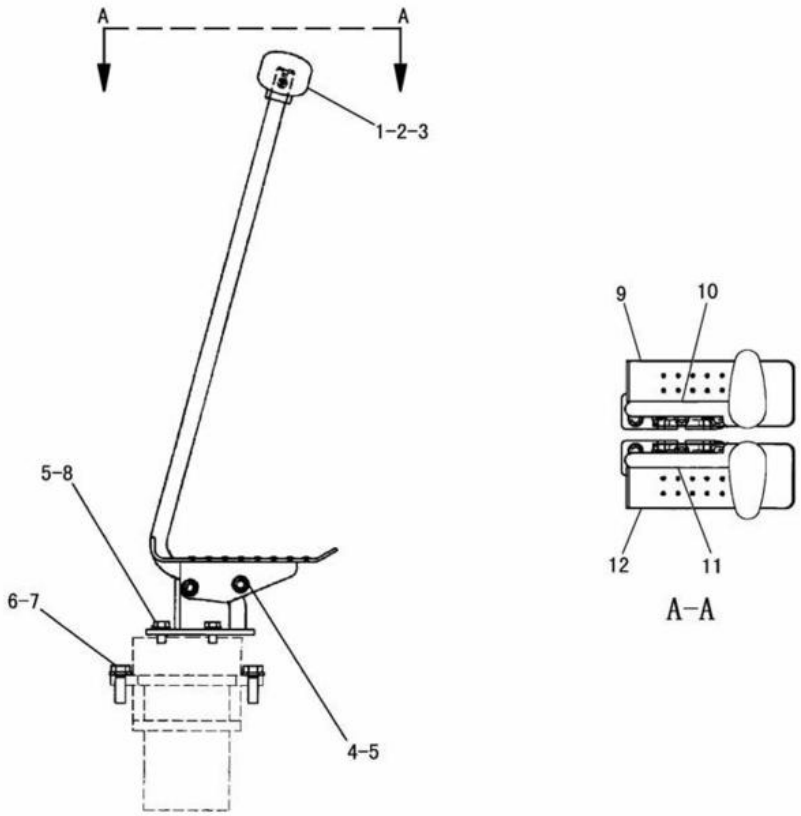

NOTE	No.	PART NO.	QTY.	PART NAME	NOTE	No.	PART NO.	QTY.	PART NAME
	1	142-5546	2	KNOB					
	2	095-0728	2	SCREW(M4×0.7)					
	3	096-6166	2	WASHER					
	4	7X-2537	4	BOLT(M8×1.25)					
	5	8T-4224	8	WASHER					
	6	8T-4121	4	WASHER					
	7	8T-4195	4	BOLT(M10×1.5)					
	8	8T-4200	4	BOLT(M8×1.25)					
	9	148-5182	1	PEDAL AS(RH)					
		8T-3612	2	NUT(M8×1.25)(WELD)					
	10	201-7062	1	LEVER AS(RH)					
	11	201-7063	1	LEVER AS(LH)					
	12	148-5184	1	PEDAL AS(LH)					
		8T-3612	2	NUT(M8×1.25)(WELD)					

J132916 X01

PEDAL CONTROL AND MOUNTING (194-6416 N/S)
PART OF 194-6415-Page 332
AN ATTACHMENT

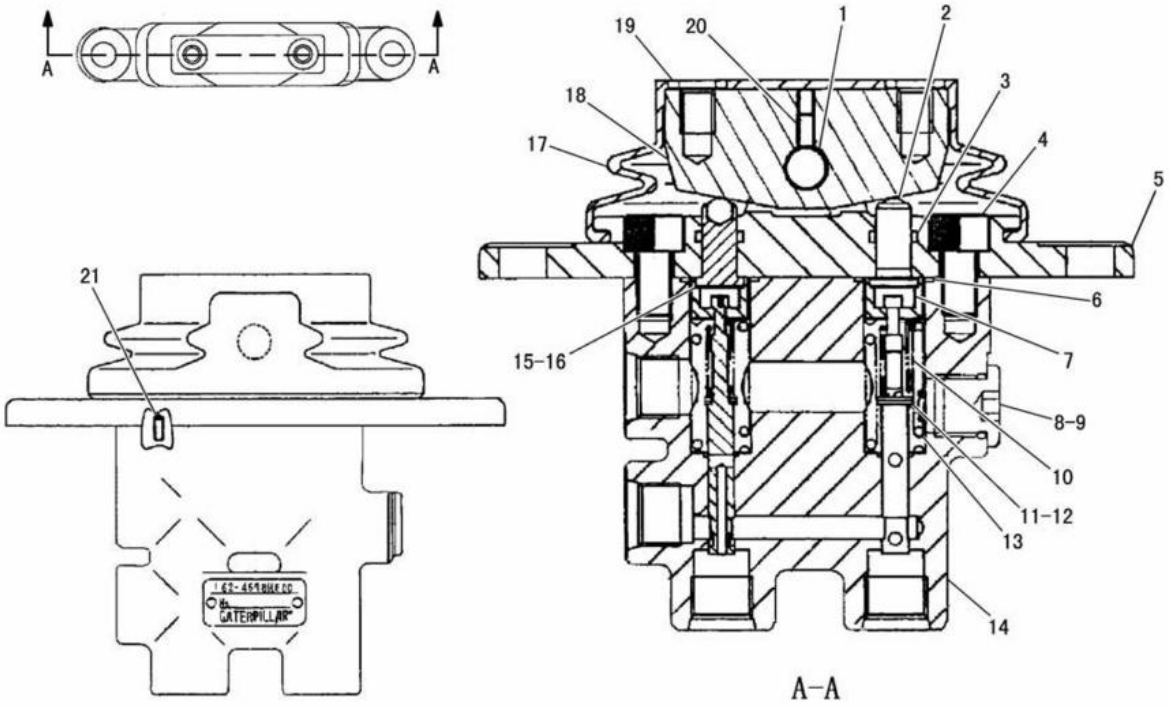

NOTE	No.	PART NO.	QTY.	PART NAME	NOTE	No.	PART NO.	QTY.	PART NAME
	1	136-0147	1	PIN		21	096-4544	2	PIN
	2	136-0140	2	PUSHROD					
	3	095-1512	2	SEAL					
	4	6V-8202	2	BOLT(M8×1.25)					
	5	136-0143	1	COVER					
	6	136-0152	2	SEAL					
	7	137-9114	2	SEAT					
	8	102-0818	1	PLUG					
	9	3J-1907	1	SEAL					
	10	136-0141	2	SPRING					
	11	136-0156	2	WASHER					
	12	136-0145	6	SHIM(0.1mm THICK)					
	13	136-0148	2	SPRING					
	14	185-9075	1	BODY AS					
	15	136-0151	2	SHIM(0.2mm THICK)					
	16	136-0150	2	SHIM(0.1mm THICK)					
	17	136-0149	1	BOOT					
	18	136-0146	1	PEDAL					
	19	136-0157	2	WASHER					
	20	136-0155	1	SETSCREW(M4×0.7)					

J131976 E01

162-4578 PILOT VALVE GROUP

PART OF 191-3824-Page 331,191-4776-Page 381,383

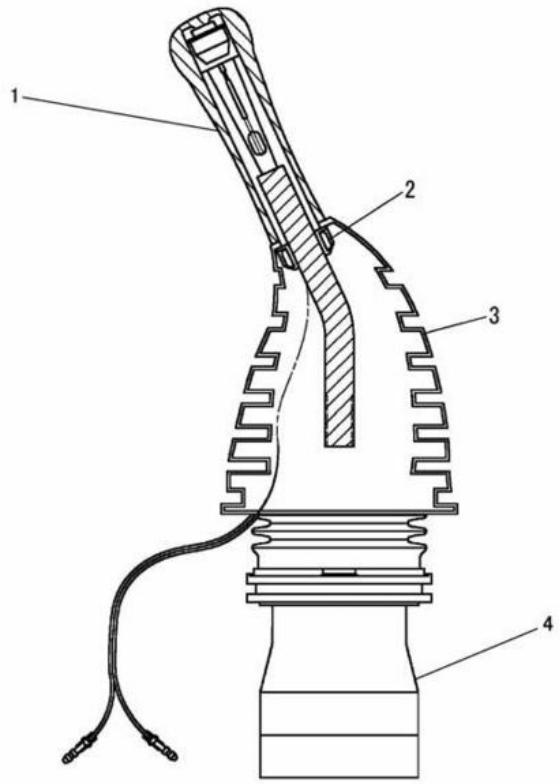

NOTE	No.	PART NO.	QTY.	PART NAME	NOTE	No.	PART NO.	QTY.	PART NAME
	1	193-6359	1	CONTROL GROUP					
	2	096-2617	2	SCREW(M5×0.8)					
	3	167-7050	1	BOOT					
Y	4	193-6360	1	VALVE GROUP					

Y-SEE SEPARATE ILLUSTRATION

J117894 X04

191-1387 PILOT VALVE GROUP -LH

PART OF 191-3869-Page 375,377
193-6360-Page 340

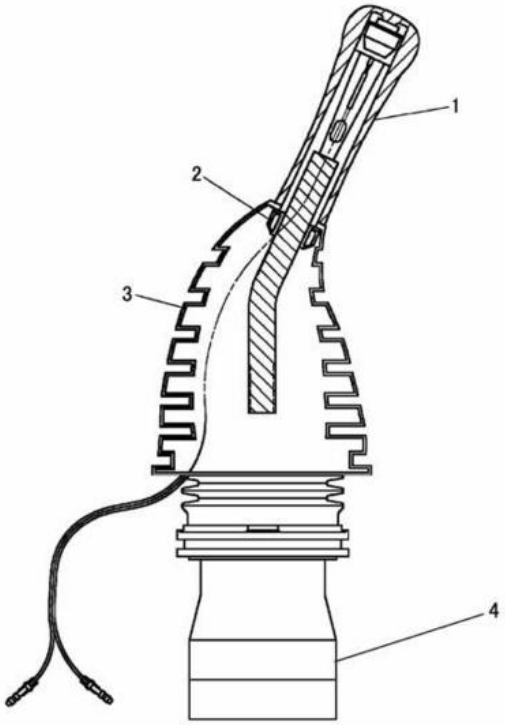

NOTE	No.	PART NO.	QTY.	PART NAME	NOTE	No.	PART NO.	QTY.	PART NAME
	1	193-6358	1	CONTROL GROUP					
	2	096-2617	2	SCREW(M5×0.8)					
	3	167-7050	1	BOOT					
Y	4	193-6360	1	VALVE GROUP					

Y-SEE SEPARATE ILLUSTRATION

J117895 X04

191-1388 PILOT VALVE GROUP -RH

PART OF 191-3869-Page 375,377
193-6360-Page 340

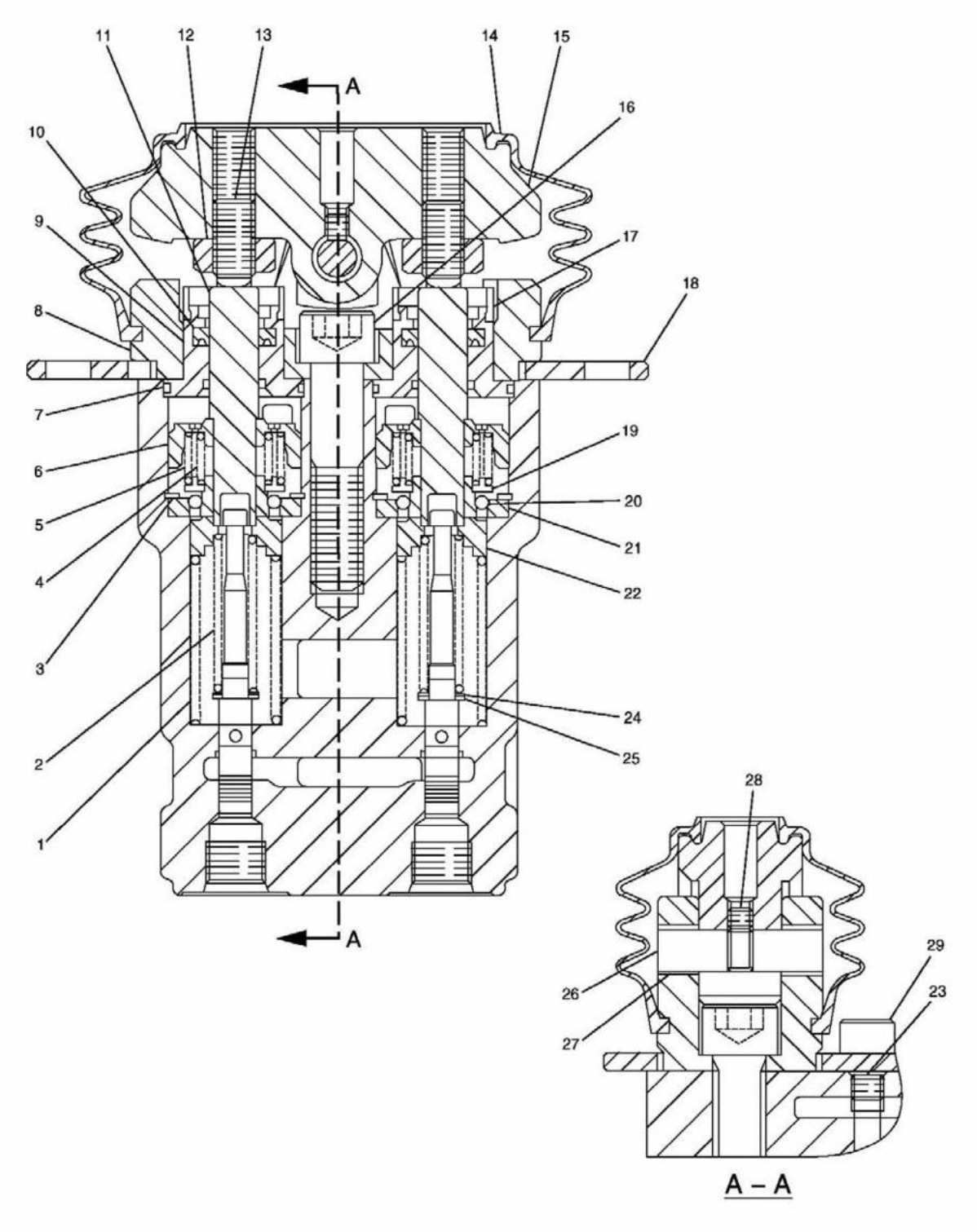

165-9522 PILOT VALVE GROUP
PART OF 191-3824-Page 331

HYDRAULIC SYSTEM

NOTE	No.	PART NO.	QTY.	PART NAME	NOTE	No.	PART NO.	QTY.	PART NAME
	1	087-4707	4	SPRING					
J		250-2559	4	SPRING					
	2	131-5818	4	SPRING					
	3	095-0936	4	RING					
	4	126-1865	4	SPRING					
	5	126-1866	4	SPRING					
	6	147-4221	4	PISTON					
	7	6V-8400	4	SEAL					
	8	165-9463	2	COVER					
	9	165-9554	4	PLUG					
	10	119-5389	4	PACKING					
	11	165-9552	4	PUSHROD					
	12	8T-4133	4	NUT(M10×1.5)					
	13	087-4710	4	SETSCREW(M10×1.5)					
	14	147-4131	2	BELLOW					
	15	087-5708	2	PEDAL					
	16	8T-0343	2	BOLT(M12×1.25)					
	17	119-5388	4	CAP					
	18	165-9553	1	COVER					
	19	119-5391	4	SEAT					
	20	153-5223	12	BALL					
	21	119-5392	4	BUSHING					
	22	165-9551	4	SEAT					
	23	8T-6759	2	PLUG					
	24	099-6137	4	WASHER					
	25	099-6141	4	WASHER					
	26	099-6145	2	CAMSHAFT					
	27	099-6144	4	BUSHING					
	28	095-1260	2	SETSCREW(M6×1)					
	29	8T-1158	2	BOLT(M8×1.25)					

J-OPTION

J109374 E02

165-9522 PILOT VALVE GROUP
PART OF 191-3824-Page 331

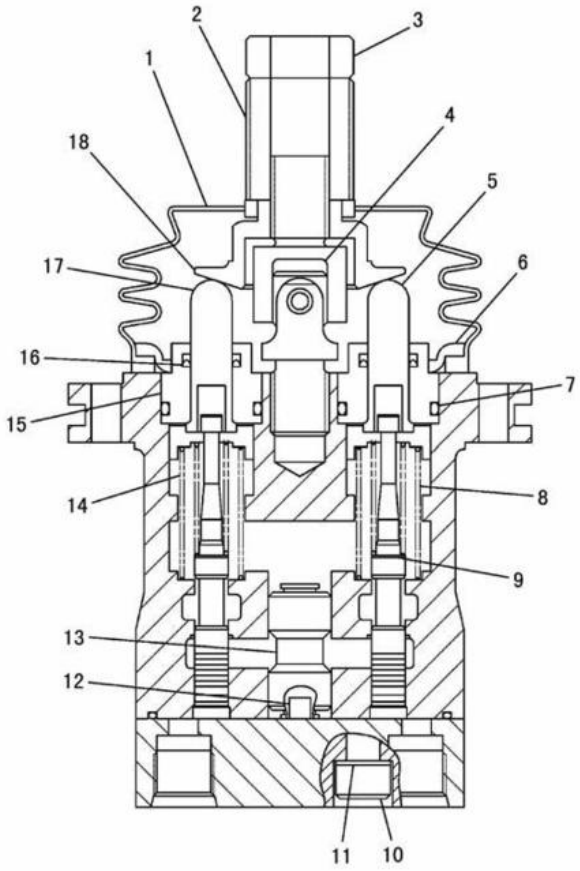

NOTE	No.	PART NO.	QTY.	PART NAME	NOTE	No.	PART NO.	QTY.	PART NAME
	1	171-0087	1	BELLOW					
	2	131-5915	1	NUT					
	3	7Y-8463	1	NUT(M14×2)					
	4	4I-6365	1	JOINT					
	5	135-8956	2	ROD					
	6	165-9438	1	PLATE					
	7	095-1586	4	SEAL					
	8	190-7751	2	SPRING					
	9	099-6137	4	WASHER					
	10	6V-8337	2	BOLT(M8×1.25)					
	11	096-4498	2	WASHER					
	12	139-4804	1	PIN					
	13	139-4805	1	BUSHING					
	14	194-0784	2	SPRING					
	15	096-1628	4	PLUG					
	16	094-0876	4	SEAL					
	17	114-8242	2	ROD					
	18	165-9431	1	PLATE					

J117478 X01

193-6360 PILOT VALVE GROUP

PART OF 191-1387-Page 336,191-1388-Page 337

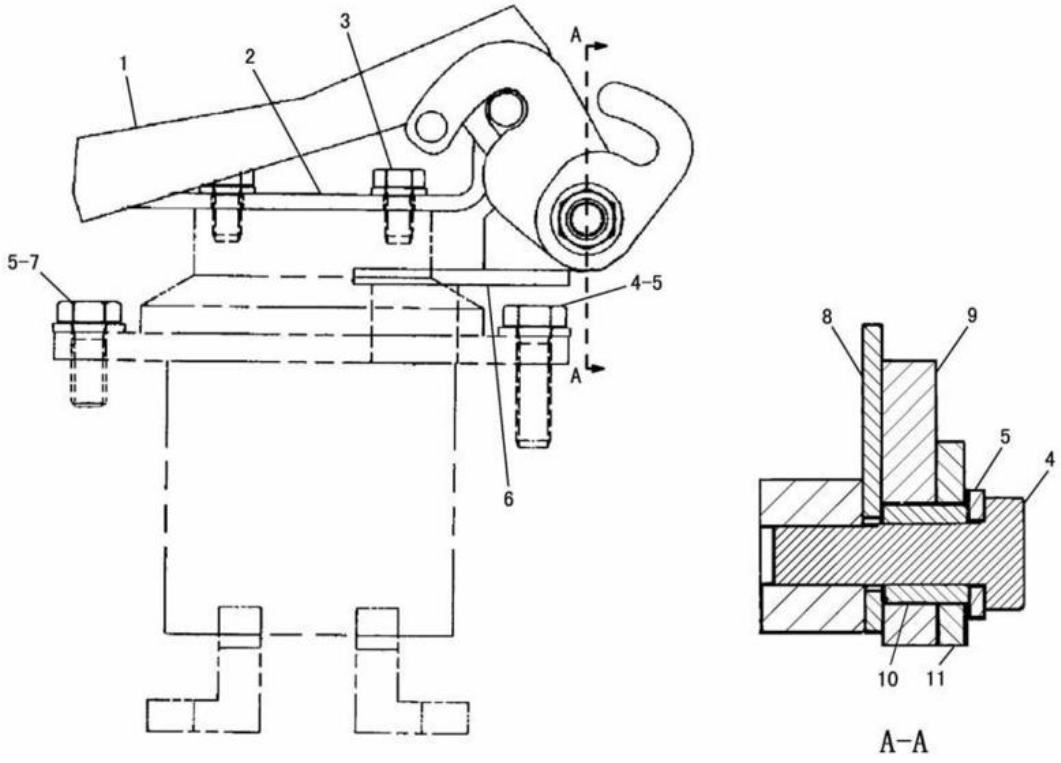

NOTE	No.	PART NO.	QTY.	PART NAME	NOTE	No.	PART NO.	QTY.	PART NAME
	1	125-7358	1	PEDAL					
	2	206-2404	1	PEDAL AS					
	3	8T-4224	2	WASHER					
		8T-4200	2	BOLT(M8×1.25)					
	4	8T-4196	2	BOLT(M10×1.5)					
	5	8T-4121	3	WASHER					
	6	206-2402	1	BRACKET AS					
	7	8T-4137	1	BOLT(M10×1.5)					
	8	206-2406	1	PLATE					
	9	206-2405	1	PLATE AS					
	10	6H-7127	1	LUG					
	11	206-2403	1	PLATE					

J117479 X01

POWER TAKE OFF CONTROL (154-2215 N/S)
PART OF 200-2854-Page 301
AN ATTACHMENT

HYDRAULIC SYSTEM

CONSISTS OF :

			PAGE
1	198-9436	ACCUMULATOR GROUP	343

J126680 XO1

ACCUMULATOR (201-5595 N/S)
EFFECTIVE WITH SERIAL NO. BMW00204-
PART OF 201-9165-Page 518,519,206-7605-Page 514,515,206-7624-Page 520,521,206-7635-Page 516,517
AN ATTACHMENT

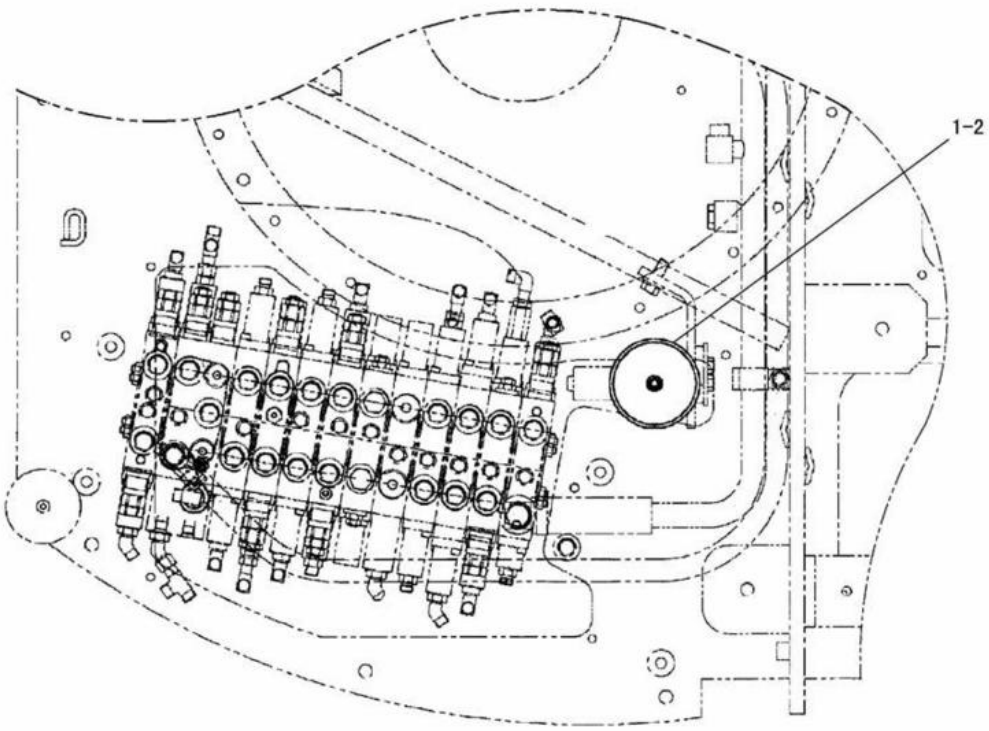

TOP VIEW

NOTE	No.	PART NO.	QTY.	PART NAME	NOTE	No.	PART NO.	QTY.	PART NAME
	1	087-4456	1	ACCUMULATOR GROUP					
	2	3K-0360	1	SEAL					

J111699 X01

ACCUMULATOR (198-9436 N/S)
EFFECTIVE WITH SERIAL NO. BMW00204-
PART OF 201-5595-Page 342
AN ATTACHMENT

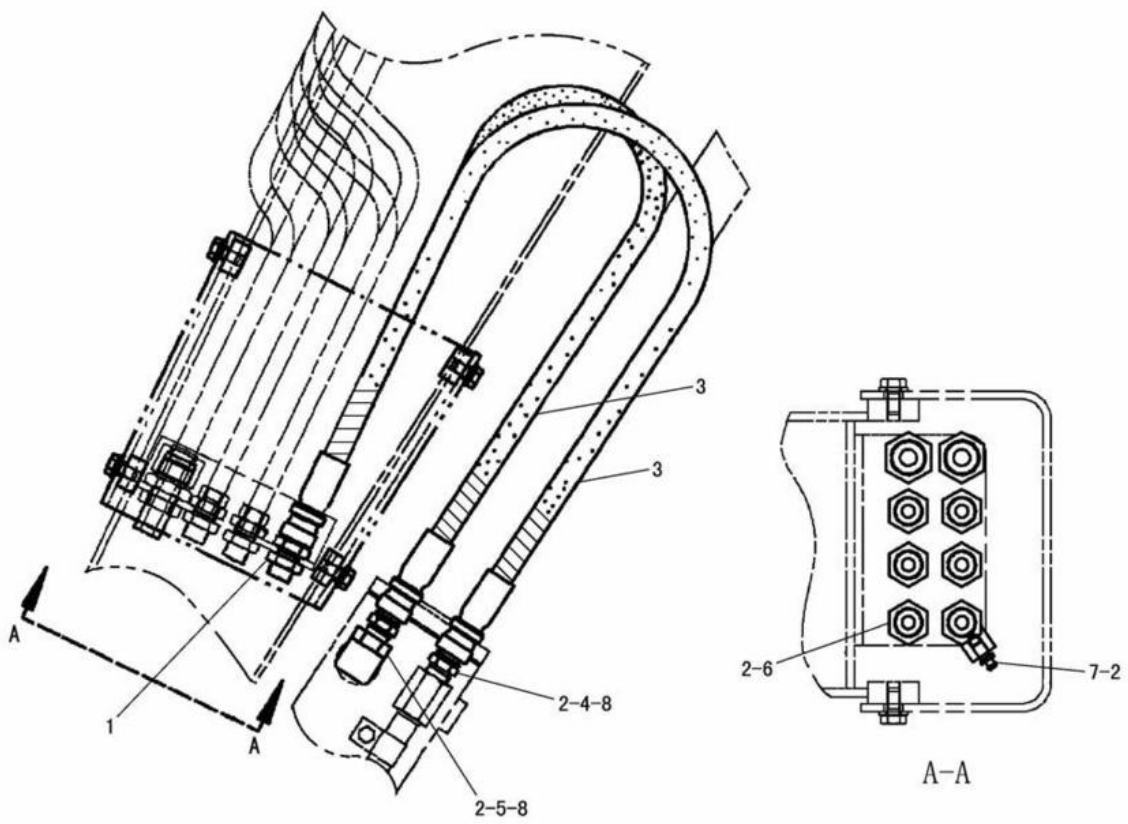

NOTE	No.	PART NO.	QTY.	PART NAME	NOTE	No.	PART NO.	QTY.	PART NAME
	1	6V-9169	2	NUT(13/16-16)					
	2	199-1902	6	SEAL					
	3	192-3571	2	HOSE AS					
	4	6V-8639	1	CONNECTOR					
	5	6V-8625	1	ELBOW					
	6	6V-8995	1	UNION					
	7	191-4762	1	CONNECTOR					
		9F-2167	1	SCREW(3/8-24)					
	8	3K-0360	2	SEAL					

J132915 X06

BOOM LINES (191-3834 N/S)

PART OF 191-3353-Page 457

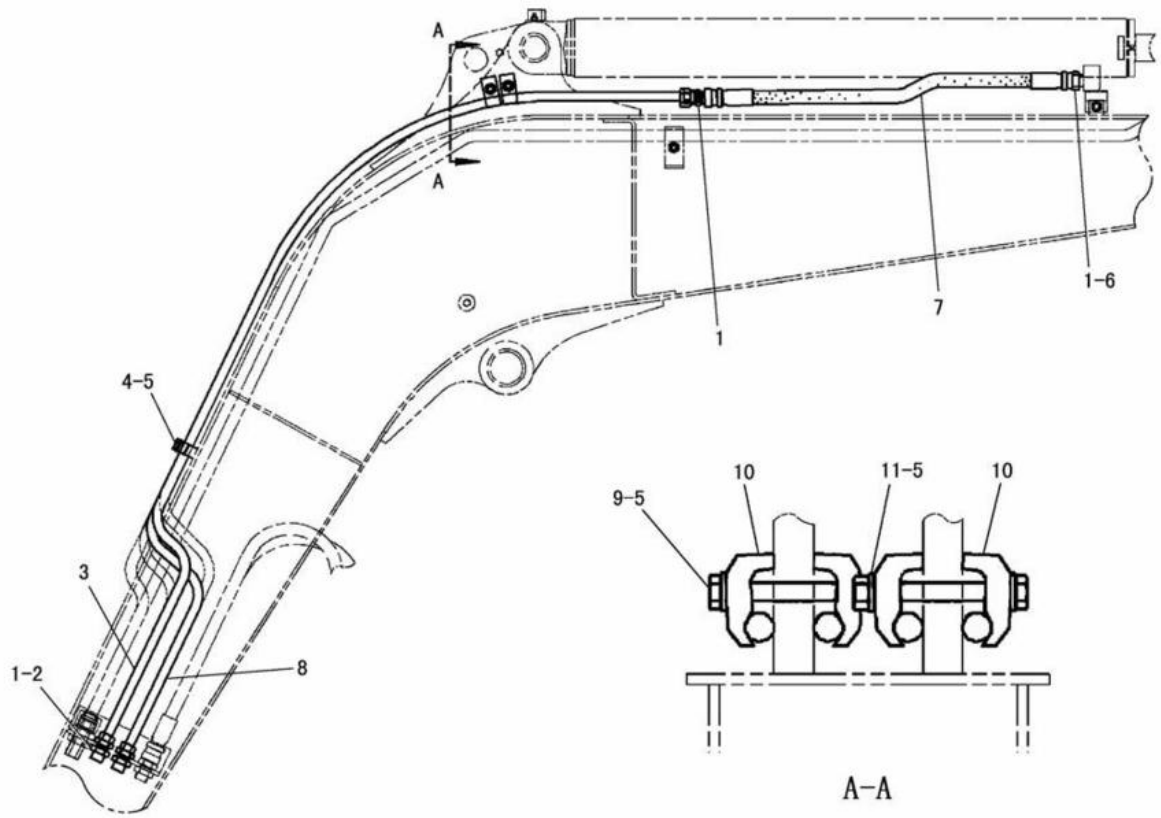

NOTE	No.	PART NO.	QTY.	PART NAME	NOTE	No.	PART NO.	QTY.	PART NAME
	1	6V-8398	6	SEAL					
	2	6V-9169	2	NUT(13/16-6)					
	3	192-3562	1	TUBE AS					
	4	192-3566	1	CLAMP					
		8T-4136	2	BOLT(M10×1.5)					
	5	8T-4121	6	WASHER					
	6	6V-8639	2	CONNECTOR					
		3K-0360	2	SEAL					
	7	195-1787	2	HOSE AS					
	8	192-3561	1	TUBE AS					
	9	8T-4178	2	BOLT(M10×1.5)					
	10	093-1290	2	CLAMP					
	11	8T-4133	2	NUT(M10×1.5)					

J107629 X05

STICK LINES (191-3836 N/S)
EFFECTIVE WITH SERIAL NO. BMW00001-BMW00716
PART OF 191-3354-Page 458,200-6572-Page 459,200-6575-Page 458

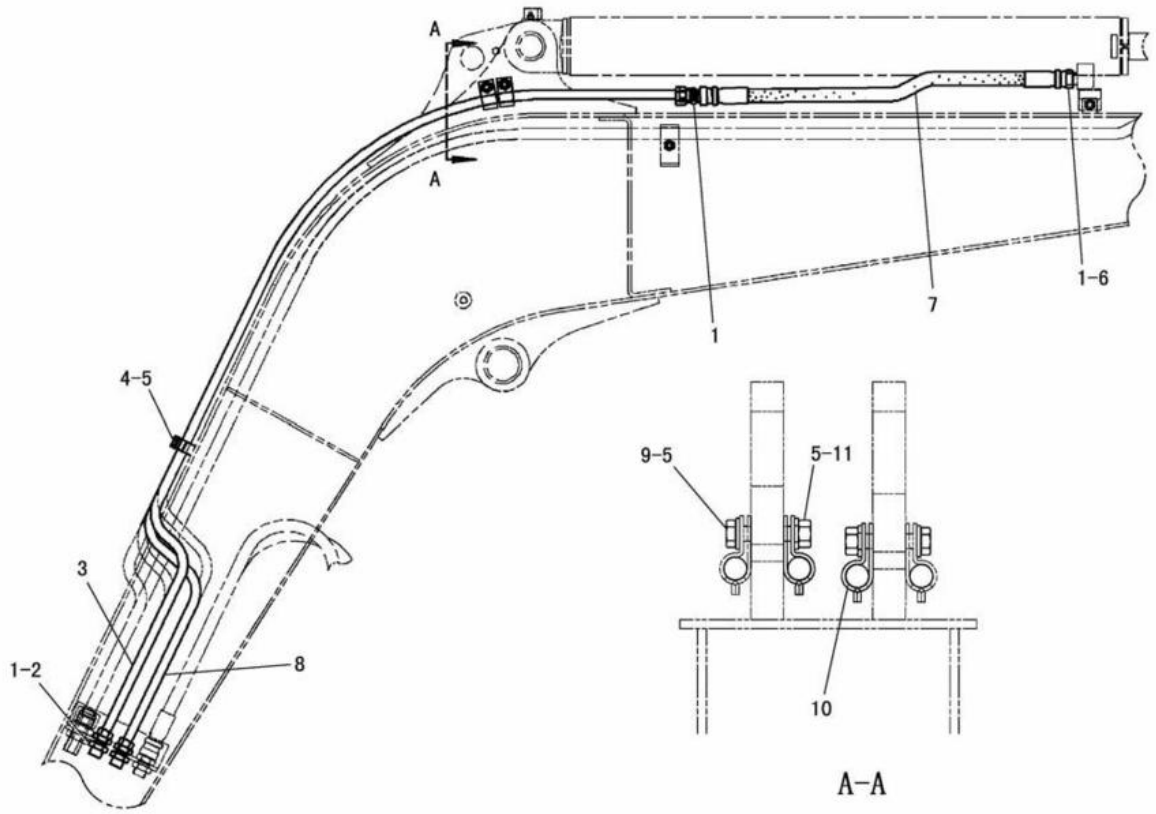

NOTE	No.	PART NO.	QTY.	PART NAME	NOTE	No.	PART NO.	QTY.	PART NAME
C	1	199-1902	6	SEAL					
	2	6V-9169	2	NUT(13/16-6)					
	3	192-3562	1	TUBE AS					
	4	192-3566	1	CLAMP					
		8T-4136	2	BOLT(M10×1.5)					
	5	8T-4121	6	WASHER					
	6	6V-8639	2	CONNECTOR					
		3K-0360	2	SEAL					
	7	195-1787	2	HOSE AS					
	8	192-3561	1	TUBE AS					
C	9	8T-4185	2	BOLT(M10×1.5)					
C	10	9R-1004	2	CLIP(TAB)					
C		9R-1005	2	CLIP(SLOT)					
	11	8T-4133	2	NUT(M10×1.5)					

C-INDICATES CHANGE

J115447 X07

STICK LINES (191-3836 N/S)
EFFECTIVE WITH SERIAL NO. BMW00717-
PART OF 191-3354-Page 458,200-6572-Page 459,200-6575-Page 458

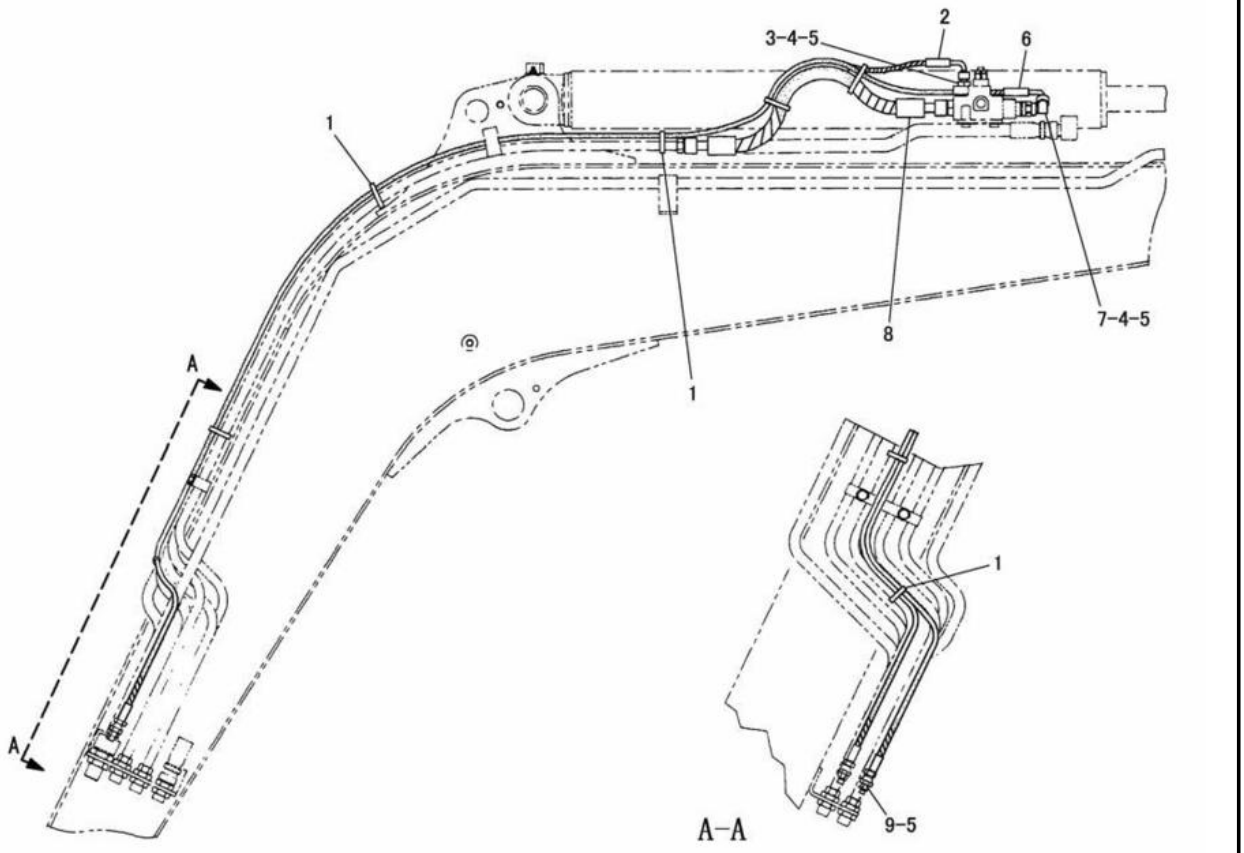

NOTE	No.	PART NO.	QTY.	PART NAME	NOTE	No.	PART NO.	QTY.	PART NAME
	1	7K-1181	6	STRAP					
	2	200-4628	1	HOSE AS					
	3	120-8053	1	CONNECTOR					
	4	095-1579	2	SEAL					
	5	4J-5477	6	SEAL					
	6	200-4629	1	HOSE AS					
	7	200-4635	1	ELBOW					
	8	200-4630	1	HOSE AS					
	9	6V-8729	2	UNION					

J126795 X05

STICK LINES (200-4613 N/S)
EFFECTIVE WITH SERIAL NO. BMW00204-
PART OF 201-9165-Page 518,519,206-7605-Page 514,515,206-7624-Page 520,521,206-7635-Page 516,517
AN ATTACHMENT

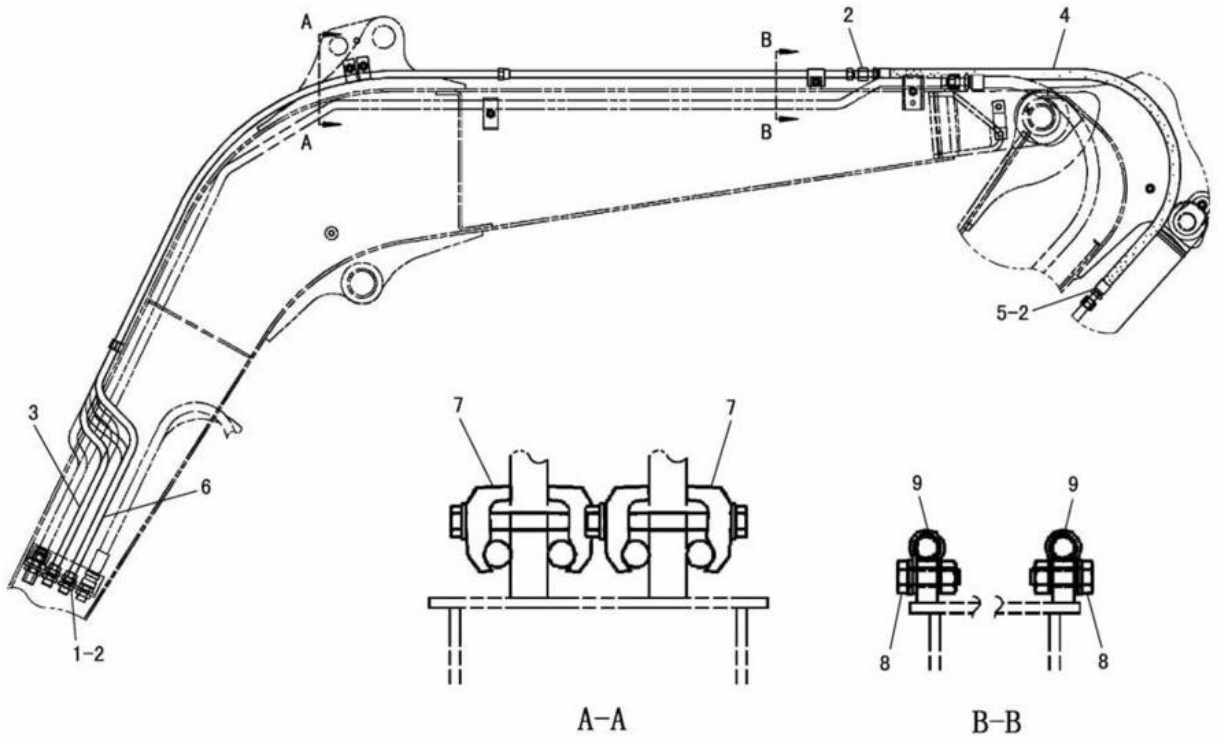

NOTE	No.	PART NO.	QTY.	PART NAME	NOTE	No.	PART NO.	QTY.	PART NAME
	1	6V-9169	2	NUT(13/16-6)					
	2	6V-8398	6	SEAL					
	3	192-3563	1	TUBE AS					
	4	202-0709	2	HOSE AS					
	5	3K-0360	2	SEAL					
		6V-8639	2	CONNECTOR					
	6	192-3564	1	TUBE AS					
	7	093-1290	2	CLAMP					
	8	8T-4195	2	BOLT(M10×1.5)					
		8T-4121	2	WASHER					
		8T-4133	2	NUT(M10×1.5)					
	9	140-5118	2	CLAMP					

J107608 X05

BUCKET LINES (191-3837 N/S)
EFFECTIVE WITH SERIAL NO. BMW00001-BMW00716
PART OF 191-3355-Page 460

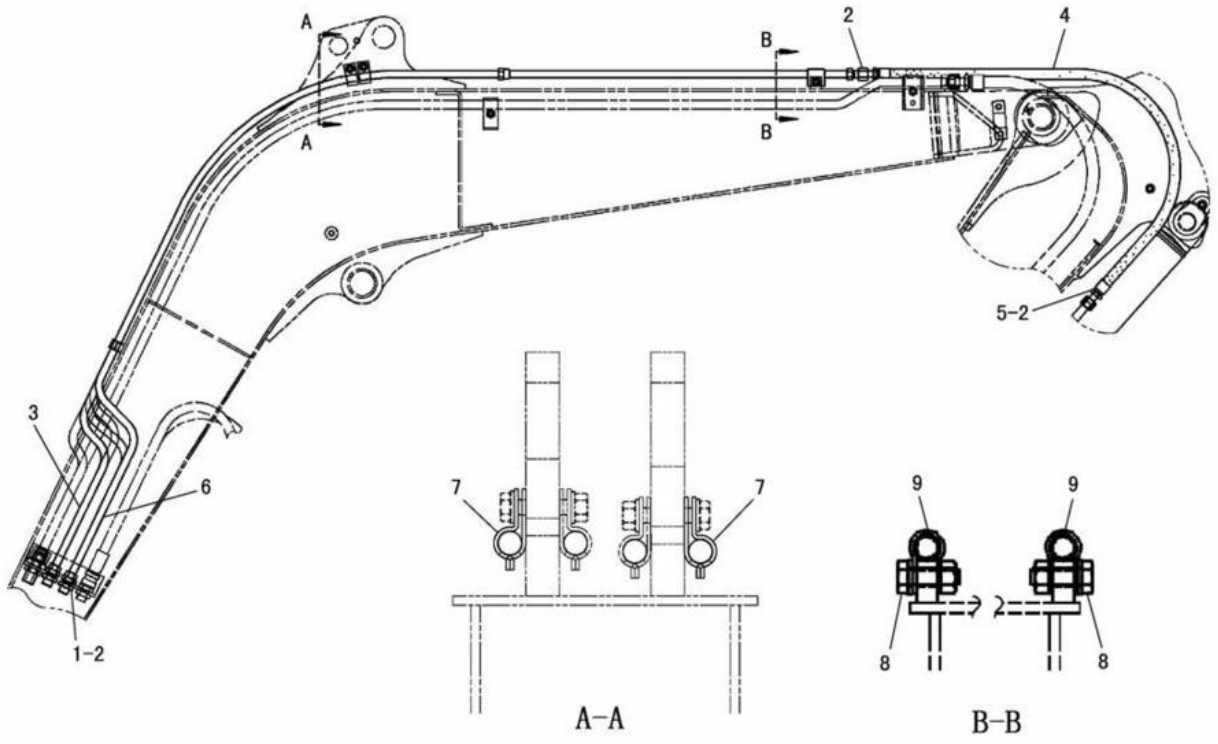

NOTE	No.	PART NO.	QTY.	PART NAME	NOTE	No.	PART NO.	QTY.	PART NAME
	1	6V-9169	2	NUT(13/16-6)					
C	2	199-1902	6	SEAL					
	3	192-3563	1	TUBE AS					
	4	202-0709	2	HOSE AS					
	5	3K-0360	2	SEAL					
		6V-8639	2	CONNECTOR					
	6	192-3564	1	TUBE AS					
C	7	9R-1004	2	CLIP(TAB)					
C		9R-1005	2	CLIP(SLOT)					
	8	8T-4195	2	BOLT(M10×1.5)					
		8T-4121	2	WASHER					
		8T-4133	2	NUT(M10×1.5)					
	9	140-5118	2	CLAMP					

C-INDICATES CHANGE

J115443 X07

BUCKET LINES (191-3837 N/S)

EFFECTIVE WITH SERIAL NO. BMW00717-
PART OF 191-3355-Page 460

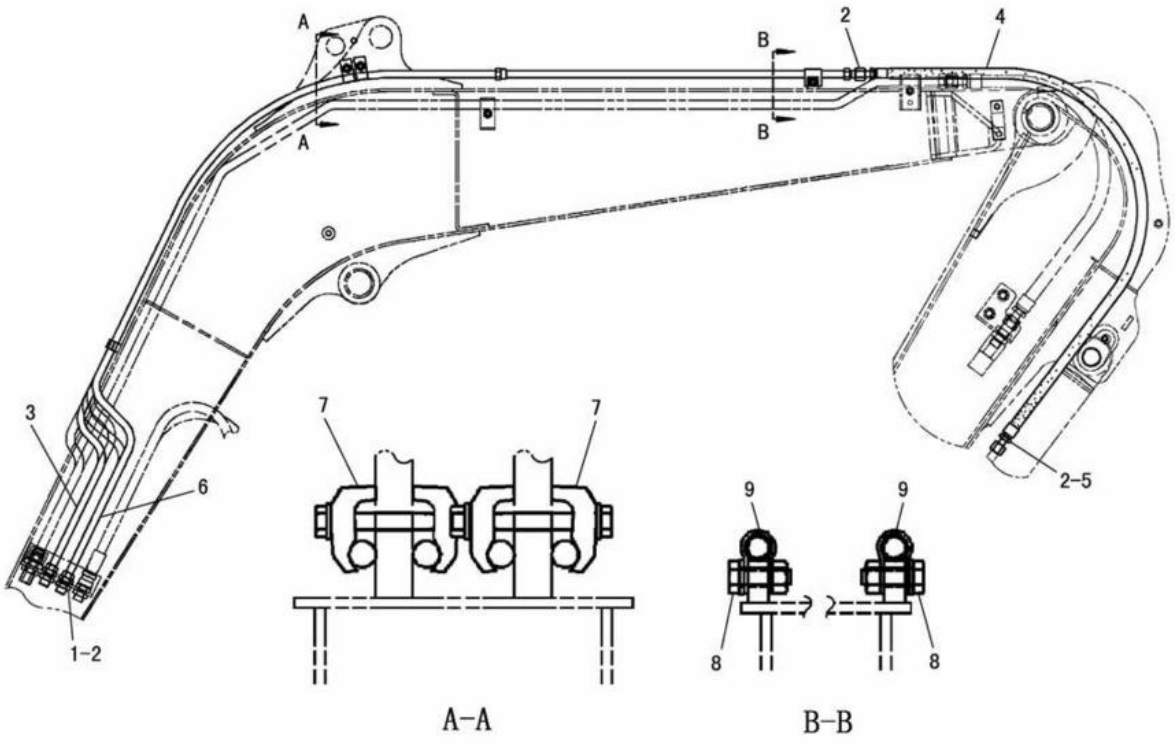

NOTE	No.	PART NO.	QTY.	PART NAME	NOTE	No.	PART NO.	QTY.	PART NAME
	1	6V-9169	2	NUT(13/16-6)					
	2	6V-8398	6	SEAL					
	3	192-3563	1	TUBE AS					
	4	202-0720	2	HOSE AS					
	5	6V-8639	2	CONNECTOR					
		3K-0360	2	SEAL					
	6	192-3564	1	TUBE AS					
	7	093-1290	2	CLAMP					
	8	8T-4195	2	BOLT(M10×1.5)					
		8T-4121	2	WASHER					
		8T-4133	2	NUT(M10×1.5)					
	9	140-5118	2	CLAMP					

J107630 X02

BUCKET LINES (194-6428 N/S) -LONG
EFFECTIVE WITH SERIAL NO. BMW00001-BMW00716
PART OF 200-6575-Page 458
AN ATTACHMENT

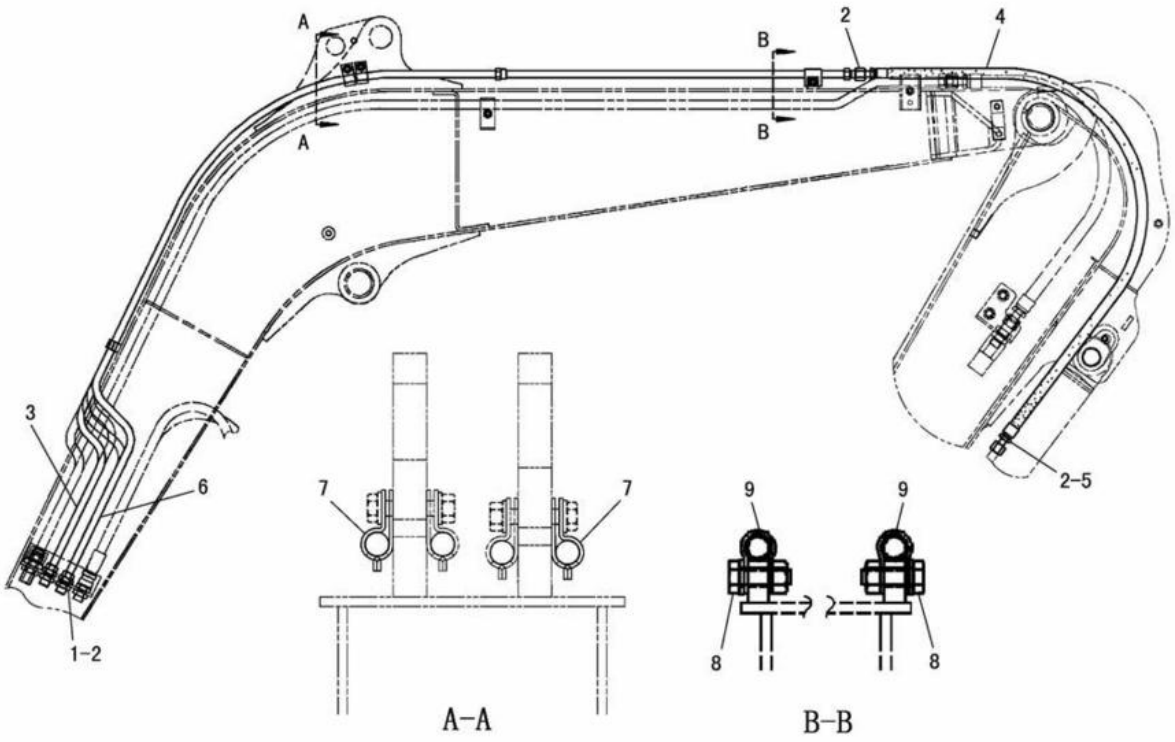

NOTE	No.	PART NO.	QTY.	PART NAME	NOTE	No.	PART NO.	QTY.	PART NAME
	1	6V-9169	2	NUT(13/16-6)					
C	2	199-1902	6	SEAL					
	3	192-3563	1	TUBE AS					
	4	202-0720	2	HOSE AS					
	5	6V-8639	2	CONNECTOR					
		3K-0360	2	SEAL					
	6	192-3564	1	TUBE AS					
C	7	9R-1004	2	CLIP(TAB)					
C		9R-1005	2	CLIP(SLOT)					
	8	8T-4195	2	BOLT(M10×1.5)					
		8T-4121	2	WASHER					
		8T-4133	2	NUT(M10×1.5)					
	9	140-5118	2	CLAMP					

C-INDICATES CHANGE

J115450 X04

BUCKET LINES (194-6428 N/S) -LONG
EFFECTIVE WITH SERIAL NO. BMW00717-
PART OF 200-6575-Page 458
AN ATTACHMENT

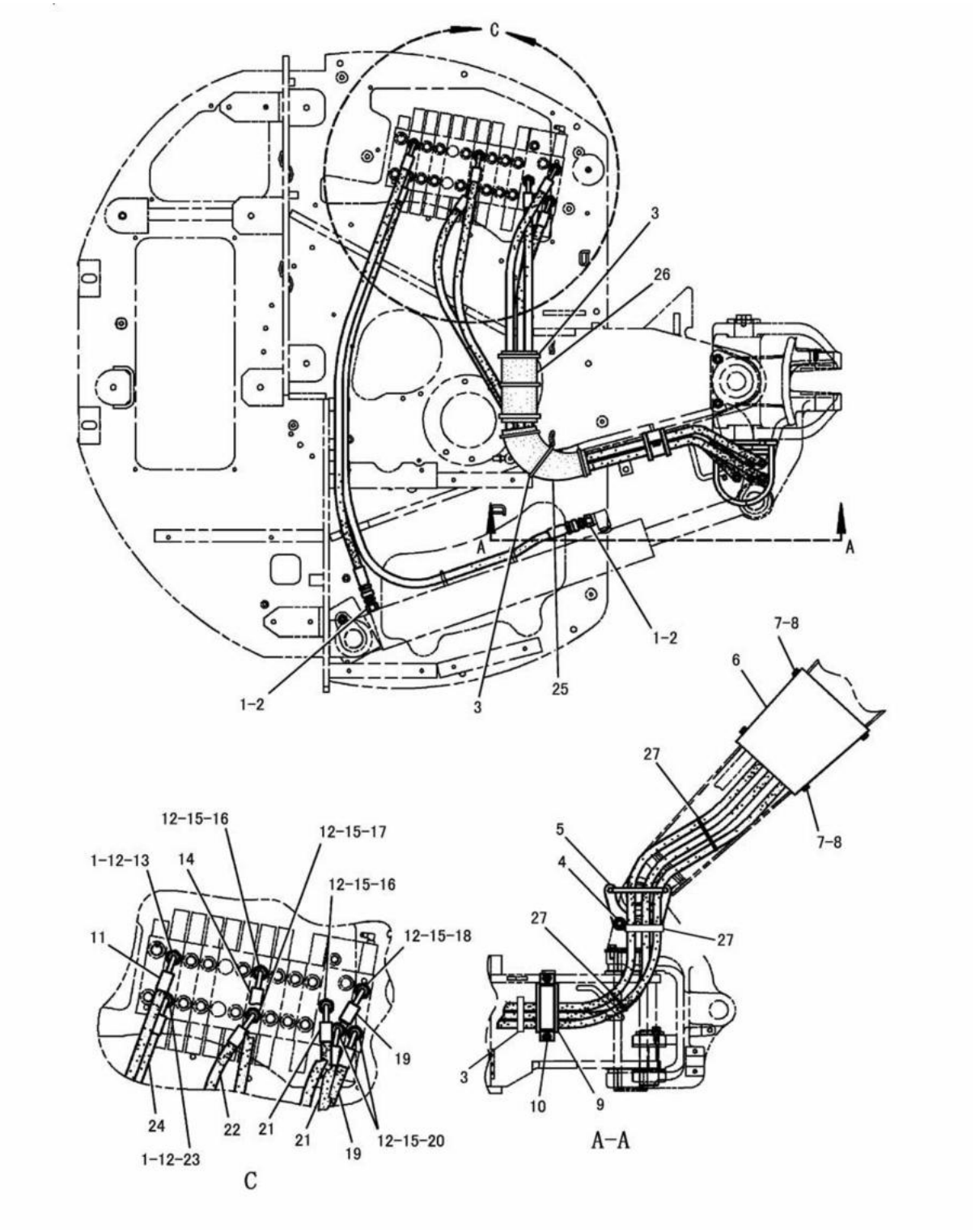

FRONT LINES (191-3855 N/S)
EFFECTIVE WITH SERIAL NO. BMW00001-BMW01172
PART OF 191-3357-Page 297,298

HYDRAULIC SYSTEM

NOTE	No.	PART NO.	QTY.	PART NAME	NOTE	No.	PART NO.	QTY.	PART NAME
	1	6V-8397	4	SEAL					
	2	6V-8636	2	CONNECTOR					
		3J-1907	2	SEAL					
	3	7K-1181	7	STRAP					
	4	8T-4139	2	BOLT(M12×1.75)					
		8T-4223	2	WASHER					
	5	192-3567	1	GUIDE AS					
	6	202-1098	1	COVER					
	7	8T-4137	4	BOLT(M10×1.5)					
	8	7X-7729	4	WASHER					
	9	215-4339	1	GROMMET					
	10	192-3578	1	PLATE					
		8T-4136	2	BOLT(M10×1.5)					
		8T-4121	2	WASHER					
	11	195-3239	1	HOSE AS					
	12	3K-0360	8	SEAL					
	13	8T-0076	1	CONNECTOR					
	14	192-3575	1	HOSE AS					
	15	6V-8398	6	SEAL					
	16	8T-1687	2	CONNECTOR					
	17	6V-8625	1	ELBOW					
	18	8T-0077	1	CONNECTOR					
	19	192-3577	2	HOSE AS					
	20	6V-8639	2	CONNECTOR					
	21	192-3576	2	HOSE AS					
	22	193-8975	1	HOSE AS					
	23	6V-8634	1	CONNECTOR					
	24	192-3568	1	HOSE AS					
E	25	134-4540		HOSE---30cm					
E	26	134-4540		HOSE---30cm					
	27	136-0207	3	STRAP					

E-ORDER BY THE cm

J126894 X12

FRONT LINES (191-3855 N/S)
EFFECTIVE WITH SERIAL NO. BMW00001-BMW01172
PART OF 191-3357-Page 297,298

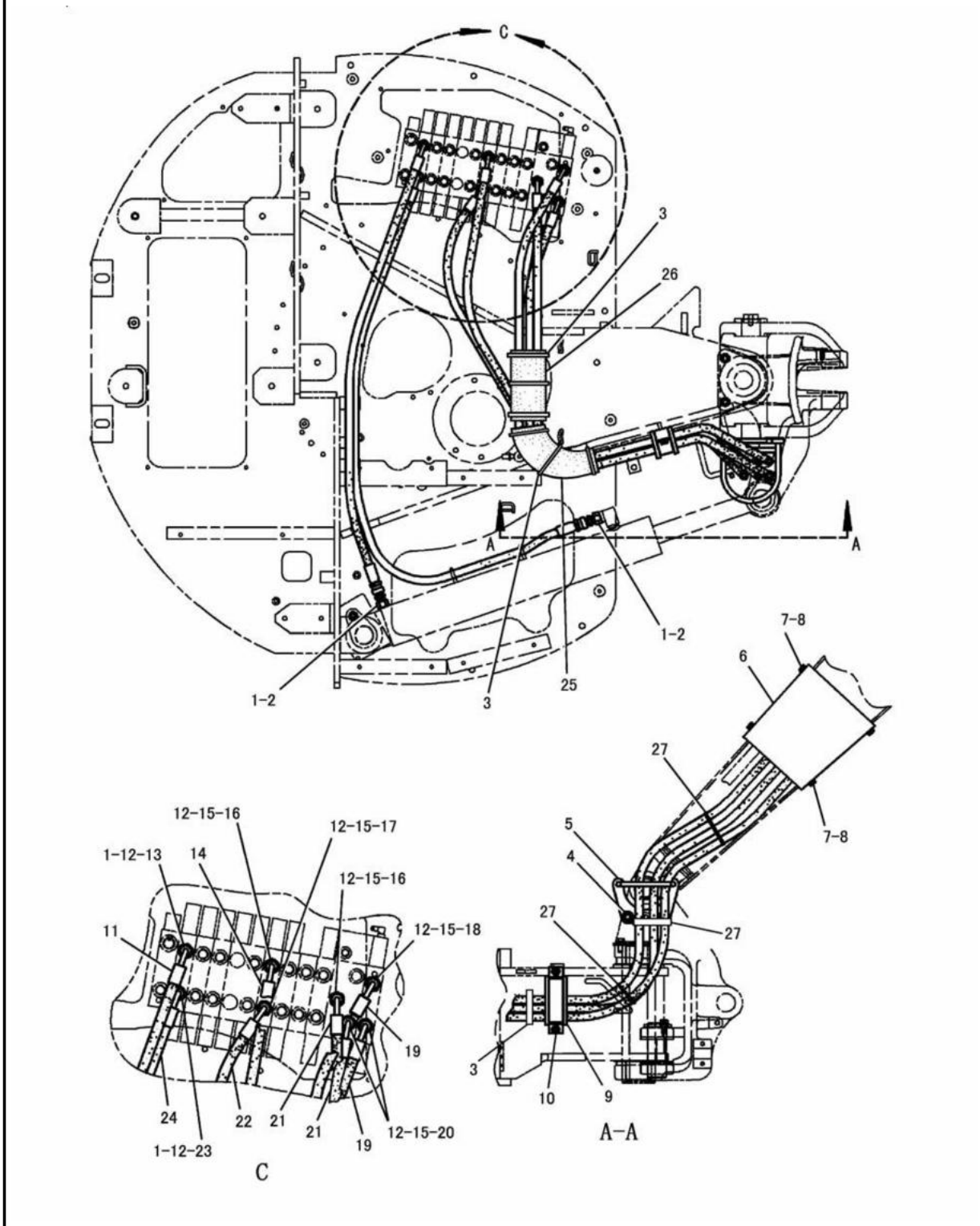

J126895 X13

FRONT LINES (191-3855 N/S)
EFFECTIVE WITH SERIAL NO. BMW01173-
PART OF 191-3357-Page 297,298

HYDRAULIC SYSTEM

NOTE	No.	PART NO.	QTY.	PART NAME	NOTE	No.	PART NO.	QTY.	PART NAME
	1	6V-8397	4	SEAL					
	2	6V-8636	2	CONNECTOR					
		3J-1907	2	SEAL					
	3	7K-1181	7	STRAP					
	4	8T-4139	2	BOLT(M12×1.75)					
		8T-4223	2	WASHER					
	5	192-3567	1	GUIDE AS					
	6	202-1098	1	COVER					
	7	8T-4137	4	BOLT(M10×1.5)					
	8	7X-7729	4	WASHER					
	9	215-4339	1	GROMMET					
C	10	218-4255	1	PLATE					
		8T-4136	2	BOLT(M10×1.5)					
		8T-4121	2	WASHER					
	11	195-3239	1	HOSE AS					
	12	3K-0360	8	SEAL					
	13	8T-0076	1	CONNECTOR					
	14	192-3575	1	HOSE AS					
	15	6V-8398	6	SEAL					
	16	8T-1687	2	CONNECTOR					
	17	6V-8625	1	ELBOW					
	18	8T-0077	1	CONNECTOR					
	19	192-3577	2	HOSE AS					
	20	6V-8639	2	CONNECTOR					
	21	192-3576	2	HOSE AS					
	22	193-8975	1	HOSE AS					
	23	6V-8634	1	CONNECTOR					
	24	192-3568	1	HOSE AS					
E	25	134-4540		HOSE---30cm					
E	26	134-4540		HOSE---30cm					
	27	136-0207	3	STRAP					

C-INDICATES CHANGE
E-ORDER BY THE cm

J126895 X13

FRONT LINES (191-3855 N/S)
EFFECTIVE WITH SERIAL NO. BMW01173-
PART OF 191-3357-Page 297,298

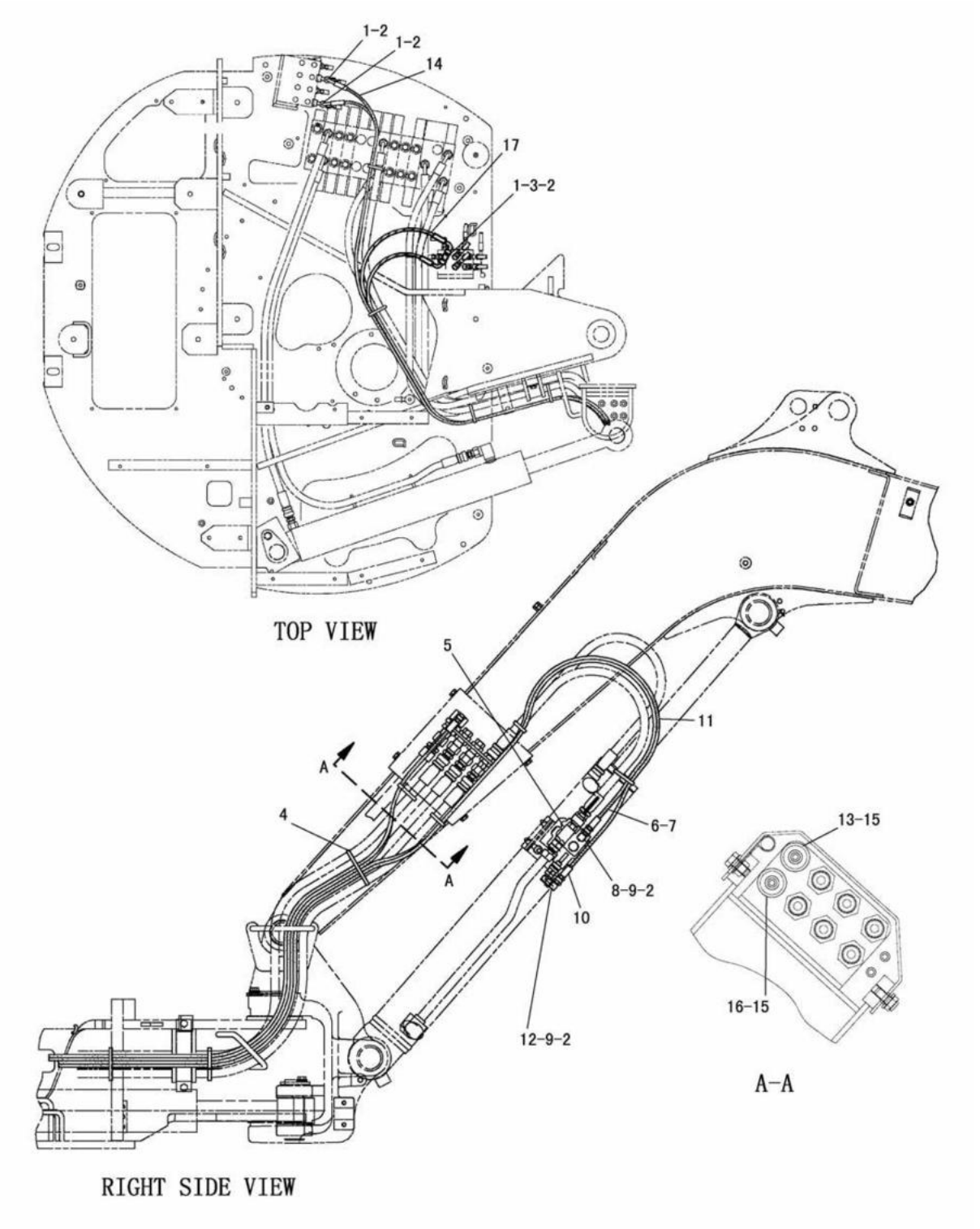

FRONT LINES (201-9141 N/S)
EFFECTIVE WITH SERIAL NO. BMW00204-
PART OF 201-9165-Page 518,519,206-7605-Page 514,515,206-7624-Page 520,521,206-7635-Page 516,517
AN ATTACHMENT

HYDRAULIC SYSTEM

NOTE	No.	PART NO.	QTY.	PART NAME	NOTE	No.	PART NO.	QTY.	PART NAME
	1	6V-9835	3	TEE					
	2	199-1900	12	SEAL					
	3	6V-9842	1	TEE					
	4	7K-1181	9	STRAP					
	5	217-2447	1	SENSOR AS					
	6	200-4633	1	HOSE AS					
E	7	7I-7439		GUARD---447cm					
	8	120-8053	1	CONNECTOR					
	9	095-1579	2	SEAL					
		6V-9849	2	ELBOW					
	10	200-4634	1	HOSE AS					
E	11	7I-7439		GUARD---382cm					
	12	200-4635	1	ELBOW					
	13	200-4631	1	HOSE AS					
E	14	7I-7439		GUARD---292cm					
	15	7X-4780	2	GROMMET					
	16	200-4632	1	HOSE AS					
E	17	7I-7439		GUARD---248cm					

E-ORDER BY THE cm

J113208 X05

FRONT LINES (201-9141 N/S)

EFFECTIVE WITH SERIAL NO. BMW00204-

PART OF 201-9165-Page 518,519,206-7605-Page 514,515,206-7624-Page 520,521,206-7635-Page 516,517

AN ATTACHMENT

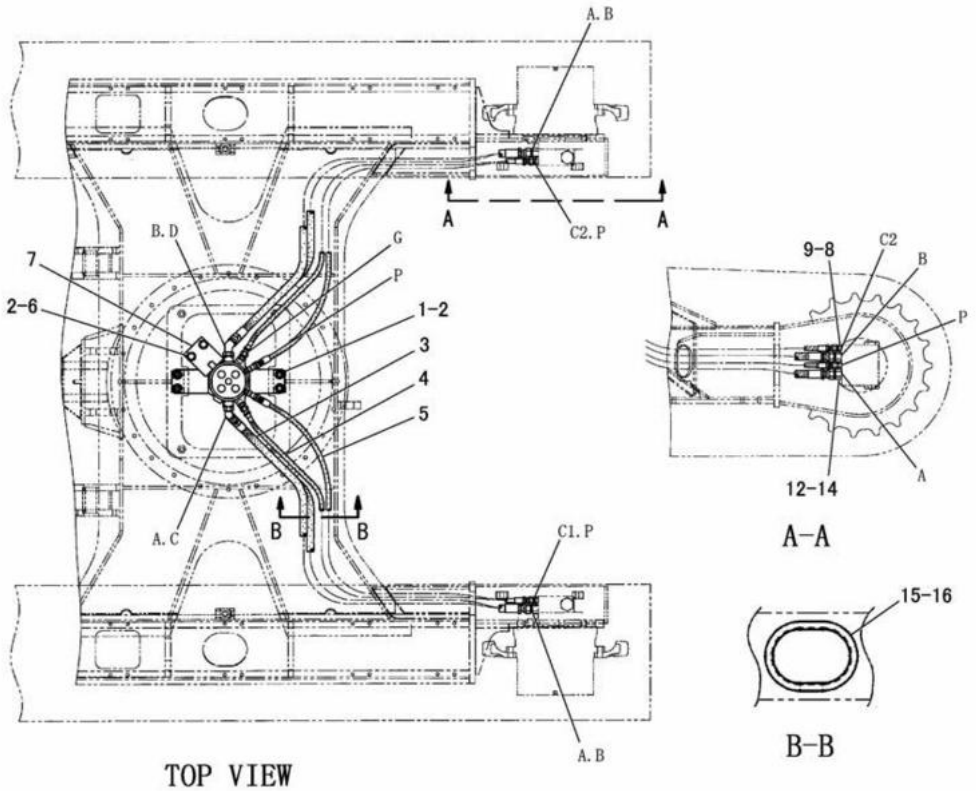

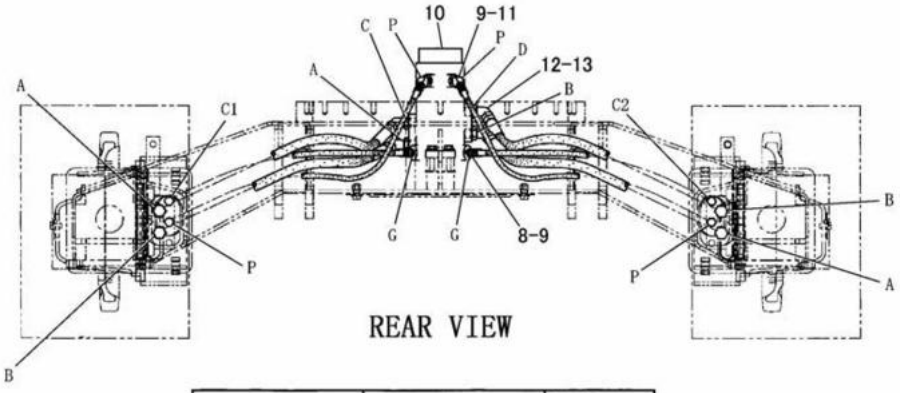

FROM	TO	PART No.
S/J PORT P	T/M PORT P(LH)	191-4738
S/J PORT P	T/M PORT P(RH)	191-4738
S/J PORT G	T/M PORT C1(LH)	191-4739
S/J PORT G	T/M PORT C2(RH)	191-4739
S/J PORT A	T/M PORT B(LH)	202-0710
S/J PORT C	T/M PORT A(LH)	202-0710
S/J PORT B	T/M PORT A(RH)	202-0710
S/J PORT D	T/M PORT B(RH)	202-0710

J132207 X06

TRACK MOTOR LINES (191-3863 N/S)
EFFECTIVE WITH SERIAL NO. BMW00001-BMW01404
PART OF 191-3357-Page 297,298

HYDRAULIC SYSTEM

NOTE	No.	PART NO.	QTY.	PART NAME	NOTE	No.	PART NO.	QTY.	PART NAME
	1	8T-4183	4	BOLT(M12×1.75)					
	2	8T-4223	6	WASHER					
	3	202-0710	4	HOSE AS					
	4	191-4739	2	HOSE AS					
	5	191-4738	2	HOSE AS					
	6	8T-4194	2	BOLT(M12×1.75)					
	7	155-7573	1	PLATE					
	8	6V-8641	6	CONNECTOR					
		3J-1907	6	SEAL					
	9	199-1900	8	SEAL					
Y	10	191-7516	1	SWIVEL GROUP					
	11	3J-7354	2	SEAL					
		6V-9000	2	ELBOW					
	12	199-1902	8	SEAL					
		3K-0360	8	SEAL					
	13	6V-9002	4	ELBOW					
	14	6V-8639	4	CONNECTOR					
E	15	107-1679		GUARD---40cm					
E	16	107-1679		GUARD---40cm					

E-ORDER BY THE cm
Y-SEE SEPARATE ILLUSTRATION

J132207 X06

TRACK MOTOR LINES (191-3863 N/S)
EFFECTIVE WITH SERIAL NO. BMW00001-BMW01404
PART OF 191-3357-Page 297,298
191-7516-Page 421

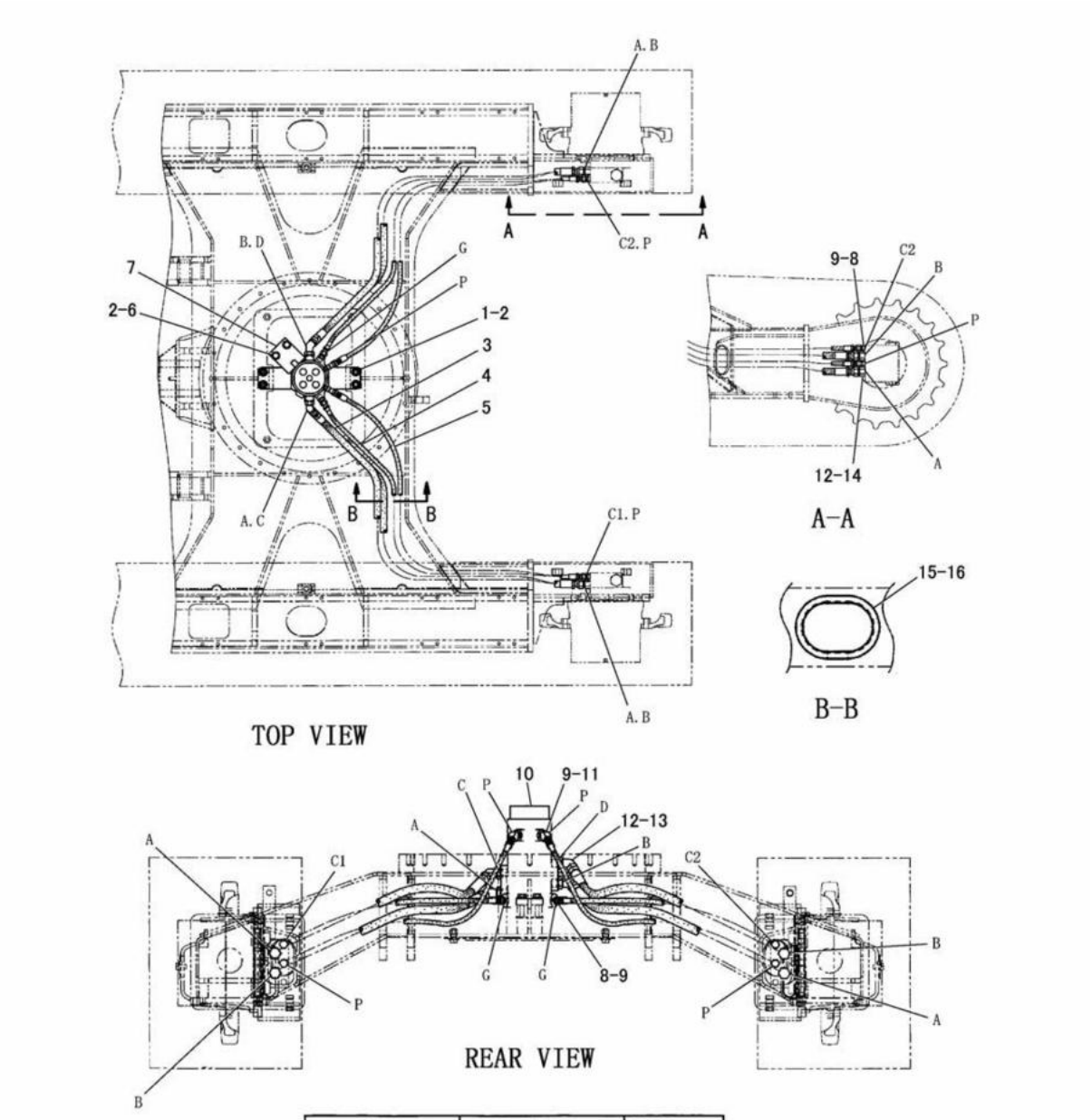

FROM	TO	PART No.
S/J PORT P	T/M PORT P(LH)	191-4738
S/J PORT P	T/M PORT P(RH)	191-4738
S/J PORT G	T/M PORT C1(LH)	191-4739
S/J PORT G	T/M PORT C2(RH)	191-4739
S/J PORT A	T/M PORT B(LH)	202-0710
S/J PORT C	T/M PORT A(LH)	202-0710
S/J PORT B	T/M PORT A(RH)	202-0710
S/J PORT D	T/M PORT B(RH)	202-0710

J132124 X07

TRACK MOTOR LINES (191-3863 N/S)
EFFECTIVE WITH SERIAL NO. BMW01405-BMW01489
PART OF 191-3357-Page 297,298

HYDRAULIC SYSTEM

NOTE	No.	PART NO.	QTY.	PART NAME	NOTE	No.	PART NO.	QTY.	PART NAME
	1	8T-4183	4	BOLT(M12×1.75)					
	2	8T-4223	6	WASHER					
	3	202-0710	4	HOSE AS					
	4	191-4739	2	HOSE AS					
	5	191-4738	2	HOSE AS					
	6	8T-4194	2	BOLT(M12×1.75)					
	7	155-7573	1	PLATE					
	8	6V-8641	6	CONNECTOR					
		3J-1907	6	SEAL					
	9	199-1900	8	SEAL					
CY	10	205-3888	1	SWIVEL GROUP					
	11	3J-7354	2	SEAL					
		6V-9000	2	ELBOW					
	12	199-1902	8	SEAL					
		3K-0360	8	SEAL					
	13	6V-9002	4	ELBOW					
	14	6V-8639	4	CONNECTOR					
E	15	107-1679		GUARD---40cm					
E	16	107-1679		GUARD---40cm					

C-INDICATES CHANGE
E-ORDER BY THE cm
Y-SEE SEPARATE ILLUSTRATION

J132124 X07

TRACK MOTOR LINES (191-3863 N/S)

EFFECTIVE WITH SERIAL NO. BMW01405-BMW01489
PART OF 191-3357-Page 297,298
205-3888-Page 422

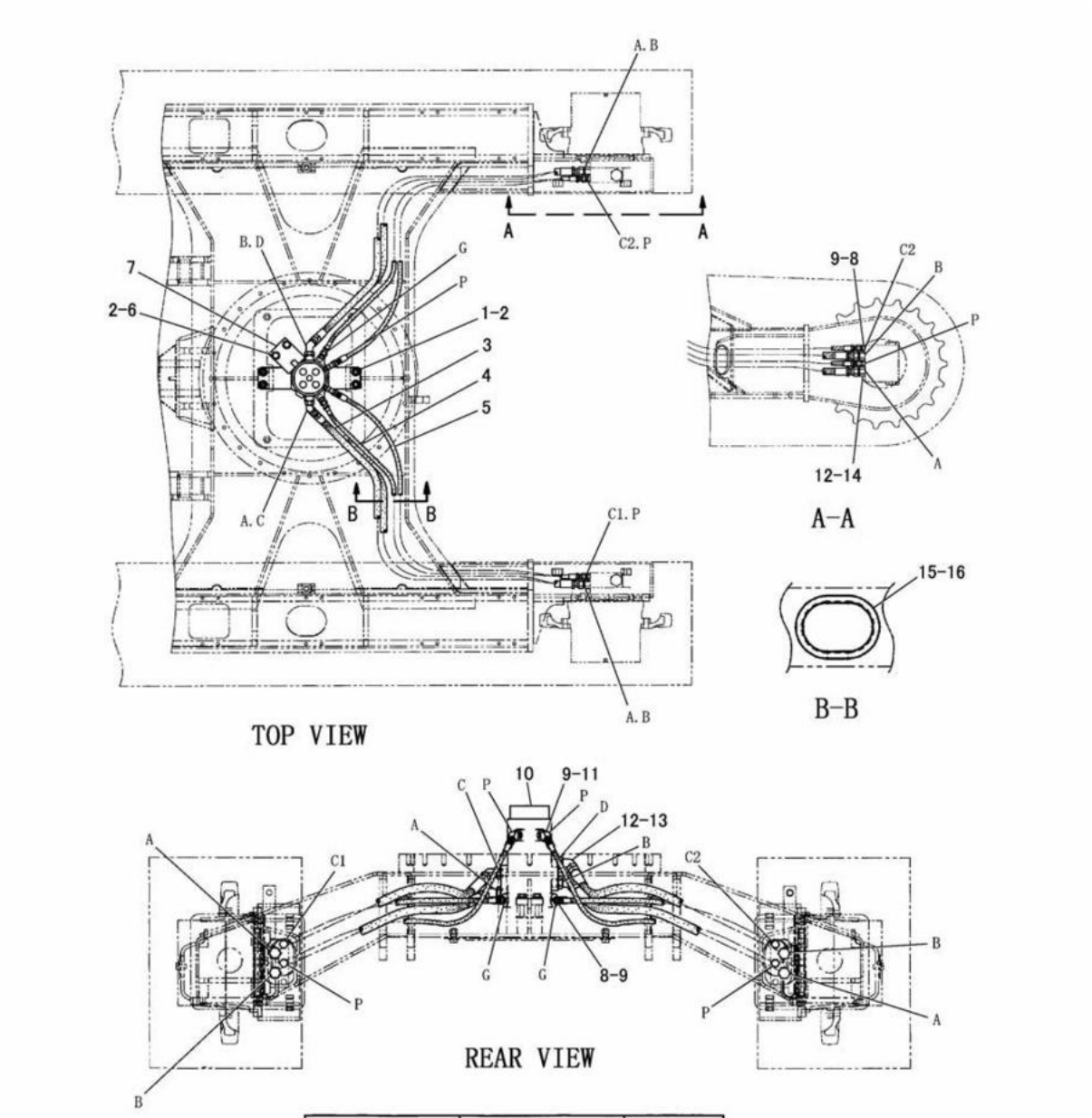

FROM	TO	PART No.
S/J PORT P	T/M PORT P(LH)	191-4738
S/J PORT P	T/M PORT P(RH)	191-4738
S/J PORT G	T/M PORT C1(LH)	191-4739
S/J PORT G	T/M PORT C2(RH)	191-4739
S/J PORT A	T/M PORT B(LH)	202-0710
S/J PORT C	T/M PORT A(LH)	202-0710
S/J PORT B	T/M PORT A(RH)	202-0710
S/J PORT D	T/M PORT B(RH)	202-0710

J133475 X08

TRACK MOTOR LINES (191-3863 N/S)
EFFECTIVE WITH SERIAL NO. BMW01490-
PART OF 191-3357-Page 297,298

HYDRAULIC SYSTEM

NOTE	No.	PART NO.	QTY.	PART NAME	NOTE	No.	PART NO.	QTY.	PART NAME
	1	8T-4183	4	BOLT(M12×1.75)					
	2	8T-4223	6	WASHER					
	3	202-0710	4	HOSE AS					
	4	191-4739	2	HOSE AS					
	5	191-4738	2	HOSE AS					
	6	8T-4194	2	BOLT(M12×1.75)					
	7	155-7573	1	PLATE					
	8	6V-8641	6	CONNECTOR					
		3J-1907	6	SEAL					
	9	199-1900	8	SEAL					
CY	10	191-7516	1	SWIVEL GROUP					
	11	3J-7354	2	SEAL					
		6V-9000	2	ELBOW					
	12	199-1902	8	SEAL					
		3K-0360	8	SEAL					
	13	6V-9002	4	ELBOW					
	14	6V-8639	4	CONNECTOR					
E	15	107-1679		GUARD---40cm					
E	16	107-1679		GUARD---40cm					

C-INDICATES CHANGE
E-ORDER BY THE cm
Y-SEE SEPARATE ILLUSTRATION

J133475 X08

TRACK MOTOR LINES (191-3863 N/S)

EFFECTIVE WITH SERIAL NO. BMW01490-
PART OF 191-3357-Page 297,298
191-7516-Page 421

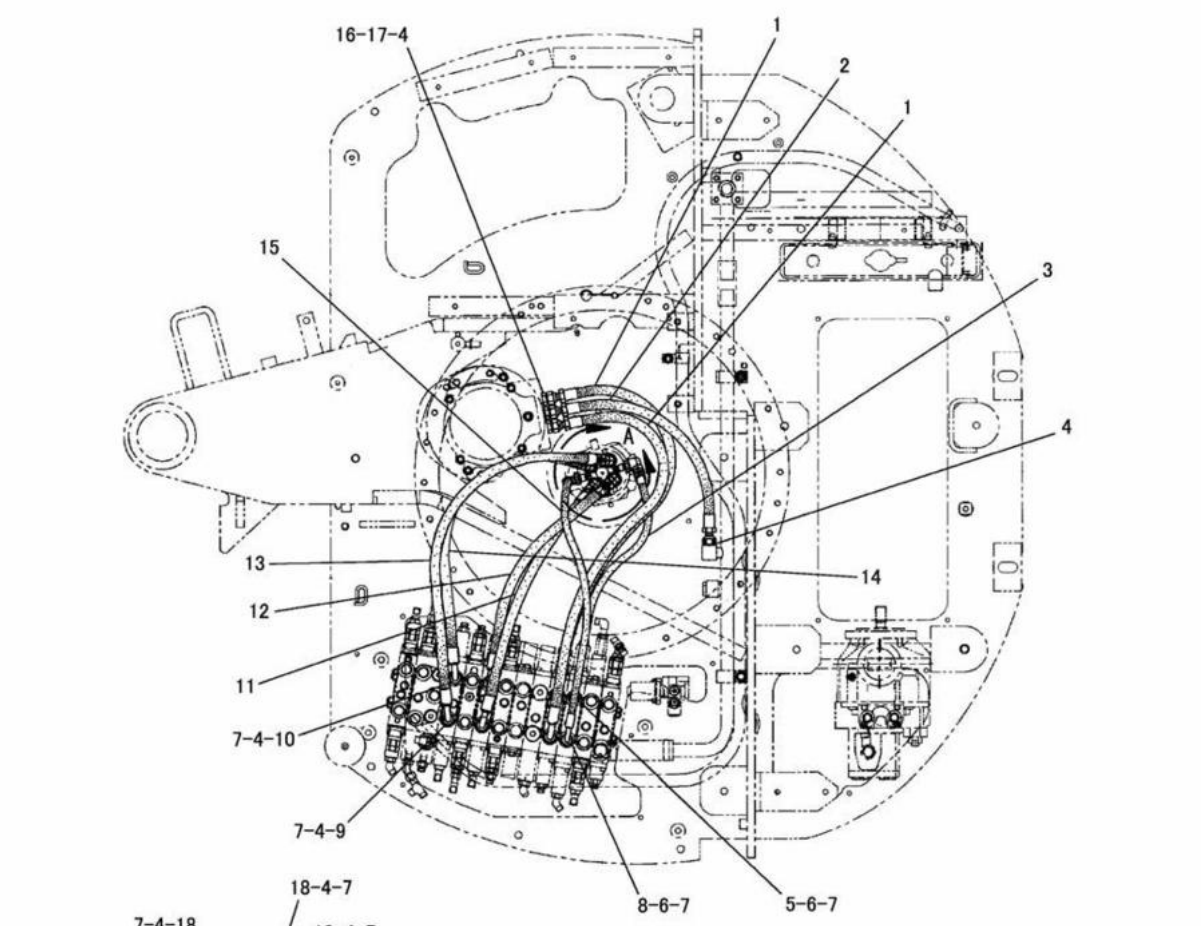

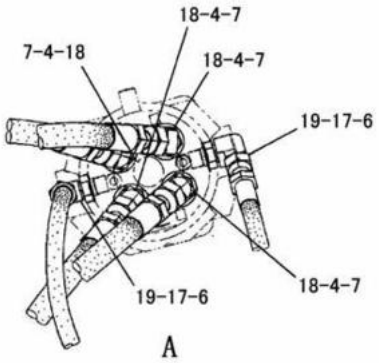

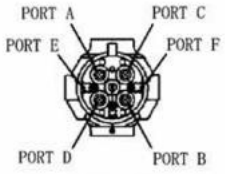

SWIVEL GROUP

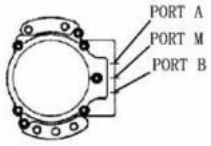

SWING MOTOR

HOSE PART No.	CONTROL VALVE	SWIVEL GP	SWING MOTOR	TUBE
202-0713	PORT A8	PORT F		
192-1135	PORT B8	PORT E		
192-1137	PORT A7		PORT A	
192-1137	PORT B7		PORT B	
202-0711	PORT B4	PORT D		
202-0712	PORT A4	PORT B		
192-1139	PORT B3	PORT C		
192-1138	PORT A3	PORT A		
196-9663			PORT M	PORT T

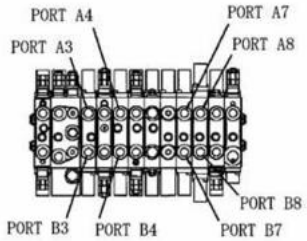

CONTROL VALVE

J115418 X07

SWING MOTOR LINES (191-3865 N/S)
EFFECTIVE WITH SERIAL NO. BMW00001-BMW01109
PART OF 191-3357-Page 297

HYDRAULIC SYSTEM

NOTE	No.	PART NO.	QTY.	PART NAME	NOTE	No.	PART NO.	QTY.	PART NAME
	1	192-1137	2	HOSE AS					
	2	196-9663	1	HOSE AS					
	3	202-0713	1	HOSE AS					
	4	199-1902	14	SEAL					
	5	6V-8634	1	CONNECTOR					
	6	199-1901	4	SEAL					
	7	3K-0360	12	SEAL					
	8	8T-0076	1	CONNECTOR					
	9	8T-0077	3	CONNECTOR					
	10	6V-8639	3	CONNECTOR					
	11	202-0711	1	HOSE AS					
	12	202-0712	1	HOSE AS					
	13	192-1139	1	HOSE AS					
	14	192-1138	1	HOSE AS					
	15	192-1135	1	HOSE AS					
	16	6V-9873	3	CONNECTOR					
	17	3J-1907	5	SEAL					
	18	6V-9002	4	ELBOW					
	19	6V-8724	2	ELBOW					

J115418 X07

SWING MOTOR LINES (191-3865 N/S)
EFFECTIVE WITH SERIAL NO. BMW00001-BMW01109
PART OF 191-3357-Page 297

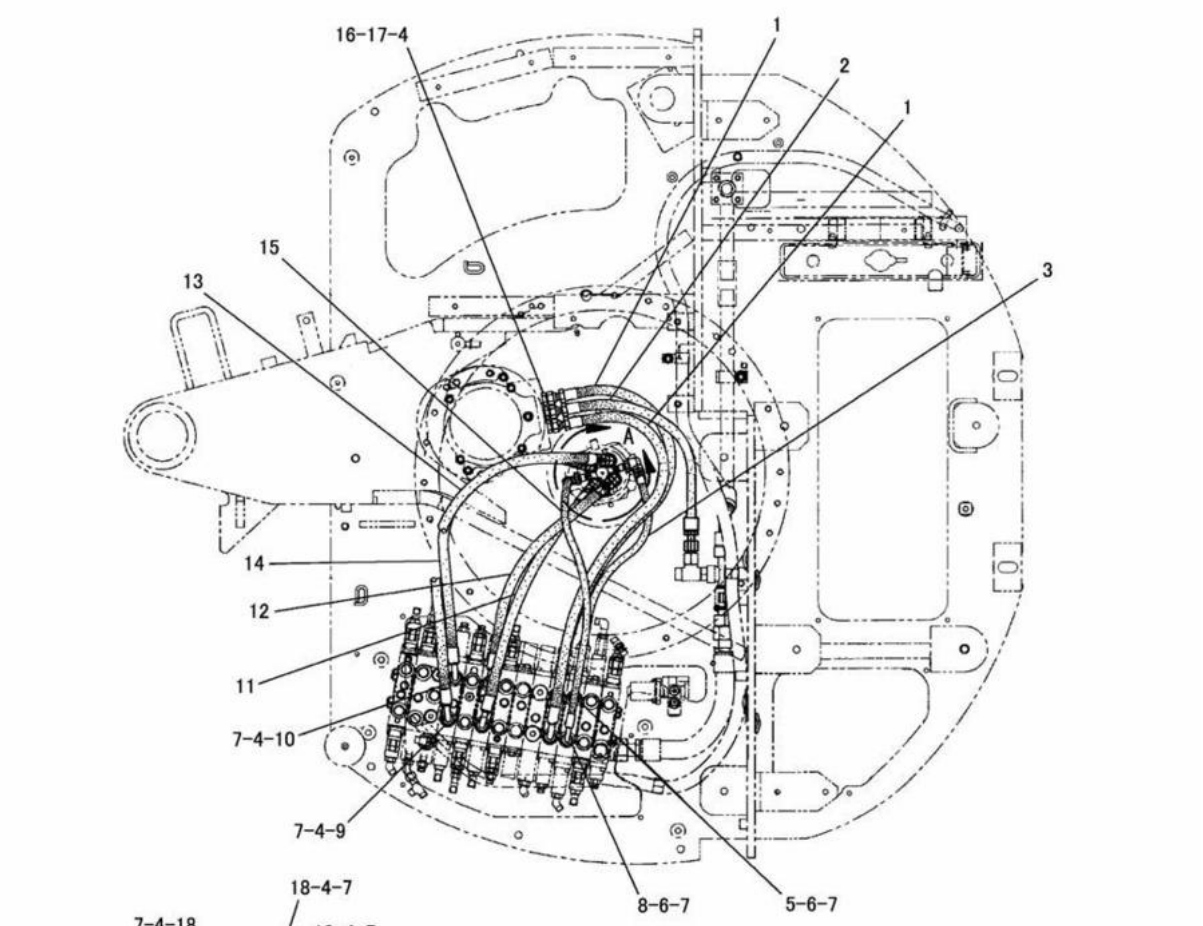

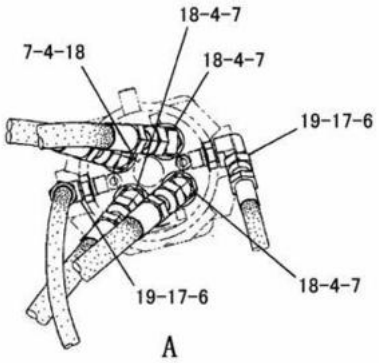

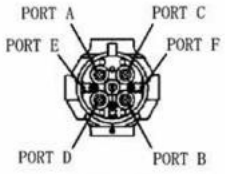

SWIVEL GROUP

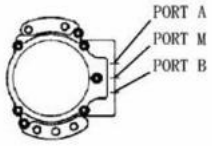

SWING MOTOR

HOSE PART No.	CONTROL VALVE	SWIVEL GP	SWING MOTOR	TUBE
202-0713	PORT A8	PORT F		
192-1135	PORT B8	PORT E		
192-1137	PORT A7		PORT A	
192-1137	PORT B7		PORT B	
202-0711	PORT B4	PORT D		
202-0712	PORT A4	PORT B		
192-1139	PORT B3	PORT C		
192-1138	PORT A3	PORT A		
196-9663			PORT M	PORT T

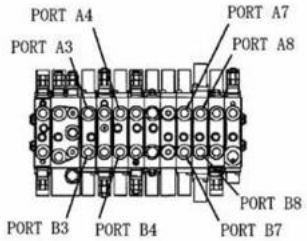

CONTROL VALVE

J117481 X03

SWING MOTOR LINES (210-0363 N/S)
EFFECTIVE WITH SERIAL NO. BMW01110-
PART OF 191-3357-Page 297,298

HYDRAULIC SYSTEM

NOTE	No.	PART NO.	QTY.	PART NAME	NOTE	No.	PART NO.	QTY.	PART NAME
	1	192-1137	2	HOSE AS					
	2	196-9663	1	HOSE AS					
	3	202-0713	1	HOSE AS					
	4	199-1902	13	SEAL					
	5	6V-8634	1	CONNECTOR					
	6	199-1901	4	SEAL					
	7	3K-0360	12	SEAL					
	8	8T-0076	1	CONNECTOR					
	9	8T-0077	3	CONNECTOR					
	10	6V-8639	3	CONNECTOR					
	11	202-0711	1	HOSE AS					
	12	202-0712	1	HOSE AS					
	13	192-1139	1	HOSE AS					
	14	192-1138	1	HOSE AS					
	15	192-1135	1	HOSE AS					
	16	6V-9873	3	CONNECTOR					
	17	3J-1907	5	SEAL					
	18	6V-9002	4	ELBOW					
	19	6V-8724	2	ELBOW					

J117481 X03

SWING MOTOR LINES (210-0363 N/S)
EFFECTIVE WITH SERIAL NO. BMW01110-
PART OF 191-3357-Page 297,298

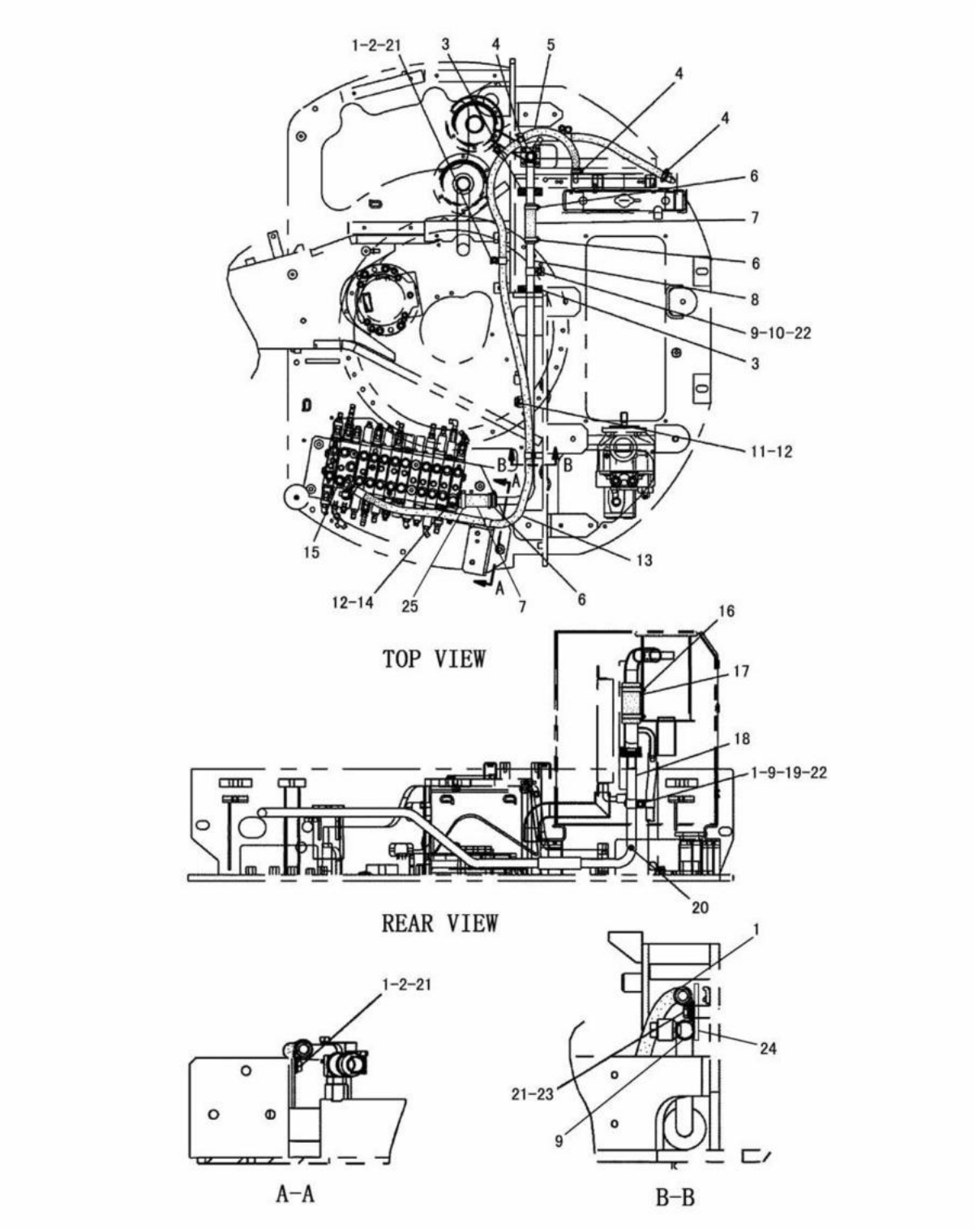

J115415 X11

RETURN LINES (191-3866 N/S)
EFFECTIVE WITH SERIAL NO. BMW00001-BMW01109
PART OF 191-3357-Page 297

HYDRAULIC SYSTEM

NOTE	No.	PART NO.	QTY.	PART NAME	NOTE	No.	PART NO.	QTY.	PART NAME
	1	7C-4354	6	CLIP					
	2	8T-4191	4	BOLT(M10×1.5)					
	3	202-4558	2	SEAL					
	4	5D-1026	3	CLAMP					
E	5	5P-0743		HOSE---55cm					
	6	095-1390	4	CLAMP					
	7	143-0170	2	HOSE					
	8	191-8046	1	TUBE AS					
	9	8T-7529	3	CLIP					
	10	8T-4137	1	BOLT(M10×1.5)					
	11	9S-4189	1	PLUG					
	12	2M-9780	2	SEAL					
	13	197-8684	1	HOSE AS					
	14	163-9743	1	ELBOW					
		5P-2211	1	ADAPTER					
		3D-2824	1	SEAL					
	15	8T-1715	1	ADAPTER					
		3K-0360	2	SEAL					
		6V-8722	1	ELBOW					
		199-1903	1	SEAL					
	16	095-1392	2	CLAMP					
	17	191-8049	1	HOSE					
	18	191-8048	1	TUBE AS					
		093-5537	1	VALVE AS					
		8T-4195	4	BOLT(M10×1.5)					
		8T-4121	4	WASHER					
		095-1701	1	SEAL					
		191-4748	1	TUBE AS					
		191-4749	1	TUBE AS					
	19	8T-4136	1	BOLT(M10×1.5)					
	20	9S-4182	1	PLUG					
		3J-7354	1	SEAL					
	21	8T-4121	5	WASHER					
	22	7X-7729	2	WASHER					
	23	8T-4195	1	BOLT(M10×1.5)					
	24	140-4276	1	PLATE					
	25	7X-7958	1	CLAMP					

E-ORDER BY THE cm

J115415 X11

RETURN LINES (191-3866 N/S)

EFFECTIVE WITH SERIAL NO. BMW00001-BMW01109

PART OF 191-3357-Page 297

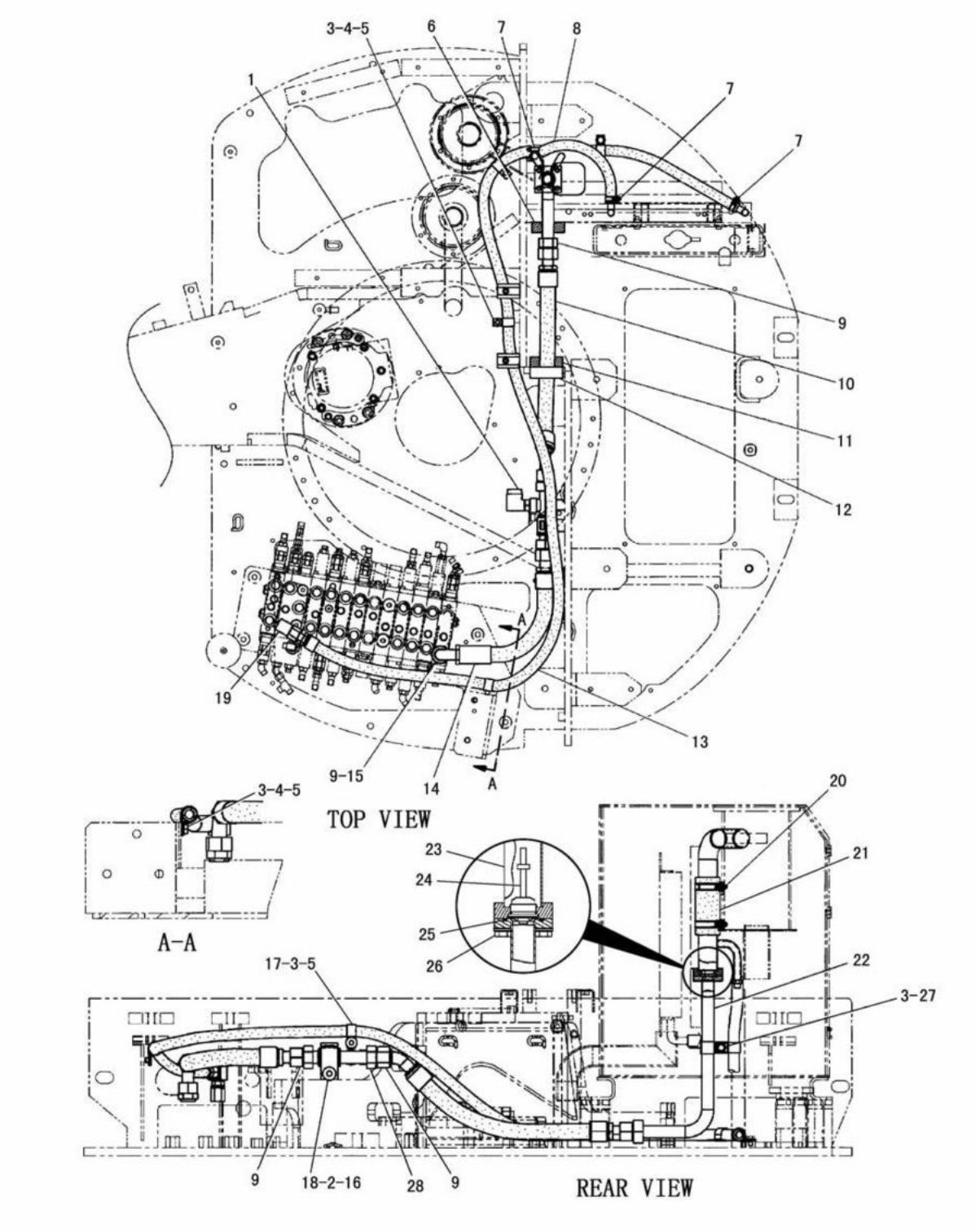

RETURN LINES (208-0651 N/S)
EFFECTIVE WITH SERIAL NO. BMW01110-
PART OF 191-3357-Page 297,298

HYDRAULIC SYSTEM

NOTE	No.	PART NO.	QTY.	PART NAME	NOTE	No.	PART NO.	QTY.	PART NAME
	1	6V-8721	1	ELBOW					
		199-1902	1	SEAL					
		2M-9780	1	SEAL					
	2	8T-2920	1	GROMMET					
	3	7C-4354	6	CLIP					
	4	8T-4191	4	BOLT(M10×1.5)					
	5	8T-4121	5	WASHER					
	6	202-4558	1	SEAL					
	7	5D-1026	3	CLAMP					
E	8	5P-0743		HOSE---55cm					
	9	199-1905	4	SEAL					
	10	209-3946	1	HOSE AS					
	11	209-3945	1	SEAL					
	12	096-5863	1	GROMMET					
	13	221-0939	1	HOSE AS					
	14	209-3947	1	HOSE AS					
	15	6V-8714	1	CONNECTOR					
		3D-2824	1	SEAL					
	16	8T-4139	1	BOLT(M12×1.75)					
		8T-4223	1	WASHER					
	17	8T-4137	1	BOLT(M10×1.5)					
	18	5P-7465	1	CLIP(TAB)					
		5P-7464	1	CLIP(SLOT)					
	19	199-1903	1	SEAL					
		6V-8722	1	ELBOW					
		3K-0360	2	SEAL					
		8T-1715	1	ADAPTER					
	20	095-1392	2	CLAMP					
	21	191-8049	1	HOSE					
	22	217-6066	1	TUBE AS					
	23	191-4748	1	TUBE AS					
	24	093-5537	1	VALVE AS					
	25	095-1701	1	SEAL					
	26	8T-4195	4	BOLT(M10×1.5)					
		8T-4121	4	WASHER					
	27	8T-7529	1	CLIP					
		7X-7729	1	WASHER					
		8T-4136	1	BOLT(M10×1.5)					
	28	209-3942	1	TUBE AS					

E-ORDER BY THE cm

J115417 X01

RETURN LINES (208-0651 N/S)
EFFECTIVE WITH SERIAL NO. BMW01110-
PART OF 191-3357-Page 297,298

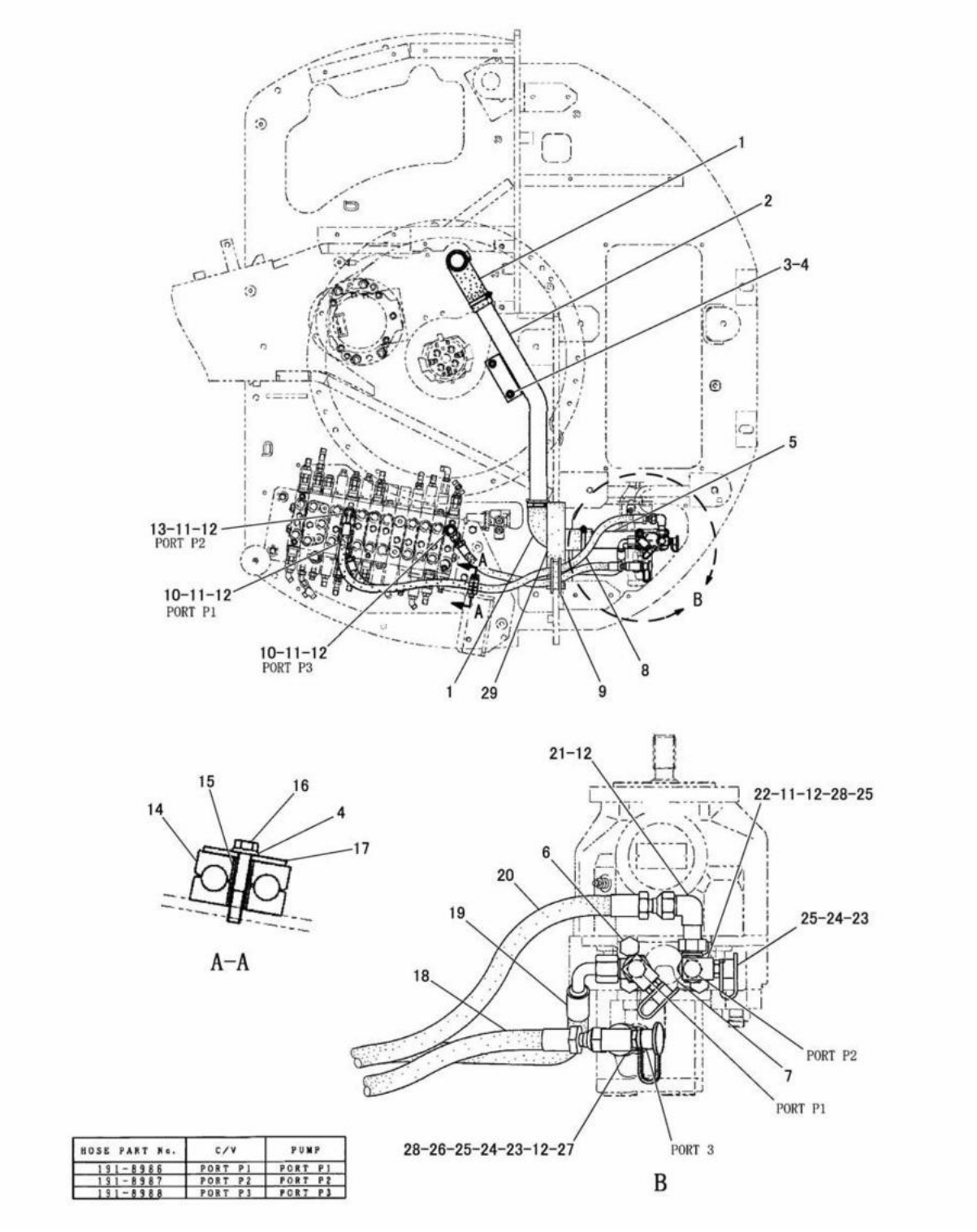

HOSE PART No.	C/V	PUMP
191-8986	PORT P1	PORT P1
191-8987	PORT P2	PORT P2
191-8988	PORT P3	PORT P3

J132917 X07

PUMP LINES (191-3868 N/S)
PART OF 191-3357-Page 297,298

HYDRAULIC SYSTEM

NOTE	No.	PART NO.	QTY.	PART NAME	NOTE	No.	PART NO.	QTY.	PART NAME
	1	191-7520	2	HOSE					
	2	191-7519	1	TUBE AS					
	3	8T-4137	2	BOLT(M10×1.5)					
	4	8T-4121	3	WASHER					
	5	191-3898	1	TUBE AS					
	6	8T-4139	4	BOLT(M12×1.75)					
	7	4J-0524	1	SEAL					
	8	095-1392	4	CLAMP					
	9	7Y-8168	1	GROMMET					
	10	6V-8625	2	ELBOW					
	11	3K-0360	5	SEAL					
	12	6V-8398	7	SEAL					
	13	8T-0077	1	CONNECTOR					
	14	140-4054	2	CLAMP					
	15	140-4739	1	SPACER					
	16	8T-6466	1	BOLT(M10×1.5)					
	17	140-4276	1	PLATE					
	18	191-8988	1	HOSE AS					
	19	191-8986	1	HOSE AS					
	20	191-8987	1	HOSE AS					
	21	6V-9851	1	ELBOW					
	22	9X-2492	2	TEE					
	23	6V-0852	3	CAP					
	24	6V-3965	3	NIPPLE AS					
	25	3J-1907	6	SEAL					
	26	2M-9780	1	SEAL					
	27	156-8835	1	TEE					
	28	6V-0484	3	ADAPTER					
	29	216-9884	1	INSULATION					

J132917 X07

PUMP LINES (191-3868 N/S)
PART OF 191-3357-Page 297,298

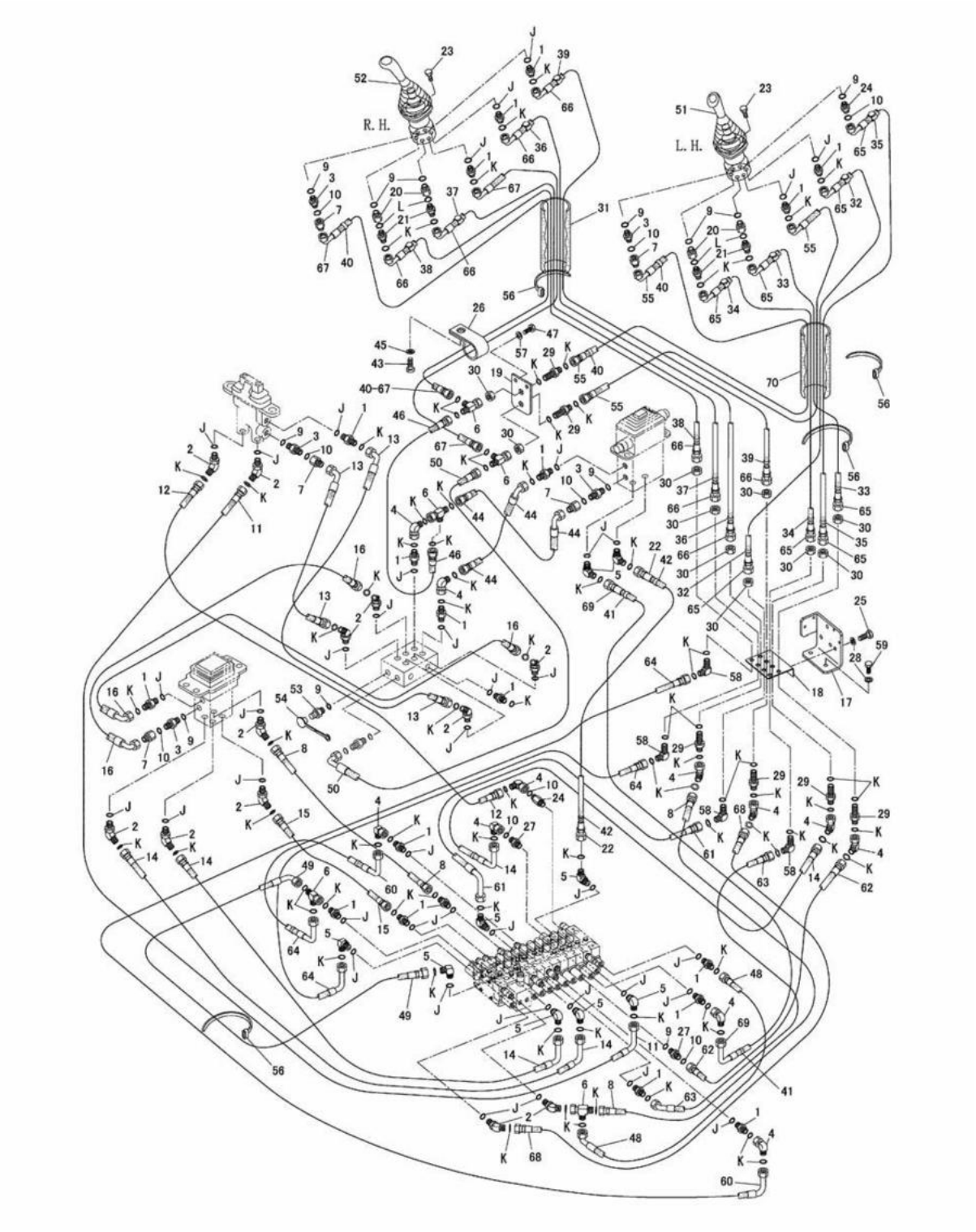

J126896 X14

PILOT LINES (191-3869 N/S)
EFFECTIVE WITH SERIAL NO. BMW00001-BMW00980
PART OF 191-3357-Page 297,298

HYDRAULIC SYSTEM

NOTE	No.	PART NO.	QTY.	PART NAME
JK	1	6V-8641	19	CONNECTOR
JK	2	8T-0164	12	ELBOW
	3	107-6910	5	CONNECTOR
K	4	6V-9849	11	ELBOW
JK	5	6V-8627	9	ELBOW
K	6	6V-9835	5	TEE(USE K MARKED PARTS 2PCS)
	7	8T-6701	5	ADAPTER
	8	194-9162	2	HOSE AS
				(TRAVEL VALVE 2
				-CONTROL VALVE Pa4)
				(BRACKET R1
				-CONTROL VALVE Pb2)
	9	3J-1907	12	SEAL
	10	4J-5477	9	SEAL
	11	192-3161	1	HOSE AS
				(SWING VALVE A
				-CONTROL VALVE Pb9)
	12	192-3162	1	HOSE AS
				(SWING VALVE B
				-CONTROL VALVE Pa9)
	13	192-3163	2	HOSE AS
	14	192-3164	3	HOSE AS
				(TRAVEL VALVE 1
				-CONTROL VALVE Pb4)
				(TRAVEL VALVE 3
				-CONTROL VALVE Pb3)
				(CONTROL VALVE Pa7
				-BRACKET L4)
	15	192-3165	1	HOSE AS
				(TRAVEL VALVE 4
				-CONTROL VALVE Pa3)
	16	192-3166	2	HOSE AS
	17	202-0706	1	BRACKET AS
	18	192-1702	1	BRACKET AS
		8T-3597	2	NUT(M12×1.75)(WELD)
	19	192-1703	1	BRACKET
	20	5P-9617	4	ADAPTER
KL	21	6V-8647	4	CONNECTOR
	22	195-0182	1	HOSE AS
				(BLADE VALVE 2
				-CONTROL VALVE Pa8)
	23	3T-0849	8	BOLT(M6×1)
	24	156-8845	2	CONNECTOR
	25	8T-4139	2	BOLT(M12×1.75)
	26	7D-1553	1	CLIP
	27	201-5348	2	CONNECTOR
	28	8T-4223	4	WASHER
K	29	6V-8993	6	UNION(USE K MARKED PARTS 2PCS)
	30	2P-1279	10	LOCKNUT
E	31	6R-2052		SLEEVE---100cm
	32	4I-9531	2	BAND(RED)
	33	4I-9532	2	BAND(YELLOW)
	34	4I-9533	2	BAND(BLUE)
	35	4I-9534	2	BAND(BROWN)
	36	4I-9535	2	BAND(ORANGE)
	37	4I-9536	2	BAND(WHITE)
	38	4I-9537	2	BAND(GREEN)
	39	4I-9538	2	BAND(PURPLE)
	40	096-6079	4	TAPE(WHITE)
	41	096-6080	2	TAPE(BLUE)
	42	096-6081	2	TAPE(ORANGE)
	43	8T-4191	1	BOLT(M10×1.5)
	44	174-7294	2	HOSE AS
	45	8T-4121	1	WASHER
	46	202-0714	1	HOSE AS
	47	8T-4200	2	BOLT(M8×1.25)
	48	194-9164	1	HOSE AS
				(CONTROL VALVE Pb2-Pi4)
	49	202-0715	1	HOSE AS
				(CONTROL VALVE Pa2-Pi1)
	50	197-8692	1	HOSE AS
Y	51	191-1387	1	VALVE GROUP(LH)
Y	52	191-1388	1	VALVE GROUP(RH)
	53	6V-3965	1	NIPPLE AS
	54	6V-0852	1	CAP
	55	202-0717	2	HOSE AS
	56	7K-1181	4	STRAP
	57	8T-4224	2	WASHER
K	58	6V-8979	4	ELBOW(USE K MARKED PARTS 2PCS)
	59	8T-4179	2	BOLT(M12×1.75)
	60	199-6946	1	HOSE AS
				(CONTROL VALVE Pa6-Pb6)
	61	194-9187	1	HOSE AS
				(CONTROL VALVE Pa5
				-BRACKET L1)
	62	194-9188	1	HOSE AS
				(CONTROL VALVE Pb7
				-BRACKET L2)
	63	194-9189	1	HOSE AS
				(CONTROL VALVE Pb5
				-BRACKET L3)
	64	194-9186	2	HOSE AS
				(BRACKET R2
				-CONTROL VALVE Pa1)
				(BRACKET R3
				-CONTROL VALVE Pa2)
	65	194-9163	4	HOSE AS
	66	202-0716	4	HOSE AS
	67	194-9358	2	HOSE AS
	68	195-0135	1	HOSE AS
				(BRACKET R4
				-CONTROL VALVE Pb1)
	69	195-0181	1	HOSE AS
				(BLADE VALVE 1
				-CONTROL VALVE Pb8)
E	70	6R-2052		SLEEVE---80cm
				USED WITH FOLLOWING SEALS
J		3J-1907	40	SEAL
K		4J-5477	85	SEAL
L		3J-7354	4	SEAL

E-ORDER BY THE cm
Y-SEE SEPARATE ILLUSTRATION

J126896 X14

PILOT LINES (191-3869 N/S)

EFFECTIVE WITH SERIAL NO. BMW00001-BMW00980
PART OF 191-3357-Page 297,298
191-1387-Page 336 191-1388-Page 337

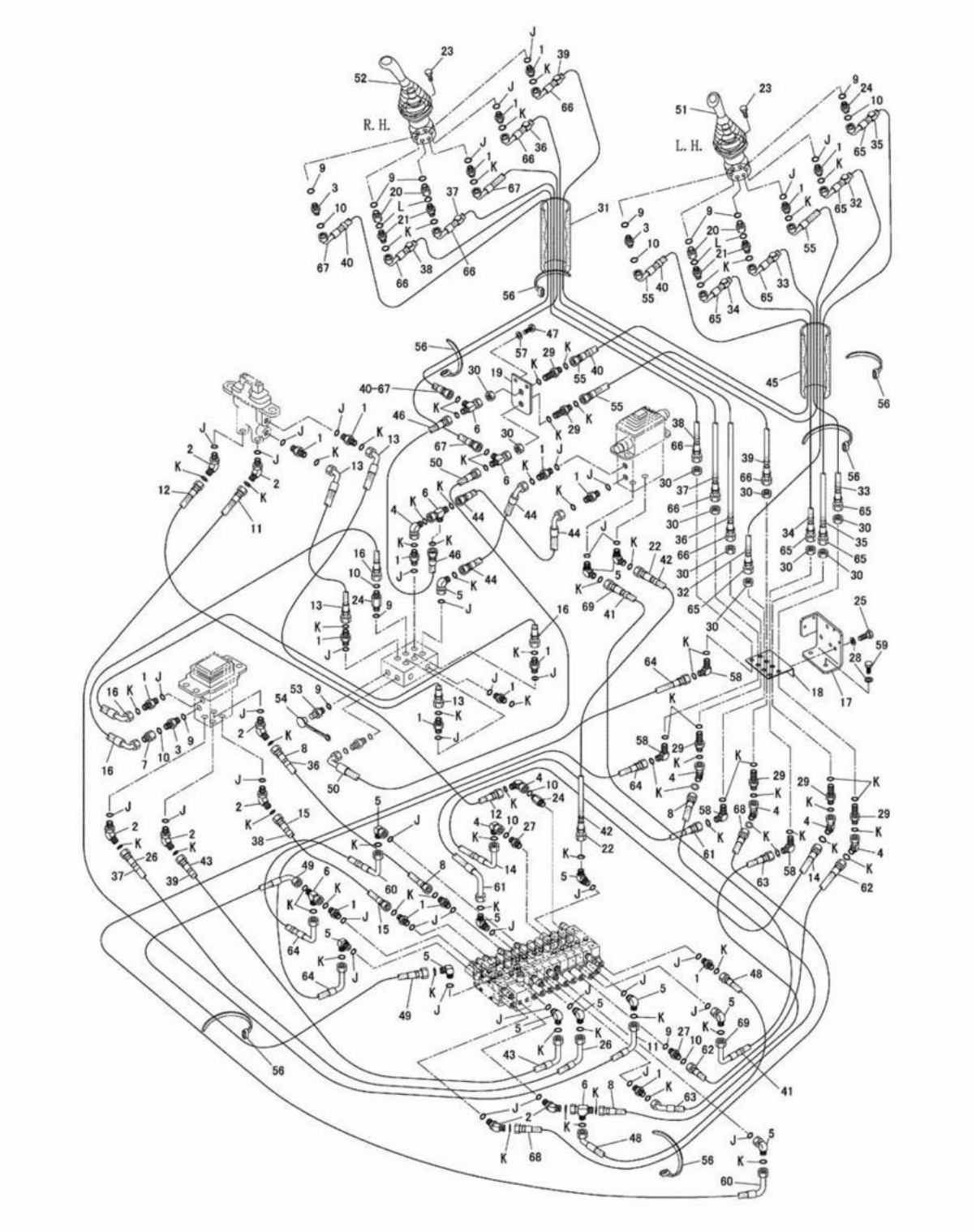

PILOT LINES (191-3869 N/S)
EFFECTIVE WITH SERIAL NO. BMW00981-
PART OF 191-3357-Page 297,298

HYDRAULIC SYSTEM

NOTE	No.	PART NO.	QTY.	PART NAME
JKC	1	6V-8641	20	CONNECTOR
JKC	2	8T-0164	8	ELBOW
C	3	107-6910	3	CONNECTOR
KC	4	6V-9849	7	ELBOW
JKC	5	6V-8627	13	ELBOW
K	6	6V-9835	5	TEE(USE K MARKED PARTS 2PCS)
C	7	8T-6701	1	ADAPTER
	8	194-9162	2	HOSE AS
				(TRAVEL VALVE 2
				-CONTROL VALVE Pa4)
				(BRACKET R1
				-CONTROL VALVE Pb2)
C	9	3J-1907	10	SEAL
C	10	4J-5477	7	SEAL
C	11	224-9572	1	HOSE AS
				(SWING VALVE A
				-CONTROL VALVE Pb9)
C	12	195-0135	1	HOSE AS
				(SWING VALVE B
				-CONTROL VALVE Pa9)
	13	192-3163	2	HOSE AS
C	14	192-3164	1	HOSE AS
				(CONTROL VALVE Pa7
				-BRACKET L4)
	15	192-3165	1	HOSE AS
				(TRAVEL VALVE 4
				-CONTROL VALVE Pa3)
	16	192-3166	2	HOSE AS
	17	202-0706	1	BRACKET AS
	18	192-1702	1	BRACKET AS
		8T-3597	2	NUT(M12×1.75)(WELD)
	19	192-1703	1	BRACKET
	20	5P-9617	4	ADAPTER
KL	21	6V-8647	4	CONNECTOR
	22	195-0182	1	HOSE AS
				(BLADE VALVE 2
				-CONTROL VALVE Pa8)
	23	3T-0849	8	BOLT(M6×1)
C	24	156-8845	3	CONNECTOR
	25	8T-4139	2	BOLT(M12×1.75)
C	26	215-2233	1	HOSE AS
				(TRAVEL VALVE 1
				-CONTROL VALVE Pb4)
	27	201-5348	2	CONNECTOR
	28	8T-4223	4	WASHER
K	29	6V-8993	6	UNION(USE K MARKED PARTS 2PCS)
	30	2P-1279	10	LOCKNUT
E	31	6R-2052		SLEEVE---100cm
	32	4I-9531	2	BAND(RED)
	33	4I-9532	2	BAND(YELLOW)
	34	4I-9533	2	BAND(BLUE)
	35	4I-9534	2	BAND(BROWN)
C	36	4I-9535	3	BAND(ORANGE)
C	37	4I-9536	3	BAND(WHITE)
C	38	4I-9537	3	BAND(GREEN)
C	39	4I-9538	3	BAND(PURPLE)
	40	096-6079	4	TAPE(WHITE)
	41	096-6080	2	TAPE(BLUE)
	42	096-6081	2	TAPE(ORANGE)
C	43	216-3344	1	HOSE AS
				(TRAVEL VALVE 3
				-CONTROL VALVE Pb3)
	44	174-7294	2	HOSE AS
E	45	6R-2052		SLEEVE---80cm
	46	202-0714	1	HOSE AS
	47	8T-4200	2	BOLT(M8×1.25)
	48	194-9164	1	HOSE AS
				(CONTROL VALVE Pb2-Pi4)
	49	202-0715	1	HOSE AS
				(CONTROL VALVE Pa2-Pi1)
C	50	206-6085	1	HOSE AS
Y	51	191-1387	1	VALVE GROUP(LH)
Y	52	191-1388	1	VALVE GROUP(RH)
	53	6V-3965	1	NIPPLE AS
	54	6V-0852	1	CAP
	55	202-0717	2	HOSE AS
C	56	7K-1181	6	STRAP
	57	8T-4224	2	WASHER
K	58	6V-8979	4	ELBOW(USE K MARKED PARTS 2PCS)
	59	8T-4179	2	BOLT(M12×1.75)
	60	199-6946	1	HOSE AS
				(CONTROL VALVE Pa6-Pb6)
	61	194-9187	1	HOSE AS
				(CONTROL VALVE Pa5
				-BRACKET L1)
	62	194-9188	1	HOSE AS
				(CONTROL VALVE Pb7
				-BRACKET L2)
	63	194-9189	1	HOSE AS
				(CONTROL VALVE Pb5
				-BRACKET L3)
	64	194-9186	2	HOSE AS
				(BRACKET R2
				-CONTROL VALVE Pa1)
				(BRACKET R3
				-CONTROL VALVE Pa2)
	65	194-9163	4	HOSE AS
	66	202-0716	4	HOSE AS
	67	194-9358	2	HOSE AS
	68	195-0135	1	HOSE AS
				(BRACKET R4
				-CONTROL VALVE Pb1)
	69	195-0181	1	HOSE AS
				(BLADE VALVE 1
				-CONTROL VALVE Pb8)
				USED WITH FOLLOWING SEALS
JC		3J-1907	41	SEAL
KC		4J-5477	82	SEAL
L		3J-7354	4	SEAL

C-INDICATES CHANGE
E-ORDER BY THE cm
Y-SEE SEPARATE ILLUSTRATION

J128372 X20

PILOT LINES (191-3869 N/S)

EFFECTIVE WITH SERIAL NO. BMW00981-
PART OF 191-3357-Page 297,298
191-1387-Page 336 191-1388-Page 337

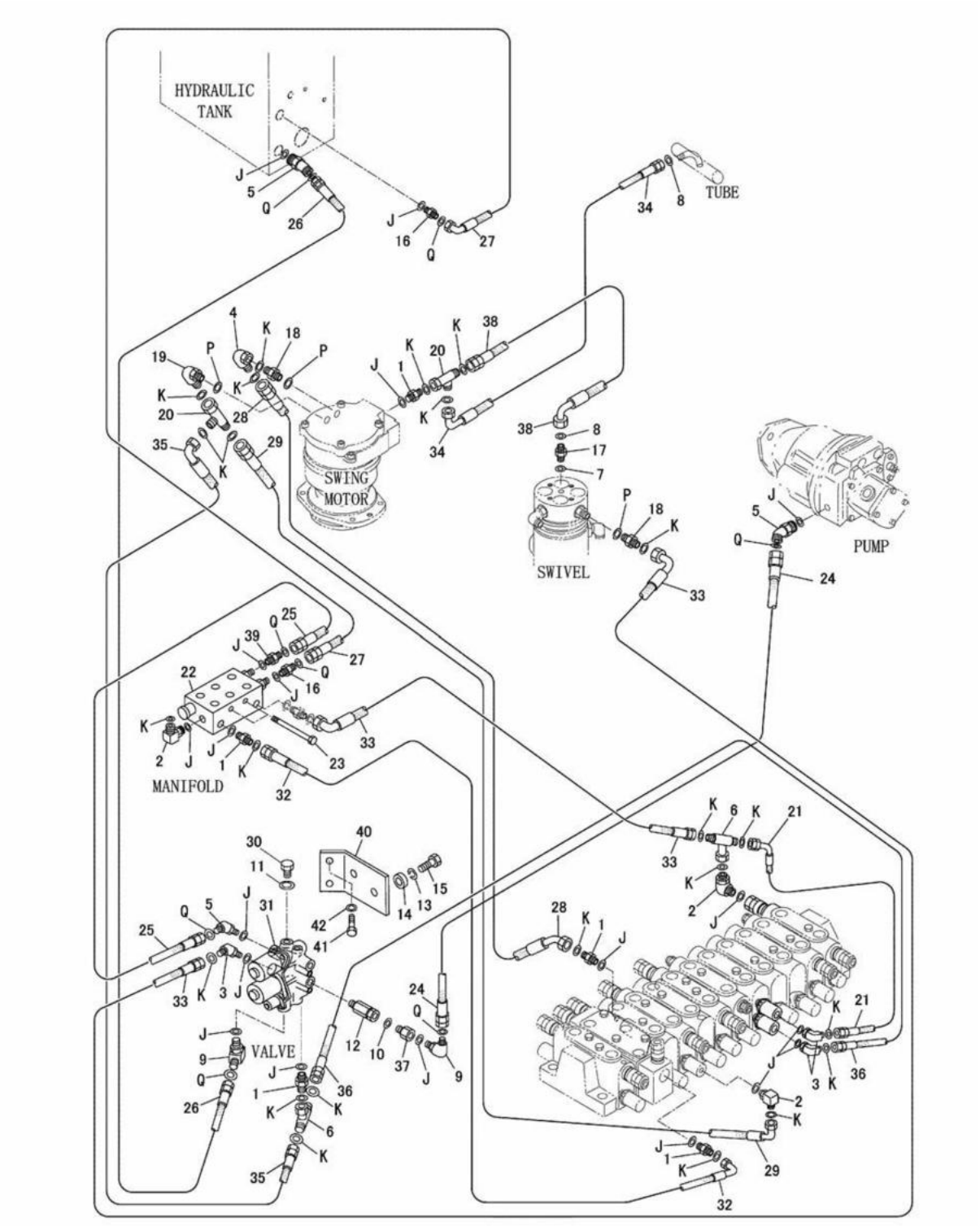

PILOT LINES (191-3870 N/S)
PART OF 191-3357-Page 297,298

HYDRAULIC SYSTEM

NOTE	No.	PART NO.	QTY.	PART NAME	NOTE	No.	PART NO.	QTY.	PART NAME
JK	1	6V-8641	5	CONNECTOR					
JK	2	6V-8627	3	ELBOW					
JK	3	8T-0164	3	CONNECTOR					
K	4	6V-9849	1	ELBOW					
JQ	5	6V-9001	3	ELBOW					
K	6	6V-9842	2	TEE(USE K MARKED PARTS 2PCS)					
	7	3J-1907	1	SEAL					
	8	4J-5477	2	SEAL					
JQ	9	6V-8724	2	ELBOW					
	10	3J-7354	1	SEAL					
	11	3K-0360	1	SEAL					
	12	217-2456	1	FILTER AS					
	13	8T-4226	4	WASHER					
	14	8D-0983	2	MOUNTING					
	15	8T-4182	2	BOLT(M10×1.5)					
JQ	16	6V-8636	2	CONNECTOR					
	17	156-8801	1	CONNECTOR					
KP	18	6V-8647	2	CONNECTOR					
KP	19	6V-8628	1	ELBOW					
K	20	6V-9835	2	TEE(USE K MARKED PARTS 2PCS)					
	21	206-6085	1	HOSE AS					
	22	153-7770	1	MANIFOLD					
	23	8T-4198	2	BOLT(M10×1.5)					
	24	192-2380	1	HOSE AS					
	25	192-2381	1	HOSE AS					
	26	192-2382	1	HOSE AS					
	27	192-2383	1	HOSE AS					
	28	192-2384	1	HOSE AS					
	29	192-2385	1	HOSE AS					
	30	9S-4185	1	PLUG					
Y	31	191-1390	1	MANIFOLD VALVE GROUP					
	32	171-0556	1	HOSE AS					
	33	202-0715	2	HOSE AS					
	34	202-0718	1	HOSE AS					
	35	195-0188	1	HOSE AS					
	36	206-6086	1	HOSE AS					
	37	8T-2353	1	ADAPTER					
	38	192-3163	1	HOSE AS					
JQ	39	8T-0075	1	CONNECTOR					
	40	194-9161	1	BRACKET					
	41	8T-4139	2	BOLT(M12×1.75)					
	42	8T-4223	2	WASHER					
				USED WITH FOLLOWING SEALS					
J		3J-1907	19	SEAL					
K		4J-5477	23	SEAL					
P		3J-7354	3	SEAL					
Q		6V-8397	8	SEAL					

Y-SEE SEPARATE ILLUSTRATION

J126667 X10

PILOT LINES (191-3870 N/S)

PART OF 191-3357-Page 297,298
191-1390-Page 426

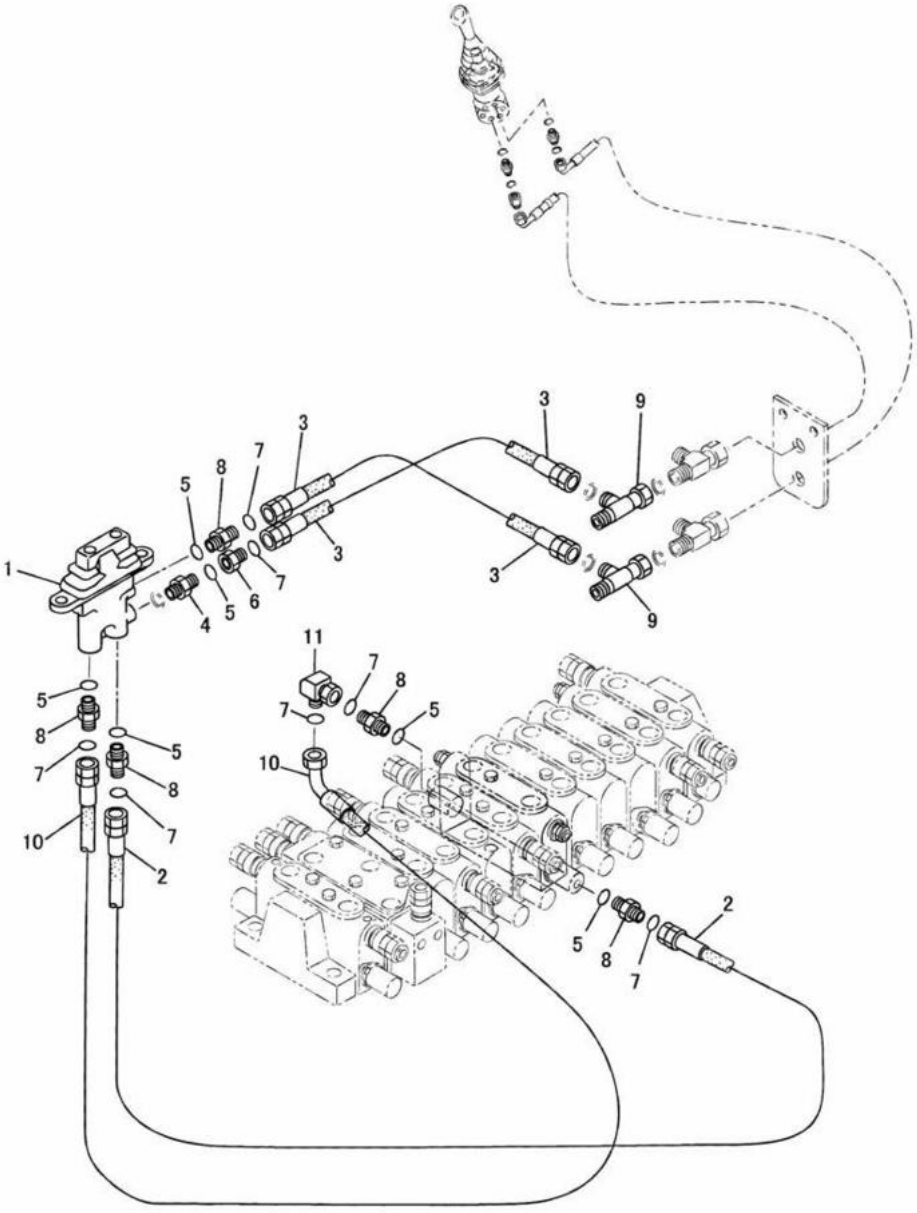

PILOT LINES (191-4776 N/S) -POWER TAKE OFF
EFFECTIVE WITH SERIAL NO. BMW00001-BMW00850
PART OF 200-2854-Page 301
AN ATTACHMENT

HYDRAULIC SYSTEM

NOTE	No.	PART NO.	QTY.	PART NAME	NOTE	No.	PART NO.	QTY.	PART NAME
Y	1	162-4578	1	VALVE GROUP					
	2	192-3165	1	HOSE AS					
	3	171-0536	2	HOSE AS					
	4	107-6910	1	CONNECTOR					
	5	3J-1907	6	SEAL					
	6	8T-6701	1	ADAPTER					
	7	4J-5477	7	SEAL					
	8	6V-8641	5	CONNECTOR					
	9	6V-9835	2	TEE					
	10	192-3161	1	HOSE AS					
	11	6V-9849	1	ELBOW					

Y-SEE SEPARATE ILLUSTRATION

J126897 X02

PILOT LINES (191-4776 N/S) -POWER TAKE OFF
EFFECTIVE WITH SERIAL NO. BMW00001-BMW00850
PART OF 200-2854-Page 301
162-4578-Page 335
AN ATTACHMENT

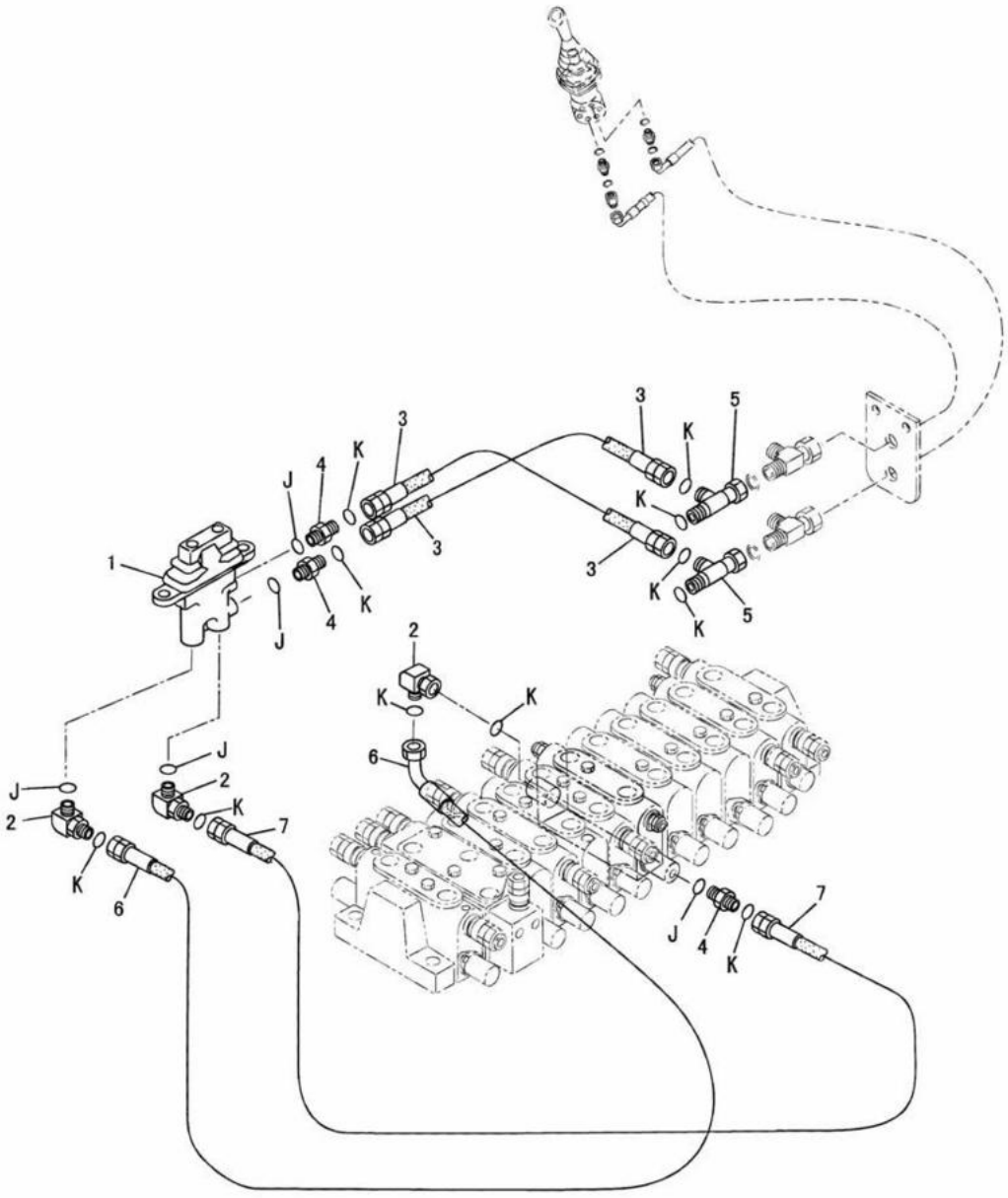

PILOT LINES (191-4776 N/S) -POWER TAKE OFF
EFFECTIVE WITH SERIAL NO. BMW00851-
PART OF 200-2854-Page 301
AN ATTACHMENT

HYDRAULIC SYSTEM

NOTE	No.	PART NO.	QTY.	PART NAME	NOTE	No.	PART NO.	QTY.	PART NAME
Y	1	162-4578	1	PILOT VALVE GROUP					
CJK	2	6V-8627	3	ELBOW					
C	3	202-0719	2	HOSE AS					
CJK	4	6V-8641	3	CONNECTOR					
K	5	6V-9835	2	TEE(USE K MARKED PARTS 2PCS)					
C	6	215-2233	1	HOSE AS					
C	7	206-2369	1	HOSE AS					
				USED WITH FOLLOWING SEALS					
CJ		3J-1907	6	SEAL					
CK		4J-5477	10	SEAL					

C-INDICATES CHANGE
Y-SEE SEPARATE ILLUSTRATION

J126572 X10

PILOT LINES (191-4776 N/S) -POWER TAKE OFF
EFFECTIVE WITH SERIAL NO. BMW00851-
PART OF 200-2854-Page 301
162-4578-Page 335
AN ATTACHMENT

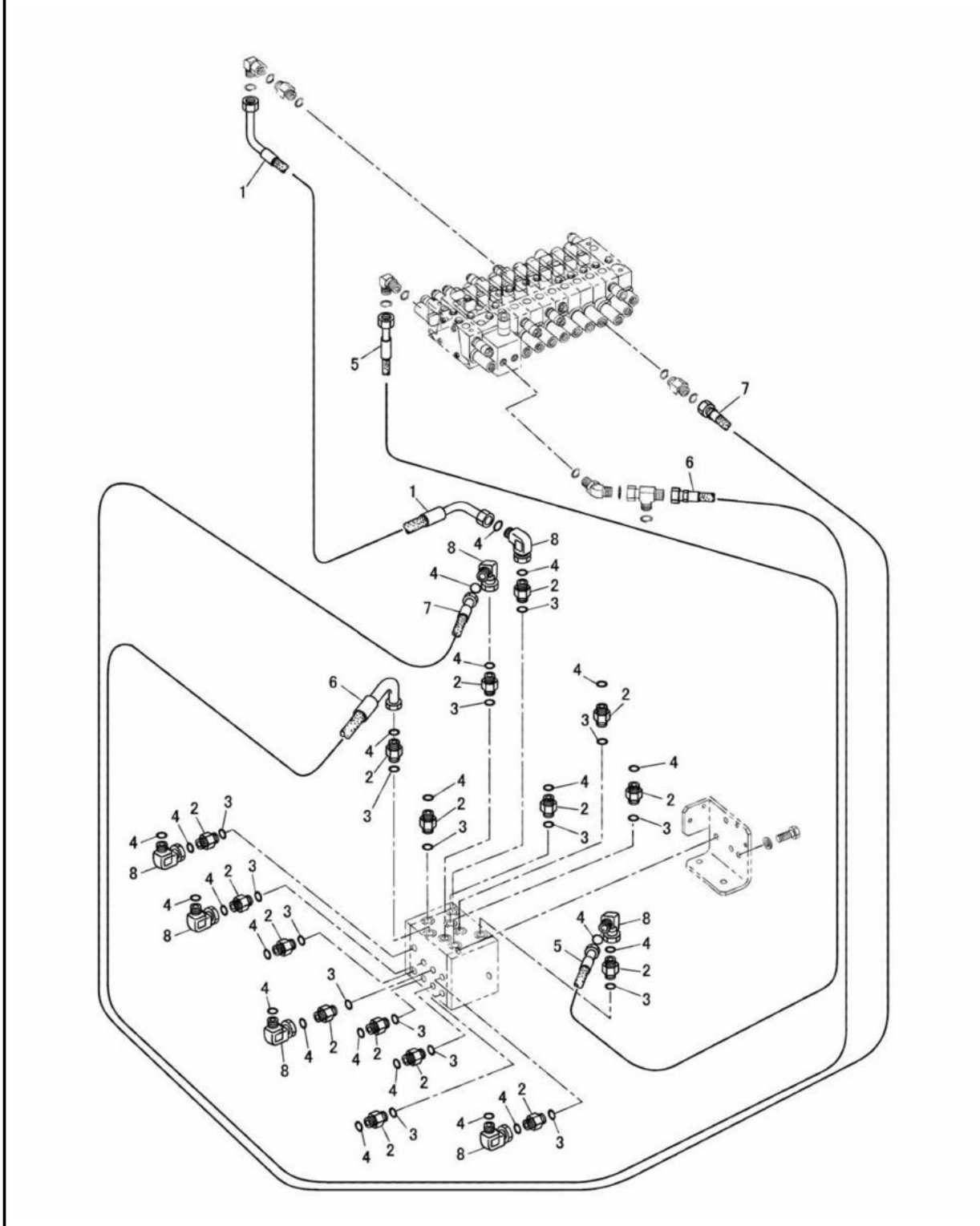

PILOT LINES (191-3872 N/S) -4 WAYS
EFFECTIVE WITH SERIAL NO. BMW00001-BMW00623
PART OF 191-3877-Page 298,299,217-7959-Page 299
AN ATTACHMENT

HYDRAULIC SYSTEM

NOTE	No.	PART NO.	QTY.	PART NAME	NOTE	No.	PART NO.	QTY.	PART NAME
	1	194-9192	1	HOSE AS (CONTROL VALVE Pa5 -PILOT VALVE 6)					
	2	6V-8641	16	CONNECTOR					
	3	3J-1907	16	SEAL					
	4	4J-5477	23	SEAL					
	5	194-9191	1	HOSE AS (CONTROL VALVE Pa1 -PILOT VALVE 2)					
	6	194-9190	1	HOSE AS (CONTROL VALVE Pb2 -PILOT VALVE 1)					
	7	194-9193	1	HOSE AS (CONTROL VALVE Pb7 -PILOT VALVE 7)					
	8	6V-9849	7	ELBOW					

J126898 X02

PILOT LINES (191-3872 N/S) -4 WAYS
EFFECTIVE WITH SERIAL NO. BMW00001-BMW00623
PART OF 191-3877-Page 298,299,217-7959-Page 299
AN ATTACHMENT

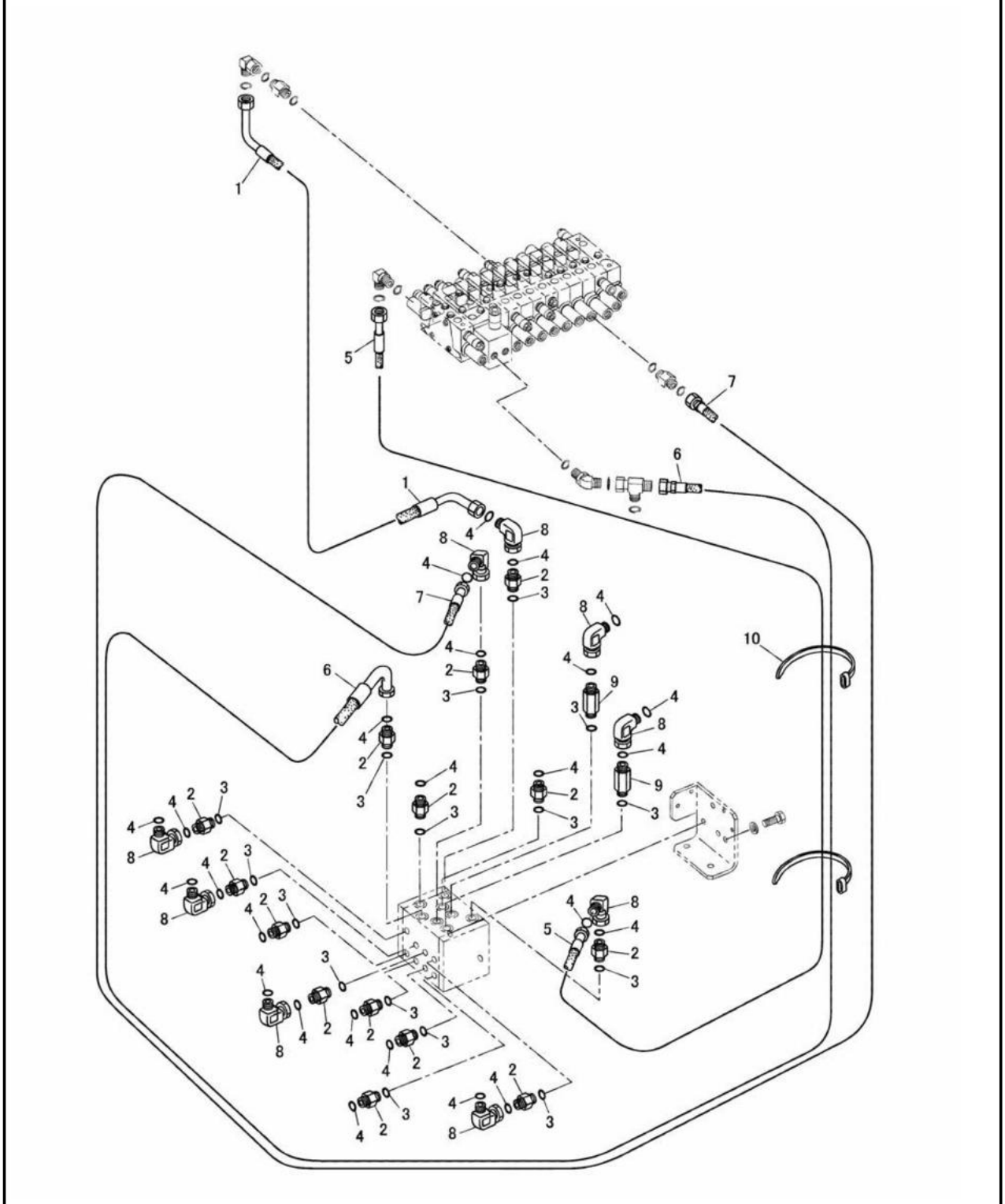

PILOT LINES (191-3872 N/S) -4 WAYS
EFFECTIVE WITH SERIAL NO. BMW00624-BMW00683
PART OF 191-3877-Page 298,299,217-7959-Page 299
AN ATTACHMENT

HYDRAULIC SYSTEM

NOTE	No.	PART NO.	QTY.	PART NAME	NOTE	No.	PART NO.	QTY.	PART NAME
	1	194-9192	1	HOSE AS (CONTROL VALVE Pa5 -PILOT VALVE 6)					
C	2	6V-8641	14	CONNECTOR					
	3	3J-1907	16	SEAL					
C	4	4J-5477	25	SEAL					
	5	194-9191	1	HOSE AS (CONTROL VALVE Pa1 -PILOT VALVE 2)					
	6	194-9190	1	HOSE AS (CONTROL VALVE Pb2 -PILOT VALVE 1)					
	7	194-9193	1	HOSE AS (CONTROL VALVE Pb7 -PILOT VALVE 7)					
C	8	6V-9849	9	ELBOW					
C	9	156-8845	2	CONNECTOR					
C	10	7K-1181	2	STRAP					

C-INDICATES CHANGE

J126899 X04

PILOT LINES (191-3872 N/S) -4 WAYS

EFFECTIVE WITH SERIAL NO. BMW00624-BMW00683
PART OF 191-3877-Page 298,299,217-7959-Page 299
AN ATTACHMENT

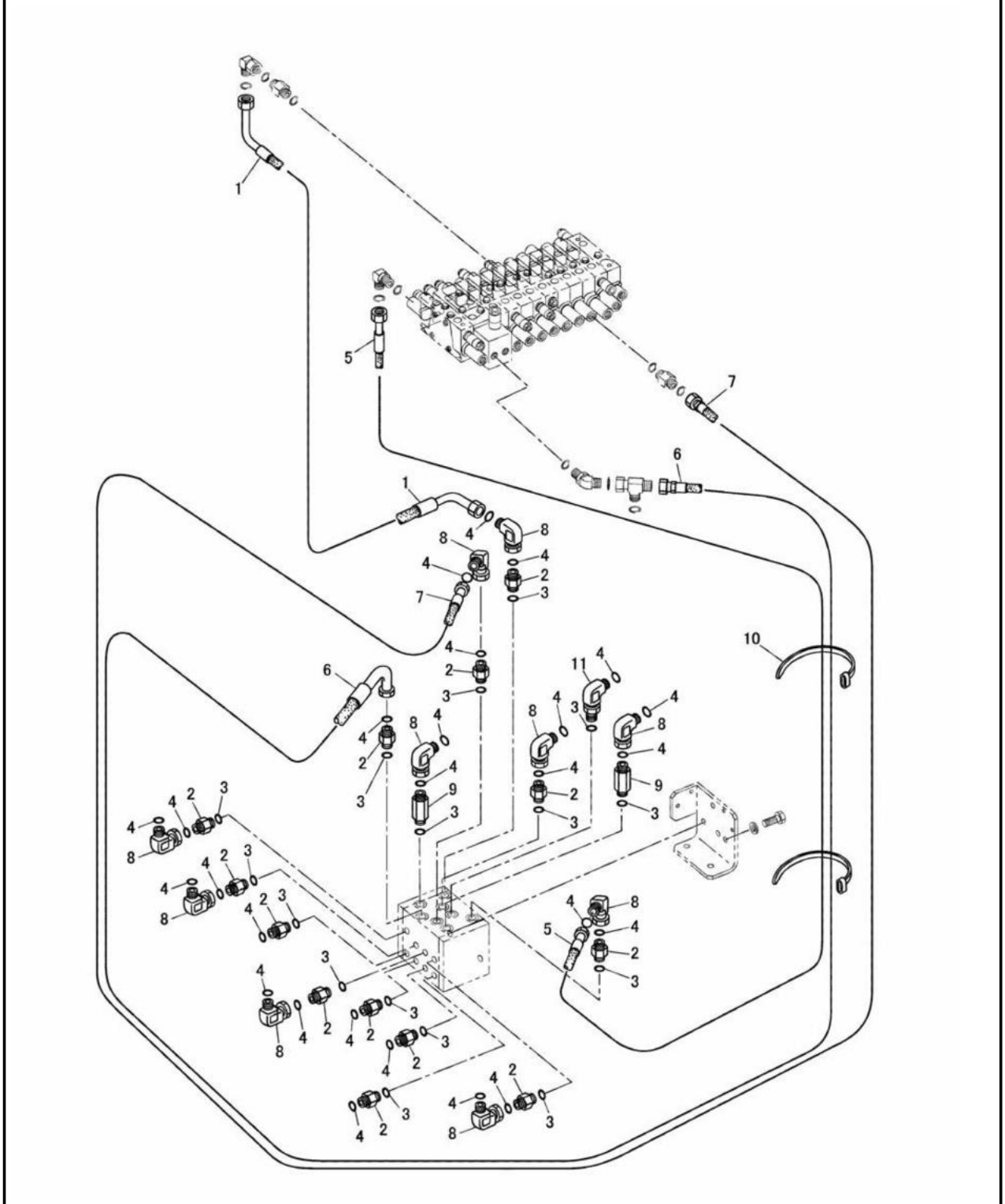

PILOT LINES (191-3872 N/S) -4 WAYS
EFFECTIVE WITH SERIAL NO. BMW00684-BMW00886
PART OF 191-3877-Page 298,299,217-7959-Page 299
AN ATTACHMENT

HYDRAULIC SYSTEM

NOTE	No.	PART NO.	QTY.	PART NAME	NOTE	No.	PART NO.	QTY.	PART NAME
	1	194-9192	1	HOSE AS (CONTROL VALVE Pa5 -PILOT VALVE 6)					
C	2	6V-8641	13	CONNECTOR					
	3	3J-1907	16	SEAL					
C	4	199-1900	26	SEAL					
	5	194-9191	1	HOSE AS (CONTROL VALVE Pa1 -PILOT VALVE 2)					
	6	194-9190	1	HOSE AS (CONTROL VALVE Pb2 -PILOT VALVE 1)					
	7	194-9193	1	HOSE AS (CONTROL VALVE Pb7 -PILOT VALVE 7)					
C	8	6V-9849	10	ELBOW					
	9	156-8845	2	CONNECTOR					
	10	7K-1181	2	STRAP					
C	11	6V-8627	1	ELBOW					

C-INDICATES CHANGE

J126900 X05

PILOT LINES (191-3872 N/S) -4 WAYS
EFFECTIVE WITH SERIAL NO. BMW00684-BMW00886
PART OF 191-3877-Page 298,299,217-7959-Page 299
AN ATTACHMENT

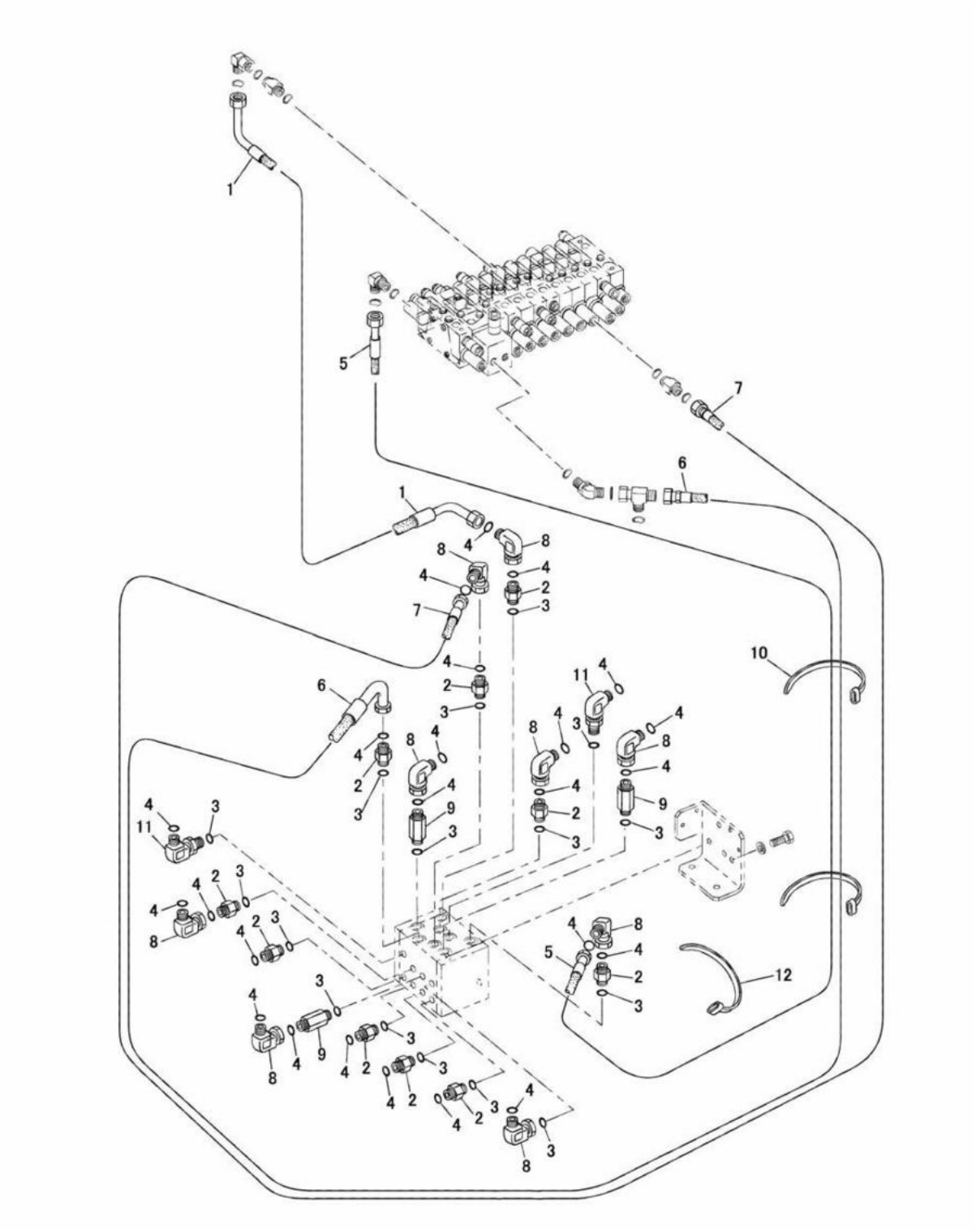

PILOT LINES (191-3872 N/S) -4 WAYS
EFFECTIVE WITH SERIAL NO. BMW00887-
PART OF 191-3877-Page 298,299,217-7959-Page 299
AN ATTACHMENT

HYDRAULIC SYSTEM

NOTE	No.	PART NO.	QTY.	PART NAME	NOTE	No.	PART NO.	QTY.	PART NAME
	1	194-9192	1	HOSE AS (CONTROL VALVE Pa5 -PILOT VALVE 6)					
C	2	6V-8641	10	CONNECTOR					
C	3	3J-1907	14	SEAL					
C	4	199-1900	24	SEAL					
	5	194-9191	1	HOSE AS (CONTROL VALVE Pa1 -PILOT VALVE 2)					
	6	194-9190	1	HOSE AS (CONTROL VALVE Pb2 -PILOT VALVE 1)					
	7	194-9193	1	HOSE AS (CONTROL VALVE Pb7 -PILOT VALVE 7)					
C	8	6V-9849	8	ELBOW					
C	9	156-8845	3	CONNECTOR					
	10	7K-1181	2	STRAP					
C	11	6V-8627	3	ELBOW					
C	12	3S-2093	1	STRAP					

C-INDICATES CHANGE

J126570 X07

PILOT LINES (191-3872 N/S) -4 WAYS
EFFECTIVE WITH SERIAL NO. BMW00887-
PART OF 191-3877-Page 298,299,217-7959-Page 299
AN ATTACHMENT

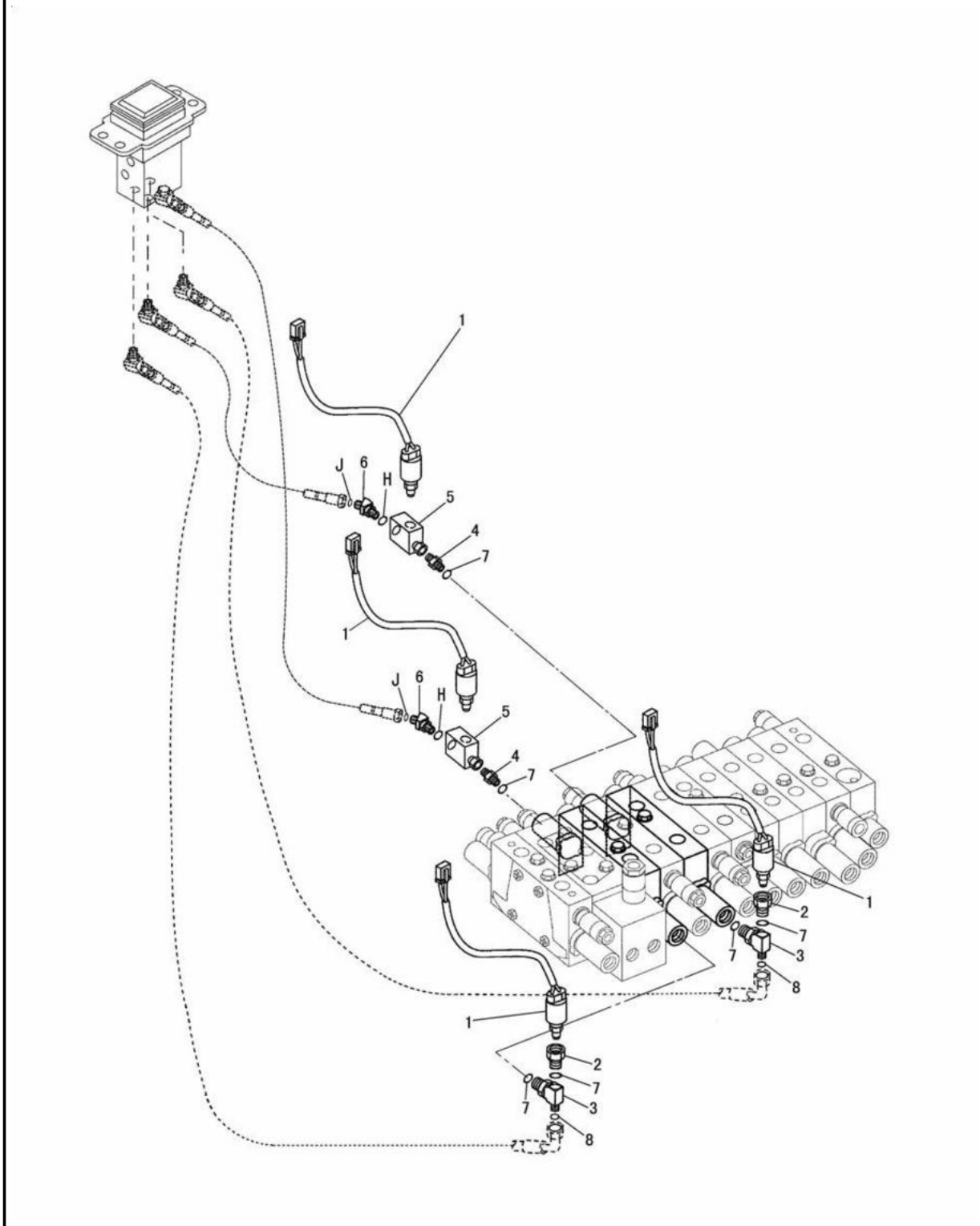

J129292 X02

PILOT LINES (199-2085 N/S) -TRAVEL ALARM
EFFECTIVE WITH SERIAL NO. BMW00001-BMW00955
PART OF 199-0744-Page 441
AN ATTACHMENT

HYDRAULIC SYSTEM

NOTE	No.	PART NO.	QTY.	PART NAME	NOTE	No.	PART NO.	QTY.	PART NAME
	1	132-7748	4	SWITCH AS					
		9W-0852	2	PIN					
		102-8802	1	RECEPTACLE KIT(2P)					
	2	108-7516	2	FITTING					
	3	8T-3311	2	TEE					
	4	2P-1314	2	CONNECTOR					
	5	5I-4075	2	FITTING					
HJ	6	6V-9000	2	ELBOW					
	7	3J-1907	6	SEAL					
	8	4J-5477	2	SEAL					
				USED WITH FOLLOWING SEALS					
H		3J-7354	2	SEAL					
J		4J-5477	2	SEAL					

J129292 X02

PILOT LINES (199-2085 N/S) -TRAVEL ALARM
EFFECTIVE WITH SERIAL NO. BMW00001-BMW00955
PART OF 199-0744-Page 441
AN ATTACHMENT

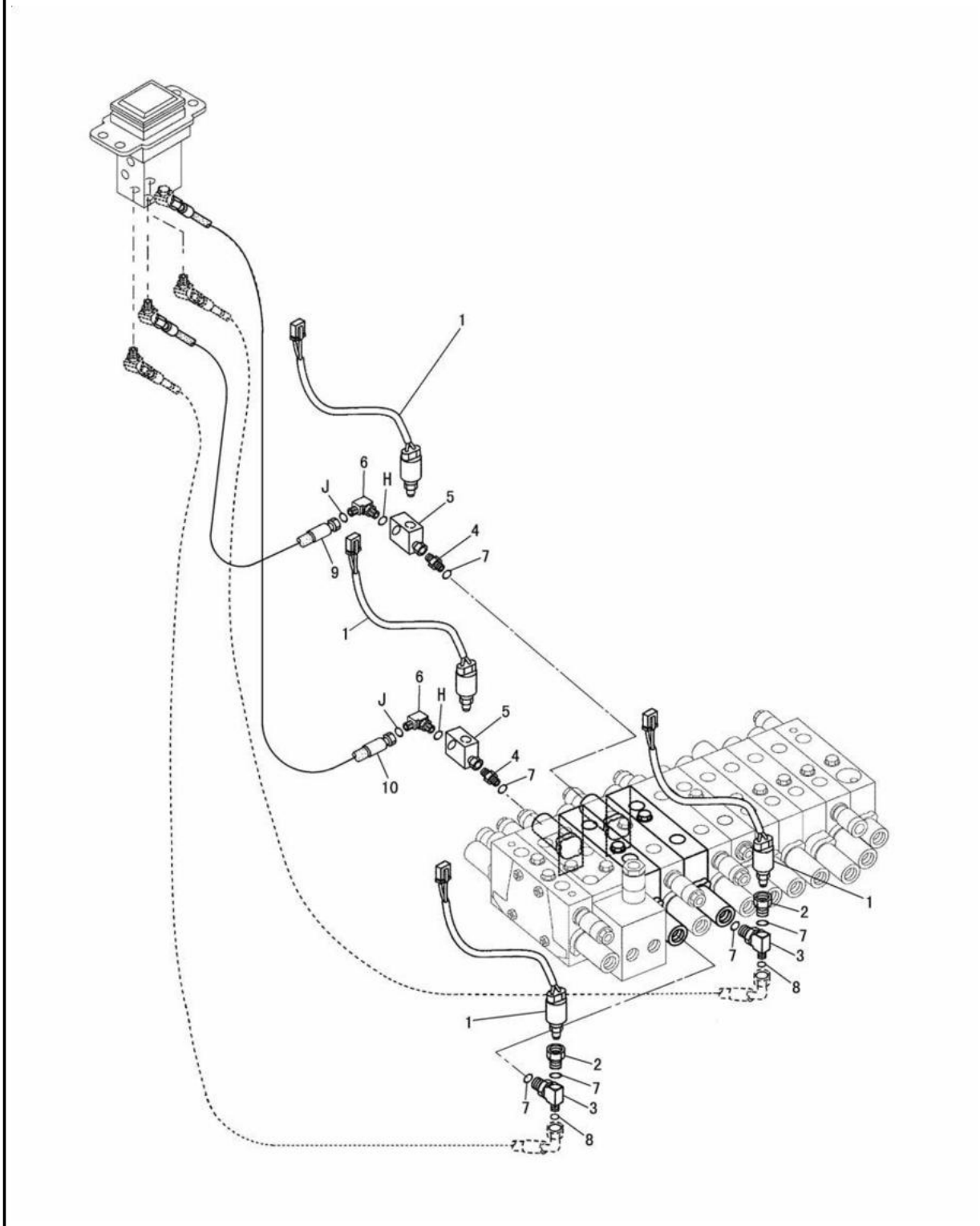

PILOT LINES (199-2085 N/S) -TRAVEL ALARM
EFFECTIVE WITH SERIAL NO. BMW00956-
PART OF 199-0744-Page 441
AN ATTACHMENT

HYDRAULIC SYSTEM

NOTE	No.	PART NO.	QTY.	PART NAME	NOTE	No.	PART NO.	QTY.	PART NAME
	1	132-7748	4	SWITCH AS					
		9W-0852	2	PIN					
		102-8802	1	RECEPTACLE KIT(2P)					
	2	108-7516	2	FITTING					
	3	8T-3311	2	TEE					
	4	2P-1314	2	CONNECTOR					
	5	5I-4075	2	FITTING					
HJC	6	6V-8628	2	ELBOW					
	7	3J-1907	6	SEAL					
	8	4J-5477	2	SEAL					
C	9	218-0520	1	HOSE AS					
C	10	218-1519	1	HOSE AS					
				USED WITH FOLLOWING SEALS					
H		3J-7354	2	SEAL					
J		4J-5477	2	SEAL					

C-INDICATES CHANGE

J129342 X03

PILOT LINES (199-2085 N/S) -TRAVEL ALARM
EFFECTIVE WITH SERIAL NO. BMW00956-
PART OF 199-0744-Page 441
AN ATTACHMENT

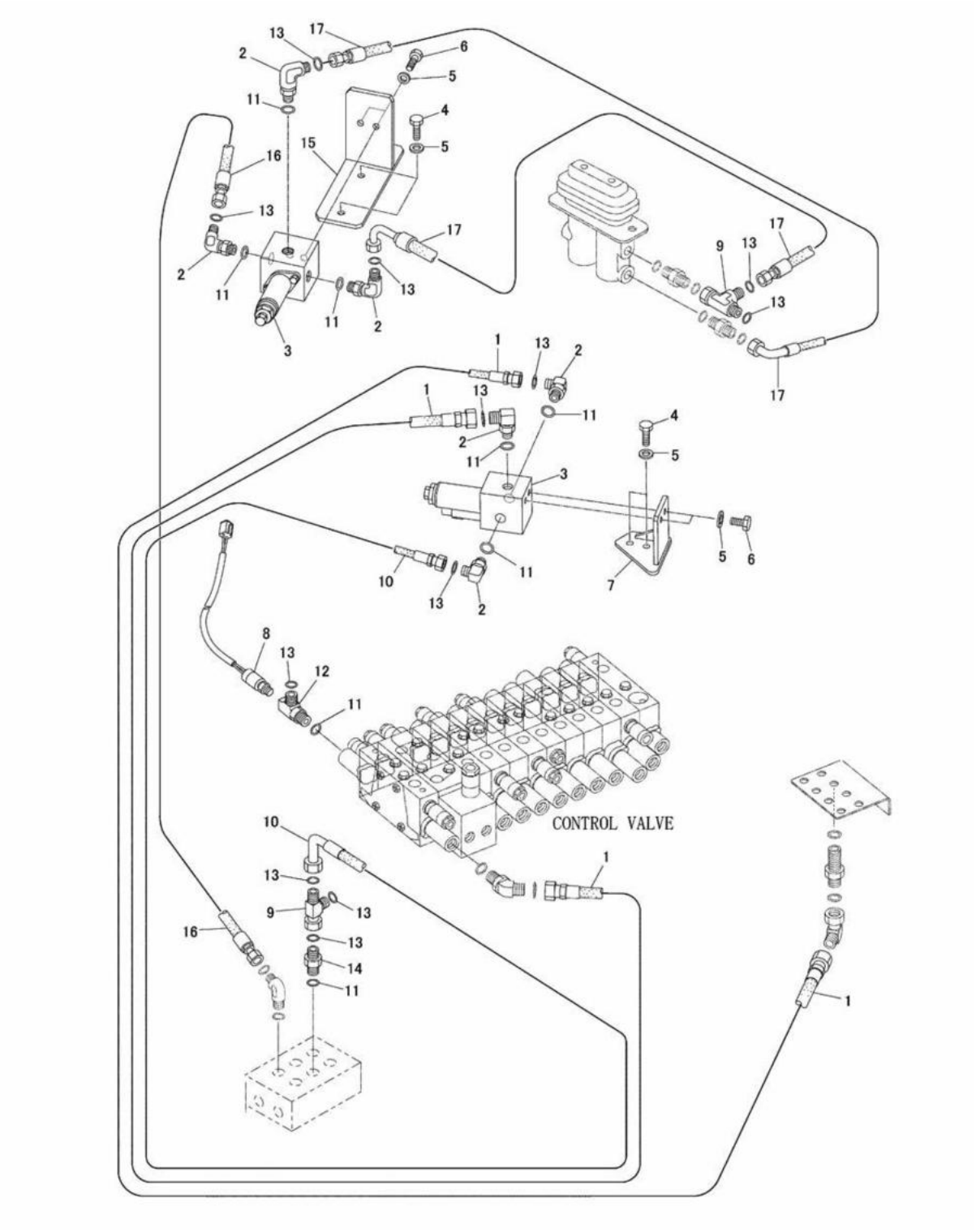

PILOT LINES (201-9157 N/S) -SHOVEL CRANE
EFFECTIVE WITH SERIAL NO. BMW00204-BMW00886
PART OF 201-9165-Page 518,519,206-7605-Page 514,515,206-7624-Page 520,521,206-7635-Page 516,517
AN ATTACHMENT

HYDRAULIC SYSTEM

NOTE	No.	PART NO.	QTY.	PART NAME	NOTE	No.	PART NO.	QTY.	PART NAME
	1	192-3162	2	HOSE AS					
	2	6V-8627	6	ELBOW					
Y	3	183-8360	2	VALVE GROUP					
	4	8T-4189	4	BOLT(M8×1.25)					
	5	8T-4224	8	WASHER					
	6	8T-4200	4	BOLT(M8×1.25)					
	7	201-9172	1	SUPPORT AS					
	8	106-0179	1	SWITCH AS(PRESSURE)					
		9W-0844	2	SOCKET					
		155-2270	1	PLUG KIT(2P)					
	9	6V-9835	2	TEE					
	10	192-3161	1	HOSE AS					
	11	3J-1907	8	SEAL					
	12	201-9170	1	FITTING					
	13	4J-5477	12	SEAL					
	14	6V-8641	1	CONNECTOR					
	15	201-9171	1	SUPPORT AS					
	16	165-3411	1	HOSE AS					
	17	174-7283	2	HOSE AS					

Y-SEE SEPARATE ILLUSTRATION

J126778 X01

PILOT LINES (201-9157 N/S) -SHOVEL CRANE

EFFECTIVE WITH SERIAL NO. BMW00204-BMW00886
PART OF 201-9165-Page 518,519,206-7605-Page 514,515,206-7624-Page 520,521,206-7635-Page 516,517
183-8360-Page 419
AN ATTACHMENT

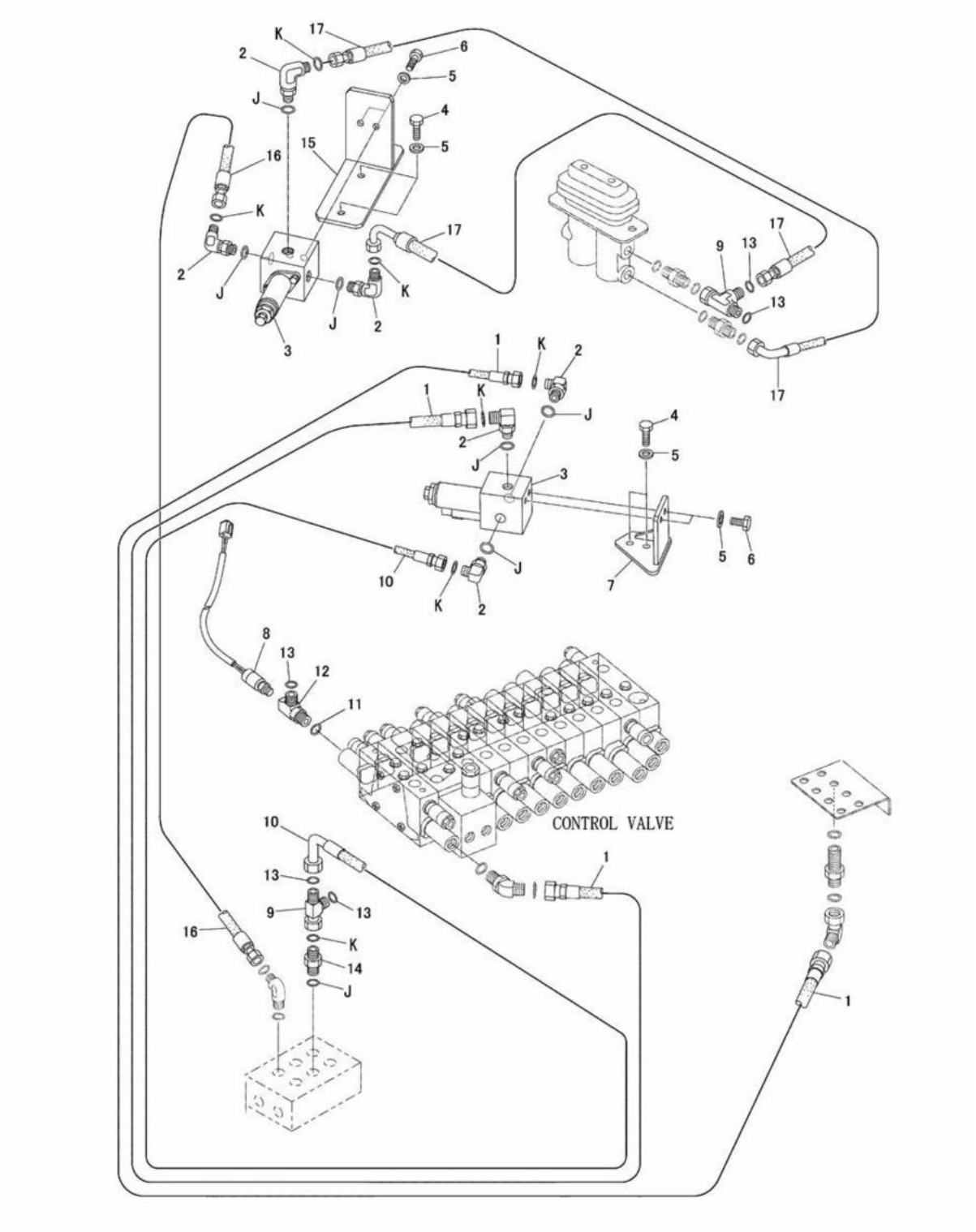

PILOT LINES (201-9157 N/S) -SHOVEL CRANE
EFFECTIVE WITH SERIAL NO. BMW00887-
PART OF 201-9165-Page 518,519,206-7605-Page 514,515,206-7624-Page 520,521,206-7635-Page 516,517
AN ATTACHMENT

HYDRAULIC SYSTEM

NOTE	No.	PART NO.	QTY.	PART NAME	NOTE	No.	PART NO.	QTY.	PART NAME
	1	192-3162	2	HOSE AS					
JK	2	6V-8627	6	ELBOW					
Y	3	183-8360	2	VALVE GROUP					
	4	8T-4189	4	BOLT(M8×1.25)					
	5	8T-4224	8	WASHER					
	6	8T-4200	4	BOLT(M8×1.25)					
	7	201-9172	1	SUPPORT AS					
	8	106-0179	1	SWITCH AS(PRESSURE)					
		9W-0844	2	SOCKET					
		155-2270	1	PLUG KIT(2P)					
	9	6V-9835	2	TEE					
	10	192-3161	1	HOSE AS					
C	11	3J-1907	1	SEAL					
	12	201-9170	1	FITTING					
C	13	4J-5477	5	SEAL					
JK	14	6V-8641	1	CONNECTOR					
	15	201-9171	1	SUPPORT AS					
	16	165-3411	1	HOSE AS					
	17	174-7283	2	HOSE AS					
				USED WITH FOLLOWING SEALS					
CJ		3J-1907	7	SEAL					
CK		4J-5477	7	SEAL					

C-INDICATES CHANGE
Y-SEE SEPARATE ILLUSTRATION

J126779 X02

PILOT LINES (201-9157 N/S) -SHOVEL CRANE

EFFECTIVE WITH SERIAL NO. BMW00887-
PART OF 201-9165-Page 518,519,206-7605-Page 514,515,206-7624-Page 520,521,206-7635-Page 516,517
183-8360-Page 419
AN ATTACHMENT

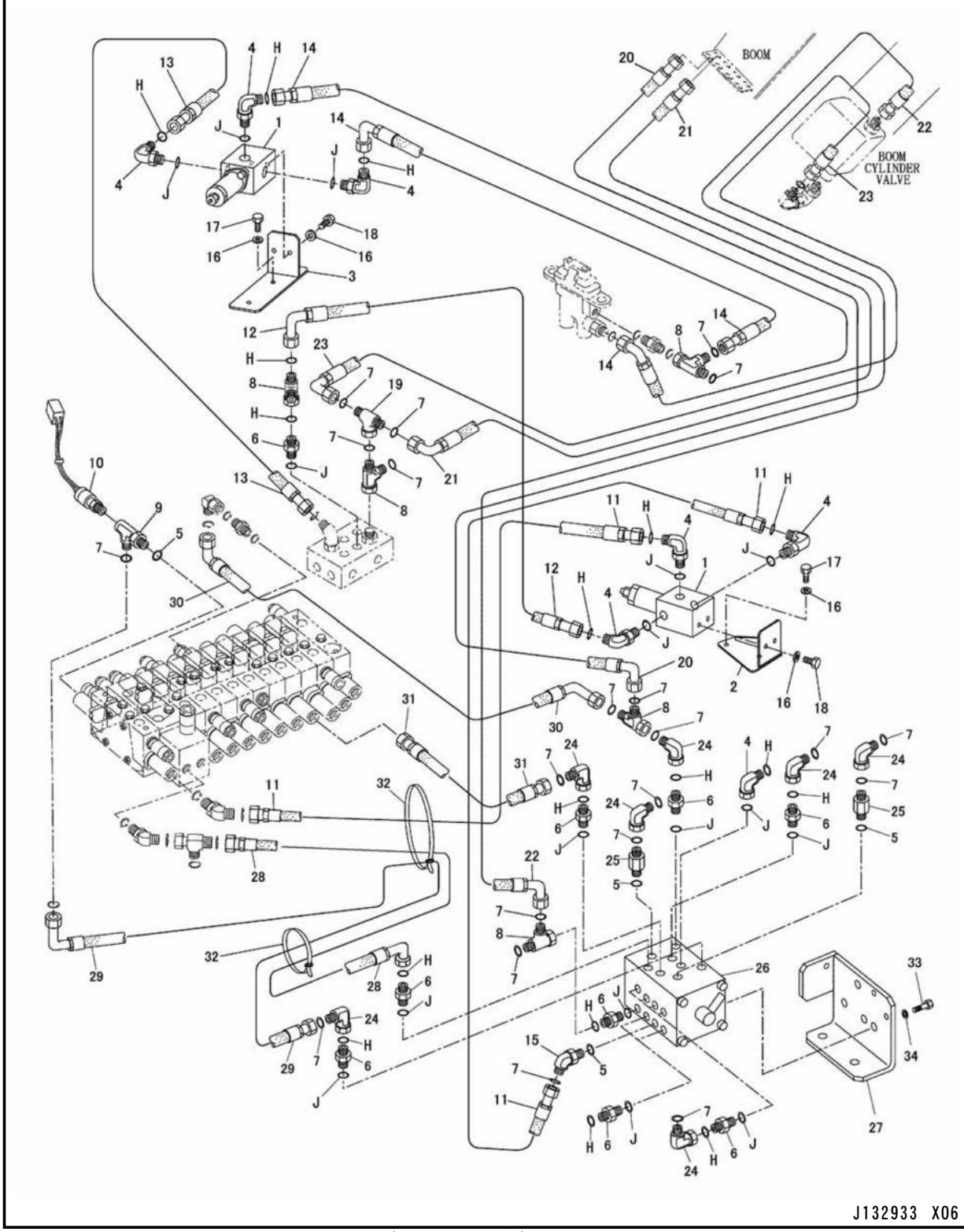

PILOT LINES (201-9185 N/S) -4 WAYS-SHOVEL CRANE
EFFECTIVE WITH SERIAL NO. BMW00981-
PART OF 228-6290-Page 300,228-6291-Page 300
AN ATTACHMENT

HYDRAULIC SYSTEM

NOTE	No.	PART NO.	QTY.	PART NAME	NOTE	No.	PART NO.	QTY.	PART NAME
Y	1	183-8360	2	VALVE GROUP					
	2	201-9172	1	SUPPORT AS					
	3	201-9171	1	SUPPORT AS					
HJ	4	6V-8627	7	ELBOW					
	5	3J-1907	4	SEAL					
HJ	6	6V-8641	13	CONNECTOR					
	7	4J-5477	24	SEAL					
	8	6V-9835	5	TEE					
	9	201-9170	1	FITTING					
	10	106-0179	1	SWITCH AS(PRESSURE)					
		9W-0844	2	SOCKET					
		155-2270	1	PLUG KIT(2P)					
	11	192-3162	2	HOSE AS					
	12	192-3161	1	HOSE AS					
	13	165-3411	1	HOSE AS					
	14	174-7283	2	HOSE AS					
	15	8T-0164	1	ELBOW					
	16	8T-4224	8	WASHER					
	17	8T-4189	4	BOLT(M8×1.25)					
	18	8T-4200	4	BOLT(M8×1.25)					
	19	6V-9842	1	TEE					
	20	200-4631	1	HOSE AS					
	21	200-4632	1	HOSE AS					
	22	200-4633	1	HOSE AS					
	23	200-4634	1	HOSE AS					
	24	6V-9849	10	ELBOW					
	25	156-8845	2	CONNECTOR					
Y	26	216-7279	1	PILOT VALVE GROUP					
	27	192-1701	1	BRACKET AS					
	28	194-9190	1	HOSE AS					
	29	194-9191	1	HOSE AS					
	30	194-9192	1	HOSE AS					
	31	194-9193	1	HOSE AS					
	32	7K-1181	2	STRAP					
	33	8T-4139	1	BOLT(M12×1.75)					
	34	8T-4223	1	WASHER					
F	35	140-3313	1	FILM(INSTRUCTION)					
				USED WITH FOLLOWING SEALS					
J		3J-1907	20	SEAL					
H		4J-5477	20	SEAL					

F-NOT SHOWN
Y-SEE SEPARATE ILLUSTRATION

J132933 X06

PILOT LINES (201-9185 N/S) -4 WAYS-SHOVEL CRANE

EFFECTIVE WITH SERIAL NO. BMW00981-
PART OF 228-6290-Page 300,228-6291-Page 300
183-8360-Page 419 216-7279-Page 329
AN ATTACHMENT

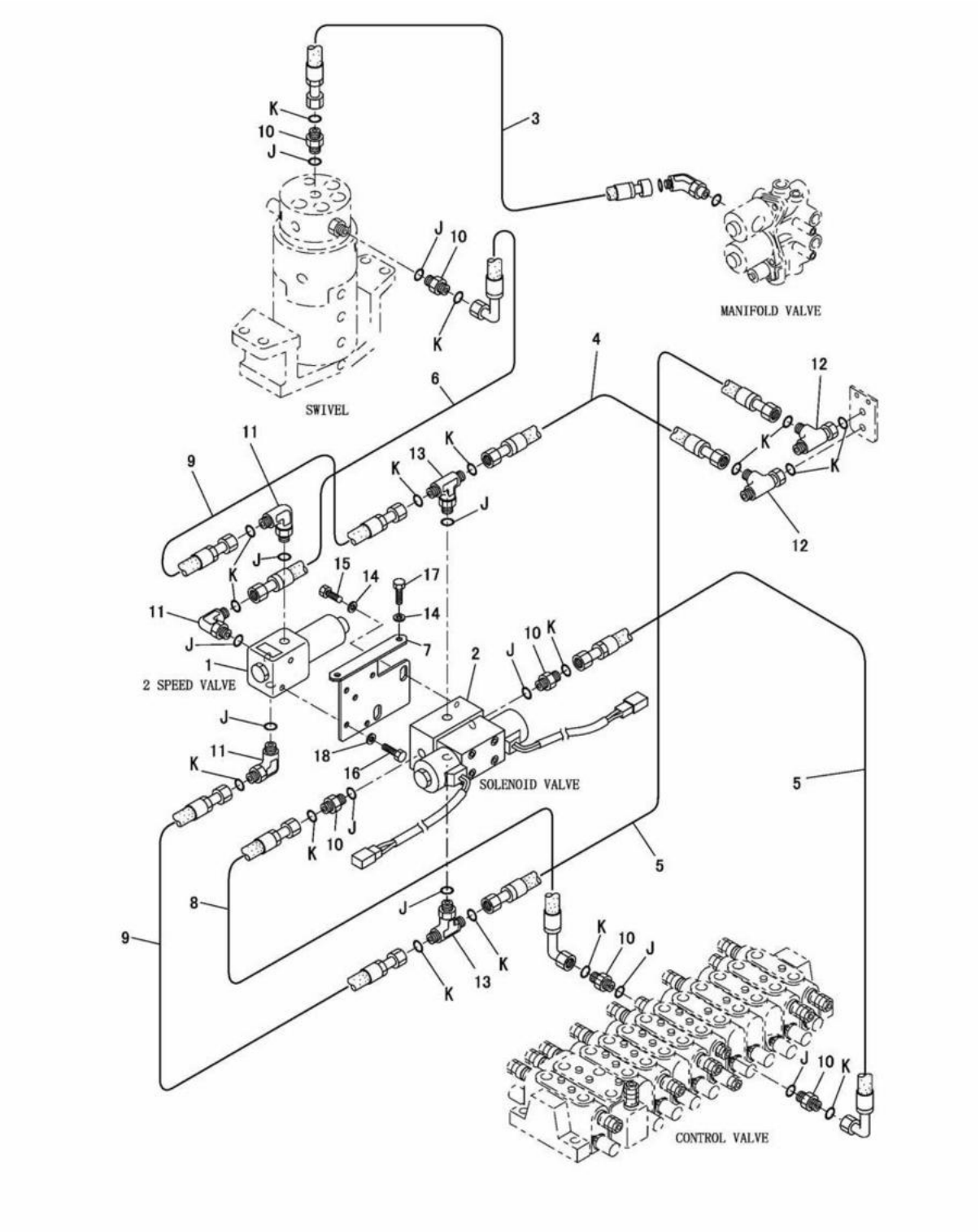

PILOT LINES (210-0425 N/S)
EFFECTIVE WITH SERIAL NO. BMW00787-
PART OF 210-1884-Page 510,511
AN ATTACHMENT

HYDRAULIC SYSTEM

NOTE	No.	PART NO.	QTY.	PART NAME	NOTE	No.	PART NO.	QTY.	PART NAME
Y	1	143-2269	1	VALVE GROUP					
Y	2	174-7299	1	SOLENOID VALVE GROUP					
	3	192-2384	1	HOSE AS					
	4	194-9188	1	HOSE AS					
	5	201-6010	2	HOSE AS					
	6	206-6085	1	HOSE AS					
	7	210-4774	1	BRACKET AS					
	8	211-7020	1	HOSE AS					
	9	211-7031	2	HOSE AS					
JK	10	6V-8647	6	CONNECTOR					
JK	11	6V-8628	3	ELBOW					
K	12	6V-9835	2	TEE(USE K MARKED PARTS 2PCS)					
JK	13	6V-8773	2	TEE(USE K MARKED PARTS 2PCS)					
	14	8T-4121	4	WASHER					
	15	8T-4137	2	BOLT(M10×1.5)					
	16	8T-4171	2	BOLT(M6×1)					
	17	8T-4195	2	BOLT(M10×1.5)					
	18	9X-8256	2	WASHER					
				USED WITH FOLLOWING SEALS					
J		3J-7354	11	SEAL					
K		4J-5477	17	SEAL					

Y-SEE SEPARATE ILLUSTRATION

J126903 X01

PILOT LINES (210-0425 N/S)
EFFECTIVE WITH SERIAL NO. BMW00787-
PART OF 210-1884-Page 510,511
143-2269-Page 423 174-7299-Page 423
AN ATTACHMENT

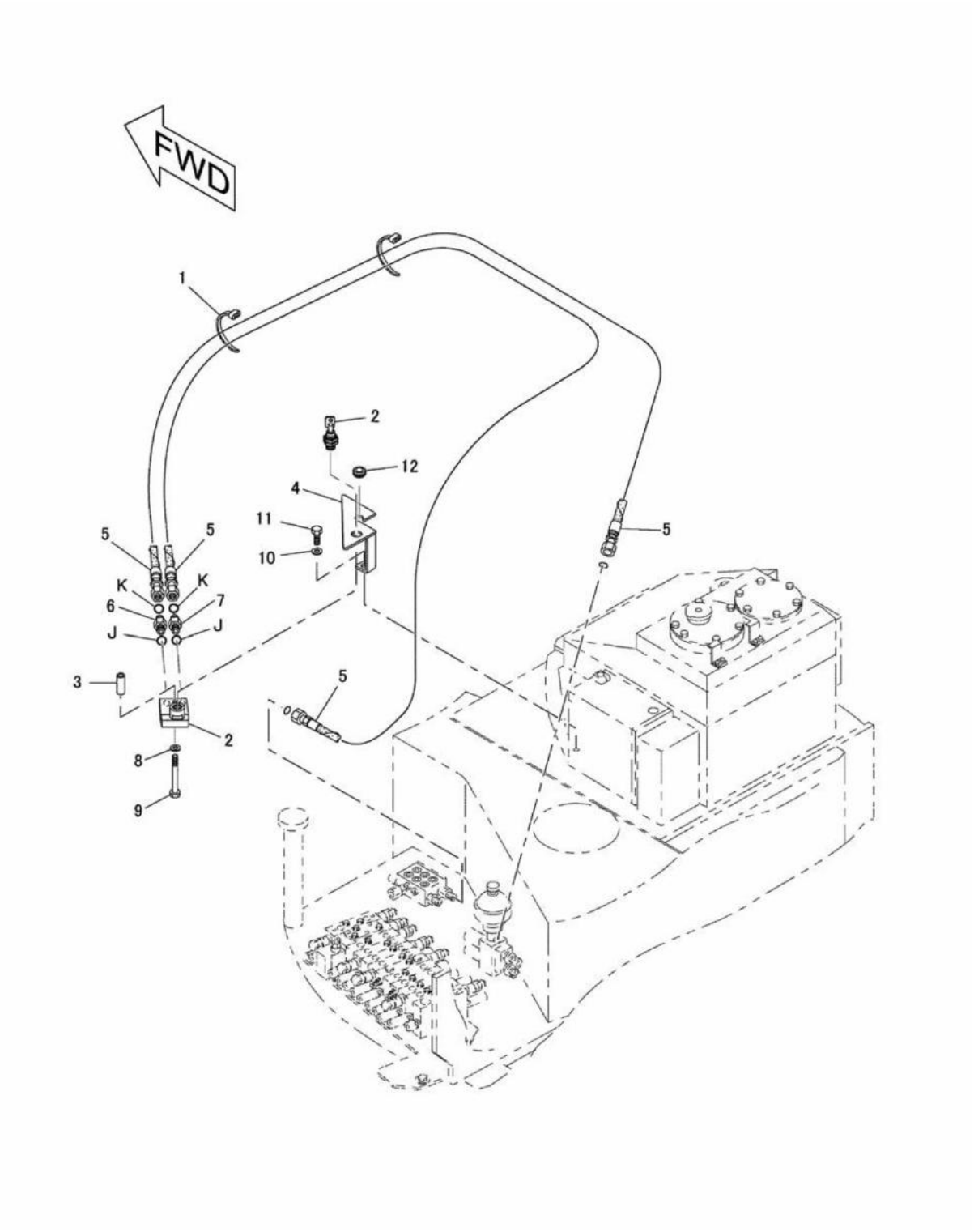

PILOT LINES (241-3948 N/S)
EFFECTIVE WITH SERIAL NO. BMW01311-
PART OF 241-3943-Page 301
AN ATTACHMENT

HYDRAULIC SYSTEM

NOTE	No.	PART NO.	QTY.	PART NAME	NOTE	No.	PART NO.	QTY.	PART NAME
	1	7K-1181	3	STRAP					
	2	196-4304	1	VALVE GROUP					
	3	216-2752	1	SPACER					
	4	242-6709	1	BRACKET AS					
		6V-9632	1	NUT(M6×1)(WELD)					
	5	242-6712	2	HOSE AS					
JK	6	6V-8636	1	CONNECTOR					
JK	7	8T-0075	1	CONNECTOR					
	8	5P-4115	1	WASHER					
	9	8T-3844	1	BOLT(M6×1)					
	10	8T-4121	2	WASHER					
	11	8T-4137	2	BOLT(M10×1.5)					
	12	9D-3769	1	GROMMET					
				USED WITH FOLLOWING SEALS					
J		3J-1907	2	SEAL					
K		6V-8397	2	SEAL					

J132918 E00

PILOT LINES (241-3948 N/S)
EFFECTIVE WITH SERIAL NO. BMW01311-
PART OF 241-3943-Page 301
AN ATTACHMENT

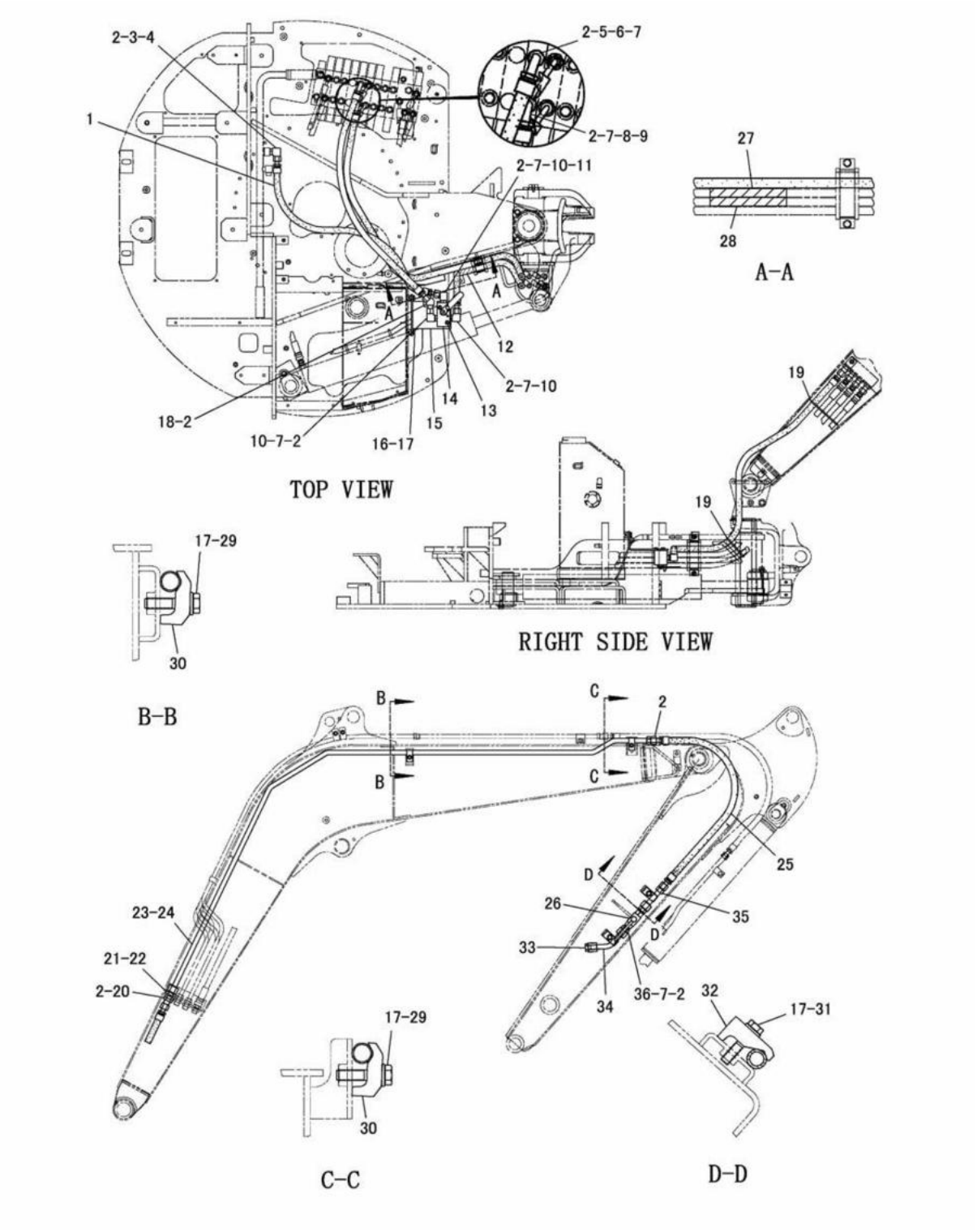

J115464 X06

AUXILIARY LINES (199-3589 N/S)
EFFECTIVE WITH SERIAL NO. BMW00001-BMW00623
PART OF 200-2854-Page 301
AN ATTACHMENT

HYDRAULIC SYSTEM

NOTE	No.	PART NO.	QTY.	PART NAME	NOTE	No.	PART NO.	QTY.	PART NAME
	1	192-8545	1	HOSE AS					
	2	7J-9108	12	SEAL					
	3	6V-8626	1	ELBOW					
	4	2M-9780	1	SEAL					
	5	192-8543	1	HOSE AS					
	6	172-0679	1	CONNECTOR					
	7	3K-0360	9	SEAL					
	8	192-8542	1	HOSE AS					
	9	172-0677	1	CONNECTOR					
	10	6V-8722	3	ELBOW					
	11	6V-9852	1	ELBOW					
	12	192-8544	1	HOSE AS					
	13	096-0187	2	BOLT(M8×1.25)					
Y	14	163-7520	1	VALVE AS					
	15	192-9797	1	PLATE AS					
		8T-3612	2	NUT(M8×1.25)(WELD)					
	16	8T-4137	2	BOLT(M10×1.5)					
	17	8T-4121	10	WASHER					
	18	8C-7563	1	ELBOW					
	19	7K-1181	2	STRAP					
	20	6V-9170	2	NUT(1-14)					
	21	163-9960	2	UNION					
	22	6V-9746	6	SEAL					
	23	192-3573	1	TUBE AS(RH)					
	24	192-4841	1	TUBE AS(LH)					
	25	201-9708	2	HOSE AS					
Y	26	4I-6188	2	VALVE AS					
E	27	7I-1024		GUARD---20cm					
E	28	7I-1024		GUARD---20cm					
	29	8T-4182	4	BOLT(M10×1.5)					
	30	093-1290	4	CLAMP					
	31	8T-4185	4	BOLT(M10×1.5)					
	32	093-1291	4	CLAMP					
	33	126-4754	2	PLUG AS					
	34	201-9706	2	TUBE AS					
	35	201-9707	2	TUBE AS					
	36	6V-9874	4	CONNECTOR					

E-ORDER BY THE cm
Y-SEE SEPARATE ILLUSTRATION

J115464 X06

AUXILIARY LINES (199-3589 N/S)

EFFECTIVE WITH SERIAL NO. BMW00001-BMW00623
PART OF 200-2854-Page 301
163-7520-Page 424 4I-6188-Page 420
AN ATTACHMENT

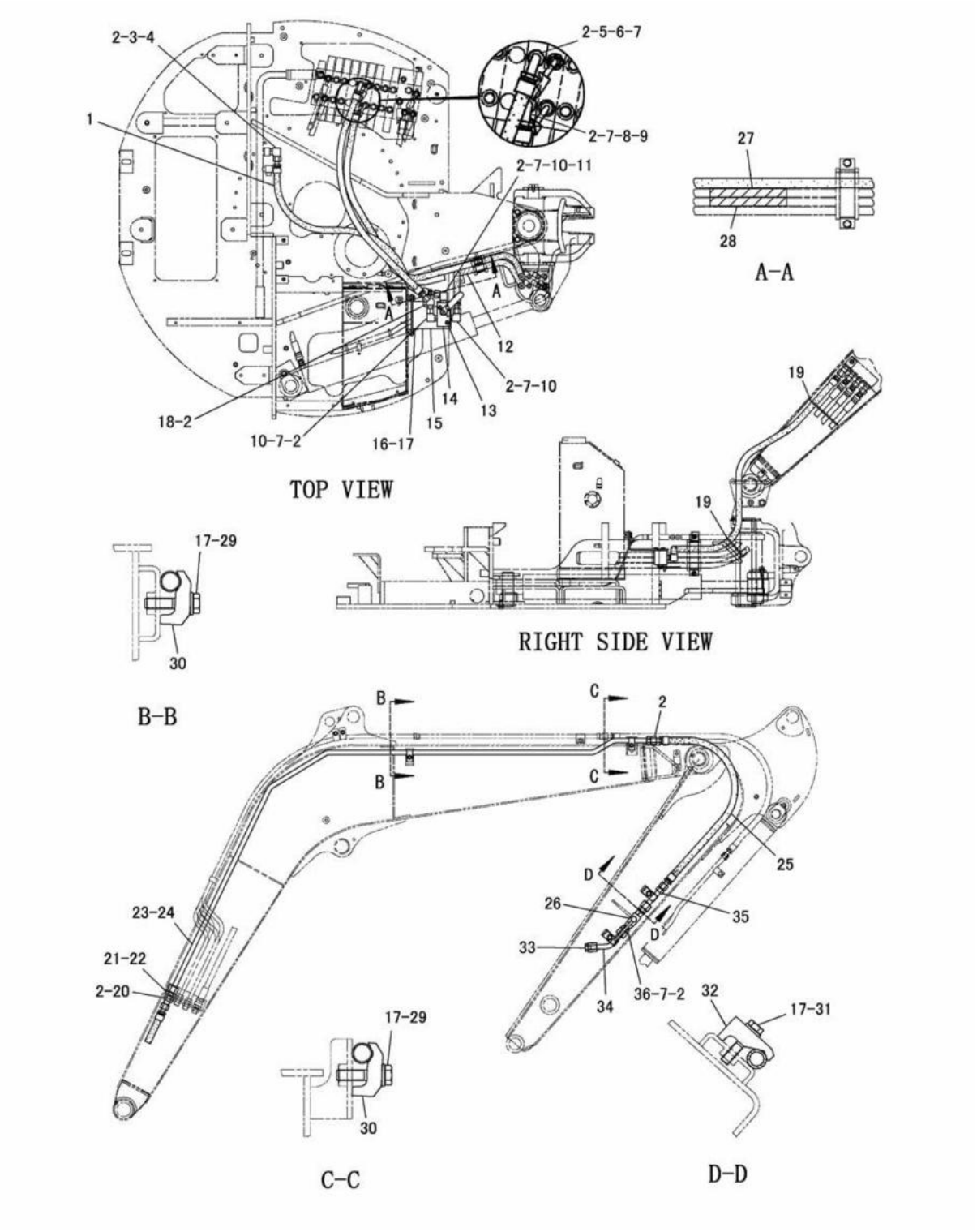

J115463 X07

AUXILIARY LINES (199-3589 N/S)
EFFECTIVE WITH SERIAL NO. BMW00624-BMW00716
PART OF 200-2854-Page 301
AN ATTACHMENT

HYDRAULIC SYSTEM

NOTE	No.	PART NO.	QTY.	PART NAME	NOTE	No.	PART NO.	QTY.	PART NAME
	1	192-8545	1	HOSE AS					
	2	7J-9108	12	SEAL					
	3	6V-8626	1	ELBOW					
	4	2M-9780	1	SEAL					
	5	192-8543	1	HOSE AS					
	6	172-0679	1	CONNECTOR					
	7	3K-0360	9	SEAL					
	8	192-8542	1	HOSE AS					
	9	172-0677	1	CONNECTOR					
	10	6V-8722	3	ELBOW					
	11	6V-9852	1	ELBOW					
	12	192-8544	1	HOSE AS					
	13	096-0187	2	BOLT(M8×1.25)					
YC	14	204-8278	1	VALVE AS					
	15	192-9797	1	PLATE AS					
		8T-3612	2	NUT(M8×1.25)(WELD)					
	16	8T-4137	2	BOLT(M10×1.5)					
	17	8T-4121	10	WASHER					
	18	8C-7563	1	ELBOW					
	19	7K-1181	2	STRAP					
	20	6V-9170	2	NUT(1-14)					
	21	163-9960	2	UNION					
	22	6V-9746	6	SEAL					
	23	192-3573	1	TUBE AS(RH)					
	24	192-4841	1	TUBE AS(LH)					
	25	201-9708	2	HOSE AS					
Y	26	4I-6188	2	VALVE AS					
E	27	7I-1024		GUARD---20cm					
E	28	7I-1024		GUARD---20cm					
	29	8T-4182	4	BOLT(M10×1.5)					
	30	093-1290	4	CLAMP					
	31	8T-4185	4	BOLT(M10×1.5)					
	32	093-1291	4	CLAMP					
	33	126-4754	2	PLUG AS					
	34	201-9706	2	TUBE AS					
	35	201-9707	2	TUBE AS					
	36	6V-9874	4	CONNECTOR					

C-INDICATES CHANGE
E-ORDER BY THE cm
Y-SEE SEPARATE ILLUSTRATION

J115463 X07

AUXILIARY LINES (199-3589 N/S)

EFFECTIVE WITH SERIAL NO. BMW00624-BMW00716
PART OF 200-2854-Page 301
204-8278-Page 425 4I-6188-Page 420
AN ATTACHMENT

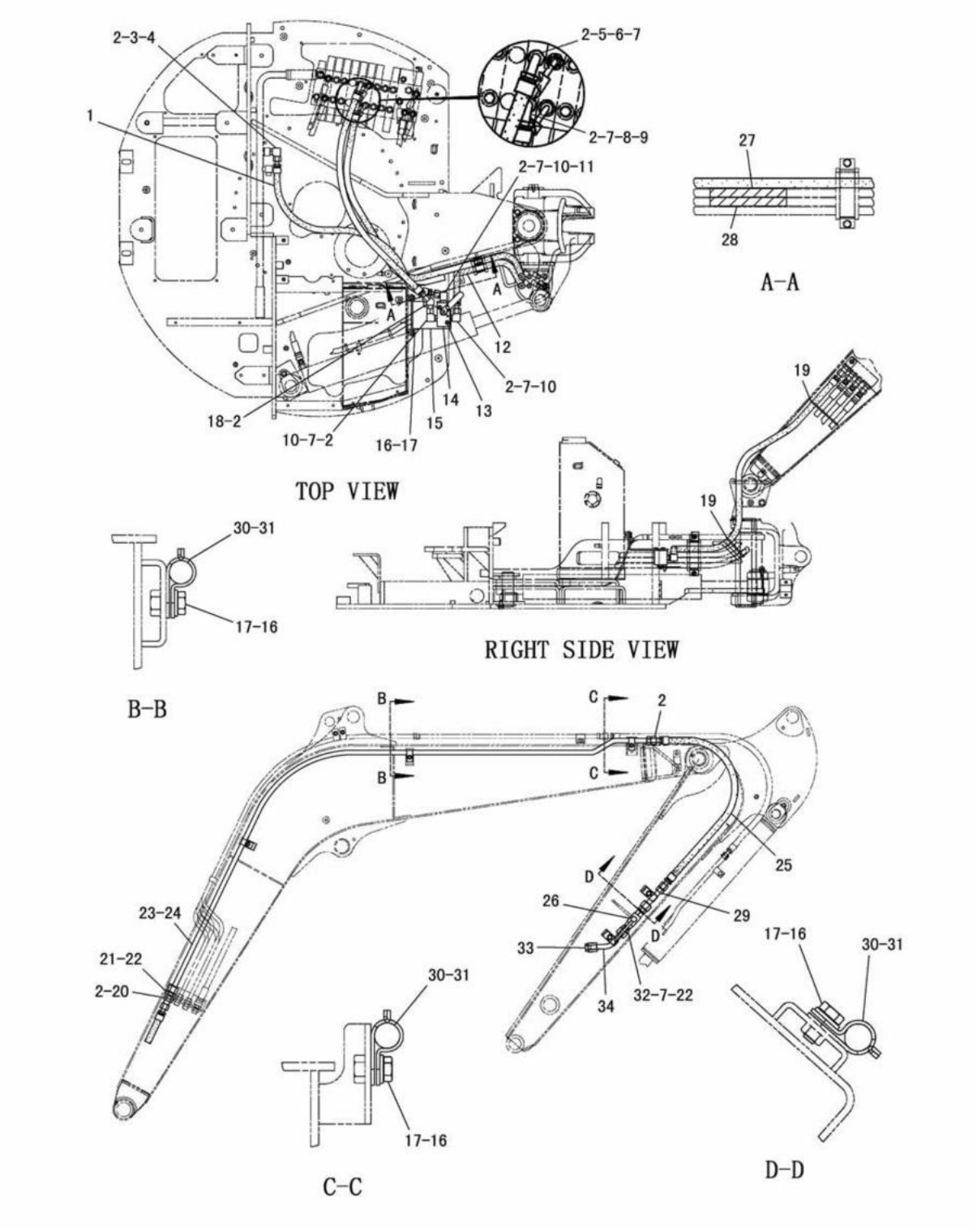

J115465 X09

AUXILIARY LINES (199-3589 N/S)
EFFECTIVE WITH SERIAL NO. BMW00717-BMW01004
PART OF 200-2854-Page 301
AN ATTACHMENT

HYDRAULIC SYSTEM

NOTE	No.	PART NO.	QTY.	PART NAME	NOTE	No.	PART NO.	QTY.	PART NAME
	1	192-8545	1	HOSE AS					
	2	7J-9108	12	SEAL					
	3	6V-8626	1	ELBOW					
	4	2M-9780	1	SEAL					
	5	192-8543	1	HOSE AS					
	6	172-0679	1	CONNECTOR					
	7	3K-0360	9	SEAL					
	8	192-8542	1	HOSE AS					
	9	172-0677	1	CONNECTOR					
	10	6V-8722	3	ELBOW					
	11	6V-9852	1	ELBOW					
	12	192-8544	1	HOSE AS					
	13	096-0187	2	BOLT(M8×1.25)					
Y	14	204-8278	1	VALVE AS					
	15	192-9797	1	PLATE AS					
		8T-3612	2	NUT(M8×1.25)(WELD)					
C	16	8T-4137	12	BOLT(M10×1.5)					
C	17	8T-4121	12	WASHER					
	18	8C-7563	1	ELBOW					
	19	7K-1181	2	STRAP					
	20	6V-9170	2	NUT(1-14)					
	21	163-9960	2	UNION					
	22	6V-9746	6	SEAL					
	23	192-3573	1	TUBE AS(RH)					
	24	192-4841	1	TUBE AS(LH)					
	25	201-9708	2	HOSE AS					
Y	26	4I-6188	2	VALVE AS					
E	27	7I-1024		GUARD---20cm					
E	28	7I-1024		GUARD---20cm					
	29	201-9707	2	TUBE AS					
C	30	8T-1887	10	CLIP(SLOT)					
C	31	8T-1888	10	CLIP(TAB)					
	32	6V-9874	4	CONNECTOR					
	33	126-4754	2	PLUG AS					
	34	201-9706	2	TUBE AS					

C-INDICATES CHANGE
E-ORDER BY THE cm
Y-SEE SEPARATE ILLUSTRATION

J115465 X09

AUXILIARY LINES (199-3589 N/S)
EFFECTIVE WITH SERIAL NO. BMW00717-BMW01004
PART OF 200-2854-Page 301
204-8278-Page 425 4I-6188-Page 420
AN ATTACHMENT

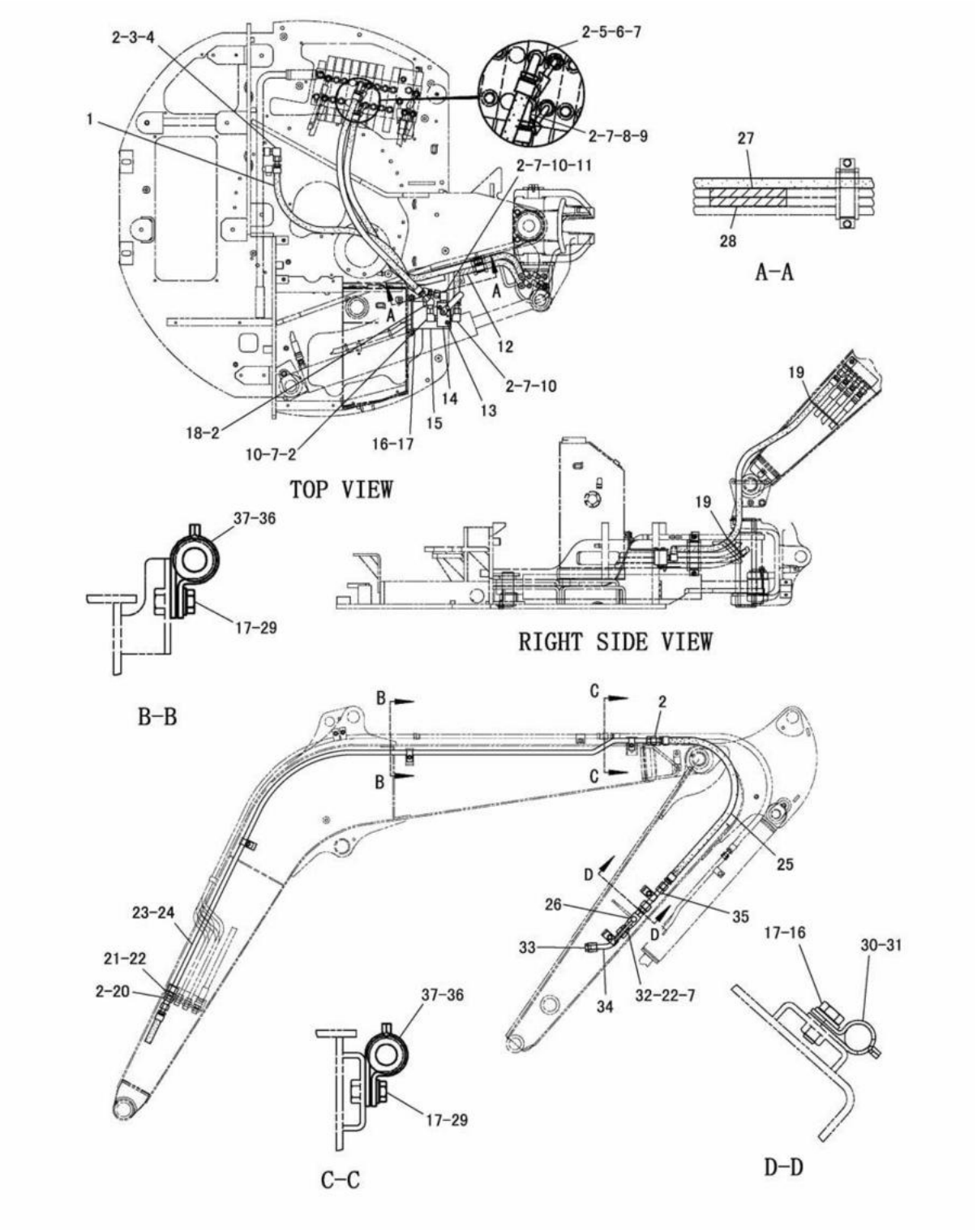

J115466 X12

AUXILIARY LINES (199-3589 N/S)
EFFECTIVE WITH SERIAL NO. BMW01005-BMW01109
PART OF 200-2854-Page 301
AN ATTACHMENT

HYDRAULIC SYSTEM

NOTE	No.	PART NO.	QTY.	PART NAME	NOTE	No.	PART NO.	QTY.	PART NAME
	1	192-8545	1	HOSE AS					
C	2	199-1903	12	SEAL					
	3	6V-8626	1	ELBOW					
	4	2M-9780	1	SEAL					
C	5	209-7511	1	HOSE AS					
	6	172-0679	1	CONNECTOR					
	7	3K-0360	9	SEAL					
C	8	209-7512	1	HOSE AS					
	9	172-0677	1	CONNECTOR					
	10	6V-8722	3	ELBOW					
	11	6V-9852	1	ELBOW					
C	12	209-5713	1	HOSE AS					
	13	096-0187	2	BOLT(M8×1.25)					
Y	14	204-8278	1	VALVE AS					
	15	192-9797	1	PLATE AS					
		8T-3612	2	NUT(M8×1.25)(WELD)					
C	16	8T-4137	6	BOLT(M10×1.5)					
	17	8T-4121	12	WASHER					
	18	8C-7563	1	ELBOW					
	19	7K-1181	2	STRAP					
	20	6V-9170	2	NUT(1-14)					
	21	163-9960	2	UNION					
C	22	199-1904	6	SEAL					
	23	192-3573	1	TUBE AS(RH)					
	24	192-4841	1	TUBE AS(LH)					
C	25	209-7514	2	HOSE AS					
Y	26	4I-6188	2	VALVE AS					
E	27	7I-1024		GUARD---20cm					
E	28	7I-1024		GUARD---20cm					
C	29	8T-4136	6	BOLT(M10×1.5)					
C	30	8T-1887	4	CLIP(SLOT)					
C	31	8T-1888	4	CLIP(TAB)					
	32	6V-9874	4	CONNECTOR					
	33	126-4754	2	PLUG AS					
	34	201-9706	2	TUBE AS					
	35	201-9707	2	TUBE AS					
C	36	6V-0683	6	GROMMET					
C	37	5P-7463	6	CLIP(TAB)					
C		5P-7462	6	CLIP(SLOT)					

C-INDICATES CHANGE
E-ORDER BY THE cm
Y-SEE SEPARATE ILLUSTRATION

J115466 X12

AUXILIARY LINES (199-3589 N/S)
EFFECTIVE WITH SERIAL NO. BMW01005-BMW01109
PART OF 200-2854-Page 301
204-8278-Page 425 4I-6188-Page 420
AN ATTACHMENT

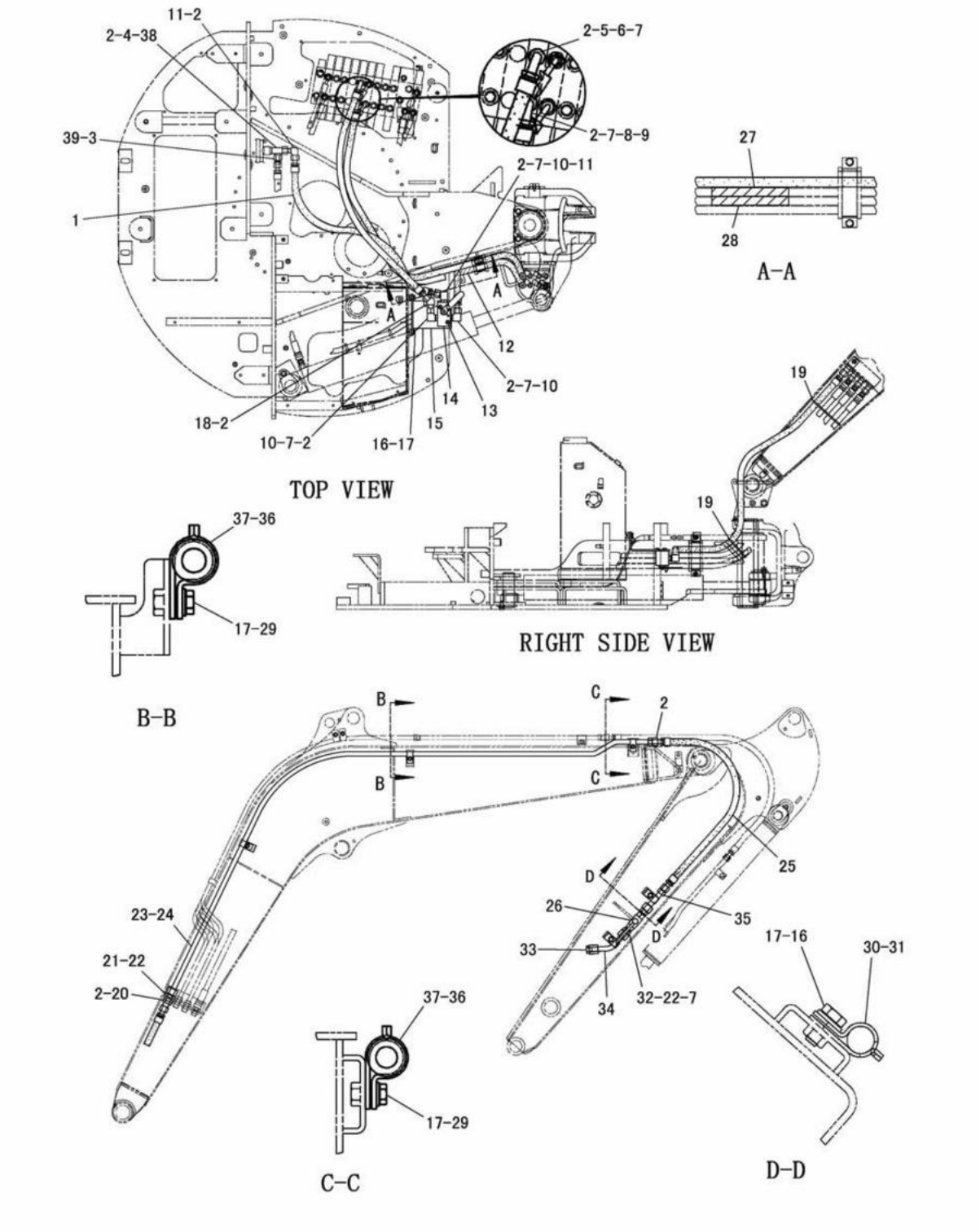

AUXILIARY LINES (199-3589 N/S)
EFFECTIVE WITH SERIAL NO. BMW01110-BMW01216
PART OF 200-2854-Page 301
AN ATTACHMENT

HYDRAULIC SYSTEM

NOTE	No.	PART NO.	QTY.	PART NAME	NOTE	No.	PART NO.	QTY.	PART NAME
	1	192-8545	1	HOSE AS					
C	2	199-1903	14	SEAL					
C	3	202-3824	1	REDUCER AS					
	4	2M-9780	1	SEAL					
	5	209-7511	1	HOSE AS					
	6	172-0679	1	CONNECTOR					
	7	3K-0360	9	SEAL					
	8	209-7512	1	HOSE AS					
	9	172-0677	1	CONNECTOR					
	10	6V-8722	3	ELBOW					
	11	6V-9852	2	ELBOW					
	12	209-5713	1	HOSE AS					
	13	096-0187	2	BOLT(M8×1.25)					
Y	14	204-8278	1	VALVE AS					
	15	192-9797	1	PLATE AS					
		8T-3612	2	NUT(M8×1.25)(WELD)					
	16	8T-4137	6	BOLT(M10×1.5)					
	17	8T-4121	12	WASHER					
	18	8C-7563	1	ELBOW					
C	19	136-0207	2	STRAP					
	20	6V-9170	2	NUT(1-14)					
	21	163-9960	2	UNION					
	22	199-1904	6	SEAL					
	23	192-3573	1	TUBE AS(RH)					
	24	192-4841	1	TUBE AS(LH)					
	25	209-7514	2	HOSE AS					
Y	26	4I-6188	2	VALVE AS					
E	27	7I-1024		GUARD---20cm					
E	28	7I-1024		GUARD---20cm					
	29	8T-4136	6	BOLT(M10×1.5)					
	30	8T-1887	4	CLIP(SLOT)					
	31	8T-1888	4	CLIP(TAB)					
	32	6V-9874	4	CONNECTOR					
	33	126-4754	2	PLUG AS					
	34	201-9706	2	TUBE AS					
	35	201-9707	2	TUBE AS					
	36	6V-0683	6	GROMMET					
	37	5P-7463	6	CLIP(TAB)					
		5P-7462	6	CLIP(SLOT)					
C	38	6V-8783	1	TEE					
C	39	9X-6581	1	NUT(1-14)					

C-INDICATES CHANGE
E-ORDER BY THE cm
Y-SEE SEPARATE ILLUSTRATION

J129294 X13

AUXILIARY LINES (199-3589 N/S)
EFFECTIVE WITH SERIAL NO. BMW01110-BMW01216
PART OF 200-2854-Page 301
204-8278-Page 425 41-6188-Page 420
AN ATTACHMENT

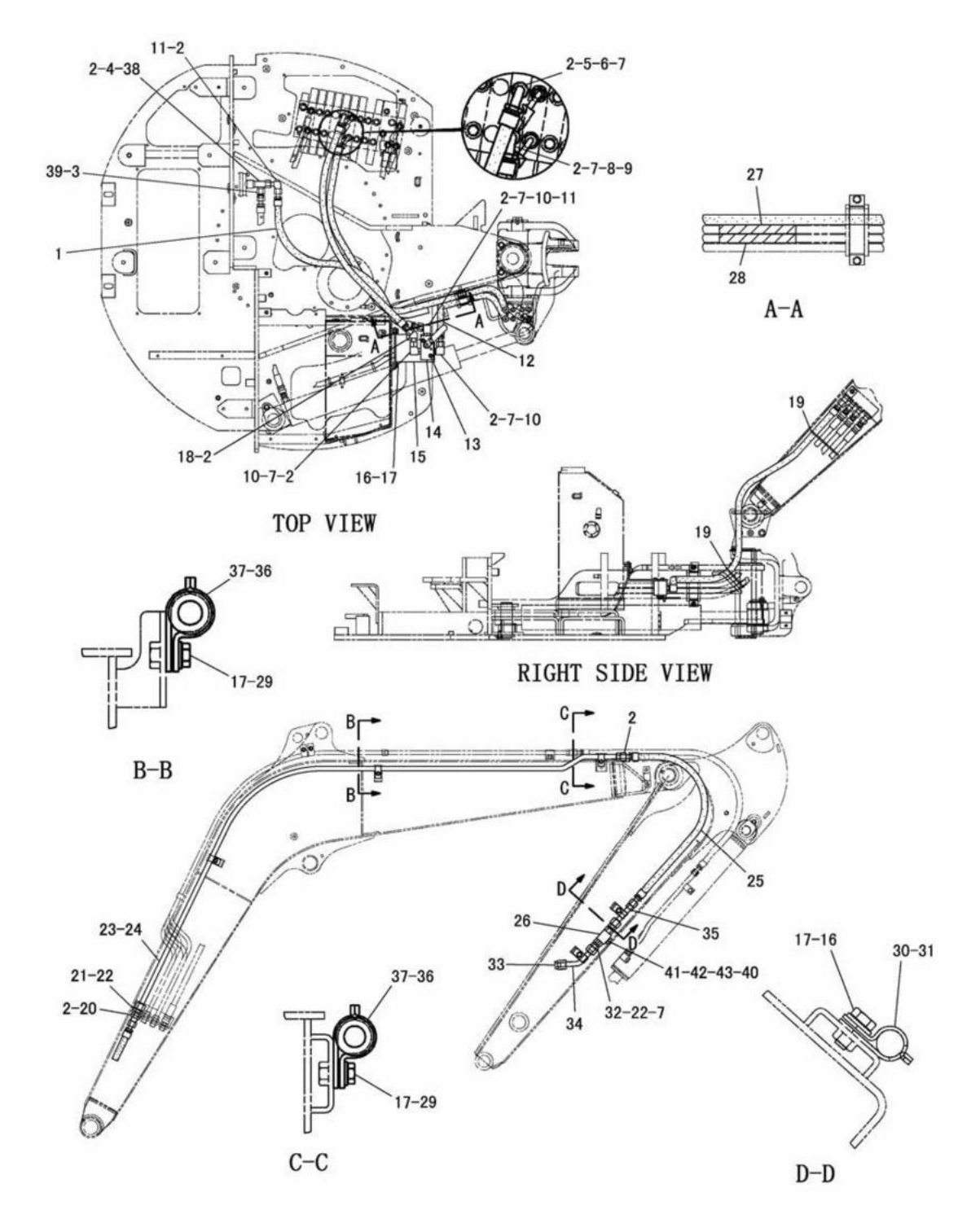

J126702 X16

AUXILIARY LINES (199-3589 N/S)
EFFECTIVE WITH SERIAL NO. BMW01217-
PART OF 200-2854-Page 301
AN ATTACHMENT

HYDRAULIC SYSTEM

NOTE	No.	PART NO.	QTY.	PART NAME	NOTE	No.	PART NO.	QTY.	PART NAME
	1	192-8545	1	HOSE AS					
	2	7J-9108	14	SEAL					
	3	202-3824	1	REDUCER AS					
	4	2M-9780	1	SEAL					
	5	209-7511	1	HOSE AS					
	6	172-0679	1	CONNECTOR					
	7	3K-0360	9	SEAL					
	8	209-7512	1	HOSE AS					
	9	172-0677	1	CONNECTOR					
	10	6V-8722	3	ELBOW					
	11	6V-9852	2	ELBOW					
	12	209-5713	1	HOSE AS					
	13	096-0187	2	BOLT(M8×1.25)					
Y	14	204-8278	1	VALVE AS					
	15	192-9797	1	PLATE AS					
		8T-3612	2	NUT(M8×1.25)(WELD)					
	16	8T-4137	6	BOLT(M10×1.5)					
	17	8T-4121	12	WASHER					
	18	8C-7563	1	ELBOW					
	19	136-0207	2	STRAP					
	20	6V-9170	2	NUT(1-14)					
	21	163-9960	2	UNION					
	22	6V-9746	6	SEAL					
	23	192-3573	1	TUBE AS(RH)					
	24	192-4841	1	TUBE AS(LH)					
	25	209-7514	2	HOSE AS					
C	26	224-9575	2	VALVE AS					
		195-0090	1	PLATE					
E	27	7I-1024		GUARD---20cm					
E	28	7I-1024		GUARD---20cm					
	29	8T-4136	6	BOLT(M10×1.5)					
	30	8T-1887	4	CLIP(SLOT)					
	31	8T-1888	4	CLIP(TAB)					
	32	6V-9874	4	CONNECTOR					
	33	126-4754	2	PLUG AS					
	34	201-9706	2	TUBE AS					
	35	201-9707	2	TUBE AS					
	36	6V-0683	6	GROMMET					
	37	5P-7463	6	CLIP(TAB)					
		5P-7462	6	CLIP(SLOT)					
	38	6V-8783	1	TEE					
	39	9X-6581	1	NUT(1-14)					
C	40	180-7451	2	WASHER					
C	41	4B-4274	2	WASHER					
C	42	230-0716	2	PLATE					
C	43	8T-0287	2	BOLT(M5×0.8)					

C-INDICATES CHANGE
E-ORDER BY THE cm
Y-SEE SEPARATE ILLUSTRATION

J126702 X16

AUXILIARY LINES (199-3589 N/S)

EFFECTIVE WITH SERIAL NO. BMW01217-
PART OF 200-2854-Page 301
204-8278-Page 425
AN ATTACHMENT

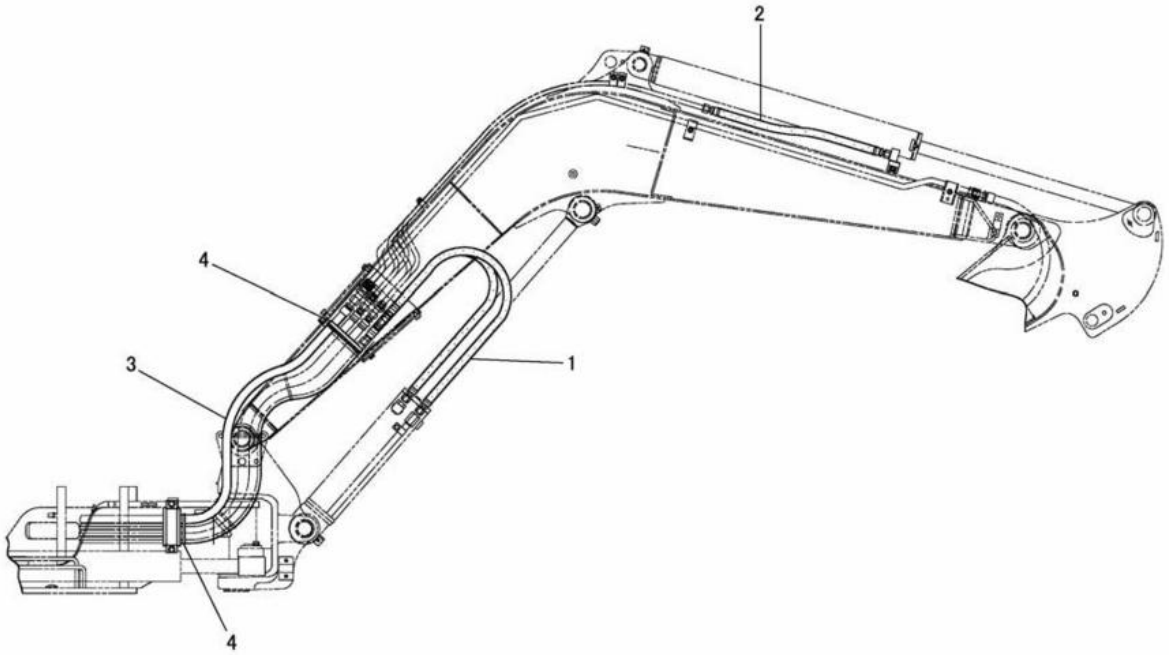

NOTE	No.	PART NO.	QTY.	PART NAME	NOTE	No.	PART NO.	QTY.	PART NAME
	1	199-0585	2	HOSE AS					
		192-3571	1	HOSE AS					
E		149-7372		SLEEVE---96cm					
		163-8811	2	CLAMP					
	2	199-0583	2	HOSE AS					
		195-1787	1	HOSE AS					
E		149-7372		SLEEVE---60cm					
		163-8811	2	CLAMP					
E	3	199-0587		SLEEVE---145cm					
	4	5P-5148	2	STRAP					

E-ORDER BY THE cm

J135450 X01

HOSE GUARD (199-0579 N/S)
AN ATTACHMENT

HYDRAULIC SYSTEM

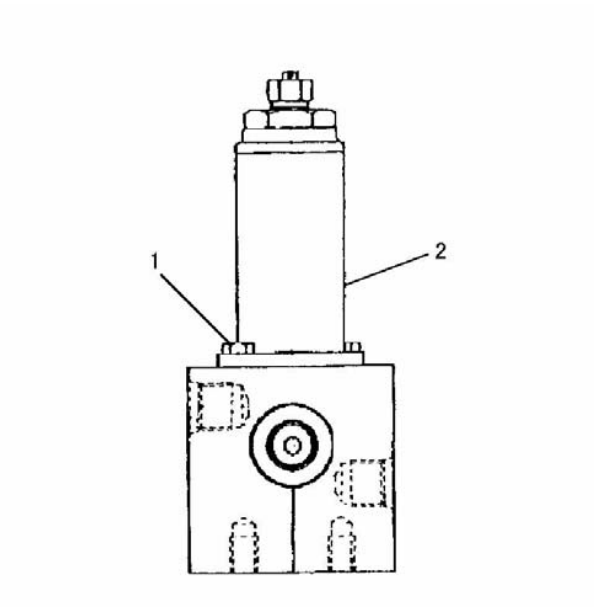

NOTE	No.	PART NO.	QTY.	PART NAME
	1	8T-0288	2	BOLT(M5×0.8)
Y	2	169-1181	1	VALVE GROUP

Y-SEE SEPARATE ILLUSTRATION

J109335 X02

183-8360 VALVE GROUP

EFFECTIVE WITH SERIAL NO. BMW00204-
PART OF 201-9157-Page 397,399,201-9185-Page 401
169-1181-Page 420
AN ATTACHMENT

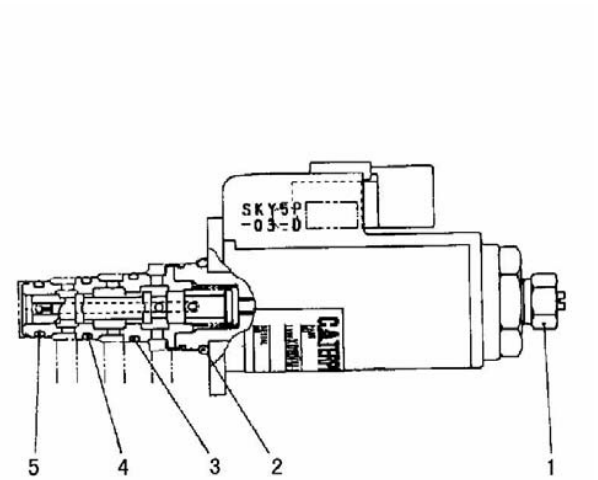

NOTE	No.	PART NO.	QTY.	PART NAME
	1	114-0623	1	NUT AS(M6×1)
	2	095-1586	1	SEAL
	3	095-1751	1	SEAL
	4	6V-8398	1	SEAL
	5	095-1750	1	SEAL

J109269 X00

169-1181 PRESSURE REDUCING SOLENOID VALVE GROUP

EFFECTIVE WITH SERIAL NO. BMW00204-
PART OF 183-8360-Page 419
AN ATTACHMENT

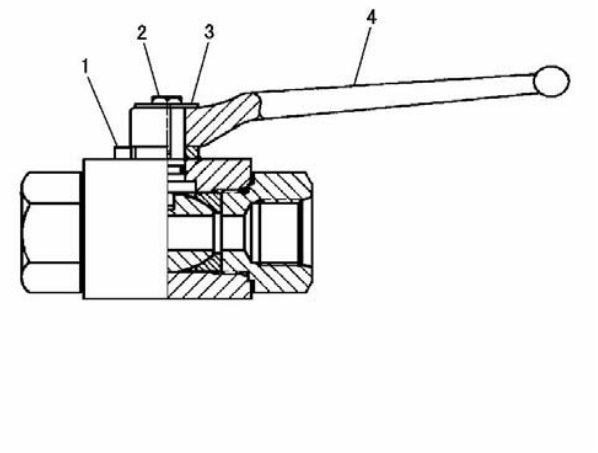

NOTE	No.	PART NO.	QTY.	PART NAME
	1	195-0090	1	PLATE
	2	134-7114	1	BOLT(M5)
	3	134-7115	1	PLATE
	4	134-7113	1	HANDLE

J120198 E06

4I-6188 VALVE ASSEMBLY -BALL STOP

EFFECTIVE WITH SERIAL NO. BMW00001-BMW01216
PART OF 199-3589-Page 407,409,411,413,415
AN ATTACHMENT

HYDRAULIC SYSTEM

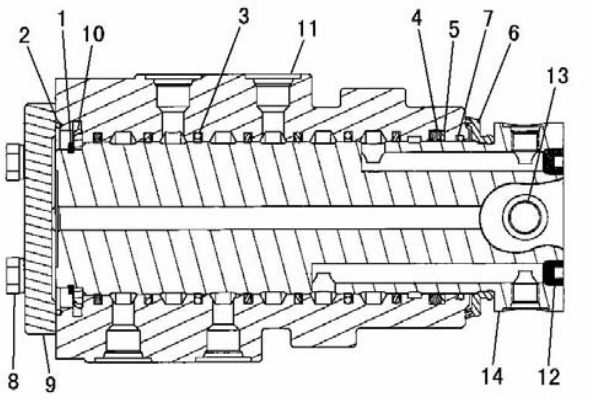

NOTE	No.	PART NO.	QTY.	PART NAME
	1	095-7951	1	RING
	2	095-1713	1	SEAL
	3	193-5330	7	SEAL AS
	4	095-1623	1	SEAL
	5	146-4875	1	SEAL
	6	146-4877	1	SEAL
	7	095-1710	1	SEAL
	8	8T-4195	4	BOLT(M10×1.5)
		095-9397	4	LOCKWASHER
	9	169-1134	1	FLANGE
	10	169-1135	1	RING
	11	221-0937	1	HOUSING
	12	095-8051	3	PLUG
	13	221-0938	1	PIN
	14	221-0936	1	SHAFT

J118441 X04

191-7516 SWIVEL GROUP
EFFECTIVE WITH SERIAL NO. BMW00001-BMW01404,BMW01490-
PART OF 191-3863-Page 359,363

HYDRAULIC SYSTEM

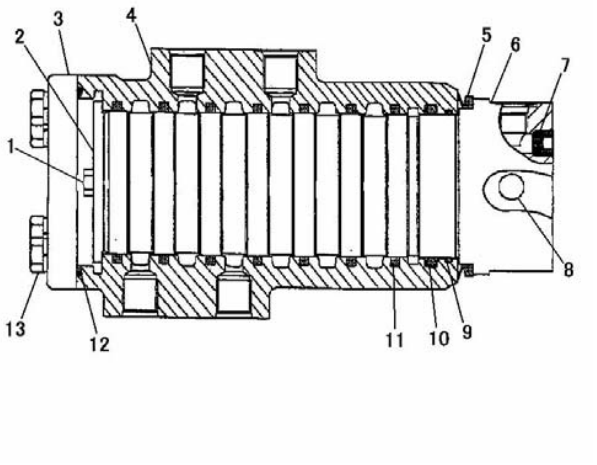

NOTE	No.	PART NO.	QTY.	PART NAME
	1	8T-4908	2	BOLT(M8×1.25)
	2	251-8489	1	RETAINER
	3	251-8485	1	COVER
	4	251-8486	1	HOUSING
	5	251-8488	1	SEAL
	6	251-8487	1	ROTOR
	7	095-8051	3	PLUG
	8	251-8490	1	PIN
	9	095-1708	1	SEAL
	10	095-1622	1	SEAL
	11	162-4693	7	SEAL
	12	095-1712	1	SEAL
	13	8T-4195	4	BOLT(M10×1.5)
		8T-4121	4	WASHER

J130844 X01

205-3888 SWIVEL GROUP
EFFECTIVE WITH SERIAL NO. BMW01405-BMW01489
PART OF 191-3863-Page 361

HYDRAULIC SYSTEM

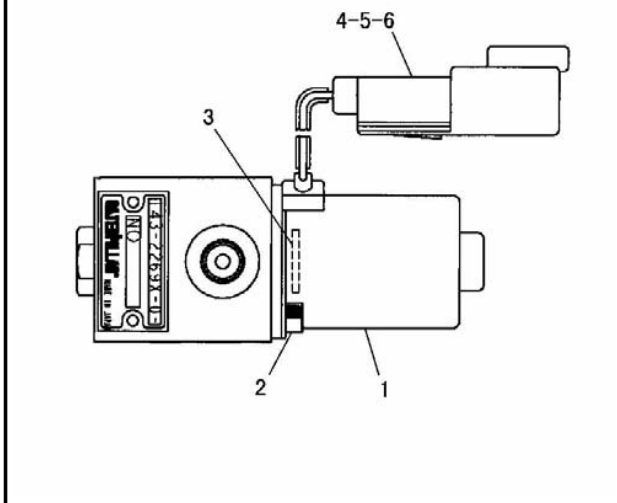

NOTE	No.	PART NO.	QTY.	PART NAME
	1	156-8847	1	SOLENOID AS
	2	099-0822	2	BOLT(M5×0.8)
	3	095-1519	1	SEAL
	4	102-8802	1	RECEPTACLE KIT(2P)
	5	3E-3365	1	WEDGE
	6	186-3735	2	PIN

J117282 X01

143-2269 2 SPEED VALVE GROUP
EFFECTIVE WITH SERIAL NO. BMW00787-
PART OF 210-0425-Page 403
AN ATTACHMENT

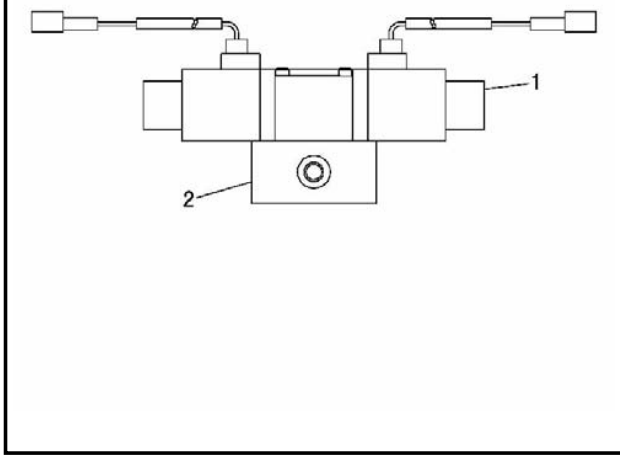

NOTE	No.	PART NO.	QTY.	PART NAME
	1	189-5670	1	VALVE GROUP
	2	174-7301	1	MANIFOLD

J117283 X01

174-7299 SOLENOID VALVE GROUP
EFFECTIVE WITH SERIAL NO. BMW00787-
PART OF 210-0425-Page 403
AN ATTACHMENT

HYDRAULIC SYSTEM

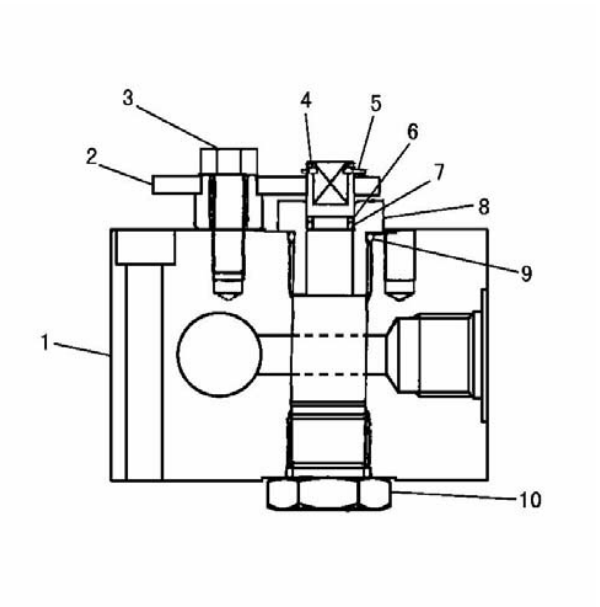

NOTE	No.	PART NO.	QTY.	PART NAME
	1	163-7513	1	VALVE
	2	163-7516	1	LEVER AS
	3	8T-4908	1	BOLT(M8×1.25)
	4	163-7515	1	SHAFT
	5	163-7518	1	RING
	6	095-1779	1	RING
	7	095-1576	1	SEAL
	8	163-7517	1	PLUG
	9	095-1585	1	SEAL
	10	140-5108	1	PLUG AS
		119-9920	1	SEAL

J115468 X03

163-7520 VALVE ASSEMBLY

EFFECTIVE WITH SERIAL NO. BMW00001-BMW00623
PART OF 199-3589-Page 407
AN ATTACHMENT

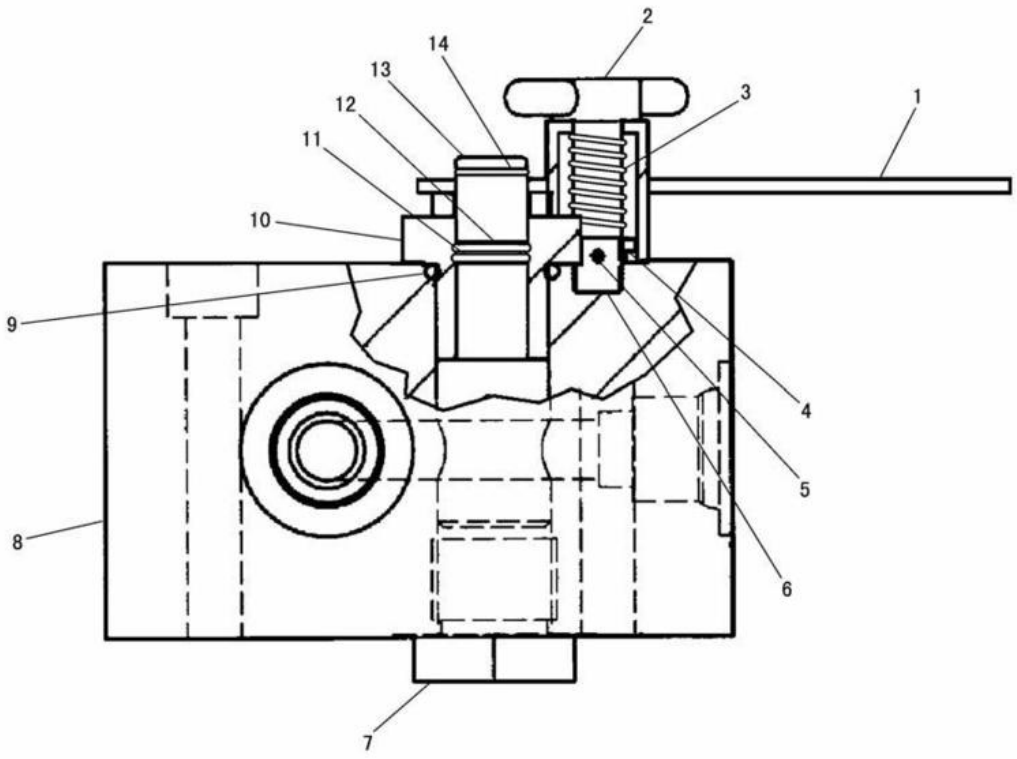

NOTE	No.	PART NO.	QTY.	PART NAME	NOTE	No.	PART NO.	QTY.	PART NAME
	1	204-7637	1	LEVER AS					
	2	204-7639	1	BOSS					
	3	204-9501	1	SPRING					
	4	204-9500	1	PLATE					
	5	3B-4605	1	COTTER PIN					
	6	204-9499	1	PIN					
	7	140-5108	1	PLUG AS					
		119-9920	1	SEAL					
	8	163-7513	1	VALVE					
	9	095-1585	1	SEAL					
	10	163-7517	1	PLUG					
	11	095-1576	1	SEAL					
	12	095-1779	1	RING					
	13	163-7515	1	SHAFT					
	14	163-7518	1	RING					

J112329 X02

204-8278 VALVE ASSEMBLY

EFFECTIVE WITH SERIAL NO. BMW00624-
PART OF 199-3589-Page 409,411,413,415,417
AN ATTACHMENT

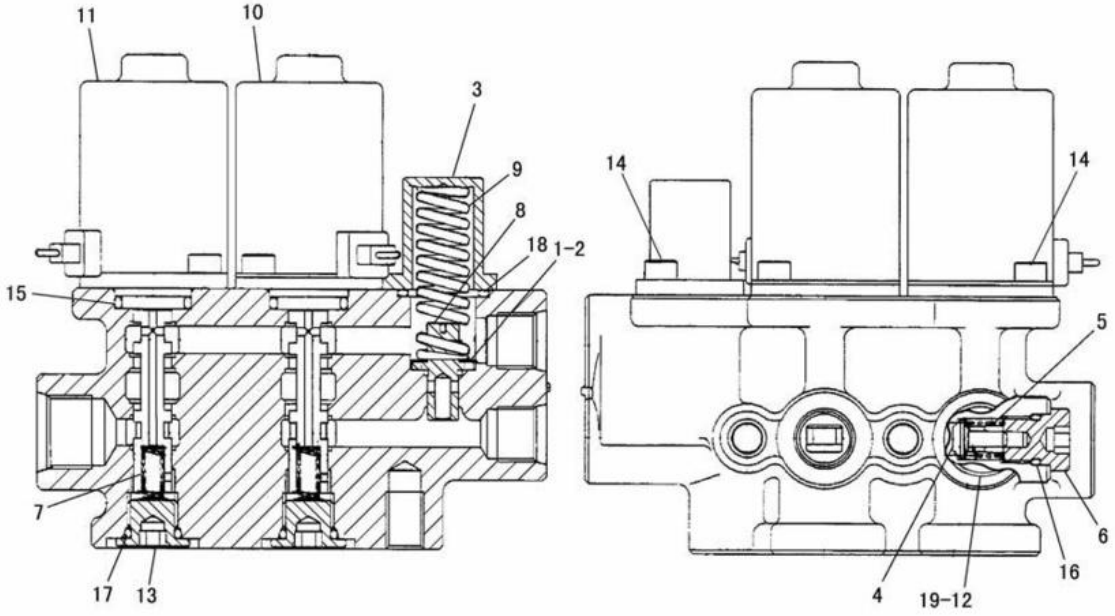

NOTE	No.	PART NO.	QTY.	PART NAME	NOTE	No.	PART NO.	QTY.	PART NAME
	1	169-1169	1	SHIM					
	2	169-1170	1	SHIM					
	3	169-1171	1	COVER					
	4	198-8418	1	PLUNGER					
	5	198-8419	1	SPRING					
	6	198-8420	1	PLUG					
	7	7I-7403	2	SPRING					
	8	169-1172	1	PLUNGER					
	9	198-8421	1	SPRING					
	10	156-8847	1	SOLENOID					
	11	198-8422	1	SOLENOID					
	12	9S-8004	1	PLUG					
	13	198-8423	2	PLUG					
	14	099-2374	6	BOLT(M5×0.8)					
	15	095-1519	2	SEAL					
	16	095-1578	1	SEAL					
	17	095-1579	2	SEAL					
	18	095-1586	1	SEAL					
	19	3J-1907	1	SEAL					

J128152 X03

191-1390 MANIFOLD VALVE GROUP
PART OF 191-3870-Page 379

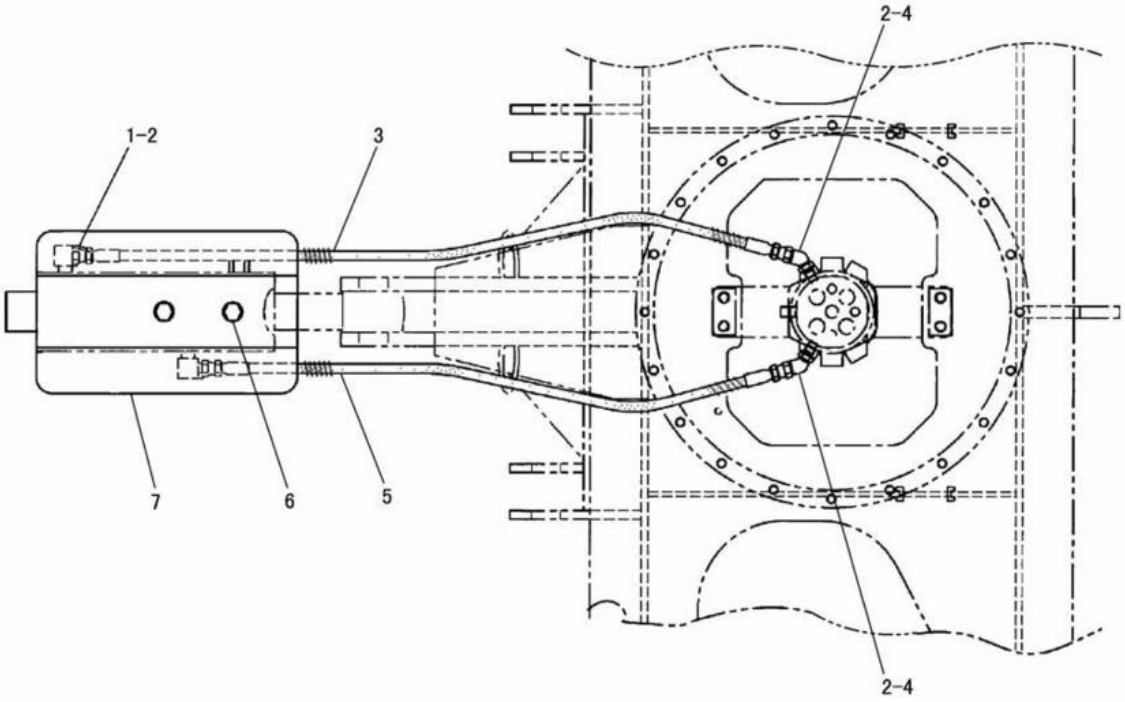

NOTE	No.	PART NO.	QTY.	PART NAME	NOTE	No.	PART NO.	QTY.	PART NAME
	1	6V-8636	2	CONNECTOR					
	2	3J-1907	4	SEAL					
		199-1901	4	SEAL					
	3	192-3159	1	HOSE AS					
	4	6V-9001	2	ELBOW					
	5	200-2883	1	HOSE AS					
	6	8T-4191	2	BOLT(M10×1.5)					
		8T-4121	2	WASHER					
	7	197-7768	1	COVER					

J129295 X04

BLADE LINES (191-3820 N/S)
EFFECTIVE WITH SERIAL NO. BMW00001-BMW01095
PART OF 191-3356-Page 461,201-4352-Page 463

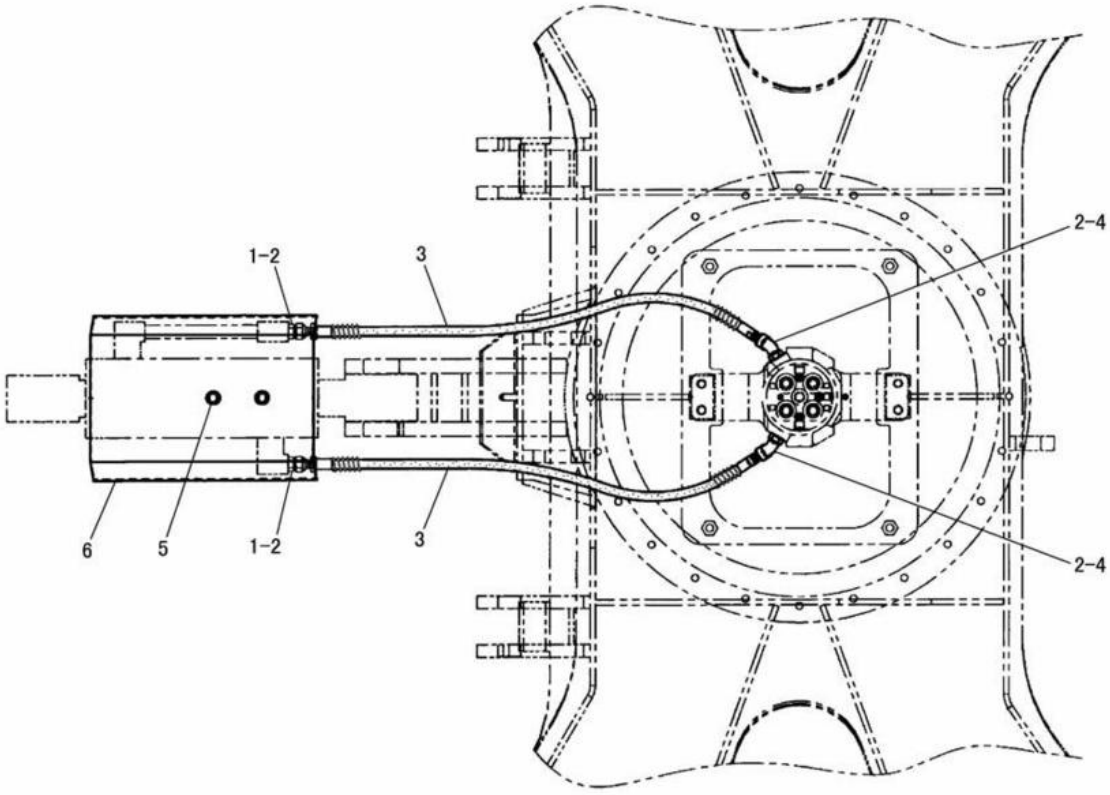

NOTE	No.	PART NO.	QTY.	PART NAME	NOTE	No.	PART NO.	QTY.	PART NAME
	1	6V-8636	2	CONNECTOR					
	2	3J-1907	4	SEAL					
		199-1901	4	SEAL					
	3	214-4991	2	HOSE AS					
E		6V-0743		GUARD---76cm					
	4	6V-9001	2	ELBOW					
	5	8T-4191	2	BOLT(M10×1.5)					
		8T-4121	2	WASHER					
	6	197-7768	1	COVER					

E-ORDER BY THE cm

J111297 X01

BLADE LINES (209-5412 N/S)
EFFECTIVE WITH SERIAL NO. BMW01096-
PART OF 208-0641-Page 463,209-1671-Page 462

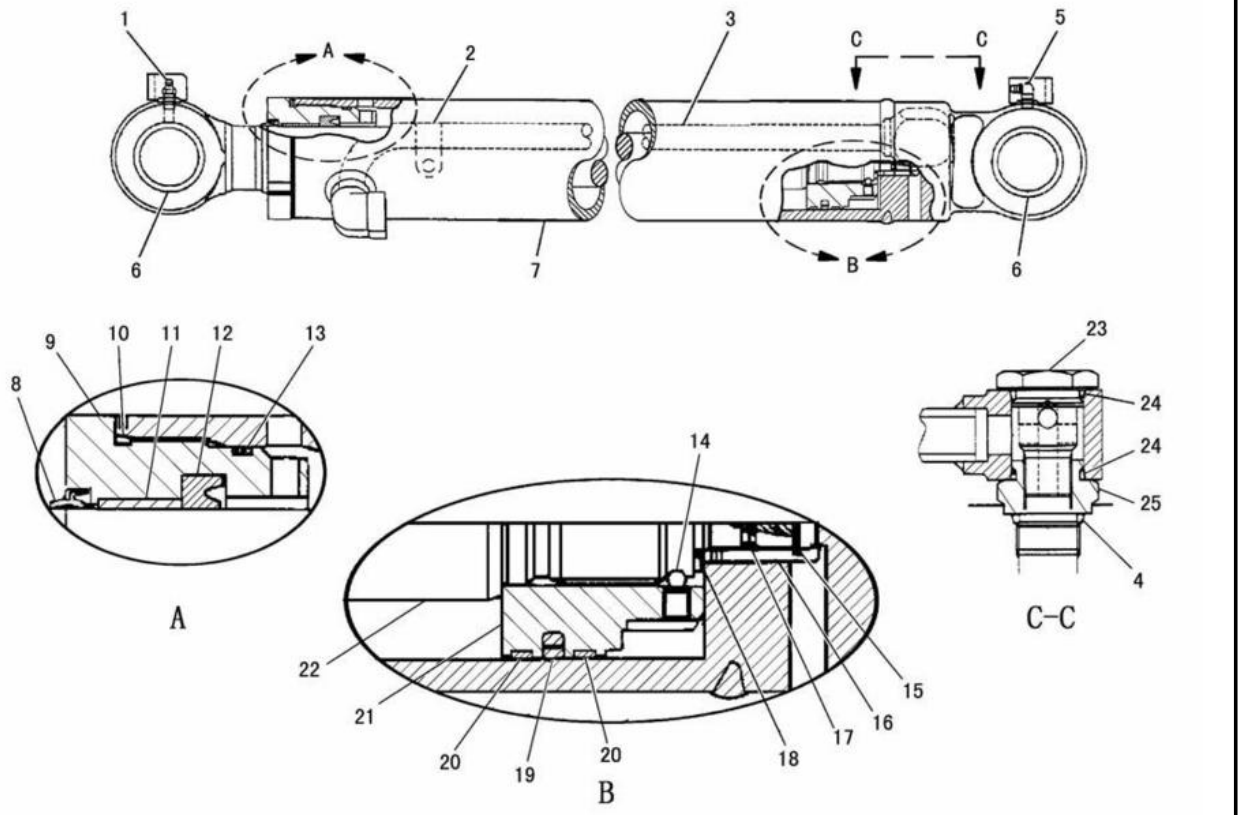

NOTE	No.	PART NO.	QTY.	PART NAME	NOTE	No.	PART NO.	QTY.	PART NAME
	1	170-8861	1	FITTING		17	199-0603	1	SEAL
	2	198-9430	1	HOLDER		18	199-0604	1	RING
		217-7970	1	BOLT AS(M8×1.25)	H	19	199-0600	1	SEAL AS
	3	199-0606	1	PIPE AS		20	199-0601	2	RING
	4	199-0608	1	SEAL		21	199-0599	1	PISTON
	5	170-8837	1	FITTING	K	22	199-0594	1	ROD AS
KJ	6	140-5166	2	BUSHING		23	198-9427	1	PLUG
		170-8786	4	RING	H	24	198-9428	2	SEAL
J	7	199-0593	1	TUBE AS		25	199-0607	1	FITTING
H	8	170-8774	1	RING					AVAILABLE REPAIR KIT(S):
	9	199-0595	1	HEAD			199-0609	1	SEAL KIT
H	10	199-0598	1	SEAL					(INCLUDES PARTS MARKED H)
	11	198-9417	1	BUSHING			199-0610	1	TUBE KIT
H	12	170-8773	1	RING					(INCLUDES PARTS MARKED J)
H	13	199-0596	1	SEAL			199-0611	1	ROD KIT
H		199-0597	1	RING					(INCLUDES PARTS MARKED K)
	14	170-8857	1	SCREW(M10×1.5)					
		170-8858	1	BALL					
	15	170-8807	2	STOPPER					
	16	170-8804	1	BEARING					

J132919 X07

191-1959 STICK CYLINDER GROUP -85mm BORE × 750mm STROKE

PART OF 191-3354-Page 458,200-6572-Page 459,200-6575-Page 458

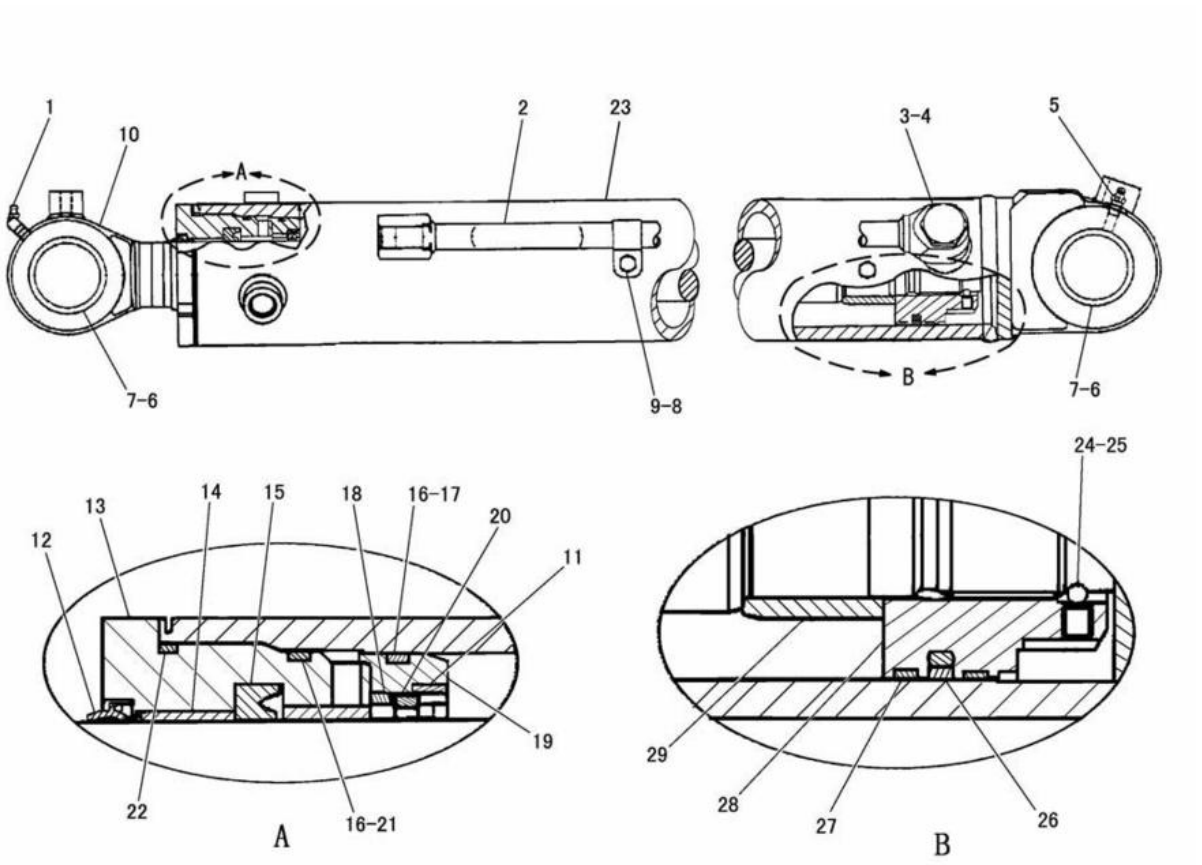

NOTE	No.	PART NO.	QTY.	PART NAME	NOTE	No.	PART NO.	QTY.	PART NAME
	1	170-8838	1	FITTING	K	21	198-9418	1	RING
	2	198-9426	1	PIPE AS	K	22	170-8778	1	RING
	3	198-9427	1	PLUG	H	23	198-9414	1	TUBE AS
K	4	198-9428	2	SEAL		24	170-8857	1	SCREW(M10×1.5)
	5	170-8861	1	FITTING		25	170-8858	1	BALL
HJ	6	195-5590	2	BUSHING	K	26	170-8781	1	SEAL AS
	7	170-8860	4	RING		27	198-9424	2	RING
	8	217-7970	1	BOLT AS(M8×1.25)		28	198-9423	1	PISTON
	9	198-9430	1	HOLDER		29	198-9422	1	BEARING
J	10	198-9415	1	ROD AS					AVAILABLE REPAIR KIT(S):
	11	200-8508	1	SPACER			198-9433	1	SEAL KIT
K	12	170-8774	1	RING					(INCLUDES PARTS MARKED K)
	13	198-9416	1	HEAD			198-9434	1	TUBE KIT
	14	198-9417	1	BUSHING					(INCLUDES PARTS MARKED H)
K	15	170-8773	1	RING			198-9435	1	ROD KIT
K	16	170-8775	2	RING					(INCLUDES PARTS MARKED J)
	17	170-8776	1	RING					
	18	198-9421	1	COLLAR					
	19	198-9419	1	HOLDER					
	20	198-9420	1	SEAL					

J132920 X06

191-1957 BOOM CYLINDER GROUP -100mm BORE × 710mm STROKE

PART OF 191-3353-Page 457

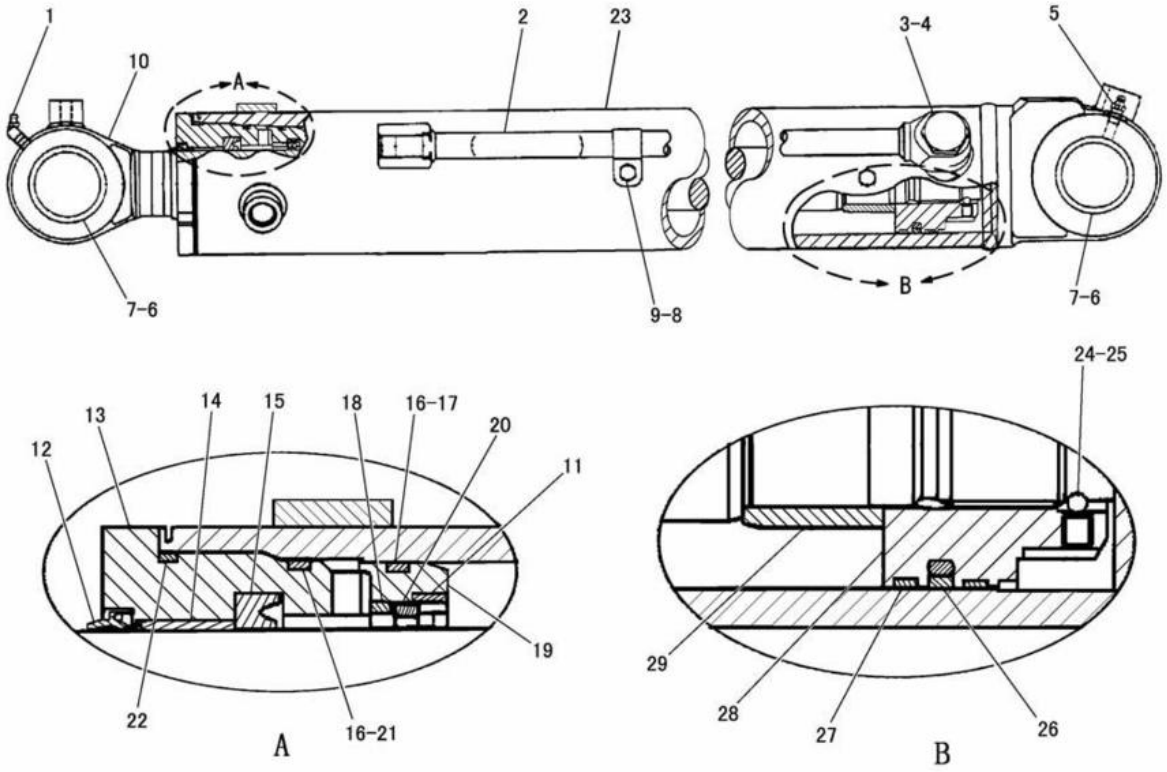

NOTE	No.	PART NO.	QTY.	PART NAME	NOTE	No.	PART NO.	QTY.	PART NAME
	1	170-8838	1	FITTING	K	21	198-9418	1	RING
	2	199-0512	1	PIPE AS	K	22	170-8778	1	RING
	3	198-9427	1	PLUG	H	23	199-0510	1	TUBE AS
K	4	198-9428	2	SEAL		24	170-8857	1	SCREW(M10×1.5)
	5	170-8861	1	FITTING		25	170-8858	1	BALL
HJ	6	195-5590	2	BUSHING	K	26	170-8781	1	SEAL AS
	7	170-8860	4	RING		27	198-9424	2	RING
	8	217-7970	1	BOLT AS(M8×1.25)		28	198-9423	1	PISTON
	9	198-9430	1	HOLDER		29	198-9422	1	BEARING
J	10	198-9415	1	ROD AS					AVAILABLE REPAIR KIT(S):
	11	200-8508	1	SPACER			198-9433	1	SEAL KIT
K	12	170-8774	1	RING					(INCLUDES PARTS MARKED K)
	13	198-9416	1	HEAD			199-0513	1	TUBE KIT
	14	198-9417	1	BUSHING					(INCLUDES PARTS MARKED H)
K	15	170-8773	1	RING			198-9435	1	ROD KIT
K	16	170-8775	2	RING					(INCLUDES PARTS MARKED J)
	17	170-8776	1	RING					
	18	198-9421	1	COLLAR					
	19	198-9419	1	HOLDER					
	20	198-9420	1	SEAL					

J132921 X07

191-1958 BOOM CYLINDER GROUP -100mm BORE × 680mm STROKE
PART OF 201-4570-Page 527,216-8440-Page 528
AN ATTACHMENT

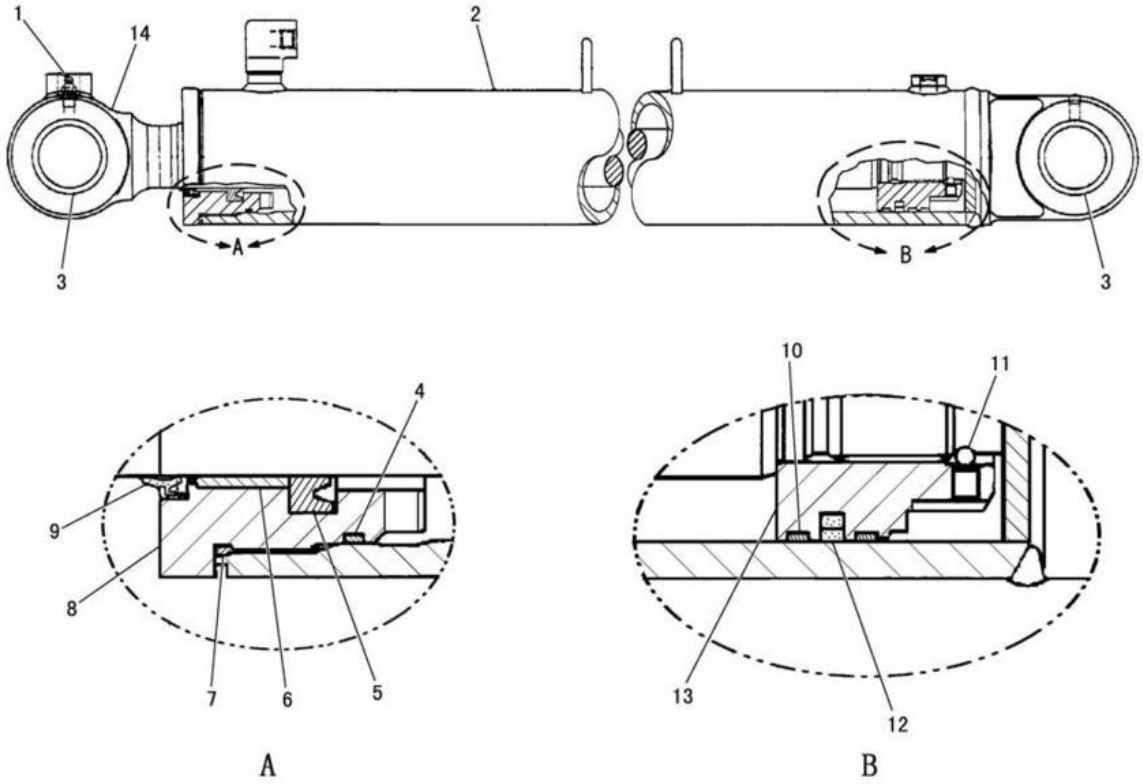

NOTE	No.	PART NO.	QTY.	PART NAME	NOTE	No.	PART NO.	QTY.	PART NAME
	1	191-3477	1	FITTING					AVAILABLE REPAIR KIT(S):
K	2	198-7046	1	TUBE AS			199-2097	1	SEAL KIT
JK	3	195-5591	2	BUSHING					(INCLUDES PARTS MARKED H)
		170-8786	4	RING			199-2098	1	TUBE KIT
H	4	170-8794	1	RING					(INCLUDES PARTS MARKED K)
H		199-2093	1	RING			199-2099	1	ROD KIT
H	5	170-8823	1	RING					(INCLUDES PARTS MARKED J)
	6	199-2092	1	BUSHING					
H	7	170-8796	1	RING					
	8	199-2091	1	HEAD					
H	9	170-8824	1	RING					
	10	199-2095	2	RING					
	11	170-8783	1	SCREW					
		170-8784	1	BALL					
H	12	170-8800	1	SEAL AS					
	13	199-2094	1	PISTON					
J	14	198-7047	1	ROD AS					

J126908 X05

191-1961 SWING CYLINDER GROUP -90mm BORE × 620mm STROKE

PART OF 191-3353-Page 457

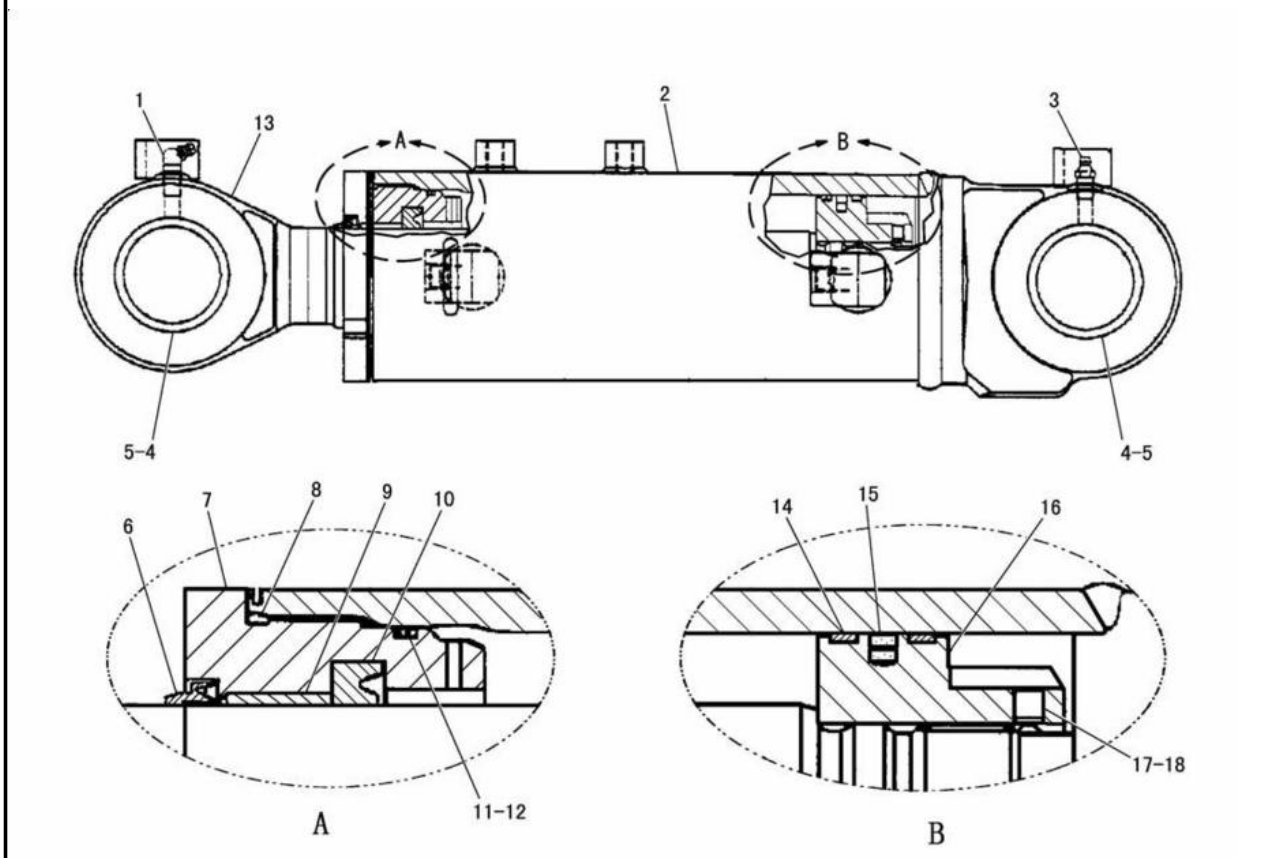

NOTE	No.	PART NO.	QTY.	PART NAME	NOTE	No.	PART NO.	QTY.	PART NAME
	1	170-8838	1	FITTING					AVAILABLE REPAIR KIT(S):
J	2	199-2400	1	TUBE AS			199-2402	1	SEAL KIT
	3	170-8861	1	FITTING					(INCLUDES PARTS MARKED H)
JK	4	195-5590	2	BUSHING			199-2403	1	TUBE KIT
	5	170-8860	4	RING					(INCLUDES PARTS MARKED J)
H	6	170-8774	1	RING			199-2405	1	ROD KIT
	7	198-9416	1	HEAD					(INCLUDES PARTS MARKED K)
H	8	170-8778	1	RING					
	9	198-9417	1	BUSHING					
H	10	170-8773	1	RING					
H	11	170-8775	1	RING					
H	12	198-9418	1	RING					
K	13	199-2401	1	ROD AS					
	14	198-9424	2	RING					
H	15	170-8781	1	SEAL AS					
	16	198-9423	1	PISTON					
	17	170-8857	1	SCREW(M10×1.5)					
	18	170-8858	1	BALL					

J126909 X04

191-1962 BLADE CYLINDER GROUP -100mm BORE × 170mm STROKE
EFFECTIVE WITH SERIAL NO. BMW00001-BMW01095
PART OF 191-3356-Page 461,201-4352-Page 463

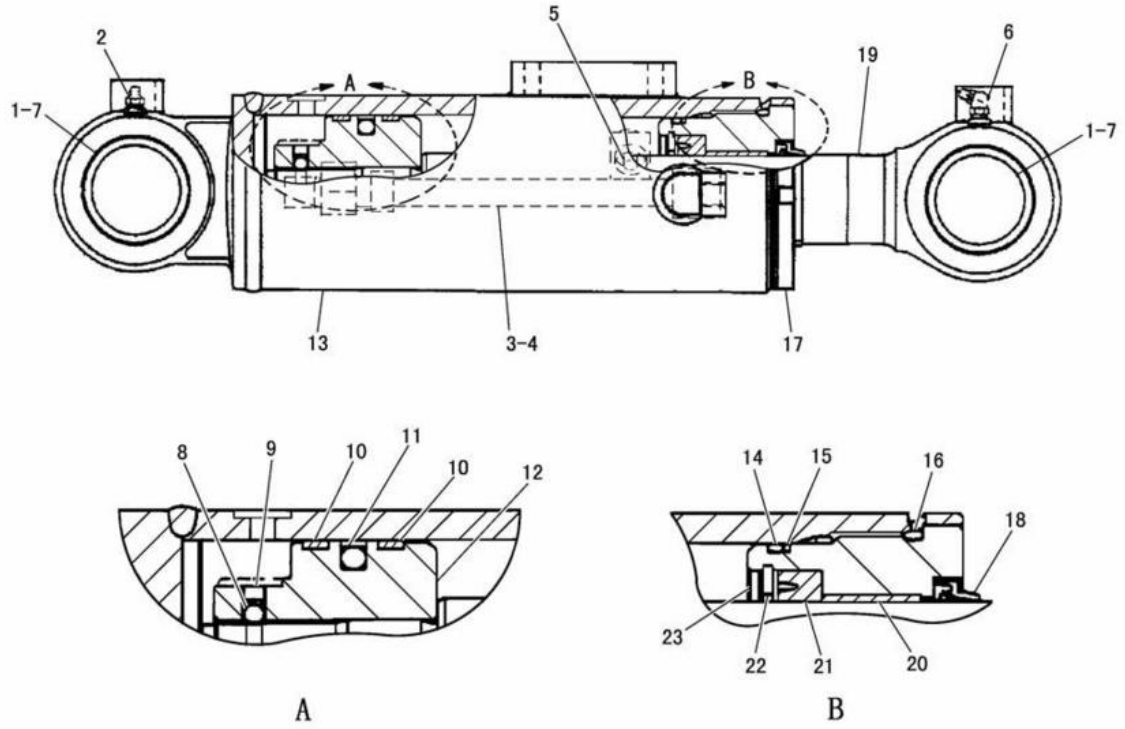

NOTE	No.	PART NO.	QTY.	PART NAME	NOTE	No.	PART NO.	QTY.	PART NAME
	1	216-7246	4	SEAL		19	216-7235	1	ROD AS
	2	3B-8489	1	FITTING	K	20	212-5096	1	BUSHING
	3	216-7244	1	SEAL	KJ	21	216-7238	1	SEAL
	4	216-7243	1	PIPE AS	K	22	216-7239	1	RING
	5	216-7245	1	BOLT	K	23	216-7240	1	RING
		8T-4121	1	WASHER					AVAILABLE PARTS:
		095-9397	1	LOCKWASHER			216-7236	1	HEAD AS
	6	3B-8485	1	FITTING					(INCLUDES PARTS MARKED K)
	7	195-5590	2	BUSHING			216-7241	1	PISTON AS
L	8	146-3969	1	BALL					(INCLUDES PARTS MARKED L)
L	9	152-2447	1	SCREW			216-7247	1	SEAL KIT
LJ	10	205-7955	2	RING					(INCLUDES PARTS MARKED J)
LJ	11	205-7956	1	SEAL AS					
L	12	216-7242	1	PISTON					
	13	216-7234	1	TUBE AS					
KJ	14	205-7950	1	SEAL					
KJ	15	205-7951	1	RING					
KJ	16	205-7952	1	SEAL					
K	17	216-7237	1	HEAD					
KJ	18	170-8774	1	RING					

J126627 X01

215-3747 BLADE CYLINDER GROUP -100mm BORE × 170mm STROKE
EFFECTIVE WITH SERIAL NO. BMW01096-
PART OF 208-0641-Page 463,209-1671-Page 462

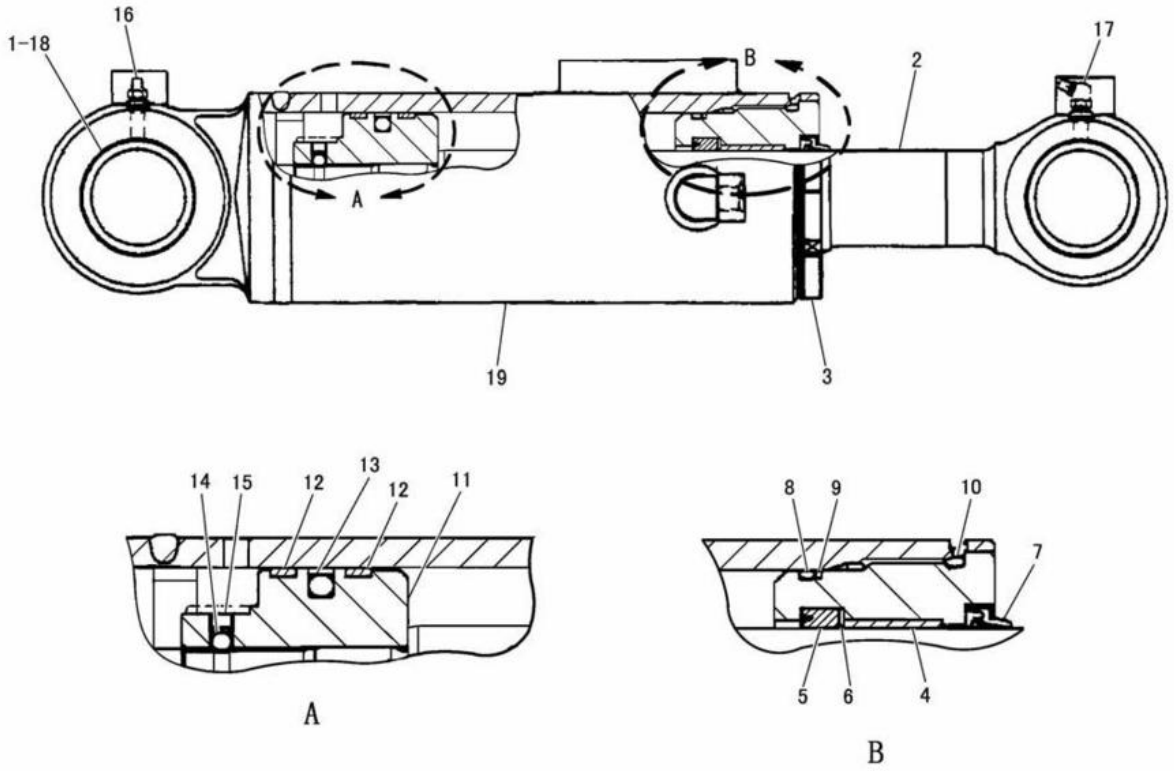

NOTE	No.	PART NO.	QTY.	PART NAME	NOTE	No.	PART NO.	QTY.	PART NAME
	1	195-5590	2	BUSHING					AVAILABLE PARTS:
	2	212-5093	1	ROD AS			212-5094	1	HEAD AS
J	3	212-5095	1	HEAD					(INCLUDES PARTS MARKED J)
J	4	212-5096	1	BUSHING			212-5101	1	PISTON AS
J	5	212-5097	1	RING					(INCLUDES PARTS MARKED K)
J	6	212-5098	1	RING					
J	7	170-8774	1	RING					
J	8	170-8775	1	RING					
J	9	205-7951	1	RING					
J	10	205-7952	1	SEAL					
K	11	212-5102	1	PISTON					
K	12	205-7955	2	RING					
K	13	205-7956	1	SEAL AS					
K	14	146-3969	1	BALL					
K	15	152-2447	1	SCREW					
	16	3B-8489	1	FITTING					
	17	3B-8486	1	FITTING					
	18	170-8860	4	RING					
	19	212-5092	1	TUBE AS					

J126910 X04

209-8871 BLADE CYLINDER GROUP -100mm BORE × 145mm STROKE
EFFECTIVE WITH SERIAL NO. BMW00787-
PART OF 210-1884-Page 510,511
AN ATTACHMENT

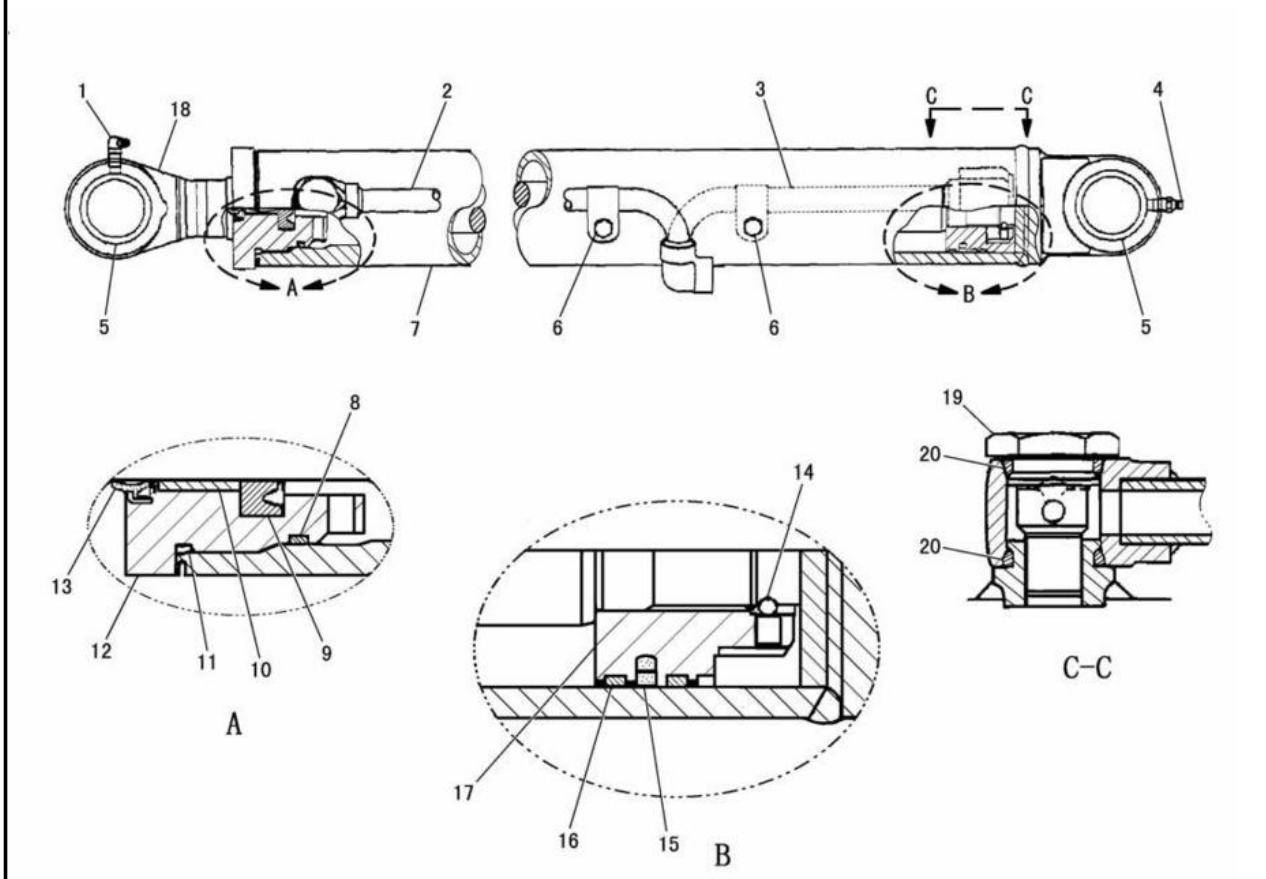

NOTE	No.	PART NO.	QTY.	PART NAME	NOTE	No.	PART NO.	QTY.	PART NAME
	1	170-8837	1	FITTING		17	199-1140	1	PISTON
	2	199-1145	1	PIPE AS	J	18	199-1134	1	ROD AS
	3	199-1144	1	PIPE AS		19	199-1146	2	PLUG
	4	170-8861	1	FITTING	K	20	199-1147	4	SEAL
HJ	5	151-4649	2	BUSHING					AVAILABLE REPAIR KIT(S):
		170-8836	4	RING			199-1149	1	SEAL KIT
	6	199-1148	2	HOLDER					(INCLUDES PARTS MARKED K)
		217-7970	2	BOLT AS(M8×1.25)			199-1150	1	TUBE KIT
H	7	199-1133	1	TUBE AS					(INCLUDES PARTS MARKED H)
K	8	170-8827	1	RING			199-1151	1	ROD KIT
K		199-1138	1	RING					(INCLUDES PARTS MARKED J)
K	9	199-1136	1	RING					
	10	191-3394	1	BUSHING					
K	11	199-1139	1	SEAL					
	12	199-1135	1	HEAD					
K	13	199-1137	1	RING					
	14	170-8783	1	SCREW					
		170-8784	1	BALL					
K	15	199-1141	1	SEAL AS					
	16	199-1142	2	RING					

J126911 X07

191-1960 BUCKET CYLINDER GROUP -75mm BORE × 630mm STROKE
EFFECTIVE WITH SERIAL NO. BMW00001-BMW01239
PART OF 191-3355-Page 460

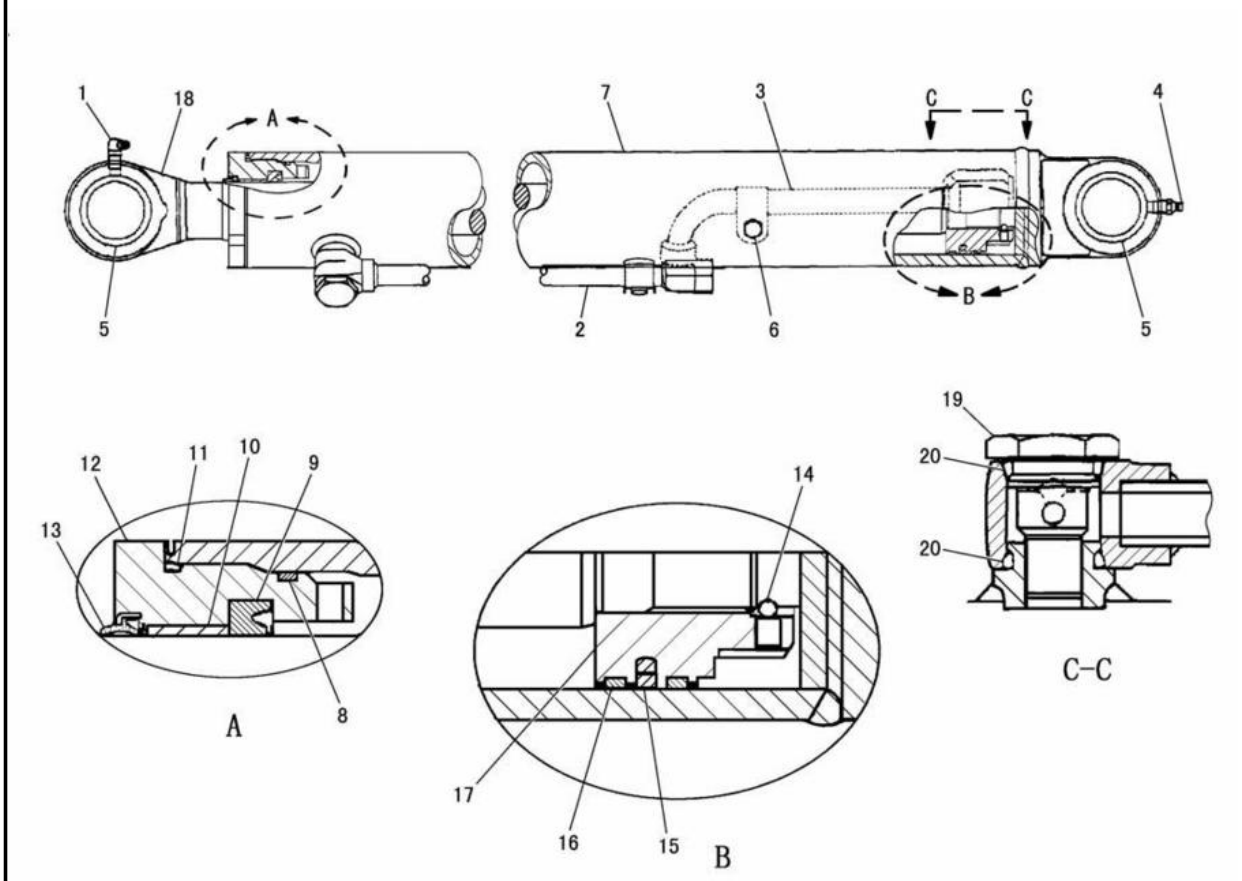

NOTE	No.	PART NO.	QTY.	PART NAME	NOTE	No.	PART NO.	QTY.	PART NAME
	1	170-8837	1	FITTING		17	199-1140	1	PISTON
	2	215-2235	1	PIPE AS	J	18	199-1134	1	ROD AS
	3	217-7968	1	PIPE AS		19	199-1146	2	PLUG
	4	170-8861	1	FITTING	K	20	199-1147	4	SEAL
HJ	5	151-4649	2	BUSHING					AVAILABLE REPAIR KIT(S):
		170-8836	4	RING			199-1149	1	SEAL KIT
	6	199-1148	2	HOLDER					(INCLUDES PARTS MARKED K)
		217-7970	2	BOLT AS(M8×1.25)			215-2845	1	TUBE KIT
H	7	215-2829	1	TUBE AS					(INCLUDES PARTS MARKED H)
K	8	170-8827	1	RING			199-1151	1	ROD KIT
K		199-1138	1	RING					(INCLUDES PARTS MARKED J)
K	9	199-1136	1	RING					
	10	191-3394	1	BUSHING					
K	11	199-1139	1	SEAL					
	12	199-1135	1	HEAD					
K	13	199-1137	1	RING					
	14	170-8783	1	SCREW					
		170-8784	1	BALL					
K	15	199-1141	1	SEAL AS					
	16	199-1142	2	RING					

J132922 X01

215-2232 BUCKET CYLINDER GROUP -75mm BORE × 630mm STROKE
EFFECTIVE WITH SERIAL NO. BMW01240-
PART OF 191-3355-Page 460

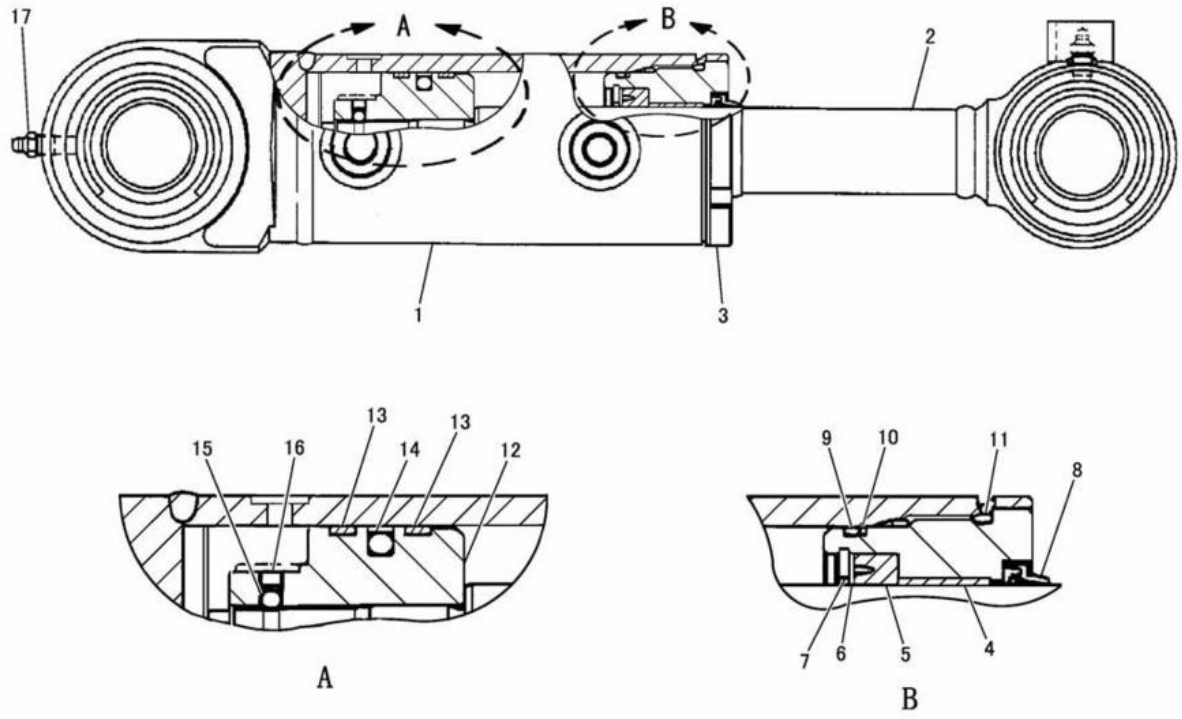

NOTE	No.	PART NO.	QTY.	PART NAME	NOTE	No.	PART NO.	QTY.	PART NAME
	1	212-6069	1	TUBE AS					AVAILABLE PARTS:
	2	212-6070	1	ROD AS			212-6071	1	HEAD AS
J	3	212-6072	1	HEAD					(INCLUDES PARTS MARKED J)
J	4	175-4708	1	BUSHING			212-6076	1	PISTON AS
J	5	212-6073	1	RING					(INCLUDES PARTS MARKED K)
J	6	212-6074	1	RING					
J	7	212-6075	1	RING					
J	8	175-4734	1	RING					
J	9	192-0629	1	SEAL					
J	10	192-0676	1	RING					
J	11	192-0626	1	SEAL					
K	12	212-6077	1	PISTON					
K	13	192-0683	2	RING					
K	14	192-0684	1	SEAL AS					
K	15	192-0633	1	BALL					
K	16	192-0634	1	SETSCREW					
	17	3B-8489	2	FITTING					

J126912 X02

210-1285 TILT CYLINDER GROUP -75mm BORE × 57mm STROKE

EFFECTIVE WITH SERIAL NO. BMW00787-
PART OF 210-1884-Page 510,511
AN ATTACHMENT

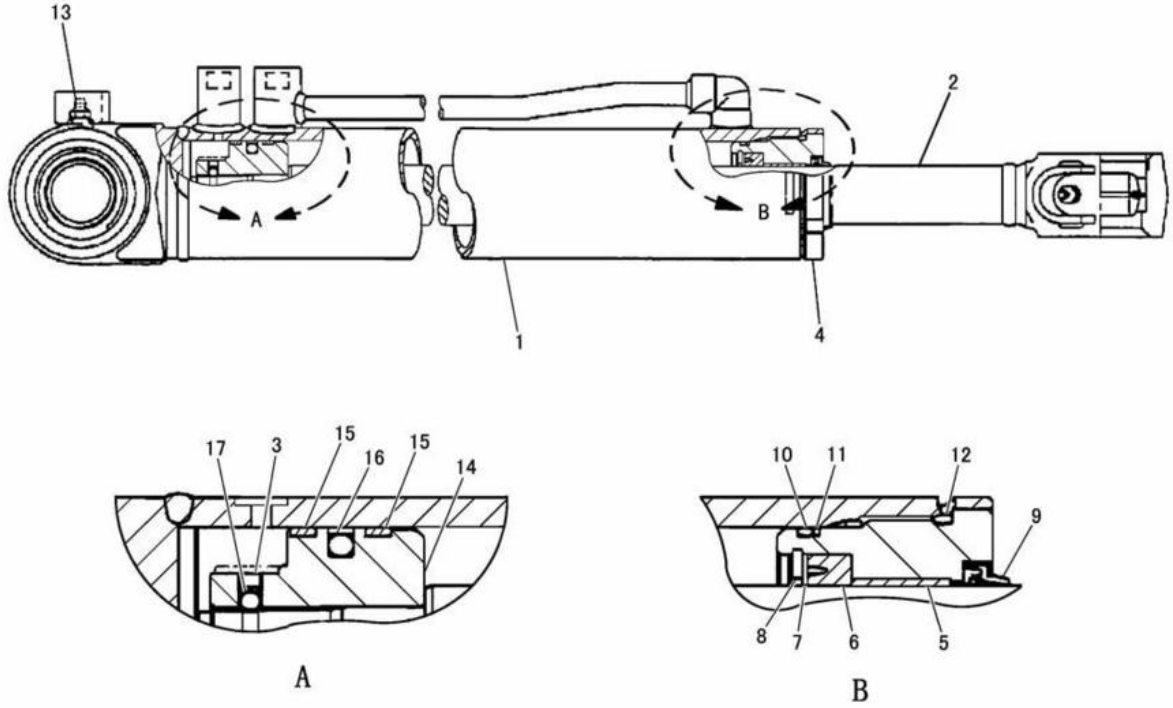

NOTE	No.	PART NO.	QTY.	PART NAME	NOTE	No.	PART NO.	QTY.	PART NAME
	1	205-1047	1	TUBE AS					AVAILABLE PARTS:
	2	205-1048	1	ROD AS			203-2341	1	HEAD AS
K	3	203-2350	1	SCREW					(INCLUDES PARTS MARKED J)
J	4	203-2342	1	HEAD			203-2348	1	PISTON AS
J	5	203-2343	1	BUSHING					(INCLUDES PARTS MARKED K)
JL	6	203-2344	1	RING			205-1049	1	SEAL KIT
J	7	203-2345	1	PACKING					(INCLUDES PARTS MARKED L)
J	8	203-2346	1	RING					
JL	9	140-4934	1	RING					
JL	10	203-2347	1	SEAL					
JL	11	145-9772	1	RING					
JL	12	192-0680	1	SEAL					
	13	203-2351	2	FITTING					
K	14	203-2349	1	PISTON					
KL	15	145-9775	2	RING					
KL	16	140-3750	1	RING AS					
K	17	192-0633	1	BALL					

J126913 X01

155-7545 ANGLE CYLINDER GROUP -65mm BORE × 411mm STROKE
EFFECTIVE WITH SERIAL NO. BMW00787-
PART OF 210-1884-Page 510,511
AN ATTACHMENT

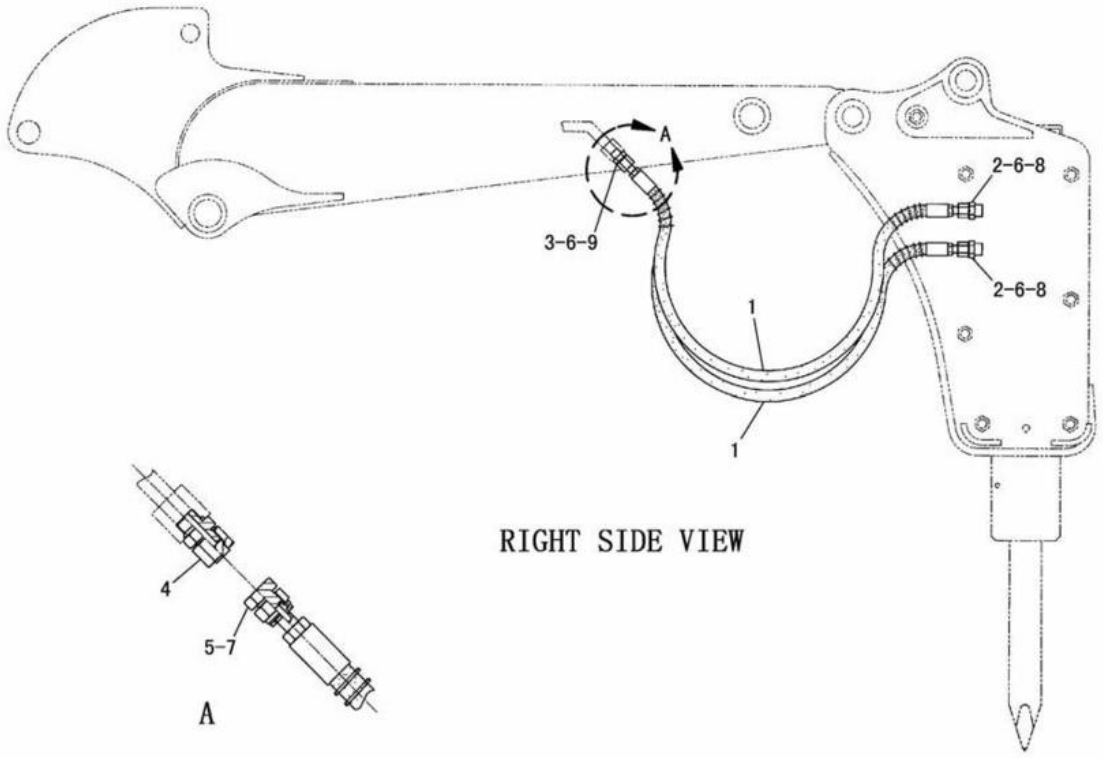

NOTE	No.	PART NO.	QTY.	PART NAME	NOTE	No.	PART NO.	QTY.	PART NAME
	1	165-1092	2	HOSE AS					
	2	165-1059	2	CONNECTOR					
	3	165-1094	2	CONNECTOR					
J	4	6V-9830	2	PLUG AS					
		6V-9356	1	PLUG					
		6V-8554	1	NUT(13/16-16)					
J	5	6V-9509	2	PLUG					
	6	199-1902	4	SEAL					
J	7	199-1902	2	SEAL					
	8	095-1592	2	SEAL					
	9	095-1585	2	SEAL					

J-SET IT IN TOOL BOX

J129296 E01

JUMPER LINES (165-1017 N/S)
PART OF 165-1095-Page 498,206-2774-Page 498
AN ATTACHMENT

HYDRAULIC SYSTEM

CONSISTS OF :

			PAGE
1	199-2085	PILOT LINES GROUP	392
1	199-0745	TRAVEL ALARM GROUP	442

J105059 X00

TRAVEL ALARM ARRANGEMENT (199-0744 N/S)
AN ATTACHMENT

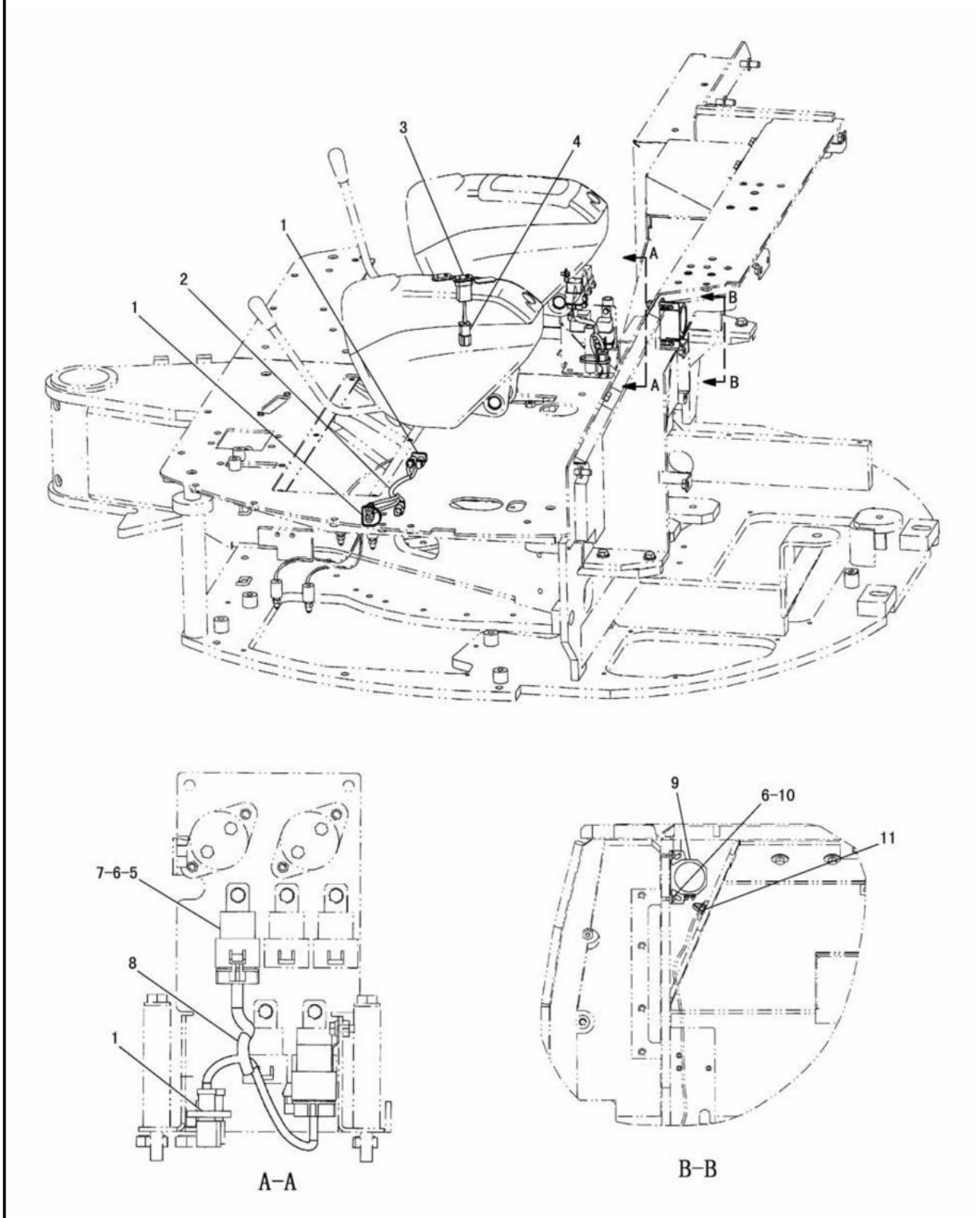

TRAVEL ALARM (199-0745 N/S)
EFFECTIVE WITH SERIAL NO. BMW00001-BMW01588
PART OF 199-0744-Page 441
AN ATTACHMENT

HYDRAULIC SYSTEM

NOTE	No.	PART NO.	QTY.	PART NAME	NOTE	No.	PART NO.	QTY.	PART NAME
	1	7K-1181	3	STRAP					
Y	2	199-2425	1	HARNESS AS					
	3	199-2428	1	SWITCH AS					
	4	102-8804	1	RECEPTACLE KIT(4P)					
		186-3735	4	PIN					
	5	115-1615	2	RELAY AS					
	6	8T-4171	4	BOLT(M6×1)					
	7	9X-8256	2	WASHER					
Y	8	199-0746	1	HARNESS AS					
	9	161-2539	1	BACKUP ALARM					
	10	8T-4205	2	WASHER					
	11	3S-2093	1	STRAP					

Y-SEE SEPARATE ILLUSTRATION

J111810 X04

TRAVEL ALARM (199-0745 N/S)
EFFECTIVE WITH SERIAL NO. BMW00001-BMW01588
PART OF 199-0744-Page 441
199-2425-Page 448 199-0746-Page 446
AN ATTACHMENT

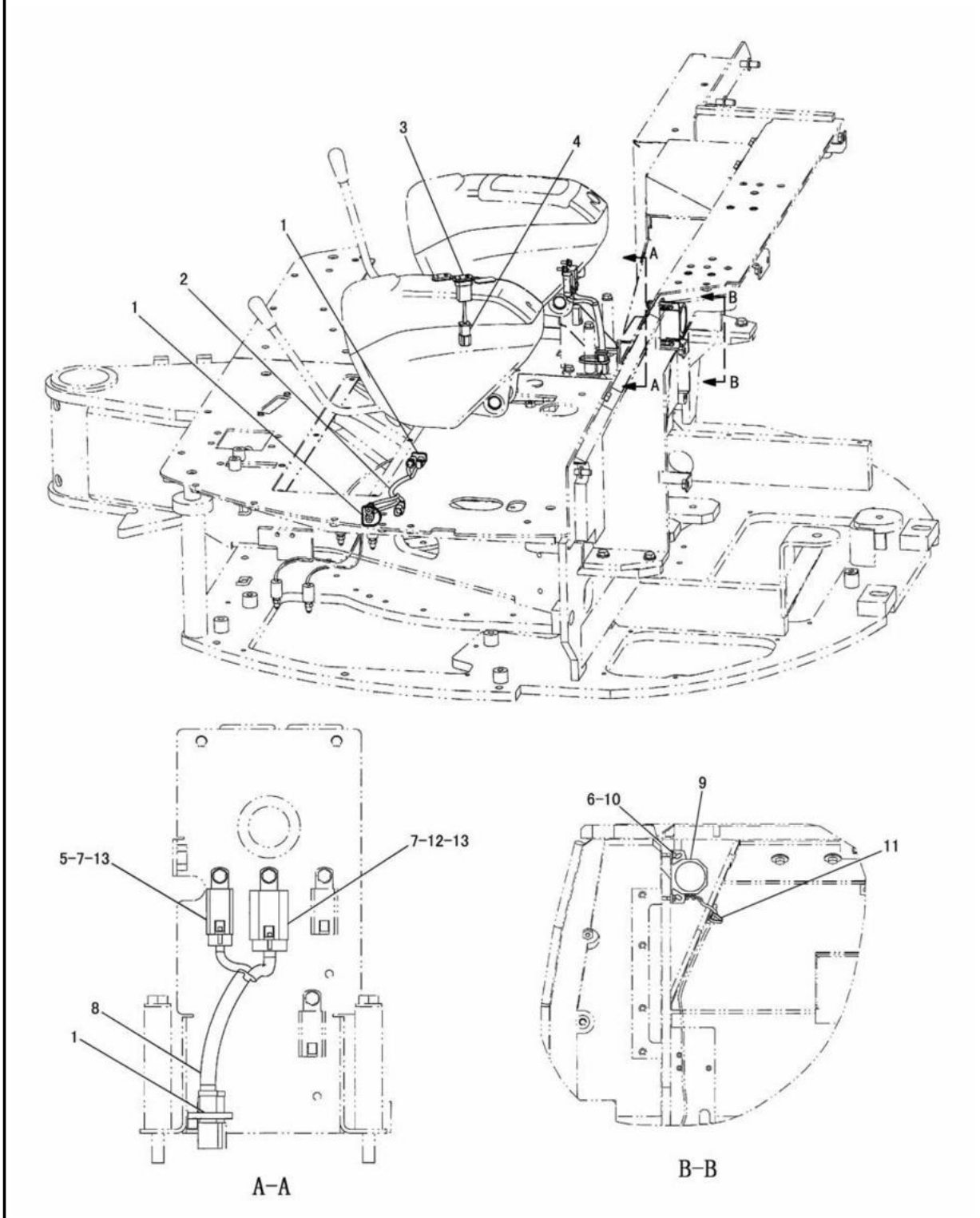

TRAVEL ALARM (199-0745 N/S)
EFFECTIVE WITH SERIAL NO. BMW01589-
PART OF 199-0744-Page 441
AN ATTACHMENT

HYDRAULIC SYSTEM

NOTE	No.	PART NO.	QTY.	PART NAME	NOTE	No.	PART NO.	QTY.	PART NAME
	1	7K-1181	3	STRAP					
Y	2	199-2425	1	HARNESS AS					
	3	199-2428	1	SWITCH AS					
	4	102-8804	1	RECEPTACLE KIT(4P)					
		186-3735	4	PIN					
C	5	239-1182	1	RELAY AS					
C	6	8T-4171	2	BOLT(M6×1)					
	7	9X-8256	2	WASHER					
CY	8	258-7765	1	HARNESS AS					
	9	161-2539	1	BACKUP ALARM					
	10	8T-4205	2	WASHER					
	11	3S-2093	1	STRAP					
C	12	239-1183	1	RELAY AS					
C	13	5C-9553	2	BOLT(M6×1)					

C-INDICATES CHANGE
Y-SEE SEPARATE ILLUSTRATION

J132130 X05

TRAVEL ALARM (199-0745 N/S)

EFFECTIVE WITH SERIAL NO. BMW01589-
PART OF 199-0744-Page 441
199-2425-Page 448 258-7765-Page 447
AN ATTACHMENT

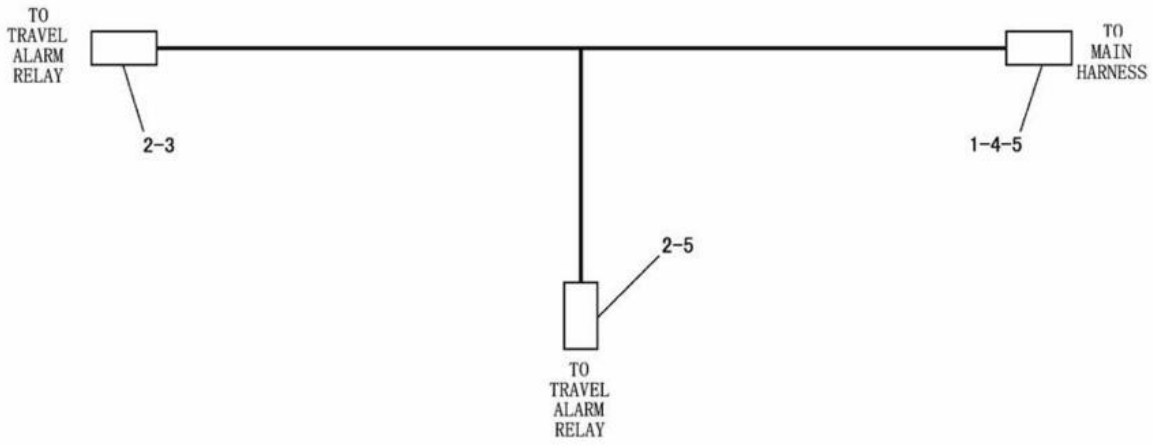

NOTE	No.	PART NO.	QTY.	PART NAME	NOTE	No.	PART NO.	QTY.	PART NAME
	1	186-3735	4	PIN					
	2	100-5041	9	TERMINAL					
	3	3E-5519	1	PLUG AS					
	4	102-8804	1	RECEPTACLE KIT(4P)					
	5	9X-1054	1	PLUG AS(4P)					

J125998 X01

199-0746 HARNESS ASSEMBLY-TRAVEL ALARM
EFFECTIVE WITH SERIAL NO. BMW00001-BMW01588
PART OF 199-0745-Page 443
AN ATTACHMENT

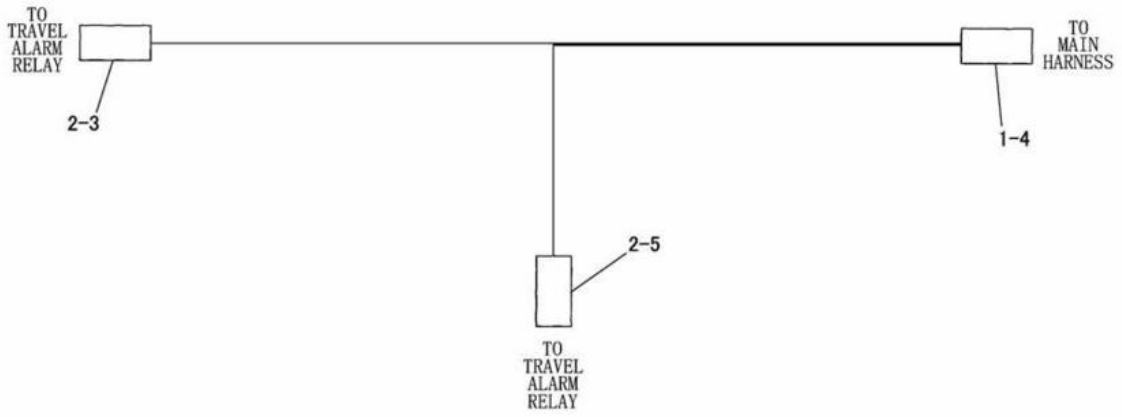

NOTE	No.	PART NO.	QTY.	PART NAME	NOTE	No.	PART NO.	QTY.	PART NAME
	1	186-3735	4	PIN					
	2	7Y-3951	9	TERMINAL					
	3	7Y-3958	1	CONNECTOR					
	4	102-8804	1	RECEPTACLE KIT(4P)					
	5	7Y-3957	1	CONNECTOR					

J132131 E00

258-7765 HARNESS ASSEMBLY-TRAVEL ALARM
EFFECTIVE WITH SERIAL NO. BMW01589-
PART OF 199-0745-Page 445
AN ATTACHMENT

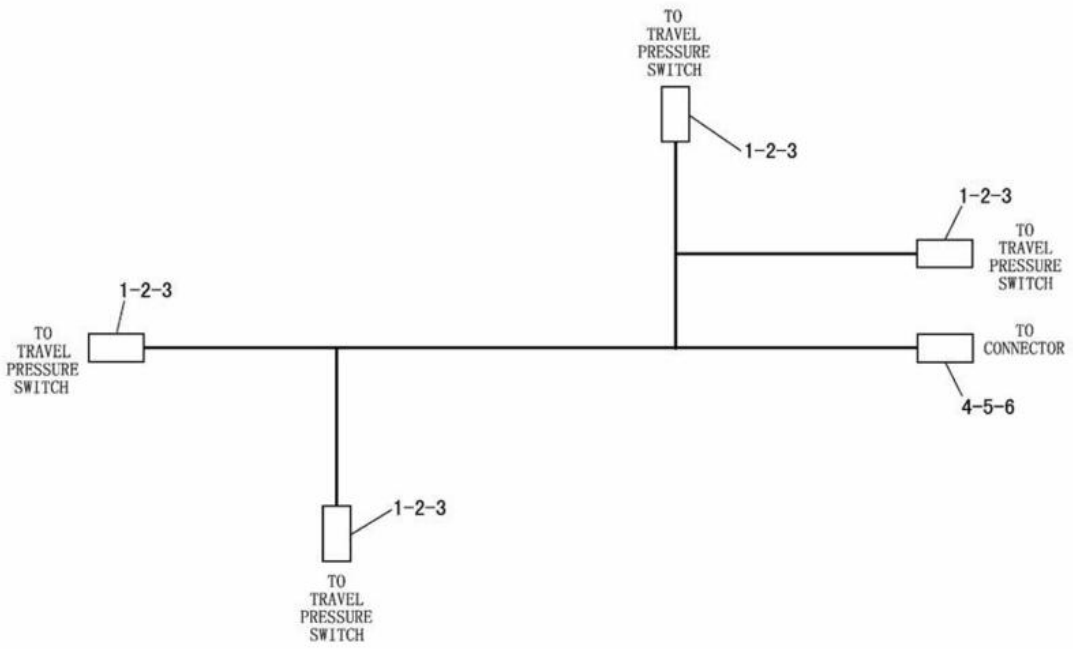

NOTE	No.	PART NO.	QTY.	PART NAME	NOTE	No.	PART NO.	QTY.	PART NAME
	1	1 8 6 − 3 7 3 6	8	SOCKET					
	2	1 5 5 − 2 2 7 0	4	PLUG KIT(2P)					
	3	3 E − 3 3 6 2	4	WEDGE					
	4	1 8 6 − 3 7 3 5	2	PIN					
	5	1 0 2 − 8 8 0 2	1	RECEPTACLE KIT(2P)					
	6	3 E − 3 3 6 5	1	WEDGE					

J111811 X01

199-2425 HARNESS ASSEMBLY
PART OF 199-0745-Page 443,445
AN ATTACHMENT

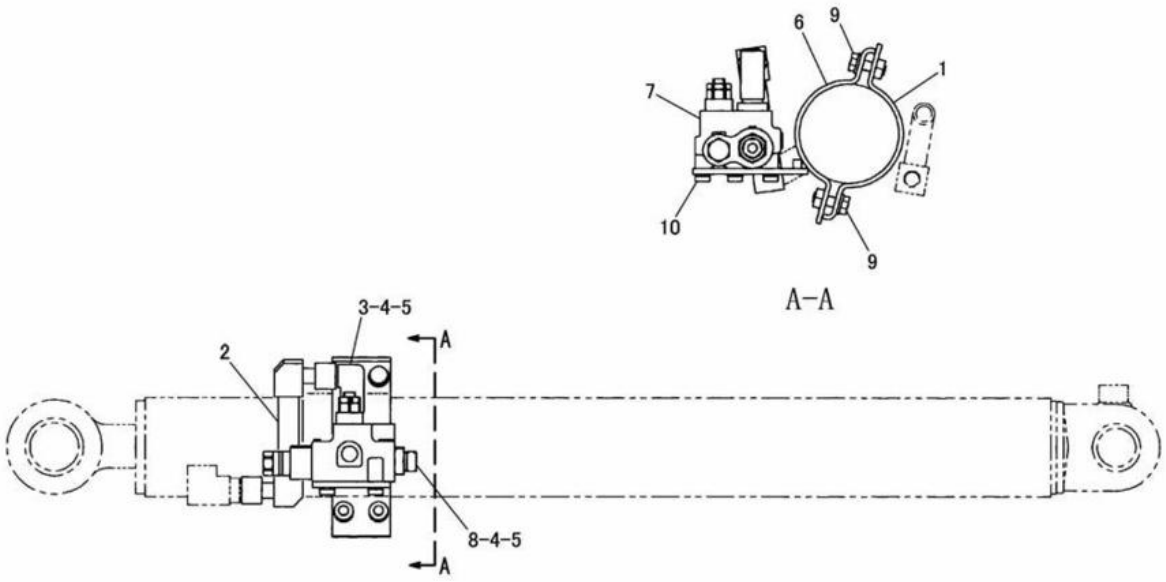

NOTE	No.	PART NO.	QTY.	PART NAME	NOTE	No.	PART NO.	QTY.	PART NAME
	1	201-9140	1	SUPPORT AS					
		8T-3490	2	NUT(M10×1.5)(WELD)					
	2	200-4625	1	TUBE AS					
	3	199-0546	1	ELBOW					
	4	095-1585	2	SEAL					
	5	6V-8398	2	SEAL					
	6	200-4608	1	SUPPORT AS					
		8T-3490	2	NUT(M10×1.5)(WELD)					
	7	199-5194	1	VALVE AS					
	8	199-0542	1	CONNECTOR					
	9	8T-4195	4	BOLT(M10×1.5)					
		8T-4121	4	WASHER					
	10	8T-4200	3	BOLT(M8×1.25)					
		8T-4224	3	WASHER					

J132923 X01

STICK CYLINDER LINES (200-4606 N/S) -LOWERING CONTROL

EFFECTIVE WITH SERIAL NO. BMW00204-

PART OF 201-9165-Page 518,519,206-7605-Page 514,515,206-7624-Page 520,521,206-7635-Page 516,517 AN ATTACHMENT

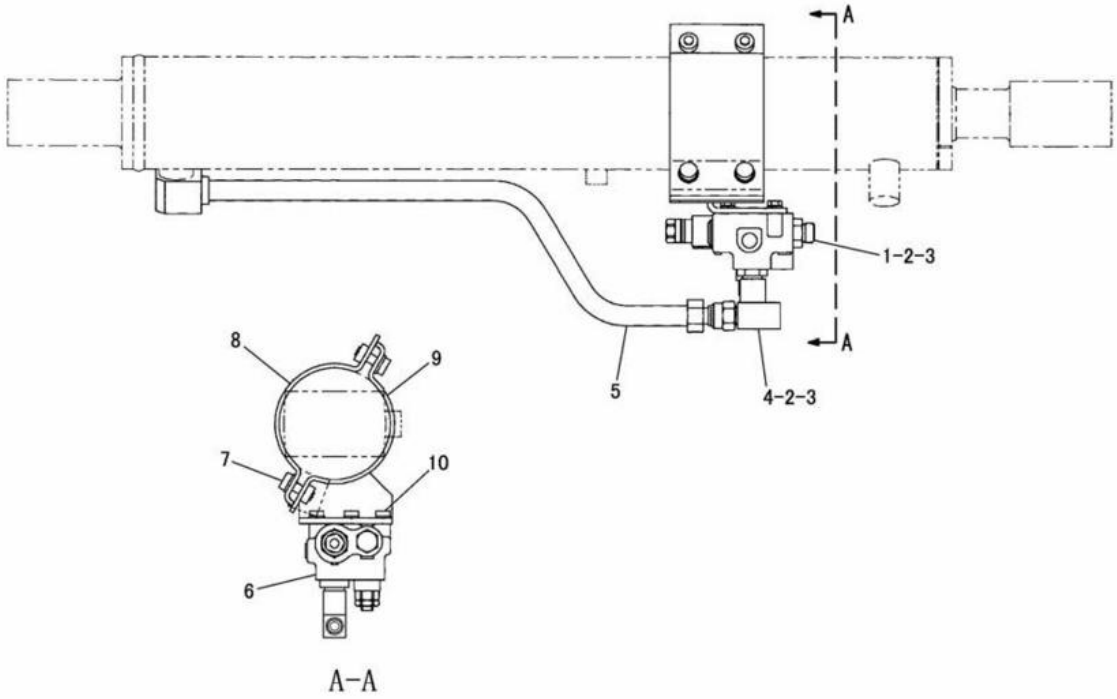

NOTE	No.	PART NO.	QTY.	PART NAME	NOTE	No.	PART NO.	QTY.	PART NAME
	1	199-0542	1	CONNECTOR					
	2	095-1585	2	SEAL					
	3	199-1902	2	SEAL					
	4	199-0541	1	TEE					
	5	200-4626	1	TUBE AS					
	6	199-5194	1	VALVE AS					
	7	8T-4195	4	BOLT(M10×1.5)					
		8T-4121	4	WASHER					
	8	200-4610	1	SUPPORT AS					
		8T-3490	2	NUT(M10×1.5)(WELD)					
	9	200-4611	1	SUPPORT AS					
		8T-3490	2	NUT(M10×1.5)(WELD)					
	10	8T-4200	3	BOLT(M8×1.25)					
		8T-4224	3	WASHER					

J126780 X02

BOOM CYLINDER LINES (200-4609 N/S) -LOWERING CONTROL

EFFECTIVE WITH SERIAL NO. BMW00204-
PART OF 201-9165-Page 518,519,206-7605-Page 514,515,206-7624-Page 520,521,206-7635-Page 516,517
AN ATTACHMENT

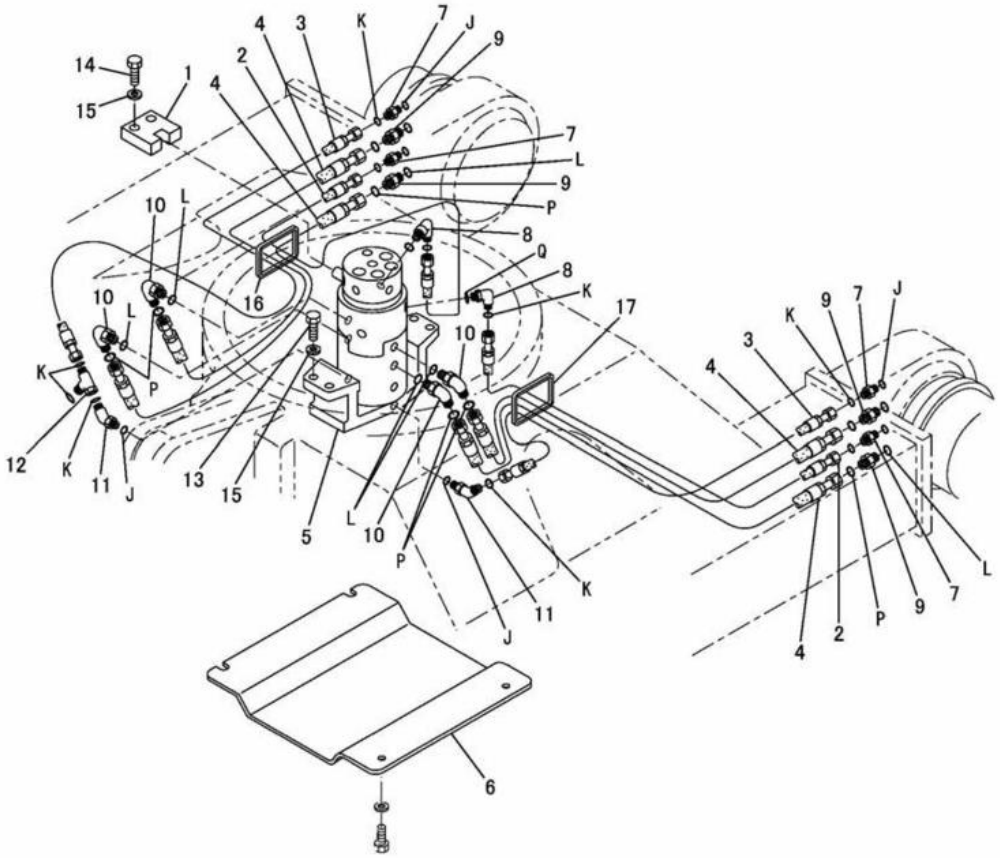

NOTE	No.	PART NO.	QTY.	PART NAME	NOTE	No.	PART NO.	QTY.	PART NAME
	1	155-7573	1	PLATE					USED WITH FOLLOWING SEALS
	2	191-4738	2	HOSE AS	J		3J-1907	6	SEAL
	3	191-4739	2	HOSE AS	K		4J-5477	10	SEAL
	4	202-0710	4	HOSE AS	L		3K-0360	8	SEAL
	5	210-0024	1	SWIVEL GROUP	P		6V-8398	8	SEAL
	6	213-7638	1	COVER AS	Q		3J-7354	2	SEAL
JK	7	6V-8641	4	CONNECTOR					
KQ	8	6V-8628	2	ELBOW					
LP	9	6V-8639	4	CONNECTOR					
LP	10	6V-9002	4	ELBOW					
JK	11	8T-0164	2	ELBOW					
K	12	6V-9835	1	TEE(WITH 2 SEALS)					
	13	8T-4183	4	BOLT(M12×1.75)					
	14	8T-4194	2	BOLT(M12×1.75)					
	15	8T-4223	6	WASHER					
E	16	107-1679		GUARD---40cm					
E	17	107-1679		GUARD---40cm					

E-ORDER BY THE cm

J126684 X01

TRACK MOTOR LINES (210-0424 N/S) -POWER ANGLE AND TILT

EFFECTIVE WITH SERIAL NO. BMW00787-
PART OF 210-1884-Page 510,511
AN ATTACHMENT

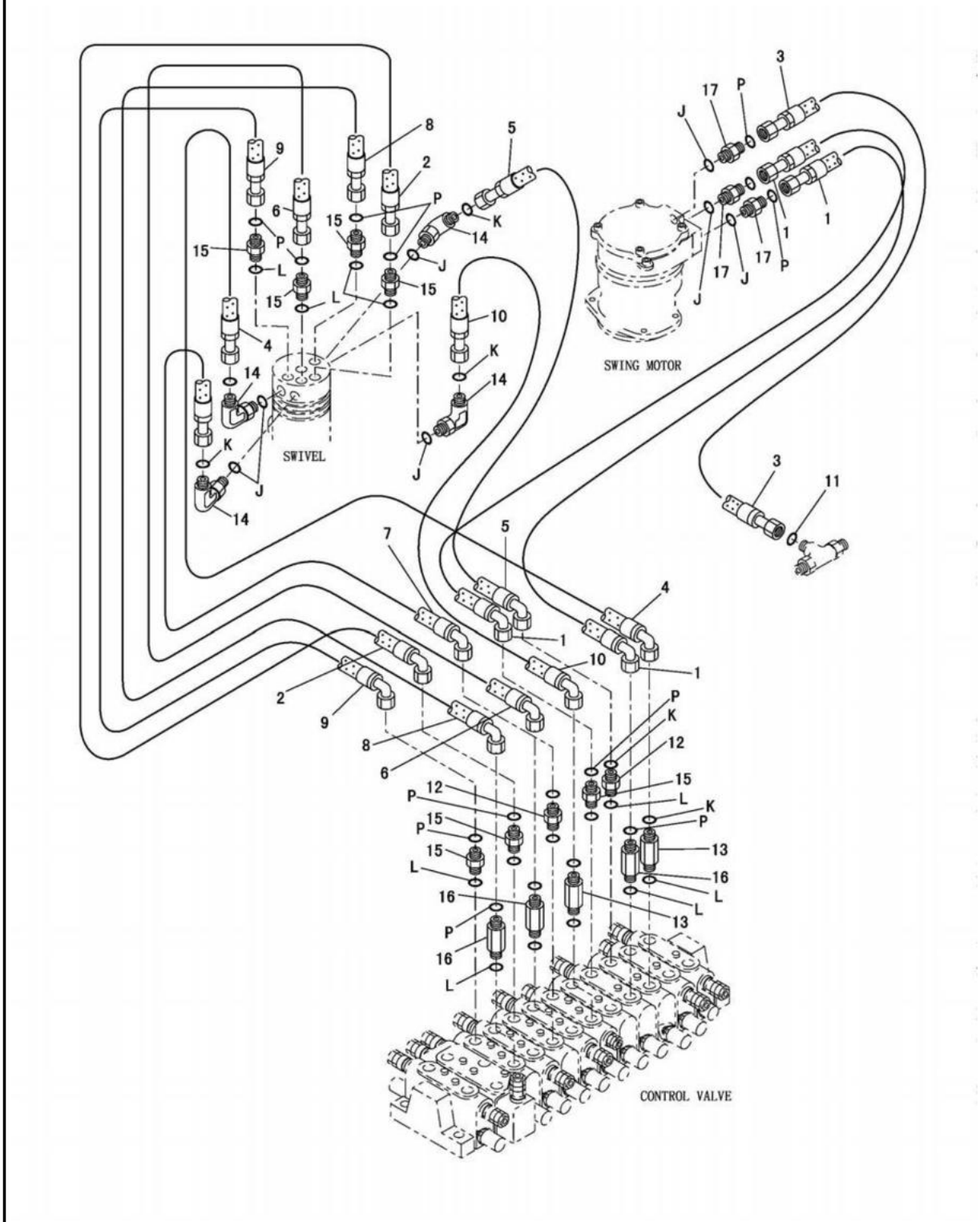

SWING MOTOR LINES (210-0426 N/S)
EFFECTIVE WITH SERIAL NO. BMW00787-
PART OF 210-1884-Page 510,511
AN ATTACHMENT

HYDRAULIC SYSTEM

NOTE	No.	PART NO.	QTY.	PART NAME	NOTE	No.	PART NO.	QTY.	PART NAME
	1	192-1137	2	HOSE AS					
	2	192-1138	1	HOSE AS					
	3	196-9663	1	HOSE AS					
	4	211-3366	1	HOSE AS					
	5	211-3367	1	HOSE AS					
	6	211-3368	1	HOSE AS					
	7	211-3369	1	HOSE AS					
	8	211-3370	1	HOSE AS					
	9	211-3371	1	HOSE AS					
	10	211-4488	1	HOSE AS					
	11	199-1902	1	SEAL					
KL	12	6V-8634	2	CONNECTOR					
KL	13	8T-0076	2	CONNECTOR					
JK	14	6V-8724	4	ELBOW					
LP	15	6V-8639	7	CONNECTOR					
LP	16	8T-0077	3	CONNECTOR					
JP	17	6V-9873	3	CONNECTOR					
				USED WITH FOLLOWING SEALS					
J		3J-1907	7	SEAL					
K		199-1901	8	SEAL					
L		3K-0360	14	SEAL					
P		199-1902	13	SEAL					

J117932 X01

SWING MOTOR LINES (210-0426 N/S)

EFFECTIVE WITH SERIAL NO. BMW00787-
PART OF 210-1884-Page 510,511
AN ATTACHMENT

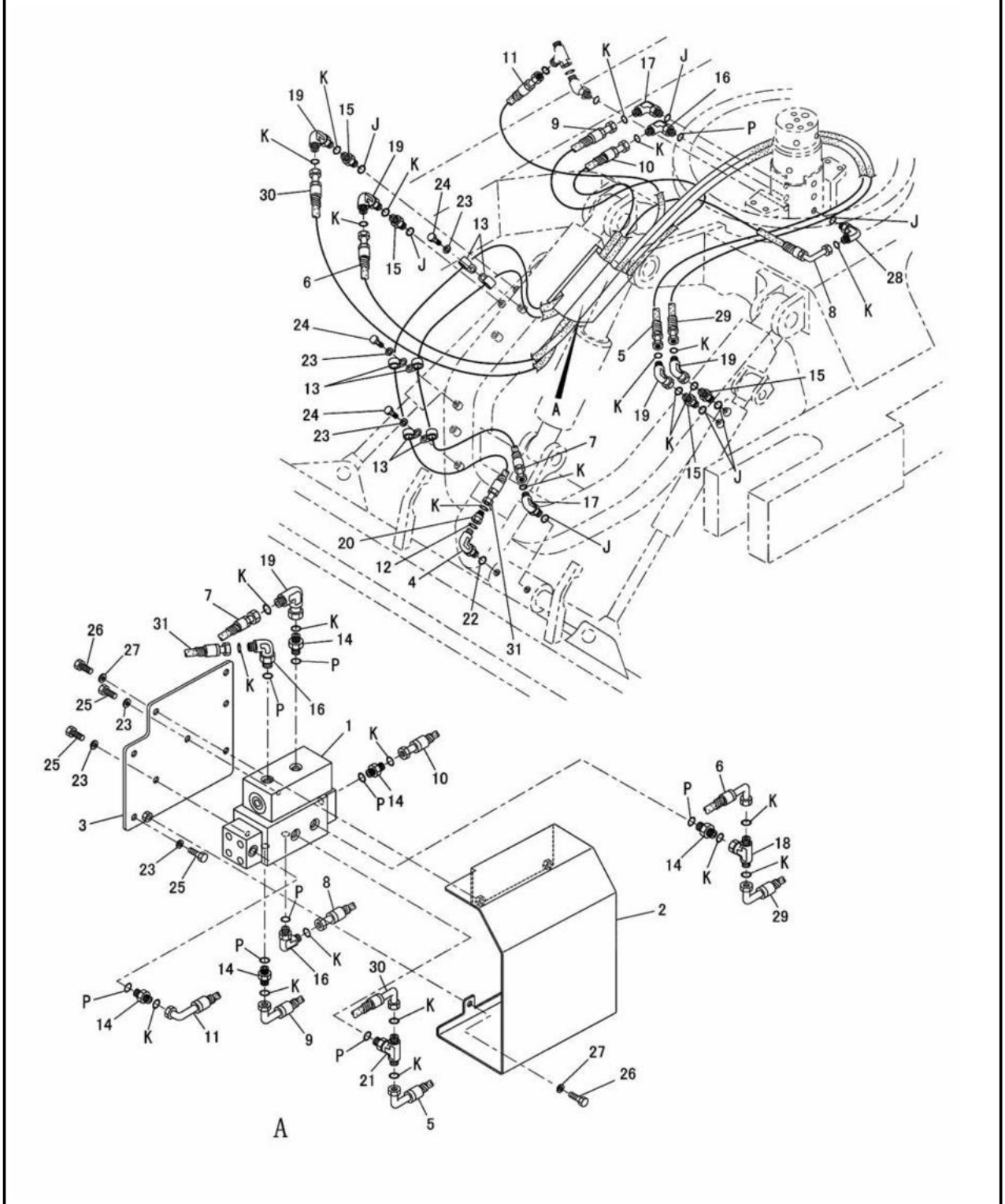

CYLINDER LINES (210-1898 N/S)
PART OF 210-1884-Page 510,511
AN ATTACHMENT

HYDRAULIC SYSTEM

NOTE	No.	PART NO.	QTY.	PART NAME	NOTE	No.	PART NO.	QTY.	PART NAME
	1	174-7298	1	VALVE GROUP					
	2	180-4956	1	COVER AS					
		8T-3612	2	NUT(M8×1.25)(WELD)					
	3	180-4974	1	BRACKET AS					
		8T-3612	1	NUT(M8×1.25)(WELD)					
	4	187-2137	1	ELBOW					
	5	211-8848	1	HOSE AS					
	6	211-8849	1	HOSE AS					
	7	211-8850	1	HOSE AS					
	8	211-8851	1	HOSE AS					
	9	211-8852	1	HOSE AS					
	10	211-8859	1	HOSE AS					
	11	211-8860	1	HOSE AS					
	12	199-1901	1	SEAL					
	13	1S-0994	6	CLIP					
KP	14	6V-8647	5	CONNECTOR					
JK	15	6V-8641	4	CONNECTOR					
KP	16	6V-8628	3	ELBOW					
JK	17	6V-8627	2	ELBOW					
K	18	6V-9842	1	TEE(WITH 2 SEALS)					
K	19	6V-9849	5	ELBOW					
K	20	6V-8934	1	REDUCER AS					
KP	21	6V-8773	1	TEE					
	22	3J-1907	1	SEAL					
	23	8T-4121	9	WASHER					
	24	8T-4137	3	BOLT(M10×1.5)					
	25	8T-4191	6	BOLT(M10×1.5)					
	26	8T-4200	3	BOLT(M8×1.25)					
	27	8T-4224	3	WASHER					
JK	28	8T-0164	1	ELBOW					
	29	211-8848	1	HOSE AS					
	30	211-8849	1	HOSE AS					
	31	211-8850	1	HOSE AS					
				USED WITH FOLLOWING SEALS					
J		3J-1907	7	SEAL					
K		199-1900	25	SEAL					
P		3J-7354	9	SEAL					

J129298 X02

CYLINDER LINES (210-1898 N/S)
PART OF 210-1884-Page 510,511
AN ATTACHMENT

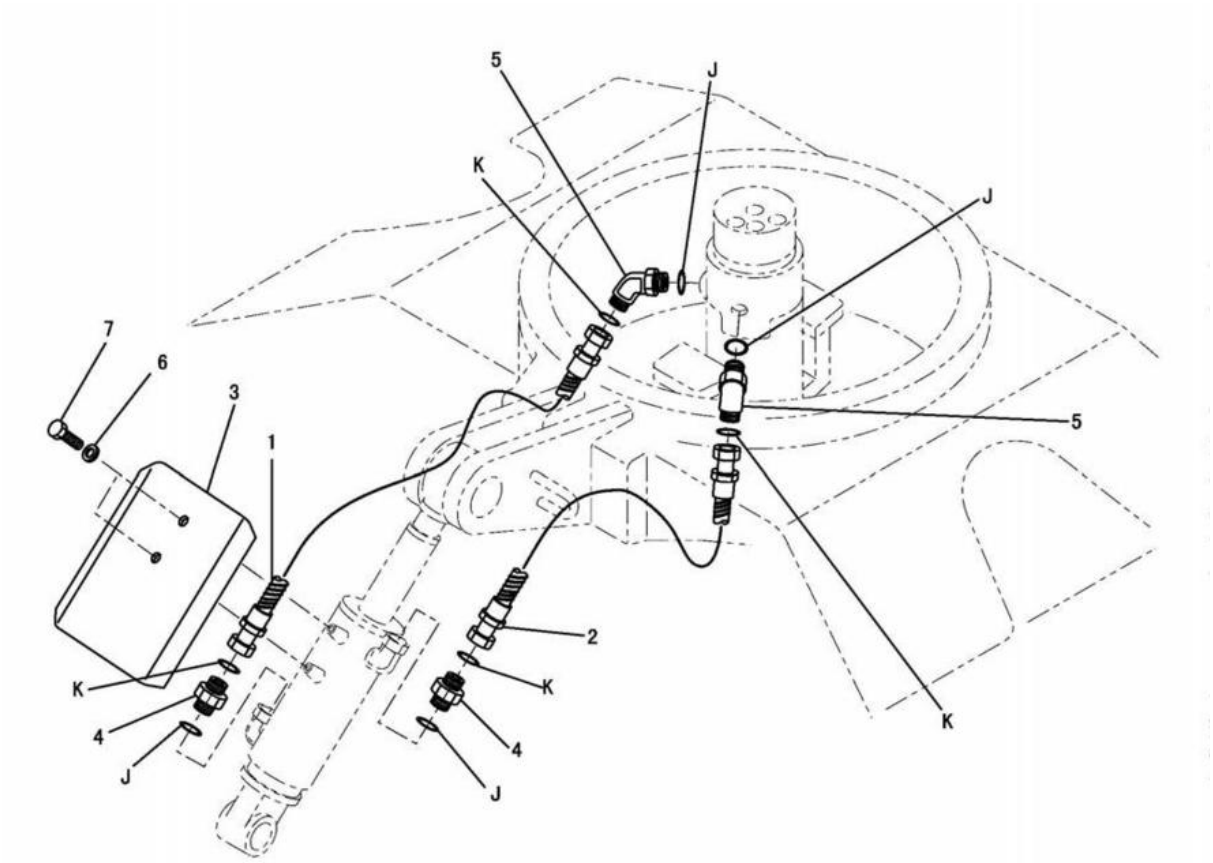

NOTE	No.	PART NO.	QTY.	PART NAME	NOTE	No.	PART NO.	QTY.	PART NAME
	1	211-1308	1	HOSE AS					
	2	211-1309	1	HOSE AS					
	3	197-7768	1	COVER					
JK	4	6V-8636	2	CONNECTOR					
JK	5	6V-9001	2	ELBOW					
	6	8T-4121	2	WASHER					
	7	8T-4191	2	BOLT(M10×1.5)					
				USED WITH FOLLOWING SEALS					
J		3J-1907	4	SEAL					
K		199-1901	4	SEAL					

J117931 X00

BLADE LINES (211-0808 N/S)
EFFECTIVE WITH SERIAL NO. BMW00787-
PART OF 210-1884-Page 510,511
AN ATTACHMENT

IMPLEMENTS

CONSISTS OF :

			PAGE
1	191-3852	FRONT WIRING GROUP	114
1	195-9040	BOOM LIGHTING GROUP(1 LAMP)	118
1	191-3876	BOOM CYLINDER GUARD GROUP	485
1	191-1957	BOOM CYLINDER GROUP	430
1	191-3834	BOOM LINES GROUP	344
1	191-3875	BOOM GROUP	482
1	191-3835	SWING FRAME GROUP	252
1	191-1961	SWING CYLINDER GROUP	432

J107687 X02

BOOM ARRANGEMENT (191-3353 N/S)
EFFECTIVE WITH SERIAL NO. BMW00001-BMW01358
PART OF 191-0178-Page 1,2

CONSISTS OF :

			PAGE
1	209-8169	FRONT WIRING GROUP	116
1	195-9040	BOOM LIGHTING GROUP(1 LAMP)	118
1	191-3876	BOOM CYLINDER GUARD GROUP	485
1	191-1957	BOOM CYLINDER GROUP	430
1	191-3834	BOOM LINES GROUP	344
1	191-3875	BOOM GROUP	482
1	191-3835	SWING FRAME GROUP	252
1	191-1961	SWING CYLINDER GROUP	432

J128722 X04

BOOM ARRANGEMENT (191-3353 N/S)
EFFECTIVE WITH SERIAL NO. BMW01359-
PART OF 191-0178-Page 1,2

CONSISTS OF :

			PAGE
1	191-1959	STICK CYLINDER GROUP	429
1	191-3836	STICK LINES GROUP	345
1	192-3547	STICK GROUP	477

J106517 X02

STICK ARRANGEMENT (191-3354 N/S)
1.43m STICK

CONSISTS OF :

			PAGE
1	191-3836	STICK LINES GROUP	345
1	194-6428	BUCKET LINES GROUP	350
1	191-1959	STICK CYLINDER GROUP	429
1	200-6576	STICK GROUP(LONG)	479

J107626 X01

STICK ARRANGEMENT (200-6575 N/S) -LONG-HEAVY DUTY
1.83m STICK
AN ATTACHMENT

IMPLEMENTS

CONSISTS OF :

			PAGE
1	191-1959	STICK CYLINDER GROUP	429
1	191-3836	STICK LINES GROUP	345
1	200-6573	STICK GROUP	478

J107624 X00

STICK ARRANGEMENT (200-6572 N/S) -HEAVY DUTY
1.43m STICK
AN ATTACHMENT

CONSISTS OF :

			PAGE
1	191-1960	BUCKET CYLINDER GROUP ·····	436
1	191-3837	BUCKET LINES GROUP ·····	348
1	192-5225	BUCKET LINKAGE GROUP ·····	488

J106520 X02

BUCKET LINKAGE ARRANGEMENT (191-3355 N/S)
EFFECTIVE WITH SERIAL NO. BMW00001-BMW01239
PART OF 191-0178-Page 1,2

CONSISTS OF :

			PAGE
1	215-2232	BUCKET CYLINDER GROUP ·····	437
1	191-3837	BUCKET LINES GROUP ·····	348
1	192-5225	BUCKET LINKAGE GROUP ·····	488

J126649 X03

BUCKET LINKAGE ARRANGEMENT (191-3355 N/S)
EFFECTIVE WITH SERIAL NO. BMW01240-
PART OF 191-0178-Page 1,2

IMPLEMENTS

CONSISTS OF :

			PAGE
1	191-3820	BLADE LINES GROUP ·····	427
1	191-1962	BLADE CYLINDER GROUP ·····	433
1	191-3821	BLADE CONTROL GROUP ·····	302
1	191-3819	STRAIGHT BLADE GROUP ·····	464

J106524 X02

STRAIGHT BLADE ARRANGEMENT (191-3356 N/S)
EFFECTIVE WITH SERIAL NO. BMW00001-BMW01075
PART OF 191-0178-Page 1

CONSISTS OF :

			PAGE
1	191-3820	BLADE LINES GROUP ·····	427
1	191-1962	BLADE CYLINDER GROUP ·····	433
1	191-3821	BLADE CONTROL GROUP ·····	302
1	214-0884	STRAIGHT BLADE GROUP ·····	465

J115345 X03

STRAIGHT BLADE ARRANGEMENT (191-3356 N/S)
EFFECTIVE WITH SERIAL NO. BMW01076-BMW01095
PART OF 191-0178-Page 1

IMPLEMENTS

CONSISTS OF :

			PAGE
1	215-3747	BLADE CYLINDER GROUP	434
1	209-5412	BLADE LINES GROUP	428
1	214-0884	STRAIGHT BLADE GROUP	465
1	191-3821	BLADE CONTROL GROUP	302

J111069 X02

STRAIGHT BLADE ARRANGEMENT (209-1671 N/S)
EFFECTIVE WITH SERIAL NO. BMW01096-
PART OF 191-0178-Page 2

CONSISTS OF :

			PAGE
1	191-3820	BLADE LINES GROUP ·····	427
1	191-1962	BLADE CYLINDER GROUP ·····	433
1	191-3821	BLADE CONTROL GROUP ·····	302
1	201-4353	STRAIGHT BLADE GROUP ·····	466

J115506 X00

STRAIGHT BLADE ARRANGEMENT (201-4352 N/S) -BOLT ON CUTTING EDGE
EFFECTIVE WITH SERIAL NO. BMW00001-BMW01133
AN ATTACHMENT

CONSISTS OF :

			PAGE
1	215-3747	BLADE CYLINDER GROUP ·····	434
1	209-5412	BLADE LINES GROUP ·····	428
1	201-4353	STRAIGHT BLADE GROUP ·····	466
1	191-3821	BLADE CONTROL GROUP ·····	302

J111802 X01

STRAIGHT BLADE ARRANGEMENT (208-0641 N/S) -BOLT ON CUTTING EDGE
EFFECTIVE WITH SERIAL NO. BMW01134-
AN ATTACHMENT

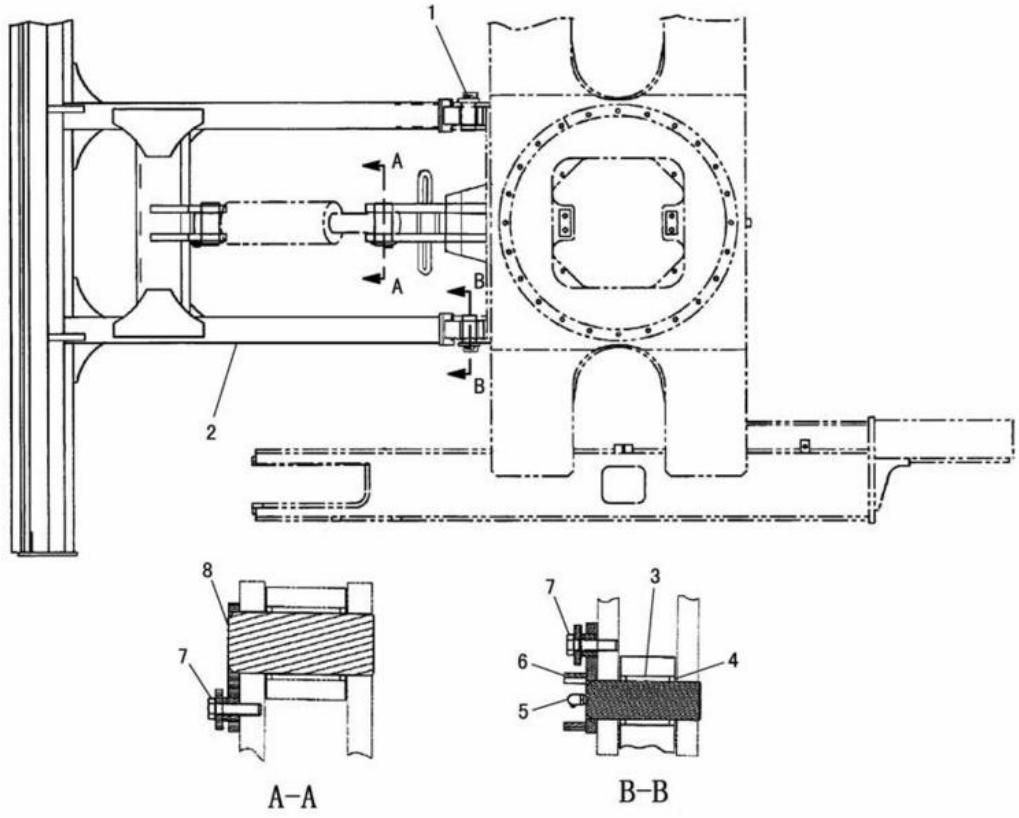

NOTE	No.	PART NO.	QTY.	PART NAME	NOTE	No.	PART NO.	QTY.	PART NAME
	1	200-0898	1	PIN AS(RH)					
	2	191-9313	1	BLADE AS					
	3	121-3772	2	BUSHING					
	4	121-3691	4	SEAL					
	5	3B-8488	2	FITTING					
	6	200-0899	1	PIN AS(LH)					
	7	8T-4137	4	BOLT(M10×1.5)					
		7X-0632	4	WASHER					
	8	200-0896	2	PIN AS					

J136073 X02

STRAIGHT BLADE (191-3819 N/S)
EFFECTIVE WITH SERIAL NO. BMW00001-BMW01075
PART OF 191-3356-Page 461

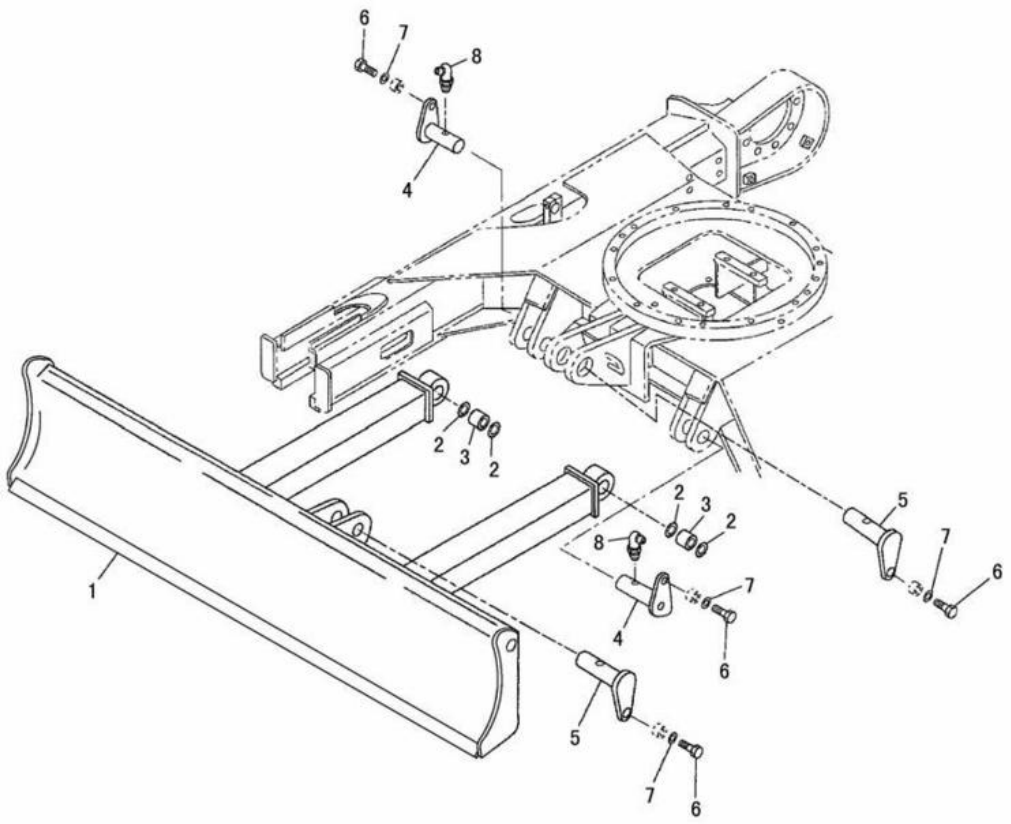

NOTE	No.	PART NO.	QTY.	PART NAME	NOTE	No.	PART NO.	QTY.	PART NAME
	1	214-0885	1	BLADE AS					
	2	121-3691	4	SEAL					
	3	140-5169	2	BUSHING					
	4	218-4681	2	PIN AS					
	5	219-0709	2	PIN AS					
	6	8T-4137	4	BOLT(M10×1.5)					
	7	7X-0632	4	WASHER					
	8	3B-8485	2	FITTING					

J111295 X02

STRAIGHT BLADE (214-0884 N/S)
EFFECTIVE WITH SERIAL NO. BMW01076-
PART OF 191-3356-Page 461,209-1671-Page 462

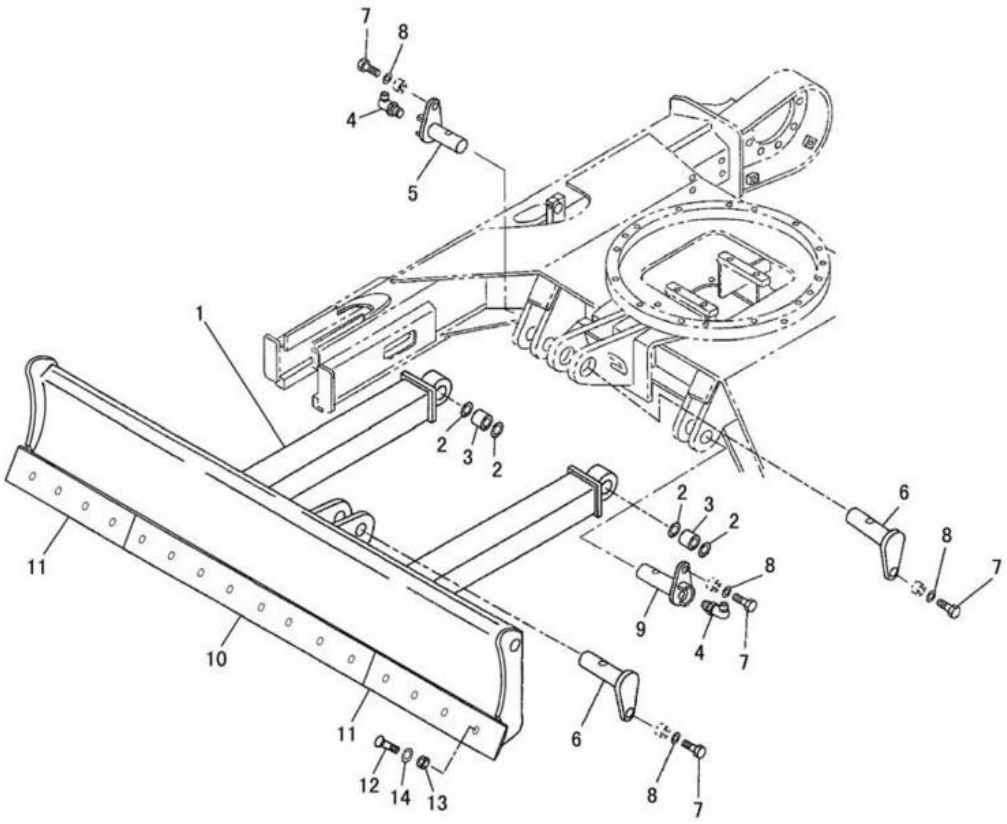

NOTE	No.	PART NO.	QTY.	PART NAME	NOTE	No.	PART NO.	QTY.	PART NAME
	1	201-4363	1	BLADE AS					
	2	121-3691	4	SEAL					
	3	121-3772	2	BUSHING					
	4	3B-8488	2	FITTING					
	5	200-0898	1	PIN AS(RH)					
	6	200-0896	2	PIN AS					
	7	8T-4137	4	BOLT(M10×1.5)					
	8	7X-0632	4	WASHER					
	9	200-0899	1	PIN AS(LH)					
	10	201-4354	1	EDGE					
	11	201-4355	2	EDGE					
	12	201-4356	16	BOLT					
	13	8T-4244	16	NUT(M12×1.75)					
	14	8T-4223	16	WASHER					

J111803 X00

STRAIGHT BLADE (201-4353 N/S) -BOLT ON CUTTING EDGE
EFFECTIVE WITH SERIAL NO. BMW00001-BMW01133
PART OF 201-4352-Page 463,208-0641-Page 463
AN ATTACHMENT

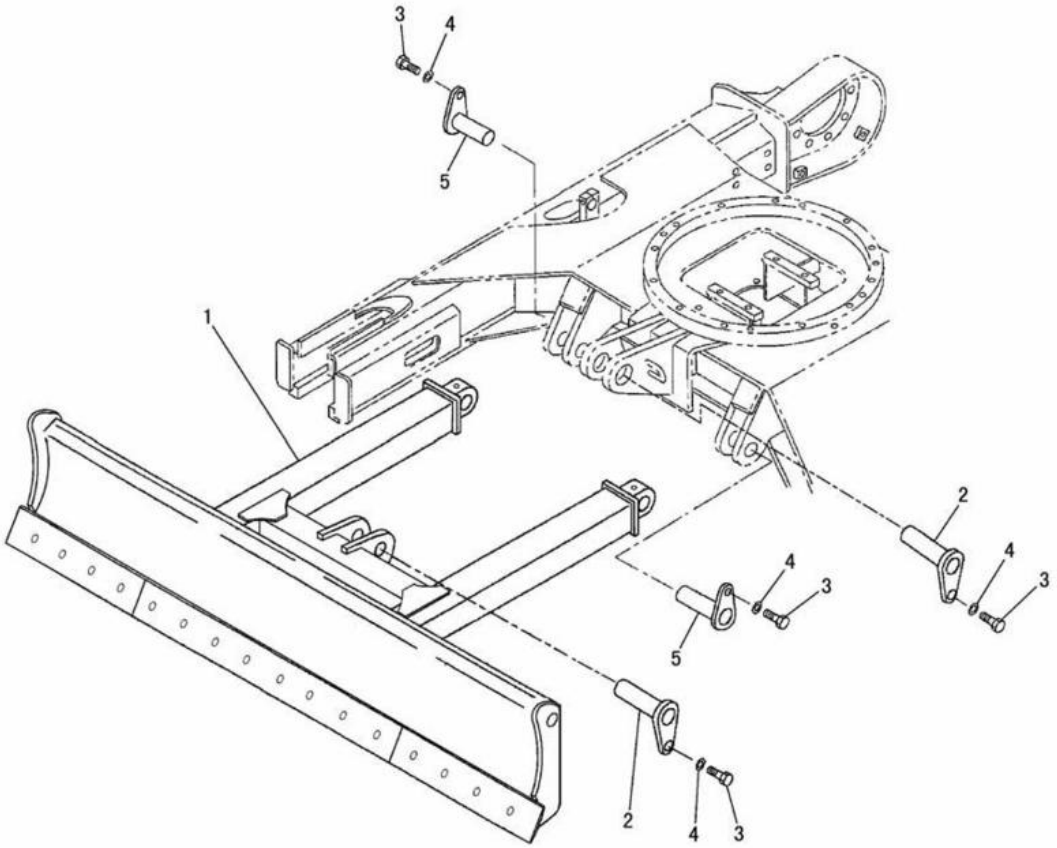

NOTE	No.	PART NO.	QTY.	PART NAME	NOTE	No.	PART NO.	QTY.	PART NAME
CY	1	222-8767	1	BLADE GROUP					
C	2	219-0709	2	PIN AS					
	3	8T-4137	4	BOLT(M10×1.5)					
	4	7X-0632	4	WASHER					
C	5	218-4681	2	PIN AS					

C-INDICATES CHANGE
Y-SEE SEPARATE ILLUSTRATION

J125999 X01

STRAIGHT BLADE (201-4353 N/S) -BOLT ON CUTTING EDGE

EFFECTIVE WITH SERIAL NO. BMW01134-
PART OF 201-4352-Page 463,208-0641-Page 463
222-8767-Page 468
AN ATTACHMENT

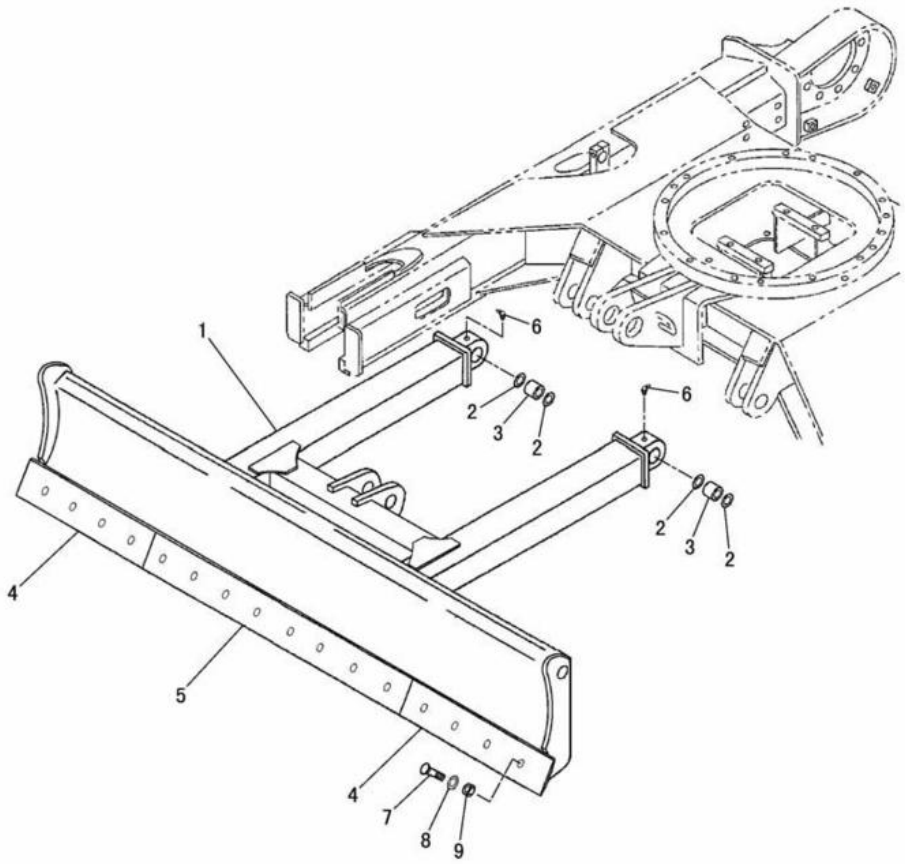

NOTE	No.	PART NO.	QTY.	PART NAME	NOTE	No.	PART NO.	QTY.	PART NAME
	1	201-4363	1	BLADE AS					
	2	140-3734	4	SEAL					
	3	140-5169	2	BUSHING					
	4	201-4355	2	EDGE					
	5	201-4354	1	EDGE					
	6	3B-8485	2	FITTING					
	7	201-4356	16	BOLT(M12×1.75)					
	8	8T-4223	16	WASHER					
	9	8T-4244	16	NUT(M12×1.75)					

J126000 E00

STRAIGHT BLADE (222-8767 N/S) -BOLT ON CUTTING EDGE
EFFECTIVE WITH SERIAL NO. BMW01134-
PART OF 201-4353-Page 467
AN ATTACHMENT

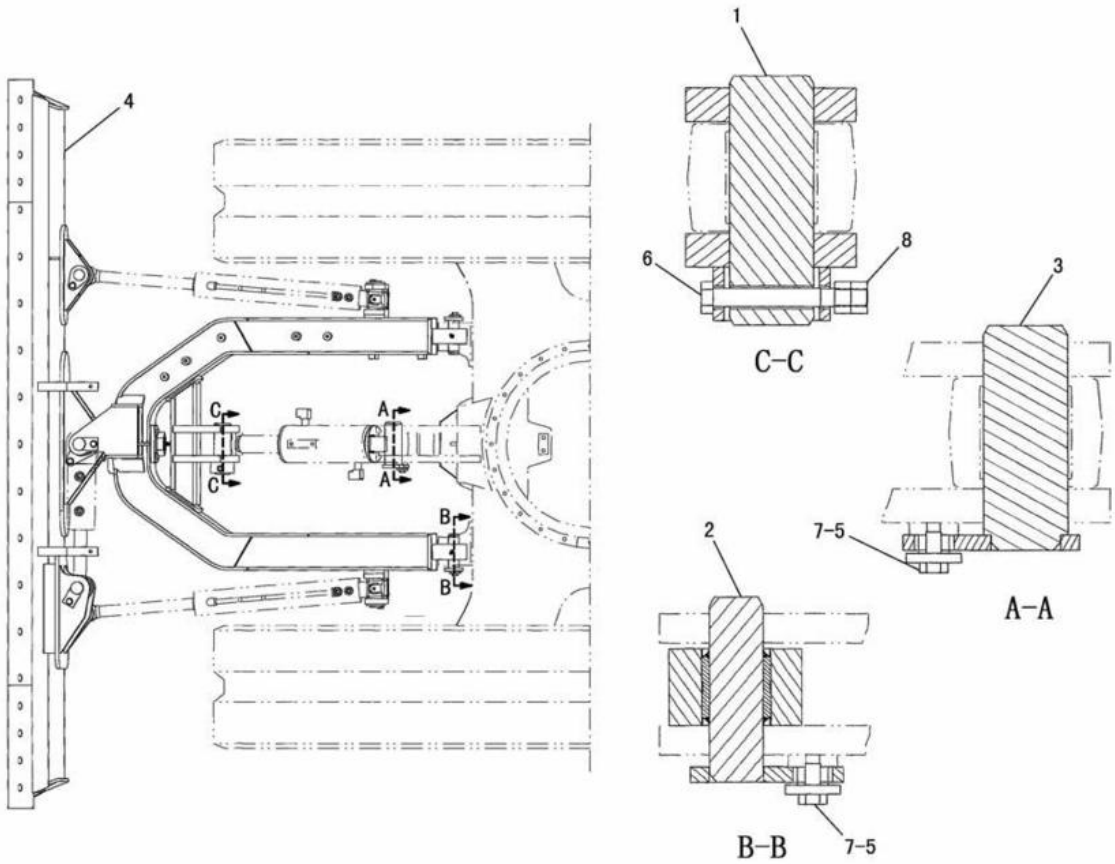

NOTE	No.	PART NO.	QTY.	PART NAME	NOTE	No.	PART NO.	QTY.	PART NAME
	1	121-3646	1	PIN					
	2	218-4681	2	PIN AS					
	3	219-0709	1	PIN AS					
Y	4	223-0736	1	ANGLING BLADE GROUP					
	5	7X-0632	3	WASHER					
	6	7X-2549	1	BOLT(M12×1.75)					
	7	8T-4137	3	BOLT(M10×1.5)					
	8	8T-4244	2	NUT(M12×1.75)					

Y-SEE SEPARATE ILLUSTRATION

J117293 E00

POWER ANGLE AND TILT BLADE (223-0735 N/S)
EFFECTIVE WITH SERIAL NO. BMW01134-
PART OF 210-1884-Page 511
223-0736-Page 472, 473
AN ATTACHMENT

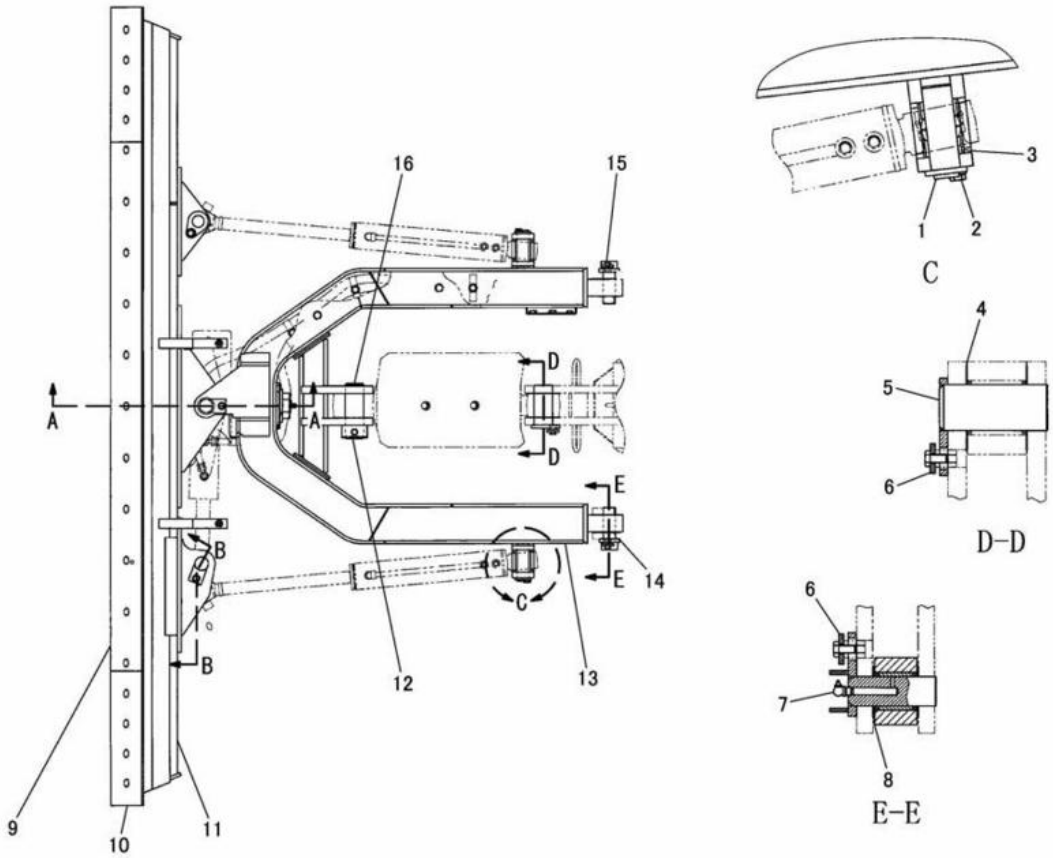

NOTE	No.	PART NO.	QTY.	PART NAME	NOTE	No.	PART NO.	QTY.	PART NAME
	1	172-1748	2	PIN AS		14	158-4691	1	PIN AS(LH)
	2	8T-4136	2	BOLT(M10×1.5)		15	158-4690	1	PIN AS(RH)
		8T-4121	2	WASHER		16	121-3646	1	PIN
	3	186-4059	4	COLLAR					
B	4	163-7179	4	SHIM(1.6mm THICK)					
B		163-7180	4	SHIM(0.5mm THICK)					
B		163-7181	4	SHIM(1.0mm THICK)					
	5	156-8748	1	PIN AS					
	6	8T-4137	3	BOLT(M10×1.5)					
		7X-0632	3	WASHER					
	7	3B-8488	2	FITTING					
B	8	163-7176	4	SHIM(1.0mm THICK)					
B		163-7177	4	SHIM(0.5mm THICK)					
B		163-7178	4	SHIM(2.0mm THICK)					
	9	210-0536	1	EDGE					
	10	201-4355	2	EDGE					
	11	210-0535	1	BLADE AS					
	12	7X-2549	1	BOLT(M12×1.75)					
		8T-4244	2	NUT(M12×1.75)					
	13	172-1761	1	FRAME AS					

B-USE AS REQUIRED

J126685 X00

POWER ANGLE AND TILT BLADE (210-0534 N/S) -PART 1 OF 2
EFFECTIVE WITH SERIAL NO. BMW00787-BMW01133
PART OF 210-1884-Page 510
AN ATTACHMENT

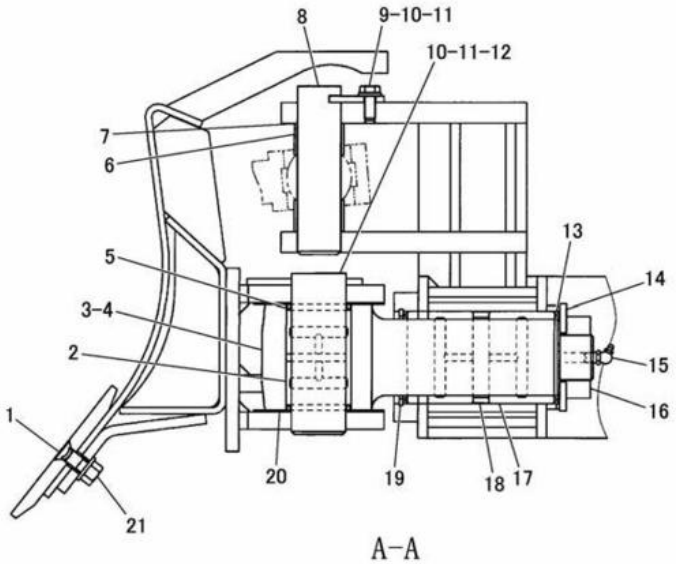

A-A

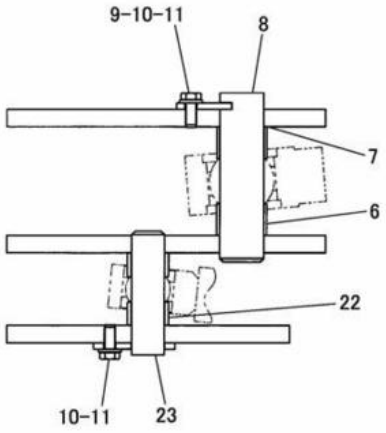

B-B

NOTE	No.	PART NO.	QTY.	PART NAME	NOTE	No.	PART NO.	QTY.	PART NAME
	1	201-4356	19	BOLT(M12×1.75)	B	20	172-1760	2	SHIM(1.0mm THICK)
	2	172-1750	2	BUSHING	B		172-1759	2	SHIM(0.5mm THICK)
	3	172-1741	1	PIN		21	8T-4223	19	WASHER
	4	3B-8488	1	FITTING			8T-4244	19	NUT(M12×1.75)
	5	121-3709	2	SEAL		22	186-4059	4	COLLER
	6	172-1744	4	COLLAR		23	172-1748	2	PIN AS
B	7	175-1794	2	SHIM(0.5mm THICK)					
B		175-1795	2	SHIM(1.0mm THICK)					
	8	172-1742	2	PIN					
	9	172-1743	2	PLATE					
	10	8T-4136	5	BOLT(M10×1.5)					
	11	8T-4121	5	WASHER					
	12	172-1747	1	PIN AS					
	13	093-1434	2	SEAL					
	14	172-1762	1	WASHER					
	15	3J-7283	1	FITTING					
	16	172-1749	1	NUT(M42×4.5)					
	17	144-2348	2	BUSHING					
	18	144-2349	1	COLLAR					
	19	6V-5590	1	RING					

B-USE AS REQUIRED

J126686 X00

POWER ANGLE AND TILT BLADE (210-0534 N/S) -PART 2 OF 2
EFFECTIVE WITH SERIAL NO. BMW00787-BMW01133
PART OF 210-1884-Page 510
AN ATTACHMENT

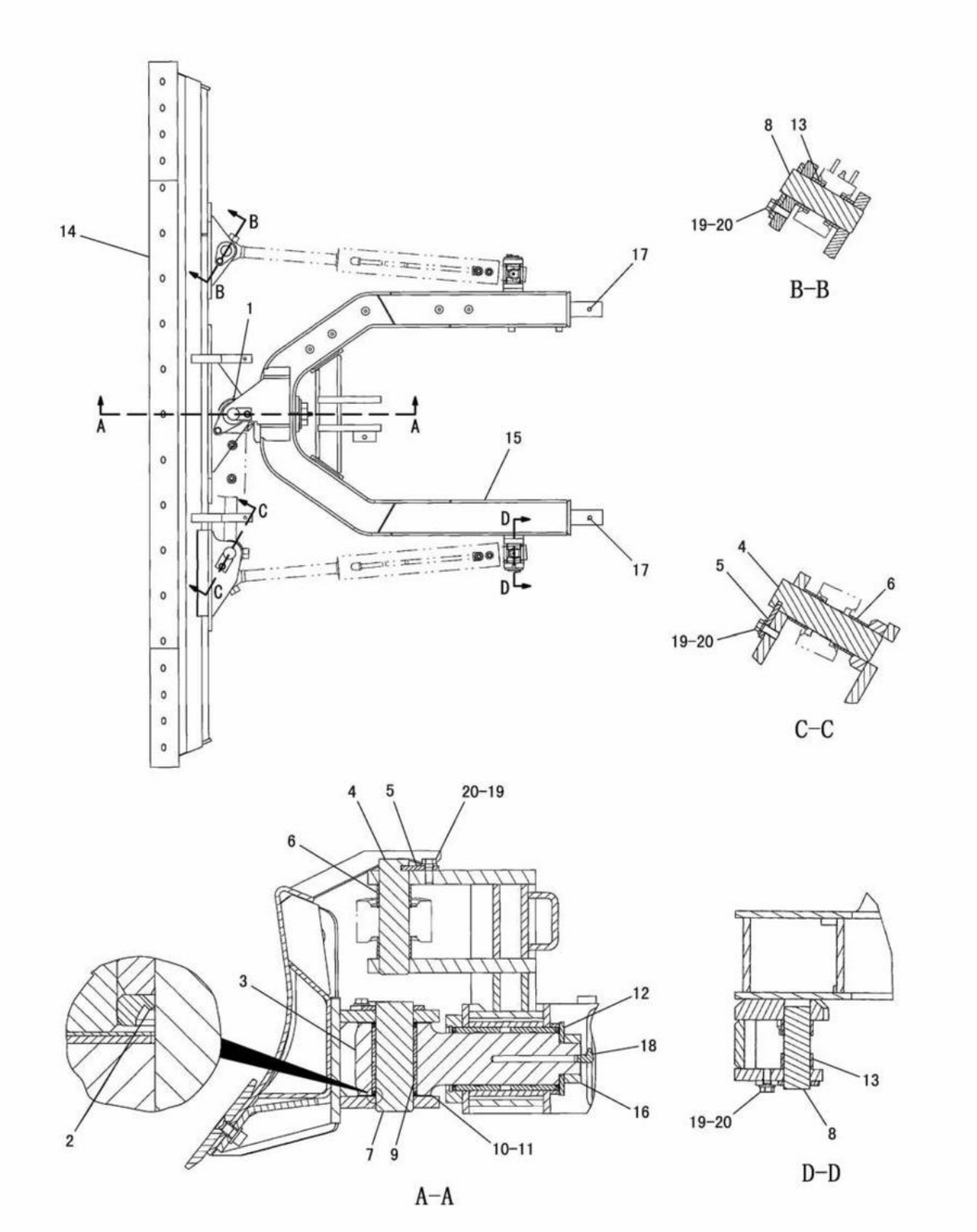

POWER ANGLE AND TILT BLADE (223-0736 N/S)
EFFECTIVE WITH SERIAL NO. BMW01134-
PART OF 223-0735-Page 469
AN ATTACHMENT

IMPLEMENTS

NOTE	No.	PART NO.	QTY.	PART NAME	NOTE	No.	PART NO.	QTY.	PART NAME
	1	3J-7283	1	FITTING					
	2	121-3709	2	SEAL					
	3	172-1741	1	PIN					
	4	172-1742	2	PIN					
	5	172-1743	2	PLATE					
	6	172-1744	4	COLLAR					
	7	172-1747	1	PIN AS					
	8	172-1748	4	PIN AS					
	9	172-1750	2	BUSHING					
B	10	172-1759	2	SHIM(0.5mm THICK)					
B	11	172-1760	2	SHIM(1.0mm THICK)					
	12	251-1896	1	WASHER					
	13	186-4059	8	COLLAR					
Y	14	223-0737	1	BLADE GROUP					
	15	223-0763	1	FRAME AS					
	16	251-1897	1	NUT(M42×4.5)					
	17	3B-8485	2	FITTING					
	18	3B-8488	1	FITTING					
	19	8T-4121	7	WASHER					
	20	8T-4136	7	BOLT(M10×1.5)					

B-USE AS REQUIRED
Y-SEE SEPARATE ILLUSTRATION

J128774 E01

POWER ANGLE AND TILT BLADE (223-0736 N/S)
EFFECTIVE WITH SERIAL NO. BMW01134-
PART OF 223-0735-Page 469
223-0737-Page 474
AN ATTACHMENT

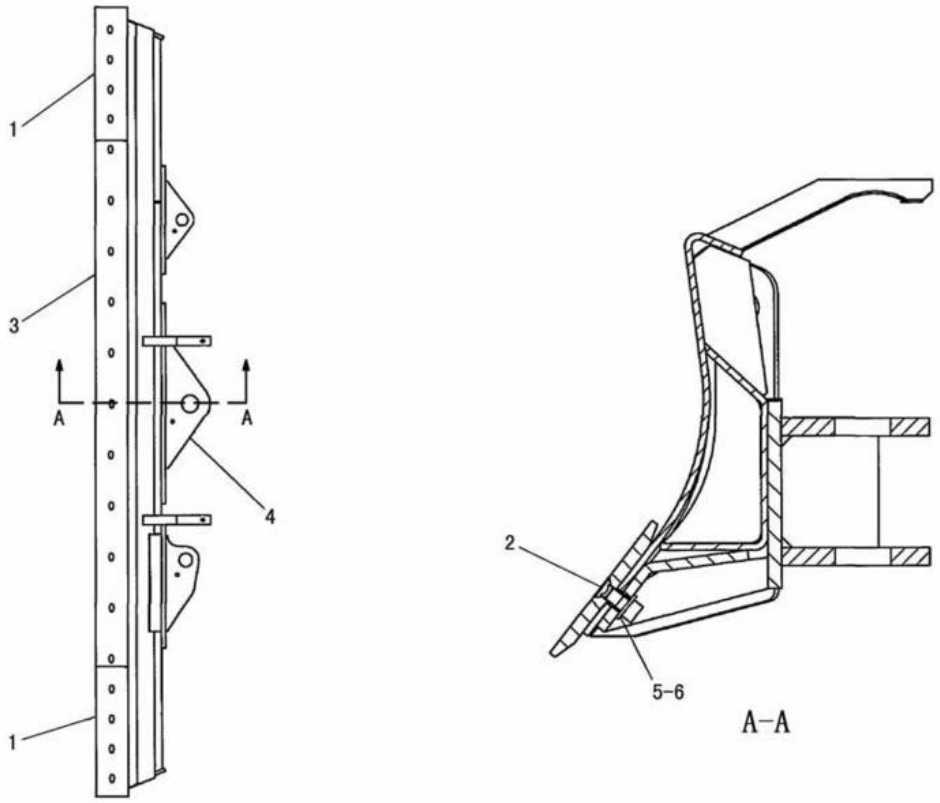

NOTE	No.	PART NO.	QTY.	PART NAME	NOTE	No.	PART NO.	QTY.	PART NAME
	1	201-4355	2	EDGE					
	2	201-4356	19	BOLT(M12×1.75)					
	3	210-0536	1	EDGE					
	4	223-0738	1	BLADE AS					
	5	8T-4223	19	WASHER					
	6	8T-4244	19	NUT(M12×1.75)					

J117296 E00

POWER ANGLE AND TILT BLADE (223-0737 N/S) -BOLT ON CUTTING EDGE
EFFECTIVE WITH SERIAL NO. BMW01134-
PART OF 223-0736-Page 473
AN ATTACHMENT

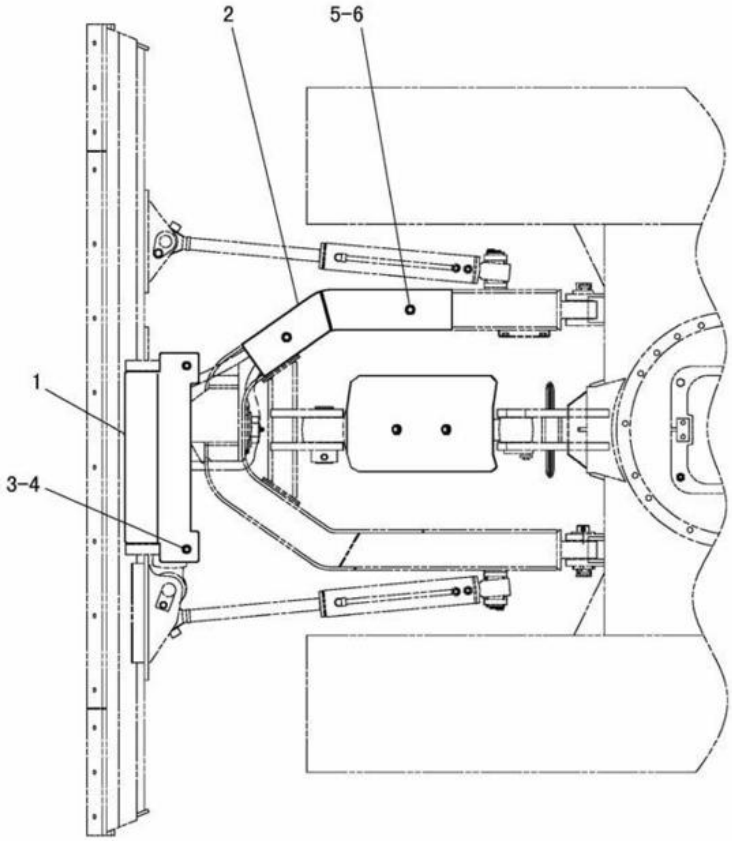

NOTE	No.	PART NO.	QTY.	PART NAME	NOTE	No.	PART NO.	QTY.	PART NAME
	1	215-4821	1	COVER					
	2	172-1739	1	COVER					
	3	8T-4136	2	BOLT(M10×1.5)					
	4	8T-4121	2	WASHER					
	5	8T-4223	2	WASHER					
	6	8T-4139	2	BOLT(M12×1.75)					

J117291 X00

GUARD (215-4820 N/S)
EFFECTIVE WITH SERIAL NO. BMW00787-
PART OF 210-1884-Page 510,511
AN ATTACHMENT

MEMORANDUM

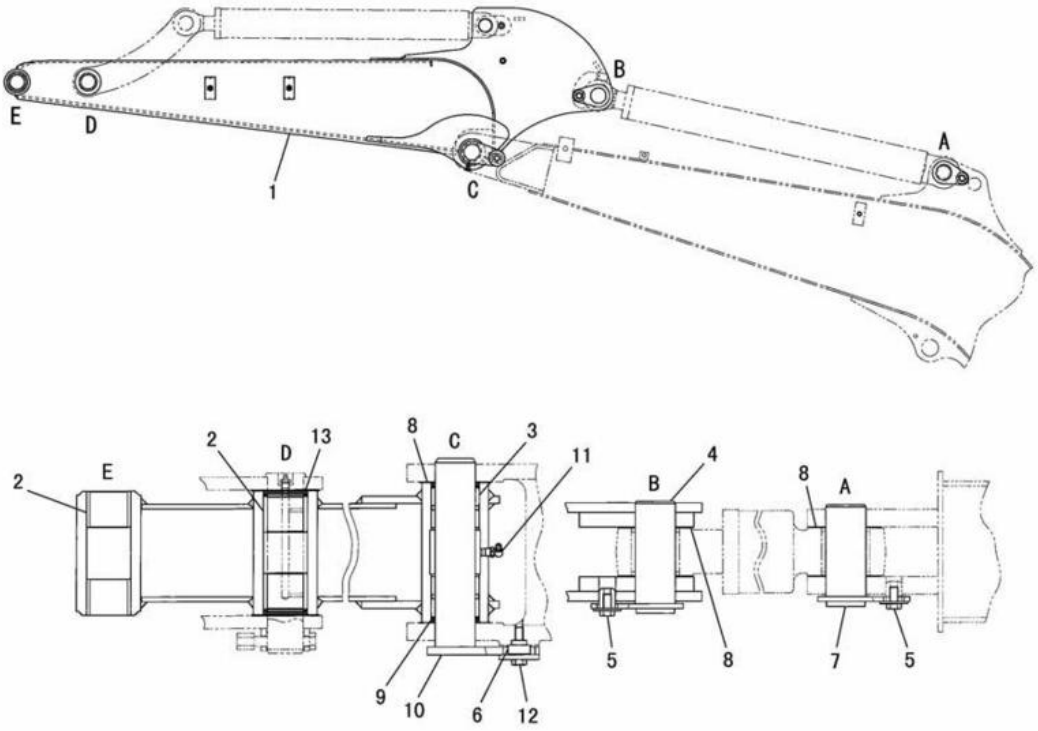

NOTE	No.	PART NO.	QTY.	PART NAME	NOTE	No.	PART NO.	QTY.	PART NAME
	1	192-3554	1	STICK AS					
	2	146-2304	4	BUSHING					
	3	150-5694	2	BUSHING					
	4	223-3594	1	PIN AS					
	5	8T-4137	2	BOLT(M10×1.5)					
		6V-8513	2	WASHER					
	6	200-0038	1	BOSS					
	7	223-3596	1	PIN AS					
B	8	150-5699	3	SHIM(1.0mm THICK)					
B		150-5689	3	SHIM(0.6mm THICK)					
	9	150-5697	2	SEAL					
	10	223-3593	1	PIN AS					
	11	3B-8488	1	FITTING					
	12	115-6433	1	WASHER					
		8T-4186	1	BOLT(M10×1.5)					
	13	093-1430	2	SEAL					

B-USE AS REQUIRED

J126705 X07

STICK (192-3547 N/S)
PART OF 191-3354-Page 458
1.43m STICK

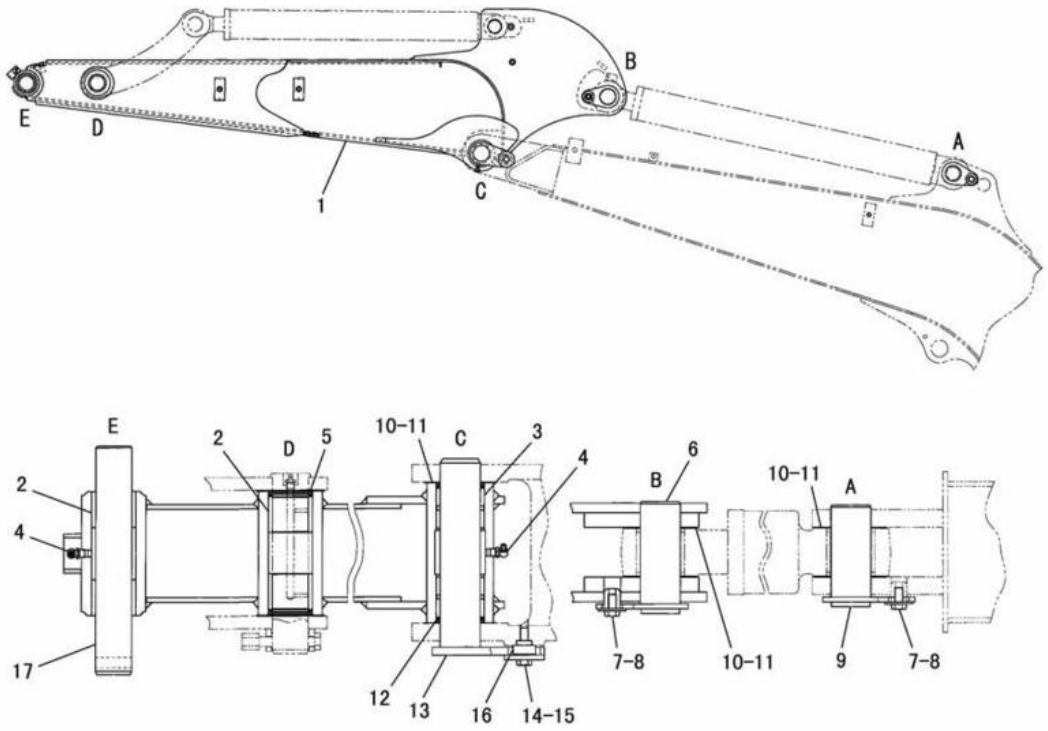

NOTE	No.	PART NO.	QTY.	PART NAME	NOTE	No.	PART NO.	QTY.	PART NAME
	1	200-3446	1	STICK AS					
	2	146-2304	4	BUSHING					
	3	150-5694	2	BUSHING					
	4	3B-8488	2	FITTING					
	5	093-1430	2	SEAL					
	6	223-3594	1	PIN AS					
	7	8T-4137	2	BOLT(M10×1.5)					
	8	6V-8513	2	WASHER					
	9	223-3596	1	PIN AS					
B	10	150-5699	3	SHIM(1.0mm THICK)					
B	11	150-5689	3	SHIM(0.6mm THICK)					
	12	150-5697	2	SEAL					
	13	223-3593	1	PIN AS					
	14	115-6433	1	WASHER					
	15	8T-4186	1	BOLT(M10×1.5)					
	16	200-0038	1	BOSS					
	17	200-6574	1	PIN					

B-USE AS REQUIRED

J126706 X05

STICK (200-6573 N/S)
PART OF 200-6572-Page 459
1.43m STICK
AN ATTACHMENT

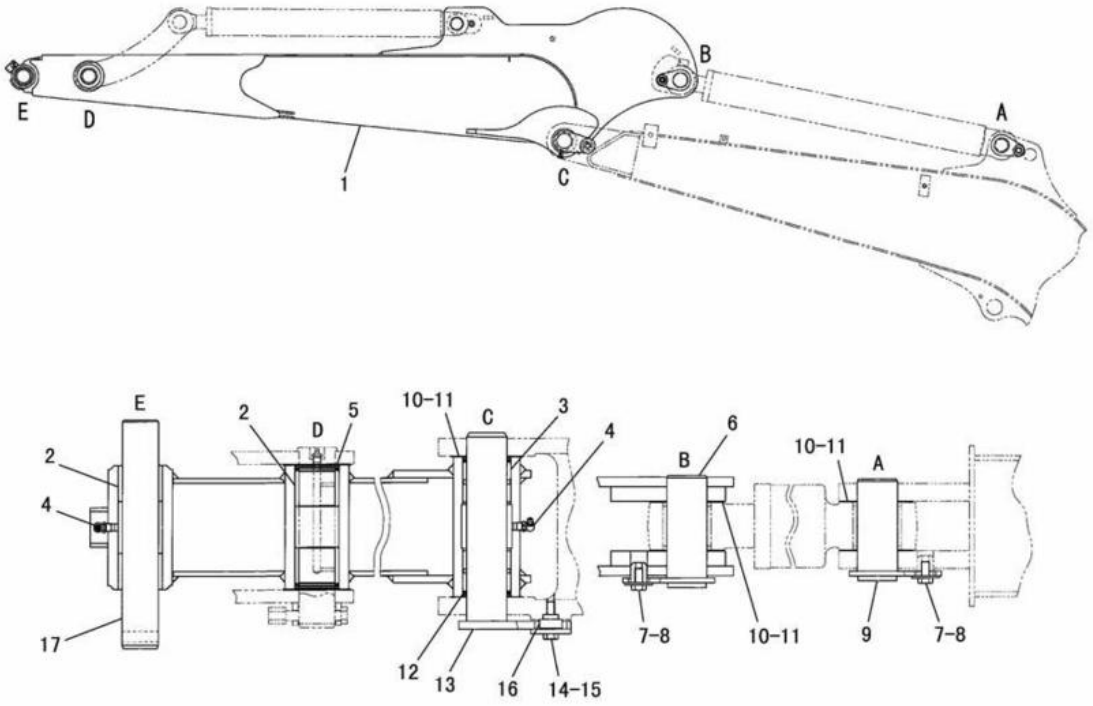

NOTE	No.	PART NO.	QTY.	PART NAME	NOTE	No.	PART NO.	QTY.	PART NAME
	1	200-3447	1	STICK AS					
	2	146-2304	4	BUSHING					
	3	150-5694	2	BUSHING					
	4	3B-8488	2	FITTING					
	5	093-1430	2	SEAL					
	6	223-3594	1	PIN AS					
	7	8T-4137	2	BOLT(M10×1.5)					
	8	6V-8513	2	WASHER					
	9	223-3596	1	PIN AS					
B	10	150-5699	3	SHIM(1.0mm THICK)					
B	11	150-5689	3	SHIM(0.6mm THICK)					
	12	150-5697	2	SEAL					
	13	223-3593	1	PIN AS					
	14	115-6433	1	WASHER					
	15	8T-4186	1	BOLT(M10×1.5)					
	16	200-0038	1	BOSS					
	17	200-6574	1	PIN					

B-USE AS REQUIRED

J126707 X05

STICK (200-6576 N/S) -LONG
PART OF 200-6575-Page 458
1.83m STICK
AN ATTACHMENT

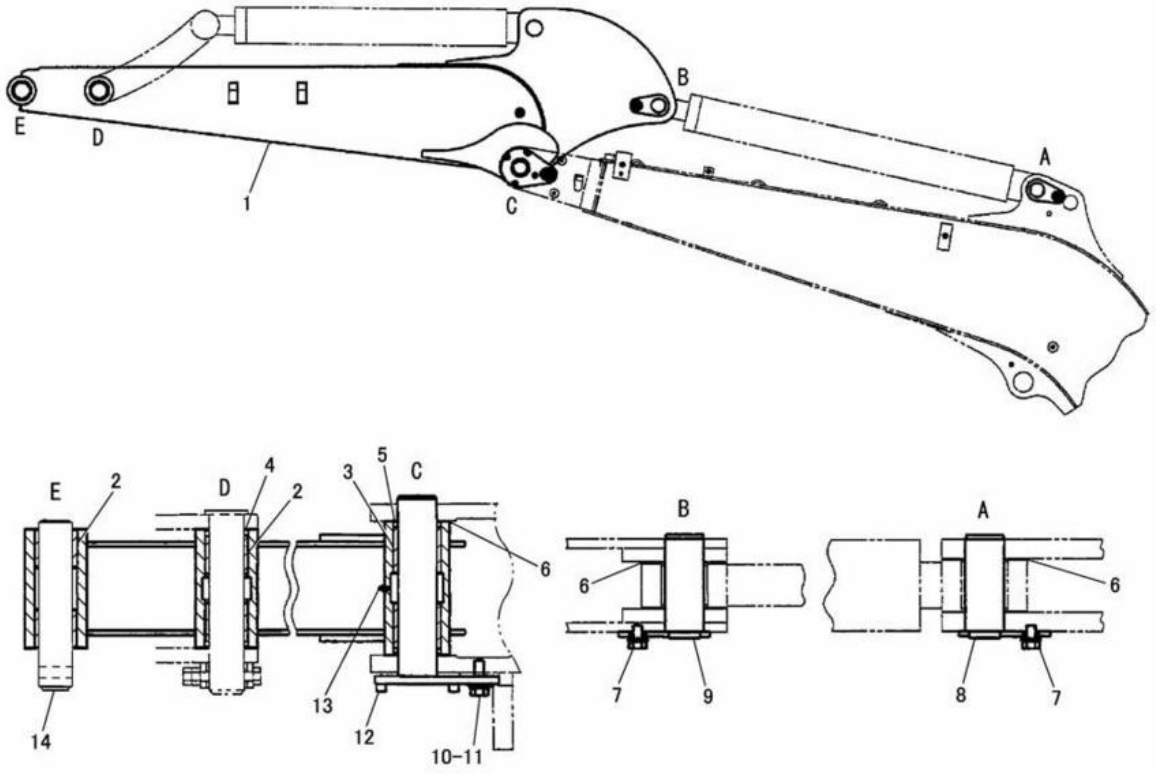

NOTE	No.	PART NO.	QTY.	PART NAME	NOTE	No.	PART NO.	QTY.	PART NAME
	1	200-4615	1	STICK AS					
	2	146-2304	4	BUSHING					
	3	150-5694	2	BUSHING					
	4	093-1430	2	SEAL					
	5	150-5697	2	SEAL					
B	6	150-5699	3	SHIM(1.0mm THICK)					
B		150-5689	3	SHIM(0.6mm THICK)					
	7	8T-4137	2	BOLT(M10×1.5)					
		6V-8513	2	WASHER					
	8	223-3596	1	PIN AS					
	9	223-3594	1	PIN AS					
	10	200-0038	1	BOSS					
	11	8T-4186	1	BOLT(M10×1.5)					
		115-6433	1	WASHER					
	12	223-3640	1	PIN AS					
	13	3B-8489	1	FITTING					
	14	195-6222	1	PIN					

B-USE AS REQUIRED

J132924 X03

STICK (200-4614 N/S)

EFFECTIVE WITH SERIAL NO. BMW00204-
PART OF 201-9165-Page 518,519,206-7605-Page 514,515
1.43m STICK
AN ATTACHMENT

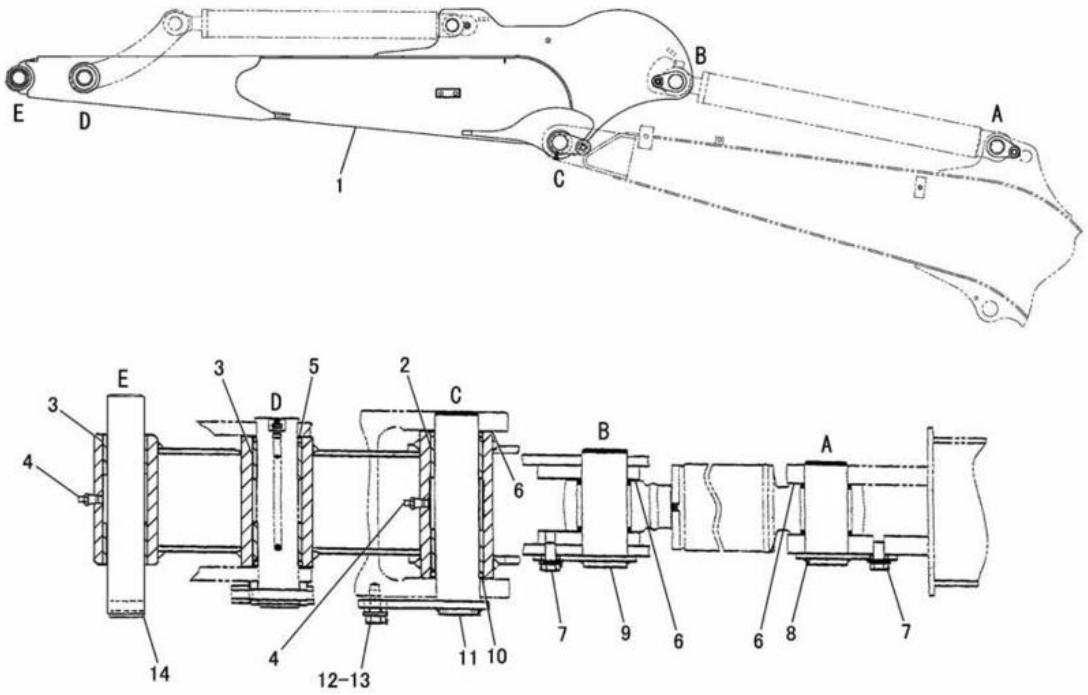

NOTE	No.	PART NO.	QTY.	PART NAME	NOTE	No.	PART NO.	QTY.	PART NAME
	1	206-7631	1	STICK AS					
	2	150-5694	2	BUSHING					
	3	146-2304	4	BUSHING					
	4	3B-8489	2	FITTING					
	5	093-1430	2	SEAL					
B	6	150-5699	3	SHIM(1.0mm THICK)					
B		150-5689	3	SHIM(0.6mm THICK)					
	7	8T-4137	2	BOLT(M10×1.5)					
		6V-8513	2	WASHER					
	8	223-3596	1	PIN AS					
	9	223-3594	1	PIN AS					
	10	150-5697	2	SEAL					
	11	223-3640	1	PIN AS					
	12	8T-4186	1	BOLT(M10×1.5)					
		115-6433	1	WASHER					
	13	200-0038	1	BOSS					
	14	200-6574	1	PIN					

B-USE AS REQUIRED

J132925 X01

STICK (206-7630 N/S) -LONG-HEAVY DUTY
EFFECTIVE WITH SERIAL NO. BMW00684-
PART OF 206-7624-Page 520,521,206-7635-Page 516,517
1.83m STICK
AN ATTACHMENT

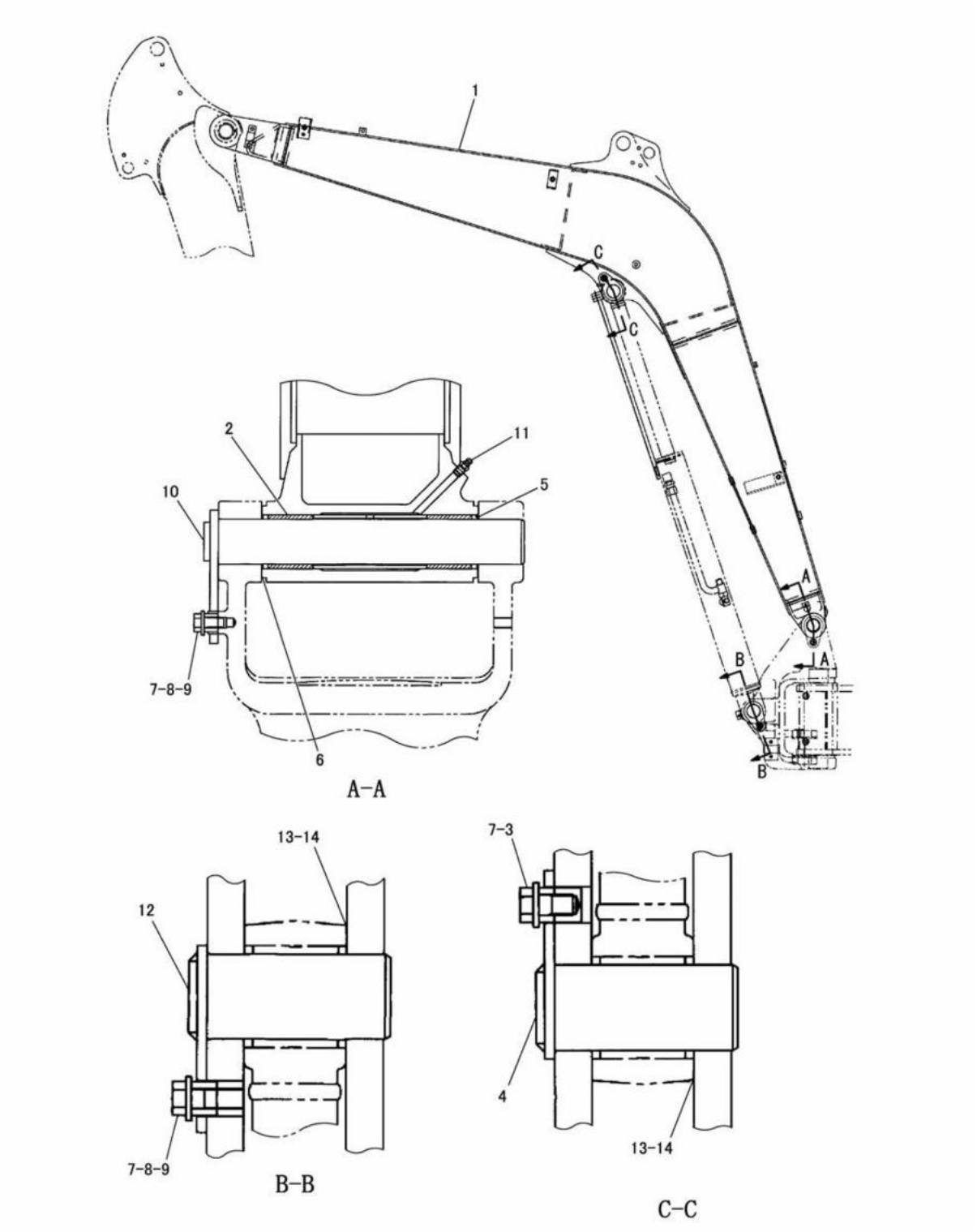

BOOM (191-3875 N/S)
PART OF 191-3353-Page 457

IMPLEMENTS

NOTE	No.	PART NO.	QTY.	PART NAME	NOTE	No.	PART NO.	QTY.	PART NAME
	1	192-4395	1	BOOM AS					
	2	150-5694	2	BUSHING					
	3	8T-4137	1	BOLT(M10×1.5)					
	4	223-3590	1	PIN AS					
	5	150-5697	2	SEAL					
B	6	150-5699	2	SHIM(0.6mmTHICK)					
	7	6V-8513	3	WASHER					
	8	8T-4196	2	BOLT(M10×1.5)					
	9	200-0019	2	BOSS					
	10	223-3586	1	PIN AS					
	11	3B-8489	1	FITTING					
	12	223-3588	1	PIN AS					
B	13	211-9750	4	SHIM(0.5mm THICK)					
B	14	211-9749	2	SHIM(1.0mm THICK)					

B-USE AS REQUIRED

J132932 X07

BOOM (191-3875 N/S)

PART OF 191-3353-Page 457

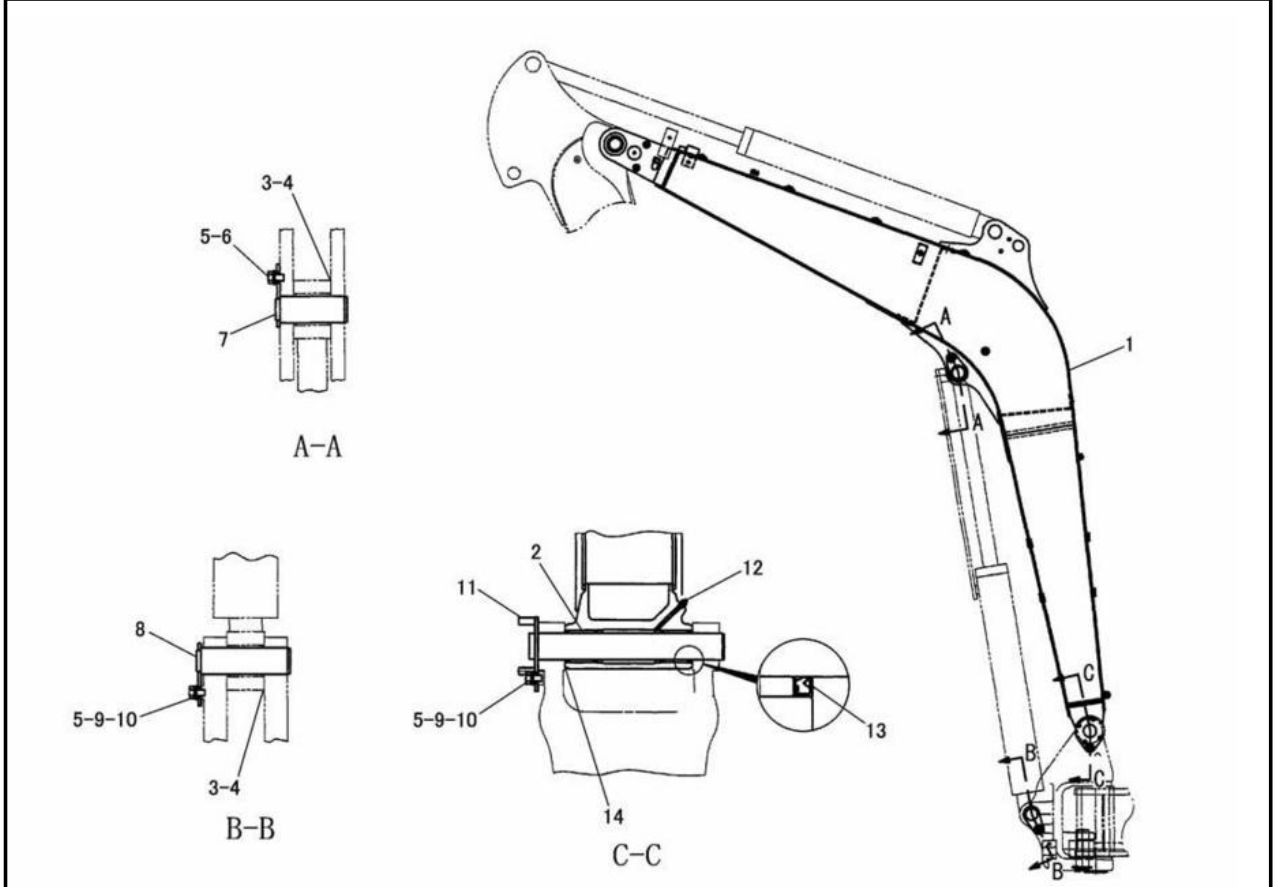

NOTE	No.	PART NO.	QTY.	PART NAME	NOTE	No.	PART NO.	QTY.	PART NAME
	1	200-4618	1	BOOM AS					
	2	150-5694	2	BUSHING					
B	3	207-4696	4	SHIM(0.5mm THICK)					
B	4	207-4695	2	SHIM(1.0mm THICK)					
	5	6V-8513	3	WASHER					
	6	8T-4137	1	BOLT(M10×1.5)					
	7	223-3590	1	PIN AS					
	8	223-3588	1	PIN AS					
	9	8T-4196	2	BOLT(M10×1.5)					
	10	200-0019	2	BOSS					
	11	223-3624	1	PIN AS					
	12	3B-8489	1	FITTING					
	13	150-5697	2	SEAL					
B	14	150-5699	2	SHIM(1.0mm THICK)					

B-USE AS REQUIRED

J126776 X02

BOOM (200-4617 N/S)
EFFECTIVE WITH SERIAL NO. BMW00204-
PART OF 201-9165-Page 518,519,206-7605-Page 514,515,206-7624-Page 520,521,206-7635-Page 516,517
AN ATTACHMENT

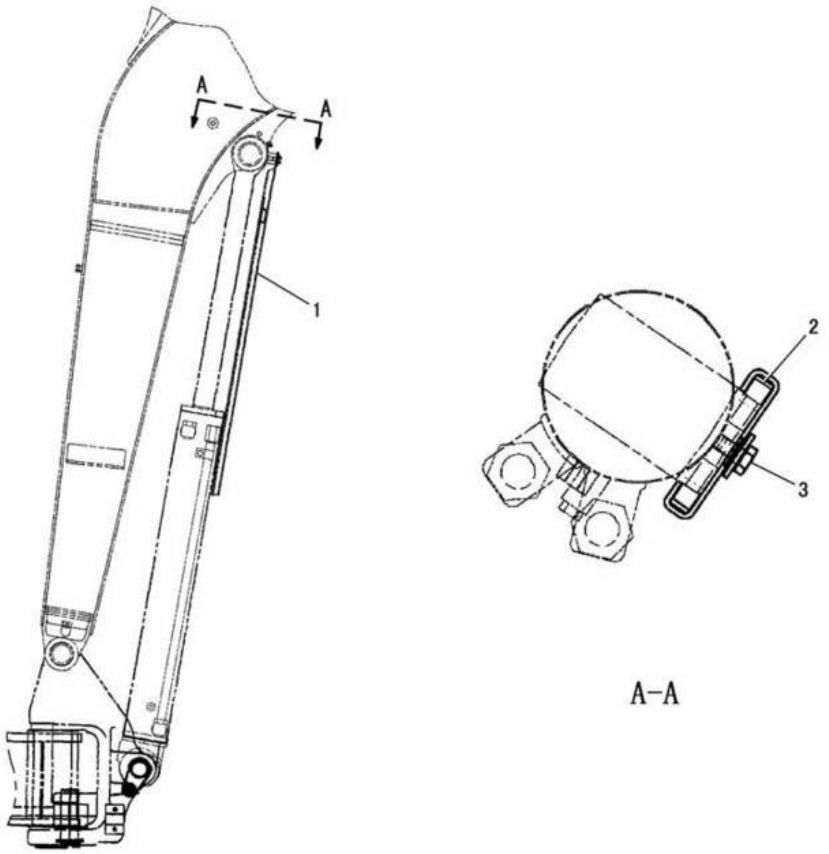

NOTE	No.	PART NO.	QTY.	PART NAME	NOTE	No.	PART NO.	QTY.	PART NAME
	1	172-2052	1	COVER					
	2	172-2596	2	TUBE					
	3	8T-4136	1	BOLT(M10×1.5)					
		140-4780	1	WASHER					
		8T-4121	1	WASHER					

J129299 X06

BOOM CYLINDER GUARD (191-3876 N/S)

PART OF 191-3353-Page 457

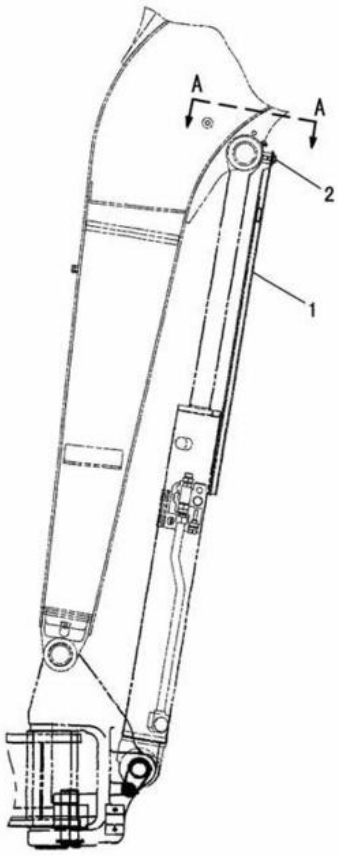

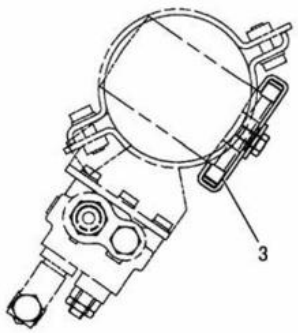

A-A

NOTE	No.	PART NO.	QTY.	PART NAME	NOTE	No.	PART NO.	QTY.	PART NAME
	1	201-9136	1	COVER					
	2	8T-4136	1	BOLT(M10×1.5)					
		8T-4121	1	WASHER					
		140-4780	1	WASHER					
	3	221-4594	2	TUBE					

J129300 X03

BOOM CYLINDER GUARD (200-4636 N/S)
EFFECTIVE WITH SERIAL NO. BMW00204-
PART OF 201-9165-Page 518,519,206-7605-Page 514,515,206-7624-Page 520,521,206-7635-Page 516,517
AN ATTACHMENT

IMPLEMENTS

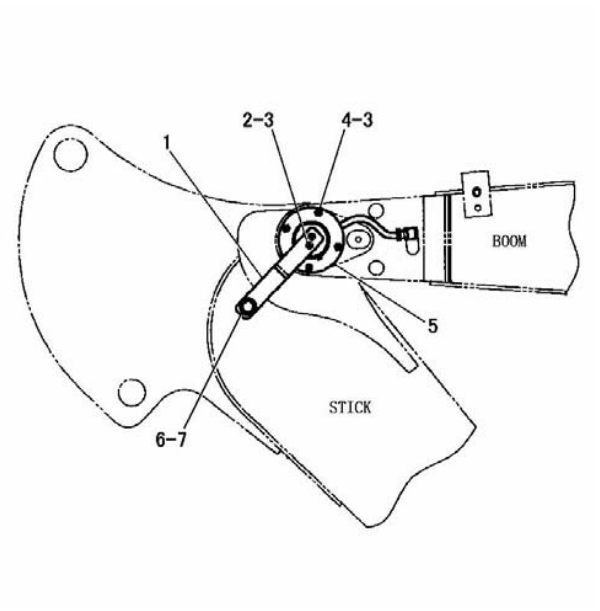

NOTE	No.	PART NO.	QTY.	PART NAME
	1	199-5209	1	LEVER
	2	5C-9553	2	BOLT(M6×1)
	3	9X-8256	6	WASHER
	4	6V-7357	4	BOLT(M6×1)
	5	201-9139	1	SENSOR AS
		171-0596	1	RECEPTACLE AS(3P)
		186-3735	3	PIN
	6	8T-4956	1	BOLT(M12×1.75)
		8T-4223	1	WASHER
	7	4J-3014	1	SPACER

J132926 X03

STICK SENSOR AND MOUNTING (199-5206 N/S)
EFFECTIVE WITH SERIAL NO. BMW00204-
PART OF 201-9165-Page 518,519,206-7605-Page 514,515,206-7624-Page 520,521,206-7635-Page 516,517
AN ATTACHMENT

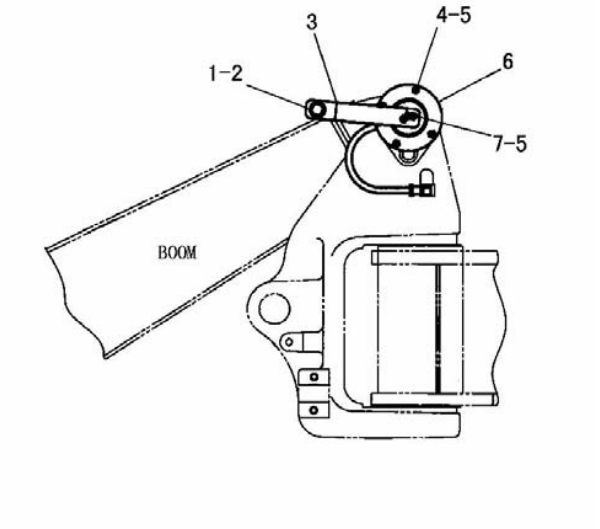

NOTE	No.	PART NO.	QTY.	PART NAME
	1	8T-4956	1	BOLT(M12×1.75)
		8T-4223	1	WASHER
	2	4J-3014	1	SPACER
	3	200-4583	1	LEVER
	4	6V-7357	4	BOLT(M6×1)
	5	9X-8256	6	WASHER
	6	201-9139	1	SENSOR AS
		171-0596	1	RECEPTACLE AS(3P)
		186-3735	3	PIN
	7	5C-9553	2	BOLT(M6×1)

J111718 X02

BOOM SENSOR AND MOUNTING (199-5207 N/S)
EFFECTIVE WITH SERIAL NO. BMW00204-
PART OF 201-9165-Page 518,519,206-7605-Page 514,515,206-7624-Page 520,521,206-7635-Page 516,517
AN ATTACHMENT

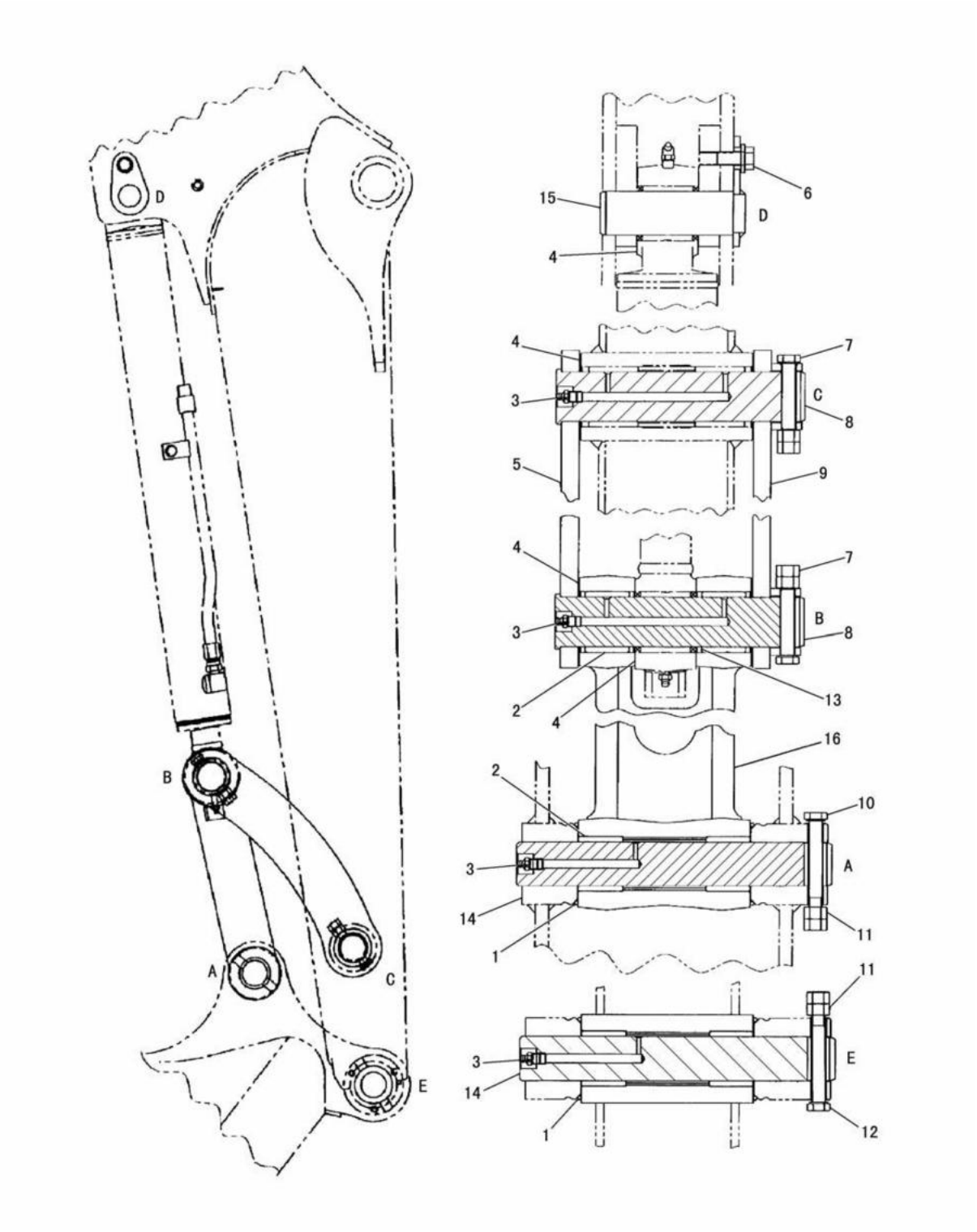

BUCKET LINKAGE (192-5225 N/S)
EFFECTIVE WITH SERIAL NO. BMW00001-BMW01327
PART OF 191-3355-Page 460

IMPLEMENTS

NOTE	No.	PART NO.	QTY.	PART NAME	NOTE	No.	PART NO.	QTY.	PART NAME
	1	146-2932	4	SEAL					
	2	146-2971	4	BUSHING					
	3	3B-8489	4	FITTING					
B	4	176-8464	4	SHIM(0.5mm THICK)					
B		176-8465	7	SHIM(1.0mm THICK)					
	5	172-2713	1	LINK					
	6	6V-8513	1	WASHER					
		8T-4137	1	BOLT(M10×1.5)					
	7	8T-4176	2	BOLT(M12×1.75)					
		8T-4244	4	NUT(M12×1.75)					
	8	150-5713	2	PIN					
	9	172-2714	1	LINK AS					
	10	8T-4198	1	BOLT(M10×1.5)					
	11	8T-4133	4	NUT(M10×1.5)					
	12	7X-2543	1	BOLT(M10×1.5)					
	13	093-1430	4	SEAL					
	14	195-6222	2	PIN					
	15	223-4723	1	PIN AS					
	16	195-3568	1	LINK AS					

B-USE AS REQUIRED

J126671 X09

BUCKET LINKAGE (192-5225 N/S)
EFFECTIVE WITH SERIAL NO. BMW00001-BMW01327
PART OF 191-3355-Page 460

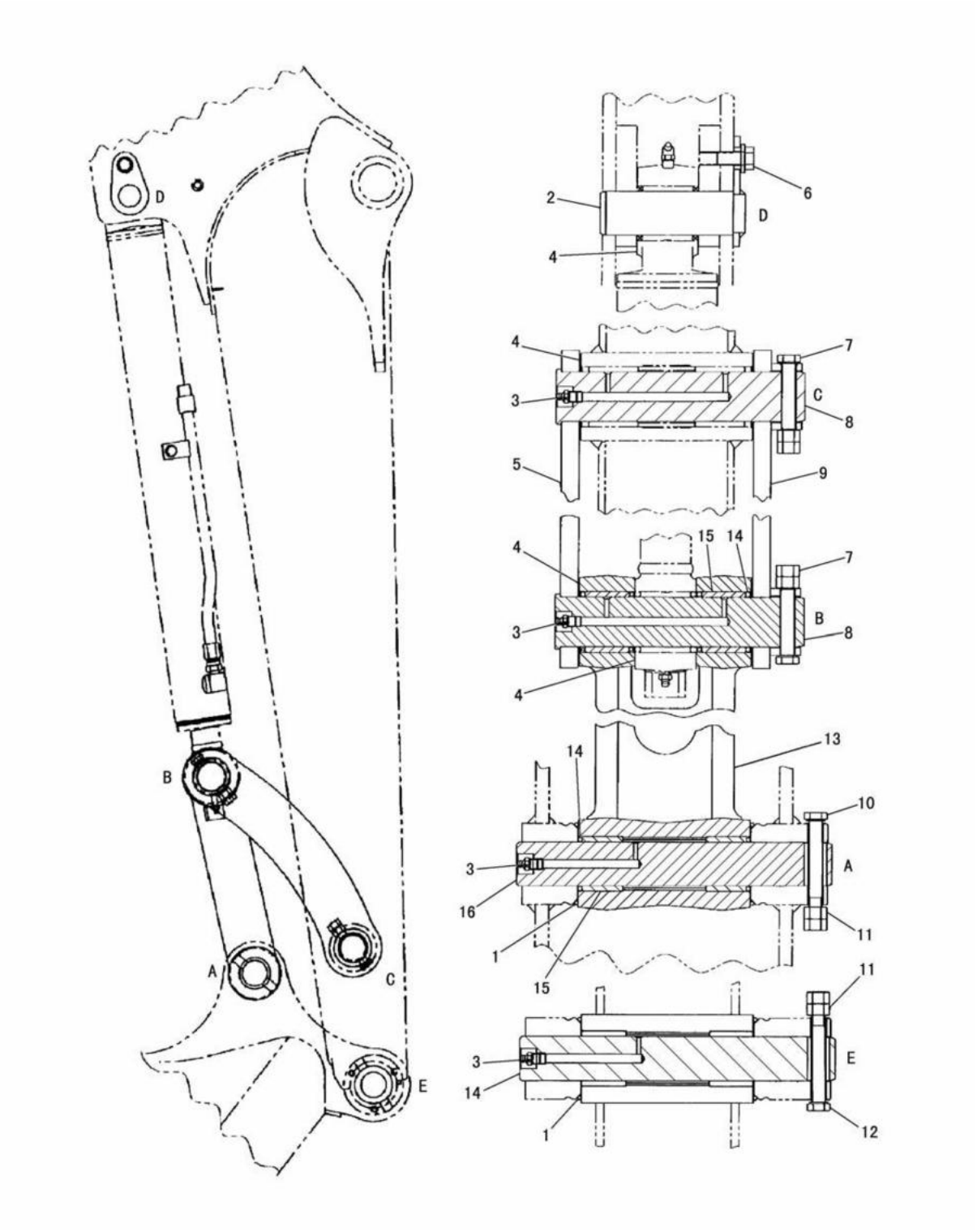

BUCKET LINKAGE (192-5225 N/S)
EFFECTIVE WITH SERIAL NO. BMW01328-
PART OF 191-3355-Page 460

IMPLEMENTS

NOTE	No.	PART NO.	QTY.	PART NAME	NOTE	No.	PART NO.	QTY.	PART NAME
	1	146-2932	4	SEAL					
	2	223-4723	1	PIN AS					
	3	3B-8489	4	FITTING					
B	4	176-8464	4	SHIM(0.5mm THICK)					
B		176-8465	7	SHIM(1.0mm THICK)					
	5	172-2713	1	LINK					
	6	6V-8513	1	WASHER					
		8T-4137	1	BOLT(M10×1.5)					
	7	8T-4176	2	BOLT(M12×1.75)					
		8T-4244	4	NUT(M12×1.75)					
	8	150-5713	2	PIN					
	9	172-2714	1	LINK AS					
	10	8T-4198	1	BOLT(M10×1.5)					
	11	8T-4133	4	NUT(M10×1.5)					
	12	7X-2543	1	BOLT(M10×1.5)					
C	13	243-0875	1	LINK AS					
	14	093-1430	6	SEAL					
	15	146-2971	4	BUSHING					
	16	195-6222	2	PIN					

B-USE AS REQUIRED
C-INDICATES CHANGE

J132927 X10

BUCKET LINKAGE (192-5225 N/S)
EFFECTIVE WITH SERIAL NO. BMW01328-
PART OF 191-3355-Page 460

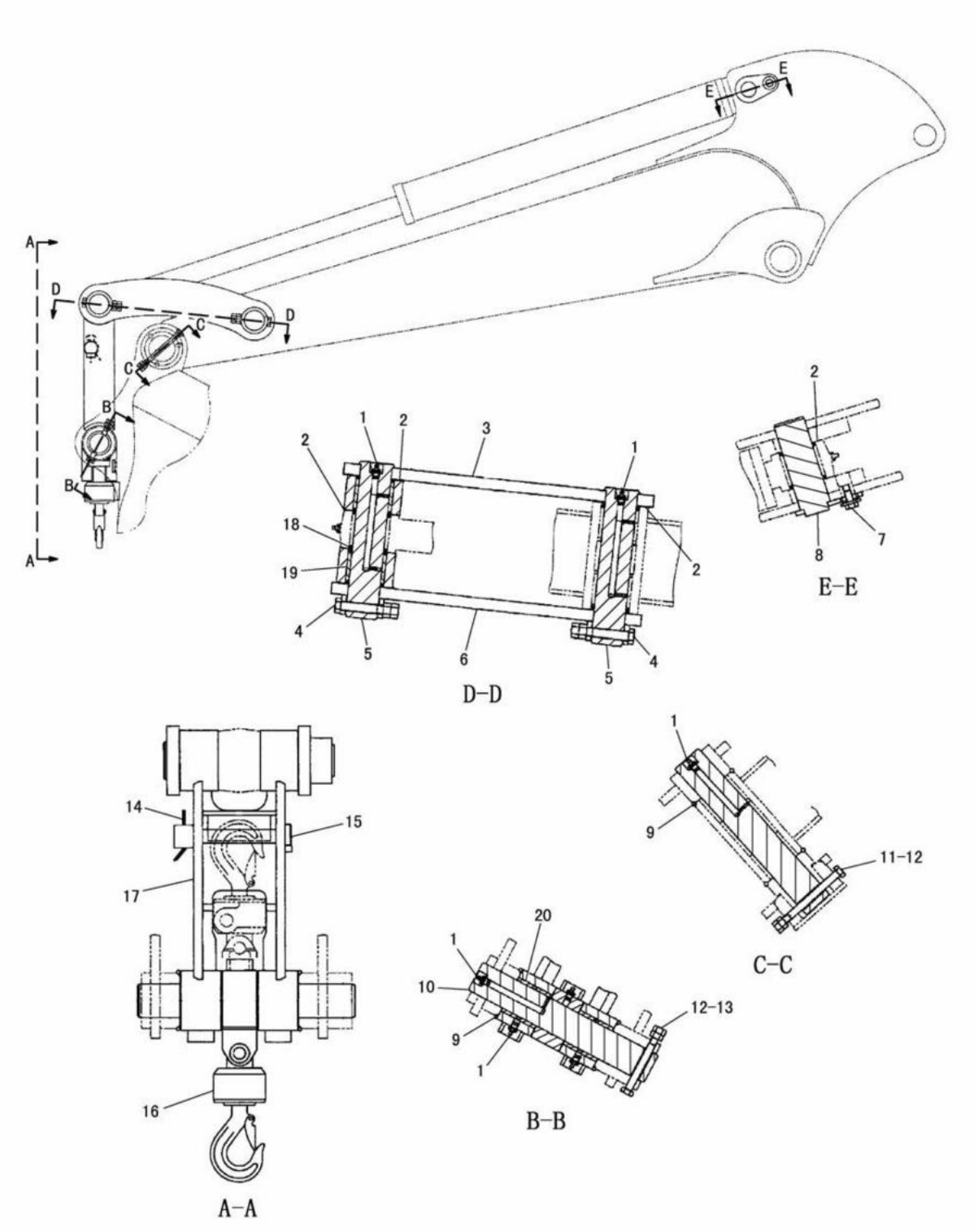

BUCKET LINKAGE (200-4603 N/S)
EFFECTIVE WITH SERIAL NO. BMW00204-
PART OF 201-9165-Page 518,519,206-7605-Page 514,515,206-7624-Page 520,521,206-7635-Page 516,517
AN ATTACHMENT

IMPLEMENTS

NOTE	No.	PART NO.	QTY.	PART NAME	NOTE	No.	PART NO.	QTY.	PART NAME
	1	3B-8489	6	FITTING					
B	2	176-8464	4	SHIM(0.5mm THICK)					
B		176-8465	7	SHIM(1.0mm THICK)					
	3	172-2713	1	LINK					
	4	8T-4176	2	BOLT(M12×1.75)					
		8T-4244	4	NUT(M12×1.75)					
	5	150-5713	2	PIN					
	6	172-2714	1	LINK AS					
	7	8T-4137	1	BOLT(M10×1.5)					
		6V-8513	1	WASHER					
	8	223-4723	1	PIN AS					
	9	146-2932	4	SEAL					
	10	195-6222	1	PIN					
	11	7X-2543	1	BOLT(M10×1.5)					
	12	8T-4133	4	NUT(M10×1.5)					
	13	8T-4198	1	BOLT(M10×1.5)					
	14	199-0534	1	PIN					
	15	199-0535	1	PIN					
	16	201-9143	1	HOOK GROUP					
		220-4000	1	LATCH KIT					
	17	207-7150	1	LINK AS					
	18	093-1430	4	SEAL					
	19	146-2971	2	BUSHING					
	20	200-4605	2	BUSHING					

B-USE AS REQUIRED

J132928 X06

BUCKET LINKAGE (200-4603 N/S)

EFFECTIVE WITH SERIAL NO. BMW00204-

PART OF 201-9165-Page 518,519,206-7605-Page 514,515,206-7624-Page 520,521,206-7635-Page 516,517

AN ATTACHMENT

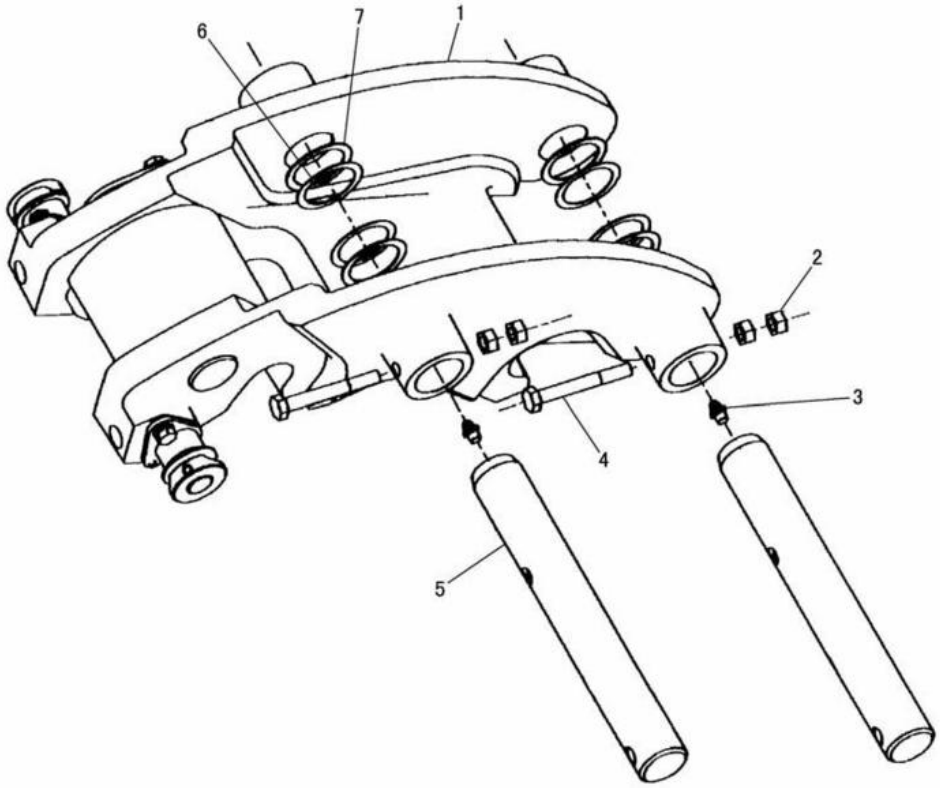

NOTE	No.	PART NO.	QTY.	PART NAME	NOTE	No.	PART NO.	QTY.	PART NAME
Y	1	199-4085	1	COUPLER GROUP					
	2	8T-4133	4	NUT(M10×1.5)					
	3	3B-8489	2	FITTING					
	4	8T-4178	2	BOLT(M10×1.5)					
	5	199-4091	2	PIN					
B	6	199-4090	4	SHIM(0.5mm THICK)					
B	7	199-4089	4	SHIM(1.0mm THICK)					

B-USE AS REQUIRED
Y-SEE SEPARATE ILLUSTRATION

J126878 X00

QUICK COUPLER (199-4083 N/S)
199-4085-Page 495
AN ATTACHMENT

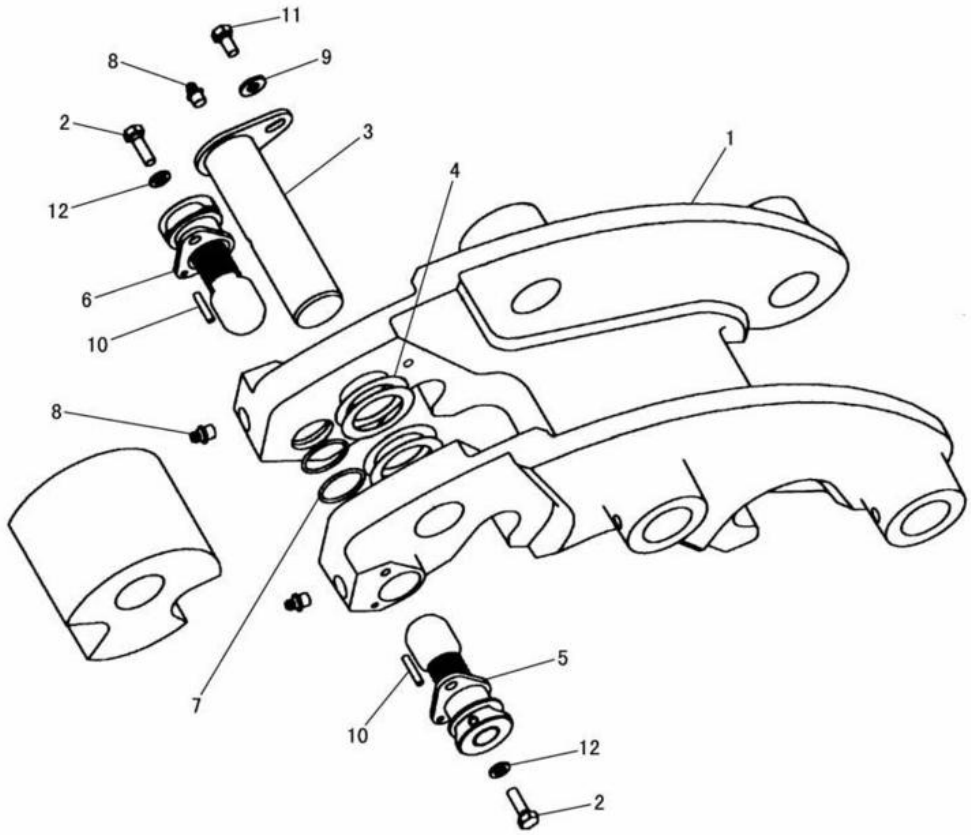

NOTE	No.	PART NO.	QTY.	PART NAME	NOTE	No.	PART NO.	QTY.	PART NAME
	1	199-4086	1	COUPLER					
	2	8T-4908	2	BOLT(M8×1.25)					
	3	203-3611	1	PIN AS					
B	4	184-4160	4	SHIM(0.3mm THICK)					
	5	202-2421	1	LOCK AS					
	6	202-2418	1	LOCK AS					
	7	2K-8198	2	SEAL					
	8	3B-8489	3	FITTING					
	9	5P-4116	1	WASHER					
	10	8T-0255	2	PIN					
	11	8T-4200	1	BOLT(M8×1.25)					
	12	8T-4224	2	WASHER					

B-USE AS REQUIRED

J126879 X02

199-4085 QUICK COUPLER GROUP
PART OF 199-4083-Page 494
AN ATTACHMENT

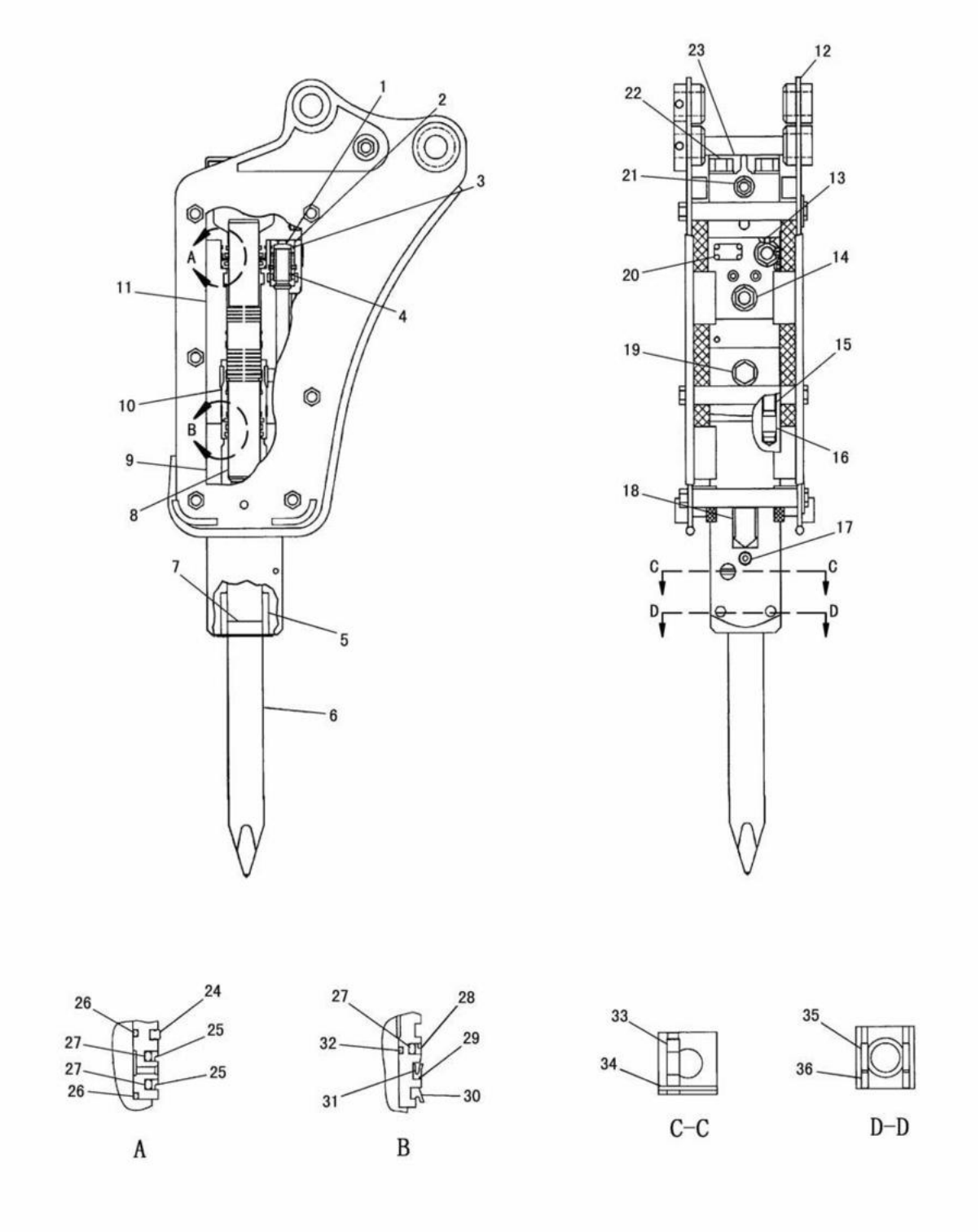

J111756 E01

HYDRAULIC HAMMER (165-1018 N/S)
PART OF 165-1095-Page 498,206-2774-Page 498
AN ATTACHMENT

IMPLEMENTS

NOTE	No.	PART NO.	QTY.	PART NAME	NOTE	No.	PART NO.	QTY.	PART NAME
	1	165-1036	1	SEAL					
	2	165-1034	1	COVER					
	3	095-1604	1	SEAL					
	4	165-1035	1	PISTON					
	5	165-1023	1	BUSHING					
	6	165-1052	1	TOOL					
	7	165-1050	1	CAP					
	8	165-1021	1	PISTON					
	9	165-1022	1	BLOCK					
	10	165-1057	1	BUSHING					
	11	165-1019	1	CYLINDER					
	12	165-1053	1	BRACKET AS					
	13	165-1040	3	SEAL					
	14	165-1056	2	PLUG					
	15	165-1046	4	BOLT(M27×2)					
	16	165-1048	4	SPRING					
	17	165-1026	1	NIPPLE					
	18	165-1051	1	FILM					
	19	165-1043	1	PLUG					
		095-1526	1	SEAL					
	20	165-1054	1	PLATE					
		095-7930	4	SCREW(M4×0.7)					
	21	165-1041	1	VALVE					
	22	165-1047	4	NUT(M27×2)					
		165-1049	4	WASHER					
	23	165-1020	1	COVER					
	24	165-1029	1	SEAL					
	25	165-1030	2	SEAL					
	26	095-1711	2	SEAL					
	27	165-1031	3	SEAL					
	28	165-1032	1	SEAL					
	29	165-1039	1	SEAL					
	30	165-1033	1	SEAL					
	31	165-1038	1	SEAL					
	32	095-1712	1	SEAL					
	33	165-1024	1	PIN					
	34	165-1028	1	PIN					
	35	165-1025	2	PIN					
	36	165-1027	2	PIN					

J111756 E01

HYDRAULIC HAMMER (165-1018 N/S)
PART OF 165-1095-Page 498,206-2774-Page 498
AN ATTACHMENT

IMPLEMENTS

CONSISTS OF :

			PAGE
1	165-1017	JUMPER LINES GROUP ·····	440
1	165-1018	HYDRAULIC HAMMER GROUP ·····	496
1	194-7463	FILM GROUP ·····	653
1	165-1098	TOOL	
1	165-1130	ADJUSTER TOOL	
		(INCLUDES REGULATOR,GAS CYLINDER,HOSE,ADAPTERS,PRESSURE GAUGE AND SEALS)	

J111754 E02

HAMMER ARRANGEMENT (165-1095 N/S)
AN ATTACHMENT

CONSISTS OF :

			PAGE
1	165-1017	JUMPER LINES GROUP ·····	440
1	165-1018	HYDRAULIC HAMMER GROUP ·····	496
1	194-7463	FILM GROUP ·····	653
2	3B-8489	FITTING	
1	7X-2543	BOLT(M10×1.5)	
4	8T-4133	NUT(M10×1.5)	
1	8T-4198	BOLT(M10×1.5)	
1	165-1098	TOOL	
2	195-6222	PIN	
1	165-1130	ADJUSTER TOOL	
		(INCLUDES REGULATOR,GAS CYLINDER,HOSE,ADAPTERS,PRESSURE GAUGE AND SEALS)	

J132177 X00

HAMMER ARRANGEMENT (206-2774 N/S)
AN ATTACHMENT

CONSISTS OF :

			PAGE
1	194-5831	BUCKET ADJUSTER GROUP ·····	501
1	194-5832	BUCKET GROUP ·····	502

J106615 X01

BUCKET AND ADJUSTER (194-5830 N/S)
0.16m³,650mm WIDTH

CONSISTS OF :

			PAGE
1	194-5831	BUCKET ADJUSTER GROUP ·····	501
1	201-0464	BUCKET GROUP ·····	503

J111751 X00

BUCKET AND ADJUSTER (201-0461 N/S)
0.18m³,700mm WIDTH
AN ATTACHMENT

CONSISTS OF :

			PAGE
1	194-5831	BUCKET ADJUSTER GROUP ·····	501
1	201-0465	BUCKET GROUP ·····	504

J111745 X00

BUCKET AND ADJUSTER (201-0462 N/S)
0.11m³,500mm WIDTH
AN ATTACHMENT

CONSISTS OF :

			PAGE
1	194-5831	BUCKET ADJUSTER GROUP ·····	501
1	201-0466	BUCKET GROUP ·····	505

J111742 X00

BUCKET AND ADJUSTER (201-0463 N/S)
0.08m³,400mm WIDTH
AN ATTACHMENT

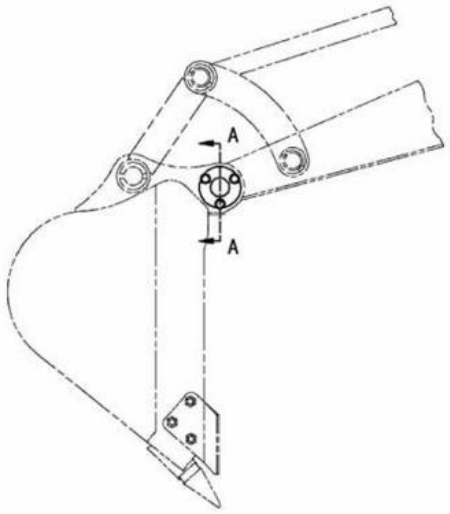

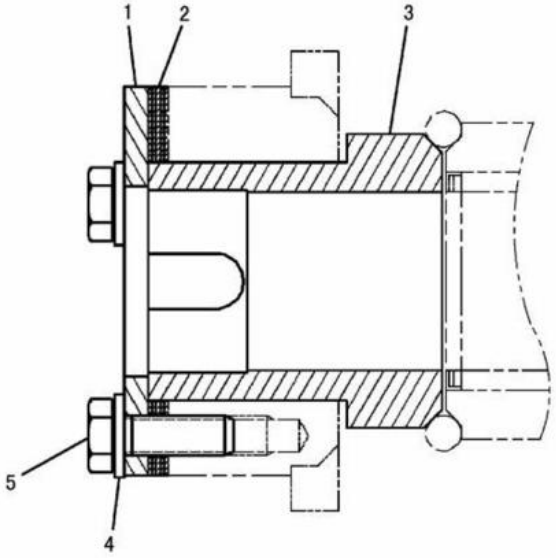

A-A

NOTE	No.	PART NO.	QTY.	PART NAME	NOTE	No.	PART NO.	QTY.	PART NAME
	1	146-2930	1	WASHER					
B	2	146-2908	6	SHIM(1.0mm THCIK)					
	3	194-5845	1	BUSHING					
	4	8T-4121	3	WASHER					
	5	8T-4195	3	BOLT(M10×1.5)					

B-USE AS REQUIRED

J106616 X01

BUCKET ADJUSTER (194-5831 N/S)

PART OF 194-5830-Page 499,201-0461-Page 499,201-0462-Page 500,201-0463-Page 500

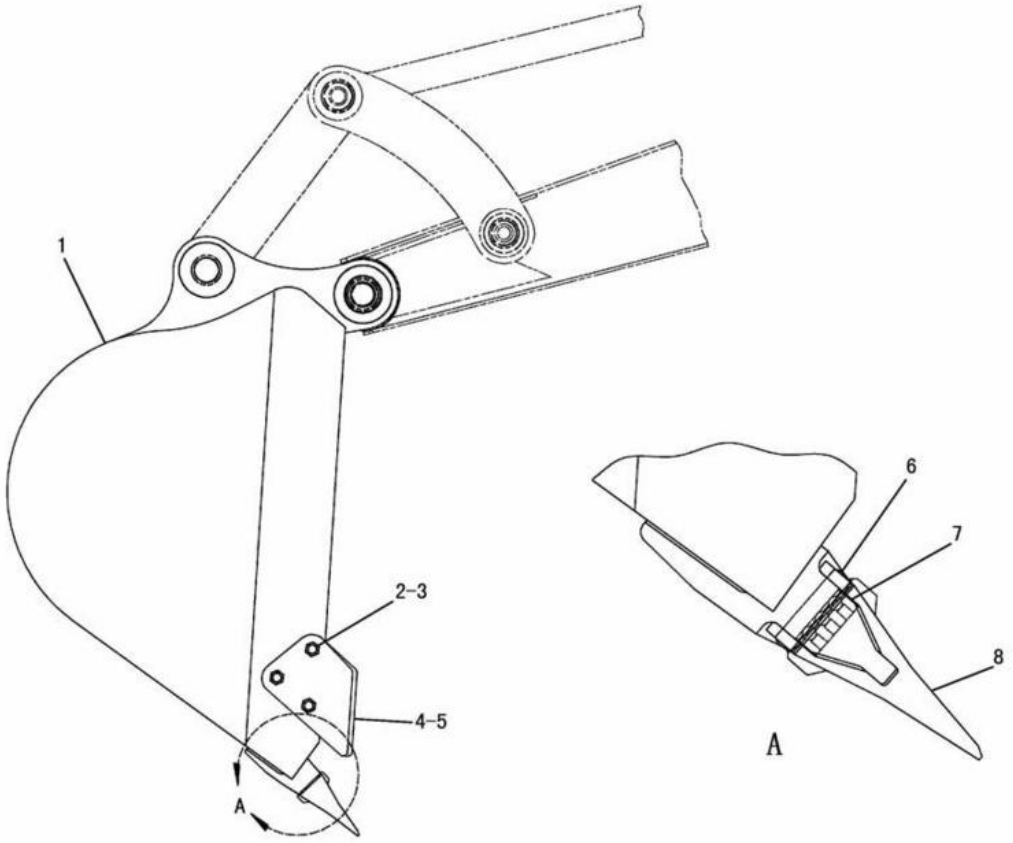

NOTE	No.	PART NO.	QTY.	PART NAME	NOTE	No.	PART NO.	QTY.	PART NAME
Y	1	194-5833	1	BUCKET AS					
	2	8T-7338	6	BOLT(M16×2)					
	3	8T-4132	6	NUT(M16×2)					
	4	175-1574	1	SIDECUTTER(LH)					
	5	175-1575	1	SIDECUTTER(RH)					
	6	119-9940	4	PIN					
	7	119-9939	4	RUBBER					
	8	119-9938	4	TOOTH					

Y-SEE SEPARATE ILLUSTRATION

J106617 X01

BUCKET (194-5832 N/S)

PART OF 194-5830-Page 499
194-5833-Page 506
0.16m³,650mm WIDTH

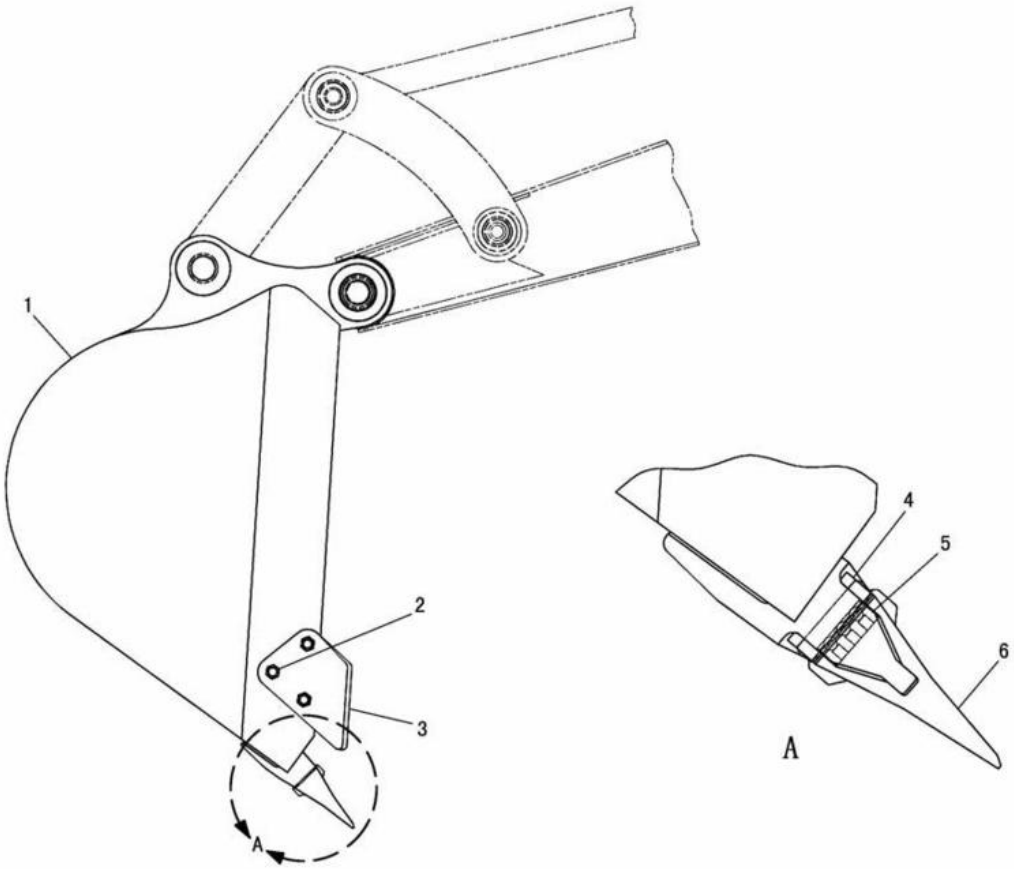

NOTE	No.	PART NO.	QTY.	PART NAME	NOTE	No.	PART NO.	QTY.	PART NAME
Y	1	201-0467	1	BUCKET AS					
	2	8T-7338	6	BOLT(M16×2)					
		8T-4132	6	NUT(M16×2)					
	3	175-1575	1	SIDECUTTER(RH)					
		175-1574	1	SIDECUTTER(LH)					
	4	119-9940	4	PIN					
	5	119-9939	4	RUBBER					
	6	119-9938	4	TOOTH					

Y-SEE SEPARATE ILLUSTRATION

J111752 X00

BUCKET (201-0464 N/S)

PART OF 201-0461-Page 499
201-0467-Page 506
0.18m³,700mm WIDTH
AN ATTACHMENT

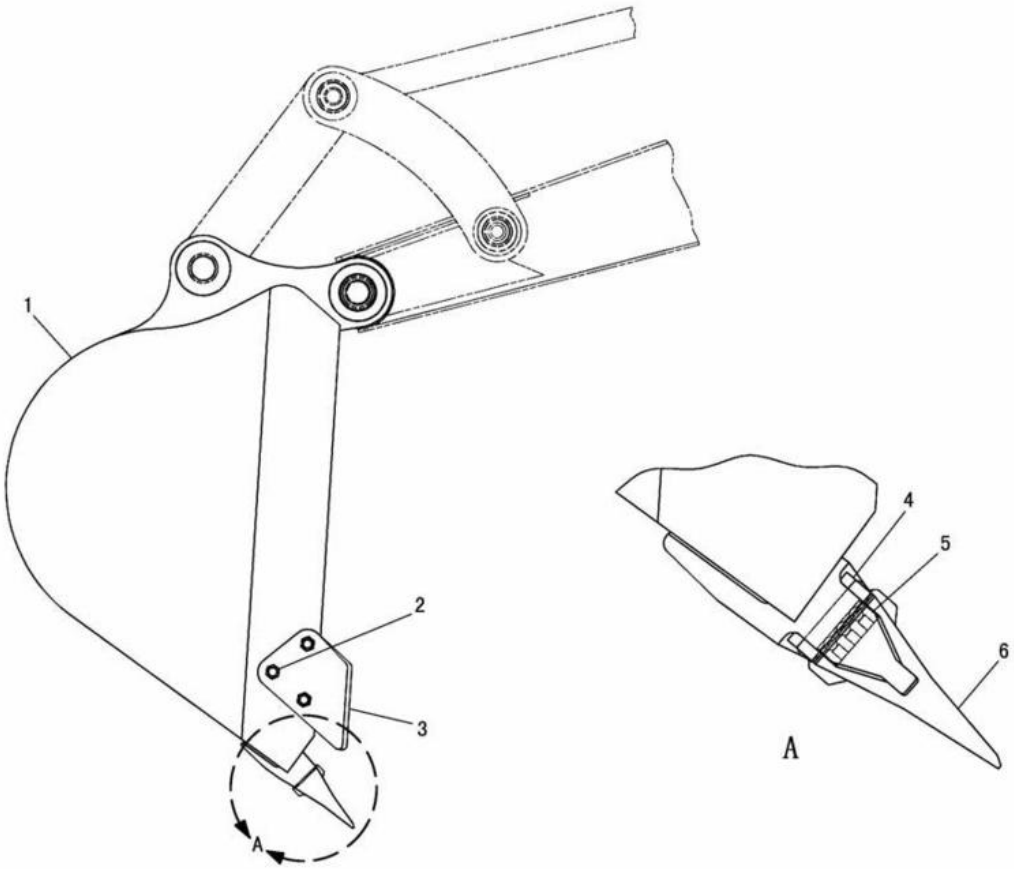

NOTE	No.	PART NO.	QTY.	PART NAME	NOTE	No.	PART NO.	QTY.	PART NAME
Y	1	201-0468	1	BUCKET AS					
	2	8T-7338	6	BOLT(M16×2)					
		8T-4132	6	NUT(M16×2)					
	3	175-1575	1	SIDECUTTER(RH)					
		175-1574	1	SIDECUTTER(LH)					
	4	119-9940	3	PIN					
	5	119-9939	3	RUBBER					
	6	119-9938	3	TOOTH					

Y-SEE SEPARATE ILLUSTRATION

J111746 X00

BUCKET (201-0465 N/S)

PART OF 201-0462-Page 500
201-0468-Page 507
0.11m³,500mm WIDTH
AN ATTACHMENT

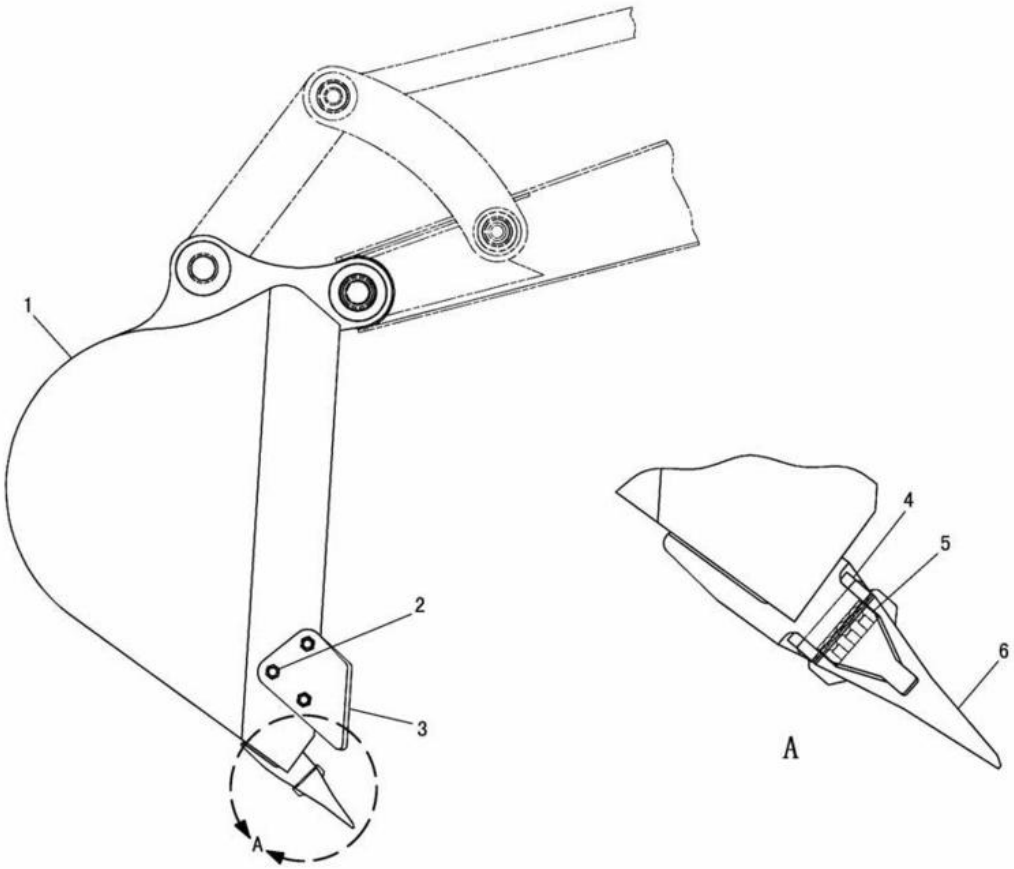

NOTE	No.	PART NO.	QTY.	PART NAME	NOTE	No.	PART NO.	QTY.	PART NAME
Y	1	201-0469	1	BUCKET AS					
	2	8T-7338	6	BOLT(M16×2)					
		8T-4132	6	NUT(M16×2)					
	3	175-1575	1	SIDECUTTER(RH)					
		175-1574	1	SIDECUTTER(LH)					
	4	119-9940	3	PIN					
	5	119-9939	3	RUBBER					
	6	119-9938	3	TOOTH					

Y-SEE SEPARATE ILLUSTRATION

J111743 X00

BUCKET (201-0466 N/S)

PART OF 201-0463-Page 500
201-0469-Page 507
0.08m³,400mm WIDTH
AN ATTACHMENT

IMPLEMENTS

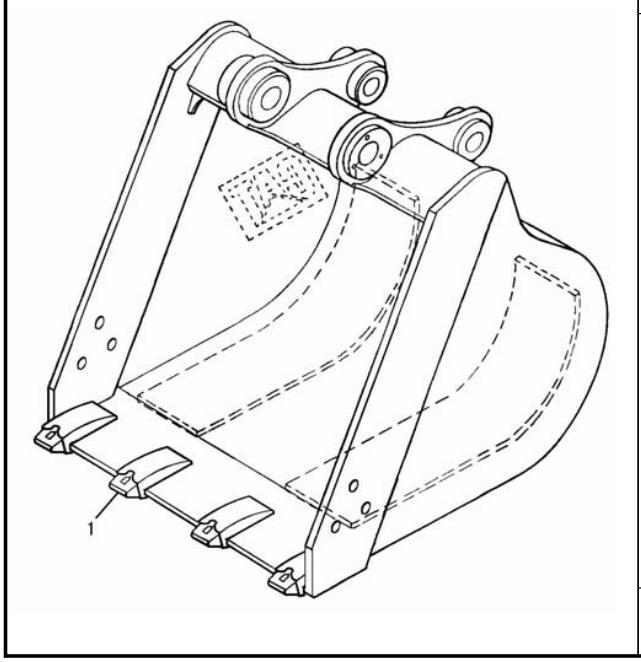

NOTE	No.	PART NO.	QTY.	PART NAME
	1	119-9937	4	ADAPTER

J104891 X01

194-5833 BUCKET ASSEMBLY
PART OF 194-5832-Page 502
0.16m³,650mm WIDTH

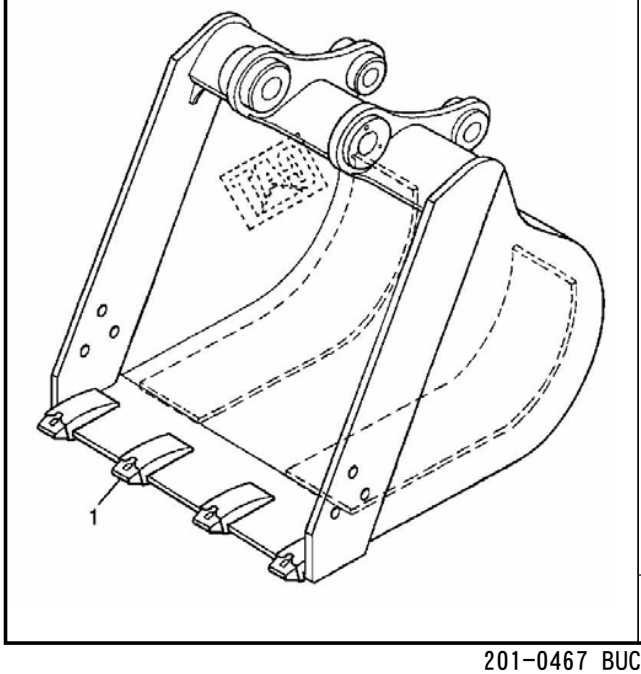

NOTE	No.	PART NO.	QTY.	PART NAME
	1	119-9937	4	ADAPTER

J111753 X00

201-0467 BUCKET ASSEMBLY
PART OF 201-0464-Page 503
0.18m³,700mm WIDTH
AN ATTACHMENT

IMPLEMENTS

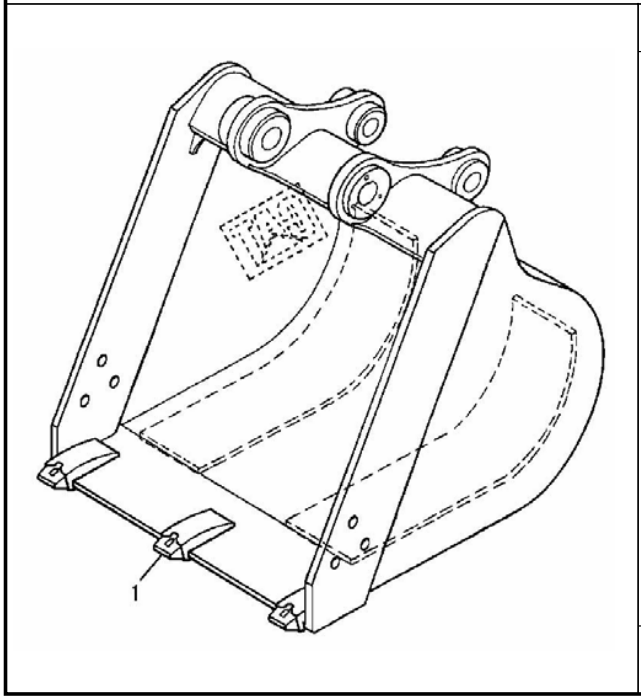

NOTE	No.	PART NO.	QTY.	PART NAME
	1	119-9937	3	ADAPTER

J111747 X00

201-0468 BUCKET ASSEMBLY
PART OF 201-0465-Page 504
0.11m³,500mm WIDTH
AN ATTACHMENT

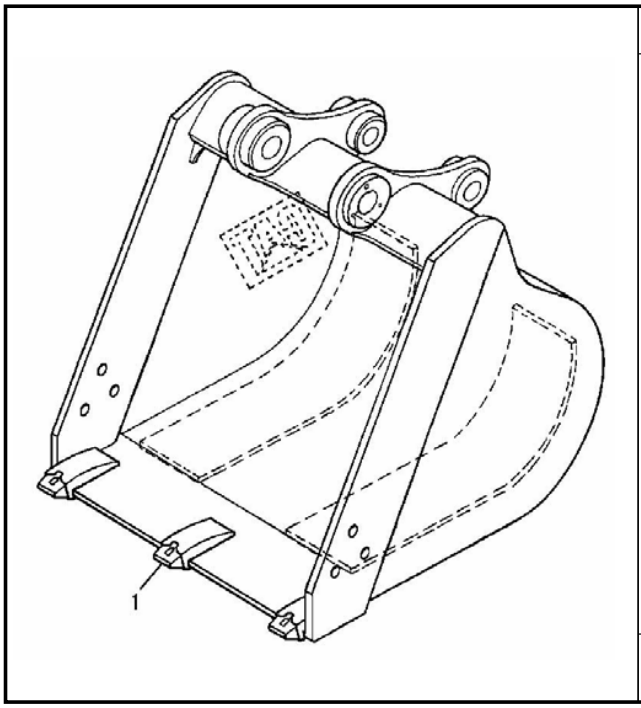

NOTE	No.	PART NO.	QTY.	PART NAME
	1	119-9937	3	ADAPTER

J111744 X00

201-0469 BUCKET ASSEMBLY
PART OF 201-0466-Page 505
0.08m³,400mm WIDTH
AN ATTACHMENT

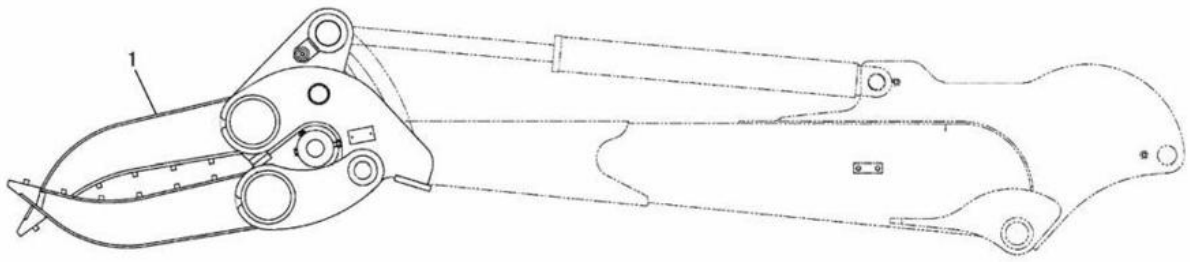

LEFT SIDE VIEW

NOTE	No.	PART NO.	QTY.	PART NAME	NOTE	No.	PART NO.	QTY.	PART NAME
Y	1	201-8162	1	GRAPPLE GROUP					

Y-SEE SEPARATE ILLUSTRATION

J111758 X03

GRAPPLE (201-8161 N/S)
201-8162-Page 509
AN ATTACHMENT

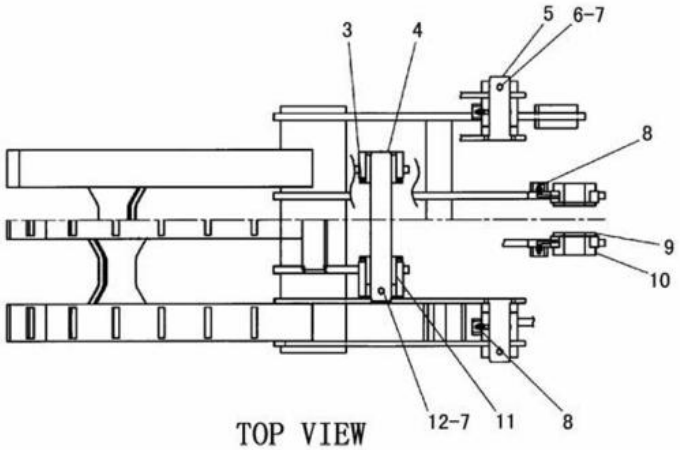

TOP VIEW

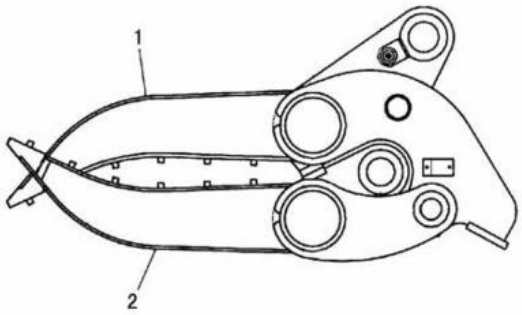

LEFT SIDE VIEW

NOTE	No.	PART NO.	QTY.	PART NAME	NOTE	No.	PART NO.	QTY.	PART NAME
	1	201-8163	1	FORK AS(UPPER)					
	2	201-8164	1	FORK AS(LOWER)					
	3	201-8169	2	SHIM					
		201-8170	2	SHIM					
	4	201-8166	1	PIN					
	5	201-8165	2	PIN					
	6	8T-4198	2	BOLT(M10×1.5)					
	7	8T-4133	6	NUT(M10×1.5)					
	8	201-8176	4	FITTING					
	9	201-8171	2	SHIM					
	10	201-8168	2	SPACER					
	11	201-8167	2	SPACER					
	12	7X-2543	1	BOLT(M10×1.5)					

J111759 X01

201-8162 GRAPPLE GROUP
PART OF 201-8161-Page 508
AN ATTACHMENT

CONSISTS OF :

			PAGE
1	210-1784	POWER ANGLE AND TILT WIRING GROUP	512
1	210-0425	PILOT LINES GROUP	402
1	210-0426	SWING MOTOR LINES GROUP	452
1	210-1897	BLADE CONTROL GROUP	304
1	210-1898	CYLINDER LINES GROUP	454
1	211-0808	BLADE LINES GROUP	456
1	210-1289	CONTROL VALVE GROUP	315
1	210-0424	TRACK MOTOR LINES GROUP	451
2	155-7545	ANGLE CYLINDER GROUP	439
1	209-8871	BLADE CYLINDER GROUP	435
1	210-1285	TILT CYLINDER GROUP	438
1	215-4820	GUARD GROUP	475
1	210-0534	POWER ANGLE AND TILT BLADE GROUP	470
1	200-5458	FILM GROUP	656

J126681 X02

POWER ANGLE AND TILT BLADE ARRANGEMENT (210-1884 N/S)
EFFECTIVE WITH SERIAL NO. BMW00787-BMW01133
AN ATTACHMENT

IMPLEMENTS

CONSISTS OF :

			PAGE
1	210-1784	POWER ANGLE AND TILT WIRING GROUP	512
1	210-0425	PILOT LINES GROUP	402
1	210-0426	SWING MOTOR LINES GROUP	452
1	210-1897	BLADE CONTROL GROUP	304
1	210-1898	CYLINDER LINES GROUP	454
1	211-0808	BLADE LINES GROUP	456
1	210-1289	CONTROL VALVE GROUP	315
1	210-0424	TRACK MOTOR LINES GROUP	451
2	155-7545	ANGLE CYLINDER GROUP	439
1	209-8871	BLADE CYLINDER GROUP	435
1	210-1285	TILT CYLINDER GROUP	438
1	215-4820	GUARD GROUP	475
1	223-0735	POWER ANGLE AND TILT BLADE GROUP	469
1	200-5458	FILM GROUP	656

J126682 X04

POWER ANGLE AND TILT BLADE ARRANGEMENT (210-1884 N/S)
EFFECTIVE WITH SERIAL NO. BMW01134-
AN ATTACHMENT

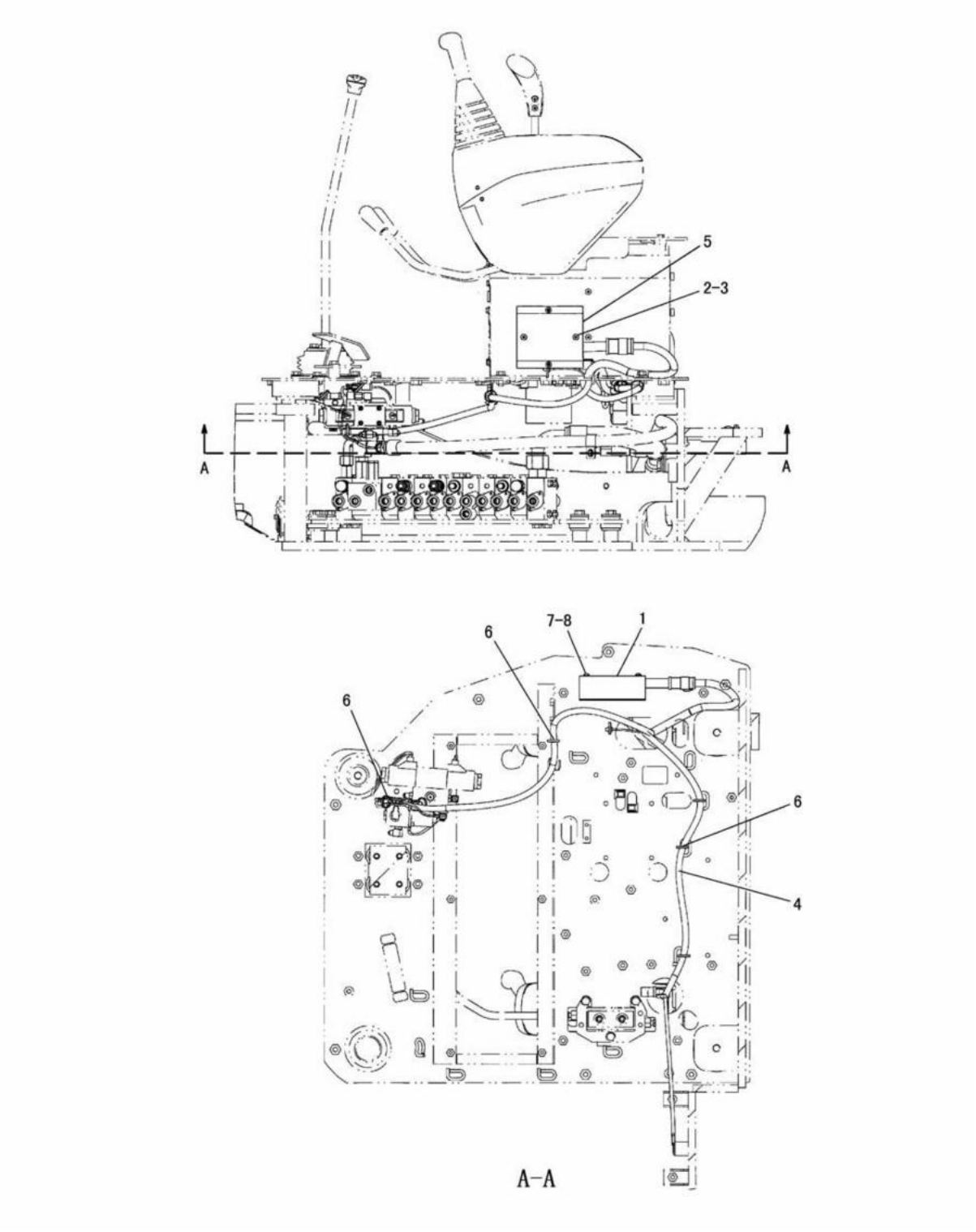

J117285 X00

POWER ANGLE AND TILT WIRING (210-1784 N/S)
EFFECTIVE WITH SERIAL NO. BMW00787-
PART OF 210-1884-Page 510,511
AN ATTACHMENT

IMPLEMENTS

NOTE	No.	PART NO.	QTY.	PART NAME	NOTE	No.	PART NO.	QTY.	PART NAME
	1	146-2829	1	CONTROLLER					
	2	203-7894	2	SCREW(M6×1)					
	3	203-7895	2	WASHER					
	4	210-4772	1	HARNESS AS					
		155-2270	1	PLUG KIT(2P)					
		186-3736	2	SOCKET					
		2L-8081	1	TERMINAL					
		7Y-3966	1	TERMINAL					
	5	210-4773	1	COVER AS					
	6	3S-2093	8	STRAP					
	7	5C-2890	2	NUT(M6×1)					
	8	9X-8256	2	WASHER					

J117285 X00

POWER ANGLE AND TILT WIRING (210-1784 N/S)
EFFECTIVE WITH SERIAL NO. BMW00787-
PART OF 210-1884-Page 510,511
AN ATTACHMENT

IMPLEMENTS

CONSISTS OF :

			PAGE
1	206-7614	MONITOR GROUP	525
1	201-9154	UPPER FRAME GROUP	276
1	200-4603	BUCKET LINKAGE GROUP	492
1	199-5207	BOOM SENSOR AND MOUNTING GROUP	487
1	199-5206	STICK SENSOR AND MOUNTING GROUP	487
1	200-4636	BOOM CYLINDER GUARD GROUP	486
1	200-4617	BOOM GROUP	484
1	200-4614	STICK GROUP	480
1	201-9157	PILOT LINES GROUP	396
1	200-4609	BOOM CYLINDER LINES GROUP	450
1	200-4606	STICK CYLINDER LINES GROUP	449
1	201-9141	FRONT LINES GROUP	356
1	200-4613	STICK LINES GROUP	347
1	206-7611	PATO LIGHTING GROUP	122
1	206-7621	WIRING GROUP	150
1	206-7619	OPERATOR PLATFORM GROUP	572
1	201-9173	SWING LOCK GROUP	522
1	199-5208	FRONT GUARD GROUP	523
1	201-5595	ACCUMULATOR GROUP	342
1	201-9151	SEAT SUPPORT GROUP	603
1	206-7606	FILM GROUP	657

J126760 X01

SPECIAL ARRANGEMENT (206-7605 N/S) -SHOVEL CRANE-CANOPY/STANDARD STICK
EFFECTIVE WITH SERIAL NO. BMW00684-BMW00955
AN ATTACHMENT

IMPLEMENTS

CONSISTS OF :

			PAGE
1	206-7614	MONITOR GROUP	525
1	201-9154	UPPER FRAME GROUP	276
1	200-4603	BUCKET LINKAGE GROUP	492
1	199-5207	BOOM SENSOR AND MOUNTING GROUP	487
1	199-5206	STICK SENSOR AND MOUNTING GROUP	487
1	200-4636	BOOM CYLINDER GUARD GROUP	486
1	200-4617	BOOM GROUP	484
1	200-4614	STICK GROUP	480
1	201-9157	PILOT LINES GROUP	396
1	200-4609	BOOM CYLINDER LINES GROUP	450
1	200-4606	STICK CYLINDER LINES GROUP	449
1	201-9141	FRONT LINES GROUP	356
1	200-4613	STICK LINES GROUP	347
1	206-7611	PATO LIGHTING GROUP	122
1	206-7621	WIRING GROUP	150
1	206-7619	OPERATOR PLATFORM GROUP	572
1	201-9173	SWING LOCK GROUP	522
1	199-5208	FRONT GUARD GROUP	523
1	201-5595	ACCUMULATOR GROUP	342
1	216-8446	SEAT SUPPORT GROUP	603
1	206-7606	FILM GROUP	657

J126761 X03

SPECIAL ARRANGEMENT (206-7605 N/S) -SHOVEL CRANE-CANOPY/STANDARD STICK
EFFECTIVE WITH SERIAL NO. BMW00956-
AN ATTACHMENT

IMPLEMENTS

CONSISTS OF :

			PAGE
1	206-7614	MONITOR GROUP	525
1	201-9154	UPPER FRAME GROUP	276
1	200-4603	BUCKET LINKAGE GROUP	492
1	199-5207	BOOM SENSOR AND MOUNTING GROUP	487
1	199-5206	STICK SENSOR AND MOUNTING GROUP	487
1	200-4636	BOOM CYLINDER GUARD GROUP	486
1	200-4617	BOOM GROUP	484
1	206-7630	STICK GROUP	481
1	201-9157	PILOT LINES GROUP	396
1	200-4609	BOOM CYLINDER LINES GROUP	450
1	200-4606	STICK CYLINDER LINES GROUP	449
1	201-9141	FRONT LINES GROUP	356
1	200-4613	STICK LINES GROUP	347
1	206-7611	PATO LIGHTING GROUP	122
1	206-7640	WIRING GROUP	156
1	206-7619	OPERATOR PLATFORM GROUP	572
1	201-9173	SWING LOCK GROUP	522
1	199-5208	FRONT GUARD GROUP	523
1	201-5595	ACCUMULATOR GROUP	342
1	201-9151	SEAT SUPPORT GROUP	603
1	206-7636	FILM GROUP	660

J126757 X01

SPECIAL ARRANGEMENT (206-7635 N/S) -SHOVEL CRANE-CANOPY/LONG STICK
EFFECTIVE WITH SERIAL NO. BMW00684-BMW00955
AN ATTACHMENT

IMPLEMENTS

CONSISTS OF :

			PAGE
1	206-7614	MONITOR GROUP	525
1	201-9154	UPPER FRAME GROUP	276
1	200-4603	BUCKET LINKAGE GROUP	492
1	199-5207	BOOM SENSOR AND MOUNTING GROUP	487
1	199-5206	STICK SENSOR AND MOUNTING GROUP	487
1	200-4636	BOOM CYLINDER GUARD GROUP	486
1	200-4617	BOOM GROUP	484
1	206-7630	STICK GROUP	481
1	201-9157	PILOT LINES GROUP	396
1	200-4609	BOOM CYLINDER LINES GROUP	450
1	200-4606	STICK CYLINDER LINES GROUP	449
1	201-9141	FRONT LINES GROUP	356
1	200-4613	STICK LINES GROUP	347
1	206-7611	PATO LIGHTING GROUP	122
1	206-7640	WIRING GROUP	156
1	206-7619	OPERATOR PLATFORM GROUP	572
1	201-9173	SWING LOCK GROUP	522
1	199-5208	FRONT GUARD GROUP	523
1	201-5595	ACCUMULATOR GROUP	342
1	216-8446	SEAT SUPPORT GROUP	603
1	206-7636	FILM GROUP	660

J126764 X03

SPECIAL ARRANGEMENT (206-7635 N/S) -SHOVEL CRANE-CANOPY/LONG STICK
EFFECTIVE WITH SERIAL NO. BMW00956-
AN ATTACHMENT

IMPLEMENTS

CONSISTS OF :

			PAGE
1	201-9146	MONITOR AND MOUNTING GROUP	524
1	201-9154	UPPER FRAME GROUP	276
1	200-4603	BUCKET LINKAGE GROUP	492
1	199-5207	BOOM SENSOR AND MOUNTING GROUP	487
1	199-5206	STICK SENSOR AND MOUNTING GROUP	487
1	200-4636	BOOM CYLINDER GUARD GROUP	486
1	200-4617	BOOM GROUP	484
1	200-4614	STICK GROUP	480
1	201-9157	PILOT LINES GROUP	396
1	200-4609	BOOM CYLINDER LINES GROUP	450
1	200-4606	STICK CYLINDER LINES GROUP	449
1	201-9141	FRONT LINES GROUP	356
1	200-4613	STICK LINES GROUP	347
1	199-5185	PATO LIGHTING GROUP	123
1	201-9158	WIRING GROUP	162
1	201-9149	OPERATOR PLATFORM GROUP	568
1	201-9173	SWING LOCK GROUP	522
1	199-5208	FRONT GUARD GROUP	523
1	201-5595	ACCUMULATOR GROUP	342
1	201-9151	SEAT SUPPORT GROUP	603
1	201-9159	FILM GROUP	658

J126758 X01

SPECIAL ARRANGEMENT (201-9165 N/S) -SHOVEL CRANE-CAB/STANDARD STICK
EFFECTIVE WITH SERIAL NO. BMW00204-BMW00955
AN ATTACHMENT

IMPLEMENTS

CONSISTS OF :

			PAGE
1	201-9146	MONITOR AND MOUNTING GROUP	524
1	201-9154	UPPER FRAME GROUP	276
1	200-4603	BUCKET LINKAGE GROUP	492
1	199-5207	BOOM SENSOR AND MOUNTING GROUP	487
1	199-5206	STICK SENSOR AND MOUNTING GROUP	487
1	200-4636	BOOM CYLINDER GUARD GROUP	486
1	200-4617	BOOM GROUP	484
1	200-4614	STICK GROUP	480
1	201-9157	PILOT LINES GROUP	396
1	200-4609	BOOM CYLINDER LINES GROUP	450
1	200-4606	STICK CYLINDER LINES GROUP	449
1	201-9141	FRONT LINES GROUP	356
1	200-4613	STICK LINES GROUP	347
1	199-5185	PATO LIGHTING GROUP	123
1	201-9158	WIRING GROUP	162
1	201-9149	OPERATOR PLATFORM GROUP	568
1	201-9173	SWING LOCK GROUP	522
1	199-5208	FRONT GUARD GROUP	523
1	201-5595	ACCUMULATOR GROUP	342
1	216-8446	SEAT SUPPORT GROUP	603
1	201-9159	FILM GROUP	658

J126759 X03

SPECIAL ARRANGEMENT (201-9165 N/S) -SHOVEL CRANE-CAB/STANDARD STICK
EFFECTIVE WITH SERIAL NO. BMW00956-
AN ATTACHMENT

IMPLEMENTS

CONSISTS OF :

			PAGE
1	201-9146	MONITOR AND MOUNTING GROUP	524
1	201-9154	UPPER FRAME GROUP	276
1	200-4603	BUCKET LINKAGE GROUP	492
1	199-5207	BOOM SENSOR AND MOUNTING GROUP	487
1	199-5206	STICK SENSOR AND MOUNTING GROUP	487
1	200-4636	BOOM CYLINDER GUARD GROUP	486
1	200-4617	BOOM GROUP	484
1	206-7630	STICK GROUP	481
1	201-9157	PILOT LINES GROUP	396
1	200-4609	BOOM CYLINDER LINES GROUP	450
1	200-4606	STICK CYLINDER LINES GROUP	449
1	201-9141	FRONT LINES GROUP	356
1	200-4613	STICK LINES GROUP	347
1	199-5185	PATO LIGHTING GROUP	123
1	206-7633	WIRING GROUP	166
1	201-9149	OPERATOR PLATFORM GROUP	568
1	201-9173	SWING LOCK GROUP	522
1	199-5208	FRONT GUARD GROUP	523
1	201-5595	ACCUMULATOR GROUP	342
1	201-9151	SEAT SUPPORT GROUP	603
1	206-7625	FILM GROUP	659

J126762 X01

SPECIAL ARRANGEMENT (206-7624 N/S) -SHOVEL CRANE-CAB/LONG STICK
EFFECTIVE WITH SERIAL NO. BMW00684-BMW00955
AN ATTACHMENT

IMPLEMENTS

CONSISTS OF :

			PAGE
1	201-9146	MONITOR AND MOUNTING GROUP	524
1	201-9154	UPPER FRAME GROUP	276
1	200-4603	BUCKET LINKAGE GROUP	492
1	199-5207	BOOM SENSOR AND MOUNTING GROUP	487
1	199-5206	STICK SENSOR AND MOUNTING GROUP	487
1	200-4636	BOOM CYLINDER GUARD GROUP	486
1	200-4617	BOOM GROUP	484
1	206-7630	STICK GROUP	481
1	201-9157	PILOT LINES GROUP	396
1	200-4609	BOOM CYLINDER LINES GROUP	450
1	200-4606	STICK CYLINDER LINES GROUP	449
1	201-9141	FRONT LINES GROUP	356
1	200-4613	STICK LINES GROUP	347
1	199-5185	PATO LIGHTING GROUP	123
1	206-7633	WIRING GROUP	166
1	201-9149	OPERATOR PLATFORM GROUP	568
1	201-9173	SWING LOCK GROUP	522
1	199-5208	FRONT GUARD GROUP	523
1	201-5595	ACCUMULATOR GROUP	342
1	216-8446	SEAT SUPPORT GROUP	603
1	206-7625	FILM GROUP	659

J126763 X03

SPECIAL ARRANGEMENT (206-7624 N/S) -SHOVEL CRANE-CAB/LONG STICK
EFFECTIVE WITH SERIAL NO. BMW00956-
AN ATTACHMENT

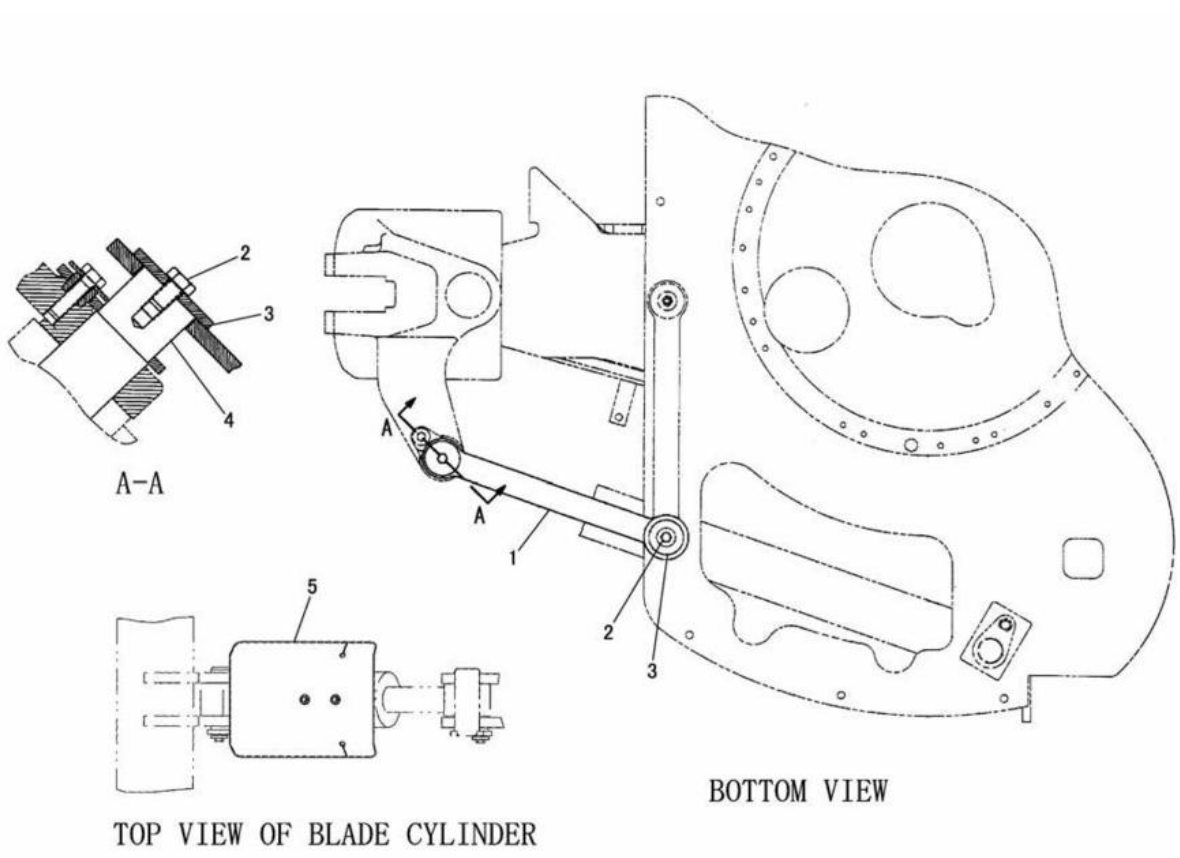

NOTE	No.	PART NO.	QTY.	PART NAME	NOTE	No.	PART NO.	QTY.	PART NAME
	1	201-9174	1	BAR					
	2	7X-2548	2	BOLT(M12×1.75)					
	3	201-9168	2	WASHER					
	4	201-9181	1	PIN AS					
	5	223-6031	1	COVER					

J129297 X04

SWING BOOM LOCK (201-9173 N/S)

EFFECTIVE WITH SERIAL NO. BMW00204-

PART OF 201-9165-Page 518,519,206-7605-Page 514,515,206-7624-Page 520,521,206-7635-Page 516,517 AN ATTACHMENT

IMPLEMENTS

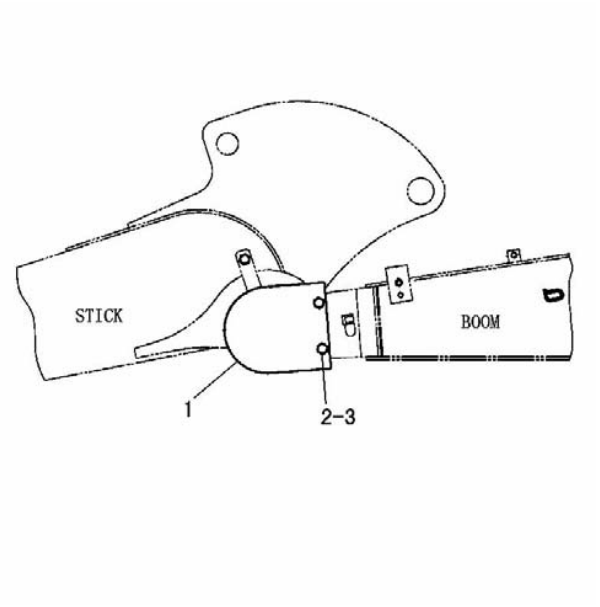

NOTE	No.	PART NO.	QTY.	PART NAME
	1	199-5210	1	COVER AS
	2	8T-4179	2	BOLT(M12×1.75)
	3	5P-1076	2	WASHER

J111719 X00

FRONT GUARD (199-5208 N/S)

EFFECTIVE WITH SERIAL NO. BMW00204-
PART OF 201-9165-Page 518,519,206-7605-Page 514,515,206-7624-Page 520,521,206-7635-Page 516,517
AN ATTACHMENT

OPERATOR STATION

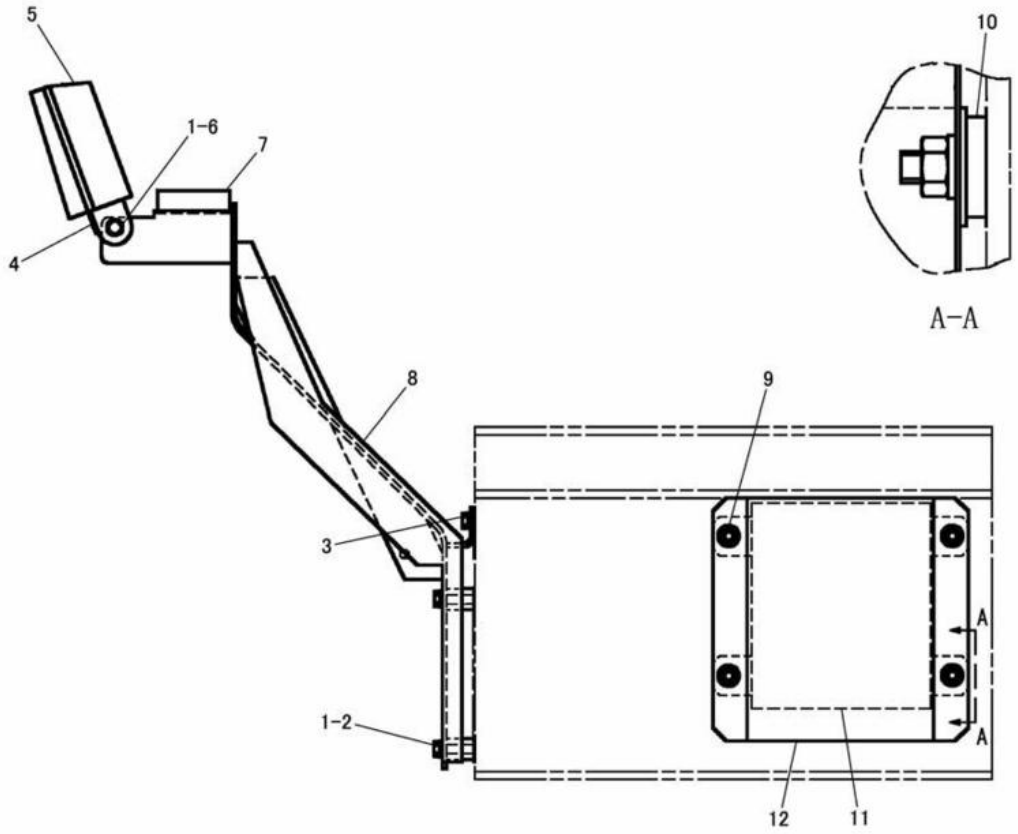

NOTE	No.	PART NO.	QTY.	PART NAME	NOTE	No.	PART NO.	QTY.	PART NAME
	1	9X-8256	4	WASHER					
	2	7X-2533	2	BOLT(M6×1)					
	3	8T-4138	1	BOLT(M6×1)					
		8T-4205	1	WASHER					
	4	200-4602	1	SUPPORT AS					
	5	206-7615	1	MONITOR					
	6	8T-4970	2	BOLT(M6×1)					
	7	186-3792	1	TILT(SWITCH)					
	8	201-9148	1	SUPPORT AS					
		6V-9632	2	NUT(M6×1)(WELD)					
	9	8T-4224	4	WASHER					
		5C-7261	4	NUT(M8×1.25)					
	10	7X-0613	4	WASHER					
	11	199-5191	1	CONTROL AS					
	12	183-7676	1	COVER AS					

J126796 X04

MONITOR AND MOUNTING (201-9146 N/S) -CAB
EFFECTIVE WITH SERIAL NO. BMW00204-
PART OF 201-9165-Page 518,519,206-7624-Page 520,521
AN ATTACHMENT

OPERATOR STATION

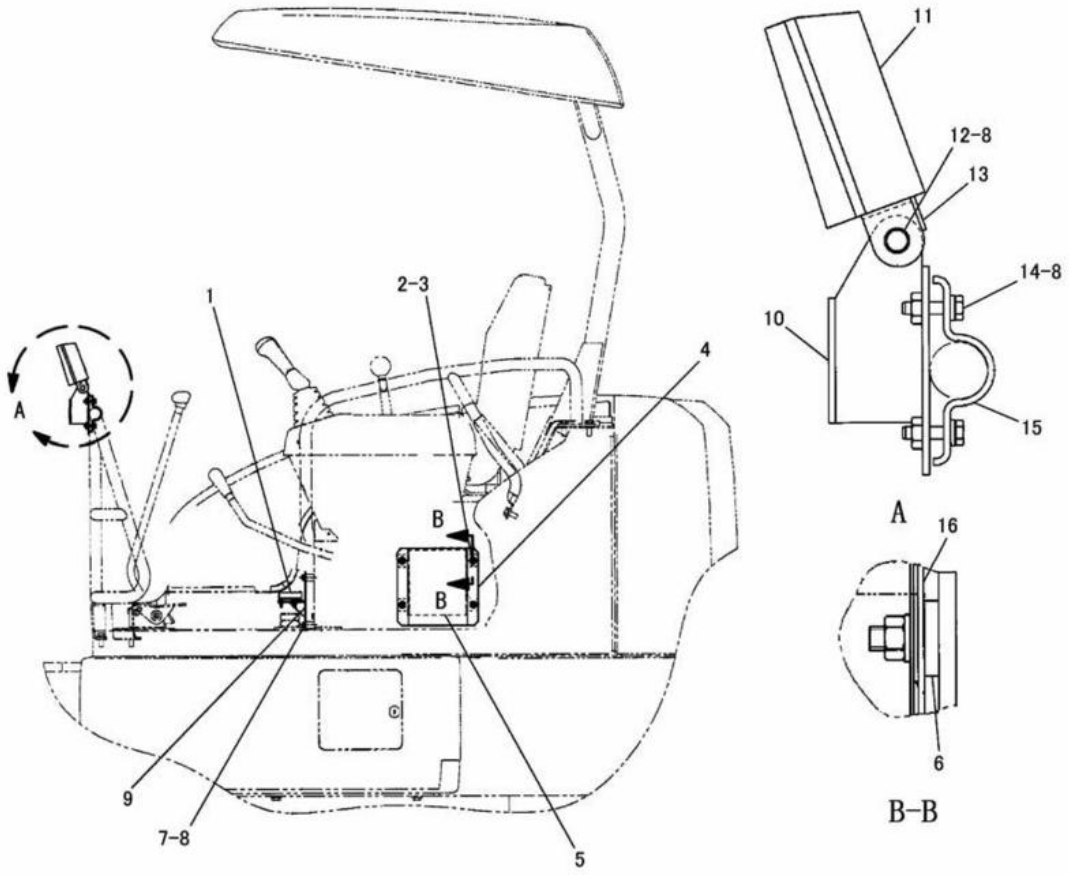

NOTE	No.	PART NO.	QTY.	PART NAME	NOTE	No.	PART NO.	QTY.	PART NAME
	1	186-3792	1	TILT(SWITCH)					
	2	5C-7261	4	NUT(M8×1.25)					
	3	8T-4224	4	WASHER					
	4	183-7676	1	COVER AS					
	5	199-5191	1	CONTROL AS					
	6	7X-0613	4	WASHER					
	7	7X-2553	2	BOLT(M16×2)					
	8	9X-8256	8	WASHER					
	9	206-7618	1	SUPPORT AS					
	10	206-7616	1	SUPPORT AS					
		6V-9632	6	NUT(M6×1)(WELD)					
	11	140-3246	1	COVER					
		207-7158	1	MONITOR					
	12	8T-4970	2	BOLT(M6×1)					
	13	200-4602	1	SUPPORT AS					
	14	8T-4138	4	BOLT(M6×1)					
	15	206-7617	1	SUPPORT					
	16	206-7642	1	PLATE AS					
D		8T-5372		SEAL---0.6m					

D-ORDER BY THE m

J126768 X03

MONITOR (206-7614 N/S) -CANOPY

EFFECTIVE WITH SERIAL NO. BMW00684-
PART OF 206-7605-Page 514,515,206-7635-Page 516,517
AN ATTACHMENT

OPERATOR STATION

CONSISTS OF :

			PAGE
1	192-2572	HANDLE GROUP ·····	596
1	191-0244	CANOPY GROUP ·····	533

J106595 E01

CANOPY ARRANGEMENT (191-0243 N/S)
EFFECTIVE WITH SERIAL NO. BMW00001-BMW01252

CONSISTS OF :

			PAGE
1	191-0244	CANOPY GROUP ·····	533
1	218-4682	HANDLE GROUP ·····	597

J113024 X00

CANOPY ARRANGEMENT (218-4684 N/S)
EFFECTIVE WITH SERIAL NO. BMW01253-

OPERATOR STATION

CONSISTS OF :

			PAGE
1	191-0280	FENDER COVER GROUP	246
1	191-0300	CAB SIDE COVER GROUP	250
1	191-1958	BOOM CYLINDER GROUP	431
1	201-4573	OPERATOR ARRANGEMENT	531
1	201-7887	CAB GROUP	535
1	191-3307	WINDSHIELD WASHER GROUP	599
1	194-6442	SWING STOP GROUP	269
1	201-4571	HEATER AND MOUNTING GROUP	624
1	191-3889	HEATER LINES GROUP	618
1	200-5545	FILM GROUP	655

J115453 X02

CAB ARRANGEMENT (201-4570 N/S)
EFFECTIVE WITH SERIAL NO. BMW00001-BMW01260
AN ATTACHMENT

CONSISTS OF :

			PAGE
1	191-0280	FENDER COVER GROUP	246
1	191-0300	CAB SIDE COVER GROUP	250
1	191-1958	BOOM CYLINDER GROUP	431
1	201-4573	OPERATOR ARRANGEMENT	531
1	201-7887	CAB GROUP	535
1	191-3307	WINDSHIELD WASHER GROUP	599
1	194-6442	SWING STOP GROUP	269
1	201-4571	HEATER AND MOUNTING GROUP	624
1	191-3889	HEATER LINES GROUP	618
1	200-5545	FILM GROUP	655
1	209-8169	FRONT WIRING GROUP	116

J126691 X05

CAB ARRANGEMENT (201-4570 N/S)
EFFECTIVE WITH SERIAL NO. BMW01261-
AN ATTACHMENT

OPERATOR STATION

CONSISTS OF :

			PAGE
1	201-7887	CAB GROUP	535
1	201-4573	OPERATOR ARRANGEMENT	531
1	191-3307	WINDSHIELD WASHER GROUP	599
1	200-5487	FENDER COVER GROUP	249
1	194-6442	SWING STOP GROUP	269
1	201-4571	HEATER AND MOUNTING GROUP	624
1	191-3889	HEATER LINES GROUP	618
1	191-1958	BOOM CYLINDER GROUP	431

J114576 X01

CAB ARRANGEMENT (216-8440 N/S) -SOUND SUPPRESSION
PART OF 216-8063-Page 192,193
AN ATTACHMENT

OPERATOR STATION

CONSISTS OF :

			PAGE
1	191-3844	CONSOLE WIRING GROUP	62
1	191-3824	PILOT CONTROL GROUP	331
1	191-3828	OPERATOR PLATFORM GROUP	562
1	191-3823	OPERATOR CONSOLE GROUP	579
1	191-3827	SEAT SUPPORT GROUP	602
1	191-3826	SEAT GROUP	601

J106481 X02

OPERATOR ARRANGEMENT (191-3822 N/S)
EFFECTIVE WITH SERIAL NO. BMW00001-BMW00955
PART OF 191-3351-Page 184,185,186,187,188,189

CONSISTS OF :

			PAGE
1	191-3844	CONSOLE WIRING GROUP	62
1	191-3824	PILOT CONTROL GROUP	331
1	191-3828	OPERATOR PLATFORM GROUP	562
1	191-3823	OPERATOR CONSOLE GROUP	579
1	210-1769	SEAT SUPPORT GROUP	602
1	191-3826	SEAT GROUP	601

J115377 X03

OPERATOR ARRANGEMENT (191-3822 N/S)
EFFECTIVE WITH SERIAL NO. BMW00956-BMW01588
PART OF 191-3351-Page 184,185,186,187,188,189

OPERATOR STATION

CONSISTS OF :

			PAGE
1	191-3844	CONSOLE WIRING GROUP	62
1	191-3824	PILOT CONTROL GROUP	331
1	191-3828	OPERATOR PLATFORM GROUP	562
1	253-3623	OPERATOR CONSOLE GROUP	581
1	210-1769	SEAT SUPPORT GROUP	602
1	191-3826	SEAT GROUP	601

J132105 X04

OPERATOR ARRANGEMENT (191-3822 N/S)
EFFECTIVE WITH SERIAL NO. BMW01589-
PART OF 191-3351-Page 184,185,186,187,188,189

OPERATOR STATION

CONSISTS OF :

			PAGE
1	191-3841	OPERATOR PLATFORM GROUP	564
1	191-3840	OPERATOR CONSOLE GROUP	582
1	194-6461	SEAT BELT GROUP	614

J126693 X00

OPERATOR ARRANGEMENT (201-4573 N/S)
EFFECTIVE WITH SERIAL NO. BMW00001-BMW01248
PART OF 201-4570-Page 527,216-8440-Page 528
AN ATTACHMENT

CONSISTS OF :

			PAGE
1	191-3841	OPERATOR PLATFORM GROUP	564
1	233-6788	OPERATOR CONSOLE GROUP	583
1	215-2865	CONSOLE WIRING GROUP(CAB)	76
1	194-6461	SEAT BELT GROUP	614

J126692 X02

OPERATOR ARRANGEMENT (201-4573 N/S)
EFFECTIVE WITH SERIAL NO. BMW01249-BMW01588
PART OF 201-4570-Page 527,216-8440-Page 528
AN ATTACHMENT

OPERATOR STATION

CONSISTS OF :

			PAGE
1	191-3841	OPERATOR PLATFORM GROUP ·····	564
1	233-6787	OPERATOR CONSOLE GROUP ·····	584
1	215-2865	CONSOLE WIRING GROUP(CAB) ·····	76
1	194-6461	SEAT BELT GROUP ·····	614

J132165 XO3

OPERATOR ARRANGEMENT (201-4573 N/S)
EFFECTIVE WITH SERIAL NO. BMW01589-
PART OF 201-4570-Page 527,216-8440-Page 528
AN ATTACHMENT

OPERATOR STATION

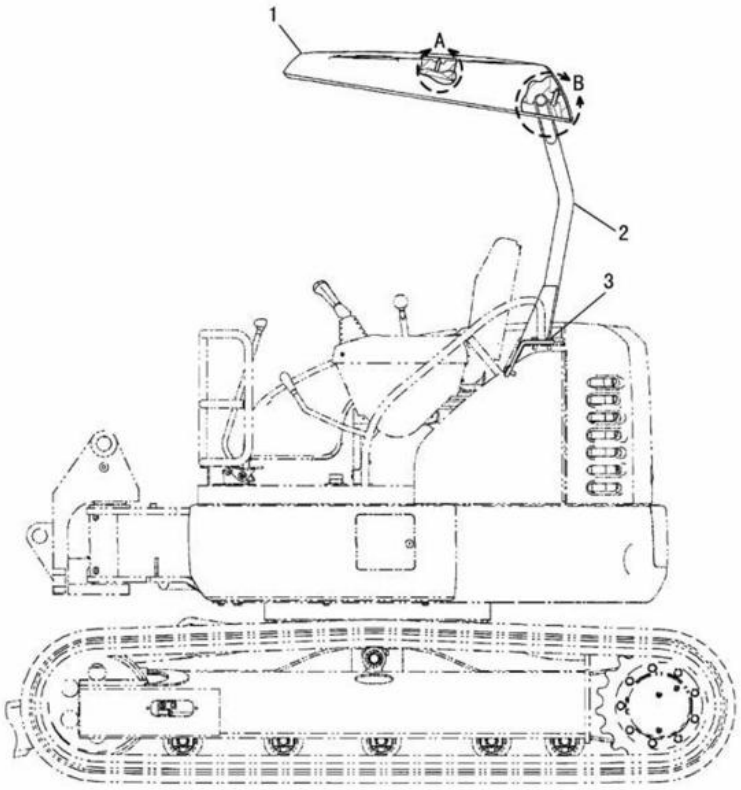

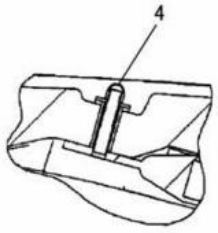

A

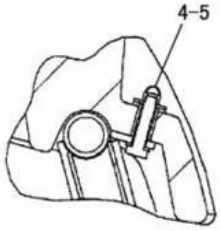

B

NOTE	No.	PART NO.	QTY.	PART NAME	NOTE	No.	PART NO.	QTY.	PART NAME
	1	191-0248	1	ROOF					
	2	192-3598	1	SUPPORT AS					
	3	8T-4956	6	BOLT(M12×1.75)					
		5P-1076	6	WASHER					
	4	140-3355	4	SPACER					
		144-6747	4	NUT(M10×1.5)					
		139-4410	4	WASHER					
	5	8T-4182	2	BOLT(M10×1.5)					
		8T-4121	2	WASHER					

J106593 E01

CANOPY (191-0244 N/S)

EFFECTIVE WITH SERIAL NO. BMW00001-BMW01116
PART OF 191-0243-Page 526,218-4684-Page 526

OPERATOR STATION

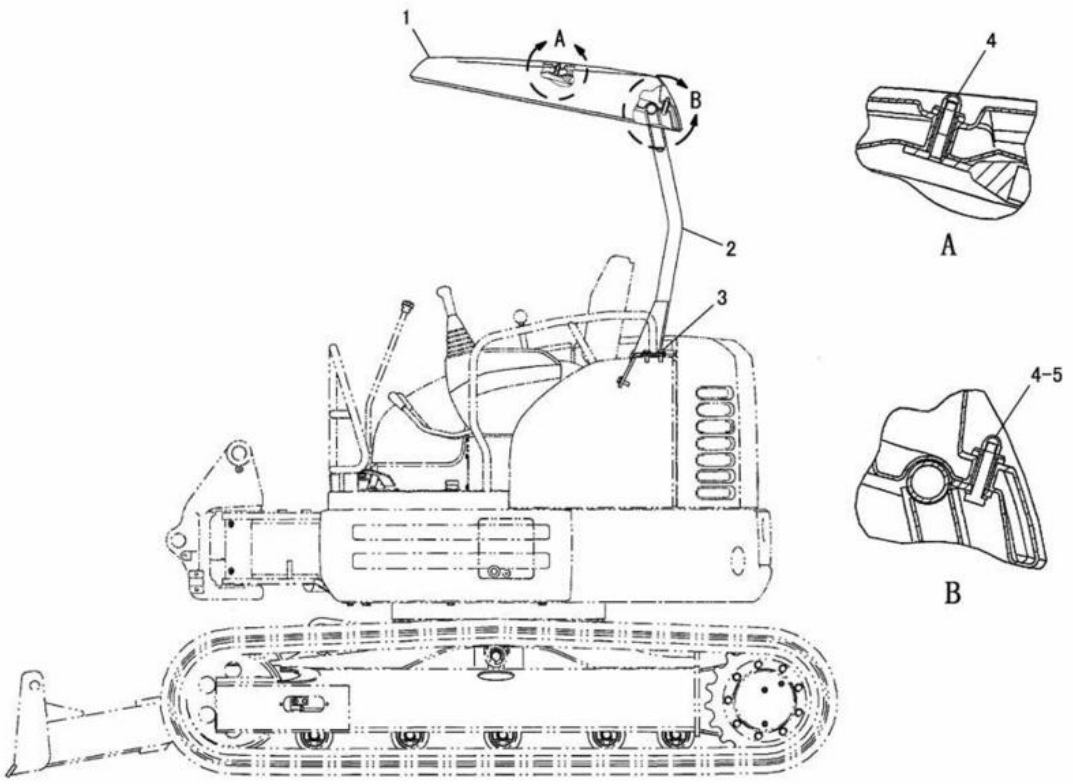

NOTE	No.	PART NO.	QTY.	PART NAME	NOTE	No.	PART NO.	QTY.	PART NAME
C	1	223-1794	1	ROOF					
	2	192-3598	1	SUPPORT AS					
	3	8T-4956	6	BOLT(M12×1.75)					
		5P-1076	6	WASHER					
C	4	223-1874	4	SPACER					
		144-6747	4	NUT(M10×1.5)					
		139-4410	4	WASHER					
C	5	8T-4185	2	BOLT(M10×1.5)					
		8T-4121	2	WASHER					

C-INDICATES CHANGE

J126038 E03

CANOPY (191-0244 N/S)

EFFECTIVE WITH SERIAL NO. BMW01117-
PART OF 191-0243-Page 526,218-4684-Page 526

OPERATOR STATION

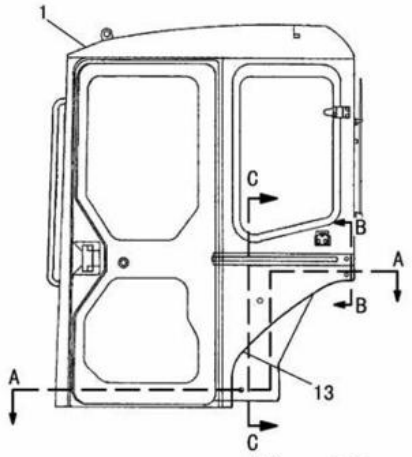

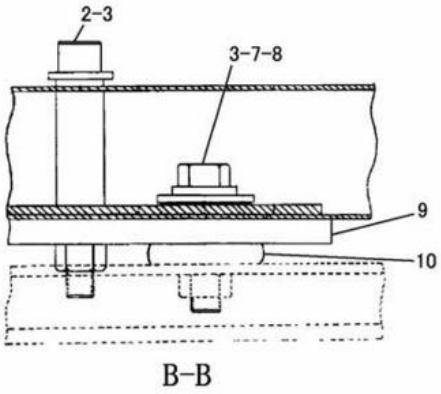

B-B

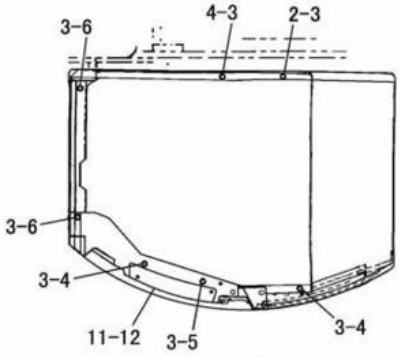

A-A

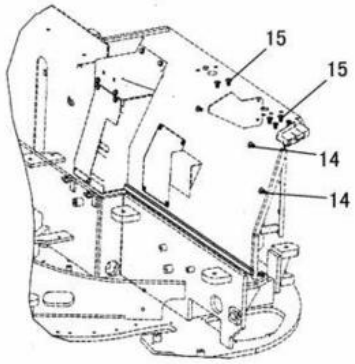

C-C

NOTE	No.	PART NO.	QTY.	PART NAME	NOTE	No.	PART NO.	QTY.	PART NAME
Y	1	201-7888	1	CAB GROUP					
	2	8T-4176	3	BOLT(M12×1.75)					
	3	8T-4223	11	WASHER					
	4	8T-4192	3	BOLT(M12×1.75)					
	5	8T-4956	1	BOLT(M12×1.75)					
	6	8T-4648	2	BOLT(M12×1.75)					
	7	8T-4194	2	BOLT(M12×1.75)					
	8	7X-0618	2	WASHER					
	9	197-6790	1	PLATE AS					
		8T-3597	2	NUT(M12×1.75)(WELD)					
	10	8D-3786	2	MOUNTING					
	11	202-0725	1	PLATE					
	12	9X-2616	2	SCREW(M8×1.25)					
	13	163-7171	2	SEAL					
	14	214-6197	3	PLUG					
	15	214-6198	6	PLUG					

Y-SEE SEPARATE ILLUSTRATION

J114583 X02

CAB (201-7887 N/S)

EFFECTIVE WITH SERIAL NO. BMW00001-BMW01172
PART OF 201-4570-Page 527,216-8440-Page 528
201-7888-Page 538～541
AN ATTACHMENT

OPERATOR STATION

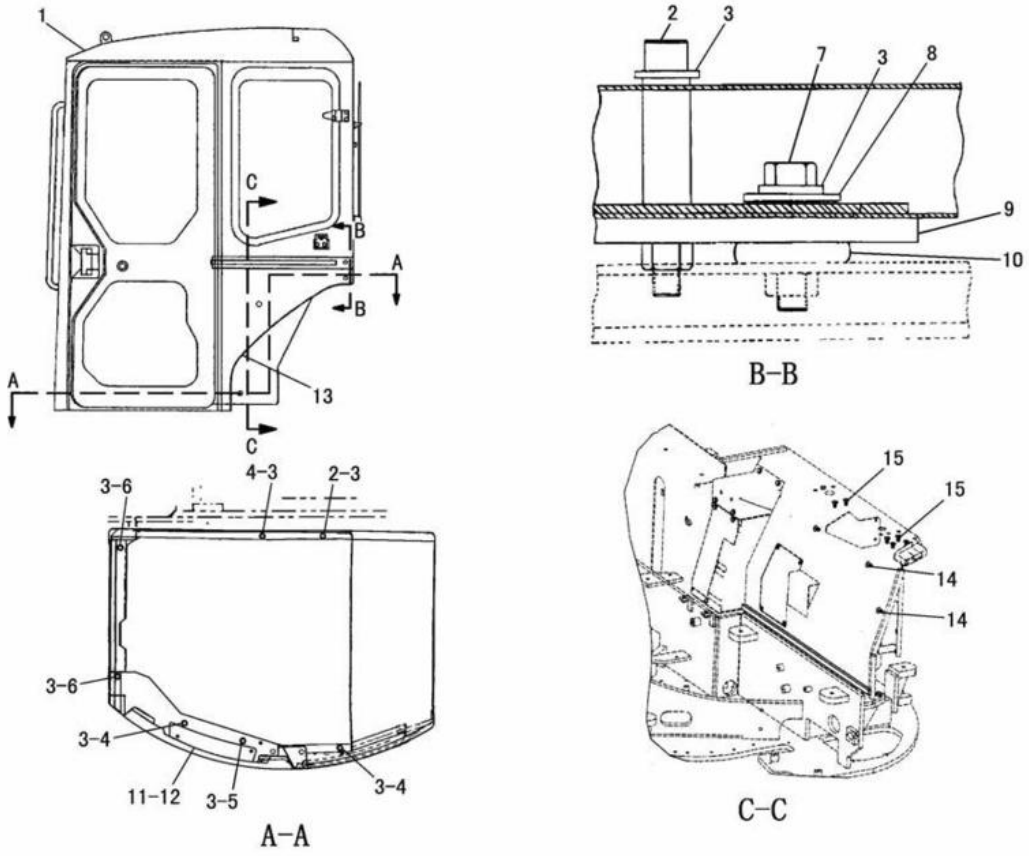

NOTE	No.	PART NO.	QTY.	PART NAME	NOTE	No.	PART NO.	QTY.	PART NAME
CY	1	210-6406	1	CAB GROUP					
	2	8T-4176	3	BOLT(M12×1.75)					
	3	8T-4223	11	WASHER					
	4	8T-4192	3	BOLT(M12×1.75)					
	5	8T-4956	1	BOLT(M12×1.75)					
	6	8T-4648	2	BOLT(M12×1.75)					
	7	8T-4194	2	BOLT(M12×1.75)					
	8	7X-0618	2	WASHER					
	9	197-6790	1	PLATE AS					
		8T-3597	2	NUT(M12×1.75)(WELD)					
	10	8D-3786	2	MOUNTING					
	11	202-0725	1	PLATE					
	12	9X-2616	2	SCREW(M8×1.25)					
	13	163-7171	2	SEAL					
	14	214-6197	3	PLUG					
	15	214-6198	6	PLUG					

C-INDICATES CHANGE
Y-SEE SEPARATE ILLUSTRATION

J126700 X03

CAB (201-7887 N/S)
EFFECTIVE WITH SERIAL NO. BMW01173-BMW01248
PART OF 201-4570-Page 527,216-8440-Page 528
210-6406-Page 542～545
AN ATTACHMENT

OPERATOR STATION

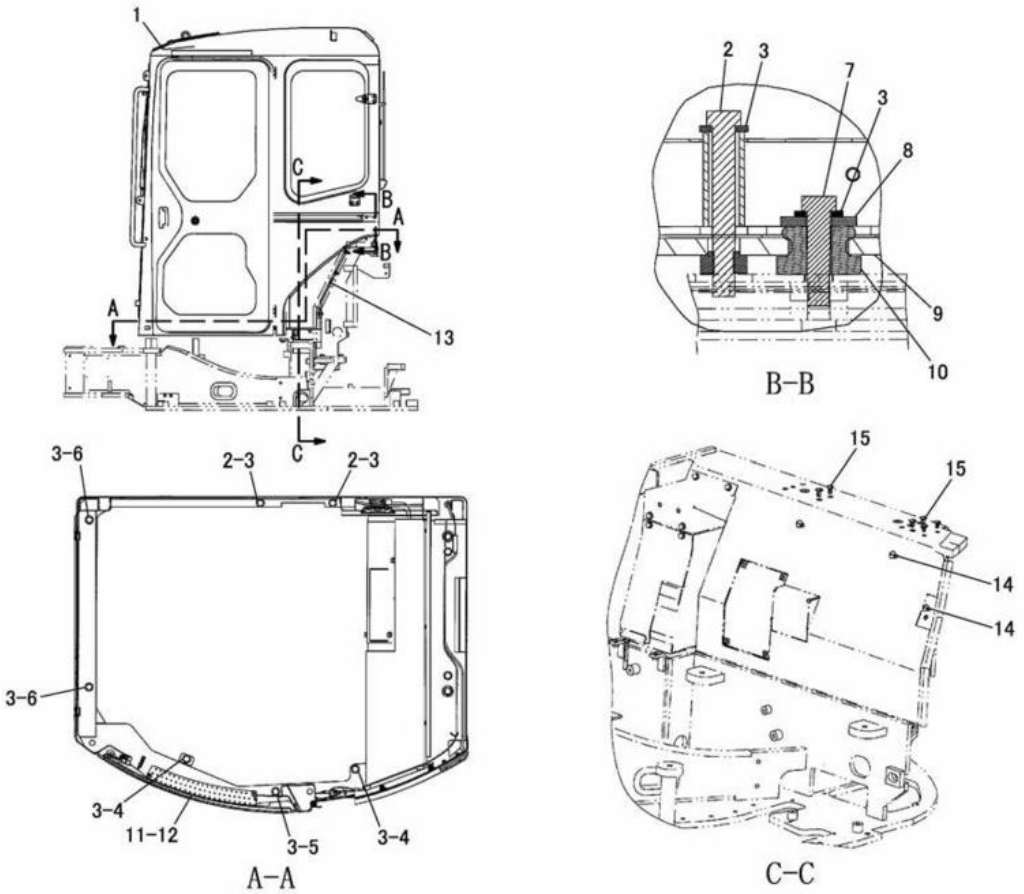

NOTE	No.	PART NO.	QTY.	PART NAME	NOTE	No.	PART NO.	QTY.	PART NAME
CY	1	230-7375	1	CAB GROUP					
C	2	8T-4176	4	BOLT(M12×1.75)					
	3	8T-4223	11	WASHER					
C	4	8T-4192	2	BOLT(M12×1.75)					
	5	8T-4956	1	BOLT(M12×1.75)					
	6	8T-4648	2	BOLT(M12×1.75)					
	7	8T-4194	2	BOLT(M12×1.75)					
	8	7X-0618	2	WASHER					
	9	197-6790	1	PLATE AS					
		8T-3597	2	NUT(M12×1.75)(WELD)					
	10	8D-3786	2	MOUNTING					
	11	202-0725	1	PLATE					
	12	9X-2616	2	SCREW(M8×1.25)					
	13	163-7171	2	SEAL					
	14	214-6197	3	PLUG					
	15	214-6198	6	PLUG					

C-INDICATES CHANGE
Y-SEE SEPARATE ILLUSTRATION

J126701 X04

CAB (201-7887 N/S)

EFFECTIVE WITH SERIAL NO. BMW01249-
PART OF 201-4570-Page 527,216-8440-Page 528
230-7375-Page 546～553
AN ATTACHMENT

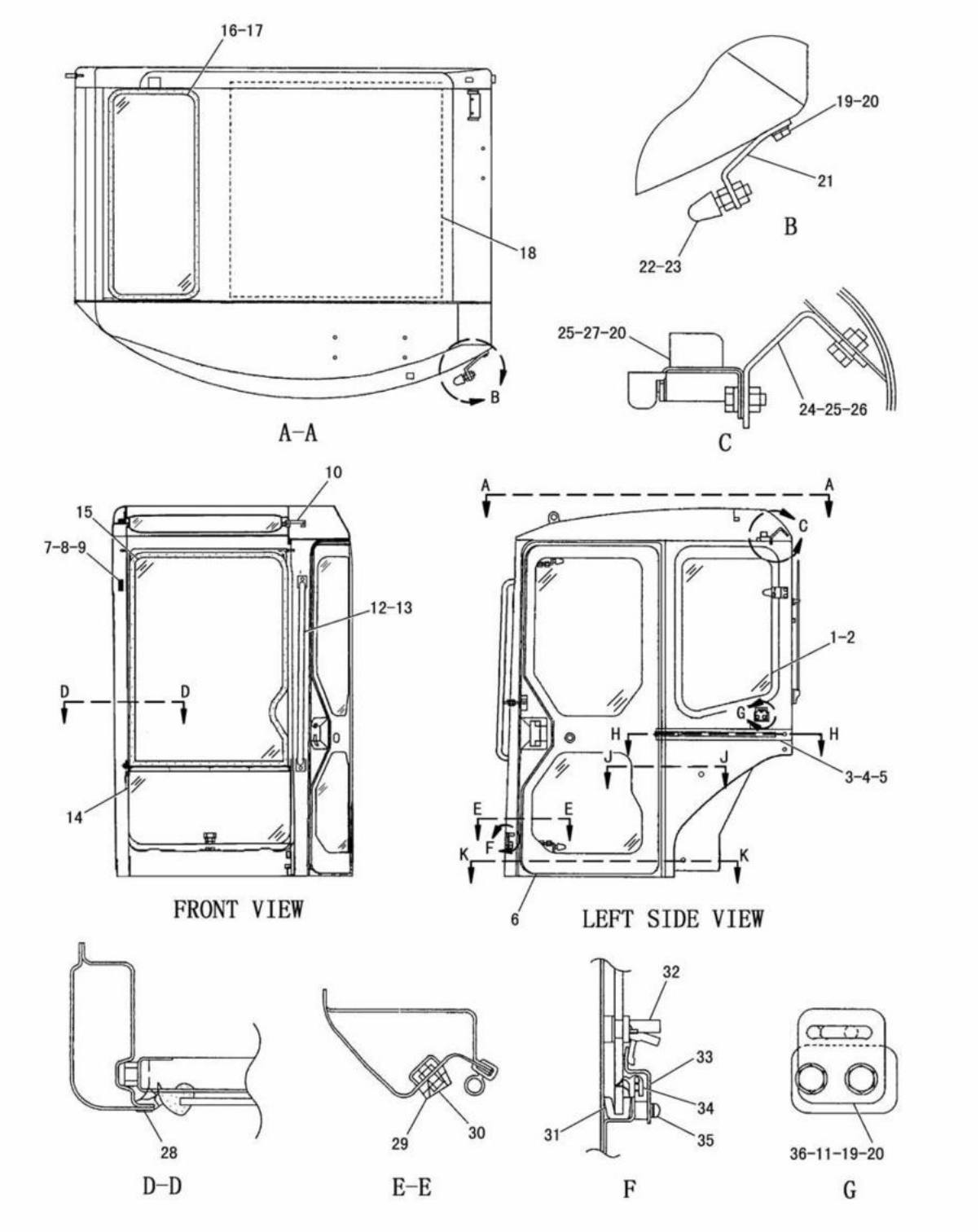

J126914 X04

201-7888 CAB GROUP -BASIC-PART 1 OF 2
EFFECTIVE WITH SERIAL NO. BMW00001-BMW01172
PART OF 201-7887-Page 535
AN ATTACHMENT

OPERATOR STATION

NOTE	No.	PART NO.	QTY.	PART NAME	NOTE	No.	PART NO.	QTY.	PART NAME
	1	162-1161	1	GLASS					
	2	132-7616	1	CUSHION					
	3	132-7573	1	COVER					
	4	8T-4138	2	BOLT(M6×1)					
	5	2U-2552	2	LOCKWASHER					
Y	6	203-4449	1	SLIDE DOOR GROUP					
	7	127-3926	1	NOZZLE					
	8	127-3927	1	STRIP					
	9	7Y-5292	2	SCREW					
	10	203-4460	1	CAP					
	11	127-3931	1	STRIKER					
	12	203-4440	1	HANDLE AS					
	13	8T-4192	2	BOLT(M12×1.75)					
	14	203-4430	1	GLASS					
Y	15	203-4450	1	FRONT DOOR GROUP					
	16	205-6092	1	GLASS					
	17	127-3943	1	SEAL					
	18	203-4439	1	LINER					
	19	8T-4200	4	BOLT(M8×1.25)					
	20	8T-4224	6	WASHER					
	21	127-3948	1	BRACKET					
	22	127-3947	1	BUMPER					
	23	095-1207	2	NUT(M12×1.75)					
	24	127-3936	1	BRACKET AS					
		8T-3612	2	NUT(M8×1.25)(WELD)					
	25	8T-4189	4	BOLT(M8×1.25)					
	26	5P-4116	2	WASHER					
	27	127-3935	1	LOCK AS					
	28	203-4432	1	SEAL					
	29	127-3928	2	STRIKER					
	30	5C-9553	4	BOLT(M6×1)					
	31	127-3922	2	STOPPER					
	32	132-7576	1	LOCK AS					
	33	127-3920	1	PLATE					
	34	203-4431	1	SEAL					
	35	8T-6411	2	SCREW(M6×1)					
	36	127-3930	1	PLATE					

Y-SEE SEPARATE ILLUSTRATION

J126914 X04

201-7888 CAB GROUP -BASIC-PART 1 OF 2
EFFECTIVE WITH SERIAL NO. BMW00001-BMW01172
PART OF 201-7887-Page 535
203-4449-Page 554, 555 203-4450-Page 556
AN ATTACHMENT

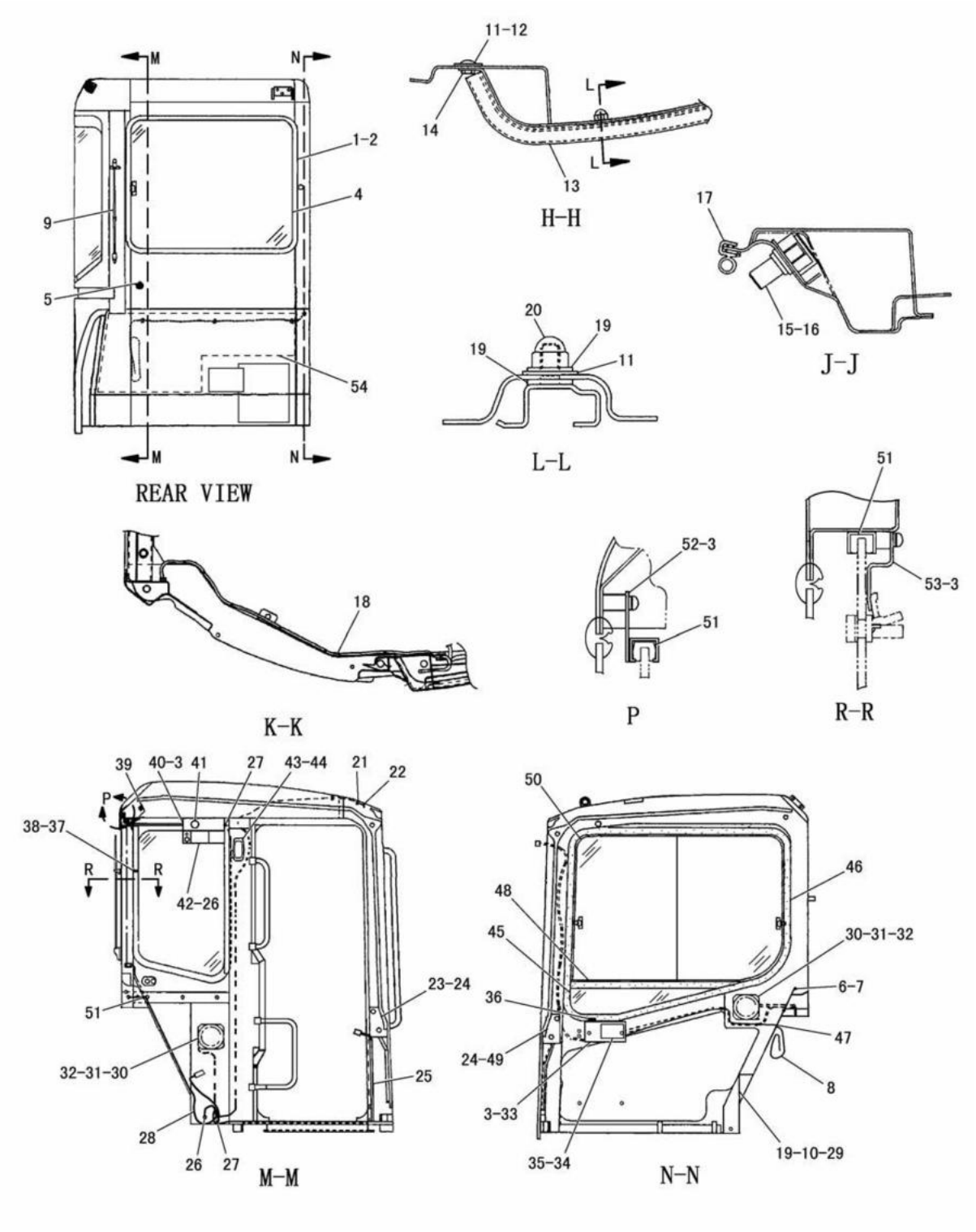

J126915 X04

201-7888 CAB GROUP -BASIC-PART 2 OF 2
EFFECTIVE WITH SERIAL NO. BMW00001-BMW01172
PART OF 201-7887-Page 535
AN ATTACHMENT

OPERATOR STATION

NOTE	No.	PART NO.	QTY.	PART NAME	NOTE	No.	PART NO.	QTY.	PART NAME
	1	203-4436	1	SEAL					
	2	127-3940	1	RING					
	3	8T-6411	10	SCREW(M6×1)					
	4	203-4435	1	GLASS					
	5	203-4458	1	CAP					
	6	203-4447	1	COVER AS					
	7	8T-4171	6	BOLT(M6×1)					
	8	127-3944	1	HOSE					
	9	211-9741	1	ANTENNA AS					
	10	8T-4200	3	BOLT(M8×1.25)					
	11	172-1870	4	PLATE					
	12	162-4852	1	SCREW(M8×1.25)					
	13	127-3932	1	RAIL AS					
	14	8T-7963	1	LOCKNUT(M8×1.25)					
	15	127-3929	1	STRIKER					
	16	8T-4223	1	WASHER					
	17	127-3924	1	SEAL					
	18	163-8856	8	CLIP					
	19	8T-4224	9	WASHER					
	20	6I-5342	3	NUT(M8×1.25)					
	21	203-4459	1	CLIP					
	22	203-4457	2	GROMMET					
	23	127-3992	1	PLATE(LH)					
	24	8C-7505	4	SCREW(M8×1.25)					
	25	206-8935	1	DUCT					
	26	095-0736	5	SCREW(M5×0.8)					
	27	203-4456	2	SEAL					
	28	203-4434	1	HARNESS AS					
	29	203-4446	1	BOX AS					
	30	203-4454	2	GRILL					
	31	203-4455	2	SPEAKER AS					
	32	6V-9672	8	SCREW(M4×0.7)					
	33	203-4448	1	BOX AS					
	34	203-4433	1	ASHTRAY					
	35	099-7127	2	SCREW(M4×0.7)					
	36	139-6341	1	CIGAR LIGHTER AS					
	37	127-3925	1	HOOK					
	38	096-2622	2	SCREW(M4×0.7)					
	39	136-0258	1	GROMMET					
	40	203-4452	1	BRACKET					
	41	203-4520	1	SWITCH AS					
	42	203-4453	1	RADIO AS					
	43	139-6332	1	ROOM LAMP					
	44	095-0728	2	SCREW(M4×0.7)					
	45	203-4441	1	GLASS					
	46	203-4438	1	SEAL					
	47	127-4006	1	GROMMET					
	48	203-4442	1	SEAL					
	49	127-3945	1	PLATE(RH)					
	50	203-4437	1	DOOR GROUP(RH)					
	51	203-4445	3	RUBBER					
	52	203-4444	1	BRACKET AS					
	53	203-4443	1	PLATE					
	54	216-9893	1	LINER					

J126915 X04

201-7888 CAB GROUP -BASIC-PART 2 OF 2
EFFECTIVE WITH SERIAL NO. BMW00001-BMW01172
PART OF 201-7887-Page 535
AN ATTACHMENT

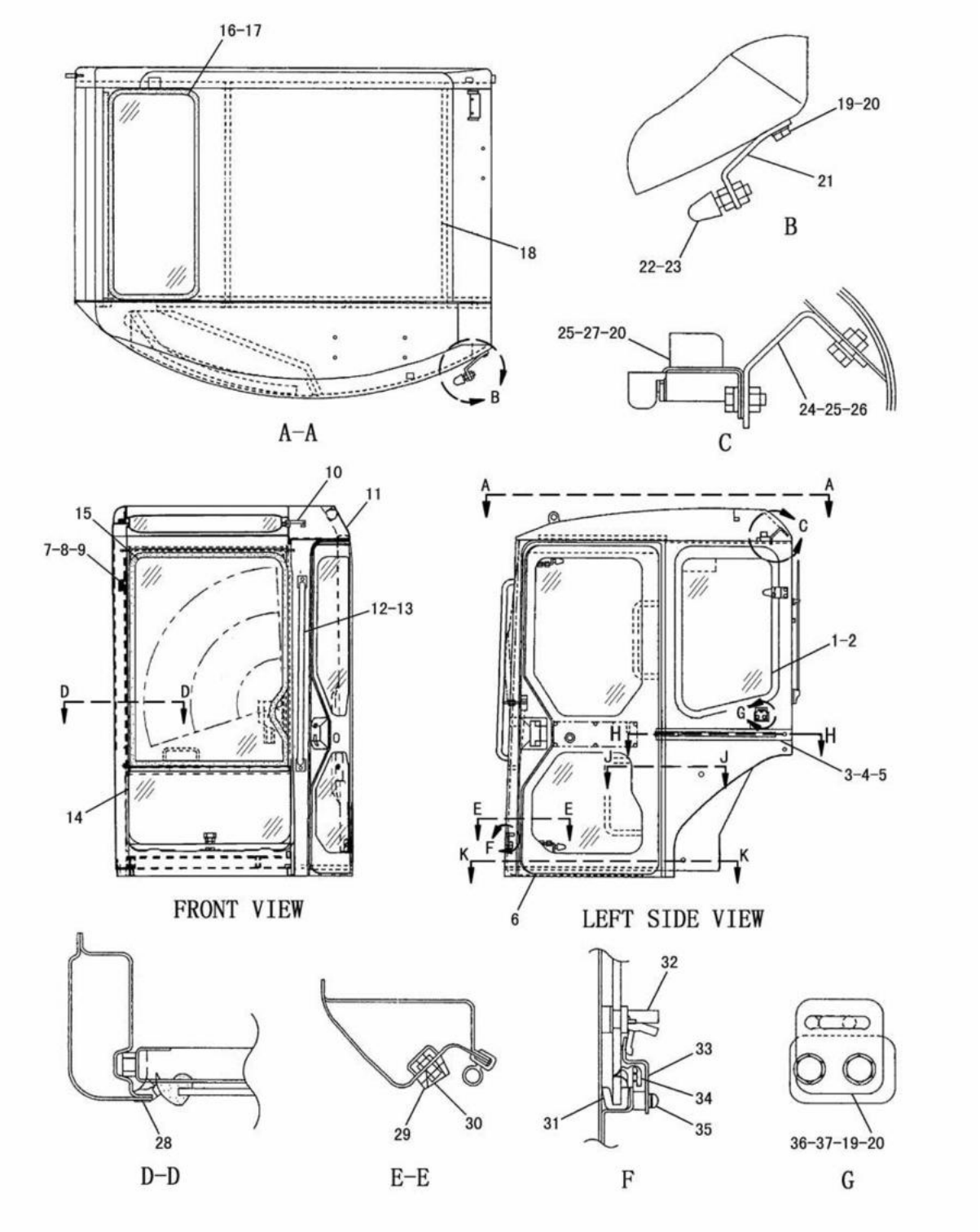

J126916 X01

210-6406 CAB GROUP -BASIC-PART 1 OF 2
EFFECTIVE WITH SERIAL NO. BMW01173-BMW01248
PART OF 201-7887-Page 536
AN ATTACHMENT

OPERATOR STATION

NOTE	No.	PART NO.	QTY.	PART NAME	NOTE	No.	PART NO.	QTY.	PART NAME
	1	162-1161	1	GLASS					
	2	132-7616	1	CUSHION					
	3	132-7573	1	COVER					
	4	8T-4138	2	BOLT(M6×1)					
	5	2U-2552	2	LOCKWASHER					
Y	6	203-4449	1	SLIDE DOOR GROUP					
	7	127-3926	1	NOZZLE					
	8	127-3927	1	STRIP					
	9	7Y-5292	2	SCREW(M4×0.7)					
	10	203-4460	1	CAP					
	11	203-4429	1	CAB AS					
	12	203-4440	1	HANDLE AS					
	13	8T-4192	2	BOLT(M12×1.75)					
	14	203-4430	1	GLASS					
Y	15	203-4450	1	FRONT DOOR GROUP					
	16	205-6092	1	GLASS					
	17	127-3943	1	SEAL					
	18	203-4439	1	LINER					
	19	8T-4200	4	BOLT(M8×1.25)					
	20	8T-4224	6	WASHER					
	21	127-3948	1	BRACKET					
	22	127-3947	1	BUMPER					
	23	095-1207	2	NUT(M12×1.75)					
	24	127-3936	1	BRACKET AS					
		8T-3612	2	NUT(M8×1.25)(WELD)					
	25	8T-4189	4	BOLT(M8×1.25)					
	26	5P-4116	2	WASHER					
	27	127-3935	1	LOCK AS					
	28	203-4432	1	SEAL					
	29	127-3928	2	STRIKER					
	30	5C-9553	4	BOLT(M6×1)					
	31	127-3922	2	STOPPER					
	32	132-7576	1	LOCK AS					
	33	127-3920	1	PLATE					
	34	203-4431	1	SEAL					
	35	8T-6411	2	SCREW(M6×1)					
	36	127-3930	1	PLATE					
	37	127-3931	1	STRIKER					

Y-SEE SEPARATE ILLUSTRATION

J126916 X01

210-6406 CAB GROUP -BASIC-PART 1 OF 2
EFFECTIVE WITH SERIAL NO. BMW01173-BMW01248
PART OF 201-7887-Page 536
203-4449-Page 554, 555 203-4450-Page 556
AN ATTACHMENT

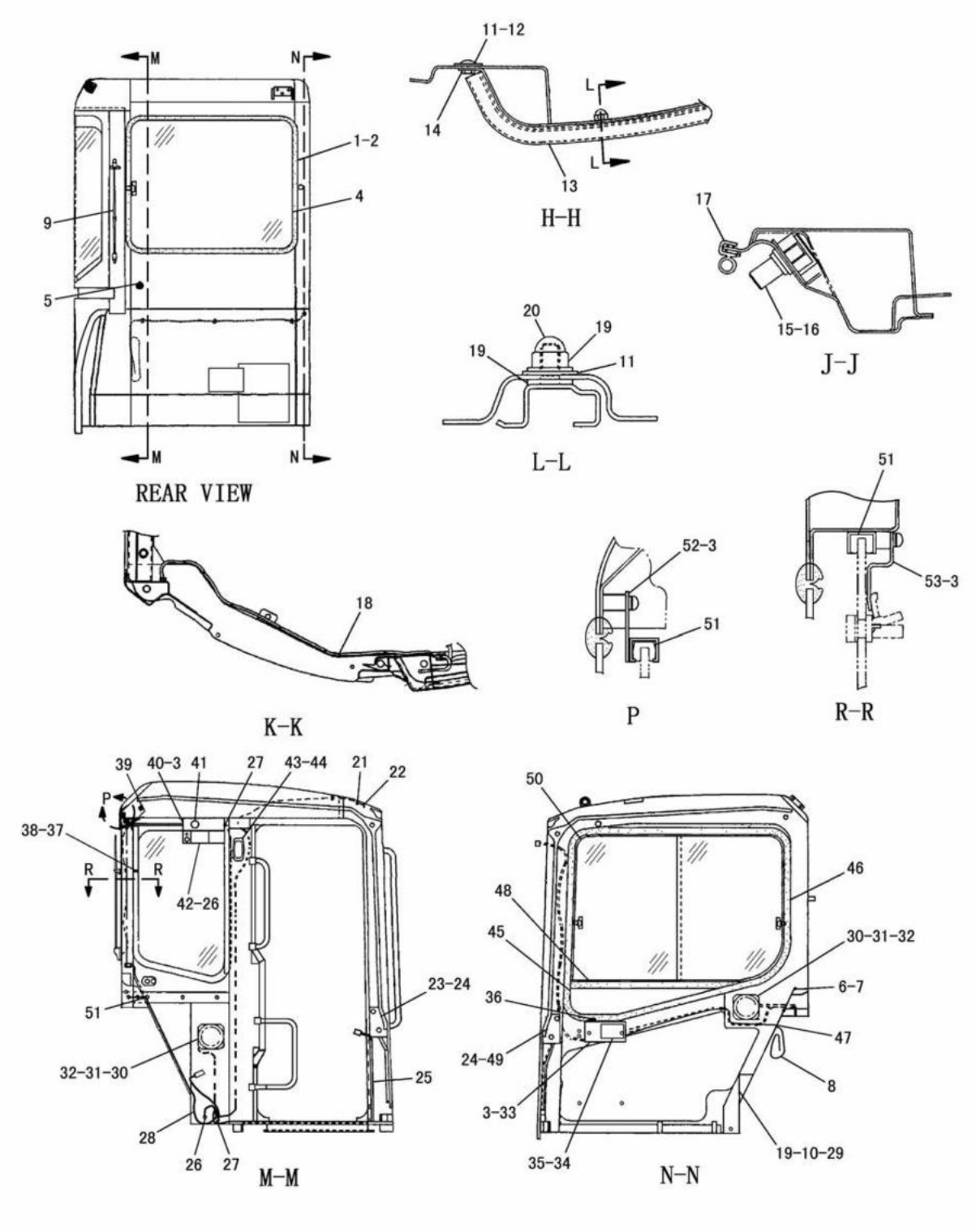

210-6406 CAB GROUP -BASIC-PART 2 OF 2
EFFECTIVE WITH SERIAL NO. BMW01173-BMW01248
PART OF 201-7887-Page 536
AN ATTACHMENT

OPERATOR STATION

NOTE	No.	PART NO.	QTY.	PART NAME	NOTE	No.	PART NO.	QTY.	PART NAME
	1	203-4436	1	SEAL					
	2	127-3940	1	RING					
	3	8T-6411	10	SCREW(M6×1)					
	4	203-4435	1	GLASS					
	5	203-4458	1	CAP					
	6	203-4447	1	COVER AS					
	7	8T-4171	6	BOLT(M6×1)					
	8	127-3944	1	HOSE					
	9	211-9741	1	ANTENNA AS					
	10	8T-4200	3	BOLT(M8×1.25)					
	11	172-1870	4	PLATE					
	12	162-4852	1	SCREW(M8×1.25)					
	13	127-3932	1	RAIL AS					
	14	8T-7963	1	LOCKNUT(M8×1.25)					
	15	127-3929	1	STRIKER					
	16	8T-4223	1	WASHER					
	17	127-3924	1	SEAL					
	18	163-8856	8	CLIP					
	19	8T-4224	9	WASHER					
	20	6I-5342	3	NUT(M8×1.25)					
	21	203-4459	1	CLIP					
	22	203-4457	2	GROMMET					
	23	127-3992	1	PLATE(LH)					
	24	8C-7505	4	SCREW(M8×1.25)					
	25	206-8935	1	DUCT					
	26	095-0736	5	SCREW(M5×0.8)					
	27	203-4456	2	SEAL					
	28	203-4434	1	HARNESS AS					
	29	210-6409	1	BOX AS					
	30	203-4454	2	GRILL					
	31	203-4455	2	SPEAKER AS					
	32	6V-9672	8	SCREW(M4×0.7)					
	33	203-4448	1	BOX AS					
	34	203-4433	1	ASHTRAY					
	35	099-7127	2	SCREW(M4×0.7)					
	36	139-6341	1	CIGAR LIGHTER AS					
	37	127-3925	1	HOOK					
	38	096-2622	2	SCREW(M4×0.7)					
	39	136-0258	1	GROMMET					
	40	203-4452	1	BRACKET					
	41	203-4520	1	WIPER SWITCH AS					
	42	203-4453	1	RADIO AS					
	43	139-6332	1	ROOM LAMP					
	44	095-0728	2	SCREW(M4×0.7)					
	45	203-4441	1	GLASS					
	46	203-4438	1	SEAL					
	47	127-4006	1	GROMMET					
	48	203-4442	1	SEAL					
	49	127-3945	1	PLATE(RH)					
	50	203-4437	1	DOOR GROUP(RH)					
	51	203-4445	3	RUBBER					
	52	203-4444	1	BRACKET AS					
	53	203-4443	1	PLATE					

J126917 X01

210-6406 CAB GROUP -BASIC-PART 2 OF 2
EFFECTIVE WITH SERIAL NO. BMW01173-BMW01248
PART OF 201-7887-Page 536
AN ATTACHMENT

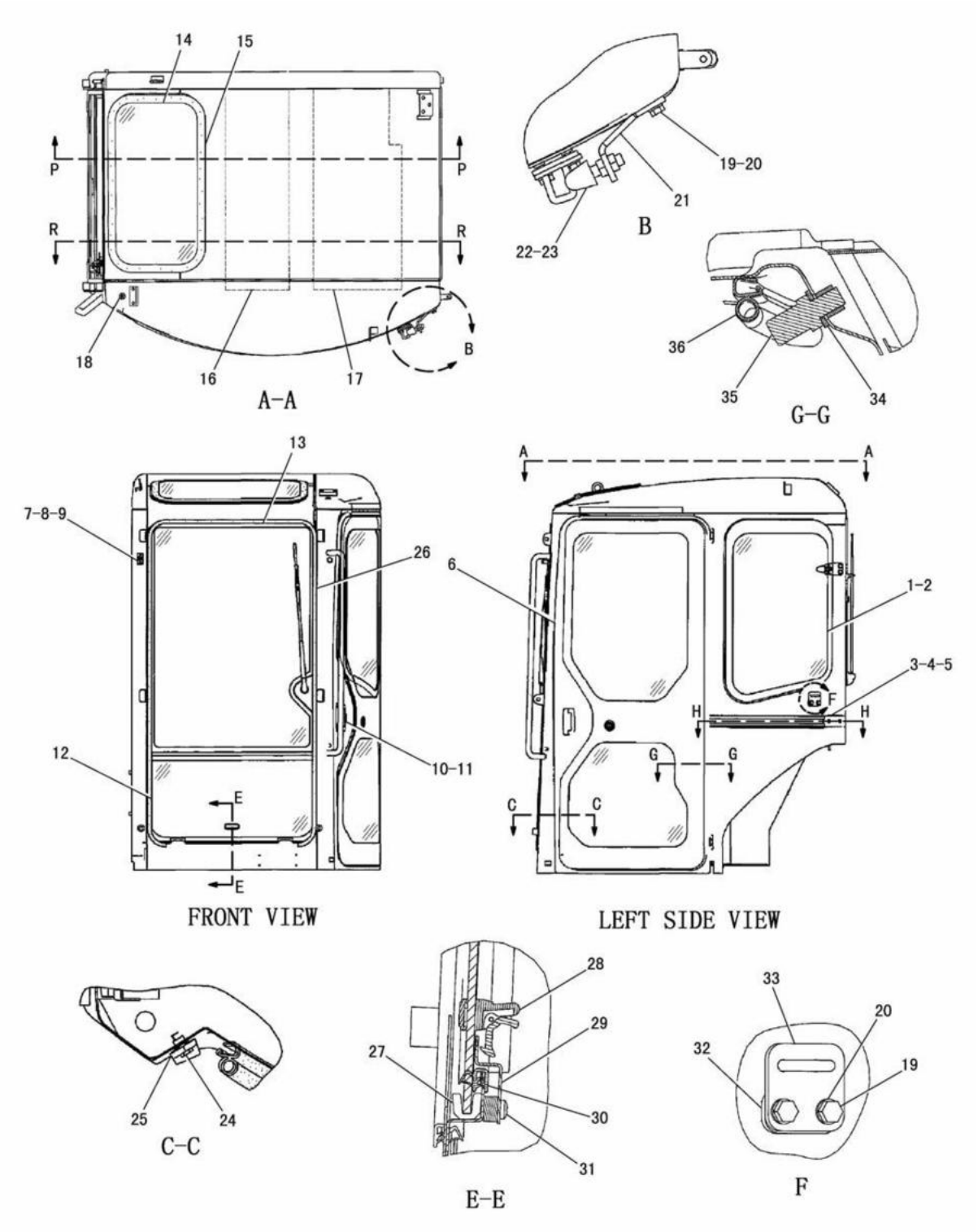

230-7375 CAB GROUP -BASIC-PART 1 OF 2
EFFECTIVE WITH SERIAL NO. BMW01249-BMW01424
PART OF 201-7887-Page 537
AN ATTACHMENT

OPERATOR STATION

NOTE	No.	PART NO.	QTY.	PART NAME	NOTE	No.	PART NO.	QTY.	PART NAME
	1	226-9843	1	GLASS					
	2	132-7616	1	CUSHION					
	3	132-7573	1	COVER					
	4	8T-4138	2	BOLT(M6×1)					
	5	095-1777	2	RING					
Y	6	203-4449	1	SLIDE DOOR GROUP					
	7	127-3926	1	NOZZLE					
	8	127-3927	1	STRIP					
	9	7Y-5292	2	SCREW(M4×0.7)					
	10	203-4440	1	HANDLE AS					
	11	8T-4192	2	BOLT(M12×1.75)					
	12	226-9841	1	GLASS					
Y	13	214-3953	1	FRONT DOOR GROUP					
	14	211-1179	1	GLASS					
	15	229-1382	1	SEAL					
	16	214-3947	1	LINER					
	17	214-3946	1	LINER					
	18	203-4457	1	GROMMET					
	19	8T-4200	4	BOLT(M8×1.25)					
	20	8T-4224	4	WASHER					
	21	127-3948	1	BRACKET					
	22	127-3947	1	BUMPER					
	23	095-1207	2	NUT(M12×1.75)					
	24	5C-9553	4	BOLT(M6×1)					
	25	127-3928	2	STRIKER					
	26	203-4432	1	SEAL					
	27	127-3922	2	STOPPER					
	28	132-7576	1	LOCK AS					
	29	127-3920	1	PLATE					
	30	203-4431	1	SEAL					
	31	8T-6411	2	SCREW(M6×1)					
	32	127-3930	1	PLATE					
	33	127-3931	1	STRIKER					
	34	8T-4223	1	WASHER					
	35	127-3929	1	STRIKER					
	36	127-3924	1	SEAL					

Y-SEE SEPARATE ILLUSTRATION

J126005 E00

230-7375 CAB GROUP -BASIC-PART 1 OF 2
EFFECTIVE WITH SERIAL NO. BMW01249-BMW01424
PART OF 201-7887-Page 537
203-4449-Page 554, 555 214-3953-Page 557
AN ATTACHMENT

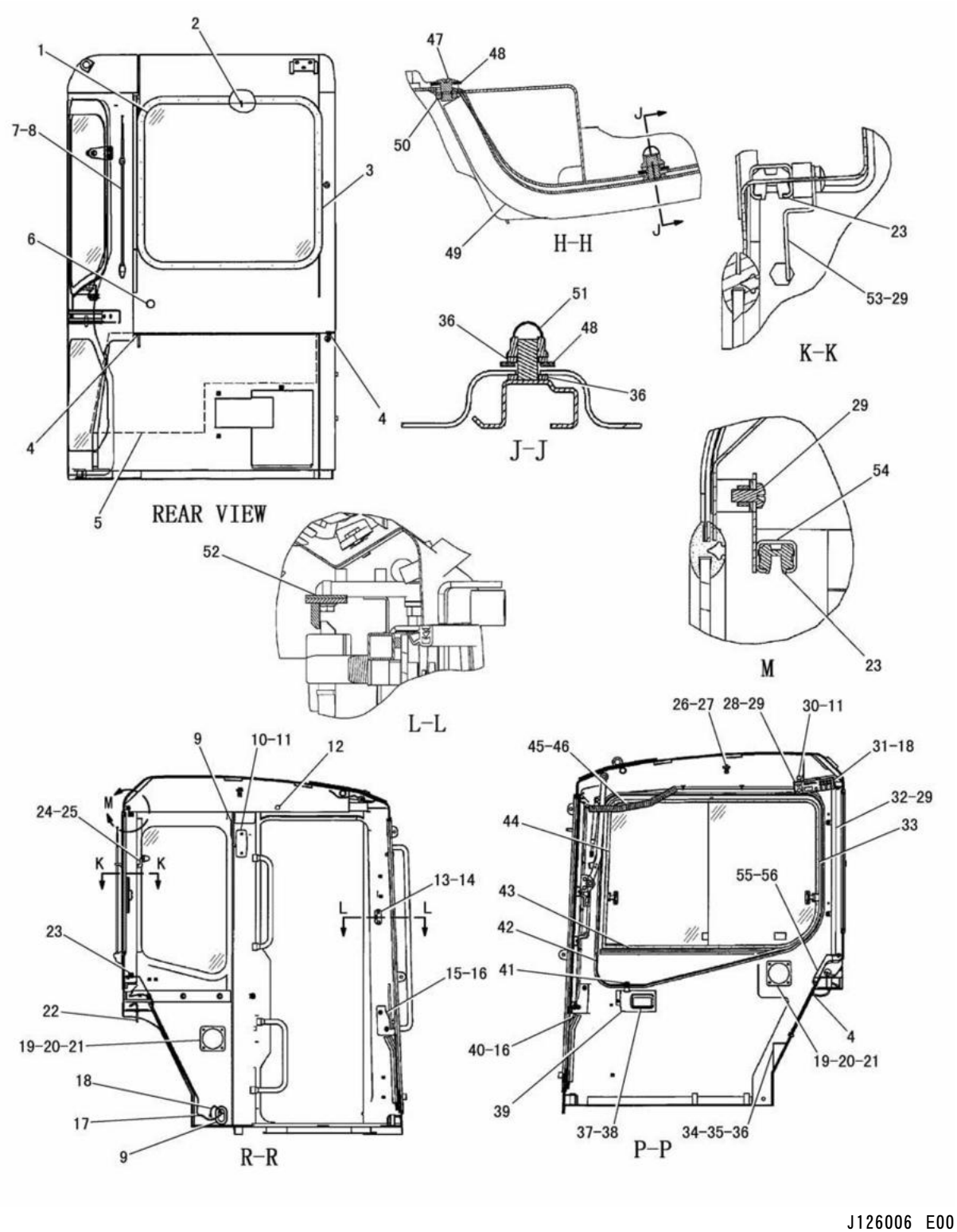

230-7375 CAB GROUP -BASIC-PART 2 OF 2
EFFECTIVE WITH SERIAL NO. BMW01249-BMW01424
PART OF 201-7887-Page 537
AN ATTACHMENT

OPERATOR STATION

NOTE	No.	PART NO.	QTY.	PART NAME	NOTE	No.	PART NO.	QTY.	PART NAME
	1	226-9840	1	GLASS					
	2	127-3940	1	RING					
	3	203-4436	1	SEAL					
	4	127-4006	3	GROMMET					
	5	216-9893	1	LINER					
	6	203-4458	1	CAP					
	7	219-0060	1	CABLE AS					
	8	211-9741	1	ANTENNA AS					
	9	203-4456	2	SEAL					
	10	139-6332	1	ROOM LAMP					
	11	095-0728	3	SCREW(M4×0.7)					
	12	219-0062	1	BUMPER					
	13	214-3963	2	BRACKET					
	14	214-3967	4	BOLT(M6×1)					
	15	127-3992	1	PLATE(LH)					
	16	8C-7505	4	SCREW(M8×1.25)					
	17	230-7377	1	HARNESS AS					
	18	095-0736	5	SCREW(M5×0.8)					
	19	203-4454	2	GRILL(SPEAKER)					
	20	203-4455	2	SPEAKER					
	21	6V-9672	8	SCREW(M4×0.7)					
	22	127-3944	1	HOSE					
	23	203-4445	3	RUBBER					
	24	127-3925	1	HOOK					
	25	096-2622	2	SCREW(M4×0.7)					
	26	8T-4133	2	NUT(M10×1.5)					
	27	127-3987	2	STOPPER					
	28	214-3954	1	COVER					
	29	8T-6411	12	SCREW(M6×1)					
	30	219-0061	1	BUMPER					
	31	203-4453	1	RADIO AS					
	32	214-3948	1	COVER					
	33	203-4438	1	SEAL					
	34	210-6409	1	BOX AS					
	35	8T-4200	3	BOLT(M8×1.25)					
	36	8T-4224	9	WASHER					
	37	203-4433	1	ASHTRAY					
	38	095-0755	2	SCREW(M4×0.7)					
	39	203-4448	1	BOX AS					
	40	127-3945	1	PLATE(RH)					
	41	139-6341	1	CIGAR LIGHTER AS					
	42	226-9839	1	GLASS					
	43	203-4442	1	SEAL					
Y	44	226-9844	1	DOOR GROUP(RH)					
	45	214-3943	1	HARNESS AS					
	46	214-3956	9	STRAP					
	47	162-4852	1	SCREW(M8×1.25)					
	48	172-1870	4	PLATE					
	49	127-3932	1	RAIL AS					
	50	8T-7963	1	LOCKNUT(M8×1.25)					
	51	6I-5342	3	NUT(M8×1.25)					
B	52	214-3970	2	SHIM(2.3mm THICK)					
	53	203-4443	1	PLATE					
	54	203-4444	1	BRACKET AS					
	55	230-7378	1	COVER AS					
	56	8T-4171	6	BOLT(M6×1)					

B-USE AS REQUIRED
Y-SEE SEPARATE ILLUSTRATION

J126006 E00

230-7375 CAB GROUP -BASIC-PART 2 OF 2
EFFECTIVE WITH SERIAL NO. BMW01249-BMW01424
PART OF 201-7887-Page 537
226-9844-Page 559
AN ATTACHMENT

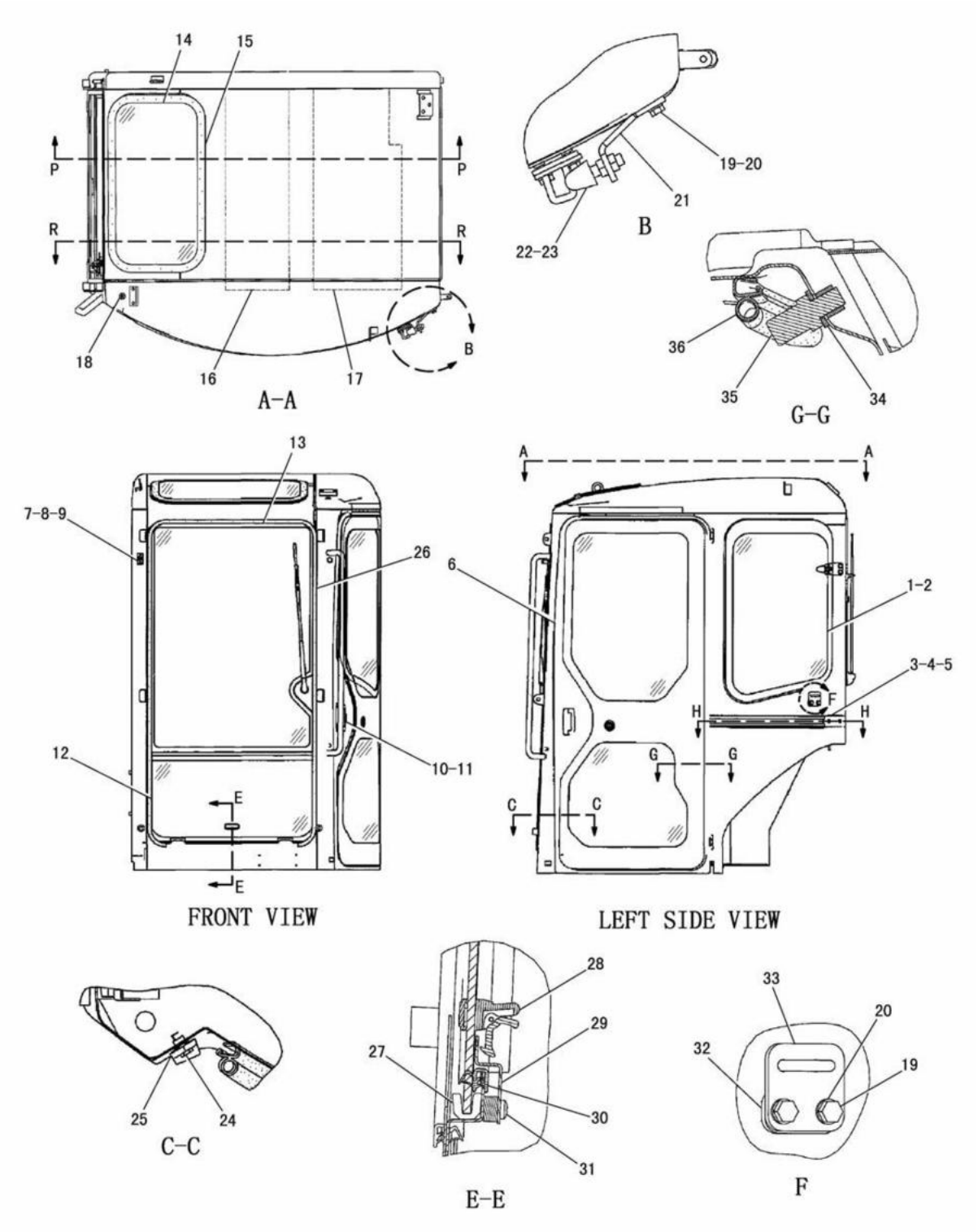

230-7375 CAB GROUP -BASIC-PART 1 OF 2
EFFECTIVE WITH SERIAL NO. BMW01425-
PART OF 201-7887-Page 537
AN ATTACHMENT

OPERATOR STATION

NOTE	No.	PART NO.	QTY.	PART NAME	NOTE	No.	PART NO.	QTY.	PART NAME
	1	226-9843	1	GLASS					
	2	132-7616	1	CUSHION					
	3	132-7573	1	COVER					
	4	8T-4138	2	BOLT(M6×1)					
	5	095-1777	2	RING					
Y	6	203-4449	1	SLIDE DOOR GROUP					
	7	127-3926	1	NOZZLE					
	8	127-3927	1	STRIP					
	9	7Y-5292	2	SCREW(M4×0.7)					
	10	203-4440	1	HANDLE AS					
	11	8T-4192	2	BOLT(M12×1.75)					
	12	226-9841	1	GLASS					
Y	13	214-3953	1	FRONT DOOR GROUP					
	14	211-1179	1	ROOF GLASS					
	15	229-1382	1	SEAL					
	16	214-3947	1	LINER					
	17	214-3946	1	LINER					
	18	203-4457	1	GROMMET					
	19	8T-4200	4	BOLT(M8×1.25)					
	20	8T-4224	4	WASHER					
	21	127-3948	1	BRACKET					
	22	127-3947	1	BUMPER					
	23	095-1207	2	NUT(M12×1.75)					
	24	5C-9553	4	BOLT(M6×1)					
	25	127-3928	2	STRIKER					
	26	203-4432	1	SEAL					
	27	127-3922	2	STOPPER					
	28	132-7576	1	LOCK AS					
	29	127-3920	1	PLATE					
	30	203-4431	1	SEAL					
	31	8T-6411	2	SCREW(M6×1)					
	32	127-3930	1	PLATE					
	33	127-3931	1	STRIKER					
	34	8T-4223	1	WASHER					
	35	127-3929	1	STRIKER					
	36	127-3924	1	SEAL					

Y-SEE SEPARATE ILLUSTRATION

J131515 E02

230-7375 CAB GROUP -BASIC-PART 1 OF 2
EFFECTIVE WITH SERIAL NO. BMW01425-
PART OF 201-7887-Page 537
203-4449-Page 554, 555 214-3953-Page 557
AN ATTACHMENT

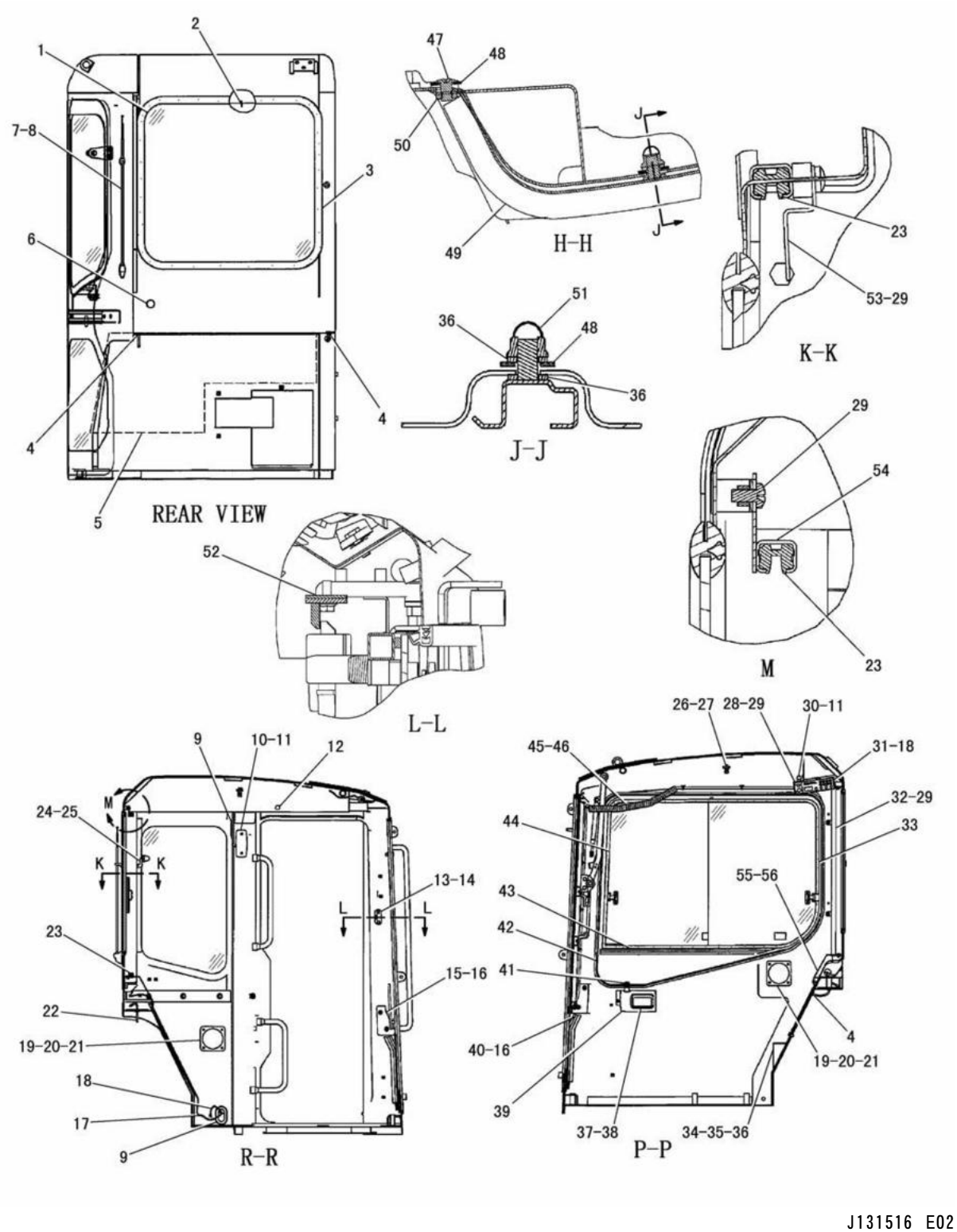

230-7375 CAB GROUP -BASIC-PART 2 OF 2
EFFECTIVE WITH SERIAL NO. BMW01425-
PART OF 201-7887-Page 537
AN ATTACHMENT

OPERATOR STATION

NOTE	No.	PART NO.	QTY.	PART NAME	NOTE	No.	PART NO.	QTY.	PART NAME
	1	226-9840	1	GLASS					
	2	127-3940	1	RING					
	3	203-4436	1	SEAL					
	4	127-4006	3	GROMMET					
	5	216-9893	1	LINER					
	6	203-4458	1	CAP					
	7	219-0060	1	CABLE AS					
	8	211-9741	1	ANTENNA AS					
	9	203-4456	2	SEAL					
	10	139-6332	1	ROOM LAMP					
	11	095-0728	3	SCREW(M4×0.7)					
	12	219-0062	1	BUMPER					
	13	214-3963	2	BRACKET					
	14	214-3967	4	BOLT(M6×1)					
	15	127-3992	1	PLATE(LH)					
	16	8C-7505	4	SCREW(M8×1.25)					
	17	230-7377	1	HARNESS AS					
	18	095-0736	5	SCREW(M5×0.8)					
	19	203-4454	2	GRILL(SPEAKER)					
	20	203-4455	2	SPEAKER					
	21	6V-9672	8	SCREW(M4×0.7)					
	22	127-3944	1	HOSE					
	23	203-4445	3	RUBBER					
	24	127-3925	1	HOOK					
	25	096-2622	2	SCREW(M4×0.7)					
	26	8T-4133	2	NUT(M10×1.5)					
	27	127-3987	2	STOPPER					
	28	214-3954	1	COVER					
	29	8T-6411	12	SCREW(M6×1)					
	30	219-0061	1	BUMPER					
	31	203-4453	1	RADIO AS					
	32	214-3948	1	COVER					
	33	203-4438	1	SEAL					
	34	210-6409	1	BOX AS					
	35	8T-4200	3	BOLT(M8×1.25)					
	36	8T-4224	9	WASHER					
	37	203-4433	1	ASHTRAY					
	38	095-0755	2	SCREW(M4×0.7)					
	39	203-4448	1	BOX AS					
	40	127-3945	1	PLATE(RH)					
	41	139-6341	1	CIGAR LIGHTER AS					
	42	226-9839	1	GLASS					
	43	203-4442	1	SEAL					
CY	44	250-3105	1	DOOR GROUP(RH)					
	45	214-3943	1	HARNESS AS					
	46	214-3956	9	STRAP					
	47	162-4852	1	SCREW(M8×1.25)					
	48	172-1870	4	PLATE					
	49	127-3932	1	RAIL AS					
	50	8T-7963	1	LOCKNUT(M8×1.25)					
	51	6I-5342	3	NUT(M8×1.25)					
B	52	214-3970	2	SHIM(2.3mm THICK)					
	53	203-4443	1	PLATE					
	54	203-4444	1	BRACKET AS					
	55	230-7378	1	COVER AS					
	56	8T-4171	6	BOLT(M6×1)					

B-USE AS REQUIRED
C-INDICATES CHANGE
Y-SEE SEPARATE ILLUSTRATION

J131516 E02

230-7375 CAB GROUP -BASIC-PART 2 OF 2
EFFECTIVE WITH SERIAL NO. BMW01425-
PART OF 201-7887-Page 537
250-3105-Page 560
AN ATTACHMENT

OPERATOR STATION

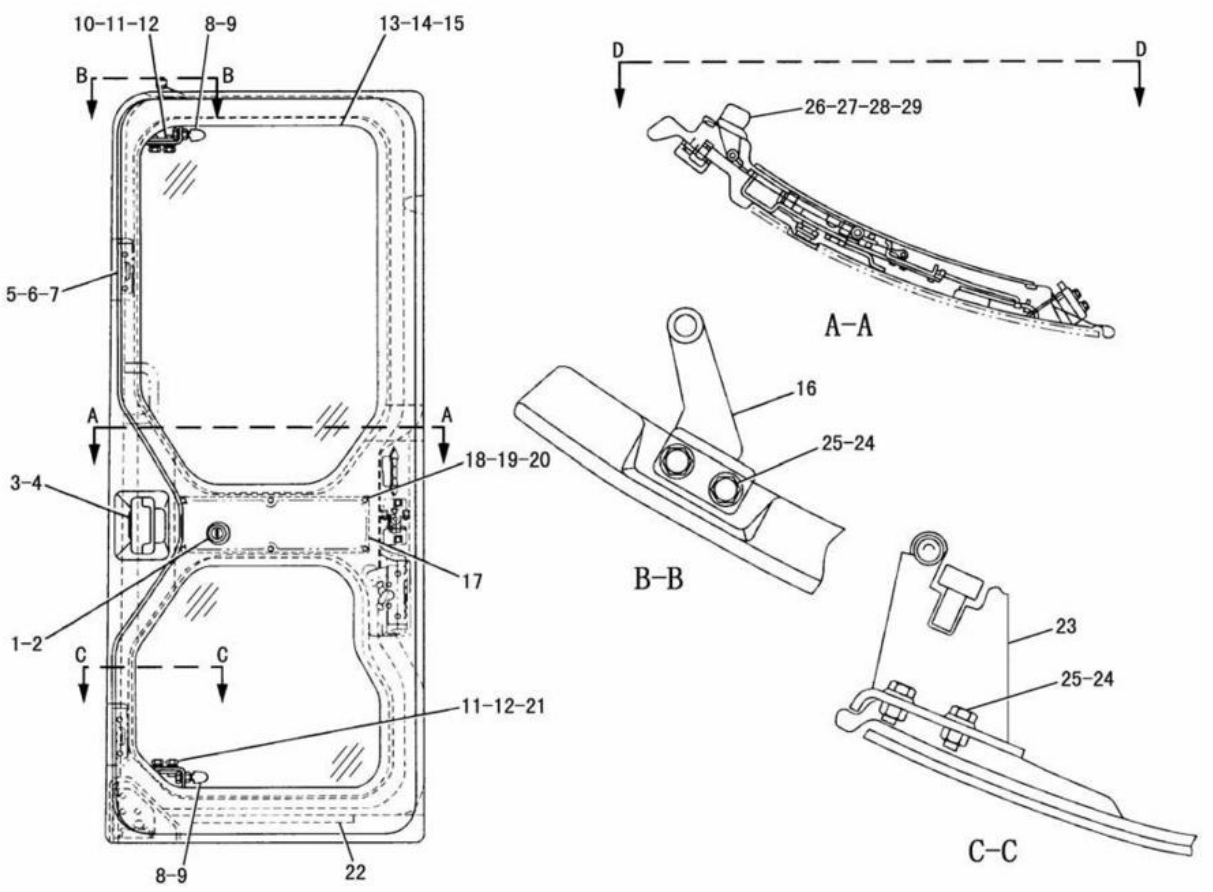

NOTE	No.	PART NO.	QTY.	PART NAME	NOTE	No.	PART NO.	QTY.	PART NAME
	1	169-7976	1	KEY AS		21	132-7628	1	BRACKET
	2	132-7626	1	SEAL		22	127-4000	1	SEAL
	3	132-7623	1	HANDLE AS		23	127-3961	1	ROLLER AS
	4	8T-4134	2	NUT(M6×1)		24	8T-4224	5	WASHER
	5	127-3958	2	STRIKER		25	8T-4200	5	BOLT(M8×1.25)
	6	8T-4171	4	BOLT(M6×1)		26	132-7624	1	HANDLE AS
	7	127-3959	4	SHIM		27	095-0742	2	SCREW(M6×1)
	8	132-7627	2	BUMPER		28	2U-2552	2	LOCKWASHER
	9	095-1207	4	NUT(M12×1.75)		29	9X-8256	2	WASHER
	10	127-3997	1	BRACKET					
	11	8T-4192	4	BOLT(M12×1.75)					
	12	8T-4223	4	WASHER					
	13	226-9842	1	GLASS					
	14	132-7622	1	CUSHION					
	15	132-7629	1	CUSHION					
	16	127-3960	1	ROLLER AS					
	17	127-3998	1	COVER AS					
	18	6V-9673	6	SCREW(M5×0.8)					
	19	3B-4503	6	LOCKWASHER					
	20	8T-0328	6	WASHER					

J131988 X01

203-4449 SLIDE DOOR GROUP -PART 1 OF 2

PART OF 201-7888-Page 539,210-6406-Page 543,230-7375-Page 547,551
AN ATTACHMENT

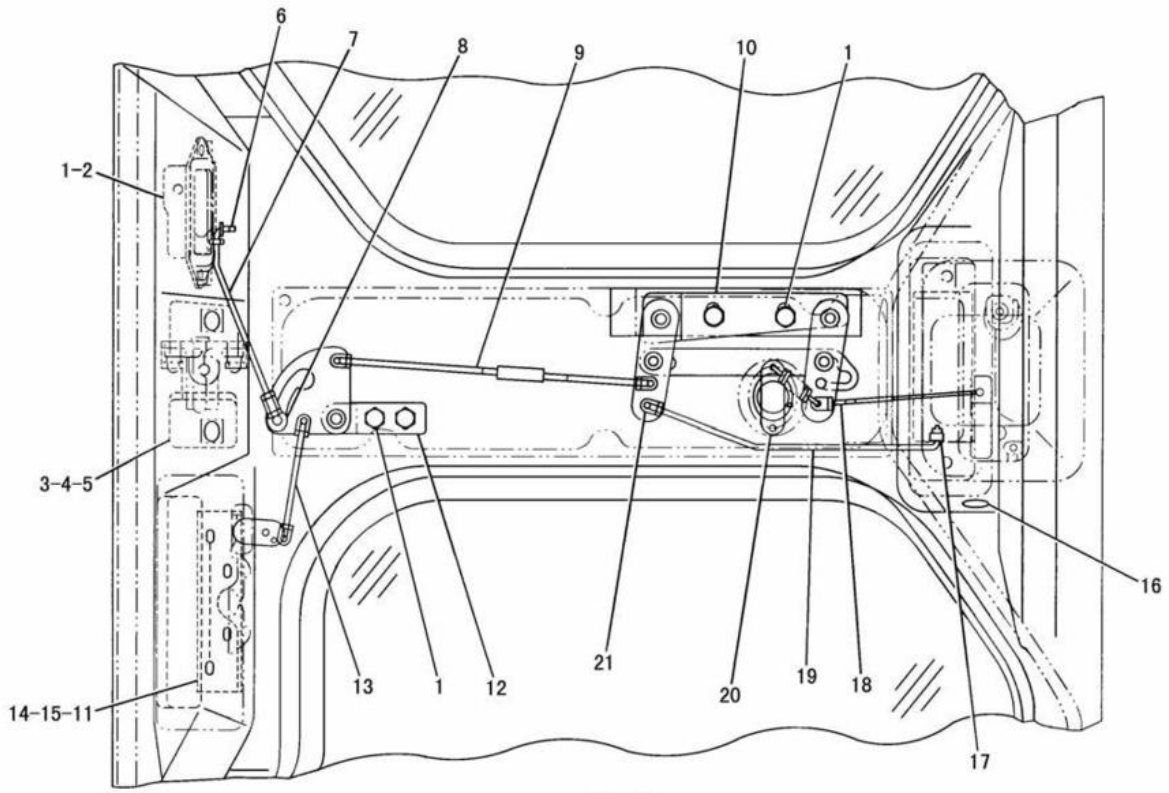

D-D

NOTE	No.	PART NO.	QTY.	PART NAME	NOTE	No.	PART NO.	QTY.	PART NAME
	1	8T-4171	6	BOLT(M6×1)		21	127-3991	5	SNAP
	2	132-7625	1	LOCK AS					
	3	127-3962	1	ROLLER AS					
	4	8T-4200	2	BOLT(M8×1.25)					
	5	8T-4224	2	WASHER					
	6	127-4001	1	SNAP					
	7	136-0234	1	ROD					
	8	136-0235	1	HOLDER					
	9	136-0238	1	ROD					
	10	136-0230	1	REMOTE CONTROL AS					
	11	127-3990	1	LOCK					
	12	136-0232	1	LINK AS					
	13	162-4666	1	ROD					
	14	9X-8256	4	WASHER					
	15	7X-2533	4	BOLT(M6×1)					
	16	127-4003	1	GROMMET					
	17	136-0259	1	SNAP					
	18	136-0233	1	CABLE AS					
	19	136-0237	1	ROD					
	20	136-0231	1	PLATE AS					

J131989 X01

203-4449 SLIDE DOOR GROUP -PART 2 OF 2

PART OF 201-7888-Page 539,210-6406-Page 543,230-7375-Page 547,551
AN ATTACHMENT

OPERATOR STATION

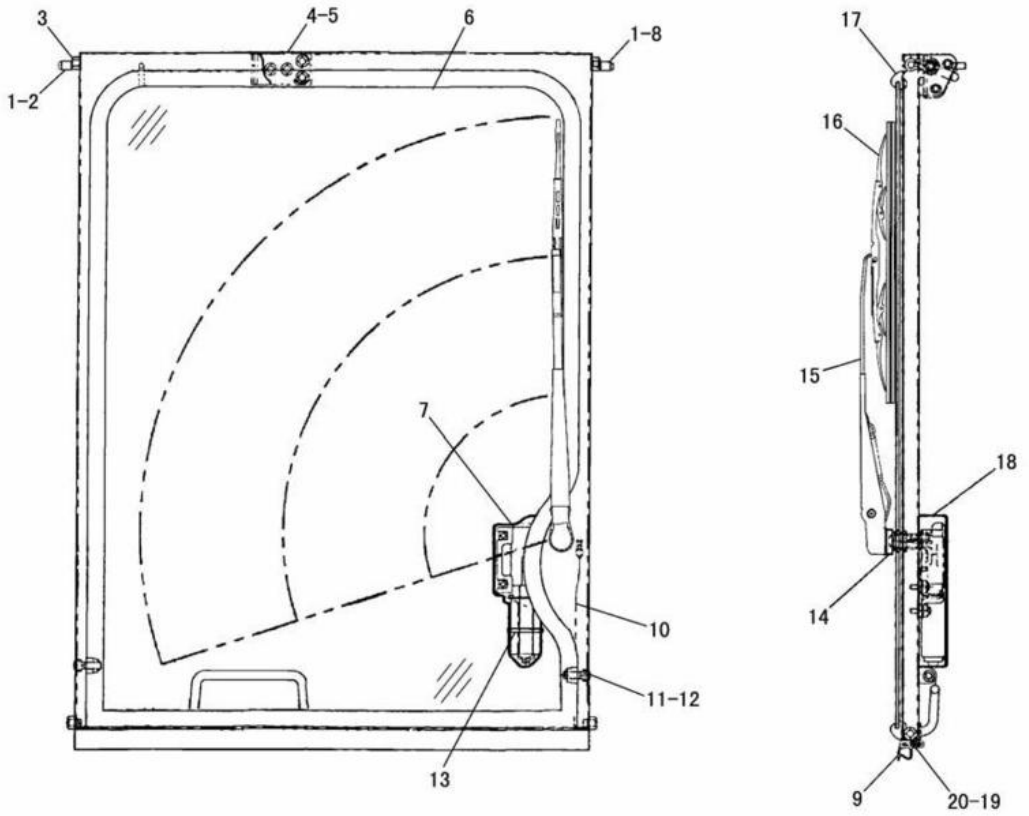

NOTE	No.	PART NO.	QTY.	PART NAME	NOTE	No.	PART NO.	QTY.	PART NAME
	1	8T-4189	4	BOLT(M8×1.25)					
	2	127-3970	1	LATCH AS(RH)					
	3	127-3967	4	ROLLER					
	4	127-3969	1	STRIKER					
	5	8C-7505	3	SCREW(M8×1.25)					
	6	206-7576	1	GLASS					
	7	139-6351	1	MOTOR					
	8	127-3986	1	LATCH AS(LH)					
	9	206-7579	1	SEAL					
	10	163-8871	1	HARNESS AS					
	11	127-3987	2	STOPPER					
	12	8T-4133	2	NUT(M10×1.5)					
	13	8L-8413	1	STRAP					
	14	132-7620	1	PACKING					
	15	162-3696	1	ARM AS					
	16	127-3955	1	BLADE AS					
	17	206-7577	1	SEAL					
	18	132-7619	1	COVER					
	19	095-0728	5	SCREW(M4×0.7)					
	20	206-7580	1	PLATE					

J126918 X00

203-4450 FRONT DOOR GROUP

EFFECTIVE WITH SERIAL NO. BMW00001-BMW01248
PART OF 201-7888-Page 539,210-6406-Page 543
AN ATTACHMENT

OPERATOR STATION

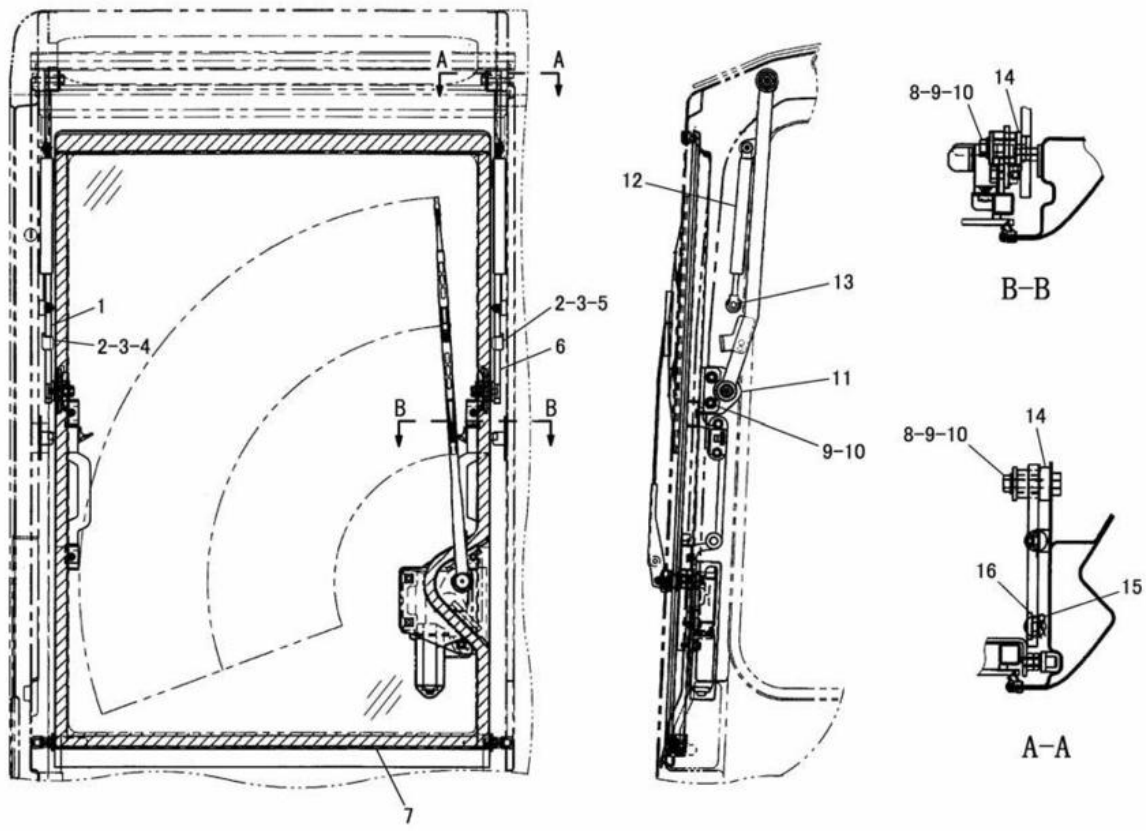

NOTE	No.	PART NO.	QTY.	PART NAME	NOTE	No.	PART NO.	QTY.	PART NAME
	1	214-3959	1	ARM(RH)					
	2	8T-0328	4	WASHER					
	3	7Y-7389	4	SCREW(M5×0.8)					
	4	219-0707	1	BRACKET(RH)					
	5	219-0708	1	BRACKET(LH)					
	6	214-3960	1	ARM(LH)					
Y	7	214-3958	1	DOOR AS					
	8	214-3968	4	WASHER					
	9	8T-4224	8	WASHER					
	10	8T-4189	8	BOLT(M8×1.25)					
	11	214-3961	2	BRACKET					
	12	214-3962	2	DAMPER					
	13	214-3966	2	NUT(M6×1)					
	14	214-3969	4	WASHER					
	15	132-7679	2	SPRING PIN					
	16	214-3964	2	WASHER					

Y-SEE SEPARATE ILLUSTRATION

J126010 X01

214-3953 FRONT DOOR GROUP

EFFECTIVE WITH SERIAL NO. BMW01249-
PART OF 230-7375-Page 547,551
214-3958-Page 558
AN ATTACHMENT

OPERATOR STATION

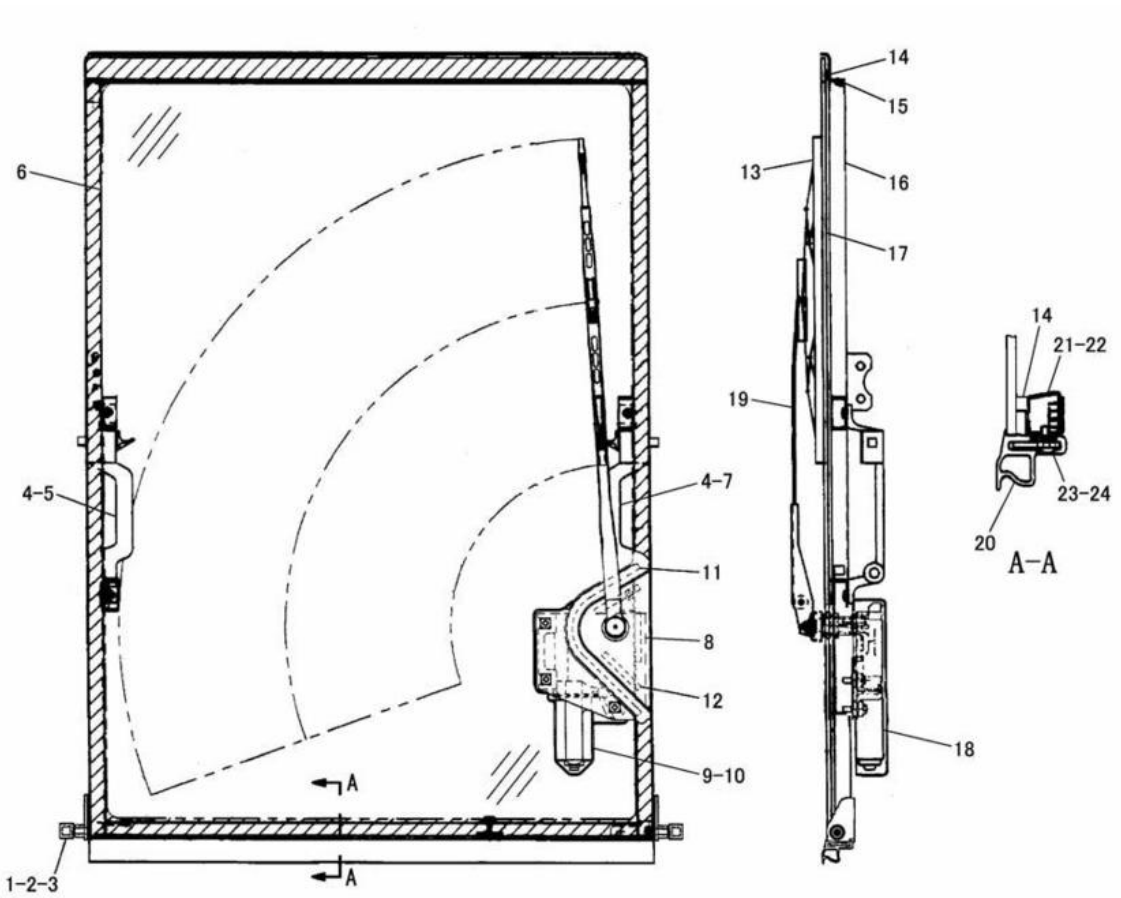

NOTE	No.	PART NO.	QTY.	PART NAME	NOTE	No.	PART NO.	QTY.	PART NAME
	1	250-1639	2	ROLLER		21	214-3976	1	PLATE
	2	214-3981	2	BOLT(M8×1.25)		22	6V-9673	3	SCREW(M5×0.8)
	3	160-8500	2	NUT(M8×1.25)	J	23	214-3980	1	PLATE
	4	250-2035	4	SCREW(M6×1)	J	24	7Y-5292	5	SCREW(M4×0.7)
	5	157-2204	1	HANDLE AS(RH)					AVAILABLE PARTS:
J	6	214-3975	1	GLASS	AJ		257-3123	1	WINDOW AS
	7	157-2202	1	HANDLE AS(LH)					(INCLUDES PART MARKED J)
J	8	214-3978	1	PLATE					
	9	8L-8413	1	STRAP					
	10	132-7619	1	COVER					
J	11	214-3984	1	SEAL					
J	12	214-3985	2	SEAL					
	13	127-3955	1	BLADE AS					
J	14	214-3983	2	SEAL					
	15	214-3986	1	SEAL					
J	16	255-3096	1	FRAME AS					
J	17	219-0185	2	SEAL					
	18	139-6351	1	MOTOR					
	19	162-3696	1	ARM AS					
J	20	214-3979	1	SEAL					

A-NOT PART OF THIS GROUP

J131518 X03

214-3958 FRONT DOOR ASSEMBLY

EFFECTIVE WITH SERIAL NO. BMW01249-
PART OF 214-3953-Page 557
AN ATTACHMENT

OPERATOR STATION

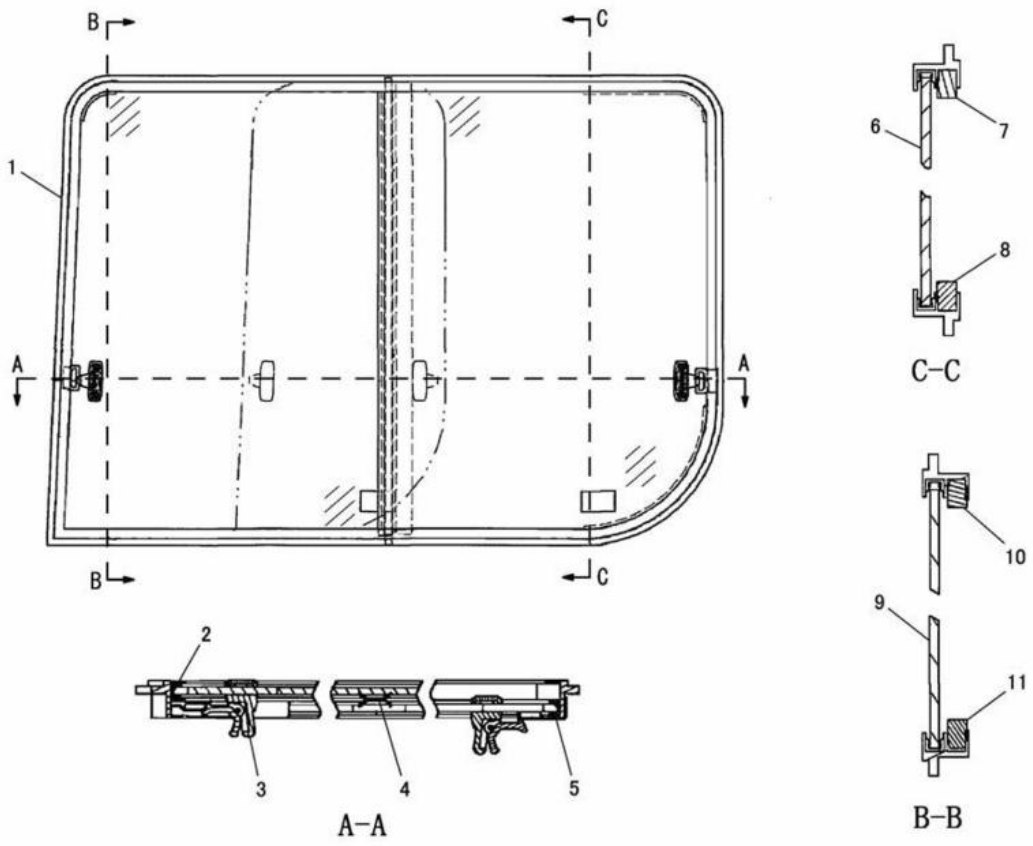

NOTE	No.	PART NO.	QTY.	PART NAME	NOTE	No.	PART NO.	QTY.	PART NAME
	1	230-5210	1	FRAME AS					
	2	230-5214	1	SEAL					
	3	132-7576	2	LOCK AS					
	4	230-5215	1	SEAL					
	5	230-5213	1	SEAL					
	6	230-5212	1	GLASS					
	7	230-5219	1	SEAL					
	8	230-5218	1	SEAL					
	9	230-5211	1	GLASS					
	10	230-5217	1	SEAL					
	11	230-5216	1	SEAL					

J126011 E01

226-9844 DOOR GROUP -RH
EFFECTIVE WITH SERIAL NO. BMW01249-BMW01424
PART OF 230-7375-Page 549
AN ATTACHMENT

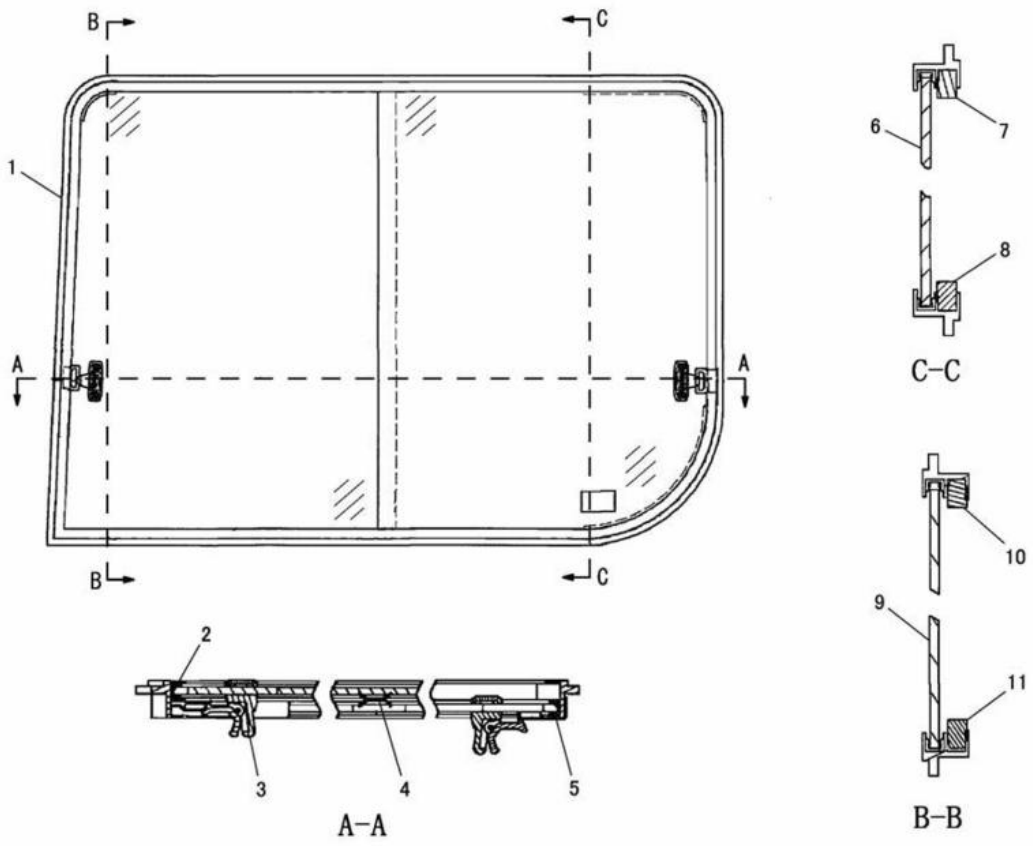

NOTE	No.	PART NO.	QTY.	PART NAME	NOTE	No.	PART NO.	QTY.	PART NAME
	1	2 5 1 − 6 5 7 8	1	FRAME AS					
	2	2 5 1 − 6 5 8 3	1	SEAL					
	3	2 5 1 − 6 5 8 1	2	LOCK AS					
	4	2 5 1 − 6 5 8 4	1	SEAL					
	5	2 5 1 − 6 5 8 2	1	SEAL					
	6	2 5 1 − 6 5 8 0	1	GLASS					
	7	2 5 1 − 6 5 8 8	1	SEAL					
	8	2 5 1 − 6 5 8 7	1	SEAL					
	9	2 5 1 − 6 5 7 9	1	GLASS					
	10	2 5 1 − 6 5 8 6	1	SEAL					
	11	2 5 1 − 6 5 8 5	1	SEAL					

J130822 E01

250-3105 DOOR GROUP -RH
EFFECTIVE WITH SERIAL NO. BMW01425-
PART OF 230-7375-Page 553
AN ATTACHMENT

MEMORANDUM

OPERATOR STATION

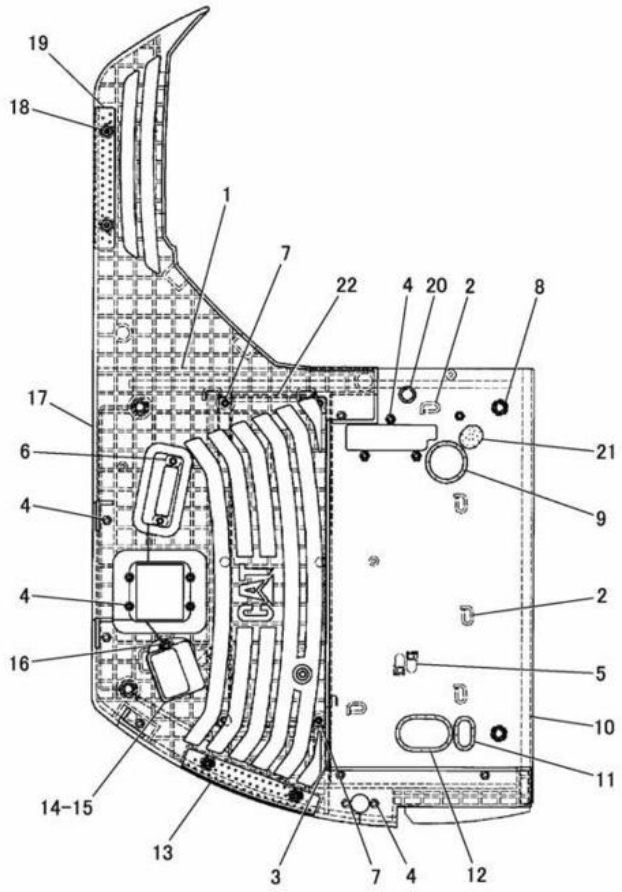

NOTE	No.	PART NO.	QTY.	PART NAME	NOTE	No.	PART NO.	QTY.	PART NAME
	1	210-3560	1	PLATE AS		18	9X-2039	4	SCREW(M10×1.5)
	2	7T-1099	8	LINK		19	191-0336	1	PLATE AS(RH)
	3	8T-3612	8	NUT(M8×1.25)(WELD)		20	8P-6363	1	PLUG
	4	8T-3490	19	NUT(M10×1.5)(WELD)		21	212-0966	1	GROMMET
	5	121-1029	4	CLIP		22	202-2515	1	COVER AS
	6	194-6377	3	NUT(M10×1.5)(WELD)					
	7	8T-4189	6	BOLT(M8×1.25)					
		8T-4224	6	WASHER					
	8	8T-4175	4	BOLT(M16×2)					
		9X-8257	4	WASHER					
	9	197-8189	1	GROMMET					
D	10	5P-5935		SEAL---0.93m					
	11	125-7520	1	GROMMET					
	12	145-0603	1	GROMMET					
	13	191-0337	1	PLATE AS(LH)					
	14	205-9679	1	FOOT REST AS					
	15	124-9156	1	TREAD					
	16	8T-4136	2	BOLT(M10×1.5)					
		7X-7729	2	WASHER					
	17	191-0345	1	FLOORMAT					

D-ORDER BY THE m

J126920 X06

OPERATOR PLATFORM (191-3828 N/S)

EFFECTIVE WITH SERIAL NO. BMW00001-BMW01116

PART OF 191-3822-Page 529,530

OPERATOR STATION

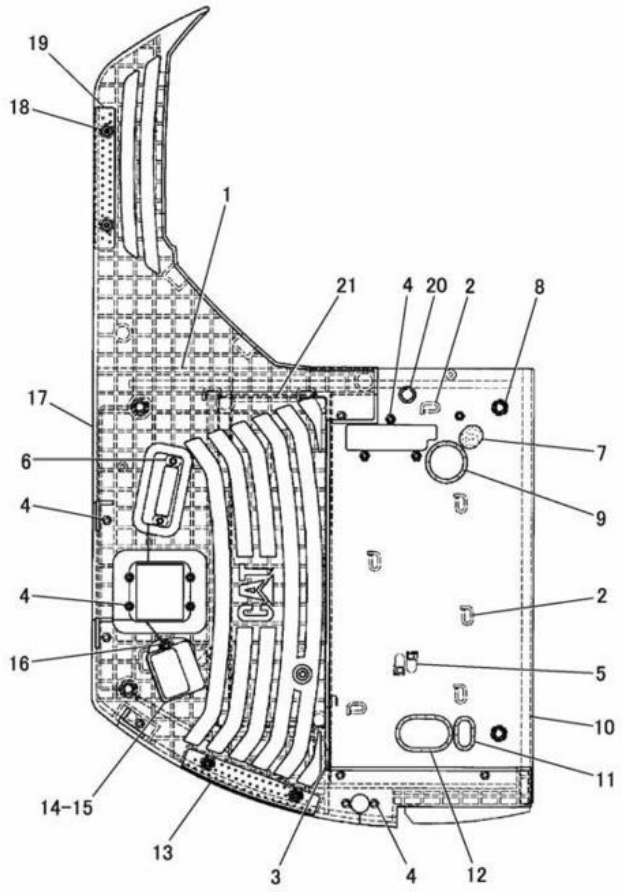

NOTE	No.	PART NO.	QTY.	PART NAME	NOTE	No.	PART NO.	QTY.	PART NAME
	1	210-3560	1	PLATE AS		19	191-0336	1	PLATE AS(RH)
C	2	7T-1099	9	LINK		20	8P-6363	1	PLUG
C	3	8T-3612	2	NUT(M8×1.25)(WELD)	C	21	218-3527	1	COVER AS
	4	8T-3490	19	NUT(M10×1.5)(WELD)					
	5	121-1029	4	CLIP					
	6	194-6377	3	NUT(M10×1.5)(WELD)					
	7	212-0966	1	GROMMET					
	8	8T-4175	4	BOLT(M16×2)					
		9X-8257	4	WASHER					
	9	197-8189	1	GROMMET					
D	10	5P-5935		SEAL---0.93m					
	11	125-7520	1	GROMMET					
	12	145-0603	1	GROMMET					
	13	191-0337	1	PLATE AS(LH)					
	14	205-9679	1	FOOT REST AS					
	15	124-9156	1	TREAD					
	16	8T-4136	2	BOLT(M10×1.5)					
		7X-7729	2	WASHER					
	17	191-0345	1	FLOORMAT					
	18	9X-2039	4	SCREW(M10×1.5)					

C-INDICATES CHANGE
D-ORDER BY THE m

J126657 X08

OPERATOR PLATFORM (191-3828 N/S)

EFFECTIVE WITH SERIAL NO. BMW01117-
PART OF 191-3822-Page 529,530

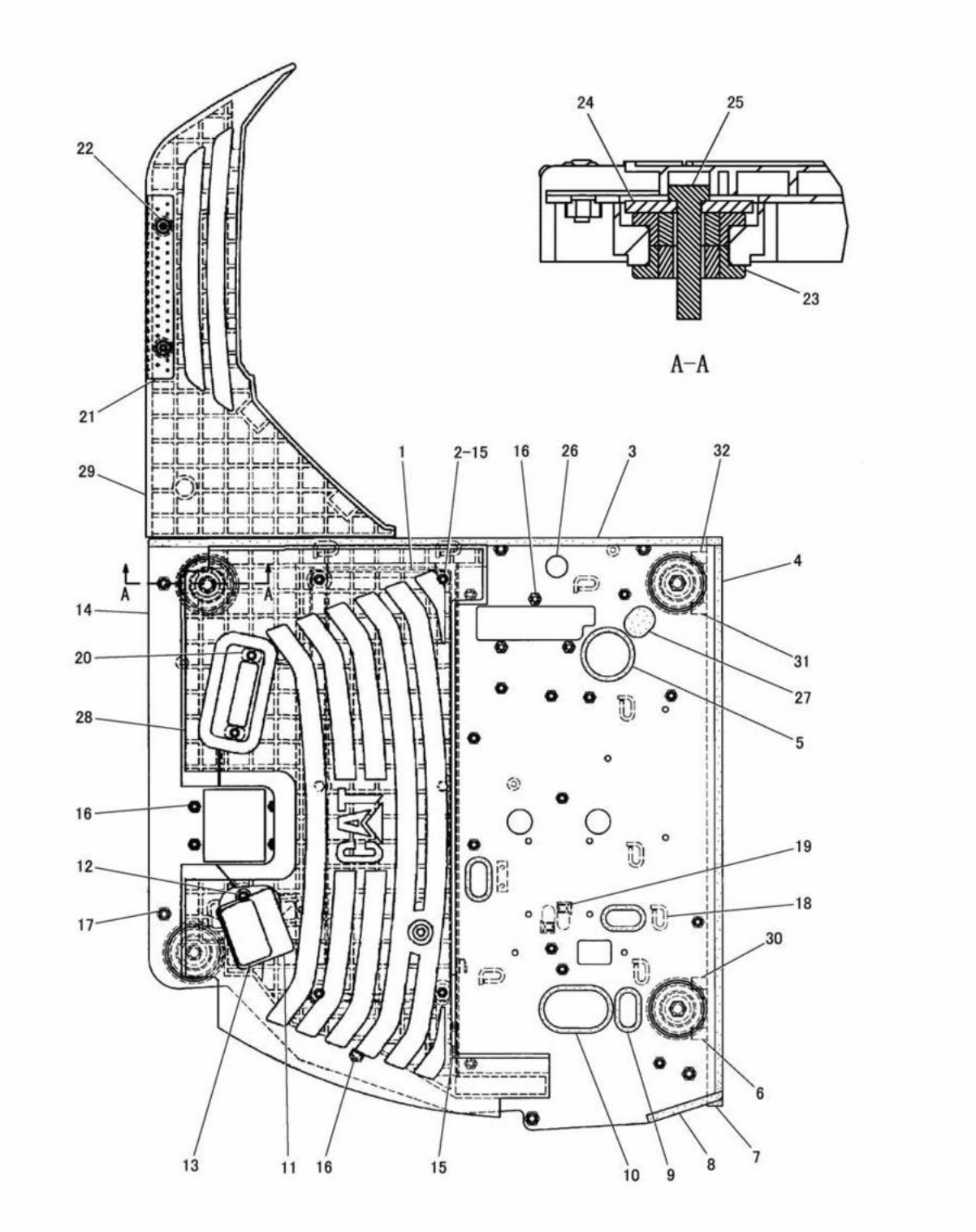

OPERATOR PLATFORM (191-3841 N/S)
EFFECTIVE WITH SERIAL NO. BMW00001-BMW01116
PART OF 201-4573-Page 531,532
AN ATTACHMENT

OPERATOR STATION

NOTE	No.	PART NO.	QTY.	PART NAME	NOTE	No.	PART NO.	QTY.	PART NAME
	1	202-2515	1	COVER AS					
	2	8T-4189	6	BOLT(M8×1.25)					
		8T-4224	6	WASHER					
E	3	203-7170		LINER---94cm					
E	4	203-7170		LINER---91cm					
	5	197-8189	1	GROMMET					
D	6	5P-5935		SEAL---0.05m					
D	7	5P-5935		SEAL---0.93m					
E	8	203-7170		LINER---13cm					
	9	125-7520	3	GROMMET					
	10	145-0603	1	GROMMET					
	11	205-9679	1	FOOT REST AS					
	12	7X-7729	2	WASHER					
		8T-4136	2	BOLT(M10×1.5)					
	13	124-9156	1	TREAD					
	14	210-3562	1	PLATE AS					
	15	8T-3612	8	NUT(M8×1.25)(WELD)					
	16	8T-3490	22	NUT(M10×1.5)(WELD)					
	17	8T-3597	7	NUT(M12×1.75)(WELD)					
	18	7T-1099	9	LINK					
	19	121-1029	4	CLIP					
	20	194-6377	3	NUT(M10×1.5)(WELD)					
	21	191-0336	1	PLATE AS(RH)					
	22	9X-2039	2	SCREW(M10×1.5)					
	23	9P-3066	8	MOUNTING					
	24	9W-9952	4	WASHER					
	25	7X-2555	4	BOLT(M16×2)					
	26	8P-6363	1	PLUG					
	27	212-0966	1	GROMMET					
	28	191-0346	1	FLOOR MAT					
	29	191-0251	1	FLOOR MAT					
D	30	5P-5935		SEAL---0.05m					
D	31	5P-5935		SEAL---0.05m					
D	32	5P-5935		SEAL---0.05m					

D-ORDER BY THE m
E-ORDER BY THE cm

J129301 X09

OPERATOR PLATFORM (191-3841 N/S)
EFFECTIVE WITH SERIAL NO. BMW00001-BMW01116
PART OF 201-4573-Page 531,532
AN ATTACHMENT

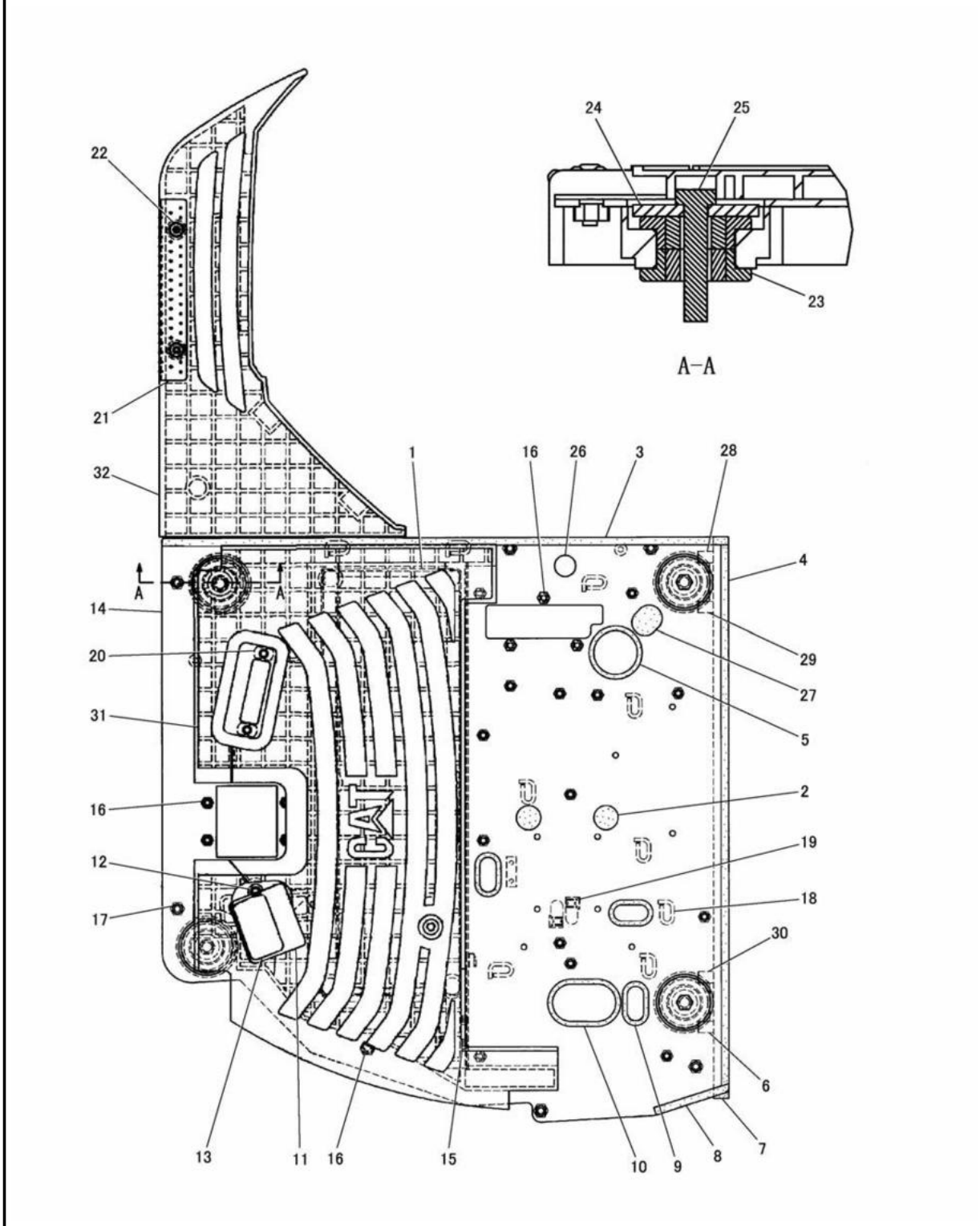

OPERATOR PLATFORM (191-3841 N/S)
EFFECTIVE WITH SERIAL NO. BMW01117-
PART OF 201-4573-Page 531,532
AN ATTACHMENT

OPERATOR STATION

NOTE	No.	PART NO.	QTY.	PART NAME	NOTE	No.	PART NO.	QTY.	PART NAME
C	1	218-3527	1	COVER AS					
C	2	125-7521	2	GROMMET					
E	3	203-7170		LINER---94cm					
E	4	203-7170		LINER---91cm					
	5	197-8189	1	GROMMET					
D	6	5P-5935		SEAL---0.05m					
D	7	5P-5935		SEAL---0.93m					
E	8	203-7170		LINER---13cm					
	9	125-7520	3	GROMMET					
	10	145-0603	1	GROMMET					
	11	205-9679	1	FOOT REST AS					
	12	7X-7729	2	WASHER					
		8T-4136	2	BOLT(M10×1.5)					
	13	124-9156	1	TREAD					
	14	210-3562	1	PLATE AS					
C	15	8T-3612	2	NUT(M8×1.25)(WELD)					
	16	8T-3490	22	NUT(M10×1.5)(WELD)					
	17	8T-3597	7	NUT(M12×1.75)(WELD)					
C	18	7T-1099	10	LINK					
	19	121-1029	4	CLIP					
	20	194-6377	3	NUT(M10×1.5)(WELD)					
	21	191-0336	1	PLATE AS(RH)					
	22	9X-2039	2	SCREW(M10×1.5)					
	23	9P-3066	8	MOUNTING					
	24	9W-9952	4	WASHER					
	25	7X-2555	4	BOLT(M16×2)					
	26	8P-6363	1	PLUG					
	27	212-0966	1	GROMMET					
D	28	5P-5935		SEAL---0.05m					
D	29	5P-5935		SEAL---0.05m					
D	30	5P-5935		SEAL---0.05m					
	31	191-0346	1	FLOORMAT					
	32	191-0251	1	FLOORMAT					

C-INDICATES CHANGE
D-ORDER BY THE m
E-ORDER BY THE cm

J126694 X10

OPERATOR PLATFORM (191-3841 N/S)
EFFECTIVE WITH SERIAL NO. BMW01117-
PART OF 201-4573-Page 531,532
AN ATTACHMENT

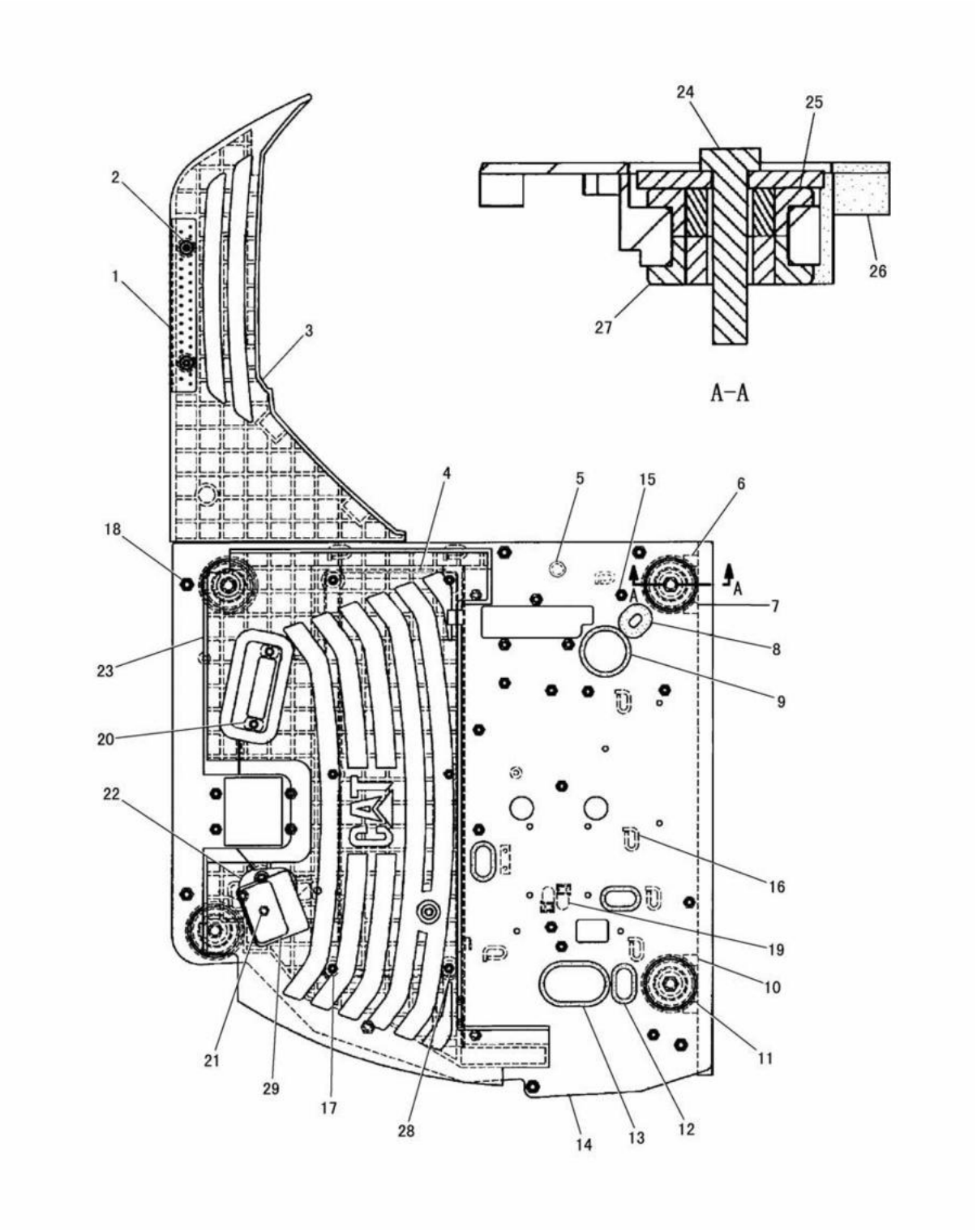

J129302 X04

OPERATOR PLATFORM (201-9149 N/S)
EFFECTIVE WITH SERIAL NO. BMW00204-BMW01116
PART OF 201-9165-Page 518,519,206-7624-Page 520,521
AN ATTACHMENT

OPERATOR STATION

NOTE	No.	PART NO.	QTY.	PART NAME	NOTE	No.	PART NO.	QTY.	PART NAME
	1	191-0336	1	PLATE AS(RH)					
	2	9X-2039	2	SCREW(M10×1.5)					
		8T-4121	2	WASHER					
	3	191-0251	1	FLOORMAT					
	4	202-2515	1	COVER AS					
	5	8P-6363	1	PLUG					
D	6	5P-5935		SEAL---0.05m					
D	7	5P-5935		SEAL---0.05m					
	8	096-2916	1	GROMMET					
	9	197-8189	1	GROMMET					
D	10	5P-5935		SEAL---0.05m					
D	11	5P-5935		SEAL---0.05m					
	12	125-7520	3	GROMMET					
	13	145-0603	1	GROMMET					
	14	210-3562	1	PLATE AS					
	15	8T-3490	22	NUT(M10×1.5)(WELD)					
	16	7T-1099	9	LINK					
	17	8T-3612	8	NUT(M8×1.25)(WELD)					
	18	8T-3597	7	NUT(M12×1.75)(WELD)					
	19	121-1029	4	CLIP					
	20	194-6377	3	NUT(M10×1.5)(WELD)					
	21	8T-4136	2	BOLT(M10×1.5)					
		7X-7729	2	WASHER					
	22	205-9679	1	FOOT REST AS					
	23	201-9176	1	FLOORMAT					
	24	7X-2555	4	BOLT(M16×2)					
	25	9W-9952	4	WASHER					
D	26	5P-5935		SEAL---0.93m					
	27	9P-3066	8	MOUNTING					
	28	8T-4189	6	BOLT(M8×1.25)					
		8T-4224	6	WASHER					
	29	124-9156	1	TREAD					

D-ORDER BY THE m

J129302 X04

OPERATOR PLATFORM (201-9149 N/S)

EFFECTIVE WITH SERIAL NO. BMW00204-BMW01116
PART OF 201-9165-Page 518,519,206-7624-Page 520,521
AN ATTACHMENT

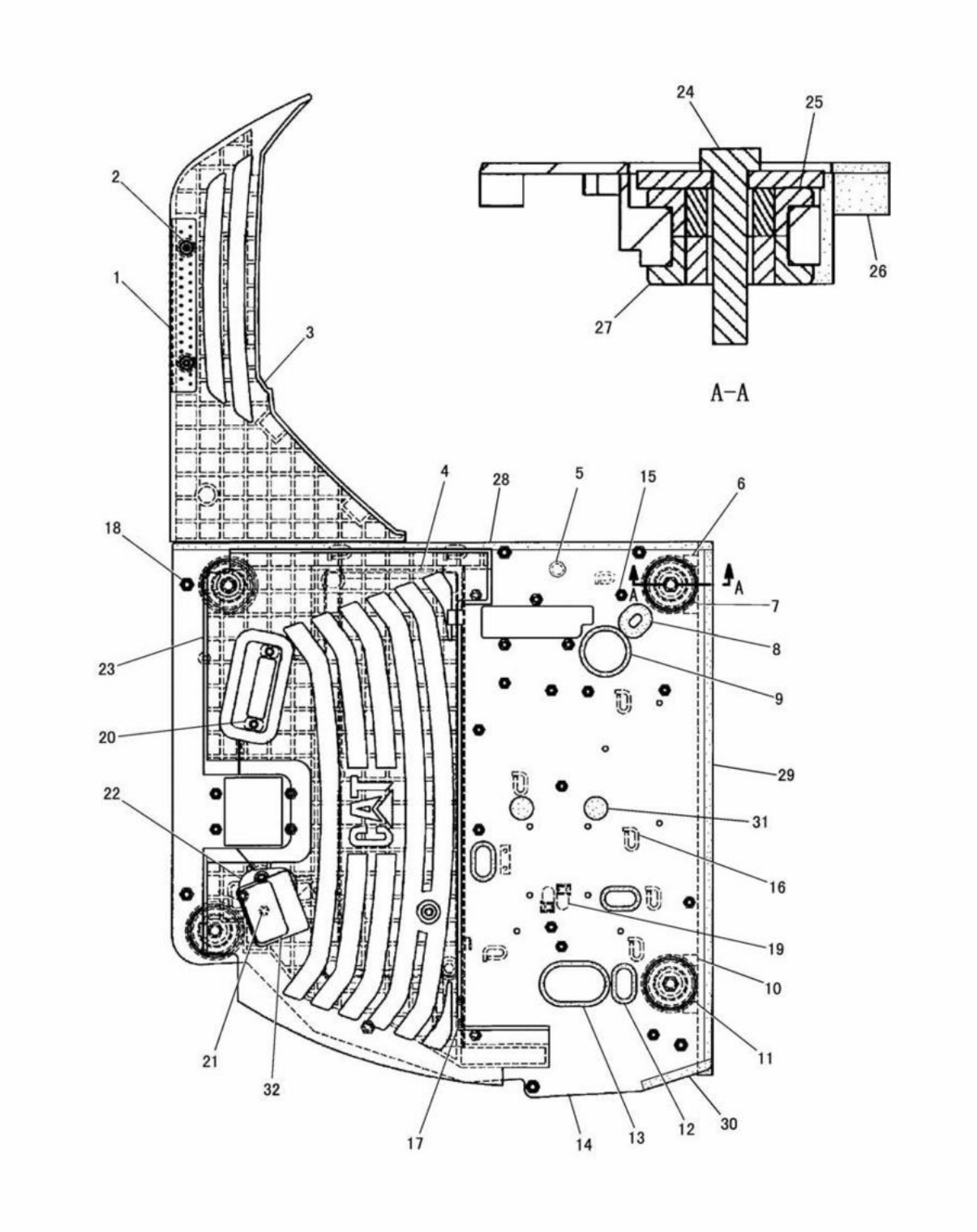

J126805 X06

OPERATOR PLATFORM (201-9149 N/S)
EFFECTIVE WITH SERIAL NO. BMW01117-
PART OF 201-9165-Page 518,519,206-7624-Page 520,521
AN ATTACHMENT

OPERATOR STATION

NOTE	No.	PART NO.	QTY.	PART NAME	NOTE	No.	PART NO.	QTY.	PART NAME
	1	191-0336	1	PLATE AS(RH)					
	2	9X-2039	2	SCREW(M10×1.5)					
	3	191-0251	1	FLOORMAT					
C	4	218-3527	1	COVER AS					
		194-6454	1	BOSS(M16×1.5)					
	5	8P-6363	1	PLUG					
D	6	5P-5935		SEAL---0.05m					
D	7	5P-5935		SEAL---0.05m					
	8	096-2916	1	GROMMET					
	9	197-8189	1	GROMMET					
D	10	5P-5935		SEAL---0.05m					
D	11	5P-5935		SEAL---0.05m					
	12	125-7520	3	GROMMET					
	13	145-0603	1	GROMMET					
	14	210-3562	1	PLATE AS					
	15	8T-3490	22	NUT(M10×1.5)(WELD)					
C	16	7T-1099	10	LINK					
C	17	8T-3612	2	NUT(M8×1.25)(WELD)					
	18	8T-3597	7	NUT(M12×1.75)(WELD)					
	19	121-1029	4	CLIP					
	20	194-6377	3	NUT(M10×1.5)(WELD)					
	21	8T-4136	2	BOLT(M10×1.5)					
		7X-7729	2	WASHER					
	22	205-9679	1	FOOT REST AS					
	23	201-9176	1	FLOORMAT					
	24	7X-2555	4	BOLT(M16×2)					
	25	9W-9952	4	WASHER					
D	26	5P-5935		SEAL---0.93m					
	27	9P-3066	8	MOUNTING					
CD	28	203-7170		LINER---0.94m					
CD	29	203-7170		LINER---0.91m					
CD	30	203-7170		LINER---0.13m					
C	31	125-7521	2	GROMMET					
	32	124-9156	1	TREAD					

C-INDICATES CHANGE
D-ORDER BY THE m

J126805 X06

OPERATOR PLATFORM (201-9149 N/S)

EFFECTIVE WITH SERIAL NO. BMW01117-
PART OF 201-9165-Page 518,519,206-7624-Page 520,521
AN ATTACHMENT

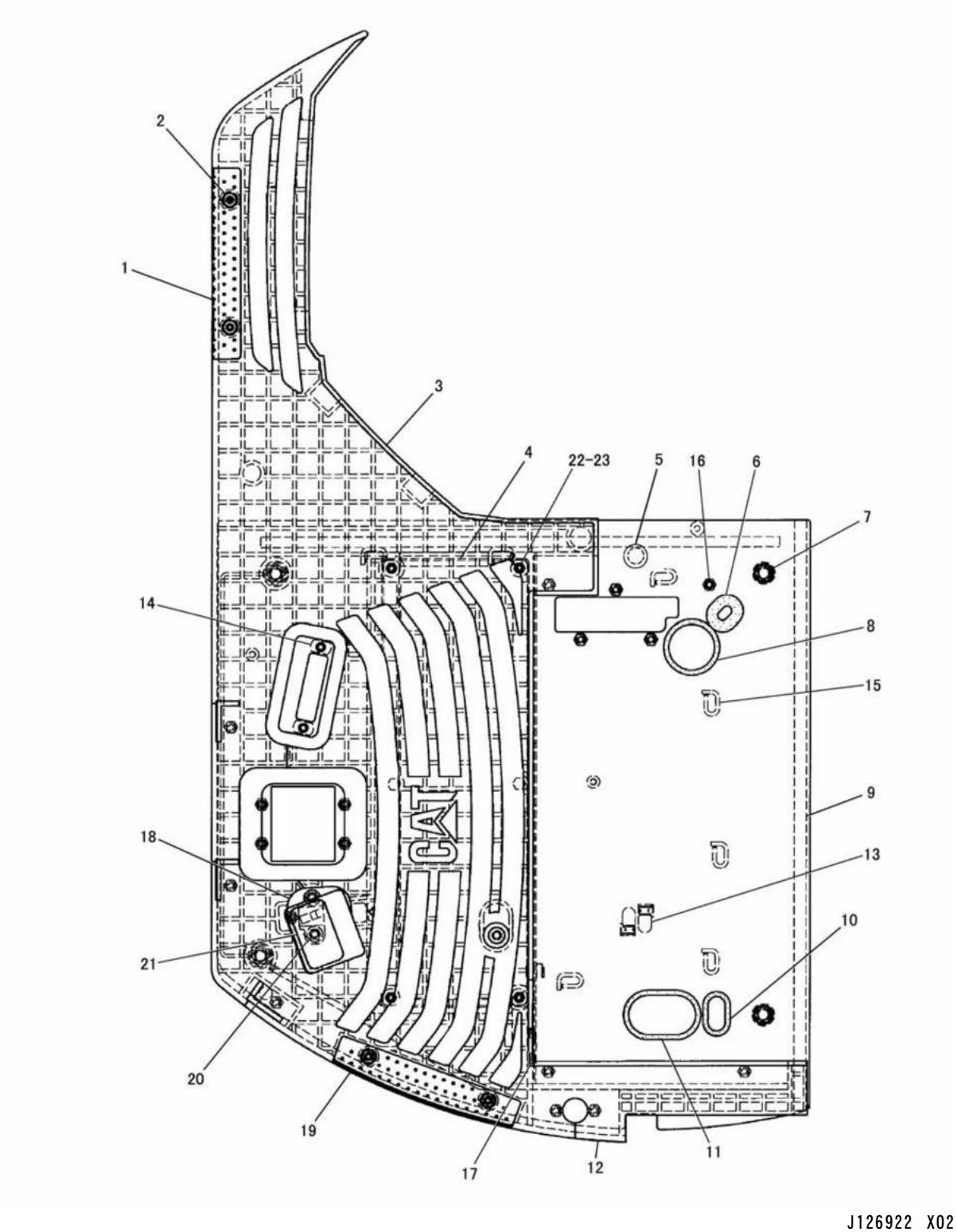

OPERATOR PLATFORM (206-7619 N/S)
EFFECTIVE WITH SERIAL NO. BMW00684-BMW01116
PART OF 206-7605-Page 514,515,206-7635-Page 516,517
AN ATTACHMENT

OPERATOR STATION

NOTE	No.	PART NO.	QTY.	PART NAME	NOTE	No.	PART NO.	QTY.	PART NAME
	1	191-0336	1	PLATE AS(RH)					
	2	9X-2039	4	SCREW(M10×1.5)					
	3	191-0345	1	FLOORMAT					
	4	202-2515	1	COVER AS					
	5	8P-6363	1	PLUG					
	6	096-2916	1	GROMMET					
	7	8T-4175	4	BOLT(M16×2)					
		9X-8257	4	WASHER					
	8	197-8189	1	GROMMET					
D	9	5P-5935		SEAL---0.93m					
	10	125-7520	1	GROMMET					
	11	145-0603	1	GROMMET					
	12	210-3560	1	PLATE AS					
	13	121-1029	4	CLIP					
	14	194-6377	3	NUT(M10×1.5)(WELD)					
	15	7T-1099	8	LINK					
	16	8T-3490	19	NUT(M10×1.5)(WELD)					
	17	8T-3612	8	NUT(M8×1.25)(WELD)					
	18	205-9679	1	FOOT REST AS					
	19	191-0337	1	PLATE AS(LH)					
	20	8T-4136	2	BOLT(M10×1.5)					
		7X-7729	2	WASHER					
	21	124-9156	1	TREAD					
	22	8T-4189	6	BOLT(M8×1.25)					
	23	8T-4224	6	WASHER					

D-ORDER BY THE m

J126922 X02

OPERATOR PLATFORM (206-7619 N/S)

EFFECTIVE WITH SERIAL NO. BMW00684-BMW01116
PART OF 206-7605-Page 514,515,206-7635-Page 516,517
AN ATTACHMENT

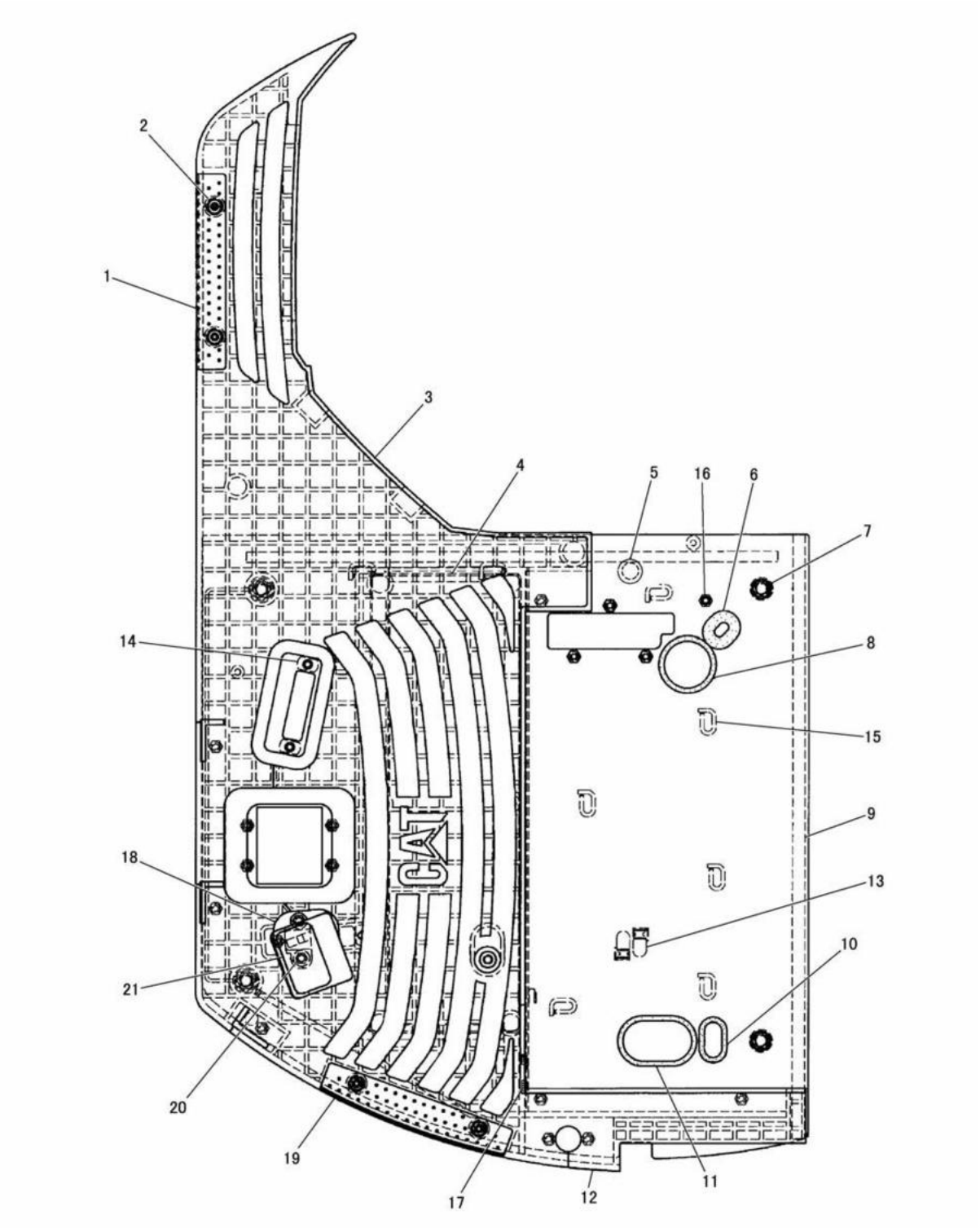

OPERATOR PLATFORM (206-7619 N/S)
EFFECTIVE WITH SERIAL NO. BMW01117-
PART OF 206-7605-Page 514,515,206-7635-Page 516,517
AN ATTACHMENT

OPERATOR STATION

NOTE	No.	PART NO.	QTY.	PART NAME	NOTE	No.	PART NO.	QTY.	PART NAME
	1	191-0336	1	PLATE AS(RH)					
	2	9X-2039	4	SCREW(M10×1.5)					
	3	191-0345	1	FLOORMAT					
C	4	218-3527	1	COVER AS					
	5	8P-6363	1	PLUG					
	6	096-2916	1	GROMMET					
	7	8T-4175	4	BOLT(M16×2)					
		9X-8257	4	WASHER					
	8	197-8189	1	GROMMET					
D	9	5P-5935		SEAL---0.93m					
	10	125-7520	1	GROMMET					
	11	145-0603	1	GROMMET					
	12	210-3560	1	PLATE AS					
	13	121-1029	4	CLIP					
	14	194-6377	3	NUT(M10×1.5)(WELD)					
C	15	7T-1099	9	LINK					
	16	8T-3490	19	NUT(M10×1.5)(WELD)					
C	17	8T-3612	2	NUT(M8×1.25)(WELD)					
	18	205-9679	1	FOOT REST AS					
	19	191-0337	1	PLATE AS(LH)					
	20	8T-4136	2	BOLT(M10×1.5)					
		7X-7729	2	WASHER					
	21	124-9156	1	TREAD					

C-INDICATES CHANGE
D-ORDER BY THE m

J126793 X03

OPERATOR PLATFORM (206-7619 N/S)
EFFECTIVE WITH SERIAL NO. BMW01117-
PART OF 206-7605-Page 514,515,206-7635-Page 516,517
AN ATTACHMENT

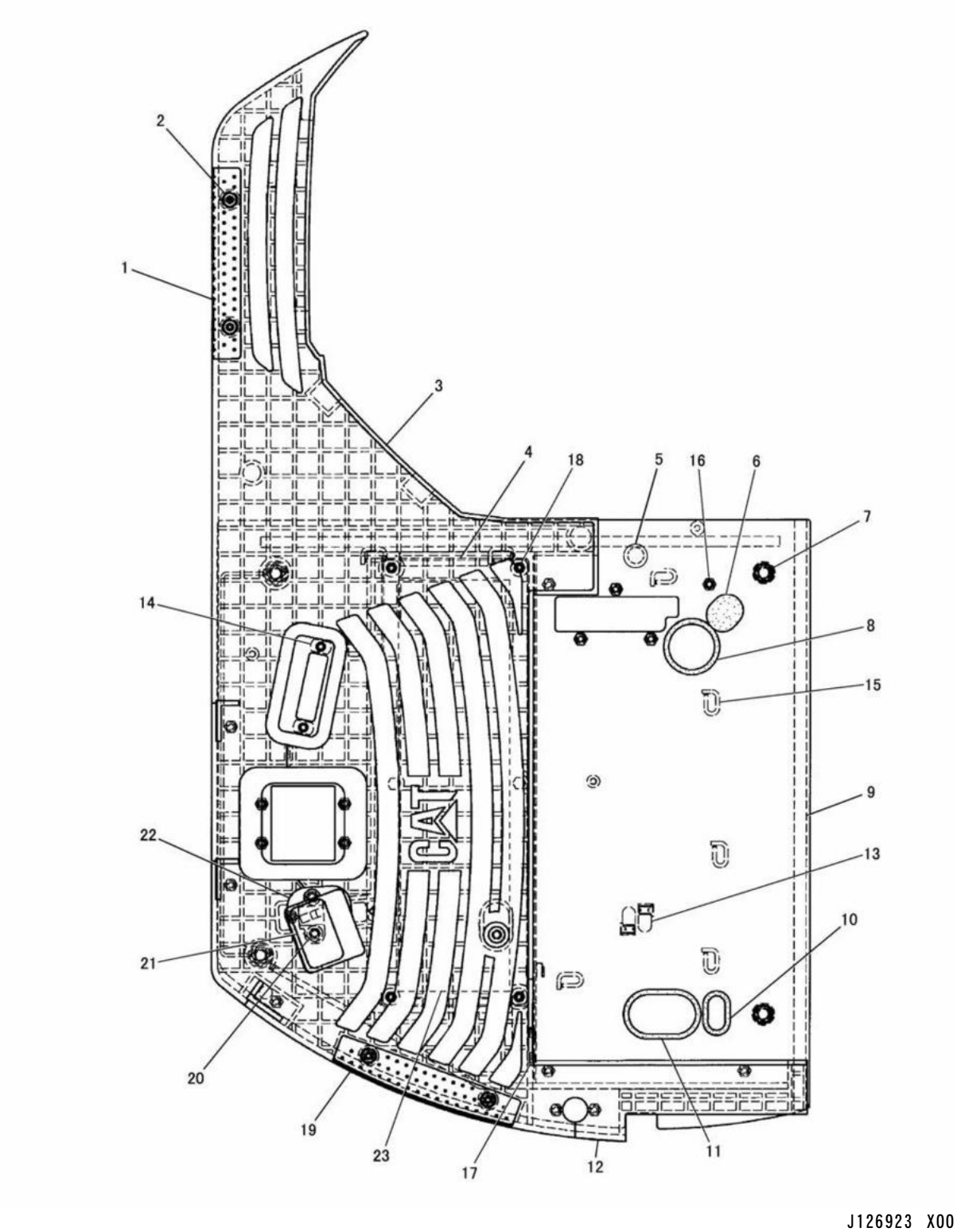

OPERATOR PLATFORM (216-8438 N/S) -SOUND SUPPRESSION
EFFECTIVE WITH SERIAL NO. BMW00001-BMW01004
PART OF 216-8062-Page 190,191,216-8063-Page 192,193
AN ATTACHMENT

OPERATOR STATION

NOTE	No.	PART NO.	QTY.	PART NAME	NOTE	No.	PART NO.	QTY.	PART NAME
	1	191-0336	1	PLATE AS(RH)					
	2	9X-2039	4	SCREW(M10×1.5)					
	3	191-0345	1	FLOORMAT					
	4	202-2515	1	COVER AS					
	5	8P-6363	1	PLUG					
	6	212-0966	1	GROMMET					
	7	8T-4175	4	BOLT(M16×2)					
		9X-8257	4	WASHER					
	8	197-8189	1	GROMMET					
D	9	5P-5935		SEAL---0.93m					
	10	125-7520	1	GROMMET					
	11	145-0603	1	GROMMET					
	12	210-3560	1	PLATE AS					
	13	121-1029	4	CLIP					
	14	194-6377	3	NUT(M10×1.5)(WELD)					
	15	7T-1099	8	LINK					
	16	8T-3490	19	NUT(M10×1.5)(WELD)					
	17	8T-3612	8	NUT(M8×1.25)(WELD)					
	18	8T-4189	6	BOLT(M8×1.25)					
		8T-4224	6	WASHER					
	19	191-0337	1	PLATE AS(LH)					
	20	8T-4136	2	BOLT(M10×1.5)					
		7X-7729	2	WASHER					
	21	124-9156	1	TREAD					
	22	205-9679	1	FOOT REST AS					
	23	216-8923	1	SEAL					

D-ORDER BY THE m

J126923 X00

OPERATOR PLATFORM (216-8438 N/S) -SOUND SUPPRESSION
EFFECTIVE WITH SERIAL NO. BMW00001-BMW01004
PART OF 216-8062-Page 190,191,216-8063-Page 192,193
AN ATTACHMENT

OPERATOR STATION

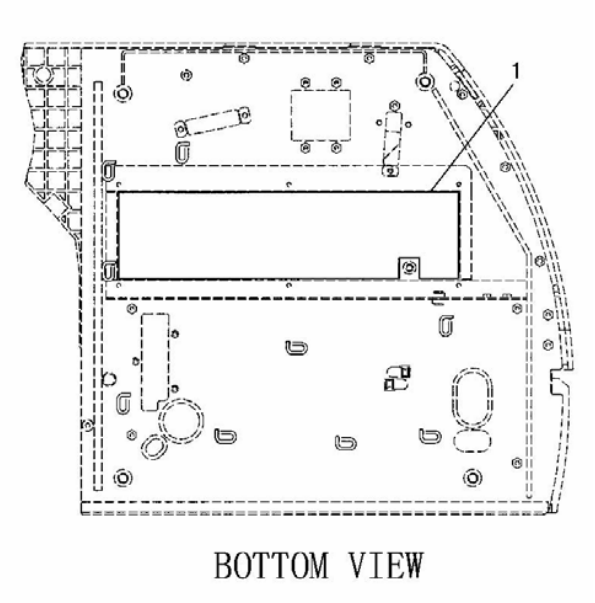

NOTE	No.	PART NO.	QTY.	PART NAME
	1	216-8923	1	SEAL

J114574 X01

OPERATOR PLATFORM LINER (216-8438 N/S) -SOUND SUPPRESSION
EFFECTIVE WITH SERIAL NO. BMW01005-
PART OF 216-8062-Page 190,191,216-8063-Page 192,193
AN ATTACHMENT

OPERATOR STATION

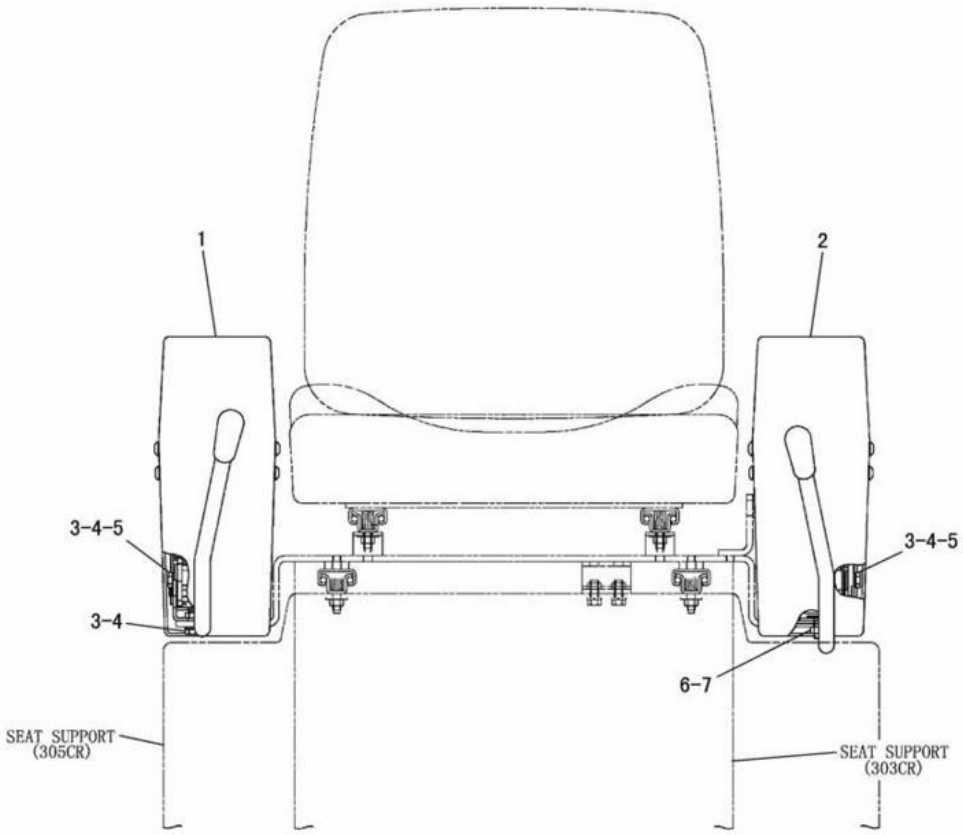

NOTE	No.	PART NO.	QTY.	PART NAME	NOTE	No.	PART NO.	QTY.	PART NAME
Y	1	197-8176	1	CONSOLE AS(RH)					
Y	2	197-8178	1	CONSOLE AS(LH)					
	3	8T-4189	4	BOLT(M8×1.25)					
	4	8T-4224	4	WASHER					
	5	7X-0592	2	WASHER					
	6	7X-2393	1	BUMPER					
	7	5C-7261	1	NUT(M8×1.25)					

Y-SEE SEPARATE ILLUSTRATION

J107547 X02

OPERATOR CONSOLE (191-3823 N/S)

EFFECTIVE WITH SERIAL NO. BMW00001-BMW00786
PART OF 191-3822-Page 529
197-8176-Page 585, 586 197-8178-Page 588, 589

OPERATOR STATION

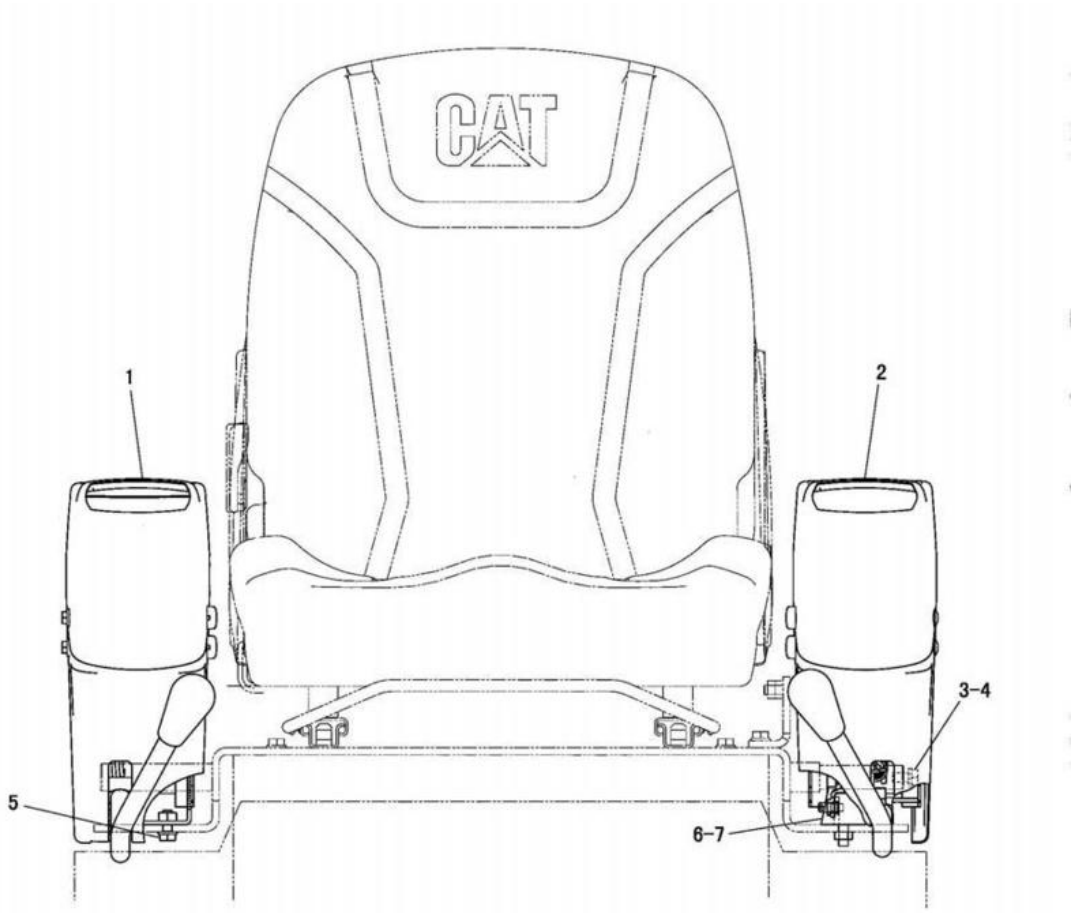

NOTE	No.	PART NO.	QTY.	PART NAME	NOTE	No.	PART NO.	QTY.	PART NAME
Y	1	197-8176	1	CONSOLE AS(RH)					
Y	2	197-8178	1	CONSOLE AS(LH)					
C	3	207-0788	1	BOLT AS(M8×1.25)					
C	4	207-0789	1	WASHER					
C	5	207-0787	2	BOLT AS(M8×1.25)					
	6	7X-2393	1	BUMPER					
C	7	207-0786	1	NUT(M8×1.25)					

C-INDICATES CHANGE
Y-SEE SEPARATE ILLUSTRATION

J115378 X04

OPERATOR CONSOLE (191-3823 N/S)

EFFECTIVE WITH SERIAL NO. BMW00787-BMW01588
PART OF 191-3822-Page 529
197-8176-Page 585, 586 197-8178-Page 588, 589

OPERATOR STATION



NOTE	No.	PART NO.	QTY.	PART NAME	NOTE	No.	PART NO.	QTY.	PART NAME
Y	1	253-3624	1	CONSOLE GROUP(RH)					
Y	2	253-3625	1	CONSOLE GROUP(LH)					
	3	207-0788	1	BOLT AS(M8×1.25)					
	4	207-0789	1	WASHER					
	5	207-0787	2	BOLT AS(M8×1.25)					
	6	7X-2393	1	BUMPER					
	7	207-0786	1	NUT(M8×1.25)					

Y-SEE SEPARATE ILLUSTRATION

J132106 E00

OPERATOR CONSOLE (253-3623 N/S)

EFFECTIVE WITH SERIAL NO. BMW01589-
PART OF 191-3822-Page 530
253-3624-Page 587 253-3625-Page 590

OPERATOR STATION

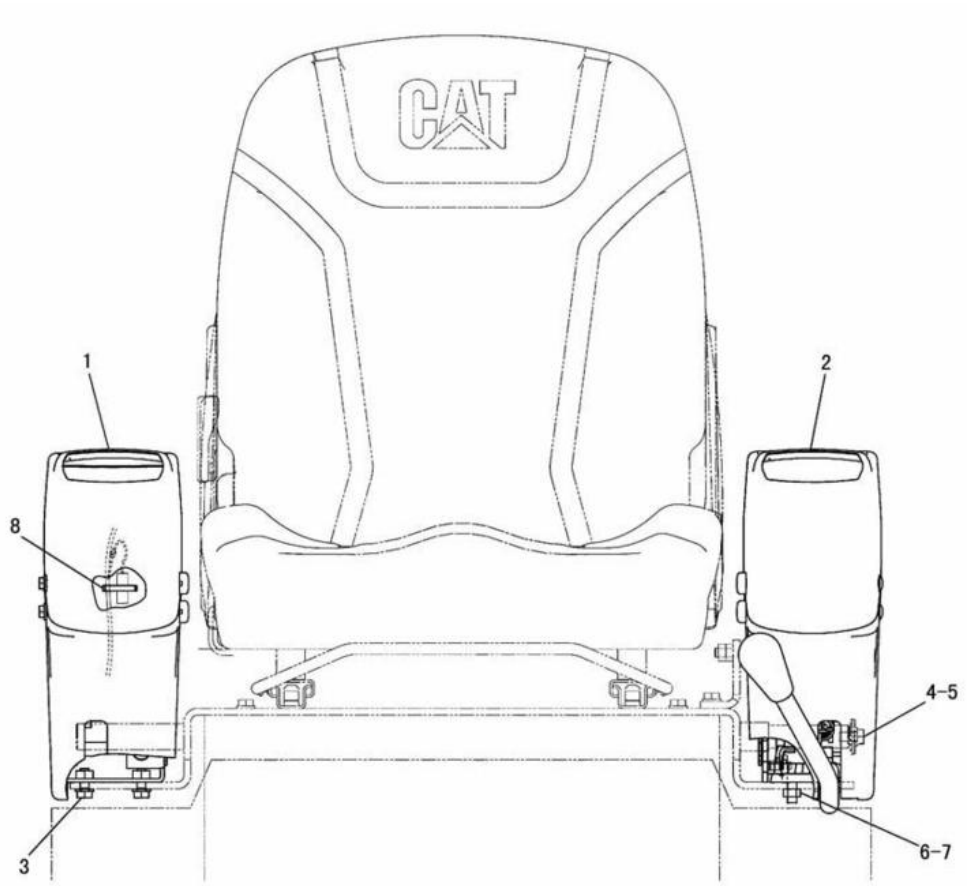

NOTE	No.	PART NO.	QTY.	PART NAME	NOTE	No.	PART NO.	QTY.	PART NAME
Y	1	197-8186	1	CONSOLE GROUP(RH)					
Y	2	197-8217	1	CONSOLE GROUP(LH)					
	3	207-0787	2	BOLT AS(M8×1.25)					
	4	207-0788	1	BOLT AS(M8×1.25)					
	5	207-0789	1	WASHER					
	6	7X-2393	1	BUMPER					
	7	207-0786	1	NUT(M8×1.25)					
	8	3S-2093	1	STRAP					

Y-SEE SEPARATE ILLUSTRATION

J118444 X04

OPERATOR CONSOLE (191-3840 N/S)

EFFECTIVE WITH SERIAL NO. BMW00001-BMW01248
PART OF 201-4573-Page 531
197-8186-Page 591 197-8217-Page 593
AN ATTACHMENT

OPERATOR STATION

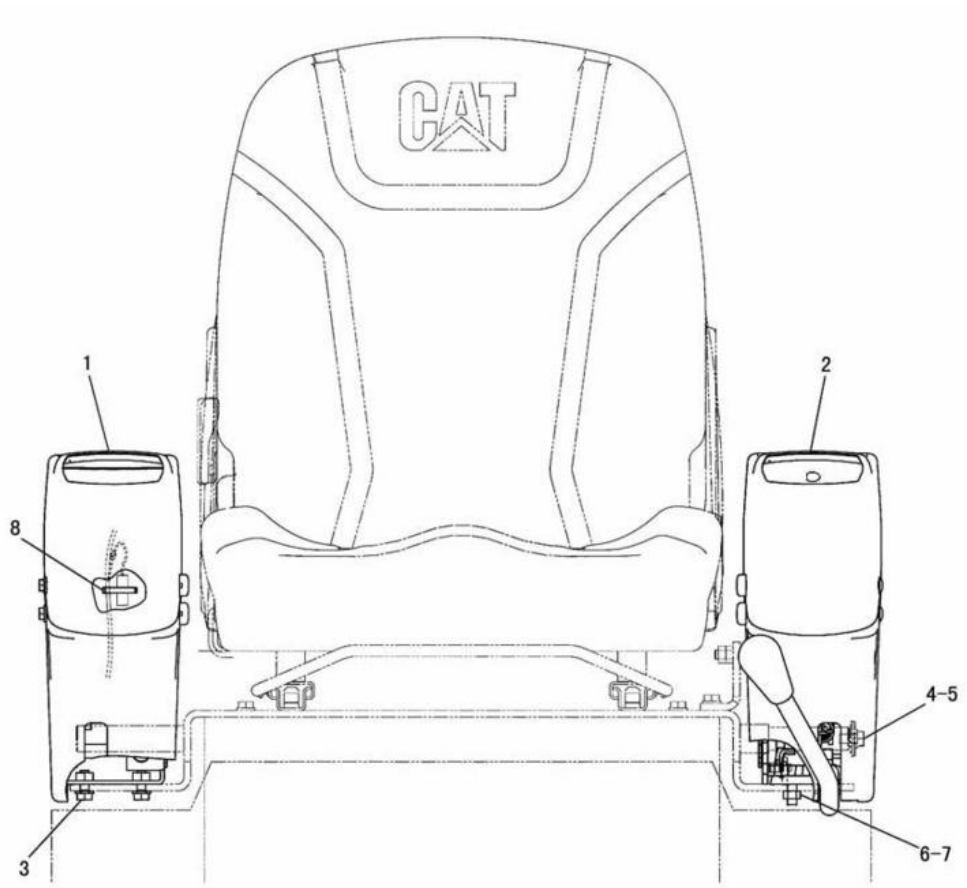

NOTE	No.	PART NO.	QTY.	PART NAME	NOTE	No.	PART NO.	QTY.	PART NAME
Y	1	197-8186	1	CONSOLE GROUP(RH)					
Y	2	233-6789	1	CONSOLE GROUP(LH)					
	3	207-0787	2	BOLT AS(M8×1.25)					
	4	207-0788	1	BOLT AS(M8×1.25)					
	5	207-0789	1	WASHER					
	6	7X-2393	1	BUMPER					
	7	207-0786	1	NUT(M8×1.25)					
	8	3S-2093	1	STRAP					

Y-SEE SEPARATE ILLUSTRATION

J126322 E00

OPERATOR CONSOLE (233-6788 N/S)

EFFECTIVE WITH SERIAL NO. BMW01249-BMW01588
PART OF 201-4573-Page 531
197-8186-Page 591 233-6789-Page 594
AN ATTACHMENT

OPERATOR STATION

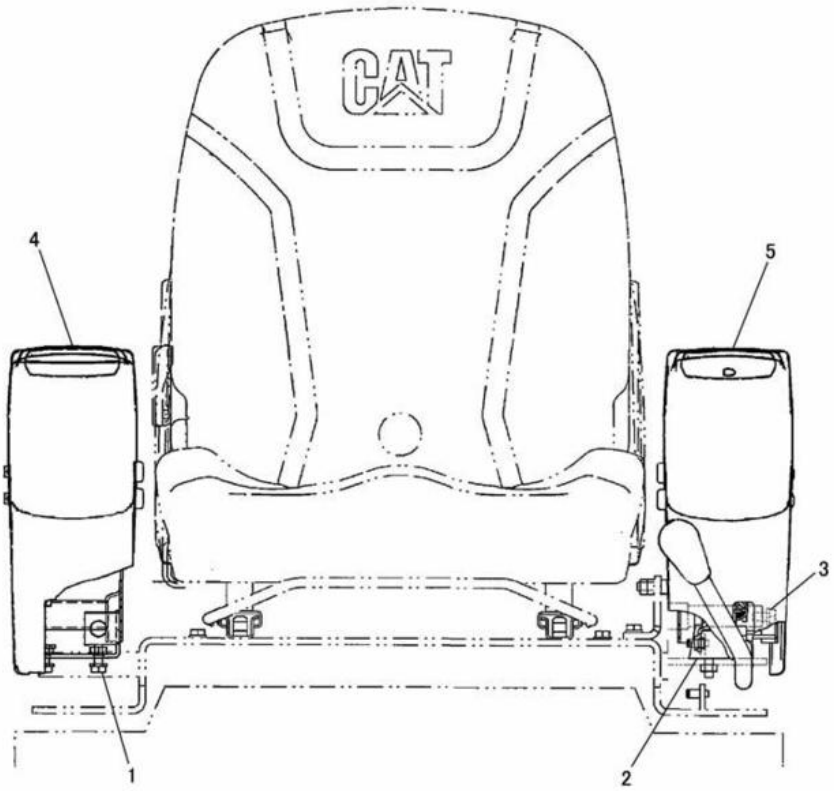

NOTE	No.	PART NO.	QTY.	PART NAME	NOTE	No.	PART NO.	QTY.	PART NAME
	1	207-0787	2	BOLT AS(M8×1.25)					
	2	7X-2393	1	BUMPER					
		207-0786	1	NUT(M8×1.25)					
	3	207-0788	1	BOLT AS(M8×1.25)					
		207-0789	1	WASHER					
Y	4	253-3626	1	CONSOLE GROUP(RH)					
Y	5	253-3627	1	CONSOLE GROUP(LH)					

Y-SEE SEPARATE ILLUSTRATION

J132171 E01

OPERATOR CONSOLE (233-6787 N/S)

EFFECTIVE WITH SERIAL NO. BMW01589-
PART OF 201-4573-Page 532
253-3626-Page 592 253-3627-Page 595
AN ATTACHMENT

OPERATOR STATION

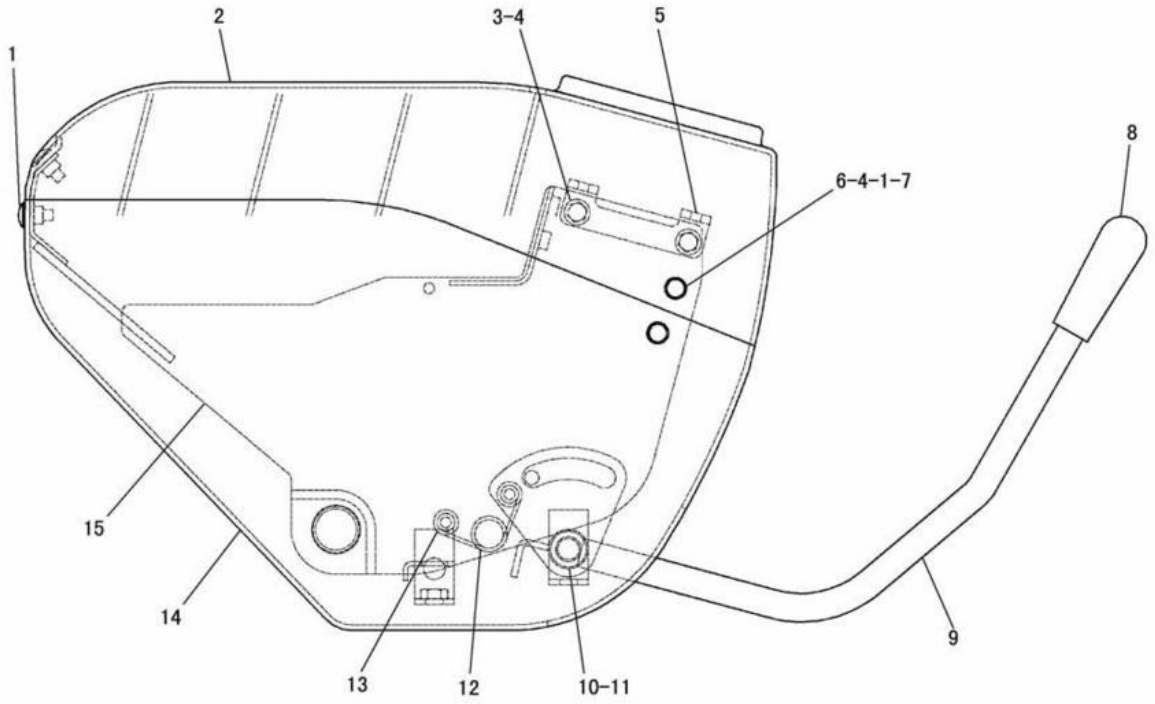

NOTE	No.	PART NO.	QTY.	PART NAME	NOTE	No.	PART NO.	QTY.	PART NAME
	1	158-4781	5	SCREW(M6)					
	2	201-7451	1	COVER					
	3	8T-4171	4	BOLT(M6×1)					
	4	8T-4205	6	WASHER					
	5	202-1804	2	BRACKET					
	6	5C-9553	2	BOLT(M6×1)					
	7	202-1795	2	CAP					
	8	8R-9202	1	KNOB					
	9	201-7461	1	LEVER AS					
	10	201-7463	1	SHAFT					
	11	4W-6985	2	RING					
	12	201-9190	1	SPRING					
	13	5C-2890	2	NUT(M6×1)					
	14	201-7457	1	COVER					
	15	201-7459	1	FRAME AS					

J107684 X01

CONSOLE (197-8176 N/S) -RH
EFFECTIVE WITH SERIAL NO. BMW00001-BMW00786
PART OF 191-3823-Page 579,580

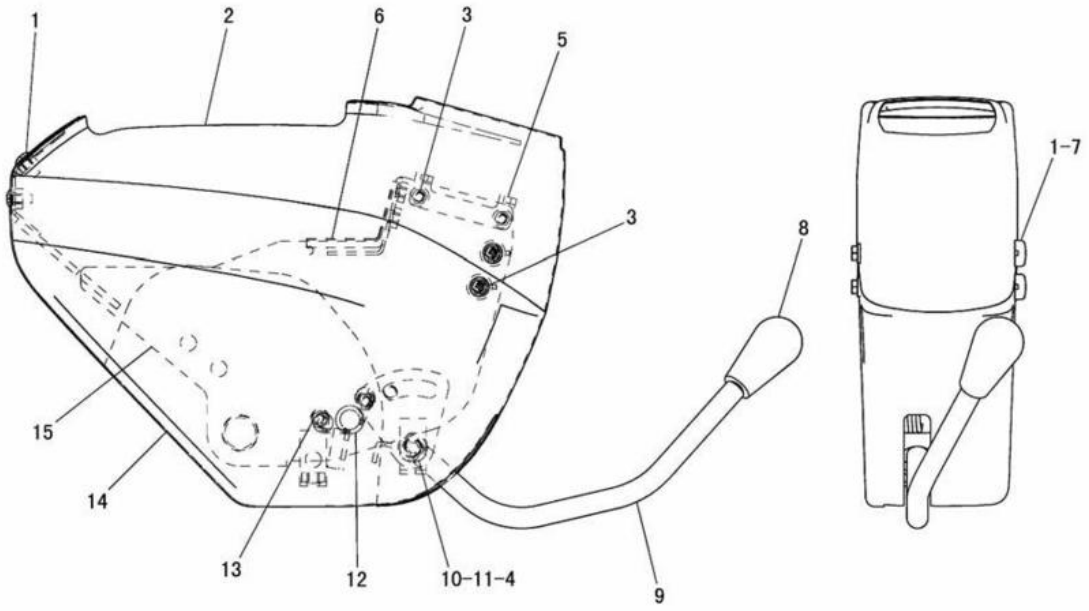

NOTE	No.	PART NO.	QTY.	PART NAME	NOTE	No.	PART NO.	QTY.	PART NAME
	1	158-4781	5	SCREW(M6)					
	2	201-7451	1	COVER					
C	3	207-0790	6	BOLT AS(M6×1)					
C	4	207-0796	2	BUSHING					
	5	202-1804	2	BRACKET					
C	6	222-0666	2	SEAL					
	7	202-1795	2	CAP					
C	8	211-7455	1	KNOB					
	9	201-7461	1	LEVER AS(RH)					
	10	201-7463	1	SHAFT					
C	11	207-0795	2	RING					
	12	201-9190	1	SPRING					
C	13	207-0794	2	NUT(M6×1)					
	14	201-7457	1	COVER					
	15	201-7459	1	FRAME AS(RH)					

C-INDICATES CHANGE

J118445 X04

CONSOLE (197-8176 N/S) -RH

EFFECTIVE WITH SERIAL NO. BMW00787-BMW01588
PART OF 191-3823-Page 579,580

OPERATOR STATION

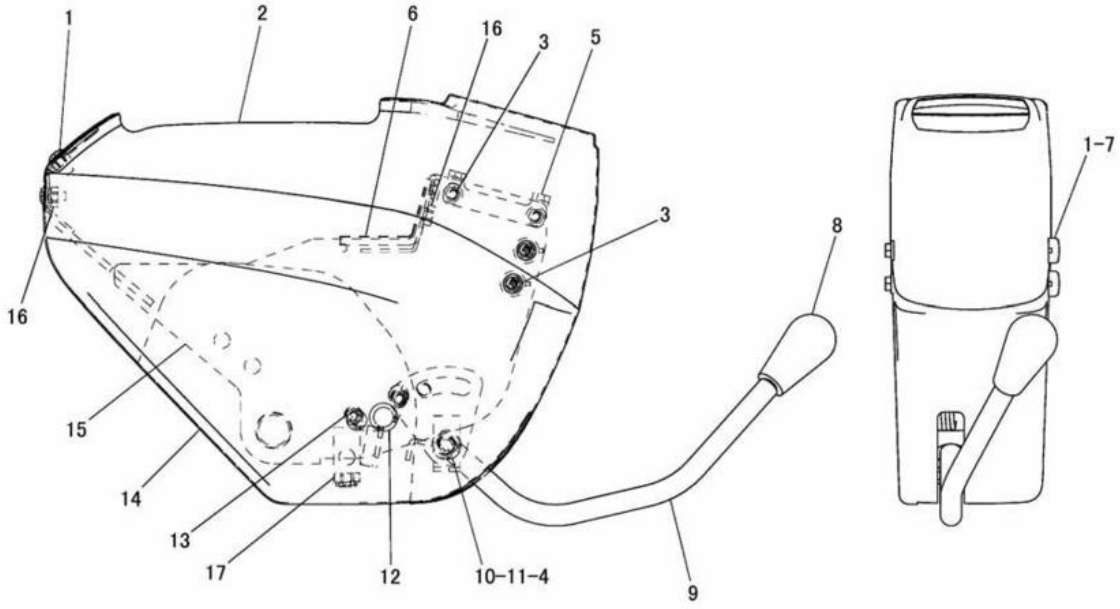

NOTE	No.	PART NO.	QTY.	PART NAME	NOTE	No.	PART NO.	QTY.	PART NAME
	1	1 5 8－4 7 8 1	5	SCREW(M6×1)					
	2	2 3 3－9 5 7 5	1	COVER					
	3	2 0 7－0 7 9 0	6	BOLT AS(M6×1)					
	4	2 0 7－0 7 9 6	2	BUSHING					
	5	2 0 2－1 8 0 4	2	BRACKET					
	6	2 2 2－0 6 6 6	2	SEAL					
	7	2 0 2－1 7 9 5	2	CAP					
	8	2 1 1－7 4 5 5	1	KNOB					
	9	2 5 2－9 3 5 7	1	LEVER AS(RH)					
	10	2 0 1－7 4 6 3	1	SHAFT					
	11	2 0 7－0 7 9 5	2	RING					
	12	2 0 1－9 1 9 0	1	SPRING					
	13	2 0 7－0 7 9 4	2	NUT(M6×1)					
	14	2 0 1－7 4 5 7	1	COVER					
	15	2 5 2－9 3 5 5	1	FRAME AS(RH)					
	16	6 V－9 6 3 2	6	NUT(M6×1)(WELD)					
	17	8 T－3 6 1 2	2	NUT(M8×1.25)(WELD)					

J132108 E01

CONSOLE (253-3624 N/S) -RH

EFFECTIVE WITH SERIAL NO. BMW01589-
PART OF 253-3623-Page 581

OPERATOR STATION

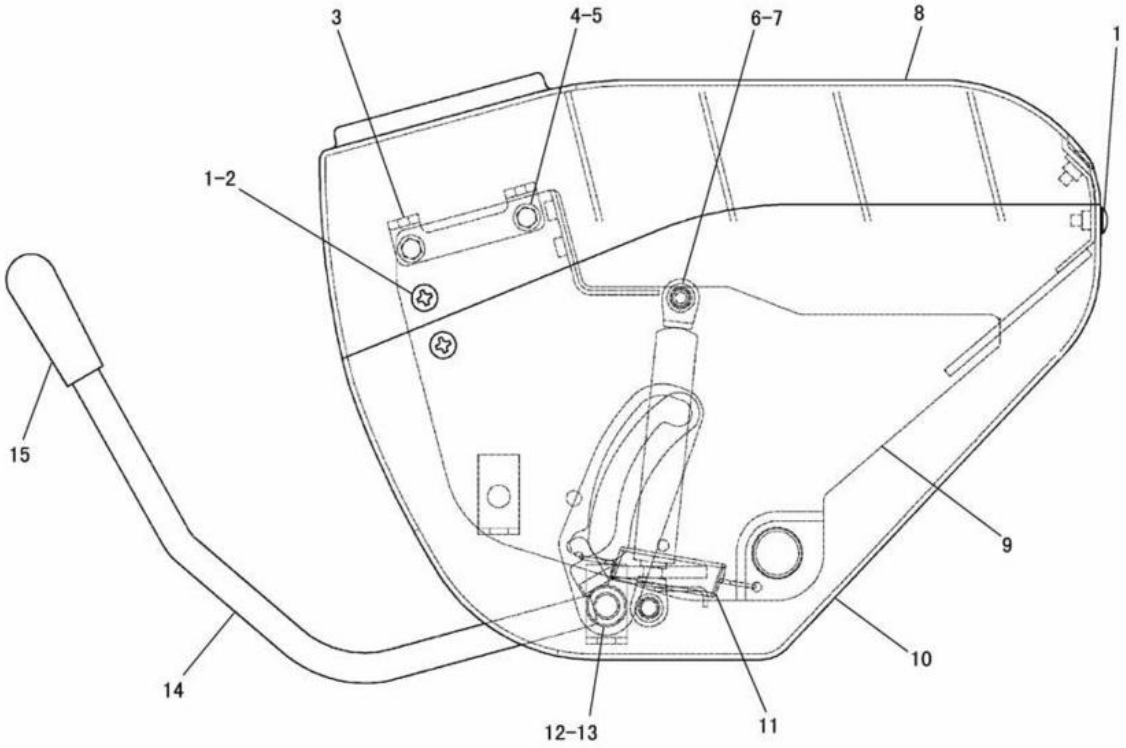

NOTE	No.	PART NO.	QTY.	PART NAME	NOTE	No.	PART NO.	QTY.	PART NAME
	1	158-4781	7	SCREW(M6)					
	2	202-1795	2	CAP					
	3	202-1804	2	BRACKET					
	4	8T-4171	4	BOLT(M6×1)					
	5	8T-4205	4	WASHER					
	6	201-7464	1	DAMPER					
	7	2Y-5685	2	RING					
	8	201-7450	1	COVER					
	9	201-7460	1	FRAME AS					
	10	201-7458	1	COVER					
	11	201-9189	1	SPRING					
	12	201-9191	1	SHAFT					
	13	4W-6985	2	RING					
	14	201-7462	1	LEVER AS					
	15	8R-9202	1	KNOB					

J107685 X01

CONSOLE (197-8178 N/S) -LH
EFFECTIVE WITH SERIAL NO. BMW00001-BMW00786
PART OF 191-3823-Page 579,580

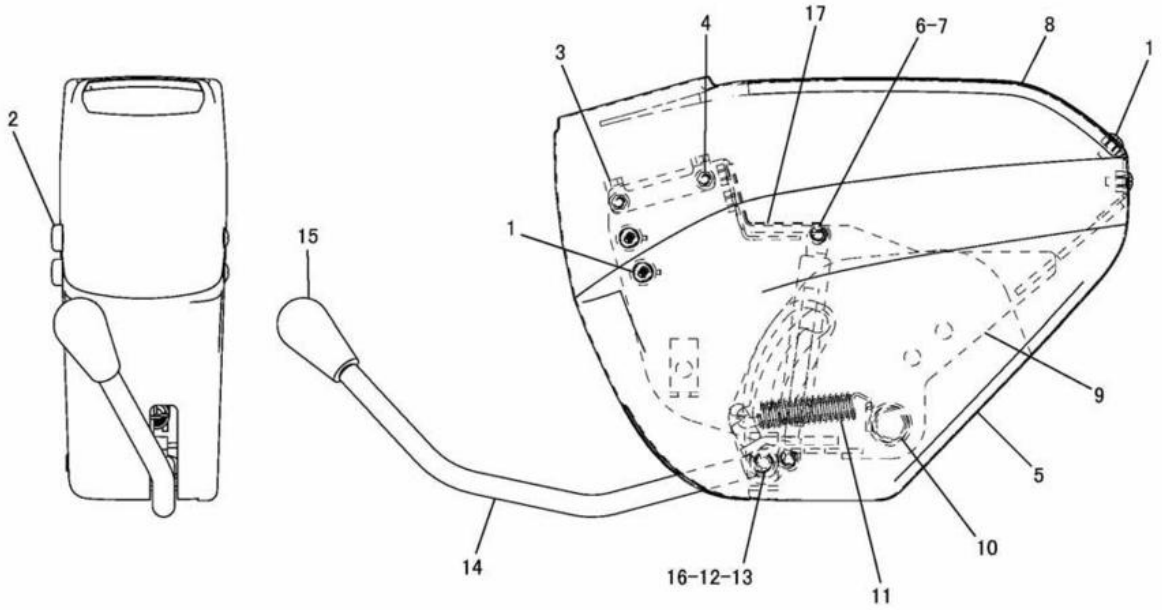

NOTE	No.	PART NO.	QTY.	PART NAME	NOTE	No.	PART NO.	QTY.	PART NAME
	1	158-4781	7	SCREW(M6)					
	2	202-1795	2	CAP					
	3	202-1804	2	BRACKET					
C	4	207-0790	4	BOLT AS(M6×1)					
	5	201-7458	1	COVER					
	6	201-7464	1	DAMPER					
C	7	207-0798	2	RING					
	8	201-7450	1	COVER					
	9	201-7460	1	FRAME AS(LH)					
C	10	207-0797	2	BUSHING					
	11	201-9189	1	SPRING					
	12	201-9191	1	SHAFT					
C	13	207-0795	2	RING					
	14	201-7462	1	LEVER AS(LH)					
C	15	211-7455	1	KNOB					
C	16	207-0796	2	BUSHING					
C	17	222-0666	2	SEAL					

C-INDICATES CHANGE

J115380 X04

CONSOLE (197-8178 N/S) -LH

EFFECTIVE WITH SERIAL NO. BMW00787-BMW01588
PART OF 191-3823-Page 579,580

OPERATOR STATION

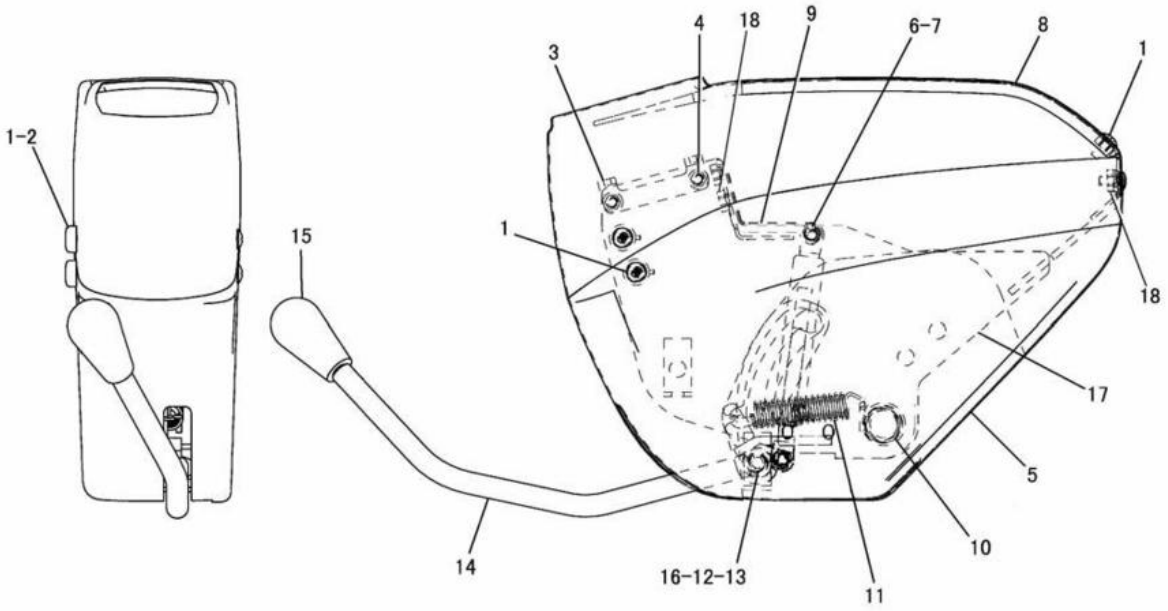

NOTE	No.	PART NO.	QTY.	PART NAME	NOTE	No.	PART NO.	QTY.	PART NAME
	1	158-4781	7	SCREW(M6×1)					
	2	202-1795	2	CAP					
	3	202-1804	2	BRACKET					
	4	207-0790	4	BOLT AS(M6×1)					
	5	201-7458	1	COVER					
	6	201-7464	1	DAMPER					
	7	207-0798	2	RING					
	8	201-7450	1	COVER					
	9	222-0666	2	SEAL					
	10	207-0797	2	BUSHING					
	11	201-9189	1	SPRING					
	12	201-9191	1	SHAFT					
	13	207-0795	2	RING					
	14	201-7462	1	LEVER AS(LH)					
	15	211-7455	1	KNOB					
	16	207-0796	2	BUSHING					
	17	252-9356	1	FRAME AS(LH)					
	18	6V-9632	6	NUT(M6×1)(WELD)					

J132107 E00

CONSOLE (253-3625 N/S) -LH
EFFECTIVE WITH SERIAL NO. BMW01589-
PART OF 253-3623-Page 581

OPERATOR STATION

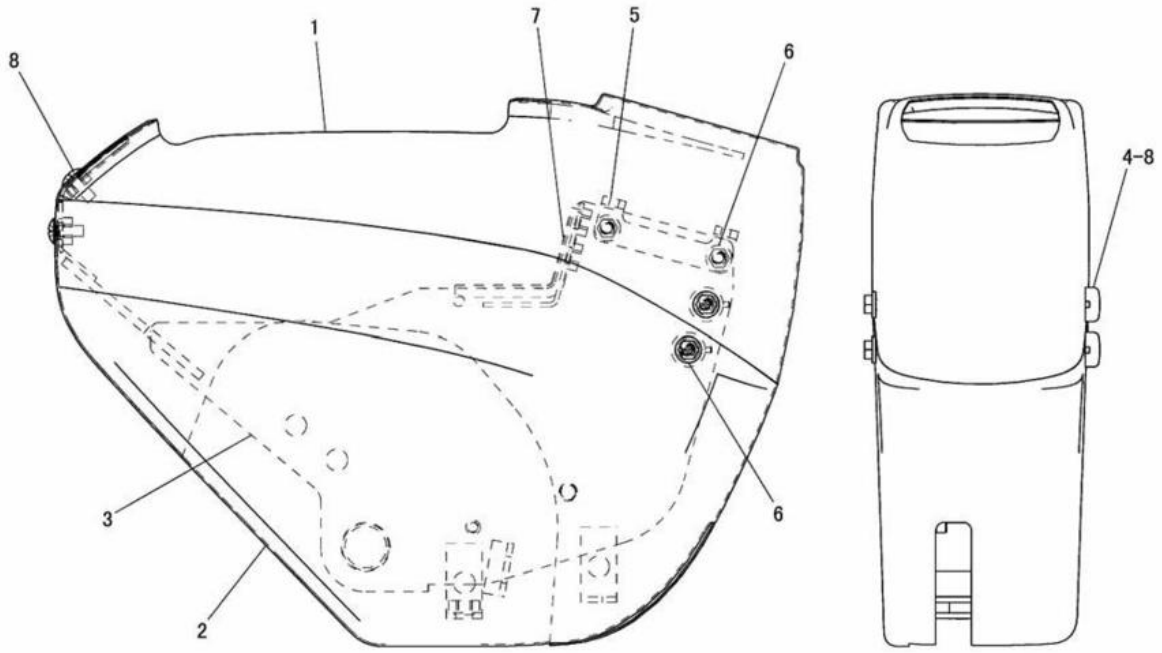

NOTE	No.	PART NO.	QTY.	PART NAME	NOTE	No.	PART NO.	QTY.	PART NAME
	1	201-7451	1	COVER					
	2	201-7457	1	COVER					
	3	201-7459	1	FRAME AS					
	4	202-1795	2	CAP					
	5	202-1804	2	BRACKET					
	6	207-0790	6	BOLT AS(M6×1)					
	7	222-0666	2	SEAL					
	8	158-4781	5	SCREW(M6×1)					

J118446 X03

CONSOLE (197-8186 N/S) -RH

EFFECTIVE WITH SERIAL NO. BMW00001-BMW01588
PART OF 191-3840-Page 582,233-6788-Page 583
AN ATTACHMENT

OPERATOR STATION

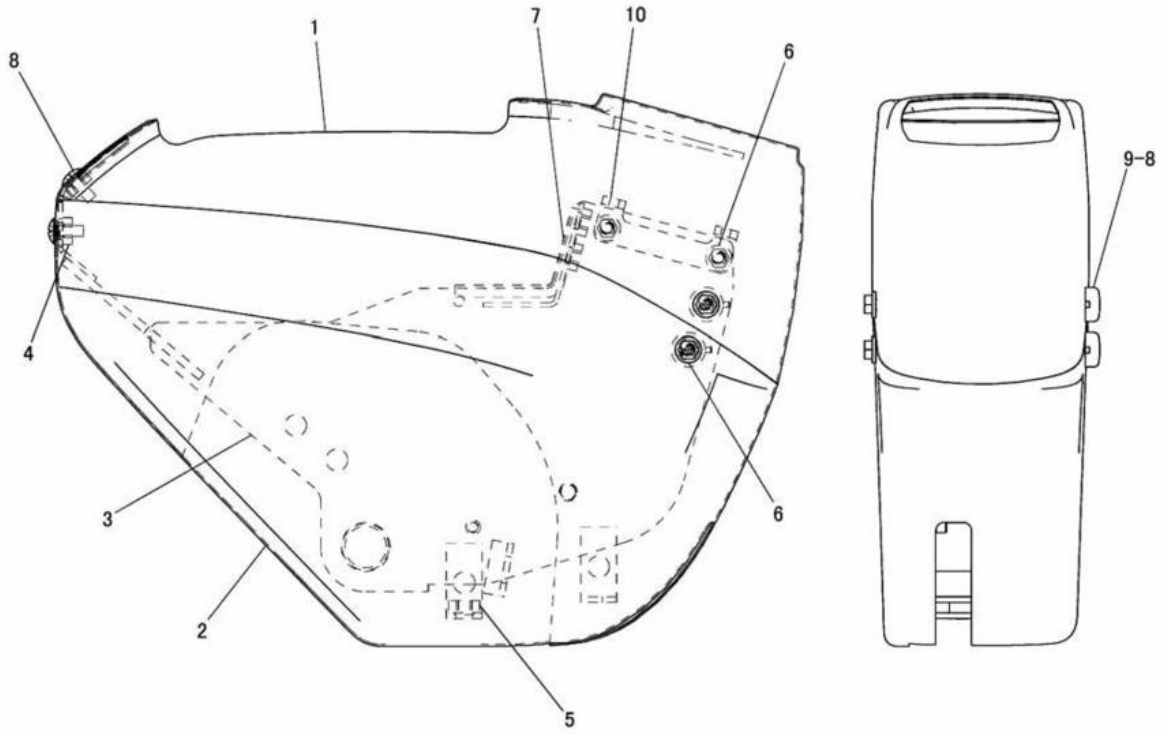

NOTE	No.	PART NO.	QTY.	PART NAME	NOTE	No.	PART NO.	QTY.	PART NAME
	1	233-9575	1	COVER					
	2	201-7457	1	COVER					
	3	252-9355	1	FRAME AS					
	4	6V-9632	6	NUT(M6×1)(WELD)					
	5	8T-3612	2	NUT(M8×1.25)(WELD)					
	6	207-0790	6	BOLT AS(M6×1)					
	7	222-0666	2	SEAL					
	8	158-4781	5	SCREW(M6×1)					
	9	202-1795	2	CAP					
	10	202-1804	2	BRACKET					

J130774 E01

CONSOLE (253-3626 N/S) -RH
EFFECTIVE WITH SERIAL NO. BMW01589-
PART OF 233-6787-Page 584
AN ATTACHMENT

OPERATOR STATION

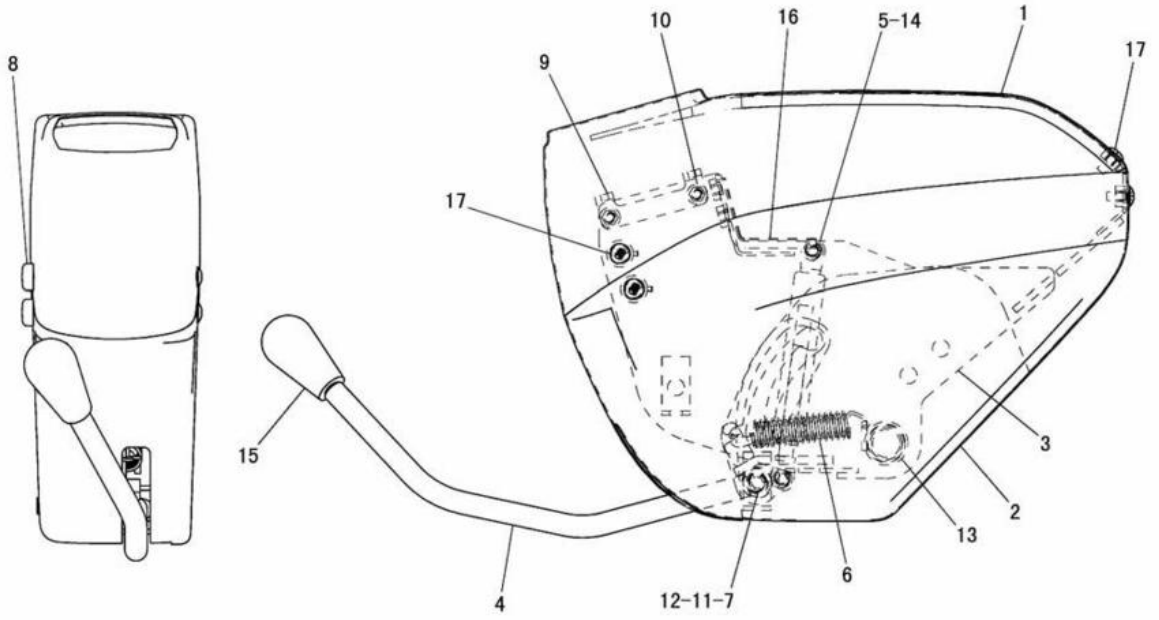

NOTE	No.	PART NO.	QTY.	PART NAME	NOTE	No.	PART NO.	QTY.	PART NAME
	1	201-7454	1	COVER					
	2	201-7458	1	COVER					
	3	201-7460	1	FRAME AS					
	4	201-7462	1	LEVER AS					
	5	201-7464	1	DAMPER					
	6	201-9189	1	SPRING					
	7	201-9191	1	SHAFT					
	8	202-1795	2	CAP					
	9	202-1804	2	BRACKET					
	10	207-0790	4	BOLT AS(M6×1)					
	11	207-0795	2	RING					
	12	207-0796	2	BUSHING					
	13	207-0797	2	BUSHING					
	14	207-0798	2	RING					
	15	211-7455	1	KNOB					
	16	222-0666	2	SEAL					
	17	158-4781	7	SCREW(M6×1)					

J118447 X04

CONSOLE (197-8217 N/S) -LH

EFFECTIVE WITH SERIAL NO. BMW00001-BMW01248
PART OF 191-3840-Page 582
AN ATTACHMENT

OPERATOR STATION

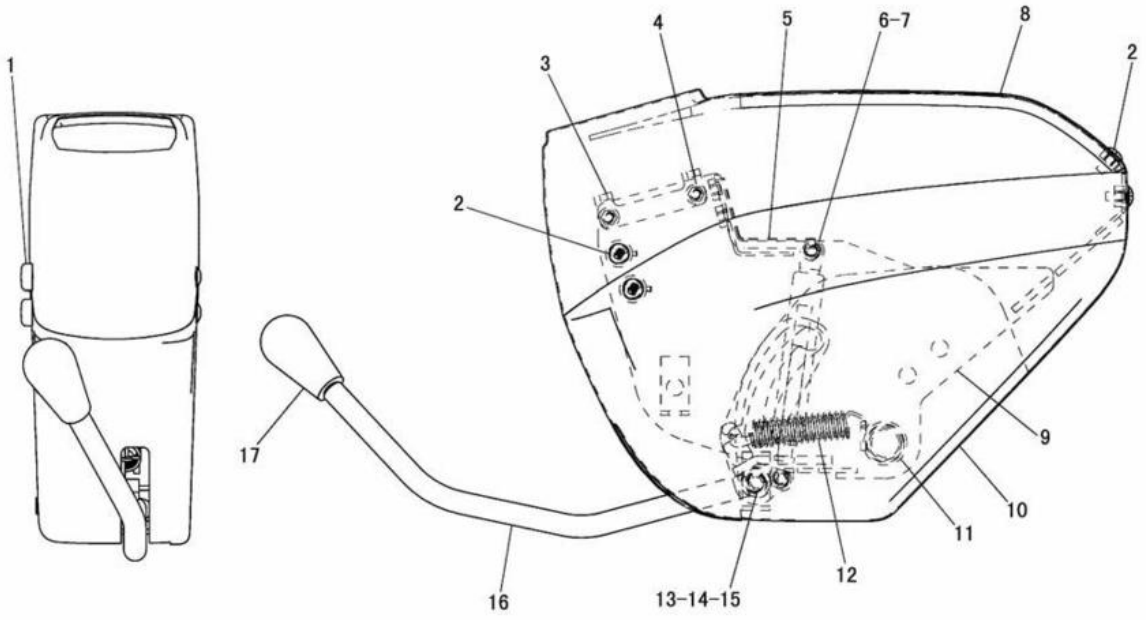

NOTE	No.	PART NO.	QTY.	PART NAME	NOTE	No.	PART NO.	QTY.	PART NAME
	1	202-1795	2	CAP					
	2	158-4781	7	SCREW(M6×1)					
	3	202-1804	2	BRACKET					
	4	207-0790	4	BOLT AS(M6×1)					
	5	222-0666	2	SEAL					
	6	201-7464	1	DAMPER					
	7	207-0798	2	RING					
	8	223-6790	1	COVER					
	9	201-7460	1	FRAME AS					
	10	201-7458	1	COVER					
	11	207-0797	2	BUSHING					
	12	201-9189	1	SPRING					
	13	207-0796	2	BUSHING					
	14	207-0795	2	RING					
	15	201-9191	1	SHAFT					
	16	201-7462	1	LEVER AS					
	17	211-7455	1	KNOB					

J126036 E00

CONSOLE (233-6789 N/S) -LH
EFFECTIVE WITH SERIAL NO. BMW01249-BMW01588
PART OF 233-6788-Page 583
AN ATTACHMENT

OPERATOR STATION

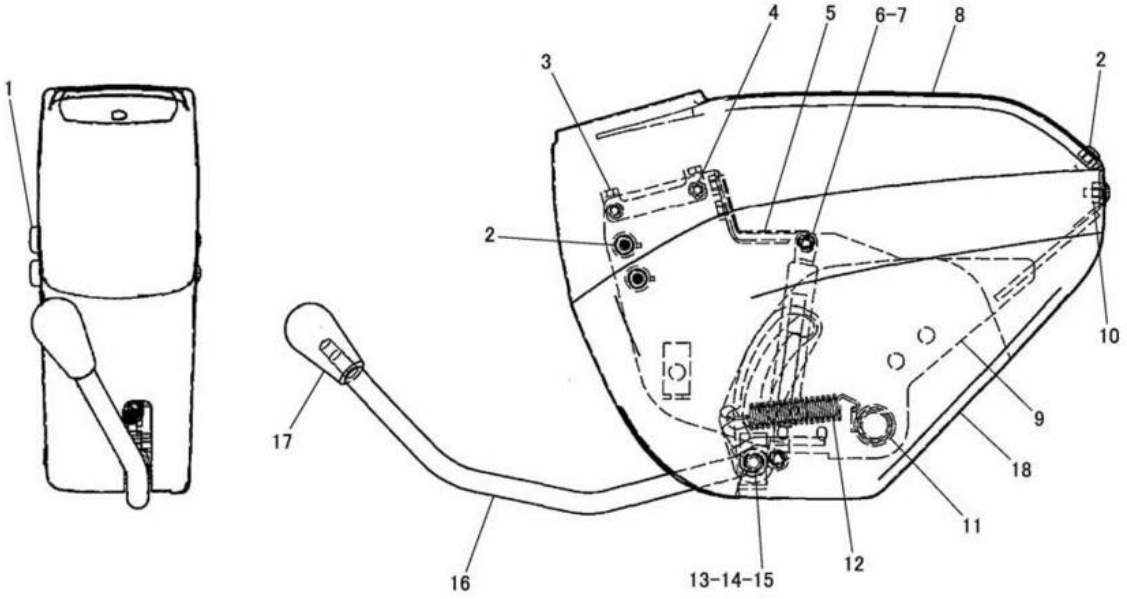

NOTE	No.	PART NO.	QTY.	PART NAME	NOTE	No.	PART NO.	QTY.	PART NAME
	1	202-1795	2	CAP					
	2	158-4781	7	SCREW(M6×1)					
	3	202-1804	2	BRACKET					
	4	207-0790	4	BOLT AS(M6×1)					
	5	222-0666	2	SEAL					
	6	201-7464	1	DAMPER					
	7	207-0798	2	RING					
	8	223-6790	1	COVER					
	9	252-9356	1	FRAME AS(LH)					
	10	6V-9632	6	NUT(M6×1)(WELD)					
	11	207-0797	2	BUSHING					
	12	201-9189	1	SPRING					
	13	207-0796	2	BUSHING					
	14	207-0795	2	RING					
	15	201-9191	1	SHAFT					
	16	201-7462	1	LEVER AS					
	17	211-7455	1	KNOB					
	18	201-7458	1	COVER					

J130775 E00

CONSOLE (253-3627 N/S) -LH

EFFECTIVE WITH SERIAL NO. BMW01589-
PART OF 233-6787-Page 584
AN ATTACHMENT

OPERATOR STATION

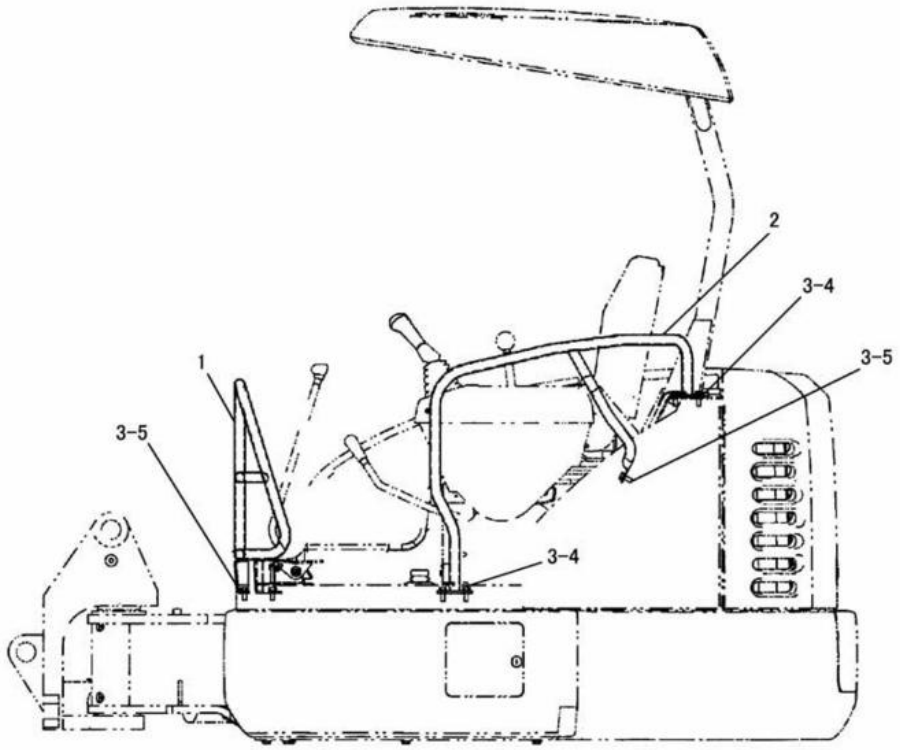

NOTE	No.	PART NO.	QTY.	PART NAME	NOTE	No.	PART NO.	QTY.	PART NAME
	1	192-3242	1	HANDLE AS					
	2	192-4407	1	HANDLE AS					
	3	8T-4121	8	WASHER					
	4	8T-4195	4	BOLT(M10×1.5)					
	5	8T-4136	4	BOLT(M10×1.5)					

J107622 X04

HANDLE (192-2572 N/S)
EFFECTIVE WITH SERIAL NO. BMW00001-BMW01252
PART OF 191-0243-Page 526

OPERATOR STATION

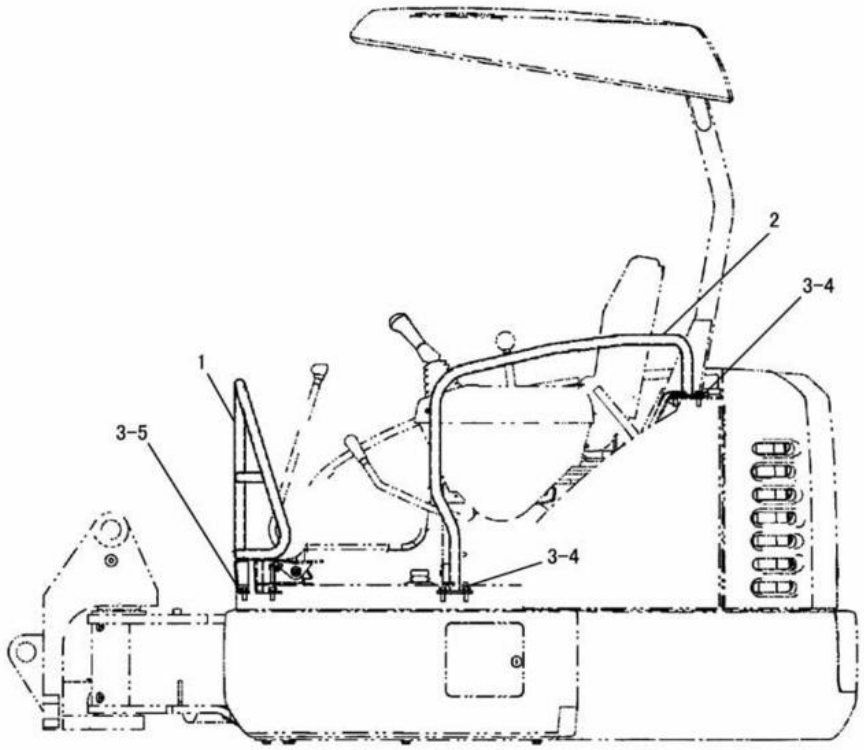

NOTE	No.	PART NO.	QTY.	PART NAME	NOTE	No.	PART NO.	QTY.	PART NAME
	1	192-3242	1	HANDLE AS					
	2	218-4683	1	HANDLE AS					
	3	8T-4121	7	WASHER					
	4	8T-4195	4	BOLT(M10×1.5)					
	5	8T-4136	3	BOLT(M10×1.5)					

J113025 X00

HANDLE (218-4682 N/S)
EFFECTIVE WITH SERIAL NO. BMW01253-
PART OF 218-4684-Page 526

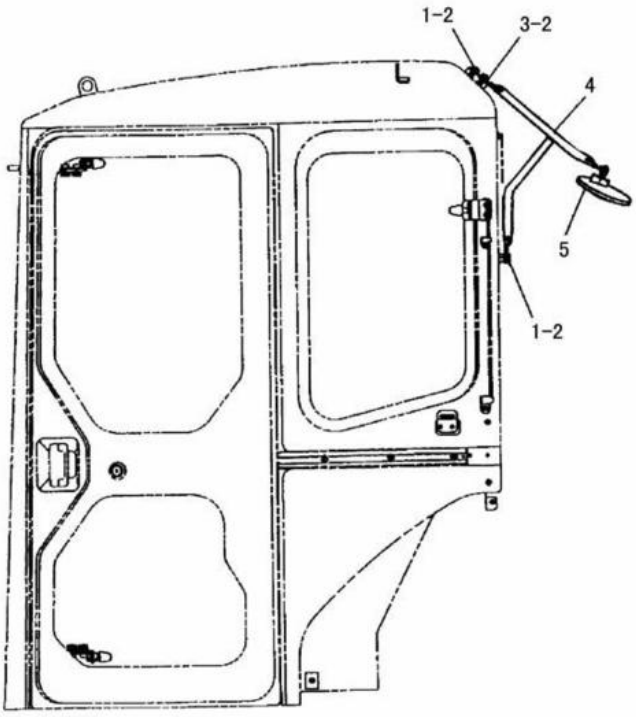

LEFT SIDE VIEW

NOTE	No.	PART NO.	QTY.	PART NAME	NOTE	No.	PART NO.	QTY.	PART NAME
	1	8T-4191	3	BOLT(M10×1.5)					
	2	8T-4121	4	WASHER					
	3	8T-4137	1	BOLT(M10×1.5)					
	4	163-8989	1	PIPE AS					
	5	4Y-3307	1	MIRROR					

J106608 X00

MIRROR ARRANGEMENT (155-6859 N/S)
AN ATTACHMENT

OPERATOR STATION

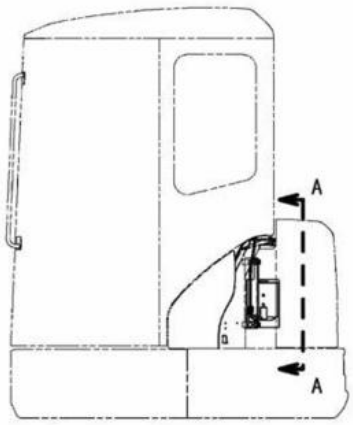

LEFT SIDE VIEW

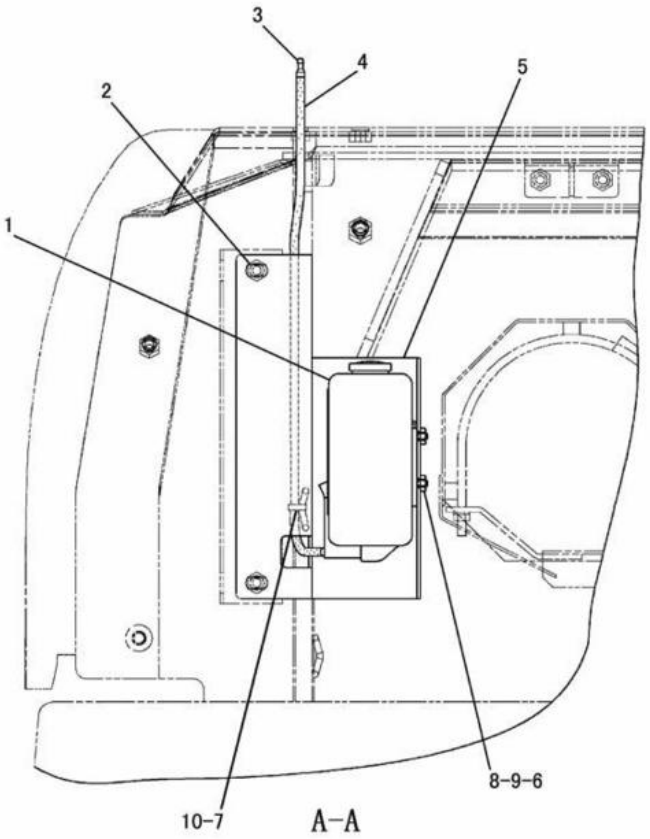

NOTE	No.	PART NO.	QTY.	PART NAME	NOTE	No.	PART NO.	QTY.	PART NAME
	1	191-7524	1	BOTTLE GROUP					
	2	8T-4136	2	BOLT(M10×1.5)					
	3	7Y-3474	1	VALVE AS					
	4	162-4538	1	HOSE					
	5	197-8182	1	PLATE AS					
	6	6V-9632	2	NUT(M6×1)(WELD)					
	7	7T-1099	1	LINK					
	8	5C-9553	2	BOLT(M6×1)					
	9	9X-8256	2	WASHER					
	10	3S-2093	1	STRAP					

J106562 X01

WINDSHIELD WASHER (191-3307 N/S)

EFFECTIVE WITH SERIAL NO. BMW00001-BMW00623
PART OF 201-4570-Page 527,216-8440-Page 528
AN ATTACHMENT

OPERATOR STATION

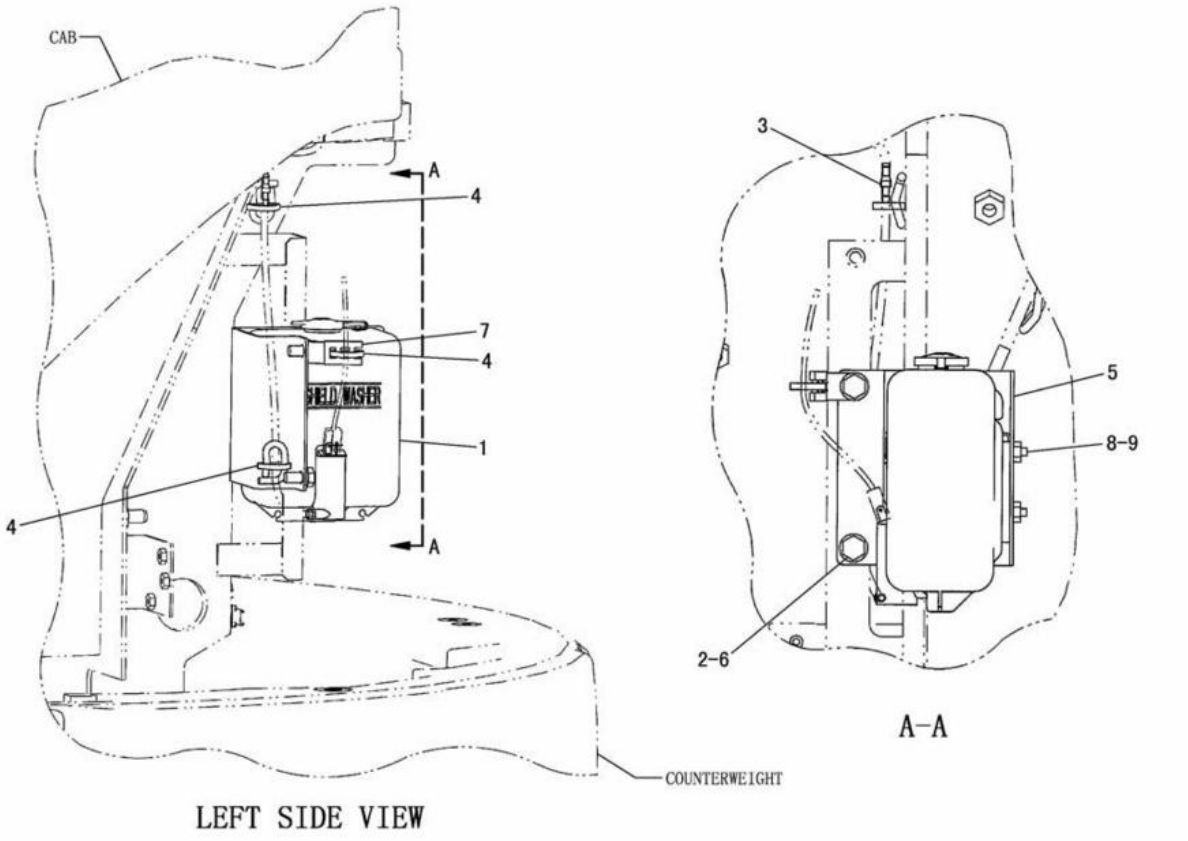

NOTE	No.	PART NO.	QTY.	PART NAME	NOTE	No.	PART NO.	QTY.	PART NAME
	1	191-7524	1	BOTTLE GROUP					
C	2	8T-4137	2	BOLT(M10×1.5)					
	3	7Y-3474	1	VALVE AS					
C	4	3S-2093	3	STRAP					
C	5	201-4575	1	BRACKET AS					
		7T-1099	1	LINK					
		6V-9632	2	NUT(M6×1)(WELD)					
C	6	8T-4121	2	WASHER					
C	7	4P-8134	1	CLIP					
	8	5C-9553	2	BOLT(M6×1)					
	9	9X-8256	2	WASHER					

C-INDICATES CHANGE

J126002 X05

WINDSHIELD WASHER (191-3307 N/S)

EFFECTIVE WITH SERIAL NO. BMW00624-
PART OF 201-4570-Page 527,216-8440-Page 528
AN ATTACHMENT

OPERATOR STATION



NOTE	No.	PART NO.	QTY.	PART NAME
	1	197-8211	1	SEAT GROUP
	2	8T-4189	4	BOLT(M8×1.25)

J115151 X01

SEAT (191-3826 N/S)

PART OF 191-3822-Page 529,530

OPERATOR STATION

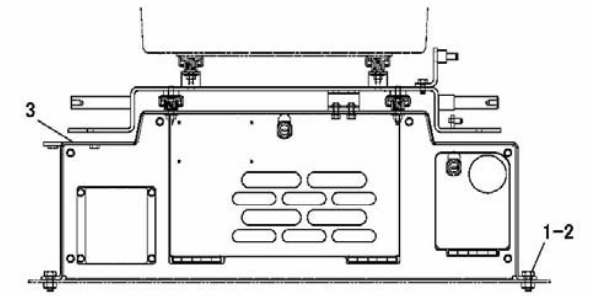

NOTE	No.	PART NO.	QTY.	PART NAME
	1	8T-4136	4	BOLT(M10×1.5)
	2	8T-4121	4	WASHER
Y	3	197-8180	1	SUPPORT AS

Y-SEE SEPARATE ILLUSTRATION

J123917 X03

SEAT SUPPORT (191-3827 N/S)
EFFECTIVE WITH SERIAL NO. BMW00001-BMW00955
PART OF 191-3822-Page 529
197-8180-Page 604

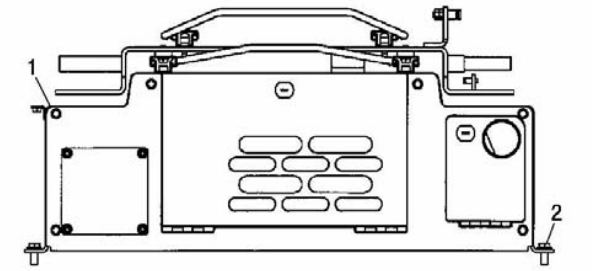

NOTE	No.	PART NO.	QTY.	PART NAME
Y	1	210-3557	1	SEAT SUPPORT AS
	2	8T-4136	4	BOLT(M10×1.5)
		8T-4121	4	WASHER

Y-SEE SEPARATE ILLUSTRATION

J111283 X00

SEAT SUPPORT (210-1769 N/S)
EFFECTIVE WITH SERIAL NO. BMW00956-
PART OF 191-3822-Page 529,530
210-3557-Page 604

OPERATOR STATION

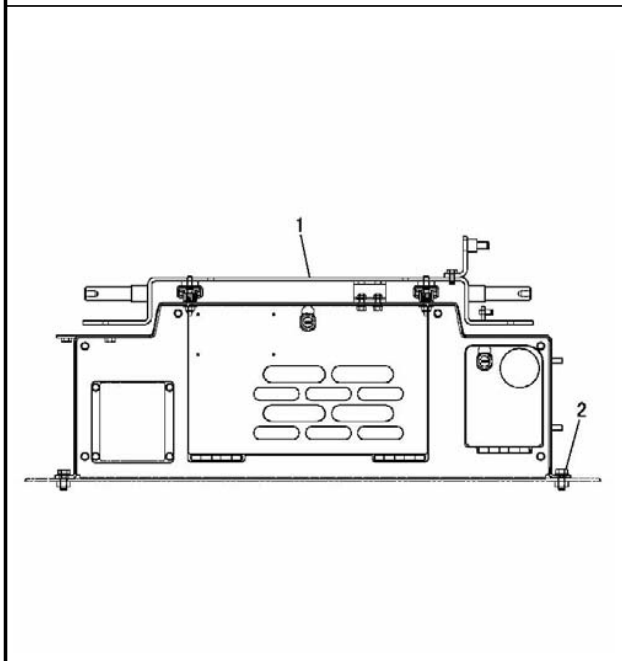

NOTE	No.	PART NO.	QTY.	PART NAME
Y	1	201-9152	1	SEAT SUPPORT AS
	2	8T-4136	4	BOLT(M10×1.5)
		8T-4121	4	WASHER

Y-SEE SEPARATE ILLUSTRATION

J126771 X00

SEAT SUPPORT (201-9151 N/S)
EFFECTIVE WITH SERIAL NO. BMW00204-BMW00955
PART OF 201-9165-Page 518,206-7605-Page 514,206-7624-Page 520,206-7635-Page 516
201-9152-Page 605
AN ATTACHMENT

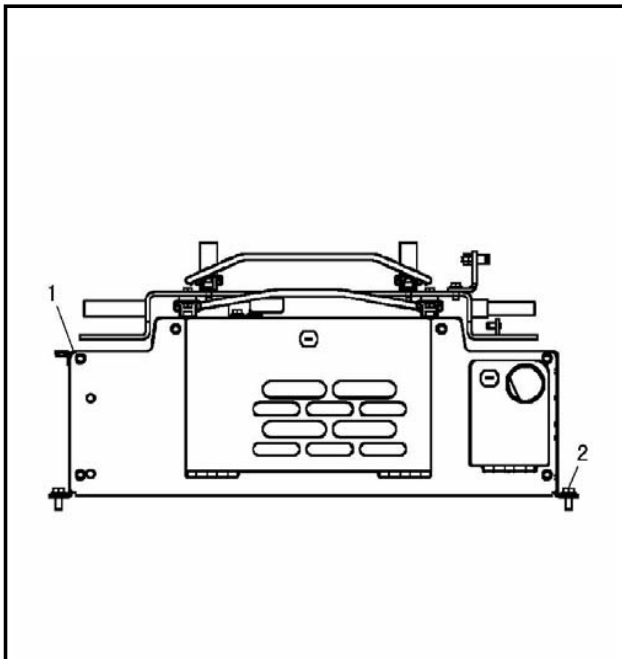

NOTE	No.	PART NO.	QTY.	PART NAME
Y	1	216-8447	1	SEAT SUPPORT AS
	2	8T-4136	4	BOLT(M10×1.5)
		8T-4121	4	WASHER

Y-SEE SEPARATE ILLUSTRATION

J113095 X00

SEAT SUPPORT (216-8446 N/S)
EFFECTIVE WITH SERIAL NO. BMW00956-
PART OF 201-9165-Page 519,206-7605-Page 515,206-7624-Page 521,206-7635-Page 517
216-8447-Page 605
AN ATTACHMENT

OPERATOR STATION

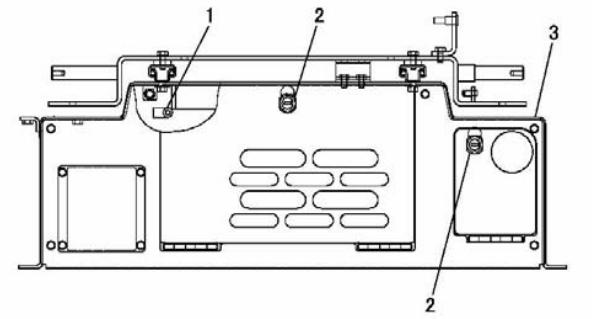

NOTE	No.	PART NO.	QTY.	PART NAME
	1	8K-1115	2	BUMPER
J	2	8T-2894	2	LOCK AS
		8T-5004	1	SCREW(1/4-28)
		7F-9223	1	LOCKWASHER
Y	3	197-8181	1	SEAT SUPPORT AS

J-USE WITH 5P-8500 KEY
Y-SEE SEPARATE ILLUSTRATION

J126845 X03

197-8180 SEAT SUPPORT ASSEMBLY

EFFECTIVE WITH SERIAL NO. BMW00001-BMW00955
PART OF 191-3827-Page 602
197-8181-Page 606, 607

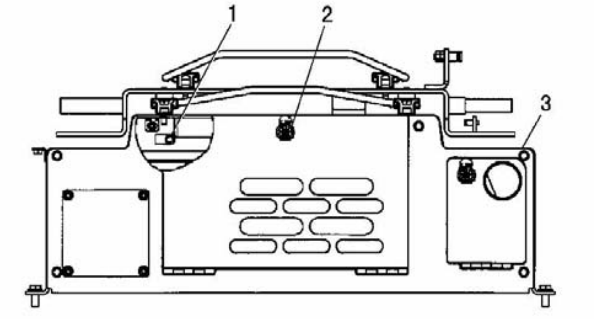

NOTE	No.	PART NO.	QTY.	PART NAME
	1	8K-1115	2	BUMPER
J	2	8T-2894	2	LOCK AS(RH)
		8T-5004	1	SCREW(1/4-28)
		7F-9223	1	LOCKWASHER
Y	3	210-3558	1	SEAT SUPPORT AS

J-USE WITH 5P-8500 KEY
Y-SEE SEPARATE ILLUSTRATION

J112863 X00

210-3557 SEAT SUPPORT ASSEMBLY

EFFECTIVE WITH SERIAL NO. BMW00956-
PART OF 210-1769-Page 602
210-3558-Page 608, 609

OPERATOR STATION

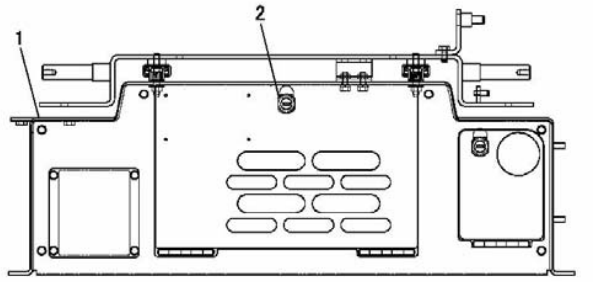

NOTE	No.	PART NO.	QTY.	PART NAME
Y	1	201-9153	1	SEAT SUPPORT AS
J	2	8T-2894	2	LOCK AS
		8T-5004	1	SCREW(1/4-28)
		7F-9223	1	LOCKWASHER

J-USE WITH 5P-8500 KEY
Y-SEE SEPARATE ILLUSTRATION

J126772 X00

201-9152 SEAT SUPPORT ASSEMBLY
EFFECTIVE WITH SERIAL NO. BMW00204-BMW00955
PART OF 201-9151-Page 603
201-9153-Page 610, 611
AN ATTACHMENT

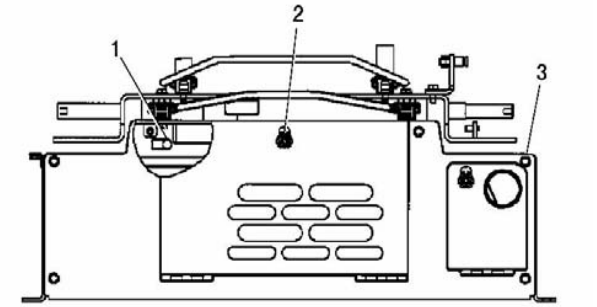

NOTE	No.	PART NO.	QTY.	PART NAME
	1	8K-1115	2	BUMPER
J	2	8T-2894	2	LOCK AS
		8T-5004	1	SCREW(1/4-28)
		7F-9223	1	LOCKWASHER
Y	3	216-8448	1	SEAT SUPPORT AS

J-USE WITH 5P-8500 KEY
Y-SEE SEPARATE ILLUSTRATION

J113137 X00

216-8447 SEAT SUPPORT ASSEMBLY
EFFECTIVE WITH SERIAL NO. BMW00956-
PART OF 216-8446-Page 603
216-8448-Page 612, 613
AN ATTACHMENT

OPERATOR STATION

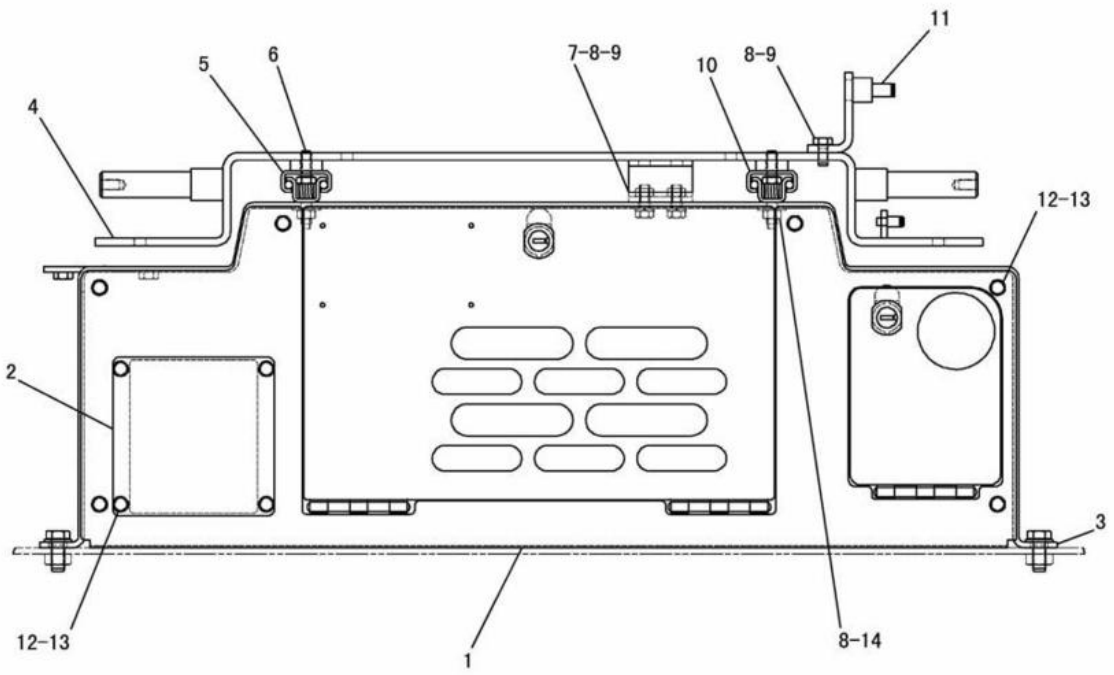

NOTE	No.	PART NO.	QTY.	PART NAME	NOTE	No.	PART NO.	QTY.	PART NAME
	1	200-8540	1	COVER AS					
	2	200-8541	1	COVER					
	3	200-8559	1	SUPPORT AS					
	4	200-8544	1	PLATE AS					
	5	200-8542	1	RAIL AS					
	6	8T-4189	4	BOLT(M8×1.25)					
	7	200-8545	1	PLATE					
	8	8T-4224	8	WASHER					
	9	8T-4200	4	BOLT AS(M8×1.25)					
	10	200-8543	1	RAIL AS					
	11	200-8546	1	BRACKET AS					
	12	5C-9553	10	BOLT(M6×1)					
	13	8T-4205	10	WASHER					
	14	5C-7261	4	NUT(M8×1.25)					

J115386 X01

197-8181 SEAT SUPPORT ASSEMBLY
EFFECTIVE WITH SERIAL NO. BMW00001-BMW00499
PART OF 197-8180-Page 604

OPERATOR STATION

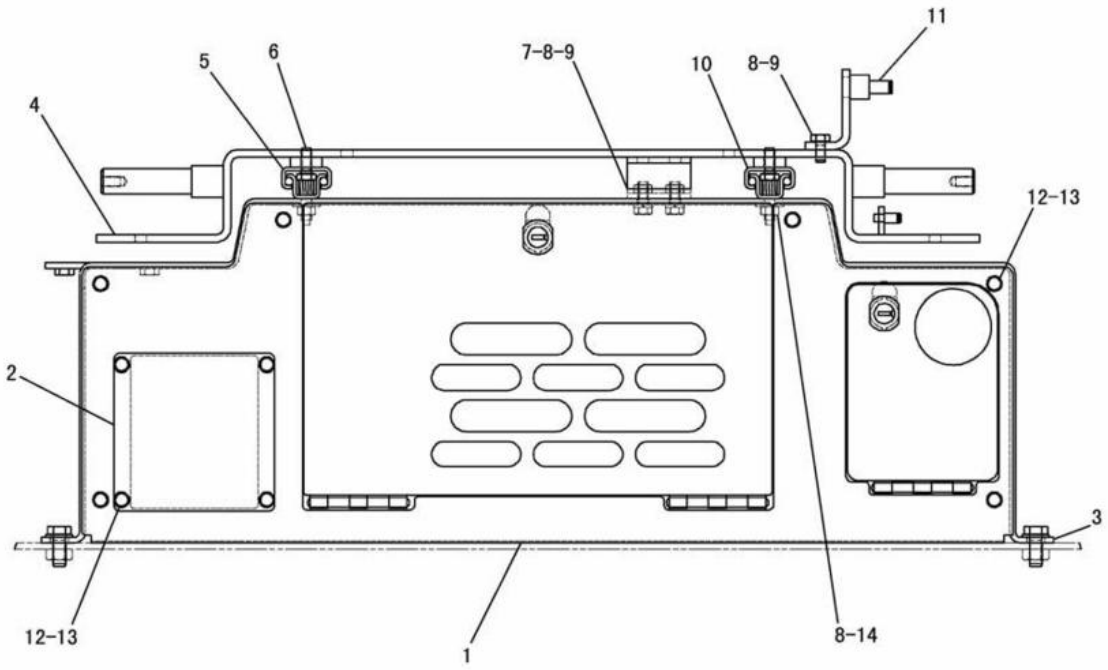

NOTE	No.	PART NO.	QTY.	PART NAME	NOTE	No.	PART NO.	QTY.	PART NAME
C	1	204-5927	1	COVER AS					
	2	200-8541	1	COVER					
	3	200-8559	1	SUPPORT AS					
	4	200-8544	1	PLATE AS					
	5	200-8542	1	RAIL AS					
	6	8T-4189	4	BOLT(M8×1.25)					
	7	200-8545	1	PLATE					
	8	8T-4224	8	WASHER					
	9	8T-4200	4	BOLT AS(M8×1.25)					
	10	200-8543	1	RAIL AS					
	11	200-8546	1	BRACKET AS					
	12	5C-9553	10	BOLT(M6×1)					
	13	8T-4205	10	WASHER					
	14	5C-7261	4	NUT(M8×1.25)					

C-INDICATES CHANGE

J129305 X03

197-8181 SEAT SUPPORT ASSEMBLY

EFFECTIVE WITH SERIAL NO. BMW00500-BMW00955

PART OF 197-8180-Page 604

OPERATOR STATION

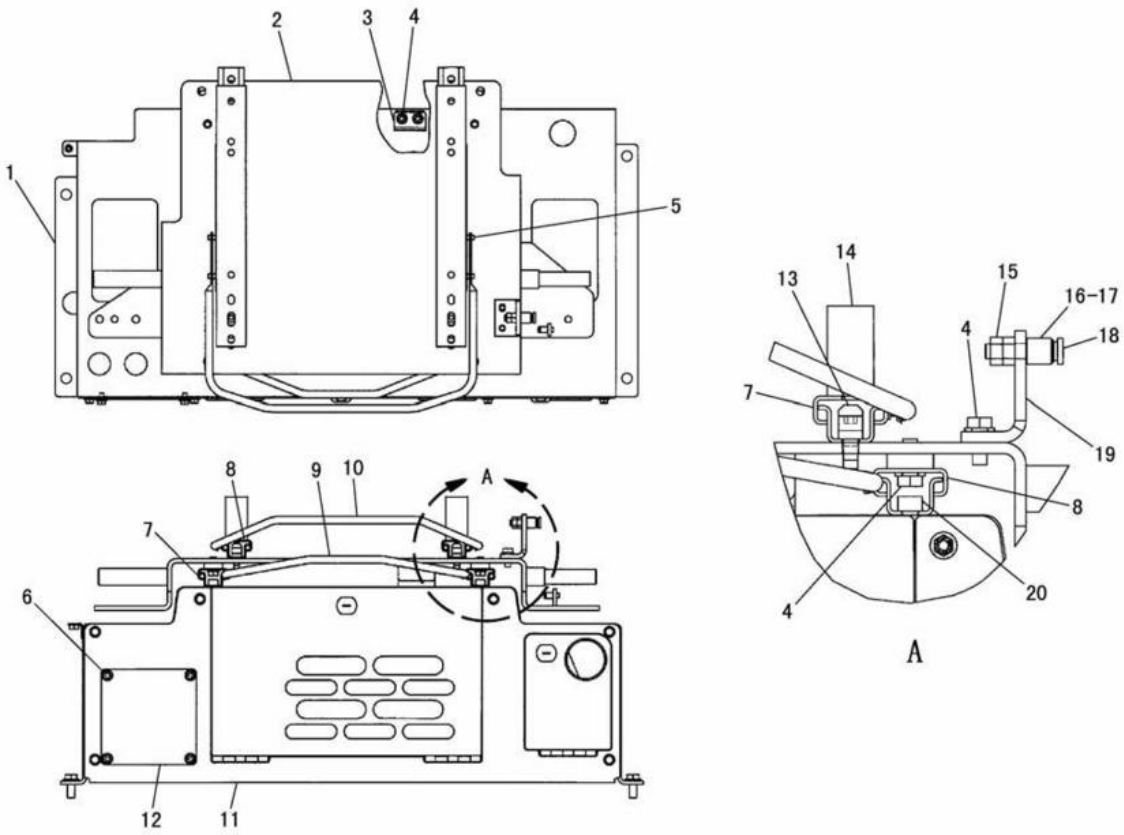

NOTE	No.	PART NO.	QTY.	PART NAME	NOTE	No.	PART NO.	QTY.	PART NAME
	1	210-3559	1	SUPPORT AS					
	2	200-8544	1	PLATE AS					
	3	200-8545	1	PLATE					
	4	207-0787	8	BOLT AS(M8×1.25)					
	5	212-7347	4	RING					
	6	207-0790	10	BOLT AS(M6×1)					
	7	200-8542	2	RAIL AS					
	8	200-8543	2	RAIL AS					
	9	203-8289	10	BAR					
	10	203-8290	1	BAR					
	11	204-5927	1	COVER AS					
	12	200-8541	1	COVER					
	13	207-0801	2	PLATE					
	14	209-3930	4	SPACER					
	15	207-0786	2	NUT(M8×1.25)					
	16	207-0800	1	BUSHING					
	17	207-0799	1	BUSHING					
	18	194-6360	1	PIN					
	19	194-6361	1	PLATE					
	20	207-0793	8	BOLT(M8)					

J112864 X01

210-3558 SEAT SUPPORT ASSEMBLY

EFFECTIVE WITH SERIAL NO. BMW00956-BMW01567

PART OF 210-3557-Page 604

OPERATOR STATION

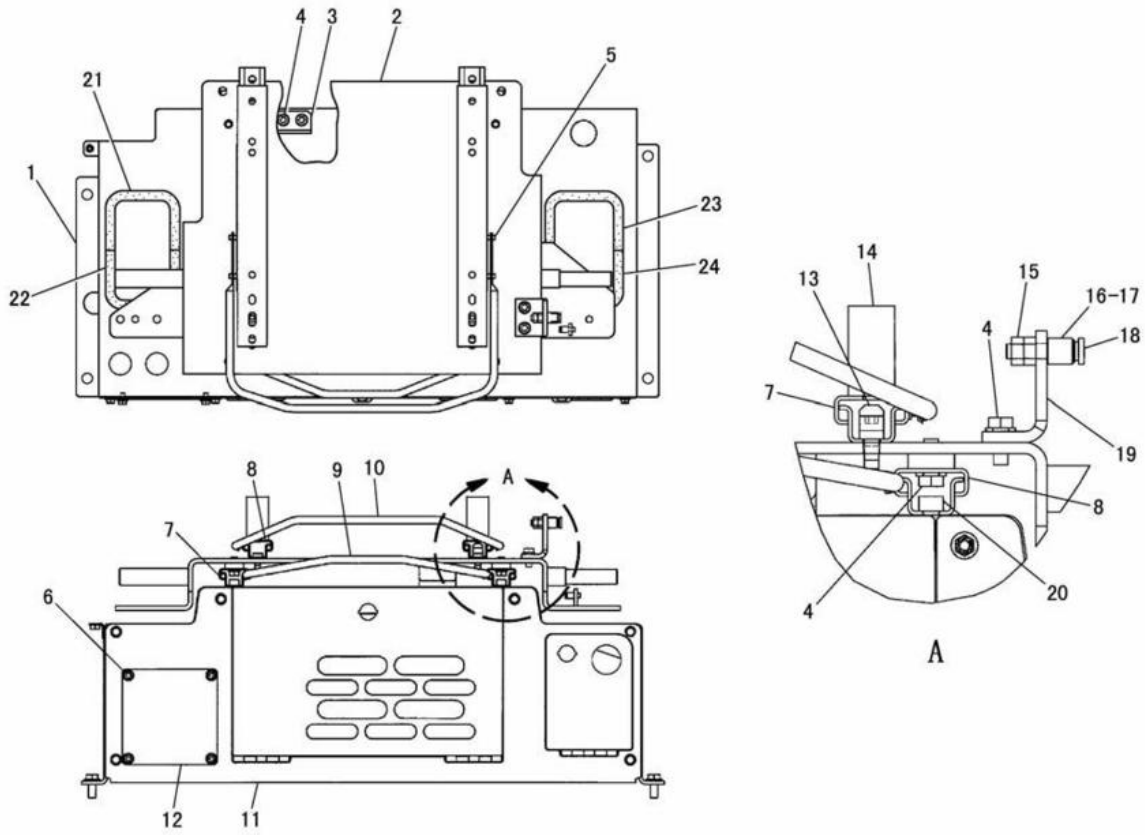

NOTE	No.	PART NO.	QTY.	PART NAME	NOTE	No.	PART NO.	QTY.	PART NAME
C	1	245-0997	1	SUPPORT AS	CE	21	7X-7877		STRIP---20.8cm
	2	200-8544	1	PLATE AS	CE	22	7X-7877		STRIP---20.8cm
	3	200-8545	1	PLATE	CE	23	7X-7877		STRIP---21.3cm
	4	207-0787	8	BOLT AS(M8×1.25)	CE	24	7X-7877		STRIP---21.3cm
	5	212-7347	4	RING					
	6	207-0790	10	BOLT AS(M6×1)					
	7	200-8542	2	RAIL AS					
	8	200-8543	2	RAIL AS					
	9	203-8289	10	BAR					
	10	203-8290	1	BAR					
	11	204-5927	1	COVER AS					
	12	200-8541	1	COVER					
C	13	207-0801	1	PLATE					
	14	209-3930	4	SPACER					
	15	207-0786	2	NUT(M8×1.25)					
	16	207-0800	1	BUSHING(LARGE)					
	17	207-0799	1	BUSHING(SMALL)					
	18	194-6360	1	PIN					
	19	194-6361	1	PLATE					
	20	207-0793	8	BOLT(M8×1.25)					

C-INDICATES CHANGE
E-ORDER BY THE cm

J132094 X03

210-3558 SEAT SUPPORT ASSEMBLY

EFFECTIVE WITH SERIAL NO. BMW01568-
PART OF 210-3557-Page 604

OPERATOR STATION

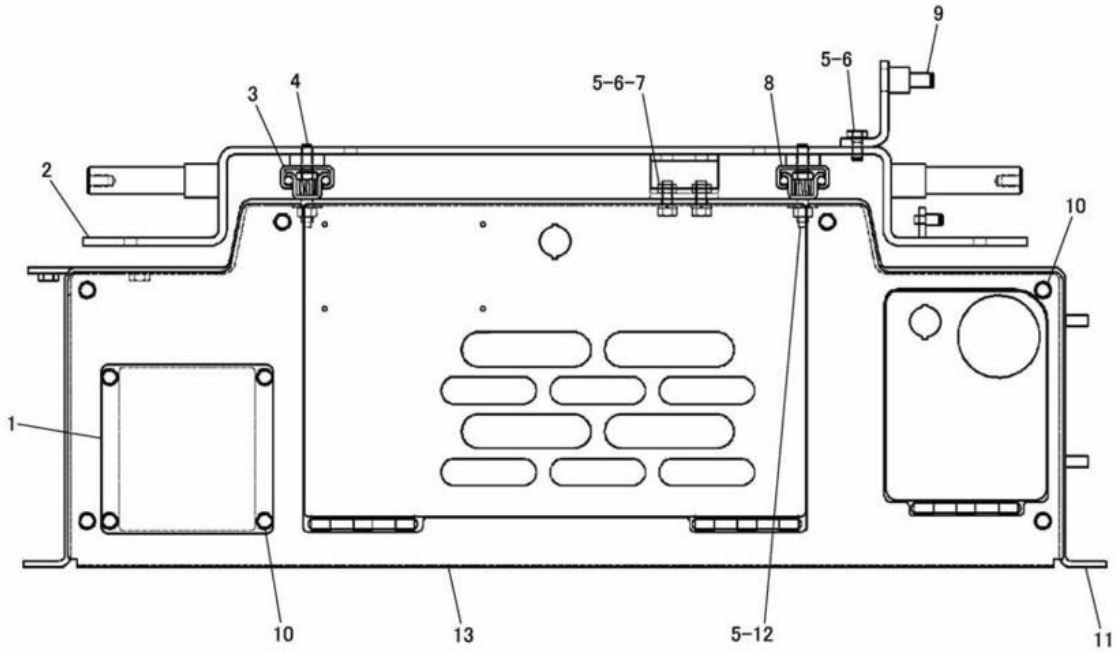

NOTE	No.	PART NO.	QTY.	PART NAME	NOTE	No.	PART NO.	QTY.	PART NAME
	1	200-8541	1	COVER					
	2	200-8544	1	PLATE AS					
	3	200-8542	1	RAIL AS					
	4	8T-4189	4	BOLT(M8×1.25)					
	5	8T-4224	8	WASHER					
	6	8T-4200	4	BOLT(M8×1.25)					
	7	200-8545	1	PLATE					
	8	200-8543	1	RAIL AS					
	9	200-8546	1	BRACKET AS					
	10	5C-9553	10	BOLT(M6×1)					
		8T-4205	10	WASHER					
	11	201-9184	1	SUPPORT AS					
	12	5C-7261	4	NUT(M8×1.25)					
	13	200-8540	1	COVER AS					

J129235 X00

201-9153 SEAT SUPPORT ASSEMBLY

EFFECTIVE WITH SERIAL NO. BMW00204-BMW00850
PART OF 201-9152-Page 605
AN ATTACHMENT

OPERATOR STATION

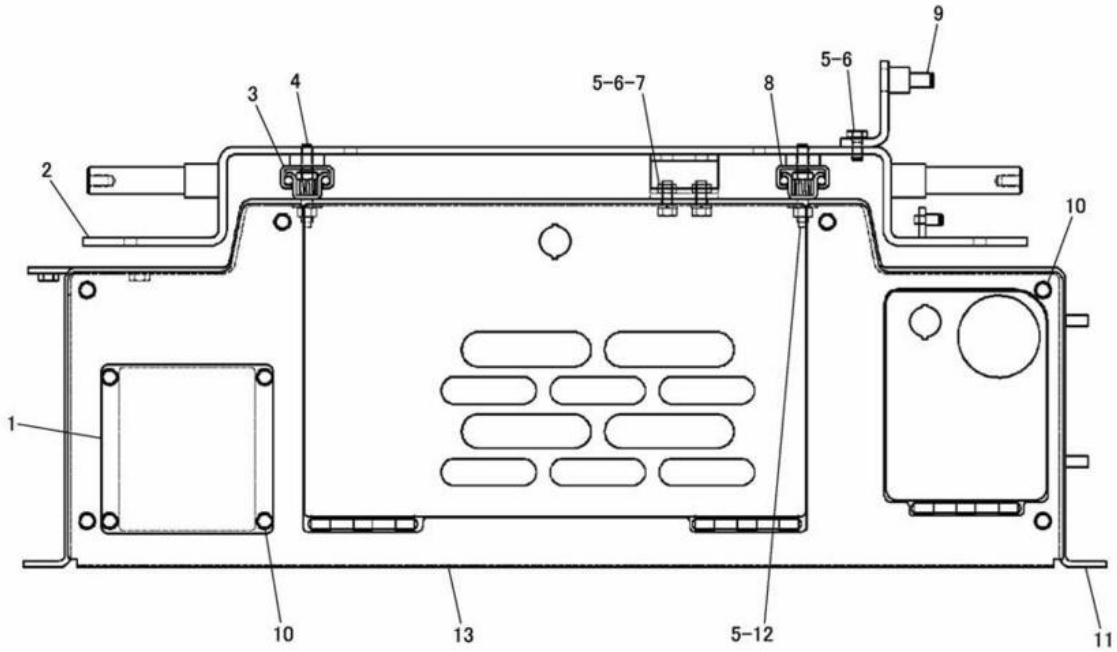

NOTE	No.	PART NO.	QTY.	PART NAME	NOTE	No.	PART NO.	QTY.	PART NAME
	1	200-8541	1	COVER					
	2	200-8544	1	PLATE AS					
	3	200-8542	1	RAIL AS					
	4	8T-4189	4	BOLT(M8×1.25)					
	5	8T-4224	8	WASHER					
	6	8T-4200	4	BOLT(M8×1.25)					
	7	200-8545	1	PLATE					
	8	200-8543	1	RAIL AS					
	9	200-8546	1	BRACKET AS					
	10	5C-9553	10	BOLT(M6×1)					
		8T-4205	10	WASHER					
	11	201-9184	1	SUPPORT AS					
	12	5C-7261	4	NUT(M8×1.25)					
C	13	204-5927	1	COVER AS					

C-INDICATES CHANGE

J126792 X01

201-9153 SEAT SUPPORT ASSEMBLY

EFFECTIVE WITH SERIAL NO. BMW00851-BMW00955
PART OF 201-9152-Page 605
AN ATTACHMENT

OPERATOR STATION

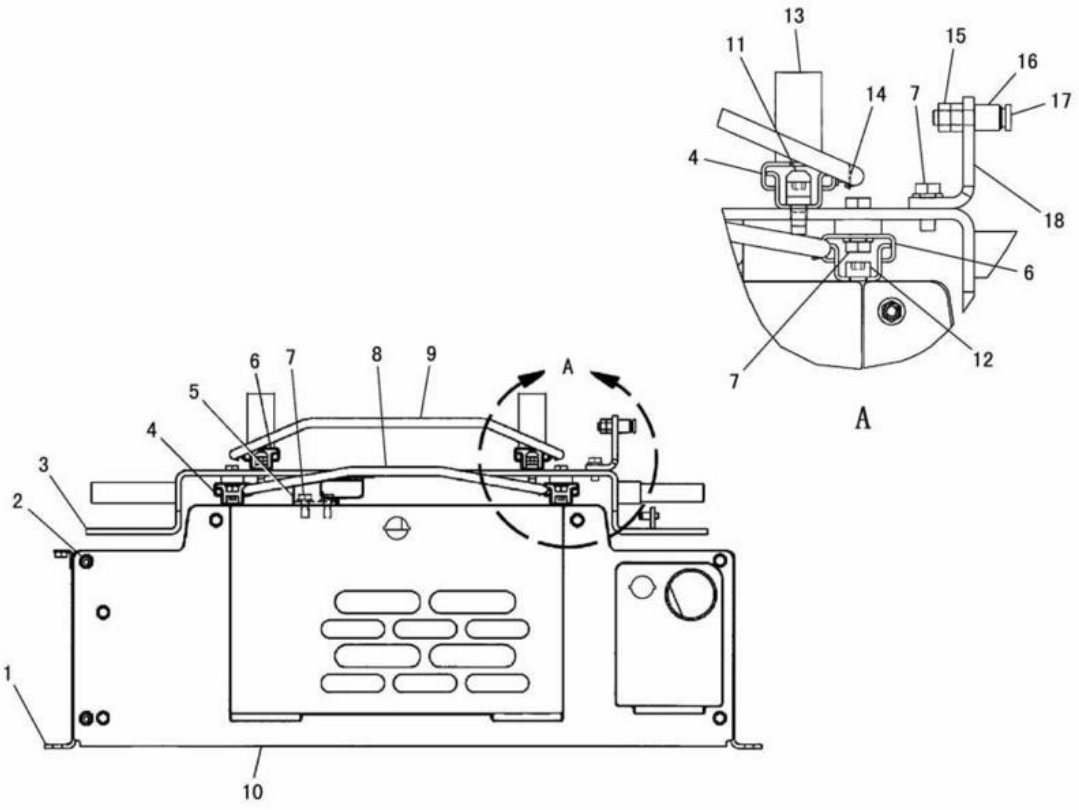

NOTE	No.	PART NO.	QTY.	PART NAME	NOTE	No.	PART NO.	QTY.	PART NAME
	1	201-9184	1	SUPPORT AS					
	2	207-0790	6	BOLT AS(M6)					
	3	200-8544	1	PLATE AS					
	4	200-8542	2	RAIL AS					
	5	200-8545	1	PLATE					
	6	200-8543	2	RAIL AS					
	7	207-0787	8	BOLT AS(M8)					
	8	203-8289	1	BAR					
	9	203-8290	1	BAR					
	10	213-8336	1	COVER AS					
	11	207-0801	2	PLATE					
	12	207-0793	8	BOLT(M8)					
	13	209-3930	4	SPACER					
	14	212-7347	4	RING					
	15	207-0786	2	NUT(M8)					
	16	207-0800	1	BUSHING					
		207-0799	1	BUSHING					
	17	194-6360	1	PIN					
	18	194-6361	1	PLATE					

J113138 X00

216-8448 SEAT SUPPORT ASSEMBLY

EFFECTIVE WITH SERIAL NO. BMW00956-BMW01404
PART OF 216-8447-Page 605
AN ATTACHMENT

OPERATOR STATION

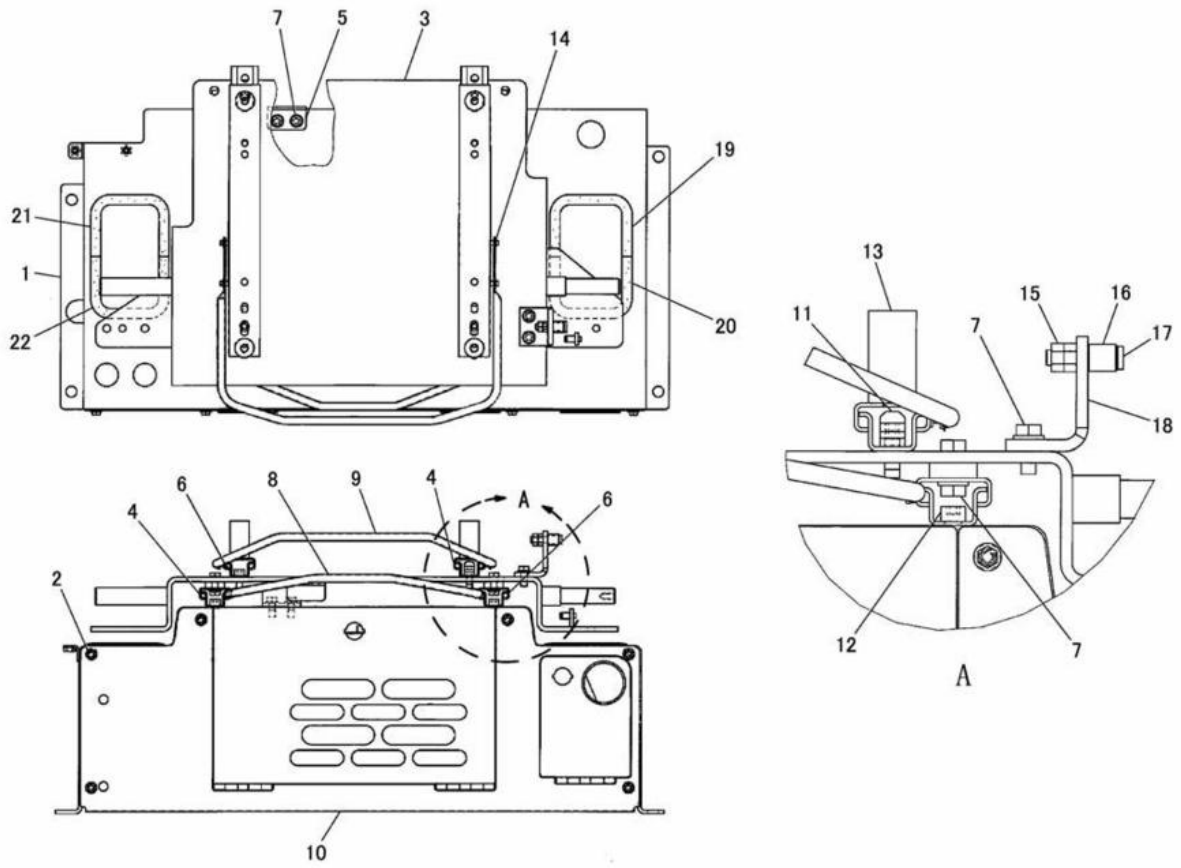

NOTE	No.	PART NO.	QTY.	PART NAME	NOTE	No.	PART NO.	QTY.	PART NAME
	1	201-9184	1	SUPPORT AS	CE	20	7X-7877		STRIP---21.3cm
	2	207-0790	6	BOLT AS(M6×1)	CE	21	7X-7877		STRIP---20.8cm
	3	200-8544	1	PLATE AS	CE	22	7X-7877		STRIP---20.8cm
	4	200-8542	2	RAIL AS					
	5	200-8545	1	PLATE					
	6	200-8543	2	RAIL AS					
	7	207-0787	8	BOLT AS(M8×1.25)					
	8	203-8289	1	BAR					
	9	203-8290	1	BAR					
C	10	204-5927	1	COVER AS					
C	11	207-0801	1	PLATE					
	12	207-0793	8	BOLT(M8×1.25)					
	13	209-3930	4	SPACER					
	14	212-7347	4	RING					
	15	207-0786	2	NUT(M8×1.25)					
	16	207-0800	1	BUSHING(LARGE)					
		207-0799	1	BUSHING(SMALL)					
	17	194-6360	1	PIN					
	18	194-6361	1	PLATE					
CE	19	7X-7877		STRIP---21.3cm					

C-INDICATES CHANGE
E-ORDER BY THE cm

J132178 X02

216-8448 SEAT SUPPORT ASSEMBLY

EFFECTIVE WITH SERIAL NO. BMW01405-
PART OF 216-8447-Page 605
AN ATTACHMENT

OPERATOR STATION

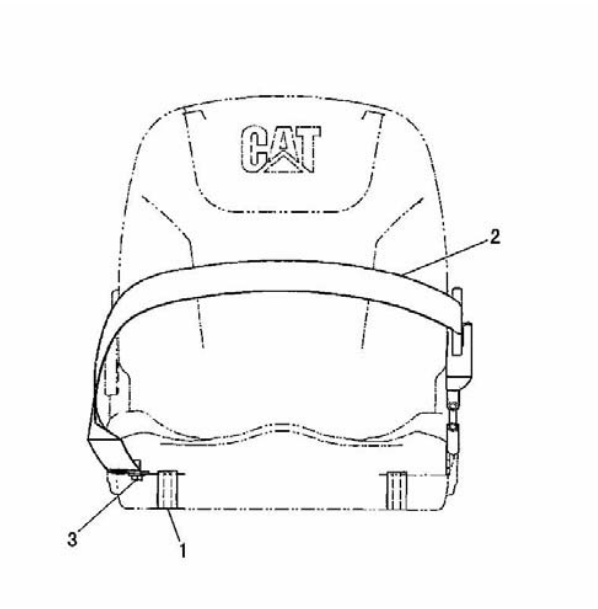

NOTE	No.	PART NO.	QTY.	PART NAME
	1	209-3930	4	SPACER
	2	229-8442	1	BELT AS
	3	8T-4189	1	BOLT(M8×1.25)
		5P-4116	1	WASHER

J120952 X03

194-6461 SEAT BELT GROUP
PART OF 201-4573-Page 531,532
AN ATTACHMENT

OPERATOR STATION

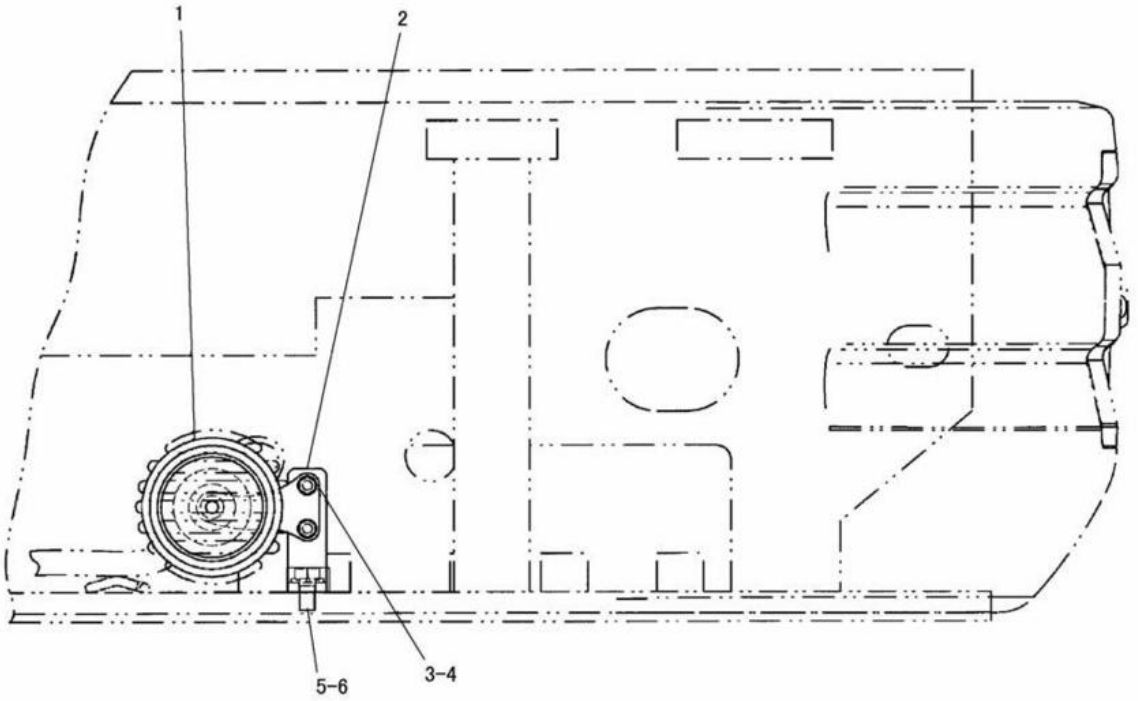

FRONT VIEW

NOTE	No.	PART NO.	QTY.	PART NAME	NOTE	No.	PART NO.	QTY.	PART NAME
	1	179-6289	1	HORN AS					
	2	191-4820	1	ANGLE					
	3	5C-9553	2	BOLT(M6×1)					
	4	9X-8256	2	WASHER					
	5	8T-4137	1	BOLT(M10×1.5)					
	6	8T-4121	1	WASHER					

J111081 X03

ELECTRIC HORN (191-3848 N/S)
EFFECTIVE WITH SERIAL NO. BMW00001-BMW01358
PART OF 191-3351-Page 184,185,186,187,188,189

OPERATOR STATION

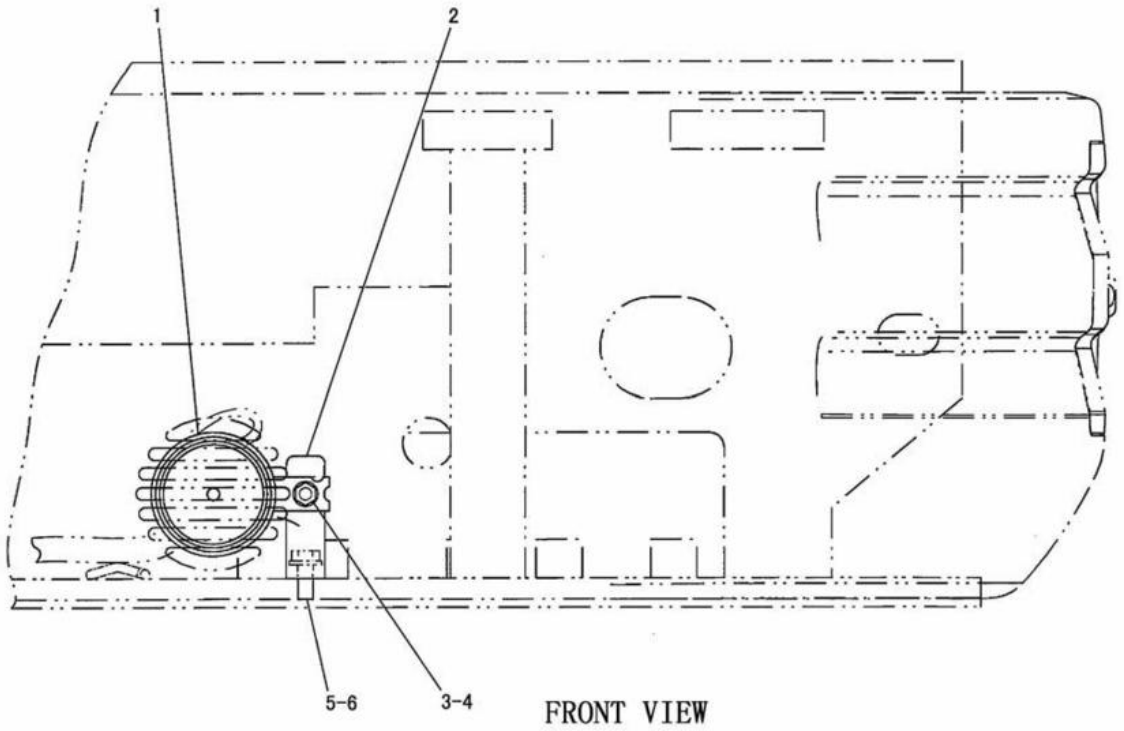

FRONT VIEW

NOTE	No.	PART NO.	QTY.	PART NAME	NOTE	No.	PART NO.	QTY.	PART NAME
C	1	245-9398	1	HORN AS					
C	2	247-0535	1	PLATE					
C	3	8T-4200	1	BOLT(M8×1.25)					
C	4	8T-4224	1	WASHER					
C	5	8T-4136	1	BOLT(M10×1.5)					
	6	8T-4121	1	WASHER					

C-INDICATES CHANGE

J128730 X06

ELECTRIC HORN (191-3848 N/S)
EFFECTIVE WITH SERIAL NO. BMW01359-
PART OF 191-3351-Page 184,185,186,187,188,189

OPERATOR STATION

CONSISTS OF :

			PAGE
1	191-8064	CONDENSER AND MOUNTING GROUP	625
1	191-8073	CONDITIONER AND MOUNTING GROUP	626
1	191-8063	HEATER AND COOLER LINES GROUP	620
1	191-8062	REFRIGERANT COMPRESSOR GROUP	634
1	200-5542	FILM GROUP	654

J115459 X02

HEATER AND COOLER ARRANGEMENT (191-3842 N/S)
EFFECTIVE WITH SERIAL NO. BMW00001-BMW01248
AN ATTACHMENT

CONSISTS OF :

			PAGE
1	191-8064	CONDENSER AND MOUNTING GROUP	625
1	233-6791	CONDITIONER AND MOUNTING GROUP	630
1	191-8063	HEATER AND COOLER LINES GROUP	620
1	191-8062	REFRIGERANT COMPRESSOR GROUP	634
1	200-5542	FILM GROUP	654

J126704 X03

HEATER AND COOLER ARRANGEMENT (191-3842 N/S)
EFFECTIVE WITH SERIAL NO. BMW01249-
AN ATTACHMENT

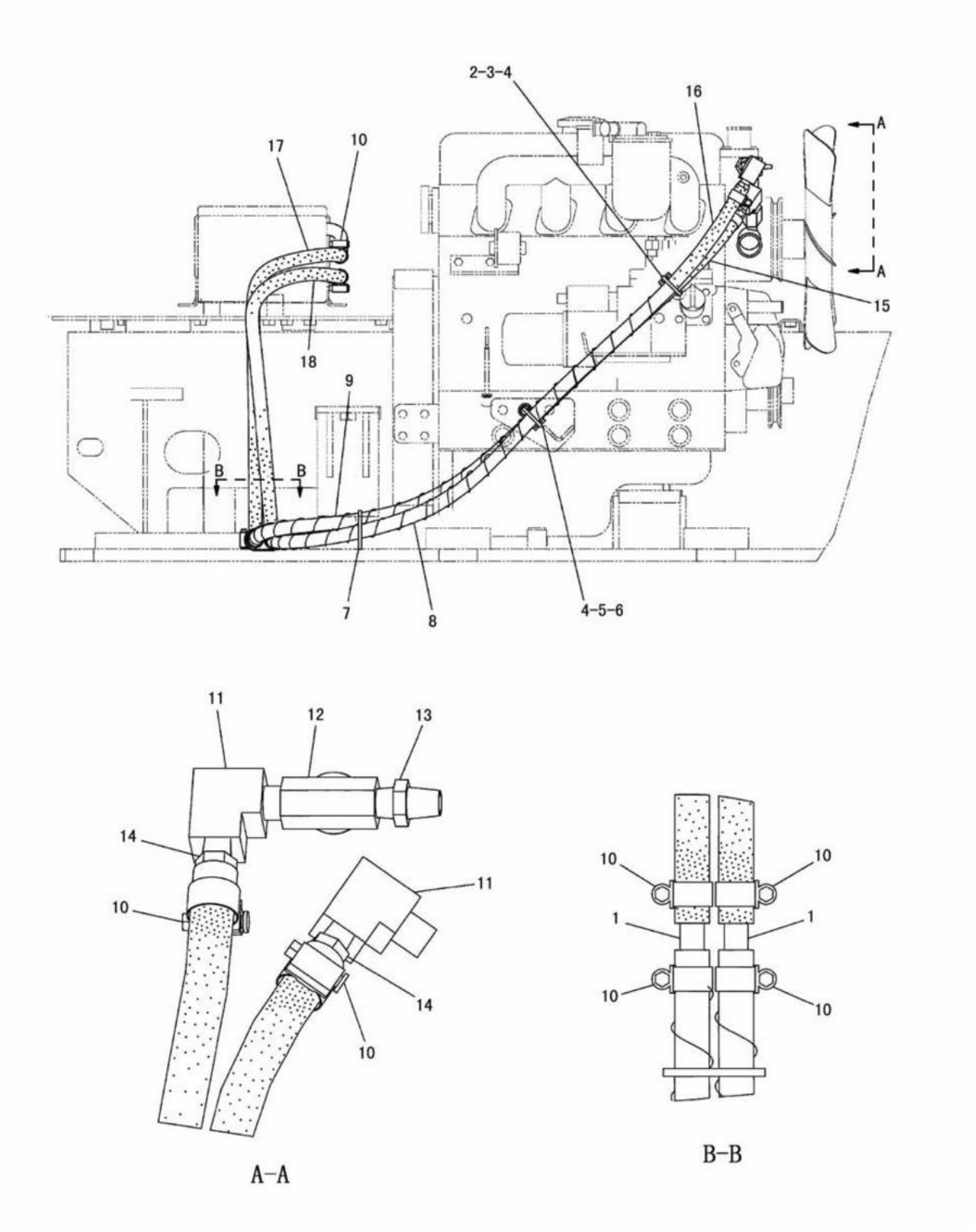

HEATER LINES (191-3889 N/S)
PART OF 201-4570-Page 527,216-8440-Page 528
AN ATTACHMENT

OPERATOR STATION

NOTE	No.	PART NO.	QTY.	PART NAME	NOTE	No.	PART NO.	QTY.	PART NAME
	1	212-0093	2	NIPPLE					
	2	8T-4138	1	BOLT(M6×1)					
	3	9X-6165	1	WASHER					
	4	4P-8134	2	CLIP					
	5	8T-4200	1	BOLT(M8×1.25)					
	6	8T-4224	1	WASHER					
	7	096-0061	5	STRAP					
E	8	7I-1024		GUARD---100cm					
E	9	7I-1024		GUARD---100cm					
	10	5D-1026	8	CLAMP					
	11	126-4714	2	ELBOW					
	12	126-4711	1	VALVE					
	13	126-4709	1	NIPPLE					
	14	126-4710	2	NIPPLE					
E	15	9X-2133		HOSE---150cm					
E	16	9X-2133		HOSE---150cm					
E	17	9X-2133		HOSE---50cm					
E	18	9X-2133		HOSE---50cm					

E-ORDER BY THE cm

J114584 X06

HEATER LINES (191-3889 N/S)

PART OF 201-4570-Page 527,216-8440-Page 528
AN ATTACHMENT

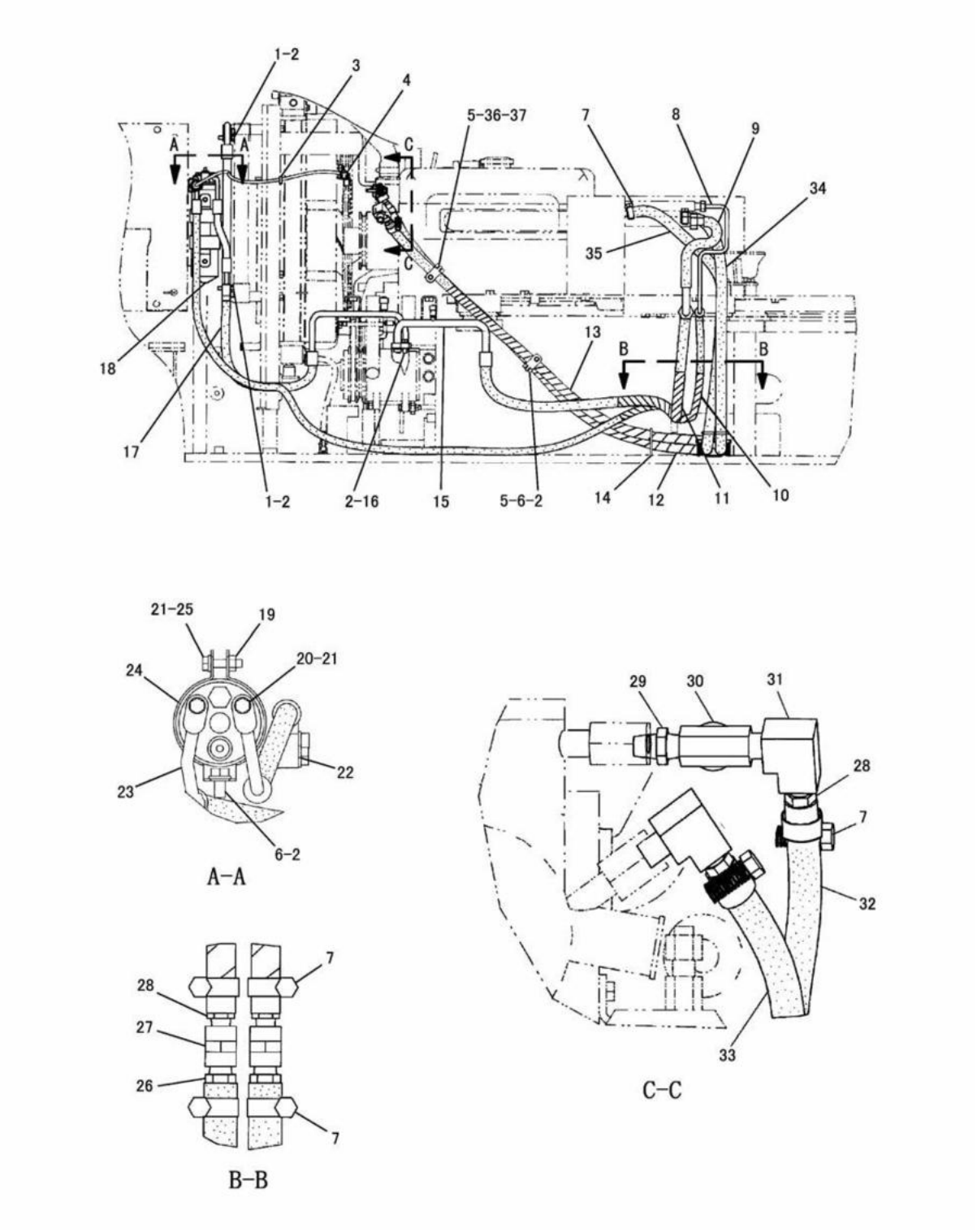

J117490 X03

HEATER AND COOLER LINES (191-8063 N/S)
EFFECTIVE WITH SERIAL NO. BMW00001-BMW01031
PART OF 191-3842-Page 617
AN ATTACHMENT

OPERATOR STATION

NOTE	No.	PART NO.	QTY.	PART NAME
	1	8T-7547	2	BOLT(M8×1.25)
	2	8T-4224	7	WASHER
	3	3S-2093	2	STRAP
	4	191-8082	1	HARNESS AS
		132-1847	1	SEAL
		132-1846	1	CONNECTOR
		7Y-3969	2	TERMINAL
		102-8802	1	RECEPTACLE KIT(2P)
		186-3735	2	PIN
	5	4P-8134	2	CLIP
	6	8T-4200	3	BOLT(M8×1.25)
	7	095-1388	8	CLAMP
	8	197-7202	1	TUBE AS
		203-7887	1	SEAL
	9	197-7199	1	TUBE AS
		150-2172	1	SEAL
E	10	7I-1024		GUARD---50cm
E	11	7I-1024		GUARD---50cm
E	12	7I-1024		GUARD---100cm
E	13	7I-1024		GUARD---100cm
	14	096-0061	5	STRAP
	15	191-9036	1	HOSE AS
		150-2172	2	SEAL
		203-7888	1	CAP
	16	8T-4908	2	BOLT(M8×1.25)
	17	191-9033	1	HOSE AS
		150-2173	1	SEAL
		150-2112	1	SEAL
		150-2174	1	CAP
	18	125-1642	1	RECEIVER AS
	19	8T-4134	2	NUT(M6×1)
	20	8T-4971	2	BOLT(M6×1)
	21	9X-8256	4	WASHER
	22	191-9034	1	HOSE AS
		150-2173	1	SEAL
		203-7887	1	SEAL
	23	191-9035	1	HOSE AS
		203-7887	2	SEAL
	24	134-8682	1	BRACKET AS
	25	6V-7357	2	BOLT(M6×1)
	26	7D-7026	2	CONNECTOR
	27	003-9514	2	COUPLING
	28	126-4710	4	NIPPLE
	29	126-4709	1	NIPPLE
	30	126-4711	1	VALVE
	31	126-4714	2	ELBOW
E	32	9X-2133		HOSE---150cm
E	33	9X-2133		HOSE---150cm
E	34	5P-0767		HOSE---75cm
E	35	5P-0767		HOSE---75cm
	36	8T-4138	1	BOLT(M6×1)
	37	9X-6165	1	WASHER

E-ORDER BY THE cm

J117490 X03

HEATER AND COOLER LINES (191-8063 N/S)

EFFECTIVE WITH SERIAL NO. BMW00001-BMW01031
PART OF 191-3842-Page 617
AN ATTACHMENT

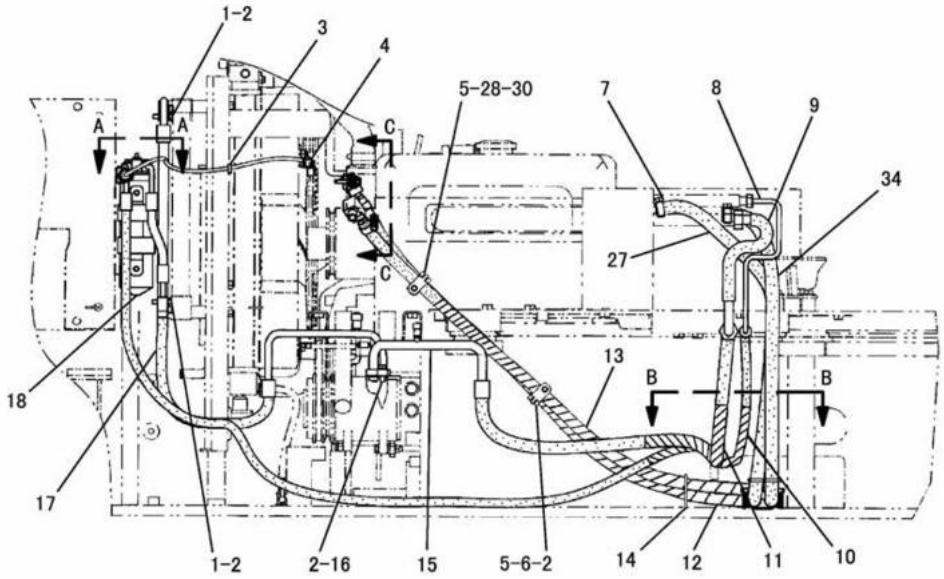

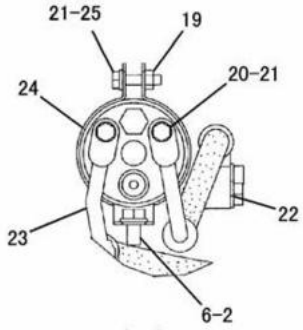

A-A

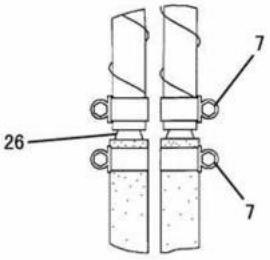

B-B

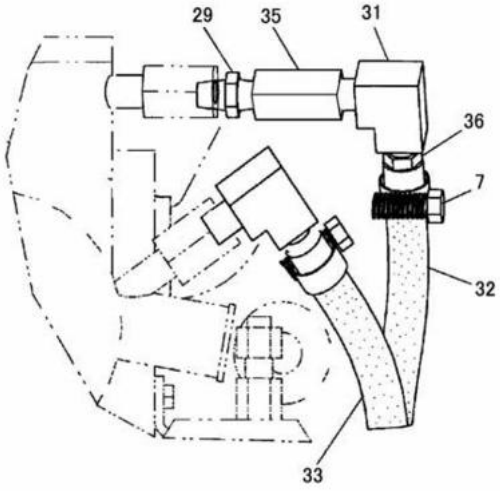

C-C

J115460 X05

HEATER AND COOLER LINES (191-8063 N/S)
EFFECTIVE WITH SERIAL NO. BMW01032-
PART OF 191-3842-Page 617
AN ATTACHMENT

OPERATOR STATION

NOTE	No.	PART NO.	QTY.	PART NAME	NOTE	No.	PART NO.	QTY.	PART NAME
	1	8T-7547	2	BOLT(M8×1.25)					
	2	8T-4224	7	WASHER					
	3	3S-2093	2	STRAP					
	4	191-8082	1	HARNESS AS					
		132-1847	1	SEAL					
		132-1846	1	CONNECTOR					
		7Y-3969	2	TERMINAL					
		102-8802	1	RECEPTACLE KIT(2P)					
		186-3735	2	PIN					
	5	4P-8134	2	CLIP					
	6	8T-4200	3	BOLT(M8×1.25)					
C	7	5D-1026	8	CLAMP					
	8	197-7202	1	TUBE AS					
		203-7887	1	SEAL					
	9	197-7199	1	TUBE AS					
		150-2172	1	SEAL					
E	10	7I-1024		GUARD---50cm					
E	11	7I-1024		GUARD---50cm					
E	12	7I-1024		GUARD---100cm					
E	13	7I-1024		GUARD---100cm					
	14	096-0061	5	STRAP					
	15	191-9036	1	HOSE AS					
		150-2172	2	SEAL					
		203-7888	1	CAP					
	16	8T-4908	2	BOLT(M8×1.25)					
	17	191-9033	1	HOSE AS					
		150-2173	1	SEAL					
		150-2112	1	SEAL					
		150-2174	1	CAP					
	18	125-1642	1	RECEIVER AS					
	19	8T-4134	2	NUT(M6×1)					
	20	8T-4971	2	BOLT(M6×1)					
	21	9X-8256	4	WASHER					
	22	191-9034	1	HOSE AS					
		150-2173	1	SEAL					
		203-7887	1	SEAL					
	23	191-9035	1	HOSE AS					
		203-7887	2	SEAL					
	24	134-8682	1	BRACKET AS					
	25	6V-7357	2	BOLT(M6×1)					
C	26	220-9869	2	REDUCER					
E	27	5P-0767		HOSE---75cm					
	28	8T-4138	1	BOLT(M6×1)					
	29	126-4709	1	NIPPLE					
	30	9X-6165	1	WASHER					
	31	126-4714	2	ELBOW					
E	32	9X-2133		HOSE---150cm					
E	33	9X-2133		HOSE---150cm					
E	34	5P-0767		HOSE---75cm					
C	35	216-0569	1	COUPLING					
C	36	126-4710	2	NIPPLE					

C-INDICATES CHANGE
E-ORDER BY THE cm

J115460 X05

HEATER AND COOLER LINES (191-8063 N/S)

EFFECTIVE WITH SERIAL NO. BMW01032-
PART OF 191-3842-Page 617
AN ATTACHMENT

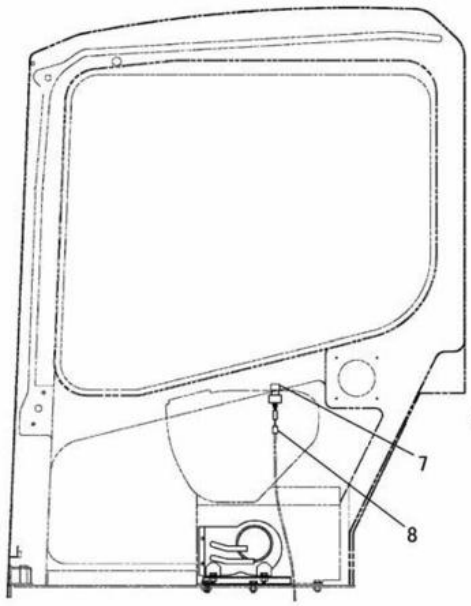

LEFT SIDE VIEW

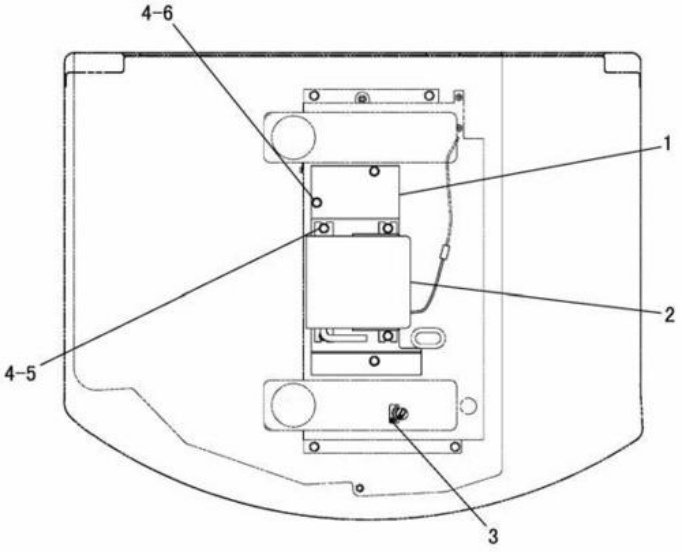

TOP VIEW

NOTE	No.	PART NO.	QTY.	PART NAME	NOTE	No.	PART NO.	QTY.	PART NAME
	1	201-4572	1	BRACKET AS					
		8T-3490	4	NUT(M10×1.5)(WELD)					
	2	214-3990	1	HEATER AS					
	3	132-7585	1	FILM					
	4	8T-4121	7	WASHER					
	5	8T-4137	4	BOLT(M10×1.5)					
	6	8T-4136	3	BOLT(M10×1.5)					
	7	105-9976	1	KNOB					
	8	099-6220	1	SWITCH AS					
		7Y-3950	3	TERMINAL					
		7Y-3955	1	CONNECTOR					
		7Y-5458	1	NUT(M12×1)					
		7Y-5464	1	WASHER					

J111766 X01

HEATER AND MOUNTING (201-4571 N/S)
PART OF 201-4570-Page 527,216-8440-Page 528
AN ATTACHMENT

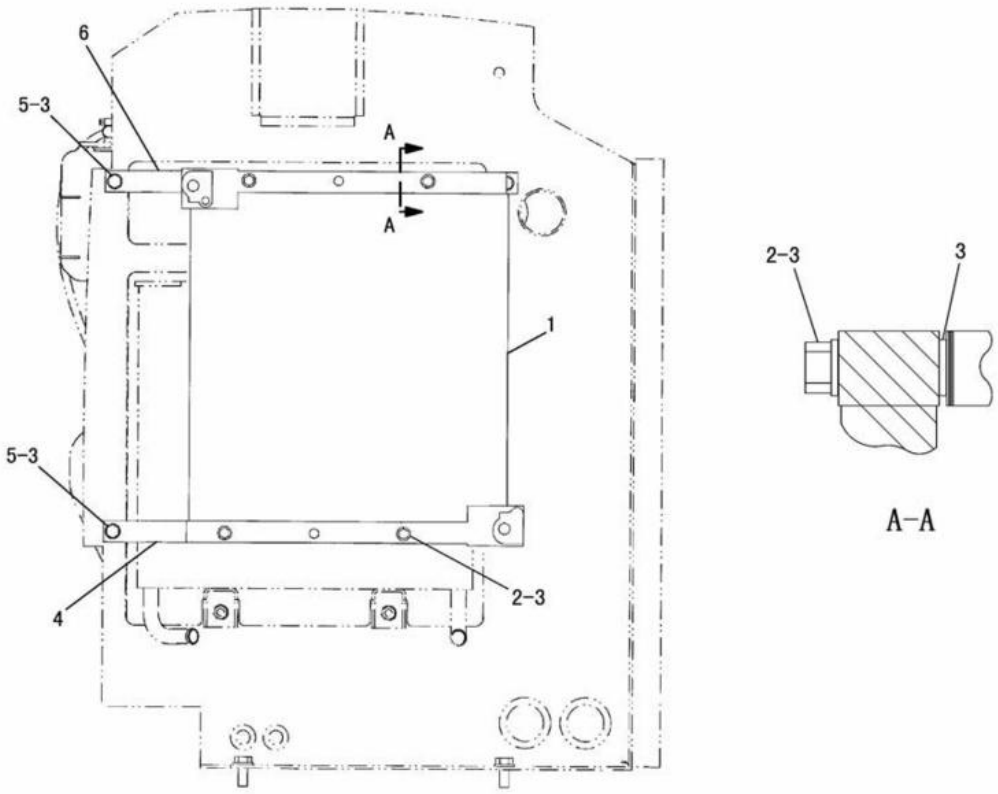

NOTE	No.	PART NO.	QTY.	PART NAME	NOTE	No.	PART NO.	QTY.	PART NAME
	1	191-9029	1	CONDENSER AS					
	2	8T-6912	4	BOLT(M8×1.25)					
	3	8T-4224	12	WASHER					
	4	191-9031	1	SUPPORT AS					
		8T-3612	2	NUT(M8×1.25)(WELD)					
	5	8T-4200	4	BOLT(M8×1.25)					
	6	191-9030	1	SUPPORT AS					
		8T-3612	2	NUT(M8×1.25)(WELD)					

J106602 X02

CONDENSER AND MOUNTING (191-8064 N/S)
PART OF 191-3842-Page 617
AN ATTACHMENT

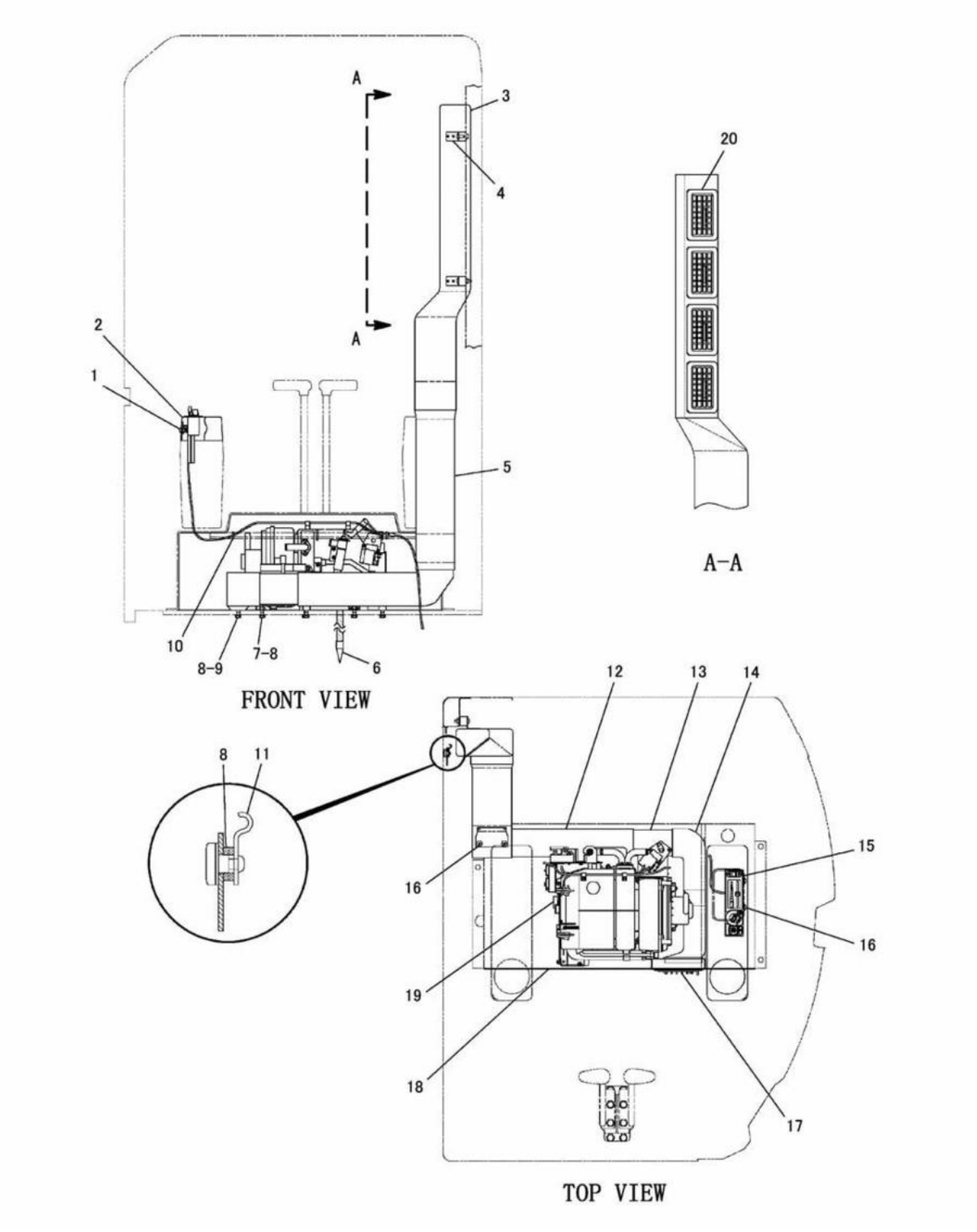

CONDITIONER AND MOUNTING (191-8073 N/S)
EFFECTIVE WITH SERIAL NO. BMW00001-BMW01031
PART OF 191-3842-Page 617
AN ATTACHMENT

OPERATOR STATION

NOTE	No.	PART NO.	QTY.	PART NAME	NOTE	No.	PART NO.	QTY.	PART NAME
	1	7X-2619	2	BOLT(M6×1)					
		9X-8256	2	WASHER					
		200-1362	1	BRACKET AS					
		6V-9632	2	NUT(M6×1)(WELD)					
	2	201-4755	1	COVER					
	3	125-1723	1	DUCT					
	4	9X-2046	2	SCREW(M6×1)					
		4N-0205	2	SPACER					
	5	125-1722	1	DUCT					
	6	125-1843	2	HOSE AS					
	7	8T-4908	5	BOLT(M8×1.25)					
	8	8T-4224	13	WASHER					
	9	8T-4200	4	BOLT(M8×1.25)					
	10	7K-1181	3	STRAP					
	11	200-1915	1	PLATE					
	12	201-1349	1	DUCT AS					
Y	13	200-0910	1	DUCT AS					
	14	125-1720	1	DUCT AS					
Y	15	197-8190	1	PANEL AS					
	16	9X-2044	4	SCREW(M6×1)					
	17	8Y-6967	1	LOUVER AS					
	18	204-5928	1	COVER AS					
Y	19	191-9470	1	CONDITIONER GROUP					
	20	125-1647	4	LOUVER					

Y-SEE SEPARATE ILLUSTRATION

J107697 X06

CONDITIONER AND MOUNTING (191-8073 N/S)

EFFECTIVE WITH SERIAL NO. BMW00001-BMW01031
PART OF 191-3842-Page 617
200-0910-Page 636 197-8190-Page 635 191-9470-Page 632, 633
AN ATTACHMENT

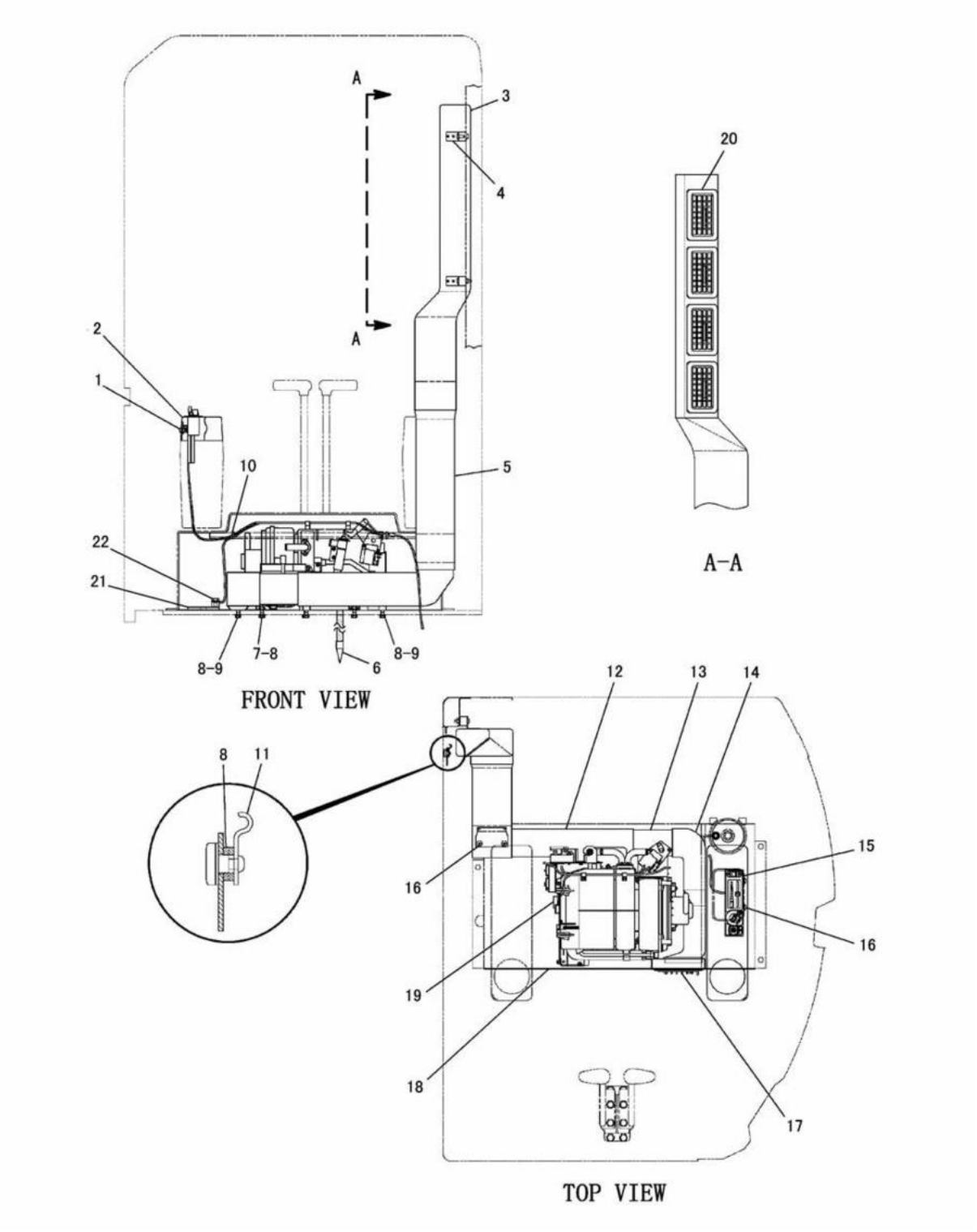

CONDITIONER AND MOUNTING (191-8073 N/S)
EFFECTIVE WITH SERIAL NO. BMW01032-BMW01248
PART OF 191-3842-Page 617
AN ATTACHMENT

OPERATOR STATION

NOTE	No.	PART NO.	QTY.	PART NAME	NOTE	No.	PART NO.	QTY.	PART NAME
	1	7X-2619	2	BOLT(M6×1)					
		9X-8256	2	WASHER					
		200-1362	1	BRACKET AS					
	2	201-7455	1	COVER					
	3	125-1723	1	DUCT					
	4	9X-2046	2	SCREW(M6×1)					
		4N-0205	2	SPACER					
	5	125-1722	1	DUCT					
	6	125-1843	2	HOSE AS					
	7	8T-4908	5	BOLT(M8×1.25)					
	8	8T-4224	13	WASHER					
	9	8T-4200	4	BOLT(M8×1.25)					
	10	7K-1181	3	STRAP					
	11	200-0915	1	PLATE					
	12	201-1349	1	DUCT AS					
Y	13	200-0910	1	DUCT AS					
	14	125-1720	1	DUCT AS					
Y	15	197-8190	1	PANEL AS					
	16	9X-2044	4	SCREW(M6×1)					
	17	8Y-6967	1	LOUVER AS					
	18	204-5928	1	COVER AS					
Y	19	191-9470	1	CONDITIONER GROUP					
	20	125-1647	4	LOUVER					
C	21	212-6720	1	PLATE AS					
C	22	8T-4191	1	BOLT(M10×1.5)					
C		8T-4121	1	WASHER					

C-INDICATES CHANGE
Y-SEE SEPARATE ILLUSTRATION

J111763 X09

CONDITIONER AND MOUNTING (191-8073 N/S)

EFFECTIVE WITH SERIAL NO. BMW01032-BMW01248
PART OF 191-3842-Page 617
200-0910-Page 636 197-8190-Page 635 191-9470-Page 632, 633
AN ATTACHMENT

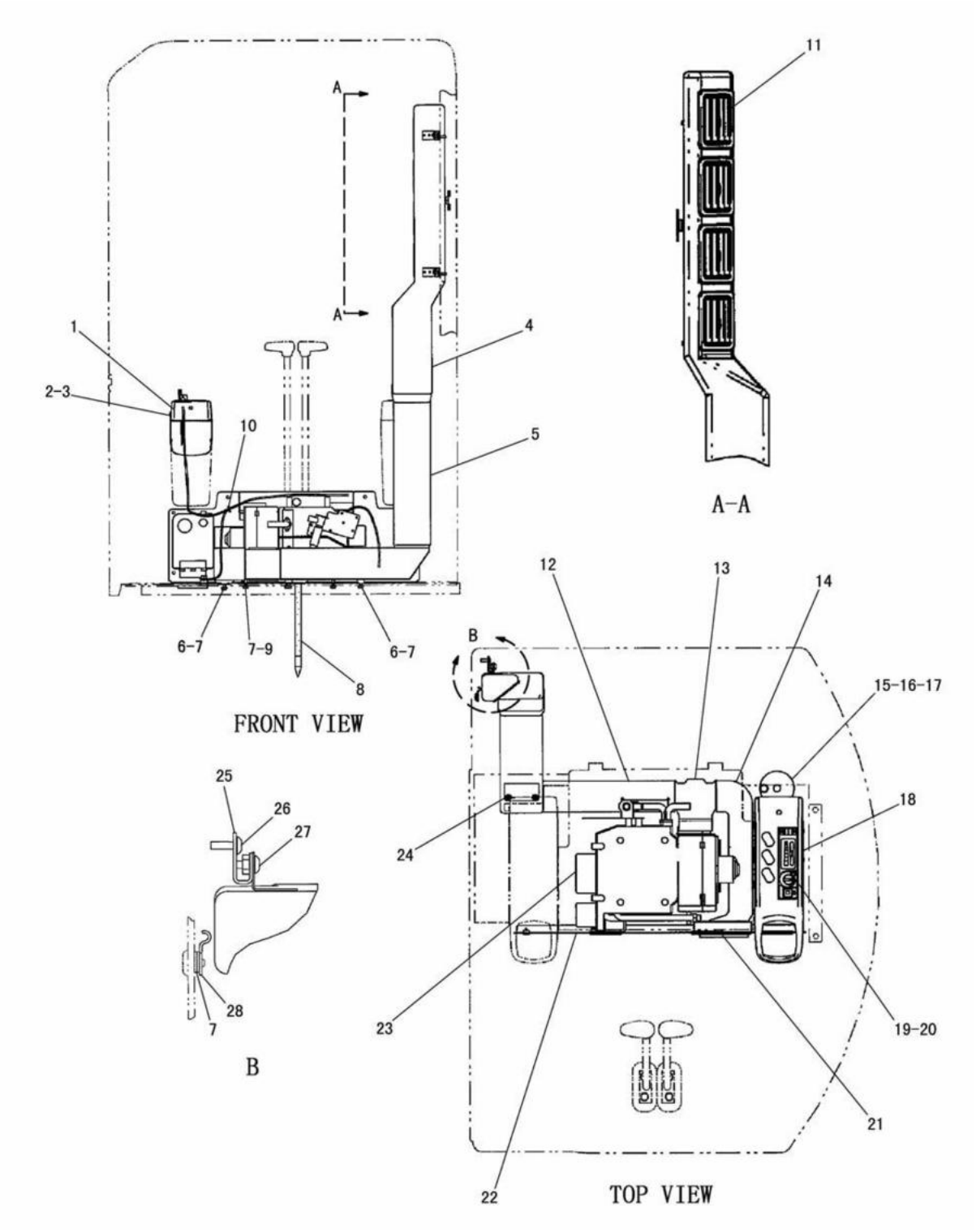

CONDITIONER AND MOUNTING (233-6791 N/S)
EFFECTIVE WITH SERIAL NO. BMW01249-
PART OF 191-3842-Page 617
AN ATTACHMENT

OPERATOR STATION

NOTE	No.	PART NO.	QTY.	PART NAME	NOTE	No.	PART NO.	QTY.	PART NAME
	1	200-1362	1	BRACKET AS					
	2	7X-2619	2	BOLT(M6×1)					
	3	9X-8256	2	WASHER					
	4	125-1723	1	DUCT					
	5	125-1722	1	DUCT					
	6	8T-4200	4	BOLT(M8×1.25)					
	7	8T-4224	13	WASHER					
	8	125-1843	2	HOSE AS					
	9	8T-4908	5	BOLT(M8×1.25)					
	10	7K-1181	3	STRAP					
	11	125-1647	4	LOUVER					
	12	201-1349	1	DUCT AS					
Y	13	200-0910	1	DUCT AS					
	14	125-1720	1	DUCT AS					
	15	212-6720	1	PLATE AS					
	16	8T-4191	1	BOLT(M10×1.5)					
	17	8T-4121	1	WASHER					
	18	233-6792	1	COVER					
Y	19	197-8190	1	PANEL AS					
	20	158-4781	2	SCREW(M6×1)					
	21	8Y-6967	1	LOUVER AS					
	22	204-5928	1	COVER AS					
		215-1164	2	PLUG					
		6V-9632	2	NUT(M6×1)(WELD)					
Y	23	191-9470	1	AIR CONDITIONER GROUP					
	24	9X-2044	2	SCREW(M6×1)					
	25	221-9035	2	BRACKET AS					
		6V-9632	1	NUT(M6×1)(WELD)					
	26	9X-2045	2	SCREW(M6×1)					
	27	9X-2043	2	SCREW(M6×1)					
	28	200-0915	1	PLATE					

Y-SEE SEPARATE ILLUSTRATION

J126046 E01

CONDITIONER AND MOUNTING (233-6791 N/S)
EFFECTIVE WITH SERIAL NO. BMW01249-
PART OF 191-3842-Page 617
200-0910-Page 636 197-8190-Page 635 191-9470-Page 632, 633
AN ATTACHMENT

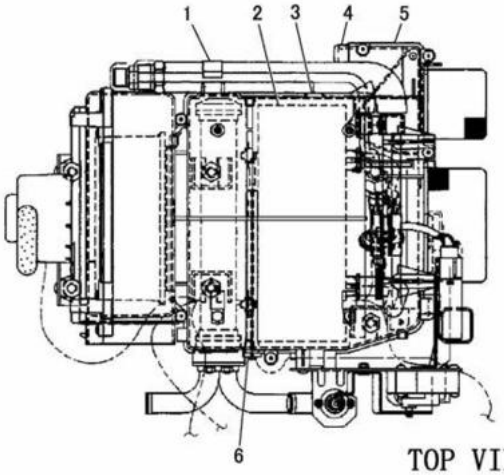

TOP VIEW

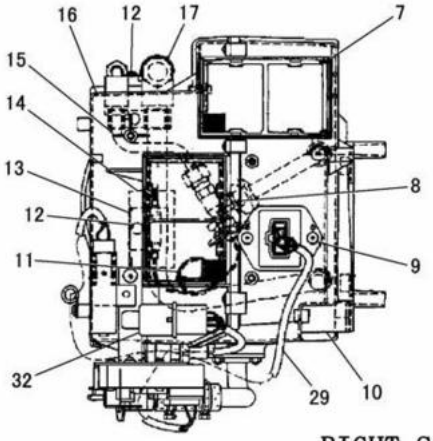

RIGHT SIDE VIEW

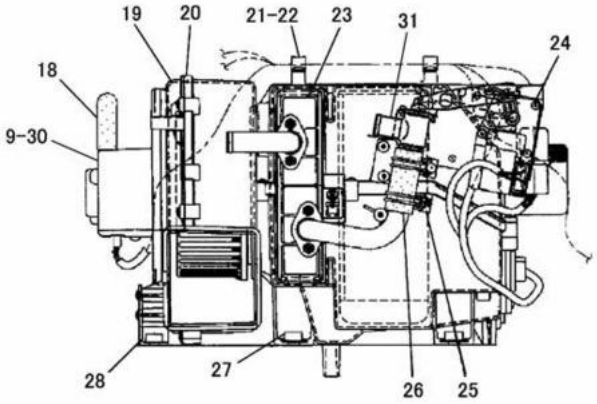

REAR VIEW

J132173 X06

191-9470 AIR CONDITIONER GROUP
PART OF 191-8073-Page 627,629,233-6791-Page 631
AN ATTACHMENT

OPERATOR STATION

NOTE	No.	PART NO.	QTY.	PART NAME	NOTE	No.	PART NO.	QTY.	PART NAME
	1	150-2119	1	CLIP					
	2	150-2109	1	EVAPORATOR					
	3	150-2130	1	CLIP					
	4	150-2135	1	COVER					
	5	150-2107	1	COVER					
	6	150-2127	1	BRACKET					
	7	150-2128	2	FILTER					
	8	150-2112	1	SEAL					
	9	150-2125	19	SCREW					
	10	150-2104	1	CASE					
	11	150-2110	1	VALVE					
	12	150-2114	14	SCREW					
	13	150-2113	1	CLIP					
	14	150-2115	1	INSULATOR					
	15	150-2111	1	PIPE					
	16	150-2103	1	CASE					
	17	150-2116	1	INSULATOR					
	18	150-2122	1	HOSE					
	19	150-2105	1	FAN					
	20	150-2106	1	FAN					
	21	150-2142	2	SCREW					
	22	150-2141	2	CLIP					
	23	150-2117	1	CORE					
	24	150-2133	3	SCREW					
	25	150-2126	2	CLAMP					
	26	150-2129	1	HOSE					
	27	150-2131	3	NUT(M8×1.25)					
	28	150-2134	1	BRACKET					
	29	211-9385	1	HARNESS AS					
	30	247-4729	1	MOTOR AS					
	31	247-7947	1	VALVE AS					
	32	247-7949	1	RELAY					

J132173 X06

191-9470 AIR CONDITIONER GROUP
PART OF 191-8073-Page 627,629,233-6791-Page 631
AN ATTACHMENT

OPERATOR STATION

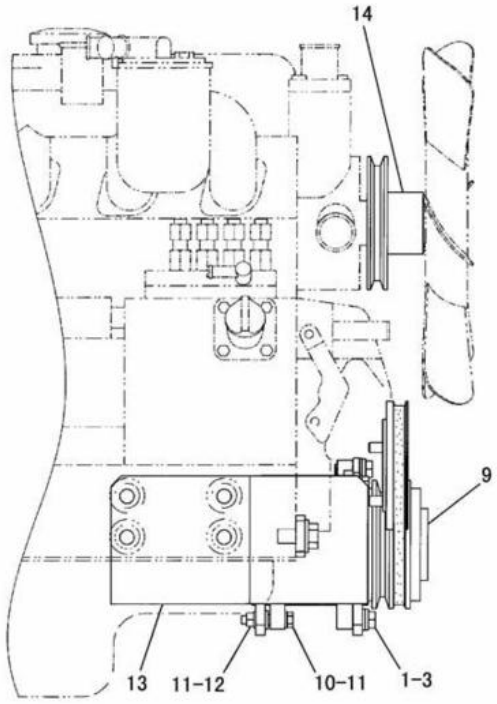

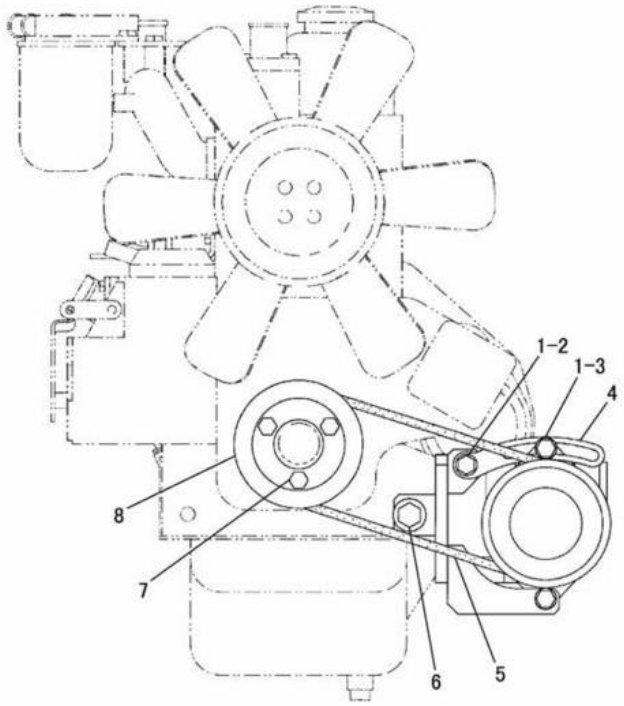

NOTE	No.	PART NO.	QTY.	PART NAME	NOTE	No.	PART NO.	QTY.	PART NAME
	1	8T-4121	3	WASHER					
	2	8T-4137	1	BOLT(M10×1.5)					
	3	9X-8912	2	BOLT(M10×1.25)					
		3B-4507	2	LOCKWASHER					
	4	191-9023	1	PLATE					
	5	191-9025	1	V-BELT					
	6	8T-4122	1	WASHER					
		141-5453	1	BOLT(M14×1.5)					
	7	163-9851	3	BOLT(M10×1.25)					
	8	191-9026	1	PULLEY					
	9	191-9028	1	COMPRESSOR GROUP					
	10	7X-0818	1	BOLT(M8×1.25)					
	11	8T-4224	2	WASHER					
	12	5C-7261	1	NUT(M8×1.25)					
	13	191-9024	1	BRACKET AS					
	14	195-8478	1	PULLEY					

J111761 X02

REFRIGERANT COMPRESSOR (191-8062 N/S)
PART OF 191-3842-Page 617
AN ATTACHMENT

OPERATOR STATION

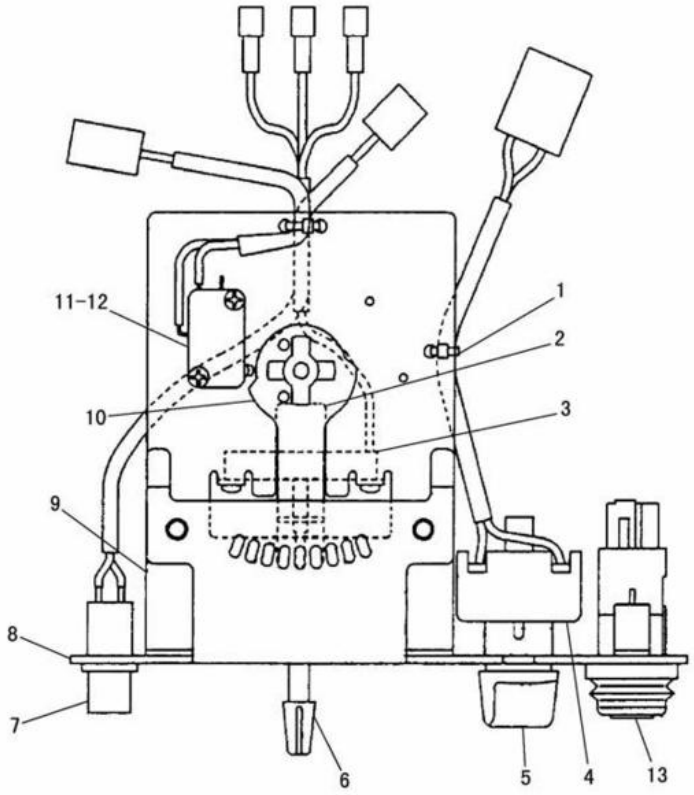

NOTE	No.	PART NO.	QTY.	PART NAME	NOTE	No.	PART NO.	QTY.	PART NAME
	1	150-2157	2	STRAP					
	2	150-2152	1	SPRING					
	3	150-2154	1	RESISTOR					
		150-2155	2	SCREW(M8×0.4)					
	4	150-2146	1	SWITCH					
	5	150-2150	1	KNOB					
	6	150-2151	1	LEVER					
		150-2149	1	KNOB					
	7	150-2147	1	SWITCH					
	8	157-9176	1	PANEL					
	9	157-9177	1	BRACKET					
	10	150-2153	1	PIN					
	11	150-2156	2	SCREW(M8×0.5)					
	12	239-0525	1	SWITCH					
	13	239-0524	1	SWITCH					

J126047 X02

197-8190 PANEL ASSEMBLY

PART OF 191-8073-Page 627,629,233-6791-Page 631
AN ATTACHMENT

OPERATOR STATION

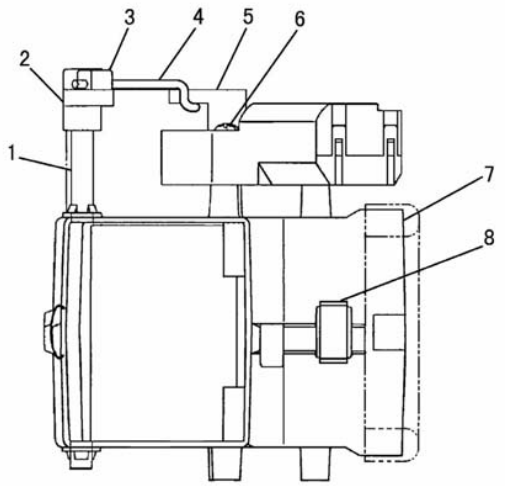

NOTE	No.	PART NO.	QTY.	PART NAME
	1	150-2170	1	DOOR
	2	150-2166	1	LEVER
	3	150-2167	1	CLIP
	4	150-2169	1	ROD
	5	150-2165	1	LEVER
	6	150-2168	3	SCREW
	7	150-2163	2	CASE
	8	150-2130	4	CLIP

J106947 X00

200-0910 DUCT ASSEMBLY
PART OF 191-8073-Page 627,629,233-6791-Page 631
AN ATTACHMENT

MEMORANDUM

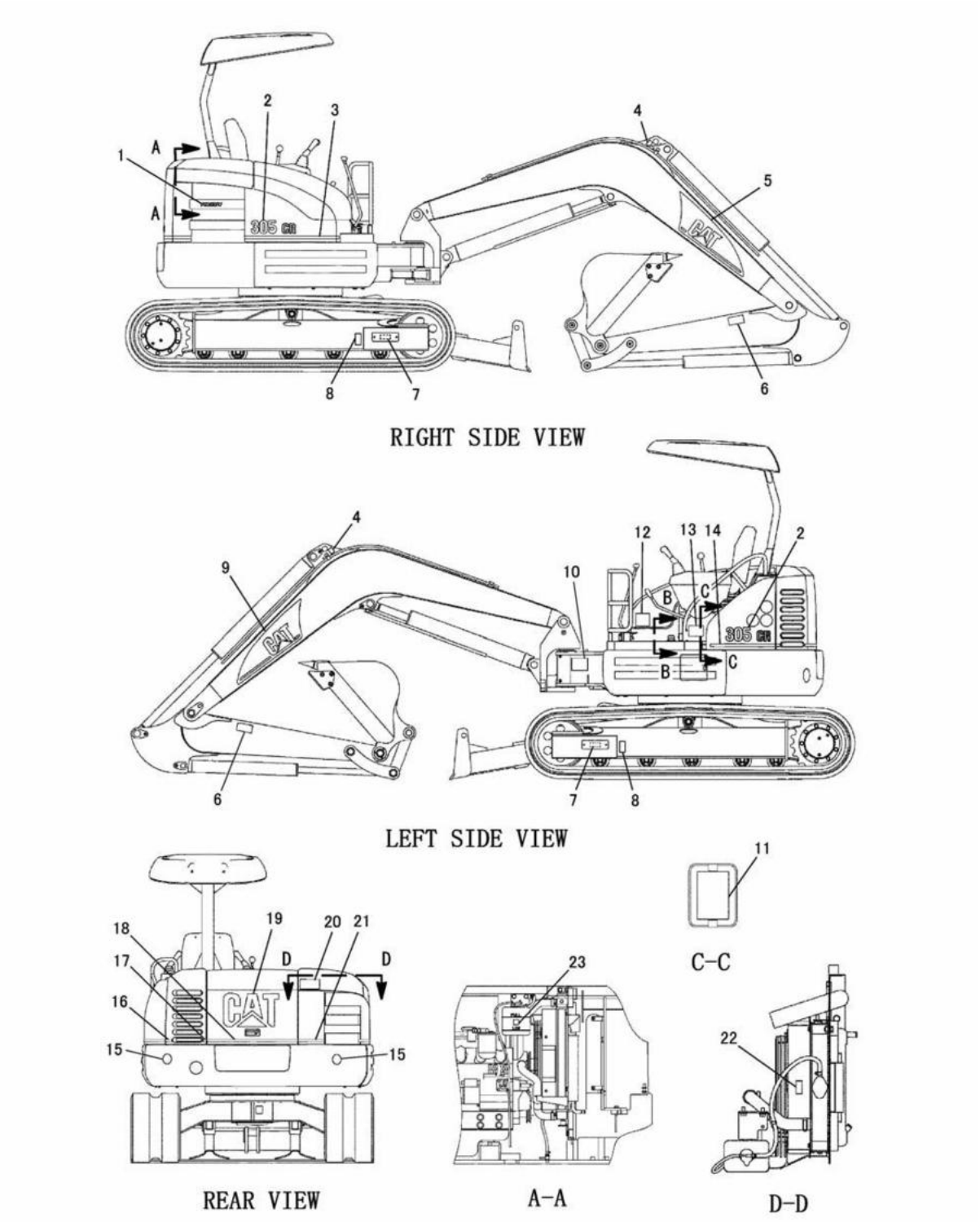

FILMS (191-0296 N/S) -PART 1 OF 3
EFFECTIVE WITH SERIAL NO. BMW00001-BMW01449
PART OF 191-3351-Page 184,185,186,187,188,189

SERVICE EQUIPMENT AND SUPPLIES

NOTE	No.	PART NO.	QTY.	PART NAME	NOTE	No.	PART NO.	QTY.	PART NAME
	1	194-7454	1	FILM(REGA)					
	2	191-0330	2	FILM(305CR)					
E	3	109-7113		FILM(STRIPE)---75cm					
	4	150-8896	2	FILM(SYMBOL)(LIFT)					
	5	132-7552	1	FILM(CAT)					
	6	160-6854	2	FILM(WARNING)					
	7	151-5740	2	FILM(WARNING)					
	8	160-6832	2	FILM(WARNING)					
	9	137-9111	1	FILM(CAT)					
Z	10		1	PLATE(PIN)					
	11	199-6953	1	FILM(FUSE)					
	12	191-0316	1	FILM(LUBE CHART)					
	13	191-0317	1	FILM(REGISTRATION)					
E	14	109-7113		FILM(STRIPE)---61cm					
	15	190-5386	2	FILM(SAFETY)					
E	16	109-7113		FILM(STRIPE)---13cm					
E	17	109-7113		FILM(STRIPE)---7.5cm					
E	18	109-7113		FILM(STRIPE)---80cm					
	19	191-0331	1	FILM(CAT)					
	20	160-6857	1	FILM(WARNING)					
E	21	109-7113		FILM(STRIPE)---28cm					
	22	160-6822	1	FILM(WARNING)					
	23	134-7258	1	FILM(IDENTIFICATION)					

E-ORDER BY THE cm
Z-NOT SERVICED SEPARATELY

J128731 E09

FILMS (191-0296 N/S) -PART 1 OF 3
EFFECTIVE WITH SERIAL NO. BMW00001-BMW01449
PART OF 191-3351-Page 184,185,186,187,188,189

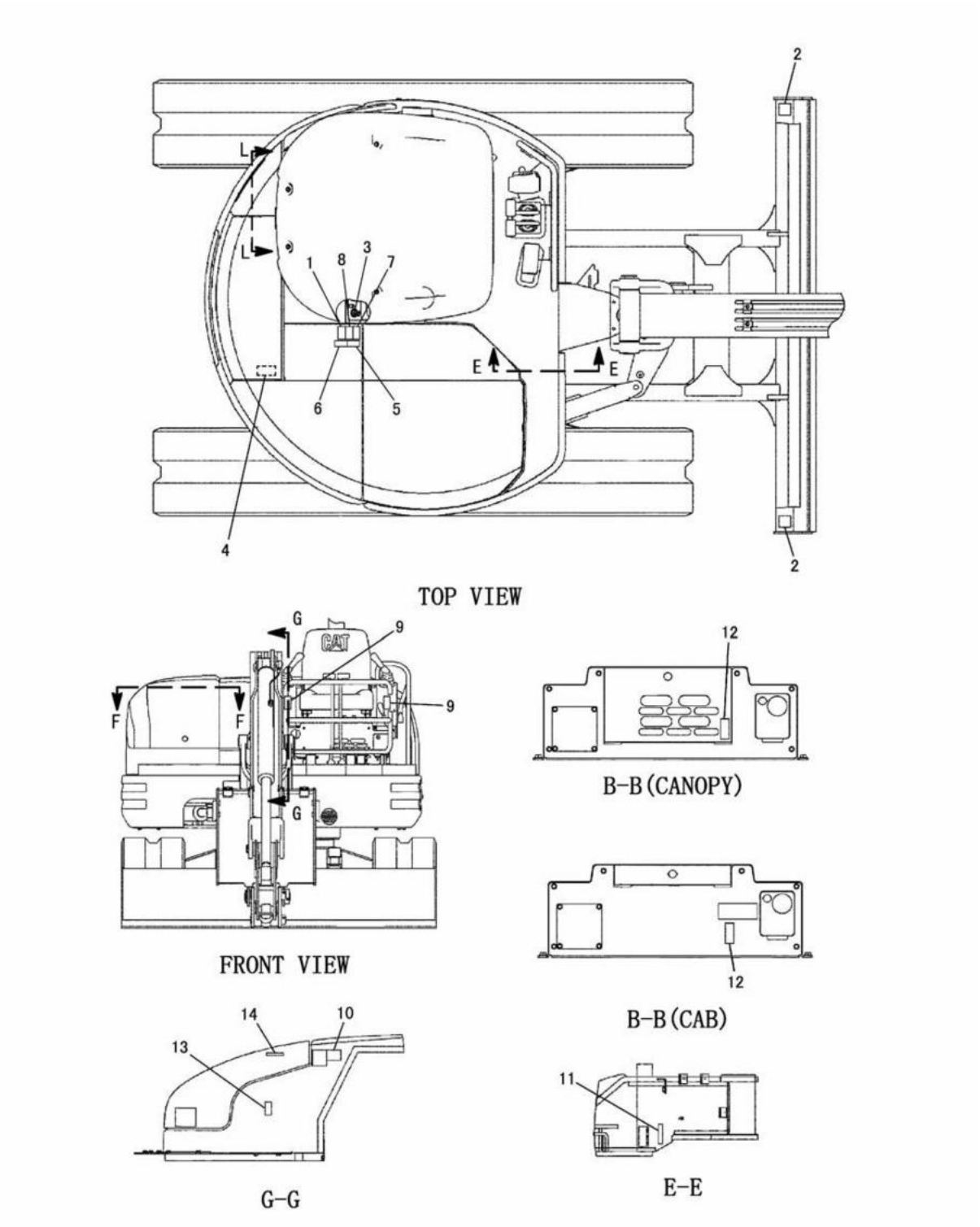

J128732 E09

FILMS (191-0296 N/S) -PART 2 OF 3
EFFECTIVE WITH SERIAL NO. BMW00001-BMW01449
PART OF 191-3351-Page 184,185,186,187,188,189

SERVICE EQUIPMENT AND SUPPLIES

NOTE	No.	PART NO.	QTY.	PART NAME	NOTE	No.	PART NO.	QTY.	PART NAME
	1	160-6845	1	FILM(WARNING)					
	2	7X-3229	2	FILM(LIFT AND TIE DOWN)					
	3	195-3207	1	FILM(INSTRUCTION)					
	4	160-6841	1	FILM(WARNING)					
	5	139-5002	1	FILM(WARNING)					
	6	139-4993	1	FILM(WARNING)					
	7	160-6818	1	FILM(WARNING)					
	8	160-6850	1	FILM(WARNING)					
	9	126-2900	2	FILM(LEVER LOCK)					
	10	139-4997	1	FILM(JIS PATTERN)					
	11	191-0318	1	FILM(LUBRICATION)					
	12	126-2897	1	FILM(2 SPEED)					
	13	160-6834	1	FILM(WARNING)					
	14	191-0322	1	FILM(INSTRUCTION)					

J128732 E09

FILMS (191-0296 N/S) -PART 2 OF 3
EFFECTIVE WITH SERIAL NO. BMW00001-BMW01449
PART OF 191-3351-Page 184,185,186,187,188,189

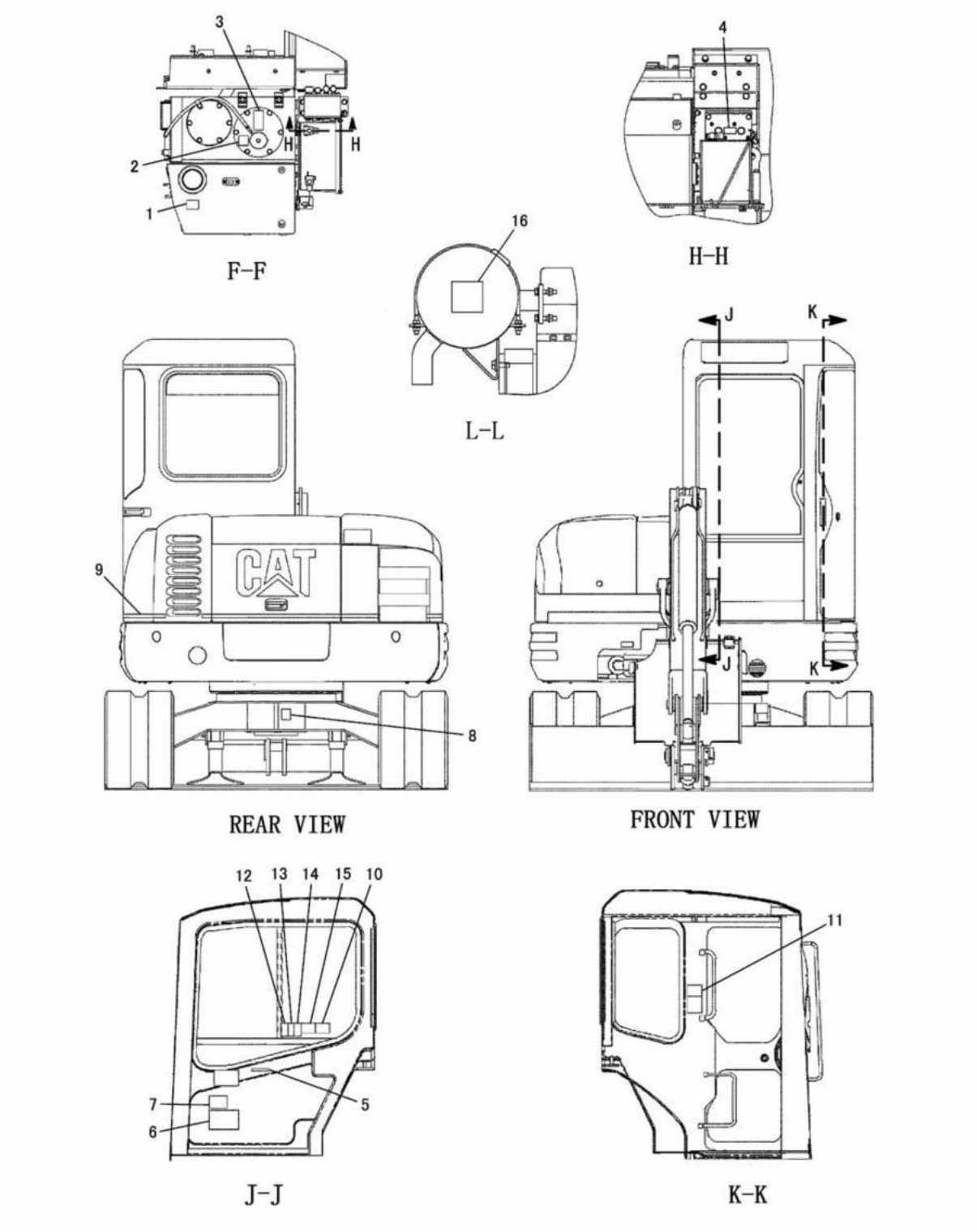

FILMS (191-0296 N/S) -PART 3 OF 3
EFFECTIVE WITH SERIAL NO. BMW00001-BMW01449
PART OF 191-3351-Page 184,185,186,187,188,189

SERVICE EQUIPMENT AND SUPPLIES

NOTE	No.	PART NO.	QTY.	PART NAME	NOTE	No.	PART NO.	QTY.	PART NAME
	1	8C-4535	1	FILM(FUEL)					
	2	158-7864	1	FILM(INSTRUCTION)					
	3	160-6822	1	FILM(WARNING)					
	4	150-8879	1	PLATE(IDENTIFICATION)					
	5	191-0322	1	FILM(INSTRUCTION)					
	6	191-0316	1	FILM(LUBE CHART)					
	7	191-0317	1	FILM(REGISTRATION)					
	8	7X-7644	1	FILM(TIE DOWN)					
E	9	109-7113		FILM(STRIPE)---54cm					
	10	139-4993	1	FILM(WARNING)					
	11	139-4997	1	FILM(JIS PATTERN)					
	12	160-6818	1	FILM(WARNING)					
	13	160-6850	1	FILM(WARNING)					
	14	160-6845	1	FILM(WARNING)					
	15	139-5002	1	FILM(WARNING)					
	16	172-4949	1	FILM(WARNING)					

E-ORDER BY THE cm

J128733 E09

FILMS (191-0296 N/S) -PART 3 OF 3
EFFECTIVE WITH SERIAL NO. BMW00001-BMW01449
PART OF 191-3351-Page 184,185,186,187,188,189

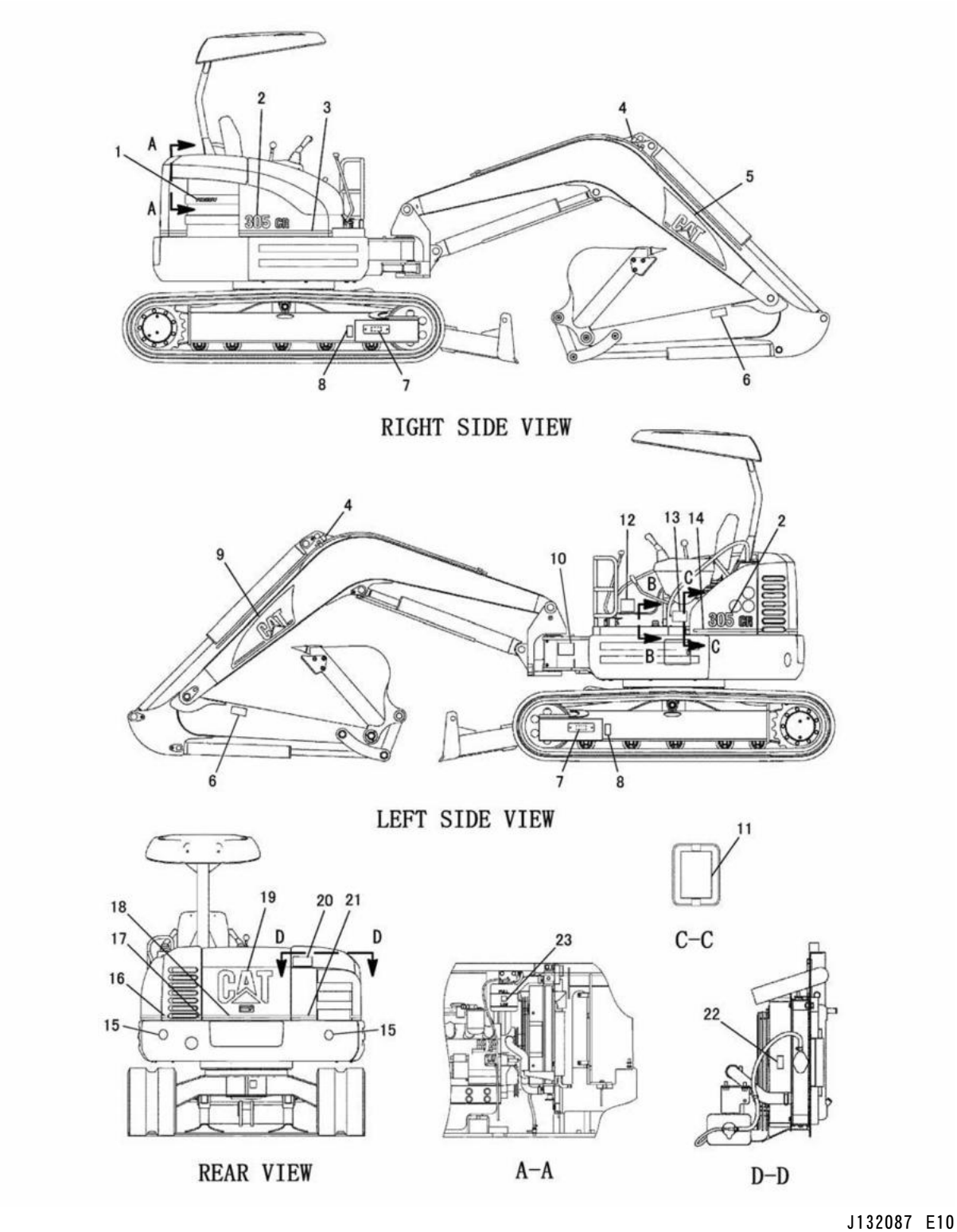

FILMS (191-0296 N/S) -PART 1 OF 3
EFFECTIVE WITH SERIAL NO. BMW01450-
PART OF 191-3351-Page 184,185,186,187,188,189

SERVICE EQUIPMENT AND SUPPLIES

NOTE	No.	PART NO.	QTY.	PART NAME	NOTE	No.	PART NO.	QTY.	PART NAME
	1	194-7454	1	FILM(REGA)					
	2	191-0330	2	FILM(305CR)					
E	3	109-7113		FILM(STRIPE)---75cm					
	4	150-8896	2	FILM(SYMBOL)(LIFT)					
	5	132-7552	1	FILM(CAT)					
	6	160-6854	2	FILM(WARNING)					
	7	151-5740	2	FILM(WARNING)					
	8	160-6832	2	FILM(WARNING)					
	9	137-9111	1	FILM(CAT)					
Z	10		1	PLATE(PIN)					
	11	199-6953	1	FILM(FUSE)					
	12	191-0316	1	FILM(LUBE CHART)					
	13	191-0317	1	FILM(REGISTRATION)					
E	14	109-7113		FILM(STRIPE)---61cm					
	15	190-5386	2	FILM(SAFETY)					
E	16	109-7113		FILM(STRIPE)---13cm					
E	17	109-7113		FILM(STRIPE)---7.5cm					
E	18	109-7113		FILM(STRIPE)---80cm					
	19	191-0331	1	FILM(CAT)					
	20	160-6857	1	FILM(WARNING)					
E	21	109-7113		FILM(STRIPE)---28cm					
	22	160-6822	1	FILM(WARNING)					
	23	134-7258	1	FILM(IDENTIFICATION)					

E-ORDER BY THE cm
Z-NOT SERVICED SEPARATELY

J132087 E10

FILMS (191-0296 N/S) -PART 1 OF 3
EFFECTIVE WITH SERIAL NO. BMW01450-
PART OF 191-3351-Page 184,185,186,187,188,189

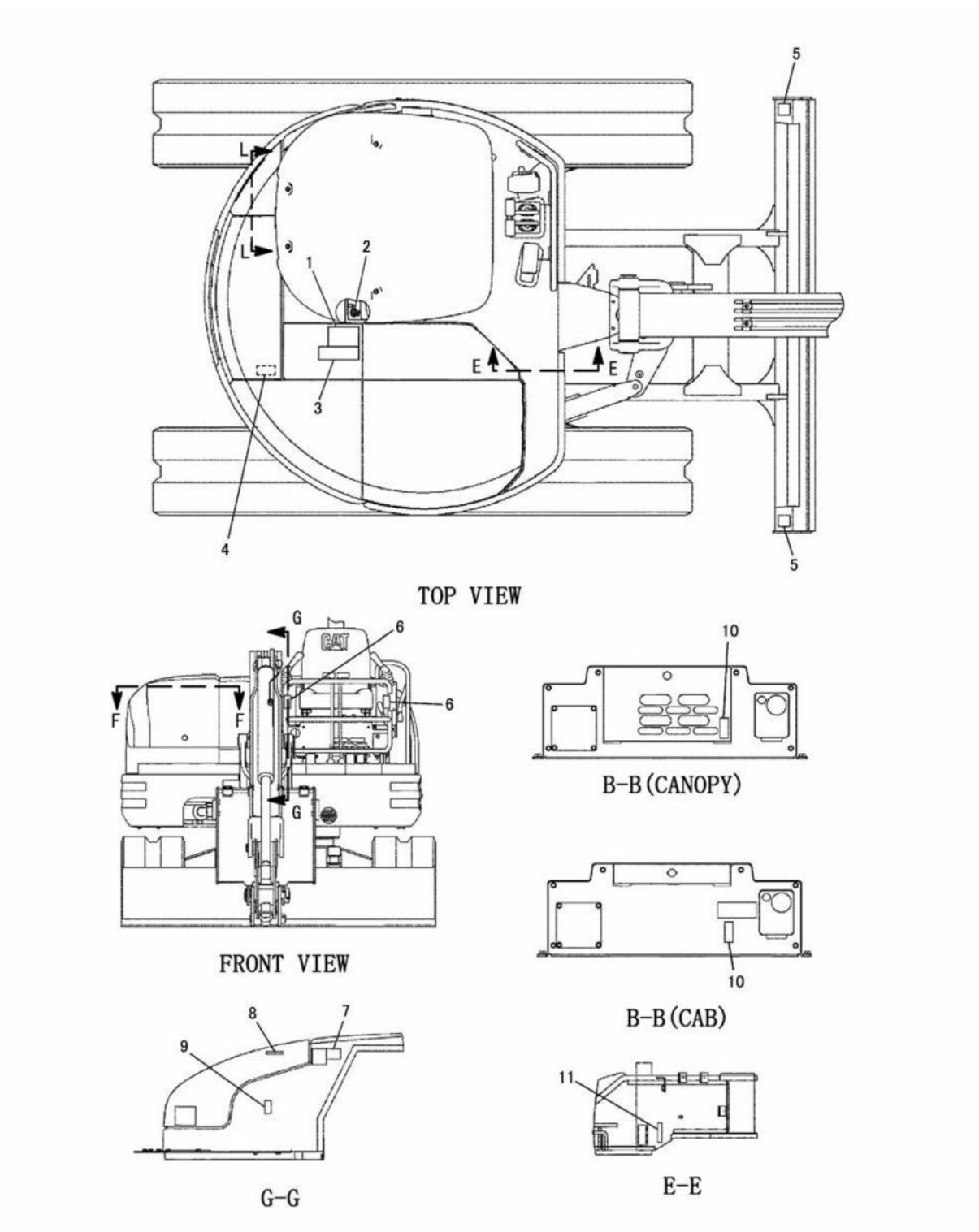

J132088 E10

FILMS (191-0296 N/S) -PART 2 OF 3
EFFECTIVE WITH SERIAL NO. BMW01450-
PART OF 191-3351-Page 184,185,186,187,188,189

SERVICE EQUIPMENT AND SUPPLIES

NOTE	No.	PART NO.	QTY.	PART NAME	NOTE	No.	PART NO.	QTY.	PART NAME
C	1	244-5747	1	FILM(WARNING)					
	2	195-3207	1	FILM(INSTRUCTION)					
C	3	246-2431	1	FILM(WARNING)					
	4	160-6841	1	FILM(WARNING)					
	5	7X-3229	2	FILM(LIFT AND TIE DOWN)					
	6	126-2900	2	FILM(LEVER LOCK)					
	7	139-4997	1	FILM(JIS PATTERN)					
	8	191-0322	1	FILM(INSTRUCTION)					
	9	160-6834	1	FILM(WARNING)					
	10	126-2897	1	FILM(2 SPEED)					
	11	191-0318	1	FILM(LUBRICATION)					

C-INDICATES CHANGE

J132088 E10

FILMS (191-0296 N/S) -PART 2 OF 3
EFFECTIVE WITH SERIAL NO. BMW01450-
PART OF 191-3351-Page 184,185,186,187,188,189

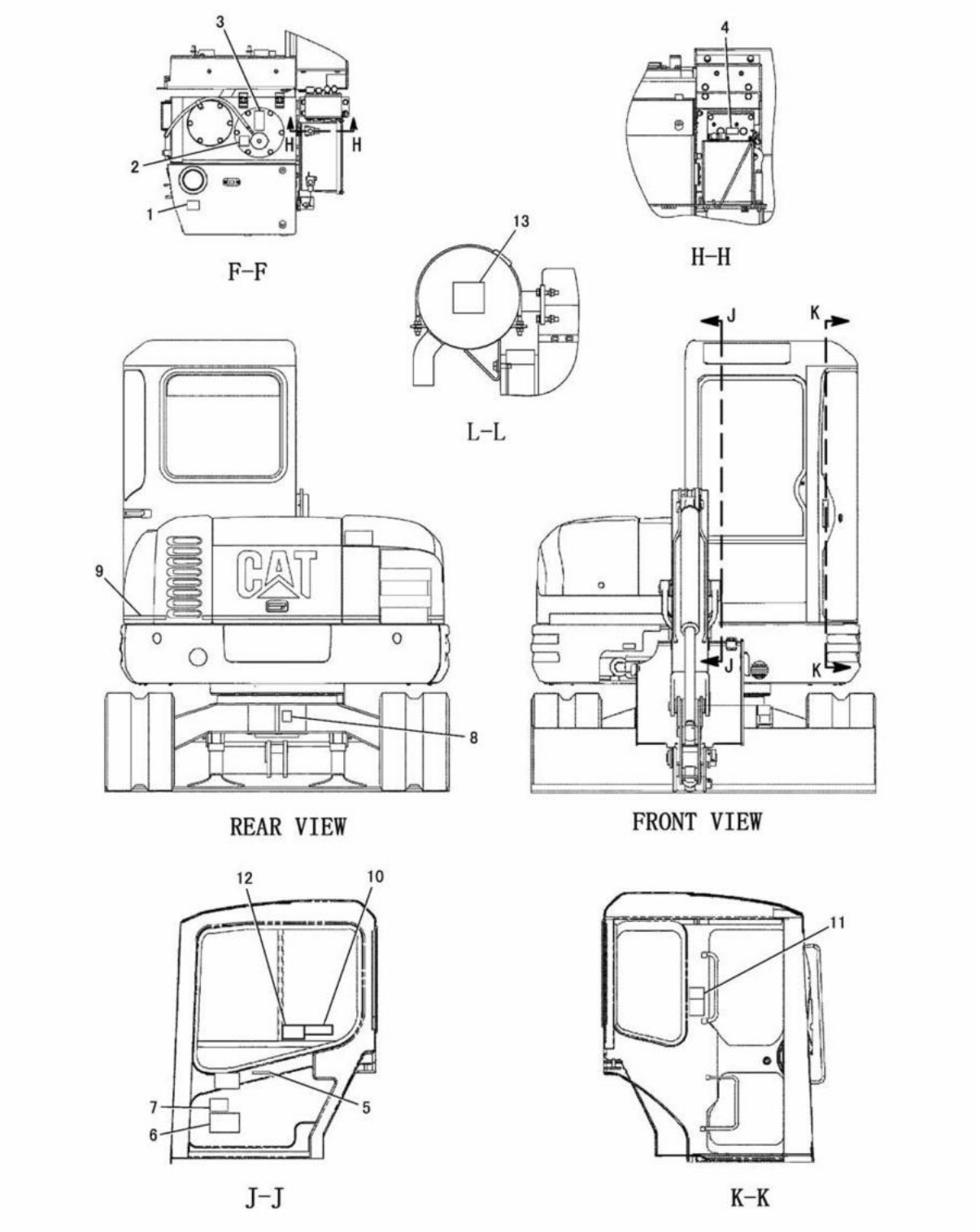

FILMS (191-0296 N/S) -PART 3 OF 3
EFFECTIVE WITH SERIAL NO. BMW01450-
PART OF 191-3351-Page 184,185,186,187,188,189

SERVICE EQUIPMENT AND SUPPLIES

NOTE	No.	PART NO.	QTY.	PART NAME	NOTE	No.	PART NO.	QTY.	PART NAME
	1	8C-4535	1	FILM(FUEL)					
	2	158-7864	1	FILM(INSTRUCTION)					
	3	160-6822	1	FILM(WARNING)					
	4	150-8879	1	PLATE(IDENTIFICATION)					
	5	191-0322	1	FILM(INSTRUCTION)					
	6	191-0316	1	FILM(LUBE CHART)					
	7	191-0317	1	FILM(REGISTRATION)					
	8	7X-7644	1	FILM(TIE DOWN)					
E	9	109-7113		FILM(STRIPE)---54cm					
C	10	246-2431	1	FILM(WARNING)					
	11	139-4997	1	FILM(JIS PATTERN)					
C	12	244-5747	1	FILM(WARNING)					
	13	172-4949	1	FILM(WARNING)					

C-INDICATES CHANGE
E-ORDER BY THE cm

J132089 E10

FILMS (191-0296 N/S) -PART 3 OF 3
EFFECTIVE WITH SERIAL NO. BMW01450-
PART OF 191-3351-Page 184,185,186,187,188,189

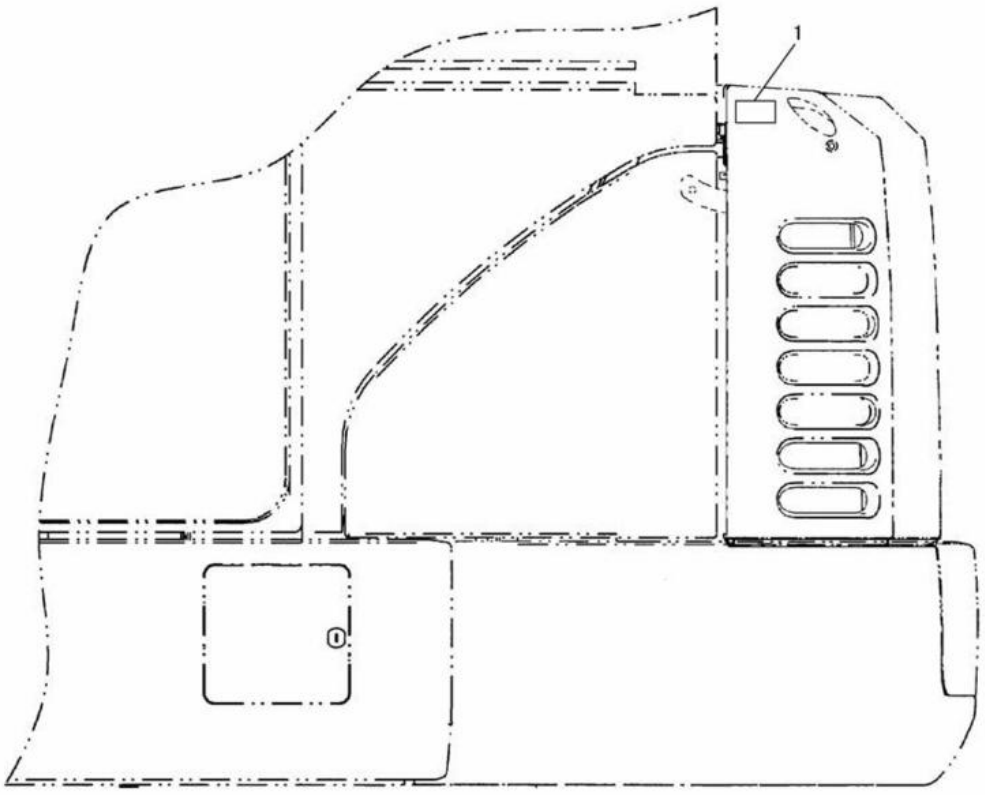

RIGHT SIDE VIEW

NOTE	No.	PART NO.	QTY.	PART NAME	NOTE	No.	PART NO.	QTY.	PART NAME
	1	160-6827	1	FILM(CEMA)					

J111809 E00

FILM (191-0356 N/S)
PART OF 191-0344-Page 33
AN ATTACHMENT

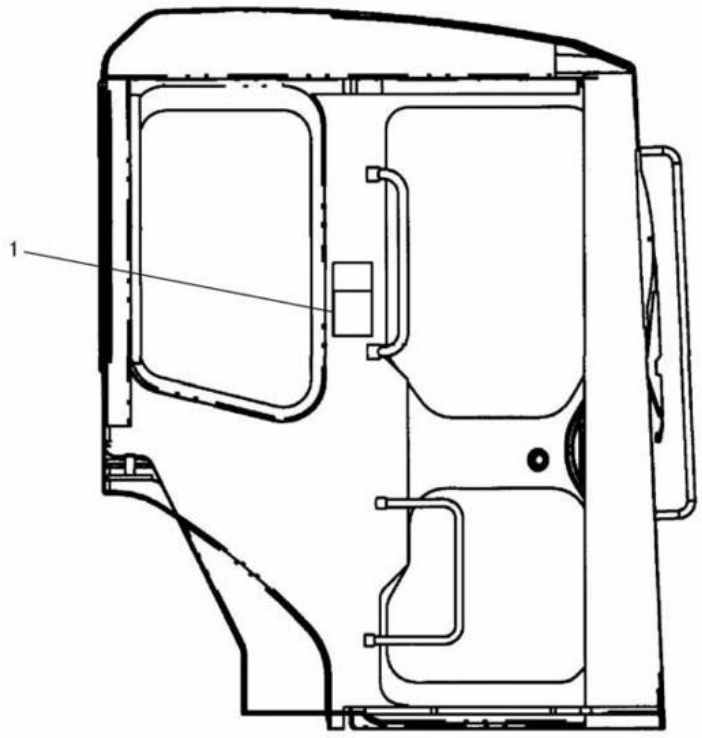

INSIDE OF DOOR

NOTE	No.	PART NO.	QTY.	PART NAME	NOTE	No.	PART NO.	QTY.	PART NAME
	1	140-3313	1	FILM(INSTRUCTION)					

J111801 E00

FILM (194-7444 N/S)
PART OF 191-3877-Page 298,299,217-7959-Page 299
AN ATTACHMENT

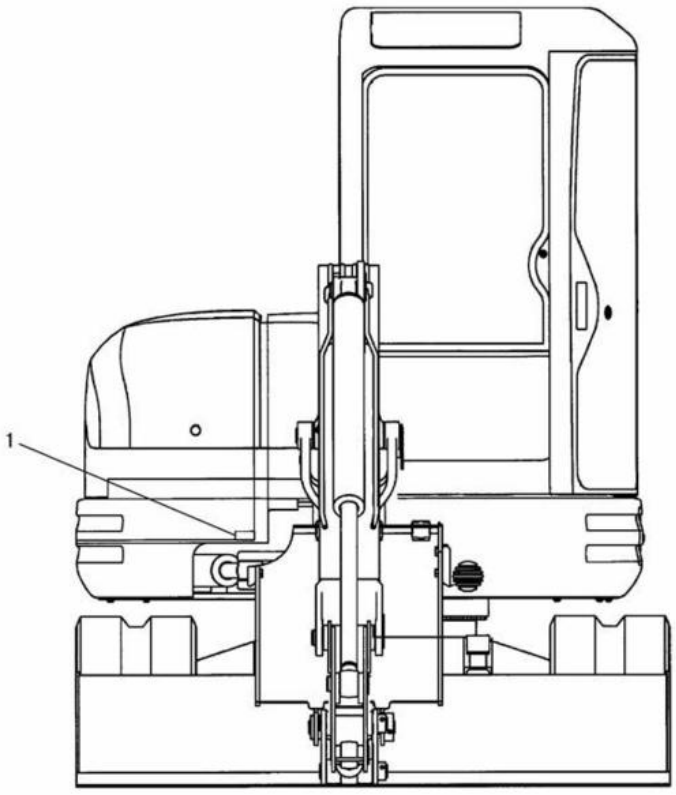

NOTE	No.	PART NO.	QTY.	PART NAME	NOTE	No.	PART NO.	QTY.	PART NAME
	1	191-0324	1	FILM(INSTRUCTION)					

J111791 E00

FILM (194-7445 N/S)
PART OF 200-2854-Page 301
AN ATTACHMENT

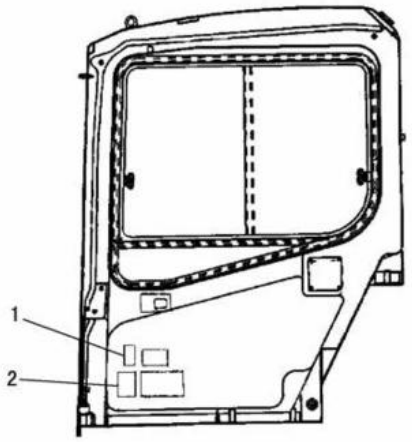

FOR CAB

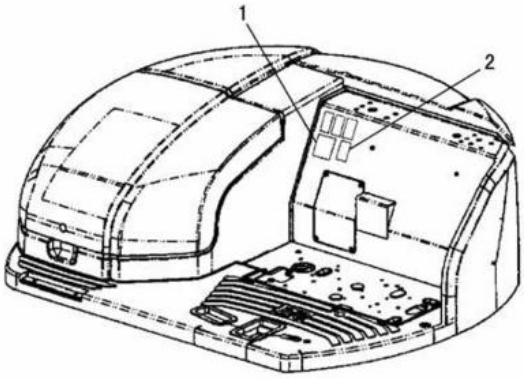

FOR CANOPY

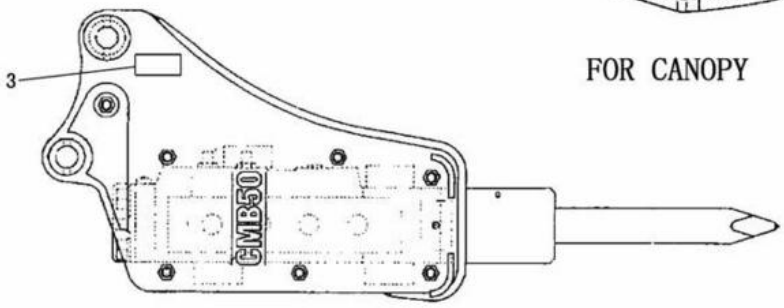

FOR HAMMER

NOTE	No.	PART NO.	QTY.	PART NAME	NOTE	No.	PART NO.	QTY.	PART NAME
	1	1 1 8 − 6 0 5 4	1	FILM(NOTICE)					
	2	1 6 0 − 6 8 8 5	1	FILM(CEMA)					
	3	1 6 0 − 6 8 8 6	2	FILM(CEMA)					

J111757 E00

FILMS (194-7463 N/S)
PART OF 165-1095-Page 498,206-2774-Page 498
AN ATTACHMENT

SERVICE EQUIPMENT AND SUPPLIES

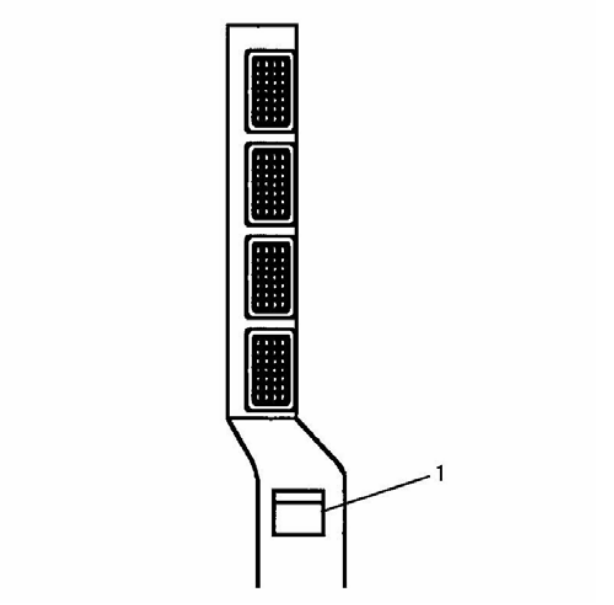

NOTE	No.	PART NO.	QTY.	PART NAME
	1	219-3146	1	FILM(NOTICE)

J113452 E00

FILM (200-5542 N/S)
PART OF 191-3842-Page 617
AN ATTACHMENT

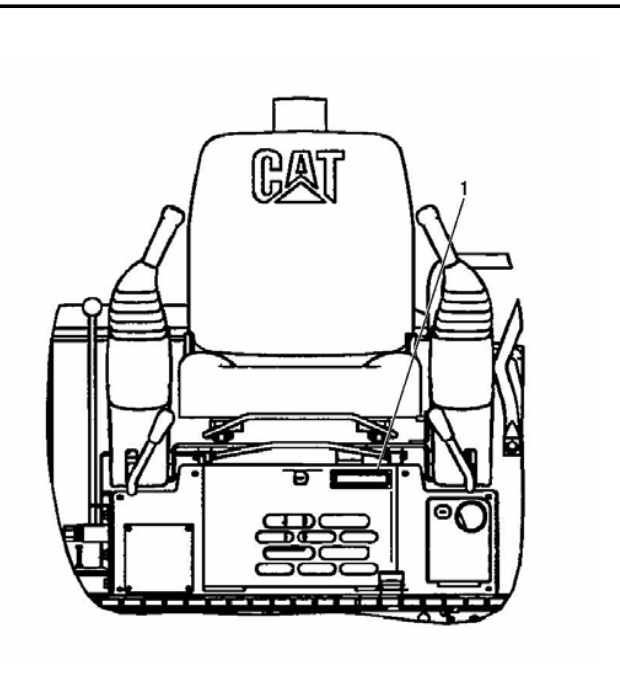

NOTE	No.	PART NO.	QTY.	PART NAME
	1	235-7959	1	FILM(SECURITY)

J126063 E00

FILM (224-8406 N/S)
EFFECTIVE WITH SERIAL NO. BMW01311-
PART OF 241-3943-Page 301
AN ATTACHMENT

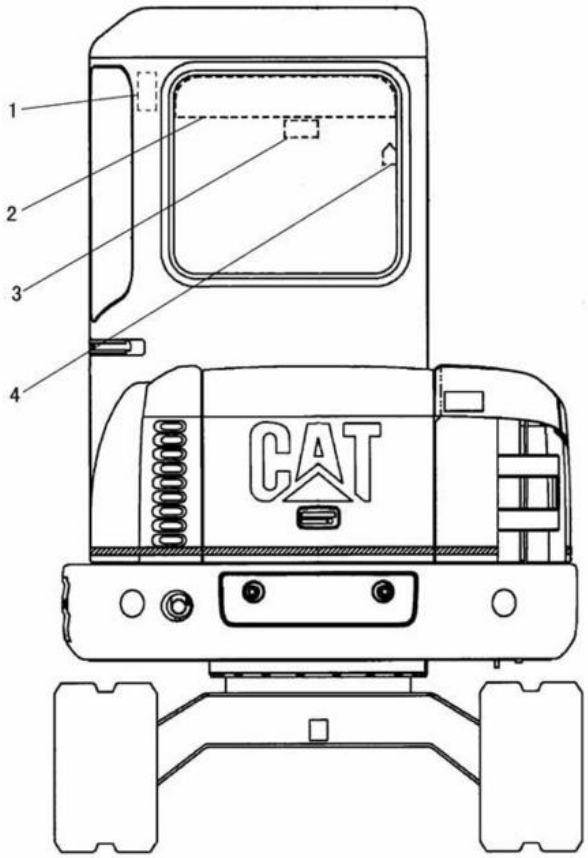

NOTE	No.	PART NO.	QTY.	PART NAME	NOTE	No.	PART NO.	QTY.	PART NAME
	1	160-6848	1	FILM(WARNING)					
	2	199-9616	1	FILM(CATERPILLAR)					
	3	187-0661	1	FILM(INSTRUCTION)					
	4	8T-6842	1	FILM(ALTERNATE EXIT)					

J115454 E00

FILMS (200-5545 N/S) -CAB

PART OF 201-4570-Page 527

AN ATTACHMENT

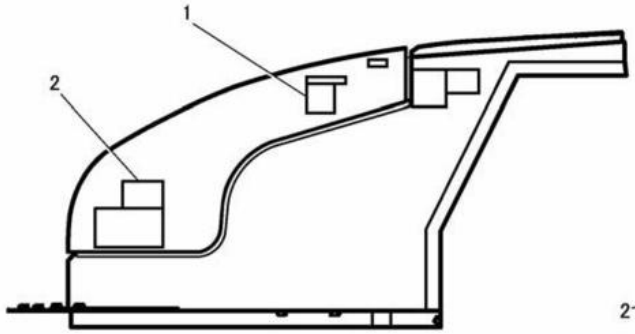

FOR CANOPY

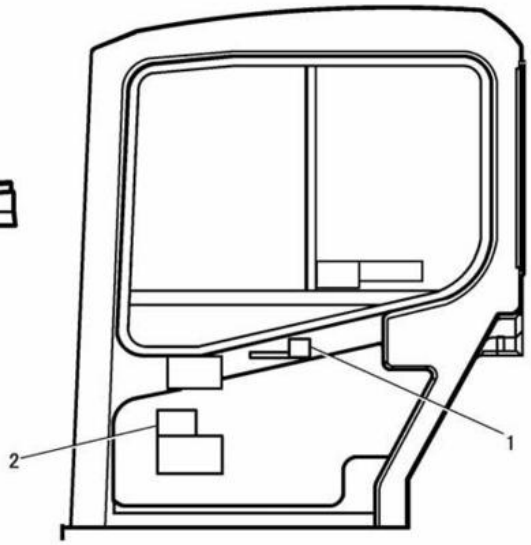

FOR CAB

NOTE	No.	PART NO.	QTY.	PART NAME	NOTE	No.	PART NO.	QTY.	PART NAME
	1	183-8286	1	FILM(PAT)					
	2	200-5462	1	FILM(REGISTRATION)					

J132132 E01

FILMS (200-5458 N/S)
EFFECTIVE WITH SERIAL NO. BMW00787-
PART OF 210-1884-Page 510,511
AN ATTACHMENT

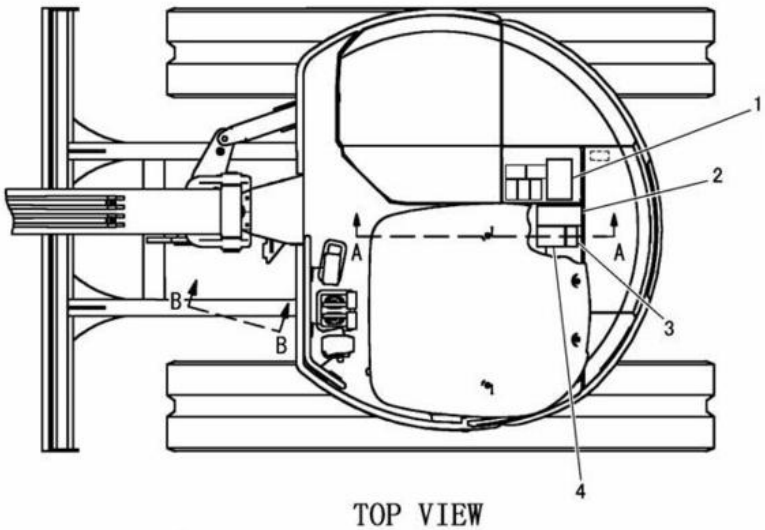

TOP VIEW

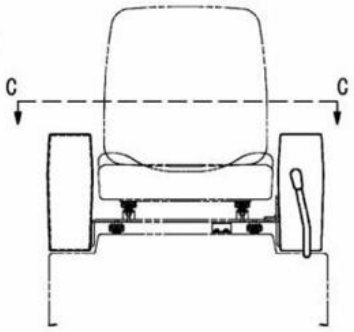

FRONT VIEW OF SEAT

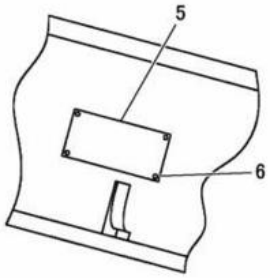

B-B

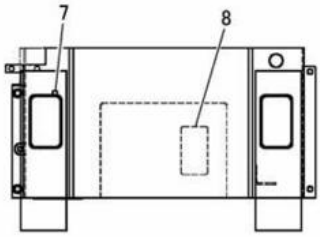

C-C

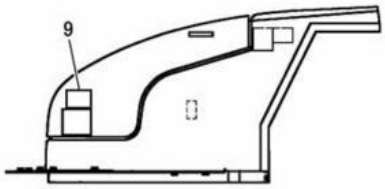

A-A

NOTE	No.	PART NO.	QTY.	PART NAME	NOTE	No.	PART NO.	QTY.	PART NAME
	1	206-7607	1	FILM(LIFTING CAPACITY)					
	2	201-9163	1	FILM(WARNING)					
	3	201-9144	1	FILM(WARNING)					
	4	200-4597	1	FILM(WARNING)					
	5	200-4600	1	PLATE					
	6	4B-4158	4	SCREW					
	7	200-4601	1	FILM(ARROW)					
	8	206-7609	1	FILM(LIFTING CAPACITY)					
	9	206-7610	1	FILM(REGISTRATION)					

J126806 X00

FILMS (206-7606 N/S) -CANOPY
EFFECTIVE WITH SERIAL NO. BMW00684-
PART OF 206-7605-Page 514,515
AN ATTACHMENT

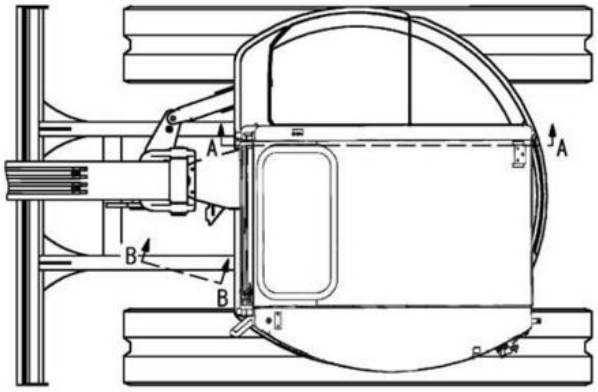

TOP VIEW

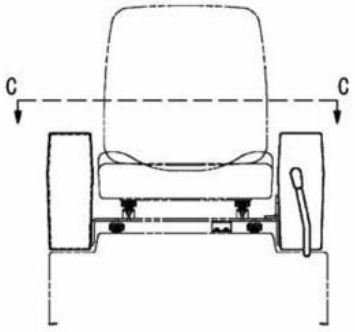

FRONT VIEW OF SEAT

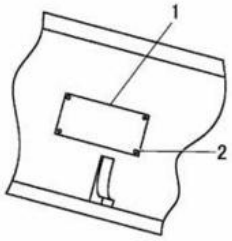

B-B

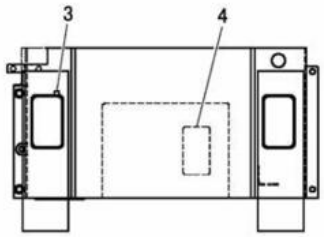

C-C

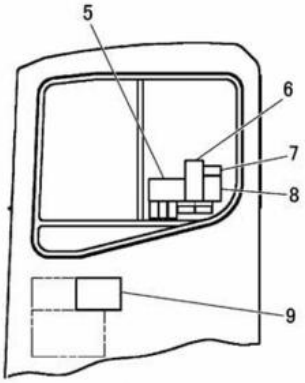

A-A

NOTE	No.	PART NO.	QTY.	PART NAME	NOTE	No.	PART NO.	QTY.	PART NAME
	1	200-4600	1	PLATE					
	2	4B-4158	4	SCREW					
	3	200-4601	1	FILM(ARROW)					
	4	201-9161	1	PLATE(LIFTING CAPACITY)					
	5	201-9160	1	FILM(LIFTING CAPACITY)					
	6	201-9163	1	FILM(WARNING)					
	7	201-9144	1	FILM(WARNING)					
	8	200-4597	1	FILM(WARNING)					
	9	201-9162	1	FILM(REGISTRATION)					

J126798 X00

FILMS (201-9159 N/S) -CAB
EFFECTIVE WITH SERIAL NO. BMW00204-
PART OF 201-9165-Page 518,519
AN ATTACHMENT

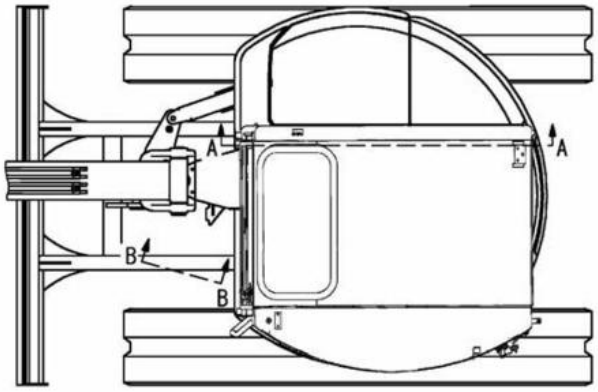

TOP VIEW

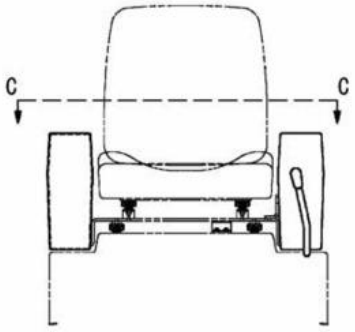

FRONT VIEW OF SEAT

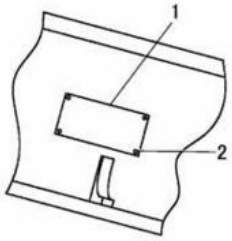

B-B

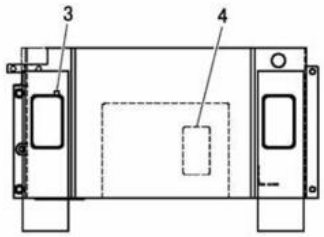

C-C

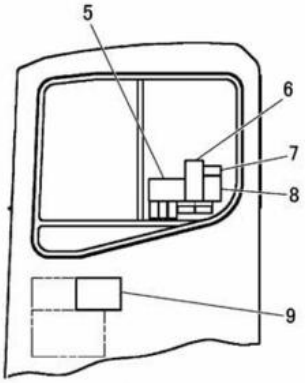

A-A

NOTE	No.	PART NO.	QTY.	PART NAME	NOTE	No.	PART NO.	QTY.	PART NAME
	1	200-4600	1	PLATE					
	2	4B-4158	4	SCREW					
	3	200-4601	1	FILM(ARROW)					
	4	206-7627	1	PLATE(LIFTING CAPACITY)					
	5	206-7626	1	FILM(LIFTING CAPACITY)					
	6	201-9163	1	FILM(WARNING)					
	7	201-9144	1	FILM(WARNING)					
	8	200-4597	1	FILM(WARNING)					
	9	206-7628	1	FILM(REGISTRATION)					

J126816 X00

FILMS (206-7625 N/S) -CAB
EFFECTIVE WITH SERIAL NO. BMW00684-
PART OF 206-7624-Page 520,521
AN ATTACHMENT

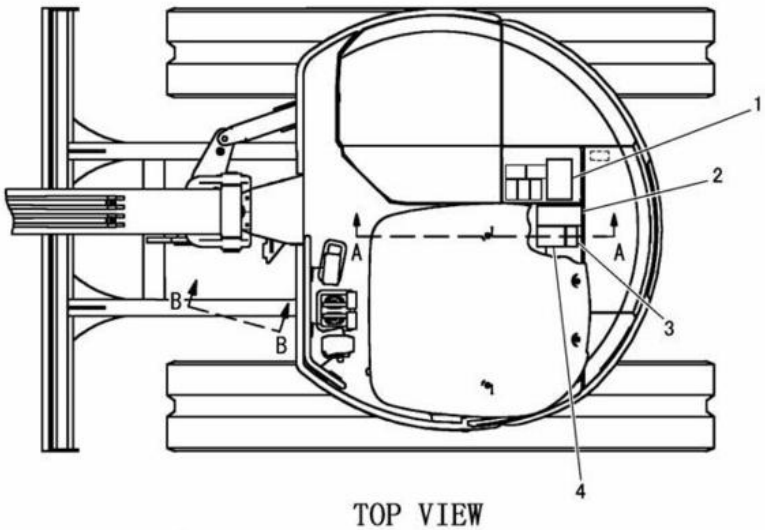

TOP VIEW

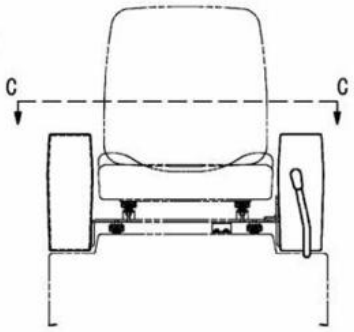

FRONT VIEW OF SEAT

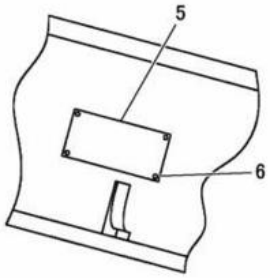

B-B

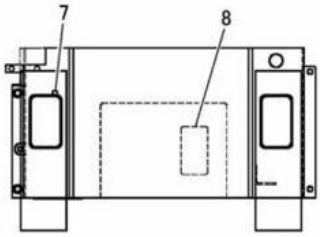

C-C

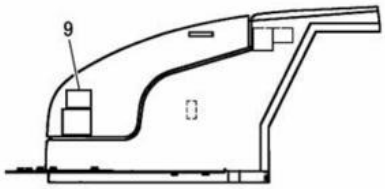

A-A

NOTE	No.	PART NO.	QTY.	PART NAME	NOTE	No.	PART NO.	QTY.	PART NAME
	1	206-7637	1	FILM(LIFTING CAPACITY)					
	2	201-9163	1	FILM(WARNING)					
	3	201-9144	1	FILM(WARNING)					
	4	200-4597	1	FILM(WARNING)					
	5	200-4600	1	PLATE					
	6	4B-4158	4	SCREW					
	7	200-4601	1	FILM(ARROW)					
	8	206-7638	1	FILM(LIFTING CAPACITY)					
	9	206-7639	1	FILM(REGISTRATION)					

J126782 X00

FILMS (206-7636 N/S) -CANOPY-LONG STICK
EFFECTIVE WITH SERIAL NO. BMW00684-
PART OF 206-7635-Page 516,517
AN ATTACHMENT

SERVICE EQUIPMENT AND SUPPLIES

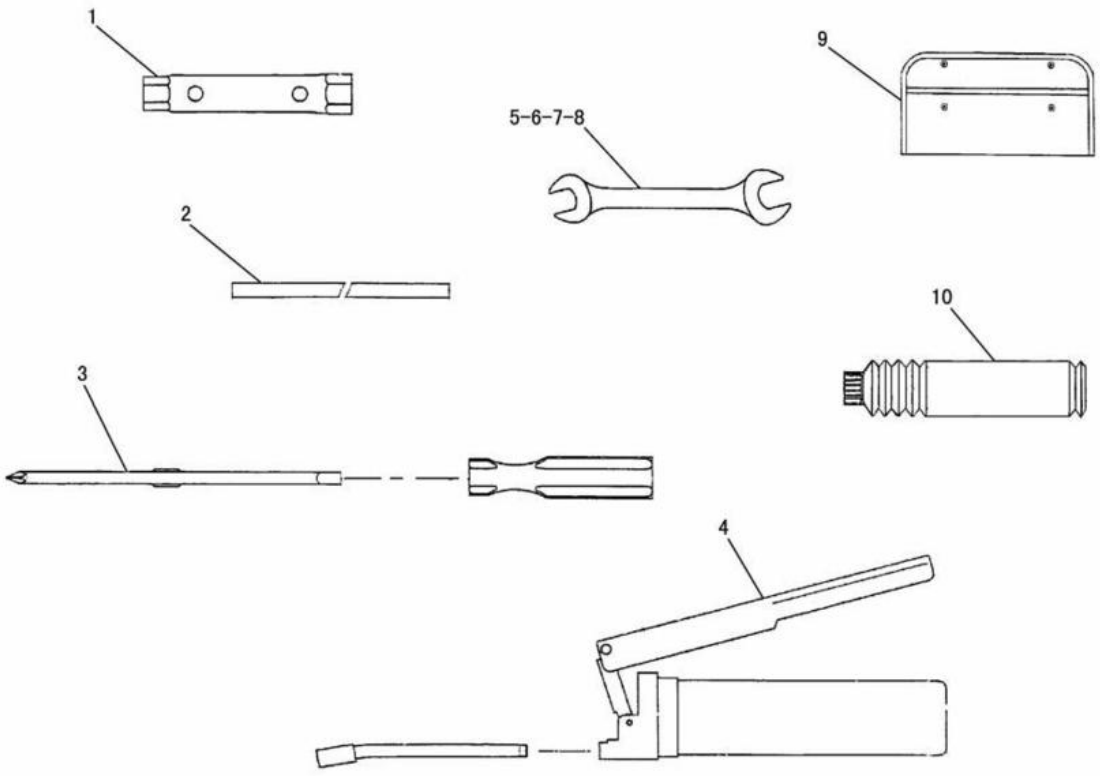

NOTE	No.	PART NO.	QTY.	PART NAME	NOTE	No.	PART NO.	QTY.	PART NAME
	1	1 7 1 − 0 4 1 4	1	WRENCH BOX					
	2	1 7 1 − 0 4 1 5	1	HANDLE					
	3	1 7 1 − 0 4 1 6	1	DRIVER					
	4	1 7 1 − 0 4 2 1	1	GREASE GUN AS					
	5	1 7 1 − 0 4 2 0	1	SPANNER(10,13)					
	6	1 7 1 − 0 4 1 9	1	SPANNER(16,18)					
	7	1 7 1 − 0 4 1 8	1	SPANNER(17,19)					
	8	1 7 1 − 0 4 1 7	1	SPANNER(19,20)					
	9	1 7 1 − 0 4 2 3	1	BAG					
	10	1 7 1 − 0 4 2 2	1	GREASE					

J136120 X02

120-6285 TOOL GROUP

PART NUMBER INDEX

Part No.	Page
0	
0A-2926	28
	29
1	
1H-3244	92
	93
	96
	97
	100
	101
1K-8850	244
	246
	247
	248
	249
1M-4986	90
	91
	96
	97
	100
	101
	102
	103
	108
	109
1M-6119	86
	87
	94
	95
	98
	99
	102
	103
	108
	109
1M-6120	86
	87
	94
	95
	98
	99
	102
	103
	108
	109
1P-4278	20
	21
	22
	23
	50
	51
	52
	53
	307
	309
	310
1R-7128	265
	266
	268
1S-0994	92
1S-0994	93
	454
	455
1S-7251	86
	87
	94
	95
	98
	99
	102
	103
	108
	109
2	
2K-8198	495
2L-8025	144
2L-8049	127
2L-8050	124
	125
	126
	127
	142
2L-8051	124
	125
	126
2L-8052	137
	141
2L-8060	137
2L-8067	102
	103
	106
	107
	108
	109
	112
	113
	129
	131
	133
	135
	137
	139
	141
	142
	170
	171
	172
	173
2L-8069	127
2L-8075	124
	125
	126
	127
	137
	141
	145
2L-8076	124
	125
	126
	127
2L-8077	129
2L-8077	131
	133
	135
	139
	142
	170
	171
	172
	173
2L-8079	124
	125
	126
	143
2L-8081	512
	513
2M-9780	301
	307
	309
	310
	368
	369
	370
	371
	372
	373
	406
	407
	408
	409
	410
	411
	412
	413
	414
	415
	416
	417
2P-1279	374
	375
	376
	377
2P-1314	392
	393
	394
	395
2U-2552	12
	41
	60
	61
	538
	539
	542
	543
	554
2V-3216	20
	21
	22
	23
2Y-5685	588
3	
3B-4503	554

▲ PRIMARY REFERENCE

PART NUMBER INDEX

Part No.	Page
3B-4505	16
	17
	18
	19
3B-4507	634
3B-4605	425
3B-4610	196
	197
	200
	201
	204
	205
	208
	209
	212
	213
	216
	217
	220
	221
	224
	225
	229
	230
	232
	233
	243
3B-4639	282
3B-6487	28
	29
3B-6552	28
	29
3B-8485	295
	296
	434
	465
	468
	472
	473
3B-8486	435
3B-8488	464
	466
	470
	471
	472
	473
	477
	478
	479
3B-8489	270
	271
	272
	273
	274
	275
	276
	434
	435
	438
	480
	481
	482
	483
3B-8489	484
	488
	489
	490
	491
	492
	493
	494
	495
	498
3D-2824	368
	369
	370
	371
3D-4603	286
3E-3362	142
	174
	448
3E-3365	130
	174
	423
	448
3E-3368	142
	146
	174
3E-3371	144
	146
3E-3380	40
	124
	125
	126
3E-3383	124
	125
	126
	130
	170
	171
	172
	173
3E-3389	40
3E-4309	270
	271
3E-5177	124
	125
	126
3E-5180	142
	174
3E-5519	142
	446
3E-6600	194
	195
	198
	199
	202
	203
	206
	207
	210
	211
	214
	215
	218
	219
3E-6600	222
	223
3G-1209	312
3H-2900	106
	107
	112
	113
3J-1907	182
	183
	335
	352
	353
	354
	355
	358
	359
	360
	361
	362
	363
	364
	365
	366
	367
	372
	373
	374
	375
	376
	377
	378
	379
	380
	381
	382
	383
	384
	385
	386
	387
	388
	389
	390
	391
	392
	393
	394
	395
	396
	397
	398
	399
	400
	401
	404
	405
	426
	427
	428
	451
	452
	453
	454

▲ PRIMARY REFERENCE

PART NUMBER INDEX

Part No.	Page
3J-1907	455
	456
3J-7283	471
	472
	473
3J-7354	180
	181
	358
	359
	360
	361
	362
	363
	368
	369
	374
	375
	376
	377
	378
	379
	392
	393
	394
	395
	402
	403
	451
	454
	455
3K-0360	314
	343
	344
	345
	346
	348
	349
	350
	351
	352
	353
	354
	355
	358
	359
	360
	361
	362
	363
	364
	365
	366
	367
	368
	369
	370
	371
	372
	373
	378
	379
	406
	407

Part No.	Page
3K-0360	408
	409
	410
	411
	412
	413
	414
	415
	416
	417
	451
	452
	453
3S-2093	20
	21
	22
	23
	37
	50
	51
	52
	53
	65
	67
	68
	69
	70
	71
	72
	73
	74
	75
	76
	77
	78
	79
	80
	81
	82
	83
	84
	85
	86
	87
	90
	91
	94
	95
	96
	97
	98
	99
	100
	101
	102
	103
	104
	105
	108
	109
	110
	111
	114

Part No.	Page
3S-2093	115
	116
	117
	118
	120
	121
	124
	125
	126
	128
	129
	130
	131
	132
	133
	134
	135
	136
	137
	138
	139
	140
	141
	142
	150
	151
	152
	153
	154
	155
	156
	157
	158
	159
	160
	161
	162
	163
	164
	165
	166
	167
	168
	169
	295
	296
	307
	309
	310
	390
	391
	442
	443
	444
	445
	512
	513
	582
	583
	599
	600
	620
	621

▲ PRIMARY REFERENCE

PART NUMBER INDEX

Part No.	Page
3S-2093	622
	623
3S-6049	86
	87
	94
	95
	98
	99
	102
	103
	108
	109
3S-6050	86
	87
	94
	95
	98
	99
	102
	103
	108
	109
3T-0849	374
	375
	376
	377
3T-4696	129
	131
	133
	135
	139
	170
	171
	172
	173
3V-0778	90
	91
	94
	95
	98
	99
	104
	105
	110
	111
4	
4B-4158	657
	658
	659
	660
4B-4274	416
	417
4D-6466	50
	51
	52
	53
4D-7388	20
	21
	22
	23
4D-7794	92
4D-7794	93
	96
	97
	100
	101
	102
	103
	108
	109
4D-8948	37
4H-1225	92
	93
	96
	97
	100
	101
	102
	103
	108
	109
	110
	111
4I-0378	55
	57
4I-3743	307
	309
	310
4I-3745	307
	309
	310
4I-6039	272
	273
	274
	275
4I-6188	406
	407
	408
	409
	410
	411
	412
	413
	414
	415
	▲420
4I-6365	340
4I-9531	374
	375
	376
	377
4I-9532	374
	375
	376
	377
4I-9533	374
	375
	376
	377
4I-9534	374
	375
	376
	377
4I-9535	374
4I-9535	375
	376
	377
4I-9536	374
	375
	376
	377
4I-9537	374
	375
	376
	377
4I-9538	374
	375
	376
	377
4J-0524	372
	373
4J-3014	487
4J-5477	347
	374
	375
	376
	377
	378
	379
	380
	381
	382
	383
	384
	385
	386
	387
	392
	393
	394
	395
	396
	397
	398
	399
	400
	401
	402
	403
	451
4K-5120	124
4K-8302	154
	155
	160
	161
4K-8864	50
	51
	52
	53
	90
	91
	152
	153
	154
	155
	158
	159

▲ PRIMARY REFERENCE

PART NUMBER INDEX

Part No.	Page
4K-8864	160
	161
	164
	165
	168
	169
4K-9821	28
	29
4K-9822	28
	29
4N-0205	626
	627
	628
	629
4N-9170	150
	151
	156
	157
	162
	163
	166
	167
4P-7581	37
4P-8134	20
	21
	22
	23
	37
	600
	618
	619
	620
	621
	622
	623
4S-1936	152
	153
	154
	155
	158
	159
	160
	161
	164
	165
	168
	169
4S-1962	62
	64
	66
	68
	70
	72
	76
	78
	80
	82
4S-8264	34
	36
4W-6985	585
	588
4Y-3307	598
4Y-8003	117

5

Part No.	Page
5A-3604	328
	329
5C-2874	90
	91
	94
	95
	98
	99
	104
	105
	110
	111
5C-2890	37
	38
	39
	65
	67
	69
	71
	72
	77
	79
	81
	82
	86
	87
	90
	91
	94
	95
	96
	97
	98
	99
	100
	101
	102
	103
	106
	107
	108
	109
	112
	113
	150
	151
	152
	153
	154
	155
	156
	157
	158
	159
	160
	161
	162
	163
	164
	165
	166

Part No.	Page
5C-2890	167
	168
	169
	512
	513
	585
5C-7261	24
	25
	32
	34
	35
	36
	37
	38
	39
	50
	51
	52
	53
	90
	91
	94
	95
	98
	99
	104
	105
	110
	111
	150
	151
	152
	153
	154
	155
	156
	157
	158
	159
	160
	161
	162
	163
	164
	165
	166
	167
	168
	169
	524
	525
	579
	606
	607
	610
	611
	634
5C-7883	106
	107
	112
	113
5C-9553	12
	24

▲ PRIMARY REFERENCE

PART NUMBER INDEX

Part No.	Page
5C-9553	25
	63
	74
	84
	90
	91
	92
	93
	96
	97
	100
	101
	106
	107
	112
	113
	444
	445
	487
	538
	539
	542
	543
	546
	547
	550
	551
	585
	599
	600
	606
	607
	610
	611
	615
5D-1026	368
	369
	370
	371
	618
	619
	622
	623
5D-4246	154
	155
5F-3999	182
	183
5G-7065	311
5I-4075	392
	393
	394
	395
5I-4969	31
5I-5010	10
	16
	17
5I-6959	150
	151
	152
	153
	154
	155
	156
5I-6959	157
	158
	159
	160
	161
	162
	163
	164
	165
	166
	167
	168
	169
5I-7505	11
5I-7628	14
5I-7951	40
5I-7954	5
	▲40
5I-8056	14
5I-8274	148
	149
5I-8275	148
	149
5I-8276	148
5I-9888	129
	131
	133
	135
	139
5P-0743	368
	369
	370
	371
5P-0767	620
	621
	622
	623
5P-1076	118
	523
	533
	534
5P-1420	50
	51
	52
	53
5P-1477	124
	125
	126
5P-2211	368
	369
5P-2230	267
5P-2948	28
	29
5P-4115	404
	405
5P-4116	34
	35
	36
	50
	51
	52
	53
	196
5P-4116	197
	200
	201
	204
	205
	208
	209
	212
	213
	216
	217
	220
	221
	224
	225
	226
	227
	229
	230
	232
	233
	243
	495
	538
	539
	542
	543
	614
5P-4400	295
	296
5P-4423	296
5P-5148	418
5P-5630	28
	29
5P-5643	194
	195
	198
	199
	202
	203
	206
	207
	210
	211
	214
	215
	218
	219
	222
	223
	254
	255
	256
	257
	258
	259
	260
	261
5P-5672	202
	203
5P-5901	254
	255
5P-5935	562

▲ PRIMARY REFERENCE

PART NUMBER INDEX

Part No.	Page
5P-5935	563
	564
	565
	566
	567
	568
	569
	570
	571
	572
	573
	574
	575
	576
	577
5P-6011	295
5P-6442	50
	51
	52
	53
5P-7462	412
	413
	414
	415
	416
	417
5P-7463	412
	413
	414
	415
	416
	417
5P-7464	370
	371
5P-7465	370
	371
5P-7483	194
	195
	198
	199
	202
	203
	206
	207
	210
	211
	214
	215
	218
	219
	222
	223
	250
	251
5P-7970	34
	35
	36
5P-8309	194
	195
	198
	199
	202
	203
5P-8309	206
	207
	210
	211
	214
	215
	218
	219
	222
	223
	228
	229
	230
	231
	232
	233
	242
	243
	254
	255
	256
	257
	258
	259
	260
	261
5P-9085	104
	105
	110
	111
5P-9617	374
	375
	376
	377

6

Part No.	Page
6D-3479	110
	111
6D-4244	104
	105
	110
	111
6D-4246	94
	95
	98
	99
	104
	105
	110
	111
	150
	151
	152
	153
	156
	157
	158
	159
	160
	161
	162
	163
6D-4246	164
	165
	166
	167
	168
	169
6D-4636	102
	103
	108
	109
6F-4718	180
	181
6F-4855	309
	310
6H-3615	264
6H-7127	341
6I-5342	540
	541
	544
	545
	548
	549
	552
	553
6I-6911	305
	306
6I-6912	305
	306
6I-6923	328
	329
6K-0806	37
6K-8178	86
	87
	94
	95
	98
	99
	104
	105
	114
	115
	116
6R-2052	374
	375
	376
	377
6V-0484	372
	373
6V-0683	412
	413
	414
	415
	416
	417
6V-0743	428
6V-0852	372
	373
	374
	375
	376
	377
6V-3938	302
	303

▲ PRIMARY REFERENCE

PART NUMBER INDEX

Part No.	Page
6V-3938	304
6V-3965	372
	373
	374
	375
	376
	377
6V-5219	34
	35
	36
6V-5588	180
	181
6V-5590	471
6V-5645	92
	93
	96
	97
	100
	101
6V-7357	41
	60
	61
	487
	620
	621
	622
	623
6V-7383	104
	105
6V-7613	329
6V-8187	96
	97
	100
	101
6V-8202	328
	329
	335
6V-8337	340
6V-8362	149
6V-8365	92
	93
6V-8397	352
	353
	354
	355
	378
	379
	404
	405
6V-8398	345
	348
	350
	352
	353
	354
	355
	372
	373
	420
	449
	451
6V-8400	338
	339
6V-8513	252
	253
	477
	478
	479
	480
	481
	482
	483
	484
	488
	489
	490
	491
	492
	493
6V-8554	440
6V-8625	344
	352
	353
	354
	355
	372
	373
6V-8626	406
	407
	408
	409
	410
	411
	412
	413
6V-8627	374
	375
	376
	377
	378
	379
	382
	383
	388
	389
	390
	391
	396
	397
	398
	399
	400
	401
	454
	455
6V-8628	378
	379
	394
	395
	402
	403
	451
	454
	455
6V-8634	352
	353
6V-8634	354
	355
	364
	365
	366
	367
	452
	453
6V-8636	352
	353
	354
	355
	378
	379
	404
	405
	427
	428
	456
6V-8639	344
	345
	346
	348
	349
	350
	351
	352
	353
	354
	355
	358
	359
	360
	361
	362
	363
	364
	365
	366
	367
	451
	452
	453
6V-8641	358
	359
	360
	361
	362
	363
	374
	375
	376
	377
	378
	379
	380
	381
	382
	383
	384
	385
	386
	387

▲ PRIMARY REFERENCE

PART NUMBER INDEX

Part No.	Page
6V-8641	388
	389
	390
	391
	396
	397
	398
	399
	400
	401
	451
	454
	455
6V-8647	374
	375
	376
	377
	378
	379
	402
	403
	454
	455
6V-8714	370
	371
6V-8721	370
	371
6V-8722	368
	369
	370
	371
	406
	407
	408
	409
	410
	411
	412
	413
	414
	415
	416
	417
6V-8724	364
	365
	366
	367
	378
	379
	452
	453
6V-8729	347
6V-8754	182
	183
6V-8773	402
	403
	454
	455
6V-8783	414
	415
	416
	417
6V-8934	454
6V-8934	455
6V-8979	374
	375
	376
	377
6V-8993	374
	375
	376
	377
6V-8995	344
6V-9000	358
	359
	360
	361
	362
	363
	392
	393
6V-9001	378
	379
	427
	428
	456
6V-9002	358
	359
	360
	361
	362
	363
	364
	365
	366
	367
	451
6V-9169	344
	345
	346
	348
	349
	350
	351
6V-9170	406
	407
	408
	409
	410
	411
	412
	413
	414
	415
	416
	417
6V-9356	440
6V-9492	119
6V-9509	440
6V-9632	20
	21
	22
	23
	88
	89
	94
6V-9632	95
	98
	99
	106
	107
	112
	113
	254
	255
	256
	257
	258
	259
	260
	261
	262
	263
	309
	310
	404
	405
	524
	525
	587
	590
	592
	595
	599
	600
	626
	627
	630
	631
6V-9672	540
	541
	544
	545
	548
	549
	552
	553
6V-9673	554
	558
6V-9746	406
	407
	408
	409
	410
	411
	416
	417
6V-9830	440
6V-9835	356
	357
	374
	375
	376
	377
	378
	379
	380
	381
	382

▲ PRIMARY REFERENCE

PART NUMBER INDEX

Part No.	Page
6V-9835	383
	396
	397
	398
	399
	400
	401
	402
	403
	451
6V-9842	356
	357
	378
	379
	400
	401
	454
	455
6V-9849	356
	357
	374
	375
	376
	377
	378
	379
	380
	381
	384
	385
	386
	387
	388
	389
	390
	391
	400
	401
	454
	455
6V-9851	372
	373
6V-9852	406
	407
	408
	409
	410
	411
	412
	413
	414
	415
	416
	417
6V-9873	364
	365
	366
	367
	452
	453
6V-9874	406
	407
	408
6V-9874	409
	410
	411
	412
	413
	414
	415
	416
	417

7

Part No.	Page
7C-4354	368
	369
	370
	371
7D-1553	27
	374
	375
7D-1728	38
	39
7D-7026	620
	621
7F-9223	244
	246
	247
	248
	249
	604
	605
7G-7918	142
7I-0676	265
	266
	268
7I-1024	406
	407
	408
	409
	410
	411
	412
	413
	414
	415
	416
	417
	618
	619
	620
	621
	622
	623
7I-2317	182
	183
7I-2673	110
	111
	114
	115
	116
	117
	150
	151
	152
7I-2673	153
	154
	155
	156
	157
	158
	159
	160
	161
	162
	163
	164
	165
	166
	167
	168
	169
7I-7403	426
7I-7439	50
	51
	52
	53
	356
	357
7J-0204	180
	181
7J-9108	312
	406
	407
	408
	409
	410
	411
	416
	417
7J-9933	329
7K-1181	62
	64
	66
	68
	70
	72
	74
	76
	77
	78
	79
	80
	81
	82
	84
	347
	352
	353
	354
	355
	356
	357
	374
	375
	376
	377
	386

▲ PRIMARY REFERENCE

PART NUMBER INDEX

Part No.	Page
7K-1181	387
	388
	389
	390
	391
	400
	401
	404
	405
	406
	407
	408
	409
	410
	411
	412
	413
	442
	443
	444
	445
	626
	627
	628
	629
	630
	631
7N-5274	86
	87
	94
	95
	98
	99
	102
	103
	108
	109
7T-1099	55
	202
	203
	216
	217
	254
	255
	256
	257
	258
	259
	260
	261
	262
	263
	270
	271
	307
	309
	310
	562
	563
	564
	565
	566
	567
7T-1099	568
	569
	570
	571
	572
	573
	574
	575
	576
	577
	599
	600
7T-1914	74
	81
	84
7T-6799	149
7V-9275	92
	93
	96
	97
	100
	101
7X-0474	196
	197
	200
	201
	204
	205
	208
	209
	212
	213
	216
	217
	220
	221
	224
	225
7X-0510	178
	179
7X-0570	177
7X-0578	254
	255
	256
	257
7X-0592	579
7X-0613	524
	525
7X-0618	313
	535
	536
	537
7X-0632	464
	465
	466
	467
	469
	470
7X-0796	58
	59
7X-0818	18
	19
	634
7X-2393	579
	580
	581
	582
	583
	584
7X-2533	26
	524
	555
7X-2537	334
7X-2543	32
	488
	489
	490
	491
	492
	493
	498
	509
7X-2548	252
	253
	254
	255
	256
	257
	258
	259
	260
	261
	262
	263
	522
7X-2549	469
	470
7X-2553	525
7X-2555	285
	564
	565
	566
	567
	568
	569
	570
	571
7X-2556	15
7X-2563	264
	265
	266
	268
7X-2619	307
	626
	627
	628
	629
	630
	631
7X-2621	254
	255
	256
	257
7X-3229	640
	641
	646

▲ PRIMARY REFERENCE

PART NUMBER INDEX

Part No.	Page
7X-3229	647
7X-4780	356
	357
7X-7644	642
	643
	648
	649
7X-7729	35
	55
	56
	194
	195
	196
	197
	198
	199
	200
	201
	202
	203
	204
	205
	206
	207
	208
	209
	210
	211
	212
	213
	214
	215
	216
	217
	218
	219
	220
	221
	222
	223
	224
	225
	226
	227
	228
	229
	230
	231
	232
	233
	234
	235
	236
	237
	242
	243
	244
	245
	246
	247
	248
	249
	250

Part No.	Page
7X-7729	251
	307
	308
	352
	353
	354
	355
	368
	369
	370
	371
	562
	563
	564
	565
	566
	567
	568
	569
	570
	571
	572
	573
	574
	575
	576
	577
7X-7877	609
	613
7X-7958	368
	369
7Y-1976	20
	21
	22
	23
	307
	309
	310
7Y-3118	270
	271
7Y-3127	270
	271
7Y-3474	599
	600
7Y-3950	75
	83
	85
	128
	130
	132
	138
	624
7Y-3951	124
	125
	126
	127
	128
	129
	130
	131
	132
	133
	134

Part No.	Page
7Y-3951	135
	136
	138
	139
	140
	141
	142
	143
	170
	171
	172
	173
	447
7Y-3952	124
	125
	126
	127
	128
	130
	132
	134
	136
	138
	140
	142
	143
	170
	171
	172
	173
7Y-3954	128
	129
	130
	131
	132
	133
	134
	135
	138
	139
	140
	141
7Y-3955	128
	130
	132
	138
	624
7Y-3957	134
	136
	140
	143
	170
	171
	172
	173
	447
7Y-3958	128
	130
	132
	134
	136
	138
	140

▲ PRIMARY REFERENCE

PART NUMBER INDEX

Part No.	Page
7Y-3958	447
7Y-3962	120
	146
7Y-3963	120
	124
	125
	126
	127
	128
	129
	130
	131
	132
	133
	134
	135
	136
	137
	138
	139
	140
	141
	146
7Y-3964	120
	146
7Y-3965	120
	124
	125
	126
	127
	128
	129
	130
	131
	132
	133
	134
	135
	136
	137
	138
	139
	140
	141
	146
7Y-3966	512
	513
7Y-3969	620
	621
	622
	623
7Y-3995	124
	125
	126
	127
7Y-3996	124
	125
	126
	127
7Y-4754	307
7Y-5292	538
	539
	542
7Y-5292	543
	546
	547
	550
	551
	558
7Y-5458	624
7Y-5464	624
7Y-5499	106
	107
	112
	113
7Y-5556	128
	130
	132
	134
	138
7Y-7389	557
7Y-8168	372
	373
7Y-8172	20
	21
	22
	23
7Y-8463	340
8	
8C-3085	312
8C-4535	642
	643
	648
	649
8C-5224	265
	266
	268
8C-7505	540
	541
	544
	545
	548
	549
	552
	553
	556
8C-7563	406
	407
	408
	409
	410
	411
	412
	413
	414
	415
	416
	417
8C-7581	119
8D-0983	378
	379
8D-3269	252
	253
8D-3786	313
8D-3786	535
	536
	537
8K-1115	244
	246
	247
	248
	249
	604
	605
8L-8413	556
	558
8M-2770	90
	91
	94
	95
	98
	99
	104
	105
	110
	111
	307
	309
	310
8M-2772	38
	39
	152
	153
	154
	155
	158
	159
	160
	161
	164
	165
	168
	169
8N-1542	129
	131
	133
	135
	139
8N-1543	142
8N-1546	124
	125
	126
	142
8N-1547	124
	125
	126
	142
8N-1725	86
	87
	94
	95
	98
	99
	102
	103
	108
	109

▲ PRIMARY REFERENCE

PART NUMBER INDEX

Part No.	Page
8P-5348	244
	246
	247
	248
	249
8P-6363	562
	563
	564
	565
	566
	567
	568
	569
	570
	571
	572
	573
	574
	575
	576
	577
8R-3857	34
	36
8R-9202	585
	588
8S-3020	86
	87
	94
	95
	98
	99
	102
	103
	108
	109
8T-0075	378
	379
	404
	405
8T-0076	352
	353
	354
	355
	364
	365
	366
	367
	452
	453
8T-0077	352
	353
	354
	355
	364
	365
	366
	367
	372
	373
	452
	453
8T-0164	374
	375
8T-0164	376
	377
	378
	379
	400
	401
	451
	454
	455
8T-0211	305
	306
8T-0255	495
8T-0287	416
	417
8T-0288	419
8T-0328	55
	57
	90
	91
	92
	93
	94
	95
	96
	97
	98
	99
	100
	101
	104
	105
	110
	111
	554
	557
8T-0343	338
	339
8T-0707	283
	284
8T-1158	182
	183
	305
	306
	338
	339
8T-1687	352
	353
	354
	355
8T-1715	368
	369
	370
	371
8T-1887	410
	411
	412
	413
	414
	415
	416
	417
8T-1888	410
	411
	412
	413
	414
	415
	416
	417
8T-2353	378
	379
8T-2894	244
	246
	247
	248
	249
	604
	605
8T-2920	370
	371
8T-3311	392
	393
	394
	395
8T-3490	20
	21
	22
	23
	24
	25
	88
	89
	94
	95
	98
	99
	106
	107
	112
	113
	122
	194
	195
	198
	199
	202
	203
	206
	207
	208
	209
	210
	211
	212
	213
	214
	215
	216
	217
	218
	219
	220
	221
	222
	223
	224

▲ PRIMARY REFERENCE

PART NUMBER INDEX

Part No.	Page
8T-3490	225
	234
	235
	236
	237
	244
	245
	246
	247
	248
	249
	254
	255
	256
	257
	258
	259
	260
	261
	262
	263
	449
	450
	562
	563
	564
	565
	566
	567
	568
	569
	570
	571
	572
	573
	574
	575
	576
	577
	624
8T-3597	254
	255
	256
	257
	258
	259
	260
	261
	262
	263
	280
	374
	375
	376
	377
	535
	536
	537
	564
	565
	566
	567
	568

Part No.	Page
8T-3597	569
	570
	571
8T-3612	24
	25
	34
	36
	38
	39
	88
	89
	92
	93
	94
	95
	96
	97
	98
	99
	100
	101
	104
	105
	106
	107
	110
	111
	112
	113
	254
	255
	256
	257
	258
	259
	260
	261
	262
	263
	334
	406
	407
	408
	409
	410
	411
	412
	413
	414
	415
	416
	417
	454
	455
	538
	539
	542
	543
	562
	563
	564
	565
	566

Part No.	Page
8T-3612	567
	568
	569
	570
	571
	572
	573
	574
	575
	576
	577
	587
	592
	625
8T-3647	16
	17
8T-3844	404
	405
8T-3957	180
	181
8T-4116	27
8T-4121	20
	21
	22
	23
	32
	38
	39
	62
	64
	66
	68
	70
	72
	76
	78
	80
	82
	86
	87
	90
	91
	92
	93
	94
	95
	96
	97
	98
	99
	100
	101
	102
	103
	104
	105
	106
	107
	108
	109
	110
	111
	112

▲ PRIMARY REFERENCE

PART NUMBER INDEX

Part No.	Page
8T-4121	113
	114
	115
	116
	117
	120
	121
	122
	123
	152
	153
	154
	155
	158
	159
	160
	161
	164
	165
	168
	169
	196
	197
	200
	201
	204
	205
	208
	209
	212
	213
	216
	217
	220
	221
	224
	225
	238
	239
	240
	241
	254
	255
	256
	257
	258
	259
	260
	261
	262
	263
	264
	265
	266
	268
	280
	285
	302
	303
	304
	307
	309
	310

Part No.	Page
8T-4121	311
	313
	332
	333
	334
	341
	345
	346
	348
	349
	350
	351
	352
	353
	354
	355
	368
	369
	370
	371
	372
	373
	374
	375
	402
	403
	404
	405
	406
	407
	408
	409
	410
	411
	412
	413
	414
	415
	416
	417
	422
	427
	428
	434
	449
	450
	454
	455
	456
	470
	471
	472
	473
	475
	485
	486
	501
	533
	534
	568
	569
	596
	597

Part No.	Page
8T-4121	598
	600
	602
	603
	615
	616
	624
	628
	629
	630
	631
	634
8T-4122	634
8T-4123	264
	265
	266
	268
8T-4132	285
	502
	503
	504
	505
8T-4133	86
	87
	117
	120
	121
	304
	338
	339
	345
	346
	348
	349
	350
	351
	488
	489
	490
	491
	492
	493
	494
	498
	509
	548
	549
	552
	553
	556
8T-4134	554
	620
	621
	622
	623
8T-4136	20
	21
	22
	23
	55
	56
	86
	87

▲ PRIMARY REFERENCE

PART NUMBER INDEX

Part No.	Page
8T-4136	94
	95
	98
	99
	104
	105
	106
	107
	110
	111
	112
	113
	196
	197
	200
	201
	204
	205
	208
	209
	212
	213
	216
	217
	220
	221
	224
	225
	242
	243
	244
	245
	246
	247
	248
	249
	307
	308
	333
	345
	346
	352
	353
	354
	355
	368
	369
	370
	371
	412
	413
	414
	415
	416
	417
	470
	471
	472
	473
	475
	485
	486
	562

Part No.	Page
8T-4136	563
	564
	565
	566
	567
	568
	569
	570
	571
	572
	573
	574
	575
	576
	577
	596
	597
	599
	602
	603
	616
	624
8T-4137	20
	21
	22
	23
	62
	64
	66
	68
	70
	72
	76
	78
	80
	82
	86
	87
	90
	91
	94
	95
	96
	97
	98
	99
	100
	101
	102
	103
	104
	105
	108
	109
	110
	111
	117
	120
	121
	123
	194
	195
	196

Part No.	Page
8T-4137	197
	198
	199
	200
	201
	202
	203
	204
	205
	206
	207
	208
	209
	210
	211
	212
	213
	214
	215
	216
	217
	218
	219
	220
	221
	222
	223
	224
	225
	226
	227
	228
	229
	230
	231
	232
	233
	234
	235
	236
	237
	238
	239
	240
	241
	242
	243
	250
	251
	252
	253
	254
	255
	256
	257
	258
	259
	260
	261
	262
	263
	280
	307

▲ PRIMARY REFERENCE

PART NUMBER INDEX

Part No.	Page
8T-4137	309
	310
	313
	332
	341
	352
	353
	354
	355
	368
	369
	370
	371
	372
	373
	402
	403
	404
	405
	406
	407
	408
	409
	410
	411
	412
	413
	414
	415
	416
	417
	454
	455
	464
	465
	466
	467
	469
	470
	477
	478
	479
	480
	481
	482
	483
	484
	488
	489
	490
	491
	492
	493
	598
	600
	615
	624
	634
8T-4138	37
	38
	39
	63
	65

Part No.	Page
8T-4138	67
	69
	71
	74
	77
	79
	81
	84
	524
	525
	538
	539
	542
	543
	546
	547
	550
	551
	618
	619
	620
	621
	622
	623
8T-4139	280
	294
	330
	352
	353
	354
	355
	370
	371
	372
	373
	374
	375
	376
	377
	378
	379
	400
	401
	475
8T-4171	96
	97
	100
	101
	106
	107
	112
	113
	308
	402
	403
	442
	443
	444
	445
	540
	541
	544
	545

Part No.	Page
8T-4171	548
	549
	552
	553
	554
	555
	585
	588
8T-4175	562
	563
	572
	573
	574
	575
	576
	577
8T-4176	488
	489
	490
	491
	492
	493
	535
	536
	537
8T-4178	345
	494
8T-4179	118
	374
	375
	376
	377
	523
8T-4182	285
	378
	379
	406
	407
	408
	409
	533
8T-4183	254
	255
	256
	257
	258
	259
	260
	261
	262
	263
	269
	358
	359
	360
	361
	362
	363
	451
8T-4185	346
	406
	407
	408

▲ PRIMARY REFERENCE

PART NUMBER INDEX

Part No.	Page
8T-4185	409
	534
8T-4186	92
	93
	244
	245
	246
	247
	248
	249
	304
	477
	478
	479
	480
	481
8T-4187	264
	265
	266
	268
8T-4189	27
	50
	51
	52
	53
	94
	95
	96
	97
	396
	397
	398
	399
	400
	401
	538
	539
	542
	543
	556
	557
	562
	564
	565
	568
	569
	572
	573
	576
	577
	579
	601
	606
	607
	610
	611
	614
8T-4190	284
8T-4191	38
	39
	62
	86
	87
8T-4191	94
	95
	98
	99
	114
	115
	116
	152
	153
	154
	155
	158
	159
	160
	161
	164
	165
	168
	169
	264
	265
	266
	268
	333
	368
	369
	370
	371
	374
	375
	427
	428
	454
	455
	456
	598
	628
	629
	630
	631
8T-4192	154
	155
	160
	161
	302
	303
	304
	535
	536
	537
	538
	539
	542
	543
	546
	547
	550
	551
	554
8T-4193	252
	253
8T-4194	313
	358
8T-4194	359
	360
	361
	362
	363
	451
	535
	536
	537
8T-4195	96
	97
	100
	101
	122
	194
	195
	196
	197
	198
	199
	202
	203
	206
	207
	208
	209
	210
	211
	214
	215
	218
	219
	220
	221
	222
	223
	302
	303
	304
	334
	348
	349
	350
	351
	368
	369
	370
	371
	402
	403
	421
	422
	449
	450
	501
	596
	597
8T-4196	102
	103
	108
	109
	252
	253

▲ PRIMARY REFERENCE

PART NUMBER INDEX

Part No.	Page
8T-4196	341
	482
	483
	484
8T-4198	378
	379
	488
	489
	490
	491
	492
	493
	498
	509
8T-4199	34
	36
	226
	227
8T-4200	20
	21
	22
	23
	24
	25
	28
	29
	34
	50
	51
	52
	53
	88
	89
	92
	93
	94
	95
	96
	97
	98
	99
	100
	101
	102
	103
	106
	107
	108
	109
	112
	113
	150
	151
	152
	153
	154
	155
	156
	157
	158
	159
	160
	161

Part No.	Page
8T-4200	162
	163
	164
	165
	166
	167
	168
	169
	283
	284
	332
	334
	341
	374
	375
	376
	377
	396
	397
	398
	399
	400
	401
	449
	450
	454
	455
	495
	538
	539
	540
	541
	542
	543
	544
	545
	546
	547
	548
	549
	550
	551
	552
	553
	554
	555
	606
	607
	610
	611
	616
	618
	619
	620
	621
	622
	623
	625
	626
	627
	628
	629
	630

Part No.	Page
8T-4200	631
8T-4205	20
	21
	22
	23
	24
	25
	26
	96
	97
	100
	101
	102
	103
	108
	109
	442
	443
	444
	445
	524
	585
	588
	606
	607
	610
	611
8T-4223	15
	37
	38
	39
	90
	91
	96
	97
	100
	101
	102
	103
	108
	109
	118
	119
	123
	154
	155
	160
	161
	254
	255
	256
	257
	258
	259
	260
	261
	262
	263
	269
	280
	281
	283
	284

▲ PRIMARY REFERENCE

PART NUMBER INDEX

Part No.	Page
8T-4223	294
	302
	303
	304
	311
	330
	352
	353
	354
	355
	358
	359
	360
	361
	362
	363
	370
	371
	374
	375
	376
	377
	378
	379
	400
	401
	451
	466
	468
	471
	474
	475
	487
	535
	536
	537
	540
	541
	544
	545
	546
	547
	550
	551
	554
8T-4224	16
	17
	18
	19
	20
	21
	22
	23
	24
	25
	28
	29
	32
	34
	36
	37
	38
	39

Part No.	Page
8T-4224	50
	51
	52
	53
	88
	89
	90
	91
	92
	93
	94
	95
	96
	97
	98
	99
	100
	101
	102
	103
	104
	105
	106
	107
	108
	109
	110
	111
	112
	113
	150
	151
	152
	153
	154
	155
	156
	157
	158
	159
	160
	161
	162
	163
	164
	165
	166
	167
	168
	169
	230
	243
	283
	284
	332
	334
	341
	374
	375
	376
	377
	396
	397

Part No.	Page
8T-4224	398
	399
	400
	401
	449
	450
	454
	455
	495
	524
	525
	538
	539
	540
	541
	542
	543
	544
	545
	546
	547
	548
	549
	550
	551
	552
	553
	554
	555
	557
	562
	564
	565
	568
	569
	572
	573
	576
	577
	579
	606
	607
	610
	611
	616
	618
	619
	620
	621
	622
	623
	625
	626
	627
	628
	629
	630
	631
	634
8T-4226	378
	379
8T-4244	154
	155

▲ PRIMARY REFERENCE

PART NUMBER INDEX

Part No.	Page
8T-4244	160
	161
	466
	468
	469
	470
	471
	474
	488
	489
	490
	491
	492
	493
8T-4648	535
	536
	537
8T-4908	90
	91
	92
	93
	94
	95
	98
	99
	100
	101
	104
	105
	110
	111
	422
	424
	495
	620
	621
	622
	623
	626
	627
	628
	629
	630
	631
8T-4910	283
8T-4956	311
	487
	533
	534
	535
	536
	537
8T-4970	20
	21
	22
	23
	524
	525
8T-4971	96
	97
	100
	101
	102
8T-4971	103
	108
	109
	620
	621
	622
	623
8T-4994	252
	253
8T-5004	244
	246
	247
	248
	249
	604
	605
8T-5372	525
8T-5436	86
	87
	94
	95
	98
	99
	106
	107
	112
	113
8T-5439	264
	265
	266
	267
	268
8T-6381	267
8T-6411	304
	538
	539
	540
	541
	542
	543
	544
	545
	546
	547
	548
	549
	550
	551
	552
	553
8T-6466	372
	373
8T-6701	374
	375
	376
	377
	380
	381
8T-6759	328
	329
	338
	339
8T-6842	655
8T-6868	281
8T-6869	18
	19
	50
	51
	52
	53
8T-6912	625
8T-7338	502
	503
	504
	505
8T-7529	154
	155
	160
	161
	368
	369
	370
	371
8T-7547	620
	621
	622
	623
8T-7934	34
8T-7963	540
	541
	544
	545
	548
	549
	552
	553
8T-8442	306
8T-8737	37
	38
	39
	40
	72
	82
	124
	125
	126
	127
	128
	129
	130
	131
	132
	133
	134
	135
	136
	137
	138
	139
	140
	141
	142
	150
	151
	152
	153

▲ PRIMARY REFERENCE

PART NUMBER INDEX

Part No.	Page
8T-8737	154
	155
	156
	157
	158
	159
	160
	161
	162
	163
	164
	165
	166
	167
	168
	169
	170
	171
	172
	173
	174
8T-8799	94
	95
	96
	97
	98
	99
	100
	101
	104
	105
	106
	107
	110
	111
	112
	113
8T-9636	63
	65
	67
	69
	71
	77
	79
	81
8Y-6967	626
	627
	628
	629
	630
	631
9	
9B-7233	149
9D-3769	404
	405
9F-2167	344
9G-4343	127
9G-7641	75
	85
	▲149
9M-1974	34
9M-1974	35
	36
9M-8406	92
	93
	96
	97
	100
	101
	102
	103
	104
	105
	108
	109
	110
	111
9P-3066	564
	565
	566
	567
	568
	569
	570
	571
9R-1004	346
	349
	351
9R-1005	346
	349
	351
9R-2613	258
	259
	262
	263
	270
	271
9R-2821	270
	271
	272
	273
	276
9R-3142	254
	255
	256
	257
	260
	261
9R-3924	254
	255
	256
	257
	260
	261
	270
	271
9S-0174	92
	93
9S-4182	368
	369
9S-4185	314
	378
	379
9S-4189	368
9S-4189	369
9S-4190	307
	309
	310
9S-8004	426
9W-0632	252
9W-0844	127
	128
	129
	130
	131
	132
	133
	134
	135
	136
	137
	138
	139
	140
	141
	142
	396
	397
	398
	399
	400
	401
9W-0852	124
	125
	126
	127
	129
	131
	133
	135
	136
	137
	139
	140
	141
	142
	143
	392
	393
	394
	395
9W-1442	63
	65
	67
	69
	71
	77
	79
	81
	170
	171
	172
	173
9W-1446	63
	65
	67
	69

▲ PRIMARY REFERENCE

PART NUMBER INDEX

Part No.	Page
9W-1446	71
	77
	79
	81
9W-1494	63
	65
	67
	69
	71
	77
	79
9W-9952	564
	565
	566
	567
	568
	569
	570
	571
9X-1054	136
	140
	142
	446
9X-1056	136
	140
	142
9X-2039	562
	563
	564
	565
	566
	567
	568
	569
	570
	571
	572
	573
	574
	575
	576
	577
9X-2043	630
	631
9X-2044	626
	627
	628
	629
	630
	631
9X-2045	630
	631
9X-2046	626
	627
	628
	629
9X-2133	618
	619
	620
	621
	622
	623
9X-2492	372
9X-2492	373
9X-2537	305
9X-2616	535
	536
	537
9X-6165	618
	619
	620
	621
	622
	623
9X-6581	414
	415
	416
	417
9X-7725	312
9X-8250	90
	91
	94
	95
	96
	97
	98
	99
	100
	101
9X-8256	37
	38
	39
	63
	65
	67
	69
	71
	72
	74
	77
	79
	81
	82
	84
	86
	87
	90
	91
	92
	93
	94
	95
	96
	97
	98
	99
	100
	101
	106
	107
	112
	113
	150
	151
	152
	153
9X-8256	154
	155
	156
	157
	158
	159
	160
	161
	162
	163
	164
	165
	166
	167
	168
	169
	180
	181
	304
	307
	308
	402
	403
	442
	443
	444
	445
	487
	512
	513
	524
	525
	554
	555
	599
	600
	615
	620
	621
	622
	623
	626
	627
	628
	629
	630
	631
9X-8257	15
	285
	562
	563
	572
	573
	574
	575
	576
	577
9X-8488	119
9X-8912	35
	311
	634
9X-9120	86
	87

▲ PRIMARY REFERENCE

PART NUMBER INDEX

Part No.	Page
9X-9120	94
	95
	98
	99
	102
	103
	108
	109
0	
003-9514	620
	621
006-6803	329
011-7960	117
085-7081	328
	329
085-7083	328
	329
085-7085	329
085-9429	60
	61
085-9768	177
	178
	179
086-1713	20
	21
	22
	23
087-4456	343
087-4707	338
	339
087-4710	338
	339
087-5708	338
	339
091-1745	15
091-3474	48
	49
092-4924	254
	255
	256
	257
	258
	259
	260
	261
	262
	263
093-1290	345
	348
	350
	406
	407
	408
	409
093-1291	406
	407
	408
	409
093-1430	477
	478
	479
093-1430	480
	481
	488
	489
	490
	491
	492
	493
093-1434	471
093-2069	122
	123
093-3328	317
093-5537	368
	369
	370
	371
094-0876	340
094-3245	307
094-3247	307
094-7036	16
	17
094-7998	40
094-9725	40
094-9726	40
095-0723	147
095-0728	333
	334
	540
	541
	544
	545
	548
	549
	552
	553
	556
095-0735	148
	149
	150
	151
	152
	153
	154
	155
	156
	157
	158
	159
	160
	161
	162
	163
	164
	165
	166
	167
	168
	169
095-0736	55
	57
	540
	541
	544
095-0736	545
	548
	549
	552
	553
095-0742	554
095-0755	548
	549
	552
	553
095-0892	283
	284
095-0936	338
	339
095-0942	312
095-0967	6
095-0990	283
	284
095-1207	538
	539
	542
	543
	546
	547
	550
	551
	554
095-1260	305
	306
	338
	339
095-1388	620
	621
095-1390	20
	21
	22
	23
	368
	369
095-1392	27
	368
	369
	370
	371
	372
	373
095-1512	335
095-1514	307
095-1517	307
095-1519	309
	310
	423
	426
095-1526	496
	497
095-1543	312
095-1575	180
	181
	182
	183
095-1576	424
	425
095-1577	180

▲ PRIMARY REFERENCE

PART NUMBER INDEX

Part No.	Page
095-1577	181
095-1578	180
	181
	305
	306
	426
095-1579	347
	356
	357
	426
095-1580	180
	181
	182
	183
095-1582	180
	181
	182
	183
095-1585	180
	181
	424
	425
	440
	449
	450
095-1586	340
	420
	426
095-1587	180
	181
095-1590	182
	183
	328
095-1592	180
	181
	440
095-1604	283
	284
	496
	497
095-1622	422
095-1623	421
095-1689	182
	183
095-1701	368
	369
	370
	371
095-1708	422
095-1710	421
095-1711	496
	497
095-1712	422
	496
	497
095-1713	421
095-1716	180
	181
095-1721	180
	181
095-1723	307
	309
	310

Part No.	Page
095-1725	307
	309
	310
095-1750	420
095-1751	420
095-1777	546
	547
	550
	551
095-1779	424
	425
095-1794	283
	284
095-6623	318
	320
095-7930	496
	497
095-7934	254
	255
	256
	257
	258
	259
	260
	261
	262
	263
095-7951	421
095-8051	421
	422
095-8638	13
	48
	49
	60
	61
095-9254	55
095-9258	180
	181
095-9397	421
	434
095-9785	20
	21
	22
	23
	27
096-0061	618
	619
	620
	621
	622
	623
096-0187	406
	407
	408
	409
	410
	411
	412
	413
	414
	415
	416
	417

Part No.	Page
096-0192	148
	149
096-1628	340
096-2320	228
	231
	242
096-2434	325
096-2501	14
096-2617	336
	337
096-2622	540
	541
	544
	545
	548
	549
	552
	553
096-2916	568
	569
	570
	571
	572
	573
	574
	575
096-3288	20
	21
	22
	23
096-4177	30
096-4498	340
096-4535	305
	306
096-4543	305
	306
096-4544	335
096-4754	307
096-5028	28
	29
096-5101	40
096-5863	370
	371
096-6079	374
	375
	376
	377
096-6080	374
	375
	376
	377
096-6081	374
	375
	376
	377
096-6142	63
	65
	67
	69
	71
	77
	79
	81

▲ PRIMARY REFERENCE

PART NUMBER INDEX

Part No.	Page
096-6145	63
	65
	67
	69
	71
	77
	79
	81
096-6166	119
	333
	334
096-6661	15
096-6662	15
096-8788	182
	183
096-9013	40
096-9014	40
099-0361	305
	306
099-0822	423
099-2374	426
099-6137	338
	339
	340
099-6141	338
	339
099-6144	338
	339
099-6145	338
	339
099-6220	624
099-7127	540
	541
	544
	545
099-7197	180
	181
1	
100-5041	136
	140
	142
	446
101-6544	12
102-0818	335
102-8801	129
	131
	133
	135
	137
	139
	141
	142
	143
	170
	171
	172
	173
	174
102-8802	37
	38
	39
102-8802	55
	57
	63
	65
	67
	69
	71
	73
	75
	77
	79
	81
	83
	128
	130
	132
	134
	136
	138
	140
	141
	142
	145
	150
	151
	156
	157
	162
	163
	164
	165
	166
	167
	168
	169
	174
	392
	393
	394
	395
	423
	448
	620
	621
	622
	623
102-8803	129
	131
	133
	135
	139
	144
	146
102-8804	62
	64
	66
	68
	70
	76
	78
	80
	128
	129
102-8804	130
	131
	132
	133
	134
	135
	136
	137
	138
	139
	140
	141
	175
	442
	443
	444
	445
	446
	447
102-8805	38
	39
	72
	82
	124
	125
	126
	127
	128
	129
	130
	131
	132
	133
	134
	135
	136
	138
	139
	140
	141
	150
	151
	152
	153
	154
	155
	156
	157
	158
	159
	160
	161
	162
	163
	164
	165
	166
	167
	168
	169
	170
	171
	172

▲ PRIMARY REFERENCE

PART NUMBER INDEX

Part No.	Page
102-8805	173
102-8806	40
102-8815	40
103-2529	98
	99
	106
	107
103-8240	307
	310
103-9011	11
104-8130	316
	317
	318
	320
	321
	322
	323
	324
	325
	326
	327
105-9871	128
	130
	132
	134
	138
105-9872	128
	130
	132
	134
	138
105-9873	128
	130
	132
	134
	138
105-9976	624
106-0179	396
	397
	398
	399
	400
	401
107-1679	358
	359
	360
	361
	362
	363
	451
107-6910	374
	375
	376
	377
	380
	381
108-7516	392
	393
	394
	395
109-7113	638
	639
	642
109-7113	643
	644
	645
	648
	649
110-5602	302
	303
111-4836	90
	91
	96
	97
	100
	101
	102
	103
	108
	109
111-5422	325
113-0363	46
	47
113-8490	136
	140
113-8491	136
	140
114-0496	182
	183
114-0623	420
114-8242	340
115-1615	74
	84
	92
	93
	96
	97
	100
	101
	442
	443
115-6433	477
	478
	479
	480
	481
116-0118	62
	114
	115
	116
	117
117-1878	150
	151
	156
	157
	162
	163
	164
	165
	166
	167
	168
	169
	174
	175
118-4779	42
118-4779	43
118-4825	42
	43
118-6054	653
119-5388	338
	339
119-5389	338
	339
119-5391	338
	339
119-5392	338
	339
119-9880	15
119-9895	92
	93
	96
	97
	100
	101
	106
	107
	112
	113
119-9896	63
	65
	67
	69
	71
	72
	77
	79
	81
	82
119-9899	50
	51
	52
	53
	▲54
119-9903	34
	35
	36
119-9920	424
	425
119-9937	506
	507
119-9938	502
	503
	504
	505
119-9939	502
	503
	504
	505
119-9940	502
	503
	504
	505
120-0664	16
	17
120-0665	175
120-4636	282
120-4652	282
120-4653	282

▲ PRIMARY REFERENCE

PART NUMBER INDEX

Part No.	Page
120-4654	282
120-4660	283
	284
120-4663	283
	284
120-4664	283
	284
120-6285	▲661
120-7724	75
	85
	128
	130
	132
	138
120-8053	347
	356
	357
120-8755	307
	309
	310
120-8757	307
	309
	310
120-8758	307
	309
	310
120-8838	57
120-8839	57
121-1029	55
	88
	89
	106
	107
	112
	113
	150
	151
	152
	153
	154
	155
	156
	157
	158
	159
	160
	161
	162
	163
	164
	165
	166
	167
	168
	169
	254
	255
	256
	257
	258
	259
	260
	261
121-1029	262
	263
	562
	563
	564
	565
	566
	567
	568
	569
	570
	571
	572
	573
	574
	575
	576
	577
121-3646	469
	470
121-3691	464
	465
	466
121-3709	471
	472
	473
121-3772	464
	466
122-3882	228
	231
	242
122-8948	44
	45
	46
	47
122-8949	44
	45
	46
	47
124-8100	264
124-9156	332
	562
	563
	564
	565
	566
	567
	568
	569
	570
	571
	572
	573
	574
	575
	576
	577
125-1642	620
	621
	622
	623
125-1647	626
	627
125-1647	628
	629
	630
	631
125-1720	626
	627
	628
	629
	630
	631
125-1722	626
	627
	628
	629
	630
	631
125-1723	626
	627
	628
	629
	630
	631
125-1843	626
	627
	628
	629
	630
	631
125-1912	329
125-3984	90
	91
	96
	97
125-5213	152
	153
	154
	155
	158
	159
	160
	161
125-5292	152
	153
	154
	155
	158
	159
	160
	161
125-5298	152
	153
	154
	155
	158
	159
	160
	161
125-7358	332
	341
125-7520	562
	563
	564
	565

▲ PRIMARY REFERENCE

PART NUMBER INDEX

Part No.	Page
125-7520	566
	567
	568
	569
	570
	571
	572
	573
	574
	575
	576
	577
125-7521	566
	567
	570
	571
126-1865	338
	339
126-1866	338
	339
126-2565	295
	296
126-2897	640
	641
	646
	647
126-2900	640
	641
	646
	647
126-4685	283
	284
126-4709	618
	619
	620
	621
	622
	623
126-4710	618
	619
	620
	621
	622
	623
126-4711	618
	619
	620
	621
126-4714	618
	619
	620
	621
	622
	623
126-4754	406
	407
	408
	409
	410
	411
	412
	413
	414
126-4754	415
	416
	417
126-4794	60
	61
127-3920	538
	539
	542
	543
	546
	547
	550
	551
127-3922	538
	539
	542
	543
	546
	547
	550
	551
127-3924	540
	541
	544
	545
	546
	547
	550
	551
127-3925	540
	541
	544
	545
	548
	549
	552
	553
127-3926	538
	539
	542
	543
	546
	547
	550
	551
127-3927	538
	539
	542
	543
	546
	547
	550
	551
127-3928	538
	539
	542
	543
	546
	547
	550
	551
127-3929	540
	541
127-3929	544
	545
	546
	547
	550
	551
127-3930	538
	539
	542
	543
	546
	547
	550
	551
127-3931	538
	539
	542
	543
	546
	547
	550
	551
127-3932	540
	541
	544
	545
	548
	549
	552
	553
127-3935	538
	539
	542
	543
127-3936	538
	539
	542
	543
127-3940	540
	541
	544
	545
	548
	549
	552
	553
127-3943	538
	539
	542
	543
127-3944	540
	541
	544
	545
	548
	549
	552
	553
127-3945	540
	541
	544
	545
	548

▲ PRIMARY REFERENCE

PART NUMBER INDEX

Part No.	Page
127-3945	549
	552
	553
127-3947	538
	539
	542
	543
	546
	547
	550
	551
127-3948	538
	539
	542
	543
	546
	547
	550
	551
127-3955	556
	558
127-3958	554
127-3959	554
127-3960	554
127-3961	554
127-3962	555
127-3967	556
127-3969	556
127-3970	556
127-3986	556
127-3987	548
	549
	552
	553
	556
127-3990	555
127-3991	555
127-3992	540
	541
	544
	545
	548
	549
	552
	553
127-3997	554
127-3998	554
127-4000	554
127-4001	555
127-4003	555
127-4006	540
	541
	544
	545
	548
	549
	552
	553
127-5483	124
	125
	126
	142
127-5484	124
127-5484	125
	126
	142
127-5485	142
127-5486	129
	131
	133
	135
	139
127-5948	58
	59
127-5949	58
	59
128-7747	34
	35
131-5818	338
	339
131-5915	340
132-1846	620
	621
	622
	623
132-1847	620
	621
	622
	623
132-7552	638
	639
	644
	645
132-7573	538
	539
	542
	543
	546
	547
	550
	551
132-7576	538
	539
	542
	543
	546
	547
	550
	551
	559
132-7585	624
132-7616	538
	539
	542
	543
	546
	547
	550
	551
132-7619	556
	558
132-7620	556
132-7622	554
132-7623	554
132-7624	554
132-7625	555
132-7626	554
132-7627	554
132-7628	554
132-7629	554
132-7679	557
132-7705	316
	317
	318
	319
	320
	321
	322
	323
	324
	326
	327
132-7748	392
	393
	394
	395
132-9046	305
	306
134-4540	352
	353
	354
	355
134-7113	420
134-7114	420
134-7115	420
134-7258	638
	639
	644
	645
134-8682	620
	621
	622
	623
135-8956	340
136-0140	335
136-0141	335
136-0143	335
136-0145	335
136-0146	335
136-0147	335
136-0148	335
136-0149	335
136-0150	335
136-0151	335
136-0152	335
136-0155	335
136-0156	335
136-0157	335
136-0199	37
	38
	39
136-0207	352
	353
	354
	355
	414
	415
	416
	417

▲ PRIMARY REFERENCE

PART NUMBER INDEX

Part No.	Page
136-0230	555
136-0231	555
136-0232	555
136-0233	555
136-0234	555
136-0235	555
136-0237	555
136-0238	555
136-0258	540
	541
	544
	545
136-0259	555
137-3687	180
	181
137-9111	638
	639
	644
	645
137-9114	335
139-4410	533
	534
139-4804	340
139-4805	340
139-4993	640
	641
	642
	643
139-4997	640
	641
	642
	643
	646
	647
	648
	649
139-5002	640
	641
	642
	643
139-5345	127
	170
	171
	172
	173
139-6275	283
	284
139-6332	540
	541
	544
	545
	548
	549
	552
	553
139-6341	540
	541
	544
	545
	548
	549
	552
	553
139-6351	556
	558
139-6411	290
139-6482	44
	45
	46
	47
139-7303	180
	181
139-7304	180
	181
139-7308	180
	181
139-7315	180
	181
139-7316	180
	181
139-7318	180
	181
139-7319	180
	181
139-7320	180
	181
139-7321	180
	181
139-7322	180
	181
139-7325	180
	181
139-7350	180
	181
139-7355	180
	181
140-3201	194
	195
	198
	199
	202
	203
	206
	207
	210
	211
	214
	215
	218
	219
	222
	223
	234
	235
	236
	237
	250
	251
140-3246	525
140-3313	400
	401
	651
140-3355	533
140-3734	468
140-3750	439
140-3895	20
140-3895	21
140-3921	55
140-4054	372
	373
140-4276	368
	369
	372
	373
140-4739	372
	373
140-4763	20
	21
	22
	23
140-4780	485
	486
140-4934	439
140-4986	281
140-5108	424
	425
140-5118	348
	349
	350
	351
140-5166	429
140-5169	465
	468
140-5217	58
	59
141-2759	136
	140
141-5453	634
142-5546	333
	334
142-9572	117
	119
	120
	121
143-0170	368
	369
143-1632	62
	64
	66
	68
	70
	75
	76
	78
	80
	85
143-2269	402
	403
	▲423
144-2317	63
	65
	67
	69
	71
	73
	77
	79
	81
	83

▲ PRIMARY REFERENCE

PART NUMBER INDEX

Part No.	Page
144-2320	63
	65
	67
	69
	71
	73
	77
	79
	81
	83
144-2321	63
	65
	67
	69
	71
	73
	77
	79
	81
	83
144-2348	471
144-2349	471
144-6747	533
	534
144-6816	242
144-9397	265
	266
	268
145-0603	562
	563
	564
	565
	566
	567
	568
	569
	570
	571
	572
	573
	574
	575
	576
	577
145-9628	228
	229
	230
	231
	232
	233
	243
145-9772	439
145-9775	439
146-0414	24
	25
146-2304	477
	478
	479
	480
	481
146-2829	512
	513
146-2908	501
146-2930	501
146-2932	488
	489
	490
	491
	492
	493
146-2971	488
	489
	490
	491
	492
	493
146-3969	434
	435
146-4875	421
146-4877	421
146-7472	30
146-7473	30
147-4131	338
	339
147-4221	338
	339
147-4245	319
148-5182	334
148-5184	334
149-7372	418
150-0584	280
150-0597	37
	38
	39
150-0598	37
	38
150-0865	180
	181
150-0885	317
150-0886	321
150-2103	632
	633
150-2104	632
	633
150-2105	632
	633
150-2106	632
	633
150-2107	632
	633
150-2109	632
	633
150-2110	632
	633
150-2111	632
	633
150-2112	620
	621
	622
	623
	632
	633
150-2113	632
	633
150-2114	632
	633
150-2115	632
	633
150-2116	632
	633
150-2117	632
	633
150-2119	632
	633
150-2122	632
	633
150-2125	632
	633
150-2126	632
	633
150-2127	632
	633
150-2128	632
	633
150-2129	632
	633
150-2130	632
	633
	636
150-2131	632
	633
150-2133	632
	633
150-2134	632
	633
150-2135	632
	633
150-2141	632
	633
150-2142	632
	633
150-2146	635
150-2147	635
150-2149	635
150-2150	635
150-2151	635
150-2152	635
150-2153	635
150-2154	635
150-2155	635
150-2156	635
150-2157	635
150-2163	636
150-2165	636
150-2166	636
150-2167	636
150-2168	636
150-2169	636
150-2170	636
150-2172	620
	621
	622
	623
150-2173	620
	621
	622
	623
150-2174	620
	621

▲ PRIMARY REFERENCE

PART NUMBER INDEX

Part No.	Page
150-2174	622
	623
150-3714	100
	101
150-3715	37
	38
	39
	102
	103
	108
	109
150-5689	252
	253
	477
	478
	479
	480
	481
150-5694	477
	478
	479
	480
	481
	482
	483
	484
150-5697	477
	478
	479
	480
	481
	482
	483
	484
150-5699	477
	478
	479
	480
	481
	482
	483
	484
150-5713	488
	489
	490
	491
	492
	493
150-6339	316
	317
	318
	319
	320
	321
	322
	323
	324
	325
	326
	327
150-6346	325
150-6367	321
150-6372	180
150-6372	181
150-6408	318
	320
150-6418	321
150-8879	642
	643
	648
	649
150-8896	638
	639
	644
	645
151-4649	436
	437
151-4674	180
	181
151-4676	180
	181
151-4715	31
151-5740	638
	639
	644
	645
152-2447	434
	435
153-2602	133
	135
	137
	139
	141
	144
153-2631	133
	135
	137
	139
	141
	144
153-5223	338
	339
153-5656	86
	87
	94
	95
	98
	99
	106
	107
	112
	113
153-5981	293
153-6116	312
153-6117	312
153-6118	312
153-6123	312
153-7770	378
	379
154-1520	182
	183
154-1523	182
	183
154-1525	182
	183
154-1526	182
154-1526	183
154-1528	182
	183
154-1529	182
	183
154-1533	182
	183
154-1534	182
	183
154-1536	182
	183
154-1537	182
	183
154-2198	331
	▲332
154-2215	301
	▲341
154-2237	283
	284
154-2240	55
154-2241	55
154-2277	332
154-7846	182
	183
154-7849	182
	183
154-7851	182
	183
154-7855	182
	183
154-7856	182
	183
154-7858	182
	183
154-7860	182
	183
154-7864	182
	183
154-7879	182
	183
154-7892	182
	183
155-2255	124
	125
	126
	127
	129
	131
	133
	135
	137
	139
	141
	170
	171
	172
	173
155-2260	129
	131
	133
	135
	137
	139

▲ PRIMARY REFERENCE

PART NUMBER INDEX

Part No.	Page
155-2260	141
	142
	146
	174
155-2265	128
	130
	132
	134
	136
	138
	140
155-2270	128
	129
	130
	131
	132
	133
	134
	135
	136
	137
	138
	139
	140
	141
	142
	143
	170
	171
	172
	173
	174
	396
	397
	398
	399
	400
	401
	448
	512
	513
155-2271	128
	129
	130
	131
	132
	133
	134
	135
	136
	137
	138
	139
	140
	141
	172
	173
155-2273	127
155-2274	40
	124
	125
	126
	128
155-2274	129
	130
	131
	132
	133
	134
	135
	136
	137
	138
	139
	140
	141
	170
	171
	172
	173
155-6790	282
	▲282
155-6844	287
	289
	290
	▲290
155-6845	287
	288
	▲294
155-6859	▲598
155-7545	510
	511
	▲439
155-7553	37
	38
	39
	▲40
155-7573	358
	359
	360
	361
	362
	363
	451
155-7583	150
	151
	152
	153
	154
	155
	156
	157
	158
	159
	160
	161
	162
	163
	164
	165
	166
	167
	168
	169
155-7585	150
	151
155-7585	152
	153
	154
	155
	156
	157
	158
	159
	160
	161
	162
	163
	164
	165
	166
	167
	168
	169
156-8691	288
	▲291
156-8695	291
156-8748	470
156-8801	378
	379
156-8835	372
	373
156-8845	374
	375
	376
	377
	386
	387
	388
	389
	390
	391
	400
	401
156-8847	423
	426
157-2202	558
157-2204	558
157-9176	635
157-9177	635
158-4670	307
	309
	310
158-4690	470
158-4691	470
158-4706	280
158-4707	280
158-4710	286
158-4711	286
158-4712	286
158-4713	286
158-4714	286
158-4715	286
158-4716	286
158-4754	280
158-4765	285
	▲286
158-4766	290
	291

▲ PRIMARY REFERENCE

PART NUMBER INDEX

Part No.	Page
158-4766	▲292
158-4767	292
158-4768	292
158-4769	292
158-4770	292
158-4771	292
158-4772	292
158-4773	292
158-4774	292
158-4775	290
	291
158-4776	290
	291
158-4777	290
158-4781	73
	75
	83
	585
	586
	587
	588
	589
	590
	591
	592
	593
	594
	595
	630
	631
158-4795	177
158-7864	642
	643
	648
	649
160-6818	640
	641
	642
	643
160-6822	638
	639
	642
	643
	644
	645
	648
	649
160-6827	650
160-6832	638
	639
	644
	645
160-6834	640
	641
	646
	647
160-6841	640
	641
	646
	647
160-6845	640
	641
	642
160-6845	643
160-6848	655
160-6850	640
	641
	642
	643
160-6854	638
	639
	644
	645
160-6857	638
	639
	644
	645
160-6885	653
160-6886	653
160-8500	558
160-8950	24
	25
161-2539	442
	443
	444
	445
162-1161	538
	539
	542
	543
162-3696	556
	558
162-4538	599
162-4578	331
	380
	381
	382
	383
	▲335
162-4666	555
162-4693	422
162-4852	540
	541
	544
	545
	548
	549
	552
	553
163-6659	129
	131
	133
	135
	137
	139
	141
163-6790	129
	131
	133
	135
	137
	139
	141
163-6795	106
	107
	112
163-6795	113
	150
	151
	152
	153
	154
	155
	156
	157
	158
	159
	160
	161
	162
	163
	164
	165
	166
	167
	168
	169
163-7093	290
163-7094	290
163-7147	287
	▲290
163-7171	535
	536
	537
163-7176	470
163-7177	470
163-7178	470
163-7179	470
163-7180	470
163-7181	470
163-7187	294
163-7188	294
163-7513	424
	425
163-7515	424
	425
163-7516	424
163-7517	424
	425
163-7518	424
	425
163-7520	406
	407
	▲424
163-8811	418
163-8856	540
	541
	544
	545
163-8871	556
163-8989	598
163-9743	368
	369
163-9851	634
163-9960	406
	407
	408
	409
	410

▲ PRIMARY REFERENCE

PART NUMBER INDEX

Part No.	Page
163-9960	411
	412
	413
	414
	415
	416
	417
163-9969	281
163-9997	177
	▲177
165-1017	498
	▲440
165-1018	498
	▲496
	▲497
165-1019	496
	497
165-1020	496
	497
165-1021	496
	497
165-1022	496
	497
165-1023	496
	497
165-1024	496
	497
165-1025	496
	497
165-1026	496
	497
165-1027	496
	497
165-1028	496
	497
165-1029	496
	497
165-1030	496
	497
165-1031	496
	497
165-1032	496
	497
165-1033	496
	497
165-1034	496
	497
165-1035	496
	497
165-1036	496
	497
165-1038	496
	497
165-1039	496
	497
165-1040	496
	497
165-1041	496
	497
165-1043	496
	497
165-1046	496
	497
165-1047	496
	497
165-1048	496
	497
165-1049	496
	497
165-1050	496
	497
165-1051	496
	497
165-1052	496
	497
165-1053	496
	497
165-1054	496
	497
165-1056	496
	497
165-1057	496
	497
165-1059	440
165-1092	440
165-1094	440
165-1095	▲498
165-1098	498
165-1130	498
165-3411	396
	397
	398
	399
	400
	401
165-9431	340
165-9438	340
165-9463	338
	339
165-9522	331
	▲338
	▲339
165-9551	338
	339
165-9552	338
	339
165-9553	338
	339
165-9554	338
	339
167-3448	83
167-7050	336
	337
169-1134	421
169-1135	421
169-1161	328
169-1164	328
	329
169-1165	328
169-1169	426
169-1170	426
169-1171	426
169-1172	426
169-1176	328
	329
169-1177	328
169-1177	329
169-1181	419
	▲420
169-1186	182
	183
169-1188	182
	183
169-1223	86
	87
	94
	95
	98
	99
	106
	107
	112
	113
169-7976	554
170-8773	429
	430
	431
	433
170-8774	429
	430
	431
	433
	434
	435
170-8775	430
	431
	433
	435
170-8776	430
	431
170-8778	430
	431
	433
170-8781	430
	431
	433
170-8783	432
	436
	437
170-8784	432
	436
	437
170-8786	429
	432
170-8794	432
170-8796	432
170-8800	432
170-8804	429
170-8807	429
170-8823	432
170-8824	432
170-8827	436
	437
170-8836	436
	437
170-8837	429
	436
	437
170-8838	430

▲ PRIMARY REFERENCE

PART NUMBER INDEX

Part No.	Page
170-8838	431
	433
170-8857	429
	430
	431
	433
170-8858	429
	430
	431
	433
170-8860	430
	431
	433
	435
170-8861	429
	430
	431
	433
	436
	437
170-8898	314
	315
170-8964	119
170-8965	119
171-0087	340
171-0340	304
171-0414	661
171-0415	661
171-0416	661
171-0417	661
171-0418	661
171-0419	661
171-0420	661
171-0421	661
171-0422	661
171-0423	661
171-0494	20
	21
	22
	23
171-0498	90
	91
	96
	97
	100
	101
	102
	103
	108
	109
171-0536	380
	381
171-0556	378
	379
171-0596	487
171-0689	32
	36
171-2208	96
	97
	100
	101
171-9334	182
	183
171-9336	182
	183
171-9342	182
	183
172-0677	406
	407
	408
	409
	410
	411
	412
	413
	414
	415
	416
	417
172-0679	406
	407
	408
	409
	410
	411
	412
	413
	414
	415
	416
	417
172-1739	475
172-1741	471
	472
	473
172-1742	471
	472
	473
172-1743	471
	472
	473
172-1744	471
	472
	473
172-1747	471
	472
	473
172-1748	470
	471
	472
	473
172-1749	471
172-1750	471
	472
	473
172-1759	471
	472
	473
172-1760	471
	472
	473
172-1761	470
172-1762	471
172-1764	285
172-1870	540
	541
172-1870	544
	545
	548
	549
	552
	553
172-2052	485
172-2596	485
172-2713	488
	489
	490
	491
	492
	493
172-2714	488
	489
	490
	491
	492
	493
172-4949	642
	643
	648
	649
172-4951	34
	36
174-6719	55
	57
174-7283	396
	397
	398
	399
	400
	401
174-7294	374
	375
	376
	377
174-7298	454
	455
174-7299	402
	403
	▲423
174-7301	423
175-1574	502
	503
	504
	505
175-1575	502
	503
	504
	505
175-1794	471
175-1795	471
175-4614	20
	21
	22
	23
175-4621	63
	65
	67
	69
	77

▲ PRIMARY REFERENCE

PART NUMBER INDEX

Part No.	Page
175-4621	79
175-4708	438
175-4734	438
176-8464	488
	489
	490
	491
	492
	493
176-8465	488
	489
	490
	491
	492
	493
179-6289	615
179-9758	182
	183
180-4956	454
	455
180-4974	454
	455
180-7451	416
	417
183-7676	524
	525
183-8286	656
183-8360	396
	397
	398
	399
	400
	401
	▲419
184-4160	495
185-0549	317
185-0555	314
	315
185-0560	317
	323
185-1290	127
	170
	171
	172
	173
185-9075	335
185-9230	284
185-9231	283
185-9232	283
185-9233	284
186-3735	37
	38
	39
	40
	55
	57
	62
	63
	64
	65
	66
	67
	68
186-3735	69
	70
	71
	72
	73
	75
	76
	77
	78
	79
	80
	81
	82
	83
	124
	125
	126
	128
	129
	130
	131
	132
	133
	134
	135
	136
	138
	139
	140
	141
	142
	143
	146
	170
	171
	172
	173
	174
	448
	512
	513
186-3792	524
	525
186-4059	470
	471
	472
	473
186-4575	120
186-8735	170
	171
187-0661	655
187-2137	454
	455
187-6417	150
	151
	156
	157
	162
	163
	164
	165
	166
	167
	168
186-3735	444
	445
	446
	447
	448
	487
	620
	621
	622
	623
186-3736	40
	124
	125
	126
	127
	128
	129
	130
	131
	132
	133
	134
	135
	136
	137
	138
	139
	140
	141
	142
	143
	146
	170
	171
	172
	173
	174
	448
	512
	513
186-3792	524
	525
186-4059	470
	471
	472
	473
186-4575	120
186-8735	170
	171
187-0661	655
187-2137	454
	455
187-6417	150
	151
	156
	157
	162
	163
	164
	165
	166
	167
	168

▲ PRIMARY REFERENCE

PART NUMBER INDEX

Part No.	Page
187-6417	169
	175
187-6419	174
187-6421	150
	151
	156
	157
	162
	163
	164
	165
	166
	167
	168
	169
	174
	175
187-6424	174
188-4056	180
	181
189-5670	423
190-5386	638
	639
	644
	645
190-7751	340
191-0178	▲1
	▲2
191-0179	184
	185
	186
	187
	188
	189
	▲264
	▲265
	▲266
191-0180	184
	185
	186
	187
	188
	189
	▲244
	▲245
191-0181	184
	185
	186
	187
	188
	189
	▲194
	▲195
	▲196
	▲197
	▲198
	▲199
	▲200
	▲201
	▲202
	▲203
	▲204
	▲205
191-0182	264
191-0183	264
	265
	266
	268
191-0184	244
	245
	246
	247
	248
	249
191-0185	244
	247
	248
191-0188	244
	245
	246
	247
	248
	249
191-0189	244
	245
	246
	247
	248
	249
191-0190	244
	245
	246
	247
	248
	249
191-0191	244
	245
	246
	247
	248
	249
191-0194	244
	246
	247
	248
	249
191-0195	244
	246
	247
	248
	249
191-0196	194
	195
	▲228
	▲229
191-0197	228
	229
	230
	231
	232
	233
191-0198	194
	195
	198
	199
	202
	203
	206
	207
	210
191-0198	203
	▲226
191-0200	194
	195
	198
	199
	202
	203
191-0202	194
	195
	198
	199
	202
	203
191-0206	194
	195
	198
	199
	202
	203
	▲234
	▲235
191-0208	194
	195
	198
	199
	202
	203
191-0210	228
	229
	230
	242
	243
191-0211	228
	229
	230
191-0212	226
	227
191-0223	234
	235
	236
	237
191-0224	234
	235
	236
	237
191-0225	234
	236
191-0232	196
	197
	208
	209
	220
	221
191-0233	194
	195
	198
	199
	202
	203
	206
	207
	210

▲ PRIMARY REFERENCE

PART NUMBER INDEX

Part No.	Page
191-0233	211
	214
	215
	218
	219
	222
	223
191-0234	196
	197
	200
	201
	204
	205
	208
	209
	212
	213
	216
	217
	220
	221
	224
	225
191-0235	196
	197
	200
	201
	204
	205
	208
	209
	212
	213
	216
	217
	220
	221
	224
	225
191-0237	226
	227
191-0239	194
	195
	198
	199
	202
	203
191-0243	▲526
191-0244	526
	▲533
	▲534
191-0245	194
	195
	198
	199
	202
	203
	208
	209
	212
	213
	216
	217
191-0245	220
	221
	224
	225
191-0248	533
191-0251	564
	565
	566
	567
	568
	569
	570
	571
191-0258	234
	236
191-0262	▲267
191-0263	267
191-0280	527
	▲246
191-0281	246
	249
191-0283	246
	249
191-0284	246
	249
191-0285	244
	246
	249
191-0286	244
	246
	247
	248
	249
191-0289	244
	246
	247
	248
	249
191-0290	244
	246
	247
	248
	249
191-0291	244
	246
	247
	248
	249
191-0292	244
	246
	247
	248
	249
191-0293	247
191-0294	246
191-0296	184
	185
	186
	187
	188
	189
	▲638
	▲639
191-0296	▲640
	▲641
	▲642
	▲643
	▲644
	▲645
	▲646
	▲647
	▲648
	▲649
191-0297	194
	195
	198
	199
	202
	203
	206
	207
	210
	211
	214
	215
191-0298	194
	195
	198
	199
	202
	203
	206
	207
	210
	211
	214
	215
191-0299	194
	195
	198
	199
	206
	207
	210
	211
191-0300	527
	▲250
	▲251
191-0301	250
	251
191-0304	218
	219
	222
	223
	250
191-0305	218
	219
	222
	223
	250
191-0306	228
	229
	230
	231
	232
	233

▲ PRIMARY REFERENCE

PART NUMBER INDEX

Part No.	Page
191-0306	243
191-0307	228
	231
	242
191-0309	228
	231
191-0310	228
	231
	242
191-0312	228
	231
	242
191-0316	638
	639
	642
	643
	644
	645
	648
	649
191-0317	638
	639
	642
	643
	644
	645
	648
	649
191-0318	640
	641
	646
	647
191-0322	640
	641
	642
	643
	646
	647
	648
	649
191-0324	652
191-0325	234
	235
	236
	237
191-0326	234
	236
191-0330	638
	639
	644
	645
191-0331	638
	639
	644
	645
191-0336	562
	563
	564
	565
	566
	567
	568
	569
191-0336	570
	571
	572
	573
	574
	575
	576
	577
191-0337	562
	563
	572
	573
	574
	575
	576
	577
191-0341	245
	246
	247
	248
	249
191-0342	246
	249
191-0344	▲33
191-0345	562
	563
	572
	573
	574
	575
	576
	577
191-0346	564
	565
	566
	567
191-0347	226
191-0348	226
191-0349	234
	235
	236
	237
191-0350	33
	▲242
	▲243
191-0351	242
191-0353	242
191-0356	33
	▲650
191-0359	196
	197
	208
	209
	220
	221
191-1311	180
	181
191-1316	180
	181
191-1321	180
	181
191-1342	180
	181
191-1383	311
	▲312
191-1384	179
	▲182
	▲183
191-1385	178
	▲180
	▲181
191-1386	313
	▲314
191-1387	374
	375
	376
	377
	▲336
191-1388	374
	375
	376
	377
	▲337
191-1390	378
	379
	▲426
191-1391	298
	▲328
191-1392	302
	303
	304
	▲305
	▲306
191-1957	457
	▲430
191-1958	527
	528
	▲431
191-1959	458
	459
	▲429
191-1960	460
	▲436
191-1961	457
	▲432
191-1962	461
	463
	▲433
191-2516	184
	185
	186
	187
	188
	▲55
191-2536	55
191-2559	297
	▲307
191-2567	307
191-3307	527
	528
	▲599
	▲600
191-3312	1
	2
	▲4
	▲5

▲ PRIMARY REFERENCE

PART NUMBER INDEX

Part No.	Page
191-3313	1
	2
	▲3
191-3351	1
	2
	▲184
	▲185
	▲186
	▲187
	▲188
	▲189
191-3352	1
	2
	▲279
191-3353	1
	2
	▲457
191-3354	▲458
191-3355	1
	2
	▲460
191-3356	1
	▲461
191-3357	1
	2
	▲297
	▲298
191-3359	1
	2
	▲177
191-3394	436
	437
191-3477	432
191-3819	461
	▲464
191-3820	461
	463
	▲427
191-3821	461
	462
	463
	▲302
	▲303
191-3822	184
	185
	186
	187
	188
	189
	▲529
	▲530
191-3823	529
	▲579
	▲580
191-3824	529
	530
	▲331
191-3826	529
	530
	▲601
191-3827	529
	▲602
191-3828	529
191-3828	530
	▲562
	▲563
191-3829	184
	185
	186
	187
	188
	189
	▲238
	▲239
191-3830	184
	185
	186
	187
	188
	189
	▲295
	▲296
191-3831	279
	▲282
191-3832	279
	▲285
191-3833	279
	▲281
191-3834	457
	▲344
191-3835	457
	▲252
	▲253
191-3836	458
	459
	▲345
	▲346
191-3837	460
	▲348
	▲349
191-3840	531
	▲582
191-3841	531
	532
	▲564
	▲565
	▲566
	▲567
191-3842	▲617
191-3844	529
	530
	▲62
	▲63
	▲64
	▲65
	▲66
	▲67
	▲68
	▲69
	▲70
	▲71
	▲72
	▲73
	▲74
	▲75
191-3845	184
191-3845	185
	186
	▲254
	▲255
191-3846	184
	185
	186
	187
	▲37
191-3847	184
	185
	▲86
	▲87
	▲88
	▲89
	▲90
	▲91
	▲92
	▲93
191-3848	184
	185
	186
	187
	188
	189
	▲615
	▲616
191-3852	457
	▲114
	▲115
191-3855	297
	298
	▲352
	▲353
	▲354
	▲355
191-3860	177
	▲178
191-3861	177
	▲179
191-3862	297
	298
	▲313
191-3863	297
	298
	▲358
	▲359
	▲360
	▲361
	▲362
	▲363
191-3865	297
	▲364
	▲365
191-3866	297
	▲368
	▲369
191-3868	297
	298
	▲372
	▲373
191-3869	297
	298

▲ PRIMARY REFERENCE

PART NUMBER INDEX

Part No.	Page
191-3869	▲374
	▲375
	▲376
	▲377
191-3870	297
	298
	▲378
	▲379
191-3871	297
	298
	▲311
191-3872	298
	299
	▲384
	▲385
	▲386
	▲387
	▲388
	▲389
	▲390
	▲391
191-3873	298
	299
	▲330
191-3875	457
	▲482
	▲483
191-3876	457
	▲485
191-3877	▲298
	▲299
191-3882	184
	185
	186
	187
	188
	189
	▲50
	▲51
	▲52
	▲53
191-3883	3
	▲15
191-3884	3
	▲27
191-3885	3
	▲20
	▲21
191-3886	3
	▲28
191-3887	3
	▲32
191-3888	3
	▲34
191-3889	527
	528
	▲618
	▲619
191-3895	184
	▲270
	▲271
191-3898	372
	373
191-4629	279
	▲280
191-4630	280
191-4631	280
191-4738	358
	359
	360
	361
	362
	363
	451
191-4739	358
	359
	360
	361
	362
	363
	451
191-4743	313
191-4748	368
	369
	370
	371
191-4749	368
	369
191-4762	344
191-4769	86
	87
	▲124
	▲125
191-4770	114
	115
	▲144
191-4771	86
	87
	94
	95
	98
	99
	▲142
191-4772	62
	64
	66
	▲128
	▲129
	▲130
	▲131
191-4776	301
	▲380
	▲381
	▲382
	▲383
191-4819	118
	▲119
191-4820	615
191-6226	62
	64
	66
	68
	76
	78
	▲147
191-6227	37
191-6228	55
	57
191-6235	86
	87
	94
	95
	98
	99
191-6236	86
	87
	94
	95
	98
	99
	102
	103
	108
	109
191-6933	311
191-7502	88
	89
	94
	95
	98
	99
191-7503	311
191-7504	311
191-7516	358
	359
	362
	363
	▲421
191-7519	372
	373
191-7520	372
	373
191-7524	599
	600
191-7540	15
191-7541	27
191-7542	27
191-7543	20
	21
	▲24
191-7544	24
	25
191-7546	24
	25
191-7547	24
	25
191-7548	24
	25
191-7549	24
	25
191-7550	24
	25
191-7551	20
	21
	22
	23
191-7552	20
	21
	22

▲ PRIMARY REFERENCE

PART NUMBER INDEX

Part No.	Page
191-7552	23
191-7553	20
	21
	22
	23
191-7554	28
	▲30
191-7555	32
191-7556	34
	35
191-7557	34
191-7558	34
	36
191-8046	368
	369
191-8048	368
	369
191-8049	368
	369
	370
	371
191-8062	617
	▲634
191-8063	617
	▲620
	▲621
	▲622
	▲623
191-8064	617
	▲625
191-8073	617
	▲626
	▲627
	▲628
	▲629
191-8082	620
	621
	622
	623
191-8986	372
	373
191-8987	372
	373
191-8988	372
	373
191-9023	634
191-9024	634
191-9025	634
191-9026	634
191-9028	634
191-9029	625
191-9030	625
191-9031	625
191-9033	620
	621
	622
	623
191-9034	620
	621
	622
	623
191-9035	620
	621
191-9035	622
	623
191-9036	620
	621
	622
	623
191-9313	464
191-9470	626
	627
	628
	629
	630
	631
	▲632
	▲633
192-0608	270
	271
192-0614	106
	107
	112
	113
	124
	125
	126
	142
192-0615	106
	107
	112
	113
	124
	125
	126
	142
192-0626	438
192-0629	438
192-0633	438
	439
192-0634	438
192-0676	438
192-0680	439
192-0683	438
192-0684	438
192-1135	364
	365
	366
	367
192-1137	364
	365
	366
	367
	452
	453
192-1138	364
	365
	366
	367
	452
	453
192-1139	364
	365
	366
	367
192-1674	307
192-1674	309
	310
192-1701	330
	400
	401
192-1702	374
	375
	376
	377
192-1703	374
	375
	376
	377
192-2379	270
	271
	272
	273
	274
	275
	276
192-2380	378
	379
192-2381	378
	379
192-2382	378
	379
192-2383	378
	379
192-2384	378
	379
	402
	403
192-2385	378
	379
192-2572	526
	▲596
192-3159	427
192-3161	374
	375
	380
	381
	396
	397
	398
	399
	400
	401
192-3162	374
	375
	396
	397
	398
	399
	400
	401
192-3163	374
	375
	376
	377
	378
	379
192-3164	374
	375

▲ PRIMARY REFERENCE

PART NUMBER INDEX

Part No.	Page
192-3164	376
	377
192-3165	374
	375
	376
	377
	380
	381
192-3166	374
	375
	376
	377
192-3242	596
	597
192-3547	458
	▲477
192-3550	252
	253
192-3554	477
192-3556	238
	240
192-3560	118
192-3561	345
	346
192-3562	345
	346
192-3563	348
	349
	350
	351
192-3564	348
	349
	350
	351
192-3566	345
	346
192-3567	352
	353
	354
	355
192-3568	352
	353
	354
	355
192-3571	344
	418
192-3573	406
	407
	408
	409
	410
	411
	412
	413
	414
	415
	416
	417
192-3575	352
	353
	354
	355
192-3576	352

Part No.	Page
192-3576	353
	354
	355
192-3577	352
	353
	354
	355
192-3578	352
	353
192-3598	533
	534
192-4395	482
	483
192-4407	596
192-4416	88
	89
	94
	95
	98
	99
192-4841	406
	407
	408
	409
	410
	411
	412
	413
	414
	415
	416
	417
192-5196	254
	255
192-5225	460
	▲488
	▲489
	▲490
	▲491
192-6541	254
	255
	256
	257
192-6544	254
	255
	256
	257
192-6545	254
	255
	256
	257
	260
	261
192-6547	254
	255
	256
	257
	260
	261
192-6548	254
	255
	256
	257

Part No.	Page
192-6548	260
	261
192-6553	254
	255
	256
	257
192-6554	254
	255
192-8542	406
	407
	408
	409
	410
	411
192-8543	406
	407
	408
	409
	410
	411
192-8544	406
	407
	408
	409
	410
	411
192-8545	406
	407
	408
	409
	410
	411
	412
	413
	414
	415
	416
	417
192-9797	406
	407
	408
	409
	410
	411
	412
	413
	414
	415
	416
	417
193-1761	34
193-2090	36
193-4240	20
	21
	22
	23
193-4252	238
	239
	240
	241
193-5330	421
193-6358	337
193-6359	336

▲ PRIMARY REFERENCE

PART NUMBER INDEX

Part No.	Page
193-6360	336
	337
	▲340
193-8975	352
	353
	354
	355
194-0755	182
	183
194-0756	182
	183
194-0757	269
194-0758	182
	183
194-0784	340
194-4631	312
194-5431	182
	183
194-5830	▲499
194-5831	499
	500
	▲501
194-5832	499
	▲502
194-5833	502
	▲506
194-5845	501
194-6360	608
	609
	612
	613
194-6361	608
	609
	612
	613
194-6377	562
	563
	564
	565
	566
	567
	568
	569
	570
	571
	572
	573
	574
	575
	576
	577
194-6383	39
194-6415	▲332
194-6416	332
	▲334
194-6428	458
	▲350
	▲351
194-6442	527
	528
	▲269
194-6454	570
	571
194-6461	531
	532
	▲614
194-7444	298
	299
	▲651
194-7445	301
	▲652
194-7454	638
	639
	644
	645
194-7463	498
	▲653
194-7808	63
	▲148
194-9161	378
	379
194-9162	374
	375
	376
	377
194-9163	374
	375
	376
	377
194-9164	374
	375
	376
	377
194-9186	374
	375
	376
	377
194-9187	374
	375
	376
	377
194-9188	374
	375
	376
	377
194-9189	374
	375
	376
	377
194-9190	384
	385
	386
	387
	388
	389
	390
	391
	400
	401
194-9191	384
	385
	386
	387
	388
194-9191	389
	390
	391
	400
	401
194-9192	384
	385
	386
	387
	388
	389
	390
	391
	400
	401
194-9193	384
	385
	386
	387
	388
	389
	390
	391
	400
	401
194-9358	374
	375
	376
	377
195-0090	416
	417
	420
195-0135	374
	375
	376
	377
195-0181	374
	375
	376
	377
195-0182	374
	375
	376
	377
195-0188	378
	379
195-0535	254
	255
	256
	257
195-0536	254
	255
	256
	257
195-0601	24
	25
195-1787	345
	346
	418
195-1795	254
	255
	256
	257

▲ PRIMARY REFERENCE

PART NUMBER INDEX

Part No.	Page
195-1795	260
	261
195-2658	37
	38
	39
195-2670	62
	64
	66
	68
	76
	78
195-2821	37
	38
	39
195-3204	63
	65
	67
	69
	71
	77
	79
	81
195-3207	640
	641
	646
	647
195-3237	270
	271
	272
	273
	274
	275
	276
195-3238	270
	271
	272
	273
	274
	275
	276
195-3239	352
	353
	354
	355
195-3568	488
	489
195-5590	430
	431
	433
	434
	435
195-5591	432
195-6222	480
	488
	489
	490
	491
	492
	493
	498
195-8200	30
195-8201	30
195-8203	6
195-8204	6
195-8205	6
195-8206	6
195-8207	9
195-8208	6
195-8209	6
195-8210	6
195-8212	6
195-8213	6
195-8214	13
195-8215	13
195-8217	6
195-8218	6
195-8219	6
195-8220	6
195-8222	6
195-8223	6
195-8224	6
195-8225	6
195-8226	6
195-8227	6
195-8228	6
195-8230	8
195-8231	8
195-8232	8
195-8233	8
195-8234	14
195-8235	14
195-8236	14
195-8237	14
195-8240	58
	59
195-8245	9
195-8246	13
195-8247	13
195-8248	13
195-8249	13
195-8250	13
195-8251	13
195-8252	13
195-8253	13
195-8254	13
195-8255	13
195-8256	13
	14
195-8258	13
195-8259	13
195-8260	13
	60
	61
195-8262	13
195-8264	13
195-8265	9
195-8266	9
195-8267	9
195-8268	9
195-8269	9
195-8271	11
195-8272	11
195-8273	11
195-8278	11
195-8279	11
195-8280	11
195-8282	11
195-8284	10
195-8285	10
	31
195-8287	10
195-8288	10
195-8289	10
195-8290	10
195-8291	7
195-8292	7
195-8293	7
195-8294	7
195-8295	7
195-8296	7
195-8297	7
195-8298	7
195-8299	7
195-8300	7
195-8301	7
195-8302	7
195-8303	7
195-8307	7
195-8308	8
195-8309	9
195-8310	8
195-8311	9
195-8312	9
195-8313	9
195-8315	14
195-8316	14
195-8317	14
195-8319	12
195-8320	12
195-8321	12
195-8324	12
195-8326	12
195-8327	12
195-8328	12
195-8329	12
195-8330	12
195-8332	12
195-8333	12
195-8337	12
195-8338	12
195-8339	12
195-8340	12
195-8341	12
195-8342	12
195-8343	10
195-8344	10
195-8345	8
	10
195-8346	41
195-8347	41
195-8348	41
195-8349	10
195-8350	41
195-8351	44
	45
	46
	47
195-8352	41
195-8354	44

▲ PRIMARY REFERENCE

PART NUMBER INDEX

Part No.	Page
195-8354	45
195-8355	44
	45
	46
	47
195-8356	44
	45
	46
	47
195-8358	44
	45
	46
	47
195-8359	44
	45
	46
	47
195-8360	44
	45
	46
	47
195-8361	44
	45
	46
	47
195-8364	44
	45
	46
	47
195-8365	44
	45
	46
	47
195-8366	44
	45
	46
	47
195-8367	44
	45
	46
	47
195-8368	44
	45
	46
	47
195-8369	44
	45
	46
	47
195-8370	44
	45
	46
	47
195-8371	44
	45
	46
	47
195-8372	44
	45
	46
	47
195-8373	41
195-8374	41
195-8375	41
195-8376	41
195-8377	41
195-8378	41
195-8379	41
195-8380	41
195-8381	41
195-8382	41
195-8383	41
195-8384	41
195-8386	48
	49
195-8387	48
	49
195-8388	48
	49
195-8389	48
	49
195-8390	48
	49
195-8391	48
	49
195-8392	48
	49
195-8393	48
	49
195-8394	48
	49
195-8395	48
	49
195-8396	48
	49
195-8398	48
	49
195-8399	48
	49
195-8400	48
	49
195-8401	48
	49
195-8403	48
	49
195-8404	48
	49
195-8407	48
	49
195-8408	48
	49
195-8409	48
	49
195-8410	48
	49
195-8411	48
	49
195-8412	48
	49
195-8413	48
	49
195-8414	48
	49
195-8415	48
	49
195-8418	48
195-8418	49
195-8426	48
	49
195-8436	16
	17
195-8437	16
	17
195-8439	16
	17
195-8440	16
	17
195-8441	16
	17
195-8442	16
	17
195-8443	16
	17
195-8444	16
	17
195-8445	16
	17
195-8446	16
	17
195-8447	16
	17
195-8450	16
	17
195-8451	16
	17
195-8452	16
	17
195-8453	16
	17
195-8455	18
	19
195-8457	18
	19
195-8458	18
	19
195-8459	18
	19
195-8460	18
	19
195-8461	18
	19
195-8464	18
	19
195-8465	18
	19
195-8468	18
	19
195-8473	18
	19
195-8474	18
	19
195-8476	18
	19
195-8477	18
	19
195-8478	634
195-8480	31
195-8482	31
195-8483	31

▲ PRIMARY REFERENCE

PART NUMBER INDEX

Part No.	Page
195-8485	31
195-8486	58
	59
195-8488	58
	59
195-8490	44
	45
195-8492	175
195-8494	60
	61
195-8495	60
	61
195-8496	60
	61
195-8497	60
	61
195-8498	60
	61
195-8502	60
	61
195-9040	457
	▲118
196-4304	404
	405
196-8277	18
	19
196-8303	4
	▲6
196-8304	4
	▲7
196-8305	4
	▲8
196-8306	4
	▲9
196-8307	4
	▲10
196-8308	4
	▲11
196-8309	4
	▲10
196-8310	4
	▲12
196-8311	4
	▲13
196-8312	4
	▲14
196-8313	4
	▲14
196-8314	4
	▲9
196-8315	5
	▲16
	▲17
196-8316	5
	▲18
	▲19
196-8317	5
	▲31
196-8318	5
	▲31
196-8319	5
	▲41
196-8320	5
196-8320	▲44
	▲45
	▲46
	▲47
196-8321	5
	▲48
	▲49
196-8322	5
	▲58
	▲59
196-8323	5
	▲175
196-8324	5
	▲60
	▲61
196-8325	5
	▲26
196-8327	41
	▲42
	▲43
196-8328	42
	43
196-8329	42
	43
196-8330	42
	43
196-8331	42
	43
196-8332	42
	43
196-8334	42
	43
196-8335	42
	43
196-8336	42
	43
196-8337	42
	43
196-8338	42
	43
196-8339	42
	43
196-8340	42
	43
196-8341	42
	43
196-8342	42
	43
196-8343	42
	43
196-8344	42
	43
196-8345	42
	43
196-8346	42
	43
196-8349	42
	43
196-8352	42
	43
196-8353	42
	43
196-8356	44
196-8356	45
	46
	47
196-8357	44
	45
	46
	47
196-8358	44
	45
	46
	47
196-8360	44
	45
	46
	47
196-8361	44
	45
196-8362	44
	45
	46
	47
196-8363	44
	45
	46
	47
196-8364	44
	45
	46
	47
196-8365	44
	45
	46
	47
196-8366	44
	45
	46
	47
196-8367	26
196-8368	31
196-8369	58
	59
196-8370	58
	59
196-8371	58
	59
196-8372	58
	59
196-8375	58
	59
196-8376	58
	59
196-8377	58
	59
196-8378	58
	59
196-8379	58
	59
196-8380	58
	59
196-8381	58
	59
196-8382	58
	59

▲ PRIMARY REFERENCE

PART NUMBER INDEX

Part No.	Page
196-8383	58
	59
196-8384	58
	59
196-8385	58
	59
196-8386	58
	59
196-8387	58
	59
196-8388	58
	59
196-8389	58
	59
196-8390	58
	59
196-8391	60
	61
196-8392	60
	61
196-8393	60
	61
196-8394	60
	61
196-8395	60
	61
196-8396	60
	61
196-8398	60
	61
196-8399	60
	61
196-8400	60
	61
196-8401	60
	61
196-8403	60
	61
196-8404	26
196-9663	364
	365
	366
	367
	452
	453
197-3815	312
197-3816	312
197-3817	312
197-6790	535
	536
	537
197-7175	86
	87
	94
	95
197-7199	620
	621
	622
	623
197-7202	620
	621
	622
	623
197-7767	27
197-7768	427
	428
	456
197-8176	579
	580
	▲585
	▲586
197-8178	579
	580
	▲588
	▲589
197-8180	602
	▲604
197-8181	604
	▲606
	▲607
197-8182	599
197-8186	582
	583
	▲591
197-8189	562
	563
	564
	565
	566
	567
	568
	569
	570
	571
	572
	573
	574
	575
	576
	577
197-8190	626
	627
	628
	629
	630
	631
	▲635
197-8211	601
197-8217	582
	▲593
197-8684	368
	369
197-8692	374
	375
198-0851	▲120
	▲121
198-0852	117
	120
	121
198-0853	120
	121
198-0856	281
198-5005	182
	183
198-5006	182
	183
198-5007	182
	183
198-5008	182
	183
198-5009	182
	183
198-5010	182
	183
198-5011	182
	183
198-5012	182
	183
198-5013	182
	183
198-5014	182
	183
198-5015	182
	183
198-5016	182
	183
198-5017	182
	183
198-5018	182
	183
198-5020	182
	183
198-5021	182
	183
198-5022	182
	183
198-5023	182
	183
198-5024	182
	183
198-5025	182
	183
198-5026	182
	183
198-5027	182
	183
198-5028	182
	183
198-5029	182
	183
198-5030	182
	183
198-5031	182
	183
198-5032	182
	183
198-5033	182
	183
198-5034	182
	183
198-5035	182
	183
198-5036	182
	183
198-5037	182
	183
198-5038	182
	183
198-5039	182

▲ PRIMARY REFERENCE

PART NUMBER INDEX

Part No.	Page
198-5039	183
198-5041	182
	183
198-5043	182
	183
198-5044	182
	183
198-7042	180
	181
198-7043	180
	181
198-7044	180
	181
198-7045	180
	181
198-7046	432
198-7047	432
198-7048	180
	181
198-7049	180
	181
198-7050	180
	181
198-7051	180
	181
198-7052	180
	181
198-7054	180
	181
198-7055	180
	181
198-7056	180
	181
198-7057	180
	181
198-7058	180
	181
198-7059	180
	181
198-7060	180
	181
198-7061	180
	181
198-7062	180
	181
198-7063	180
	181
198-7064	180
	181
198-7065	180
	181
198-7066	180
	181
198-7067	180
	181
198-7068	180
	181
198-7069	180
	181
198-7543	305
	306
198-8153	305
	306
198-8154	305
	306
198-8155	305
198-8156	305
	306
198-8157	305
198-8158	305
198-8159	305
	306
198-8160	305
	306
198-8161	305
	306
198-8162	305
	306
198-8163	305
	306
198-8164	305
	306
198-8165	305
	306
198-8166	305
	306
198-8167	305
	306
198-8168	305
	306
198-8170	305
	306
198-8171	305
	306
198-8174	305
198-8175	305
198-8177	305
	306
198-8178	305
	306
198-8418	426
198-8419	426
198-8420	426
198-8421	426
198-8422	426
198-8423	426
198-9044	328
198-9045	328
198-9046	328
198-9101	63
	65
	67
	69
	77
	79
198-9414	430
198-9415	430
	431
198-9416	430
	431
	433
198-9417	429
	430
	431
	433
198-9418	430
198-9418	431
	433
198-9419	430
	431
198-9420	430
	431
198-9421	430
	431
198-9422	430
	431
198-9423	430
	431
	433
198-9424	430
	431
	433
198-9426	430
198-9427	429
	430
	431
198-9428	429
	430
	431
198-9430	429
	430
	431
198-9433	430
	431
198-9434	430
198-9435	430
	431
198-9436	342
	▲343
198-9446	180
	181
199-0510	431
199-0512	431
199-0513	431
199-0534	492
	493
199-0535	492
	493
199-0541	450
199-0542	449
	450
199-0546	449
199-0579	▲418
199-0583	418
199-0585	418
199-0587	418
199-0593	429
199-0594	429
199-0595	429
199-0596	429
199-0597	429
199-0598	429
199-0599	429
199-0600	429
199-0601	429
199-0603	429
199-0604	429
199-0606	429
199-0607	429

▲ PRIMARY REFERENCE

PART NUMBER INDEX

Part No.	Page
199-0608	429
199-0609	429
199-0610	429
199-0611	429
199-0744	▲441
199-0745	441
	▲442
	▲443
	▲444
	▲445
199-0746	442
	443
	▲446
199-1110	270
	271
	272
	273
	274
	275
	276
199-1133	436
199-1134	436
	437
199-1135	436
	437
199-1136	436
	437
199-1137	436
	437
199-1138	436
	437
199-1139	436
	437
199-1140	436
	437
199-1141	436
	437
199-1142	436
	437
199-1144	436
199-1145	436
199-1146	436
	437
199-1147	436
	437
199-1148	436
	437
199-1149	436
	437
199-1150	436
199-1151	436
	437
199-1900	356
	357
	358
	359
	360
	361
	362
	363
	388
	389
	390
199-1900	391
	454
	455
199-1901	364
	365
	366
	367
	427
	428
	452
	453
	454
	455
	456
199-1902	344
	346
	349
	351
	358
	359
	360
	361
	362
	363
	364
	365
	366
	367
	370
	371
	440
	450
	452
	453
199-1903	368
	369
	370
	371
	412
	413
	414
	415
199-1904	412
	413
	414
	415
199-1905	370
	371
199-2085	441
	▲392
	▲393
	▲394
	▲395
199-2091	432
199-2092	432
199-2093	432
199-2094	432
199-2095	432
199-2097	432
199-2098	432
199-2099	432
199-2205	9
	13
199-2212	13
	48
	49
199-2225	14
199-2241	18
	19
199-2263	18
	19
199-2354	46
	47
199-2400	433
199-2401	433
199-2402	433
199-2403	433
199-2405	433
199-2417	46
	47
199-2425	442
	443
	444
	445
	▲448
199-2428	442
	443
	444
	445
199-2923	29
	▲30
199-3589	301
	▲406
	▲407
	▲408
	▲409
	▲410
	▲411
	▲412
	▲413
	▲414
	▲415
	▲416
	▲417
199-4083	▲494
199-4085	494
	▲495
199-4086	495
199-4089	494
199-4090	494
199-4091	494
199-5185	518
	519
	520
	521
	▲123
199-5189	122
	123
199-5191	524
	525
199-5194	449
	450
199-5197	123
199-5206	514
	515
	516

▲ PRIMARY REFERENCE

PART NUMBER INDEX

Part No.	Page
199-5206	517
	518
	519
	520
	521
	▲487
199-5207	514
	515
	516
	517
	518
	519
	520
	521
	▲487
199-5208	514
	515
	516
	517
	518
	519
	520
	521
	▲523
199-5209	487
199-5210	523
199-6382	254
	255
	256
	257
	258
	259
	260
	261
	262
	263
199-6946	374
	375
	376
	377
199-6953	638
	639
	644
	645
199-7467	238
	240
199-7468	270
	271
	272
	273
	274
	275
	276
199-7926	332
199-8523	254
	255
	256
	257
	260
	261
199-8524	254
	255
	256
199-8524	257
199-8525	254
	255
	256
	257
	260
	261
199-9601	252
199-9616	655
2	
200-0019	252
	253
	482
	483
	484
200-0038	477
	478
	479
	480
	481
200-0159	252
200-0896	464
	466
200-0898	464
	466
200-0899	464
	466
200-0910	626
	627
	628
	629
	630
	631
	▲636
200-0915	628
	629
	630
	631
200-1352	20
	21
	22
	23
200-1362	626
	627
	628
	629
	630
	631
200-1915	626
	627
200-2854	▲301
200-2883	427
200-3435	92
	93
	96
	97
	100
	101
	104
	105
	110
200-3435	111
200-3446	478
200-3447	479
200-4583	487
200-4589	150
	151
	156
	157
	162
	163
	164
	165
	166
	167
	168
	169
200-4590	162
	163
	164
	165
200-4597	657
	658
	659
	660
200-4600	657
	658
	659
	660
200-4601	657
	658
	659
	660
200-4602	524
	525
200-4603	514
	515
	516
	517
	518
	519
	520
	521
	▲492
	▲493
200-4605	492
	493
200-4606	514
	515
	516
	517
	518
	519
	520
	521
	▲449
200-4608	449
200-4609	514
	515
	516
	517
	518
	519
	520

▲ PRIMARY REFERENCE

PART NUMBER INDEX

Part No.	Page
200-4609	521
	▲450
200-4610	450
200-4611	450
200-4613	514
	515
	516
	517
	518
	519
	520
	521
	▲347
200-4614	514
	515
	518
	519
	▲480
200-4615	480
200-4617	514
	515
	516
	517
	518
	519
	520
	521
	▲484
200-4618	484
200-4625	449
200-4626	450
200-4628	347
200-4629	347
200-4630	347
200-4631	356
	357
	400
	401
200-4632	356
	357
	400
	401
200-4633	356
	357
	400
	401
200-4634	356
	357
	400
	401
200-4635	347
	356
	357
200-4636	514
	515
	516
	517
	518
	519
	520
	521
	▲486
200-4842	321
200-4853	319
200-4856	314
	315
200-4857	314
	315
200-4858	314
	315
	▲316
200-4859	314
	315
	▲317
200-4860	314
	315
	▲318
200-4861	314
	315
	▲319
200-4862	314
	315
	▲320
200-4863	314
	315
	▲321
200-4864	314
	▲322
200-4865	314
	315
	▲323
200-4866	314
	315
	▲324
200-4867	314
	315
	▲325
200-4868	314
	315
	▲326
200-4869	314
	315
	▲327
200-4870	314
	315
200-4871	314
	315
200-4938	318
	320
200-4939	319
200-4940	316
	317
	318
	320
	321
	322
	324
200-4941	316
	317
	318
	320
	322
	323
	321
200-4941	324
	325
	326
	327
200-4942	316
	317
	318
	320
	322
	324
	325
	326
	327
200-4943	316
	317
	321
	322
	323
	324
	325
	326
	327
200-4944	316
200-4945	316
	317
	321
	322
	323
	324
	325
	326
	327
200-4946	316
	317
	318
	320
	321
	322
	323
	324
	325
	326
	327
200-4947	316
	317
	318
	320
	321
	322
	323
	324
	325
	326
	327
200-4948	252
	253
200-4950	321
200-4951	325
200-4952	317
200-4953	317
	318
	320
	321

▲ PRIMARY REFERENCE

PART NUMBER INDEX

Part No.	Page
200-4953	323
	324
	325
	326
	327
200-4955	317
200-4956	317
200-4958	317
200-4959	317
200-4960	317
200-4961	317
200-4962	317
200-4963	317
200-4964	317
200-4965	317
200-4966	317
200-4967	317
200-4968	317
200-4969	317
200-4970	317
200-4971	317
200-4972	317
200-4973	317
200-4974	317
200-4975	316
200-5444	265
	266
	268
200-5458	510
	511
	▲656
200-5459	202
	203
	214
	215
200-5462	656
200-5483	190
	191
	192
	193
	▲268
200-5484	190
	191
	▲206
	▲207
	▲208
	▲209
	▲210
	▲211
	▲212
	▲213
	▲214
	▲215
	▲216
	▲217
200-5485	190
	191
	▲248
200-5486	192
	193
	▲218
	▲219
	▲220
200-5486	▲221
	▲222
	▲223
	▲224
	▲225
200-5487	528
	▲249
200-5489	268
200-5490	268
200-5491	268
200-5492	268
200-5493	206
	207
	218
	219
	▲231
	▲232
200-5494	206
	207
	210
	211
	214
	215
	218
	219
	222
	223
	▲227
200-5495	206
	207
	210
	211
	214
	215
	218
	219
	222
	223
200-5496	206
	207
	210
	211
	214
	215
	218
	219
	222
	223
200-5497	206
	207
	210
	211
	214
	215
	218
	219
	222
	223
200-5498	206
	207
	210
200-5498	211
	214
	215
	218
	219
	222
	223
200-5500	208
	209
	212
	213
	216
	217
	220
	221
	224
	225
200-5501	231
	232
	233
200-5502	231
	232
	233
200-5503	227
200-5504	227
200-5505	206
	207
	210
	211
	214
	215
	218
	219
	222
	223
200-5506	206
	207
	210
	211
	214
	215
	218
	219
	222
	223
200-5507	206
	207
	210
	211
	214
	215
	218
	219
	222
	223
200-5510	236
	237
200-5511	206
	207
	210
	211
	214
	215

▲ PRIMARY REFERENCE

PART NUMBER INDEX

Part No.	Page
200-5511	218
	219
	222
	223
200-5513	208
	209
	212
	213
	216
	217
	220
	221
	224
	225
200-5514	208
	209
	212
	213
	216
	217
	220
	221
	224
	225
200-5515	218
	219
	222
	223
200-5516	218
	219
	222
	223
200-5517	248
	249
200-5518	248
200-5519	249
200-5521	248
	249
200-5522	248
200-5524	249
200-5525	194
	195
	198
	199
	202
	203
	206
	207
	210
	211
	214
	215
200-5526	194
	195
	198
	199
	206
	207
	210
	211
	214
	215
200-5527	202
200-5527	203
200-5528	250
	251
200-5529	265
	266
	268
200-5530	265
	266
	268
200-5532	299
	300
	▲247
200-5533	245
200-5535	248
	249
200-5536	248
	249
200-5538	229
	230
	232
	233
	243
200-5539	229
	230
	232
	233
	243
200-5540	229
	230
	232
	233
	243
200-5541	229
	230
	232
	233
	243
200-5542	617
	▲654
200-5543	206
	207
	210
	211
	214
	215
	218
	219
	222
	223
200-5544	248
	249
200-5545	527
	▲655
200-5625	319
200-5626	319
200-5627	319
	323
200-5629	321
200-5630	321
200-5631	321
200-5632	321
200-5633	321
200-5634	323
200-5635	323
200-5637	323
200-5638	323
200-5639	323
200-5640	325
200-5642	327
200-6572	▲459
200-6573	459
	▲478
200-6574	478
	479
	481
200-6575	▲458
200-6576	458
	▲479
200-8508	430
	431
200-8540	606
	610
200-8541	606
	607
	608
	609
	610
	611
200-8542	606
	607
	608
	609
	610
	611
	612
	613
200-8543	606
	607
	608
	609
	610
	611
	612
	613
200-8544	606
	607
	608
	609
	610
	611
	612
	613
200-8545	606
	607
	608
	609
	610
	611
	612
	613
200-8546	606
	607
	610
	611
200-8559	606
	607

▲ PRIMARY REFERENCE

PART NUMBER INDEX

Part No.	Page
201-0461	▲499
201-0462	▲500
201-0463	▲500
201-0464	499
	▲503
201-0465	500
	▲504
201-0466	500
	▲505
201-0467	503
	▲506
201-0468	504
	▲507
201-0469	505
	▲507
201-1349	626
	627
	628
	629
	630
	631
201-1717	252
201-4352	▲463
201-4353	463
	▲466
	▲467
201-4354	466
	468
201-4355	466
	468
	470
	474
201-4356	466
	468
	471
	474
201-4363	466
	468
201-4570	▲527
201-4571	527
	528
	▲624
201-4572	624
201-4573	527
	528
	▲531
	▲532
201-4575	600
201-4755	626
	627
201-5348	374
	375
	376
	377
201-5595	514
	515
	516
	517
	518
	519
	520
	521
	▲342

Part No.	Page
201-6010	402
	403
201-7062	334
201-7063	334
201-7450	588
	589
	590
201-7451	585
	586
	591
201-7454	593
201-7455	628
	629
201-7457	585
	586
	587
	591
	592
201-7458	588
	589
	590
	593
	594
	595
201-7459	585
	586
	591
201-7460	588
	589
	593
	594
201-7461	585
	586
201-7462	588
	589
	590
	593
	594
	595
201-7463	585
	586
	587
201-7464	588
	589
	590
	593
	594
	595
201-7867	267
201-7887	527
	528
	▲535
	▲536
	▲537
201-7888	535
	▲538
	▲539
	▲540
	▲541
201-8161	▲508
201-8162	508
	▲509
201-8163	509

Part No.	Page
201-8164	509
201-8165	509
201-8166	509
201-8167	509
201-8168	509
201-8169	509
201-8170	509
201-8171	509
201-8176	509
201-8713	301
201-9136	486
201-9138	150
	151
	152
	153
	154
	155
	156
	157
	158
	159
	160
	161
	162
	163
	164
	165
	166
	167
	168
	169
201-9139	487
201-9140	449
201-9141	514
	515
	516
	517
	518
	519
	520
	521
	▲356
	▲357
201-9143	492
	493
201-9144	657
	658
	659
	660
201-9146	518
	519
	520
	521
	▲524
201-9148	524
201-9149	518
	519
	520
	521
	▲568
	▲569
	▲570
	▲571

▲ PRIMARY REFERENCE

PART NUMBER INDEX

Part No.	Page
201-9151	514
	516
	518
	520
	▲603
201-9152	603
	▲605
201-9153	605
	▲610
	▲611
201-9154	514
	515
	516
	517
	518
	519
	520
	521
	▲276
201-9155	276
201-9157	514
	515
	516
	517
	518
	519
	520
	521
	▲396
	▲397
	▲398
	▲399
201-9158	518
	519
	▲162
	▲163
	▲164
	▲165
201-9159	518
	519
	▲658
201-9160	658
201-9161	658
201-9162	658
201-9163	657
	658
	659
	660
201-9165	▲518
	▲519
201-9166	162
	163
	164
	165
	166
	167
	168
	169
	▲170
	▲171
201-9167	150
	151
	152
201-9167	153
	154
	155
	156
	157
	158
	159
	160
	161
	162
	163
	164
	165
	166
	167
	168
	169
	▲174
201-9168	522
201-9170	396
	397
	398
	399
	400
	401
201-9171	396
	397
	398
	399
	400
	401
201-9172	396
	397
	398
	399
	400
	401
201-9173	514
	515
	516
	517
	518
	519
	520
	521
	▲522
201-9174	522
201-9176	568
	569
	570
	571
201-9181	522
201-9184	610
	611
	612
	613
201-9185	300
	▲400
	▲401
201-9189	588
	589
	590
	593
201-9189	594
	595
201-9190	585
	586
	587
201-9191	588
	589
	590
	593
	594
	595
201-9706	406
	407
	408
	409
	410
	411
	412
	413
	414
	415
	416
	417
201-9707	406
	407
	408
	409
	410
	411
	412
	413
	414
	415
	416
	417
201-9708	406
	407
	408
	409
	410
	411
202-0706	374
	375
	376
	377
202-0709	348
	349
202-0710	358
	359
	360
	361
	362
	363
	451
202-0711	364
	365
	366
	367
202-0712	364
	365
	366
	367
202-0713	364

▲ PRIMARY REFERENCE

PART NUMBER INDEX

Part No.	Page
202-0713	365
	366
	367
202-0714	374
	375
	376
	377
202-0715	374
	375
	376
	377
	378
	379
202-0716	374
	375
	376
	377
202-0717	374
	375
	376
	377
202-0718	378
	379
202-0719	382
	383
202-0720	350
	351
202-0725	535
	536
	537
202-1098	352
	353
	354
	355
202-1795	585
	586
	587
	588
	589
	590
	591
	592
	593
	594
	595
202-1804	585
	586
	587
	588
	589
	590
	591
	592
	593
	594
	595
202-2418	495
202-2421	495
202-2515	562
	564
	565
	568
	569
202-2515	572
	573
	576
	577
202-3824	414
	415
	416
	417
202-4558	368
	369
	370
	371
202-5298	302
	303
202-7193	33
	▲36
202-7194	36
202-8827	302
	303
	304
202-9228	329
203-2341	439
203-2342	439
203-2343	439
203-2344	439
203-2345	439
203-2346	439
203-2347	439
203-2348	439
203-2349	439
203-2350	439
203-2351	439
203-2887	333
203-2888	333
203-3602	331
	▲333
203-3611	495
203-3643	▲293
203-3644	▲287
203-3645	▲287
203-3646	▲288
203-4429	542
	543
203-4430	538
	539
	542
	543
203-4431	538
	539
	542
	543
	546
	547
	550
	551
203-4432	538
	539
	542
	543
	546
	547
	550
	551
203-4433	540
	541
	544
	545
	548
	549
	552
	553
203-4434	540
	541
	544
	545
203-4435	540
	541
	544
	545
203-4436	540
	541
	544
	545
	548
	549
	552
	553
203-4437	540
	541
	544
	545
203-4438	540
	541
	544
	545
	548
	549
	552
	553
203-4439	538
	539
	542
	543
203-4440	538
	539
	542
	543
	546
	547
	550
	551
203-4441	540
	541
	544
	545
203-4442	540
	541
	544
	545
	548
	549
	552
	553
203-4443	540
	541
	544

▲ PRIMARY REFERENCE

PART NUMBER INDEX

Part No.	Page
203-4443	545
	548
	549
	552
	553
203-4444	540
	541
	544
	545
	548
	549
	552
	553
203-4445	540
	541
	544
	545
	548
	549
	552
	553
203-4446	540
	541
203-4447	540
	541
	544
	545
203-4448	540
	541
	544
	545
	548
	549
	552
	553
203-4449	538
	539
	542
	543
	546
	547
	550
	551
	▲554
	▲555
203-4450	538
	539
	542
	543
	▲556
203-4452	540
	541
	544
	545
203-4453	540
	541
	544
	545
	548
	549
	552
	553
203-4454	540
203-4454	541
	544
	545
	548
	549
	552
	553
203-4455	540
	541
	544
	545
	548
	549
	552
	553
203-4456	540
	541
	544
	545
	548
	549
	552
	553
203-4457	540
	541
	544
	545
	546
	547
	550
	551
203-4458	540
	541
	544
	545
	548
	549
	552
	553
203-4459	540
	541
	544
	545
203-4460	538
	539
	542
	543
203-4520	540
	541
	544
	545
203-6214	34
	36
203-7170	564
	565
	566
	567
	570
	571
203-7887	620
	621
	622
	623
203-7888	620
	621
	622
	623
203-7894	37
	38
	39
	65
	67
	69
	71
	72
	77
	79
	81
	82
	512
	513
203-7895	37
	38
	39
	65
	67
	69
	71
	72
	77
	79
	81
	82
	512
	513
203-8115	253
203-8289	608
	609
	612
	613
203-8290	608
	609
	612
	613
204-1974	306
204-1975	306
204-1977	306
204-1978	306
204-1980	306
204-1981	306
204-3923	314
	315
204-5927	607
	608
	609
	611
	613
204-5928	626
	627
	628
	629
	630
	631
204-6880	36
204-6881	36
204-6923	36

▲ PRIMARY REFERENCE

PART NUMBER INDEX

Part No.	Page
204-7637	425
204-7639	425
204-8278	408
	409
	410
	411
	412
	413
	414
	415
	416
	417
	▲425
204-9499	425
204-9500	425
204-9501	425
205-1047	439
205-1048	439
205-1049	439
205-3888	360
	361
	▲422
205-5070	36
205-6079	296
205-6092	538
	539
	542
	543
205-7460	125
	126
	127
205-7461	125
	126
	127
205-7950	434
205-7951	434
	435
205-7952	434
	435
205-7955	434
	435
205-7956	434
	435
205-9679	562
	563
	564
	565
	566
	567
	568
	569
	570
	571
	572
	573
	574
	575
	576
	577
206-0650	18
	19
206-0659	60
	61
206-2369	382
	383
206-2402	341
206-2403	341
206-2404	341
206-2405	341
206-2406	341
206-2774	▲498
206-6085	376
	377
	378
	379
	402
	403
206-6086	378
	379
206-7576	556
206-7577	556
206-7579	556
206-7580	556
206-7605	▲514
	▲515
206-7606	514
	515
	▲657
206-7607	657
206-7609	657
206-7610	657
206-7611	514
	515
	516
	517
	▲122
206-7612	122
206-7613	122
206-7614	514
	515
	516
	517
	▲525
206-7615	524
206-7616	525
206-7617	525
206-7618	525
206-7619	514
	515
	516
	517
	▲572
	▲573
	▲574
	▲575
206-7621	514
	515
	▲150
	▲151
	▲152
	▲153
	▲154
	▲155
206-7622	150
	151
	152
206-7622	153
	154
	155
	156
	157
	158
	159
	160
	161
	▲172
	▲173
206-7623	150
	151
	152
	153
	154
	155
206-7624	▲520
	▲521
206-7625	520
	521
	▲659
206-7626	659
206-7627	659
206-7628	659
206-7630	516
	517
	520
	521
	▲481
206-7631	481
206-7633	520
	521
	▲166
	▲167
	▲168
	▲169
206-7634	166
	167
	168
	169
206-7635	▲516
	▲517
206-7636	516
	517
	▲660
206-7637	660
206-7638	660
206-7639	660
206-7640	516
	517
	▲156
	▲157
	▲158
	▲159
	▲160
	▲161
206-7641	156
	157
	158
	159
	160
	161

▲ PRIMARY REFERENCE

PART NUMBER INDEX

Part No.	Page
206-7642	525
206-7657	152
	153
	154
	155
	158
	159
	160
	161
	▲175
206-8935	540
	541
	544
	545
207-0782	68
	70
	72
	78
	80
	82
207-0786	580
	581
	582
	583
	584
	608
	609
	612
	613
207-0787	580
	581
	582
	583
	584
	608
	609
	612
	613
207-0788	580
	581
	582
	583
	584
207-0789	580
	581
	582
	583
	584
207-0790	586
	587
	589
	590
	591
	592
	593
	594
	595
	608
	609
	612
	613
207-0793	608
	609
207-0793	612
	613
207-0794	586
	587
207-0795	586
	587
	589
	590
	593
	594
	595
207-0796	586
	587
	589
	590
	593
	594
	595
207-0797	589
	590
	593
	594
	595
207-0798	589
	590
	593
	594
	595
207-0799	608
	609
	612
	613
207-0800	608
	609
	612
	613
207-0801	608
	609
	612
	613
207-4695	484
207-4696	484
207-7150	492
	493
207-7154	175
207-7156	175
207-7157	175
207-7158	525
208-0641	▲463
208-0651	297
	298
	▲370
	▲371
208-1092	190
	191
	192
	193
	▲29
208-2141	187
	▲256
	▲257
208-2156	185
	186
208-2156	187
	188
	189
	▲272
	▲273
	▲274
	▲275
209-1671	2
	▲462
209-1687	256
	257
	260
	261
209-2213	▲117
209-2214	117
209-2215	117
	▲146
209-3451	35
209-3930	608
	609
	612
	613
	614
209-3942	370
	371
209-3945	370
	371
209-3946	370
	371
209-3947	370
	371
209-5412	462
	463
	▲428
209-5713	412
	413
	414
	415
	416
	417
209-6511	258
	259
	262
	263
209-7511	412
	413
	414
	415
	416
	417
209-7512	412
	413
	414
	415
	416
	417
209-7514	412
	413
	414
	415
	416
	417
209-8169	457

▲ PRIMARY REFERENCE

PART NUMBER INDEX

Part No.	Page
209-8169	527
	▲116
209-8170	116
	▲145
209-8171	186
	187
	188
	189
	▲94
	▲95
	▲96
	▲97
	▲98
	▲99
	▲100
	▲101
	▲102
	▲103
	▲104
	▲105
	▲106
	▲107
	▲108
	▲109
	▲110
	▲111
	▲112
	▲113
209-8172	94
	95
	98
	99
	▲126
209-8173	76
	▲138
	▲139
209-8871	510
	511
	▲435
209-9631	272
	273
	274
	275
210-0024	451
210-0363	297
	298
	▲366
	▲367
210-0424	510
	511
	▲451
210-0425	510
	511
	▲402
	▲403
210-0426	510
	511
	▲452
	▲453
210-0534	510
	▲470
	▲471
210-0535	470
210-0536	470
	474
210-1285	510
	511
	▲438
210-1289	510
	511
	▲315
210-1308	315
210-1769	529
	530
	▲602
210-1784	510
	511
	▲512
	▲513
210-1884	▲510
	▲511
210-1897	510
	511
	▲304
210-1898	510
	511
	▲454
	▲455
210-3557	602
	▲604
210-3558	604
	▲608
	▲609
210-3559	608
210-3560	562
	563
	572
	573
	574
	575
	576
	577
210-3562	564
	565
	566
	567
	568
	569
	570
	571
210-3569	315
210-4759	304
210-4772	512
	513
210-4773	512
	513
210-4774	402
	403
210-6406	536
	▲542
	▲543
	▲544
	▲545
210-6409	544
	545
	548
210-6409	549
	552
	553
210-7944	34
210-7946	34
210-9818	42
	43
210-9840	42
	43
210-9852	42
	43
210-9994	44
	45
	46
	47
211-0808	510
	511
	▲456
211-1179	546
	547
	550
	551
211-1308	456
211-1309	456
211-3366	452
	453
211-3367	452
	453
211-3368	452
	453
211-3369	452
	453
211-3370	452
	453
211-3371	452
	453
211-4488	452
	453
211-7020	402
	403
211-7031	402
	403
211-7455	586
	587
	589
	590
	593
	594
	595
211-8848	454
	455
211-8849	454
	455
211-8850	454
	455
211-8851	454
	455
211-8852	454
	455
211-8859	454
	455
211-8860	454
	455

▲ PRIMARY REFERENCE

PART NUMBER INDEX

Part No.	Page
211-9385	632
	633
211-9741	540
	541
	544
	545
	548
	549
	552
	553
211-9749	482
	483
211-9750	482
	483
212-0093	618
	619
212-0966	562
	563
	564
	565
	566
	567
	576
	577
212-5092	435
212-5093	435
212-5094	435
212-5095	435
212-5096	434
	435
212-5097	435
212-5098	435
212-5101	435
212-5102	435
212-5119	291
212-5120	291
212-5125	▲288
212-5126	288
	▲289
212-5127	288
	▲289
212-5128	289
	▲291
212-5129	291
212-6069	438
212-6070	438
212-6071	438
212-6072	438
212-6073	438
212-6074	438
212-6075	438
212-6076	438
212-6077	438
212-6720	628
	629
	630
	631
212-7347	608
	609
	612
	613
212-9588	147
212-9589	147
212-9590	147
212-9591	147
212-9592	147
212-9593	147
213-7638	451
213-8336	612
214-0884	461
	462
	▲465
214-0885	465
214-1489	35
214-3943	548
	549
	552
	553
214-3946	546
	547
	550
	551
214-3947	546
	547
	550
	551
214-3948	548
	549
	552
	553
214-3953	546
	547
	550
	551
	▲557
214-3954	548
	549
	552
	553
214-3956	548
	549
	552
	553
214-3958	557
	▲558
214-3959	557
214-3960	557
214-3961	557
214-3962	557
214-3963	548
	549
	552
	553
214-3964	557
214-3966	557
214-3967	548
	549
	552
	553
214-3968	557
214-3969	557
214-3970	548
	549
	552
	553
214-3975	558
214-3976	558
214-3978	558
214-3979	558
214-3980	558
214-3981	558
214-3983	558
214-3984	558
214-3985	558
214-3986	558
214-3990	624
214-4991	428
214-6197	267
	535
	536
	537
214-6198	535
	536
	537
215-1164	630
	631
215-2232	460
	▲437
215-2233	376
	377
	382
	383
215-2235	437
215-2829	437
215-2845	437
215-2865	531
	532
	▲76
	▲77
	▲78
	▲79
	▲80
	▲81
	▲82
	▲83
	▲84
	▲85
215-3347	38
	39
215-3348	188
	189
	▲38
	▲39
215-3746	38
	39
215-3747	462
	463
	▲434
215-4339	352
	353
	354
	355
215-4369	256
	257
	258
	259
	260
	261
	262

▲ PRIMARY REFERENCE

PART NUMBER INDEX

Part No.	Page
215-4369	263
215-4820	510
	511
	▲475
215-4821	475
215-5065	44
	45
	46
	47
215-5066	44
	45
	46
	47
215-6531	253
215-7888	258
	259
	262
	263
215-7896	190
	192
	▲260
	▲261
215-7923	256
	257
	260
	261
216-0056	228
	229
	231
	232
216-0569	622
	623
216-2752	404
	405
216-3192	260
	261
216-3193	260
	261
216-3194	260
	261
	262
	263
216-3195	260
	261
	262
	263
216-3197	260
	261
	262
	263
216-3198	260
	261
	262
	263
216-3199	260
	261
	262
	263
216-3200	260
	261
216-3202	260
	261
	262
216-3202	263
216-3203	260
	261
216-3204	260
	261
	262
	263
216-3207	260
	261
	262
	263
216-3208	260
	261
216-3209	260
	261
	262
	263
216-3210	260
	261
216-3211	260
	261
	262
	263
216-3344	376
	377
216-5588	190
	191
	192
	193
	▲22
	▲23
216-5589	3
	190
	191
	192
	193
	▲35
216-7234	434
216-7235	434
216-7236	434
216-7237	434
216-7238	434
216-7239	434
216-7240	434
216-7241	434
216-7242	434
216-7243	434
216-7244	434
216-7245	434
216-7246	434
216-7247	434
216-7279	299
	400
	401
	▲329
216-8062	▲190
	▲191
216-8063	▲192
	▲193
216-8437	190
	191
	192
	193
216-8437	▲277
216-8438	190
	191
	192
	193
	▲576
	▲577
	▲578
216-8439	190
	191
	192
	193
	▲240
	▲241
216-8440	192
	193
	▲528
216-8446	515
	517
	519
	521
	▲603
216-8447	603
	▲605
216-8448	605
	▲612
	▲613
216-8923	576
	577
	578
216-9884	372
	373
216-9893	540
	541
	548
	549
	552
	553
216-9894	35
216-9895	25
216-9896	25
216-9897	25
216-9898	25
216-9899	25
216-9900	22
	23
	▲25
216-9903	25
216-9904	25
217-0972	277
217-0973	277
217-0974	277
217-0975	277
217-0976	277
217-0977	277
217-0978	277
217-0979	277
217-0980	277
217-0981	277
217-0982	277
217-0983	277
217-0984	277
217-0985	277

▲ PRIMARY REFERENCE

PART NUMBER INDEX

Part No.	Page
217-0986	277
217-0987	240
	241
217-1631	260
	261
217-1632	260
	261
217-2447	356
	357
217-2456	378
	379
217-5958	323
217-6066	370
	371
217-7959	▲299
217-7968	437
217-7970	429
	430
	431
	436
	437
217-9451	329
217-9452	329
217-9453	329
217-9454	329
217-9456	329
218-0520	394
	395
218-1519	394
	395
218-3527	563
	566
	567
	570
	571
	574
	575
218-4171	48
	49
218-4190	258
	259
	262
	263
218-4210	258
	259
	262
	263
218-4255	354
	355
218-4269	258
	259
	262
	263
218-4681	465
	467
	469
218-4682	526
	▲597
218-4683	597
218-4684	▲526
218-9377	253
219-0060	548
	549

Part No.	Page
219-0060	552
	553
219-0061	548
	549
	552
	553
219-0062	548
	549
	552
	553
219-0185	558
219-0707	557
219-0708	557
219-0709	465
	467
	469
219-3146	654
220-0305	278
220-4000	492
	493
220-4014	307
	309
220-4600	258
	259
	262
	263
220-4601	258
	259
220-4602	258
	259
220-6409	258
	259
	262
	263
220-6410	258
	259
	262
	263
220-9869	622
	623
221-0936	421
221-0937	421
221-0938	421
221-0939	370
	371
221-1501	190
	191
	192
	193
	▲278
221-2140	260
	261
221-4133	323
221-4134	324
	326
	327
221-4135	322
221-4594	486
221-9035	630
	631
222-0666	586
	587
	589

Part No.	Page
222-0666	590
	591
	592
	593
	594
	595
222-2622	76
	78
	80
	82
222-6862	65
	▲148
222-8767	467
	▲468
222-9363	76
	78
	80
	83
223-0735	511
	▲469
223-0736	469
	▲472
	▲473
223-0737	472
	473
	▲474
223-0738	474
223-0763	472
	473
223-0812	256
	257
	260
	261
223-0813	256
	257
	260
	261
223-0814	256
	257
	260
	261
223-1794	534
223-1874	534
223-3586	482
	483
223-3588	482
	483
	484
223-3590	482
	483
	484
223-3593	477
	478
	479
223-3594	477
	478
	479
	480
	481
223-3596	477
	478
	479
	480

▲ PRIMARY REFERENCE

PART NUMBER INDEX

Part No.	Page
223-3596	481
223-3624	484
223-3640	480
	481
223-4114	253
223-4115	253
223-4723	488
	489
	490
	491
	492
	493
223-6031	522
223-6156	196
	197
	208
	209
	220
	221
223-6790	594
	595
224-8406	301
	▲654
224-9572	376
	377
224-9575	416
	417
226-3701	228
	229
	230
	231
	232
	233
	243
226-3702	228
	229
	230
	231
	232
	233
	243
226-9839	548
	549
	552
	553
226-9840	548
	549
	552
	553
226-9841	546
	547
	550
	551
226-9842	554
226-9843	546
	547
	550
	551
226-9844	548
	549
	▲559
227-0620	309
	310
227-8562	188
	189
	▲258
	▲259
227-8564	191
	193
	▲262
	▲263
227-8565	258
	259
	262
	263
227-8577	258
	259
	262
	263
227-8578	258
	259
227-8579	258
	259
227-8582	258
	259
	262
	263
227-8583	258
	259
227-8585	258
	259
227-8586	258
	259
227-8587	262
	263
227-8588	262
	263
227-8589	262
	263
227-8590	262
	263
227-8591	262
	263
227-8592	262
	263
227-8593	262
	263
227-8594	262
	263
227-8595	262
	263
227-8596	262
	263
227-8597	262
	263
227-8598	262
	263
227-8600	258
	259
	262
	263
228-6290	▲300
228-6291	▲300
229-1382	546
	547
	550
229-1382	551
229-1680	148
	149
229-8442	614
230-0716	416
	417
230-5210	559
230-5211	559
230-5212	559
230-5213	559
230-5214	559
230-5215	559
230-5216	559
230-5217	559
230-5218	559
230-5219	559
230-7375	537
	▲546
	▲547
	▲548
	▲549
	▲550
	▲551
	▲552
	▲553
230-7377	548
	549
	552
	553
230-7378	548
	549
	552
	553
231-7924	136
	140
231-7925	136
	140
231-7926	136
	140
231-7928	71
	72
	81
	82
231-9122	136
	140
231-9694	230
	233
	243
233-0098	106
	107
	112
	113
233-0099	118
	▲119
233-2852	262
	263
233-2853	262
	263
233-2854	258
	259
	262
	263
233-6787	532

▲ PRIMARY REFERENCE

PART NUMBER INDEX

Part No.	Page
233-6787	▲584
233-6788	531
	▲583
233-6789	583
	▲594
233-6791	617
	▲630
	▲631
233-6792	630
	631
233-7738	54
233-7740	54
233-7741	54
233-7742	54
233-7743	54
233-7744	54
233-7754	54
233-7756	54
233-7757	54
233-7760	54
233-7761	54
233-7762	54
233-7763	54
233-8366	106
	107
	112
	113
233-8699	136
	140
233-8700	106
	107
	112
	113
233-8701	136
	140
233-8702	136
	140
233-9575	587
	592
234-8962	286
235-0435	235
	237
235-0436	235
	237
235-7959	654
236-3257	309
	310
236-3258	309
	310
236-3259	309
	310
236-6782	70
	75
	80
	85
237-3530	67
	69
	71
	77
	79
	81
	▲149
238-3230	▲293
238-3231	293
239-0524	635
239-0525	635
239-1182	106
	107
	112
	113
	444
	445
239-1183	444
	445
239-6387	307
	308
240-0481	239
	241
240-0482	239
	241
240-6302	282
	▲283
240-6303	282
	▲284
240-6304	283
	284
240-6305	283
	284
240-6306	283
	284
240-6307	283
	284
240-6308	283
	284
240-7590	198
	199
	202
	203
	▲230
240-7591	200
	201
	204
	205
	212
	213
	216
	217
	224
	225
240-7592	210
	211
	214
	215
	222
	223
	▲233
240-7593	243
240-7600	189
	▲56
240-7601	56
	▲57
240-7602	57
240-8772	200
	201
	204
	205
240-8772	212
	213
	216
	217
	224
	225
241-3597	68
	78
	▲132
	▲133
241-3943	▲301
241-3948	301
	▲404
	▲405
241-7451	298
	▲308
241-7452	308
	▲309
	▲310
241-7453	309
	310
242-6709	404
	405
242-6712	404
	405
243-0875	490
	491
243-1342	98
	99
	106
	107
	112
	113
243-4455	39
244-5728	71
	73
	81
	83
244-5747	646
	647
	648
	649
245-0997	609
245-9398	616
246-2431	646
	647
	648
	649
246-5339	310
246-6428	70
	80
	▲134
	▲135
246-6764	266
246-6766	266
246-6767	266
246-6810	230
	243
246-6811	230
	243
246-6812	230
	243
247-0535	616

▲ PRIMARY REFERENCE

PART NUMBER INDEX

Part No.	Page
247-4729	632
	633
247-7947	632
	633
247-7949	632
	633
248-0493	309
248-1982	102
	103
	108
	109
	▲143
248-1986	102
	103
	108
	109
	▲127
248-1987	82
	▲140
	▲141
248-1988	72
	▲136
	▲137
248-3862	70
	72
	80
	82
	▲147
249-6899	136
	140
250-0074	147
250-0989	73
	75
	83
250-1639	558
250-2035	558
250-2044	106
	107
	112
	113
250-2047	106
	107
	112
	113
250-2048	106
	107
	112
	113
250-2049	106
	107
	112
	113
250-2050	106
	107
	112
	113
250-2051	102
	103
250-2559	338
	339
250-2703	274
	275
250-3105	552
250-3105	553
	▲560
250-3109	106
	107
	112
	113
251-1896	472
	473
251-1897	472
	473
251-6578	560
251-6579	560
251-6580	560
251-6581	560
251-6582	560
251-6583	560
251-6584	560
251-6585	560
251-6586	560
251-6587	560
251-6588	560
251-8485	422
251-8486	422
251-8487	422
251-8488	422
251-8489	422
251-8490	422
252-1086	329
252-1087	329
252-1088	329
252-5942	106
	107
	112
	113
252-9355	587
	592
252-9356	590
	595
252-9357	587
253-3623	530
	▲581
253-3624	581
	▲587
253-3625	581
	▲590
253-3626	584
	▲592
253-3627	584
	▲595
255-3096	558
257-3123	558
258-7765	444
	445
	▲447
262-2661	108
	109

▲ PRIMARY REFERENCE

M E M O R A N D U M

XEBP7473-03(11-2005)

Printed in JAPAN