M0096123-00 (en-us)
October 2018

RUTHZIL TRATOR COMERCIAL DE PEÇAS LTDA 11 97083-6812 ROLANDO

Parts Manual

308 CR Mini Hydraulic Excavator

GG81-UP (Machine)

Powered By C3.3B Engine

Product and Dealer Information

Note: For product identification plate locations, see the section “Product Identification Information” in the Operation and Maintenance Manual.

Delivery Date: _____

Product Information

Model: _____

Product Identification Number: _____

Engine Serial Number: _____

Transmission Serial Number: _____

Generator Serial Number: _____

Attachment Serial Numbers: _____

Attachment Information: _____

Customer Equipment Number: _____

Dealer Equipment Number: _____

Dealer Information

Name: _____ Branch: _____

Address: _____

_____

_____

	Dealer Contact	Phone Number	Hours
Sales:	_____	_____	_____
Parts:	_____	_____	_____
Service:	_____	_____	_____

MEMORANDA

TABLE OF CONTENTS

NAME	PAGE
GENERAL INFORMATION	A4
REPAIR ALTERNATIVES	A7
SUPPLEMENTAL COOLANT ADDITIVES	A8
MAINTENANCE PARTS	A9
INDEX	A11
MACHINE ARRANGEMENT	1
CHASSIS AR	1
COMMON AR	1
DISTRIBUTION AR	2
STICK & CONTROL AR-AUXILIARY	5
TRACK & BLADE AR-EXCAVATOR	6
ENGINE ARRANGEMENT	8
ENGINE AR	8
INSTALLATION AR-ENGINE	8
BASIC ENGINE	9
DRAIN GP-ENGINE OIL	9
MOUNTING GP-ENGINE	10
PULLEY GP-IDLER	11
COOLING SYSTEM	12
COOLING GP-RADIATOR	12
FAN GP-SUCTION	13
LINES GP-COOLANT	14
RADIATOR & HYD OIL COOLER GP	16
AIR INLET AND EXHAUST SYSTEM	17
AIR CLEANER GP	17
EXTENSION GP-EXHAUST	19
LINES GP-AIR	20
FUEL SYSTEM	21
LINES GP-FUEL	21
PUMP AR-FUEL TRANSFER	23
PUMP GP-FUEL TRANSFER	24
TANK & MTG GP-FUEL	26
TANK GP-FUEL	27
ELECTRICAL AND STARTING SYSTEM	32
ALARM GP-TRAVEL	32
BATTERY & WIRING GP	34
CONTROL GP-ELECTRONIC	39
ELECTRICAL AR	40
ELECTRONICS GP-MACHINE	40
ELECTRONICS GP-MONITOR	40
HARNESS AS-AUXILIARY	41
HARNESS AS-CAB	42
HARNESS AS-CHASSIS	45
HARNESS AS-ENGINE	48
HARNESS AS-FRONT	49
HARNESS AS-LIGHTING	50
HARNESS AS-MONITOR	50
HARNESS AS-PUMP	51
HARNESS AS-SENSOR	51
HARNESS AS-WIRING	53
HEATER GP-JACKET WATER	54
INSTALLATION GP-SECURITY	55
KIT-CAMERA	57
KIT-JACKET WATER HEATER	57
KIT-LIGHTING	57
KIT-RADIO	58
KIT-WIRING	58
LAMP GP-FLOOD	59
LAMP GP-WARNING BEACON	61
LIGHTING GP-FLOOD	62
MOUNTING GP-WIRING	67
RADIO GP-COMMUNICATION	68
RELAY GP	69
SWITCH GP-DISCONNECT	70
SWITCH GP-START	71
WIRING GP-AUXILIARY CONTROL	72
WIRING GP-CAB	73
WIRING GP-CAMERA	77
WIRING GP-COMMUNICATION	79
WIRING GP-ENGINE	81
WIRING GP-FRONT	83
WIRING GP-FUEL PUMP	85
WIRING GP-OVERLOAD WARNING	86
POWER TRAIN	87
DRIVE GP-FINAL	87
MOTOR & MTG GP-TRAVEL	89
SPROCKET GP	90
FRAME AND BODY	91
COUNTERWEIGHT & MOUNTING GP	91
COUNTERWEIGHT GP	93
COVER GP-ACCESS	94
COVER GP-FRAME	97
DOOR GP-ACCESS	98
ENCLOSURE GP	104
FIREWALL GP	108
FRAME AS-UNDERCARRIAGE	110
FRAME GP-SWING	111
FRAME GP-UPPER	113
GUARD GP-BOTTOM	114
GUARD GP-CYLINDER	115
GUARD GP-SWIVEL	116
HOOD & GUARD GP	117
KIT-COUNTERWEIGHT	118
KIT-SCREEN	118
MIRROR & MTG GP-REAR VIEW	119
PLUG GP-COUNTERWEIGHT	120
STEP GP	121

TABLE OF CONTENTS

NAME	PAGE
UNDERCARRIAGE	122
ADJUSTMENT GP-HYDRAULIC TRACK	122
GEAR & BEARING GP-SWING	123
GUARD GP-TRACK GUIDE	124
GUARD GP-TRAVEL MOTOR	126
IDLER GP-FRONT	127
KIT-RUBBER TRACK PAD	130
LINK AS-TRACK	131
LINK GP-TRACK	132
ROLLER GP-TRACK	134
ROLLER GP-TRACK CARRIER	135
ROLLER GP-TRACK-CENTER FLANGE	137
ROLLER GP-TRACK-SINGLE FLANGE	138
SPRING GP-RECOIL	140
TRACK AR	141
TRACK GP	142
UNDERCARRIAGE AR	144
HYDRAULIC SYSTEM	145
ACCUMULATOR GP-HYDRAULIC	145
CONTROL AR-BLADE	147
CONTROL AR-COUPLER	147
CONTROL AR-HYDRAULIC	149
CYLINDER & LINES GP-BOOM	152
CYLINDER & LINES GP-HYDRAULIC	155
CYLINDER & LINES GP-STICK	156
CYLINDER & LINES GP-THUMB	159
CYLINDER GP-BLADE	165
CYLINDER GP-BUCKET	166
CYLINDER GP-COUPLER	167
CYLINDER GP-THUMB	168
CYLINDER GP-VARIABLE ADJ BOOM	170
FILTER GP-OIL	171
GUARD AS-BLADE CYLINDER	172
HYDRAULIC AR	173
LINES AR-AUXILIARY HYDRAULIC	175
LINES AR-BOOM	177
LINES AR-STICK	177
LINES GP-AUXILIARY HYDRAULIC	179
LINES GP-BOOM	189
LINES GP-CONTROL	195
LINES GP-COUPLER	197
LINES GP-CYLINDER	203
LINES GP-FRONT	205
LINES GP-PILOT	215
LINES GP-PUMP	220
LINES GP-QUICK COUPLER	225
LINES GP-RETURN	227
LINES GP-STICK	230
LINES GP-SWING MOTOR	232
LINES GP-SWIVEL	234
LINES GP-TRAVEL MOTOR	235
MANIFOLD & SOLENOID GP-CONTROL	236
MOTOR & MTG GP-SWING	237
MOTOR GP-PISTON	238
MOTOR GP-SWING	240
MOUNTING GP-CYLINDER	242
PUMP & MTG GP-MAIN HYDRAULIC	245
PUMP GP-MAIN HYDRAULIC	247
ROTATING GP-PUMP	253
SWIVEL & MOUNTING GP	255
SWIVEL GP	256
TANK & FILTER GP-HYDRAULIC	257
TANK & MTG GP-HYDRAULIC	262
VALVE & MOUNTING GP	263
VALVE & MTG GP-BANK	264
VALVE GP-AUXILIARY	268
VALVE GP-CONTROL	269
VALVE GP-MAIN CONTROL	270
VALVE GP-PUMP CONTROL	282
VALVE GP-RELIEF	284
IMPLEMENTS	286
BOOM AR	286
BOOM GP	287
LINES GP-GREASE	290
LINK & BEARING AS	292
LINK GP	293
LINKAGE AR-BUCKET	295
LINKAGE GP-BUCKET	296
PIN GP-EXCAVATOR	304
STICK AR	305
STICK AR-HOE	305
STICK GP-HOE	306
WORK TOOLS	308
BLADE & MOUNTING GP	308
BLADE AR-STRAIGHT	310
BLADE GP-STRAIGHT	311
BUCKET GP-EXCAVATION	313
COUPLER AR-QUICK	318
COUPLER GP-QUICK	320
COUPLER GP-WORK TOOL	325
EDGE GP-BIT & CUTTING	326
EDGE GP-CUTTING	327
HANDLE & PIN GP-COUPLER	328
INDICATOR GP-POSITION	330
LOCK GP-QUICK COUPLER	331
PIN GP-COUPLER	334
THUMB AR	335
OPERATOR STATION	341
AIR CONDITIONER & MOUNTING GP	341
AIR CONDITIONER GP	342
CAB GP	346

TABLE OF CONTENTS

NAME	PAGE
COMPRESSOR GP-REFRIGERANT	351
CONDENSER GP-REFRIGERANT	353
CONSOLE GP-OPERATOR	355
CONTROL & MTG GP-JOYSTICK	361
CONTROL & MTG GP-PEDAL	362
CONTROL GP-BLADE	364
CONTROL GP-JOYSTICK	365
CONTROL GP-PILOT OPERATED HYD	367
DISPLAY GP-MONITOR	368
DOOR GP-CAB	372
DUCT GP-CAB AIR	375
GUARD AR-FRONT WINDOW	377
GUARD AR-OVERHEAD	379
GUARD GP-OVERHEAD	380
GUARD GP-WINDOW	383
HANDRAIL GP	387
KIT-DISPLAY	388
KIT-GUARD	388
KIT-MIRROR	389
LINER GP-CAB	390
LINES GP-AIR CONDITIONER	392
MIRROR GP	394
MIRROR GP-REAR VIEW	395
MONITOR GP-OPERATOR	396
MOUNTING GP-PLATFORM	397
MOUNTING GP-RADIO	398
OPERATOR AR	399
RADIO GP	400
SEAT & MOUNTING GP	402
SEAT BELT GP	404
SEAT GP	406
SUPPORT GP-SEAT	407
TRIM GP-CAB	408
VALVE GP-ACTUATOR	410
VISOR GP-PROTECTION	411
WASHER GP-WINDOW	413
WINDOW AS-SLIDING	414
WINDOW GP-CAB	415
WINDOW GP-DOOR	422
WIPER GP-WINDOW	423
SERVICE EQUIPMENT AND SUPPLIES	424
FILM GP	424
FILM GP-INTERNATIONAL	445
FILM GP-U.S.	447
KIT-SEAL	449
PLATE & FILM GP	450
PLATE GP-CERTIFICATION	454
PART NUMBER INDEX	B1

1. MACHINE IDENTIFICATION

Cat machines are identified by Product Identification Numbers (PIN). Some components included in a machine may be identified by Serial Numbers (S/N). Typical components that will be serialized include engines, transmissions, bulldozers, and rippers. The machine and engine are further identified by arrangement numbers and in some cases modification numbers. These numbers are shown on the product identification plate(s) and on the master plate in the operator's compartment.

Cat dealers need all of these numbers to determine accurate parts identification.

Effective First Quarter 2001 the Cat Product Identification Number (PIN) changed from 8 to 17 characters. In an effort to provide uniform equipment identification, Caterpillar and other construction equipment manufacturers are moving to comply with the latest version of the product identification numbering standard. Non-road machine PINs are defined by ISO 10261. The new PIN format will apply to all Cat machines and generator sets. The PIN plates and frame marking will display the 17 character PIN. The new format will look like the following:

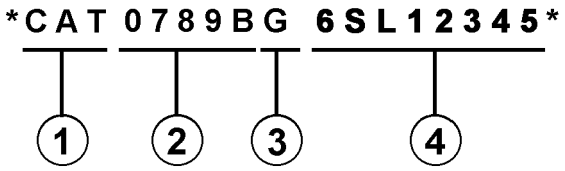

Where:

1. Caterpillar's World Manufacturing Code (characters 1-3)

2. Machine Descriptor (characters 4-8)

3. Check Character (character 9)

4. Machine Indicator Section (MIS) or Product Sequence Number (characters 10-17). These were previously referred to as the Serial Number.

Machines and generator sets produced before First Quarter 2001 will maintain their 8 character PIN format.

Components such as engines, transmissions, axles, etc. and work tools will continue to use an 8 character Serial Number (S/N).

2. ORDERING PARTS

⚠ WARNING

When replacement parts are required for this product Caterpillar recommends using Caterpillar replacement parts or parts with equivalent specifications including, but not limited to, physical dimensions, type, strength and material.

Failure to heed this warning can lead to premature failures, product damage, personal injury or death.

Quality Cat replacement parts are available from Cat dealers throughout the world. Their parts inventories are up to date and include all parts normally required to protect your investment in Cat machines. Dealers may offer repair kits or remanufactured parts to allow selection of the most effective repair alternative for a particular situation. When ordering parts, your order should specify the quantity, part number, part name, and the serial number/product identification number of the machine for which the parts are needed.

3. PARTS MANUAL ORGANIZATION

Product information in this manual is presented as "information elements" that represent all of the components for the specific model. Engine Arrangement and Seat Group are examples of information elements. The information elements are organized alphabetically by part name and secondarily by part number within each major section of the manual.

4. TABLE OF CONTENTS

A table of contents (TOC) is found at the beginning of the manual. The TOC lists each section of the manual with a complete list of all information elements organized as they appear in the manual. Page numbers are provided for quick reference to detailed parts identification illustrations and serviceable consist lists.

5. MAINTENANCE PARTS INDEX

The Maintenance Parts Index, located near the beginning of the manual, references most frequently used maintenance part numbers, providing description, quantity, usage and page number. This information is organized alphabetically by part description.

6. INDEX

The index located near the front of the manual is an alphabetical listing of all information elements included in the manual. Page numbers are provided for quick reference to detailed parts identification illustrations and serviceable consist lists.

7. PART NUMBER INDEX

A numerical index listing all part numbers and the corresponding page number(s) appears at the back of the manual.

8. CAPTIONS

Captions located at the beginning of each information element identify the part number and part name along with additional descriptive information. PIN and S/N information found in each caption should be used to select correct information for a specific machine. Field replacement options, identification of optional attachment components, and where used ("part of") information is also provided.

The first line of a caption is shown in larger type font to indicate the beginning of an information element. Captions for additional pages that may be required to illustrate an information element will be shown in standard type font and will include the term (contd.).

9. NON-SERVICED PARTS

In some instances it is necessary to display non-serviced parts that are a link to a lower level serviceable consist lists. These non-serviced part numbers are shown in italic type indicating that they are not available.

10. PARTS LIST REFERENCE NUMBERS

Numbers shown in the Ref No column correspond to numbers used in the associated graphic(s). An alphabetic suffix may be added to a reference number to identify lower level consist items. Numbers shown in the Graphic Ref column refer to the graphic number identifier displayed in the lower left corner of each illustration. The Graphic Ref number may be used in combination with the item Ref No to determine the correct part number. There may be intentional omission of a Ref No in a consist list as information is updated to reflect the latest serviceable part numbers.

11. INDENTED PART NAMES

When a part name is indented in a parts list, it is part of (included in) the group or assembly under which it is indented.

12. ILLUSTRATION REFERENCE LETTERS

When necessary, illustrations contain reference letters (A, B, C etc.) that are intended to track lines and harnesses from one point to another. They are also used to show where to reconnect illustrations that have been separated.

13. ABBREVIATIONS AND SYMBOLS

O.D. – Outside Diameter
I.D. – Inside Diameter
A – Not Part Of This Group
B – Use As Required
C – Change From Previous Type
D – Order By The Meter
E – Order By The Centimeter
F – Not Shown
G – Order By The Inch
I – Refer To Hydraulic Information System
M – Metric Part
R – Remfg Part May Be Available
Y – Separate Illustration
Z – Not Serviced Separately

14. DESCRIPTION OF TYPE CHANGES

Type - A type is defined as any configuration change that requires an additional Information Element for an Arrangement, Group, or Assembly. If serial number breaks for types are not available, a type # (Type 1, Type 2, etc.) will be displayed in the caption. These "type" changes are identified with a "C" note (change from previous type) in the Parts List. Only the "types" that apply to this Parts Manual will be included. Additional types may exist causing "C" notes to appear on an Information Element when no other types are shown.

15.<END>

This symbol indicates the end of an information element.

NOTE:

Continuing improvement and advancement of product design may cause changes to your machine which may not be included in this publication. Whenever a question arises regarding your Cat product or this publication, please consult your Cat dealer for the latest available information.

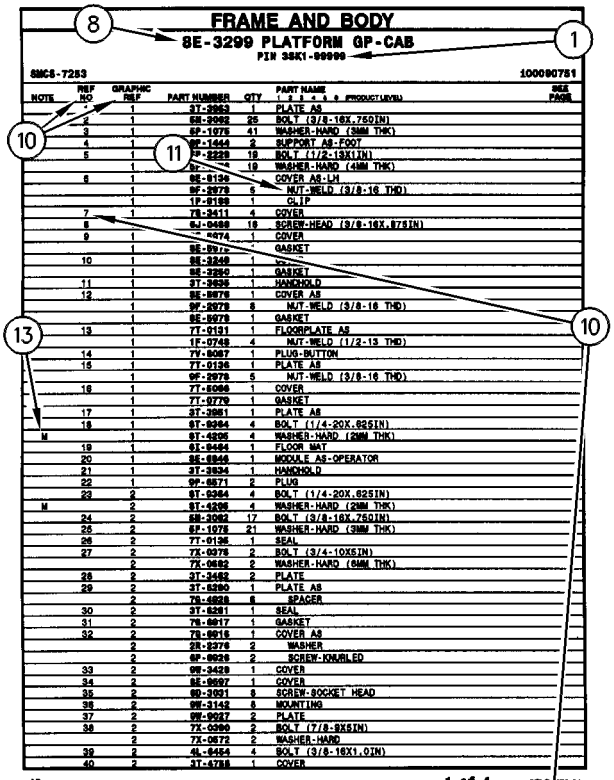

FRAME AND BODY

8E-3299 PLATFORM GP-CAB

PIN 3SK1-99999

SMCS-7283 100090751

NOTE	REF NO	GRAPHIC REF	PART NUMBER	QTY	PART NAME 1 2 3 4 5 6 (PRODUCT LEVEL)	SEE PAGE
	1	1	3T-3963	1	PLATE AS	
	2	1	6M-3982	25	BOLT (3/8-16X.75DIN)	
	3	1	5P-1078	41	WASHER-HARD (3MM THK)	
	4	1	9F-1444	2	SUPPORT AS-FOOT	
	5	1	7P-2229	19	BOLT (1/2-13X1IN)	
		1	5P-[illegible]	19	WASHER-HARD (4MM THK)	
	6	1	8E-8136	1	COVER AS-LH	
		1	9F-2979	6	NUT-WELD (3/8-16 THD)	
		1	1F-8188	1	CLIP	
	7	1	7S-3411	4	COVER	
	8		6J-0488	19	SCREW-HEAD (3/8-16X.875IN)	
	9	1	[illegible]-0474	1	COVER	
		1	8E-8976	1	GASKET	
	10	1	8E-3249	1	[illegible]	
		1	8E-3250	1	GASKET	
	11	1	3T-3935	1	HANDHOLD	
	12	1	8E-8978	1	COVER AS	
		1	9F-2979	8	NUT-WELD (3/8-16 THD)	
		1	8E-8979	1	GASKET	
	13	1	7T-0131	1	FLOORPLATE AS	
		1	1F-0748	4	NUT-WELD (1/2-13 THD)	
	14	1	7V-8067	1	PLUG-BUTTON	
	15	1	7T-0136	1	PLATE AS	
		1	9F-2979	5	NUT-WELD (3/8-16 THD)	
	16	1	7T-8066	1	COVER	
		1	7T-0779	1	GASKET	
	17	1	3T-3961	1	PLATE AS	
	18	1	6T-9364	4	BOLT (1/4-20X.625IN)	
M		1	6T-4206	4	WASHER-HARD (2MM THK)	
	19	1	6T-9494	1	FLOOR MAT	
	20	1	8E-8946	1	MODULE AS-OPERATOR	
	21	1	3T-3934	1	HANDHOLD	
	22	1	9F-8571	2	PLUG	
	23	2	6T-9364	4	BOLT (1/4-20X.625IN)	
M		2	6T-4206	4	WASHER-HARD (2MM THK)	
	24	2	6M-3982	17	BOLT (3/8-16X.75DIN)	
	25	2	5P-1078	21	WASHER-HARD (3MM THK)	
	26	2	7T-0136	1	SEAL	
	27	2	7X-0378	2	BOLT (3/4-10X5IN)	
		2	7X-0682	2	WASHER-HARD (6MM THK)	
	28	2	3T-3462	2	PLATE	
	29	2	3T-8280	1	PLATE AS	
		2	7S-4828	6	SPACER	
	30	2	3T-8281	1	SEAL	
	31	2	7S-8917	1	GASKET	
	32	2	7S-8916	1	COVER AS	
		2	2S-2376	2	WASHER	
		2	9F-8628	2	SCREW-KNURLED	
	33	2	9W-3429	1	COVER	
	34	2	8E-9697	1	COVER	
	35	2	9D-3931	8	SCREW-SOCKET HEAD	
	36	2	9W-3142	8	MOUNTING	
	37	2	9W-9927	2	PLATE	
	38	2	7X-0290	2	BOLT (7/8-9X5IN)	
		2	7X-0572	2	WASHER-HARD	
	39	2	4L-6454	4	BOLT (3/8-16X1.0IN)	
	40	2	3T-4788	1	COVER	

12 FRAME AND BODY 1 of 4 SELP4570-01

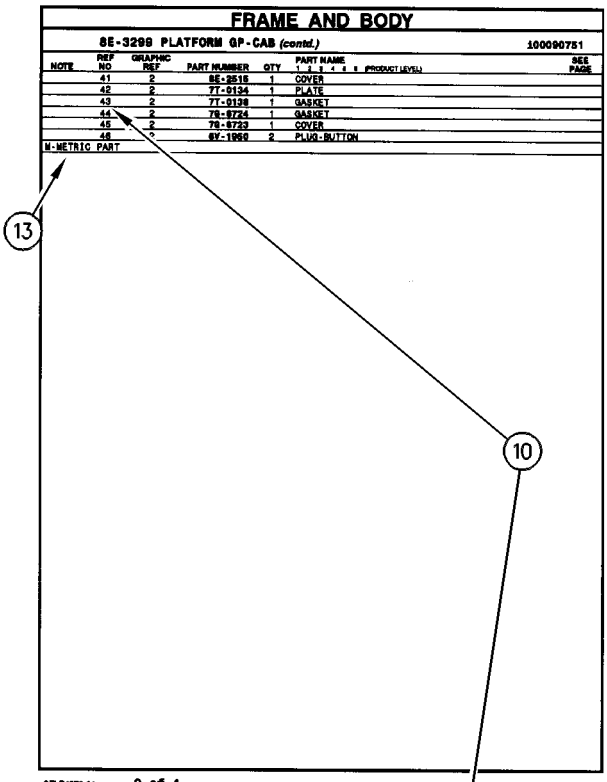

FRAME AND BODY

8E-3299 PLATFORM GP-CAB (contd.)

100090751

NOTE	REF NO	GRAPHIC REF	PART NUMBER	QTY	PART NAME 1 2 3 4 5 6 (PRODUCT LEVEL)	SEE PAGE
	41	2	8E-2516	1	COVER	
	42	2	7T-0134	1	PLATE	
	43	2	7T-0138	1	GASKET	
	44	2	7S-8724	1	GASKET	
	45	2	7S-8723	1	COVER	
	46	2	6V-1960	2	PLUG-BUTTON	

M-METRIC PART

SELP4570-01 2 of 4 FRAME AND BODY 13

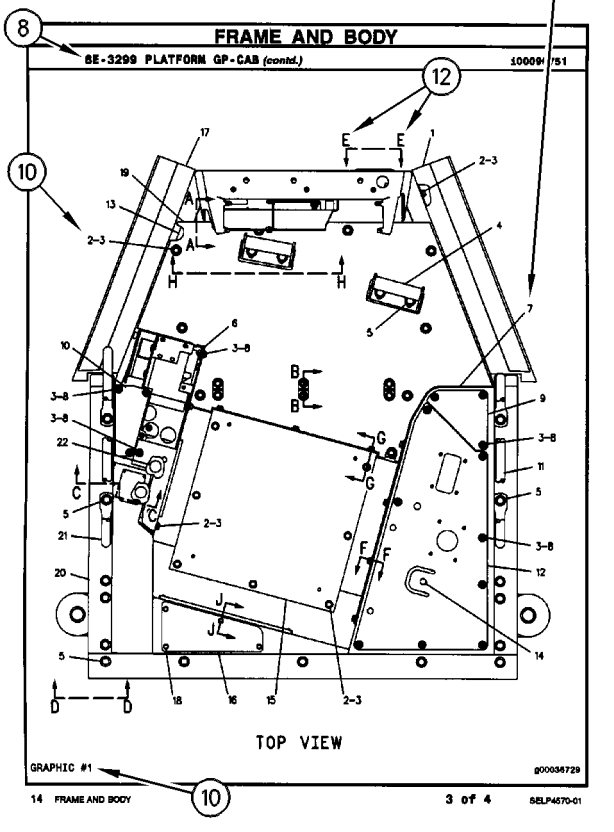

FRAME AND BODY

8E-3299 PLATFORM GP-CAB (contd.)

100090751

TOP VIEW

GRAPHIC #1 g00036729

14 FRAME AND BODY 3 of 4 SELP4570-01

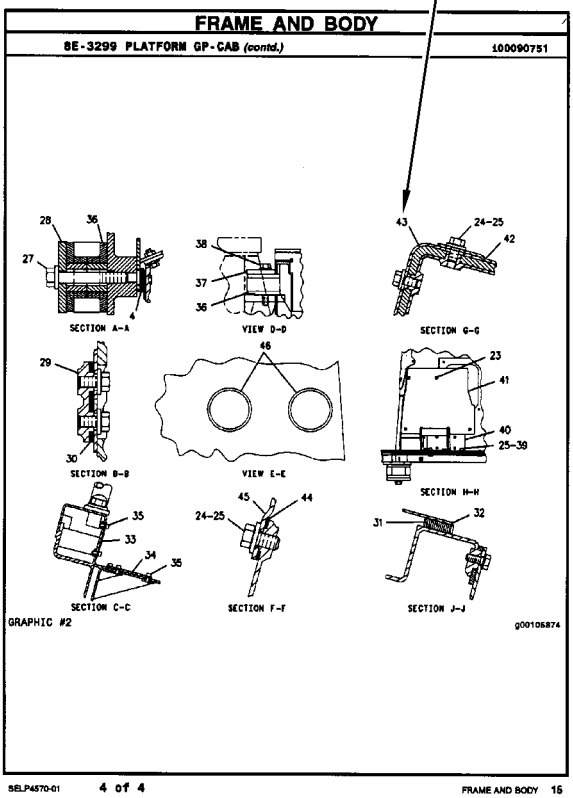

FRAME AND BODY

8E-3299 PLATFORM GP-CAB (contd.)

100090751

SECTION A-A VIEW D-D SECTION G-G

SECTION B-B VIEW E-E SECTION H-H

SECTION C-C SECTION F-F SECTION J-J

GRAPHIC #2 g00105874

SELP4570-01 4 of 4 FRAME AND BODY 15

REMANUFACTURED COMPONENTS

As an option when making repairs consider Cat Remanufactured Components. Components that are available through the Cat Remanufactured Program are identified three ways in the parts book:

- with the letter R in the note field of the parts list
- with an R* at the beginning of the first line of the caption
- with an *R at the end of the first line of the caption

Typical components included in the Remanufacturing Program include:

ALTERNATORS
CONNECTING RODS
CRANKSHAFTS - UNDERSIZE
CRANKSHAFTS - UPGRADE TO NEW
CYLINDER HEADS
ELECTRONIC CONTROL MODULES (ECM)
ELECTRONIC SENSORS
FUEL INJECTORS
FUEL NOZZLES
FUEL PUMPS
GOVERNORS
OIL PUMPS
PISTONS
SHORT BLOCKS
STARTERS
TURBOCHARGERS - COMPLETE
TURBOCHARGER CARTRIDGES
WATER PUMPS

Cat Remanufactured engines for many engine arrangements are also available.

SUPPLEMENTAL COOLANT ADDITIVES

CUSTOMER BENEFITS:

Protects against cavitation, foam, erosion, corrosion, and scale buildup in cooling systems.

- Provides measured coolant conditioner.

DESCRIPTION:

Additives deplete from the coolant with normal operation. For this reason, Supplemental Coolant Additives (SCA) must be added to all heavy duty coolants at regular intervals. In addition, when not using a fully formulated, pre-charged antifreeze, like Cat DEAC, an initial charge of SCA must be added to the cooling system. The amount of SCA added to the system is dependent on the capacity of the system.

The SCA for initial fill is provided as a liquid. SCA's for maintenance intervals are available in liquid form and as a spin-on element. (No Spin-on available for 3600 Family of Engines)

NOTE:

The amount of SCA added at initial fill is not the same as the amount added at maintenance intervals.

The coolant additive elements can be used with any ethylene or propylene glycol type antifreeze which meets ASTM D4985 or ASTM D5345 Specifications.

NOTE:

For use with standard heavy duty coolant only, not for use with Extended Life Coolant.

PARTS NEEDED:

Cooling System Capacity		Liquid SCA at Initial Fill	Liquid SCA at Maintenance*	Spin-on SCA Maintenance Element*
Liters	Gallons			
22-30	(6-8)	3P-2044 (1)	6V-3542 (1)	111-2370 (1)
30-38	(8-10)	3P-2044 (1) 6V-3542 (1)	111-2372 (1)	111-2369 (1)
38-49	(10-13)	3P-2044 (1) 8T-1589 (1)	111-2372 (1)	111-2369 (1)
49-64	(13-17)	3P-2044 (2)	8T-1589 (1)	9N-3368 (1)
64-83	(17-22)	3P-2044 (2) 8T-1589 (1)	111-2372 (1) 6V-3542 (1)	111-2371 (1)
83-114	(22-30)	3P-2044 (3) 8T-1589 (1)	3P-2044 (1)	9N-3718 (1)
114-163	(30-43)	3P-2044 (5)	3P-2044 (1) 6V-3542 (1)	111-2371 (2)
163-242	(43-64)	3P-2044 (8)	3P-2044 (2)	9N-3718 (2)

* Normal maintenance period is 250 hrs. See your Operation and Maintenance Manual for complete coolant maintenance instructions.

( ) Indicates quantity required.

MAINTENANCE PARTS

DESCRIPTION	PART NUMBER	QTY	WHERE USED	PAGE
AIR INLET AND EXHAUST SYSTEM				
FILTER ELEMENT AS-AIR	526-3122	1	AIR CLEANER GP	18
COOLING SYSTEM				
CAP AS (COOLANT RECOVERY)	140-4238	1	LINES GP-COOLANT	14
ELECTRICAL AND STARTING SYSTEM				
BATTERY	464-7675	1	CONTROL GP-ELECTRONIC	39
BATTERY (12-VOLT, MAINTENANCE FREE)	263-9574	1	BATTERY & WIRING GP	34
BELT-DRIVE (WARNING BEACON)	9X-8139	1	LAMP GP-WARNING BEACON	61
CIRCUIT BREAKER AS (30-AMPERE)	180-0613	1	HARNESS AS-CHASSIS	45
FUSE (10-AMPERE)	113-8490	11	HARNESS AS-CHASSIS	45
FUSE (15-AMPERE)	113-8491	5	HARNESS AS-CHASSIS	45
FUSE (20-AMPERE)	113-8492	2	HARNESS AS-CHASSIS	45
FUSE (25-AMPERE)	113-8493	1	HARNESS AS-CHASSIS	45
FUSE (30-AMPERE)	124-3548	2	HARNESS AS-CHASSIS	45
FUSE (40-AMPERE)	278-6377	1	RELAY GP	69
FUSE (60-AMPERE)	267-2701	1	RELAY GP	69
KEY (BATTERY DISCONNECT)	8H-5306	1	SWITCH GP-DISCONNECT	70
LAMP (12-VOLT, 55-WATT) (FLOODLIGHT)	9W-0607	1	LAMP GP-FLOOD	59
LAMP (12-VOLT, 55-WATT) (WARNING BEACON)	9X-8118	1	LAMP GP-WARNING BEACON	61
LAMP AS-FLOOD (9 TO 32-VOLT) (FRONT, LH)	479-8445	1	LIGHTING GP-FLOOD	65
LAMP AS-FLOOD (9 TO 32-VOLT) (FRONT, RH)	479-8445	1	LIGHTING GP-FLOOD	65
LAMP AS-FLOOD (9 TO 32-VOLT) (REAR LH)	479-8445	1	LIGHTING GP-FLOOD	65
LAMP AS-FLOOD (9 TO 32-VOLT) (REAR RH)	479-8445	1	LIGHTING GP-FLOOD	65
LAMP AS-FLOOD (9 TO 32-VOLT) (WIDE)	479-8445	4	LIGHTING GP-FLOOD	66
FUEL SYSTEM				
CAP AS-FUEL (LOCKABLE, VENTED)	349-7059	1	TANK GP-FUEL	27
		1	TANK GP-FUEL	30
FILTER AS-FUEL	541-6956	1	LINES GP-FUEL	21
FILTER-FUEL (IN-LINE)	1G-7206	1	LINES GP-FUEL	21
KEY	5P-8500	1	PUMP GP-FUEL TRANSFER	24
STRAINER-FUEL (FUEL TANK)	9P-7121	1	TANK GP-FUEL	27
		1	TANK GP-FUEL	30
HYDRAULIC SYSTEM				
CAP-PRESSURE (HYDRAULIC TANK)	4I-3745	1	TANK & FILTER GP-HYDRAULIC	257
		1	TANK & FILTER GP-HYDRAULIC	259
FILTER ELEMENT AS-OIL	519-9926	1	FILTER GP-OIL	171

MAINTENANCE PARTS

DESCRIPTION	PART NUMBER	QTY	WHERE USED	PAGE
PLUG-DRAIN	9J-7031	1	TANK & FILTER GP-HYDRAULIC	257
		1	TANK & FILTER GP-HYDRAULIC	259
STRAINER AS	555-7092	1	TANK & FILTER GP-HYDRAULIC	257
		1	TANK & FILTER GP-HYDRAULIC	259
OPERATOR STATION				
FILTER	538-6396	1	AIR CONDITIONER GP	342
FILTER-CAB AIR	518-9395	1	AIR CONDITIONER & MOUNTING GP	341
SEAL-INTEGRAL (1/2-IN)	327-0282	2	AIR CONDITIONER GP	342
SEAL-INTEGRAL (3/4-IN)	327-0283	2	AIR CONDITIONER GP	342
V-BELT (COMPRESSOR)	4N-9891	1	COMPRESSOR GP-REFRIGERANT	351
SERVICE EQUIPMENT AND SUPPLIES				
KEY	5P-8500	1	PLATE & FILM GP	451

INDEX

NAME PAGE

A

ACCUMULATOR GP-HYDRAULIC–UNCHARGED 145
146
ADJUSTMENT GP-HYDRAULIC TRACK 122
AIR CLEANER GP 17
18
AIR CONDITIONER & MOUNTING GP 341
AIR CONDITIONER GP 342
ALARM GP-TRAVEL 32
33

B

BATTERY 39
BATTERY (12-VOLT, MAINTENANCE FREE) 34
BATTERY & WIRING GP 34
BELT-DRIVE (WARNING BEACON) 61
BLADE & MOUNTING GP 308
309
BLADE AR-STRAIGHT 310
BLADE GP-STRAIGHT 311
312
BOOM AR 286
BOOM AR–VARIABLE ADJUSTABLE BOOM . . . 286
BOOM GP 287
288
BUCKET GP-EXCAVATION 313
314
316

C

CAB GP 346
348
350
CAB GP–SWING BOOM 350
CAMERA GP 77
CAMERA GP (12-VOLT) 57
CAMERA GP (12V) (REAR) 78
CAP AS (COOLANT RECOVERY) 14
CAP AS-END (AUXILIARY 2) 269
CAP AS-FUEL (LOCKABLE, VENTED) 27
30
CAP-PRESSURE (HYDRAULIC TANK) 257
259
CHASSIS AR 1
CIRCUIT BREAKER AS (30-AMPERE) 45
COMMON AR 1
COMPRESSOR GP-REFRIGERANT 351
COMPRESSOR GP-REFRIGERANT (BASIC) . . . 351
CONDENSER GP-REFRIGERANT 353
354
CONSOLE GP-OPERATOR 355
360
CONSOLE GP-OPERATOR–LH 358
CONSOLE GP-OPERATOR–RH 356
CONTROL & MTG GP-JOYSTICK 361

NAME PAGE

CONTROL & MTG GP-PEDAL 363
CONTROL & MTG GP-PEDAL–RH 362
CONTROL AR-BLADE 147
CONTROL AR-COUPLER–LONG STICK 147
CONTROL AR-COUPLER–STANDARD STICK . . 147
148
CONTROL AR-COUPLER–VARIABLE ADJUSTABLE BOOM 147
CONTROL AR-HYDRAULIC 151
CONTROL AR-HYDRAULIC–AUXILIARY 150
CONTROL AR-HYDRAULIC–TRAVEL 149
CONTROL GP-BLADE 364
CONTROL GP-ELECTRONIC 39
CONTROL GP-ELECTRONIC (COMMUNICATION) 79
CONTROL GP-HANDLE (LH) 366
CONTROL GP-HANDLE (RH) 365
CONTROL GP-JOYSTICK–LH 366
CONTROL GP-JOYSTICK–RH 365
CONTROL GP-PEDAL 362
363
CONTROL GP-PILOT OPERATED HYD 367
CONTROL GP-UNPROGRAMMED 34
COOLER GP-HYDRAULIC OIL 16
COOLING GP-RADIATOR 12
COUNTERWEIGHT & MOUNTING GP 91
92
COUNTERWEIGHT GP 93
COUPLER AR-QUICK 318
319
COUPLER GP-QUICK 320
321
322
323
324
COUPLER GP-WORK TOOL 325
COVER GP-ACCESS 94
96
COVER GP-ACCESS–PEDAL 95
COVER GP-FRAME 97
CYLINDER & LINES GP-BOOM 152
153
CYLINDER & LINES GP-BOOM–VARIABLE ADJUSTABLE BOOM 154
CYLINDER & LINES GP-HYDRAULIC–SWING BOOM 155
CYLINDER & LINES GP-STICK 156
157
158
CYLINDER & LINES GP-THUMB 159
161
163
CYLINDER GP-BLADE 165
CYLINDER GP-BUCKET 166
CYLINDER GP-COUPLER 167
CYLINDER GP-THUMB 168
169
CYLINDER GP-VARIABLE ADJ BOOM 170

NAME PAGE

D

DISPLAY GP-MONITOR–GAUGE 370
DISPLAY GP-MONITOR–TOUCHSCREEN 368
DISTRIBUTION AR 2
3
4
5
DOOR GP-ACCESS–CENTER 102
DOOR GP-ACCESS–LEFT 100
DOOR GP-ACCESS–RIGHT 98
DOOR GP-CAB 372
373
DRAIN GP-ENGINE OIL–ECOLOGY. 9
DRIVE GP-FINAL–WITH MOTOR 87
DUCT GP-CAB AIR. 375
DUCT GP-CAB AIR–FRONT. 376

E

EDGE GP-BIT & CUTTING. 326
EDGE GP-CUTTING 327
ELECTRICAL AR 40
ELECTRONICS GP-MACHINE 40
ELECTRONICS GP-MACHINE–CONTROL 40
ELECTRONICS GP-MONITOR 40
41
ENCLOSURE GP–RH 104
ENGINE AR. 8
EXTENSION GP-EXHAUST. 19

F

FAN GP-SUCTION–6-BLADE 13
FILM GP. 427
429
431
432
433
434
435
436
437
438
439
440
442
444
FILM GP-INTERNATIONAL 445
FILM GP-INTERNATIONAL–2-PIECE BOOM 445
FILM GP-INTERNATIONAL–QUICK COUPLER 446
FILM GP-U.S. 447
FILM GP-U.S.–2-PIECE BOOM 447
FILM GP-U.S.–QUICK COUPLER 448
FILM GP–2ND AUXILIARY 443
FILM GP–CAB. 425
FILM GP–CAB FRONT. 424
426
FILM GP–VARIABLE ADJUSTABLE BOOM 441
FILM-IDENTIFICATION (AUXILIARY HYDRAULIC) (LH) 443
444
FILM-IDENTIFICATION (AUXILIARY HYDRAULIC) (RH) 443
444
FILM-IDENTIFICATION (BREATHER). 451
FILM-IDENTIFICATION (CANADIAN STANDARDS ASSOCIATION). 435
FILM-IDENTIFICATION (CAT, LH). 431
438
451
FILM-IDENTIFICATION (CAT, RH) 431
438
451
FILM-IDENTIFICATION (CAT). 451
FILM-IDENTIFICATION (ENGINE OIL). 451
FILM-IDENTIFICATION (FRONT GUARD). 424
426
FILM-IDENTIFICATION (FUSE/RELAY PANEL). . . 34
FILM-IDENTIFICATION (HIGH FLOW) 433
FILM-IDENTIFICATION (HYDRAULIC ACCUMULATOR) 145
FILM-IDENTIFICATION (LH) 443
FILM-IDENTIFICATION (LIFT EYE LOCATION) 451
FILM-IDENTIFICATION (LIFT EYE, TIE-DOWN LOCATION) 434
454
FILM-IDENTIFICATION (LUBRICATION POINTS) 431
438
FILM-IDENTIFICATION (READ SERVICE MANUAL, AUXILIARY FLOW VALVE). 433
FILM-IDENTIFICATION (REFLECTIVE, RED, LH) 451
FILM-IDENTIFICATION (REFLECTIVE, RED, RH). 451
FILM-IDENTIFICATION (RESERVOIR) 443
FILM-IDENTIFICATION (RH). 443
FILM-IDENTIFICATION (SHEAR CONTROL, READ OMM). 441
FILM-IDENTIFICATION (SHIPPING, LIFTING, TIE-DOWN) 431
438
FILM-IDENTIFICATION (TIE-DOWN). 440
451
FILM-IDENTIFICATION (TOP GUARD) 425
FILM-INFORMATION (ALTERNATE EXIT) 439
FILM-INFORMATION (EXTENDED LIFE COOLANT). 451
FILM-INFORMATION (HYDO ADVANCED 10) . . 451
FILM-INFORMATION (LIFTING CAPACITIES, READ OMM). 431
FILM-INFORMATION (LIFTING CAPACITY) 438
FILM-INFORMATION (LOW SULFUR DIESEL FUEL) 427
FILM-INFORMATION (PRODUCT LINK, READ OMM). 79

INDEX

NAME PAGE

FILM-INSTRUCTION (AIR CONDITIONER). 436 437
FILM-INSTRUCTION (AUX BALL VALVE) 432 433
FILM-INSTRUCTION (FUEL, READ OMM). 429
FILM-INSTRUCTION (HYDRAULIC OIL CHECK) 451
FILM-INSTRUCTION (JOYSTICK FUNCTION/ PATTERN, LUB, BLADE). 451
FILM-INSTRUCTION (KEY START SWITCH) 55 56
FILM-INSTRUCTION (LEVER LOCK). 451
FILM-INSTRUCTION (MACHINE SECURITY, CONSOLE). 55 58 71
FILM-INSTRUCTION (NO STEP). 440
FILM-INSTRUCTION (OPERATOR CONTROL PEDALS). 442
FILM-INSTRUCTION (WINDOW CLEANING, READ OMM). 451
FILM-ROPS (OPS, READ OMM). 439
FILM-WARNING (CRUSH HAZARD, READ OMM, INTL) 446
FILM-WARNING (CRUSH HAZARD, READ OMM, U.S.). 448
FILM-WARNING (CRUSH HAZARD, STAY BACK, INTL) 427
FILM-WARNING (CRUSH HAZARD, STAY BACK, U.S.). 429
FILM-WARNING (CRUSH/ELECTROCUTION/ FALLING OBJECT HAZARD, READ OMM) . . . 427 429
FILM-WARNING (CUTTING HAZARD HAND, STAY BACK) 427 429
FILM-WARNING (DO NOT USE ETHER, U. S.). 429
FILM-WARNING (HIGH PRESSURE FUEL LINES). 427 429
FILM-WARNING (HIGH PRESSURE, READ MANUAL) 427 429
FILM-WARNING (HOT FLUID UNDER PRESSURE) 429
FILM-WARNING (HOT SURFACE, HANDS CLEAR, INTL) 427
FILM-WARNING (HOT SURFACE, HANDS CLEAR). 429
FILM-WARNING (JUMP START, READ OMM, INTL) 427
FILM-WARNING (JUMP START, READ OMM, U. S.). 429
FILM-WARNING (MACHINE SWING, CRUSHING, INTL) 427
FILM-WARNING (MACHINE SWING, CRUSHING, U.S.). 429
FILM-WARNING (NO ETHER SPRAY/AIR INTK, INTL) 427

NAME PAGE

FILM-WARNING (NO WELD, NO DRILL, READ OMM). 424 425 426 427 429
FILM-WARNING (PRODUCT LINK 300, INTL) . . . 79
FILM-WARNING (RADIATOR). 427
FILTER 342
FILTER AS-FUEL. 21
FILTER ELEMENT AS-AIR 18
FILTER ELEMENT AS-OIL 171
FILTER GP-OIL–HYDRAULIC FILTER 171
FILTER GP-WATER 21
FILTER-CAB AIR 341
FILTER-FUEL (IN-LINE) 21
FIREWALL GP 108
FLOOR MAT 149
FLOOR MAT (AUXILIARY) 150
FRAME AS-UNDERCARRIAGE 110
FRAME GP-SWING. 111
FRAME GP-UPPER. 113
FUSE (10-AMPERE) 45
FUSE (15-AMPERE) 45
FUSE (20-AMPERE) 45
FUSE (25-AMPERE) 45
FUSE (30-AMPERE) 45
FUSE (40-AMPERE) 69
FUSE (60-AMPERE) 69

G

GAUGE-SIGHT 257 259
GEAR & BEARING GP-SWING. 123
GUARD AR-FRONT WINDOW–CAB. 377 378
GUARD AR-OVERHEAD–CAB 379
GUARD AS-BLADE CYLINDER. 172
GUARD GP-BOTTOM. 114
GUARD GP-CYLINDER–BOOM 115
GUARD GP-OVERHEAD 380 382
GUARD GP-SWIVEL. 116
GUARD GP-TRACK GUIDE 124 125
GUARD GP-TRAVEL MOTOR 126
GUARD GP-WINDOW. 383 384 385 386

H

HANDLE & PIN GP-COUPLER–LH. 328
HANDLE & PIN GP-COUPLER–RH 329
HANDRAIL GP 387
HARNESS AS-ALARM 32 33

INDEX

NAME PAGE

HARNESS AS-AUXILIARY 41
HARNESS AS-CAB 42
HARNESS AS-CAB–CAMERA 44
HARNESS AS-CHASSIS 45
HARNESS AS-CHASSIS–FRAME 47
HARNESS AS-ENGINE 48
HARNESS AS-FRONT 49
HARNESS AS-LIGHTING 62
HARNESS AS-LIGHTING (CAB) 74
HARNESS AS-LIGHTING (REAR) 66
HARNESS AS-LIGHTING–FRONT 50
HARNESS AS-MONITOR–ETHERNET 50
HARNESS AS-POWER (MAIN) 34
HARNESS AS-PUMP–REFUELING PUMP 51
HARNESS AS-SENSOR–CONSOLE 53
HARNESS AS-SENSOR–ENGINE 51
HARNESS AS-SENSOR–OVERLOAD WARNING 52
HARNESS AS-WIRING (ETHERNET) 368 370 388
HARNESS AS-WIRING (HEATER ELEMENT) 54 57
HARNESS AS-WIRING–ETHERNET 53
HEATER GP-JACKET WATER 54
HOOD & GUARD GP–REAR 117
HYDRAULIC AR 173
HYDRAULIC AR–1-WAY, 2-WAY FLOW 173
HYDRAULIC AR–2ND AUXILIARY 173 174
HYDRAULIC AR–AUXILIARY PUMP 174 175

I

IDLER GP-FRONT 127 128 129
INDICATOR 20
INDICATOR GP-POSITION 324 330
INSTALLATION AR-ENGINE 8
INSTALLATION GP-SECURITY 56
INSTALLATION GP-SECURITY–KEY 55

K

KEY 24 451
KEY (BATTERY DISCONNECT) 70
KIT-CAMERA–REAR 57
KIT-COUNTERWEIGHT 118
KIT-DISPLAY 388
KIT-GUARD 389
KIT-GUARD–CAB 388
KIT-JACKET WATER HEATER 57
KIT-LIGHTING–ROTATING 57
KIT-MIRROR–REAR 389
KIT-RADIO–DIGITAL 58
KIT-RUBBER TRACK PAD 130
KIT-SCREEN–PROTECTION 118
KIT-SEAL–PISTON MOTOR 449
KIT-WIRING 58

L

LAMP (12-VOLT, 55-WATT) (FLOODLIGHT) 59
LAMP (12-VOLT, 55-WATT) (WARNING BEACON) 61
LAMP AS-FLOOD (9 TO 32-VOLT) (FRONT, LH) 65
LAMP AS-FLOOD (9 TO 32-VOLT) (FRONT, RH) 65
LAMP AS-FLOOD (9 TO 32-VOLT) (REAR LH) 65
LAMP AS-FLOOD (9 TO 32-VOLT) (REAR RH) 65
LAMP AS-FLOOD (9 TO 32-VOLT) (WIDE) 66
LAMP GP-DOME (12/24-VOLT) (LED) 74
LAMP GP-FLOOD 59
LAMP GP-FLOOD–DIFFUSER 60
LAMP GP-WARNING BEACON–AMBER 61
LIGHTING GP-FLOOD–BOOM 65
LIGHTING GP-FLOOD–HALOGEN 64
LIGHTING GP-FLOOD–LED 66
LIGHTING GP-FLOOD–REAR 62 66
LINER GP-CAB 390 391
LINES AR-AUXILIARY HYDRAULIC–LONG STICK 175 176
LINES AR-AUXILIARY HYDRAULIC–STANDARD STICK 175 176
LINES AR-AUXILIARY HYDRAULIC–VARIABLE ADJUSTABLE BOOM 176
LINES AR-BOOM 177
LINES AR-STICK 177 178
LINES GP-AIR 20
LINES GP-AIR CONDITIONER 392
LINES GP-AUXILIARY HYDRAULIC 181 187
LINES GP-AUXILIARY HYDRAULIC–LONG BOOM 180
LINES GP-AUXILIARY HYDRAULIC–LONG STICK 179 185
LINES GP-AUXILIARY HYDRAULIC–MEDIUM STICK 183
LINES GP-AUXILIARY HYDRAULIC–STANDARD STICK 184
LINES GP-AUXILIARY HYDRAULIC–VARIABLE ADJUSTABLE BOOM 186
LINES GP-BOOM 189 193
LINES GP-BOOM–STICK LOWERING 194

INDEX

NAME PAGE

LINES GP-BOOM–VARIABLE ADJUSTABLE BOOM 190
LINES GP-CONTROL 195
LINES GP-COOLANT 14
LINES GP-COUPLER–BOOM 199
LINES GP-COUPLER–LONG STICK. 198
LINES GP-COUPLER–STANDARD STICK 197
LINES GP-COUPLER–VARIABLE ADJUSTABLE BOOM 201
LINES GP-CYLINDER–SWING 203
LINES GP-FRONT–2ND AUXILIARY 207
LINES GP-FRONT–AUXILIARY 205
208
LINES GP-FRONT–BOOM LOWERING 213
LINES GP-FRONT–QUICK COUPLER 210
LINES GP-FRONT–VARIABLE ADJUSTABLE BOOM 212
LINES GP-FUEL. 21
LINES GP-GREASE 290
LINES GP-GREASE–SWING. 291
LINES GP-PILOT 215
217
219
LINES GP-PUMP 220
222
LINES GP-QUICK COUPLER. 225
LINES GP-RETURN 227
229
LINES GP-STICK 230
LINES GP-STICK–STANDARD STICK 231
LINES GP-SWING MOTOR. 232
LINES GP-SWIVEL 234
LINES GP-TRAVEL MOTOR. 235
LINK & BEARING AS. 292
LINK AS-TRACK–GREASE LUBRICATED TRACK 131
LINK GP. 293
294
LINK GP-TRACK 132
133
LINKAGE AR-BUCKET 295
LINKAGE AR-BUCKET–WITH LIFTING EYE 295
LINKAGE AR-BUCKET–WITHOUT LIFTING EYE 295
LINKAGE GP-BUCKET. 296
300
302
LINKAGE GP-BUCKET–WITHOUT HOOK. 298
LOCK GP-MECHANICAL 321
LOCK GP-QUICK COUPLER 331
332
333

M

MANIFOLD & SOLENOID GP-CONTROL. 236
269
270
274
278
MANIFOLD GP-CONTROL 270
274
278
MANIFOLD GP-CONTROL (IMPLEMENT) 274
278
MIRROR & MTG GP-REAR VIEW 119
346
MIRROR GP 389
394
MIRROR GP (REAR VIEW) 395
MIRROR GP-REAR VIEW–TRAVEL 395
MODULE GP-DISPLAY. 368
370
388
MODULE GP-KEYPAD (JOG DIAL) 74
MODULE GP-KEYPAD (ROTARY DIAL). 74
MONITOR GP-OPERATOR–ETHERNET 396
MOTOR & MTG GP-SWING. 237
MOTOR & MTG GP-TRAVEL. 89
MOTOR GP-PISTON. 238
MOTOR GP-SWING 240
MOUNTING GP-CYLINDER. 242
244
MOUNTING GP-ENGINE 10
MOUNTING GP-PLATFORM. 397
MOUNTING GP-RADIO 398
MOUNTING GP-WIRING–WITHOUT PRODUCT LINK. 67

O

OPERATOR AR–SWING BOOM 399

P

PAD GP-TRACK RUBBER 143
PADLOCK GP. 24
451
PIN GP-COUPLER. 334
PIN GP-EXCAVATOR 304
PLATE & FILM GP 450
451
PLATE GP-CERTIFICATION 454
455
PLUG AS 275
279
PLUG GP-COUNTERWEIGHT 120
PLUG-DRAIN. 257
259
PULLEY GP-IDLER 11
PUMP & MTG GP-MAIN HYDRAULIC 245
246
PUMP AR-FUEL TRANSFER 23
PUMP GP-FUEL TRANSFER. 24
PUMP GP-MAIN HYDRAULIC 249
PUMP GP-MAIN HYDRAULIC–LH. 247
PUMP GP-MAIN HYDRAULIC–RH 251

NAME PAGE

R

RADIATOR & HYD OIL COOLER GP. 16
RADIATOR GP 16
RADIO GP 400
RADIO GP (AUX/USB/BLUETOOTH) 401
RADIO GP (DIGITAL) 58
RADIO GP-COMMUNICATION 68
RADIO GP–CAN MODULE 401
RADIO GP–DIGITAL 400
RELAY (12-VDC) 46
RELAY AS 46
RELAY GP 69
ROLLER GP-TRACK 134
ROLLER GP-TRACK CARRIER 135, 136
ROLLER GP-TRACK-CENTER FLANGE 137
ROLLER GP-TRACK-SINGLE FLANGE 138, 139
ROTATING GP-PUMP 253, 254

S

SEAL-INTEGRAL (1/2-IN). 342
SEAL-INTEGRAL (3/4-IN). 342
SEAT & MOUNTING GP–AIR SUSPENSION . . . 402
SEAT & MOUNTING GP–FABRIC 403
SEAT BELT GP 404, 405
SEAT GP (FABRIC) 403
SEAT GP–HEATED 406
SENDER AS-FUEL LEVEL 27, 30
SENSOR (TEMPERATURE) 342
SENSOR-PRESSURE (EJECTOR) 72
SENSOR-PRESSURE (EJECTOR) (CALIBRATION) 34
SENSOR-PRESSURE (EJECTOR) (PUMP) 34
SENSOR-PRESSURE (EJECTOR) (TRAVEL, LH) 34
SENSOR-PRESSURE (EJECTOR) (TRAVEL, RH). 34
SENSOR-TEMPERATURE (2-PIN) (HYDRAULIC TANK) 34
SOFTWARE 368
SOFTWARE GP-ELECTRONIC 39
SOFTWARE GP-MACHINE 40
SOFTWARE GP-MONITOR. 40, 41, 68
SPRING GP-RECOIL–BASIC 140
SPROCKET GP 90
STEP GP 121
STICK & CONTROL AR-AUXILIARY–LONG, THUMB 6
STICK & CONTROL AR-AUXILIARY–STANDARD, THUMB 5
STICK & CONTROL AR-AUXILIARY–THUMB 5, 6
STICK AR 305
STICK AR-HOE–LONG STICK. 305
STICK AR-HOE–STANDARD STICK. 305
STICK GP-HOE–THUMB 306, 307
STRAINER AS 257, 259
STRAINER-FUEL (FUEL TANK) 27, 30
SUPPORT GP-SEAT. 407
SWITCH AS-MAGNETIC (PROXIMITY) 74
SWITCH AS-MAGNETIC (PROXIMITY) (LOAD CONTROL). 415
SWITCH AS-PRESSURE (HIGH, LOW) 81
SWITCH AS-PUSH BUTTON (HOUR METER) . . . 73
SWITCH AS-ROCKER (REFUELING PUMP). 85
SWITCH AS-ROTARY (PUSH). 58, 71
SWITCH AS-START (KEY) 55, 56
SWITCH GP-DISCONNECT–BATTERY 70
SWITCH GP-START 71
SWIVEL & MOUNTING GP 255
SWIVEL GP. 256

T

TANK & FILTER GP-HYDRAULIC 257, 259, 261
TANK & MTG GP-FUEL 26
TANK & MTG GP-HYDRAULIC 262
TANK GP-FUEL 27, 29, 30
TANK GP-WINDOW WASHER. 413
THUMB AR 335, 336, 337, 338, 339, 340
TRACK & BLADE AR-EXCAVATOR. 6, 7
TRACK AR. 141
TRACK AR–RUBBER BELT 141
TRACK GP 143
TRACK GP–RUBBER BELT 142
TRIM GP-CAB. 408

U

UNDERCARRIAGE AR. 144

V

V-BELT (COMPRESSOR) 351
VALVE & MOUNTING GP. 263

INDEX

NAME PAGE

VALVE & MTG GP-BANK 264 265 266
VALVE & MTG GP-BANK–AUXILIARY 267
VALVE AS-COUNTERBALANCE 167
VALVE AS-RELIEF 208 275
VALVE AS-RELIEF (BLADE) 271 279
VALVE AS-RELIEF (BOOM UP) 271 275 279
VALVE AS-RELIEF (SWING LEFT) 270 274 278
VALVE AS-RELIEF (SWING RIGHT) 270 274 278
VALVE GP-ACTUATOR 410
VALVE GP-AUXILIARY 268
VALVE GP-BUTTERFLY (AUX) 268
VALVE GP-BUTTERFLY (INLET) 268
VALVE GP-BUTTERFLY (OUTLET) 268
VALVE GP-CHECK (VENTED PILOT) 269
VALVE GP-CONTROL–2ND AUXILIARY 269
VALVE GP-MAIN CONTROL 270 274 278
VALVE GP-MAKEUP (BLADE) 271 275 279
VALVE GP-MAKEUP (BOOM SWING, LEFT) . . . 271 275 279
VALVE GP-MAKEUP (BOOM SWING, RIGHT) 271 275 279
VALVE GP-MAKEUP (SWING LEFT) 271 275 279
VALVE GP-MAKEUP (SWING RIGHT) 271 275 279
VALVE GP-PRESSURE REDUCING (PILOT) . . . 271 275 279
VALVE GP-PUMP CONTROL 283
VALVE GP-PUMP CONTROL (FLOW COMPENSATOR) 251
VALVE GP-PUMP CONTROL (STEERING) 249
VALVE GP-PUMP CONTROL–FLOW COMPENSATOR 282
VALVE GP-RELIEF 268
VALVE GP-RELIEF (BOOM DOWN) 271 275 279
VALVE GP-RELIEF (BUCKET DIG) 271 275 279
VALVE GP-RELIEF (BUCKET DUMP) 271 275 279
VALVE GP-RELIEF (QUICK COUPLER) 210
VALVE GP-RELIEF (STICK IN) 271 275 279
VALVE GP-RELIEF (STICK OUT) 271 275 279
VALVE GP-RELIEF–PILOT OPERATED 284 285
VALVE GP-SERVO 249 251
VALVE GP-SOLENOID (12 VDC) 270 274 278
VALVE GP-SOLENOID (12 VDC) (AUXILIARY) 269
VALVE GP-SOLENOID (12 VDC) (BOOM SWING) 236
VALVE GP-SOLENOID (12 VDC) (SWING BRAKE) 278
VALVE GP-SOLENOID (12-VDC) 270 274
VALVE GP-SOLENOID (12-VDC) (BOOM SWING) 236
VALVE GP-SOLENOID (12-VDC) (TRAVEL SPEED) 278
VALVE GP-SOLENOID (QUICK COUPLER) 210
VALVE GP-SOLENOID & MANIFOLD (12-VOLT) (QUICK COUPLER) 210
VALVE-SOLENOID (12-VDC) 268
VISOR GP-PROTECTION 411
VISOR GP-PROTECTION–RAIN 412

W

WASHER GP-WINDOW 413
WINDOW AS-SLIDING–RH 414
WINDOW GP-CAB 417
WINDOW GP-CAB (REAR) 346
WINDOW GP-CAB–FRONT 415
WINDOW GP-CAB–LH 421
WINDOW GP-CAB–RH 419
WINDOW GP-CAB–TOP 420
WINDOW GP-DOOR 422
WIPER GP-WINDOW 423
WIRING GP-AUXILIARY CONTROL 72
WIRING GP-CAB 73
WIRING GP-CAB–CAMERA 76
WIRING GP-CAB–ETHERNET 74
WIRING GP-CAMERA–REAR 77
WIRING GP-CAMERA–RIGHT 78
WIRING GP-COMMUNICATION–PRODUCT LINK ELITE 79
WIRING GP-ENGINE 81
WIRING GP-FRONT–SWING BOOM 83
WIRING GP-FRONT–VARIABLE ADJUSTABLE BOOM 84

INDEX

NAME	PAGE	NAME	PAGE
WIRING GP-FUEL PUMP–REFUELING	85		
WIRING GP-OVERLOAD WARNING	86		

MACHINE ARRANGEMENT

512-1513 CHASSIS AR

PART OF 512-1401 COMMON AR

SMCS-7000 **i07542242**

NOTE	PART NUMBER	QTY	PART NAME 1 2 3 4 5 6 (PRODUCT LEVEL)	SEE PAGE
Y	*512-1508*	1	COUNTERWEIGHT & MOUNTING GP	91
Y	*521-6027*	1	COVER GP-ACCESS	94
Y	*512-1526*	1	ENCLOSURE GP	104
Y	*511-7328*	1	FIREWALL GP	108
Y	*512-2587*	1	FRAME GP-SWING	111
Y	*512-1534*	1	FRAME GP-UPPER	113
Y	*549-7086*	1	GUARD GP-BOTTOM	114
Y	*528-4126*	1	HANDRAIL GP	387
Y	*523-0491*	1	HOOD & GUARD GP	117
Y	*512-5197*	1	LINES GP-GREASE	291
Y	*523-6405*	1	MIRROR GP	394
Y	*513-7854*	1	TANK & MTG GP-FUEL	26

Y - SEPARATE ILLUSTRATION

<END>

512-1401 COMMON AR

SMCS-7000 **i07542236**

NOTE	PART NUMBER	QTY	PART NAME 1 2 3 4 5 6 (PRODUCT LEVEL)	SEE PAGE
Y	*512-1513*	1	CHASSIS AR	1
Y	*512-1420*	1	HYDRAULIC AR	173
Y	*512-1441*	1	UNDERCARRIAGE AR	144

Y - SEPARATE ILLUSTRATION

<END>

562-4906 DISTRIBUTION AR

AN ATTACHMENT

SMCS-7000 **i07542502**

NOTE	PART NUMBER	QTY	PART NAME 1 2 3 4 5 6 (PRODUCT LEVEL)	SEE PAGE
Y	*511-6157*	1	ALARM GP-TRAVEL	32
Y	*512-2573*	1	BOOM AR	286
Y	*512-1401*	1	COMMON AR	1
Y	*516-1613*	1	CONTROL AR-COUPLER (LONG STICK)	147
Y	*520-0778*	1	CONTROL AR-COUPLER (STANDARD STICK)	148
Y	*514-8067*	1	CYLINDER & LINES GP-STICK	156
Y	*522-6475*	1	DISPLAY GP-MONITOR	370
Y	*382-8757*	1	DRAIN GP-ENGINE OIL (ECOLOGY)	9
Y	*511-6253*	1	ELECTRICAL AR	40
Y	*518-6184*	1	ENGINE AR	8
Y	*552-5984*	1	FILM GP	435
Y	*555-8731*	1	FILM GP-INTERNATIONAL	446
Y	*523-3993*	1	FILM GP-U.S.	447
Y	*415-2556*	1	HEATER GP-JACKET WATER	54
Y	*522-6460*	1	INSTALLATION GP-SECURITY	56
Y	*511-6216*	1	LIGHTING GP-FLOOD	64
Y	*514-8055*	1	LINES AR-BOOM	177
Y	*568-1567*	1	LINKAGE AR-BUCKET	295
Y	*541-4580*	1	OPERATOR AR	399
Y	*538-2663*	1	PLUG GP-COUNTERWEIGHT	120
Y	*511-6219*	1	RADIO GP	401
Y	*510-6085*	1	SEAT BELT GP	405
Y	*563-2071*	1	STICK AR	305
Y	*562-3700*	1	TRACK & BLADE AR-EXCAVATOR	7
Y	*511-6235*	1	WIRING GP-CAMERA	77
Y	*511-6229*	1	WIRING GP-COMMUNICATION	79

Y - SEPARATE ILLUSTRATION

<END>

562-9155 DISTRIBUTION AR

AN ATTACHMENT

SMCS-7000 **i07546252**

NOTE	PART NUMBER	QTY	PART NAME 1 2 3 4 5 6 (PRODUCT LEVEL)	SEE PAGE
Y	*511-6157*	1	ALARM GP-TRAVEL	32
Y	*512-2573*	1	BOOM AR	286
Y	*512-1401*	1	COMMON AR	1
Y	*516-1613*	1	CONTROL AR-COUPLER (LONG STICK)	147
Y	*520-0778*	1	CONTROL AR-COUPLER (STANDARD STICK)	148
Y	*525-6657*	1	COUNTERWEIGHT & MOUNTING GP	92
Y	*514-8067*	1	CYLINDER & LINES GP-STICK	156
Y	*522-6475*	1	DISPLAY GP-MONITOR	370
Y	*382-8757*	1	DRAIN GP-ENGINE OIL (ECOLOGY)	9
Y	*511-6253*	1	ELECTRICAL AR	40
Y	*518-6184*	1	ENGINE AR	8
Y	*552-5984*	1	FILM GP	435
Y	*555-8731*	1	FILM GP-INTERNATIONAL	446
Y	*523-3993*	1	FILM GP-U.S.	447
Y	*415-2556*	1	HEATER GP-JACKET WATER	54
Y	*522-6460*	1	INSTALLATION GP-SECURITY	56
Y	*511-6216*	1	LIGHTING GP-FLOOD	64
Y	*514-8055*	1	LINES AR-BOOM	177
Y	*568-1567*	1	LINKAGE AR-BUCKET	295
Y	*510-6070*	1	OPERATOR AR	399
Y	*511-6219*	1	RADIO GP	401
Y	*510-6085*	1	SEAT BELT GP	405
Y	*563-2071*	1	STICK AR	305
Y	*562-3698*	1	TRACK & BLADE AR-EXCAVATOR	6
Y	*511-6235*	1	WIRING GP-CAMERA	77
Y	*511-6229*	1	WIRING GP-COMMUNICATION	79

Y - SEPARATE ILLUSTRATION

<END>

562-9156 DISTRIBUTION AR

AN ATTACHMENT

SMCS-7000 **i07546268**

NOTE	PART NUMBER	QTY	PART NAME 1 2 3 4 5 6 (PRODUCT LEVEL)	SEE PAGE
Y	*511-6157*	1	ALARM GP-TRAVEL	32
Y	*512-2573*	1	BOOM AR	286
Y	*512-1401*	1	COMMON AR	1
Y	*516-1613*	1	CONTROL AR-COUPLER (LONG STICK)	147
Y	*520-0778*	1	CONTROL AR-COUPLER (STANDARD STICK)	148
Y	*525-6657*	1	COUNTERWEIGHT & MOUNTING GP	92
Y	*514-8067*	1	CYLINDER & LINES GP-STICK	156
Y	*511-6177*	1	DISPLAY GP-MONITOR	368
Y	*382-8757*	1	DRAIN GP-ENGINE OIL (ECOLOGY)	9
Y	*511-6253*	1	ELECTRICAL AR	40
Y	*518-6184*	1	ENGINE AR	8
Y	*552-5984*	1	FILM GP	435
Y	*555-8731*	1	FILM GP-INTERNATIONAL	446
Y	*523-3993*	1	FILM GP-U.S.	447
Y	*415-2556*	1	HEATER GP-JACKET WATER	54
Y	*522-6460*	1	INSTALLATION GP-SECURITY	56
Y	*511-6216*	1	LIGHTING GP-FLOOD	64
Y	*514-8055*	1	LINES AR-BOOM	177
Y	*568-1567*	1	LINKAGE AR-BUCKET	295
Y	*510-6070*	1	OPERATOR AR	399
Y	*511-6219*	1	RADIO GP	401
Y	*510-6085*	1	SEAT BELT GP	405
Y	*563-2071*	1	STICK AR	305
Y	*562-3698*	1	TRACK & BLADE AR-EXCAVATOR	6
Y	*511-6235*	1	WIRING GP-CAMERA	77
Y	*511-6229*	1	WIRING GP-COMMUNICATION	79

Y - SEPARATE ILLUSTRATION

<END>

562-9158 DISTRIBUTION AR

AN ATTACHMENT

SMCS-7000 **i07548461**

NOTE	PART NUMBER	QTY	PART NAME 1 2 3 4 5 6 (PRODUCT LEVEL)	SEE PAGE
Y	*511-6157*	1	ALARM GP-TRAVEL	32
Y	*512-2573*	1	BOOM AR	286
Y	*512-1401*	1	COMMON AR	1
Y	*382-8757*	1	DRAIN GP-ENGINE OIL (ECOLOGY)	9
Y	*511-6253*	1	ELECTRICAL AR	40
Y	*518-6184*	1	ENGINE AR	8
Y	*568-1567*	1	LINKAGE AR-BUCKET	295
Y	*511-6219*	1	RADIO GP	401
Y	*510-6085*	1	SEAT BELT GP	405

Y - SEPARATE ILLUSTRATION

<END>

562-9159 DISTRIBUTION AR

AN ATTACHMENT

SMCS-7000 **i07548465**

NOTE	PART NUMBER	QTY	PART NAME 1 2 3 4 5 6 (PRODUCT LEVEL)	SEE PAGE
Y	*511-6157*	1	ALARM GP-TRAVEL	32
Y	*512-2576*	1	BOOM AR	286
Y	*512-1401*	1	COMMON AR	1
Y	*519-3140*	1	CONTROL AR-COUPLER (VARIABLE ADJUSTABLE BOOM)	147
Y	*520-0778*	1	CONTROL AR-COUPLER (STANDARD STICK)	148
Y	*525-6657*	1	COUNTERWEIGHT & MOUNTING GP	92
Y	*382-8757*	1	DRAIN GP-ENGINE OIL (ECOLOGY)	9
Y	*511-6253*	1	ELECTRICAL AR	40
Y	*518-6184*	1	ENGINE AR	8
Y	*415-2556*	1	HEATER GP-JACKET WATER	54
Y	*511-6217*	1	LIGHTING GP-FLOOD	65
Y	*514-8060*	1	LINES AR-BOOM	177
Y	*514-8074*	1	LINES AR-STICK	177
Y	*568-1567*	1	LINKAGE AR-BUCKET	295
Y	*510-6070*	1	OPERATOR AR	399
Y	*511-6219*	1	RADIO GP	401
Y	*510-6085*	1	SEAT BELT GP	405
Y	*563-2092*	1	STICK & CONTROL AR-AUXILIARY	6
Y	*562-3698*	1	TRACK & BLADE AR-EXCAVATOR	6
Y	*511-6235*	1	WIRING GP-CAMERA	77

Y - SEPARATE ILLUSTRATION

<END>

563-2070 STICK & CONTROL AR-AUXILIARY—STANDARD, THUMB

AN ATTACHMENT

SMCS-5051, 5057, 6502, 6700 **i07548515**

NOTE	PART NUMBER	QTY	PART NAME 1 2 3 4 5 6 (PRODUCT LEVEL)	SEE PAGE
Y	*541-4573*	1	CONTROL AR-HYDRAULIC (TRAVEL)	149
Y	*514-3230*	1	HYDRAULIC AR (1-WAY, 2-WAY FLOW)	173
Y	*520-0765*	1	LINES AR-AUXILIARY HYDRAULIC (STANDARD STICK)	175
Y	*515-3511*	1	STICK AR-HOE (THUMB)	305

Y - SEPARATE ILLUSTRATION

<END>

563-2082 STICK & CONTROL AR-AUXILIARY—THUMB

AN ATTACHMENT

SMCS-5051, 5057, 6502, 6700 **i07548520**

NOTE	PART NUMBER	QTY	PART NAME 1 2 3 4 5 6 (PRODUCT LEVEL)	SEE PAGE
Y	*541-4573*	1	CONTROL AR-HYDRAULIC (TRAVEL)	149
Y	*514-3235*	1	HYDRAULIC AR (2ND AUXILIARY)	173
Y	*520-0800*	1	LINES AR-AUXILIARY HYDRAULIC	176
Y	*515-3511*	1	STICK AR-HOE (STANDARD STICK)	305

Y - SEPARATE ILLUSTRATION

<END>

563-2083 STICK & CONTROL AR-AUXILIARY—LONG, THUMB

AN ATTACHMENT

SMCS-5051, 5057, 6502, 6700 **i07548521**

NOTE	PART NUMBER	QTY	PART NAME 1 2 3 4 5 6 (PRODUCT LEVEL)	SEE PAGE
Y	*541-4573*	1	CONTROL AR-HYDRAULIC (TRAVEL)	149
Y	*514-3235*	1	HYDRAULIC AR (2ND AUXILIARY)	173
Y	*520-0820*	1	LINES AR-AUXILIARY HYDRAULIC (LONG STICK)	176
Y	*515-3513*	1	STICK AR-HOE (THUMB)	305

Y - SEPARATE ILLUSTRATION

<END>

563-2092 STICK & CONTROL AR-AUXILIARY—THUMB

VARIABLE ADJUSTABLE BOOM
PART OF 562-9159 DISTRIBUTION AR
AN ATTACHMENT

SMCS-5051, 5057, 6502, 6700 **i07548466**

NOTE	PART NUMBER	QTY	PART NAME 1 2 3 4 5 6 (PRODUCT LEVEL)	SEE PAGE
Y	*541-4574*	1	CONTROL AR-HYDRAULIC	150
Y	*517-8129*	1	HYDRAULIC AR (2ND AUXILIARY)	174
Y	*520-0781*	1	LINES AR-AUXILIARY HYDRAULIC	176
Y	*515-3511*	1	STICK AR-HOE (THUMB)	305

Y - SEPARATE ILLUSTRATION

<END>

562-3697 TRACK & BLADE AR-EXCAVATOR

AN ATTACHMENT

SMCS-4170, 6060 **i07548458**

NOTE	PART NUMBER	QTY	PART NAME 1 2 3 4 5 6 (PRODUCT LEVEL)	SEE PAGE
Y	*512-2524*	1	BLADE AR-STRAIGHT	310
Y	*541-4598*	1	CONTROL AR-BLADE	147
Y	*514-0870*	1	TRACK AR	141

Y - SEPARATE ILLUSTRATION

<END>

562-3698 TRACK & BLADE AR-EXCAVATOR

PART OF 562-9155, 562-9156, 562-9159 DISTRIBUTION AR
AN ATTACHMENT

SMCS-4170, 6060 **i07546259**

NOTE	PART NUMBER	QTY	PART NAME 1 2 3 4 5 6 (PRODUCT LEVEL)	SEE PAGE
Y	*512-2524*	1	BLADE AR-STRAIGHT	310
Y	*541-4598*	1	CONTROL AR-BLADE	147
Y	*514-0869*	1	TRACK AR	141

Y - SEPARATE ILLUSTRATION

<END>

562-3699 TRACK & BLADE AR-EXCAVATOR

AN ATTACHMENT

SMCS-4170, 6060 **i07546430**

NOTE	PART NUMBER	QTY	PART NAME 1 2 3 4 5 6 (PRODUCT LEVEL)	SEE PAGE
Y	*512-2526*	1	BLADE AR-STRAIGHT	310
Y	*541-4598*	1	CONTROL AR-BLADE	147
Y	*514-0871*	1	TRACK AR	141

Y - SEPARATE ILLUSTRATION

<END>

562-3700 TRACK & BLADE AR-EXCAVATOR

PART OF 562-4906 DISTRIBUTION AR

AN ATTACHMENT

SMCS-4170, 6060 **i07546215**

NOTE	PART NUMBER	QTY	PART NAME 1 2 3 4 5 6 (PRODUCT LEVEL)	SEE PAGE
Y	*512-2524*	1	BLADE AR-STRAIGHT	310
Y	*541-4598*	1	CONTROL AR-BLADE	147
Y	*514-0886*	1	TRACK AR	141

Y - SEPARATE ILLUSTRATION

<END>

518-6184 ENGINE AR

PART OF 562-4906, 562-9155, 562-9156, 562-9158, 562-9159 DISTRIBUTION AR
AN ATTACHMENT

SMCS-1000 **i07544896**

NOTE	PART NUMBER	QTY	PART NAME 1 2 3 4 5 6 (PRODUCT LEVEL)	SEE PAGE
Y	*492-1693*	1	AIR CLEANER GP	17
Y	*553-6871*	1	COMPRESSOR GP-REFRIGERANT	351
Y	*492-1658*	1	CONDENSER GP-REFRIGERANT	353
Y	*492-1656*	1	COOLING GP-RADIATOR	12
Y	*492-1665*	1	EXTENSION GP-EXHAUST	19
Y	*492-1654*	1	FAN GP-SUCTION (6-BLADE)	13
Y	*492-1673*	1	LINES GP-AIR	20
Y	*512-4547*	1	LINES GP-AIR CONDITIONER	392
Y	*515-7635*	1	LINES GP-COOLANT	14
Y	*515-7632*	1	LINES GP-FUEL	21
Y	*492-1649*	1	MOUNTING GP-ENGINE	10
Y	*518-9385*	1	WASHER GP-WINDOW	413
	514-7594	1	ENGINE AR-PRIMARY	

Y - SEPARATE ILLUSTRATION

<END>

520-6936 INSTALLATION AR-ENGINE

AN ATTACHMENT

SMCS-1000 **i07546549**

NOTE	PART NUMBER	QTY	PART NAME 1 2 3 4 5 6 (PRODUCT LEVEL)	SEE PAGE
Y	*492-1693*	1	AIR CLEANER GP	17
Y	*553-6871*	1	COMPRESSOR GP-REFRIGERANT	351
Y	*492-1658*	1	CONDENSER GP-REFRIGERANT	353
Y	*492-1656*	1	COOLING GP-RADIATOR	12
Y	*492-1665*	1	EXTENSION GP-EXHAUST	19
Y	*492-1654*	1	FAN GP-SUCTION (6-BLADE)	13
Y	*492-1673*	1	LINES GP-AIR	20
Y	*512-4547*	1	LINES GP-AIR CONDITIONER	392
Y	*515-7635*	1	LINES GP-COOLANT	14
Y	*515-7632*	1	LINES GP-FUEL	21
Y	*492-1649*	1	MOUNTING GP-ENGINE	10
Y	*518-9385*	1	WASHER GP-WINDOW	413
	515-9513	1	ENGINE AR-PRIMARY	

Y - SEPARATE ILLUSTRATION

<END>

382-8757 DRAIN GP-ENGINE OIL—ECOLOGY

PART OF 562-4906, 562-9155, 562-9156, 562-9158, 562-9159 DISTRIBUTION AR AN ATTACHMENT

SMCS-1302 **i05413299**

NOTE	REF NO	GRAPHIC REF	PART NUMBER	QTY	PART NAME 1 2 3 4 5 6 (PRODUCT LEVEL)	SEE PAGE
	1	1	**422-9330**	1	VALVE-SHUTOFF (ENGINE OIL)	

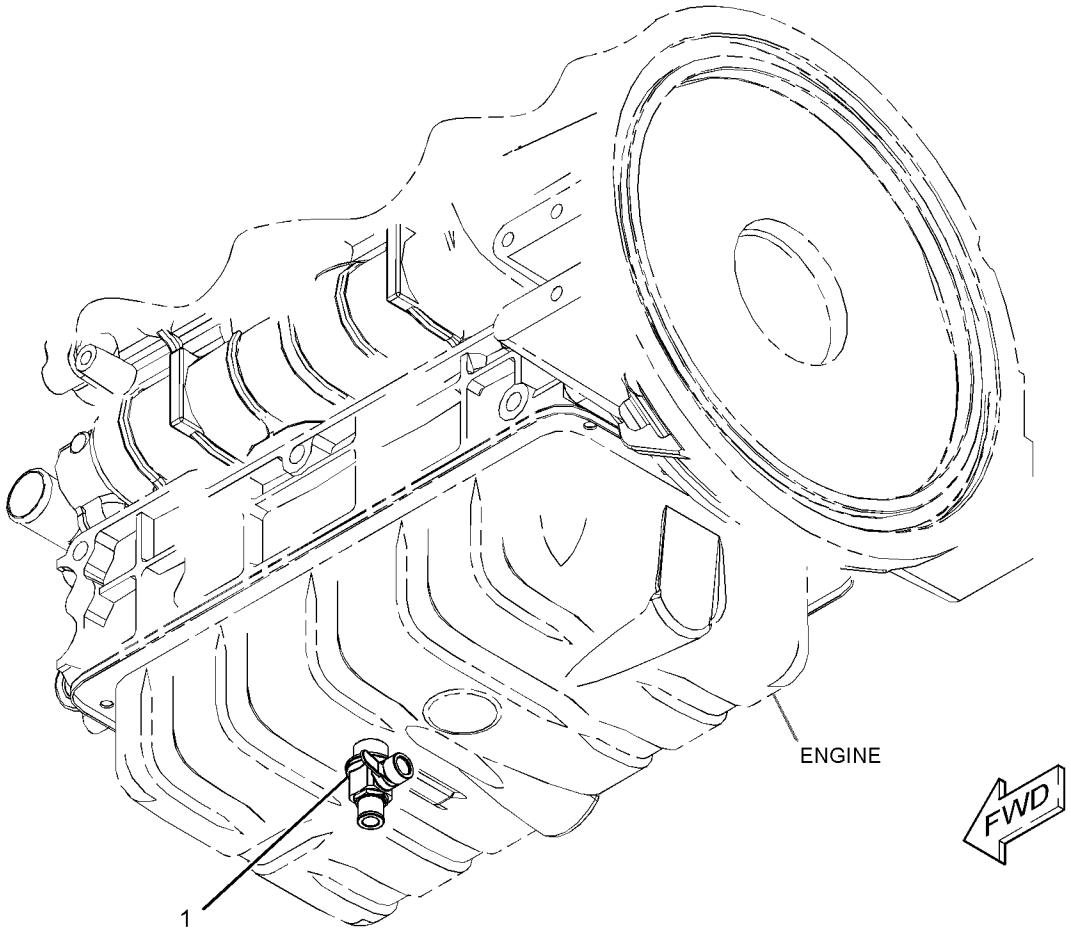

GRAPHIC #1 <END> g03411876

492-1649 MOUNTING GP-ENGINE

PART OF 518-6184 ENGINE AR, 520-6936 INSTALLATION AR-ENGINE
AN ATTACHMENT

SMCS-1152, 1153, 1154 **i07544898**

NOTE	REF NO	GRAPHIC REF	PART NUMBER	QTY	PART NAME 1 2 3 4 5 6 (PRODUCT LEVEL)	SEE PAGE
	1	1	**492-1696**	4	MOUNT AS (RH)	
M	2	1	**8T-4175**	4	BOLT (M16X2X90-MM)	
	3	1	**5V-0500**	4	WASHER (16.5X75X6-MM THK)	
	4	1	**7X-0510**	7	WASHER-HARD (15.5X29X3-MM THK)	
	5	1	**8T-4121**	20	WASHER-HARD (11X21X2.5-MM THK)	
M	6	1	**128-7747**	8	BOLT (M10X1.25X40-MM)	
M	7	1	**303-8825**	12	BOLT (M10X1.25X35-MM)	
	8	1	**345-3548**	1	COUPLING	
	9	1	**492-1676**	1	PLATE-ADAPTER	
	10	1	**492-1677**	1	BRACKET (RH)	
	11	1	**492-1678**	1	BRACKET (LH)	
M	12	1	**270-8607**	7	BOLT (M14X1.5X50-MM)	

M - METRIC PART

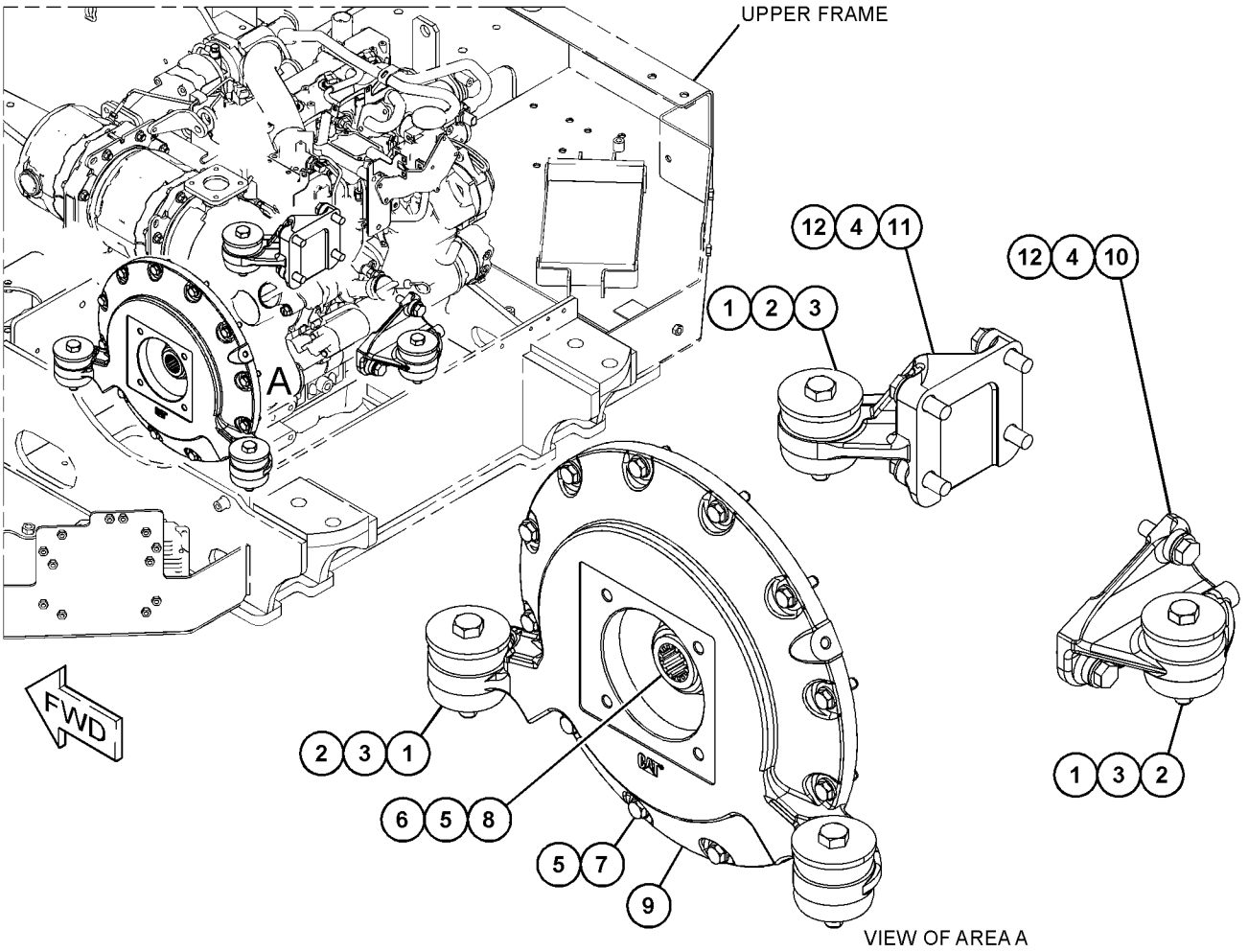

GRAPHIC #1 <END> g06340821

125-1657 PULLEY GP-IDLER

PART OF 553-6871 COMPRESSOR GP-REFRIGERANT
AN ATTACHMENT

SMCS-1358 **i05429318**

NOTE	REF NO	GRAPHIC REF	PART NUMBER	QTY	PART NAME 1 2 3 4 5 6 (PRODUCT LEVEL)	SEE PAGE
	1	1	**125-1645**	1	PULLEY AS	
	2	1	**125-1646**	1	COVER	
	3	1	**150-2161**	1	COLLAR	
	4	1	**150-2162**	1	BOLT (M8X1.25X100-MM)	
	5	1	**150-2159**	1	SHAFT	

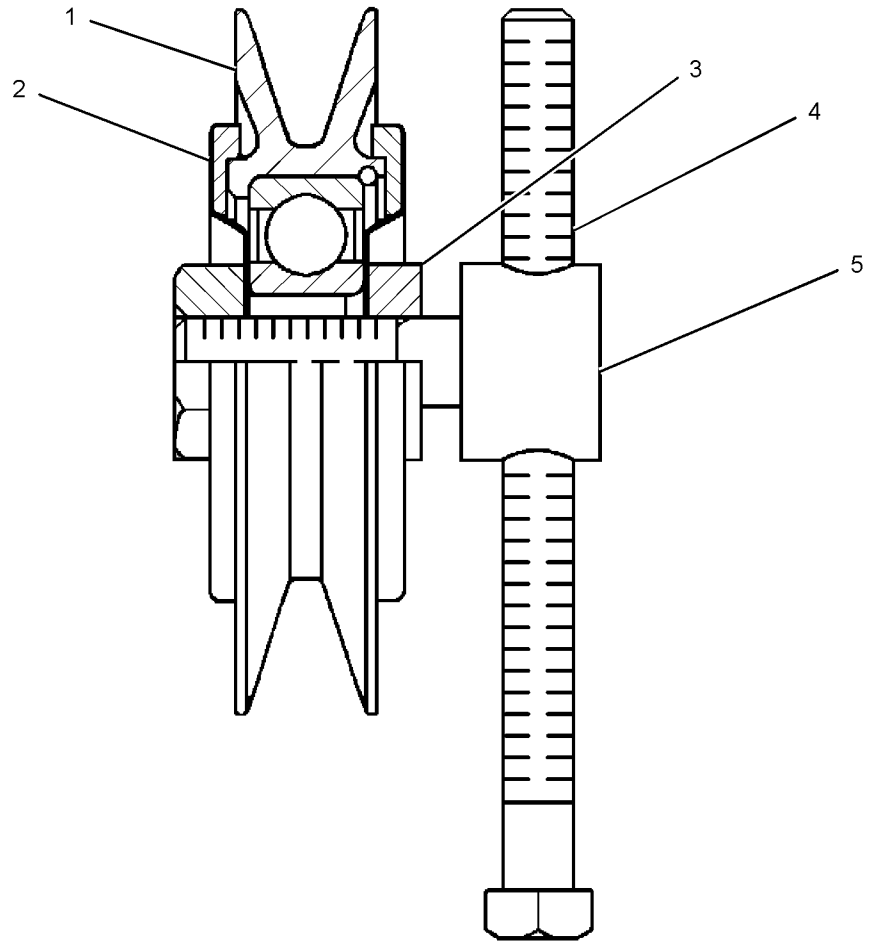

GRAPHIC #1 <END> g01165046

492-1656 COOLING GP-RADIATOR

PART OF 518-6184 ENGINE AR, 520-6936 INSTALLATION AR-ENGINE
AN ATTACHMENT

SMCS-1351, 1353, 1374, 1378, 1712, 7000 **i07544901**

NOTE	REF NO	GRAPHIC REF	PART NUMBER	QTY	PART NAME 1 2 3 4 5 6 (PRODUCT LEVEL)	SEE PAGE
M	1	1	**8T-4186**	4	BOLT (M10X1.5X40-MM)	
	2	1	**5P-4116**	3	WASHER-HARD (8.8X20.5X2-MM THK)	
M	3	1	**8T-7547**	3	BOLT (M8X1.25X30-MM)	
	4	1	**515-7626**	1	GUARD AS-FAN	
Y	5	1	*515-7630*	1	RADIATOR & HYD OIL COOLER GP (BASIC)	16
	6	1	**515-7644**	1	SEAL (REAR)	
	7	1	**515-7645**	1	SEAL (REAR)	
	8	1	**539-8624**	1	PLATE AS	
M		1	**8T-3612**	3	NUT-WELD (M8X1.25-THD)	
M	9	1	**5P-7970**	3	NUT (M8X1.25-THD)	
	10	1	**7X-7729**	4	WASHER (11X25X3-MM THK)	
	11	1	**8T-4224**	3	WASHER-HARD (8.8X16X2-MM THK)	

M - METRIC PART
Y - SEPARATE ILLUSTRATION

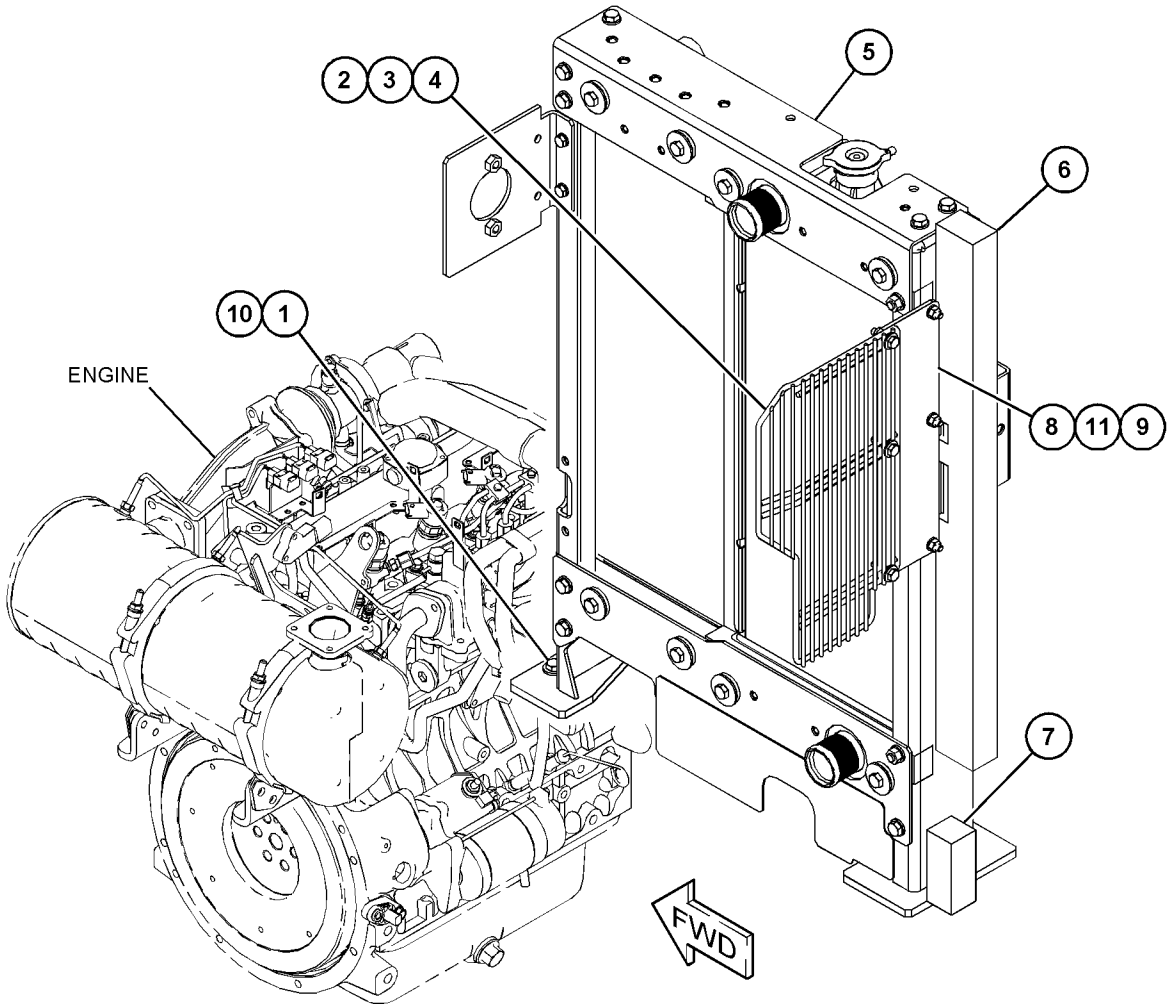

GRAPHIC #1 <END> g06341067

492-1654 FAN GP-SUCTION–6-BLADE

PART OF 518-6184 ENGINE AR, 520-6936 INSTALLATION AR-ENGINE
AN ATTACHMENT

SMCS-1356 **i07544900**

NOTE	REF NO	GRAPHIC REF	PART NUMBER	QTY	PART NAME 1 2 3 4 5 6 (PRODUCT LEVEL)	SEE PAGE
M	1	1	**8T-4908**	8	BOLT (M8X1.25X25-MM)	
	2	1	**5P-4116**	8	WASHER-HARD (8.8X20.5X2-MM THK)	
	3	1	**492-1671**	1	SHROUD AS	
	4	1	**492-1680**	1	FAN-SUCTION (6-BLADE)	
M	5	1	**5C-9553**	4	BOLT (M6X1X16-MM)	
	6	1	**9X-8256**	4	WASHER (6.6X12X2-MM THK)	

M - METRIC PART

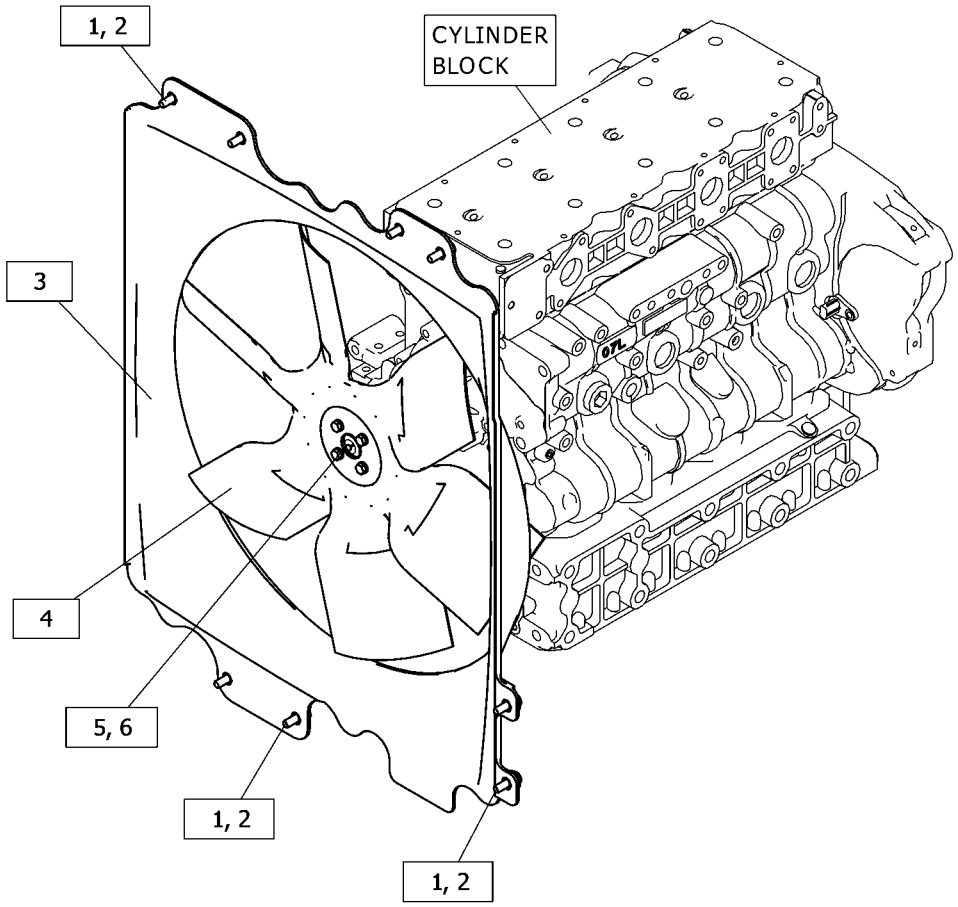

GRAPHIC #1 <END> g06342969

515-7635 LINES GP-COOLANT

PART OF 518-6184 ENGINE AR, 520-6936 INSTALLATION AR-ENGINE
AN ATTACHMENT

SMCS-1380 **i07544917**

NOTE	REF NO	GRAPHIC REF	PART NUMBER	QTY	PART NAME 1 2 3 4 5 6 (PRODUCT LEVEL)	SEE PAGE
M	1	1	**8T-4189**	3	BOLT (M8X1.25X20-MM)	
	2	1	**5P-4116**	1	WASHER-HARD (8.8X20.5X2-MM THK)	
	3	1	**140-4236**	1	TANK AS-COOLANT (RECOVERY)	
		1	**140-4238**	1	CAP AS (COOLANT RECOVERY)	
	4	1	**1P-4278**	2	CLAMP-HOSE	
	5	1	**290-5562**	1	MOUNT (DUAL SWIVEL)	
	6	1	**3S-2093**	2	STRAP-CABLE	
	7	1	**492-1669**	1	HOSE-RADIATOR (INLET)	
	8	1	**492-1670**	1	HOSE-RADIATOR (OUTLET)	
	9	1	**4P-8134**	1	CLIP (LADDER)	
	10	1	**539-8620**	1	BRACKET AS	
M		1	**6V-9632**	2	NUT-WELD (M6X1-THD)	
	11	1	**6K-8178**	1	CLIP (LOOP)	
	12	1	**7K-1181**	2	STRAP-CABLE	
	13	1	**8T-4121**	1	WASHER-HARD (11X21X2.5-MM THK)	
M	14	1	**8T-4136**	1	BOLT (M10X1.5X25-MM)	
M	15	1	**8T-4138**	2	BOLT (M6X1X20-MM)	
	16	1	**8T-4205**	2	WASHER-HARD (7.2X14.5X2-MM THK)	
	17	1	**8T-4224**	2	WASHER-HARD (8.8X16X2-MM THK)	
	18	1	**8T-4983**	2	CLAMP-HOSE	
	19	1	**8T-4984**	2	CLAMP-HOSE	
E	20	1	**5P-1507**		HOSE (85-CM)	
E	21	1	**292-8504**		TUBE (82-CM)	

E - ORDER BY THE CENTIMETER
M - METRIC PART

515-7635 **LINES GP-COOLANT (**contd.**)** **i07544917**

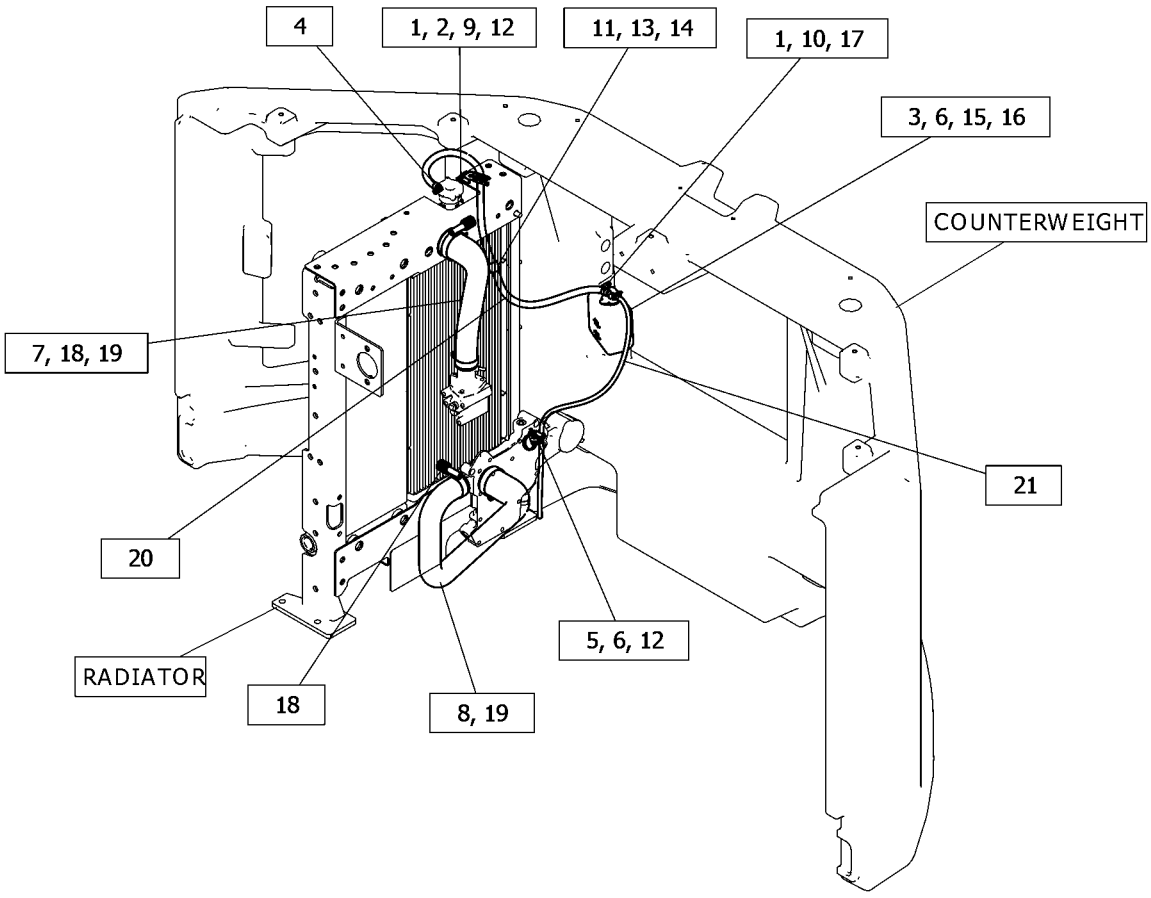

GRAPHIC #1 <END> g06338001

515-7630 RADIATOR & HYD OIL COOLER GP

PART OF 492-1656 COOLING GP-RADIATOR

AN ATTACHMENT

SMCS-1351, 1353, 1356, 1374, 1382, 1386 **i07544905**

NOTE	REF NO	GRAPHIC REF	PART NUMBER	QTY	PART NAME 1 2 3 4 5 6 (PRODUCT LEVEL)	SEE PAGE
M	1	1	**8T-4196**	8	BOLT (M10X1.5X35-MM)	
	2	1	**8T-4121**	2	WASHER-HARD (11X21X2.5-MM THK)	
	3	1	**134-3196**	8	WASHER (10.2X39.6X2.3-MM THK)	
M	4	1	**256-0466**	2	NUT (M10X1.5-THD)	
	5	1	**546-5782**	1	RADIATOR GP	
	6	1	**546-5783**	1	COOLER GP-HYDRAULIC OIL	

M - METRIC PART

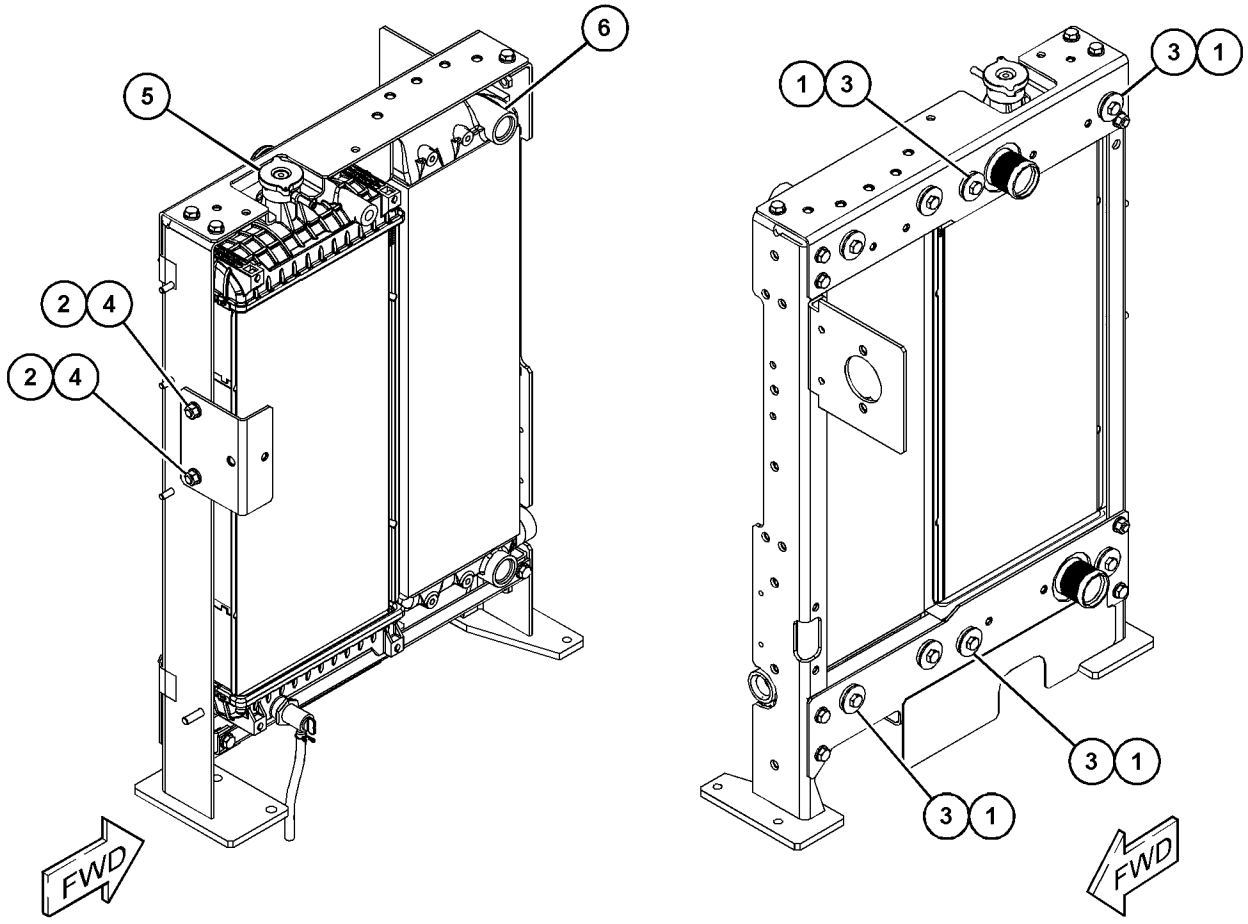

GRAPHIC #1 <END> g06342846

492-1693 AIR CLEANER GP

PART OF 518-6184 ENGINE AR, 520-6936 INSTALLATION AR-ENGINE AN ATTACHMENT

SMCS-1051, 1054 **i07544910**

NOTE	REF NO	GRAPHIC REF	PART NUMBER	QTY	PART NAME 1 2 3 4 5 6 (PRODUCT LEVEL)	SEE PAGE
Y	1	1	*514-7409*	1	AIR CLEANER GP	18
	2	1	**8T-4224**	2	WASHER-HARD (8.8X16X2-MM THK)	
M	3	1	**8T-7547**	2	BOLT (M8X1.25X30-MM)	

M - METRIC PART
Y - SEPARATE ILLUSTRATION

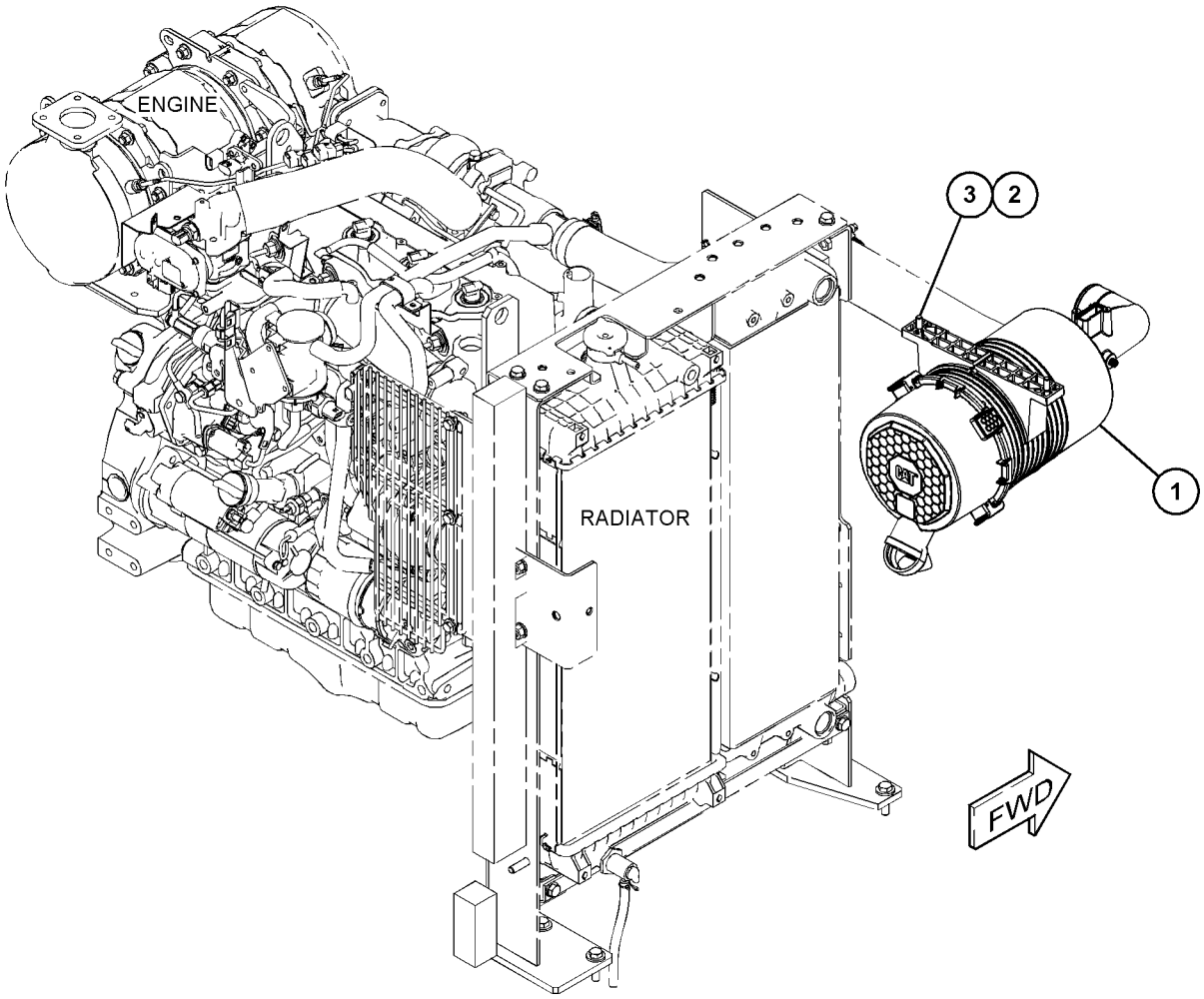

GRAPHIC #1 <END> g06341908

514-7409 AIR CLEANER GP

PART OF 492-1693 AIR CLEANER GP

AN ATTACHMENT

SMCS-1051, 1054 **i07544912**

NOTE	REF NO	GRAPHIC REF	PART NUMBER	QTY	PART NAME 1 2 3 4 5 6 (PRODUCT LEVEL)	SEE PAGE
	1	1	**112-9717**	1	VALVE-DUST (AIR CLEANER)	
	2	1	**526-3118**	1	ELEMENT-PRIMARY	
	3	1	**526-3122**	1	FILTER ELEMENT AS-AIR	
	4	1	**526-3126**	1	COVER AS-AIR CLEANER	

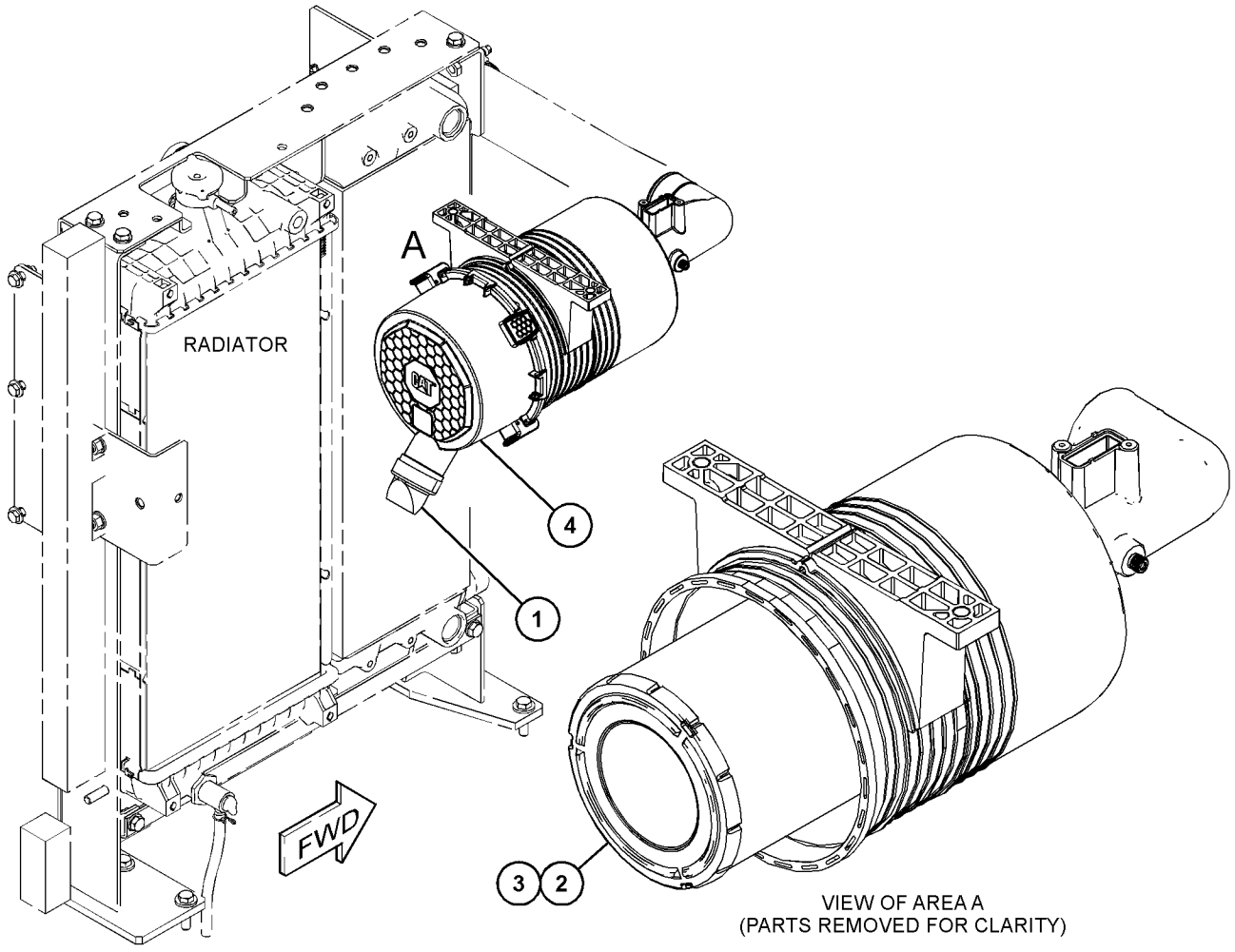

GRAPHIC #1 <END> g06344674

492-1665 EXTENSION GP-EXHAUST

PART OF 518-6184 ENGINE AR, 520-6936 INSTALLATION AR-ENGINE
AN ATTACHMENT

SMCS-1061 **i07544908**

NOTE	REF NO	GRAPHIC REF	PART NUMBER	QTY	PART NAME 1 2 3 4 5 6 (PRODUCT LEVEL)	SEE PAGE
	1	1	**492-1687**	1	PIPE AS-EXHAUST	
M	2	1	**127-4839**	4	BOLT (M10X1.25X25-MM)	
	3	1	**8T-4121**	4	WASHER-HARD (11X21X2.5-MM THK)	
F			**436-0854**	1	GASKET	

F - NOT SHOWN
M - METRIC PART

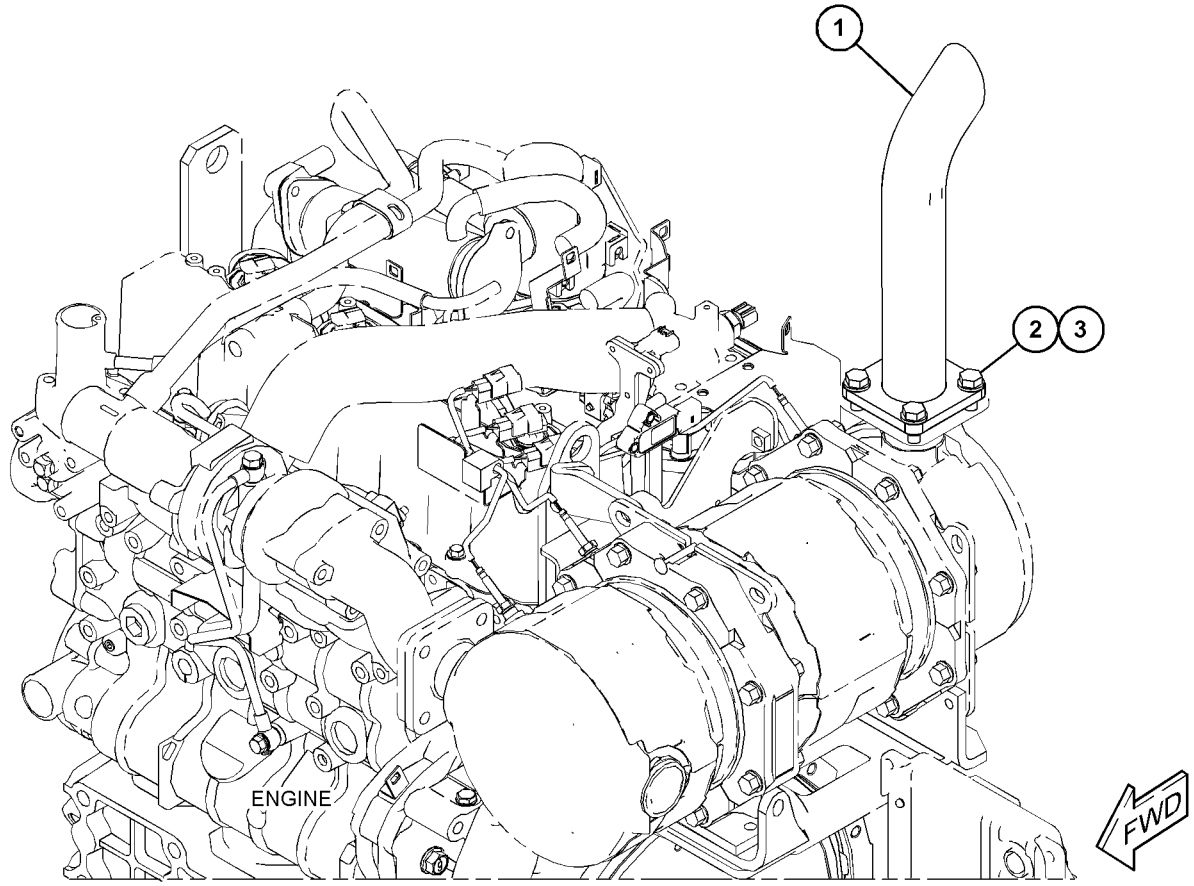

GRAPHIC #1 <END> g06339025

492-1673 LINES GP-AIR

PART OF 518-6184 ENGINE AR, 520-6936 INSTALLATION AR-ENGINE AN ATTACHMENT

SMCS-1071 **i07544909**

NOTE	REF NO	GRAPHIC REF	PART NUMBER	QTY	PART NAME 1 2 3 4 5 6 (PRODUCT LEVEL)	SEE PAGE
M	1	1	**8T-4195**	2	BOLT (M10X1.5X30-MM)	
	2	1	**492-1689**	1	HOSE-AIR CLEANER	
	3	1	**492-1690**	1	HOSE	
	4	1	**549-8930**	1	TUBE AS	
	5	1	**559-2337**	1	INDICATOR	
	6	1	**5P-0597**	1	CLAMP-HOSE	
	7	1	**5P-4868**	3	CLAMP-HOSE	
M	8	1	**6V-5210**	2	SCREW-MACHINE (M4X0.7X10-MM)	
	9	1	**8T-4121**	2	WASHER-HARD (11X21X2.5-MM THK)	

M - METRIC PART

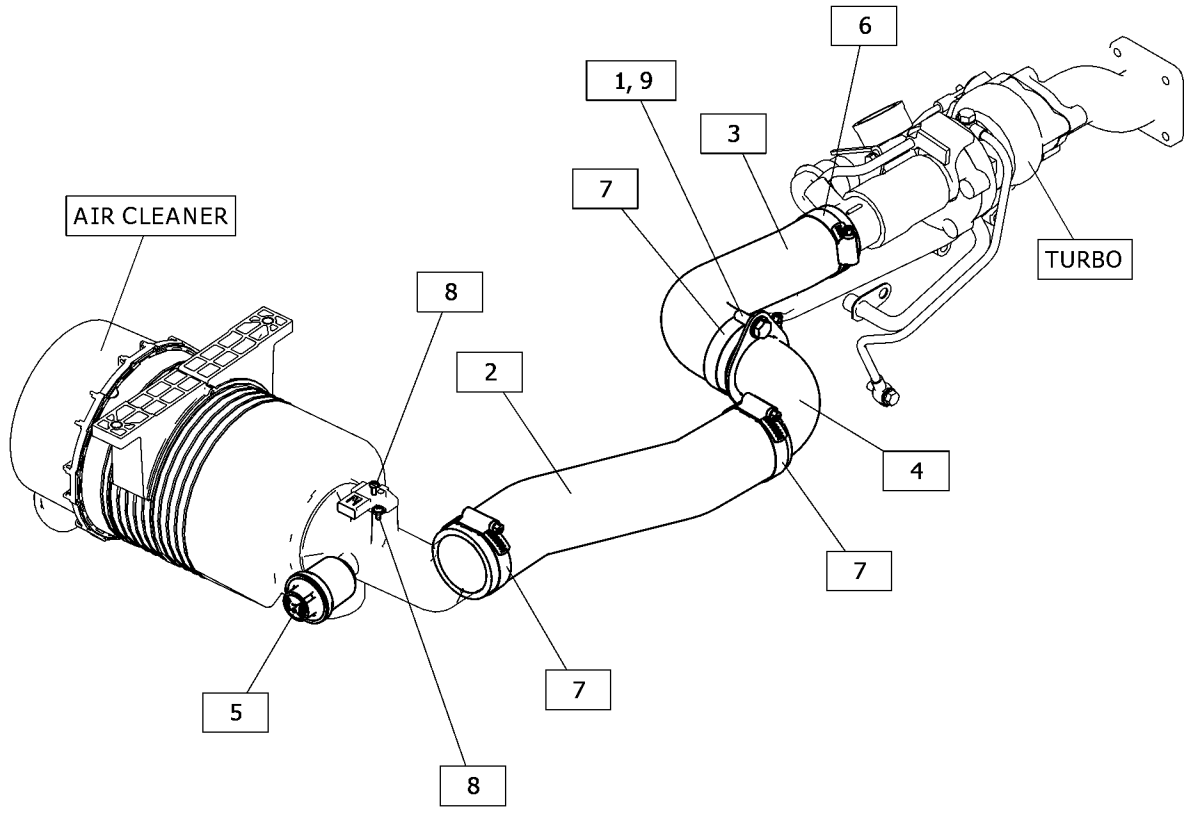

GRAPHIC #1 <END> g06339008

515-7632 LINES GP-FUEL

PART OF 518-6184 ENGINE AR, 520-6936 INSTALLATION AR-ENGINE
AN ATTACHMENT

SMCS-1274 **i07544916**

NOTE	REF NO	GRAPHIC REF	PART NUMBER	QTY	PART NAME 1 2 3 4 5 6 (PRODUCT LEVEL)	SEE PAGE
M	1	1	**7X-2536**	1	BOLT (M8X1.25X14-MM)	
M	2	1	**8T-4971**	2	BOLT (M6X1X30-MM)	
M	3	1	**8T-6870**	2	BOLT (M8X1.25X70-MM)	
	4	1	**3S-2093**	1	STRAP-CABLE	
	5	1	**1G-7206**	1	FILTER-FUEL (IN-LINE)	
	6	1	**1P-4278**	16	CLAMP-HOSE	
	7	1	**204-1611**	4	STRAP (DUAL)	
	8	1	**255-4560**	1	VALVE AS-SHUTOFF (FUEL)	
	9	1	**266-7379**	1	STRAP-CABLE	
M	10	1	**344-5675**	1	NUT (M10X1.5-THD)	
	11	1	**370-4008**	1	PUMP AS-FUEL	
	12	1	**392-0812**	1	ADAPTER	
	13	1	**4D-6466**	8	CLIP	
	14	1	**525-3458**	1	FILTER GP-WATER	
		1	**541-6956**	1	FILTER AS-FUEL	
	15	1	**541-2275**	1	ADAPTER	
	16	1	**5P-4116**	1	WASHER-HARD (8.8X20.5X2-MM THK)	
	17	1	**6K-8178**	2	CLIP (LOOP)	
	18	1	**8T-4121**	7	WASHER-HARD (11X21X2.5-MM THK)	
M	19	1	**8T-4137**	6	BOLT (M10X1.5X20-MM)	
	20	1	**8T-4224**	2	WASHER-HARD (8.8X16X2-MM THK)	
	21	1	**9X-6165**	4	WASHER (6.5X22X2.5-MM THK)	
	22	1	**9X-8256**	2	WASHER (6.6X12X2-MM THK)	
G	23	1	**423-1982**		HOSE (11.8-IN)	
G	24	1	**423-1981**		HOSE (135-IN)	
G	24A	1	**423-1981**		HOSE (132.2-IN)	
G	24B	1	**423-1981**		HOSE (15-IN)	
G	24C	1	**423-1981**		HOSE (6.3-IN)	
G	24D	1	**423-1981**		HOSE (5.7-IN)	
G	24E	1	**423-1981**		HOSE (2.8-IN EACH)	
E	25	1	**292-8504**		TUBE (20-CM)	

E - ORDER BY THE CENTIMETER
G - ORDER BY THE INCH
M - METRIC PART

515-7632 **LINES GP-FUEL (**contd.**)** **i07544916**

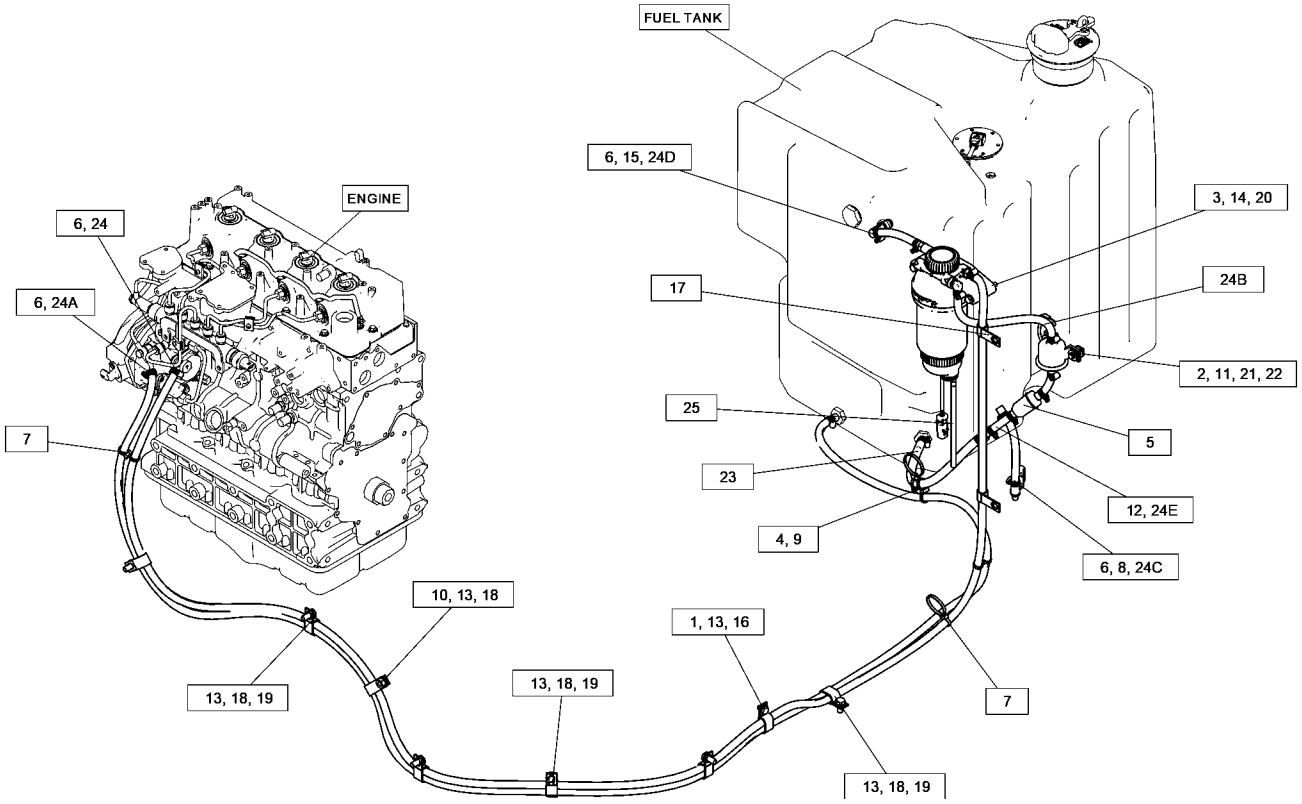

GRAPHIC #1 <END> g06339503

518-3295 PUMP AR-FUEL TRANSFER

AN ATTACHMENT

SMCS-1256 **i07546522**

NOTE	PART NUMBER	QTY	PART NAME 1 2 3 4 5 6 (PRODUCT LEVEL)	SEE PAGE
Y	*550-5445*	1	PUMP GP-FUEL TRANSFER	24
Y	*511-6231*	1	WIRING GP-FUEL PUMP (REFUELING PUMP)	85

Y - SEPARATE ILLUSTRATION

<END>

550-5445 PUMP GP-FUEL TRANSFER

PART OF 518-3295 PUMP AR-FUEL TRANSFER

AN ATTACHMENT

SMCS-1256 **i07546525**

NOTE	REF NO	GRAPHIC REF	PART NUMBER	QTY	PART NAME 1 2 3 4 5 6 (PRODUCT LEVEL)	SEE PAGE
	1	1	**379-0525**	1	HOSE	
M	2	1	**5C-9553**	4	BOLT (M6X1X16-MM)	
M	3	1	**8T-4189**	1	BOLT (M8X1.25X20-MM)	
M	4	1	**8T-6912**	1	BOLT (M8X1.25X50-MM)	
	5	1	**095-0843**	1	PIN-COTTER	
	6	1	**096-3780**	1	PIN-CLEVIS	
	7	1	**159-1503**	3	CLAMP-HOSE	
	8	1	**204-8000**	1	MOUNTING-CABLE TIE	
	9	1	**276-9254**	2	BUMPER	
	10	1	**290-5562**	1	MOUNT (DUAL SWIVEL)	
	11	1	**376-9487**	1	PUMP AS-FUEL	
		1	**9W-0852**	2	PIN-CONNECTOR (14-GA TO 16-GA)	
		1	**243-4505**	1	RECEPTACLE AS-CONNECTOR (2-PIN)	
	12	1	**379-2008**	1	VALVE AS (FOOT)	
	13	1	**3H-2900**	1	GROMMET	
	14	1	**525-1731**	1	ADAPTER	
	15	1	**525-3288**	1	SEAL	
	16	1	*541-8523*	1	BOX AS	
M		1	**5C-9553**	2	BOLT (M6X1X16-MM)	
M		1	**6V-9632**	2	NUT-WELD (M6X1-THD)	
M		1	**9R-2613**	1	BOSS-WELD (M10X1.5X25-MM)	
		1	**106-8917**	2	WASHER (6.4X12.5X1.6-MM THK)	
		1	**567-8544**	1	DOOR AS	
	17	1	**550-5185**	1	SUPPORT AS	
	18	1	**550-5446**	1	HOSE	
	19	1	**553-7140**	1	BRACKET AS	
	20	1	**5D-1026**	1	CLAMP-BAND	
	21	1	**5P-4115**	4	WASHER-HARD (7.2X19X2-MM THK)	
	22	1	**246-2641**	1	PADLOCK GP	
		1	**5P-8500**	1	KEY	
	23	1	**6D-1641**	1	CLIP (LOOP)	
	24	1	**7K-1181**	3	STRAP-CABLE	
	25	1	**8T-4121**	1	WASHER-HARD (11X21X2.5-MM THK)	
M	26	1	**8T-4137**	1	BOLT (M10X1.5X20-MM)	
	27	1	**8T-4224**	2	WASHER-HARD (8.8X16X2-MM THK)	

M - METRIC PART

550-5445 **PUMP GP-FUEL TRANSFER (**contd.**)** **i07546525**

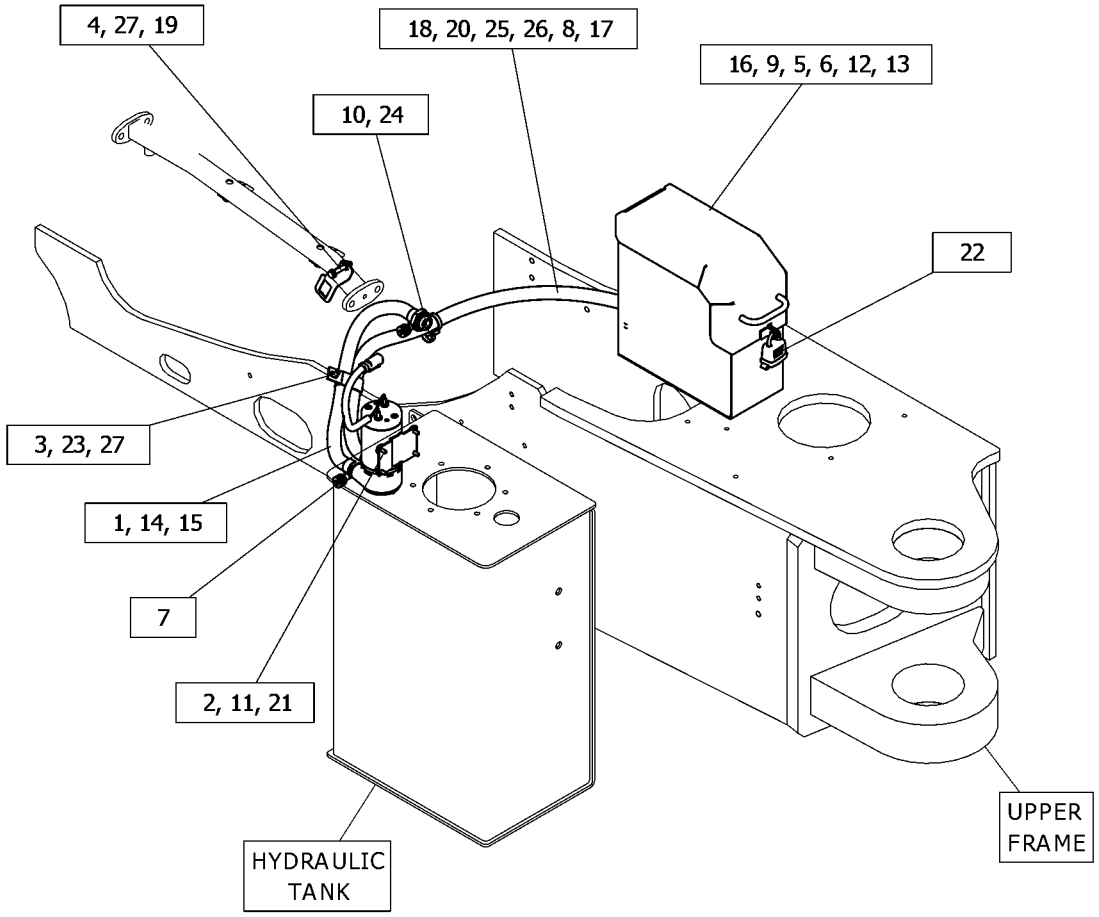

GRAPHIC #1 <END> g06347524

513-7854 TANK & MTG GP-FUEL

PART OF 512-1513 CHASSIS AR

SMCS-1273 **i07542429**

NOTE	REF NO	GRAPHIC REF	PART NUMBER	QTY	PART NAME 1 2 3 4 5 6 (PRODUCT LEVEL)	SEE PAGE
M	1	1	**8T-4182**	1	BOLT (M10X1.5X45-MM)	
M	2	1	**8T-6466**	1	BOLT (M10X1.5X60-MM)	
M	3	1	**7X-2537**	2	BOLT (M8X1.25X35-MM)	
	4	1	**517-0175**	1	PLATE	
Y	5	1	*523-9601*	1	TANK GP-FUEL	29
	6	1	**533-0008**	1	STRAP AS	
	7	1	**549-7636**	1	FOAM	
	8	1	**7X-0579**	2	WASHER-HARD (8.8X25.5X2-MM THK)	
	9	1	**8T-4121**	2	WASHER-HARD (11X21X2.5-MM THK)	

M - METRIC PART
Y - SEPARATE ILLUSTRATION

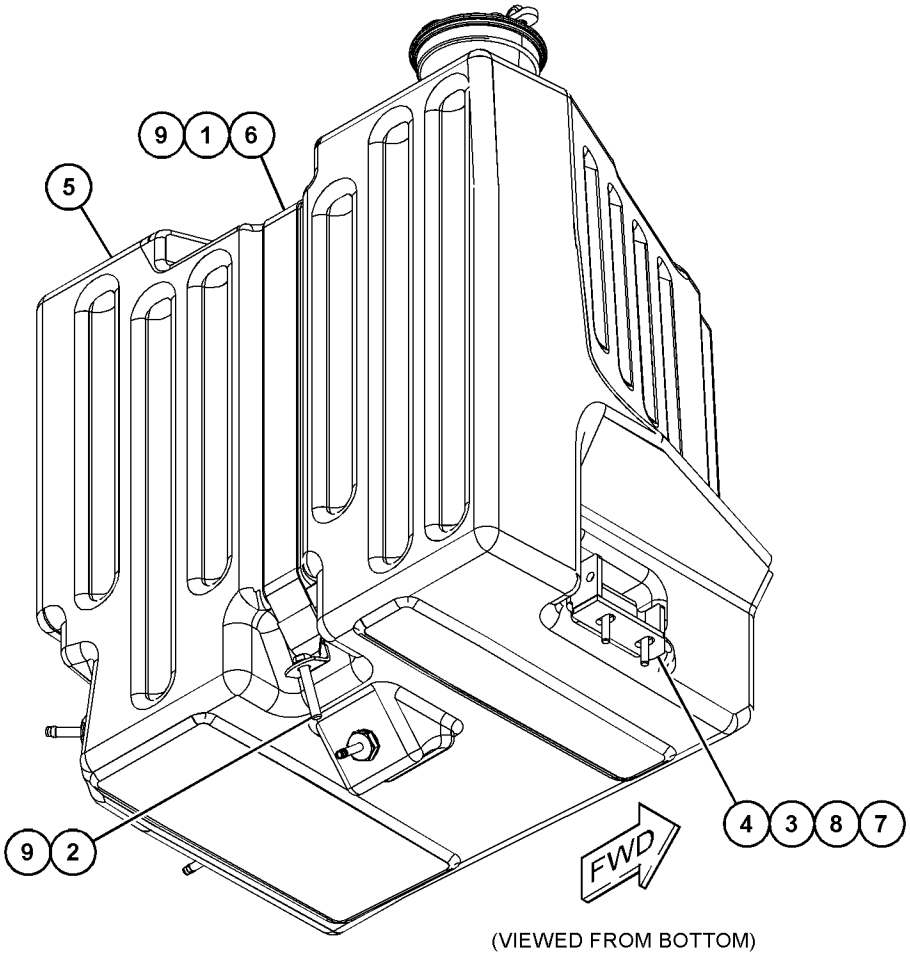

(VIEWED FROM BOTTOM)

GRAPHIC #1 <END> g06332927

513-7855 TANK GP-FUEL

147-LITER (38.8-US GAL)

FIELD REPLACEMENT ORDER 523-9601—PAGE: 29

PART OF 523-9601 TANK GP-FUEL

SMCS-1273 **i07542431**

NOTE	REF NO	GRAPHIC REF	PART NUMBER	QTY	PART NAME 1 2 3 4 5 6 (PRODUCT LEVEL)	SEE PAGE
	1	1	**9P-7121**	1	STRAINER-FUEL (FUEL TANK)	
	2	1	**306-8127**	1	ADAPTER	
	3	1	**349-7059**	1	CAP AS-FUEL (LOCKABLE, VENTED)	
		1	**350-7735**	1	KIT-CAP FILTER (FUEL TANK)	
					(INCLUDES BODY, GASKET, SCREWS & WASHERS)	
	4	1	**363-4122**	1	GASKET	
	5	1	**385-5361**	1	GROMMET	
	6	1	**511-8600**	1	TANK AS-FUEL	
	7	1	**520-4917**	1	TUBE AS	
	8	1	**524-2779**	2	ADAPTER	
	9	1	**524-3792**	1	PLUG	
	10	1	**525-3287**	3	SEAL	
	11	1	**525-3288**	1	SEAL	
	12	1	**525-5736**	1	SENDER AS-FUEL LEVEL	
		1	**9X-3401**	2	PIN-CONNECTOR (16-GA TO 18-GA)	
		1	**102-8802**	1	KIT-RECEPTACLE (2-PIN)	
					(INCLUDES RECEPTACLE AS & WEDGE)	
	13	1	**8C-6438**	1	SCREW-PAN HEAD (6-20X12.7-MM)	
	14	1	**8T-0328**	6	WASHER-HARD (5.5X10X1-MM THK)	
M	15	1	**8T-4127**	6	SCREW-MACHINE (M5X0.8X20-MM)	

M - METRIC PART

513-7855 **TANK GP-FUEL (**contd.**)** **i07542431**

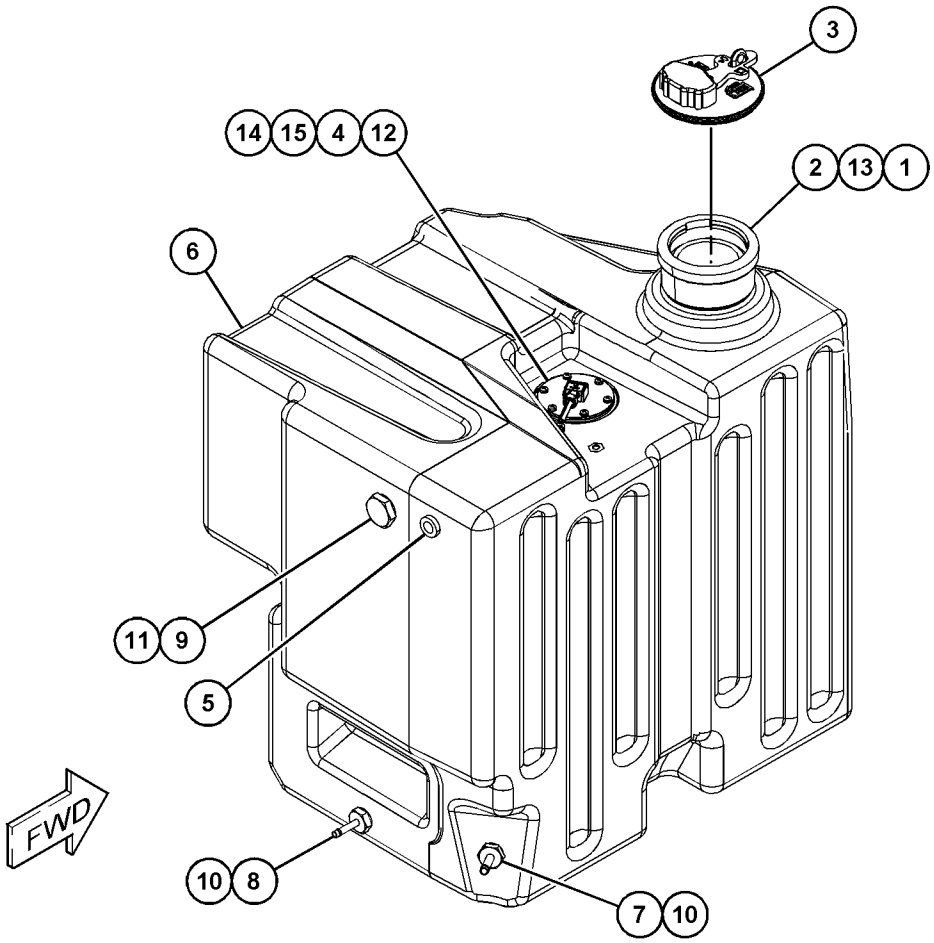

GRAPHIC #1 <END> g06343585

523-9601 TANK GP-FUEL

FIELD REPLACEMENT FOR 523-9606—PAGE: 30: FOR 513-7855—PAGE: 27
PART OF 513-7854 TANK & MTG GP-FUEL

SMCS-1273 **i07542430**

NOTE	PART NUMBER	QTY	PART NAME 1 2 3 4 5 6 (PRODUCT LEVEL)	SEE PAGE
Y	*513-7855*	1	TANK GP-FUEL	27
			—OR—	
Y	*523-9606*	1	TANK GP-FUEL	30

Y - SEPARATE ILLUSTRATION

<END>

523-9606 TANK GP-FUEL

147-LITER (38.8-US GAL)

FIELD REPLACEMENT ORDER 523-9601—PAGE: 29

PART OF 523-9601 TANK GP-FUEL

SMCS-1273 **i07542432**

NOTE	REF NO	GRAPHIC REF	PART NUMBER	QTY	PART NAME 1 2 3 4 5 6 (PRODUCT LEVEL)	SEE PAGE
	1	1	**9P-7121**	1	STRAINER-FUEL (FUEL TANK)	
	2	1	**306-8127**	1	ADAPTER	
	3	1	**329-3707**	1	SCREW-PAN HEAD (6X0.375-IN)	
	4	1	**349-7059**	1	CAP AS-FUEL (LOCKABLE, VENTED)	
		1	**350-7735**	1	KIT-CAP FILTER (FUEL TANK)	
					(INCLUDES BODY, GASKET, SCREWS & WASHERS)	
	5	1	**363-4122**	1	GASKET	
	6	1	**385-5361**	1	GROMMET	
	7	1	**520-4917**	1	TUBE AS	
	8	1	**523-9607**	1	TANK AS-FUEL	
	9	1	**524-2779**	2	ADAPTER	
	10	1	**524-3792**	1	PLUG	
	11	1	**525-3287**	3	SEAL	
	12	1	**525-3288**	1	SEAL	
	13	1	**525-5736**	1	SENDER AS-FUEL LEVEL	
		1	**9X-3401**	2	PIN-CONNECTOR (16-GA TO 18-GA)	
		1	**102-8802**	1	KIT-RECEPTACLE (2-PIN)	
					(INCLUDES RECEPTACLE AS & WEDGE)	
	14	1	**8T-0328**	6	WASHER-HARD (5.5X10X1-MM THK)	
M	15	1	**8T-4127**	6	SCREW-MACHINE (M5X0.8X20-MM)	

M - METRIC PART

523-9606 **TANK GP-FUEL (**contd.**)** **i07542432**

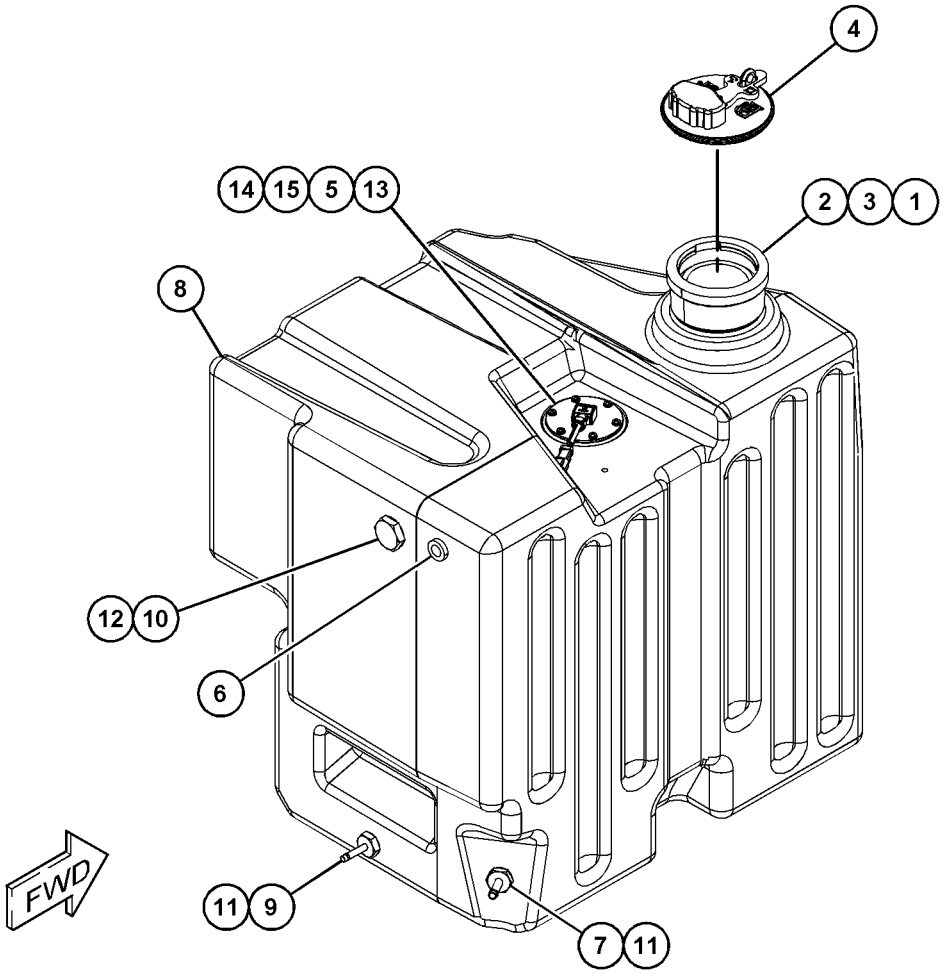

GRAPHIC #1 <END> g06343636

511-6157 ALARM GP-TRAVEL

PART OF 562-4906, 562-9155, 562-9156, 562-9158, 562-9159 DISTRIBUTION AR AN ATTACHMENT

SMCS-7429 **i07542504**

NOTE	REF NO	GRAPHIC REF	PART NUMBER	QTY	PART NAME 1 2 3 4 5 6 (PRODUCT LEVEL)	SEE PAGE
	1	1	**161-2539**	1	ALARM AS (BACKUP)	
		1	**4B-2043**	2	NUT (8-32-THD)	
	2	1	**511-6208**	1	HARNESS AS-ALARM	
		1	**102-8802**	1	KIT-RECEPTACLE (2-PIN)	
					(INCLUDES RECEPTACLE AS & WEDGE)	
		1	**5P-1475**	2	TERMINAL-FORK (14-GA TO 16-GA, NO. 8 SCREW)	
		1	**9X-3401**	2	PIN-CONNECTOR (16-GA TO 18-GA)	
					–OR–	
		1	**126-1767**	2	PIN-CONNECTOR (14-GA TO 16-GA)	
B		1	**329-3734**		TAPE-ELECTRICAL	
	3	1	**204-1611**	1	STRAP (DUAL)	
M	4	1	**8T-4138**	2	BOLT (M6X1X20-MM)	
	5	1	**9X-8256**	2	WASHER (6.6X12X2-MM THK)	

B - USE AS REQUIRED
M - METRIC PART

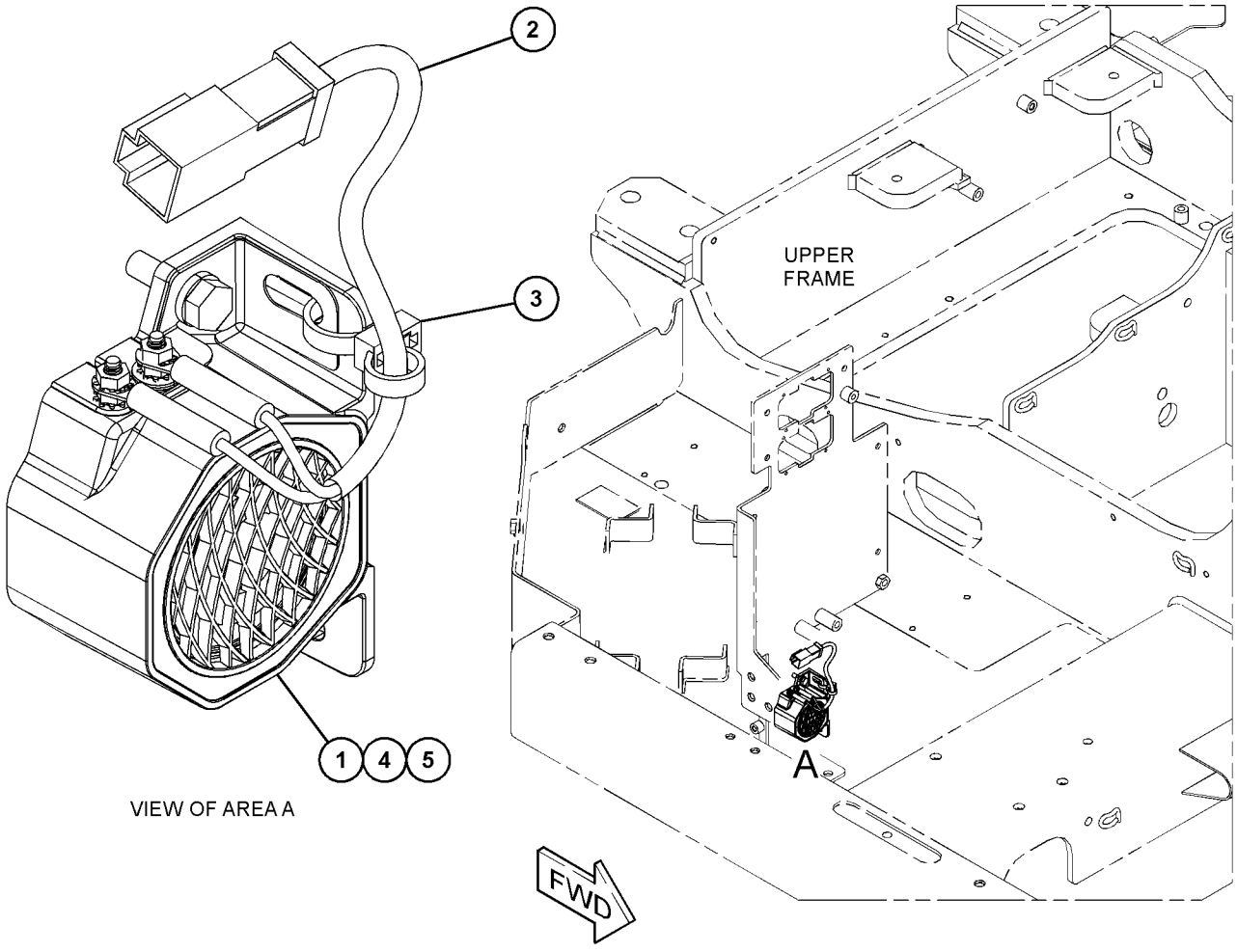

VIEW OF AREA A

GRAPHIC #1 <END> g06346021

561-8107 ALARM GP-TRAVEL

AN ATTACHMENT

SMCS-7429 **i07548451**

NOTE	PART NUMBER	QTY	PART NAME 1 2 3 4 5 6 (PRODUCT LEVEL)	SEE PAGE
	161-2539	1	ALARM AS (BACKUP)	
	4B-2043	2	NUT (8-32-THD)	
M	**8T-4138**	2	BOLT (M6X1X20-MM)	
	511-6208	1	HARNESS AS-ALARM	
	9X-3401	2	PIN-CONNECTOR (16-GA TO 18-GA)	
			—OR—	
	126-1767	2	PIN-CONNECTOR (14-GA TO 16-GA)	
	102-8802	1	KIT-RECEPTACLE (2-PIN)	
			(INCLUDES RECEPTACLE AS & WEDGE)	
B	**329-3734**		TAPE-ELECTRICAL	
	5P-1475	2	TERMINAL-FORK (14-GA TO 16-GA, NO. 8 SCREW)	
	204-1611	1	STRAP (DUAL)	
	9X-8256	2	WASHER (6.6X12X2-MM THK)	

B - USE AS REQUIRED
M - METRIC PART

<END>

511-6233 BATTERY & WIRING GP

PART OF 511-6253 ELECTRICAL AR

AN ATTACHMENT

SMCS-1401, 1402, 1408 **i07544886**

NOTE	REF NO	GRAPHIC REF	PART NUMBER	QTY	PART NAME 1 2 3 4 5 6 (PRODUCT LEVEL)	SEE PAGE
E	1	1	**103-2543**		SEAL (3-CM)	
	2	2	**3E-8320**	1	PLATE-INSTRUCTION (BATTERY)	
	3	2	**3S-2093**	42	STRAP-CABLE	
	4	1	**5P-4116**	2	WASHER-HARD (8.8X20.5X2-MM THK)	
	5	2,3	**7K-1181**	21	STRAP-CABLE	
	6	1,2	**7X-7729**	7	WASHER (11X25X3-MM THK)	
	7	1	**9X-2038**	4	WASHER (7X19X2-MM THK)	
	8	1	**116-7471**	1	PULLER-MINIFUSE	
	9	2	**164-9425**	1	HORN AS (12-VOLT, LOW TONE)	
	10	2	**201-1024**	1	BRACKET	
	11	2	**256-6453**	1	SENSOR-TEMPERATURE (2-PIN) (HYDRAULIC TANK)	
	12	2	**263-9574**	1	BATTERY (12-VOLT, MAINTENANCE FREE)	
	13	1,2	**266-7379**	8	STRAP-CABLE	
	14	1	**275-0553**	1	BAR-BUS	
	15	2	**326-9726**	3	BASE-MOUNTING	
	16	2	**327-6236**	1	ANGLE	
	17	1	**344-7391**	1	SENSOR-PRESSURE (EJECTOR) (TRAVEL, LH)	
	17A	1	**344-7391**	1	SENSOR-PRESSURE (EJECTOR) (TRAVEL, RH)	
	17B	1	**344-7391**	1	SENSOR-PRESSURE (EJECTOR) (CALIBRATION)	
	17C	1	**344-7391**	1	SENSOR-PRESSURE (EJECTOR) (PUMP)	
	18	2	**471-5095**	1	PLATE	
	19	2	**511-6160**	1	HARNESS AS-POWER (MAIN)	
		2	**135-2543**	1	BOOT (RED)	
E		2	**292-2893**		CONDUIT (10.1-MM ID) (37-CM)	
		2	**2L-8051**	2	TERMINAL-RING (6-GA, 5/16-IN SCREW)	
					—OR—	
		2	**5P-3455**	2	TERMINAL-RING (8-GA, 5/16-IN SCREW)	
	20	2	**522-6512**	1	FILM-IDENTIFICATION (FUSE/RELAY PANEL)	
	21	2	**522-6513**	1	FILM-IDENTIFICATION (FUSE/RELAY PANEL)	
	22	2	**132-5789**	1	CLIP (LADDER)	
	23	2	**145-9717**	2	ROD	
M	24	1	**162-2165**	8	BOLT-SOCKET HEAD (M4X0.7X16-MM)	
	25	3	**1S-2342**	1	STRAP AS-GROUND	
	26	3	**204-1611**	1	STRAP (DUAL)	
	27	2,3	**206-1345**	13	STRAP-CABLE	
	28	2	**238-5080**	1	SEAL-O-RING	
	29	2	**277-1873**	1	CLIP (LADDER)	
	30	1	**2V-1771**	1	GROMMET	
	31	2	**2V-8260**	1	GROMMET	
	32	3	**310-1898**	1	CLIP (LADDER)	
	33	2	**316-9351**	3	MOUNTING-CABLE TIE	
Y	34	1	**327-6208**	1	RELAY GP (12-VOLT) (GLOW PLUG)	69
Y	34A	1	**327-6208**	1	RELAY GP (12-VOLT) (MAIN POWER)	69
	35	1	**352-3964**	1	CLIP (LADDER)	
	36	2,3	**352-3968**	6	CLIP (LADDER)	
	37	1	**3J-1907**	4	SEAL-O-RING	
	38	2	**491-4581**	1	CONTROL GP-UNPROGRAMMED	

511-6233 **BATTERY & WIRING GP (**contd.**)** **i07544886**

NOTE	REF NO	GRAPHIC REF	PART NUMBER	QTY	PART NAME 1 2 3 4 5 6 (PRODUCT LEVEL)	SEE PAGE
	39	2	**4P-7581**	4	CLIP (LADDER)	
	40	2	**522-6465**	1	CABLE AS	
E		2	**159-8048**		CABLE-ELECTRICAL (0-GA, BLACK) (35-CM)	
		2	**7N-5274**	1	COVER AS-TERMINAL (BLACK)	
		2	**8L-8413**	1	STRAP-CABLE (WHITE)	
		2	**9G-8909**	1	COVER-TERMINAL (BLACK)	
		2	**7X-1169**	1	TERMINAL AS-BATTERY (NEGATIVE)	
		2	**1M-6119**	1	BOLT (5/16-18X1.375-IN)	
		2	**1M-6120**	1	NUT (5/16-18-THD)	
		2	**030-1707**	1	TERMINAL-RING (0-GA, 3/8-IN SCREW)	
E		2	**351-9309**		TUBE-HEAT SHRINK (32-MM DIA) (4-CM)	
	41	2	**542-2357**	1	PLATE	
	42	1	**543-8771**	1	BRACKET AS	
	43	2	**543-8772**	1	COVER	
Y	44	3	**557-5090**	1	HARNESS AS-CHASSIS (ENGINE)	45
Y	45	2	**557-5105**	1	HARNESS AS-CHASSIS (FRAME)	47
	46	1	**565-9402**	1	PLATE AS	
	47	2	**565-9404**	1	COVER	
M	48	1,2	**5C-7261**	6	NUT (M8X1.25-THD)	
M	49	1	**5C-9553**	4	BOLT (M6X1X16-MM)	
	50	1	**6V-9499**	8	WASHER-HARD (4.3X7X0.8-MM THK)	
Y	51	2	**7N-0718**	1	SWITCH GP-DISCONNECT (BATTERY)	70
	52	2,3	**7P-1695**	3	WASHER (10.5X19X3-MM THK)	
	53	2	**7X-0579**	2	WASHER-HARD (8.8X25.5X2-MM THK)	
M	54	1	**7X-2534**	2	BOLT (M6X1X50-MM)	
M	55	2	**7X-2537**	4	BOLT (M8X1.25X35-MM)	
	56	1	**8F-7242**	2	WASHER (8.7X15.9X1.6-MM THK)	
	57	1,2,3	**8T-4121**	10	WASHER-HARD (11X21X2.5-MM THK)	
M	58	1,2	**8T-4136**	7	BOLT (M10X1.5X25-MM)	
M	59	1,2,3	**8T-4137**	7	BOLT (M10X1.5X20-MM)	
M	60	2	**8T-4139**	1	BOLT (M12X1.75X30-MM)	
M	61	1,2	**8T-4189**	5	BOLT (M8X1.25X20-MM)	
M	62	2	**8T-4191**	3	BOLT (M10X1.5X16-MM)	
M	63	2	**8T-4200**	1	BOLT (M8X1.25X16-MM)	
	64	2	**8T-4223**	1	WASHER-HARD (13.5X25.5X3-MM THK)	
	65	2	**8T-4224**	8	WASHER-HARD (8.8X16X2-MM THK)	
M	66	2,3	**8T-8894**	3	BOLT-SOCKET HEAD (M10X1.5X20-MM)	
	67	2	**8X-9618**	1	STRAP AS-GROUND	
	68	1	**9X-8256**	2	WASHER (6.6X12X2-MM THK)	

E - ORDER BY THE CENTIMETER
M - METRIC PART
Y - SEPARATE ILLUSTRATION

511-6233 **BATTERY & WIRING GP (**contd.**)** **i07544886**

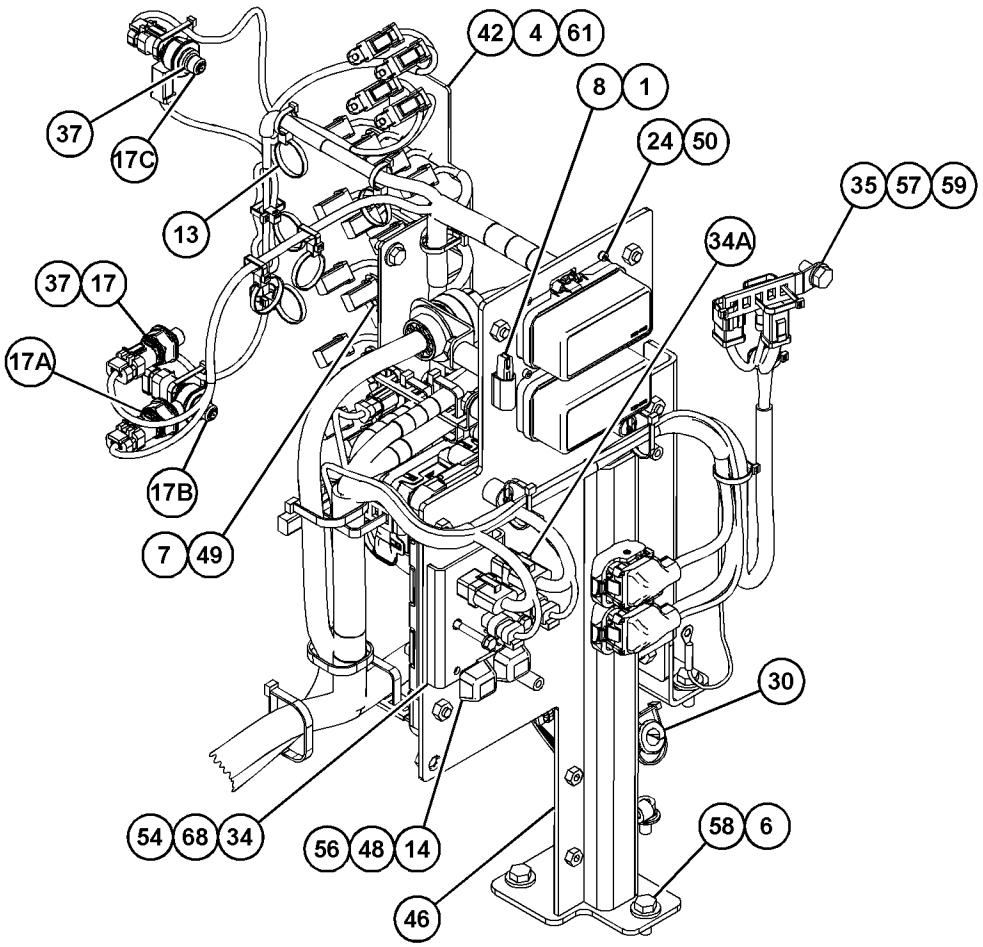

VIEW OF AREA D
(PARTS REMOVED FOR CLARITY)

GRAPHIC #1 g06348985

511-6233 **BATTERY & WIRING GP (**contd.**)** **i07544886**

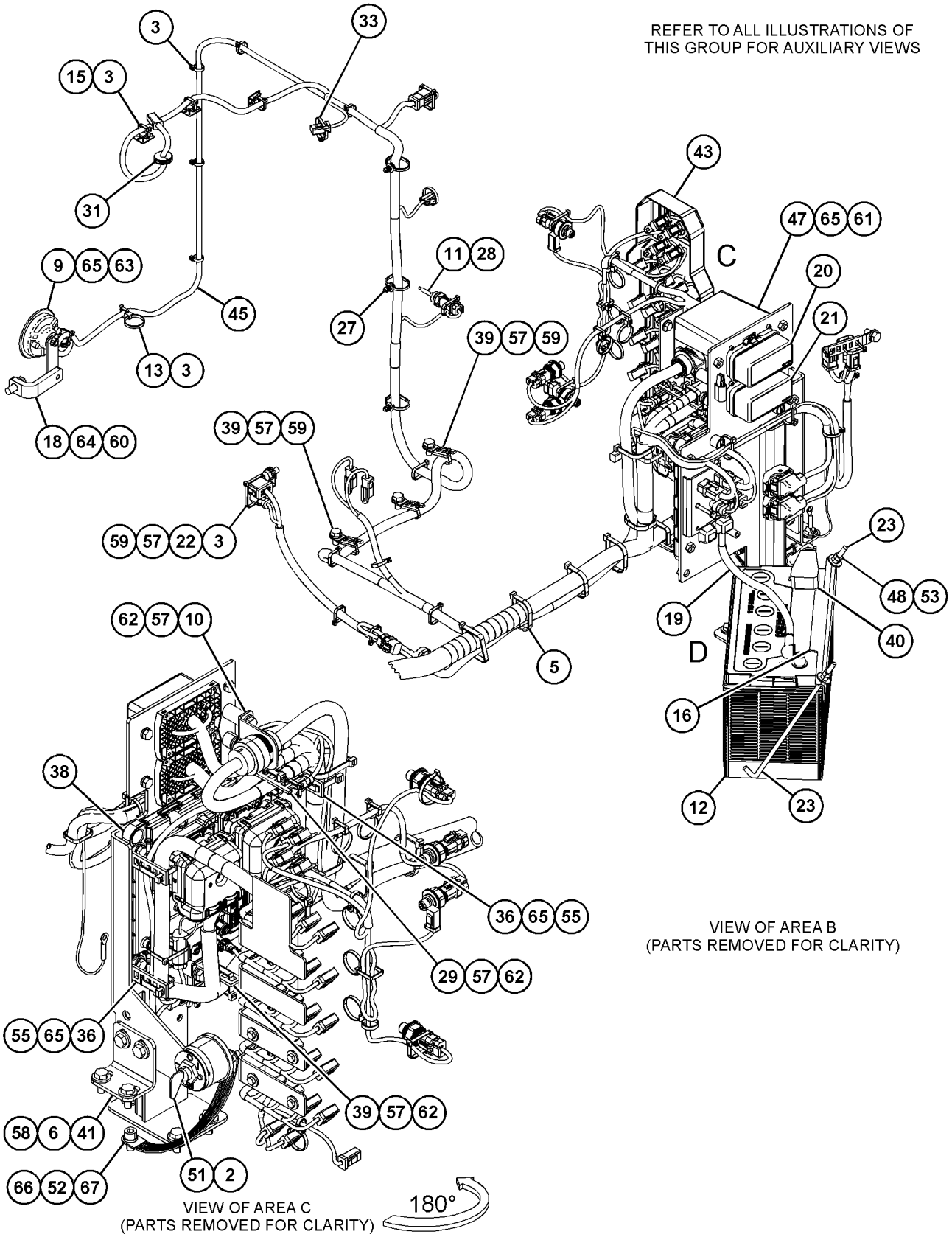

GRAPHIC #2 g06348984

511-6233 **BATTERY & WIRING GP (**contd.**)** **i07544886**

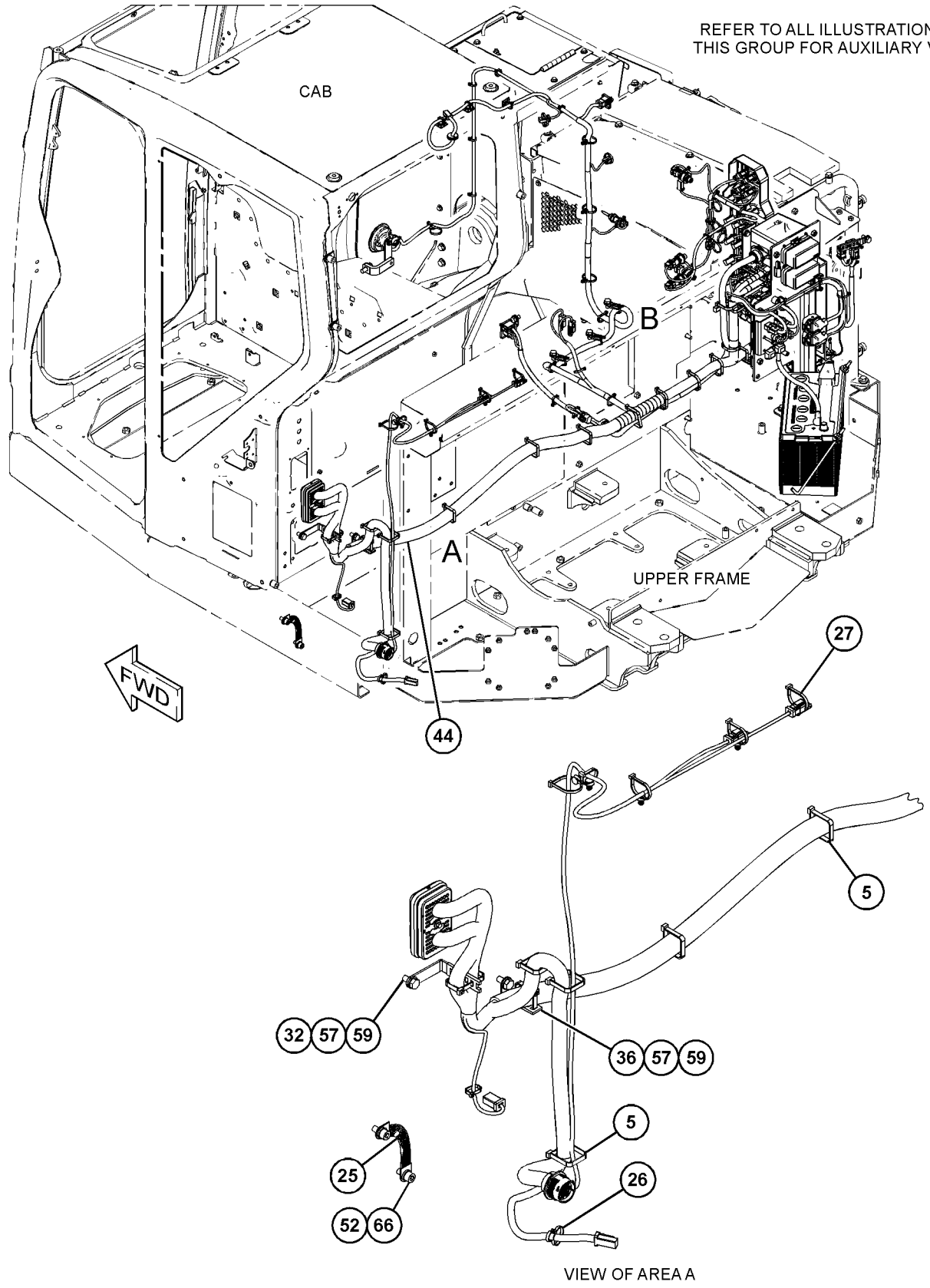

GRAPHIC #3 <END> g06348983

487-3004 CONTROL GP-ELECTRONIC

PART OF 511-6174 INSTALLATION GP-SECURITY, 561-8108 KIT-WIRING, 522-6461 SWITCH GP-START
AN ATTACHMENT

SMCS-1424, 1901, 1902, 1917, 1924, 3168, 7418, 7490, 7494, 7600, 7610, 7632

i07546414

NOTE	REF NO	GRAPHIC REF	PART NUMBER	QTY	PART NAME 1 2 3 4 5 6 (PRODUCT LEVEL)	SEE PAGE
	1	1	**464-7675**	1	BATTERY	
F		1	**519-9084**	1	SOFTWARE GP-ELECTRONIC	

F - NOT SHOWN

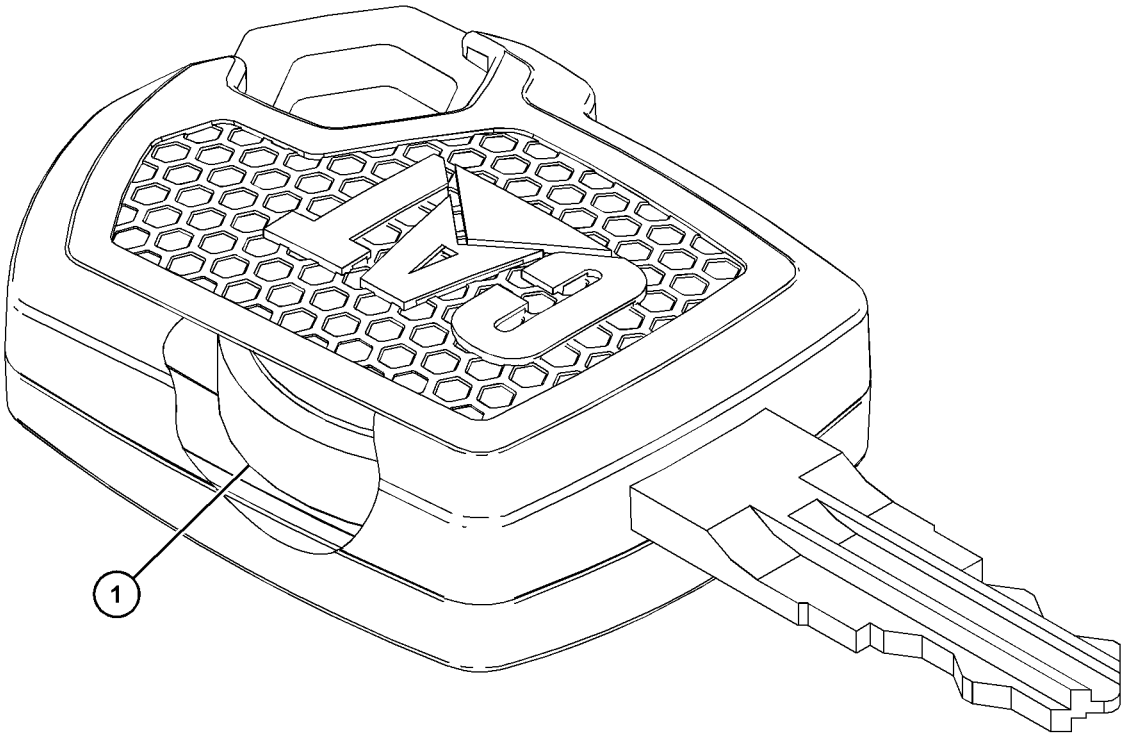

GRAPHIC #1 <END> g06234124

511-6253 ELECTRICAL AR

PART OF 562-4906, 562-9155, 562-9156, 562-9158, 562-9159 DISTRIBUTION AR
AN ATTACHMENT

SMCS-1408 **i07544885**

NOTE	PART NUMBER	QTY	PART NAME 1 2 3 4 5 6 (PRODUCT LEVEL)	SEE PAGE
Y	*511-6233*	1	BATTERY & WIRING GP	34
Y	*511-6181*	1	ELECTRONICS GP-MACHINE	40
Y	*511-6222*	1	WIRING GP-CAB	73
Y	*511-6238*	1	WIRING GP-ENGINE	81

Y - SEPARATE ILLUSTRATION

<END>

504-4980 ELECTRONICS GP-MACHINE–CONTROL

PART OF 511-6174 INSTALLATION GP-SECURITY, 561-8108 KIT-WIRING, 522-6461 SWITCH GP-START
AN ATTACHMENT

SMCS-7610, 7620 **i07427496**

NOTE	PART NUMBER	QTY	PART NAME 1 2 3 4 5 6 (PRODUCT LEVEL)	SEE PAGE
	545-7942	1	SOFTWARE GP-MACHINE	

<END>

511-6181 ELECTRONICS GP-MACHINE

PART OF 511-6253 ELECTRICAL AR
AN ATTACHMENT

SMCS-7610, 7620 **i07544890**

NOTE	PART NUMBER	QTY	PART NAME 1 2 3 4 5 6 (PRODUCT LEVEL)	SEE PAGE
	564-7772	1	SOFTWARE GP-MACHINE	

<END>

542-8852 ELECTRONICS GP-MACHINE

PART OF 511-6174 INSTALLATION GP-SECURITY, 561-8108 KIT-WIRING, 522-6461 SWITCH GP-START
AN ATTACHMENT

SMCS-7610, 7620 **i07546416**

NOTE	PART NUMBER	QTY	PART NAME 1 2 3 4 5 6 (PRODUCT LEVEL)	SEE PAGE
	553-5958	1	SOFTWARE GP-MACHINE	

<END>

522-6546 ELECTRONICS GP-MONITOR

PART OF 511-6176 MONITOR GP-OPERATOR
AN ATTACHMENT

SMCS-7490, 7601, 7603, 7610, 7620 **i07546419**

NOTE	PART NUMBER	QTY	PART NAME 1 2 3 4 5 6 (PRODUCT LEVEL)	SEE PAGE
	567-2264	1	SOFTWARE GP-MONITOR	

<END>

522-6547 ELECTRONICS GP-MONITOR

PART OF 522-6475 DISPLAY GP-MONITOR
AN ATTACHMENT

SMCS-7490, 7601, 7603, 7610, 7620 **i07542511**

NOTE	PART NUMBER	QTY	PART NAME 1 2 3 4 5 6 (PRODUCT LEVEL)	SEE PAGE
	567-2270	1	SOFTWARE GP-MONITOR	

<END>

522-6548 ELECTRONICS GP-MONITOR

PART OF 511-6177 DISPLAY GP-MONITOR, 561-8100 KIT-DISPLAY
AN ATTACHMENT

SMCS-7490, 7601, 7603, 7610, 7620 **i07546270**

NOTE	PART NUMBER	QTY	PART NAME 1 2 3 4 5 6 (PRODUCT LEVEL)	SEE PAGE
	567-2260	1	SOFTWARE GP-MONITOR	

<END>

542-8834 ELECTRONICS GP-MONITOR

PART OF 511-6229 WIRING GP-COMMUNICATION
AN ATTACHMENT

SMCS-7490, 7601, 7603, 7610, 7620 **i07544487**

NOTE	PART NUMBER	QTY	PART NAME 1 2 3 4 5 6 (PRODUCT LEVEL)	SEE PAGE
	549-8436	1	SOFTWARE GP-MONITOR	

<END>

511-6213 HARNESS AS-AUXILIARY

PART OF 511-6226 WIRING GP-AUXILIARY CONTROL
AN ATTACHMENT

SMCS-1408 **i07546283**

NOTE	PART NUMBER	QTY	PART NAME 1 2 3 4 5 6 (PRODUCT LEVEL)	SEE PAGE
E	**196-8876**		BRAID (BLACK, ONE GOLD STRAND) (188-CM)	
	9X-3401	7	PIN-CONNECTOR (16-GA TO 18-GA)	
			—OR—	
	126-1767	7	PIN-CONNECTOR (14-GA TO 16-GA)	
	155-2270	2	KIT-CONNECTING PLUG (2-PIN)	
			(EACH INCLUDES PLUG AS, WEDGE, & INTERFACE SEAL)	
	230-4013	1	PLUG AS-CONNECTOR (3-PIN)	
	455-0705	1	SEAL-CONNECTOR	
	102-8802	2	KIT-RECEPTACLE (2-PIN)	
	102-8803	1	KIT-RECEPTACLE (3-PIN)	
			(EACH RECEPTACLE KIT INCLUDES RECEPTACLE AS & WEDGE)	
	9X-3402	7	SOCKET-CONNECTOR (16-GA TO 18-GA)	
			—OR—	
	126-1768	7	SOCKET-CONNECTOR (14-GA TO 16-GA)	
B	**329-3734**		TAPE-ELECTRICAL	
	3E-3371	1	WEDGE-RECEPTACLE LOCK (3-PIN)	

B - USE AS REQUIRED
E - ORDER BY THE CENTIMETER

<END>

511-6183 HARNESS AS-CAB

PART OF 511-6234 WIRING GP-CAB

AN ATTACHMENT

SMCS-1408 **i07545076**

NOTE	PART NUMBER	QTY	PART NAME 1 2 3 4 5 6 (PRODUCT LEVEL)	SEE PAGE
	377-5603	1	CAP AS	
	424-4322	1	COVER-CONNECTOR	
	374-7464	1	CAP-SEAL	
	374-7465	3	CAP-SEAL	
	374-7466	1	CAP-SEAL	
	374-7467	1	CAP-SEAL	
	123-7615	2	CONNECTOR (1-PIN)	
	203-9007	1	NUT (1-1/2-18-THD)	
	213-0139	2	PIN (4-MM)	
	9X-3401	80	PIN-CONNECTOR (16-GA TO 18-GA)	
			—OR—	
	126-1767	80	PIN-CONNECTOR (14-GA TO 16-GA)	
	262-9151	4	PIN-CONNECTOR (12-GA TO 14-GA)	
	7Y-3958	1	CONNECTOR-PLUG (6-PIN)	
	111-4816	1	PLUG-CONNECTOR (13-PIN)	
	155-2260	7	KIT-CONNECTING PLUG (3-PIN)	
			(EACH INCLUDES PLUG AS, WEDGES & INTERFACE SEAL)	
	155-2255	1	KIT-CONNECTING PLUG (12-PIN)	
	155-2265	3	KIT-CONNECTING PLUG (8-PIN)	
	155-2270	1	KIT-CONNECTING PLUG (2-PIN)	
	155-2271	4	KIT-CONNECTING PLUG (4-PIN)	
	155-2274	1	KIT-CONNECTING PLUG (6-PIN)	
			(EACH PLUG KIT INCLUDES PLUG AS, WEDGE, & INTERFACE SEAL)	
	163-6659	1	CONNECTOR-PLUG (12-PIN)	
	177-9648	1	KIT-CONNECTING PLUG (2-PIN)	
			(INCLUDES PLUG AS & WEDGE)	
	454-6738	1	PLUG AS-CONNECTOR	
	507-1383	1	PLUG AS-CONNECTOR	
	507-1384	1	PLUG AS-CONNECTOR	
	531-2250	1	PLUG AS-CONNECTOR	
	8T-8737	34	PLUG-SEAL	
	274-8267	2	PLUG (4-GA)	
	102-8802	1	KIT-RECEPTACLE (2-PIN)	
	102-8806	1	KIT-RECEPTACLE (8-PIN)	
	102-8801	1	KIT-RECEPTACLE (12-PIN)	
			(EACH RECEPTACLE KIT INCLUDES RECEPTACLE AS & WEDGE)	
	134-2540	4	RECEPTACLE AS-CONNECTOR	
	347-0593	1	RECEPTACLE AS	
	451-8019	1	RECEPTACLE AS-CONNECTOR (14-PIN)	
	169-0705	24	SEAL	
	9X-3402	68	SOCKET-CONNECTOR (16-GA TO 18-GA)	
			—OR—	
	126-1768	68	SOCKET-CONNECTOR (14-GA TO 16-GA)	
	9X-3402	11	SOCKET-CONNECTOR (16-GA TO 18-GA)	
	507-3112	17	TERMINAL AS	
	531-2251	2	SOCKET-TERMINAL	
	3S-2093	2	STRAP-CABLE	

511-6183 **HARNESS AS-CAB (**contd.**)** **i07545076**

NOTE	PART NUMBER	QTY	PART NAME 1 2 3 4 5 6 (PRODUCT LEVEL)	SEE PAGE
B	**329-3734**		TAPE-ELECTRICAL	
	122-4401	2	TERMINAL	
	454-6739	3	TERMINAL	
	097-7234	2	TERMINAL-BLADE (18-GA TO 22-GA)	
	7N-7221	5	TERMINAL-BLADE (18-GA TO 22-GA)	
	2L-8069	1	TERMINAL-RING (2-GA TO 10-GA, 3/8-IN SCREW)	
	2L-8079	1	TERMINAL-RING (14-GA TO 16-GA, 3/8-IN SCREW)	
	091-2436	2	TERMINAL-BLADE (18-GA TO 22-GA)	
	7Y-3951	5	TERMINAL-BLADE (14-GA)	
	102-7965	10	TERMINAL (FEMALE)	
	125-4785	9	TERMINAL (FEMALE)	
E	**119-3662**		TUBE-HEAT SHRINK (10.85-MM DIA) (11-CM)	
E	**125-7874**		TUBE-HEAT SHRINK (5.72-MM DIA) (130-CM)	
E	**125-7876**		TUBE-HEAT SHRINK (17.78-MM DIA) (8-CM)	
	270-2679	1	LOCKWASHER	
	125-4840	1	WEDGE-PLUG LOCK (13-PIN)	

B - USE AS REQUIRED
E - ORDER BY THE CENTIMETER

<END>

557-5103 HARNESS AS-CAB–CAMERA

DISPLAY

PART OF 522-6539 WIRING GP-CAB

AN ATTACHMENT

SMCS-1408 **i07545081**

NOTE	PART NUMBER	QTY	PART NAME 1 2 3 4 5 6 (PRODUCT LEVEL)	SEE PAGE
E	**196-8876**		BRAID (BLACK, ONE GOLD STRAND) (243-CM)	
	174-3091	1	KIT-RECEPTACLE (12-PIN)	
	102-8801	1	KIT-RECEPTACLE (12-PIN)	
			(EACH RECEPTACLE KIT INCLUDES RECEPTACLE AS & WEDGE)	
	9X-3401	7	PIN-CONNECTOR (16-GA TO 18-GA)	
			–OR–	
	126-1767	7	PIN-CONNECTOR (14-GA TO 16-GA)	
	9X-3401	4	PIN-CONNECTOR (16-GA TO 18-GA)	
	483-2762	1	PLUG AS-CONNECTOR	
	490-0571	2	PLUG AS-CONNECTOR (2-PIN)	
	8T-8737	1	PLUG-SEAL	
	483-2768	29	PLUG-SEAL	
B	**329-3734**		TAPE-ELECTRICAL	
	483-2765	8	TERMINAL AS (CONNECTOR)	
	483-2767	7	TERMINAL AS (CONNECTOR)	
E	**125-7874**		TUBE-HEAT SHRINK (5.72-MM DIA) (6-CM)	

B - USE AS REQUIRED
E - ORDER BY THE CENTIMETER

<END>

557-5090 HARNESS AS-CHASSIS

PART OF 511-6233 BATTERY & WIRING GP

AN ATTACHMENT

SMCS-1408 **i07544888**

NOTE	PART NUMBER	QTY	PART NAME 1 2 3 4 5 6 (PRODUCT LEVEL)	SEE PAGE
	319-3237	4	HOUSING AS-CONNECTOR	
	510-6045	1	BLOCK AS-FUSE	
	510-6047	1	BLOCK AS-FUSE	
			(EACH BLOCK AS INCLUDES)	
M	**5C-8312**	4	NUT (M4X0.7-THD)	
	180-0613	1	CIRCUIT BREAKER AS (30-AMPERE)	
	374-7463	7	CAP-SEAL	
	374-7464	1	CAP-SEAL	
	374-7466	1	CAP-SEAL	
	483-2777	2	COVER-CONNECTOR	
	510-6043	2	COVER-FUSE	
	113-8490	11	FUSE (10-AMPERE)	
	113-8491	5	FUSE (15-AMPERE)	
	113-8492	2	FUSE (20-AMPERE)	
	113-8493	1	FUSE (25-AMPERE)	
	124-3548	2	FUSE (30-AMPERE)	
	557-5054	1	HARNESS AS-SWITCH	
	9X-3401	2	PIN-CONNECTOR (16-GA TO 18-GA)	
			—OR—	
	126-1767	2	PIN-CONNECTOR (14-GA TO 16-GA)	
	8T-8737	1	PLUG-SEAL	
	102-8803	1	KIT-RECEPTACLE (3-PIN)	
			(INCLUDES RECEPTACLE AS & WEDGE)	
	211-0052	1	NUT (1-11/16-18-THD)	
	213-0139	12	PIN (4-MM)	
	9X-3401	31	PIN-CONNECTOR (16-GA TO 18-GA)	
			—OR—	
	126-1767	31	PIN-CONNECTOR (14-GA TO 16-GA)	
	202-5397	12	PLUG	
	155-2260	2	KIT-CONNECTING PLUG (3-PIN)	
			(EACH INCLUDES PLUG AS, WEDGES & INTERFACE SEAL)	
	155-2270	31	KIT-CONNECTING PLUG (2-PIN)	
	155-2271	1	KIT-CONNECTING PLUG (4-PIN)	
	155-2274	1	KIT-CONNECTING PLUG (6-PIN)	
			(EACH PLUG KIT INCLUDES PLUG AS, WEDGE, & INTERFACE SEAL)	
	196-2381	2	KIT-CONNECTING PLUG (2-PIN)	
			(EACH INCLUDES PLUG AS,CONNECTOR LOCK & TERMINAL ASSEMBLIES)	
	176-2947	1	KIT-CONNECTING PLUG (4-PIN)	
	177-9648	1	KIT-CONNECTING PLUG (2-PIN)	
			(EACH PLUG KIT INCLUDES PLUG AS & WEDGE)	
	225-3854	1	PLUG AS-CONNECTOR (31-PIN)	
	230-4011	2	PLUG AS-CONNECTOR (2-PIN)	
			(EACH INCLUDES)	
	455-0704	1	SEAL-CONNECTOR	
	230-4013	4	PLUG AS-CONNECTOR (3-PIN)	
			(EACH INCLUDES)	
	455-0705	1	SEAL-CONNECTOR	

557-5090 **HARNESS AS-CHASSIS (**contd.**)** **i07544888**

NOTE	PART NUMBER	QTY	PART NAME 1 2 3 4 5 6 (PRODUCT LEVEL)	SEE PAGE
	374-8331	1	PLUG AS-CONNECTOR (86-PIN)	
	374-8333	1	PLUG AS-CONNECTOR	
			(EACH PLUG AS INCLUDES)	
	435-5221	1	KIT-BOLT (CONNECTOR)	
	435-5222	1	SEAL	
	483-2762	1	PLUG AS-CONNECTOR	
	483-2763	1	PLUG AS-CONNECTOR	
	490-0571	1	PLUG AS-CONNECTOR (2-PIN)	
	8T-8737	30	PLUG-SEAL	
	483-2768	72	PLUG-SEAL	
	521-4689	2	PLUG-SEAL	
	274-8267	2	PLUG (4-GA)	
	225-3861	1	RECEPTACLE AS-CONNECTOR (31-PIN)	
	515-8199	7	RELAY (12-VDC)	
	522-8384	2	RELAY AS	
	169-0705	72	SEAL	
	173-8919	4	SEAL-CONNECTOR	
	185-1860	50	SEAL-WIRE	
	185-1861	22	SEAL-WIRE	
	479-0022	4	SEAL-WIRE	
	521-4687	6	SEAL-WIRE	
	521-4688	2	SEAL-WIRE	
E	**289-5151**		SLEEVE (165-CM)	
E	**337-7978**		SLEEVE (129-CM)	
	196-2414	2	TERMINAL AS (10-GA)	
	437-7359	2	TERMINAL AS (8-GA)	
	240-4590	112	SOCKET-CONNECTOR (16-GA TO 20-GA)	
	9X-3402	168	SOCKET-CONNECTOR (16-GA TO 18-GA)	
			—OR—	
	126-1768	168	SOCKET-CONNECTOR (14-GA TO 16-GA)	
	9X-3402	8	SOCKET-CONNECTOR (16-GA TO 18-GA)	
	483-2765	2	TERMINAL AS	
	483-2767	14	TERMINAL AS	
	521-4684	4	SOCKET-CONNECTOR	
	521-4685	4	SOCKET-CONNECTOR	
	521-4686	4	SOCKET-CONNECTOR	
	3S-2093	4	STRAP-CABLE	
B	**329-3734**		TAPE-ELECTRICAL	
	2L-8069	2	TERMINAL-RING (2-GA TO 10-GA, 3/8-IN SCREW)	
	2L-8077	1	TERMINAL-RING (14-GA TO 16-GA, 1/4-IN SCREW)	
	342-8419	22	TERMINAL (14-GA TO 16-GA)	
	342-8441	50	TERMINAL (18-GA TO 20-GA)	
D	**6V-2689**		TUBE-HEAT SHRINK (6.35-MM DIA) (0.2-M)	
E	**119-3662**		TUBE-HEAT SHRINK (10.85-MM DIA) (30-CM)	
E	**125-7874**		TUBE-HEAT SHRINK (5.72-MM DIA) (113-CM)	
E	**125-7875**		TUBE-HEAT SHRINK (7.44-MM DIA) (55-CM)	
	310-0674	1	LOCKWASHER	

B - USE AS REQUIRED
D - ORDER BY THE METER
E - ORDER BY THE CENTIMETER
M - METRIC PART

<END>

557-5105 HARNESS AS-CHASSIS–FRAME

PART OF 511-6233 BATTERY & WIRING GP

AN ATTACHMENT

SMCS-1408 **i07544889**

NOTE	PART NUMBER	QTY	PART NAME 1 2 3 4 5 6 (PRODUCT LEVEL)	SEE PAGE
	374-7463	2	CAP-SEAL	
	374-7464	1	CAP-SEAL	
	374-7466	1	CAP-SEAL	
	7Y-3952	1	PLUG-CONNECTOR (2-PIN)	
	155-2255	1	KIT-CONNECTING PLUG (12-PIN)	
	155-2270	5	KIT-CONNECTING PLUG (2-PIN)	
	155-2274	1	KIT-CONNECTING PLUG (6-PIN)	
			(EACH PLUG KIT INCLUDES PLUG AS, WEDGE, & INTERFACE SEAL)	
	155-2260	1	KIT-CONNECTING PLUG (3-PIN)	
			(INCLUDES PLUG AS, WEDGES & INTERFACE SEAL)	
	230-4011	1	PLUG AS-CONNECTOR (2-PIN)	
	455-0704	1	SEAL-CONNECTOR	
	230-5008	1	PLUG AS-CONNECTOR (4-PIN)	
	455-0706	1	SEAL-CONNECTOR	
	8T-8737	13	PLUG-SEAL	
	225-3861	1	RECEPTACLE AS-CONNECTOR (31-PIN)	
	274-3782	1	CAP-SEAL	
	9X-3402	55	SOCKET-CONNECTOR (16-GA TO 18-GA)	
			–OR–	
	126-1768	55	SOCKET-CONNECTOR (14-GA TO 16-GA)	
B	**329-3734**		TAPE-ELECTRICAL	
	7Y-3951	2	TERMINAL-BLADE (14-GA)	
E	**125-7874**		TUBE-HEAT SHRINK (5.72-MM DIA) (15-CM)	
E	**125-7875**		TUBE-HEAT SHRINK (7.44-MM DIA) (5-CM)	

B - USE AS REQUIRED
E - ORDER BY THE CENTIMETER

<END>

511-6192 HARNESS AS-ENGINE

PART OF 511-6238 WIRING GP-ENGINE

AN ATTACHMENT

SMCS-1403, 1408 **i07544894**

NOTE	PART NUMBER	QTY	PART NAME 1 2 3 4 5 6 (PRODUCT LEVEL)	SEE PAGE
	187-6419	1	CONNECTOR	
	8T-8799	1	BOOT (RED)	
	7Y-3995	1	CONNECTOR-PLUG	
	9X-3401	20	PIN-CONNECTOR (16-GA TO 18-GA)	
			—OR—	
	126-1767	20	PIN-CONNECTOR (14-GA TO 16-GA)	
	262-9151	2	PIN-CONNECTOR (12-GA TO 14-GA)	
	360-3814	1	PLUG AS	
	360-3817	1	PLUG AS	
	7Y-3952	2	PLUG-CONNECTOR (2-PIN)	
	155-2260	1	KIT-CONNECTING PLUG (3-PIN)	
			(INCLUDES PLUG AS, WEDGES & INTERFACE SEAL)	
	155-2270	3	KIT-CONNECTING PLUG (2-PIN)	
			(EACH INCLUDES PLUG AS, WEDGE, & INTERFACE SEAL)	
	539-7796	2	PLUG AS-CONNECTOR	
	331-3594	1	PLUG AS-CONNECTOR (31-PIN)	
	8T-8737	12	PLUG-SEAL	
	107-3136	3	PLUG-SEAL	
	134-2540	1	RECEPTACLE AS-CONNECTOR	
	177-9645	1	KIT-RECEPTACLE (2-PIN)	
			(INCLUDES RECEPTACLE AS & WEDGE)	
	356-6120	1	RECEPTACLE AS-CONNECTOR (80-PIN)	
	356-6123	1	RECEPTACLE AS-CONNECTOR (80-PIN)	
	361-6383	1	RESISTOR AS	
	100-6674	2	SEAL-CONNECTOR	
	360-7538	4	SEAL-WIRE	
	380-8868	3	SEAL-WIRE	
E	**325-3767**		SLEEVE (28-CM)	
	9X-3402	8	SOCKET-CONNECTOR (16-GA TO 18-GA)	
			—OR—	
	126-1768	8	SOCKET-CONNECTOR (14-GA TO 16-GA)	
	512-1682	3	TERMINAL AS	
	116-6159	2	SOCKET-TERMINAL	
	189-3158	1	SUPPRESSOR-ARC	
B	**329-3734**		TAPE-ELECTRICAL	
	187-6421	3	TERMINAL	
	419-0087	3	TERMINAL	
	2L-8078	1	TERMINAL-RING (14-GA TO 16-GA, 5/16-IN SCREW)	
	7N-7221	1	TERMINAL-BLADE (18-GA TO 22-GA)	
	2L-8049	1	TERMINAL-RING (6-GA, NO. 10 SCREW)	
			—OR—	
	2L-8057	1	TERMINAL-RING (8-GA, NO. 10 SCREW)	
	2L-8071	1	TERMINAL-RING (10-GA TO 12-GA, 1/2-IN SCREW)	
	2L-8081	1	TERMINAL-RING (14-GA TO 16-GA, 1/2-IN SCREW)	
	107-3135	11	TERMINAL (16-GA TO 20-GA)	
	7Y-3951	3	TERMINAL-BLADE (14-GA)	
	7Y-3996	1	TERMINAL-BLADE (14-GA TO 20-GA)	

511-6192 **HARNESS AS-ENGINE (**contd.**)** **i07544894**

NOTE	PART NUMBER	QTY	PART NAME 1 2 3 4 5 6 (PRODUCT LEVEL)	SEE PAGE
E	**119-3662**		TUBE-HEAT SHRINK (10.85-MM DIA) (13-CM)	
E	**125-7874**		TUBE-HEAT SHRINK (5.72-MM DIA) (110-CM)	

B - USE AS REQUIRED
E - ORDER BY THE CENTIMETER

<END>

511-6197 HARNESS AS-FRONT

PART OF 511-6241 WIRING GP-FRONT
AN ATTACHMENT

SMCS-1408 **i07546203**

NOTE	PART NUMBER	QTY	PART NAME 1 2 3 4 5 6 (PRODUCT LEVEL)	SEE PAGE
	374-7463	1	CAP-SEAL	
	374-7468	1	CAP-SEAL	
G	**122-6871**		HOSE-HYDRAULIC (108.7-IN)	
	9X-3401	11	PIN-CONNECTOR (16-GA TO 18-GA)	
			—OR—	
	126-1767	11	PIN-CONNECTOR (14-GA TO 16-GA)	
	155-2255	1	KIT-CONNECTING PLUG (12-PIN)	
	155-2270	2	KIT-CONNECTING PLUG (2-PIN)	
			(EACH PLUG KIT INCLUDES PLUG AS, WEDGE, & INTERFACE SEAL)	
	155-2260	1	KIT-CONNECTING PLUG (3-PIN)	
			(INCLUDES PLUG AS, WEDGES & INTERFACE SEAL)	
	8T-8737	4	PLUG-SEAL	
	102-8801	1	KIT-RECEPTACLE (12-PIN)	
			(INCLUDES RECEPTACLE AS & WEDGE)	
	134-2540	1	RECEPTACLE AS-CONNECTOR	
	9X-3402	16	SOCKET-CONNECTOR (16-GA TO 18-GA)	
			—OR—	
	126-1768	16	SOCKET-CONNECTOR (14-GA TO 16-GA)	
B	**329-3734**		TAPE-ELECTRICAL	
E	**135-5009**		TUBE-HEAT SHRINK (32-MM DIA) (20-CM)	
E	**125-7874**		TUBE-HEAT SHRINK (5.72-MM DIA) (20-CM)	

B - USE AS REQUIRED
E - ORDER BY THE CENTIMETER
G - ORDER BY THE INCH

<END>

511-6198 HARNESS AS-LIGHTING—FRONT

VARIABLE ADJUSTABLE BOOM
PART OF 511-6242 WIRING GP-FRONT
AN ATTACHMENT

SMCS-1408 **i07546518**

NOTE	PART NUMBER	QTY	PART NAME 1 2 3 4 5 6 (PRODUCT LEVEL)	SEE PAGE
	374-7463	1	CAP-SEAL	
	374-7468	1	CAP-SEAL	
G	**9X-2383**		HOSE (44.8-IN)	
G	**122-6871**		HOSE-HYDRAULIC (115.35-IN)	
	155-2255	1	KIT-CONNECTING PLUG (12-PIN)	
	155-2270	2	KIT-CONNECTING PLUG (2-PIN)	
			(EACH PLUG KIT INCLUDES PLUG AS, WEDGE, & INTERFACE SEAL)	
	155-2260	1	KIT-CONNECTING PLUG (3-PIN)	
			(INCLUDES PLUG AS,WEDGES & INTERFACE SEAL)	
	102-8801	1	KIT-RECEPTACLE (12-PIN)	
			(INCLUDES RECEPTACLE AS & WEDGE)	
	9X-3401	11	PIN-CONNECTOR (16-GA TO 18-GA)	
			—OR—	
	126-1767	11	PIN-CONNECTOR (14-GA TO 16-GA)	
	8T-8737	4	PLUG-SEAL	
	134-2540	1	RECEPTACLE AS-CONNECTOR	
	9X-3402	16	SOCKET-CONNECTOR (16-GA TO 18-GA)	
			—OR—	
	126-1768	16	SOCKET-CONNECTOR (14-GA TO 16-GA)	
B	**329-3734**		TAPE-ELECTRICAL	
E	**135-5009**		TUBE-HEAT SHRINK (32-MM DIA) (36-CM)	
E	**125-7874**		TUBE-HEAT SHRINK (5.72-MM DIA) (20-CM)	
	155-2258	1	WEDGE-PLUG LOCK (12-PIN)	

B - USE AS REQUIRED
E - ORDER BY THE CENTIMETER
G - ORDER BY THE INCH

<END>

511-6185 HARNESS AS-MONITOR—ETHERNET

PART OF 511-6236 WIRING GP-CAMERA
AN ATTACHMENT

SMCS-1408, 7490 **i07546428**

NOTE	PART NUMBER	QTY	PART NAME 1 2 3 4 5 6 (PRODUCT LEVEL)	SEE PAGE
	9X-3401	2	PIN-CONNECTOR (16-GA TO 18-GA)	
	490-0571	2	PLUG AS-CONNECTOR (2-PIN)	
	490-0578	1	PLUG AS-CONNECTOR (2-PIN)	
	151-9272	1	KIT-RECEPTACLE (2-PIN)	
			(INCLUDES RECEPTACLE AS & WEDGE)	
E	**125-7874**		TUBE-HEAT SHRINK (5.72-MM DIA) (5-CM)	

E - ORDER BY THE CENTIMETER

<END>

522-6495 HARNESS AS-PUMP—REFUELING PUMP

PART OF 511-6231 WIRING GP-FUEL PUMP

AN ATTACHMENT

SMCS-1408 **i07546526**

NOTE	PART NUMBER	QTY	PART NAME 1 2 3 4 5 6 (PRODUCT LEVEL)	SEE PAGE
	228-5856	1	CONNECTOR (10-PIN)	
	9X-3401	6	PIN-CONNECTOR (16-GA TO 18-GA)	
			—OR—	
	126-1767	6	PIN-CONNECTOR (14-GA TO 16-GA)	
	155-2270	2	KIT-CONNECTING PLUG (2-PIN)	
			(EACH INCLUDES PLUG AS, WEDGE, & INTERFACE SEAL)	
	230-4011	1	PLUG AS-CONNECTOR (2-PIN)	
	455-0704	1	SEAL-CONNECTOR	
	102-8805	1	KIT-RECEPTACLE (6-PIN)	
			(INCLUDES RECEPTACLE AS & WEDGE)	
	9X-3402	6	SOCKET-CONNECTOR (16-GA TO 18-GA)	
			—OR—	
	126-1768	6	SOCKET-CONNECTOR (14-GA TO 16-GA)	
	189-3158	2	SUPPRESSOR-ARC	
	091-2436	2	TERMINAL-BLADE (18-GA TO 22-GA)	
	104-1995	1	TERMINAL-BLADE (14-GA TO 18-GA)	
E	**125-7874**		TUBE-HEAT SHRINK (5.72-MM DIA) (5-CM)	
E	**125-7875**		TUBE-HEAT SHRINK (7.44-MM DIA) (5-CM)	

E - ORDER BY THE CENTIMETER

<END>

511-6189 HARNESS AS-SENSOR—ENGINE

MASS AIR FLOW

PART OF 511-6238 WIRING GP-ENGINE

AN ATTACHMENT

SMCS-1408, 1901 **i07544893**

NOTE	PART NUMBER	QTY	PART NAME 1 2 3 4 5 6 (PRODUCT LEVEL)	SEE PAGE
	9X-3401	5	PIN-CONNECTOR (16-GA TO 18-GA)	
	360-3815	1	PLUG AS	
	8T-8737	1	PLUG-SEAL	
	151-9275	1	KIT-RECEPTACLE (6-PIN)	
	102-8805	1	KIT-RECEPTACLE (6-PIN)	
			(EACH RECEPTACLE KIT INCLUDES RECEPTACLE AS & WEDGE)	
	360-3816	5	TERMINAL (20-GA)	

<END>

511-6205 HARNESS AS-SENSOR—OVERLOAD WARNING

PART OF 511-6224 WIRING GP-OVERLOAD WARNING

AN ATTACHMENT

SMCS-1408, 1901

i07546482

NOTE	PART NUMBER	QTY	PART NAME 1 2 3 4 5 6 (PRODUCT LEVEL)	SEE PAGE
E	**103-2529**		HOSE (256-CM)	
	102-8803	1	KIT-RECEPTACLE (3-PIN)	
			(INCLUDES RECEPTACLE AS & WEDGE)	
	9X-3401	3	PIN-CONNECTOR (16-GA TO 18-GA)	
			—OR—	
	126-1767	3	PIN-CONNECTOR (14-GA TO 16-GA)	
	230-4013	1	PLUG AS-CONNECTOR (3-PIN)	
	455-0705	1	SEAL-CONNECTOR	
	9X-3402	3	SOCKET-CONNECTOR (16-GA TO 18-GA)	
			—OR—	
	126-1768	3	SOCKET-CONNECTOR (14-GA TO 16-GA)	
B	**329-3734**		TAPE-ELECTRICAL	
E	**135-5009**		TUBE-HEAT SHRINK (32-MM DIA) (20-CM)	

B - USE AS REQUIRED
E - ORDER BY THE CENTIMETER

<END>

557-5106 HARNESS AS-SENSOR—CONSOLE

PART OF 511-6234 WIRING GP-CAB

AN ATTACHMENT

SMCS-1408, 1901 **i07545078**

NOTE	PART NUMBER	QTY	PART NAME 1 2 3 4 5 6 (PRODUCT LEVEL)	SEE PAGE
	374-7465	1	CAP-SEAL	
	374-7467	1	CAP-SEAL	
	228-5856	1	CONNECTOR (10-PIN)	
	9X-3401	12	PIN-CONNECTOR (16-GA TO 18-GA)	
			—OR—	
	126-1767	12	PIN-CONNECTOR (14-GA TO 16-GA)	
	331-5048	1	PLUG AS-CONNECTOR (6-PIN)	
	155-2255	1	KIT-CONNECTING PLUG (12-PIN)	
	155-2265	1	KIT-CONNECTING PLUG (8-PIN)	
	155-2271	3	KIT-CONNECTING PLUG (4-PIN)	
			(EACH PLUG KIT INCLUDES PLUG AS, WEDGE, & INTERFACE SEAL)	
	560-5813	2	PLUG AS-CONNECTOR	
	8T-8737	3	PLUG-SEAL	
	102-8801	1	KIT-RECEPTACLE (12-PIN)	
			(INCLUDES RECEPTACLE AS & WEDGE)	
	369-3774	8	SEAL-CONNECTOR	
	9X-3402	29	SOCKET-CONNECTOR (16-GA TO 18-GA)	
			—OR—	
	126-1768	29	SOCKET-CONNECTOR (14-GA TO 16-GA)	
	283-8106	6	SOCKET-CONNECTOR (20-GA)	
			—OR—	
	374-8372	6	SOCKET-CONNECTOR (16-GA TO 18-GA)	
B	**329-3734**		TAPE-ELECTRICAL	
	091-2436	4	TERMINAL-BLADE (18-GA TO 22-GA)	
E	**125-7874**		TUBE-HEAT SHRINK (5.72-MM DIA) (65-CM)	
	332-1983	1	WEDGE-PLUG LOCK (6-PIN)	

B - USE AS REQUIRED
E - ORDER BY THE CENTIMETER

<END>

511-6184 HARNESS AS-WIRING—ETHERNET

PART OF 561-8101 KIT-CAMERA, 511-6235 WIRING GP-CAMERA

AN ATTACHMENT

SMCS-1408 **i07544470**

NOTE	PART NUMBER	QTY	PART NAME 1 2 3 4 5 6 (PRODUCT LEVEL)	SEE PAGE
	151-9272	1	KIT-RECEPTACLE (2-PIN)	
	102-8802	1	KIT-RECEPTACLE (2-PIN)	
			(EACH RECEPTACLE KIT INCLUDES RECEPTACLE AS & WEDGE)	
	9X-3401	2	PIN-CONNECTOR (16-GA TO 18-GA)	
	490-0571	2	PLUG AS-CONNECTOR (2-PIN)	
	490-0578	1	PLUG AS-CONNECTOR (2-PIN)	
E	**125-7874**		TUBE-HEAT SHRINK (5.72-MM DIA) (3-CM)	

E - ORDER BY THE CENTIMETER

<END>

415-2556 HEATER GP-JACKET WATER

PART OF 562-4906, 562-9155, 562-9156, 562-9159 DISTRIBUTION AR
AN ATTACHMENT

SMCS-1383 **i07490699**

NOTE	REF NO	GRAPHIC REF	PART NUMBER	QTY	PART NAME 1 2 3 4 5 6 (PRODUCT LEVEL)	SEE PAGE
	1	1	**3S-2093**	4	STRAP-CABLE	
	2	1	**321-6069**	1	CORD AS-HEATER ELEMENT (120-VOLT)	
	3	1	**382-8738**	1	HEATER AS-JACKET WATER	
	4	1	**382-8740**	1	HARNESS AS-WIRING (HEATER ELEMENT)	
		1	**155-2260**	1	KIT-CONNECTING PLUG (3-PIN)	
					(INCLUDES PLUG AS, WEDGE & INTERFACE SEAL)	
		1	**8T-8737**	3	PLUG-SEAL	

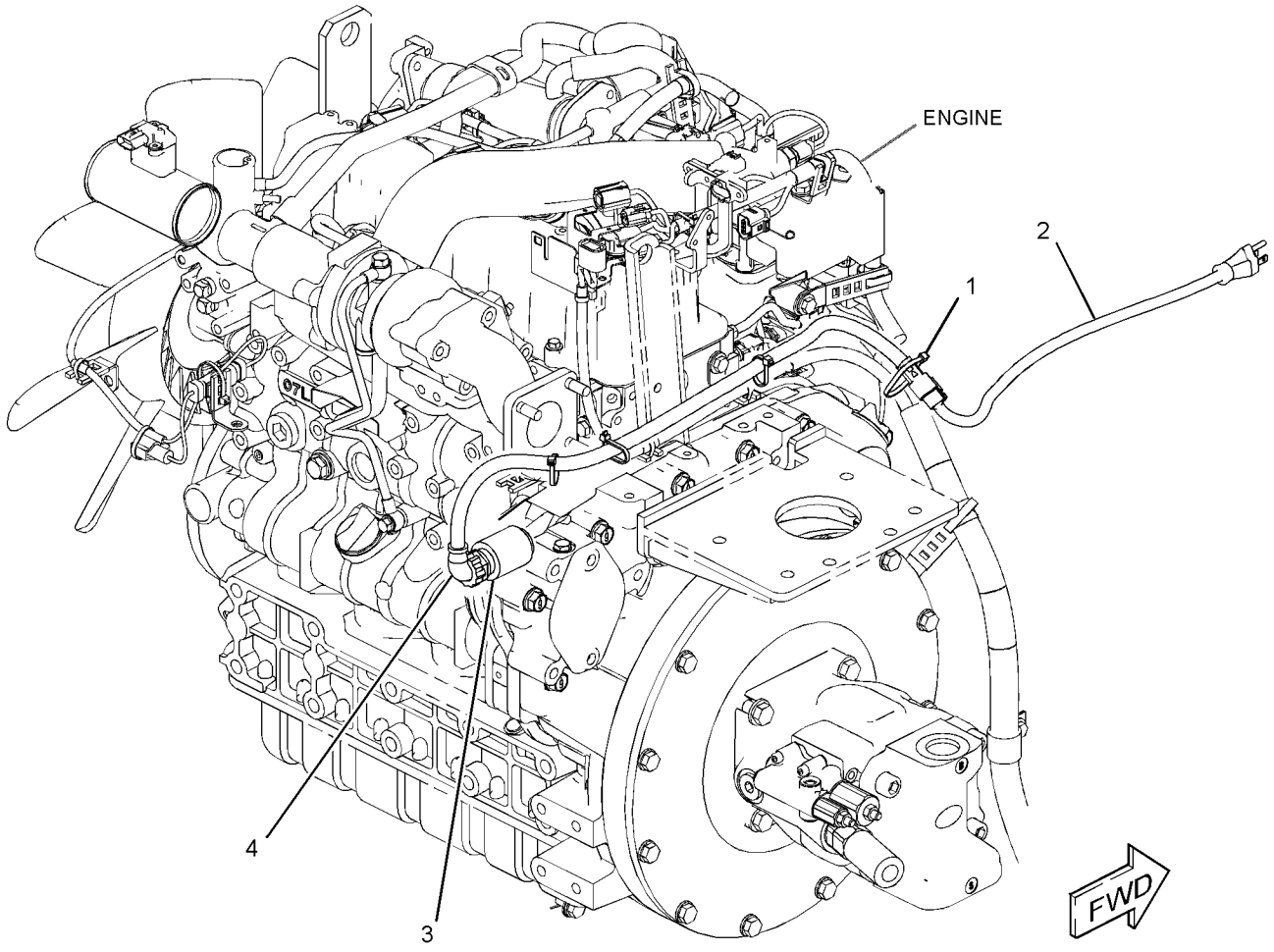

GRAPHIC #1 <END> g03428998

511-6174 INSTALLATION GP-SECURITY–KEY
AN ATTACHMENT

SMCS-7631 **i07546411**

NOTE	REF NO	GRAPHIC REF	PART NUMBER	QTY	PART NAME 1 2 3 4 5 6 (PRODUCT LEVEL)	SEE PAGE
	1	1	**205-0826**	1	FILM-INSTRUCTION (MACHINE SECURITY, CONSOLE)	
	2	1	**218-0651**	1	FILM-INSTRUCTION (KEY START SWITCH)	
	3	1	**467-8535**	1	SWITCH AS-START (KEY)	
		1	**7T-6799**	1	NUT-MOUNTING (1-32-THD)	
		1	**8T-8729**	4	PIN-CONNECTOR (16-GA TO 18-GA)	
		1	**102-8804**	1	KIT-RECEPTACLE (4-PIN)	
					(INCLUDES RECEPTACLE AS & WEDGE)	
Y	4	1	**487-3004**	2	CONTROL GP-ELECTRONIC	39
Y	5	1	**504-4980**	1	ELECTRONICS GP-MACHINE (CONTROL)	40
Y	6	1	*542-8852*	1	ELECTRONICS GP-MACHINE (MACHINE SECURITY SYSTEM)	40
	7	1	**8C-5607**	4	MOUNT-ISOLATION	
	8	1	**8C-5608**	2	SPACER (6.5X9.5X25.4-MM THK)	
M	9	1	**8C-8451**	2	BOLT (M6X1X40-MM)	
	10	1	**9X-6165**	2	WASHER (6.5X22X2.5-MM THK)	

M - METRIC PART
Y - SEPARATE ILLUSTRATION

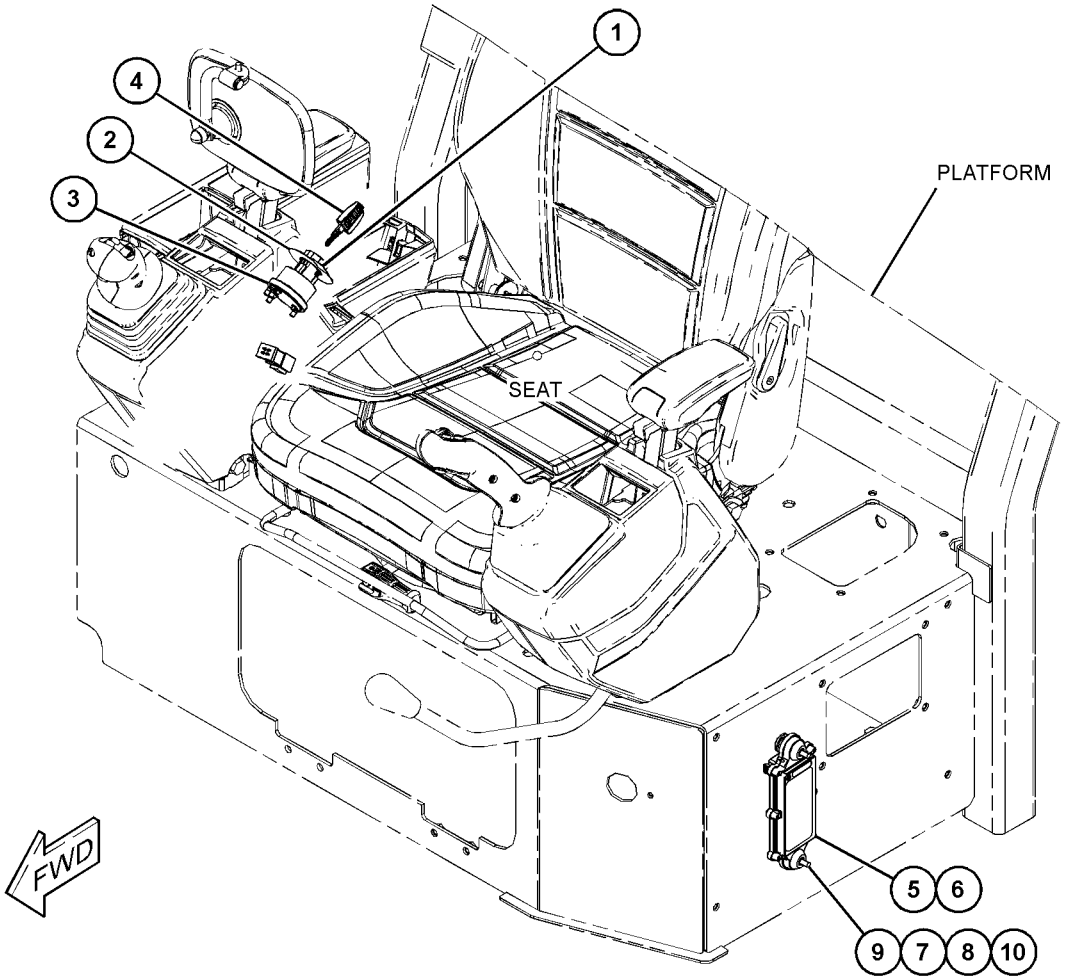

GRAPHIC #1 <END> g06343164

522-6460 INSTALLATION GP-SECURITY

PART OF 562-4906, 562-9155, 562-9156 DISTRIBUTION AR
AN ATTACHMENT

SMCS-7631 **i07544867**

NOTE	REF NO	GRAPHIC REF	PART NUMBER	QTY	PART NAME 1 2 3 4 5 6 (PRODUCT LEVEL)	SEE PAGE
	1	1	**218-0651**	1	FILM-INSTRUCTION (KEY START SWITCH)	
	2	1	**467-8535**	1	SWITCH AS-START (KEY)	
		1	**7T-6799**	1	NUT-MOUNTING (1-32-THD)	
		1	**8T-8729**	4	PIN-CONNECTOR (16-GA TO 18-GA)	
		1	**102-8804**	1	KIT-RECEPTACLE (4-PIN)	
					(INCLUDES RECEPTACLE AS & WEDGE)	

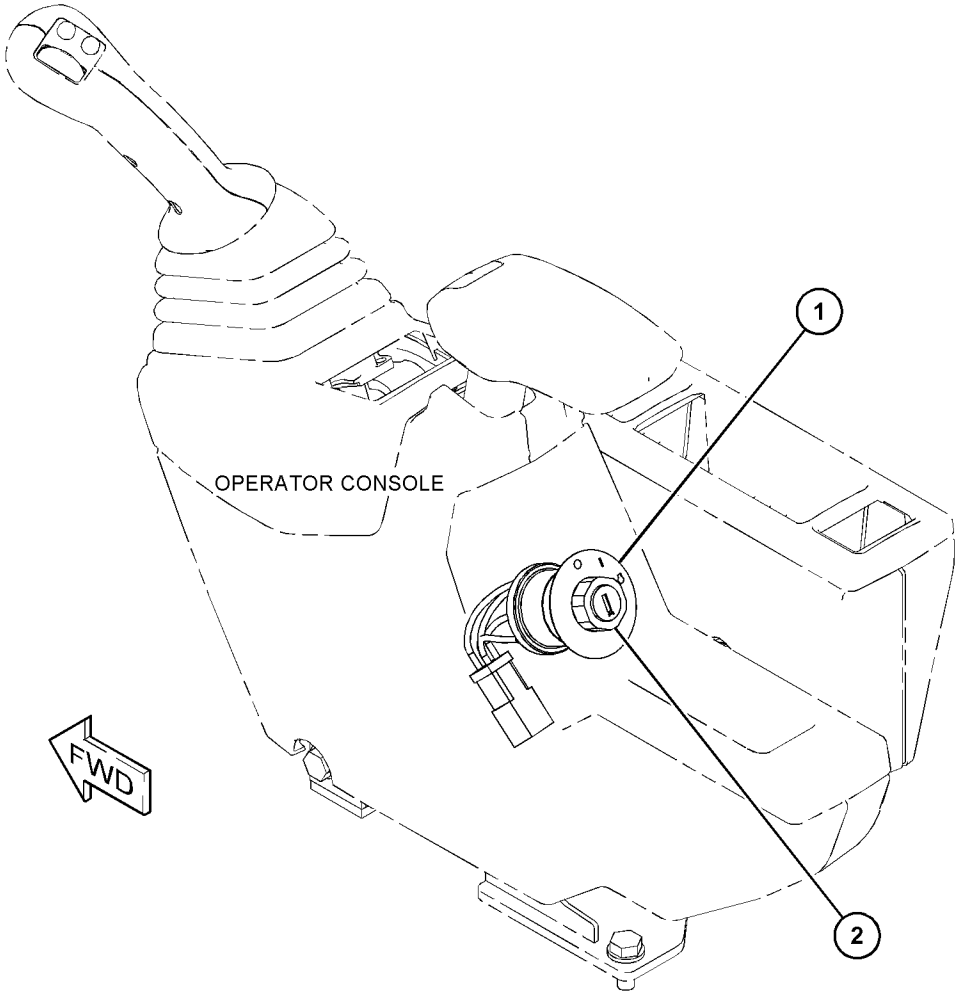

GRAPHIC #1 <END> g06343670

561-8101 KIT-CAMERA—REAR

AN ATTACHMENT

SMCS-7348 **i07548446**

NOTE	PART NUMBER	QTY	PART NAME 1 2 3 4 5 6 (PRODUCT LEVEL)	SEE PAGE
Y	**511-6184**	1	HARNESS AS-WIRING (ETHERNET)	53
M	**8T-4189**	6	BOLT (M8X1.25X20-MM)	
M	**109-1393**	2	BOLT-SOCKET HEAD (M4X0.7X10-MM)	
	541-8665	1	BRACKET	
	488-9162	1	CAMERA GP (12-VOLT)	
	490-0572	1	RECEPTACLE AS	
	490-0582	1	RECEPTACLE AS	
	4P-7581	1	CLIP (LADDER)	
	541-8666	1	PLATE	
	204-1611	2	STRAP (DUAL)	
	3S-2093	18	STRAP-CABLE	
	5P-4116	6	WASHER-HARD (8.8X20.5X2-MM THK)	
	8T-0328	2	WASHER-HARD (5.5X10X1-MM THK)	

M - METRIC PART
Y - SEPARATE ILLUSTRATION

<END>

566-6979 KIT-JACKET WATER HEATER

AN ATTACHMENT

SMCS-1383 **i07548528**

NOTE	PART NUMBER	QTY	PART NAME 1 2 3 4 5 6 (PRODUCT LEVEL)	SEE PAGE
	321-6069	1	CORD AS-HEATER ELEMENT (120-VOLT)	
	382-8740	1	HARNESS AS-WIRING (HEATER ELEMENT)	
	155-2260	1	KIT-CONNECTING PLUG (3-PIN)	
			(INCLUDES PLUG AS, WEDGE, & INTERFACE SEAL)	
	8T-8737	3	PLUG-SEAL	
	3S-2093	4	STRAP-CABLE	
	382-8738	1	HEATER AS-JACKET WATER	

<END>

566-0410 KIT-LIGHTING—ROTATING

AN ATTACHMENT

SMCS-1429, 1434 **i07548526**

NOTE	PART NUMBER	QTY	PART NAME 1 2 3 4 5 6 (PRODUCT LEVEL)	SEE PAGE
Y	**309-1325**	1	LAMP GP-WARNING BEACON (12-VOLT, AMBER)	61

Y - SEPARATE ILLUSTRATION

<END>

561-8099 KIT-RADIO—DIGITAL

AN ATTACHMENT

SMCS-7338 **i07548444**

NOTE	PART NUMBER	QTY	PART NAME 1 2 3 4 5 6 (PRODUCT LEVEL)	SEE PAGE
	557-5096	2	BRACKET (RADIO)	
	515-8095	1	CABLE AS	
	096-0192	4	LOCKWASHER (EXTERNAL TOOTH)	
	487-7442	1	RADIO GP (DIGITAL)	
	515-8093	1	ROD	
M	**185-8163**	4	SCREW-MACHINE (M5X0.8X8-MM)	
M	**9X-2044**	4	SCREW-TRUSS HEAD (M6X1X16-MM)	
	9X-2038	4	WASHER (7X19X2-MM THK)	
	8T-0328	4	WASHER-HARD (5.5X10X1-MM THK)	

M - METRIC PART

<END>

561-8108 KIT-WIRING

AN ATTACHMENT

SMCS-1408 **i07548452**

NOTE	PART NUMBER	QTY	PART NAME 1 2 3 4 5 6 (PRODUCT LEVEL)	SEE PAGE
Y	**487-3004**	2	CONTROL GP-ELECTRONIC	39
Y	**504-4980**	1	ELECTRONICS GP-MACHINE (BLUETOOTH)	40
Y	*542-8852*	1	ELECTRONICS GP-MACHINE	40
M	**8C-8451**	2	BOLT (M6X1X40-MM)	
	205-0826	1	FILM-INSTRUCTION (MACHINE SECURITY, CONSOLE)	
	8C-5607	4	MOUNT-ISOLATION	
	8C-5608	2	SPACER (6.5X9.5X25.4-MM THK)	
	526-5710	1	SWITCH AS-ROTARY (PUSH)	
	8T-8729	6	PIN-CONNECTOR (16-GA TO 18-GA)	
	102-8802	1	KIT-RECEPTACLE (2-PIN)	
			(INCLUDES RECEPTACLE AS & WEDGE)	
	102-8804	1	KIT-RECEPTACLE (4-PIN)	
			(INCLUDES RECEPTACLE AS & WEDGE)	
	9X-6165	2	WASHER (6.5X22X2.5-MM THK)	

M - METRIC PART
Y - SEPARATE ILLUSTRATION

<END>

388-3782 LAMP GP-FLOOD

12-VOLT, 55-WATT
PART OF 511-6216 LIGHTING GP-FLOOD
AN ATTACHMENT

SMCS-1429, 1434

i05162951

NOTE	REF NO	GRAPHIC REF	PART NUMBER	QTY	PART NAME 1 2 3 4 5 6 (PRODUCT LEVEL)	SEE PAGE
	1	1	**175-4291**	1	BRACKET AS	
M	2	1	**9X-4244**	2	SCREW-SPECIAL (M4X1.79X25-MM)	
	3	1	**9W-0607**	1	LAMP (12-VOLT, 55-WATT) (FLOODLIGHT)	
	4	1	**8T-4224**	1	WASHER-HARD (8.8X16X2-MM THK)	
M	5	1	**8T-7547**	1	BOLT (M8X1.25X30-MM)	
M	6	1	**5C-7261**	1	NUT (M8X1.25-THD)	

M - METRIC PART

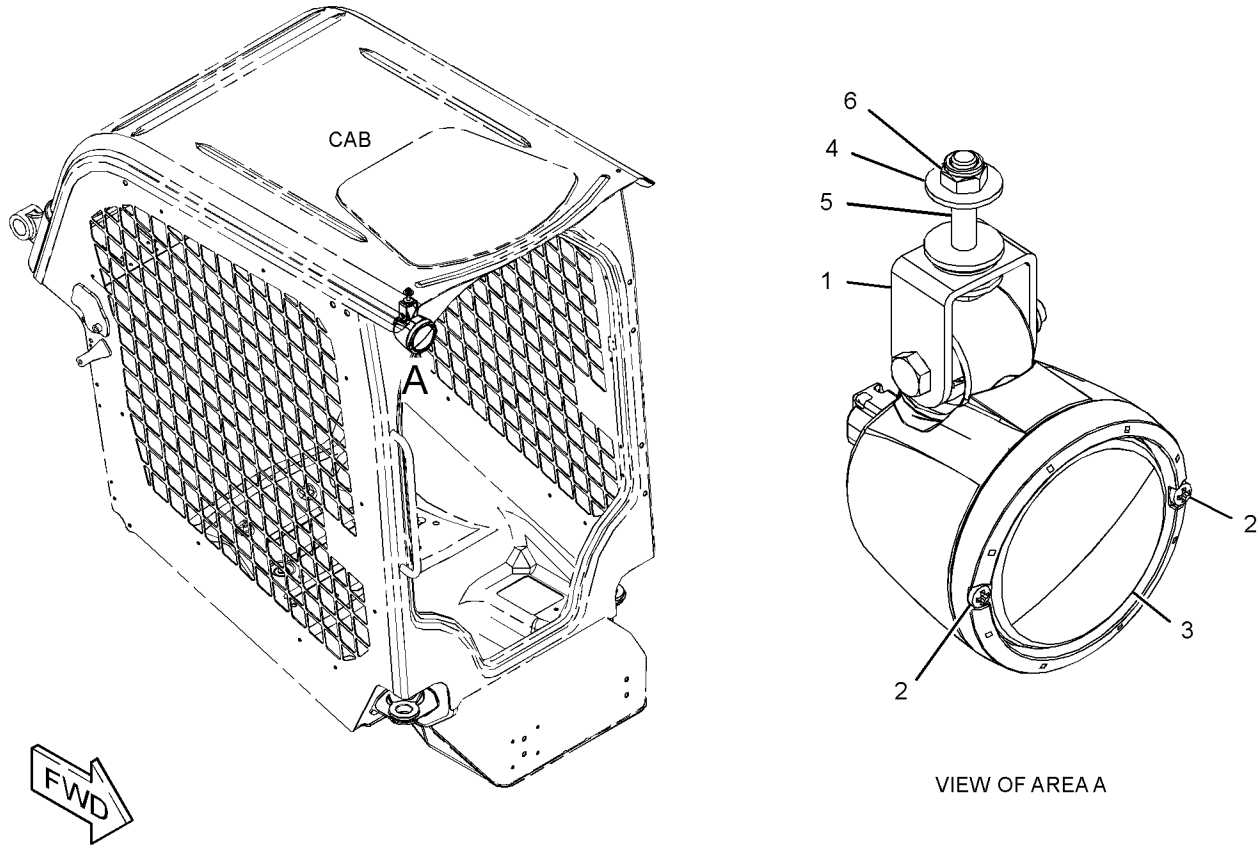

VIEW OF AREA A

GRAPHIC #1 <END> g03320357

548-5734 LAMP GP-FLOOD—DIFFUSER

REAR WORK LIGHTS

PART OF 561-8104 LIGHTING GP-FLOOD

AN ATTACHMENT

SMCS-1429, 1434 **i07546421**

NOTE	REF NO	GRAPHIC REF	PART NUMBER	QTY	PART NAME 1 2 3 4 5 6 (PRODUCT LEVEL)	SEE PAGE
M	1	1	**3T-0852**	2	LOCKNUT (M8X1.25-THD)	
	2	1	**5P-4116**	1	WASHER-HARD (8.8X20.5X2-MM THK)	
M	3	1	**8T-6912**	1	BOLT (M8X1.25X50-MM)	

M - METRIC PART

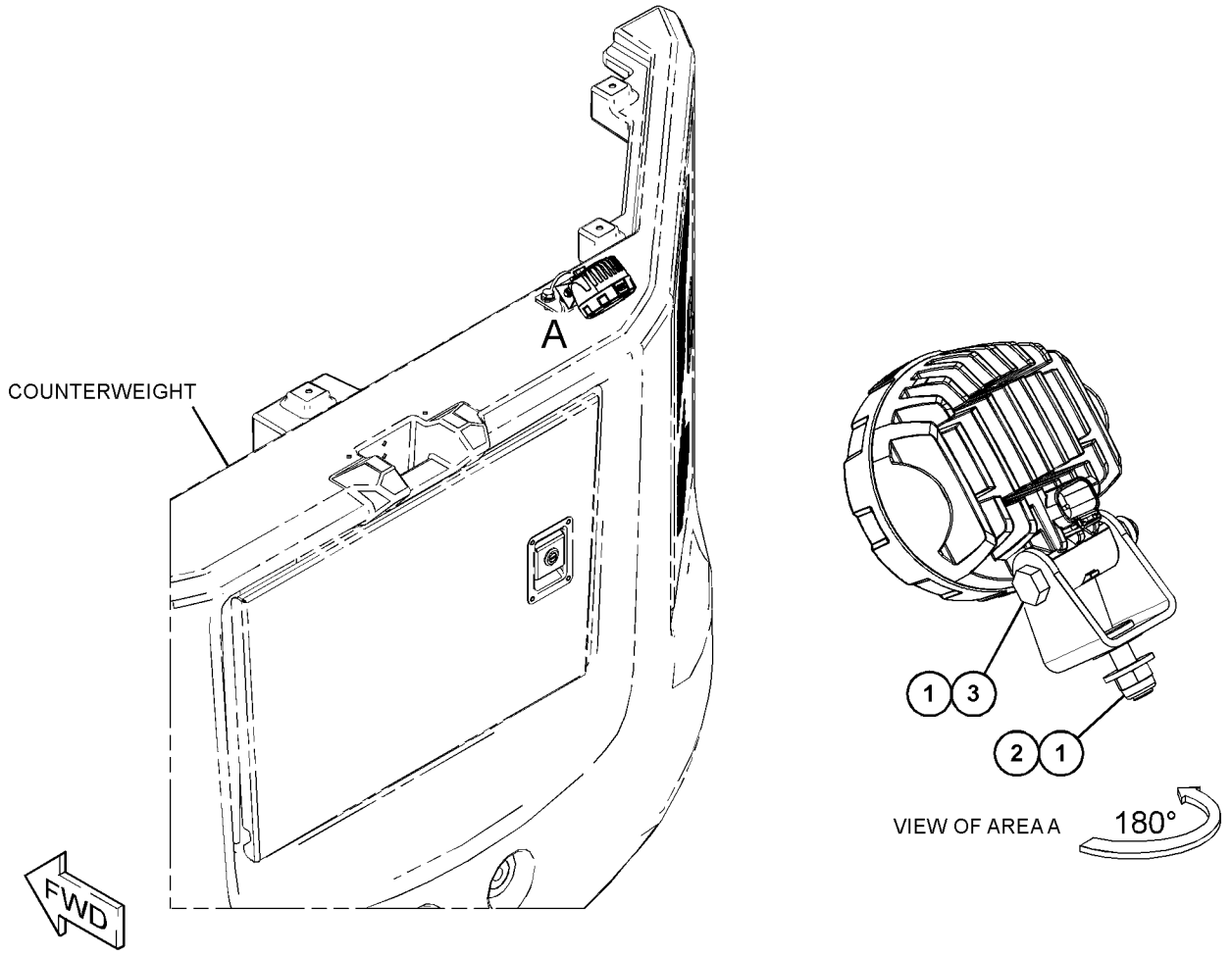

GRAPHIC #1 <END> g06344581

309-1325 LAMP GP-WARNING BEACON–AMBER

12-VOLT
PART OF 566-0410 KIT-LIGHTING
AN ATTACHMENT

SMCS-1429, 1431

i05090816

NOTE	REF NO	GRAPHIC REF	PART NUMBER	QTY	PART NAME 1 2 3 4 5 6 (PRODUCT LEVEL)	SEE PAGE
	1	1	**272-9800**	1	LENS (AMBER) (WARNING BEACON)	
	2	1	**9X-8118**	1	LAMP (12-VOLT, 55-WATT) (WARNING BEACON)	
	3	1	**9X-8139**	1	BELT-DRIVE (WARNING BEACON)	
	4	1	**9R-7958**	1	CORD AS	
	4A	1	**9R-7942**	1	PLUG AS	

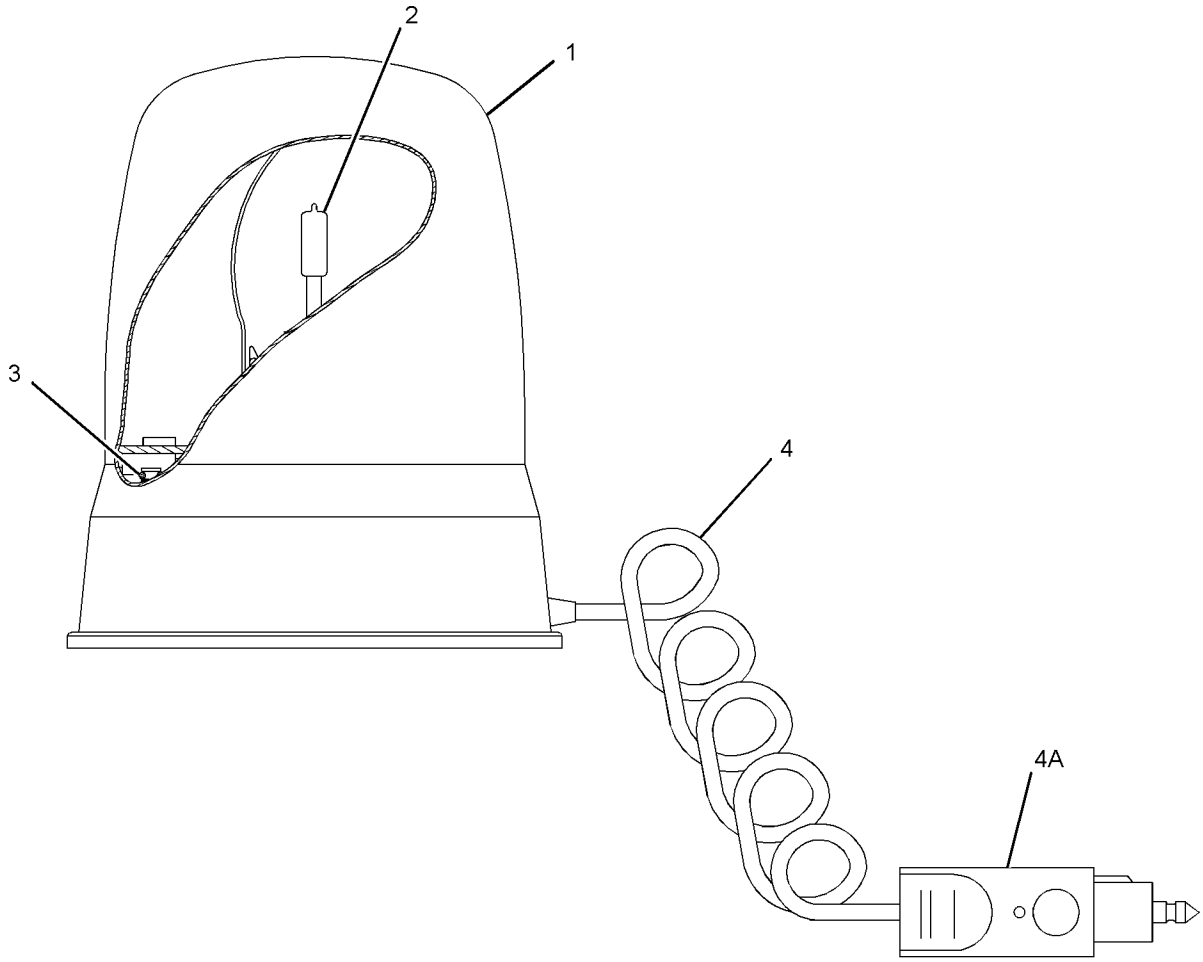

GRAPHIC #1 <END> g01382357

511-6211 LIGHTING GP-FLOOD—REAR

AN ATTACHMENT

SMCS-1434 **i07546420**

NOTE	REF NO	GRAPHIC REF	PART NUMBER	QTY	PART NAME 1 2 3 4 5 6 (PRODUCT LEVEL)	SEE PAGE
	1	1	**521-7591**	1	PLATE	
	2	1	**3S-2093**	3	STRAP-CABLE	
	3	1	**8T-4121**	1	WASHER-HARD (11X21X2.5-MM THK)	
M	4	1	**8T-4136**	1	BOLT (M10X1.5X25-MM)	
	5	1	**204-1611**	2	STRAP (DUAL)	
B	6	1	**206-1345**	3	STRAP-CABLE	
	7	1	**4P-7581**	1	CLIP (LADDER)	
	8	1	**511-6203**	1	HARNESS AS-LIGHTING	
		1	**102-8802**	1	KIT-RECEPTACLE (2-PIN)	
					(INCLUDES RECEPTACLE AS & WEDGE)	
		1	**9X-3402**	2	SOCKET-CONNECTOR (16-GA TO 18-GA)	
					—OR—	
		1	**126-1768**	2	SOCKET-CONNECTOR (14-GA TO 16-GA)	
		1	**9X-3401**	2	PIN-CONNECTOR (16-GA TO 18-GA)	
					—OR—	
		1	**126-1767**	2	PIN-CONNECTOR (14-GA TO 16-GA)	
		1	**155-2270**	1	KIT-CONNECTING PLUG (2-PIN)	
					(INCLUDES PLUG AS, WEDGE, & INTERFACE SEAL)	
	9	1	**548-5734**	1	LAMP GP-FLOOD (WORK LIGHT)	
M		1	**3T-0852**	2	LOCKNUT (M8X1.25-THD)	
		1	**5P-4116**	1	WASHER-HARD (8.8X20.5X2-MM THK)	
M		1	**8T-6912**	1	BOLT (M8X1.25X50-MM)	

B - USE AS REQUIRED
M - METRIC PART

511-6211 **LIGHTING GP-FLOOD (**contd.**)** **i07546420**

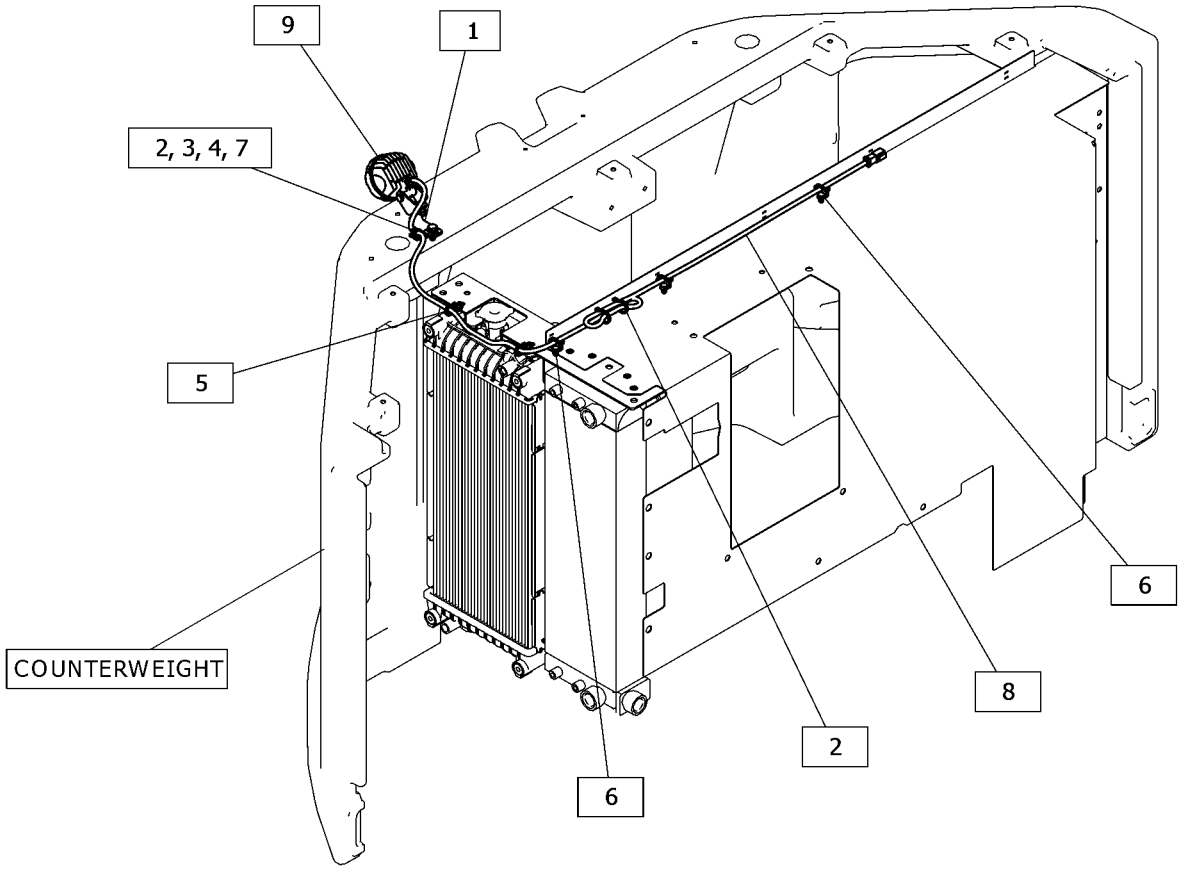

GRAPHIC #1 <END> g06342827

511-6216 LIGHTING GP-FLOOD–HALOGEN

PART OF 562-4906, 562-9155, 562-9156 DISTRIBUTION AR
AN ATTACHMENT

SMCS-1434 **i07544458**

NOTE	REF NO	GRAPHIC REF	PART NUMBER	QTY	PART NAME 1 2 3 4 5 6 (PRODUCT LEVEL)	SEE PAGE
	1	1	**2Y-3812**	1	CLIP	
Y	2	1	**388-3782**	3	LAMP GP-FLOOD (12-VOLT,55-WATT)	59
	3	1	**522-6531**	1	PLATE	
	4	1	**522-6532**	1	BRACKET	
	5	1	**8T-4121**	2	WASHER-HARD (11X21X2.5-MM THK)	
M	6	1	**8T-4192**	1	BOLT (M12X1.75X25-MM)	
	7	1	**8T-4223**	1	WASHER-HARD (13.5X25.5X3-MM THK)	
M	8	1	**9X-2041**	2	SCREW-TRUSS HEAD (M10X1.5X20-MM)	

M - METRIC PART
Y - SEPARATE ILLUSTRATION

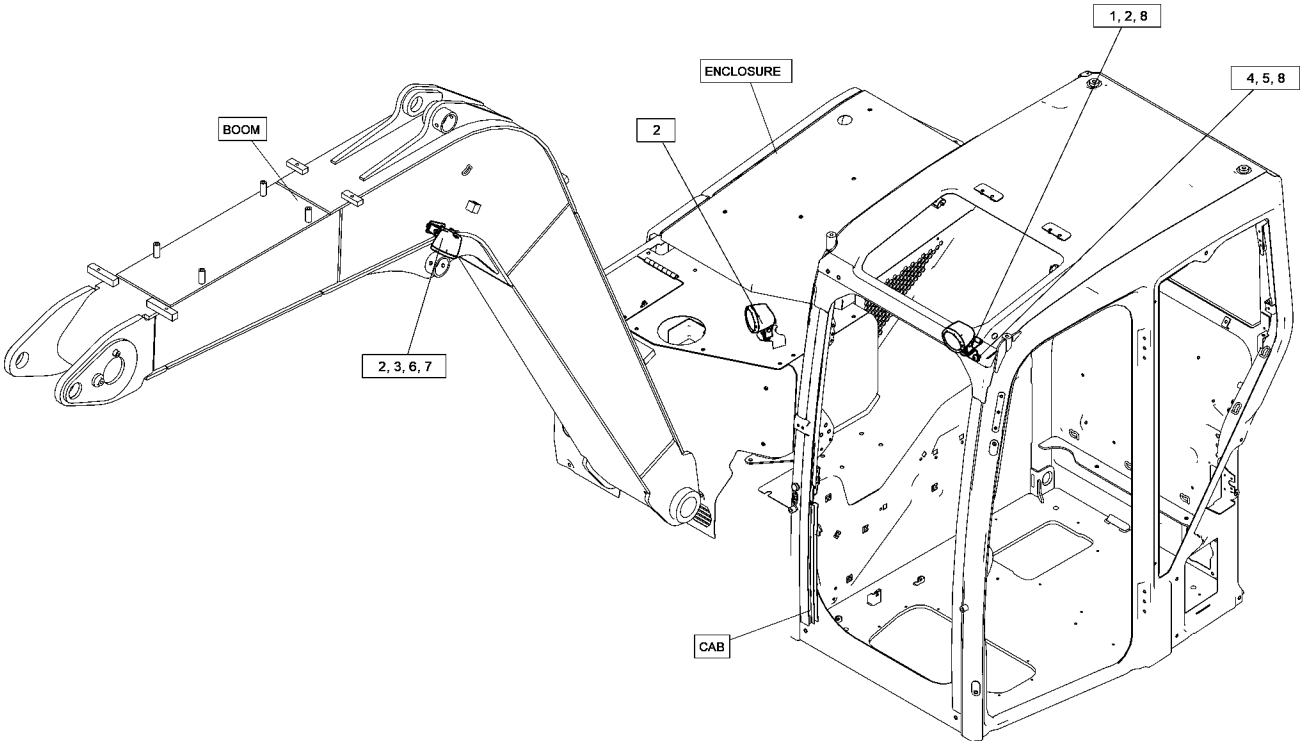

GRAPHIC #1 <END> g06337720

511-6217 LIGHTING GP-FLOOD–BOOM

LED

PART OF 562-9159 DISTRIBUTION AR

AN ATTACHMENT

SMCS-1434 **i07546277**

NOTE	REF NO	GRAPHIC REF	PART NUMBER	QTY	PART NAME 1 2 3 4 5 6 (PRODUCT LEVEL)	SEE PAGE
	1	1	**2Y-3812**	1	CLIP	
	2	1	**479-8445**	1	LAMP AS-FLOOD (9 TO 32-VOLT) (REAR RH)	
	2A	1	**479-8445**	1	LAMP AS-FLOOD (9 TO 32-VOLT) (REAR LH)	
	2B	1	**479-8445**	1	LAMP AS-FLOOD (9 TO 32-VOLT) (FRONT, RH)	
	2C	1	**479-8445**	1	LAMP AS-FLOOD (9 TO 32-VOLT) (FRONT, LH)	
					(EACH LAMP AS INCLUDES)	
M		1	**3T-0852**	2	LOCKNUT (M8X1.25-THD)	
		1	**5P-4116**	1	WASHER-HARD (8.8X20.5X2-MM THK)	
M		1	**8T-6912**	1	BOLT (M8X1.25X50-MM)	
	3	1	**522-6531**	2	PLATE	
	4	1	**522-6532**	1	BRACKET	
	5	1	**8T-4121**	2	WASHER-HARD (11X21X2.5-MM THK)	
M	6	1	**8T-4192**	2	BOLT (M12X1.75X25-MM)	
	7	1	**8T-4223**	2	WASHER-HARD (13.5X25.5X3-MM THK)	
M	8	1	**9X-2041**	2	SCREW-TRUSS HEAD (M10X1.5X20-MM)	

M - METRIC PART

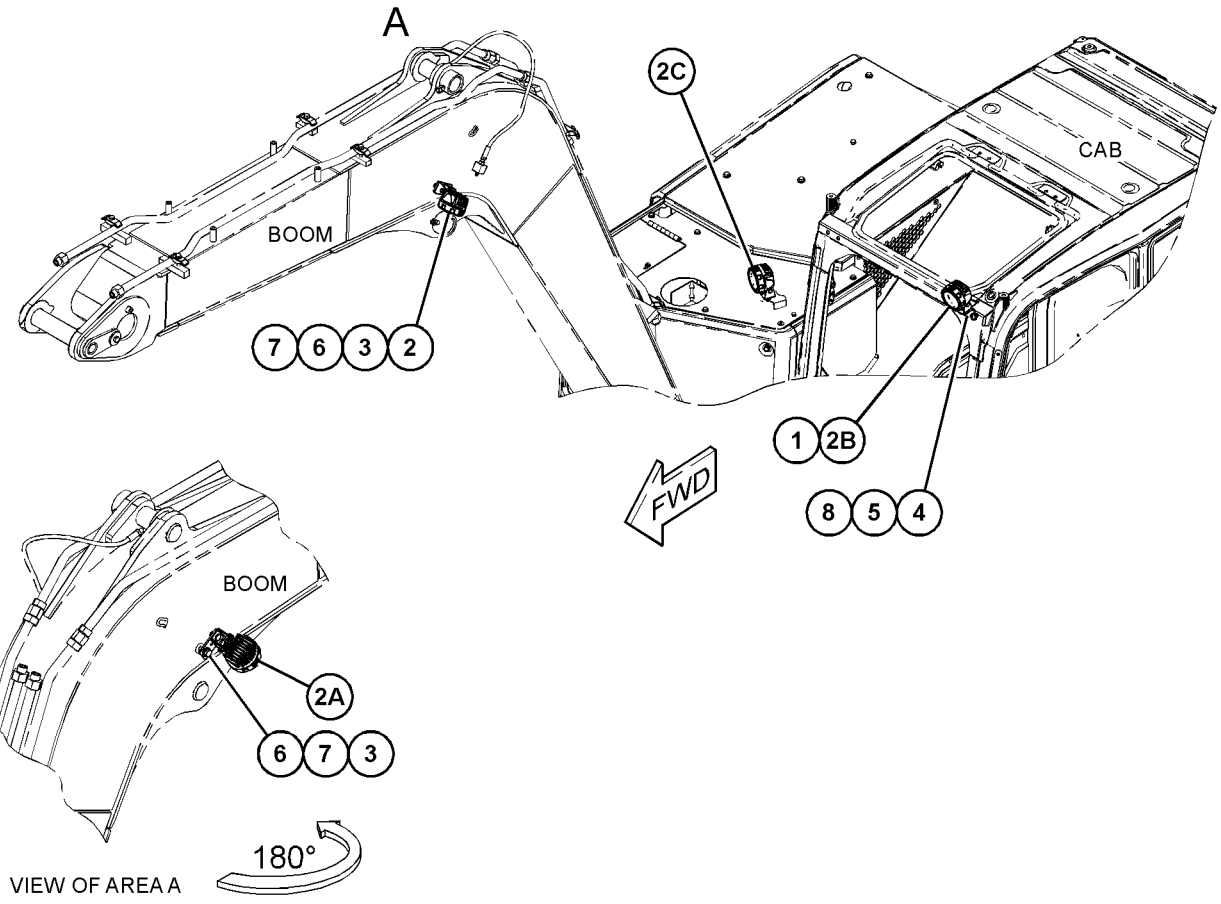

GRAPHIC #1 <END> g06337994

561-8098 LIGHTING GP-FLOOD—LED

AN ATTACHMENT

SMCS-1434 **i07548443**

NOTE	PART NUMBER	QTY	PART NAME 1 2 3 4 5 6 (PRODUCT LEVEL)	SEE PAGE
M	**8T-4192**	2	BOLT (M12X1.75X25-MM)	
	522-6532	1	BRACKET	
	2Y-3812	1	CLIP	
	479-8445	4	LAMP AS-FLOOD (9 TO 32-VOLT) (WIDE)	
			(EACH INCLUDES)	
M	**8T-6912**	1	BOLT (M8X1.25X50-MM)	
M	**3T-0852**	2	LOCKNUT (M8X1.25-THD)	
	5P-4116	1	WASHER-HARD (8.8X20.5X2-MM THK)	
	522-6531	2	PLATE	
M	**9X-2041**	2	SCREW-TRUSS HEAD (M10X1.5X20-MM)	
	8T-4121	2	WASHER-HARD (11X21X2.5-MM THK)	
	8T-4223	2	WASHER-HARD (13.5X25.5X3-MM THK)	

M - METRIC PART

<END>

561-8104 LIGHTING GP-FLOOD—REAR

AN ATTACHMENT

SMCS-1434 **i07548450**

NOTE	PART NUMBER	QTY	PART NAME 1 2 3 4 5 6 (PRODUCT LEVEL)	SEE PAGE
M	**8T-4136**	1	BOLT (M10X1.5X25-MM)	
	4P-7581	1	CLIP (LADDER)	
	511-6203	1	HARNESS AS-LIGHTING (REAR)	
E	**196-8876**		BRAID (BLACK, ONE GOLD STRAND) (199-CM)	
	9X-3401	2	PIN-CONNECTOR (16-GA TO 18-GA)	
			—OR—	
	126-1767	2	PIN-CONNECTOR (14-GA TO 16-GA)	
	155-2270	1	KIT-CONNECTING PLUG (2-PIN)	
			(INCLUDES PLUG AS, WEDGE, & INTERFACE SEAL)	
	102-8802	1	KIT-RECEPTACLE (2-PIN)	
			(INCLUDES RECEPTACLE AS & WEDGE)	
	9X-3402	2	SOCKET-CONNECTOR (16-GA TO 18-GA)	
			—OR—	
	126-1768	2	SOCKET-CONNECTOR (14-GA TO 16-GA)	
Y	**548-5734**	1	LAMP GP-FLOOD (REAR WORK LIGHTS)	60
	521-7591	1	PLATE	
	204-1611	2	STRAP (DUAL)	
	3S-2093	6	STRAP-CABLE	
	8T-4121	1	WASHER-HARD (11X21X2.5-MM THK)	

E - ORDER BY THE CENTIMETER
M - METRIC PART
Y - SEPARATE ILLUSTRATION

<END>

511-6228 MOUNTING GP-WIRING—WITHOUT PRODUCT LINK

CANNOT BE USED WITH 511-6229—PAGE: 79

AN ATTACHMENT

SMCS-1408 **i07546423**

NOTE	REF NO	GRAPHIC REF	PART NUMBER	QTY	PART NAME 1 2 3 4 5 6 (PRODUCT LEVEL)	SEE PAGE
	1	1	**1L-6377**	1	BUTTON-PLUG	
	2	1	**156-6175**	2	CLIP (LADDER)	
	3	1	**546-1919**	2	CAP-CONNECTOR	
	4	1	**6K-0806**	1	STRAP-CABLE	
M	5	1	**8T-4138**	2	BOLT (M6X1X20-MM)	
	6	1	**9X-6165**	2	WASHER (6.5X22X2.5-MM THK)	

M - METRIC PART

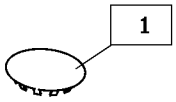

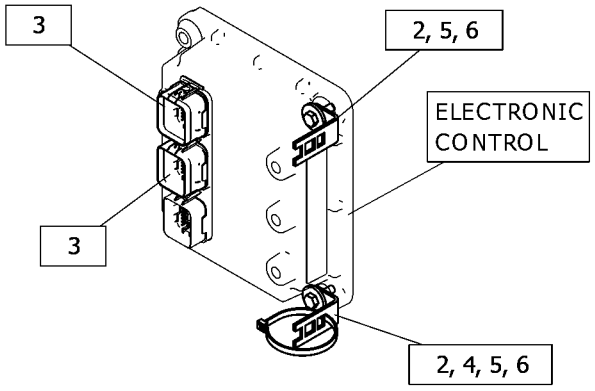

GRAPHIC #1 <END> g06342719

514-7505 RADIO GP-COMMUNICATION

PART OF 511-6229 WIRING GP-COMMUNICATION

AN ATTACHMENT

SMCS-733T **i07544486**

NOTE	PART NUMBER	QTY	PART NAME 1 2 3 4 5 6 (PRODUCT LEVEL)	SEE PAGE
	560-6948	1	SOFTWARE GP-MONITOR	

<END>

327-6208 RELAY GP

PART OF 511-6233 BATTERY & WIRING GP

AN ATTACHMENT

SMCS-1422, 4493 **i06656153**

NOTE	REF NO	GRAPHIC REF	PART NUMBER	QTY	PART NAME 1 2 3 4 5 6 (PRODUCT LEVEL)	SEE PAGE
	1	1	**278-6377**	1	FUSE (40-AMPERE)	
	2	1	**267-2701**	1	FUSE (60-AMPERE)	
	3	1	**267-5213**	1	COVER	
	4	1	**267-5211**	1	SEAL	
M	5	1	**5C-7261**	1	NUT (M8X1.25-THD)	
	6	1	**8F-7242**	1	WASHER (8.7X15.9X1.6-MM THK)	
	7	1	**3F-9556**	1	LOCKWASHER	

M - METRIC PART

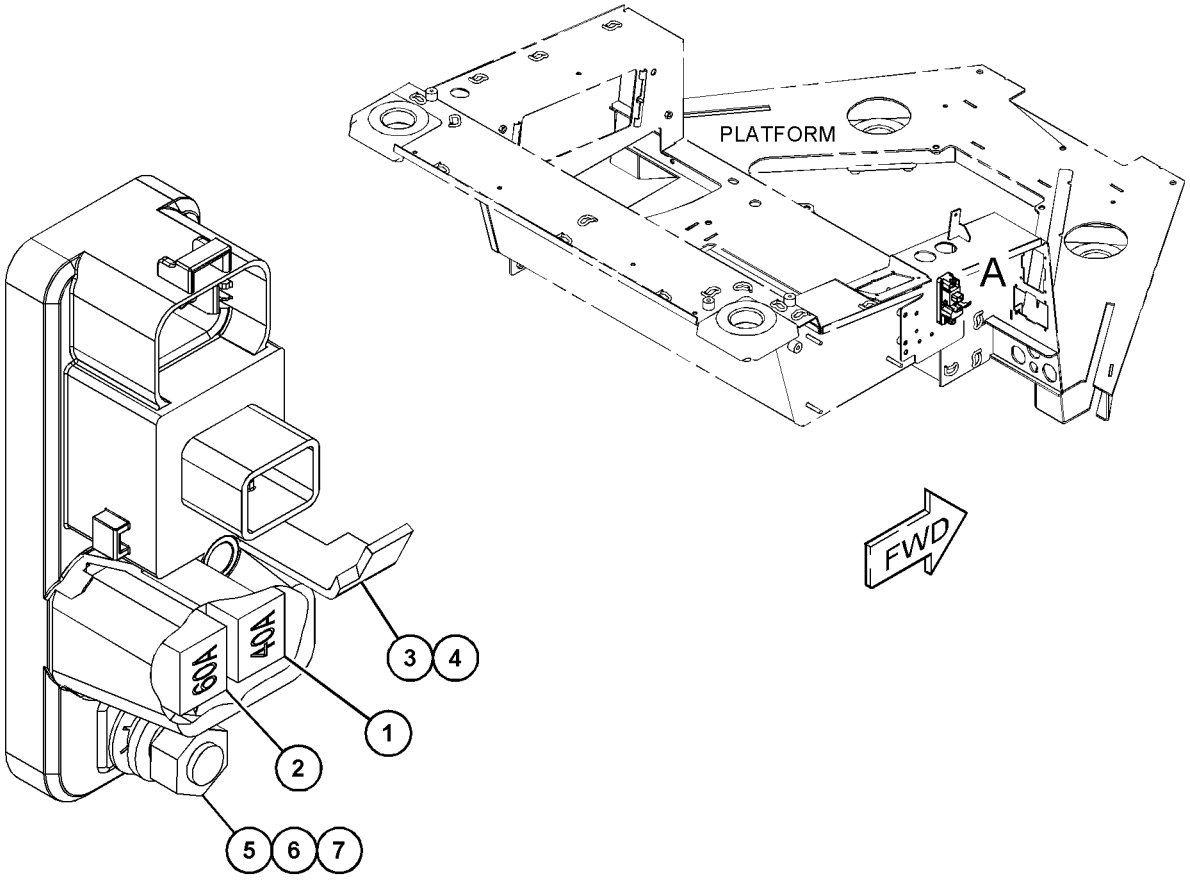

VIEW OF AREA A

GRAPHIC #1 <END> g06062926

7N-0718 SWITCH GP-DISCONNECT–BATTERY

6-VOLT TO 24-VOLT
PART OF 511-6233 BATTERY & WIRING GP
AN ATTACHMENT

SMCS-1411 **i07250275**

NOTE	REF NO	GRAPHIC REF	PART NUMBER	QTY	PART NAME 1 2 3 4 5 6 (PRODUCT LEVEL)	SEE PAGE
	1	1	**8H-5306**	1	KEY (BATTERY DISCONNECT)	
	2	1	**8H-5303**	1	NUT (3/4-16-THD)	
	3	1	**2H-3922**	2	LOCKWASHER	
	4	1	**264-3617**	2	LOCKWASHER	
	5	1	**6F-7045**	2	NUT-FULL (3/8-24-THD)	

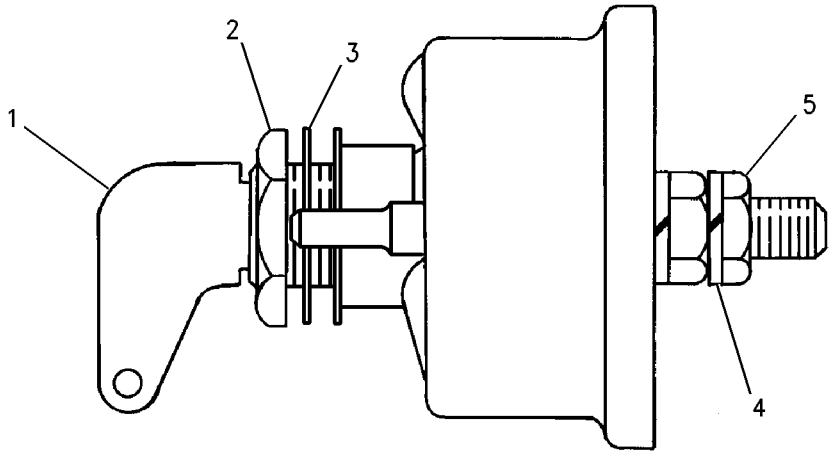

GRAPHIC #1 <END> g00715584

522-6461 SWITCH GP-START

AN ATTACHMENT

SMCS-1416 **i07546556**

NOTE	REF NO	GRAPHIC REF	PART NUMBER	QTY	PART NAME 1 2 3 4 5 6 (PRODUCT LEVEL)	SEE PAGE
	1	1	**205-0826**	1	FILM-INSTRUCTION (MACHINE SECURITY, CONSOLE)	
Y	2	1	**487-3004**	2	CONTROL GP-ELECTRONIC (KEY FOB)	39
Y	3	1	**504-4980**	1	ELECTRONICS GP-MACHINE (CONTROL)	40
	4	1	**526-5710**	1	SWITCH AS-ROTARY (PUSH)	
		1	**8T-8729**	6	PIN-CONNECTOR (16-GA TO 18-GA)	
		1	**102-8802**	1	KIT-RECEPTACLE (2-PIN)	
		1	**102-8804**	1	KIT-RECEPTACLE (4-PIN)	
					(EACH RECEPTACLE KIT INCLUDES RECEPTACLE AS & WEDGE)	
Y	5	1	*542-8852*	1	ELECTRONICS GP-MACHINE	40
	6	1	**8C-5607**	4	MOUNT-ISOLATION	
	7	1	**8C-5608**	2	SPACER (6.5X9.5X25.4-MM THK)	
M	8	1	**8C-8451**	2	BOLT (M6X1X40-MM)	
	9	1	**9X-6165**	2	WASHER (6.5X22X2.5-MM THK)	

M - METRIC PART
Y - SEPARATE ILLUSTRATION

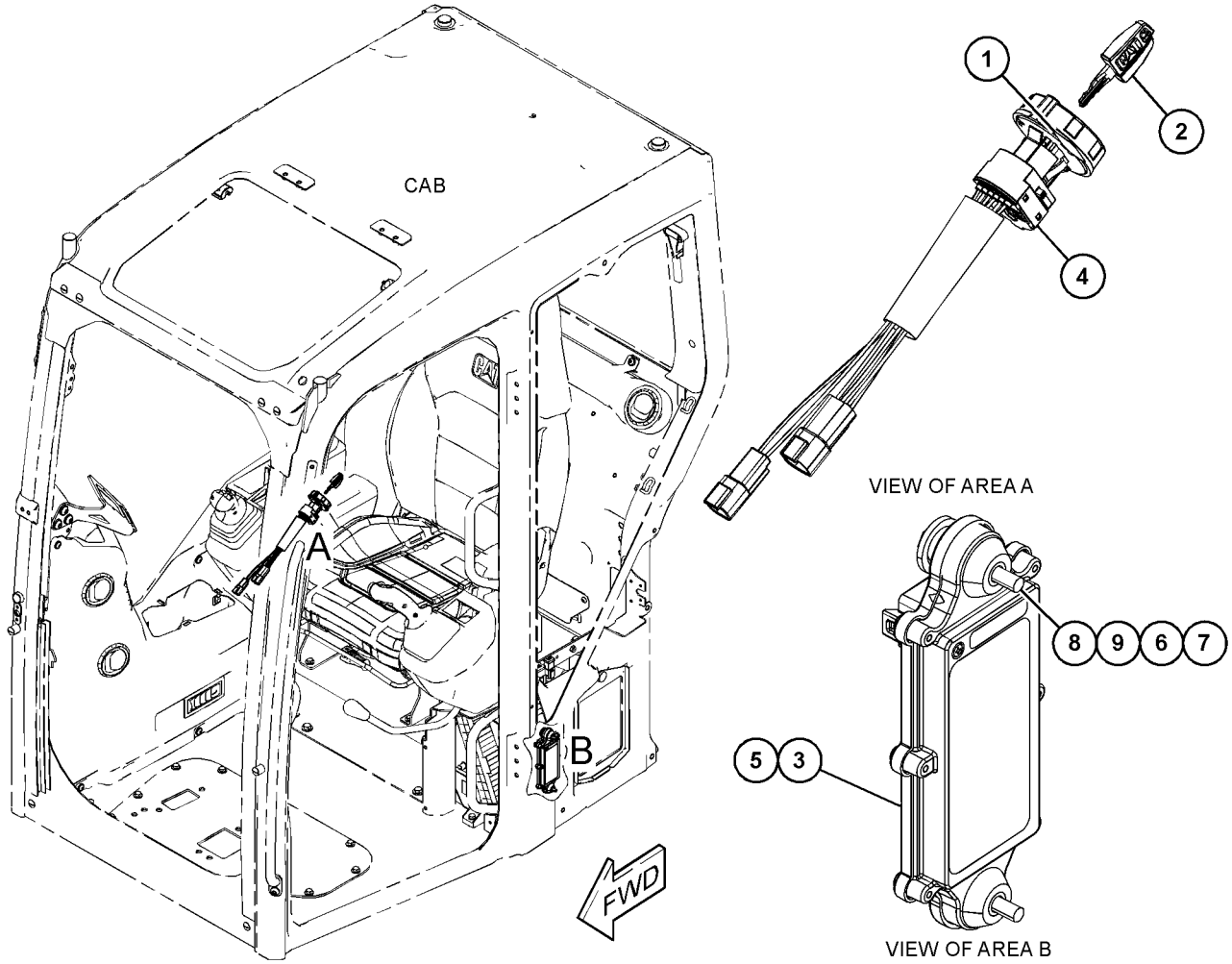

GRAPHIC #1 <END> g06343652

511-6226 WIRING GP-AUXILIARY CONTROL

PART OF 514-3240, 520-0774 HYDRAULIC AR
AN ATTACHMENT

SMCS-1408 **i07546282**

NOTE	REF NO	GRAPHIC REF	PART NUMBER	QTY	PART NAME 1 2 3 4 5 6 (PRODUCT LEVEL)	SEE PAGE
	1	1	**204-1611**	5	STRAP (DUAL)	
	2	1	**266-7379**	2	STRAP-CABLE (PLASTIC)	
	3	1	**344-7391**	1	SENSOR-PRESSURE (EJECTOR)	
	4	1	**3J-1907**	1	SEAL-O-RING	
	5	1	**3S-2093**	7	STRAP-CABLE	
Y	6	1	**511-6213**	1	HARNESS AS-AUXILIARY	41

Y - SEPARATE ILLUSTRATION

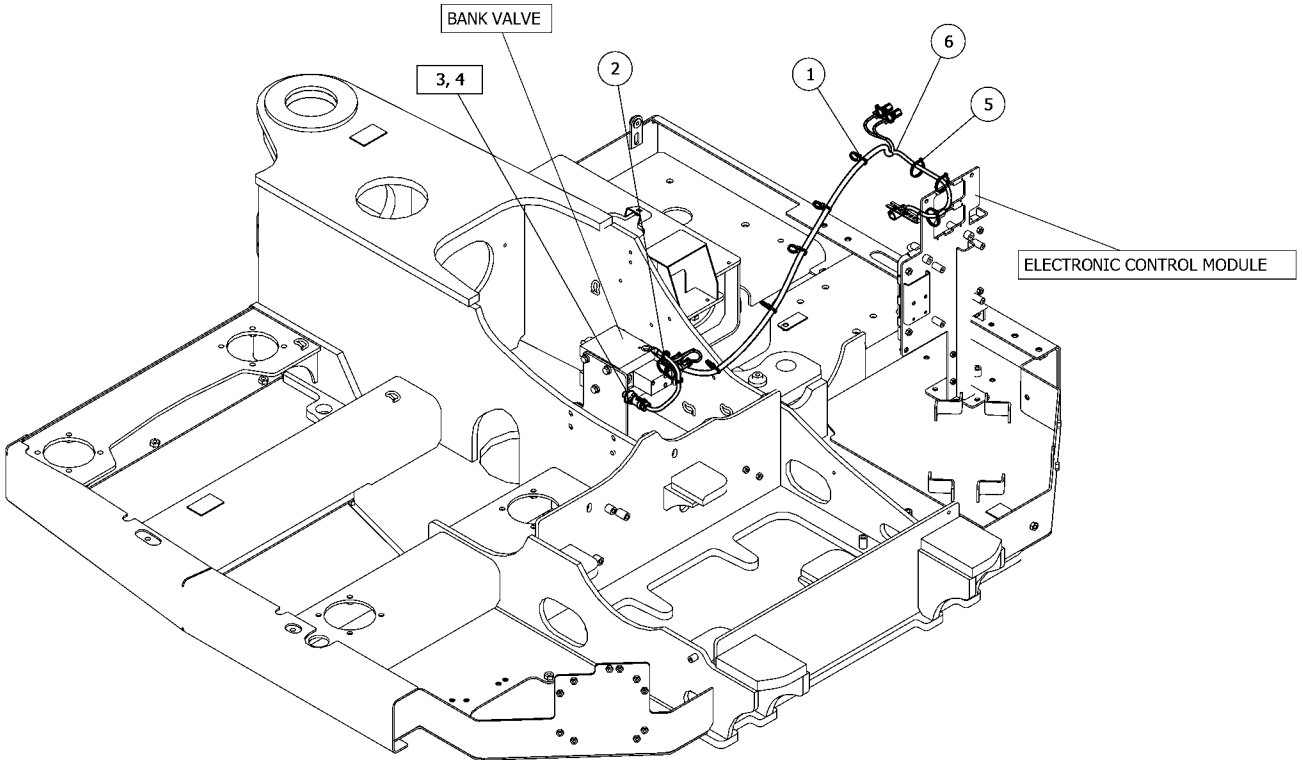

GRAPHIC #1 <END> g06337857

511-6222 WIRING GP-CAB

PART OF 511-6253 ELECTRICAL AR
AN ATTACHMENT

SMCS-1408, 7301

i07544891

NOTE	REF NO	GRAPHIC REF	PART NUMBER	QTY	PART NAME 1 2 3 4 5 6 (PRODUCT LEVEL)	SEE PAGE
	1	1	**335-5365**	1	SOCKET-AUXILIARY POWER (12-VOLT)	
	2	1	**242-8009**	1	SCREW-PAN HEAD (6-19X0.5-IN)	
	3	1	**4B-4863**	1	WASHER (4.7X11X1.2-MM THK)	
	4	1	**521-2475**	1	SWITCH AS-PUSH BUTTON (HOUR METER)	

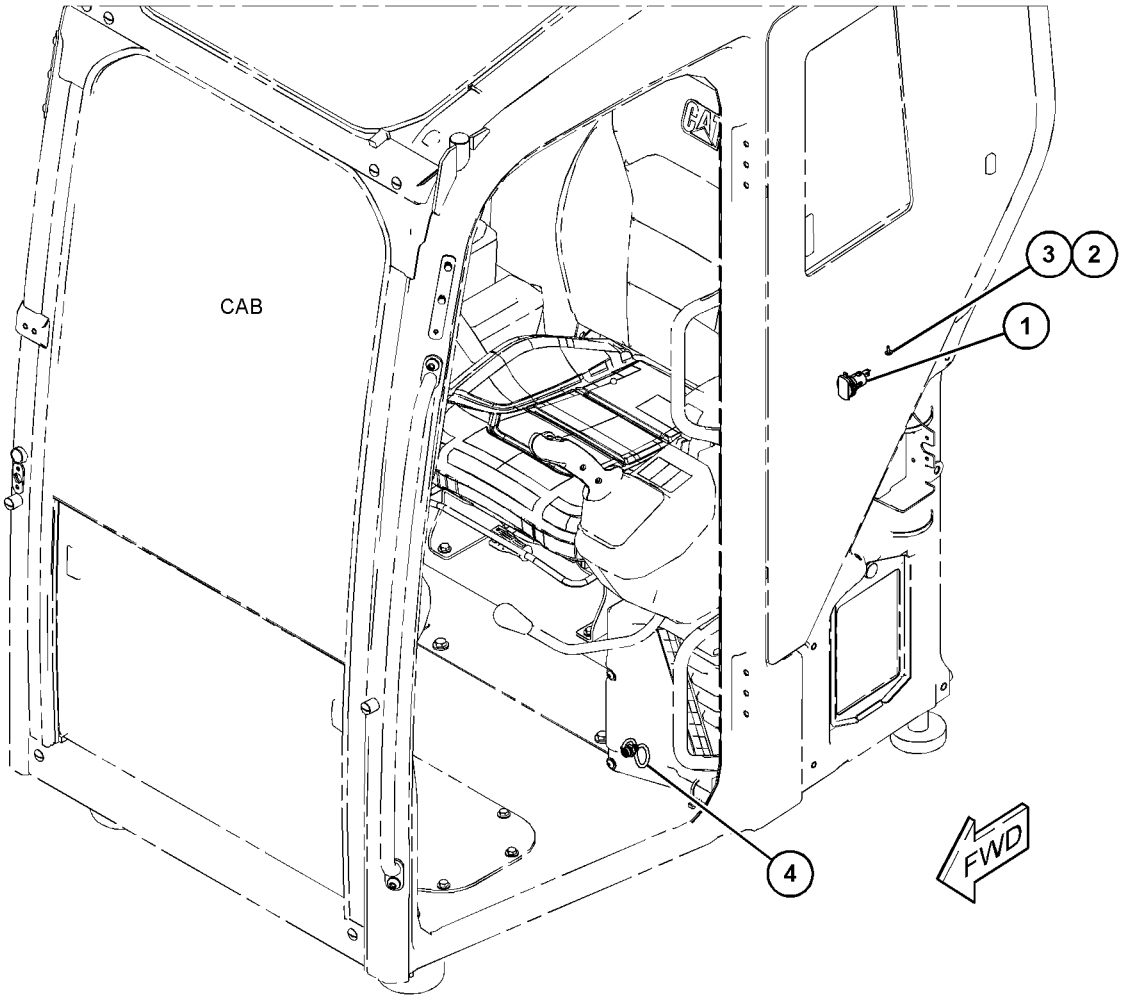

GRAPHIC #1 <END> g06342286

511-6234 WIRING GP-CAB–ETHERNET

PART OF 541-4591 CAB GP
AN ATTACHMENT

SMCS-1408, 7301 **i07545073**

NOTE	REF NO	GRAPHIC REF	PART NUMBER	QTY	PART NAME 1 2 3 4 5 6 (PRODUCT LEVEL)	SEE PAGE
	1	1	**110-2028**	4	SCREW-PAN HEAD (10-14X0.75-IN)	
	2	1	**165-0311**	6	PLUG	
	3	1	**167-8176**	2	HOUSING (3-SWITCHES)	
M	4	1	**200-1131**	2	SCREW-TRUSS HEAD (M4X0.7X20-MM)	
	5	1	**204-1611**	1	STRAP (DUAL)	
	6	1	**206-1345**	6	STRAP-CABLE	
	7	1	**2M-3432**	1	GROMMET	
	8	1	**347-0596**	1	FLANGE-MOUNTING	
	9	1	**378-1007**	1	SWITCH AS-MAGNETIC (PROXIMITY)	
		1	**3E-3371**	1	WEDGE-RECEPTACLE LOCK (3-PIN)	
		1	**171-0596**	1	RECEPTACLE AS-CONNECTOR (3-PIN)	
	10	1	**3S-2093**	38	STRAP-CABLE	
M	11	1	**3T-0851**	1	LOCKNUT (M5X0.8-THD)	
	12	1	**427-9771**	1	TIE (FIXING)	
	13	1	**431-9515**	1	LAMP GP-DOME (12/24-VOLT) (LED)	
	14	1	**436-2988**	1	ACTUATOR (MAGNETIC)	
	15	1	**4P-7581**	4	CLIP (LADDER)	
	16	1	**4P-8134**	1	CLIP (LADDER)	
Y	17	1	**511-6183**	1	HARNESS AS-CAB	42
	18	1	**517-3097**	1	MODULE GP-KEYPAD (JOG DIAL)	
	19	1	**517-3098**	1	MODULE GP-KEYPAD (ROTARY DIAL)	
	20	1	**522-6473**	1	HARNESS AS-LIGHTING (CAB)	
		1	**9X-3402**	4	SOCKET-CONNECTOR (16-GA TO 18-GA)	
					–OR–	
		1	**126-1768**	4	SOCKET-CONNECTOR (14-GA TO 16-GA)	
		1	**155-2270**	2	KIT-CONNECTING PLUG (2-PIN)	
					(EACH INCLUDES PLUG AS, WEDGE, & INTERFACE SEAL)	
B		1	**329-3734**		TAPE-ELECTRICAL	
		1	**374-7463**	1	CAP-SEAL	
	21	1	**522-6534**	1	SEAL	
	22	1	**522-6535**	1	PLATE	
	23	1	**557-5102**	1	RESISTOR AS (2-PIN)	
Y	24	1	**557-5106**	1	HARNESS AS-SENSOR (CONSOLE)	53
	25	1	**7K-1181**	9	STRAP-CABLE	
	26	1	**7P-1695**	1	WASHER (10.5X19X3-MM THK)	
	27	1	**8T-0328**	1	WASHER-HARD (5.5X10X1-MM THK)	
M	28	1	**8T-3998**	2	BOLT (M4X0.7X12-MM)	
M	29	1	**8T-8894**	1	BOLT-SOCKET HEAD (M10X1.5X20-MM)	
	30	1	**9R-7941**	1	SOCKET AS	
		1	**9R-7980**	1	COVER	
	31	1	**9X-2038**	3	WASHER (7X19X2-MM THK)	
M	32	1	**9X-2044**	11	SCREW-TRUSS HEAD (M6X1X16-MM)	
	33	1	**9X-8256**	4	WASHER (6.6X12X2-MM THK)	

B - USE AS REQUIRED
M - METRIC PART
Y - SEPARATE ILLUSTRATION

511-6234 **WIRING GP-CAB (**contd.**)** **i07545073**

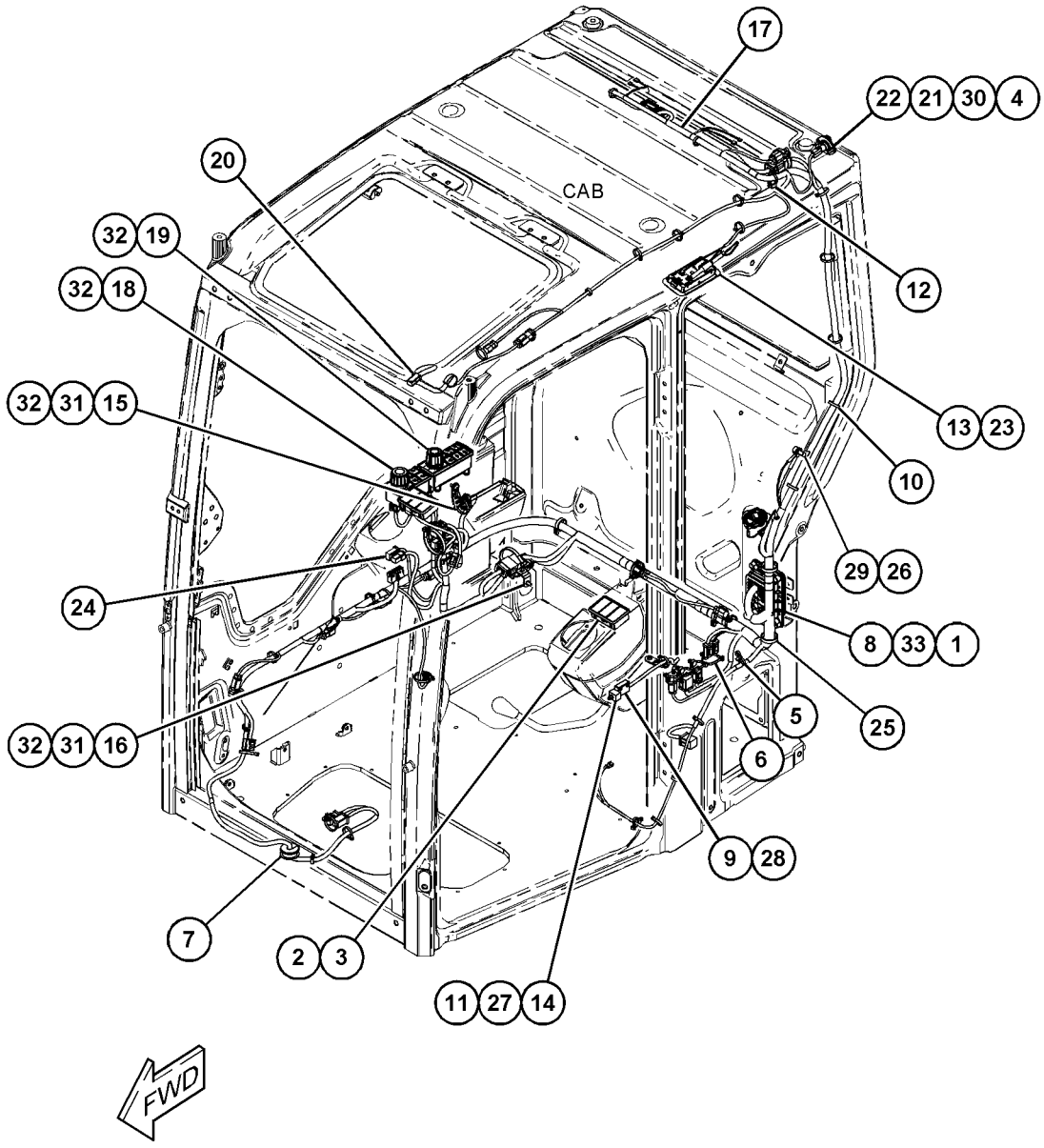

GRAPHIC #1 <END> g06348252

522-6539 WIRING GP-CAB–CAMERA

PART OF 541-4591 CAB GP

AN ATTACHMENT

SMCS-1408, 7301 **i07545080**

NOTE	REF NO	GRAPHIC REF	PART NUMBER	QTY	PART NAME 1 2 3 4 5 6 (PRODUCT LEVEL)	SEE PAGE
	1	1	**3S-2093**	11	STRAP-CABLE	
	2	1	**490-0579**	2	ADAPTER AS	
	3	1	**490-0588**	2	NUT	
	4	1	**352-3970**	1	CLIP (LADDER)	
	5	1	**490-0590**	2	CAP-RECEPTACLE	
Y	6	1	**557-5103**	1	HARNESS AS-CAB	44

Y - SEPARATE ILLUSTRATION

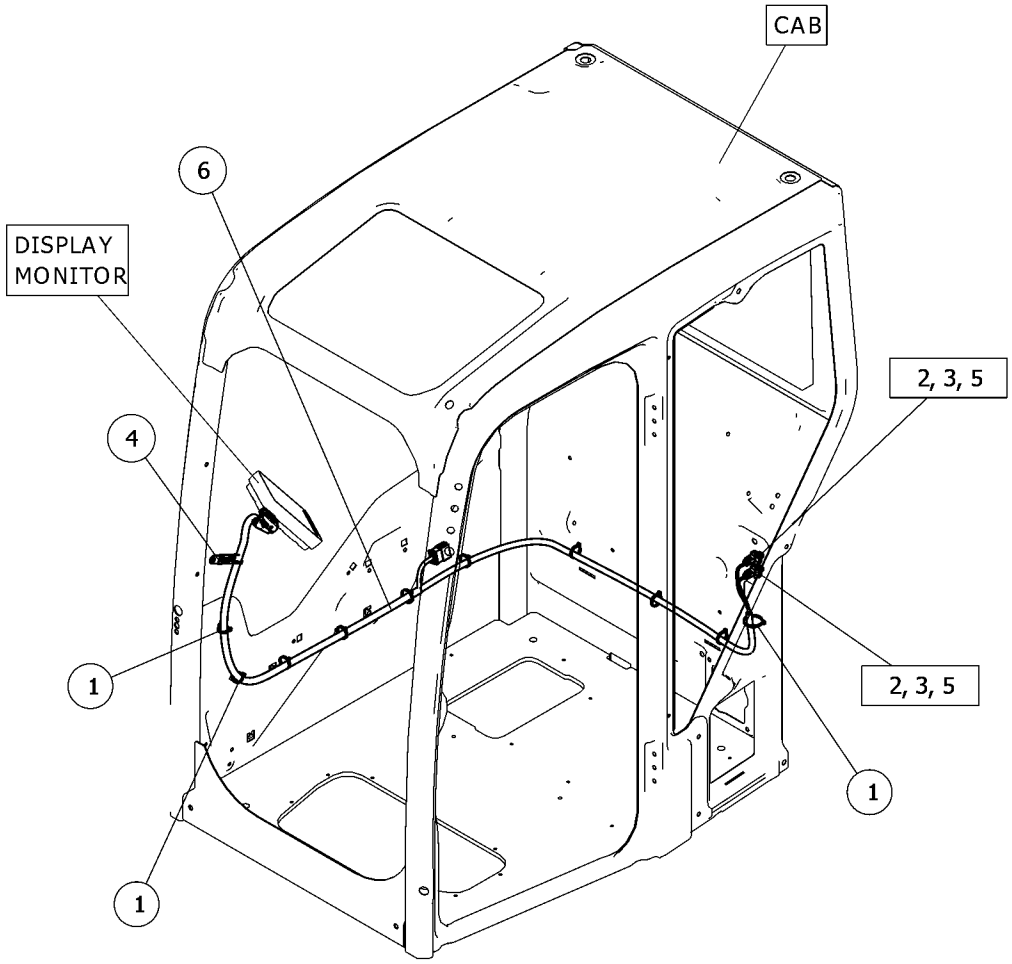

GRAPHIC #1 <END> g06336770

511-6235 WIRING GP-CAMERA–REAR

PART OF 562-4906, 562-9155, 562-9156, 562-9159 DISTRIBUTION AR
AN ATTACHMENT

SMCS-1408, 7348 **i07544467**

NOTE	REF NO	GRAPHIC REF	PART NUMBER	QTY	PART NAME 1 2 3 4 5 6 (PRODUCT LEVEL)	SEE PAGE
M	1	1	**8T-4189**	6	BOLT (M8X1.25X20-MM)	
	2	1	**3S-2093**	16	STRAP-CABLE	
	3	1	**5P-4116**	6	WASHER-HARD (8.8X20.5X2-MM THK)	
	4	1	**8T-0328**	2	WASHER-HARD (5.5X10X1-MM THK)	
M	5	1	**109-1393**	2	BOLT-SOCKET HEAD (M4X0.7X10-MM)	
	6	1	*488-9162*	1	CAMERA GP	
		1	**490-0572**	1	RECEPTACLE AS	
		1	**490-0582**	1	RECEPTACLE AS	
Y	7	1	**511-6184**	1	HARNESS AS-WIRING (ETHERNET)	53
	8	1	**541-8665**	1	BRACKET	
	9	1	**541-8666**	1	PLATE	
	10	1	**204-1611**	2	STRAP (DUAL)	
	11	1	**4P-7581**	1	CLIP (LADDER)	

M - METRIC PART
Y - SEPARATE ILLUSTRATION

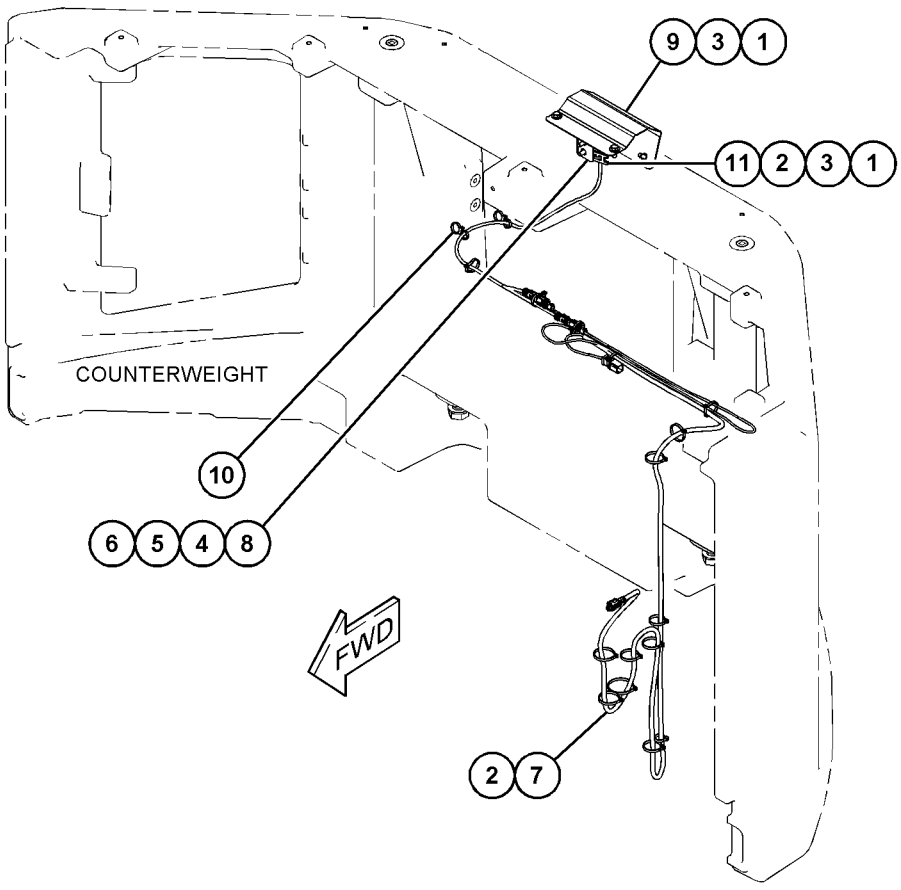

GRAPHIC #1 <END> g06263158

511-6236 WIRING GP-CAMERA—RIGHT

AN ATTACHMENT

SMCS-1408, 7348 **i07546427**

NOTE	REF NO	GRAPHIC REF	PART NUMBER	QTY	PART NAME 1 2 3 4 5 6 (PRODUCT LEVEL)	SEE PAGE
	1	1	**3S-2093**	22	STRAP-CABLE	
	2	1	**7K-1181**	1	STRAP-CABLE	
M	3	1	**109-1393**	2	BOLT-SOCKET HEAD (M4X0.7X10-MM)	
	4	1	**235-8966**	1	BASE-MOUNTING	
	5	1	**488-9161**	1	CAMERA GP (12V) (REAR)	
		1	**490-0572**	1	RECEPTACLE AS	
		1	**490-0582**	1	RECEPTACLE AS	
Y	6	1	**511-6185**	1	HARNESS AS-MONITOR (ETHERNET)	50
	7	1	**204-1611**	5	STRAP (DUAL)	
	8	1	**8T-0328**	2	WASHER-HARD (5.5X10X1-MM THK)	

M - METRIC PART
Y - SEPARATE ILLUSTRATION

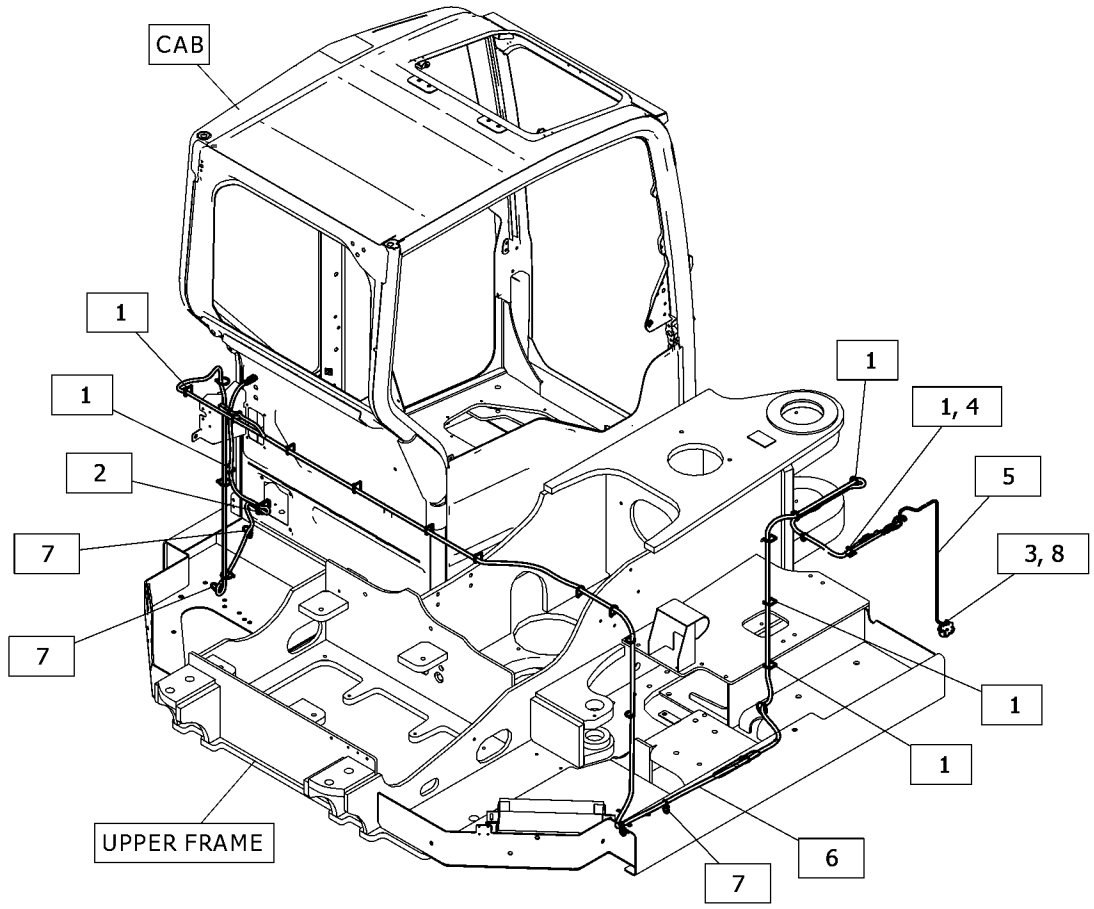

GRAPHIC #1 <END> g06343960

511-6229 WIRING GP-COMMUNICATION–PRODUCT LINK ELITE

PART OF 562-4906, 562-9155, 562-9156 DISTRIBUTION AR

AN ATTACHMENT

SMCS-1408, 7606

i07544472

NOTE	REF NO	GRAPHIC REF	PART NUMBER	QTY	PART NAME 1 2 3 4 5 6 (PRODUCT LEVEL)	SEE PAGE
	1	1	**517-4512**	1	CONTROL GP-ELECTRONIC (COMMUNICATION)	
		1	**7X-6315**	1	STRAP AS-GROUND	
D		1	**5P-6006**		TUBE-HEAT SHRINK (9.52-MM DIA) (0.1-M)	
		1	**2L-8078**	1	TERMINAL-RING (14-GA TO 16-GA, 5/16-IN SCREW)	
		1	**2L-8075**	1	TERMINAL-RING (14-GA TO 16-GA, NO. 8 SCREW)	
	2	1	**3S-2093**	2	STRAP-CABLE	
	3	1	**260-7653**	1	FILM-WARNING (PRODUCT LINK 300, INTL)	
	4	1	**307-0047**	1	FILM-INFORMATION (PRODUCT LINK, READ OMM)	
	5	1	**156-6175**	1	CLIP (LADDER)	
Y	6	1	**514-7505**	1	RADIO GP-COMMUNICATION (CELLULAR)	68
	7	1	**9X-8256**	1	WASHER (6.6X12X2-MM THK)	
	8	1	**8C-5607**	8	MOUNT-ISOLATION	
	9	1	**8C-5608**	4	SPACER (6.5X9.5X25.4-MM THK)	
M	10	1	**8C-8451**	4	BOLT (M6X1X40-MM)	
	11	1	**9X-6165**	4	WASHER (6.5X22X2.5-MM THK)	
FY			*542-8834*	1	ELECTRONICS GP-MONITOR	41

D - ORDER BY THE METER
F - NOT SHOWN
M - METRIC PART
Y - SEPARATE ILLUSTRATION

511-6229 **WIRING GP-COMMUNICATION (**contd.**)** **i07544472**

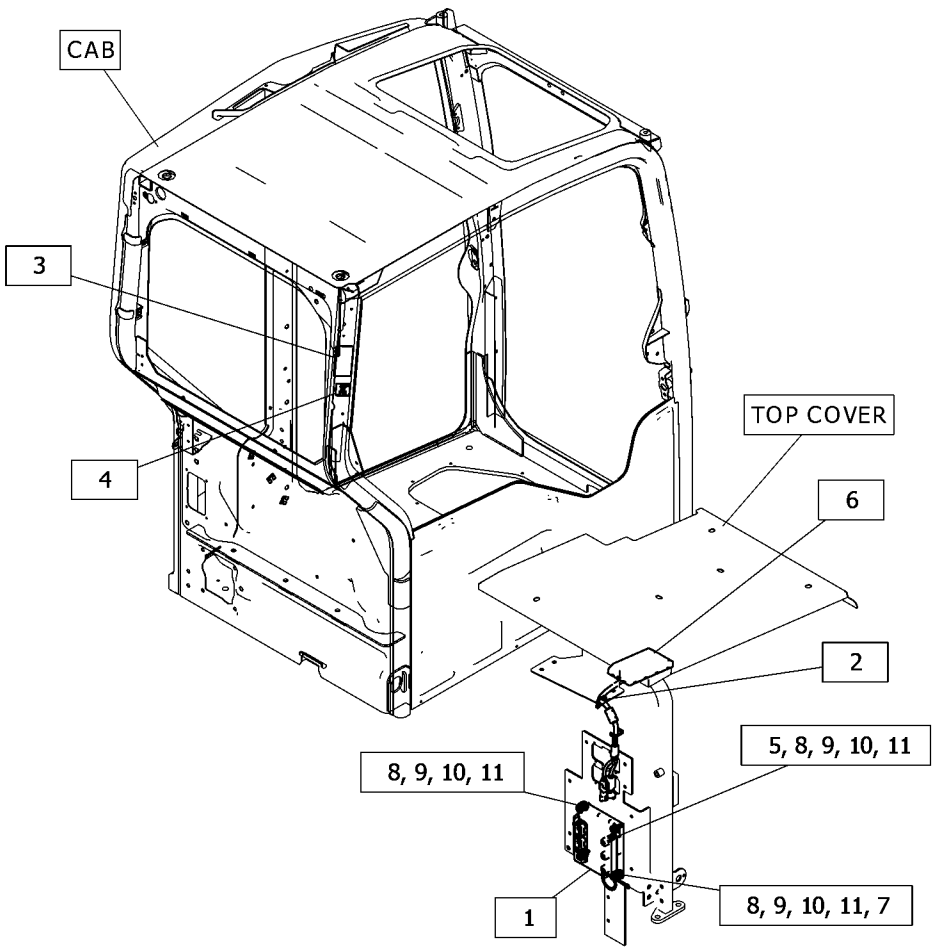

GRAPHIC #1 <END> g06344708

511-6238 WIRING GP-ENGINE

PART OF 511-6253 ELECTRICAL AR
AN ATTACHMENT

SMCS-1408 **i07544892**

NOTE	REF NO	GRAPHIC REF	PART NUMBER	QTY	PART NAME 1 2 3 4 5 6 (PRODUCT LEVEL)	SEE PAGE
	1	1	**522-6528**	1	PLATE	
M	2	1	**8T-4189**	2	BOLT (M8X1.25X20-MM)	
M	3	1	**8T-4908**	7	BOLT (M8X1.25X25-MM)	
	4	1	**111-4837**	2	CLIP	
	5	1	**132-5789**	1	CLIP (LADDER)	
M	6	1	**150-3715**	3	BOLT (M12X1.25X25-MM)	
	7	1	**204-1611**	11	STRAP (DUAL)	
	8	1	**206-1345**	1	STRAP-CABLE	
	9	1	**223-3490**	1	CLIP	
	10	1	**236-6923**	1	SWITCH AS-PRESSURE (HIGH, LOW)	
M	11	1	**251-1391**	1	BOLT (M10X1.25X16-MM)	
	12	1	**277-1873**	6	CLIP (LADDER)	
	13	1	**350-5720**	1	CLIP (LADDER)	
	14	1	**352-3965**	1	CLIP (LADDER)	
	15	1	**352-3966**	1	CLIP (LADDER)	
	16	1	**352-3968**	3	CLIP (LADDER)	
	17	1	**389-0748**	1	STRAP AS	
		1	**1M-4986**	1	TERMINAL-RING (0-GA, 1/2-IN SCREW)	
		1	**030-1707**	1	TERMINAL-RING (0-GA, 3/8-IN SCREW)	
	18	1	**3S-2093**	23	STRAP-CABLE	
	19	1	**4B-4280**	2	WASHER (13.5X27X2.5-MM THK)	
	20	1	**4P-7581**	3	CLIP (LADDER)	
	21	1	**4P-8134**	2	CLIP (LADDER)	
	22	1	**511-6161**	1	CABLE AS (BATTERY)	
		1	**8T-8799**	1	BOOT (RED)	
E		1	**159-8047**		CABLE-ELECTRICAL (0-GA, RED) (131-CM)	
		1	**8N-1725**	1	COVER AS-TERMINAL (RED)	
		1	**276-1786**	1	COVER-TERMINAL (RED)	
		1	**1M-6120**	1	NUT (5/16-18-THD)	
		1	**3T-3349**	1	STUD (5/16-18X0.5-IN, 5/16-18X1.5-IN)	
		1	**8T-9758**	1	TERMINAL AS (POSITIVE)	
		1	**2L-8050**	1	TERMINAL-RING (6-GA, 1/4-IN SCREW)	
					–OR–	
		1	**2L-8058**	1	TERMINAL-RING (8-GA, 1/4-IN SCREW)	
		1	**377-2282**	1	TERMINAL-RING	
E		1	**135-5009**		TUBE-HEAT SHRINK (32-MM DIA) (4-CM)	
Y	23	1	**511-6189**	1	HARNESS AS-SENSOR (ENGINE)	51
Y	24	1	**511-6192**	1	HARNESS AS-ENGINE (ECM)	48
	25	1	**5P-4115**	1	WASHER-HARD (7.2X19X2-MM THK)	
	26	1	**5P-4116**	6	WASHER-HARD (8.8X20.5X2-MM THK)	
	27	1	**6V-0826**	1	GROMMET	
	28	1	**7K-1181**	10	STRAP-CABLE	
	29	1	**7P-1695**	1	WASHER (10.5X19X3-MM THK)	
B	30	1	**8T-4121**	6	WASHER-HARD (11X21X2.5-MM THK)	
M	31	1	**8T-4136**	2	BOLT (M10X1.5X25-MM)	
M	32	1	**8T-4137**	2	BOLT (M10X1.5X20-MM)	
M	33	1	**8T-4171**	1	BOLT (M6X1X12-MM)	
M	34	1	**8T-4191**	1	BOLT (M10X1.5X16-MM)	

511-6238 **WIRING GP-ENGINE (**contd.**)** **i07544892**

NOTE	REF NO	GRAPHIC REF	PART NUMBER	QTY	PART NAME 1 2 3 4 5 6 (PRODUCT LEVEL)	SEE PAGE
M	35	1	**8T-4200**	4	BOLT (M8X1.25X16-MM)	
	36	1	**8T-4223**	1	WASHER-HARD (13.5X25.5X3-MM THK)	
	37	1	**8T-4224**	7	WASHER-HARD (8.8X16X2-MM THK)	
M	38	1	**8T-8894**	1	BOLT-SOCKET HEAD (M10X1.5X20-MM)	
	39	1	**9X-7378**	1	SEAL-O-RING	

B - USE AS REQUIRED
E - ORDER BY THE CENTIMETER
M - METRIC PART
Y - SEPARATE ILLUSTRATION

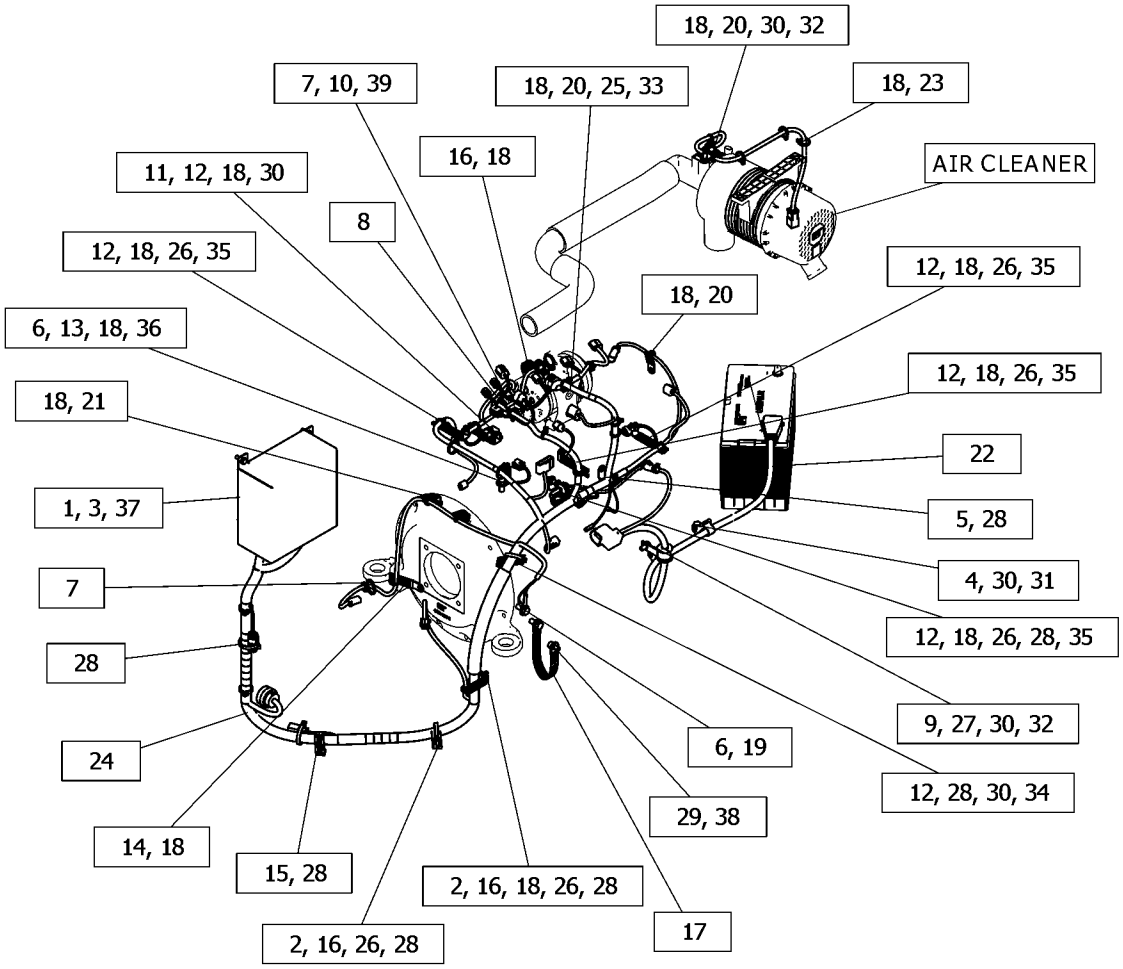

GRAPHIC #1 <END> g06339961

511-6241 WIRING GP-FRONT–SWING BOOM

PART OF 514-3230, 514-3235, 514-3240 HYDRAULIC AR
AN ATTACHMENT

SMCS-1408 **i07546202**

NOTE	REF NO	GRAPHIC REF	PART NUMBER	QTY	PART NAME 1 2 3 4 5 6 (PRODUCT LEVEL)	SEE PAGE
	1	1	**3S-2093**	5	STRAP-CABLE	
	2	1	**279-1308**	1	PLATE AS	
Y	3	1	**511-6197**	1	HARNESS AS-FRONT	49
	4	1	**095-0913**	1	CLIP	
	5	1	**204-1611**	15	STRAP (DUAL)	
M	6	1	**5C-9553**	1	BOLT (M6X1X16-MM)	
	7	1	**5P-4115**	1	WASHER-HARD (7.2X19X2-MM THK)	

M - METRIC PART
Y - SEPARATE ILLUSTRATION

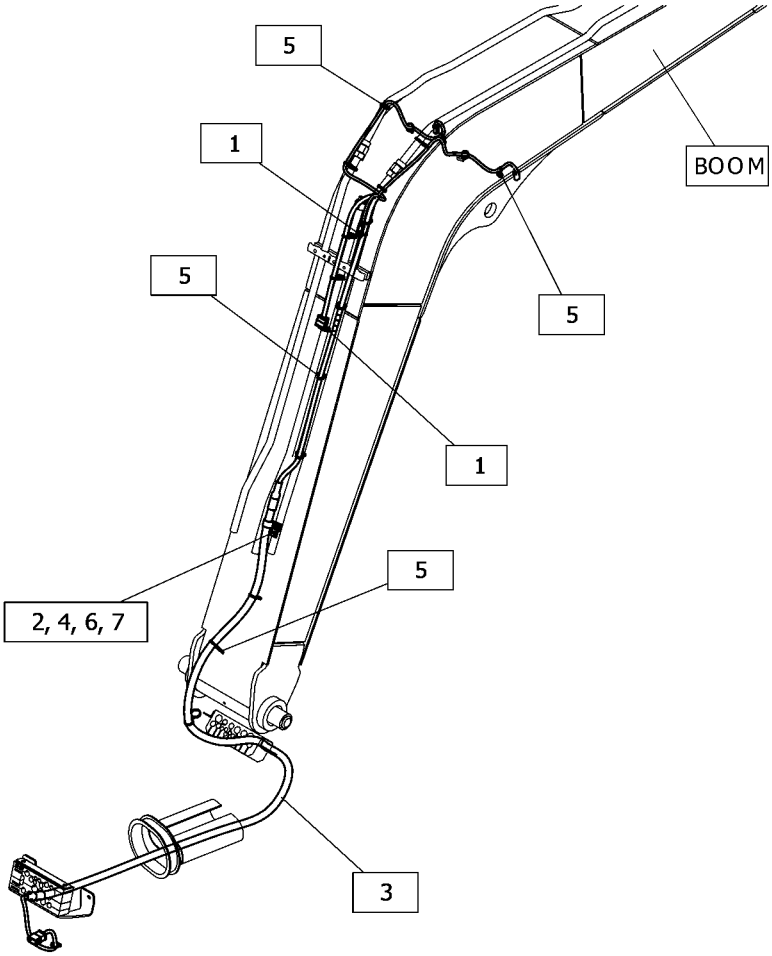

GRAPHIC #1 <END> g06341437

511-6242 WIRING GP-FRONT—VARIABLE ADJUSTABLE BOOM

PART OF 517-8129, 520-0774 HYDRAULIC AR
AN ATTACHMENT

SMCS-1408 **i07546512**

NOTE	REF NO	GRAPHIC REF	PART NUMBER	QTY	PART NAME 1 2 3 4 5 6 (PRODUCT LEVEL)	SEE PAGE
	1	1	**3S-2093**	6	STRAP-CABLE	
	2	1	**279-1308**	1	PLATE AS	
Y	3	1	**511-6198**	1	HARNESS AS-LIGHTING	50
	4	1	**095-0913**	1	CLIP	
	5	1	**204-1611**	6	STRAP (DUAL)	
M	6	1	**5C-9553**	1	BOLT (M6X1X16-MM)	
	7	1	**5P-4115**	1	WASHER-HARD (7.2X19X2-MM THK)	
	8	1	**8T-4121**	4	WASHER-HARD (11X21X2.5-MM THK)	
M	9	1	**8T-4133**	4	NUT (M10X1.5-THD)	
	10	1	**9M-8406**	4	CLIP (LOOP)	

M - METRIC PART
Y - SEPARATE ILLUSTRATION

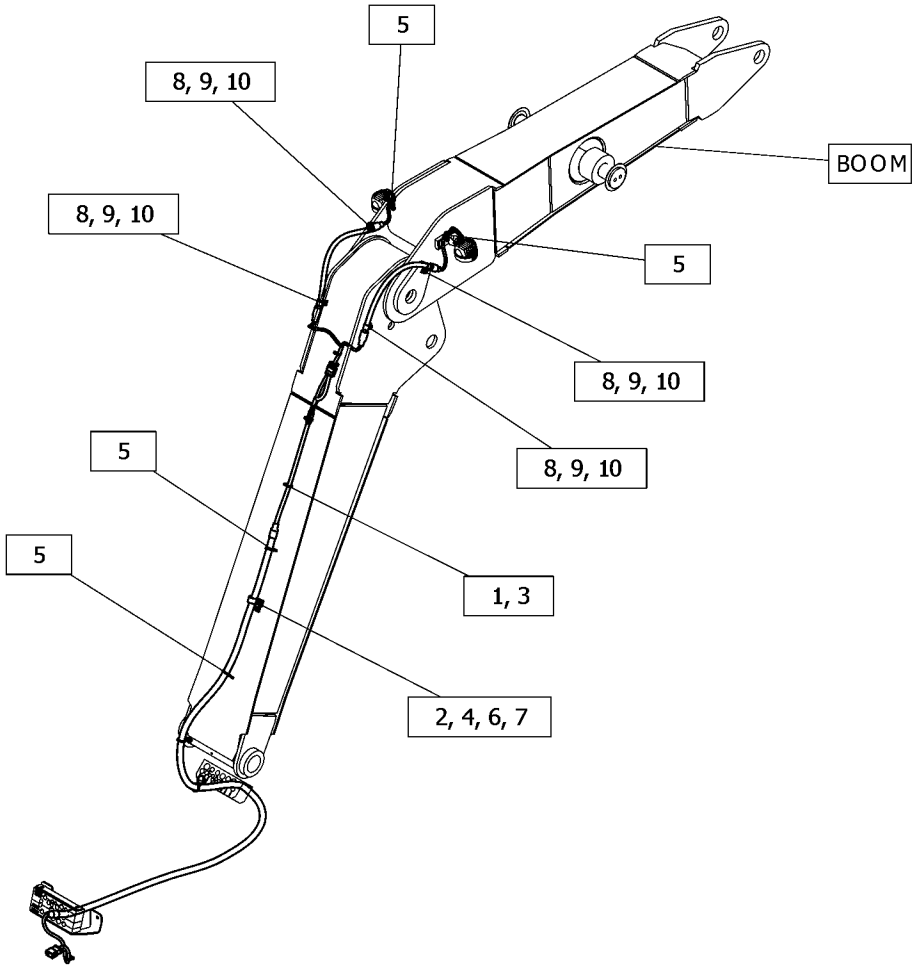

GRAPHIC #1 <END> g06339951

511-6231 WIRING GP-FUEL PUMP–REFUELING

PART OF 518-3295 PUMP AR-FUEL TRANSFER AN ATTACHMENT

SMCS-1256, 1258, 1408 **i07546524**

NOTE	REF NO	GRAPHIC REF	PART NUMBER	QTY	PART NAME 1 2 3 4 5 6 (PRODUCT LEVEL)	SEE PAGE
	1	1	**3S-2093**	5	STRAP-CABLE	
	2	1	**266-7379**	1	STRAP-CABLE	
Y	3	1	**522-6495**	1	HARNESS AS-PUMP (REFUELING)	51
	4	1	**524-3728**	1	SWITCH AS-ROCKER (REFUELING PUMP)	
		1	**111-7899**	1	GASKET	
	5	1	**352-3970**	2	CLIP (LADDER)	

Y - SEPARATE ILLUSTRATION

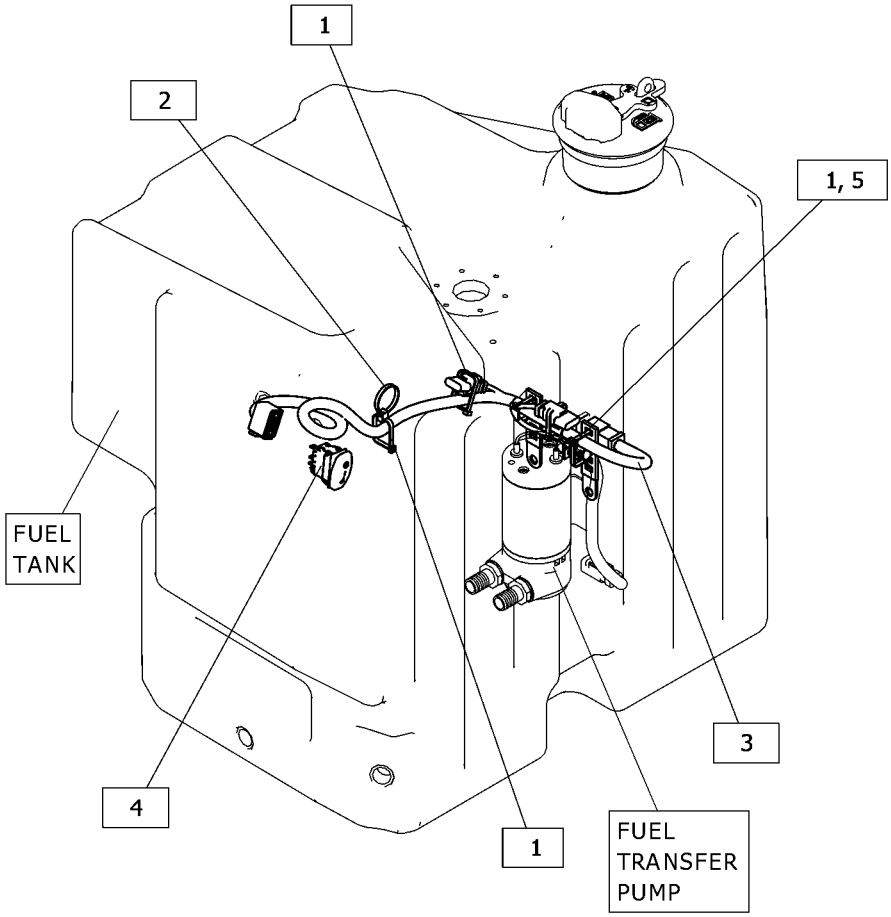

GRAPHIC #1 <END> g06340704

511-6224 WIRING GP-OVERLOAD WARNING

PART OF 514-8059, 514-8060 LINES AR-BOOM
AN ATTACHMENT

SMCS-1408 **i07546478**

NOTE	REF NO	GRAPHIC REF	PART NUMBER	QTY	PART NAME 1 2 3 4 5 6 (PRODUCT LEVEL)	SEE PAGE
	1	1	**204-1611**	4	STRAP (DUAL)	
	2	1	**245-8842**	1	CLIP	
Y	3	1	**511-6205**	1	HARNESS AS-SENSOR (OVERLOAD WARNING)	52

Y - SEPARATE ILLUSTRATION

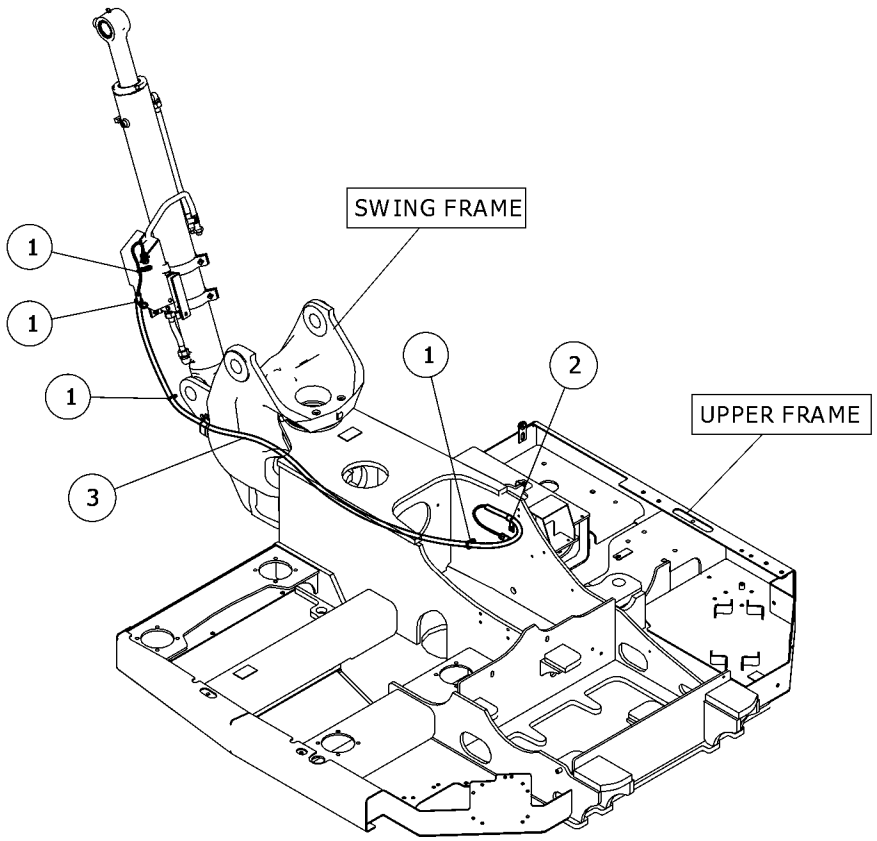

GRAPHIC #1 <END> g06336903

515-5825 DRIVE GP-FINAL—WITH MOTOR

PART OF 512-2519 MOTOR & MTG GP-TRAVEL

AN ATTACHMENT

SMCS-4050 **i07546220**

NOTE	REF NO	GRAPHIC REF	PART NUMBER	QTY	PART NAME 1 2 3 4 5 6 (PRODUCT LEVEL)	SEE PAGE
Y	1	1	**548-7543**	1	MOTOR GP-PISTON	238
	2	1	**435-0793**	1	COVER	
	3	1	**435-0794**	4	GEAR-PLANETARY	
	4	1	**435-0795**	1	GEAR-SUN	
	5	1	**435-0796**	4	COLLAR	
	6	1	**435-0797**	1	COLLAR-THRUST	
	7	1	**435-0798**	1	RING-SNAP	
	8	1	**435-0799**	1	PLATE-THRUST	
	9	1	**435-0800**	1	PLATE-THRUST	
	10	1	**438-8338**	1	RING-SLIDE	
	11	1	**438-8339**	1	SET-SEAL	
	12	1	**438-8340**	120	GUIDE	
	13	1	**438-8341**	4	RING-SNAP	
	14	1	**438-8342**	4	WASHER-THRUST	
	15	1	**438-8343**	4	WASHER-THRUST	
	16	1	**227-5990**	2	PLUG	
	17	1	**150-6379**	1	PLUG	
	18	1	**9S-8004**	2	PLUG (9/16-18-THD)	
	19	1	**548-7541**	1	KIT-BASE	
					(INCLUDES CASING BODY, BALL BEARINGS & SNAP RING)	
	20	1	**430-4676**	1	KIT-FINAL DRIVE BEARING	
					(INCLUDES CARRIER, PLANETARY GEARS, SUN GEAR, COLLARS, ROLLER BEARINGS, SNAP RINGS & THRUST WASHERS)	
	21	1	**435-0792**	1	KIT-SNAP RING	
					(INCLUDES SNAP RINGS)	
					AVAILABLE REPAIR KIT(S):	
			435-0789	1	KIT-FINAL DRIVE BEARING	
					(INCLUDES PARTS MARKED "J"IN THE GRAPHIC)	

Y - SEPARATE ILLUSTRATION

515-5825 **DRIVE GP-FINAL (**contd.**)** **i07546220**

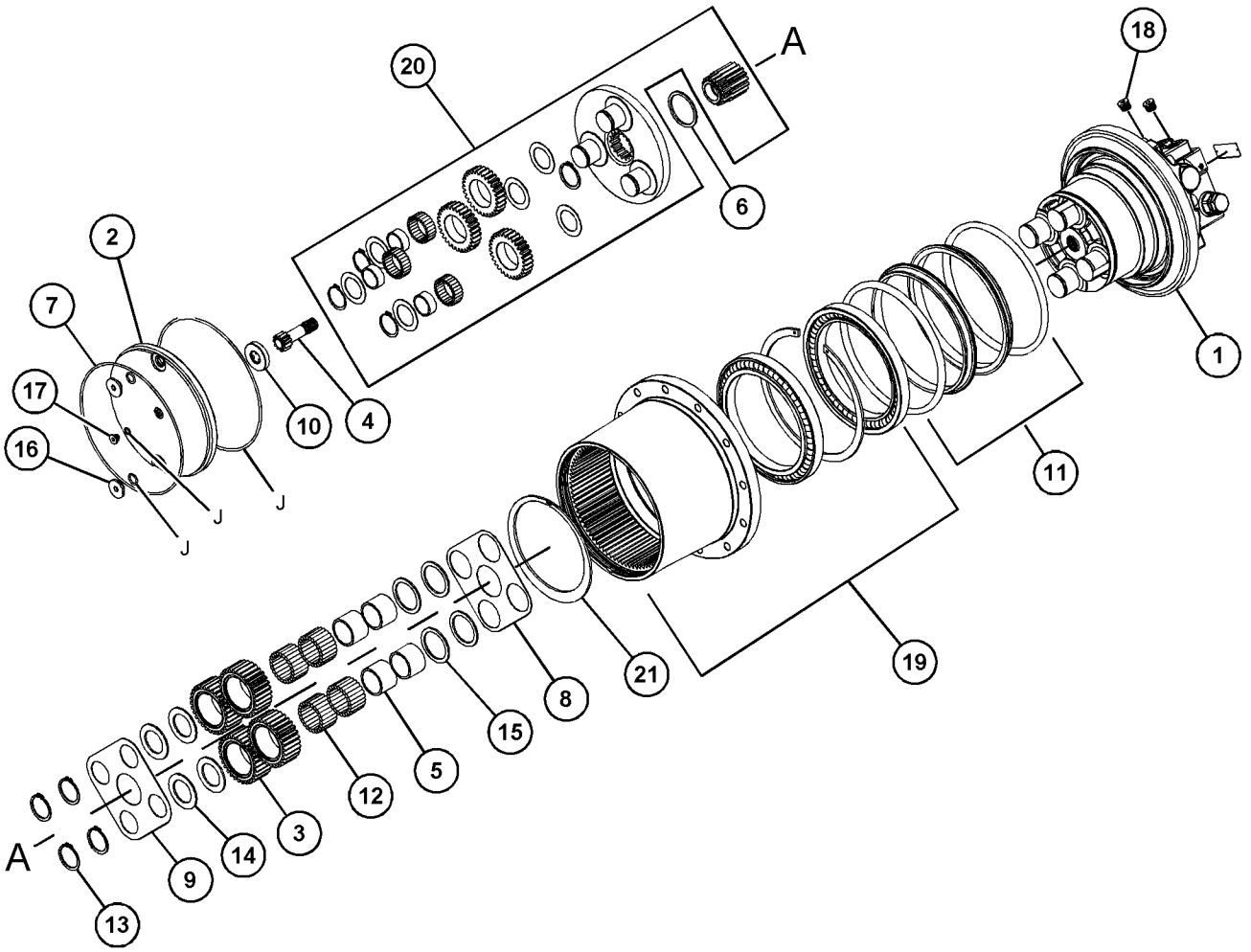

GRAPHIC #1 <END> g06344204

512-2519 MOTOR & MTG GP-TRAVEL

PART OF 512-2524, 512-2526 BLADE AR-STRAIGHT
AN ATTACHMENT

SMCS-4351 **i07546219**

NOTE	REF NO	GRAPHIC REF	PART NUMBER	QTY	PART NAME 1 2 3 4 5 6 (PRODUCT LEVEL)	SEE PAGE
Y	1	1	*515-5825*	2	DRIVE GP-FINAL (WITH MOTOR)	87
M	2	1	**8T-7338**	32	BOLT (M16X2X45-MM)	
	3	1	**9X-8257**	32	WASHER (17.5X30X3.5-MM THK)	

M - METRIC PART
Y - SEPARATE ILLUSTRATION

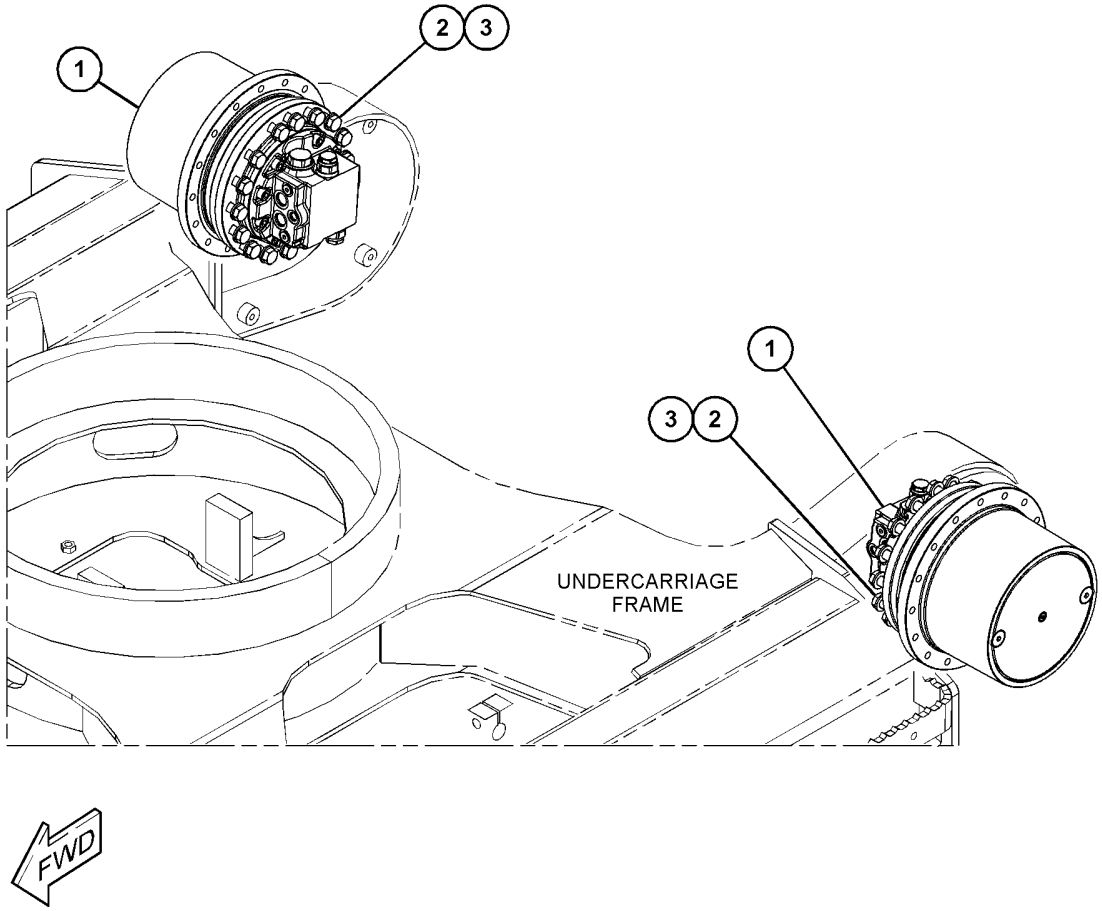

GRAPHIC #1 <END> g06335337

514-0897 SPROCKET GP

PART OF 512-2524, 512-2526 BLADE AR-STRAIGHT
AN ATTACHMENT

SMCS-4164 **i07546232**

NOTE	REF NO	GRAPHIC REF	PART NUMBER	QTY	PART NAME 1 2 3 4 5 6 (PRODUCT LEVEL)	SEE PAGE
	1	1	**7X-0510**	16	WASHER-HARD (15.5X29X3-MM THK)	
M	2	1	**8C-6855**	16	BOLT (M14X2X45-MM)	
	3	1	**514-0898**	1	SPROCKET-TRACK	

M - METRIC PART

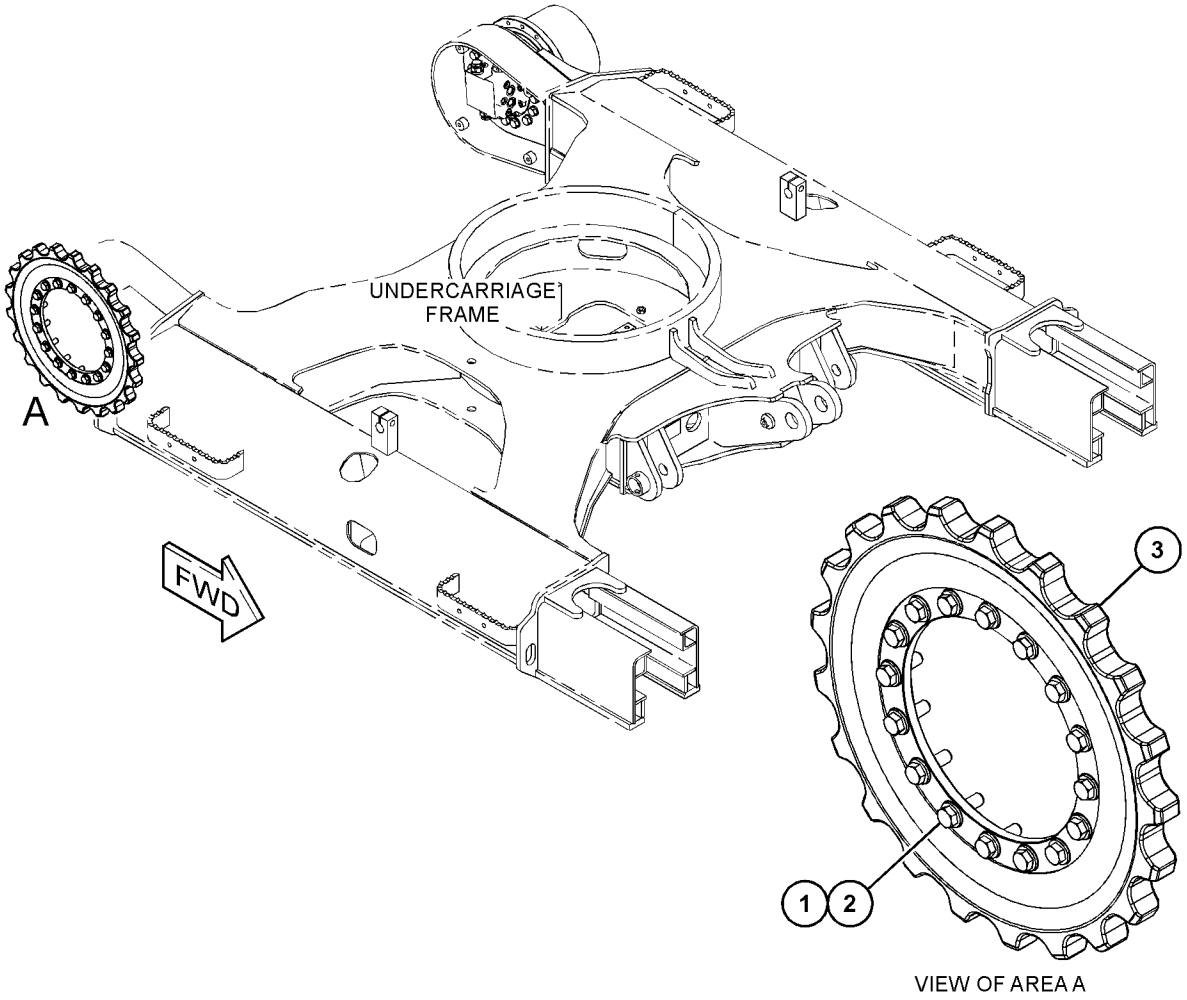

VIEW OF AREA A

GRAPHIC #1 <END> g06334684

512-1508 COUNTERWEIGHT & MOUNTING GP

PART OF 512-1513 CHASSIS AR

SMCS-7056 **i07542364**

NOTE	REF NO	GRAPHIC REF	PART NUMBER	QTY	PART NAME 1 2 3 4 5 6 (PRODUCT LEVEL)	SEE PAGE
B	1	1	**193-5914**	2	PLUG	
	2	1	**548-8514**	2	PLUG	
Y	3	1	*562-2465*	1	COUNTERWEIGHT GP	93
M	4	1	**7X-2576**	4	BOLT (M24X3X70-MM)	
	5	1	**8T-4167**	4	WASHER-HARD (26X44X4-MM THK)	

B - USE AS REQUIRED
M - METRIC PART
Y - SEPARATE ILLUSTRATION

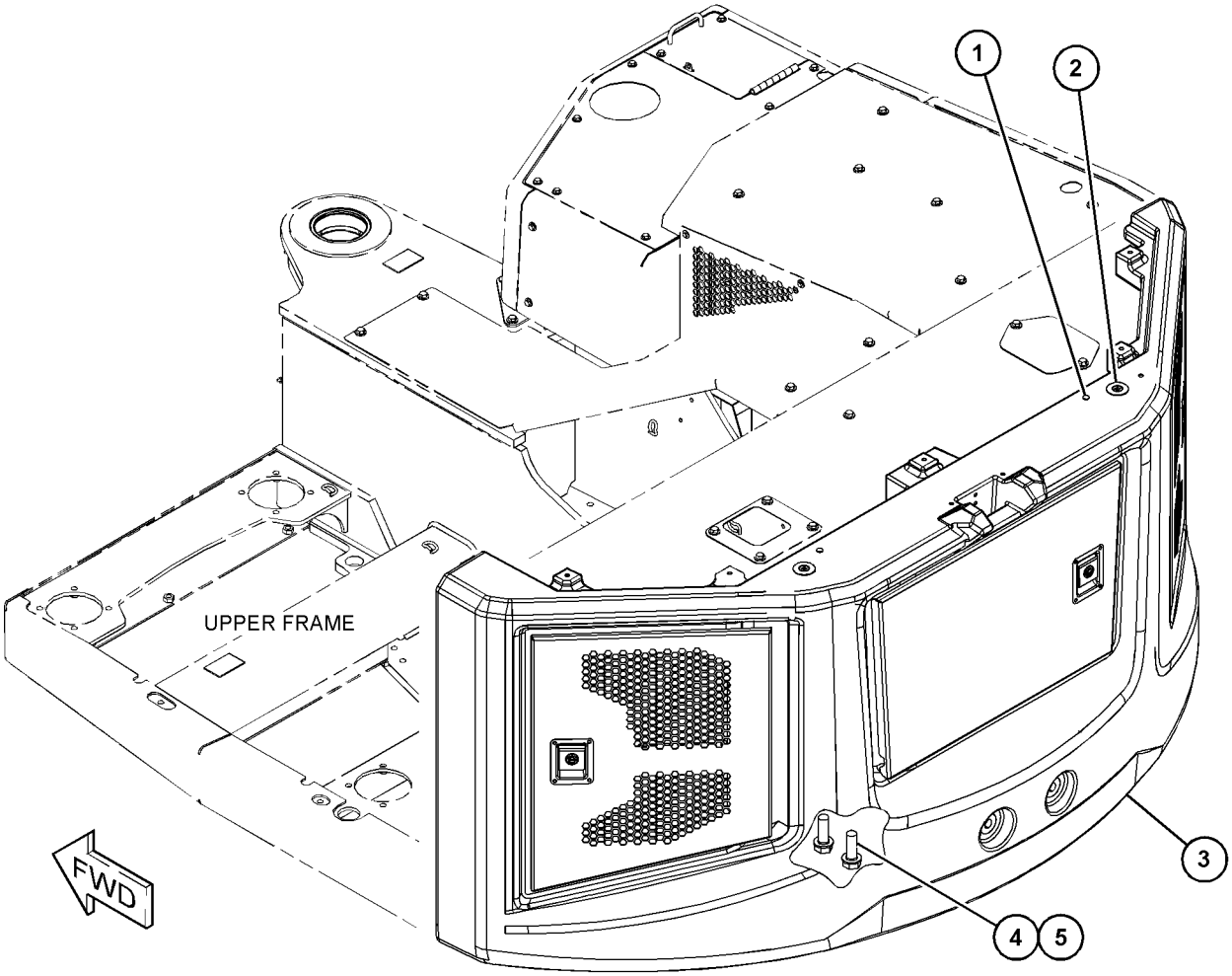

GRAPHIC #1 <END> g06332228

525-6657 COUNTERWEIGHT & MOUNTING GP

250-KG (551-LB)

PART OF 562-9155, 562-9156, 562-9159 DISTRIBUTION AR

AN ATTACHMENT

SMCS-7056 **i07546254**

NOTE	REF NO	GRAPHIC REF	PART NUMBER	QTY	PART NAME 1 2 3 4 5 6 (PRODUCT LEVEL)	SEE PAGE
M	1	1	**147-5112**	2	BOLT (M24X3X150-MM)	
	2	1	**258-2111**	2	CAP	
	3	1	**517-7257**	1	COUNTERWEIGHT AS	
	4	1	**8T-1482**	2	WASHER-HARD (26X50X8-MM THK)	

M - METRIC PART

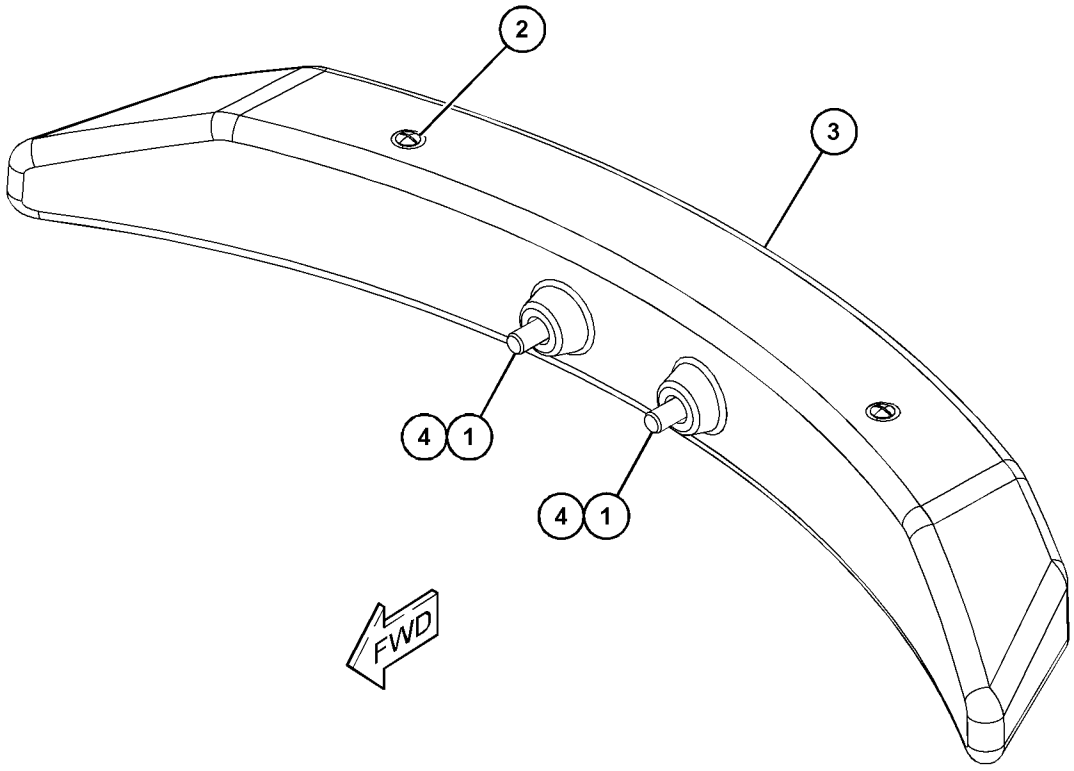

GRAPHIC #1 <END> g06341475

562-2465 COUNTERWEIGHT GP

1288-KG (2840-LB)

PART OF 512-1508 COUNTERWEIGHT & MOUNTING GP

SMCS-7055, 7056

i07542406

NOTE	REF NO	GRAPHIC REF	PART NUMBER	QTY	PART NAME 1 2 3 4 5 6 (PRODUCT LEVEL)	SEE PAGE
	1	1	**512-5260**	3	STRIKER AS	
	2	1	**512-8693**	1	COUNTERWEIGHT AS	
Y	3	1	*551-6578*	1	DOOR GP-ACCESS (RH)	98
Y	4	1	*551-6579*	1	DOOR GP-ACCESS (LH)	100
Y	5	1	*551-6580*	1	DOOR GP-ACCESS (CENTER)	102
	6	1	**552-3541**	1	INSULATION	
	7	1	**7X-7729**	18	WASHER (11X25X3-MM THK)	
M	8	1	**8T-4136**	18	BOLT (M10X1.5X25-MM)	

M - METRIC PART
Y - SEPARATE ILLUSTRATION

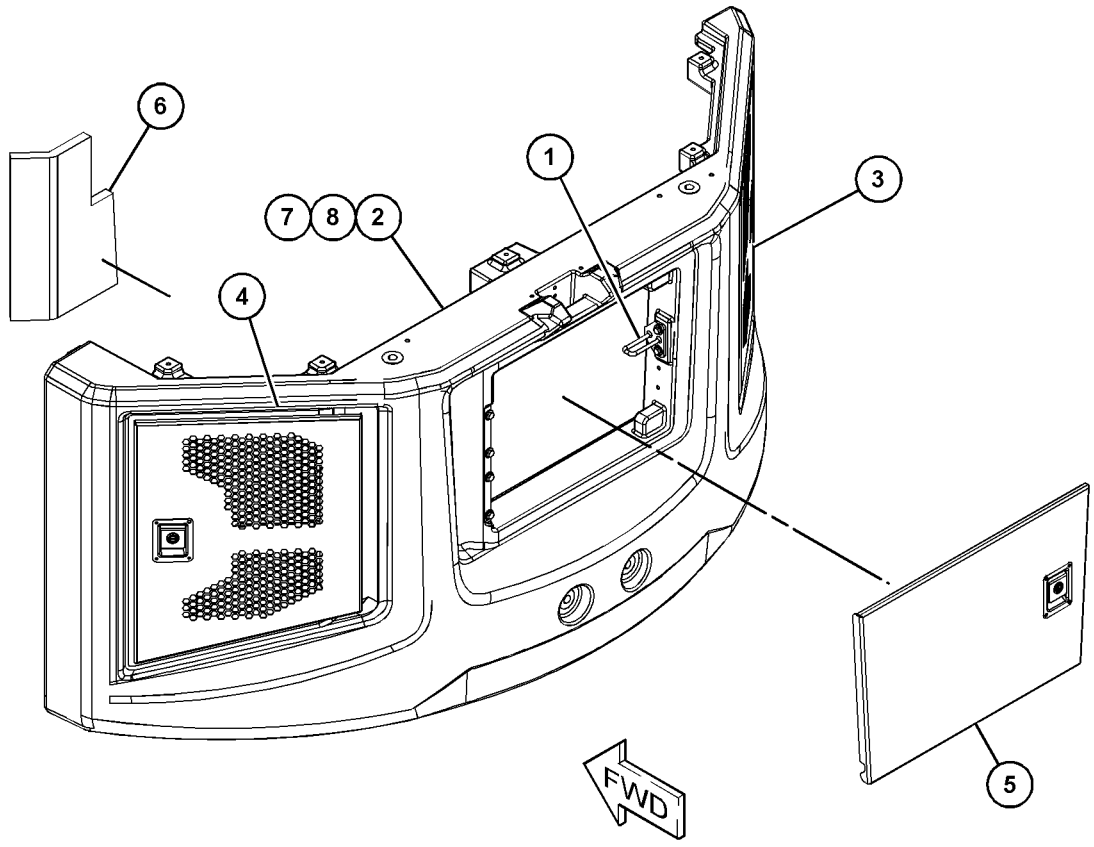

GRAPHIC #1

<END>

g06331910

521-6027 COVER GP-ACCESS

PART OF 512-1513 CHASSIS AR

SMCS-726A **i07542492**

NOTE	REF NO	GRAPHIC REF	PART NUMBER	QTY	PART NAME 1 2 3 4 5 6 (PRODUCT LEVEL)	SEE PAGE
M	1	1	**8T-4189**	5	BOLT (M8X1.25X20-MM)	
M	2	1	**8T-4200**	4	BOLT (M8X1.25X16-MM)	
	3	1	**140-3201**	1	GROMMET	
	4	1	**275-6710**	1	RETAINER (PUSH ON)	
M	5	1	**288-3657**	1	SCREW-THUMB (M6X1X10-MM)	
	6	1	**521-6030**	1	COVER AS-ACCESS	
	7	1	**547-8215**	1	DOOR AS-FILTER	
	8	1	**549-6869**	1	BRACKET AS	
	9	1	**549-6871**	1	BRACKET AS	
	10	1	**5P-4116**	9	WASHER-HARD (8.8X20.5X2-MM THK)	
E	11	1	**7X-2634**		SEAL (41.7-CM)	
E	11A	1	**7X-2634**		SEAL (39.4-CM)	

E - ORDER BY THE CENTIMETER
M - METRIC PART

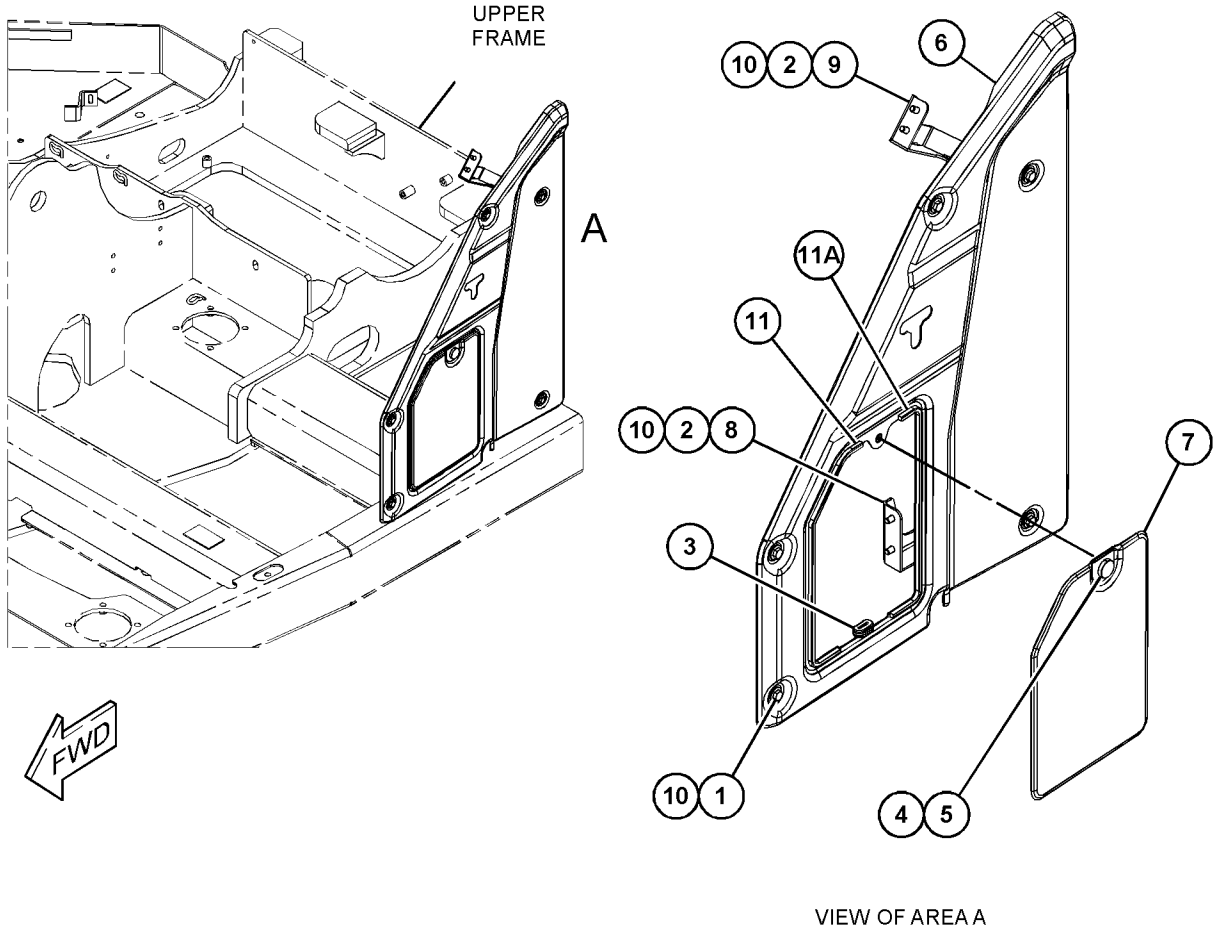

VIEW OF AREA A

GRAPHIC #1 <END> g06332939

541-4576 COVER GP-ACCESS–PEDAL

PART OF 541-4575 CONTROL AR-HYDRAULIC

AN ATTACHMENT

SMCS-726A **i07546723**

NOTE	REF NO	GRAPHIC REF	PART NUMBER	QTY	PART NAME 1 2 3 4 5 6 (PRODUCT LEVEL)	SEE PAGE
	1	1	**541-4668**	1	COVER	

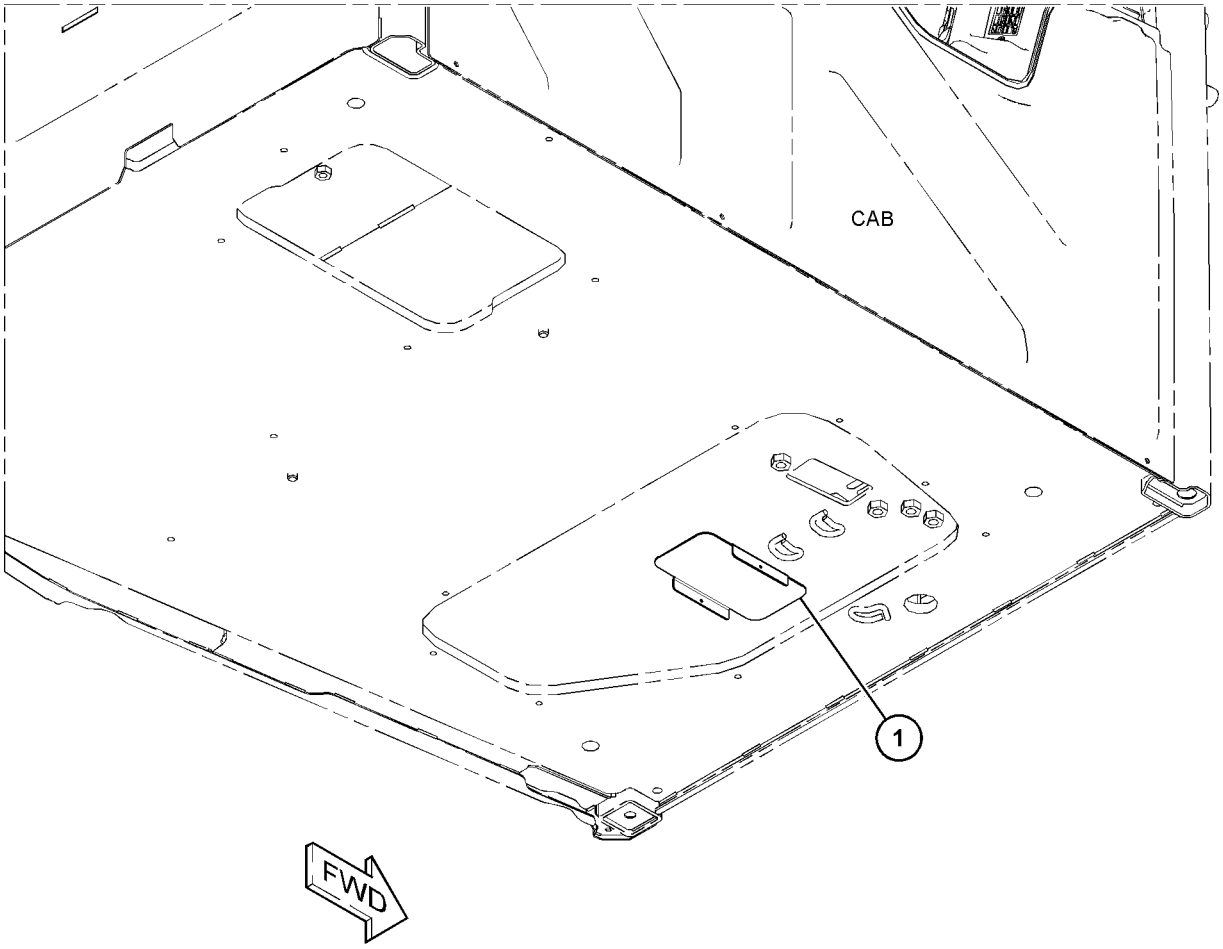

(VIEWED FROM BOTTOM)

GRAPHIC #1 <END> g06341780

545-6721 COVER GP-ACCESS

CANNOT BE USED WITH 511-6235—PAGE: 77

AN ATTACHMENT

SMCS-726A **i07548418**

NOTE	REF NO	GRAPHIC REF	PART NUMBER	QTY	PART NAME 1 2 3 4 5 6 (PRODUCT LEVEL)	SEE PAGE
	1	1	**5P-4116**	4	WASHER-HARD (8.8X20.5X2-MM THK)	
	2	1	**545-6720**	1	PLATE	
M	3	1	**8T-4189**	4	BOLT (M8X1.25X20-MM)	

M - METRIC PART

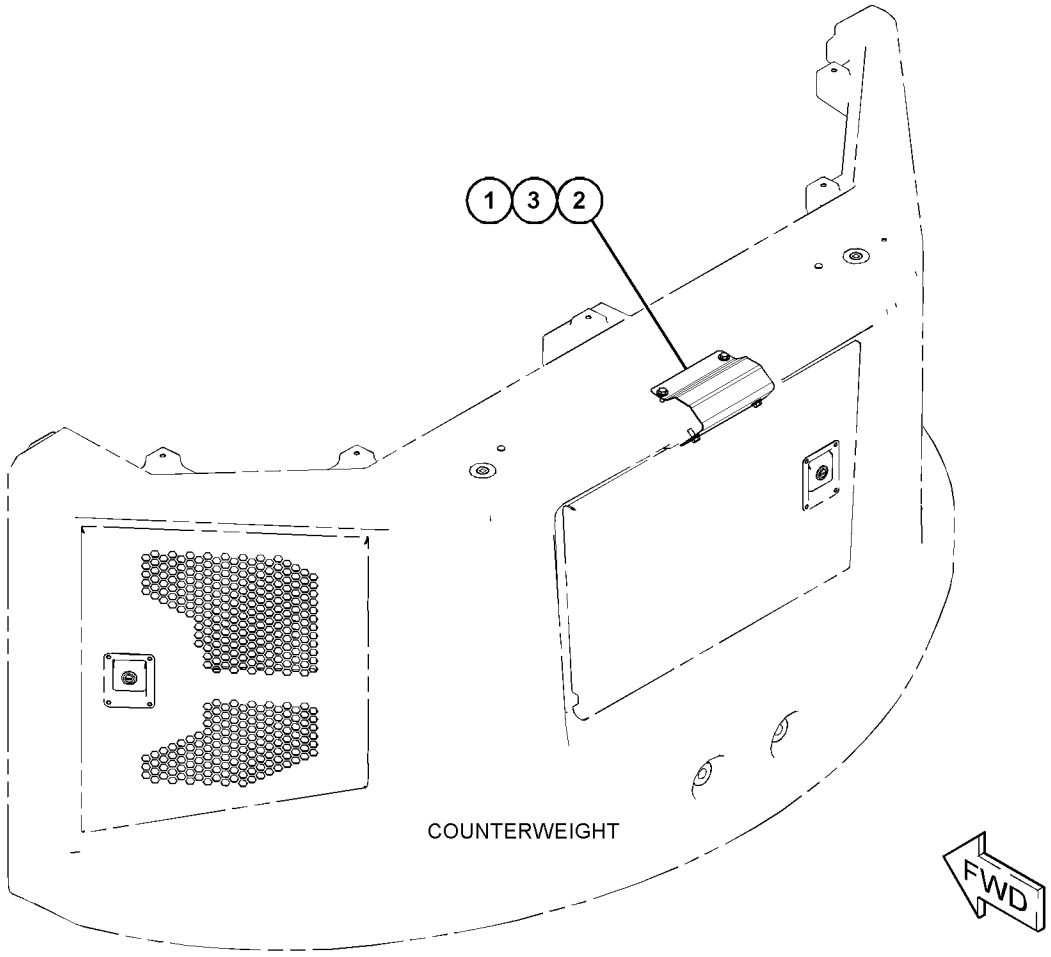

GRAPHIC #1 <END> g06340748

526-4252 COVER GP-FRAME

AN ATTACHMENT

SMCS-7051 **i07546698**

NOTE	REF NO	GRAPHIC REF	PART NUMBER	QTY	PART NAME 1 2 3 4 5 6 (PRODUCT LEVEL)	SEE PAGE
	1	1	**526-4253**	1	COVER	
M	2	1	**9X-2042**	1	SCREW-TRUSS HEAD (M6X1X12-MM)	

M - METRIC PART

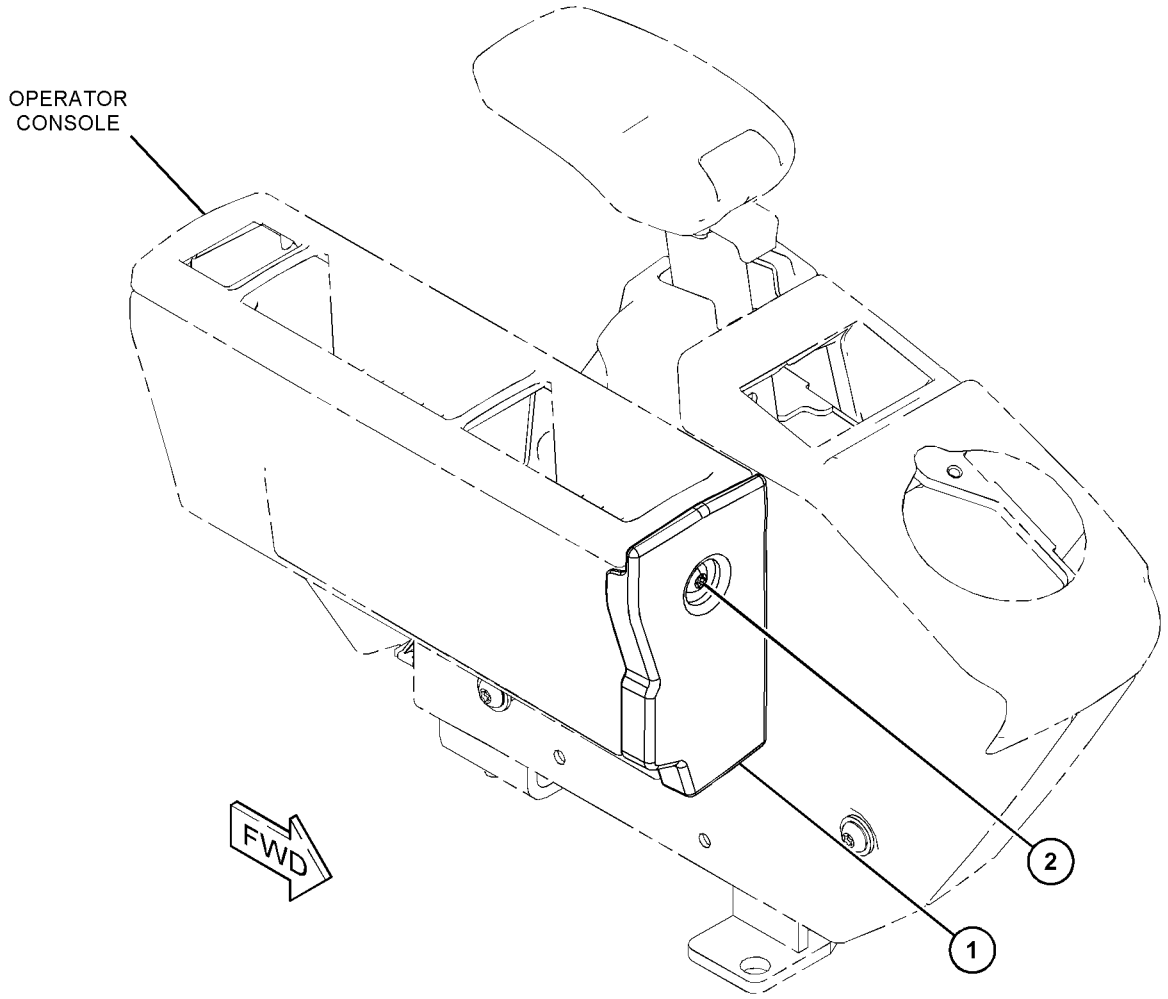

GRAPHIC #1 <END> g06320155

551-6578 DOOR GP-ACCESS—RIGHT

PART OF 562-2465 COUNTERWEIGHT GP

SMCS-7273 **i07542409**

NOTE	REF NO	GRAPHIC REF	PART NUMBER	QTY	PART NAME 1 2 3 4 5 6 (PRODUCT LEVEL)	SEE PAGE
	1	1	**333-5726**	2	BUMPER	
M	2	1	**344-5673**	4	NUT (M6X1-THD)	
M	3	1	**344-5674**	3	NUT (M8X1.25-THD)	
	4	1	**3B-4611**	1	PIN-COTTER	
	5	1	**510-7331**	1	DOOR AS-ACCESS (RIGHT)	
		1	*511-4470*	2	BRACKET AS	
					(EACH INCLUDES)	
M		1	**8T-3612**	1	NUT-WELD (M8X1.25-THD)	
		1	**515-9434**	2	PLATE-HINGE	
	6	1	*515-0726*	1	BRACKET AS	
M		1	**8T-3612**	1	NUT-WELD (M8X1.25-THD)	
	7	1	**515-0729**	2	BUSHING	
	8	1	**520-0780**	1	HINGE	
E	9	1	**149-5933**		SEAL (51.5-CM EACH)	
E	9A	1	**149-5933**		SEAL (63.5-CM)	
	10	1	**548-7980**	1	LATCH AS	
	11	1	**5P-4116**	2	WASHER-HARD (8.8X20.5X2-MM THK)	
	12	1	**7S-5757**	1	RING-RETAINING	
	13	1	**7X-0579**	1	WASHER-HARD (8.8X25.5X2-MM THK)	
	14	1	**7X-7729**	2	WASHER (11X25X3-MM THK)	
M	15	1	**8T-4136**	2	BOLT (M10X1.5X25-MM)	
	16	1	**8T-4224**	1	WASHER-HARD (8.8X16X2-MM THK)	
M	17	1	**8T-7547**	1	BOLT (M8X1.25X30-MM)	
	18	1	**9X-8256**	4	WASHER (6.6X12X2-MM THK)	

E - ORDER BY THE CENTIMETER
M - METRIC PART

551-6578 **DOOR GP-ACCESS (**contd.**)** **i07542409**

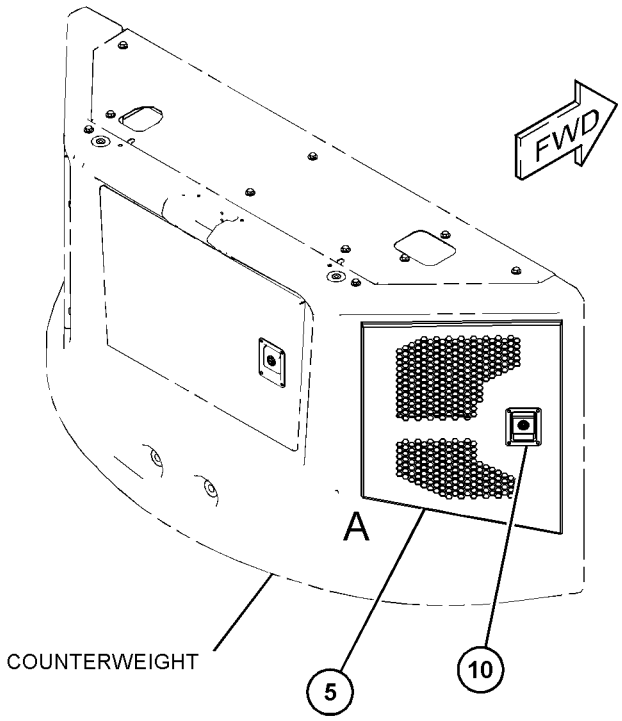

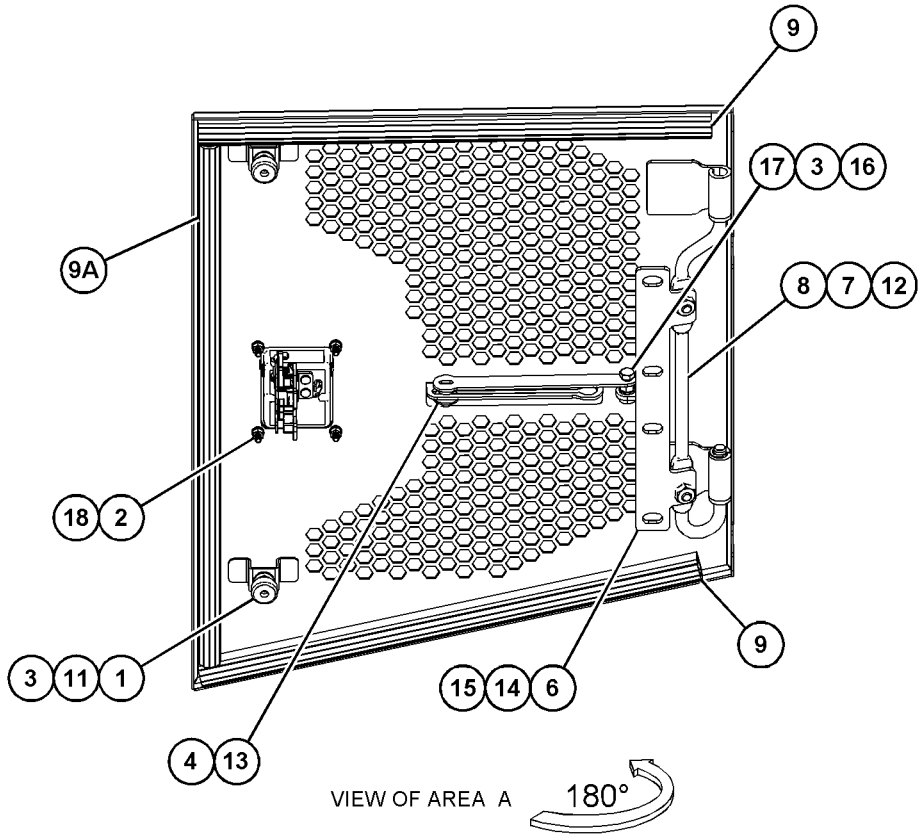

GRAPHIC #1 <END> g06346010

551-6579 DOOR GP-ACCESS—LEFT

PART OF 562-2465 COUNTERWEIGHT GP

SMCS-7273 **i07542411**

NOTE	REF NO	GRAPHIC REF	PART NUMBER	QTY	PART NAME 1 2 3 4 5 6 (PRODUCT LEVEL)	SEE PAGE
	1	1	**333-5726**	2	BUMPER	
M	2	1	**344-5673**	4	NUT (M6X1-THD)	
M	3	1	**344-5674**	3	NUT (M8X1.25-THD)	
	4	1	**3B-4611**	1	PIN-COTTER	
	5	1	**510-9236**	1	DOOR AS-HOOD (LEFT)	
		1	*511-4470*	2	BRACKET AS	
					(EACH INCLUDES)	
M		1	**8T-3612**	1	NUT-WELD (M8X1.25-THD)	
		1	**515-9434**	2	PLATE-HINGE	
	6	1	*515-0726*	1	BRACKET AS	
M		1	**8T-3612**	1	NUT-WELD (M8X1.25-THD)	
	7	1	**515-0729**	2	BUSHING	
	8	1	**520-0780**	1	HINGE	
E	9	1	**149-5933**		SEAL (51.5-CM EACH)	
E	9A	1	**149-5933**		SEAL (63.5-CM)	
	10	1	**548-7980**	1	LATCH AS	
	11	1	**5P-4116**	2	WASHER-HARD (8.8X20.5X2-MM THK)	
	12	1	**7S-5757**	1	RING-RETAINING	
	13	1	**7X-0579**	1	WASHER-HARD (8.8X25.5X2-MM THK)	
	14	1	**7X-7729**	2	WASHER (11X25X3-MM THK)	
M	15	1	**8T-4136**	2	BOLT (M10X1.5X25-MM)	
	16	1	**8T-4224**	1	WASHER-HARD (8.8X16X2-MM THK)	
M	17	1	**8T-7547**	1	BOLT (M8X1.25X30-MM)	
	18	1	**9X-8256**	4	WASHER (6.6X12X2-MM THK)	

E - ORDER BY THE CENTIMETER
M - METRIC PART

551-6579 **DOOR GP-ACCESS (**contd.**)** **i07542411**

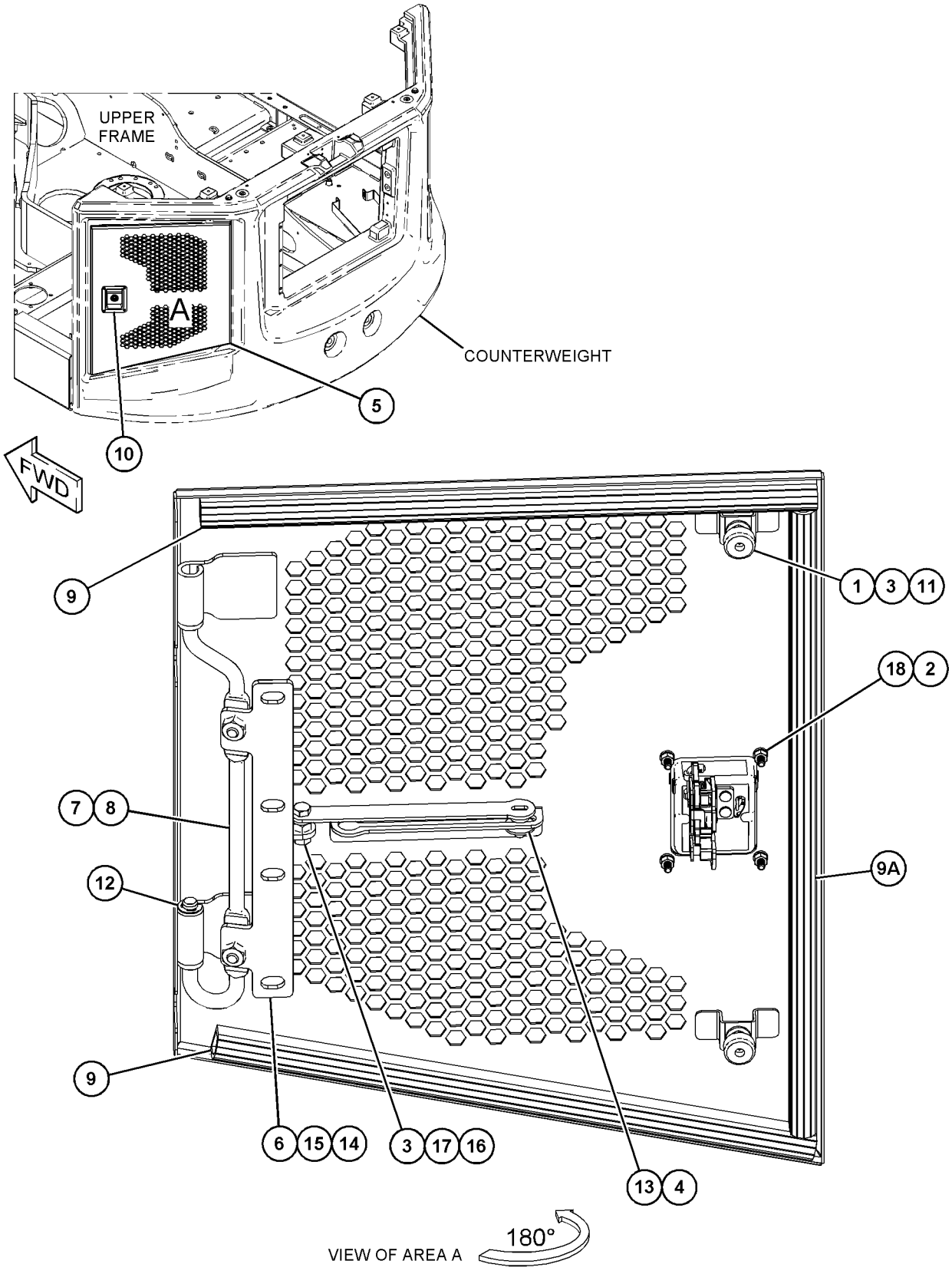

GRAPHIC #1 <END> g06345595

551-6580 DOOR GP-ACCESS—CENTER

PART OF 562-2465 COUNTERWEIGHT GP

SMCS-7273 **i07542412**

NOTE	REF NO	GRAPHIC REF	PART NUMBER	QTY	PART NAME 1 2 3 4 5 6 (PRODUCT LEVEL)	SEE PAGE
	1	1	**333-5726**	2	BUMPER	
M	2	1	**344-5673**	4	NUT (M6X1-THD)	
M	3	1	**344-5674**	3	NUT (M8X1.25-THD)	
	4	1	**3B-4611**	1	PIN-COTTER	
	5	1	**510-7327**	1	DOOR AS-HOOD (REAR)	
		1	*511-4470*	2	BRACKET AS	
					(EACH INCLUDES)	
M		1	**8T-3612**	1	NUT-WELD (M8X1.25-THD)	
		1	**515-9434**	2	PLATE-HINGE	
	6	1	*515-0726*	1	BRACKET AS	
M		1	**8T-3612**	1	NUT-WELD (M8X1.25-THD)	
	7	1	**515-0729**	2	BUSHING	
	8	1	**520-0780**	1	HINGE	
	10	1	**548-7980**	1	LATCH AS	
	11	1	**549-6875**	1	INSULATION	
	12	1	**549-6876**	1	INSULATION	
	13	1	**5P-4116**	2	WASHER-HARD (8.8X20.5X2-MM THK)	
	14	1	**7S-5757**	1	RING-RETAINING	
	15	1	**7X-0579**	1	WASHER-HARD (8.8X25.5X2-MM THK)	
	16	1	**7X-7729**	2	WASHER (11X25X3-MM THK)	
M	17	1	**8T-4136**	2	BOLT (M10X1.5X25-MM)	
	18	1	**8T-4224**	1	WASHER-HARD (8.8X16X2-MM THK)	
M	19	1	**8T-7547**	1	BOLT (M8X1.25X30-MM)	
	20	1	**9X-8256**	4	WASHER (6.6X12X2-MM THK)	
E	21	1	**149-5933**		SEAL (65-CM EACH)	
E	21A	1	**149-5933**		SEAL (45-CM)	

E - ORDER BY THE CENTIMETER
M - METRIC PART

551-6580 **DOOR GP-ACCESS** (contd.) **i07542412**

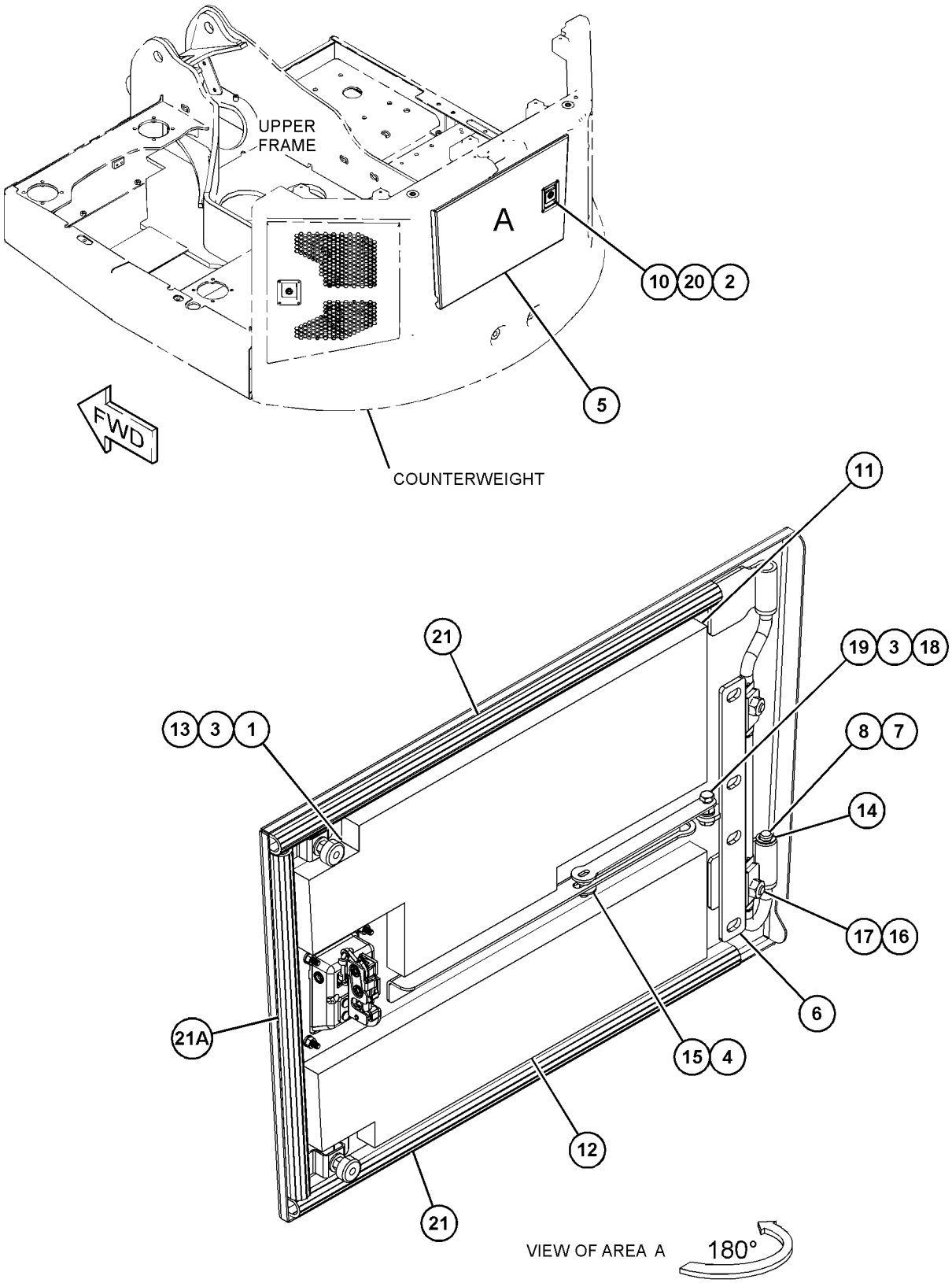

GRAPHIC #1 <END> g06345684

512-1526 ENCLOSURE GP–RH

PART OF 512-1513 CHASSIS AR

SMCS-7251, 7263, 7267, 7276 **i07542417**

NOTE	REF NO	GRAPHIC REF	PART NUMBER	QTY	PART NAME 1 2 3 4 5 6 (PRODUCT LEVEL)	SEE PAGE
M	1	2	**8T-4196**	1	BOLT (M10X1.5X35-MM)	
M	2	1,2	**8T-6466**	8	BOLT (M10X1.5X60-MM)	
	3	1	**552-5460**	1	INSULATION	
M	4	2	**5C-9553**	2	BOLT (M6X1X16-MM)	
M	5	2	**8T-4189**	3	BOLT (M8X1.25X20-MM)	
M	6	1,2	**8T-4200**	19	BOLT (M8X1.25X16-MM)	
	7	1	**5P-1076**	5	WASHER-HARD (13.5X30X4-MM THK)	
	8	1,2	**5P-4116**	22	WASHER-HARD (8.8X20.5X2-MM THK)	
	9	1,2	**7X-7729**	37	WASHER (11X25X3-MM THK)	
	10	2	**9X-2038**	2	WASHER (7X19X2-MM THK)	
	11	2	**214-6197**	1	PLUG	
	12	2	**424-7007**	1	MOUNT	
	13	2	**555-0524**	1	BRACKET AS	
M		2	**8T-3612**	2	NUT-WELD (M8X1.25-THD)	
M		2	**083-9539**	2	BOSS (M8X1.25X16-MM)	
	14	1	**333-5726**	2	BUMPER	
M	15	1	**344-5673**	4	NUT (M6X1-THD)	
M	16	1	**344-5674**	2	NUT (M8X1.25-THD)	
	17	1	**3B-4617**	1	PIN-COTTER	
	18	2	**3H-2900**	1	GROMMET	
	19	2	**510-9918**	1	COVER AS	
	20	2	**510-9956**	1	DOOR AS-ACCESS (RH)	
	21	1	**511-0770**	1	TUBE AS	
	22	1	**511-0777**	1	TUBE AS	
	23	1	**512-5260**	1	STRIKER AS	
	24	1	**545-5508**	1	ROD AS	
	25	2	**547-4565**	1	COVER AS-FRONT	
M		2	**8T-3612**	3	NUT-WELD (M8X1.25-THD)	
	26	2	**547-4567**	1	COVER AS-TOP	
M		2	**8T-3612**	1	NUT-WELD (M8X1.25-THD)	
	27	2	**547-4568**	1	COVER AS	
M		2	**8T-3612**	2	NUT-WELD (M8X1.25-THD)	
	28	2	**547-4569**	1	COVER AS-ENCLOSURE	
M		2	**8T-3612**	2	NUT-WELD (M8X1.25-THD)	
	29	2	**548-2392**	1	PLATE AS	
M		2	**8T-3612**	1	NUT-WELD (M8X1.25-THD)	
	30	2	**548-7980**	1	LATCH AS	
	31	2	**549-3304**	1	COVER AS-TOP	
M		2	**6V-9632**	2	NUT-WELD (M6X1-THD)	
	32	1	*550-7357*	2	HINGE AS	
					(EACH INCLUDES)	
		1	**3B-4611**	1	PIN-COTTER	
		1	**7X-0608**	1	WASHER-HARD (10.2X16X2-MM THK)	
	33	1	**551-2224**	1	TUBE AS	
	34	1	**552-5458**	1	INSULATION	
	35	1	**552-5459**	1	INSULATION	
	36	2	**554-1892**	1	COVER AS-ENCLOSURE	
M		2	**8T-3490**	3	NUT-WELD (M10X1.5-THD)	
M	37	1,2	**8T-4136**	21	BOLT (M10X1.5X25-MM)	

512-1526 **ENCLOSURE GP (**contd.**)** **i07542417**

NOTE	REF NO	GRAPHIC REF	PART NUMBER	QTY	PART NAME 1 2 3 4 5 6 (PRODUCT LEVEL)	SEE PAGE
M	38	1,2	**8T-4137**	8	BOLT (M10X1.5X20-MM)	
M	39	1	**8T-4956**	4	BOLT (M12X1.75X35-MM)	
	40	2	**9L-8781**	1	WASHER (0.406X1.5X0.188-IN THK)	
	41	1	**9X-8256**	4	WASHER (6.6X12X2-MM THK)	
E	42	2	**7X-7877**		STRIP-EDGE (75-CM)	
E	42A	2	**7X-7877**		STRIP-EDGE (64-CM)	
E	42B	2	**7X-7877**		STRIP-EDGE (9.2-CM)	
E	42C	2	**7X-7877**		STRIP-EDGE (44-CM)	
E	42D	2	**7X-7877**		STRIP-EDGE (28-CM)	

E - ORDER BY THE CENTIMETER
M - METRIC PART

512-1526 **ENCLOSURE GP** (contd.) **i07542417**

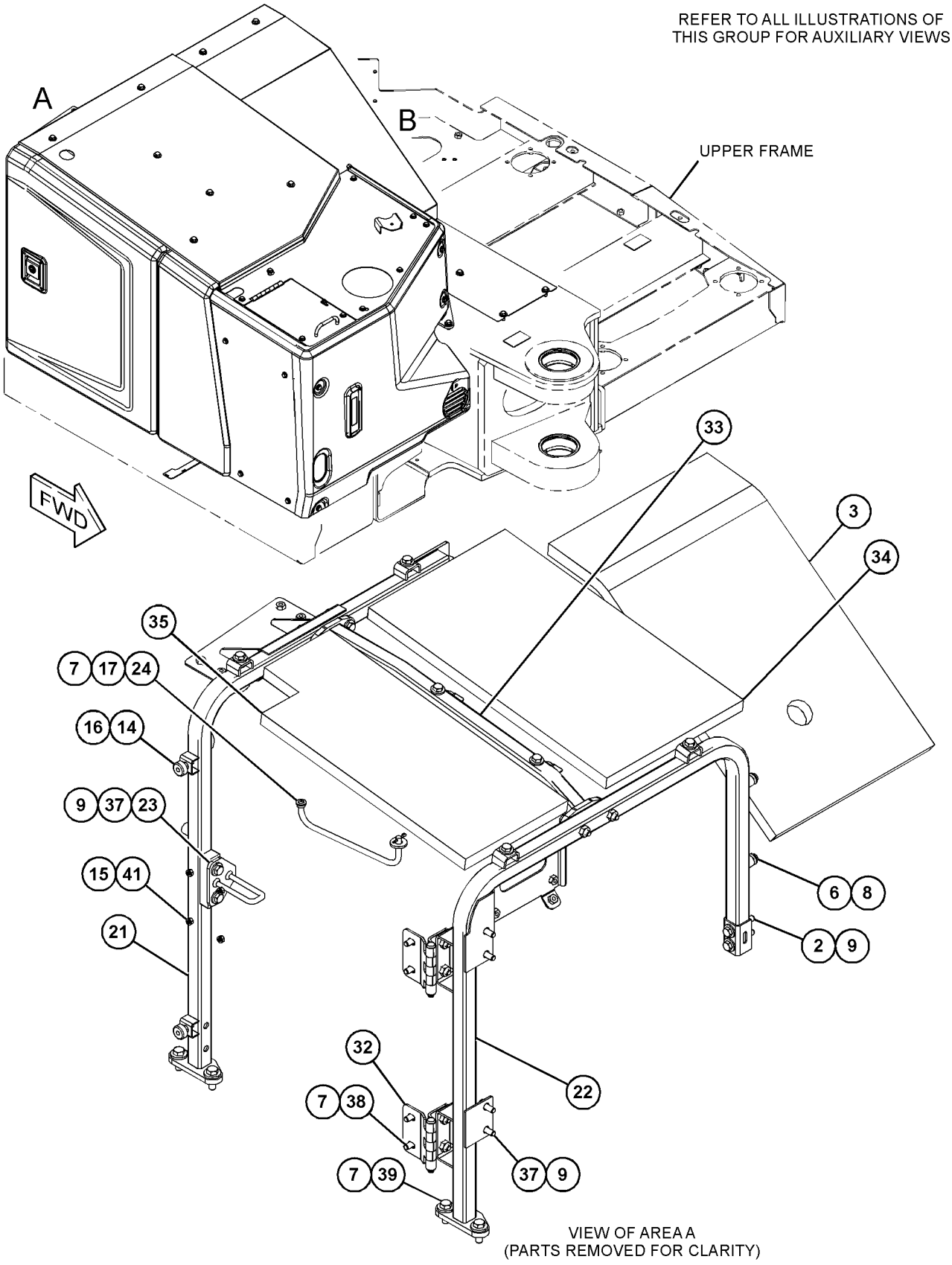

GRAPHIC #1 g06346053

512-1526 **ENCLOSURE GP** (contd.) **i07542417**

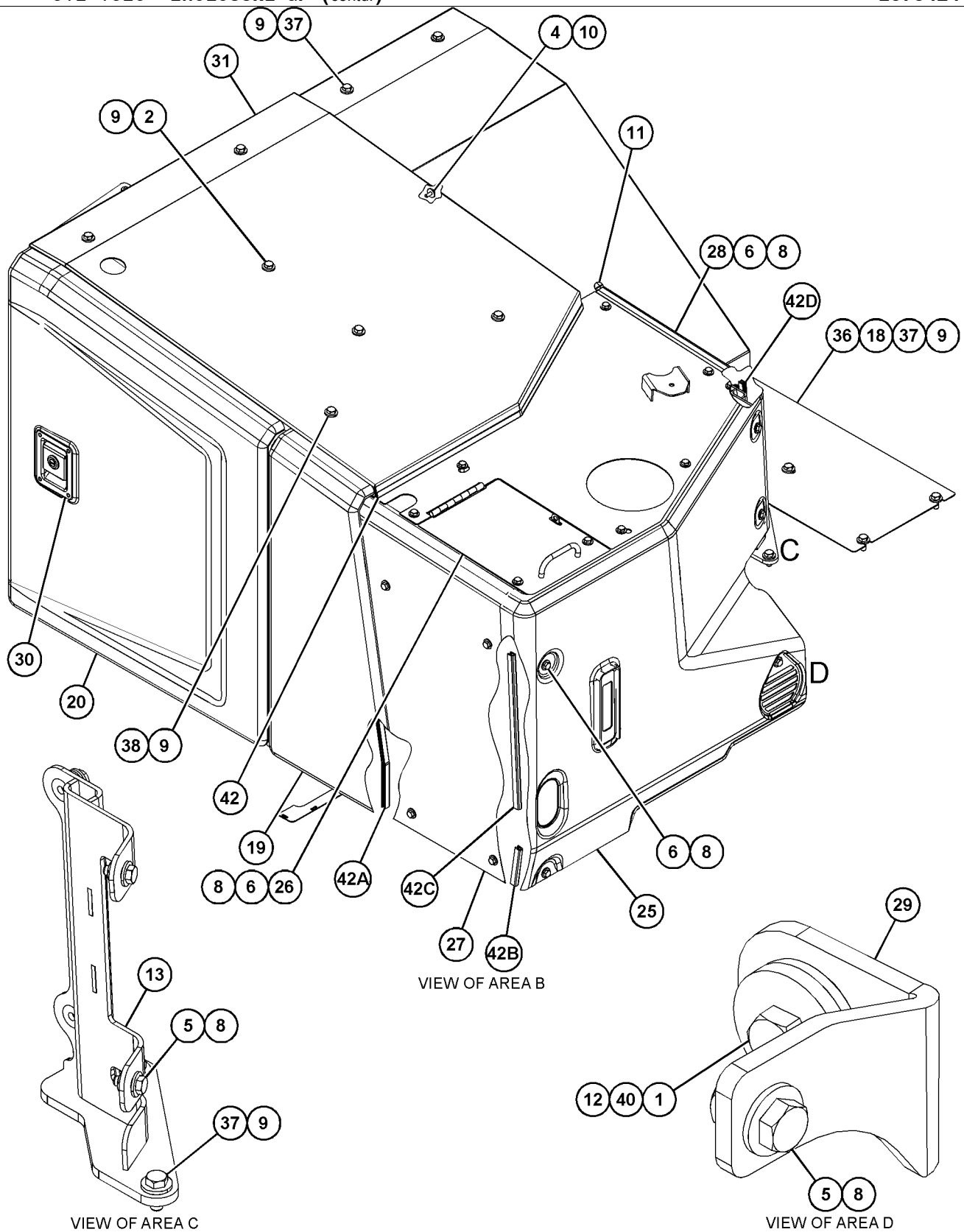

VIEW OF AREA B

VIEW OF AREA C
(PARTS REMOVED FOR CLARITY)

VIEW OF AREA D
(PARTS REMOVED FOR CLARITY)

GRAPHIC #2

<END>

g06346054

511-7328 FIREWALL GP

PART OF 512-1513 CHASSIS AR

SMCS-7262 **i07542363**

NOTE	REF NO	GRAPHIC REF	PART NUMBER	QTY	PART NAME 1 2 3 4 5 6 (PRODUCT LEVEL)	SEE PAGE
M	1	1	**8T-4195**	2	BOLT (M10X1.5X30-MM)	
	2	1	**515-7643**	1	SEAL (TOP)	
	3	1	**543-0997**	1	PLATE	
	4	1	**547-8216**	1	INSULATION	
	5	1	**550-9804**	1	SEAL	
	6	1	*566-4059*	1	FIREWALL AS	
		1	**7T-1099**	5	LINK	
M		1	**8T-3490**	7	NUT-WELD (M10X1.5-THD)	
M		1	**8T-3612**	7	NUT-WELD (M8X1.25-THD)	
M		1	**8Y-3795**	2	BOSS (M10X1.5X39-MM)	
M		1	**9R-2672**	2	BOSS-THREADED (M10X1.5X120-MM)	
M		1	**8T-3612**	6	NUT-WELD (M8X1.25-THD)	
	7	1	**566-4062**	1	PLATE	
	8	1	**7X-7729**	8	WASHER (11X25X3-MM THK)	
M	9	1	**8T-4136**	11	BOLT (M10X1.5X25-MM)	
M	10	1	**8T-4137**	4	BOLT (M10X1.5X20-MM)	
	11	1	**8T-4222**	9	WASHER-PLATED (11X32X2.5-MM THK)	
D	12	1	**5P-5649**		SEAL-BULK (0.3-M)	
D	13	1	**5P-7211**		SEAL (1.4-M)	

D - ORDER BY THE METER
M - METRIC PART

511-7328 **FIREWALL GP (**contd.**)** **i07542363**

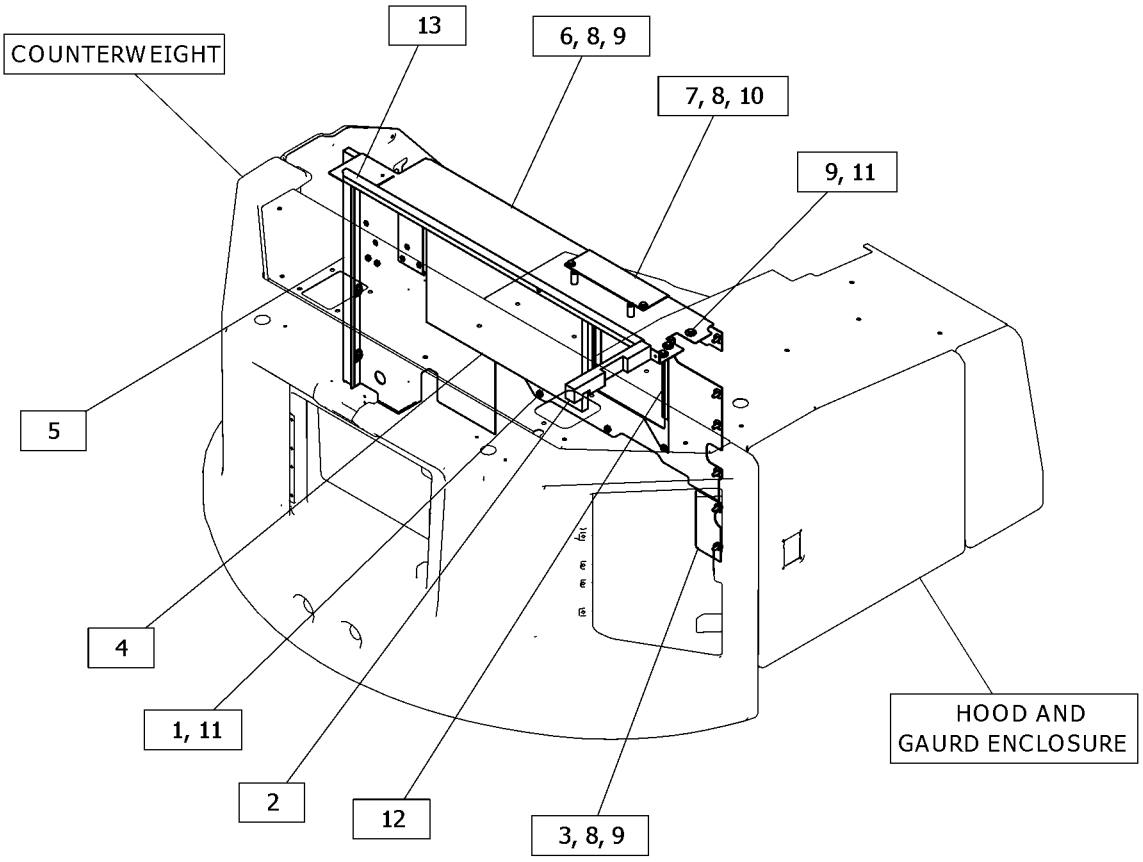

GRAPHIC #1 <END> g06344010

512-1546 FRAME AS-UNDERCARRIAGE

PART OF 512-2524, 512-2526 BLADE AR-STRAIGHT

AN ATTACHMENT

SMCS-4150 **i07546218**

NOTE	REF NO	GRAPHIC REF	PART NUMBER	QTY	PART NAME 1 2 3 4 5 6 (PRODUCT LEVEL)	SEE PAGE
					(NO SERVICED PARTS)	

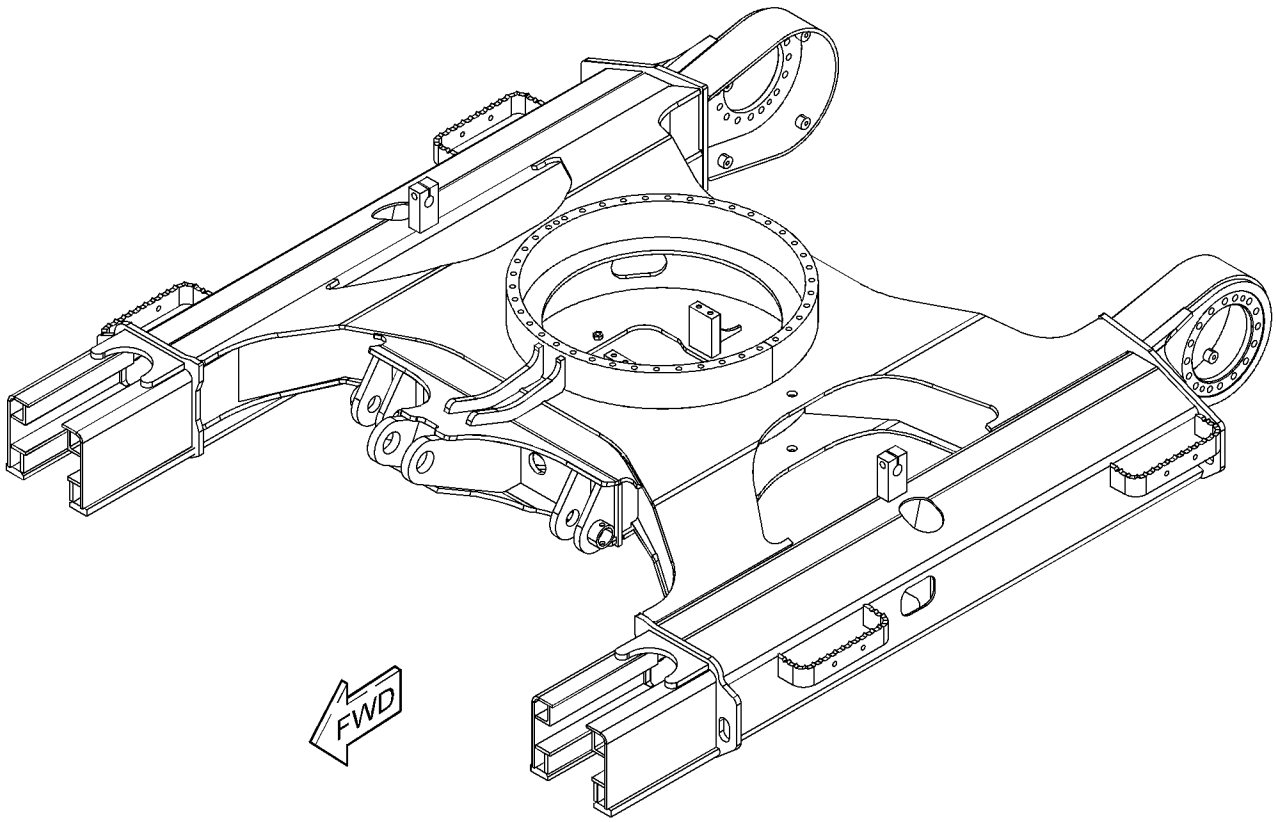

GRAPHIC #1 <END> g06342632

512-2587 FRAME GP-SWING

PART OF 512-1513 CHASSIS AR

SMCS-6506 **i07542425**

NOTE	REF NO	GRAPHIC REF	PART NUMBER	QTY	PART NAME 1 2 3 4 5 6 (PRODUCT LEVEL)	SEE PAGE
	1	1	**296-9540**	1	PIN AS	
	2	1	**451-7576**	3	SHIM (2-MM THK)	
	3	1	**512-8732**	2	PIN AS	
	4	1	**512-8735**	2	PIN AS	
	5	1	**512-8895**	1	SUPPORT & BEARING AS	
	5A	1	**296-9533**	2	BUSHING	
	5B	1	**296-9534**	2	BUSHING	
		1	**281-0926**	2	BOSS	
		1	**296-9535**	4	BOSS	
	6	1	**512-8922**	1	WASHER (121X230X10-MM THK)	
	7	1	**086-0298**	4	WASHER (19X60X9-MM THK)	
M	8	1	**8T-4140**	4	BOLT (M16X2X60-MM)	
M	9	1	**8T-4184**	2	BOLT (M12X1.75X45-MM)	
M	10	1	**8T-4192**	1	BOLT (M12X1.75X25-MM)	
	11	1	**8T-4895**	3	WASHER (13.5X50X5-MM THK)	
B	12	1	**451-7573**	3	SHIM (1-MM THK)	
B		1	**451-7579**	3	SHIM (0.5-MM THK)	
B	13	1	**468-7325**	1	SHIM (0.5-MM THK)	
B		1	**468-7326**	1	SHIM (1-MM THK)	

B - USE AS REQUIRED
M - METRIC PART

512-2587 **FRAME GP-SWING (**contd.**)** **i07542425**

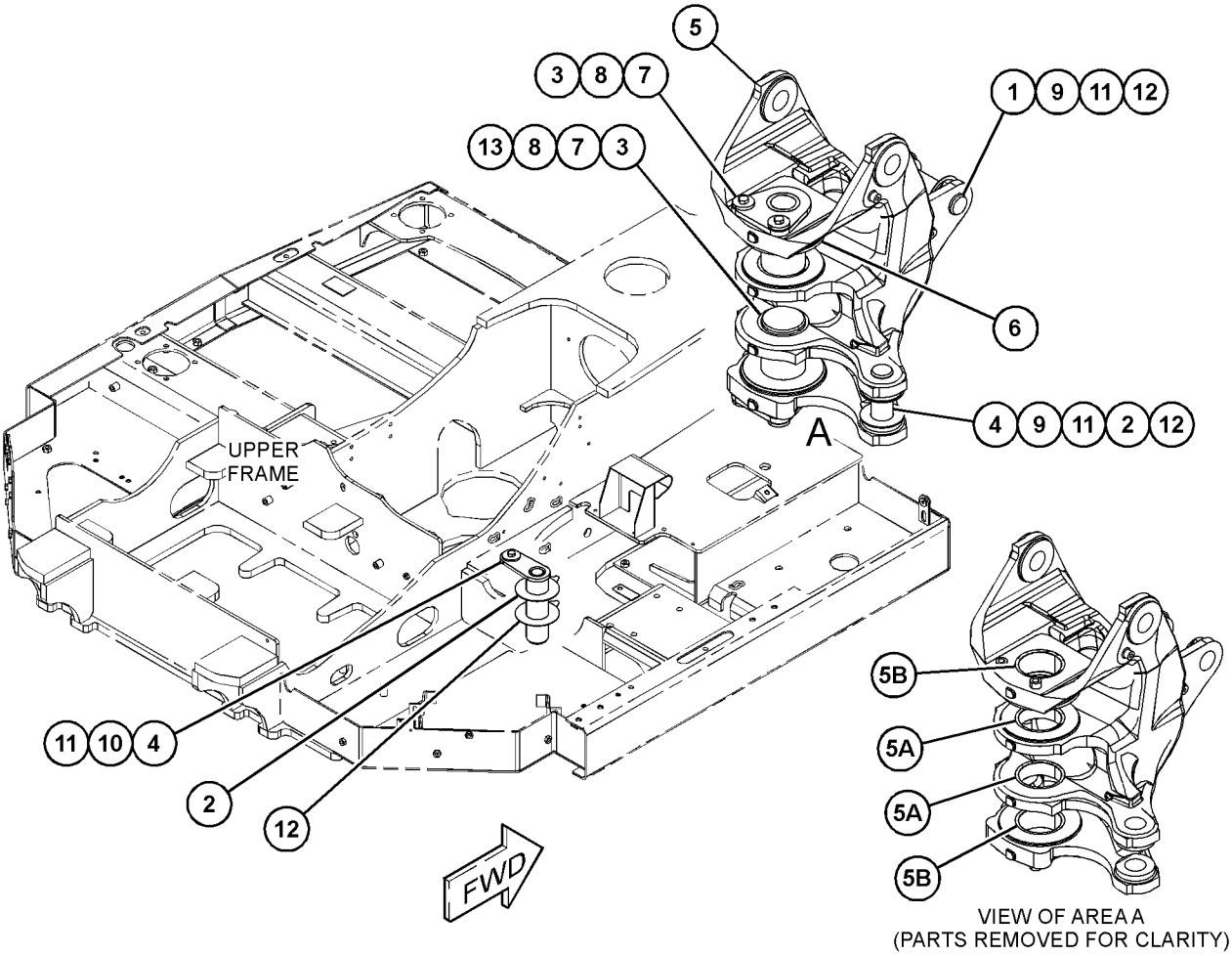

GRAPHIC #1 <END> g06344545

512-1534 FRAME GP-UPPER

PART OF 512-1513 CHASSIS AR

SMCS-7051 **i07542419**

NOTE	REF NO	GRAPHIC REF	PART NUMBER	QTY	PART NAME 1 2 3 4 5 6 (PRODUCT LEVEL)	SEE PAGE
	1	1	**3B-8489**	2	FITTING-GREASE (1/8-27 PTF)	
	2	1	**512-8715**	1	FRAME AS-UPPER	
	2A	1	**375-7328**	2	BUSHING	
		1	**166-1498**	4	SEAL-LIP TYPE	
	3	1	**512-8738**	1	COVER	
	4	1	**8T-4121**	2	WASHER-HARD (11X21X2.5-MM THK)	
M	5	1	**8T-4136**	2	BOLT (M10X1.5X25-MM)	

M - METRIC PART

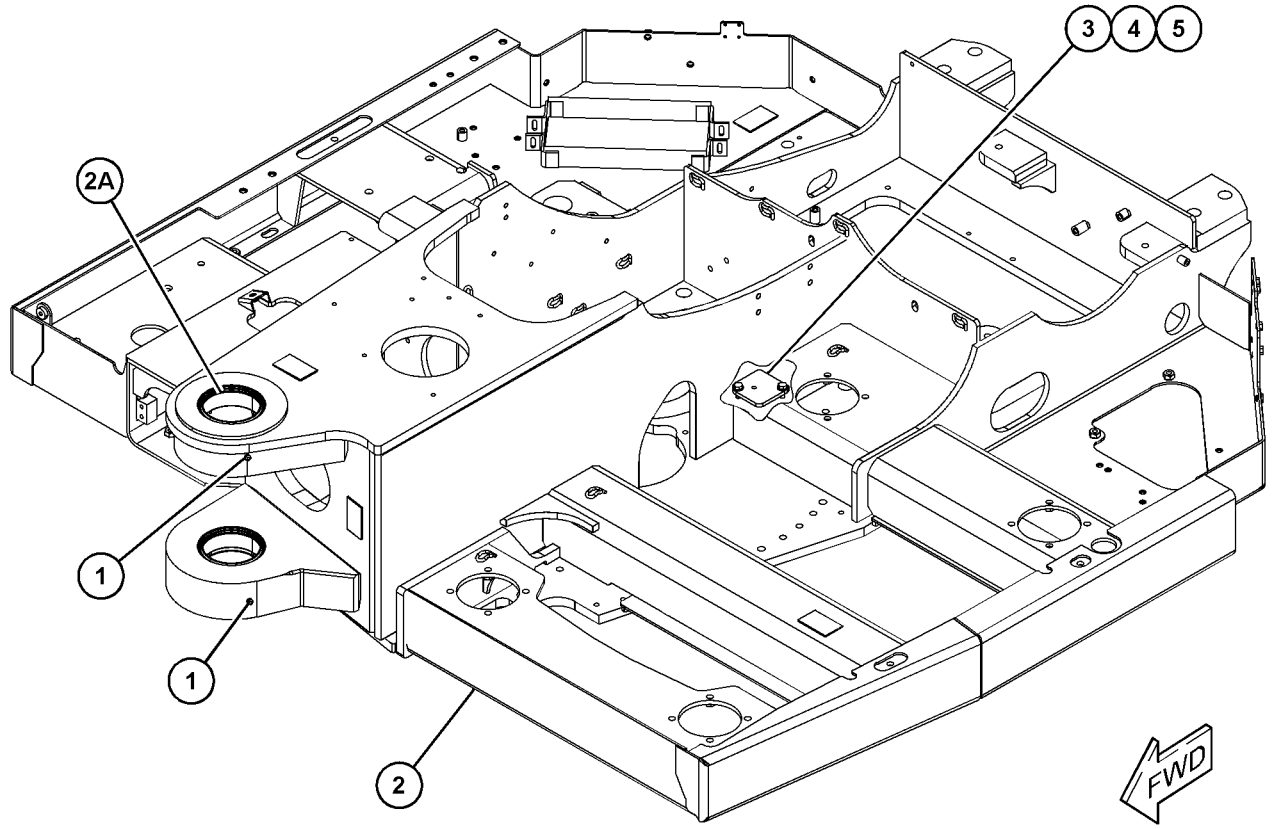

GRAPHIC #1 <END> g06344139

549-7086 GUARD GP-BOTTOM

PART OF 512-1513 CHASSIS AR

SMCS-7153 **i07542475**

NOTE	REF NO	GRAPHIC REF	PART NUMBER	QTY	PART NAME 1 2 3 4 5 6 (PRODUCT LEVEL)	SEE PAGE
M	1	1	**8C-8992**	28	BOLT-LOCKING (M12X1.75X30-MM)	
	2	1	**5P-1076**	28	WASHER-HARD (13.5X30X4-MM THK)	
	3	1	**512-7460**	1	COVER	
	4	1	**512-7461**	1	COVER	
	5	1	**512-7462**	1	COVER	
	6	1	**512-7463**	1	COVER	
	7	1	**512-7464**	1	COVER	
	8	1	**549-7073**	1	COVER	
	9	1	**549-7087**	1	COVER	

M - METRIC PART

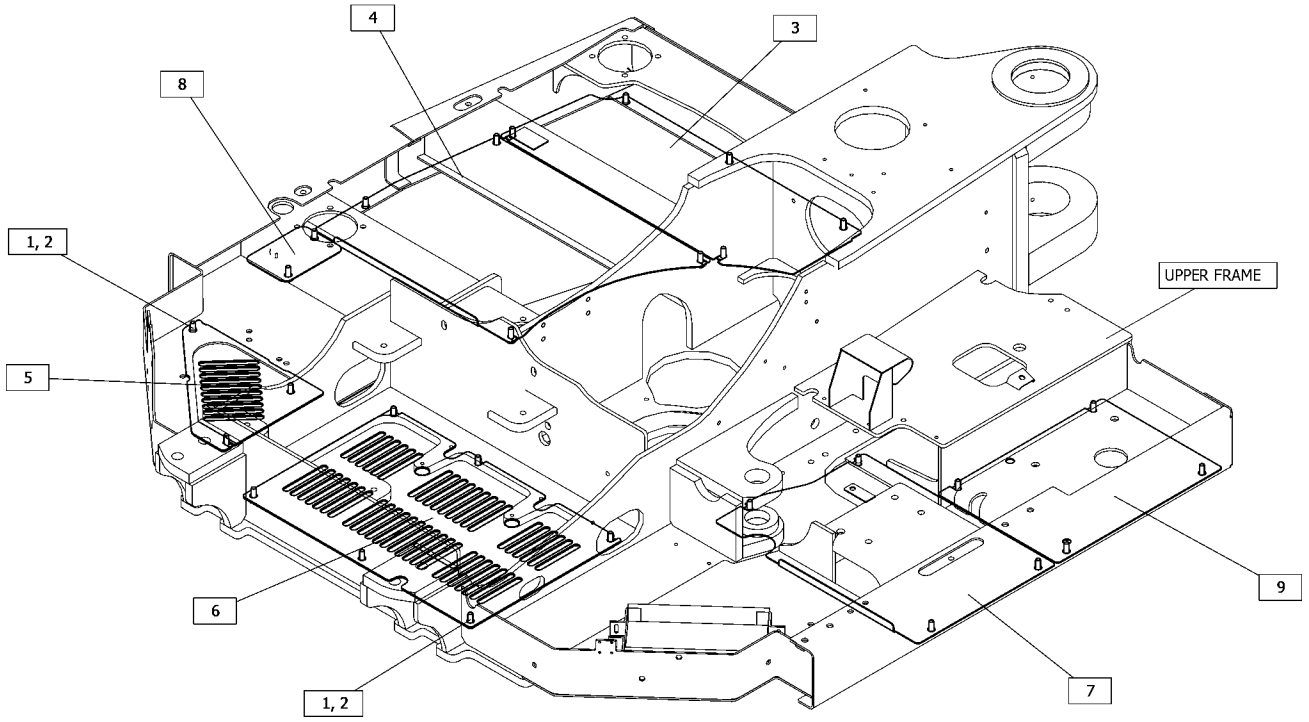

GRAPHIC #1 <END> g06334805

567-6410 GUARD GP-CYLINDER–BOOM

PART OF 512-2576 BOOM AR
AN ATTACHMENT

SMCS-7164 **i07546443**

NOTE	REF NO	GRAPHIC REF	PART NUMBER	QTY	PART NAME 1 2 3 4 5 6 (PRODUCT LEVEL)	SEE PAGE
	1	1	**172-2596**	2	TUBE	
	2	1	**564-7741**	1	GUIDE	
	3	1	**564-7742**	1	COVER-ROD	
M	4	1	**7X-2552**	1	BOLT (M16X2X30-MM)	
	5	1	**8T-4224**	2	WASHER-HARD (8.8X16X2-MM THK)	
M	6	1	**8T-4908**	2	BOLT (M8X1.25X25-MM)	
	7	1	**9X-8257**	1	WASHER (17.5X30X3.5-MM THK)	

M - METRIC PART

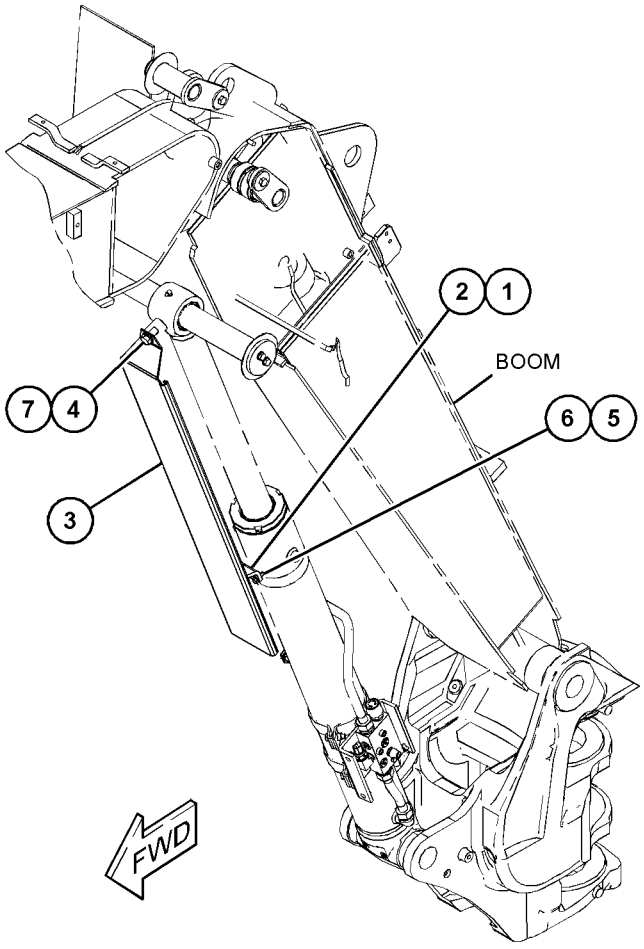

GRAPHIC #1 <END> g06335477

512-5813 GUARD GP-SWIVEL

PART OF 512-1441 UNDERCARRIAGE AR

SMCS-7183 **i07542332**

NOTE	REF NO	GRAPHIC REF	PART NUMBER	QTY	PART NAME 1 2 3 4 5 6 (PRODUCT LEVEL)	SEE PAGE
	1	1	**516-0930**	1	COVER	
M	2	1	**8C-8992**	4	BOLT-LOCKING (M12X1.75X30-MM)	
	3	1	**8T-4821**	2	WASHER (13.5X40X3-MM THK)	
	4	1	**8T-7971**	4	WASHER-HARD (13.5X25.5X5-MM THK)	

M - METRIC PART

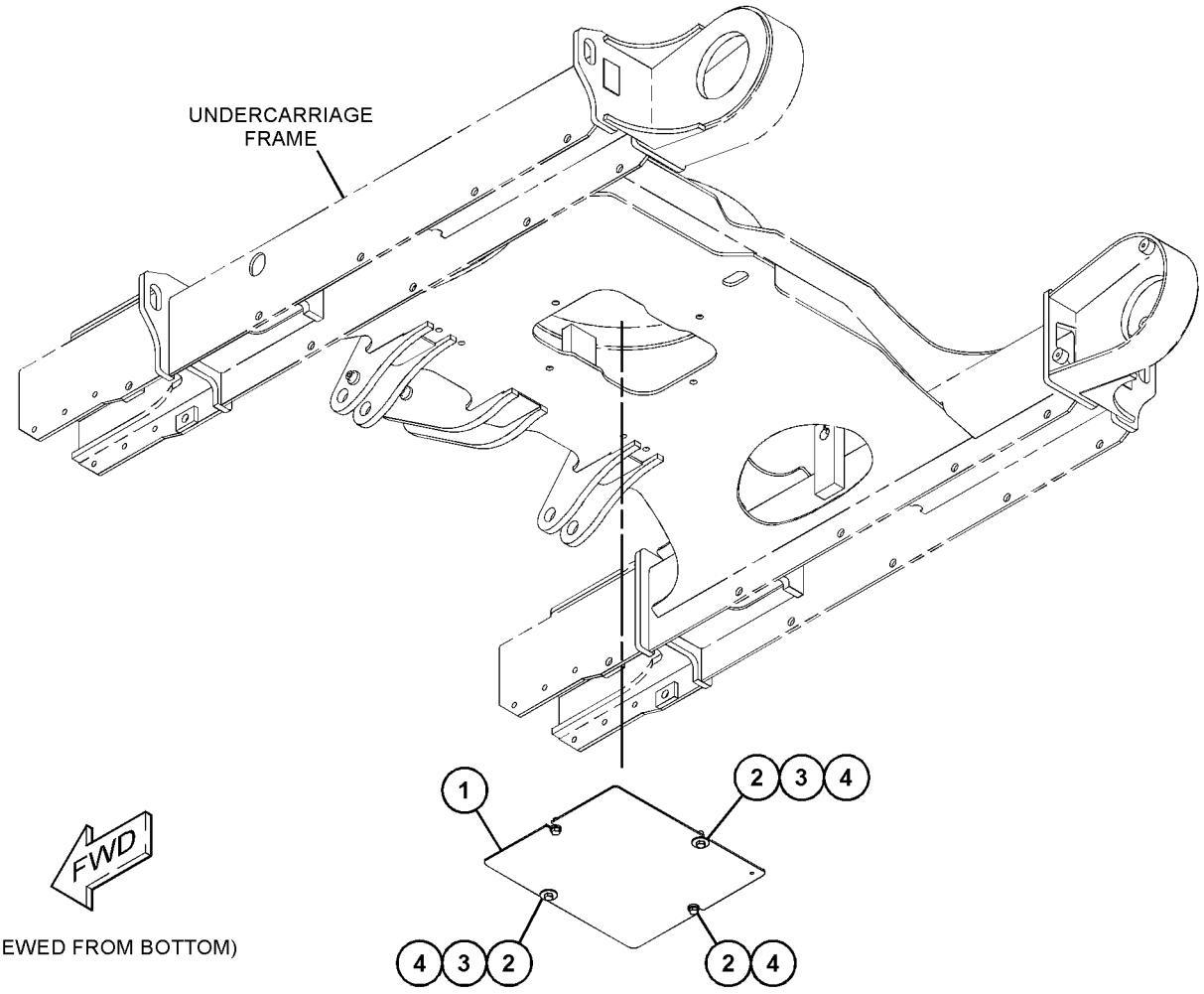

GRAPHIC #1 <END> g06331579

523-0491 HOOD & GUARD GP–REAR

PART OF 512-1513 CHASSIS AR

SMCS-7150, 7251 **i07542440**

NOTE	REF NO	GRAPHIC REF	PART NUMBER	QTY	PART NAME 1 2 3 4 5 6 (PRODUCT LEVEL)	SEE PAGE
	1	1	**541-7046**	1	BRACKET AS	
	2	1	**549-6877**	1	INSULATION	
	3	1	**549-6878**	1	INSULATION	
	4	1	**550-7640**	1	COVER AS-HOOD	
	5	1	**567-7574**	1	PLATE	
	6	1	**567-7582**	1	PLATE	
	7	1	**7X-7729**	14	WASHER (11X25X3-MM THK)	
M	8	1	**8T-4136**	8	BOLT (M10X1.5X25-MM)	
M	9	1	**8T-4137**	6	BOLT (M10X1.5X20-MM)	
D	10	1	**5P-7211**		SEAL (1.2-M)	

D - ORDER BY THE METER
M - METRIC PART

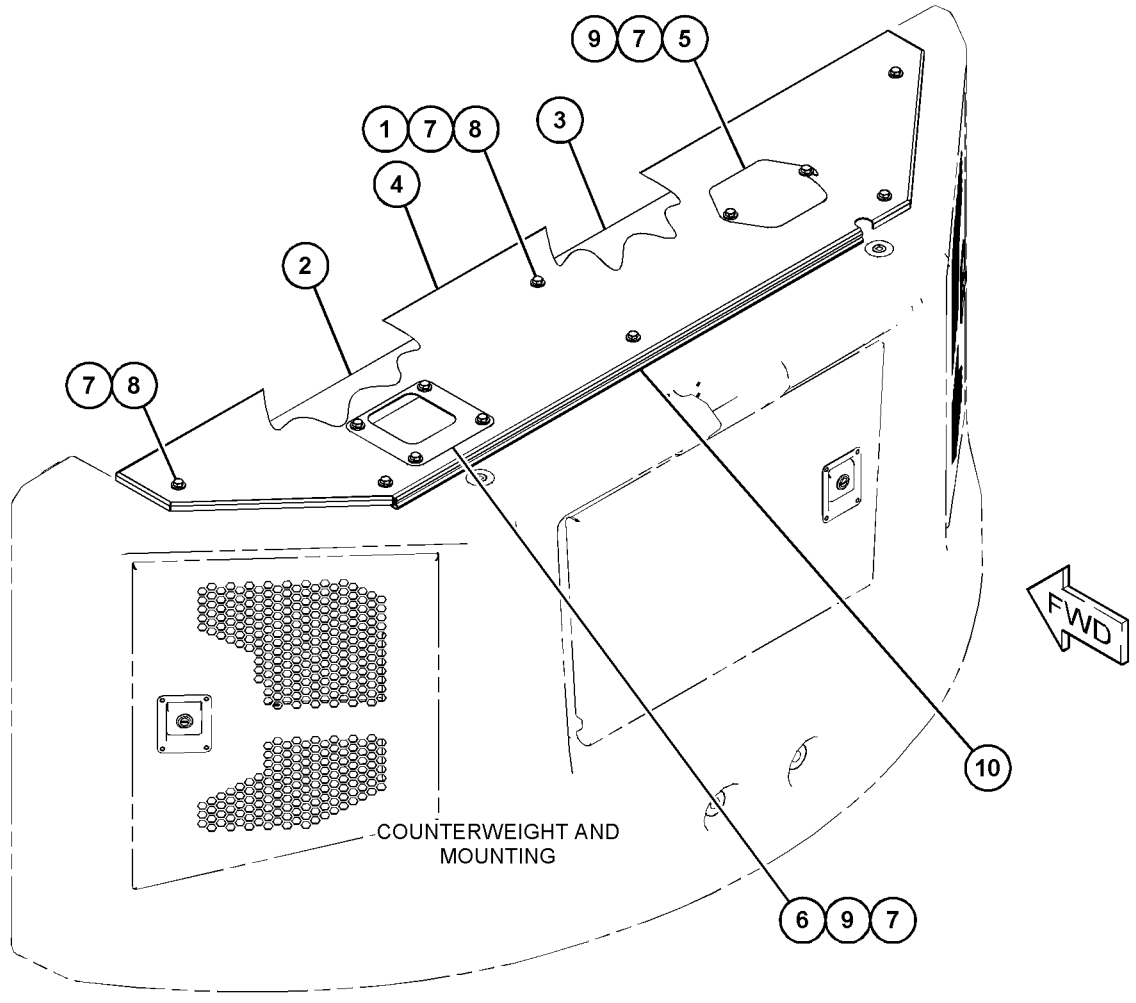

GRAPHIC #1 <END> g06341881

561-8205 KIT-COUNTERWEIGHT

AN ATTACHMENT

SMCS-7056 **i07548457**

NOTE	PART NUMBER	QTY	PART NAME 1 2 3 4 5 6 (PRODUCT LEVEL)	SEE PAGE
M	**147-5112**	2	BOLT (M24X3X150-MM)	
	258-2111	2	CAP	
	517-7257	1	COUNTERWEIGHT AS	
	8T-1482	2	WASHER-HARD (26X50X8-MM THK)	

M - METRIC PART

<END>

567-4596 KIT-SCREEN—PROTECTION

AIR EXIT

AN ATTACHMENT

SMCS-506B **i07548557**

NOTE	PART NUMBER	QTY	PART NAME 1 2 3 4 5 6 (PRODUCT LEVEL)	SEE PAGE
M	**8T-4137**	8	BOLT (M10X1.5X20-MM)	
	530-2784	1	SCREEN AS-AIR (RADIATOR)	
	530-2785	1	SCREEN AS-AIR (OIL COOLER)	
	8T-4121	8	WASHER-HARD (11X21X2.5-MM THK)	

M - METRIC PART

<END>

523-6404 MIRROR & MTG GP-REAR VIEW

AN ATTACHMENT

SMCS-7319 **i07546575**

NOTE	REF NO	GRAPHIC REF	PART NUMBER	QTY	PART NAME 1 2 3 4 5 6 (PRODUCT LEVEL)	SEE PAGE
	1	1	**162-3548**	1	MIRROR AS (RH)	
		1	**320-5472**	1	NUT (M8X1.25-THD)	
	2	1	**438-9121**	1	MIRROR AS (LH)	
		1	**454-3607**	1	MIRROR	
	3	1	**533-2209**	1	SUPPORT AS	
M	4	1	**6V-7357**	2	BOLT (M6X1X25-MM)	
	5	1	**7X-7729**	1	WASHER (11X25X3-MM THK)	
M	6	1	**8T-4136**	1	BOLT (M10X1.5X25-MM)	
	7	1	**9X-8256**	2	WASHER (6.6X12X2-MM THK)	

M - METRIC PART

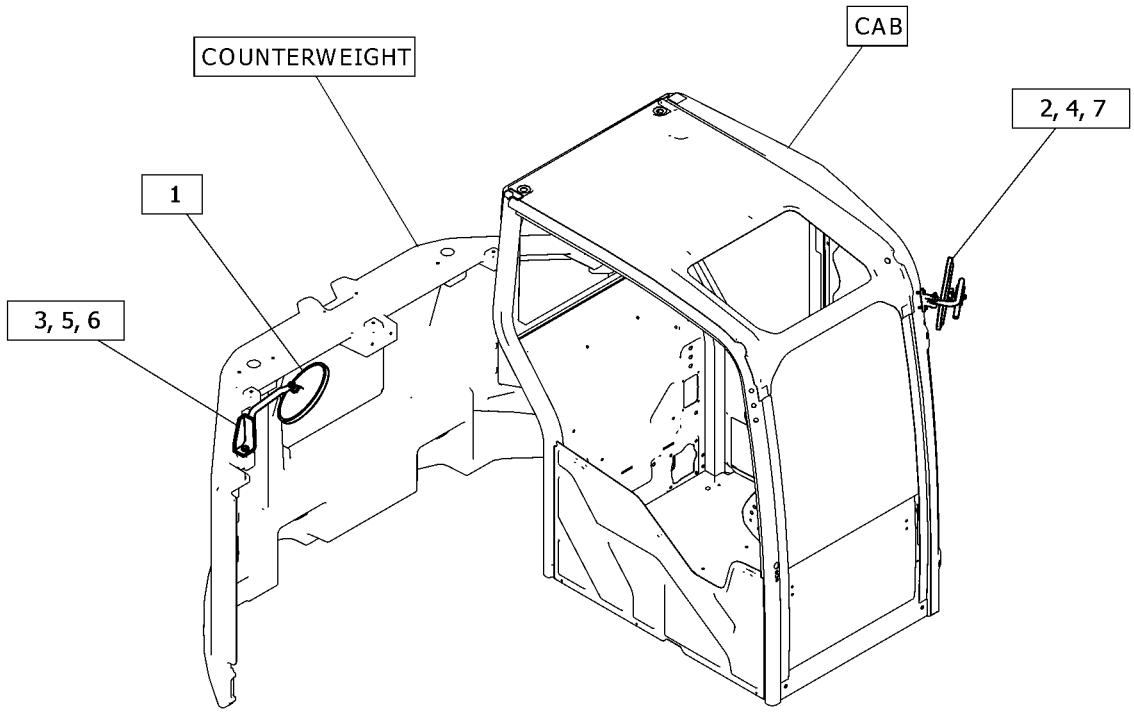

GRAPHIC #1 <END> g06344158

538-2663 PLUG GP-COUNTERWEIGHT

PART OF 562-4906 DISTRIBUTION AR

AN ATTACHMENT

SMCS-7055 **i07544465**

NOTE	REF NO	GRAPHIC REF	PART NUMBER	QTY	PART NAME 1 2 3 4 5 6 (PRODUCT LEVEL)	SEE PAGE
	1	1	**548-8514**	2	PLUG	

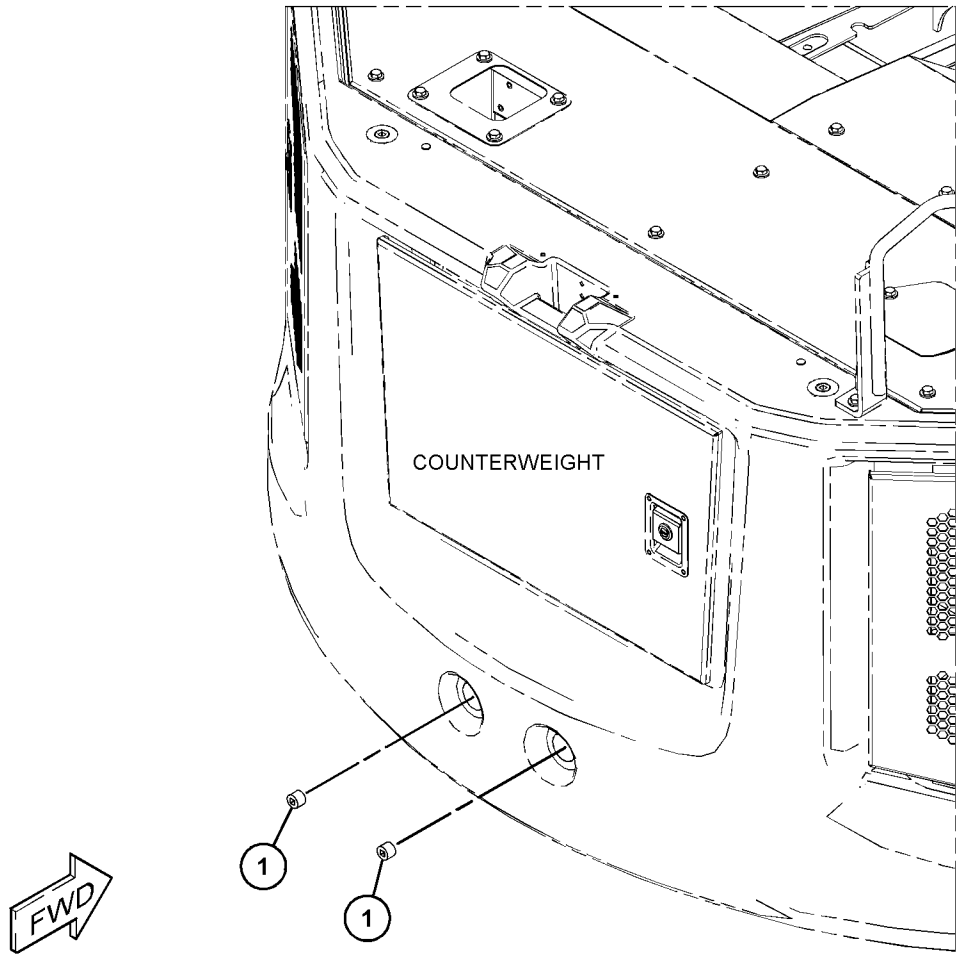

GRAPHIC #1 <END> g06339457

514-9171 STEP GP

PART OF 514-0871 TRACK AR
AN ATTACHMENT

SMCS-7254 **i07546438**

NOTE	REF NO	GRAPHIC REF	PART NUMBER	QTY	PART NAME 1 2 3 4 5 6 (PRODUCT LEVEL)	SEE PAGE
	1	1	**514-9172**	4	STEP	
M	2	1	**8T-4183**	8	BOLT (M12X1.75X40-MM)	
	3	1	**8T-4223**	8	WASHER-HARD (13.5X25.5X3-MM THK)	

M - METRIC PART

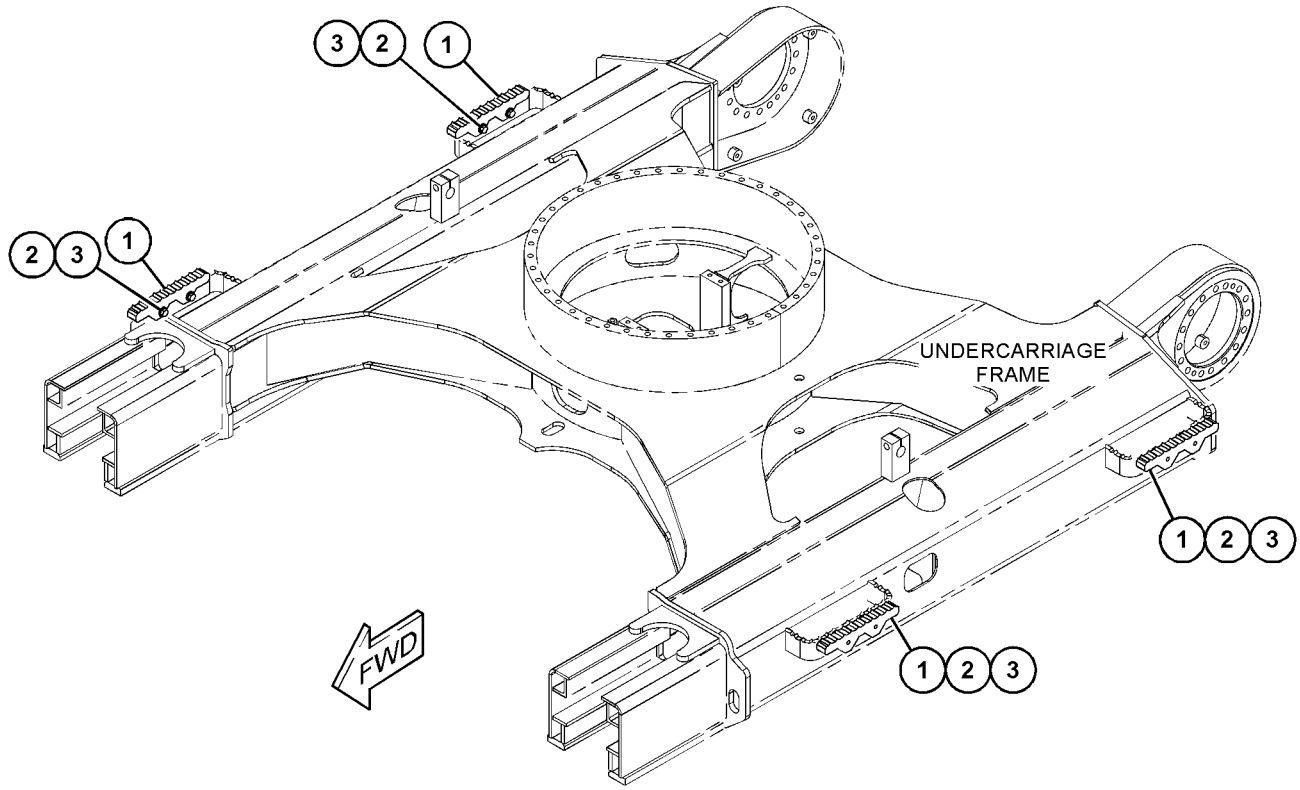

GRAPHIC #1 <END> g06340842

510-3615 ADJUSTMENT GP-HYDRAULIC TRACK

PART OF 510-3610 IDLER GP-FRONT

SMCS-4157 **i07542256**

NOTE	REF NO	GRAPHIC REF	PART NUMBER	QTY	PART NAME 1 2 3 4 5 6 (PRODUCT LEVEL)	SEE PAGE
	1	1	**2S-5926**	1	VALVE-RELIEF	
	2	1	**265-2372**	1	PLATE AS	
		1	**4B-4158**	4	SCREW-DRIVE (NO 4X0.25-IN)	
		1	**253-1346**	1	PLATE-WARNING (HIGH PRESSURE CYLINDER)	
	3	1	**514-0913**	1	SEAL-LIP TYPE	
	4	1	**514-0914**	2	RING-BACKUP	
	5	1	**520-5133**	2	SEAL-O-RING	
	6	1	**510-3606**	1	PISTON	
	7	1	**510-3607**	1	CYLINDER AS	
	8	1	**564-9847**	1	VALVE-FILL	
	9	1	**8T-4121**	2	WASHER-HARD (11X21X2.5-MM THK)	
M	10	1	**8T-4137**	2	BOLT (M10X1.5X20-MM)	

M - METRIC PART

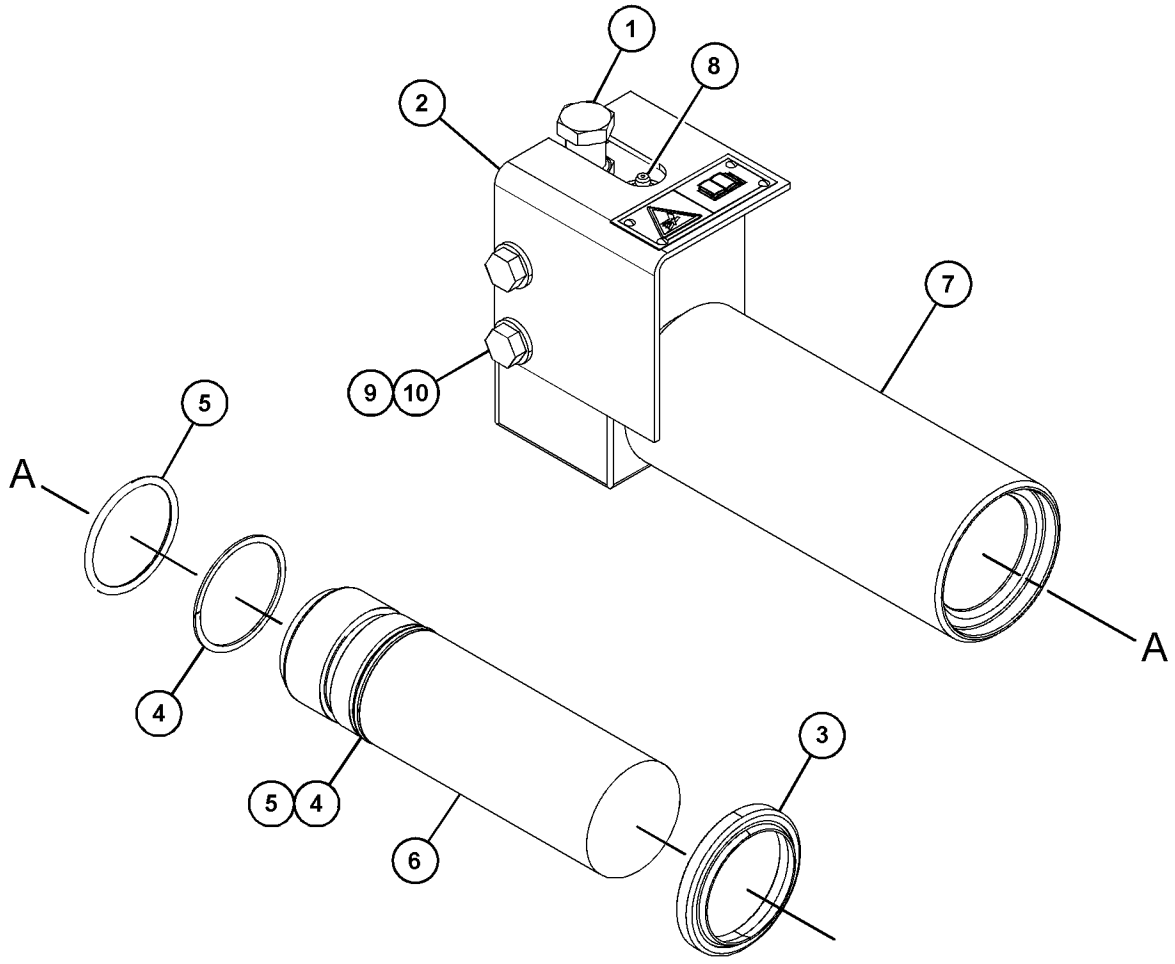

GRAPHIC #1 <END> g06331622

512-1572 GEAR & BEARING GP-SWING

PART OF 512-1441 UNDERCARRIAGE AR

SMCS-7063 **i07542265**

NOTE	REF NO	GRAPHIC REF	PART NUMBER	QTY	PART NAME 1 2 3 4 5 6 (PRODUCT LEVEL)	SEE PAGE
	1	1	**512-8893**	1	GEAR & BEARING GP-SWING	
		1	**3B-8489**	2	FITTING-GREASE (1/8-27 PTF)	
E		1	**546-1918**		SEAL-BULK (490-CM)	
M	2	1	**522-0896**	78	BOLT-HEAD (M16X2X100-MM)	
	3	1	**095-1299**	2	DOWEL	
	4	1	**7X-0591**	78	WASHER-HARD (17X29X3-MM THK)	

E - ORDER BY THE CENTIMETER
M - METRIC PART

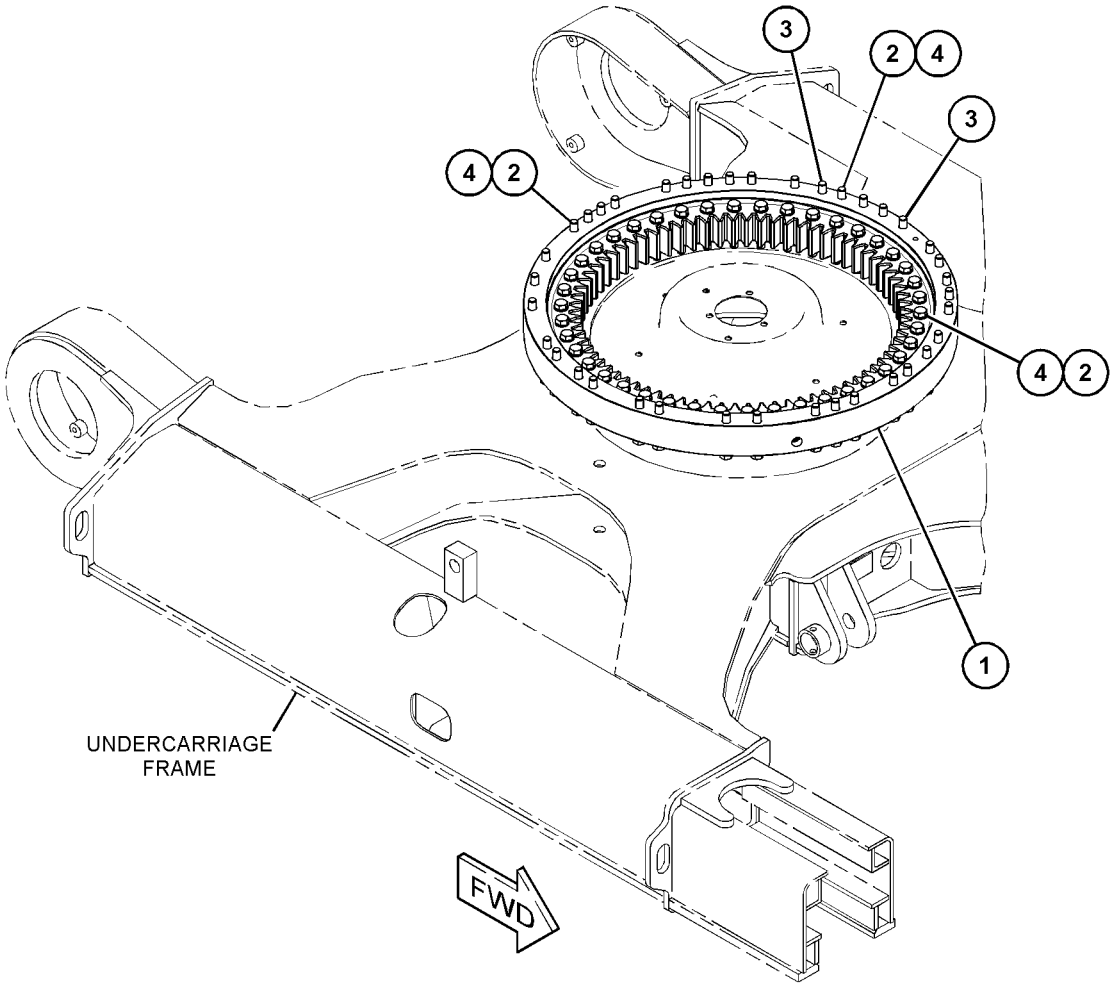

GRAPHIC #1 <END> g06331248

276-0978 GUARD GP-TRACK GUIDE

AN ATTACHMENT

SMCS-4177 **i05921563**

NOTE	REF NO	GRAPHIC REF	PART NUMBER	QTY	PART NAME 1 2 3 4 5 6 (PRODUCT LEVEL)	SEE PAGE
	1	1	**276-0979**	2	GUARD AS-TRACK GUIDE	
M	2	1	**8T-4139**	8	BOLT (M12X1.75X30-MM)	
	3	1	**7X-3391**	8	WASHER-HARD (13.5X32X6-MM THK)	

M - METRIC PART

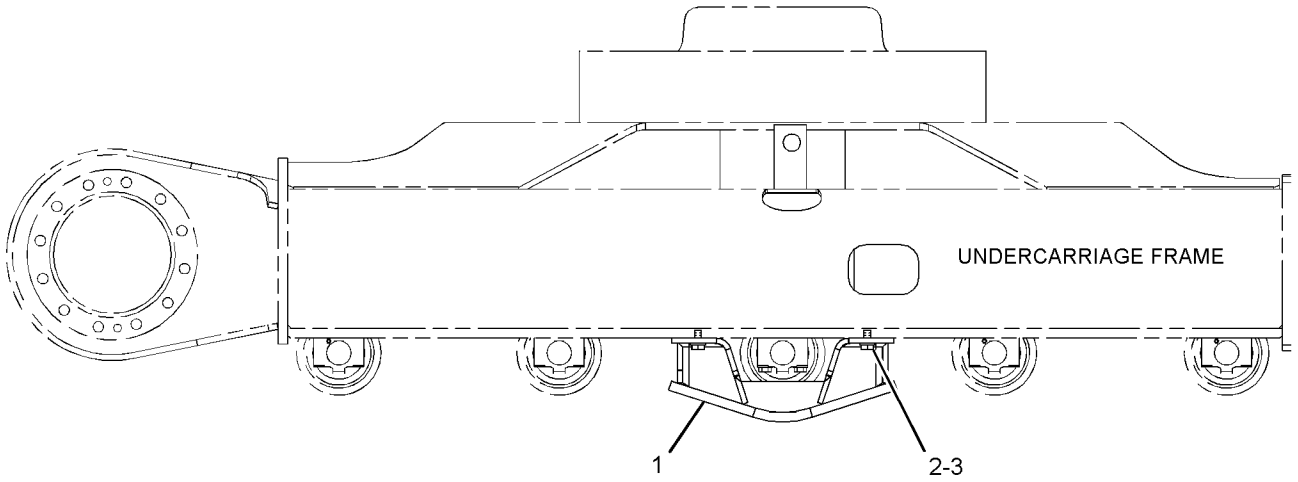

RIGHT SIDE VIEW

GRAPHIC #1 <END> g01357022

313-4254 GUARD GP-TRACK GUIDE

PART OF 514-0869, 514-0870, 514-0871 TRACK AR
AN ATTACHMENT

SMCS-4177 **i07417651**

NOTE	REF NO	GRAPHIC REF	PART NUMBER	QTY	PART NAME 1 2 3 4 5 6 (PRODUCT LEVEL)	SEE PAGE
	1	1	**313-4247**	2	GUIDE AS	
	2	1	**313-4248**	2	GUIDE AS	
M	3	1	**8T-7338**	16	BOLT (M16X2X45-MM)	
	4	1	**9X-8257**	16	WASHER (17.5X30X3.5-MM THK)	

M - METRIC PART

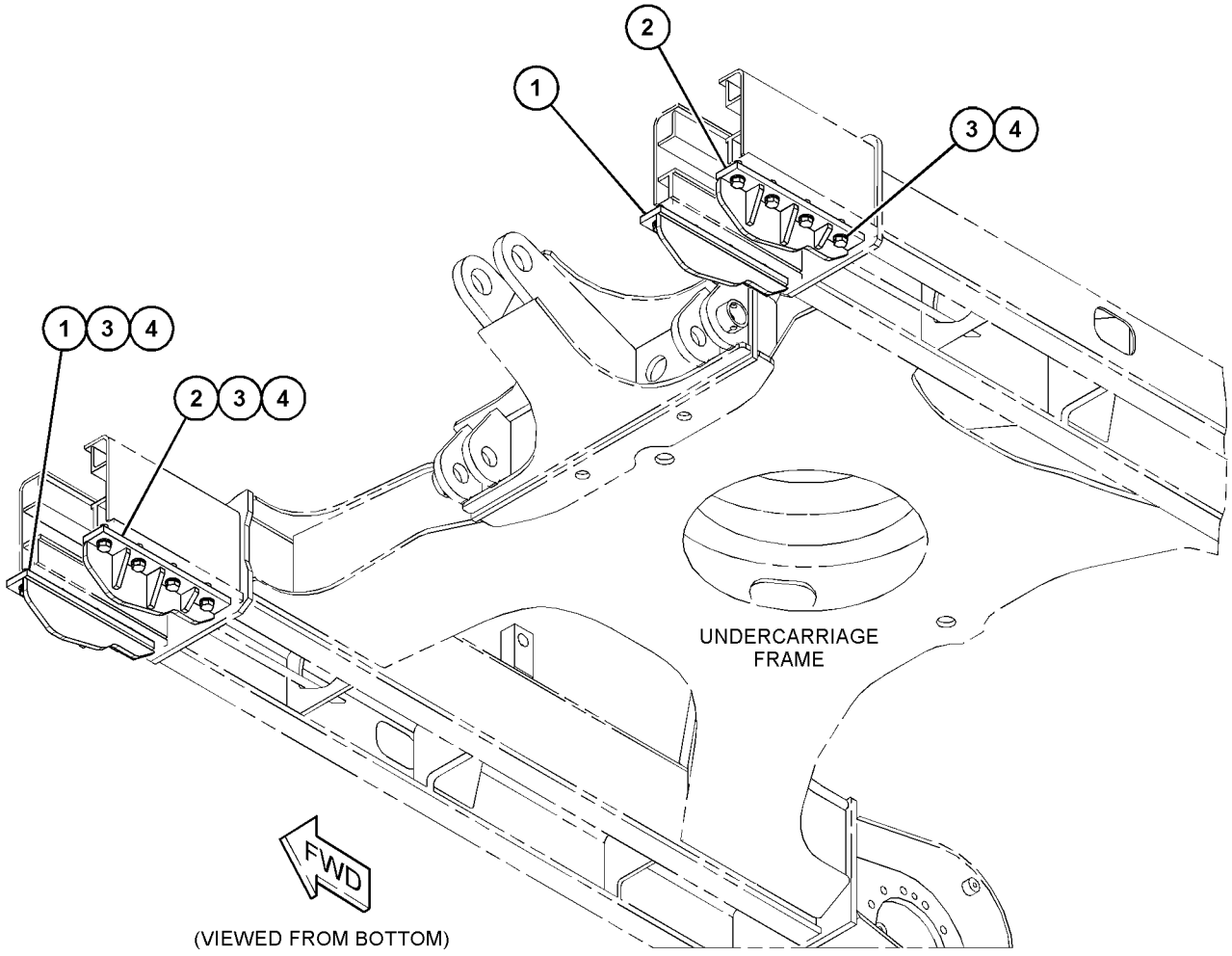

(VIEWED FROM BOTTOM)

GRAPHIC #1 <END> g06317194

102-3129 GUARD GP-TRAVEL MOTOR

PART OF 512-1441 UNDERCARRIAGE AR

SMCS-7163 **i05430727**

NOTE	REF NO	GRAPHIC REF	PART NUMBER	QTY	PART NAME 1 2 3 4 5 6 (PRODUCT LEVEL)	SEE PAGE
	1	1	**106-6733**	2	PLATE	
M	2	1	**8C-8992**	8	BOLT-LOCKING (M12X1.75X30-MM)	
	3	1	**8T-4223**	8	WASHER-HARD (13.5X25.5X3-MM THK)	

M - METRIC PART

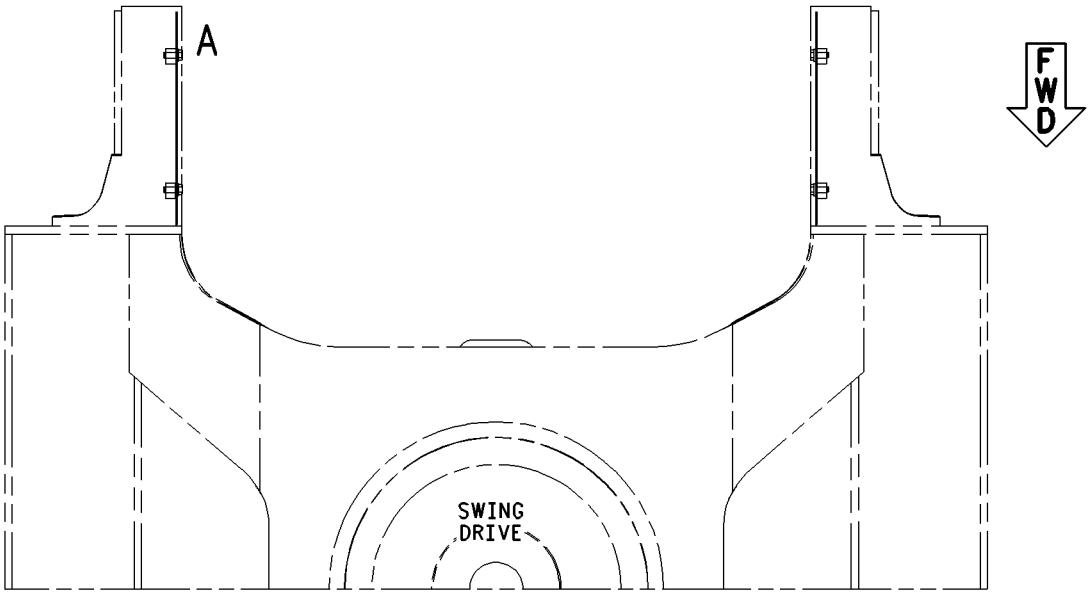

TOP VIEW

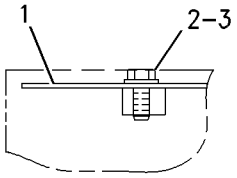

VIEW OF AREA A

GRAPHIC #1 <END> g00741746

510-3610 IDLER GP-FRONT

PART OF 512-1441 UNDERCARRIAGE AR

SMCS-4159 **i07542253**

NOTE	REF NO	GRAPHIC REF	PART NUMBER	QTY	PART NAME 1 2 3 4 5 6 (PRODUCT LEVEL)	SEE PAGE
Y	1	1	*510-3615*	1	ADJUSTMENT GP-HYDRAULIC TRACK	122
Y	2	1	*510-3620*	1	IDLER GP-FRONT	129
M	3	1	**8T-4183**	2	BOLT (M12X1.75X40-MM)	

M - METRIC PART
Y - SEPARATE ILLUSTRATION

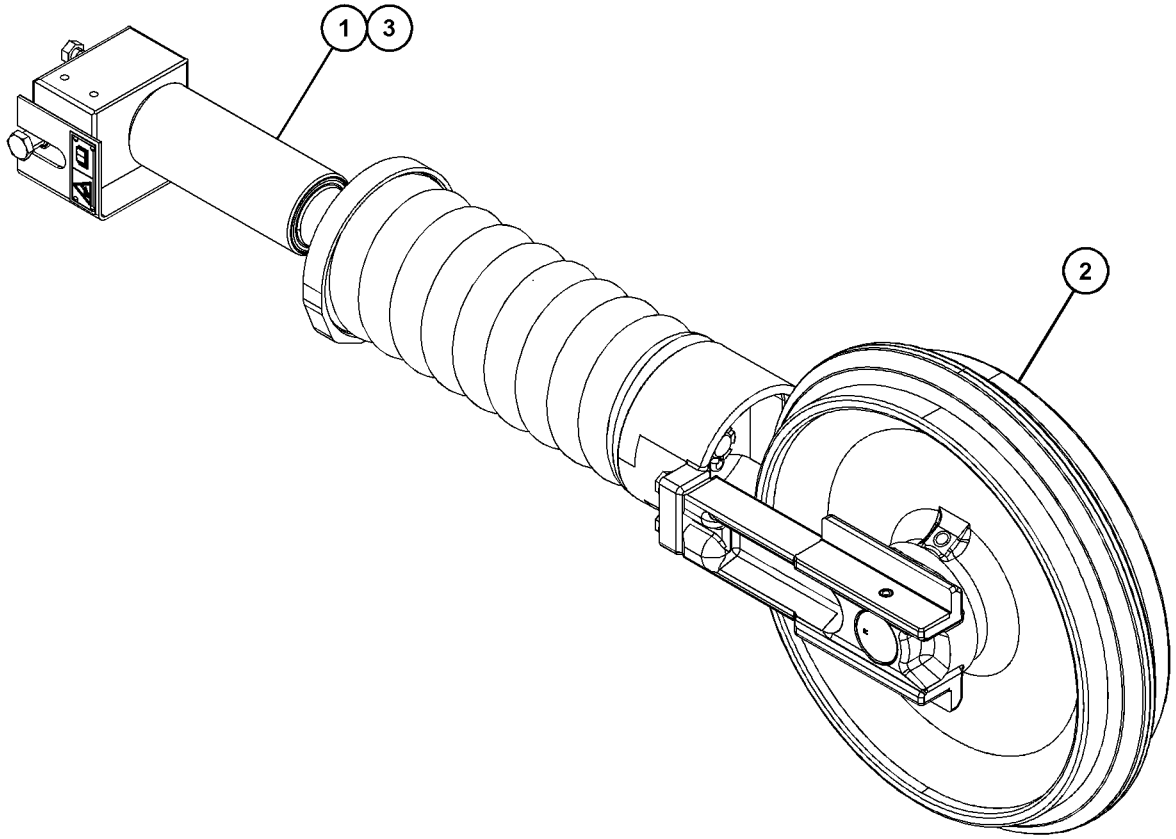

GRAPHIC #1 <END> g06330821

510-3614 IDLER GP-FRONT

PART OF 510-3620 IDLER GP-FRONT

SMCS-4159 **i07548856**

NOTE	REF NO	GRAPHIC REF	PART NUMBER	QTY	PART NAME 1 2 3 4 5 6 (PRODUCT LEVEL)	SEE PAGE
	1	1	**095-0894**	2	PIN-SPRING	
	2	1	**294-4439**	2	BEARING-FRONT IDLER	
	3	1	**422-0871**	1	SHAFT-IDLER	
	4	1	*510-3617*	1	IDLER & BEARING AS	
	4A	1	**294-5350**	2	BEARING-IDLER	
		1	**510-3627**	1	IDLER-TRACK	
	5	1	*522-4880*	2	SEAL GP	
					(EACH INCLUDES)	
		1	**522-4881**	2	SEAL-RING	
		1	**099-0194**	2	RING-SEALING	
	6	1	**6V-7660**	2	SEAL-O-RING	
	7	1	**7H-3171**	1	PLUG-PIPE	

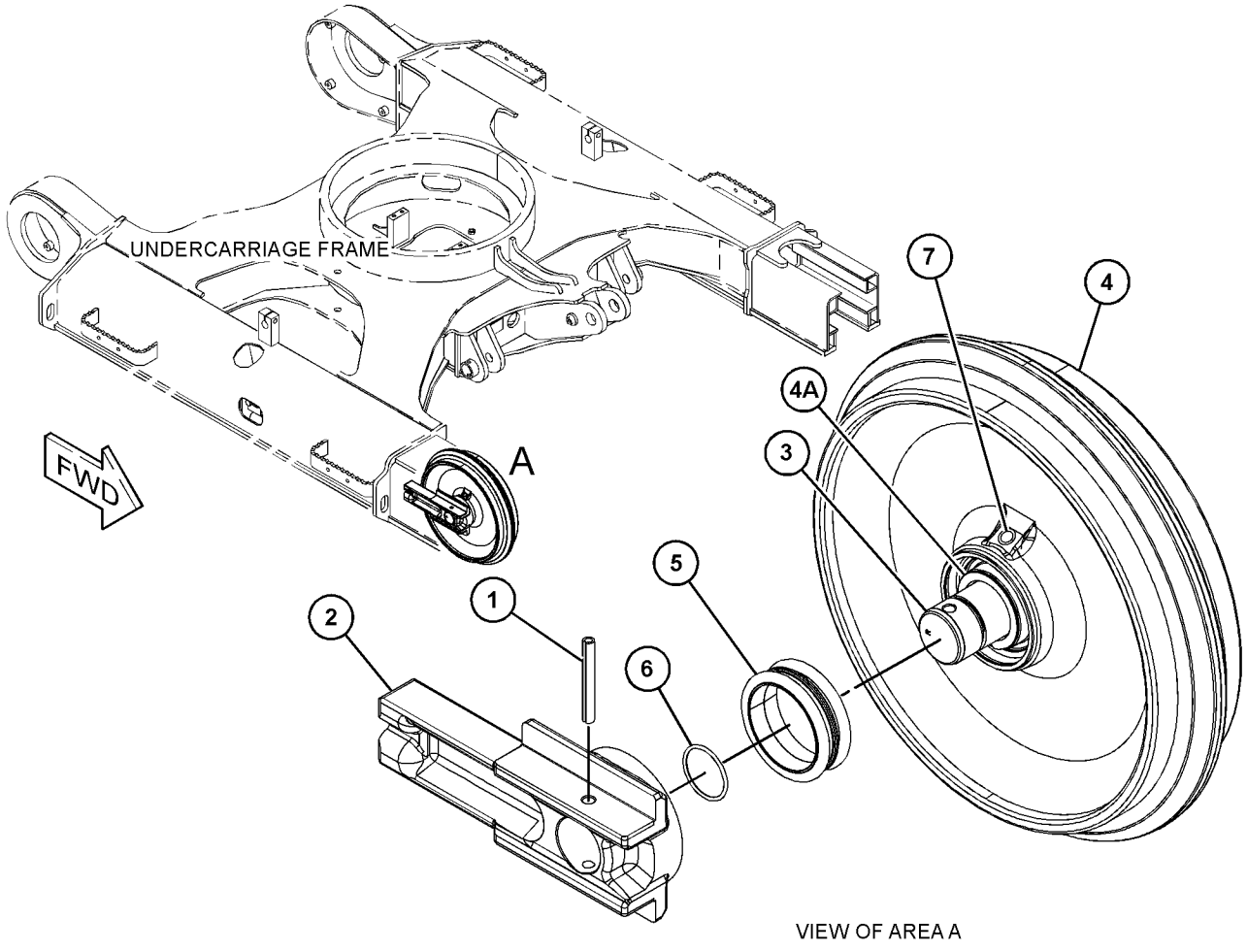

VIEW OF AREA A

GRAPHIC #1 <END> g06346214

510-3620 IDLER GP-FRONT

PART OF 510-3610 IDLER GP-FRONT

SMCS-4159 **i07542259**

NOTE	REF NO	GRAPHIC REF	PART NUMBER	QTY	PART NAME 1 2 3 4 5 6 (PRODUCT LEVEL)	SEE PAGE
Y	1	1	*510-3614*	1	IDLER GP-FRONT	128
Y	2	1	*510-3619*	1	SPRING GP-RECOIL	140
M	3	1	**8T-4194**	4	BOLT (M12X1.75X50-MM)	
	4	1	**8T-4223**	4	WASHER-HARD (13.5X25.5X3-MM THK)	

M - METRIC PART
Y - SEPARATE ILLUSTRATION

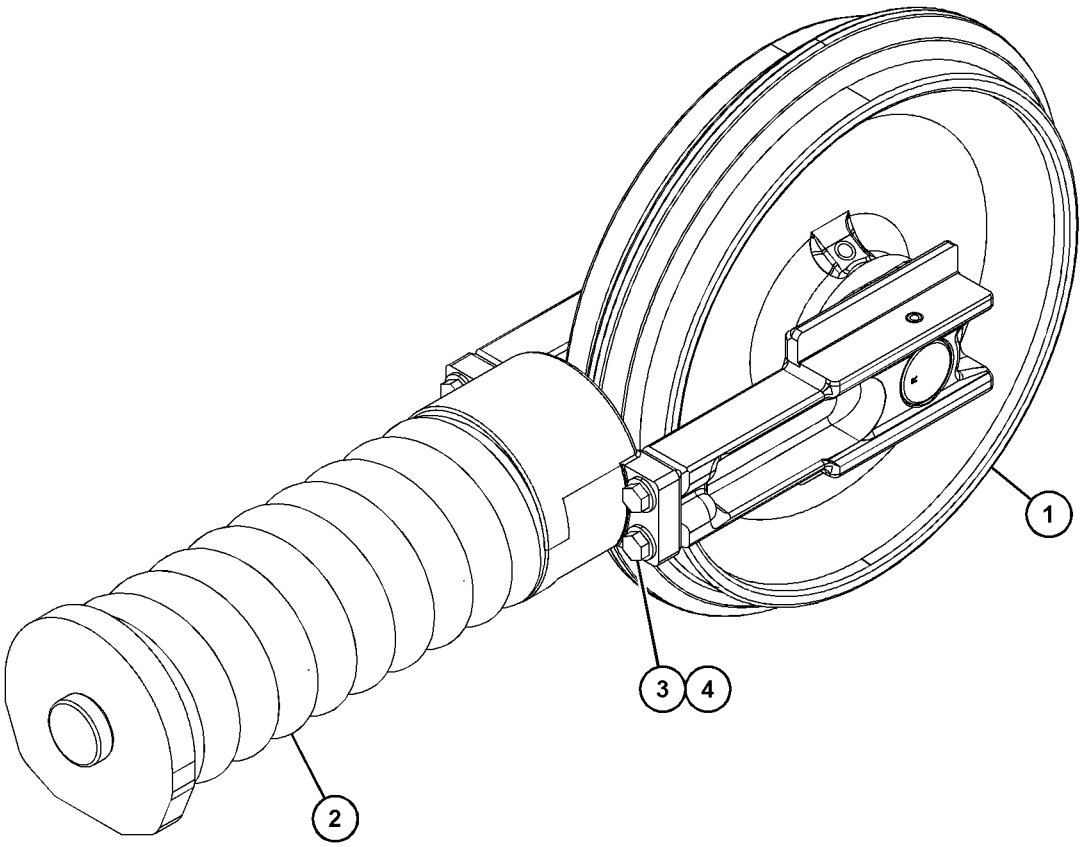

GRAPHIC #1 <END> g06330832

514-0900 KIT-RUBBER TRACK PAD

FOR USE WITH 450MM / 18 INCH WIDTH STEEL TRIPLE GROUSER TRACK TECHNICAL: PROVIDES PADS AND HARDWARE FOR ONE (1) TRACK
FIELD INSTALLATION

SMCS-4172 **i07174071**

NOTE	REF NO	GRAPHIC REF	PART NUMBER	QTY	PART NAME 1 2 3 4 5 6 (PRODUCT LEVEL)	SEE PAGE
M	1	1	**096-4876**	160	NUT (M14X2-THD)	
	2	1	**159-6529**	160	WASHER	
	3	1	**170-4419**	40	PAD AS	

M - METRIC PART

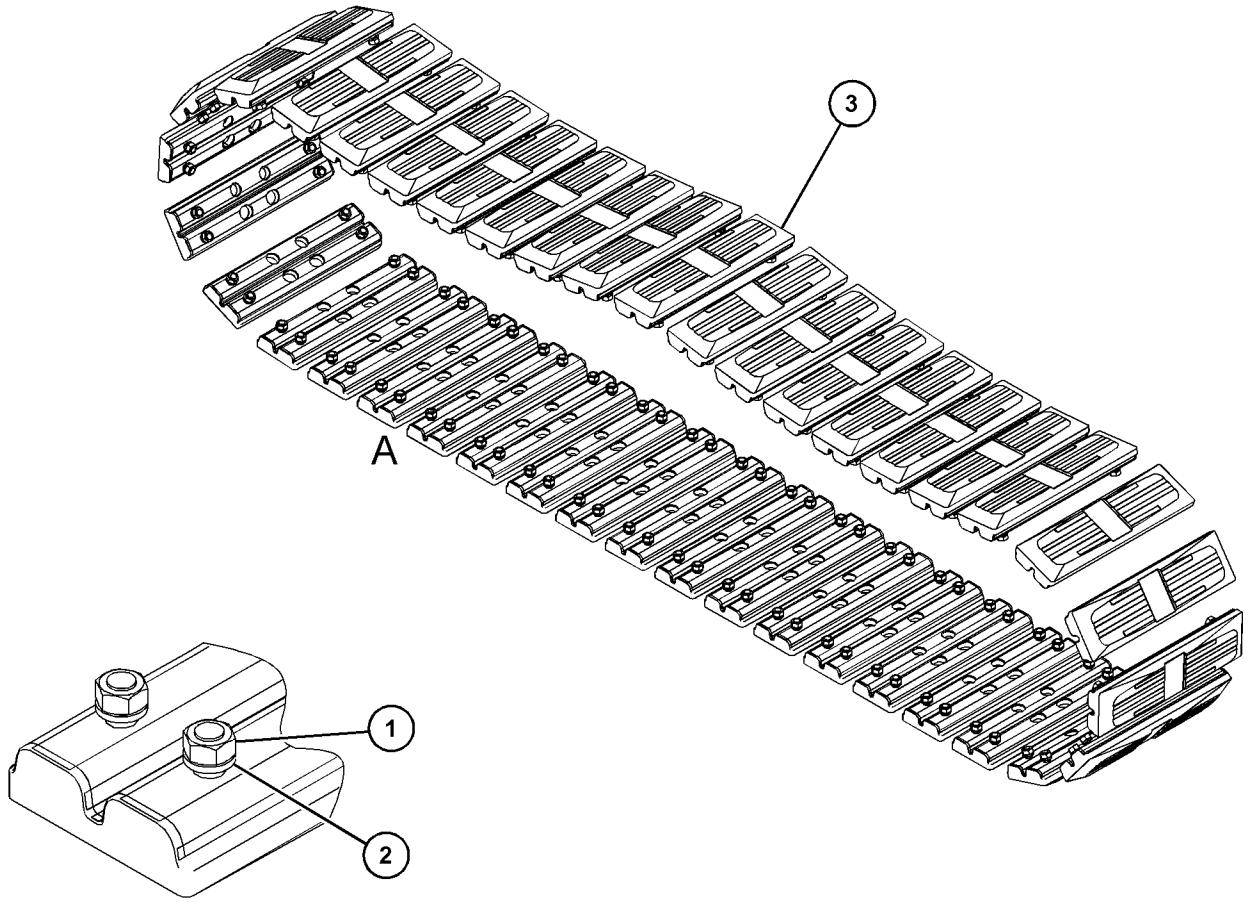

VIEW OF AREA A

GRAPHIC #1 <END> g06181156

323-0956 LINK AS-TRACK—GREASE LUBRICATED TRACK

PART OF 514-0906 LINK GP-TRACK

AN ATTACHMENT

SMCS-4169, 4171 **i07531195**

NOTE	REF NO	GRAPHIC REF	PART NUMBER	QTY	PART NAME 1 2 3 4 5 6 (PRODUCT LEVEL)	SEE PAGE
	1	1	**136-2404**	39	LINK-TRACK (RH)	
	2	1	**096-7033**	1	PIN-COTTER	
	3	1	**136-2405**	1	LINK AS-TRACK (RH)	
		1	**136-2404**	1	LINK-TRACK (RH)	
	4	1	**168-6756**	1	BUSHING	
	5	1	**136-2407**	1	LINK AS-TRACK (LH)	
		1	**136-2410**	1	LINK-TRACK (LH)	
	6	1	**323-0959**	1	PIN-TRACK MASTER	
	7	1	**136-2410**	39	LINK-TRACK (LH)	
	8	1	**168-6758**	39	PIN-TRACK	
	9	1	**168-6757**	39	BUSHING-TRACK	
	11	1	**168-6759**	78	SEAL-TRACK	
	12	1	**168-6760**	2	SEAL-TRACK MASTER	

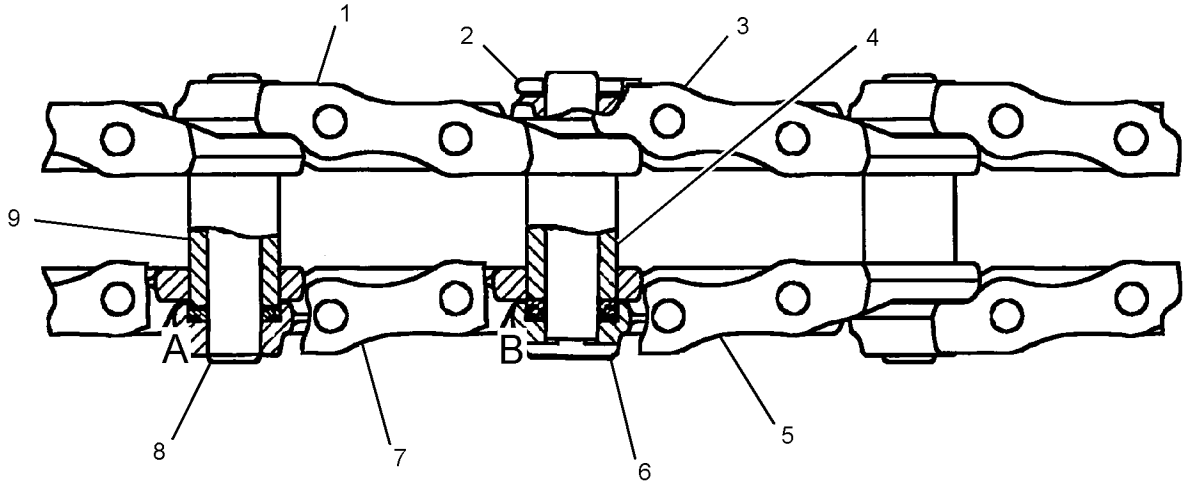

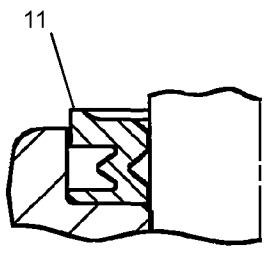

VIEW OF AREA A

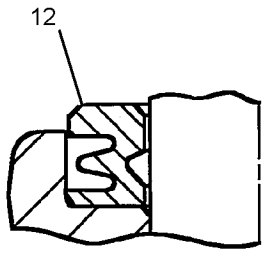

VIEW OF AREA B

GRAPHIC #1 <END> g01449200

514-0906 LINK GP-TRACK

PART OF 514-0888, 514-0893 TRACK GP

AN ATTACHMENT

SMCS-4169, 4171

i07546264

NOTE	PART NUMBER	QTY	PART NAME 1 2 3 4 5 6 (PRODUCT LEVEL)	SEE PAGE
Y	**323-0956**	1	LINK AS-TRACK	131
			—OR—	
Y	**514-0907**	1	LINK GP-TRACK	133

Y - SEPARATE ILLUSTRATION

<END>

514-0907 LINK GP-TRACK

PART OF 514-0906 LINK GP-TRACK

AN ATTACHMENT

SMCS-4169, 4171 **i07546265**

NOTE	REF NO	GRAPHIC REF	PART NUMBER	QTY	PART NAME 1 2 3 4 5 6 (PRODUCT LEVEL)	SEE PAGE
	1	1	**3B-4639**	1	PIN-COTTER	
	2	1	**514-0910**	78	SEAL-TRACK	
	3	1	**514-0911**	2	SEAL-TRACK MASTER	
	4	1	**521-0149**	39	LINK-TRACK (RH)	
	5	1	**521-0150**	1	LINK AS-TRACK (RH)	
		1	**521-0149**	1	LINK-TRACK (RH)	
	6	1	**521-0151**	1	LINK AS-TRACK (LH)	
		1	**521-0152**	1	LINK-TRACK (LH)	
	7	1	**521-0152**	39	LINK-TRACK (LH)	
	8	1	**521-0153**	1	BUSHING-TRACK	
	9	1	**521-0154**	39	BUSHING-TRACK	
	10	1	**521-0155**	39	PIN-TRACK	
	11	1	**521-0156**	1	PIN-TRACK	

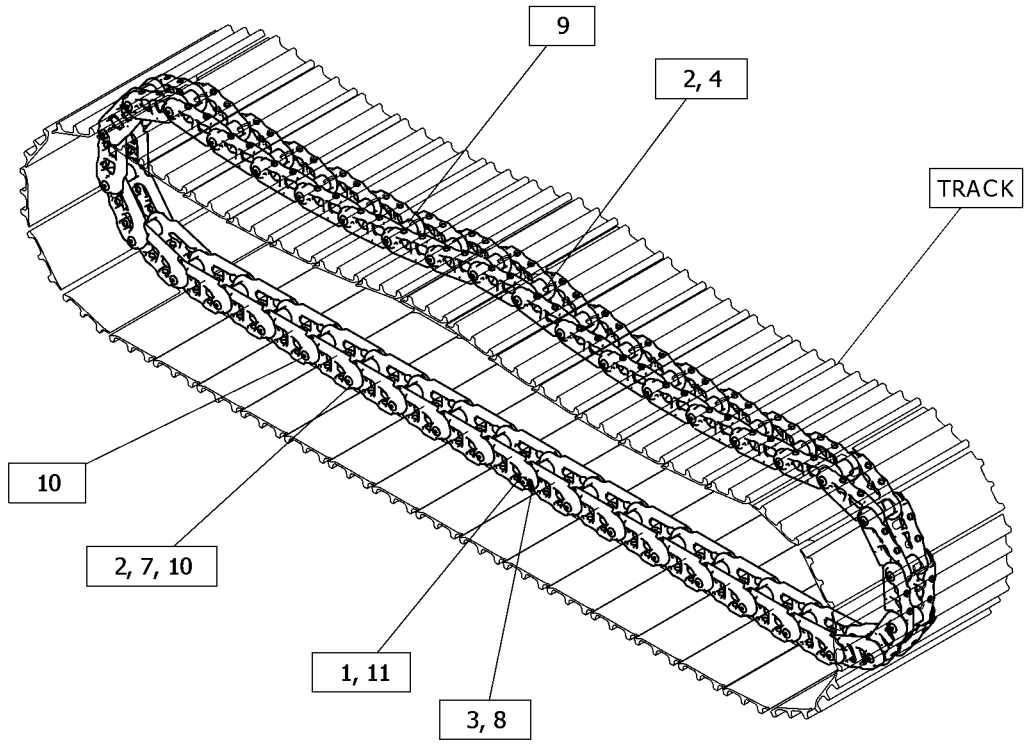

GRAPHIC #1 <END> g06344100

415-5179 ROLLER GP-TRACK

PART OF 514-0886 TRACK AR

AN ATTACHMENT

SMCS-4154, 4180 **i05430311**

NOTE	REF NO	GRAPHIC REF	PART NUMBER	QTY	PART NAME 1 2 3 4 5 6 (PRODUCT LEVEL)	SEE PAGE
Y	1	1	**127-3807**	10	ROLLER GP-TRACK-CENTER FLANGE	137
	2	1	**5P-8245**	40	WASHER-HARD (13.5X25.5X3-MM THK)	
M	3	1	**6V-8336**	40	BOLT (M12X1.75X70-MM)	

M - METRIC PART
Y - SEPARATE ILLUSTRATION

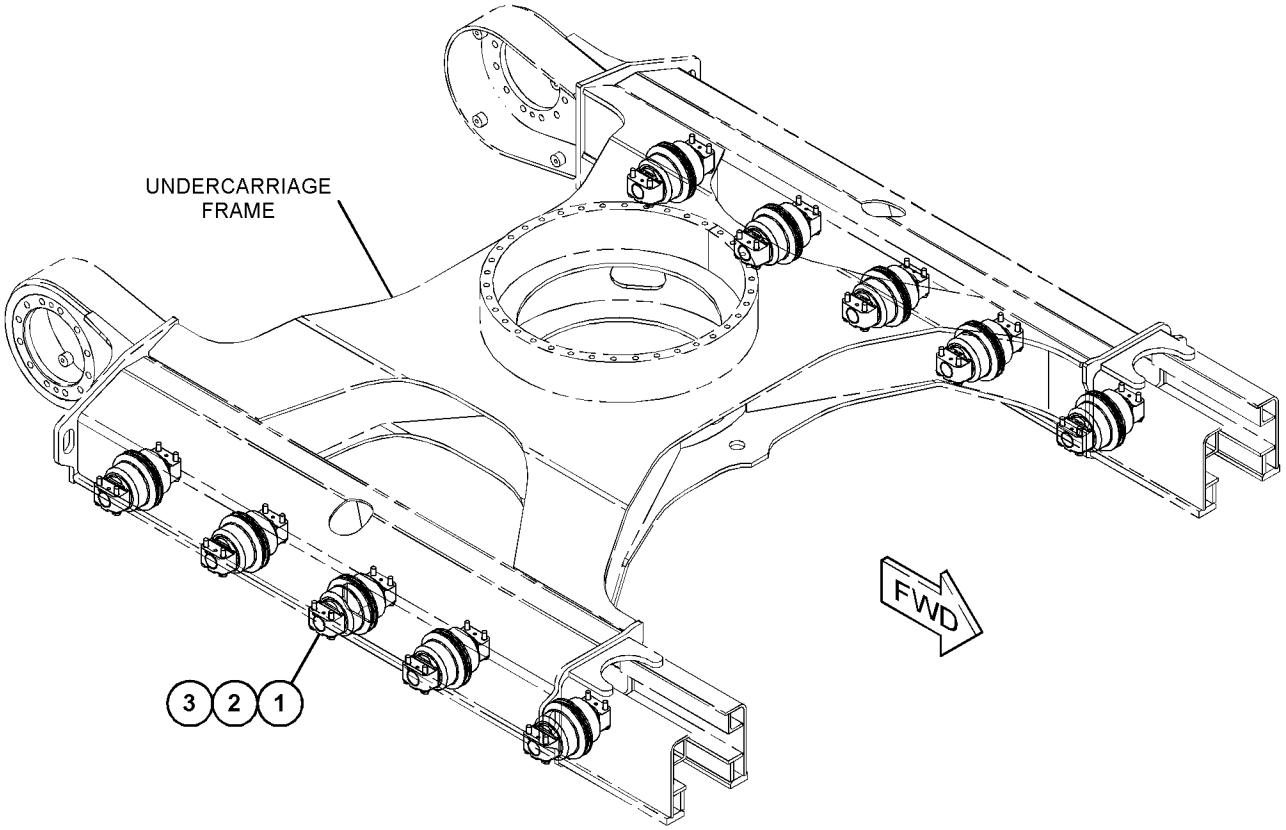

GRAPHIC #1 <END> g03428255

521-3693 ROLLER GP-TRACK CARRIER

PART OF 514-0869, 514-0870, 514-0871, 514-0886 TRACK AR
AN ATTACHMENT

SMCS-4154 **i07546238**

NOTE	REF NO	GRAPHIC REF	PART NUMBER	QTY	PART NAME 1 2 3 4 5 6 (PRODUCT LEVEL)	SEE PAGE
	1	1	**299-3427**	4	WASHER-HARD (20X36.5X3.5-MM THK)	
Y	2	1	*521-3694*	2	ROLLER GP-TRACK CARRIER	136
M	3	1	**564-6661**	4	NUT-HEX (M18X2.5-THD)	
M	4	1	**564-6663**	2	BOLT-HEAD (M18X2.5X110-MM)	

M - METRIC PART
Y - SEPARATE ILLUSTRATION

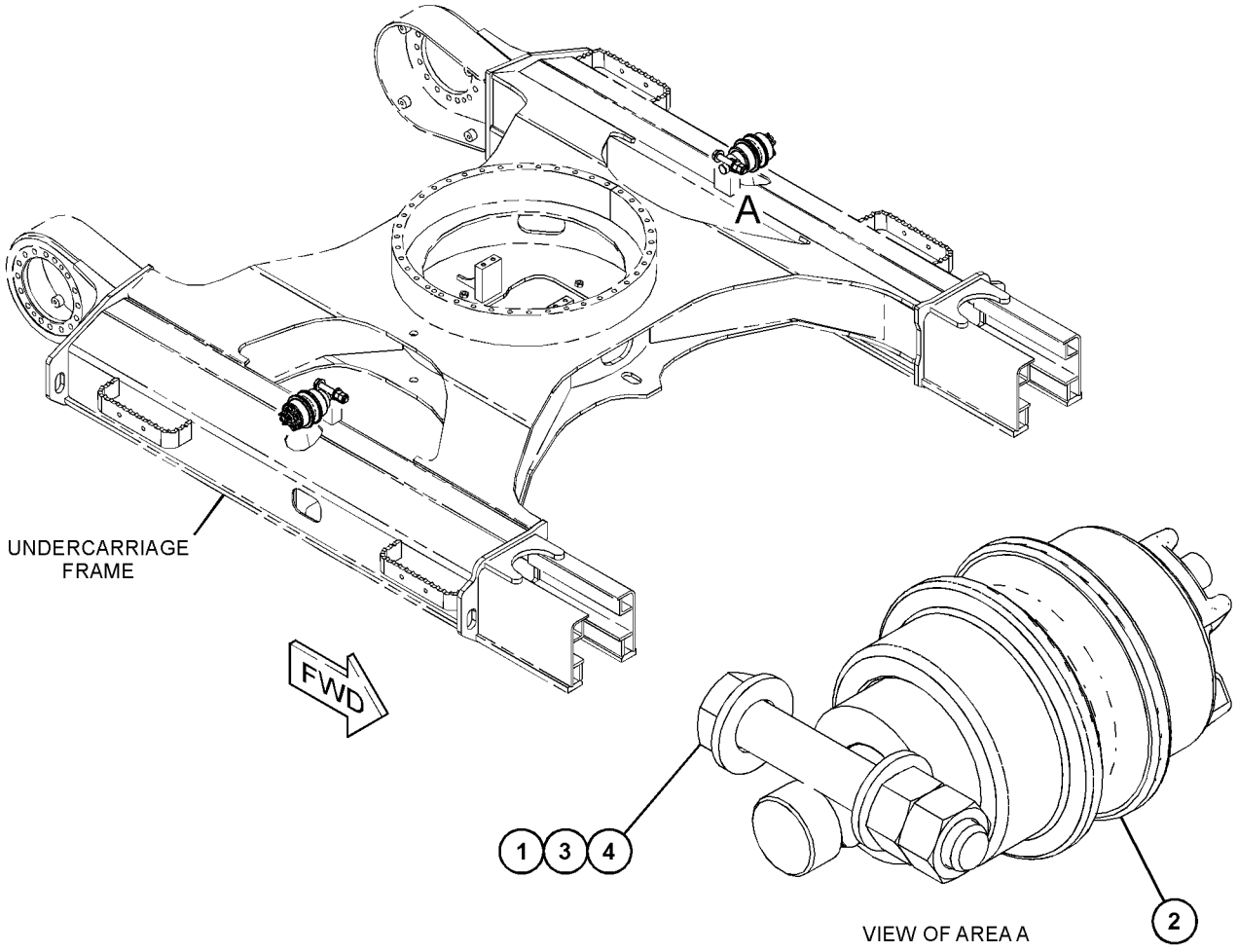

GRAPHIC #1 <END> g06343583

521-3694 ROLLER GP-TRACK CARRIER

PART OF 521-3693 ROLLER GP-TRACK CARRIER

AN ATTACHMENT

SMCS-4154 **i07546240**

NOTE	REF NO	GRAPHIC REF	PART NUMBER	QTY	PART NAME 1 2 3 4 5 6 (PRODUCT LEVEL)	SEE PAGE
	1	1	**7H-3171**	1	PLUG-PIPE	
	2	1	**095-1541**	1	SEAL-O-RING	
	3	1	**099-6463**	1	SEAL GP	
	4	1	**102-8079**	1	COVER	
	5	1	**136-2394**	1	ROLLER & BEARING AS	
	5A	1	**099-6461**	2	BEARING-CARRIER ROLLER	
	6	1	**333-5605**	1	RETAINER	
	7	1	**521-3695**	1	SHAFT AS-TRACK CARRIER ROLLER	
M	8	1	**6V-8202**	5	BOLT-SOCKET HEAD (M8X1.25X16-MM)	

M - METRIC PART

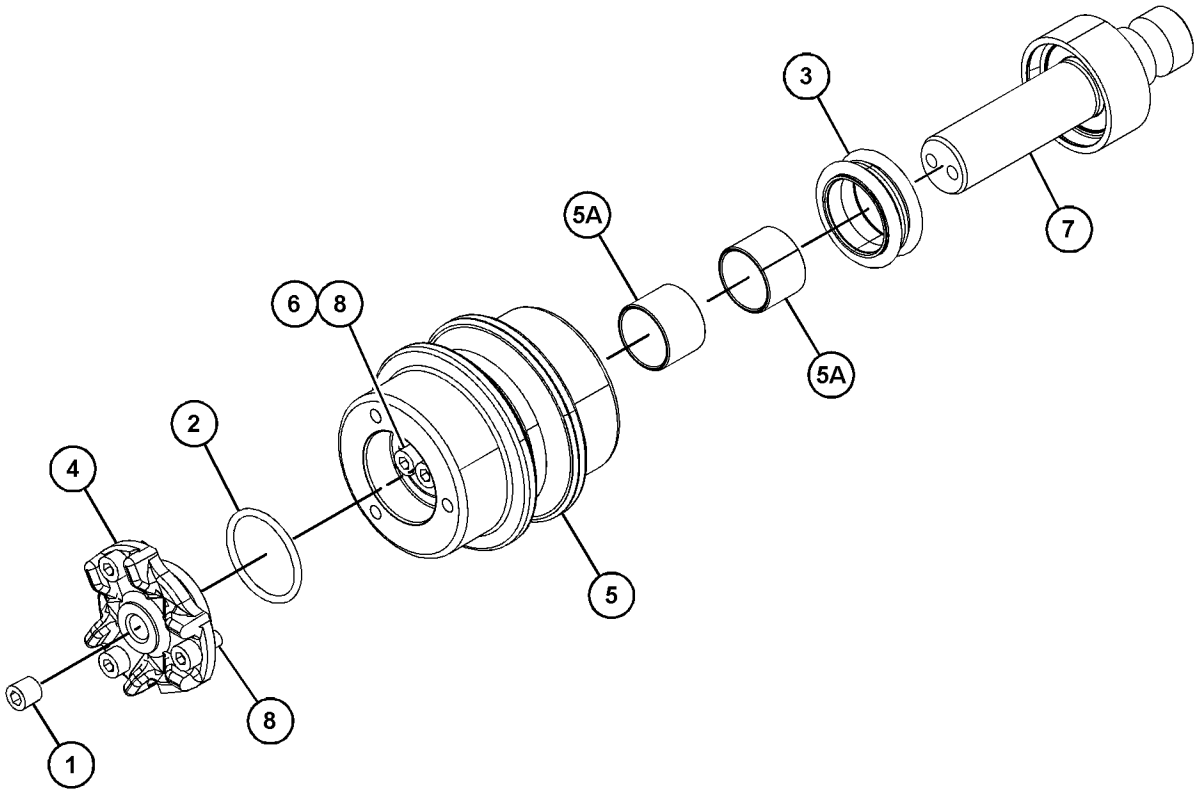

GRAPHIC #1 <END> g06345632

127-3807 ROLLER GP-TRACK-CENTER FLANGE

PART OF 415-5179 ROLLER GP-TRACK
AN ATTACHMENT

SMCS-4180 **i05426513**

NOTE	REF NO	GRAPHIC REF	PART NUMBER	QTY	PART NAME 1 2 3 4 5 6 (PRODUCT LEVEL)	SEE PAGE
	1	1	**6I-6528**	1	ROLLER & BEARING AS	
	1A	1	**5I-6274**	2	BEARING-IDLER	
	2	1	**095-1659**	2	SEAL-O-RING	
	3	1	**102-8115**	1	SHAFT-TRACK ROLLER	
	4	1	**136-0296**	2	SEAL GP	
					(EACH INCLUDES)	
		1	**136-0297**	2	RING	
	5	1	**424-4194**	1	COLLAR-TRACK ROLLER	
	6	1	**424-4197**	1	COLLAR-TRACK ROLLER	
	7	1	**102-8116**	2	DOWEL	
	8	1	**3D-4603**	1	PLUG-PIPE	

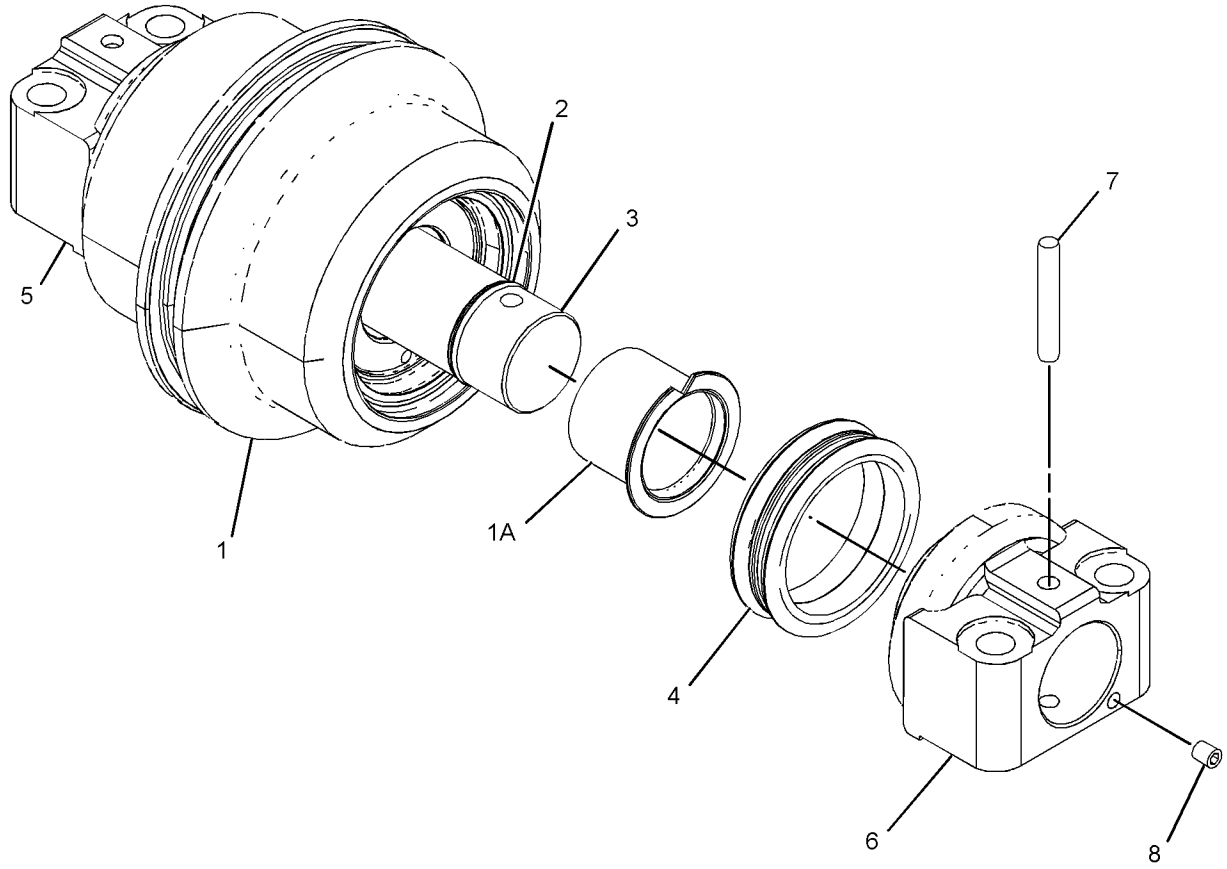

GRAPHIC #1 <END> g03427649

507-1285 ROLLER GP-TRACK-SINGLE FLANGE

PART OF 514-0884 ROLLER GP-TRACK-SINGLE FLANGE
AN ATTACHMENT

SMCS-4180 **i07546267**

NOTE	REF NO	GRAPHIC REF	PART NUMBER	QTY	PART NAME 1 2 3 4 5 6 (PRODUCT LEVEL)	SEE PAGE
	1	1	**095-1659**	2	SEAL-O-RING	
	2	1	**507-1286**	1	ROLLER & BEARING AS	
	2A	1	**507-1292**	2	BEARING-TRACK ROLLER	
	3	1	**507-1289**	1	COLLAR-TRACK ROLLER	
	4	1	**507-1290**	1	COLLAR-TRACK ROLLER	
	5	1	**507-1291**	1	SHAFT-TRACK ROLLER	
	6	1	**521-6382**	2	SEAL AS	
					(EACH INCLUDES)	
		1	**136-0297**	2	RING	
		1	**521-6383**	2	SEAL-RING	
	7	1	**102-8116**	2	DOWEL	
	8	1	**3D-4603**	1	PLUG-PIPE	

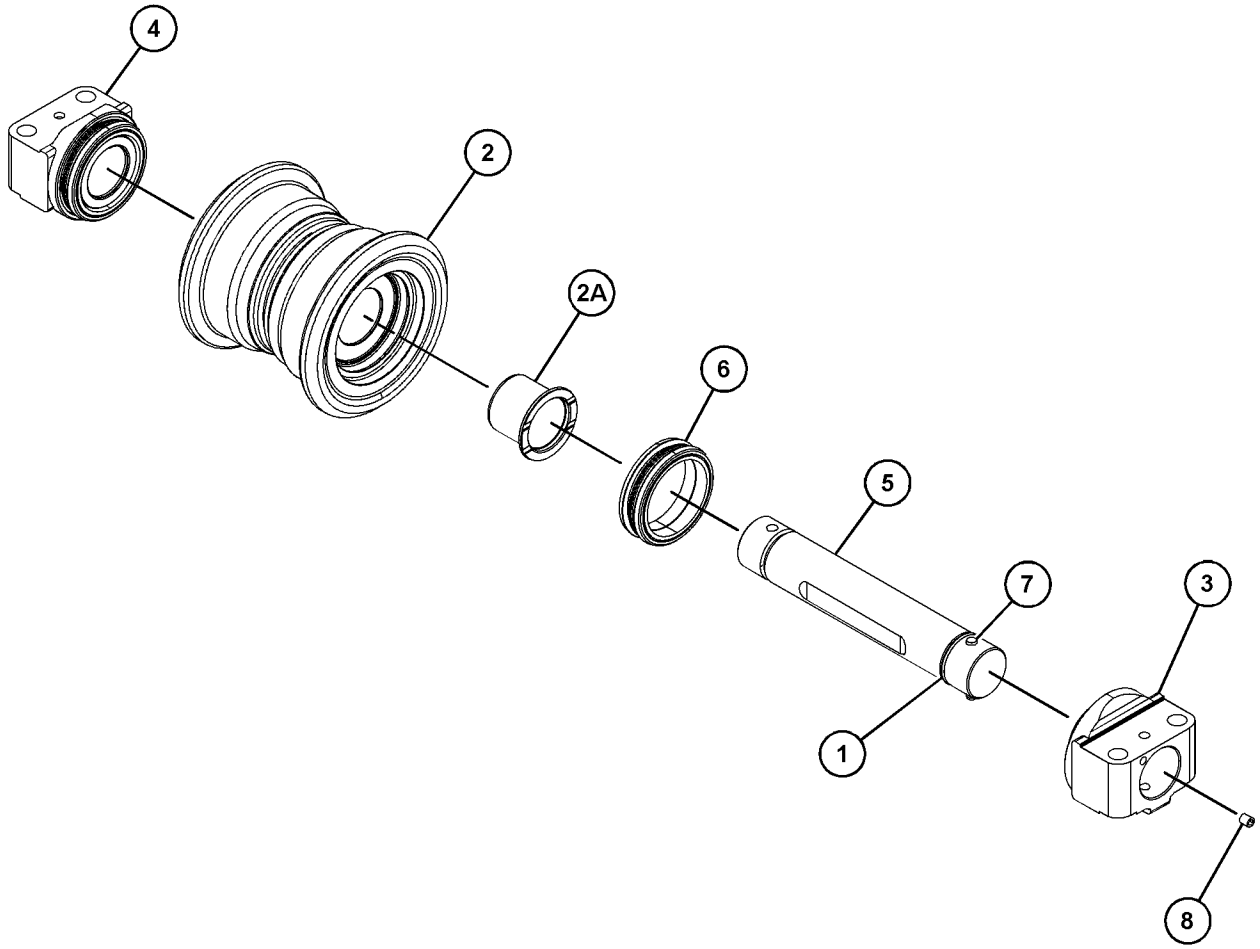

GRAPHIC #1 <END> g06344646

514-0884 ROLLER GP-TRACK-SINGLE FLANGE

PART OF 514-0869, 514-0870, 514-0871 TRACK AR
AN ATTACHMENT

SMCS-4180 **i07546266**

NOTE	REF NO	GRAPHIC REF	PART NUMBER	QTY	PART NAME 1 2 3 4 5 6 (PRODUCT LEVEL)	SEE PAGE
Y	1	1	**507-1285**	10	ROLLER GP-TRACK-SINGLE FLANGE	138
	2	1	**5P-8245**	40	WASHER-HARD (13.5X25.5X3-MM THK)	
M	3	1	**6V-8336**	40	BOLT (M12X1.75X70-MM)	

M - METRIC PART
Y - SEPARATE ILLUSTRATION

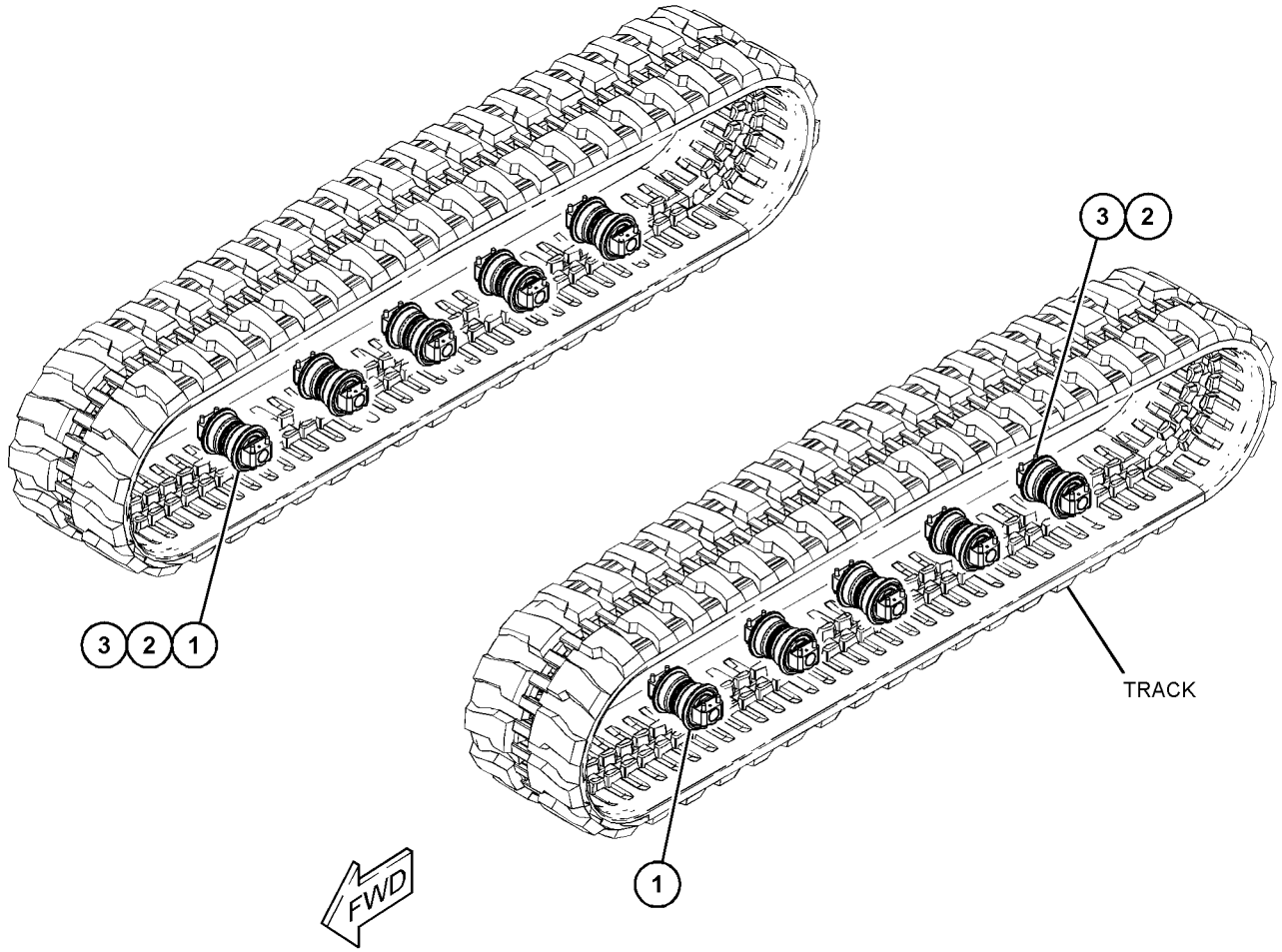

GRAPHIC #1 <END> g06343544

510-3619 SPRING GP-RECOIL—BASIC

PART OF 510-3620 IDLER GP-FRONT

SMCS-4158 **i07548857**

NOTE	REF NO	GRAPHIC REF	PART NUMBER	QTY	PART NAME 1 2 3 4 5 6 (PRODUCT LEVEL)	SEE PAGE
	1	1	**3B-4630**	1	PIN-COTTER	
M	2	1	**240-5084**	1	NUT-HEX SLOTTED (M24X3-THD)	
	3	1	**510-3621**	1	SUPPORT	
	4	1	**510-3622**	1	ROD	
	5	1	**510-3623**	1	SPRING	
	6	1	**510-3624**	1	CYLINDER AS	
	7	1	**8T-4167**	1	WASHER-HARD (26X44X4-MM THK)	

M - METRIC PART

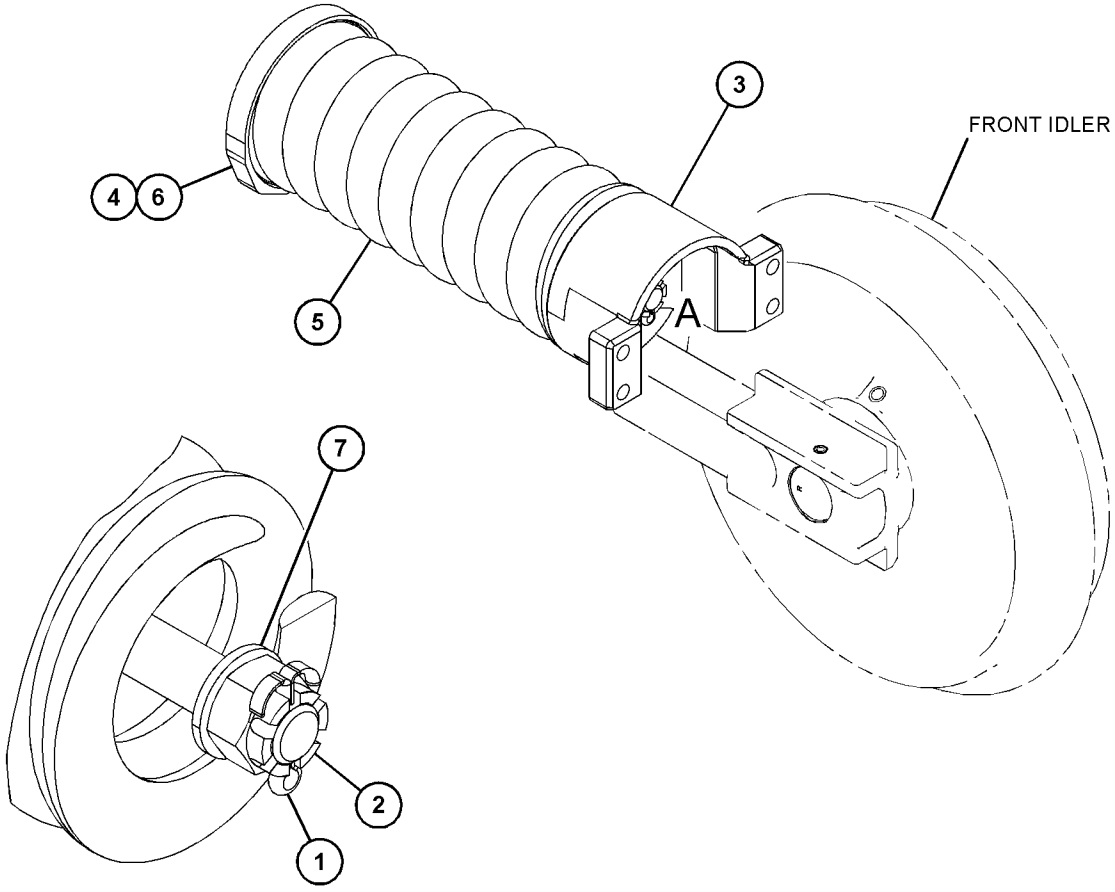

VIEW OF AREA A
(PARTS REMOVED FOR CLARITY)

GRAPHIC #1 <END> g06331307

514-0869 TRACK AR

PART OF 562-3698 TRACK & BLADE AR-EXCAVATOR
AN ATTACHMENT

SMCS-4170 **i07546261**

NOTE	PART NUMBER	QTY	PART NAME 1 2 3 4 5 6 (PRODUCT LEVEL)	SEE PAGE
Y	*313-4254*	1	GUARD GP-TRACK GUIDE	125
Y	**521-3693**	1	ROLLER GP-TRACK CARRIER	135
Y	*514-0884*	1	ROLLER GP-TRACK-SINGLE FLANGE	139
Y	*514-0877*	2	TRACK GP	143

Y - SEPARATE ILLUSTRATION

<END>

514-0870 TRACK AR

PART OF 562-3697 TRACK & BLADE AR-EXCAVATOR
AN ATTACHMENT

SMCS-4170 **i07546444**

NOTE	PART NUMBER	QTY	PART NAME 1 2 3 4 5 6 (PRODUCT LEVEL)	SEE PAGE
Y	*313-4254*	1	GUARD GP-TRACK GUIDE	125
Y	*521-3693*	1	ROLLER GP-TRACK CARRIER	135
Y	*514-0884*	1	ROLLER GP-TRACK-SINGLE FLANGE	139
Y	*514-0888*	1	TRACK GP	143

Y - SEPARATE ILLUSTRATION

<END>

514-0871 TRACK AR

PART OF 562-3699 TRACK & BLADE AR-EXCAVATOR
AN ATTACHMENT

SMCS-4170 **i07546436**

NOTE	PART NUMBER	QTY	PART NAME 1 2 3 4 5 6 (PRODUCT LEVEL)	SEE PAGE
Y	*313-4254*	1	GUARD GP-TRACK GUIDE	125
Y	**521-3693**	1	ROLLER GP-TRACK CARRIER	135
Y	*514-0884*	1	ROLLER GP-TRACK-SINGLE FLANGE	139
Y	**514-9171**	1	STEP GP	121
Y	*514-0893*	2	TRACK GP	143

Y - SEPARATE ILLUSTRATION

<END>

514-0886 TRACK AR–RUBBER BELT

PART OF 562-3700 TRACK & BLADE AR-EXCAVATOR
AN ATTACHMENT

SMCS-4170 **i07546235**

NOTE	PART NUMBER	QTY	PART NAME 1 2 3 4 5 6 (PRODUCT LEVEL)	SEE PAGE
Y	*415-5179*	1	ROLLER GP-TRACK	134
Y	**521-3693**	1	ROLLER GP-TRACK CARRIER	135
Y	*415-5177*	2	TRACK GP (RUBBER BELT)	142

Y - SEPARATE ILLUSTRATION

<END>

415-5177 TRACK GP—RUBBER BELT

PART OF 514-0886 TRACK AR

AN ATTACHMENT

SMCS-4170, 4198 **i06718580**

NOTE	REF NO	GRAPHIC REF	PART NUMBER	QTY	PART NAME 1 2 3 4 5 6 (PRODUCT LEVEL)	SEE PAGE
	1	1	**465-9223**	1	TRACK AS	

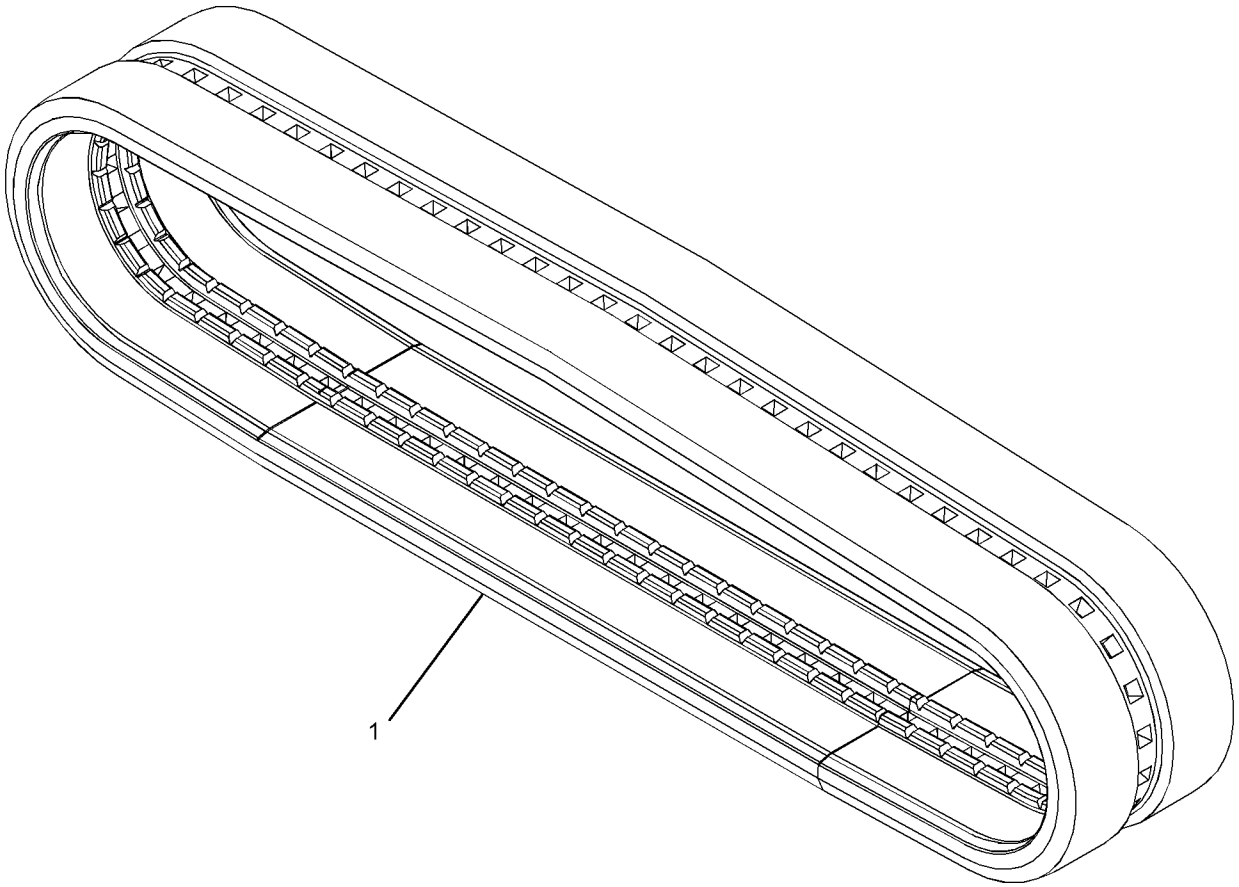

GRAPHIC #1 <END> g03428997

514-0877 TRACK GP

450-MM (17.7-IN) TRIPLE GROUSER SHOE
PART OF 514-0869 TRACK AR
AN ATTACHMENT

SMCS-4170, 4198 **i07546262**

NOTE	PART NUMBER	QTY	PART NAME 1 2 3 4 5 6 (PRODUCT LEVEL)	SEE PAGE
Y	*514-0888*	1	TRACK GP	143
	514-0904	1	PAD GP-TRACK RUBBER	
M	**096-4876**	160	NUT (M14X2-THD)	
	159-6529	160	WASHER	
	170-4419	40	PAD AS	

M - METRIC PART
Y - SEPARATE ILLUSTRATION

<END>

514-0888 TRACK GP

450-MM (17.7-IN) TRIPLE GROUSER SHOE
PART OF 514-0870 TRACK AR, 514-0877 TRACK GP
AN ATTACHMENT

SMCS-4170, 4198 **i07546263**

NOTE	PART NUMBER	QTY	PART NAME 1 2 3 4 5 6 (PRODUCT LEVEL)	SEE PAGE
Y	*514-0906*	1	LINK GP-TRACK	132
M	**136-2401**	160	BOLT-TRACK (M14X1.5X35-MM)	
M	**136-2402**	160	NUT-TRACK (M14X1.5-THD)	
	522-0652	40	SHOE-TRACK	

M - METRIC PART
Y - SEPARATE ILLUSTRATION

<END>

514-0893 TRACK GP

600-MM (23.6-IN) TRIPLE GROUSER SHOE
PART OF 514-0871 TRACK AR
AN ATTACHMENT

SMCS-4170, 4198 **i07546437**

NOTE	PART NUMBER	QTY	PART NAME 1 2 3 4 5 6 (PRODUCT LEVEL)	SEE PAGE
Y	*514-0906*	1	LINK GP-TRACK	132
M	**136-2401**	160	BOLT-TRACK (M14X1.5X35-MM)	
M	**136-2402**	160	NUT-TRACK (M14X1.5-THD)	
	522-1046	40	SHOE-TRACK	

M - METRIC PART
Y - SEPARATE ILLUSTRATION

<END>

512-1441 UNDERCARRIAGE AR

PART OF 512-1401 COMMON AR

SMCS-4150 **i07542241**

NOTE	PART NUMBER	QTY	PART NAME 1 2 3 4 5 6 (PRODUCT LEVEL)	SEE PAGE
Y	*512-1572*	1	GEAR & BEARING GP-SWING	123
Y	*512-5813*	1	GUARD GP-SWIVEL	116
Y	*102-3129*	1	GUARD GP-TRAVEL MOTOR	126
Y	*510-3610*	2	IDLER GP-FRONT	127

Y - SEPARATE ILLUSTRATION

<END>

227-8807 ACCUMULATOR GP-HYDRAULIC—UNCHARGED

FIELD REPLACEMENT FOR 397-6929—PAGE: 146
PART OF 517-8114 LINES GP-PILOT
AN ATTACHMENT

SMCS-5077 **i06737704**

NOTE	REF NO	GRAPHIC REF	PART NUMBER	QTY	PART NAME 1 2 3 4 5 6 (PRODUCT LEVEL)	SEE PAGE
	1	1	**232-3317**	1	FILM-IDENTIFICATION (HYDRAULIC ACCUMULATOR)	

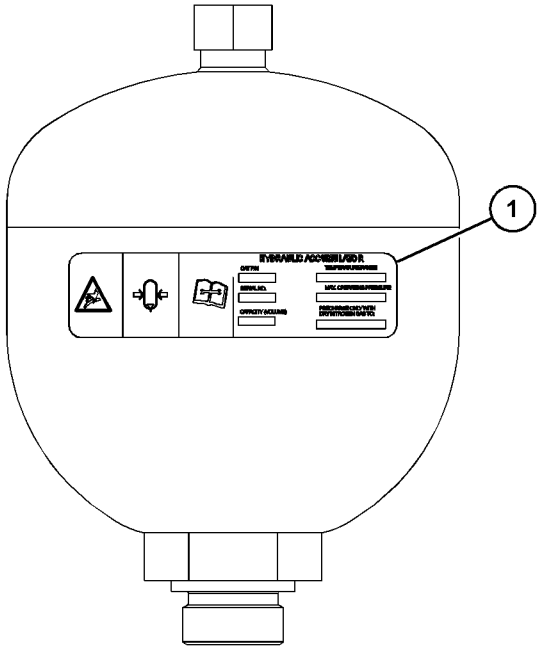

GRAPHIC #1 <END> g06048678

397-6929 ACCUMULATOR GP-HYDRAULIC—UNCHARGED

FIELD REPLACEMENT ORDER 227-8807—PAGE: 145
PART OF 512-5198 LINES GP-PILOT
AN ATTACHMENT

SMCS-5077 **i05429302**

NOTE	REF NO	GRAPHIC REF	PART NUMBER	QTY	PART NAME 1 2 3 4 5 6 (PRODUCT LEVEL)	SEE PAGE
					(NO SERVICED PARTS)	

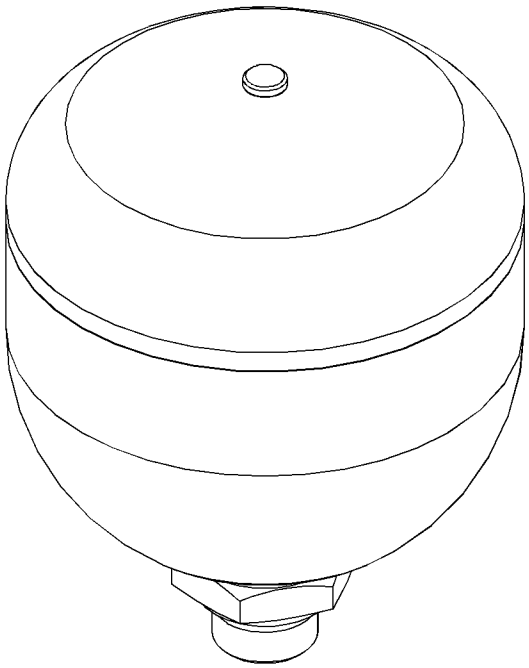

GRAPHIC #1 <END> g03428128

541-4598 CONTROL AR-BLADE

CANNOT BE USED WITH 526-4252—PAGE: 97
PART OF 562-3697, 562-3698, 562-3699, 562-3700 TRACK & BLADE AR-EXCAVATOR
AN ATTACHMENT

SMCS-6060 **i07546241**

NOTE	PART NUMBER	QTY	PART NAME 1 2 3 4 5 6 (PRODUCT LEVEL)	SEE PAGE
Y	*513-0480*	1	CONSOLE GP-OPERATOR	360
Y	*511-6166*	1	CONTROL GP-BLADE	364

Y - SEPARATE ILLUSTRATION

<END>

516-1612 CONTROL AR-COUPLER—STANDARD STICK

FOR USE WITH 520-0778—PAGE: 148
AN ATTACHMENT

SMCS-6129 **i07546505**

NOTE	PART NUMBER	QTY	PART NAME 1 2 3 4 5 6 (PRODUCT LEVEL)	SEE PAGE
Y	*515-7897*	1	LINES GP-COUPLER (STANDARD STICK)	197
Y	*515-8014*	1	LINES GP-COUPLER (BOOM)	199

Y - SEPARATE ILLUSTRATION

<END>

516-1613 CONTROL AR-COUPLER—LONG STICK

FOR USE WITH 520-0778—PAGE: 148
PART OF 562-4906, 562-9155, 562-9156 DISTRIBUTION AR
AN ATTACHMENT

SMCS-6129 **i07544876**

NOTE	PART NUMBER	QTY	PART NAME 1 2 3 4 5 6 (PRODUCT LEVEL)	SEE PAGE
Y	*515-7903*	1	LINES GP-COUPLER (LONG STICK)	198
Y	*515-8014*	1	LINES GP-COUPLER (BOOM)	199

Y - SEPARATE ILLUSTRATION

<END>

519-3140 CONTROL AR-COUPLER—VARIABLE ADJUSTABLE BOOM

FOR USE WITH 520-0778—PAGE: 148
PART OF 562-9159 DISTRIBUTION AR
AN ATTACHMENT

SMCS-6129 **i07546528**

NOTE	PART NUMBER	QTY	PART NAME 1 2 3 4 5 6 (PRODUCT LEVEL)	SEE PAGE
Y	*515-7897*	1	LINES GP-COUPLER (STANDARD STICK)	197
Y	*518-1279*	1	LINES GP-COUPLER (VARIABLE ADJUSTABLE BOOM)	201

Y - SEPARATE ILLUSTRATION

<END>

520-0778 CONTROL AR-COUPLER–STANDARD STICK

FOR USE WITH 516-1612–PAGE: 147, 516-1613–PAGE: 147
PART OF 562-4906, 562-9155, 562-9156, 562-9159 DISTRIBUTION AR
AN ATTACHMENT

SMCS-6129 **i07544883**

NOTE	PART NUMBER	QTY	PART NAME 1 2 3 4 5 6 (PRODUCT LEVEL)	SEE PAGE
Y	*515-7910*	1	LINES GP-FRONT (QUICK COUPLER)	210

Y - SEPARATE ILLUSTRATION

<END>

541-4573 CONTROL AR-HYDRAULIC—TRAVEL

CANNOT BE USED WITH 541-4574—PAGE: 150, 541-4575—PAGE: 151

PART OF 563-2070, 563-2082, 563-2083 STICK & CONTROL AR-AUXILIARY, 563-2071 STICK AR AN ATTACHMENT

SMCS-5050, 5051, 5057, 5059, 5705

i07546212

NOTE	REF NO	GRAPHIC REF	PART NUMBER	QTY	PART NAME 1 2 3 4 5 6 (PRODUCT LEVEL)	SEE PAGE
Y	1	1	*510-6078*	1	CONTROL GP-PILOT OPERATED HYD (TRAVEL)	367
	2	1	**519-9930**	1	FLOOR MAT	
Y	3	1	*552-1608*	1	CONTROL & MTG GP-PEDAL	363

Y - SEPARATE ILLUSTRATION

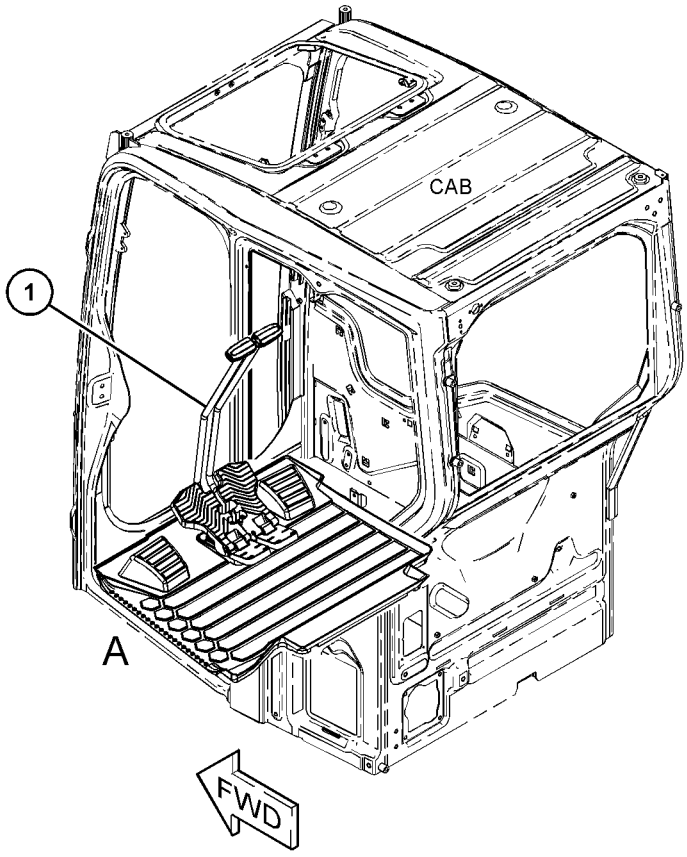

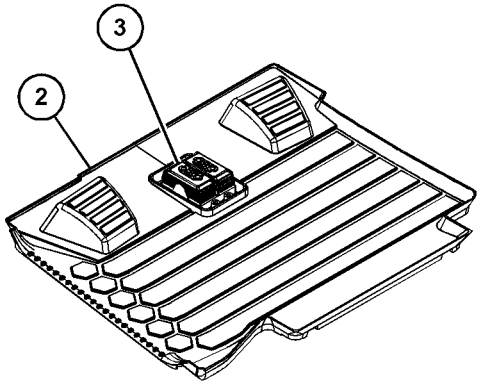

VIEW OF AREA A
(PARTS REMOVED FOR CLARITY)

GRAPHIC #1

<END>

g06343554

541-4574 CONTROL AR-HYDRAULIC—AUXILIARY

FOR USE WITH 512-2576—PAGE: 286, 517-8129—PAGE: 174, 520-0774—PAGE: 175, 512-2576—PAGE: 286

CANNOT BE USED WITH 541-4573—PAGE: 149, 541-4575—PAGE: 151, 541-4573—PAGE: 149, 541-4575—PAGE: 151, 541-4573—PAGE: 149, 541-4575—PAGE: 151

PART OF 563-2092 STICK & CONTROL AR-AUXILIARY

AN ATTACHMENT

SMCS-5050, 5051, 5057, 5059, 5705 **i07546717**

NOTE	REF NO	GRAPHIC REF	PART NUMBER	QTY	PART NAME 1 2 3 4 5 6 (PRODUCT LEVEL)	SEE PAGE
Y	1	1	*510-6078*	1	CONTROL GP-PILOT OPERATED HYD (TRAVEL)	367
Y	2	1	*518-7892*	1	CONTROL & MTG GP-PEDAL (RH)	362
	3	1	**519-9931**	1	FLOOR MAT (AUXILIARY)	
Y	4	1	*552-1608*	1	CONTROL & MTG GP-PEDAL	363

Y - SEPARATE ILLUSTRATION

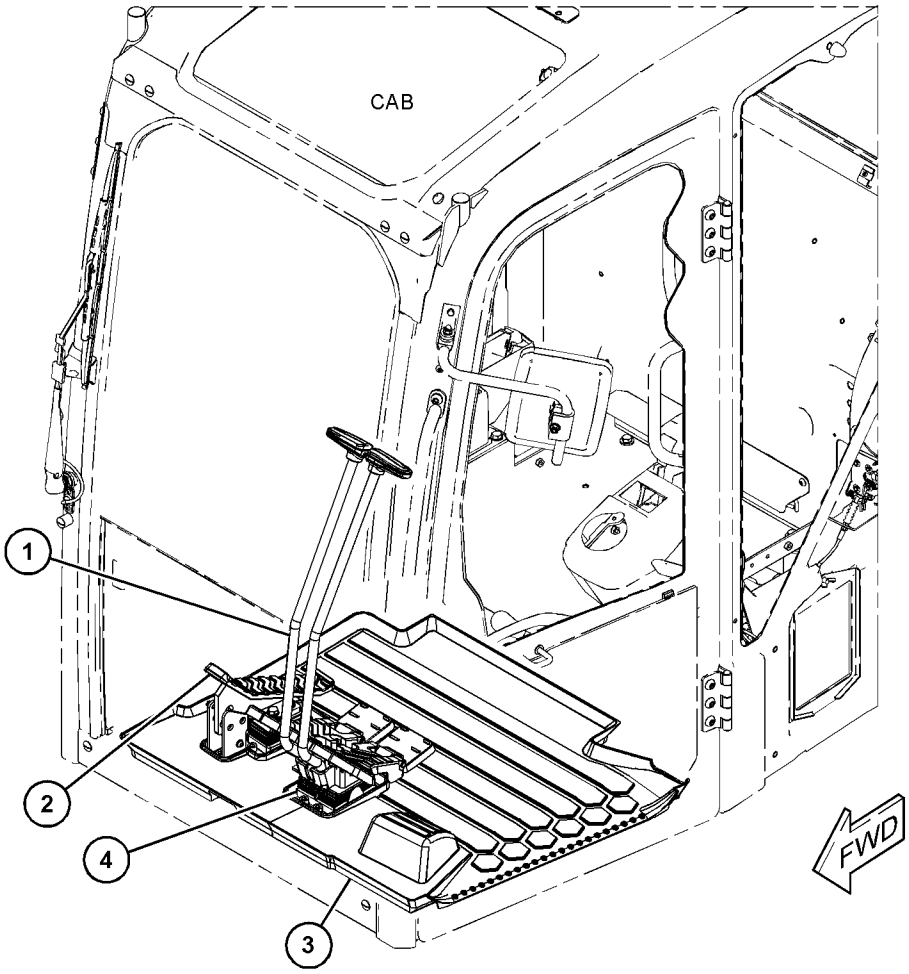

GRAPHIC #1 <END> g06342228

541-4575 CONTROL AR-HYDRAULIC

CANNOT BE USED WITH 541-4573—PAGE: 149, 541-4574—PAGE: 150
AN ATTACHMENT

SMCS-5050, 5051, 5057, 5059, 5705

i07546720

NOTE	PART NUMBER	QTY	PART NAME 1 2 3 4 5 6 (PRODUCT LEVEL)	SEE PAGE
Y	*541-4576*	1	COVER GP-ACCESS	95
	539-8641	1	FLOOR MAT	

Y - SEPARATE ILLUSTRATION

<END>

515-5481 CYLINDER & LINES GP-BOOM

115-MM (4.5-IN) BORE X 922-MM (36.2-IN) STROKE
PART OF 514-8055 LINES AR-BOOM
AN ATTACHMENT

SMCS-5057, 5456, 7562

i07544924

NOTE	REF NO	GRAPHIC REF	PART NUMBER	QTY	PART NAME 1 2 3 4 5 6 (PRODUCT LEVEL)	SEE PAGE
					(NO BREAKDOWN OF SERVICEABLE PARTS AVAILABLE AT TIME OF PUBLICATION)	

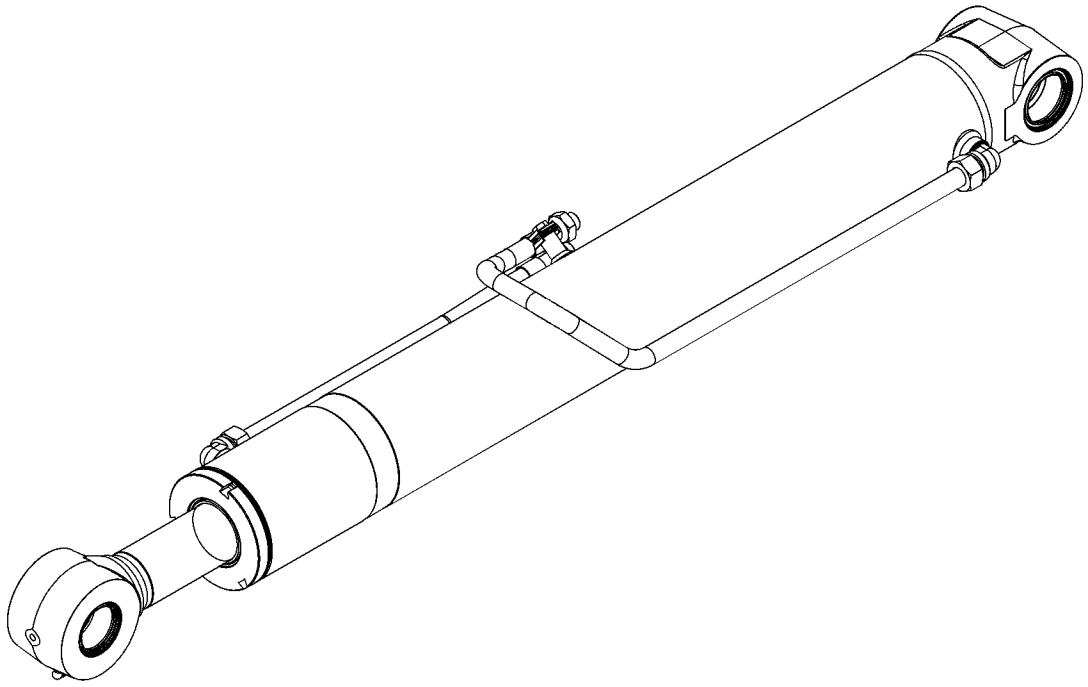

GRAPHIC #1 <END> g06345245

515-5482 CYLINDER & LINES GP-BOOM

115-MM (4.5-IN) BORE X 922-MM (36.2-IN) STROKE
PART OF 514-8059 LINES AR-BOOM
AN ATTACHMENT

SMCS-5057, 5456, 7562

i07546479

NOTE	REF NO	GRAPHIC REF	PART NUMBER	QTY	PART NAME 1 2 3 4 5 6 (PRODUCT LEVEL)	SEE PAGE
					(NO SERVICED PARTS)	

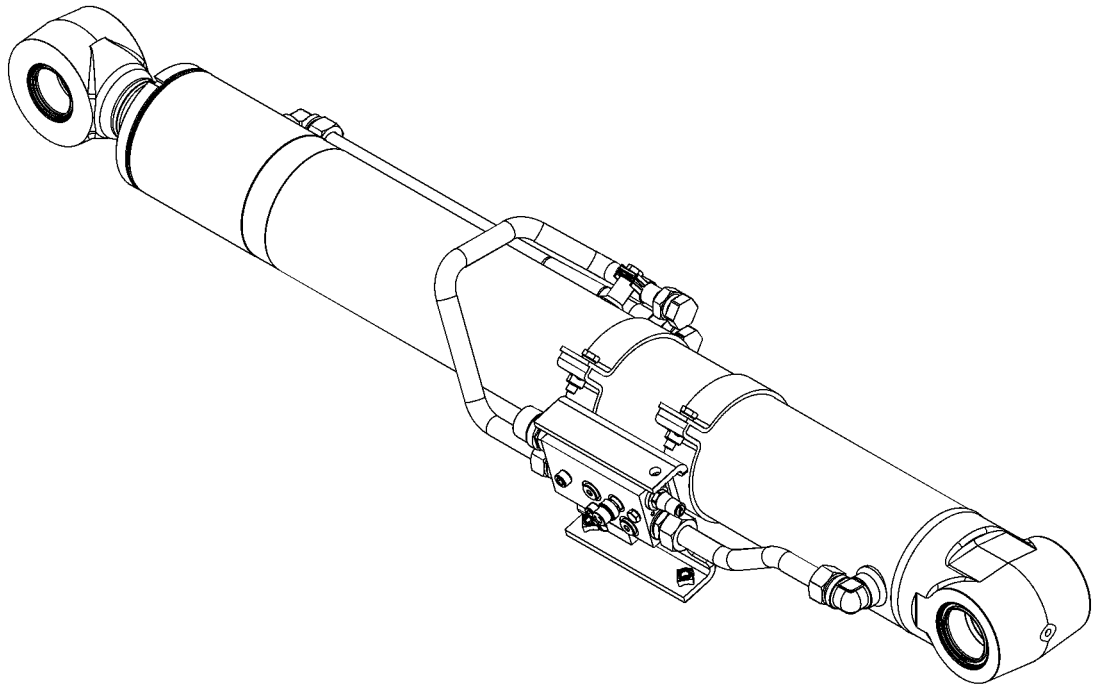

GRAPHIC #1

<END>

g06344625

526-3982 CYLINDER & LINES GP-BOOM–VARIABLE ADJUSTABLE BOOM

110-MM (4.3-IN) BORE X 922-MM (36.2-IN) STROKE
PART OF 514-8060 LINES AR-BOOM
AN ATTACHMENT

SMCS-5057, 5456, 7562 **i07546488**

NOTE	REF NO	GRAPHIC REF	PART NUMBER	QTY	PART NAME 1 2 3 4 5 6 (PRODUCT LEVEL)	SEE PAGE
					(NO BREAKDOWN OF SERVICEABLE PARTS AVAILABLE AT TIME OF PUBLICATION)	

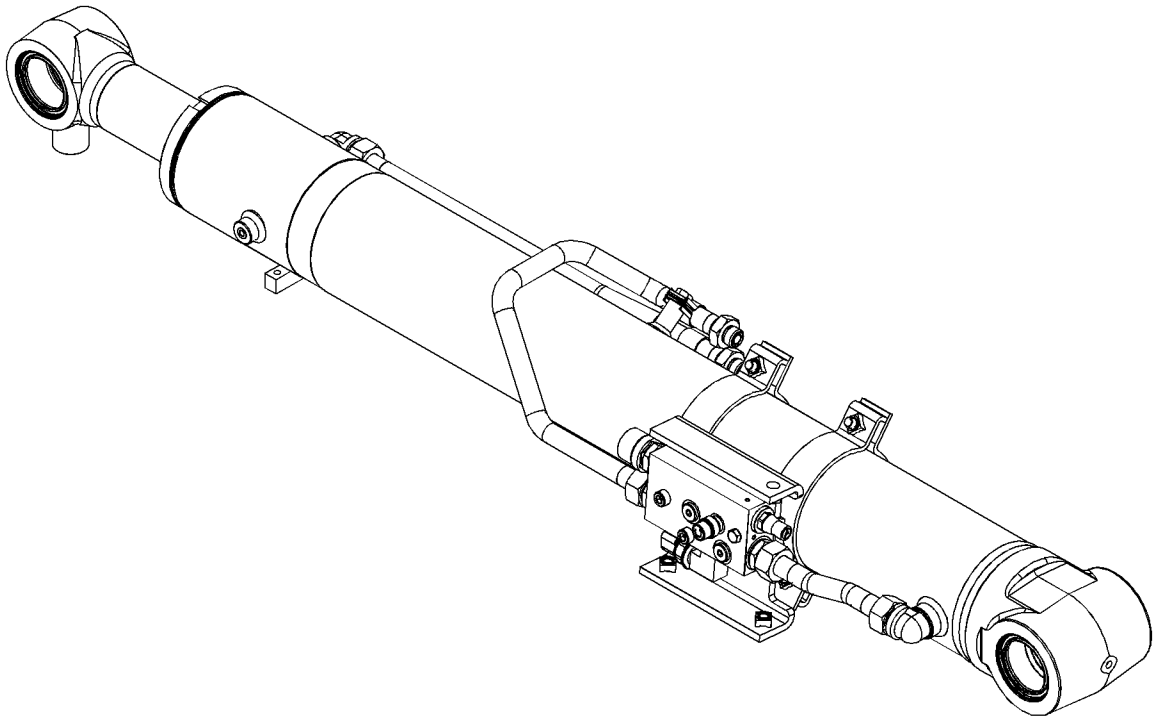

GRAPHIC #1 <END> g06340801

515-5483 CYLINDER & LINES GP-HYDRAULIC—SWING BOOM

110-MM (4.3-IN) BORE X 597-MM (23.5-IN) STROKE
PART OF 514-8055, 514-8059, 514-8060 LINES AR-BOOM
AN ATTACHMENT

SMCS-7562 **i07544925**

NOTE	REF NO	GRAPHIC REF	PART NUMBER	QTY	PART NAME 1 2 3 4 5 6 (PRODUCT LEVEL)	SEE PAGE
					(NO BREAKDOWN OF SERVICEABLE PARTS AVAILABLE AT TIME OF PUBLICATION)	

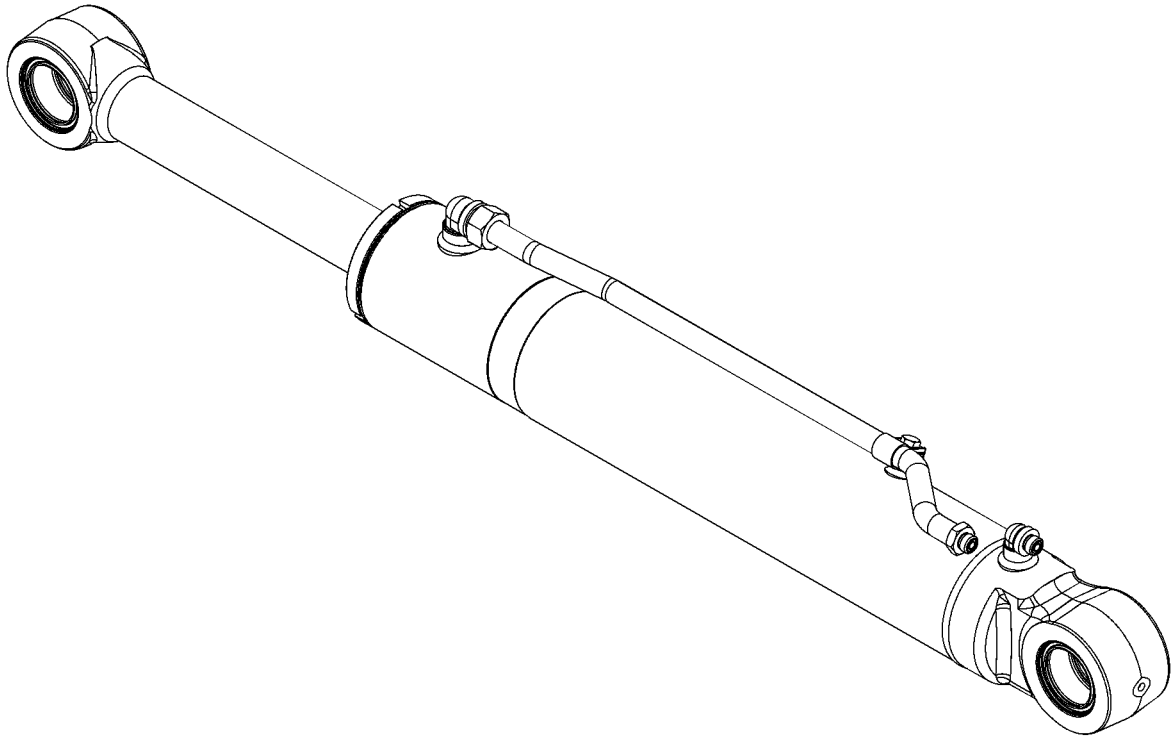

GRAPHIC #1 <END> g06340836

514-8067 CYLINDER & LINES GP-STICK

FOR USE WITH 514-8055—PAGE: 177
PART OF 562-4906, 562-9155, 562-9156 DISTRIBUTION AR
AN ATTACHMENT

SMCS-5057, 5458

i07542513

NOTE	PART NUMBER	QTY	PART NAME 1 2 3 4 5 6 (PRODUCT LEVEL)	SEE PAGE
Y	**524-0076**	1	CYLINDER & LINES GP-STICK	157
Y	*518-1300*	1	LINES GP-BOOM	193

Y - SEPARATE ILLUSTRATION

<END>

524-0076 CYLINDER & LINES GP-STICK

95-MM (3.7-IN) BORE X 885-MM (35-IN) STROKE
PART OF 514-8067 CYLINDER & LINES GP-STICK
AN ATTACHMENT

SMCS-5057, 5458

i07465937

NOTE	REF NO	GRAPHIC REF	PART NUMBER	QTY	PART NAME 1 2 3 4 5 6 (PRODUCT LEVEL)	SEE PAGE
M	1	1	**8T-4137**	1	BOLT (M10X1.5X20-MM)	
	2	1	**544-4208**	1	KIT-BUSHING	
					(INCLUDES BUSHINGS & WIPER SEALS)	
	3	1	**544-4209**	1	KIT-TUBE	
					(INCLUDES PIPE AS, CLIP & O-RING)	
	4	1	**3B-8488**	1	FITTING-GREASE (1/8-27 PTF)	
					AVAILABLE REPAIR KIT(S):	
			544-4207	1	KIT-SEAL	
					(INCLUDES WIPER, RING, O-RING, ROD SEAL, BUFFER RING, BUSHING, RING RETAINER, O-RING SEALS, BACKUP RINGS, WEAR RINGS, PISTON SEAL & DUST RINGS)	

M - METRIC PART

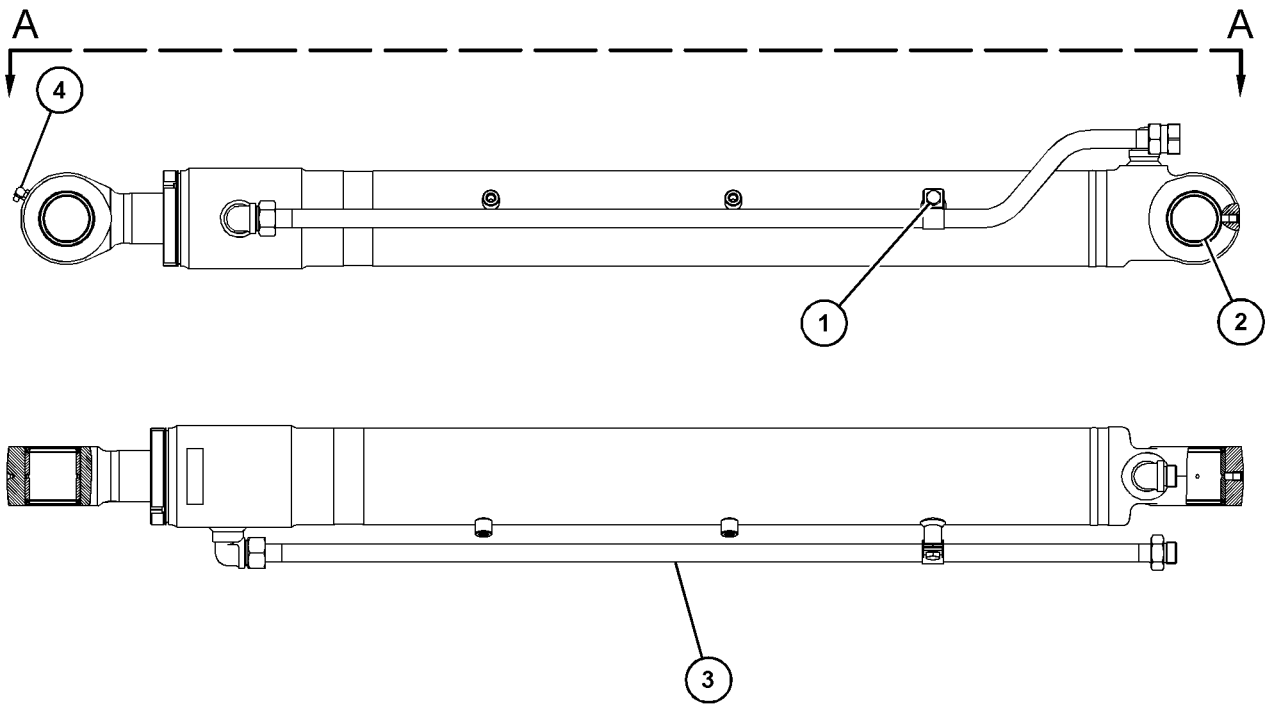

VIEW A-A

GRAPHIC #1

<END>

g06330395

524-0077 CYLINDER & LINES GP-STICK

95-MM (3.7-IN) BORE X 885-MM (34.8-IN) STROKE
PART OF 514-8074, 519-8825 LINES AR-STICK
AN ATTACHMENT

SMCS-5057, 5458

i07546491

NOTE	REF NO	GRAPHIC REF	PART NUMBER	QTY	PART NAME 1 2 3 4 5 6 (PRODUCT LEVEL)	SEE PAGE
					(NO BREAKDOWN OF SERVICEABLE PARTS AVAILABLE AT TIME OF PUBLICATION)	

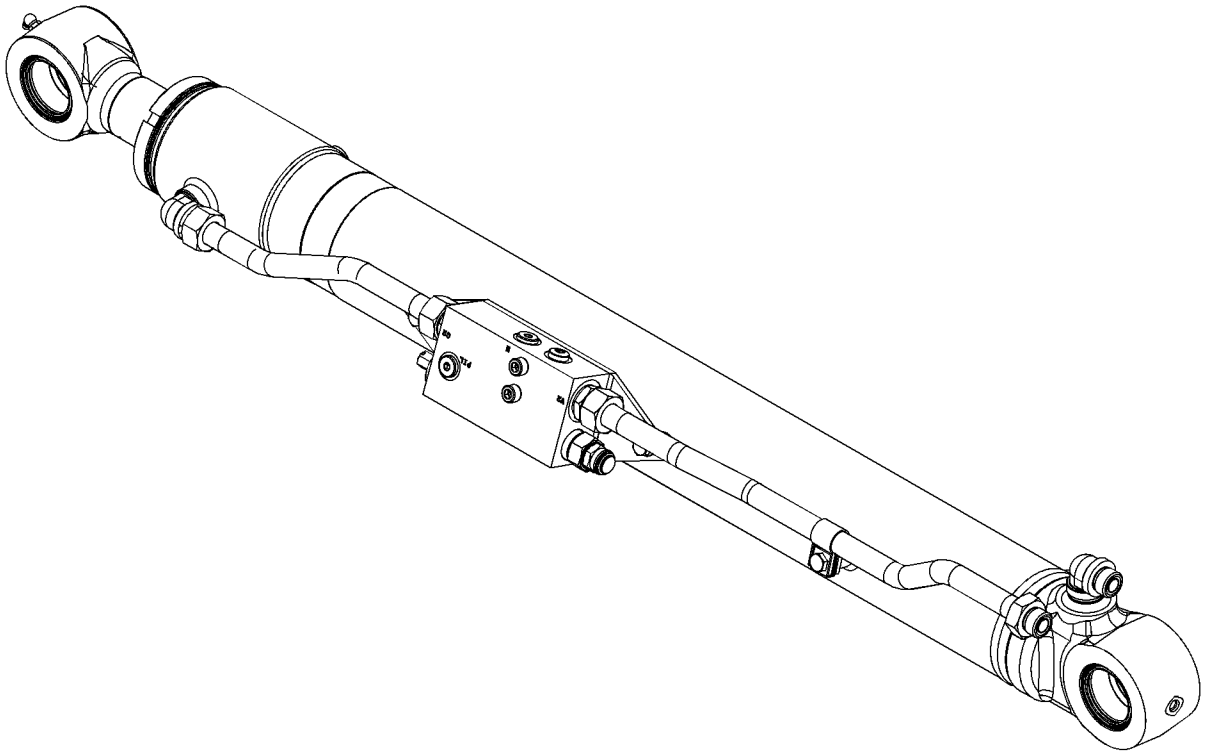

GRAPHIC #1

<END>

g06333869

305-6780 CYLINDER & LINES GP-THUMB

PART OF 305-6740, 305-6741 THUMB AR
AN ATTACHMENT

SMCS-5057, 5362 **i05430597**

NOTE	REF NO	GRAPHIC REF	PART NUMBER	QTY	PART NAME 1 2 3 4 5 6 (PRODUCT LEVEL)	SEE PAGE
	1	1	**108-7251**	2	CONNECTOR	
	2	1	**280-2652**	2	VALVE-BALL	
	3	1	**294-0973**	1	TOOL	
Y	4	1	**305-6716**	1	CYLINDER GP-THUMB	168
I	5	1	**305-6759**	2	HOSE AS	
	6	1	**439-5338**	1	BRACKET	
	7	1	**439-5339**	1	BRACKET	
	8	1	*148-8364*	2	ELBOW AS	
					(EACH INCLUDES)	
		1	**3K-0360**	1	SEAL-O-RING	
		1	**6V-8398**	1	SEAL-O-RING	
		1	**6V-8625**	1	ELBOW	
	9	1	*148-8393*	2	ELBOW AS	
					(EACH INCLUDES)	
		1	**6V-9852**	1	ELBOW (SWIVEL)	
		1	**7J-9108**	1	SEAL-O-RING	
	10	1	*148-8446*	2	TEE AS-SWIVEL	
					(EACH INCLUDES)	
		1	**6V-9838**	1	TEE-SWIVEL	
		1	**7J-9108**	2	SEAL-O-RING	
	11	1	**3K-0360**	2	SEAL-O-RING	
	12	1	**6V-8398**	2	SEAL-O-RING	
	13	1	**9X-6581**	2	NUT-O-RING SEAL (1-14-THD)	
	14	1	**6V-8939**	2	REDUCER-O-RING	
	15	1	**7J-9108**	2	SEAL-O-RING	
M	16	1	**8T-4139**	4	BOLT (M12X1.75X30-MM)	
	17	1	**6V-1889**	2	CLIP (LOOP)	
	18	1	**8T-4223**	4	WASHER-HARD (13.5X25.5X3-MM THK)	
	19	1	**8T-4121**	4	WASHER-HARD (11X21X2.5-MM THK)	
M	20	1	**8T-4133**	2	NUT (M10X1.5-THD)	
M	21	1	**8T-4136**	2	BOLT (M10X1.5X25-MM)	

I - REFER TO HYDRAULIC INFORMATION SYSTEM
M - METRIC PART
Y - SEPARATE ILLUSTRATION

305-6780 **CYLINDER & LINES GP-THUMB** (contd.) **i05430597**

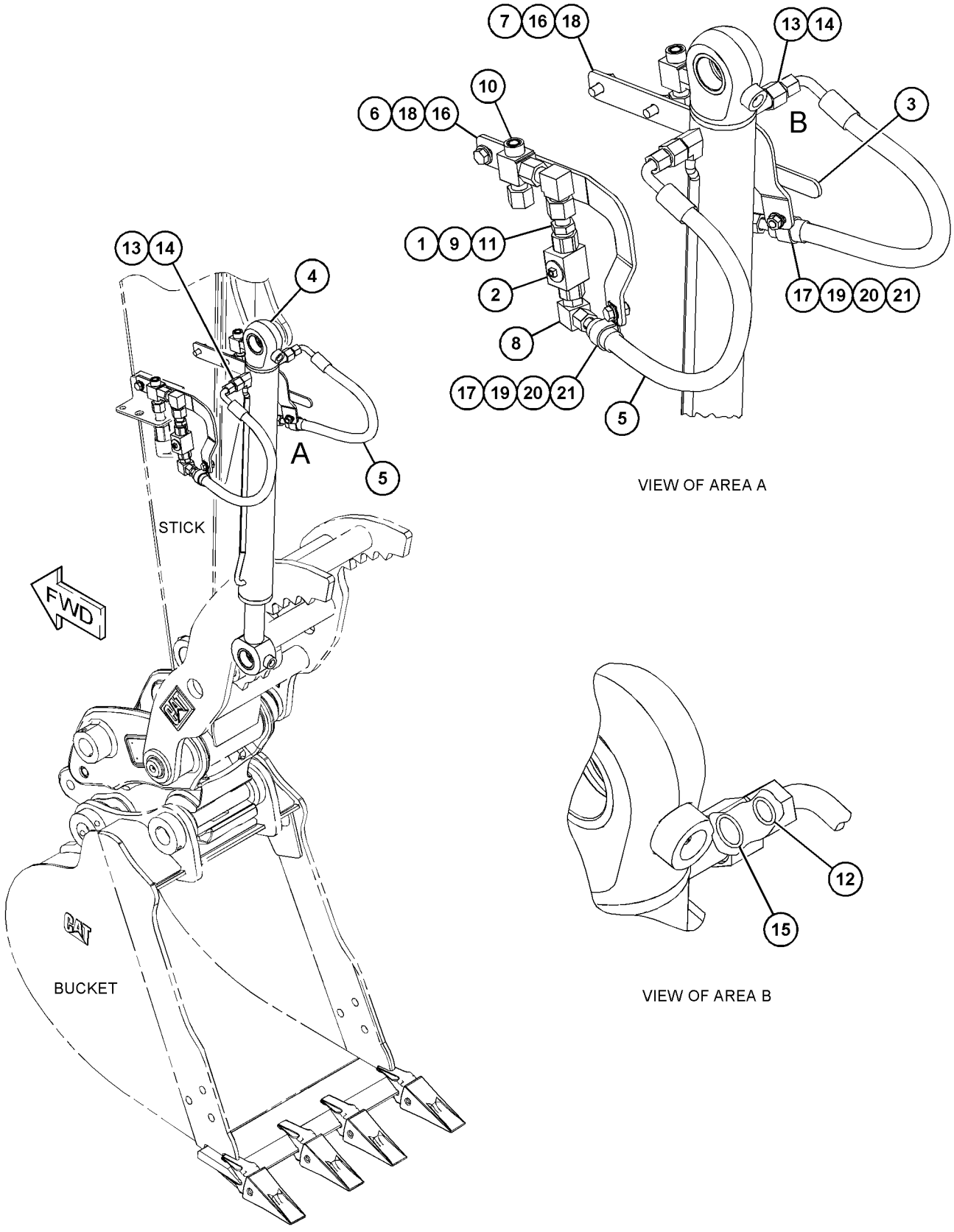

VIEW OF AREA A

VIEW OF AREA B

GRAPHIC #1 <END> g03426298

305-6781 CYLINDER & LINES GP-THUMB

PART OF 305-6744, 305-6745 THUMB AR
AN ATTACHMENT

SMCS-5057, 5362 **i05430598**

NOTE	REF NO	GRAPHIC REF	PART NUMBER	QTY	PART NAME 1 2 3 4 5 6 (PRODUCT LEVEL)	SEE PAGE
	1	1	**108-7251**	2	CONNECTOR	
	2	1	**280-2652**	2	VALVE-BALL	
	3	1	**294-0973**	1	TOOL	
Y	4	1	**305-6717**	1	CYLINDER GP-THUMB	169
I	5	1	**305-6759**	2	HOSE AS	
	6	1	**439-5338**	1	BRACKET	
	7	1	**439-5339**	1	BRACKET	
	8	1	*148-8364*	2	ELBOW AS	
					(EACH INCLUDES)	
		1	**3K-0360**	1	SEAL-O-RING	
		1	**6V-8398**	1	SEAL-O-RING	
		1	**6V-8625**	1	ELBOW	
	9	1	*148-8393*	2	ELBOW AS	
					(EACH INCLUDES)	
		1	**6V-9852**	1	ELBOW (SWIVEL)	
		1	**7J-9108**	1	SEAL-O-RING	
	10	1	*148-8446*	2	TEE AS-SWIVEL	
					(EACH INCLUDES)	
		1	**6V-9838**	1	TEE-SWIVEL	
		1	**7J-9108**	2	SEAL-O-RING	
	11	1	**3K-0360**	2	SEAL-O-RING	
	12	1	**6V-8398**	2	SEAL-O-RING	
	13	1	**9X-6581**	2	NUT-O-RING SEAL (1-14-THD)	
	14	1	**6V-8939**	2	REDUCER-O-RING	
	15	1	**7J-9108**	2	SEAL-O-RING	
M	16	1	**8T-4139**	4	BOLT (M12X1.75X30-MM)	
	18	1	**8T-4223**	4	WASHER-HARD (13.5X25.5X3-MM THK)	
	19	1	**6V-1889**	2	CLIP (LOOP)	
	20	1	**8T-4121**	4	WASHER-HARD (11X21X2.5-MM THK)	
M	21	1	**8T-4133**	2	NUT (M10X1.5-THD)	
M	22	1	**8T-4136**	2	BOLT (M10X1.5X25-MM)	

I - REFER TO HYDRAULIC INFORMATION SYSTEM
M - METRIC PART
Y - SEPARATE ILLUSTRATION

305-6781 **CYLINDER & LINES GP-THUMB (**contd.**)** **i05430598**

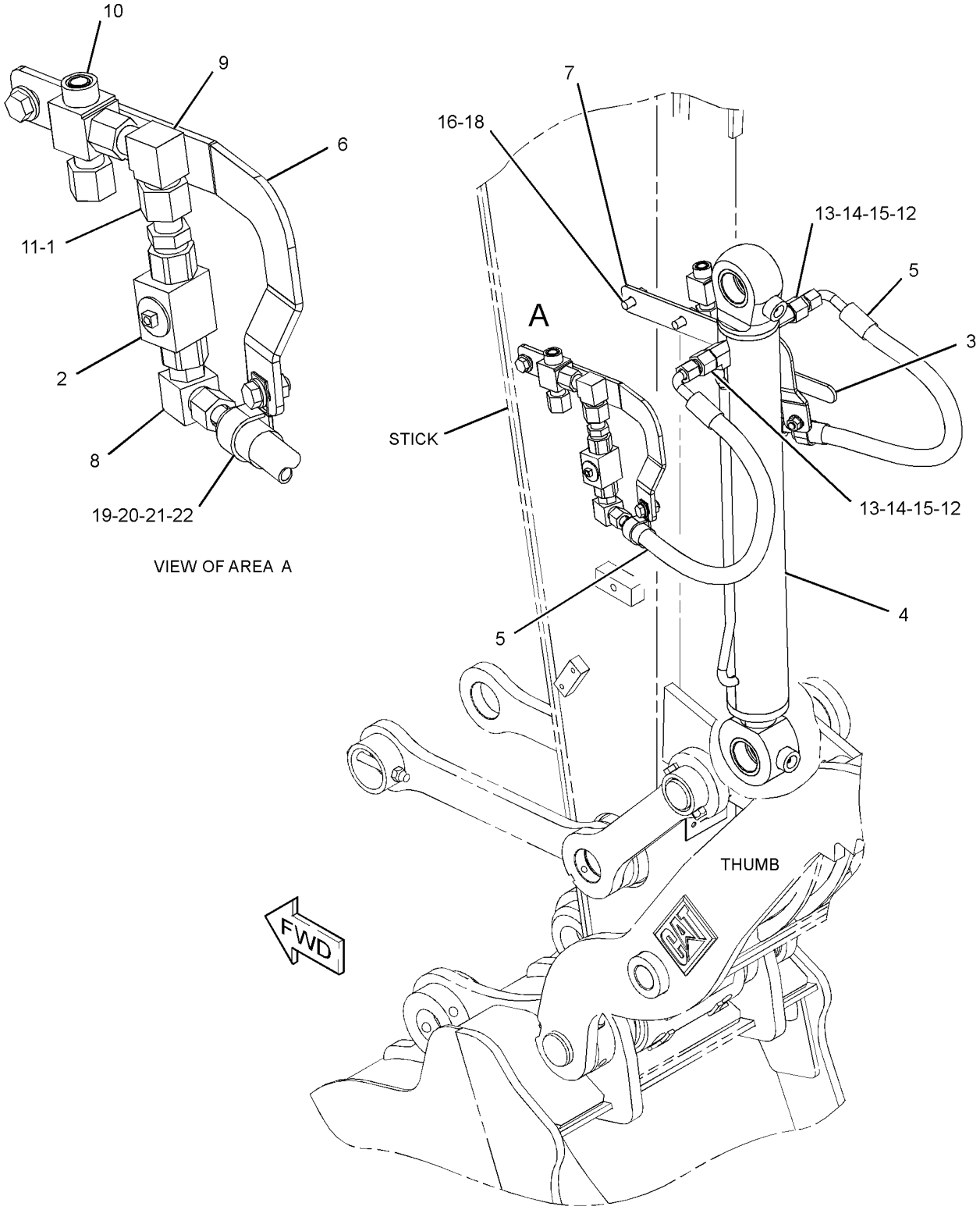

GRAPHIC #1 <END> g03426195

504-6176 CYLINDER & LINES GP-THUMB

PART OF 504-6174, 504-6175 THUMB AR
AN ATTACHMENT

SMCS-5057, 5362 **i07546398**

NOTE	REF NO	GRAPHIC REF	PART NUMBER	QTY	PART NAME 1 2 3 4 5 6 (PRODUCT LEVEL)	SEE PAGE
	1	1	*148-8364*	2	ELBOW AS	
					(EACH INCLUDES)	
		1	**3K-0360**	1	SEAL-O-RING	
		1	**6V-8398**	1	SEAL-O-RING	
		1	**6V-8625**	1	ELBOW	
	2	1	*148-8393*	2	ELBOW AS	
					(EACH INCLUDES)	
		1	**6V-9852**	1	ELBOW (SWIVEL)	
		1	**7J-9108**	1	SEAL-O-RING	
	3	1	*148-8416*	2	REDUCER AS	
					(EACH INCLUDES)	
		1	**6V-8398**	1	SEAL-O-RING	
		1	**6V-8939**	1	REDUCER-O-RING	
	4	1	**280-2652**	2	VALVE-BALL	
	5	1	*281-5897*	2	COUPLING AS	
					(EACH INCLUDES)	
		1	**3K-0360**	1	SEAL-O-RING	
		1	**108-7251**	1	CONNECTOR	
	6	1	**294-0973**	1	TOOL	
Y	7	1	**305-6716**	1	CYLINDER GP-THUMB	168
I	8	1	**305-6759**	2	HOSE AS	
	9	1	**439-5338**	1	BRACKET	
	10	1	**439-5339**	1	BRACKET	
	11	1	*552-3353*	2	ADAPTER AS-TEE	
					(EACH INCLUDES)	
		1	**6V-9746**	1	SEAL-O-RING	
		1	**7J-9108**	1	SEAL-O-RING	
		1	**552-3352**	1	ADAPTER-TEE	
	12	1	**6V-1889**	2	CLIP (LOOP)	
	13	1	**7J-9108**	2	SEAL-O-RING	
	14	1	**8T-4121**	4	WASHER-HARD (11X21X2.5-MM THK)	
M	15	1	**8T-4133**	2	NUT (M10X1.5-THD)	
M	16	1	**8T-4136**	2	BOLT (M10X1.5X25-MM)	
M	17	1	**8T-4139**	4	BOLT (M12X1.75X30-MM)	
	18	1	**8T-4223**	4	WASHER-HARD (13.5X25.5X3-MM THK)	
	19	1	**9X-6581**	2	NUT-O-RING SEAL (1-14-THD)	

I - REFER TO HYDRAULIC INFORMATION SYSTEM
M - METRIC PART
Y - SEPARATE ILLUSTRATION

504-6176 **CYLINDER & LINES GP-THUMB (**contd.**)** **i07546398**

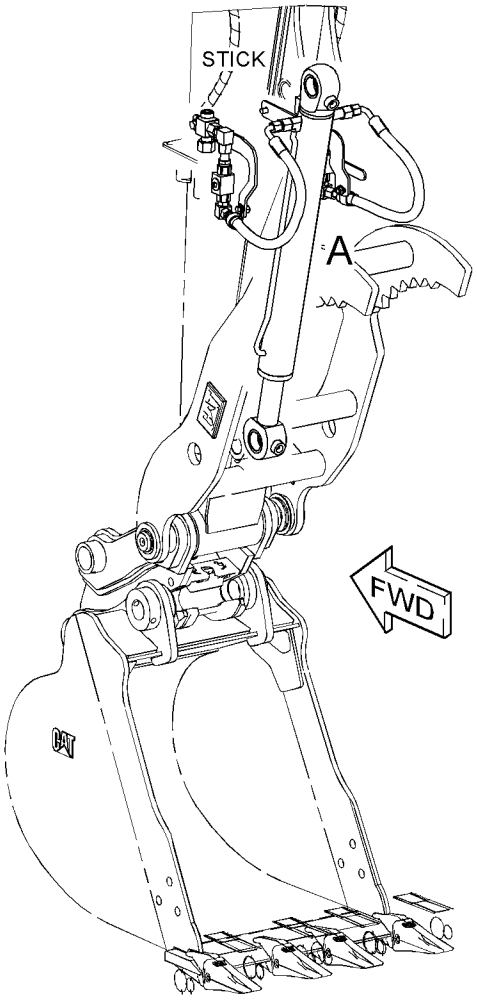

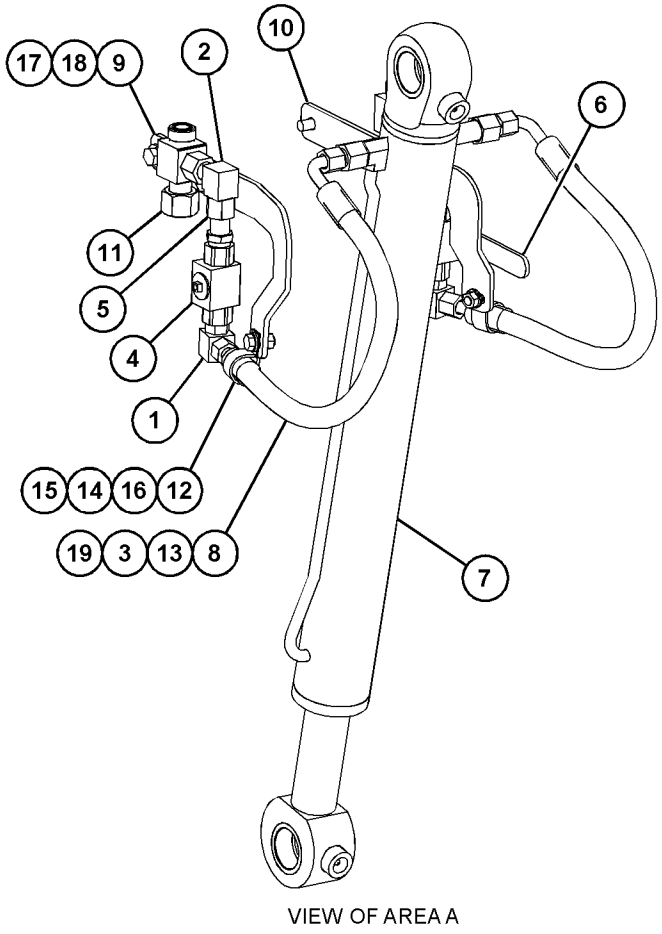

VIEW OF AREA A

GRAPHIC #1 <END> g06356352

374-1857 CYLINDER GP-BLADE

120-MM (4.8-IN) BORE X 157-MM (6.2-IN) STROKE
PART OF 512-2524, 512-2526 BLADE AR-STRAIGHT
AN ATTACHMENT

SMCS-5102, 7164

i07546217

NOTE	REF NO	GRAPHIC REF	PART NUMBER	QTY	PART NAME 1 2 3 4 5 6 (PRODUCT LEVEL)	SEE PAGE
					(NO BREAKDOWN OF SERVICEABLE PARTS AVAILABLE AT TIME OF PUBLICATION)	

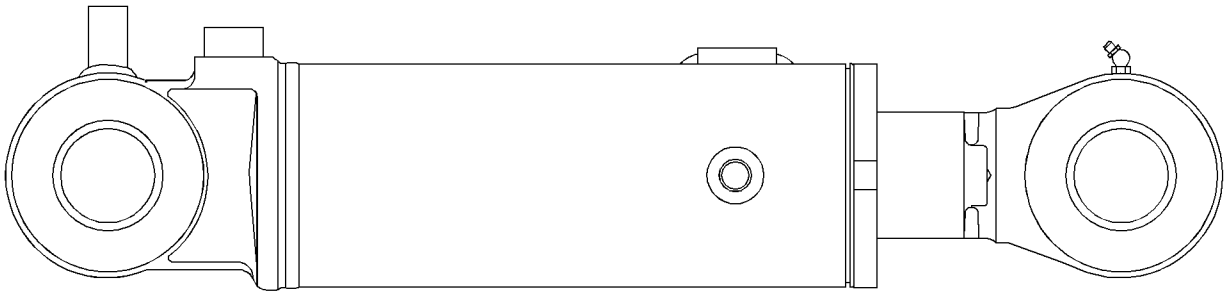

GRAPHIC #1

<END>

g02722866

521-2883 CYLINDER GP-BUCKET

85-MM (3.3-IN) BORE X 742-MM (29.2-IN) STROKE
PART OF 516-7070, 521-7589, 568-1566, 568-1567 LINKAGE AR-BUCKET
AN ATTACHMENT

SMCS-5457 **i07544927**

NOTE	REF NO	GRAPHIC REF	PART NUMBER	QTY	PART NAME 1 2 3 4 5 6 (PRODUCT LEVEL)	SEE PAGE
					(NO BREAKDOWN OF SERVICEABLE PARTS AVAILABLE AT TIME OF PUBLICATION)	

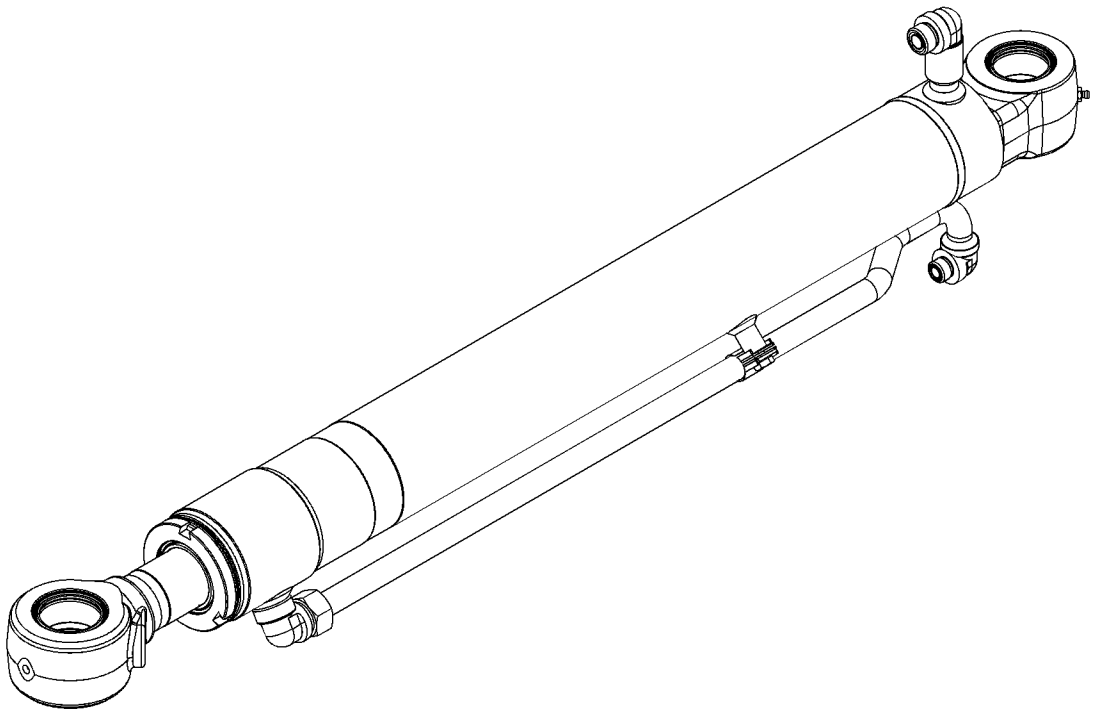

GRAPHIC #1 <END> g06341335

485-5289 CYLINDER GP-COUPLER

31.8-MM (1.2-IN) BORE X 38-MM (1.5-IN) STROKE
PART OF 361-1153, 485-5245 LOCK GP-QUICK COUPLER
AN ATTACHMENT

SMCS-5133 **i07200445**

NOTE	REF NO	GRAPHIC REF	PART NUMBER	QTY	PART NAME 1 2 3 4 5 6 (PRODUCT LEVEL)	SEE PAGE
	1	1	**216-9060**	1	PLUG	
	2	1	**361-1128**	1	SEAL	
	3	1	**361-1140**	1	PISTON	
N	4	1	**479-0646**	1	VALVE AS-COUNTERBALANCE	
	5	1	**485-5284**	1	KIT-SEAL	
					(INCLUDES PARTS MARKED J IN THE GRAPHICS)	
	6	1	**485-5285**	1	PISTON	
	7	1	**485-5286**	1	ROD AS	
	8	1	**4D-2297**	1	SEAL-O-RING	
M	9	1	**6V-5192**	1	BOLT-SOCKET HEAD (M8X1.25X30-MM)	
					AVAILABLE REPAIR KIT(S):	
N			**499-9314**	1	KIT-SEAL (COUNTERBALANCE VALVE)	
					(INCLUDES RING-BACK UPS & O-RING SEALS)	

M - METRIC PART
N - KIT MARKED N SERVICES PART(S) MARKED N

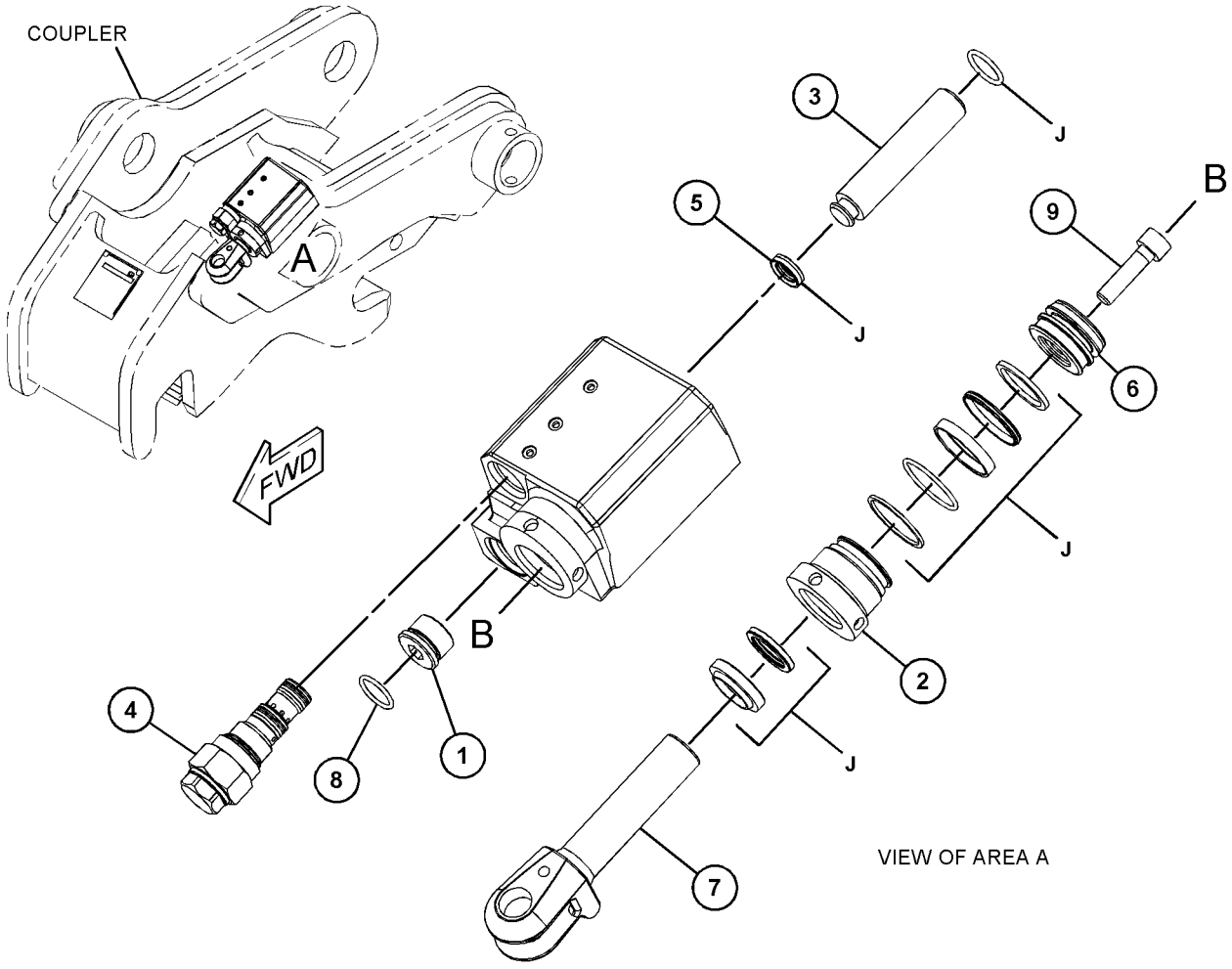

GRAPHIC #1 <END> g06188483

305-6716 CYLINDER GP-THUMB

PART OF 305-6780, 504-6176 CYLINDER & LINES GP-THUMB
AN ATTACHMENT

SMCS-5362 **i02901571**

NOTE	REF NO	GRAPHIC REF	PART NUMBER	QTY	PART NAME 1 2 3 4 5 6 (PRODUCT LEVEL)	SEE PAGE
	1	1	**276-4170**	1	PISTON	
	2	1	**276-4171**	1	HEAD	
	3	1	**282-6836**	1	STOP	
	4	1	**305-6713**	1	ROD AS	
	5	1	**305-6714**	1	CYLINDER AS (THUMB)	
	6	1	**3B-8489**	2	FITTING-GREASE (1/8-27 PTF) (HYDRAULIC)	
	7	1	**9R-0320**	4	BUSHING	
					AVAILABLE REPAIR KIT(S):	
			276-4172	1	KIT-SEAL	
					(INCLUDES SEALS, RINGS & SETSCREW)	

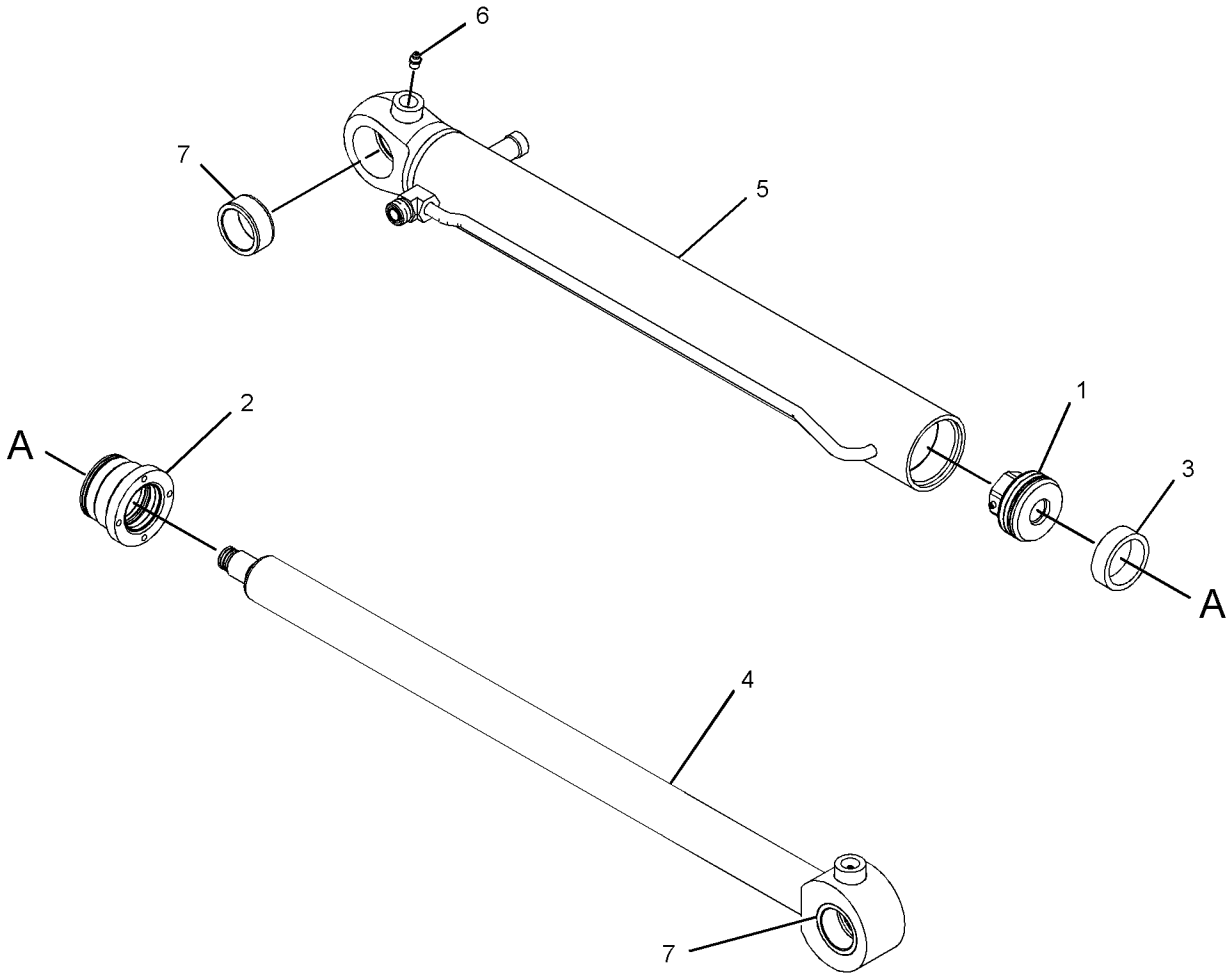

GRAPHIC #1 <END> g01448958

305-6717 CYLINDER GP-THUMB

PART OF 305-6781 CYLINDER & LINES GP-THUMB
AN ATTACHMENT

SMCS-5362 **i02901573**

NOTE	REF NO	GRAPHIC REF	PART NUMBER	QTY	PART NAME 1 2 3 4 5 6 (PRODUCT LEVEL)	SEE PAGE
	1	1	**276-4170**	1	PISTON	
	2	1	**276-4171**	1	HEAD	
	3	1	**282-6836**	1	STOP	
	4	1	**305-6711**	1	ROD AS	
	5	1	**305-6712**	1	CYLINDER AS	
	6	1	**3B-8489**	2	FITTING-GREASE (1/8-27 PTF) (HYDRAULIC)	
	7	1	**9R-0320**	4	BUSHING	
					AVAILABLE REPAIR KIT(S):	
			276-4172	1	KIT-SEAL	
					(INCLUDES SEALS, RINGS & SETSCREW)	

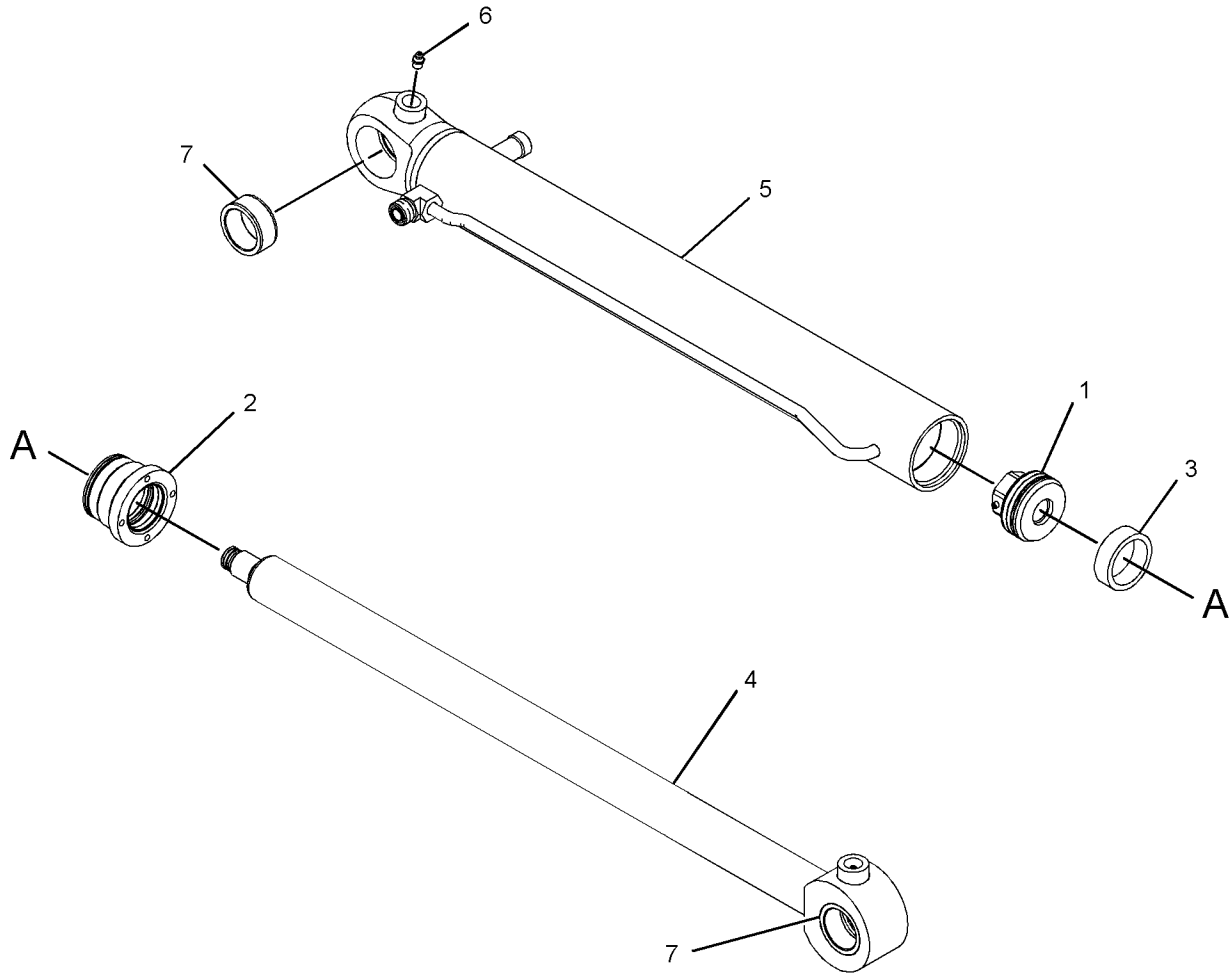

GRAPHIC #1 <END> g01448958

519-8850 CYLINDER GP-VARIABLE ADJ BOOM

100-MM (4-IN) BORE X 372-MM (14.6-IN) STROKE
PART OF 514-8074 LINES AR-STICK
AN ATTACHMENT

SMCS-5456 **i07546490**

NOTE	REF NO	GRAPHIC REF	PART NUMBER	QTY	PART NAME 1 2 3 4 5 6 (PRODUCT LEVEL)	SEE PAGE
					(NO BREAKDOWN OF SERVICEABLE PARTS AVAILABLE AT TIME OF PUBLICATION)	

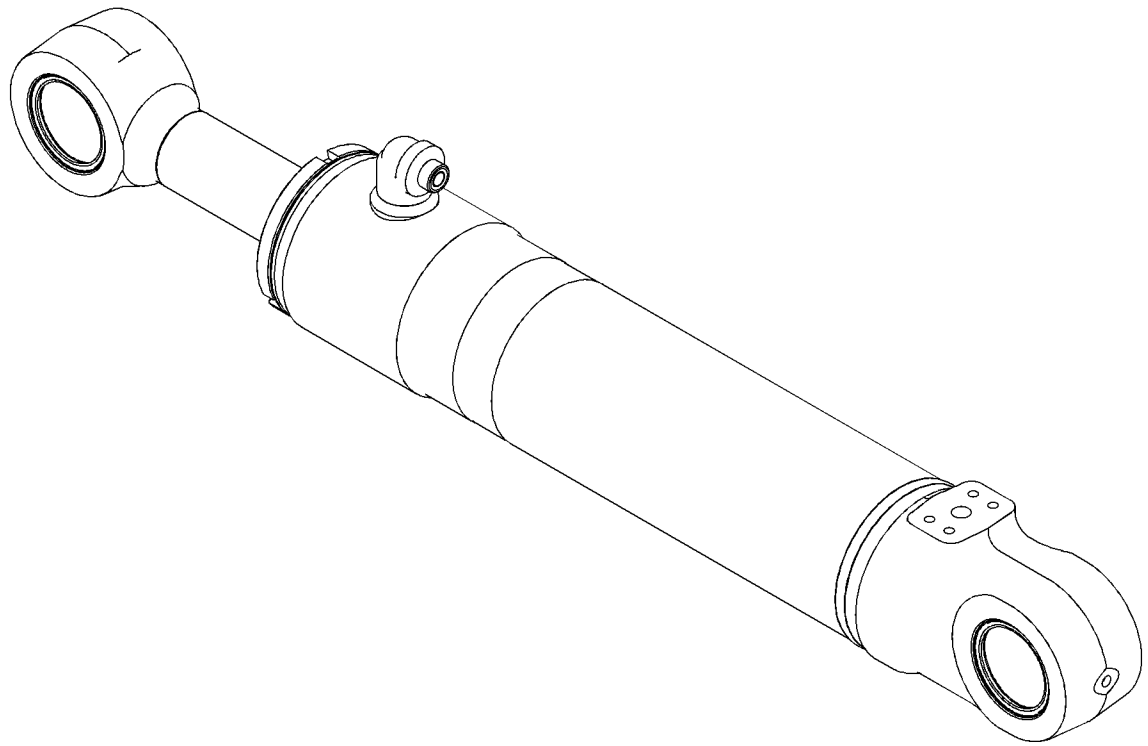

GRAPHIC #1 <END> g06340796

515-3268 FILTER GP-OIL—HYDRAULIC FILTER

PART OF 513-1375, 551-2207 TANK & FILTER GP-HYDRAULIC

SMCS-5068, 5093 **i07542350**

NOTE	REF NO	GRAPHIC REF	PART NUMBER	QTY	PART NAME 1 2 3 4 5 6 (PRODUCT LEVEL)	SEE PAGE
	1	1	**519-9926**	1	FILTER ELEMENT AS-OIL	
	2	1	**6V-5657**	1	SEAL-O-RING	
	3	1	**054-6854**	1	SEAL-O-RING	
M	4	1	**105-3484**	4	BOLT-SOCKET HEAD (M10X1.5X25-MM)	
	5	1	**549-2188**	1	COVER AS-FILTER	

M - METRIC PART

NO GRAPHIC AVAILABLE AT TIME OF PUBLICATION

GRAPHIC #1 <END> g01269539

550-1905 GUARD AS-BLADE CYLINDER

PART OF 512-2524, 512-2526 BLADE AR-STRAIGHT
AN ATTACHMENT

SMCS-5102 **i07546233**

NOTE	REF NO	GRAPHIC REF	PART NUMBER	QTY	PART NAME 1 2 3 4 5 6 (PRODUCT LEVEL)	SEE PAGE
	1	1	**550-1904**	1	GUARD AS-CYLINDER	
M	2	1	**8T-4192**	3	BOLT (M12X1.75X25-MM)	
	3	1	**8T-4223**	3	WASHER-HARD (13.5X25.5X3-MM THK)	

M - METRIC PART

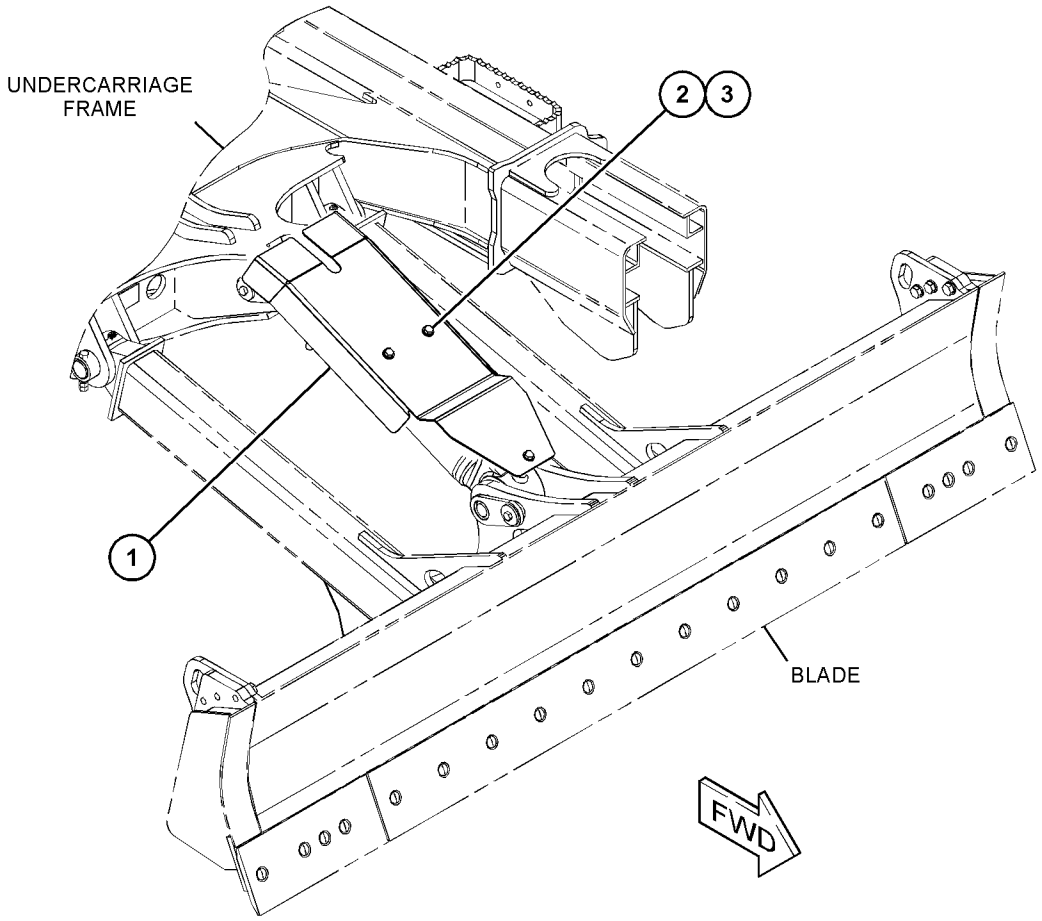

GRAPHIC #1 <END> g06335308

512-1420 HYDRAULIC AR

PART OF 512-1401 COMMON AR

SMCS-5050 **i07542238**

NOTE	PART NUMBER	QTY	PART NAME 1 2 3 4 5 6 (PRODUCT LEVEL)	SEE PAGE
Y	*512-1893*	1	LINES GP-RETURN	227
Y	*512-5201*	1	LINES GP-SWING MOTOR	232
Y	*522-1622*	1	MOTOR & MTG GP-SWING	237
Y	*512-1569*	1	TANK & MTG GP-HYDRAULIC	262

Y - SEPARATE ILLUSTRATION

<END>

514-3230 HYDRAULIC AR–1-WAY, 2-WAY FLOW

FOR USE WITH 520-0765–PAGE: 175, 520-0769–PAGE: 175
PART OF 563-2070 STICK & CONTROL AR-AUXILIARY, 563-2071 STICK AR
AN ATTACHMENT

SMCS-5050 **i07546184**

NOTE	PART NUMBER	QTY	PART NAME 1 2 3 4 5 6 (PRODUCT LEVEL)	SEE PAGE
Y	*566-9891*	1	FILM GP	442
Y	*551-4077*	1	FILM GP (AUXILIARY)	432
Y	*513-6063*	1	LINES GP-CONTROL	195
Y	*513-9196*	1	LINES GP-FRONT (AUXILIARY)	205
Y	*512-5198*	1	LINES GP-PILOT	215
Y	*511-3201*	1	LINES GP-PUMP	220
Y	*515-0451*	1	PUMP & MTG GP-MAIN HYDRAULIC	245
Y	*515-3526*	1	VALVE & MTG GP-BANK	264
Y	*511-6241*	1	WIRING GP-FRONT (SWING BOOM)	83

Y - SEPARATE ILLUSTRATION

<END>

514-3235 HYDRAULIC AR–2ND AUXILIARY

FOR USE WITH 520-0800–PAGE: 176, 520-0820–PAGE: 176
PART OF 563-2082, 563-2083 STICK & CONTROL AR-AUXILIARY
AN ATTACHMENT

SMCS-5050 **i07546455**

NOTE	PART NUMBER	QTY	PART NAME 1 2 3 4 5 6 (PRODUCT LEVEL)	SEE PAGE
Y	*566-9891*	1	FILM GP	442
Y	*551-4077*	1	FILM GP (AUXILIARY)	432
Y	*513-6063*	1	LINES GP-CONTROL	195
Y	*513-9196*	1	LINES GP-FRONT (AUXILIARY)	205
Y	*513-9202*	1	LINES GP-FRONT (2ND AUXILIARY)	207
Y	*512-5198*	1	LINES GP-PILOT	215
Y	*511-3201*	1	LINES GP-PUMP	220
Y	*515-0451*	1	PUMP & MTG GP-MAIN HYDRAULIC	245
Y	*515-3529*	1	VALVE & MTG GP-BANK	265
Y	*511-6241*	1	WIRING GP-FRONT (SWING BOOM)	83

Y - SEPARATE ILLUSTRATION

<END>

514-3240 HYDRAULIC AR–AUXILIARY PUMP

FOR USE WITH 520-0800–PAGE: 176, 520-0820–PAGE: 176
AN ATTACHMENT

SMCS-5050 **i07546280**

NOTE	PART NUMBER	QTY	PART NAME 1 2 3 4 5 6 (PRODUCT LEVEL)	SEE PAGE
Y	*566-9891*	1	FILM GP	442
Y	*551-4078*	1	FILM GP	433
Y	*513-6063*	1	LINES GP-CONTROL	195
Y	*513-9217*	1	LINES GP-FRONT	208
Y	*512-5198*	1	LINES GP-PILOT	215
Y	*520-4891*	1	LINES GP-PILOT	219
Y	*511-4977*	1	LINES GP-PUMP	222
Y	*520-5981*	1	LINES GP-RETURN	229
Y	*515-0452*	1	PUMP & MTG GP-MAIN HYDRAULIC	246
Y	*515-3526*	1	VALVE & MTG GP-BANK	264
Y	*516-3705*	1	VALVE & MTG GP-BANK (AUXILIARY)	267
Y	*511-6226*	1	WIRING GP-AUXILIARY CONTROL	72
Y	*511-6241*	1	WIRING GP-FRONT (SWING BOOM)	83

Y - SEPARATE ILLUSTRATION

<END>

517-8129 HYDRAULIC AR–2ND AUXILIARY

FOR USE WITH 520-0781–PAGE: 176
PART OF 563-2092 STICK & CONTROL AR-AUXILIARY
AN ATTACHMENT

SMCS-5050 **i07546510**

NOTE	PART NUMBER	QTY	PART NAME 1 2 3 4 5 6 (PRODUCT LEVEL)	SEE PAGE
Y	*551-4077*	1	FILM GP (AUXILIARY)	432
Y	*566-9866*	1	FILM GP (VARIABLE ADJUSTABLE BOOM)	441
Y	*513-6063*	1	LINES GP-CONTROL	195
Y	*513-9196*	1	LINES GP-FRONT (AUXILIARY)	205
Y	*517-8120*	1	LINES GP-FRONT (VARIABLE ADJUSTABLE BOOM)	212
Y	*513-9202*	1	LINES GP-FRONT (2ND AUXILIARY)	207
Y	*517-8114*	1	LINES GP-PILOT	217
Y	*511-3201*	1	LINES GP-PUMP	220
Y	*515-0451*	1	PUMP & MTG GP-MAIN HYDRAULIC	245
Y	*515-3533*	1	VALVE & MTG GP-BANK	266
Y	*511-6242*	1	WIRING GP-FRONT (VARIABLE ADJUSTABLE BOOM)	84

Y - SEPARATE ILLUSTRATION

<END>

520-0774 HYDRAULIC AR—AUXILIARY PUMP

FOR USE WITH 520-0781—PAGE: 176
AN ATTACHMENT

SMCS-5050 **i07546535**

NOTE	PART NUMBER	QTY	PART NAME 1 2 3 4 5 6 (PRODUCT LEVEL)	SEE PAGE
Y	*566-9866*	1	FILM GP (VARIABLE ADJUSTABLE BOOM)	441
Y	*551-4078*	1	FILM GP	433
Y	*513-6063*	1	LINES GP-CONTROL	195
Y	*513-9217*	1	LINES GP-FRONT (AUXILIARY)	208
Y	*517-8120*	1	LINES GP-FRONT (VARIABLE ADJUSTABLE BOOM)	212
Y	*517-8114*	1	LINES GP-PILOT	217
Y	*520-4891*	1	LINES GP-PILOT	219
Y	*511-4977*	1	LINES GP-PUMP	222
Y	*520-5981*	1	LINES GP-RETURN	229
Y	*515-0452*	1	PUMP & MTG GP-MAIN HYDRAULIC	246
Y	*515-3533*	1	VALVE & MTG GP-BANK	266
Y	*516-3705*	1	VALVE & MTG GP-BANK (AUXILIARY)	267
Y	*511-6226*	1	WIRING GP-AUXILIARY CONTROL	72
Y	*511-6242*	1	WIRING GP-FRONT (VARIABLE ADJUSTABLE BOOM)	84

Y - SEPARATE ILLUSTRATION

<END>

520-0765 LINES AR-AUXILIARY HYDRAULIC—STANDARD STICK

PART OF 563-2070 STICK & CONTROL AR-AUXILIARY
AN ATTACHMENT

SMCS-5057 **i07546533**

NOTE	PART NUMBER	QTY	PART NAME 1 2 3 4 5 6 (PRODUCT LEVEL)	SEE PAGE
Y	*568-3680*	1	FILM GP	444
Y	*513-9192*	1	LINES GP-AUXILIARY HYDRAULIC (LONG BOOM)	180
Y	*515-9162*	1	LINES GP-AUXILIARY HYDRAULIC (MEDIUM STICK)	183

Y - SEPARATE ILLUSTRATION

<END>

520-0769 LINES AR-AUXILIARY HYDRAULIC—LONG STICK

FOR USE WITH 514-3230—PAGE: 173
PART OF 563-2071 STICK AR
AN ATTACHMENT

SMCS-5057 **i07546208**

NOTE	PART NUMBER	QTY	PART NAME 1 2 3 4 5 6 (PRODUCT LEVEL)	SEE PAGE
Y	*568-3680*	1	FILM GP	444
Y	*513-7140*	1	LINES GP-AUXILIARY HYDRAULIC (LONG STICK)	179
Y	*513-9192*	1	LINES GP-AUXILIARY HYDRAULIC (LONG BOOM)	180

Y - SEPARATE ILLUSTRATION

<END>

520-0781 LINES AR-AUXILIARY HYDRAULIC—VARIABLE ADJUSTABLE BOOM

FOR USE WITH 517-8129—PAGE: 174
PART OF 563-2092 STICK & CONTROL AR-AUXILIARY
AN ATTACHMENT

SMCS-5057 **i07546537**

NOTE	PART NUMBER	QTY	PART NAME 1 2 3 4 5 6 (PRODUCT LEVEL)	SEE PAGE
Y	*568-3678*	1	FILM GP	443
Y	*515-9162*	1	LINES GP-AUXILIARY HYDRAULIC (MEDIUM STICK)	183
Y	*515-9164*	1	LINES GP-AUXILIARY HYDRAULIC (STANDARD STICK)	184
Y	*517-8126*	1	LINES GP-AUXILIARY HYDRAULIC (VARIABLE ADJUSTABLE BOOM)	186
Y	*517-8127*	1	LINES GP-AUXILIARY HYDRAULIC (2ND AUXILIARY)	187

Y - SEPARATE ILLUSTRATION

<END>

520-0800 LINES AR-AUXILIARY HYDRAULIC—STANDARD STICK

FOR USE WITH 514-3235—PAGE: 173, 514-3240—PAGE: 174
PART OF 563-2082 STICK & CONTROL AR-AUXILIARY
AN ATTACHMENT

SMCS-5057 **i07546545**

NOTE	PART NUMBER	QTY	PART NAME 1 2 3 4 5 6 (PRODUCT LEVEL)	SEE PAGE
Y	*568-3678*	1	FILM GP	443
Y	*513-9192*	1	LINES GP-AUXILIARY HYDRAULIC (LONG BOOM)	180
Y	*515-9162*	1	LINES GP-AUXILIARY HYDRAULIC (MEDIUM STICK)	183
Y	*515-9164*	1	LINES GP-AUXILIARY HYDRAULIC (STANDARD STICK)	184
Y	*515-7892*	1	LINES GP-AUXILIARY HYDRAULIC (2ND AUXILIARY)	181

Y - SEPARATE ILLUSTRATION

<END>

520-0820 LINES AR-AUXILIARY HYDRAULIC—LONG STICK

FOR USE WITH 514-3235—PAGE: 173, 514-3240—PAGE: 174
PART OF 563-2083 STICK & CONTROL AR-AUXILIARY
AN ATTACHMENT

SMCS-5057 **i07546297**

NOTE	PART NUMBER	QTY	PART NAME 1 2 3 4 5 6 (PRODUCT LEVEL)	SEE PAGE
Y	*568-3678*	1	FILM GP	443
Y	*513-7140*	1	LINES GP-AUXILIARY HYDRAULIC (LONG STICK)	179
Y	*513-9192*	1	LINES GP-AUXILIARY HYDRAULIC (LONG BOOM)	180
Y	*515-7892*	1	LINES GP-AUXILIARY HYDRAULIC (2ND AUXILIARY)	181
Y	*515-9168*	1	LINES GP-AUXILIARY HYDRAULIC (LONG STICK)	185

Y - SEPARATE ILLUSTRATION

<END>

514-8055 LINES AR-BOOM

FOR USE WITH 514-8067—PAGE: 156
PART OF 562-4906, 562-9155, 562-9156 DISTRIBUTION AR
AN ATTACHMENT

SMCS-5057 **i07544923**

NOTE	PART NUMBER	QTY	PART NAME 1 2 3 4 5 6 (PRODUCT LEVEL)	SEE PAGE
Y	**515-5481**	1	CYLINDER & LINES GP-BOOM	152
Y	**515-5483**	1	CYLINDER & LINES GP-HYDRAULIC (SWING BOOM)	155

Y - SEPARATE ILLUSTRATION

<END>

514-8059 LINES AR-BOOM

FOR USE WITH 519-8825—PAGE: 178
AN ATTACHMENT

SMCS-5057 **i07546477**

NOTE	PART NUMBER	QTY	PART NAME 1 2 3 4 5 6 (PRODUCT LEVEL)	SEE PAGE
Y	**515-5482**	1	CYLINDER & LINES GP-BOOM	153
Y	**515-5483**	1	CYLINDER & LINES GP-HYDRAULIC (SWING BOOM)	155
Y	*519-2184*	1	LINES GP-FRONT (BOOM LOWERING)	213
Y	*511-6224*	1	WIRING GP-OVERLOAD WARNING	86

Y - SEPARATE ILLUSTRATION

<END>

514-8060 LINES AR-BOOM

FOR USE WITH 514-8074—PAGE: 177
PART OF 562-9159 DISTRIBUTION AR
AN ATTACHMENT

SMCS-5057 **i07546485**

NOTE	PART NUMBER	QTY	PART NAME 1 2 3 4 5 6 (PRODUCT LEVEL)	SEE PAGE
Y	**526-3982**	1	CYLINDER & LINES GP-BOOM	154
Y	**515-5483**	1	CYLINDER & LINES GP-HYDRAULIC (SWING BOOM)	155
Y	*519-2184*	1	LINES GP-FRONT (BOOM LOWERING)	213
Y	*511-6224*	1	WIRING GP-OVERLOAD WARNING	86

Y - SEPARATE ILLUSTRATION

<END>

514-8074 LINES AR-STICK

FOR USE WITH 514-8060—PAGE: 177
PART OF 562-9159 DISTRIBUTION AR
AN ATTACHMENT

SMCS-5057 **i07546486**

NOTE	PART NUMBER	QTY	PART NAME 1 2 3 4 5 6 (PRODUCT LEVEL)	SEE PAGE
Y	**524-0077**	1	CYLINDER & LINES GP-STICK	158
Y	**519-8850**	2	CYLINDER GP-VARIABLE ADJ BOOM	170

Y - SEPARATE ILLUSTRATION

<END>

519-8825 LINES AR-STICK

FOR USE WITH 514-8059—PAGE: 177

AN ATTACHMENT

SMCS-5057 **i07546530**

NOTE	PART NUMBER	QTY	PART NAME 1 2 3 4 5 6 (PRODUCT LEVEL)	SEE PAGE
Y	**524-0077**	1	CYLINDER & LINES GP-STICK	158
Y	*519-1831*	1	LINES GP-BOOM (STICK LOWERING)	194

Y - SEPARATE ILLUSTRATION

<END>

513-7140 LINES GP-AUXILIARY HYDRAULIC—LONG STICK

PART OF 520-0769, 520-0820 LINES AR-AUXILIARY HYDRAULIC
AN ATTACHMENT

SMCS-5057 **i07546209**

NOTE	REF NO	GRAPHIC REF	PART NUMBER	QTY	PART NAME 1 2 3 4 5 6 (PRODUCT LEVEL)	SEE PAGE
M	1	1	**8T-4192**	4	BOLT (M12X1.75X25-MM)	
	2	1	**2P-1293**	2	LOCKNUT (1-3/16-12-THD)	
	3	1	**8T-4223**	4	WASHER-HARD (13.5X25.5X3-MM THK)	
	4	1	**152-5717**	1	CAP-DUST	
	5	1	**152-5718**	1	CAP-DUST	
	6	1	**153-2994**	1	COUPLING (FEMALE)	
	7	1	**153-2995**	1	COUPLING (MALE)	
	8	1	**332-8545**	2	CONNECTOR	
	9	1	**518-8468**	1	PLATE	
	10	1	**2M-9780**	2	SEAL-O-RING	
I	11	1	**513-6438**	2	HOSE AS	
	12	1	**567-4354**	1	PLATE	
	13	1	**6V-9746**	2	SEAL-O-RING	

I - REFER TO HYDRAULIC INFORMATION SYSTEM
M - METRIC PART

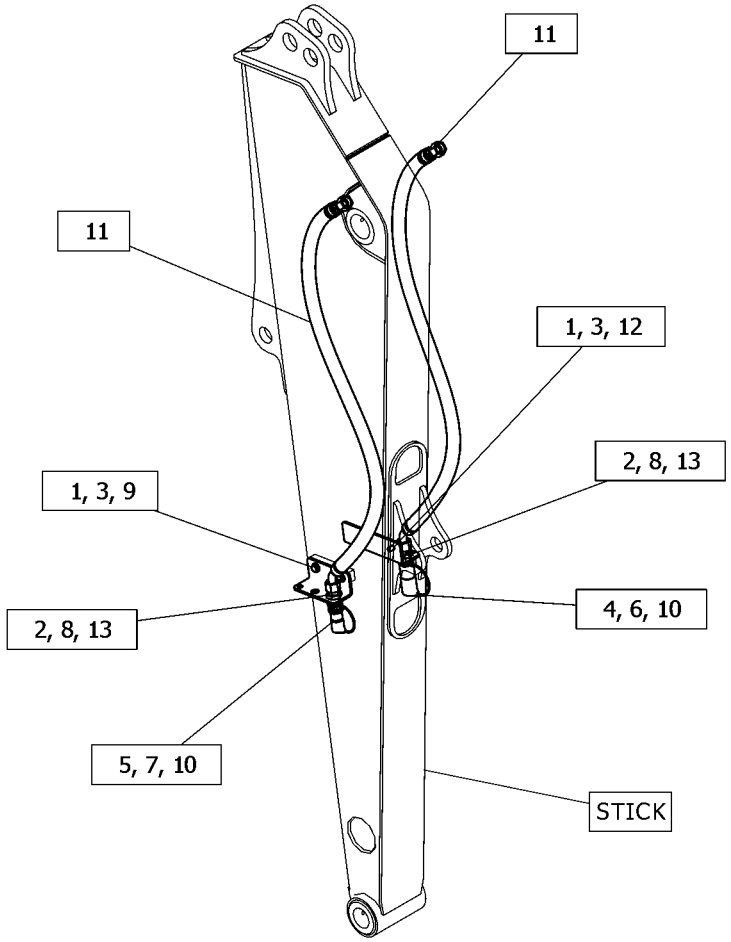

GRAPHIC #1 <END> g06340545

513-9192 LINES GP-AUXILIARY HYDRAULIC—LONG BOOM

PART OF 520-0765, 520-0769, 520-0800, 520-0820 LINES AR-AUXILIARY HYDRAULIC AN ATTACHMENT

SMCS-5057 **i07546210**

NOTE	REF NO	GRAPHIC REF	PART NUMBER	QTY	PART NAME 1 2 3 4 5 6 (PRODUCT LEVEL)	SEE PAGE
M	1	1	**8T-4195**	2	BOLT (M10X1.5X30-MM)	
	2	1	**3S-2093**	1	STRAP-CABLE	
	3	1	**266-7379**	1	STRAP-CABLE	
	4	1	**513-6415**	1	TUBE AS	
	5	1	**513-6416**	1	TUBE AS	
	6	1	**515-8023**	1	TUBE AS	
	7	1	**515-8024**	1	TUBE AS	
	8	1	**518-8447**	2	PLATE	
	9	1	**6V-9746**	6	SEAL-O-RING	
	10	1	**8T-1889**	2	CLIP (SLOT)	
	11	1	**8T-1890**	2	CLIP (TAB)	
	12	1	**8T-4121**	4	WASHER-HARD (11X21X2.5-MM THK)	
M	13	1	**8T-4136**	2	BOLT (M10X1.5X25-MM)	

M - METRIC PART

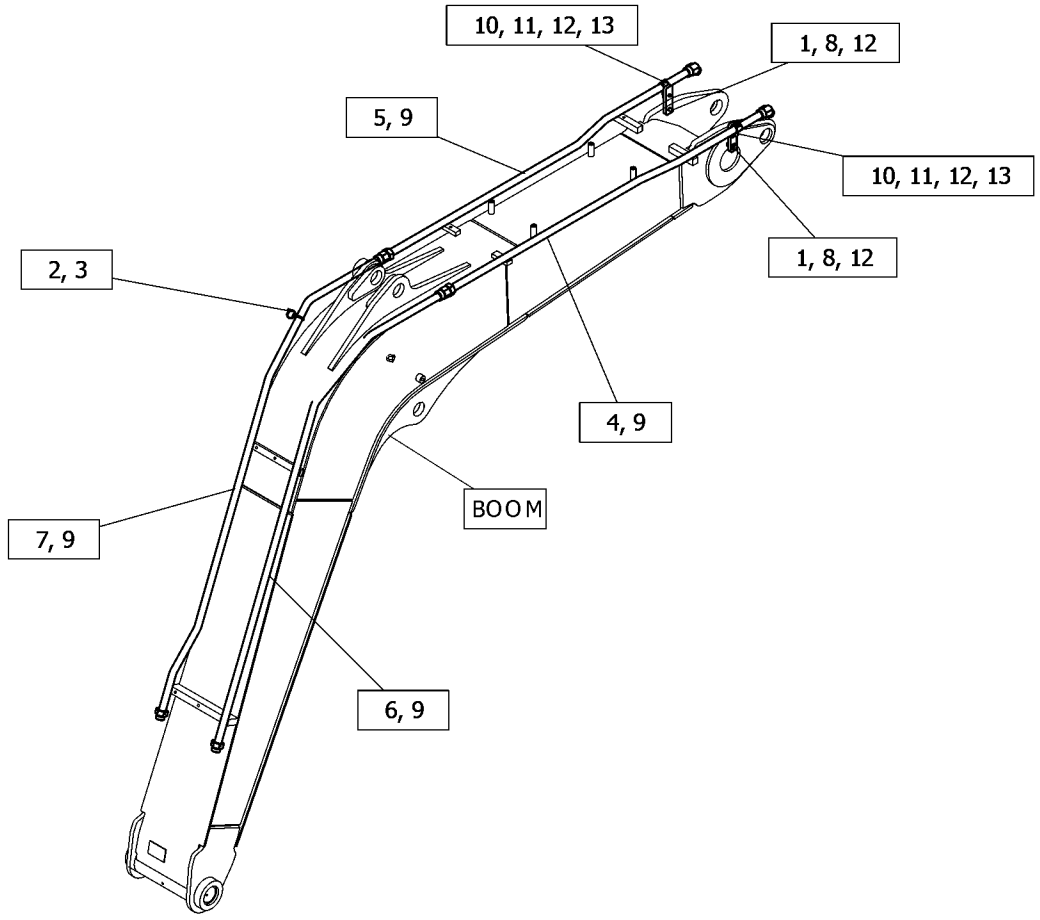

GRAPHIC #1 <END> g06339096

515-7892 LINES GP-AUXILIARY HYDRAULIC

PART OF 520-0800, 520-0820 LINES AR-AUXILIARY HYDRAULIC
AN ATTACHMENT

SMCS-5057 **i07546298**

NOTE	REF NO	GRAPHIC REF	PART NUMBER	QTY	PART NAME 1 2 3 4 5 6 (PRODUCT LEVEL)	SEE PAGE
M	1	1	**8T-4185**	1	BOLT (M10X1.5X50-MM)	
M	2	1	**8T-5005**	2	BOLT (M10X1.5X70-MM)	
M	3	1	**8T-6466**	5	BOLT (M10X1.5X60-MM)	
	4	1	**198-4766**	2	WASHER-HARD (11X25X10-MM THK)	
	5	1	**296-6980**	2	SPACER (11X25X30-MM THK)	
	6	1	**3E-6909**	3	CLIP (LOOP)	
	7	1	**515-8025**	2	TUBE AS	
	8	1	**515-8026**	1	TUBE AS	
	9	1	**515-8027**	1	TUBE AS	
	10	1	**536-9974**	1	PLATE	
	11	1	**566-2321**	1	TUBE AS	
	12	1	**566-2322**	1	TUBE AS	
	13	1	**6V-8397**	4	SEAL-O-RING	
	14	1	**6V-8398**	3	SEAL-O-RING	
	15	1	**6V-9168**	1	NUT (11/16-16-THD)	
	16	1	**7J-9108**	2	SEAL-O-RING	
	17	1	**8T-1887**	4	CLIP (SLOT)	
	18	1	**8T-1888**	4	CLIP (TAB)	
	19	1	**8T-4121**	12	WASHER-HARD (11X21X2.5-MM THK)	
M	20	1	**8T-4178**	2	BOLT (M10X1.5X90-MM)	
	21	1	**9R-1004**	4	CLIP (TAB)	
	22	1	**9R-1005**	4	CLIP (SLOT)	

M - METRIC PART

515-7892 **LINES GP-AUXILIARY HYDRAULIC (**contd.**)** **i07546298**

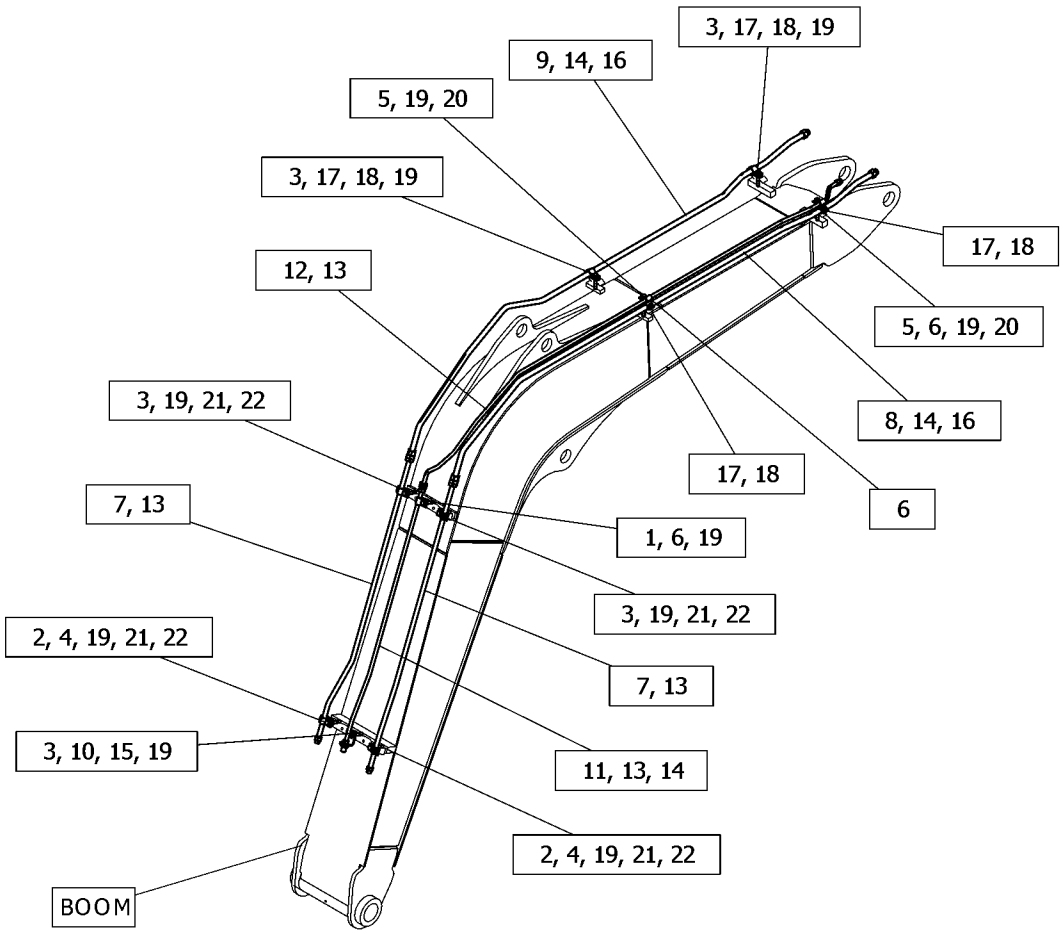

GRAPHIC #1 <END> g06340500

515-9162 LINES GP-AUXILIARY HYDRAULIC—MEDIUM STICK

PART OF 520-0765, 520-0781, 520-0800 LINES AR-AUXILIARY HYDRAULIC
AN ATTACHMENT

SMCS-5057 **i07546534**

NOTE	REF NO	GRAPHIC REF	PART NUMBER	QTY	PART NAME 1 2 3 4 5 6 (PRODUCT LEVEL)	SEE PAGE
M	1	1	**8T-4192**	4	BOLT (M12X1.75X25-MM)	
	2	1	**2P-1293**	2	LOCKNUT (1-3/16-12-THD)	
	3	1	**8T-4223**	4	WASHER-HARD (13.5X25.5X3-MM THK)	
	4	1	**152-5717**	1	CAP-DUST	
	5	1	**152-5718**	1	CAP-DUST	
	6	1	**153-2994**	1	COUPLING (FEMALE)	
	7	1	**153-2995**	1	COUPLING (MALE)	
	8	1	**332-8545**	2	CONNECTOR	
	9	1	**518-8468**	1	PLATE	
	10	1	**2M-9780**	2	SEAL-O-RING	
I	11	1	**513-6453**	2	HOSE AS	
	12	1	**567-4354**	1	PLATE	
	13	1	**6V-9746**	2	SEAL-O-RING	

I - REFER TO HYDRAULIC INFORMATION SYSTEM
M - METRIC PART

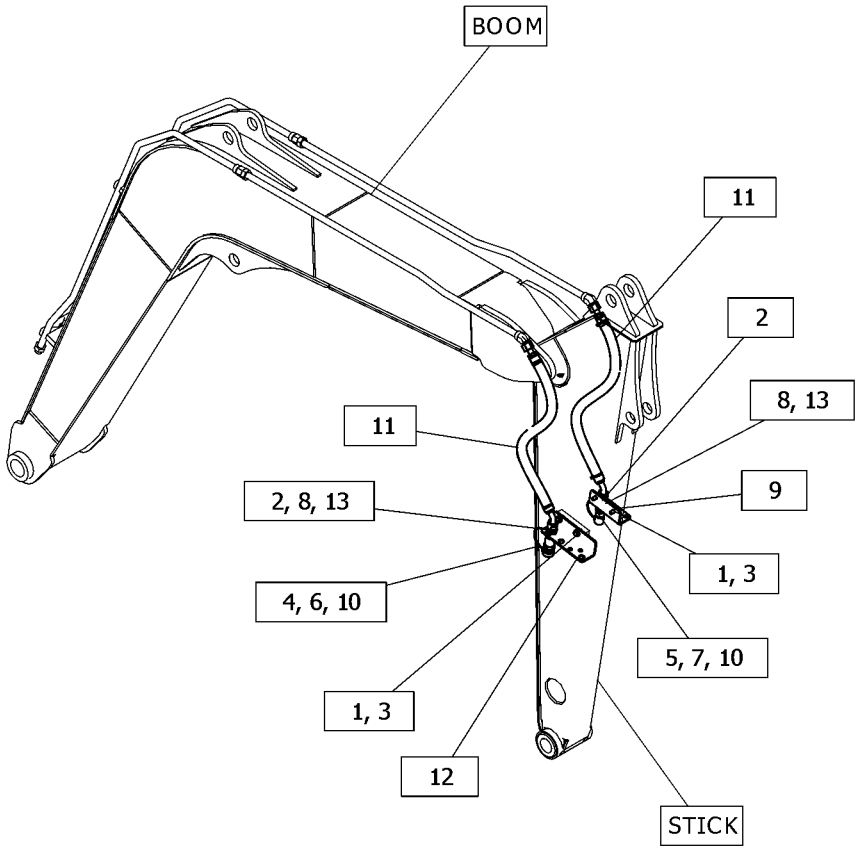

GRAPHIC #1 <END> g06340433

515-9164 LINES GP-AUXILIARY HYDRAULIC—STANDARD STICK

2ND AUXILIARY

PART OF 520-0781, 520-0800 LINES AR-AUXILIARY HYDRAULIC

AN ATTACHMENT

SMCS-5057 **i07546538**

NOTE	REF NO	GRAPHIC REF	PART NUMBER	QTY	PART NAME 1 2 3 4 5 6 (PRODUCT LEVEL)	SEE PAGE
	1	1	**7K-1181**	3	STRAP-CABLE	
	2	1	**153-2996**	2	FITTING AS (QUICK DISCONNECT, MALE)	
	3	1	**153-2997**	1	FITTING AS (QUICK DISCONNECT, FEMALE)	
	4	1	**161-2560**	2	CAP-DUST	
	5	1	**161-2561**	1	CAP-DUST	
	6	1	*169-5701*	3	CONNECTOR AS	
					(EACH INCLUDES)	
		1	**3K-0360**	1	SEAL-O-RING	
		1	**6V-8398**	1	SEAL-O-RING	
		1	**152-6942**	1	CONNECTOR	
I	7	1	**515-8022**	2	HOSE AS	
I	8	1	**567-4455**	1	HOSE AS	
	9	1	**6V-9169**	3	NUT (13/16-16-THD)	

I - REFER TO HYDRAULIC INFORMATION SYSTEM

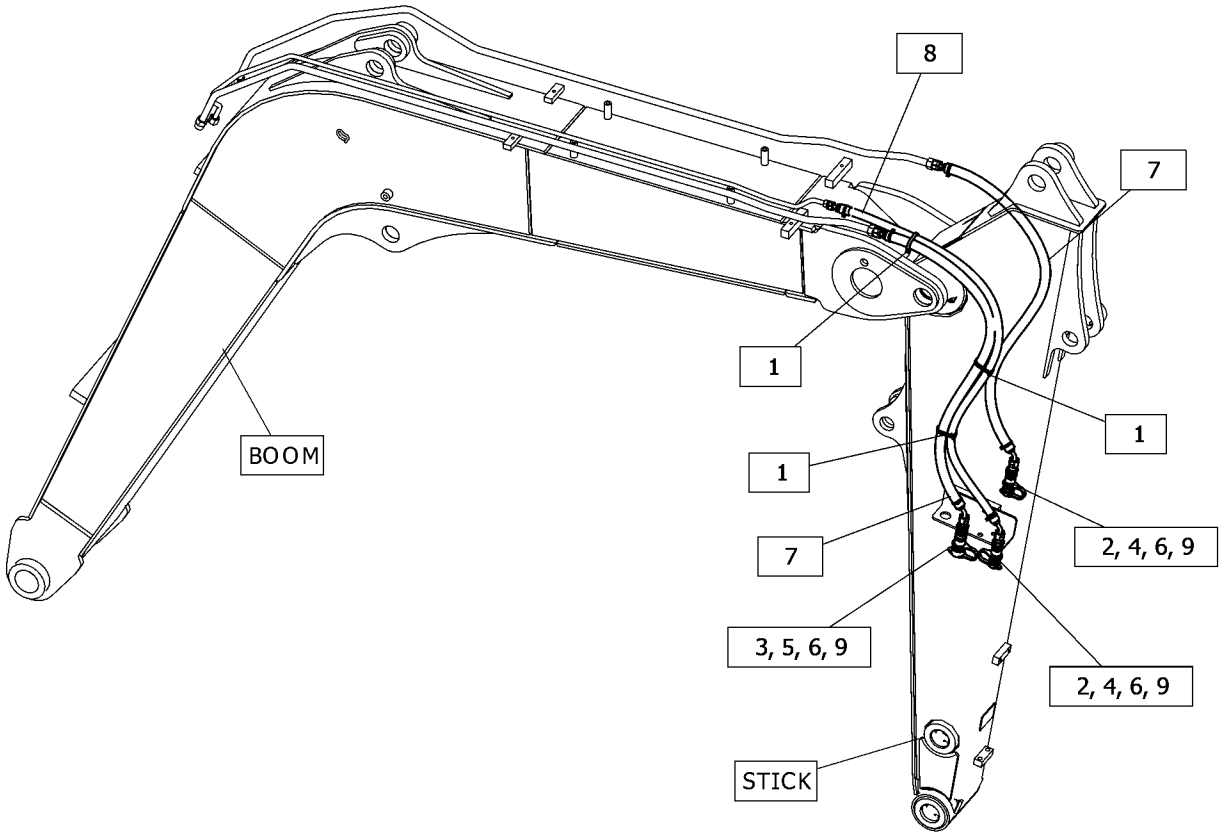

GRAPHIC #1 <END> g06339150

515-9168 LINES GP-AUXILIARY HYDRAULIC—LONG STICK

PART OF 520-0820 LINES AR-AUXILIARY HYDRAULIC
AN ATTACHMENT

SMCS-5057 **i07546299**

NOTE	REF NO	GRAPHIC REF	PART NUMBER	QTY	PART NAME 1 2 3 4 5 6 (PRODUCT LEVEL)	SEE PAGE
	1	1	**7K-1181**	3	STRAP-CABLE	
	2	1	**153-2996**	2	FITTING AS (QUICK DISCONNECT, MALE)	
	3	1	**153-2997**	1	FITTING AS (QUICK DISCONNECT, FEMALE)	
	4	1	**161-2560**	2	CAP-DUST	
	5	1	**161-2561**	1	CAP-DUST	
	6	1	*169-5701*	3	CONNECTOR AS	
					(EACH INCLUDES)	
		1	**3K-0360**	1	SEAL-O-RING	
		1	**6V-8398**	1	SEAL-O-RING	
		1	**152-6942**	1	CONNECTOR	
I	7	1	**515-8031**	2	HOSE AS	
I	8	1	**567-4456**	1	HOSE AS	
	9	1	**6V-9169**	3	NUT (13/16-16-THD)	

I - REFER TO HYDRAULIC INFORMATION SYSTEM

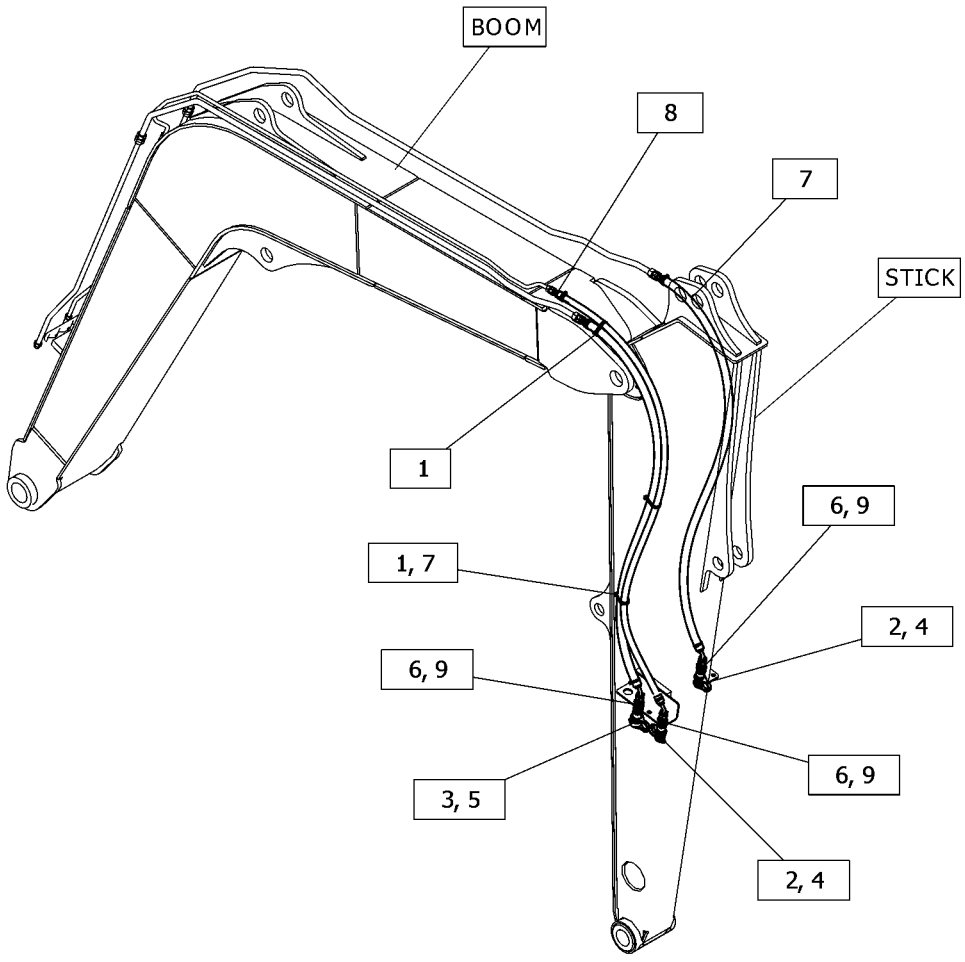

GRAPHIC #1 <END> g06340540

517-8126 LINES GP-AUXILIARY HYDRAULIC–VARIABLE

ADJUSTABLE BOOM

PART OF 520-0781 LINES AR-AUXILIARY HYDRAULIC
AN ATTACHMENT

SMCS-5057 **i07546539**

NOTE	REF NO	GRAPHIC REF	PART NUMBER	QTY	PART NAME 1 2 3 4 5 6 (PRODUCT LEVEL)	SEE PAGE
M	1	1	**8T-4195**	2	BOLT (M10X1.5X30-MM)	
	2	1	**8T-4121**	6	WASHER-HARD (11X21X2.5-MM THK)	
M	3	1	**8T-4136**	4	BOLT (M10X1.5X25-MM)	
	4	1	**518-1284**	1	TUBE AS	
	5	1	**518-1285**	1	TUBE AS	
I	6	1	**518-1296**	2	HOSE AS	
	7	1	**518-1307**	1	TUBE AS	
	8	1	**518-1308**	1	TUBE AS	
	9	1	**518-8447**	2	PLATE	
	10	1	**6V-9746**	8	SEAL-O-RING	
	11	1	**8T-1889**	4	CLIP (SLOT)	
	12	1	**8T-1890**	4	CLIP (TAB)	

I - REFER TO HYDRAULIC INFORMATION SYSTEM
M - METRIC PART

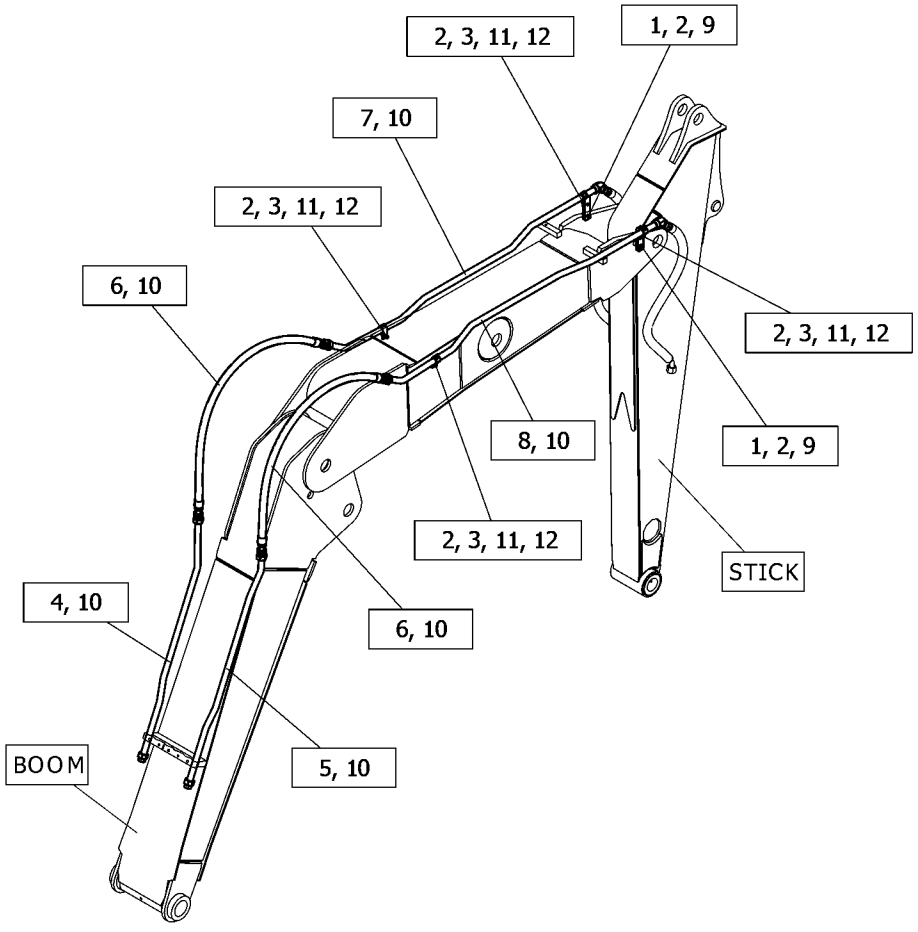

GRAPHIC #1 <END> g06340788

517-8127 LINES GP-AUXILIARY HYDRAULIC

VARIABLE ADJUSTABLE BOOM

PART OF 520-0781 LINES AR-AUXILIARY HYDRAULIC

AN ATTACHMENT

SMCS-5057 **i07546544**

NOTE	REF NO	GRAPHIC REF	PART NUMBER	QTY	PART NAME 1 2 3 4 5 6 (PRODUCT LEVEL)	SEE PAGE
M	1	1	**8T-4195**	5	BOLT (M10X1.5X30-MM)	
M	2	1	**8T-4196**	3	BOLT (M10X1.5X35-MM)	
M	3	1	**8T-6466**	2	BOLT (M10X1.5X60-MM)	
M	4	1	**8T-4172**	2	BOLT (M10X1.5X80-MM)	
	5	1	*149-5452*	1	UNION AS (STRAIGHT)	
		1	**6V-8397**	2	SEAL-O-RING	
		1	**6V-8994**	1	UNION (STRAIGHT)	
	6	1	**198-4766**	2	WASHER-HARD (11X25X10-MM THK)	
	7	1	**296-6980**	2	SPACER (11X25X30-MM THK)	
	8	1	**393-8302**	2	PLATE	
	9	1	**3E-6909**	3	CLIP (LOOP)	
	10	1	**487-2142**	2	BRACKET AS	
	11	1	**515-8056**	1	TUBE AS	
	12	1	**515-8057**	1	TUBE AS	
I	13	1	**518-1278**	2	HOSE AS	
	14	1	**518-1305**	1	TUBE AS	
	15	1	**518-1306**	1	TUBE AS	
I	16	1	**547-9485**	1	HOSE AS	
	17	1	**566-4400**	1	TUBE AS	
	18	1	**6V-8397**	6	SEAL-O-RING	
	19	1	**6V-8398**	4	SEAL-O-RING	
	20	1	**6V-9168**	1	NUT (11/16-16-THD)	
	21	1	**7K-1181**	6	STRAP-CABLE	
	22	1	**8T-1887**	8	CLIP (SLOT)	
	23	1	**8T-1888**	8	CLIP (TAB)	
	24	1	**8T-1889**	2	CLIP (SLOT)	
	25	1	**8T-1890**	2	CLIP (TAB)	
	26	1	**8T-4121**	18	WASHER-HARD (11X21X2.5-MM THK)	
M	27	1	**8T-4133**	2	NUT (M10X1.5-THD)	
M	28	1	**8T-4136**	2	BOLT (M10X1.5X25-MM)	
M	29	1	**8T-4178**	2	BOLT (M10X1.5X90-MM)	
	30	1	**8T-7934**	2	WASHER-HARD (11X21X5-MM THK)	
	31	1	**9R-1004**	4	CLIP (TAB)	
	32	1	**9R-1005**	4	CLIP (SLOT)	

I - REFER TO HYDRAULIC INFORMATION SYSTEM
M - METRIC PART

517-8127 **LINES GP-AUXILIARY HYDRAULIC (**contd.**)** **i07546544**

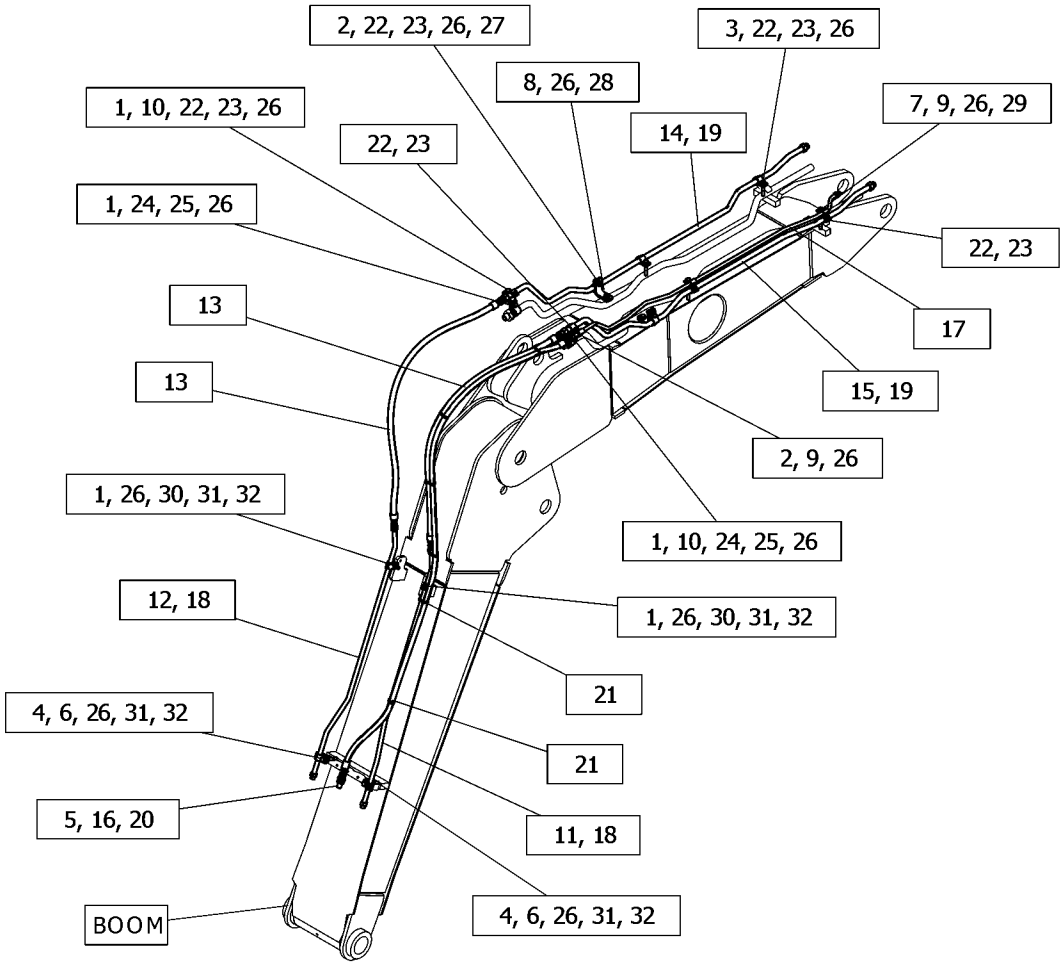

GRAPHIC #1 <END> g06340681

513-7126 LINES GP-BOOM

PART OF 512-2573 BOOM AR
AN ATTACHMENT

SMCS-5057, 5456, 6501 **i07544872**

NOTE	REF NO	GRAPHIC REF	PART NUMBER	QTY	PART NAME 1 2 3 4 5 6 (PRODUCT LEVEL)	SEE PAGE
M	1	1	**8T-4185**	6	BOLT (M10X1.5X50-MM)	
M	2	1	**085-8091**	4	BOLT (M10X1.5X55-MM)	
	3	1	**096-5766**	4	CLAMP	
	4	1	**513-6417**	1	TUBE AS	
	5	1	**513-6418**	1	TUBE AS	
	6	1	**513-6421**	1	CLAMP	
	7	1	**513-6429**	2	TUBE AS	
	8	1	**513-6430**	1	CLAMP	
	9	1	**515-8051**	1	TUBE AS	
	10	1	**515-8052**	1	TUBE AS	
	11	1	**6V-9746**	2	SEAL-O-RING	
	12	1	**7J-9108**	8	SEAL-O-RING	
	13	1	**8T-4121**	8	WASHER-HARD (11X21X2.5-MM THK)	
	14	1	**8T-7934**	2	WASHER-HARD (11X21X5-MM THK)	

M - METRIC PART

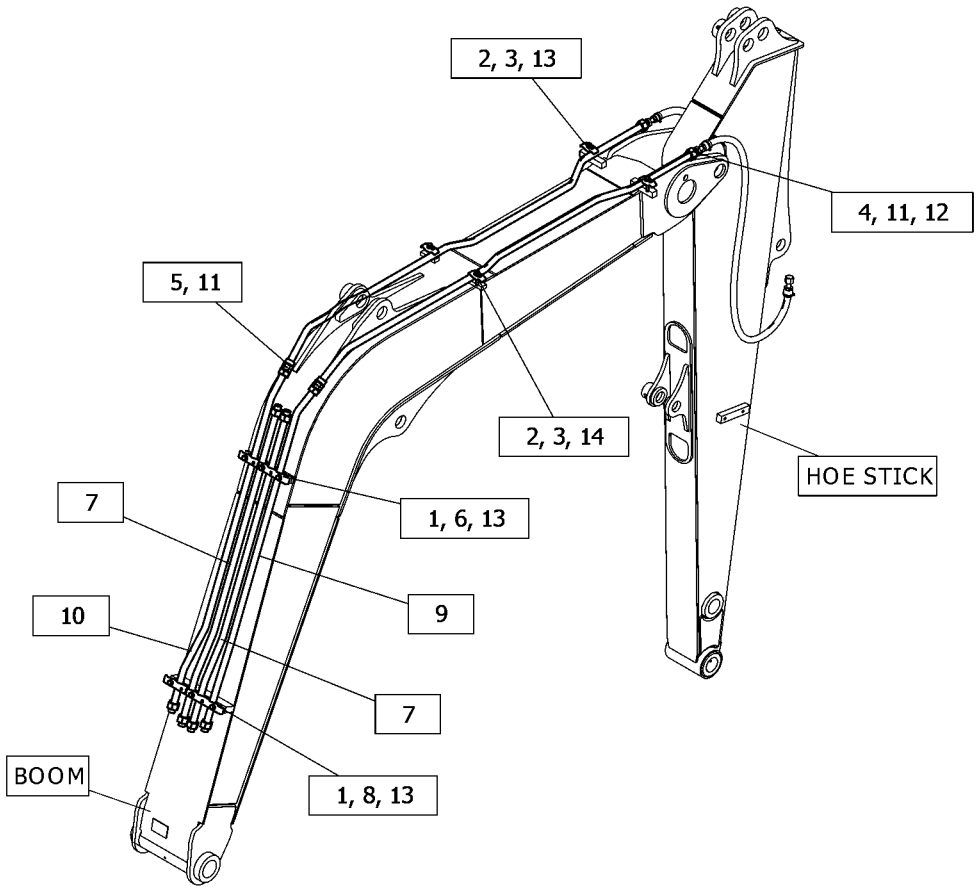

GRAPHIC #1 <END> g06334822

513-7135 LINES GP-BOOM—VARIABLE ADJUSTABLE BOOM

PART OF 512-2576 BOOM AR

AN ATTACHMENT

SMCS-5057, 5456, 6501 **i07552519**

NOTE	REF NO	GRAPHIC REF	PART NUMBER	QTY	PART NAME 1 2 3 4 5 6 (PRODUCT LEVEL)	SEE PAGE
M	1	1	**8T-4185**	4	BOLT (M10X1.5X50-MM)	
M	2	1	**8T-4191**	2	BOLT (M10X1.5X16-MM)	
M	3	1	**8T-4195**	2	BOLT (M10X1.5X30-MM)	
M	4	1	**8T-6466**	1	BOLT (M10X1.5X60-MM)	
	5	1	**5P-4116**	4	WASHER-HARD (8.8X20.5X2-MM THK)	
	6	1	**6V-9168**	4	NUT (11/16-16-THD)	
	7	1	**7K-1181**	8	STRAP-CABLE	
	8	1	**8T-4121**	16	WASHER-HARD (11X21X2.5-MM THK)	
M	9	1	**8T-4136**	7	BOLT (M10X1.5X25-MM)	
	10	1	**096-5766**	10	CLAMP	
M	11	1	**136-4184**	6	BOLT-SOCKET HEAD (M8X1.25X40-MM)	
	12	1	*148-8310*	2	ADAPTER AS	
					(EACH INCLUDES)	
		1	**3J-1907**	1	SEAL-O-RING	
		1	**8T-0151**	1	ADAPTER	
	13	1	*148-8336*	2	CONNECTOR AS	
					(EACH INCLUDES)	
		1	**3J-1907**	1	SEAL-O-RING	
		1	**6V-8397**	1	SEAL-O-RING	
		1	**6V-8636**	1	CONNECTOR	
	14	1	*148-8374*	2	ELBOW AS	
					(EACH INCLUDES)	
		1	**3K-0360**	1	SEAL-O-RING	
		1	**6V-8397**	1	SEAL-O-RING	
		1	**6V-8723**	1	ELBOW	
	15	1	*148-8378*	4	ELBOW AS	
					(EACH INCLUDES)	
		1	**3J-1907**	1	SEAL-O-RING	
		1	**6V-8397**	1	SEAL-O-RING	
		1	**6V-8724**	1	ELBOW	
	16	1	*148-8424*	1	TEE AS	
		1	**6V-8397**	1	SEAL-O-RING	
		1	**8T-8902**	1	ADAPTER-TEE	
	17	1	*148-8427*	2	TEE AS	
					(EACH INCLUDES)	
		1	**6V-8398**	3	SEAL-O-RING	
		1	**8T-6895**	1	TEE-UNION	
	18	1	*148-8447*	1	TEE AS-SWIVEL	
		1	**7J-1908**	1	SEAL	
		1	**7X-0872**	1	TEE-SWIVEL	
	19	1	*149-5452*	1	UNION AS (STRAIGHT)	
		1	**6V-8397**	2	SEAL-O-RING	
		1	**6V-8994**	1	UNION (STRAIGHT)	
	20	1	*153-6241*	2	ELBOW AS	
					(EACH INCLUDES)	
		1	**6V-8398**	1	SEAL-O-RING	
		1	**8C-8989**	1	ELBOW	
	21	1	*153-6246*	1	TEE AS	

513-7135 **LINES GP-BOOM (**contd.**)** **i07552519**

NOTE	REF NO	GRAPHIC REF	PART NUMBER	QTY	PART NAME 1 2 3 4 5 6 (PRODUCT LEVEL)	SEE PAGE
		1	**6V-8397**	3	SEAL-O-RING	
		1	**7X-0820**	1	TEE	
	22	1	*164-5567*	1	COUPLER AS-QUICK DISCONNECT (MALE)	
		1	**6V-3965**	1	FITTING (QUICK DISCONNECT)	
		1	**214-7568**	1	SEAL-O-RING	
	23	1	**317-3004**	2	COLLAR	
	24	1	**354-7051**	2	PLATE AS	
	25	1	**473-4270**	2	PLATE AS	
					(EACH INCLUDES)	
M		1	**8T-3490**	1	NUT-WELD (M10X1.5-THD)	
I	26	1	**491-4673**	1	HOSE AS	
I	27	1	**491-4674**	2	HOSE AS	
I	28	1	**506-7653**	1	HOSE AS	
	29	1	**513-6430**	1	CLAMP	
	30	1	**518-1286**	2	TUBE AS	
	31	1	**518-1287**	1	TUBE AS	
	32	1	**518-1288**	1	TUBE AS	
	33	1	**518-1289**	1	TUBE AS	
	34	1	**518-1290**	1	TUBE AS	
I	35	1	**518-1291**	2	HOSE AS	
I	36	1	**518-1292**	2	HOSE AS	
I	37	1	**518-1293**	1	HOSE AS	
I	38	1	**518-1294**	1	HOSE AS	
I	39	1	**518-1295**	1	HOSE AS	
	40	1	**518-1297**	1	BRACKET	
	41	1	**518-1298**	1	PLATE	
I	42	1	**518-1299**	2	HOSE AS	
	43	1	**518-1303**	1	TUBE AS	
	44	1	**518-1304**	1	TUBE AS	
I	45	1	**518-8442**	1	HOSE AS	
I	46	1	**519-1832**	1	HOSE AS	
	47	1	**523-7892**	1	VALVE-CHECK (RH)	
	48	1	**523-7893**	1	VALVE-CHECK (LH)	
M	49	1	**153-3061**	2	BOLT (M8X1.25X130-MM)	
	50	1	**178-3620**	2	STRAP-DUAL CLAMP	
	51	1	**1S-6420**	2	CLIP	
	52	1	**5F-7054**	2	SEAL-O-RING	
	53	1	**5P-7464**	2	CLIP (SLOT)	
	54	1	**5P-7465**	2	CLIP (TAB)	
	55	1	**6D-3479**	1	CLIP (LOOP)	
	56	1	**6V-0852**	1	CAP-DUST	
	57	1	**6V-1249**	2	GROMMET (22-MM ID)	
	58	1	**6V-8398**	2	SEAL-O-RING	
	59	1	**7J-9108**	18	SEAL-O-RING	
	60	1	**8T-1889**	4	CLIP (SLOT)	
	61	1	**8T-1890**	4	CLIP (TAB)	

I - REFER TO HYDRAULIC INFORMATION SYSTEM
M - METRIC PART

513-7135 **LINES GP-BOOM (**contd.**)** **i07552519**

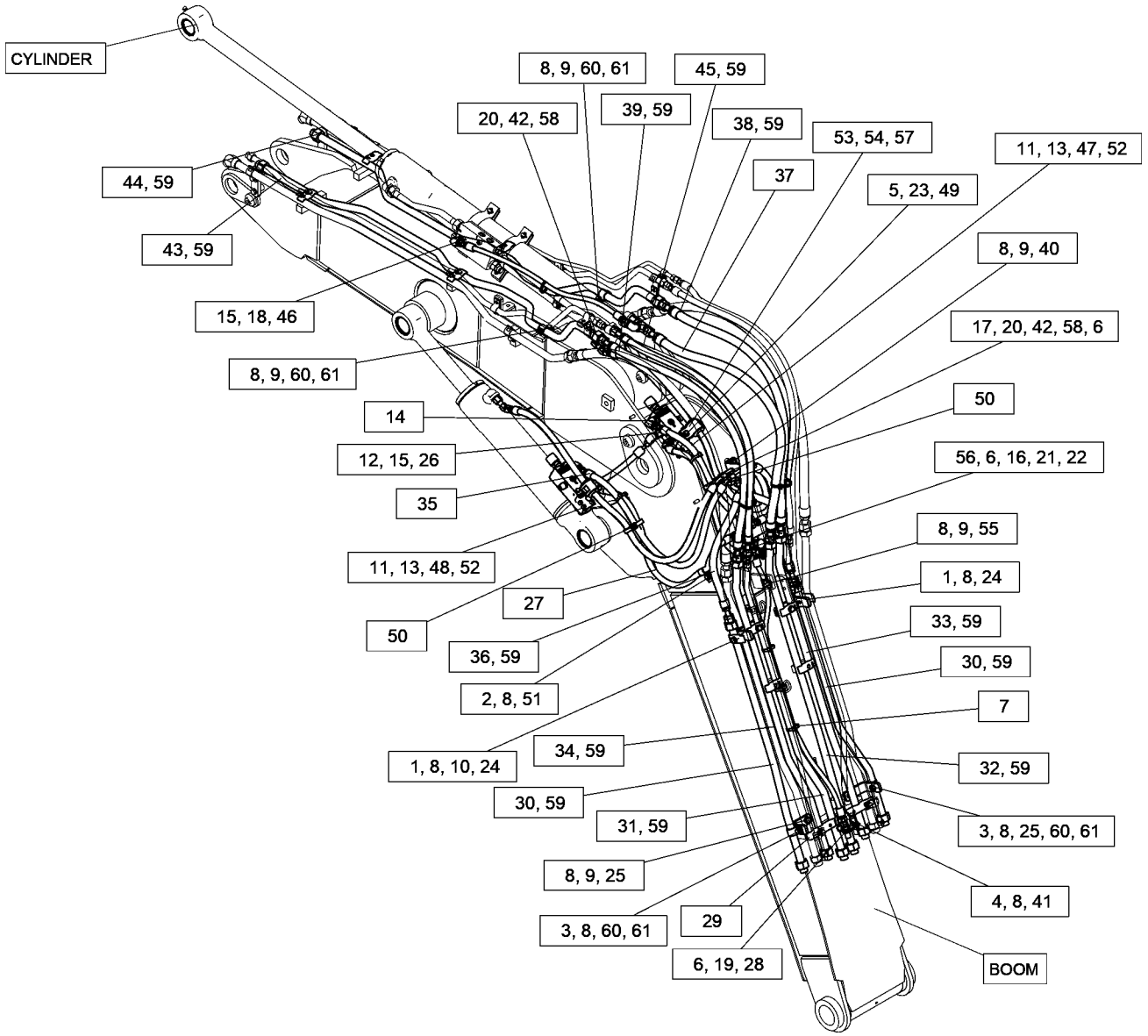

GRAPHIC #1 <END> g06341119

518-1300 LINES GP-BOOM

PART OF 514-8067 CYLINDER & LINES GP-STICK

AN ATTACHMENT

SMCS-5057, 5456, 6501 **i07542514**

NOTE	REF NO	GRAPHIC REF	PART NUMBER	QTY	PART NAME 1 2 3 4 5 6 (PRODUCT LEVEL)	SEE PAGE
I	1	1	**513-6419**	1	HOSE AS	
I	2	1	**513-6420**	1	HOSE AS	
	3	1	**7J-9108**	2	SEAL-O-RING	

I - REFER TO HYDRAULIC INFORMATION SYSTEM

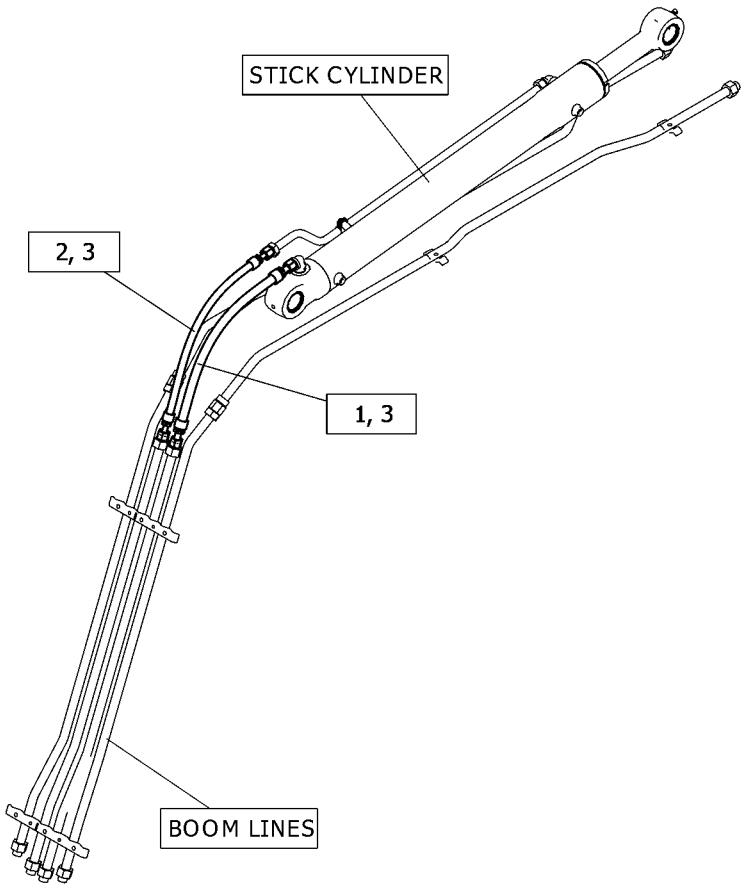

GRAPHIC #1 <END> g06336444

519-1831 LINES GP-BOOM—STICK LOWERING

PART OF 519-8825 LINES AR-STICK

AN ATTACHMENT

SMCS-5057, 5456, 6501 **i07546531**

NOTE	REF NO	GRAPHIC REF	PART NUMBER	QTY	PART NAME 1 2 3 4 5 6 (PRODUCT LEVEL)	SEE PAGE
	1	1	**7K-1181**	1	STRAP-CABLE	
	2	1	*148-8378*	2	ELBOW AS	
					(EACH INCLUDES)	
		1	**3J-1907**	1	SEAL-O-RING	
		1	**6V-8397**	1	SEAL-O-RING	
		1	**6V-8724**	1	ELBOW	
	3	1	*148-8447*	1	TEE AS-SWIVEL	
		1	**7J-9108**	1	SEAL-O-RING	
		1	**7X-0872**	1	TEE-SWIVEL	
I	4	1	**513-6420**	1	HOSE AS	
I	5	1	**518-1301**	1	HOSE AS	
I	6	1	**519-1832**	1	HOSE AS	
	7	1	**7J-9108**	2	SEAL-O-RING	

I - REFER TO HYDRAULIC INFORMATION SYSTEM

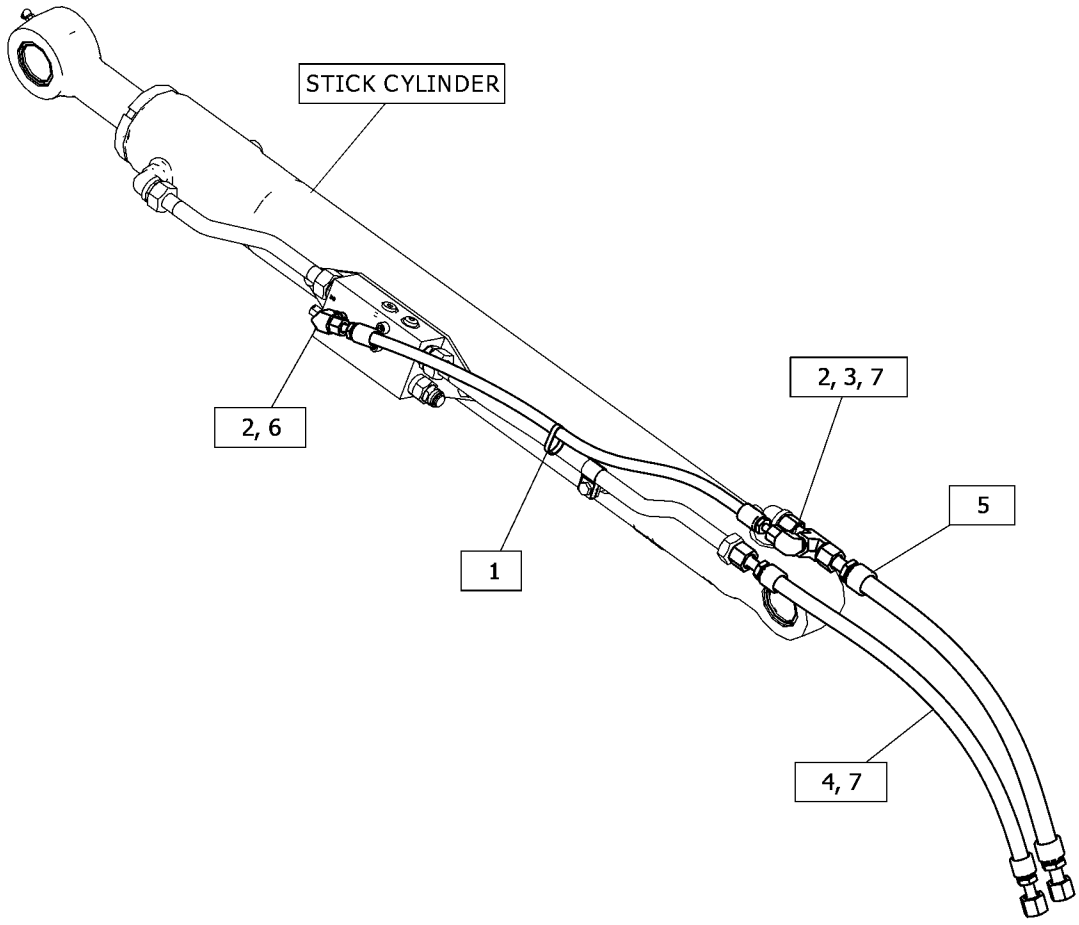

GRAPHIC #1 <END> g06334312

513-6063 LINES GP-CONTROL

PART OF 514-3230, 514-3235, 514-3240, 517-8129, 520-0774 HYDRAULIC AR AN ATTACHMENT

SMCS-5057 **i07546200**

NOTE	REF NO	GRAPHIC REF	PART NUMBER	QTY	PART NAME 1 2 3 4 5 6 (PRODUCT LEVEL)	SEE PAGE
M	1	1	**8T-4183**	2	BOLT (M12X1.75X40-MM)	
M	2	1	**8T-4195**	2	BOLT (M10X1.5X30-MM)	
	3	1	**279-4733**	1	STRAP-CABLE (BLUE)	
	4	1	**279-4735**	2	STRAP-CABLE (ORANGE)	
	5	1	**279-4737**	3	STRAP-CABLE (GREEN)	
	6	1	**3S-2093**	2	STRAP-CABLE	
	7	1	**6V-8397**	2	SEAL-O-RING	
	8	1	**6V-8398**	2	SEAL-O-RING	
	9	1	**7K-1181**	1	STRAP-CABLE	
	10	1	**8T-4121**	4	WASHER-HARD (11X21X2.5-MM THK)	
M	11	1	**8T-4136**	2	BOLT (M10X1.5X25-MM)	
	12	1	**8T-4223**	4	WASHER-HARD (13.5X25.5X3-MM THK)	
M	13	1	**096-4884**	2	LOCKNUT (M12X1.75-THD)	
	14	1	**136-0207**	5	STRAP-CABLE (BLACK)	
	15	1	*148-8328*	6	CONNECTOR AS	
					(EACH INCLUDES)	
		1	**3D-2824**	1	SEAL-O-RING	
		1	**6V-8398**	1	SEAL-O-RING	
		1	**6V-8633**	1	CONNECTOR	
	16	1	**199-1986**	1	GUARD	
	17	1	*260-9174*	2	CONNECTOR AS	
					(EACH INCLUDES)	
		1	**3D-2824**	1	SEAL-O-RING	
		1	**7J-1908**	1	SEAL	
		1	**109-5815**	1	CONNECTOR	
	18	1	**279-4731**	1	STRAP-CABLE (RED)	
	19	1	**279-4732**	1	STRAP-CABLE (YELLOW)	
	20	1	**327-8220**	4	SPACER (15.3X21.7X50-MM THK)	
	21	1	**349-2666**	1	PLATE	
I	22	1	**513-6071**	1	HOSE AS	
I	23	1	**513-6072**	1	HOSE AS	
I	24	1	**513-6073**	1	HOSE AS	
I	25	1	**513-6074**	1	HOSE AS	
I	26	1	**513-6075**	1	HOSE AS	
I	27	1	**513-6076**	1	HOSE AS	
I	28	1	**513-6079**	2	HOSE AS	
	29	1	**513-6082**	1	GROMMET	
	30	1	**513-6083**	1	GROMMET	
	31	1	**513-6084**	1	GROMMET	
	32	1	**513-6085**	1	GROMMET	
	33	1	**513-6086**	1	GROMMET	
	34	1	**515-5387**	1	GROMMET	
	35	1	**515-5396**	1	PLATE AS	
	36	1	**515-5459**	1	PLATE	
	37	1	**3G-8054**	1	CLIP (TAB)	
	38	1	**3G-8057**	1	CLIP (SLOT)	
	39	1	**6V-0974**	1	GROMMET	

I - REFER TO HYDRAULIC INFORMATION SYSTEM
M - METRIC PART

513-6063 **LINES GP-CONTROL (**contd.**)** **i07546200**

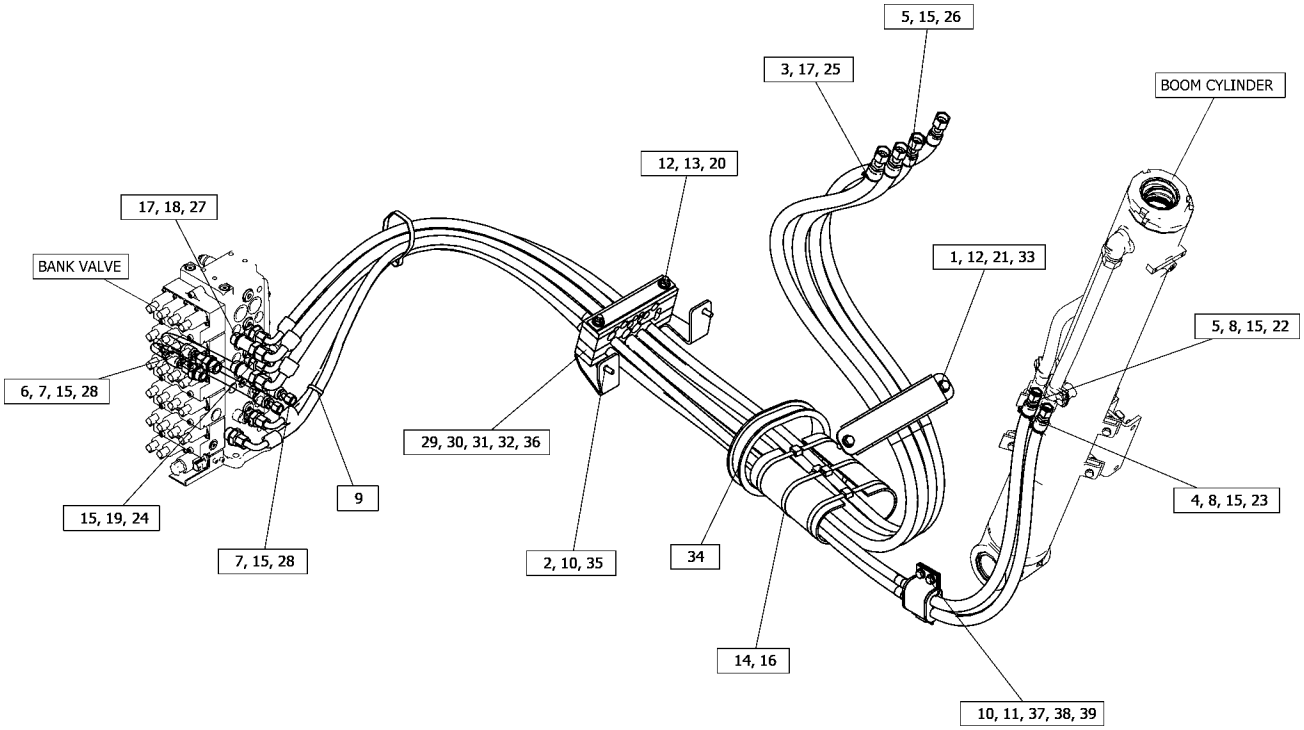

GRAPHIC #1 <END> g06337016

515-7897 LINES GP-COUPLER—STANDARD STICK

PART OF 516-1612, 519-3140 CONTROL AR-COUPLER

AN ATTACHMENT

SMCS-5057, 5133 **i07546507**

NOTE	REF NO	GRAPHIC REF	PART NUMBER	QTY	PART NAME 1 2 3 4 5 6 (PRODUCT LEVEL)	SEE PAGE
	1	1	**279-4735**	1	STRAP-CABLE (ORANGE)	
	2	1	**279-4737**	1	STRAP-CABLE (GREEN)	
	3	1	**6V-9828**	3	CAP (ORFS)	
	4	1	*150-4052*	3	UNION AS	
					(EACH INCLUDES)	
		1	**4J-5477**	2	SEAL-O-RING	
		1	**6V-8993**	1	UNION	
	5	1	**279-4738**	1	STRAP-CABLE (PURPLE)	
I	6	1	**515-8034**	1	HOSE AS	
I	7	1	**515-8035**	2	HOSE AS	
	8	1	**2P-1279**	3	LOCKNUT (9/16-18-THD)	

I - REFER TO HYDRAULIC INFORMATION SYSTEM

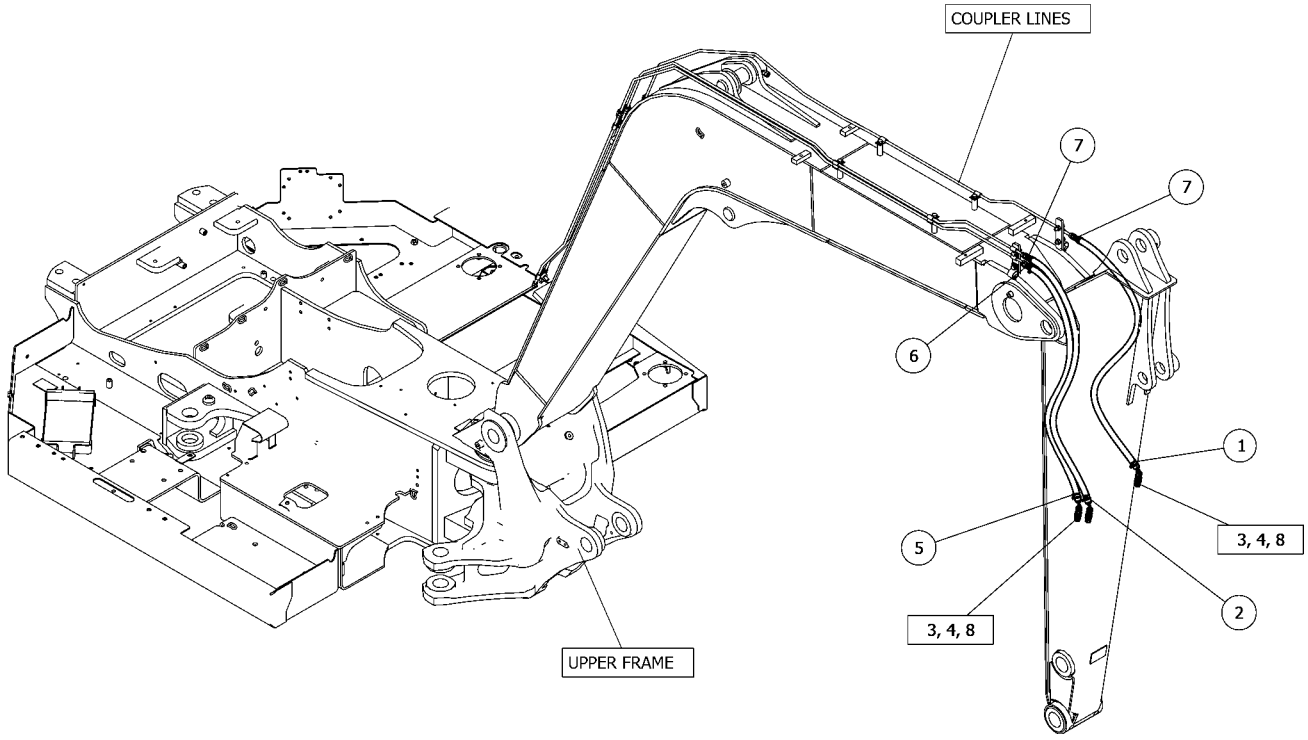

GRAPHIC #1 <END> g06337329

515-7903 LINES GP-COUPLER—LONG STICK

PART OF 516-1613 CONTROL AR-COUPLER

AN ATTACHMENT

SMCS-5057, 5133 **i07544877**

NOTE	REF NO	GRAPHIC REF	PART NUMBER	QTY	PART NAME 1 2 3 4 5 6 (PRODUCT LEVEL)	SEE PAGE
	1	1	**279-4735**	1	STRAP-CABLE (ORANGE)	
	2	1	**279-4737**	1	STRAP-CABLE (GREEN)	
	3	1	**6V-9828**	3	CAP (ORFS)	
	4	1	*150-4052*	3	UNION AS	
					(EACH INCLUDES)	
		1	**4J-5477**	2	SEAL-O-RING	
		1	**6V-8993**	1	UNION	
	5	1	**279-4738**	1	STRAP-CABLE (PURPLE)	
I	6	1	**515-8032**	1	HOSE AS	
I	7	1	**515-8033**	2	HOSE AS	
	8	1	**2P-1279**	3	LOCKNUT (9/16-18-THD)	

I - REFER TO HYDRAULIC INFORMATION SYSTEM

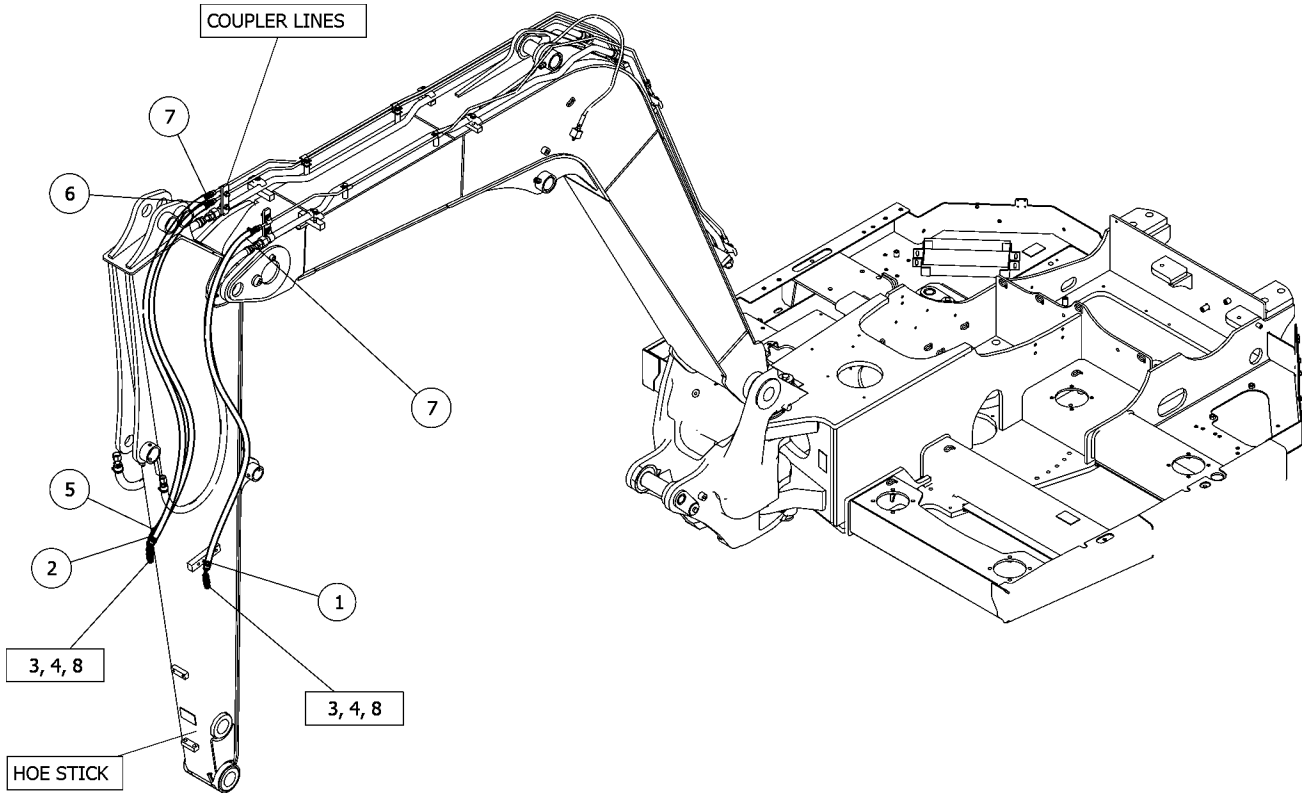

GRAPHIC #1 <END> g06336786

515-8014 LINES GP-COUPLER—BOOM

PART OF 516-1612, 516-1613 CONTROL AR-COUPLER AN ATTACHMENT

SMCS-5057, 5133 **i07544878**

NOTE	REF NO	GRAPHIC REF	PART NUMBER	QTY	PART NAME 1 2 3 4 5 6 (PRODUCT LEVEL)	SEE PAGE
M	1	1	**8T-4186**	2	BOLT (M10X1.5X40-MM)	
M	2	1	**8T-4195**	2	BOLT (M10X1.5X30-MM)	
M	3	1	**8T-4196**	2	BOLT (M10X1.5X35-MM)	
M	4	1	**8T-6466**	2	BOLT (M10X1.5X60-MM)	
	5	1	**198-4766**	2	WASHER-HARD (11X25X10-MM THK)	
	6	1	**379-0676**	2	PLATE AS	
					(EACH INCLUDES)	
M		1	**8T-3490**	2	NUT-WELD (M10X1.5-THD)	
	7	1	**436-7870**	2	CLAMP	
	8	1	**457-9869**	2	SPACER (11X20X15-MM THK)	
	9	1	**4J-5477**	6	SEAL-O-RING	
	10	1	**515-8055**	3	TUBE AS	
	11	1	**567-2529**	1	TUBE AS	
	12	1	**567-2530**	1	TUBE AS	
	13	1	**567-2531**	1	TUBE AS	
	14	1	**5P-9297**	15	CLIP (LOOP)	
	15	1	**6V-8397**	3	SEAL-O-RING	
	16	1	**8T-4121**	12	WASHER-HARD (11X21X2.5-MM THK)	
M	17	1	**8T-4136**	4	BOLT (M10X1.5X25-MM)	

M - METRIC PART

515-8014 **LINES GP-COUPLER** (contd.) **i07544878**

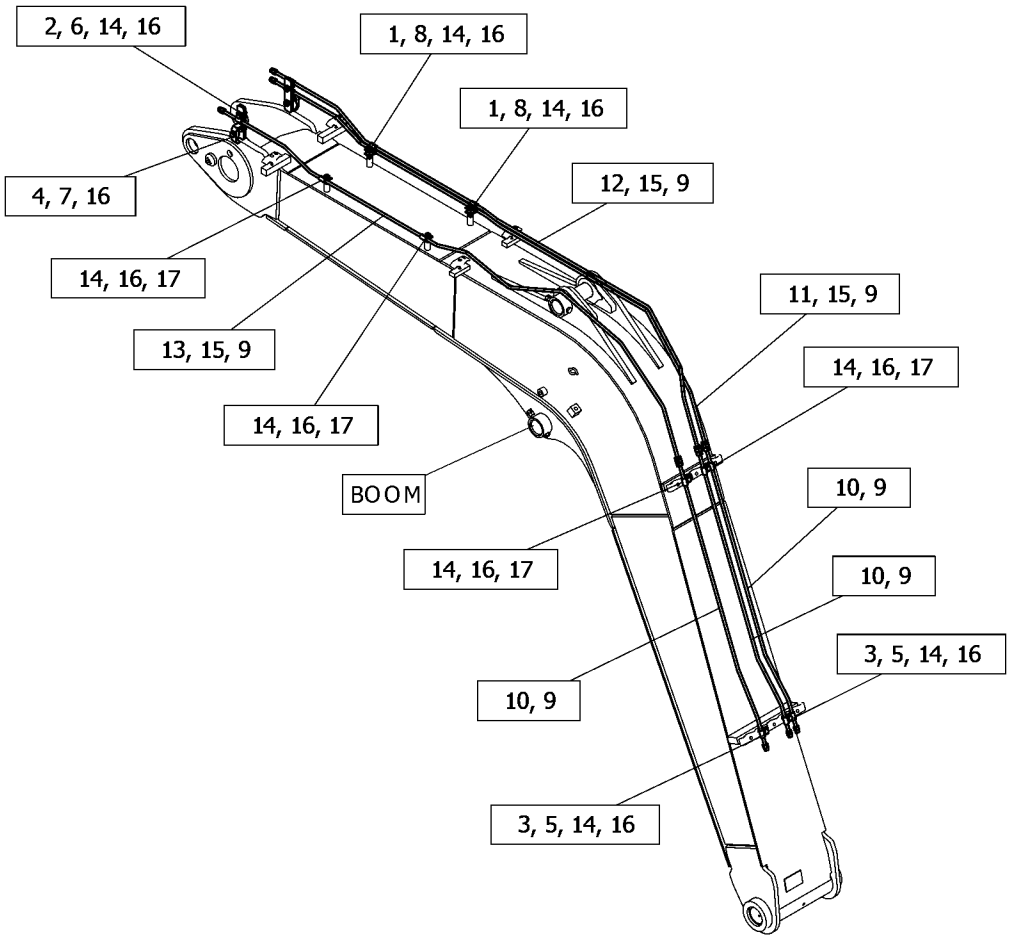

GRAPHIC #1 <END> g06338500

518-1279 LINES GP-COUPLER—VARIABLE ADJUSTABLE BOOM

PART OF 519-3140 CONTROL AR-COUPLER

AN ATTACHMENT

SMCS-5057, 5133 **i07546529**

NOTE	REF NO	GRAPHIC REF	PART NUMBER	QTY	PART NAME 1 2 3 4 5 6 (PRODUCT LEVEL)	SEE PAGE
M	1	1	**8T-4182**	2	BOLT (M10X1.5X45-MM)	
M	2	1	**8T-4195**	8	BOLT (M10X1.5X30-MM)	
M	3	1	**8T-4196**	2	BOLT (M10X1.5X35-MM)	
M	4	1	**8T-6466**	2	BOLT (M10X1.5X60-MM)	
M	5	1	**085-8091**	2	BOLT (M10X1.5X55-MM)	
	6	1	**198-4766**	2	WASHER-HARD (11X25X10-MM THK)	
	7	1	**379-0676**	2	PLATE AS	
	8	1	**425-7828**	1	BRACKET AS	
	9	1	**425-7830**	1	BRACKET AS	
	10	1	**436-7870**	2	CLAMP	
	11	1	**397-9301**	2	WASHER-HARD (11.5X20X15-MM THK)	
	12	1	**487-2142**	2	BRACKET AS	
I	13	1	**491-4677**	3	HOSE AS	
	14	1	**4J-5477**	12	SEAL-O-RING	
	15	1	**518-1280**	2	TUBE AS	
	16	1	**518-1281**	1	TUBE AS	
	17	1	**567-2533**	1	TUBE AS	
	18	1	**567-2534**	1	TUBE AS	
	19	1	**567-2535**	1	TUBE AS	
	20	1	**5P-9297**	21	CLIP (LOOP)	
	21	1	**7K-1181**	3	STRAP-CABLE	
	22	1	**7X-7729**	5	WASHER (11X25X3-MM THK)	
	23	1	**8T-1889**	2	CLIP (SLOT)	
	24	1	**8T-1890**	2	CLIP (TAB)	
	25	1	**8T-4121**	18	WASHER-HARD (11X21X2.5-MM THK)	
M	26	1	**8T-4136**	2	BOLT (M10X1.5X25-MM)	
M	27	1	**8T-4137**	3	BOLT (M10X1.5X20-MM)	

I - REFER TO HYDRAULIC INFORMATION SYSTEM
M - METRIC PART

518-1279 **LINES GP-COUPLER (**contd.**)** **i07546529**

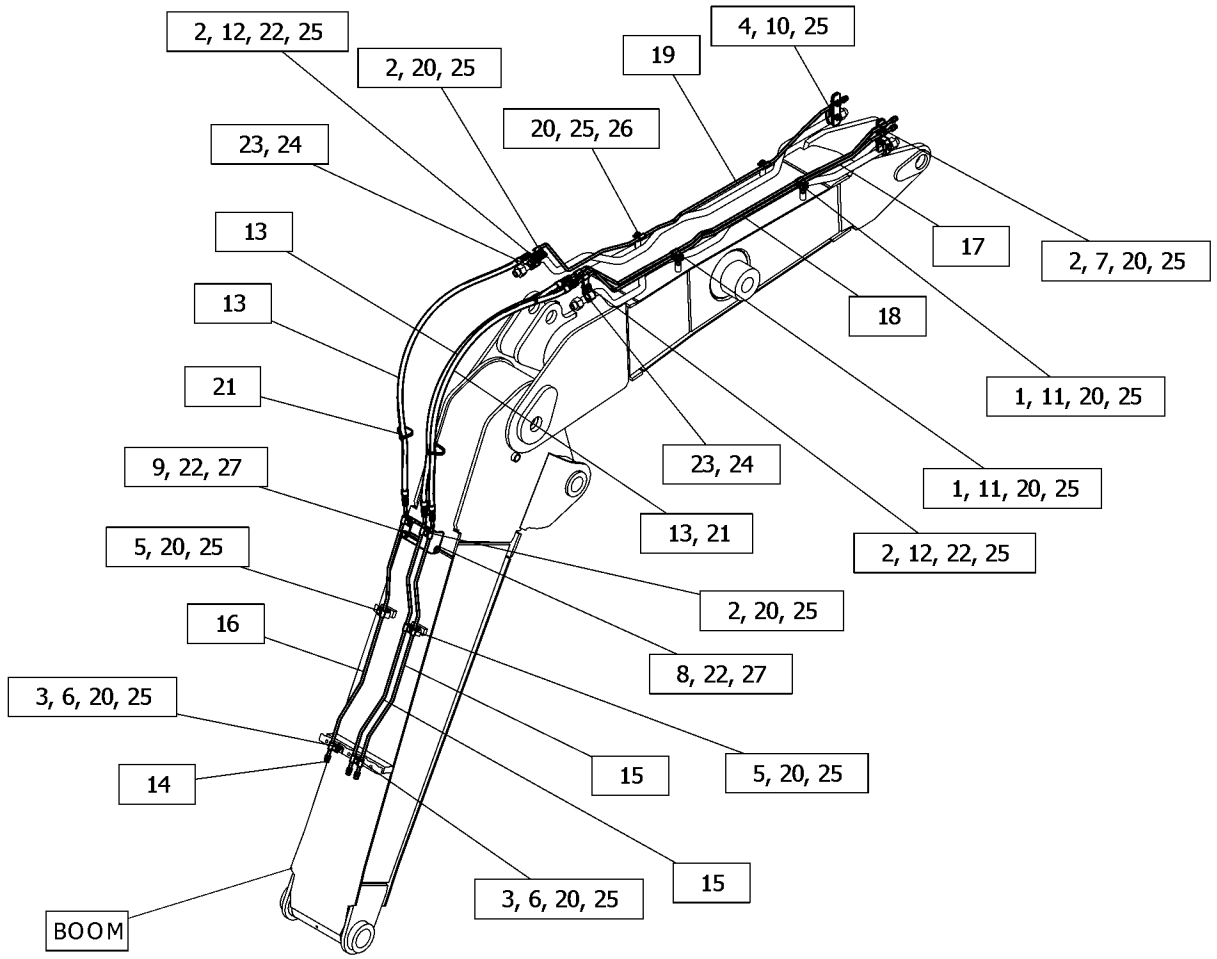

GRAPHIC #1 <END> g06338104

512-2552 LINES GP-CYLINDER—SWING

PART OF 512-2524, 512-2526 BLADE AR-STRAIGHT

AN ATTACHMENT

SMCS-5057 **i07546224**

NOTE	REF NO	GRAPHIC REF	PART NUMBER	QTY	PART NAME 1 2 3 4 5 6 (PRODUCT LEVEL)	SEE PAGE
	1	1	*148-8340*	2	CONNECTOR AS	
					(EACH INCLUDES)	
		1	**3K-0360**	1	SEAL-O-RING	
		1	**6V-8398**	1	SEAL-O-RING	
		1	**6V-8639**	1	CONNECTOR	
	2	1	*148-8354*	1	ELBOW AS	
		1	**3K-0360**	1	SEAL-O-RING	
		1	**6V-8398**	1	SEAL-O-RING	
		1	**6V-9002**	1	ELBOW	
	3	1	*148-8364*	1	ELBOW AS	
		1	**3K-0360**	1	SEAL-O-RING	
		1	**6V-8398**	1	SEAL-O-RING	
		1	**6V-8625**	1	ELBOW	
	4	1	*194-2903*	1	ELBOW AS	
		1	**3K-0360**	1	SEAL-O-RING	
		1	**8T-0119**	1	ELBOW	
I	5	1	**565-7941**	1	HOSE AS	
I	6	1	**565-7942**	1	HOSE AS	

I - REFER TO HYDRAULIC INFORMATION SYSTEM

512-2552 **LINES GP-CYLINDER (**contd.**)** **i07546224**

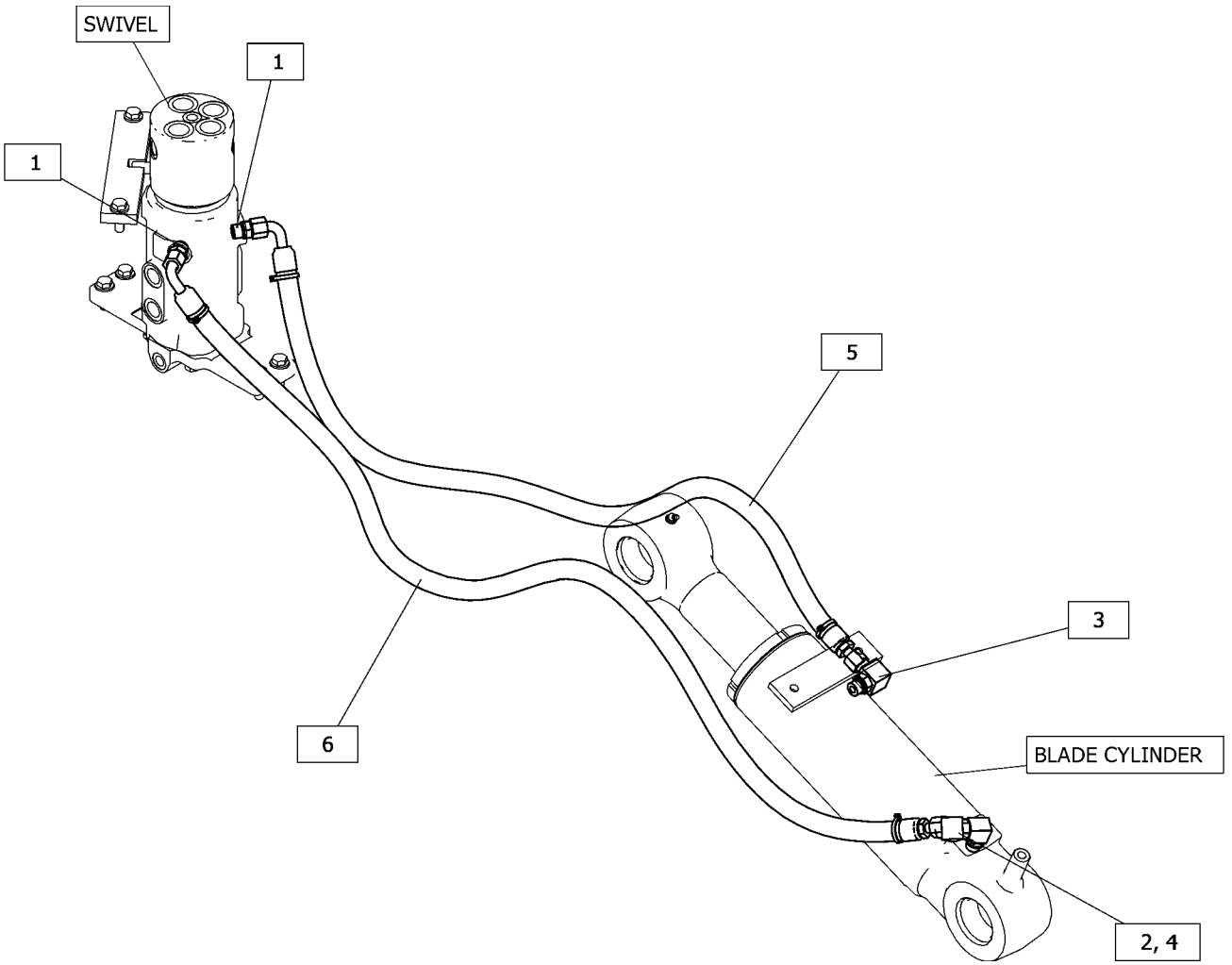

GRAPHIC #1 <END> g06336507

513-9196 LINES GP-FRONT—AUXILIARY

PART OF 514-3230, 514-3235, 517-8129 HYDRAULIC AR
AN ATTACHMENT

SMCS-5057 **i07546198**

NOTE	REF NO	GRAPHIC REF	PART NUMBER	QTY	PART NAME 1 2 3 4 5 6 (PRODUCT LEVEL)	SEE PAGE
M	1	1	**8T-4195**	1	BOLT (M10X1.5X30-MM)	
	2	1	**279-4735**	1	STRAP-CABLE (ORANGE)	
	3	1	**8L-8413**	1	STRAP-CABLE (WHITE)	
M	4	1	**7I-2272**	4	BOLT (M5X0.8X12-MM)	
	5	1	**8T-0328**	4	WASHER-HARD (5.5X10X1-MM THK)	
	6	1	**8T-4121**	2	WASHER-HARD (11X21X2.5-MM THK)	
M	7	1	**8T-4137**	1	BOLT (M10X1.5X20-MM)	
	8	1	*148-8315*	1	CONNECTOR AS	
		1	**2M-9780**	1	SEAL-O-RING	
		1	**6V-8642**	1	CONNECTOR	
		1	**7J-9108**	1	SEAL-O-RING	
	9	1	*148-8322*	1	CONNECTOR AS	
		1	**2M-9780**	1	SEAL-O-RING	
		1	**6V-8640**	1	CONNECTOR	
		1	**6V-9746**	1	SEAL-O-RING	
	10	1	*148-8341*	1	CONNECTOR AS	
		1	**3D-2824**	1	SEAL-O-RING	
		1	**6V-8713**	1	CONNECTOR	
		1	**7J-9108**	1	SEAL-O-RING	
	11	1	*148-8360*	1	ELBOW AS	
		1	**6V-9182**	1	ELBOW	
		1	**6V-9746**	1	SEAL-O-RING	
		1	**7M-8485**	1	SEAL-O-RING	
	12	1	*250-1454*	1	TEE AS	
		1	**3D-2824**	1	SEAL-O-RING	
		1	**6V-9746**	1	SEAL-O-RING	
		1	**7J-9108**	1	SEAL-O-RING	
		1	**118-4569**	1	TEE	
I	13	1	**513-6077**	1	HOSE AS	
I	14	1	**513-6078**	1	HOSE AS	
	15	1	**513-6081**	1	TUBE AS	
	16	1	**515-4617**	1	HOSE AS	
	17	1	**520-0065**	1	VALVE AS-BALL	
	18	1	**3S-8664**	1	CLIP (LOOP)	
	19	1	**7W-9094**	1	SPACER (10.5X20X9-MM THK)	
	20	1	**8K-1117**	1	CLAMP	

I - REFER TO HYDRAULIC INFORMATION SYSTEM
M - METRIC PART

513-9196 **LINES GP-FRONT (**contd.**)** **i07546198**

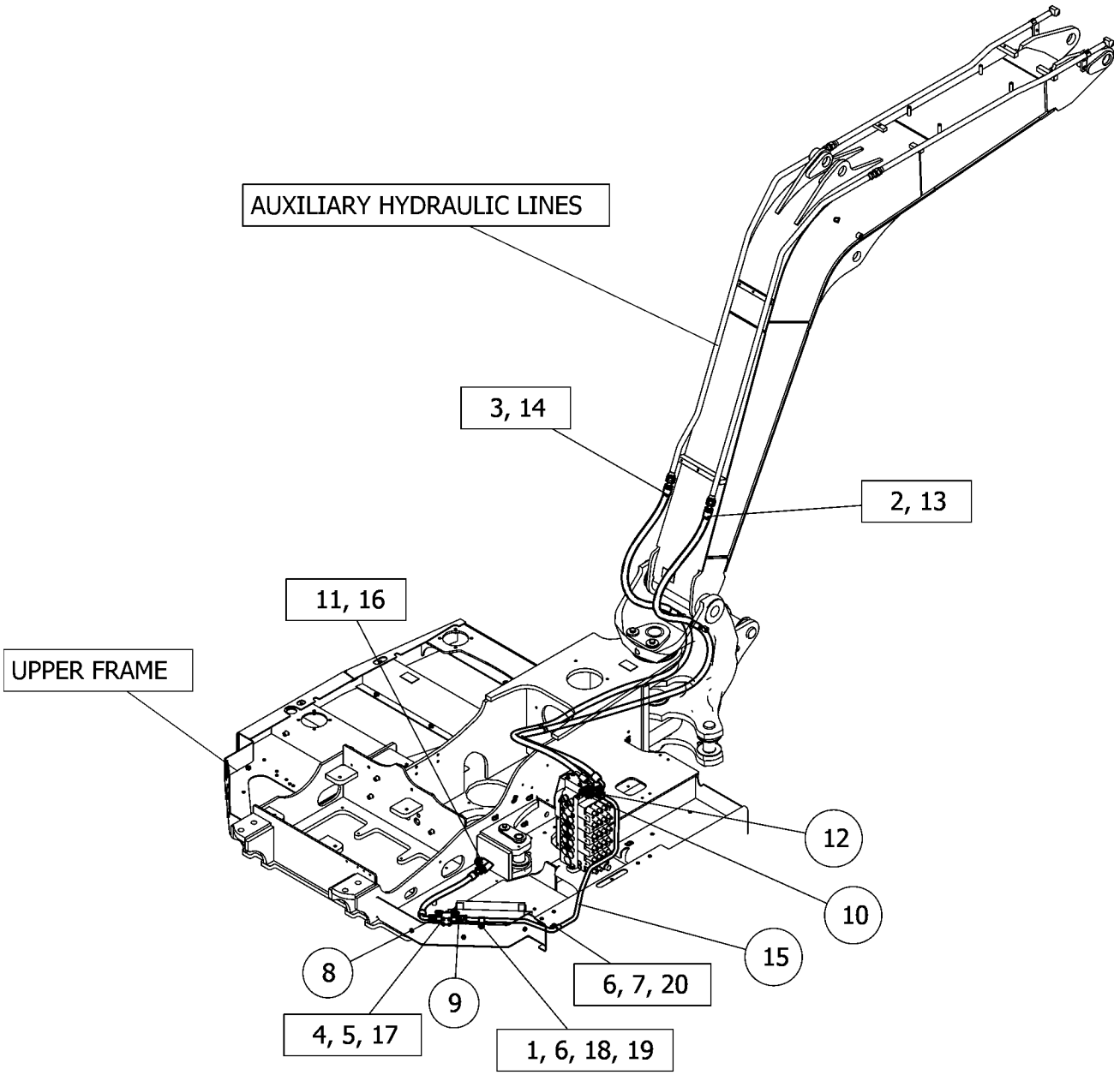

GRAPHIC #1 <END> g06337220

513-9202 LINES GP-FRONT–2ND AUXILIARY

PART OF 514-3235, 517-8129 HYDRAULIC AR
AN ATTACHMENT

SMCS-5057 **i07546457**

NOTE	REF NO	GRAPHIC REF	PART NUMBER	QTY	PART NAME 1 2 3 4 5 6 (PRODUCT LEVEL)	SEE PAGE
	1	1	**279-4733**	2	STRAP-CABLE (BLUE)	
	2	1	**7K-1181**	1	STRAP-CABLE	
	3	1	*148-8318*	2	CONNECTOR AS	
					(EACH INCLUDES)	
		1	**3K-0360**	1	SEAL-O-RING	
		1	**6V-8397**	1	SEAL-O-RING	
		1	**6V-8634**	1	CONNECTOR	
	4	1	*148-8336*	1	CONNECTOR AS	
		1	**3J-1907**	1	SEAL-O-RING	
		1	**6V-8397**	1	SEAL-O-RING	
		1	**6V-8636**	1	CONNECTOR	
	5	1	**279-4732**	1	STRAP-CABLE (YELLOW)	
	6	1	**279-4734**	2	STRAP-CABLE (BROWN)	
I	7	1	**513-9284**	1	HOSE AS	
I	8	1	**513-9285**	1	HOSE AS	
I	9	1	**536-9975**	1	HOSE AS	

I - REFER TO HYDRAULIC INFORMATION SYSTEM

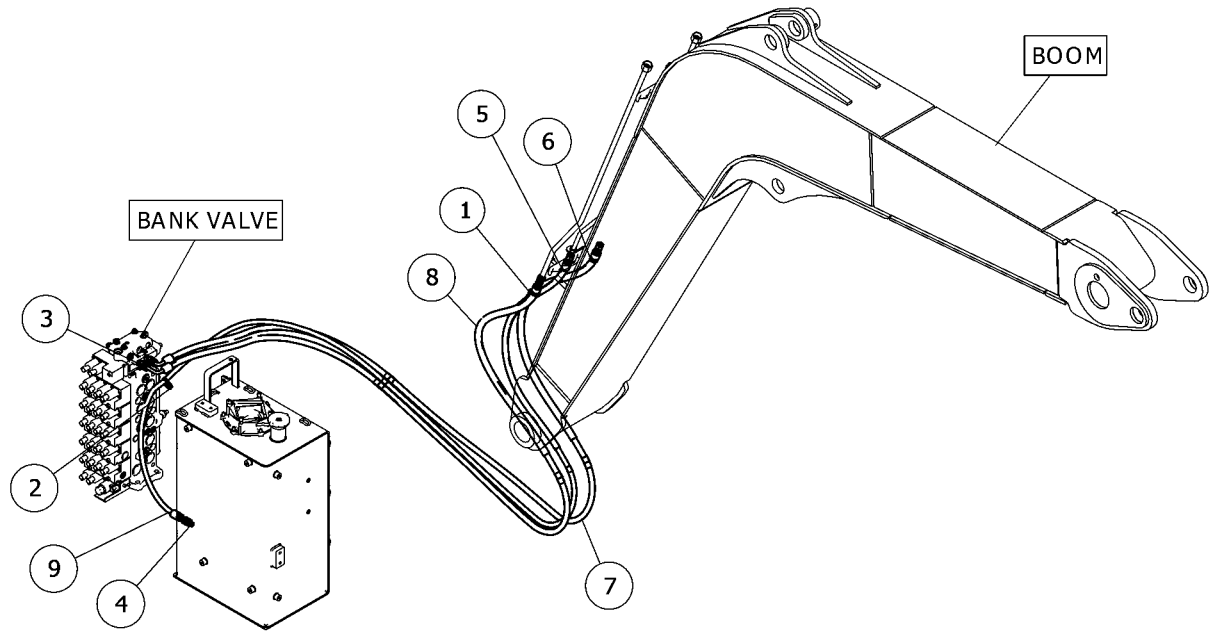

GRAPHIC #1 <END> g06338237

513-9217 LINES GP-FRONT—AUXILIARY

PART OF 514-3240, 520-0774 HYDRAULIC AR
AN ATTACHMENT

SMCS-5057 **i07546284**

NOTE	REF NO	GRAPHIC REF	PART NUMBER	QTY	PART NAME 1 2 3 4 5 6 (PRODUCT LEVEL)	SEE PAGE
	1	1	**279-4733**	2	STRAP-CABLE (BLUE)	
	2	1	**279-4735**	1	STRAP-CABLE (ORANGE)	
	3	1	**8L-8413**	1	STRAP-CABLE (WHITE)	
M	4	1	**8T-5005**	2	BOLT (M10X1.5X70-MM)	
	5	1	*148-8327*	3	CONNECTOR AS	
					(EACH INCLUDES)	
		1	**3D-2824**	1	SEAL-O-RING	
		1	**6V-8637**	1	CONNECTOR	
		1	**6V-9746**	1	SEAL-O-RING	
	6	1	*148-8335*	1	CONNECTOR AS	
		1	**5K-9090**	1	SEAL-O-RING	
		1	**6V-8635**	1	CONNECTOR	
		1	**7M-8485**	1	SEAL-O-RING	
	7	1	*148-8336*	1	CONNECTOR AS	
		1	**3J-1907**	1	SEAL-O-RING	
		1	**6V-8397**	1	SEAL-O-RING	
		1	**6V-8636**	1	CONNECTOR	
	8	1	*148-8347*	2	ELBOW AS	
					(EACH INCLUDES)	
		1	**3D-2824**	1	SEAL-O-RING	
		1	**6V-9007**	1	ELBOW	
		1	**6V-9746**	1	SEAL-O-RING	
	9	1	*148-8431*	1	TEE AS	
		1	**5K-9090**	2	SEAL-O-RING	
		1	**6V-8785**	1	TEE	
		1	**7M-8485**	1	SEAL-O-RING	
	10	1	*148-8449*	2	TEE AS-SWIVEL	
					(EACH INCLUDES)	
		1	**6V-9746**	2	SEAL-O-RING	
		1	**6V-9839**	1	TEE-SWIVEL	
	11	1	**279-4732**	1	STRAP-CABLE (YELLOW)	
	12	1	**279-4734**	2	STRAP-CABLE (BROWN)	
	13	1	*371-7194*	2	CONNECTOR AS	
					(EACH INCLUDES)	
		1	**3D-2824**	1	SEAL-O-RING	
		1	**6V-8397**	1	SEAL-O-RING	
		1	**371-7193**	1	CONNECTOR	
I	14	1	**513-9284**	1	HOSE AS	
I	15	1	**513-9285**	1	HOSE AS	
I	16	1	**515-8458**	1	HOSE AS	
I	17	1	**515-8459**	1	HOSE AS	
I	18	1	**536-9975**	1	HOSE AS	
	19	1	*550-3736*	1	VALVE AS-RELIEF	
J		1	**566-1307**	2	VALVE AS-RELIEF	
		1	**566-1309**	2	HANDLE	
I	20	1	**550-4877**	1	HOSE AS	
I	21	1	**550-4878**	1	HOSE AS	
	22	1	**550-4882**	1	PLATE AS	

513-9217 **LINES GP-FRONT (**contd.**)** **i07546284**

NOTE	REF NO	GRAPHIC REF	PART NUMBER	QTY	PART NAME 1 2 3 4 5 6 (PRODUCT LEVEL)	SEE PAGE
M		1	**8T-3490**	2	NUT-WELD (M10X1.5-THD)	
I	23	1	**566-1302**	1	HOSE AS	
	24	1	**7K-1181**	1	STRAP-CABLE	
	25	1	**8T-4121**	4	WASHER-HARD (11X21X2.5-MM THK)	
M	26	1	**8T-4136**	2	BOLT (M10X1.5X25-MM)	
					AVAILABLE REPAIR KIT(S):	
J			**566-1308**	1	KIT-SEAL	
					(INCLUDES O-RINGS & BACKUP RING)	

I - REFER TO HYDRAULIC INFORMATION SYSTEM
J - KIT MARKED J SERVICES PART(S) MARKED J
M - METRIC PART

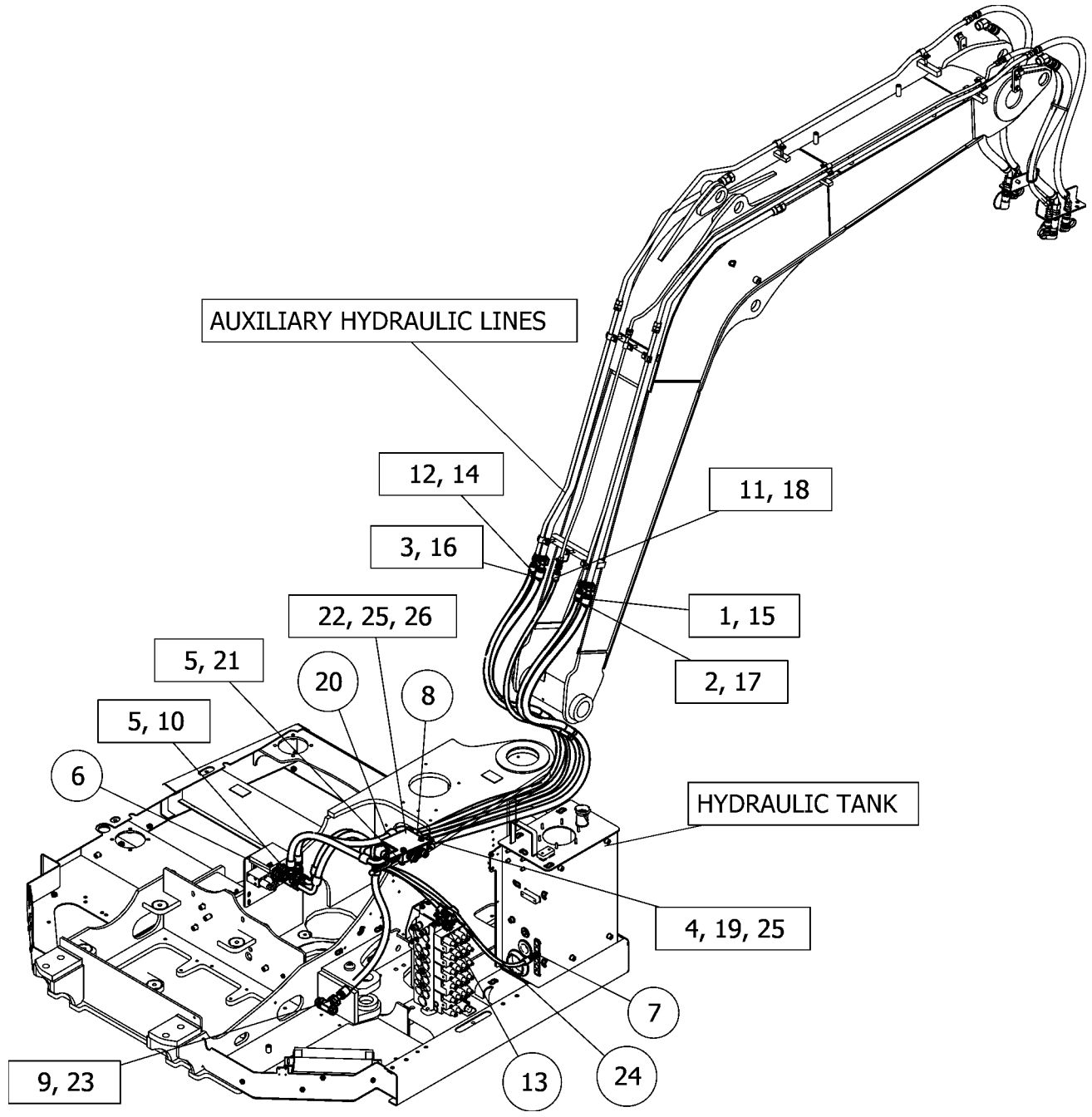

GRAPHIC #1 <END> g06338765

515-7910 LINES GP-FRONT—QUICK COUPLER

PART OF 520-0778 CONTROL AR-COUPLER

AN ATTACHMENT

SMCS-5057 **i07544884**

NOTE	REF NO	GRAPHIC REF	PART NUMBER	QTY	PART NAME 1 2 3 4 5 6 (PRODUCT LEVEL)	SEE PAGE
	1	1	**279-4735**	1	STRAP-CABLE (ORANGE)	
	2	1	**279-4737**	1	STRAP-CABLE (GREEN)	
	3	1	*148-8316*	4	CONNECTOR AS	
					(EACH INCLUDES)	
		1	**3J-7354**	1	SEAL-O-RING	
		1	**4J-5477**	1	SEAL-O-RING	
		1	**6V-8647**	1	CONNECTOR	
	4	1	*148-8325*	1	CONNECTOR AS	
		1	**3J-1907**	1	SEAL-O-RING	
		1	**4J-5477**	1	SEAL-O-RING	
		1	**6V-8641**	1	CONNECTOR	
	5	1	*148-8385*	1	ELBOW AS	
		1	**3J-7354**	1	SEAL-O-RING	
		1	**4J-5477**	1	SEAL-O-RING	
		1	**6V-9000**	1	ELBOW	
	6	1	*150-3033*	1	ELBOW AS	
		1	**3J-1907**	1	SEAL-O-RING	
		1	**4J-5477**	1	SEAL-O-RING	
		1	**8T-0164**	1	ELBOW	
	7	1	**279-4738**	1	STRAP-CABLE (PURPLE)	
	8	1	**449-1589**	1	VALVE GP-SOLENOID & MANIFOLD (12-VOLT) (QUICK COUPLER)	
J		1	**479-0618**	2	VALVE GP-SOLENOID (QUICK COUPLER)	
					(EACH INCLUDES)	
		1	**437-2838**	1	COIL AS (12-VDC)	
L		1	**479-0620**	1	VALVE GP-RELIEF (QUICK COUPLER)	
I	9	1	**516-1586**	1	HOSE AS	
I	10	1	**516-1587**	1	HOSE AS	
I	11	1	**516-1591**	1	HOSE AS	
I	12	1	**516-1592**	1	HOSE AS	
I	13	1	**516-1593**	1	HOSE AS	
	14	1	**7K-1181**	5	STRAP-CABLE	
	15	1	**8T-4224**	2	WASHER-HARD (8.8X16X2-MM THK)	
M	16	1	**8T-7547**	2	BOLT (M8X1.25X30-MM)	
E	17	1	**134-4540**		SLEEVE-HOSE (27-CM)	
					AVAILABLE REPAIR KIT(S):	
J			**446-1412**	1	KIT-SEAL	
L			**454-7925**	1	KIT-SEAL	
					(EACH KIT-SEAL INCLUDES O-RING SEALS & BACKUP RINGS)	

E - ORDER BY THE CENTIMETER
I - REFER TO HYDRAULIC INFORMATION SYSTEM
J - KIT MARKED J SERVICES PART(S) MARKED J
L - KIT MARKED L SERVICES PART(S) MARKED L
M - METRIC PART

515-7910 **LINES GP-FRONT (**contd.**)** **i07544884**

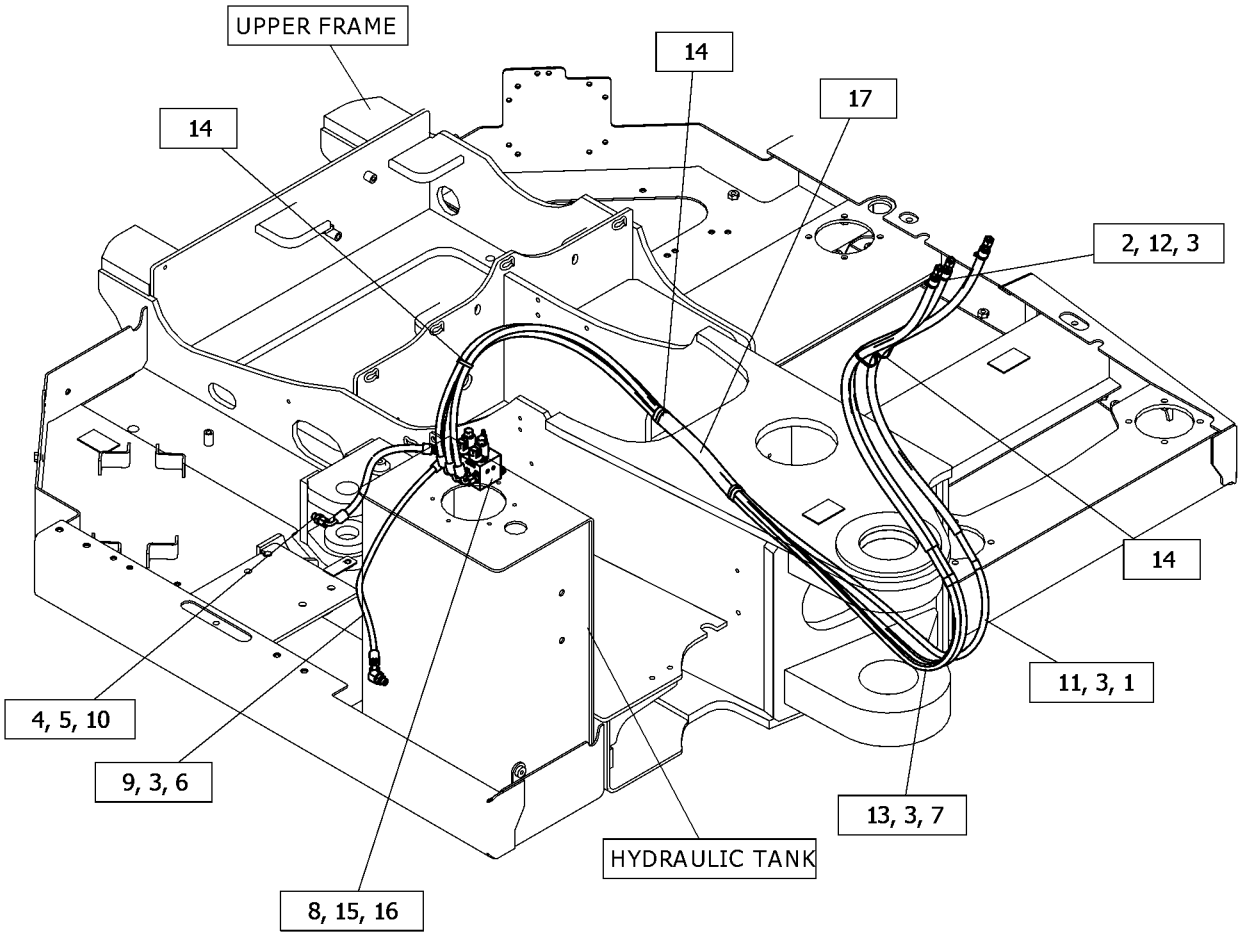

GRAPHIC #1 <END> g06341351

517-8120 LINES GP-FRONT—VARIABLE ADJUSTABLE BOOM

PART OF 517-8129, 520-0774 HYDRAULIC AR
AN ATTACHMENT

SMCS-5057 **i07546515**

NOTE	REF NO	GRAPHIC REF	PART NUMBER	QTY	PART NAME 1 2 3 4 5 6 (PRODUCT LEVEL)	SEE PAGE
	1	1	**8L-8413**	1	STRAP-CABLE (WHITE)	
	2	1	*148-8336*	1	CONNECTOR AS	
		1	**3J-1907**	1	SEAL-O-RING	
		1	**6V-8397**	1	SEAL-O-RING	
		1	**6V-8636**	1	CONNECTOR	
	3	1	*148-8340*	2	CONNECTOR AS	
					(EACH INCLUDES)	
		1	**3K-0360**	1	SEAL-O-RING	
		1	**6V-8398**	1	SEAL-O-RING	
		1	**6V-8639**	1	CONNECTOR	
	4	1	**279-4734**	1	STRAP-CABLE (BROWN)	
	5	1	**279-4738**	1	STRAP-CABLE (PURPLE)	
I	6	1	**518-0841**	1	HOSE AS	
I	7	1	**518-0842**	1	HOSE AS	
I	8	1	**518-0843**	1	HOSE AS	

I - REFER TO HYDRAULIC INFORMATION SYSTEM

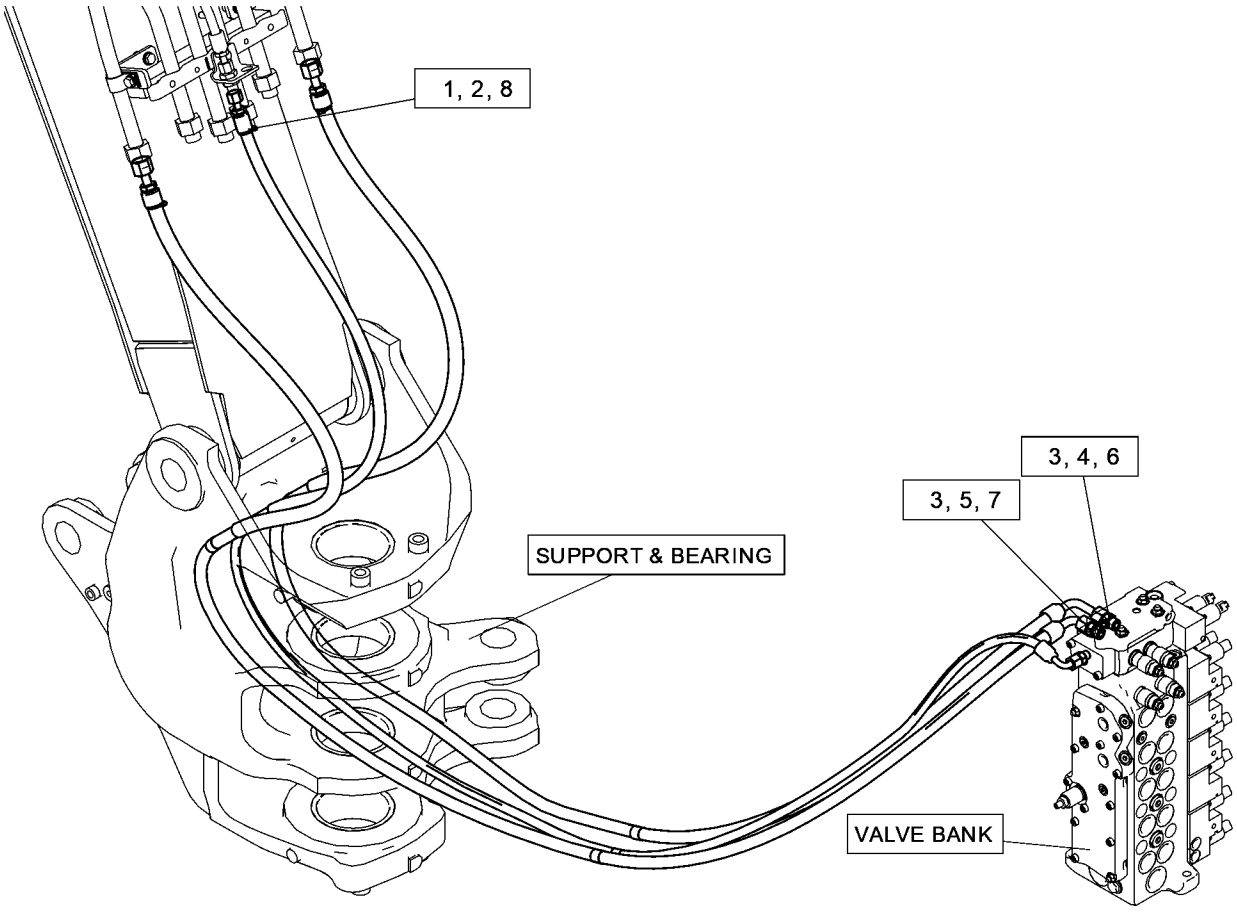

GRAPHIC #1 <END> g06336932

519-2184 LINES GP-FRONT—BOOM LOWERING

PART OF 514-8059, 514-8060 LINES AR-BOOM

AN ATTACHMENT

SMCS-5057 **i07546480**

NOTE	REF NO	GRAPHIC REF	PART NUMBER	QTY	PART NAME 1 2 3 4 5 6 (PRODUCT LEVEL)	SEE PAGE
M	1	1	**8T-4195**	3	BOLT (M10X1.5X30-MM)	
M	2	1	**8T-4192**	1	BOLT (M12X1.75X25-MM)	
	3	1	*148-8378*	1	ELBOW AS	
		1	**3J-1907**	1	SEAL-O-RING	
		1	**6V-8397**	1	SEAL-O-RING	
		1	**6V-8724**	1	ELBOW	
	4	1	*164-6873*	1	CONNECTOR AS	
		1	**3J-1907**	1	SEAL-O-RING	
		1	**6V-8397**	1	SEAL-O-RING	
		1	**113-9234**	1	CONNECTOR	
	5	1	**275-1442**	1	CLIP (TAB)	
	6	1	**275-1443**	1	CLIP (SLOT)	
	7	1	**393-8252**	1	GROMMET	
I	8	1	**519-2188**	1	HOSE AS	
	9	1	**549-2880**	1	PLATE	
	10	1	**7K-1181**	2	STRAP-CABLE	
	11	1	**7X-7729**	3	WASHER (11X25X3-MM THK)	
	12	1	**8T-4223**	1	WASHER-HARD (13.5X25.5X3-MM THK)	

I - REFER TO HYDRAULIC INFORMATION SYSTEM
M - METRIC PART

519-2184 **LINES GP-FRONT (**contd.**)** **i07546480**

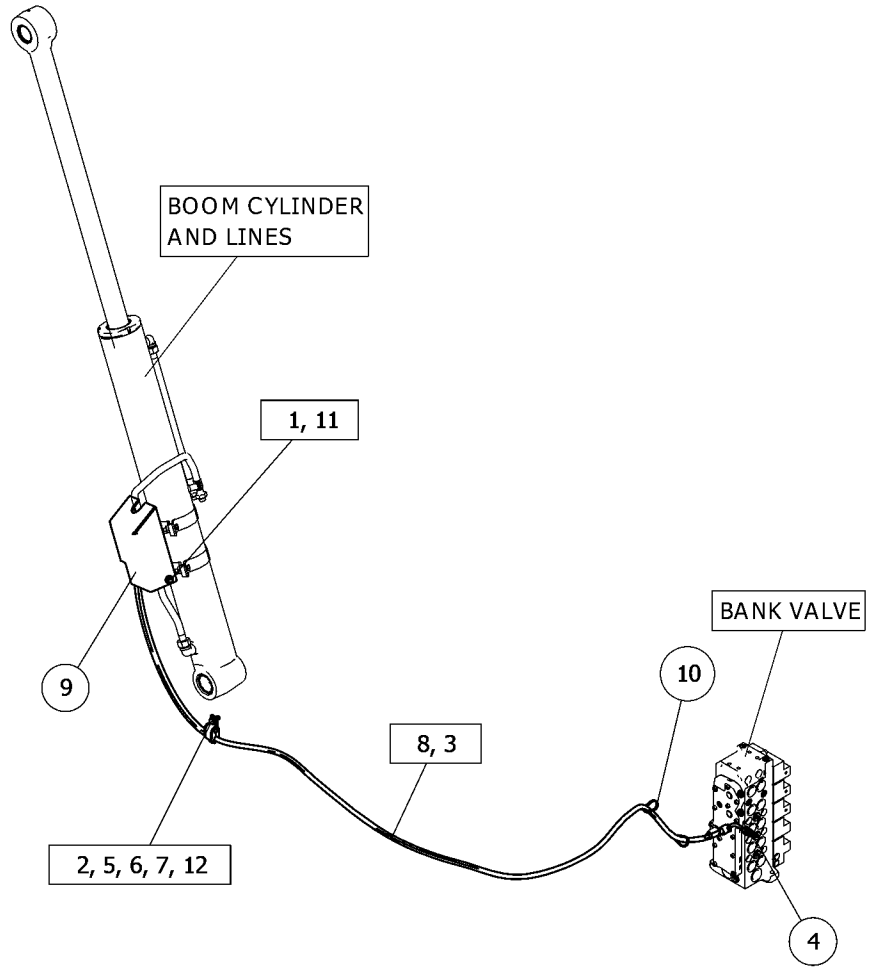

GRAPHIC #1 <END> g06335390

512-5198 LINES GP-PILOT

PART OF 514-3230, 514-3235, 514-3240 HYDRAULIC AR
AN ATTACHMENT

SMCS-5057, 5059 **i07546201**

NOTE	REF NO	GRAPHIC REF	PART NUMBER	QTY	PART NAME 1 2 3 4 5 6 (PRODUCT LEVEL)	SEE PAGE
M	1	1	**8T-4908**	1	BOLT (M8X1.25X25-MM)	
	2	1	**3J-1907**	2	SEAL-O-RING	
	3	1	**4J-5477**	2	SEAL-O-RING	
	4	1	**5P-4116**	1	WASHER-HARD (8.8X20.5X2-MM THK)	
	5	1	**7K-1181**	2	STRAP-CABLE	
	6	1	**8T-4121**	2	WASHER-HARD (11X21X2.5-MM THK)	
M	7	1	**8T-4136**	2	BOLT (M10X1.5X25-MM)	
	8	1	*148-8351*	1	ELBOW AS	
		1	**4J-5477**	1	SEAL-O-RING	
		1	**6V-9849**	1	ELBOW	
	9	1	*148-8363*	1	ELBOW AS	
		1	**3K-0360**	1	SEAL-O-RING	
		1	**6V-8397**	1	SEAL-O-RING	
		1	**6V-9876**	1	ELBOW	
	10	1	*148-8371*	1	ELBOW AS	
		1	**6V-8397**	1	SEAL-O-RING	
		1	**8C-8988**	1	ELBOW	
	11	1	*148-8378*	2	ELBOW AS	
					(EACH INCLUDES)	
		1	**3J-1907**	1	SEAL-O-RING	
		1	**6V-8397**	1	SEAL-O-RING	
		1	**6V-8724**	1	ELBOW	
	12	1	*164-5567*	1	COUPLER AS-QUICK DISCONNECT (MALE)	
		1	**6V-3965**	1	FITTING (QUICK DISCONNECT)	
		1	**214-7568**	1	SEAL-O-RING	
	13	1	*164-5590*	1	VALVE AS-FLUID SAMPLING	
		1	**3J-7354**	1	SEAL-O-RING	
		1	**8C-3446**	1	VALVE-SAMPLING	
	14	1	**203-3470**	1	CONNECTOR	
	15	1	**204-8000**	1	MOUNTING-CABLE TIE	
	16	1	**311-3072**	1	CONNECTOR AS	
	17	1	**353-4402**	1	ADAPTER AS	
Y	18	1	*397-6929*	1	ACCUMULATOR GP-HYDRAULIC (CHARGED)	146
I	19	1	**513-7121**	1	HOSE AS	
I	20	1	**514-6645**	1	HOSE AS	
	21	1	**204-1611**	4	STRAP (DUAL)	
	22	1	**352-3964**	1	CLIP (LADDER)	
	23	1	**3K-0360**	1	SEAL-O-RING	
I	24	1	**513-7124**	1	HOSE AS	
	25	1	**540-1422**	2	ADAPTER-SCREEN	
	26	1	**565-9410**	1	PLATE AS	
M		1	**8T-3612**	1	NUT-WELD (M8X1.25-THD)	
	27	1	**565-9562**	1	HOSE AS	
	28	1	**565-9563**	1	HOSE AS	
	29	1	**6V-0852**	1	CAP-DUST	
	30	1	**8C-3451**	1	CAP-DUST (HYDRAULIC OIL)	

I - REFER TO HYDRAULIC INFORMATION SYSTEM
M - METRIC PART
Y - SEPARATE ILLUSTRATION

512-5198 **LINES GP-PILOT (**contd.**)** **i07546201**

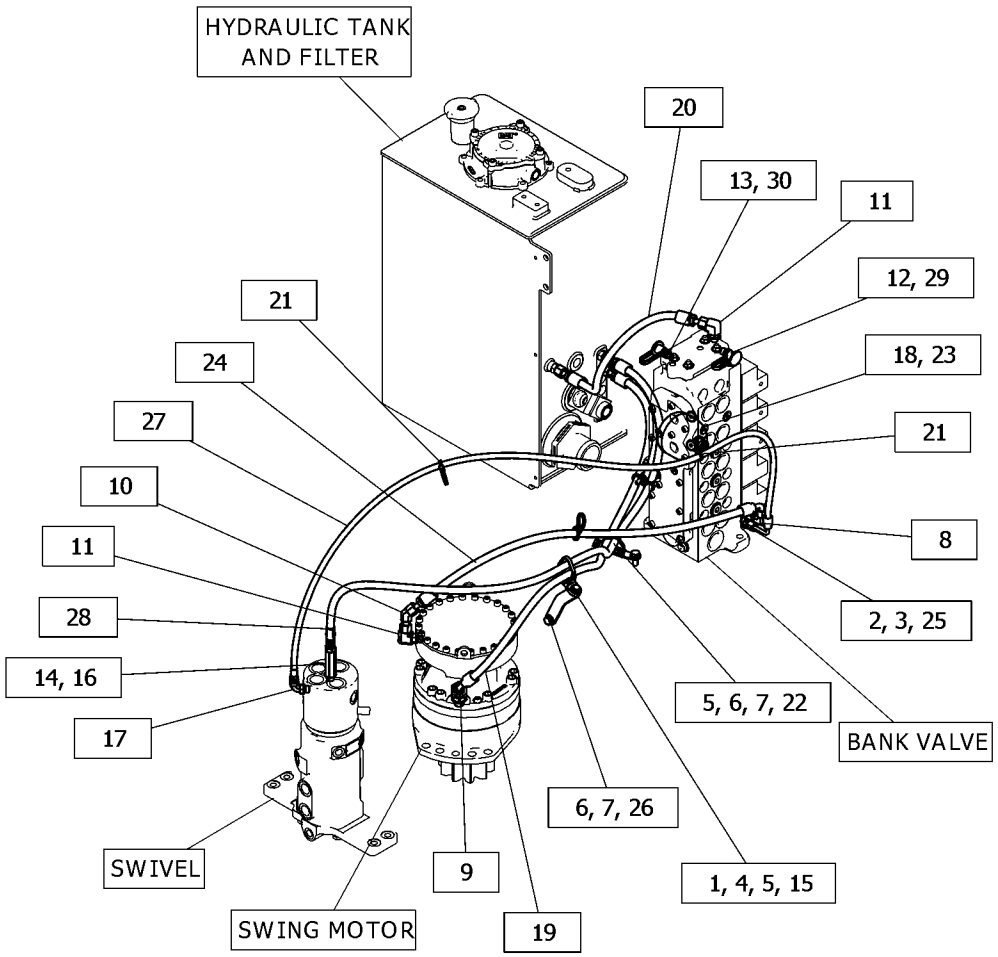

GRAPHIC #1 <END> g06339909

517-8114 LINES GP-PILOT

PART OF 517-8129, 520-0774 HYDRAULIC AR
AN ATTACHMENT

SMCS-5057, 5059 **i07546514**

NOTE	REF NO	GRAPHIC REF	PART NUMBER	QTY	PART NAME 1 2 3 4 5 6 (PRODUCT LEVEL)	SEE PAGE
M	1	1	**8T-4908**	1	BOLT (M8X1.25X25-MM)	
	2	1	*148-8351*	1	ELBOW AS	
		1	**4J-5477**	1	SEAL-O-RING	
		1	**6V-9849**	1	ELBOW	
	3	1	*148-8363*	1	ELBOW AS	
		1	**3K-0360**	1	SEAL-O-RING	
		1	**6V-8397**	1	SEAL-O-RING	
		1	**6V-9876**	1	ELBOW	
	4	1	*148-8371*	1	ELBOW AS	
		1	**6V-8397**	1	SEAL-O-RING	
		1	**8C-8988**	1	ELBOW	
	5	1	*148-8378*	2	ELBOW AS	
					(EACH INCLUDES)	
		1	**3J-1907**	1	SEAL-O-RING	
		1	**6V-8397**	1	SEAL-O-RING	
		1	**6V-8724**	1	ELBOW	
	6	1	*164-5567*	1	COUPLER AS-QUICK DISCONNECT (MALE)	
		1	**6V-3965**	1	FITTING (QUICK DISCONNECT)	
		1	**214-7568**	1	SEAL-O-RING	
	7	1	*164-5590*	1	VALVE AS-FLUID SAMPLING	
		1	**3J-7354**	1	SEAL-O-RING	
		1	**8C-3446**	1	VALVE-SAMPLING	
	8	1	**203-3470**	1	CONNECTOR	
	9	1	**204-1611**	4	STRAP (DUAL)	
	10	1	**204-8000**	1	MOUNTING-CABLE TIE	
	11	1	**311-3072**	1	CONNECTOR AS	
	12	1	**352-3964**	1	CLIP (LADDER)	
	13	1	**353-4402**	1	ADAPTER AS	
Y	14	1	**227-8807**	1	ACCUMULATOR GP-HYDRAULIC (UNCHARGED)	145
	15	1	**3J-1907**	2	SEAL-O-RING	
	16	1	**3K-0360**	1	SEAL-O-RING	
	17	1	**4J-5477**	2	SEAL-O-RING	
I	18	1	**513-7121**	1	HOSE AS	
I	19	1	**513-7124**	1	HOSE AS	
I	20	1	**517-8200**	1	HOSE AS	
	21	1	**540-1422**	2	ADAPTER-SCREEN	
	22	1	**565-9410**	1	PLATE AS	
M		1	**8T-3612**	1	NUT-WELD (M8X1.25-THD)	
	23	1	**565-9562**	1	HOSE AS	
	24	1	**565-9563**	1	HOSE AS	
	25	1	**5P-4116**	1	WASHER-HARD (8.8X20.5X2-MM THK)	
	26	1	**6V-0852**	1	CAP-DUST	
	27	1	**7K-1181**	2	STRAP-CABLE	
	28	1	**8C-3451**	1	CAP-DUST (HYDRAULIC OIL)	
	29	1	**8T-4121**	2	WASHER-HARD (11X21X2.5-MM THK)	
M	30	1	**8T-4136**	2	BOLT (M10X1.5X25-MM)	

I - REFER TO HYDRAULIC INFORMATION SYSTEM
M - METRIC PART
Y - SEPARATE ILLUSTRATION

517-8114 **LINES GP-PILOT (**contd.**)** **i07546514**

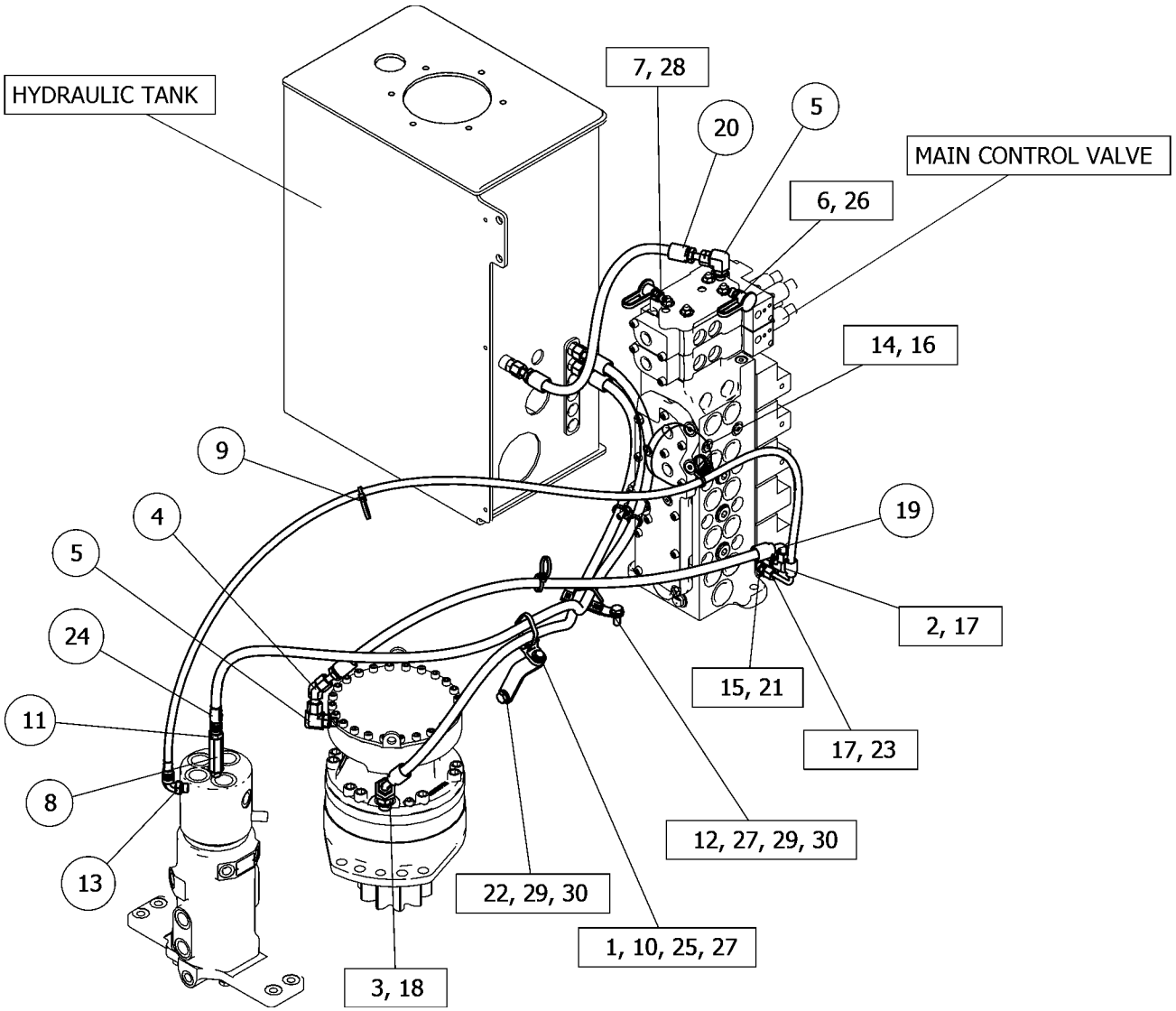

GRAPHIC #1 <END> g06338392

520-4891 LINES GP-PILOT

PART OF 514-3240, 520-0774 HYDRAULIC AR
AN ATTACHMENT

SMCS-5057, 5059 **i07546293**

NOTE	REF NO	GRAPHIC REF	PART NUMBER	QTY	PART NAME 1 2 3 4 5 6 (PRODUCT LEVEL)	SEE PAGE
	1	1	**5I-4376**	1	FITTING	
	2	1	**7K-1181**	2	STRAP-CABLE	
	3	1	*148-8336*	3	CONNECTOR AS	
					(EACH INCLUDES)	
		1	**3J-1907**	1	SEAL-O-RING	
		1	**6V-8397**	1	SEAL-O-RING	
		1	**6V-8636**	1	CONNECTOR	
	4	1	*148-8371*	1	ELBOW AS	
		1	**6V-8397**	1	SEAL-O-RING	
		1	**8C-8988**	1	ELBOW	
	5	1	*148-8378*	2	ELBOW AS	
					(EACH INCLUDES)	
		1	**3J-1907**	1	SEAL-O-RING	
		1	**6V-8397**	1	SEAL-O-RING	
		1	**6V-8724**	1	ELBOW	
	6	1	**290-5562**	1	MOUNT (DUAL SWIVEL)	
I	7	1	**514-3960**	1	HOSE AS	
I	8	1	**520-4905**	1	HOSE AS	

I - REFER TO HYDRAULIC INFORMATION SYSTEM

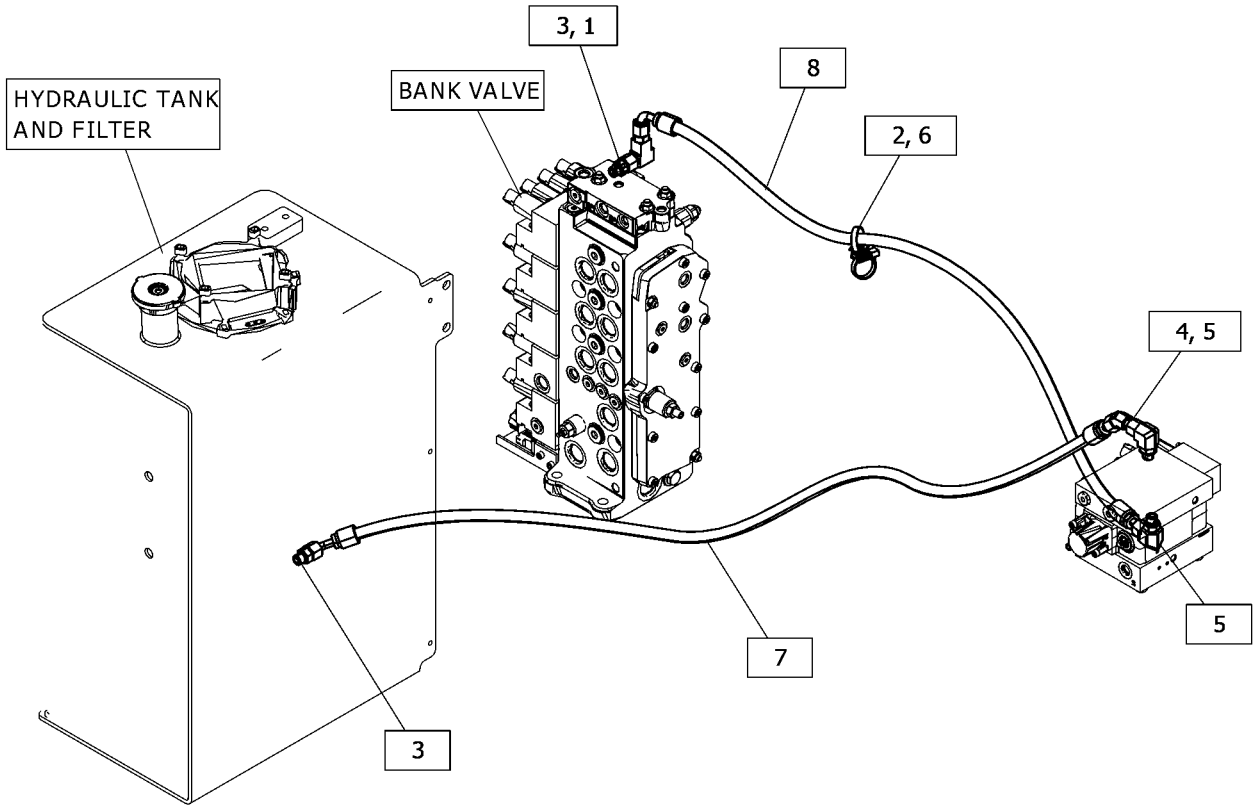

GRAPHIC #1 <END> g06338992

511-3201 LINES GP-PUMP

PART OF 514-3230, 514-3235, 517-8129 HYDRAULIC AR
AN ATTACHMENT

SMCS-5057 **i07546204**

NOTE	REF NO	GRAPHIC REF	PART NUMBER	QTY	PART NAME 1 2 3 4 5 6 (PRODUCT LEVEL)	SEE PAGE
M	1	1	**8T-4195**	2	BOLT (M10X1.5X30-MM)	
M	2	1	**8T-4196**	6	BOLT (M10X1.5X35-MM)	
	3	1	**144-0367**	5	CLAMP-HOSE	
	4	1	*148-8352*	1	ELBOW AS	
		1	**5K-9090**	1	SEAL-O-RING	
		1	**6V-9854**	1	ELBOW (SWIVEL)	
	5	1	*150-3059*	1	TEE AS	
		1	**5K-9090**	1	SEAL-O-RING	
		1	**7M-8485**	1	SEAL-O-RING	
		1	**8T-1674**	1	TEE	
	6	1	*164-5567*	1	COUPLER AS-QUICK DISCONNECT (MALE)	
		1	**6V-3965**	1	FITTING (QUICK DISCONNECT)	
		1	**214-7568**	1	SEAL-O-RING	
	7	1	*164-5594*	1	CONNECTOR AS	
		1	**5K-9090**	1	SEAL-O-RING	
		1	**7M-8485**	1	SEAL-O-RING	
		1	**8C-5723**	1	CONNECTOR	
	8	1	**173-0064**	1	ELBOW	
	9	1	**421-6229**	1	LINER	
	10	1	**4J-0526**	1	SEAL-O-RING	
	11	1	**511-3190**	1	HOSE	
	12	1	**511-3191**	1	HOSE	
	13	1	**511-3192**	1	HOSE	
	14	1	**511-3193**	1	TUBE AS	
	15	1	**511-3194**	1	TUBE AS	
	16	1	**511-3195**	1	TUBE AS	
I	17	1	**556-0874**	1	HOSE AS	
	18	1	**5P-7468**	2	CLIP (SLOT)	
	19	1	**5P-7469**	2	CLIP (TAB)	
	20	1	**5P-8444**	2	GROMMET (37-MM ID)	
	21	1	**6V-0852**	1	CAP-DUST	
	22	1	**7M-8485**	1	SEAL-O-RING	
	23	1	**7X-7729**	2	WASHER (11X25X3-MM THK)	
	24	1	**8T-4121**	6	WASHER-HARD (11X21X2.5-MM THK)	
	25	1	**8T-4223**	4	WASHER-HARD (13.5X25.5X3-MM THK)	
M	26	1	**8T-4956**	4	BOLT (M12X1.75X35-MM)	
	27	1	**8T-4984**	1	CLAMP-HOSE	

I - REFER TO HYDRAULIC INFORMATION SYSTEM
M - METRIC PART

511-3201 **LINES GP-PUMP (**contd.**)** **i07546204**

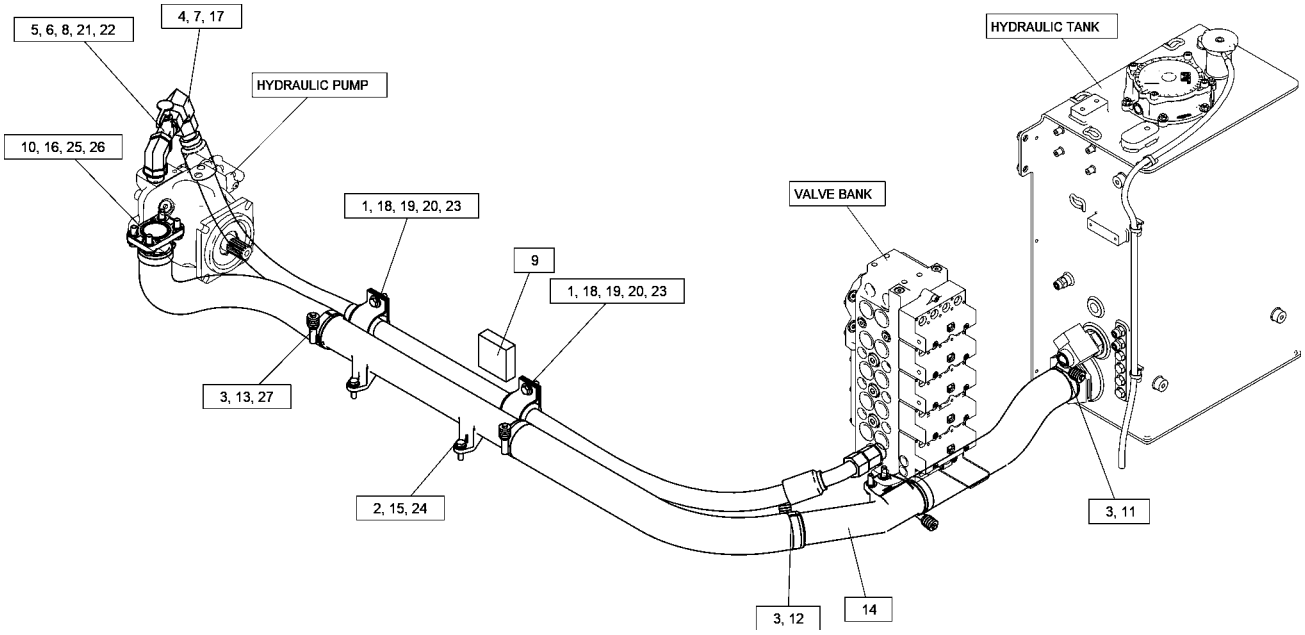

GRAPHIC #1 <END> g06339606

511-4977 LINES GP-PUMP

PART OF 514-3240, 520-0774 HYDRAULIC AR
AN ATTACHMENT

SMCS-5057 **i07546281**

NOTE	REF NO	GRAPHIC REF	PART NUMBER	QTY	PART NAME 1 2 3 4 5 6 (PRODUCT LEVEL)	SEE PAGE
M	1	1	**8T-4182**	1	BOLT (M10X1.5X45-MM)	
M	2	1	**8T-4196**	6	BOLT (M10X1.5X35-MM)	
M	3	1	**8T-4195**	3	BOLT (M10X1.5X30-MM)	
	4	1	**6V-3251**	1	SEAL-O-RING	
	5	1	**2M-9780**	1	SEAL-O-RING	
	6	1	**7X-7729**	3	WASHER (11X25X3-MM THK)	
	7	1	**8T-4223**	8	WASHER-HARD (13.5X25.5X3-MM THK)	
M	8	1	**8T-4956**	8	BOLT (M12X1.75X35-MM)	
	9	1	*148-8316*	1	CONNECTOR AS	
		1	**3J-7354**	1	SEAL-O-RING	
		1	**4J-5477**	1	SEAL-O-RING	
		1	**6V-8647**	1	CONNECTOR	
	10	1	*148-8335*	1	CONNECTOR AS	
		1	**5K-9090**	1	SEAL-O-RING	
		1	**6V-8635**	1	CONNECTOR	
		1	**7M-8485**	1	SEAL-O-RING	
	11	1	*148-8345*	2	CONNECTOR AS	
					(EACH INCLUDES)	
		1	**2M-9780**	1	SEAL-O-RING	
		1	**6V-8398**	1	SEAL-O-RING	
		1	**6V-8638**	1	CONNECTOR	
	12	1	*148-8352*	1	ELBOW AS	
		1	**5K-9090**	1	SEAL-O-RING	
		1	**6V-9854**	1	ELBOW (SWIVEL)	
	13	1	*148-8355*	1	ELBOW AS	
		1	**5K-9090**	1	SEAL-O-RING	
		1	**6V-9005**	1	ELBOW	
		1	**7M-8485**	1	SEAL-O-RING	
	14	1	*148-8425*	1	TEE AS	
		1	**5K-9090**	1	SEAL-O-RING	
		1	**8T-4834**	1	TEE-SWIVEL-ORFS	
	15	1	*150-3059*	1	TEE AS	
		1	**5K-9090**	1	SEAL-O-RING	
		1	**7M-8485**	1	SEAL-O-RING	
		1	**8T-1674**	1	TEE	
	16	1	*164-5594*	1	CONNECTOR AS	
		1	**5K-9090**	1	SEAL-O-RING	
		1	**7M-8485**	1	SEAL-O-RING	
		1	**8C-5723**	1	CONNECTOR	
	17	1	**173-0064**	1	ELBOW	
	18	1	**290-5562**	1	MOUNT (DUAL SWIVEL)	
	19	1	**309-5126**	1	ADAPTER-TEE	
	20	1	**397-9301**	1	WASHER-HARD (11.5X20X15-MM THK)	
	21	1	**511-3190**	1	HOSE	
	22	1	**511-3191**	1	HOSE	
	23	1	**511-3193**	1	TUBE AS	
	24	1	**511-3197**	1	HOSE	
	25	1	**511-3198**	1	TUBE	

511-4977 **LINES GP-PUMP (**contd.**)** **i07546281**

NOTE	REF NO	GRAPHIC REF	PART NUMBER	QTY	PART NAME 1 2 3 4 5 6 (PRODUCT LEVEL)	SEE PAGE
	26	1	**511-3199**	1	HOSE	
	27	1	**511-3200**	1	HOSE	
I	28	1	**514-3959**	1	HOSE AS	
I	29	1	**556-0874**	1	HOSE AS	
	30	1	**144-0367**	8	CLAMP-HOSE	
	31	1	*148-8336*	1	CONNECTOR AS	
		1	**3J-1907**	1	SEAL-O-RING	
		1	**6V-8397**	1	SEAL-O-RING	
		1	**6V-8636**	1	CONNECTOR	
	32	1	*149-5452*	1	UNION AS (STRAIGHT)	
		1	**6V-8397**	2	SEAL-O-RING	
		1	**6V-8994**	1	UNION (STRAIGHT)	
	33	1	*164-5567*	2	COUPLER AS-QUICK DISCONNECT (MALE)	
					(EACH INCLUDES)	
		1	**6V-3965**	1	FITTING (QUICK DISCONNECT)	
		1	**214-7568**	1	SEAL-O-RING	
	34	1	**204-1611**	1	STRAP (DUAL)	
	35	1	*241-6202*	1	ADAPTER AS	
		1	**2M-9780**	1	SEAL-O-RING	
		1	**219-8136**	1	ADAPTER	
	36	1	**313-4553**	1	PLUG	
	37	1	**4J-0526**	2	SEAL-O-RING	
	38	1	**511-3194**	1	TUBE AS	
	39	1	**511-3195**	2	TUBE AS	
I	40	1	**514-2343**	1	HOSE AS	
	41	1	**514-3958**	1	TUBE AS	
	42	1	**566-6469**	1	HOSE AS	
	43	1	**567-7748**	1	TUBE AS	
	44	1	**5K-9090**	1	SEAL-O-RING	
	45	1	**5P-7468**	3	CLIP (SLOT)	
	46	1	**5P-7469**	3	CLIP (TAB)	
	47	1	**5P-8444**	3	GROMMET (37-MM ID)	
	48	1	**6D-3479**	1	CLIP (LOOP)	
	49	1	**6V-0852**	2	CAP-DUST	
	50	1	**6V-9168**	1	NUT (11/16-16-THD)	
	51	1	**6V-9172**	1	NUT (1-7/16-12-THD)	
	52	1	**7K-1181**	2	STRAP-CABLE	
	53	1	**7M-8485**	1	SEAL-O-RING	
	54	1	**8T-4121**	7	WASHER-HARD (11X21X2.5-MM THK)	
	55	1	**8T-4984**	2	CLAMP-HOSE	

I - REFER TO HYDRAULIC INFORMATION SYSTEM
M - METRIC PART

511-4977 **LINES GP-PUMP (**contd.**)** **i07546281**

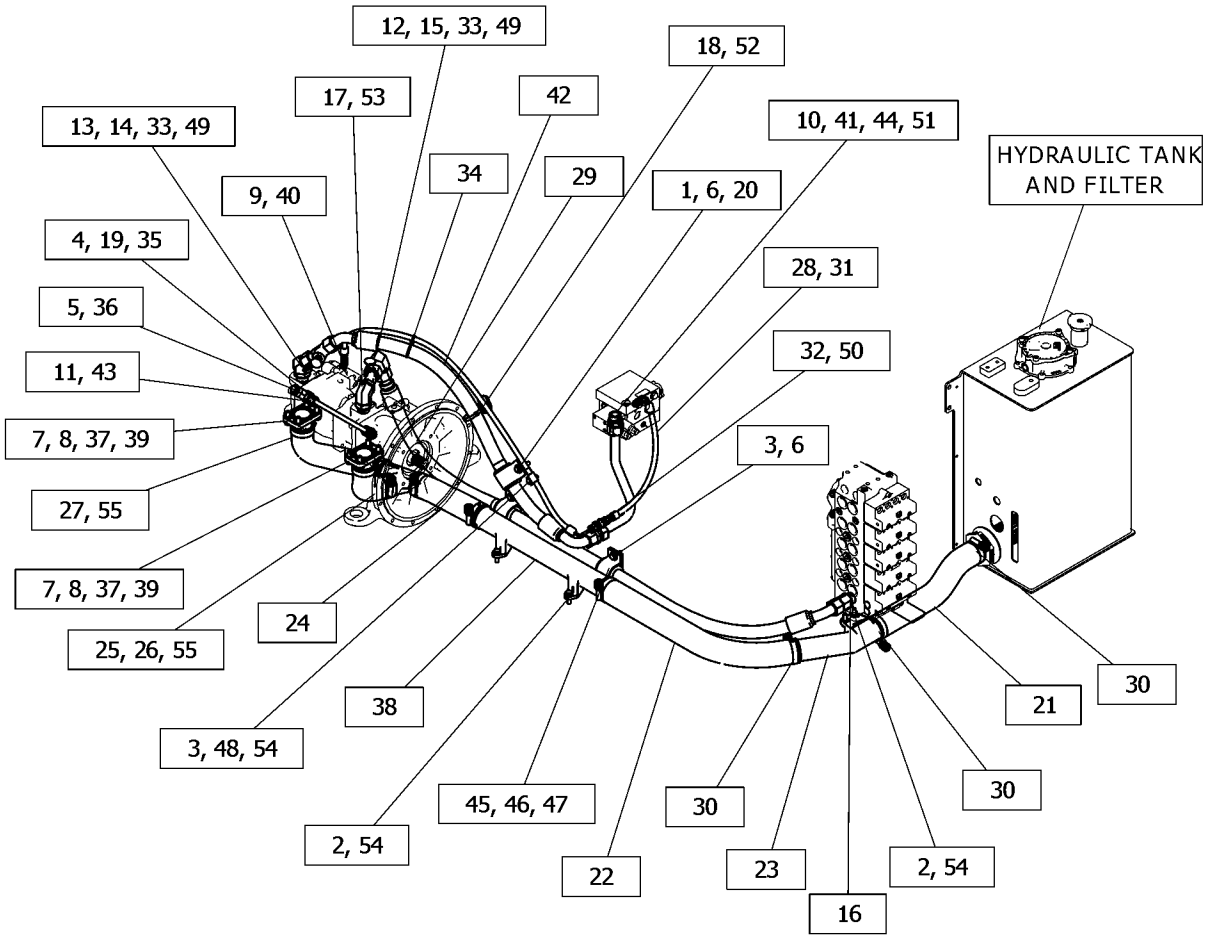

GRAPHIC #1 <END> g06349531

361-1150 LINES GP-QUICK COUPLER

PART OF 485-5302 COUPLER AR-QUICK, 428-2145, 485-5272, 504-6175 THUMB AR AN ATTACHMENT

SMCS-5057, 6129 **i05800641**

NOTE	REF NO	GRAPHIC REF	PART NUMBER	QTY	PART NAME 1 2 3 4 5 6 (PRODUCT LEVEL)	SEE PAGE
	1	1	**7K-1181**	3	STRAP-CABLE	
I	2	1	**340-1665**	3	HOSE AS	
M	3	1	**8T-4196**	2	BOLT (M10X1.5X35-MM)	
	4	1	**361-1120**	1	MANIFOLD	
	5	1	**067-2551**	1	CLIP	
	6	1	*148-8316*	6	CONNECTOR AS	
					(EACH INCLUDES)	
		1	**3J-7354**	1	SEAL-O-RING	
		1	**4J-5477**	1	SEAL-O-RING	
		1	**6V-8647**	1	CONNECTOR	
	7	1	*148-8395*	3	PLUG AS	
					(EACH INCLUDES)	
		1	**3K-0360**	1	SEAL-O-RING	
		1	**9S-8005**	1	PLUG (3/4-16-THD)	
M	8	1	**8T-4137**	2	BOLT (M10X1.5X20-MM)	
	9	1	**4D-7733**	1	CLIP (LOOP)	
	10	1	**7X-7729**	2	WASHER (11X25X3-MM THK)	
	11	1	**8T-4121**	2	WASHER-HARD (11X21X2.5-MM THK)	

I - REFER TO HYDRAULIC INFORMATION SYSTEM
M - METRIC PART

361-1150 **LINES GP-QUICK COUPLER (**contd.**)** **i05800641**

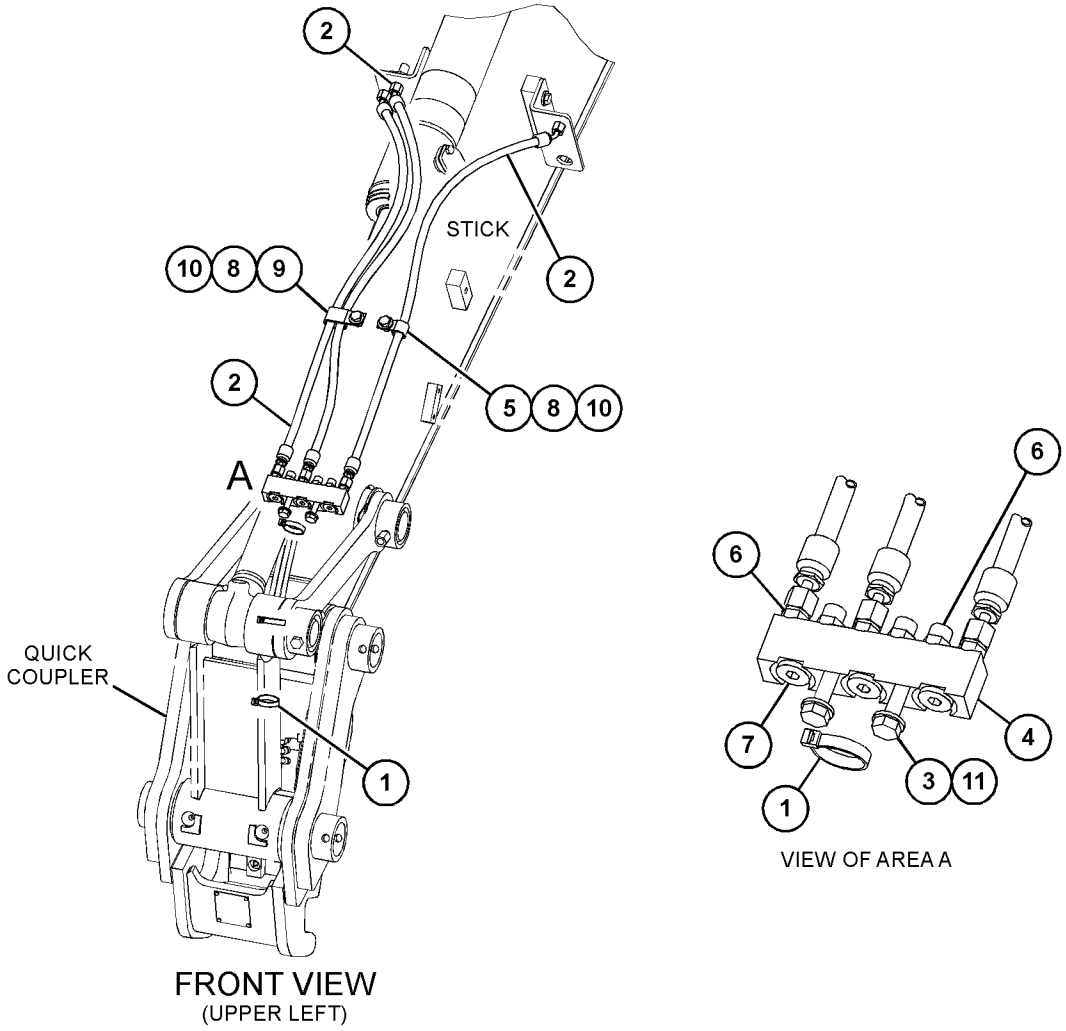

FRONT VIEW
(UPPER LEFT)

VIEW OF AREA A

GRAPHIC #1 <END> g03692964

512-1893 LINES GP-RETURN

PART OF 512-1420 HYDRAULIC AR

SMCS-5057 **i07542353**

NOTE	REF NO	GRAPHIC REF	PART NUMBER	QTY	PART NAME 1 2 3 4 5 6 (PRODUCT LEVEL)	SEE PAGE
M	1	1	**8T-4195**	1	BOLT (M10X1.5X30-MM)	
	2	1	*148-8335*	2	CONNECTOR AS	
					(EACH INCLUDES)	
		1	**5K-9090**	1	SEAL-O-RING	
		1	**6V-8635**	1	CONNECTOR	
		1	**7M-8485**	1	SEAL-O-RING	
	3	1	*150-3050*	1	CONNECTOR AS	
		1	**6V-7486**	1	CONNECTOR	
		1	**7M-8485**	1	SEAL-O-RING	
	4	1	**290-5562**	1	MOUNT (DUAL SWIVEL)	
	5	1	*304-8018*	1	ADAPTER AS	
		1	**3D-2824**	1	SEAL-O-RING	
		1	**6V-5258**	1	ADAPTER	
	6	1	**512-3864**	1	HOSE AS	
	7	1	**521-2998**	1	VALVE AS-CHECK	
		1	**5K-9090**	1	SEAL-O-RING	
		1	**7M-8485**	1	SEAL-O-RING	
	8	1	**553-6998**	1	VALVE AS-CHECK	
		1	**7M-8485**	1	SEAL-O-RING	
	9	1	**556-8773**	1	HOSE AS	
	10	1	**565-9608**	1	HOSE AS	
	11	1	**7D-7233**	2	CLIP (LOOP)	
	12	1	**7K-1181**	2	STRAP-CABLE	
	13	1	**7X-7958**	2	CLAMP-HOSE	
	14	1	**8T-4121**	2	WASHER-HARD (11X21X2.5-MM THK)	
M	15	1	**8T-4136**	1	BOLT (M10X1.5X25-MM)	

M - METRIC PART

512-1893 **LINES GP-RETURN (**contd.**)** **i07542353**

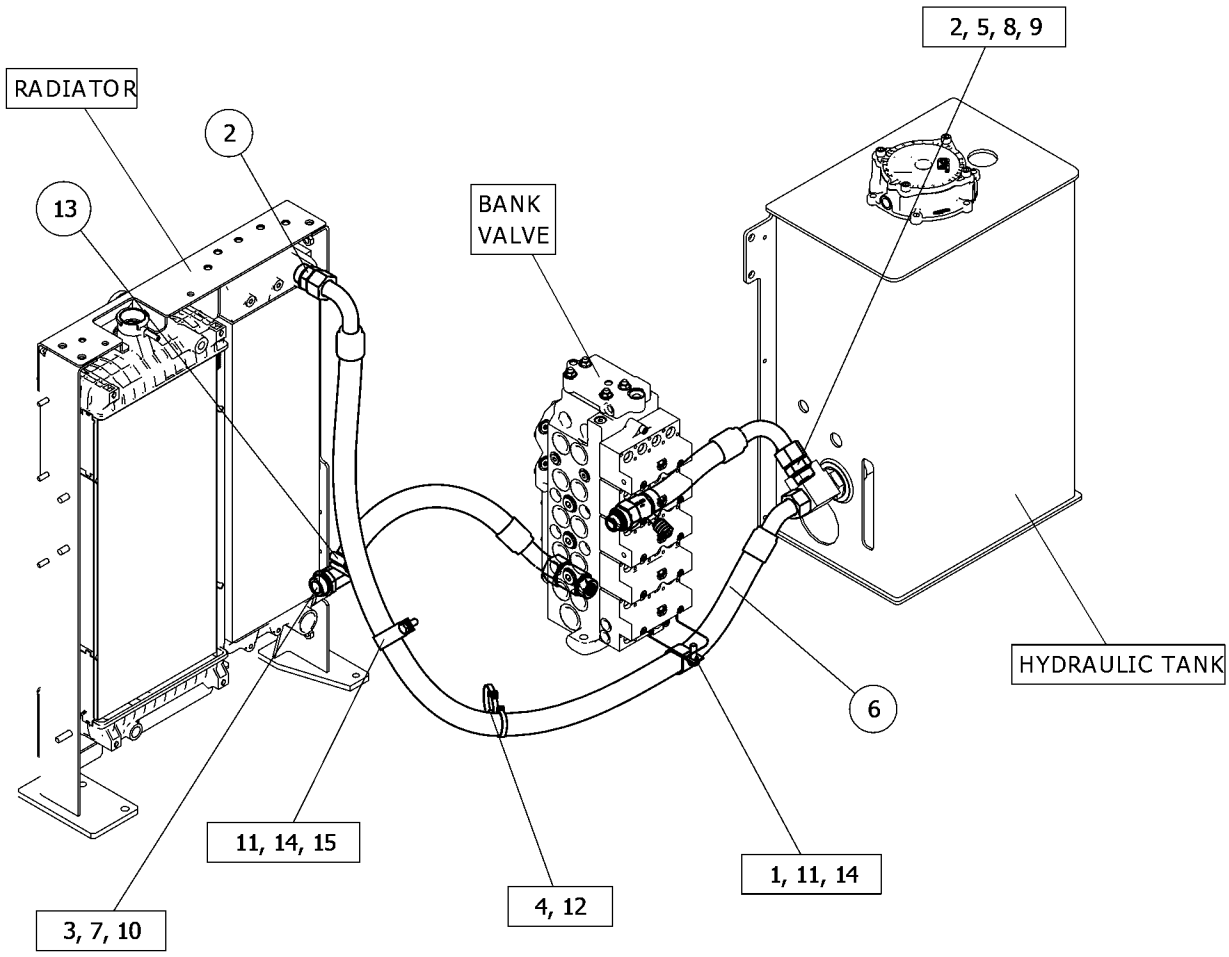

GRAPHIC #1 <END> g06336650

520-5981 LINES GP-RETURN

PART OF 514-3240, 520-0774 HYDRAULIC AR
AN ATTACHMENT

SMCS-5057 **i07546294**

NOTE	REF NO	GRAPHIC REF	PART NUMBER	QTY	PART NAME 1 2 3 4 5 6 (PRODUCT LEVEL)	SEE PAGE
	1	1	**550-5132**	1	HOSE AS	
	2	1	**565-8662**	1	TUBE AS	
	3	1	**7X-7958**	1	CLAMP-HOSE	

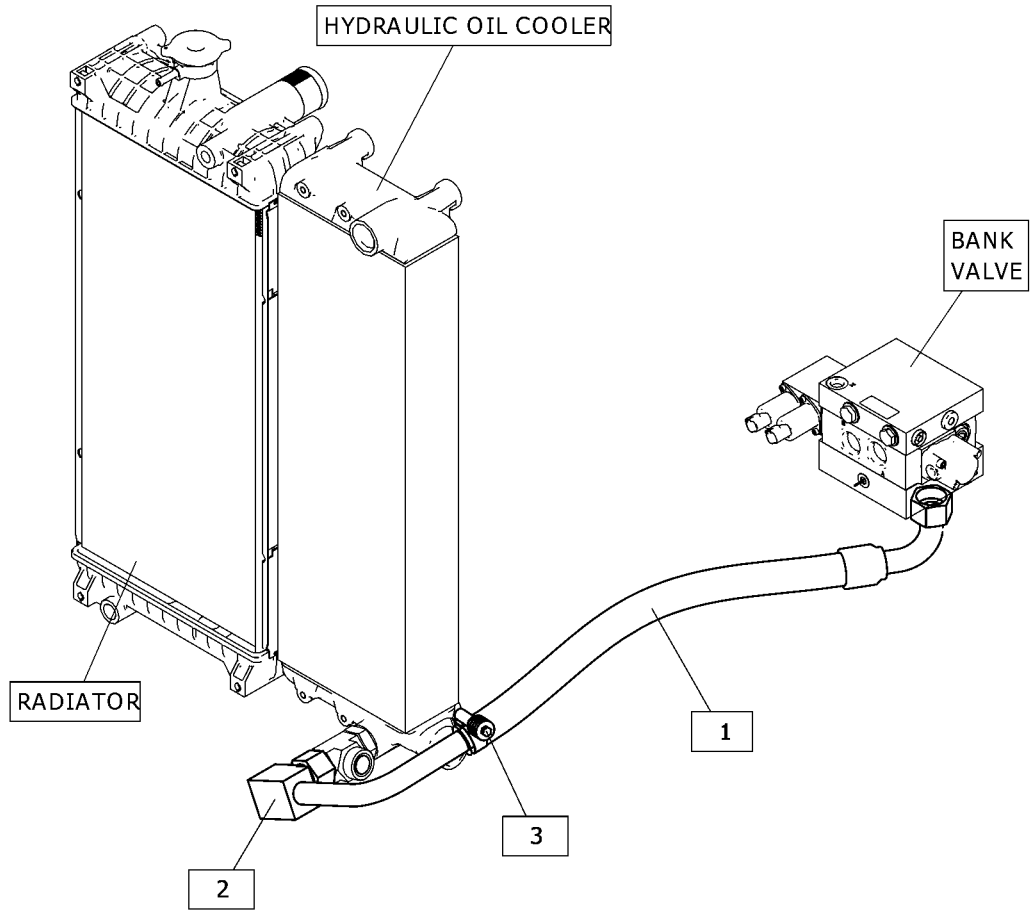

GRAPHIC #1 <END> g06339029

513-7143 LINES GP-STICK

PART OF 515-3513 STICK AR-HOE

AN ATTACHMENT

SMCS-5057, 5458, 6502 **i07546206**

NOTE	REF NO	GRAPHIC REF	PART NUMBER	QTY	PART NAME 1 2 3 4 5 6 (PRODUCT LEVEL)	SEE PAGE
I	1	1	**513-6437**	1	HOSE AS	
I	2	1	**513-6454**	1	HOSE AS	
	3	1	**6V-8398**	1	SEAL-O-RING	
	4	1	**7J-9108**	1	SEAL-O-RING	

I - REFER TO HYDRAULIC INFORMATION SYSTEM

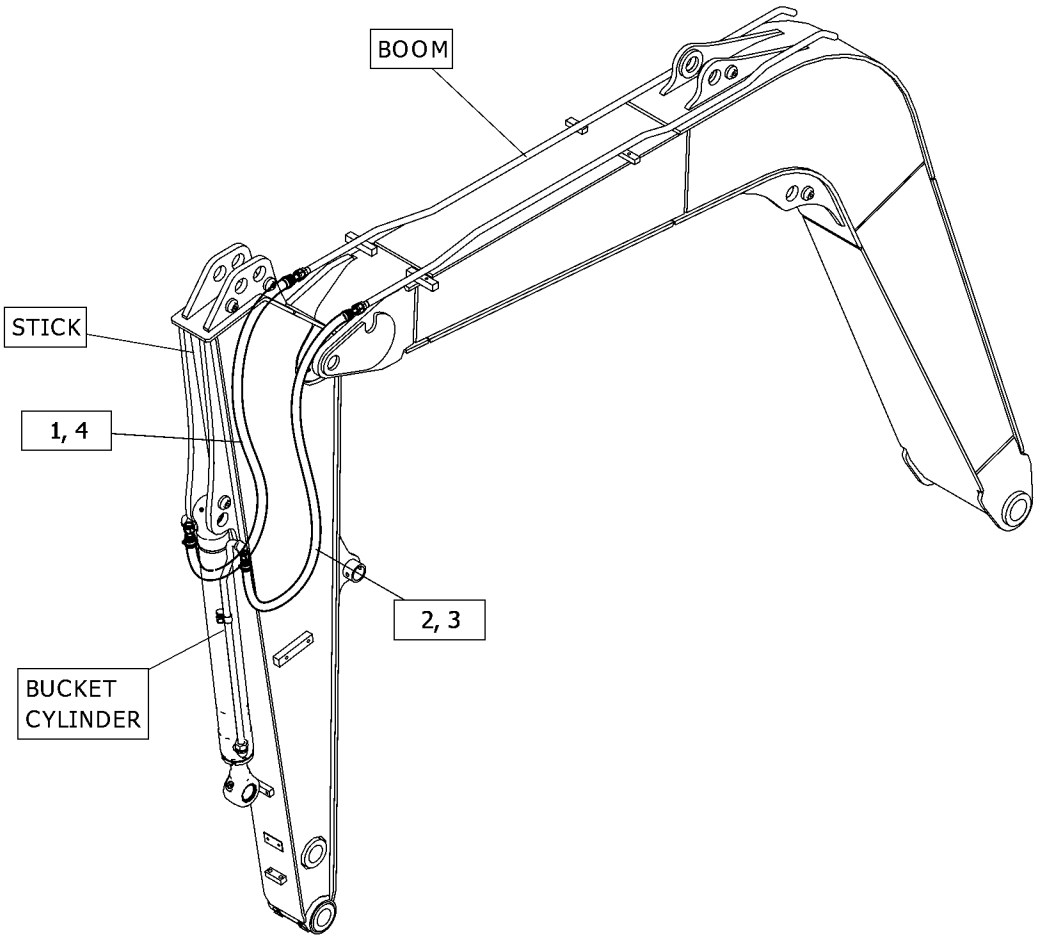

GRAPHIC #1 <END> g06337796

515-8010 LINES GP-STICK—STANDARD STICK

PART OF 515-3511 STICK AR-HOE

AN ATTACHMENT

SMCS-5057, 5458, 6502 **i07546501**

NOTE	REF NO	GRAPHIC REF	PART NUMBER	QTY	PART NAME 1 2 3 4 5 6 (PRODUCT LEVEL)	SEE PAGE
I	1	1	**513-6456**	1	HOSE AS	
I	2	1	**513-6457**	1	HOSE AS	
	3	1	**6V-8398**	1	SEAL-O-RING	
	4	1	**7J-9108**	1	SEAL-O-RING	

I - REFER TO HYDRAULIC INFORMATION SYSTEM

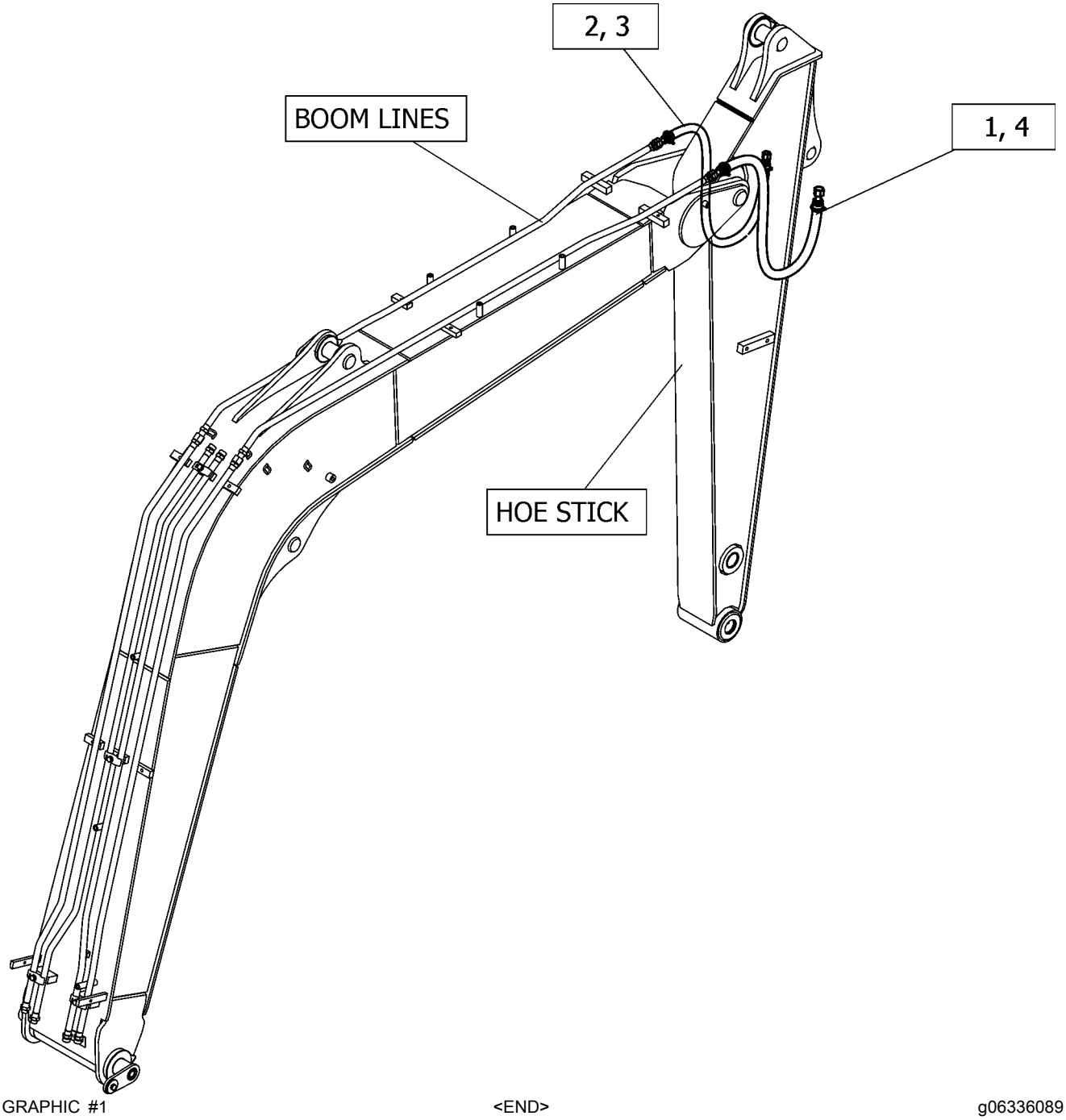

GRAPHIC #1 <END> g06336089

512-5201 LINES GP-SWING MOTOR

PART OF 512-1420 HYDRAULIC AR

SMCS-5057, 5058, 5105 **i07542357**

NOTE	REF NO	GRAPHIC REF	PART NUMBER	QTY	PART NAME 1 2 3 4 5 6 (PRODUCT LEVEL)	SEE PAGE
	1	1	**7K-1181**	1	STRAP-CABLE	
	2	1	*148-8327*	3	CONNECTOR AS	
					(EACH INCLUDES)	
		1	**3D-2824**	1	SEAL-O-RING	
		1	**6V-8637**	1	CONNECTOR	
		1	**6V-9746**	1	SEAL-O-RING	
	3	1	*148-8344*	2	CONNECTOR AS	
					(EACH INCLUDES)	
		1	**3D-2824**	1	SEAL-O-RING	
		1	**6V-9162**	1	CONNECTOR	
		1	**6V-9746**	1	SEAL-O-RING	
	4	1	*185-2271*	3	CONNECTOR AS	
					(EACH INCLUDES)	
		1	**3D-2824**	1	SEAL-O-RING	
		1	**6V-9746**	1	SEAL-O-RING	
		1	**8T-9023**	1	CONNECTOR-O-RING	
	5	1	**500-8850**	4	ADAPTER AS	
					(EACH INCLUDES)	
		1	**238-5082**	1	SEAL-O-RING	
I	6	1	**513-4406**	1	HOSE AS	
I	7	1	**513-4407**	1	HOSE AS	
I	8	1	**513-4408**	1	HOSE AS	
I	9	1	**513-4409**	1	HOSE AS	
I	10	1	**513-4410**	1	HOSE AS	
I	11	1	**513-4411**	1	HOSE AS	

I - REFER TO HYDRAULIC INFORMATION SYSTEM

512-5201 **LINES GP-SWING MOTOR (**contd.**)** **i07542357**

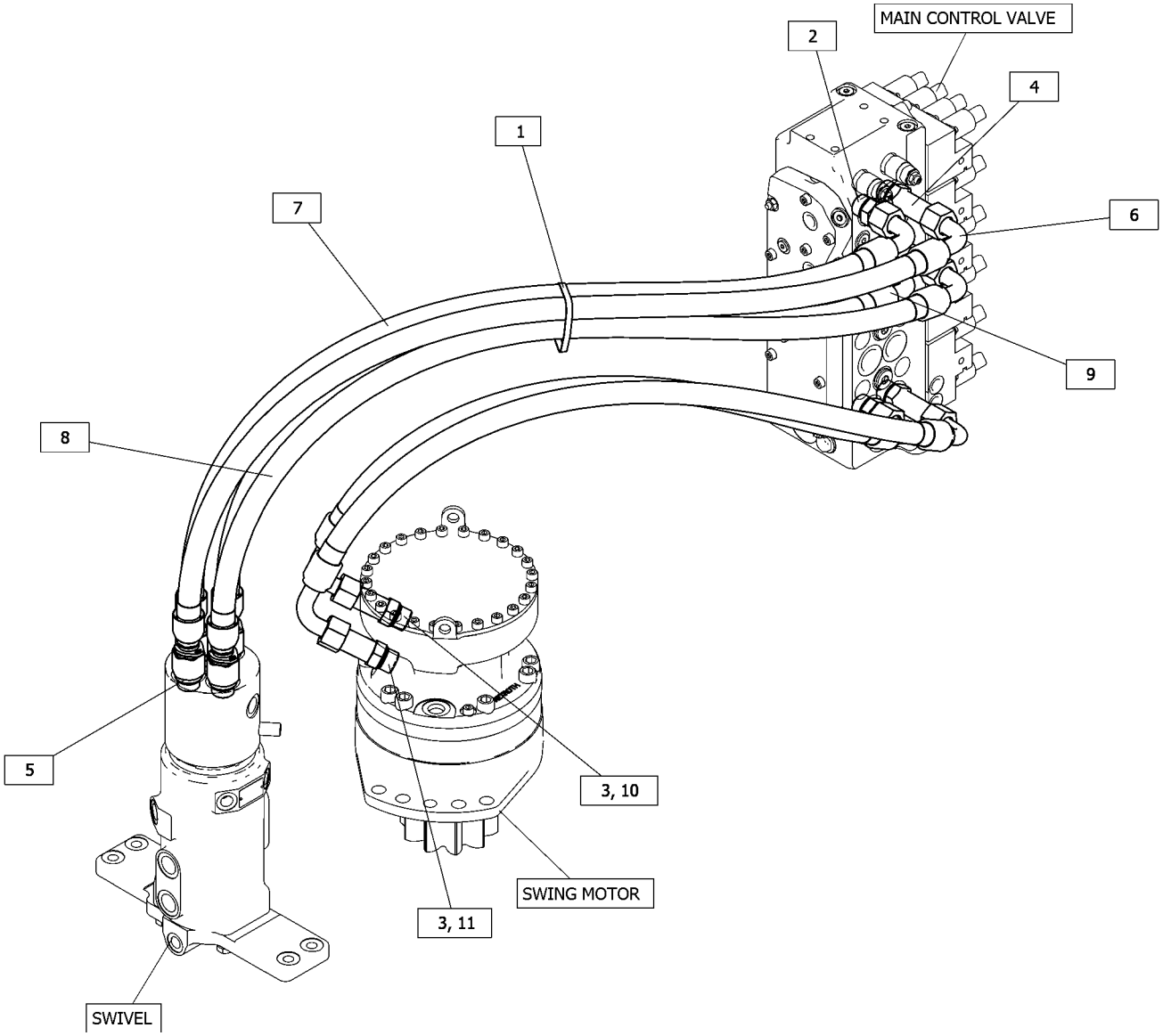

GRAPHIC #1 <END> g06328964

512-2549 LINES GP-SWIVEL

PART OF 512-2524, 512-2526 BLADE AR-STRAIGHT
AN ATTACHMENT

SMCS-5057, 5060 **i07546223**

NOTE	REF NO	GRAPHIC REF	PART NUMBER	QTY	PART NAME 1 2 3 4 5 6 (PRODUCT LEVEL)	SEE PAGE
	1	1	*148-8328*	2	CONNECTOR AS	
					(EACH INCLUDES)	
		1	**3D-2824**	1	SEAL-O-RING	
		1	**6V-8398**	1	SEAL-O-RING	
		1	**6V-8633**	1	CONNECTOR	
I	2	1	**513-7965**	1	HOSE AS	
	3	1	*529-7516*	2	ELBOW AS	
					(EACH INCLUDES)	
		1	**238-5080**	1	SEAL-O-RING	
I	4	1	**565-9380**	1	HOSE AS	

I - REFER TO HYDRAULIC INFORMATION SYSTEM

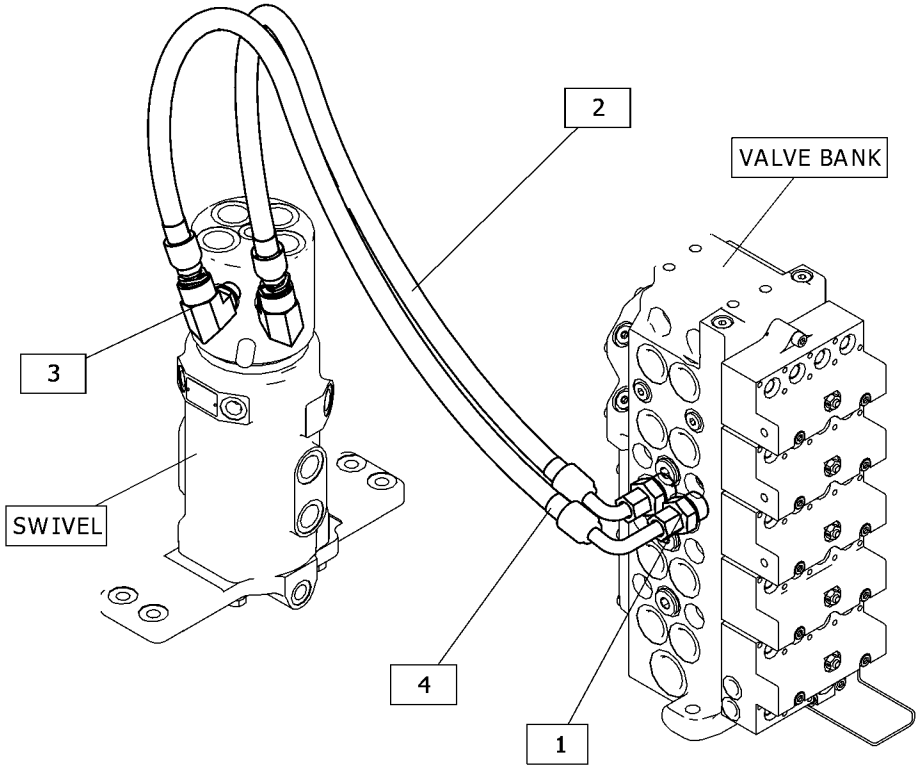

GRAPHIC #1 <END> g06334810

512-2546 LINES GP-TRAVEL MOTOR

PART OF 512-2524, 512-2526 BLADE AR-STRAIGHT
AN ATTACHMENT

SMCS-4351 **i07546222**

NOTE	REF NO	GRAPHIC REF	PART NUMBER	QTY	PART NAME 1 2 3 4 5 6 (PRODUCT LEVEL)	SEE PAGE
	1	1	**4V-5282**	2	GROMMET	
	2	1	**7K-1181**	2	STRAP-CABLE	
	3	1	**7Y-5431**	2	GROMMET	
I	4	1	**514-3295**	2	HOSE AS	
I	5	1	**514-3296**	2	HOSE AS	
I	6	1	**514-3297**	2	HOSE AS	
	7	1	*148-8336*	8	CONNECTOR AS	
					(EACH INCLUDES)	
		1	**3J-1907**	1	SEAL-O-RING	
		1	**6V-8397**	1	SEAL-O-RING	
		1	**6V-8636**	1	CONNECTOR	
	8	1	*148-8315*	8	CONNECTOR AS	
					(EACH INCLUDES)	
		1	**2M-9780**	1	SEAL-O-RING	
		1	**6V-8642**	1	CONNECTOR	
		1	**7J-9108**	1	SEAL-O-RING	
I	9	1	**514-3298**	2	HOSE AS	

I - REFER TO HYDRAULIC INFORMATION SYSTEM

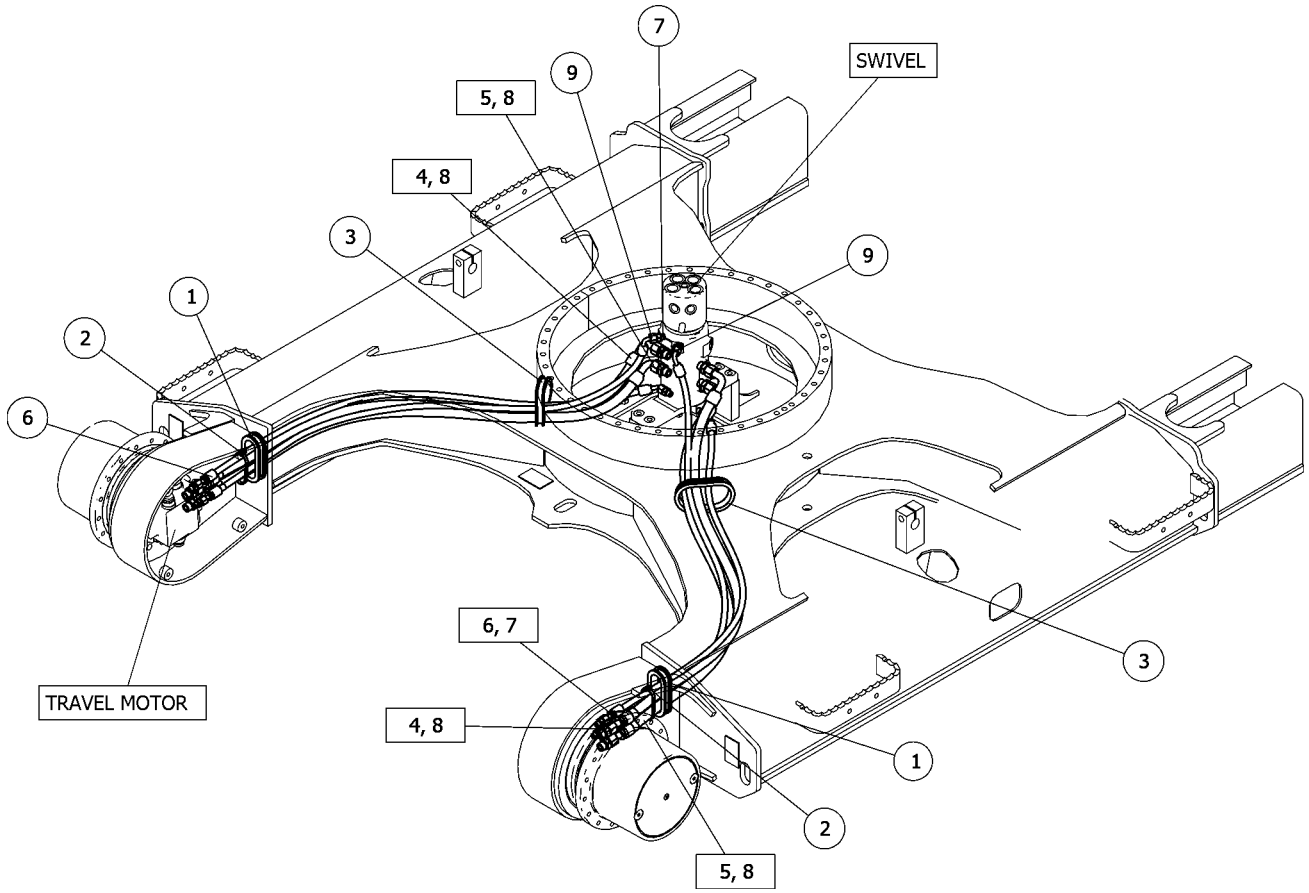

GRAPHIC #1 <END> g06335628

557-9339 MANIFOLD & SOLENOID GP-CONTROL

PART OF 515-3528, 515-3535, 518-9270 VALVE GP-MAIN CONTROL

AN ATTACHMENT

SMCS-5264, 5479 **i07546191**

NOTE	REF NO	GRAPHIC REF	PART NUMBER	QTY	PART NAME 1 2 3 4 5 6 (PRODUCT LEVEL)	SEE PAGE
	1	1	**362-3212**	3	VALVE GP-SOLENOID (12 VDC) (BOOM SWING)	
M	2	1	**109-1393**	8	BOLT-SOCKET HEAD (M4X0.7X10-MM)	
	3	1	**449-1636**	1	VALVE GP-SOLENOID (12-VDC) (BOOM SWING)	
	4	1	*565-0135*	1	VALVE AS-CHECK (VENTED PILOT)	
		1	**095-1750**	1	SEAL-O-RING	
	5	1	**453-7468**	1	SHUTTLE (VALVE)	

M - METRIC PART

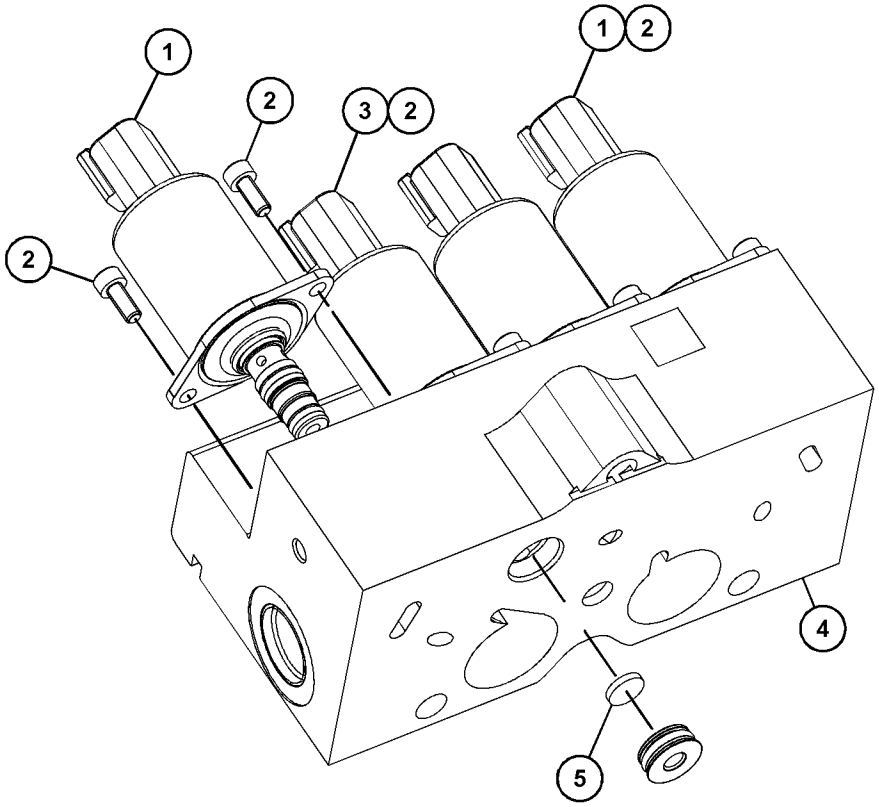

GRAPHIC #1 <END> g06346327

522-1622 MOTOR & MTG GP-SWING

PART OF 512-1420 HYDRAULIC AR

SMCS-5058 **i07542359**

NOTE	REF NO	GRAPHIC REF	PART NUMBER	QTY	PART NAME 1 2 3 4 5 6 (PRODUCT LEVEL)	SEE PAGE
Y	1	1	**487-6234**	1	MOTOR GP-SWING	240
	2	1	**085-9309**	8	SPACER (16.6X32X8.5-MM THK)	
	3	1	**525-6567**	2	DOWEL	
M	4	1	**8T-7338**	8	BOLT (M16X2X45-MM)	
M	5	1	**7X-2536**	2	BOLT (M8X1.25X14-MM)	
	6	1	**5P-4116**	2	WASHER-HARD (8.8X20.5X2-MM THK)	

M - METRIC PART
Y - SEPARATE ILLUSTRATION

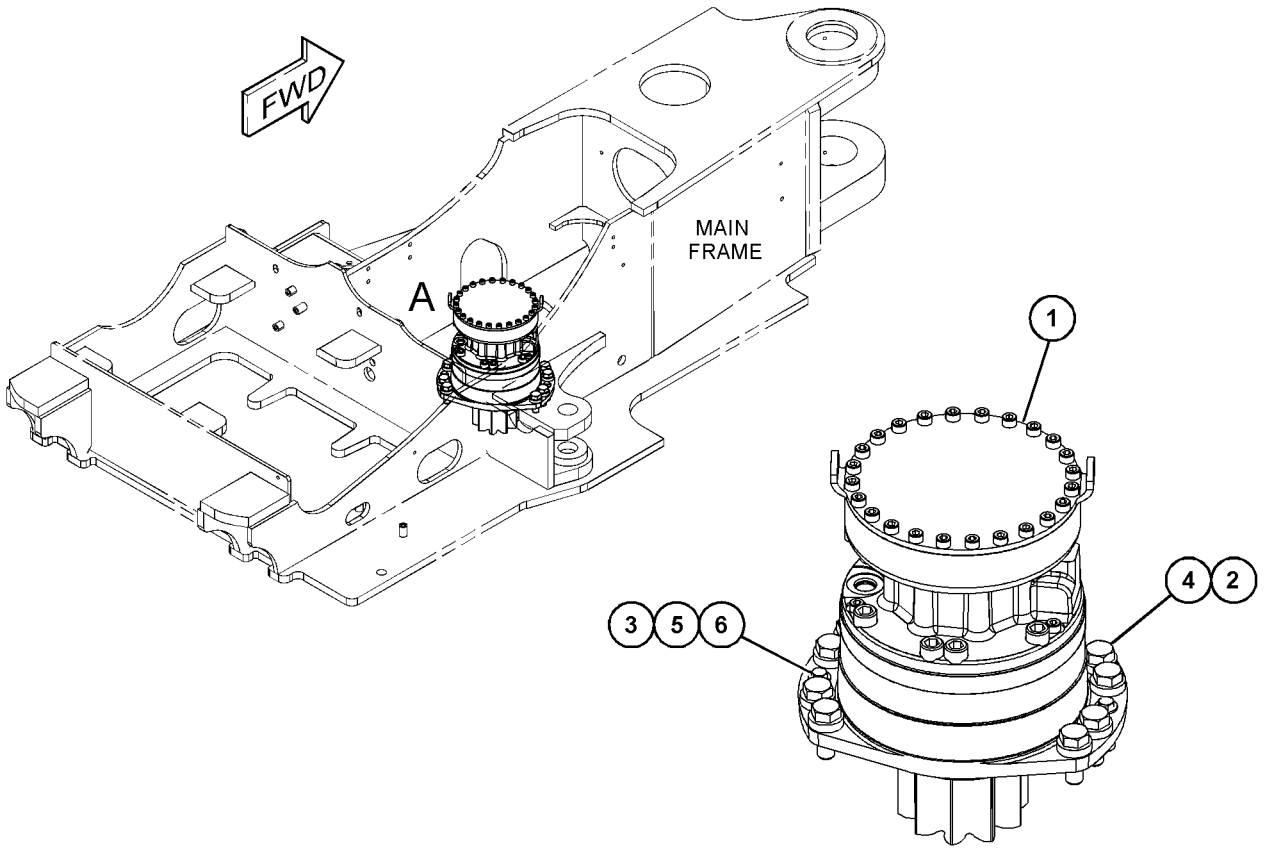

VIEW OF AREA A

GRAPHIC #1 <END> g06331393

548-7543 MOTOR GP-PISTON

PART OF 515-5825 DRIVE GP-FINAL

AN ATTACHMENT

SMCS-5058 **i07546221**

NOTE	REF NO	GRAPHIC REF	PART NUMBER	QTY	PART NAME 1 2 3 4 5 6 (PRODUCT LEVEL)	SEE PAGE
	1	1	**551-1074**	1	SWASHPLATE	
	2	1	**438-8346**	3	PLATE-DISC	
	3	1	**438-8347**	4	PLATE	
	4	1	**438-8348**	1	PISTON-BRAKE	
	5	1	**438-8349**	1	SPACER	
	6	1	**438-8350**	8	SPRING	
	7	1	**438-8351**	2	BALL	
	8	1	**452-3599**	1	PIN	
M	9	1	**8T-3957**	8	BOLT-SOCKET HEAD (M12X1.75X30-MM)	
	10	1	**435-0787**	1	KIT-CRANKSHAFT BEARING	
					(INCLUDES SHAFT & BALL BEARING)	
	11	1	**430-4677**	1	KIT-FINAL DRIVE BEARING	
		1	**095-1575**	2	SEAL-O-RING	
		1	**095-1582**	2	SEAL-O-RING	
		1	**095-1593**	2	SEAL-O-RING	
					(ALSO INCLUDES BALL BEARING, SPRING PIN, BODY, SPOOLS, CHECK VALVES, SPRING GUIDE, SPRINGS, PLUGS, CHOKES, RING, RING-BACKUP, RETAINERS, PISTONS & SPACERS)	
	12	1	**470-9608**	1	KIT-PUMP	
					AVAILABLE REPAIR KIT(S):	
HY			**435-0790**	1	KIT-SEAL	449
					(INCLUDES PARTS MARKED H IN THE GRAPHICS)	
J			**435-0788**	1	KIT-FINAL DRIVE BEARING	
					(INCLUDES PARTS MARKED J IN THE GRAPHICS)	

H - KIT MARKED H SERVICES PART(S) MARKED H
J - KIT MARKED J SERVICES PART(S) MARKED J
M - METRIC PART
Y - SEPARATE ILLUSTRATION

548-7543 **MOTOR GP-PISTON (**contd.**)** **i07546221**

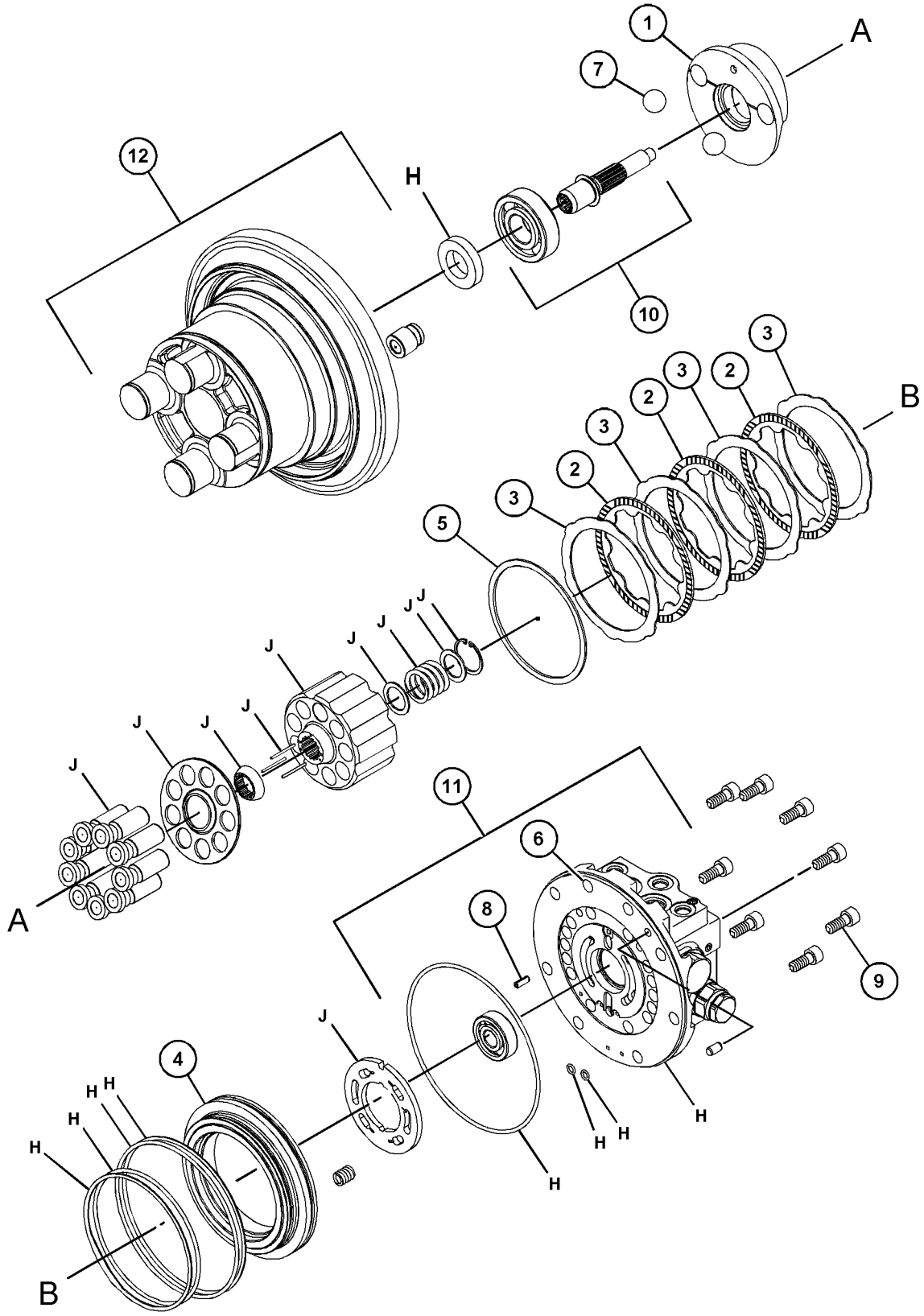

GRAPHIC #1 <END> g06338510

487-6234 MOTOR GP-SWING

PART OF 522-1622 MOTOR & MTG GP-SWING

SMCS-5058 **i07542360**

NOTE	REF NO	GRAPHIC REF	PART NUMBER	QTY	PART NAME 1 2 3 4 5 6 (PRODUCT LEVEL)	SEE PAGE
	1	1	**559-4148**	1	SHAFT	
	2	1	**559-4153**	1	KIT-BEARING	
					(INCLUDES PARTS MARKED "J" IN GRAPHIC)	
	3	1	**559-4898**	1	KIT-SEAL	
					(INCLUDES O-RINGS)	
M	4	1	**289-6348**	10	BOLT (M14X2X85-MM)	
	5	1	**559-4158**	1	KIT-DISTRIBUTOR	
					(INCLUDES PARTS MARKED "P" IN GRAPHIC)	
M	6	1	**101-7398**	6	BOLT-SOCKET HEAD (M10X1.5X40-MM)	
	7	1	**559-4159**	1	KIT-BRAKE	
					(INCLUDES PARTS MARKED "L" IN GRAPHIC)	
	8	1	**7X-2906**	2	PIN	
M	9	1	**8T-1158**	24	BOLT-SOCKET HEAD (M8X1.25X20-MM)	
M	10	1	**3E-8025**	2	BOLT-SOCKET HEAD (M8X1.25X50-MM)	
	11	1	**559-4156**	1	RING	
	12	1	**559-4191**	1	KIT-SEAL	
					(INCLUDES PARTS MARKED "N" IN GRAPHIC)	
	13	1	**559-4154**	1	KIT-ROTATING	

M - METRIC PART

487-6234 **MOTOR GP-SWING (**contd.**)** **i07542360**

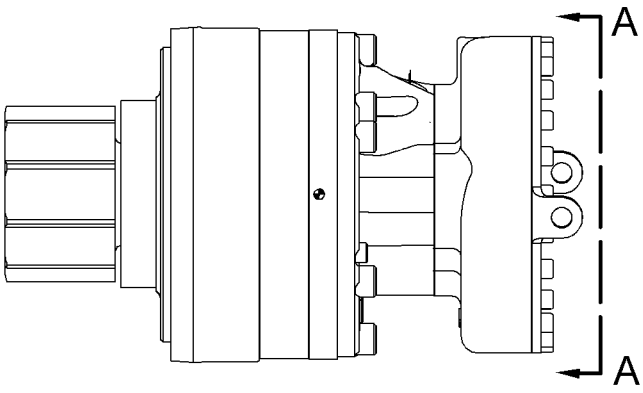

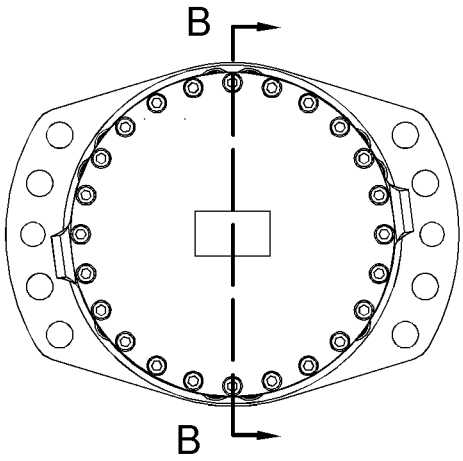

VIEW A-A

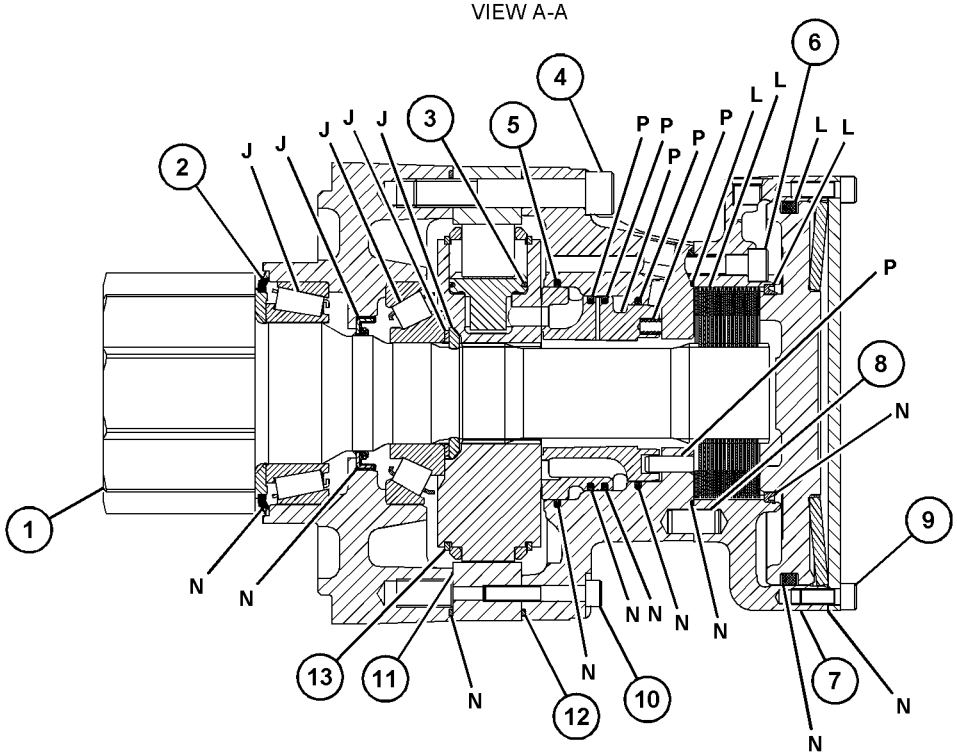

SECTION B-B

GRAPHIC #1 <END> g06347154

305-6731 MOUNTING GP-CYLINDER

PART OF 305-6744, 305-6745 THUMB AR

AN ATTACHMENT

SMCS-5102, 5362, 5498, 6068, 7562 **i05430589**

NOTE	REF NO	GRAPHIC REF	PART NUMBER	QTY	PART NAME 1 2 3 4 5 6 (PRODUCT LEVEL)	SEE PAGE
	1	1	**9R-1510**	3	WASHER (51X82X4-MM THK)	
	2	1	**305-6721**	1	LINK AS (RH)	
	3	1	**305-6722**	1	LINK AS (LH)	
	4	1	**305-6723**	1	LINK AS	
	4A	1	**7K-9592**	4	BUSHING	
	5	1	**305-6724**	1	PIN AS	
	6	1	**305-6725**	1	PIN	
	7	1	**305-6726**	1	PIN	
	8	1	**305-6730**	1	PIN	
	9	1	**305-6733**	1	LINK AS	
	10	1	**305-6779**	2	RETAINER	
	11	1	**425-6641**	1	PIN	
	12	1	**305-6795**	1	PIN	
	13	1	**305-6803**	1	LINK AS	
	14	1	**3B-8489**	9	FITTING-GREASE (1/8-27 PTF) (HYDRAULIC)	
M	15	1	**6V-7687**	8	LOCKNUT (M12X1.75-THD)	
M	16	1	**7X-2549**	2	BOLT (M12X1.75X100-MM)	
M	17	1	**8T-5041**	1	BOLT (M12X1.75X120-MM)	
M	18	1	**8T-6868**	5	BOLT (M12X1.75X80-MM)	

M - METRIC PART

305-6731 **MOUNTING GP-CYLINDER (**contd.**)** **i05430589**

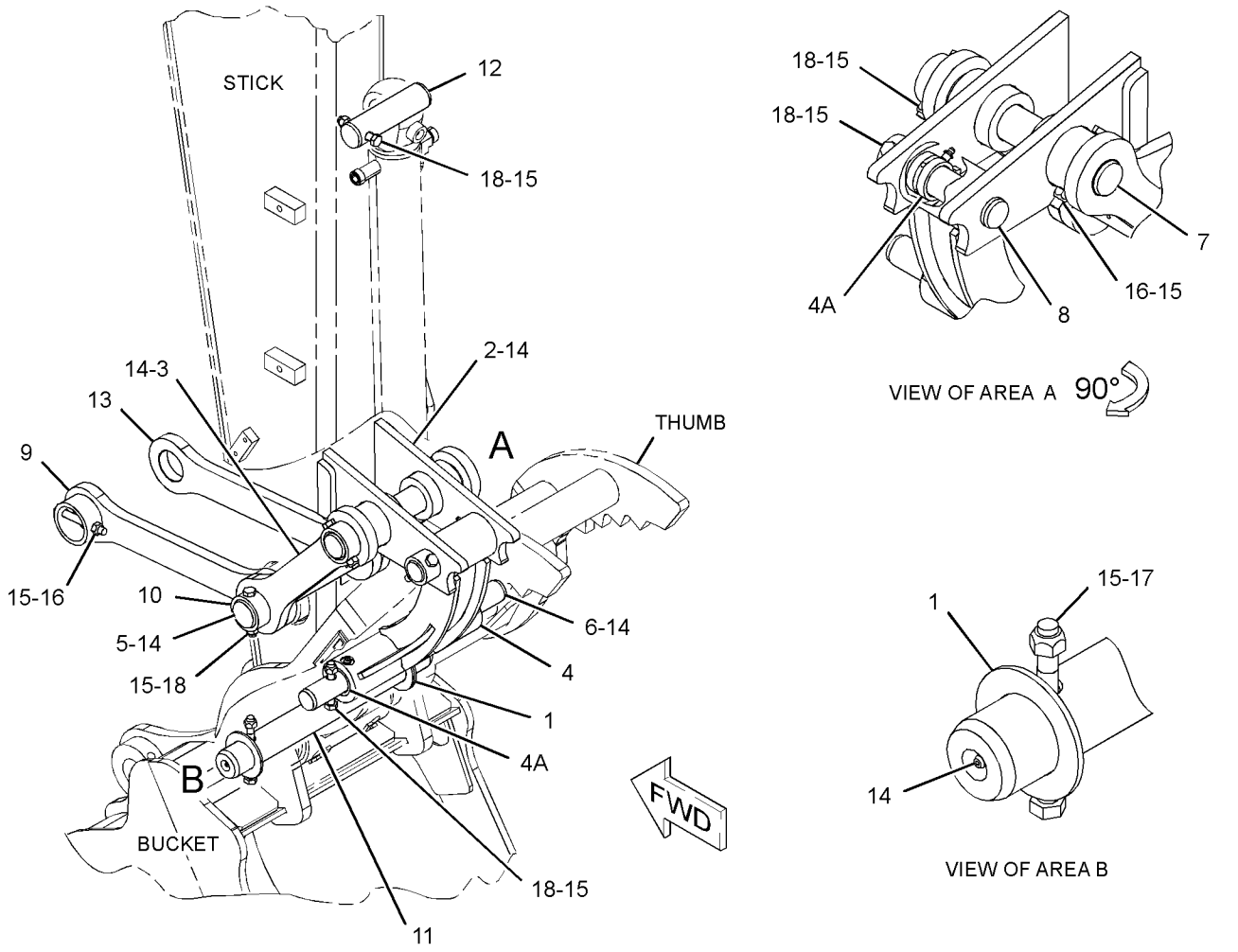

GRAPHIC #1 <END> g03437901

305-6778 MOUNTING GP-CYLINDER

PART OF 305-6740, 305-6741, 504-6174, 504-6175 THUMB AR
AN ATTACHMENT

SMCS-5102, 5362, 5498, 6068, 7562 **i07264976**

NOTE	REF NO	GRAPHIC REF	PART NUMBER	QTY	PART NAME 1 2 3 4 5 6 (PRODUCT LEVEL)	SEE PAGE
B	1	1	**9R-1510**	3	WASHER (51X82X4-MM THK)	
	2	1	**425-6641**	1	PIN	
	3	1	**305-6795**	1	PIN	
	4	1	**305-6796**	1	PIN	
	5	1	**3B-8489**	2	FITTING-GREASE (1/8-27 PTF)	
M	6	1	**6V-7687**	3	LOCKNUT (M12X1.75-THD)	
M	7	1	**8T-5041**	1	BOLT (M12X1.75X120-MM)	
M	8	1	**8T-6868**	1	BOLT (M12X1.75X80-MM)	
M	9	1	**8T-4176**	1	BOLT (M12X1.75X90-MM)	
B	10	1	**176-8467**	3	SHIM (1-MM THK)	

B - USE AS REQUIRED
M - METRIC PART

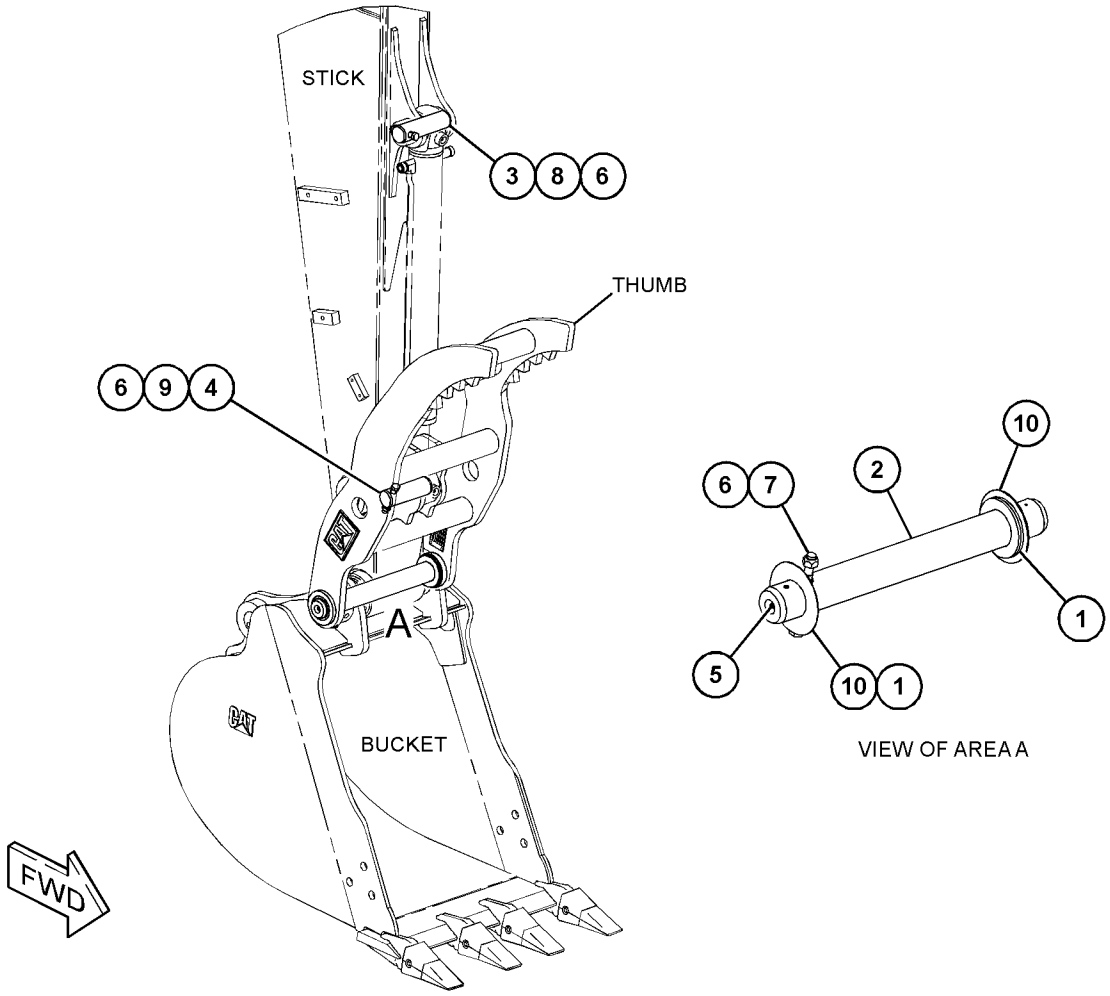

GRAPHIC #1 <END> g06293785

515-0451 PUMP & MTG GP-MAIN HYDRAULIC

PART OF 514-3230, 514-3235, 517-8129 HYDRAULIC AR
AN ATTACHMENT

SMCS-5070 **i07546193**

NOTE	REF NO	GRAPHIC REF	PART NUMBER	QTY	PART NAME 1 2 3 4 5 6 (PRODUCT LEVEL)	SEE PAGE
M	1	1	**8T-4184**	4	BOLT (M12X1.75X45-MM)	
	2	1	**8T-7971**	4	WASHER-HARD (13.5X25.5X5-MM THK)	
	3	1	**2M-9780**	1	SEAL-O-RING	
	4	1	**313-4553**	1	PLUG	
Y	5	1	**564-7829**	1	PUMP GP-MAIN HYDRAULIC	249

M - METRIC PART
Y - SEPARATE ILLUSTRATION

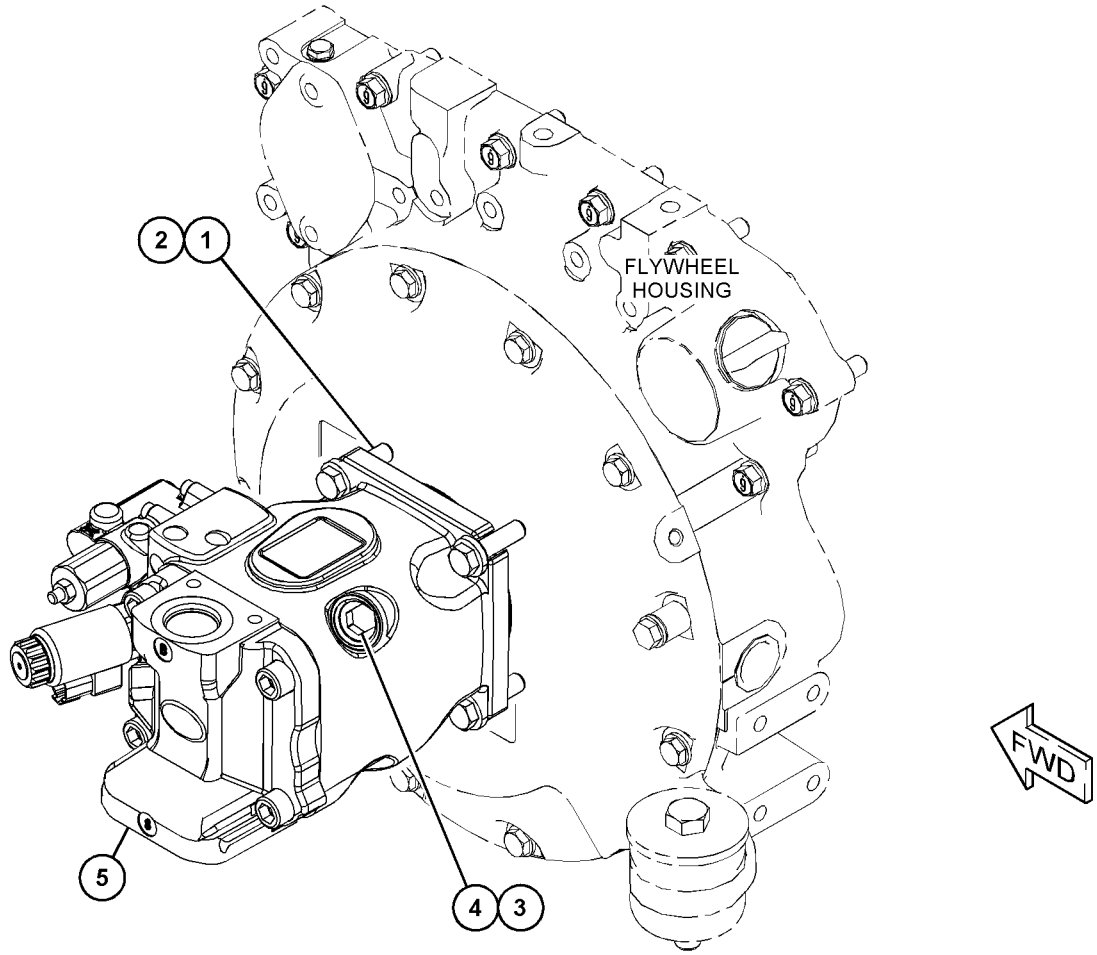

GRAPHIC #1 <END> g06341398

515-0452 PUMP & MTG GP-MAIN HYDRAULIC

PART OF 514-3240, 520-0774 HYDRAULIC AR
AN ATTACHMENT

SMCS-5070 **i07546285**

NOTE	REF NO	GRAPHIC REF	PART NUMBER	QTY	PART NAME 1 2 3 4 5 6 (PRODUCT LEVEL)	SEE PAGE
M	1	1	**8T-4184**	4	BOLT (M12X1.75X45-MM)	
	2	1	**3K-0715**	1	SEAL-O-RING	
Y	3	1	**487-6229**	1	PUMP GP-MAIN HYDRAULIC (LH)	247
Y	4	1	*564-7830*	1	PUMP GP-MAIN HYDRAULIC (RH)	251
	5	1	**8T-4223**	2	WASHER-HARD (13.5X25.5X3-MM THK)	
M	6	1	**8T-4956**	2	BOLT (M12X1.75X35-MM)	
	7	1	**8T-7971**	4	WASHER-HARD (13.5X25.5X5-MM THK)	

M - METRIC PART
Y - SEPARATE ILLUSTRATION

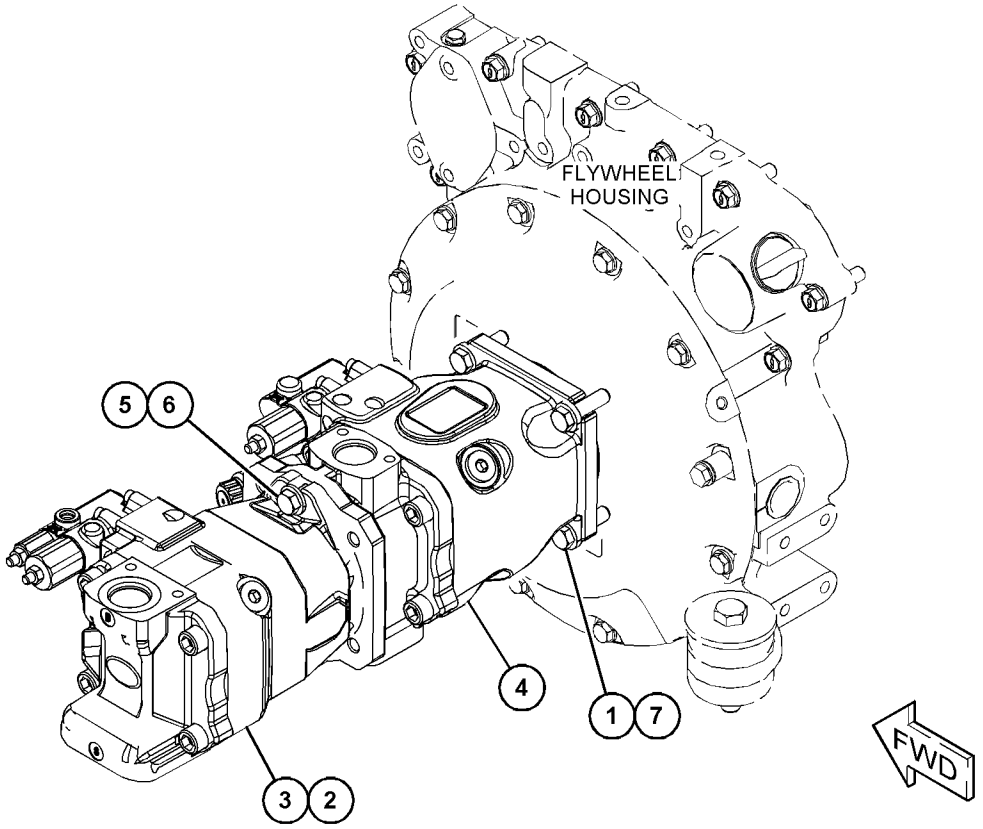

GRAPHIC #1 <END> g06345599

487-6229 PUMP GP-MAIN HYDRAULIC—LH

PART OF 515-0452 PUMP & MTG GP-MAIN HYDRAULIC
AN ATTACHMENT

SMCS-5070, 5073 **i07546288**

NOTE	REF NO	GRAPHIC REF	PART NUMBER	QTY	PART NAME 1 2 3 4 5 6 (PRODUCT LEVEL)	SEE PAGE
M	1	1	**6R-7943**	2	SCREW (M5X0.8X15-MM)	
	2	1	**180-6213**	1	RING-RETAINING	
	3	1	**139-2840**	1	SEAL-SHAFT	
	4	1	**168-2197**	1	SPRING	
	5	1	**274-7452**	1	LINK-CONTROL	
	6	1	**174-9994**	1	PISTON-CONTROL	
	7	1	**310-7267**	1	PLUG-CONTROL	
	8	1	**8T-7525**	1	SEAL-O-RING	
	9	1	**192-7470**	1	SEAL-O-RING	
	10	1	**083-4419**	1	PIN	
M	11	1	**8T-2503**	4	BOLT-SOCKET HEAD (M14X2X35-MM)	
	12	1	**9W-2109**	1	CONE-BEARING	
	13	1	**9W-2110**	1	CUP-TAPERED ROLLER	
	14	1	**279-2491**	1	PLATE-PORT	
	15	1	**168-2203**	1	SHIM-SHAFT (3-MM THK)	
Y	16	1	*168-2204*	1	ROTATING GP-PUMP	253
	17	1	**282-0918**	1	BEARING-CRADLE	
	18	1	**282-0919**	1	BEARING-CRADLE	
	19	1	**279-2488**	1	SWASHPLATE	
	20	1	**3P-1210**	1	CONE-BEARING	
	21	1	**3K-0649**	1	CUP-BEARING	
	22	1	**190-6507**	1	RING-STOP	
	23	1	**455-7988**	1	SHAFT-PUMP	
Y	24	1	**347-0612**	1	VALVE GP-PUMP CONTROL (FLOW COMPENSATOR)	282
	25	1	**168-3504**	1	SEAL	

M - METRIC PART
Y - SEPARATE ILLUSTRATION

487-6229 **PUMP GP-MAIN HYDRAULIC (**contd.**)** **i07546288**

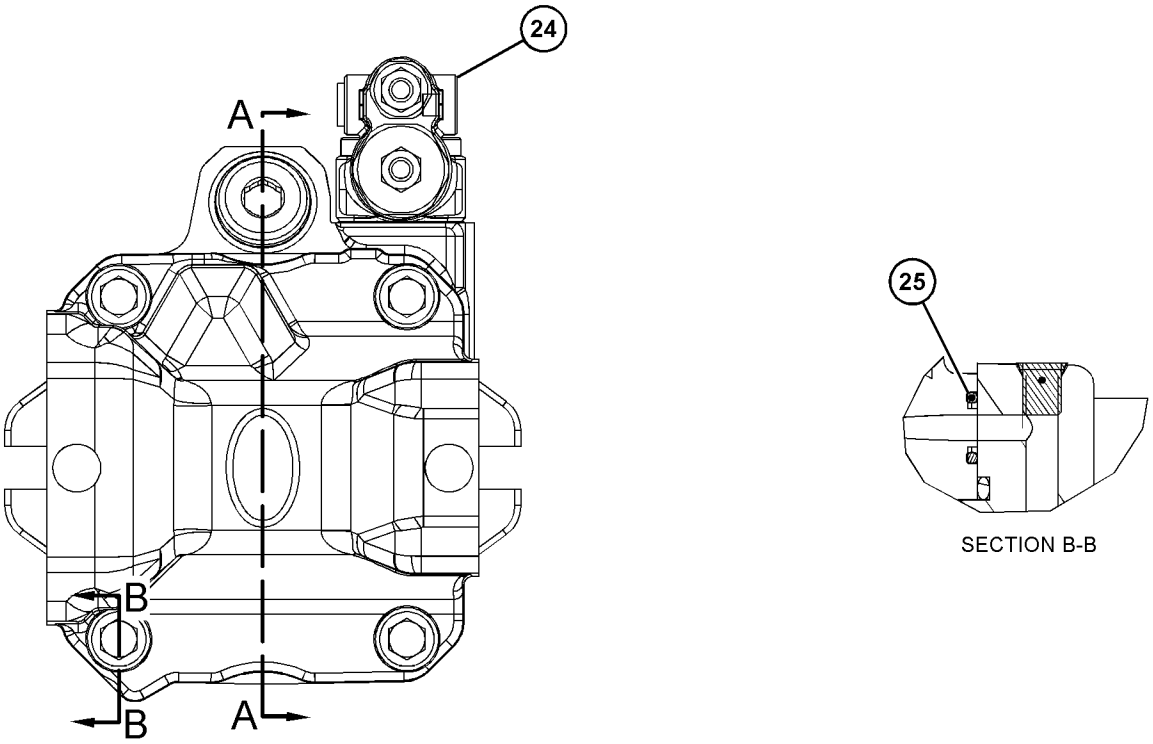

SECTION B-B

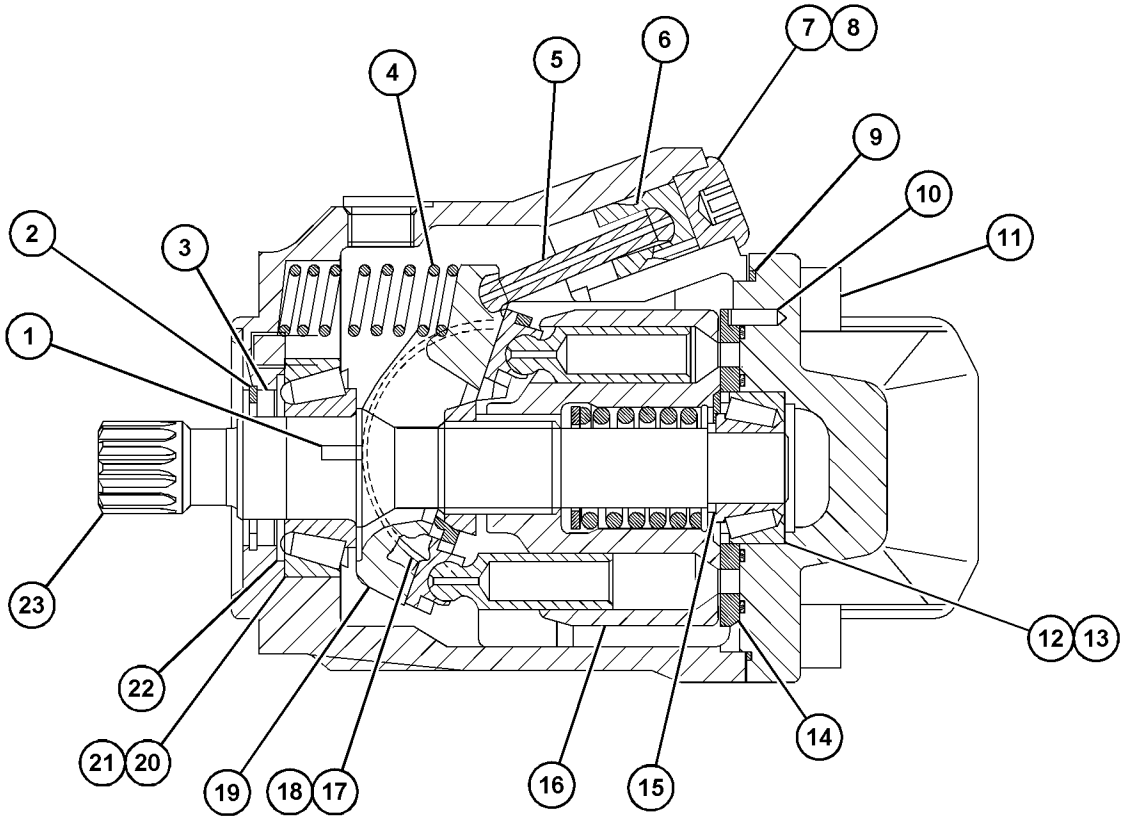

SECTION A-A

GRAPHIC #1 <END> g06345262

564-7829 PUMP GP-MAIN HYDRAULIC

PART OF 515-0451 PUMP & MTG GP-MAIN HYDRAULIC
AN ATTACHMENT

SMCS-5070, 5073 **i07546195**

NOTE	REF NO	GRAPHIC REF	PART NUMBER	QTY	PART NAME 1 2 3 4 5 6 (PRODUCT LEVEL)	SEE PAGE
Y	1	1	**421-1062**	1	VALVE GP-PUMP CONTROL (STEERING)	283
	2	1	**168-3504**	2	SEAL	
	3	1	**180-6213**	1	RING-RETAINING	
	4	1	**564-7833**	1	SEAL-LIP TYPE	
	5	1	**386-6610**	1	SPRING	
	6	1	**379-5187**	1	SPRING	
	7	1	**333-7840**	1	STOP	
M	8	1	**8T-2503**	4	BOLT-SOCKET HEAD (M14X2X35-MM)	
	9	1	**083-4419**	1	PIN	
	10	1	**9W-2109**	1	CONE-BEARING	
	11	1	**9W-2110**	1	CUP-TAPERED ROLLER	
	12	1	**192-7470**	1	SEAL-O-RING	
	13	1	**168-2203**	1	SHIM-SHAFT (3-MM THK)	
	14	1	**536-5062**	1	CONTROL AS	
		1	**468-7159**	1	PISTON-CONTROL	
		1	**469-3303**	1	SPRING	
		1	**536-5063**	1	COLLAR-SPRING	
Y	15	1	**469-2340**	1	ROTATING GP-PUMP (PISTON)	254
	16	1	**3P-1210**	1	CONE-BEARING	
	17	1	**3K-0649**	1	CUP-BEARING	
	18	1	**197-2850**	1	SHAFT	
	19	1	**190-6507**	1	RING-STOP	
	20	1	**536-5056**	1	BEARING-CRADLE	
	21	1	**536-5057**	1	BEARING-CRADLE	
	22	1	**487-6232**	1	SWASHPLATE	
	23	1	**487-6235**	1	VALVE GP-SERVO	
		1	**228-7106**	1	SEAL-O-RING	

M - METRIC PART
Y - SEPARATE ILLUSTRATION

564-7829 **PUMP GP-MAIN HYDRAULIC (**contd.**)** **i07546195**

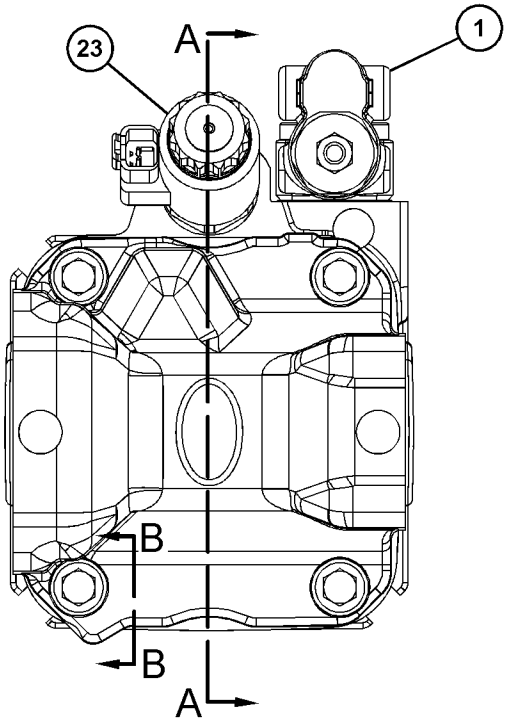

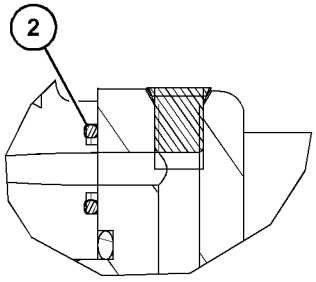

SECTION B-B

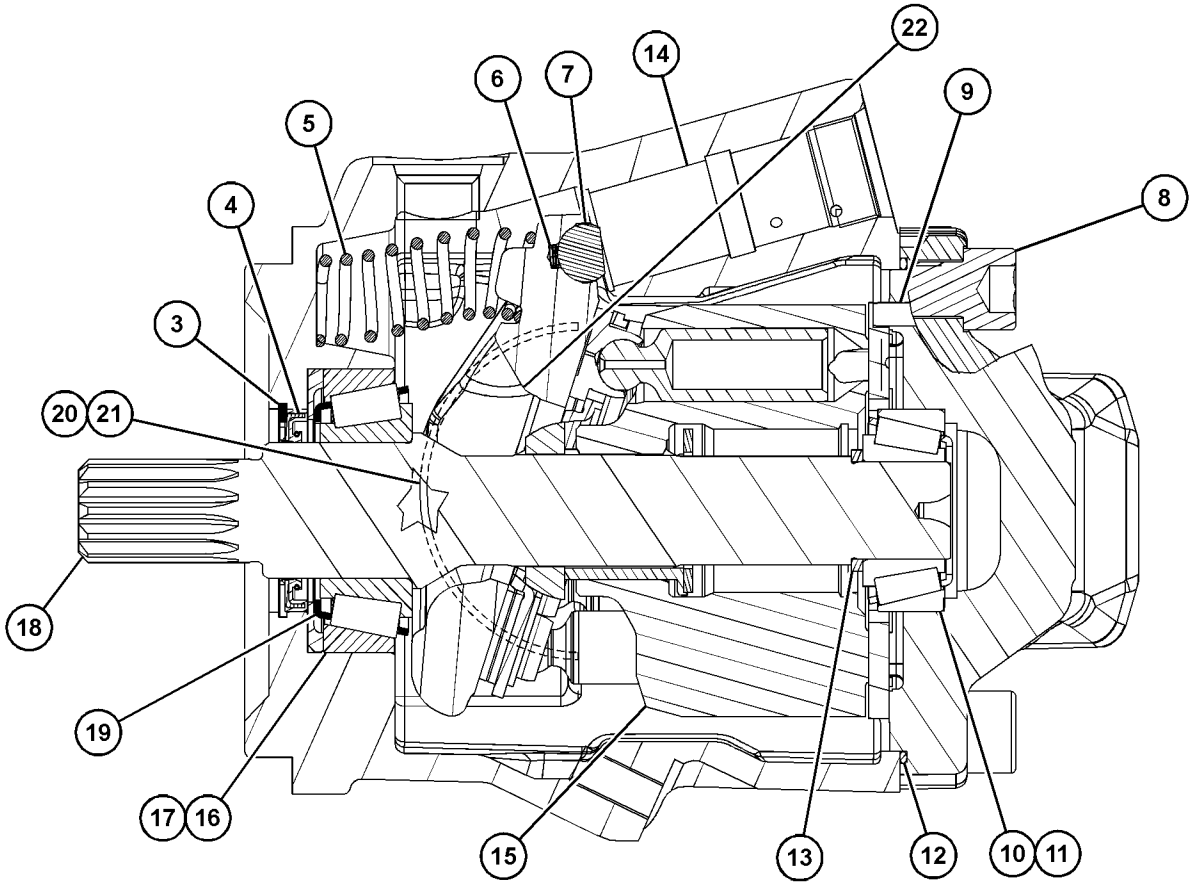

SECTION A-A

GRAPHIC #1 <END> g06347145

564-7830 PUMP GP-MAIN HYDRAULIC—RH

PART OF 515-0452 PUMP & MTG GP-MAIN HYDRAULIC
AN ATTACHMENT

SMCS-5070, 5073

i07546286

NOTE	REF NO	GRAPHIC REF	PART NUMBER	QTY	PART NAME 1 2 3 4 5 6 (PRODUCT LEVEL)	SEE PAGE
Y	1	1	**421-1062**	1	VALVE GP-PUMP CONTROL (FLOW COMPENSATOR)	283
	2	1	**168-3504**	2	SEAL	
	3	1	**180-6213**	1	RING-RETAINING	
	4	1	**564-7833**	1	SEAL-LIP TYPE	
	5	1	**386-6610**	1	SPRING	
	6	1	**379-5187**	1	SPRING	
	7	1	**333-7840**	1	STOP	
M	8	1	**8T-2503**	4	BOLT-SOCKET HEAD (M14X2X35-MM)	
	9	1	**083-4419**	1	PIN	
	10	1	**9W-2109**	1	CONE-BEARING	
	11	1	**9W-2110**	1	CUP-TAPERED ROLLER	
	12	1	**192-7470**	1	SEAL-O-RING	
	13	1	**168-2203**	1	SHIM-SHAFT (3-MM THK)	
	14	1	*536-5062*	1	CONTROL AS	
		1	**468-7159**	1	PISTON-CONTROL	
		1	**469-3303**	1	SPRING	
		1	**536-5063**	1	COLLAR-SPRING	
Y	15	1	**469-2340**	1	ROTATING GP-PUMP	254
	16	1	**3P-1210**	1	CONE-BEARING	
	17	1	**3K-0649**	1	CUP-BEARING	
	18	1	**235-2404**	1	SHAFT	
	19	1	**190-6507**	1	RING-STOP	
	20	1	**536-5056**	1	BEARING-CRADLE	
	21	1	**536-5057**	1	BEARING-CRADLE	
	22	1	**487-6232**	1	SWASHPLATE	
	23	1	*487-6235*	1	VALVE GP-SERVO	
		1	**228-7106**	1	SEAL-O-RING	
	24	1	**286-7151**	1	COUPLER	

M - METRIC PART
Y - SEPARATE ILLUSTRATION

564-7830 **PUMP GP-MAIN HYDRAULIC (**contd.**)** **i07546286**

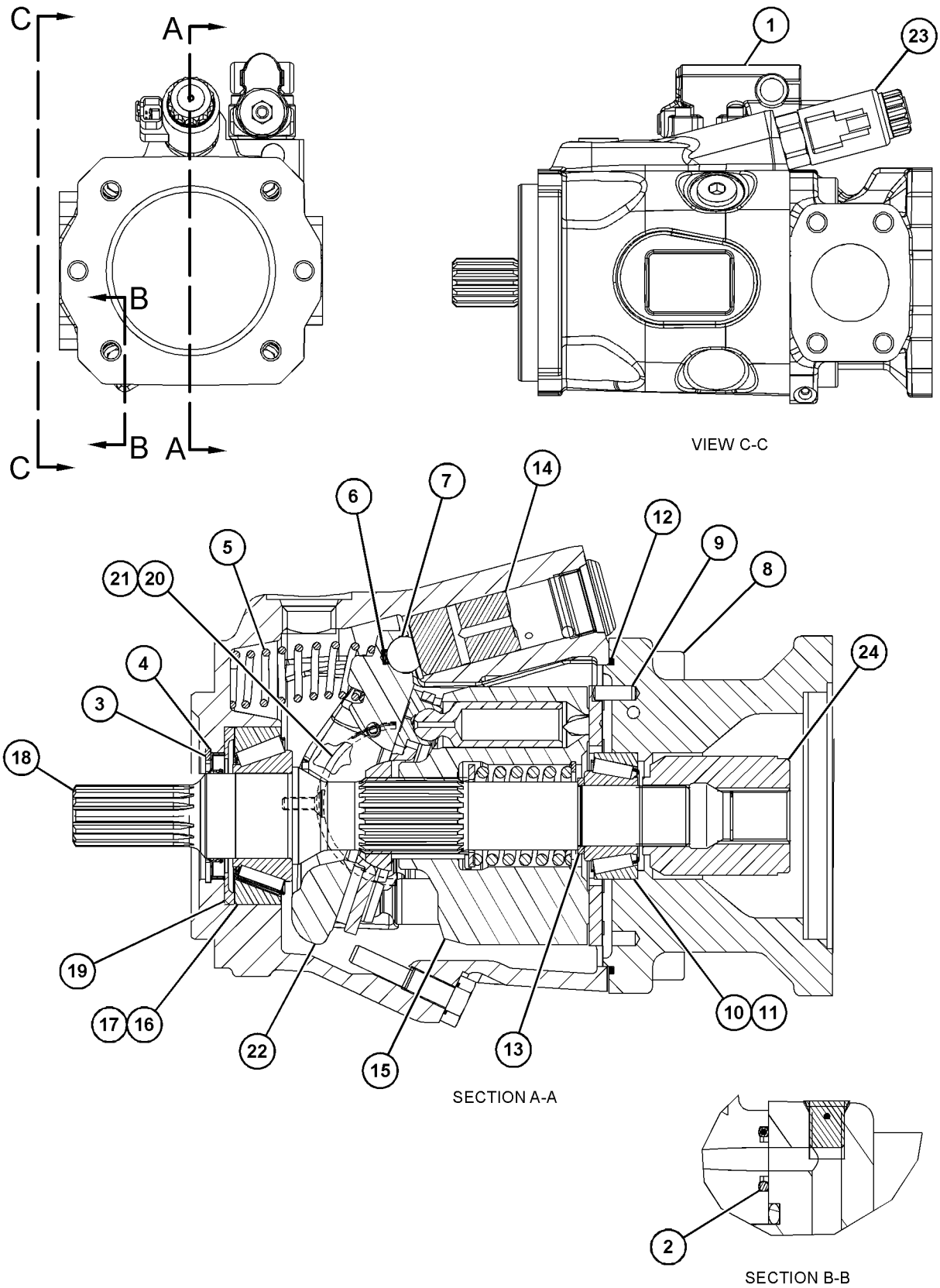

GRAPHIC #1 <END> g06346138

168-2204 ROTATING GP-PUMP

PART OF 487-6229 PUMP GP-MAIN HYDRAULIC
AN ATTACHMENT

SMCS-5070 **i04822911**

NOTE	REF NO	GRAPHIC REF	PART NUMBER	QTY	PART NAME 1 2 3 4 5 6 (PRODUCT LEVEL)	SEE PAGE
	1	1	**168-3378**	1	BEARING-SPHERICAL	
	2	1	**168-3379**	3	PIN	
	3	1	**6V-7723**	1	RING-RETAINING	
	4	1	**168-3380**	1	BARREL-CYLINDER	
	5	1	**168-3381**	1	SPRING	
	6	1	**168-3382**	1	WASHER (30X42X2.7-MM THK)	
	7	1	**168-3384**	9	PISTON AS-PUMP	
	8	1	**168-3385**	1	PLATE-RETRACTION	

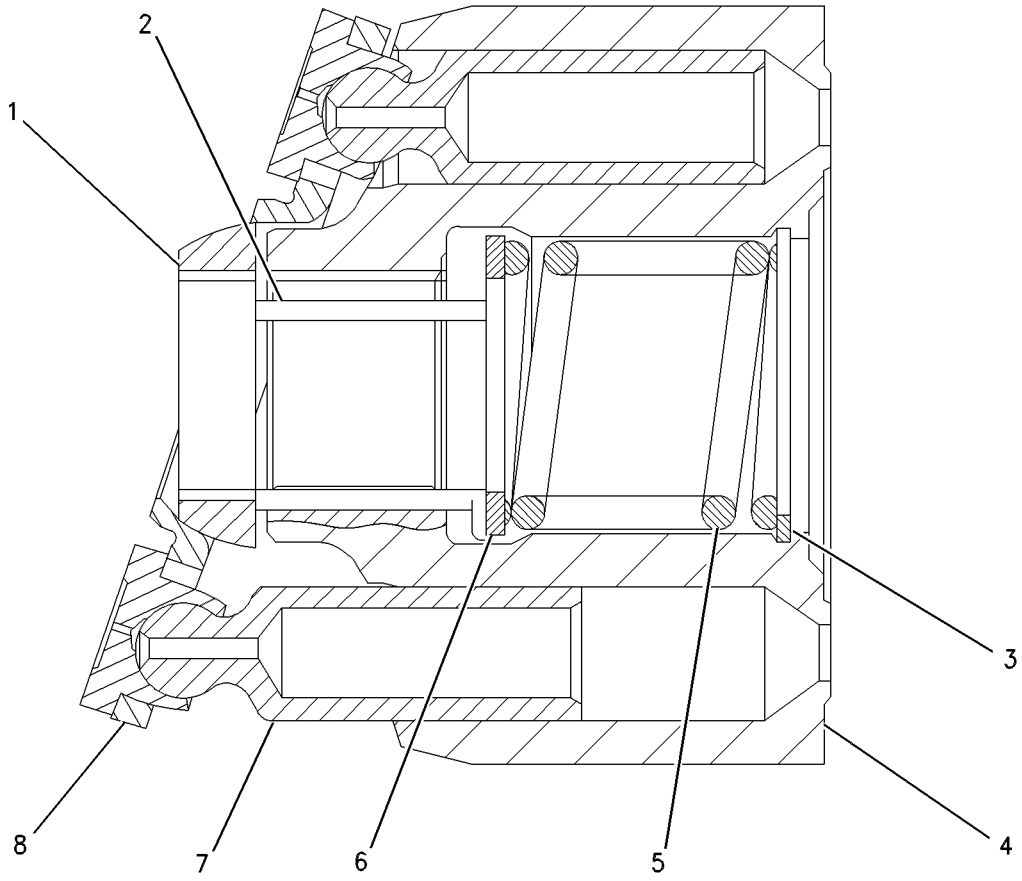

GRAPHIC #1 <END> g00538144

469-2340 ROTATING GP-PUMP

PART OF 564-7829, 564-7830 PUMP GP-MAIN HYDRAULIC AN ATTACHMENT

SMCS-5070 **i07546196**

NOTE	REF NO	GRAPHIC REF	PART NUMBER	QTY	PART NAME 1 2 3 4 5 6 (PRODUCT LEVEL)	SEE PAGE
	1	1	**168-3379**	3	PIN	
	2	1	**279-2491**	1	PLATE-PORT	
	3	1	**6V-7723**	1	RING-RETAINING	
	4	1	**185-0292**	1	SPRING	
	5	1	**168-3382**	1	WASHER (30X42X2.7-MM THK)	
	6	1	**168-3378**	1	BEARING-SPHERICAL	
	7	1	**168-3385**	1	PLATE-RETRACTION	

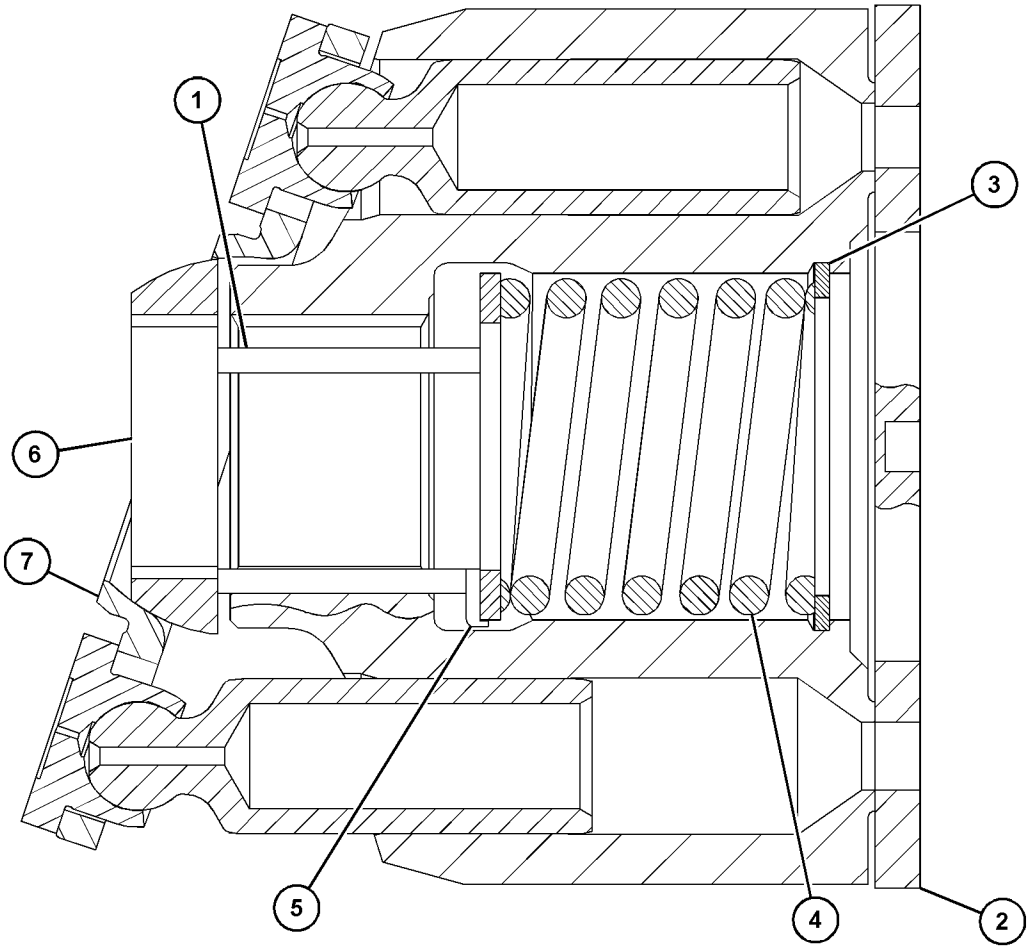

GRAPHIC #1 <END> g03888233

513-5836 SWIVEL & MOUNTING GP

PART OF 512-2524, 512-2526 BLADE AR-STRAIGHT
AN ATTACHMENT

SMCS-5060 **i07546230**

NOTE	REF NO	GRAPHIC REF	PART NUMBER	QTY	PART NAME 1 2 3 4 5 6 (PRODUCT LEVEL)	SEE PAGE
Y	1	1	**512-1013**	1	SWIVEL GP	256
M	2	1	**8T-4183**	6	BOLT (M12X1.75X40-MM)	
	3	1	**8T-4223**	6	WASHER-HARD (13.5X25.5X3-MM THK)	
	4	1	**565-8629**	1	PLATE	

M - METRIC PART
Y - SEPARATE ILLUSTRATION

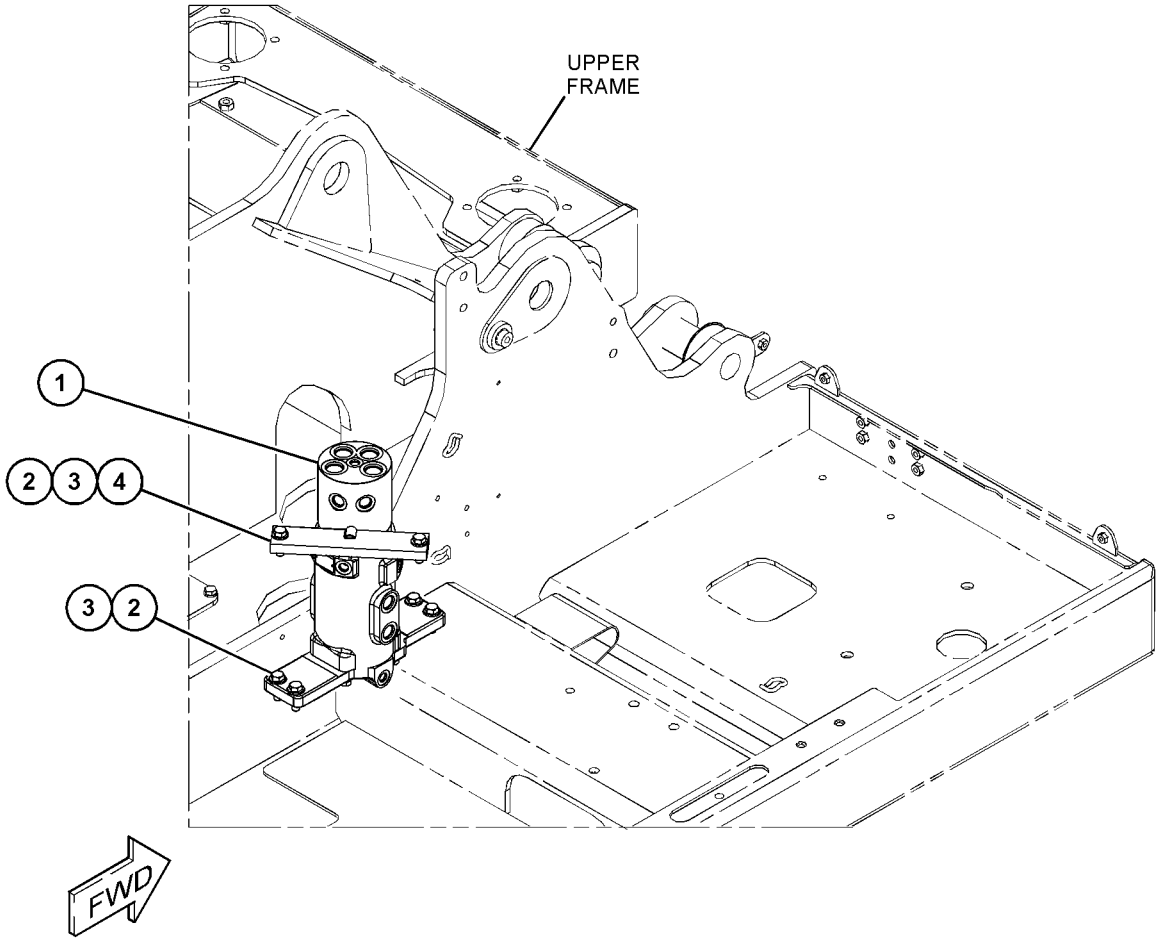

GRAPHIC #1 <END> g06334226

512-1013 SWIVEL GP

PART OF 513-5836 SWIVEL & MOUNTING GP

AN ATTACHMENT

SMCS-5060 **i07546231**

NOTE	REF NO	GRAPHIC REF	PART NUMBER	QTY	PART NAME 1 2 3 4 5 6 (PRODUCT LEVEL)	SEE PAGE
	1	1	**095-1623**	1	SEAL-O-RING	
	2	1	**095-1713**	1	SEAL-O-RING	
	3	1	**095-7951**	1	RING-RETAINING	
	4	1	**146-4875**	1	SEAL-BACK UP	
	5	1	**146-4877**	1	SEAL-DUST	
	6	1	**460-0259**	7	SEAL	
	7	1	**7X-0796**	4	LOCKWASHER (10.2X18.4X2.5-MM THK)	
M	8	1	**8T-4196**	4	BOLT (M10X1.5X35-MM)	
	9	1	**8T-5376**	1	SEAL-O-RING	

M - METRIC PART

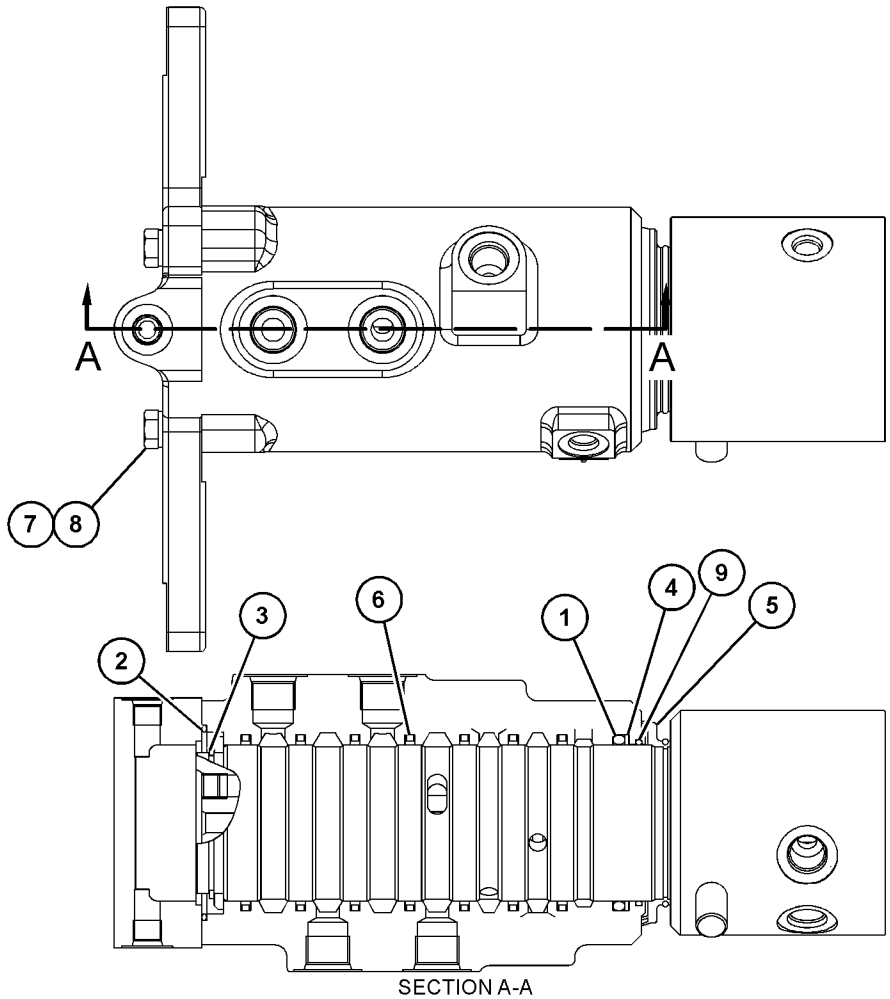

SECTION A-A

GRAPHIC #1 <END> g06335465

513-1375 TANK & FILTER GP-HYDRAULIC

FIELD REPLACEMENT ORDER 551-2440—PAGE: 261
PART OF 551-2440 TANK & FILTER GP-HYDRAULIC

SMCS-5056, 5068 **i07542349**

NOTE	REF NO	GRAPHIC REF	PART NUMBER	QTY	PART NAME 1 2 3 4 5 6 (PRODUCT LEVEL)	SEE PAGE
	1	1	**5P-4116**	6	WASHER-HARD (8.8X20.5X2-MM THK)	
M	2	1	**5P-7970**	6	NUT (M8X1.25-THD)	
	3	1	*148-8336*	3	CONNECTOR AS	
					(EACH INCLUDES)	
		1	**3J-1907**	1	SEAL-O-RING	
		1	**6V-8397**	1	SEAL-O-RING	
		1	**6V-8636**	1	CONNECTOR	
	4	1	*148-8407*	4	PLUG AS	
					(EACH INCLUDES)	
		1	**3J-1907**	1	SEAL-O-RING	
		1	**9S-4191**	1	PLUG (9/16-18-THD)	
	5	1	**4I-3745**	1	CAP-PRESSURE (HYDRAULIC TANK)	
	6	1	**513-1376**	1	TANK AS-HYDRAULIC	
Y	7	1	**515-3268**	1	FILTER GP-OIL	171
	8	1	**515-3814**	1	GAUGE-SIGHT	
	9	1	*542-6996*	1	TEE AS	
		1	**2S-4078**	1	SEAL-O-RING	
		1	**5K-9090**	1	SEAL-O-RING	
		1	**541-0709**	1	TEE	
	10	1	*555-7092*	1	STRAINER AS	
		1	**135-7940**	1	SEAL-O-RING	
	11	1	**5M-2057**	1	SEAL-O-RING	
	12	1	**7K-1181**	3	STRAP-CABLE	
	13	1	**9J-7031**	1	PLUG-DRAIN	
E	14	1	**7Y-1976**		HOSE-WATER (111-CM)	

E - ORDER BY THE CENTIMETER
M - METRIC PART
Y - SEPARATE ILLUSTRATION

513-1375 **TANK & FILTER GP-HYDRAULIC** (contd.) **i07542349**

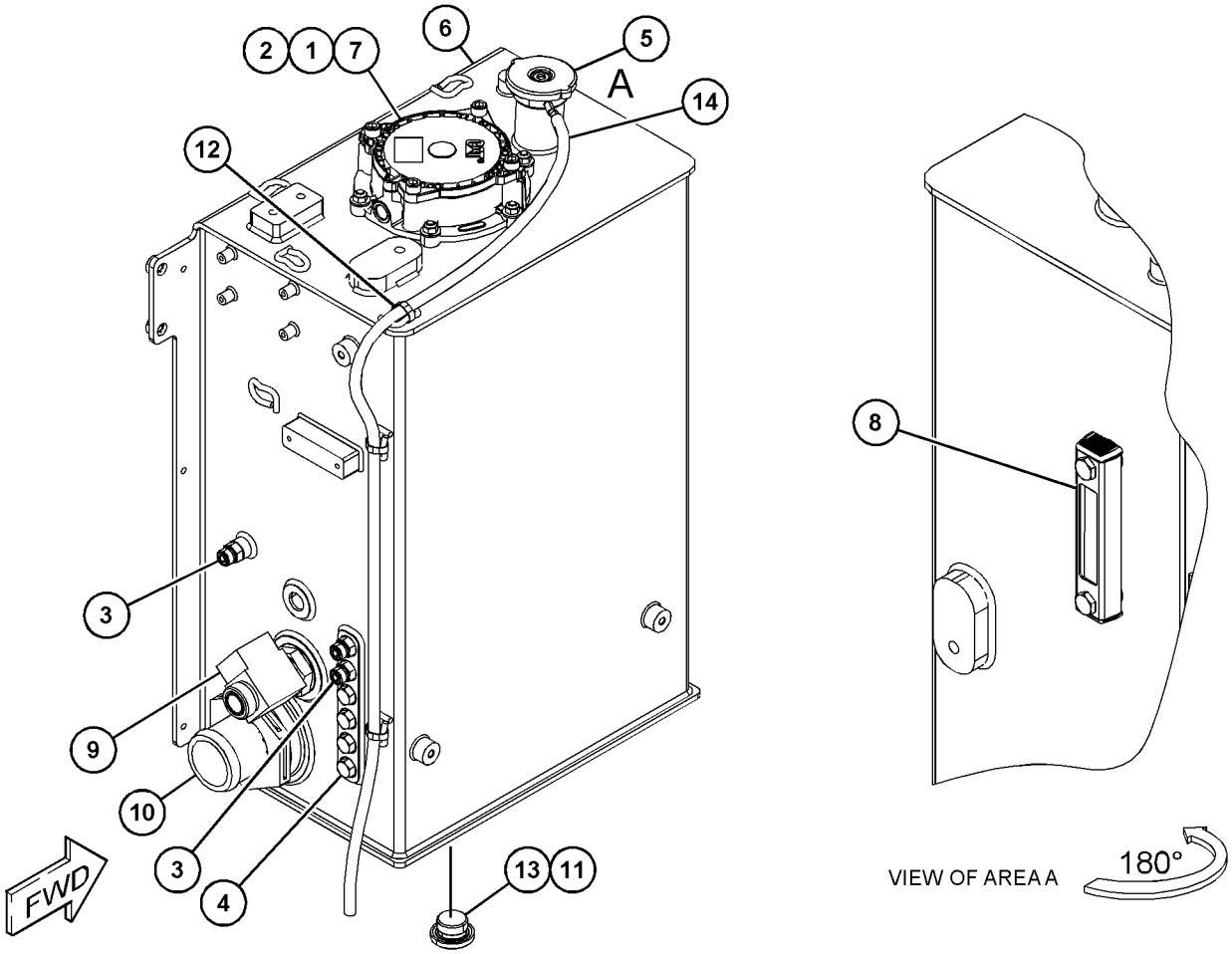

GRAPHIC #1 <END> g06344683

551-2207 TANK & FILTER GP-HYDRAULIC

FIELD REPLACEMENT ORDER 551-2440—PAGE: 261
PART OF 551-2440 TANK & FILTER GP-HYDRAULIC

SMCS-5056, 5068 **i07542351**

NOTE	REF NO	GRAPHIC REF	PART NUMBER	QTY	PART NAME 1 2 3 4 5 6 (PRODUCT LEVEL)	SEE PAGE
	1	1	**5P-4116**	6	WASHER-HARD (8.8X20.5X2-MM THK)	
M	2	1	**5P-7970**	6	NUT (M8X1.25-THD)	
	3	1	*148-8336*	3	CONNECTOR AS	
					(EACH INCLUDES)	
		1	**3J-1907**	1	SEAL-O-RING	
		1	**6V-8397**	1	SEAL-O-RING	
		1	**6V-8636**	1	CONNECTOR	
	4	1	*148-8407*	4	PLUG AS	
					(EACH INCLUDES)	
		1	**3J-1907**	1	SEAL-O-RING	
		1	**9S-4191**	1	PLUG (9/16-18-THD)	
	5	1	**4I-3745**	1	CAP-PRESSURE (HYDRAULIC TANK)	
Y	6	1	**515-3268**	1	FILTER GP-OIL	171
	7	1	**515-3814**	1	GAUGE-SIGHT	
	8	1	*542-6996*	1	TEE AS	
		1	**2S-4078**	1	SEAL-O-RING	
		1	**5K-9090**	1	SEAL-O-RING	
		1	**541-0709**	1	TEE	
	9	1	**551-2208**	1	TANK AS-HYDRAULIC	
	10	1	*555-7092*	1	STRAINER AS	
		1	**135-7940**	1	SEAL-O-RING	
	11	1	**5M-2057**	1	SEAL-O-RING	
	12	1	**7K-1181**	3	STRAP-CABLE	
	13	1	**9J-7031**	1	PLUG-DRAIN	
E	14	1	**7Y-1976**		HOSE-WATER (111-CM)	

E - ORDER BY THE CENTIMETER
M - METRIC PART
Y - SEPARATE ILLUSTRATION

551-2207 **TANK & FILTER GP-HYDRAULIC (**contd.**)** **i07542351**

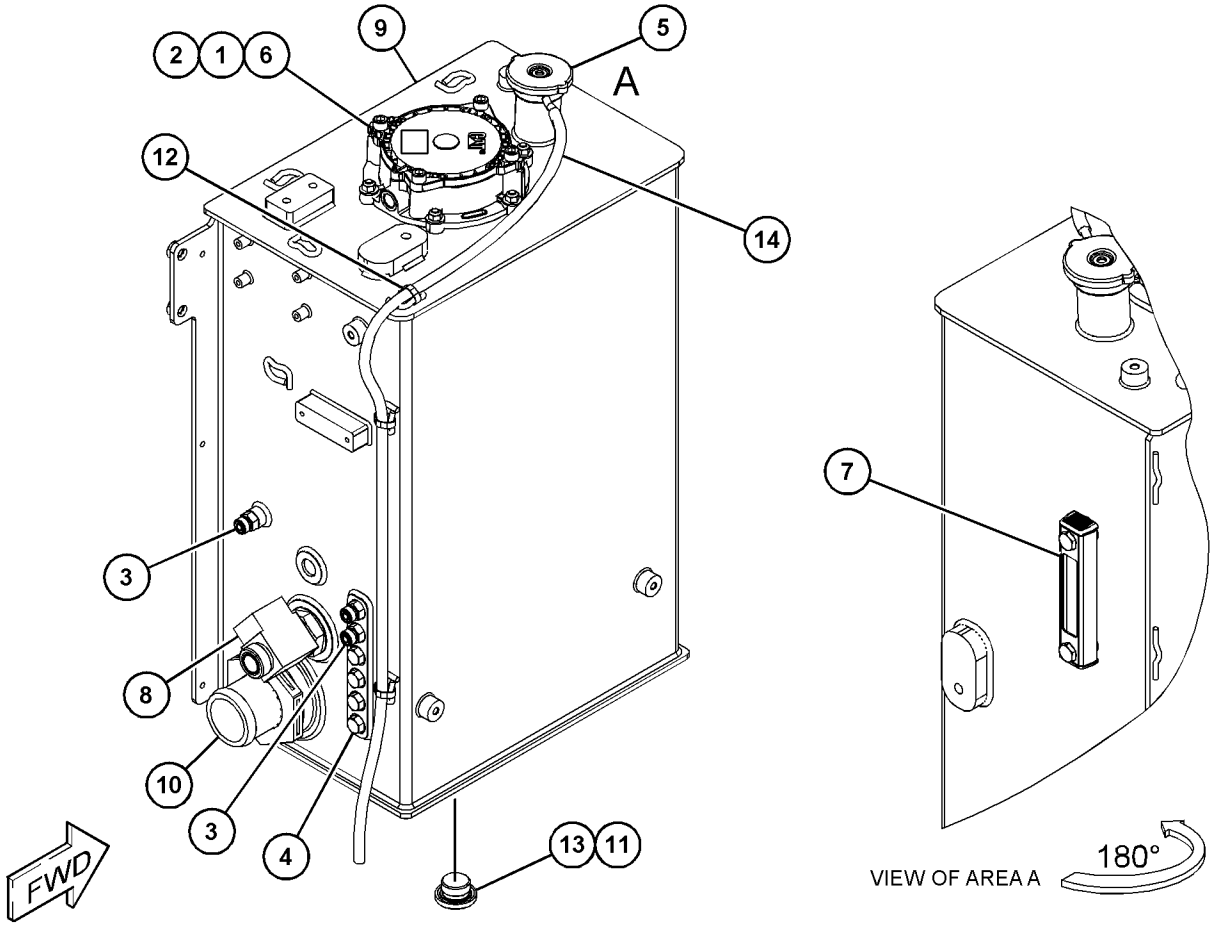

GRAPHIC #1 <END> g06344531

551-2440 TANK & FILTER GP-HYDRAULIC

FIELD REPLACEMENT FOR 513-1375—PAGE: 257: FOR 551-2207—PAGE: 259
PART OF 512-1569 TANK & MTG GP-HYDRAULIC

SMCS-5056, 5068

i07542346

NOTE	PART NUMBER	QTY	PART NAME 1 2 3 4 5 6 (PRODUCT LEVEL)	SEE PAGE
Y	*513-1375*	1	TANK & FILTER GP-HYDRAULIC	257
			—OR—	
Y	*551-2207*	1	TANK & FILTER GP-HYDRAULIC	259

Y - SEPARATE ILLUSTRATION

<END>

512-1569 TANK & MTG GP-HYDRAULIC

PART OF 512-1420 HYDRAULIC AR

SMCS-5056 **i07542334**

NOTE	REF NO	GRAPHIC REF	PART NUMBER	QTY	PART NAME 1 2 3 4 5 6 (PRODUCT LEVEL)	SEE PAGE
	1	1	**085-9310**	4	SPACER (16.6X32X26-MM THK)	
M	2	1	**099-0169**	4	BOLT (M16X2X55-MM)	
Y	3	1	*551-2440*	1	TANK & FILTER GP-HYDRAULIC	261

M - METRIC PART
Y - SEPARATE ILLUSTRATION

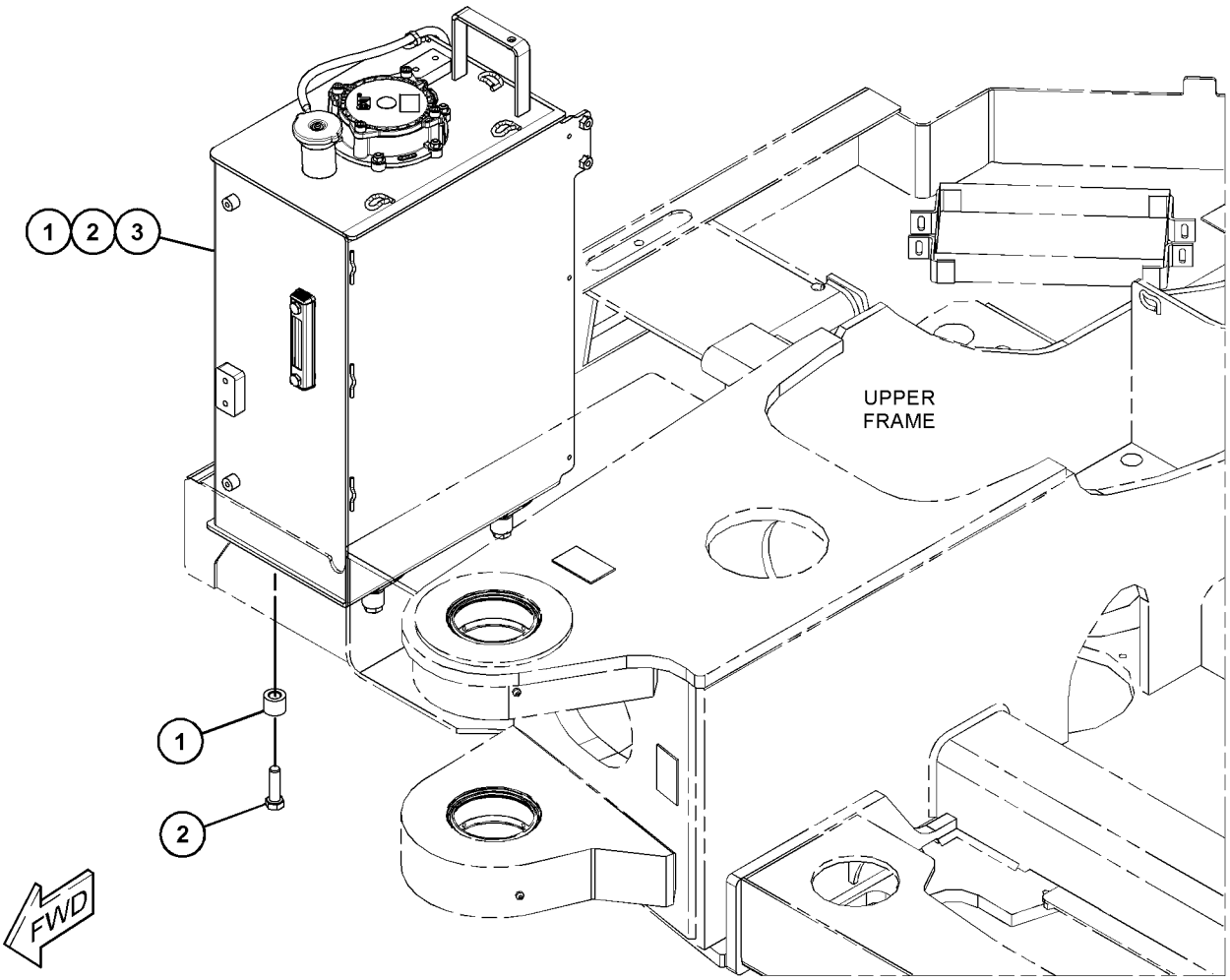

GRAPHIC #1 <END> g06331640

543-0098 VALVE & MOUNTING GP

PART OF 510-6070, 541-4580 OPERATOR AR
AN ATTACHMENT

SMCS-5051 **i07545090**

NOTE	REF NO	GRAPHIC REF	PART NUMBER	QTY	PART NAME 1 2 3 4 5 6 (PRODUCT LEVEL)	SEE PAGE
M	1	1	**8T-4200**	2	BOLT (M8X1.25X16-MM)	
	2	1	**450-4968**	4	SCREW-HEX HEAD (8-16X0.5-IN)	
	3	1	**543-0429**	1	PLATE-MOUNTING	
Y	4	1	*546-5540*	1	VALVE GP-ACTUATOR (HEATER CONTROL)	410
	5	1	**8T-4224**	2	WASHER-HARD (8.8X16X2-MM THK)	

M - METRIC PART
Y - SEPARATE ILLUSTRATION

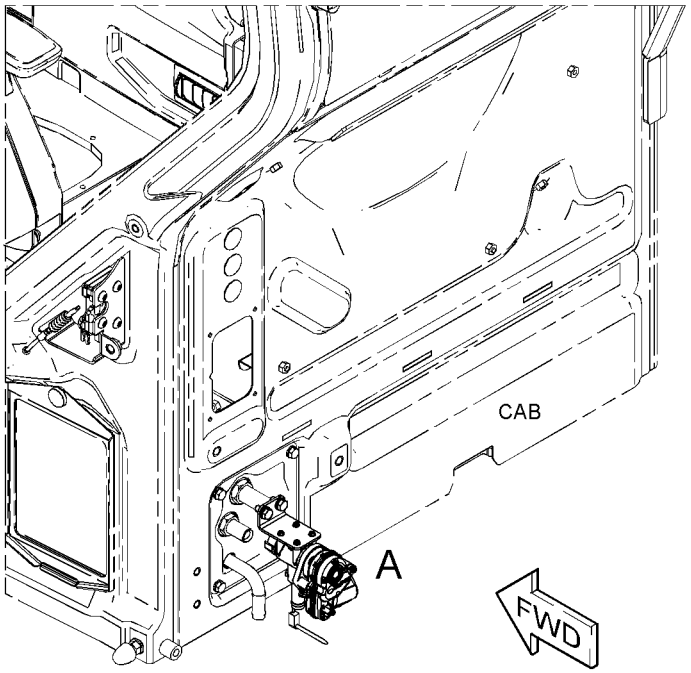

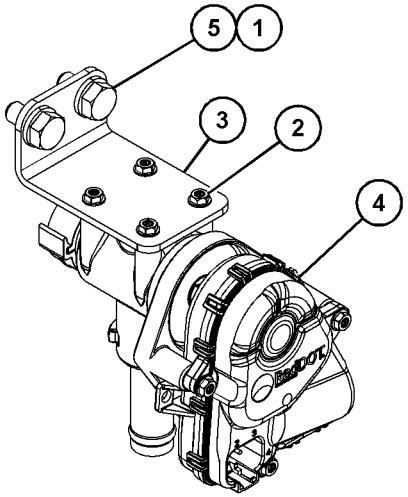

VIEW OF AREA A

GRAPHIC #1 <END> g06334584

515-3526 VALVE & MTG GP-BANK

PART OF 514-3230, 514-3240 HYDRAULIC AR
AN ATTACHMENT

SMCS-5051, 5057 **i07546189**

NOTE	REF NO	GRAPHIC REF	PART NUMBER	QTY	PART NAME 1 2 3 4 5 6 (PRODUCT LEVEL)	SEE PAGE
Y	1	1	*515-3528*	1	VALVE GP-MAIN CONTROL	270
M	2	1	**8T-4194**	3	BOLT (M12X1.75X50-MM)	
	3	1	**8T-4223**	3	WASHER-HARD (13.5X25.5X3-MM THK)	

M - METRIC PART
Y - SEPARATE ILLUSTRATION

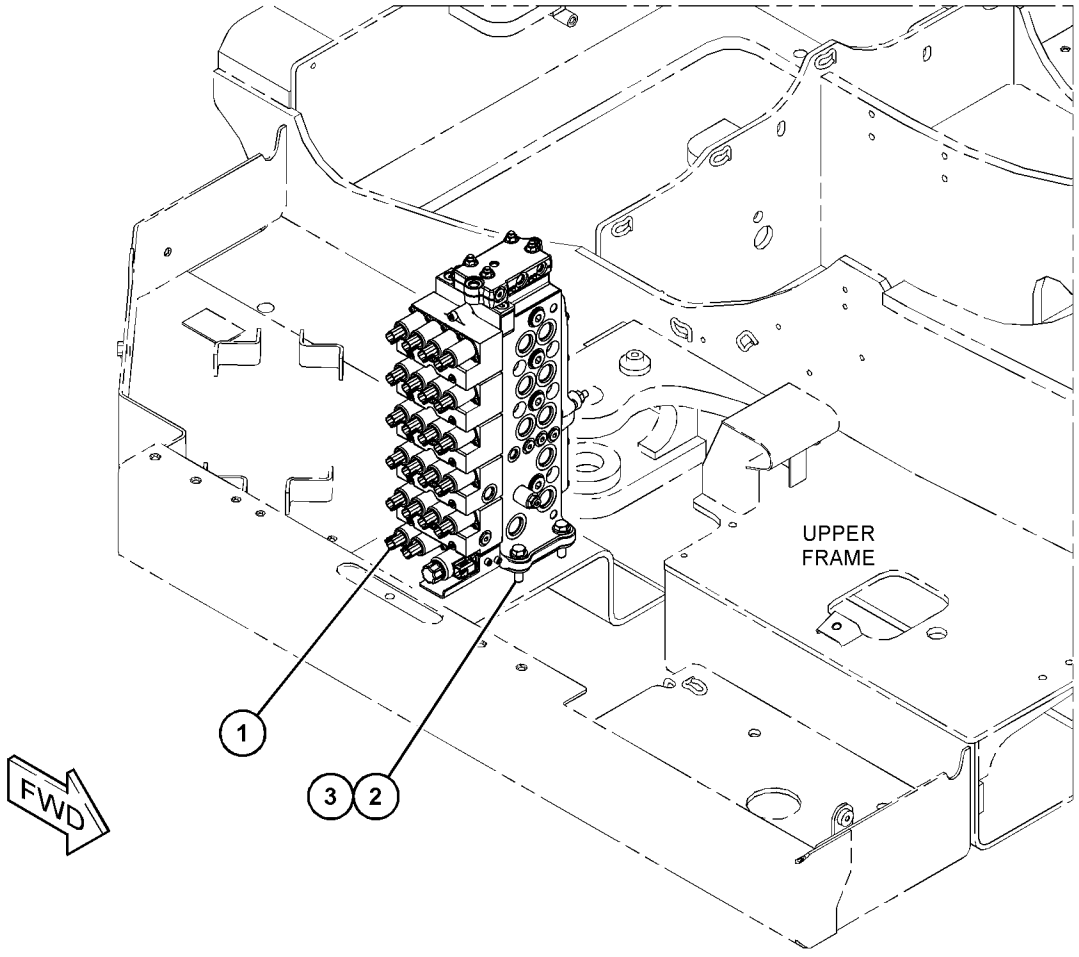

GRAPHIC #1 <END> g06341511

515-3529 VALVE & MTG GP-BANK

PART OF 514-3235 HYDRAULIC AR
AN ATTACHMENT

SMCS-5051, 5057 **i07546458**

NOTE	REF NO	GRAPHIC REF	PART NUMBER	QTY	PART NAME 1 2 3 4 5 6 (PRODUCT LEVEL)	SEE PAGE
Y	1	1	**518-9270**	1	VALVE GP-MAIN CONTROL	278
M	2	1	**8T-4194**	3	BOLT (M12X1.75X50-MM)	
	3	1	**8T-4223**	3	WASHER-HARD (13.5X25.5X3-MM THK)	

M - METRIC PART
Y - SEPARATE ILLUSTRATION

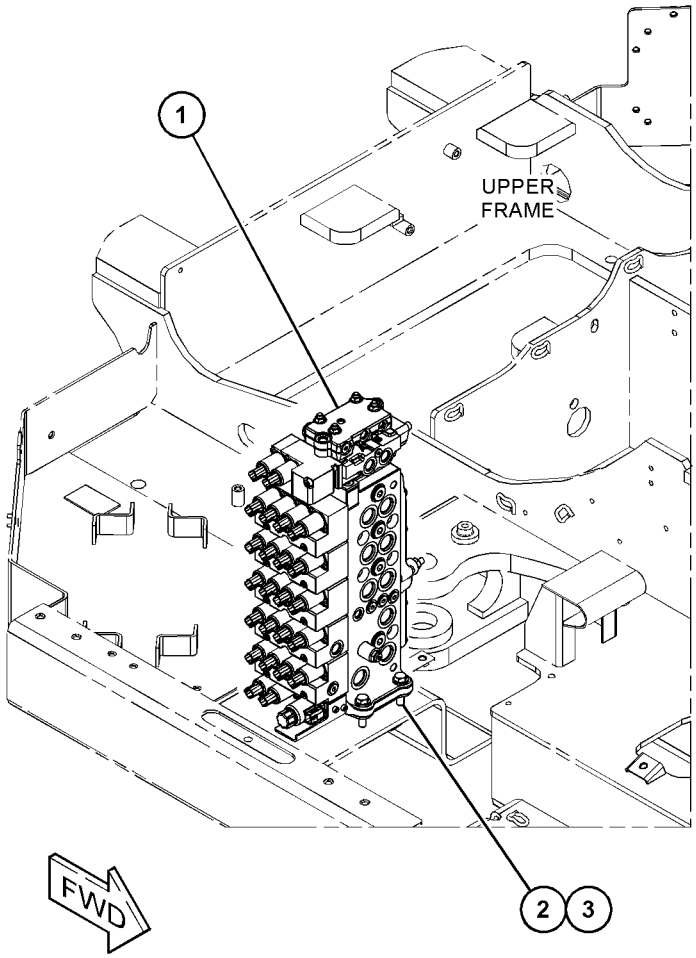

GRAPHIC #1 <END> g06345532

515-3533 VALVE & MTG GP-BANK

PART OF 517-8129, 520-0774 HYDRAULIC AR
AN ATTACHMENT

SMCS-5051, 5057 **i07546513**

NOTE	REF NO	GRAPHIC REF	PART NUMBER	QTY	PART NAME 1 2 3 4 5 6 (PRODUCT LEVEL)	SEE PAGE
Y	1	1	**515-3535**	1	VALVE GP-MAIN CONTROL	274
M	2	1	**8T-4194**	3	BOLT (M12X1.75X50-MM)	
	3	1	**8T-4223**	3	WASHER-HARD (13.5X25.5X3-MM THK)	

M - METRIC PART
Y - SEPARATE ILLUSTRATION

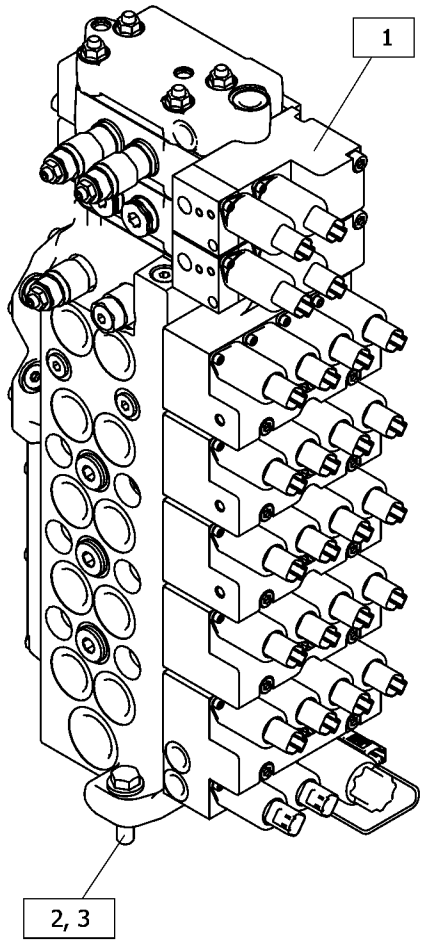

GRAPHIC #1 <END> g06341392

516-3705 VALVE & MTG GP-BANK–AUXILIARY

PART OF 514-3240, 520-0774 HYDRAULIC AR
AN ATTACHMENT

SMCS-5051, 5057 **i07546290**

NOTE	REF NO	GRAPHIC REF	PART NUMBER	QTY	PART NAME 1 2 3 4 5 6 (PRODUCT LEVEL)	SEE PAGE
Y	1	1	**520-6925**	1	VALVE GP-AUXILIARY (AUXILIARY)	268
	2	1	**520-4832**	1	PLATE	
M	3	1	**8T-4139**	4	BOLT (M12X1.75X30-MM)	
M	4	1	**8T-4136**	3	BOLT (M10X1.5X25-MM)	
	5	1	**5P-1076**	4	WASHER-HARD (13.5X30X4-MM THK)	
	6	1	**8T-7934**	3	WASHER-HARD (11X21X5-MM THK)	

M - METRIC PART
Y - SEPARATE ILLUSTRATION

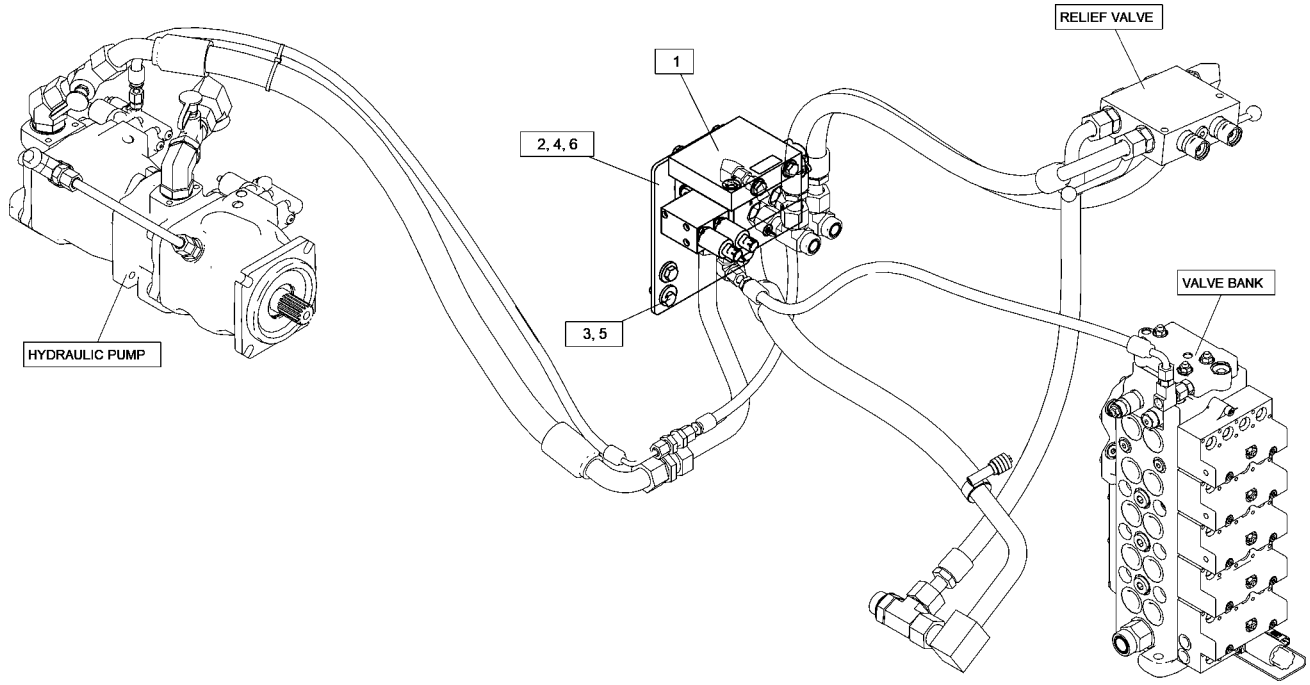

GRAPHIC #1 <END> g06339562

520-6925 VALVE GP-AUXILIARY

PART OF 516-3705 VALVE & MTG GP-BANK

AN ATTACHMENT

SMCS-5051 **i07546291**

NOTE	REF NO	GRAPHIC REF	PART NUMBER	QTY	PART NAME 1 2 3 4 5 6 (PRODUCT LEVEL)	SEE PAGE
J	1	1	**346-4995**	2	VALVE-SOLENOID (12-VDC)	
	2	1	**550-1174**	1	VALVE GP-BUTTERFLY (INLET)	
	3	1	**550-1175**	1	VALVE GP-BUTTERFLY (OUTLET)	
		1	**417-5438**	1	VALVE GP-RELIEF	
		1	**8T-7877**	1	SEAL-O-RING	
		1	**550-1179**	1	KIT-PLUG	
					(INCLUDES O-RING SEAL)	
	4	1	**550-1176**	1	VALVE GP-BUTTERFLY (AUX)	
		1	**550-1180**	1	KIT-COVER	
					(INCLUDES BOLTS, KIT-COVER & KIT-SEAL)	
J		1	**550-1181**	1	KIT-SOLENOID	
					(ALSO INCLUDES BOLTS & KIT-SEAL)	
	5	1	**561-5432**	2	KIT-SEAL	
					(INCLUDES O-RING SEALS)	
M	6	1	**8T-7586**	3	BOLT (M10X1.5X100-MM)	

J - KIT MARKED J SERVICES PART(S) MARKED J
M - METRIC PART

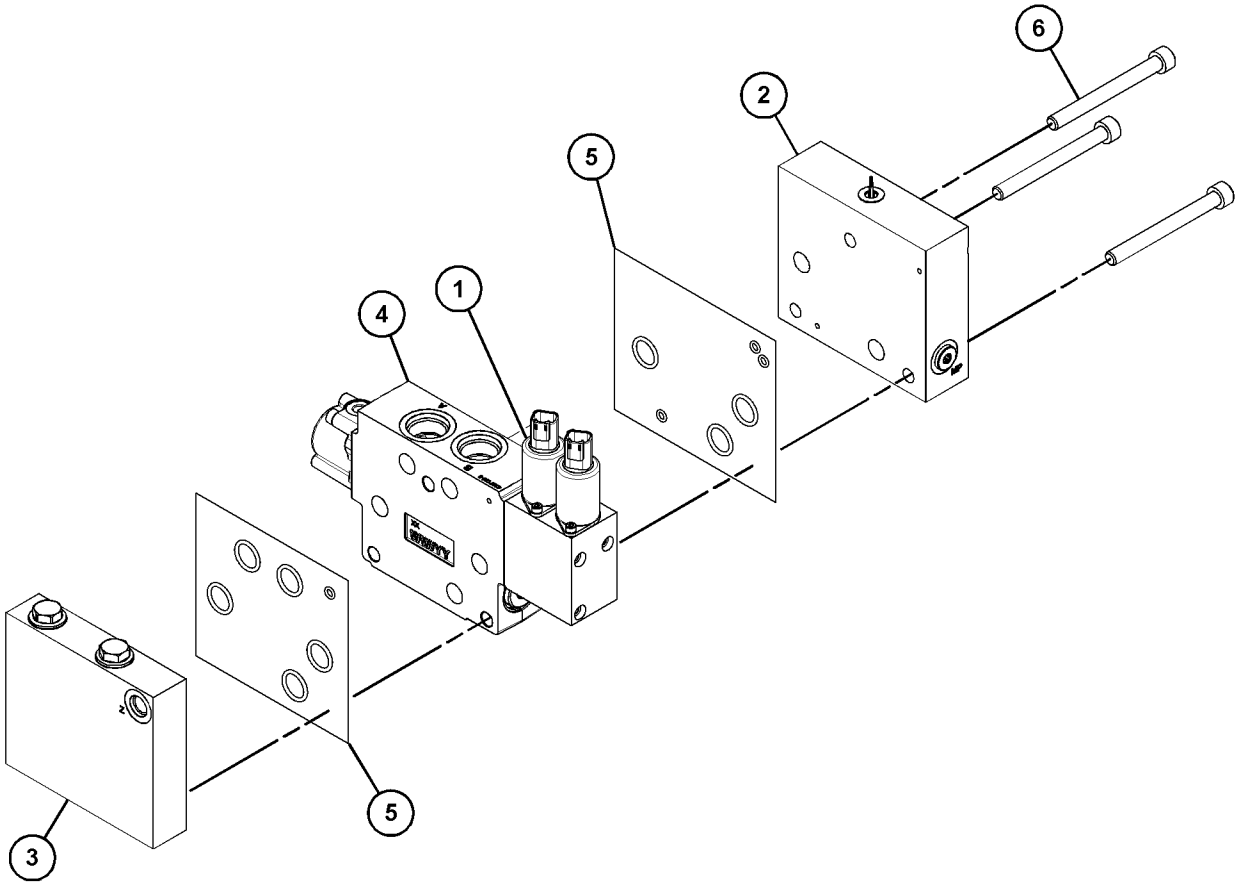

GRAPHIC #1 <END> g06346048

564-1385 VALVE GP-CONTROL–2ND AUXILIARY

PART OF 515-3535, 518-9270 VALVE GP-MAIN CONTROL
AN ATTACHMENT

SMCS-5051 **i07546466**

NOTE	REF NO	GRAPHIC REF	PART NUMBER	QTY	PART NAME 1 2 3 4 5 6 (PRODUCT LEVEL)	SEE PAGE
	1	1	**565-0142**	1	MANIFOLD & SOLENOID GP-CONTROL	
		1	**4J-5477**	3	SEAL-O-RING	
		1	**7E-4846**	1	SEAL-O-RING	
M		1	**109-1393**	4	BOLT-SOCKET HEAD (M4X0.7X10-MM)	
		1	**362-3212**	2	VALVE GP-SOLENOID (12 VDC) (AUXILIARY)	
	2	1	**565-0143**	1	CAP AS-END (AUXILIARY 2)	
		1	**4J-5477**	1	SEAL-O-RING	
		1	**7E-4846**	1	SEAL-O-RING	
	3	1	**557-9299**	1	VALVE AS-CONTROL (BOOM SWING) (AUXILIARY 2)	
		1	**562-8138**	1	NUT	
		1	**567-3173**	1	SPRING	
	4	1	**565-0138**	1	VALVE GP-CHECK (VENTED PILOT)	

M - METRIC PART

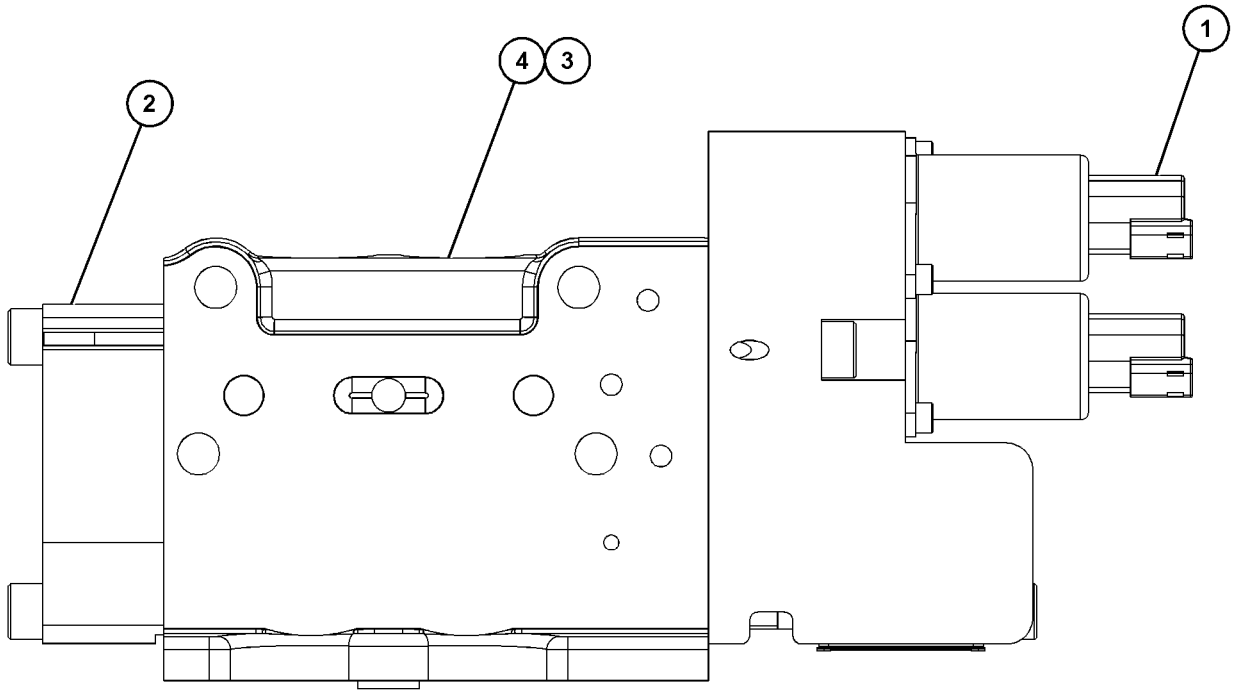

GRAPHIC #1 <END> g06345582

515-3528 VALVE GP-MAIN CONTROL

PART OF 515-3526 VALVE & MTG GP-BANK

AN ATTACHMENT

SMCS-5051 **i07546190**

NOTE	REF NO	GRAPHIC REF	PART NUMBER	QTY	PART NAME 1 2 3 4 5 6 (PRODUCT LEVEL)	SEE PAGE
	1	1	**557-9337**	3	MANIFOLD & SOLENOID GP-CONTROL	
					(EACH INCLUDES)	
M		1	**109-1393**	8	BOLT-SOCKET HEAD (M4X0.7X10-MM)	
		1	**362-3212**	4	VALVE GP-SOLENOID (12 VDC)	
Y	2	1	**557-9339**	1	MANIFOLD & SOLENOID GP-CONTROL	236
	3	1	**557-9351**	1	MANIFOLD & SOLENOID GP-CONTROL	
M		1	**109-1393**	12	BOLT-SOCKET HEAD (M4X0.7X10-MM)	
		1	**362-3212**	4	VALVE GP-SOLENOID (12 VDC)	
		1	**449-1636**	2	VALVE GP-SOLENOID (12-VDC)	
M	4	1,2	**136-4184**	20	BOLT-SOCKET HEAD (M8X1.25X40-MM)	
	5	1	**564-2791**	5	STUD	
M	6	1,2	**5P-7970**	7	NUT (M8X1.25-THD)	
M	7	1	**6V-5196**	10	BOLT-SOCKET HEAD (M8X1.25X80-MM)	
	8	2	**557-9353**	1	KIT-FASTENER	
	9	2	**564-2802**	1	COVER AS	
	10	1	**532-8213**	1	VALVE AS-SOLENOID (BOOM)	
		1	**393-1582**	1	COIL AS (12-VDC)	
		1	**483-4607**	1	KIT-SEAL	
					(INCLUDES O-RING SEALS & BACKUP RING)	
	11	1	**564-2799**	1	MANIFOLD GP-CONTROL	
		1	**4J-5477**	1	SEAL-O-RING	
		1	**9X-7454**	1	SEAL-O-RING	
	12	1	**564-2804**	1	VALVE AS-CHECK	
	13	1	**565-0121**	1	VALVE AS-RELIEF (SWING RIGHT)	
	13A	2	**565-0121**	1	VALVE AS-RELIEF (SWING LEFT)	
	14	1	**562-9526**	5	GASKET	
	15	1	**557-9298**	1	VALVE AS-CONTROL (SWING)	
	16	1	**557-9299**	1	VALVE AS-CONTROL (BOOM SWING)	
	17	1	**557-9301**	1	VALVE AS-CONTROL (BLADE)	
	18	1	**557-9302**	1	VALVE AS-CONTROL (TRAVEL LEFT)	
	18A	1	**557-9302**	1	VALVE AS-CONTROL (TRAVEL RIGHT)	
	19	1	**557-9304**	1	VALVE AS-CONTROL (AUX)	
	20	1	**557-9306**	1	VALVE AS-CONTROL (STICK)	
	21	1	**557-9307**	1	VALVE AS-CONTROL (BUCKET)	
	22	1	**565-0000**	1	VALVE AS-CONTROL (BYPASS)	
	23	1	**557-9308**	1	VALVE AS-CONTROL (BOOM)	
					(EACH VALVE AS INCLUDES)	
		1	**562-8138**	1	NUT	
		1	**567-3173**	1	SPRING	
	24	2	**562-9524**	1	GASKET	
	25	2	**562-9525**	1	GASKET	
	26	2	**564-2800**	1	MANIFOLD GP-CONTROL	
		2	**3J-1907**	2	SEAL-O-RING	
		2	**9S-8004**	2	PLUG (9/16-18-THD)	
		2	**453-7468**	2	SHUTTLE	
		2	**565-0137**	2	PLUG AS	
					(EACH INCLUDES)	
		2	**3J-1907**	1	SEAL-O-RING	

515-3528 **VALVE GP-MAIN CONTROL (**contd.**)** **i07546190**

NOTE	REF NO	GRAPHIC REF	PART NUMBER	QTY	PART NAME 1 2 3 4 5 6 (PRODUCT LEVEL)	SEE PAGE
		2	**4J-5477**	1	SEAL-O-RING	
	27	2	**564-9999**	2	STUD	
J	28	2	**557-7676**	1	VALVE GP-PRESSURE REDUCING (PILOT)	
	29	1,2	**9S-8004**	10	PLUG (9/16-18-THD)	
	30	1,2	**3J-1907**	10	SEAL-O-RING	
	31	1,2	**564-2807**	7	VALVE AS-CHECK	
	32	2	**438-8465**	1	VALVE GP-MAKEUP (SWING RIGHT)	
	32A	2	**438-8465**	1	VALVE GP-MAKEUP (SWING LEFT)	
	32B	2	**438-8465**	1	VALVE GP-MAKEUP (BOOM SWING, LEFT)	
	32C	2	**438-8465**	1	VALVE GP-MAKEUP (BOOM SWING, RIGHT)	
	32D	2	**438-8465**	1	VALVE GP-MAKEUP (BLADE)	
					(EACH INCLUDES)	
		2	**8T-7877**	1	SEAL-O-RING	
	33	2	**566-9874**	1	VALVE AS-RELIEF (BLADE)	
		2	**8T-7877**	1	SEAL-O-RING	
Y	34	2	**456-1861**	1	VALVE GP-RELIEF (PILOT OPERATED) (AUXILIARY 1)	284
Y	35	2	**566-6523**	1	VALVE GP-RELIEF (AUXILIARY 2)	285
	36	1	**417-5438**	1	VALVE GP-RELIEF (STICK IN)	
	36A	1	**417-5438**	1	VALVE GP-RELIEF (STICK OUT)	
	36B	1	**417-5438**	1	VALVE GP-RELIEF (BUCKET DIG)	
	36C	1	**417-5438**	1	VALVE GP-RELIEF (BUCKET DUMP)	
	36D	1	**417-5438**	1	VALVE GP-RELIEF (BOOM DOWN)	
					(EACH INCLUDES)	
		1	**8T-7877**	1	SEAL-O-RING	
	37	1	**566-9876**	1	VALVE AS-RELIEF (BOOM UP)	
		1	**8T-7877**	1	SEAL-O-RING	
					AVAILABLE REPAIR KIT(S):	
J			**559-2265**	1	KIT-SEAL	
					(INCLUDES O-RINGS & BACKUP RINGS)	

J - KIT MARKED J SERVICES PART(S) MARKED J
M - METRIC PART
Y - SEPARATE ILLUSTRATION

515-3528 **VALVE GP-MAIN CONTROL (**contd.**)** **i07546190**

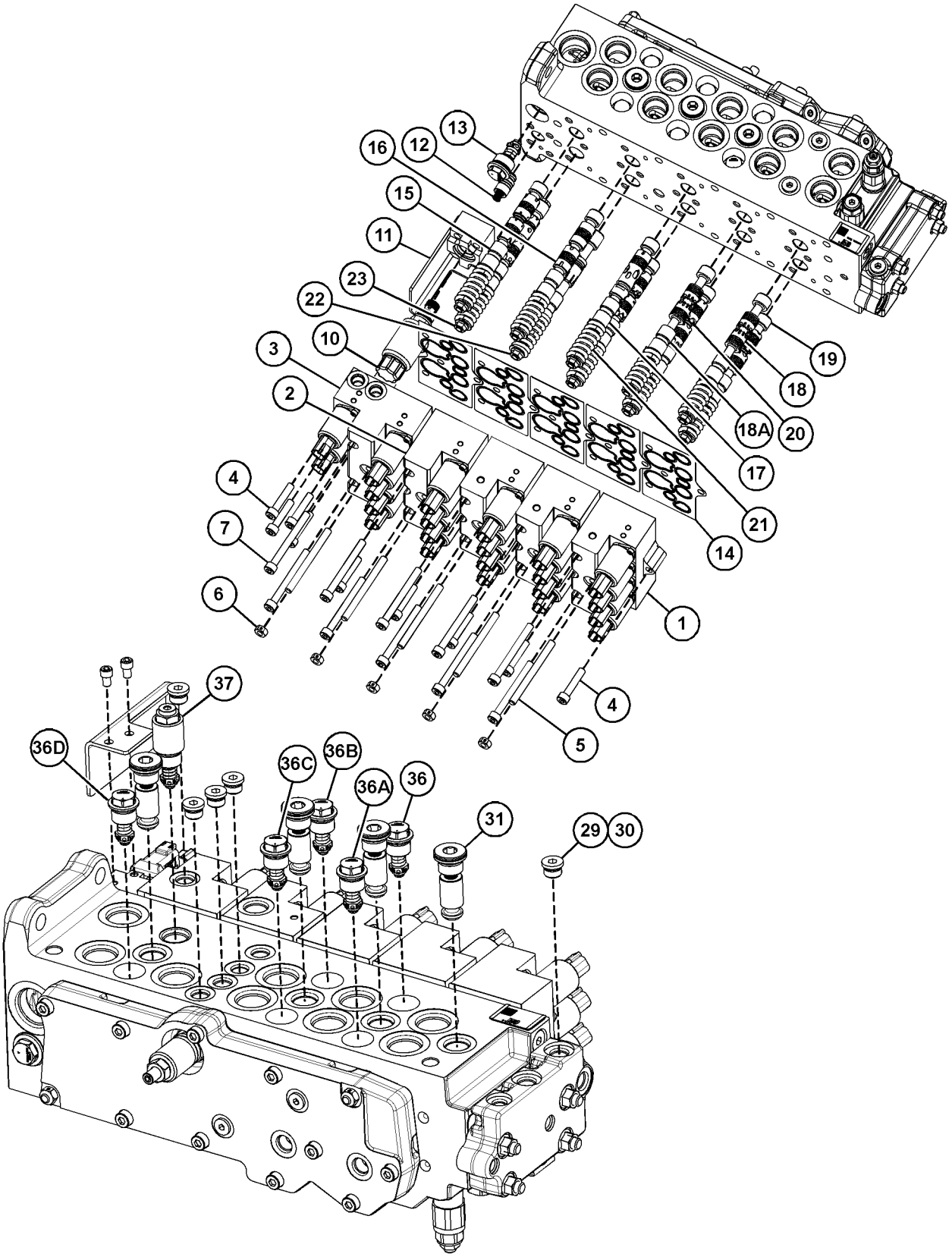

GRAPHIC #1 g06347425

515-3528 **VALVE GP-MAIN CONTROL (**contd.**)** **i07546190**

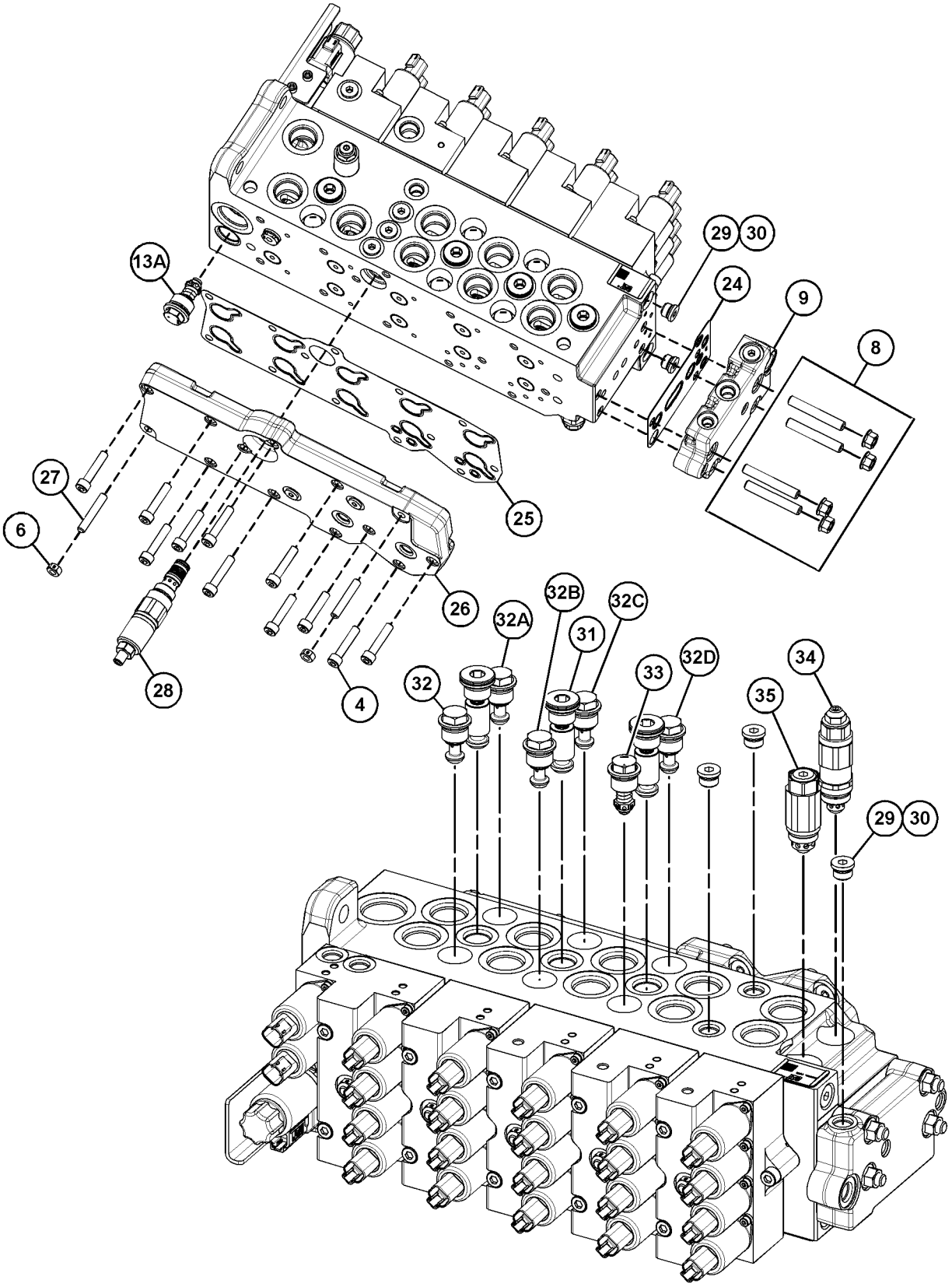

GRAPHIC #2 <END> g06347426

515-3535 VALVE GP-MAIN CONTROL

PART OF 515-3533 VALVE & MTG GP-BANK

AN ATTACHMENT

SMCS-5051 **i07546520**

NOTE	REF NO	GRAPHIC REF	PART NUMBER	QTY	PART NAME 1 2 3 4 5 6 (PRODUCT LEVEL)	SEE PAGE
	1	1	**557-9337**	3	MANIFOLD & SOLENOID GP-CONTROL	
					(EACH INCLUDES)	
		1	**362-3212**	4	VALVE GP-SOLENOID (12 VDC)	
M		1	**109-1393**	8	BOLT-SOCKET HEAD (M4X0.7X10-MM)	
Y	2	1	**557-9339**	1	MANIFOLD & SOLENOID GP-CONTROL	236
	3	1	**557-9351**	1	MANIFOLD & SOLENOID GP-CONTROL	
M		1	**109-1393**	12	BOLT-SOCKET HEAD (M4X0.7X10-MM)	
		1	**362-3212**	4	VALVE GP-SOLENOID (12 VDC)	
		1	**449-1636**	2	VALVE GP-SOLENOID (12-VDC)	
M	4	1,2	**136-4184**	20	BOLT-SOCKET HEAD (M8X1.25X40-MM)	
	5	1	**564-2791**	5	STUD	
M	6	1,2	**5P-7970**	7	NUT (M8X1.25-THD)	
M	7	1	**6V-5196**	10	BOLT-SOCKET HEAD (M8X1.25X80-MM)	
	8	2	**564-1383**	1	KIT-FASTENER	
	9	2	**564-2802**	1	COVER AS (END)	
	10	1	**532-8213**	1	VALVE AS-SOLENOID (BOOM)	
		1	**393-1582**	1	COIL AS (12-VDC)	
		1	**483-4607**	1	KIT-SEAL	
					(INCLUDES O-RING SEALS & BACKUP RING)	
	11	1	**564-2799**	1	MANIFOLD GP-CONTROL (IMPLEMENT)	
		1	**4J-5477**	1	SEAL-O-RING	
		1	**9X-7454**	1	SEAL-O-RING	
	12	1	**564-2804**	1	VALVE AS-CHECK	
	13	1	**565-0121**	1	VALVE AS-RELIEF (SWING RIGHT)	
	13A	2	**565-0121**	1	VALVE AS-RELIEF (SWING LEFT)	
	14	1	**562-9526**	5	GASKET	
	15	1	**557-9298**	1	VALVE AS-CONTROL (SWING)	
	16	1	**557-9299**	1	VALVE AS-CONTROL (BOOM SWING)	
	17	1	**557-9301**	1	VALVE AS-CONTROL (BLADE)	
	18	1	**557-9302**	1	VALVE AS-CONTROL (TRAVEL LEFT)	
	18A	1	**557-9302**	1	VALVE AS-CONTROL (TRAVEL RIGHT)	
	19	1	**557-9304**	1	VALVE AS-CONTROL (AUX)	
	20	1	**557-9306**	1	VALVE AS-CONTROL (STICK)	
	21	1	**557-9307**	1	VALVE AS-CONTROL (BUCKET)	
	22	1	**565-0000**	1	VALVE AS-CONTROL (BYPASS)	
	23	1	**557-9308**	1	VALVE AS-CONTROL (BOOM)	
					(EACH VALVE AS-CONTROL INCLUDES)	
		1	**562-8138**	1	NUT	
		1	**567-3173**	1	SPRING	
	24	2	**562-9524**	3	GASKET	
	25	2	**562-9525**	1	GASKET	
	26	2	**564-2800**	1	MANIFOLD GP-CONTROL	
		2	**9S-8004**	2	PLUG (9/16-18-THD)	
		2	**453-7468**	2	SHUTTLE	
		2	**565-0137**	2	PLUG AS	
					(EACH INCLUDES)	
		2	**3J-1907**	1	SEAL-O-RING	
		2	**4J-5477**	1	SEAL-O-RING	

515-3535 **VALVE GP-MAIN CONTROL (**contd.**)** **i07546520**

NOTE	REF NO	GRAPHIC REF	PART NUMBER	QTY	PART NAME 1 2 3 4 5 6 (PRODUCT LEVEL)	SEE PAGE
	27	2	**564-9999**	2	STUD	
J	28	2	**557-7676**	1	VALVE GP-PRESSURE REDUCING (PILOT)	
	29	1,2	**9S-8004**	10	PLUG (9/16-18-THD)	
	30	1,2	**3J-1907**	10	SEAL-O-RING	
	31	1,2	**564-2807**	7	VALVE AS-CHECK	
	32	1	**438-8465**	1	VALVE GP-MAKEUP (SWING RIGHT)	
	32A	1	**438-8465**	1	VALVE GP-MAKEUP (SWING LEFT)	
	32B	1	**438-8465**	1	VALVE GP-MAKEUP (BOOM SWING, LEFT)	
	32C	1	**438-8465**	1	VALVE GP-MAKEUP (BOOM SWING, RIGHT)	
	32D	1	**438-8465**	1	VALVE GP-MAKEUP (BLADE)	
					(EACH INCLUDES)	
		1	**8T-7877**	1	SEAL-O-RING	
	33	1	**566-9874**	1	VALVE AS-RELIEF	
		1	**8T-7877**	1	SEAL-O-RING	
Y	34	1	**456-1861**	3	VALVE GP-RELIEF (PILOT OPERATED)	284
Y	35	1	**566-6523**	1	VALVE GP-RELIEF (AUXILIARY 2)	285
	36	2	**417-5438**	1	VALVE GP-RELIEF (STICK IN)	
	36A	2	**417-5438**	1	VALVE GP-RELIEF (STICK OUT)	
	36B	2	**417-5438**	1	VALVE GP-RELIEF (BUCKET DIG)	
	36C	2	**417-5438**	1	VALVE GP-RELIEF (BUCKET DUMP)	
	36D	2	**417-5438**	1	VALVE GP-RELIEF (BOOM DOWN)	
					(EACH INCLUDES)	
		2	**8T-7877**	1	SEAL-O-RING	
	37	2	**566-9876**	1	VALVE AS-RELIEF (BOOM UP)	
		2	**8T-7877**	1	SEAL-O-RING	
	38	1	**564-1387**	2	PLUG AS	
					(EACH INCLUDES)	
		1	**130-1676**	1	SEAL-O-RING	
Y	39	2	**564-1385**	2	VALVE GP-CONTROL (2ND AUXILIARY)	269
					AVAILABLE REPAIR KIT(S):	
J			**559-2265**	1	KIT-SEAL	
					(INCLUDES O-RINGS & BACKUP RINGS)	

J - KIT MARKED J SERVICES PART(S) MARKED J
M - METRIC PART
Y - SEPARATE ILLUSTRATION

515-3535 **VALVE GP-MAIN CONTROL (**contd.**)** **i07546520**

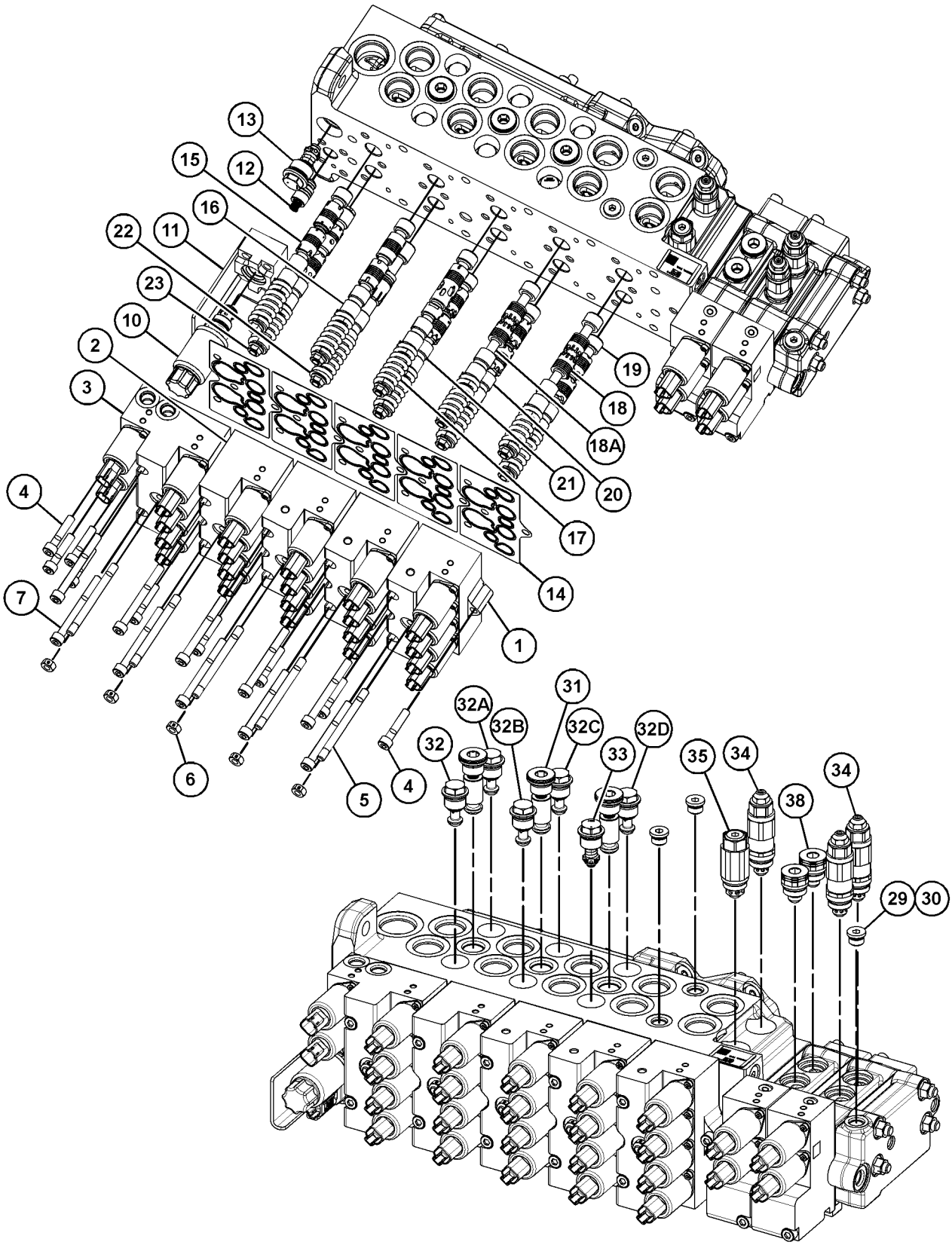

GRAPHIC #1 g06347421

515-3535 **VALVE GP-MAIN CONTROL (**contd.**)** **i07546520**

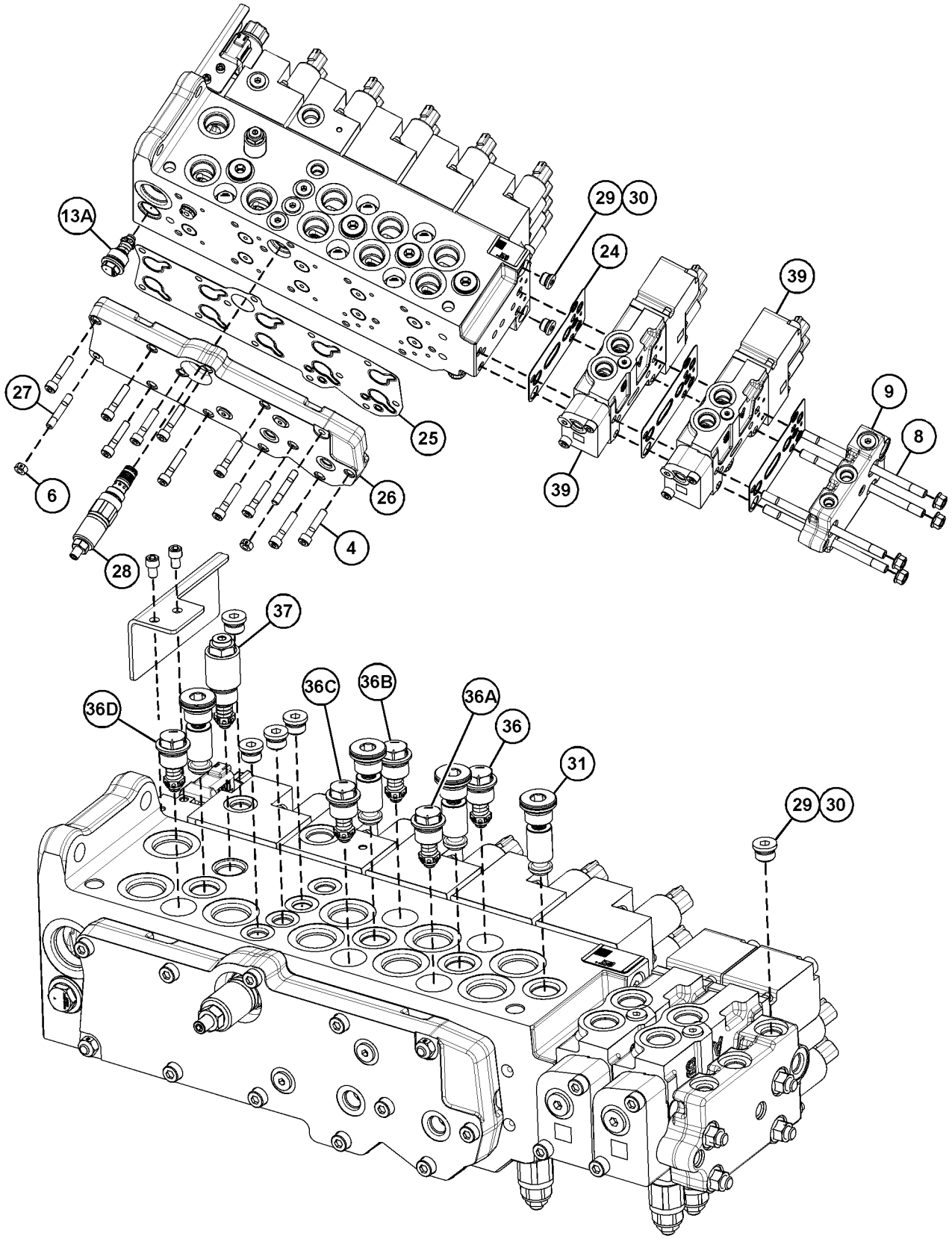

GRAPHIC #2 <END> g06347422

518-9270 VALVE GP-MAIN CONTROL

PART OF 515-3529 VALVE & MTG GP-BANK

AN ATTACHMENT

SMCS-5051 **i07546463**

NOTE	REF NO	GRAPHIC REF	PART NUMBER	QTY	PART NAME 1 2 3 4 5 6 (PRODUCT LEVEL)	SEE PAGE
	1	1	**557-9337**	3	MANIFOLD & SOLENOID GP-CONTROL	
					(EACH INCLUDES)	
M		1	**109-1393**	8	BOLT-SOCKET HEAD (M4X0.7X10-MM)	
		1	**362-3212**	4	VALVE GP-SOLENOID (12 VDC)	
Y	2	1	**557-9339**	1	MANIFOLD & SOLENOID GP-CONTROL	236
	3	1	**557-9351**	1	MANIFOLD & SOLENOID GP-CONTROL	
M		1	**109-1393**	12	BOLT-SOCKET HEAD (M4X0.7X10-MM)	
		1	**362-3212**	4	VALVE GP-SOLENOID (12 VDC) (SWING BRAKE)	
		1	**449-1636**	2	VALVE GP-SOLENOID (12-VDC) (TRAVEL SPEED)	
M	4	1,2	**136-4184**	20	BOLT-SOCKET HEAD (M8X1.25X40-MM)	
	5	1	**564-2791**	5	STUD	
M	6	1,2	**5P-7970**	7	NUT (M8X1.25-THD)	
M	7	1	**6V-5196**	10	BOLT-SOCKET HEAD (M8X1.25X80-MM)	
	8	2	**564-1382**	1	KIT-FASTENER	
	9	2	**564-2802**	1	COVER AS (END)	
J	10	1	**532-8213**	1	VALVE AS-SOLENOID (BOOM)	
		1	**393-1582**	1	COIL AS (12-VDC)	
	11	1	**564-2799**	1	MANIFOLD GP-CONTROL (IMPLEMENT)	
		1	**4J-5477**	1	SEAL-O-RING	
		1	**9X-7454**	1	SEAL-O-RING	
	12	1	**564-2804**	1	VALVE AS-CHECK (OUTLET)	
	13	1	**565-0121**	1	VALVE AS-RELIEF (SWING RIGHT)	
	13A	2	**565-0121**	1	VALVE AS-RELIEF (SWING LEFT)	
	14	1	**562-9526**	5	GASKET	
	15	1	**557-9298**	1	VALVE AS-CONTROL (SWING)	
	16	1	**557-9299**	1	VALVE AS-CONTROL (BOOM SWING)	
	17	1	**557-9301**	1	VALVE AS-CONTROL (BLADE)	
	18	1	**557-9302**	1	VALVE AS-CONTROL (TRAVEL LEFT)	
	18A	1	**557-9302**	1	VALVE AS-CONTROL (TRAVEL RIGHT)	
	19	1	**557-9304**	1	VALVE AS-CONTROL (AUX)	
	20	1	**557-9306**	1	VALVE AS-CONTROL (STICK)	
	21	1	**557-9307**	1	VALVE AS-CONTROL (BUCKET)	
	22	1	**565-0000**	1	VALVE AS-CONTROL (BYPASS)	
	23	1	**557-9308**	1	VALVE AS-CONTROL (BOOM)	
					(EACH VALVE AS INCLUDES)	
		1	**562-8138**	1	NUT	
		1	**567-3173**	1	SPRING	
	24	2	**562-9524**	2	GASKET	
	25	2	**562-9525**	1	GASKET	
	26	2	**564-2800**	1	MANIFOLD GP-CONTROL	
		2	**3J-1907**	2	SEAL-O-RING	
		2	**9S-8004**	2	PLUG (9/16-18-THD)	
		2	**453-7468**	2	SHUTTLE	
		2	**565-0137**	2	PLUG AS	
					(EACH INCLUDES)	
		2	**3J-1907**	1	SEAL-O-RING	
		2	**4J-5477**	1	SEAL-O-RING	
	27	2	**564-9999**	2	STUD	

518-9270 **VALVE GP-MAIN CONTROL (**contd.**)** **i07546463**

NOTE	REF NO	GRAPHIC REF	PART NUMBER	QTY	PART NAME 1 2 3 4 5 6 (PRODUCT LEVEL)	SEE PAGE
L	28	2	**557-7676**	1	VALVE GP-PRESSURE REDUCING (PILOT)	
	29	1,2	**9S-8004**	10	PLUG (9/16-18-THD)	
	30	1,2	**3J-1907**	10	SEAL-O-RING	
	31	1,2	**564-2807**	7	VALVE AS-CHECK	
	32	1	**438-8465**	1	VALVE GP-MAKEUP (SWING RIGHT)	
	32A	1	**438-8465**	1	VALVE GP-MAKEUP (SWING LEFT)	
	32B	1	**438-8465**	1	VALVE GP-MAKEUP (BOOM SWING, LEFT)	
	32C	1	**438-8465**	1	VALVE GP-MAKEUP (BOOM SWING, RIGHT)	
	32D	1	**438-8465**	1	VALVE GP-MAKEUP (BLADE)	
					(EACH INCLUDES)	
		1	**8T-7877**	1	SEAL-O-RING	
	33	1	**566-9874**	1	VALVE AS-RELIEF (BLADE)	
		1	**8T-7877**	1	SEAL-O-RING	
Y	34	1	**456-1861**	1	VALVE GP-RELIEF (PILOT OPERATED) (AUXILIARY 1)	284
Y	35	1	**566-6523**	1	VALVE GP-RELIEF (AUXILIARY 2)	285
	36	2	**417-5438**	1	VALVE GP-RELIEF (STICK IN)	
	36A	2	**417-5438**	1	VALVE GP-RELIEF (STICK OUT)	
	36B	2	**417-5438**	1	VALVE GP-RELIEF (BUCKET DIG)	
	36C	2	**417-5438**	1	VALVE GP-RELIEF (BUCKET DUMP)	
	36D	2	**417-5438**	1	VALVE GP-RELIEF (BOOM DOWN)	
					(EACH INCLUDES)	
		2	**8T-7877**	1	SEAL-O-RING	
	37	2	**566-9876**	1	VALVE AS-RELIEF (BOOM UP)	
		2	**8T-7877**	1	SEAL-O-RING	
	38	1	**564-1387**	2	PLUG AS	
					(EACH INCLUDES)	
		1	**130-1676**	1	SEAL-O-RING	
Y	39	2	**564-1385**	1	VALVE GP-CONTROL (2ND AUXILIARY)	269
					AVAILABLE REPAIR KIT(S):	
J			**483-4607**	1	KIT-SEAL	
					(INCLUDES O-RINGS & BACKUP RING)	
L			**559-2265**	1	KIT-SEAL	
					(INCLUDES O-RINGS & BACKUP RINGS)	

J - KIT MARKED J SERVICES PART(S) MARKED J
L - KIT MARKED L SERVICES PART(S) MARKED L
M - METRIC PART
Y - SEPARATE ILLUSTRATION

518-9270 **VALVE GP-MAIN CONTROL (**contd.**)** **i07546463**

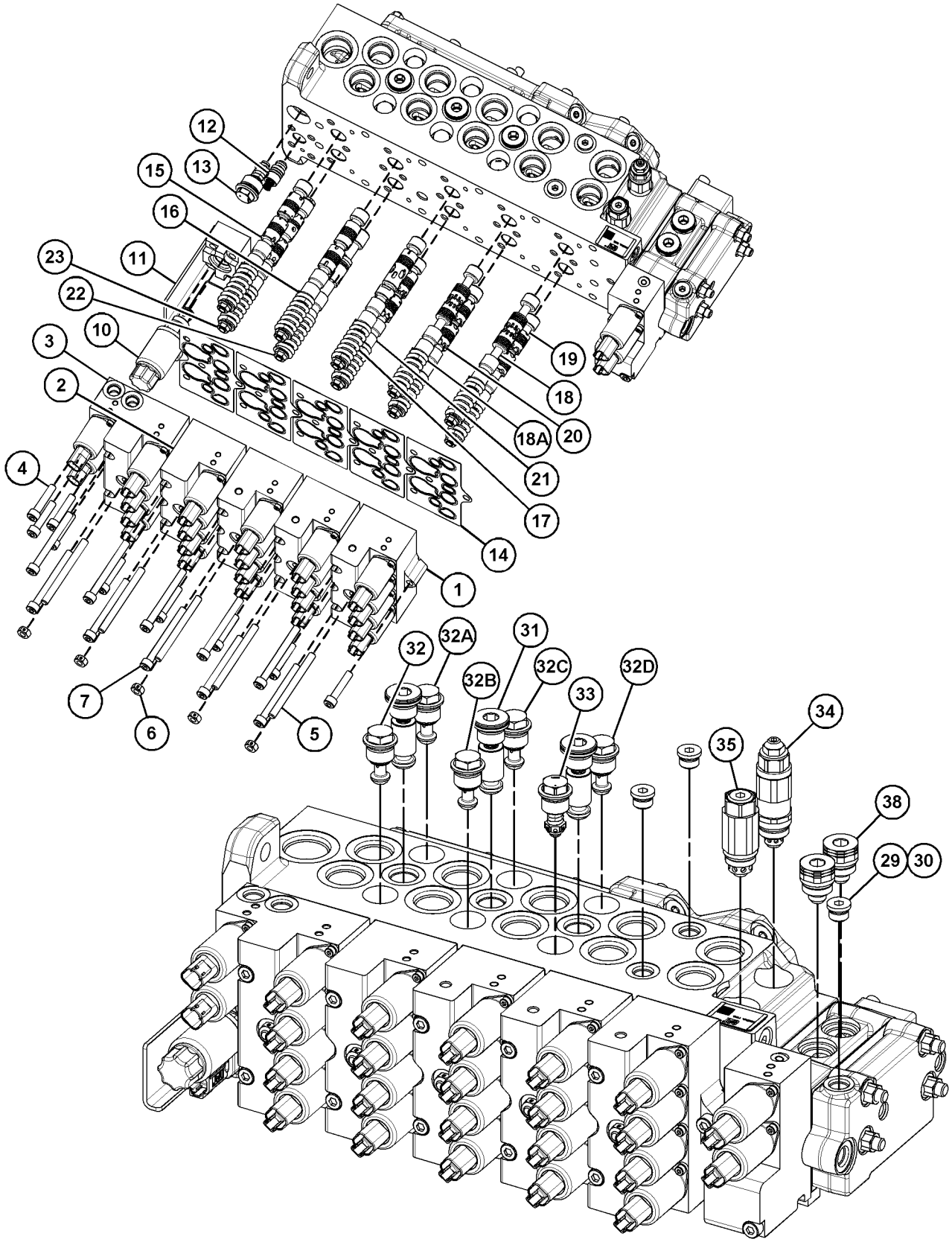

GRAPHIC #1 g06347423

518-9270 **VALVE GP-MAIN CONTROL (**contd.**)** **i07546463**

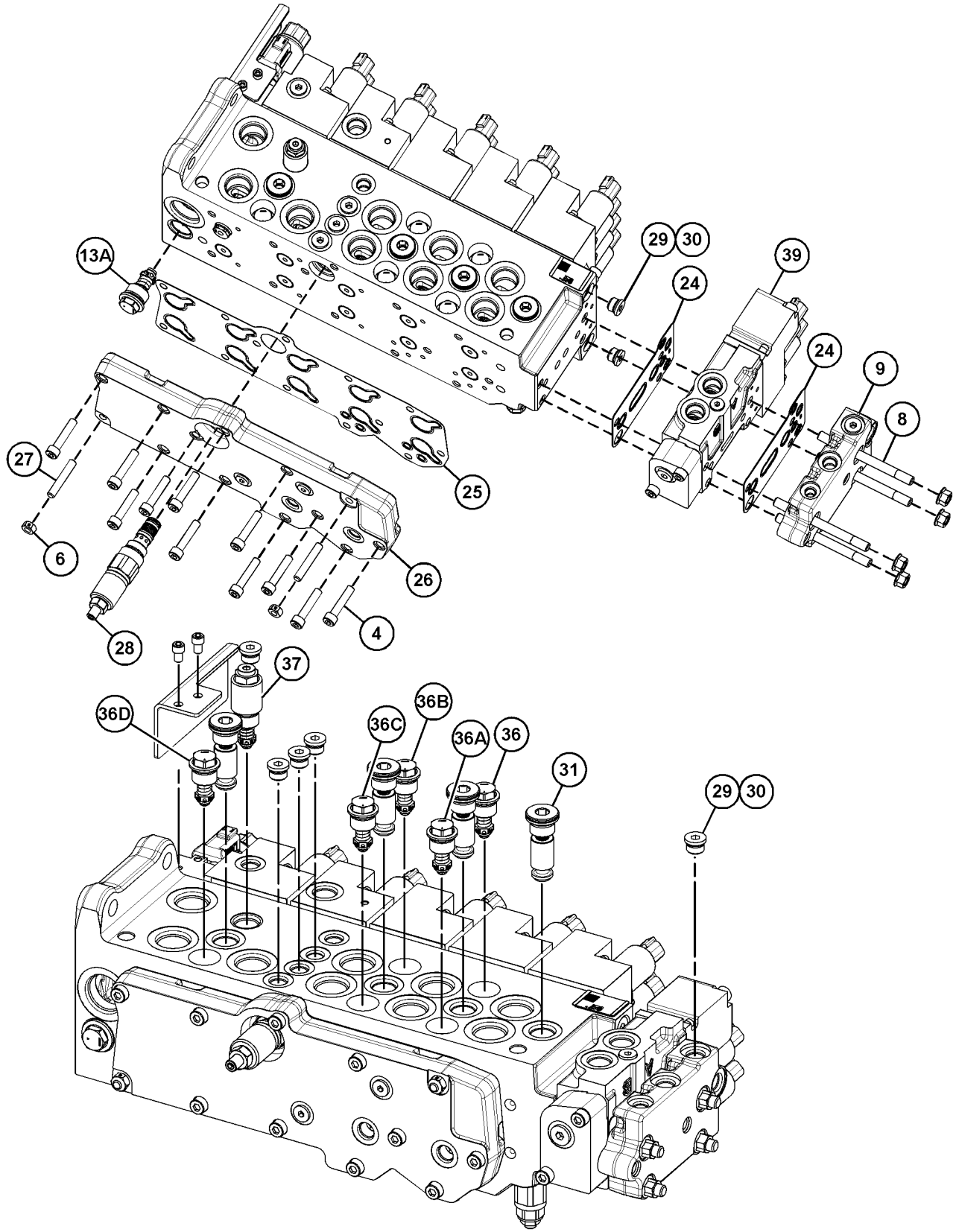

GRAPHIC #2 <END> g06347424

347-0612 VALVE GP-PUMP CONTROL–FLOW COMPENSATOR

PART OF 487-6229 PUMP GP-MAIN HYDRAULIC

AN ATTACHMENT

SMCS-5455 **i06535058**

NOTE	REF NO	GRAPHIC REF	PART NUMBER	QTY	PART NAME 1 2 3 4 5 6 (PRODUCT LEVEL)	SEE PAGE
M	1	1	**8T-8442**	4	BOLT-SOCKET HEAD (M6X1X30-MM)	
	2	1	**280-7870**	1	GASKET	
	3	1	**6E-6528**	2	SEAL	
C	4	1	**200-5363**	2	RING-THRUST	
C	5	1	**200-5362**	2	SEAL-O-RING	
	6	1	**033-6043**	1	SEAL-O-RING	
C	7	1	**6V-8352**	1	SEAL-O-RING	

C - CHANGE FROM PREVIOUS TYPE
M - METRIC PART

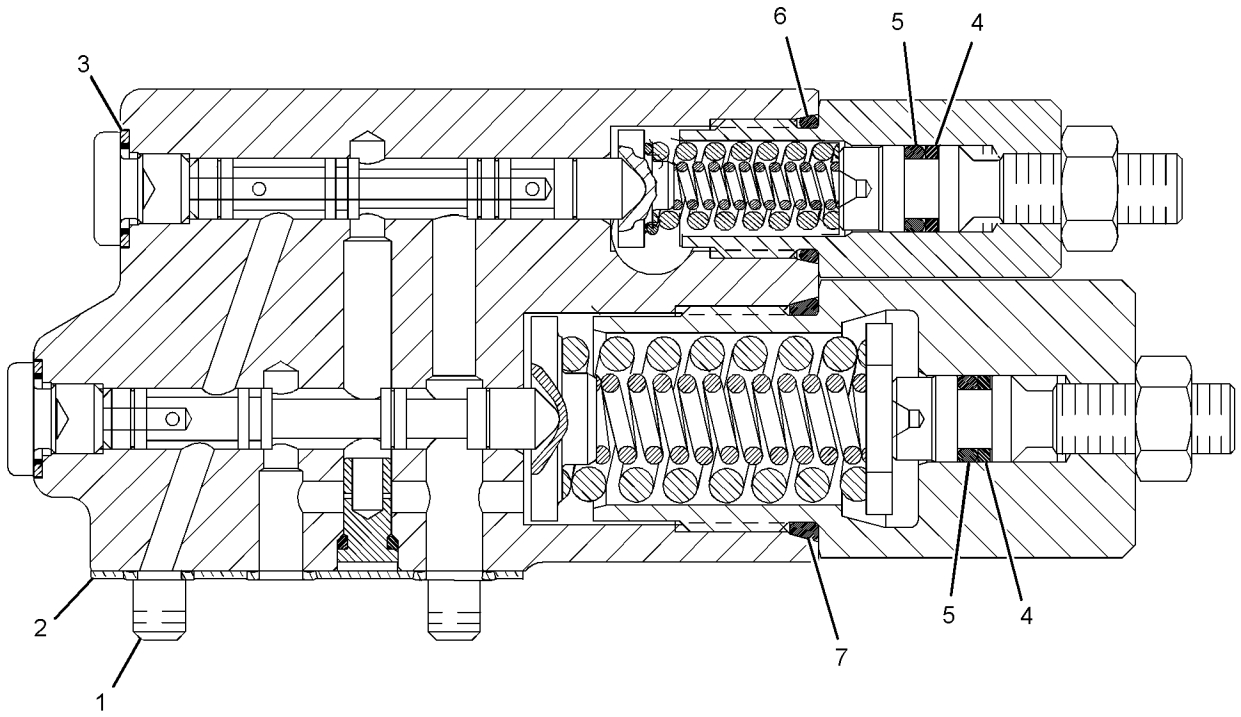

GRAPHIC #1 <END> g06016957

421-1062 VALVE GP-PUMP CONTROL

PART OF 564-7829, 564-7830 PUMP GP-MAIN HYDRAULIC
AN ATTACHMENT

SMCS-5455 **i06102355**

NOTE	REF NO	GRAPHIC REF	PART NUMBER	QTY	PART NAME 1 2 3 4 5 6 (PRODUCT LEVEL)	SEE PAGE
	1	1	**280-7870**	1	GASKET	
M	2	1	**8T-8442**	4	BOLT-SOCKET HEAD (M6X1X30-MM)	
	3	1	**033-6043**	1	SEAL-O-RING	
	4	1	**200-5362**	1	SEAL-O-RING	
	5	1	**200-5363**	1	RING-THRUST	

M - METRIC PART

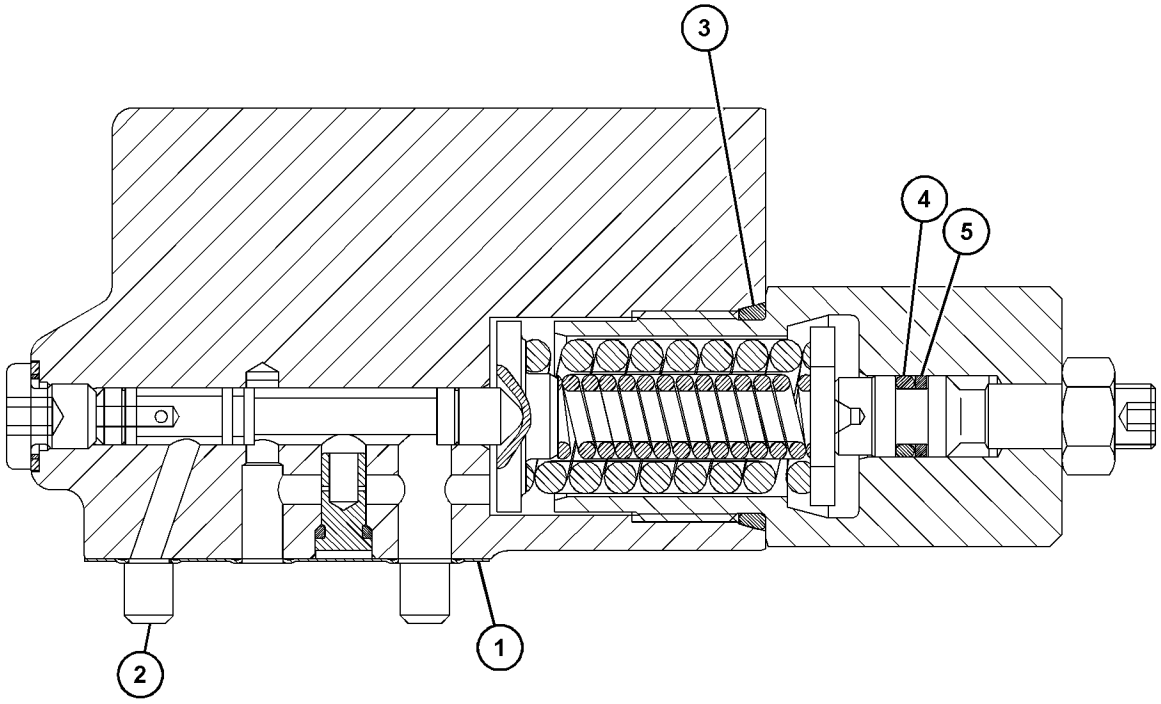

GRAPHIC #1 <END> g03821088

456-1861 VALVE GP-RELIEF–PILOT OPERATED

PART OF 515-3528, 515-3535, 518-9270 VALVE GP-MAIN CONTROL

AN ATTACHMENT

SMCS-5069, 5117 **i06718567**

NOTE	REF NO	GRAPHIC REF	PART NUMBER	QTY	PART NAME 1 2 3 4 5 6 (PRODUCT LEVEL)	SEE PAGE
	1	1	**033-6027**	2	SEAL-O-RING	
	2	1	**186-2487**	1	RING-BACKUP	
	3	1	**033-5879**	2	SEAL-O-RING	
	4	1	**9N-1756**	1	SEAL-O-RING	
	5	1	**186-2488**	1	RING-BACKUP	

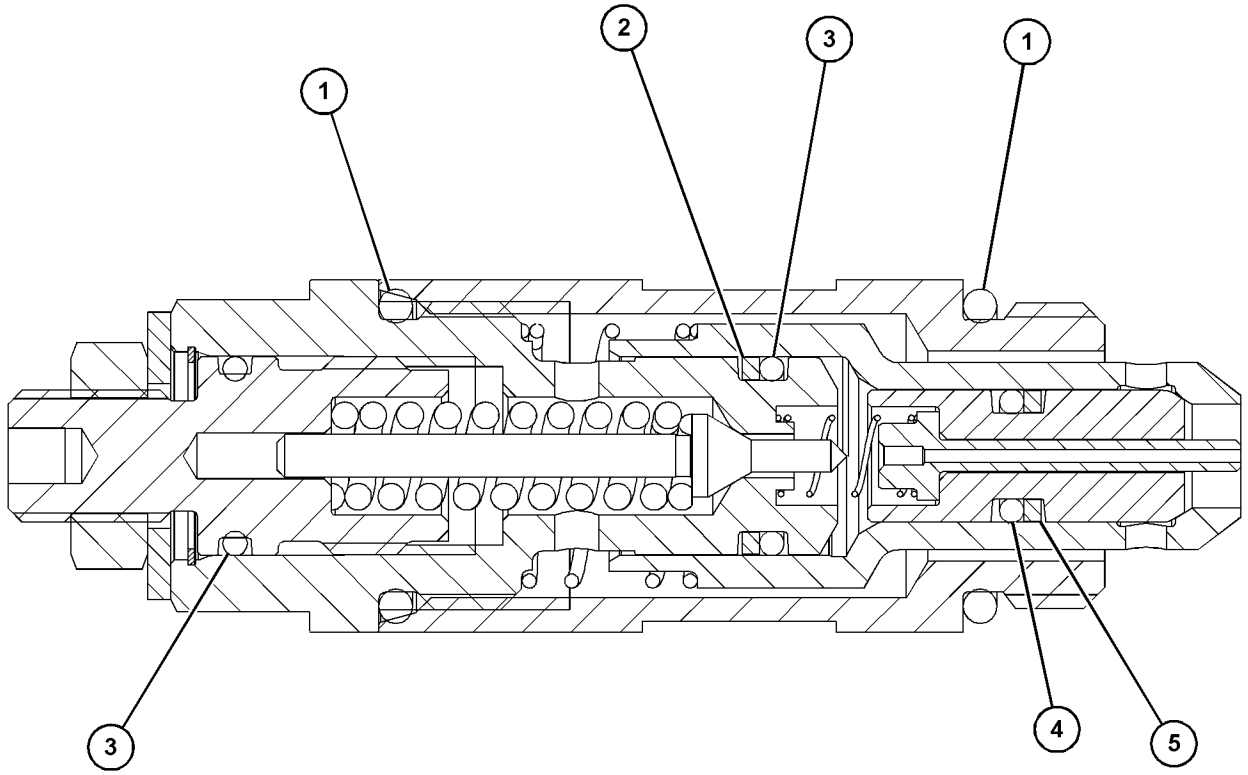

GRAPHIC #1 <END> g03867066

566-6523 VALVE GP-RELIEF—PILOT OPERATED

PART OF 515-3528, 515-3535, 518-9270 VALVE GP-MAIN CONTROL
AN ATTACHMENT

SMCS-5069, 5117

i07546192

NOTE	REF NO	GRAPHIC REF	PART NUMBER	QTY	PART NAME 1 2 3 4 5 6 (PRODUCT LEVEL)	SEE PAGE
	1	1	**9T-7266**	1	NUT (3/4-16-THD)	
	2	1	**238-5080**	1	SEAL-O-RING	
	3	1	**6E-3008**	1	SPRING	
	4	1	**130-1676**	1	SEAL-O-RING	
	5	1	**464-0509**	1	SEAL-O-RING	

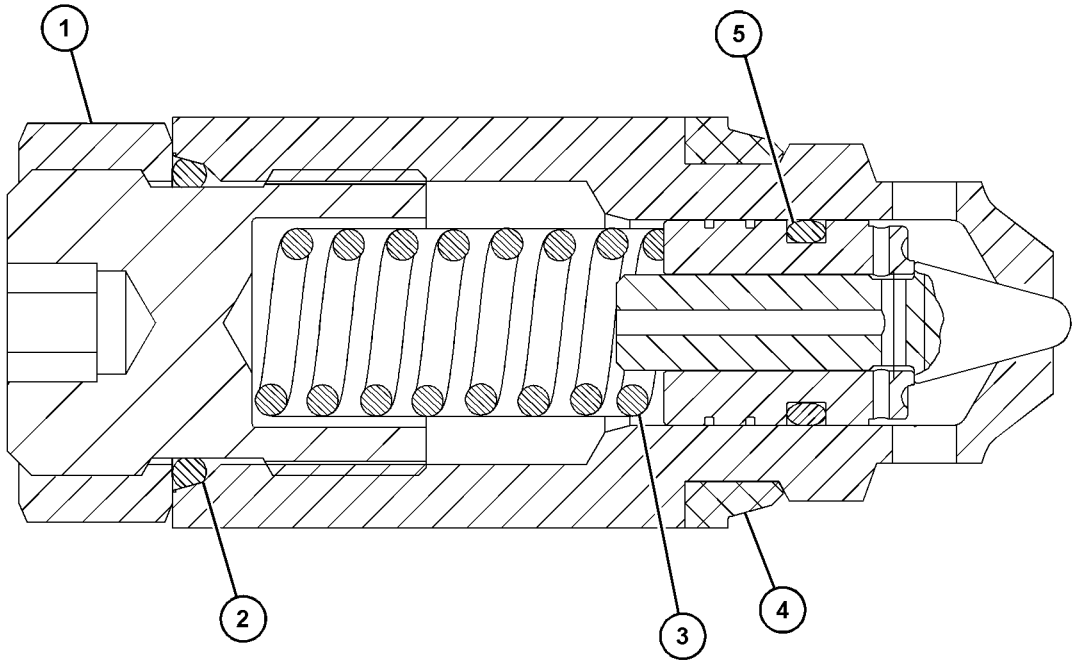

GRAPHIC #1 <END> g06345569

512-2573 BOOM AR

PART OF 562-4906, 562-9155, 562-9156, 562-9158 DISTRIBUTION AR
AN ATTACHMENT

SMCS-6501 **i07544870**

NOTE	PART NUMBER	QTY	PART NAME 1 2 3 4 5 6 (PRODUCT LEVEL)	SEE PAGE
Y	*512-2581*	1	BOOM GP	287
Y	*513-7126*	1	LINES GP-BOOM	189
Y	*296-9642*	1	LINES GP-GREASE	290
Y	*520-7314*	1	PIN GP-EXCAVATOR	304

Y - SEPARATE ILLUSTRATION

<END>

512-2576 BOOM AR—VARIABLE ADJUSTABLE BOOM

PART OF 562-9159 DISTRIBUTION AR
AN ATTACHMENT

SMCS-6501 **i07546440**

NOTE	PART NUMBER	QTY	PART NAME 1 2 3 4 5 6 (PRODUCT LEVEL)	SEE PAGE
Y	*512-2584*	1	BOOM GP	288
Y	*567-6410*	1	GUARD GP-CYLINDER	115
Y	*513-7135*	1	LINES GP-BOOM (VARIABLE ADJUSTABLE BOOM)	190
Y	*520-7314*	1	PIN GP-EXCAVATOR	304

Y - SEPARATE ILLUSTRATION

<END>

512-2581 BOOM GP

PART OF 512-2573 BOOM AR
AN ATTACHMENT

SMCS-6501 **i07544871**

NOTE	REF NO	GRAPHIC REF	PART NUMBER	QTY	PART NAME 1 2 3 4 5 6 (PRODUCT LEVEL)	SEE PAGE
	1	1	**3B-8485**	1	ELBOW	
	2	1	**166-1492**	2	SEAL-LIP TYPE	
	3	1	**167-9888**	2	SHIM (2-MM THK)	
B		1	**433-3898**	2	SHIM (1-MM THK)	
B		1	**433-3913**	1	SHIM (0.5-MM THK)	
M	4	1	**198-5646**	2	BOLT (M12X1.75X104-MM)	
	5	1	**296-9473**	1	PIN	
	6	1	**296-9573**	1	PIN	
M	7	1	**8T-4244**	4	NUT (M12X1.75-THD)	
	8	1	**514-4460**	1	BOOM & BEARING AS	
	8A	1	**239-7708**	2	BUSHING	
M		1	**5I-3272**	2	BOSS (M12X1.75X20-MM)	
		1	**7T-1099**	2	LINK	
M		1	**9R-3761**	4	BOSS (M10X1.5X51-MM)	
B	9	1	**468-7328**	1	SHIM (1-MM THK)	

B - USE AS REQUIRED
M - METRIC PART

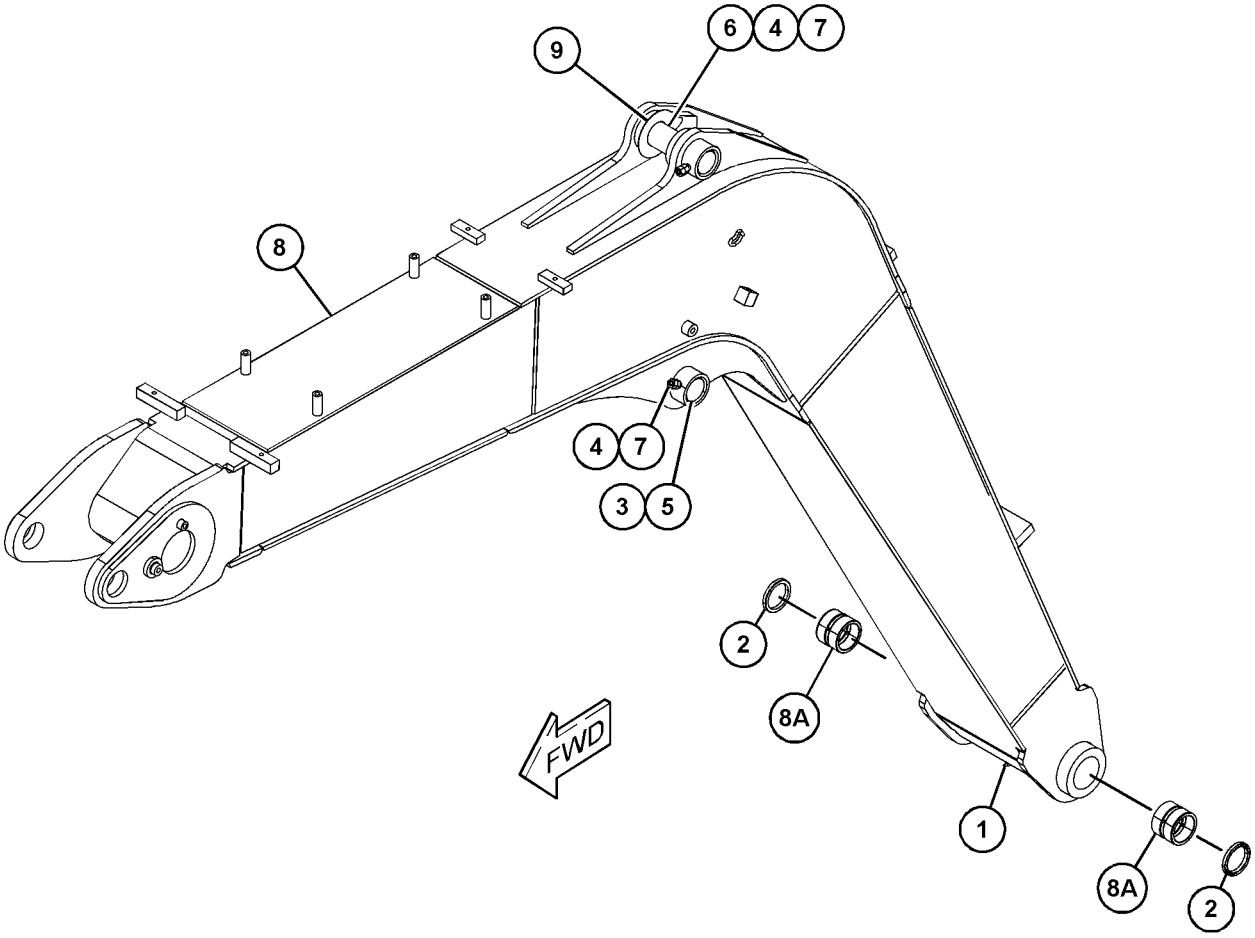

GRAPHIC #1 <END> g06340709

512-2584 BOOM GP

PART OF 512-2576 BOOM AR

AN ATTACHMENT

SMCS-6501 **i07546441**

NOTE	REF NO	GRAPHIC REF	PART NUMBER	QTY	PART NAME 1 2 3 4 5 6 (PRODUCT LEVEL)	SEE PAGE
	1	1	**3B-8485**	1	ELBOW	
	2	1	**3B-8489**	2	FITTING-GREASE (1/8-27 PTF)	
	3	1	**166-1492**	4	SEAL-LIP TYPE	
	4	1	**324-7093**	2	PIN	
	5	1	**324-7094**	1	PIN AS	
	6	1	**324-7096**	1	PIN AS	
	7	1	**352-9047**	4	PLATE	
	8	1	**8T-4895**	2	WASHER (13.5X50X5-MM THK)	
B	9	1	**353-5516**	4	SHIM (1-MM THK)	
B		1	**353-5515**	2	SHIM (0.5-MM THK)	
B		1	**353-5517**	4	SHIM (2-MM THK)	
M	10	1	**8T-4192**	2	BOLT (M12X1.75X25-MM)	
B	11	1	**468-7328**	1	SHIM (1-MM THK)	
	12	1	**515-1040**	1	BOOM & BEARING AS	
	12A	1	**239-7708**	4	BUSHING	
		1	**7T-1099**	3	LINK	
M		1	**8T-4967**	2	STUD-WELD (M10X1.5X23-MM)	
M		1	**9R-2672**	4	BOSS-THREADED (M10X1.5X120-MM)	
M		1	**9R-2821**	2	BOSS (M10X1.5X15-MM)	
		1	**121-1029**	1	CLIP	
	13	1	**520-0333**	1	BOOM AS (UPPER)	
M		1	**8T-4967**	2	STUD-WELD (M10X1.5X23-MM)	
M		1	**9R-2613**	2	BOSS-WELD (M10X1.5X25-MM)	
M		1	**9R-3572**	2	BOSS (M12X1.75X20-MM)	
M		1	**9R-3761**	4	BOSS (M10X1.5X51-MM)	
		1	**087-5841**	2	PLATE	
	14	1	**4M-5317**	1	BUSHING-REDUCER	
	15	1	**8T-4121**	8	WASHER-HARD (11X21X2.5-MM THK)	
M	16	1	**8T-4136**	8	BOLT (M10X1.5X25-MM)	

B - USE AS REQUIRED
M - METRIC PART

512-2584 **BOOM GP (**contd.**)** **i07546441**

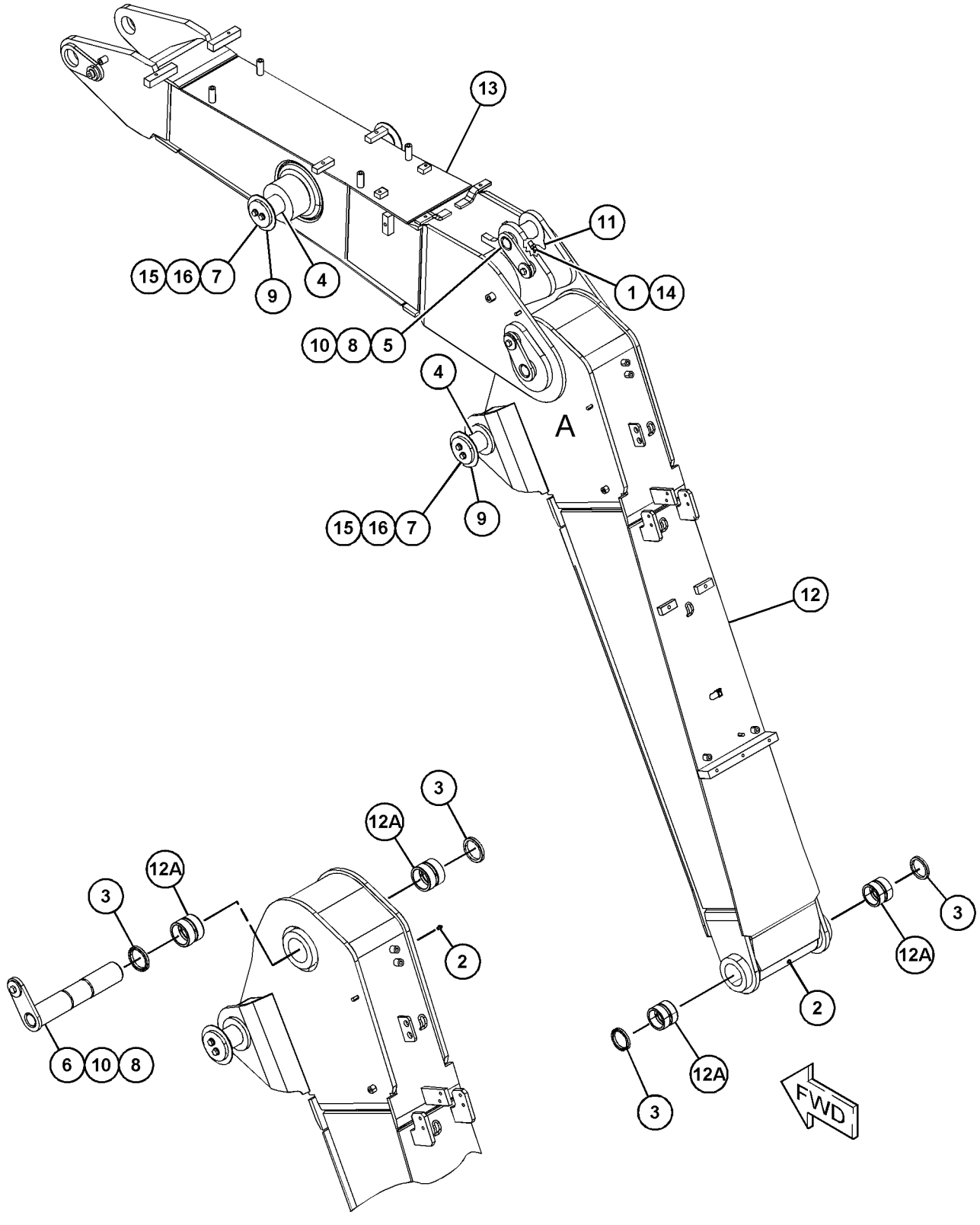

VIEW OF AREA A
(PARTS REMOVED FOR CLARITY)

GRAPHIC #1 <END> g06340841

296-9642 LINES GP-GREASE

PART OF 512-2573 BOOM AR

AN ATTACHMENT

SMCS-7510 **i05424278**

NOTE	REF NO	GRAPHIC REF	PART NUMBER	QTY	PART NAME 1 2 3 4 5 6 (PRODUCT LEVEL)	SEE PAGE
I	1	1	**6I-5140**	1	HOSE AS	
	2	1	**3B-8489**	1	FITTING-GREASE (1/8-27 PTF) (HYDRAULIC)	

I - REFER TO HYDRAULIC INFORMATION SYSTEM

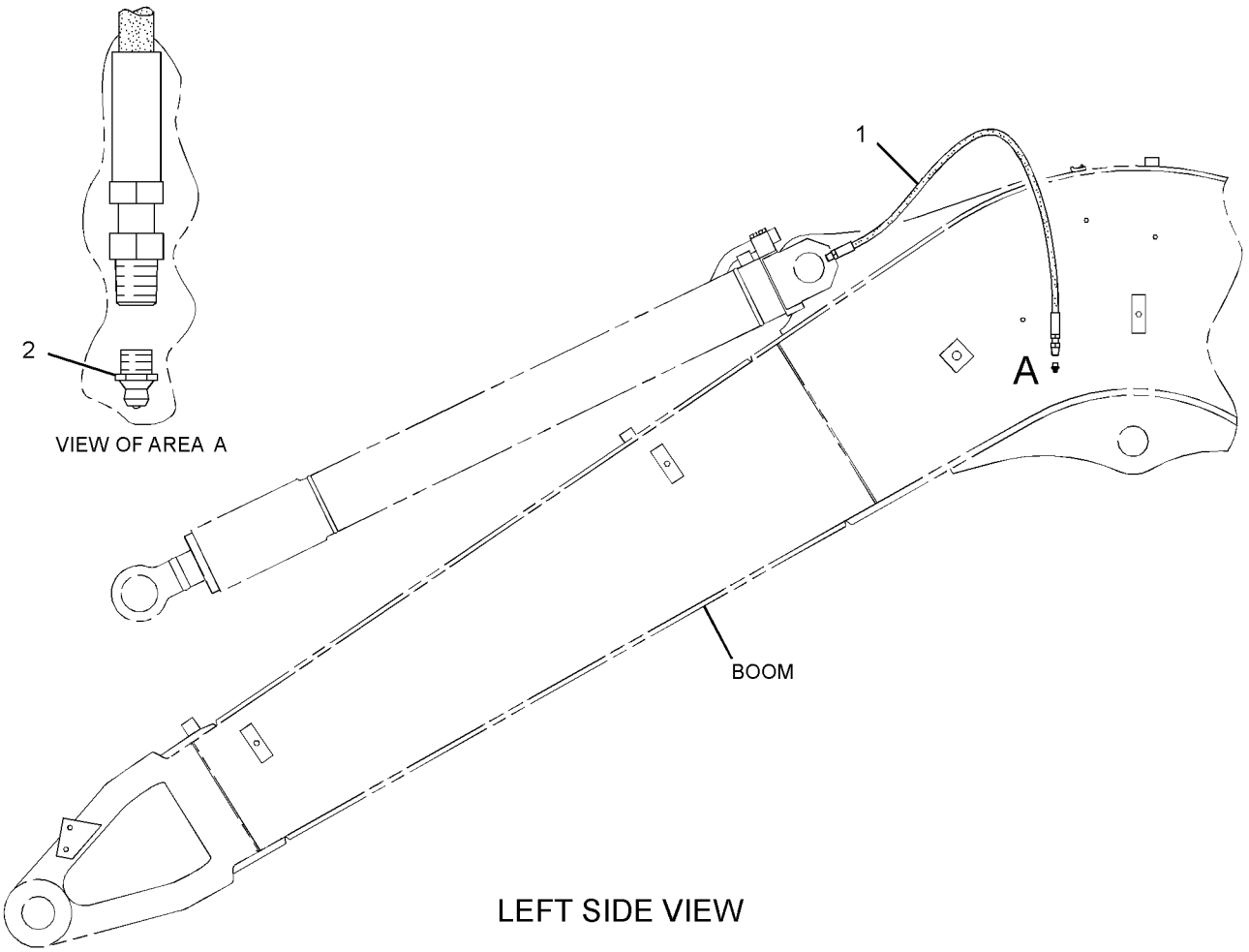

LEFT SIDE VIEW

GRAPHIC #1 <END> g01449968

512-5197 LINES GP-GREASE–SWING

PART OF 512-1513 CHASSIS AR

SMCS-7510 **i07542426**

NOTE	REF NO	GRAPHIC REF	PART NUMBER	QTY	PART NAME 1 2 3 4 5 6 (PRODUCT LEVEL)	SEE PAGE
	1	1	**3B-6552**	2	ELBOW-PIPE	
	2	1	**3B-8489**	2	FITTING-GREASE (1/8-27 PTF)	
	3	1	**7K-1181**	4	STRAP-CABLE	
	4	1	**002-0639**	2	ADAPTER-PIPE	
I	5	1	**513-4309**	1	HOSE AS	
I	6	1	**513-4310**	1	HOSE AS	
	7	1	**0L-1407**	1	GROMMET	

I - REFER TO HYDRAULIC INFORMATION SYSTEM

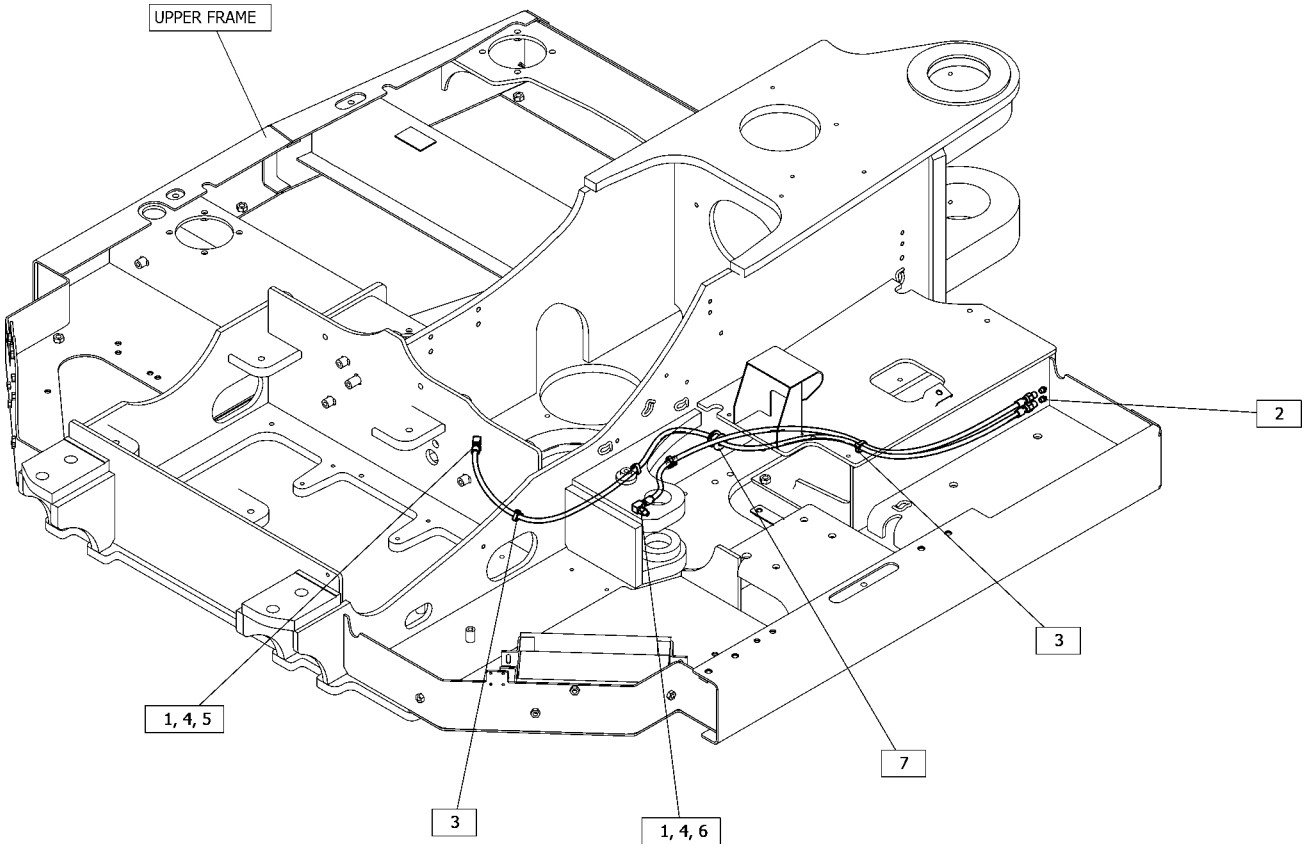

GRAPHIC #1 <END> g06328988

296-9482 LINK & BEARING AS

PART OF 424-9494 LINK GP

AN ATTACHMENT

SMCS-6513 **i05421013**

NOTE	REF NO	GRAPHIC REF	PART NUMBER	QTY	PART NAME 1 2 3 4 5 6 (PRODUCT LEVEL)	SEE PAGE
	1	1	**218-5197**	2	BUSHING	
	2	1	**296-9438**	2	BUSHING	

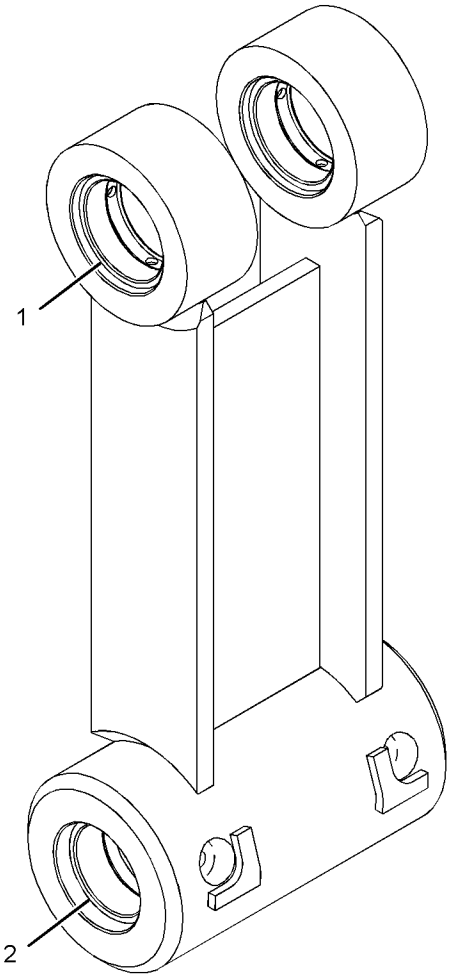

GRAPHIC #1 <END> g03338529

424-9494 LINK GP

PART OF 319-3652, 322-9892 LINKAGE GP-BUCKET
AN ATTACHMENT

SMCS-6117, 7118

i05421007

NOTE	REF NO	GRAPHIC REF	PART NUMBER	QTY	PART NAME 1 2 3 4 5 6 (PRODUCT LEVEL)	SEE PAGE
	1	1	**093-1432**	4	SEAL-LIP TYPE	
Y	2	1	**296-9482**	1	LINK & BEARING AS	292
	3	1	**296-9578**	2	SEAL-LIP TYPE	

Y - SEPARATE ILLUSTRATION

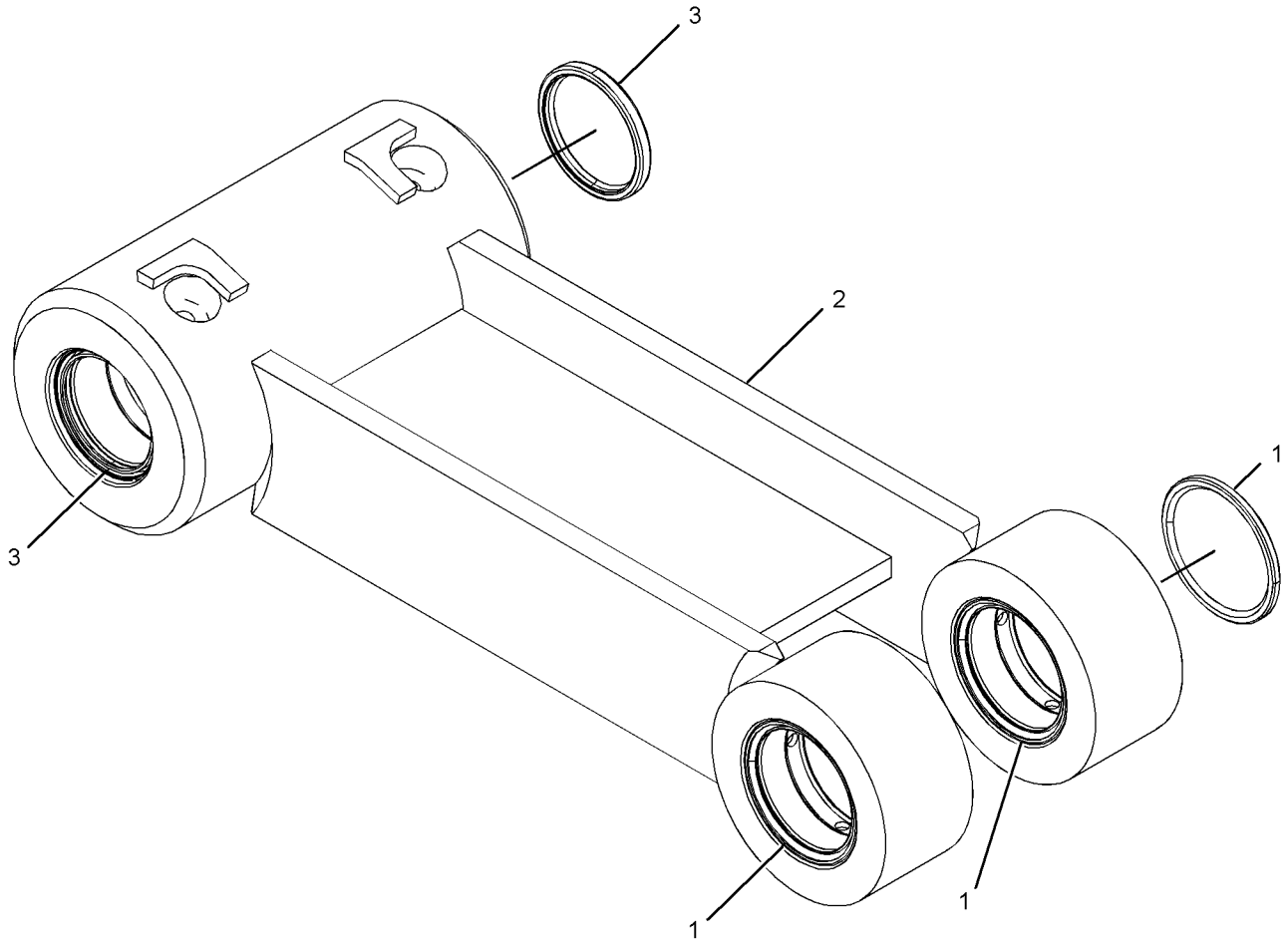

GRAPHIC #1 <END> g03411991

523-7476 LINK GP

PART OF 423-6751 LINKAGE GP-BUCKET
AN ATTACHMENT

SMCS-6117, 7118 **i07176330**

NOTE	REF NO	GRAPHIC REF	PART NUMBER	QTY	PART NAME 1 2 3 4 5 6 (PRODUCT LEVEL)	SEE PAGE
	1	1	**093-1432**	4	SEAL-LIP TYPE	
	2	1	**296-9578**	2	SEAL-LIP TYPE	
	3	1	**523-7477**	1	LINK & BEARING AS	
	3A	1	**218-5197**	2	BUSHING	
	3B	1	**296-9438**	2	BUSHING	

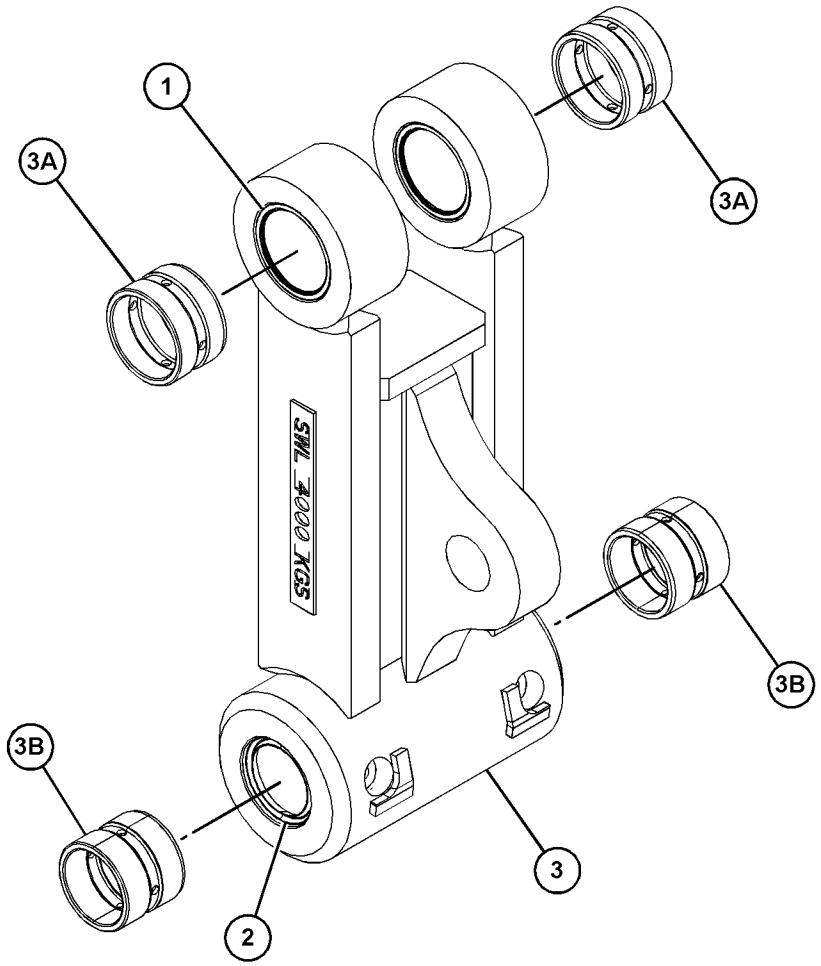

GRAPHIC #1 <END> g06243226

516-7070 LINKAGE AR-BUCKET

AN ATTACHMENT

SMCS-6513 **i07546508**

NOTE	PART NUMBER	QTY	PART NAME 1 2 3 4 5 6 (PRODUCT LEVEL)	SEE PAGE
Y	**521-2883**	1	CYLINDER GP-BUCKET	166
Y	*457-2531*	1	LINKAGE GP-BUCKET	302

Y - SEPARATE ILLUSTRATION

<END>

521-7589 LINKAGE AR-BUCKET—WITHOUT LIFTING EYE

CANNOT BE USED WITH 516-7070—PAGE: 295

AN ATTACHMENT

SMCS-6513 **i07546553**

NOTE	PART NUMBER	QTY	PART NAME 1 2 3 4 5 6 (PRODUCT LEVEL)	SEE PAGE
Y	**521-2883**	1	CYLINDER GP-BUCKET	166
Y	*319-3652*	1	LINKAGE GP-BUCKET	296

Y - SEPARATE ILLUSTRATION

<END>

568-1566 LINKAGE AR-BUCKET—WITHOUT LIFTING EYE

AN ATTACHMENT

SMCS-6513 **i07548558**

NOTE	PART NUMBER	QTY	PART NAME 1 2 3 4 5 6 (PRODUCT LEVEL)	SEE PAGE
Y	*521-2883*	1	CYLINDER GP-BUCKET	166
Y	*322-9892*	1	LINKAGE GP-BUCKET (WITHOUT HOOK)	298

Y - SEPARATE ILLUSTRATION

<END>

568-1567 LINKAGE AR-BUCKET—WITH LIFTING EYE

PART OF 562-4906, 562-9155, 562-9156, 562-9158, 562-9159 DISTRIBUTION AR

AN ATTACHMENT

SMCS-6513 **i07544947**

NOTE	PART NUMBER	QTY	PART NAME 1 2 3 4 5 6 (PRODUCT LEVEL)	SEE PAGE
Y	*521-2883*	1	CYLINDER GP-BUCKET	166
Y	*423-6751*	1	LINKAGE GP-BUCKET	300

Y - SEPARATE ILLUSTRATION

<END>

319-3652 LINKAGE GP-BUCKET

PART OF 521-7589 LINKAGE AR-BUCKET

AN ATTACHMENT

SMCS-6513 **i07546554**

NOTE	REF NO	GRAPHIC REF	PART NUMBER	QTY	PART NAME 1 2 3 4 5 6 (PRODUCT LEVEL)	SEE PAGE
B	1	1	**433-3898**	4	SHIM (1-MM THK)	
	1A	1	**167-9888**	2	SHIM (2-MM THK)	
B	3	1	**433-3930**	4	SHIM (1-MM THK)	
M	5	1	**198-5646**	2	BOLT (M12X1.75X104-MM)	
	6	1	**296-9481**	2	PIN	
	9	1	**319-3653**	1	PIN	
	10	1	**319-3654**	1	PIN	
	11	1	**319-3655**	1	LINK AS	
	12	1	**319-3656**	1	LINK AS	
	13	1	**093-1342**	4	SEAL-O-RING	
	14	1	**3B-8489**	4	FITTING-GREASE (1/8-27 PTF)	
M	15	1	**8T-4244**	8	NUT (M12X1.75-THD)	
M	16	1	**8T-5412**	2	BOLT (M12X1.75X140-MM)	
Y	17	1	**424-9494**	1	LINK GP	293

B - USE AS REQUIRED
M - METRIC PART
Y - SEPARATE ILLUSTRATION

319-3652 **LINKAGE GP-BUCKET (**contd.**)** **i07546554**

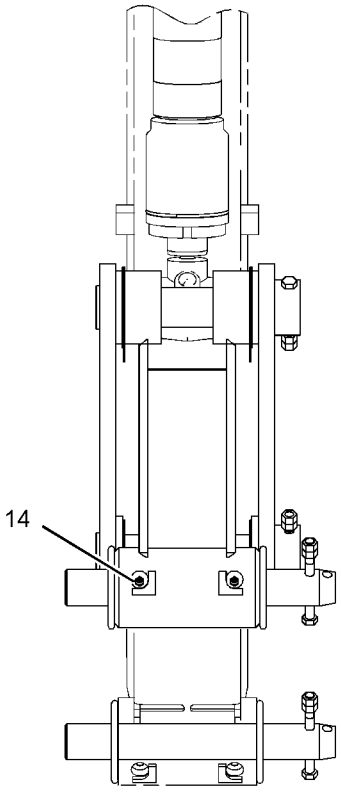

FRONT VIEW

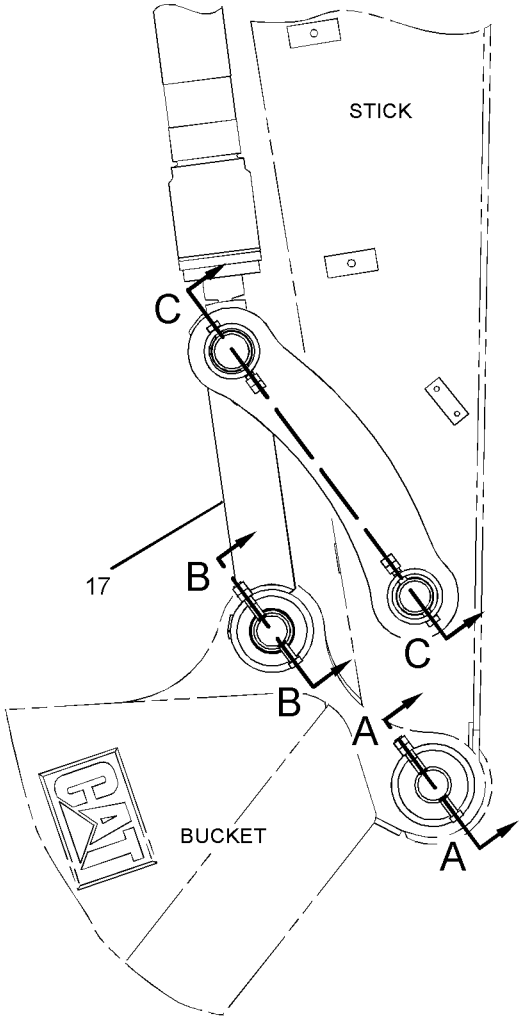

LEFT SIDE VIEW

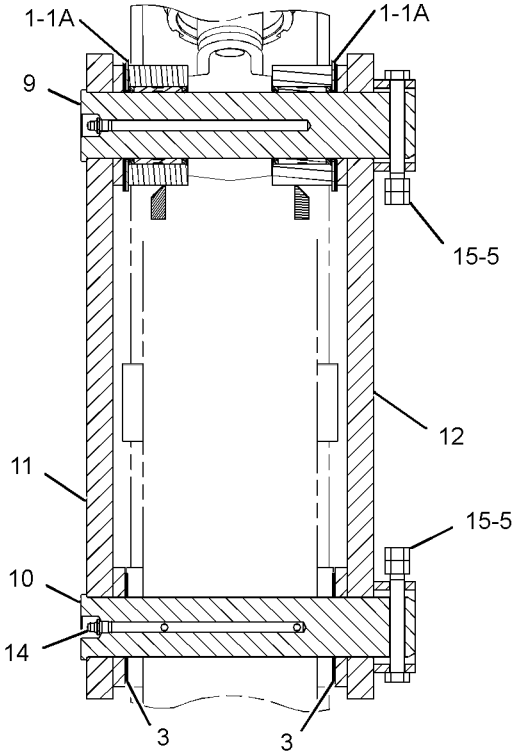

SECTION C-C

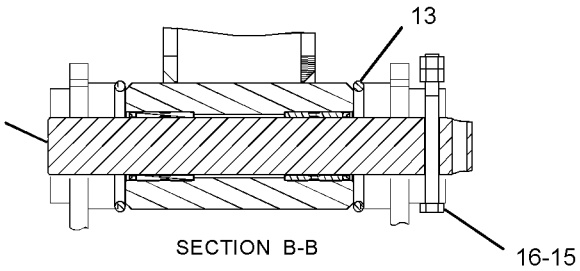

SECTION B-B

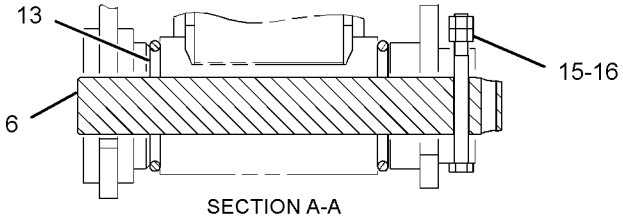

SECTION A-A

GRAPHIC #1 <END> g06277848

322-9892 LINKAGE GP-BUCKET—WITHOUT HOOK

PART OF 568-1566 LINKAGE AR-BUCKET

AN ATTACHMENT

SMCS-6513 **i06718149**

NOTE	REF NO	GRAPHIC REF	PART NUMBER	QTY	PART NAME 1 2 3 4 5 6 (PRODUCT LEVEL)	SEE PAGE
B	1	1	**468-7328**	4	SHIM (1-MM THK)	
M	2	1	**8T-5001**	2	BOLT (M12X1.75X130-MM)	
B	3	1	**150-5689**	4	SHIM (1-MM THK)	
	4	1	**167-9888**	2	SHIM (2-MM THK)	
M	5	1	**198-5646**	2	BOLT (M12X1.75X104-MM)	
	6	1	**296-9477**	1	LINK	
	7	1	**296-9478**	1	LINK AS	
	8	1	**296-9479**	1	PIN	
	9	1	**296-9480**	1	PIN	
	10	1	**296-9481**	2	PIN	
Y	11	1	*424-9494*	1	LINK GP	293
M	12	1	**8T-4244**	8	NUT (M12X1.75-THD)	
	13	1	**3B-8489**	4	FITTING-GREASE (1/8-27 PTF)	

B - USE AS REQUIRED
M - METRIC PART
Y - SEPARATE ILLUSTRATION

322-9892 **LINKAGE GP-BUCKET (**contd.**)** **i06718149**

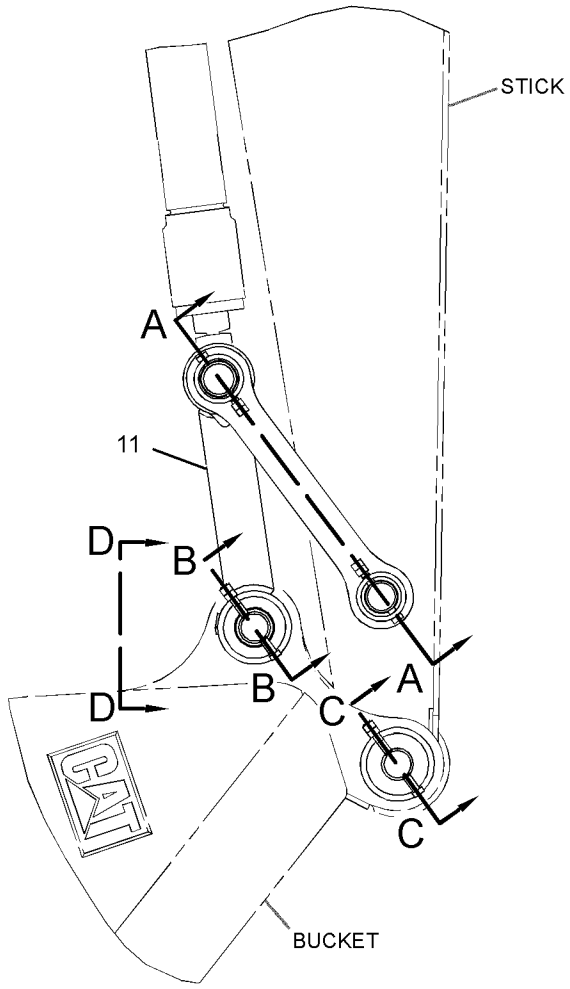

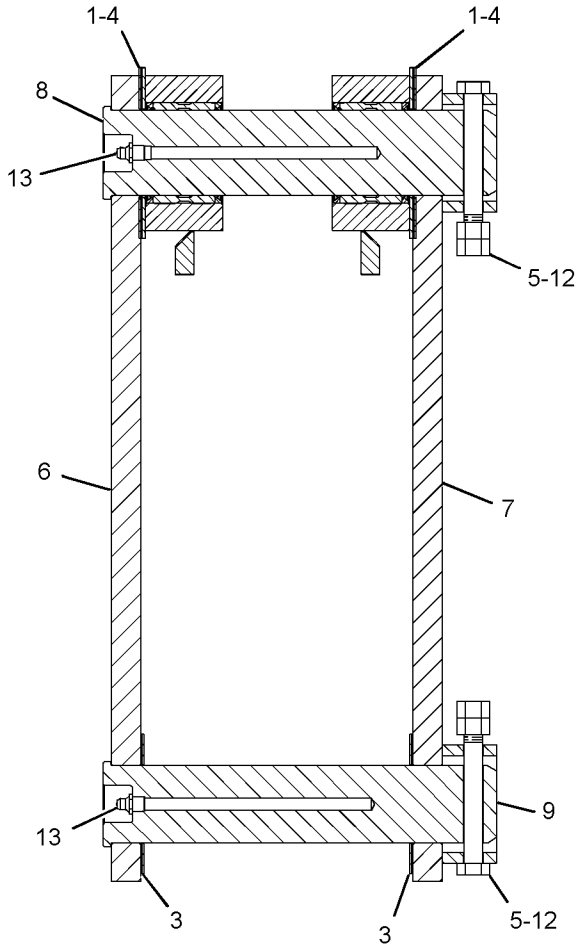

SECTION A-A

LEFT SIDE VIEW

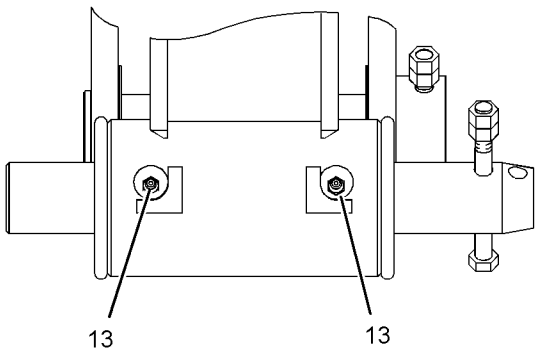

VIEW D-D

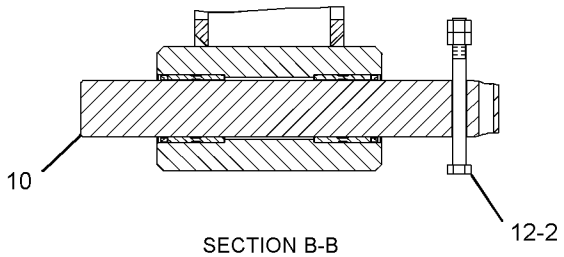

SECTION B-B

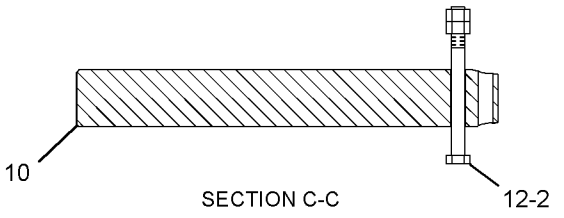

SECTION C-C

GRAPHIC #1 <END> g03427826

423-6751 LINKAGE GP-BUCKET

PART OF 568-1567 LINKAGE AR-BUCKET

AN ATTACHMENT

SMCS-6513 **i07167278**

NOTE	REF NO	GRAPHIC REF	PART NUMBER	QTY	PART NAME 1 2 3 4 5 6 (PRODUCT LEVEL)	SEE PAGE
B	1	1	**468-7328**	4	SHIM (1-MM THK)	
B	2	1	**150-5689**	4	SHIM (1-MM THK)	
	3	1	**167-9888**	2	SHIM (2-MM THK)	
M	4	1	**198-5646**	2	BOLT (M12X1.75X104-MM)	
	5	1	**296-9477**	1	LINK	
	6	1	**296-9478**	1	LINK AS	
	7	1	**296-9479**	1	PIN	
	8	1	**296-9480**	1	PIN	
	9	1	**296-9481**	2	PIN	
CY	10	1	*523-7476*	1	LINK GP	294
M	11	1	**8T-5001**	2	BOLT (M12X1.75X130-MM)	
	12	1	**3B-8489**	4	FITTING-GREASE (1/8-27 PTF)	
M	13	1	**8T-4244**	8	NUT (M12X1.75-THD)	

B - USE AS REQUIRED
C - CHANGE FROM PREVIOUS TYPE
M - METRIC PART
Y - SEPARATE ILLUSTRATION

423-6751 **LINKAGE GP-BUCKET (**contd.**)** **i07167278**

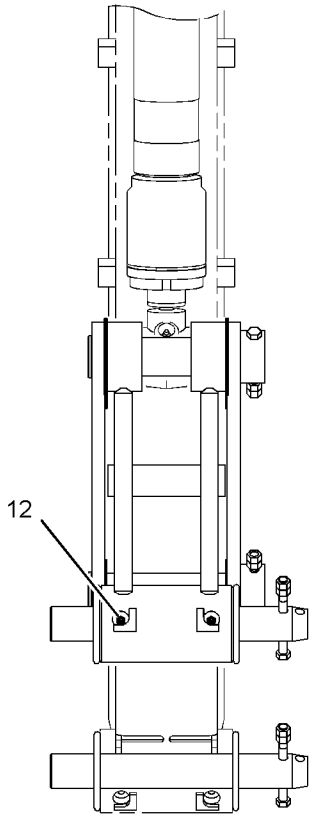

FRONT VIEW

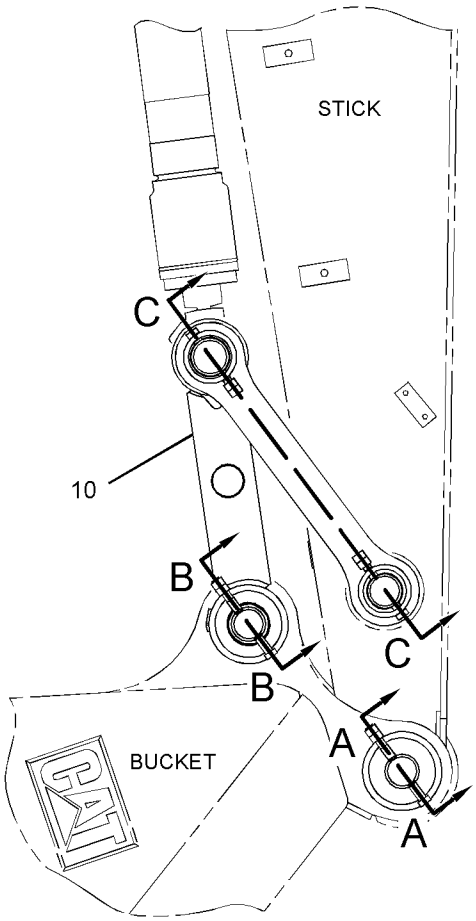

LEFT SIDE VIEW

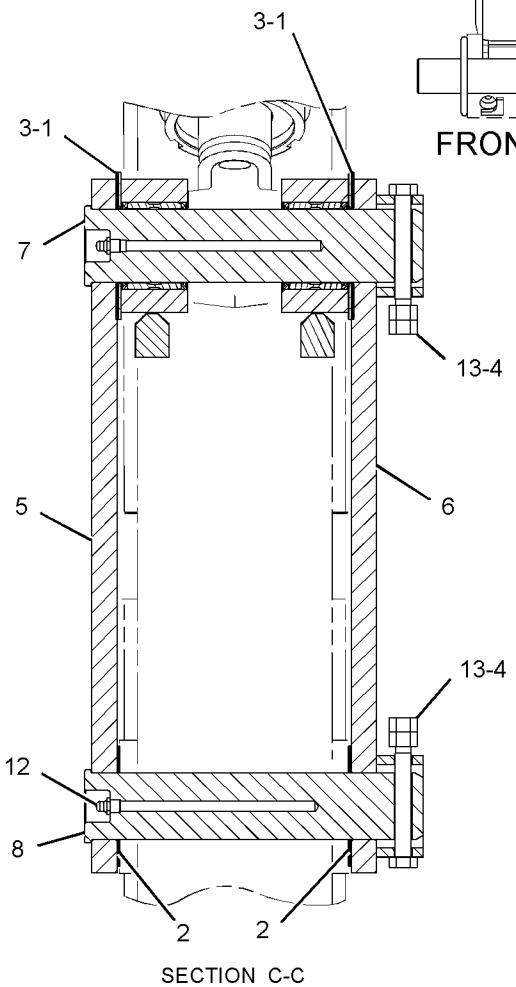

SECTION C-C

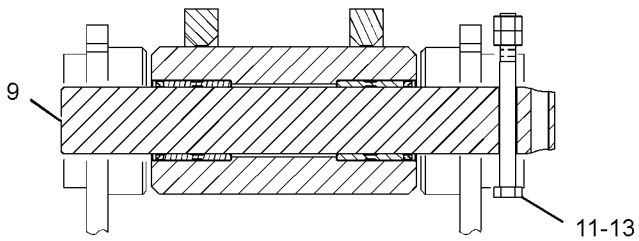

SECTION B-B

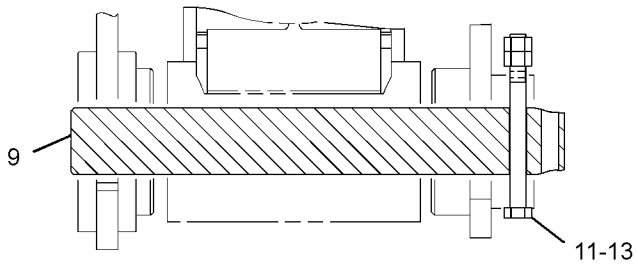

SECTION A-A

GRAPHIC #1 <END> g03424759

457-2531 LINKAGE GP-BUCKET

PART OF 516-7070 LINKAGE AR-BUCKET

AN ATTACHMENT

SMCS-6513 **i07546509**

NOTE	REF NO	GRAPHIC REF	PART NUMBER	QTY	PART NAME 1 2 3 4 5 6 (PRODUCT LEVEL)	SEE PAGE
	1	1	**3B-8489**	4	FITTING-GREASE (1/8-27 PTF)	
	2	1	**093-1432**	4	SEAL-LIP TYPE	
	3	1	**167-9888**	2	SHIM (2-MM THK)	
M	4	1	**198-5646**	2	BOLT (M12X1.75X104-MM)	
	5	1	**296-9481**	2	PIN	
	6	1	**296-9578**	2	SEAL-LIP TYPE	
	7	1	**319-3653**	1	PIN	
	8	1	**319-3654**	1	PIN	
	9	1	**319-3655**	1	LINK AS	
	10	1	**319-3656**	1	LINK AS	
	11	1	**423-6752**	1	LINK & BEARING AS	
	11A	1	**218-5197**	2	BUSHING	
	11B	1	**296-9438**	2	BUSHING	
B	12	1	**433-3898**	4	SHIM (1-MM THK)	
B	13	1	**433-3930**	4	SHIM (1-MM THK)	
	14	1	**367-8465**	4	SEAL-O-RING	
M	15	1	**8T-4244**	8	NUT (M12X1.75-THD)	
M	16	1	**8T-5412**	2	BOLT (M12X1.75X140-MM)	

B - USE AS REQUIRED
M - METRIC PART

457-2531 **LINKAGE GP-BUCKET (**contd.**)** **i07546509**

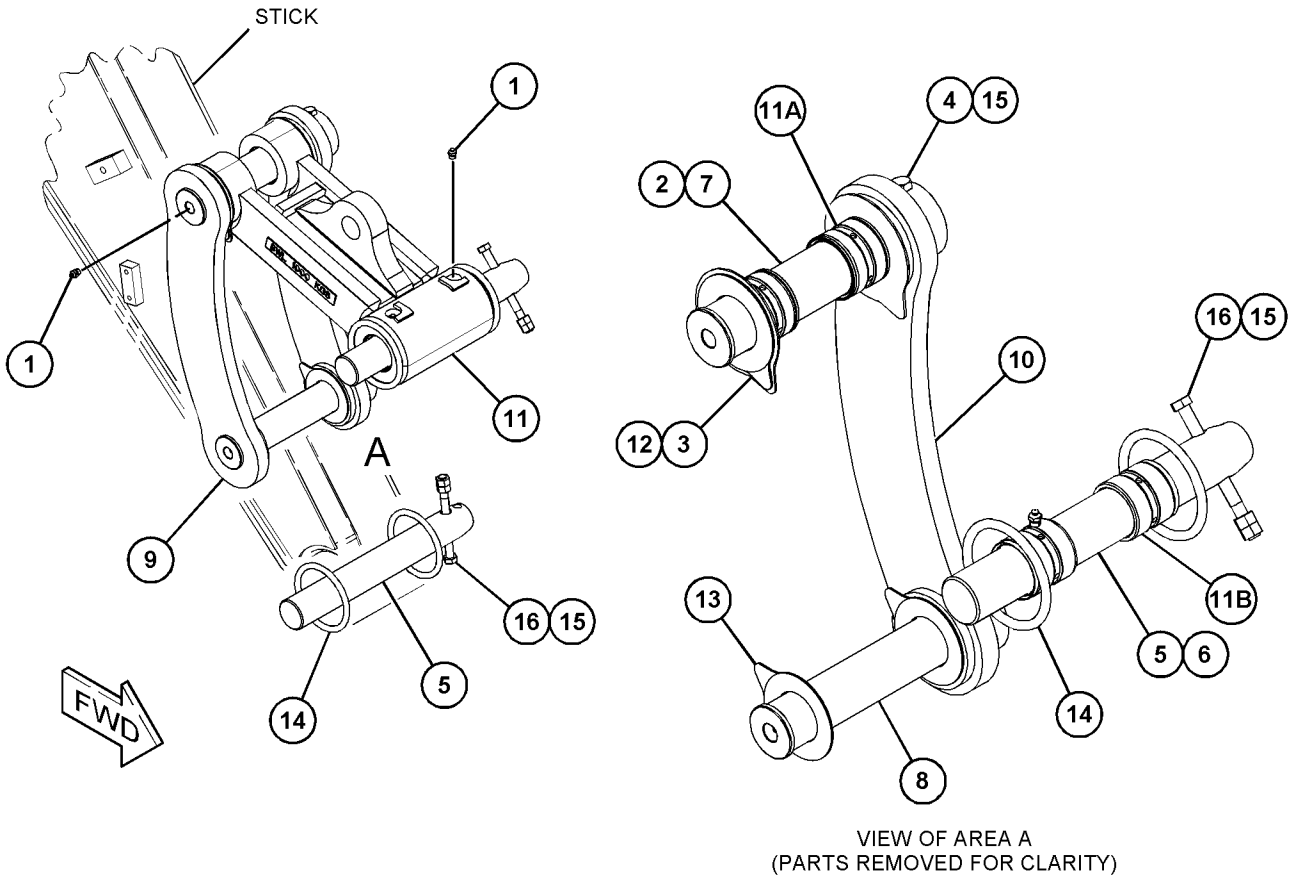

VIEW OF AREA A
(PARTS REMOVED FOR CLARITY)

GRAPHIC #1 <END> g03867068

520-7314 PIN GP-EXCAVATOR

PART OF 512-2573, 512-2576 BOOM AR

AN ATTACHMENT

SMCS-6108, 6501, 6502 **i07544875**

NOTE	REF NO	GRAPHIC REF	PART NUMBER	QTY	PART NAME 1 2 3 4 5 6 (PRODUCT LEVEL)	SEE PAGE
B	1	1	**166-1481**	4	SHIM (2-MM THK)	
B		1	**451-7573**	2	SHIM (1-MM THK)	
	2	1	**296-9538**	1	PIN AS	
		1	**7Y-2362**	1	PLATE	
	3	1	**296-9586**	1	PIN AS	
		1	**7Y-2362**	1	PLATE	
	4	1	**8T-4895**	2	WASHER (13.5X50X5-MM THK)	
B	5	1	**451-7579**	2	SHIM (0.5-MM THK)	
M	6	1	**8T-4192**	2	BOLT (M12X1.75X25-MM)	

B - USE AS REQUIRED
M - METRIC PART

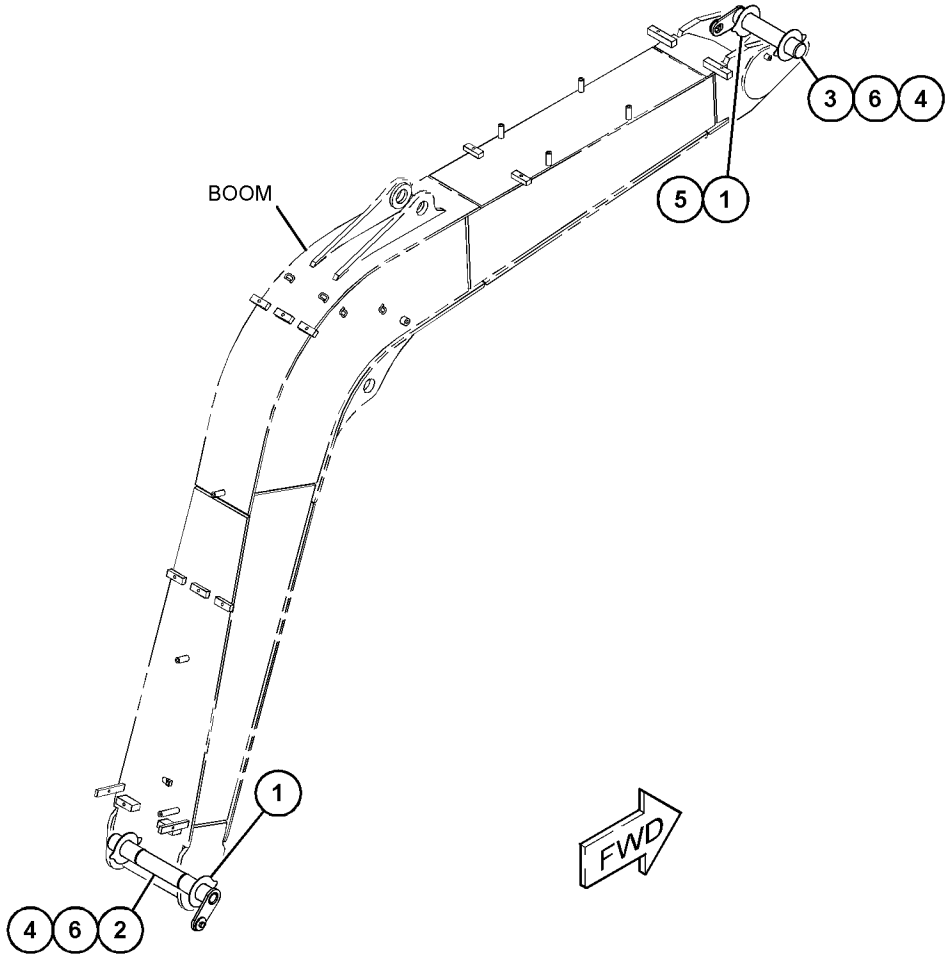

GRAPHIC #1 <END> g06338056

563-2071 STICK AR

PART OF 562-4906, 562-9155, 562-9156 DISTRIBUTION AR
AN ATTACHMENT

SMCS-6502 **i07545097**

NOTE	PART NUMBER	QTY	PART NAME 1 2 3 4 5 6 (PRODUCT LEVEL)	SEE PAGE
Y	*541-4573*	1	CONTROL AR-HYDRAULIC	149
Y	*514-3230*	1	HYDRAULIC AR	173
Y	*520-0769*	1	LINES AR-AUXILIARY HYDRAULIC	175
Y	*515-3513*	1	STICK AR-HOE	305

Y - SEPARATE ILLUSTRATION

<END>

515-3511 STICK AR-HOE—STANDARD STICK

THUMB
PART OF 563-2070, 563-2082, 563-2092 STICK & CONTROL AR-AUXILIARY
AN ATTACHMENT

SMCS-6502 **i07546495**

NOTE	PART NUMBER	QTY	PART NAME 1 2 3 4 5 6 (PRODUCT LEVEL)	SEE PAGE
Y	*515-8010*	1	LINES GP-STICK (STANDARD STICK)	231
Y	*515-1115*	1	STICK GP-HOE (THUMB)	306

Y - SEPARATE ILLUSTRATION

<END>

515-3513 STICK AR-HOE—LONG STICK

THUMB
PART OF 563-2083 STICK & CONTROL AR-AUXILIARY, 563-2071 STICK AR
AN ATTACHMENT

SMCS-6502 **i07546205**

NOTE	PART NUMBER	QTY	PART NAME 1 2 3 4 5 6 (PRODUCT LEVEL)	SEE PAGE
Y	*513-7143*	1	LINES GP-STICK	230
Y	*515-1135*	1	STICK GP-HOE (THUMB)	307

Y - SEPARATE ILLUSTRATION

<END>

515-1115 STICK GP-HOE—THUMB

1.8-M (6-FT)
PART OF 515-3511 STICK AR-HOE
AN ATTACHMENT

SMCS-6502 **i07546500**

NOTE	REF NO	GRAPHIC REF	PART NUMBER	QTY	PART NAME 1 2 3 4 5 6 (PRODUCT LEVEL)	SEE PAGE
	1	1	**3B-8489**	4	FITTING-GREASE (1/8-27 PTF)	
B	2	1	**150-5689**	3	SHIM (1-MM THK)	
	3	1	**150-5697**	2	SEAL-LIP TYPE	
	4	1	**166-1492**	2	SEAL-LIP TYPE	
	5	1	**167-9888**	2	SHIM (2-MM THK)	
M	6	1	**198-5646**	2	BOLT (M12X1.75X104-MM)	
	7	1	**296-9578**	2	SEAL-LIP TYPE	
	8	1	**380-8749**	1	PIN	
	9	1	**380-8750**	1	PIN	
B	10	1	**468-7328**	3	SHIM (1-MM THK)	
	11	1	**514-4490**	1	STICK & BEARING AS	
	11A	1	**239-7708**	2	BUSHING	
	11B	1	**296-9438**	4	BUSHING	
M	12	1	**8T-4244**	4	NUT (M12X1.75-THD)	

B - USE AS REQUIRED
M - METRIC PART

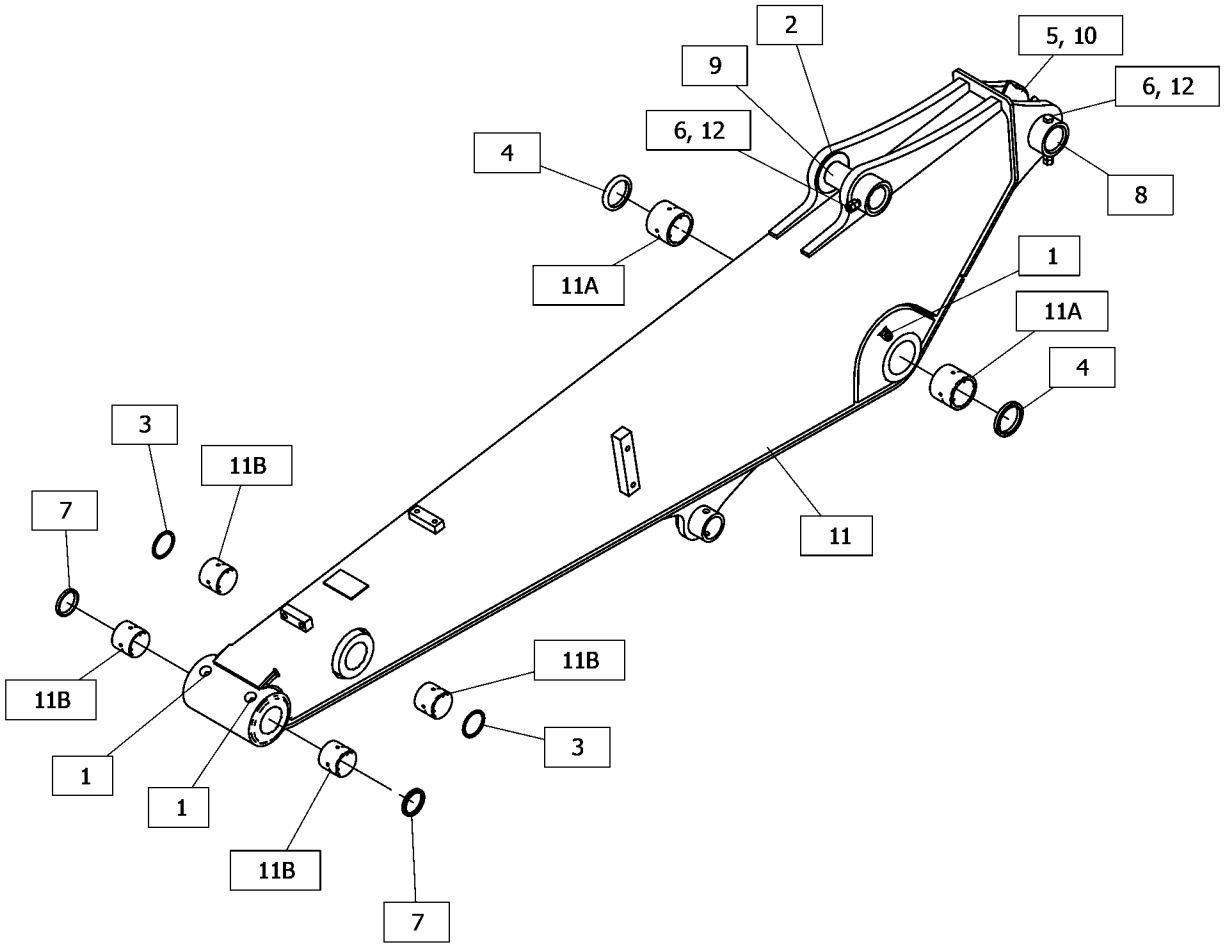

GRAPHIC #1 <END> g06343152

515-1135 STICK GP-HOE–THUMB

2.3-M (7.5-FT)
PART OF 515-3513 STICK AR-HOE
AN ATTACHMENT

SMCS-6502 **i07546207**

NOTE	REF NO	GRAPHIC REF	PART NUMBER	QTY	PART NAME 1 2 3 4 5 6 (PRODUCT LEVEL)	SEE PAGE
	1	1	**3B-8489**	4	FITTING-GREASE (1/8-27 PTF)	
B	2	1	**150-5689**	3	SHIM (1-MM THK)	
	3	1	**150-5697**	2	SEAL-LIP TYPE	
	4	1	**166-1492**	2	SEAL-LIP TYPE	
	5	1	**167-9888**	2	SHIM (2-MM THK)	
M	6	1	**198-5646**	2	BOLT (M12X1.75X104-MM)	
	7	1	**296-9578**	2	SEAL-LIP TYPE	
	8	1	**380-8749**	1	PIN	
	9	1	**380-8750**	1	PIN	
B	10	1	**468-7328**	3	SHIM (1-MM THK)	
	11	1	**514-4500**	1	STICK & BEARING AS	
	11A	1	**239-7708**	2	BUSHING	
	11B	1	**296-9438**	4	BUSHING	
M	12	1	**8T-4244**	4	NUT (M12X1.75-THD)	

B - USE AS REQUIRED
M - METRIC PART

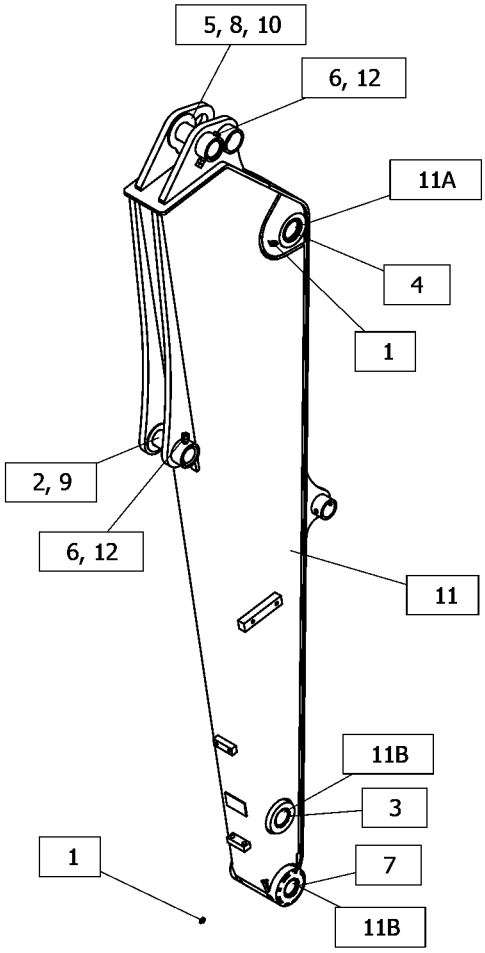

GRAPHIC #1 <END> g06343607

512-5800 BLADE & MOUNTING GP

2450-MM (96.4-IN)
PART OF 512-2526 BLADE AR-STRAIGHT
AN ATTACHMENT

SMCS-6060, 6151

i07546431

NOTE	REF NO	GRAPHIC REF	PART NUMBER	QTY	PART NAME 1 2 3 4 5 6 (PRODUCT LEVEL)	SEE PAGE
	1	1	**3B-8489**	1	FITTING-GREASE (1/8-27 PTF)	
	2	1	**3J-7283**	2	FITTING-GREASE	
	3	1	**093-1430**	4	SEAL-LIP TYPE	
	4	1	**137-9097**	1	PIN AS	
	5	1	**137-9269**	1	PIN AS	
Y	6	1	*512-5801*	1	BLADE GP-STRAIGHT	311
	7	1	**086-0297**	2	WASHER (13X50X6-MM THK)	
M	8	1	**329-3356**	4	NUT (M12X1.75-THD)	
	9	1	**5I-9543**	2	PIN	
M	10	1	**8T-4176**	2	BOLT (M12X1.75X90-MM)	
M	11	1	**8T-4179**	2	BOLT (M12X1.75X20-MM)	

M - METRIC PART
Y - SEPARATE ILLUSTRATION

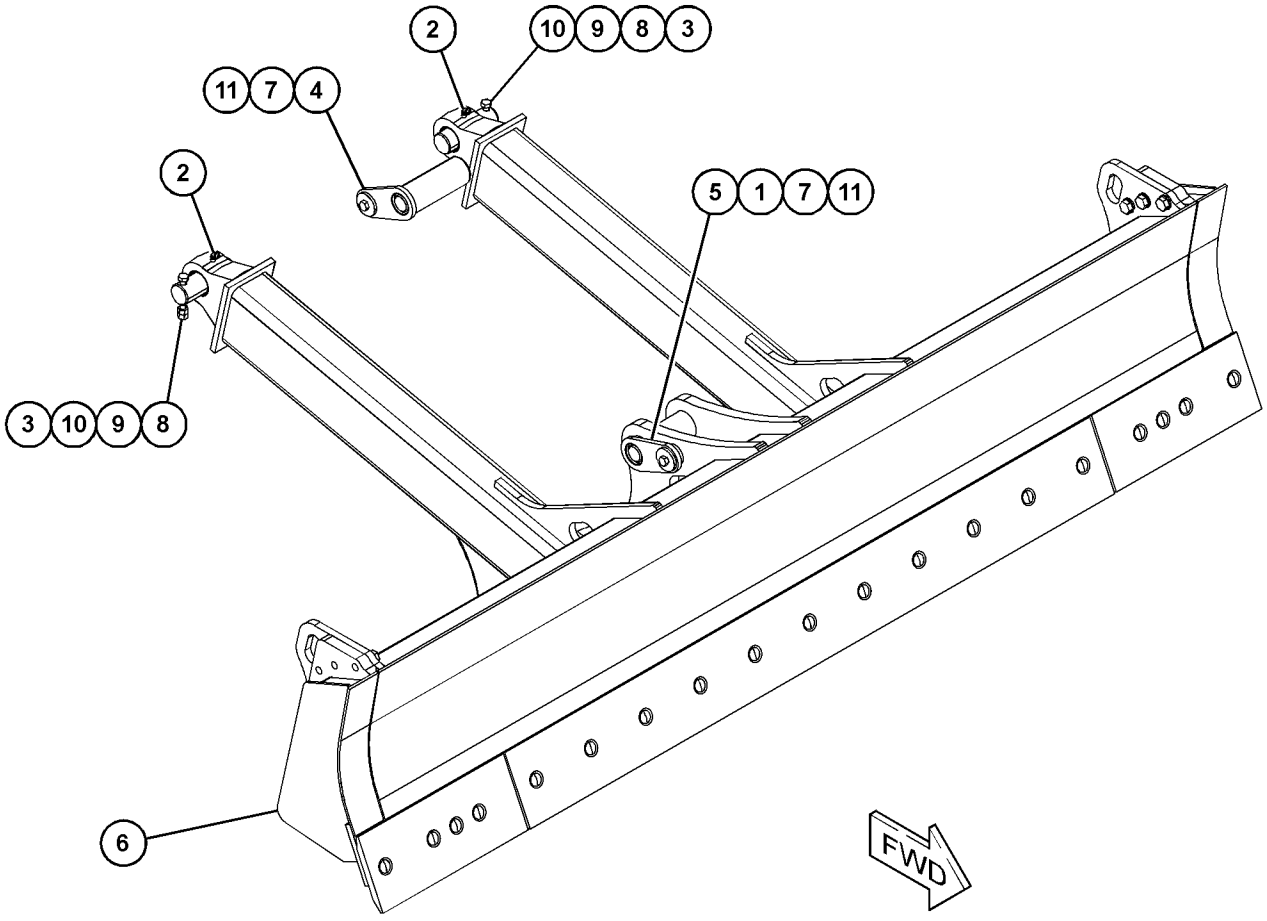

GRAPHIC #1 <END> g06347590

512-5806 BLADE & MOUNTING GP

2300-MM (91-IN)
PART OF 512-2524 BLADE AR-STRAIGHT
AN ATTACHMENT

SMCS-6060, 6151 **i07546225**

NOTE	REF NO	GRAPHIC REF	PART NUMBER	QTY	PART NAME 1 2 3 4 5 6 (PRODUCT LEVEL)	SEE PAGE
	1	1	**3B-8489**	1	FITTING-GREASE (1/8-27 PTF)	
	2	1	**3J-7283**	2	FITTING-GREASE	
	3	1	**093-1430**	4	SEAL-LIP TYPE	
	4	1	**137-9097**	1	PIN AS	
	5	1	**137-9269**	1	PIN AS	
Y	6	1	*512-5807*	1	BLADE GP-STRAIGHT	312
	7	1	**086-0297**	2	WASHER (13X50X6-MM THK)	
M	8	1	**329-3356**	4	NUT (M12X1.75-THD)	
	9	1	**5I-9543**	2	PIN	
M	10	1	**8T-4176**	2	BOLT (M12X1.75X90-MM)	
M	11	1	**8T-4179**	2	BOLT (M12X1.75X20-MM)	

M - METRIC PART
Y - SEPARATE ILLUSTRATION

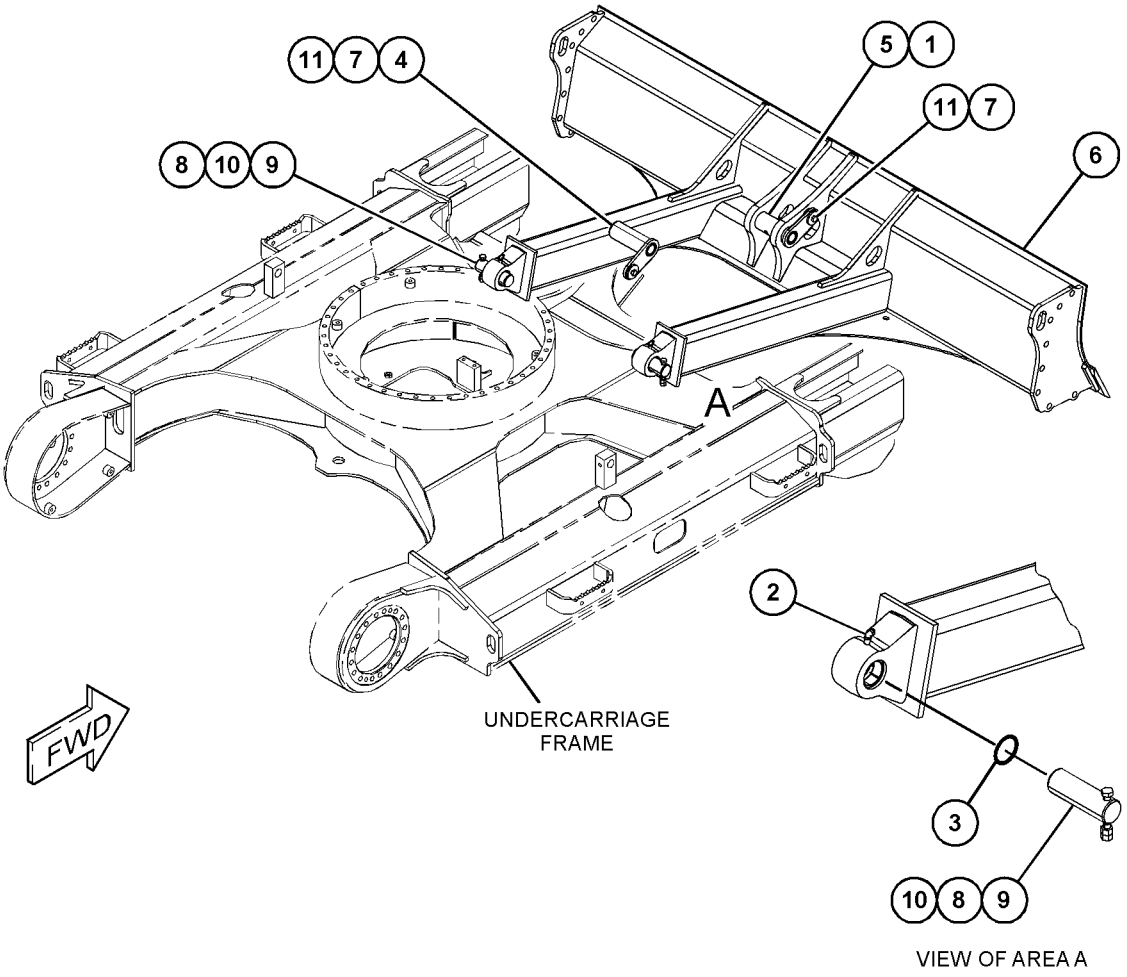

GRAPHIC #1 <END> g06337862

512-2524 BLADE AR-STRAIGHT

PART OF 562-3697, 562-3698, 562-3700 TRACK & BLADE AR-EXCAVATOR
AN ATTACHMENT

SMCS-6051, 6060 **i07546216**

NOTE	PART NUMBER	QTY	PART NAME 1 2 3 4 5 6 (PRODUCT LEVEL)	SEE PAGE
Y	*512-5806*	1	BLADE & MOUNTING GP	309
Y	**374-1857**	1	CYLINDER GP-BLADE	165
Y	*566-6080*	1	FILM GP	440
Y	**512-1546**	1	FRAME AS-UNDERCARRIAGE	110
Y	*550-1905*	1	GUARD AS-BLADE CYLINDER	172
Y	*512-2552*	1	LINES GP-CYLINDER (SWING)	203
Y	*512-2549*	1	LINES GP-SWIVEL	234
Y	*512-2546*	1	LINES GP-TRAVEL MOTOR	235
Y	*512-2519*	1	MOTOR & MTG GP-TRAVEL	89
Y	*514-0897*	2	SPROCKET GP	90
Y	*513-5836*	1	SWIVEL & MOUNTING GP	255

Y - SEPARATE ILLUSTRATION

<END>

512-2526 BLADE AR-STRAIGHT

PART OF 562-3699 TRACK & BLADE AR-EXCAVATOR
AN ATTACHMENT

SMCS-6051, 6060 **i07546429**

NOTE	PART NUMBER	QTY	PART NAME 1 2 3 4 5 6 (PRODUCT LEVEL)	SEE PAGE
Y	*512-5800*	1	BLADE & MOUNTING GP	308
Y	**374-1857**	1	CYLINDER GP-BLADE	165
Y	*566-6080*	1	FILM GP	440
Y	**512-1546**	1	FRAME AS-UNDERCARRIAGE	110
Y	*550-1905*	1	GUARD AS-BLADE CYLINDER	172
Y	*512-2552*	1	LINES GP-CYLINDER (SWING)	203
Y	*512-2549*	1	LINES GP-SWIVEL	234
Y	*512-2546*	1	LINES GP-TRAVEL MOTOR	235
Y	*512-2519*	1	MOTOR & MTG GP-TRAVEL	89
Y	*514-0897*	2	SPROCKET GP	90
Y	*513-5836*	1	SWIVEL & MOUNTING GP	255

Y - SEPARATE ILLUSTRATION

<END>

512-5801 BLADE GP-STRAIGHT

2450-MM (96.4-IN)
PART OF 512-5800 BLADE & MOUNTING GP
AN ATTACHMENT

SMCS-6051, 6060

i07546433

NOTE	REF NO	GRAPHIC REF	PART NUMBER	QTY	PART NAME 1 2 3 4 5 6 (PRODUCT LEVEL)	SEE PAGE
	1	1	**511-4615**	1	BLADE AS-STRAIGHT	
M		1	**8T-7338**	16	BOLT (M16X2X45-MM)	
		1	**9X-8257**	16	WASHER (17.5X30X3.5-MM THK)	
		1	**511-4607**	1	BLADE AS	
		1	**511-4613**	1	BLADE AS	
	2	1	**512-5808**	1	BLADE & BEARING AS	
	2A	1	**218-5429**	2	BUSHING	
Y	3	1	**520-7438**	1	EDGE GP-CUTTING	327

M - METRIC PART
Y - SEPARATE ILLUSTRATION

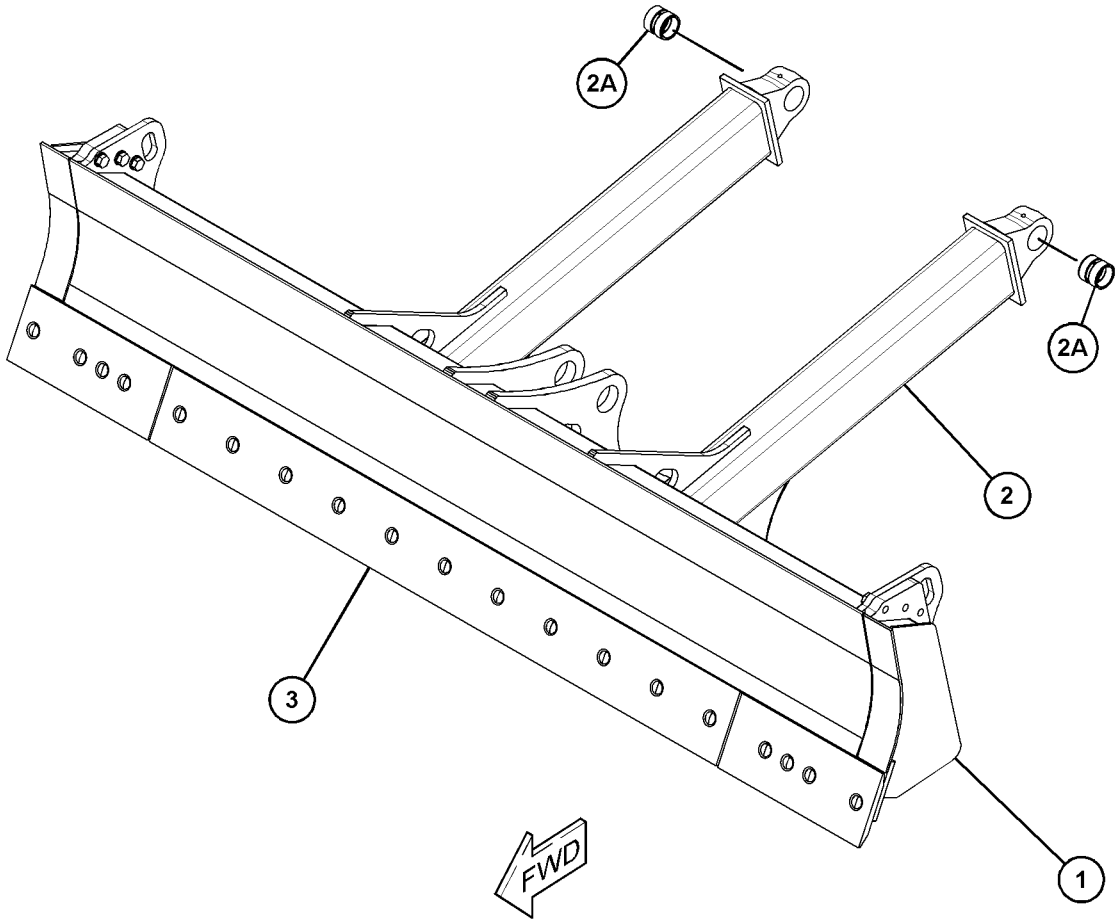

GRAPHIC #1

<END>

g06340726

512-5807 BLADE GP-STRAIGHT

2300-MM (91-IN)
PART OF 512-5806 BLADE & MOUNTING GP
AN ATTACHMENT

SMCS-6051, 6060

i07546226

NOTE	REF NO	GRAPHIC REF	PART NUMBER	QTY	PART NAME 1 2 3 4 5 6 (PRODUCT LEVEL)	SEE PAGE
	1	1	**512-5808**	1	BLADE & BEARING AS	
	1A	1	**218-5429**	2	BUSHING	
Y	2	1	*516-2428*	1	EDGE GP-BIT & CUTTING	326

Y - SEPARATE ILLUSTRATION

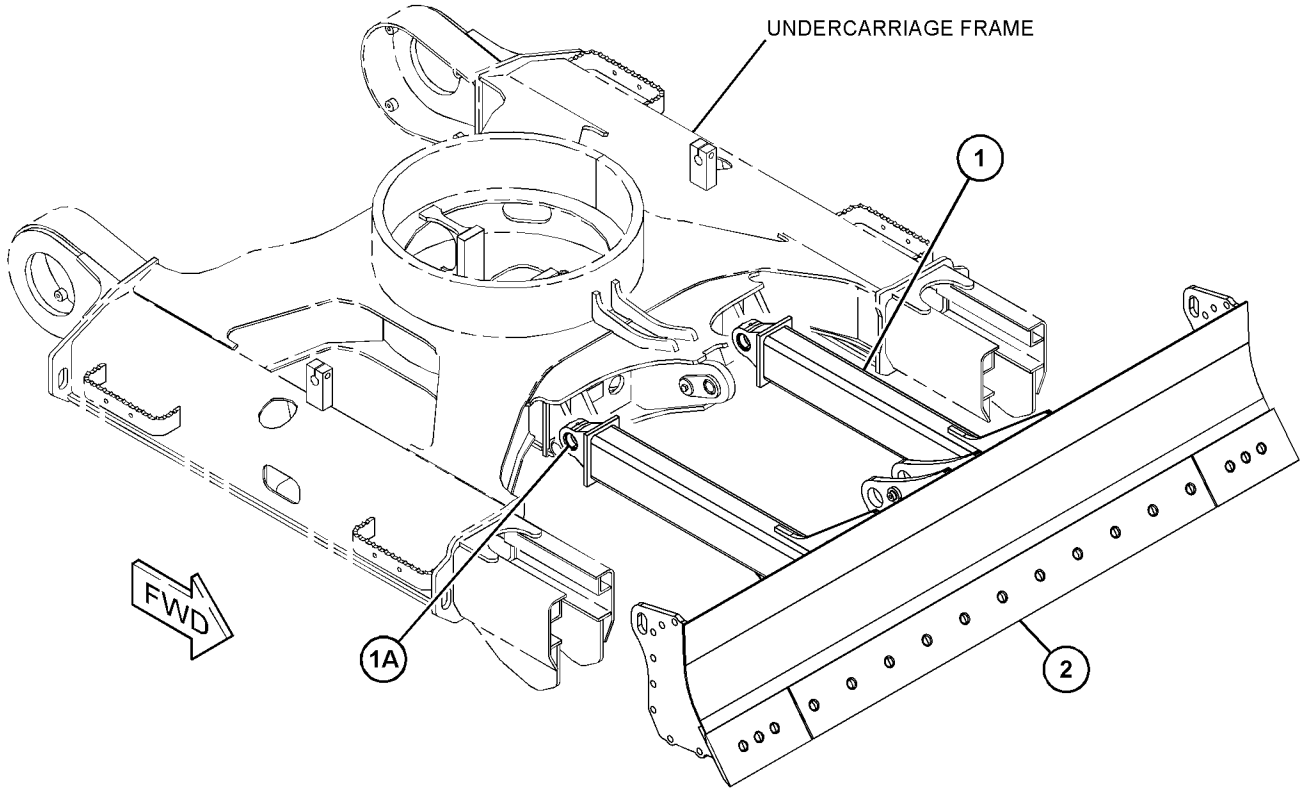

GRAPHIC #1

<END>

g06335553

295-5951 BUCKET GP-EXCAVATION

463-MM(18-IN) WIDE X 0.23-CU M (0.30-CU YD) CAPACITY
AN ATTACHMENT

SMCS-6523, 6803, 6805, 6822 **i06758713**

NOTE	REF NO	GRAPHIC REF	PART NUMBER	QTY	PART NAME 1 2 3 4 5 6 (PRODUCT LEVEL)	SEE PAGE
	1	1	*6Y-6767*	4	TIP GP-LONG	
					(EACH INCLUDES)	
		1	**6Y-3222**	1	TIP-LONG	
		1	**6Y-3228**	1	PIN	
		1	**8E-6259**	1	RETAINER AS	
	2	1	**154-2704**	1	PLATE-INSTRUCTION (BUCKET SPECIFICATIONS)	
	3	1	**168-8389**	4	TACK (METAL)	
	4	1	*295-5932*	1	BUCKET AS-EXCAVATION	
		1	**195-7224**	4	ADAPTER	
		1	**219-9483**	1	EDGE	

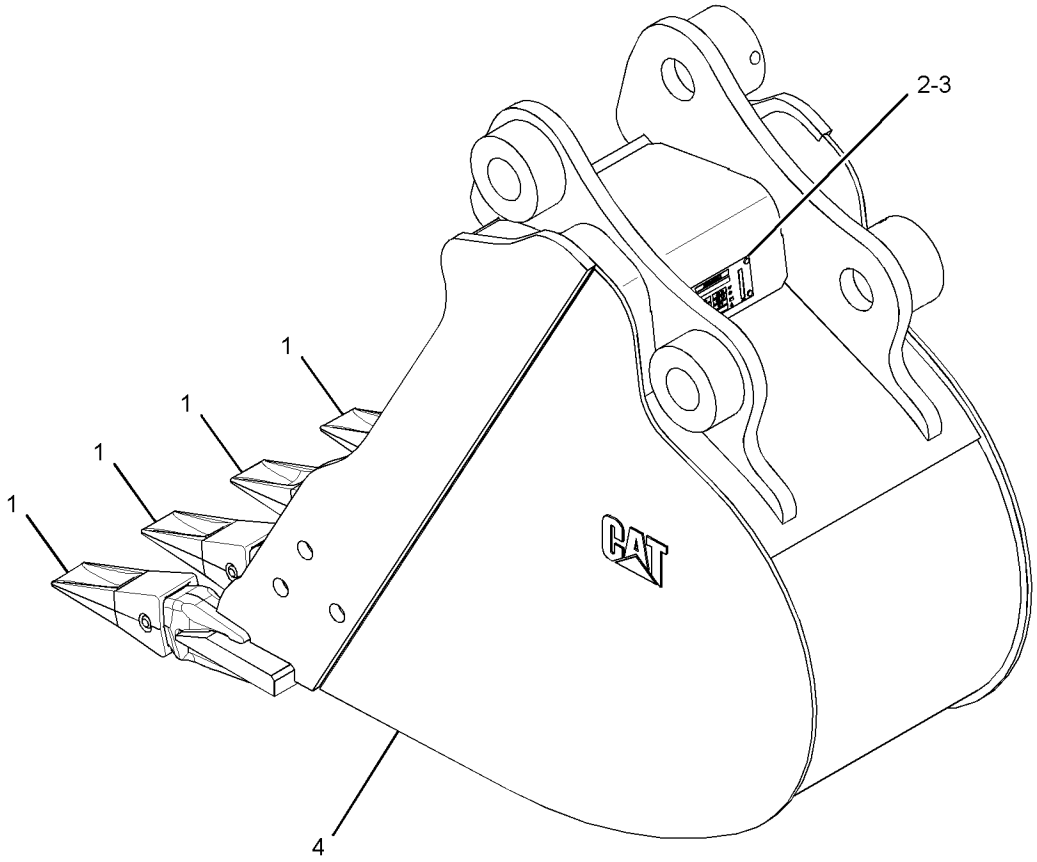

GRAPHIC #1 <END> g01448918

295-5952 BUCKET GP-EXCAVATION

619-MM (24-IN) WIDE X 0.23-CU M (0.30-YD)
AN ATTACHMENT

SMCS-6523, 6803, 6805, 6822 **i02930369**

NOTE	REF NO	GRAPHIC REF	PART NUMBER	QTY	PART NAME 1 2 3 4 5 6 (PRODUCT LEVEL)	SEE PAGE
	1	1	*6Y-6767*	4	TIP GP-LONG	
		1	**6Y-3222**	1	TIP-LONG	
		1	**6Y-3228**	1	PIN	
		1	**8E-6259**	1	RETAINER AS	
	2	1	**154-2704**	1	PLATE-INSTRUCTION (BUCKET SPECIFICATIONS)	
	3	1	**168-8389**	4	TACK (METAL)	
	4	1	*295-5942*	1	BUCKET AS-EXCAVATION	
	4A	1	**195-7224**	4	ADAPTER	
	4B	1	**219-9484**	1	EDGE	

295-5952 **BUCKET GP-EXCAVATION (**contd.**)** **i02930369**

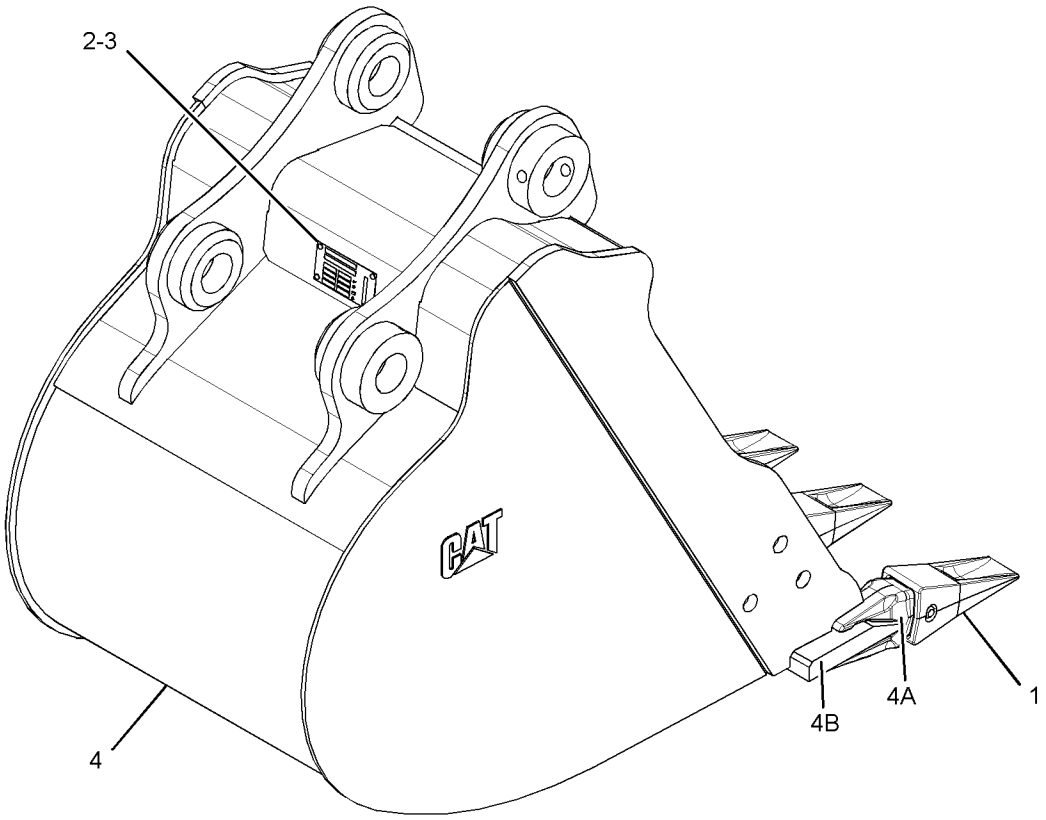

GRAPHIC #1 <END> g01456347

295-5954 BUCKET GP-EXCAVATION

912-MM (36-IN) WIDE X 0.23-CU M (0.30-CU YD) CAPACITY
AN ATTACHMENT

SMCS-6523, 6803, 6805, 6822 **i02930473**

NOTE	REF NO	GRAPHIC REF	PART NUMBER	QTY	PART NAME 1 2 3 4 5 6 (PRODUCT LEVEL)	SEE PAGE
	1	1	*6Y-6767*	5	TIP GP-LONG	
					(EACH INCLUDES)	
		1	**6Y-3222**	1	TIP-LONG	
		1	**6Y-3228**	1	PIN	
		1	**8E-6259**	1	RETAINER AS	
	2	1	**154-2704**	1	PLATE-INSTRUCTION (BUCKET SPECIFICATIONS)	
	3	1	**168-8389**	4	TACK (METAL)	
	4	1	*295-5963*	1	BUCKET AS-EXCAVATION	
	4A	1	**195-7224**	5	ADAPTER	
	4B	1	**219-9486**	1	EDGE	

295-5954 **BUCKET GP-EXCAVATION (**contd.**)** **i02930473**

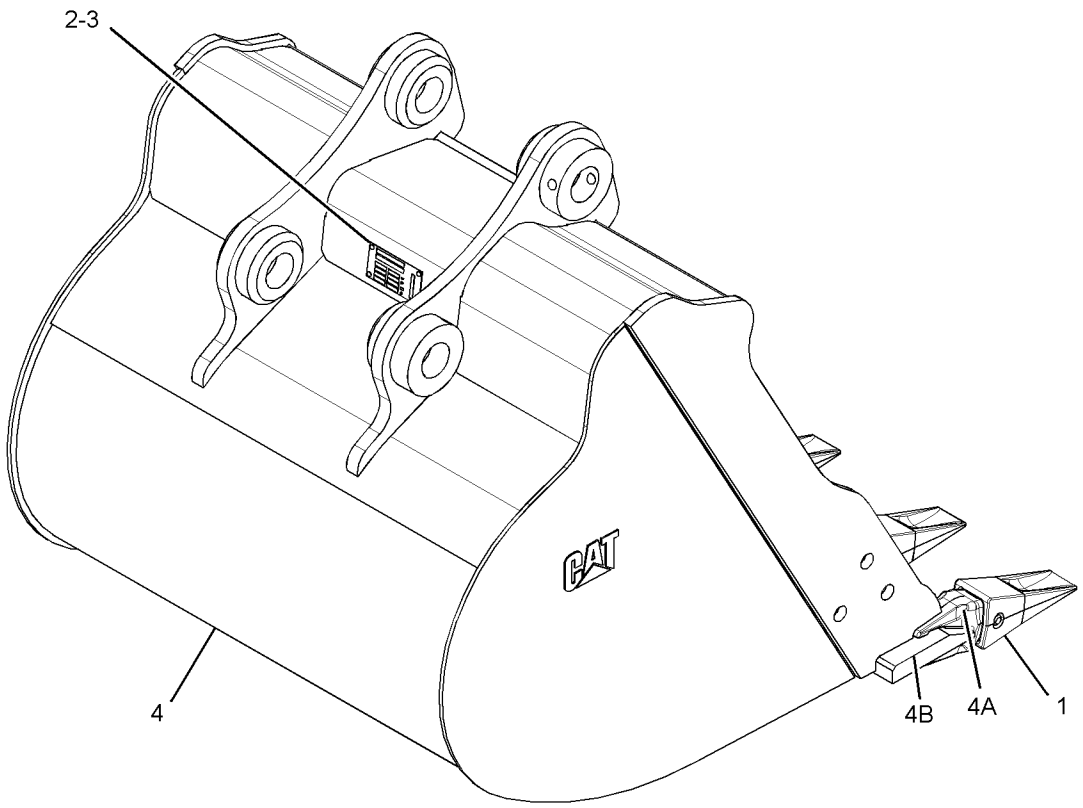

GRAPHIC #1 <END> g01456336

444-7498 COUPLER AR-QUICK

AN ATTACHMENT

SMCS-6129 **i07085669**

NOTE	REF NO	GRAPHIC REF	PART NUMBER	QTY	PART NAME 1 2 3 4 5 6 (PRODUCT LEVEL)	SEE PAGE
	1	1	**296-9481**	2	PIN	
B	2	1	**176-8467**	6	SHIM (1-MM THK)	
Y	3	1	*444-7499*	1	COUPLER GP-QUICK	321
	4	1	**4J-1888**	2	PIN-COTTER	
					PARTS SHOWN IN GRAPHIC(S) WITHOUT A REFERENCE NUMBER ARE NOT SERVICED SEPARATELY	

B - USE AS REQUIRED
Y - SEPARATE ILLUSTRATION

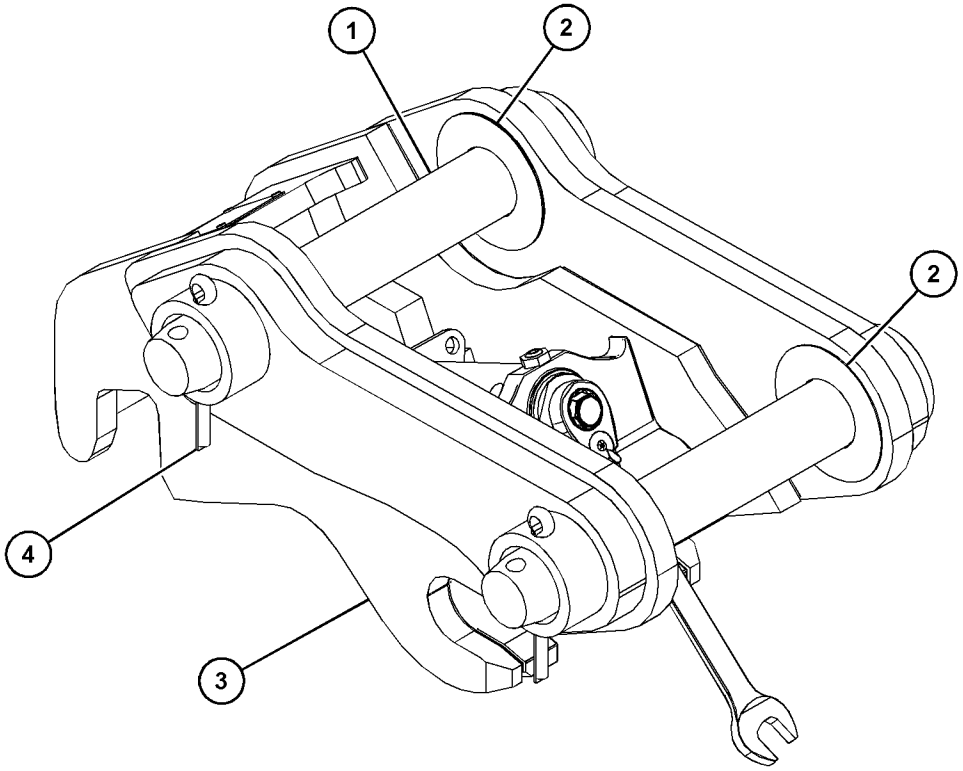

GRAPHIC #1 <END> g06219927

485-5302 COUPLER AR-QUICK

AN ATTACHMENT

SMCS-6129 **i07200443**

NOTE	REF NO	GRAPHIC REF	PART NUMBER	QTY	PART NAME 1 2 3 4 5 6 (PRODUCT LEVEL)	SEE PAGE
	1	1	**4J-1888**	2	PIN-COTTER	
	2	1	**296-9481**	2	PIN	
Y	3	1	*361-1150*	1	LINES GP-QUICK COUPLER	225
Y	4	1	*485-5223*	1	COUPLER GP-QUICK	323
B	5	1	**176-8467**	6	SHIM (1-MM THK)	

B - USE AS REQUIRED
Y - SEPARATE ILLUSTRATION

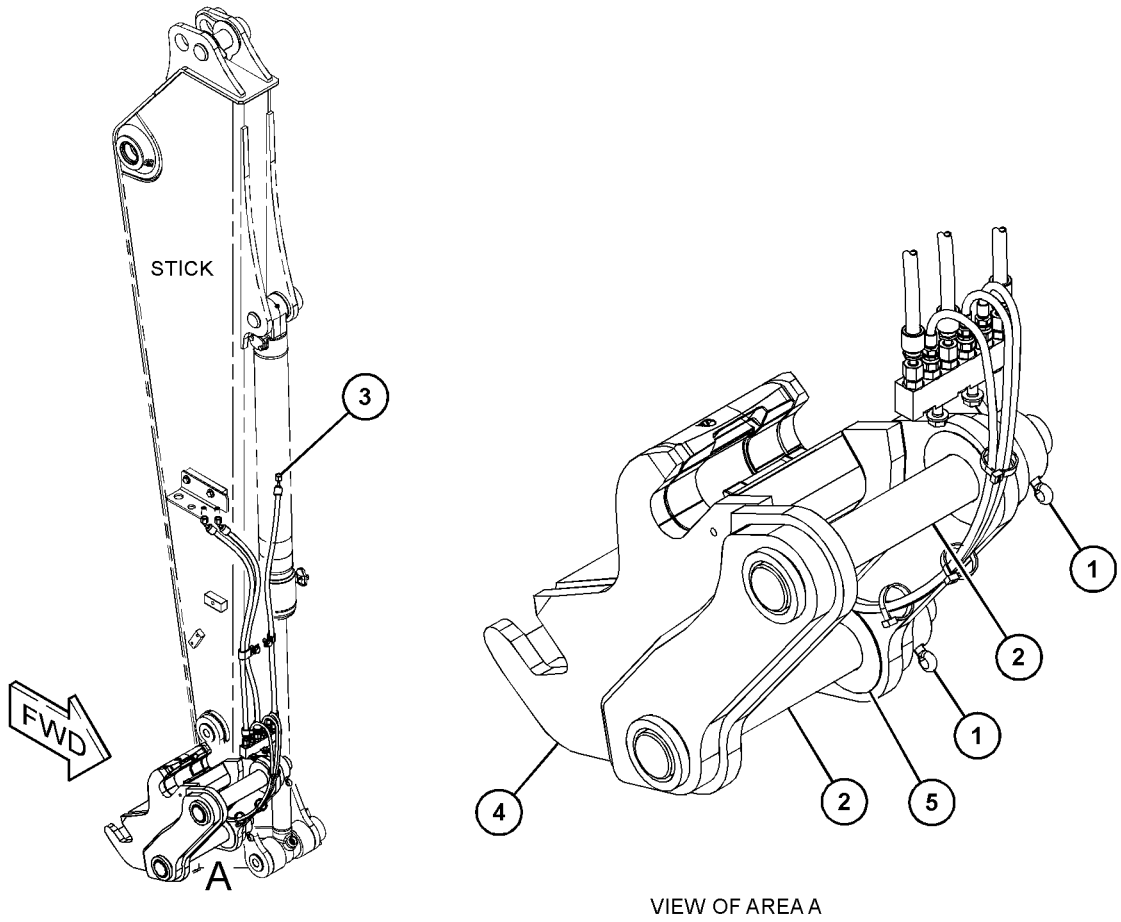

VIEW OF AREA A

GRAPHIC #1 <END> g06251134

361-1151 COUPLER GP-QUICK

PART OF 446-9435 COUPLER GP-QUICK

AN ATTACHMENT

SMCS-6129 **i07417654**

NOTE	REF NO	GRAPHIC REF	PART NUMBER	QTY	PART NAME 1 2 3 4 5 6 (PRODUCT LEVEL)	SEE PAGE
	1	1	**485-5225**	1	COUPLER AS	
	2	1	**361-1155**	1	SHAFT	
Y	3	1	*361-1153*	1	LOCK GP-QUICK COUPLER	331
	4	1	**9H-3771**	1	FITTING-GREASE (LUBE)	
	5	1	**361-1111**	1	RETAINER-SPRING	
	6	1	**361-1141**	1	SPRING	
	7	1	**361-1142**	1	LOCK	

Y - SEPARATE ILLUSTRATION

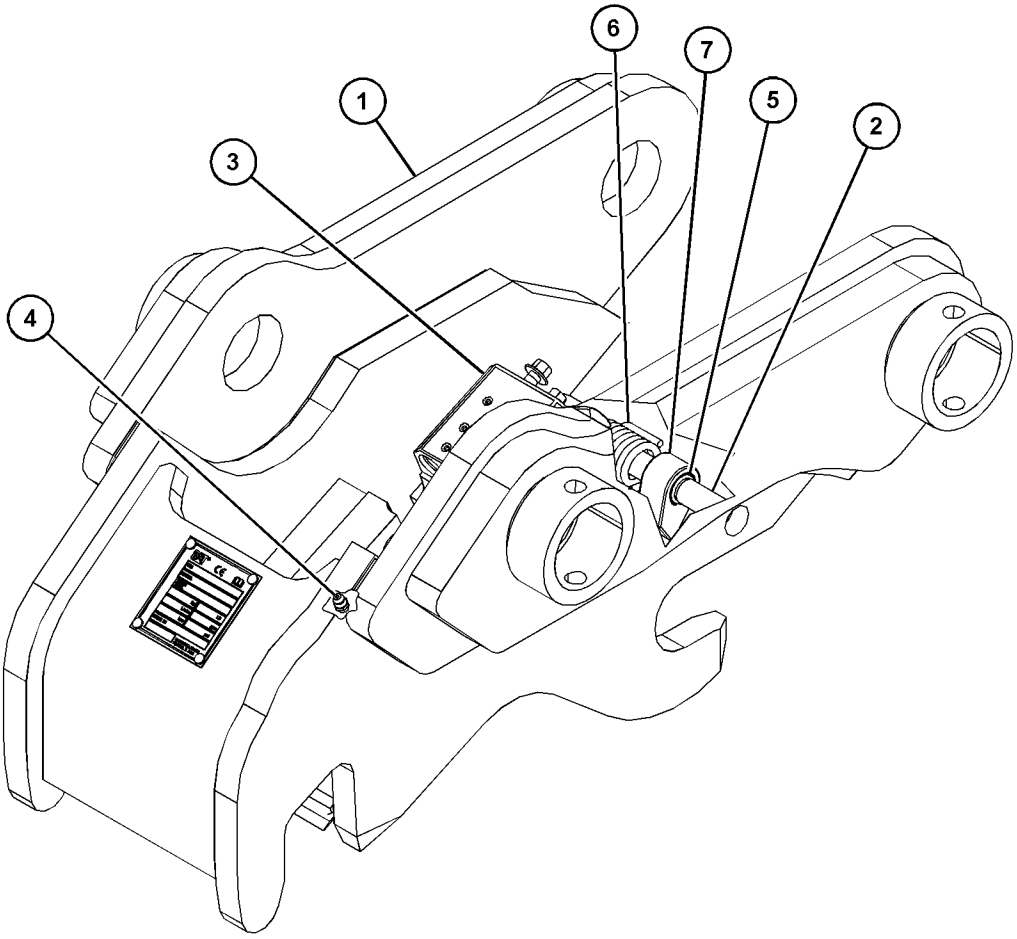

GRAPHIC #1 <END> g06342345

444-7499 COUPLER GP-QUICK

PART OF 444-7498 COUPLER AR-QUICK, 428-2140, 504-6174 THUMB AR
AN ATTACHMENT

SMCS-6129 **i06754193**

NOTE	REF NO	GRAPHIC REF	PART NUMBER	QTY	PART NAME 1 2 3 4 5 6 (PRODUCT LEVEL)	SEE PAGE
	1	1	**361-1210**	1	PLATE-IDENTIFICATION (SERIAL NUMBER)	
Y	2	1	**444-7491**	1	LOCK GP-QUICK COUPLER	332
	3	1	**168-8389**	4	TACK (METAL)	
	4	1	**9H-3771**	1	FITTING-GREASE	
	5	1	**361-1111**	1	RETAINER-SPRING	
	6	1	**361-1148**	1	LOCK GP-MECHANICAL	
	7	1	**361-1149**	1	SHAFT	
	8	1	**444-7490**	1	COUPLER AS	
	9	1	**444-7504**	1	LOCK AS	
M	10	1	**095-1207**	1	NUT (M12X1.75-THD)	

M - METRIC PART
Y - SEPARATE ILLUSTRATION

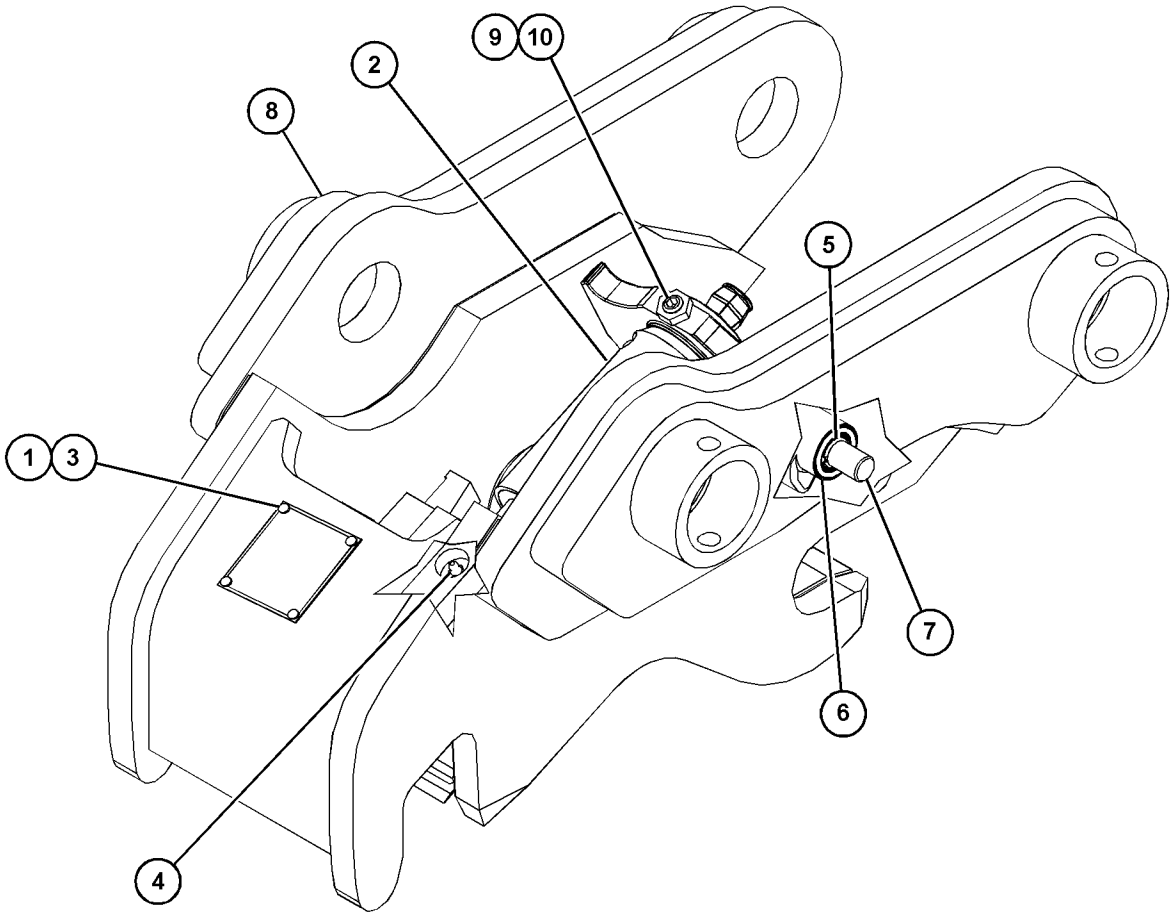

GRAPHIC #1 <END> g03487376

446-9435 COUPLER GP-QUICK

PART OF 428-2145 THUMB AR

AN ATTACHMENT

SMCS-6129 **i05800655**

NOTE	REF NO	GRAPHIC REF	PART NUMBER	QTY	PART NAME 1 2 3 4 5 6 (PRODUCT LEVEL)	SEE PAGE
	1	1	**361-1119**	3	HOSE AS	
Y	2	1	*361-1151*	1	COUPLER GP-QUICK	320
	3	1	*169-7393*	3	CONNECTOR AS	
					(EACH INCLUDES)	
		1	**3J-7352**	1	CONNECTOR	
		1	**3J-7354**	1	SEAL-O-RING	

Y - SEPARATE ILLUSTRATION

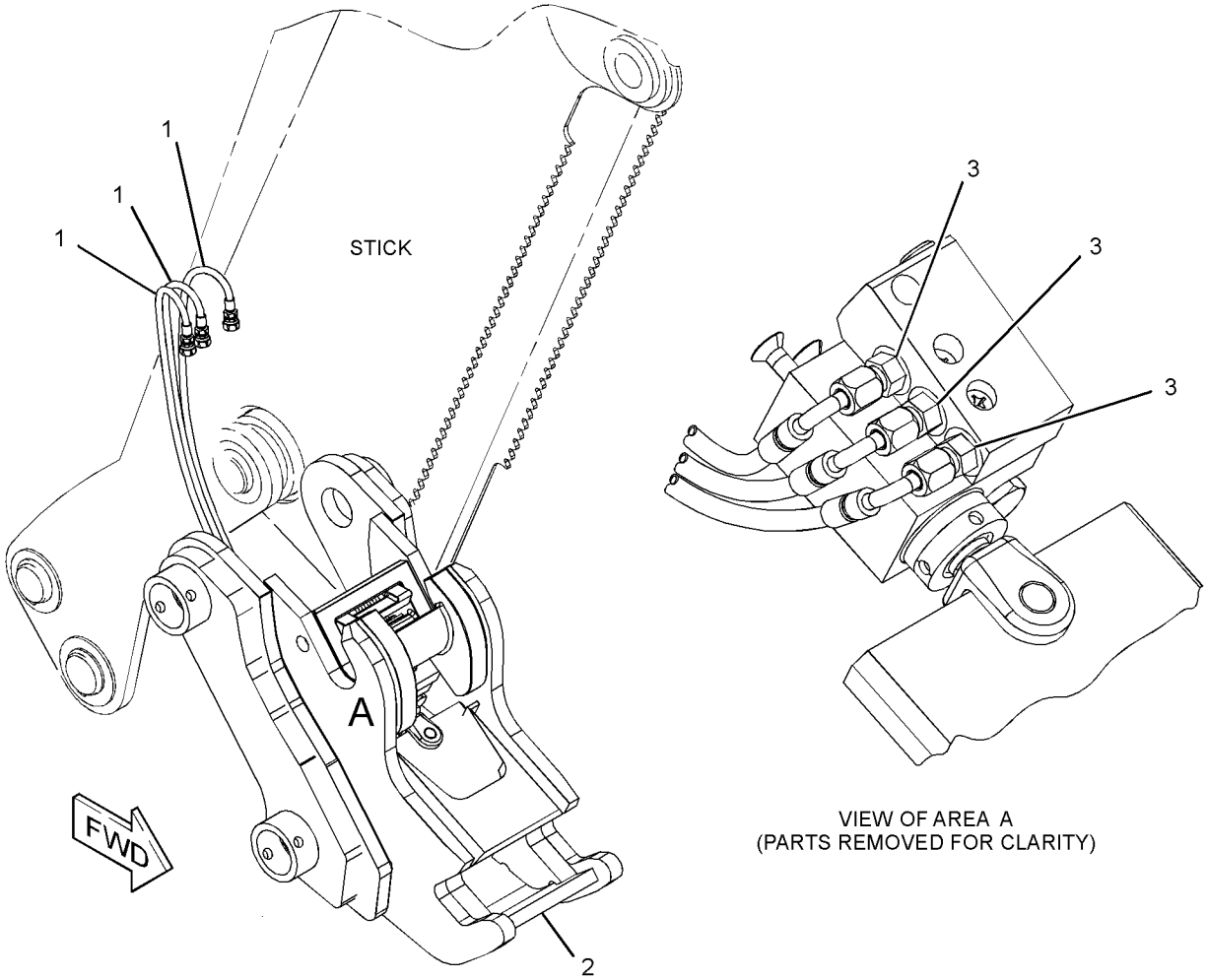

VIEW OF AREA A
(PARTS REMOVED FOR CLARITY)

GRAPHIC #1 <END> g03685990

485-5223 COUPLER GP-QUICK

PART OF 485-5302 COUPLER AR-QUICK, 485-5272, 504-6175 THUMB AR AN ATTACHMENT

SMCS-6129 **i07200455**

NOTE	REF NO	GRAPHIC REF	PART NUMBER	QTY	PART NAME 1 2 3 4 5 6 (PRODUCT LEVEL)	SEE PAGE
	1	1	*169-7393*	3	CONNECTOR AS	
					(EACH INCLUDES)	
		1	**3J-7352**	1	CONNECTOR	
		1	**3J-7354**	1	SEAL-O-RING	
	2	1	**361-1119**	3	HOSE AS	
Y	3	1	*485-5224*	1	COUPLER GP-QUICK	324

Y - SEPARATE ILLUSTRATION

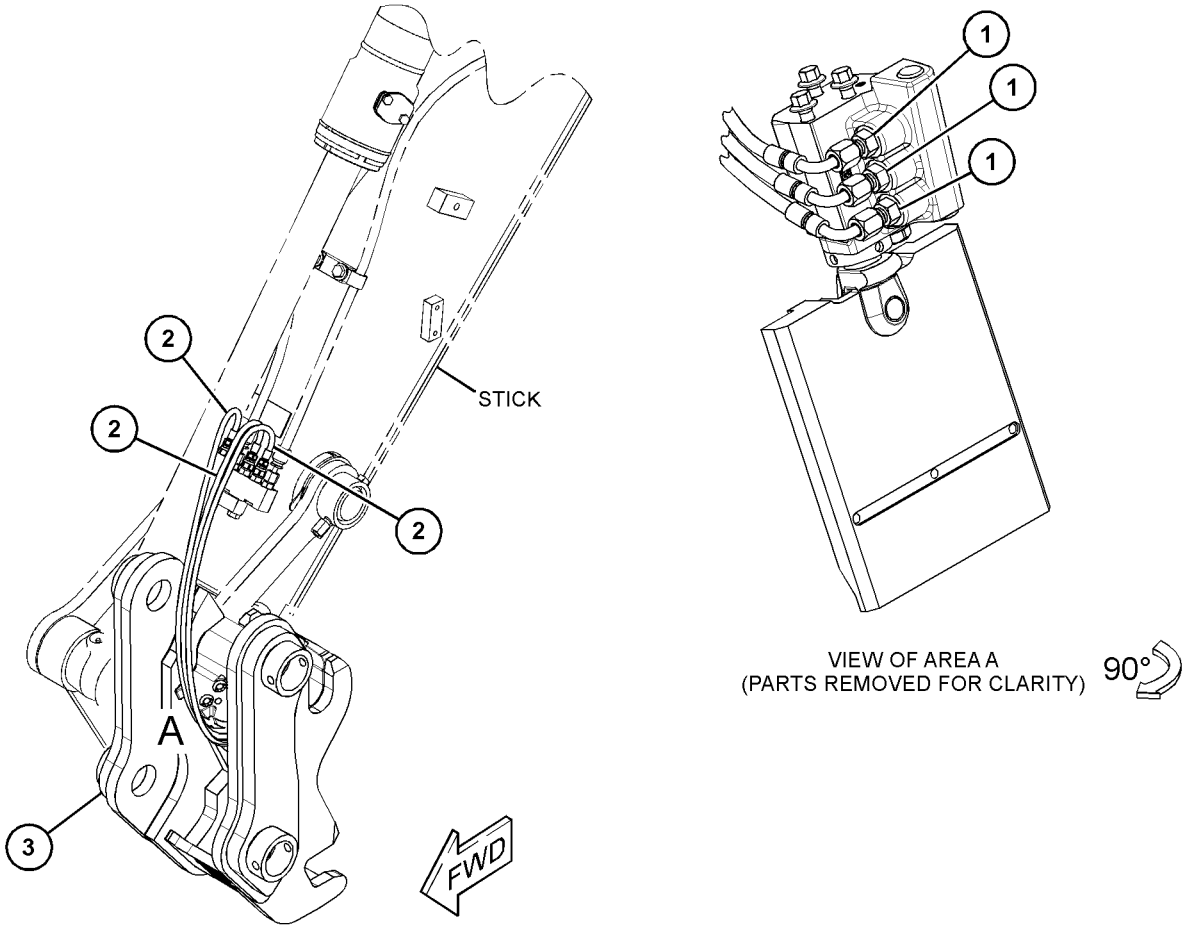

GRAPHIC #1 <END> g06251390

485-5224 COUPLER GP-QUICK

PART OF 485-5223 COUPLER GP-QUICK

AN ATTACHMENT

SMCS-6129 **i07200457**

NOTE	REF NO	GRAPHIC REF	PART NUMBER	QTY	PART NAME 1 2 3 4 5 6 (PRODUCT LEVEL)	SEE PAGE
	1	1	**9H-3771**	1	FITTING-GREASE	
Y	2	1	*485-5245*	1	LOCK GP-QUICK COUPLER	333
	3	1	**230-5652**	1	PIN-SPRING	
	4	1	**361-1111**	1	RETAINER-SPRING	
	5	1	**361-1141**	1	SPRING	
	6	1	**361-1142**	1	LOCK	
	7	1	**361-1155**	1	SHAFT	
Y	8	1	**485-5226**	1	INDICATOR GP-POSITION	330
	9	1	**485-5225**	1	COUPLER AS	

Y - SEPARATE ILLUSTRATION

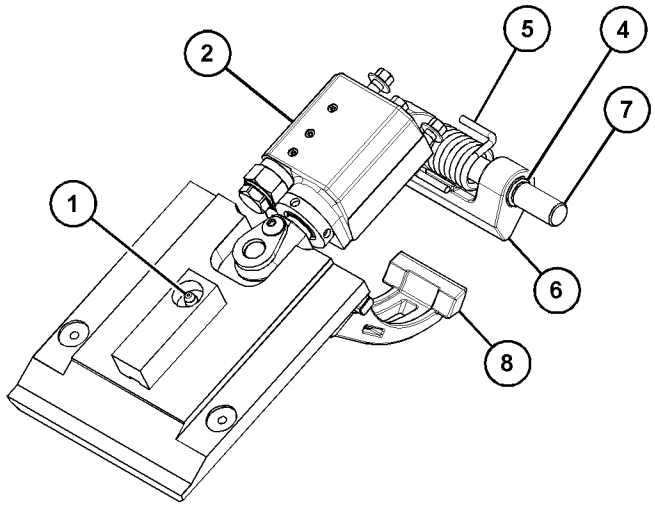

VIEW OF AREA A
(PARTS REMOVED FOR CLARITY)

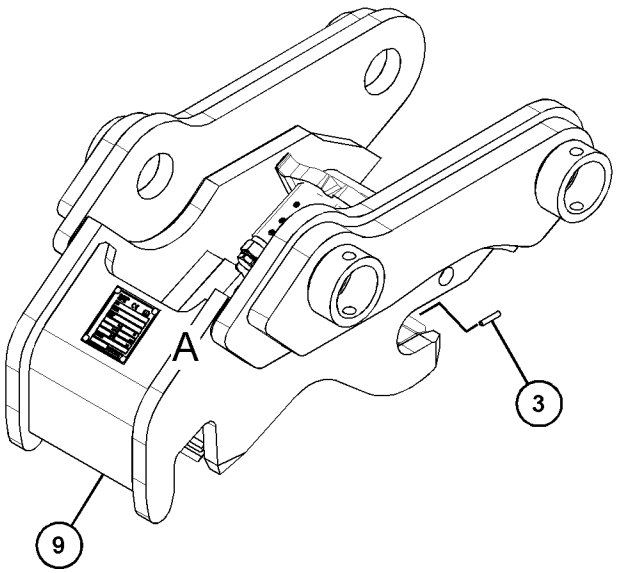

GRAPHIC #1 <END> g06251444

542-7263 COUPLER GP-WORK TOOL

AN ATTACHMENT

SMCS-6129 **i07548413**

NOTE	REF NO	GRAPHIC REF	PART NUMBER	QTY	PART NAME 1 2 3 4 5 6 (PRODUCT LEVEL)	SEE PAGE
M	1	1	**8T-4182**	4	BOLT (M10X1.5X45-MM)	
M	2	1	**8T-5041**	2	BOLT (M12X1.75X120-MM)	
	3	1	**8T-4222**	4	WASHER-PLATED (11X32X2.5-MM THK)	
	4	1	**168-8389**	4	TACK (METAL)	
M	5	1	**237-2228**	2	BOLT (M10X1.5X70-MM)	
	6	1	**296-9481**	2	PIN	
M	7	1	**344-5675**	4	NUT (M10X1.5-THD)	
	8	1	**3B-8491**	2	FITTING-GREASE (1/8-27 PTF)	
	9	1	**479-5461**	2	SPRING	
	10	1	**8T-4121**	10	WASHER-HARD (11X21X2.5-MM THK)	
Y	11	1	*541-6571*	1	HANDLE & PIN GP-COUPLER (LH)	328
Y	12	1	*541-6574*	1	HANDLE & PIN GP-COUPLER (RH)	329
	13	1	*565-2650*	1	GUIDE AS	
		1	**565-2651**	2	PLATE	
		1	**565-2652**	1	ROD	
M	14	1	**6V-7687**	2	LOCKNUT (M12X1.75-THD)	
M	15	1	**6V-7744**	2	LOCKNUT (M10X1.5-THD)	

M - METRIC PART
Y - SEPARATE ILLUSTRATION

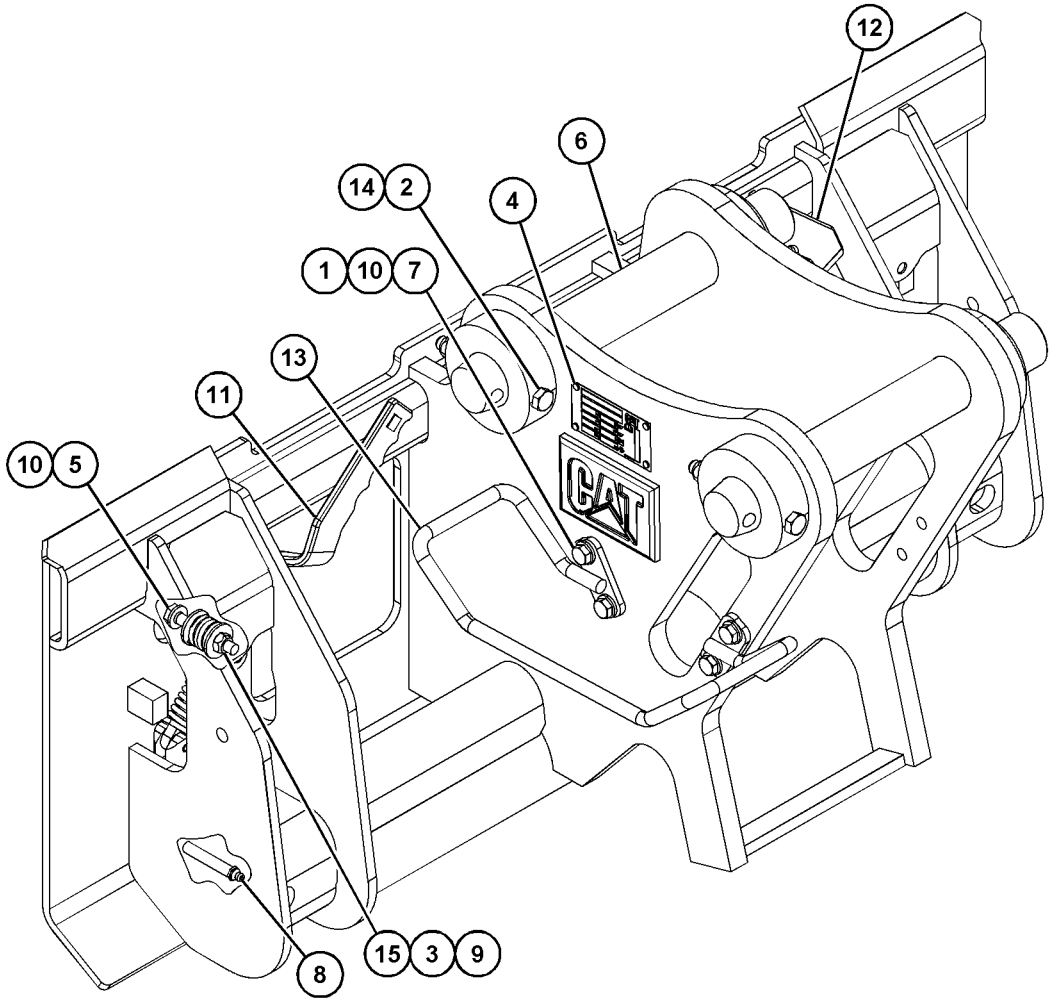

GRAPHIC #1 <END> g06356827

516-2428 EDGE GP-BIT & CUTTING

2300-MM (91-IN)
PART OF 512-5807 BLADE GP-STRAIGHT
AN ATTACHMENT

SMCS-6174, 6801, 6804, 6809 **i07546229**

NOTE	REF NO	GRAPHIC REF	PART NUMBER	QTY	PART NAME 1 2 3 4 5 6 (PRODUCT LEVEL)	SEE PAGE
	1	1	**4T-6229**	2	BIT-END	
	2	1	**143-3088**	1	EDGE-CUTTING	
	3	1	**3F-5108**	17	BOLT-PLOW (5/8-11X2.25-IN)	
	4	1	**4K-0367**	17	NUT-FULL (5/8-11-THD)	
	5	1	**5P-8247**	17	WASHER-HARD (17X32X3.5-MM THK)	

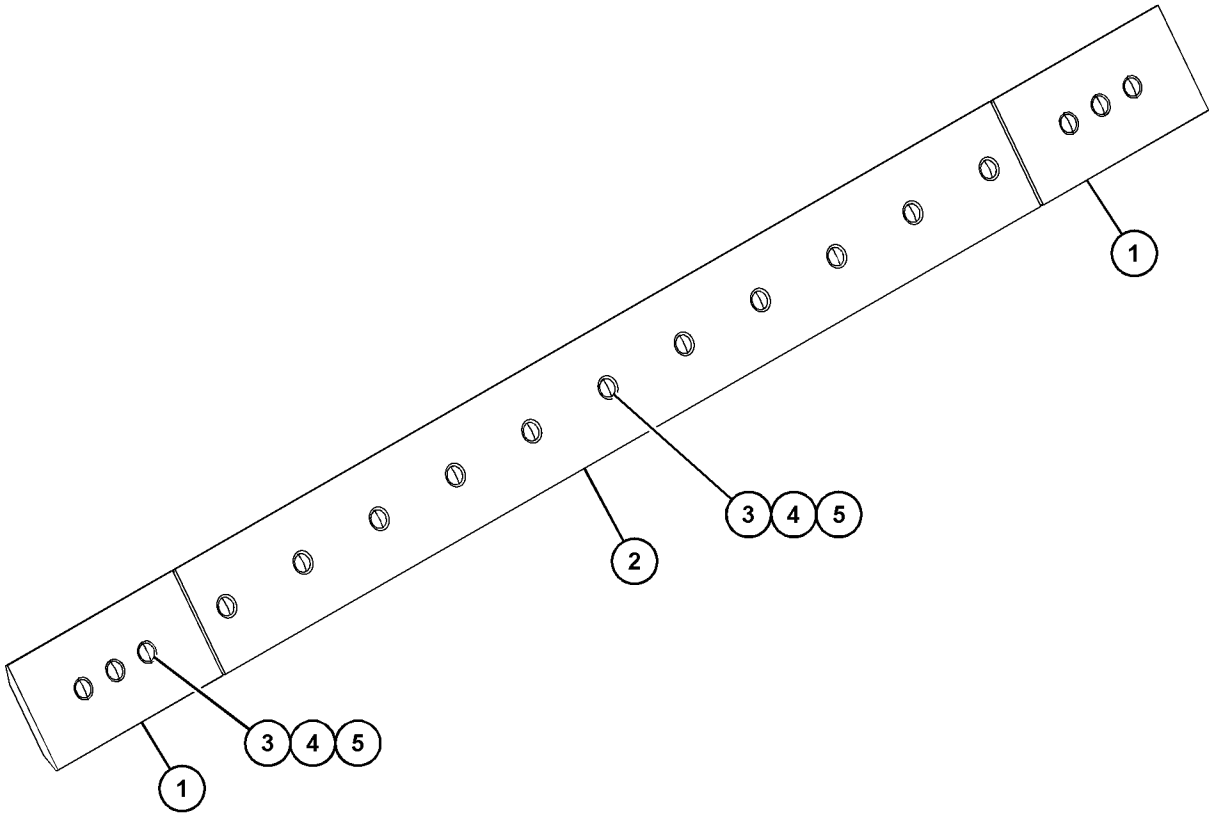

GRAPHIC #1 <END> g06335286

520-7438 EDGE GP-CUTTING

2450-MM (96.4-IN)
PART OF 512-5801 BLADE GP-STRAIGHT
AN ATTACHMENT

SMCS-6801 **i07546434**

NOTE	REF NO	GRAPHIC REF	PART NUMBER	QTY	PART NAME 1 2 3 4 5 6 (PRODUCT LEVEL)	SEE PAGE
	1	1	**143-3088**	1	EDGE-CUTTING	
	2	1	**520-7437**	2	BIT-END	
	3	1	**3F-5108**	19	BOLT-PLOW (5/8-11X2.25-IN)	
	4	1	**4K-0367**	19	NUT-FULL (5/8-11-THD)	
	5	1	**5P-8247**	19	WASHER-HARD (17X32X3.5-MM THK)	

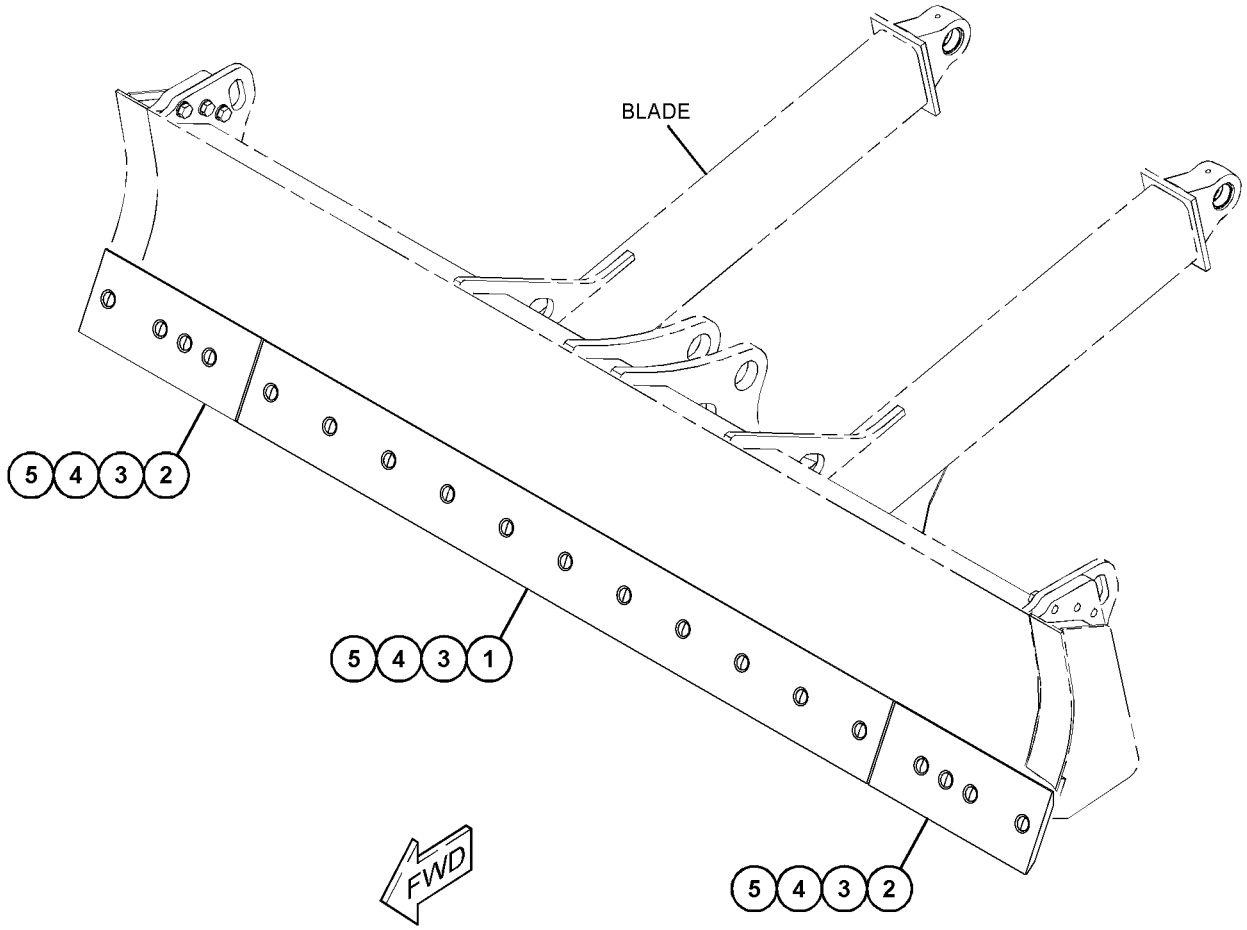

GRAPHIC #1 <END> g06340723

541-6571 HANDLE & PIN GP-COUPLER–LH

PART OF 542-7263 COUPLER GP-WORK TOOL
AN ATTACHMENT

SMCS-6129 **i07548429**

NOTE	REF NO	GRAPHIC REF	PART NUMBER	QTY	PART NAME 1 2 3 4 5 6 (PRODUCT LEVEL)	SEE PAGE
	1	1	**315-5493**	2	WASHER-HARD (22.5X35X4.5-MM THK)	
	2	1	**388-7978**	1	PLATE	
	3	1	**424-5546**	1	PIN	
	4	1	**192-2645**	1	SPRING	
	5	1	**310-6660**	2	PIN-SPRING	
	6	1	**541-6572**	1	HANDLE AS	

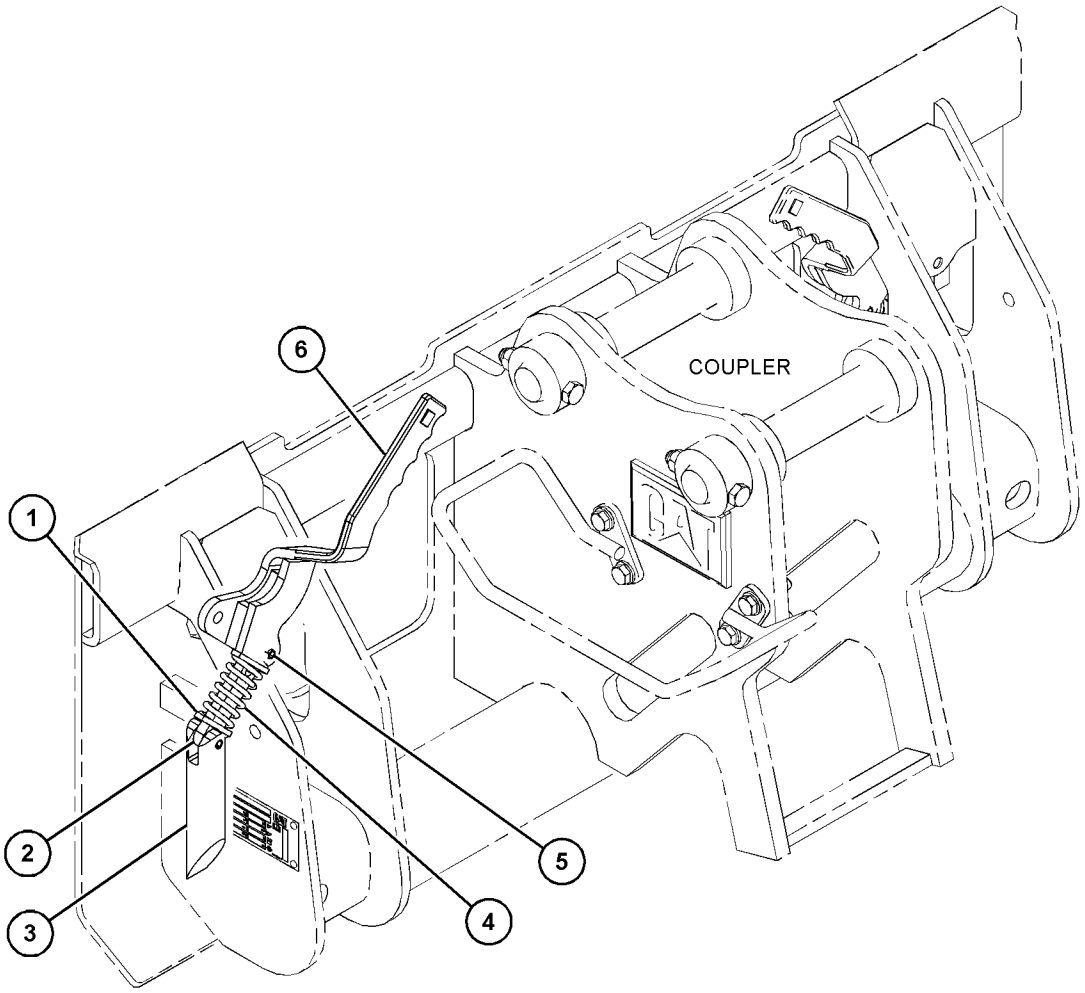

GRAPHIC #1 <END> g06356377

541-6574 HANDLE & PIN GP-COUPLER—RH

PART OF 542-7263 COUPLER GP-WORK TOOL
AN ATTACHMENT

SMCS-6129 **i07548421**

NOTE	REF NO	GRAPHIC REF	PART NUMBER	QTY	PART NAME 1 2 3 4 5 6 (PRODUCT LEVEL)	SEE PAGE
	1	1	**315-5493**	2	WASHER-HARD (22.5X35X4.5-MM THK)	
	2	1	**388-7978**	1	PLATE	
	3	1	**424-5546**	1	PIN	
	4	1	**192-2645**	1	SPRING	
	5	1	**310-6660**	2	PIN-SPRING	
	6	1	**541-6575**	1	HANDLE AS	

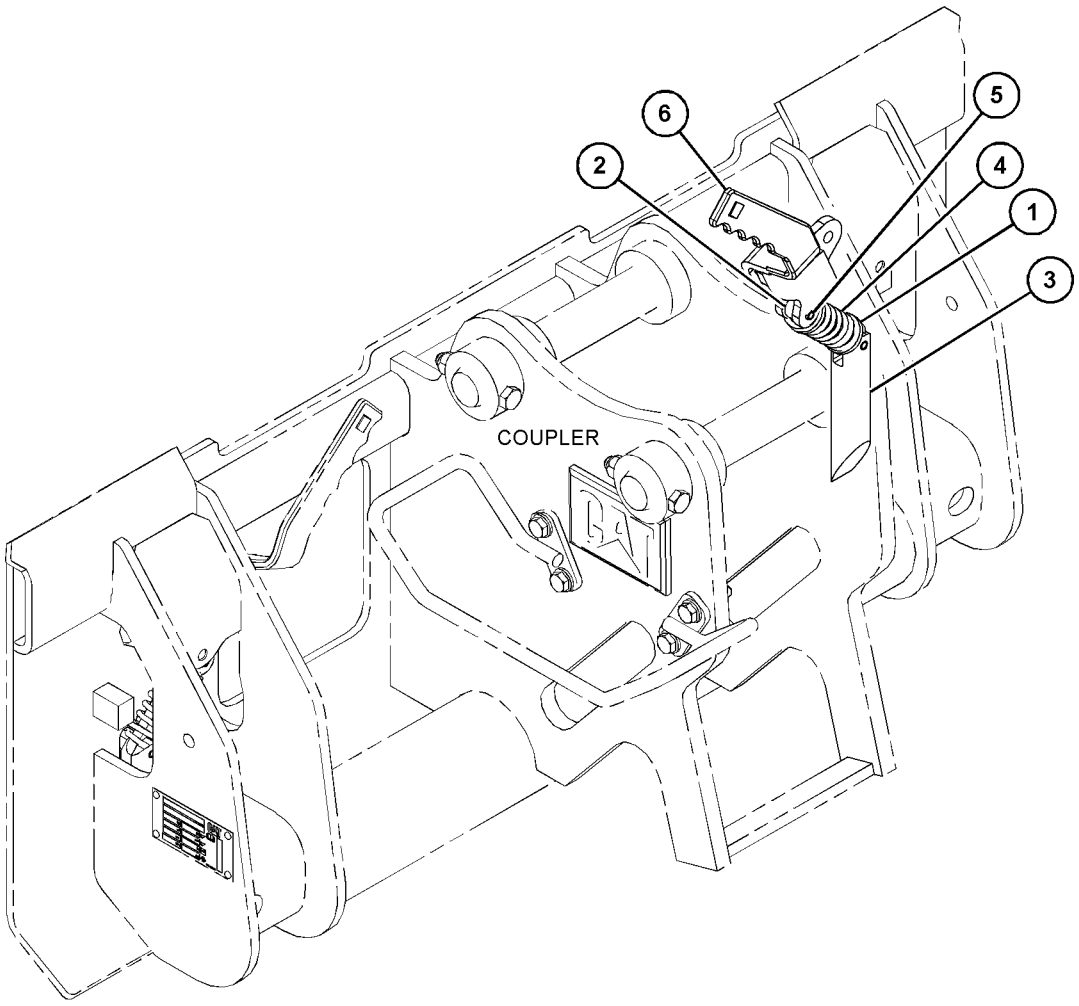

GRAPHIC #1 <END> g06356375

485-5226 INDICATOR GP-POSITION

PART OF 485-5224 COUPLER GP-QUICK

AN ATTACHMENT

SMCS-6129 **i07200459**

NOTE	REF NO	GRAPHIC REF	PART NUMBER	QTY	PART NAME 1 2 3 4 5 6 (PRODUCT LEVEL)	SEE PAGE
	1	1	**4V-2264**	2	NUT-PUSH	
	2	1	**522-1680**	1	RING-RETAINING	
	3	1	**485-5238**	1	SPRING-TORSION	
	4	1	**485-5229**	1	CAM	

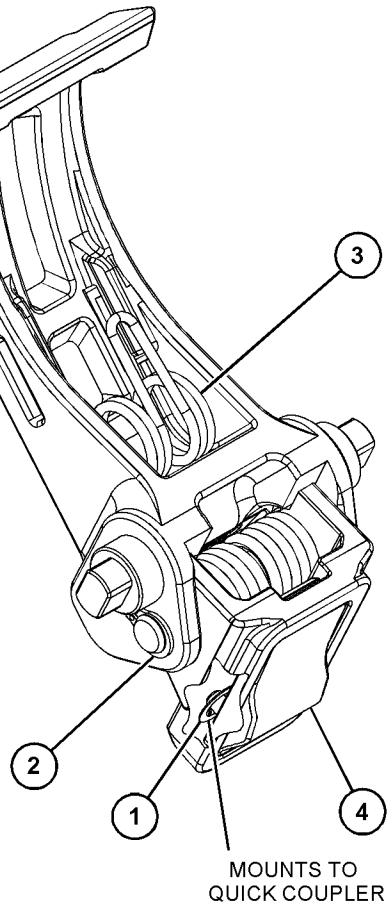

GRAPHIC #1 <END> g06252412

361-1153 LOCK GP-QUICK COUPLER

PART OF 361-1151 COUPLER GP-QUICK

AN ATTACHMENT

SMCS-6129 **i07488912**

NOTE	REF NO	GRAPHIC REF	PART NUMBER	QTY	PART NAME 1 2 3 4 5 6 (PRODUCT LEVEL)	SEE PAGE
	1	1	**361-1126**	1	PIN AS	
CY	2	1	**485-5289**	1	CYLINDER GP-COUPLER (QUICK COUPLER)	167
C	3	1	**485-5283**	1	WEDGE AS	
	3A	1	**6V-9274**	1	BEARING	
CM	4	1	**208-9283**	2	BOLT-FLANGE HEAD (M8X1.25X30-MM)	
CM	5	1	**9X-2043**	1	SCREW-TRUSS HEAD (M6X1X14-MM)	

C - CHANGE FROM PREVIOUS TYPE
M - METRIC PART
Y - SEPARATE ILLUSTRATION

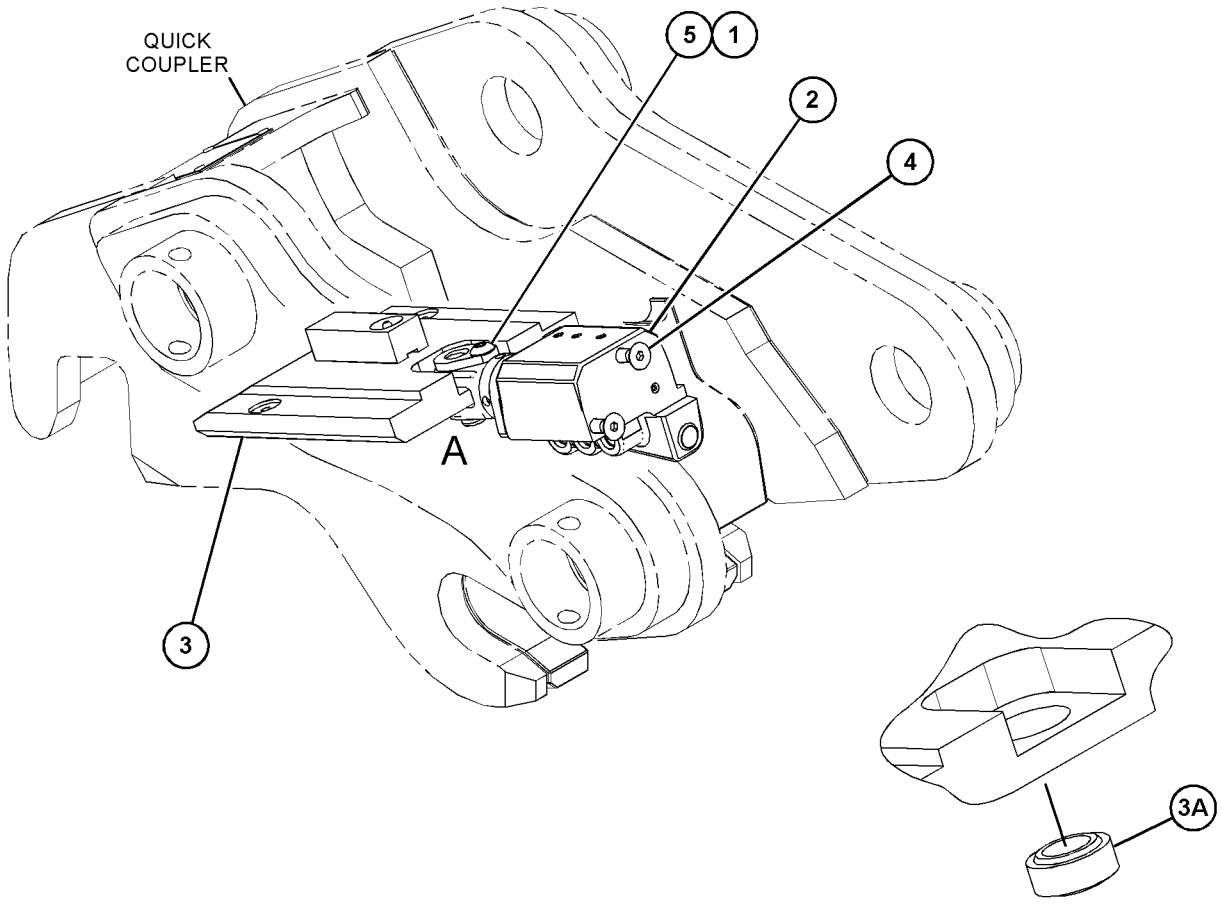

VIEW OF AREA A
(PARTS REMOVED FOR CLARITY)

GRAPHIC #1 <END> g06186280

444-7491 LOCK GP-QUICK COUPLER

PART OF 444-7499 COUPLER GP-QUICK

AN ATTACHMENT

SMCS-6129 **i06754196**

NOTE	REF NO	GRAPHIC REF	PART NUMBER	QTY	PART NAME 1 2 3 4 5 6 (PRODUCT LEVEL)	SEE PAGE
	1	1	**7K-1700**	2	WASHER-THRUST (1.27X2.12X0.60-MM THK)	
	2	1	**444-7507**	1	BUSHING	
	3	1	**444-7505**	1	SCREW-ADJUSTING	
	4	1	**444-7506**	1	NUT-SLEEVE	
	5	1	**361-1107**	1	SEAL-WIPER	
	6	1	**361-1147**	1	WEDGE AS	
M	7	1	**8T-0269**	2	BOLT-SOCKET HEAD (M6X1X20-MM)	

M - METRIC PART

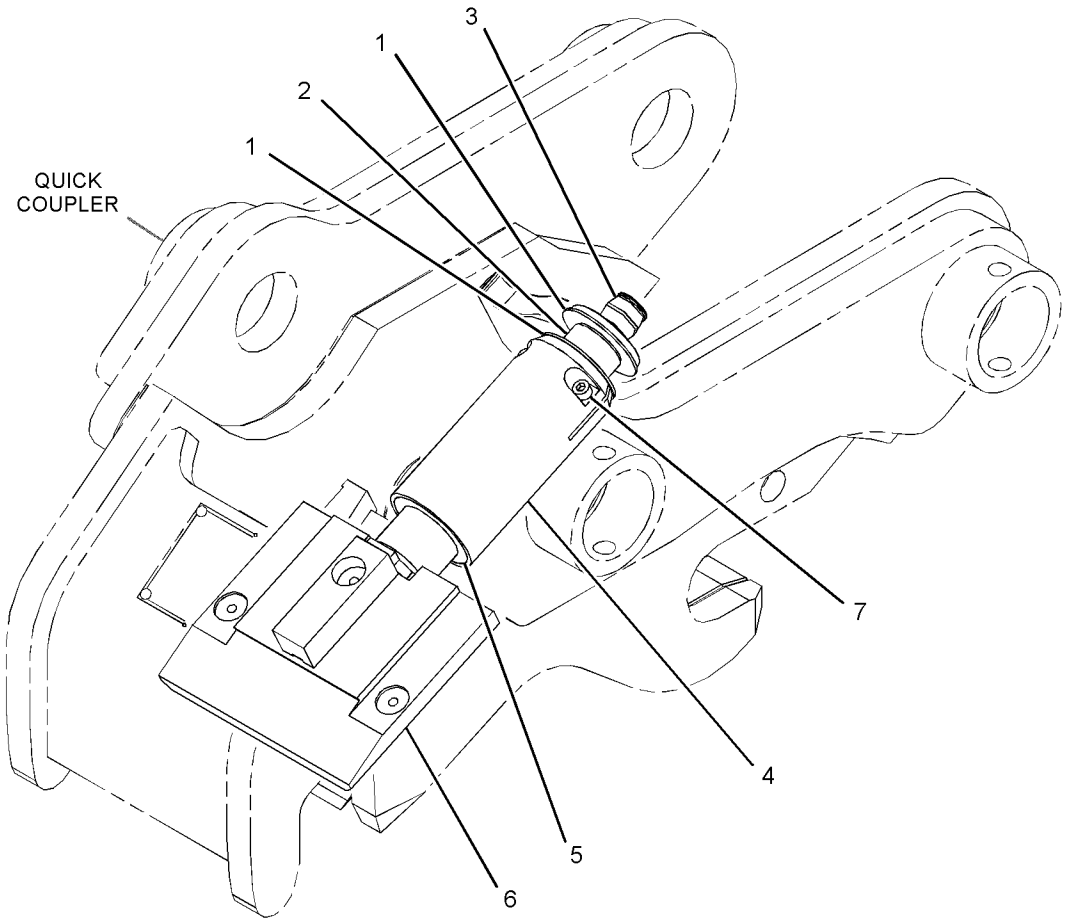

GRAPHIC #1 <END> g02980478

485-5245 LOCK GP-QUICK COUPLER

PART OF 485-5224 COUPLER GP-QUICK

AN ATTACHMENT

SMCS-6129 **i07200461**

NOTE	REF NO	GRAPHIC REF	PART NUMBER	QTY	PART NAME 1 2 3 4 5 6 (PRODUCT LEVEL)	SEE PAGE
M	1	1	**9X-2043**	1	SCREW-TRUSS HEAD (M6X1X14-MM)	
	2	1	**361-1126**	1	PIN AS	
	3	1	**485-5283**	1	WEDGE AS	
	3A	1	**6V-9274**	1	BEARING	
Y	4	1	**485-5289**	1	CYLINDER GP-COUPLER	167
M	5	1	**208-9283**	3	BOLT-FLANGE HEAD (M8X1.25X30-MM)	

M - METRIC PART
Y - SEPARATE ILLUSTRATION

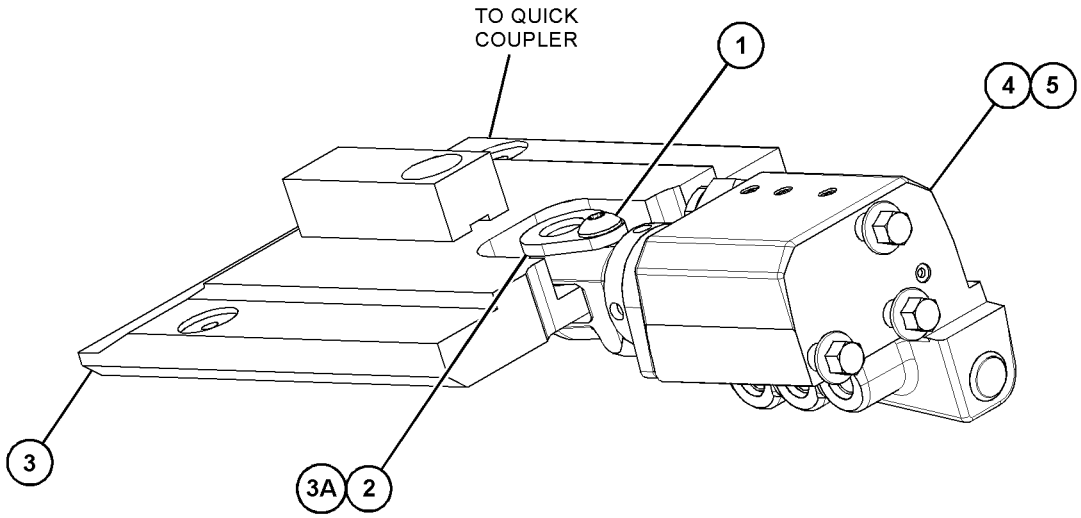

GRAPHIC #1 <END> g06251138

308-0324 PIN GP-COUPLER

AN ATTACHMENT

SMCS-5133, 6129 **i05413283**

NOTE	REF NO	GRAPHIC REF	PART NUMBER	QTY	PART NAME 1 2 3 4 5 6 (PRODUCT LEVEL)	SEE PAGE
	1	1	**296-9481**	2	PIN	
M	2	1	**6V-7687**	2	LOCKNUT (M12X1.75-THD)	
M	3	1	**7X-2550**	2	BOLT (M12X1.75X110-MM)	

M - METRIC PART

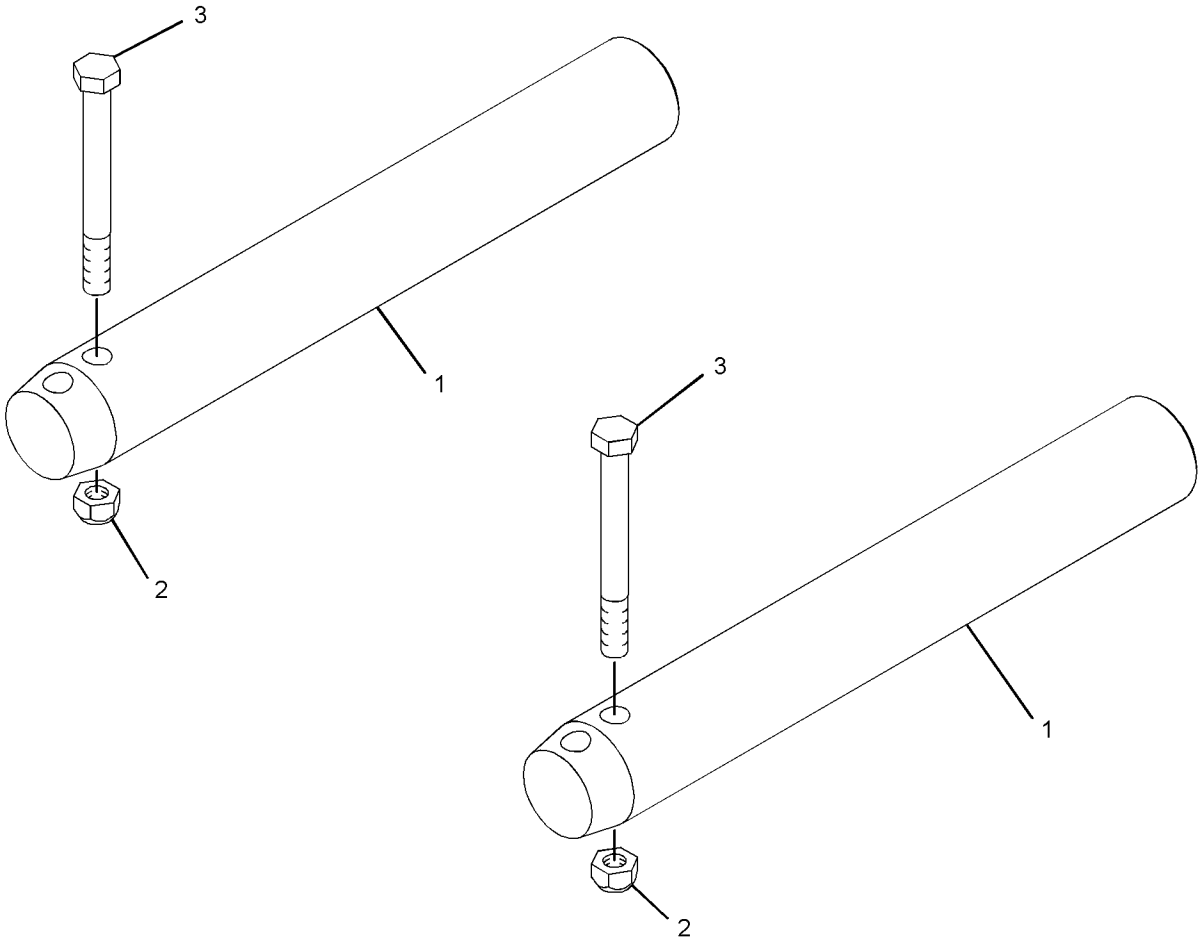

GRAPHIC #1 <END> g01819957

305-6740 THUMB AR

AN ATTACHMENT

SMCS-6547 **i05430590**

NOTE	REF NO	GRAPHIC REF	PART NUMBER	QTY	PART NAME 1 2 3 4 5 6 (PRODUCT LEVEL)	SEE PAGE
	1	1	**440-0642**	1	THUMB AS	
		1	**154-2704**	1	PLATE-INSTRUCTION (BUCKET SPECIFICATIONS)	
		1	**168-8389**	4	TACK (METAL)	
	1A	1	**9R-3700**	2	BUSHING	
	1B	1	**161-4130**	2	PLATE-IDENTIFICATION (CAT)	
Y	2	1	*305-6778*	1	MOUNTING GP-CYLINDER (THUMB)	244
Y	3	1	*305-6780*	1	CYLINDER & LINES GP-THUMB	159

Y - SEPARATE ILLUSTRATION

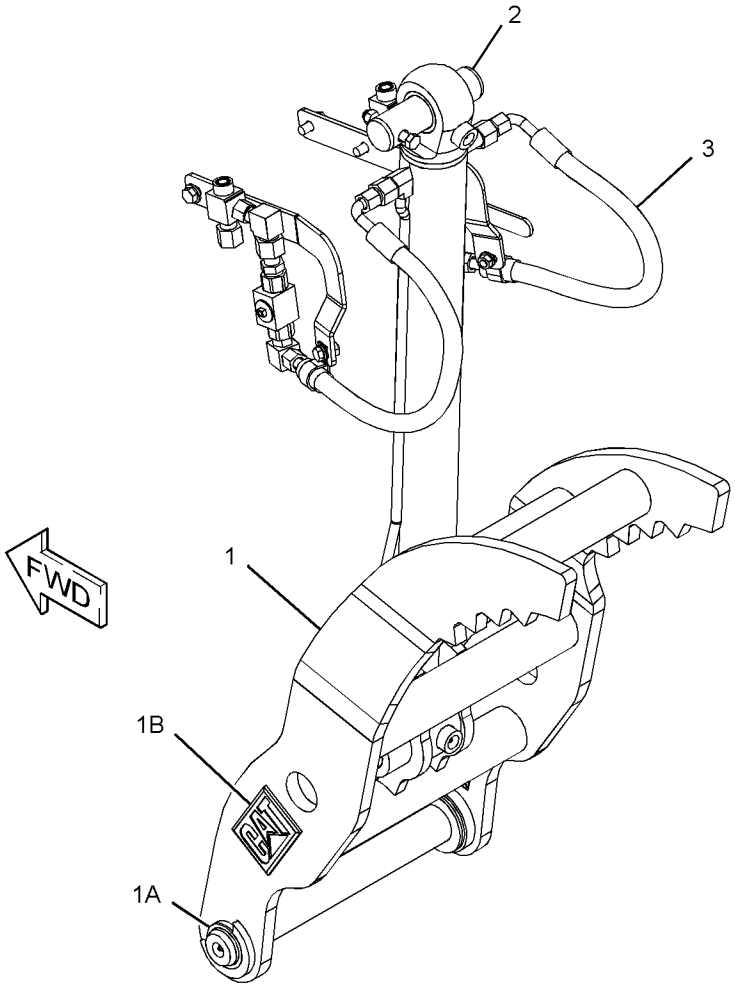

GRAPHIC #1 <END> g03425530

305-6741 THUMB AR

PART OF 428-2140, 428-2145, 485-5272 THUMB AR

AN ATTACHMENT

SMCS-6547 **i05430591**

NOTE	REF NO	GRAPHIC REF	PART NUMBER	QTY	PART NAME 1 2 3 4 5 6 (PRODUCT LEVEL)	SEE PAGE
	1	1	**440-0645**	1	THUMB AS	
		1	**154-2704**	1	PLATE-INSTRUCTION (BUCKET SPECIFICATIONS)	
		1	**168-8389**	4	TACK (METAL)	
	1A	1	**9R-3700**	2	BUSHING	
	1B	1	**161-4130**	2	PLATE-IDENTIFICATION (CAT)	
Y	2	1	*305-6778*	1	MOUNTING GP-CYLINDER (THUMB)	244
Y	3	1	*305-6780*	1	CYLINDER & LINES GP-THUMB	159

Y - SEPARATE ILLUSTRATION

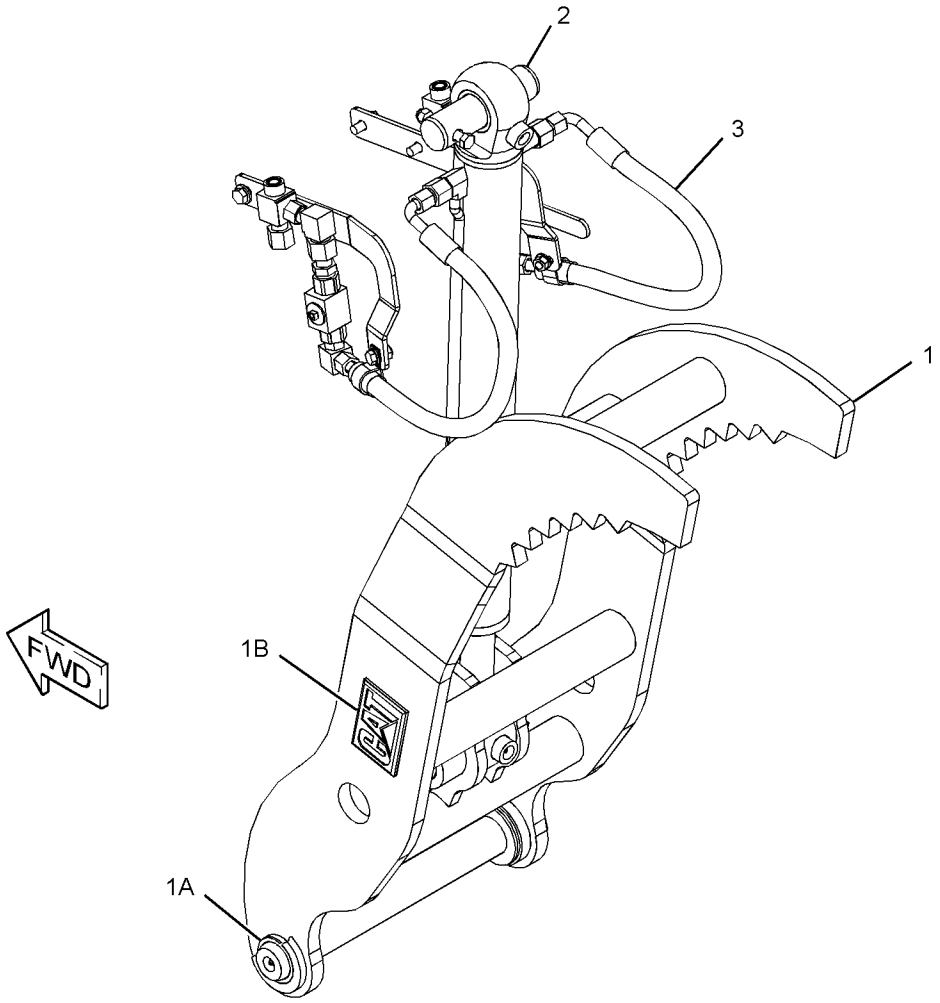

GRAPHIC #1 <END> g03425571

305-6744 THUMB AR

AN ATTACHMENT

SMCS-6547 **i05430594**

NOTE	REF NO	GRAPHIC REF	PART NUMBER	QTY	PART NAME 1 2 3 4 5 6 (PRODUCT LEVEL)	SEE PAGE
Y	1	1	*305-6731*	1	MOUNTING GP-CYLINDER (THUMB)	242
	2	1	**440-0647**	1	THUMB AS	
		1	**154-2704**	1	PLATE-INSTRUCTION (BUCKET SPECIFICATIONS)	
		1	**168-8389**	4	TACK (METAL)	
	2A	1	**161-4130**	2	PLATE-IDENTIFICATION (CAT)	
	2B	1	**9R-3700**	2	BUSHING	
Y	3	1	*305-6781*	1	CYLINDER & LINES GP-THUMB	161

Y - SEPARATE ILLUSTRATION

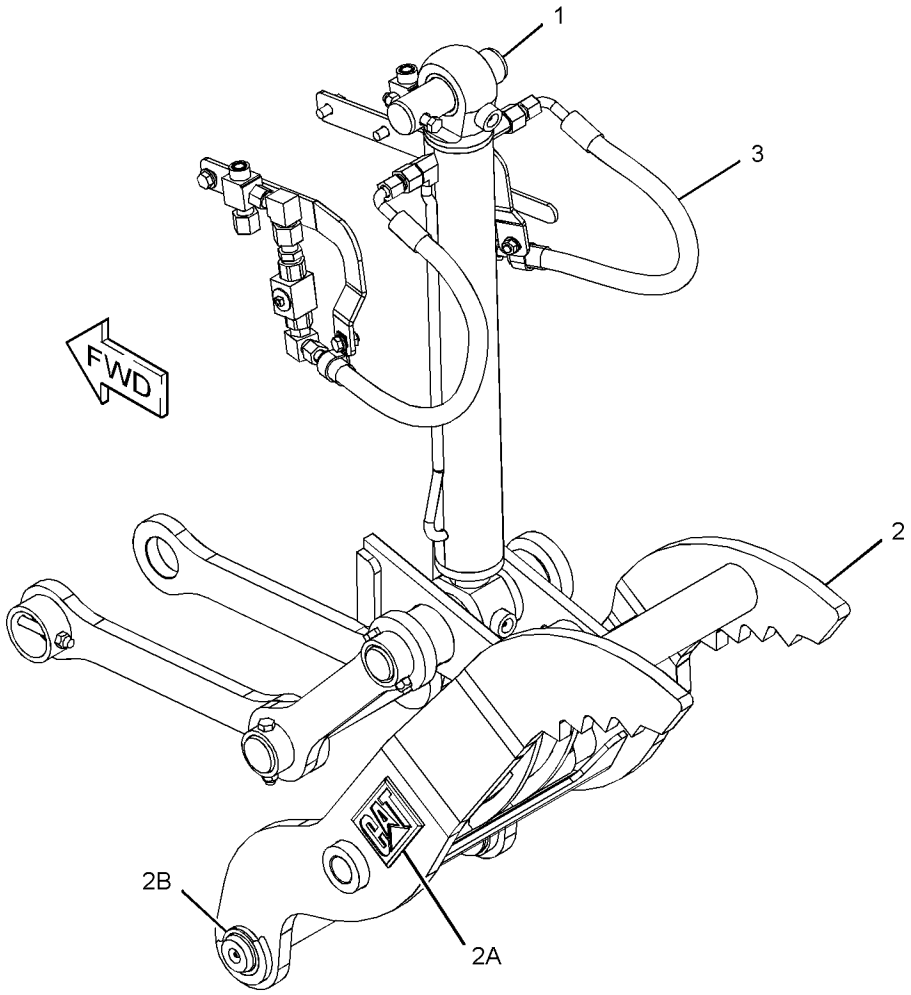

GRAPHIC #1 <END> g03425691

305-6745 THUMB AR

AN ATTACHMENT

SMCS-6547 **i05430595**

NOTE	REF NO	GRAPHIC REF	PART NUMBER	QTY	PART NAME 1 2 3 4 5 6 (PRODUCT LEVEL)	SEE PAGE
Y	1	1	*305-6731*	1	MOUNTING GP-CYLINDER (THUMB)	242
	2	1	**440-0649**	1	THUMB AS	
		1	**154-2704**	1	PLATE-INSTRUCTION (BUCKET SPECIFICATIONS)	
		1	**168-8389**	4	TACK (METAL)	
	2A	1	**9R-3700**	2	BUSHING	
	2B	1	**161-4130**	2	PLATE-IDENTIFICATION (CAT)	
Y	3	1	*305-6781*	1	CYLINDER & LINES GP-THUMB	161

Y - SEPARATE ILLUSTRATION

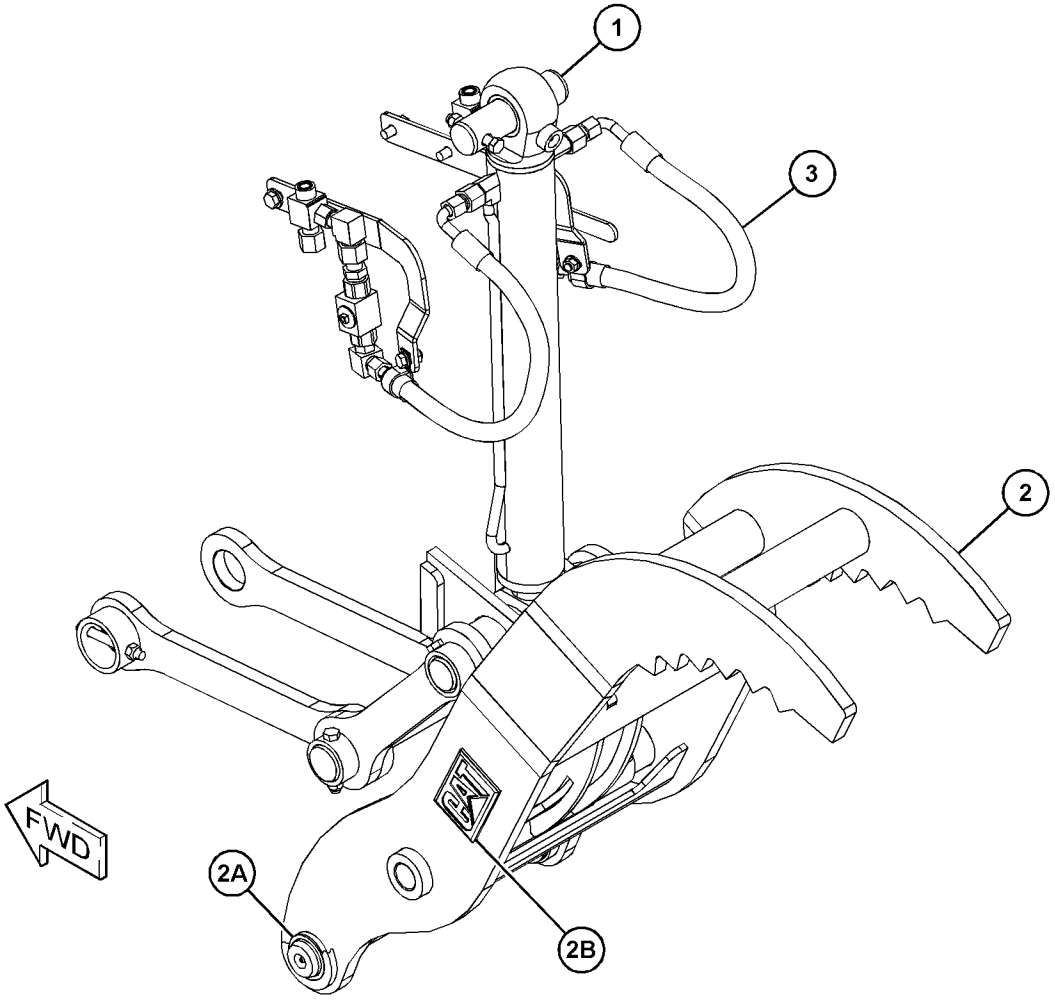

GRAPHIC #1 <END> g03425707

428-2140 THUMB AR

AN ATTACHMENT

SMCS-6547 **i07422622**

NOTE	PART NUMBER	QTY	PART NAME 1 2 3 4 5 6 (PRODUCT LEVEL)	SEE PAGE
Y	*444-7499*	1	COUPLER GP-QUICK	321
Y	**305-6741**	1	THUMB AR	336
	296-9481	1	PIN	
	4J-1888	1	PIN-COTTER	
	363-7466	1	WRENCH (22-MM)	

Y - SEPARATE ILLUSTRATION

<END>

428-2145 THUMB AR

AN ATTACHMENT

SMCS-6547 **i07422687**

NOTE	PART NUMBER	QTY	PART NAME 1 2 3 4 5 6 (PRODUCT LEVEL)	SEE PAGE
Y	**305-6741**	1	THUMB AR	336
Y	*361-1151*	1	COUPLER GP-QUICK	320
			—OR—	
Y	*446-9435*	1	COUPLER GP-QUICK	322
Y	*361-1150*	1	LINES GP-QUICK COUPLER	225
	296-9481	1	PIN	
	4J-1888	1	PIN-COTTER	
B	**176-8467**	1	SHIM (1-MM THK)	

B - USE AS REQUIRED
Y - SEPARATE ILLUSTRATION

<END>

485-5272 THUMB AR

AN ATTACHMENT

SMCS-6547 **i07548645**

NOTE	PART NUMBER	QTY	PART NAME 1 2 3 4 5 6 (PRODUCT LEVEL)	SEE PAGE
Y	*485-5223*	1	COUPLER GP-QUICK	323
Y	*361-1150*	1	LINES GP-QUICK COUPLER	225
Y	**305-6741**	1	THUMB AR	336
	296-9481	1	PIN	
	4J-1888	1	PIN-COTTER	
B	**468-7327**	4	SHIM (1-MM THK)	

B - USE AS REQUIRED
Y - SEPARATE ILLUSTRATION

<END>

504-6174 THUMB AR

AN ATTACHMENT

SMCS-6547 **i07546392**

NOTE	PART NUMBER	QTY	PART NAME 1 2 3 4 5 6 (PRODUCT LEVEL)	SEE PAGE
Y	*444-7499*	1	COUPLER GP-QUICK	321
Y	*504-6176*	1	CYLINDER & LINES GP-THUMB	163
Y	*305-6778*	1	MOUNTING GP-CYLINDER (THUMB)	244
	296-9481	1	PIN	
	4J-1888	1	PIN-COTTER	
B	**176-8467**	6	SHIM (1-MM THK)	
	440-0645	1	THUMB AS	
	168-8389	4	TACK (METAL)	
	9R-3700	2	BUSHING	
	161-4130	2	PLATE-IDENTIFICATION (CAT)	

B - USE AS REQUIRED
Y - SEPARATE ILLUSTRATION

<END>

504-6175 THUMB AR

AN ATTACHMENT

SMCS-6547 **i07548646**

NOTE	PART NUMBER	QTY	PART NAME 1 2 3 4 5 6 (PRODUCT LEVEL)	SEE PAGE
Y	*485-5223*	1	COUPLER GP-QUICK	323
Y	*504-6176*	1	CYLINDER & LINES GP-THUMB	163
Y	*361-1150*	1	LINES GP-QUICK COUPLER	225
Y	*305-6778*	1	MOUNTING GP-CYLINDER (THUMB)	244
	296-9481	1	PIN	
	4J-1888	1	PIN-COTTER	
B	**468-7327**	6	SHIM (1-MM THK)	
	440-0645	1	THUMB AS	
	168-8389	4	TACK (METAL)	
	9R-3700	2	BUSHING	
	161-4130	2	PLATE-IDENTIFICATION (CAT)	

B - USE AS REQUIRED
Y - SEPARATE ILLUSTRATION

<END>

513-0499 AIR CONDITIONER & MOUNTING GP

PART OF 496-0802 CAB GP

AN ATTACHMENT

SMCS-7320 **i07545002**

NOTE	REF NO	GRAPHIC REF	PART NUMBER	QTY	PART NAME 1 2 3 4 5 6 (PRODUCT LEVEL)	SEE PAGE
M	1	1	**8T-4908**	12	BOLT (M8X1.25X25-MM)	
	2	1	**8T-4224**	12	WASHER-HARD (8.8X16X2-MM THK)	
	3	1	**275-6710**	1	RETAINER (PUSH ON)	
M	4	1	**288-3657**	1	SCREW-THUMB (M6X1X10-MM)	
Y	5	1	**513-2525**	1	AIR CONDITIONER GP	342
	6	1	**518-9395**	1	FILTER-CAB AIR	
	7	1	**544-1149**	1	PLATE-RETAINER	

M - METRIC PART
Y - SEPARATE ILLUSTRATION

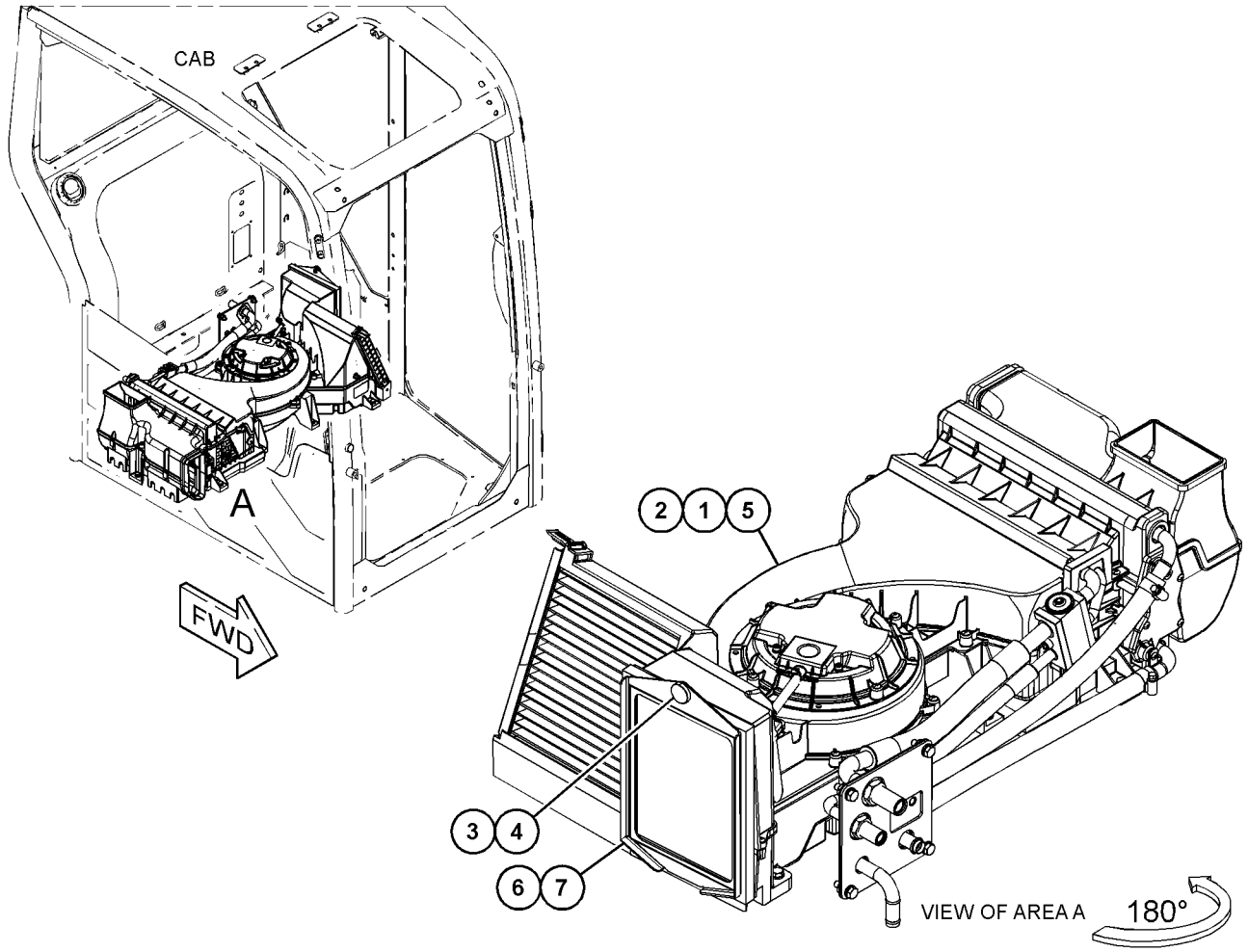

GRAPHIC #1 <END> g06341830

513-2525 AIR CONDITIONER GP

PART OF 513-0499 AIR CONDITIONER & MOUNTING GP

AN ATTACHMENT

SMCS-7320 **i07545005**

NOTE	REF NO	GRAPHIC REF	PART NUMBER	QTY	PART NAME 1 2 3 4 5 6 (PRODUCT LEVEL)	SEE PAGE
	1	1	**538-6393**	1	GASKET	
	2	2	**7F-2050**	1	LOCKNUT (3/4-16-THD)	
	3	2	**7F-2060**	1	LOCKNUT (7/8-14-THD)	
	4	1	**7T-9793**	4	VALVE-CHECK	
M	5	2	**209-8296**	1	BOLT-SOCKET HEAD (M8X1.25X25-MM)	
	6	2	**327-0282**	2	SEAL-INTEGRAL (1/2-IN)	
	7	2	**327-0283**	2	SEAL-INTEGRAL (3/4-IN)	
	8	2	**355-1790**	1	CLAMP	
	9	1	**435-2988**	2	CLIP AS	
	10	1,2	**449-1706**	49	SCREW-PAN HEAD	
	11	1	**476-9504**	1	SENSOR (TEMPERATURE)	
	12	2	**525-4852**	2	CLIP	
	13	1	**550-2025**	1	GROMMET	
	14	2	**2H-3922**	1	LOCKWASHER	
	15	2	**2H-3923**	1	LOCKWASHER	
	16	1	**538-6378**	1	CASE (LOWER)	
	17	1	**538-6379**	1	CASE (UPPER)	
	18	2	**538-6380**	1	PLATE-SUPPORT	
	19	1	**538-6381**	1	CASE (AIR INLET)	
	20	1	**538-6382**	1	COVER-AIR INLET	
	21	1	**538-6383**	1	BAFFLE (AIR)	
	22	1	**538-6384**	1	BLOWER AS	
	23	1	**538-6385**	1	EVAPORATOR AS	
	24	1	**538-6387**	1	GROMMET	
	25	1	**538-6388**	1	GROMMET	
	26	1	**538-6392**	1	CORE AS-HEATER	
	27	1	**538-6394**	1	GASKET	
	28	1	**538-6396**	1	FILTER	
	29	1	**538-6397**	1	GASKET	
	30	1	**538-6398**	2	GASKET	
	31	1	**538-6400**	1	GROMMET (HEATER)	
	32	1	**538-6401**	1	GASKET (FLOOR)	
	33	1	**538-6402**	1	GASKET (AIR INLET)	
	34	1	**538-6403**	1	GASKET-DUCT	
	35	1	**538-6404**	1	GASKET-DUCT	
	36	2	**538-6406**	1	BRACKET-SUPPORT	
	37	2	**538-6411**	1	HOSE AS	
	38	2	**538-6412**	1	HOSE AS	
	39	2	**538-6414**	1	GASKET (BULKHEAD)	
	40	2	**538-6415**	1	BULKHEAD AS	
	41	2	**552-8909**	1	VALVE AS-EXPANSION	
	42	1	**564-2796**	1	THERMOSTAT	
M	43	2	**5C-9553**	1	BOLT (M6X1X16-MM)	
M	44	2	**6V-8653**	2	BOLT-SOCKET HEAD (M6X1X40-MM)	
	45	2	**8T-0154**	4	CLAMP-HOSE	
	46	2	**8T-4224**	1	WASHER-HARD (8.8X16X2-MM THK)	

513-2525 **AIR CONDITIONER GP (**contd.**)** **i07545005**

NOTE	REF NO	GRAPHIC REF	PART NUMBER	QTY	PART NAME 1 2 3 4 5 6 (PRODUCT LEVEL)	SEE PAGE
E	47	2	**136-1953**		HOSE (51.1-CM)	
E	47A	2	**136-1953**		HOSE (43.4-CM)	

E - ORDER BY THE CENTIMETER
M - METRIC PART

513-2525 **AIR CONDITIONER GP (**contd.**)** **i07545005**

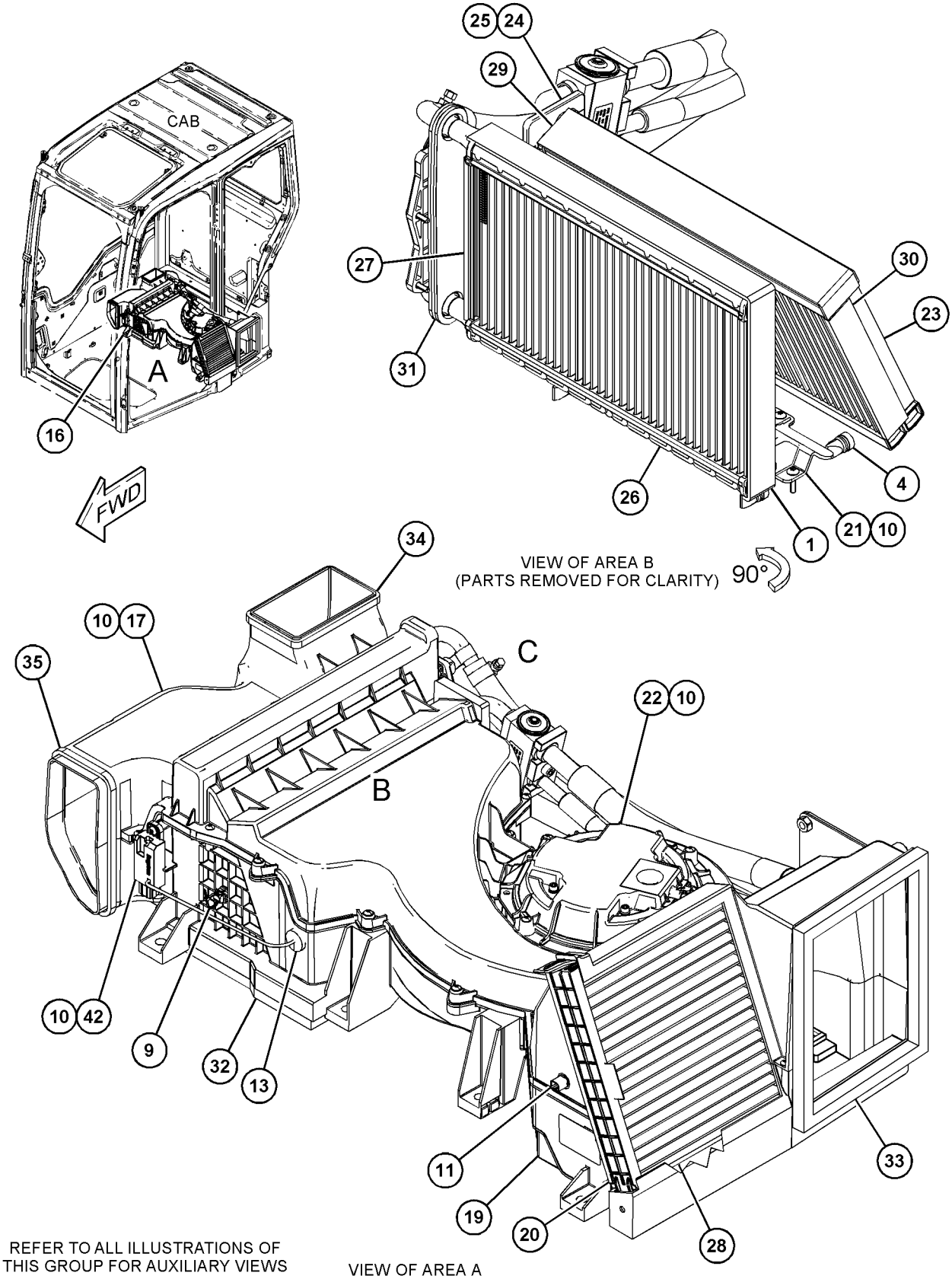

GRAPHIC #1

g06346003

513-2525 **AIR CONDITIONER GP (**contd.**)** **i07545005**

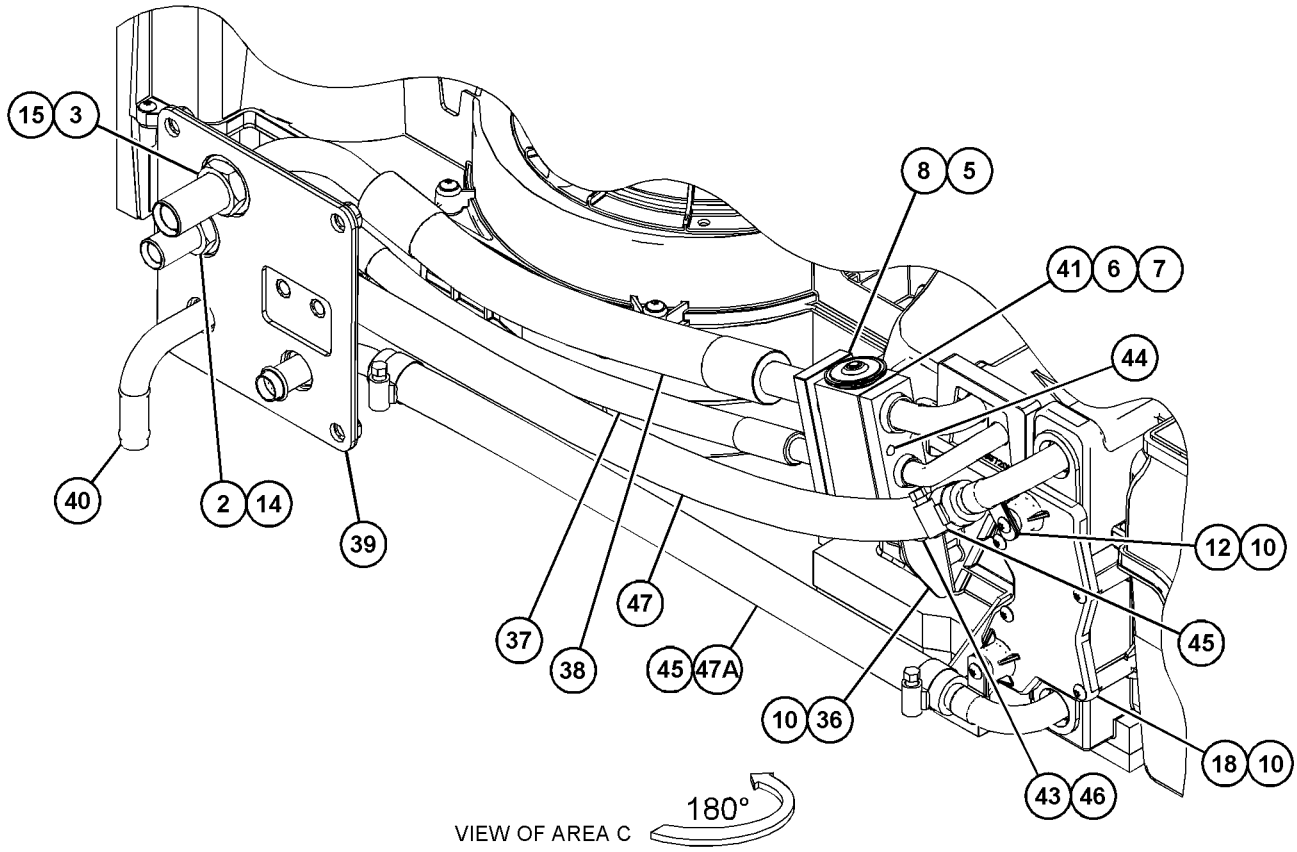

GRAPHIC #2 <END> g06346004

496-0802 CAB GP

PART OF 541-4591 CAB GP

AN ATTACHMENT

SMCS-7301 **i07544978**

NOTE	REF NO	GRAPHIC REF	PART NUMBER	QTY	PART NAME 1 2 3 4 5 6 (PRODUCT LEVEL)	SEE PAGE
Y	1	1	*496-0804*	1	WINDOW GP-CAB (FRONT)	415
Y	2	1	*510-6075*	1	CONSOLE GP-OPERATOR	355
Y	3	1	*510-6082*	1	SUPPORT GP-SEAT	407
Y	4	1	*541-4586*	1	DUCT GP-CAB AIR (FRONT)	376
	5	1	**496-0803**	1	CAB AS	
Y	6	1	*496-0805*	1	DOOR GP-CAB	372
	7	1	*496-0806*	1	WINDOW GP-CAB (REAR)	
		1	**178-5572**	2	SPACER-SPECIAL (WINDOW)	
		1	**178-5574**	4	SPACER	
		1	**496-1135**	1	GLASS-REAR	
Y	8	1	*496-0807*	1	CAB GP (BASIC)	348
Y	9	1	*511-6221*	1	MOUNTING GP-RADIO	398
Y	10	1	*513-0499*	1	AIR CONDITIONER & MOUNTING GP	341
	11	1	*544-0982*	1	MIRROR & MTG GP-REAR VIEW	
M		1	**6V-7357**	2	BOLT (M6X1X25-MM)	
		1	**9X-8256**	2	WASHER (6.6X12X2-MM THK)	
		1	**438-9121**	1	MIRROR AS (LH)	
		1	**454-3607**	1	MIRROR	

M - METRIC PART
Y - SEPARATE ILLUSTRATION

496-0802 **CAB GP** (contd.) **i07544978**

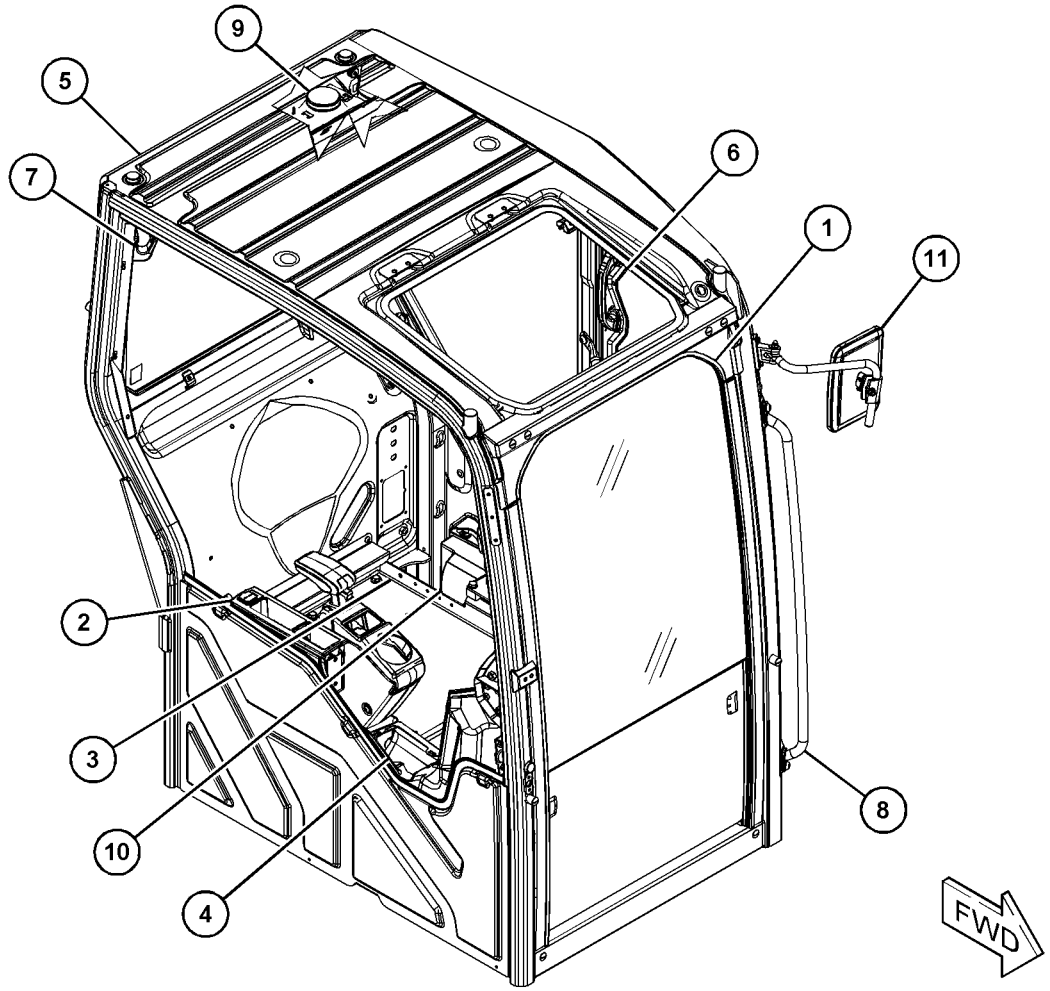

GRAPHIC #1 <END> g06347113

496-0807 CAB GP

PART OF 496-0802 CAB GP

AN ATTACHMENT

SMCS-7301 **i07544990**

NOTE	REF NO	GRAPHIC REF	PART NUMBER	QTY	PART NAME 1 2 3 4 5 6 (PRODUCT LEVEL)	SEE PAGE
	1	1	**332-1809**	11	PLUG	
	2	1	**496-0826**	1	HANDLE AS (FRONT)	
	3	1	**496-1147**	1	COVER-REAR	
	4	1	**519-2438**	1	HANDLE	
	5	1	**519-2442**	1	HANDLE	
M	6	1	**172-8591**	16	NUT-CLIP (M6X1-THD)	
	7	1	**389-8729**	10	SEAL	
M	8	1	**354-0132**	4	INSERT-HEX (M4X0.7-THD)	
M	9	1	**9X-2041**	6	SCREW-TRUSS HEAD (M10X1.5X20-MM)	
M	10	1	**225-3322**	2	SCREW-TRUSS HEAD (M6X1X10-MM)	
	11	1	**511-0962**	1	SHIM (1-MM THK)	
	12	1	**524-1936**	1	STRIKER	
	13	1	**542-1142**	1	COVER AS-REAR	
M		1	**6V-9632**	1	NUT-WELD (M6X1-THD)	
	14	1	**6V-8928**	1	HOOK-COAT	
	15	1	**8T-4121**	6	WASHER-HARD (11X21X2.5-MM THK)	
M	16	1	**9X-2042**	8	SCREW-TRUSS HEAD (M6X1X12-MM)	
M	17	1	**9X-2045**	1	SCREW-TRUSS HEAD (M6X1X20-MM)	

M - METRIC PART

496-0807 **CAB GP** (contd.) **i07544990**

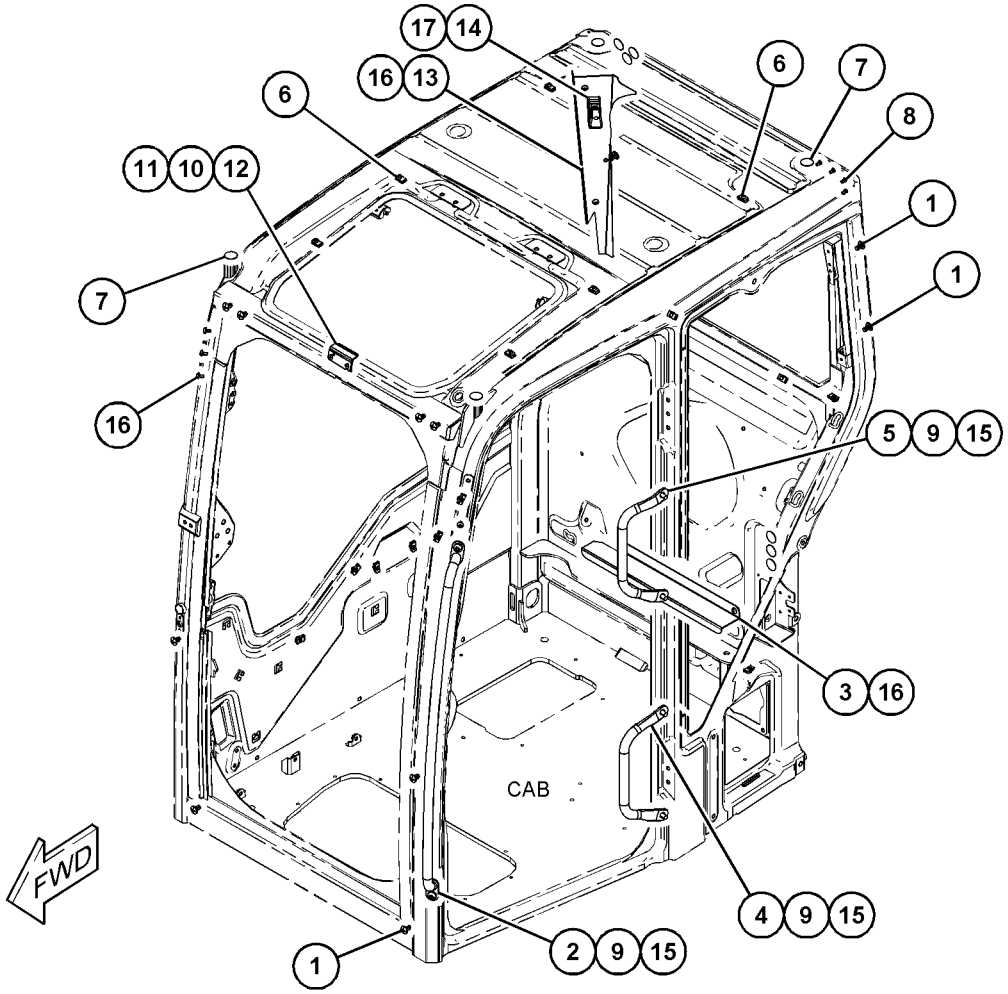

GRAPHIC #1 <END> g06347188

510-6071 CAB GP

PART OF 510-6070 OPERATOR AR
AN ATTACHMENT

SMCS-7301 **i07546256**

NOTE	PART NUMBER	QTY	PART NAME 1 2 3 4 5 6 (PRODUCT LEVEL)	SEE PAGE
Y	*541-4591*	1	CAB GP (SWING BOOM)	350
Y	*513-3440*	1	SEAT & MOUNTING GP (AIR SUSPENSION)	402

Y - SEPARATE ILLUSTRATION

<END>

541-4581 CAB GP

PART OF 541-4580 OPERATOR AR
AN ATTACHMENT

SMCS-7301 **i07544969**

NOTE	PART NUMBER	QTY	PART NAME 1 2 3 4 5 6 (PRODUCT LEVEL)	SEE PAGE
Y	*541-4591*	1	CAB GP (SWING BOOM)	350
Y	*521-2495*	1	SEAT & MOUNTING GP (FABRIC)	403

Y - SEPARATE ILLUSTRATION

<END>

541-4591 CAB GP—SWING BOOM

PART OF 510-6071, 541-4581 CAB GP
AN ATTACHMENT

SMCS-7301 **i07552520**

NOTE	PART NUMBER	QTY	PART NAME 1 2 3 4 5 6 (PRODUCT LEVEL)	SEE PAGE
Y	*496-0802*	1	CAB GP	346
Y	*511-6168*	1	CONTROL & MTG GP-JOYSTICK	361
Y	*521-6012*	1	LINER GP-CAB	391
Y	*544-0589*	1	WINDOW GP-CAB (RH)	419
Y	*544-0591*	1	WINDOW GP-CAB (TOP)	420
Y	*549-9080*	1	WINDOW GP-CAB (LH)	421
Y	*549-9082*	1	WINDOW GP-DOOR	422
Y	*510-6083*	1	WIPER GP-WINDOW	423
Y	*511-6234*	1	WIRING GP-CAB (ETHERNET)	74
Y	*522-6539*	1	WIRING GP-CAB (CAMERA)	76

Y - SEPARATE ILLUSTRATION

<END>

553-6871 COMPRESSOR GP-REFRIGERANT

PART OF 518-6184 ENGINE AR, 520-6936 INSTALLATION AR-ENGINE
AN ATTACHMENT

SMCS-1802 **i07544919**

NOTE	REF NO	GRAPHIC REF	PART NUMBER	QTY	PART NAME 1 2 3 4 5 6 (PRODUCT LEVEL)	SEE PAGE
M	1	1	**7X-2538**	4	BOLT (M8X1.25X100-MM)	
	2	1	**8T-4121**	3	WASHER-HARD (11X21X2.5-MM THK)	
	3	1	**8T-4224**	8	WASHER-HARD (8.8X16X2-MM THK)	
Y	4	1	**125-1657**	1	PULLEY GP-IDLER (REFRIGERANT COMPRESSOR)	11
	5	1	**382-4815**	1	SLEEVE	
	6	1	**468-5113**	1	BRACKET AS	
	7	1	**492-1662**	1	BRACKET (COMPRESSOR)	
	8	1	**4N-9891**	1	V-BELT (COMPRESSOR)	
	9	1	**544-4117**	1	COMPRESSOR GP-REFRIGERANT (BASIC)	
		1	**9X-3401**	2	PIN-CONNECTOR (16-GA TO 18-GA)	
					—OR—	
		1	**126-1767**	2	PIN-CONNECTOR (14-GA TO 16-GA)	
		1	**9X-7385**	2	SEAL-O-RING	
		1	**102-8802**	1	KIT-RECEPTACLE (2-PIN)	
					(INCLUDES RECEPTACLE AS & WEDGE)	
	10	1	**550-7350**	1	SPACER (8.5X20X23.5-MM THK)	
	11	1	**550-7351**	1	SPACER (8.5X20X32.5-MM THK)	
M	12	1	**5C-7261**	1	NUT (M8X1.25-THD)	
M	13	1	**8T-7329**	2	BOLT (M8X1.25X55-MM)	
M	14	1	**9X-8912**	3	BOLT (M10X1.25X30-MM)	

M - METRIC PART
Y - SEPARATE ILLUSTRATION

553-6871 **COMPRESSOR GP-REFRIGERANT** (contd.) **i07544919**

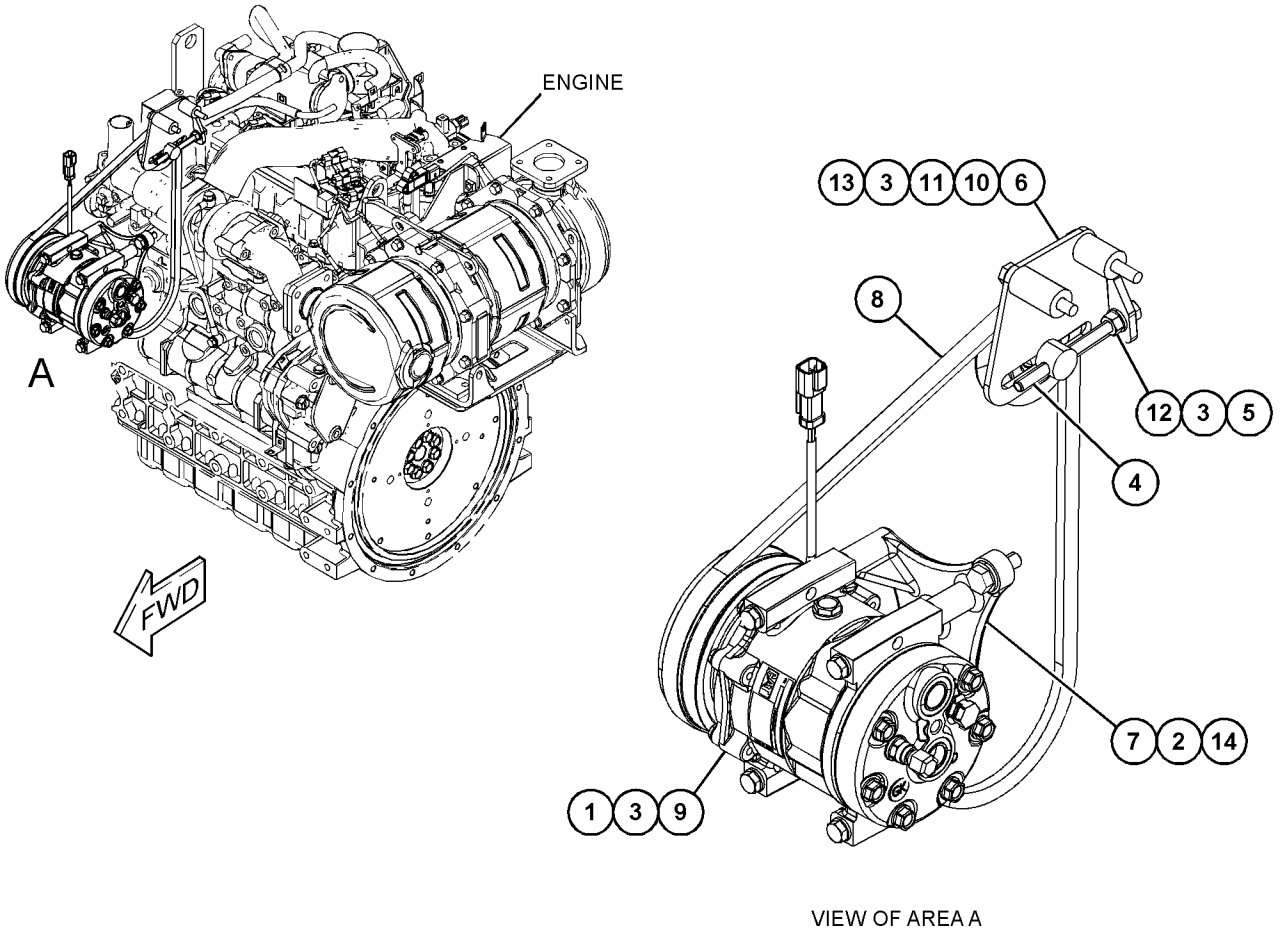

VIEW OF AREA A

GRAPHIC #1 <END> g06337999

492-1658 CONDENSER GP-REFRIGERANT

PART OF 518-6184 ENGINE AR, 520-6936 INSTALLATION AR-ENGINE AN ATTACHMENT

SMCS-1805 **i07544902**

NOTE	REF NO	GRAPHIC REF	PART NUMBER	QTY	PART NAME 1 2 3 4 5 6 (PRODUCT LEVEL)	SEE PAGE
Y	1	1	*515-7627*	1	CONDENSER GP-REFRIGERANT	354
	2	1	**8T-4121**	4	WASHER-HARD (11X21X2.5-MM THK)	
M	3	1	**8T-4136**	4	BOLT (M10X1.5X25-MM)	

M - METRIC PART
Y - SEPARATE ILLUSTRATION

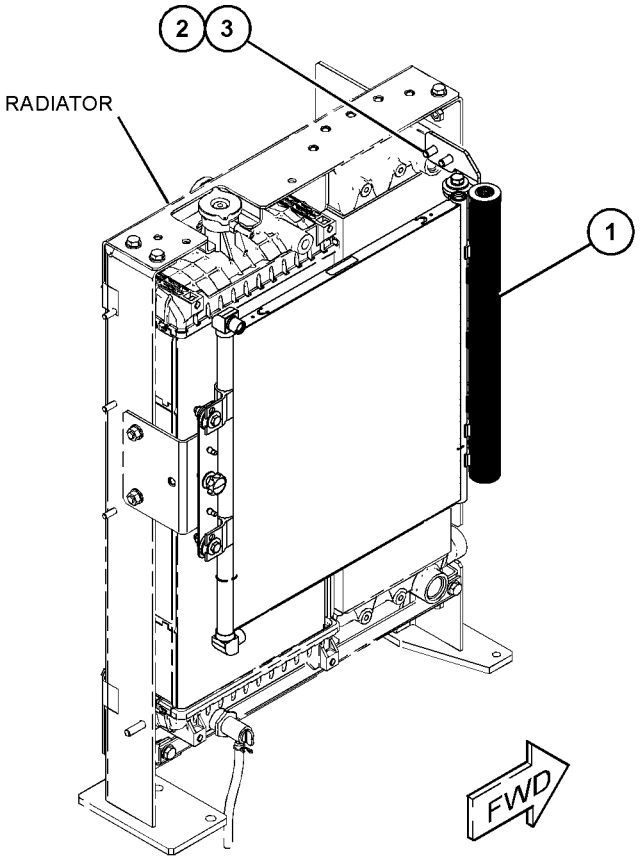

GRAPHIC #1 <END> g06340843

515-7627 CONDENSER GP-REFRIGERANT

PART OF 492-1658 CONDENSER GP-REFRIGERANT

AN ATTACHMENT

SMCS-1805 **i07544907**

NOTE	REF NO	GRAPHIC REF	PART NUMBER	QTY	PART NAME 1 2 3 4 5 6 (PRODUCT LEVEL)	SEE PAGE
	1	1	**552-7041**	1	BRACKET AS	
	2	1	**552-7042**	1	KIT-HARDWARE	
					(INCLUDES PARTS MARKED 'J' IN THE GRAPHICS)	
	3	1	**552-9247**	5	MOUNT AS	
	4	1	**552-9249**	1	BRACKET AS	

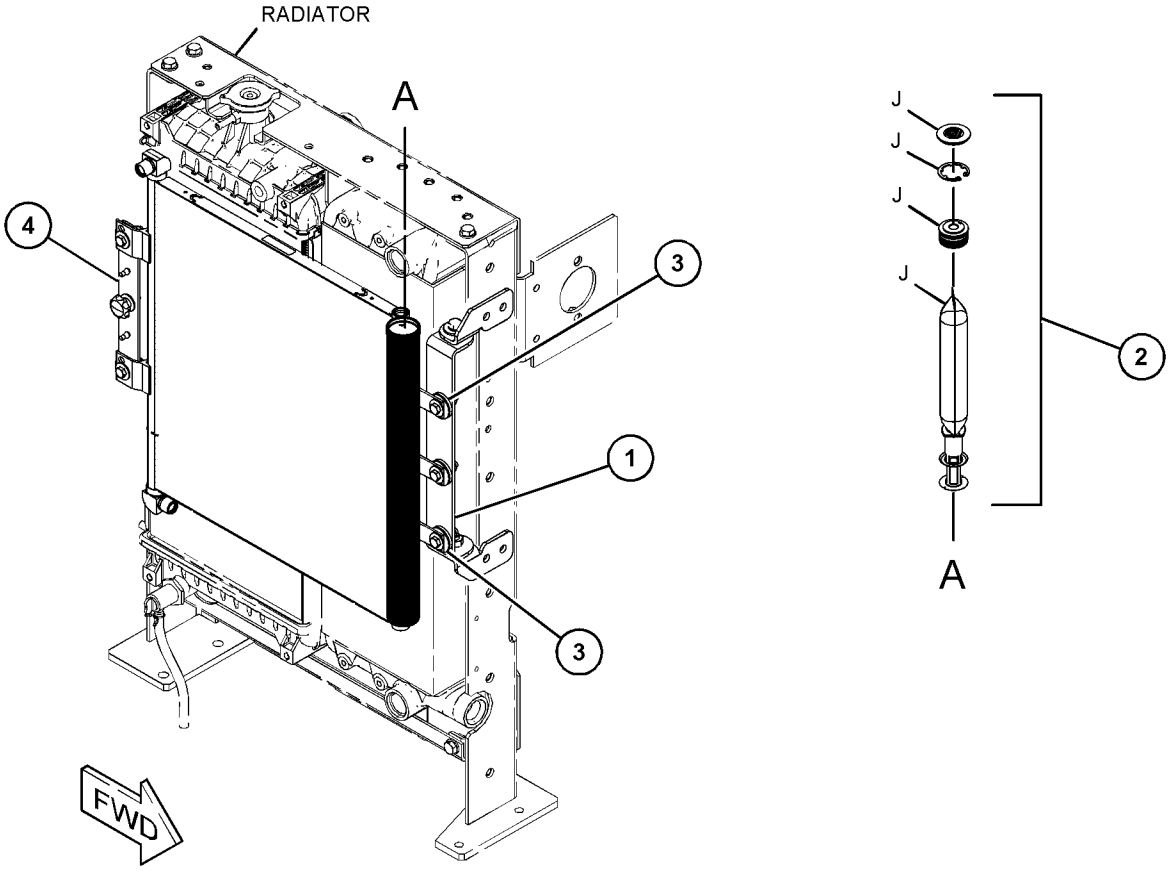

GRAPHIC #1 <END> g06342967

510-6075 CONSOLE GP-OPERATOR

PART OF 496-0802 CAB GP

AN ATTACHMENT

SMCS-5258, 7451 **i07544992**

NOTE	REF NO	GRAPHIC REF	PART NUMBER	QTY	PART NAME 1 2 3 4 5 6 (PRODUCT LEVEL)	SEE PAGE
Y	1	1	*513-0470*	1	CONSOLE GP-OPERATOR (RH)	356
Y	2	1	*513-0471*	1	CONSOLE GP-OPERATOR (LH)	358
	3	1	**8T-4121**	8	WASHER-HARD (11X21X2.5-MM THK)	
M	4	1	**8T-4136**	8	BOLT (M10X1.5X25-MM)	

M - METRIC PART
Y - SEPARATE ILLUSTRATION

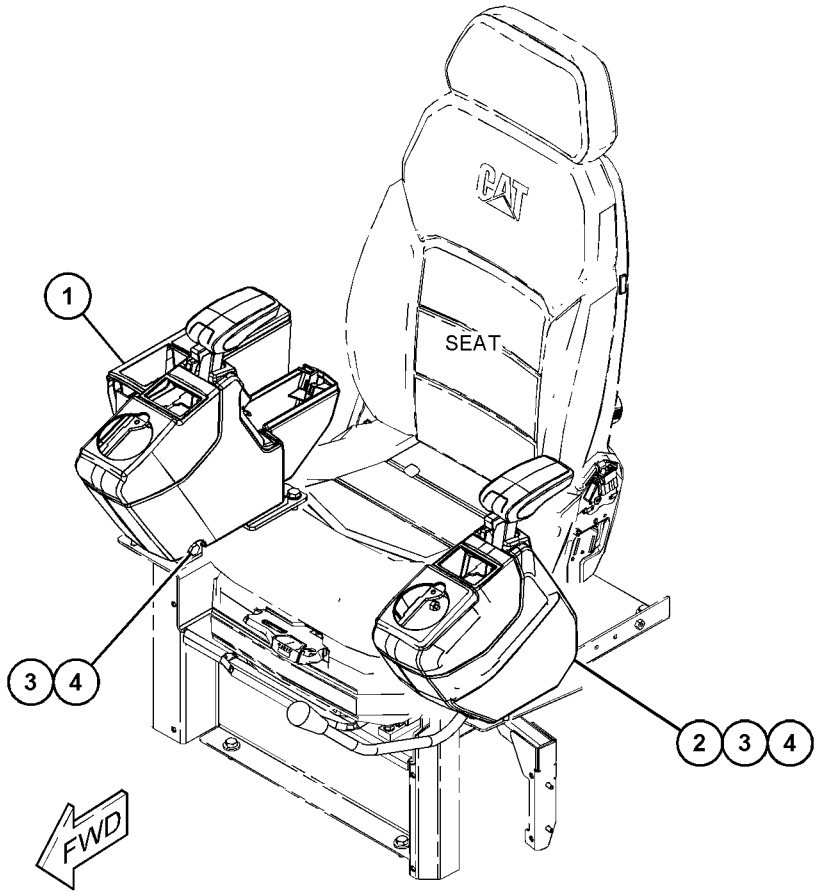

GRAPHIC #1 <END> g06332575

513-0470 CONSOLE GP-OPERATOR–RH

PART OF 510-6075 CONSOLE GP-OPERATOR

AN ATTACHMENT

SMCS-5258, 7451 **i07544993**

NOTE	REF NO	GRAPHIC REF	PART NUMBER	QTY	PART NAME 1 2 3 4 5 6 (PRODUCT LEVEL)	SEE PAGE
	1	1	**164-0150**	2	SPACER (9X20X20-MM THK)	
M	2	1	**287-6692**	2	SCREW-TRUSS HEAD (M8X1.25X35-MM)	
	3	1	**198-4775**	1	WASHER-HARD (6.6X15X6-MM THK)	
	4	1	**206-1667**	10	CLIP (TRIM)	
	5	1	**513-0473**	1	COVER-CONTROL	
	6	1	**513-0474**	1	COVER-CONTROL	
	7	1	*513-0479*	1	SUPPORT AS	
M		1	**6V-9632**	6	NUT-WELD (M6X1-THD)	
		1	**7T-1099**	1	LINK	
	8	1	**513-0481**	1	FRAME AS (RH)	
	9	1	**513-0488**	1	COVER	
	10	1	**513-0489**	1	COVER	
	11	1	**513-0490**	1	COVER	
	12	1	**521-5535**	1	COVER-CONTROL	
	13	1	**536-6831**	1	ARMREST AS	
	14	1	**5P-4116**	2	WASHER-HARD (8.8X20.5X2-MM THK)	
	15	1	**9X-2038**	6	WASHER (7X19X2-MM THK)	
M	16	1	**9X-2044**	3	SCREW-TRUSS HEAD (M6X1X16-MM)	
M	17	1	**9X-2045**	3	SCREW-TRUSS HEAD (M6X1X20-MM)	

M - METRIC PART

513-0470 **CONSOLE GP-OPERATOR (**contd.**)** **i07544993**

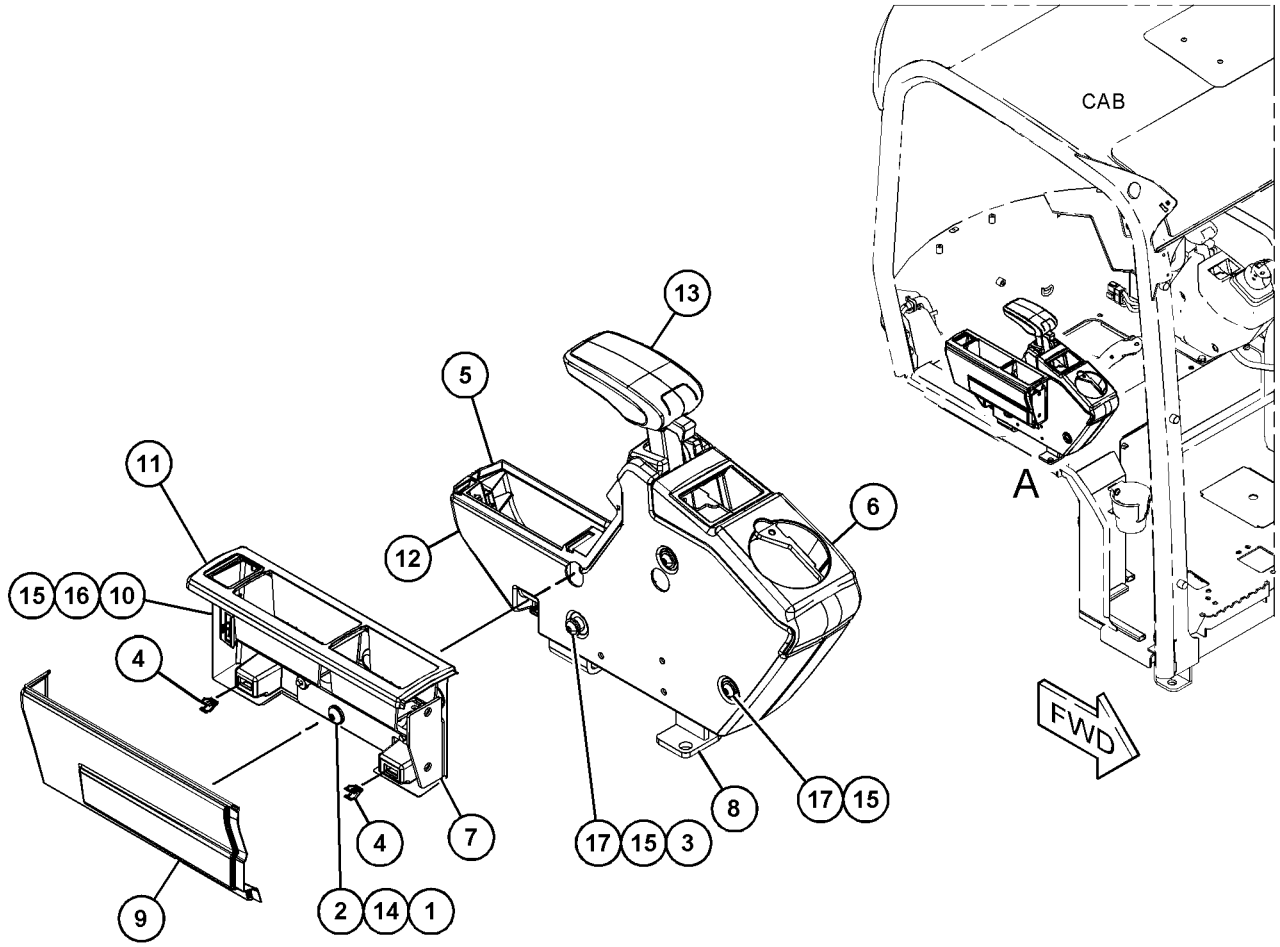

VIEW OF AREA A

GRAPHIC #1 <END> g06318347

513-0471 CONSOLE GP-OPERATOR–LH

PART OF 510-6075 CONSOLE GP-OPERATOR

AN ATTACHMENT

SMCS-5258, 7451 **i07544994**

NOTE	REF NO	GRAPHIC REF	PART NUMBER	QTY	PART NAME 1 2 3 4 5 6 (PRODUCT LEVEL)	SEE PAGE
	1	1	**206-1667**	6	CLIP (TRIM)	
	2	1	**211-7455**	1	KNOB	
	3	1	**430-9534**	1	LEVER AS	
	4	1	**513-0476**	1	COVER-CONTROL	
	5	1	**513-0477**	1	COVER-CONTROL	
	6	1	*513-0483*	1	FRAME AS (LH)	
	6A	1	**207-0797**	3	BUSHING	
	6B	1	**207-0799**	2	BUSHING	
	6C	1	**207-0800**	2	BUSHING	
	6D	1	**284-0838**	1	BUSHING	
		1	**226-0622**	1	SPRING	
		1	**281-8631**	1	SPRING	
		1	**095-0919**	1	RING-RETAINING	
		1	**284-0840**	2	NUT	
		1	**327-1749**	2	RING	
		1	**517-4087**	1	SUPPORT AS	
		1	**517-4089**	1	SUPPORT AS	
		1	**545-8729**	1	PLATE AS	
	7	1	**517-4060**	1	BRACKET	
	8	1	**517-4065**	1	BRACKET	
	9	1	**521-5536**	1	COVER-CONTROL	
	10	1	**536-6831**	1	ARMREST AS	
M	11	1	**7X-2619**	2	BOLT (M6X1X10-MM)	
	12	1	**9X-2038**	3	WASHER (7X19X2-MM THK)	
M	13	1	**9X-2045**	5	SCREW-TRUSS HEAD (M6X1X20-MM)	
	14	1	**9X-8256**	2	WASHER (6.6X12X2-MM THK)	

M - METRIC PART

513-0471 **CONSOLE GP-OPERATOR (**contd.**)** **i07544994**

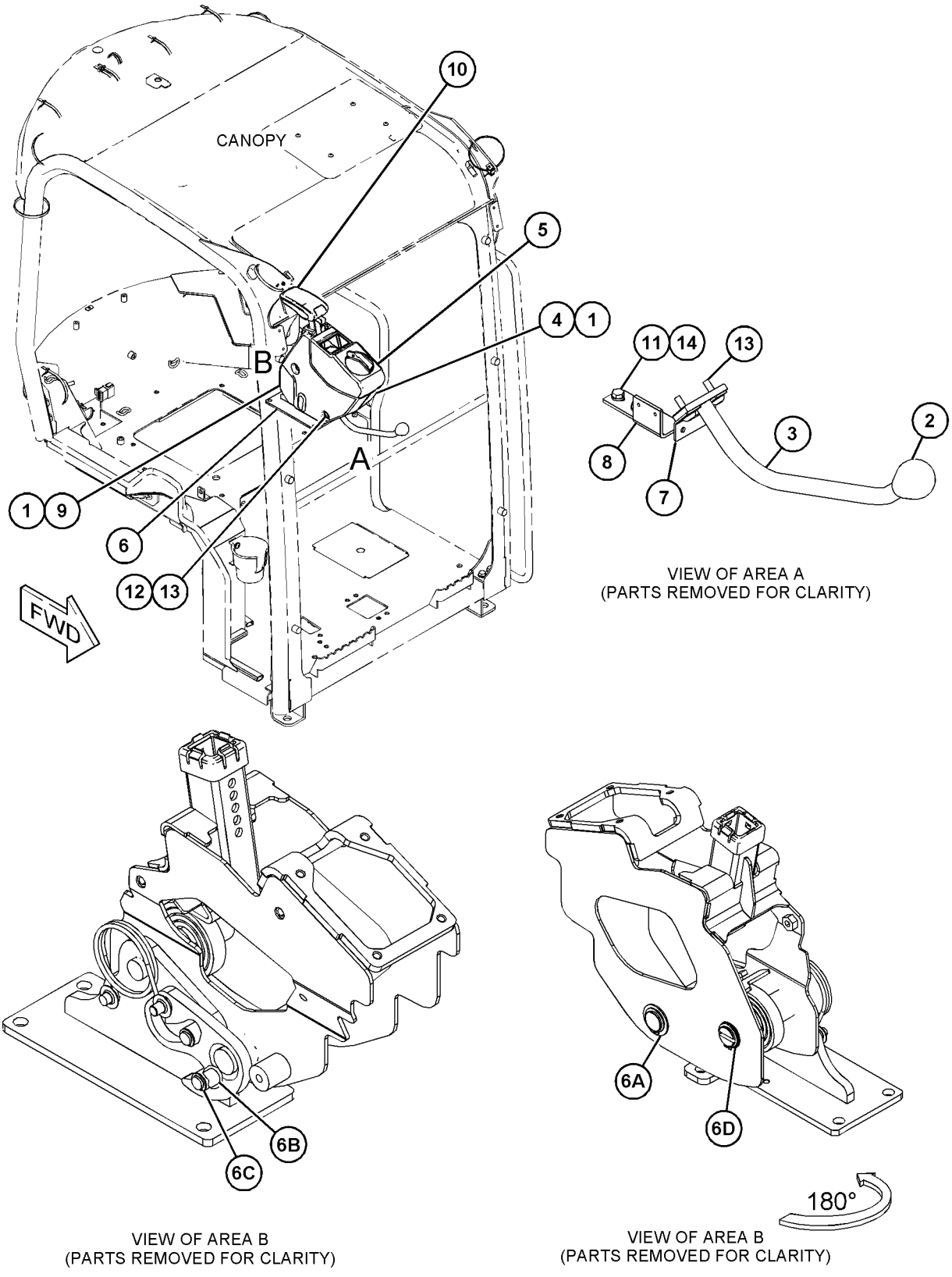

GRAPHIC #1 <END> g06319032

513-0480 CONSOLE GP-OPERATOR

PART OF 541-4598 CONTROL AR-BLADE

AN ATTACHMENT

SMCS-5258, 7451 **i07546242**

NOTE	REF NO	GRAPHIC REF	PART NUMBER	QTY	PART NAME 1 2 3 4 5 6 (PRODUCT LEVEL)	SEE PAGE
	1	1	**513-0491**	1	COVER	
	2	1	**543-0495**	1	SUPPORT AS	
	3	1	**9X-2038**	3	WASHER (7X19X2-MM THK)	
M	4	1	**9X-2044**	3	SCREW-TRUSS HEAD (M6X1X16-MM)	

M - METRIC PART

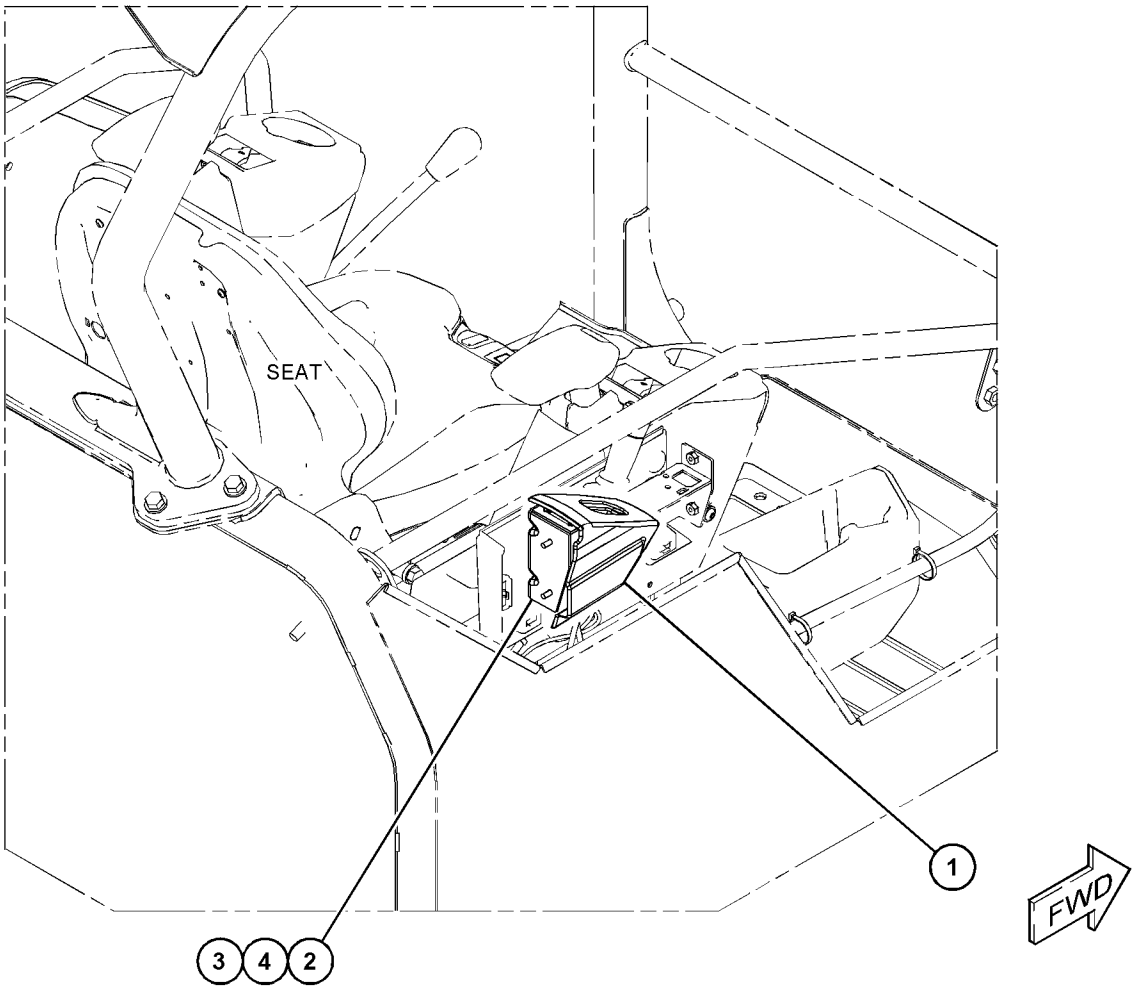

GRAPHIC #1 <END> g06318348

511-6168 CONTROL & MTG GP-JOYSTICK

PART OF 541-4591 CAB GP
AN ATTACHMENT

SMCS-5059, 5063, 5705 **i07545009**

NOTE	REF NO	GRAPHIC REF	PART NUMBER	QTY	PART NAME 1 2 3 4 5 6 (PRODUCT LEVEL)	SEE PAGE
M	1	1	**252-5790**	8	BOLT-SOCKET HEAD (M6X1X16-MM)	
Y	2	1	**515-7113**	1	CONTROL GP-JOYSTICK (LH)	366
	3	1	**206-1345**	1	STRAP-CABLE	
	4	1	**427-9771**	1	TIE	
Y	5	1	**515-7112**	1	CONTROL GP-JOYSTICK (RH)	365
	6	1	**9X-8256**	8	WASHER (6.6X12X2-MM THK)	

M - METRIC PART
Y - SEPARATE ILLUSTRATION

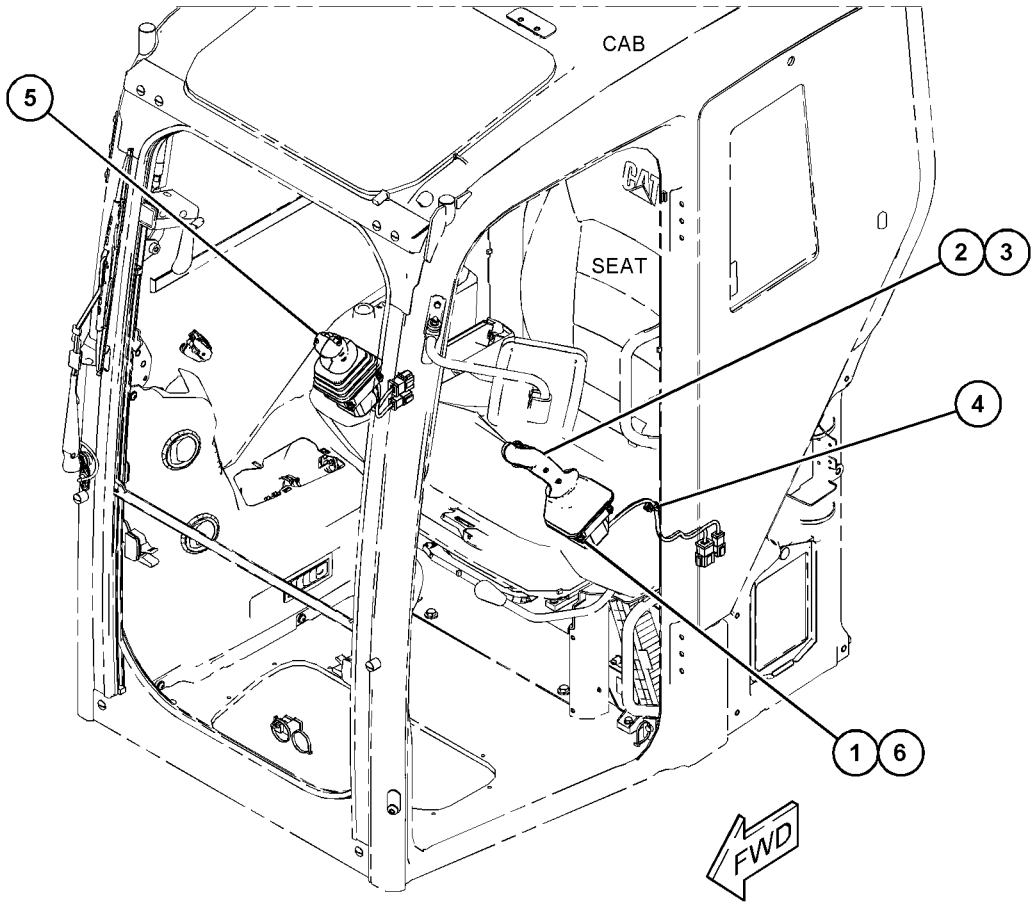

GRAPHIC #1 <END> g06332055

518-7892 CONTROL & MTG GP-PEDAL–RH

PART OF 541-4574 CONTROL AR-HYDRAULIC
AN ATTACHMENT

SMCS-5051, 5063, 5462 **i07546719**

NOTE	REF NO	GRAPHIC REF	PART NUMBER	QTY	PART NAME 1 2 3 4 5 6 (PRODUCT LEVEL)	SEE PAGE
	1	1	**122-9611**	1	PEDAL-RUBBER (RH)	
	2	1	**233-5260**	1	LANYARD	
	3	1	**498-7705**	1	SUPPORT AS	
	4	1	**498-7706**	1	PEDAL AS (RH)	
	5	1	**510-0842**	1	STOPPER	
M	6	1	**101-7404**	4	BOLT-SOCKET HEAD (M10X1.5X30-MM)	
	7	1	**561-7005**	1	CONTROL GP-PEDAL	
		1	**8T-8729**	4	PIN-CONNECTOR (16-GA TO 18-GA)	
		1	**151-9274**	1	KIT-RECEPTACLE (4-PIN)	
					(INCLUDES RECEPTACLE AS & WEDGE)	
		1	**509-3086**	1	BOOT	
	8	1	**8T-0114**	1	PIN-SPRING	
M	9	1	**8T-0287**	2	BOLT (M5X0.8X10-MM)	
	10	1	**8T-4121**	2	WASHER-HARD (11X21X2.5-MM THK)	
M	11	1	**8T-4136**	2	BOLT (M10X1.5X25-MM)	
	12	1	**9X-2027**	4	WASHER (11X18X2-MM THK)	

M - METRIC PART

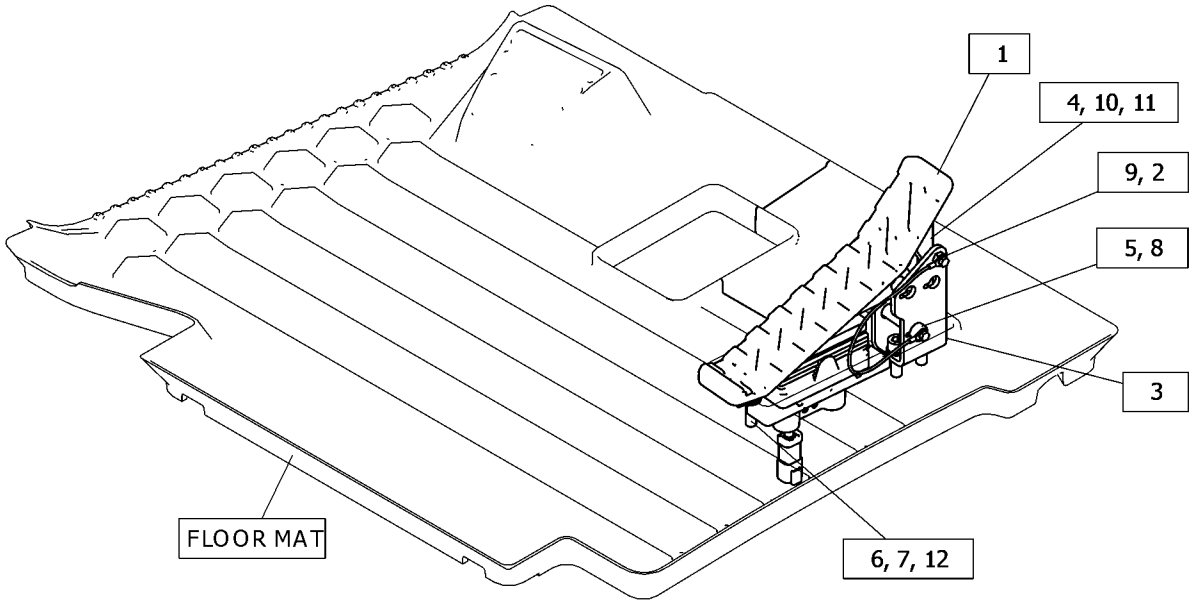

GRAPHIC #1 <END> g06343581

552-1608 CONTROL & MTG GP-PEDAL

PART OF 541-4573, 541-4574 CONTROL AR-HYDRAULIC
AN ATTACHMENT

SMCS-5051, 5063, 5462 **i07546214**

NOTE	REF NO	GRAPHIC REF	PART NUMBER	QTY	PART NAME 1 2 3 4 5 6 (PRODUCT LEVEL)	SEE PAGE
M	1	1	**101-7404**	4	BOLT-SOCKET HEAD (M10X1.5X30-MM)	
	2	1	**561-7001**	1	CONTROL GP-PEDAL	
		1	**8T-8729**	6	PIN-CONNECTOR (16-GA TO 18-GA)	
		1	**151-9275**	1	KIT-RECEPTACLE (6-PIN)	
		1	**509-3085**	1	BOOT	
		1	**509-3087**	1	DAMPER AS	
	3	1	**9X-2027**	4	WASHER (11X18X2-MM THK)	

M - METRIC PART

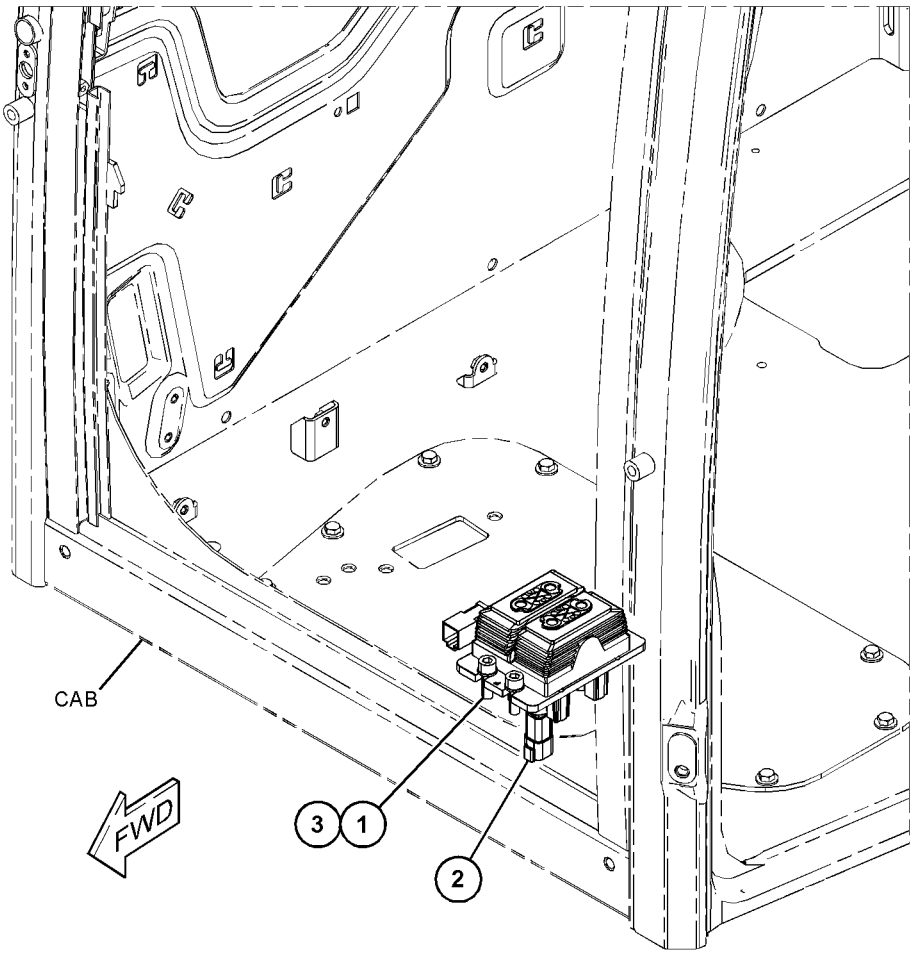

GRAPHIC #1 <END> g06344060

511-6166 CONTROL GP-BLADE

PART OF 541-4598 CONTROL AR-BLADE

AN ATTACHMENT

SMCS-5063, 6060 **i07548861**

NOTE	REF NO	GRAPHIC REF	PART NUMBER	QTY	PART NAME 1 2 3 4 5 6 (PRODUCT LEVEL)	SEE PAGE
	1	1	**326-9726**	1	BASE-MOUNTING	
	2	1	**3S-2093**	1	STRAP-CABLE	
	3	1	**519-4582**	1	CONTROL AS-JOYSTICK (BLADE CONTROL)	
		1	**151-9274**	1	KIT-RECEPTACLE (4-PIN)	
					(INCLUDES RECEPTACLE AS & WEDGE)	
M	4	1	**9X-6155**	4	BOLT-SOCKET HEAD (M6X1X16.7-MM)	

M - METRIC PART

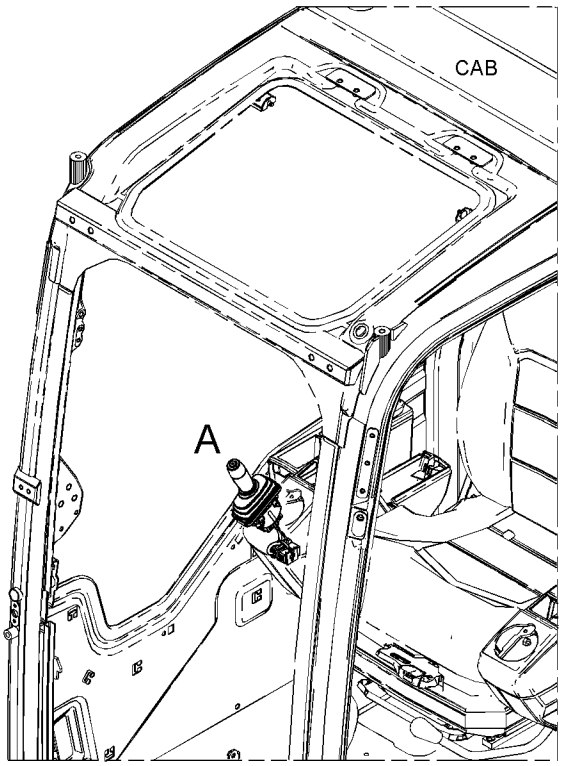

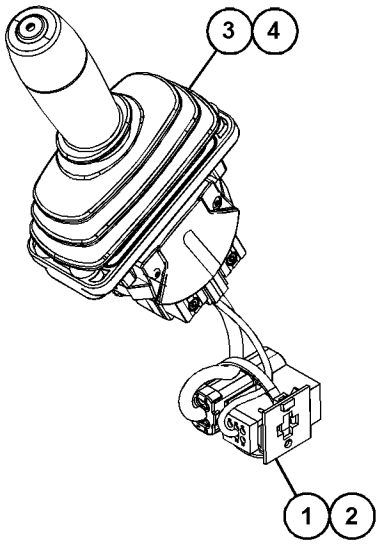

VIEW OF AREA A

GRAPHIC #1 <END> g06343997

515-7112 CONTROL GP-JOYSTICK–RH

PART OF 511-6168 CONTROL & MTG GP-JOYSTICK
AN ATTACHMENT

SMCS-5063, 5705, 6107 **i07545041**

NOTE	REF NO	GRAPHIC REF	PART NUMBER	QTY	PART NAME 1 2 3 4 5 6 (PRODUCT LEVEL)	SEE PAGE
	1	1	**515-7114**	1	BASE AS-JOYSTICK	
	1A	1	**151-9274**	1	KIT-RECEPTACLE (4-PIN)	
					(INCLUDES RECEPTACLE AS & WEDGE)	
	2	1	**515-7116**	1	CONTROL GP-HANDLE (RH)	
	2A	1	**160-3518**	1	KIT-RECEPTACLE (8-PIN)	
					(INCLUDES RECEPTACLE AS & WEDGE)	
M	2B	1	**178-9983**	2	LOCKNUT (M4X0.7-THD)	
M	2C	1	**213-7489**	2	SCREW (M4X0.7X25-MM)	
	3	1	**539-8596**	1	BOOT	

M - METRIC PART

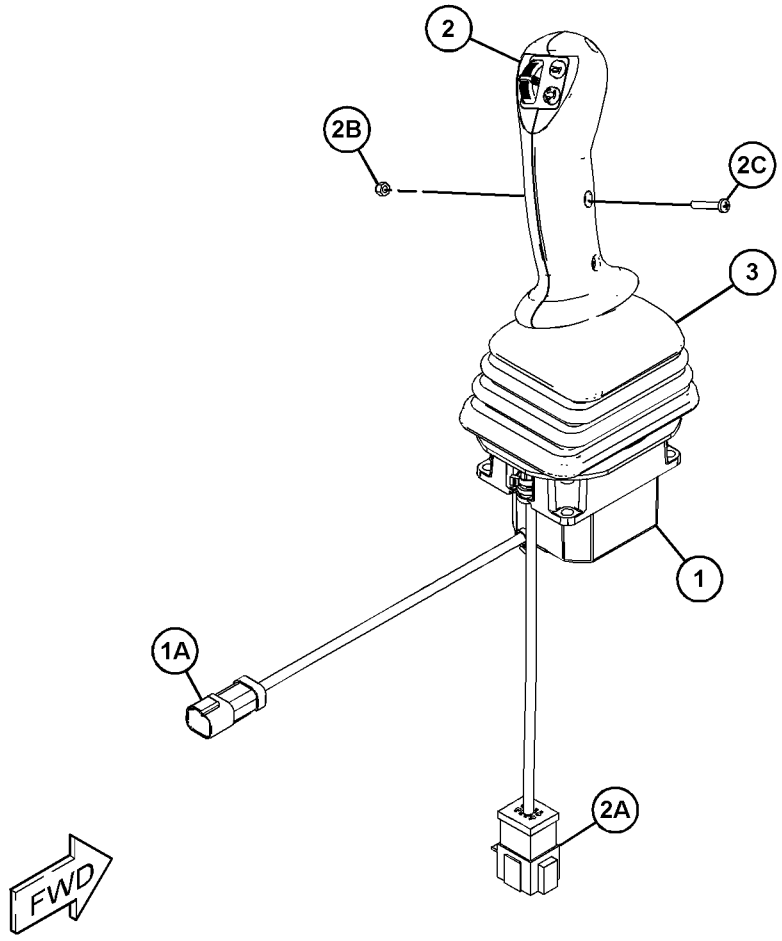

GRAPHIC #1 <END> g06315033

515-7113 CONTROL GP-JOYSTICK–LH

PART OF 511-6168 CONTROL & MTG GP-JOYSTICK

AN ATTACHMENT

SMCS-5063, 5705, 6107 **i07545053**

NOTE	REF NO	GRAPHIC REF	PART NUMBER	QTY	PART NAME 1 2 3 4 5 6 (PRODUCT LEVEL)	SEE PAGE
	1	1	**515-7115**	1	BASE AS	
	1A	1	**151-9274**	1	KIT-RECEPTACLE (4-PIN)	
					(INCLUDES RECEPTACLE AS & WEDGE)	
	2	1	**515-7117**	1	CONTROL GP-HANDLE (LH)	
	2A	1	**160-3518**	1	KIT-RECEPTACLE (8-PIN)	
					(INCLUDES RECEPTACLE AS & WEDGE)	
M	2B	1	**213-7489**	2	SCREW (M4X0.7X25-MM)	
M	2C	1	**178-9983**	2	LOCKNUT (M4X0.7-THD)	
	3	1	**539-8597**	1	BOOT	

M - METRIC PART

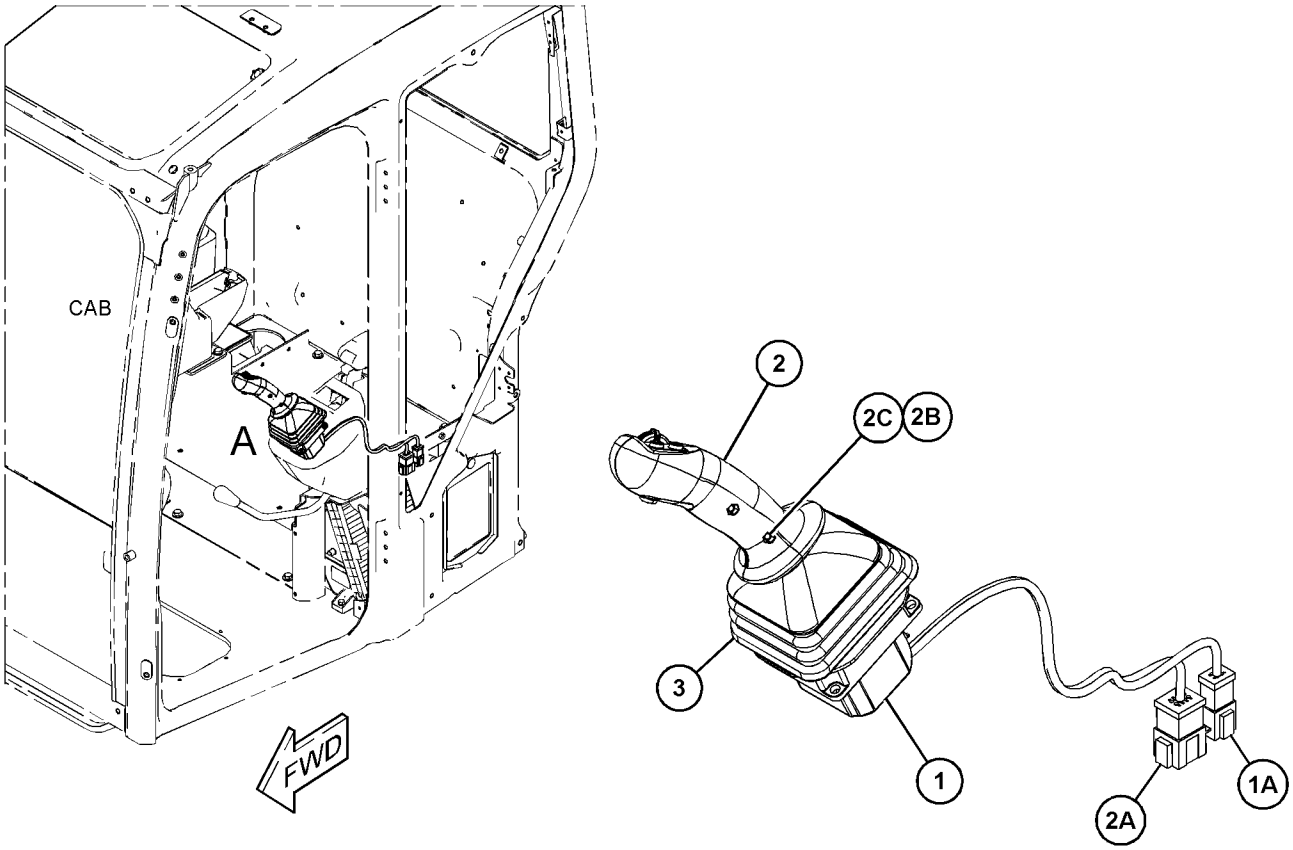

VIEW OF AREA A

GRAPHIC #1 <END> g06314334

510-6078 CONTROL GP-PILOT OPERATED HYD

PART OF 541-4573, 541-4574 CONTROL AR-HYDRAULIC
AN ATTACHMENT

SMCS-5059, 5705 **i07546213**

NOTE	REF NO	GRAPHIC REF	PART NUMBER	QTY	PART NAME 1 2 3 4 5 6 (PRODUCT LEVEL)	SEE PAGE
M	1	1	**105-3477**	4	BOLT-SOCKET HEAD (M10X1.5X45-MM)	
	2	1	**513-4526**	1	PEDAL AS (LH)	
		1	**6V-2456**	1	RING-RETAINING	
		1	**513-7295**	1	PEDAL	
		1	**526-4553**	1	PEDAL AS	
		1	**551-6644**	1	PIN-CLEVIS	
	3	1	**513-4527**	1	PEDAL AS (RH)	
		1	**6V-2456**	1	RING-RETAINING	
		1	**513-7295**	1	PEDAL	
		1	**526-4554**	1	PEDAL AS	
		1	**551-6644**	1	PIN-CLEVIS	
	4	1	**513-4528**	1	LEVER AS (LH)	
	5	1	**513-4529**	1	LEVER AS (RH)	
	6	1	**517-5487**	2	HANDLE	
	7	1	**096-6166**	2	WASHER-HARD (4.5X9X1-MM THK)	
M	8	1	**8T-0337**	2	SCREW-MACHINE (M4X0.7X12-MM)	
	9	1	**9X-2027**	4	WASHER (11X18X2-MM THK)	

M - METRIC PART

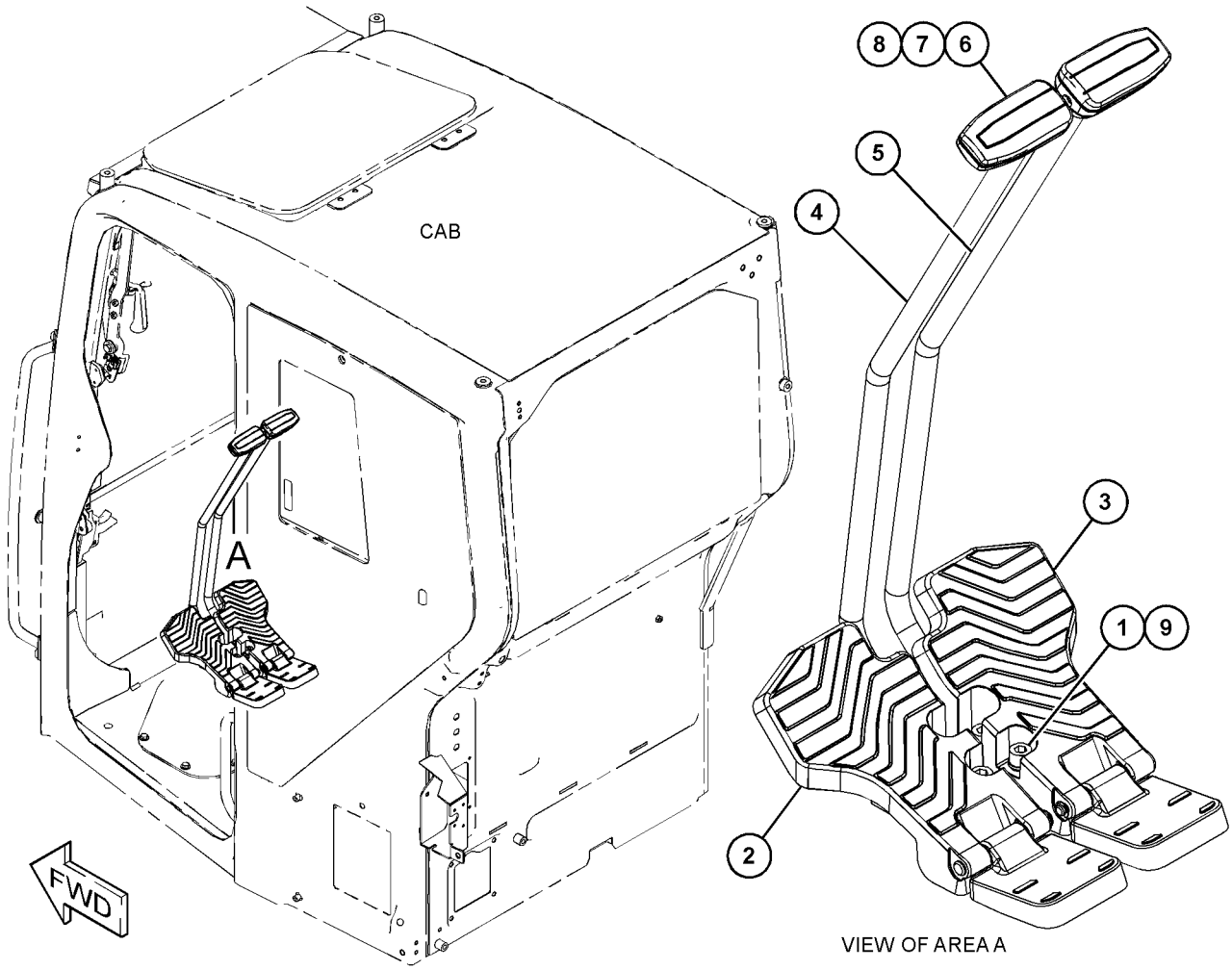

GRAPHIC #1 <END> g06343686

511-6177 DISPLAY GP-MONITOR—TOUCHSCREEN

PART OF 562-9156 DISTRIBUTION AR

AN ATTACHMENT

SMCS-7490 **i07546269**

NOTE	REF NO	GRAPHIC REF	PART NUMBER	QTY	PART NAME 1 2 3 4 5 6 (PRODUCT LEVEL)	SEE PAGE
	1	1	**3S-2093**	8	STRAP-CABLE	
	2	1	**509-6447**	1	MODULE GP-DISPLAY	
		1	**520-3389**	1	SOFTWARE	
	3	1	**511-6178**	1	HARNESS AS-WIRING (ETHERNET)	
E		1	**196-8876**		BRAID (BLACK, ONE GOLD STRAND) (240-CM)	
E		1	**125-7874**		TUBE-HEAT SHRINK (5.72-MM DIA) (3-CM)	
		1	**490-0571**	1	PLUG AS-CONNECTOR (2-PIN)	
		1	**490-0578**	1	PLUG AS-CONNECTOR (2-PIN)	
M	4	1	**9X-2043**	4	SCREW-TRUSS HEAD (M6X1X14-MM)	
FY			*522-6548*	1	ELECTRONICS GP-MONITOR	41

E - ORDER BY THE CENTIMETER
F - NOT SHOWN
M - METRIC PART
Y - SEPARATE ILLUSTRATION

511-6177 **DISPLAY GP-MONITOR (**contd.**)** **i07546269**

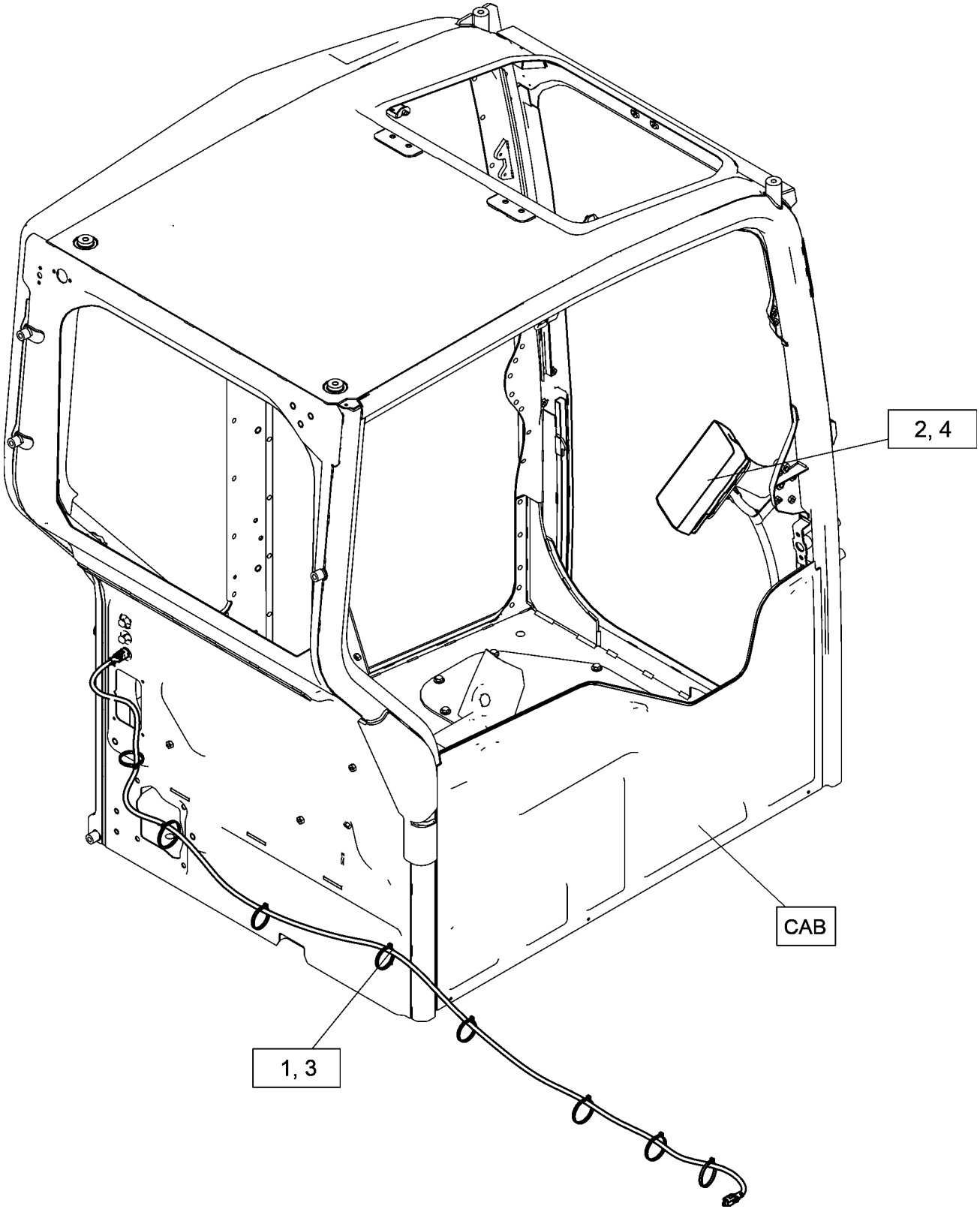

GRAPHIC #1 <END> g06339614

522-6475 DISPLAY GP-MONITOR–GAUGE

CAM

PART OF 562-4906, 562-9155 DISTRIBUTION AR

AN ATTACHMENT

SMCS-7490 **i07542508**

NOTE	REF NO	GRAPHIC REF	PART NUMBER	QTY	PART NAME 1 2 3 4 5 6 (PRODUCT LEVEL)	SEE PAGE
	1	1	**3S-2093**	8	STRAP-CABLE	
	2	1	**511-6178**	1	HARNESS AS-WIRING (ETHERNET)	
E		1	**125-7874**		TUBE-HEAT SHRINK (5.72-MM DIA) (3-CM)	
E		1	**196-8876**		BRAID (BLACK, ONE GOLD STRAND) (240-CM)	
		1	**490-0571**	1	PLUG AS-CONNECTOR (2-PIN)	
		1	**490-0578**	1	PLUG AS-CONNECTOR (2-PIN)	
	3	1	**520-6242**	1	MODULE GP-DISPLAY	
M	4	1	**9X-2043**	4	SCREW-TRUSS HEAD (M6X1X14-MM)	
FY			*522-6547*	1	ELECTRONICS GP-MONITOR	41

E - ORDER BY THE CENTIMETER
F - NOT SHOWN
M - METRIC PART
Y - SEPARATE ILLUSTRATION

522-6475 **DISPLAY GP-MONITOR (**contd.**)** **i07542508**

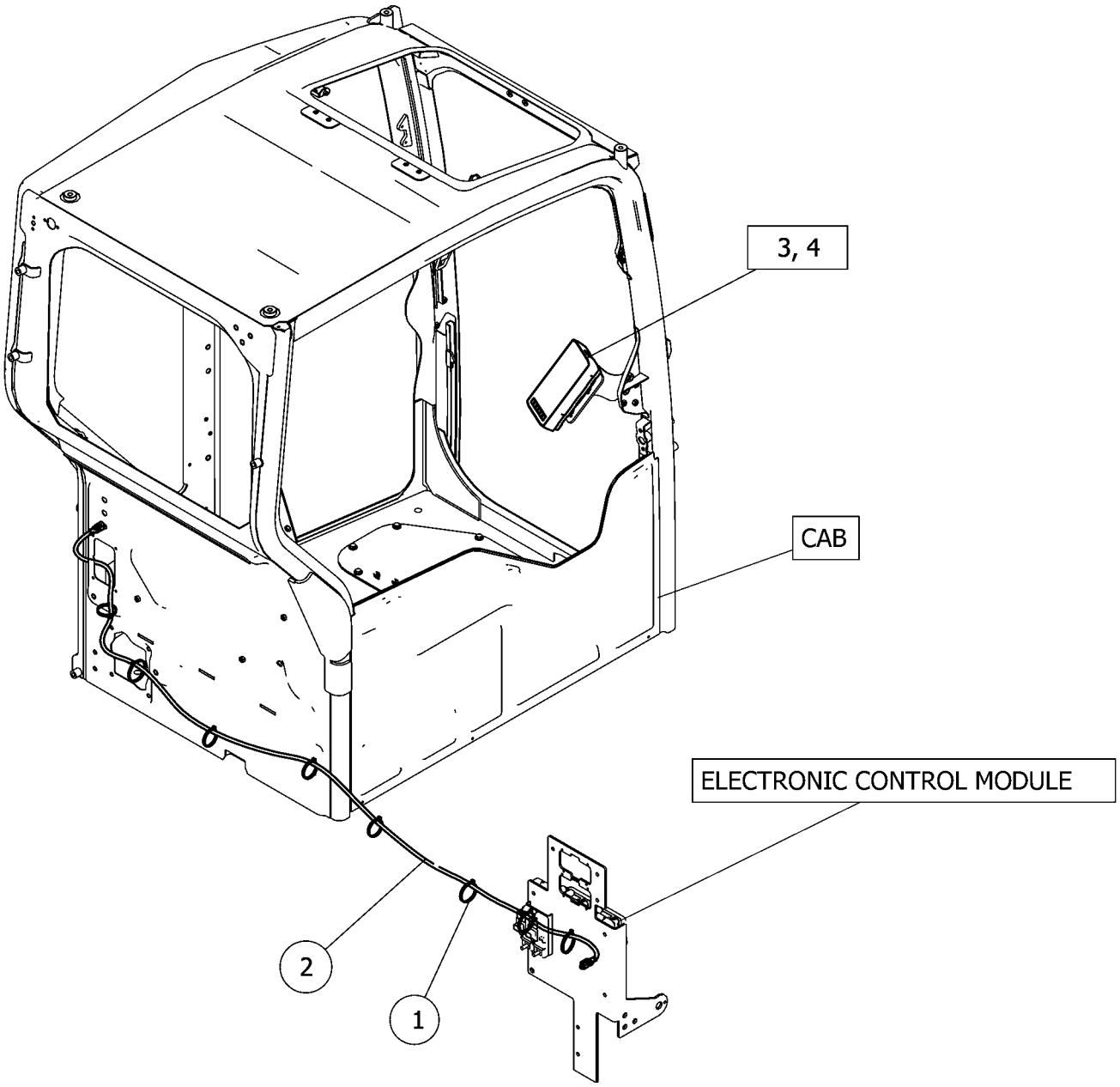

GRAPHIC #1 <END> g06348550

496-0805 DOOR GP-CAB

PART OF 496-0802 CAB GP

AN ATTACHMENT

SMCS-7308 **i07544987**

NOTE	REF NO	GRAPHIC REF	PART NUMBER	QTY	PART NAME 1 2 3 4 5 6 (PRODUCT LEVEL)	SEE PAGE
	1	1	**500-9046**	1	SEAL-DOOR	
	2	1	**3S-2093**	2	STRAP-CABLE	
	3	1	**389-8718**	1	COVER	
	4	1	**511-5969**	2	BUMPER	
	5	1	**518-5921**	1	STRIKER AS	
	6	1	**526-8575**	1	LEVER AS	
	7	1	**095-1255**	2	LOCKWASHER	
M	8	1	**127-1960**	2	SCREW-FLAT HEAD (M6X1X16-MM)	
M	9	1	**344-5675**	2	NUT (M10X1.5-THD)	
M	10	1	**3E-8020**	4	SCREW-TRUSS HEAD (M6X1X25-MM)	
	11	1	**496-1145**	1	CABLE AS	
Y	12	1	*518-7880*	1	DOOR GP-CAB	373
	13	1	**548-4551**	1	LATCH AS	
	14	1	**8T-4121**	7	WASHER-HARD (11X21X2.5-MM THK)	
M	15	1	**9X-2041**	6	SCREW-TRUSS HEAD (M10X1.5X20-MM)	
M	16	1	**9X-2045**	2	SCREW-TRUSS HEAD (M6X1X20-MM)	

M - METRIC PART
Y - SEPARATE ILLUSTRATION

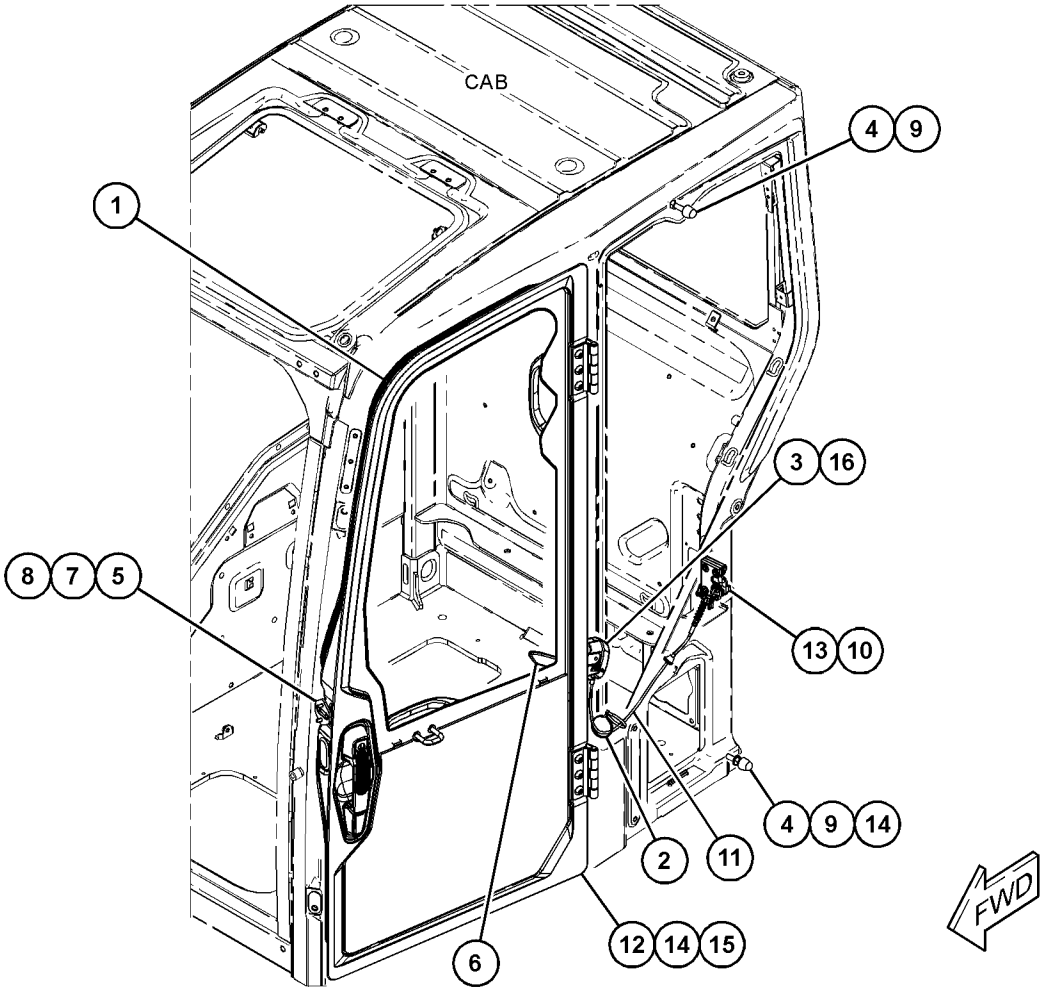

GRAPHIC #1 <END> g06347206

518-7880 DOOR GP-CAB

PART OF 496-0805 DOOR GP-CAB

AN ATTACHMENT

SMCS-7308 **i07544988**

NOTE	REF NO	GRAPHIC REF	PART NUMBER	QTY	PART NAME 1 2 3 4 5 6 (PRODUCT LEVEL)	SEE PAGE
M	1	1	**096-2622**	2	SCREW-MACHINE (M4X0.7X8-MM)	
	2	1	**538-9681**	2	HANDLE-PULL	
	3	1	**538-9682**	4	CAP (HANDLE)	
	4	1	**167-7039**	2	GROMMET	
	5	1	**178-5572**	3	SPACER-SPECIAL (WINDOW)	
	6	1	**178-5574**	4	SPACER	
	7	1	**213-0985**	1	GROMMET (BLANKING)	
	8	1	**269-2893**	1	CLIP	
M	9	1	**271-9408**	4	SCREW-TRUSS HEAD (M5X0.8X10-MM)	
	10	1	**496-1132**	1	GLASS-DOOR	
	11	1	**334-6534**	1	HOOK	
	12	1	**496-1141**	2	HINGE AS	
	13	1	**496-1142**	1	HANDLE AS-PULL	
	14	1	**496-1146**	2	SPACER (WINDOW)	
	15	1	**4I-4286**	1	KNOB (HANDLE)	
	16	1	**526-8628**	3	PLUG	
	17	1	**518-7881**	1	DOOR AS-CAB	
	18	1	**544-1674**	1	GASKET	
M	19	1	**096-3884**	2	NUT-SPRING (M8X1.25-THD)	
M	20	1	**101-8899**	4	SCREW AS (M6X1.0X16-MM)	
M	21	1	**127-0580**	2	SCREW-FLAT HEAD (M8X1.25X20-MM)	
	22	1	**1R-5998**	2	LOCKWASHER	
	23	1	**269-2892**	1	PIN (CLEVIS)	
	24	1	**548-4549**	1	COVER	
	25	1	**563-7945**	1	LATCH AS-DOOR	
	26	1	**563-7947**	1	CLEVIS AS	
	27	1	**564-1689**	1	SEAL AS	
	28	1	**564-1690**	1	SEAL-DOOR	
M	29	1	**9X-2041**	6	SCREW-TRUSS HEAD (M10X1.5X20-MM)	

M - METRIC PART

518-7880 **DOOR GP-CAB** (contd.) **i07544988**

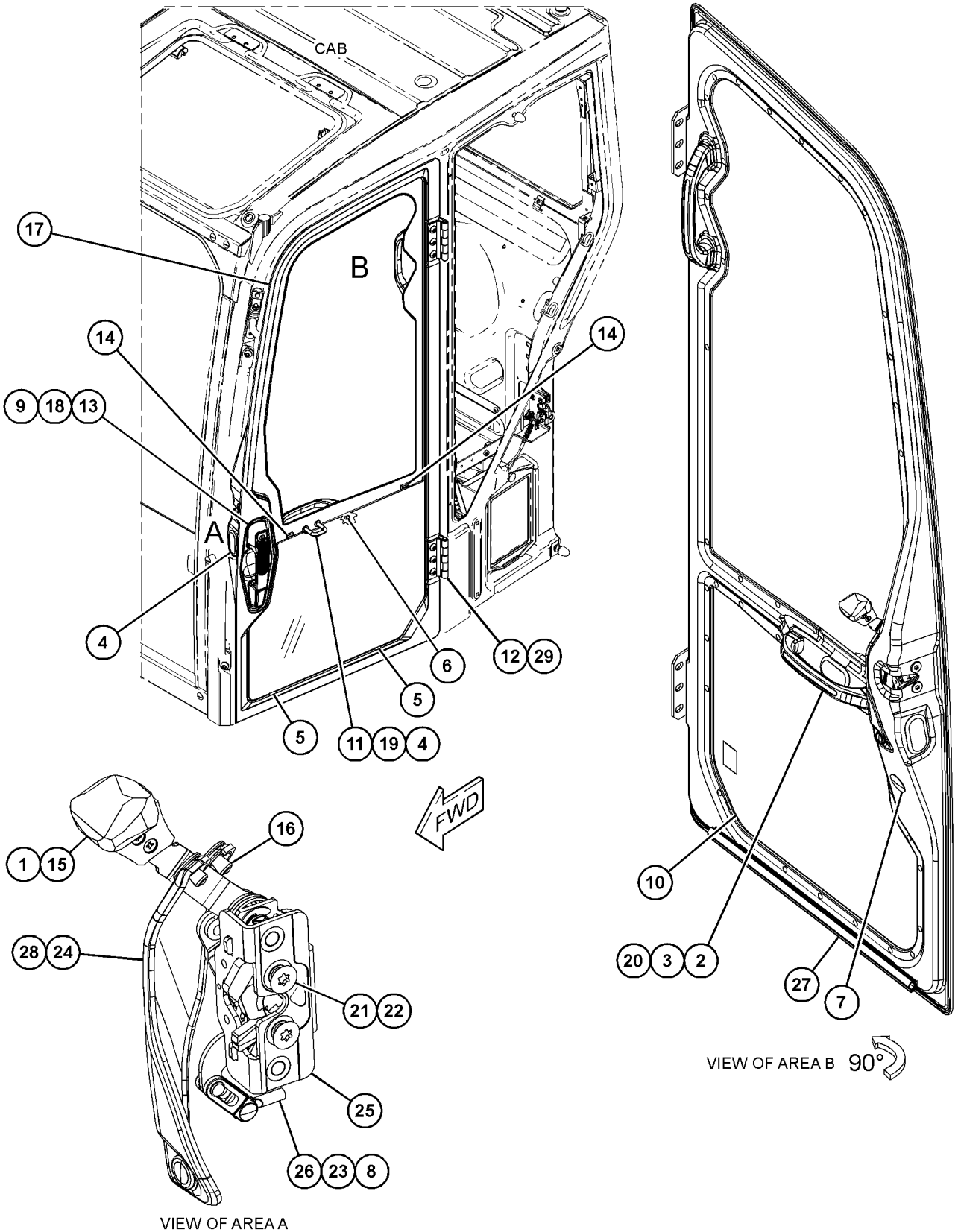

GRAPHIC #1 <END> g06347572

513-0500 DUCT GP-CAB AIR

PART OF 510-6070, 541-4580 OPERATOR AR
AN ATTACHMENT

SMCS-734D **i07544967**

NOTE	REF NO	GRAPHIC REF	PART NUMBER	QTY	PART NAME 1 2 3 4 5 6 (PRODUCT LEVEL)	SEE PAGE
	1	1	**460-4738**	2	LOUVER AS	
	2	1	**513-2506**	1	DUCT	
	3	1	**513-2507**	1	DUCT	
	4	1	**548-6979**	2	GASKET	
	5	1	**9X-2038**	3	WASHER (7X19X2-MM THK)	
M	6	1	**9X-2044**	3	SCREW-TRUSS HEAD (M6X1X16-MM)	
	7	1	**548-6981**	1	SEAL	

M - METRIC PART

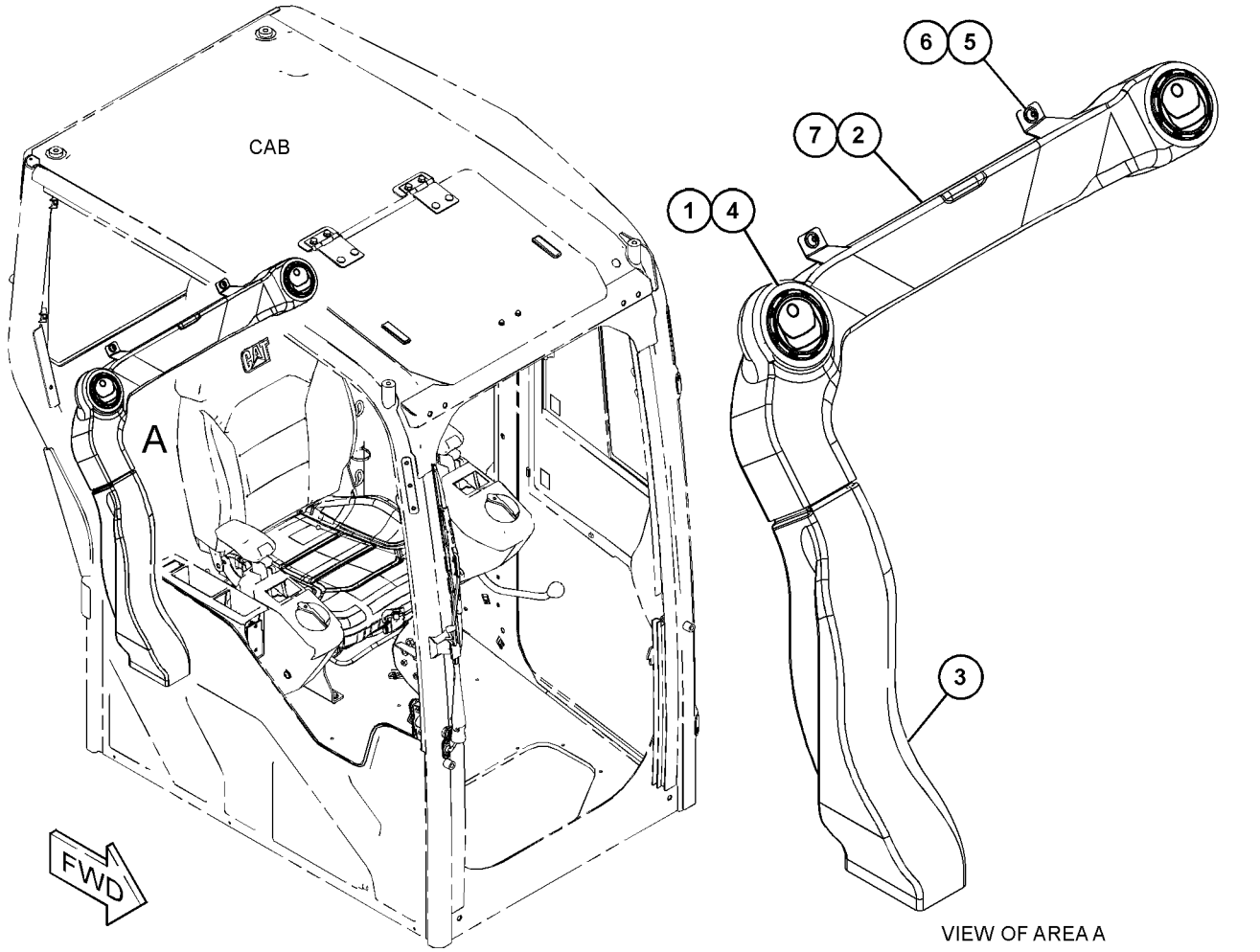

VIEW OF AREA A

GRAPHIC #1 <END> g06331581

541-4586 DUCT GP-CAB AIR–FRONT

PART OF 496-0802 CAB GP

AN ATTACHMENT

SMCS-734D **i07545007**

NOTE	REF NO	GRAPHIC REF	PART NUMBER	QTY	PART NAME 1 2 3 4 5 6 (PRODUCT LEVEL)	SEE PAGE
	1	1	**9X-2038**	10	WASHER (7X19X2-MM THK)	
M	2	1	**9X-2044**	10	SCREW-TRUSS HEAD (M6X1X16-MM)	
	3	1	**460-4734**	1	LOUVER AS	
	4	1	**460-4736**	1	LOUVER AS	
	5	1	**460-4738**	3	LOUVER AS	
	6	1	**513-2511**	1	COVER	
	7	1	**544-3048**	1	DUCT AS	
		1	**513-2508**	1	DUCT	
	8	1	**548-6979**	3	GASKET	
	9	1	**548-6980**	1	GASKET	
	10	1	**118-5619**	2	SCREW-FLAT HEAD (6-20X1-IN)	

M - METRIC PART

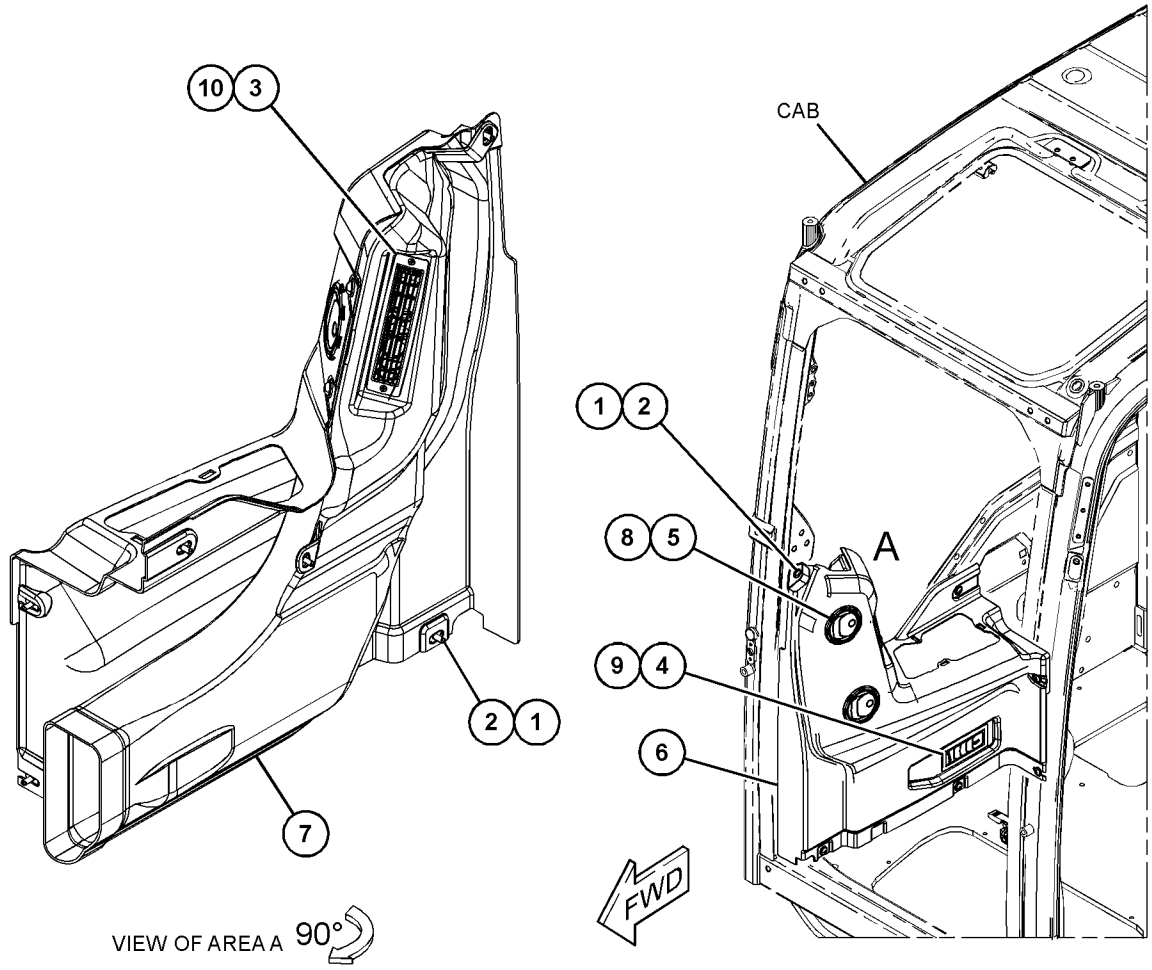

GRAPHIC #1 <END> g06336198

525-9062 GUARD AR-FRONT WINDOW–CAB

FOR USE WITH 525-9065–PAGE: 379
CANNOT BE USED WITH 525-9068–PAGE: 378, 525-9070–PAGE: 411
AN ATTACHMENT

SMCS-7150, 7301, 7310 **i07546579**

NOTE	REF NO	GRAPHIC REF	PART NUMBER	QTY	PART NAME 1 2 3 4 5 6 (PRODUCT LEVEL)	SEE PAGE
Y	1	1	*538-1363*	1	FILM GP (CAB FRONT)	424
Y	2	1	*559-4006*	1	GUARD GP-WINDOW	385

Y - SEPARATE ILLUSTRATION

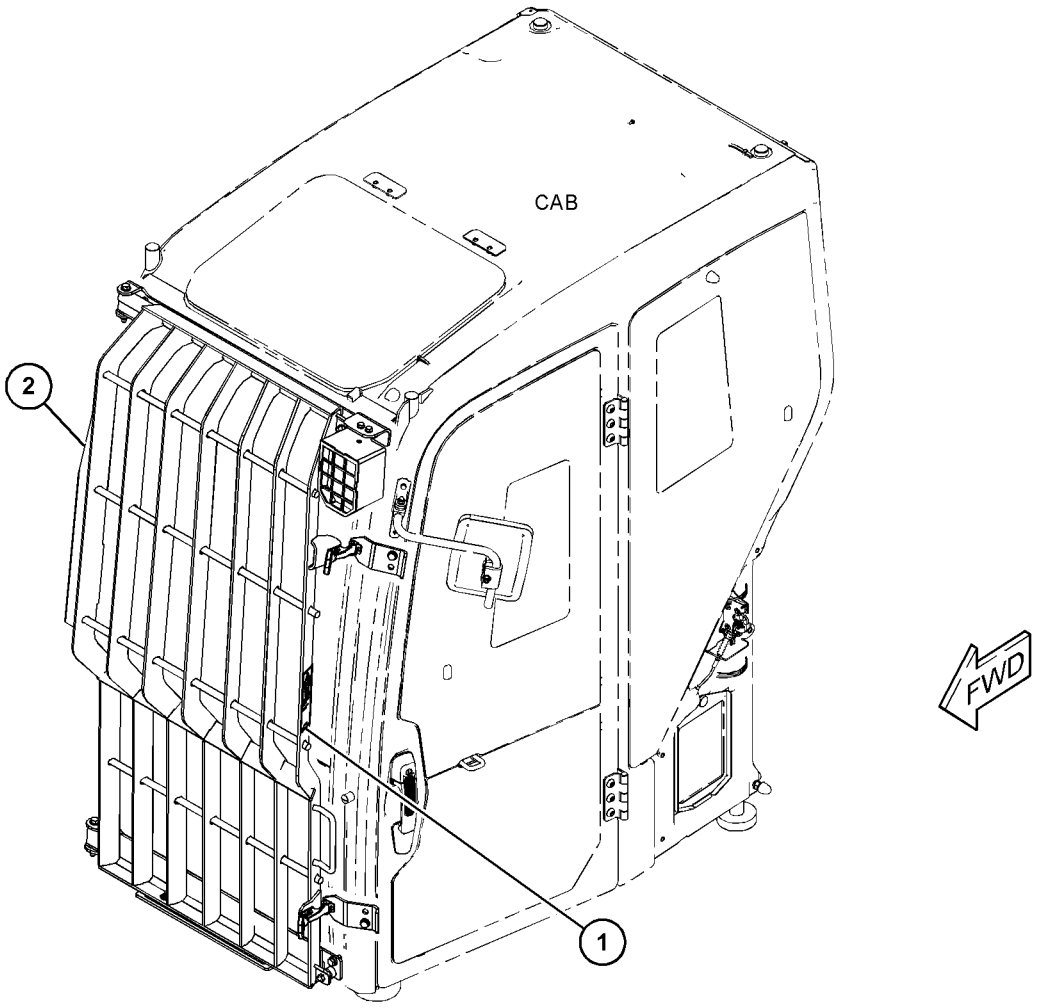

GRAPHIC #1 <END> g06344163

525-9068 GUARD AR-FRONT WINDOW—CAB

FOR USE WITH 525-9062—PAGE: 377
CANNOT BE USED WITH 525-9065—PAGE: 379, 525-9070—PAGE: 411
AN ATTACHMENT

SMCS-7150, 7301, 7310 **i07546608**

NOTE	REF NO	GRAPHIC REF	PART NUMBER	QTY	PART NAME 1 2 3 4 5 6 (PRODUCT LEVEL)	SEE PAGE
Y	1	1	*538-1396*	1	FILM GP (CAB FRONT)	426
Y	2	1	*559-4007*	1	GUARD GP-WINDOW	386

Y - SEPARATE ILLUSTRATION

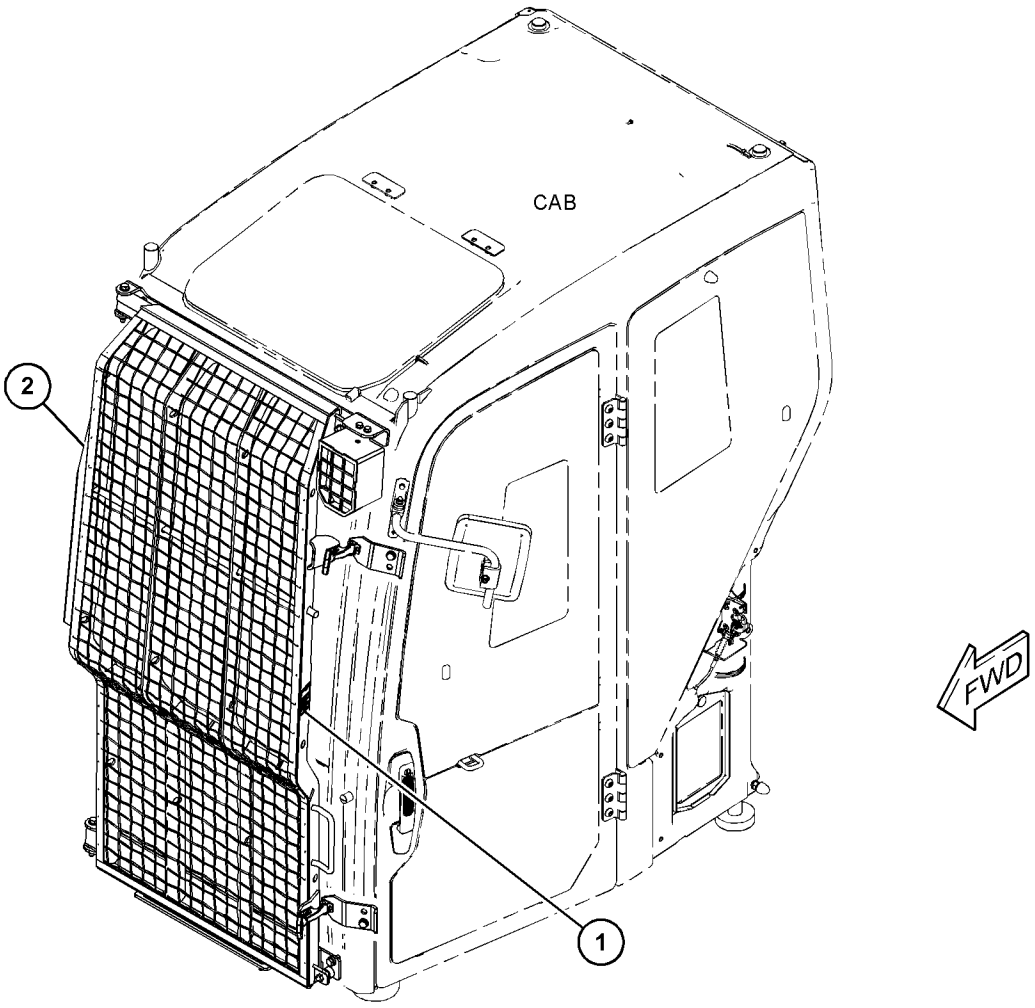

GRAPHIC #1 <END> g06344157

525-9065 GUARD AR-OVERHEAD—CAB

FOR USE WITH 525-9062—PAGE: 377
CANNOT BE USED WITH 525-9068—PAGE: 378, 525-9070—PAGE: 411
AN ATTACHMENT

SMCS-7159 **i07546598**

NOTE	REF NO	GRAPHIC REF	PART NUMBER	QTY	PART NAME 1 2 3 4 5 6 (PRODUCT LEVEL)	SEE PAGE
Y	1	1	*538-1374*	1	FILM GP (CAB)	425
Y	2	1	*558-7367*	1	GUARD GP-OVERHEAD	382

Y - SEPARATE ILLUSTRATION

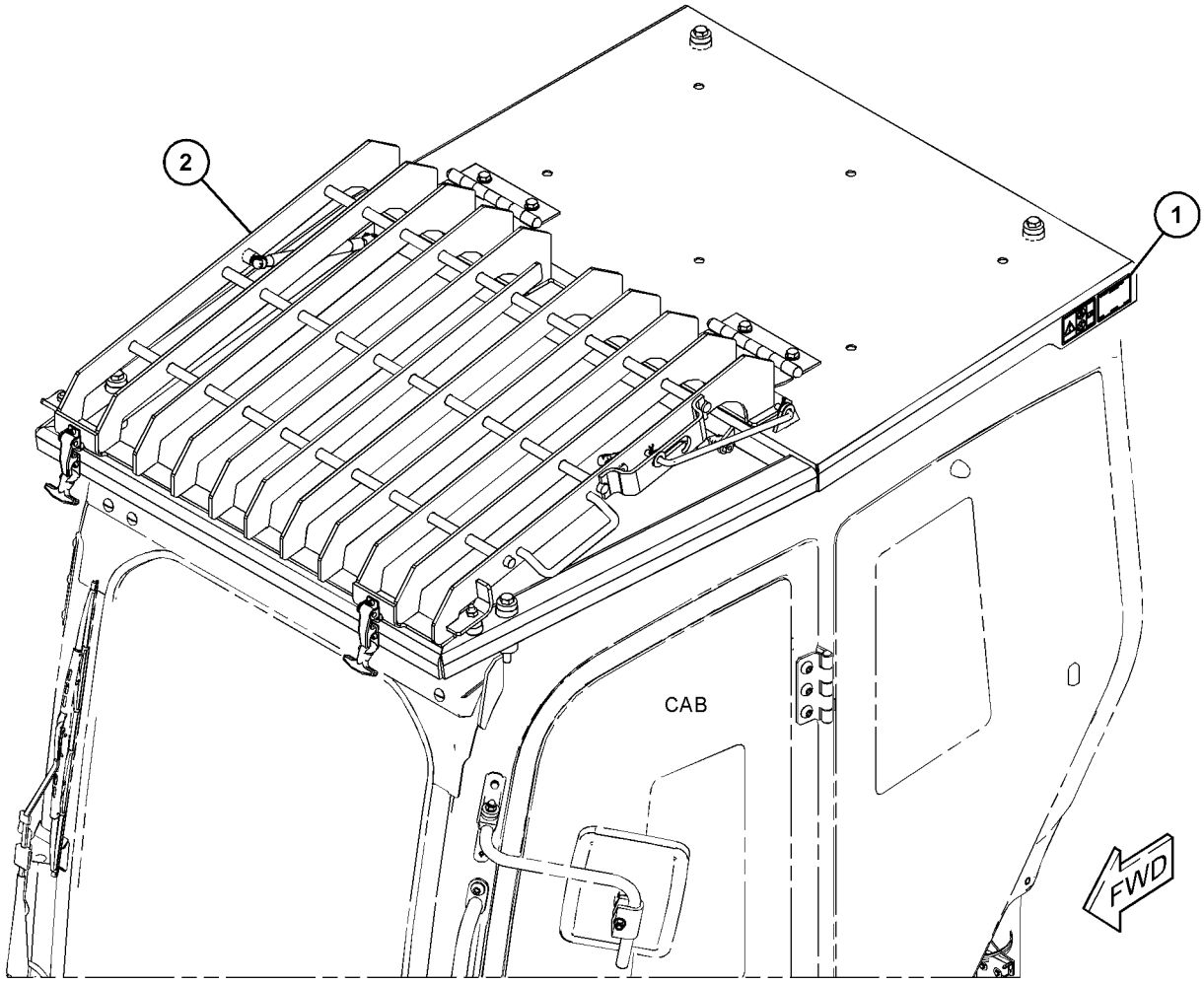

GRAPHIC #1 <END> g06344147

557-1485 GUARD GP-OVERHEAD

PART OF 558-7367 GUARD GP-OVERHEAD

AN ATTACHMENT

SMCS-7159 **i07546603**

NOTE	REF NO	GRAPHIC REF	PART NUMBER	QTY	PART NAME 1 2 3 4 5 6 (PRODUCT LEVEL)	SEE PAGE
	1	1	**5P-4116**	2	WASHER-HARD (8.8X20.5X2-MM THK)	
	2	1	**8T-4121**	6	WASHER-HARD (11X21X2.5-MM THK)	
M	3	1	**8T-4136**	4	BOLT (M10X1.5X25-MM)	
	4	1	**096-1205**	2	PIN	
	5	1	**114-9284**	2	BUMPER	
M	6	1	**344-5674**	2	NUT (M8X1.25-THD)	
	7	1	**222-4067**	8	BOLT-SOCKET HEAD (M5X0.8X14-MM)	
	8	1	**557-0571**	2	LATCH AS	
	9	1	*557-1479*	1	GUARD AS-OVERHEAD	
M		1	**8T-8874**	4	NUT-WELD (M5X0.8-THD)	
M		1	**9R-2160**	2	BOSS (M8X1.25X25-MM)	
M		1	**8T-3612**	1	NUT-WELD (M8X1.25-THD)	
M		1	**8T-3612**	1	NUT-WELD (M8X1.25-THD)	
		1	**559-1627**	2	HINGE AS	
	10	1	**557-1482**	1	GUARD AS-OVERHEAD	
M		1	**8T-3612**	5	NUT-WELD (M8X1.25-THD)	
M		1	**8T-3612**	1	NUT-WELD (M8X1.25-THD)	
	11	1	**558-4172**	1	BAR	
	12	1	**558-7333**	2	SPRING-GAS	
	13	1	**6C-9047**	4	WASHER (12X25X1.5-MM THK)	
	14	1	**8T-2444**	4	STUD-BALL	

M - METRIC PART

557-1485 **GUARD GP-OVERHEAD (**contd.**)** **i07546603**

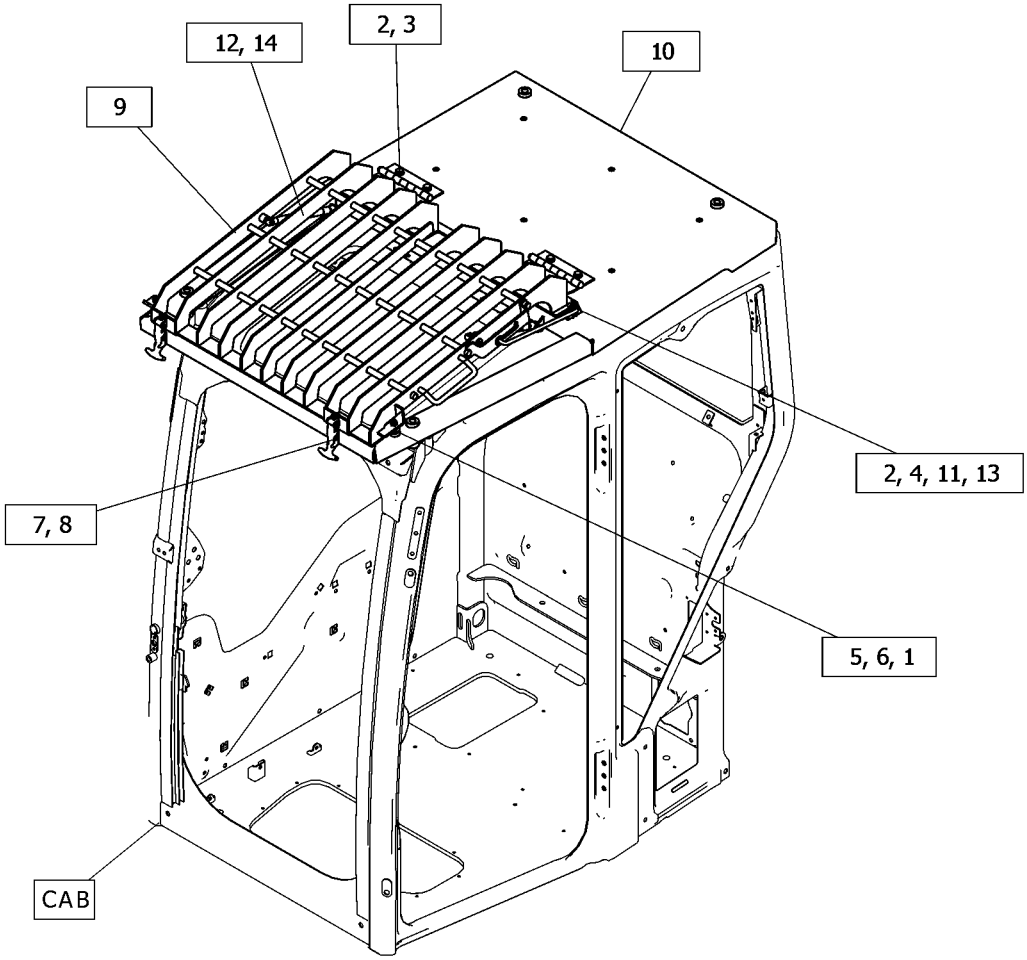

GRAPHIC #1 <END> g06347095

558-7367 GUARD GP-OVERHEAD

PART OF 525-9065 GUARD AR-OVERHEAD, 567-4594 KIT-GUARD
AN ATTACHMENT

SMCS-7159 **i07546601**

NOTE	REF NO	GRAPHIC REF	PART NUMBER	QTY	PART NAME 1 2 3 4 5 6 (PRODUCT LEVEL)	SEE PAGE
M	1	1	**8T-5041**	2	BOLT (M12X1.75X120-MM)	
M	2	1	**7X-2550**	2	BOLT (M12X1.75X110-MM)	
	3	1	**265-9596**	4	WASHER-HARD (13.5X30X9-MM THK)	
Y	4	1	*557-1485*	1	GUARD GP-OVERHEAD	380

M - METRIC PART
Y - SEPARATE ILLUSTRATION

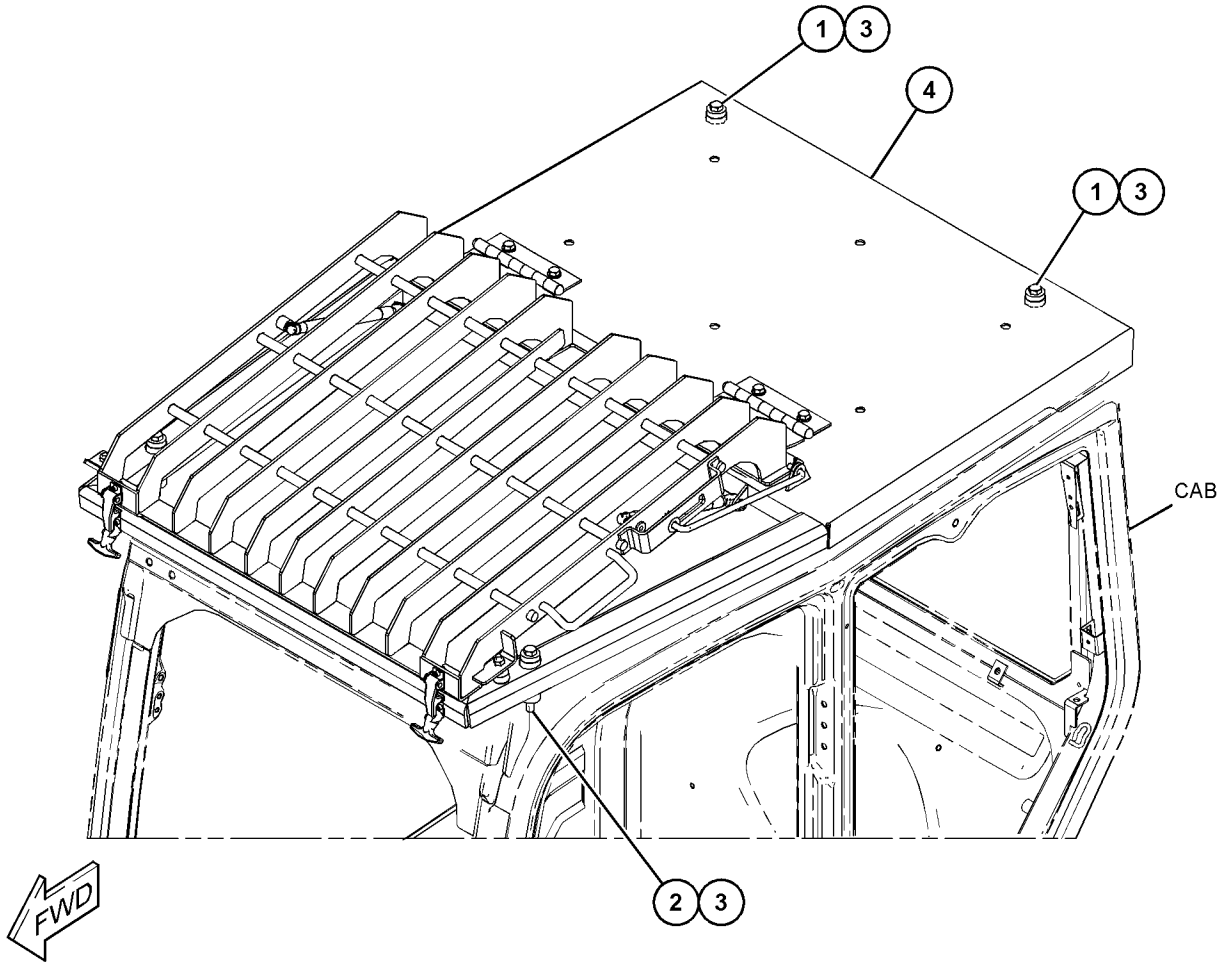

GRAPHIC #1 <END> g06340787

557-0539 GUARD GP-WINDOW

PART OF 559-4006 GUARD GP-WINDOW

AN ATTACHMENT

SMCS-7150 **i07546585**

NOTE	REF NO	GRAPHIC REF	PART NUMBER	QTY	PART NAME 1 2 3 4 5 6 (PRODUCT LEVEL)	SEE PAGE
	1	1	**5P-4116**	2	WASHER-HARD (8.8X20.5X2-MM THK)	
	2	1	**8T-4121**	6	WASHER-HARD (11X21X2.5-MM THK)	
M	3	1	**8T-4178**	2	BOLT (M10X1.5X90-MM)	
	4	1	**096-1205**	2	PIN (SNAP)	
	5	1	**114-9284**	2	BUMPER	
	6	1	**366-2382**	8	WASHER-NYLON (12.2X25X2-MM THK)	
M	7	1	**344-5674**	2	NUT (M8X1.25-THD)	
	8	1	**557-0465**	1	GUARD AS-WINDOW	
	9	1	**557-0531**	1	PLATE	
	10	1	**557-0532**	1	PLATE	
	11	1	**558-8712**	1	BAR	
	12	1	**6C-9047**	4	WASHER (12X25X1.5-MM THK)	
M	13	1	**6V-7744**	2	LOCKNUT (M10X1.5-THD)	

M - METRIC PART

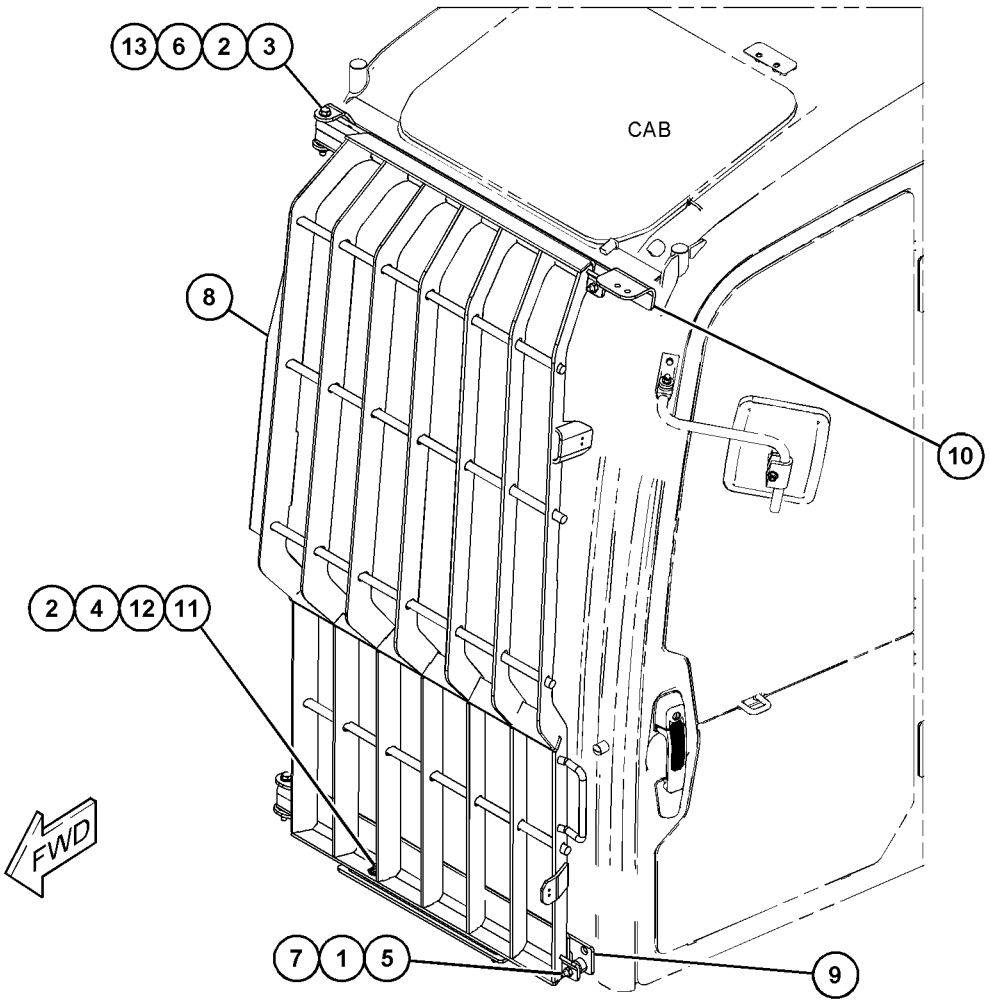

GRAPHIC #1 <END> g06342862

557-1966 GUARD GP-WINDOW

PART OF 559-4007 GUARD GP-WINDOW

AN ATTACHMENT

SMCS-7150 **i07546621**

NOTE	REF NO	GRAPHIC REF	PART NUMBER	QTY	PART NAME 1 2 3 4 5 6 (PRODUCT LEVEL)	SEE PAGE
	1	1	**5P-4116**	2	WASHER-HARD (8.8X20.5X2-MM THK)	
	2	1	**8T-4121**	6	WASHER-HARD (11X21X2.5-MM THK)	
M	3	1	**8T-4178**	2	BOLT (M10X1.5X90-MM)	
	4	1	**096-1205**	2	PIN	
	5	1	**114-9284**	2	BUMPER	
M	6	1	**344-5674**	2	NUT (M8X1.25-THD)	
	7	1	**366-2382**	8	WASHER-NYLON (12.2X25X2-MM THK)	
	8	1	**557-0531**	1	PLATE	
	9	1	**557-0532**	1	PLATE	
	10	1	**557-1964**	1	GUARD AS-WINDOW	
	11	1	**558-8712**	1	BAR	
	12	1	**6C-9047**	4	WASHER (12X25X1.5-MM THK)	
M	13	1	**6V-7744**	2	LOCKNUT (M10X1.5-THD)	

M - METRIC PART

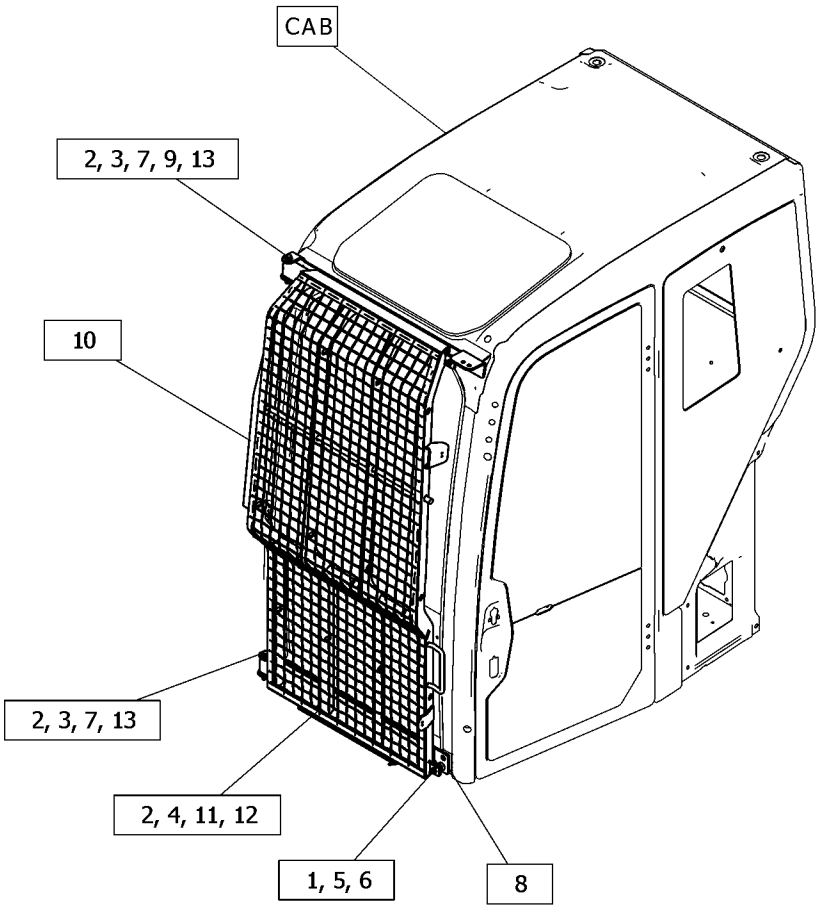

GRAPHIC #1 <END> g06344174

559-4006 GUARD GP-WINDOW

PART OF 525-9062 GUARD AR-FRONT WINDOW, 567-4592 KIT-GUARD
AN ATTACHMENT

SMCS-7150 **i07546584**

NOTE	REF NO	GRAPHIC REF	PART NUMBER	QTY	PART NAME 1 2 3 4 5 6 (PRODUCT LEVEL)	SEE PAGE
M	1	1	**8T-4908**	2	BOLT (M8X1.25X25-MM)	
	2	1	**8T-4121**	2	WASHER-HARD (11X21X2.5-MM THK)	
M	3	1	**8T-4136**	6	BOLT (M10X1.5X25-MM)	
	4	1	**8T-4224**	2	WASHER-HARD (8.8X16X2-MM THK)	
	5	1	**8T-7934**	4	WASHER-HARD (11X21X5-MM THK)	
	6	1	**222-4067**	8	BOLT-SOCKET HEAD (M5X0.8X14-MM)	
	7	1	**557-0533**	2	PLATE AS	
					(EACH INCLUDES)	
M		1	**8T-8874**	2	NUT-WELD (M5X0.8-THD)	
Y	8	1	*557-0539*	1	GUARD GP-WINDOW	383
	9	1	**557-0571**	2	LATCH AS	
	10	1	**558-1673**	1	PLATE AS	
M		1	**8T-3612**	2	NUT-WELD (M8X1.25-THD)	

M - METRIC PART
Y - SEPARATE ILLUSTRATION

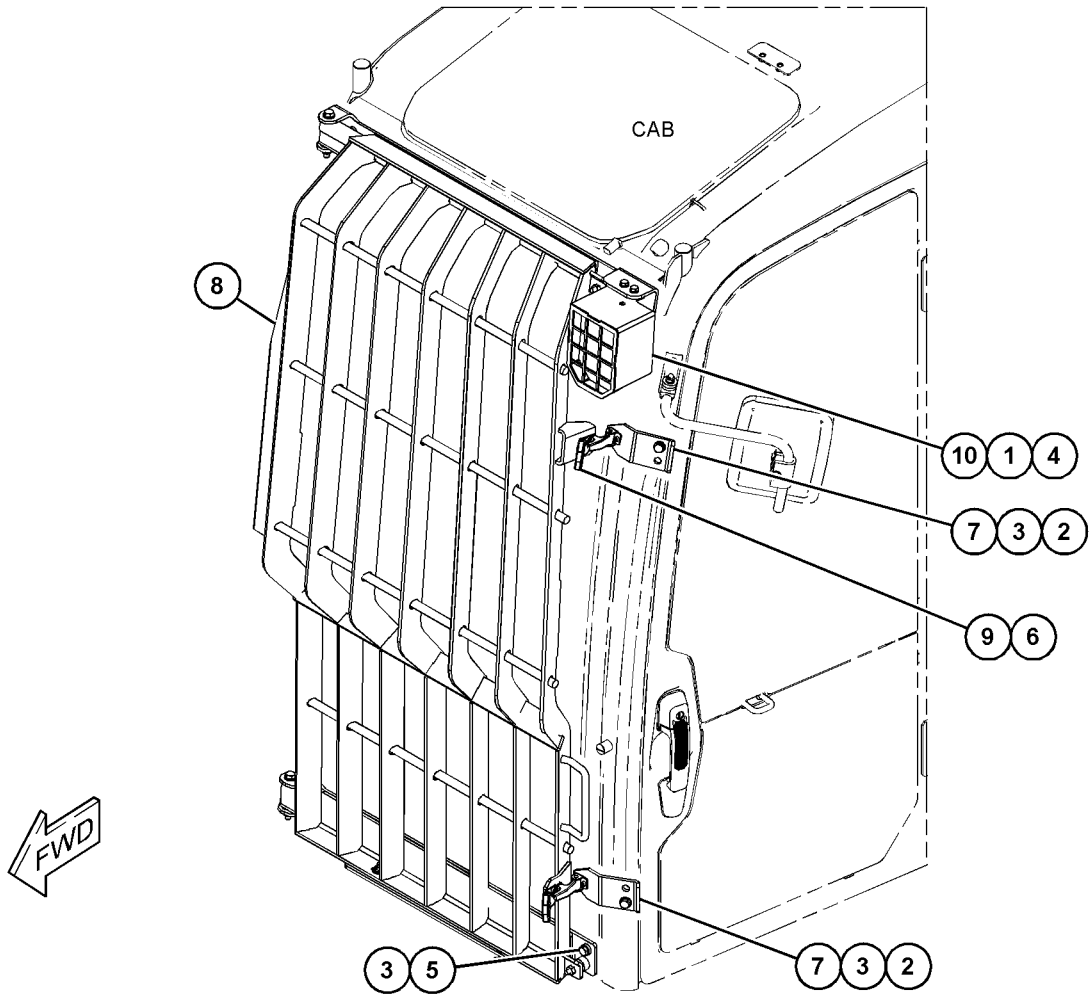

GRAPHIC #1 <END> g06342588

559-4007 GUARD GP-WINDOW

PART OF 525-9068 GUARD AR-FRONT WINDOW, 567-4593 KIT-GUARD
AN ATTACHMENT

SMCS-7150 **i07546616**

NOTE	REF NO	GRAPHIC REF	PART NUMBER	QTY	PART NAME 1 2 3 4 5 6 (PRODUCT LEVEL)	SEE PAGE
M	1	1	**8T-4908**	2	BOLT (M8X1.25X25-MM)	
	2	1	**8T-4121**	2	WASHER-HARD (11X21X2.5-MM THK)	
M	3	1	**8T-4136**	6	BOLT (M10X1.5X25-MM)	
	4	1	**8T-4224**	2	WASHER-HARD (8.8X16X2-MM THK)	
	5	1	**8T-7934**	4	WASHER-HARD (11X21X5-MM THK)	
	6	1	**222-4067**	8	BOLT-SOCKET HEAD (M5X0.8X14-MM)	
	7	1	**557-0533**	2	PLATE AS	
					(EACH INCLUDES)	
M		1	**8T-8874**	2	NUT-WELD (M5X0.8-THD)	
	8	1	**557-0571**	2	LATCH AS	
Y	9	1	*557-1966*	1	GUARD GP-WINDOW	384
	10	1	**558-1673**	1	PLATE AS	
M		1	**8T-3612**	2	NUT-WELD (M8X1.25-THD)	

M - METRIC PART
Y - SEPARATE ILLUSTRATION

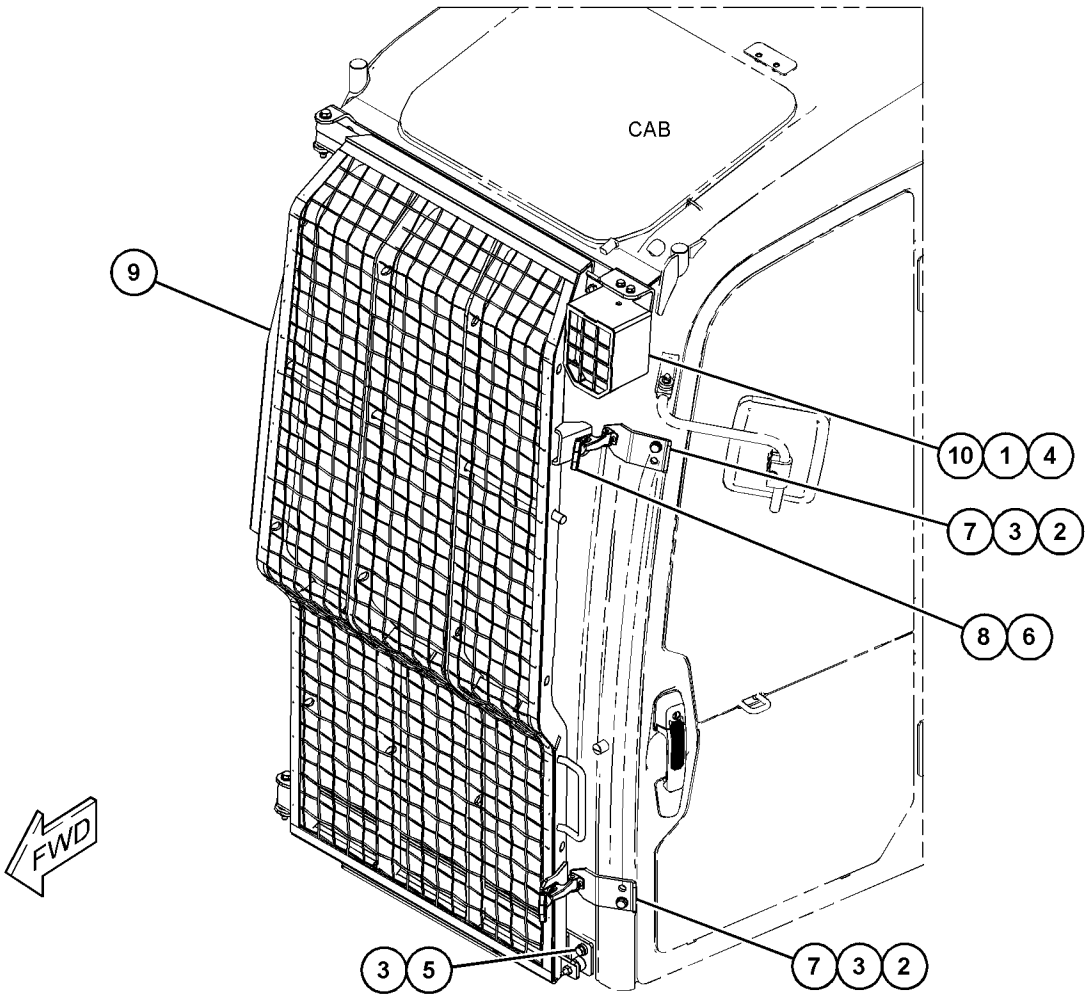

GRAPHIC #1 <END> g06341873

528-4126 HANDRAIL GP

PART OF 512-1513 CHASSIS AR

SMCS-7256 **i07542470**

NOTE	REF NO	GRAPHIC REF	PART NUMBER	QTY	PART NAME 1 2 3 4 5 6 (PRODUCT LEVEL)	SEE PAGE
	1	1	**7X-7729**	2	WASHER (11X25X3-MM THK)	
M	2	1	**8T-4136**	2	BOLT (M10X1.5X25-MM)	
	3	1	**548-2901**	1	HANDRAIL AS	

M - METRIC PART

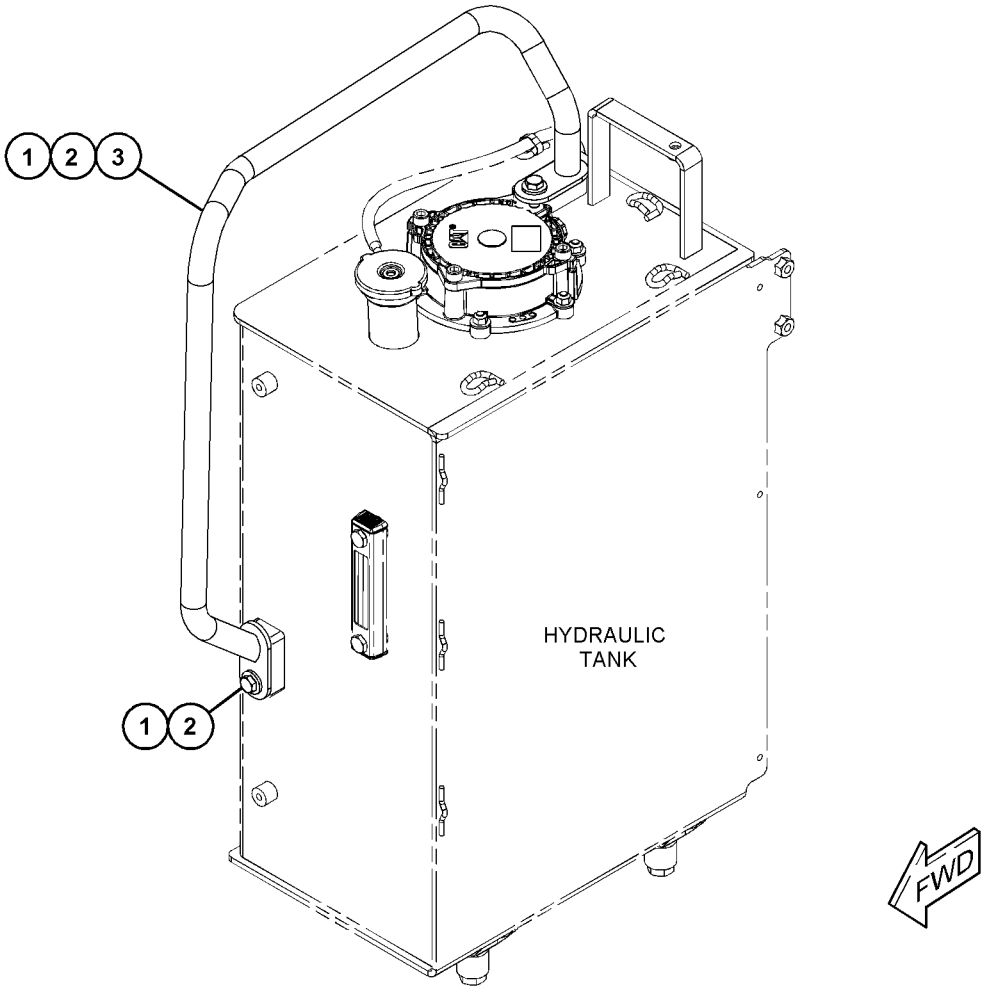

GRAPHIC #1 <END> g06331777

561-8100 KIT-DISPLAY

AN ATTACHMENT

SMCS-7490 **i07548445**

NOTE	PART NUMBER	QTY	PART NAME 1 2 3 4 5 6 (PRODUCT LEVEL)	SEE PAGE
Y	*522-6548*	1	ELECTRONICS GP-MONITOR	41
	511-6178	1	HARNESS AS-WIRING (ETHERNET)	
E	**196-8876**		BRAID (BLACK, ONE GOLD STRAND) (240-CM)	
	490-0571	1	PLUG AS-CONNECTOR (2-PIN)	
	490-0578	1	PLUG AS-CONNECTOR (2-PIN)	
E	**125-7874**		TUBE-HEAT SHRINK (5.72-MM DIA) (3-CM)	
	509-6447	1	MODULE GP-DISPLAY	
M	**9X-2043**	4	SCREW-TRUSS HEAD (M6X1X14-MM)	
	3S-2093	8	STRAP-CABLE	

E - ORDER BY THE CENTIMETER
M - METRIC PART
Y - SEPARATE ILLUSTRATION

<END>

567-4592 KIT-GUARD–CAB

HEAVY DUTY

AN ATTACHMENT

SMCS-7165, 7182, 7310 **i07548548**

NOTE	PART NUMBER	QTY	PART NAME 1 2 3 4 5 6 (PRODUCT LEVEL)	SEE PAGE
Y	*538-1363*	1	FILM GP (CAB FRONT)	424
Y	*559-4006*	1	GUARD GP-WINDOW	385

Y - SEPARATE ILLUSTRATION

<END>

567-4593 KIT-GUARD–CAB

WINDOW

AN ATTACHMENT

SMCS-7165, 7182, 7310 **i07548550**

NOTE	PART NUMBER	QTY	PART NAME 1 2 3 4 5 6 (PRODUCT LEVEL)	SEE PAGE
Y	*538-1396*	1	FILM GP (CAB FRONT)	426
Y	*559-4007*	1	GUARD GP-WINDOW	386

Y - SEPARATE ILLUSTRATION

<END>

567-4594 KIT-GUARD–CAB

OVERHEAD

AN ATTACHMENT

SMCS-7165, 7182, 7310 **i07548551**

NOTE	PART NUMBER	QTY	PART NAME 1 2 3 4 5 6 (PRODUCT LEVEL)	SEE PAGE
Y	*538-1374*	1	FILM GP (CAB)	425
Y	*558-7367*	1	GUARD GP-OVERHEAD	382

Y - SEPARATE ILLUSTRATION

<END>

567-4595 KIT-GUARD

AN ATTACHMENT

SMCS-7165, 7182, 7310 **i07548552**

NOTE	PART NUMBER	QTY	PART NAME 1 2 3 4 5 6 (PRODUCT LEVEL)	SEE PAGE
M	**8T-4139**	8	BOLT (M12X1.75X30-MM)	
	511-4618	2	GUARD AS-TRACK GUIDE	
	7X-3391	8	WASHER-HARD (13.5X32X6-MM THK)	

M - METRIC PART

<END>

561-8204 KIT-MIRROR—REAR

AN ATTACHMENT

SMCS-7319 **i07548454**

NOTE	PART NUMBER	QTY	PART NAME 1 2 3 4 5 6 (PRODUCT LEVEL)	SEE PAGE
M	**160-8758**	2	BOLT-SOCKET HEAD (M10X1.5X55-MM)	
	437-0899	1	CLAMP	
	394-9460	1	MIRROR GP	
	9X-8256	2	WASHER (6.6X12X2-MM THK)	
M	**191-8921**	2	BOLT-SOCKET HEAD (M6X1X25-MM)	
M	**1W-9589**	2	NUT (M10X1.5-THD)	
	548-5965	1	SUPPORT AS	
	8T-4121	2	WASHER-HARD (11X21X2.5-MM THK)	

M - METRIC PART

<END>

510-6073 LINER GP-CAB

PART OF 510-6070, 541-4580 OPERATOR AR
AN ATTACHMENT

SMCS-7329, 7330 **i07544965**

NOTE	REF NO	GRAPHIC REF	PART NUMBER	QTY	PART NAME 1 2 3 4 5 6 (PRODUCT LEVEL)	SEE PAGE
M	1	1	**9X-2044**	13	SCREW-TRUSS HEAD (M6X1X16-MM)	
	2	1	**206-1667**	6	CLIP (TRIM)	
	3	1	**513-2512**	1	COVER	
	4	1	**518-9387**	1	COVER	
	5	1	**518-9388**	1	COVER	
	6	1	**518-9391**	1	COVER	
	7	1	**518-9399**	1	COVER	
	8	1	**548-6982**	1	SEAL	
	9	1	**9X-2038**	13	WASHER (7X19X2-MM THK)	

M - METRIC PART

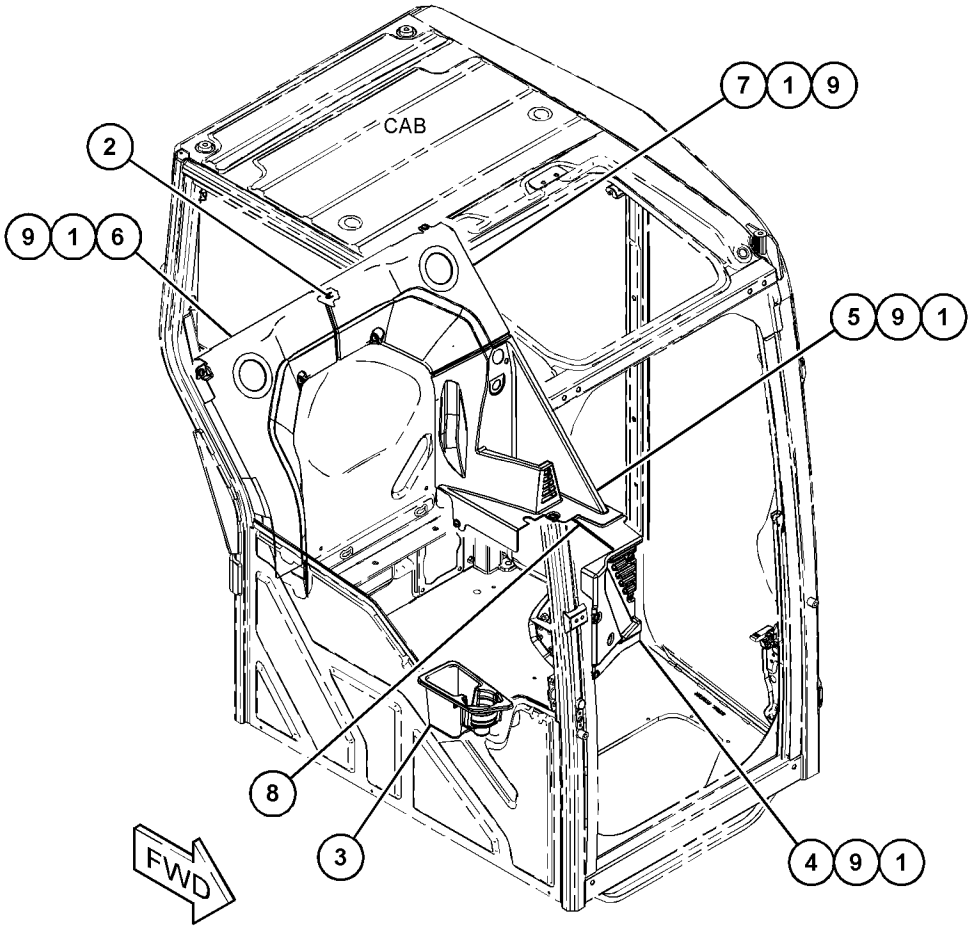

GRAPHIC #1 <END> g06333934

521-6012 LINER GP-CAB

PART OF 541-4591 CAB GP
AN ATTACHMENT

SMCS-7329, 7330 **i07545079**

NOTE	REF NO	GRAPHIC REF	PART NUMBER	QTY	PART NAME 1 2 3 4 5 6 (PRODUCT LEVEL)	SEE PAGE
	1	1	**564-5816**	1	CHANNEL (ROOF)	
	2	1	**185-8205**	15	CLIP	
	3	1	**235-8929**	2	HANDLE	
	4	1	**521-6013**	1	HEADLINER	
	5	1	**521-6014**	1	SCREEN	
	6	1	**521-6015**	1	TRACK (LH)	
	7	1	**521-6016**	1	TRACK (RH)	
M	8	1	**9X-2042**	3	SCREW-TRUSS HEAD (M6X1X12-MM)	
M	9	1	**9X-2043**	8	SCREW-TRUSS HEAD (M6X1X14-MM)	

M - METRIC PART

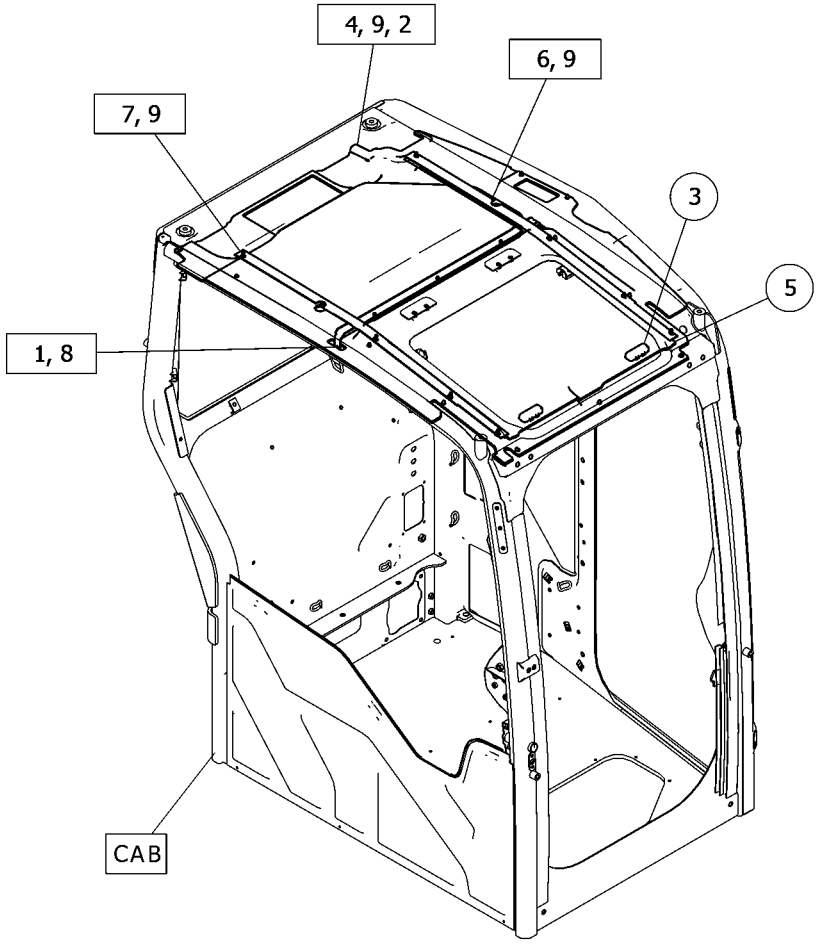

GRAPHIC #1 <END> g06335366

512-4547 LINES GP-AIR CONDITIONER

PART OF 518-6184 ENGINE AR, 520-6936 INSTALLATION AR-ENGINE
AN ATTACHMENT

SMCS-1808 **i07552522**

NOTE	REF NO	GRAPHIC REF	PART NUMBER	QTY	PART NAME 1 2 3 4 5 6 (PRODUCT LEVEL)	SEE PAGE
M	1	1	**8T-4189**	2	BOLT (M8X1.25X20-MM)	
	2	1	**5P-4116**	2	WASHER-HARD (8.8X20.5X2-MM THK)	
	3	1	**6P-8855**	2	SPACER-TUBE	
	4	1	**7K-1181**	6	STRAP-CABLE	
	5	1	**7X-0510**	2	WASHER-HARD (15.5X29X3-MM THK)	
	6	1	**7X-7729**	2	WASHER (11X25X3-MM THK)	
M	7	1	**8T-4137**	1	BOLT (M10X1.5X20-MM)	
M	8	1	**8T-4138**	2	BOLT (M6X1X20-MM)	
	9	1	**8T-4205**	2	WASHER-HARD (7.2X14.5X2-MM THK)	
	10	1	**268-1589**	1	CONNECTOR	
	11	1	**315-7790**	1	PLATE	
	12	1	**513-5284**	1	HOSE AS	
I	13	1	**513-5286**	1	HOSE AS	
	14	1	**513-5288**	1	BRACKET AS	
M		1	**8T-3490**	1	NUT-WELD (M10X1.5-THD)	
I	15	1	**515-2866**	1	HOSE AS	
	16	1	**518-5015**	1	HOSE	
	17	1	**518-5016**	1	HOSE	
	18	1	**543-0142**	1	HOSE AS	
	19	1	**543-0145**	1	GROMMET	
	20	1	**543-0146**	1	PLATE AS	
M		1	**6V-9632**	2	NUT-WELD (M6X1-THD)	
	21	1	**004-6810**	1	ELBOW	
M	22	1	**174-3877**	2	BOLT (M14X1.5X25-MM)	
	23	1	**309-4314**	1	CLIP (LADDER)	
	24	1	**332-8553**	1	ADAPTER	
	25	1	**352-3970**	1	CLIP (LADDER)	
	26	1	**373-7621**	8	CLAMP-BAND	
	27	1	**4I-0472**	1	CLIP	
	28	1	**4P-7582**	2	CLIP (LADDER)	
I	29	1	**550-5881**	1	HOSE AS	
	30	1	**561-8628**	1	PLATE-INSTRUCTION (AIR CONDITIONER)	
	31	1	**565-8563**	1	PLATE AS	
M		1	**8T-3612**	2	NUT-WELD (M8X1.25-THD)	
	32	1	**6D-1641**	2	CLIP (LOOP)	
	33	1	**8T-4121**	4	WASHER-HARD (11X21X2.5-MM THK)	
M	34	1	**8T-4136**	6	BOLT (M10X1.5X25-MM)	
	35	1	**9X-7381**	4	SEAL-O-RING	
	36	1	**9X-7382**	2	SEAL-O-RING	
E	38	1	**5P-0767**		HOSE (91.6-CM)	
E	38A	1	**5P-0767**		HOSE (112-CM)	

E - ORDER BY THE CENTIMETER
I - REFER TO HYDRAULIC INFORMATION SYSTEM
M - METRIC PART

512-4547 **LINES GP-AIR CONDITIONER (**contd.**)** **i07552522**

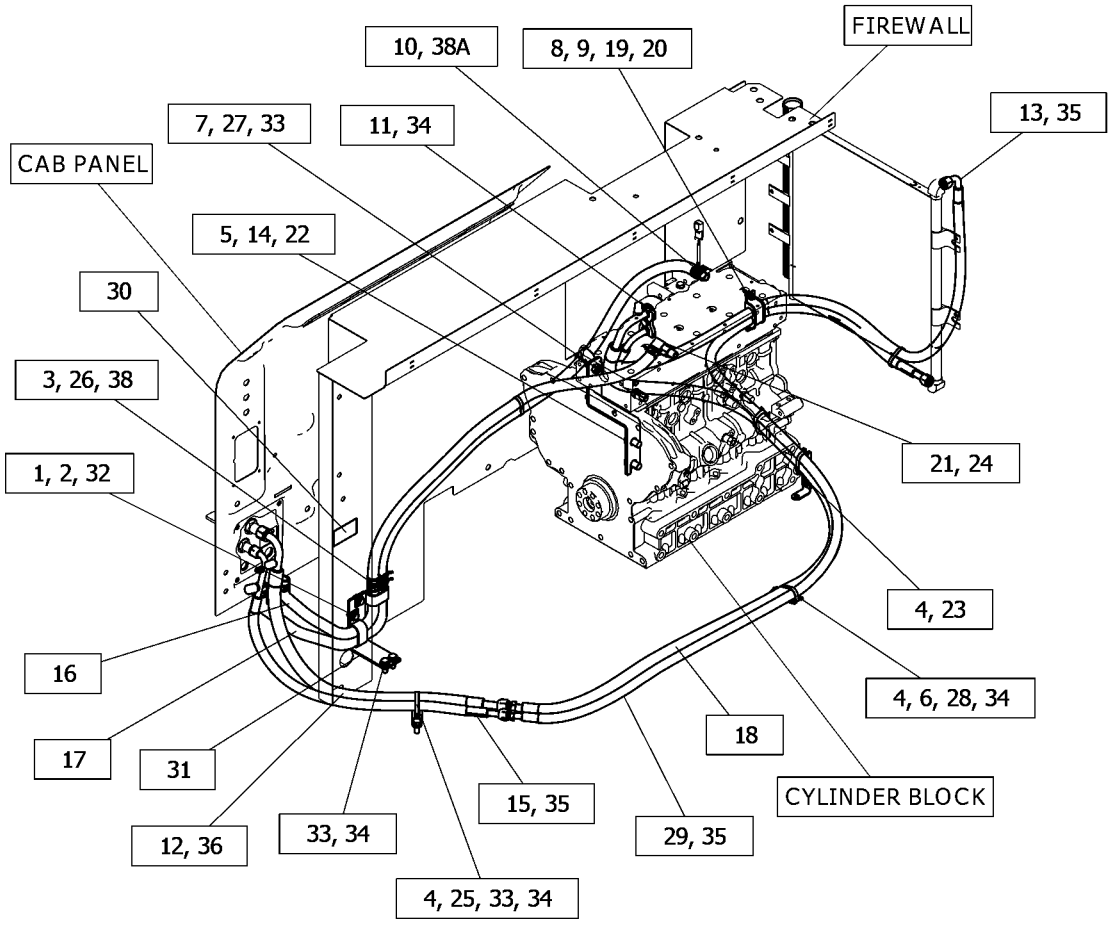

GRAPHIC #1 <END> g06338484

523-6405 MIRROR GP

PART OF 512-1513 CHASSIS AR

SMCS-7319 **i07542467**

NOTE	REF NO	GRAPHIC REF	PART NUMBER	QTY	PART NAME 1 2 3 4 5 6 (PRODUCT LEVEL)	SEE PAGE
M	1	1	**8T-4196**	1	BOLT (M10X1.5X35-MM)	
	2	1	**162-3548**	1	MIRROR AS	
	3	1	**533-2209**	1	SUPPORT AS	
	4	1	**7X-7729**	1	WASHER (11X25X3-MM THK)	

M - METRIC PART

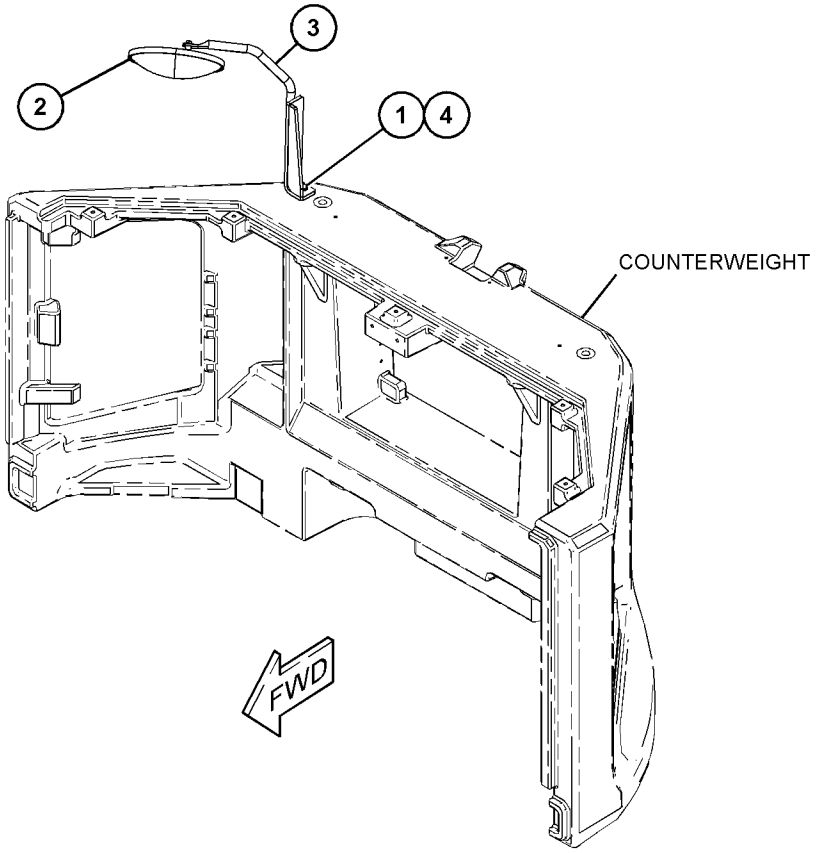

GRAPHIC #1 <END> g06334237

523-6409 MIRROR GP-REAR VIEW–TRAVEL

AN ATTACHMENT

SMCS-7319 **i07546576**

NOTE	REF NO	GRAPHIC REF	PART NUMBER	QTY	PART NAME 1 2 3 4 5 6 (PRODUCT LEVEL)	SEE PAGE
	1	1	**437-0899**	1	CLAMP	
	2	1	**8T-4121**	2	WASHER-HARD (11X21X2.5-MM THK)	
	3	1	**394-9460**	1	MIRROR GP (REAR VIEW)	
		1	**9X-8256**	2	WASHER (6.6X12X2-MM THK)	
M		1	**191-8921**	2	BOLT-SOCKET HEAD (M6X1X25-MM)	
M	4	1	**160-8758**	2	BOLT-SOCKET HEAD (M10X1.5X55-MM)	
	5	1	**548-5965**	1	SUPPORT AS	
M	6	1	**1W-9589**	2	NUT (M10X1.5-THD)	

M - METRIC PART

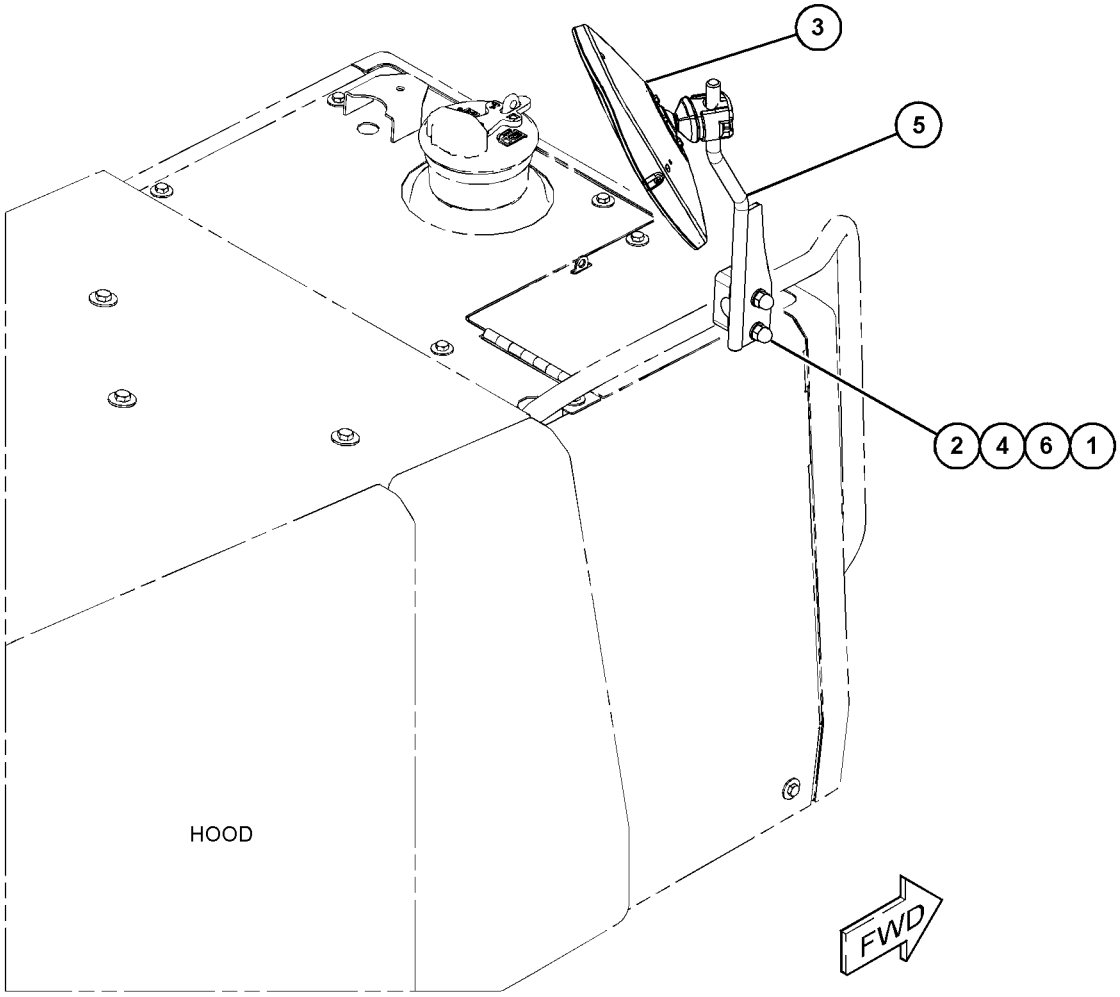

GRAPHIC #1 <END> g06340799

511-6176 MONITOR GP-OPERATOR–ETHERNET

AN ATTACHMENT

SMCS-7490 **i07546417**

NOTE	REF NO	GRAPHIC REF	PART NUMBER	QTY	PART NAME 1 2 3 4 5 6 (PRODUCT LEVEL)	SEE PAGE
	1	1	**490-0590**	1	CAP-RECEPTACLE	
	2	1	**514-0566**	1	MONITOR-DISPLAY	
Y	3	1	*522-6546*	1	ELECTRONICS GP-MONITOR	40
M	4	1	**9X-2043**	4	SCREW-TRUSS HEAD (M6X1X14-MM)	

M - METRIC PART
Y - SEPARATE ILLUSTRATION

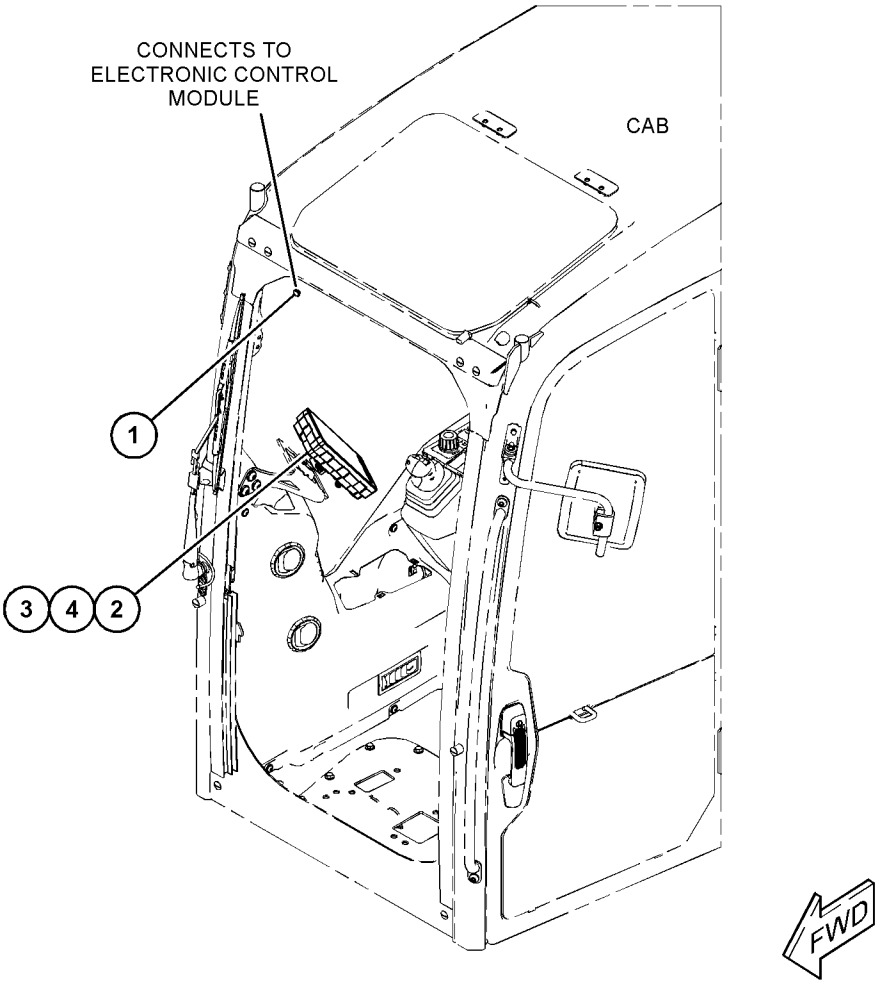

GRAPHIC #1 <END> g06340792

510-6080 MOUNTING GP-PLATFORM

PART OF 510-6070, 541-4580 OPERATOR AR
AN ATTACHMENT

SMCS-7253 **i07544966**

NOTE	REF NO	GRAPHIC REF	PART NUMBER	QTY	PART NAME 1 2 3 4 5 6 (PRODUCT LEVEL)	SEE PAGE
	1	1	**418-3272**	1	STOP (FRONT)	
	2	1	**525-1266**	1	TUBE	
	3	1	**514-6847**	4	MOUNT AS	
M	4	1	**7X-2553**	4	BOLT (M16X2X40-MM)	
M	5	1	**7X-2556**	1	BOLT (M16X2X100-MM)	
	6	1	**8T-4121**	16	WASHER-HARD (11X21X2.5-MM THK)	
M	7	1	**8T-4195**	16	BOLT (M10X1.5X30-MM)	
	8	1	**9X-8257**	4	WASHER (17.5X30X3.5-MM THK)	

M - METRIC PART

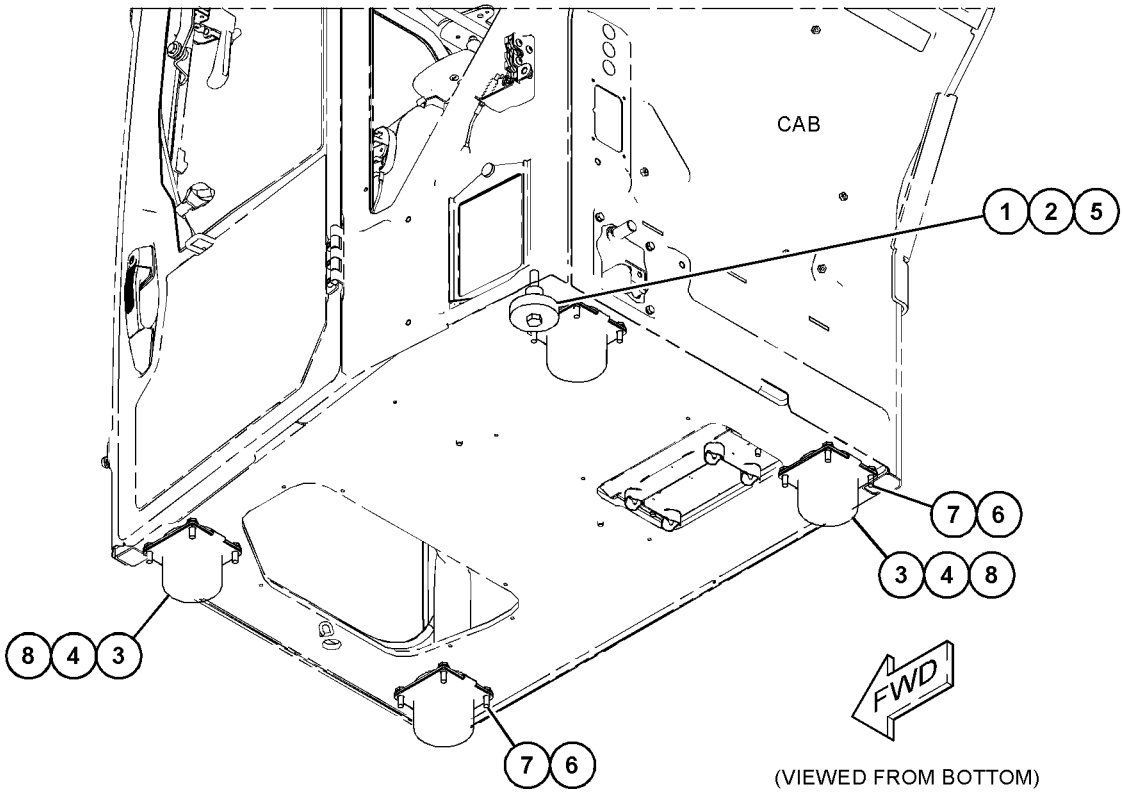

GRAPHIC #1 <END> g06332049

511-6221 MOUNTING GP-RADIO

PART OF 496-0802 CAB GP

AN ATTACHMENT

SMCS-7338 **i07544999**

NOTE	REF NO	GRAPHIC REF	PART NUMBER	QTY	PART NAME 1 2 3 4 5 6 (PRODUCT LEVEL)	SEE PAGE
	1	1	**3S-2093**	1	STRAP-CABLE	
	2	1	**168-8772**	2	SPEAKER AS-RADIO	
M	3	1	**200-1131**	10	SCREW-TRUSS HEAD (M4X0.7X20-MM)	
	4	1	**494-0023**	1	RECEPTACLE AS-CONNECTOR	
	5	1	**096-6166**	2	WASHER-HARD (4.5X9X1-MM THK)	
	6	1	**528-7800**	1	BASE AS	
	7	1	**5P-6459**	1	GROMMET	

M - METRIC PART

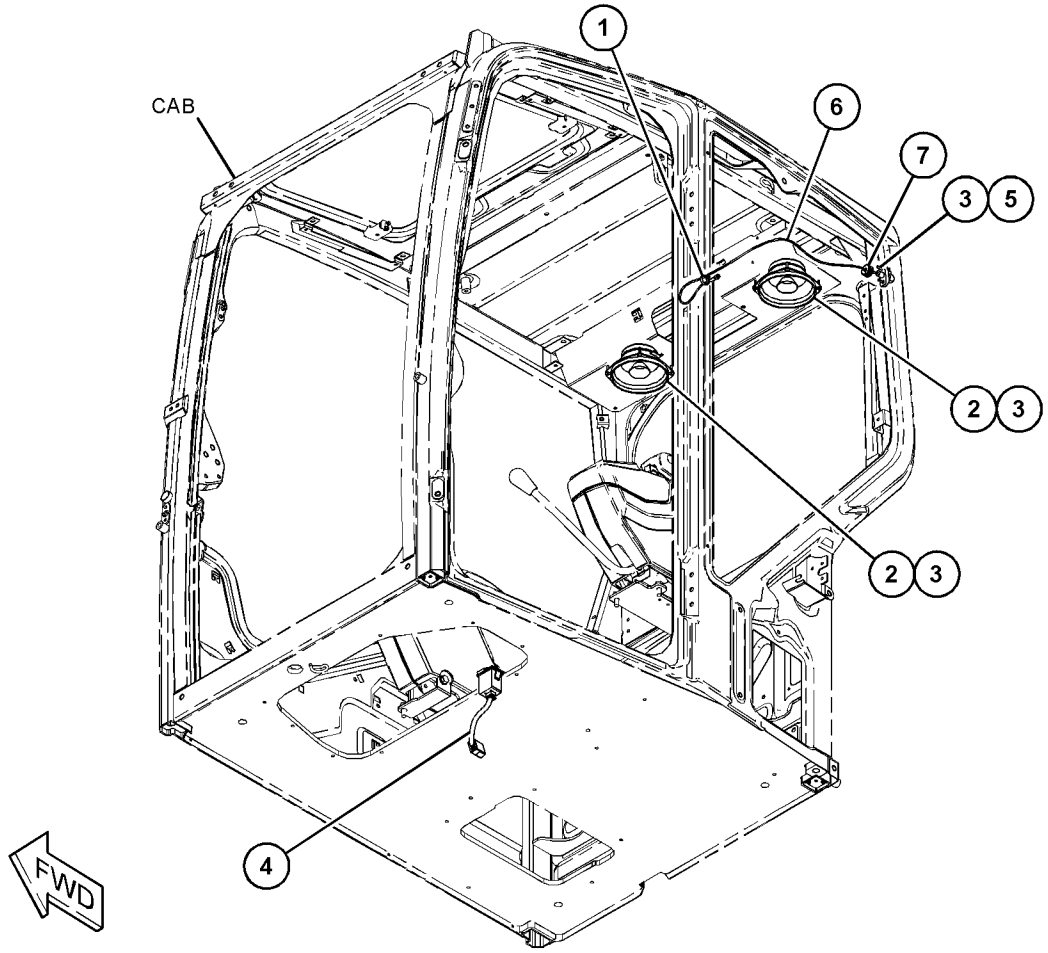

(VIEWED FROM BOTTOM)

GRAPHIC #1 <END> g06332930

510-6070 OPERATOR AR—SWING BOOM

PART OF 562-9155, 562-9156, 562-9159 DISTRIBUTION AR

AN ATTACHMENT

SMCS-7300, 7301 **i07546255**

NOTE	PART NUMBER	QTY	PART NAME 1 2 3 4 5 6 (PRODUCT LEVEL)	SEE PAGE
Y	*510-6071*	1	CAB GP	350
Y	*513-0500*	1	DUCT GP-CAB AIR	375
Y	*562-7442*	1	FILM GP	439
Y	*510-6073*	1	LINER GP-CAB	390
Y	*510-6080*	1	MOUNTING GP-PLATFORM	397
Y	*510-6072*	1	TRIM GP-CAB	408
Y	*543-0098*	1	VALVE & MOUNTING GP	263

Y - SEPARATE ILLUSTRATION

<END>

541-4580 OPERATOR AR—SWING BOOM

PART OF 562-4906 DISTRIBUTION AR

AN ATTACHMENT

SMCS-7300, 7301 **i07544950**

NOTE	PART NUMBER	QTY	PART NAME 1 2 3 4 5 6 (PRODUCT LEVEL)	SEE PAGE
Y	*541-4581*	1	CAB GP	350
Y	*513-0500*	1	DUCT GP-CAB AIR	375
Y	*562-7442*	1	FILM GP	439
Y	*510-6073*	1	LINER GP-CAB	390
Y	*510-6080*	1	MOUNTING GP-PLATFORM	397
Y	*510-6072*	1	TRIM GP-CAB	408
Y	*543-0098*	1	VALVE & MOUNTING GP	263

Y - SEPARATE ILLUSTRATION

<END>

511-6218 RADIO GP—DIGITAL

AN ATTACHMENT

SMCS-7338 **i07546422**

NOTE	REF NO	GRAPHIC REF	PART NUMBER	QTY	PART NAME 1 2 3 4 5 6 (PRODUCT LEVEL)	SEE PAGE
	1	1	**557-5096**	2	BRACKET (RADIO)	
	2	1	**487-7442**	1	RADIO GP	
	3	1	**515-8093**	1	ROD	
M	4	1	**095-0735**	4	SCREW-MACHINE (M5X0.8X8-MM)	
	5	1	**096-0192**	4	LOCKWASHER (EXTERNAL TOOTH)	
	6	1	**515-8095**	1	CABLE AS	
	7	1	**8T-0328**	4	WASHER-HARD (5.5X10X1-MM THK)	
	8	1	**9X-2038**	4	WASHER (7X19X2-MM THK)	
M	9	1	**9X-2044**	4	SCREW-TRUSS HEAD (M6X1X16-MM)	

M - METRIC PART

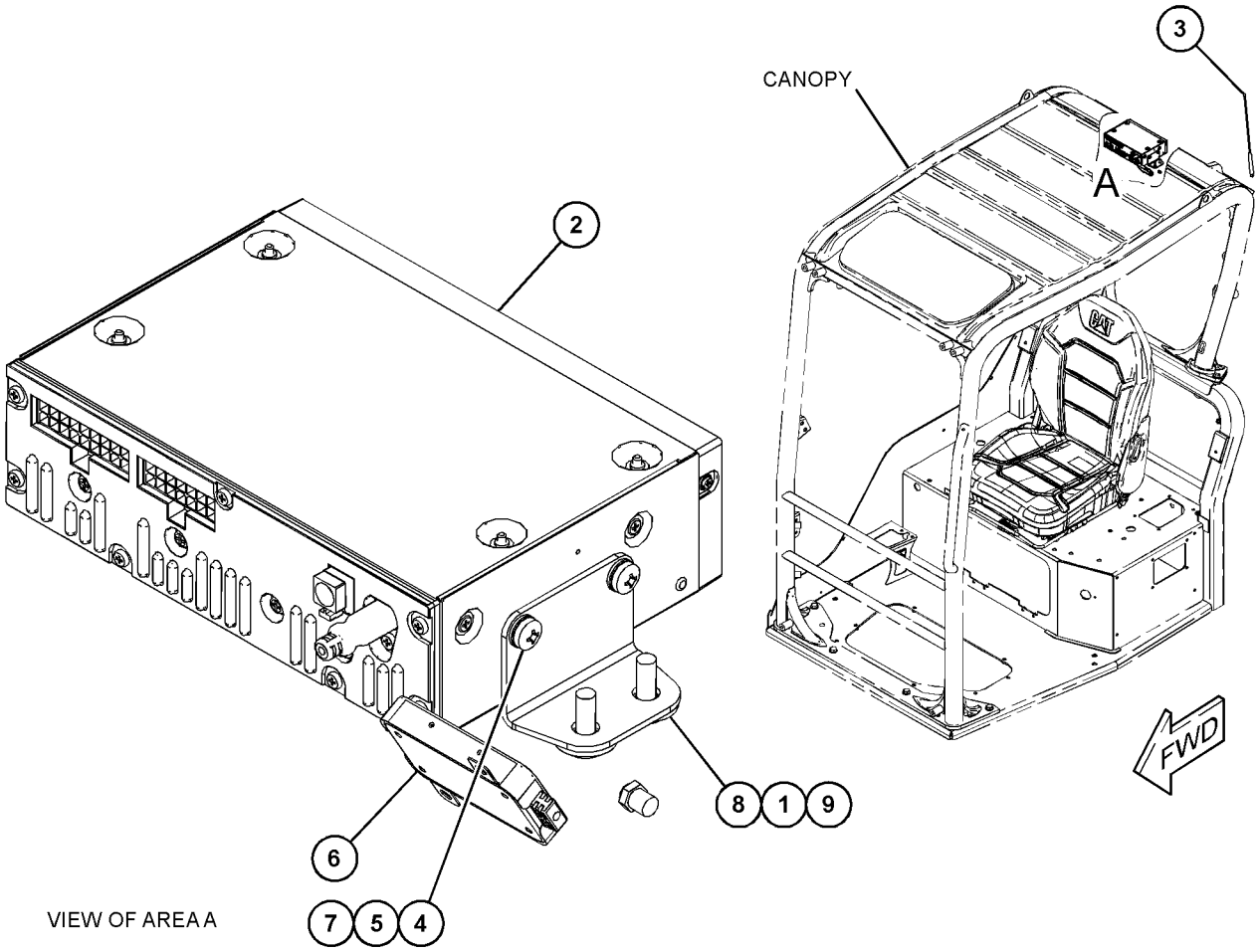

GRAPHIC #1 <END> g06343245

511-6219 RADIO GP–CAN MODULE

PART OF 562-4906, 562-9155, 562-9156, 562-9158, 562-9159 DISTRIBUTION AR AN ATTACHMENT

SMCS-7338 **i07544461**

NOTE	REF NO	GRAPHIC REF	PART NUMBER	QTY	PART NAME 1 2 3 4 5 6 (PRODUCT LEVEL)	SEE PAGE
	1	1	**557-5096**	2	BRACKET (RADIO)	
	2	1	**487-7440**	1	RADIO GP (AUX/USB/BLUETOOTH)	
	3	1	**515-8094**	1	ROD (ANTENNA)	
	4	1	**515-8096**	1	CABLE AS	
M	5	1	**185-8163**	4	SCREW-MACHINE (M5X0.8X8-MM)	
	6	1	**096-0192**	4	LOCKWASHER (EXTERNAL TOOTH)	
	7	1	**8T-0328**	4	WASHER-HARD (5.5X10X1-MM THK)	
	8	1	**9X-2038**	4	WASHER (7X19X2-MM THK)	
M	9	1	**9X-2044**	4	SCREW-TRUSS HEAD (M6X1X16-MM)	

M - METRIC PART

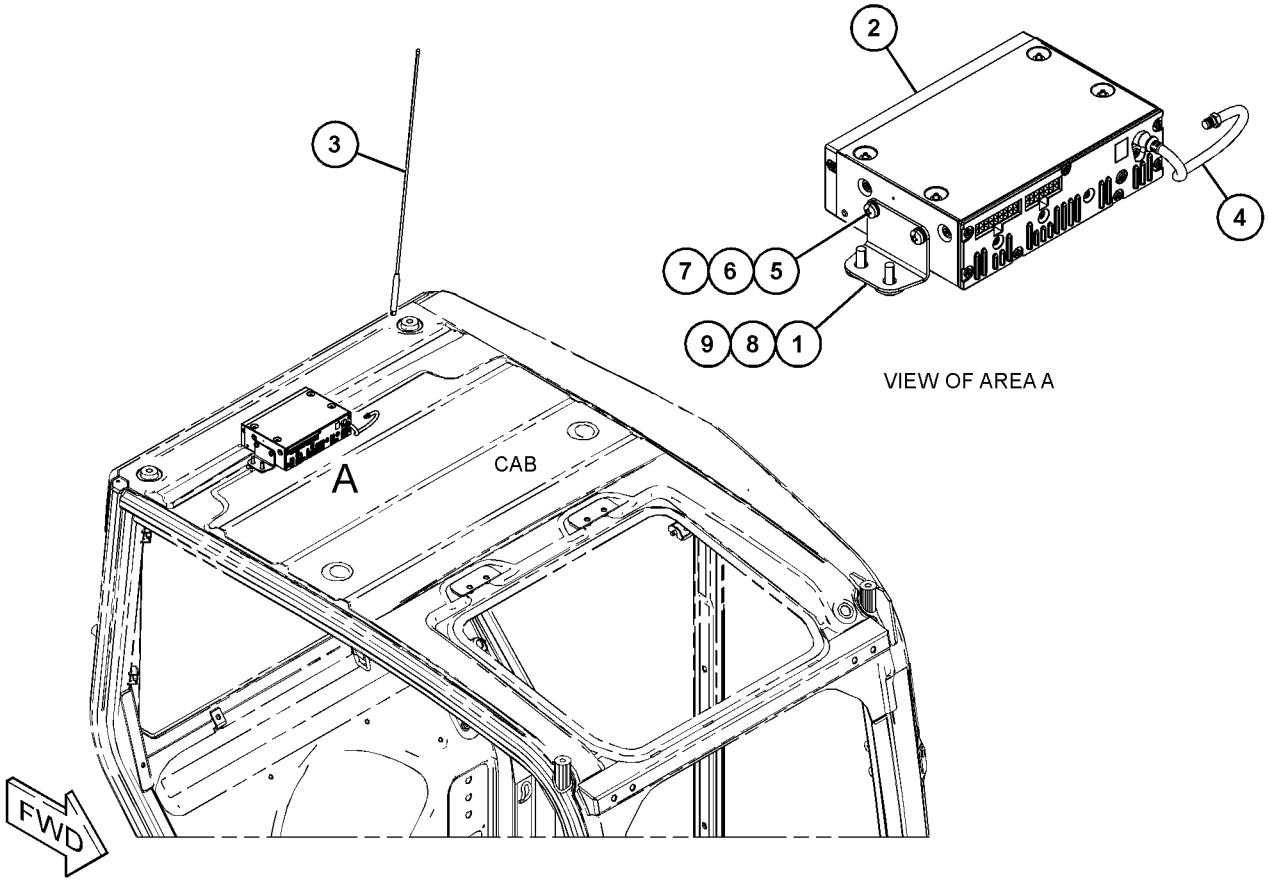

GRAPHIC #1 <END> g06343151

513-3440 SEAT & MOUNTING GP—AIR SUSPENSION

PART OF 510-6071 CAB GP

AN ATTACHMENT

SMCS-7312 **i07546257**

NOTE	REF NO	GRAPHIC REF	PART NUMBER	QTY	PART NAME 1 2 3 4 5 6 (PRODUCT LEVEL)	SEE PAGE
	1	1	**0T-0244**	2	BOLT (7/16-20X1.25-IN)	
Y	2	1	**505-6340**	1	SEAT GP (HEATED)	406
	3	1	**7X-0561**	5	WASHER-HARD (12X18.5X3-MM THK)	
	4	1	**8T-4224**	4	WASHER-HARD (8.8X16X2-MM THK)	
M	5	1	**8T-7547**	4	BOLT (M8X1.25X30-MM)	

M - METRIC PART
Y - SEPARATE ILLUSTRATION

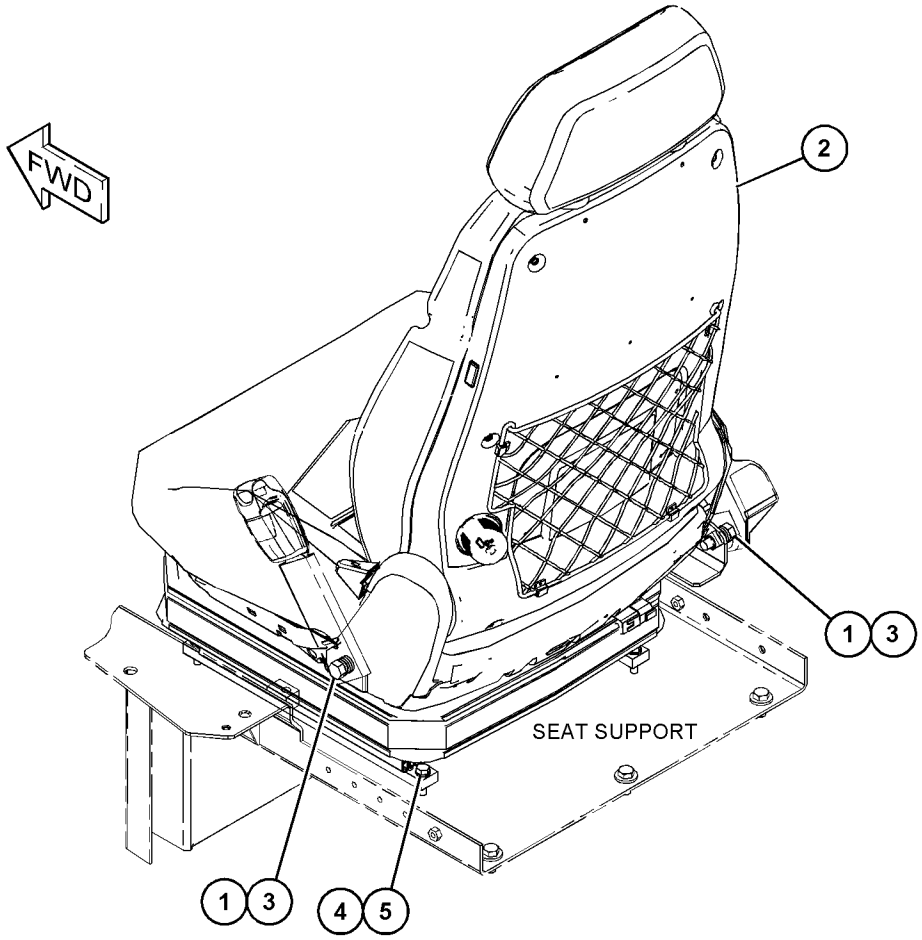

GRAPHIC #1 <END> g06331973

521-2495 SEAT & MOUNTING GP–FABRIC

MECHANICAL
PART OF 541-4581 CAB GP
AN ATTACHMENT

SMCS-7312 **i07544972**

NOTE	REF NO	GRAPHIC REF	PART NUMBER	QTY	PART NAME 1 2 3 4 5 6 (PRODUCT LEVEL)	SEE PAGE
M	1	1	**446-1437**	4	BOLT (M8X1.25X20-MM)	
	2	1	**513-3446**	1	SEAT GP (FABRIC)	
	3	1	**521-2498**	1	STOP-ADJUSTER	
	4	1	**0T-0244**	2	BOLT (7/16-20X1.25-IN)	
	5	1	**521-2496**	1	SUPPORT AS	
	6	1	**5P-4116**	4	WASHER-HARD (8.8X20.5X2-MM THK)	
	7	1	**7X-0561**	4	WASHER-HARD (12X18.5X3-MM THK)	
M	8	1	**8T-4189**	4	BOLT (M8X1.25X20-MM)	

M - METRIC PART

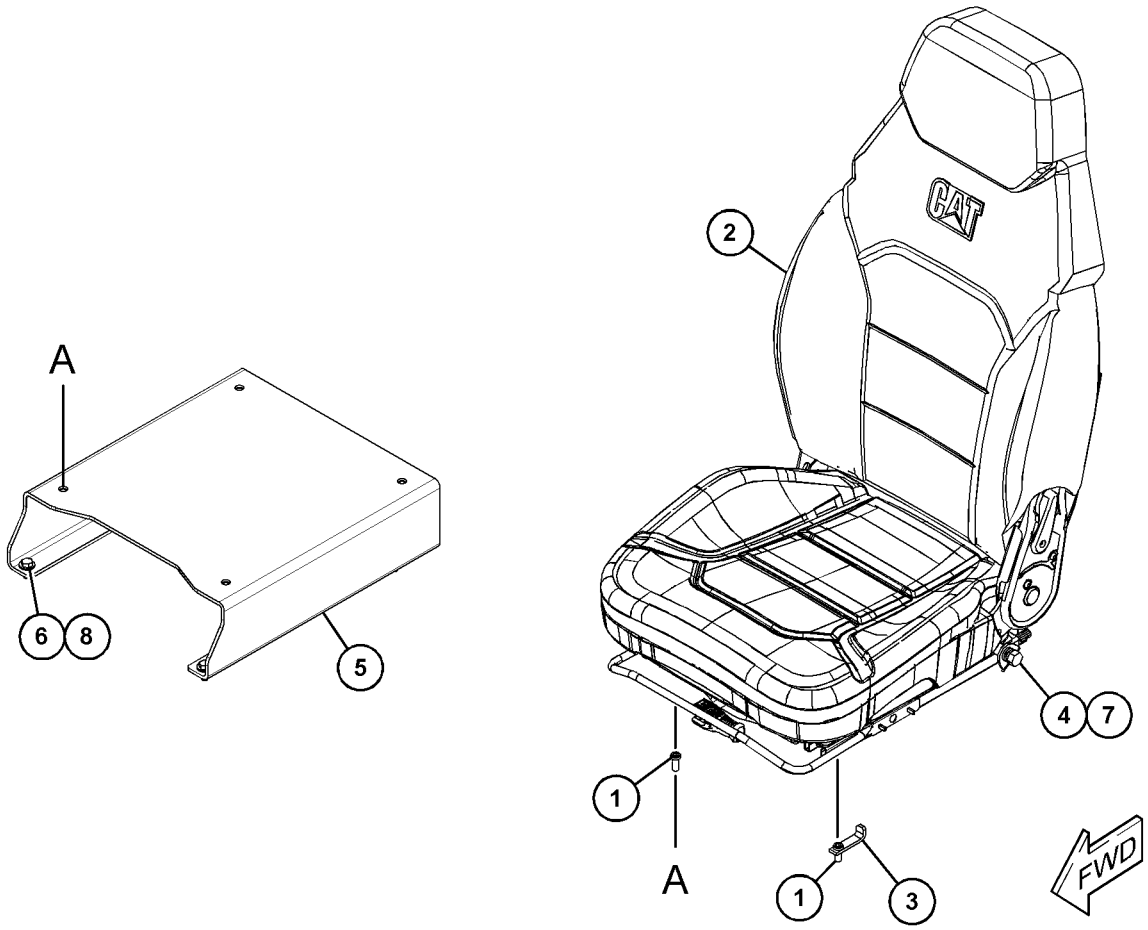

GRAPHIC #1 <END> g06340018

510-6084 SEAT BELT GP

AN ATTACHMENT

SMCS-7327 **i07548562**

NOTE	REF NO	GRAPHIC REF	PART NUMBER	QTY	PART NAME 1 2 3 4 5 6 (PRODUCT LEVEL)	SEE PAGE
	1	1	**521-2502**	1	SEAT BELT GP	

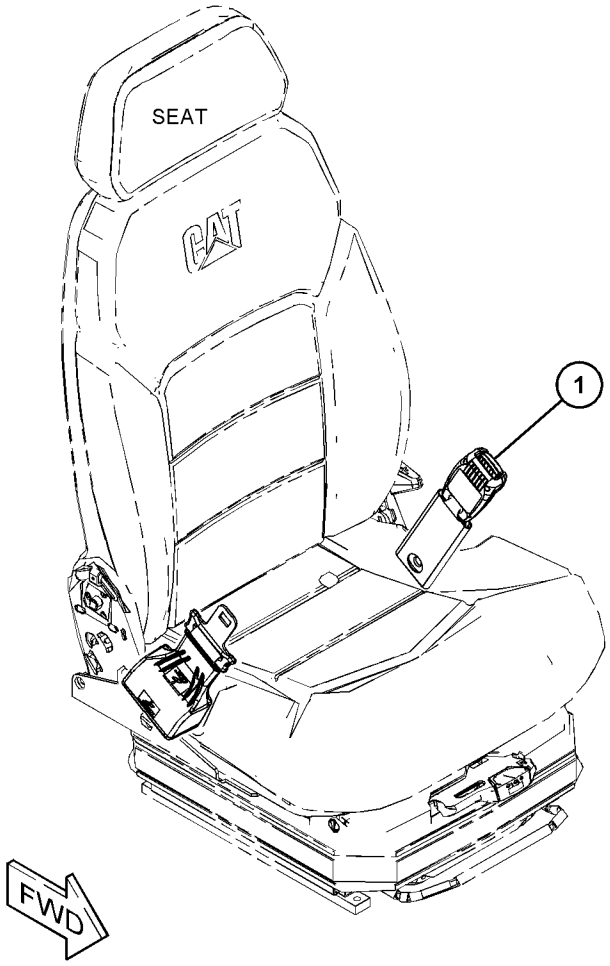

GRAPHIC #1 <END> g06344562

510-6085 SEAT BELT GP

PART OF 562-4906, 562-9155, 562-9156, 562-9158, 562-9159 DISTRIBUTION AR AN ATTACHMENT

SMCS-7327 **i07542505**

NOTE	REF NO	GRAPHIC REF	PART NUMBER	QTY	PART NAME 1 2 3 4 5 6 (PRODUCT LEVEL)	SEE PAGE
	1	1	**521-2503**	1	SEAT BELT GP	

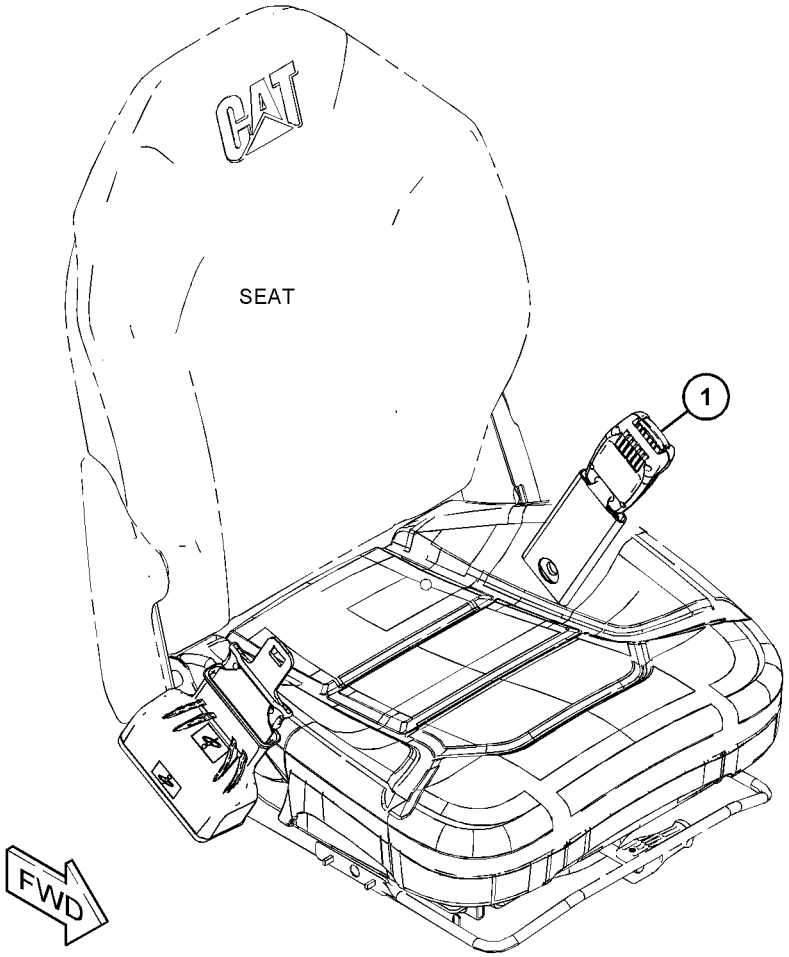

GRAPHIC #1 <END> g06315614

505-6340 SEAT GP–HEATED

12-VOLT

PART OF 513-3440 SEAT & MOUNTING GP

AN ATTACHMENT

SMCS-7312, 7321, 7327 **i07546258**

NOTE	REF NO	GRAPHIC REF	PART NUMBER	QTY	PART NAME 1 2 3 4 5 6 (PRODUCT LEVEL)	SEE PAGE
					(NO SERVICED PARTS)	

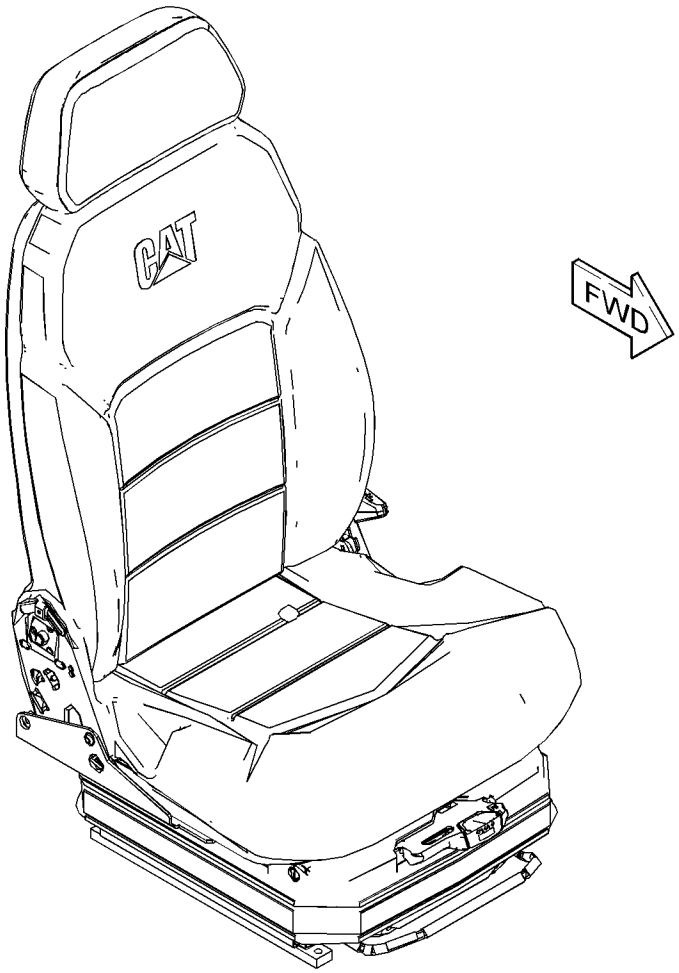

GRAPHIC #1 <END> g06331947

510-6082 SUPPORT GP-SEAT

PART OF 496-0802 CAB GP
AN ATTACHMENT

SMCS-7321 **i07544998**

NOTE	REF NO	GRAPHIC REF	PART NUMBER	QTY	PART NAME 1 2 3 4 5 6 (PRODUCT LEVEL)	SEE PAGE
	1	1	**7X-7729**	5	WASHER (11X25X3-MM THK)	
M	2	1	**8T-4136**	5	BOLT (M10X1.5X25-MM)	
	3	1	**9X-2038**	2	WASHER (7X19X2-MM THK)	
M	4	1	**9X-2044**	2	SCREW-TRUSS HEAD (M6X1X16-MM)	
	5	1	**525-4851**	1	PLATE AS	
M		1	**6V-9632**	2	NUT-WELD (M6X1-THD)	
M		1	**8T-3490**	1	NUT-WELD (M10X1.5-THD)	

M - METRIC PART

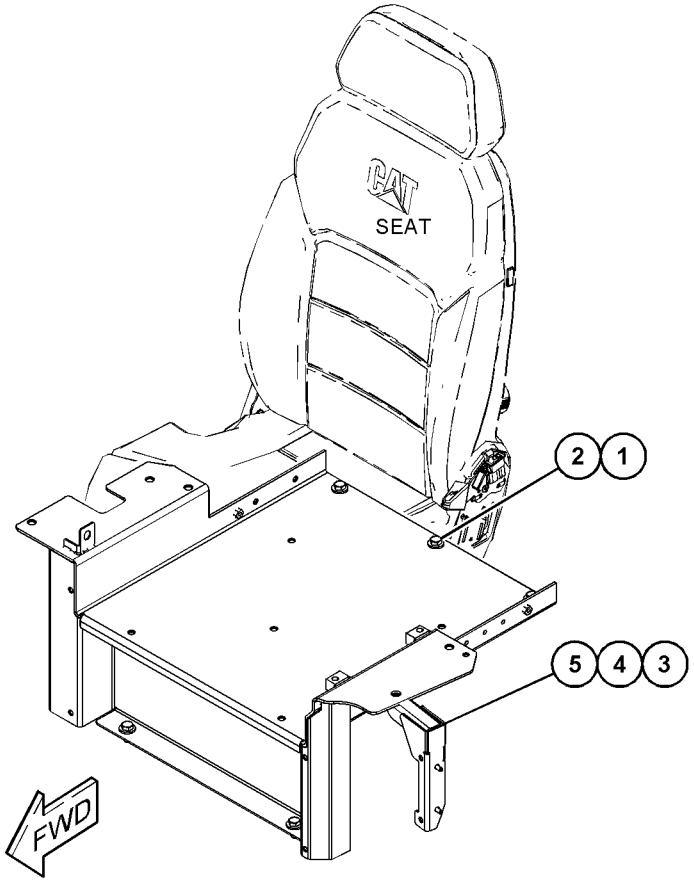

GRAPHIC #1 <END> g06332565

510-6072 TRIM GP-CAB

PART OF 510-6070, 541-4580 OPERATOR AR
AN ATTACHMENT

SMCS-7301, 7329 **i07544962**

NOTE	REF NO	GRAPHIC REF	PART NUMBER	QTY	PART NAME 1 2 3 4 5 6 (PRODUCT LEVEL)	SEE PAGE
	1	1	**524-9685**	1	PLATE-SIDE (RH)	
M	2	1	**8T-4189**	8	BOLT (M8X1.25X20-MM)	
	3	1	**5P-4116**	8	WASHER-HARD (8.8X20.5X2-MM THK)	
	4	1	**7X-7729**	3	WASHER (11X25X3-MM THK)	
	5	1	**9X-2038**	2	WASHER (7X19X2-MM THK)	
M	6	1	**101-7401**	3	BOLT-SOCKET HEAD (M10X1.5X20-MM)	
	7	1	**185-8205**	5	CLIP	
	8	1	**280-8618**	1	HAMMER	
	9	1	**206-1667**	3	CLIP (TRIM)	
	10	1	**513-0494**	1	COVER-CONTROL	
	11	1	**513-2514**	1	BRACKET	
	12	1	**519-2435**	1	FLOORPLATE AS	
		1	**7T-1099**	2	LINK	
M		1	**8T-3490**	8	NUT-WELD (M10X1.5-THD)	
	13	1	**524-9686**	1	COVER	
	14	1	**545-7845**	1	COVER	
M	15	1	**9X-1046**	2	SCREW (M4X0.7X18-MM)	
M	16	1	**9X-2044**	2	SCREW-TRUSS HEAD (M6X1X16-MM)	

M - METRIC PART

510-6072 **TRIM GP-CAB (**contd.**)** **i07544962**

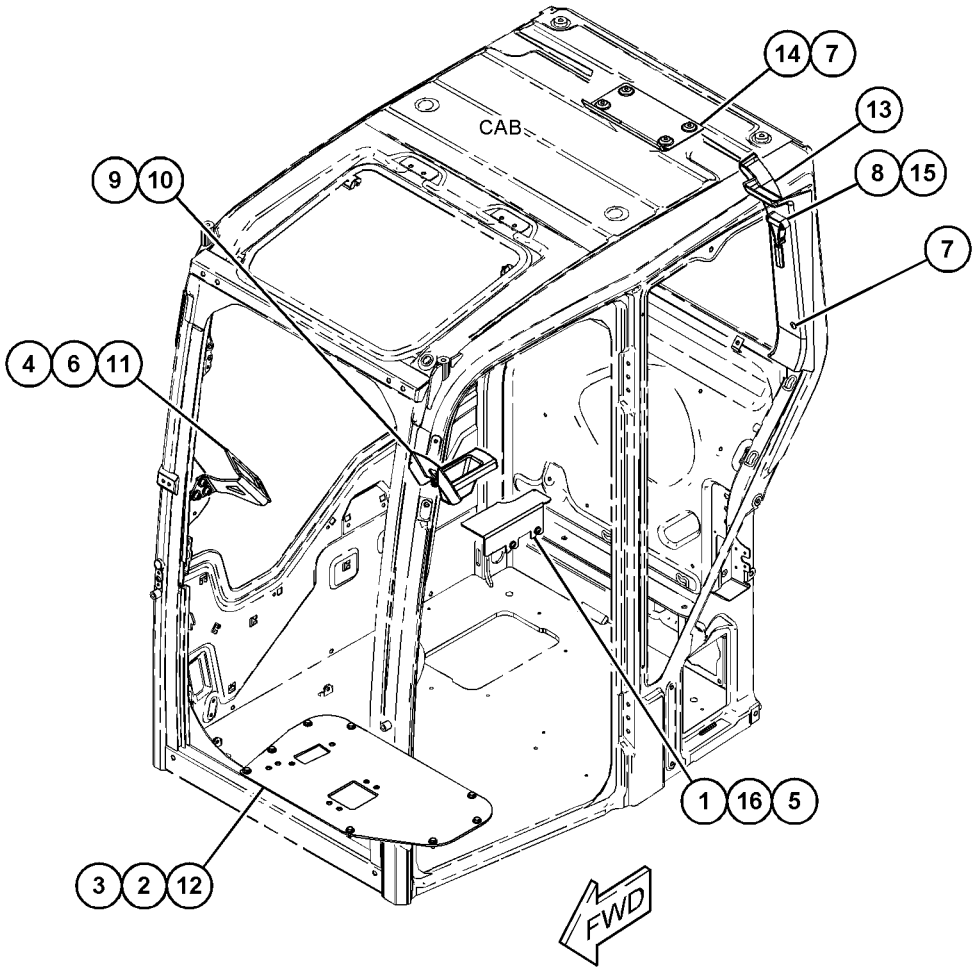

GRAPHIC #1 <END> g06335283

546-5540 VALVE GP-ACTUATOR

PART OF 543-0098 VALVE & MOUNTING GP

AN ATTACHMENT

SMCS-7304 **i07545091**

NOTE	REF NO	GRAPHIC REF	PART NUMBER	QTY	PART NAME 1 2 3 4 5 6 (PRODUCT LEVEL)	SEE PAGE
	1	1	**465-7612**	2	CLIP	
	2	1	**465-7635**	1	VALVE AS-WATER	
	3	1	**279-0850**	1	ACTUATOR (ELECTRONIC)	
	4	1	**450-4968**	3	SCREW-HEX HEAD (8-16X0.5-IN)	

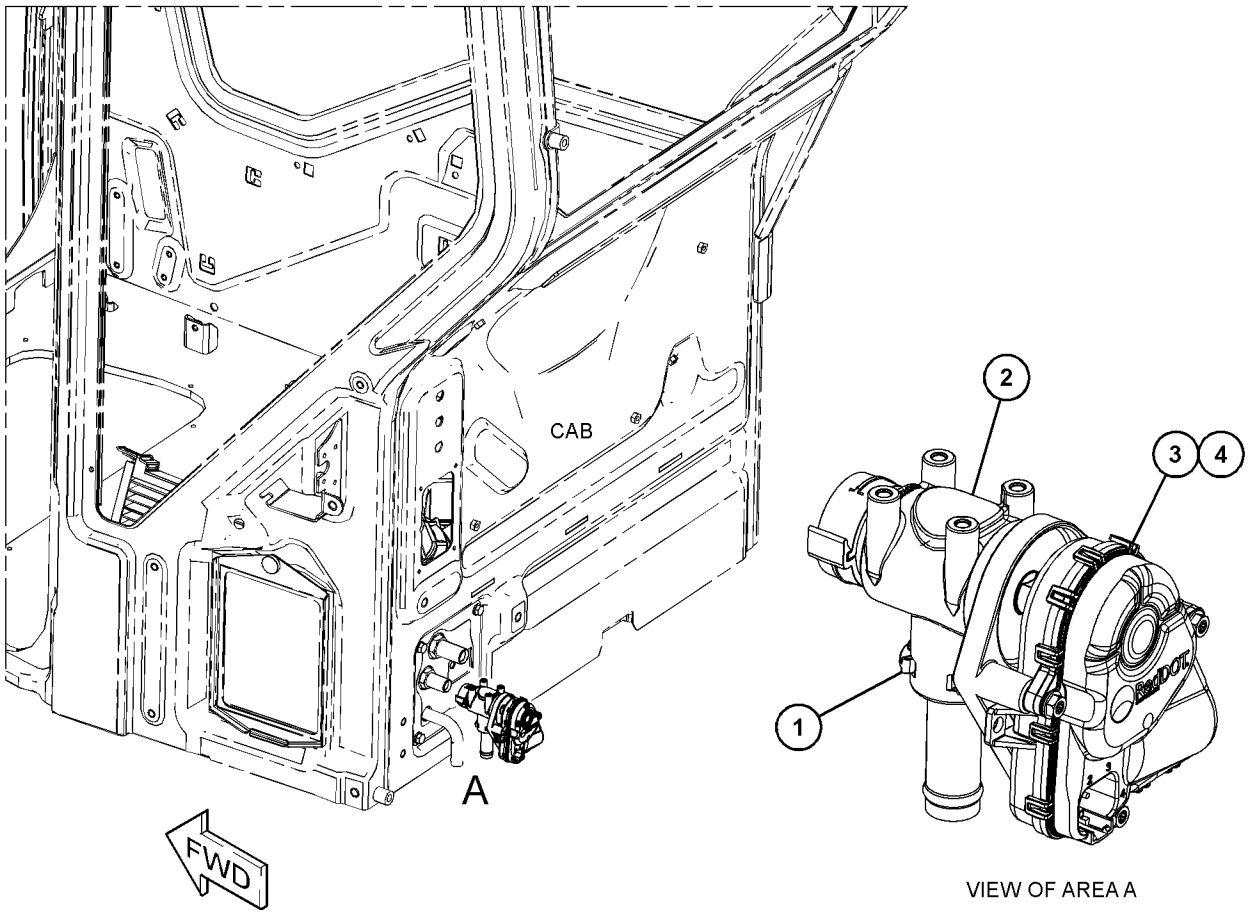

GRAPHIC #1 <END> g06332924

525-9070 VISOR GP-PROTECTION

CANNOT BE USED WITH 525-9062—PAGE: 377, 525-9065—PAGE: 379, 525-9068—PAGE: 378 AN ATTACHMENT

SMCS-7340 **i07546668**

NOTE	REF NO	GRAPHIC REF	PART NUMBER	QTY	PART NAME 1 2 3 4 5 6 (PRODUCT LEVEL)	SEE PAGE
M	1	1	**4I-5049**	6	NUT-SPACER (M6X1-THD)	
	2	1	**540-3855**	1	VISOR	
	3	1	**540-3856**	1	BRACKET	
M	4	1	**6V-7357**	6	BOLT (M6X1X25-MM)	
	5	1	**8T-4121**	4	WASHER-HARD (11X21X2.5-MM THK)	
M	6	1	**8T-4136**	3	BOLT (M10X1.5X25-MM)	
M	7	1	**8T-4138**	2	BOLT (M6X1X20-MM)	
	8	1	**9X-2038**	2	WASHER (7X19X2-MM THK)	
	9	1	**9X-8256**	6	WASHER (6.6X12X2-MM THK)	
J	10	1	**438-4919**		SEAL (11.3-DM)	

J - ORDER BY THE DECIMETER
M - METRIC PART

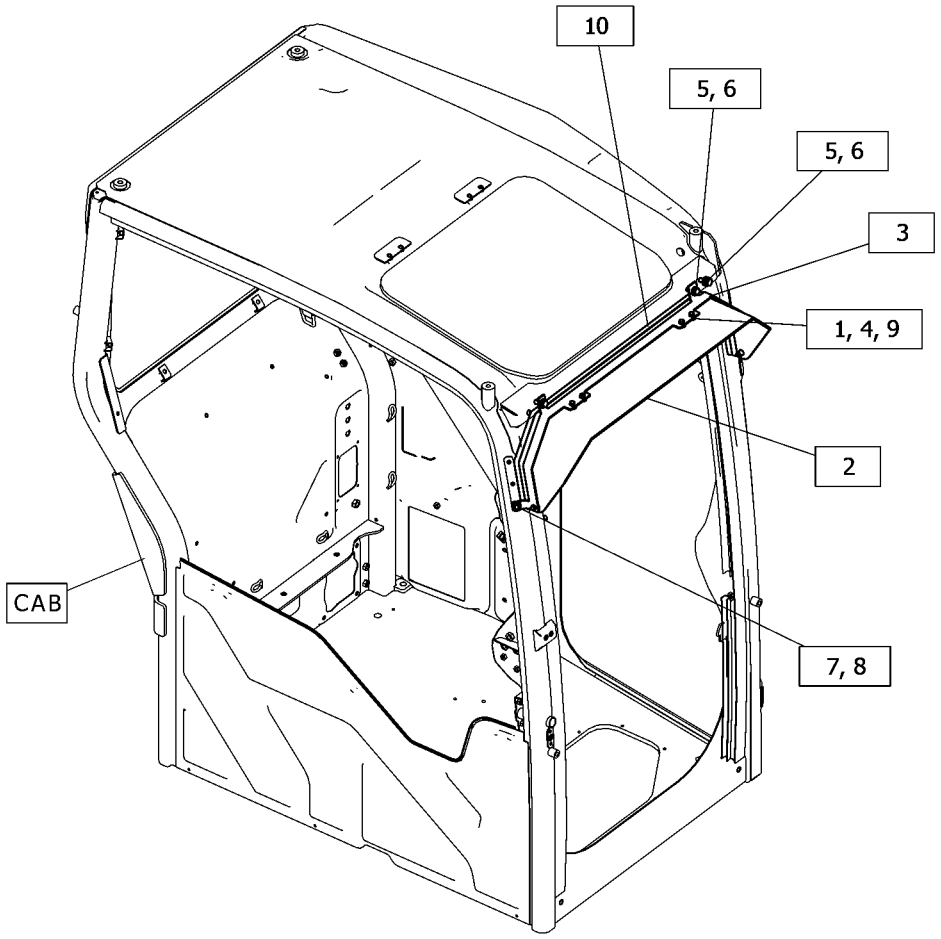

GRAPHIC #1 <END> g06343114

561-8103 VISOR GP-PROTECTION–RAIN

AN ATTACHMENT

SMCS-7340 **i07548447**

NOTE	PART NUMBER	QTY	PART NAME 1 2 3 4 5 6 (PRODUCT LEVEL)	SEE PAGE
M	**6V-7357**	6	BOLT (M6X1X25-MM)	
M	**8T-4136**	3	BOLT (M10X1.5X25-MM)	
M	**8T-4138**	2	BOLT (M6X1X20-MM)	
	540-3856	1	BRACKET	
M	**4I-5049**	6	NUT-SPACER (M6X1-THD)	
P	**438-4919**		SEAL (12-DM)	
	540-3855	1	VISOR	
	9X-2038	2	WASHER (7X19X2-MM THK)	
	9X-8256	6	WASHER (6.6X12X2-MM THK)	
	8T-4121	4	WASHER-HARD (11X21X2.5-MM THK)	

M - METRIC PART
P - ORDER BY THE DECIMETER

<END>

518-9385 WASHER GP-WINDOW

PART OF 518-6184 ENGINE AR, 520-6936 INSTALLATION AR-ENGINE
AN ATTACHMENT

SMCS-7306 **i07544918**

NOTE	REF NO	GRAPHIC REF	PART NUMBER	QTY	PART NAME 1 2 3 4 5 6 (PRODUCT LEVEL)	SEE PAGE
	1	1	**3S-2093**	4	STRAP-CABLE	
	2	1	**7K-1181**	4	STRAP-CABLE	
	3	1	**191-7524**	1	TANK GP-WINDOW WASHER	
	4	1	**4P-8134**	1	CLIP (LADDER)	
	5	1	**524-0863**	1	PLATE AS	
M	6	1	**5C-9553**	2	BOLT (M6X1X16-MM)	
	7	1	**7Y-3474**	1	VALVE AS-CHECK (WINDOW WASHER)	
M	8	1	**8T-4189**	3	BOLT (M8X1.25X20-MM)	
	9	1	**8T-4224**	3	WASHER-HARD (8.8X16X2-MM THK)	
	10	1	**9X-8256**	2	WASHER (6.6X12X2-MM THK)	
E	11	1	**144-0195**		HOSE (317-CM)	

E - ORDER BY THE CENTIMETER
M - METRIC PART

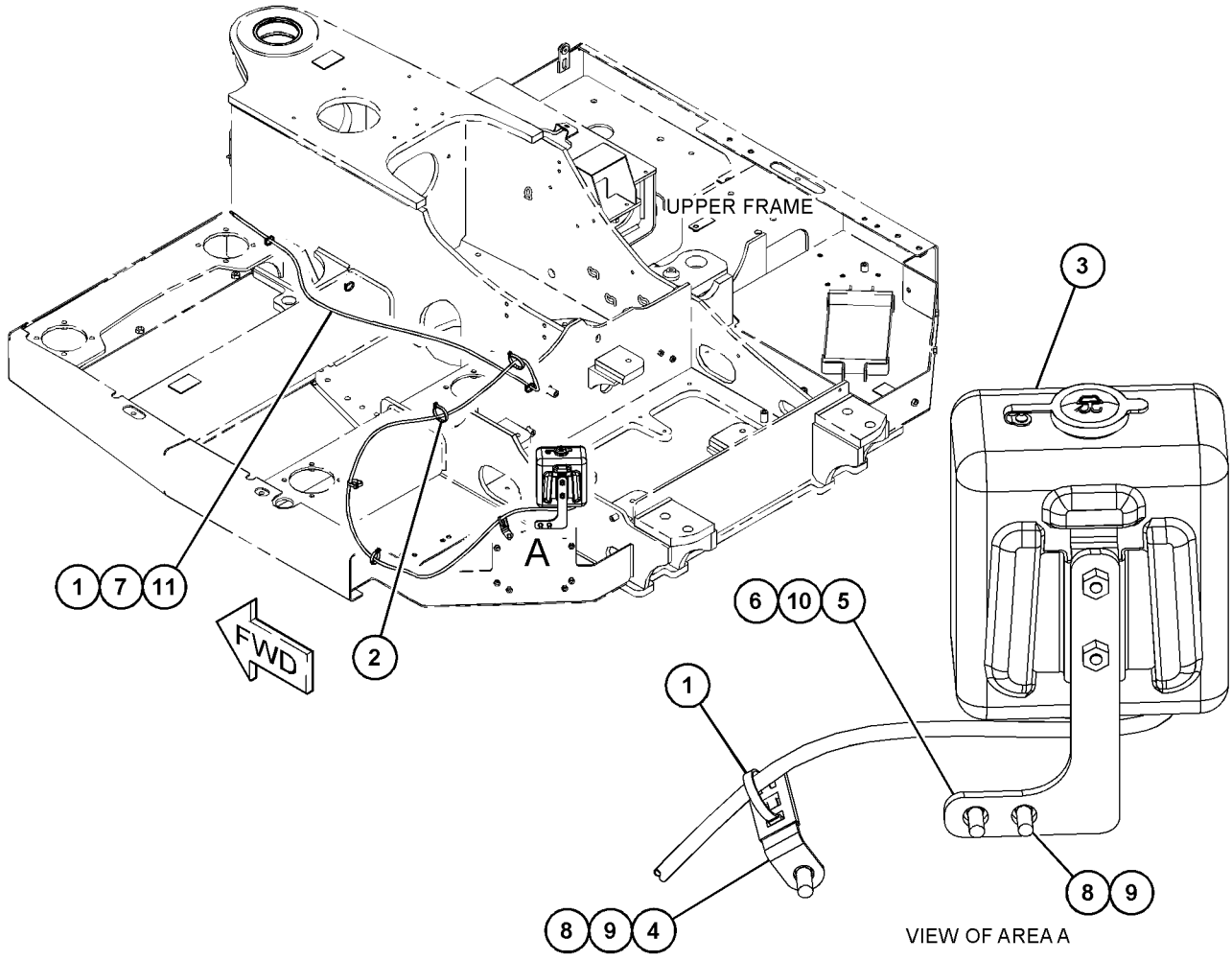

GRAPHIC #1

<END>

g06346286

544-1668 WINDOW AS-SLIDING—RH

PART OF 544-0589 WINDOW GP-CAB

AN ATTACHMENT

SMCS-7310 **i07545085**

NOTE	REF NO	GRAPHIC REF	PART NUMBER	QTY	PART NAME 1 2 3 4 5 6 (PRODUCT LEVEL)	SEE PAGE
	1	1	**512-9956**	1	LATCH AS	
	2	1	**512-9958**	2	PLUG	
	3	1	**544-1669**	1	GLASS (RH)	
	4	1	**544-1670**	1	KIT-SEAL	
					(INCLUDES BUMPERS & SEALS)	
	5	1	**544-1672**	1	CHANNEL AS	

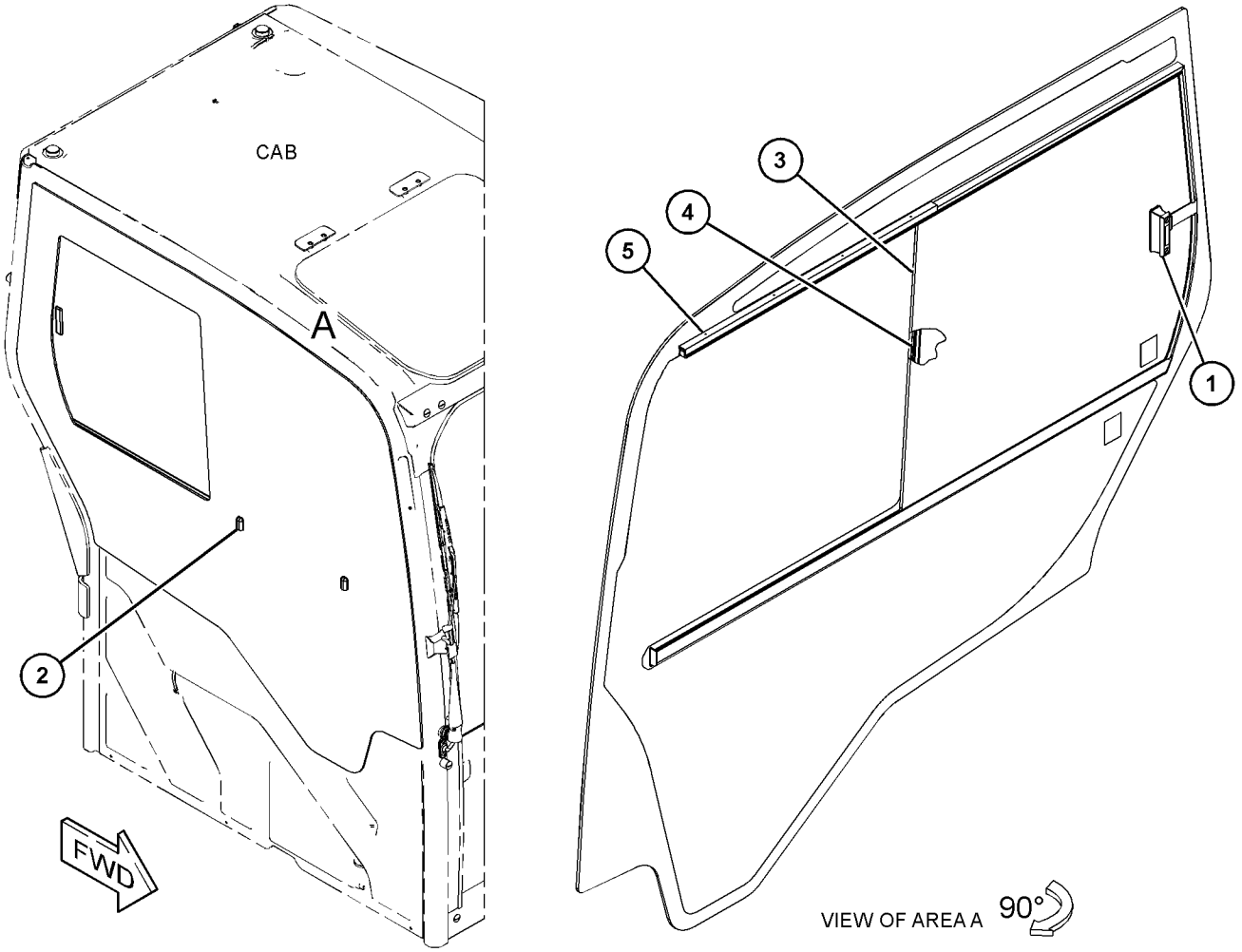

GRAPHIC #1 <END> g06348212

496-0804 WINDOW GP-CAB—FRONT

PART OF 496-0802 CAB GP

AN ATTACHMENT

SMCS-7310 **i07544980**

NOTE	REF NO	GRAPHIC REF	PART NUMBER	QTY	PART NAME 1 2 3 4 5 6 (PRODUCT LEVEL)	SEE PAGE
M	1	1	**8T-4196**	2	BOLT (M10X1.5X35-MM)	
	2	1	**523-6550**	1	SEAL	
	3	1	**550-4593**	2	SEAL	
	4	1	**538-5008**	1	SEAL	
	5	1	**3S-2093**	1	STRAP-CABLE	
	6	1	**114-9284**	4	BUMPER	
M	7	1	**164-1342**	2	BOLT-SPECIAL (M10X1.5X28-MM)	
	8	1	**164-1343**	2	WASHER-THRUST (13.6X30X5.1-MM THK)	
	9	1	**164-1345**	2	BEARING	
	10	1	**274-3524**	1	STRIKER AS	
	11	1	**378-1007**	1	SWITCH AS-MAGNETIC (PROXIMITY) (LOAD CONTROL)	
		1	**171-0596**	1	RECEPTACLE AS-CONNECTOR (3-PIN)	
		1	**102-8803**	1	KIT-RECEPTACLE (3-PIN)	
					(INCLUDES RECEPTACLE AS & WEDGE)	
	12	1	*523-6478*	1	WINDOW AS-FRONT (LOWER)	
		1	**496-1131**	1	GLASS-FRONT	
		1	**533-2051**	1	LATCH AS (LH)	
		1	**533-2052**	1	LATCH AS (RH)	
		1	**538-5021**	1	SEAL	
	13	1	*526-2822*	1	TRACK AS (RH)	
	14	1	*526-2823*	1	TRACK AS (LH)	
					(EACH TRACK AS INCLUDES)	
		1	**538-5045**	2	SPACER	
	15	1	**533-2048**	1	WASHER (20.5X30X1-MM THK)	
	16	1	**538-5009**	2	STOPPER	
	17	1	**538-5010**	2	SEAL	
	18	1	**540-0360**	1	BRACKET AS	
	19	1	**164-1344**	2	WASHER-THRUST (13.6X30X2.1-MM THK)	
M	20	1	**344-5674**	4	NUT (M8X1.25-THD)	
	21	1	**443-3962**	1	TIE	
	22	1	**523-6463**	1	ARM AS-WINDOW (FRONT)	
	23	1	**523-6548**	1	SPRING	
Y	24	1	*526-2603*	1	WINDOW GP-CAB (FRONT)	417
	25	1	**533-2046**	2	SLEEVE	
B	26	1	**533-2047**	4	SHIM	
	27	1	**533-2049**	2	BEARING	
	28	1	**5D-4822**	1	RING-RETAINING	
	29	1	**7X-7729**	1	WASHER (11X25X3-MM THK)	
	30	1	**8T-2444**	1	STUD-BALL	
M	31	1	**8T-3998**	2	BOLT (M4X0.7X12-MM)	
	32	1	**8T-4224**	1	WASHER-HARD (8.8X16X2-MM THK)	
M	33	1	**9X-2042**	4	SCREW-TRUSS HEAD (M6X1X12-MM)	
M	34	1	**9X-2044**	4	SCREW-TRUSS HEAD (M6X1X16-MM)	

B - USE AS REQUIRED
M - METRIC PART
Y - SEPARATE ILLUSTRATION

496-0804 **WINDOW GP-CAB (**contd.**)** **i07544980**

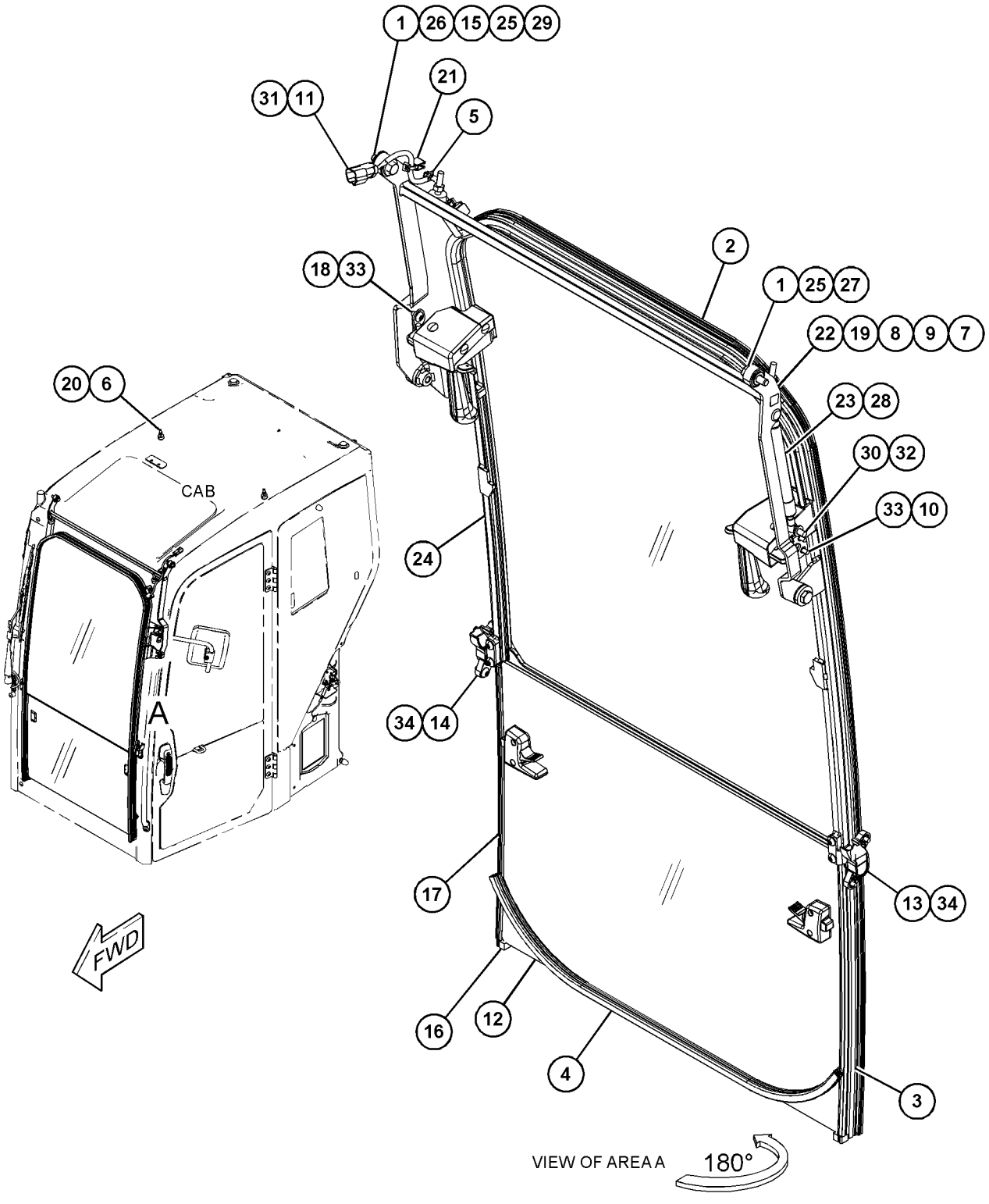

GRAPHIC #1 <END> g06348280

526-2603 WINDOW GP-CAB

PART OF 496-0804 WINDOW GP-CAB

AN ATTACHMENT

SMCS-7310 **i07544985**

NOTE	REF NO	GRAPHIC REF	PART NUMBER	QTY	PART NAME 1 2 3 4 5 6 (PRODUCT LEVEL)	SEE PAGE
	1	1	**151-9576**	2	ROLLER	
	2	1	**171-7420**	6	CLIP	
	3	1	**274-3562**	2	LOCK AS	
	4	1	**436-2988**	1	ACTUATOR (MAGNETIC)	
	5	1	**496-1130**	1	GLASS-FRONT	
	6	1	**523-6470**	1	WINDOW AS-FRONT	
M		1	**9R-2821**	2	BOSS (M10X1.5X15-MM)	
	7	1	*523-6495*	2	SEAL AS	
					(EACH INCLUDES)	
E		1	**544-0579**		SEAL (49-CM)	
	8	1	**524-5546**	2	KNOB	
	9	1	**538-5009**	2	STOPPER	
	10	1	**540-0357**	1	COVER (RH)	
	11	1	**540-0358**	1	COVER (LH)	
	12	1	**540-0359**	1	SEAL	
	13	1	**540-0362**	1	BRACKET AS	
	14	1	**540-0364**	1	BRACKET AS	
	15	1	**550-3684**	1	LEVER AS	
		1	**274-3563**	1	SPRING	
M		1	**6V-9632**	2	NUT-WELD (M6X1-THD)	
	16	1	**550-3686**	1	LEVER AS	
		1	**274-3563**	1	SPRING	
M		1	**6V-9632**	2	NUT-WELD (M6X1-THD)	
M	17	1	**225-3322**	4	SCREW-TRUSS HEAD (M6X1X10-MM)	
M	18	1	**3E-8020**	4	SCREW-TRUSS HEAD (M6X1X25-MM)	
M	19	1	**3T-0851**	1	LOCKNUT (M5X0.8-THD)	
	20	1	**8T-0328**	1	WASHER-HARD (5.5X10X1-MM THK)	

E - ORDER BY THE CENTIMETER
M - METRIC PART

526-2603 **WINDOW GP-CAB (**contd.**)** **i07544985**

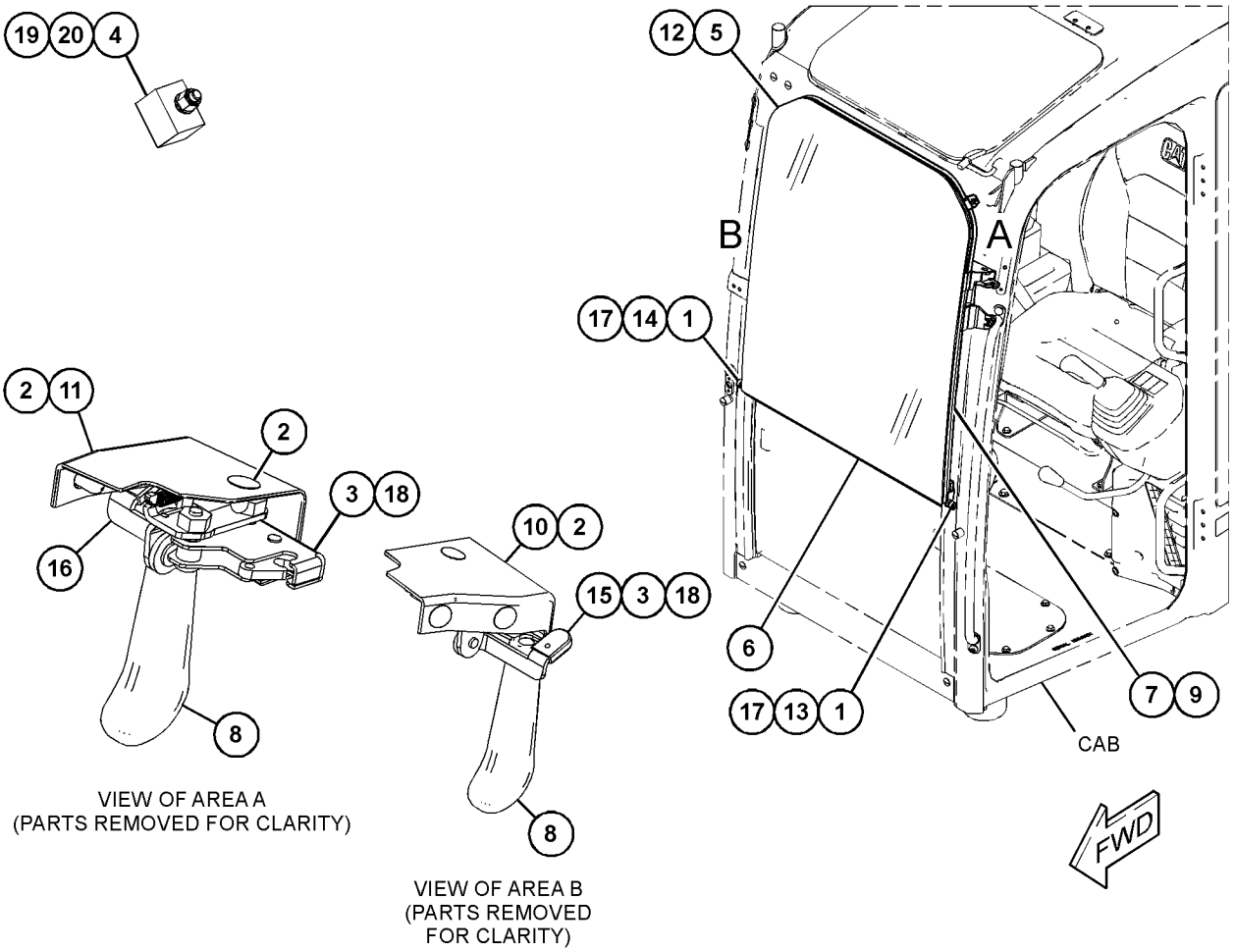

GRAPHIC #1 <END> g06348473

544-0589 WINDOW GP-CAB—RH

SLIDE

PART OF 541-4591 CAB GP

AN ATTACHMENT

SMCS-7310 **i07545082**

NOTE	REF NO	GRAPHIC REF	PART NUMBER	QTY	PART NAME 1 2 3 4 5 6 (PRODUCT LEVEL)	SEE PAGE
	1	1	**178-5572**	4	SPACER-SPECIAL (WINDOW)	
	2	1	**178-5574**	9	SPACER (SPECIAL)	
Y	3	1	*544-1668*	1	WINDOW AS-SLIDING (RH)	414

Y - SEPARATE ILLUSTRATION

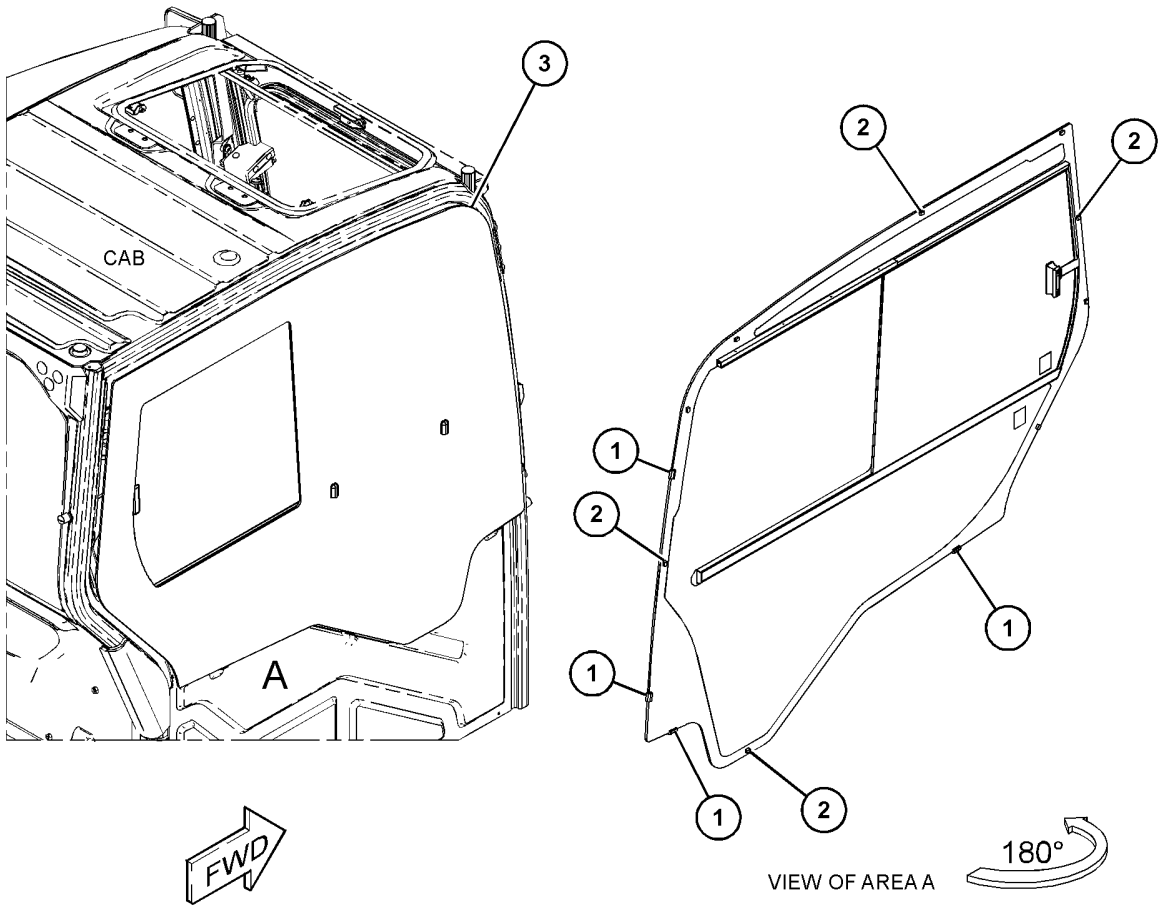

GRAPHIC #1 <END> g06347177

544-0591 WINDOW GP-CAB—TOP

PART OF 541-4591 CAB GP

AN ATTACHMENT

SMCS-7310 **i07545086**

NOTE	REF NO	GRAPHIC REF	PART NUMBER	QTY	PART NAME 1 2 3 4 5 6 (PRODUCT LEVEL)	SEE PAGE
	1	1	**496-1140**	1	WINDOW-TOP	
	2	1	**526-6969**	1	SEAL (SKYLIGHT)	

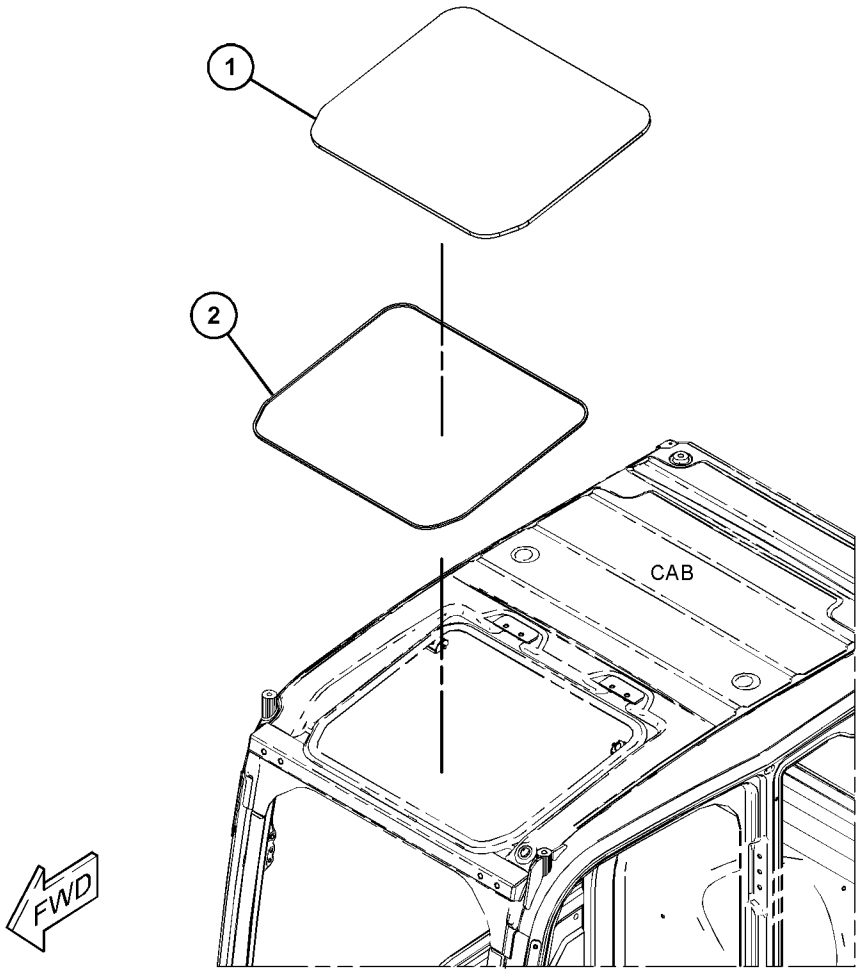

GRAPHIC #1 <END> g06333923

549-9080 WINDOW GP-CAB–LH

PART OF 541-4591 CAB GP

AN ATTACHMENT

SMCS-7310 **i07545087**

NOTE	REF NO	GRAPHIC REF	PART NUMBER	QTY	PART NAME 1 2 3 4 5 6 (PRODUCT LEVEL)	SEE PAGE
	1	1	**178-5572**	4	SPACER-SPECIAL (WINDOW)	
	2	1	**178-5574**	3	SPACER	
	3	1	**496-1138**	1	WINDOW AS-SLIDING (LH)	
		1	**512-9956**	1	LATCH AS	
		1	**512-9958**	1	PLUG	
		1	**523-9141**	1	GLASS (LH)	
		1	**526-6955**	1	KIT-SEAL	
					(INCLUDES BUMPERS & SEALS)	

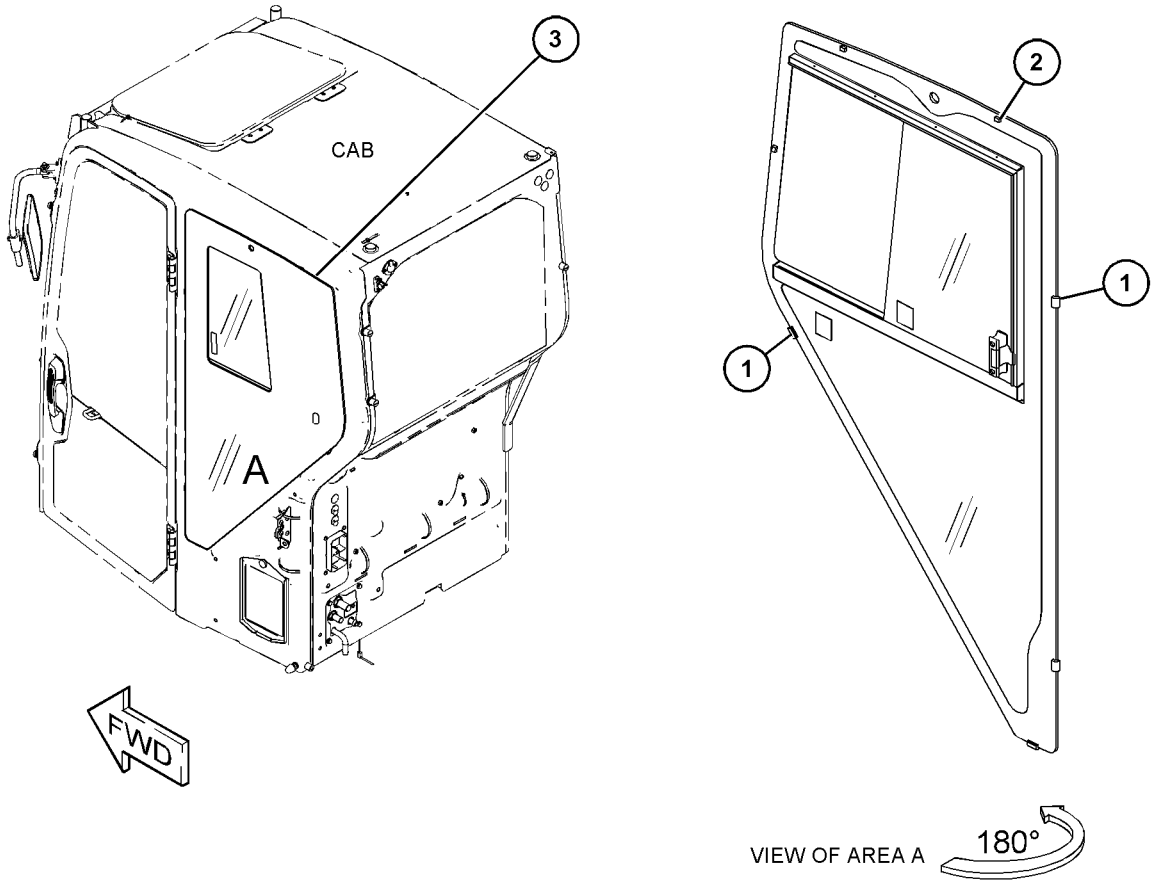

GRAPHIC #1 <END> g06332058

549-9082 WINDOW GP-DOOR

PART OF 541-4591 CAB GP

AN ATTACHMENT

SMCS-7308, 7310 **i07545088**

NOTE	REF NO	GRAPHIC REF	PART NUMBER	QTY	PART NAME 1 2 3 4 5 6 (PRODUCT LEVEL)	SEE PAGE
	1	1	**178-5572**	2	SPACER-SPECIAL (WINDOW)	
	2	1	**178-5574**	5	SPACER	
	3	1	**496-1133**	1	GLASS-DOOR	

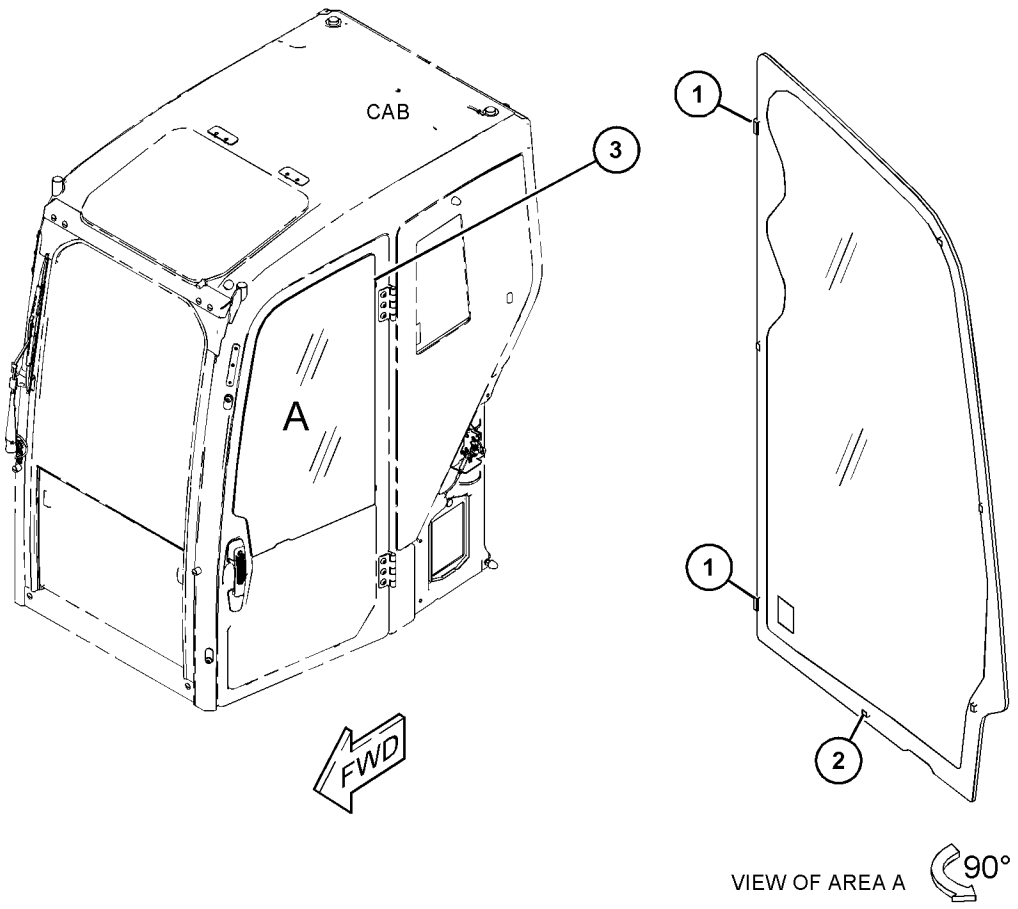

GRAPHIC #1 <END> g06332057

510-6083 WIPER GP-WINDOW

PART OF 541-4591 CAB GP

AN ATTACHMENT

SMCS-7305 **i07545008**

NOTE	REF NO	GRAPHIC REF	PART NUMBER	QTY	PART NAME 1 2 3 4 5 6 (PRODUCT LEVEL)	SEE PAGE
M	1	1	**191-8920**	2	BOLT-SOCKET HEAD (M6X1X12-MM)	
M	2	1	**3E-8020**	2	SCREW-TRUSS HEAD (M6X1X25-MM)	
	3	1	**500-9023**	1	PLATE	
	4	1	**518-7719**	1	BLADE AS-WIPER	
	5	1	**518-7720**	1	LINKAGE AS	
	6	1	**518-7721**	1	ARM AS-WIPER	
	7	1	**518-7722**	1	RAMP	
	8	1	**518-9398**	1	CONTROLLER AS	
	9	1	**8T-5400**	1	CONNECTOR	
	10	1	**9L-6074**	1	GROMMET	
M	11	1	**9X-1046**	2	SCREW (M4X0.7X18-MM)	
M	12	1	**9X-2042**	4	SCREW-TRUSS HEAD (M6X1X12-MM)	
M	13	1	**9X-2045**	2	SCREW-TRUSS HEAD (M6X1X20-MM)	
E	14	1	**144-0195**		HOSE (64-CM)	

E - ORDER BY THE CENTIMETER
M - METRIC PART

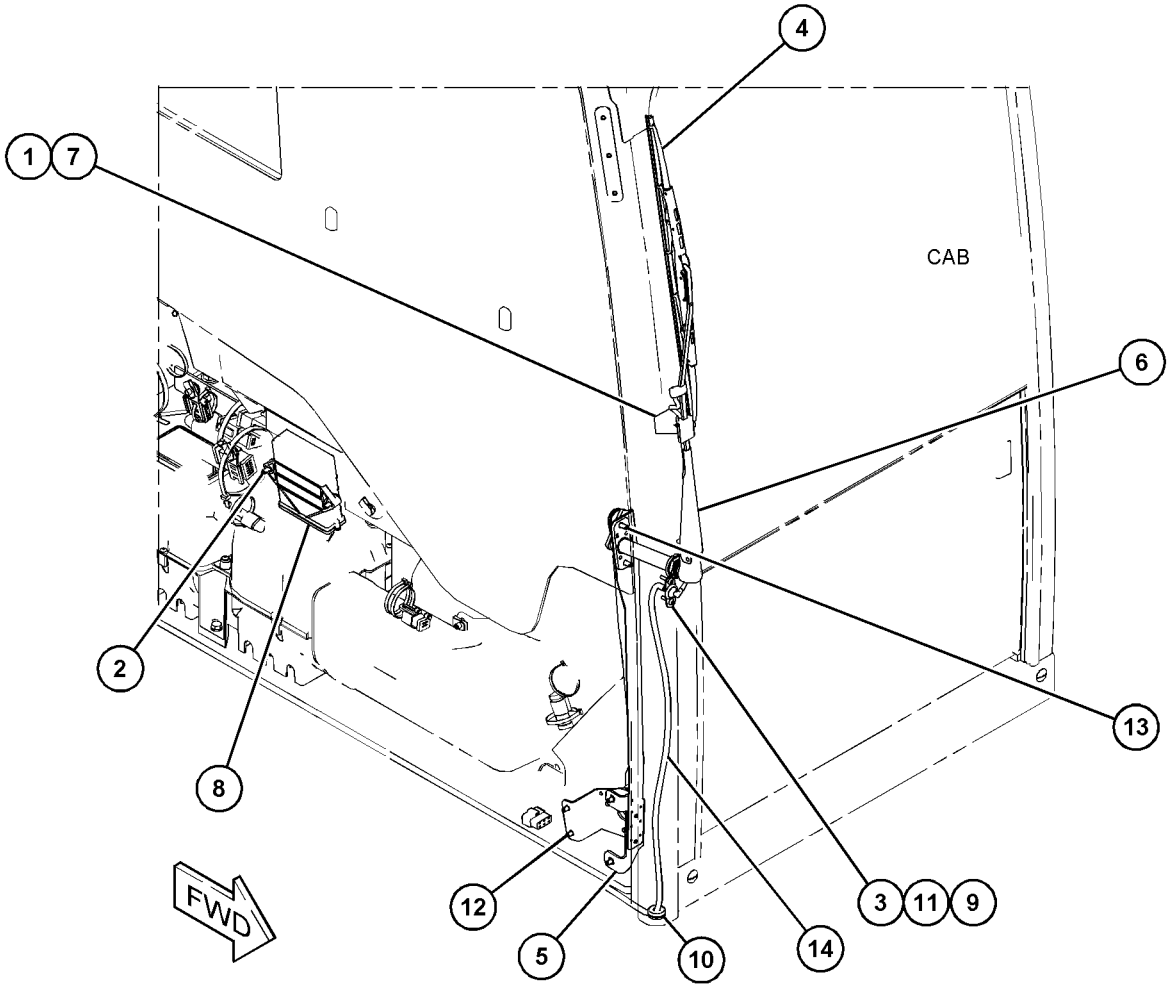

GRAPHIC #1 <END> g06332060

538-1363 FILM GP—CAB FRONT

PART OF 525-9062 GUARD AR-FRONT WINDOW, 567-4592 KIT-GUARD AN ATTACHMENT

SMCS-7557 **i07546583**

NOTE	REF NO	GRAPHIC REF	PART NUMBER	QTY	PART NAME 1 2 3 4 5 6 (PRODUCT LEVEL)	SEE PAGE
	1	1	**219-0302**	1	FILM-WARNING (NO WELD, NO DRILL, READ OMM)	
	2	1	**542-1282**	1	FILM-IDENTIFICATION (FRONT GUARD)	

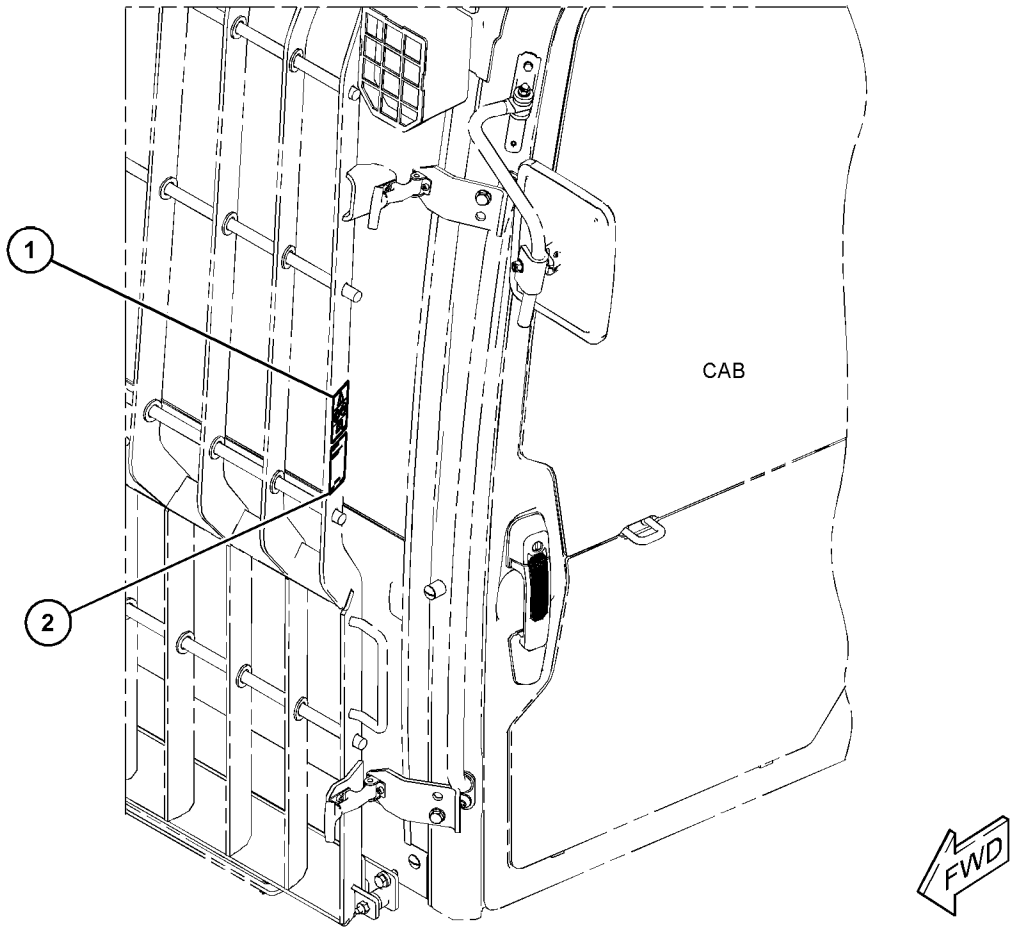

GRAPHIC #1 <END> g06347628

538-1374 FILM GP–CAB

TOP GUARD

PART OF 525-9065 GUARD AR-OVERHEAD, 567-4594 KIT-GUARD

AN ATTACHMENT

SMCS-7557 **i07546600**

NOTE	REF NO	GRAPHIC REF	PART NUMBER	QTY	PART NAME 1 2 3 4 5 6 (PRODUCT LEVEL)	SEE PAGE
	1	1	**219-0305**	1	FILM-WARNING (NO WELD, NO DRILL, READ OMM)	
	2	1	**542-1283**	1	FILM-IDENTIFICATION (TOP GUARD)	

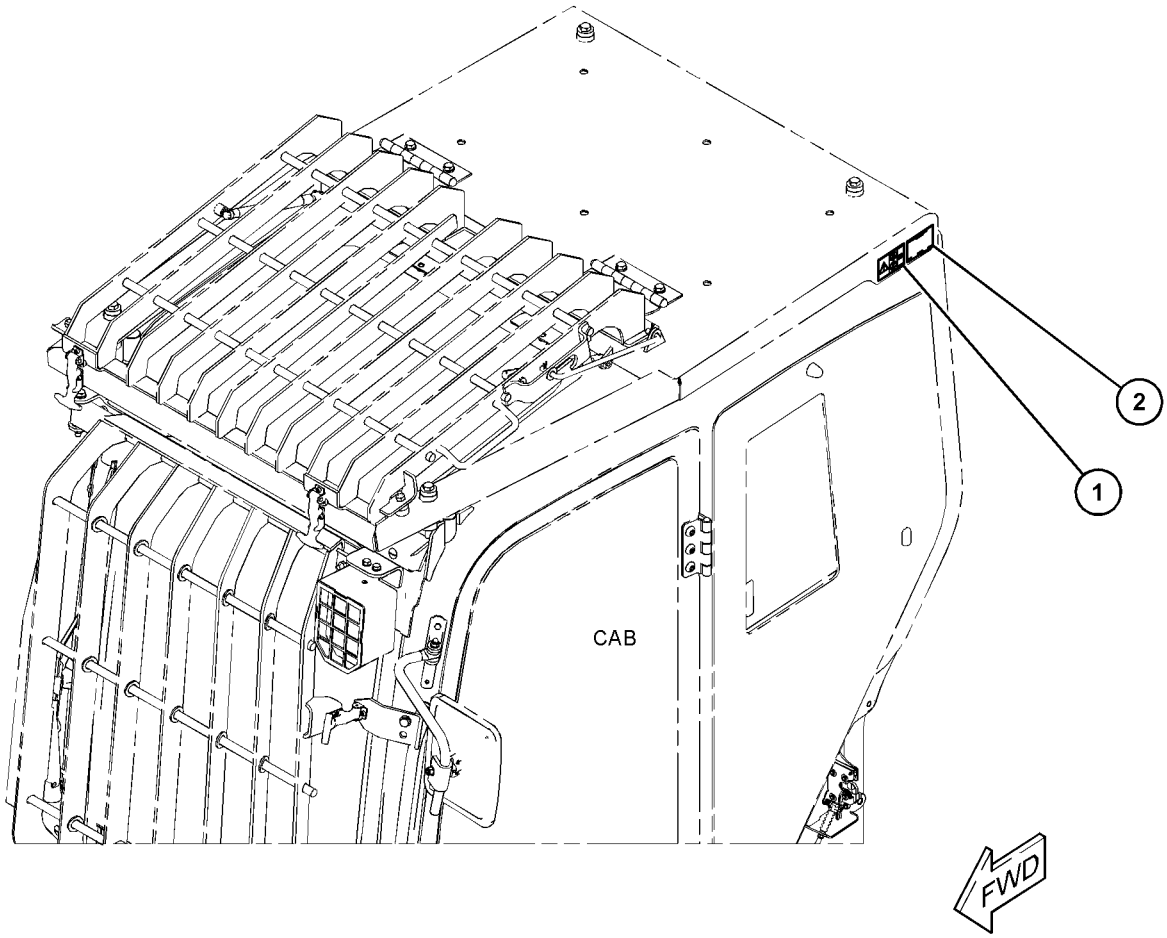

GRAPHIC #1 <END> g06347621

538-1396 FILM GP—CAB FRONT

PART OF 525-9068 GUARD AR-FRONT WINDOW, 567-4593 KIT-GUARD AN ATTACHMENT

SMCS-7557 **i07546614**

NOTE	REF NO	GRAPHIC REF	PART NUMBER	QTY	PART NAME 1 2 3 4 5 6 (PRODUCT LEVEL)	SEE PAGE
	1	1	**389-9183**	1	FILM-WARNING (NO WELD, NO DRILL, READ OMM)	
	2	1	**542-1284**	1	FILM-IDENTIFICATION (FRONT GUARD)	

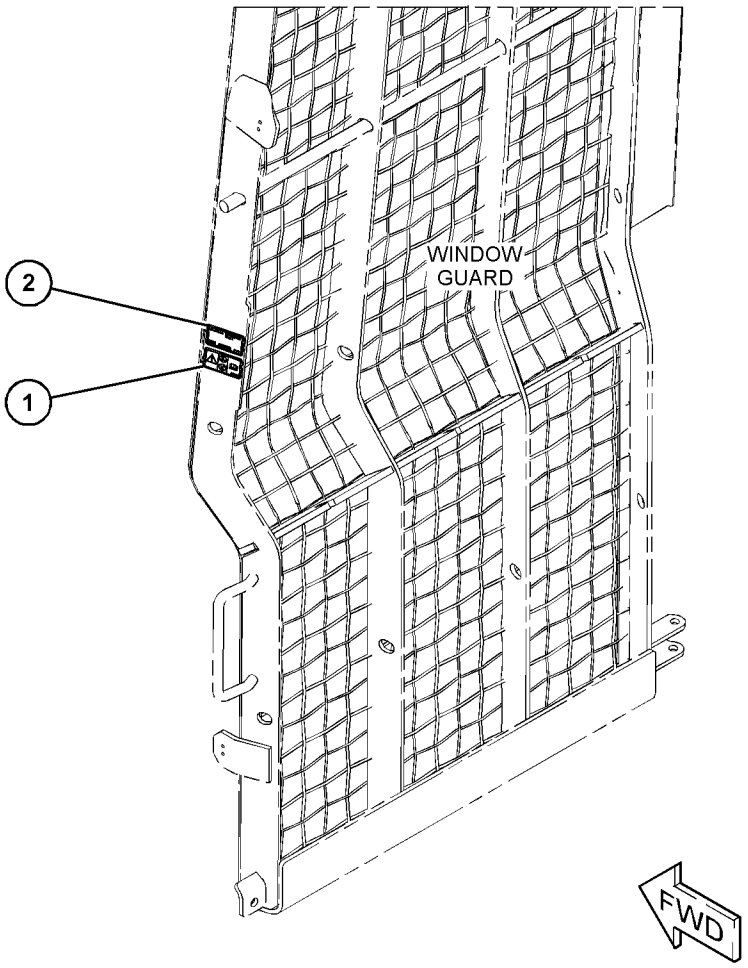

GRAPHIC #1 <END> g06347351

547-6495 FILM GP

PART OF 523-3986, 553-9615 FILM GP-INTERNATIONAL

AN ATTACHMENT

SMCS-7557 **i07546563**

NOTE	REF NO	GRAPHIC REF	PART NUMBER	QTY	PART NAME 1 2 3 4 5 6 (PRODUCT LEVEL)	SEE PAGE
	1	1	**219-0305**	1	FILM-WARNING (NO WELD, NO DRILL, READ OMM)	
	2	2	**225-0312**	1	FILM-WARNING (JUMP START, READ OMM, INTL)	
	3	1	**228-7316**	1	FILM-WARNING (HOT SURFACE, HANDS CLEAR, INTL)	
	4	2	**235-1368**	1	FILM-WARNING (RADIATOR)	
	5	1	**257-7461**	2	FILM-WARNING (MACHINE SWING, CRUSHING, INTL)	
	6	2	**273-0471**	1	FILM-WARNING (HIGH PRESSURE, READ MANUAL)	
	7	2	**298-4282**	2	FILM-WARNING (CRUSH HAZARD, STAY BACK, INTL)	
	8	2	**349-8604**	1	FILM-INFORMATION (LOW SULFUR DIESEL FUEL)	
	9	1	**389-8773**	1	FILM-WARNING (CUTTING HAZARD HAND, STAY BACK)	
	10	2	**393-1683**	1	FILM-WARNING (HIGH PRESSURE FUEL LINES)	
	11	2	**224-8946**	1	FILM-WARNING (NO ETHER SPRAY/AIR INTK, INTL)	
	12	2	**547-6492**	1	FILM-WARNING (CRUSH/ELECTROCUTION/FALLING OBJECT HAZARD, READ OMM)	

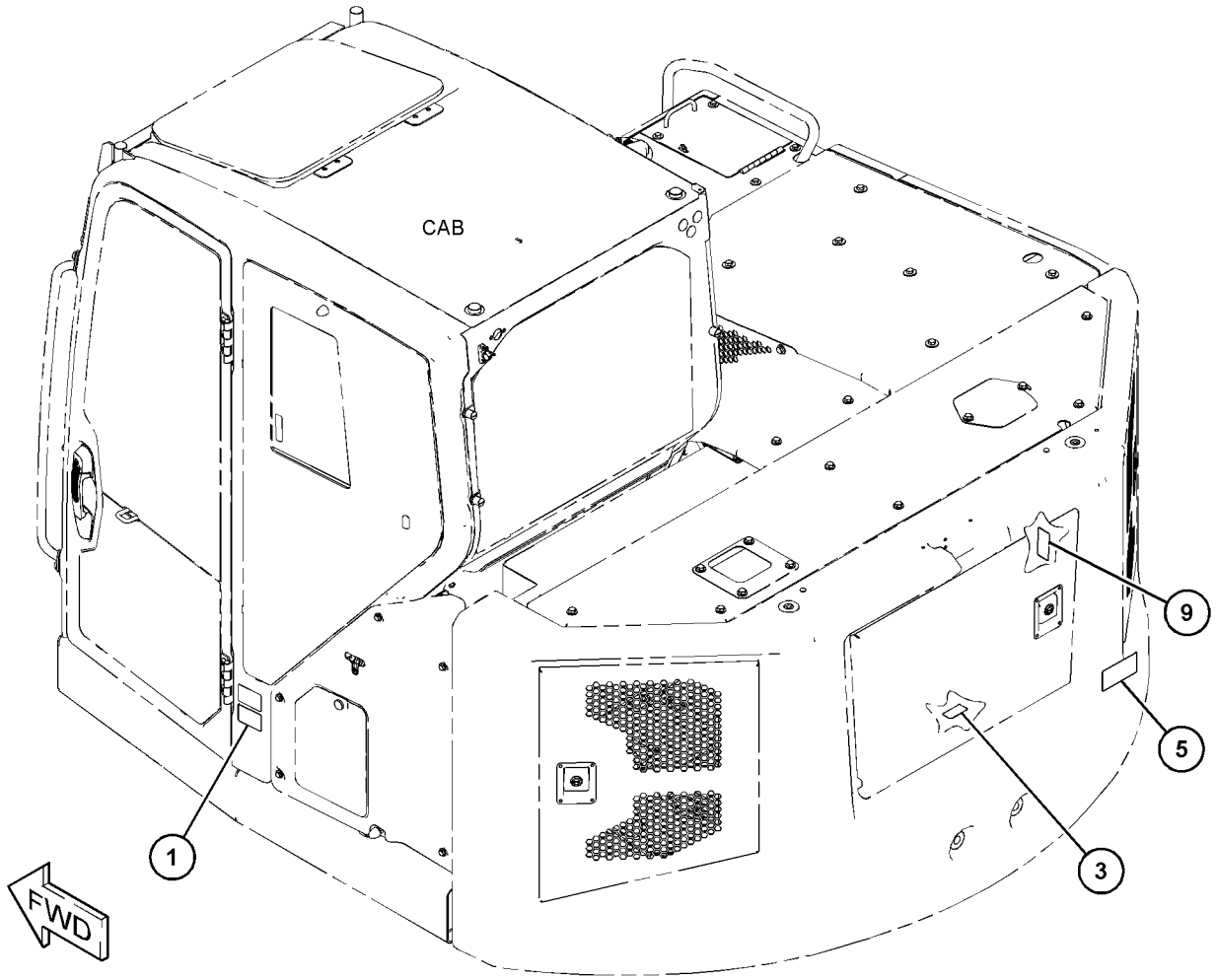

GRAPHIC #1 g06342354

547-6495 **FILM GP (**contd.**)** **i07546563**

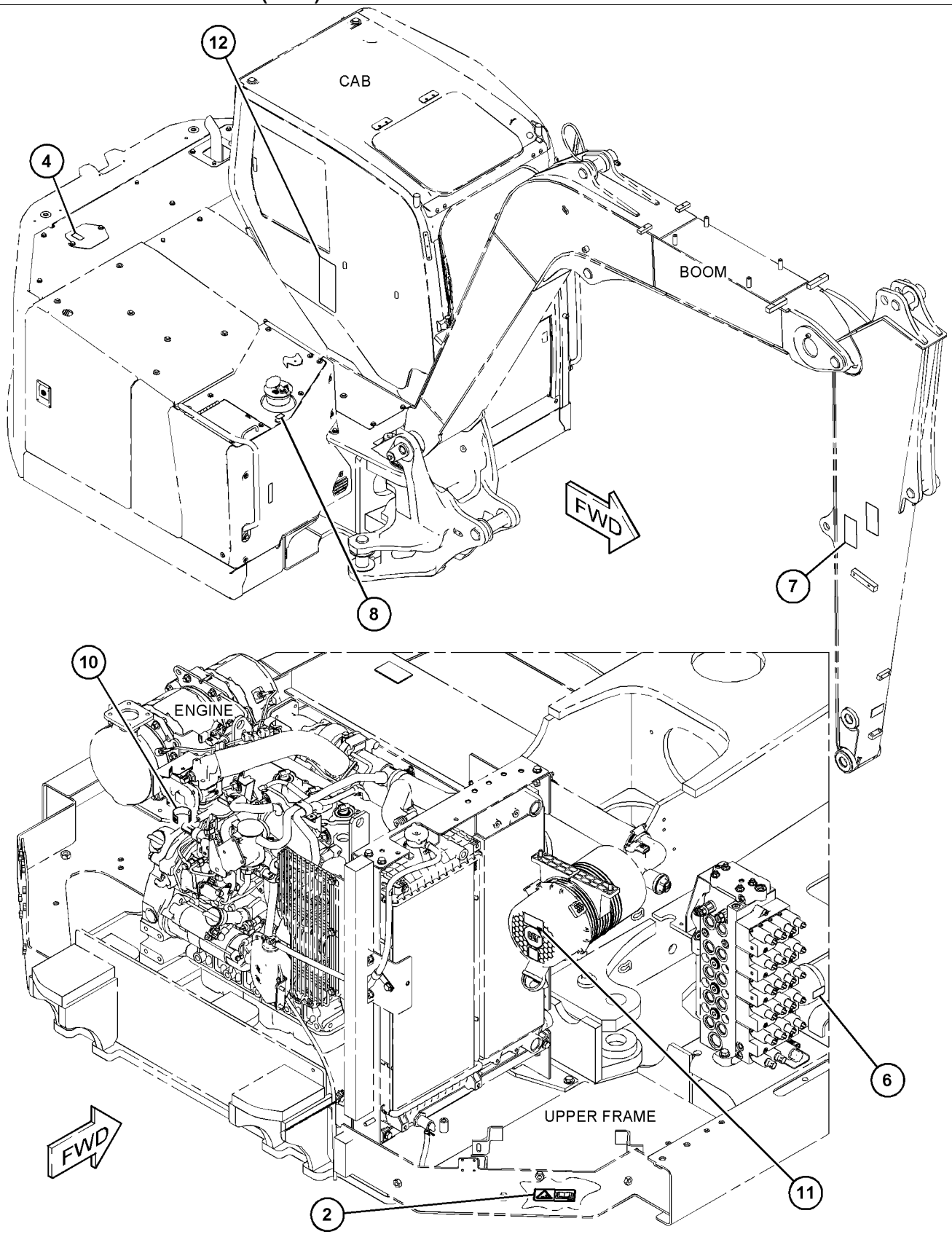

GRAPHIC #2 <END> g06342352

547-6497 FILM GP

PART OF 523-3993, 553-9616 FILM GP-U.S.
AN ATTACHMENT

SMCS-7557 **i07542523**

NOTE	REF NO	GRAPHIC REF	PART NUMBER	QTY	PART NAME 1 2 3 4 5 6 (PRODUCT LEVEL)	SEE PAGE
	1	1	**284-8898**	1	FILM-WARNING (HIGH PRESSURE, READ MANUAL)	
	2	1	**219-0305**	1	FILM-WARNING (NO WELD, NO DRILL, READ OMM)	
	3	1	**224-8945**	1	FILM-WARNING (DO NOT USE ETHER, U.S.)	
	4	1	**225-0313**	1	FILM-WARNING (JUMP START, READ OMM, U.S.)	
	5	1	**228-7315**	1	FILM-WARNING (HOT SURFACE, HANDS CLEAR)	
	6	1	**235-1365**	1	FILM-WARNING (HOT FLUID UNDER PRESSURE)	
	7	1	**257-7460**	2	FILM-WARNING (MACHINE SWING, CRUSHING, U.S.)	
	8	1	**313-2048**	2	FILM-WARNING (CRUSH HAZARD, STAY BACK, U.S.)	
	9	1	**349-8603**	1	FILM-INSTRUCTION (FUEL, READ OMM)	
	10	1	**389-8774**	1	FILM-WARNING (CUTTING HAZARD HAND, STAY BACK)	
	11	1	**466-7415**	1	FILM-WARNING (HIGH PRESSURE FUEL LINES)	
	12	1	**547-6496**	1	FILM-WARNING (CRUSH/ELECTROCUTION/FALLING OBJECT HAZARD, READ OMM)	

547-6497 **FILM GP (**contd.**)** **i07542523**

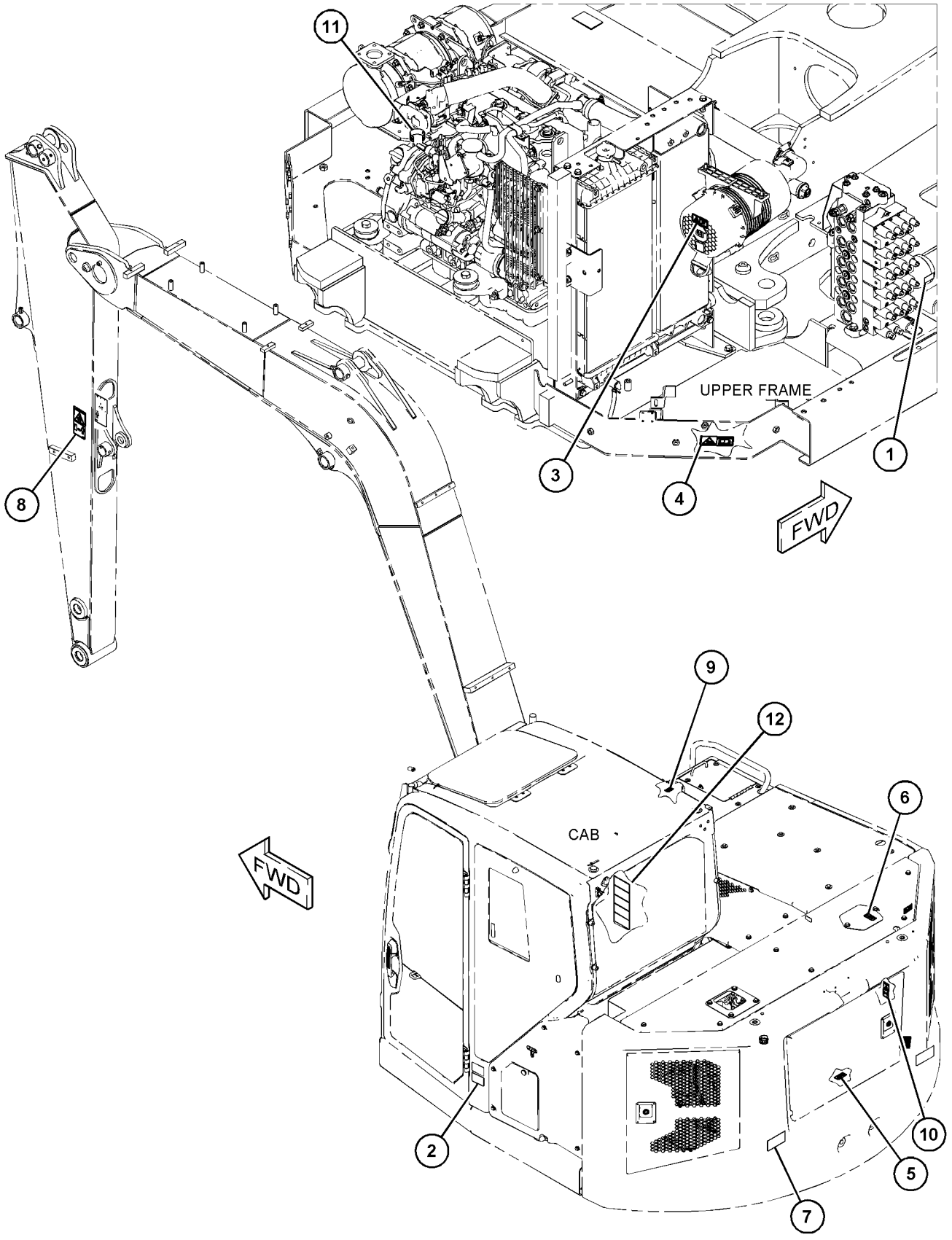

GRAPHIC #1 <END> g06341647

547-7236 FILM GP

PART OF 523-3986 FILM GP-INTERNATIONAL, 523-3993 FILM GP-U.S.
AN ATTACHMENT

SMCS-7557 **i07542524**

NOTE	REF NO	GRAPHIC REF	PART NUMBER	QTY	PART NAME 1 2 3 4 5 6 (PRODUCT LEVEL)	SEE PAGE
	1	1	**532-9903**	1	FILM-INFORMATION (LIFTING CAPACITIES, READ OMM)	
	2	1	**532-9905**	1	FILM-IDENTIFICATION (SHIPPING, LIFTING, TIE-DOWN)	
	3	1	**533-4387**	1	FILM-IDENTIFICATION (CAT, RH)	
	4	1	**533-4388**	1	FILM-IDENTIFICATION (CAT, LH)	
	5	1	**567-0705**	1	FILM-IDENTIFICATION (LUBRICATION POINTS)	

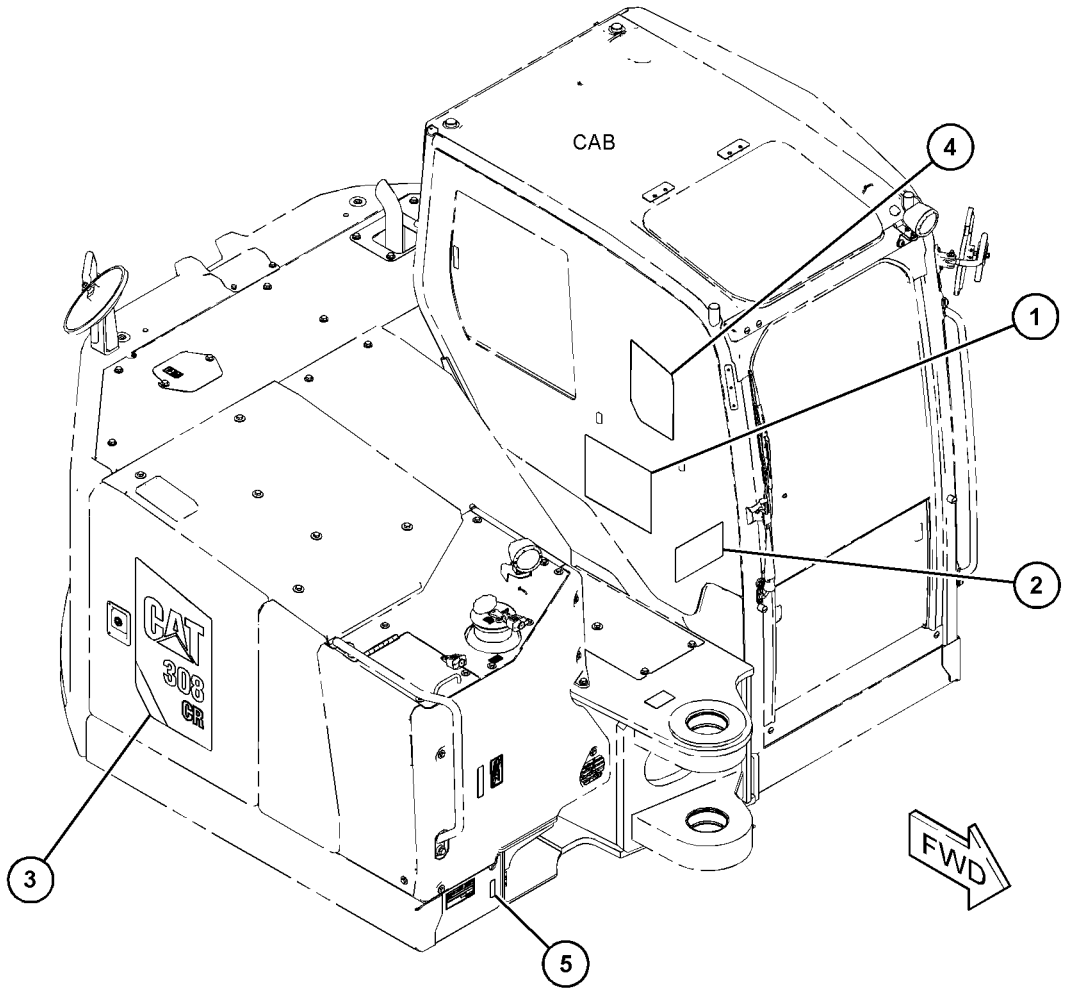

GRAPHIC #1 <END> g06347314

551-4077 FILM GP

PART OF 514-3230, 514-3235, 517-8129 HYDRAULIC AR
AN ATTACHMENT

SMCS-7557 **i07546187**

NOTE	REF NO	GRAPHIC REF	PART NUMBER	QTY	PART NAME 1 2 3 4 5 6 (PRODUCT LEVEL)	SEE PAGE
	1	1	**377-9729**	1	FILM-INSTRUCTION (AUX BALL VALVE)	

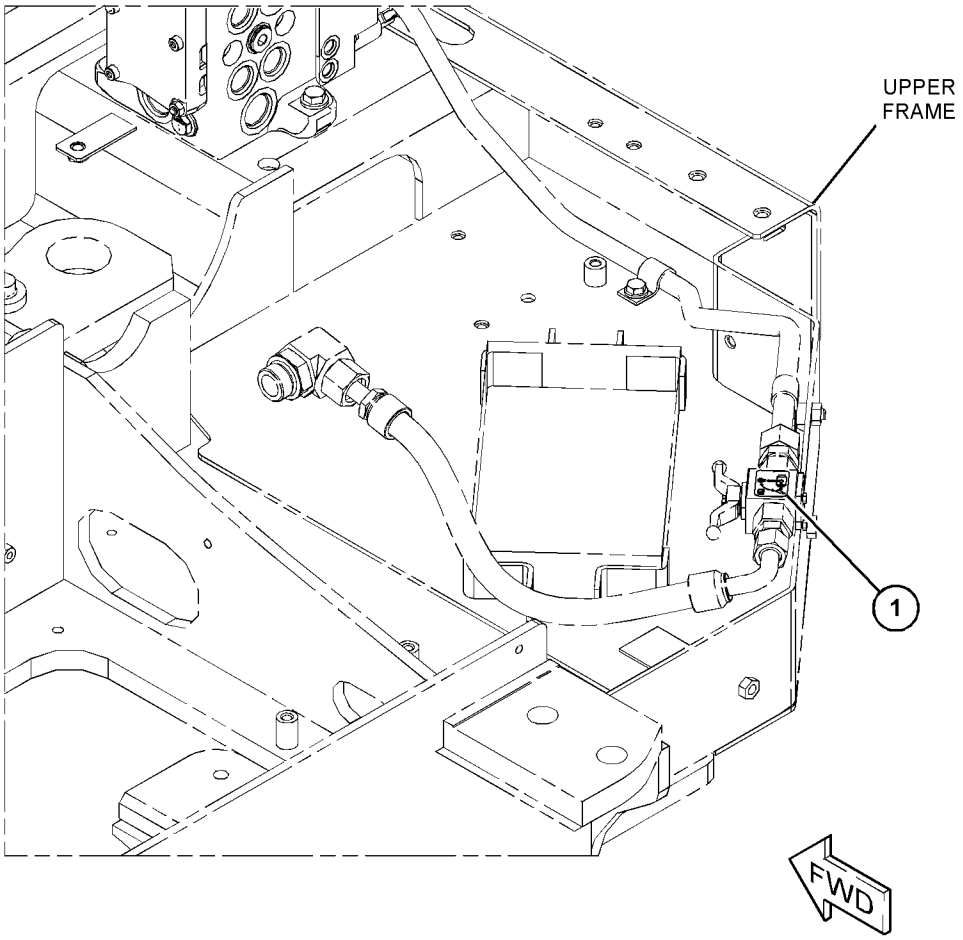

GRAPHIC #1 <END> g06344198

551-4078 FILM GP

PART OF 514-3240, 520-0774 HYDRAULIC AR
AN ATTACHMENT

SMCS-7557 **i07546295**

NOTE	REF NO	GRAPHIC REF	PART NUMBER	QTY	PART NAME 1 2 3 4 5 6 (PRODUCT LEVEL)	SEE PAGE
	1	1	**551-3885**	2	FILM-IDENTIFICATION (HIGH FLOW)	
	2	1	**551-4076**	1	FILM-IDENTIFICATION (READ SERVICE MANUAL, AUXILIARY FLOW VALVE)	
	3	1	**567-0698**	1	FILM-INSTRUCTION (AUX BALL VALVE)	

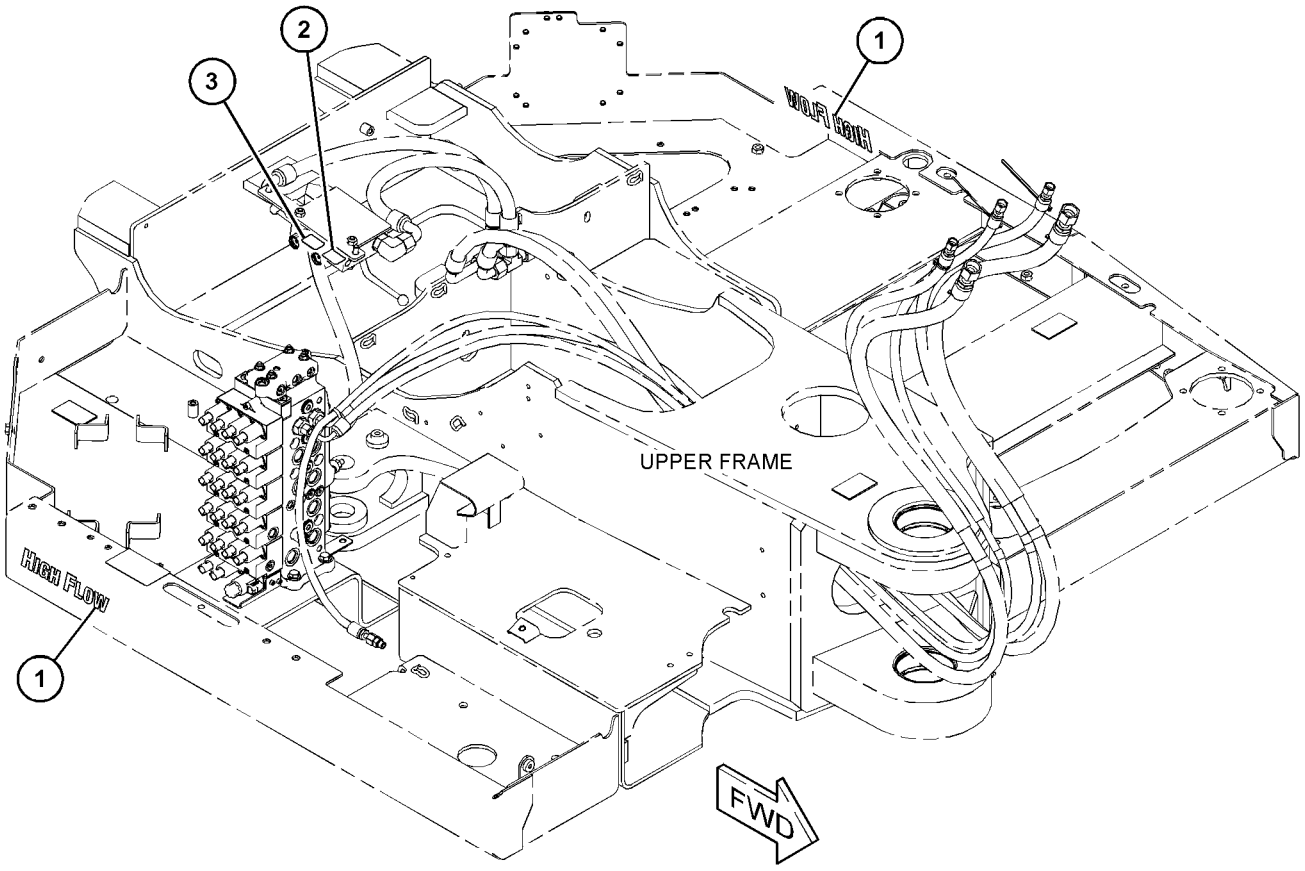

GRAPHIC #1 <END> g06350595

552-5980 FILM GP

CANNOT BE USED WITH 552-5979—PAGE: 454

AN ATTACHMENT

SMCS-7557 **i07548420**

NOTE	REF NO	GRAPHIC REF	PART NUMBER	QTY	PART NAME 1 2 3 4 5 6 (PRODUCT LEVEL)	SEE PAGE
	1	1	**172-1241**	1	FILM-IDENTIFICATION (LIFT EYE, TIE-DOWN LOCATION)	
					PARTS SHOWN IN GRAPHIC(S) WITHOUT A REFERENCE NUMBER ARE NOT SERVICED SEPARATELY	

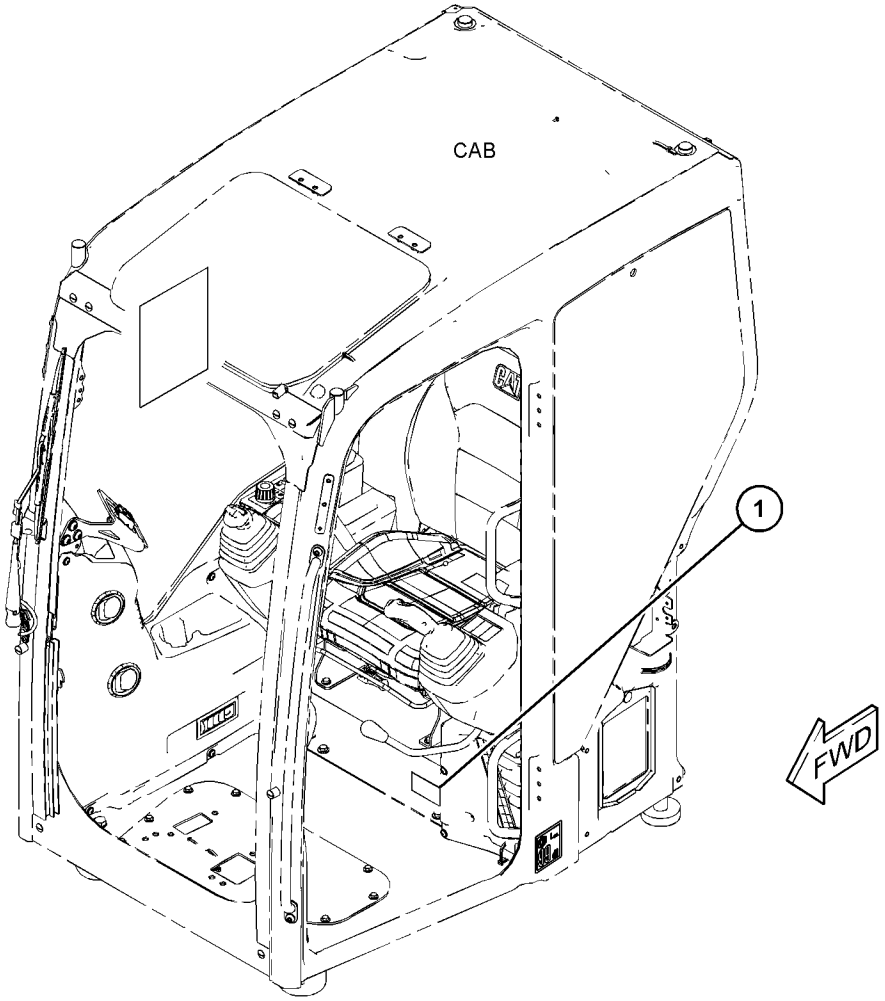

GRAPHIC #1 <END> g06344001

552-5984 FILM GP

CANADA

PART OF 562-4906, 562-9155, 562-9156 DISTRIBUTION AR

AN ATTACHMENT

SMCS-7557 **i07542516**

NOTE	REF NO	GRAPHIC REF	PART NUMBER	QTY	PART NAME 1 2 3 4 5 6 (PRODUCT LEVEL)	SEE PAGE
	1	1	**504-1365**	1	FILM-IDENTIFICATION (CANADIAN STANDARDS ASSOCIATION)	

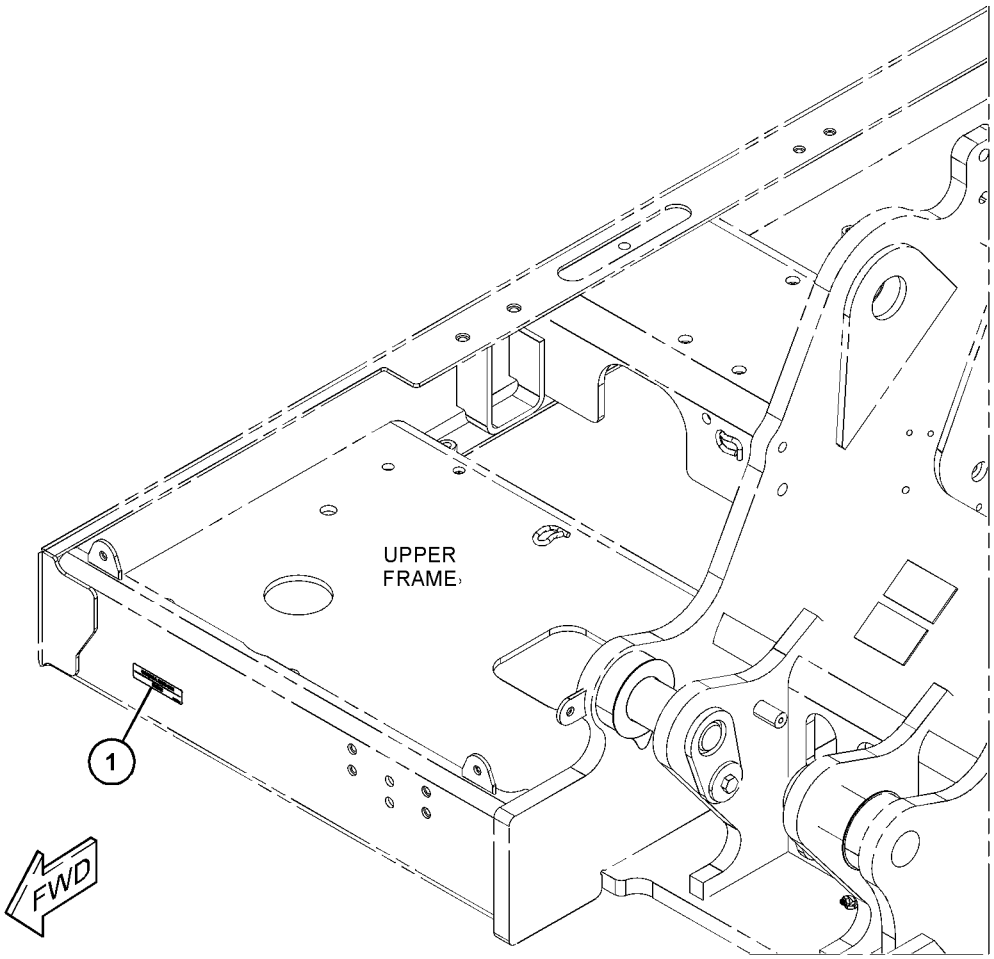

GRAPHIC #1 <END> g06347219

553-0132 FILM GP

CANNOT BE USED WITH 553-0133—PAGE: 437

AN ATTACHMENT

SMCS-7557 **i07548423**

NOTE	REF NO	GRAPHIC REF	PART NUMBER	QTY	PART NAME 1 2 3 4 5 6 (PRODUCT LEVEL)	SEE PAGE
	1	1	**547-9119**	1	FILM-INSTRUCTION (AIR CONDITIONER)	

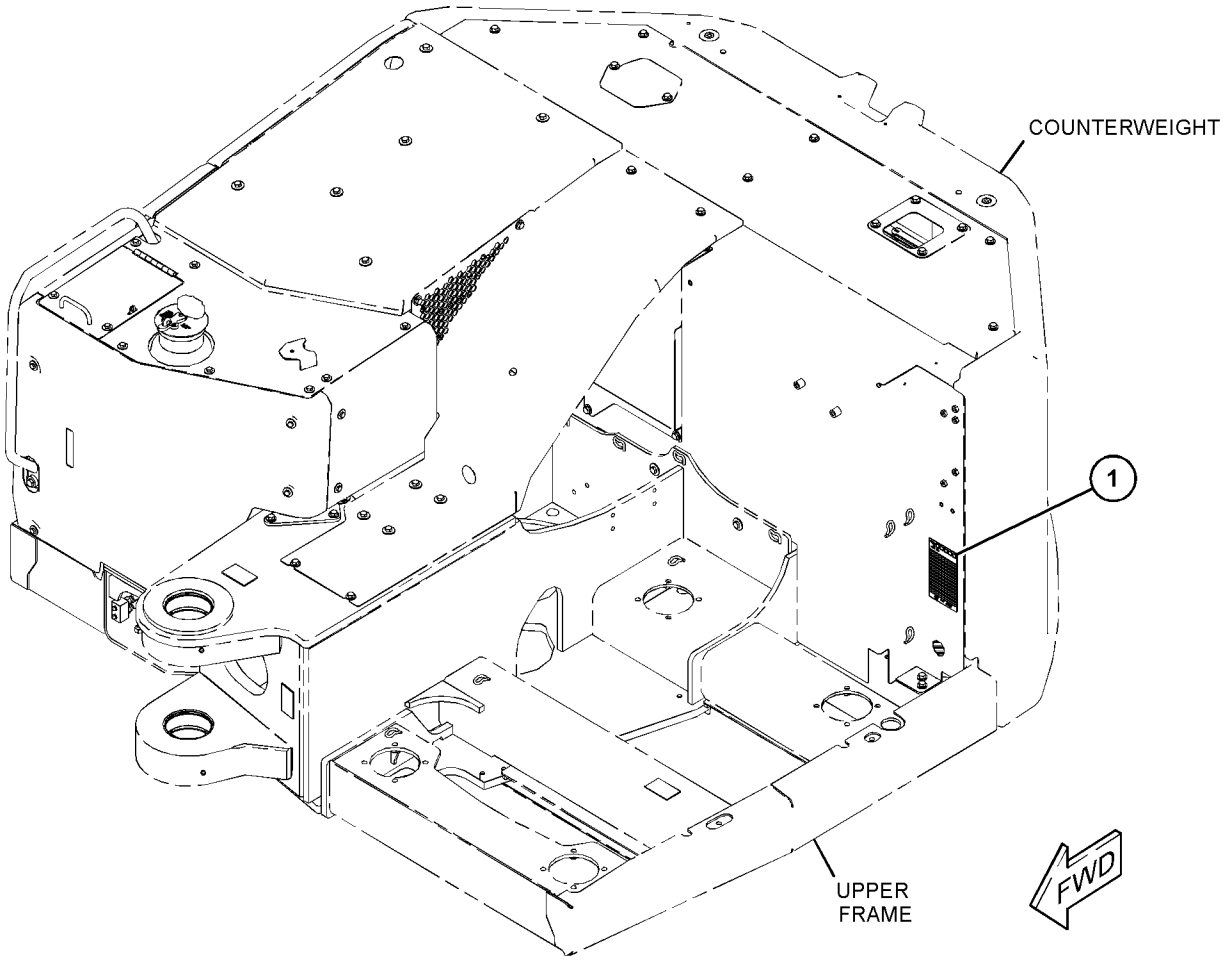

GRAPHIC #1 <END> g06348241

553-0133 FILM GP

CANNOT BE USED WITH 553-0132—PAGE: 436

AN ATTACHMENT

SMCS-7557 **i07548430**

NOTE	REF NO	GRAPHIC REF	PART NUMBER	QTY	PART NAME 1 2 3 4 5 6 (PRODUCT LEVEL)	SEE PAGE
	1	1	**547-9119**	1	FILM-INSTRUCTION (AIR CONDITIONER)	

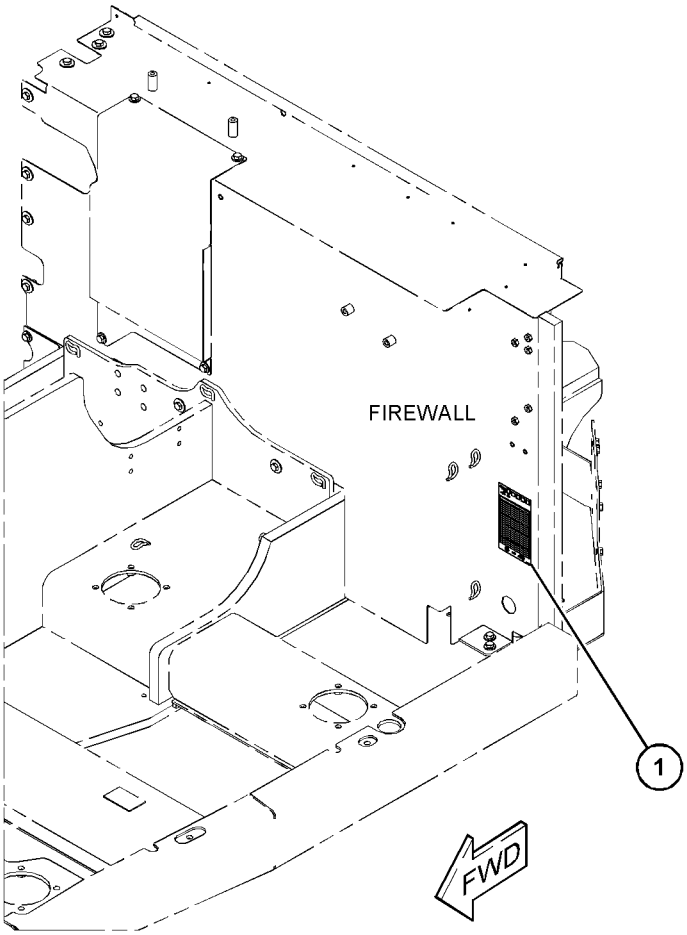

GRAPHIC #1 <END> g06347160

553-9612 FILM GP

PART OF 553-9615 FILM GP-INTERNATIONAL, 553-9616 FILM GP-U.S.
AN ATTACHMENT

SMCS-7557 **i07548433**

NOTE	REF NO	GRAPHIC REF	PART NUMBER	QTY	PART NAME 1 2 3 4 5 6 (PRODUCT LEVEL)	SEE PAGE
	1	1	**532-9905**	1	FILM-IDENTIFICATION (SHIPPING, LIFTING, TIE-DOWN)	
	2	1	**533-4387**	1	FILM-IDENTIFICATION (CAT, RH)	
	3	1	**533-4388**	1	FILM-IDENTIFICATION (CAT, LH)	
	4	1	**553-9611**	1	FILM-INFORMATION (LIFTING CAPACITY)	
	5	1	**567-0705**	1	FILM-IDENTIFICATION (LUBRICATION POINTS)	

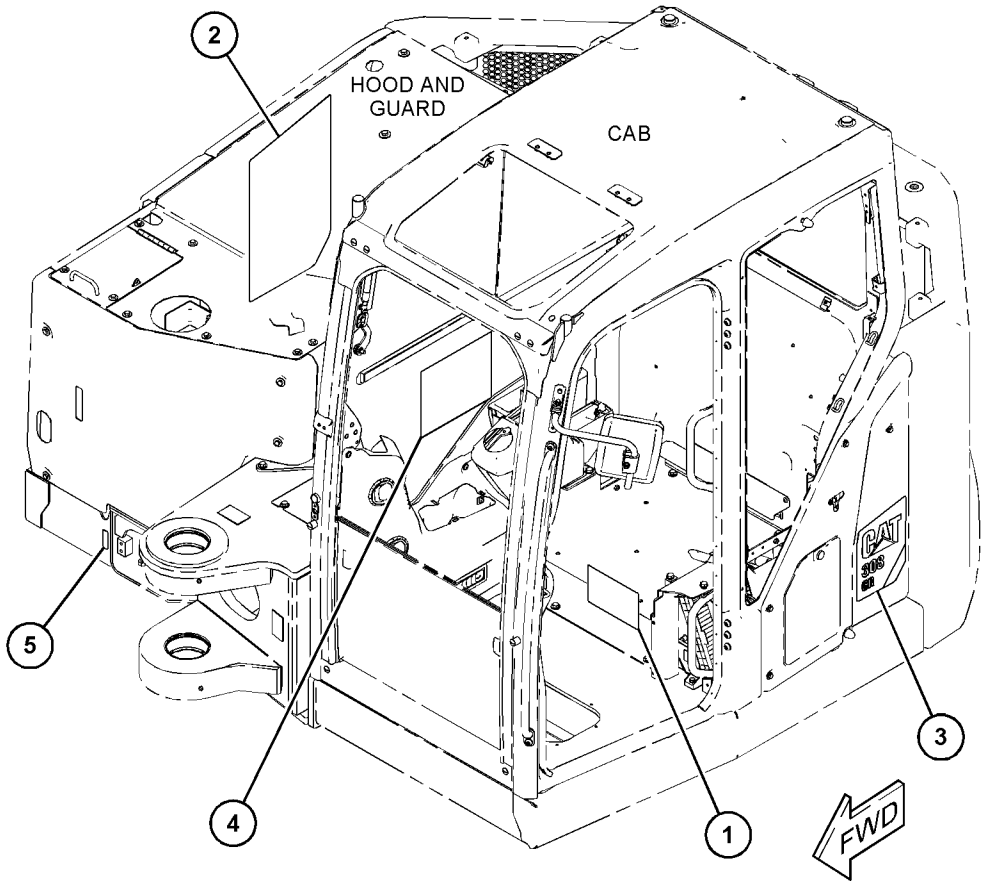

GRAPHIC #1 <END> g06348605

562-7442 FILM GP

PART OF 510-6070, 541-4580 OPERATOR AR
AN ATTACHMENT

SMCS-7557 **i07545092**

NOTE	REF NO	GRAPHIC REF	PART NUMBER	QTY	PART NAME 1 2 3 4 5 6 (PRODUCT LEVEL)	SEE PAGE
	1	1	**187-9185**	1	FILM-INFORMATION (ALTERNATE EXIT)	
	2	1	**532-9900**	1	FILM-ROPS (OPS, READ OMM)	

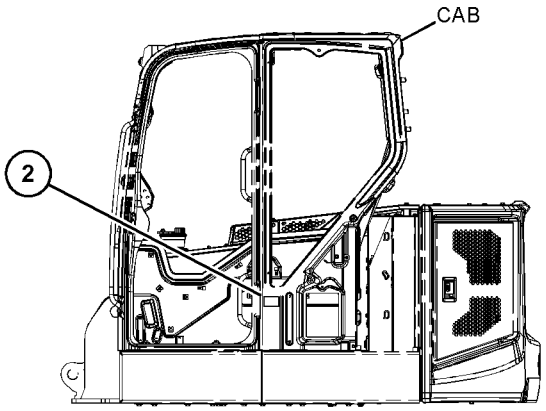

LEFT SIDE VIEW

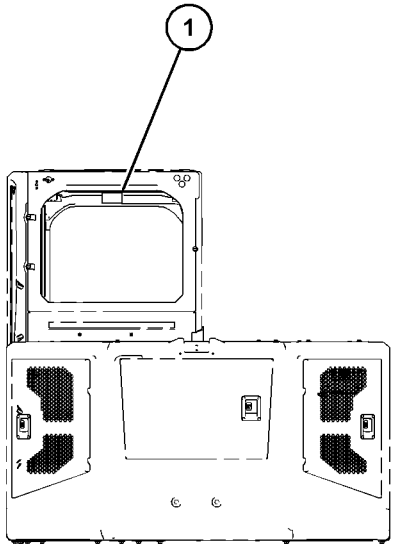

REAR VIEW

GRAPHIC #1 <END> g06332053

566-6080 FILM GP

PART OF 512-2524, 512-2526 BLADE AR-STRAIGHT

AN ATTACHMENT

SMCS-7557 **i07546234**

NOTE	REF NO	GRAPHIC REF	PART NUMBER	QTY	PART NAME 1 2 3 4 5 6 (PRODUCT LEVEL)	SEE PAGE
	1	1	**167-7270**	1	FILM-INSTRUCTION (NO STEP)	
	2	1	**7X-7644**	2	FILM-IDENTIFICATION (TIE-DOWN)	

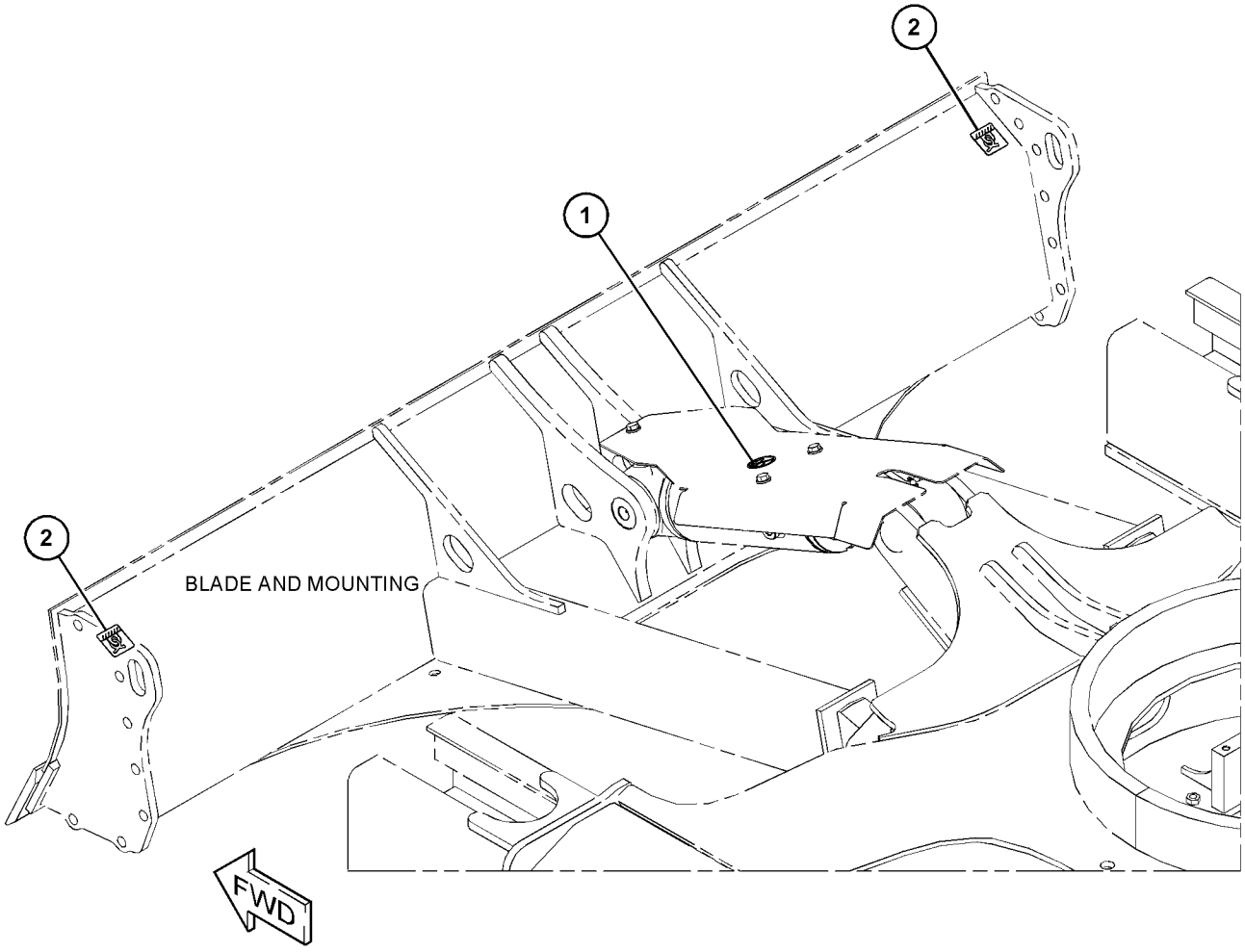

GRAPHIC #1 <END> g06343342

566-9866 FILM GP—VARIABLE ADJUSTABLE BOOM PEDAL PART OF 517-8129, 520-0774 HYDRAULIC AR AN ATTACHMENT

SMCS-7557 **i07546516**

NOTE	REF NO	GRAPHIC REF	PART NUMBER	QTY	PART NAME 1 2 3 4 5 6 (PRODUCT LEVEL)	SEE PAGE
	1	1	**487-3429**	1	FILM-IDENTIFICATION (SHEAR CONTROL, READ OMM)	

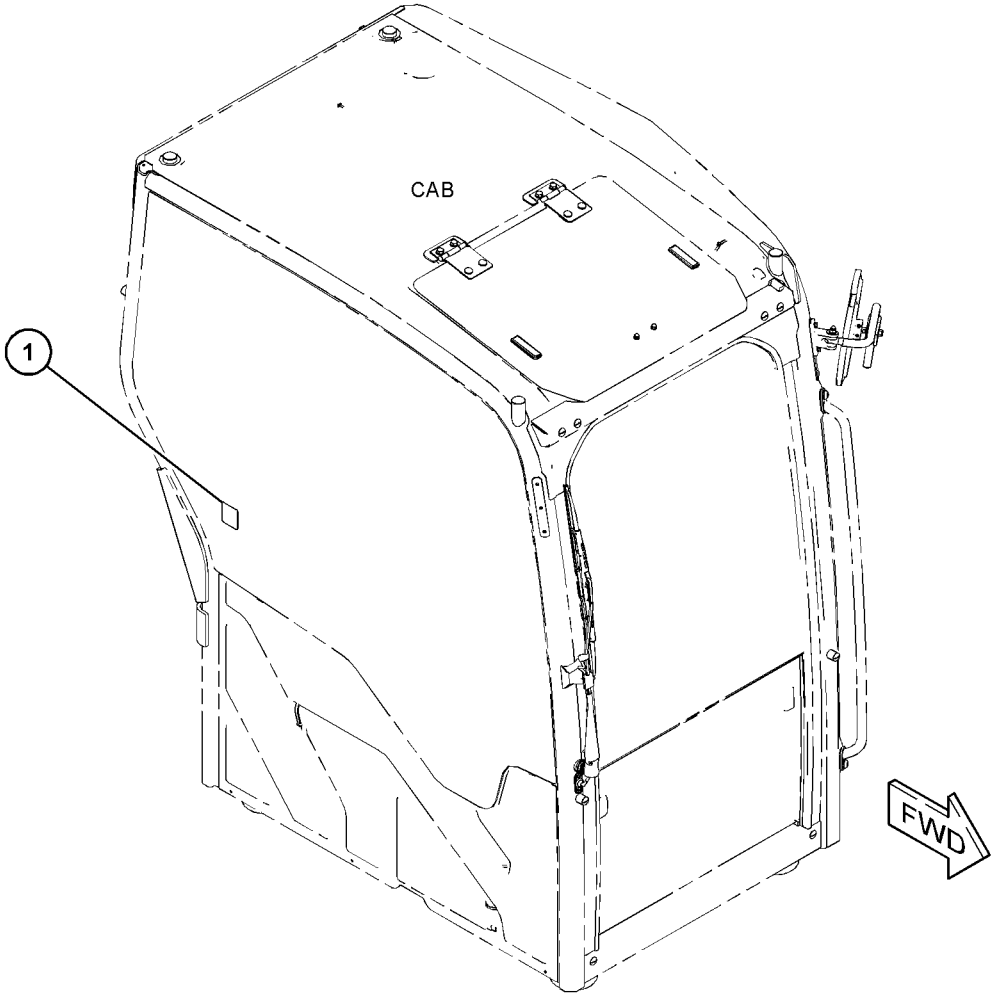

GRAPHIC #1 <END> g06341425

566-9891 FILM GP

PART OF 514-3230, 514-3235, 514-3240 HYDRAULIC AR
AN ATTACHMENT

SMCS-7557 **i07546186**

NOTE	REF NO	GRAPHIC REF	PART NUMBER	QTY	PART NAME 1 2 3 4 5 6 (PRODUCT LEVEL)	SEE PAGE
	1	1	**567-0326**	1	FILM-INSTRUCTION (OPERATOR CONTROL PEDALS)	

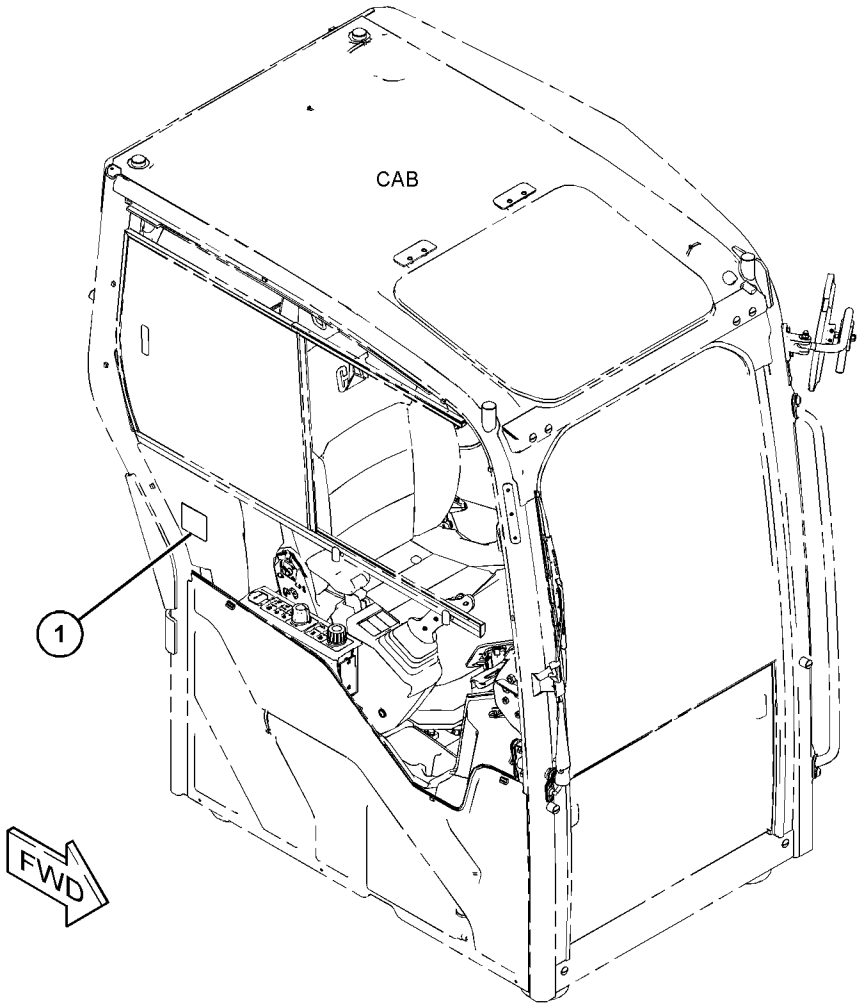

GRAPHIC #1 <END> g06345293

568-3678 FILM GP–2ND AUXILIARY

PART OF 520-0781, 520-0800, 520-0820 LINES AR-AUXILIARY HYDRAULIC AN ATTACHMENT

SMCS-7557 **i07546300**

NOTE	REF NO	GRAPHIC REF	PART NUMBER	QTY	PART NAME 1 2 3 4 5 6 (PRODUCT LEVEL)	SEE PAGE
	1	1	**568-3676**	1	FILM-IDENTIFICATION (AUXILIARY HYDRAULIC) (RH)	
	2	1	**568-3677**	1	FILM-IDENTIFICATION (AUXILIARY HYDRAULIC) (LH)	
	3	1	**568-5522**	1	FILM-IDENTIFICATION (RH)	
	4	1	**568-5523**	1	FILM-IDENTIFICATION (LH)	
	5	1	**568-5524**	1	FILM-IDENTIFICATION (RESERVOIR)	

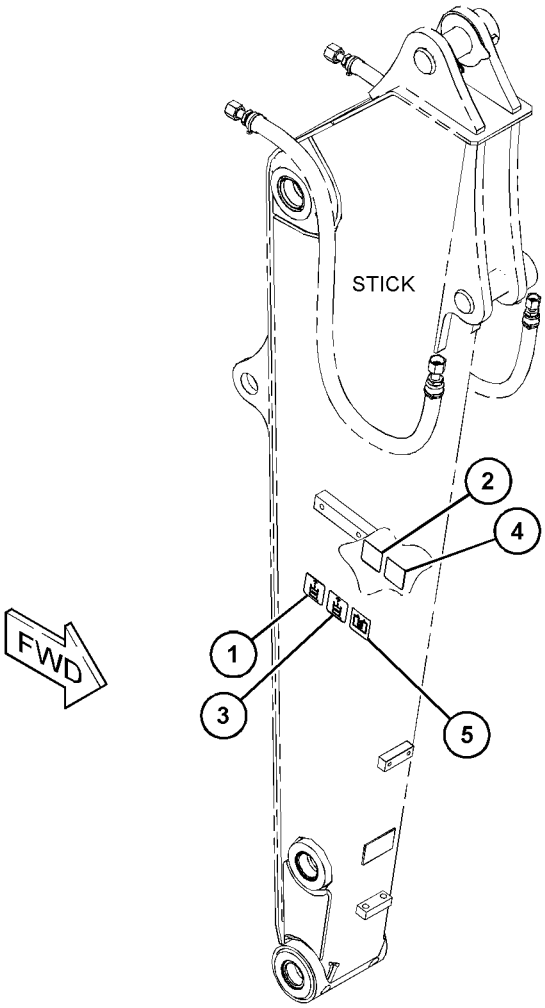

GRAPHIC #1 <END> g06347137

568-3680 FILM GP

PART OF 520-0765, 520-0769 LINES AR-AUXILIARY HYDRAULIC AN ATTACHMENT

SMCS-7557 **i07546211**

NOTE	REF NO	GRAPHIC REF	PART NUMBER	QTY	PART NAME 1 2 3 4 5 6 (PRODUCT LEVEL)	SEE PAGE
	1	1	**568-3676**	1	FILM-IDENTIFICATION (AUXILIARY HYDRAULIC) (RH)	
	2	1	**568-3677**	1	FILM-IDENTIFICATION (AUXILIARY HYDRAULIC) (LH)	

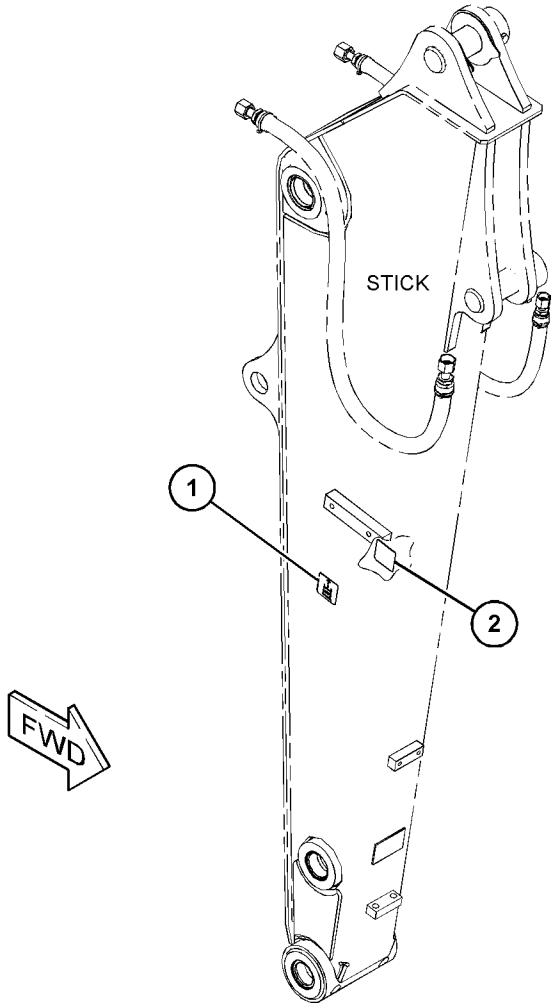

GRAPHIC #1 <END> g06347117

523-3986 FILM GP-INTERNATIONAL

AN ATTACHMENT

SMCS-7405, 7557 **i07546559**

NOTE	PART NUMBER	QTY	PART NAME 1 2 3 4 5 6 (PRODUCT LEVEL)	SEE PAGE
Y	*547-6495*	1	FILM GP	427
Y	*547-7236*	1	FILM GP	431
Y	*547-6494*	1	PLATE & FILM GP	451

Y - SEPARATE ILLUSTRATION

<END>

553-9615 FILM GP-INTERNATIONAL—2-PIECE BOOM

AN ATTACHMENT

SMCS-7405, 7557 **i07548432**

NOTE	PART NUMBER	QTY	PART NAME 1 2 3 4 5 6 (PRODUCT LEVEL)	SEE PAGE
Y	*547-6495*	1	FILM GP	427
Y	*553-9612*	1	FILM GP	438
Y	*547-6494*	1	PLATE & FILM GP	451

Y - SEPARATE ILLUSTRATION

<END>

555-8731 FILM GP-INTERNATIONAL–QUICK COUPLER

PART OF 562-4906, 562-9155, 562-9156 DISTRIBUTION AR
AN ATTACHMENT

SMCS-7405, 7557 **i07542517**

NOTE	REF NO	GRAPHIC REF	PART NUMBER	QTY	PART NAME 1 2 3 4 5 6 (PRODUCT LEVEL)	SEE PAGE
	1	1	**269-0121**	1	FILM-WARNING (CRUSH HAZARD, READ OMM, INTL)	

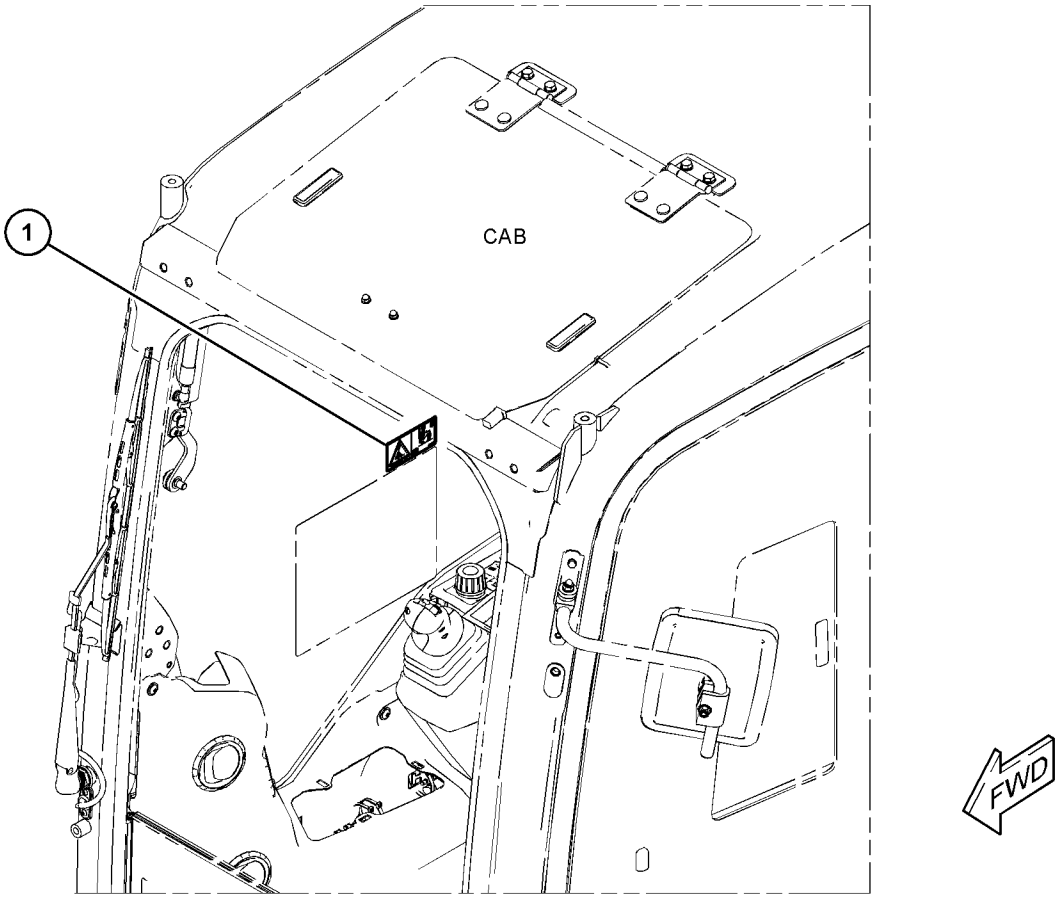

GRAPHIC #1 <END> g06347702

523-3993 FILM GP-U.S.

CANNOT BE USED WITH 523-3986—PAGE: 445
PART OF 562-4906, 562-9155, 562-9156 DISTRIBUTION AR
AN ATTACHMENT

SMCS-7405, 7557 **i07542519**

NOTE	PART NUMBER	QTY	PART NAME 1 2 3 4 5 6 (PRODUCT LEVEL)	SEE PAGE
Y	*547-6497*	1	FILM GP	429
Y	*547-7236*	1	FILM GP	431
Y	*547-6494*	1	PLATE & FILM GP	451

Y - SEPARATE ILLUSTRATION

<END>

553-9616 FILM GP-U.S.—2-PIECE BOOM

AN ATTACHMENT

SMCS-7405, 7557 **i07548435**

NOTE	PART NUMBER	QTY	PART NAME 1 2 3 4 5 6 (PRODUCT LEVEL)	SEE PAGE
Y	*547-6497*	1	FILM GP	429
Y	*553-9612*	1	FILM GP	438
Y	*547-6494*	1	PLATE & FILM GP	451

Y - SEPARATE ILLUSTRATION

<END>

555-8732 FILM GP-U.S.–QUICK COUPLER
AN ATTACHMENT

SMCS-7405, 7557 **i07548442**

NOTE	REF NO	GRAPHIC REF	PART NUMBER	QTY	PART NAME 1 2 3 4 5 6 (PRODUCT LEVEL)	SEE PAGE
	1	1	**268-8872**	1	FILM-WARNING (CRUSH HAZARD, READ OMM, U.S.)	

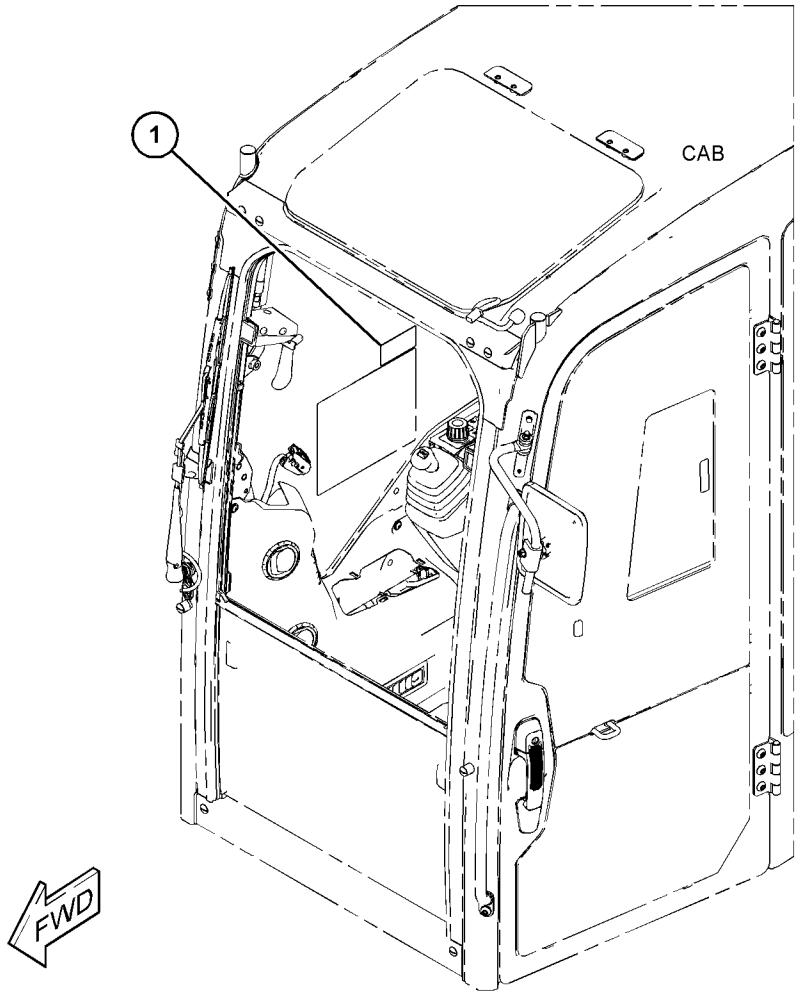

GRAPHIC #1 <END> g06347412

435-0790 KIT-SEAL–PISTON MOTOR

PART OF 548-7543 MOTOR GP-PISTON

AN ATTACHMENT

SMCS-6333 **i06156467**

NOTE	REF NO	GRAPHIC REF	PART NUMBER	QTY	PART NAME 1 2 3 4 5 6 (PRODUCT LEVEL)	SEE PAGE
	1	1	**452-3598**	1	SEAL	
	2	1	**7D-9014**	1	SEAL-O-RING	
	3	1	**095-1574**	2	SEAL-O-RING	
	4	1	**095-1722**	1	SEAL-O-RING	
	5	1	**095-1720**	1	SEAL-O-RING	
	6	1	**111-8816**	1	RING-BACKUP	
	7	1	**397-9082**	1	RING	
	8	1	**095-1575**	2	SEAL-O-RING	
	9	1	**095-1582**	2	SEAL-O-RING	
	10	1	**095-1593**	2	SEAL-O-RING	

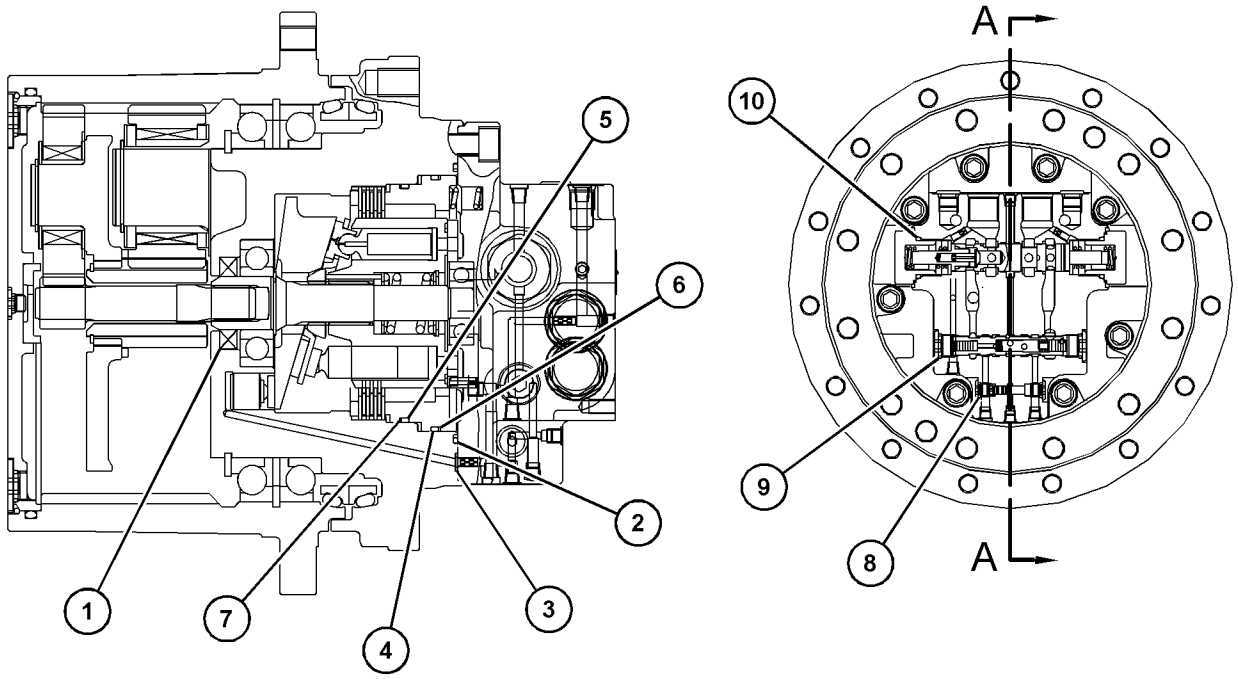

SECTION A-A

GRAPHIC #1 <END> g03831814

524-7230 PLATE & FILM GP

CALIFORNIA

AN ATTACHMENT

SMCS-7405, 7557, 7563 **i07546578**

NOTE	REF NO	GRAPHIC REF	PART NUMBER	QTY	PART NAME 1 2 3 4 5 6 (PRODUCT LEVEL)	SEE PAGE
	1	1	**555-8447**	1	TAG-WARNING (PROPOSITION 65)	

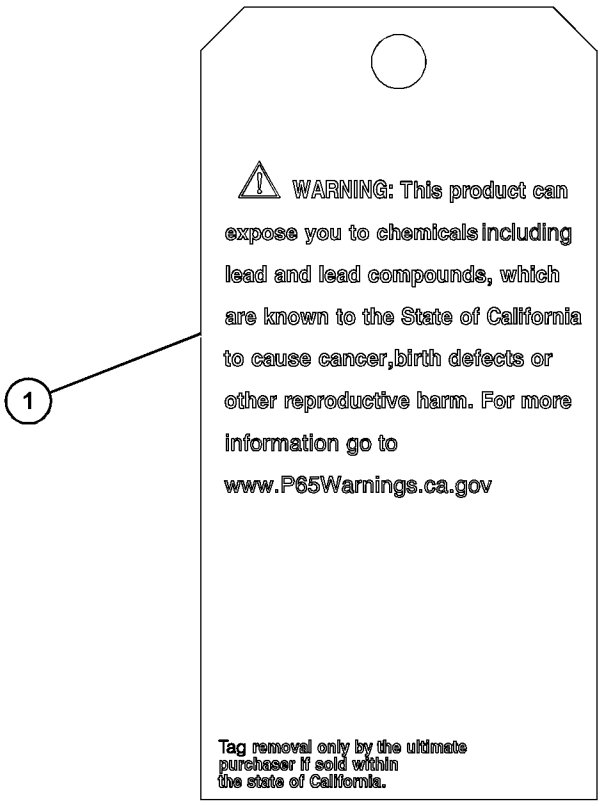

GRAPHIC #1 <END> g06344769

547-6494 PLATE & FILM GP

PART OF 523-3986, 553-9615 FILM GP-INTERNATIONAL, 523-3993, 553-9616 FILM GP-U.S.
AN ATTACHMENT

SMCS-7405, 7557, 7563

i07542521

NOTE	REF NO	GRAPHIC REF	PART NUMBER	QTY	PART NAME 1 2 3 4 5 6 (PRODUCT LEVEL)	SEE PAGE
	1	2	**1P-2807**	4	FILM-IDENTIFICATION (LIFT EYE LOCATION)	
	2	2	**246-2641**	2	PADLOCK GP	
					(EACH INCLUDES)	
		2	**5P-8500**	1	KEY	
	3	2	**7X-7644**	4	FILM-IDENTIFICATION (TIE-DOWN)	
	4	1	**126-2900**	1	FILM-INSTRUCTION (LEVER LOCK)	
	5	1	**134-7258**	1	FILM-INFORMATION (EXTENDED LIFE COOLANT)	
	6	1	**223-9818**	1	FILM-INSTRUCTION (WINDOW CLEANING, READ OMM)	
	7	2	**242-1510**	1	FILM-INSTRUCTION (HYDRAULIC OIL CHECK)	
	8	1	**279-9304**	1	FILM-IDENTIFICATION (CAT)	
	9	2	**334-4603**	1	FILM-INFORMATION (HYDO ADVANCED 10)	
	10	2	**421-2279**	1	FILM-IDENTIFICATION (BREATHER)	
	11	2	**450-9772**	1	PLATE-IDENTIFICATION (CAT)	
	12	2	**515-7905**	1	PLATE-SERIAL NUMBER (MACHINE)	
	13	2	**538-5166**	1	FILM-IDENTIFICATION (CAT, LH)	
	14	2	**538-5167**	1	FILM-IDENTIFICATION (CAT, RH)	
	15	2	**542-1454**	1	FILM-IDENTIFICATION (ENGINE OIL)	
	16	1	**553-0136**	1	FILM-IDENTIFICATION (REFLECTIVE, RED, LH)	
	17	2	**553-0137**	1	FILM-IDENTIFICATION (REFLECTIVE, RED, RH)	
	18	2	**547-6493**	1	FILM-INSTRUCTION (JOYSTICK FUNCTION/PATTERN, LUB, BLADE)	

547-6494 **PLATE & FILM GP** (contd.) **i07542521**

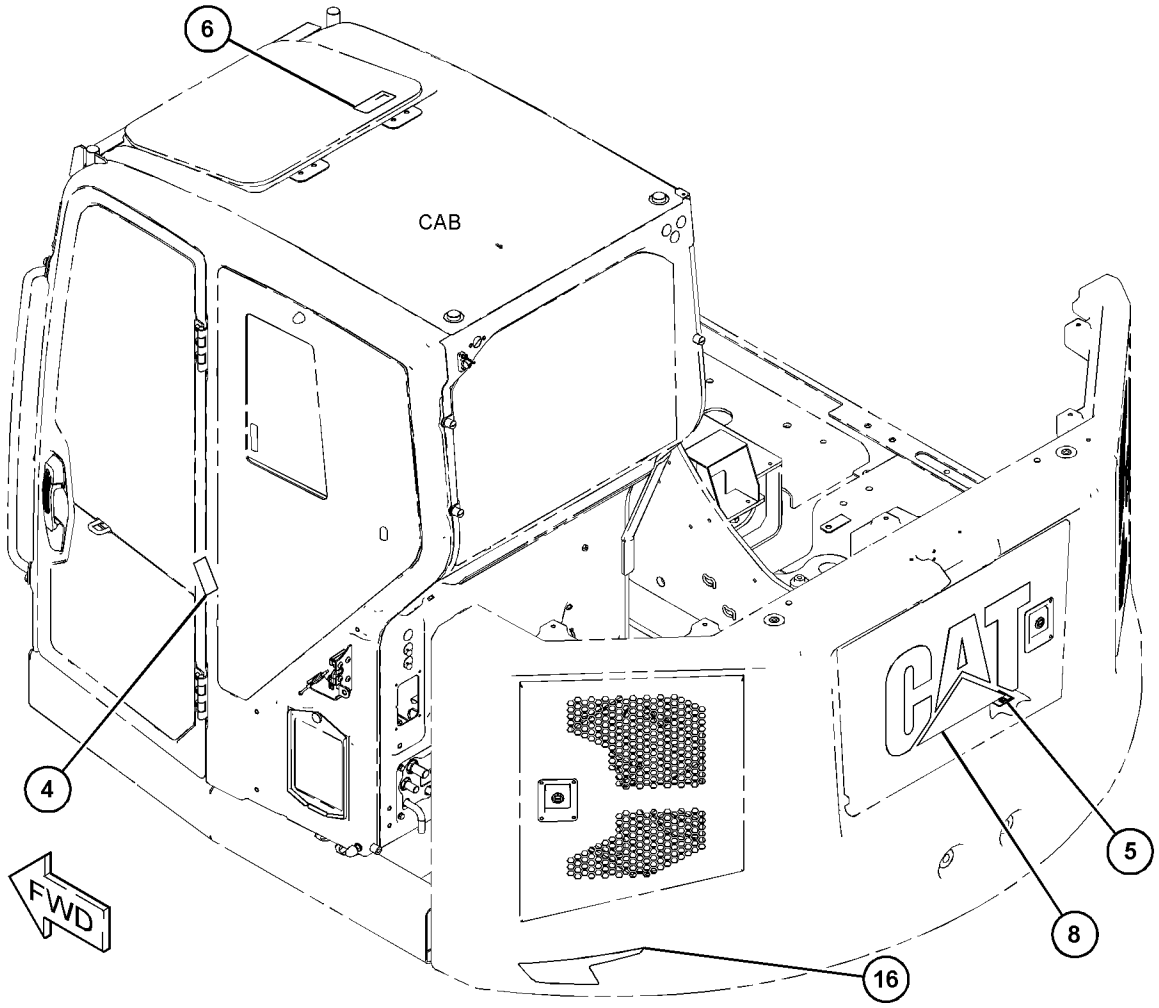

GRAPHIC #1 g06341707

547-6494 **PLATE & FILM GP (**contd.**)** **i07542521**

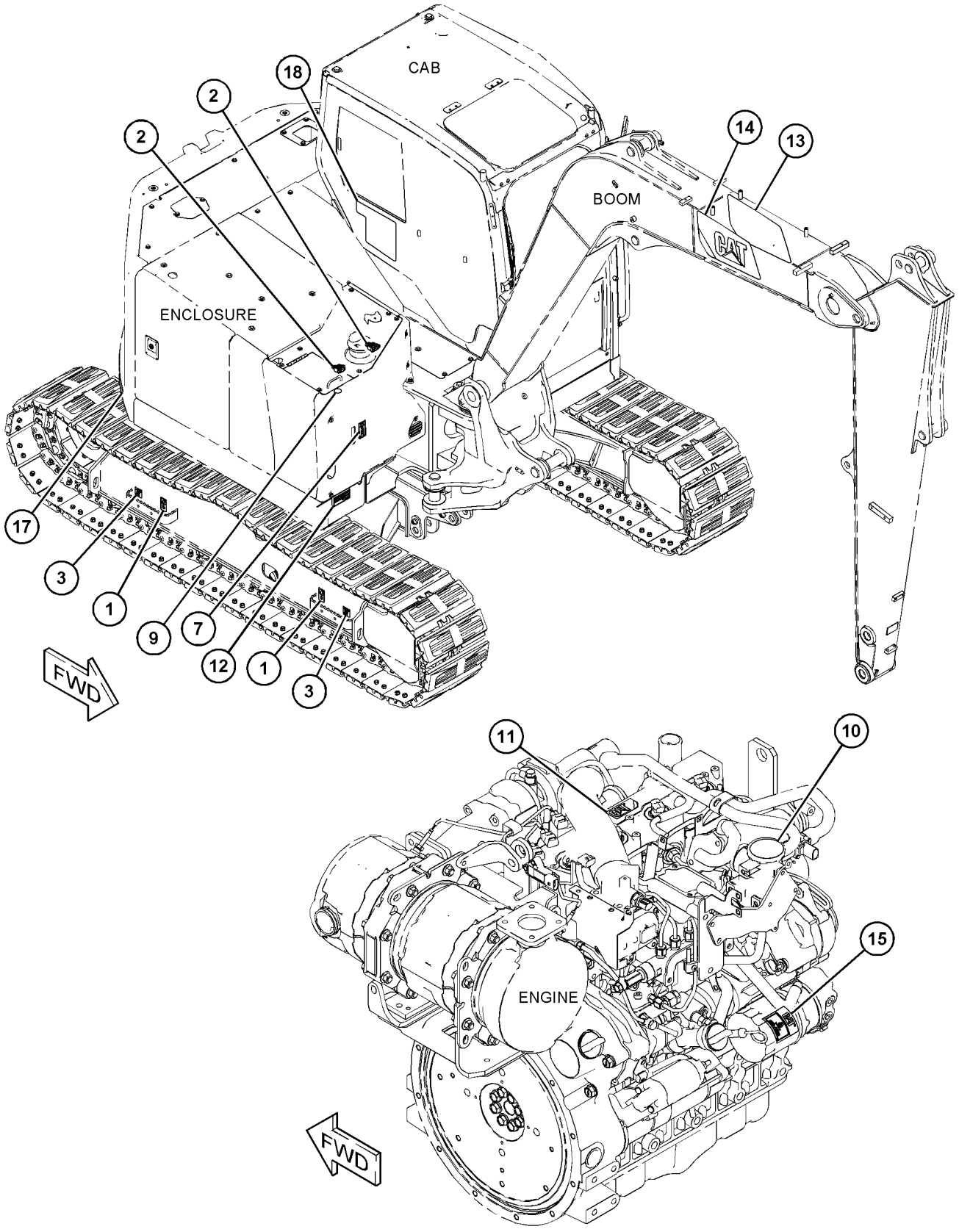

GRAPHIC #2 <END> g06341708

552-5979 PLATE GP-CERTIFICATION

CANNOT BE USED WITH 552-5980—PAGE: 434

AN ATTACHMENT

SMCS-7405, 7557 **i07548419**

NOTE	REF NO	GRAPHIC REF	PART NUMBER	QTY	PART NAME 1 2 3 4 5 6 (PRODUCT LEVEL)	SEE PAGE
	1	1	**225-4148**	1	PLATE-CERTIFICATION (MACHINE)	
	2	1	**172-1241**	1	FILM-IDENTIFICATION (LIFT EYE, TIE-DOWN LOCATION)	

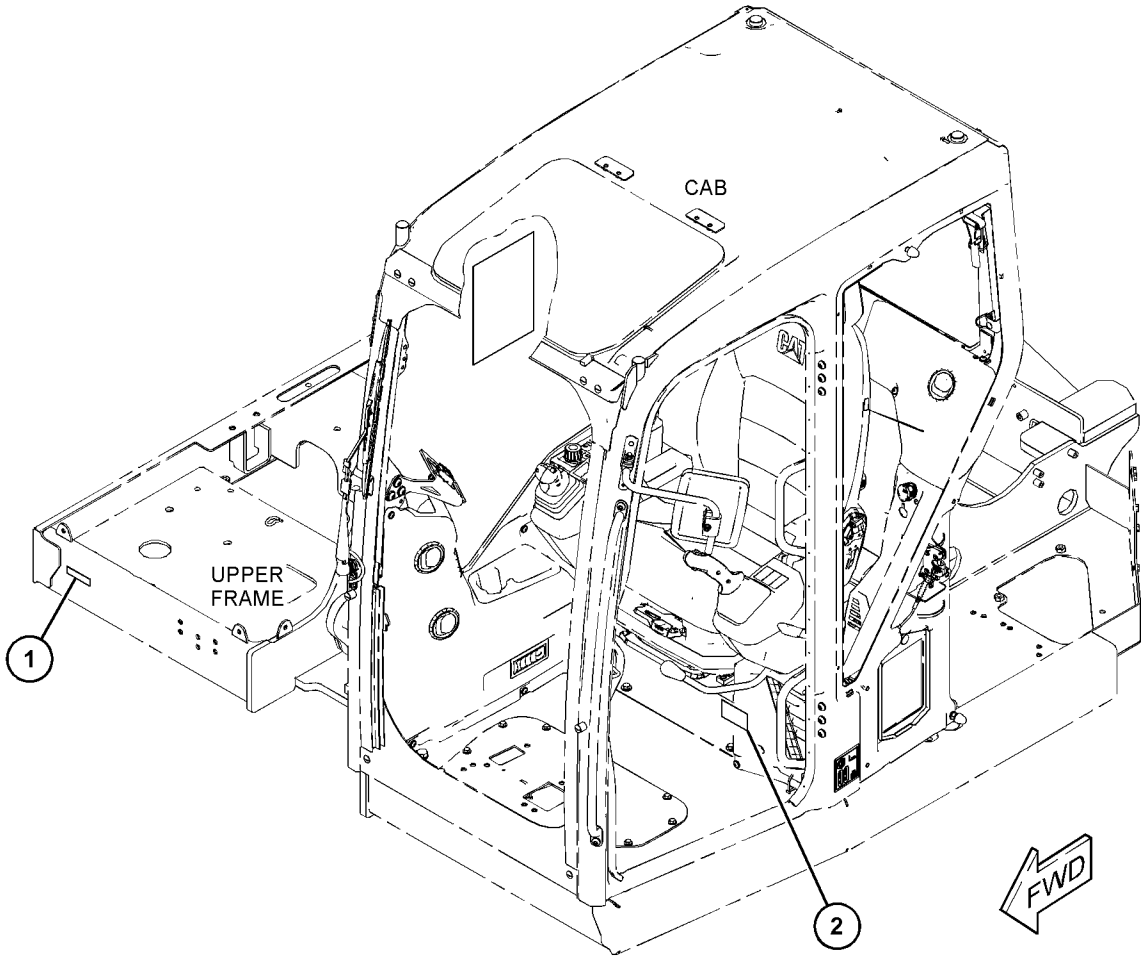

GRAPHIC #1 <END> g06348405

552-5981 PLATE GP-CERTIFICATION

AN ATTACHMENT

SMCS-7405, 7557 **i07548422**

NOTE	REF NO	GRAPHIC REF	PART NUMBER	QTY	PART NAME 1 2 3 4 5 6 (PRODUCT LEVEL)	SEE PAGE
	1	1	**479-3043**	1	PLATE-CERTIFICATION (MACHINE)	

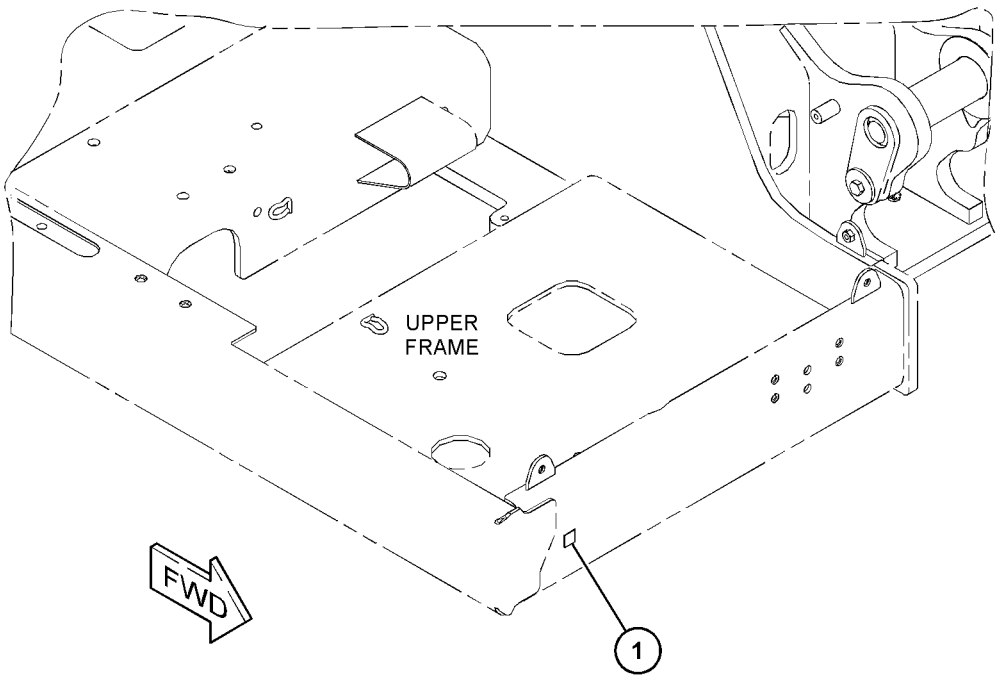

GRAPHIC #1 <END> g06348227

PART NUMBER INDEX

Part Page

0

0L-1407 291
0T-0244 402
403

1

1G-7206 21
1L-6377 67
1M-4986 81
1M-6119 35
1M-6120 35
81
1P-2807 451
1P-4278 14
21
1R-5998 373
1S-2342 34
1S-6420 191
1W-9589 389
395

2

2H-3922 70
342
2H-3923 342
2L-8049 48
2L-8050 81
2L-8051 34
2L-8057 48
2L-8058 81
2L-8069 43
46
2L-8071 48
2L-8075 79
2L-8077 46
2L-8078 48
79
2L-8079 43
2L-8081 48
2M-3432 74
2M-9780 179
183
205
222
223
235
245
2P-1279 197
198
2P-1293 179
183
2S-4078 257
259
2S-5926 122
2V-1771 34
2V-8260 34
2Y-3812 64
65
66

3

3B-4611 98
100
102
104
3B-4617 104
3B-4630 140
3B-4639 133
3B-6552 291
3B-8485 287
288
3B-8488 157
3B-8489 113
123
168
169
242
244
288
290
291
296
298
300
302
306
307
308
309
3B-8491 325
3D-2824 195
205
208
227
232
234
3D-4603 137
138
3E-3371 41
74
3E-6909 181
187
3E-8020 372
417
423
3E-8025 240
3E-8320 34
3F-5108 326
327
3F-9556 69
3G-8054 195
3G-8057 195
3H-2900 24
104
3J-1907 34
72
190
194
207
208
210
212
213
215
217
219
223
235
257
259
270
271
274
275
278
279
3J-7283 308
309
3J-7352 322
323
3J-7354 210
215
217
222
225
322
323
3K-0360 159
161
163
184
185
190
203
207
212
215
217
225
3K-0649 247
249
251
3K-0715 246
3P-1210 247
249
251
3S-2093 14
21
34
42
46
54
57
62
66
72
74
76
77
78
79
81
83
84
85
180
195
364
368
370
372
388
398
413
415
3S-8664 205
3T-0851 74
417
3T-0852 60
62
65
66
3T-3349 81

4

4B-2043 32
33
4B-4158 122
4B-4280 81
4B-4863 73
4D-2297 167
4D-6466 21
4D-7733 225
4I-0472 392
4I-3745 257
259
4I-4286 373
4I-5049 411
412
4J-0526 220
223
4J-1888 318
319
339
340
4J-5477 197
198
199
201
210
215
217
222
225
269
270
271
274
278
4K-0367 326
327
4M-5317 288
4N-9891 351
4P-7581 35
57
62
66
74
77
81
4P-7582 392
4P-8134 14
74
81
413
4T-6229 326
4V-2264 330
4V-5282 235

5

5C-7261 35
59
69
351
5C-8312 45
5C-9553 13
24
35
83
84
104
342
413
5D-1026 24
5D-4822 415
5F-7054 191
5I-3272 287
5I-4376 219
5I-6274 137
5I-9543 308
309

PART NUMBER INDEX

Part	Page
5K-9090	208
	220
	222
	223
	227
	257
	259
5M-2057	257
	259
5P-0597	20
5P-0767	392
5P-1076	104
	114
	267
5P-1475	32
	33
5P-1507	14
5P-3455	34
5P-4115	24
	81
	83
	84
5P-4116	12
	13
	14
	21
	34
	57
	60
	62
	65
	66
	77
	81
	94
	96
	98
	100
	102
	104
	190
	215
	217
	237
	257
	259
	356
	380
	383
	384
	392
	403
	408
5P-4868	20
5P-5649	108
5P-6006	79
5P-6459	398
5P-7211	108
	117
5P-7464	191
5P-7465	191
5P-7468	220
	223
5P-7469	220
	223
5P-7970	12
	257
	259
	270
	274
	278
5P-8245	134
	139
5P-8247	326
	327
5P-8444	220
	223
5P-8500	24
	451
5P-9297	199
	201
5V-0500	10

6

Part	Page
6C-9047	380
	383
	384
6D-1641	24
	392
6D-3479	191
	223
6E-3008	285
6E-6528	282
6F-7045	70
6I-5140	290
6I-6528	137
6K-0806	67
6K-8178	14
	21
6P-8855	392
6R-7943	247
6V-0826	81
6V-0852	191
	215
	217
	220
	223
6V-0974	195
6V-1249	191
6V-1889	159
	161
	163
6V-2456	367
6V-2689	46
6V-3251	222
6V-3965	191
	215
	217
	220
	223
6V-5192	167
6V-5196	270
	274
	278
6V-5210	20
6V-5258	227
6V-5657	171
6V-7357	119
	346
	411
	412
6V-7486	227
6V-7660	128
6V-7687	242
	244
	325
	334
6V-7723	253
	254
6V-7744	325
	383
	384
6V-8202	136
6V-8336	134
	139
6V-8352	282
6V-8397	181
	187
	190
	191
	194
	195
	199
	207
	208
	212
	213
	215
	217
	219
	223
	235
	257
	259
6V-8398	159
	161
	163
	181
	184
	185
	187
	190
	191
	195
	203
	212
	222
	230
	231
	234
6V-8625	159
	161
	163
	203
6V-8633	195
	234
6V-8634	207
6V-8635	208
	222
	227
6V-8636	190
	207
	208
	212
	219
	223
	235
	257
	259
6V-8637	208
	232
6V-8638	222
6V-8639	203
	212
6V-8640	205
6V-8641	210
6V-8642	205
	235
6V-8647	210
	222
	225
6V-8653	342
6V-8713	205
6V-8723	190
6V-8724	190
	194
	213
	215
	217
	219
6V-8785	208
6V-8928	348
6V-8939	159
	161
	163
6V-8993	197
	198
6V-8994	187
	190
	223
6V-9000	210
6V-9002	203
6V-9005	222
6V-9007	208
6V-9162	232
6V-9168	181
	187
	190
	223
6V-9169	184
	185
6V-9172	223
6V-9182	205
6V-9274	331
	333
6V-9499	35
6V-9632	14
	24
	104
	348
	356
	392
	407
	417
6V-9746	163
	179
	180
	183
	186
	189
	205
	208
	232
6V-9828	197
	198
6V-9838	159
	161
6V-9839	208
6V-9849	215
	217
6V-9852	159
	161
	163
6V-9854	220
	222
6V-9876	215
	217
6Y-3222	313
	314
	316
6Y-3228	313
	314
	316
6Y-6767	313
	314
	316

7

Part	Page
7D-7233	227
7D-9014	449

► PRIMARY REFERENCE

PART NUMBER INDEX

Part	Page
7E-4846	269
7F-2050	342
7F-2060	342
7H-3171	128
	136
7I-2272	205
7J-1908	190
	195
7J-9108	159
	161
	163
	181
	189
	191
	193
	194
	205
	230
	231
	235
7K-1181	14
	24
	34
	74
	78
	81
	184
	185
	187
	190
	194
	195
	201
	207
	209
	210
	213
	215
	217
	219
	223
	225
	227
	232
	235
	257
	259
	291
	392
	413
7K-1700	332
7K-9592	242
7M-8485	205
	208
	220
	222
	223
	227
7N-0718	35
	►70
7N-5274	35
7N-7221	43
	48
7P-1695	35
	74
	81
7S-5757	98
	100
	102
7T-1099	108
	287
	288
	356
	408
7T-6799	55
	56
7T-9793	342
7W-9094	205
7X-0510	10
	90
	392
7X-0561	402
	403
7X-0579	26
	35
	98
	100
	102
7X-0591	123
7X-0608	104
7X-0796	256
7X-0820	191
7X-0872	190
	194
7X-1169	35
7X-2534	35
7X-2536	21
	237
7X-2537	26
	35
7X-2538	351
7X-2549	242
7X-2550	334
	382
7X-2552	115
7X-2553	397
7X-2556	397
7X-2576	91
7X-2619	358
7X-2634	94
7X-2906	240
7X-3391	124
	389
7X-6315	79
7X-7644	440
	451
7X-7729	12
	34
	93
	98
	100
	102
	104
	108
	117
	119
	201
	213
	220
	222
	225
	387
	392
	394
	407
	408
	415
7X-7877	105
7X-7958	227
	229
7Y-1976	257
	259
7Y-2362	304
7Y-3474	413
7Y-3951	43
	47
	48
7Y-3952	47
	48
7Y-3958	42
7Y-3995	48
7Y-3996	48
7Y-5431	235
8	
8C-3446	215
	217
8C-3451	215
	217
8C-5607	55
	58
	71
	79
8C-5608	55
	58
	71
	79
8C-5723	220
	222
8C-6438	27
8C-6855	90
8C-8451	55
	58
	71
	79
8C-8988	215
	217
	219
8C-8989	190
8C-8992	114
	116
	126
8E-6259	313
	314
	316
8F-7242	35
	69
8H-5303	70
8H-5306	70
8K-1117	205
8L-8413	35
	205
	208
	212
8N-1725	81
8T-0114	362
8T-0119	203
8T-0151	190
8T-0154	342
8T-0164	210
8T-0269	332
8T-0287	362
8T-0328	27
	30
	57
	58
	74
	77
	78
	205
	400
	401
	417
8T-0337	367
8T-1158	240
8T-1482	92
	118
8T-1674	220
	222
8T-1887	181
	187
8T-1888	181
	187
8T-1889	180
	186
	187
	191
	201
8T-1890	180
	186
	187
	191
	201
8T-2444	380
	415
8T-2503	247
	249
	251
8T-3490	104
	108
	191
	199
	209
	392
	407
	408
8T-3612	12
	98
	100
	102
	104
	108
	215
	217
	380
	385
	386
	392
8T-3957	238
8T-3998	74
	415
8T-4121	10
	14
	16
	19
	20
	21
	24
	26
	35
	62
	64
	65
	66
	81
	84
	113
	118
	122
	159
	161
	163
	180
	181
	186
	187
	189
	190
	195
	199
	201
	205
	209

► PRIMARY REFERENCE

PART NUMBER INDEX

Part	Page
	215
	217
	220
	223
	225
	227
	288
	325
	348
	351
	353
	355
	362
	372
	380
	383
	384
	385
	386
	389
	392
	395
	397
	411
	412
8T-4127	27
	30
8T-4133	84
	159
	161
	163
	187
8T-4136	14
	35
	62
	66
	81
	93
	98
	100
	102
	104
	108
	113
	117
	119
	159
	161
	163
	180
	186
	187
	190
	195
	199
	201
	209
	215
	217
	227
	267
	288
	353
	355
	362
	380
	385
	386
	387
	392
	407
	411
	412
8T-4137	21
	24
	35
	81
	105
	108
	117
	118
	122
	157
	201
	205
	225
	392
8T-4138	14
	32
	33
	67
	392
	411
	412
8T-4139	35
	124
	159
	161
	163
	267
	389
8T-4140	111
8T-4167	91
	140
8T-4171	81
8T-4172	187
8T-4175	10
8T-4176	244
	308
	309
8T-4178	181
	187
	383
	384
8T-4179	308
	309
8T-4182	26
	201
	222
	325
8T-4183	121
	127
	195
	255
8T-4184	111
	245
	246
8T-4185	181
	189
	190
8T-4186	12
	199
8T-4189	14
	24
	35
	57
	77
	81
	94
	96
	104
	392
	403
	408
	413
8T-4191	35
	81
	190
8T-4192	64
	65
	66
	111
	172
	179
	183
	213
	288
	304
8T-4194	129
	264
	265
	266
8T-4195	20
	108
	180
	186
	187
	190
	195
	199
	201
	205
	213
	220
	222
	227
	397
8T-4196	16
	104
	187
	199
	201
	220
	222
	225
	256
	394
	415
8T-4200	35
	82
	94
	104
	263
8T-4205	14
	392
8T-4222	108
	325
8T-4223	35
	64
	65
	66
	82
	121
	126
	129
	159
	161
	163
	172
	179
	183
	195
	213
	220
	222
	246
	255
	264
	265
	266
8T-4224	12
	14
	17
	21
	24
	35
	59
	82
	98
	100
	102
	115
	210
	263
	341
	342
	351
	385
	386
	402
	413
	415
8T-4244	287
	296
	298
	300
	302
	306
	307
8T-4821	116
8T-4834	222
8T-4895	111
	288
	304
8T-4908	13
	81
	115
	215
	217
	341
	385
	386
8T-4956	105
	220
	222
	246
8T-4967	288
8T-4971	21
8T-4983	14
8T-4984	14
	220
	223
8T-5001	298
	300
8T-5005	181
	208
8T-5041	242
	244
	325
	382
8T-5376	256
8T-5400	423
8T-5412	296
	302
8T-6466	26
	104
	181
	187
	190
	199
	201
8T-6868	242
	244
8T-6870	21
8T-6895	190
8T-6912	24

► PRIMARY REFERENCE

PART NUMBER INDEX

Part	Page
	60
	62
	65
	66
8T-7329	351
8T-7338	89
	125
	237
	311
8T-7525	247
8T-7547	12
	17
	59
	98
	100
	102
	210
	402
8T-7586	268
8T-7877	268
	271
	275
	279
8T-7934	187
	189
	267
	385
	386
8T-7971	116
	245
	246
8T-8442	282
	283
8T-8729	55
	56
	58
	71
	362
	363
8T-8737	42
	44
	45
	46
	47
	48
	49
	50
	51
	53
	54
	57
8T-8799	48
	81
8T-8874	380
	385
	386
8T-8894	35
	74
	82
8T-8902	190
8T-9023	232
8T-9758	81
8X-9618	35
8Y-3795	108

9

Part	Page
9G-8909	35
9H-3771	320
	321
	324
9J-7031	257
	259
9L-6074	423
9L-8781	105
9M-8406	84
9N-1756	284
9P-7121	27
	30
9R-0320	168
	169
9R-1004	181
	187
9R-1005	181
	187
9R-1510	242
	244
9R-2160	380
9R-2613	24
	288
9R-2672	108
	288
9R-2821	288
	417
9R-3572	288
9R-3700	335
	336
	337
	338
	340
9R-3761	287
	288
9R-7941	74
9R-7942	61
9R-7958	61
9R-7980	74
9S-4191	257
	259
9S-8004	87
	270
	271
	274
	275
	278
	279
9S-8005	225
9T-7266	285
9W-0607	59
9W-0852	24
9W-2109	247
	249
	251
9W-2110	247
	249
	251
9X-1046	408
	423
9X-2027	362
	363
	367
9X-2038	34
	58
	74
	104
	356
	358
	360
	375
	376
	390
	400
	401
	407
	408
	411
	412
9X-2041	64
	65
	66
	348
	372
	373
9X-2042	97
	348
	391
	415
	423
9X-2043	331
	333
	368
	370
	388
	391
	396
9X-2044	58
	74
	356
	360
	375
	376
	390
	400
	401
	407
	408
	415
9X-2045	348
	356
	358
	372
	423
9X-2383	50
9X-3401	27
	30
	32
	33
	41
	42
	44
	45
	48
	49
	50
	51
	52
	53
	62
	66
	351
9X-3402	41
	42
	46
	47
	48
	49
	50
	51
	52
	53
	62
	66
	74
9X-4244	59
9X-6155	364
9X-6165	21
	55
	58
	67
	71
	79
9X-6581	159
	161
	163
9X-7378	82
9X-7381	392
9X-7382	392
9X-7385	351
9X-7454	270
	274
	278
9X-8118	61
9X-8139	61
9X-8256	13
	21
	32
	33
	35
	74
	79
	98
	100
	102
	105
	119
	346
	358
	361
	389
	395
	411
	412
	413
9X-8257	89
	115
	125
	311
	397
9X-8912	351

0

Part	Page
002-0639	291
004-6810	392
030-1707	35
	81
033-5879	284
033-6027	284
033-6043	282
	283
054-6854	171
067-2551	225
083-4419	247
	249
	251
083-9539	104
085-8091	189
	201
085-9309	237
085-9310	262
086-0297	308
	309
086-0298	111
087-5841	288
091-2436	43
	51
	53
093-1342	296
093-1430	308
	309
093-1432	293
	294
	302

PART NUMBER INDEX

Part	Page
095-0735	400
095-0843	24
095-0894	128
095-0913	83
	84
095-0919	358
095-1207	321
095-1255	372
095-1299	123
095-1541	136
095-1574	449
095-1575	238
	449
095-1582	238
	449
095-1593	238
	449
095-1623	256
095-1659	137
	138
095-1713	256
095-1720	449
095-1722	449
095-1750	236
095-7951	256
096-0192	58
	400
	401
096-1205	380
	383
	384
096-2622	373
096-3780	24
096-3884	373
096-4876	130
	143
096-4884	195
096-5766	189
	190
096-6166	367
	398
096-7033	131
097-7234	43
099-0169	262
099-0194	128
099-6461	136
099-6463	136

1

Part	Page
100-6674	48
101-7398	240
101-7401	408
101-7404	362
	363
101-8899	373
102-3129	▶126
	144
102-7965	43
102-8079	136
102-8115	137
102-8116	137
	138
102-8801	42
	44
	49
	50
	53
102-8802	27
	30
	32
	33
	41
	42
	53
	58
	62
	66
	71
	351
102-8803	41
	45
	52
	415
102-8804	55
	56
	58
	71
102-8805	51
102-8806	42
103-2529	52
103-2543	34
104-1995	51
105-3477	367
105-3484	171
106-6733	126
106-8917	24
107-3135	48
107-3136	48
108-7251	159
	161
	163
109-1393	57
	77
	78
	236
	269
	270
	274
	278
109-5815	195
110-2028	74
111-4816	42
111-4837	81
111-7899	85
111-8816	449
112-9717	18
113-8490	45
113-8491	45
113-8492	45
113-8493	45
113-9234	213
114-9284	380
	383
	384
	415
116-6159	48
116-7471	34
118-4569	205
118-5619	376
119-3662	43
	46
	49
121-1029	288
122-4401	43
122-6871	49
	50
122-9611	362
123-7615	42
124-3548	45
125-1645	11
125-1646	11
125-1657	▶11
	351
125-4785	43
125-4840	43
125-7874	43
	44
	46
	47
	49
	50
	51
	53
	368
	370
	388
125-7875	46
	47
	51
125-7876	43
126-1767	32
	33
	41
	42
	44
	45
	48
	49
	50
	51
	52
	53
	62
	66
	351
126-1768	41
	42
	46
	47
	48
	49
	50
	51
	52
	53
	62
	66
	74
126-2900	451
127-0580	373
127-1960	372
127-3807	134
	▶137
127-4839	19
128-7747	10
130-1676	275
	279
	285
132-5789	34
	81
134-2540	42
	48
	49
	50
134-3196	16
134-4540	210
134-7258	451
135-2543	34
135-5009	49
	50
	52
	81
135-7940	257
	259
136-0207	195
136-0296	137
136-0297	137
	138
136-1953	343
136-2394	136
136-2401	143
136-2402	143
136-2404	131
136-2405	131
136-2407	131
136-2410	131
136-4184	190
	270
	274
	278
137-9097	308
	309
137-9269	308
	309
139-2840	247
140-3201	94
140-4236	14
140-4238	14
143-3088	326
	327
144-0195	413
	423
144-0367	220
	223
145-9717	34
146-4875	256
146-4877	256
147-5112	92
	118
148-8310	190
148-8315	205
	235
148-8316	210
	222
	225
148-8318	207
148-8322	205
148-8325	210
148-8327	208
	232
148-8328	195
	234
148-8335	208
	222
	227
148-8336	190
	207
	208
	212
	219
	223
	235
	257
	259
148-8340	203
	212
148-8341	205
148-8344	232
148-8345	222
148-8347	208
148-8351	215
	217
148-8352	220
	222
148-8354	203
148-8355	222
148-8360	205
148-8363	215
	217
148-8364	159
	161
	163
	203

▶ PRIMARY REFERENCE

PART NUMBER INDEX

Part	Page
148-8371	215
	217
	219
148-8374	190
148-8378	190
	194
	213
	215
	217
	219
148-8385	210
148-8393	159
	161
	163
148-8395	225
148-8407	257
	259
148-8416	163
148-8424	190
148-8425	222
148-8427	190
148-8431	208
148-8446	159
	161
148-8447	190
	194
148-8449	208
149-5452	187
	190
	223
149-5933	98
	100
	102
150-2159	11
150-2161	11
150-2162	11
150-3033	210
150-3050	227
150-3059	220
	222
150-3715	81
150-4052	197
	198
150-5689	298
	300
	306
	307
150-5697	306
	307
150-6379	87
151-9272	50
	53
151-9274	362
	364
	365
	366
151-9275	51
	363
151-9576	417
152-5717	179
	183
152-5718	179
	183
152-6942	184
	185
153-2994	179
	183
153-2995	179
	183
153-2996	184
	185
153-2997	184
	185
153-3061	191
153-6241	190
153-6246	190
154-2704	313
	314
	316
	335
	336
	337
	338
155-2255	42
	47
	49
	50
	53
155-2258	50
155-2260	42
	45
	47
	48
	49
	50
	54
	57
155-2265	42
	53
155-2270	41
	42
	45
	47
	48
	49
	50
	51
	62
	66
	74
155-2271	42
	45
	53
155-2274	42
	45
	47
156-6175	67
	79
159-1503	24
159-6529	130
	143
159-8047	81
159-8048	35
160-3518	365
	366
160-8758	389
	395
161-2539	32
	33
161-2560	184
	185
161-2561	184
	185
161-4130	335
	336
	337
	338
	340
162-2165	34
162-3548	119
	394
163-6659	42
164-0150	356
164-1342	415
164-1343	415
164-1344	415
164-1345	415
164-5567	191
	215
	217
	220
	223
164-5590	215
	217
164-5594	220
	222
164-6873	213
164-9425	34
165-0311	74
166-1481	304
166-1492	287
	288
	306
	307
166-1498	113
167-7039	373
167-7270	440
167-8176	74
167-9888	287
	296
	298
	300
	302
	306
	307
168-2197	247
168-2203	247
	249
	251
168-2204	247
	▶253
168-3378	253
	254
168-3379	253
	254
168-3380	253
168-3381	253
168-3382	253
	254
168-3384	253
168-3385	253
	254
168-3504	247
	249
	251
168-6756	131
168-6757	131
168-6758	131
168-6759	131
168-6760	131
168-8389	313
	314
	316
	321
	325
	335
	336
	337
	338
	340
168-8772	398
169-0705	42
	46
169-5701	184
	185
169-7393	322
	323
170-4419	130
	143
171-0596	74
	415
171-7420	417
172-1241	434
	454
172-2596	115
172-8591	348
173-0064	220
	222
173-8919	46
174-3091	44
174-3877	392
174-9994	247
175-4291	59
176-2947	45
176-8467	244
	318
	319
	339
	340
177-9645	48
177-9648	42
	45
178-3620	191
178-5572	346
	373
	419
	421
	422
178-5574	346
	373
	419
	421
	422
178-9983	365
	366
180-0613	45
180-6213	247
	249
	251
185-0292	254
185-1860	46
185-1861	46
185-2271	232
185-8163	58
	401
185-8205	391
	408
186-2487	284
186-2488	284
187-6419	48
187-6421	48
187-9185	439
189-3158	48
	51
190-6507	247
	249
	251
191-7524	413
191-8920	423
191-8921	389
	395
192-2645	328
	329
192-7470	247
	249
	251
193-5914	91
194-2903	203
195-7224	313
	314
	316
196-2381	45
196-2414	46
196-8876	41
	44
	66

► PRIMARY REFERENCE

PART NUMBER INDEX

Part	Page
	368
	370
	388
197-2850	249
198-4766	181
	187
	199
	201
198-4775	356
198-5646	287
	296
	298
	300
	302
	306
	307
199-1986	195
2	
200-1131	74
	398
200-5362	282
	283
200-5363	282
	283
201-1024	34
202-5397	45
203-3470	215
	217
203-9007	42
204-1611	21
	32
	33
	34
	57
	62
	66
	72
	74
	77
	78
	81
	83
	84
	86
	215
	217
	223
204-8000	24
	215
	217
205-0826	55
	58
	71
206-1345	34
	62
	74
	81
	361
206-1667	356
	358
	390
	408
207-0797	358
207-0799	358
207-0800	358
208-9283	331
	333
209-8296	342
211-0052	45
211-7455	358
213-0139	42
	45
213-0985	373
213-7489	365
	366
214-6197	104
214-7568	191
	215
	217
	220
	223
216-9060	167
218-0651	55
	56
218-5197	292
	294
	302
218-5429	311
	312
219-0302	424
219-0305	425
	427
	429
219-8136	223
219-9483	313
219-9484	314
219-9486	316
222-4067	380
	385
	386
223-3490	81
223-9818	451
224-8945	429
224-8946	427
225-0312	427
225-0313	429
225-3322	348
	417
225-3854	45
225-3861	46
	47
225-4148	454
226-0622	358
227-5990	87
227-8807	▶145
	217
228-5856	51
	53
228-7106	249
	251
228-7315	429
228-7316	427
230-4011	45
	47
	51
230-4013	41
	45
	52
230-5008	47
230-5652	324
232-3317	145
233-5260	362
235-1365	429
235-1368	427
235-2404	251
235-8929	391
235-8966	78
236-6923	81
237-2228	325
238-5080	34
	234
	285
238-5082	232
239-7708	287
	288
	306
	307
240-4590	46
240-5084	140
241-6202	223
242-1510	451
242-8009	73
243-4505	24
245-8842	86
246-2641	24
	451
250-1454	205
251-1391	81
252-5790	361
253-1346	122
255-4560	21
256-0466	16
256-6453	34
257-7460	429
257-7461	427
258-2111	92
	118
260-7653	79
260-9174	195
262-9151	42
	48
263-9574	34
264-3617	70
265-2372	122
265-9596	382
266-7379	21
	34
	72
	85
	180
267-2701	69
267-5211	69
267-5213	69
268-1589	392
268-8872	448
269-0121	446
269-2892	373
269-2893	373
270-2679	43
270-8607	10
271-9408	373
272-9800	61
273-0471	427
274-3524	415
274-3562	417
274-3563	417
274-3782	47
274-7452	247
274-8267	42
	46
275-0553	34
275-1442	213
275-1443	213
275-6710	94
	341
276-0978	▶124
276-0979	124
276-1786	81
276-4170	168
	169
276-4171	168
	169
276-4172	168
	169
276-9254	24
277-1873	34
	81
278-6377	69
279-0850	410
279-1308	83
	84
279-2488	247
279-2491	247
	254
279-4731	195
279-4732	195
	207
	208
279-4733	195
	207
	208
279-4734	207
	208
	212
279-4735	195
	197
	198
	205
	208
	210
279-4737	195
	197
	198
	210
279-4738	197
	198
	210
	212
279-9304	451
280-2652	159
	161
	163
280-7870	282
	283
280-8618	408
281-0926	111
281-5897	163
281-8631	358
282-0918	247
282-0919	247
282-6836	168
	169
283-8106	53
284-0838	358
284-0840	358
284-8898	429
286-7151	251
287-6692	356
288-3657	94
	341
289-5151	46
289-6348	240
290-5562	14
	24
	219
	222
	227
292-2893	34
292-8504	14
	21
294-0973	159
	161
	163
294-4439	128
294-5350	128
295-5932	313
295-5942	314
295-5951	▶313
295-5952	▶314
295-5954	▶316
295-5963	316
296-6980	181

PART NUMBER INDEX

Part	Page
	187
296-9438	292
	294
	302
	306
	307
296-9473	287
296-9477	298
	300
296-9478	298
	300
296-9479	298
	300
296-9480	298
	300
296-9481	296
	298
	300
	302
	318
	319
	325
	334
	339
	340
296-9482	▶292
	293
296-9533	111
296-9534	111
296-9535	111
296-9538	304
296-9540	111
296-9573	287
296-9578	293
	294
	302
	306
	307
296-9586	304
296-9642	286
	▶290
298-4282	427
299-3427	135

3

Part	Page
303-8825	10
304-8018	227
305-6711	169
305-6712	169
305-6713	168
305-6714	168
305-6716	159
	163
	▶168
305-6717	161
	▶169
305-6721	242
305-6722	242
305-6723	242
305-6724	242
305-6725	242
305-6726	242
305-6730	242
305-6731	▶242
	337
	338
305-6733	242
305-6740	▶335
305-6741	▶336
	339
305-6744	▶337
305-6745	▶338
305-6759	159
	161
	163
305-6778	▶244
	335
	336
	340
305-6779	242
305-6780	▶159
	335
	336
305-6781	▶161
	337
	338
305-6795	242
	244
305-6796	244
305-6803	242
306-8127	27
	30
307-0047	79
308-0324	▶334
309-1325	57
	▶61
309-4314	392
309-5126	222
310-0674	46
310-1898	34
310-6660	328
	329
310-7267	247
311-3072	215
	217
313-2048	429
313-4247	125
313-4248	125
313-4254	▶125
	141
313-4553	223
	245
315-5493	328
	329
315-7790	392
316-9351	34
317-3004	191
319-3237	45
319-3652	295
	▶296
319-3653	296
	302
319-3654	296
	302
319-3655	296
	302
319-3656	296
	302
320-5472	119
321-6069	54
	57
322-9892	295
	▶298
323-0956	▶131
	132
323-0959	131
324-7093	288
324-7094	288
324-7096	288
325-3767	48
326-9726	34
	364
327-0282	342
327-0283	342
327-1749	358
327-6208	34
	▶69
327-6236	34
327-8220	195
329-3356	308
	309
329-3707	30
329-3734	32
	33
	41
	43
	44
	46
	47
	48
	49
	50
	52
	53
	74
331-3594	48
331-5048	53
332-1809	348
332-1983	53
332-8545	179
	183
332-8553	392
333-5605	136
333-5726	98
	100
	102
	104
333-7840	249
	251
334-4603	451
334-6534	373
335-5365	73
337-7978	46
340-1665	225
342-8419	46
342-8441	46
344-5673	98
	100
	102
	104
344-5674	98
	100
	102
	104
	380
	383
	384
	415
344-5675	21
	325
	372
344-7391	34
	72
345-3548	10
346-4995	268
347-0593	42
347-0596	74
347-0612	247
	▶282
349-2666	195
349-7059	27
	30
349-8603	429
349-8604	427
350-5720	81
350-7735	27
	30
351-9309	35
352-3964	34
	215
	217
352-3965	81
352-3966	81
352-3968	34
	81
352-3970	76
	85
	392
352-9047	288
353-4402	215
	217
353-5515	288
353-5516	288
353-5517	288
354-0132	348
354-7051	191
355-1790	342
356-6120	48
356-6123	48
360-3814	48
360-3815	51
360-3816	51
360-3817	48
360-7538	48
361-1107	332
361-1111	320
	321
	324
361-1119	322
	323
361-1120	225
361-1126	331
	333
361-1128	167
361-1140	167
361-1141	320
	324
361-1142	320
	324
361-1147	332
361-1148	321
361-1149	321
361-1150	▶225
	319
	339
	340
361-1151	▶320
	322
	339
361-1153	320
	▶331
361-1155	320
	324
361-1210	321
361-6383	48
362-3212	236
	269
	270
	274
	278
363-4122	27
	30
363-7466	339
366-2382	383
	384
367-8465	302
369-3774	53
370-4008	21
371-7193	208
371-7194	208
373-7621	392
374-1857	▶165
	310

PART NUMBER INDEX

Part	Page
374-7463	45
	47
	49
	50
	74
374-7464	42
	45
	47
374-7465	42
	53
374-7466	42
	45
	47
374-7467	42
	53
374-7468	49
	50
374-8331	46
374-8333	46
374-8372	53
375-7328	113
376-9487	24
377-2282	81
377-5603	42
377-9729	432
378-1007	74
	415
379-0525	24
379-0676	199
	201
379-2008	24
379-5187	249
	251
380-8749	306
	307
380-8750	306
	307
380-8868	48
382-4815	351
382-8738	54
	57
382-8740	54
	57
382-8757	2
	3
	4
	5
	▶9
385-5361	27
	30
386-6610	249
	251
388-3782	▶59
	64
388-7978	328
	329
389-0748	81
389-8718	372
389-8729	348
389-8773	427
389-8774	429
389-9183	426
392-0812	21
393-1582	270
	274
	278
393-1683	427
393-8252	213
393-8302	187
394-9460	389
	395
397-6929	▶146
	215
397-9082	449
397-9301	201
	222
4	
415-2556	2
	3
	4
	5
	▶54
415-5177	141
	▶142
415-5179	▶134
	141
417-5438	268
	271
	275
	279
418-3272	397
419-0087	48
421-1062	249
	251
	▶283
421-2279	451
421-6229	220
422-0871	128
422-9330	9
423-1981	21
423-1982	21
423-6751	295
	▶300
423-6752	302
424-4194	137
424-4197	137
424-4322	42
424-5546	328
	329
424-7007	104
424-9494	▶293
	296
	298
425-6641	242
	244
425-7828	201
425-7830	201
427-9771	74
	361
428-2140	▶339
428-2145	▶339
430-4676	87
430-4677	238
430-9534	358
431-9515	74
433-3898	287
	296
	302
433-3913	287
433-3930	296
	302
435-0787	238
435-0788	238
435-0789	87
435-0790	238
	▶449
435-0792	87
435-0793	87
435-0794	87
435-0795	87
435-0796	87
435-0797	87
435-0798	87
435-0799	87
435-0800	87
435-2988	342
435-5221	46
435-5222	46
436-0854	19
436-2988	74
	417
436-7870	199
	201
437-0899	389
	395
437-2838	210
437-7359	46
438-4919	411
	412
438-8338	87
438-8339	87
438-8340	87
438-8341	87
438-8342	87
438-8343	87
438-8346	238
438-8347	238
438-8348	238
438-8349	238
438-8350	238
438-8351	238
438-8465	271
	275
	279
438-9121	119
	346
439-5338	159
	161
	163
439-5339	159
	161
	163
440-0642	335
440-0645	336
	340
440-0647	337
440-0649	338
443-3962	415
444-7490	321
444-7491	321
	▶332
444-7498	▶318
444-7499	318
	▶321
	339
	340
444-7504	321
444-7505	332
444-7506	332
444-7507	332
446-1412	210
446-1437	403
446-9435	▶322
	339
449-1589	210
449-1636	236
	270
	274
	278
449-1706	342
450-4968	263
	410
450-9772	451
451-7573	111
	304
451-7576	111
451-7579	111
	304
451-8019	42
452-3598	449
452-3599	238
453-7468	236
	270
	274
	278
454-3607	119
	346
454-6738	42
454-6739	43
454-7925	210
455-0704	45
	47
	51
455-0705	41
	45
	52
455-0706	47
455-7988	247
456-1861	271
	275
	279
	▶284
457-2531	295
	▶302
457-9869	199
460-0259	256
460-4734	376
460-4736	376
460-4738	375
	376
464-0509	285
464-7675	39
465-7612	410
465-7635	410
465-9223	142
466-7415	429
467-8535	55
	56
468-5113	351
468-7159	249
	251
468-7325	111
468-7326	111
468-7327	339
	340
468-7328	287
	288
	298
	300
	306
	307
469-2340	249
	251
	▶254
469-3303	249
	251
470-9608	238
471-5095	34
473-4270	191
476-9504	342
479-0022	46
479-0618	210
479-0620	210
479-0646	167
479-3043	455
479-5461	325
479-8445	65
	66
483-2762	44
	46
483-2763	46
483-2765	44

PART NUMBER INDEX

Part	Page
	46
483-2767	44
	46
483-2768	44
	46
483-2777	45
483-4607	270
	274
	279
485-5223	319
	▶323
	339
	340
485-5224	323
	▶324
485-5225	320
	324
485-5226	324
	▶330
485-5229	330
485-5238	330
485-5245	324
	▶333
485-5272	▶339
485-5283	331
	333
485-5284	167
485-5285	167
485-5286	167
485-5289	▶167
	331
	333
485-5302	▶319
487-2142	187
	201
487-3004	▶39
	55
	58
	71
487-3429	441
487-6229	246
	▶247
487-6232	249
	251
487-6234	237
	▶240
487-6235	249
	251
487-7440	401
487-7442	58
	400
488-9161	78
488-9162	57
	77
490-0571	44
	46
	50
	53
	368
	370
	388
490-0572	57
	77
	78
490-0578	50
	53
	368
	370
	388
490-0579	76
490-0582	57
	77
	78
490-0588	76
490-0590	76
	396
491-4581	34
491-4673	191
491-4674	191
491-4677	201
492-1649	8
	▶10
492-1654	8
	▶13
492-1656	8
	▶12
492-1658	8
	▶353
492-1662	351
492-1665	8
	▶19
492-1669	14
492-1670	14
492-1671	13
492-1673	8
	▶20
492-1676	10
492-1677	10
492-1678	10
492-1680	13
492-1687	19
492-1689	20
492-1690	20
492-1693	8
	▶17
492-1696	10
494-0023	398
496-0802	▶346
	350
496-0803	346
496-0804	346
	▶415
496-0805	346
	▶372
496-0806	346
496-0807	346
	▶348
496-0826	348
496-1130	417
496-1131	415
496-1132	373
496-1133	422
496-1135	346
496-1138	421
496-1140	420
496-1141	373
496-1142	373
496-1145	372
496-1146	373
496-1147	348
498-7705	362
498-7706	362
499-9314	167

5

Part	Page
500-8850	232
500-9023	423
500-9046	372
504-1365	435
504-4980	▶40
	55
	58
	71
504-6174	▶340
504-6175	▶340
504-6176	▶163
	340
505-6340	402
	▶406
506-7653	191
507-1285	▶138
	139
507-1286	138
507-1289	138
507-1290	138
507-1291	138
507-1292	138
507-1383	42
507-1384	42
507-3112	42
509-3085	363
509-3086	362
509-3087	363
509-6447	368
	388
510-0842	362
510-3606	122
510-3607	122
510-3610	▶127
	144
510-3614	▶128
	129
510-3615	▶122
	127
510-3617	128
510-3619	129
	▶140
510-3620	127
	▶129
510-3621	140
510-3622	140
510-3623	140
510-3624	140
510-3627	128
510-6043	45
510-6045	45
510-6047	45
510-6070	3
	4
	5
	▶399
510-6071	▶350
	399
510-6072	399
	▶408
510-6073	▶390
	399
510-6075	346
	▶355
510-6078	149
	150
	▶367
510-6080	▶397
	399
510-6082	346
	▶407
510-6083	350
	▶423
510-6084	▶404
510-6085	2
	3
	4
	5
	▶405
510-7327	102
510-7331	98
510-9236	100
510-9918	104
510-9956	104
511-0770	104
511-0777	104
511-0962	348
511-3190	220
	222
511-3191	220
	222
511-3192	220
511-3193	220
	222
511-3194	220
	223
511-3195	220
	223
511-3197	222
511-3198	222
511-3199	223
511-3200	223
511-3201	173
	174
	▶220
511-4470	98
	100
	102
511-4607	311
511-4613	311
511-4615	311
511-4618	389
511-4977	174
	175
	▶222
511-5969	372
511-6157	2
	3
	4
	5
	▶32
511-6160	34
511-6161	81
511-6166	147
	▶364
511-6168	350
	▶361
511-6174	▶55
511-6176	▶396
511-6177	4
	▶368
511-6178	368
	370
	388
511-6181	▶40
511-6183	▶42
	74
511-6184	▶53
	57
	77
511-6185	▶50
	78
511-6189	▶51
	81
511-6192	▶48
	81
511-6197	▶49
	83
511-6198	▶50
	84
511-6203	62
	66
511-6205	▶52
	86
511-6208	32
	33
511-6211	▶62

PART NUMBER INDEX

Part	Page
511-6213	►41
	72
511-6216	2
	3
	4
	►64
511-6217	5
	►65
511-6218	►400
511-6219	2
	3
	4
	5
	►401
511-6221	346
	►398
511-6222	40
	►73
511-6224	►86
	177
511-6226	►72
	174
	175
511-6228	►67
511-6229	2
	3
	4
	►79
511-6231	23
	►85
511-6233	►34
	40
511-6234	►74
	350
511-6235	2
	3
	4
	5
	►77
511-6236	►78
511-6238	40
	►81
511-6241	►83
	173
	174
511-6242	►84
	174
	175
511-6253	2
	3
	4
	5
	►40
511-7328	1
	►108
511-8600	27
512-1013	255
	►256
512-1401	►1
	2
	3
	4
	5
512-1420	1
	►173
512-1441	1
	►144
512-1508	1
	►91
512-1513	►1
512-1526	1
	►104
512-1534	1
	►113
512-1546	►110
	310
512-1569	173
	►262
512-1572	►123
	144
512-1682	48
512-1893	173
	►227
512-2519	►89
	310
512-2524	6
	7
	►310
512-2526	7
	►310
512-2546	►235
	310
512-2549	►234
	310
512-2552	►203
	310
512-2573	2
	3
	4
	►286
512-2576	5
	►286
512-2581	286
	►287
512-2584	286
	►288
512-2587	1
	►111
512-3864	227
512-4547	8
	►392
512-5197	1
	►291
512-5198	173
	174
	►215
512-5201	173
	►232
512-5260	93
	104
512-5800	►308
	310
512-5801	308
	►311
512-5806	►309
	310
512-5807	309
	►312
512-5808	311
	312
512-5813	►116
	144
512-7460	114
512-7461	114
512-7462	114
512-7463	114
512-7464	114
512-8693	93
512-8715	113
512-8732	111
512-8735	111
512-8738	113
512-8893	123
512-8895	111
512-8922	111
512-9956	414
	421
512-9958	414
	421
513-0470	355
	►356
513-0471	355
	►358
513-0473	356
513-0474	356
513-0476	358
513-0477	358
513-0479	356
513-0480	147
	►360
513-0481	356
513-0483	358
513-0488	356
513-0489	356
513-0490	356
513-0491	360
513-0494	408
513-0499	►341
	346
513-0500	►375
	399
513-1375	►257
	261
513-1376	257
513-2506	375
513-2507	375
513-2508	376
513-2511	376
513-2512	390
513-2514	408
513-2525	341
	►342
513-3440	350
	►402
513-3446	403
513-4309	291
513-4310	291
513-4406	232
513-4407	232
513-4408	232
513-4409	232
513-4410	232
513-4411	232
513-4526	367
513-4527	367
513-4528	367
513-4529	367
513-5284	392
513-5286	392
513-5288	392
513-5836	►255
	310
513-6063	173
	174
	175
	►195
513-6071	195
513-6072	195
513-6073	195
513-6074	195
513-6075	195
513-6076	195
513-6077	205
513-6078	205
513-6079	195
513-6081	205
513-6082	195
513-6083	195
513-6084	195
513-6085	195
513-6086	195
513-6415	180
513-6416	180
513-6417	189
513-6418	189
513-6419	193
513-6420	193
	194
513-6421	189
513-6429	189
513-6430	189
	191
513-6437	230
513-6438	179
513-6453	183
513-6454	230
513-6456	231
513-6457	231
513-7121	215
	217
513-7124	215
	217
513-7126	►189
	286
513-7135	►190
	286
513-7140	175
	176
	►179
513-7143	►230
	305
513-7295	367
513-7854	1
	►26
513-7855	►27
	29
513-7965	234
513-9192	175
	176
	►180
513-9196	173
	174
	►205
513-9202	173
	174
	►207
513-9217	174
	175
	►208
513-9284	207
	208
513-9285	207
	208
514-0566	396
514-0869	6
	►141
514-0870	6
	►141
514-0871	7
	►141
514-0877	141
	►143
514-0884	►139
	141
514-0886	7
	►141
514-0888	►143
514-0893	141
	►143
514-0897	►90
	310
514-0898	90
514-0900	►130
514-0904	143

► PRIMARY REFERENCE

PART NUMBER INDEX

Part	Page
514-0906	▶132
	143
514-0907	132
	▶133
514-0910	133
514-0911	133
514-0913	122
514-0914	122
514-2343	223
514-3230	5
	▶173
	305
514-3235	5
	6
	▶173
514-3240	▶174
514-3295	235
514-3296	235
514-3297	235
514-3298	235
514-3958	223
514-3959	223
514-3960	219
514-4460	287
514-4490	306
514-4500	307
514-6645	215
514-6847	397
514-7409	17
	▶18
514-7505	▶68
	79
514-7594	8
514-8055	2
	3
	4
	▶177
514-8059	▶177
514-8060	5
	▶177
514-8067	2
	3
	4
	▶156
514-8074	5
	▶177
514-9171	▶121
	141
514-9172	121
515-0451	173
	174
	▶245
515-0452	174
	175
	▶246
515-0726	98
	100
	102
515-0729	98
	100
	102
515-1040	288
515-1115	305
	▶306
515-1135	305
	▶307
515-2866	392
515-3268	▶171
	257
	259
515-3511	5
	6
	▶305
515-3513	▶305
515-3526	173
	174
	▶264
515-3528	264
	▶270
515-3529	173
	▶265
515-3533	174
	175
	▶266
515-3535	266
	▶274
515-3814	257
	259
515-4617	205
515-5387	195
515-5396	195
515-5459	195
515-5481	▶152
	177
515-5482	▶153
	177
515-5483	▶155
	177
515-5825	▶87
	89
515-7112	361
	▶365
515-7113	361
	▶366
515-7114	365
515-7115	366
515-7116	365
515-7117	366
515-7626	12
515-7627	353
	▶354
515-7630	12
	▶16
515-7632	8
	▶21
515-7635	8
	▶14
515-7643	108
515-7644	12
515-7645	12
515-7892	176
	▶181
515-7897	147
	▶197
515-7903	147
	▶198
515-7905	451
515-7910	148
	▶210
515-8010	▶231
	305
515-8014	147
	▶199
515-8022	184
515-8023	180
515-8024	180
515-8025	181
515-8026	181
515-8027	181
515-8031	185
515-8032	198
515-8033	198
515-8034	197
515-8035	197
515-8051	189
515-8052	189
515-8055	199
515-8056	187
515-8057	187
515-8093	58
	400
515-8094	401
515-8095	58
	400
515-8096	401
515-8199	46
515-8458	208
515-8459	208
515-9162	175
	176
	▶183
515-9164	176
	▶184
515-9168	176
	▶185
515-9434	98
	100
	102
515-9513	8
516-0930	116
516-1586	210
516-1587	210
516-1591	210
516-1592	210
516-1593	210
516-1612	▶147
516-1613	2
	3
	4
	▶147
516-2428	312
	▶326
516-3705	174
	175
	▶267
516-7070	▶295
517-0175	26
517-3097	74
517-3098	74
517-4060	358
517-4065	358
517-4087	358
517-4089	358
517-4512	79
517-5487	367
517-7257	92
	118
517-8114	174
	175
	▶217
517-8120	174
	175
	▶212
517-8126	176
	▶186
517-8127	176
	▶187
517-8129	6
	▶174
517-8200	217
518-0841	212
518-0842	212
518-0843	212
518-1278	187
518-1279	147
	▶201
518-1280	201
518-1281	201
518-1284	186
518-1285	186
518-1286	191
518-1287	191
518-1288	191
518-1289	191
518-1290	191
518-1291	191
518-1292	191
518-1293	191
518-1294	191
518-1295	191
518-1296	186
518-1297	191
518-1298	191
518-1299	191
518-1300	156
	▶193
518-1301	194
518-1303	191
518-1304	191
518-1305	187
518-1306	187
518-1307	186
518-1308	186
518-3295	▶23
518-5015	392
518-5016	392
518-5921	372
518-6184	2
	3
	4
	5
	▶8
518-7719	423
518-7720	423
518-7721	423
518-7722	423
518-7880	372
	▶373
518-7881	373
518-7892	150
	▶362
518-8442	191
518-8447	180
	186
518-8468	179
	183
518-9270	265
	▶278
518-9385	8
	▶413
518-9387	390
518-9388	390
518-9391	390
518-9395	341
518-9398	423
518-9399	390
519-1831	178
	▶194
519-1832	191
	194
519-2184	177
	▶213
519-2188	213
519-2435	408
519-2438	348
519-2442	348
519-3140	5
	▶147
519-4582	364
519-8825	▶178
519-8850	▶170
	177
519-9084	39
519-9926	171
519-9930	149

PART NUMBER INDEX

Part	Page
519-9931	150
520-0065	205
520-0333	288
520-0765	5
	▶175
520-0769	▶175
	305
520-0774	▶175
520-0778	2
	3
	4
	5
	▶148
520-0780	98
	100
	102
520-0781	6
	▶176
520-0800	5
	▶176
520-0820	6
	▶176
520-3389	368
520-4832	267
520-4891	174
	175
	▶219
520-4905	219
520-4917	27
	30
520-5133	122
520-5981	174
	175
	▶229
520-6242	370
520-6925	267
	▶268
520-6936	▶8
520-7314	286
	▶304
520-7437	327
520-7438	311
	▶327
521-0149	133
521-0150	133
521-0151	133
521-0152	133
521-0153	133
521-0154	133
521-0155	133
521-0156	133
521-2475	73
521-2495	350
	▶403
521-2496	403
521-2498	403
521-2502	404
521-2503	405
521-2883	▶166
	295
521-2998	227
521-3693	▶135
	141
521-3694	135
	▶136
521-3695	136
521-4684	46
521-4685	46
521-4686	46
521-4687	46
521-4688	46
521-4689	46
521-5535	356
521-5536	358
521-6012	350
	▶391
521-6013	391
521-6014	391
521-6015	391
521-6016	391
521-6027	1
	▶94
521-6030	94
521-6382	138
521-6383	138
521-7589	▶295
521-7591	62
	66
522-0652	143
522-0896	123
522-1046	143
522-1622	173
	▶237
522-1680	330
522-4880	128
522-4881	128
522-6460	2
	3
	4
	▶56
522-6461	▶71
522-6465	35
522-6473	74
522-6475	2
	3
	▶370
522-6495	▶51
	85
522-6512	34
522-6513	34
522-6528	81
522-6531	64
	65
	66
522-6532	64
	65
	66
522-6534	74
522-6535	74
522-6539	▶76
	350
522-6546	▶40
	396
522-6547	▶41
	370
522-6548	▶41
	368
	388
522-8384	46
523-0491	1
	▶117
523-3986	▶445
523-3993	2
	3
	4
	▶447
523-6404	▶119
523-6405	1
	▶394
523-6409	▶395
523-6463	415
523-6470	417
523-6478	415
523-6495	417
523-6548	415
523-6550	415
523-7476	▶294
	300
523-7477	294
523-7892	191
523-7893	191
523-9141	421
523-9601	26
	▶29
523-9606	29
	▶30
523-9607	30
524-0076	156
	▶157
524-0077	▶158
	177
	178
524-0863	413
524-1936	348
524-2779	27
	30
524-3728	85
524-3792	27
	30
524-5546	417
524-7230	▶450
524-9685	408
524-9686	408
525-1266	397
525-1731	24
525-3287	27
	30
525-3288	24
	27
	30
525-3458	21
525-4851	407
525-4852	342
525-5736	27
	30
525-6567	237
525-6657	3
	4
	5
	▶92
525-9062	▶377
525-9065	▶379
525-9068	▶378
525-9070	▶411
526-2603	415
	▶417
526-2822	415
526-2823	415
526-3118	18
526-3122	18
526-3126	18
526-3982	▶154
	177
526-4252	▶97
526-4253	97
526-4553	367
526-4554	367
526-5710	58
	71
526-6955	421
526-6969	420
526-8575	372
526-8628	373
528-4126	1
	▶387
528-7800	398
529-7516	234
530-2784	118
530-2785	118
531-2250	42
531-2251	42
532-8213	270
	274
	278
532-9900	439
532-9903	431
532-9905	431
	438
533-0008	26
533-2046	415
533-2047	415
533-2048	415
533-2049	415
533-2051	415
533-2052	415
533-2209	119
	394
533-4387	431
	438
533-4388	431
	438
536-5056	249
	251
536-5057	249
	251
536-5062	249
	251
536-5063	249
	251
536-6831	356
	358
536-9974	181
536-9975	207
	208
538-1363	377
	388
	▶424
538-1374	379
	388
	▶425
538-1396	378
	388
	▶426
538-2663	2
	▶120
538-5008	415
538-5009	415
	417
538-5010	415
538-5021	415
538-5045	415
538-5166	451
538-5167	451
538-6378	342
538-6379	342
538-6380	342
538-6381	342
538-6382	342
538-6383	342
538-6384	342
538-6385	342
538-6387	342
538-6388	342
538-6392	342
538-6393	342
538-6394	342
538-6396	342
538-6397	342
538-6398	342
538-6400	342
538-6401	342
538-6402	342
538-6403	342
538-6404	342
538-6406	342
538-6411	342

▶ PRIMARY REFERENCE

PART NUMBER INDEX

Part	Page
538-6412	342
538-6414	342
538-6415	342
538-9681	373
538-9682	373
539-7796	48
539-8596	365
539-8597	366
539-8620	14
539-8624	12
539-8641	151
540-0357	417
540-0358	417
540-0359	417
540-0360	415
540-0362	417
540-0364	417
540-1422	215
	217
540-3855	411
	412
540-3856	411
	412
541-0709	257
	259
541-2275	21
541-4573	5
	6
	▶149
	305
541-4574	6
	▶150
541-4575	▶151
541-4576	▶95
	151
541-4580	2
	▶399
541-4581	▶350
	399
541-4586	346
	▶376
541-4591	▶350
541-4598	6
	7
	▶147
541-4668	95
541-6571	325
	▶328
541-6572	328
541-6574	325
	▶329
541-6575	329
541-6956	21
541-7046	117
541-8523	24
541-8665	57
	77
541-8666	57
	77
542-1142	348
542-1282	424
542-1283	425
542-1284	426
542-1454	451
542-2357	35
542-6996	257
	259
542-7263	▶325
542-8834	▶41
	79
542-8852	▶40
	55
	58
	71
543-0098	▶263
	399
543-0142	392
543-0145	392
543-0146	392
543-0429	263
543-0495	360
543-0997	108
543-8771	35
543-8772	35
544-0579	417
544-0589	350
	▶419
544-0591	350
	▶420
544-0982	346
544-1149	341
544-1668	▶414
	419
544-1669	414
544-1670	414
544-1672	414
544-1674	373
544-3048	376
544-4117	351
544-4207	157
544-4208	157
544-4209	157
545-5508	104
545-6720	96
545-6721	▶96
545-7845	408
545-7942	40
545-8729	358
546-1918	123
546-1919	67
546-5540	263
	▶410
546-5782	16
546-5783	16
547-4565	104
547-4567	104
547-4568	104
547-4569	104
547-6492	427
547-6493	451
547-6494	445
	447
	▶451
547-6495	▶427
	445
547-6496	429
547-6497	▶429
	447
547-7236	▶431
	445
	447
547-8215	94
547-8216	108
547-9119	436
	437
547-9485	187
548-2392	104
548-2901	387
548-4549	373
548-4551	372
548-5734	▶60
	62
	66
548-5965	389
	395
548-6979	375
	376
548-6980	376
548-6981	375
548-6982	390
548-7541	87
548-7543	87
	▶238
548-7980	98
	100
	102
	104
548-8514	91
	120
549-2188	171
549-2880	213
549-3304	104
549-6869	94
549-6871	94
549-6875	102
549-6876	102
549-6877	117
549-6878	117
549-7073	114
549-7086	1
	▶114
549-7087	114
549-7636	26
549-8436	41
549-8930	20
549-9080	350
	▶421
549-9082	350
	▶422
550-1174	268
550-1175	268
550-1176	268
550-1179	268
550-1180	268
550-1181	268
550-1904	172
550-1905	▶172
	310
550-2025	342
550-3684	417
550-3686	417
550-3736	208
550-4593	415
550-4877	208
550-4878	208
550-4882	208
550-5132	229
550-5185	24
550-5445	23
	▶24
550-5446	24
550-5881	392
550-7350	351
550-7351	351
550-7357	104
550-7640	117
550-9804	108
551-1074	238
551-2207	▶259
	261
551-2208	259
551-2224	104
551-2440	▶261
	262
551-3885	433
551-4076	433
551-4077	173
	174
	▶432
551-4078	174
	175
	▶433
551-6578	93
	▶98
551-6579	93
	▶100
551-6580	93
	▶102
551-6644	367
552-1608	149
	150
	▶363
552-3352	163
552-3353	163
552-3541	93
552-5458	104
552-5459	104
552-5460	104
552-5979	▶454
552-5980	▶434
552-5981	▶455
552-5984	2
	3
	4
	▶435
552-7041	354
552-7042	354
552-8909	342
552-9247	354
552-9249	354
553-0132	▶436
553-0133	▶437
553-0136	451
553-0137	451
553-5958	40
553-6871	8
	▶351
553-6998	227
553-7140	24
553-9611	438
553-9612	▶438
	445
	447
553-9615	▶445
553-9616	▶447
554-1892	104
555-0524	104
555-7092	257
	259
555-8447	450
555-8731	2
	3
	4
	▶446
555-8732	▶448
556-0874	220
	223
556-8773	227
557-0465	383
557-0531	383
	384
557-0532	383
	384
557-0533	385
	386
557-0539	▶383
	385
557-0571	380
	385
	386
557-1479	380
557-1482	380
557-1485	▶380
	382
557-1964	384

▶ PRIMARY REFERENCE

PART NUMBER INDEX

Part	Page
557-1966	▶384
	386
557-5054	45
557-5090	35
	▶45
557-5096	58
	400
	401
557-5102	74
557-5103	▶44
	76
557-5105	35
	▶47
557-5106	▶53
	74
557-7676	271
	275
	279
557-9298	270
	274
	278
557-9299	269
	270
	274
	278
557-9301	270
	274
	278
557-9302	270
	274
	278
557-9304	270
	274
	278
557-9306	270
	274
	278
557-9307	270
	274
	278
557-9308	270
	274
	278
557-9337	270
	274
	278
557-9339	▶236
	270
	274
	278
557-9351	270
	274
	278
557-9353	270
558-1673	385
	386
558-4172	380
558-7333	380
558-7367	379
	▶382
	388
558-8712	383
	384
559-1627	380
559-2265	271
	275
	279
559-2337	20
559-4006	377
	▶385
	388
559-4007	378
	▶386
	388
559-4148	240
559-4153	240
559-4154	240
559-4156	240
559-4158	240
559-4159	240
559-4191	240
559-4898	240
560-5813	53
560-6948	68
561-5432	268
561-7001	363
561-7005	362
561-8098	▶66
561-8099	▶58
561-8100	▶388
561-8101	▶57
561-8103	▶412
561-8104	▶66
561-8107	▶33
561-8108	▶58
561-8204	▶389
561-8205	▶118
561-8628	392
562-2465	91
	▶93
562-3697	▶6
562-3698	3
	4
	5
	▶6
562-3699	▶7
562-3700	2
	▶7
562-4906	▶2
562-7442	399
	▶439
562-8138	269
	270
	274
	278
562-9155	▶3
562-9156	▶4
562-9158	▶4
562-9159	▶5
562-9524	270
	274
	278
562-9525	270
	274
	278
562-9526	270
	274
	278
563-2070	▶5
563-2071	2
	3
	4
	▶305
563-2082	▶5
563-2083	▶6
563-2092	5
	▶6
563-7945	373
563-7947	373
564-1382	278
564-1383	274
564-1385	▶269
	275
	279
564-1387	275
	279
564-1689	373
564-1690	373
564-2791	270
	274
	278
564-2796	342
564-2799	270
	274
	278
564-2800	270
	274
	278
564-2802	270
	274
	278
564-2804	270
	274
	278
564-2807	271
	275
	279
564-5816	391
564-6661	135
564-6663	135
564-7741	115
564-7742	115
564-7772	40
564-7829	245
	▶249
564-7830	246
	▶251
564-7833	249
	251
564-9847	122
564-9999	271
	275
	278
565-0000	270
	274
	278
565-0121	270
	274
	278
565-0135	236
565-0137	270
	274
	278
565-0138	269
565-0142	269
565-0143	269
565-2650	325
565-2651	325
565-2652	325
565-7941	203
565-7942	203
565-8563	392
565-8629	255
565-8662	229
565-9380	234
565-9402	35
565-9404	35
565-9410	215
	217
565-9562	215
	217
565-9563	215
	217
565-9608	227
566-0410	▶57
566-1302	209
566-1307	208
566-1308	209
566-1309	208
566-2321	181
566-2322	181
566-4059	108
566-4062	108
566-4400	187
566-6080	310
	▶440
566-6469	223
566-6523	271
	275
	279
	▶285
566-6979	▶57
566-9866	174
	175
	▶441
566-9874	271
	275
	279
566-9876	271
	275
	279
566-9891	173
	174
	▶442
567-0326	442
567-0698	433
567-0705	431
	438
567-2260	41
567-2264	40
567-2270	41
567-2529	199
567-2530	199
567-2531	199
567-2533	201
567-2534	201
567-2535	201
567-3173	269
	270
	274
	278
567-4354	179
	183
567-4455	184
567-4456	185
567-4592	▶388
567-4593	▶388
567-4594	▶388
567-4595	▶389
567-4596	▶118
567-6410	▶115
	286
567-7574	117
567-7582	117
567-7748	223
567-8544	24
568-1566	▶295
568-1567	2
	3
	4
	5
	▶295
568-3676	443
	444
568-3677	443
	444
568-3678	176
	▶443
568-3680	175
	▶444
568-5522	443
568-5523	443
568-5524	443

▶ PRIMARY REFERENCE

MEMORANDA



©2018 Caterpillar
All Rights Reserved

CAT, CATERPILLAR, their respective logos, “Caterpillar Yellow”, and the POWER EDGE trade dress as well as corporate and product identity used herein, are trademarks of Caterpillar and may not be used without permission.