RUTHZIL TRATOR COMERCIAL DE PEÇAS LTDA 11 97083-6812 ROLANDO CITRANGULO

DCO

John Deere JD310 Backhoe Loader

DEZEMBRO 1980

JOHN DEERE

PARTS CATALOG

John Deere JD310
Backhoe Loader

PC4136 (15DEC80) English

John Deere Werke Mannheim
PC4136 (15DEC80)

Printed in Germany
ENGLISH

PC4136 15DEC80

Directions for use of parts catalog

A How do you find a part, if Part Number is not known?

1. Turn to Primary Index beginning on page A1 and determine required Section
2. Decode Section Number to corresponding page (refer to accompanying insert)
3. Determine required components from Sectional Index
4. Turn to relevant page for these components
5. Identify part on drawing and determine Part Number in text with help of drawing key number

B How do you identify a part, if Part Number is known?

1. Turn to Numerical Index at end of catalog
2. Locate Part Number and determine page location
3. Turn to relevant page in Parts Catalog
4. Identify part on corresponding drawing

Layout of text page with seven columns

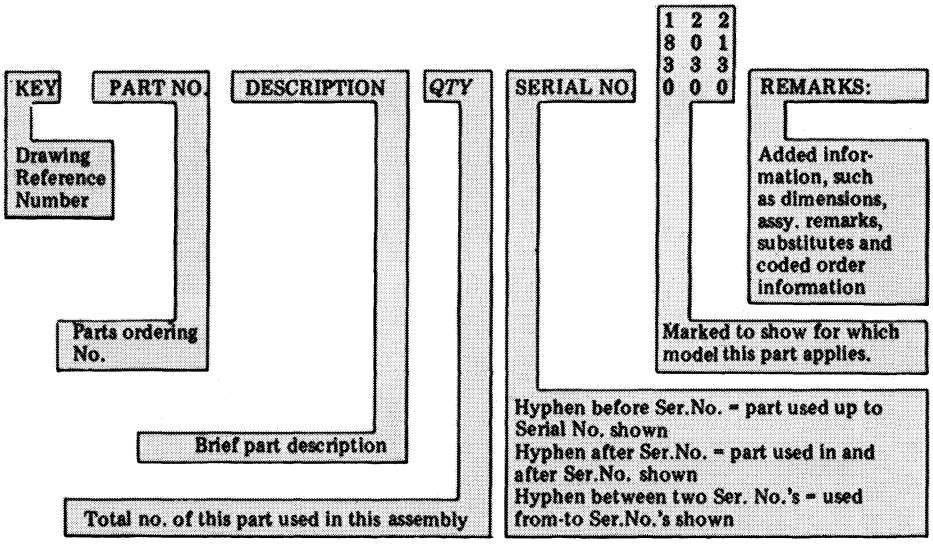

Coded notes used when ordering spare parts

As required AR	Kit KIT	Or OR	Upper UP
Complete assembly ASSY	Number of links L	Order ORD	With W/
For FOR	Length LGTH	By package of PACKG	Without W/O
Front FRONT	Left-hand L.H.	Right-hand R.H.	Gear and sprocket teeth number Z
See page GRID	Lower LOW	Rear REAR	
Inside diameter I.D.	Not supplied separately NSEP	Substitute for SUB. FOR	
Including keys INCL. KEYS	Outside diameter O.D.	Thickness TK	

Utilisation des catalogues pièces

A) Comment trouver la référence d'une pièce donnée?

1) Dans l'index principal commençant en A1 déterminer le numéro de section
2) Dans les cases latérales, ou inférieures voir les pages correspondant au numéro de section
3) Rechercher l'élément dans l'index de section
4) Ouvrir à la page indiquée pour cet élément
5) Identifier la pièce dans l'illustration. Son numéro de repère permet alors de trouver la référence dans la partie texte.

B) Comment identifier une pièce d'après sa référence

1) Ouvrir à l'index alphanumérique se trouvant à la fin du catalogue
2) Rechercher la référence et relever le numéro de page correspondant
3) Ouvrir le catalogue à la page indiquée
4) Identifier la pièce dans l'illustration.

Disposition d'une page de texte en sept colonnes

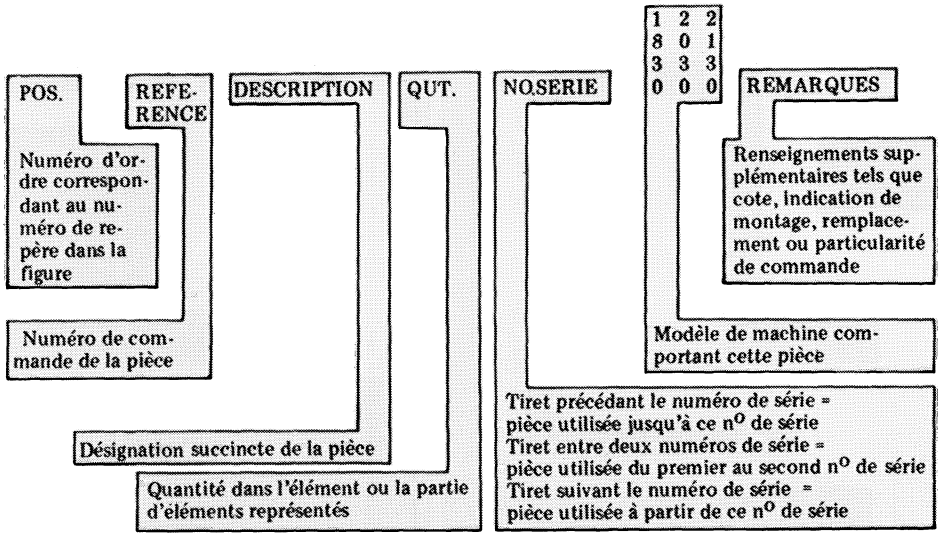

Codes des remarques

Suivant besoin **AR**	Nécessaire de réparation **KIT**	Ou **OR**	Supérieur **UP**
Ensemble complet **ASSY**	Nombre de maillons **L**	Commander **ORD**	Avec **W/**
Pour **FOR**	Longueur **LGTH**	Par paquet de **PACKG**	Sans **W/O**
Avant **FRONT**	Gauche **L.H.**	Droit **R.H.**	Nombre de dents des pignons **Z**
Voir page **GRID**	Inférieur **LOW**	Arrière **REAR**	
Diamètre intérieur **I.D.**	Non livré séparément **NSEP**	Remplace **SUB. FOR**	
Comprend les repères . . . **INCL. KEYS**	Diamètre extérieur **O.D.**	Epaisseur **TK**	

Hinweise zur Benutzung des Ersatzteile-Katalogs

A Wie findet man ein Teil wenn die Bestellnummer nicht bekannt ist?

1. Hauptindex beginnend auf Seite A1 aufschlagen und gesuchte Gruppe ermitteln
2. Gruppennummer umschlüsseln in entsprechende Seite (siehe Kasten auf der Seite)
3. In Gruppenindex gewünschte Komponenten ermitteln
4. Für diese Komponenten angegebenen Seite aufschlagen
5. In der Bildtafel Teil identifizieren und entsprechend der Teilnummer die Stücknummer aus Textteil entnehmen.

B Wie kann man ein Teil identifizieren von dem die Stücknummer bekannt ist?

1. Nummernindex am Ende des Kataloges aufschlagen
2. Bestellnummer suchen und Seite feststellen
3. Im Katalog entsprechende Seite aufschlagen
4. Auf zugehöriger Bildtafel Ersatzteil identifizieren

Aufbau einer Textseite = sieben Spalten

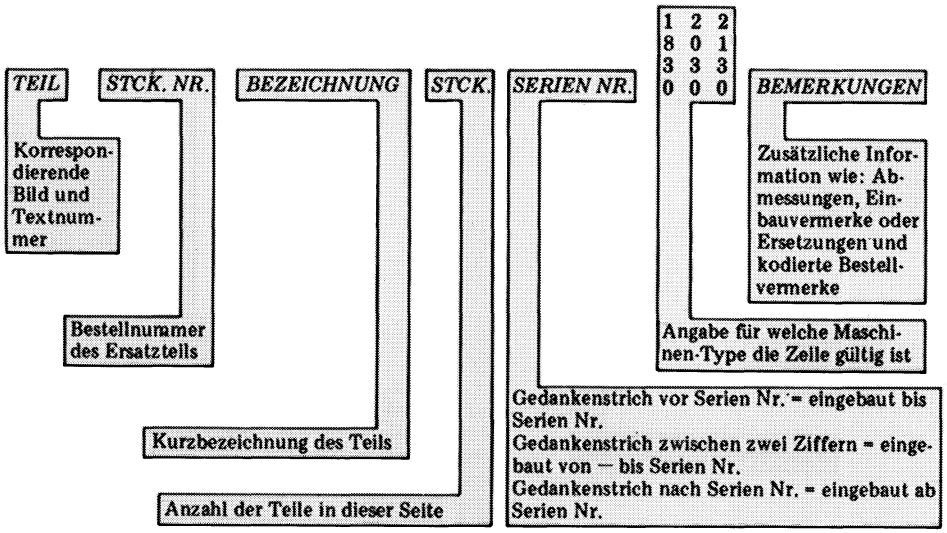

Umschlüsselung der kodierten Bestellvermerke

AR — Nach Bedarf	KIT — Reparatursatz	OR — Oder	UP — Oben
ASSY — Kompletter Zusammenbau	L — Zahl der Glieder	ORD — Bestelle	W/ — Mit
FOR — für	LGTH — Länge	PACKG — Verpackt zu	W/O — Ohne
FRONT — Vorn	L.H. — Links	R.H. — Rechts	Z — Zähnezahl für Ketten- und Zahnrad
GRID — siehe Seite	LOW — Unten	REAR — Hinten	
I.D. — Innendurchmesser	NSEP — Einzeln nicht lieferbar	SUB. FOR — Ersatz für	
INCL. KEYS — Einschließlich Teile	O.D. — Außendurchmesser	TK — Stärke	

Istruzioni per l'uso del catalogo parti di ricambio

A. Come rintracciare un pezzo se non se ne conosce il numero.

1. Aprire il Primary Index cominciando nella pagina A1 e determinare la sezione richiesta.
2. Decodificare il numero della sezione nella corrispondente pagina (vedere casella nella pagina)
3. Determinare i componenti cercati dell'indice della sezione.
4. Aprire la pagina relativa a questi componenti.
5. Identificare il pezzo sul disegno e determinare il numero del pezzo nel testo, servendosi del numero di chiave del disegno.

B. Come rintracciare un pezzo conoscendone il numero.

1. Aprire il indice numerico al fine del catàlogo.
2. Individuare il numero del pezzo e determinare la pagina relativa.
3. Aprire la pagina cosî trovata.
4. Identificare il pezzo sul corrispondente disegno.

Tracciato della pagina di testo a 7 colonne

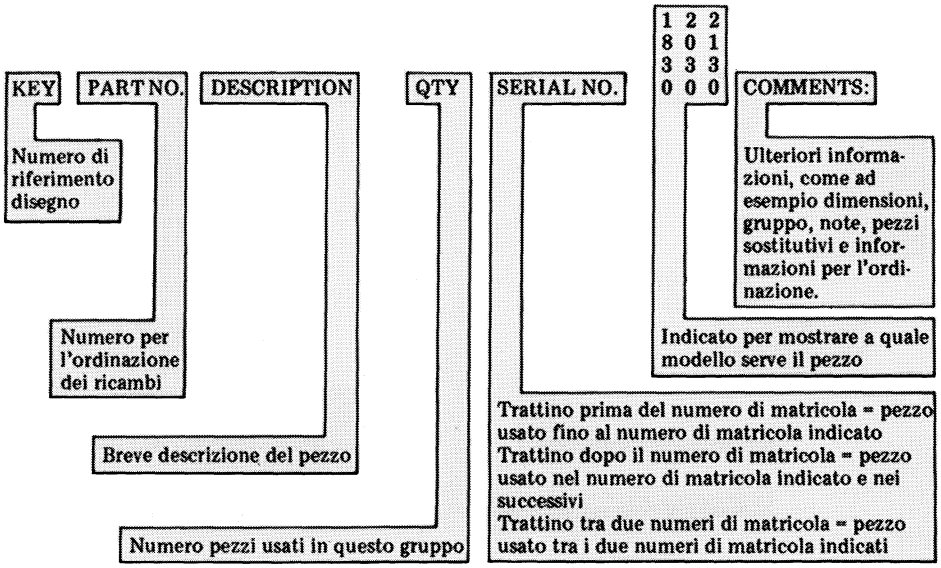

Decodificazione dei codice usati per ordinare parti di ricambio

A secondo della necessità **AR**	Kit **KIT**	Oppure **OR**	Superiore **UP**
Gruppo completo **ASSY**	Numero dei anelli **L**	Ordinare **ORD**	Con **W/**
Per **FOR**	Lunghezza **LGTH**	Confezionato con **PACKG**	Senza **W/O**
Parte anteriore **FRONT**	Sinistro **L.H.**	Destro **R.H.**	Numero denti ingranaggi e pignoni **Z**
Vedere pagina **GRID**	Inferiore **LOW**	Parte posteriore **REAR**	
Diametro interno **I.D.**	Non fornito separatamente **NSEP**	Sostituisce **SUB. FOR**	
Comprese le chiavi **INCL. KEYS**	Diametro esterno **O.D.**	Spessore **TK**	

Forma de utilizar los catálogos de piezas

A ¿Cómo encontrar la referencia de una pieza cuando se desconoce?

1. Utilizar el índice de materias a partir de la página A1 para averiguar en qué sección aparece la pieza.
2. Convertir el número de la sección en el número de la página que le corresponde.
3. Localizar la pieza en el índice de secciones.
4. Consultar la página en la que aparece la pieza.
5. Localizar, a la vista de la lámina, la pieza deseada y comparar el número de posición que tiene asignado con la referencia que figura en el texto.

B ¿Cómo encontrar el dibujo de una pieza cuando se conoce la referencia?

1. Consultar el índice numérico en las últimas páginas del catálogo.
2. Localizar la referencia y la página que le corresponde.
3. Abrir la página del catálogo que se acaba de localizar.
4. Localizar la pieza a la vista de la lámina.

Estructura de una página con texto en siete columnas

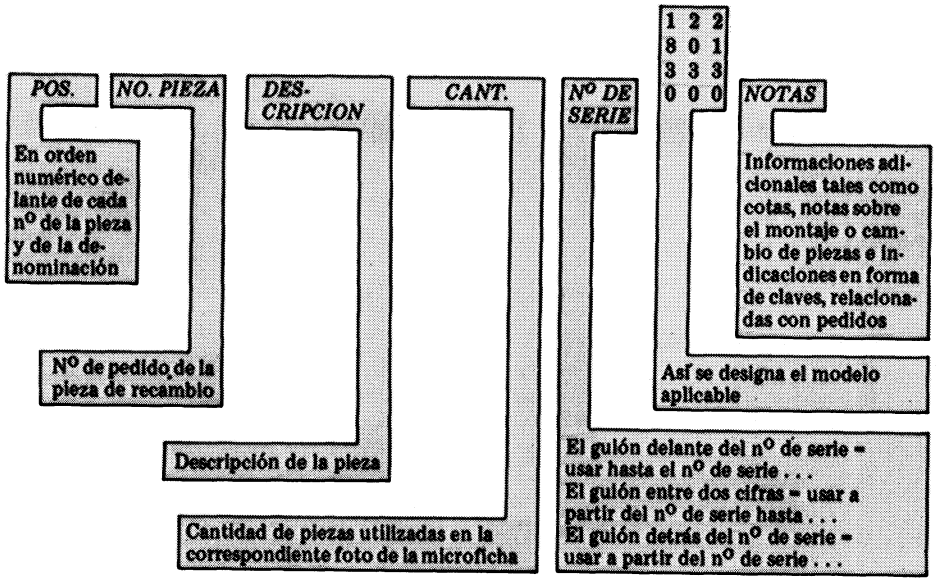

Interpretación de las letras clave usadas en pedidos

AR — Las que se necesiten	KIT — Juego de piezas para una reparación	OR — o	UP — Superior
ASSY — Conjunto completo	L — Número de eslabones	ORD — Pídase	W/ — Con
FOR — Para	LGTH — Longitud	PACKG — Por paquete de	W/O — Sin
FRONT — Frente	L.H. — Izquierda	R.H. — Derecha	Z — Número de dientes de los engranajes
GRID — Véase página	LOW — Más bajo	REAR — Trasero	
I.D. — Diámetro interior	NSEP — No se suministra por separado	SUB. FOR — Sustitución para	
INCL. KEYS — Incluye las posiciones	O.D. — Diámetro exterior	TK — Espesor	

Instruktion för användning av papperskatalog

A Hur hittar jag en del om reservdelsnumret inte är känt?

1. Slå upp huvudindexet som börjar på sidan A1 och fastställ det sökta gruppnumret
2. Tag reda på beteckningen för respektive sida som motsvarar gruppnumret (se bilaga)
3. Leta upp detaljerna i gruppregistret
4. Leta upp motsvarande sida i katalogen
5. Avläs delarna från bilden respektive textsidan

B Hur hittar jag en del om reservdelsnumret är känt?

1. Slå upp nummerförteckningen i slutet av katalogen
2. Avläs sidans nummerkombination vid sidan om respektive reservdelsnummer
3. Slå upp respektive sida i katalogen
4. Identifiera delen på sprängskissen och textsidan

Beskrivning av textkolumner (7 st) på textsidorna

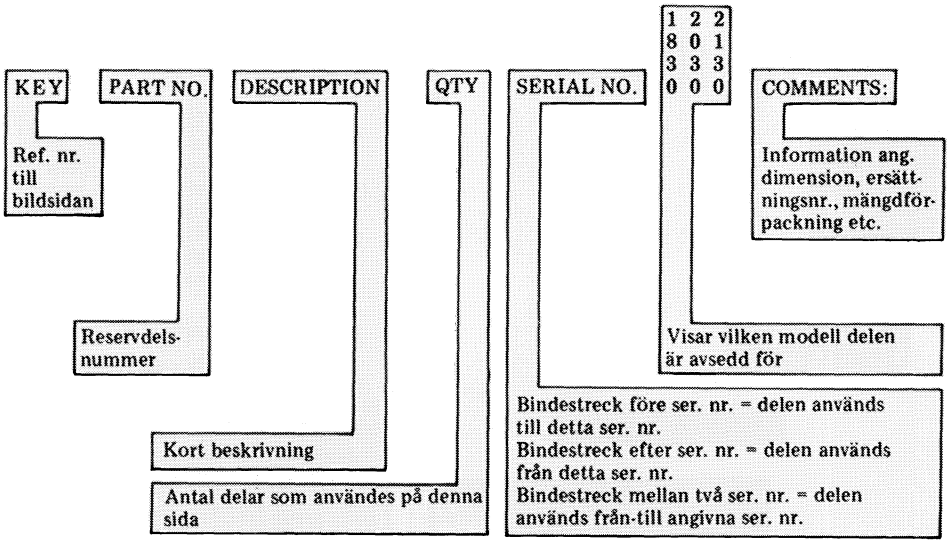

Koder använda i reservdelskatalogen

AR — Antal efter behov	KIT — Sats	OR — Eller	UP — Övre
ASSY — Komplett	L — Antal länkar	ORD — Beställ	W/ — Med
FOR — För	LGTH — Längd	PACKG — Mängdförpackning av	W/O — Utan
FRONT — Främre	L.H. — Vänster	R.H. — Höger	Z — Antal tänder på kedje-och kugghjul
GRID — Se sidan	LOW — Nedre	REAR — Bakre	
I.D. — Innerdiameter	NSEP — Levereras ej separat	SUB. FOR — Ersättning för	
INCL. KEYS — Inklusive delar	O.D. — Ytterdiameter	TK — Grovlek	

PRIMARY INDEX
INDEX PRINCIPAL
HAUPTINDEX
INDICE PRINCIPALE
INDICE DE MATERIAS
HUVUDFORTECKNING
L 27547

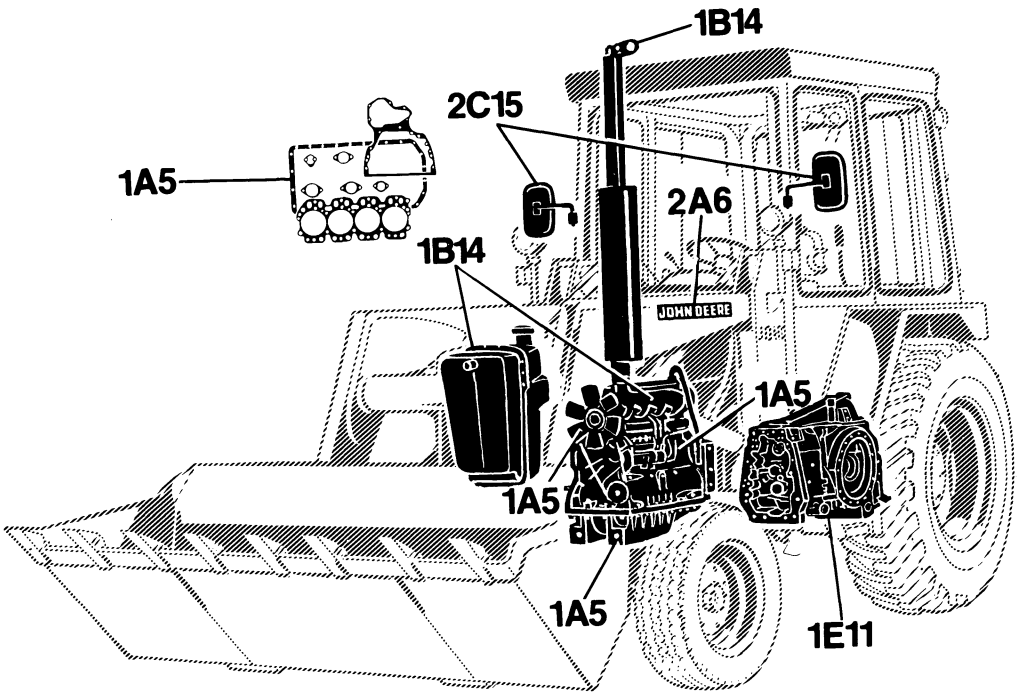

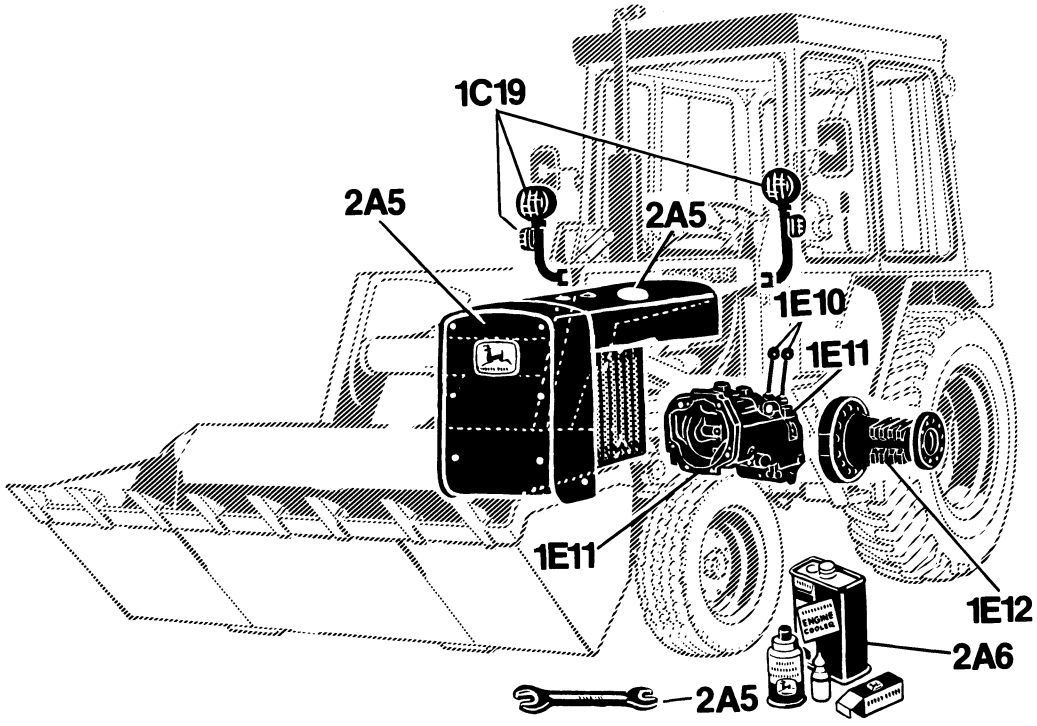

L 27547

 © by Deere & Co., European Office, D-6800 Mannheim

PRIMARY INDEX
INDEX PRINCIPAL
HAUPTINDEX
INDICE PRINCIPALE
INDICE DE MATERIAS
HUVUDFORTECKNING
L 27548

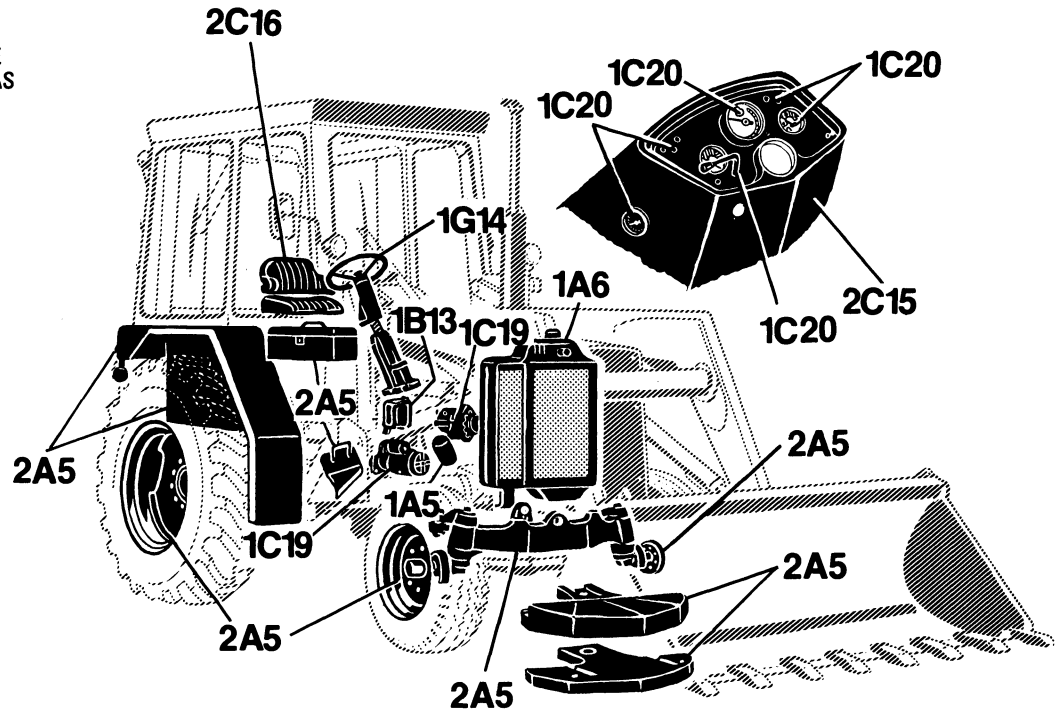

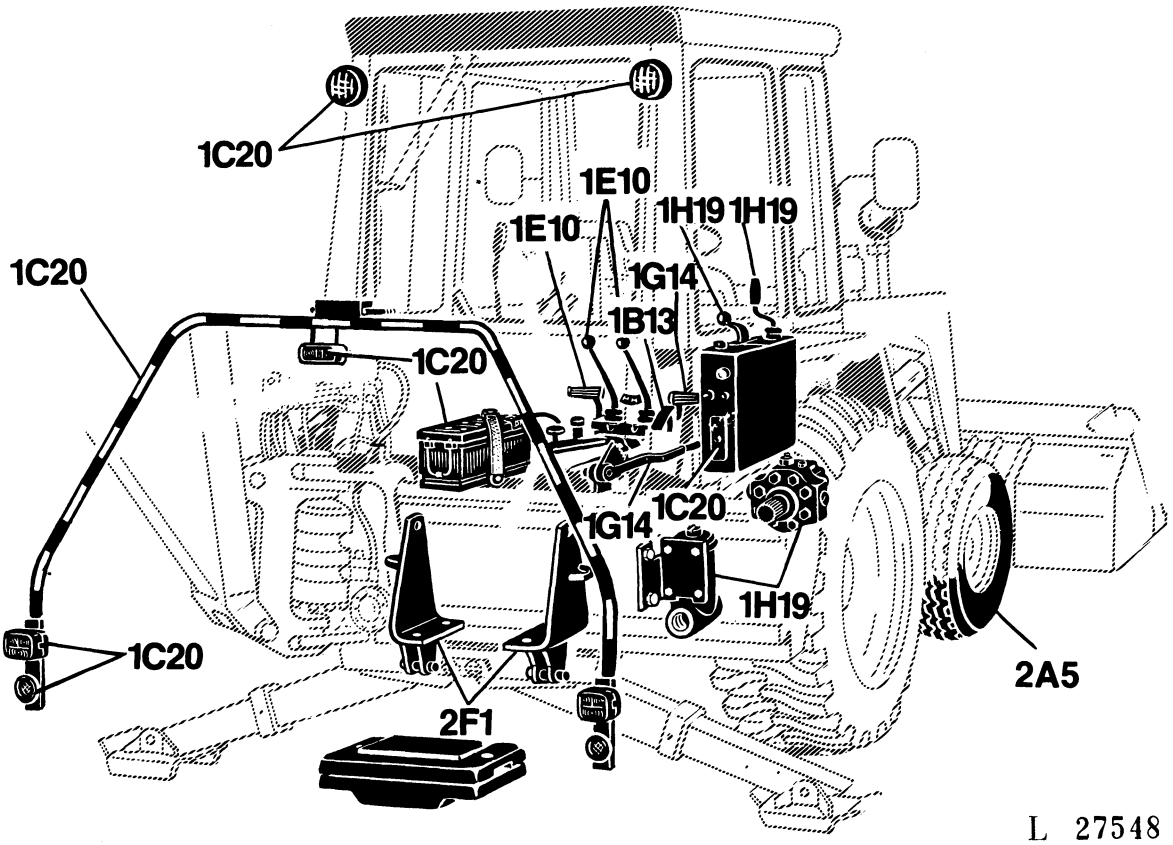

L 27548

PRIMARY INDEX
INDEX PRINCIPAL
HAUPTINDEX
INDICE PRINCIPALE
INDICE DE MATERIAS
HUVUDFORTECKNING
L 27549

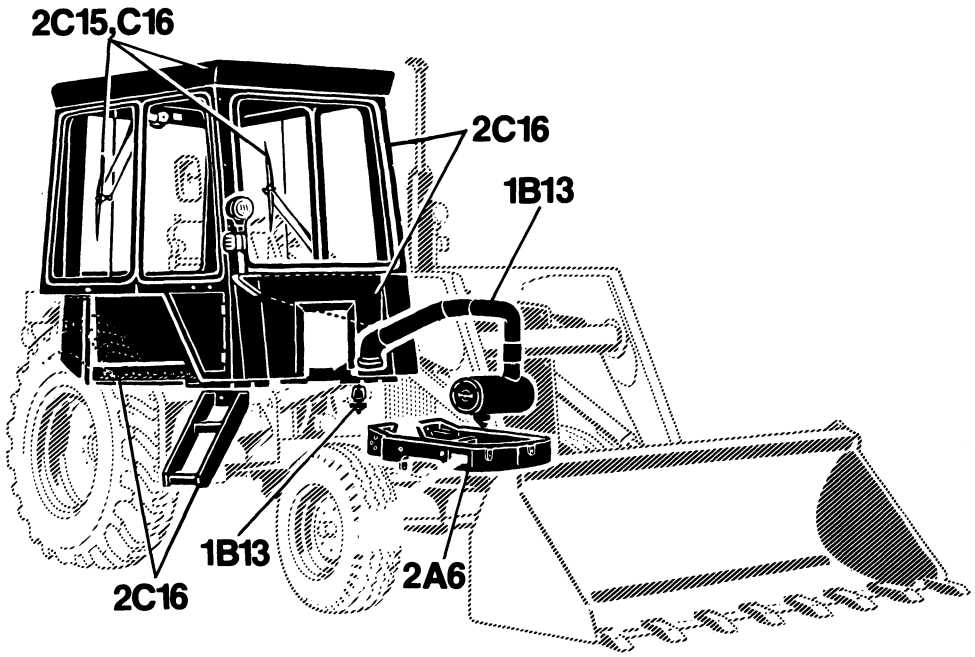

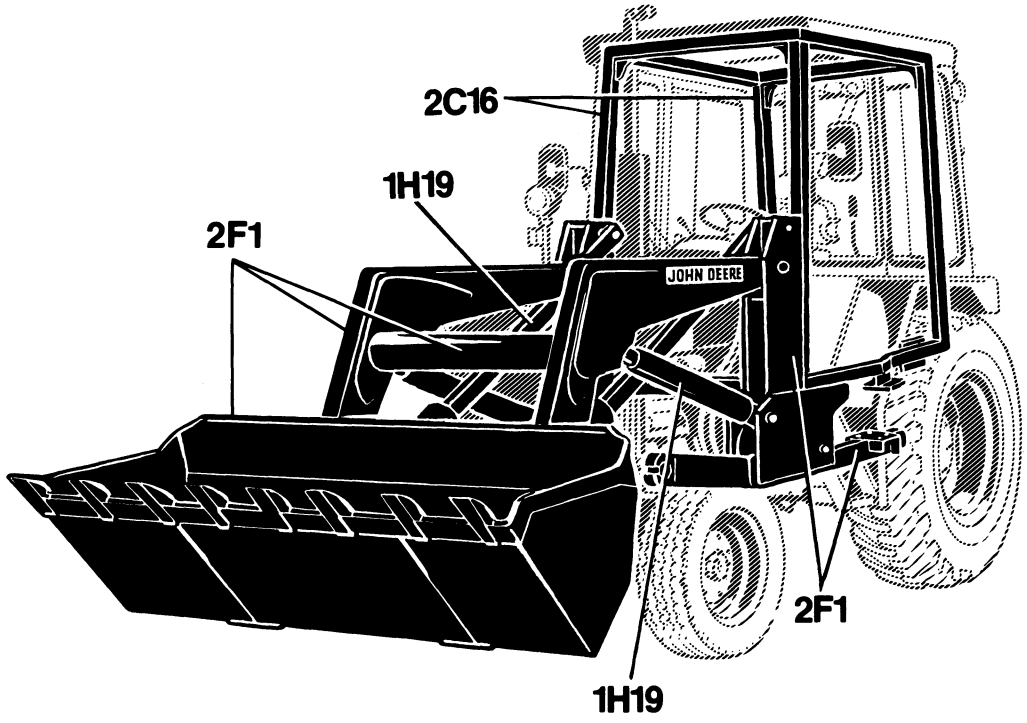

L 27549

INDENTIFICATION VIEW
VUE D'ENSEMBLE
TYPENBILD
VISTA DELLA MACCHINA
VISTA DE LA MAQUINA
VY AV MASKINEN
L 15234





L 15234

SECTIONAL INDEX
INDEX DE SECTION
GRUPPENINDEX
INDICE DELLA SEZIONE
INDICE DE SECCION
GRUPPSFORTECKNING
L 27550

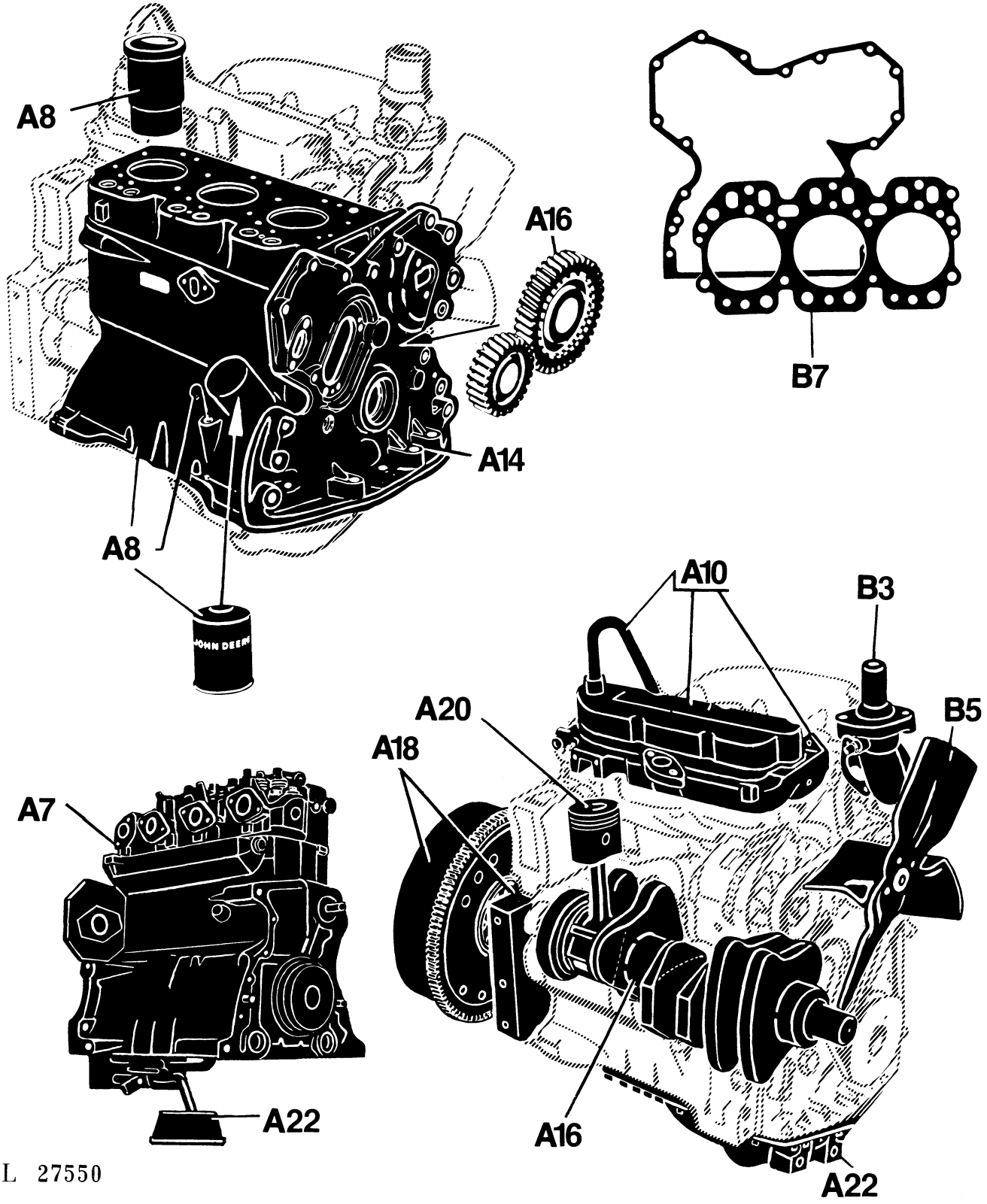

SECTIONAL INDEX
INDEX DE SECTION
GRUPPENINDEX
INDICE DELLA SEZIONE
INDICE DE SECCION
GRUPPSFORTECKNING
L 27581

XXXX

SHORT ENGINE
MOTEUR DEPOUILLE
KURZMOTOR
MOTORE CORTO
MOTOR BASICO
KORT MOTOR
L 13259

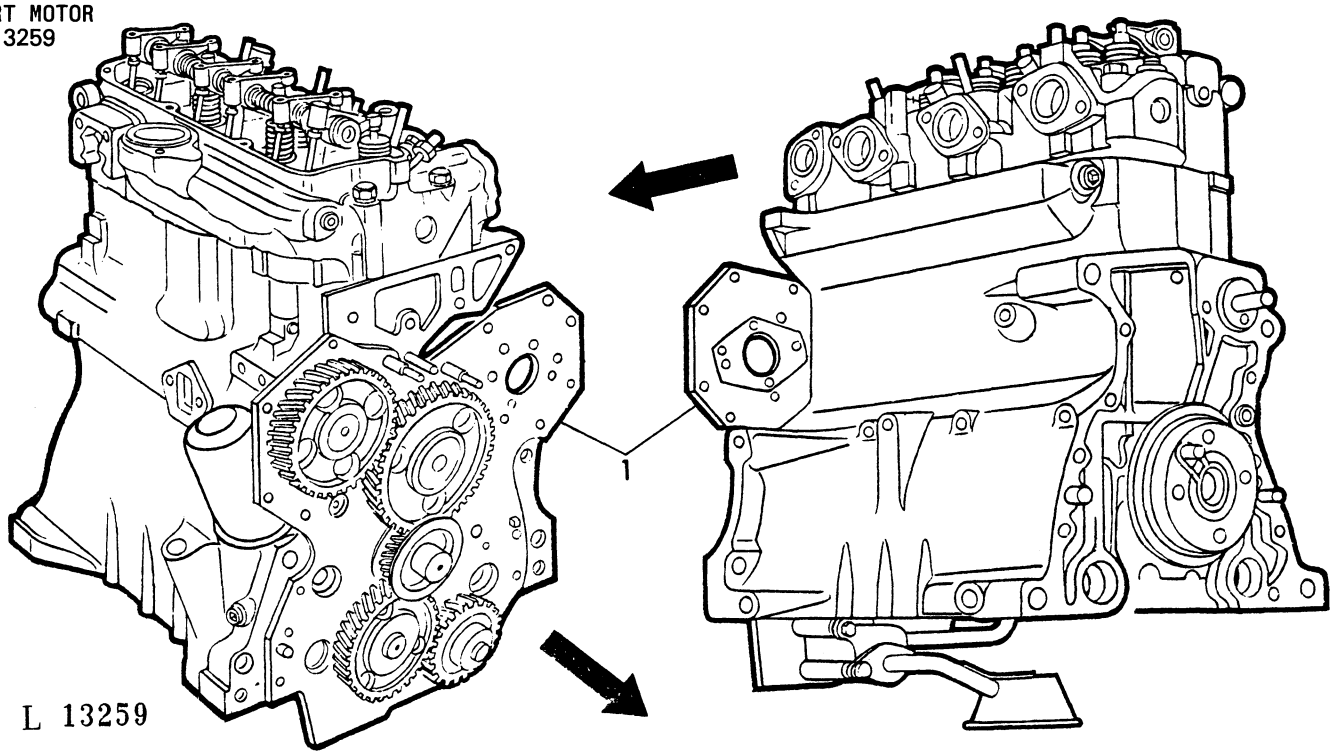

KEY	PART NO.	DESCRIPTION	QTY	SERIAL NO.	JD310	REMARKS
1	DD 12098	SHORT ENGINE	AR		X	ASSY, ORD W/AR 67942, AR92893

CYLINDERBLOCK
BLOC-CYLINDRES
ZYLINDERBLOCK
BLOCCO CILINDRI
BLOQUE DE CILINDROS
CYLINDERBLOCK
L 27143

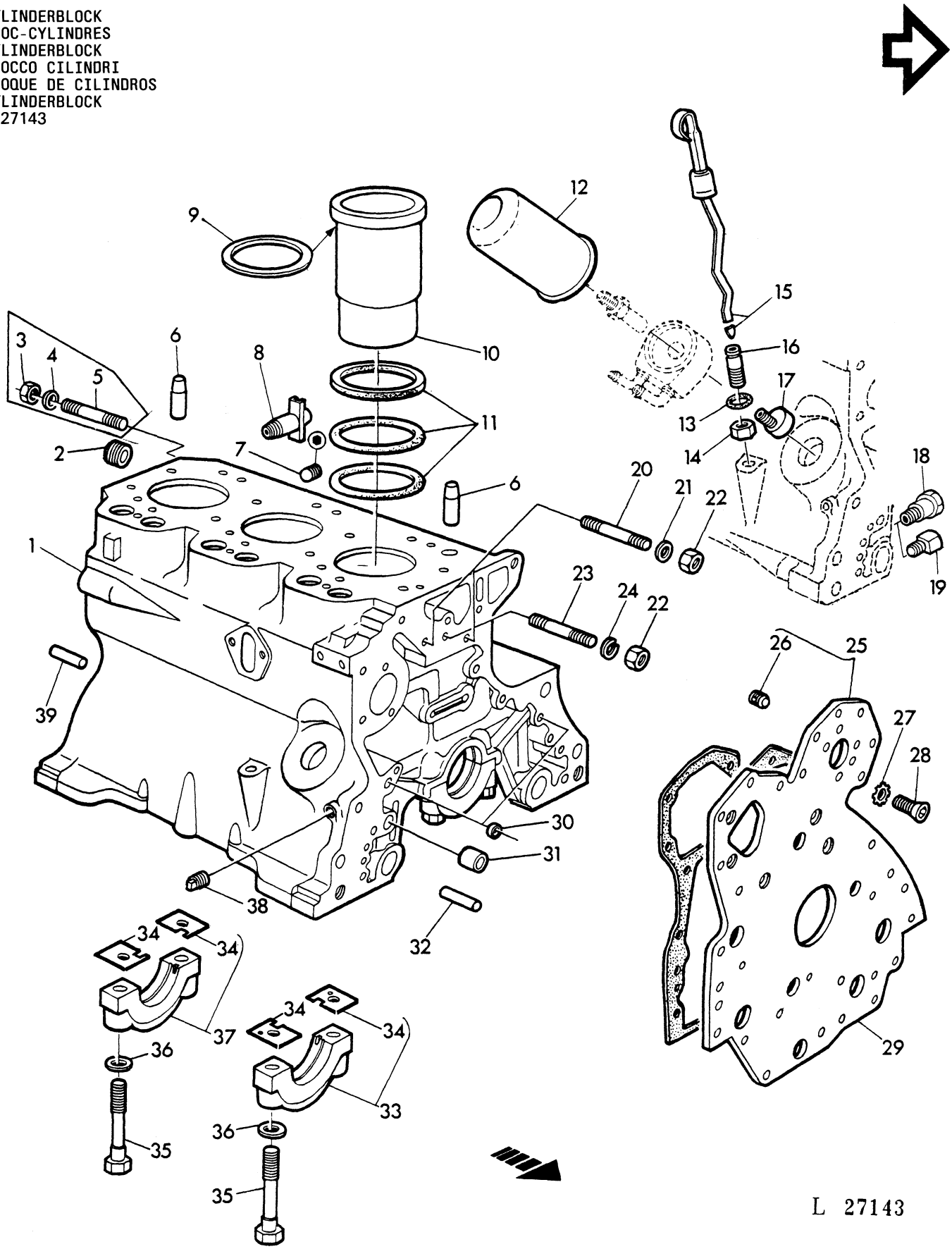

KEY	PART NO.	DESCRIPTION	QTY	ENGINE SERIAL NO.	JD310	REMARKS
1	AR 67961	CYLINDER BLOCK	1		X	ASSY, INCL. KEYS 2, 6, 7, 17-20, 23, 30-33, 35-39
2	15H 665	PIPE PLUG	1		X	3/4"
3	14H 1039	NUT	1		X	5/8", SUB. FOR 14H760
4	R 42363	WASHER	1		X	
5	L 29854	STUD	1		X	5/8"
6	R 26241	DOWEL PIN	2		X	
7	15H 275	PIPE PLUG	1		X	1/4"
8	AT 13740	DRAIN VALVE	1		X	1/4"
9	CD 15466	SHIM	AR		X	TK=0, 05MM(.002")
	R 65833	SHIM	AR		X	TK=0, 1MM(.004")
10	R 51726	CYLINDER LINER	3		X	
11	AR 65507	PACKING	3		X	KIT, SUB. FOR R26121, R48767 DD13277, AR68318
12	T 19044	OIL FILTER	1		X	
13	R 10093	O-RING	1		X	
14	14H 826	NUT	1		X	1/2"
15	AT 21534	DIPSTICK	1	-202994	X	ORD AT21535 W/R55300
	AT 21535	DIPSTICK	1	202995-	X	
16	R 55299	THREADED NIPPLE	1	-202994	X	1/2" ORD AT21535 W/R55300
	R 55300	THREADED NIPPLE	1	202995-	X	1/2"
17	T 23435	THREADED NIPPLE	1		X	
18	R 54802	NOZZLE	3		X	
19	22H 932	SCREW	AR		X	5/16"X3/8"
20	T 33279	STUD	2		X	
21	24H 1303	WASHER	2		X	13/32"X11/16"X.060"
22	14H 812	NUT	3		X	3/8"
23	T 25701	STUD	1		X	3/8"
24	12H 304	LOCK WASHER	1		X	3/8"
25	AT 29928	PLATE	1		X	ASSY, INCL. KEY 26, FRONT
26	AT 21191	SET SCREW	8		X	5/16"
	AT 22919	SET SCREW	2		X	3/8"
27	12H 324	WASHER	5		X	3/8"
28	T 20166	SCREW	5		X	3/8"X7/8"
29	T 24965	GASKET	1		X	
30	T 18891	PLUG	2		X	
31	R 26493	BUSHING	1		X	
32	A 4879R	DOWEL PIN	2		X	
33	AR 82294	BEARING	3		X	ASSY, INCL. KEY 34
						SUB. FOR AT21226
34	T 23670	SHIM	AR		X	TK=0, 076MM(.003")
	T 23671	SHIM	AR		X	TK=0, 051MM(.002")
35	T 23474	CAP SCREW	8		X	1/2"
36	T 20168	WASHER	8		X	
37	AR 82295	BEARING	1		X	ASSY, INCL. KEY 34
						SUB. FOR AT21227
38	15H 255	PIPE PLUG	1		X	3/8"
39	A 120R	DOWEL PIN	2		X	

CYLINDER HEAD / ROCKER ARM COVER
CULASSE / COUVERCLE DE CULBUTEURS
ZYLINDERKOPF / ZYLINDERKOPFHAUBE
TESTA CILINDRI / COPERCHIO PUNTERIE
CULATA / TAPA DE BALANCINES
CYLINDERTOPP / VENTILKAPA
L 27140

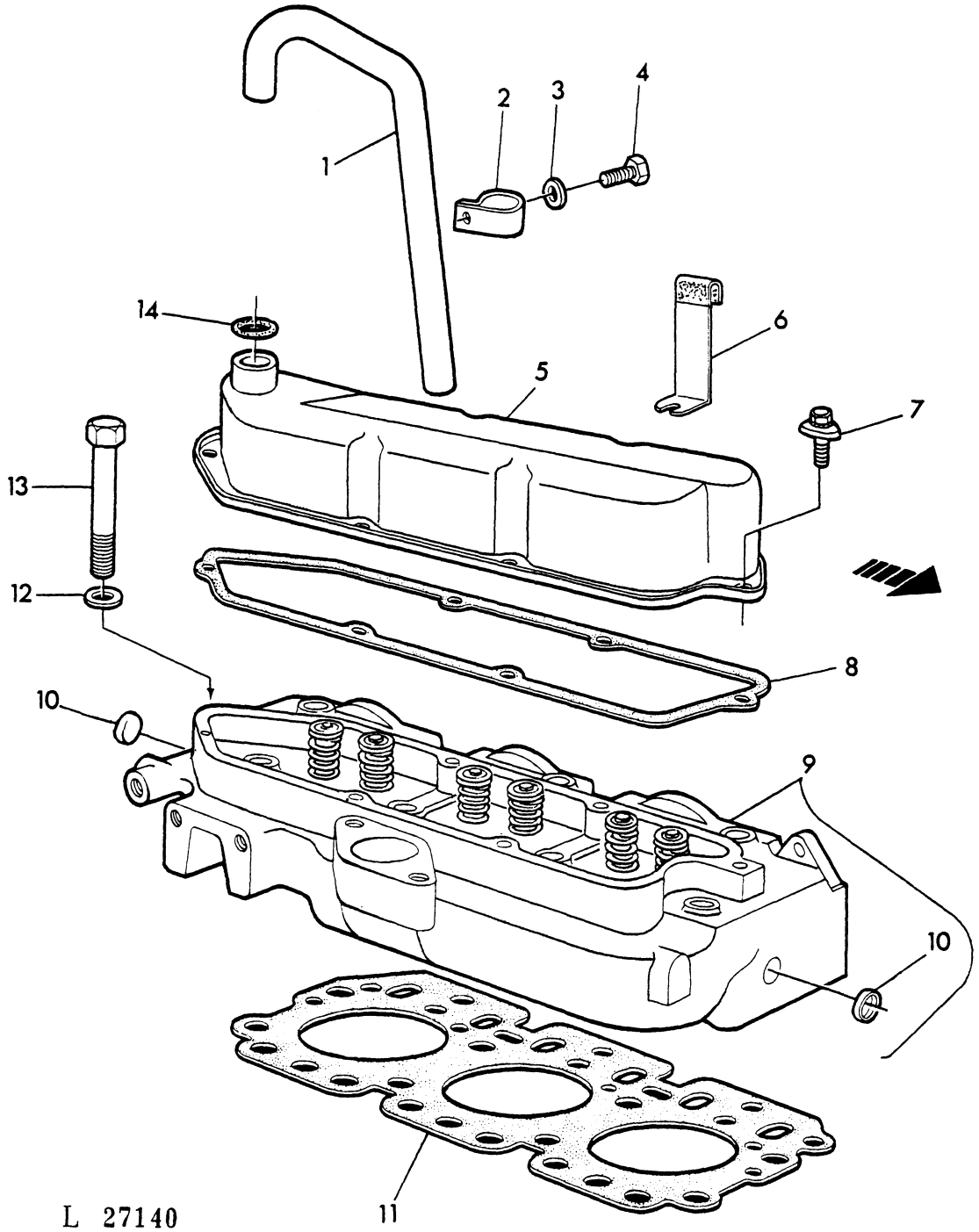

KEY	PART NO.	DESCRIPTION	QTY	SERIAL NO.	JD310	REMARKS
1	T 20074	PIPE	1		X	
2	R 40791	CLAMP	1		X	
3	24H 1685	WASHER	1		X	11/32"X3/4"X.075"
4	19H 1813	CAP SCREW	1		X	5/16"X5/8"
5	AT 18016	COVER	1		X	
6	T 24151	RETAINER	1		X	
7	AR 45530	SCREW	6		X	
8	R 68226	GASKET	1		X	SUB. FOR T20111
9	AR 70583	CYLINDER HEAD	1		X	ASSY, INCL. KEY 10
10	A 3910R	PLUG	2		X	
11	R 59447	GASKET	1		X	SUB. FOR T20039, R52789
12	T 20168	WASHER	14		X	
13	R 53223	CAP SCREW	14		X	1/2"X4-1/4"
14	R 495R	O-RING	1		X	

CAMSHAFT / VALVES / ROCKER ARM SHAFT
ARBRE A CAMES / SOUPAPES / ARBRE DES CULBUTEURS
NOCKENWELLE/VENTILE/KIPPHEBELWELLE
ALBERO A CAMME / VALVOLE / ALBERO BILANCIERI
ARBOL DE LEVAS / VALVULAS / EJE DE BALANCINES
KAMAXEL / VENTILER / VIPPARMSAXEL
L 13272

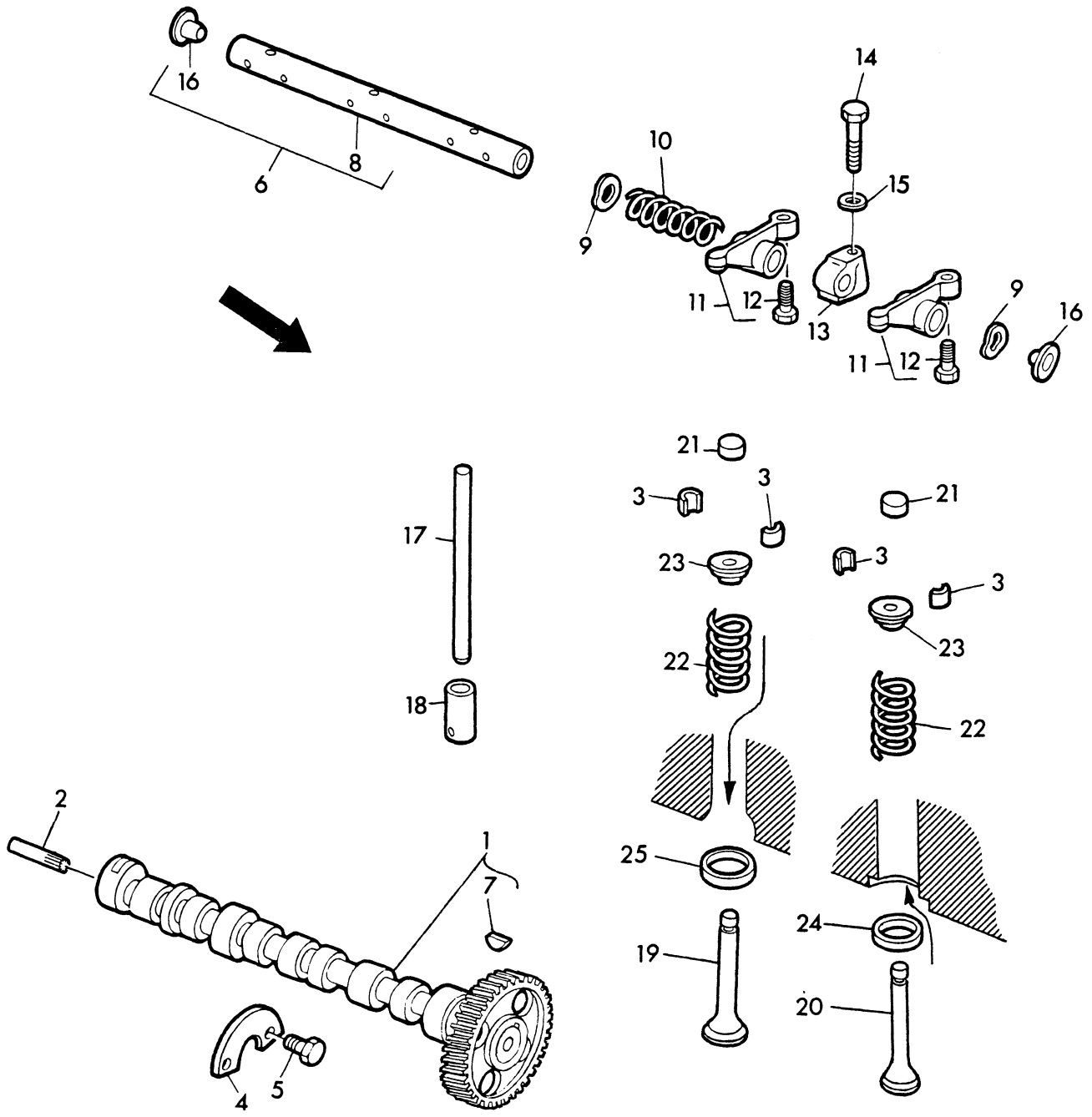

L 13272

KEY	PART NO.	DESCRIPTION	QTY	SERIAL NO.	JD310	REMARKS
1	AR 79622	CAMSHAFT	1		X	ASSY, INCL. KEY 7 SUB. FOR AT18055, DD12094
2	T 20071	DRIVE SHAFT	1		X	
3	T 20077	RETAINER	12		X	
4	T 20072	PLATE	1		X	
5	19H 1731	CAP SCREW	2		X	3/8"X1"
6	DD 12119	ROCKER ARM SHAFT	1		X	KIT, INCL. KEYS 8, 16
7	T 28041	SHAFT KEY	1		X	
8	R 54985	ROCKER ARM SHAFT	1		X	NSEP, ORD KIT DD12119
9	T 20316	THRUST WASHER	2		X	
10	T 20314	SPRING	2		X	
11	AT 31250	ROCKER ARM	6		X	ASSY, INCL. KEY 12
12	.....	CAP SCREW	6		X	NSEP, ORD AT31250
13	T 20315	SUPPORT	3		X	
14	19H 1733	CAP SCREW	3		X	3/8"X2-1/2"
15	R 42729	WASHER	3		X	SUB. FOR T23594
16	R 54565	PLUG	2		X	
17	T 20310	PUSH ROD	6		X	
18	T 20073	TAPPET	6		X	
19	R 52251	INTAKE VALVE	3		X	O.D. STANDARD
	R 57332	INTAKE VALVE	AR		X	O.D. =+0,076MM(.003")
	R 57334	INTAKE VALVE	AR		X	O.D. =+0,381MM(.015")
	R 57336	INTAKE VALVE	AR		X	O.D. =+0,762MM(.030")
20	R 52252	EXHAUST VALVE	3		X	O.D. =STANDARD
	R 57333	EXHAUST VALVE	AR		X	O.D. =+0,076MM(.003")
	R 57335	EXHAUST VALVE	AR		X	O.D. =+0,381MM(.015")
	R 57337	EXHAUST VALVE	AR		X	O.D. =+0,762MM(.030")
21	T 20129	CAP	6		X	
22	R 26125	SPRING	6		X	
23	T 20176	CAP	6		X	
24	CD 13979	SEAT	3		X	
25	CD 14725	SEAT	AR		X	

TIMING GEAR COVER/OIL FILLER INLET
COUVERCLE DE DISTRIBUTION/GOULOTTE DE REMPLISSAGE D'HUILE
STEUERGEHAEUSE/OELEINFUELLSTUTZEN
COPERCHIO DISTRIBUZIONE/BOCCHETTONE RIEMPIMENTO OLIO
TAPA DE LA DISTRIBUCION/BOCA DE LLENADO DE ACEITE
TIDHJULSKAPA/OLJEPAFYLLNING
L 13780

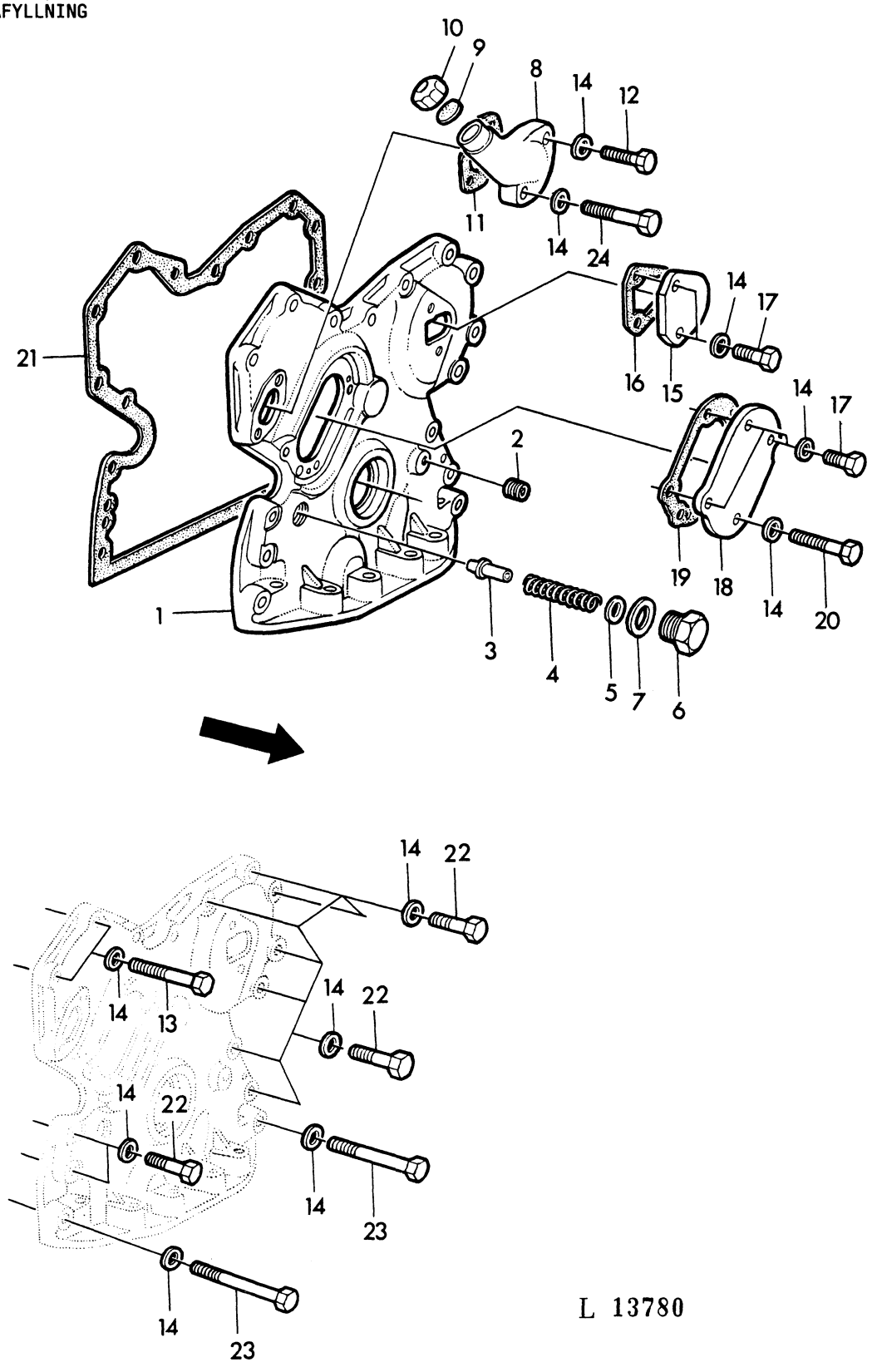

L 13780

KEY	PART NO.	DESCRIPTION	QTY	SERIAL NO.	JD310	REMARKS
1	AR 58196	COVER	1		X	ORD W/KEYS 2, 14, 17-20 SUB. FOR AT19509
2	15H 275	PIPE PLUG	1		X	1/4"
3	R 51516	VALVE	1		X	
4	T 27658	SPRING	1		X	
5	24H 1290	WASHER	AR		X	21/64"X3/4"X. 036"
6	T 27657	CAP SCREW	1		X	
7	A 4827R	SEAL	1		X	
8	T 23614	FILLER NECK	1		X	
9	T 20328	GASKET	1		X	
10	T 20294	COVER	1		X	
11	T 20336	GASKET	1		X	
12	19H 2665	CAP SCREW	1		X	3/8"X1-5/8"
13	19H 2128	CAP SCREW	2		X	3/8"X3"
14	24H 1304	WASHER	21		X	13/32"X23/32"X. 120"
15	T 20362	COVER	1		X	
16	T 20364	GASKET	1		X	
17	19H 2284	CAP SCREW	5		X	3/8"X7/8"
18	T 20272	COVER	1		X	
19	T 20273	GASKET	1		X	
20	19H 1726	CAP SCREW	1		X	3/8"X2-1/4"
21	T 20155	GASKET	1		X	
22	19H 1801	CAP SCREW	9		X	3/8"X2"
23	19H 1733	CAP SCREW	2		X	3/8"X2-1/2"
24	19H 2023	CAP SCREW	1		X	3/8"X3-1/4"

CRANKSHAFT / TIMING GEARS / MAIN BEARINGS
VILEBREQUIN / DISTRIBUTION / PALIERS PRINCIPAUX
KURBELWELLE / STEUERRAEDER / HAUPTLAGER
ALBERO A COLLI / INGRANAGGI DELLA DISTRIBUZIONE / CUSCINETTI
CIGUENAL / PINONES DE DISTRIBUCION / COJINETES DE BANCADA
VEVAXEL / TIDHJUL / RAMLAGER
L 27142

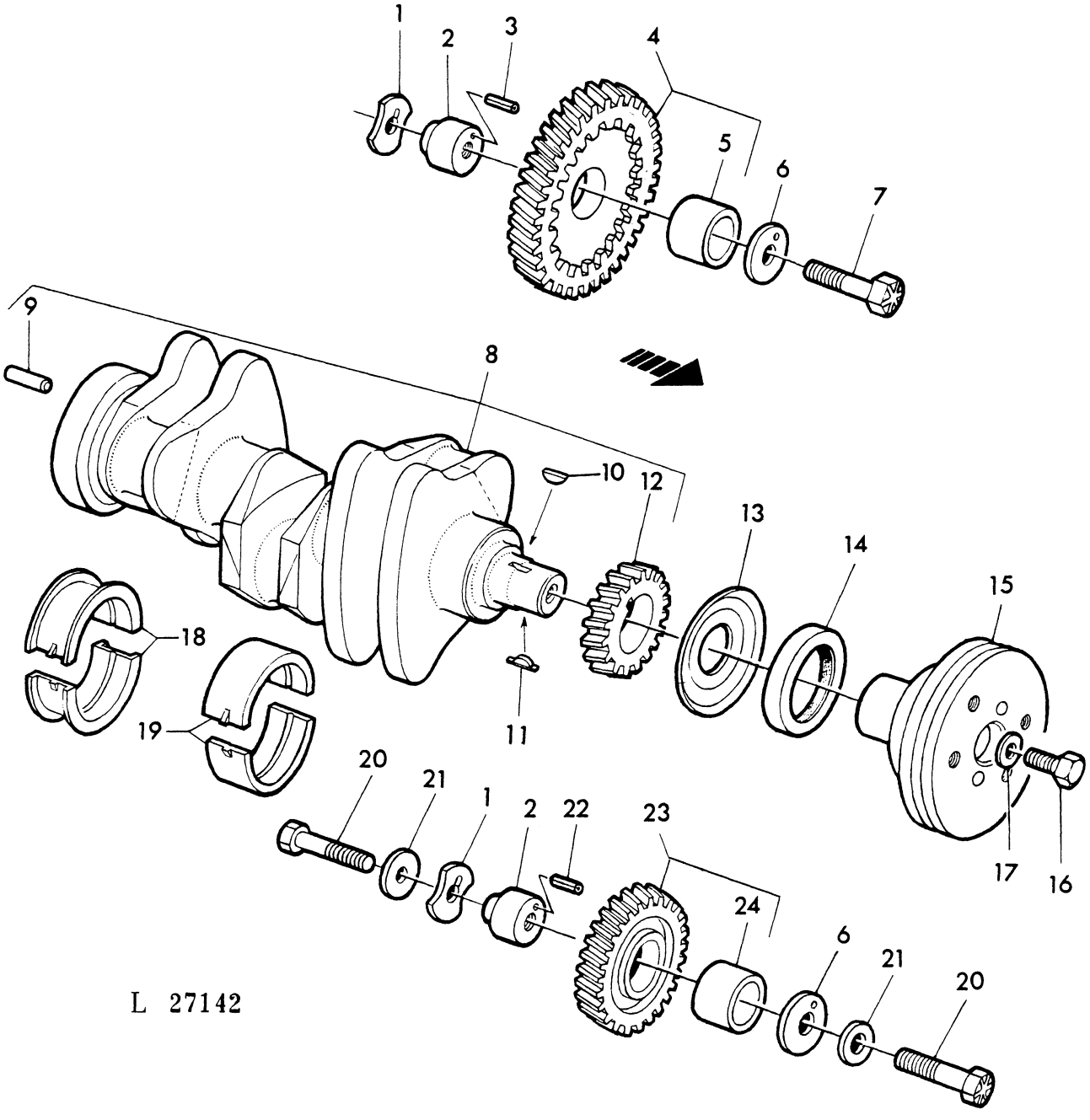

KEY	PART NO.	DESCRIPTION	QTY	SERIAL NO.	JD310	REMARKS
1	T 26324	THRUST WASHER	2		X	
2	T 26323	SHAFT	2		X	
3	34H 283	SPRING PIN	1		X	3/16"X1-1/8"
4	AR 91660	GEAR	1		X	UP, Z=55, INCL. KEY 5 SUB. FOR AT18009
5	T 20034	BUSHING	1		X	
6	T 26326	THRUST WASHER	2		X	
7	T 26327	SCREW	1		X	
8	AT 18031	CRANKSHAFT	1		X	ASSY, INCL. KEYS 9, 10, 12
9	T 26565	DOWEL PIN	1		X	
10	26H 72	KEY	1		X	1/8"X5/8"
11	T 23604	KEY	1		X	
12	T 20094	GEAR	1		X	Z=24
13	T 20046	OIL SLINGER	1		X	
14	AR 67942	SEAL	1		X	FRONT, SUB. FOR AT21608
15	R 72112	PULLEY	1		X	SUB. FOR R47438, R59915
16	19H 1721	CAP SCREW	1		X	1/2"X1-1/2"
17	T 20217	WASHER	1		X	
18	AT 21139	BEARING	1		X	REAR, I. D. =STANDARD
	AT 21130	BEARING	1		X	I. D. REAR, =-0, 051MM(. 002")
	AT 21132	BEARING	1		X	I. D. REAR=-0, 254MM(. 010")
	AT 21134	BEARING	1		X	I. D. REAR=-0, 508MM(. 020")
	AT 21136	BEARING	1		X	I. D. REAR=-0, 762MM(. 030")
19	AT 21140	BEARING	3		X	I. D. =STANDARD
	AT 21108	BEARING	3		X	I. D. =-0, 051MM(. 002")
	AT 21110	BEARING	3		X	I. D. =-0, 254MM(. 010")
	AT 21112	BEARING	3		X	I. D. =-0, 508MM(. 020")
	AT 21114	BEARING	3		X	I. D. =-0, 762MM(. 030")
20	T 26325	SCREW	2		X	
21	R 42364	WASHER	2		X	SUB. FOR 24H1890
22	34H 286	SPRING PIN	1		X	3/16"X1-1/2"
23	AT 24252	GEAR	1		X	LOW, Z=45, INCL. KEY 24
24	T 26321	BUSHING	1		X	

FLYWHEEL / FLYWHEEL HOUSING
VOLANT / CARTER DE VOLANT
SCHWUNGRAD / SCHWUNGRADGEHAEUSE
VOLANO / CARTER VOLANO
VOLANTE / CARTER DEL VOLANTE
SANGHJUL/SVANGHJULSKAPA
L 27144

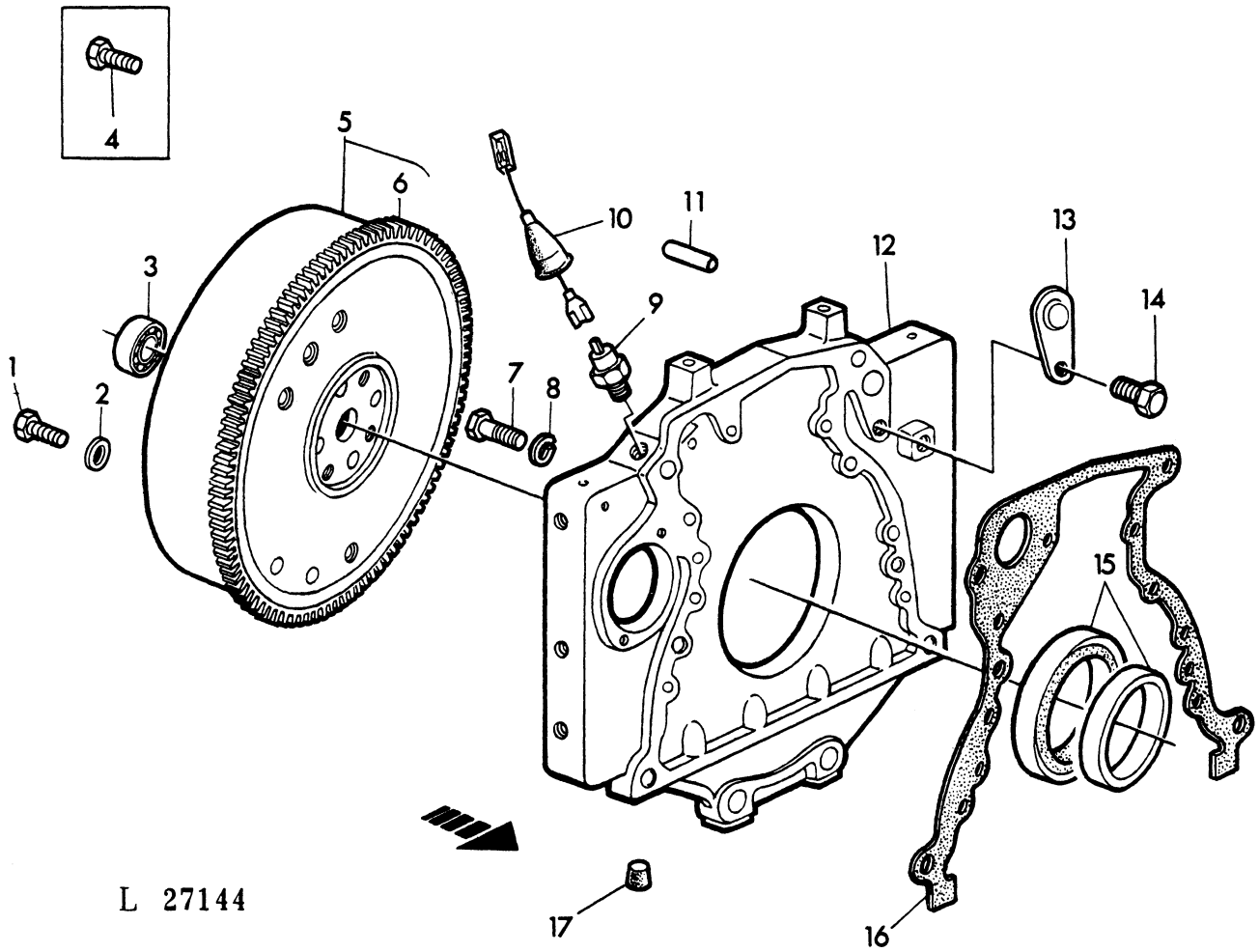

KEY	PART NO.	DESCRIPTION	QTY	ENGINE SERIAL NO.	JD310	REMARKS
1	19H 3385	CAP SCREW	4	333625-	X	1/2"X1-1/8"
2	T 23891	WASHER	4	333625-	X	
3	JD 9449	BALL BEARING	1		X	
4	R 28029	CAP SCREW	4	-333624	X	1/2", ORD 19H3385 W/T23891
5	AR 67976	FLYWHEEL	1		X	W/T20088
6	T 20088	GEAR	1		X	Z=142
7	19H 1800	CAP SCREW	8		X	3/8"X1-1/2"
8	12H 304	LOCK WASHER	8		X	3/8"
9	AR 27977	SENDER	1		X	
10	AT 30691	WIRING LEAD	1		X	
11	T 26565	DOWEL PIN	2		X	
12	R 62009	HOUSING	1		X	SUB. FOR T28433
13	T 28435	COVER	1		X	
14	19H 2351	CAP SCREW	1		X	1/2"X1/2"
15	AR 92893	SEAL	1		X	REAR, SUB. FOR AT22965
16	R 49516	GASKET	1		X	
17	T 23590	PLUG	1		X	

PISTON / CONNECTING ROD
PISTON / BIELLE
KOLBEN / PLEUELSTANGE
PISTONE / BIELLA
PISTON / BIELA
KOLV / KOLVSTAKE
L 27141

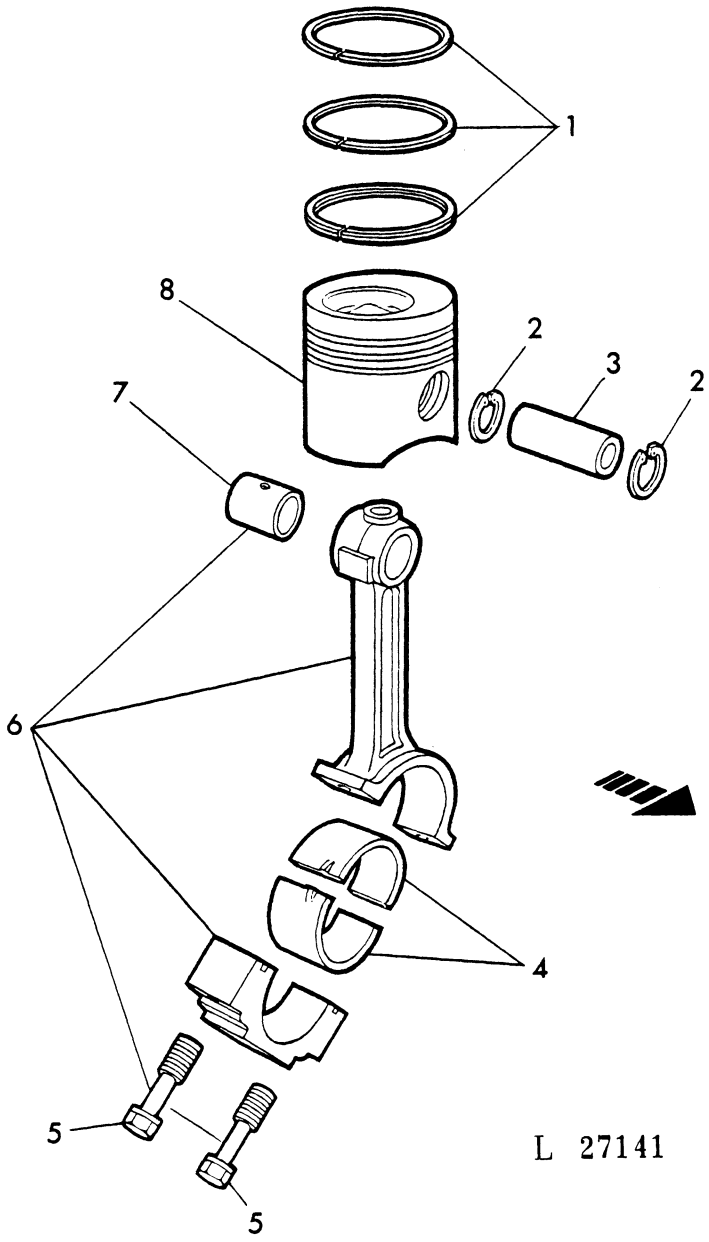

KEY	PART NO.	DESCRIPTION	QTY	SERIAL NO.	JD310	REMARKS
1	DD 11831	PISTON RING	3		X	KIT (3)
	AR 87738	PISTON	AR		X	(B)
2	M 41029	SNAP RING	6		X	PACKG (6)
3	R 51731	PIN	3		X	
4	AT 21138	BEARING	3		X	I.D.=STANDARD
	AT 21122	BEARING	AR		X	I.D.=-0,051MM(.002")
	AT 21124	BEARING	AR		X	I.D.=-0,254MM(.010")
	AT 21126	BEARING	AR		X	I.D.=-0,508MM(.020")
	AT 21128	BEARING	AR		X	I.D.=-0,762MM(.030")
5	T 20009	CAP SCREW	6		X	
6	AR 55978	CONNECTING ROD	3		X	ASSY, INCL. KEYS 5, 7
7	R 55647	BUSHING	3		X	
8	AR 55980	PISTON	3	-271533	X	
	AR 79868	PISTON	AR	271534-	X	(A)

(A) PISTON MARKED "B"
PISTON REPERE "B"
KOLBEN MIT "B" MARKIERT
PISTONE MARCATO "B"
PISTON MARCADO CON "B"
KOLV MARKT "B"

(B) PISTON MARKED "H"
PISTON REPERE "H"
KOLBEN MIT"H" MARKIERT
PISTONE MARCATO "H"
PISTON MARCADO CON "H"
KOLV MARKT "H"

OIL PUMP / OIL PAN
POMPE A HUILE / CARTER D'HUILE
OELPUMPE / OELWANNE
POMPA OLIO / COPPA DELL'OLIO
BOMBA DE ACEITE / CARTER DE ACEITE
OLJEPUMP / OLJETRAG
L 27145

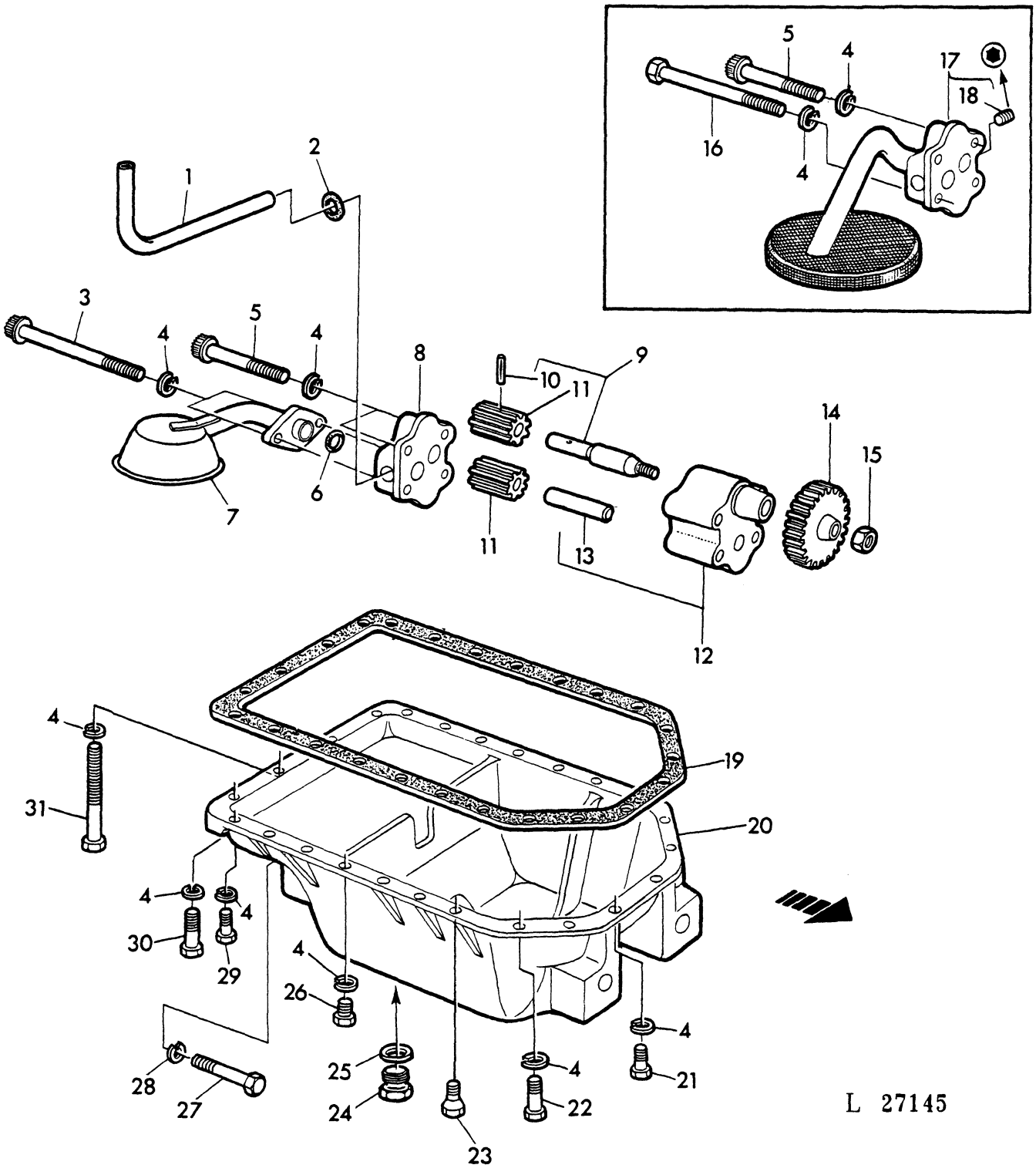

KEY	PART NO.	DESCRIPTION	QTY	ENGINE SERIAL NO.	JD310	REMARKS
1	T 20050	OIL LINE	1		X	
2	R 27166	O-RING	1		X	
3	R 59409	CAP SCREW	2	172482-	X	SUB. FOR 19H2228
4	12H 304	LOCK WASHER	28		X	3/8"
5	R 57059	CAP SCREW	2	172482-	X	SUB. FOR 19H1944
6	A 4730R	O-RING	1	172482-	X	
7	AR 60701	STRAINER	1	172482-	X	
8	R 53382	COVER	1	172482-	X	
9	AR 62978	SHAFT	1		X	ASSY, INCL. KEYS 10, 11
10	M 3853T	GROOVE PIN	1		X	3/16"X7/8"
11	R 54614	GEAR	2		X	Z=7
12	AR 62979	HOUSING	1		X	ASSY, INCL. KEY 13
13	T 20091	SHAFT	1		X	NSEP, ORD AR62979
14	T 20298	GEAR	1		X	Z=33
15	14H 826	NUT	1		X	1/2"
16	19H 1854	CAP SCREW	1	-172481	X	3/8"X3-3/4"
17	AT 24254	STRAINER	1	-172481	X	INCL. KEY 18, ORD KEYS 6-8
18	15H 560	PIPE PLUG	1	-172481	X	1/16"
19	R 49514	GASKET	1		X	
20	R 53469	OIL PAN	1		X	
21	19H 1800	CAP SCREW	5		X	3/8"X1-1/2"
22	19H 1801	CAP SCREW	1		X	3/8"X2"
23	T 20309	CAP SCREW	2		X	
24	M 1746T	DRAIN PLUG	1		X	7/8"
25	T 13213	SEAL	1		X	
26	19H 1732	CAP SCREW	11		X	3/8"X1-1/4"
27	19H 2726	CAP SCREW	2		X	5/8"X4"
28	12H 294	LOCK WASHER	2		X	5/8"
29	19H 2545	CAP SCREW	1		X	3/8"X1-3/8"
30	19H 1733	CAP SCREW	2		X	3/8"X2-1/2"
31	19H 2228	CAP SCREW	2		X	3/8"X4"

ENGINE OIL COOLER
REFROIDISSEUR D'HUILE DU MOTEUR
MOTOR-OELKUEHLER
DISPOSITIVO RAFFREDDAMENTO OLIO
REFRIGERADOR DEL ACEITE DEL MOTOR
MOTOROLJEKYLARE
L 27146

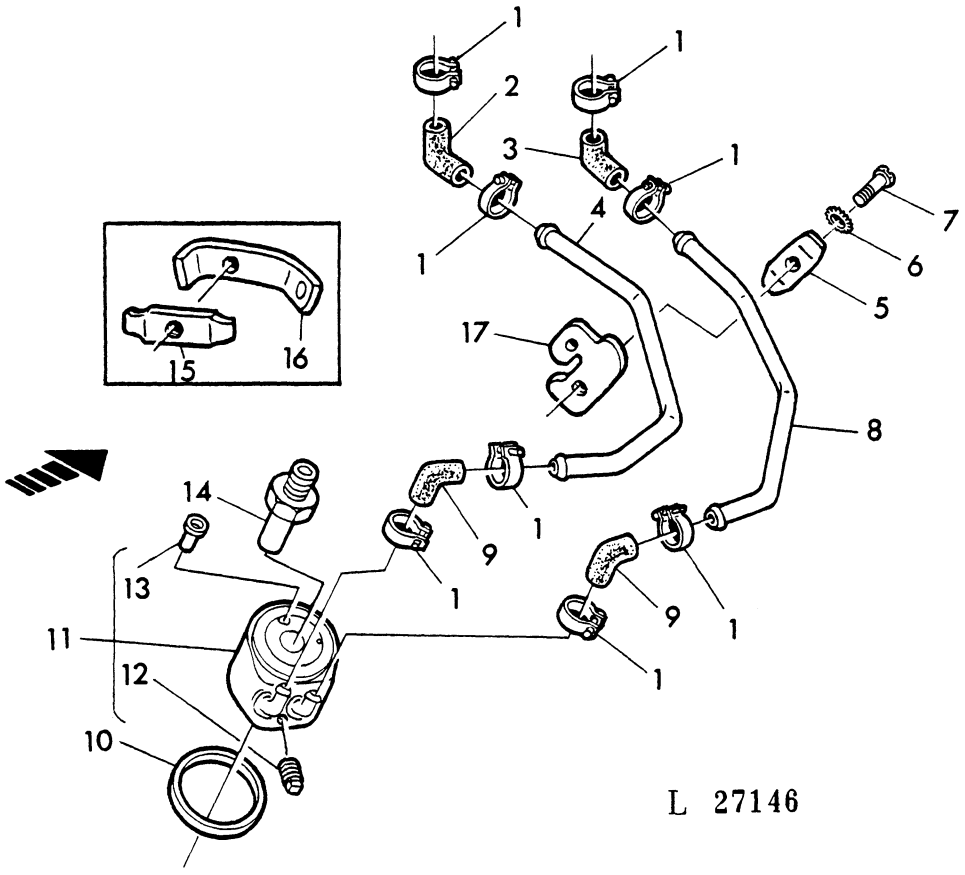

KEY	PART NO.	DESCRIPTION	QTY	SERIAL NO.	JD310	REMARKS
1	AR 21837	CLAMP	8		X	SUB. FOR T33112
2	T 22942	HOSE	1		X	
3	R 48989	HOSE	1		X	
4	R 55125	PIPE	1		X	
5	R 60204	RETAINER	1		X	
6	12H 295	WASHER	1		X	NO. 10
7	21H 1312	CAP SCREW	1		X	10X1
8	R 55126	PIPE	1		X	
9	R 55127	HOSE	2		X	
10	R 55434	SEAL	1		X	
11	AR 64415	OIL COOLER	1		X	ASSY, INCL. KEYS 12, 13
12	R 56947	DRAIN PLUG	1		X	
13	AT 31093	VALVE	1		X	
14	T 31306	THREADED NIPPLE	1		X	
15	R 55129	STRAP	1		X	ORD R60203 W/R60204
16	R 55128	RETAINER	1		X	ORD R60203 W/R60204
17	R 60203	STRAP	1		X	

RADIATOR / WATER HOSES / OIL COOLER
RADIATEUR / TUYAUX FLEXIBLES D'EAU / REFROIDISSEUR D'HUILE
KUEHLER / WASSERSCHLAEUCHE / OELKUEHLER
RADIATORE / MANICOTTI / RADIATORE OLIO
RADIADOR / MANGUERAS DE AGUA / RADIADOR DE ACEITE
KYLARE / VATTENSLAGAR / OLJEKYLARE
L 27147

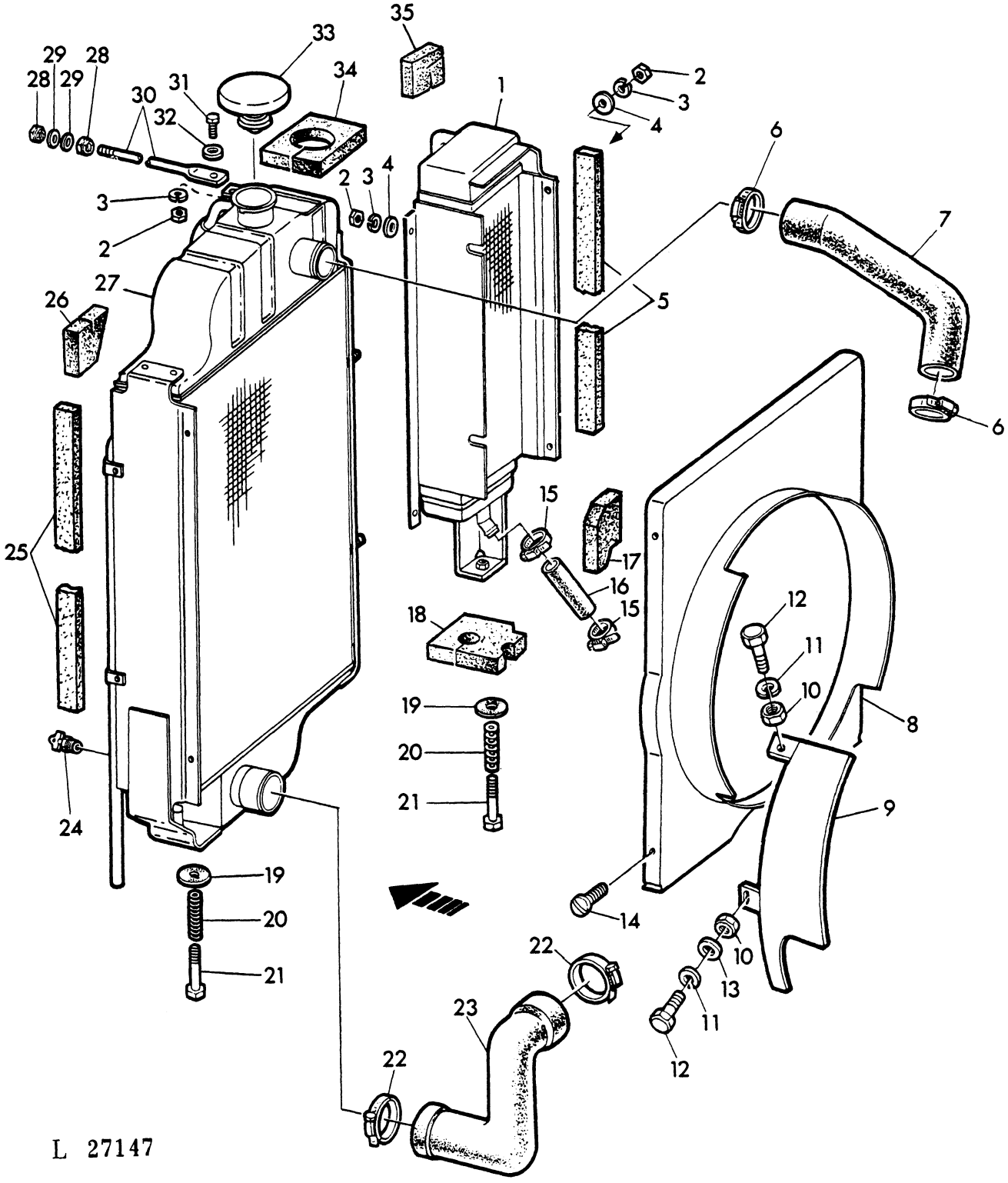

KEY	PART NO.	DESCRIPTION	QTY	SERIAL NO.	JD310	REMARKS
1	AT 33887	OIL COOLER	1		X	
2	14H 785	NUT	5		X	5/16"
3	12H 303	LOCK WASHER	5		X	5/16"
4	24H 1685	WASHER	4		X	11/32"X3/4"X.075"
5	T 22383	FOAM PAD	1		X	
6	AL 31992	CLAMP	2		X	SUB. FOR AR48499
7	R 38312	HOSE	1		X	UP
8	T 31479	SHIELD	1		X	
9	AT 28064	GUARD	1		X	
10	14H 786	NUT	2		X	1/4"
11	12H 302	LOCK WASHER	2		X	1/4"
12	19H 1227	CAP SCREW	2		X	1/4"X1/2"
13	24H 1287	WASHER	1		X	9/32"X5/8"X.060"
14	37H 24	SCREW	4		X	1/4"X3/4", SUB. FOR 37H79
15	AL 31992	CLAMP	2		X	SUB. FOR H2742B
16	T 35690	HOSE	1		X	
17	L 32645	FOAM PAD	1		X	LOW
18	T 36499	FOAM PAD	1		X	LOW
19	T 22381	WASHER	2		X	
20	R 34352	SPRING	2		X	
21	19H 2023	CAP SCREW	2		X	3/8"X3-1/4", SUB. FOR 19H2128
22	M 2392T	CLAMP	2		X	
23	T 22500	HOSE	1		X	LOW
24	AT 13740	DRAIN VALVE	1		X	1/4"
25	T 30954	FOAM PAD	1		X	
26	T 33324	FOAM PAD	1		X	
27	AT 32527	RADIATOR	1		X	
28	T 11234	LOCK NUT	2		X	3/8"
29	24H 1305	WASHER	2		X	13/32"X13/16"X.060"
30	R 61460	ROD	1		X	SUB. FOR T22495
31	19H 1900	CAP SCREW	1		X	5/16"X3/4"
32	24H 1122	WASHER	1		X	3/8"X7/8"X.075"
33	AT 29054	CAP	1		X	
34	T 31651	FOAM PAD	1		X	
35	T 35773	FOAM PAD	1		X	UP

THERMOSTAT / THERMOSTAT HOUSING
THERMOSTAT / BOITIER DU THERMOSTAT
THERMOSTAT / THERMOSTATGEHAEUSE
TERMOSTATO / SEDE TERMOSTATO
TERMOSTATO / CAJA DEL TERMOSTATO
TERMOSTAT / TERMOSTATHUS
L 13771

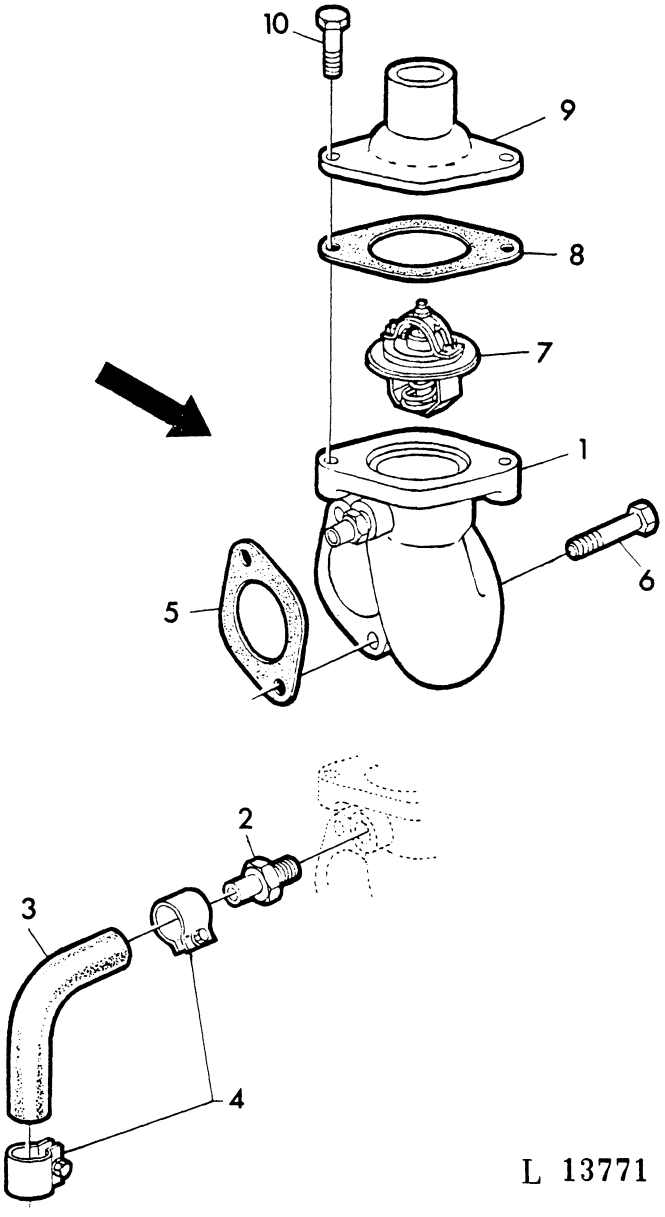

KEY	PART NO.	DESCRIPTION	QTY	SERIAL NO.	JD310	REMARKS
1	AT 18074	HOUSING	1		X	W/T19651
2	T 19651	FITTING	1		X	
3	T 20277	HOSE	1		X	
4	AR 21837	CLAMP	2		X	
5	T 20219	GASKET	1		X	
6	19H 1726	CAP SCREW	2		X	3/8"X2-1/4"
7	AT 22961	THERMOSTAT	1		X	82C(180F)
	AT 22963	THERMOSTAT	AR		X	90C(194F)
	AT 24013	THERMOSTAT	AR		X	96C(205F)
8	T 20215	GASKET	1		X	
9	T 20317	COVER	1		X	
10	19H 1732	CAP SCREW	2		X	3/8"X1-1/4"

WATER PUMP / FAN
POMPE A EAU / VENTILATEUR
WASSERPUMPE / LUEFTER
POMPA ACQUA / VENTILATORE
BOMBA DE AGUA / VENTILADOR
VATTENPUMP/FLAKT
L 27148

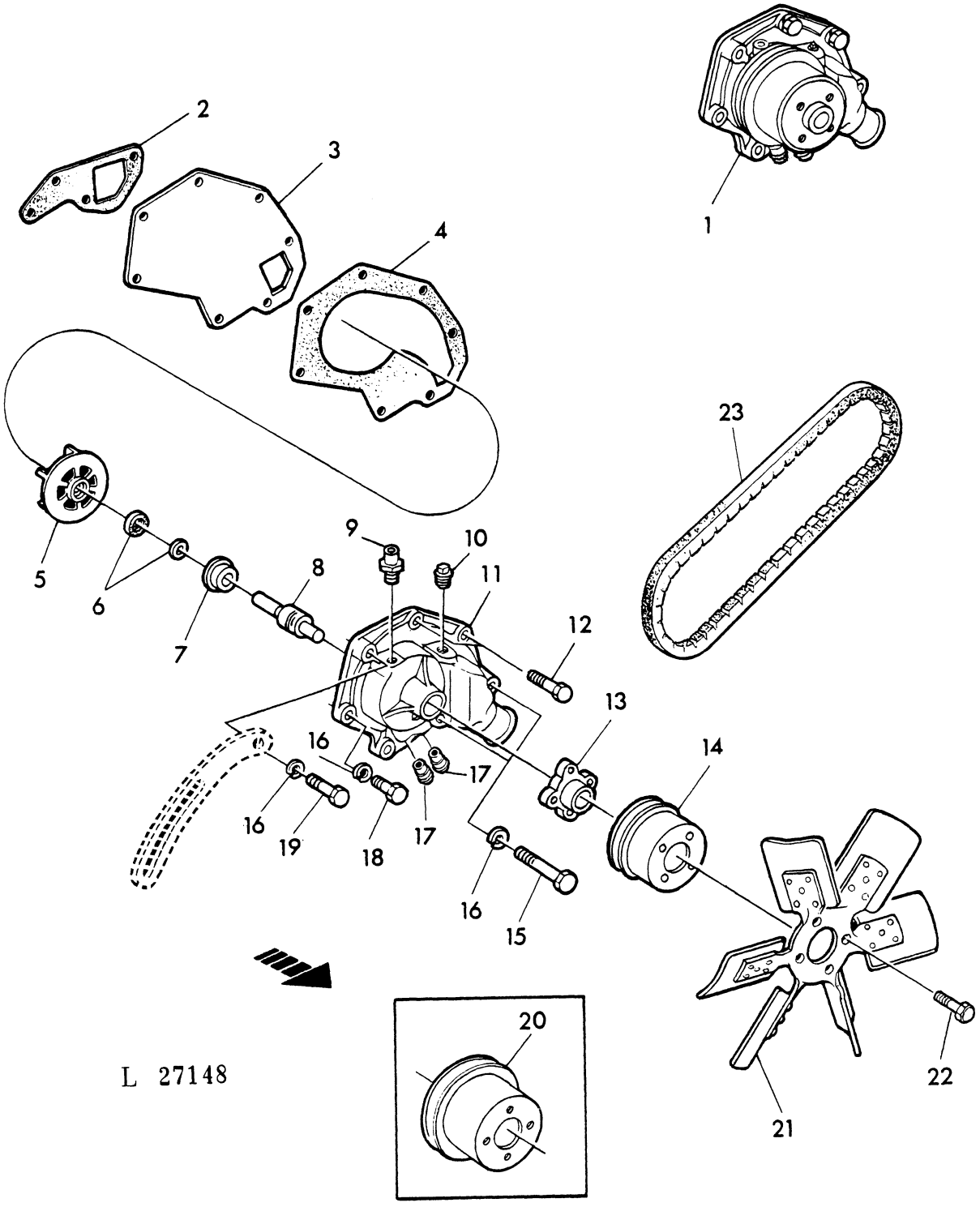

KEY	PART NO.	DESCRIPTION	QTY	SERIAL NO.	JD310	REMARKS
1	AR 65260	WATER PUMP	1		X	ASSY, INCL. KEYS 3-14, 17, 21
2	T 20243	GASKET	1		X	
3	T 20270	PLATE	1		X	
4	T 20271	GASKET	1		X	
5	T 30897	IMPELLER	1		X	
6	AR 41691	KIT	1		X	KIT
7	T 27261	SEAL	1		X	
8	JD 9257	BEARING	1		X	
9	T 19651	HOSE FITTING	1		X	
10	15H 584	PIPE PLUG	1		X	1/2"
11	AR 80105	HOUSING	1		X	ASSY, INCL. KEY 17 SUB. FOR R55758
12	19H 2545	CAP SCREW	2		X	3/8"X1-3/8", SUB. FOR 19H1800
13	T 30720	HUB	1		X	
14	T 30721	PULLEY	1		X	
15	19H 1912	CAP SCREW	2		X	3/8"X3-1/2"
16	12H 304	LOCK WASHER	4		X	3/8"
17	R 48993	HOSE FITTING	2		X	
18	19H 1801	CAP SCREW	1		X	3/8"X2"
19	19H 1819	CAP SCREW	1		X	3/8"X2-1/8"
20	AT 34754	FAN	1		X	
	T 23628	PULLEY	1		X	ORD T30720 W/T30721
21	19H 2127	CAP SCREW	4		X	5/16"X7/8", SUB. FOR 19H2117
22	T 20334	BELT	1		X	
-	AT 32489	KIT	1		X	KIT, INCL. KEYS 6-8, ORD W/T20271

ENGINE GASKET SET
JEU DE JOINTS DE MOTEUR
MOTOR-DICHTUNGSSATZ
SERIE GUARNIZIONE MOTORE
JUEGO DE JUNTAS PARA EL MOTOR
PACKNINGSSATZ FOR MOTOR
L 27149

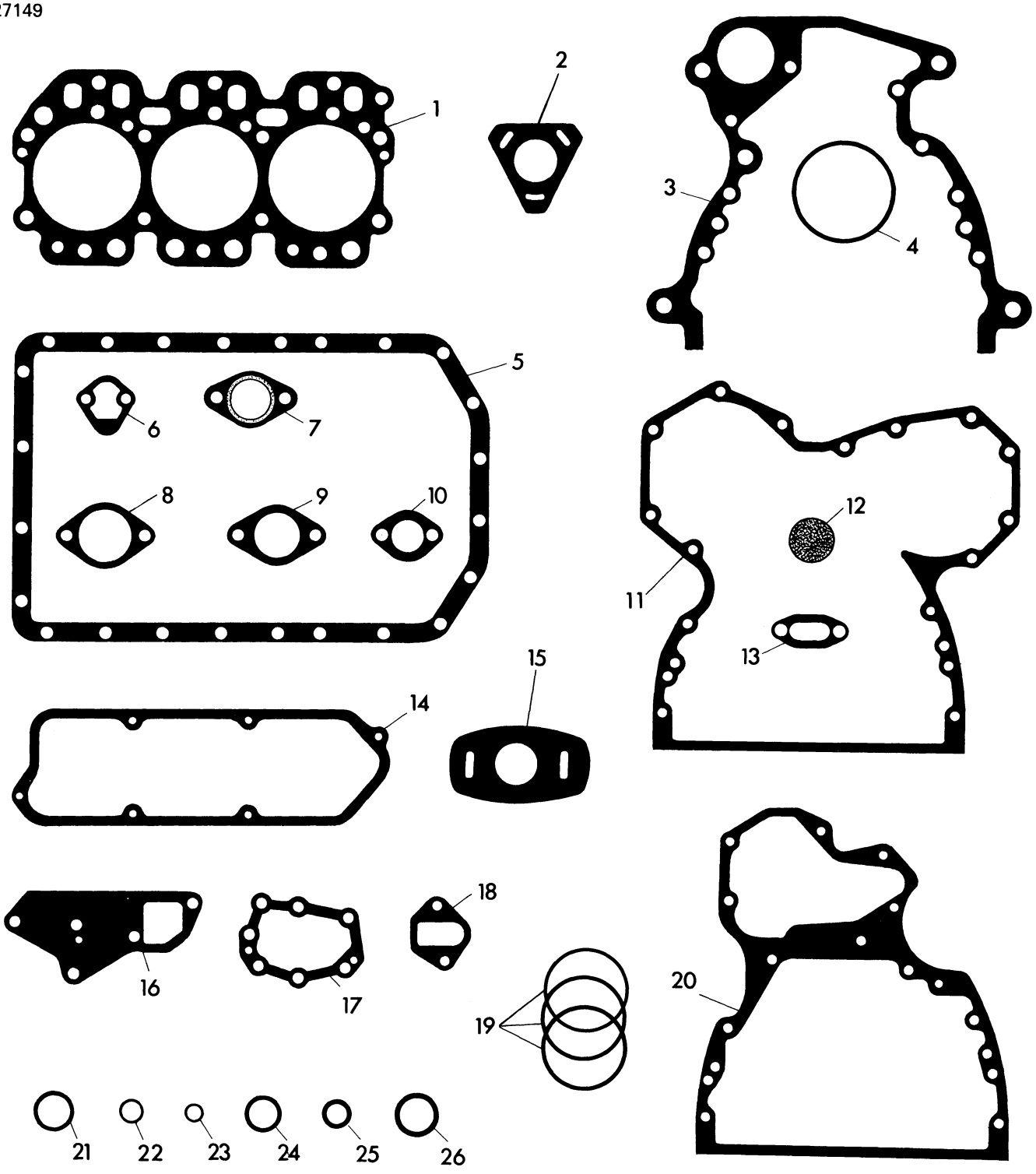

L 27149

KEY	PART NO.	DESCRIPTION	QTY	SERIAL NO.	JD310	REMARKS
1	R 59447	GASKET	1		X	SUB. FOR T20039
2	T 24460	GASKET	6		X	
3	R 49516	GASKET	1		X	SUB. FOR T23596
4	R 55434	SEAL	3		X	
5	T 24534	GASKET	1		X	
	R 49514	GASKET	1		X	(A)
6	R 27285	GASKET	1		X	
7	T 20006	GASKET	3		X	
8	T 20159	GASKET	1		X	
9	T 20215	GASKET	1		X	
10	T 20219	GASKET	1		X	
11	T 20155	GASKET	1		X	
12	T 20328	GASKET	1		X	
13	T 20336	GASKET	1		X	
14	R 68226	GASKET	1		X	SUB. FOR T20111
15	T 23443	GASKET	1		X	
16	T 20243	GASKET	1		X	
17	T 20273	GASKET	1		X	
18	T 20364	GASKET	1		X	
19	AR 65507	SEAL KIT	3		X	KIT, SUB. FOR DD13277, AR68318
20	T 24965	GASKET	1		X	
21	R 495R	O-RING	1		X	
22	R 27166	O-RING	1		X	
23	R 60746	PACKING	3		X	SUB. FOR R34764
24	R 48000	PACKING	3		X	SUB. FOR R34767
25	T 20304	PACKING	1		X	
26	T 13213	PACKING	1		X	
-	AR 71990	GASKET	1		X	KIT, INCL. KEYS 1, 7-10, 14, 21, 23, 24
-	AR 71996	GASKET	1		X	KIT, INCL. KEYS 1-18, 20-26 ORD W/(3)DD13277, AR67942 AR92893

(A) FOR CAST OIL PAN
POUR CARTER FONTE
FUER GUSS-OELWANNE
PER COPPA OLIO IN GHISA
PARA CARTER DE ACEITE DE FUNDICION
FOR GJUTJARNSOLJETRAG

SECTIONAL INDEX
INDEX DE SECTION
GRUPPENINDEX
INDICE DELLA SEZIONE
INDICE DE SECCION
GRUPPSFORTECKNING
L 27582

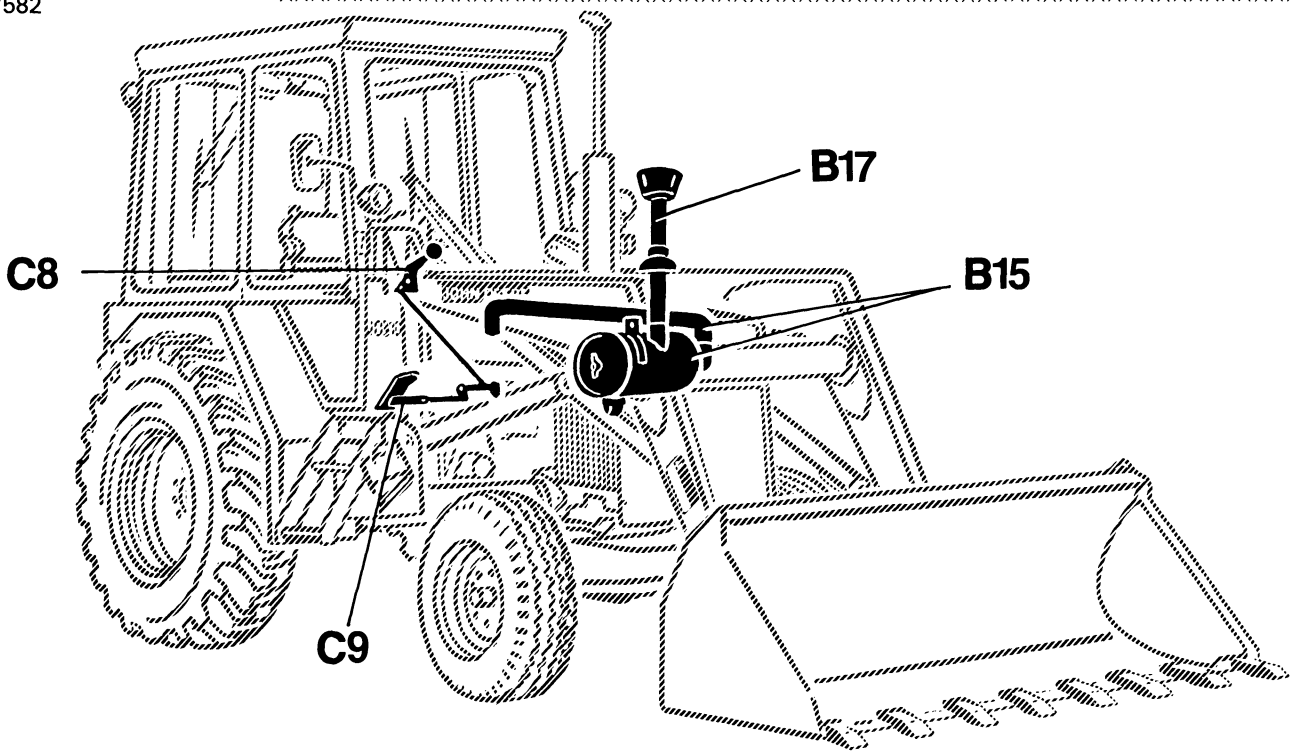

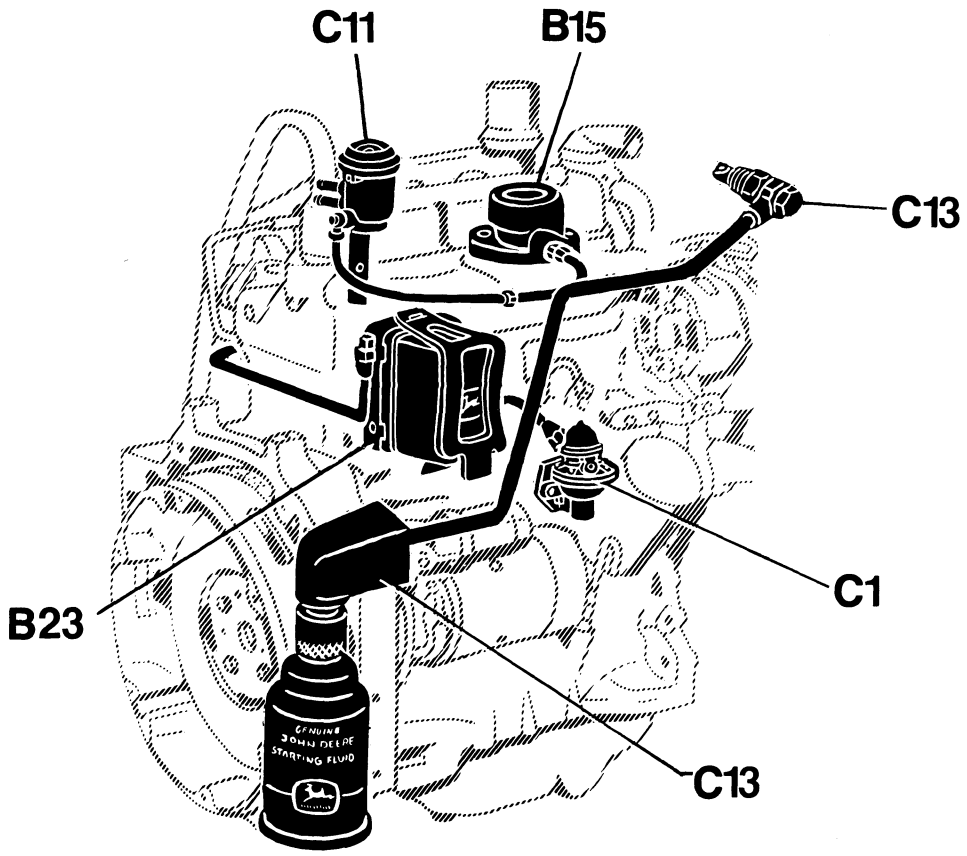

L 27582

SECTIONAL INDEX
INDEX DE SECTION
GRUPPENINDEX
INDICE DELLA SEZIONE
INDICE DE SECCION
GRUPPSFORTECKNING
L 27551

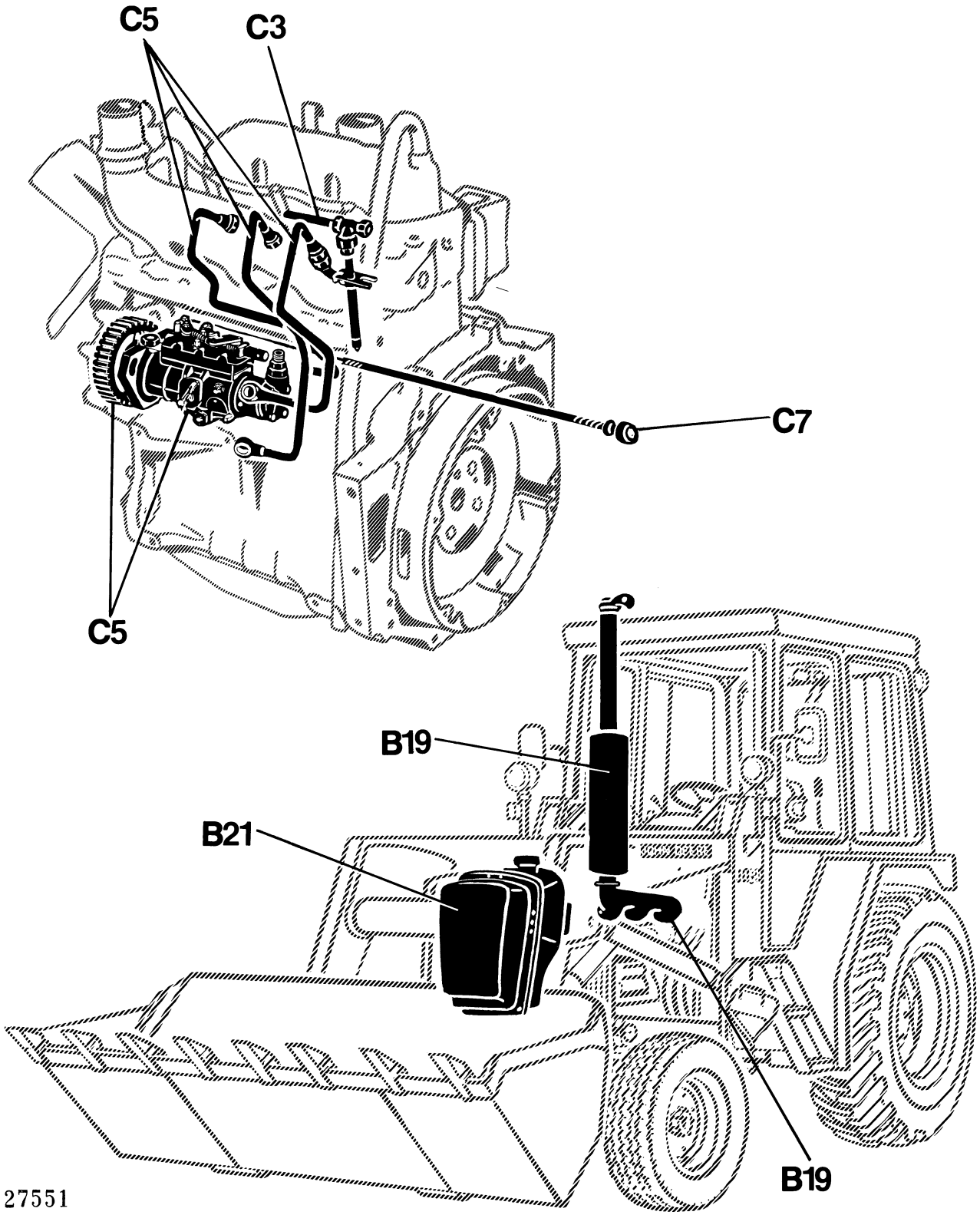

DRY AIR CLEANER
FILTRE A AIR A SEC
TROCKENLUFTFILTER
FILTRO ARIA A SECCO
FILTRO DE AIRE EN SECCO
TORRLUFTFILTER
L 13270

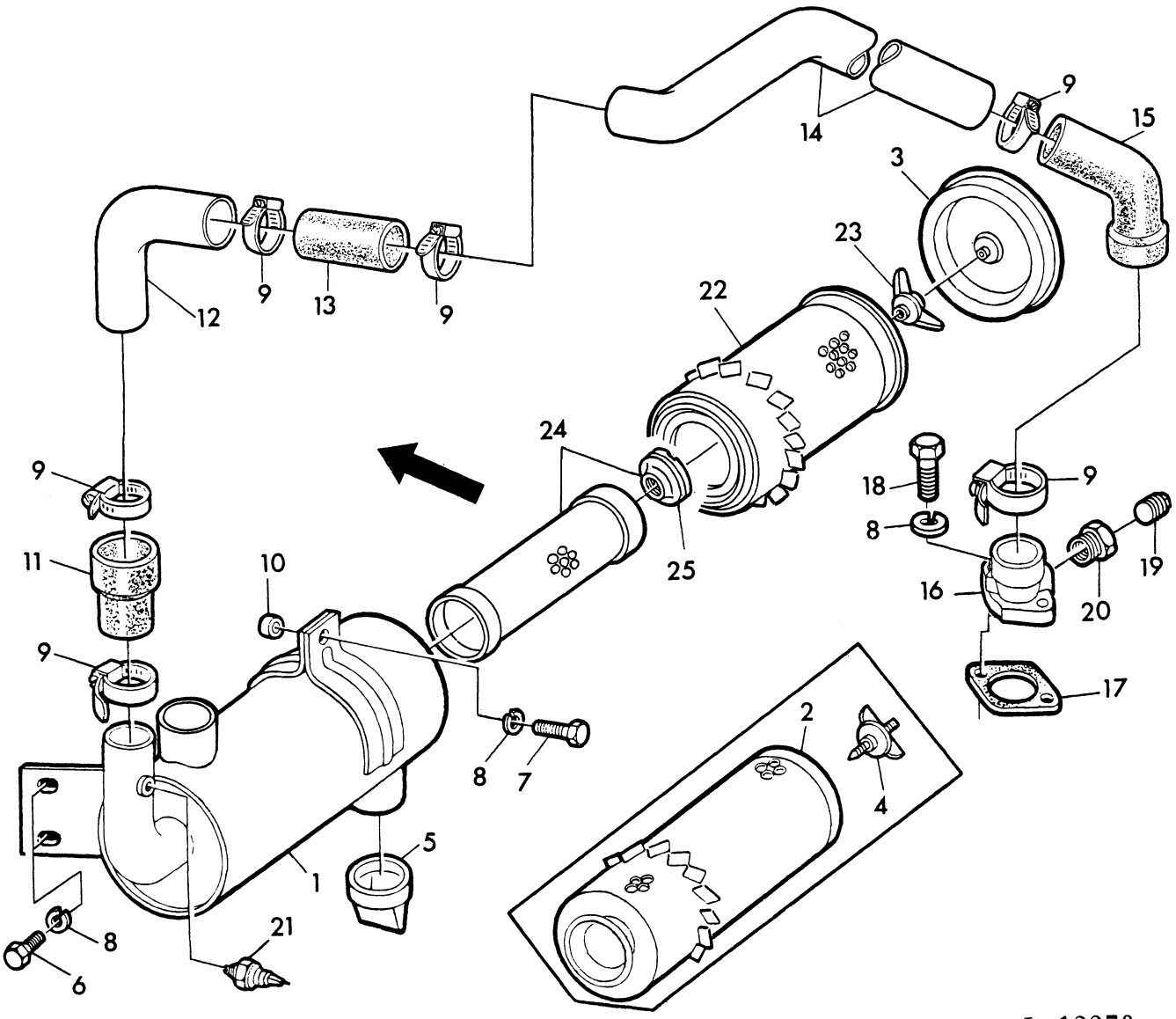

L 13270

KEY	PART NO.	DESCRIPTION	QTY	SERIAL NO.	JD310	REMARKS
1	AL 27156	HOUSING	1		X	ASSY, INCL. KEYS 3, 22, 23, SUB. FOR AT20727
2	AT 20728	AIR CLEANER	1	-190319	X	
3	AT 24438	COVER	1		X	
4	AT 24437	THUMBSCREW	1	-190319	X	
5	T 23262	DUST BOWL	1		X	
6	19H 2021	CAP SCREW	2		X	3/8"X5/8"
7	19H 2284	CAP SCREW	1		X	3/8"X7/8"
8	12H 304	LOCK WASHER	5		X	3/8"
9	AR 21999	CLAMP	6		X	
10	M 1335T	SPACER	1		X	
11	L 31144	SHIELD	1		X	FRONT
12	L 30790	PIPE	1		X	
13	L 30789	HOSE	1		X	
14	L 30791	PIPE	1		X	
15	L 29849	HOSE	1		X	REAR
16	R 56455	INTAKE MANIFOLD	1		X	
17	T 20159	GASKET KIT	1		X	
18	19H 1732	CAP SCREW	2		X	3/8"X1-1/4"
19	15H 255	CONNECTOR	AR		X	3/8"
20	T 27986	PLUG	1		X	
21	AL 32975	SWITCH	1		X	SUB. FOR AL24194
22	AR 84228	AIR CLEANER	1	190320-	X	SUB. FOR AE31723
23	AH 20849	WING NUT	1	190320-	X	
24	AL 27159	FILTER ELEMENT	1	190320-	X	W/R48567
25	R 48567	NUT	1		X	

AIR PRE-CLEANER WITH SOUNDPROOFING
PREFILTRE A AIR AVEC ELEMENTS D'INSONORISATION
LUFTVORFILTER MIT SCHALLDAEMPFUNG
PREFILTRO ARIA CON DISPOSITIVO SALVA SUONI
PRE-PURIFICADOR DE AIRE CON ELEMENTOS DE INSONORIZACION
LUFTFORFILTER MED LJUDABSORBENT
L 13143

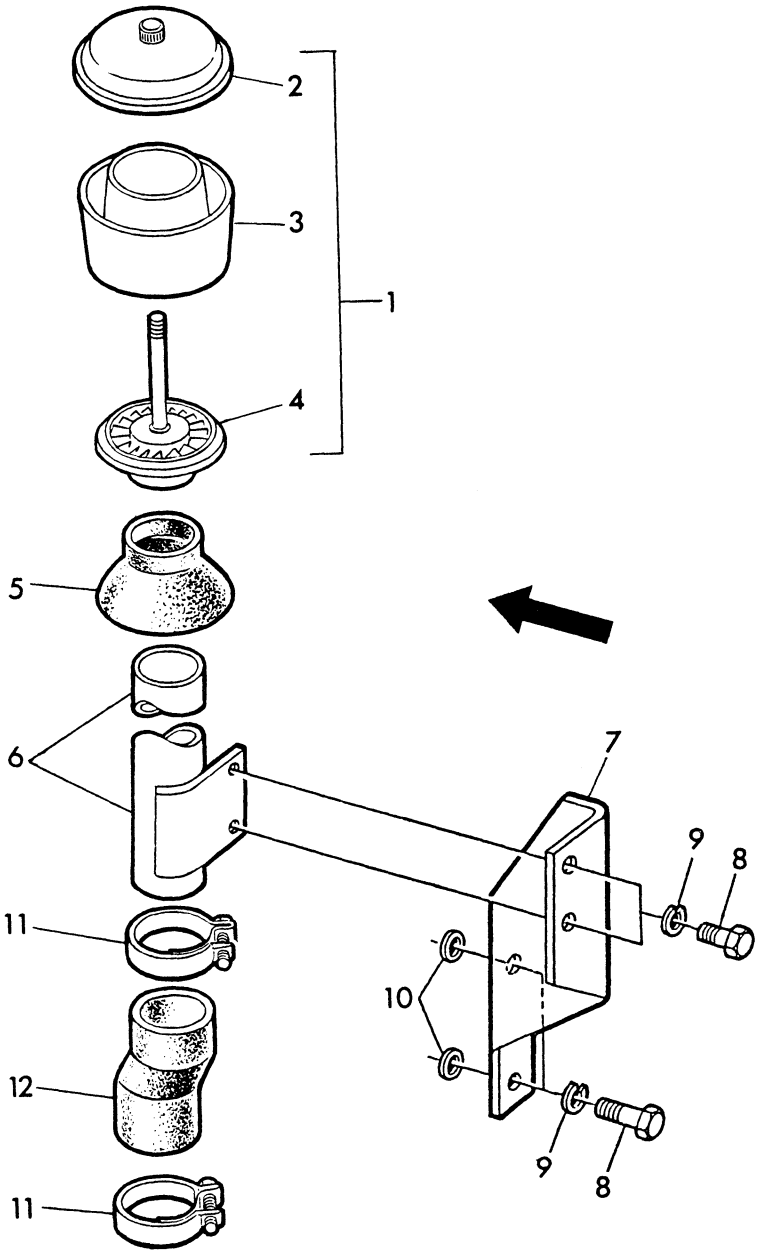

L 13143

KEY	PART NO.	DESCRIPTION	QTY	SERIAL NO.	JD310	REMARKS
1	AT 40588	PRESCREENER	1		X	ASSY, INCL. KEYS 2-4
2	AF 3583R	COVER	1		X	
3	R 28794	BOWL	1		X	
4	AF 3584R	BASE	1		X	
5	R 28799	SEAL	1		X	
6	AL 19744	PIPE	1		X	
7	L 28370	RETAINER	1		X	
8	19H 2021	CAP SCREW	4		X	3/8"X5, 8"
9	12H 304	LOCK WASHER	4		X	3/8"
10	24H 1304	WASHER	2		X	13/32"X23/32"X. 120"
11	AR 21841	CLAMP	2		X	
12	L 28371	HOSE	1		X	

EXHAUST SYSTEM
SYSTEME D'ECHAPPEMENT
ABGASANLAGE
CIRCUITO DI SCARICO
SISTEMA DE ESCAPE
AVGASSYSTEM
L 63848

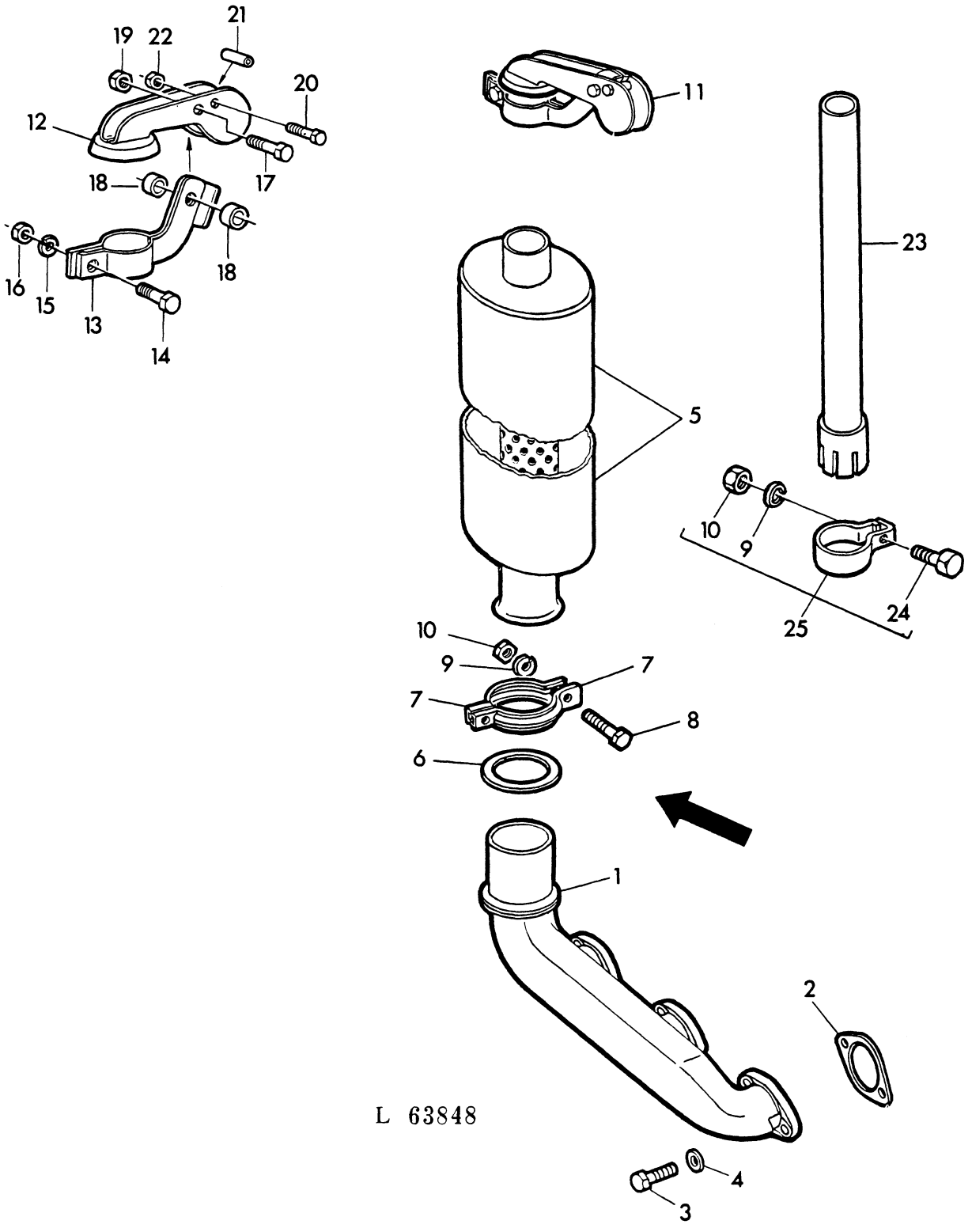

KEY	PART NO.	DESCRIPTION	QTY	SERIAL NO.	JD310	REMARKS
1	T 20252	EXHAUST MANIFOLD	1		X	
2	T 20006	GASKET	3		X	
3	19H 1732	CAP SCREW	6		X	3/8"X1-1/4"
4	24H 1304	WASHER	6		X	13/32"X23/32"X. 120"
5	AL 25009	MUFFLER	1		X	ORD AL25705, R38358, AR38398
	AL 25705	MUFFLER	1		X	
6	T 20141	SEAL	1		X	
7	T 19978	CLAMP	2		X	
8	19H 1906	CAP SCREW	2		X	5/16"X1-1/2"
9	12H 303	LOCK WASHER	3		X	5/16"
10	14H 785	NUT	3		X	5/16"
11	AT 10611	EXHAUST CAP	1		X	ASSY, INCL. KEYS 12-22
12	AL 18047	EXHAUST CAP	1		X	
13	AL 18236	CLAMP	1		X	
14	19M 7376	CAP SCREW	1		X	8X25MM
15	12M 7008	LOCK WASHER	1		X	8MM
16	14M 6825	NUT	1		X	8MM
17	19M 7177	CAP SCREW	1		X	6X35MM
18	L 24921	SPACER	2		X	
19	L 48705	NUT	1		X	6MM
20	19M 7176	CAP SCREW	1		X	5X35MM
21	L 24922	SPACER	1		X	
22	L 48704	NUT	1		X	5MM
23	R 38358	EXTENSION	1		X	
24	19H 1849	CAP SCREW	1		X	5/16"X1-1/4"
25	AR 38398	CLAMP	1		X	INCL. KEYS 9, 10, 24

FUEL TANK
RESERVOIR A COMBUSTIBLE
KRAFTSTOFFBEHAELTER
SERBATOIO COMBUSTIBLE
DEPOSITO DE COMBUSTIBLE
BRANSLETANK
L 11343

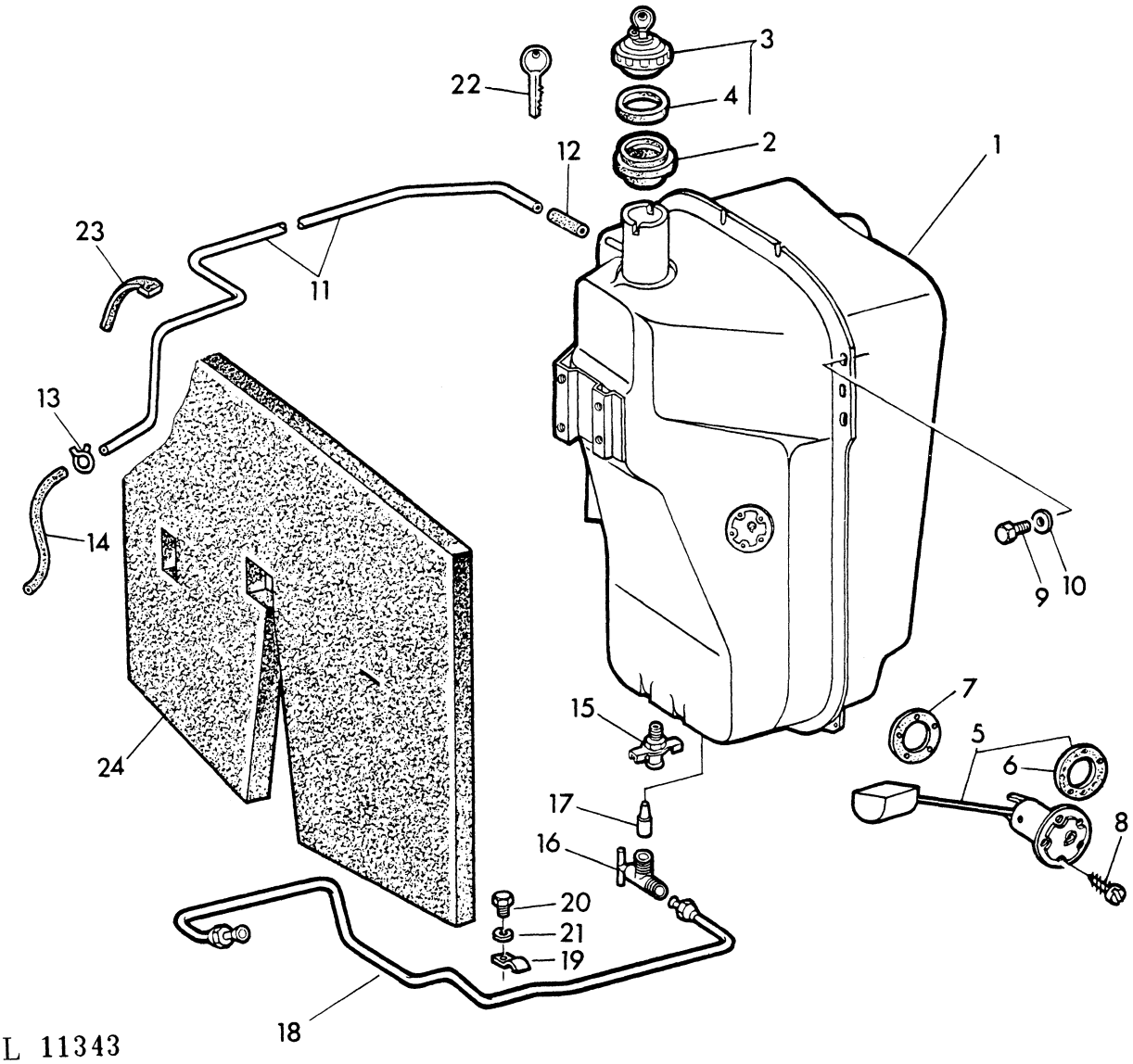

L 11343

KEY	PART NO.	DESCRIPTION	QTY	SERIAL NO.	JD310	REMARKS
1	AL 24509	FUEL TANK	1		X	INCL. KEYS 5-8
2	T 36247	SEAL	1		X	SUB. FOR R39613
3	AL 24854	COVER	1		X	W/R39615 ASSY, INCL. KEYS 4, 22
4	R 39615	SEAL	1		X	
5	AT 31619	SENDER	1		X	W/L29265
6	L 29265	GASKET	1		X	
7	R 27181	GASKET	1		X	
8	37M 7020	SCREW	5		X	4, 2X13MM, SUB. FOR 37H47
9	19H 1936	CAP SCREW	4		X	3/8"X3/4"
10	24H 1305	WASHER	4		X	13/32"X13/16"X. 060"
11	L 30656	FUEL LINE	1		X	
12	T 27466	HOSE	1		X	NSEP, ORD AT32064, SUB. FOR T26379
13	L 48777	SNAP RING	1		X	SUB. FOR T13254
14	CD 13259	HOSE	1		X	NSEP, ORD AT32064
15	AT 13740	DRAIN VALVE	1		X	
16	AT 35139	SHUT-OFF VALVE	1		X	
17	T 42632	FILTER	1		X	
18	AL 25040	FUEL LINE	1		X	SUB. FOR AL24308
19	A 4881R	CLAMP	1		X	
20	19H 2038	CAP SCREW	1		X	3/8"X1/2"
21	12H 304	LOCK WASHER	1		X	3/8"
22	L 30627	KEY	2		X	
23	T 44946	BAND	1		X	SUB. FOR L30660, L30657
24	L 30959	BARRIER	1		X	(A)
-	AT 32064	KIT	1		X	LGTH=10M(394")

(A) FOR MACHINES WITH SOUNDPROOFING
POUR MACHINES AVEC ELEMENTS D'INSONORISATION
FUER MASCHINEN MIT SCHALLDAEMPFUNG
PER MACCHINE CON DISPOSITIVO SALVA SUONI
PARA MAQUINAS CON ELEMENTOS DE INSONORIZACION
FOR MASKINER MED LJUDABSORBENT

FUEL FILTER
FILTRE A COMBUSTIBLE
KRAFTSTOFF-FILTER
FILTRO COMBUSTIBILE
FILTRO DE COMBUSTIBLE
BRANSLEFILTER
L 27171

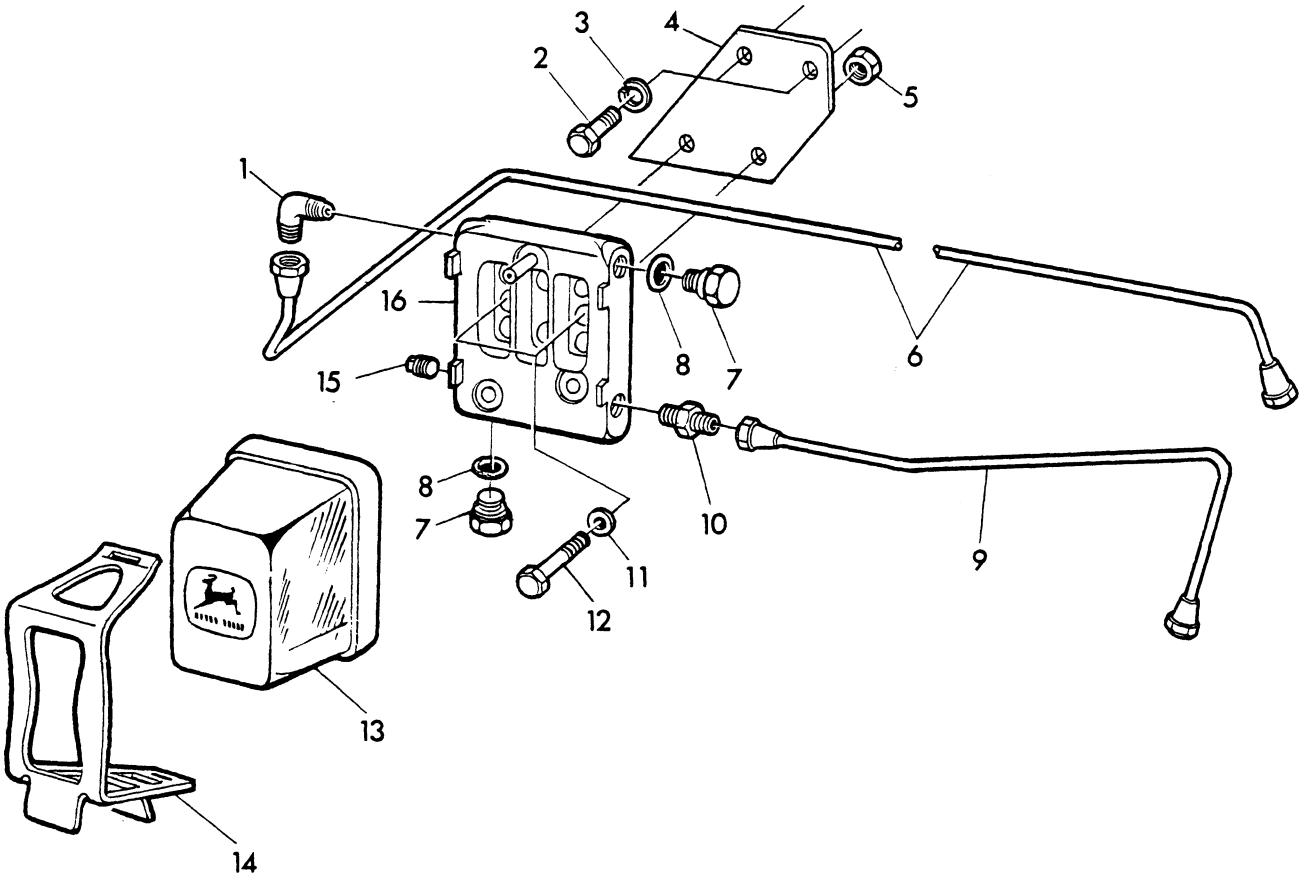

L 27171

KEY	PART NO.	DESCRIPTION	QTY	SERIAL NO.	JD310	REMARKS
1	T 30738	ELBOW	1		X	
2	19H 2284	CAP SCREW	2		X	3/8"X7/8"
3	12H 304	LOCK WASHER	2		X	3/8"
4	R 54998	PLATE	1		X	
5	14H 812	NUT	2		X	3/8"
6	AR 67091	FUEL LINE	1		X	
7	R 48071	DRAIN PLUG	2		X	
8	R 26287	O-RING	2		X	
9	AR 63653	FUEL LINE	1		X	
10	R 27346	CONNECTOR	1		X	
11	24H 1303	WASHER	2		X	13/32"X11/16"X. 060"
12	19H 1731	CAP SCREW	2		X	3/8"X1"
13	AR 50041	FILTER	1		X	
14	R 66821	RETAINER	1		X	SUB. FOR R47358, R57258
15	15H 558	PLUG	1		X	1/8"
16	AR 50040	PLATE	1		X	

FUEL PUMP
POMPE D'ALIMENTATION
KRAFTSTOFFOERDERPUMPE
POMPA ALIMENTAZIONE
BOMBA DE ALIMENTACION DE COMBUSTIBLE
MATAREPUMP
L 13260

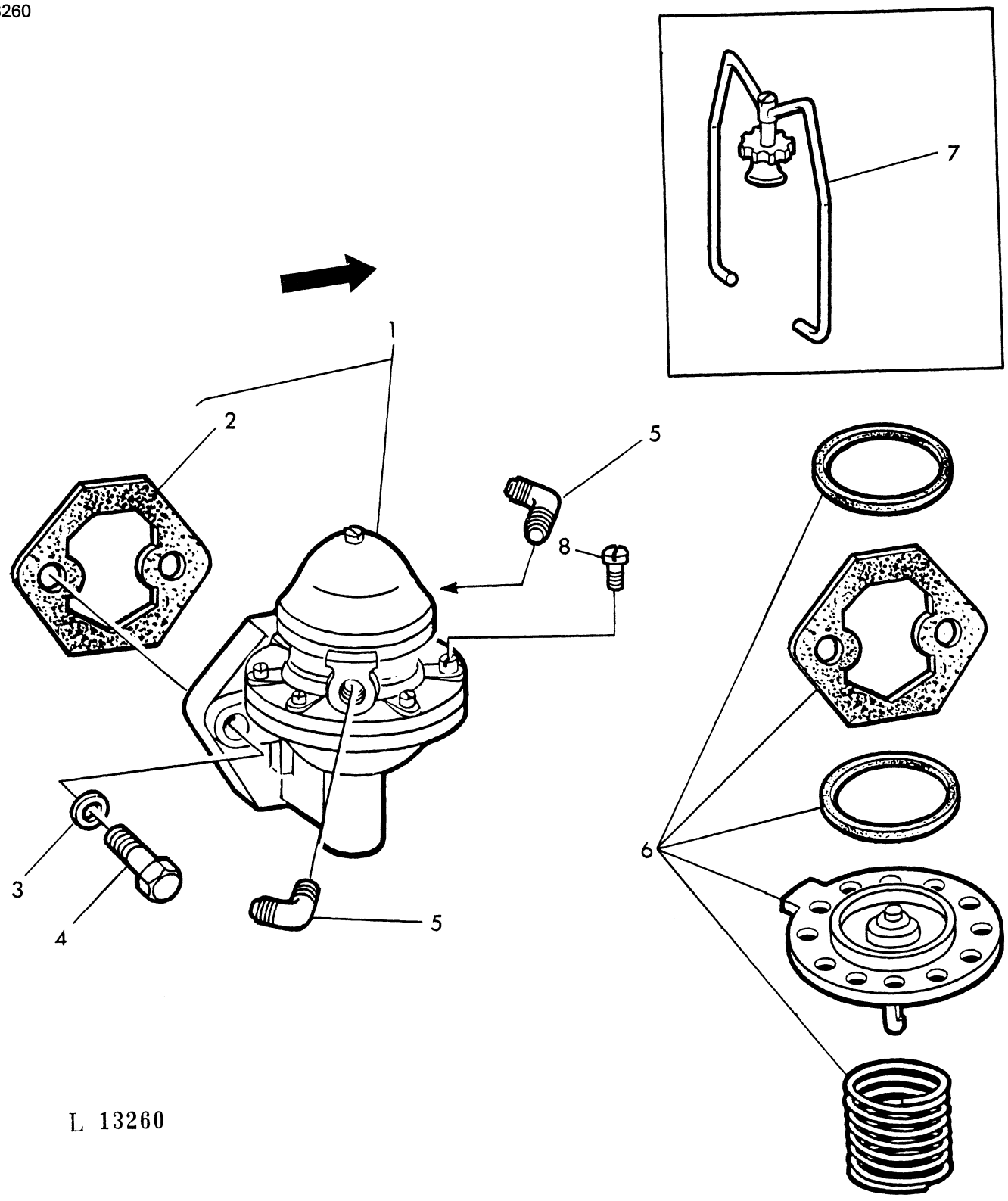

L 13260

KEY	PART NO.	DESCRIPTION	QTY	ENGINE SERIAL NO.	JD310	REMARKS
1	DD 13483	FUEL PUMP	1		X	ASSY, INCL. KEYS 2, 8, SUB. FOR AR52729
2	R 27285	GASKET	1		X	
3	R 20498	WASHER	2		X	
4	19H 1849	CAP SCREW	2		X	5/16"X1-1/4"
5	T 30738	ELBOW	2		X	
6	AR 60559	KIT	AR		X	
7	AT 10638	BAIL	1	-236201	X	
8	R 49266	SCREW	8		X	

FUEL INJECTION NOZZLE "ROOSA-MASTER"
INJECTEUR ROOSA MASTER
KRAFTSTOFF-EINSPRITZDUESE "ROOSA-MASTER"
INIETTORE "ROOSA MASTER"
INYECTOR "ROOSA MASTER"
BRANSLEINSPRUTARE "ROOSA MASTER"
L 27172

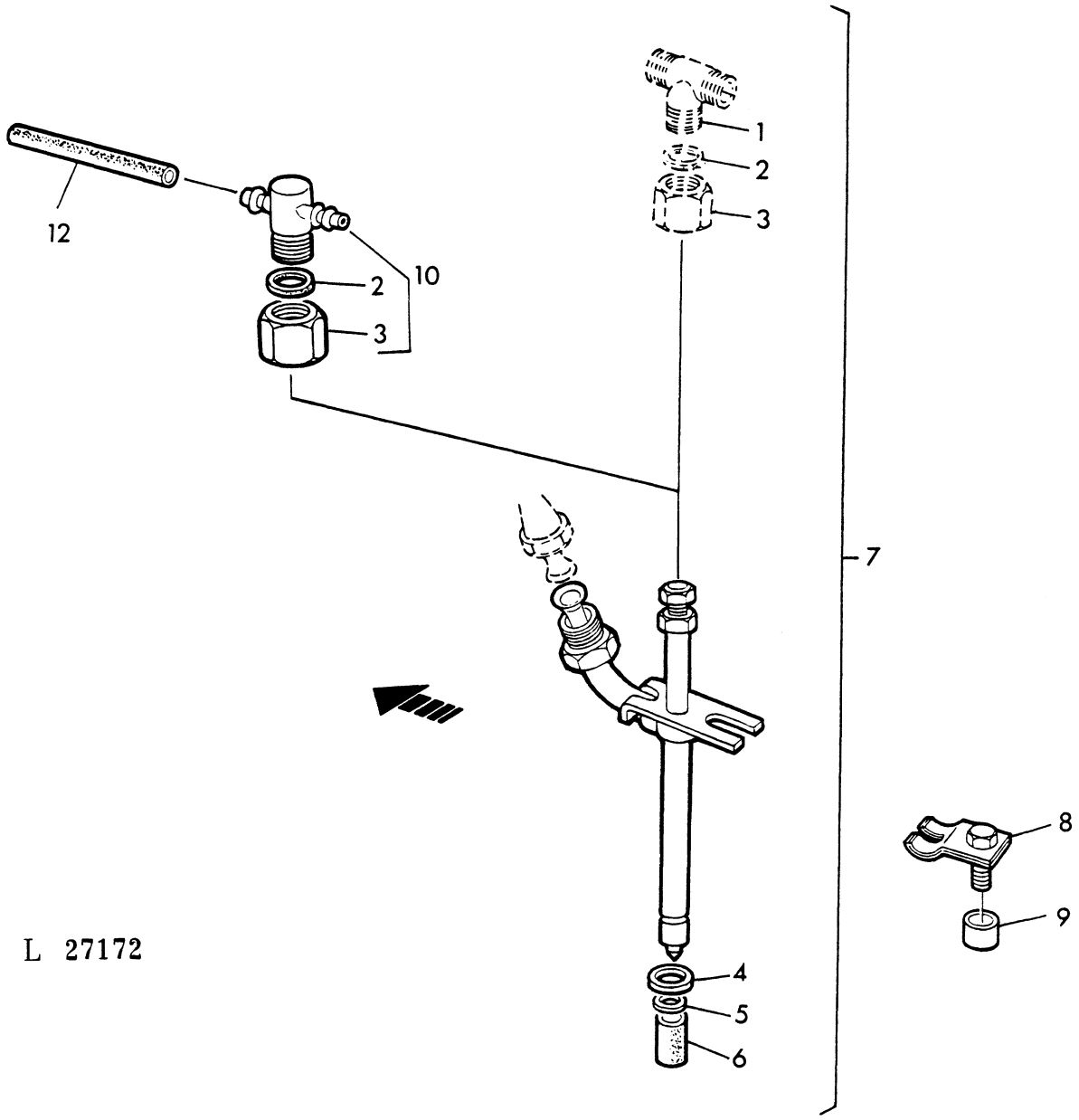

KEY	PART NO.	DESCRIPTION	QTY	SERIAL NO.	JD310	REMARKS
1	.....		6		X	(A) ORD AT27622
2	T 29539	PACKING	6		X	
3	T 29540	NUT	6		X	NSEP, ORD AT27622
4	R 60746	PACKING	6		X	SUB. FOR R34764
5	R 48000	PACKING	6		X	SUB. FOR R34767
6	T 24472	CAP	6		X	
7	AR 89563	INJECTION NOZZLE	6		X	ASSY, INCL. KEYS 1-6, SUB. FOR AR56290, AR73673, AR88239, AR88236
8	R 34760	CLAMP	6		X	
9	R 60745	SPACER	6		X	SUB. FOR R34761
10	AT 27622	KIT	6		X	KIT, INCL. KEYS 2, 3
12	.....	HOSE	1		X	NSEP, ORD AT32064
-	AT 32064	HOSE	AR		X	KIT, LGTH=1, 5M (59")

(A) NOT FOR (JD310)
PAS POUR (JD310)
NICHT FUER (JD310)
NO PER (JD310)
NADA PARA (JD310)
INTE FOR (JD310)

FUEL INJECTION PUMP
POMPE D'INJECTION
KRAFTSTOFF-EINSPRITZPUMPE
POMPA DI INIEZIONE
BOMBA DE INYECCION DE COMBUSTIBLE
INSPRUTNINGSPUMP
L 27173

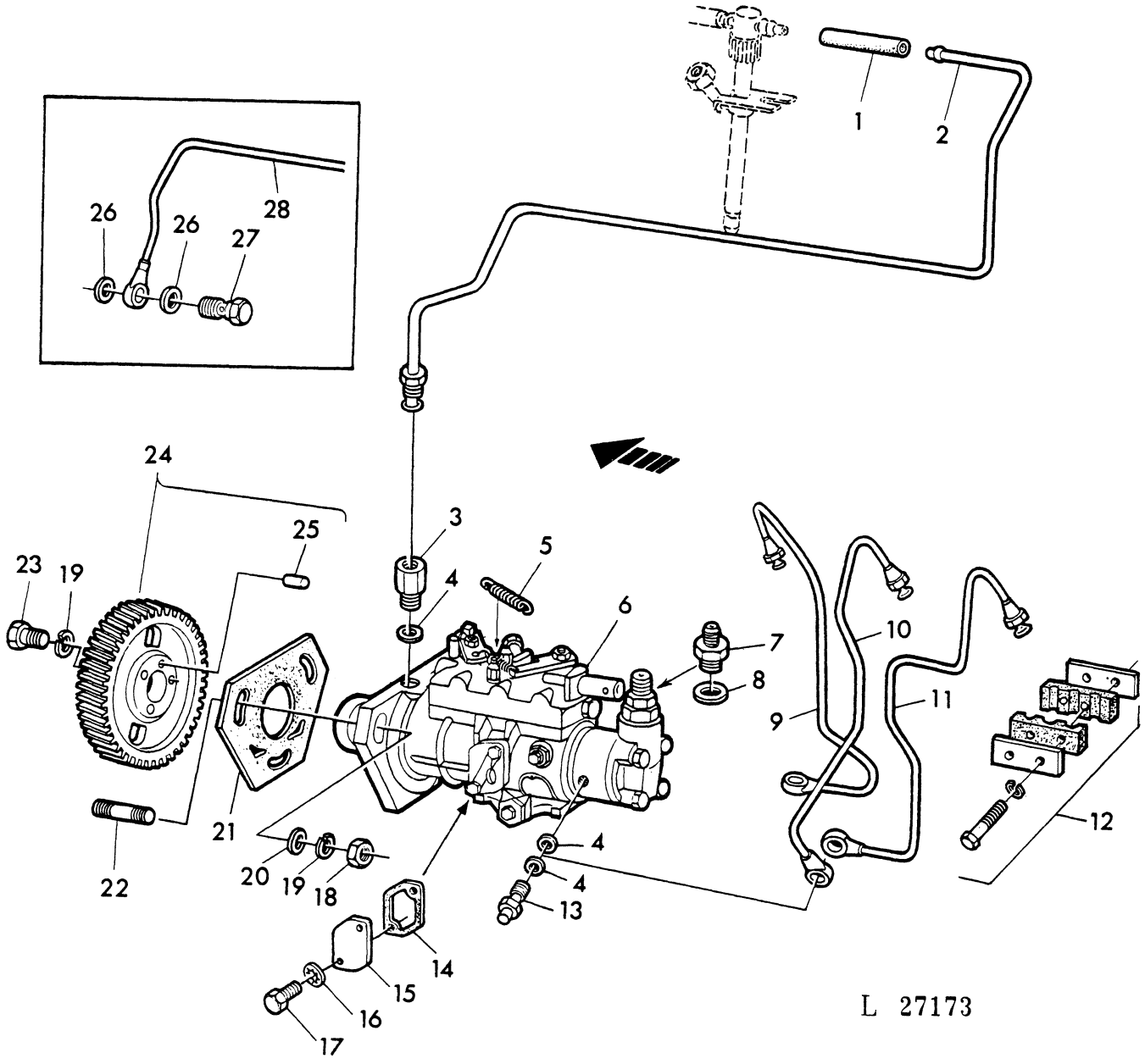

KEY	PART NO.	DESCRIPTION	QTY	ENGINE SERIAL NO.	JD310	REMARKS
1	T 27466	HOSE	1		X	NSEP, ORD AT32064
2	AR 72881	FUEL LINE	1	207160-	X	
3	AR 76102	CONNECTOR	1	207160-	X	SUB. FOR DDX8087
4	T 20055	SEAL	6	-207159	X	
	T 20055	SEAL	7	207160-	X	
5	T 26058	SPRING	1		X	
6	AR 67092	FUEL INJECTION PUMP	1	-207159	X	ROTO DIESEL R3432440, ASSY, INCL. KEYS 4, 5, 7, 8, 13-17, 26, 27 ORD AR91772 W/AR72881
	AR 91772	FUEL INJECTION PUMP	1	207160-	X	ROTO DIESEL R3432 F730, ASSY, INCL. KEYS 3-5, 7, 8, 13-17 SUB. FOR AR72875
7	T 24607	CONNECTOR	1		X	
8	T 24608	SEAL	1		X	
9	AR 80332	FUEL LINE	1		X	NO. 1, SUB. FOR AR67002
10	AR 67003	FUEL LINE	1		X	NO. 2
11	AR 67004	FUEL LINE	1		X	NO. 3
12	DD 13912	CLAMP	1		X	SUB. FOR AR62194
13	AT 29464	HOLLOW SCREW	3		X	
14	T 24543	GASKET	1		X	
15	T 24542	COVER	1		X	
16	12H 295	WASHER	2		X	NO. 10
17	T 24544	CAP SCREW	2		X	
18	14H 785	NUT	3		X	5/16"
19	12H 303	LOCK WASHER	3		X	5/16"
20	24H 1243	WASHER	3		X	11/32"X5/8"X. 060"
21	T 24460	GASKET	1		X	
22	T 23442	STUD	3		X	
23	19H 2551	CAP SCREW	3		X	5/16"X3/4"
24	AR 85710	GEAR	1		X	Z=48, W/T28030, SUB. FOR AT27917
25	T 28030	DOWEL PIN	1		X	
26	T 27765	SEAL	2	-207159	X	
27	T 27764	HOLLOW SCREW	1	-207159	X	
28	AT 27614	FUEL LINE	1	-207159	X	
-	AT 32064	HOSE	1		X	LGTH=1, 5M(59")

SHUT-OFF KNOB
TIRETTE D'ARRET
ABSTELLZUG
TIRANTE D'ARRESTO
DISPOSITIVO DE PARADA
STOPPREGLAGE
L 27174

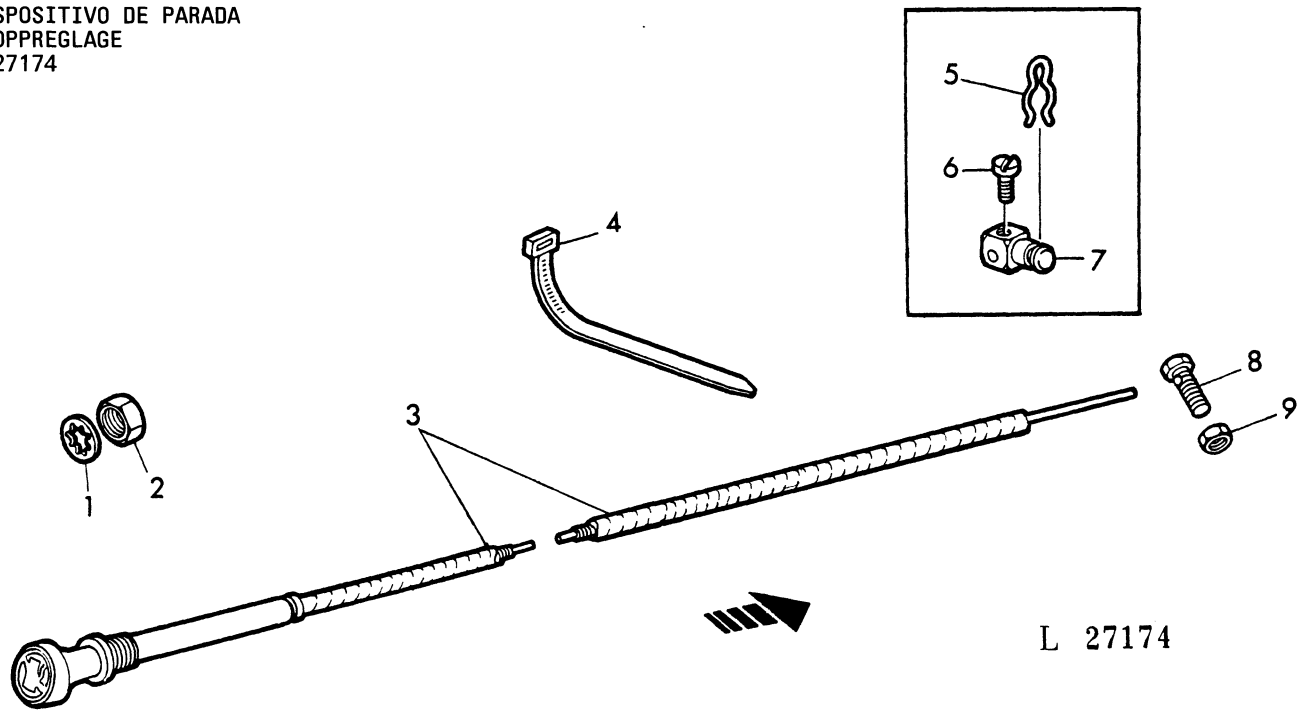

KEY	PART NO.	DESCRIPTION	QTY	SERIAL NO.	JD310	REMARKS
1	12H 325	WASHER	1		X	7/16"
2	14H 934	NUT	1		X	7/16"
3	AL 30843	PUSH PULL CABLE	1		X	SUB. FOR AL24519
4	R 44302	BAND	1		X	
5	R 10185	CLIP	1		X	ORD T29185, 14H850
6	21H 1293	SCREW	1		X	NO. 8X5/16"
7	R 10184	GUIDE	1		X	ORD T29185, 14H850
8	T 29185	SCREW	1		X	
9	14H 850	NUT	1		X	1/4"

THROTTLE LINKAGE
TRINGLERIE DE REGULATION DU REGIME
DREHZAHLREGULIERUNG
REGOLAZIONE
VARILLAJE DEL ACELERADOR
GASREGLAGE
L 13775

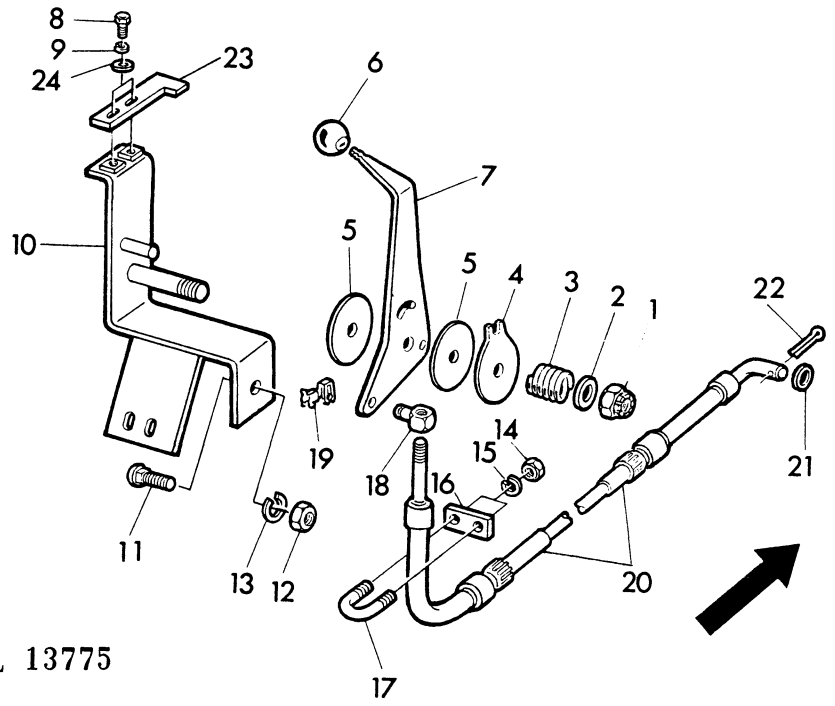

L 13775

KEY	PART NO.	DESCRIPTION	QTY	SERIAL NO.	JD310	REMARKS
1	T 11234	LOCK NUT	1		X	3/8"
2	24H 1304	WASHER	1		X	13/32"X23/32"X. 120"
3	R 31271	SPRING	1		X	
4	R 33976	PLATE	1		X	
5	R 39985	DISK	2		X	
6	R 40948	KNOB	1		X	
7	T 48181	ACCELERATOR	1		X	SUB. FOR T34190
8	19H 1227	CAP SCREW	2	-169012	X	1/4"X1/2"
	19H 1948	CAP SCREW	2	169013-	X	1/4"X3/4"
9	12H 297	LOCK WASHER	2		X	1/4"
10	AT 33242	RETAINER	1		X	
11	03H 1765	BOLT	1		X	3/8"X3/4"
12	14H 812	NUT	1		X	3/8"
13	12H 304	LOCK WASHER	1		X	3/8"
14	14H 786	NUT	2		X	1/4"
15	12H 302	LOCK WASHER	2		X	1/4"
16	T 15021	STRAP	1		X	
17	T 13988	U-BOLT	1		X	
18	T 35887	SWIVEL	1		X	
19	T 29742	CLIP	1		X	
20	AT 33243	PUSH PULL CABLE	1		X	
21	24H 1286	WASHER	1		X	9/32"X1/2"X. 060"
22	11H 231	COTTER PIN	1		X	1/16"X1"
23	T 48182	STRAP	1	169013-	X	
24	24H 1287	WASHER	2	169013-	X	9/32"X5/8"X. 060"

THROTTLE LINKAGE
TRINGLERIE DE REGULATION DU REGIME
DREHZAHLREGULIERUNG
REGOLAZIONE
VARILLAJE DEL ACELERADOR
GASREGLAGE
L 31415

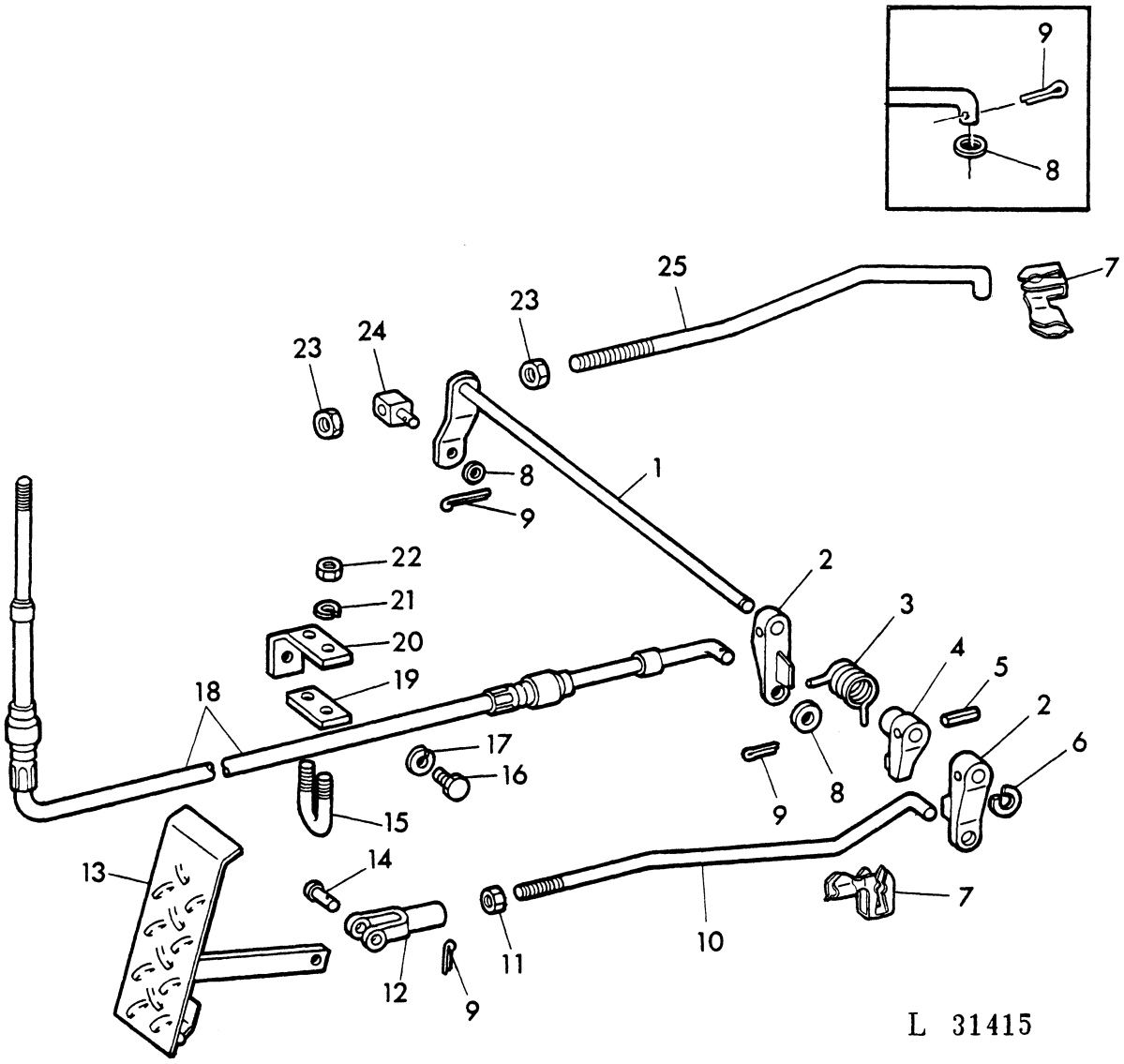

KEY	PART NO.	DESCRIPTION	QTY	SERIAL NO.	JD310	REMARKS
1	AT 34862	ROD	1		X	
2	T 22240	LEVER	2		X	
3	T 50467	SPRING	1		X	SUB. FOR T22151
4	T 22150	LEVER	1		X	
5	34H 264	SPRING PIN	1		X	5/32"X7/8"
6	F 3396R	SNAP RING	1		X	
7	T 29742	CLIP	2		X	
8	24H 1286	WASHER	2		X	9/32"X1/2"X. 060"
9	11H 231	COTTER PIN	3		X	1/16"X1"
10	T 34194	ROD	1		X	
11	14H 649	NUT	1		X	1/4"
12	M 3742T	YOKE	1		X	
13	AT 33245	ACCELERATOR	1		X	
14	L 4667T	PIN	1		X	
15	T 13988	U-BOLT	1		X	
16	19H 2552	CAP SCREW	1		X	3/8"X1-1/8"
17	12H 304	LOCK WASHER	1		X	3/8"
18	AT 33243	PUSH PULL CABLE	1		X	
19	T 15021	STRAP	1		X	
20	T 34193	RETAINER	1		X	
21	12H 302	LOCK WASHER	2		X	1/4"
22	14H 786	NUT	2		X	1/4"
23	14H 850	NUT	2		X	1/4"
24	T 22242	GUIDE	1		X	
25	T 27349	ROD	1		X	

COLD WEATHER STARTING AID "THERMOSTART"
DISPOSITIF D'AIDE AU DEMARRAGE PAR TEMPS FROID "THERMOSTART"
KALTSTARTANLAGE "THERMOSTART"
APPARECCHIATURA PER AVVIAMENTO A FREDDO "THERMOSTART"
DISPOSITIVO PARA EL ARRANQUE EN TIEMPO FRIO "THERMOSTART"
KALLSTARTSUTRUSTNING
L 27175

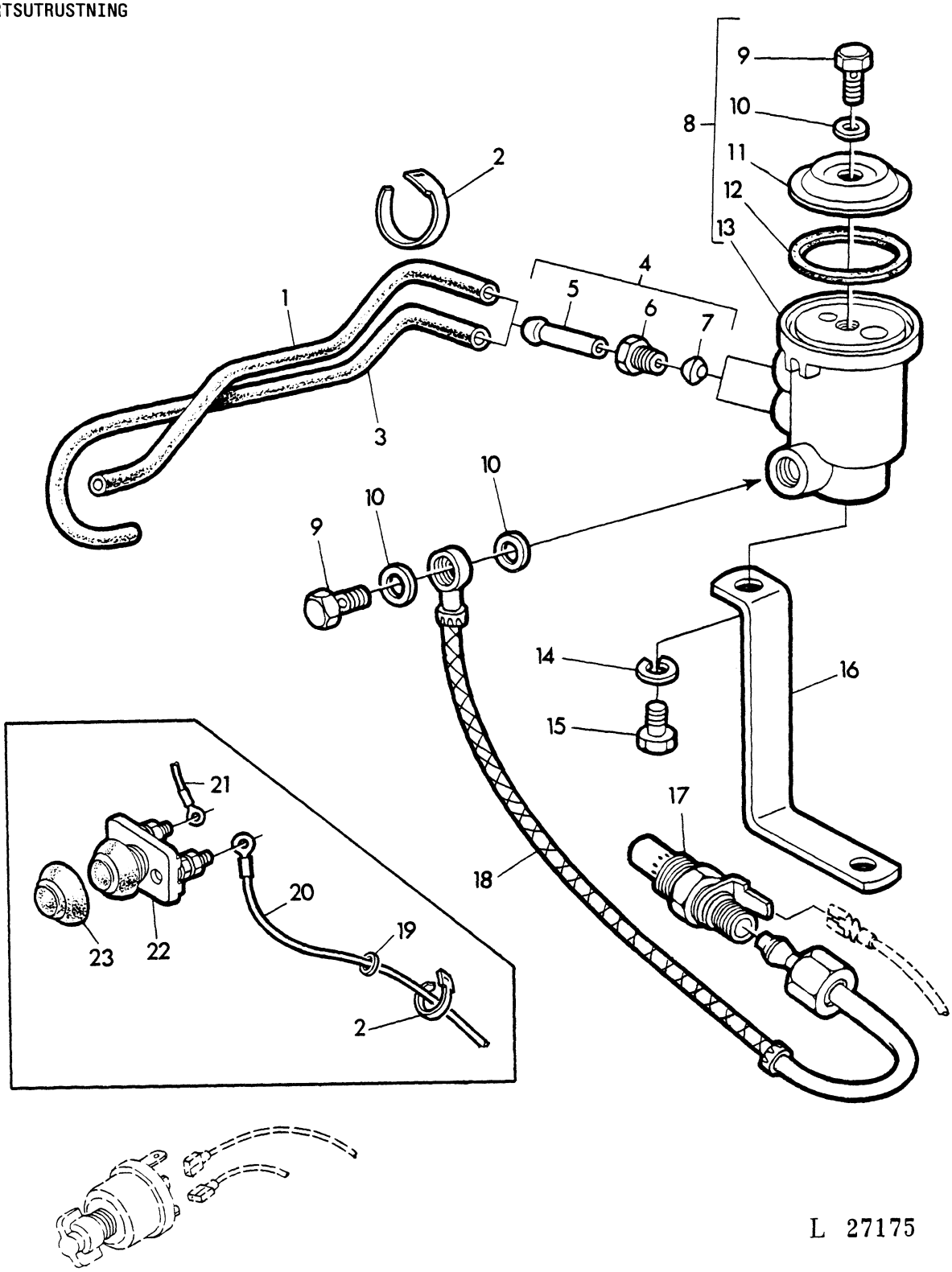

L 27175

KEY	PART NO.	DESCRIPTION	QTY	SERIAL NO.	JD310	REMARKS
1	T 27979	HOSE	1		X	NSEP, ORD AT32064
2	CD 12892	BAND	3		X	
3	CD 13259	HOSE	1		X	NSEP, ORD AT32064
4	DD 13407	KIT	AR		X	KIT, INCL. KEYS 5-7
5	CD 12884	HOSE FITTING	2		X	NSEP, ORD DD13407
6	CD 12886	CONNECTOR	2		X	NSEP, ORD DD13407
7	R 62034	ORIFICE	1		X	SUB. FOR CD12885
8	AT 26140	RESERVOIR	1		X	ASSY, INCL. KEYS 2-5 SUB. FOR DD11381
9	CD 12887	HOLLOW SCREW	2		X	
10	CD 12888	GASKET	3		X	
11	T 27974	COVER	1		X	
12	T 27973	GASKET	1		X	
13	.....	RESERVOIR	1		X	NSEP, ORD AT26140
14	12H 304	LOCK WASHER	1		X	3/8"
15	19H 1894	CAP SCREW	1		X	3/8"X3/4"
16	R 49507	RETAINER	1		X	
17	AR 63103	BURNER	1		X	CAV-1854102 TYPE 357/11
18	AR 65440	FUEL LINE	1		X	
19	T 29801	GROMMET	1		X	
20	AR 63104	WIRING LEAD	1		X	
21	AT 26137	WIRING LEAD	1		X	
22	AT 26136	SWITCH	1		X	KIT M 2-718.03, W/CD13157
23	CD 13157	CAP	1		X	KIT M 457.14
-	AT 27565	THERMOSTART STARTING AID	1		X	KIT, INCL. KEYS 1-23
-	AT 32064	HOSE	1		X	KIT, LGTH=1,5M (59")

COLD WEATHER STARTING AID
DISPOSITIF D'AIDE AU DEMARRAGE PAR TEMPS FROID
KALTSTARTANLAGE
APPARECCHIATURA PER AVVIAMENTO A FREDDO
DISPOSITIVO PARA EL ARRANQUE EN TIEMPO FRIO
KALLSTARTSUTRUSTNING
L 13798

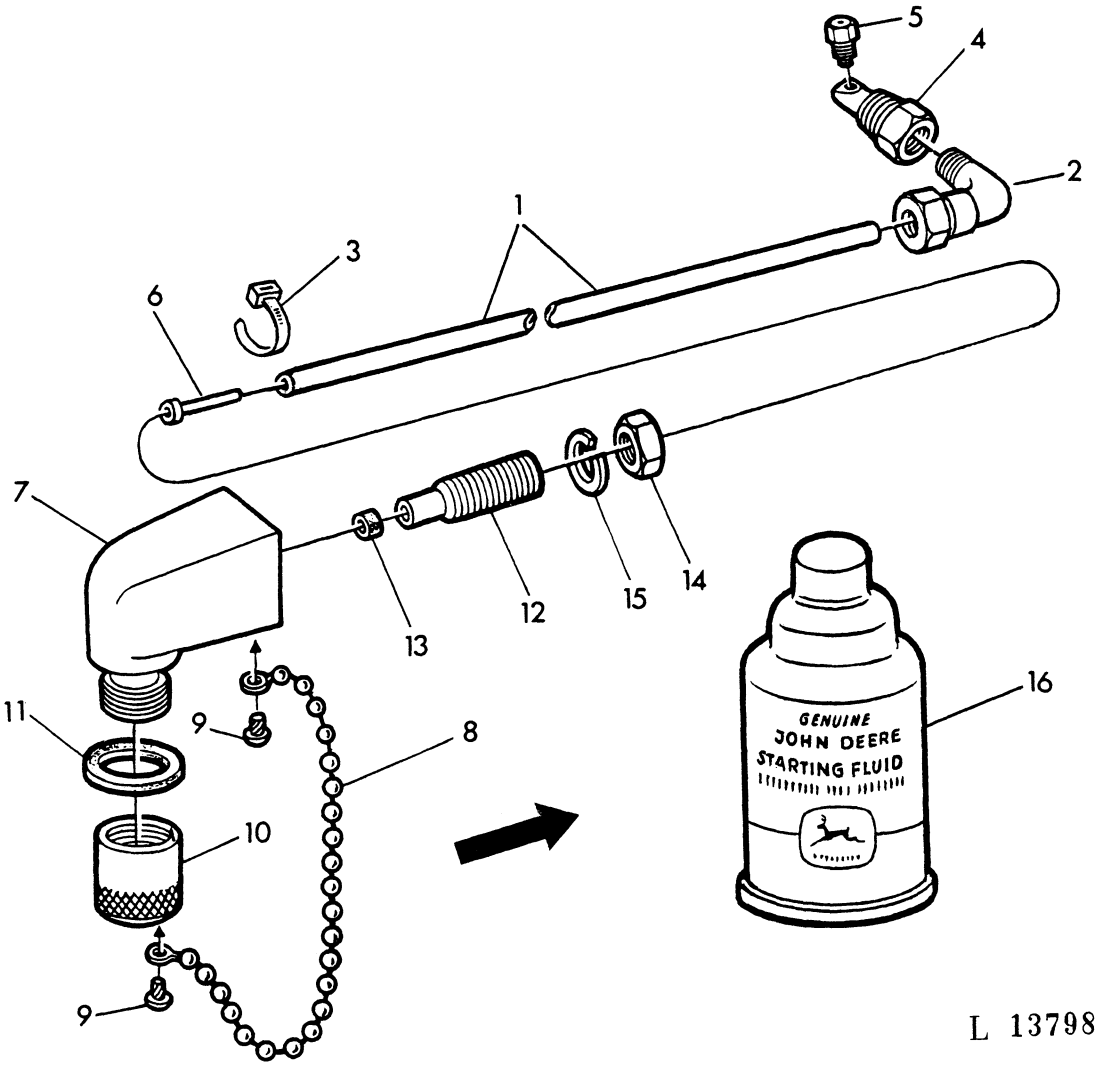

L 13798

KEY	PART NO.	DESCRIPTION	QTY	SERIAL NO.	JD310	REMARKS
1	T 33420	LINE	1		X	
2	AT 25266	ELBOW	1		X	
3	R 44302	BAND	2		X	
4	R 47160	NOZZLE HOLDER	1		X	
5	R 28583	NOZZLE	1		X	
6	T 33113	SLEEVE	1		X	
7	T 22534	ADAPTER	1		X	
8	AR 27940	CHAIN	1		X	
9	37H 44	SCREW	2		X	NO. 7X3/8"
10	R 32306	CAP	1		X	
11	R 26149	PACKING	1		X	
12	R 34395	UNION FITTING	1		X	
13	R 34394	SEAL	1		X	
14	14H 809	NUT	1		X	1/2"
15	24H 301	LOCK WASHER	1		X	1/2"
16	AR 27814	STARTING FLUID	1		X	

SECTIONAL INDEX
INDEX DE SECTION
GRUPPENINDEX
INDICE DELLA SEZIONE
INDICE DE SECCION
GRUPPSFORTECKNING
L 27567

XXXX

SECTIONAL INDEX
INDEX DE SECTION
GRUPPENINDEX
INDICE DELLA SEZIONE
INDICE DE SECCION
GRUPPSFORTECKNING
L 27552

XXXX

ALTERNATOR / VOLTAGE REGULATOR
ALTERNATEUR / REGULATEUR DE TENSION
DREHSTROM-GENERATOR / REGLERSCHALTER
ALTERNATORE / REGOLATORE
ALTERNADOR / REGULADOR DE VOLTAJE
VAXELSTROMSGENERATOR/SPANNINGSREGULATOR
L 13827

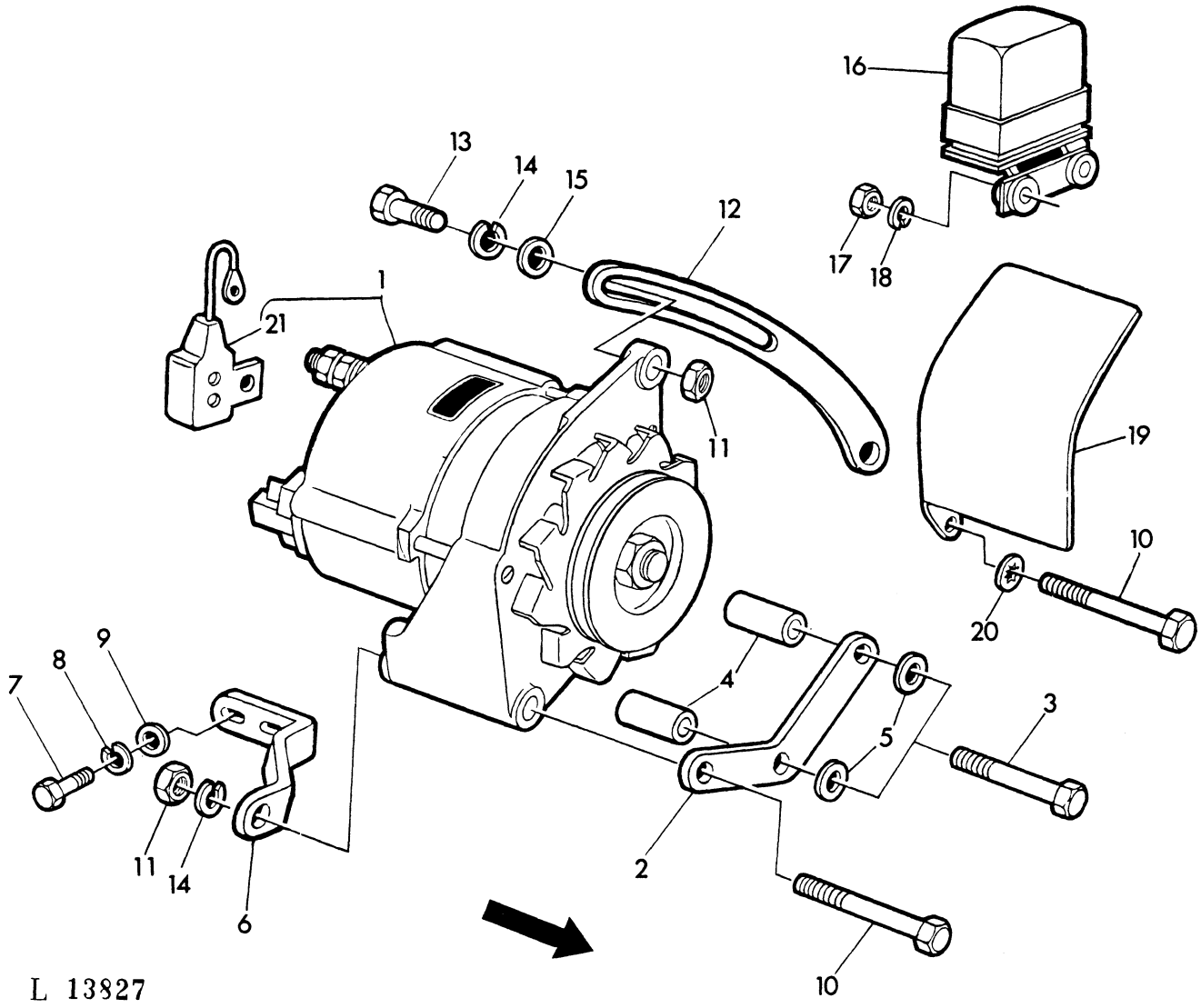

L 13827

KEY	PART NO.	DESCRIPTION	QTY	SERIAL NO.	JD310	REMARKS
1	AR 62401	ALTERNATOR	1		X	R. BOSCH-G1-14V-28A (0120300535/562)ASSY, W/AL23434
2	R 60827	RETAINER	1		X	FRONT, SUB. FOR T20202
3	19H 2128	CAP SCREW	2		X	3/8"X3"
4	R 64469	SPACER	2		X	3/8"X1", SUB. FOR 28H2547
5	24H 1304	WASHER	2		X	13/32"X23/32"X. 120"
6	R 60828	RETAINER	1		X	REAR, SUB. FOR R50557
7	19H 2284	CAP SCREW	2		X	3/8"X7/8"
8	12H 304	LOCK WASHER	3		X	3/8"
9	24H 1305	WASHER	2		X	13/32"X13/16"X. 060"
10	19H 1921	CAP SCREW	1		X	5/16"X3-1/4"
11	14H 785	NUT	2		X	5/16"
12	T 20204	STRAP	1		X	
13	19H 1849	CAP SCREW	1		X	5/8"X1-1/4"
14	12H 303	LOCK WASHER	2		X	5/16"
15	24H 1136	WASHER	1		X	11/32"X5/16"X. 060"
16	AT 31413	REGULATOR	1		X	R. BOSCH-AD1/14V 0190601009
17	14H 631	NUT	2		X	NO. 10
18	12M 7064	LOCK WASHER	2		X	5MM, SUB. FOR 12H246
19	AL 19226	GUARD	1		X	
20	12H 291	LOCK WASHER	1		X	5/16"
21	AL 23434	VAPOR CONDENSER	1		X	R. BOSCH-0290800014

ALTERNATOR
ALTERNATEUR
DREHSTROM-GENERATOR
ALTERNATORE
ALTERNADOR
VAXELSTROMSGENERATOR
L 31224

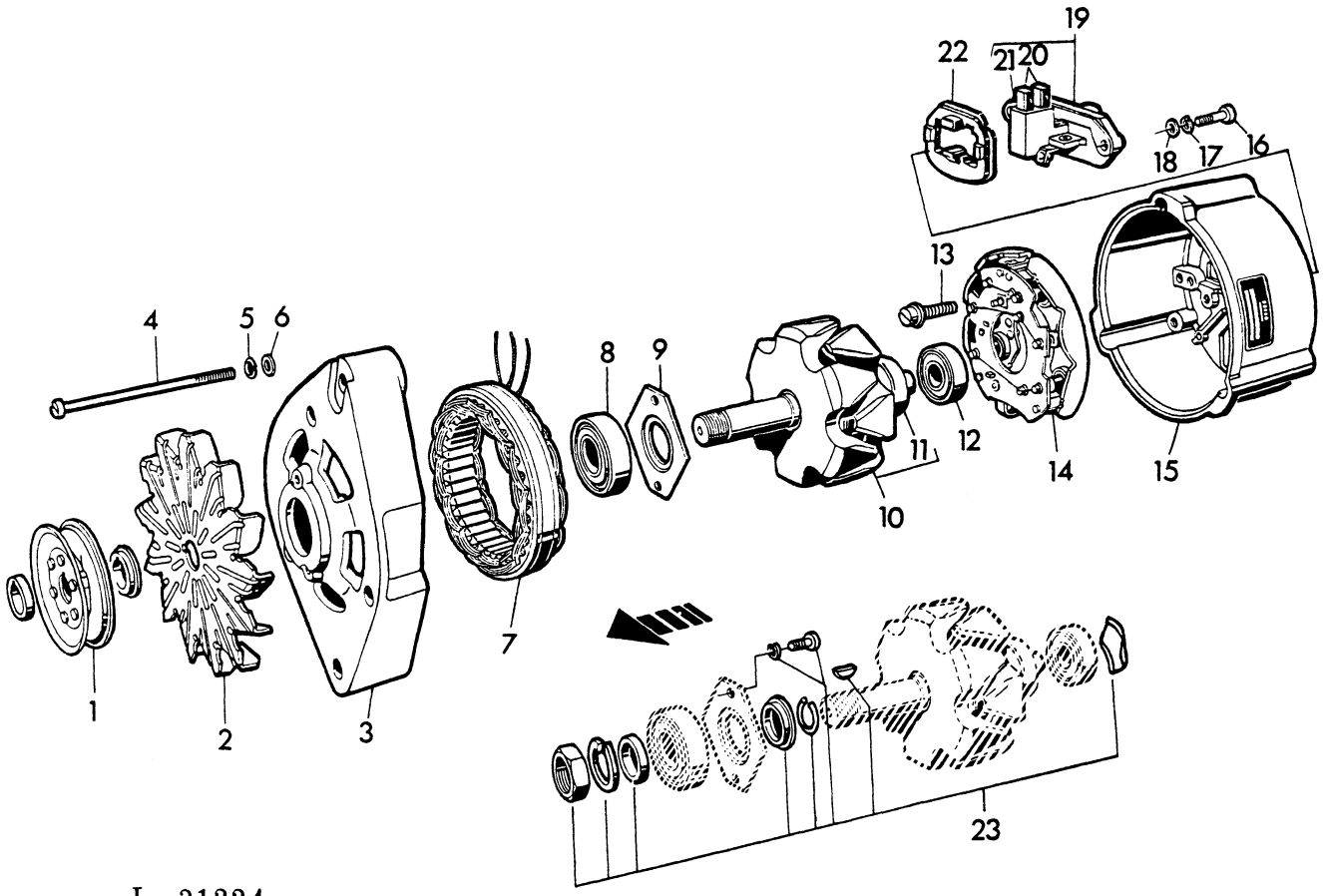

L 31224

KEY	PART NO.	DESCRIPTION	QTY	SERIAL NO.	JD310	REMARKS
1	AL 23856	PULLEY	1		X	R. BOSCH-1126600151
2	L 29167	FAN	1		X	R. BOSCH-1126610032
3	L 29159	HOUSING	1		X	R. BOSCH-1125823019
4	L 32147	SCREW	3		X	R. BOSCH-1123410041 SUB. FOR L29166
5	12M 7011	LOCK WASHER	3		X	5MM
6	24M 7027	WASHER	3		X	5, 3MM
7	AL 27371	STATOR	1		X	R. BOSCH-1125043007 SUB. FOR AL23849
8	AL 23851	BEARING	1		X	R. BOSCH-1900905281
9	L 29161	PLATE	1		X	R. BOSCH-1120551000
10	AL 23850	ROTOR	1		X	R. BOSCH-1124033011, W/L29160
11	L 29160	RING	1		X	R. BOSCH-1124303004
12	AL 23852	BEARING	1		X	R. BOSCH-1900905103
13	21M 7242	SCREW	3		X	R. BOSCH-1 123 410 046 SUB. FOR L29163
14	AL 27374	DIODE HOLDER	1		X	R. BOSCH-1127320141 SUB. FOR AL23855
15	L 29164	HOUSING	1		X	R. BOSCH-1125883034
16	AL 19208	SCREW	2		X	R. BOSCH-2910011128
17	12M 1622	LOCK WASHER	2		X	4MM
18	L 29162	WASHER	2		X	R. BOSCH-2916021010
19	AL 27372	REGULATOR	1		X	R. BOSCH-1194336010 INCL. KEYS 13, 14
20	AL 27373	CARBON BRUSH CONDUCTOR	1		X	SUB. FOR AL23853 R. BOSCH-1127014011 KIT SUB. FOR AL23854
21	L 27339	SPRING	2		X	R. BOSCH-1124625000
22	L 29165	GASKET	1		X	R. BOSCH-1121015003
23	AL 23857	ROTOR	1		X	R. BOSCH-1127011016, KIT
-	AR 62401	ALTERNATOR	1		X	R. BOSCH-0120300535/562 ASSY, INCL. KEYS1-23, AL23434

BATTERY
BATTERIE
BATTERIE
BATTERIA
BATERIA
BATTERI
L 31222

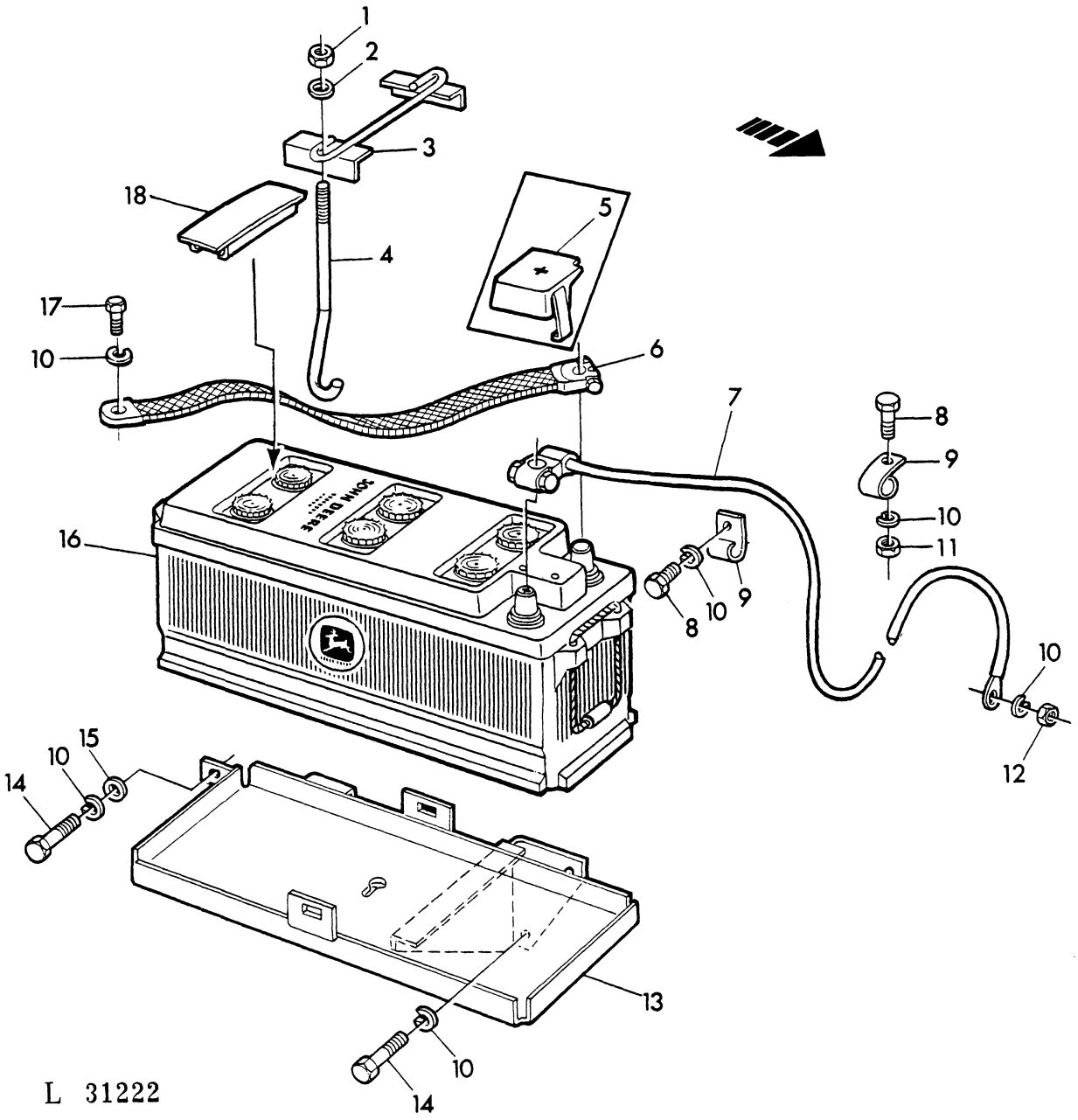

KEY	PART NO.	DESCRIPTION	QTY	SERIAL NO.	JD310	REMARKS
1	14H 786	NUT	2		X	1/4"
2	24H 1646	WASHER	2		X	17/64"X3/4"X. 060"
3	AL 24497	CLAMP	1		X	
4	L 29841	BOLT	2		X	
5	L 29843	CAP	1		X	
6	AL 24499	GROUND STRAP	1		X	(-)
7	AL 24498	CABLE	1		X	(+)
8	19H 1936	CAP SCREW	2		X	3/8"X3/4"
9	R 46415	CLAMP	2		X	
10	12H 304	LOCK WASHER	7		X	3/8"
11	14H 812	NUT	1		X	3/8"
12	14H 732	NUT	1		X	3/8"
13	AT 39534	BRACKET	1		X	
14	19H 1731	CAP SCREW	3		X	3/8"X1"
15	24H 1307	WASHER	1		X	13/32"X1"X. 060"
16	AL 31917	BATTERY	1		X	12V, 143AH, SUB. FOR AT41099, AL27423
17	19H 2284	CAP SCREW	1		X	3/8"X7/8", SUB. FOR 19H2021
18	L 31257	GUARD	3		X	

STARTING MOTOR
DEMARREUR
STARTER
AVVIATORE ELETTRICO
MOTOR DE ARRANGUE
STARTMOTOR
L 11418

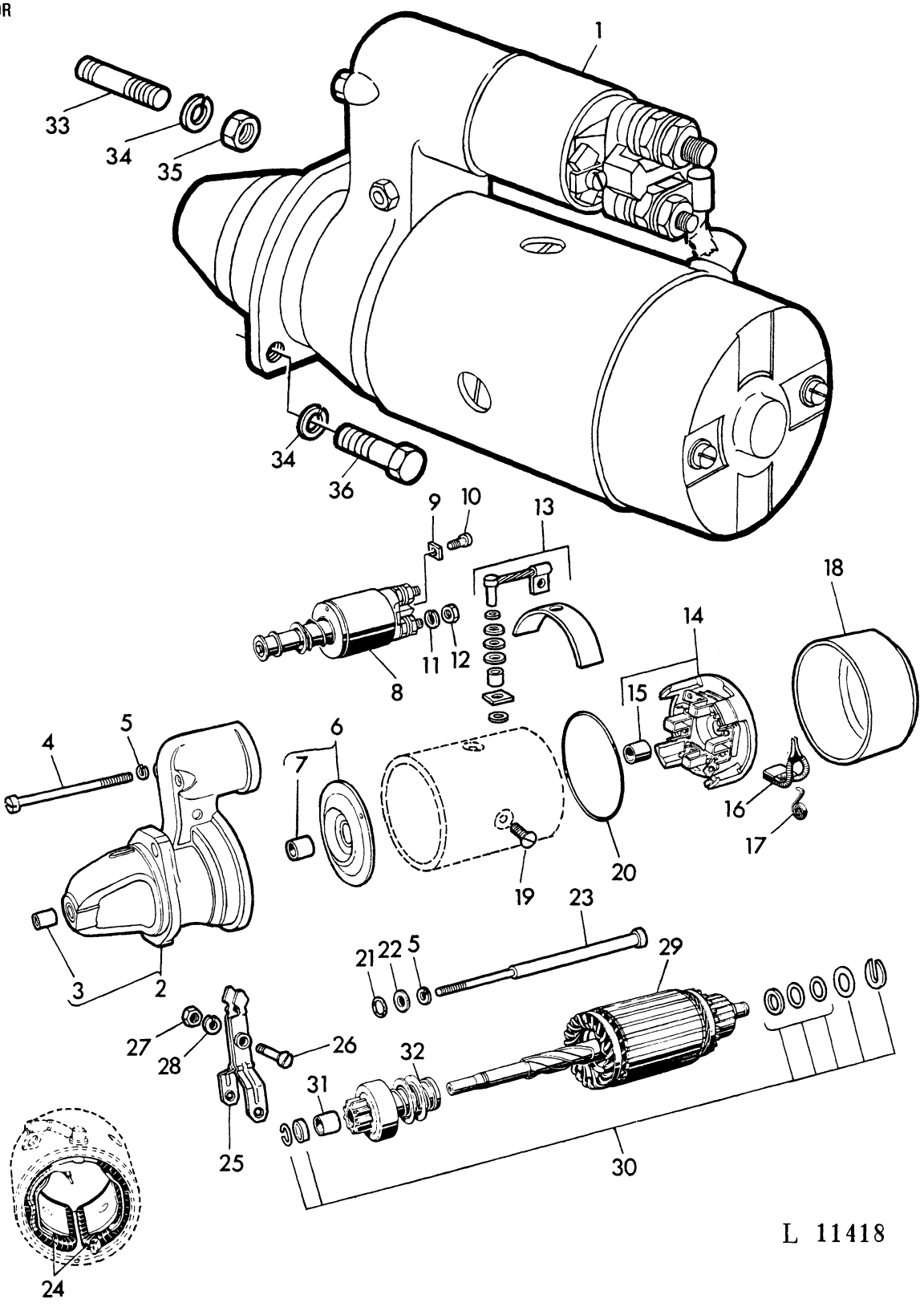

KEY	PART NO.	DESCRIPTION	QTY	SERIAL NO.	JD310	REMARKS
1	AT 23401	STARTER	1		X	ASSY, INCL. KEYS 2-32 (JD R12 V4 PS) R. BOSCH-0001359016 ORD AR70436
2	AL 23844	CASE	1		X	R. BOSCH-2005 824 425 W/L19651
3	L 19651	BUSHING	1		X	R. BOSCH-2000 301 000
4	21M 6041	SCREW	2		X	6X50MM
5	L 29153	LOCK WASHER	4		X	R. BOSCH-2916 693 005
6	Z 24798	BEARING	1		X	R. BOSCH-2005 824 266 W/L19654
7	L 19654	BUSHING	1		X	R. BOSCH-2000 301 011
8	AL 19192	SOLENOID	1		X	R. BOSCH-0331 401 001
9	L 29156	CLAMP	1		X	R. BOSCH-1901 321 209
10	21M 1211	SCREW	1		X	4X6MM
11	12M 7013	LOCK WASHER	2		X	10MM
12	14M 7152	NUT	4		X	10MM
13	AL 23847	KIT	1		X	R. BOSCH-2007 011 533 KIT
14	AL 23846	COMMUTATOR HOUSING	1		X	R. BOSCH-2005 854 040 W/Z24799
15	Z 24799	BUSHING	1		X	R. BOSCH-1900 301 420
16	AZ 14507	CARBON BRUSH CONDUCTOR	1		X	R. BOSCH-2007 014 011 KIT
17	Z 24810	SPRING	1		X	R. BOSCH-2004 652 038
18	L 29158	COVER	1		X	R. BOSCH-2000 520 055
19	L 29157	SCREW	1		X	R. BOSCH-2910 551 284
20	Z 24801	O-RING	1		X	R. BOSCH-2000 210 028
21	L 29155	O-RING	1		X	R. BOSCH-2000 210 038
22	L 29154	WASHER	1		X	R. BOSCH-1520 100 005
23	L 29152	SCREW	1		X	R. BOSCH-2003 410 065
24	AZ 14504	FIELD WINDING COIL	1		X	R. BOSCH-2004 114 164
25	AT 25914	LEVER	1		X	R. BOSCH-2001 933 135
26	T 27671	SCREW	1		X	R. BOSCH-2003 410 016
27	14M 7151	NUT	1		X	8MM
28	12M 7008	LOCK WASHER	1		X	8MM
29	AZ 14506	ARMATURE	1		X	R. BOSCH-2004 004 061
30	AL 23848	ARMATURE	1		X	R. BOSCH-2007 010 007, KIT
31	Z 24800	BUSHING	1		X	R. BOSCH-2000 301 006
32	AT 25910	BENDIX DRIVE	1		X	R. BOSCH-2006 209 201
33	M 3636T	STUD	1		X	3/8"X1-1/2"
34	12H 304	LOCK WASHER	2		X	3/8"
35	14H 812	NUT	1		X	3/8"
36	19H 1731	CAP SCREW	1		X	3/8"X1"

STARTING MOTOR
DEMARREUR
STARTER
AVVIATORE ELETTRICO
MOTOR DE ARRANGUE
STARTMOTOR
L 11416

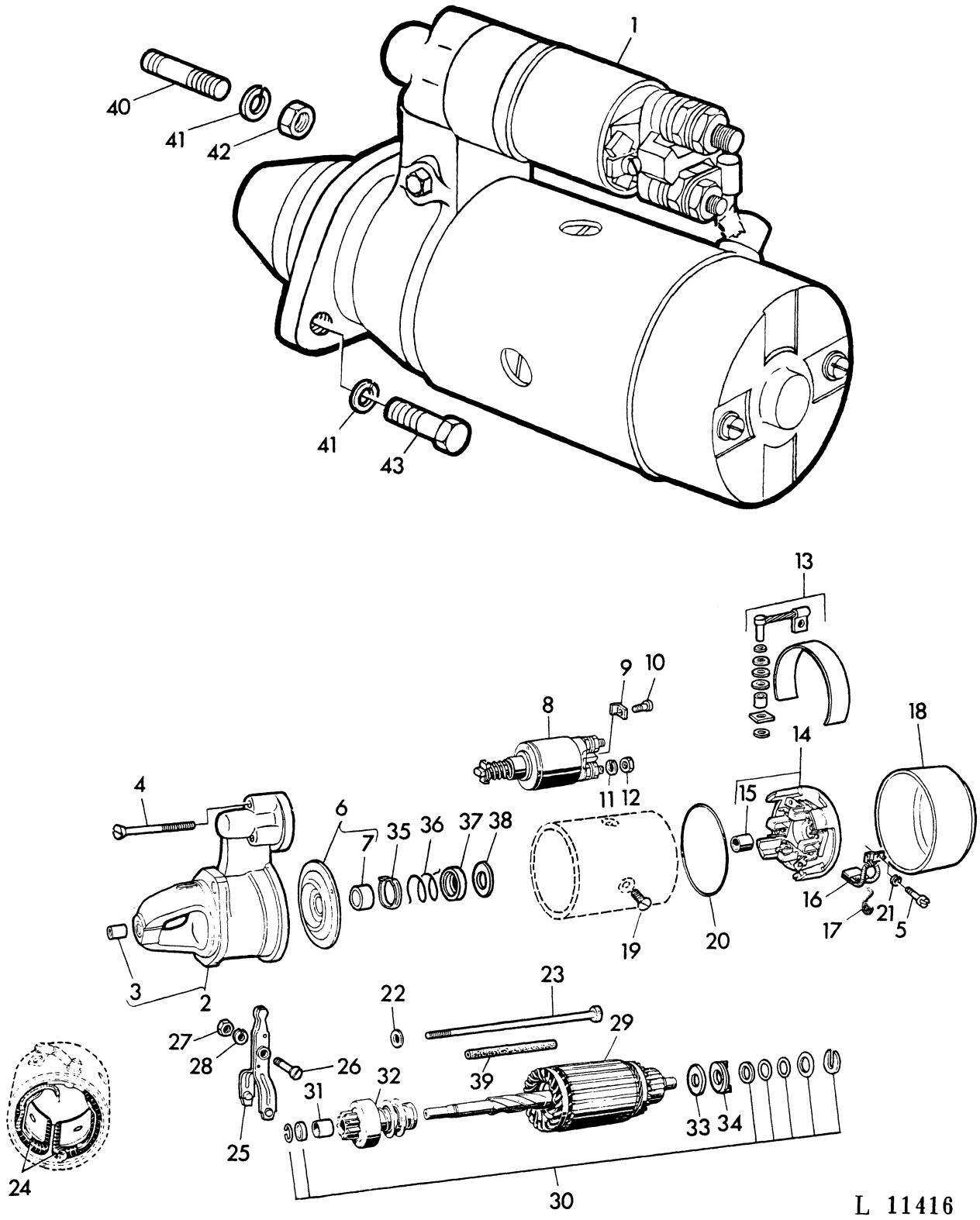

KEY	PART NO.	DESCRIPTION	QTY	SERIAL NO.	JD310	REMARKS
1	AR 70436	STARTER	1		X	ASSY, INCL. KEY 2-39(JD R12 V4PS R. BOSCH-0001 359 090
2	AL 25266	HOUSING	1		X	R. BOSCH-2005 824 741, W/L19651
3	L 19651	BUSHING	1		X	R. BOSCH-2000 301 000
4	L 30860	SCREW	3		X	R. BOSCH-2003 421 014
5	21M 7198	SCREW	1		X	5X8MM
6	AL 25267	BEARING	1		X	R. BOSCH-2005 824 649, W/L30862
7	L 30862	BUSHING	1		X	R. BOSCH-2000 301 041
8	AL 25268	SOLENOID	1		X	R. BOSCH-0331 402 004
9	L 29156	CLAMP	1		X	R. BOSCH-1901 321 209
10	21M 1211	SCREW	1		X	4X6MM
11	12M 7013	LOCK WASHER	2		X	10MM
12	14M 7152	NUT	4		X	10MM
13	AL 25269	TERMINAL	1		X	R. BOSCH-2007 011 041, KIT
14	AL 25270	COMMUTATOR HOUSING	1		X	R. BOSCH-2005 854 053, W/Z24799
15	Z 24799	BUSHING	1		X	R. BOSCH-1900 301 420
16	AL 25271	CARBON BRUSH CONDUCTOR	1		X	R. BOSCH-2007 014 052, KIT
17	Z 24810	SPRING	4		X	R. BOSCH-2004 652 038
18	L 29158	COVER	1		X	R. BOSCH-2000 520 055
19	L 29157	SCREW	1		X	R. BOSCH-2910 551 284
20	Z 24801	O-RING	1		X	R. BOSCH-2000 210 028
21	12M 7011	LOCK WASHER	4		X	5MM
22	L 30863	WASHER	1		X	R. BOSCH-2000 100 073
23	L 29152	SCREW	1		X	R. BOSCH-2003 410 065
24	AL 25272	FIELD WINDING COIL	1		X	R. BOSCH-2004 114 169
25	AL 25273	LEVER	1		X	R. BOSCH-2001 933 175
26	T 27671	SCREW	1		X	R. BOSCH-2003 410 016
27	14M 7151	NUT	1		X	8MM
28	12M 7008	LOCK WASHER	1		X	8MM
29	AL 25274	ARMATURE	1		X	R. BOSCH-2004 004 112
30	AL 23848	ARMATURE	1		X	R. BOSCH-2007 010 007, KIT
31	Z 24800	BUSHING	1		X	R. BOSCH-2000 301 006
32	AL 25275	BENDIX DRIVE	1		X	R. BOSCH-2006 209 414
33	L 30869	DISK	1		X	R. BOSCH-2000 147 002
34	L 30868	THRUST WASHER	1		X	R. BOSCH-2000 112 003
35	L 30864	GUIDE	1		X	R. BOSCH-2000 500 017
36	L 30865	SPRING	1		X	R. BOSCH-2004 616 004
37	L 30866	GUIDE	1		X	R. BOSCH-2000 134 002
38	L 30867	WASHER	1		X	R. BOSCH-2000 113 000
39	L 30861	TERMINAL NIPPLE	2		X	R. BOSCH-2000 708 070
40	M 3636T	STUD	1		X	3/8"X1-1/2"
41	12H 304	LOCK WASHER	2		X	3/8"
42	14H 812	NUT	1		X	3/8"
43	19H 1731	CAP SCREW	1		X	3/8"X1"

TACHOMETER
COMPTE-TOURS
DREHZAHLMESSER
CONTAGIRI
TACOMETRO
VARVTALSRACKNARE
L 27160

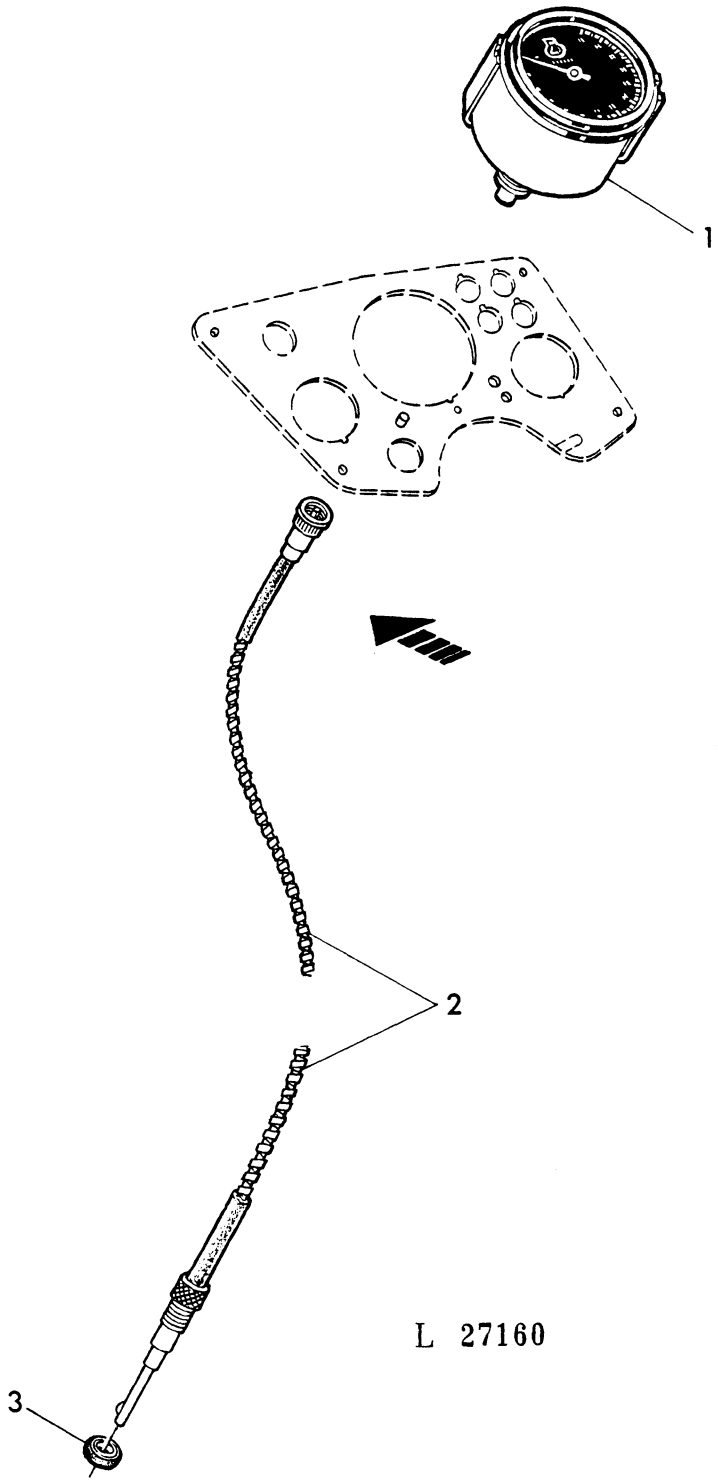

KEY	PART NO.	DESCRIPTION	QTY	SERIAL NO.	JD310	REMARKS
1	AL 24528	TACHOMETER	1		X	ASSY
2	AT 32915	DRIVE SHAFT	1		X	
3	L 35628	SEAL	1		X	SUB. FOR T31437

ELECTRICAL INSTRUMENTS
INSTRUMENTS ELECTRIQUES
ELEKTRISCHE ARMATUREN
STRUMENTAZIONE ELETTRICA
MANDOS E INSTRUMENTOS ELECTRICOS
ELEKTRISKA INSTRUMENT
L 31226

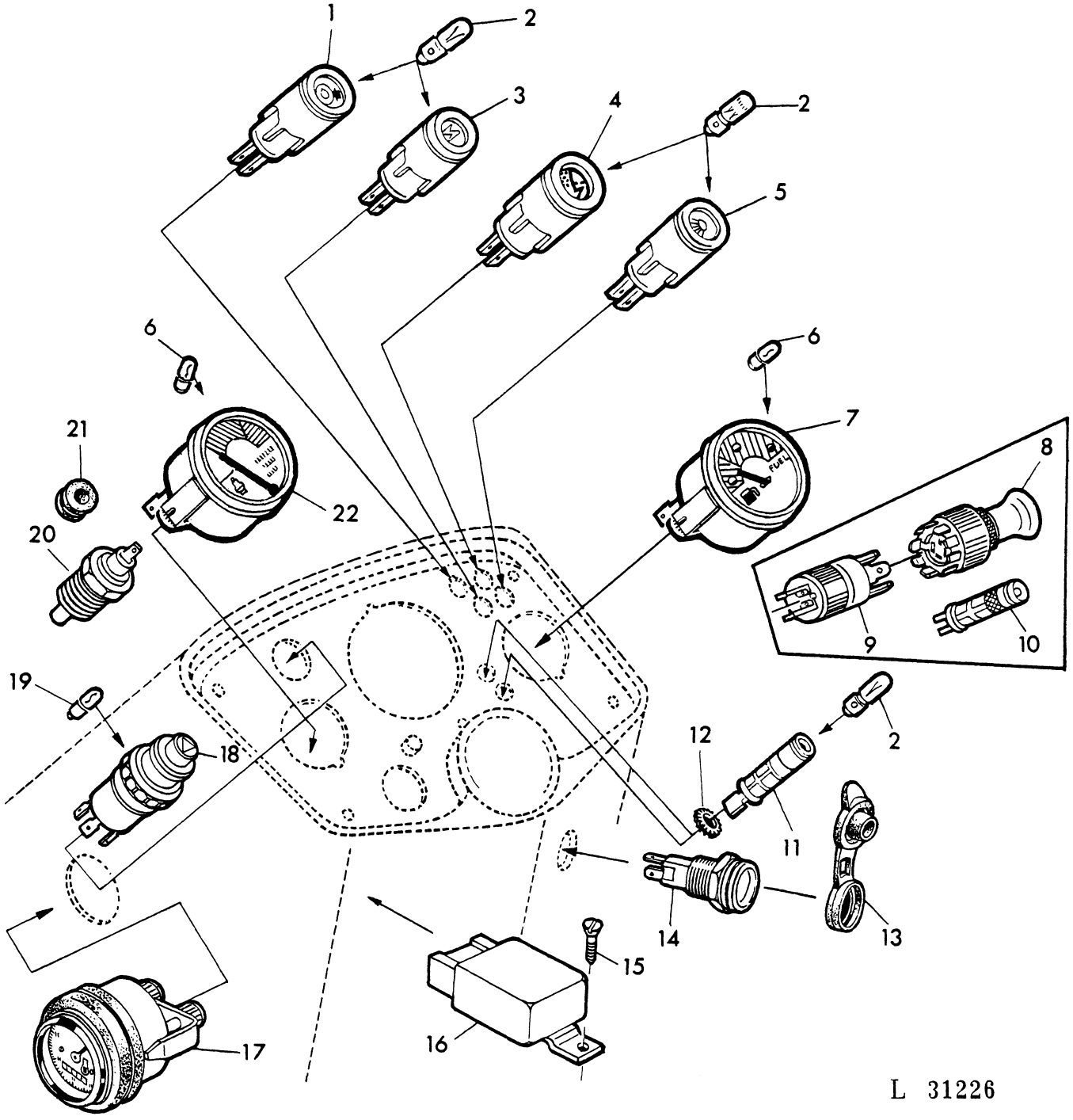

KEY	PART NO.	DESCRIPTION	QTY	SERIAL NO.	JD310	REMARKS
1	AT 24693	INDICATOR LIGHT	1		X	
2	57M 6394	BULB	7		X	12V, 4W
3	AT 24692	INDICATOR LIGHT	1		X	
4	AL 19907	INDICATOR LIGHT	1		X	
5	AT 24691	INDICATOR LIGHT	1		X	
6	57M 6343	BULB	2		X	12V, 2W
7	AL 24294	GAGE	1		X	
8	AL 24541	SWITCH	1		X	
9	AL 24542	FLASHER	1		X	12V, 25W
10	AL 25551	INDICATOR LIGHT	1		X	
11	AL 23015	INDICATOR LIGHT	2		X	
12	12H 331	WASHER	2		X	3/8"
13	L 30661	CAP	1		X	
14	AL 24543	RECEPTACLE	1		X	
15	37M 7024	SCREW	1		X	4, 8X16MM, SUB. FOR 37M7040
16	AL 33454	FLASHER	1		X	SUB. FOR AL27855, AL32891
17	AL 31535	INSTRUMENT	1		X	SUB. FOR AT40048, AT50179
18	T 67007	SWITCH	1		X	
	AL 27856	SWITCH	1		X	ORD T67007, 57M7018
19	57M 7018	BULB	1		X	12V, 1, 2W
20	AL 24527	SENDER	1		X	
21	R 26936	GROMMET	1		X	
22	AL 24526	INSTRUMENT	1		X	

ELECTRICAL INSTRUMENTS
INSTRUMENTS ELECTRIQUES
ELEKTRISCHE ARMATUREN
STRUMENTAZIONE ELETTRICA
MANDOS E INSTRUMENTOS ELECTRICOS
ELEKTRISKA INSTRUMENT
L 13852

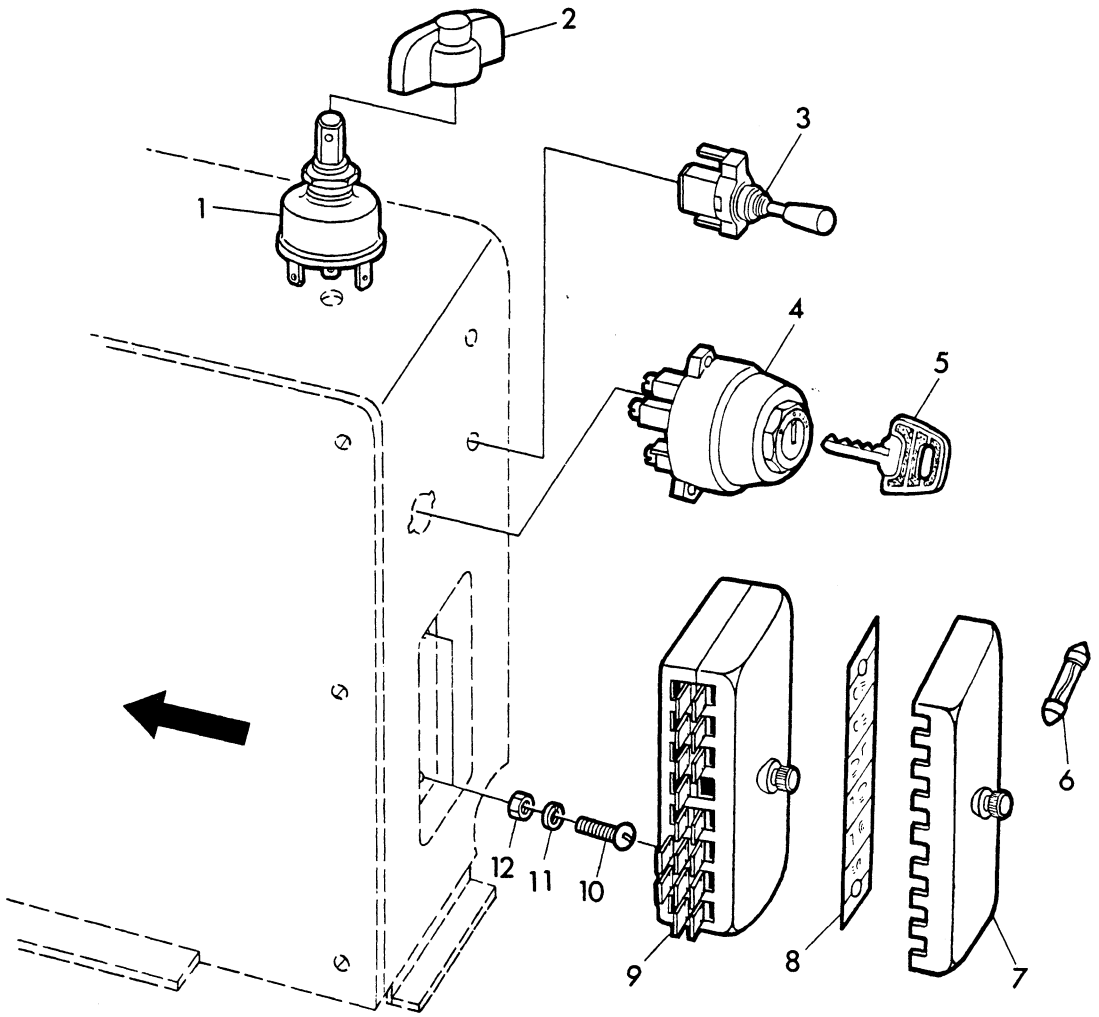

L 13852

KEY	PART NO.	DESCRIPTION	QTY	SERIAL NO.	JD310	REMARKS
1	AL 25064	SWITCH	1		X	
2	L 30655	SWITCH	1		X	
3	AL 24042	SWITCH	1		X	
4	AL 19890	SWITCH	1		X	
5	L 28520	KEY	2		X	
6	99M 7048	FUSE	8		X	8AMP., SUB. FOR L12624
7	AL 14235	COVER	1		X	
8	AT 24540	LABEL	1		X	
9	AL 14007	FUSE BOX	1		X	W/AL14235
10	21H 1128	BOLT	2		X	NO. 10X3/4"
11	12M 7064	LOCK WASHER	2		X	5MM, SUB. FOR 12H246
12	14H 631	NUT	2		X	NO. 10

LIGHTS "HASSIA" - "BILUX"
PROJECTEURS "HASSIA" - "BILUX"
SCHEINWERFER "HASSIA" - "BILUX"
PROIETTORI "HASSIA" - "BILUX"
FAROS "HASSIA" - "BILUX"
BELYSNING "HASSIA" - "BILUX"
L 13848

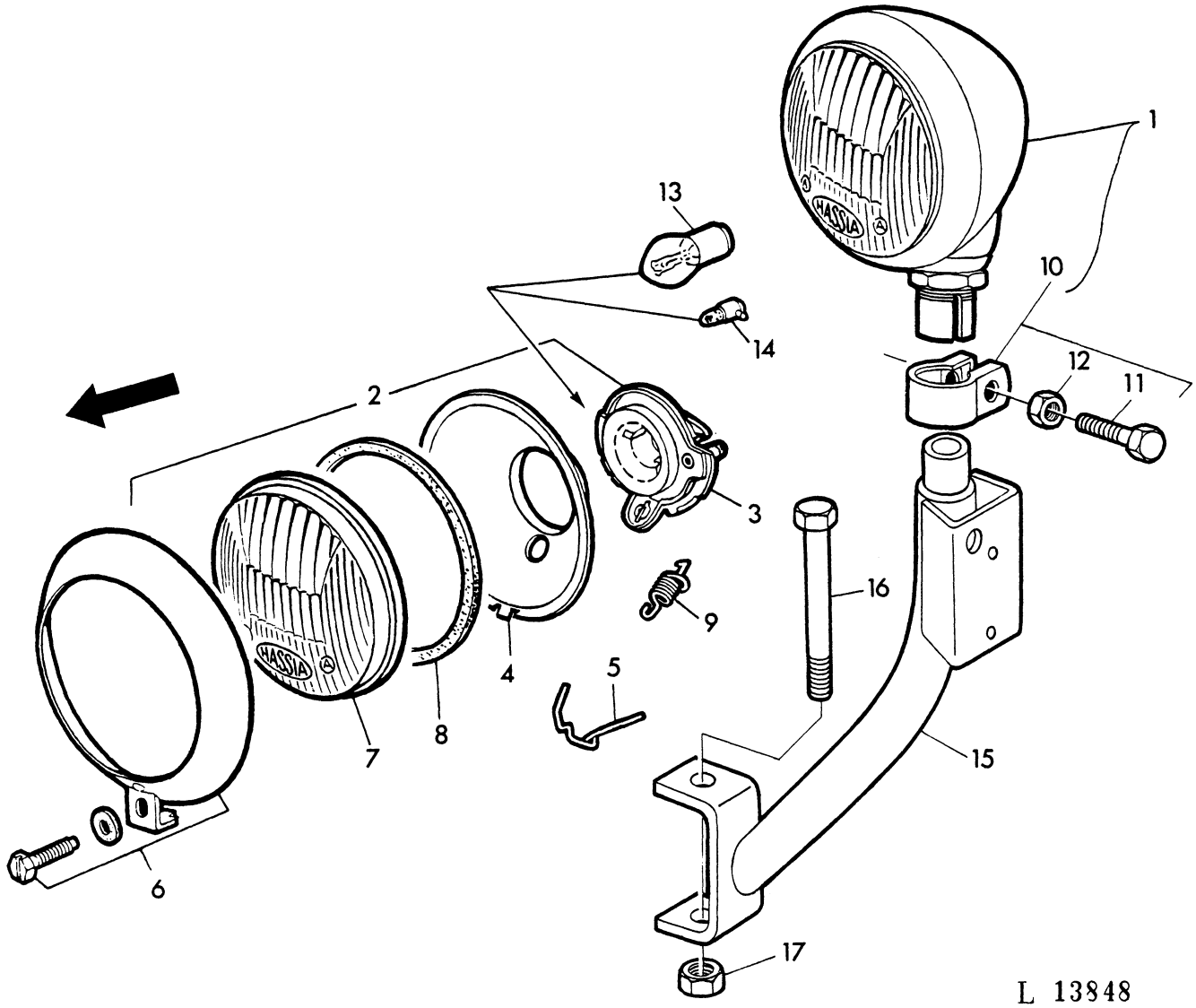

KEY	PART NO.	DESCRIPTION	QTY	SERIAL NO.	JD310	REMARKS
1	AL 17692	HEADLIGHT	2		X	ASSY, INCL. KEYS 2-12 ORD AL25765(2)
2	AL 14797	HEADLIGHT	2		X	ASSY, INCL. KEYS 2-9 ORD AL25765(2)
3	L 19144	SOCKET	2		X	ORD AL25765(2)
4	L 26952	REFLECTOR	2		X	ORD AL25765(2)
5	L 19146	CLIP	8		X	ORD AL25765(2)
6	AL 18944	BEZEL	2		X	ASSY, ORD AL25765(2)
7	L 26951	LENS	2		X	ORD AL25765(2)
8	L 19149	SEAL	2		X	ORD AL25765(2)
9	L 19148	SPRING	2		X	ORD AL25765(2)
10	AL 15007	CLAMP	2		X	ASSY, INCL. KEYS 11, 12
11	19M 7180	CAP SCREW	2		X	10X45MM
12	14M 7060	NUT	2		X	10MM
13	57M 6276	BULB	2		X	12V, 35/35W
	57M 7000	BULB	2		X	12V, 35/35W, GELB, YELLOW, AMARILLO, JAUNE, GIALLA, GUL,
14	57M 6394	BULB	2		X	12V, 4W
15	AL 24546	RETAINER	2	-176986	X	ORD AL25634(2)
	AL 25634	RETAINER	2	176987-	X	
16	19H 1854	CAP SCREW	2		X	3/8"X3-3/4"
17	T 11234	LOCK NUT	2		X	3/8"

LIGHTS "HELLA" - "BILUX"
PROJECTEURS "HELLA" - "BILUX"
SCHEINWERFER "HELLA" - "BILUX"
PROIETTORI "HELLA" - "BILUX"
FAROS "HELLA" - "BILUX"
BELYSNING "HELLA" - "BILUX"
L 13832

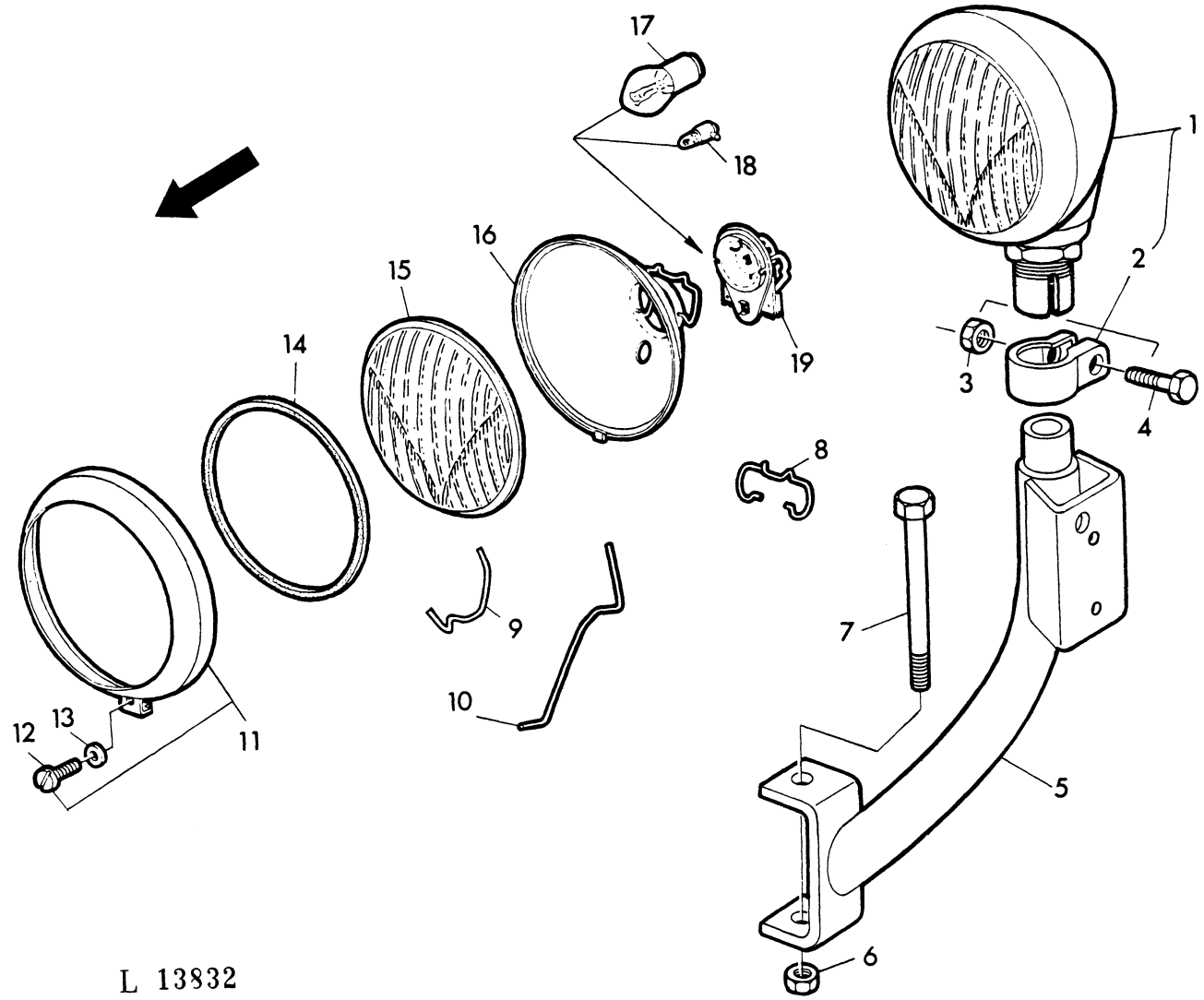

L 13832

KEY	PART NO.	DESCRIPTION	QTY	SERIAL NO.	JD310	REMARKS
1	AL 25765	HEADLIGHT	2		X	ASSY, INCL. KEYS 2-4, 8-16, 19, ORD AL29683
2	AL 15007	CLAMP	2		X	ASSY, INCL. KEYS 3, 4
3	14M 7060	NUT	2		X	10MM
4	19M 7180	CAP SCREW	2		X	10X45MM
5	AL 24546	RETAINER	2	-176986	X	ORD AL25634(2)
	AL 25634	RETAINER	2	176987-	X	
6	T 11234	LOCK NUT	2		X	3/8"
7	19H 1854	CAP SCREW	2		X	3/8"X3-3/4"
8	L 17672	CLIP	2		X	
9	L 18705	CLIP	12		X	
10	L 17674	CLIP	10		X	
11	AL 15006	BEZEL	2		X	ASSY, INCL. KEYS 12, 13
12	21M 7033	BOLT	2		X	4X15MM
13	24M 1579	WASHER	2		X	4, 3MM
14	L 18703	SEAL	2		X	
15	L 18704	LENS	2		X	
16	AL 15005	REFLECTOR	2		X	W/L17672
17	57M 6276	BULB	2		X	12V, 35/35W
	57M 7000	BULB	2		X	12V, 35/35W, GELB, YELLOW, AMARILLO, JAUNE, GIALLA, GUL
18	57M 6394	BULB	2		X	12V, 4W
19	L 13958	SOCKET	2		X	

HEADLIGHTS "HELLA"-"BILUX"
PROJECTEURS "HELLA"-"BILUX"
SCHEINWERFER "HELLA"-"BILUX"
PROIETTORI "HELLA"-"BILUX"
FAROS "HELLA"-"BILUX"
BELYSNING "HELLA"-"BILUX"
L 31221

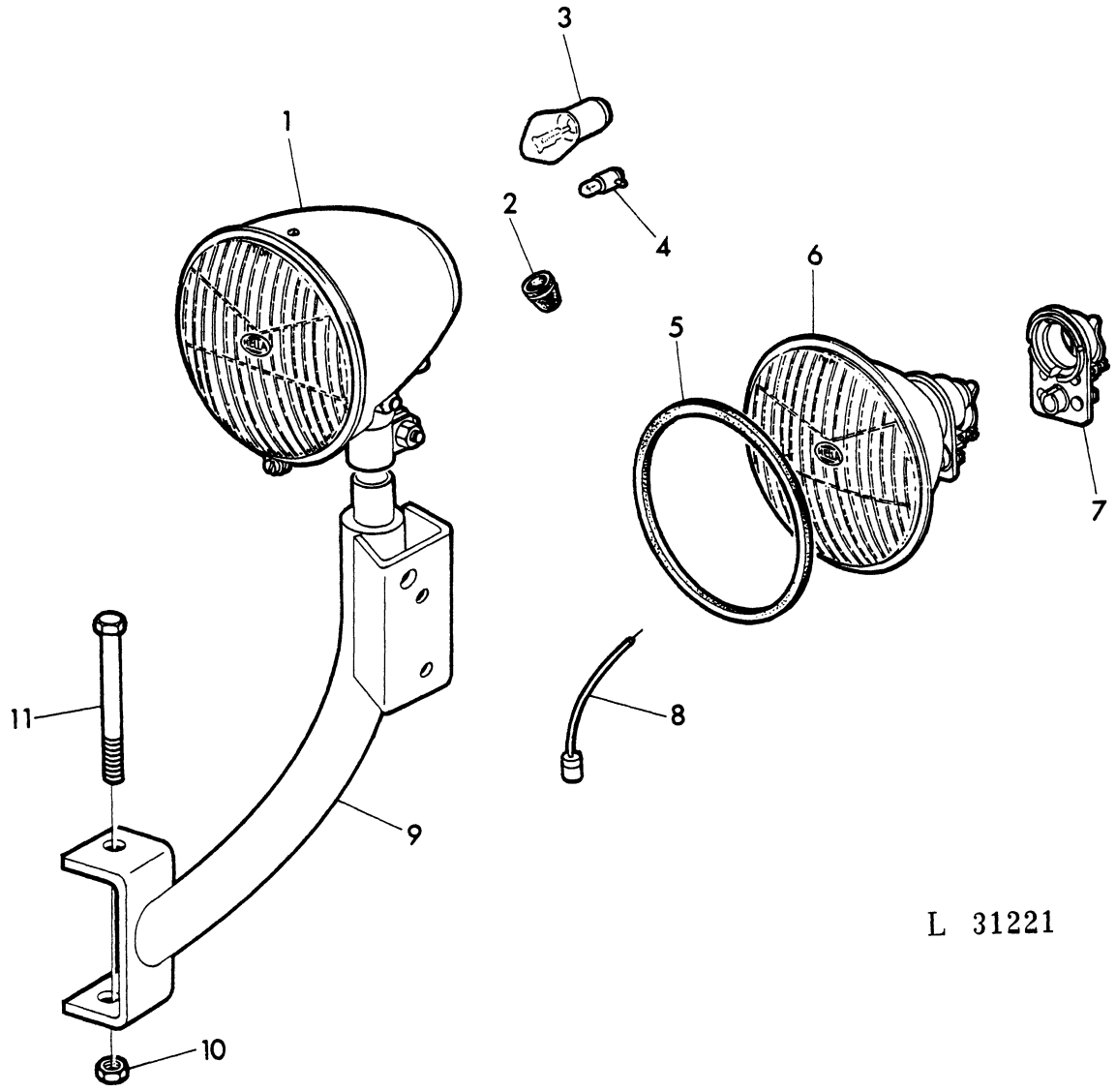

KEY	PART NO.	DESCRIPTION	QTY	SERIAL NO.	JD310	REMARKS
1	AL 29683	HEADLIGHT	2		X	ASSY, INCL. KEYS 2, 5-7 SUB. FOR AL25765
2	L 33900	PLUG	2		X	
3	57M 6276	BULB	2		X	12V, 35/35W
	57M 7000	BULB	2		X	12V, 35/35W, GELB, YELLOW AMARILLO, JAUNE, GUL
4	57M 6394	BULB	2		X	12V, 4W
5	L 33899	SEAL	2		X	
6	AL 30089	LAMP	2		X	
7	AL 30088	SOCKET	2		X	
8	AL 29682	WIRING LEAD	2		X	
9	AL 25634	RETAINER	2		X	
10	T 11234	NUT	2		X	3/8"
11	19H 1854	CAP SCREW	2		X	3/8"X3-3/4"

REAR WORK LIGHT
PHARE DE LABOUR
GERAETESCHEINWERFER
FANALE POSTERIORE
FARO AUXILIAR
BAKRE ARBETSLAMPA
L 13853

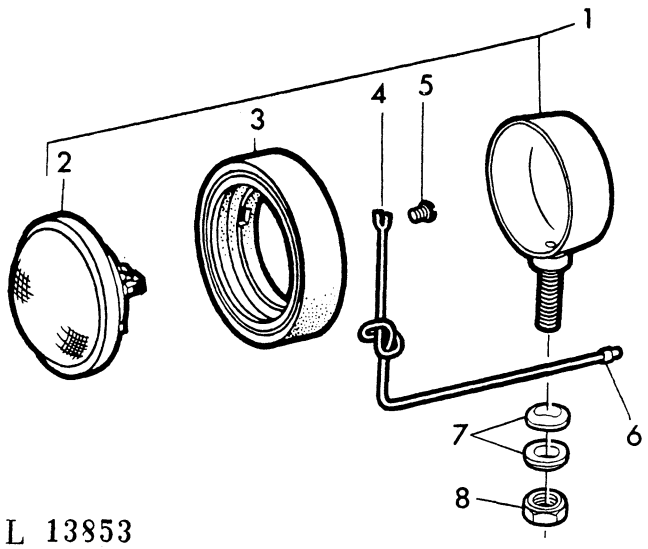

L 13853

KEY	PART NO.	DESCRIPTION	QTY	SERIAL NO.	JD3100	REMARKS
1	AT 18815	HEADLIGHT	2		X	ASSY, INCL. KEYS 2-6
2	AR 21059	LAMP	1		X	
3	R 30182	BEZEL	1		X	(HOBBS)
	R 31250	BEZEL	1		X	(GUIDE LAMP)
4	AT 14771	WIRING LEAD	1		X	(HOBBS)
	AT 18995	WIRING LEAD	1		X	(GUIDE LAMP)
5	R 11100	SCREW	1		X	
6	T 16623	TERMINAL	1		X	
7	T 20693	WASHER	4		X	
8	14H 865	NUT	2		X	1/2"

REPAIR KIT FOR WARNING BLINKER SYSTEM
NECESSAIRE DE REPARATION POUR FEU DE DETRESSE
REPARATURSATZ FUER WARNBLINKANLAGE
SCATOLA DI RIPARAZIONE PER LUCI DI EMERGENZA
PIEZAS PARA EQUIPO ELECTRICO CON LUCES INTERMITENTES
REPARATURSATS FOR VARNINGSLAMPOR
L 27161

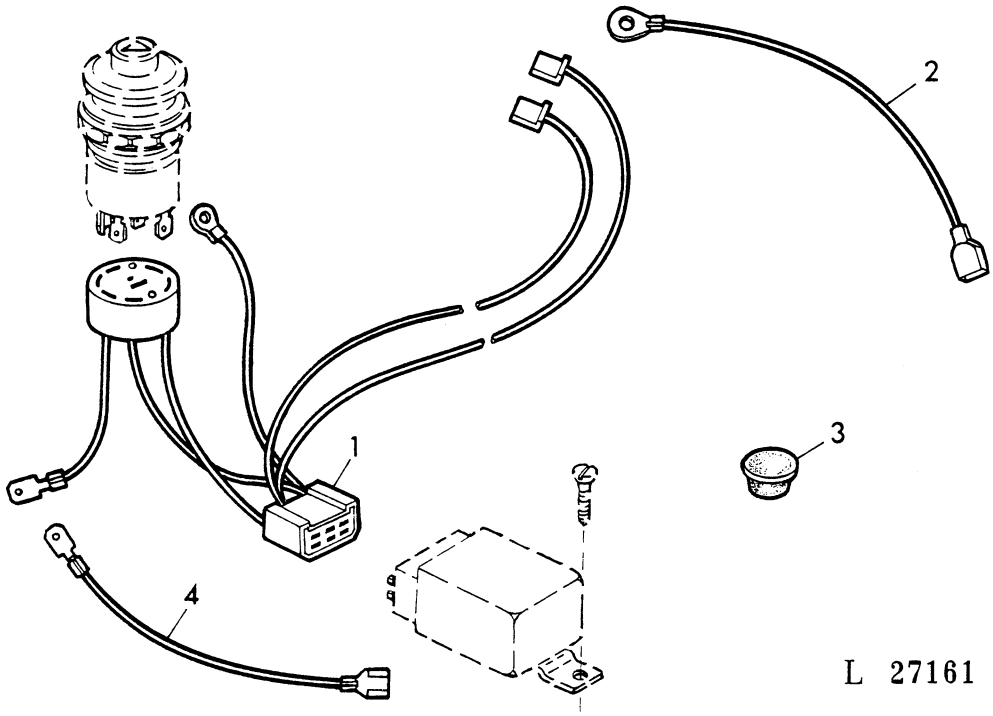

KEY	PART NO.	DESCRIPTION	QTY	SERIAL NO.	JD310	REMARKS
1	AL 27858	WIRING HARNESS	1	214776-	X	
2	AT 24549	WIRING LEAD	1	214776-	X	
3	99M 7004	PLUG	1	214776-	X	13,5MM
4	AL 27860	WIRING LEAD	1	214776-	X	
-	AL 27853	KIT	1	214776-	X	KIT

HORN / SOCKET / STOP LIGHT SWITCH
AVERTISSEUR SONORE / PRISE DE COURANT / CONTACTEUR FEUX DE STOP
SIGNALHORN / STECKDOSE / BREMSLICHTSCHALTER
LACSON / PRESE DI CORRENTE / INTERRUTTORE STOP
BOCINA / BASE DE ENCHUFE / INTERRUPTOR DE LA LUZ DE "PARE"
SIGNALHORN / STICKKONTAKT / BROMSLJUSKONTAKT
L 13822

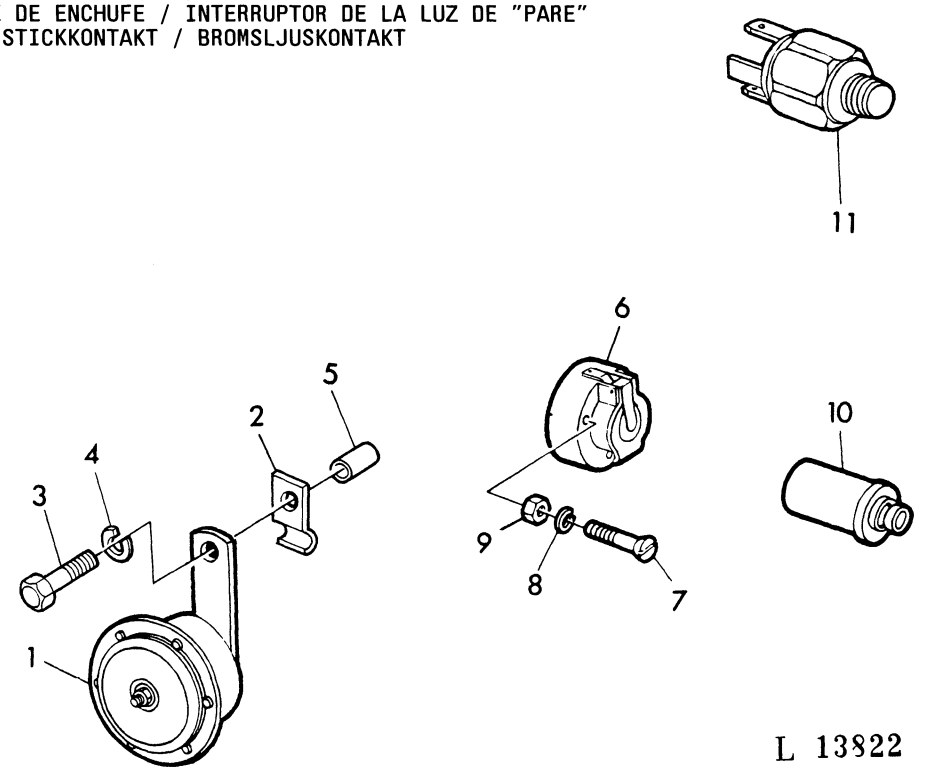

L 13822

KEY	PART NO.	DESCRIPTION	QTY	SERIAL NO.	JD310	REMARKS
1	AL 14896	HORN	1		X	
2	L 13326	CLAMP	1		X	
3	19H 2569	CAP SCREW	1		X	5/16"X1-5/8"
4	12H 303	LOCK WASHER	1		X	5/16"
5	N 120831	SPACER	1		X	
6	L 83677	RECEPTACLE	1		X	
7	21H 1342	BOLT	3		X	NO. 10X1-3/8"
8	12M 7064	LOCK WASHER	3		X	5MM, SUB. FOR 12H246
9	14H 631	NUT	3		X	NO. 10
10	L 83676	ELECTRICAL PLUG	1		X	
11	AL 27809	SWITCH	1		X	R. BOSCH-A344 000 020, 1/8" SUB. FOR AL17696

TURN AND TAIL LIGHTS
CLIGNOTANTS ET FEUX ARRIERE
BLINK- UND SCHLUSSLEUCHTEN
LUCI DI DIREZIONE E POSTERIORI
LUCES DE INTERMITENCIA Y TRASERAS
BLUIKERS OCH BAKLJUS
L 31229

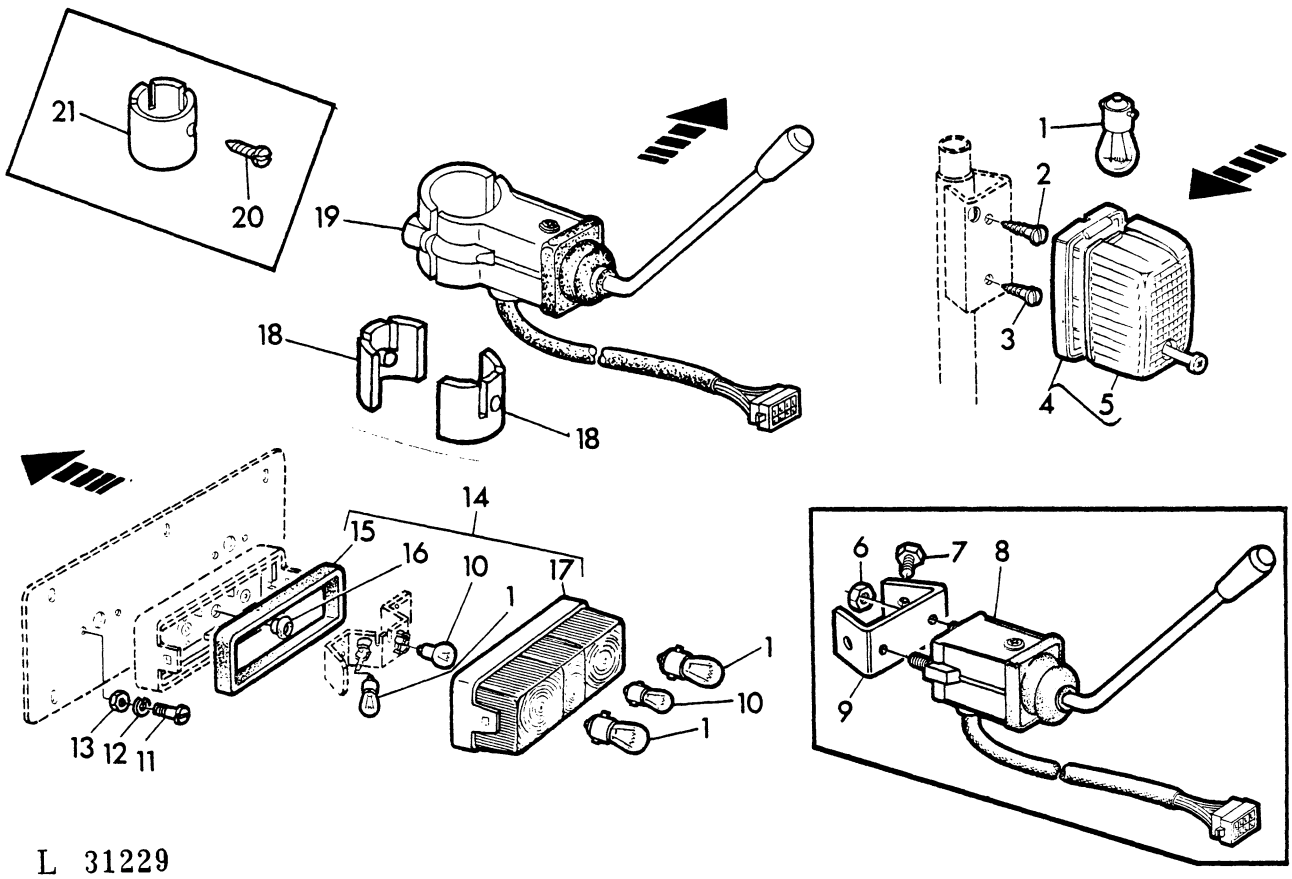

L 31229

KEY	PART NO.	DESCRIPTION	QTY	SERIAL NO.	JD310	REMARKS
1	57M 7014	BULB	6		X	12V, 21W
2	37M 6646	SCREW	2		X	4, 2X19MM
3	37M 6630	SCREW	2		X	4, 2X16MM
4	AL 24548	DIRECTION INDICATOR	1		X	R. H. INCL. KEY AL27010
	AL 24547	DIRECTION INDICATOR	1		X	L. H. INCL. KEY AL27009
5	AL 27010	LENS	1		X	R. H.
	AL 27009	LENS	1		X	L. H.
6	14M 7028	NUT	2	-248211	X	5MM
7	19H 1919	SCREW	2	-248211	X	1/4"X5/8"
8	AL 24529	SWITCH	1	-248211	X	
9	L 29878	RETAINER	1	-248211	X	
10	57M 7013	BULB	1		X	12V, 10W
11	21H 1317	SCREW	4		X	NO. 10X5/8"
12	12M 7064	LOCK WASHER	4		X	5MM, SUB. FOR 12H246
13	14H 631	NUT	4		X	NO. 10
14	AL 24545	LAMP	1		X	R. H. INCL. KEYS AL27008 L31774, L31775
	AL 24544	LAMP	1		X	L. H. INCL. KEYS AL27007 L31774, L31775
15	L 31775	PACKING	2		X	
16	L 31774	GROMMET	2		X	
17	AL 27008	LENS	1		X	R. H.
	AL 27007	LENS	1		X	L. H.
18	AL 30392	RETAINER	2		X	
19	AL 28270	SWITCH	1	248212-	X	
20	37M 7054	SCREW	1	248212-	X	2, 9X6, 5MM
21	L 32706	BUSHING	1	248212-	X	ORD AL30392

TAIL LIGHT FOR BACKHOE
FEUX ARRIERE POUR PELLE RETRO
SCHLUSSLEUCHTEN FUER HECKBAGGER
LUCE POSTERIORE PER RETROESCAVATORE
LUCES TRASERAS PARA EL EXCAVADOR TRASERO
BAKLJUS FOR GRAVAGGREGAT
L 64439

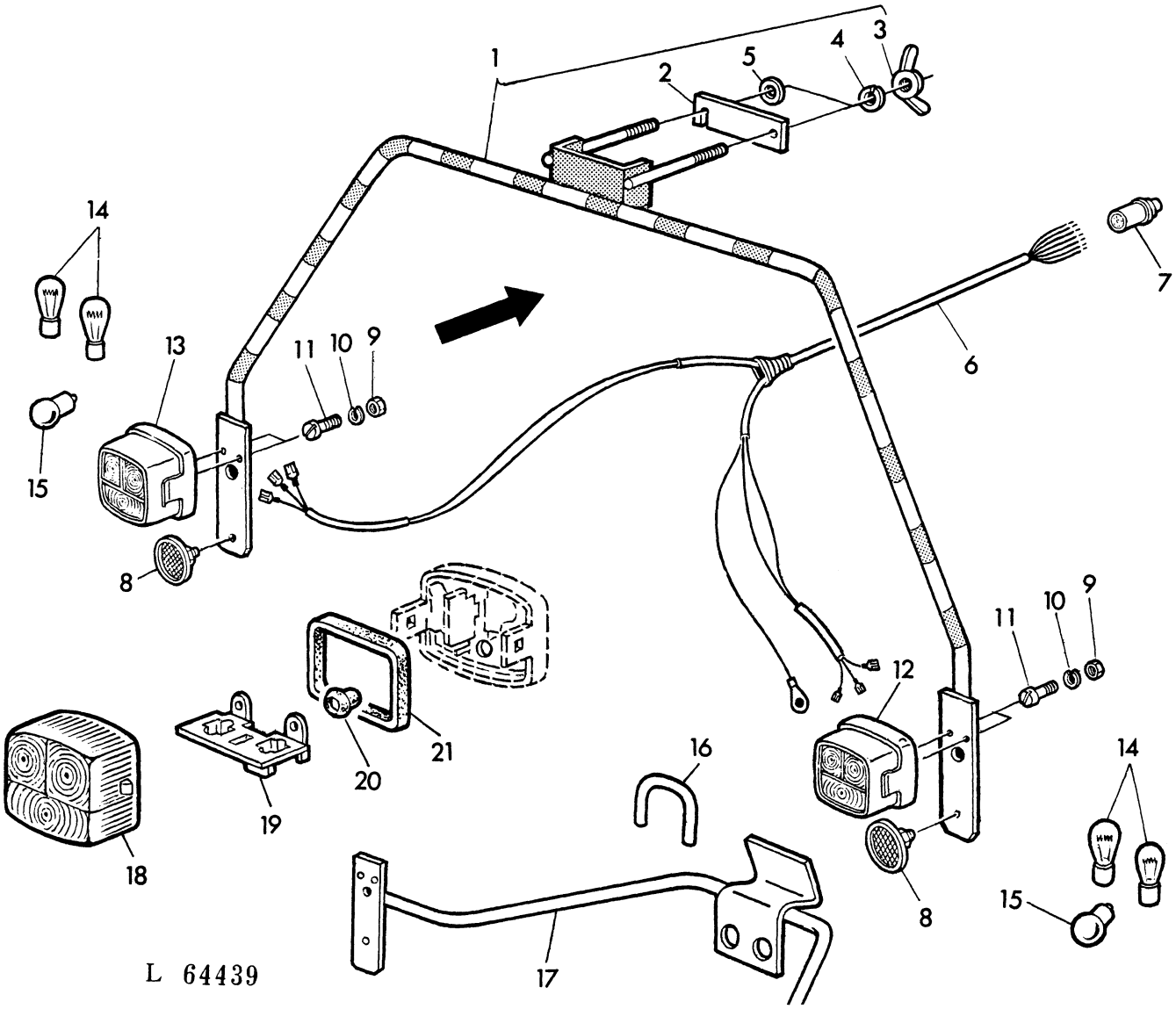

KEY	PART NO.	DESCRIPTION	QTY	SERIAL NO.	JD310	REMARKS
1	AT 43599	RETAINER	1		X	ASSY, INCL. KEYS 2-5
2	L 24770	STRAP	1		X	
3	14M 1685	WING NUT	2		X	10MM
4	12M 1626	LOCK WASHER	2		X	10MM
5	24M 1584	WASHER	1		X	10, 5MM
6	AL 25635	WIRING HARNESS	1		X	(A)
	AT 34437	WIRING HARNESS	1		X	
7	L 83676	ELECTRICAL PLUG	1		X	
8	99M 6488	REFLECTOR	2		X	
9	14H 631	NUT	4		X	NO. 10
10	12M 7064	LOCK WASHER	4		X	5MM, SUB. FOR 12H246
11	21H 1128	BOLT	4		X	NO. 10X3/4"
12	AT 43601	LAMP	1		X	R.H. INCL. KEYS 18-21
13	AT 43600	LAMP	1		X	L.H. INCL. KEYS 18-21
14	57M 7014	BULB	4		X	12V, 21W
15	57M 7013	BULB	2		X	12V, 10W
16	L 31111	BAIL	1		X	(A)
17	AL 25633	RETAINER	1		X	(A)
18	L 31780	LENS	1		X	L.H.
	L 31781	LENS	1		X	R.H.
19	L 31777	SOCKET	2		X	
20	L 31774	GROMMET	2		X	
21	L 31778	GASKET	2		X	

(A) FOR BACKHOE 9505 A
POUR PELLE-RETRO 9505 A
FUER HECKBAGGER 9505 A
PER RETROSCAVATORE 9505 A
PARA RETROEXCAVADORA 9505 A
FOR GRAVAGGREGAT 9505 A

ELECTRICAL WIRING SYSTEM
CIRCUIT ELECTRIQUE
ELEKTRISCHE ANLAGE
APPARECCHIATURA ELETTRICA
EQUIPO ELETRICO
ELEKTRISK KABELDRAGNING
L 27162

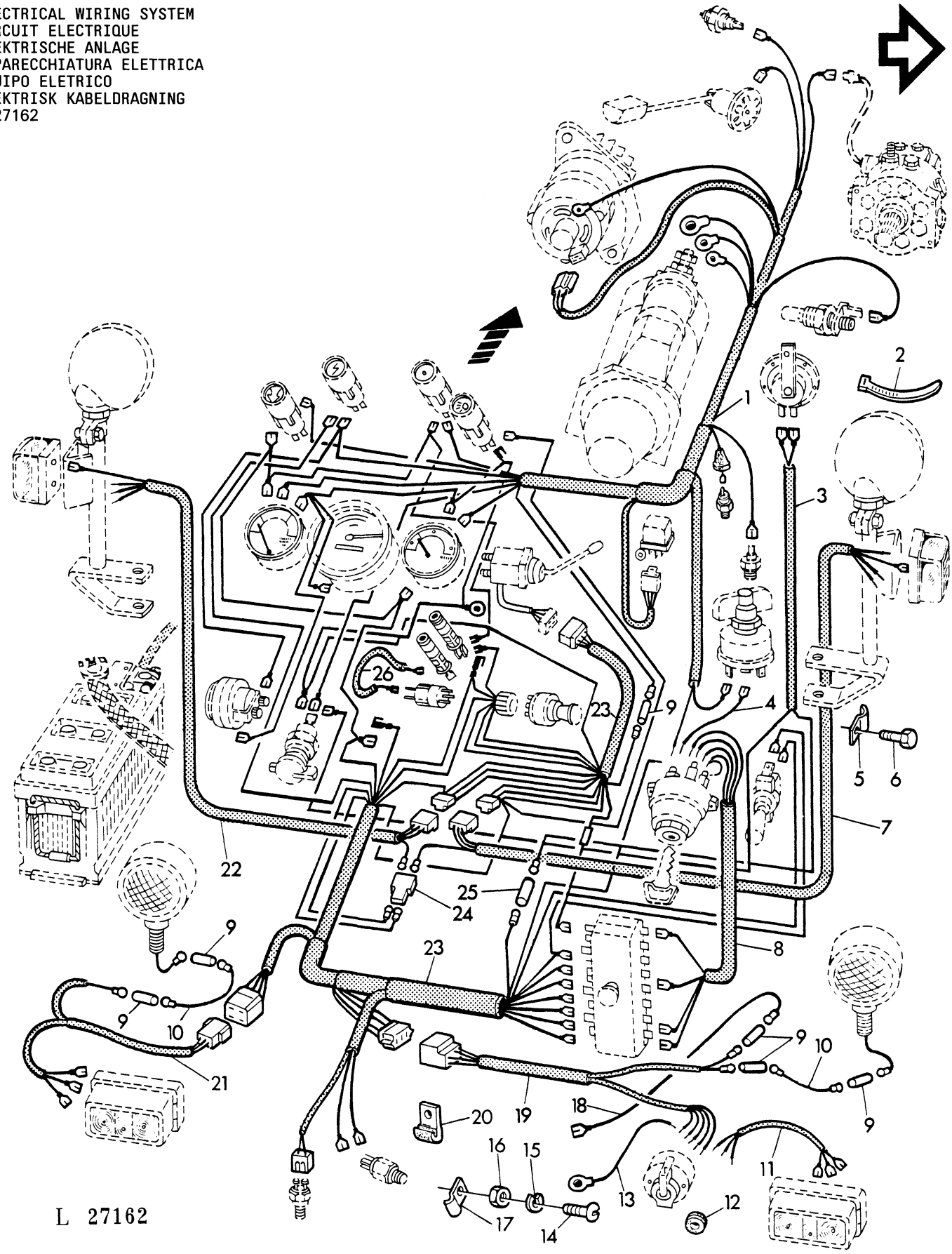

KEY	PART NO.	DESCRIPTION	QTY	SERIAL NO.	JD310	REMARKS
1	AL 24524	WIRING HARNESS	1		X	
2	R 44302	BAND	3		X	
3	AL 25196	WIRING HARNESS	1		X	
4	AL 25065	WIRING LEAD	1		X	
5	L 84611	CLAMP	6		X	
6	T 10671	CAP SCREW	6		X	
7	AL 24534	WIRING HARNESS	1		X	R.H.
8	AL 24525	WIRING HARNESS	1		X	
9	AL 2976T	CONNECTOR	7		X	
10	AL 24532	WIRING LEAD	2		X	
11	AT 34433	WIRING HARNESS	1		X	
12	L 12807	GROMMET	1		X	
13	AL 17099	WIRING LEAD	1		X	
14	21H 1317	SCREW	2		X	NO. 10X5/8"
15	12M 7064	LOCK WASHER	2		X	5MM, SUB. FOR 12H246
16	14H 778	NUT	2		X	NO. 10
17	L 84612	CLAMP	2		X	
18	AL 24540	WIRING LEAD	1		X	
19	AL 24535	WIRING HARNESS	1		X	R.H.
20	T 19935	CLAMP	3		X	
21	AL 24537	WIRING HARNESS	1		X	L.H.
22	AL 24533	WIRING HARNESS	1		X	L.H.
23	AL 25549	WIRING HARNESS	1	-214775	X	SUB. FOR AL24788
	AL 27857	WIRING HARNESS	1	214776-	X	
24	AM 531T	CONNECTOR	1		X	
25	AL 17098	CONNECTOR	2		X	
26	AL 25550	WIRING LEAD	1		X	SUB. FOR AL24789

SECTIONAL INDEX
INDEX DE SECTION
GRUPPENINDEX
INDICE DELLA SEZIONE
INDICE DE SECCION
GRUPPSFORTECKNING
L 27583

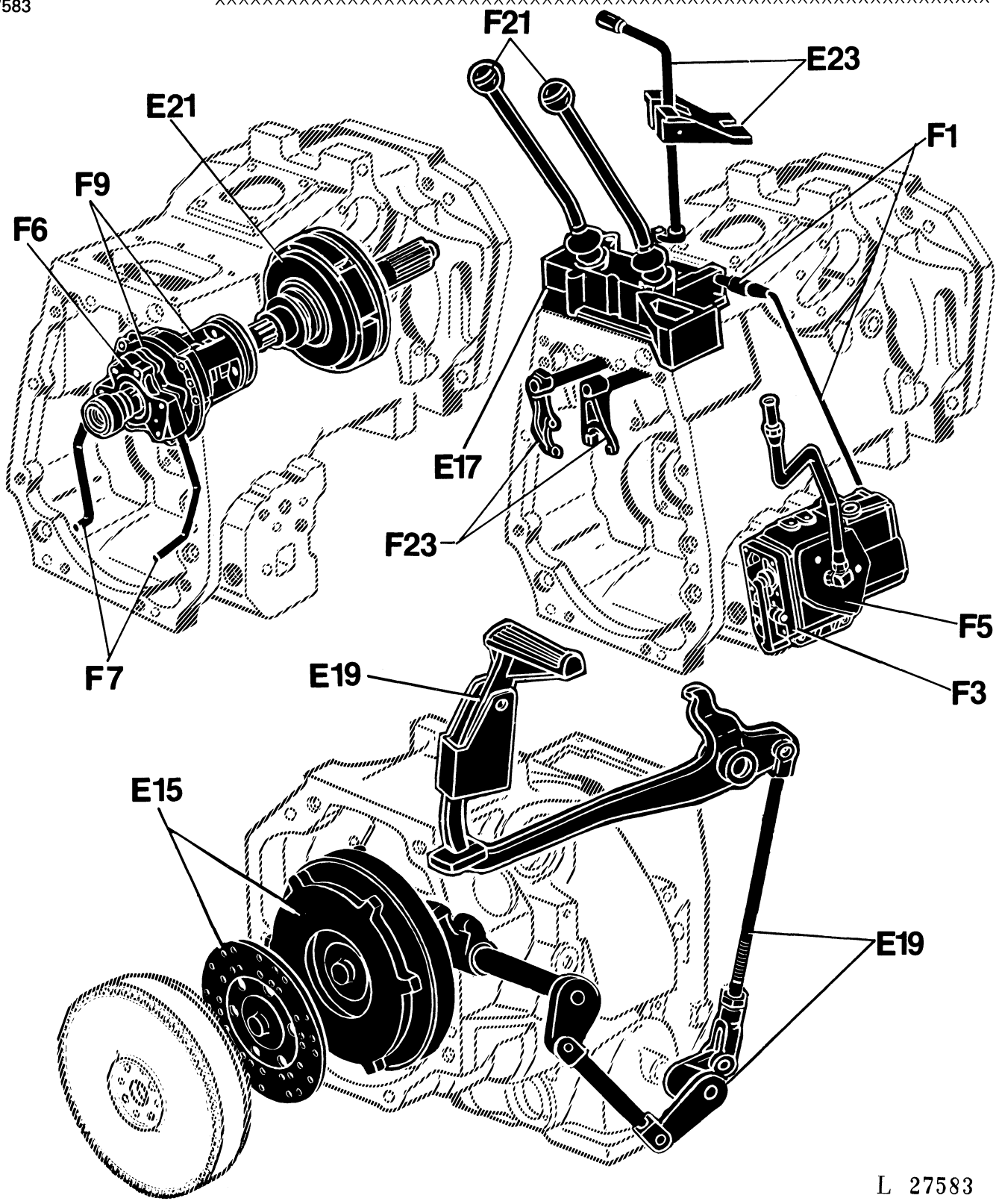

SECTIONAL INDEX
INDEX DE SECTION
GRUPPENINDEX
INDICE DELLA SEZIONE
INDICE DE SECCION
GRUPPSFORTECKNING
L 27553

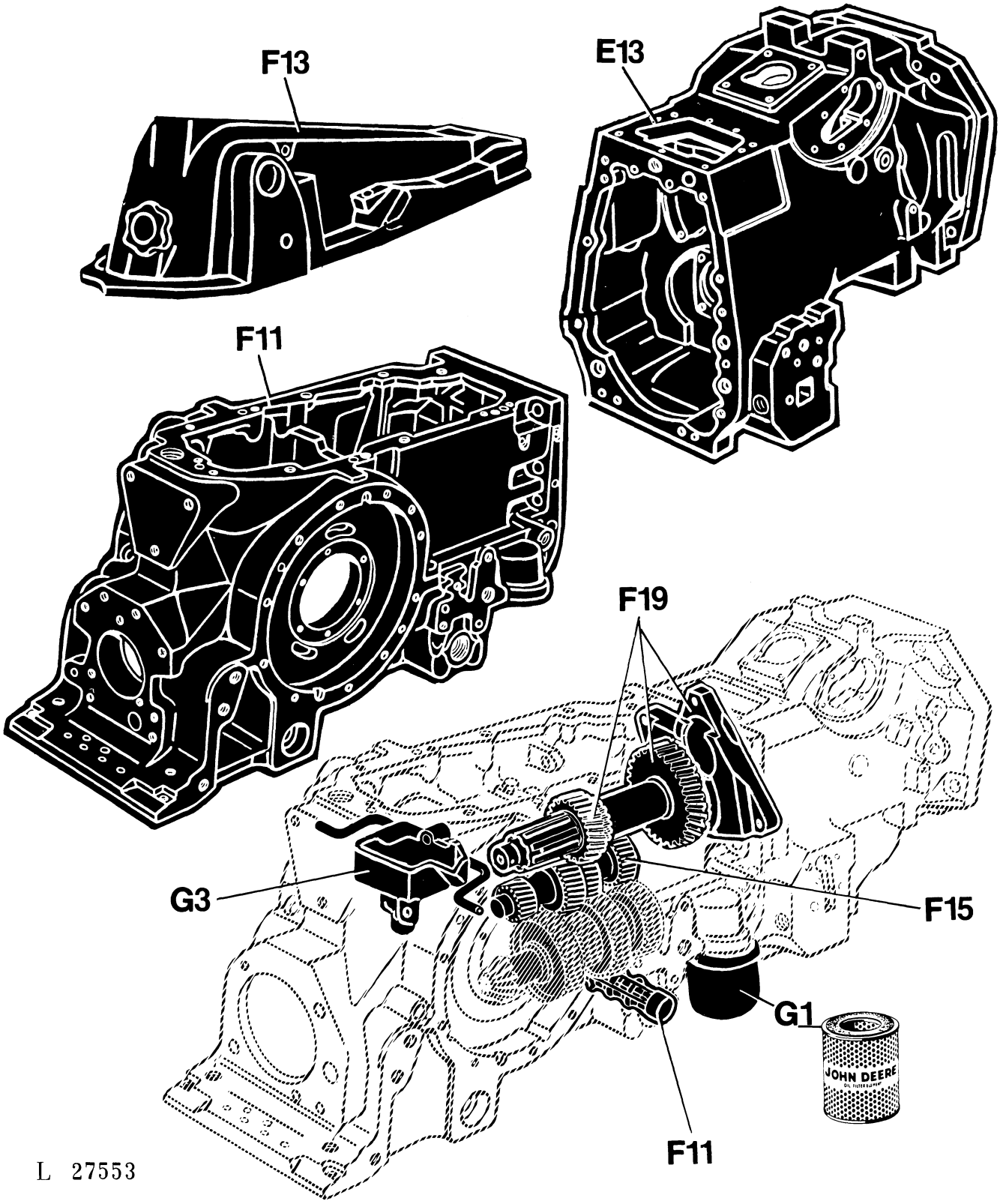

SECTIONAL INDEX
INDEX DE SECTION
GRUPPENINDEX
INDICE DELLA SEZIONE
INDICE DE SECCION
GRUPPSFORTECKNING
L 27554

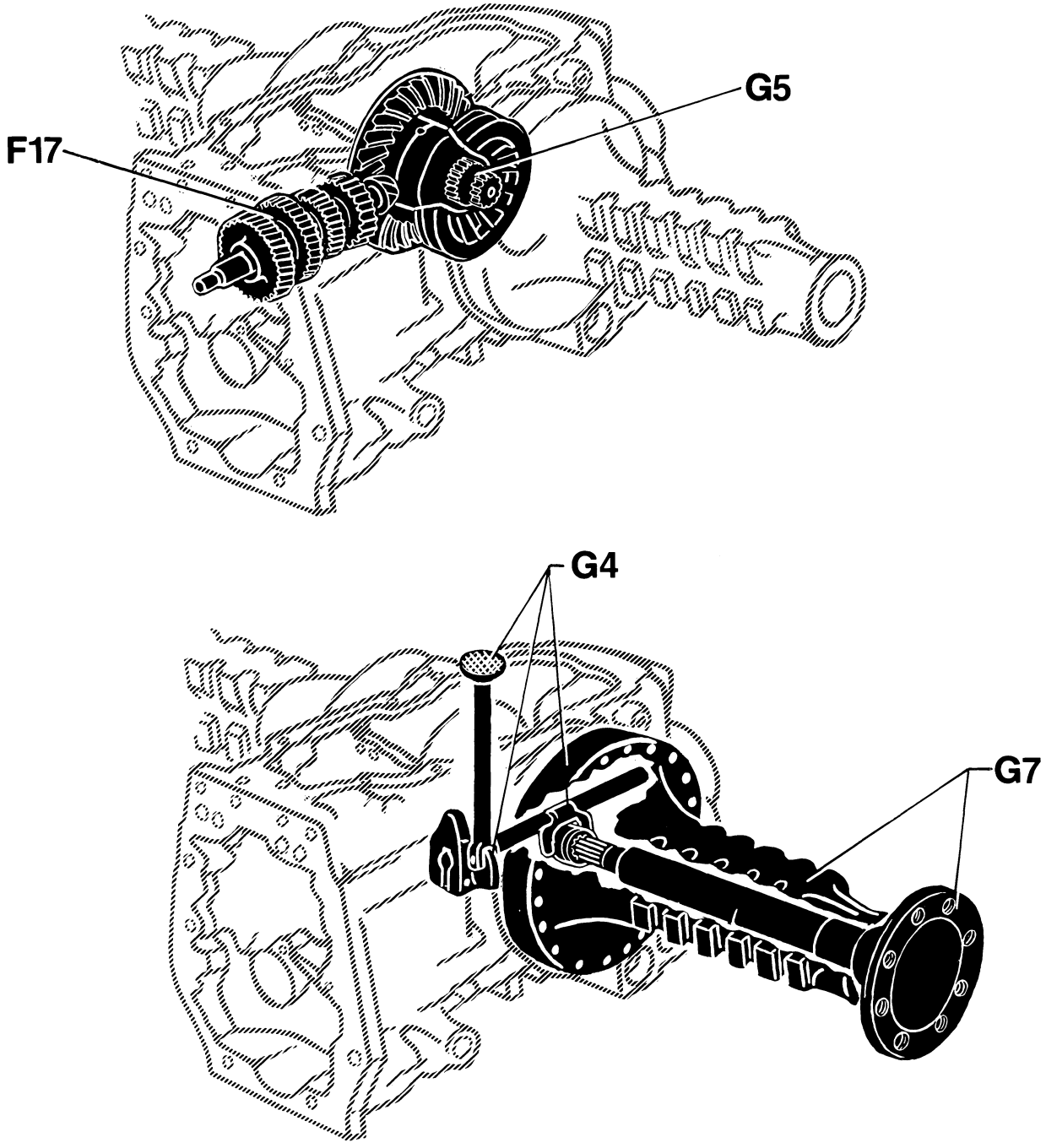

L 27554

CLUTCH HOUSING
CARTER D'EMBRAYAGE
KUPPLUNGSGEHAEUSE
SCATOLA FRIZIONE
CARTER DEL EMBRAGUE
KOPPLINGSHUS
L 27176

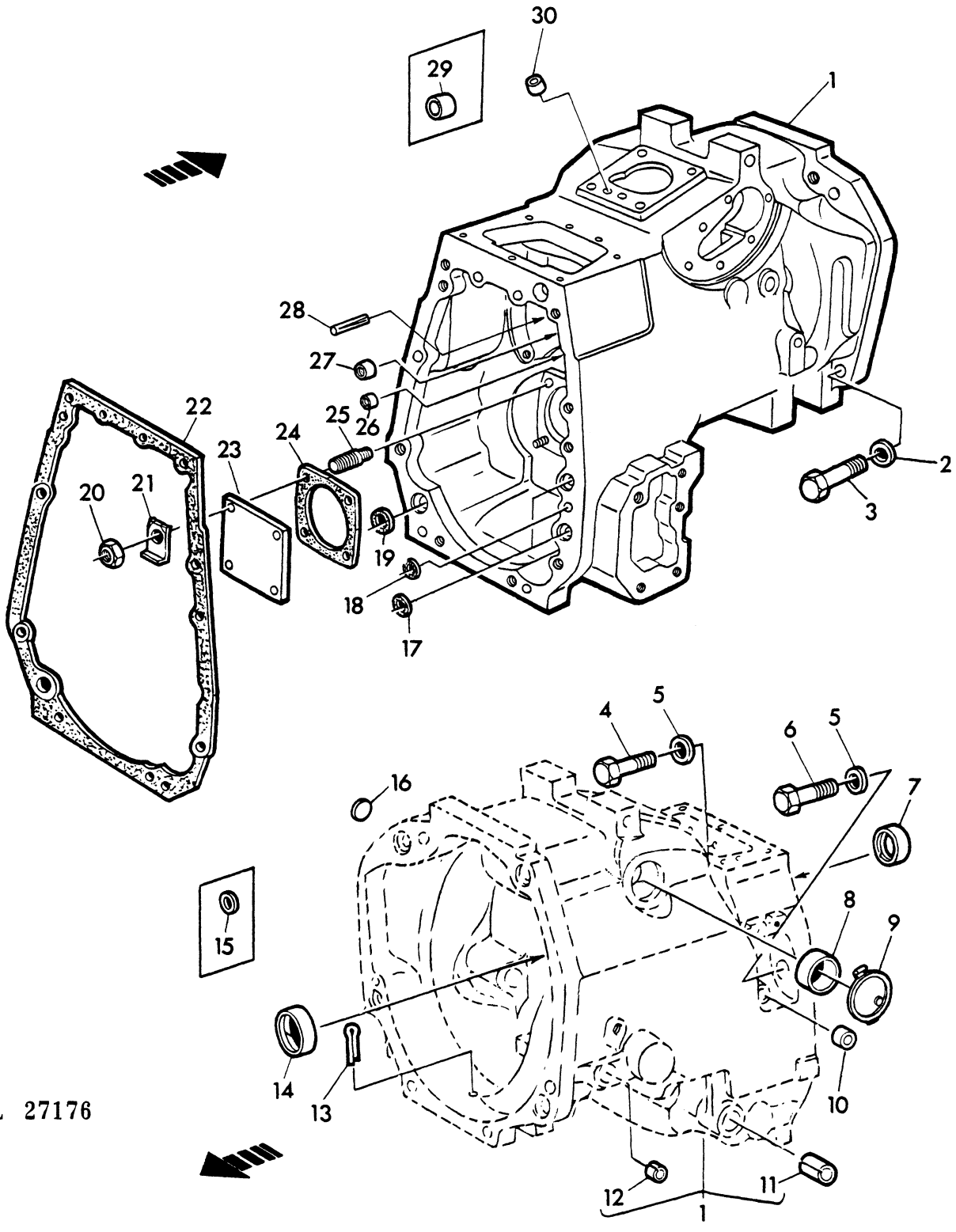

KEY	PART NO.	DESCRIPTION	QTY	SERIAL NO.	JD310	REMARKS
1	AL 24505	HOUSING	1	-248211	X	ASSY, INCL. KEYS 7, 8, 11-14 24, 27-29
	AL 24505	HOUSING	1	248212-	X	ORD W/M1102T
2	R 42363	WASHER	4		X	
3	19H 3170	CAP SCREW	4		X	5/8"X4-1/2"
4	19H 2510	CAP SCREW	2		X	1/2"X1-5/8"
5	L 30695	WASHER	3		X	
6	19H 2735	CAP SCREW	1		X	1/2"X2"
7	T 23212	BUSHING	1		X	
8	L 1788C	BUSHING	1		X	
9	AL 24554	PLUG	1		X	
10	M 4224T	PLUG	1		X	
11	R 27567	BUSHING	1		X	
12	R 27320	BUSHING	1		X	
13	11H 216	COTTER PIN	1		X	3/16"X1"
14	T 23211	BUSHING	1		X	
15	R 26919	SEAL	1		X	ORD L35628
16	30H 13	PLUG	1		X	1"
17	T 22851	PACKING	1	-338999	X	
	T 68412	PACKING	1	339000-	X	
18	A 4847R	PACKING	1		X	
19	R 26149	PACKING	1		X	
20	14H 812	NUT	4		X	3/8"
21	R 30958	LOCK PLATE	4		X	
22	T 36236	GASKET	1		X	
23	T 26416	PLATE	1		X	
24	T 21997	GASKET	1		X	
25	C 2175R	STUD	4		X	3/8"
26	T 22585	BUSHING	1		X	
27	T 22584	BUSHING	1		X	
28	34H 251	SPRING PIN	1		X	1/8"X1"
29	T 12083	PLUG	1		X	
30	M 1102T	PLUG	1	248212-	X	

SINGLE CLUTCH (WITH DIRECTION REVERSER)
EMBRAYAGE SIMPLE (AVEC INVERSEUR DE MARCHE)
EINFACHKUPPLUNG (BEI UMKEHRGETRIEBE)
FRIZIONE MONOSTADIO (CON INVERTITORE)
EMBRAGUE SIMPLE (CON INVERSOR DE MARCHA)
ENKELKOPPLING (MED FRAM-BACK VAXEL)
L 31418

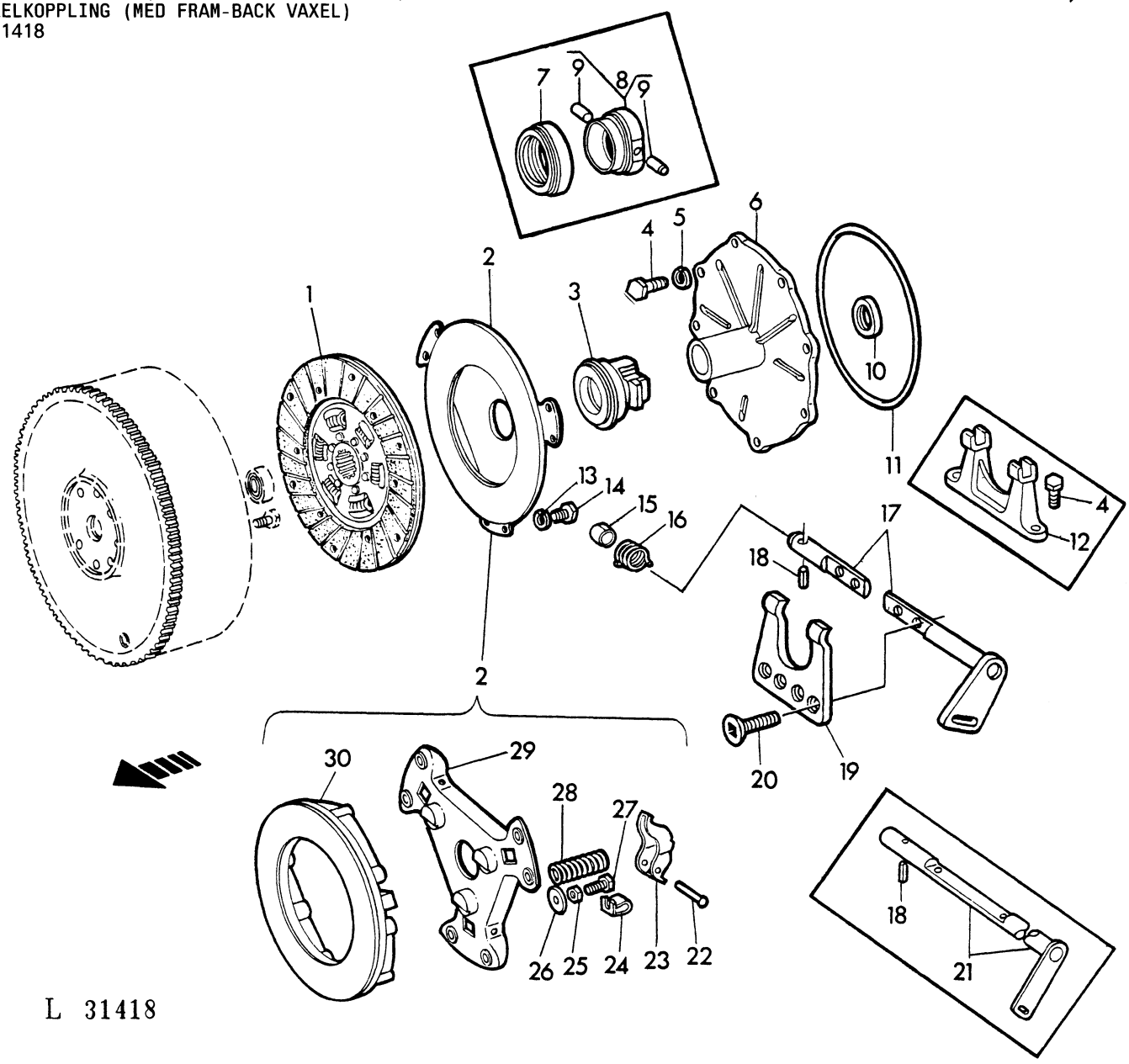

L 31418

KEY	PART NO.	DESCRIPTION	QTY	SERIAL NO.	JD310	REMARKS
1	AL 24059	CLUTCH DISK	1		X	
2	AT 60368	CLUTCH PLATE	1		X	ASSY, INCL. KEYS 22-30 SUB. FOR AT22064
3	AT 60365	THRUST BEARING	1	341196-	X	
4	19H 2552	CAP SCREW	AR		X	3/8"X1-1/8"
5	12H 304	LOCK WASHER	8		X	3/8"
6	T 22177	COVER	1		X	
7	AT 17464	THRUST BEARING	1	-341195	X	
8	AT 20055	HOUSING	1	-341195	X	W/KEY9
9	T 22567	PIN	2		X	
10	AF 1934R	SEAL	1		X	
11	T 22178	PACKING	1		X	
12	T 22505	FORK	1	-341195	X	
13	12H 303	LOCK WASHER	6		X	
14	L 372T	CAP SCREW	6		X	
15	R 27320	BUSHING	1		X	
16	T 24948	SPRING	1		X	
17	AT 60373	SHAFT	1	341196-	X	
18	34H 253	SPRING PIN	1		X	1/8"X1-3/8"
19	T 63651	FORK	1	341196-	X	
20	R 49482	SCREW	4	341196-	X	
21	AT 27717	SHAFT	1	-341195	X	
22	T 11700	PIN	3		X	
23	T 63652	LEVER	3		X	SUB. FOR T11701
24	T 13267	CLIP	3		X	
25	14H 882	NUT	3		X	5/16"
26	T 13269	WASHER	3		X	
27	H 61022	CAP SCREW	3		X	
28	R 55042	SPRING	3		X	SUB. FOR T24956
29	H 33689	BRACKET	1		X	
30	T 24955	CLUTCH PLATE	1		X	

CLUTCH HOUSING COVER
COUVERCLE DU CARTER D'EMBRAYAGE
KUPPLUNGSGEHAEUSEDECKEL
COPERCHIO DELLA SCATOLA FRIZIONE
TAPA DEL CARTER DEL EMBRAGUE
KAPA AV KOPPLINGSHUS
L 13791

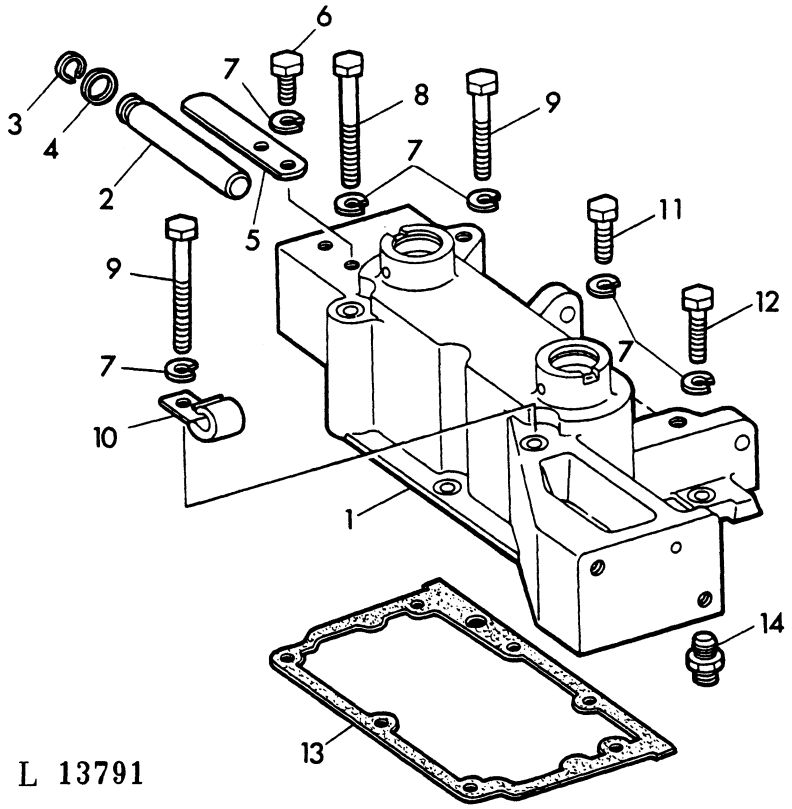

L 13791

KEY	PART NO.	DESCRIPTION	QTY	SERIAL NO.	JD310	REMARKS
1	AT 39738	COVER	1		X	W/T21448
2	T 21448	SHAFT	1		X	
3	A 602R	SNAP RING	1		X	
4	24H 1451	WASHER	1		X	1-1/32"X1-3/4"X. 060"
5	T 33534	STOP	1		X	
6	19H 1936	CAP SCREW	2		X	3/8"X3/4"
7	12H 304	LOCK WASHER	11		X	3/8"
8	19H 1726	CAP SCREW	1		X	3/8"X2-1/4"
9	19H 1944	CAP SCREW	2		X	3/8"X2-3/4"
10	T 19935	CLAMP	1		X	
11	19H 2552	CAP SCREW	5		X	3/8"X1-1/8"
12	19H 2545	CAP SCREW	1		X	3/8"X1-3/8"
13	R 54189	GASKET	1		X	
14	R 39832	THREADED NIPPLE	1		X	

CLUTCH PEDAL
PEDALE D'EMBRAYAGE
KUPPLUNGSFUSSHEBEL
PEDALE FRIZIONE
PEDAL DEL EMBRAGUE
KOPPLINGSPEDAL
L 13282

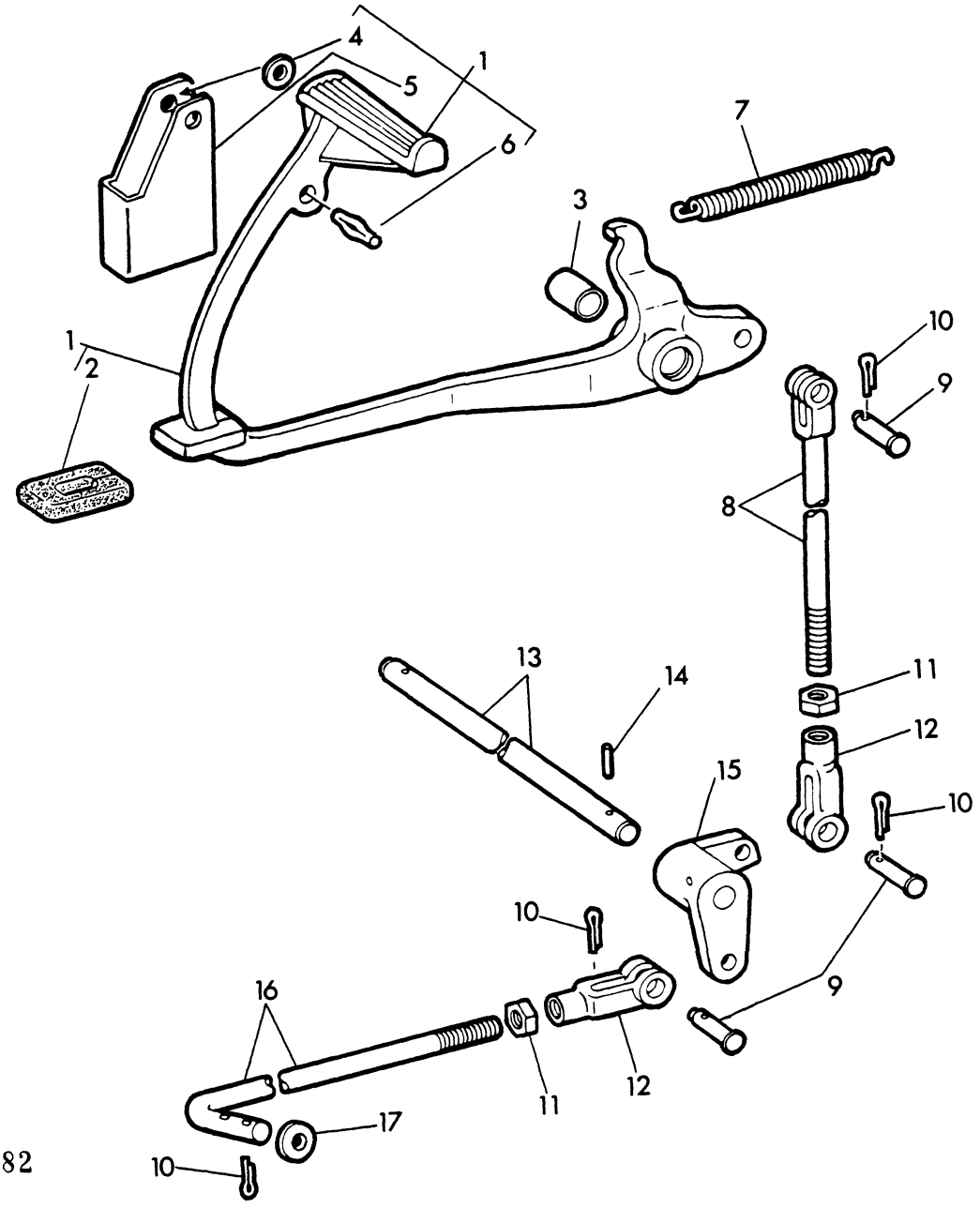

L 13282

KEY	PART NO.	DESCRIPTION	QTY	SERIAL NO.	JD310	REMARKS
1	AT 32712	PEDAL	1		X	ASSY, INCL. KEYS 2-6
2	T 33533	BUMPER	1		X	
3	T 21998	BUSHING	1		X	
4	12M 7051	LOCK WASHER	2		X	10MM
5	T 35890	STOP	1		X	
6	25H 827	GROOVE PIN	1		X	3/8"X1-1/4"
7	T 22302	RETURN SPRING	1		X	
8	AT 32713	ROD	1		X	
9	C 1067R	PIN	3		X	
10	11H 211	COTTER PIN	5		X	1/8"X3/4"
11	14H 774	NUT	2		X	3/8"
12	L 324T	YOKE	2		X	
13	T 33531	SHAFT	1		X	
14	34H 288	SPRING PIN	1		X	3/16"X1-3/4"
15	T 33535	LEVER	1		X	
16	T 29581	ROD	1		X	
17	24H 1303	WASHER	2		X	13/32"X11/16"X.060"

DIRECTION REVERSER - CLUTCH
INVERSEUR DE MARCHE - EMBRAYAGE
UMKEHRGETRIEBE - KUPPLUNG
INVERTITORE - FRIZIONE
INVERSOR DE MARCHA - EMBRAGUE
FRAM-BACK VAXEL - KOPPLING
L 13773

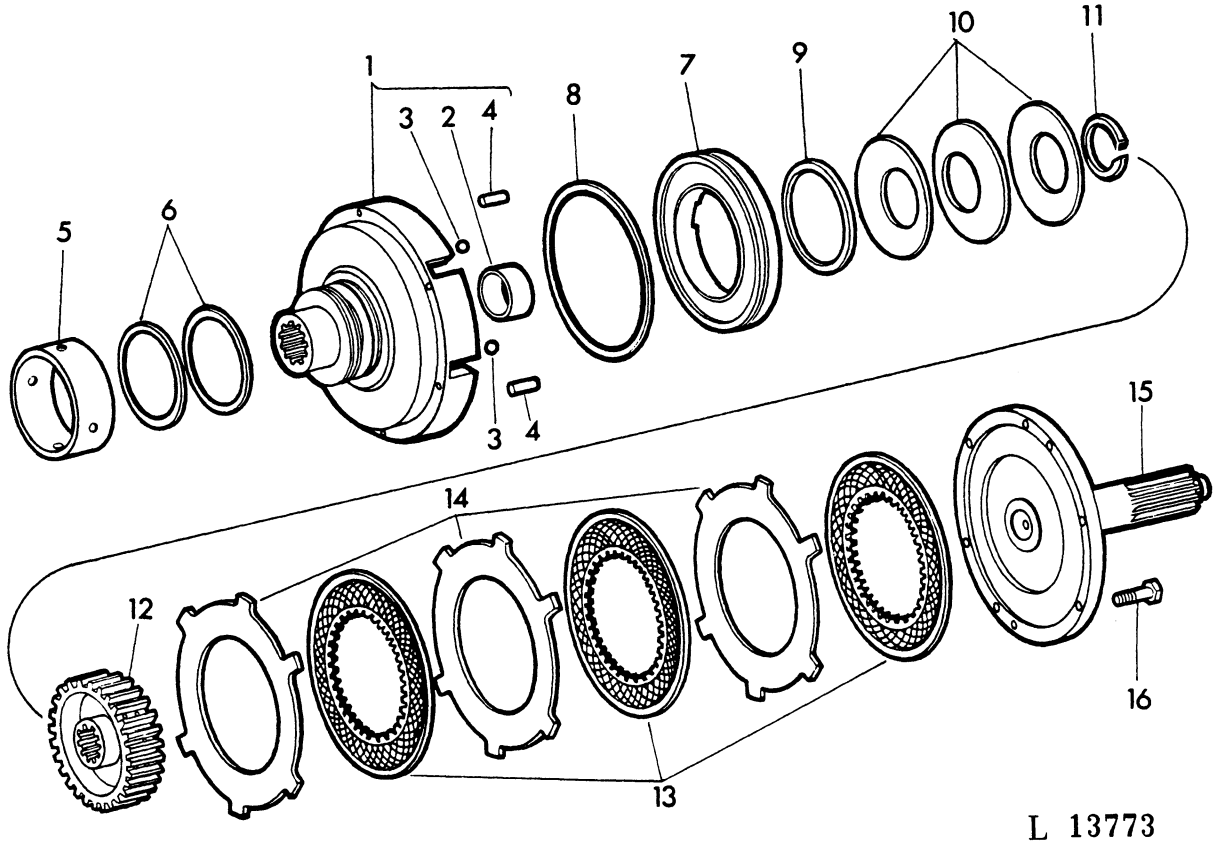

KEY	PART NO.	DESCRIPTION	QTY	SERIAL NO.	JD310	REMARKS
1	AR 39077	DRUM	1		X	ASSY, INCL. KEYS 2-4
2	R 39114	BUSHING	1		X	
3	H 836R	BALL	2		X	
4	R 30587	SPRING PIN	2		X	
5	T 27693	BUSHING	1		X	
6	R 39322	SEAL	2		X	
7	R 39115	PISTON	1		X	
8	R 39116	SEAL	1		X	
9	R 39117	SEAL	1		X	
10	R 39082	DIAPHRAGM SPRING	3		X	
11	R 39081	SNAP RING	1		X	
12	R 39118	HUB	1		X	
13	R 31404	DISK, INNER SPLINE	3		X	
14	R 39325	DISK, OUTER SPLINE	3		X	
15	R 55017	DRIVE SHAFT	1		X	
16	19H 2117	CAP SCREW	6		X	5/16"X1-1/8"

DIRECTION REVERSER OPERATING LINKAGE
TRINGLERIE DE COMMANDE DE L'INVERSEUR DE MARCHE
UMKEHRGETRIEBESCHALTUNG
INNESTO INVERTITORE
VARILLAJE DEL INVERSOR DE MARCHA
FRAM-BACK VAXELNS MANOVERLANKAGE
L 27177

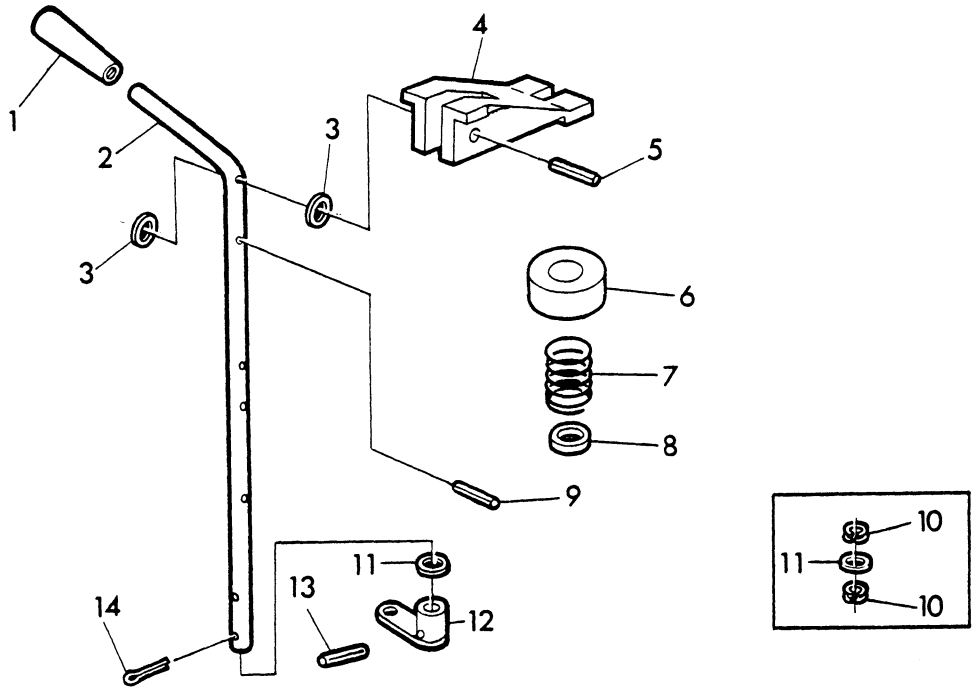

L 27177

KEY	PART NO.	DESCRIPTION	QTY	SERIAL NO.	JD310	REMARKS
1	T 33746	KNOB	1		X	
2	T 39854	LEVER	1		X	
3	24H 1283	WASHER	2		X	7/32"X1/2"X.048"
4	T 39856	STOP	1		X	
5	34H 284	SPRING PIN	1		X	3/16"X1-1/4"
6	T 40934	WASHER	1		X	
7	T 23921	SPRING	1		X	
8	24H 1227	WASHER	1		X	17/32"X13/16"X.060"
9	25H 522	GROOVE PIN	1		X	3/16"X7/8", SUB. FOR 34H387
10	R 34811	BUSHING	2		X	
11	24H 1340	WASHER	1		X	33/64"X7/8"X.075"
12	T 39519	ARM	1		X	
13	34H 280	SPRING PIN	1		X	3/16"X7/8"
14	11H 239	COTTER PIN	1		X	5/32"X1"

DIRECTION REVERSER OPERATING LINKAGE
TRINGLERIE DE COMMANDE DE L'INVERSEUR DE MARCHA
UMKEHRGETRIEBESCHALTUNG
INNESTO INVERTITORE
VARILLAJE DEL INVERSOR DE MARCHA
FRAM-BACK VAXELNS MANOVERLANKAGE
L 13789

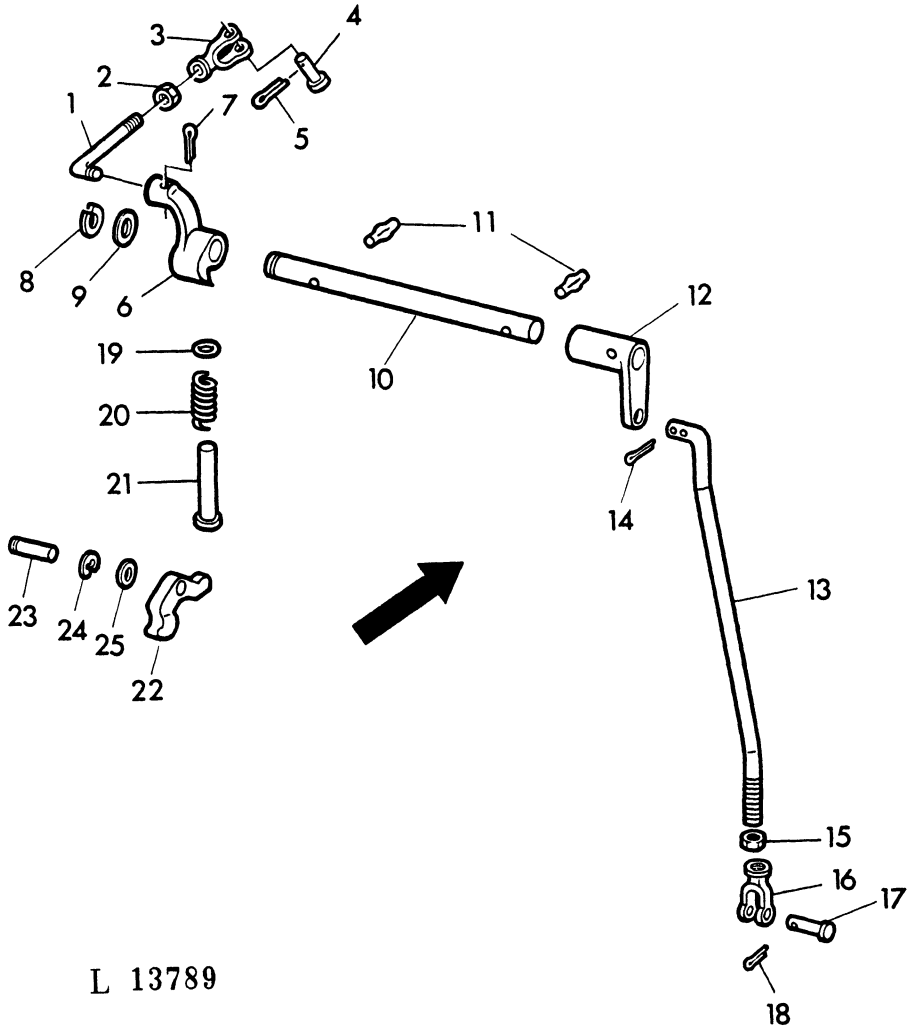

KEY	PART NO.	DESCRIPTION	QTY	SERIAL NO.	JD310	REMARKS
1	T 39855	ROD	1		X	
2	14H 650	NUT	1		X	5/16"
3	L 299T	YOKE	1		X	
4	P 46404	PIN	1		X	
5	11H 233	COTTER PIN	1		X	3/32"X1/2"
6	T 22754	ARM	1		X	
7	11H 234	COTTER PIN	1		X	3/32"X1"
8	A 4883R	SNAP RING	1		X	
9	24H 1658	WASHER	1		X	21/32"X1"X.060"
10	T 22753	SHAFT	1		X	
11	25H 72	GROOVE PIN	2		X	3/16"X1"
12	T 22755	ARM	1		X	
13	T 22757	ROD	1		X	
14	11H 206	COTTER PIN	2		X	3/32"X3/4"
15	14H 732	NUT	1		X	3/8"
16	C 284R	YOKE	1		X	
17	C 1067R	PIN	1		X	
18	11H 211	COTTER PIN	1		X	1/8"X3/4"
19	F 3353R	O-RING	1		X	
20	R 26169	SPRING	1		X	
21	T 23206	PIN	1		X	
22	T 23207	ARM	1		X	
23	R 39166	PIN	1		X	
24	T 12808	SNAP RING	1		X	
25	24H 1305	WASHER	1		X	13/32"X13/16"X.060"

DIRECTION REVERSER - CONTROL VALVE
SOUPAPE DE COMMANDE DE L'INVERSEUR DE MARCHE
UMKEHRGETRIEBE - STEUERVENTIL
VALVOLA DI CONTROLLO INVERTITORE
VALVULA DE MANDO DEL INVERSOR DE MARCHA
FRAM - BACK VAXEL - VENTIL
L 13782

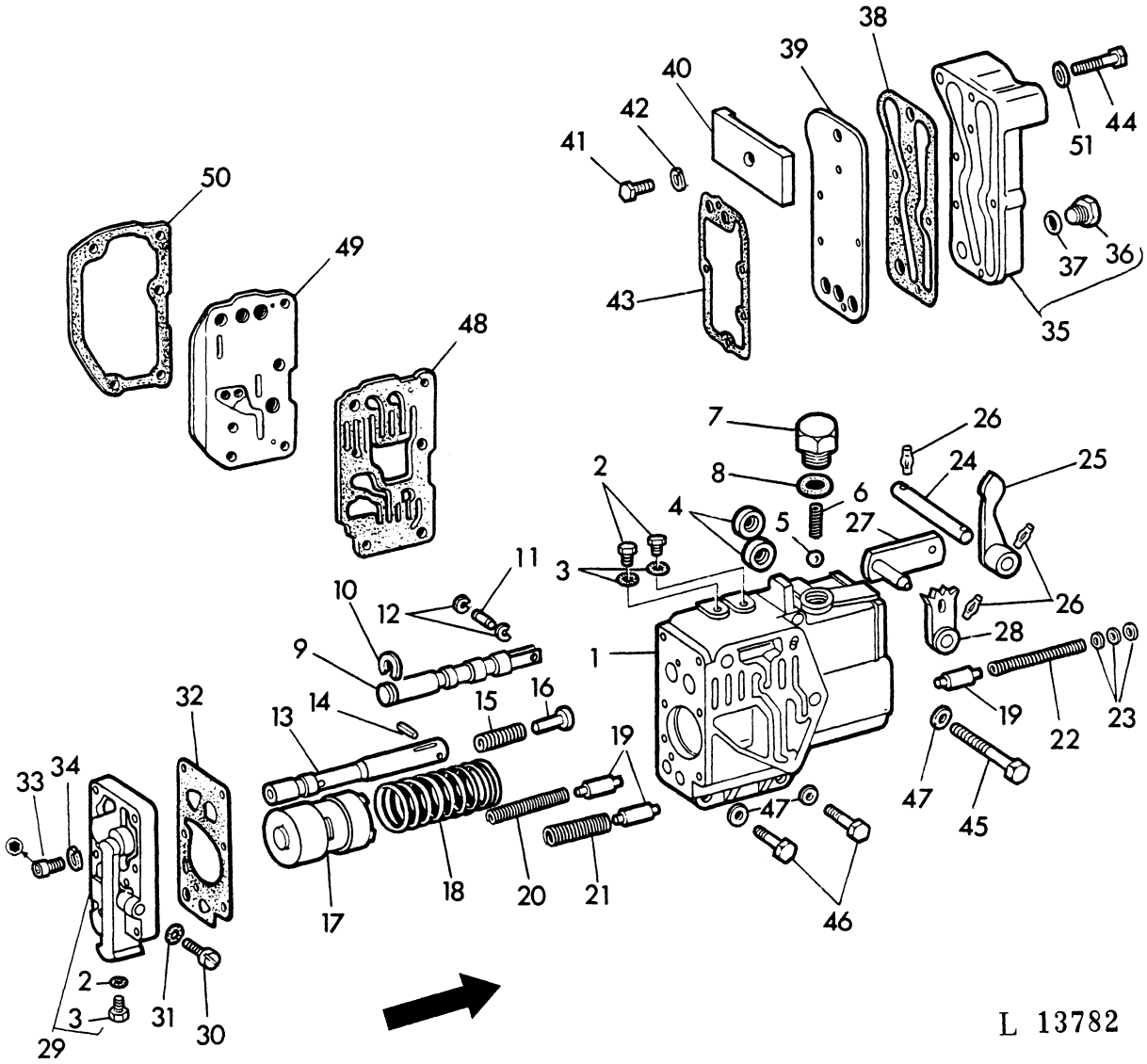

KEY	PART NO.	DESCRIPTION	QTY	SERIAL NO.	JD310	REMARKS
1	R 54579	HOUSING	1		X	
2	R 31631	PLUG	3		X	3/8"
3	R 26287	O-RING	3		X	
4	AR 39043	SEAL	2		X	
5	D 2361R	BALL	1		X	1/2"
6	R 33277	SPRING	1		X	
7	R 39164	PLUG	1		X	
8	R 26906	O-RING	1		X	
9	T 39520	VALVE SPOOL	1		X	
10	F 3366R	SNAP RING	1		X	
11	R 31319	PIN	1		X	
12	R 27507	SNAP RING	2		X	
13	R 39149	VALVE	1		X	
14	34H 310	SPRING PIN	1		X	1/4"X3/4"
15	R 39137	SPRING	1		X	
16	R 39140	STOP	1		X	
17	R 63364	PISTON	1		X	SUB. FOR R39131
18	R 39229	SPRING	1		X	
19	R 39294		3	-295599	X	
	R 39294	VALVE	2	295600-	X	
20	R 39133	SPRING	1		X	
21	F 3322R	SPRING	1	-295599	X	
22	R 39132	SPRING	1		X	
23	R 33521	SHIM	6		X	TK=0,75MM(.030")
24	R 39152	SHAFT	1	-295599	X	
25	AR 39040	ARM	1		X	
26	25H 748	GROOVE PIN	3		X	3/16"X7/8"
27	AR 39064	LEVER	1		X	
28	T 39521	ARM	1		X	
29	AR 39096	COVER	1		X	
30	R 34028	SCREW	1		X	
31	R 27976	O-RING	1		X	
32	R 39159	GASKET	1		X	
33	19H 2932	SCREW	6		X	1/4"X1"
34	12H 302	LOCK WASHER	6		X	1/4"
35	AR 39138	COVER	1		X	INCL. KEYS 36,37
36	R 27218	PLUG	1		X	9/16"
37	R 26448	O-RING	1		X	
38	R 39161	GASKET	1		X	
39	R 39162	PLATE	1		X	
40	R 39248	PLATE	1		X	
41	19H 2552	CAP SCREW	1		X	3/8"X1-1/8"
42	12H 304	LOCK WASHER	1		X	3/8"
43	R 39163	GASKET	1		X	
44	19H 2935	CAP SCREW	5		X	1/4"X1-1/2"
45	19H 1912	CAP SCREW	1		X	3/8"X3-1/2"
46	19H 2665	CAP SCREW	2		X	3/8"X1-5/8"
47	24H 1301	WASHER	3		X	13/32"X9/16"X.060"
48	T 40170	GASKET	1		X	
49	T 27772	PLATE	1		X	
50	T 27771	GASKET	1		X	
51	24H 1286	WASHER	5		X	9/32"X1/2"

DIRECTION REVERSER - CONTROL VALVE COVER/OIL LINE
INVERSEUR DE MARCHE - COUVERCLE DU DISTRIBUTEUR/CONDUITE
UMKEHRGETRIEBE - STEUERVENTILDECKEL/OELLEITUNG
INVERTITORE - COPERCHIO DEL DISTRIBUTORE/CONDOTTO D'OLIO
INVERSOR DE MARCHA - TAPA DE LA VALVULA/CONDUCTO DE ACEITE
FRAM-BACK VAXEL - LOCK AV MANOVERVENTIL/LEDNING
L 13779

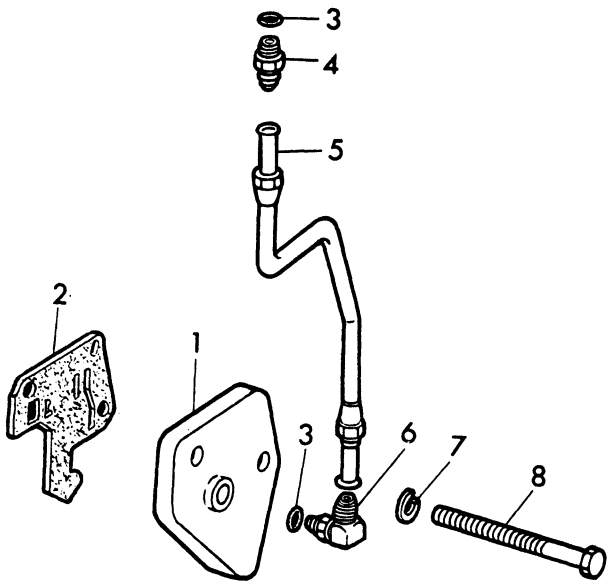

L 13779

KEY	PART NO.	DESCRIPTION	QTY	SERIAL NO.	JD310	REMARKS
1	T 33594	COVER	1		X	
2	T 40169	GASKET	1		X	
3	R 26287	O-RING	2		X	
4	R 27139	THREADED NIPPLE	1		X	
5	AT 32724	OIL LINE	1		X	
6	AR 26746	ELBOW	1		X	
7	12H 301	LOCK WASHER	2		X	1/2"
8	19H 1739	CAP SCREW	2		X	1/2"X4-1/2"

TRANSMISSION OIL PUMP
POMPE A HUILE DE BOITE
GETRIEBEOELPUMPE
POMPA OLIO CAMBIO
BOMBA DE ACEITE DE LA TRANSMISION
TRANSMISSIONSOLJEPUMP
L 27178

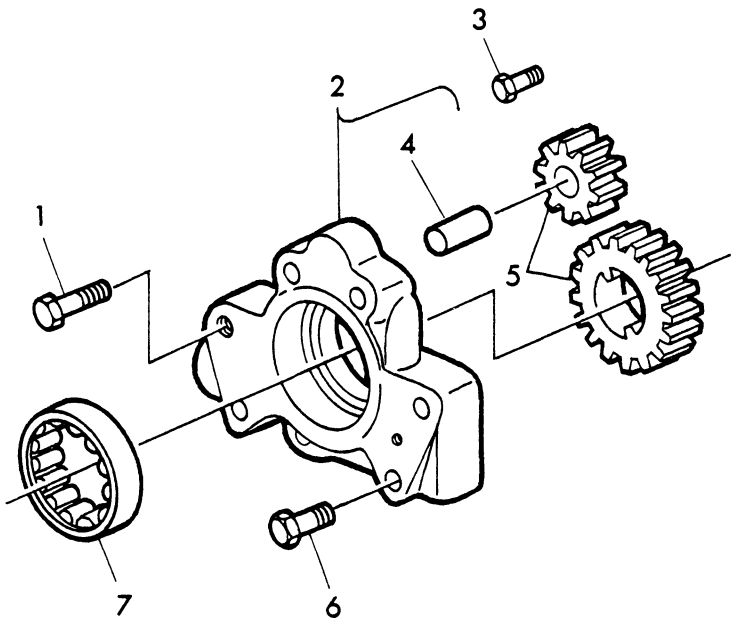

L 27178

KEY	PART NO.	DESCRIPTION	QTY	SERIAL NO.	JD310	REMARKS
1	R 40808	CAP SCREW	1		X	3/8"
2	AR 39182	HOUSING	1		X	
3	19H 2552	CAP SCREW	7		X	3/8"X1-1/8"
4	R 39327	DOWEL PIN	1		X	
5	AR 39180	KIT	1		X	KIT
6	R 39332	CAP SCREW	5		X	3/8"
7	JD 8720	ROLLER BEARING	1		X	

DIRECTION REVERSER LINES
TUYAUTERIES D'HUILE VERS L'INVERSEUR DE MARCHE
OELLEITUNGEN FUER UMKEHRGETRIEBE
TUBAZIONI OLIO PER INVERTITORE
TUBERIAS DE ACEITE DEL INVERSOR DE MARCHA
OLJELEDNINGAR FOR FRAM-BACK VAXEL
L 27179

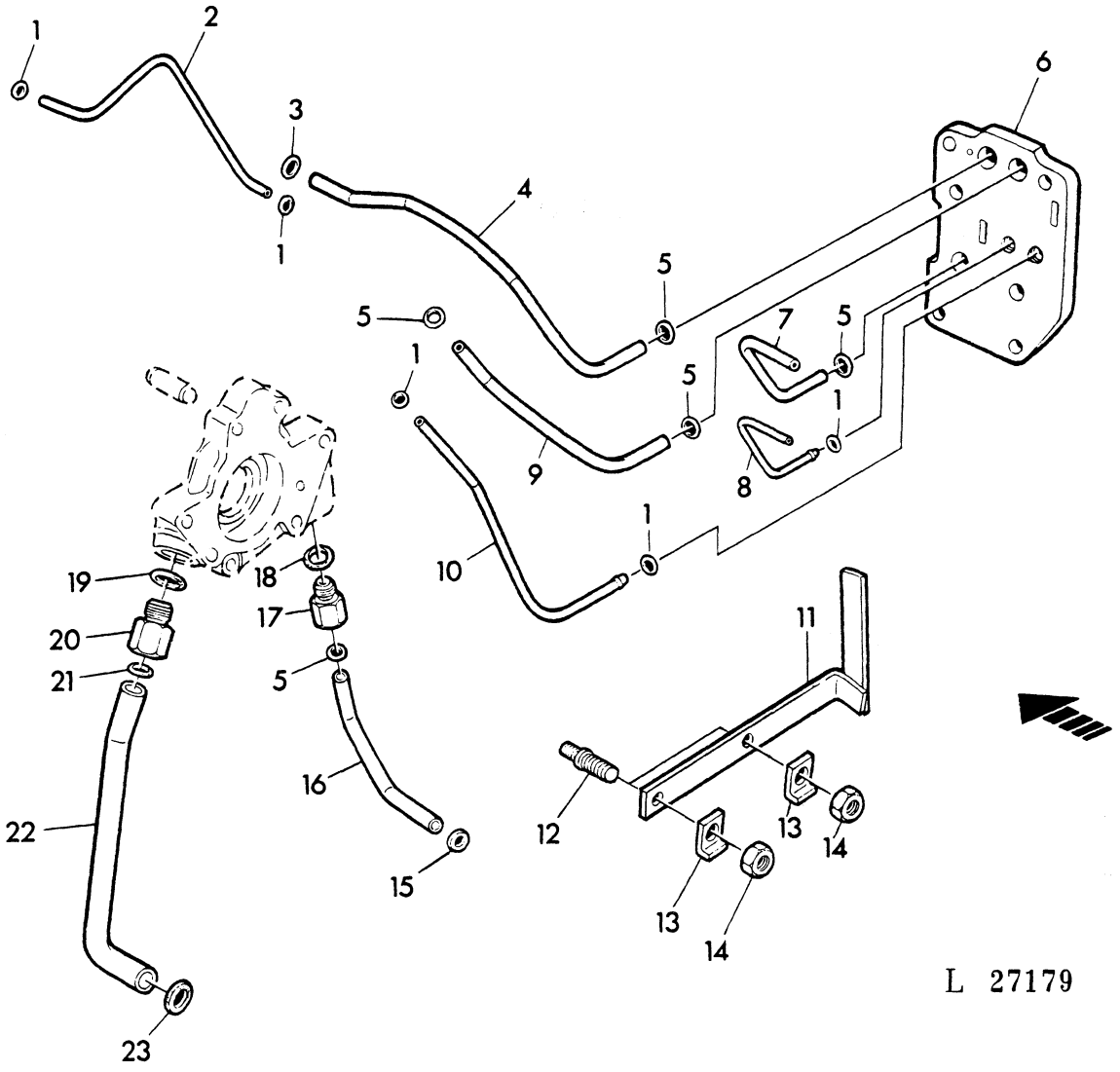

KEY	PART NO.	DESCRIPTION	QTY	SERIAL NO.	JD310	REMARKS
1	A 3917R	O-RING	5		X	
2	T 22583	OIL TUBE	1		X	FRONT
3	R 27166	O-RING	1		X	
4	T 22582	OIL TUBE	1		X	
5	R 375R	O-RING	5		X	
6	T 27772	PLATE	1		X	
7	T 22932	OIL TUBE	1		X	
8	T 22933	OIL TUBE	1		X	
9	T 22579	OIL TUBE	1		X	
10	T 22580	OIL TUBE	1		X	REAR
11	AT 22335	RETAINER	1		X	
12	C 2175R	STUD	2		X	
	T 68412	PACKING	1	339000-	X	
13	R 30958	LOCK PLATE	1		X	
14	14H 812	NUT	2		X	
15	T 22851	PACKING	1	-338999	X	
16	T 25419	OIL TUBE	1		X	
17	T 22862	ADAPTER	1		X	7/8"
18	R 26906	O-RING	1		X	
19	F 3171R	O-RING	1		X	
20	T 30754	ADAPTER	1		X	1-1/16"
21	T 13119	O-RING	1		X	
22	T 25418	OIL TUBE	1		X	
23	R 26149	PACKING	1		X	

DIRECTION REVERSER - BRAKE
INVERSEUR DE MARCHE - FREIN
UMKEHRGETRIEBE - BREMSE
INVERTITORE - FRENI
INVERSOR DE MARCHA - FRENO
FRAM-BACK VAXEL - BROMS
L 27180

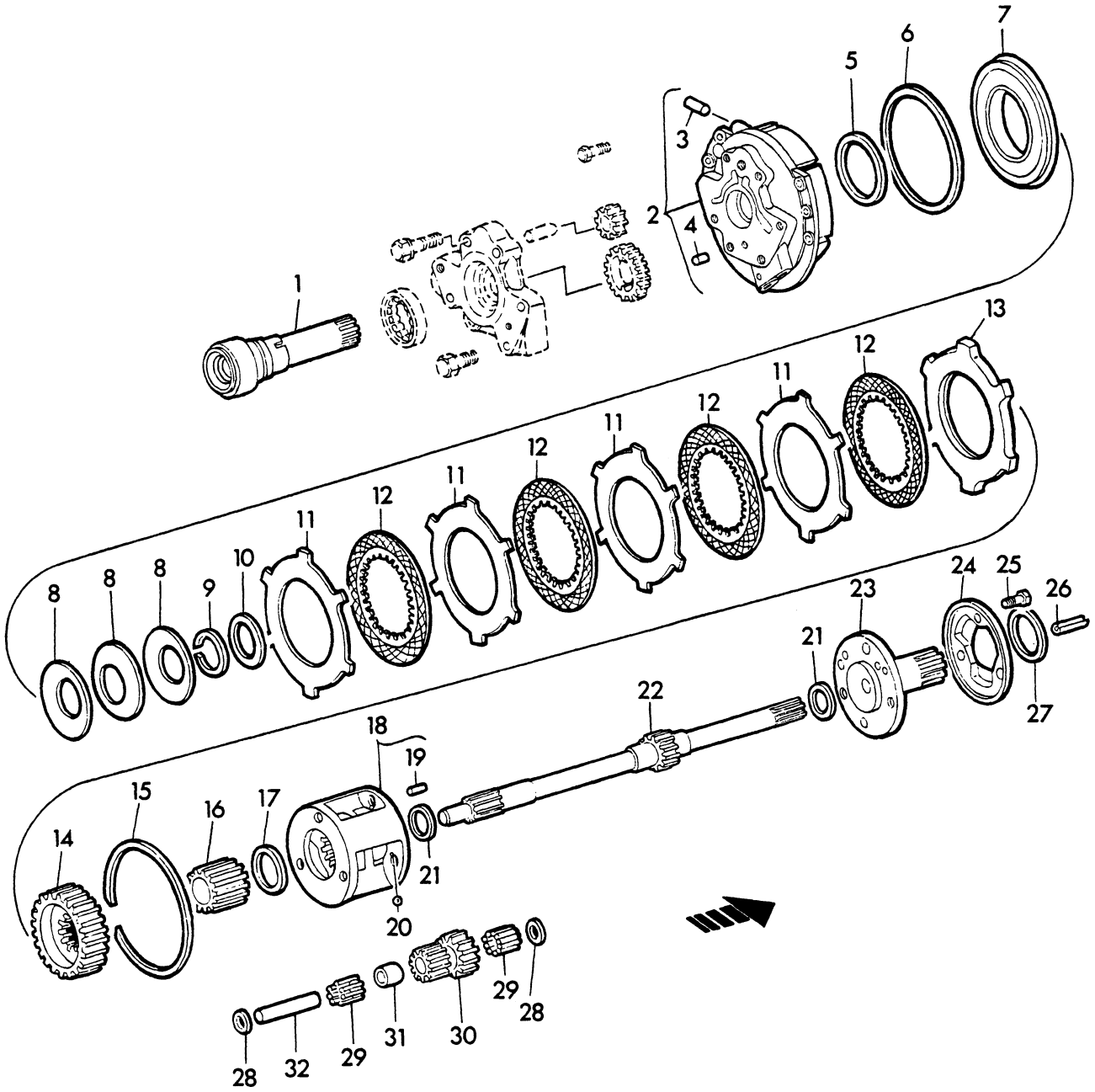

L 27180

KEY	PART NO.	DESCRIPTION	QTY	SERIAL NO.	JD310	REMARKS
1	T 35864	SHAFT	1		X	
2	AR 39183	HOUSING	1		X	INCL. KEYS 2, 3
3	R 39166	PIN	1		X	
4	R 30587	PIN	3		X	
5	R 39117	PACKING	1		X	
6	R 33059	PACKING	1		X	
7	R 39189	PISTON	1		X	
8	R 39313	DIAPHRAGM SPRING	3		X	
9	R 39081	SNAP RING	1		X	
10	R 39088	THRUST WASHER	1		X	
11	R 39325	DISK, OUTER SPLINE	4		X	
12	R 31404	DISK, INNER SPLINE	4		X	
13	R 39085	PLATE	1		X	
14	R 39119	HUB	1		X	
15	R 31289	SNAP RING	1		X	
16	R 39145	GEAR	1		X	
17	R 39193	THRUST WASHER	1		X	
18	AR 39074	PLANET PINION CARRIER	1		X	
19	R 1612R	DOWEL PIN	1		X	
20	A 4742R	BALL	3		X	
21	R 39192	THRUST WASHER	2		X	
22	R 39123	DRIVE SHAFT	1		X	
23	R 39124	DRIVER	1		X	
24	R 39125	DEFLECTOR	1		X	
25	19H 2284	CAP SCREW	3		X	3/8"X7/8"
26	34H 251	SPRING PIN	1		X	1/8"X1"
27	T 22660	WASHER	1		X	
28	R 39129	THRUST WASHER	6		X	
29	R 39090	NEEDLE	132		X	
30	AR 39099	PINION	1		X	KIT(3)
31	R 39091	SPACER	3		X	
32	R 39089	PIN	3		X	

TRANSMISSION CASE
CARTER DE BOITE
GETRIEBEGEHAEUSE
SCATOLA CAMBIO
CAJA DE CAMBIOS
TRANSMISSIONSHUS
L 13777

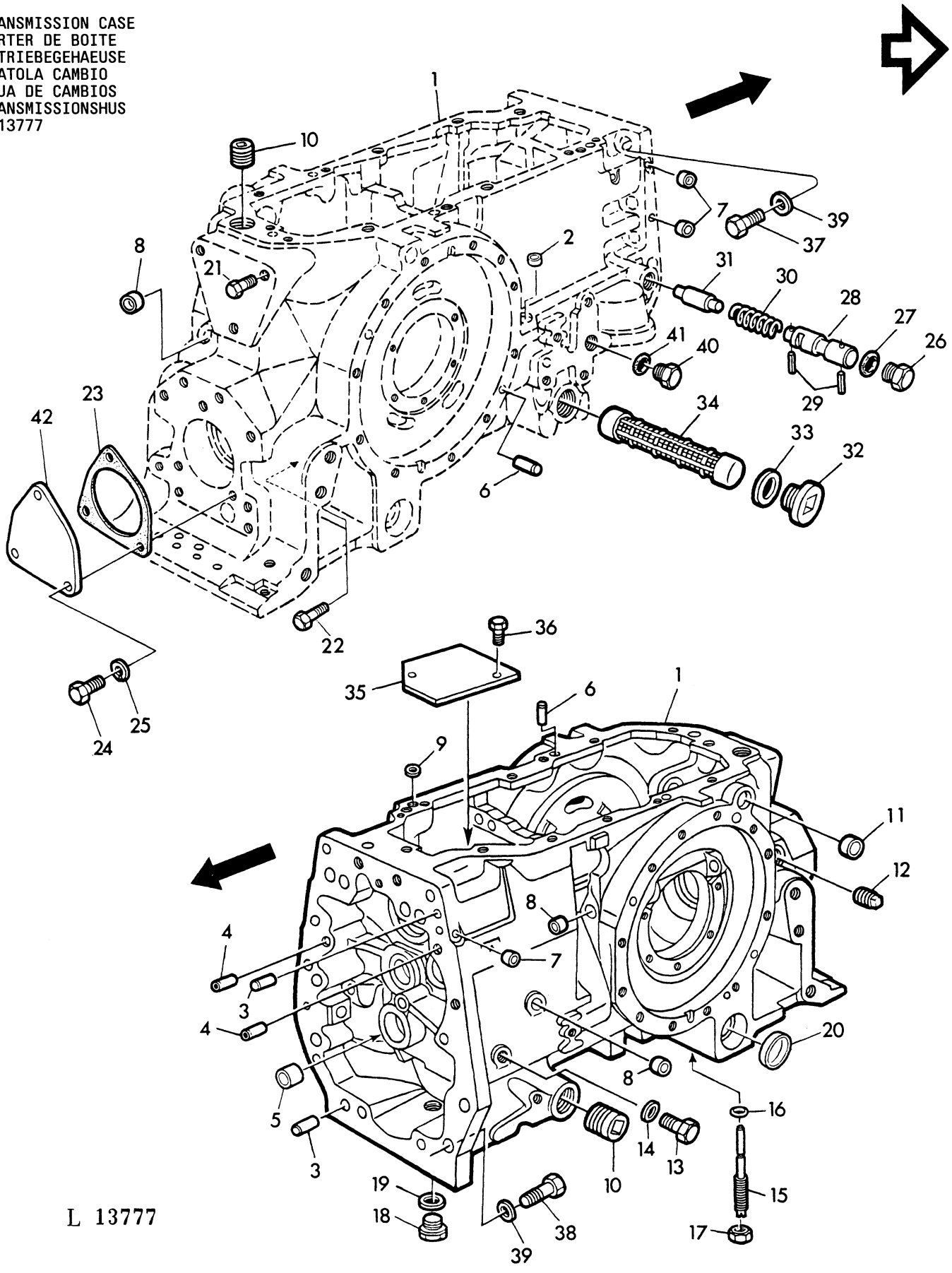

KEY	PART NO.	DESCRIPTION	QTY	SERIAL NO.	JD310	REMARKS
1	AL 25022	TRANSMISSION CASE	1	-200309	X	ORD AL27274 W/AL25598, L31077 L29041(3), L29042(4), L29043(2) L29044(3), L29048, L28672
	AL 27274	TRANSMISSION CASE	1	200310-	X	ASSY, INCL. KEYS 2-6 SUB. FOR AL25099
2	T 12083	PLUG	1		X	SUB. FOR T23433
3	T 26565	SPRING PIN	2		X	
4	T 24729	SPRING PIN	2		X	
5	T 22128	BUSHING	2		X	
6	A 120R	DOWEL PIN	6		X	
7	M 1102T	PLUG	3		X	
8	T 18891	PLUG	3		X	
9	T 17882	PACKING	1		X	
10	15H 562	PIPE PLUG	2		X	1"
11	T 21937	BUSHING	1		X	
12	15H 584	PIPE PLUG	1		X	1/2"
13	R 53802	PLUG	1		X	
14	R 27003	PACKING	1		X	
15	T 21776	SET SCREW	1		X	1/2"
16	R 27490	O-RING	1		X	
17	14H 971	NUT	1		X	1/2"
18	R 51895	PLUG	2		X	1"
19	51M 7019	PACKING	2		X	SUB. FOR A4827R, 51M7016
20	T 22653	CAP	2		X	
21	19H 2367	CAP SCREW	3		X	3/8"X3/4"
22	19H 2643	CAP SCREW	1		X	1/2"X7/8"
23	T 22080	GASKET	1		X	
24	19H 1721	CAP SCREW	3		X	1/2"X1-1/2"
25	12H 301	LOCK WASHER	3		X	1/2"
26	R 27175	PLUG	1		X	1-1/16"
27	F 3171R	O-RING	1		X	
28	T 22853	VALVE	1		X	
29	34H 247	SPRING PIN	2		X	1/8"X3/4"
30	T 24999	SPRING	1		X	
31	R 39294	VALVE	1		X	
32	R 40147	PLUG	1		X	1-1/2"
33	51M 4282	PACKING	1		X	SUB. FOR A4808R
34	R 53169	SCREEN	1		X	
35	T 22854	COVER	1		X	
36	19H 2021	CAP SCREW	2		X	3/8"X5/8"
37	19H 2735	CAP SCREW	2		X	1/2"X2"
38	19H 2993	CAP SCREW	6		X	1/2"X1-1/2"
39	L 30695	WASHER	8		X	
40	R 39112	PLUG	1		X	3/4"
41	R 26375	O-RING	1		X	
42	T 30719	COVER	1		X	

TRANSMISSION TOP COVER
COUVERCLE DE LA BOITE
GETRIEBEGEHAEUSEDECKEL
COPERCHIO DELLA SCATOLA CAMBIO
TAPA DE LA CAJA DE TRANSMISION
KAPA AV TRANSMISSIONSHUS
L 13778

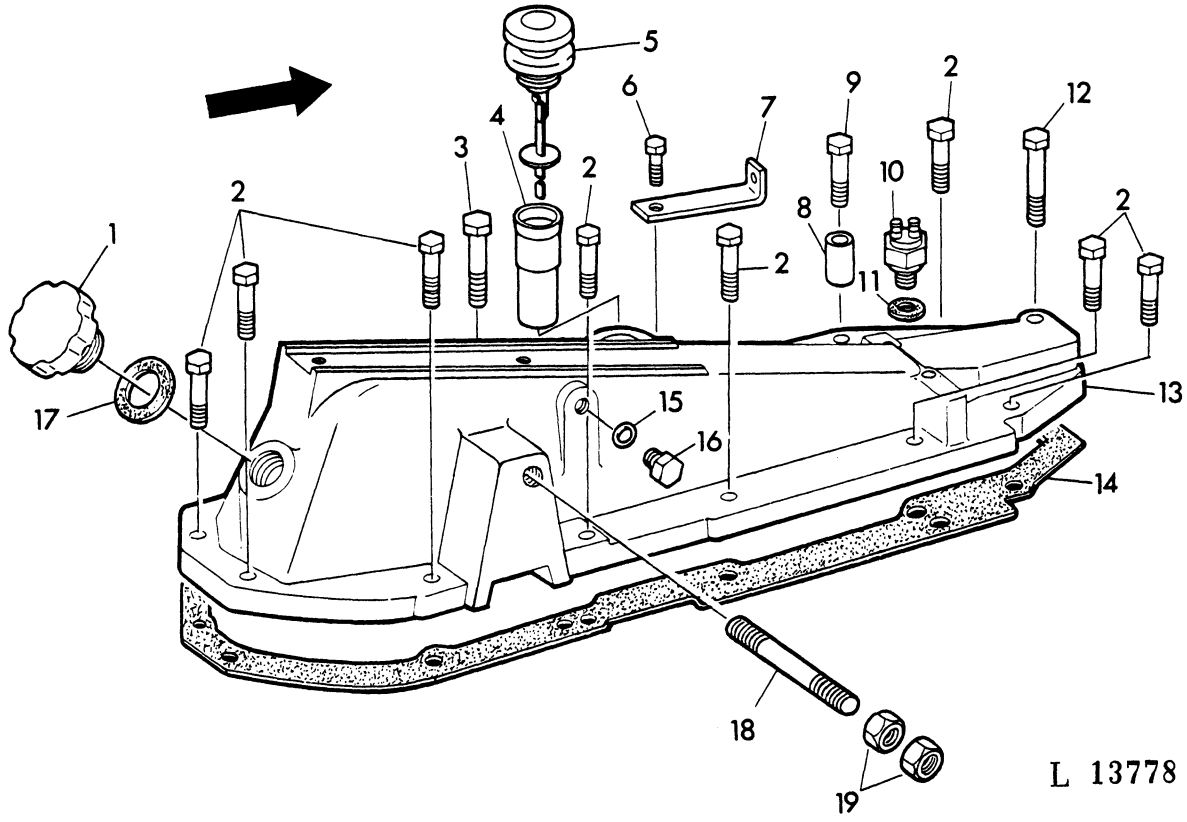

KEY	PART NO.	DESCRIPTION	QTY	SERIAL NO.	JD310	REMARKS
1	AL 32620	CAP	1		X	SUB. FOR L29872
2	19H 1721	CAP SCREW	9		X	1/2"X1-1/2"
3	19H 1831	CAP SCREW	1		X	1/2"X2"
4	R 41859	SLEEVE	1		X	
5	AT 34291	DIPSTICK	1		X	
6	19H 1974	CAP SCREW	1		X	1/2"X2-3/4", SUB. FOR 19H1930
7	T 34530	STRAP	1		X	
8	28H 2642	SPACER	1		X	1/2"X2-1/2"
9	19H 1992	CAP SCREW	1		X	1/2"X4"
10	AR 89691	SWITCH	1		X	SUB. FOR R36265, AR85323
11	T 16911	SEAL	1		X	
12	19H 1805	CAP SCREW	1		X	1/2"X2-1/4"
13	T 55423	COVER	1		X	SUB. FOR T44562
14	T 21641	GASKET	1		X	
15	R 26906	O-RING	1		X	
16	R 27474	PLUG	1		X	
17	T 21564	PACKING	1		X	
18	T 44566	STUD	1		X	5/8"
19	K 40015	LOCK NUT	2		X	5/8", SUB. FOR H35925

TRANSMISSION INPUT SHAFT
TRANSMISSION ARBRE PRIMAIRE
GETRIEBE-ANTRIEBSWELLE
CAMBIO ALBERO DI COMANDO
TRANSMISSION EJE PRIMARIO
TRANSMISSION INGANDE VAXELLADSAXEL
L 13769

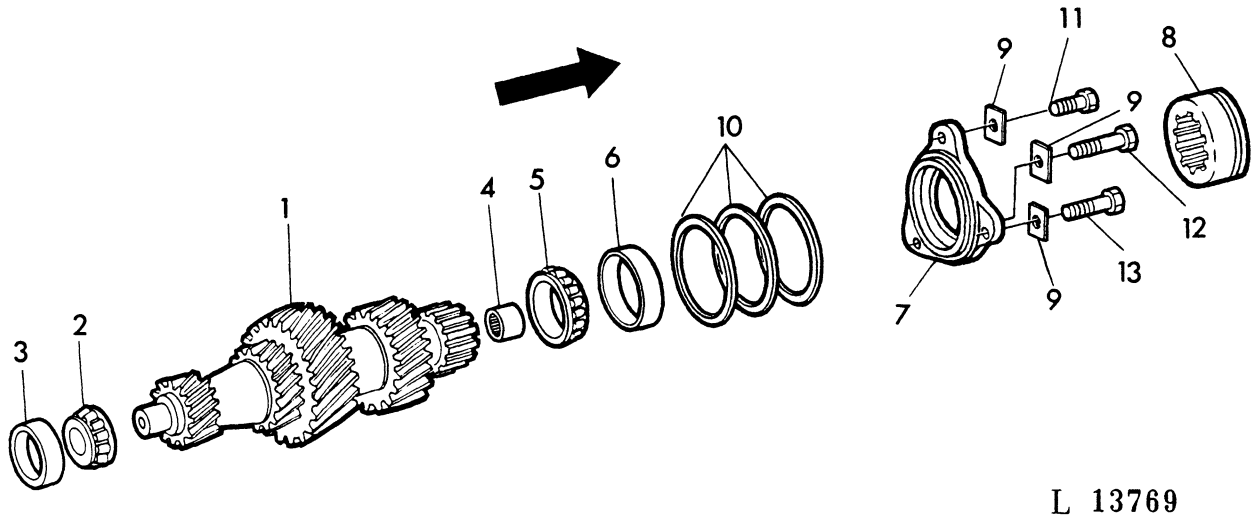

L 13769

KEY	PART NO.	DESCRIPTION	QTY	SERIAL NO.	JD310	REMARKS
1	T 21980	DRIVE SHAFT	1	-248211	X	
	L 28662	DRIVE SHAFT	1	248212-	X	
2	JD 7375	BEARING CONE	1		X	REAR
3	JD 7449	BEARING CUP	1		X	REAR
4	JD 9839	NEEDLE BEARING	1		X	
5	JD 8171	BEARING CONE	1	-248211	X	FRONT
	L 28675	BEARING CONE	1	248212-	X	FRONT
6	JD 8276	BEARING CUP	1	-092903	X	FRONT
	L 31077	BEARING CUP	1	-248211	X	FRONT
	L 29040	BEARING CUP	1	248212-	X	FRONT
7	T 23243	QUILL	1	-092903	X	
	L 28672	QUILL	1	092904-	X	
8	T 23244	SHIFT COLLAR	1		X	
9	H 246R	LOCK PLATE	3		X	
10	T 21442	SHIM	AR	-092903	X	TK=0,08MM(.003")
	T 21443	SHIM	AR	-092903	X	TK=0,13MM(.005")
	T 21444	SHIM	AR	-092903	X	TK=0,25MM(.010")
	T 29561	SHIM	AR	-092903	X	TK=0,5MM(.020")
	T 29562	SHIM	AR	-092903	X	TK=1MM(.040")
	L 29041	SHIM	AR	092904-	X	TK=0,08MM(.003")
	L 29042	SHIM	AR	092904-	X	TK=0,13MM(.005")
	L 29043	SHIM	AR	092904-	X	TK=0,25MM(.010")
	L 29044	SHIM	AR	092904-	X	TK=0,50MM(.020")
11	19H 1731	CAP SCREW	1		X	3/8"X1"
12	19H 1800	CAP SCREW	1		X	3/8"X1-1/2"
13	19H 1732	CAP SCREW	1		X	3/8"X1-1/4"

PINION SHAFT
ARBRE DU PIGNON D'ATTAGUE
HAUPTWELLE
ALBERO PRINCIPALE
EJE DE SALIDA DEL CAMBIO
PINJONGAXEL
L 27181

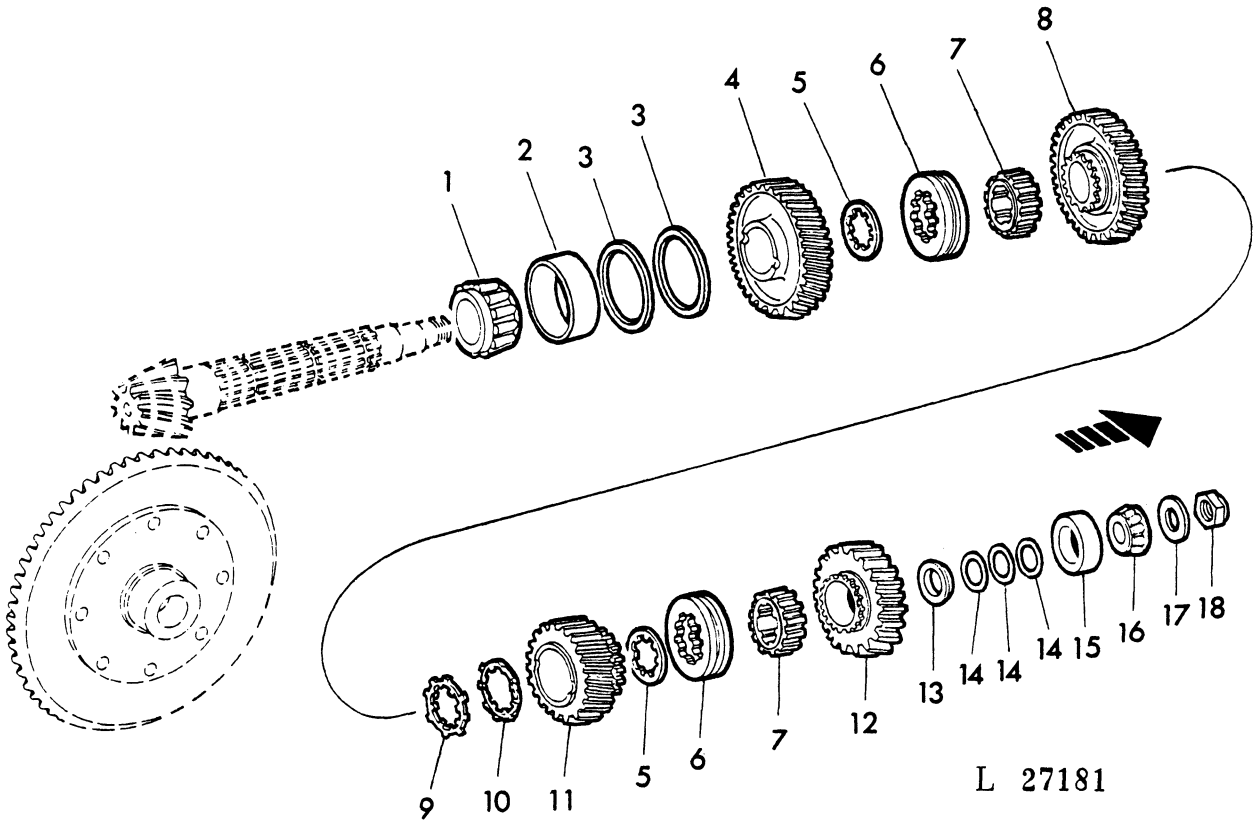

KEY	PART NO.	DESCRIPTION	QTY	SERIAL NO.	JD310	REMARKS
1	JD 8997	BEARING CONE	1		X	REAR
2	JD 8255	BEARING CUP	1		X	REAR
3	T 17201	SHIM	2		X	TK=0,25MM(.010")
4	L 31503	GEAR	1	-248211	X	Z=40, SUB. FOR T21975
	L 28663	GEAR	1	248212-	X	Z=40
5	T 24730	THRUST WASHER	2		X	
6	L 29283	SHIFT COLLAR	2		X	SUB. FOR T21970
7	L 29284	SHIFT COLLAR CARRIER	2		X	SUB. FOR T21964
8	T 21976	GEAR	1	-248211	X	Z=36
	L 28664	GEAR	1	248212-	X	Z=36
9	T 24731	THRUST WASHER	1		X	
10	R 56473	LOCK PLATE	1		X	
11	T 21977	GEAR	1	-248211	X	Z=27
	L 28665	GEAR	1	248212-	X	Z=27
12	AT 19966	GEAR	1	-248211	X	Z=31
	AT 30053	GEAR	1	248212-	X	Z=31
13	T 21965	SPACER	1		X	
14	L 29269	SHIM	AR		X	TK=0,05MM(.002")
	L 29270	SHIM	AR		X	TK=0,13MM(.005")
	L 29271	SHIM	AR		X	TK=0,25MM(.010")
	L 35024	SHIM	AR		X	TK=1,00MM
15	JD 8267	BEARING CUP	1		X	FRONT
16	JD 8979	BEARING CONE	1		X	FRONT
17	T 24918	WASHER	1		X	
18	T 24917	NUT	1		X	1-1/8", SUB. FOR L32843

COUNTERSHAFT/BEARING SUPPORT
ARBRE INTERMEDIARE/COUVERCLE DU ROULEMENT
NEBENWELLE/LAGERDECKEL
ALBERO SECONDARIO CAMBIO/SUPPORTO
EJE INTERMEDIO/TAPA DEL RODAMIENTO
MELLANAXEL/LAGERLAGE
L 11412

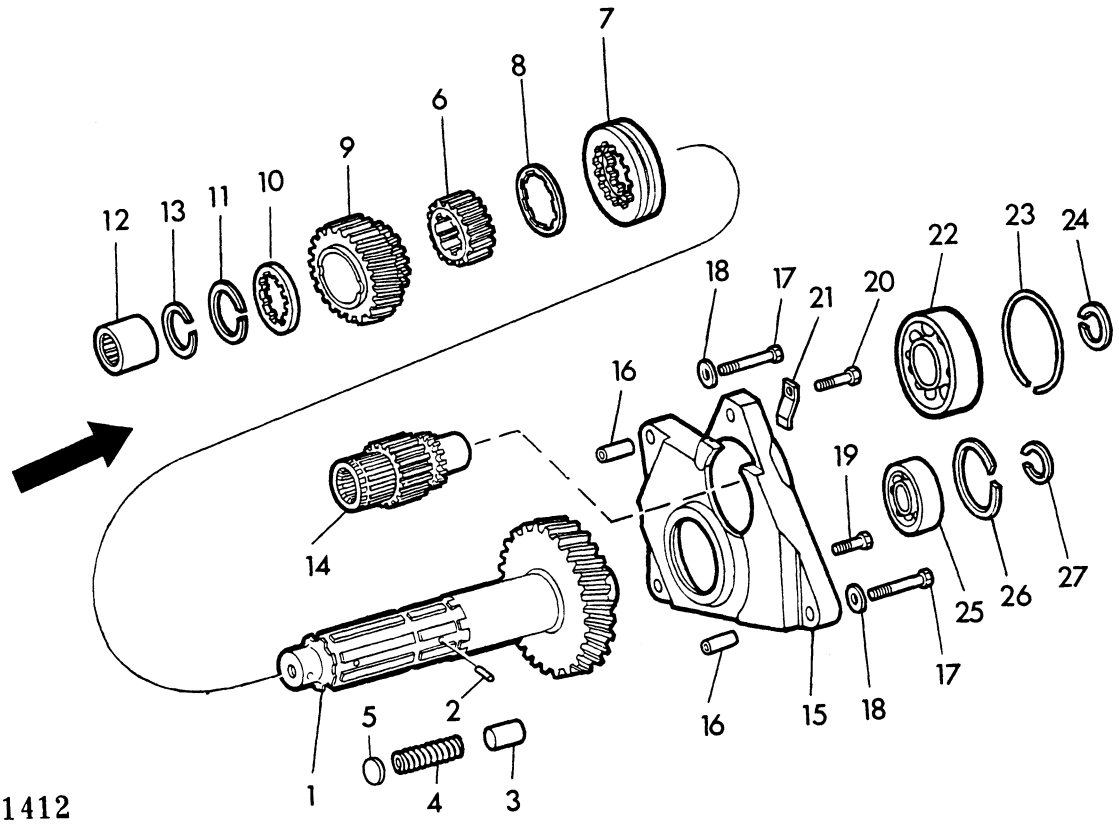

L 11412

KEY	PART NO.	DESCRIPTION	QTY	SERIAL NO.	JD310	REMARKS
1	T 24726	COUNTERSHAFT	1	-317104	X	Z=37
	L 28671	COUNTERSHAFT	1	317105-	X	Z=36
2	T 16573	PIN	1		X	
3	T 21969	FRICTION PLUG	2		X	
4	T 24732	SPRING	2		X	
5	T 24521	SPACER	2		X	
6	L 29284	SHIFT COLLAR	1		X	SUB. FOR T21964
7	T 21970	SHIFT COLLAR	1	-317104	X	ORD R50655-W/R51233
	R 50655	SHIFT COLLAR	1	317105-	X	
8	T 24730	THRUST WASHER	1		X	
9	T 21978	GEAR	1	-317104	X	Z=22
	L 28661	GEAR	1	317105-	X	Z=22
10	T 19245	THRUST WASHER	1		X	
11	T 19242	SNAP RING	1		X	
12	AL 25598	NEEDLE BEARING	1	-317104	X	
	JD 9822	NEEDLE BEARING	1	-248211	X	
	L 28673	NEEDLE BEARING	1	317105-	X	
13	R 34399	SNAP RING	1	-248211	X	
	L 29048	SNAP RING	1	248212-	X	
14	T 24728	GEAR	1	-317104	X	Z=12
	L 28660	GEAR	1	317105-	X	Z=13
15	L 36557	QUILL	1		X	SUB. FOR T24691
16	T 24729	SPRING PIN	2		X	
17	19H 1801	CAP SCREW	2		X	3/8"X2"
18	R 1870R	WASHER	2		X	
19	19H 1731	CAP SCREW	1		X	3/8"X1"
20	19H 1732	CAP SCREW	1		X	3/8"X1-1/4"
21	T 24736	LOCK PLATE	1		X	
22	AR 52706	BALL BEARING	1		X	
23	T 24737	SNAP RING	1		X	
24	A 364R	SNAP RING	1		X	
25	L 28405	BALL BEARING	1		X	SUB. FOR JD9258
26	B 190R	SNAP RING	1		X	
27	F 215R	SNAP RING	1		X	

GEAR SHIFT LEVER
LEVIER DE CHANGEMENT DE VITESSES
GANGSCHALTHEBEL
LEVA DEL CAMBIO
PALANCA DE CAMBIO DE VELOCIDADES
VAXELSPAK
L 13781

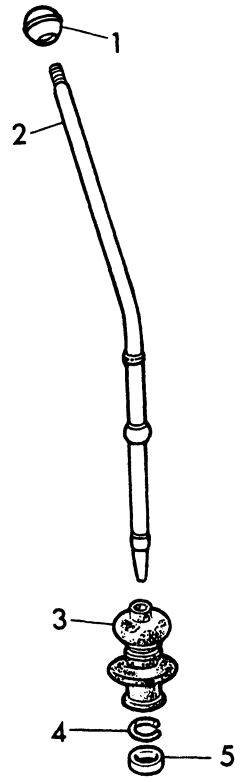

L 13781

KEY	PART NO.	DESCRIPTION	QTY	SERIAL NO.	JD310	REMARKS
1	F 2861R	KNOB	2		X	
2	T 40984	GEARSHIFT LEVER	2		X	
3	T 40985	BOOT	2		X	
4	L 4035T	SNAP RING	2		X	
5	L 4027T	RING	2		X	

GEAR SHIFTING PARTS
ELEMENTS DU CHANGEMENT DE VITESSES
GANGSCHALTUNGSTEILE
PARTI DI INNESTO MARCE
PIEZAS DEL CAMBIO DE VELOCIDADES
VAXELLADSDELAR
L 13280

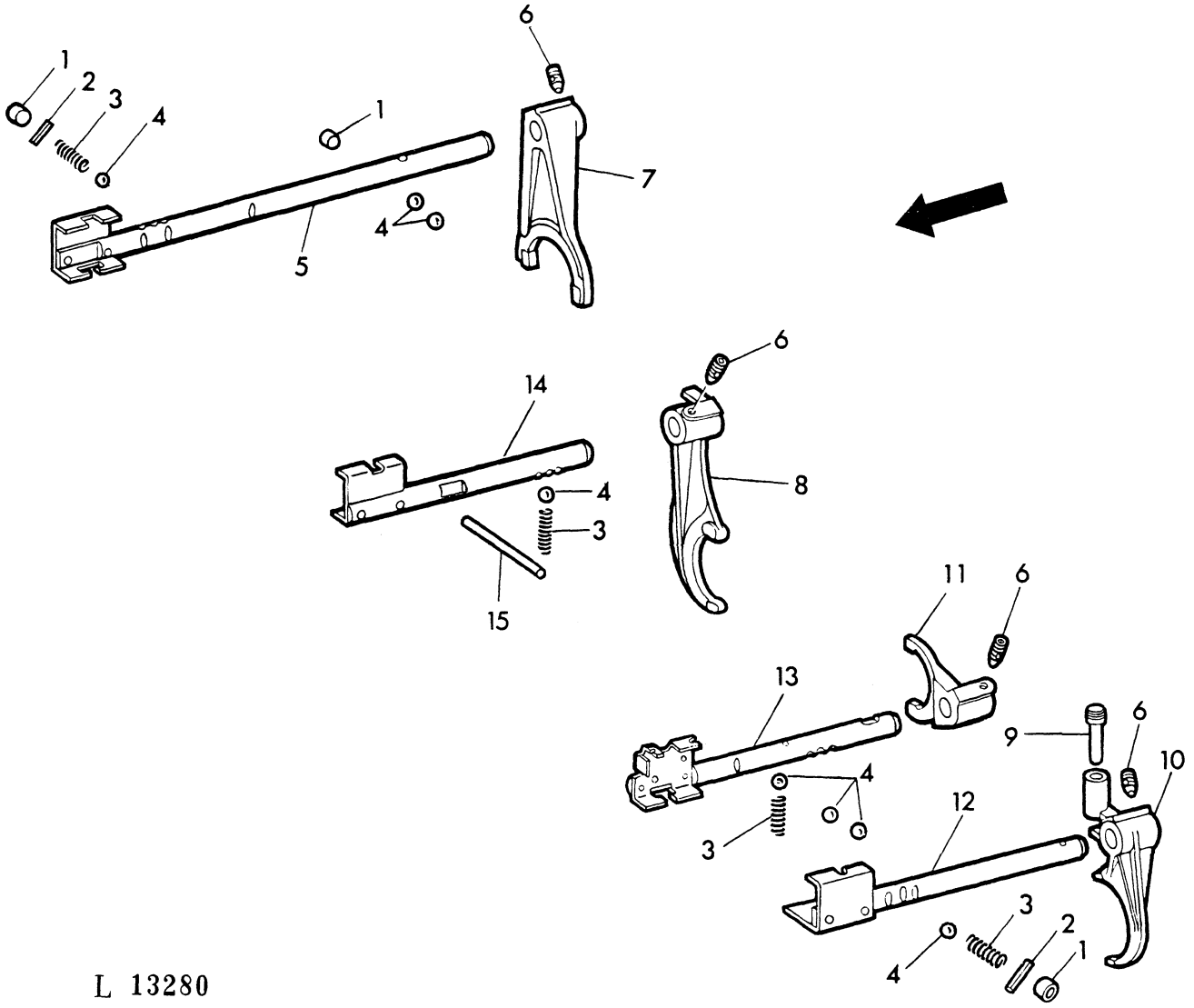

L 13280

KEY	PART NO.	DESCRIPTION	QTY	SERIAL NO.	JD310	REMARKS
1	M 1102T	PLUG	3		X	
2	34H 251	SPRING PIN	2		X	1/8"X1"
3	T 27716	SPRING	4		X	
4	R 26552	BALL	8		X	5/16"
5	AT 20786	SHIFTER ROD	1	-248211	X	
	AL 33278	SHIFTER ROD	1	248212-	X	SUB. FOR AL23122, AL33248
6	T 25614	SET SCREW	4		X	
7	T 21603	SHIFTER	1	-248211	X	
	L 28401	SHIFTER	1	248212-	X	
8	T 32142	SHIFTER	1		X	
9	T 22435	PIN	1		X	
10	T 21602	SHIFTER	1	-248211	X	ORD R51233 W/R50655
	R 51233	SHIFTER	1	248212-	X	
11	T 26197	SHIFTER	1		X	
12	AL 33250	SHIFTER ROD	1		X	SUB. FOR AT29387
13	AL 24504	SHIFTER ROD	1		X	(A)
	AT 32738	SHIFTER ROD	1		X	
14	AL 33538	SHIFTER ROD	1	-186299	X	SUB. FOR AT20784, AL33246
	AL 33997	SHIFTER ROD	1	-092903	X	(A) SUB. FOR AT20802, AL33256
	AL 33279	SHIFTER ROD	1	186300-	X	SUB. FOR AL25883, AL33251
	AL 33346	SHIFTER ROD	1	092904-	X	(A) SUB. FOR AL27843
15	T 22736	PIN	1		X	(A)

(A) 8TH SPEED LOCKED
8IEME VITESSE VERROUILLEE
8. GANG BLOCKIERT
8A VELOCITA BLOCCATA
8A VELOCIDAD BLOQUEADA
8:E VAXELLN LAST

TRANSMISSION OIL FILTER
FILTRE A HUILE DE LA TRANSMISSION
GETRIEBEOELFILTER
FILTRO OLIO DEL CAMBIO
FILTRO DE ACEITE DE LA TRANSMISION
TRANSMISSIONSOLJEFILTER
L 13783

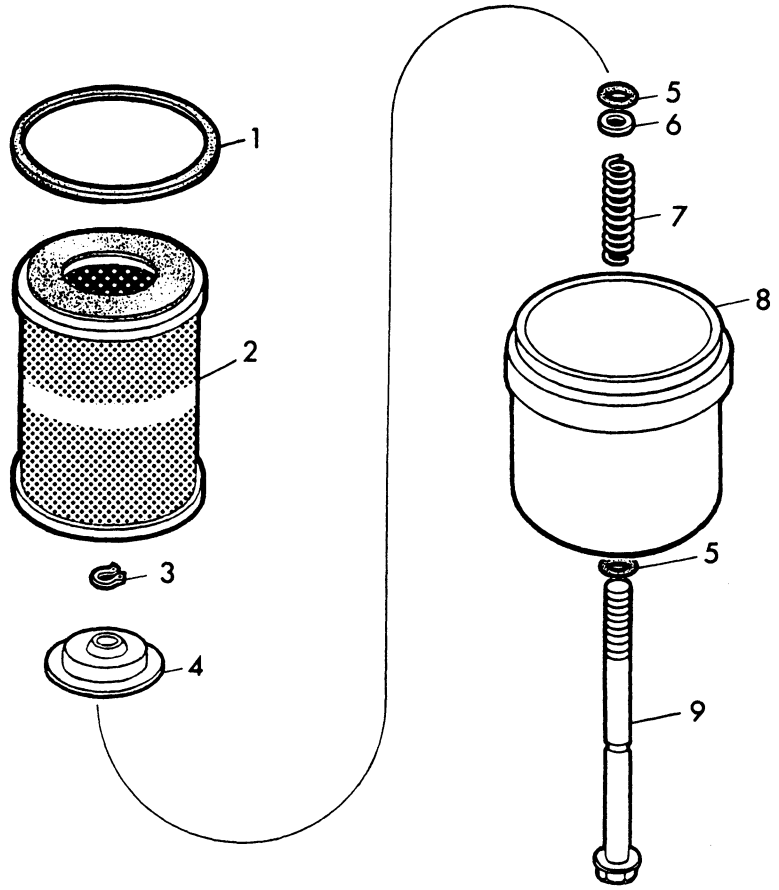

L 13783

KEY	PART NO.	DESCRIPTION	QTY	SERIAL NO.	JD310	REMARKS
1	R 34733	GASKET	1		X	
2	AR 28072	FILTER ELEMENT	1		X	
3	R 32507	SNAP RING	1		X	
4	L 29251	RETAINER	1		X	
5	R 394R	O-RING	2		X	
6	24H 1227	WASHER	1		X	17/32"X13/16"X.060"
7	L 29252	SPRING	1		X	
8	L 29250	COVER	1		X	
9	L 29253	CAP SCREW	1		X	1/2"

TRANSMISSION OIL LINES/OIL CUP
TUYAUTERIES D'HUILE DE LA TRANSMISSION/CUVE A HUILE
GETRIEBEOELLEITUNGEN/OELTOPF
TUBAZIONE OLIO CAMBIO/TAPPO DELL'OLIO
TUBERIAS DE ACEITE DE LA TRANSMISION/TAZA DE ACEITE
TRANSMISSIONSOLJEROR/OLIELOCK
L 27182

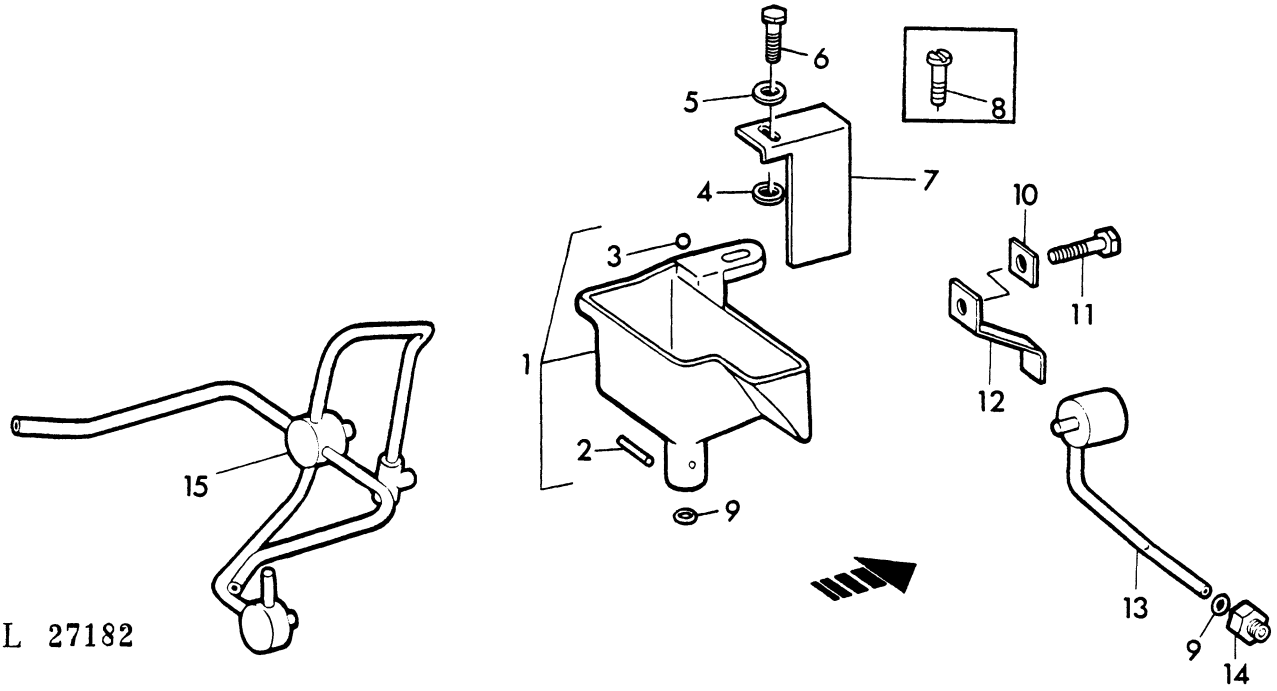

KEY	PART NO.	DESCRIPTION	QTY	SERIAL NO.	JD310	REMARKS
1	AT 22359	OIL CUP	1	-270404	X	ASSY, INCL. KEYS 2, 3
	AL 28231	OIL CUP	1	270405-	X	ASSY, INCL. KEYS 2, 3
2	R 39090	PIN	1		X	
3	R 26552	BALL	1		X	5/16"
4	T 26550	WASHER	1	299992-	X	
5	24H 1307	WASHER	1		X	13/32"X1"X.060"
6	19H 1731	CAP SCREW	1		X	3/8"X1"
7	T 47072	GUARD	1		X	SUB. FOR T38435
8	21H 1322	SCREW	1		X	3/8"X7/8", ORD 19H1731
9	A 3917R	O-RING	2		X	
10	H 246R	LOCK PLATE	2		X	
11	19H 1800	CAP SCREW	1		X	3/8"X1-1/2"
12	T 22974	CLAMP	1		X	
13	AT 22002	OIL TUBE	1		X	FRONT
14	T 22852	ADAPTER	1		X	9/16"
15	AL 24496	MANIFOLD	1	-270404	X	REAR
	AL 28232	MANIFOLD	1	270405-	X	REAR

DIFFERENTIAL LOCK MECHANISM
BLOCAGE DE DIFFERENTIEL
DIFFERENTIALSPERRE
BLOCCO DEL DIFFERENZIALE
BLOQUEO DEL DIFERENCIAL
DIFFERENTIEEL SLOT
L 13807

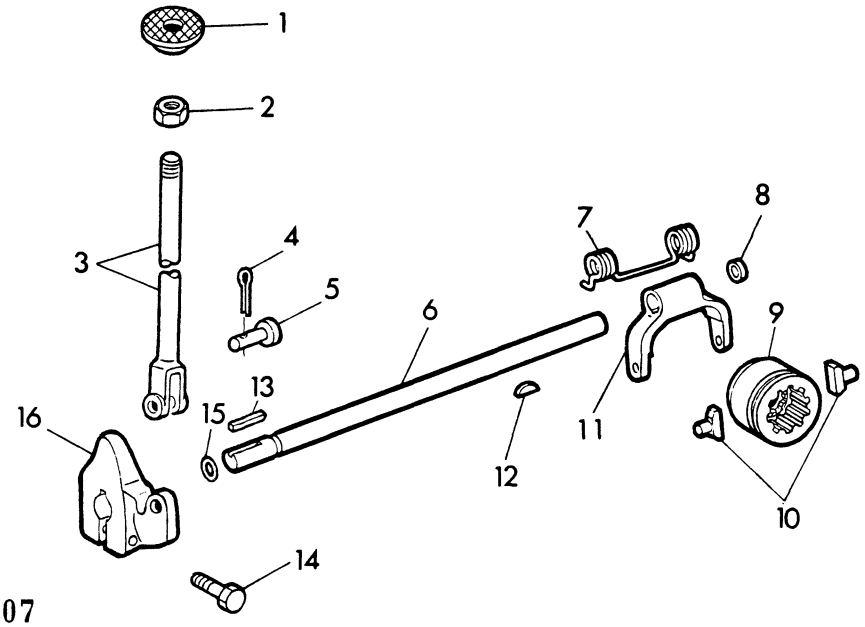

L 13807

KEY	PART NO.	DESCRIPTION	QTY	SERIAL NO.	JD310	REMARKS
1	T 33388	PEDAL	1		X	
2	14H 826	NUT	1		X	1/2"
3	AT 32581	ROD	1		X	
4	11H 211	COTTER PIN	1		X	1/8"X3/4"
5	T 10187	PIN	1		X	
6	L 29833	SHAFT	1	-210484	X	
	L 32536	SHAFT	1	210485-	X	ORD W/R28776(1)26H77(2)
	L 32839	SHAFT	1		X	ORD W/R28776(1)26H77(1) SUB. FOR L32536
7	R 63850	SPRING	1		X	SUB. FOR T24522
8	T 18891	PLUG	1		X	
9	R 51501	SHIFT COLLAR	1	-248211	X	
	L 32569	SHIFT COLLAR	1	248212-	X	
10	T 21841	SHOE	2		X	
11	T 21840	SHIFTER	1		X	
12	26H 77	SHAFT KEY	2		X	3/16"X3/4"
13	L 29834	SHAFT KEY	1		X	
14	19H 1732	CAP SCREW	1		X	3/8"X1-1/4"
15	R 28776	O-RING	1	210485-	X	
	L 29406	O-RING	1	-210484	X	
16	T 33389	ARM	1		X	

DIFFERENTIAL
DIFFERENTIEL
DIFFERENTIAL
DIFFERENZIALE
DIFERENCIAL
DIFFERENTIAL
L 13191

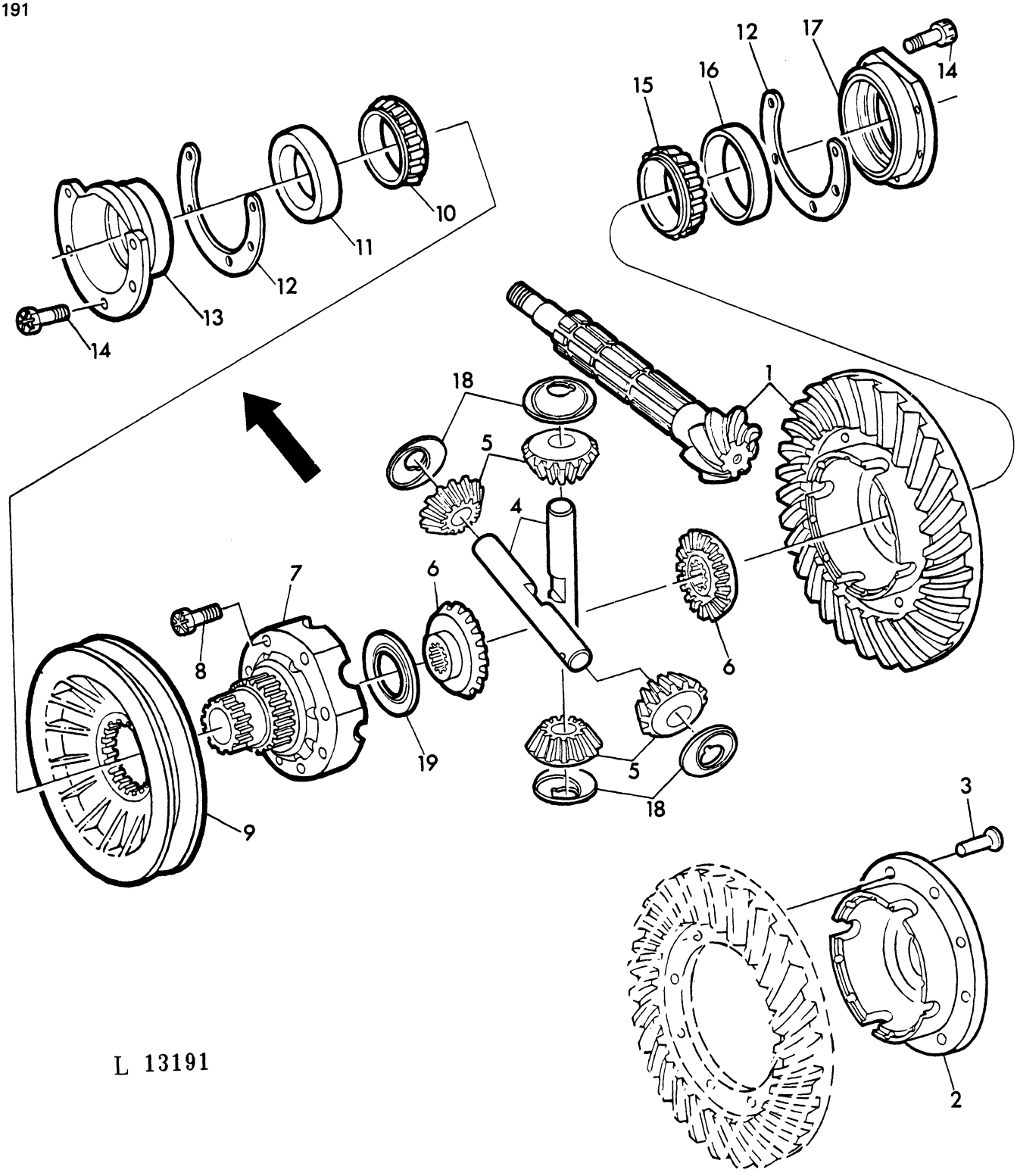

L 13191

KEY	PART NO.	DESCRIPTION	QTY	SERIAL NO.	JD310	REMARKS
1	AT 21622	DIFFERENTIAL	1	-248211	X	ASSY, INCL. KEYS 2, 3(8)Z=35/8
	AT 24183	DIFFERENTIAL	1	-248211	X	ASSY, INCL. KEYS 2, 3(8)Z=46/9
	AT 57405	SHAFT	1	248212-	X	ASSY, INCL. KEYS 2, 3(16)Z=35/8
	AT 57404	SHAFT	1	248212-	X	ASSY, INCL. KEYS 2, 3(16)Z=46/9
2	T 30253	HOUSING	1	-248211		
	T 59690	HOUSING	1	248212-	X	
3	L 29871	RIVET	8	-248211	X	7/16"X1-11/16"
	L 29871	RIVET	16	248212-	X	7/16"X1-11/16"
4	L 29226	SHAFT	2		X	
5	L 29227	GEAR	4		X	Z=11
6	T 29394	GEAR	2		X	Z=18
7	R 51500	HOUSING	1	-248211	X	L.H.
	L 32568	HOUSING	1	248212-	X	L.H.
8	T 21430	SCREW	8		X	3/8"
9	T 21596	BRAKE DRUM	1		X	
10	JD 8147	BEARING CONE	1	-248211	X	L.H.
	JD 8151	BEARING CONE	1	248212-	X	L.H.
11	JD 7425	BEARING CUP	1	-248211	X	L.H.
	JD 8206	BEARING CUP	1	248212-	X	L.H.
12	T 21434	SHIM	AR		X	TK=0,08MM(.003")
	T 21435	SHIM	AR		X	TK=0,13MM(.005")
	T 21436	SHIM	AR		X	TK=0,25MM(.010")
	T 29862	SHIM	AR		X	TK=0,51MM(.02")
13	T 21433	QUILL	1	-248211	X	L.H.
	L 32571	QUILL	1	248212-	X	L.H., ORD R62849
	R 62849	QUILL	1	276070-	X	L.H.
14	T 22874	CAP SCREW	10		X	3/8"
15	JD 8946	BEARING CONE	1		X	R.H.
16	JD 8206	BEARING CUP	1		X	R.H.
17	T 21432	QUILL	1		X	R.H.
18	L 31793	WASHER	4	248212-	X	
19	L 32570	WASHER	1	248212-	X	L.H.

FINAL DRIVE REAR AXLE
COMMANDES FINALES/ESSIEU ARRIERE
ENDANTRIEB/HINTERACHSE
RIDUZIONE FINALE/ASSALE POSTERIORE
MANDOS FINALES/PALIER
SLUTDREV/BAKAXEL
L 27183

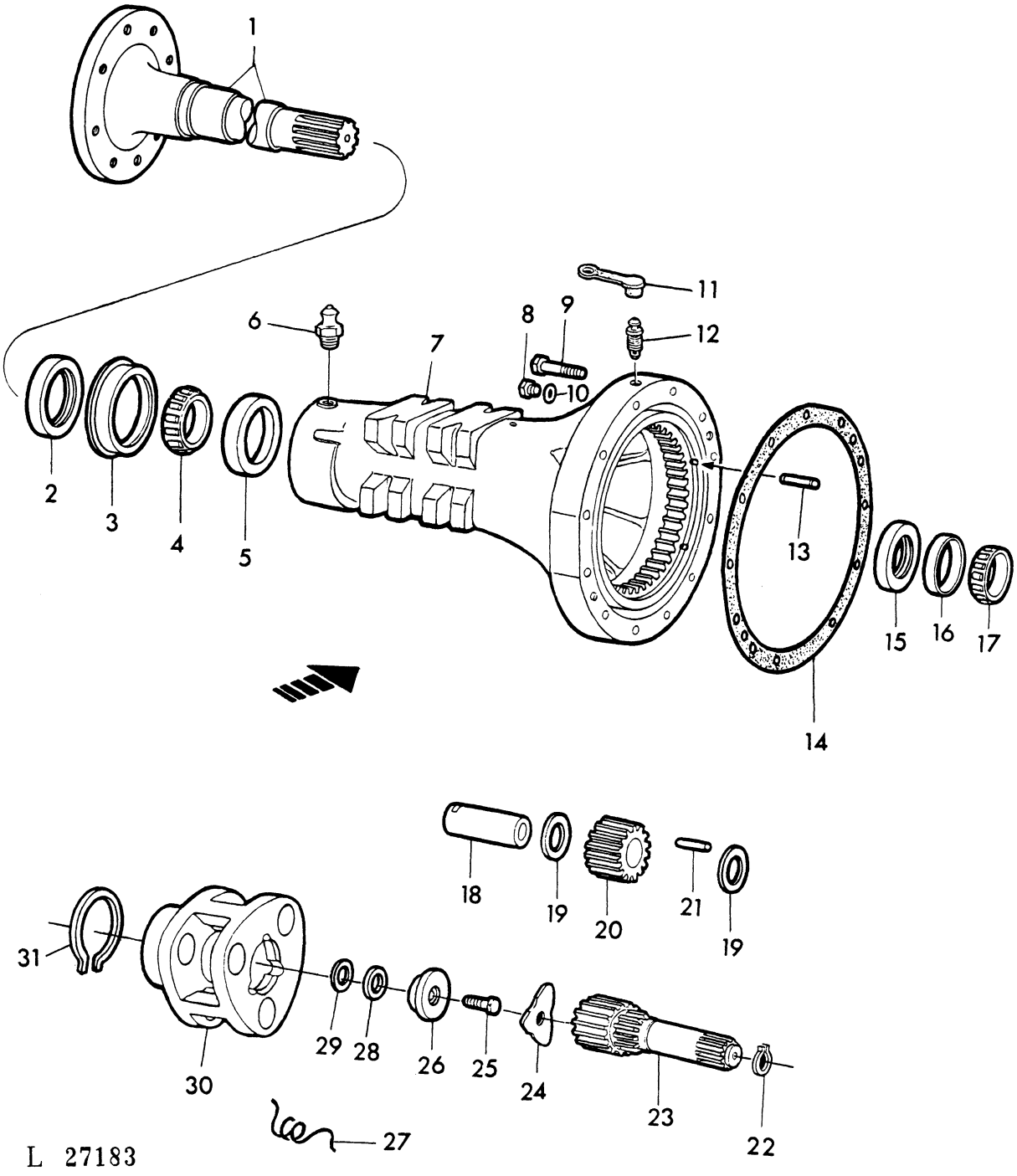

KEY	PART NO.	DESCRIPTION	QTY	SERIAL NO.	JD310	REMARKS
1	L 29244	HALF AXLE	2	-248211	X	
	L 32618	HALF AXLE	2	248212-	X	
2	AT 20703	SEAL	2		X	
3	L 35542	GUIDE	2		X	SUB. FOR T21429
4	JD 8946	BEARING CONE	2		X	
5	JD 8206	BEARING CUP	2		X	
6	JD 7759	LUBRICATION FITTING	2		X	1/8"
7	AT 40757	HOUSING	1		X	ORD W/T21428(3) R26198 (3)
8	R 31631	PLUG	2		X	3/8"
9	19H 1805	CAP SCREW	22		X	1/2"X2-1/4"
10	R 26287	O-RING	2		X	
11	R 47862	CAP	2		X	
12	R 21612	BLEED SCREW	2		X	3/8"
13	T 21428	DOWEL PIN	6		X	
14	T 21419	GASKET	2		X	
15	AT 16887	SEAL	2		X	
16	JD 8206	BEARING CUP	2		X	
17	JD 8151	BEARING CONE	2		X	
18	T 38049	SHAFT	6		X	
19	T 21424	THRUST WASHER	12		X	
20	T 21547	PINION	6		X	Z=18
21	AL 24238	NEEDLE	6		X	KIT (23)
22	L 34400	SNAP RING	2		X	
23	L 34168	DRIVE SHAFT	1		X	R.H., SUB. FOR T28907
	L 34353	DRIVE SHAFT	1		X	L.H., SUB. FOR T28908
24	T 21427	LOCK PLATE	2	-248211	X	
	T 55419	LOCK PLATE	2	248212-	X	
25	19H 2993	CAP SCREW	2	-248211	X	1/2"X1-1/2"
	T 35306	CAP SCREW	2	248212-	X	5/8"X1-1/2"
26	L 29237	WASHER	2	-248211	X	
	T 67294	WASHER	2	248212-	X	SUB. FOR T38555
27	L 34175	WIRE	1		X	
28	T 55420	SHIM	AR	248212-	X	TK=1,0MM(.036")
29	M 2054T	SHIM	AR	248212-	X	TK=0,13MM(.005)
	M 2055T	SHIM	AR	248212-	X	TK=0,25MM(.010)
30	L 30263	PLANET PINION CARRIER	2		X	
31	T 35791	SNAP RING	2		X	

SECTIONAL INDEX
INDEX DE SECTION
GRUPPENINDEX
INDICE DELLA SEZIONE
INDICE DE SECCION
GRUPPSFORTECKNING
L 27555

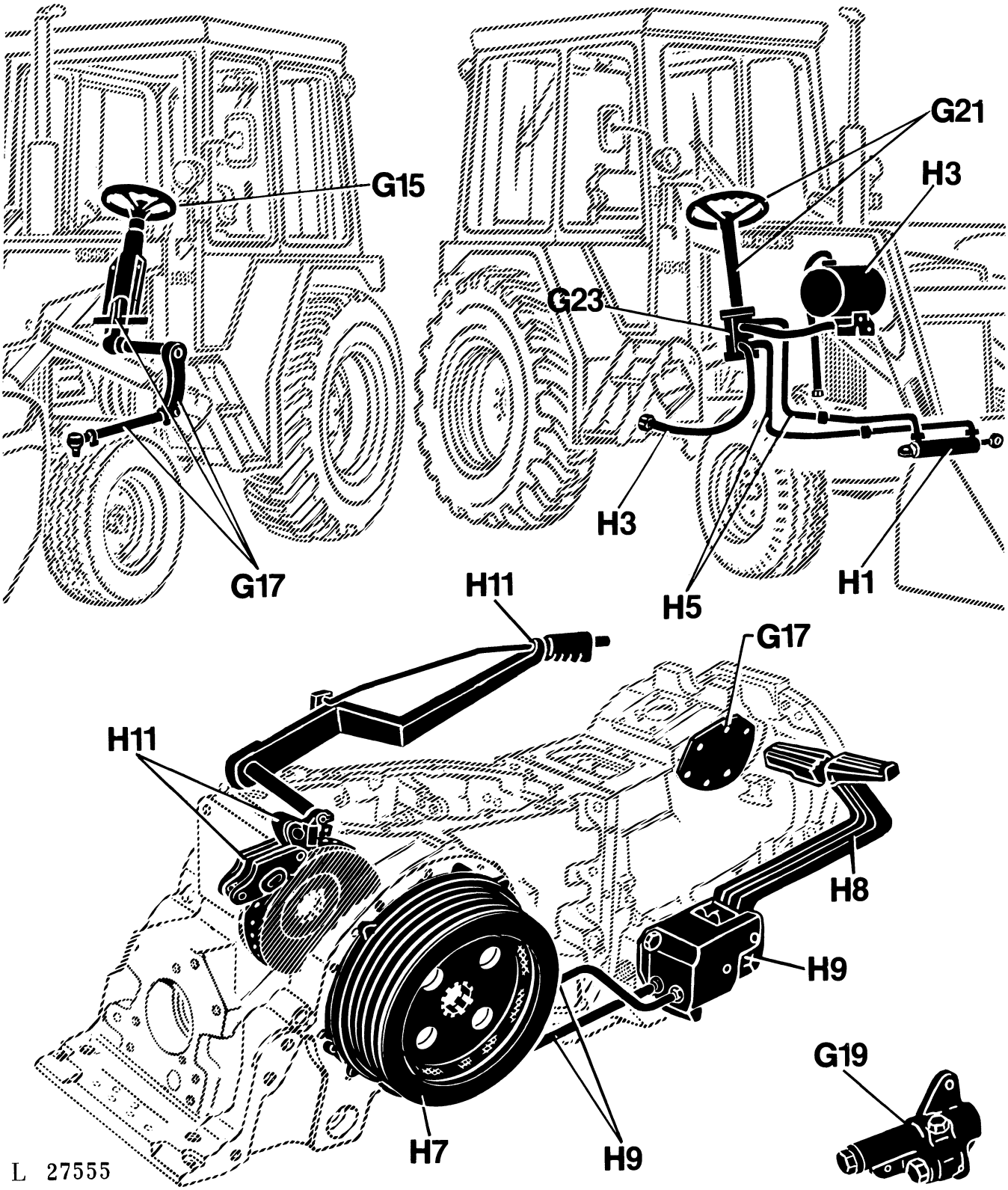

POWER STEERING
DIRECTION HYDRAULIQUE
HYDRAULISCHE LENKUNG
STERZO IDRAULICO
DIRECCION HIDRAULICA
HYDRAULSTYRNING
L 27184

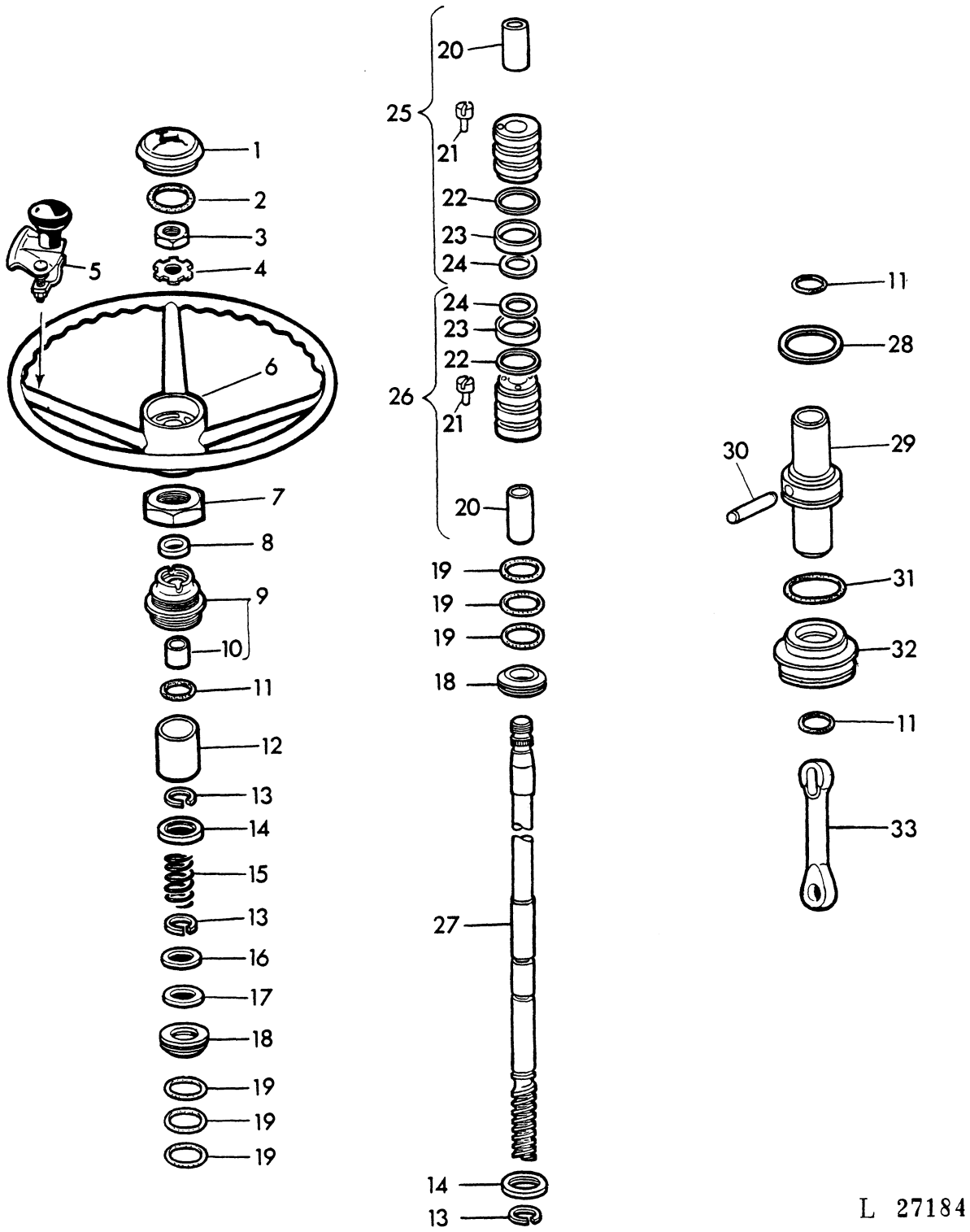

KEY	PART NO.	DESCRIPTION	QTY	SERIAL NO.	JD310	REMARKS
1	R 47998	COVER	1		X	SUB. FOR L29260
2	B 3690R	O-RING	1		X	
3	14H 904	NUT	1		X	3/4"
4	T 17148	LOCK PLATE	1		X	
5	DD 12060	GRIP	1	198422-248211	X	
6	AL 28457	STEERING WHEEL	1		X	SUB. FOR T22875
7	T 21718	NUT	1		X	2"
8	T 22260	SEAL	1		X	
9	AT 19858	ADJUSTER	1		X	W/R27320
10	R 27320	BUSHING	1		X	
11	T 34248	O-RING	3		X	
12	T 22823	SPACER	1		X	
13	R 35226	SNAP RING	3		X	
14	T 22824	THRUST WASHER	2		X	
15	T 13555	SPRING	1		X	
16	L 29197	THRUST WASHER	1		X	
17	T 25741	SHIM	AR	-248211	X	TK=0,05MM(.002")
	T 22825	SHIM	AR	-248211	X	TK=0,13MM(.005")
	T 31290	SHIM	AR	-248211	X	TK=0,76MM(.030")
18	AL 25855	THRUST BEARING	2	-248211	X	SUB. FOR JD9832, T21716, T25329
19	T 25335	O-RING	6		X	
20	R 49980	SLEEVE	2		X	SUB. FOR T25330
21	R 49982	SLEEVE	2		X	
22	T 25333	SHIM	4		X	0,05MM(.002")
	T 25334	SHIM	8		X	0,25MM(.010")
23	T 25332	SPACER	2		X	
24	L 31434	WASHER	2		X	
25	AL 26312	VALVE	1		X	UP, INCL. KEYS 20-24 SUB. FOR AT28055, ORD W/AL26311
26	AL 26311	VALVE	1		X	LOW, INCL. KEYS 20-24 SUB. FOR AT25490, ORD W/AL26312
27	T 43602	STEERING WHEEL SHAFT	1		X	
28	T 34246	PACKING	1		X	
29	T 34244	ROD	1		X	
30	T 34247	PIN	1		X	
31	T 35893	O-RING	1		X	
32	T 40194	GUIDE	1		X	
33	T 34245	ROD	1		X	

POWER STEERING
DIRECTION HYDRAULIQUE
HYDRAULISCHE LENKUNG
STERZO IDRAULICO
DIRECCION HIDRAULICA
HYDRAULSTYRNING
L 13033

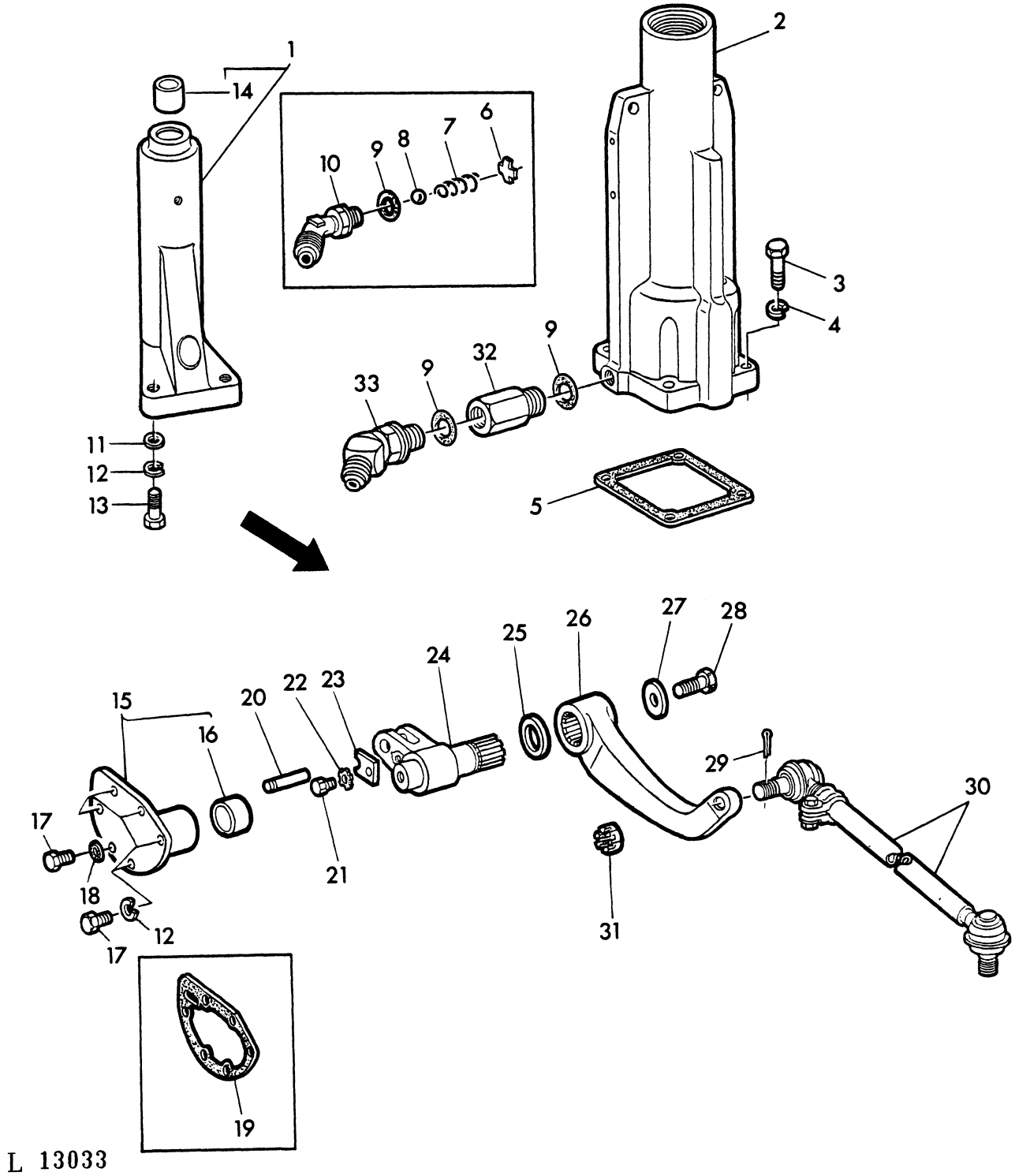

KEY	PART NO.	DESCRIPTION	QTY	SERIAL NO.	JD310	REMARKS
1	AL 24488	SUPPORT	1	-248211	X	W/R27320
2	AL 30946	HOUSING	1	-248211	X	SUB. FOR AT41310
3	19H 1831	CAP SCREW	4	-248211	X	1/2"X2"
4	12H 301	LOCK WASHER	4	-248211	X	1/2"
5	T 34253	GASKET	1	-248211	X	
6	T 38449	RETAINER	1	-236231	X	
7	T 38448	SPRING	1	-236231	X	
8	R 26552	BALL	1	-236231	X	5/16"
9	R 26448	O-RING	2	-248211	X	
10	AT 37206	ELBOW	1	-236231	X	9/16"
11	24H 1303	WASHER	3	-248211	X	13/32"X11/16"X. 060"
12	12H 304	LOCK WASHER	8		X	3/8"
13	19H 2284	CAP SCREW	3	-248211	X	3/8"X7/8"
14	R 27320	BUSHING	1	-248211	X	
15	AT 54955	COVER	1		X	W/T21445 SUB. FOR AT20854, AT46457
16	T 21445	BUSHING	1		X	
17	19H 1732	CAP SCREW	6		X	3/8"X1-1/4"
18	T 11292	WASHER	1		X	
19	T 21527	GASKET	1	-235083	X	
20	T 21722	PIN	1	-248211	X	
21	19H 1227	CAP SCREW	1	-248211	X	1/4"X1/2"
22	12H 297	LOCK WASHER	1	-248211	X	1/4"
23	T 21659	LOCK PLATE	1	-248211	X	
24	T 34254	SHAFT	1	-248211	X	
25	AN 70540	SEAL	1	-248211	X	
26	L 29831	LEVER	1	-248211	X	
27	T 42971	WASHER	1	-248211	X	
28	19H 2710	CAP SCREW	1	-248211	X	5/8"X1-3/4"
29	11H 240	COTTER PIN	2	-248211	X	5/32"X1-1/2"
30	AT 37826	DRAG LINK	1	-248211	X	
31	14H 902	NUT	2	-248211	X	3/4"
32	AT 54132	VALVE	1	236232-248211	X	
33	AR 26722	ELBOW	1	236232-248211	X	

FLOW CONTROL VALVE
SOUPAPE REGULATRICE DE DEBIT
MENGENKONTROLLVENTIL
VALVOLA DE PRIORITA
VALVULA DOSIFICADORA
FLODESKONTROLLVENTIL
L 13851

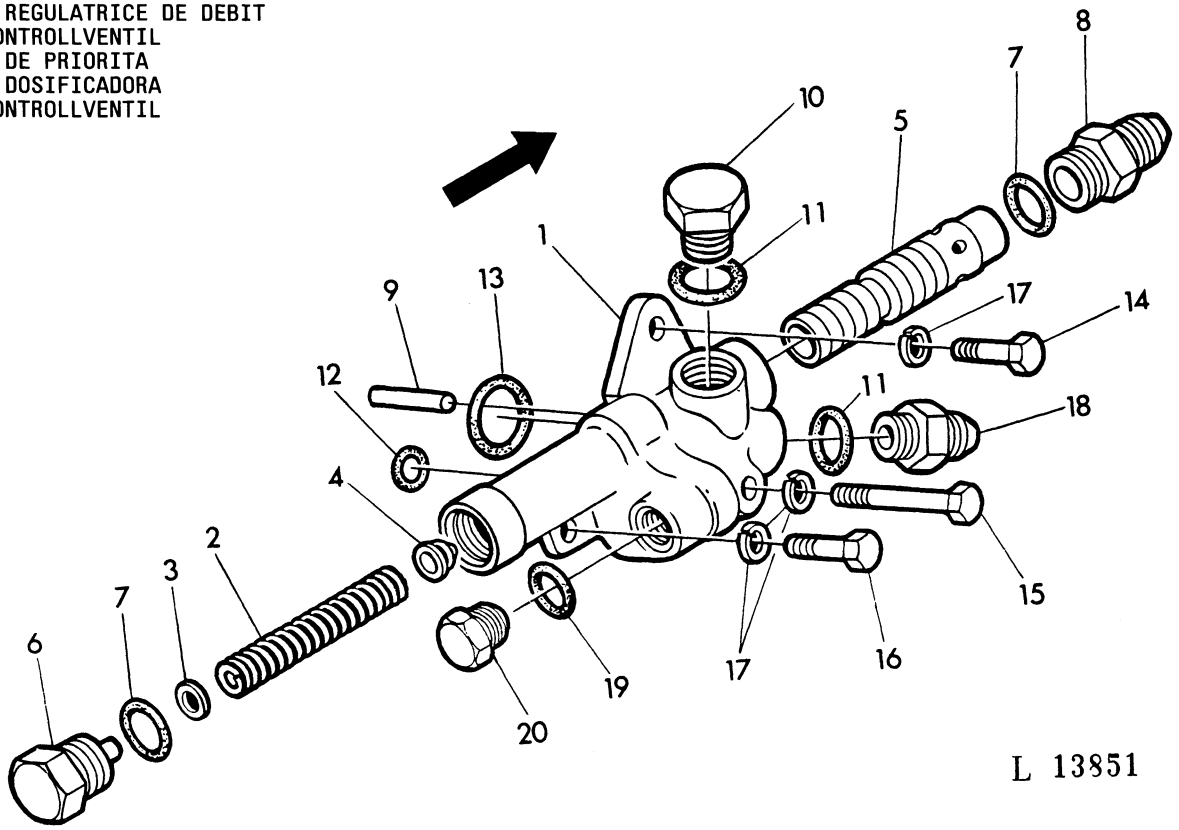

KEY	PART NO.	DESCRIPTION	QTY	SERIAL NO.	JD310	REMARKS
1	R 39323	HOUSING	1		X	
2	R 40072	SPRING	1		X	
3	24H 1283	WASHER	2		X	7/32"X1/2"X.048, SUB. FOR R33521
4	R 40562	ORIFICE	1		X	
5	L 32788	VALVE SPOOL	1	-193168	X	
	R 48528	VALVE SPOOL	1		X	
6	R 63494	PLUG	1		X	SUB. FOR AR26761
7	R 26906	O-RING	2		X	
8	T 34887	THREADED NIPPLE	1		X	7/8", 1-3/16"
9	R 39324	DOWEL PIN	1		X	
10	R 27175	PLUG	1		X	
11	F 3171R	O-RING	2		X	
12	R 28776	O-RING	1		X	
13	R 60332	O-RING	1		X	SUB. FOR U15415
14	19H 1800	CAP SCREW	1		X	3/8"X1-1/2"
15	19H 2128	CAP SCREW	1		X	3/8"X3"
16	19H 2552	CAP SCREW	1		X	3/8"X1-1/8"
17	12H 304	LOCK WASHER	3		X	3/8"
18	R 27267	FITTING	1		X	1-1/6"
19	R 26375	O-RING	1		X	
20	R 39112	PLUG	1		X	3/4"

HYDROSTATIC STEERING
DIRECTION HYDROSTATIQUE
HYDROSTATISCHE LENKUNG
STERZO IDROSTATICA
DIRECCION HIDROSTATICA
HYDROSTATISCHSTYRNING
L 31422

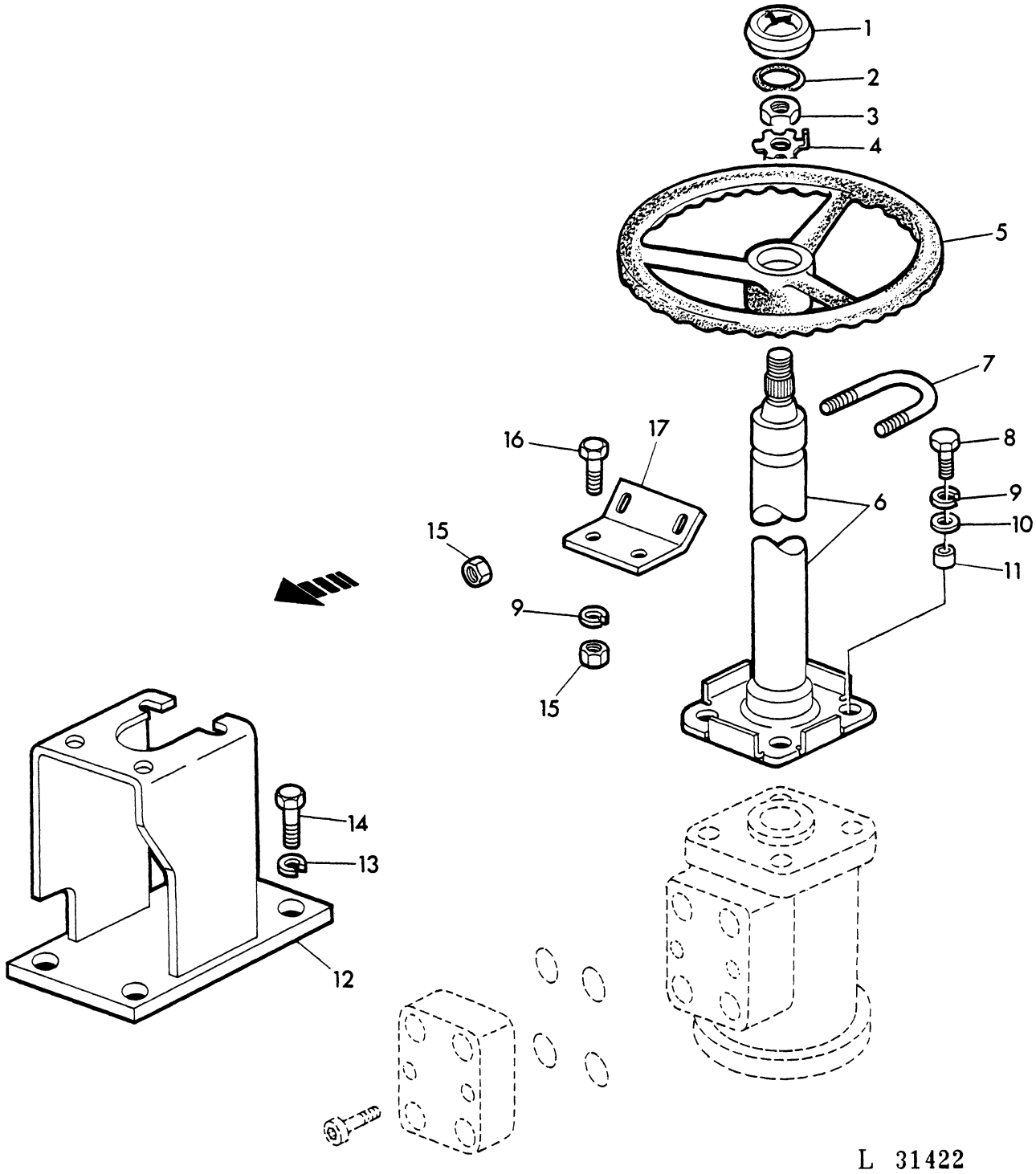

KEY	PART NO.	DESCRIPTION	QTY	SERIAL NO.	JD310	REMARKS
1	R 47998	CAP	1	248212-	X	
2	B 3690R	SEAL	1	248212-	X	
3	14M 7209	NUT	1	248212-	X	18MM
4	T 17148	LOCK WASHER	1	248212-	X	
5	AL 28457	STEERING WHEEL	1	248212-	X	SUB. FOR T22875
6	AL 30393	STEERING COLUMN	1	248212-	X	W/14M7209, SUB. FOR AL28250, AL29655
7	H 199DN	U-BOLT	1	248212-	X	
8	19H 2665	CAP SCREW	4	248212-	X	3/8"X1-5/8"
9	12H 304	LOCK WASHER	6	248212-	X	3/8"
10	24H 1305	WASHER	2	248212-	X	13/32"X13/16"X. 060"
11	L 32957	SPACER	2	248212-	X	
12	AT 46763	BRACKET	1	248212-	X	
13	12H 301	WASHER	4	248212-	X	1/2"
14	19H 2508	SCREW	4	248212-	X	1/2"X1-3/8"
15	14H 812	NUT	4	248212-	X	3/8"
16	19H 1731	SCREW	2	248212-	X	3/8X1"
17	T 48194	RETAINER	1	248212-	X	

HYDROSTATIC STEERING
DIRECTION HYDROSTATIQUE
HYDROSTATISCHE LENKUNG
STERZO IDROSTATICA
DIRECCION HIDROSTATICA
HYDROSTATISCHSTYRNING
L 13011

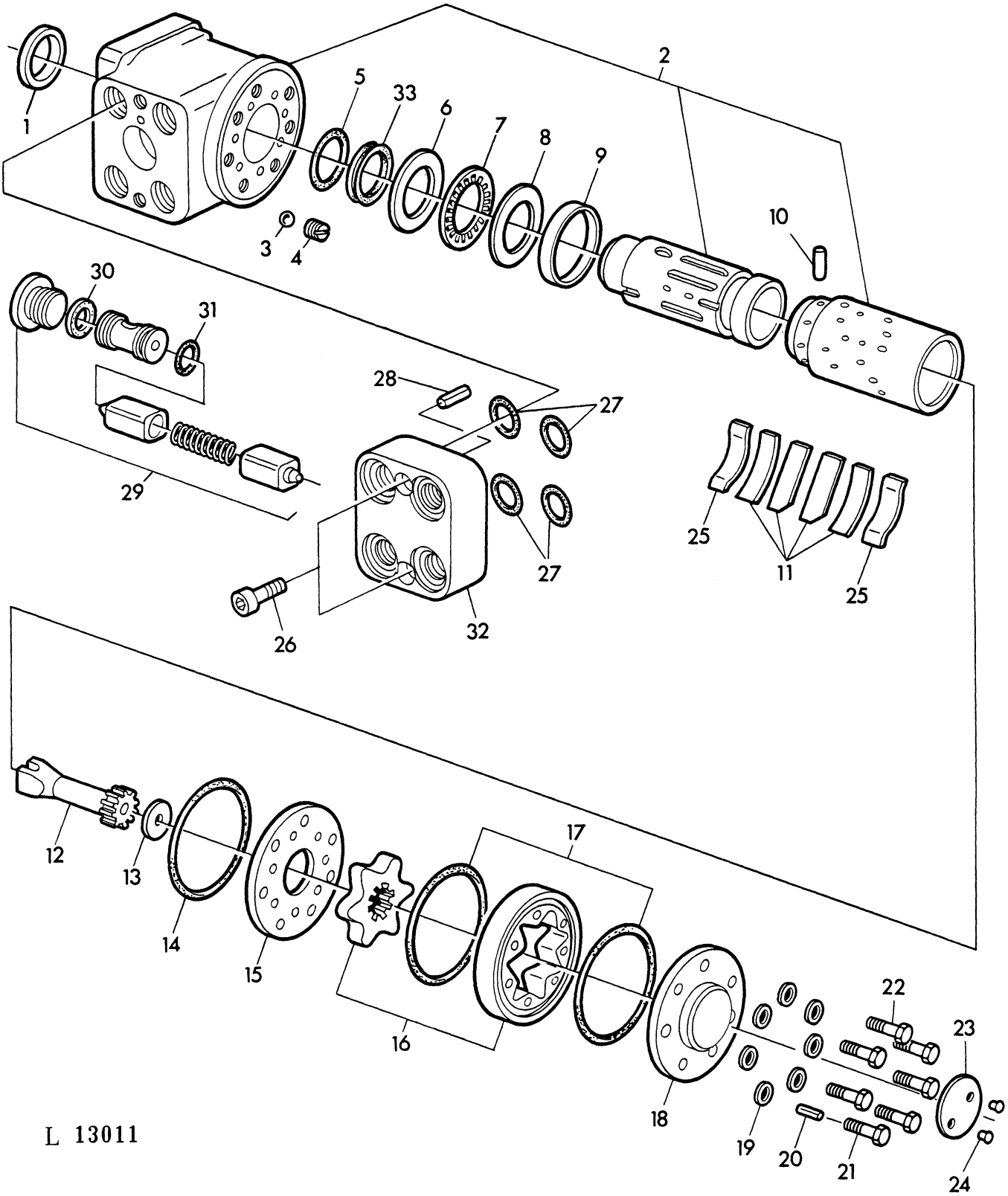

L 13011

KEY	PART NO.	DESCRIPTION	QTY	SERIAL NO.	JD310	REMARKS
1	Z 31348	SEAL	1	248212-	X	
2	AL 28271	HOUSING	1	248212-	X	
3	Z 31349	BALL	1	248212-	X	8,0MM
4	Z 31350	PIPE PLUG	1	248212-	X	
5	Z 31452	O-RING	1	248212-	X	
6	Z 31351	THRUST WASHER	1	248212-	X	
7	AZ 20006	THRUST BEARING	1	248212-	X	
8	Z 31352	THRUST WASHER	1	248212-	X	
9	Z 31353	RETAINER	1	248212-	X	
10	Z 31354	PIN	1	248212-	X	
11	L 32707	LEAF SPRING	4	248212-	X	
12	Z 31356	SHAFT	1	248212-	X	
13	L 32708	SPACER	1	248212-	X	
14	Z 31453	O-RING	1	248212-	X	
15	Z 31358	DISTRIBUTOR PLATE	1	248212-	X	
16	AL 28272	GEAR	1	248212-	X	KIT
17	Z 31454	O-RING	2	248212-	X	
18	Z 31359	COVER	1	248212-	X	
19	Z 31456	WASHER	7	248212-	X	
20	Z 31360	SPRING PIN	1	248212-	X	
21	L 32709	CAP SCREW	1	248212-	X	8X40MM
22	19M 7698	CAP SCREW	6	248212-	X	8X40MM
23	L 32710	MEDALLION	1	248212-	X	
24	Z 31364	SCREW	2	248212-	X	
25	Z 31355	LEAF SPRING	2	248212-	X	
| 26	19M 7661	SCREW	2	248212-	X	10X1X40MM, SUB. FOR L34174
| 27	L 34346	O-RING	4	248212-	X	
28	L 32725	SPRING PIN	1	248212-	X	
29	AL 28281	KIT	1	248212-	X	INCL. KEYS 30,31
30	.....	SEAL KIT	2	248212-	X	ORD AL28283
31	.....	SEAL KIT	2	248212-	X	ORD AL28283
32	AL 28251	VALVE STACK	1	248212-	X	ASSY, INCL. KEYS 26-31
33	Z 31455	BACK-UP RING	1	248212-	X	
-	AZ 20003	SEAL KIT	1	248212-	X	INCL. KEYS 1,5,14,17,19,33
-	AL 28268	VALVE	1	248212-	X	ASSY, INCL. KEYS 1-25,33
| -	AL 28282	KIT	1	248212-	X	KIT, INCL. KEYS 26,27

HYDROSTATIC STEERING / STEERING CYLINDER
DIRECTION HYDROSTATIQUE / VERIN DE DIRECTION
HYDROSTATISCHE LENKUNG / LENKZYLINDER
STERZO IDROSTATICA / CILINDRO DE STERZO
DIRECCION HIDROSTATICA / CILINDRO DE DIRECCION
HYDROSTATISCHSTYRNING / STYRNINGSCYLINDER
L 11271

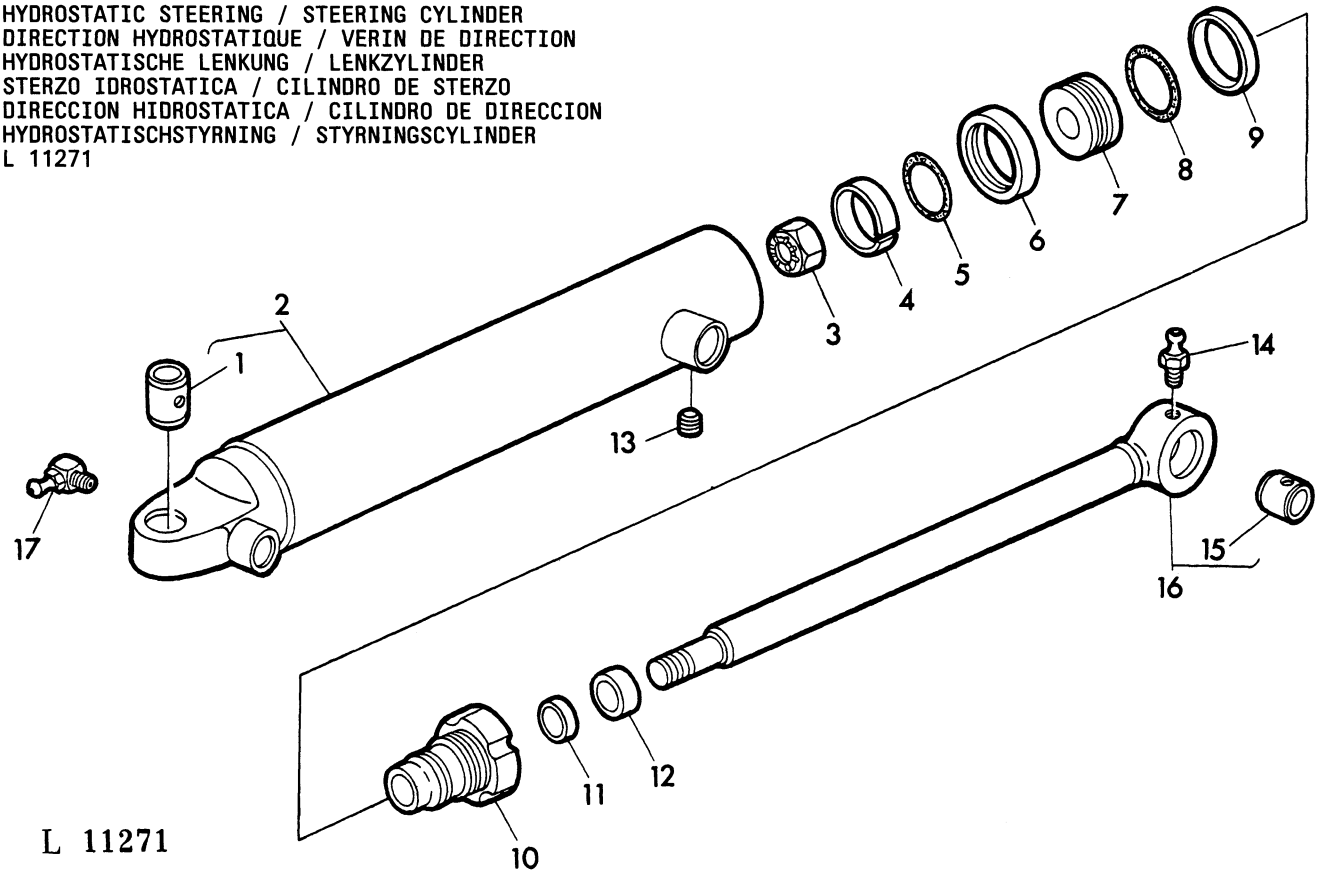

KEY	PART NO.	DESCRIPTION	QTY	SERIAL NO.	JD3110	REMARKS
1	T 48206	BUSHING	1	248212-	X	
2	AT 46769	CYLINDER	1	248212-	X	INCL. T48206
3	M 2023T	NUT	1	248212-	X	
4	T 48209	WEAR RING	1	248212-	X	
5	U 15973	O-RING	1	248212-	X	
6	T 48208	SEAL	1	248212-	X	
7	T 48207	PISTON	1	248212-	X	
8	R 31378	O-RING	1	248212-	X	
9	T 50240	BACK-UP RING	1	248212-	X	
10	T 48198	GUIDE	1	248212-	X	
11	T 48199	PACKING	1	248212-	X	
12	T 48200	SCRAPER RING	1	248212-	X	
13	22H 842	PIPE PLUG	1	248212-	X	1/4"X5/16"
14	JD 7797	LUBRICATION FITTING	1	248212-	X	1/4"
15	T 48203	BUSHING	1	248212-	X	
16	AT 46768	ROD	1	248212-	X	W/T48203
17	JD 7806	LUBRICATION FITTING	1	248212-	X	1/4"
-	AT 46766	HYDRAULIC CYLINDER	1	248212-	X	ASSY, INCL. KEYS 1-17
-	AT 51658	SEAL KIT	1	248212-	X	INCL. KEYS 4-6, 8, 9, 11, 12

HYDROSTATIC STEERING / OIL CIRCUIT
DIRECTION HYDROSTATIQUE / TUYEAUX D'HUILE
HYDROSTATISCHE LENKUNG / OELLEITUNGEN
STERZO IDROSTATICA / TUBAZIONI OLIO
DIRECCION HIDROSTATICA / TUBERIAS DE ACEITE
HYDROSTATISCHSTYRNING / OLJELEDNINGAR
L 27185

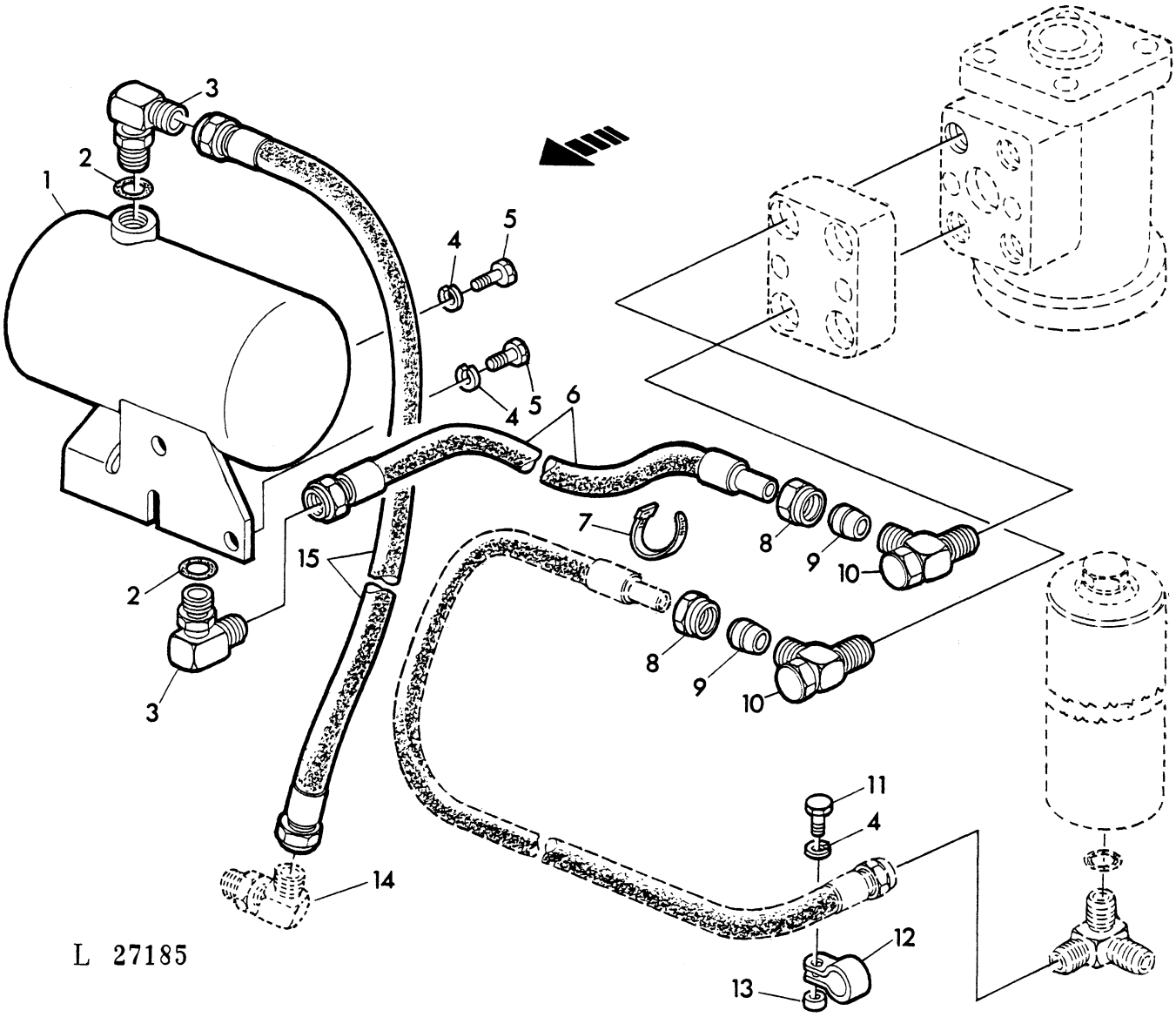

KEY	PART NO.	DESCRIPTION	QTY	SERIAL NO.	JD310	REMARKS
1	AL 28261	HYDRAULIC RESERVOIR	1	248212-	X	
2	R 26448	O-RING	2	248212-	X	
3	AR 26725	ELBOW	2	248212-	X	
4	12H 304	LOCK WASHER	3	248212-	X	3/8"
5	19H 2021	CAP SCREW	2	248212-	X	3/8X5/8"
6	AL 28255	HYDRAULIC HOSE	1	248212-	X	
7	R 44302	BAND	1	248212-	X	
8	15M 6506	NUT	2	248212-	X	
9	L 32690	NUT	2	248212-	X	
10	AL 28252	THREADED NIPPLE	2	248212-	X	
11	19H 2552	CAP SCREW	1	248212-	X	3/8"X1-1/8"
12	R 46414	CLAMP	1	248212-	X	
13	28H 860	SPACER	1	248212-	X	3/8"X3/8"
14	.....	CLAMP	1	248212-	X	(AR26725)
15	AL 28254	HYDRAULIC HOSE	1	248212-	X	

HYDROSTATIC STEERING / OIL CIRCUIT
DIRECTION HYDROSTATIQUE / TUYEAUX D'HUILE
HYDROSTATISCHE LENKUNG / OELLEITUNGEN
STERZO IDROSTATICA / TUBAZIONI OLIO
DIRECCION HIDROSTATICA / TUBERIAS DE ACEITE
HYDROSTATISCHSTYRNING / OLJELEDNINGAR
L 31420

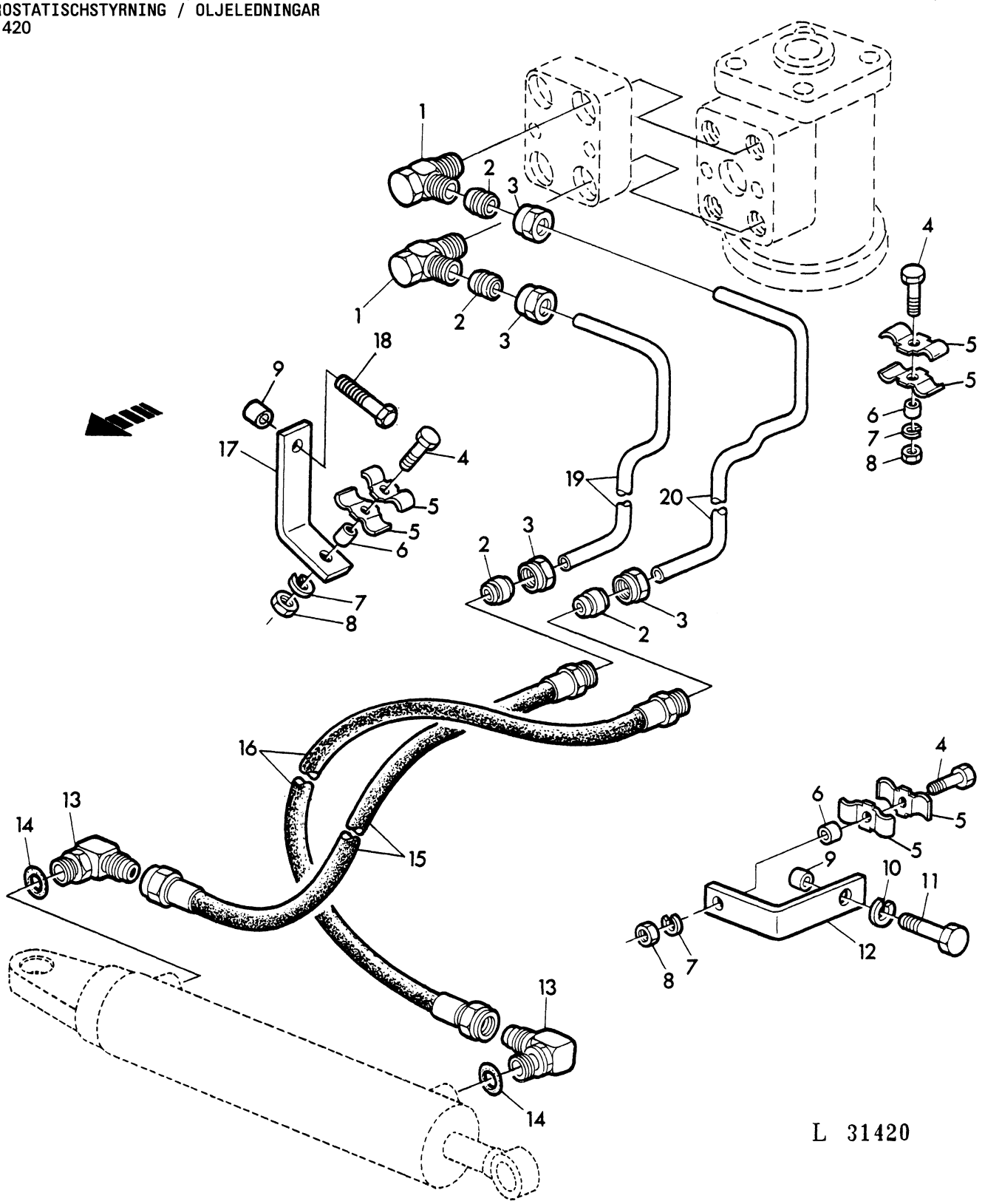

KEY	PART NO.	DESCRIPTION	QTY	SERIAL NO.	JD310	REMARKS
1	AL 28252	CONNECTOR	2	248212-	X	
2	L 32690	NUT	4	248212-	X	
3	15M 6506	NUT	4	248212-	X	
4	19H 1732	SCREW	2	248212-	X	3/8"X1-1/4"
5	R 27491	CLAMP	4	248212-	X	
6	28H 860	SPACER	2	248212-	X	3/8"X3/8"
7	12H 304	LOCK WASHER	2	248212-	X	3/8"
8	14H 812	NUT	2	248212-	X	3/8"
9	24H 1367	SPACER	2	248212-	X	21/32"X1-1/4"X.25"
10	12H 294	LOCK WASHER	1	248212-	X	5/8"
11	19H 1833	SCREW	1	248212-	X	5/8"X1-1/4"
12	L 33517	RETAINER	1	248212-	X	(A) SUB. FOR T48191
13	AR 26725	ELBOW	2	248212-	X	
14	R 26448	O-RING	2	248212-	X	
15	AL 28258	HYDRAULIC HOSE	1	248212-	X	R.H.
16	AL 28253	HYDRAULIC HOSE	1	248212-	X	L.H.
17	L 33518	RETAINER	1	248212-	X	SUB. FOR L32802
18	19H 2353	SCREW	1	248212-	X	9/16"X1"
19	AL 29000	OIL LINE	1	248212-	X	R.H. INCL. KEYS 2,3
20	AL 29654	OIL LINE	1	248212-	X	L.H. INCL. KEYS 2,3

(A) W/O OPERATOR'S CAB
SANS CABINE
OHNE KABINE
SENZA CABINA
SIN CABINA
UTAN FORARHYTT

BRAKE DISK
DISQUE DE FREIN
BREMSSCHEIBE
DISCO FRENO
DISCO DEL FRENO
BROMSLAMELL
L 31237

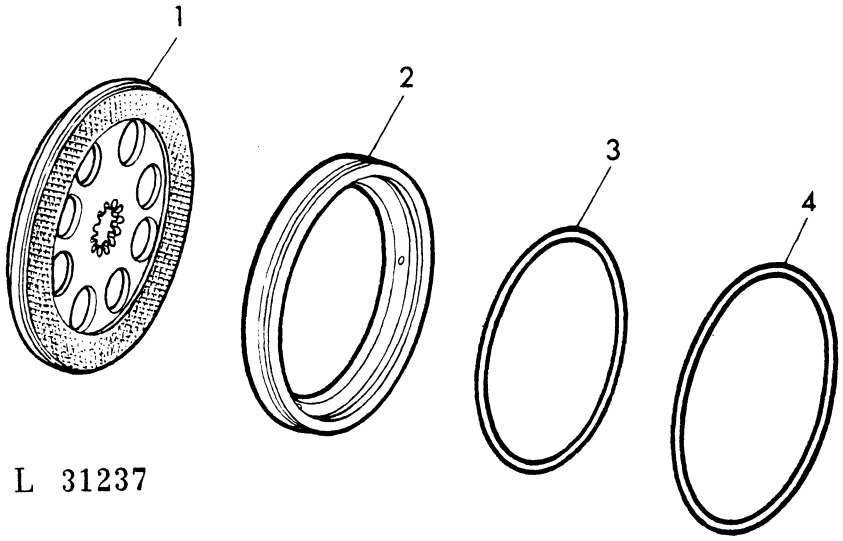

L 31237

KEY	PART NO.	DESCRIPTION	QTY	SERIAL NO.	JD310	REMARKS
1	AT 63106	BRAKE DISK	2		X	SUB. FOR AT22034, AT50338, AT58574
2	R 55774	RING	2		X	
3	R 50704	PACKING	2		X	SUB. FOR R55769
4	T 28473	PACKING	2		X	

BRAKE PEDAL
PEDALE DE FREIN
BREMSFUSSHEBEL
PEDALE FRENI
PEDAL DE FRENO
BROMSPEDAL
L 13787

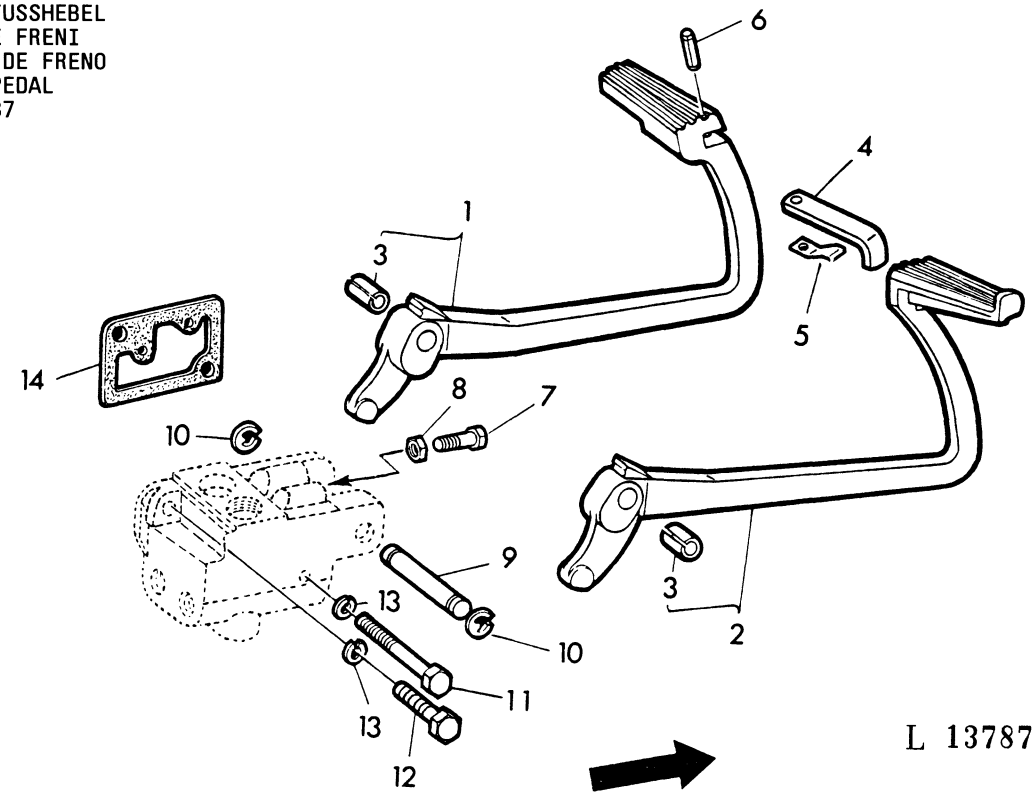

KEY	PART NO.	DESCRIPTION	QTY	SERIAL NO.	JD310	REMARKS
1	AL 24066	PEDAL	1		X	L.H. W/B177R
2	AL 24067	PEDAL	1		X	R.H. W/B177R
3	B 177R	BUSHING	2		X	
4	L 29418	STRAP	1		X	
5	T 31134	SPRING	1		X	
6	34H 312	SPRING PIN	1		X	1/4"X1"
7	L 32504	CAP SCREW	2		X	3/8"X1-1/4", SUB. FOR 19H1732
8	14H 732	NUT	2		X	3/8"
9	T 49189	PIN	1		X	SUB. FOR T21803
10	F 2863R	SNAP RING	2		X	
11	19H 2224	CAP SCREW	1		X	1/2"X4-3/4"
12	19H 2508	CAP SCREW	1		X	1/2"X1-3/8"
13	12H 301	LOCK WASHER	2		X	1/2"
14	T 33547	GASKET	1		X	

BRAKE VALVE / BRAKE OIL LINES
SOUPAPE DE FREIN / CONDUITES D'HUILE DES FREINS
BREMSVENTIL / BREMSOELLEITUNGEN
VALVOLA FRENI / TUBAZIONI OLIO FRENI
VALVULA DE MANDO DEL FRENO / TUBERIAS DE ACEITE DEL FRENO
BROMSVENTIL / BROMSOLJEDNINGAR
L 11402

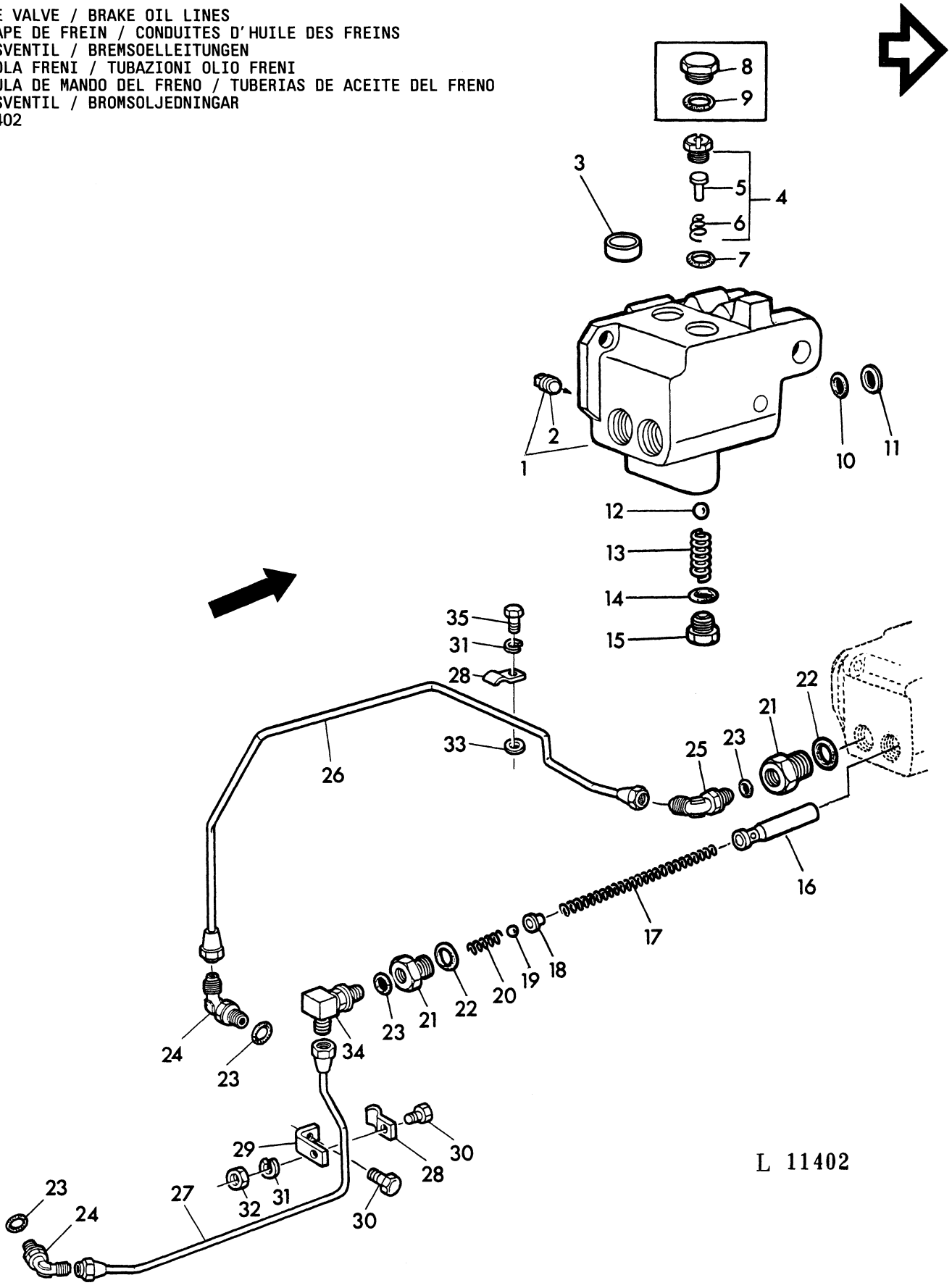

KEY	PART NO.	DESCRIPTION	QTY	SERIAL NO.	JD310	REMARKS
1	AL 24487	HOUSING	1	-185976	X	
	AL 25969	HOUSING	1	185977-	X	
2	15H 560	PIPE PLUG	1		X	1/16"
3	R 35286	PLUG	1	-185976	X	
	R 35286	PLUG	2	185977-	X	
4	AL 23836	CHECK VALVE	2		X	ASSY, INCL. KEYS 5, 6
5	.....	POPPET	1		X	NSEP, ORD AL23836
6	.....	SPRING	2		X	NSEP, ORD AL23836
7	R 26906	O-RING	2		X	
8	T 21806	PIPE PLUG	1	-185976	X	1-5/16"
9	R 29936	RING	1	-185976	X	
10	R 495R	O-RING	2		X	
11	T 22101	PACKING	2		X	
12	D 2361R	BALL	2		X	1/2"
13	T 21816	SPRING	2		X	
14	R 26375	O-RING	2		X	
15	R 39112	PLUG	2		X	3/4"
16	L 34040	PISTON	2		X	SUB. FOR R50111, L31840
17	R 50112	SPRING	2		X	
18	T 21815	GUIDE	2		X	
19	400R	BALL	2		X	1/4"
20	T 21814	SPRING	2		X	
21	R 50110	FITTING	2		X	
22	F 3171R	O-RING	2		X	
23	R 26287	O-RING	4		X	
24	AR 26746	ELBOW	3		X	3/8"
25	AT 29531	ELBOW	1		X	3/8", SUB. FOR AR35223
26	AT 37333	OIL LINE	1		X	L. H.
27	AT 32723	OIL LINE	1		X	R. H.
28	R 27528	CLAMP	1		X	
29	T 38500	BRACKET	1		X	
30	19H 1936	CAP SCREW	2		X	3/8"X3/4"
31	12H 304	LOCK WASHER	4		X	3/8"
32	14H 812	NUT	1		X	3/8"
33	24H 1304	WASHER	1		X	23/32"X13/32"X. 120"
34	AT 24652	ELBOW	1		X	
35	19H 2284	CAP SCREW	1		X	3/8"X7/8", SUB. FOR 19H1936

HANDBRAKE
FREIN A MAIN
HANDBREMSE
FRENO A MANO
FRENO DE MANO
HANDBROMS
L 13776

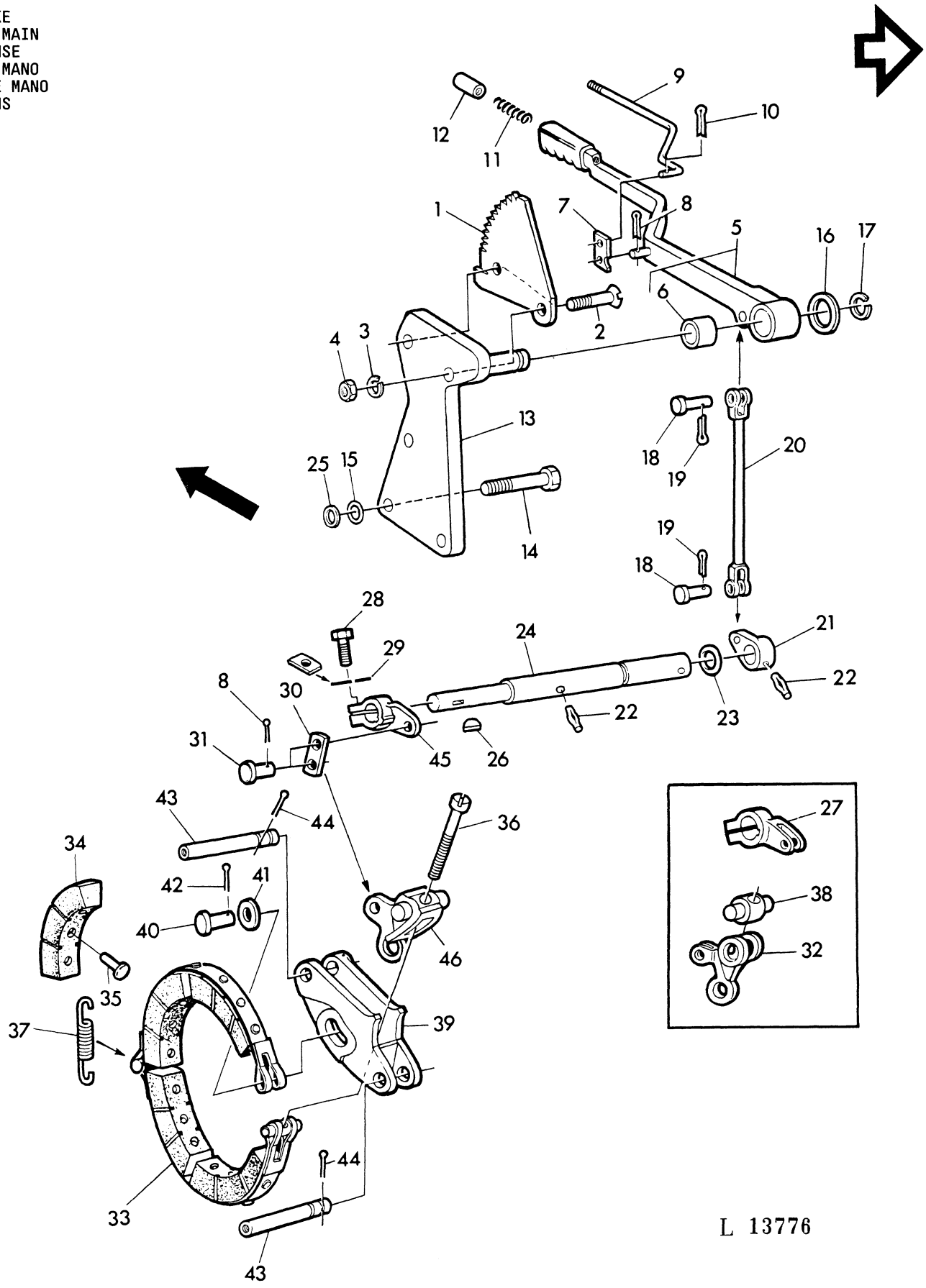

KEY	PART NO.	DESCRIPTION	QTY	SERIAL NO.	JD310	REMARKS
1	T 44560	SECTOR	1		X	
2	21H 1253	BOLT	2		X	1/2"X1-1/4"
3	12H 301	LOCK WASHER	2		X	1/2"
4	14H 809	NUT	2		X	1/2"
5	AT 43403	HANDBRAKE LEVER	1		X	W/T21998
6	T 21998	BUSHING	1		X	
7	T 21587	PAWL	1		X	
8	11H 211	COTTER PIN	3		X	1/8"X3/4"
9	T 44561	ROD	1		X	
10	11H 231	COTTER PIN	1		X	1/16"X1/2"
11	T 21576	SPRING	1		X	
12	T 21595	KNOB	1		X	
13	AT 56984	SUPPORT	1		X	SUB. FOR AT43404
14	19H 1820	CAP SCREW	2		X	1/2"X3"
15	24H 1162	WASHER	2		X	17/32"X1-1/4"X. 060"
16	24H 1451	WASHER	1		X	1-1/32"X1-3/4"X. 060"
17	A 602R	SNAP RING	1		X	
18	C 1067R	PIN	2		X	
19	11H 206	COTTER PIN	5		X	3/32"X3/4"
20	AT 43405	ROD	1		X	
21	T 44558	LEVER	1		X	
22	25H 154	GROOVE PIN	2		X	3/8"X2"
23	U 11061	O-RING	1		X	
24	T 49572	SHAFT	1		X	SUB. FOR T44557
25	24H 1272	WASHER	2		X	9/16"X1-1/4"X. 250"
26	26H 77	SHAFT KEY	1		X	3/16"X3/4"
27	T 21590	LEVER	1		X	ORD L29884, L29883(2), L32144
28	19H 2552	CAP SCREW	1		X	3/8"X1-1/8"
29	R 1888R	PLATE	1		X	
30	T 21586	STRAP	1	-208299	X	
	L 29883	STRAP	2	208300-	X	
31	F 2653R	PIN	2		X	
32	T 21771	ARM	1		X	ORD L29884, L29883(2), L32144
33	AT 19833	BRAKE BAND	1		X	ASSY, INCL. KEYS 34, 35
34	T 21583	LINING	4		X	
35	16M 7014	RIVET	12		X	
36	T 21579	SCREW	1		X	
37	T 21577	SPRING	1		X	
38	T 21589	PIN	1		X	
39	T 21772	ANCHOR	1		X	
40	T 25285	PIN	1		X	16X75X68MM
41	24H 1658	WASHER	1		X	21/32"X1"X. 060"
42	11H 236	COTTER PIN	2		X	1/8"X1"
43	T 21775	PIN	2		X	
44	11H 240	COTTER PIN	2		X	5/32"X1-1/2", SUB. FOR 11H222
45	L 32144	LEVER	1		X	
46	L 29884	ARM	1		X	

SECTIONAL INDEX
INDEX DE SECTION
GRUPPENINDEX
INDICE DELLA SEZIONE
INDICE DE SECCION
GRUPPSFORTECKNING
L 27556

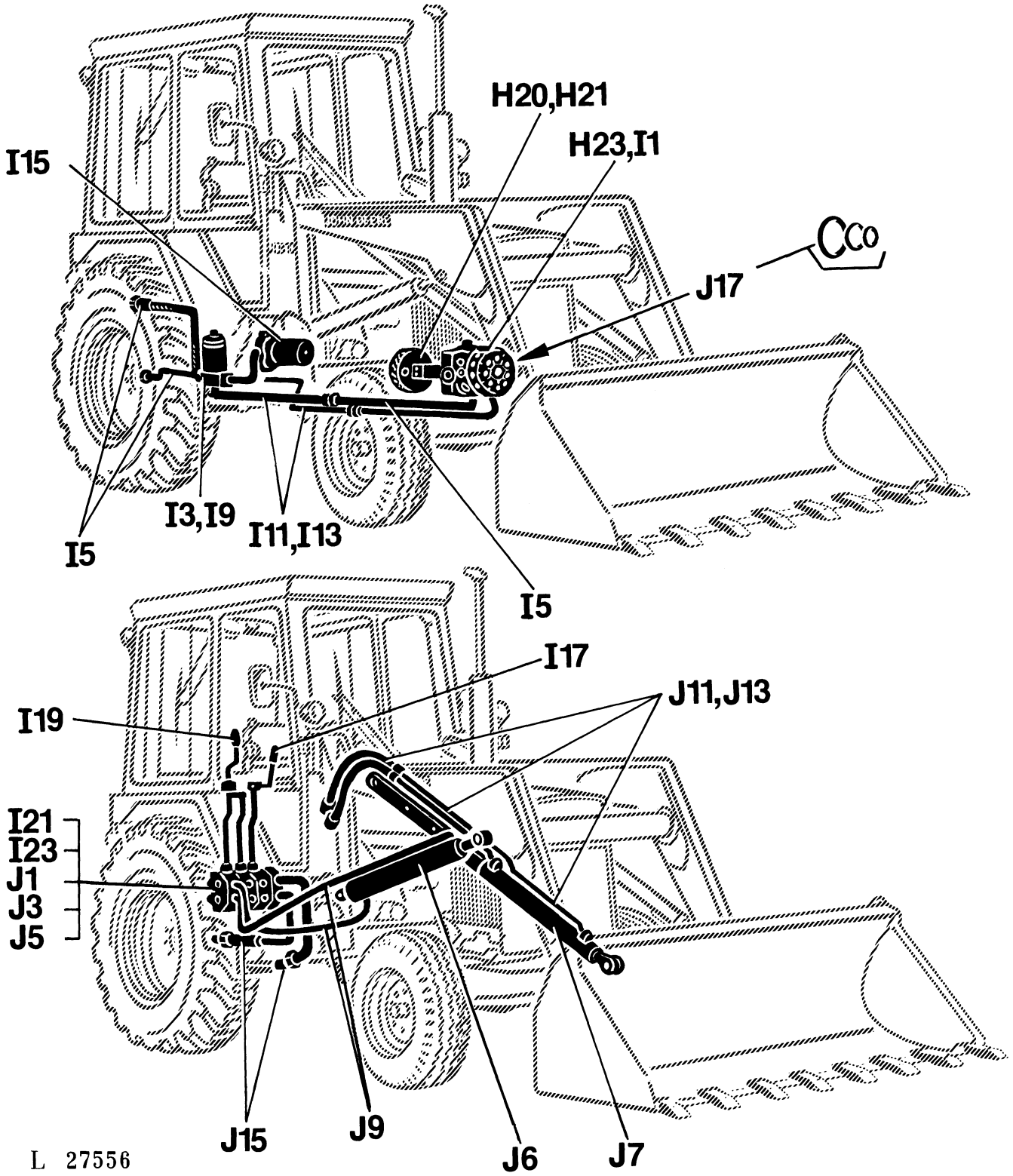

HYDRAULIC PUMP DRIVE
ELEMENTS D'ENTRAINEMENT DE LA POMPE HYDRAULIQUE
ANTRIEBSTEILE FUER HYDRAULIKPUMPE
COMANDO PER POMPA IDRAULICA
ACCIONAMIENTO BOMBA HIDRAULICA
DRIVING FOR HYDRAULPUMP
L 13788

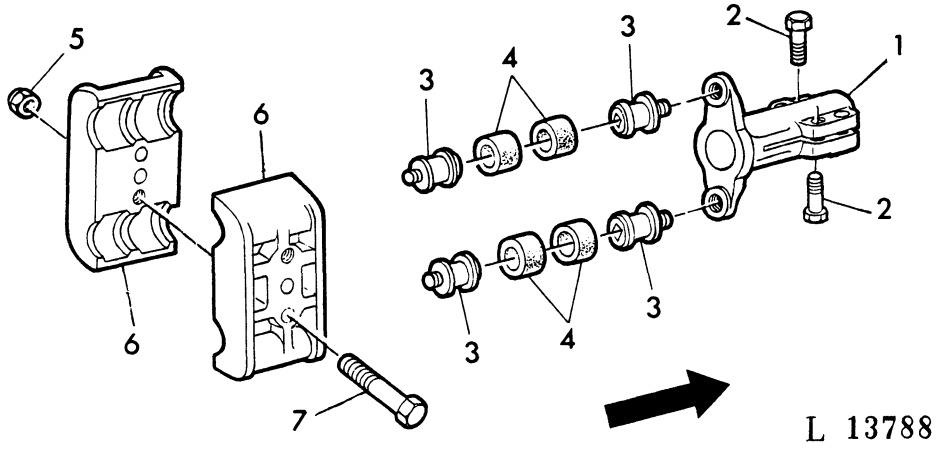

KEY	PART NO.	DESCRIPTION	QTY	SERIAL NO.	JD310	REMARKS
1	T 36523	DRIVE SHAFT	1	-235857	X	
2	19H 1732	CAP SCREW	4	-235857	X	3/8"X1-1/4"
3	R 34360	SCREW	4	-235857	X	3/8"
4	AR 49427	GROMMET	1	-235857	X	KIT, W/4, SUB. FOR AR34098
5	T 11234	LOCK NUT	2	-235857	X	3/8"
6	R 34362	DRIVER	2	-235857	X	
7	19H 2116	CAP SCREW	2	-235857	X	3/8"X2-1/2"

HYDRAULIC PUMP DRIVE
ELEMENTS D'ENTRAINEMENT DE LA POMPE HYDRAULIQUE
ANTRIEBSTEILE FUER HYDRAULIKPUMPE
COMANDO POMPA IDRAULICA
ACCIONAMIENTO BOMBA HIDRAULICA
HYDRAULPUMPENS DRIVNING
L 27136

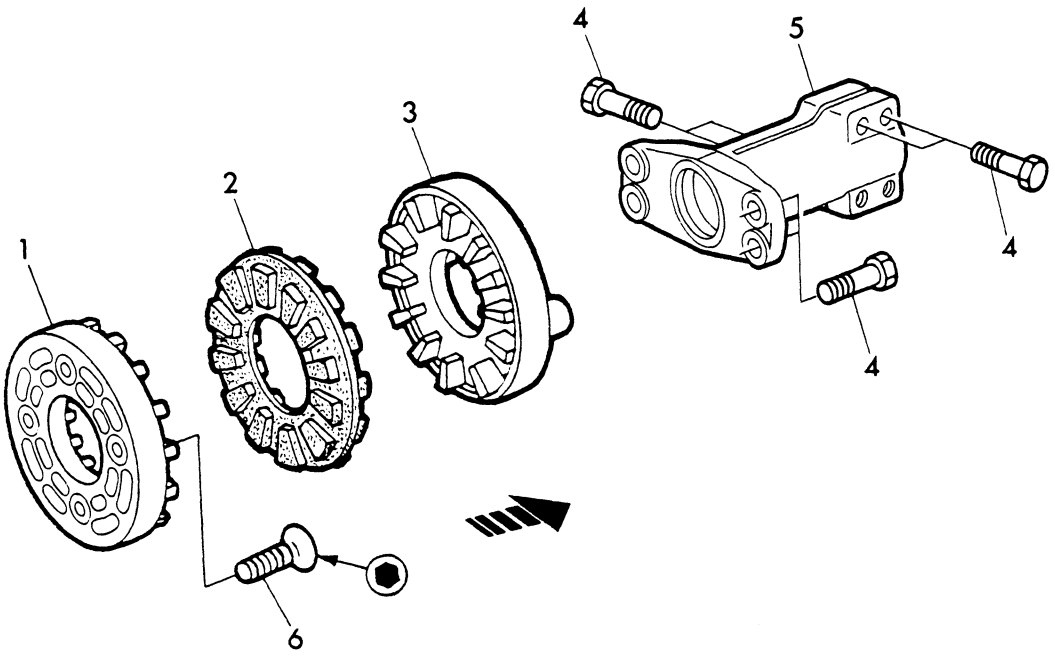

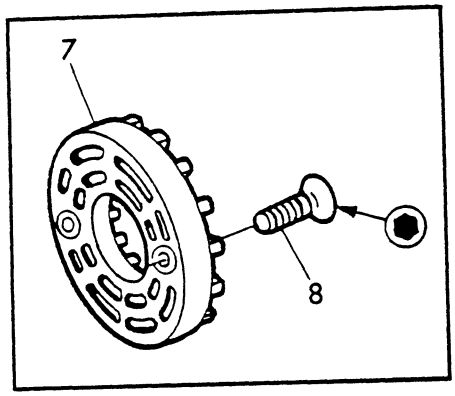

L 27136

KEY	PART NO.	DESCRIPTION	QTY	SERIAL NO.	JD310	REMARKS
1	L 34569	COUPLING	1	235858-	X	REAR
2	T 58196	DRIVER	1	235858-	X	
3	L 34432	COUPLING	1	235858-	X	FRONT, SUB. FOR T5819
4	19H 1732	CAP SCREW	AR	235858-	X	3/8"X1-1/4"
5	T 69418	DRIVE SHAFT	1	235858-	X	SUB. FOR T58193
6	L 34575	SCREW	AR	235858-	X	
7	T 58195	COUPLING	1	235858-	X	ORD L34569 W/L34575
8	T 29324	SCREW	2	235858-	X	

HYDRAULIC PUMP 49,2CM3(3.00CU-IN)
POMPE HYDRAULIQUE 49,2CM3(3.00CU-IN)
HYDRAULIKPUMPE 49,2CM3(3.00CU-IN)
POMPA IDRAULICA 49,2CM3(3.00CU-IN)
BOMBA HIDRAULICA 49,2CM3(3.00CU-IN)
HYDRAULPUMP 49,2CM3(3.00CU-IN)
L 31430

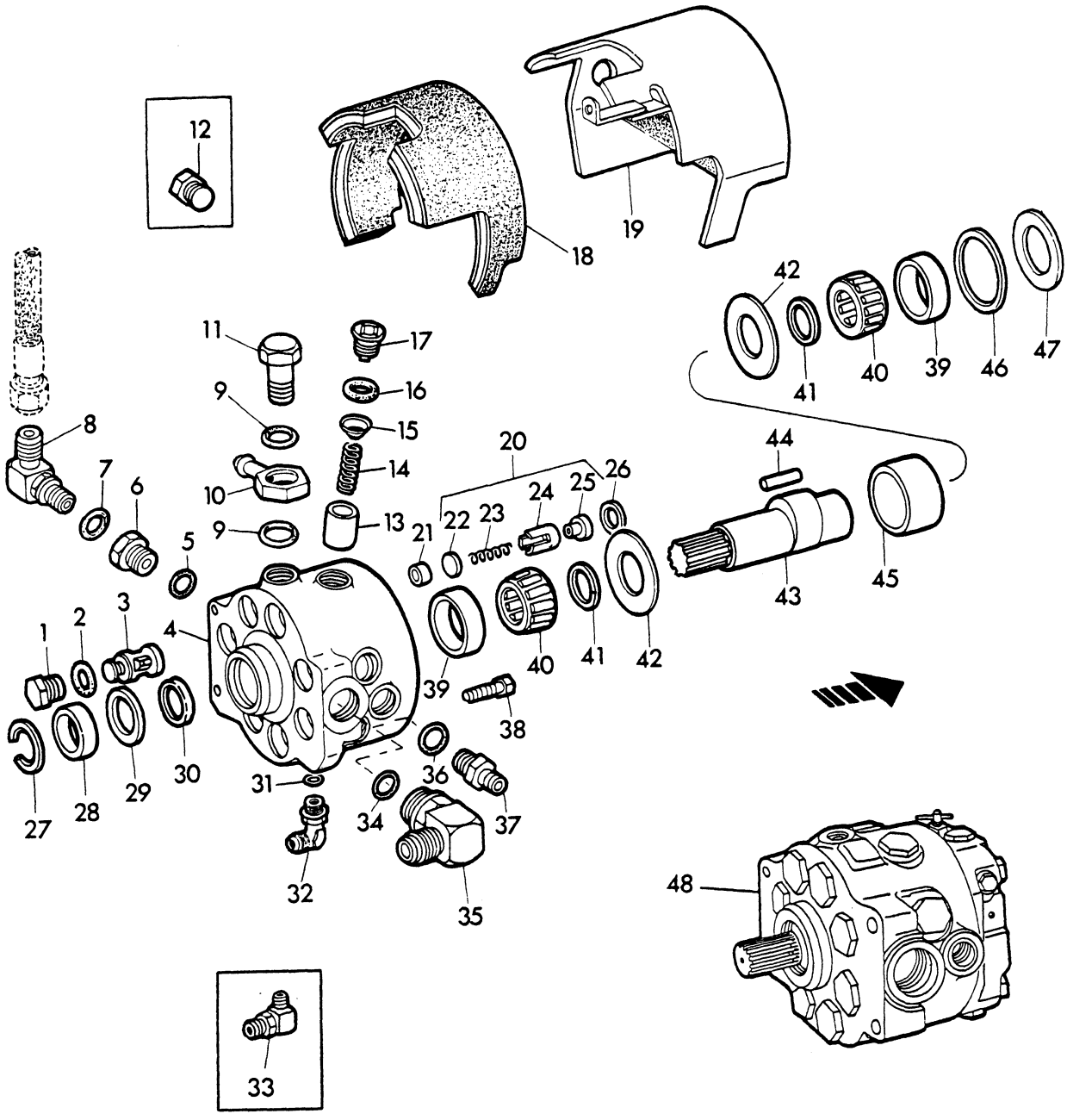

L 31430

KEY	PART NO.	DESCRIPTION	QTY	SERIAL NO.	JD310	REMARKS
1	R 51912	PLUG	8		X	SUB. FOR R44823
2	R 27149	O-RING	8		X	
3	AR 53301	INTAKE VALVE	8		X	
4	AR 47580	HOUSING	1		X	INCL. KEYS 1-3, 21 ORD W/AR52785
5	R 56751	O-RING	1		X	SUB. FOR F3171R,
6	L 32704	CONNECTOR	1	248212-	X	
7	R 26448	O-RING	1	248212-	X	
8	AR 26725	ELBOW	1	248212-	X	
9	R 27928	O-RING	2		X	
10	R 27926	HOSE FITTING	1		X	
11	R 27927	HOLLOW SCREW	1		X	
12	R 27175	PLUG	1	-248211	X	1-1/16"
13	R 27150	PISTON	8		X	
14	AR 76762	SPRING	8		X	KIT, SUB. FOR AR55186
15	R 56749	PACKING	8		X	
16	R 56463	O-RING	8		X	
	R 495R	O-RING	8		X	ORD R56463, R56749
17	R 45438	PLUG	8		X	
18	L 30957	BARRIER	1		X	(A)
19	AL 25352	GUARD	1		X	(A)
20	AR 52785	VALVE	8		X	ASSY, INCL. KEYS 22-25
21	R 39067	SEAT	8		X	
22	R 49297	DISK	8		X	
23	R 39228	SPRING	8		X	
24	R 48738	GUIDE	8		X	
25	R 49298	VALVE	8		X	
26	R 56754	PACKING	8		X	SUB. FOR R26149,
27	R 26137	SNAP RING	1		X	
28	AR 52224	SEAL	1		X	
29	R 56753	BACK-UP RING	1		X	
30	R 39729	PACKING	1		X	
31	R 26287	O-RING	1		X	
32	AT 32336	ELBOW	1		X	
33	AR 26746	ELBOW	1		X	
34	U 13639	O-RING	1		X	
35	AT 33911	ELBOW	1		X	
36	R 26906	O-RING	1		X	
37	T 34887	CONNECTOR	1		X	SUB. FOR T36102
38	19H 1805	CAP SCREW	4		X	1/2"X2-1/4"
39	JD 8223	BEARING CUP	2		X	
40	JD 8192	BEARING CONE	2		X	
41	R 34349	SPACER	2		X	
42	R 60732	THRUST WASHER	2		X	SUB. FOR R42467
43	R 34348	SHAFT	1		X	
44	R 27145	NEEDLE	36		X	
45	R 45874	BEARING RACE	1		X	
46	R 27478	SHIM	AR		X	TK=0, 15MM(.006")
	R 27479	SHIM	AR		X	TK=1, 5MM (.060")
47	R 49072	SPACER	1		X	
48	AR 56160	HYDRAULIC PUMP	1		X	ASSY, SUB. FOR AR52472
-	.....	SEAL KIT	1		X	(AR67718)

(A) FOR MACHINES WITH SOUND-PROOFING
POUR MACHINES AVEC ELEMENTS D'INSONORISATION
FUER MASCHINEN MIT SCHALLDAEMPFUNG
POR MACCHINE CON DISPOSITIVO SALVA SUONI
PARA MAQUINAS CON ELEMENTOS DE INSONORIZACION
FOR MASKINER MED LJUDABSORBENT

PUMP COVER AND VALVES
COUVERCLE DE LA POMPE ET SOUPAPES
PUMPENDECKEL UND VENTILE
COPERCHIO DELLA POMPA E VALVOLAS
TAPA DE BOMBA Y VALVULAS
PUMPKAPA OCH VENTILER
L 31431

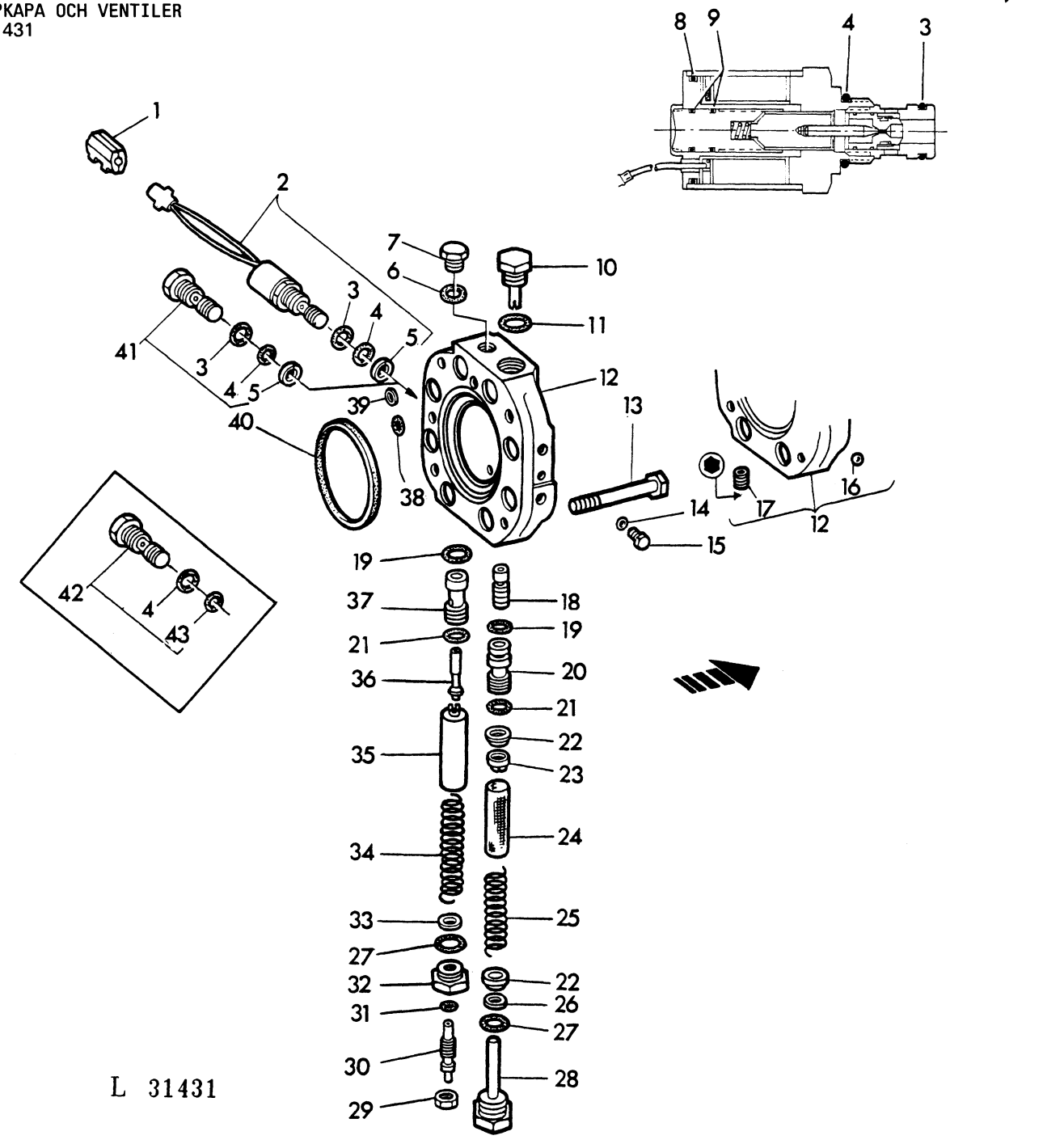

KEY	PART NO.	DESCRIPTION	QTY	SERIAL NO.	JD310	REMARKS
1	L 31124	GUARD	1		X	
2	AT 37169	VALVE	1		X	ASSY, INCL. KEYS 3-5
3	T 40308	O-RING	1		X	
4	R 26375	O-RING	1		X	
5	T 57374	BACK-UP RING	1		X	
6	R 26448	O-RING	1		X	
7	R 27218	PLUG	1		X	9/16"
8	U 11326	O-RING	1		X	
9	T 55758	O-RING	2		X	
10	AR 51745	PLUG	1		X	
11	R 26906	O-RING	1		X	
12	AR 52494	HOUSING	1		X	ASSY, INCL. KEYS 16, 17
13	19H 1945	CAP SCREW	4		X	1/2"X3-1/4"
14	R 26287	O-RING	2		X	
15	R 31631	PLUG	1		X	3/8", SUB. FOR R27216
16	R 26552	BALL	1		X	5/16"
17	15H 560	PLUG	1		X	1/16"
18	R 27172	VALVE	1		X	
19	R 27564	O-RING	2		X	
20	R 70351	SLEEVE	1		X	SUB. FOR R27476
21	R 27166	O-RING	2		X	
22	R 27174	PACKING	2		X	
23	R 27167	GUIDE	1		X	
24	R 27173	FILTER	1		X	
25	R 27159	SPRING	1		X	
26	R 27170	WASHER	3		X	
	24H 1298	WASHER	2		X	3/8"X5/8"X.030"
27	R 56751	O-RING	2		X	SUB. FOR F3171R,
28	AR 26646	PLUG	1		X	
29	14H 1021	NUT	1		X	7/16"
30	AR 52254	SET SCREW	1		X	
31	R 28782	O-RING	1		X	
32	R 28781	CONNECTOR	1		X	
33	R 48808	WASHER	1		X	
34	R 31781	SPRING	1		X	
35	R 32344	GUIDE	1		X	
36	R 70559	VALVE	1		X	SUB. FOR R27472, R65194
37	R 69262	SLEEVE	1		X	SUB. FOR R27471, R65192, ORD W/R70559
38	R 56756	O-RING	1		X	SUB. FOR A3917R,
39	R 56755	PACKING	1		X	SUB. FOR A4847R,
40	R 56757	O-RING	1		X	SUB. FOR R26621,
41	AR 90378		1		X	ASSY, INCL. KEYS 3-5 (SOLENOID TEST)
42	AR 52495	PLUG	1		X	ASSY, INCL. KEYS 4, 43
43	R 49074	O-RING	1		X	ORD AR90378 (SOLENOID TEST)
-	.....		1		X	(AR 67718)
-	AT 53556	SEAL KIT	AR		X	KIT, INCL. KEYS 3, 4, 8, 9

HYDRAULIC OIL ACCUMULATOR
ACCUMULATEUR D'HUILE HYDRAULIQUE
DRUCKOELSPEICHER
ACCUMULATORE IDRAULICO
ACCUMULADOR DE ACEITE HIDRAULICO
HYDRAUL ACKUMULATOR
L 31432

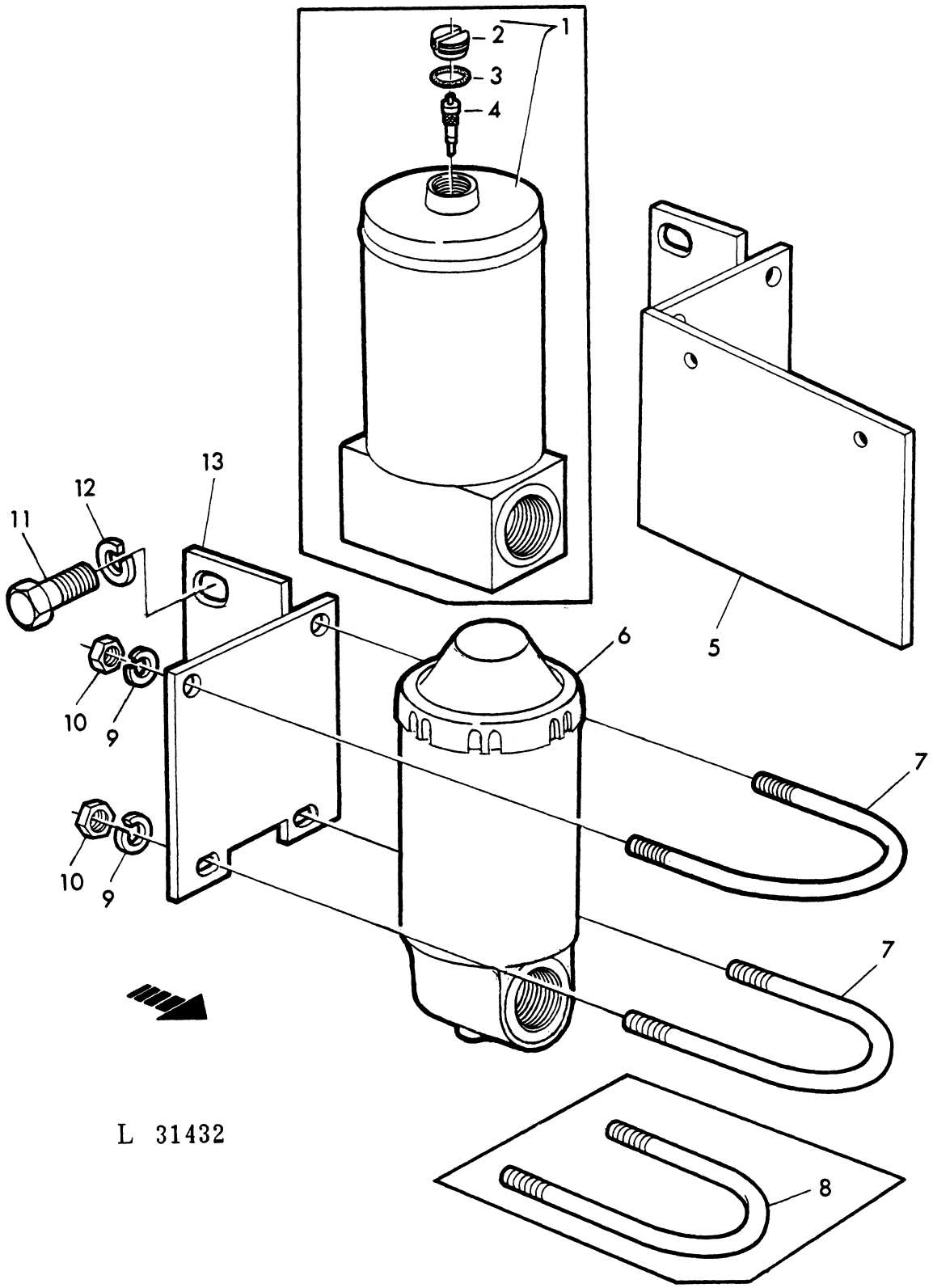

KEY	PART NO.	DESCRIPTION	QTY	SERIAL NO.	JD310	REMARKS
1	AL 28278	ACCUMULATOR	1	-193168	X	ASSY, INCL. KEYS 2-4 SUB. FOR AT43476, ORD. AT59761 W/L33898, T23717
2	T 44603	PIPE PLUG	1	-193168	X	1/2"
3	T 44604	O-RING	1	-193168	X	
4	T 44602	CHECK VALVE	1	-193168	X	
5	AL 27448	SUPPORT	1	-193168	X	(A)
	AT 44541	SUPPORT	1	-193168	X	(A)
6	AT 59761	ACCUMULATOR	1	-193168	X	ASSY, ORD. W/L33898, TT23717
7	T 23717	U-BOLT	2	-193168	X	FOR AT59761
	T 23717	U-BOLT	1	-193168	X	UP, FOR AL28278
8	T 44941	U-BOLT	1	-193168	X	LOW, FOR AL28278
9	12H 304	LOCK WASHER	4	-193168	X	3/8"
10	14H 812	NUT	4	-193168	X	3/8"
11	19H 1708	CAP SCREW	2	-193168	X	5/8"X1-3/4"
12	12H 294	LOCK WASHER	2	-193168	X	5/8"
13	AT 43475	BRACKET	1	-193168	X	

(A) FOR MACHINES WITH SOUNDPROOFING
POUR MACHINES AVEC ELEMENTS D'INSONORISATION
FUER MASCHINEN MIT SCHALLDAEMPFUNG
PER MACCHINE CON DISPOSITIVO SALVA SUONI
PARA MAQUINAS CON ELEMENTOS DE INSONORIZACION
FOR MASKINER MED LJUDABSORBENT

HYDRAULIC OIL LINES
TUYAUTERIES HYDRAULIQUES
HYDRAULIKOELLEITUNGEN
TUBAZIONI DELL'OLIO
TUBERIAS DE ACEITE HYDRAULICO
HYDRAULLEDNINGAR
L 31433

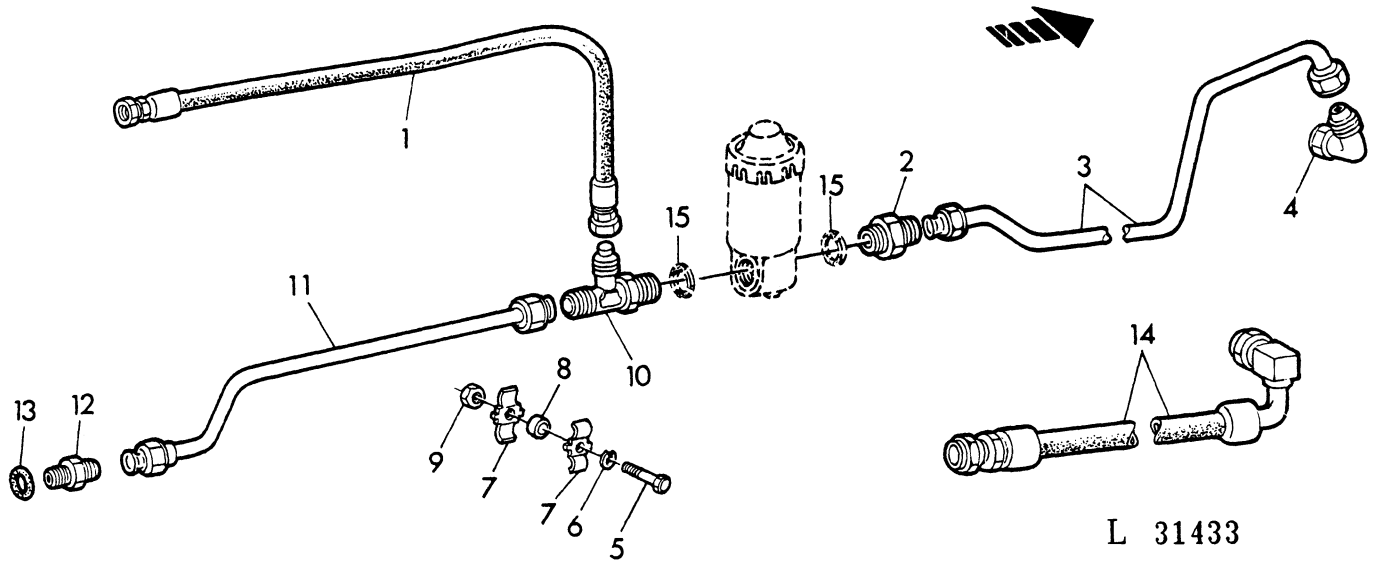

KEY	PART NO.	DESCRIPTION	QTY	SERIAL NO.	JD310	REMARKS
1	AT 58579	HYDRAULIC HOSE	1	-193168	X	1/4"X29", SUB. FOR AU41959
2	L 33898	CONNECTOR	1	-193168	X	FOR AT59761
	AT 43472	CONNECTOR	1	-193168	X	1-3/16", FOR AL28278
3	AT 43474	OIL LINE	1	-193168	X	FRONT
4	AT 33922	ELBOW	1	-193168	X	1-3/16"
5	19H 1905	CAP SCREW	1	-193168	X	5/16"X1"
6	12H 303	LOCK WASHER	1	-193168	X	5/16"
7	R 43475	CLAMP	2	-193168	X	
8	T 16172	SPACER	1	-193168	X	
9	14H 785	NUT	1	-193168	X	5/16"
10	AT 43471	TEE FITTING	1	-193168	X	1-3/16", 9/16"
11	AT 43473	OIL LINE	1	-193168	X	REAR
12	T 34887	THREADED NIPPLE	1	-193168	X	7/8", 1-3/16"
13	R 26906	O-RING	1	-193168	X	
14	AL 27504	HYDRAULIC HOSE	1	-193168	X	(A) FRONT
15	U 17409	O-RING	2	-193168	X	

(A) FOR MACHINES WITH SOUNDPROOFING
POUR MACHINES AVEC ELEMENTS D'INSONORISATION
FUER MASCHINEN MIT SCHALLDAEMPFUNG
PER MACCHINE CON DISPOSITIVO SALVA SUONI
PARA MAQUINAS CON ELEMENTOS DE INSONORIZACION
FOR MASKINER MED LJUDABSORBENT

HYDRAULIC OIL LINES
TUYAUTERIES HYDRAULIQUES
HYDRAULIKOELLEITUNGEN
TUBAZIONI DELL'OLIO
TUBERIAS DE ACEITE HYDRAULICO
HYDRAULLEDNINGAR
L 31434

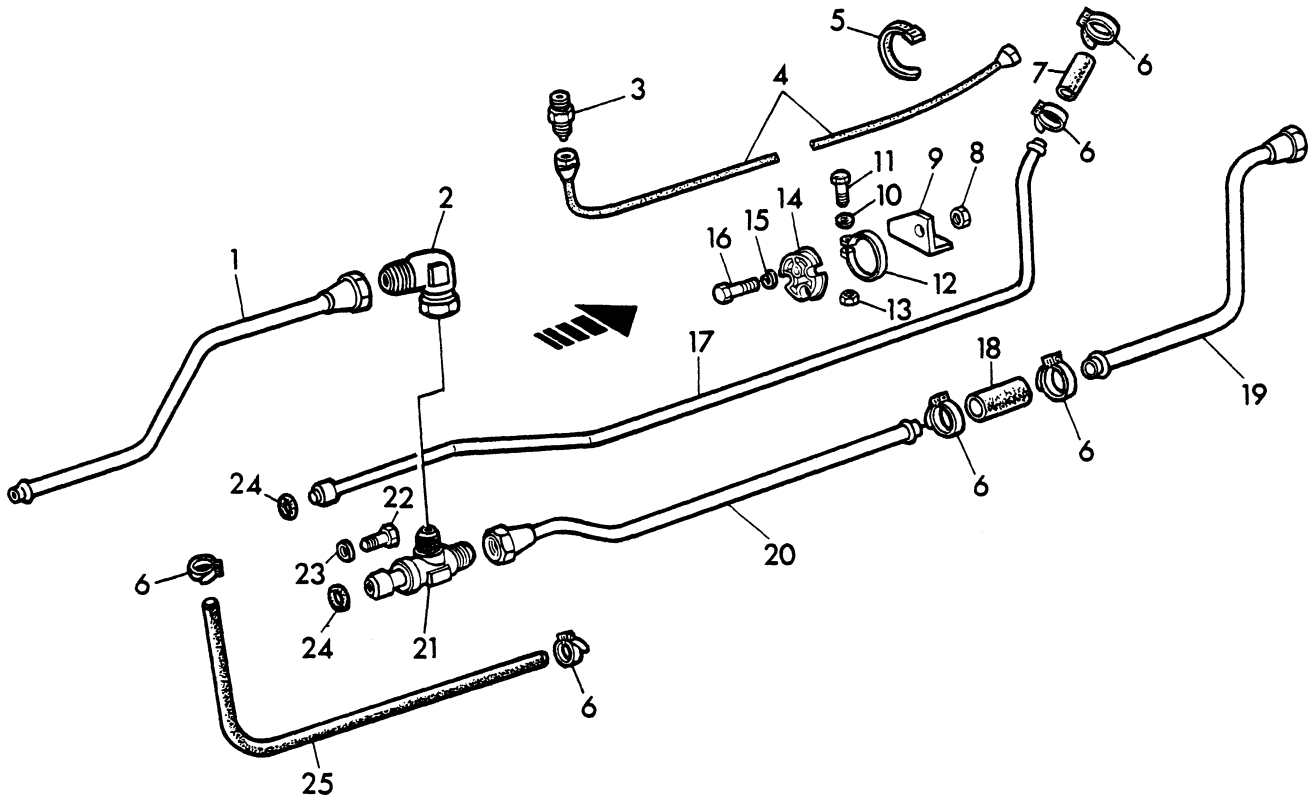

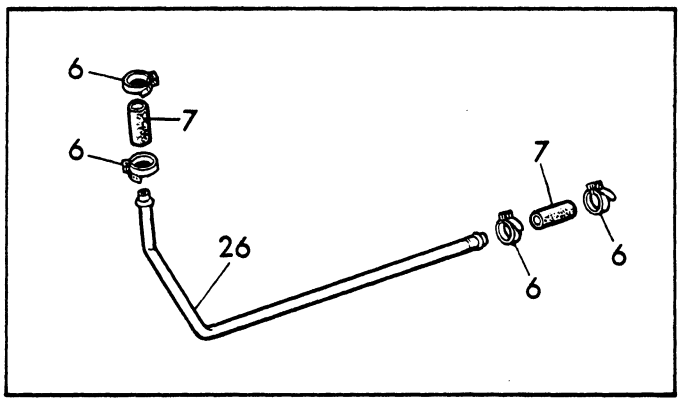

L 31434

KEY	PART NO.	DESCRIPTION	QTY	SERIAL NO.	JD310	REMARKS
1	AT 33918	OIL LINE	1		X	REAR
2	AT 33917	ELBOW	1		X	
3	R 27346	CONNECTOR	1		X	
4	AT 63378	OIL LINE	1		X	SUB. FOR AT25345, AR79710
5	R 44302	BAND	7		X	
6	AL 31992	CLAMP	AR		X	SUB. FOR H2742B
7	T 35690	HOSE	AR		X	LGTH=57MM, ORD T61939
8	14H 785	NUT	1		X	5/16"
9	T 36048	RETAINER	1		X	
	L 32548	RETAINER	1	234486-	X	(A)
10	24H 1287	WASHER	1		X	9/32"X5/8"X. 060"
11	19H 1914	CAP SCREW	1		X	1/4"X1"
12	T 36200	CLAMP	1		X	
13	14H 786	NUT	1		X	1/4"
14	T 34888	SPACER	1		X	
	L 32547	SPACER	1	234486-	X	(A)
15	12H 303	LOCK WASHER	1		X	5/16"
16	19H 1849	CAP SCREW	1		X	5/16"X1-1/4"
17	AT 34953	OIL LINE	1		X	
18	T 35691	HOSE	1		X	LGTH=76MM, ORD U11186
19	AT 34954	OIL LINE	1		X	FRONT
20	AT 33921	OIL LINE	1		X	
21	AT 33923	ADAPTER	1		X	
22	19H 1731	CAP SCREW	1		X	3/8"X1"
23	A 4231R	WASHER	1		X	
24	R 1662R	SEAL	2		X	
25	R 58921	HOSE	1		X	LGTH=565MM, SUB. FOR T60952 ORD T61939
26	T 34881	OIL LINE	1		X	ORD T60952
-	T 61939	HOSE	AR		X	LGTH=3048MM
-	U 11186	HOSE	AR		X	LGTH=3048MM

(A) FOR MACHINES WITH SOUNDPROOFING
POUR MACHINES AVEC ELEMENTS D'INSONORISATION
FUER MASCHINEN MIT SCHALLDAEMPFUNG
PER MACCHINE CON DISPOSITIVO SALVA SUONI
PARA MAQUINAS CON ELEMENTOS DE INSONORIZACION
FOR MASKINER MED LJUDABSORBENT

HYDRAULIC OIL ACCUMULATOR
ACCUMULATEUR D'HUILE HYDRAULIQUE
DRUCKOELSPEICHER
ACCUMULATORE IDRAULICO
ACCUMULADOR DE ACEITE HIDRAULICO
HYDRAUL ACKUMULATOR
L 31435

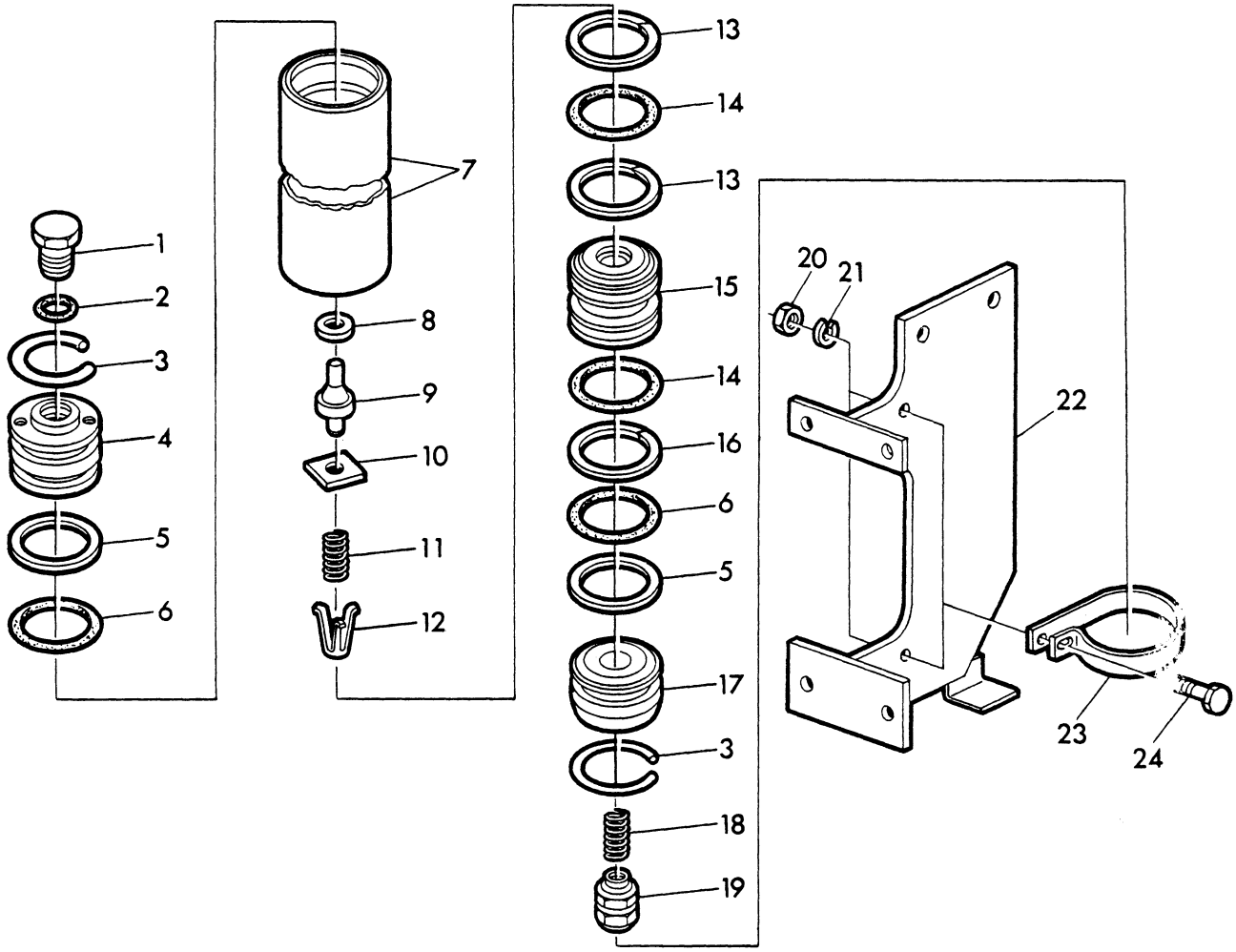

L 31435

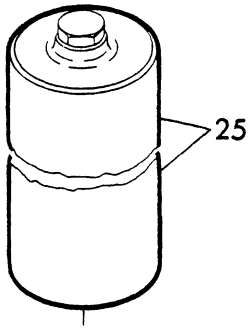

KEY	PART NO.	DESCRIPTION	QTY	SERIAL NO.	JD310	REMARKS
1	R 27094	PLUG	1	193169-	X	1/2"
2	R 26286	O-RING	1	193169-	X	
3	U 10136	SNAP RING	2	193169-	X	
4	R 48957	CAP	1	193169-	X	
5	R 35684	BACK-UP RING	2	193169-	X	
6	U 12331	O-RING	2	193169-	X	
7	R 46986	CYLINDER	1	193169-	X	
8	R 60038	PACKING	1	193169-	X	SUB. FOR R26760
9	R 47085	VALVE	1	193169-	X	
10	R 47087	WASHER	1	193169-	X	
11	R 47086	SPRING	1	193169-	X	
12	R 41877	GUIDE	1	193169-	X	
13	L 29015	BACK-UP RING	2	193169-	X	
14	A 4728R	O-RING	2	193169-	X	
15	R 57103	PISTON	1	193169-	X	
16	R 27649	BACK-UP RING	1	193169-	X	
17	R 47912	CAP	1	193169-	X	
18	R 28084	SPRING	1	193169-	X	
19	R 47913	RESTRICTOR	1	193169-	X	
20	14H 812	NUT	2	193169-	X	3/8"
21	12H 304	LOCK WASHER	2	193169-	X	3/8"
22	AL 27997	BRACKET	1	193169-	X	
23	R 35794	CLAMP	2	193169-	X	
24	19H 1732	CAP SCREW	2	193169-	X	3/8"X1-1/4"
25	AR 46054	ACCUMULATOR	1	193169-	X	ASSY, INCL. KEYS-1-17

HYDRAULIC OIL LINES
TUYAUTERIES HYDRAULIQUES
HYDRAULIKOELLEITUNGEN
TUBAZIONI DELL'OLIO
TUBERIAS DE ACEITE HIDRAULICO
HYDRAULLEDNINGAR
L 31436

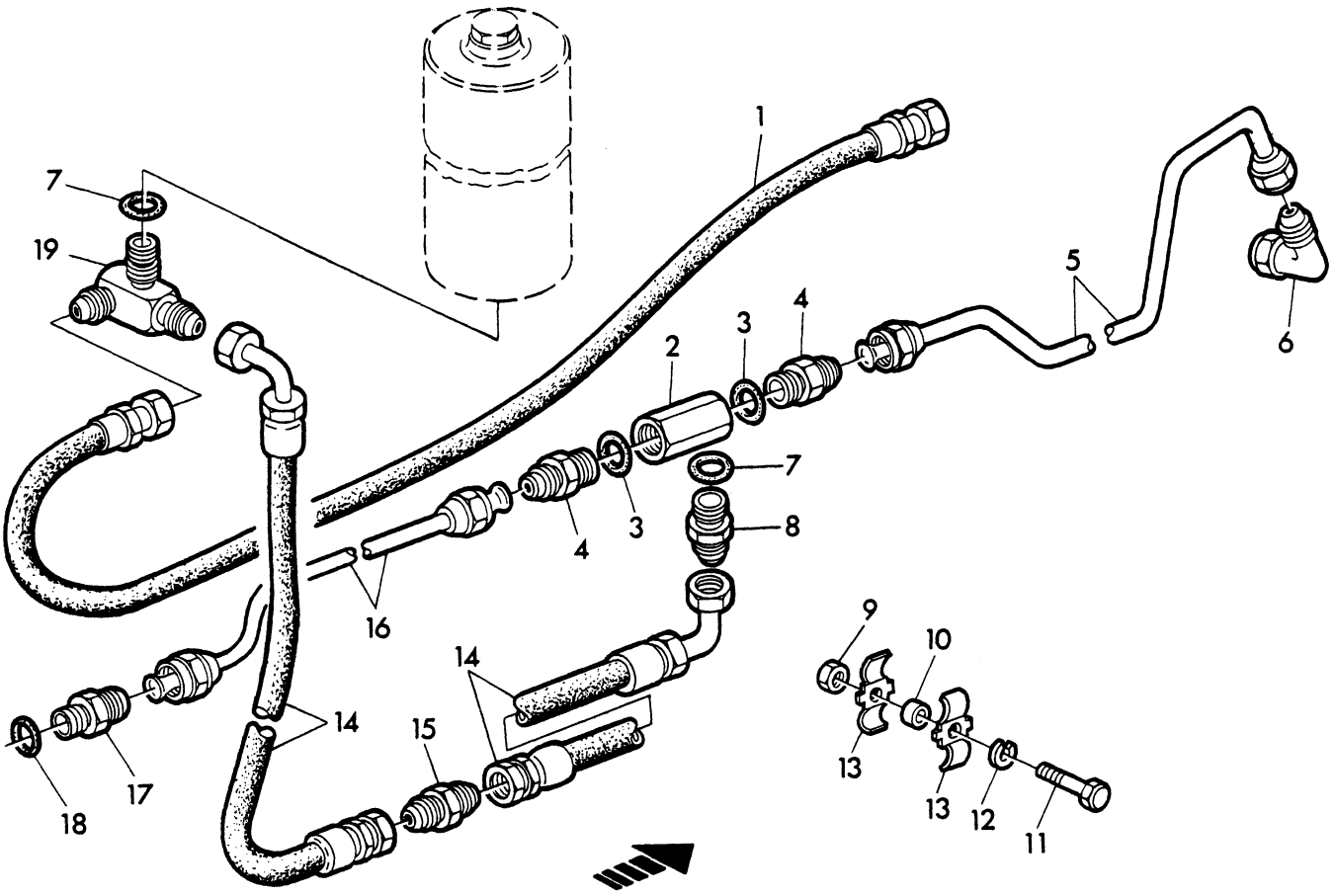

L 31436

KEY	PART NO.	DESCRIPTION	QTY	SERIAL NO.	JD310	REMARKS
1	AT 58579	HYDRAULIC HOSE	1	193169-248211	X	1/4"X29", SUB. FOR AU41959
2	L 32516	CONNECTOR	1	193169-248211	X	
3	U 17409	O-RING	2	193169-248211	X	
4	R 58774	CONNECTOR	2	193169-248211	X	SUB. FOR AT434472 ORD W/KEY 3
5	AT 43474	OIL LINE	1	193169-248211	X	FRONT
6	AT 33922	ELBOW	1	193169-248211	X	1-3/16"
7	R 26375	O-RING	2	193169-248211	X	
8	R 27237	CONNECTOR	1	193169-248211	X	3/4"
9	14H 785		1	193169-248211	X	5/16"
10	28H 1514	SPACER	1	193169-248211	X	SUB. FOR T16172
11	19H 1905	CAP SCREW	1	193169-248211	X	5/16X1"
12	12H 303	LOCK WASHER	1	193169-248211	X	5/16"
13	R 43475	CLAMP	2	193169-248211	X	
14	AT 38634	HYDRAULIC HOSE	2	193169-248211	X	
15	R 34063	CONNECTOR	1	193169-248211	X	
16	AT 43473	OIL LINE	1	193169-248211	X	REAR
17	T 34887	CONNECTOR	1	193169-248211	X	7/8", 1-3/16"
18	R 26906	O-RING	1	193169-248211	X	
19	AR 32665	FITTING	1	193169-248211	X	

HYDRAULIC OIL LINES
TUYAUTERIES HYDRAULIQUES
HYDRAULIKOELLEITUNGEN
TUBAZIONI DELL'OLIO
TUBERIAS DE ACEITE HIDRAULICO
HYDRAULLEDNINGAR
L 31437

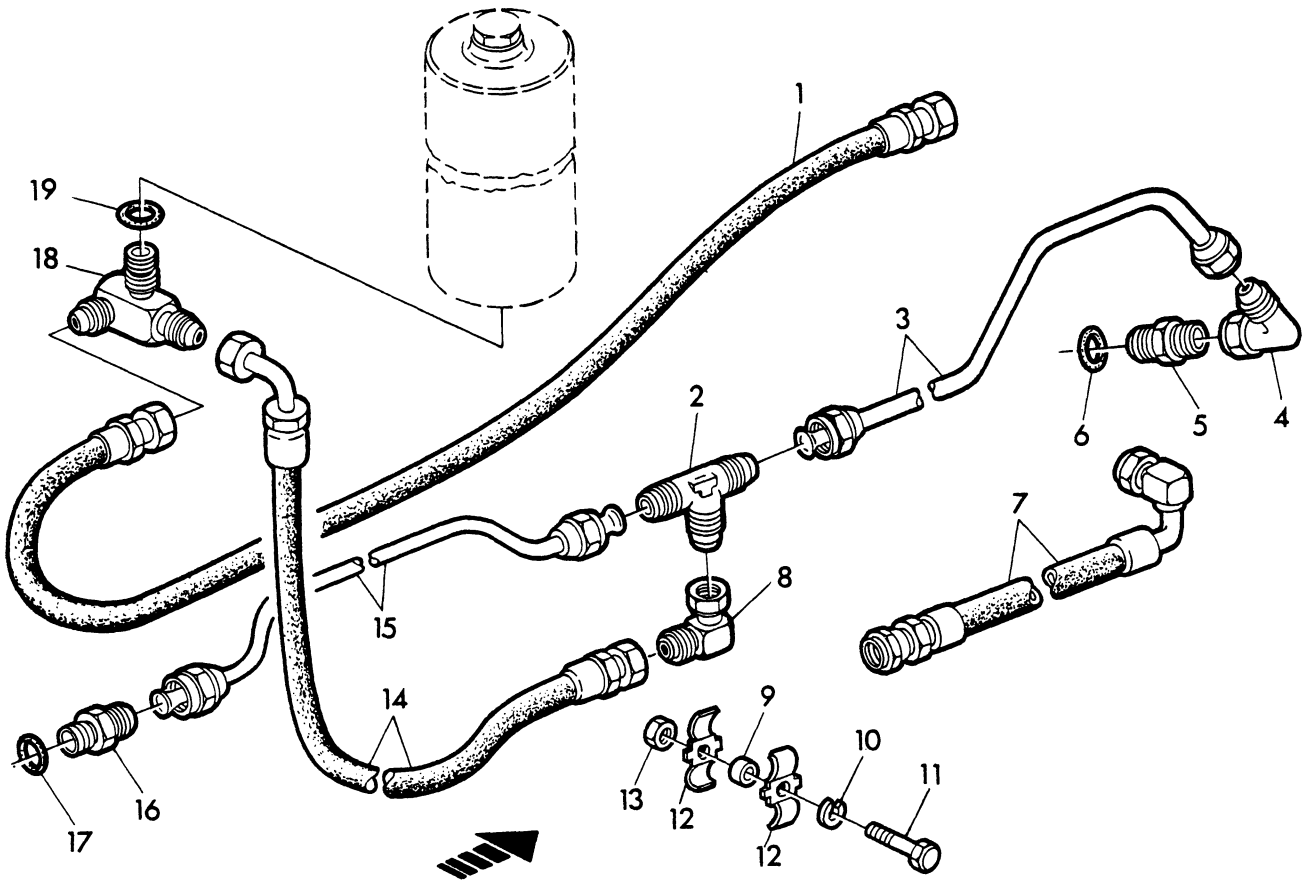

L 31437

KEY	PART NO.	DESCRIPTION	QTY	SERIAL NO.	JD310	REMARKS
1	AL 28256	HYDRAULIC HOSE	1	248212-	X	
2	T 34889	TEE FITTING	1	248212-	X	
3	AT 34952	OIL LINE	1	248212-	X	FRONT
4	AT 33922	ELBOW	1	248212-	X	1"-3/16"
5	T 34882	CONNECTOR	1	248212-	X	
6	F 3171R	O-RING	1	248212-	X	
7	AL 28040	HYDRAULIC HOSE	1	248212-	X	(A)FRONT
8	AH 75164	ELBOW	1	248212-	X	
9	28H 1514	SPACER	1	248212-	X	SUB. FOR T16172
10	12H 303	LOCK WASHER	1	248212-	X	5/16"
11	19H 1905	CAP SCREW	1	248212-	X	5/16"X1"
12	R 43475	CLAMP	2	248212-	X	
13	14H 785	NUT	1	248212-	X	5/16"
14	AL 27998	HYDRAULIC HOSE	1	248212-	X	
15	AT 33920	OIL LINE	1	248212-	X	REAR
16	T 34887	CONNECTOR	1	248212-	X	7/8",1-3/16"
17	R 26906	O-RING	1	248212-	X	
18	AR 32665	FITTING	1	248212-	X	
19	R 26375	O-RING	1	248212-	X	

(A) FOR MACHINES WITH SOUNDPROOFING
POUR MACHINES AVEC ELEMENTS D'INSONORISATION
FUER MASCHINEN MIT SCHALLDAEMPFUNG
PER MACCHINE CON DISPOSITIVO SALVA SUONI
PARA MAQUINAS CON ELEMENTOS DE INSONORIZACION
FOR MASKINER MED LJUDABSORBENT

HYDRAULIC OIL FILTER / RELIEF VALVE
FILTRE A HUILE HYDRAULIQUE / CLAPET DE DECHARGE
HYDRAULIKOELFILTER / UEBERDRUCKVENTIL
FILTRO OLIO IDRAULICO / VALVOLA DI SOVRAPRESSIONE
FILTRO DE ACEITE HIDRAULICO / VALVULA DE SEGURIDAD
HYDRAULOLJEFILTER / OVERSTROMNINGSVENTIL
L 13793

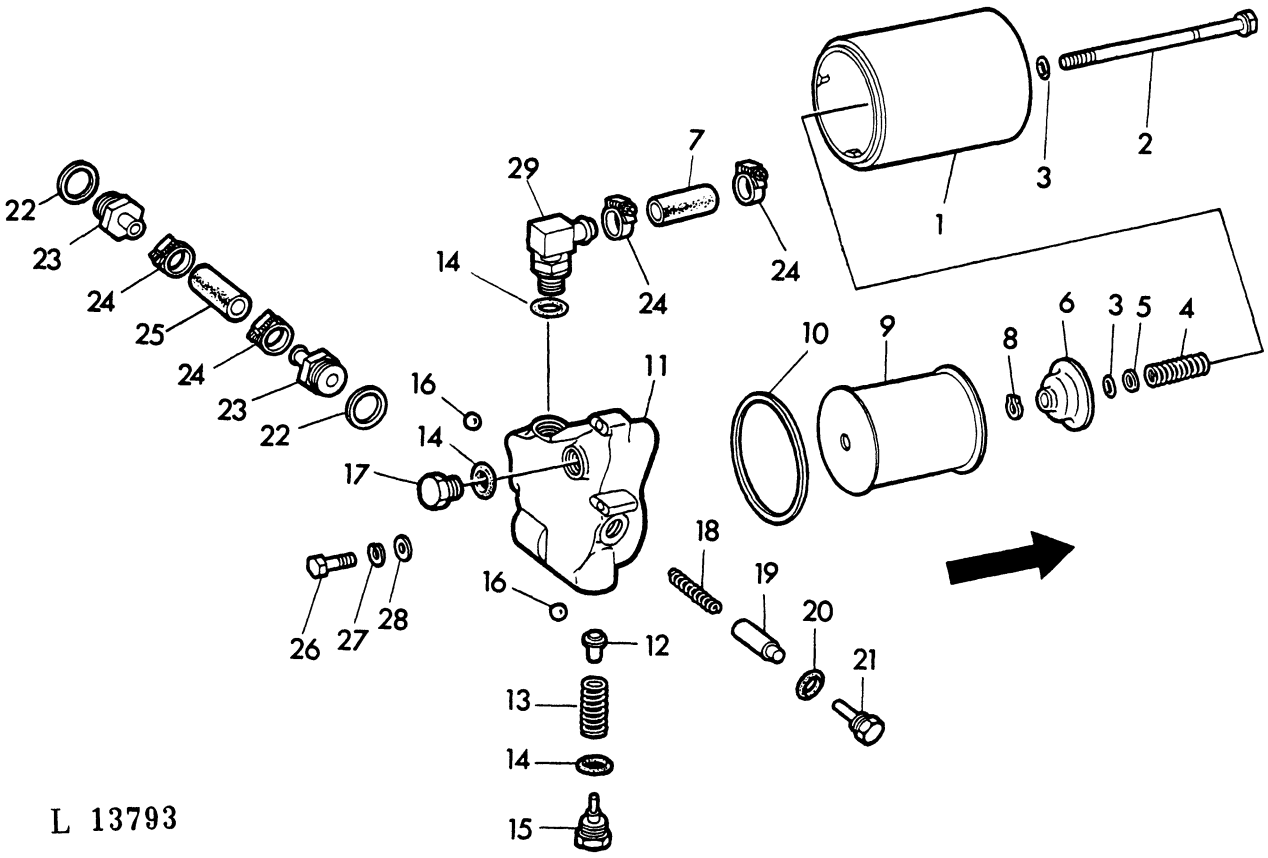

KEY	PART NO.	DESCRIPTION	QTY	SERIAL NO.	JD310	REMARKS
1	R 39798	COVER	1		X	
2	L 29253	CAP SCREW	1		X	1/2"
3	R 394R	O-RING	2		X	
4	L 29252	SPRING	1		X	
5	24H 1227	WASHER	1		X	17/32"X13/16"X.060"
6	L 29251	RETAINER	1		X	
7	T 35691	HOSE	1		X	1"X3"
8	R 32507	SNAP RING	1		X	
9	AT 34670	FILTER ELEMENT	1		X	
10	R 34733	GASKET	1		X	
11	AT 27078	HOUSING	1		X	W/M886T
12	R 40976	VALVE	1		X	
13	R 30776	SPRING	1		X	
14	F 3171R	O-RING	4		X	
15	AT 26171	PLUG	1		X	
16	M 886T	BALL	2		X	
17	R 27175	PLUG	2		X	1-1/16"
18	T 27992	SPRING	1		X	
19	R 33162	VALVE	1		X	
20	R 26906	O-RING	1		X	
21	AT 26172	PLUG	1		X	
22	A 4808R	WASHER	2		X	
23	T 38460	UNION FITTING	2		X	
24	AL 31992	CLAMP	4		X	SUB. FOR AR21839
25	T 38461	HOSE	1		X	LGTH=86MM, ORD U11186
26	19H 1732	CAP SCREW	2		X	3/8"X1-1/4"
27	12H 304	LOCK WASHER	2		X	3/8"
28	24H 1303	WASHER	2		X	13/32"X11/16"X.060"
29	AT 33916	UNION FITTING	1		X	
-	U 11186	HOSE	AR		X	LGTH=3048MM

CONTROL LEVER - MULTI-PUPOSE BUCKET
LEVIER DE COMMANDE - BENNE UNIVERSELLE
STEUERHEBEL - MEHRZWECKSCHAUFEL
LEVA DI COMANDO - BENNA UNIVERSALE
PALANCA DE MANDO - CUCHARA UNIVERSAL
MANOVERSPAK - KOMBINATIONSSKOPA
L 13083

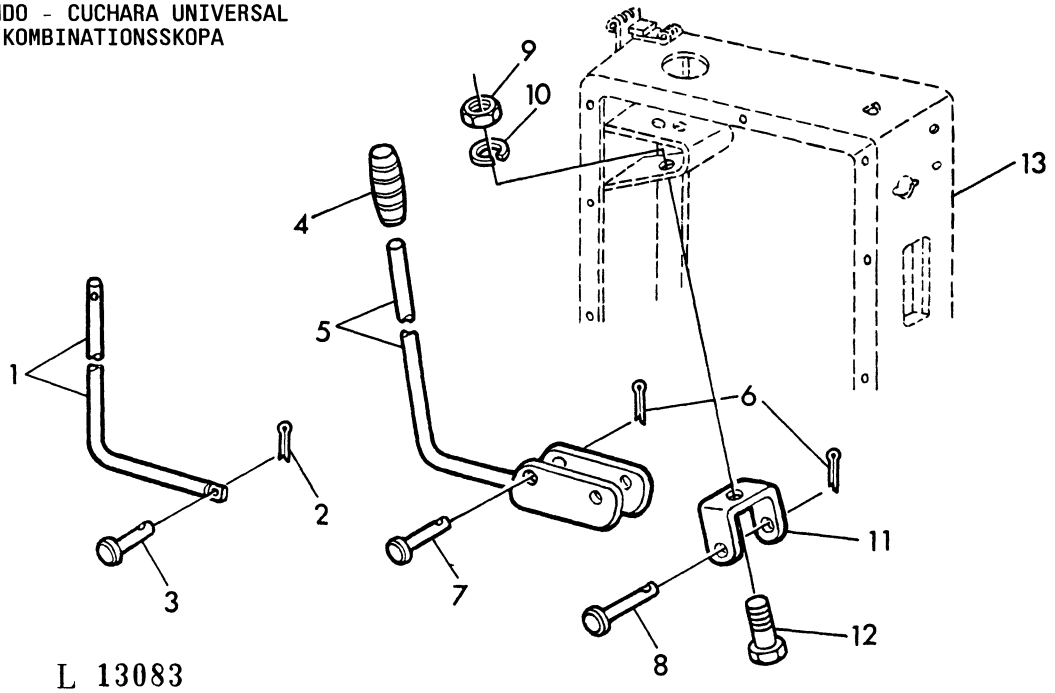

L 13083

KEY	PART NO.	DESCRIPTION	QTY	SERIAL NO.	JD310	REMARKS
1	T 39374	ROD	1		X	
2	11H 206	COTTER PIN	1		X	3/32"X3/4"
3	U 11004	PIN	1		X	
4	U 43703	GRIP	1		X	
5	AT 38159	LEVER	1		X	
6	11H 211	COTTER PIN	2		X	1/8"X3/4"
7	N 31296	PIN	1		X	
8	U 11001	PIN	1		X	
9	14H 812	NUT	1		X	3/8"
10	12H 304	LOCK WASHER	1		X	3/8"
11	T 39375	RETAINER	1		X	
12	19H 1936	CAP SCREW	1		X	3/8"X3/4"
13	.....	BOX	1		X	(AL25588)

LOADER - CONTROL LEVER WITH CONTROL LINKAGE
CHARGEUR - LEVIER ET TRINGLERIE DE COMMANDE
LADER - BEDIENUNGSHEBEL MIT STEUERGESTAENGE
CARICATORE - LEVA DI COMANDO CON ASTE DI COMANDO
CARGADOR - PALANCA DE MANDO CON VARILLAJE
LASTARE - MANOVERSPAK MED KONTROLLANKAGE
L 13772

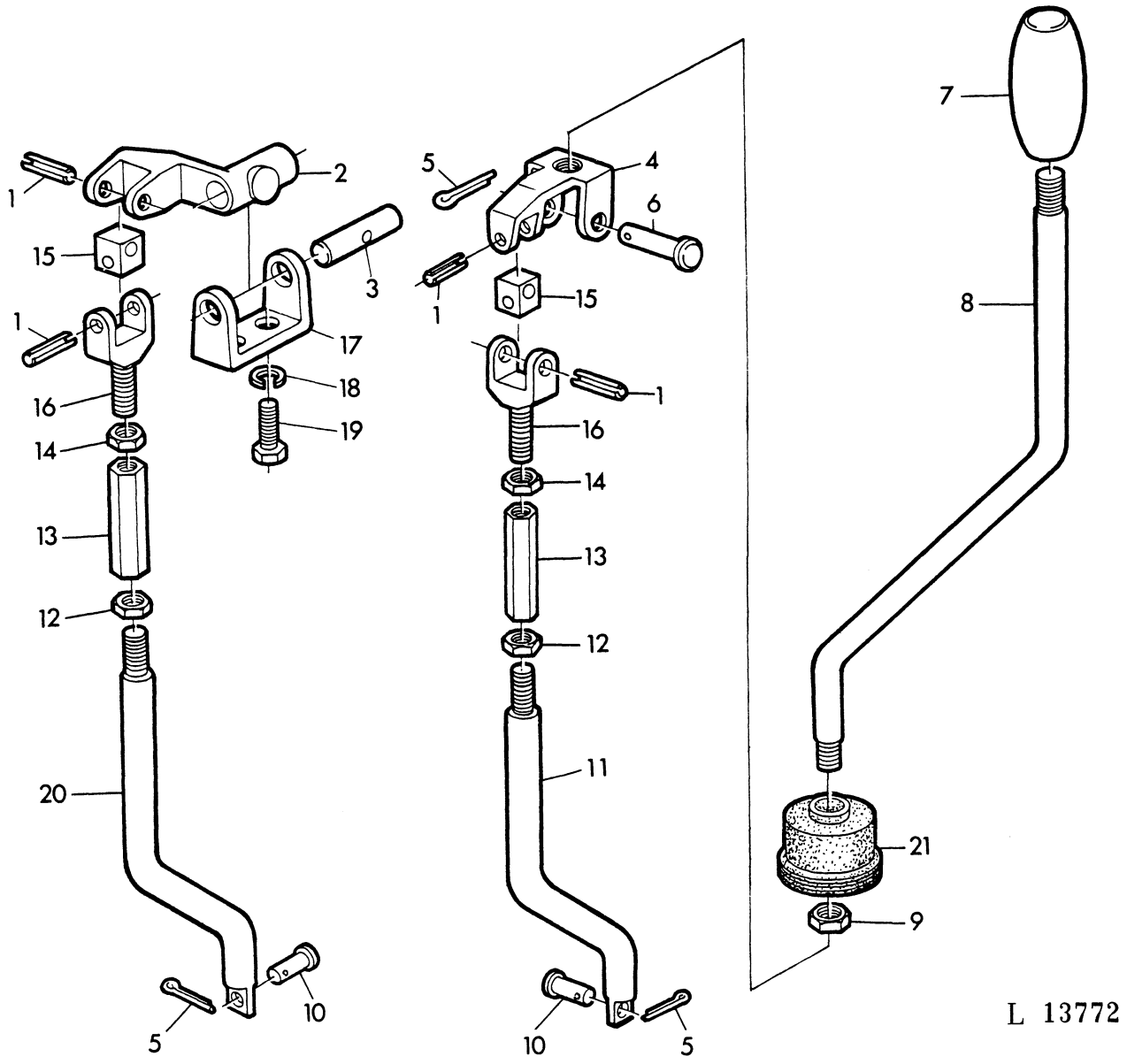

KEY	PART NO.	DESCRIPTION	QTY	SERIAL NO.	JD310	REMARKS
1	34H 330	SPRING PIN	4		X	5/16"X1-3/8"
2	U 10895	ARM	1		X	
3	U 11000	PIN	1		X	
4	U 10897	ARM	1		X	
5	11H 211	COTTER PIN	3		X	1/8"X3/4"
6	U 11001	PIN	1		X	
7	U 43703	GRIP	1		X	
8	T 33980	LEVER	1		X	
9	14H 821	NUT	1		X	5/8"
10	U 11004	PIN	2		X	
11	T 33982	ROD	1		X	
12	14H 881	NUT	2		X	1/2"
13	T 10400	THREADED NIPPLE	2		X	
14	14H 856	NUT	2		X	1/2"
15	U 11003	UNIVERSAL JOINT	2		X	
16	T 33979	YOKE	2		X	
17	U 15097	RETAINER	1		X	
18	12H 304	LOCK WASHER	2		X	3/8"
19	19H 2021	CAP SCREW	2		X	3/8"X5/8"
20	T 33981	ROD	1		X	
21	T 36272	BOOT	1		X	

LOADER - CONTROL VALVE
CHARGEUR - DISTRIBUTEUR MULTIELEMENT
LADER - STEUERGERAET
CARICATORE - DISTRIBUTORE
CARGADOR - VALVULA DE MANDO
LASTARE - MANOVERVENTIL
L 13051

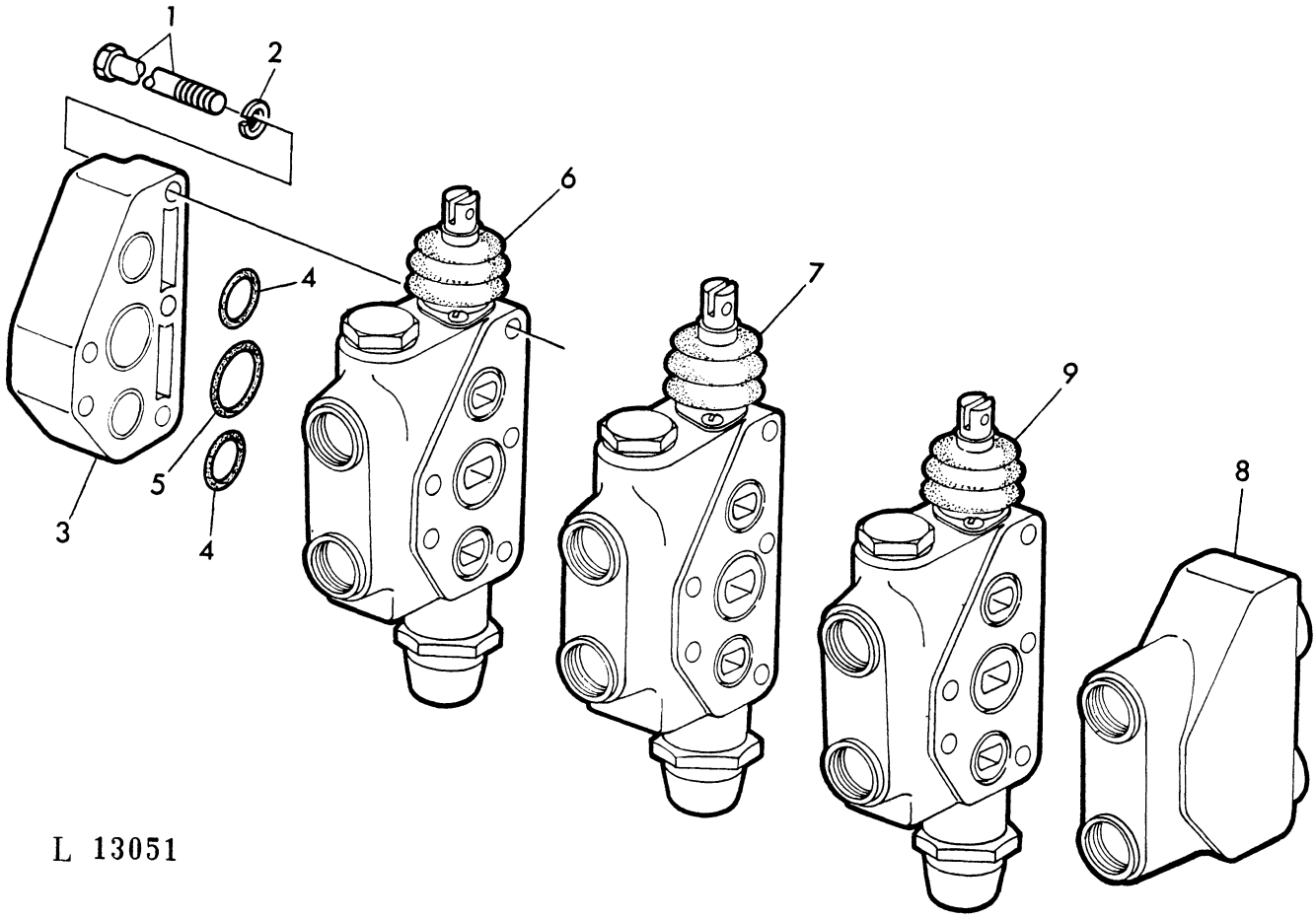

L 13051

KEY	PART NO.	DESCRIPTION	QTY	SERIAL NO.	JD310	REMARKS
1	19H 2853	CAP SCREW	5		X	(A)5-16"X5-14"
	T 38454	CAP SCREW	5		X	(B)
2	12H 303	LOCK WASHER	5		X	5/16"
3	T 30939	PLATE	1		X	
4	U 11326	O-RING	6		X	(A)
	U 11326	O-RING	8		X	(B)
5	U 15415	O-RING	3		X	(A)
	U 15415	O-RING	4		X	(B)
6	AT 29938	VALVE	1		X	ASSY,
7	AT 29939	VALVE	1		X	ASSY,
8	T 30938	PLATE	1		X	
9	AT 36808	VALVE	1		X	(B)ASSY,
-	AT 29662	VALVE	1		X	ASSY, INCL. KEYS 1-8
-	AT 29942	KIT	1		X	INCL. AT29943, AT29941(2)
-	AT 29943		1		X	INCL. U11326 (6), U15415(3)

(A) WITHOUT MULTI-PURPOSE BUCKET
SANS BENNE UNIVERSELLE
OHNE MEHRZWECKSCHAUFEL
SENZA BENNA UNIVERSALE
SIN CUCHARA UNIVERSAL
UTAN KOMBINATIONSSKOPA

(B) WITH MULTI-PURPOSE BUCKET
AVEC BENNE UNIVERSELLE
MIT MEHRZWECKSCHAUFEL
CON BENNA UNIVERSALE
CON CUCHARA UNIVERSAL
MED KOMBINATIONSSKOPA

BUCKET CONTROL VALVE(MULTI-PURPOSE BUCKET)
ELEMENT DE COMMANDE DE LA BENNE(BENNE UNIVERSELLE)
STEUERGERAET FUER LADESCHAUFEL(MEHRZWECKSCHAUFEL)
DISTRIBUTORE PER BENNA(BENNA UNIVERSALE)
VALVULA DE CONTROL DE LA CUCHARA(CUCHARA UNIVERSAL)
MANOVERVENTIL FOR SKOPA(KOMBINATIONSSKOPA)
L 31438

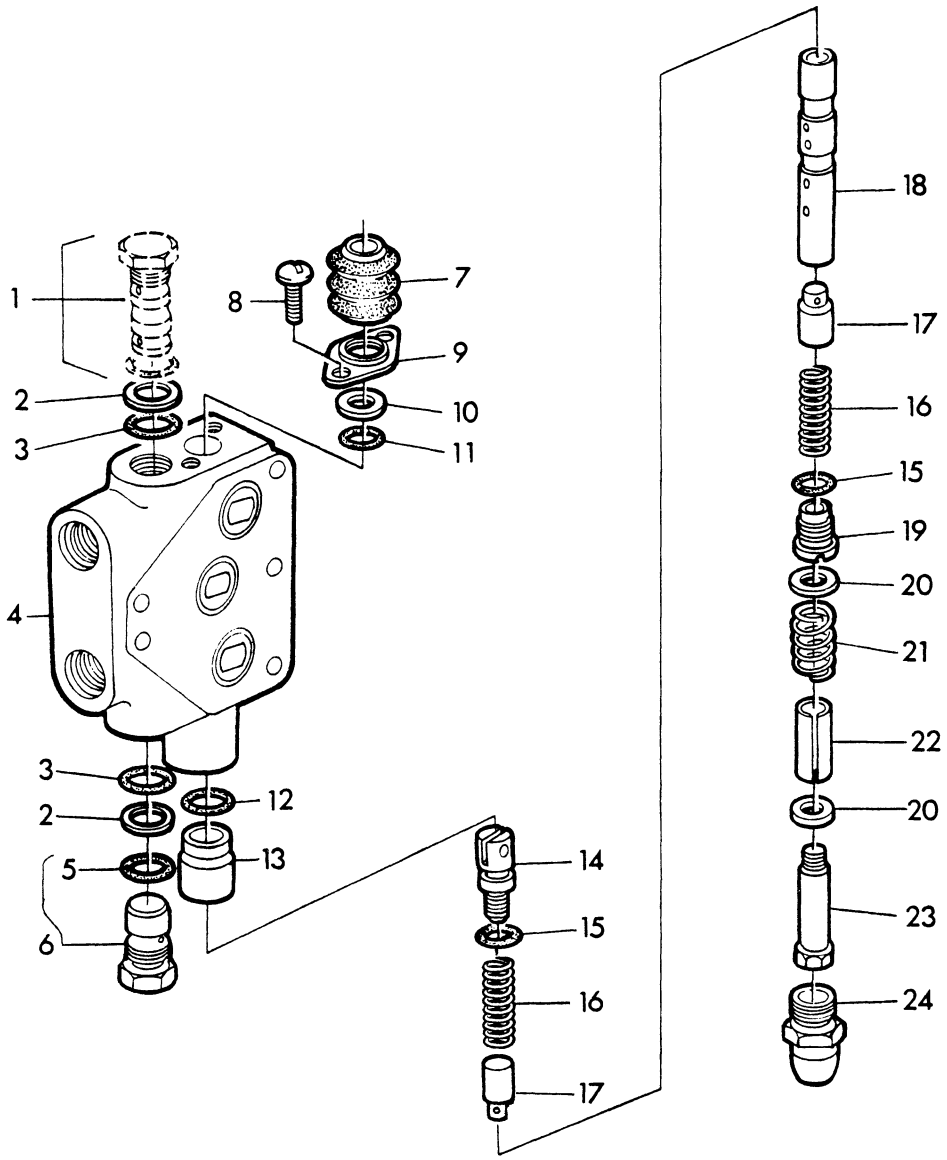

L 31438

KEY	PART NO.	DESCRIPTION	QTY	SERIAL NO.	JD310	REMARKS
1	.....		1		X	(AU40751)
2	U 40727	BACK-UP RING	2		X	
3	P 47908	O-RING	2		X	
4	.....	O-RING	1		X	NSEP, ORD AT36808
5	32240	O-RING	2		X	
6	U 11427	RELIEF VALVE	1		X	ASSY, INCL. KEY 5
7	U 42834	BOOT	1		X	
8	21H 1352	SCREW	2		X	
9	U 42827	RETAINER	1		X	
10	U 42835	WASHER	1		X	
11	T 30946	O-RING	1		X	
12	T 30942	O-RING	1		X	
13	U 41169	BUSHING	1		X	
14	U 42833	PLUG	1		X	
15	P 46051	O-RING	2		X	
16	U 41170	SPRING	2		X	
17	U 41168	VALVE	2		X	
18	.....	PLUG	1		X	NSEP, ORD AT36808
19	U 41162	PLUG	1		X	
20	N 31767	WASHER	2		X	
21	U 11336	SPRING	1		X	
22	U 41167	SPACER	1		X	
23	U 11428	SET SCREW	1		X	
24	AU 41892	CAP	1		X	
-	AT 36808	VALVE	1		X	ASSY, INCL. KEYS 2-4, 7-24
-	AT 29941	SEAL KIT	1		X	INCL. KEYS 2, 3, 5, 11, 12, 15

BOOM CONTROL VALVE
ELEMENT DE COMMANDE DU CADRE DE LEVAGE
STEUERGERAET FUER LADESCHWINGE
DISTRIBUTORE PER BRACCI
VALVULA DE CONTROL DEL AGUILON
MANOVERVENTIL FOR LASTARERAMEN
L 11405

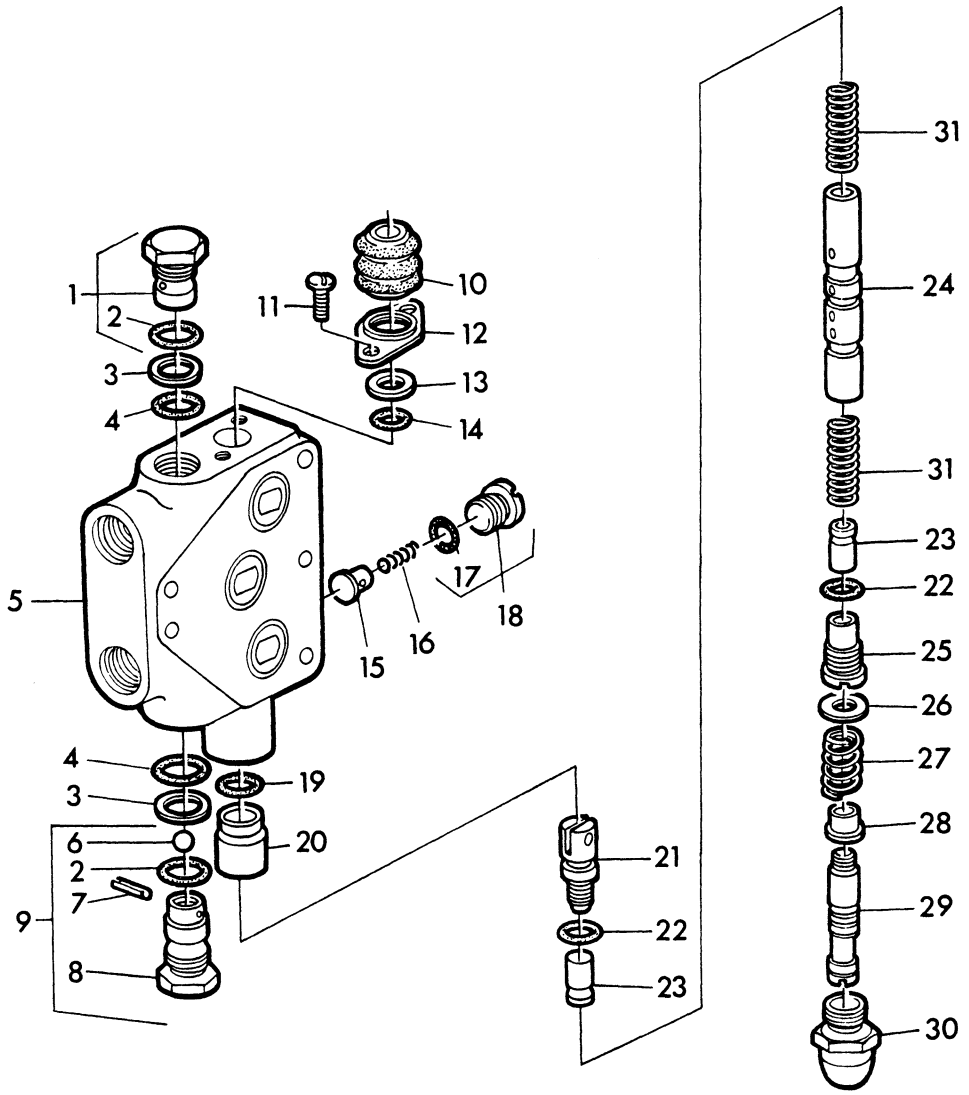

KEY	PART NO.	DESCRIPTION	QTY	SERIAL NO.	JD310	REMARKS
1	U 11427	RELIEF VALVE	1		X	ASSY, INCL. KEY 2
2	32240	O-RING	2		X	
3	U 40727	BACK-UP RING	2		X	
4	P 47908	O-RING	2		X	
5	.....		1		X	ORD. AT29938
6	U 11498	BALL	1		X	
7	34H 264	PIN	1		X	5/32"X7/8"
8	U 11499	PLUG	1		X	
9	AU 10997	CHECK VALVE	1		X	ASSY, INCL. KEYS 2, 6, 7, 8
10	U 42834	BOOT	1		X	
11	21H 1352	SCREW	2		X	1/4"X3/8"
12	U 42827	RETAINER	1		X	
13	U 42835	WASHER	1		X	
14	T 30946	O-RING	1		X	
15	U 41172	CHECK VALVE	1		X	
16	N 85304	SPRING	1		X	
17	R 394R	O-RING	1		X	
18	AN 85149	PLUG	1		X	ASSY, INCL. KEY 17
19	T 30942	O-RING	1		X	
20	U 41169	BUSHING	1		X	
21	T 30948	PLUG	1		X	
22	P 46051	O-RING	2		X	
23	U 41168	VALVE	2		X	
24	.....		1		X	ORD AT29938
25	U 41162	PLUG	1		X	
26	H 26239	WASHER	1		X	
27	T 30941	SPRING	1		X	
28	H 26238	GUIDE	1		X	
29	T 30940	SET SCREW	1		X	
30	AT 29940	CAP	1		X	
31	U 41170	SPRING	2		X	
-	AT 29938	VALVE	1		X	ASSY, INCL. KEYS 1-31
-	AT 29941	SEAL KIT	1		X	INCL. KEYS 2-4, 14, 17, 19, 22

BUCKET CONTROL VALVE
ELEMENT DE COMMANDE DE LA BENNE
STEUERGERAET FUER LADESCHAUFEL
DISTRIBUTORE PER BENNA
VALVULA DE CONTROL DE LA CUCHARA
MANOVERVENTIL FOR SKOPA
L 31439

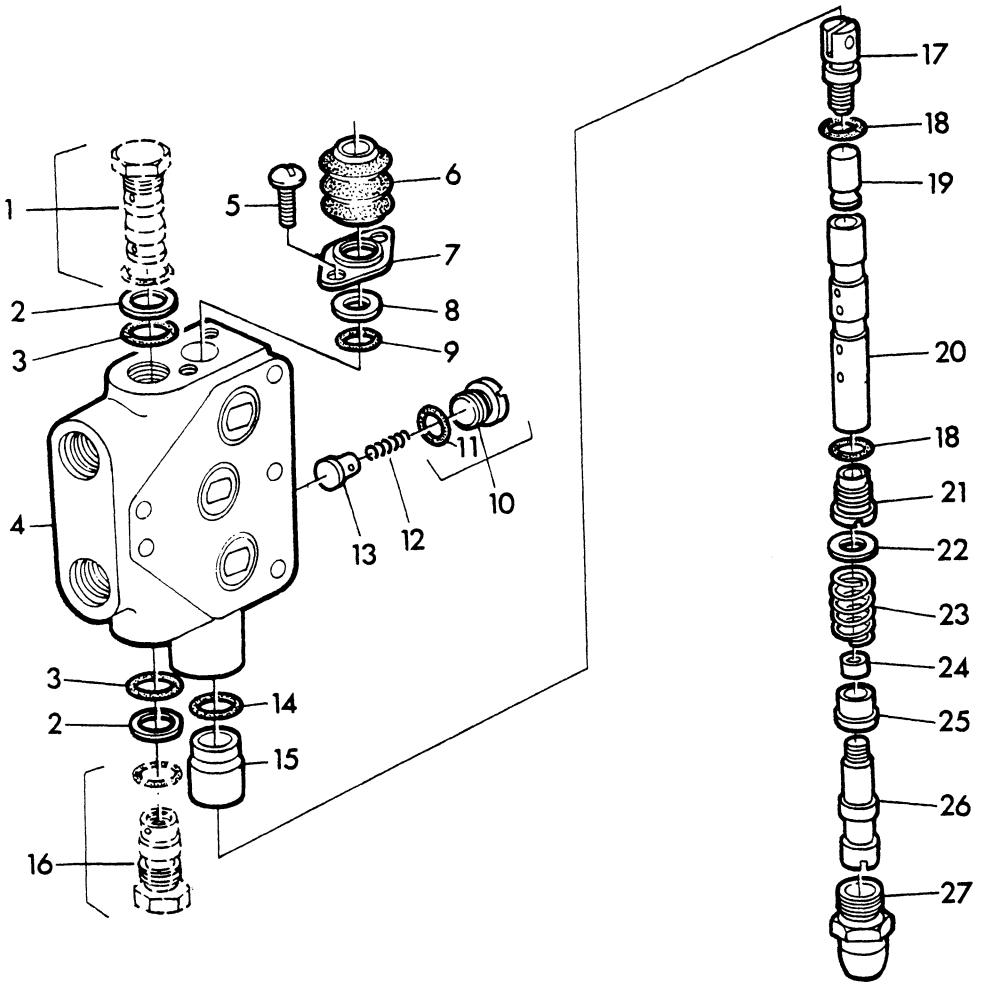

L 31439

KEY	PART NO.	DESCRIPTION	QTY	SERIAL NO.	JD310	REMARKS
1	.....		1		X	(AU40752)
2	U 40727	BACK-UP RING	2		X	
3	P 47908	O-RING	2		X	
4	.....		1		X	NSEP, ORD, AT29939
5	21H 1352	SCREW	2		X	1/4"X3/8"
6	U 42834	BOOT	1		X	
7	U 42827	RETAINER	1		X	
8	U 42835	WASHER	1		X	
9	T 30946	O-RING	1		X	
10	AN 85149	PLUG	1		X	ASSY, INCL. KEY 11
11	R 394R	O-RING	1		X	
12	N 85304	SPRING	1		X	
13	U 41172	CHECK VALVE	1		X	
14	T 30942	O-RING	1		X	
15	U 41169	BUSHING	1		X	
16	.....		1		X	(AU40528)
17	U 42833	PLUG	1		X	
18	P 46051	O-RING	2		X	
19	U 41168	VALVE	1		X	
20	.....		1		X	NSEP, ORD AT29939
21	U 41162	PLUG	1		X	
22	H 26239	WASHER	1		X	
23	T 30941	SPRING	1		X	
24	H 26237	SLEEVE	1		X	
25	H 26238	GUIDE	1		X	
26	U 41299	SET SCREW	1		X	
27	AT 29940	CAP	1		X	
-	AT 29939	VALVE	1		X	ASSY, INCL. KEYS 1-27
-	AT 29941	SEAL KIT	1		X	INCL. KEYS 2, 3, 9, 11, 14, 18

RELIEF VALVE
CLAPET DE DECHARGE
UEBERDRUCKVENTIL
VALVOLA DI SICUREZZA
VALVULA DE SEGURIDAD
OVERIRYCKSVENTIL
L 31440

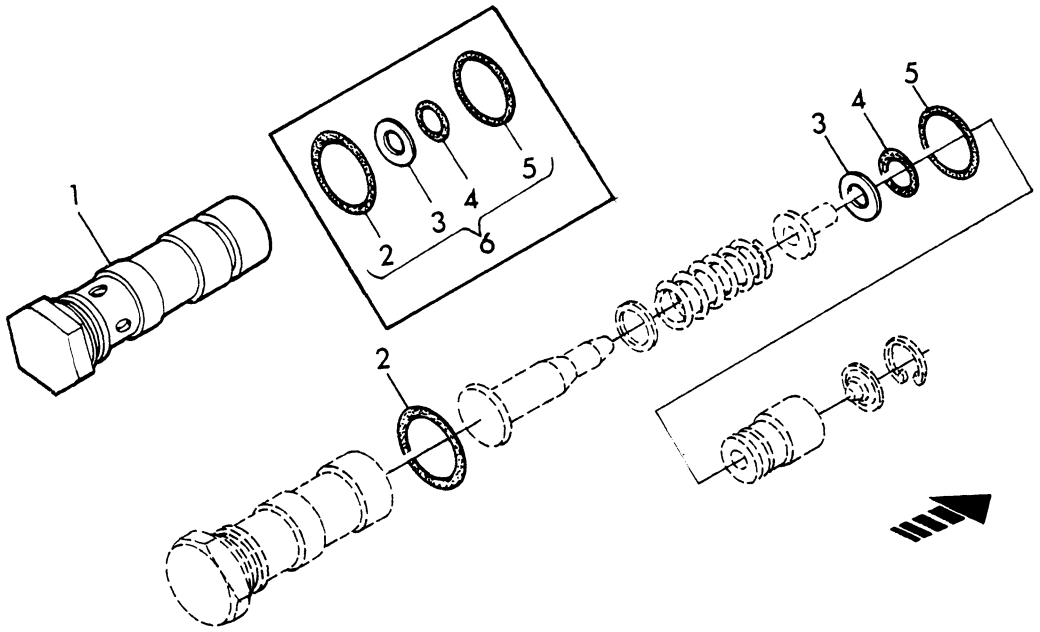

L 31440

KEY	PART NO.	DESCRIPTION	QTY	SERIAL NO.	JD310	REMARKS
1	AU 40528	RELIEF VALVE	1		X	10300KPA(103BAR,1500PSI) ASSY,INCL.KEYS 2-5
	AU 40751	RELIEF VALVE	1		X	17200KPA(172BAR,2500PSI) ASSY,INCL.KEYS 2-5
	AU 40752	RELIEF VALVE	1		X	18900KPA(189BAR,2750PSI) ASSY,INCL.KEYS 2-5
2	N 130510	O-RING	1		X	3/32"X1-16",SUB.FOR 32240
3	H 61397	WASHER	1		X	SUB.FOR U40747
4	R 27976	O-RING	1		X	SUB.FOR U40746
5	U 40745	O-RING	1		X	
6	AT 25851	SEAL KIT	AR		X	KIT,INCL.KEYS 2-5

BOOM CYLINDER
VERINS HYDRAULIQUES DU CADRE DE LEVAGE
HYDRAULIKZYLINDER FUER LADESCHWINGE
CILINDRO IDRAULICO PER BRACCI
CILINDRO DEL AGUILON
HYDRAULCYLINDER FOR LASTARE KRETSEN
L 11410

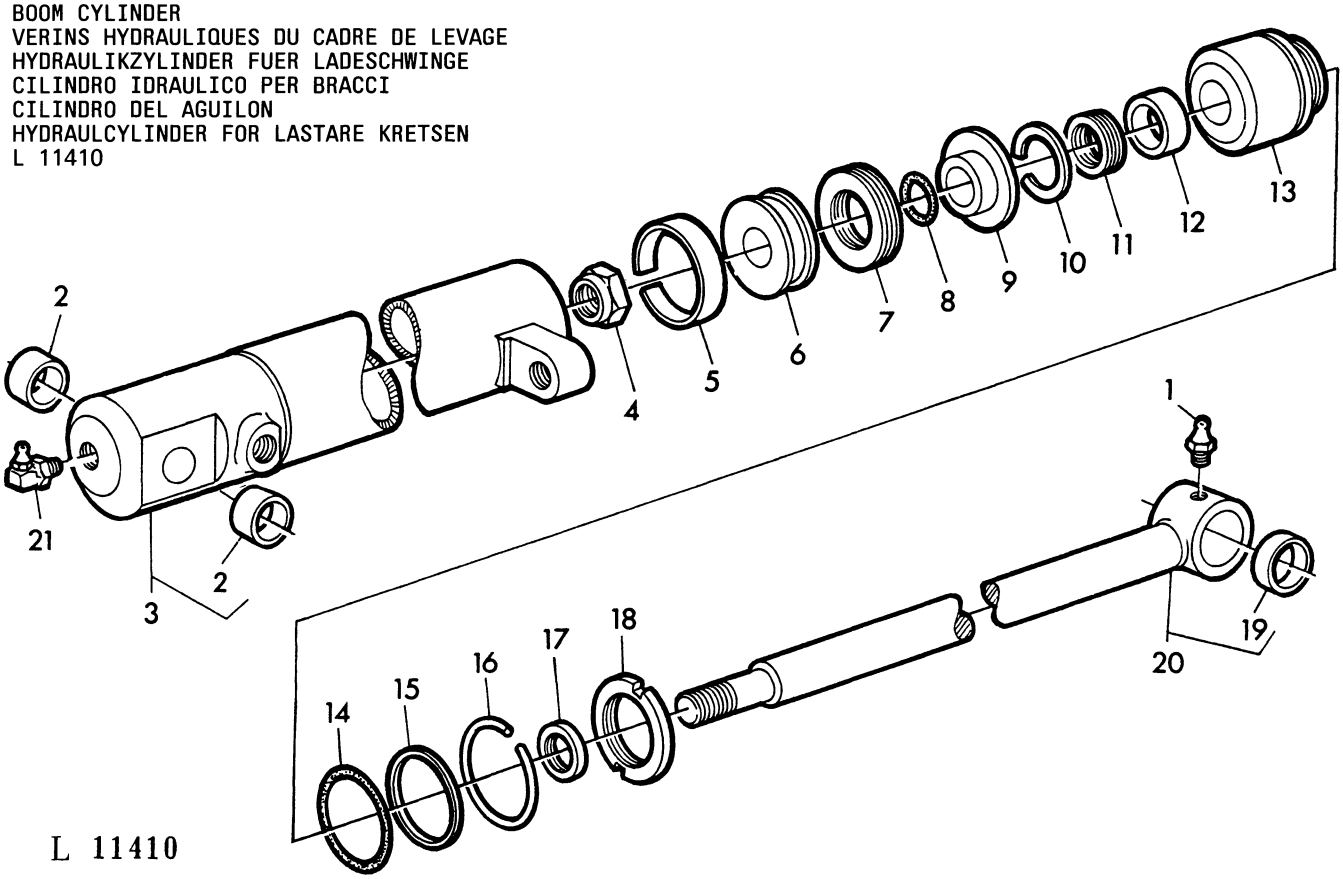

KEY	PART NO.	DESCRIPTION	QTY	SERIAL NO.	JD310	REMARKS
1	JD 7798	LUBRICATION FITTING	1		X	1/8"
2	U 42424	BUSHING	2		X	
3	AT 41896	HYDRAULIC CYLINDER	1		X	ASSY, INCL. KEY 2
4	U 13572	LOCK NUT	1		X	
5	T 40416	WEAR RING	1		X	
6	C 19260	PISTON	1		X	
7	U 12966	PACKING	1		X	
8	A 3606R	O-RING	1		X	
9	C 19261	PISTON	1		X	
10	U 14128	SNAP RING	1		X	
11	T 36998	PACKING	1		X	
12	U 41823	WEAR RING	1		X	
13	U 41958	GUIDE	1		X	
14	U 12331	O-RING	1		X	
15	U 13431	BACK-UP RING	1		X	
16	U 10136	SNAP RING	1		X	
17	U 16406	SEAL	1		X	
18	U 10139	NUT	1		X	
19	T 34259	BUSHING	1		X	
20	AT 41898	ROD	2		X	ASSY, INCL. KEY 19
21	JD 7799	LUBRICATION FITTING	2		X	
-	AT 36829	KIT	1		X	INCL. KEYS 5, 7, 8, 11, 12, 14, 15, 17
-	AT 41895	HYDRAULIC CYLINDER	2		X	ASSY, INCL. KEYS 2-20

BUCKET CYLINDER
VERINS HYDRAULIQUES DE LA BENNE
HYDRAULIKZYLINDER FUER LADESCHAUFEL
CILINDRO IDRAULICO PER BENNA
CILINDRO DEL CUCHARON
SKOPCYLINDER
L 11414

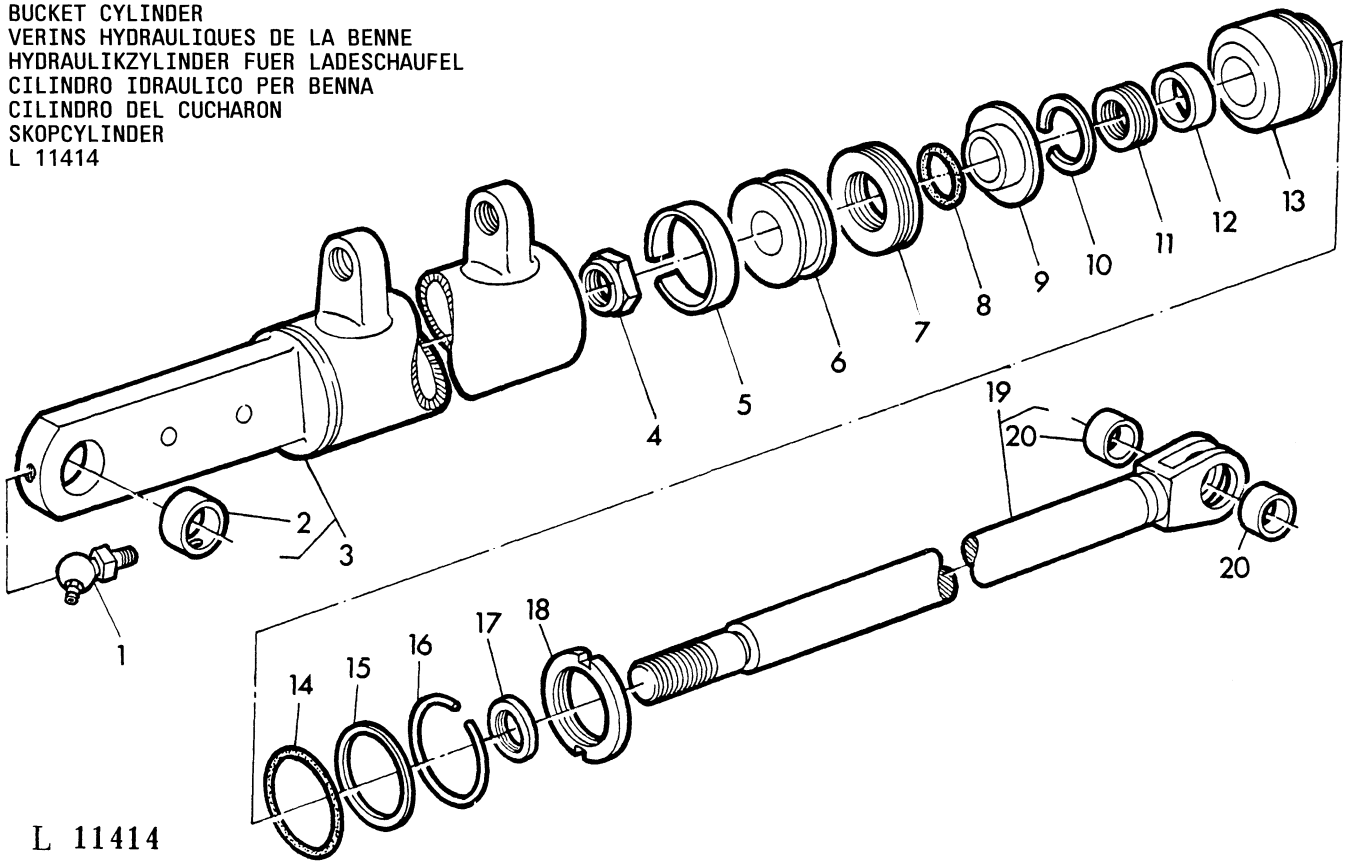

L 11414

KEY	PART NO.	DESCRIPTION	QTY	SERIAL NO.	JD310	REMARKS
1	JD 7799	LUBRICATION FITTING	1		X	1/8"
2	T 42955	BUSHING	1		X	SUB. FOR T42945
3	AT 33481	HYDRAULIC CYLINDER	1		X	ASSY, INCL. KEY 2
4	U 13572	LOCK NUT	1		X	
5	T 40416	WEAR RING	1		X	SUB. FOR U17303
6	C 19260	PISTON	1		X	
7	U 12966	PACKING	1		X	
8	A 3606R	O-RING	1		X	
9	C 19261	PISTON	1		X	
10	U 14128	SNAP RING	1		X	
11	U 44948	PACKING	1		X	
12	U 41823	WEAR RING	1		X	
13	U 41958	GUIDE	1		X	
14	U 12331	O-RING	1		X	
15	U 13431	BACK-UP RING	1		X	
16	U 10136	SNAP RING	1		X	
17	U 16406	SEAL	1		X	
18	U 10139	NUT	1		X	
19	AT 35753	ROD	1		X	ASSY, INCL. KEY 20
20	T 34259	BUSHING	2		X	
-	AT 35002	HYDRAULIC CYLINDER	1		X	ASSY, INCL. KEYS 2-20
-	AT 35929	KIT	1		X	INCL. KEYS 5, 7, 8, 11, 12, 14, 15, 17

OIL LINES OF BOOM CIRCUIT
CONDUITES D'HUILE DU CADRE DE LEVAGE
OELLEITUNGEN FUER LADESCHWINGE
TUBAZIONI DELL'OLIO PER I BRACCI
CONDUCTOS DE ACEITE DEL CIRCUITO DEL AGUILON
OLJELEDNINGAR FOR LASTERAKRETSEN
L 13766

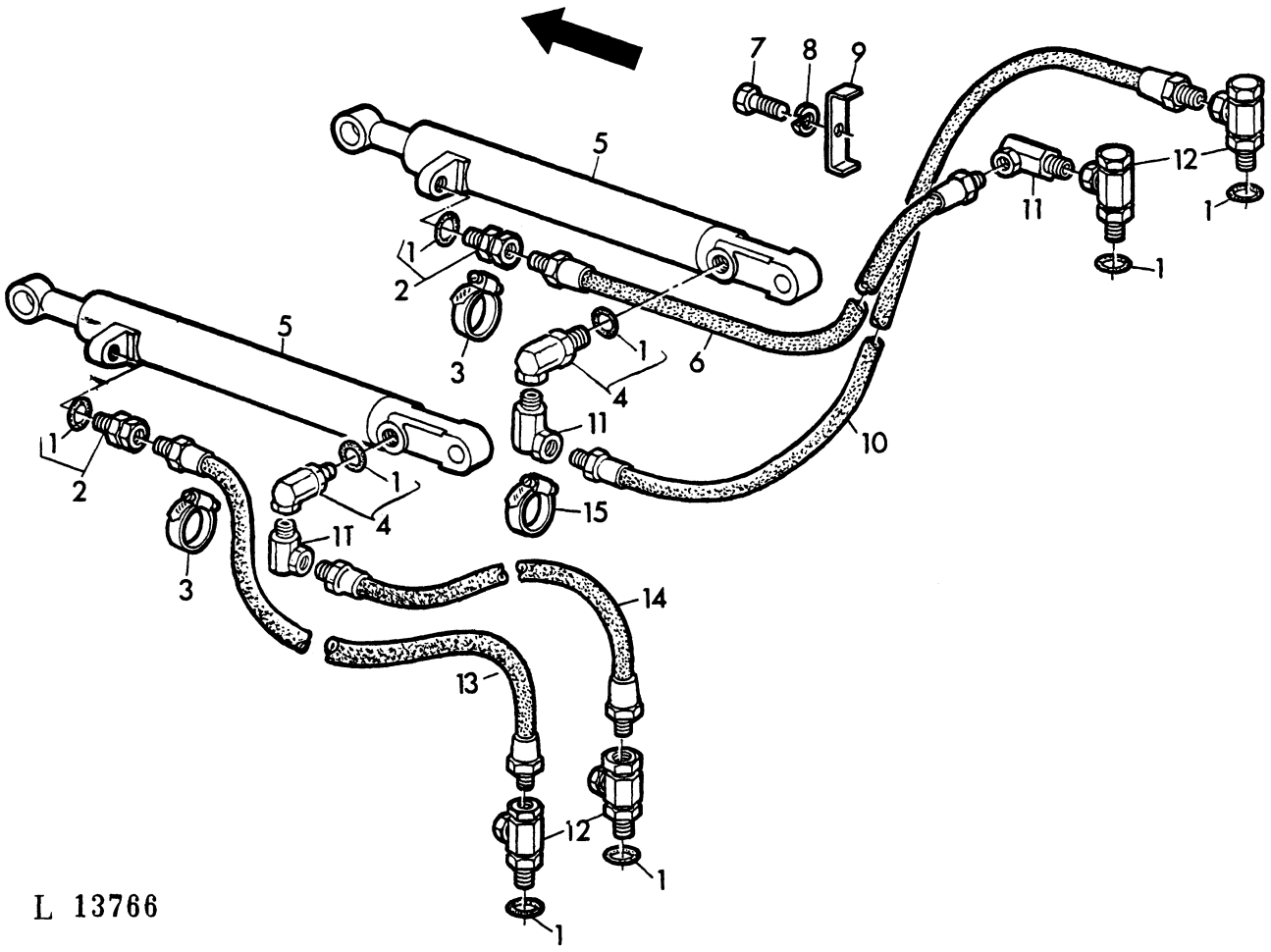

KEY	PART NO.	DESCRIPTION	QTY	SERIAL NO.	JD310	REMARKS
1	R 26906	O-RING	8		X	
2	AU 11753	THREADED NIPPLE	2		X	ASSY, INCL. KEY 1
3	AR 21842	CLAMP	2		X	
4	AU 11752	ELBOW	2		X	ASSY, INCL. KEY 1 SUB. FOR AU11751, ORD W/KEY 11
5	AT 41895	HYDRAULIC CYLINDER	2		X	ASSY,
6	AT 34206	HYDRAULIC HOSE	1		X	L.H. 1/2"X113"
7	19H 2665	CAP SCREW	1		X	3/8"X1-5/8"
8	12H 304	LOCK WASHER	1		X	3/8"
9	T 33989	CLAMP	1		X	
10	AT 34205	HYDRAULIC HOSE	1		X	L.H. 1/2"X80"
11	AT 34204	ELBOW	3		X	SUB. FOR AT10503
12	AT 33031	ELBOW	4		X	
13	AU 40400	HYDRAULIC HOSE	1		X	R.H. 1/2"X73"
14	AU 13295	HYDRAULIC HOSE	1		X	R.H. 1/2"X46"
15	AR 21839	CLAMP	1		X	

OIL LINES OF BUCKET CIRCUIT
CONDUITES D'HUILE DE LA BENNE
OELLEITUNGEN FUER LADESCHAUFEL
TUBAZIONI DELL'OLIO PER LA BENNA
CONDUCTOS DE ACEITE DEL CIRCUITO DEL CUCHARON
OLJELEDNINGAR FOR SKOPKRETSEN
L 13838

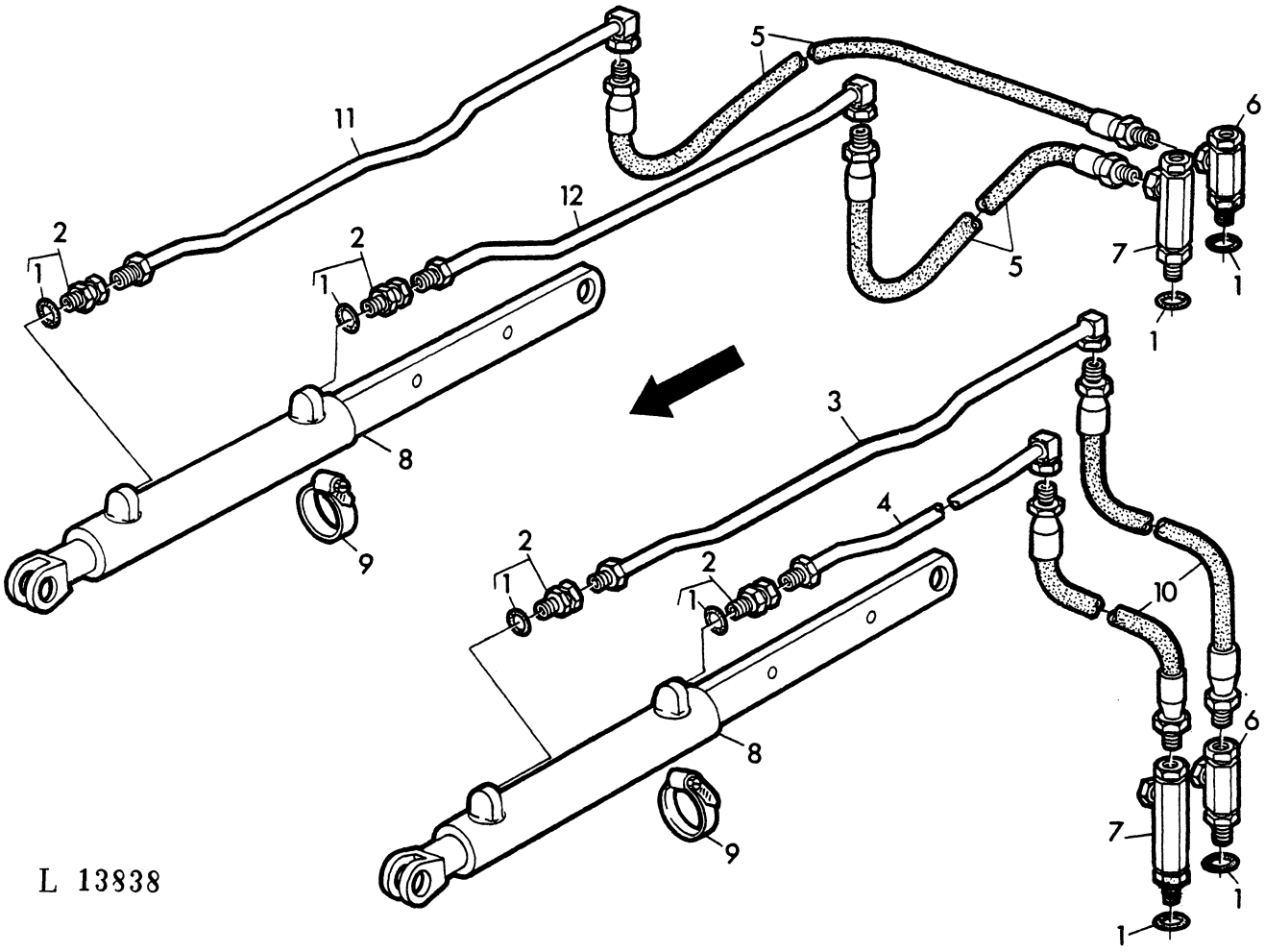

KEY	PART NO.	DESCRIPTION	QTY	SERIAL NO.	JD310	REMARKS
1	R 26906	O-RING	8		X	
2	AU 11753	THREADED NIPPLE	4		X	ASSY, INCL. KEY 1
3	AT 33045	OIL LINE	1		X	L.H.
4	AT 33046	OIL LINE	1		X	L.H.
5	AT 32146	HYDRAULIC HOSE	2		X	1/2"X105"
6	AT 33031	ELBOW	2		X	
7	AT 33032	ELBOW	2		X	
8	AT 35002	HYDRAULIC CYLINDER	2		X	ASSY
9	AT 25242	CLAMP	4		X	
10	AT 34203	HYDRAULIC HOSE	2		X	1/2"X78"
11	AT 46554	OIL LINE	1		X	R.H. SUB. FOR DDX7186
12	AT 46555	OIL LINE	1		X	R.H. SUB. FOR DDX7185

OIL LINES FOR MULTI-PURPOSE BUCKET
CONDUITES D'HUILE DE LA BENNE UNIVERSELLE
OELLEITUNGEN FUER MEHRZWECKSCHAUFEL
TUBAZIONI DELL'OLIO PER LA BENNA UNIVERSALE
TUBERIAS DE LA CUCHARA UNIVERSAL
OLJETORBINDELSER KOMBINATIONSKOPA
L 31441

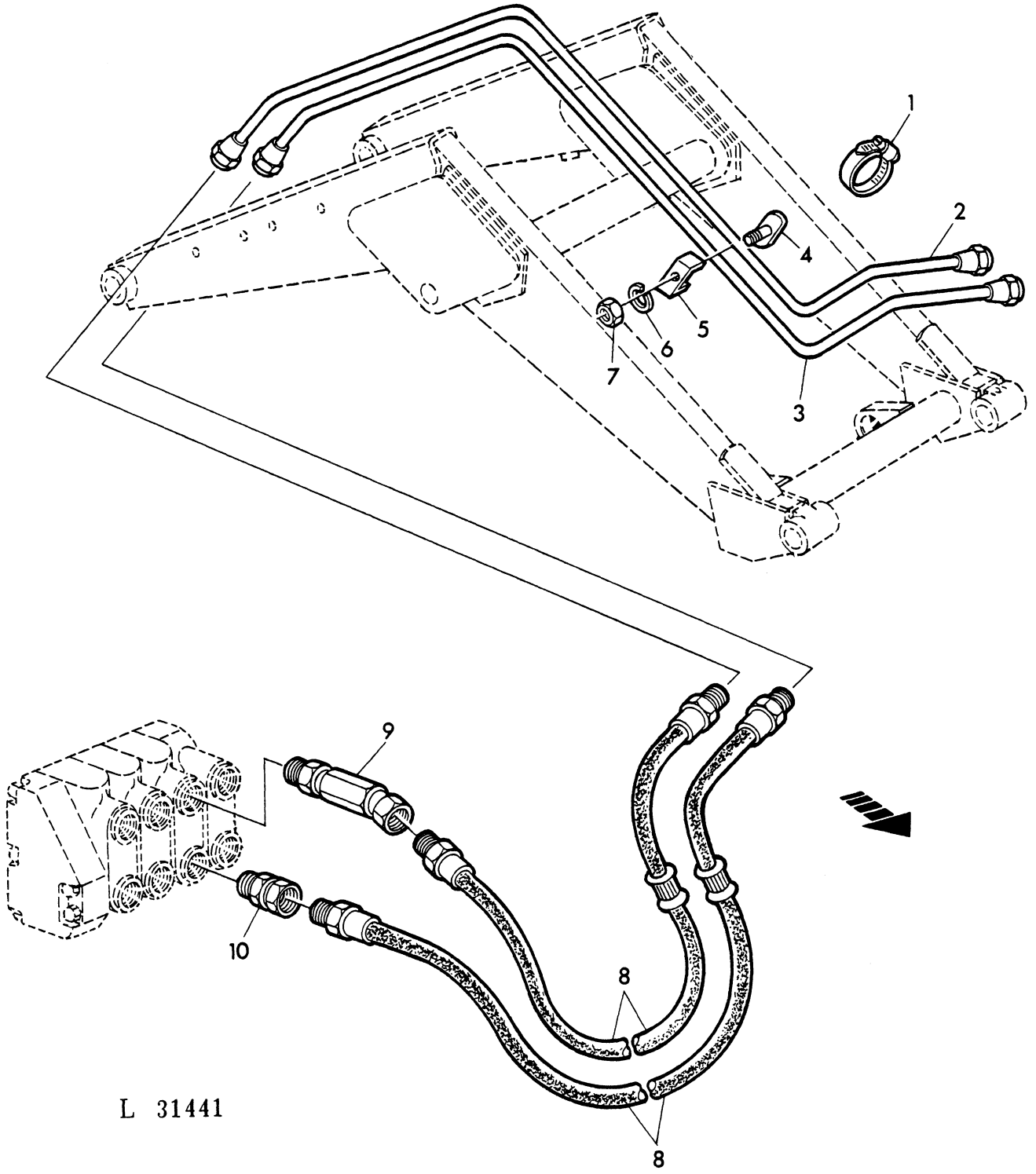

KEY	PART NO.	DESCRIPTION	QTY	SERIAL NO.	JD310	REMARKS
1	AR 21842	CLAMP	3		X	
2	AT 38161	OIL LINE	1		X	UP
3	AT 38162	OIL LINE	1		X	LOW
4	AU 40511	CLAMP	3		X	
5	U 13051	CLAMP	3		X	
6	12H 303	LOCK WASHER	3		X	5/16"
7	14H 785	NUT	3		X	5/16"
8	AU 40250	HYDRAULIC HOSE	2		X	1/2"X68-1/4"
9	U 11009	ADAPTER	1		X	
10	AU 11753	ADAPTER	1		X	

LOADER-PRESSURE AND RETURN CIRCUIT
CHARGEUR-CONDUITES DE PRESSION ET DE RETOUR
LADER-DRUCK-UND RUECKLAUFLEITUNGEN
CARICATORE-TUBAZIONI DI MANDATA E RITORNO
CARGADOR-CIRCUITOS DE PRESION Y RETORNO
LASTARE-TRYCK-OCH RETURLEDNINGAR
L 13266

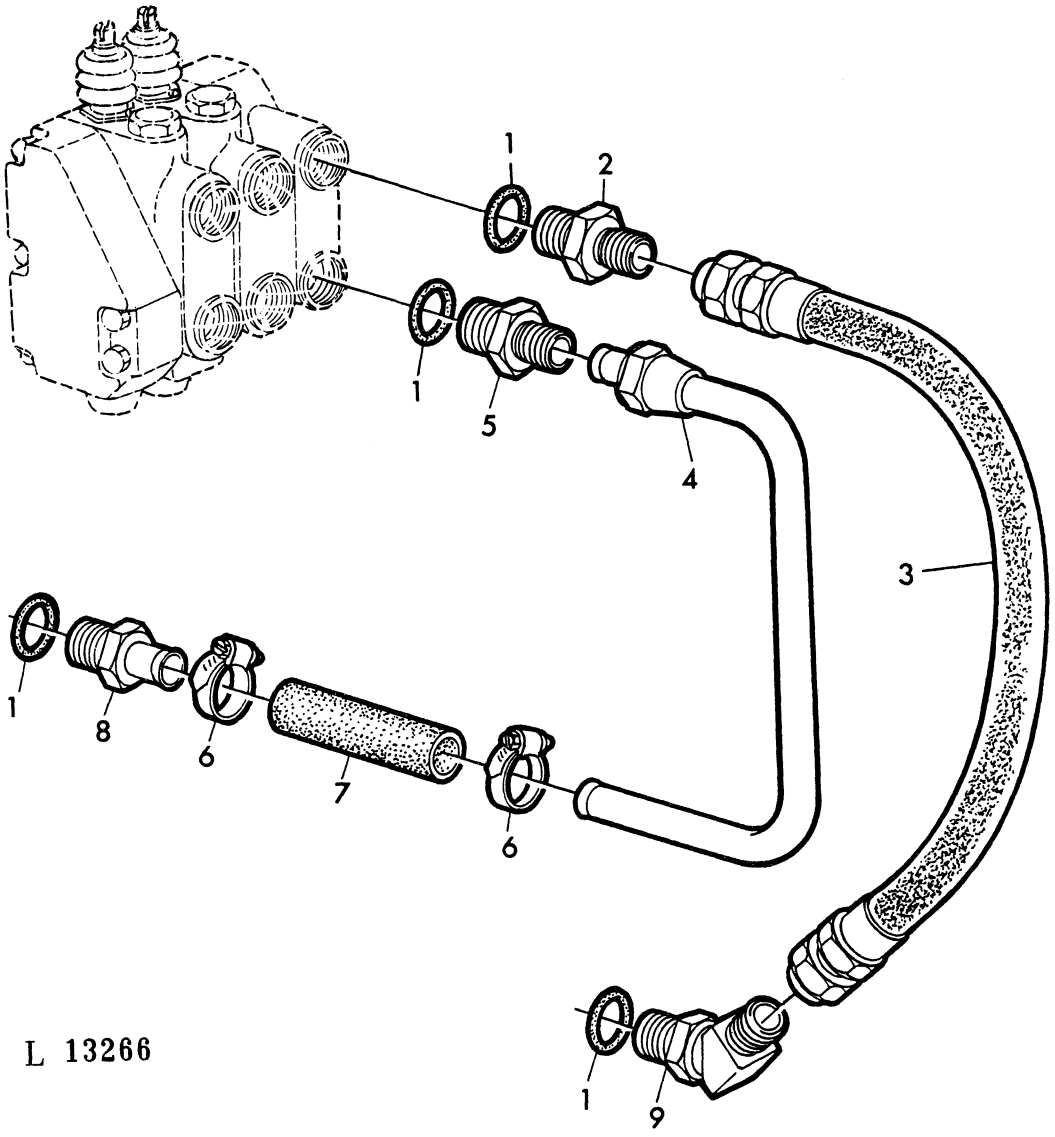

KEY	PART NO.	DESCRIPTION	QTY	SERIAL NO.	JD310	REMARKS
1	F 3171R	O-RING	4		X	
2	R 36075	THREADED NIPPLE	1		X	
3	AT 42366	HYDRAULIC HOSE	1		X	SUB. FOR AT33024
4	AT 33025	OIL LINE	1		X	
5	R 27267	FITTING	1		X	
6	AR 21839	CLAMP	2		X	
7	T 34614	HOSE	1		X	3/4"X3-3/8"
8	R 53540	HOSE FITTING	1		X	
9	AT 33033	ELBOW	1		X	

HYDRAULIC PUMP KIT
JEU DE JOINTS POMPE
HYDRAULIKPUMPENDICHTUNGSSATZ
SERIE GUARNIZIONI POMPA IDRAULICA
JUEGO DE JUNTAS PARA BOMBA HIDRAULICA
PACKNINGSSATS FOR HYDRAULPUMP
L 31442

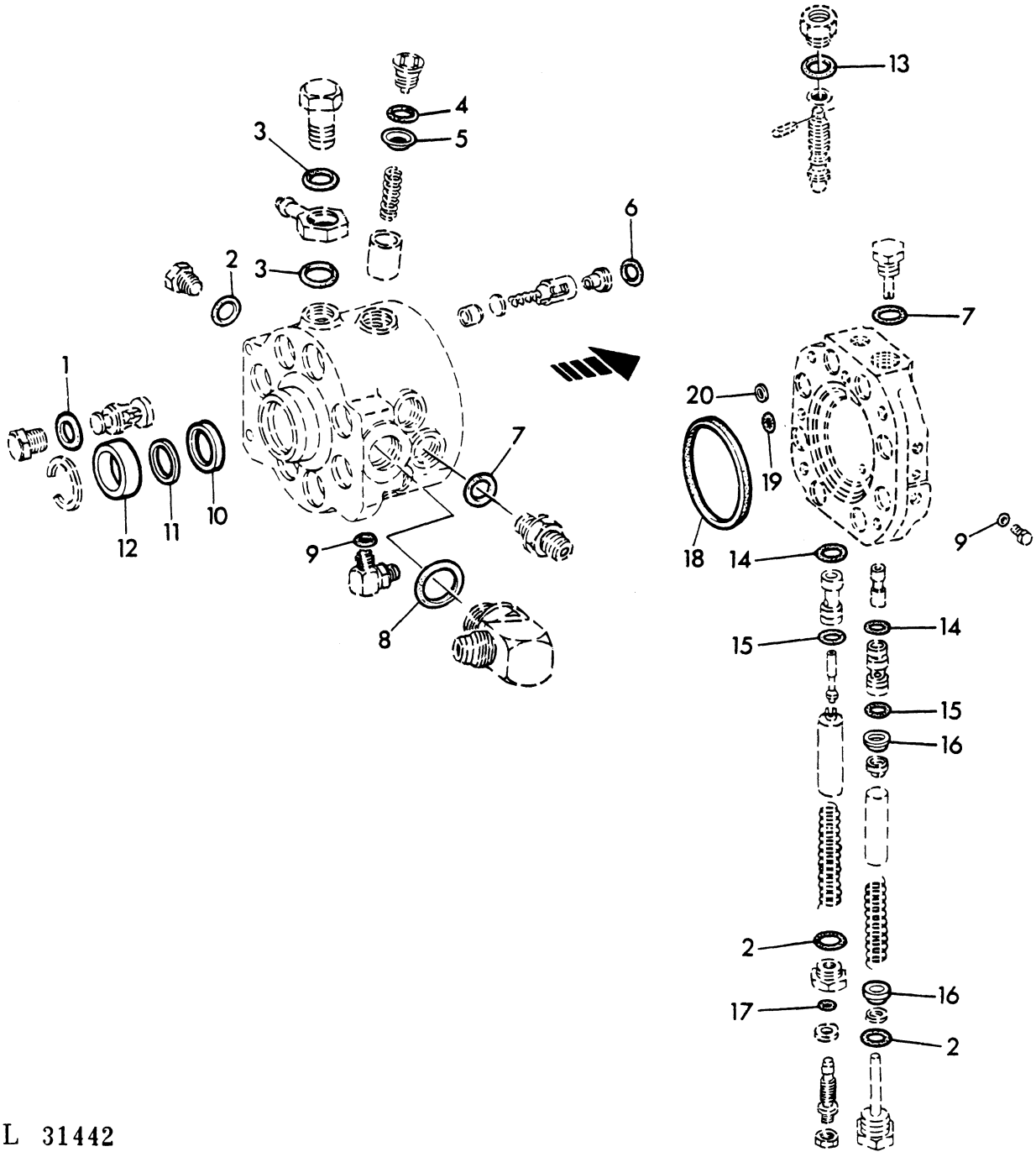

L 31442

KEY	PART NO.	DESCRIPTION	QTY	SERIAL NO.	JD310	REMARKS
1	R 27149	O-RING	8		X	
2	R 56751	O-RING	3		X	SUB. FOR F3171R
3	R 27928	O-RING	2		X	
4	R 56463	O-RING	8		X	
5	R 56749	PACKING	8		X	
6	R 56754	PACKING	8		X	SUB. FOR R26149
7	R 26906	O-RING	2		X	
8	U 13639	O-RING	1		X	
9	R 26287	O-RING	2		X	
10	R 39729	PACKING	1		X	
11	R 56753	BACK-UP RING	1		X	
12	AR 52224	SEAL	1		X	
13	R 26448	BACK-UP RING	1		X	
14	R 27564	O-RING	2		X	
15	R 27166	O-RING	2		X	
16	R 27174	PACKING	2		X	
17	R 28782	O-RING	1		X	
18	R 56757	O-RING	1		X	SUB. FOR R26621
19	R 56756	O-RING	1		X	SUB. FOR A3917R
20	R 56755	PACKING	1		X	SUB. FOR A4847R
-	AR 67718	KIT	1		X	ASSY, INCL. KEYS 1-2

SECTIONAL INDEX
INDEX DE SECTION
GRUPPENINDEX
INDICE DELLA SEZIONE
INDICE DE SECCION
GRUPPSFORTECKNING
L 27557

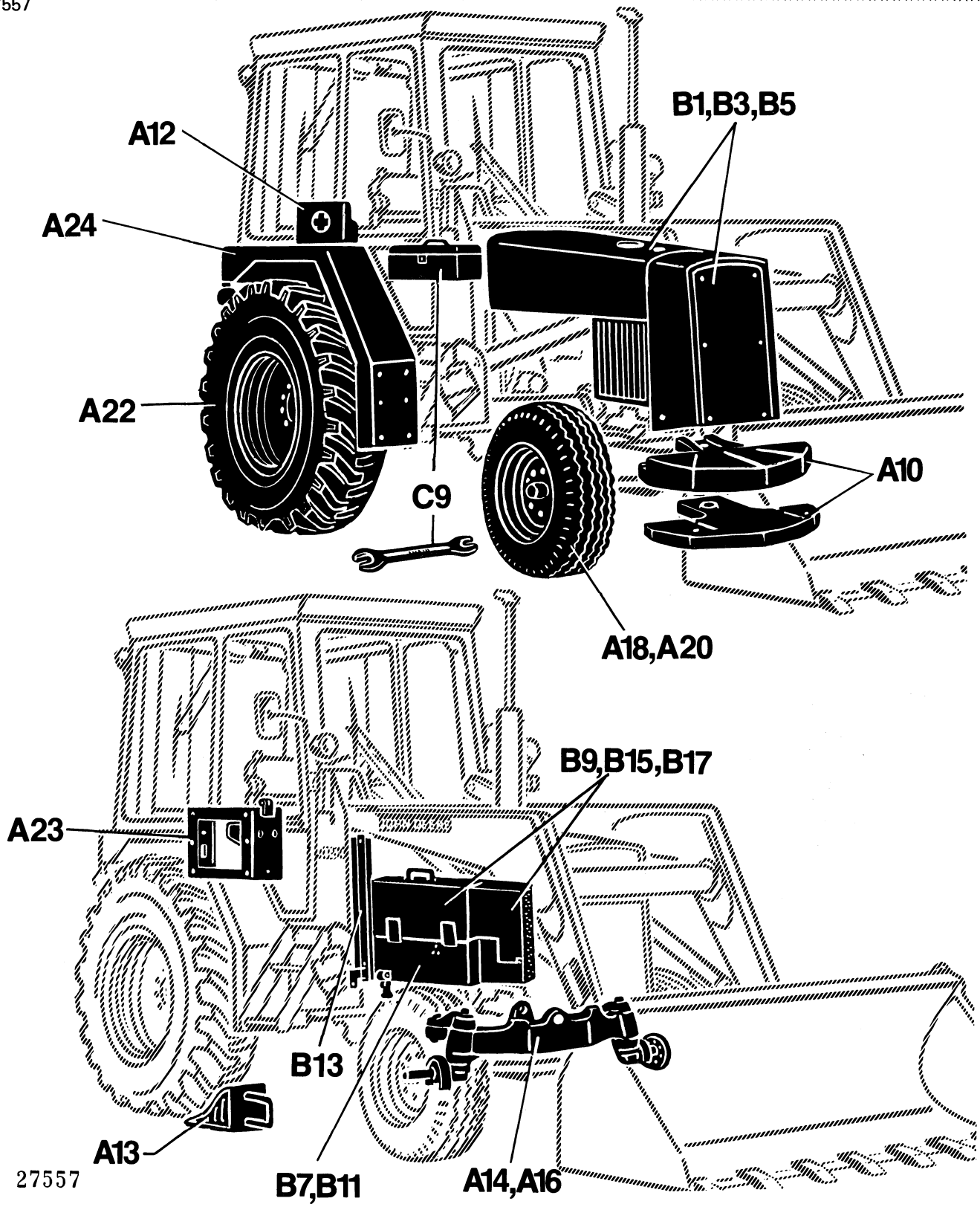

SECTIONAL INDEX
INDEX DE SECTION
GRUPPENINDEX
INDICE DELLA SEZIONE
INDICE DE SECCION
GRUPPSFORTECKNING
L 27558

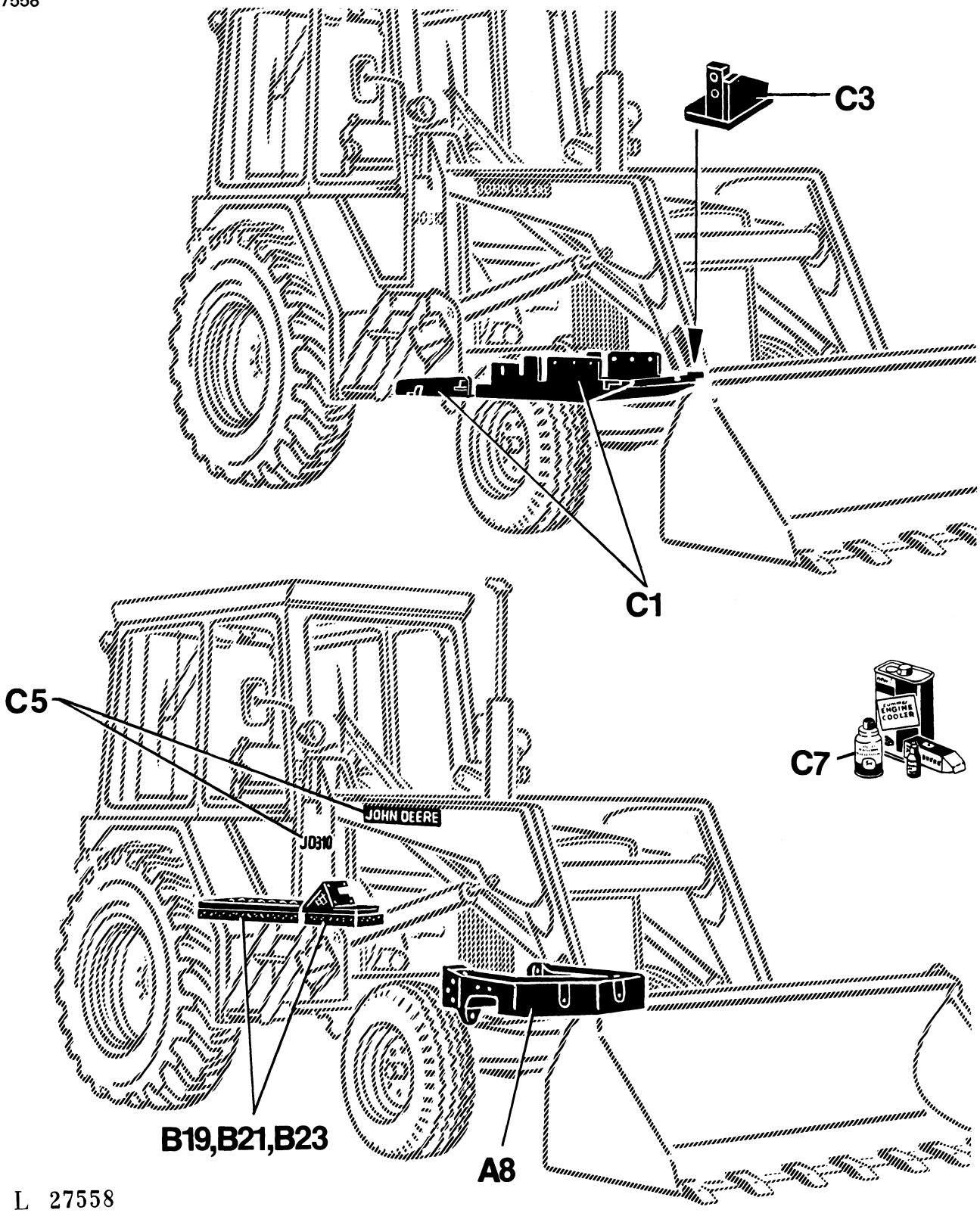

FRONT SUPPORT
SUPPORT AVANT
TRAGBOCK VORN
SUPPORTO ANTERIORE
SOPORTE DEL PUENTE DELANTERO
FRAMRE UPPHANGNING
L 27138

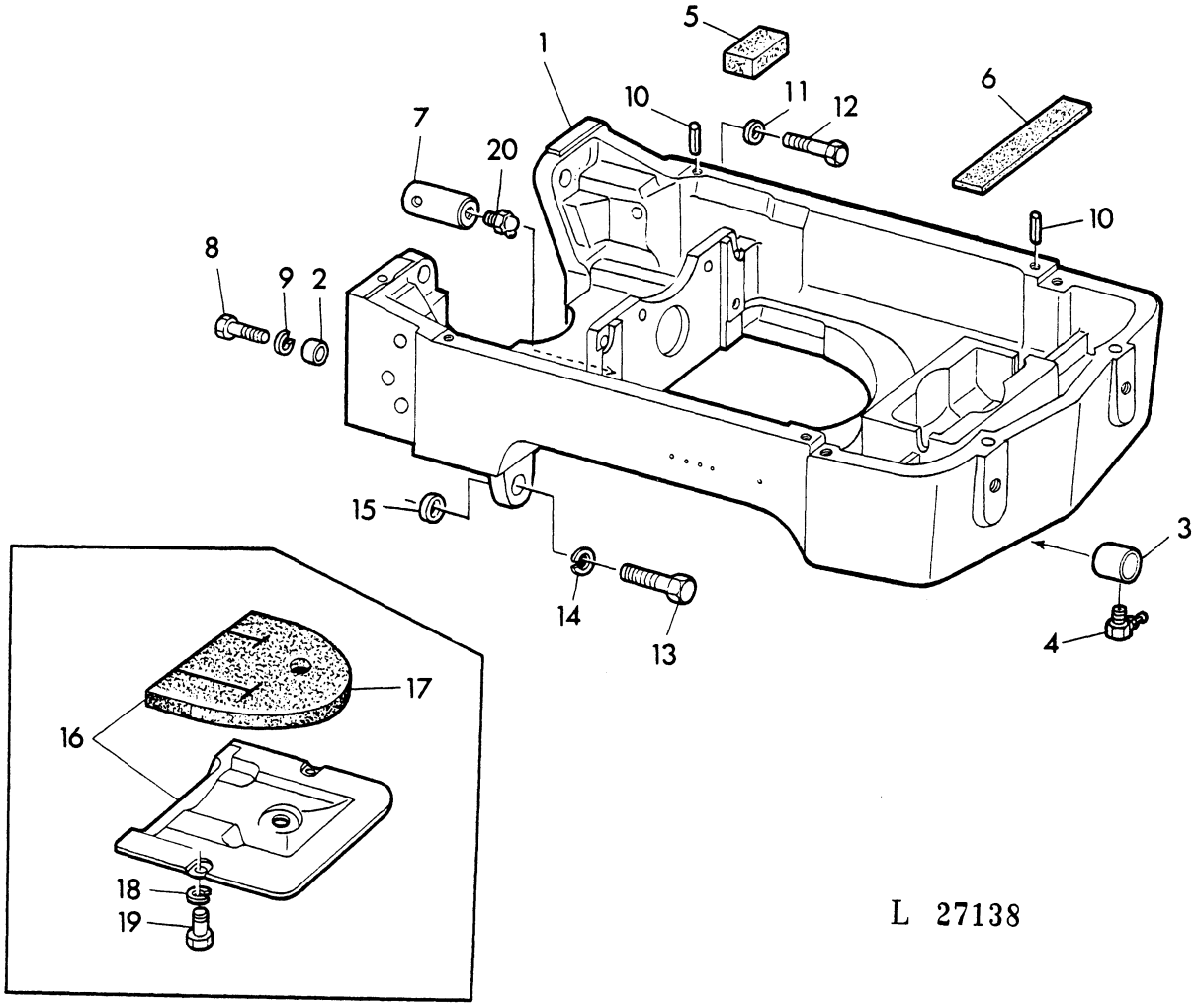

KEY	PART NO.	DESCRIPTION	QTY	SERIAL NO.	JD310	REMARKS
1	AL 34331	FRONT AXLE SUPPORT	1		X	ASSY, INCL. KEYS 2-7, SUB. FOR AL24678, AL27236
2	T 26929	SPACER	2		X	
3	T 23118	BUSHING	1		X	
4	JD 7799	LUBRICATION FITTING	1		X	1/8"
5	T 36498	FOAM PAD	1		X	
6	T 21540	FOAM PAD	2		X	
7	T 34441	PIN	1	-197819	X	REAR, ORD T53267, JD7788
	T 53267	PIN	1	197820-	X	REAR
8	19H 2358	CAP SCREW	2		X	9/16"X2-1/4"
9	12H 317	LOCK WASHER	2		X	9/16"
10	34H 340	SPRING PIN	4		X	5/16"X13/16"
11	12H 294	LOCK WASHER	4		X	5/8"
12	19H 1890	CAP SCREW	4		X	5/8"X2-3/4"
13	19H 1715	CAP SCREW	2		X	3/4"X3"
14	12H 236	LOCK WASHER	2		X	3/4"
15	T 40983	SPACER	AR		X	5,96MM(.235")
	T 36034	SPACER	AR		X	6,22MM(.245")
	T 36035	SPACER	AR		X	6,47MM(.255")
	T 36036	SPACER	AR		X	6,73MM(.265")
	T 36037	SPACER	AR		X	6,98MM(.275")
	T 36038	SPACER	AR		X	7,23MM(.285")
	T 37417	SPACER	AR		X	7,49MM(.295")
16	AT 44307	COVER	1		X	(A) W/T45540
17	T 45540	FOAM PAD	1		X	(A)
18	12H 304	LOCK WASHER	2		X	(A) 3/8"
19	19H 2021	CAP SCREW	2		X	(A) 3/8"X5/8"
20	JD 7788	LUBRICATION FITTING	1	-203966	X	
	JD 7781	LUBRICATION FITTING	1	203967-	X	SUB. FOR JD7763

(A) FOR MACHINES WITH SOUNDPROOFING
POUR MACHINES AVEC ELEMENTS D'INSONORISATION
FUER MASCHINEN MIT SCHALLDAEMPFUNG
PER MACCHINE CON DISPOSITIVO SALVA SUONI
PARA MAQUINAS CON ELEMENTOS DE INSONORIZACION
FOR MASKINER MED LJUDABSORBENT

COUNTERWEIGHT INSTALLATION AT FRONT
CONTREPOIDS AVANT
GEGENGEWICHTSANBAU VORN
CONTRAPPESI ANTERIORI
CONTRAPESOS DELANTEROS
MOTVIKTSSATS FOR FRONTMONTERING
L 13790

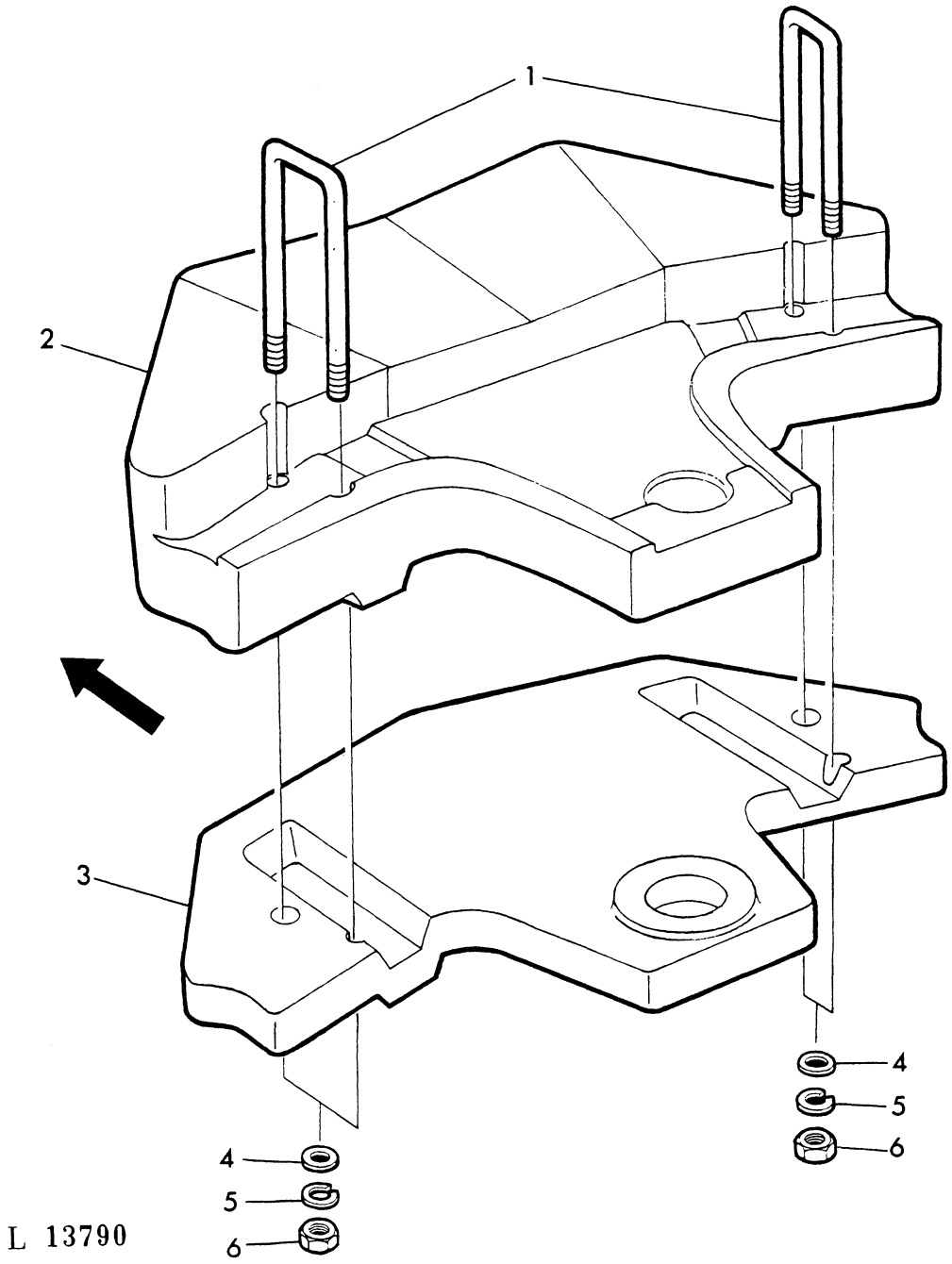

KEY	PART NO.	DESCRIPTION	QTY	SERIAL NO.	JD310	REMARKS
1	T 33480	U-BOLT	2		X	W/T33479
	T 33482	U-BOLT	2		X	
2	T 33479	WEIGHT	1		X	
3	T 33481	WEIGHT	1		X	
4	24H 1396	WASHER	4		X	25/32"X1-1/2"X. 105"
5	12H 236	LOCK WASHER	4		X	3/4"
6	14H 794	NUT	4		X	3/4"

FIRST AID KIT CONTAINER
SUPPORT DE BOITE DE Ppremier SECOURS
VERBANDSKASTEN-HALTER
SUPPORTO DELLA CASSETTA DIPRONTO INTERVENTO
SOPORTO DE CAJA DE VENDAJES
HALLARE FOR FORSTA FORBANDSSATS
L 13828

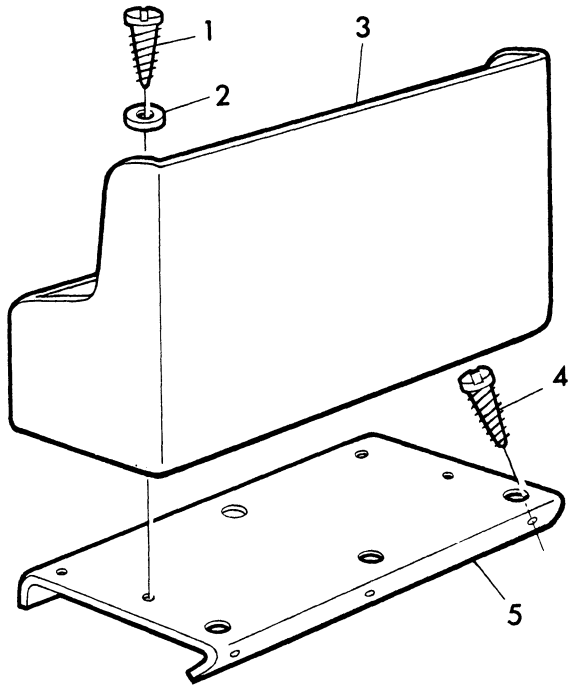

L 13828

KEY	PART NO.	DESCRIPTION	QTY	SERIAL NO.	JD310	REMARKS
1	37M 7005	SCREW	4		X	4,8X19MM
2	24M 7027	WASHER	4		X	5,3X11X1MM
3	L 32177	FIRST-AID KIT	1		X	
4	37M 7045	SCREW	3		X	4,2X19MM
5	L 32178	RETAINER	1		X	

CHOCK BLOCK
CALE
UNTERLEGKEIL
CUNEO
CALZO DE RUEDA
STOPPKLOSS
L 13839

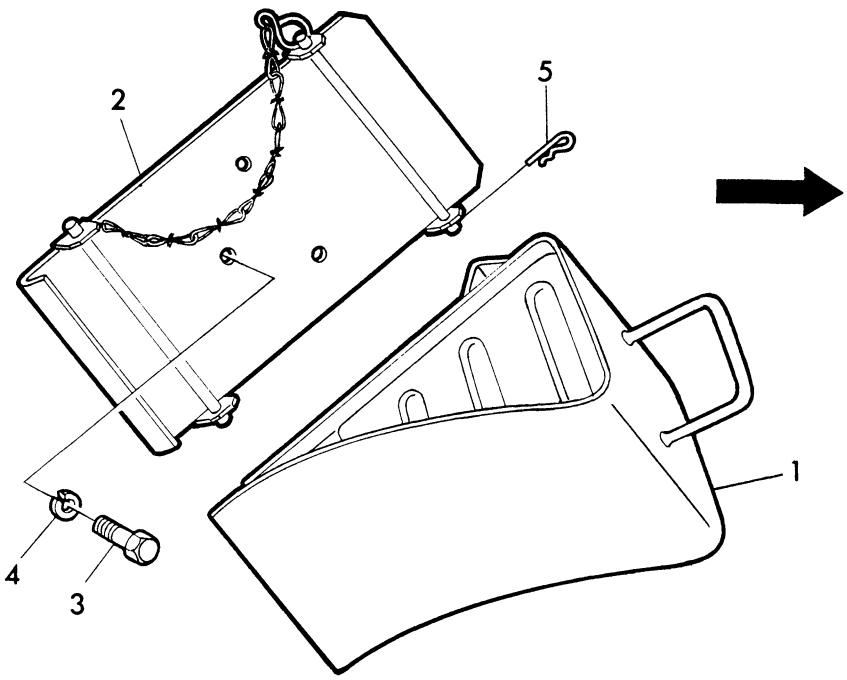

L 13839

KEY	PART NO.	DESCRIPTION	QTY	SERIAL NO.	JD310	REMARKS
1	AT 31444	CHOCK BLOCK	2		X	
2	AL 18788	RETAINER	1		X	L.H.
	AL 25019	RETAINER	1		X	R.H.
3	19H 1936	CAP SCREW	6		X	3/8"X3/4"
4	12H 304	LOCK WASHER	6		X	3/8"
5	L 12621	CLIP	2		X	

FRONT AXLE / SPINDLE KNUCKLE / TIE ROD
ESSIEU / FUSEE / BARRE D'ACCOUPLEMENT
VORDERACHSE / ACHSSCHENKEL / SPURSTANGE
ASSALE ANTERIORE / FUSELLO / BARRA D'ACCOPPIAMENTO
EJE DELANTERO / MANGUETA / VARILLA TENSORE
FRAMAXEL / SPINDELHUS / PARALLELSTAG
L 13184

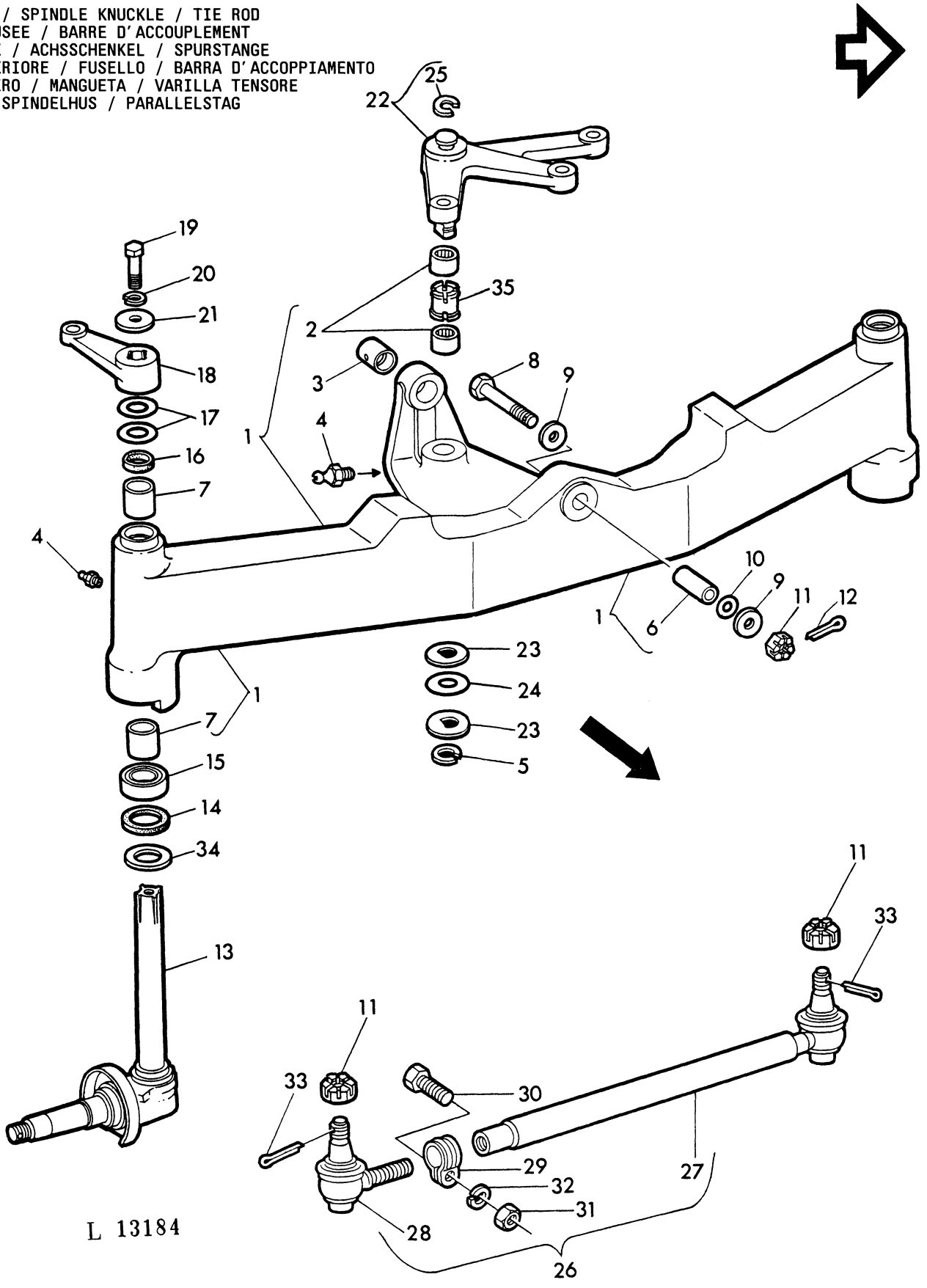

KEY	PART NO.	DESCRIPTION	QTY	SERIAL NO.	JD310	REMARKS
1	AT 37823	AXLE	1	-197819	X	ORD AT52153, AT52152, R49068, R49069, R49070, T29208(2) T29209, U16068
	AT 52153	AXLE	1	197820-248211	X	ASSY, INCL. KEYS 2-7
2	JD 8827	NEEDLE BEARING	2	197820-248211	X	SUB. FOR JD9910
	JD 9911	NEEDLE BEARING	2	-197819	X	
3	T 23170	BUSHING	1	-248211	X	
4	JD 7798	LUBRICATION FITTING	3	-248211	X	
5	U 16068	SNAP RING	1	197820-248211	X	SUB. FOR F534R
6	T 21669	BUSHING	1	-248211	X	FRONT
7	T 34546	BUSHING	4	-248211	X	
8	T 25840	CAP SCREW	1	-248211	X	3/4"
9	T 25922	WASHER	2	-248211	X	
10	T 25921	SHIM	AR	-248211	X	TK=0, 4MM(.016")
11	14H 902	NUT	5	-248211	X	3/4"
12	11H 218	COTTER PIN	1	-248211	X	3/16"X1-1/2"
13	AL 24258	KNUCKLE	2	-248211	X	
14	T 31749	SEAL	2	-248211	X	LOW
15	JD 8412	THRUST BEARING	2	-248211	X	LOW
16	T 15288	SEAL	2	-248211	X	UP
17	T 15285	SHIM	AR	-248211	X	TK=0, 68MM(.027")UP
18	T 39091	ARM	1	-248211	X	R.H.
	T 39092	ARM	1	-248211	X	L.H.
19	19H 1374	CAP SCREW	2	-248211	X	3/4"X2"
20	12H 236	LOCK WASHER	2	-248211	X	3/4"
21	F 3607R	WASHER	2	-248211	X	
22	AT 37822	LEVER	1	-197819	X	W/F534R
	AT 52152	LEVER	1	197820-248211	X	
23	T 23229	WASHER	2	-197819	X	
	T 29208	WASHER	2	197820-248211	X	
24	T 23228	SHIM	AR	-197819	X	TK=0, 25MM(.010")
	T 29209	SHIM	AR	197820-248211	X	TK=0, 25MM(.010")
	R 49068	SHIM	AR	197820-	X	TK=0, 1MM(.004")
	R 49069	SHIM	AR	197820-	X	TK=0, 5MM(.020")
	R 49070	SHIM	AR	197820-	X	TK=1, 0MM(.040")
25	F 534R	SNAP RING	1	-248211	X	
26	AT 37821	TIE ROD	2	-248211	X	ASSY, INCL. KEYS 27-32
27	AL 26879	TIE ROD END	2	-248211	X	
28	AL 26880	TIE ROD END	2	-248211	X	
29	L 31706	CLAMP	2	-248211	X	
30	19H 2541	CAP SCREW	2	-248211	X	3/8"X1-3/4"
31	14H 846	NUT	2	-248211	X	3/8"
32	12H 304	LOCK WASHER	2	-248211	X	3/8"
33	11M 7023	COTTER PIN	4	-248211	X	4X35MM
34	T 34548	WASHER	2	-248211	X	LOW
35	L 32815	SPACER	1	-197819	X	
	L 32814	SPACER	1	197820-248211	X	

FRONT AXLE / SPINDLE KNUCKLE / TIE ROD
ESSIEU / FUSEE / BARRE D'ACCOUPLEMENT
VORDERACHSE / ACHSSCHENKEL / SPURSTANGE
ASSALE ANTERIORE / FUSELLO / BARRA D'ACCOPPIAMENTO
EJE DELANTERO / MANGUETA / VARILLA TENSORE
FRAMAXEL / SPINDELHUS / PARALLELLSTAG
L 11273

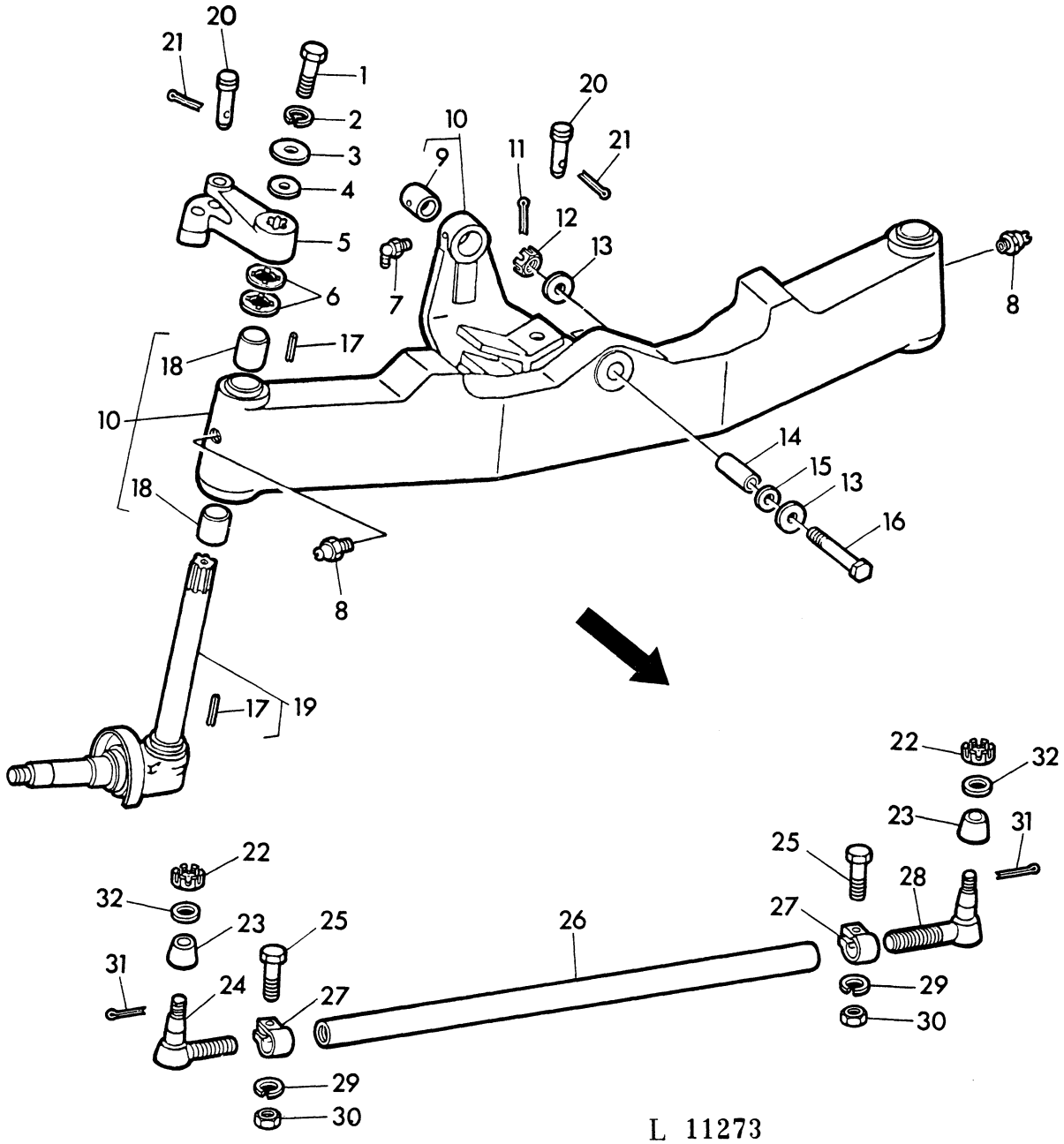

L 11273

KEY	PART NO.	DESCRIPTION	QTY	SERIAL NO.	JD310	REMARKS
1	19H 1863	CAP SCREW	2	248212-	X	5/8"X3"
2	12H 294	LOCK WASHER	2	248212-	X	5/8"
3	R 20135	WASHER	2	248212-	X	
4	R 52383	THRUST WASHER	4	248212-	X	
5	T 66936	ARM	1	248212-	X	R.H., SUB. FOR T54444
	T 66937	ARM	1	248212-	X	L.H., SUB. FOR T54445
6	R 49838	WASHER	4	248212-	X	
7	JD 7799	LUBRICATION FITTING	1	248212-	X	1/8"
8	JD 7798	LUBRICATION FITTING	2	248212-	X	1/8"
9	T 23170	BUSHING	1	248212-	X	
10	AT 63366	AXLE	1	248212-	X	ASSY, INCL. KEYS 9, 17, 18
11	11H 218	COTTER PIN	1	248212-	X	3/16"X1-1/2"
12	14H 902	NUT	1	248212-	X	3/4"
13	T 25922	WASHER	2	248212-	X	
14	T 21669	BUSHING	1	248212-	X	FRONT
15	T 25921	SHIM	AR	248212-	X	TK=0,38MM(.015")
16	T 25840	CAP SCREW	1	248212-	X	3/4"
17	34H 308	SPRING PIN	4	248212-	X	1/4"X1/2"
18	R 49835	BUSHING	4	248212-	X	
19	AT 46785	KNUCKLE	2	248212-	X	W/34H308
20	T 48225	PIN	2	248212-	X	
21	11M 7023	COTTER PIN	2	248212-	X	4X32MM
22	14H 918	NUT	2	248212-	X	5/8"
23	R 21101	BOOT	2	248212-	X	
24	AR 74131	TIE ROD END	1	248212-	X	R.H.
25	19H 1805	CAP SCREW	2	248212-	X	1/2"X2-1/4"
26	.....	TIE ROD	1	248212-	X	ORD AT46786
27	M 2301T	CLAMP	2	248212-	X	
28	AR 74132	TIE ROD END	1	248212-	X	L.H.
29	12H 301	LOCK WASHER	2	248212-	X	1/2"
30	14H 809	NUT	2	248212-	X	1/2"
31	11H 236	COTTER PIN	2	248212-	X	1/8"X1"
32	24H 1365	WASHER	2	248212-	X	21/32"X1"X.090"
-	AT 46786	TIE ROD	1	248212-	X	ASSY, INCL. KEYS 22-32

FRONT WHEEL / ASSEMBLY
ROUES AVANT / ROULEMENTS
VORDERRAEDER / LAGER
RUOTE ANTERIORI / MOZZO
RUEDAS DELANTERAS
FRAMHJULSENHET
L 31443

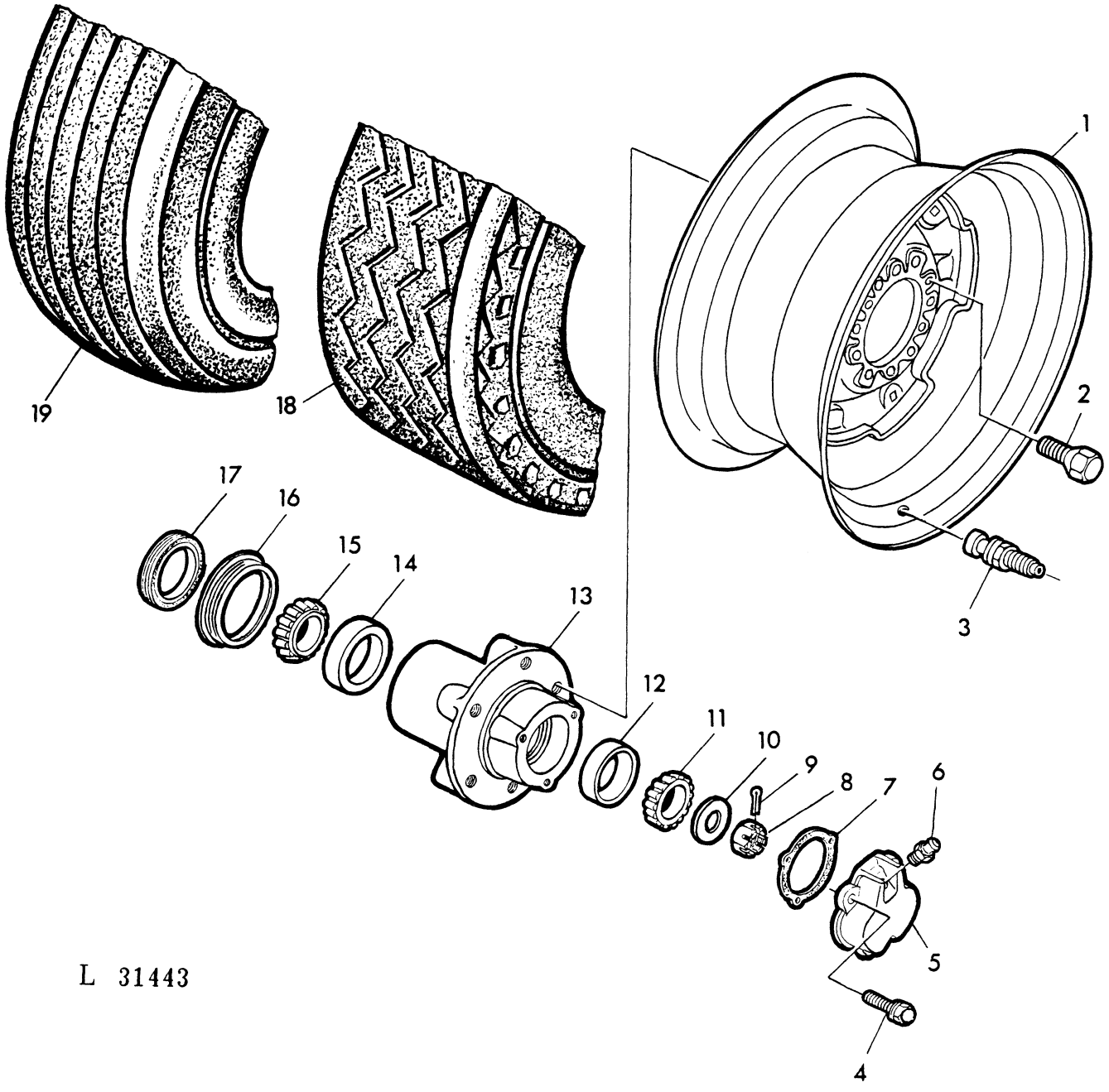

KEY	PART NO.	DESCRIPTION	QTY	SERIAL NO.	JD310	REMARKS
1	JD 3043	RIM	2	-248211	X	(A) 11LX15
2	JD 21	SCREW	12	-248211	X	9/16"
3	AT 37037	VALVE	2	-248211	X	
4	R 32703	SCREW	6	-248211	X	
5	A 1555R	COVER	2	-248211	X	
6	JD 7798	LUBRICATION FITTING	2	-248211	X	SUB. FOR L25141
7	A 1556R	GASKET	2	-248211	X	
8	14H 920	NUT	2	-248211	X	1"
9	11H 268	COTTER PIN	2	-248211	X	5/32"X1-1/4"
10	A 5146R	WASHER	2	-248211	X	
11	JD 8929	BEARING CONE	2	-248211	X	
12	JD 8251	BEARING CUP	2	-248211	X	
13	T 21545	HUB	2	-248211	X	
14	JD 7445	BEARING CUP	2	-248211	X	
15	JD 8969	BEARING CONE	2	-248211	X	
16	R 26632	RING	2	-248211	X	
17	AR 26480	SEAL	2	-248211	X	
18	L 30517	TIRE	2	-248211	X	11LX15 (F-3)
19	L 34172	TIRE	1	-248211	X	11LX15 (I-1)

(A) FOR TIRE SIZE
POUR PNEUMATIQUES
FUER BEREIFUNG
PER PNEUMATICI
PARA NEUMATICAS
FOR DACKSDIMENSION

FRONT WHEEL / ASSEMBLY
ROUES AVANT / ROULEMENTS
VORDERRAEDER / LAGER
RUOTE ANTERIORI / MOZZO
RUEDAS DELANTERAS
FRAMHJULSENHET
L 31444

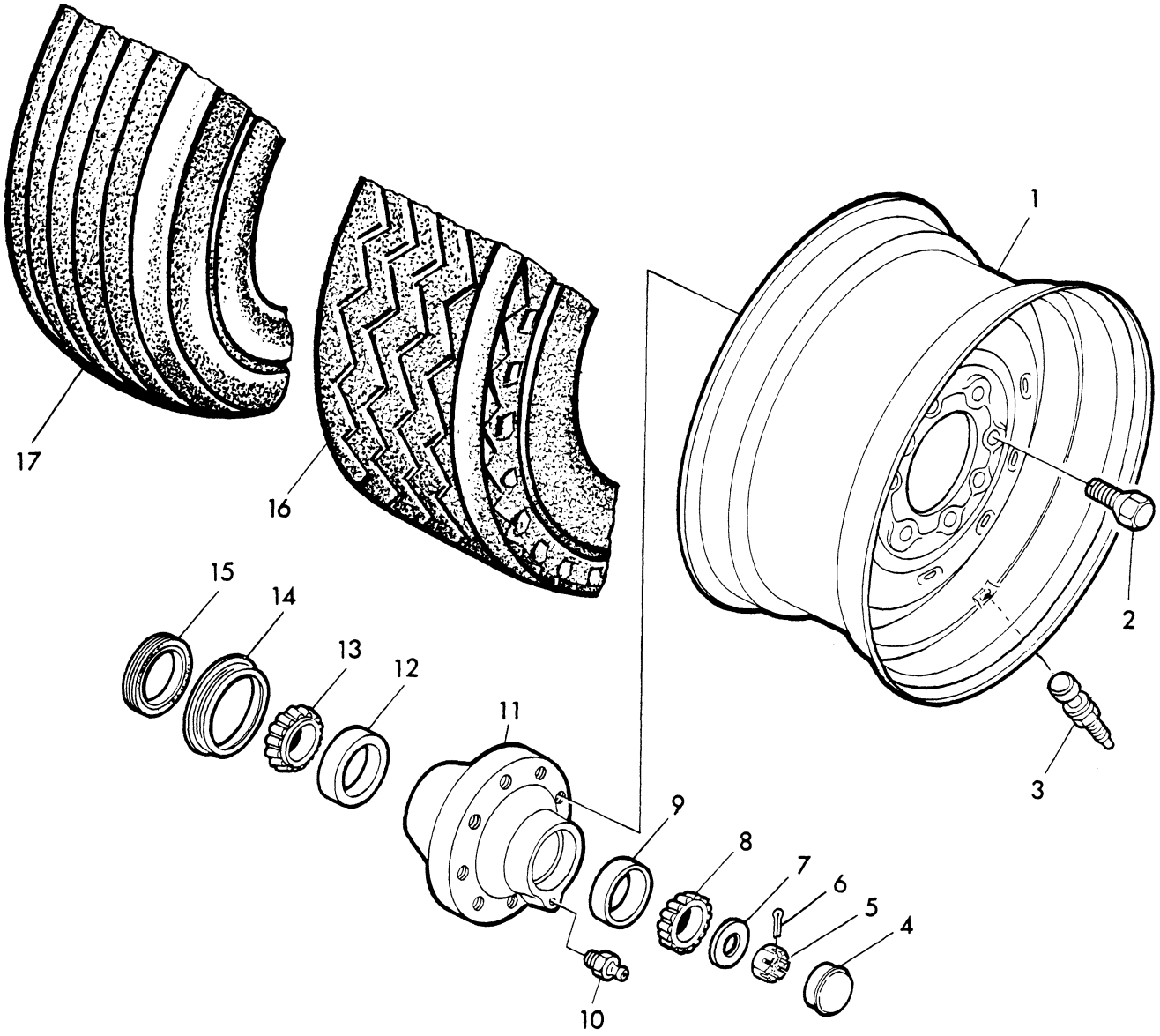

L 31444

KEY	PART NO.	DESCRIPTION	QTY	SERIAL NO.	JD310	REMARKS
1	AT 51878	RIM	2	248212-	X	(A). 11LX15
2	JD 21	SCREW	16	248212-	X	9/16X2"
3	AT 37037	VALVE	2	248212-	X	
4	R 50992	CAP	2	248212-	X	
5	14H 920	NUT	2	248212-	X	1"
6	11H 218	COTTER PIN	2	248212-	X	3/16"X1-1/2"
7	A 5146R	WASHER	2	248212-	X	
8	JD 8929	BEARING CONE	2	248212-	X	
9	JD 8251	BEARING CUP	2	248212-	X	
10	JD 7798	LUBRICATION FITTING	2	248212-	X	1/8"
11	R 49841	HUB	2	248212-	X	
12	JD 7418	BEARING CUP	2	248212-	X	
13	JD 8969	BEARING CONE	2	248212-	X	
14	R 26632	RING	2	248212-	X	
15	AR 26480	SEAL	2	248212-	X	
16	L 30517	TIRE	2	248212-	X	11LX15 (F-3)
17	L 34172	TIRE	1	248212-	X	11LX15 (I-1)

(A) FOR TIRE SIZE
POUR PNEUMATIQUES
FUER BEREIFUNG
PER PNEUMATICI
PARA NEUMATICAS
FOR DACKSDIMENSION

DISK REAR WHEELS
ROUES ARRIERE
HINTERRAEDER
RUOTE POSTERIORI
RUEDAS TRASERAS DE DISCO
BAKHJUL MED DISK
L 13084

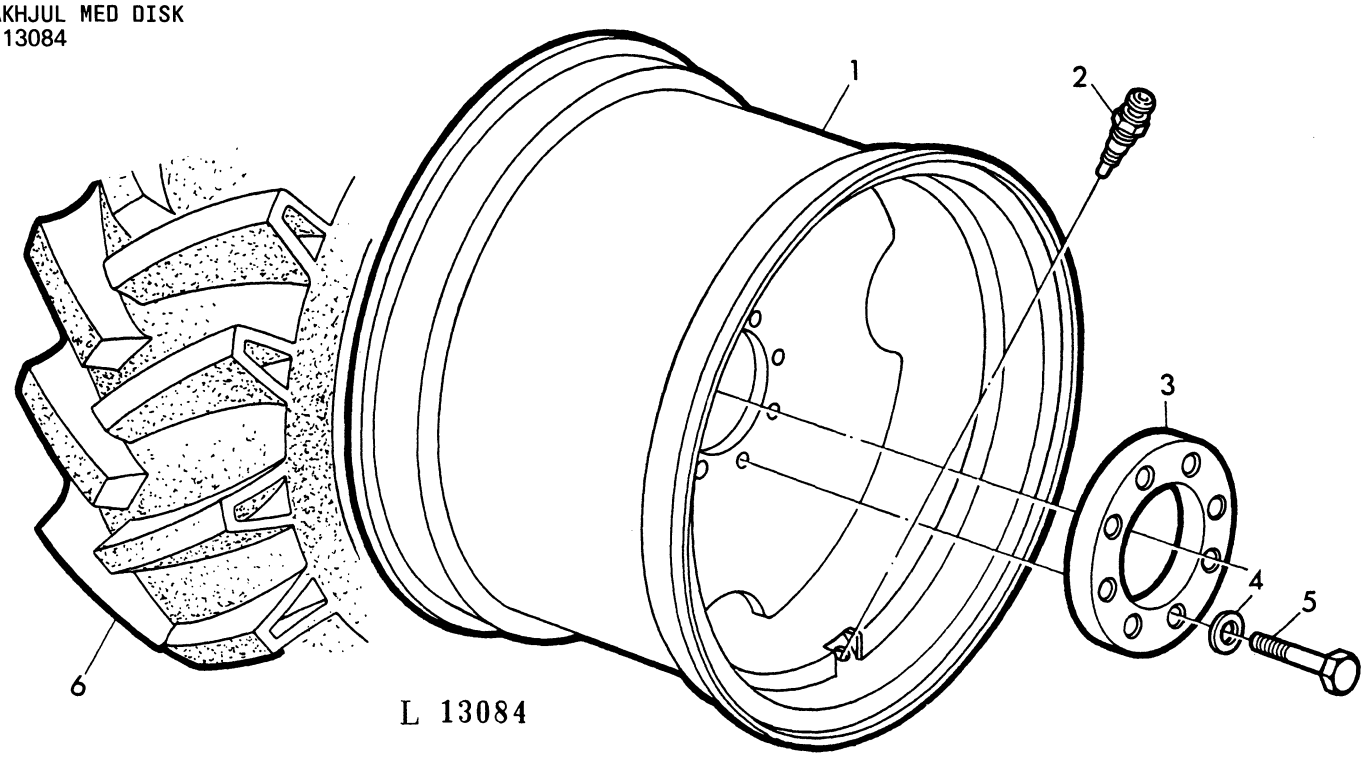

KEY	PART NO.	DESCRIPTION	QTY	SERIAL NO.	JD310	REMARKS
1	AL 24508	RIM	2	-248211	X	(A) 16,9-28
	AT 38626	RIM	2	-248211	X	(A) 16,9-24
	AL 28180	RIM	2	248212-	X	(A) 16,9-28
	AL 28226	RIM	2	248212-	X	(A) 14,00-24
2	AT 25226	TIRE VALVE STEM	2		X	
3	T 39877	RING	2	-248211	X	
	L 31679	RING	2	248212-	X	
4	T 18407	WASHER	16	-248211	X	SUB. FOR T12526
5	19H 3260	CAP SCREW	16	-248211	X	9/16"X3-1/2"
	19H 3280	CAP SCREW	16	248212-	X	3/4"X3"
6	L 29915	TIRE	2		X	16,9-24
	L 29916	TIRE	2		X	16,9-28

(A) FOR TIRE SIZE
POUR PNEUMATIQUES
FUER BEREIFUNG
PER PNEUMATICI
PARA NEUMATICAS
FOR DACKSDIMENSION

CONTROL BOX
COFFRE LATERAL
SEITENKONSOLE
CASSETTA LATERALE
ARMADURA LATERAL
REGLAGEBOX
L 13831

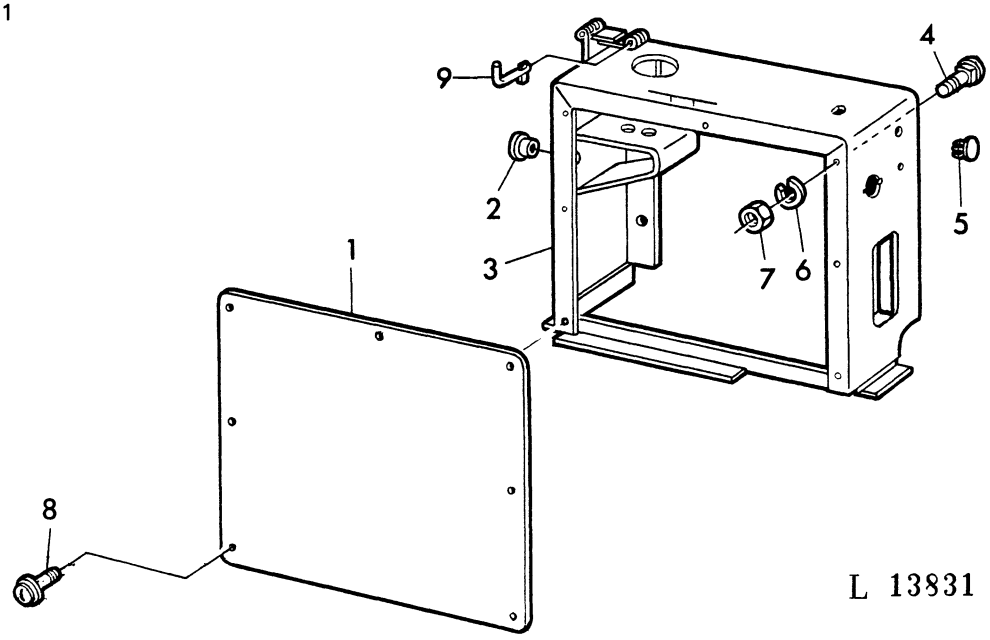

KEY	PART NO.	DESCRIPTION	QTY	SERIAL NO.	JD310	REMARKS
1	T 34058	SHEET METAL	1		X	
2	99M 7009	PLUG	1		X	
3	AL 25588	BOX	1		X	SUB. FOR AL24493
4	03H 1765	BOLT	5		X	3/8"X3/4"
5	R 42451	PLUG	1		X	
6	12H 304	LOCK WASHER	5		X	3/8"
7	14H 812	NUT	1		X	3/8"
8	37M 7033	SCREW	7		X	4, 2X9, 5MM, SUB. FOR 37H43
9	AL 25922	CATCH	1		X	SUB. FOR AL24899

FENDERS
AILES
KOTFLUEGEL
PARAFANGHI
GUARDABARROS
STANKSKARMAR
L 13847

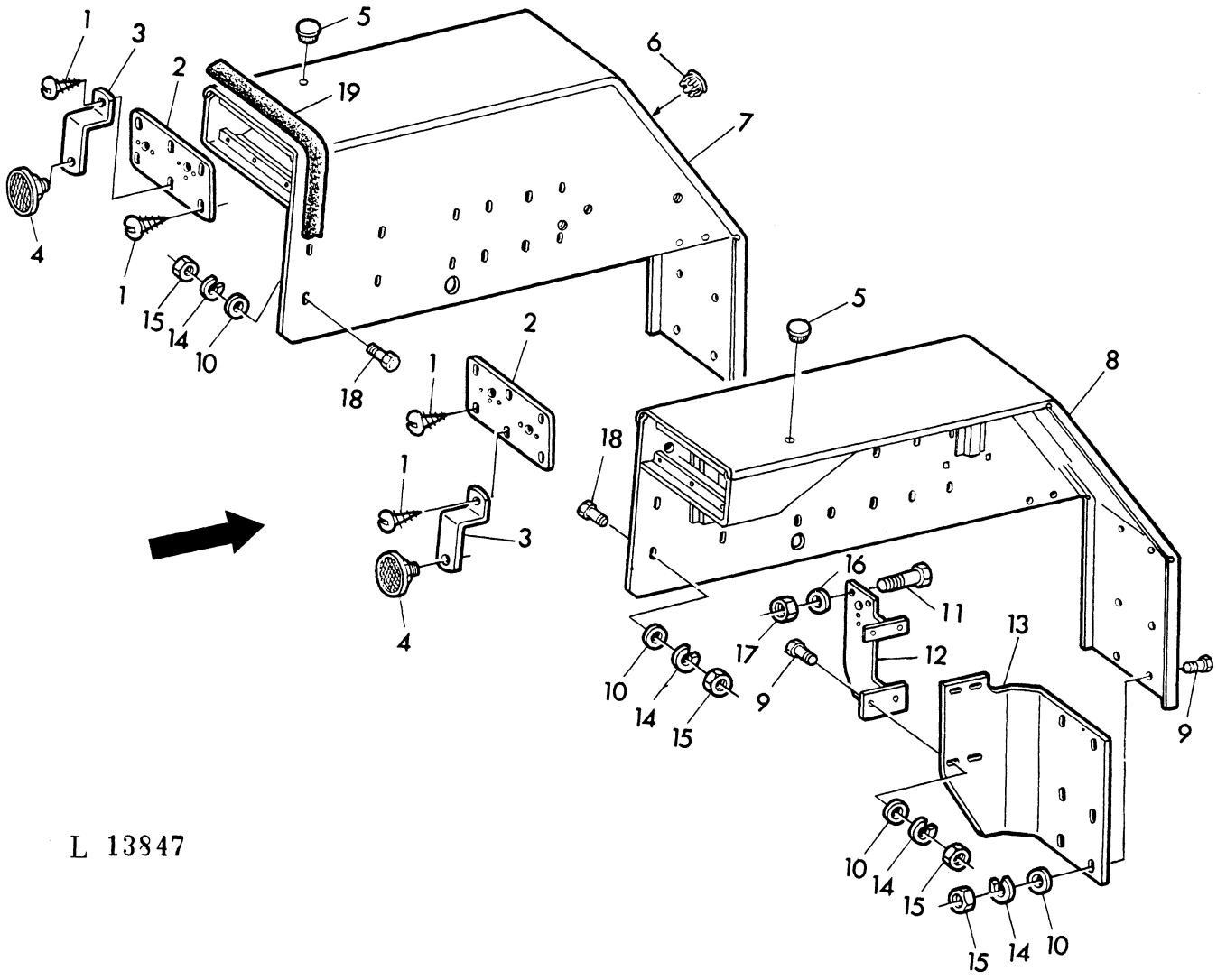

KEY	PART NO.	DESCRIPTION	QTY	SERIAL NO.	JD310	REMARKS
1	37H 51	SCREW	12		X	1/4"X1/2"
2	L 29408	PLATE	2		X	REAR
3	L 29877	RETAINER	2		X	
4	99M 6488	REFLECTOR	2		X	
5	P 48093	PLUG	2		X	
6	R 42451	PLUG	4		X	
7	AT 44776	FENDER	1		X	L.H. SUB. FOR AT32967
8	AT 44775	FENDER	1		X	R.H. SUB. FOR AT32966
9	19H 1732	CAP SCREW	20		X	3/8"X1-1/4"
10	24H 1308	WASHER	32		X	13/32"X1"X. 134"
11	19H 1777	CAP SCREW	4		X	1/2"X1-3/4"
12	AT 32968	BRACE	2		X	
13	T 33859	SUPPORT	1		X	R.H.
	T 33860	SUPPORT	1		X	L.H.
14	12H 304	LOCK WASHER	32		X	3/8"
15	14H 812	NUT	32		X	3/8"
16	12H 301	LOCK WASHER	4		X	1/2"
17	14H 809	NUT	4		X	1/2"
18	19H 1731	CAP SCREW	12		X	3/8"X1"
19	L 30958	WEATHERSTRIP	2		X	(A)

(A) WITH OPERATOR'S CAB
AVEC CABINE
BEI KABINE
CON CABINA
CON CABINA
MED FORARHYTT

HOOD/FRONT PLATE/GRILLE HOUSING
CAPOT/PLAQUE AVANT/GRILLE DE RADIATEUR
HAUBE/FRONTPLATTE/KUEHLERSCHUTZ
COFANO/MASCHERINA/PROTEZIONE DEL RADIATORE
CAPO/PLACA DELANTERA/CORAZA DEL RADIADOR
HUV/FRONTPLATTA/GRILL
L 13850

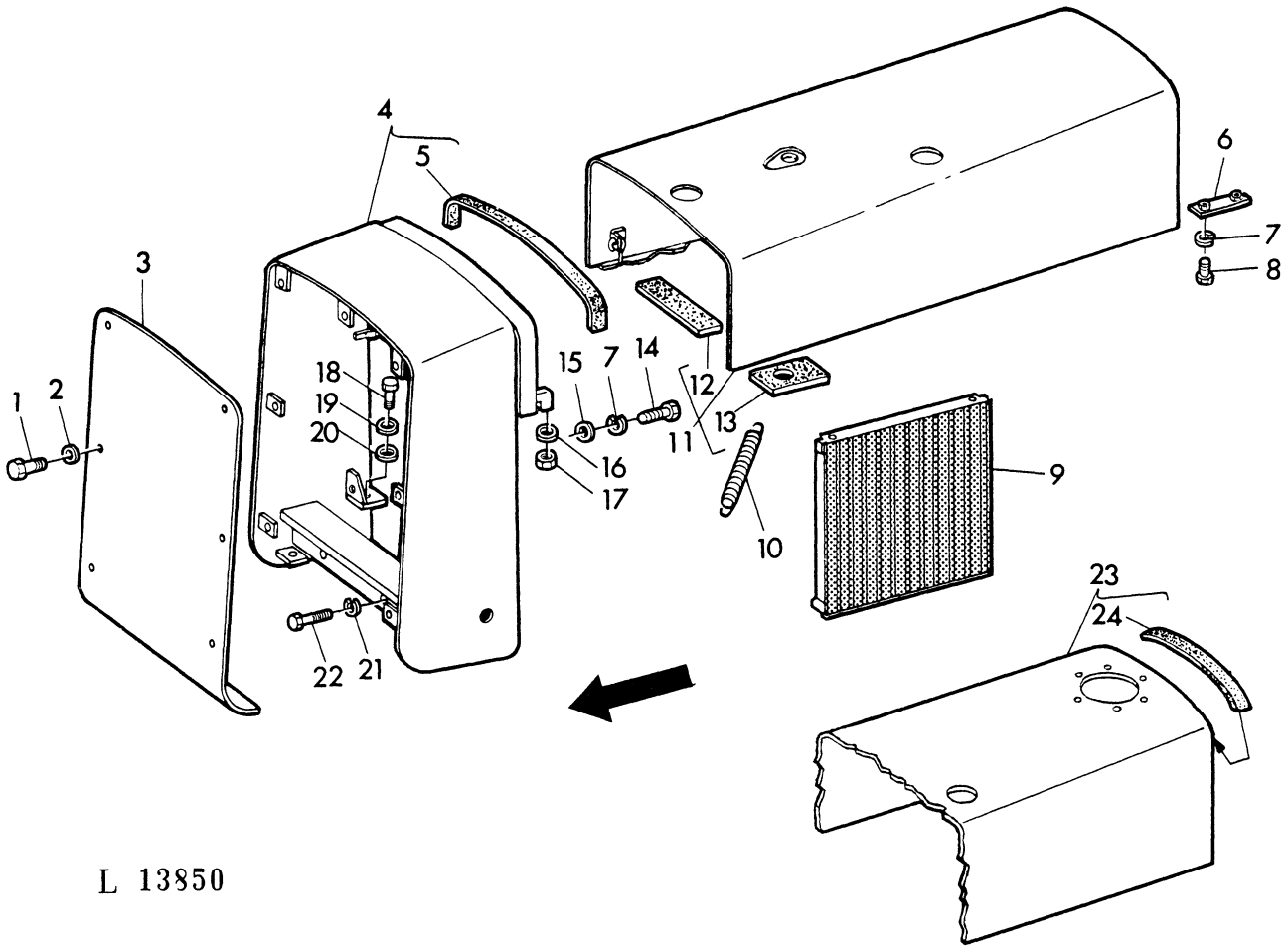

L 13850

KEY	PART NO.	DESCRIPTION	QTY	SERIAL NO.	JD310	REMARKS
1	19H 1895	CAP SCREW	8		X	1/2"X3/4"
2	24H 1625	WASHER	8		X	17/32"X1"X. 120"
3	T 33610	PLATE	1		X	
4	AT 44133	HOUSING	1		X	ASSY, INCL. KEY 5, SUB. FOR AT30726
5	T 31647	FOAM PAD	1		X	
6	AT 20027	STRAP	2		X	
7	12H 304	LOCK WASHER	4		X	
8	19H 2021	CAP SCREW	2		X	3/8"X5/8"
9	AT 35236	GRILLE	2		X	
10	R 26858	SPRING	2		X	
11	AL 25066	HOOD	1		X	ASSY, INCL. KEYS 12, 13
12	T 31650	FOAM PAD	2		X	
13	T 31651	FOAM PAD	1		X	
14	19H 2284	CAP SCREW	2		X	3/8"X7/8"
15	24H 1312	WASHER	2		X	13/32"X1-3/8"X. 105"
16	24H 1305	WASHER	1		X	13/32"X13/16"X. 060"
17	BP 12232	LOCK NUT	2		X	
18	19H 1777	CAP SCREW	2		X	1/2"X1-3/4"
19	24H 1111	WASHER	2		X	13/32"X1-1/16"X. 090"
20	24H 1341	WASHER	2		X	17/32"X15/16"X. 060"
21	12H 236	LOCK WASHER	2		X	3/4"
22	19H 1782	CAP SCREW	2		X	3/4"X2-1/4"
23	AL 24810	HOOD	1		X	(A)ASSY, INCL. KEYS 12, 13, 24
24	T 31659	FOAM PAD	1		X	(A)

(A) WITH OPERATOR'S CAB
AVEC CABINE
BEI KABINE
CON CABINA
CON CABINA
MED FORARHYTT

HOOD/FRONT PLATE/WITH SOUNDPROOFING
CAPOT/PLAQUE AVANT/AVEC ELEMENTS D'INSONORISATION
HAUBE/FRONTPLATTE/MIT SCHALLDAEMPFUNG
COFANO/MASCHERINA/CON DISPOSITIVO SALVA SUONI
CAPO/PLACA DELANTERA/CON INSONORIZACION
HUV/FRONTPLATTE/MED LJUDABSORBENT
L 31234

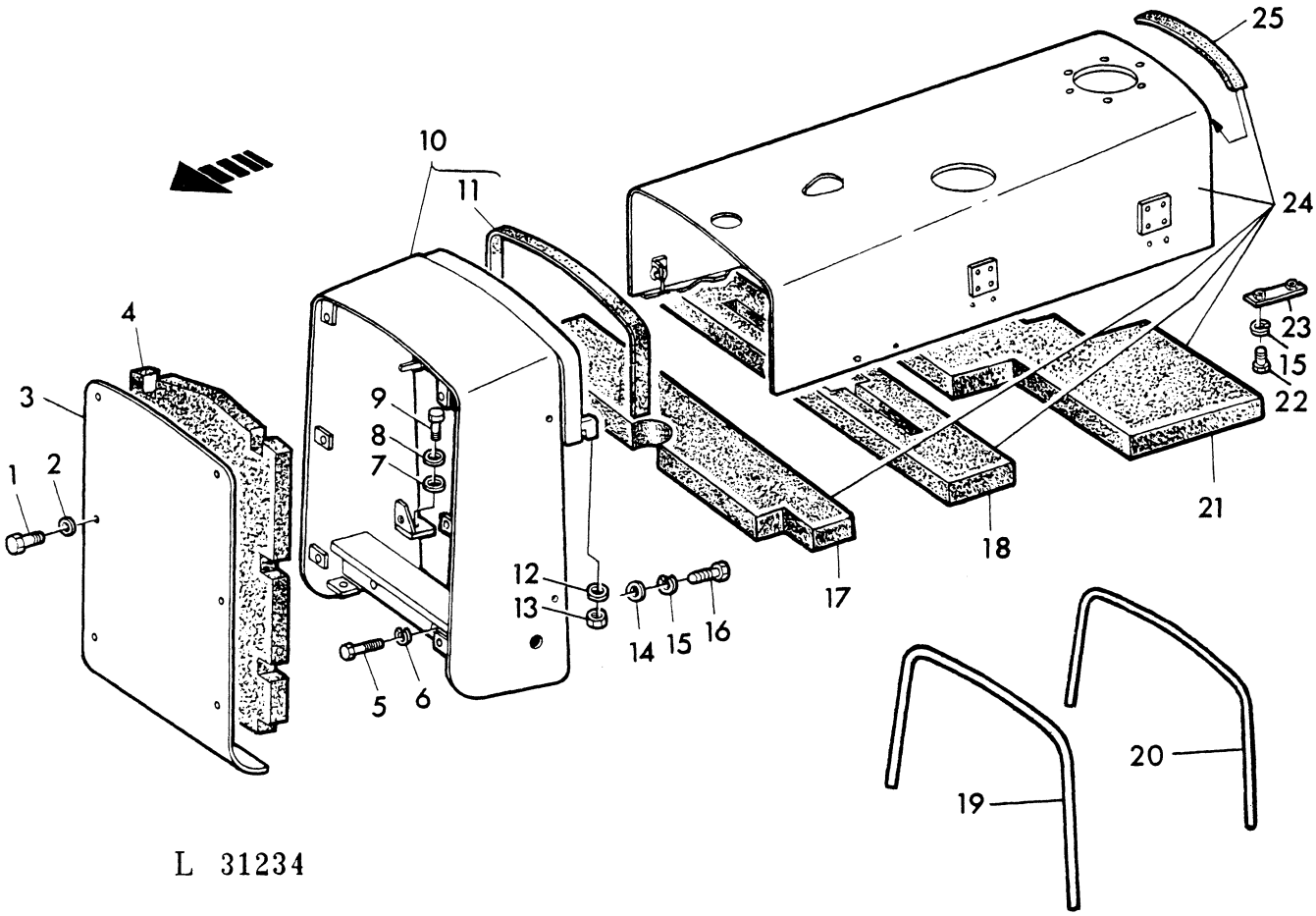

L 31234

KEY	PART NO.	DESCRIPTION	QTY	SERIAL NO.	JD310	REMARKS
1	19H 1895	CAP SCREW	8	193017-	X	1/2"X3/4"
2	24H 1625	LOCK WASHER	8	193017-	X	17/32"X1"X. 120"
3	T 33610	PLATE	1	193017-	X	
4	T 45268	BARRIER	1	193017-	X	
5	19H 1782	CAP SCREW	2	193017-	X	3/4"X2-1/4"
6	12H 236	LOCK WASHER	2	193017-	X	3/4"
7	24H 1341	WASHER	2	193017-	X	17/32"X15/16"X. 060"
8	24H 1111	WASHER	2	193017-	X	13/32"X1-1/16"X. 090"
10	AT 44133	HOUSING	1	193017-	X	W/T31647
11	T 31647	FOAM PAD	1	193017-	X	
12	24H 1305	WASHER	1	193017-	X	
13	BP 12232	LOCK NUT	2	193017-	X	
14	24H 1312	WASHER	2	193017-	X	13/32"X1-3/8"X. 105"
15	12H 304	LOCK WASHER	4	193017-	X	
16	19H 2284	CAP SCREW	2	193017-	X	3/8"X7/8"
17	L 32249	BARRIER	1	193017-	X	
18	L 32250	BARRIER	1	193017-	X	
19	L 34137	CLAMP	1	295909-	X	
20	L 34138	CLAMP	1	295909-	X	
21	L 32258	BARRIER	1	193017-	X	
22	19H 2021	CAP SCREW	2	193017-	X	3/8"X5/8"
23	AT 20027	STRAP	2	193017-	X	
24	AL 27456	HOOD	1	193017-	X	ASSY, INCL. KEYS 17, 18, 21, 24, 25
25	T 31659	FOAM PAD	1	193017-	X	

HOOD/FRONT PLATE/WITH SOUNDPROOFING
CAPOT/PLAQUE AVANT/AVEC ELEMENTS D'INSONORISATION
HAUBE/FRONTPLATTE/MIT SCHALLDAEMPFUNG
COFANO/MASCHERINA/CON DISPOSITIVO SALVA SUONI
CAPO/PLACA DELANTERA/CON ELEMENTOS DE INSONORIZACION
HUV/FRONTPLATTE/MED LJUDABSORBENT
L 13811

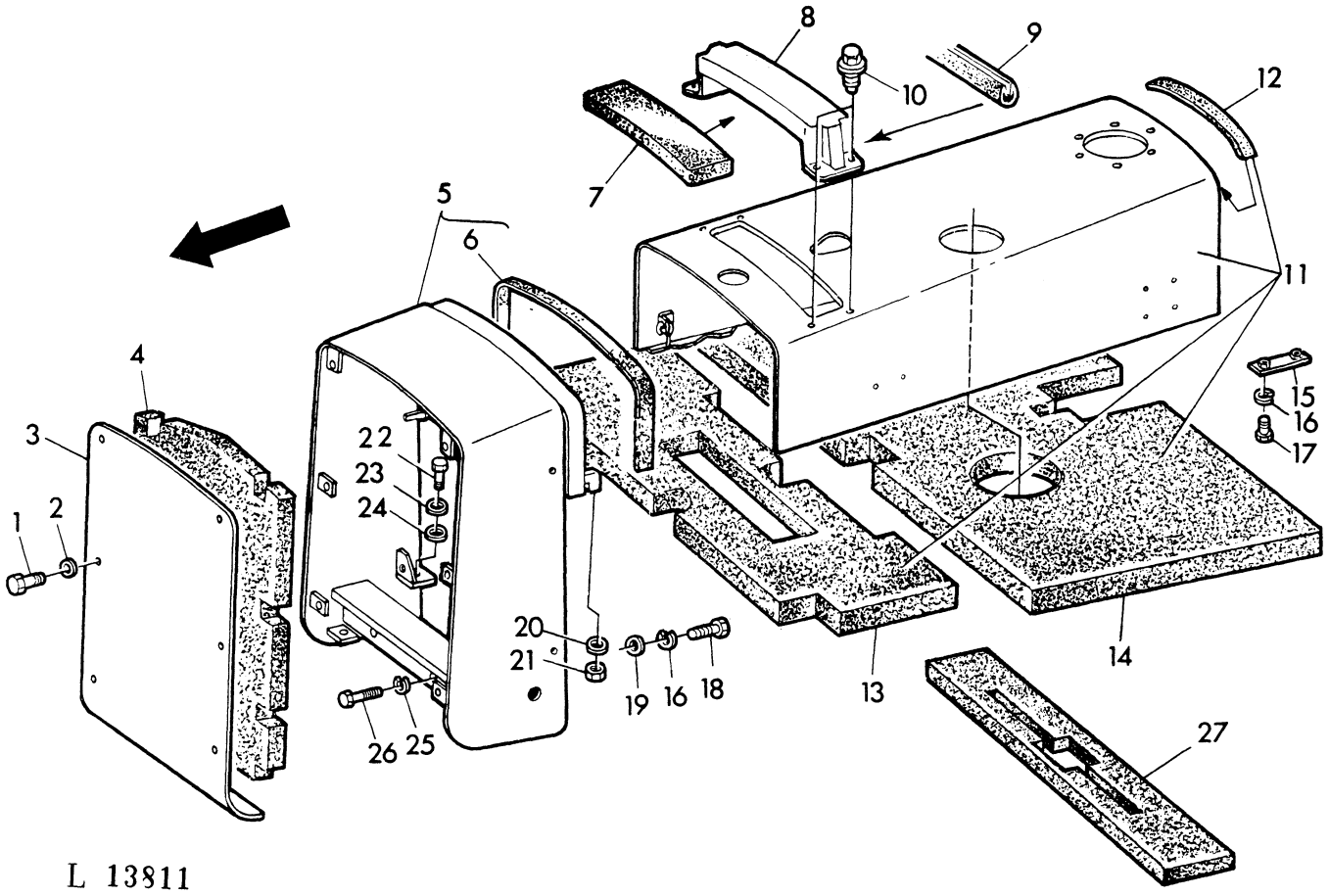

KEY	PART NO.	DESCRIPTION	QTY	SERIAL NO.	JD310	REMARKS
1	19H 1895	CAP SCREW	8	-193016	X	1/2"X3/4"
2	24H 1625	WASHER	8	-193016	X	17/32"X1"X. 120"
3	T 33610	PLATE	1	-193016	X	
4	T 45268	BARRIER	1	-193016	X	
5	AT 44133	HOUSING	1	-193016	X	W/T31647
6	T 31647	FOAM PAD	1	-193016	X	
7	T 45264	BARRIER	1	-193016	X	
8	T 45263	COVER	1	-193016	X	
9	T 45262	WEATHERSTRIP	1	-193016	X	
10	T 22211	SCREW	1	-193016	X	
11	AT 44135	HOOD	1	-193016	X	ASSY, INCL. KEYS 12-14
12	T 31659	FOAM PAD	1	-193016	X	
13	T 45260	BARRIER	1	-193016	X	
14	T 45270	BARRIER	1	-193016	X	
15	AT 20027	STRAP	2	-193016	X	
16	12H 304	LOCK WASHER	4	-193016	X	
17	19H 2021	CAP SCREW	2	-193016	X	3/8"X5/8"
18	19H 2284	CAP SCREW	2	-193016	X	3/8"X7/8"
19	24H 1312	WASHER	2	-193016	X	13/32"X1-3/8"X. 105"
20	24H 1305	WASHER	1	-193016	X	13/32"X13/16"X. 060"
21	BP 12232	LOCK NUT	2	-193016	X	
22	19H 1777	CAP SCREW	2	-193016	X	1/2"X1-3/4"
23	24H 1111	WASHER	2	-193016	X	13/32"X1-1/16"X. 090"
24	24H 1341	WASHER	2	-193016	X	17/32"X15/16"X. 060"
25	12H 236	LOCK WASHER	2	-193016	X	3/4"
26	19H 1782	CAP SCREW	2	-193016	X	3/4"X2-1/4"
27	L 31267	BARRIER	1	-193016	X	

SOUND-PROOFING SIDE PANELS WITH SOUNDPROOFING
REVETEMENT LATERAL AVEC ELEEMENTS D' INSONORISATION
SEITENVERKLEIDUNG MIT SCHALLDAEMPFUNG
FIANCATE LATERALI CON DISPOSITIVO SALVA SUONI
PROTECCIONES LATERALES CON ELEMENTOS DE INSONORIZACION
SIDOPLATTOR MED LJUDABSORBENT
L 13092

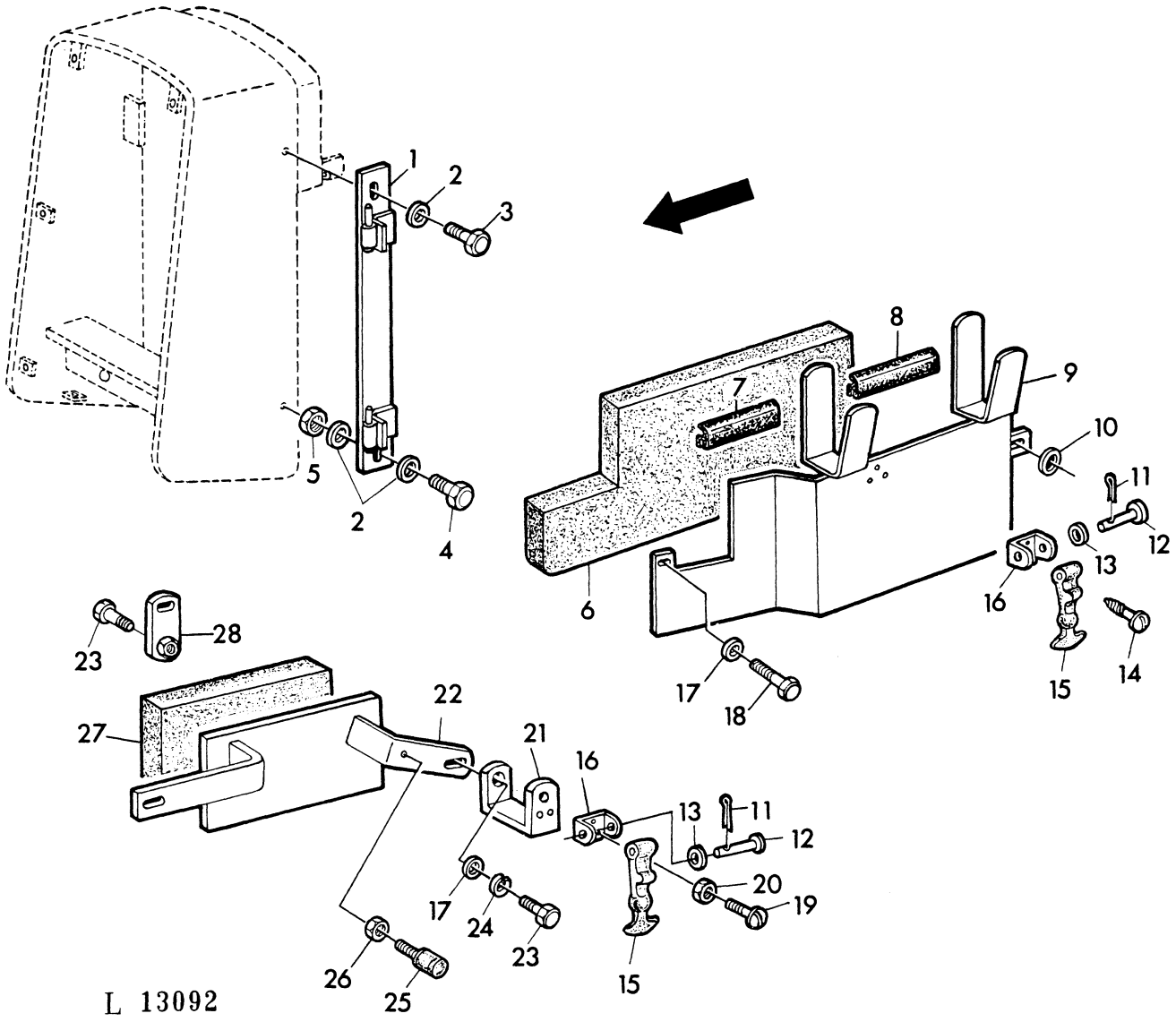

KEY	PART NO.	DESCRIPTION	QTY	SERIAL NO.	JD310	REMARKS
1	AL 27428	HINGE	1	-248211	X	L.H.
	AL 27429	HINGE	1	-248211	X	R.H.
2	24M 7139	WASHER	10	-248211	X	6,4X18X1,5MM
3	19H 1227	CAP SCREW	2	-248211	X	1/4"X1/2"
4	19H 1791	CAP SCREW	2	-248211	X	1/4"X1-1/4"
5	14H 786	NUT	2	-248211	X	1/4"
6	L 32260	BARRIER	1	-248211	X	L.H.
	L 32263	BARRIER	1	-248211	X	R.H.
7	L 32211	WEATHERSTRIP	1	-248211	X	
8	L 32259	WEATHERSTRIP	2	-248211	X	L.H.
9	AL 27459	SIDE WALL	1	-248211	X	L.H. INCL. KEYS 6,8
	AL 27461	SIDE WALL	1	-248211	X	R.H. INCL. KEYS 6,8
10	24H 1378	WASHER	2	-248211	X	(A)11/16"X1-1/2"X.134"
11	11M 7075	COTTER PIN	4	-248211	X	1,2X12MM
12	L 32207	PIN	4	-248211	X	
13	24M 7027	WASHER	4	-248211	X	5,3X10X1MM
14	37M 7006	SCREW	6	-248211	X	3,5X16MM
15	L 32206	RETAINER	4	-248211	X	
16	L 32205	RETAINER	4	-248211	X	
17	24H 1305	WASHER	2	-248211	X	13/32"X13/96"X.060"
18	19H 2021	CAP SCREW	2	-248211	X	3/8"X5/8"
19	21M 7153	BOLT	6	-248211	X	4X15MM
20	14M 7139	NUT	6	-248211	X	4MM
21	L 32194	RETAINER	2	-248211	X	
22	AL 27430	SHIELD	1	-248211	X	L.H. INCL. KEY 27
	AL 27431	SHIELD	1	-248211	X	R.H. INCL. KEY 27
23	19H 2284	CAP SCREW	3	-248211	X	3/8"X7/8"
24	12H 304	LOCK WASHER	2	-248211	X	3/8"
25	AL 27432	BUMPER	2	-248211	X	
26	14M 7027	NUT	6	-248211	X	6MM
27	L 32204	BARRIER	2	-248211	X	
28	AL 27435	STRAP	1	-248211	X	

(A) W/RIGID PLATFORM
AVEC PLATEFORME SANS SILENT-BLOCS
BEI STARRGELAGERTER PLATTFORM
PER PIATTAFORMA SENZA AMORTIZZATORE DI GOMMA
PARA PLATAFORMA SIN AMORTIGUARDORES DE GOMA
FOR PLATFORM UTAN GUMMIFJADRING

SOUND-PROOFING SIDE PANELS WITH SOUNDPROOFING
REVETEMENT LATERAL AVEC ELEMENTS D'INSONORISATION
SEITENVERKLEIDUNG MIT SCHALLDAEMPFUNG
FIANCATE LATERALI CON DISPOSITIVO SALVA SUONI
PROTECCIONES LATERALES CON ELEMENTOS DE INSONORIZACION
SIDOPLATTOR MED LJUDABSORBENT
L 31231

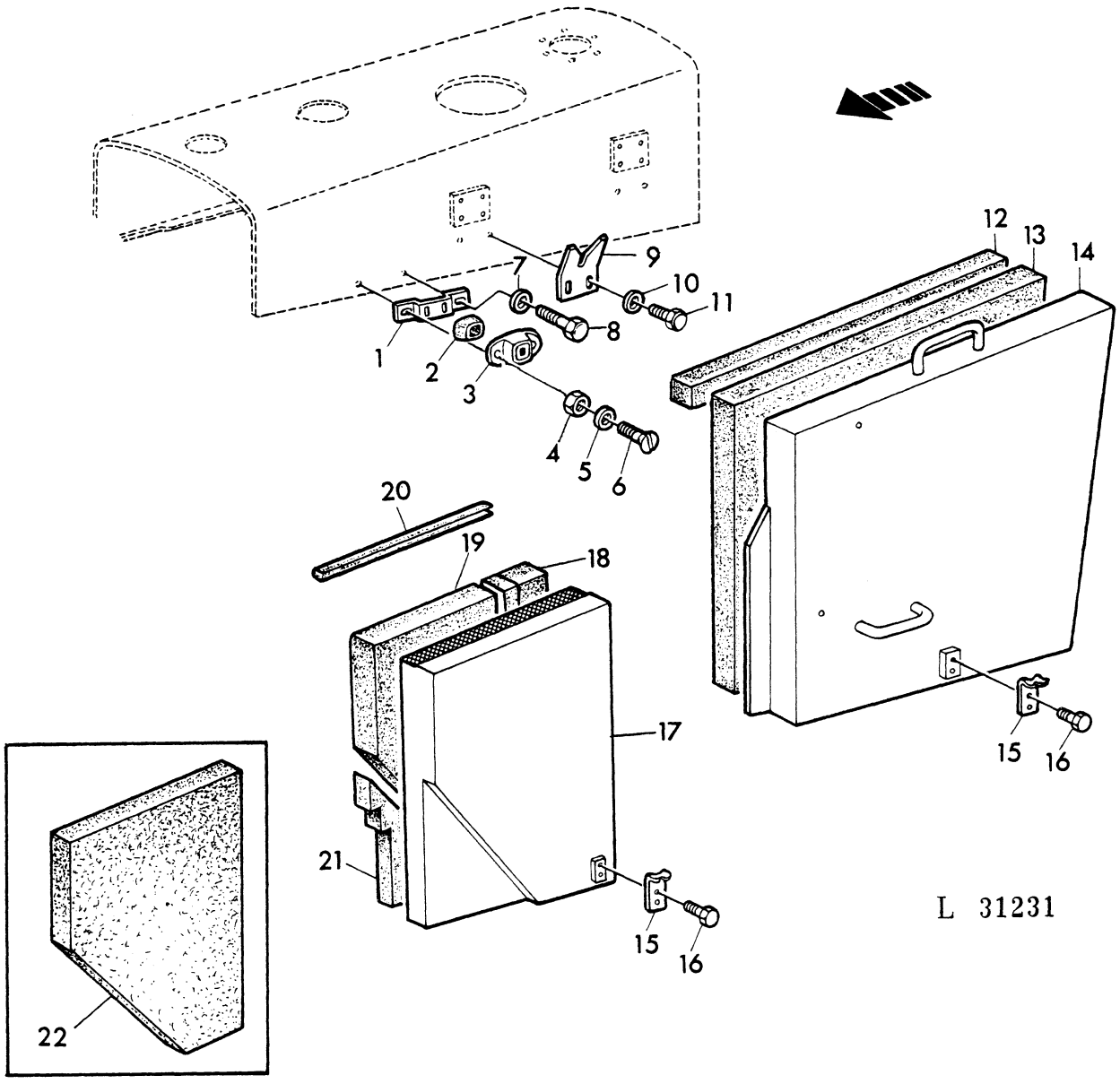

KEY	PART NO.	DESCRIPTION	QTY	SERIAL NO.	JD310	REMARKS
1	L 32191	RETAINER	2		X	
2	L 32193	GROMMET	2		X	
3	L 32192	HOUSING	2		X	
4	14M 7027	NUT	6		X	6MM
5	24M 7054	WASHER	4		X	6,4X12X1,5MM
6	21M 7155	SCREW	4		X	6X15MM
7	24M 7139	WASHER	10		X	6,4X18X1,5MM
8	19H 1227	CAP SCREW	4		X	1/4"X1/2"
9	L 32190	STRAP	4		X	
10	24M 7055	WASHER	10		X	8,4X17X2MM
11	19M 7162	CAP SCREW	8		X	8X15MM
12	L 32253	BARRIER	2		X	
13	L 32254	BARRIER	1		X	R.H.
	L 32256	BARRIER	1		X	L.H.
14	AL 27452	SIDE WALL	1		X	R.H. INCL. KEYS 12,13
	AL 27454	SIDE WALL	1		X	L.H. INCL. KEYS 12,13
15	L 32208	STOP	4		X	
16	19M 7598	CAP SCREW	8		X	4X10MM
17	AL 31886	DOOR	1		X	R.H., INCL. KEYS 18,19,21 SUB. FOR AL 27426 W/KEYS 21,22
	AL 31889	DOOR	1		X	L.H., INCL. KEYS 18,19,21 SUB. FOR AL 27427 W/KEYS 21,22
18	L 34956	BARRIER	1		X	R.H.
	L 34966	BARRIER	1		X	L.H.
19	L 34957	BARRIER	1		X	R.H.
	L 34967	BARRIER	1		X	L.H.
20	L 32537	WEATHERSTRIP	2		X	
21	L 32199	BARRIER	1		X	R.H.
	L 32201	BARRIER	1		X	L.H.
22	L 32198	BARRIER	1		X	R.H., ORD. L34956, L34957
	L 32200	BARRIER	1		X	L.H., ORD. L34966, L34967

SOUND-PROOFING SIDE PANELS MACHINES WITH SOUNDPROOFING
REVETEMENT LATERAL MACHINES AVEC INSONORISATION
SEITENVERKLEIDUNG MASCHINEN MIT SCHALLDAEMPFUNG
FIANCATE LATERALI MACCHINE CON DISPOSITIVO SALVA SUONI
PROTECCIONES LATERALES MAQUINAS INSONORIZADAS
SIDOPLATTOR MASKINER MED LJUDABSORBENT
L 13093

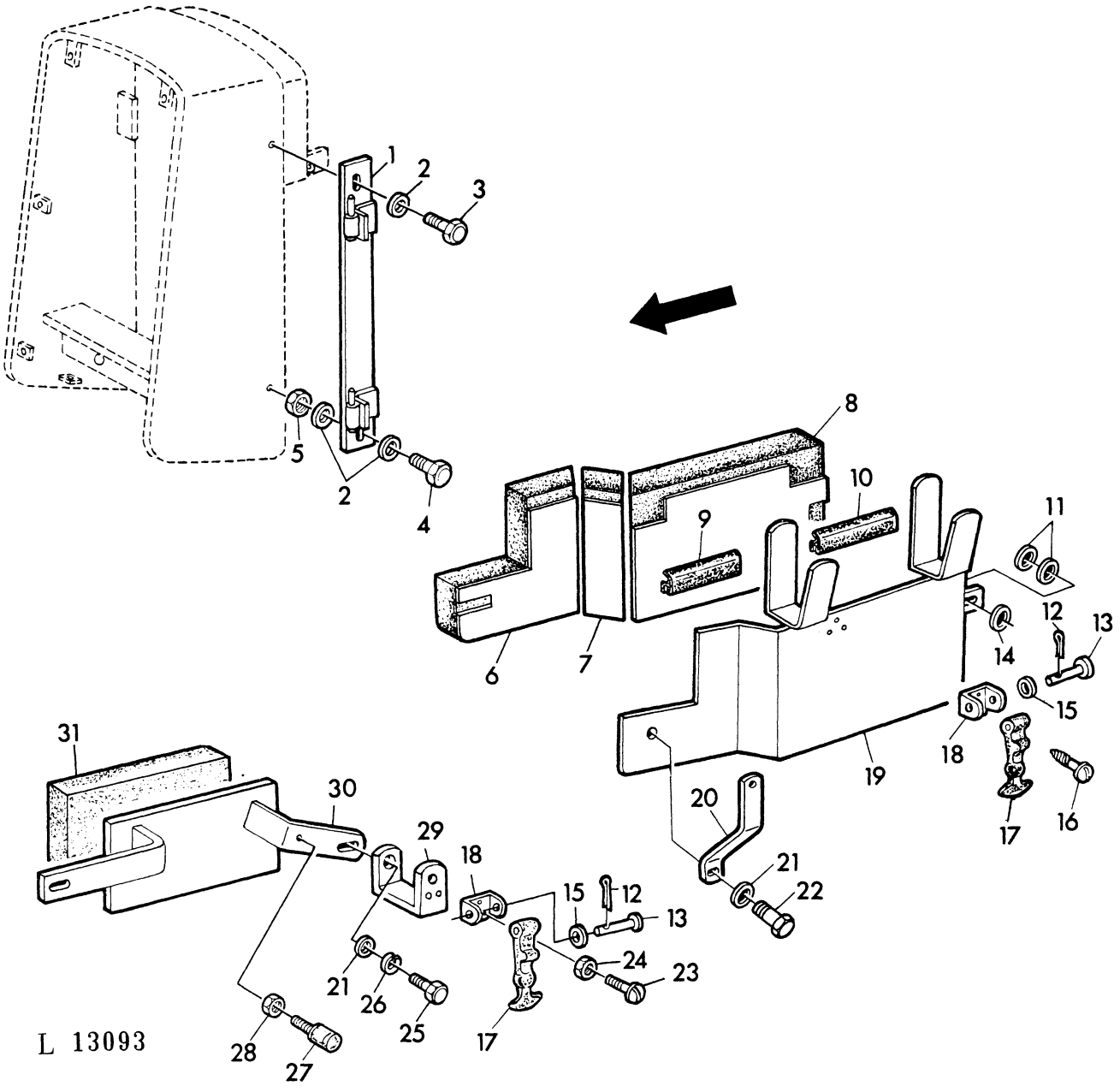

KEY	PART NO.	DESCRIPTION	QTY	SERIAL NO.	JD310	REMARKS
1	AL 27428	HINGE	1	248212-	X	L.H.
	AL 27429	HINGE	1	248212-	X	R.H.
2	24M 7139	WASHER	10	248212-	X	6,4X18X1,5MM
3	19H 1227	CAP SCREW	2	248212-	X	1/4"X1/2"
4	19H 1898	CAP SCREW	2	248212-	X	1/4"X1-1/2", SUB. FOR 19H1791
5	14H 786	NUT	2	248212-	X	1/4"
6	L 32750	BARRIER	1	248212-	X	R.H.
	L 32752	BARRIER	1	248212-	X	L.H.
7	L 32641	BARRIER	2	248212-	X	
8	L 32642	BARRIER	1	248212-	X	L.H.
	L 32751	BARRIER	1	248212-	X	R.H.
9	L 32211	WEATHERSTRIP	1	248212-	X	L.H.
	L 32753	WEATHERSTRIP	1	248212-	X	R.H.
10	L 32259	WEATHERSTRIP	1	248212-	X	L.H.
	L 32262	WEATHERSTRIP	1	248212-	X	R.H.
11	T 40728	WASHER	4	248212-	X	(A)
12	11M 7075	COTTER PIN	4	248212-	X	1,2X12MM
13	L 32207	PIN	4	248212-	X	
14	24H 1378	WASHER	2	248212-	X	(A)11/16"X1-1/2"X.134
15	24M 7027	WASHER	4	248212-	X	5,3X10X1MM
16	37M 7006	SCREW	6	248212-	X	3,5X16MM
17	L 32206	RETAINER	4	248212-	X	
18	L 32205	RETAINER	4	248212-	X	
19	AL 28327	SIDE WALL	1	248212-	X	R.H. INCL. KEYS 6-8,9,10
	AL 28329	SIDE WALL	1	248212-	X	L.H. INCL. KEYS 6-8,9,10
20	L 32747	RETAINER	2	248212-	X	
21	24H 1305	WASHER	2	248212-	X	13/32"X13/96"X.060"
22	19H 2021	CAP SCREW	2	248212-	X	3/8"X5/8"
23	21M 7153	BOLT	6	248212-	X	4X15MM
24	14M 7139	NUT	6	248212-	X	4MM
25	19H 2284	CAP SCREW	3	248212-	X	3/8"X7/8"
26	12H 304	LOCK WASHER	2	248212-	X	3/8"
27	AL 27432	BUMPER	2	248212-	X	
28	14M 7027	NUT	6	248212-	X	6MM
29	L 32194	RETAINER	2	248212-	X	
30	AL 27430	SHIELD	1	248212-	X	L.H. INCL. KEY 31
	AL 27431	SHIELD	1	248212-	X	R.H. INCL. KEY 31
31	L 32204	BARRIER	2	248212-	X	

(A) WITH RIGID PLATFORM
AVEC PLATE-FORME SANS SILENT-BLOCS
BEI STARRGELAGERTER PLATTFORM
PER PIATTAFORMA SENZA AMORTIZZATORI DI GOMMA
PARA PLATAFORMA SIN AMORTIQUADORES DE GOMA
FOR PLATFORM UTAN GUMMIFJADRING

BRACKETS/SUPPORTS/WITH SOUNDPROOFING
SUPPORTS/AVEC ELEMENTS D' INSONORISATION
TRAEGER/STUETZEN/MIT SCHALLDAEMPFUNG
SUPPORTI/CON DISPOSITIVO SALVA SUONI
BARRAS DE APOYO Y SOPORTES/CON ELEMENTOS DE INSONORIZACION
HALLARE/MED LJUDABSORBENT
L 58034

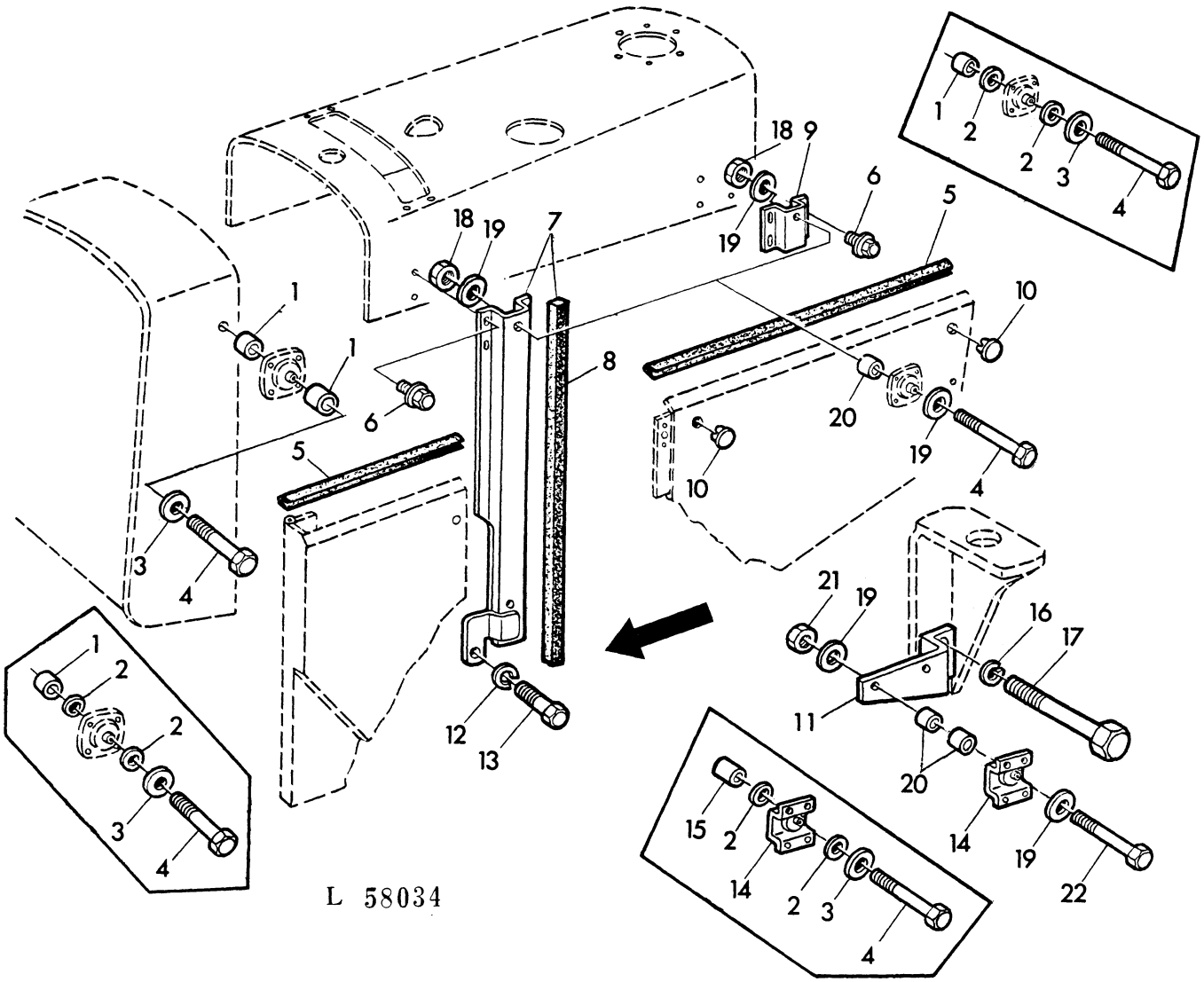

KEY	PART NO.	DESCRIPTION	QTY	SERIAL NO.	JD310	REMARKS
1	28H 5	SPACER	8		X	1/8"X1/4"
2	24H 1288	WASHER	24		X	9/32"X1"X.060"
3	24H 1908	WASHER	4		X	17/64"X1-3/4"X.090"
4	19H 1898	CAP SCREW	10		X	1/4"X1-1/2"
5	T 45262	WEATHERSTRIP	1		X	LGTH=893MM(35.16")
6	T 22211	SCREW	16		X	1/4"
7	AT 44284	SUPPORT	1		X	R.H. W/T45355
	AT 44286	SUPPORT	1		X	L.H. W/T45355
8	T 45355	FOAM PAD	2		X	
9	T 45327	RETAINER	2		X	
10	M 2291T	PLUG	5		X	
11	T 45486	BRACKET	1		X	
12	12H 304	LOCK WASHER	2		X	3/8"
13	19H 1731	CAP SCREW	2		X	3/8"X1"
14	AT 44289	RETAINER	2		X	
15	28H 1882	SPACER	2		X	1/8"X1"
16	12H 294	LOCK WASHER	4		X	5/8"
17	19H 1708	CAP SCREW	4		X	5/8"X1-3/4"
18	14H 786	NUT	4		X	1/4"
19	24H 1287	WASHER	14		X	9/32"X1"X.060"
20	L 31125	SPACER	10		X	
21	14M 7009	NUT	2		X	6MM
22	19M 7299	CAP SCREW	2		X	6X45MM

DOOR, UPPER SHIELD WITH SOUNDPROOFING
VOLET ET PAROI SUPERIEURE AVEC ELEMENTS D'INSONORISATION
TUER, SCHILD OBEN MIT SCHALLDAEMPFUNG
PANNELLI SUPERIORI CON DISPOSITIVO SALVA SUONI
PLACA ARTICULADA SUPERIOR CON ELEMENTOS DE INSONORIZACION
OVRE SKYDDORNA MED LJUDABSORBENT
L 13835

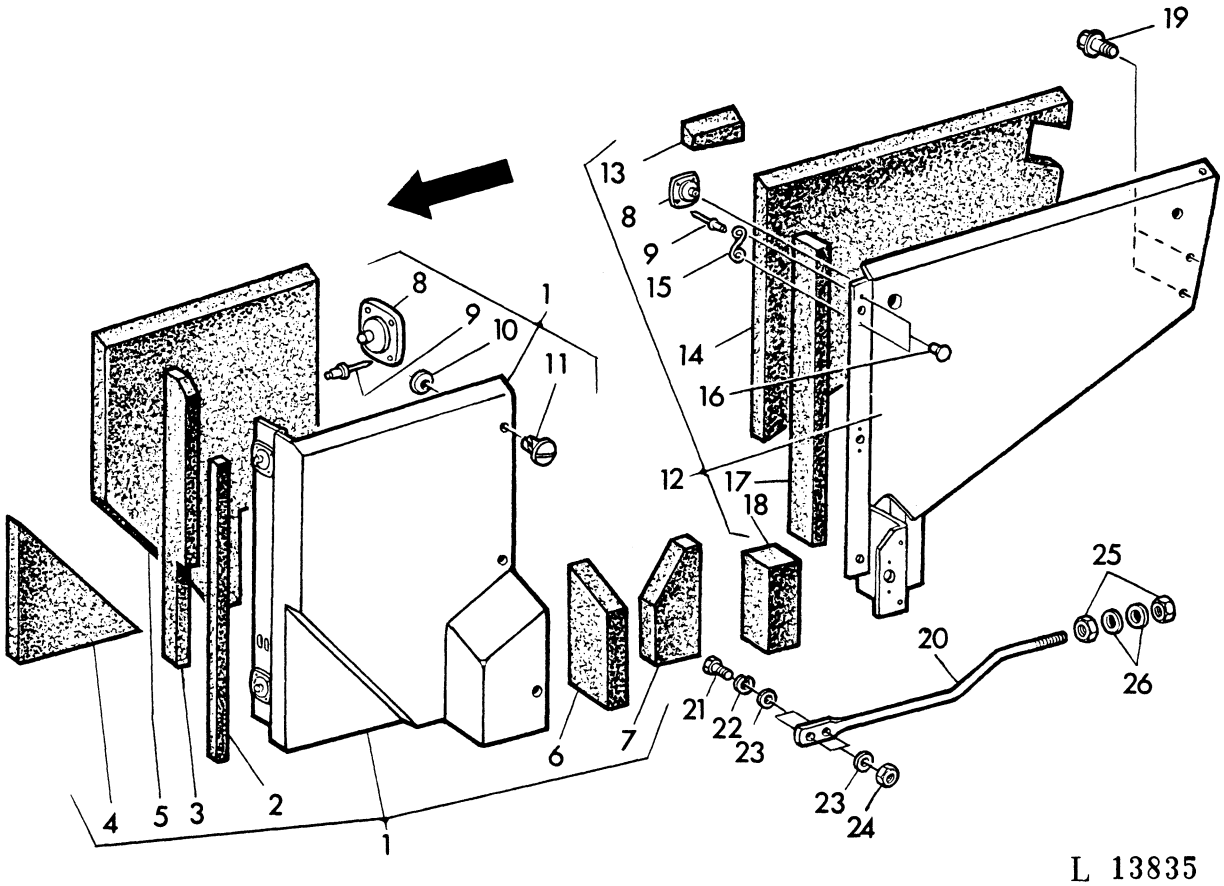

L 13835

KEY	PART NO.	DESCRIPTION	QTY	SERIAL NO.	JD310	REMARKS
1	AT 44294	DOOR	1	-193016	X	R.H. ASSY, INCL. KEYS 2-11
	AT 44296	DOOR	1	-193016	X	L.H. ASSY, INCL. KEYS 2-11
2	T 45512	FOAM PAD	2	-193016	X	
3	T 45513	FOAM PAD	2	-193016	X	
4	T 45499	BARRIER	2	-193016	X	
5	T 45502	BARRIER	1	-193016	X	R.H.
	T 45514	BARRIER	1	-193016	X	L.H.
6	T 45500	FOAM PAD	2	-193016	X	
7	T 45501	FOAM PAD	2	-193016	X	
8	AL 25282	RETAINER	10	-193016	X	
9	AT 44188	RIVET	40	-193016	X	
10	L 30966	SLEEVE	6	-193016	X	
11	L 30823	STUD	6	-193016	X	SUB. FOR L30539
12	AT 44290	SHIELD	1	-193016	X	L.H. UP, ASSY, INCL. KEYS 13-18
	AT 44292	SHIELD	1	-193016	X	R.H. UP, ASSY, INCL. KEYS 13-18
13	T 45357	FOAM PAD	1	-193016	X	L.H.
	T 45368	FOAM PAD	1	-193016	X	R.H.
14	T 45494	BARRIER	1	-193016	X	L.H.
	T 45498	BARRIER	1	-193016	X	R.H.
15	L 30967	SPRING	6	-193016	X	
16	16M 7066	RIVET	12	-193016	X	3X8MM
17	T 45493	FOAM PAD	2	-193016	X	
18	T 45492	FOAM PAD	2	-193016	X	
19	T 22211	SCREW	2	-193016	X	
20	T 45352	ROD	2	-193016	X	
21	19H 1948	CAP SCREW	4	-193016	X	1/4"X3/4"
22	12H 302	LOCK WASHER	4	-193016	X	1/4"
23	24H 1287	WASHER	4	-193016	X	9/32"X5/8"X.060"
24	14H 786	NUT	4	-193016	X	1/4"
25	14H 812	NUT	4	-193016	X	3/8"
26	24H 1305	WASHER	4	-193016	X	13/32"X13/16"X.060"

LOWER SHIELDS WITH SOUNDPROOFING
PAROIS INFERIEURES AVEC ELEMENTS D'INSONORISATION
SCHILDER UNTEN MIT SCHALLDAEMPFUNG
PANNELLI INFERIORI CON DISPOSITIVO SALVA SUONI
PLACAS INFERIORES CON ELEMENTOS DE INSONORIZACION
NEDRE SKYDDORNA MED LJUDABSORBENT
L 58031

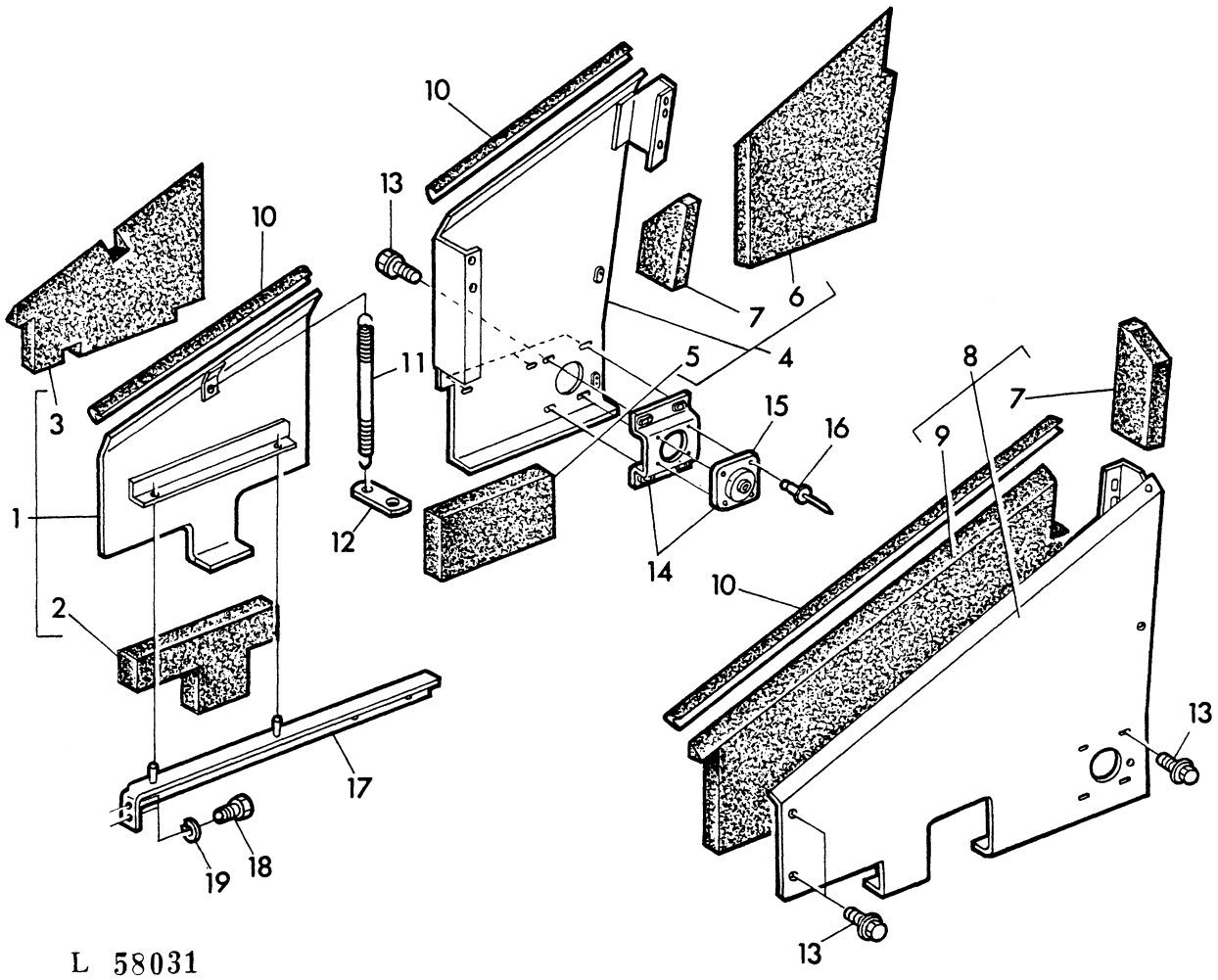

L 58031

KEY	PART NO.	DESCRIPTION	QTY	SERIAL NO.	JD310	REMARKS
1	AT 44301	SHIELD	1	-193016	X	FRONT, R.H. ASSY, INCL. KEYS 2, 3
2	T 45528	BARRIER	1	-193016	X	
3	T 45529	BARRIER	1	-193016	X	
4	AT 44299	SHIELD	1	-193016	X	REAR, R.H. ASSY, INCL. KEYS 5-7
5	T 45525	BARRIER	1	-193016	X	
6	T 45524	BARRIER	1	-193016	X	
7	T 45521	BARRIER	2	-193016	X	
8	AT 44303	SHIELD	1	-193016	X	L.H. ASSY, INCL. KEYS 7, 9
9	T 45531	BARRIER	1	-193016	X	
10	T 45262	WEATHERSTRIP	1	-193016	X	LGTH=893MM(35.16")
11	R 26858	SPRING	1	-193016	X	
12	T 45485	STRAP	1	-193016	X	
13	T 22211	SCREW	12	-193016	X	1/4"
14	AT 44289	RETAINER	2	-193016	X	ASSY, INCL. KEYS 15, 16
15	AL 25282	RETAINER	2	-193016	X	
16	AT 44188	RIVET	8	-193016	X	
17	AT 44298	SUPPORT	1	-193016	X	R.H.
18	19H 1227	CAP SCREW	2	-193016	X	1/4"X1/2"
19	12H 302	LOCK WASHER	2	-193016	X	1/4"

PLATFORMS, BATTERY COVER
PLATES-FORMES, COUVERCLE DE BATTERIE
PLATTFORMEN, BATTERIEDECKEL
PLATTAFORME, COPERCHIO DELLA BATERIA
PLATAFORMAS, TAPA DE LA BATERIA
PLATTFORM, BATTERI LOCKET
L 31233

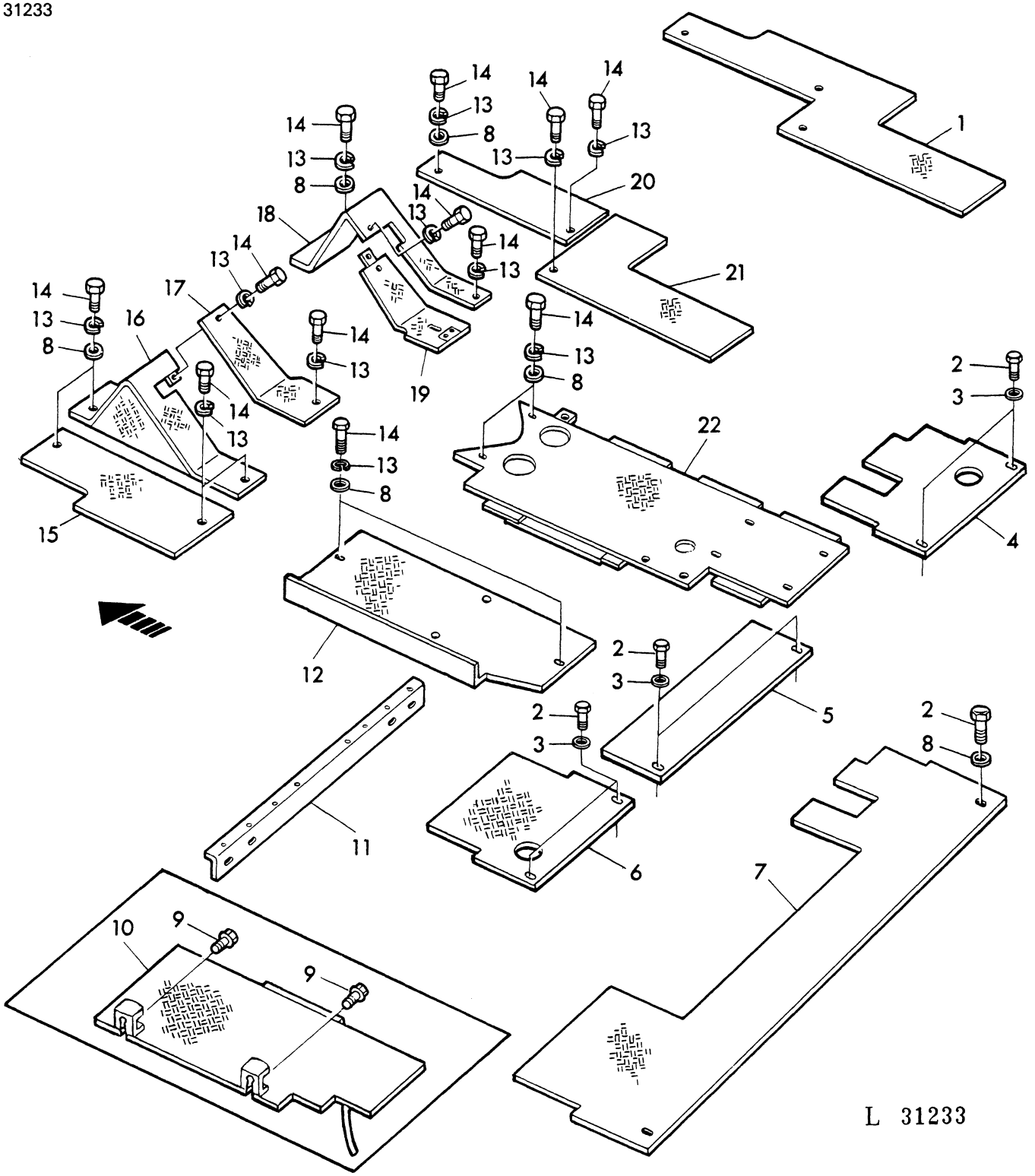

KEY	PART NO.	DESCRIPTION	QTY	SERIAL NO.	JD310	REMARKS
1	T 38942	PLATFORM	1		X	R.H.
	T 38942	PLATFORM	1		X	(A) R.H. ORD T49221, T49222
2	19H 1731	CAP SCREW	AR		X	3/8"X1"
3	24H 1307	WASHER	6		X	13/32"X1"X.060"
4	L 33921	PLATFORM	1		X	(A) REAR
5	L 33920	PLATFORM	1		X	(A) REAR
6	L 33919	PLATFORM	1		X	(A) REAR
7	T 44568	PLATFORM	1		X	REAR
	L 30283	PLATFORM	1		X	(A) REAR, ORD. L33919, L33920, L33921
8	24H 1305	WASHER	AR		X	13/32"X13/16"X.060"
9	T 34037	CAP SCREW	2		X	
10	AT 37770	PLATFORM	1		X	
11	T 33928	SUPPORT	1		X	
12	L 31424	COVER	1		X	
13	12H 304	LOCK WASHER	AR		X	3/8"
14	19H 2284	CAP SCREW	AR		X	3/8"X7/8"
15	T 38944	PLATFORM	1		X	L.H.
16	AT 37773	PLATFORM	1		X	L.H.
17	T 38947	PLATFORM	1		X	L.JH.
18	AL 25382	PLATFORM	1		X	R.H. SUB. FOR AT37772
19	AL 25381	PLATFORM	1		X	R.H. SUB. FOR T38940
20	T 49221	PLATFORM	1		X	(A) R.H. FRONT
21	T 49222	PLATFORM	1		X	(A) R.H. REAR
22	AT 39739	PLATFORM	1		X	

(A) WITH OPERATOR'S CAB
AVEC CABINE
BEI KABINE
CON CABINA
CON CABINA
MED FORARHYTT

SOUND PROOFING MATS/PLATFORMS/BATTERY COVER
PLAQUES INSONORISANTES/PLATES-FORMES/COUVERCLE DE BATTERIE
DAEMMATTEN/PLATTFORMEN/BATTERIEDECKEL)
STUOIE ANTIRUMORE/PIATTAFORME/COPERCHIO DI BATTERIA
ESTERAS INSONORIZANTES/PLATAFORMAS/TAPA DE BATERIA
LJUDABSORBERAD MATTOR/PLATFORM/BATTERILOCKET
L 31446

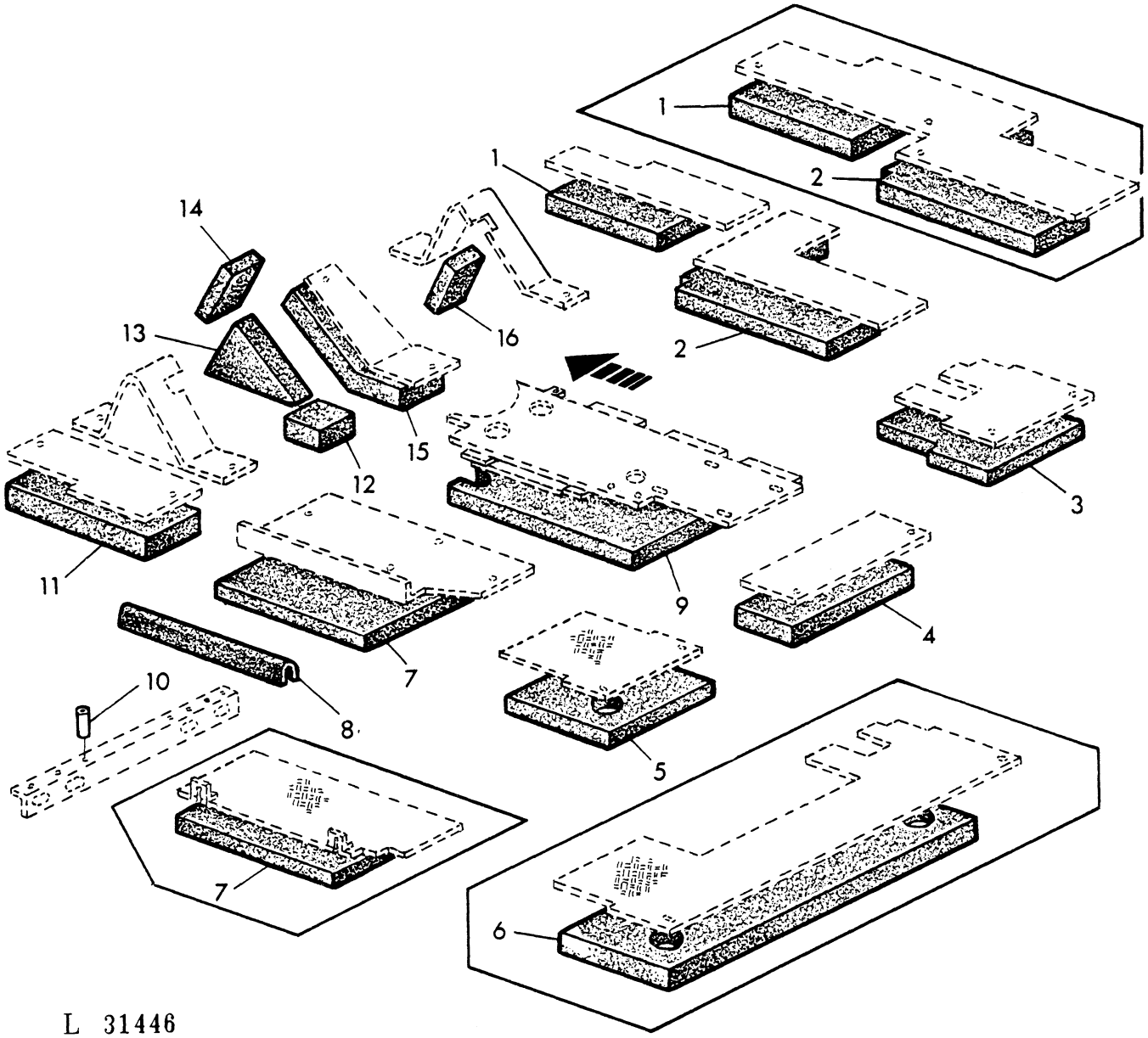

L 31446

KEY		PART NO.	DESCRIPTION	QTY	SERIAL NO.	JD310	REMARKS
1	T	45623	BARRIER	1		X	
2	T	45622	BARRIER	1		X	
3	L	33924	BARRIER	1		X	
4	L	33923	BARRIER	1		X	
5	L	33922	BARRIER	1		X	
6	L	30845	BARRIER	1		X	
7	T	45621	BARRIER	1		X	
8	L	31425	WEATHERSTRIP	1		X	
9	T	45625	BARRIER	1		X	
10	L	31426	NUT	1		X	
11	T	45620	BARRIER	1		X	
12	T	45627	BARRIER	1		X	
13	T	45628	BARRIER	1		X	
14	T	45629	BARRIER	1		X	
15	T	45630	BARRIER	1		X	
16	T	45624	BARRIER	1		X	

PARTS WITH RIGID OPERATOR'S PLATFORM
PIECES AVEC PLATE-FORMES SANS SILENT-BLOCS
TEILE MIT STARRGELAGERTER PLATTFORM
PARTI CON PIATTAFORME SENZA AMORTIZZATORI
PIEZAS CON PLATAFORMAS SIN AMORTIGUADORES
DELAR MED FORARPLATTFORM UTAN GUMMIFJADRING
L 13149

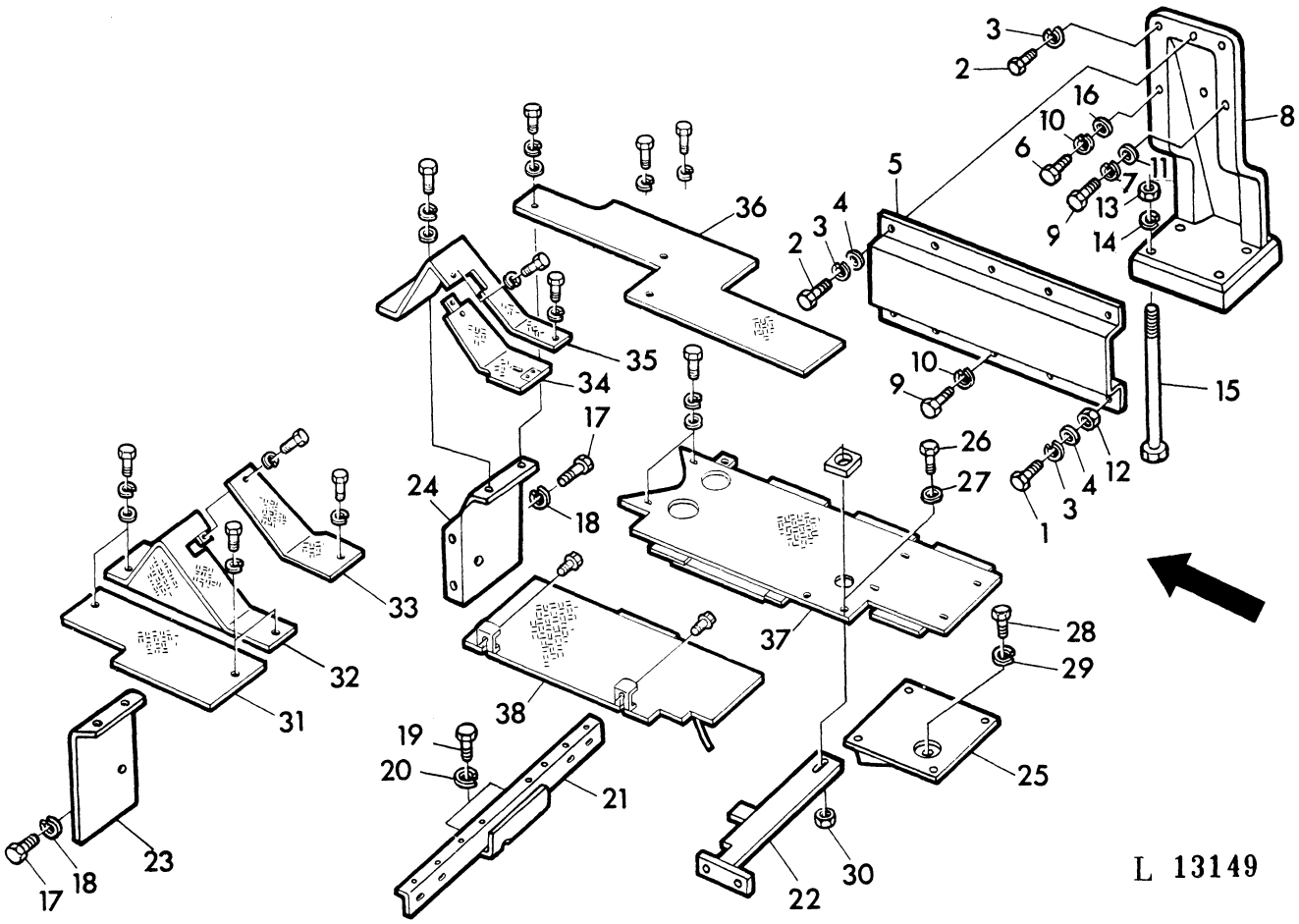

KEY	PART NO.	DESCRIPTION	QTY	SERIAL NO.	JD310	REMARKS
1	19H 2284	CAP SCREW	1	199178-	X	3/8"X7/8"
2	19H 1731	CAP SCREW	11	199178-	X	3/8"X1"
3	12H 304	LOCK WASHER	33	199178-	X	3/8"
4	24H 1308	WASHER	10	199178-	X	13/32"X1"X. 134"
5	T 34517	REINFORCEMENT	2	199178-	X	
6	19H 1731	CAP SCREW	14	199178-	X	3/8"X1"
7	12H 304	LOCK WASHER	14	199178-	X	3/8"
8	T 34518	SUPPORT	2	199178-	X	
9	19H 1732	CAP SCREW	10	199178-	X	3/8"X1-1/4"
10	12H 304	LOCK WASHER	3	199178-	X	3/8"
11	24H 1308	WASHER	2	199178-	X	13/32"X1"X. 134"
12	14H 812	NUT	6	199178-	X	3/8"
13	14H 836	NUT	8	199178-	X	7/8"
14	12H 245	LOCK WASHER	8	199178-	X	7/8"
15	08H 4487	CAP SCREW	8	199178-	X	7/8"X9"
16	24H 1309	WASHER	1	199178-	X	13/32"X1-1/16"X. 120"
17	19H 1835	CAP SCREW	2	199178-	X	3/4"X1-1/2"
18	12H 236	LOCK WASHER	2	199178-	X	3/4"
19	19H 1815	CAP SCREW	4	199178-	X	1/2"X1-1/4"
20	12H 301	LOCK WASHER	4	199178-	X	1/2"
21	AT 53579	SUPPORT	1	199178-	X	SUB. FOR AT33063
22	AT 33064	BRACE	1	199178-	X	
23	T 34020	SUPPORT	1	199178-	X	
24	T 34019	SUPPORT	1	199178-	X	
25	AT 33062	SUPPORT	1	199178-	X	
26	19H 2552	CAP SCREW	1	199178-	X	3/8"X1-1/8"
27	24H 1305	WASHER	1	199178-	X	13/32"X13/16"X. 060"
28	19H 1815	CAP SCREW	4	199178-	X	1/2"X1-1/4"
29	12H 301	LOCK WASHER	4	199178-	X	1/2"
30	14H 812	NUT	1	199178-	X	3/8"
31	T 38944	PLATFORM	1	199178-	X	
32	AT 37773	PLATFORM	1	199178-	X	
33	T 38947	PLATFORM	1	199178-	X	
34	AL 25381	PLATFORM	1	199178-	X	
35	AL 25382	PLATFORM	1	199178-	X	
36	T 38942	PLATFORM	1	199178-	X	
37	AT 39739	PLATFORM	1	199178-	X	
38	AT 37770	PLATFORM	1	199178-	X	

BOTTOM SEALING PLATES/WITH SOUNDPROOFING
PLAQUES INFERIEURES/AVEC ELEMENTS D'INSONORISATION
BODENWANNEN/MIT SCHALLDAEMPFUNG
PANNELLI DI FONDO/CON DISPOSITIVO SALVA SUONI
BANDEJAS DE FONDO/CON ELEMENTOS DE INSONORIZACION
TATNINGSPLATTAR/MED LJUDABSORBENT
L 58025

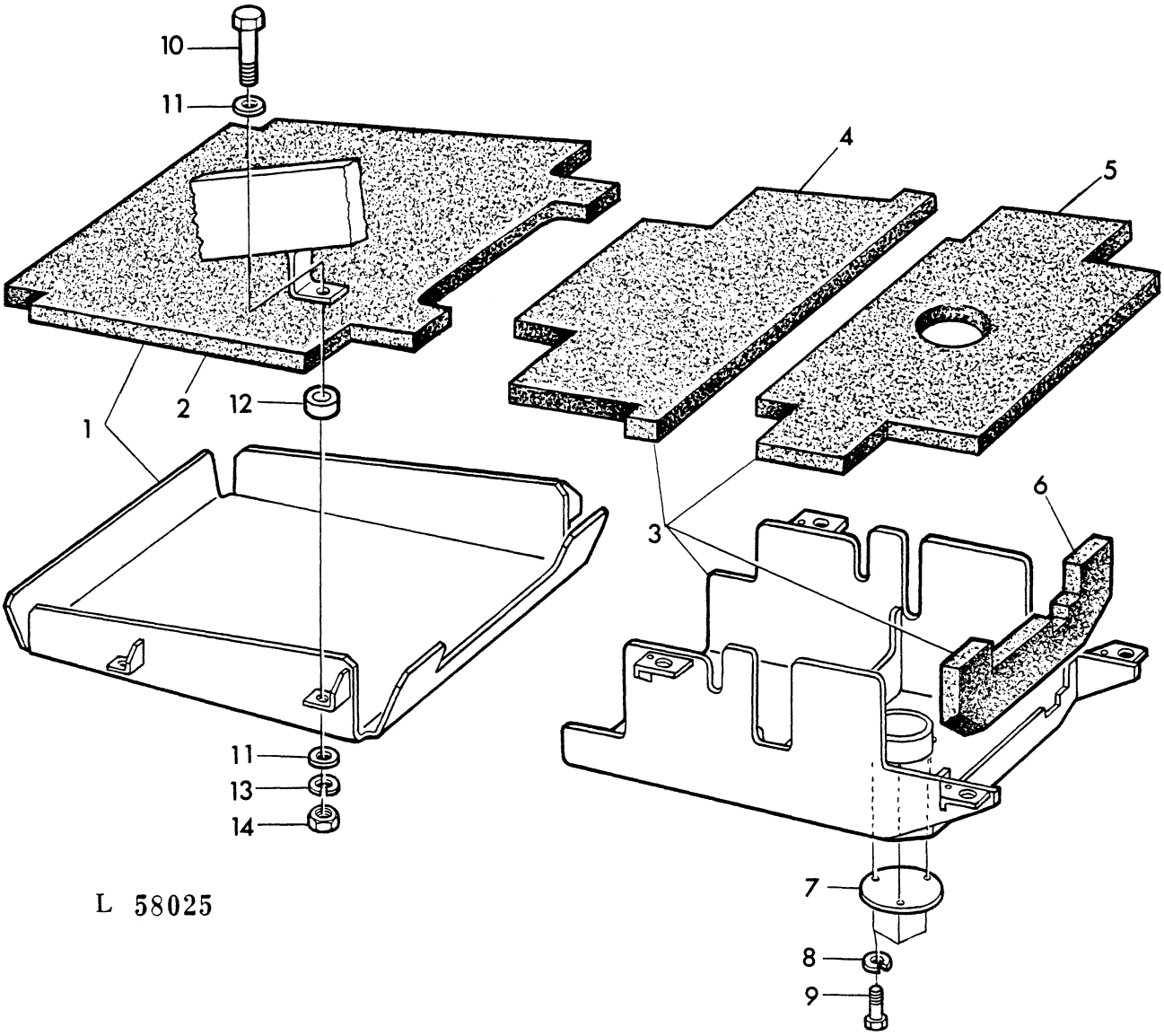

KEY	PART NO.	DESCRIPTION	QTY	SERIAL NO.	JD310	REMARKS
1	AT 44308	GUARD	1	-193016	X	REAR, W/T45545
2	T 45545	BARRIER	1	-193016	X	
3	AT 44314	GUARD	1	-193016	X	FRONT, ASSY, INCL. KEYS 4-6
4	T 45547	BARRIER	1	-193016	X	
5	T 45559	BARRIER	1	-193016	X	
6	T 45548	BARRIER	1	-193016	X	
7	T 45553	COVER	1	-193016	X	
8	12H 302	LOCK WASHER	3	-193016	X	1/4"
9	19H 1919	CAP SCREW	3	-193016	X	1/4"X5/8"
10	19H 1815	CAP SCREW	4	-193016	X	1/2"X1-1/4"
11	24H 1338	WASHER	8	-193016	X	33/64"X7/8"X. 048"
12	T 45405	SPACER	4	-193016	X	
13	12H 301	LOCK WASHER	4	-193016	X	1/2"
14	14H 809	NUT	4	-193016	X	1/2"

FRONT BOTTOM SEALING PLATE SUPPORTS WITH SOUNDPROOFING
SUPPORT DE LA PLAQUE INFERIEURE AVANT AVEC INSONORISATION
HALTER BODENWANNE VORN MIT SCHALLDAEMPFUNG
SUPPORTO PER PANNELLO DI FONDO ANTERIORE CON SALVA SUONI
SOPORTO DE LA BANDEJA DE FONDO DELANTERA CON INSONORIZACION
MONTERING FOR FRAMRE TATNINGSPLATTA MED LJUDABSORBENT
L 13825

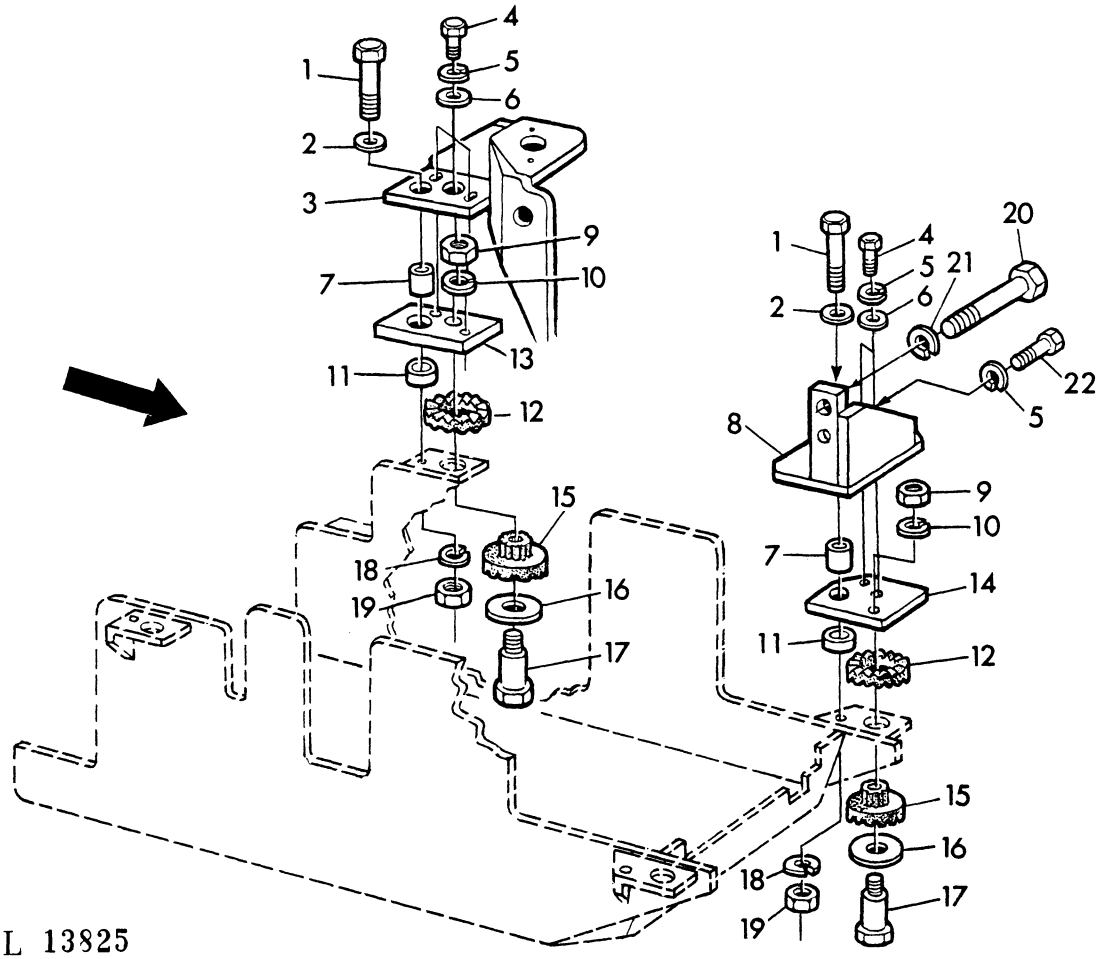

KEY	PART NO.	DESCRIPTION	QTY	SERIAL NO.	JD310	REMARKS
1	19H 1831	CAP SCREW	4	-193016	X	1/2"X2"
2	24H 1788	WASHER	4	-193016	X	17/32"X1-1/8"X. 060"
3	AT 44387	BRACKET	1	-193016	X	R. H. REAR
	AT 44388	BRACKET	1	-193016	X	L. H. REAR
4	19H 2284	CAP SCREW	8	-193016	X	3/8"X7/8"
5	12H 304	LOCK WASHER	10	-193016	X	3/8"
6	24H 1307	WASHER	8	-193016	X	13/32"X1"X. 060"
7	T 45404	SPACER	4	-193016	X	UP
8	AT 44312	BRACKET	1	-193016	X	R. H. FRONT
	AT 44313	BRACKET	1	-193016	X	L. H. FRONT
9	14H 813	NUT	4	-193016	X	7/16"
10	12H 293	WASHER	4	-193016	X	7/16"
11	T 45405	SPACER	4	-193016	X	LOW
12	T 45401	RING	4	-193016	X	
13	T 45399	PLATE	2	-193016	X	REAR
14	L 30885	PLATE	2	-193016	X	FRONT
15	T 45400	BUSHING	4	-193016	X	
16	T 45403	WASHER	4	-193016	X	
17	T 45402	SCREW	4	-193016	X	
18	12H 301	LOCK WASHER	4	-193016	X	1/2"
19	14H 826	NUT	4	-193016	X	1/2"
20	19H 1734	CAP SCREW	2	-193016	X	5/8"X2"
21	12H 294	LOCK WASHER	2	-193016	X	5/8"
22	19H 2552	CAP SCREW	2	-193016	X	3/8"X1-1/8"

NAME PLATES/DECALS
PLAQUES DU CONSTRUCTEUR/DECALCOMANIES
SCHILDER/ABSCHIEBEBILDER
TARGHETTE/DECALCOMANIE
ROTULOS/CALCOMANIAS
SKYLTAR/DECALER
L 31447

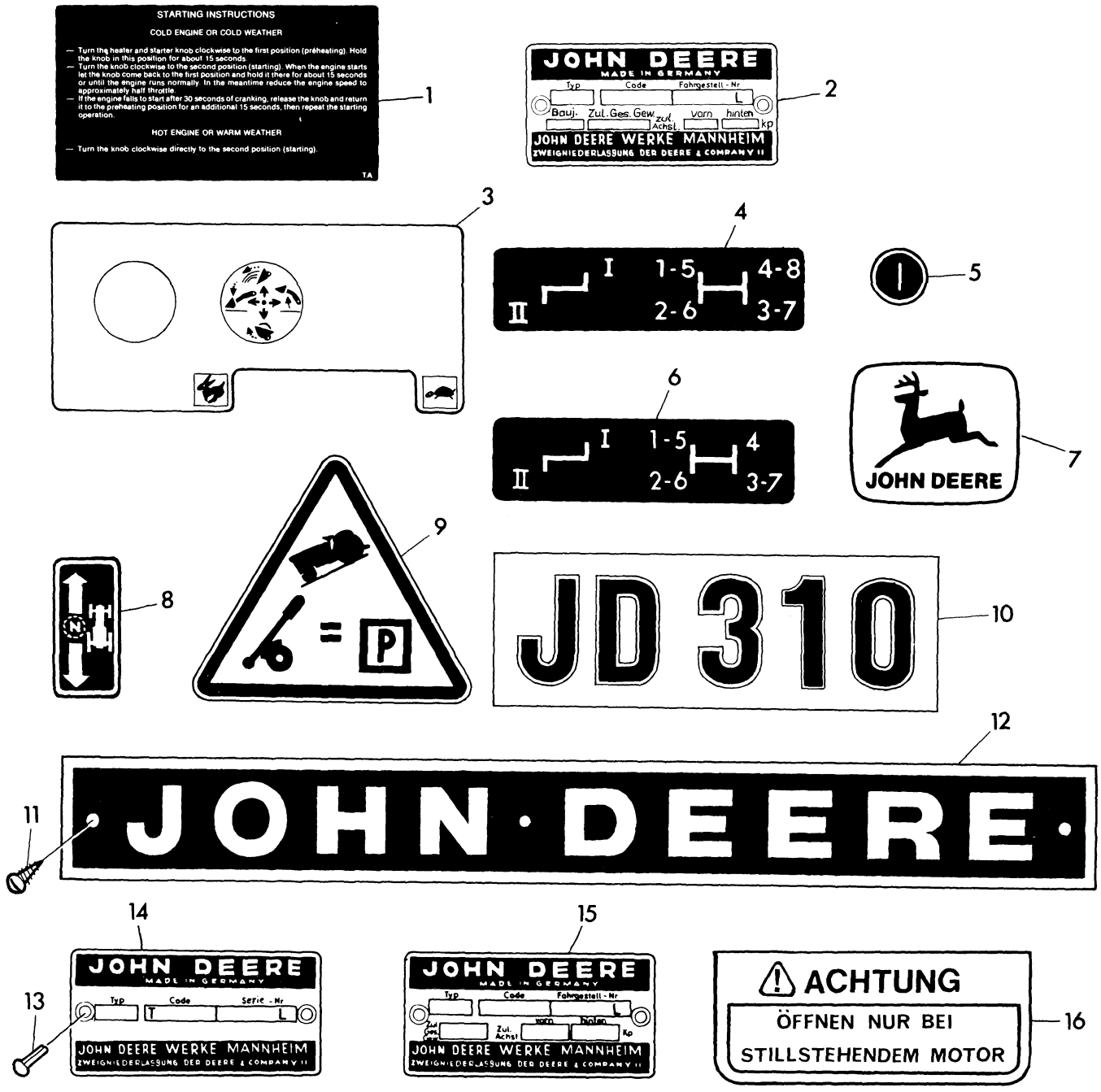

L 31447

KEY	PART NO.	DESCRIPTION	QTY	SERIAL NO.	JD310	REMARKS
1	CD 14210	DECALCOMANIA	AR		X	ENGLISH
	CD 14209	DECALCOMANIA	AR		X	FRANCAIS
	CD 14211	DECALCOMANIA	AR		X	DEUTSCH
2	L 32845	SERIAL NUMBER PLATE	1		X	SUB. FOR T36503
3	T 34059	LABEL	1		X	
4	T 40421	LABEL	1		X	
5	T 29393	LABEL	1		X	
6	L 29852	LABEL	1		X	
7	JD 5602	LABEL	1		X	(A) SUB. FOR JD5272, JD5536
	JD 5606	LABEL	1		X	(B) SUB. FOR JD5276, JD5540
8	T 39805	LABEL	1		X	
9	T 31695	LABEL	1		X	
10	T 33537	LABEL	1		X	
11	T 10671	SCREW	6		X	
12	T 42511	MEDALLION	1		X	SUB. FOR T33460
13	25M 3827	SCREW	2		X	3X8MM
14	T 36502	SERIAL NUMBER PLATE	1		X	
15	L 30694	SERIAL NUMBER PLATE	1		X	FRANCAIS
16	L 31703	INSTRUCTION PLATE	2		X	DEUTSCH

(A) FOR TOOL BOX
POUR BOITE A OUTILS
FUER WERKZEUGKASTEN
PER SCATOLA ATTREZZI
PARA CAJA DE HERRAMIENTAS
FOR VERKTYGSLADA

(B) FOR FRONT PLATE
POUR PLAQUE AVANT
FUER FRONTPLATTE
PER MASCHERINA
PARA PLACA DELANTERA
FOR FRONTPLATTA

ACCESSORY PARTS
ACCESSOIRES
ZUBEHOERTEILE
ACCESSORI
ACCESORIOS
TILLBEHORSDELAR
L 31448



L 31448

KEY	PART NO.	DESCRIPTION	QTY	SERIAL NO.	JD310	REMARKS
1	AT 14264	SEALANT	1		X	LOCTITE SEALANT (A) 59CCM
	AT 26340	SEALANT	1		X	LOCTITE SEALANT (B) 59CCM
2	T 19566	RUST INHIBITOR	1		X	
3	L 94773	PAINT	1		X	GELB, YELLOW, JAUNE, AMARILLO,
4	AR 41785	RUST INHIBITOR	1		X	KIT
5	AR 27814	STARTING FLUID	1		X	(AR27814)
6	AL 25914	ACTIVATOR	1		X	LOCTITE ACTIVATOR T, 180CCM
7	AL 25913	ADHESIVE	1		X	LOCTITE ADHESIVE NO. 307, 100CCM
8	AT 14927	SEALANT	1		X	LOCTITE SEALANT (A) 2CCM

(A) HIGH VISCOSITY
VISCOSITE ELEVEE
HOHE VISKOSITAET
ALTA VISCOSITA
ALTA VISCOSIDAD
HOG VISKOSITET

(B) LOW VISCOSITY
VISCOSITE BASSE
NIEDRIGE VISKOSITAET
BASSA VISCOSITA
BAJA VISCOSIDAD
LAG VISKOSITET

TOOLS / TOOL BOX
OUTILS / BOITE A OUTILS
WERKZEUG / WERKZEUGKASTEN
ATTREZZI / SCATOLA ATTREZZI
HERRAMIENTAS / CAJA DE HERRAMIENTAS
VERKTYG / VERKTYGSLADA
L 31449

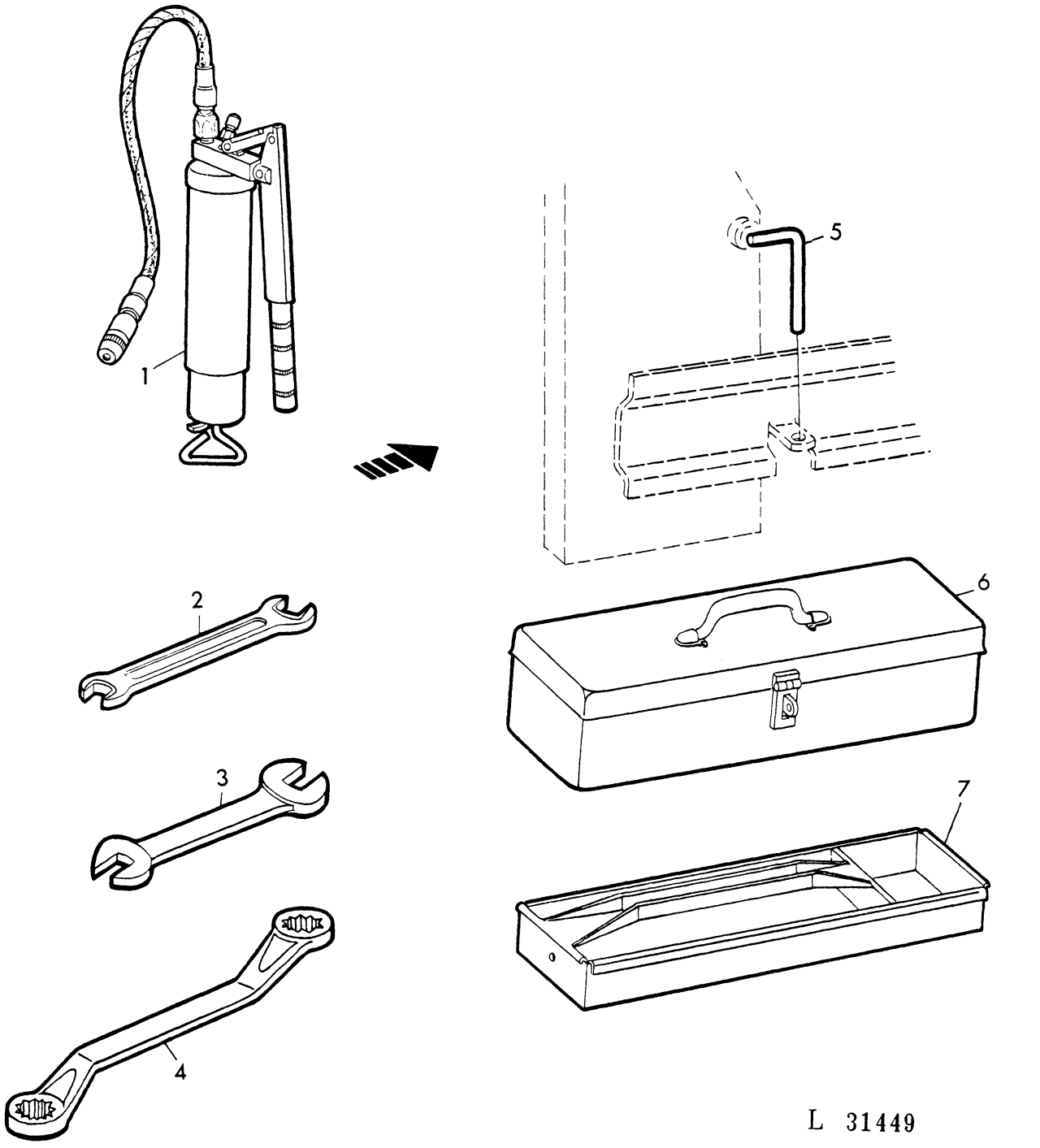

L 31449

KEY	PART NO.	DESCRIPTION	QTY	SERIAL NO.	JD310	REMARKS
1	AL 19093	GREASE GUN	1		X	SUB. FOR 99M6430
2	31M 5964	TOOL	1		X	3/8"X7/16"
	31M 5965	WRENCH	1		X	1/2"X9/16"
	31M 6953	TOOL	1		X	13/16"X7/8"
3	31M 5226	WRENCH	1		X	19X24MM
	31M 5227	WRENCH	1		X	22X27MM
4	31M 6965	TOOL	1		X	1-5/16"X1-1/8"
5	T 23027	PIN	1		X	
6	AT 22071	TOOLBOX	1		X	
7	AL 24044	BOX	1		X	

SECTIONAL INDEX
INDEX DE SECTION
GRUPPENINDEX
INDICE DELLA SEZIONE
INDICE DE SECCION
GRUPPSFORTECKNING
L 27584

XXXX

SECTIONAL INDEX
INDEX DE SECTION
GRUPPENINDEX
INDICE DELLA SEZIONE
INDICE DE SECCION
GRUPPSFORTECKNING
L 27559

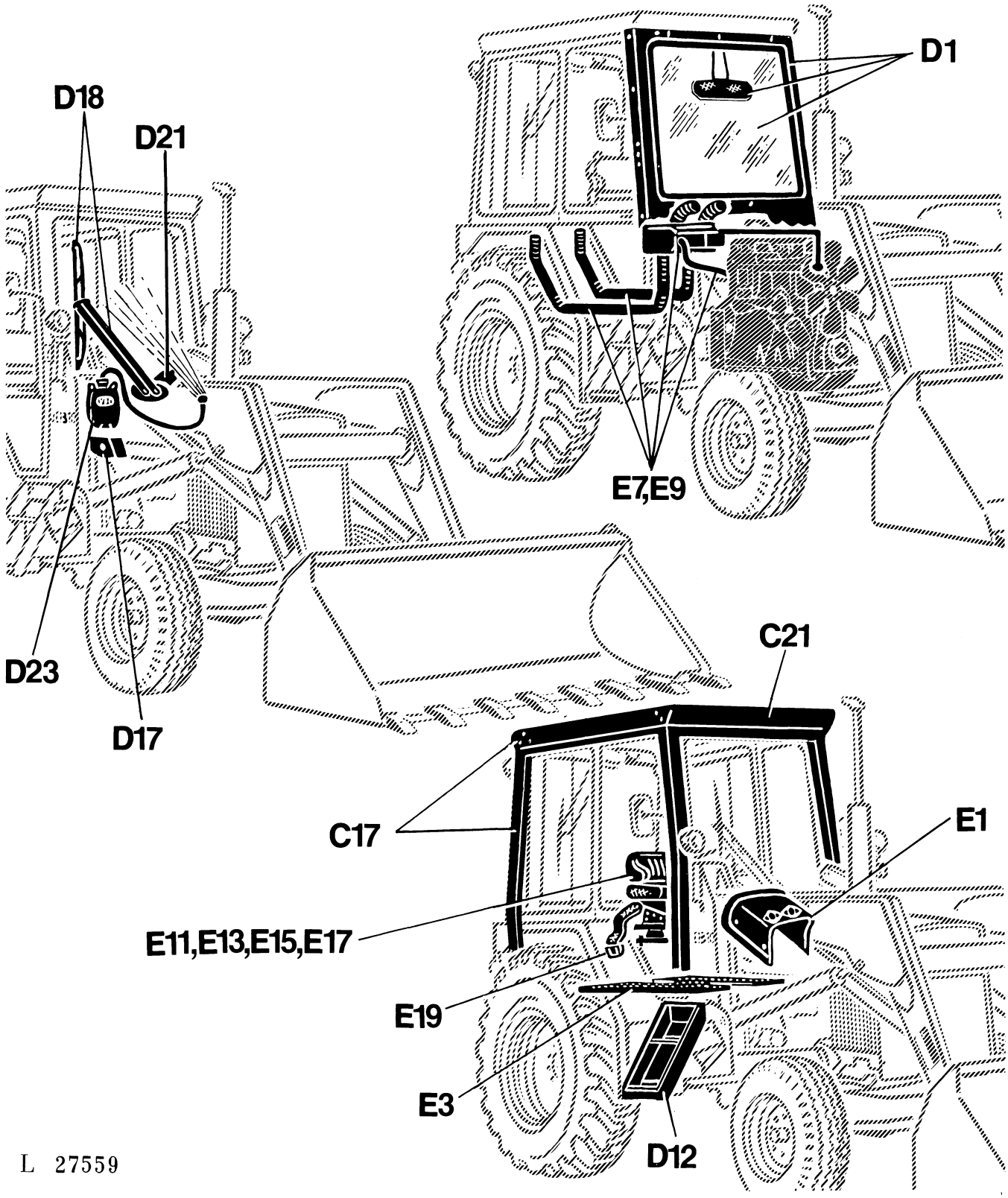

ROLL-GUARD
DISPOSITIF ANTI-CAPOTAGE
UEBERSCHLAGSCHUTZ
PROTEZIONE ANTIRIBALDAMENTO
BARRAS PROTECTORAS CONTRA VUELCOS
FOERARSKYDD
L 13829

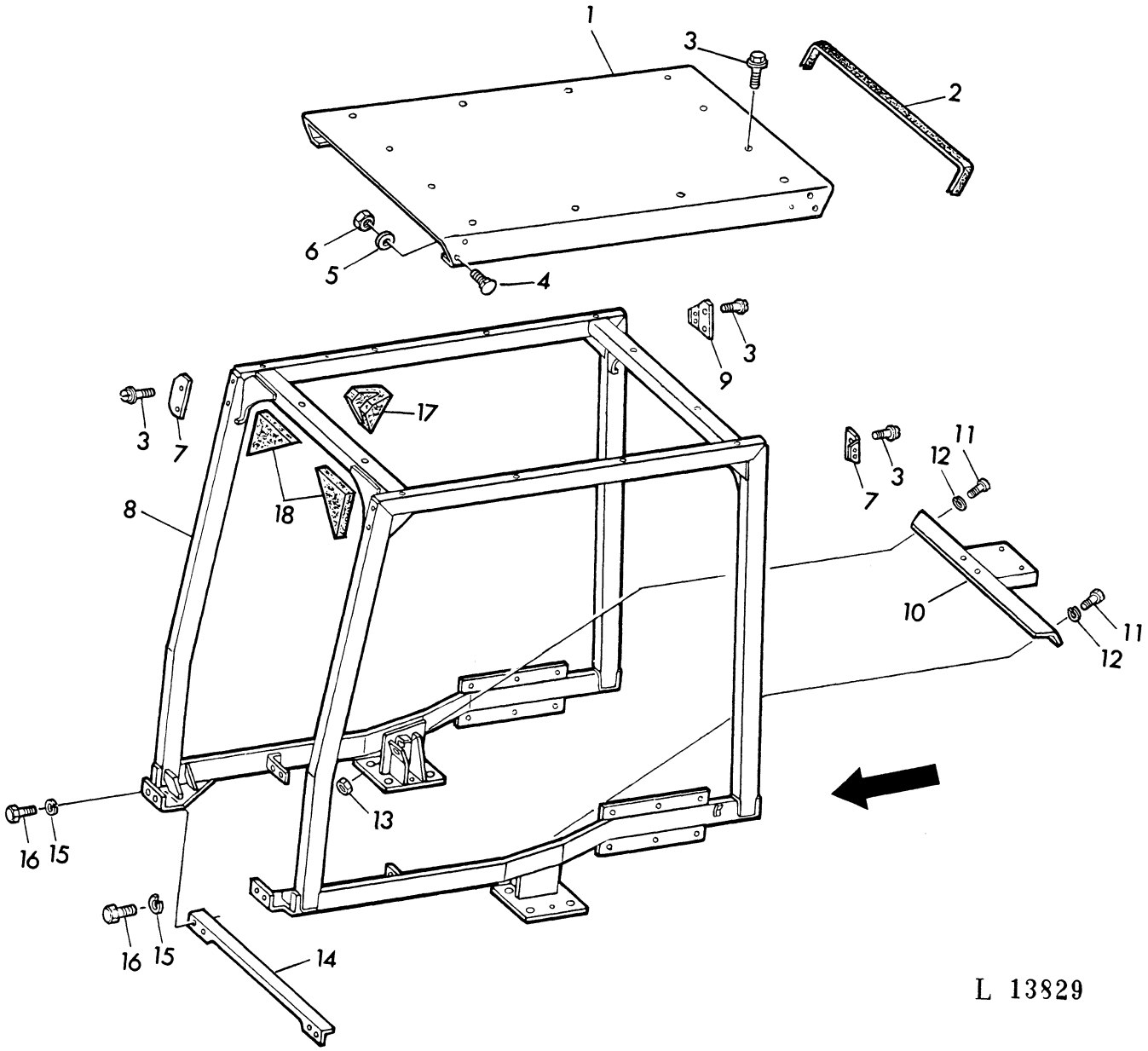

KEY	PART NO.	DESCRIPTION	QTY	SERIAL NO.	JD310	REMARKS
1	T 33916	ROOF	1		X	
2	L 30004	WEATHERSTRIP	2		X	
3	37H 29	SCREW	20		X	5/16"X5/8"
4	03H 1268	BOLT	8		X	5/16"X3/4"
5	24H 1136	WASHER	8		X	11/32"X11/16"X.060"
6	14H 785	NUT	8		X	5/16"
7	T 33918	STRAP	2		X	
8	AL 24798	FRAME	1		X	
	AL 24811	FRAME	1		X	(A)
9	T 33917	BRACKET	2		X	
10	AT 47792	BRACE	1		X	REAR, SUB. FOR AT32988
11	19H 1374	CAP SCREW	2		X	3/4"X2"
12	12H 236	LOCK WASHER	2		X	3/4"
13	14H 794	NUT	2		X	3/4"
14	AT 32985	BRACE	1		X	FRONT
15	12H 294	LOCK WASHER	4		X	5/8"
16	19H 1708	CAP SCREW	4		X	5/8"X1-3/4", SUB. FOR 19H1756
17	L 31074	FOAM PAD	4		X	(A)
18	L 31075	FOAM PAD	4		X	(A)

(A) WITH OPERATOR'S CAB
AVEC CABINE
BEI KABINE
CON CABINA
CON CABINA
MED FORARHYTT

ROLL-GUARD - BRACKETS/SUPPORTS
ARCEAU DE SECURITE - SUPPORTS
UEBERSCHLAGSCHUTZ - TRAEGER/STUETZEN
BARRAS ANTIRIBALTAMENTO - SUPPORTI
DEFENSA CONTRA VUELCOS - BARRAS DE APOYO Y SOPORTES
SKYDDS BAGE - HALLARE
L 11279

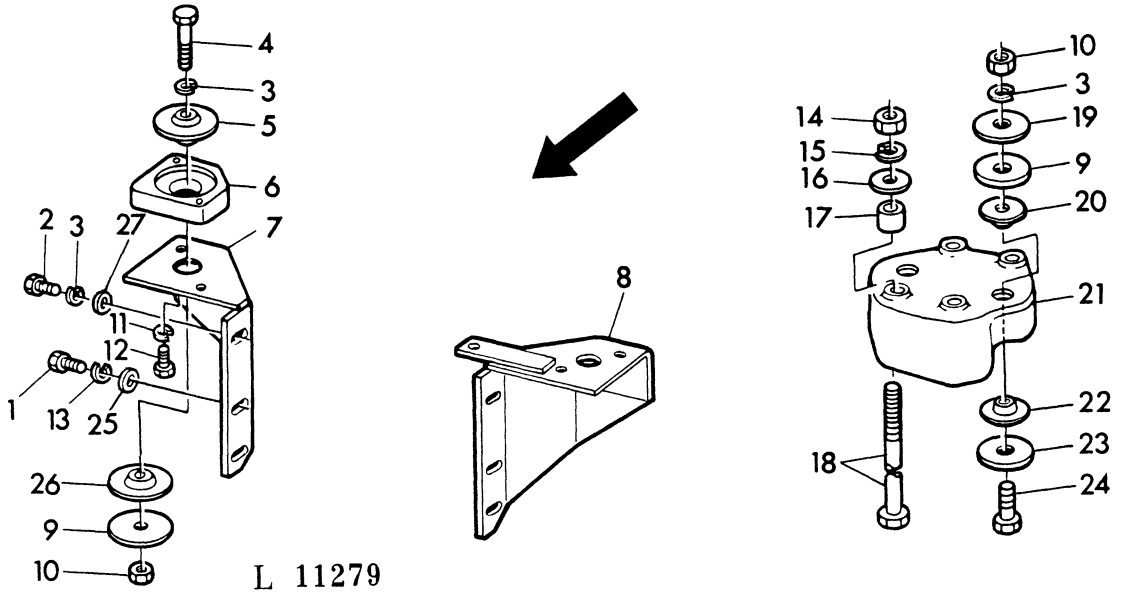

L 11279

KEY	PART NO.	DESCRIPTION	QTY	SERIAL NO.	JD310	REMARKS
1	19H 1708	CAP SCREW	4		X	5/8"X1-3/4"
2	19H 1374	CAP SCREW	2		X	3/4"X2"
3	12H 236	LOCK WASHER	8		X	3/4"
4	19H 2113	CAP SCREW	2		X	3/4"X1-3/4"
5	AT 33507	RUBBER MOUNT	2		X	FRONT
6	T 34494	QUILL	2		X	
7	AT 32986	BRACKET	1		X	R.H. FRONT
8	AT 48593	BRACKET	1		X	L.H. FRONT, SUB. FOR AT32987
9	24H 1893	WASHER	6		X	25/32"X3-7/8"X. 194"
10	14H 794	NUT	6		X	3/4"
11	12H 304	LOCK WASHER	4		X	3/8"
12	19H 1732	CAP SCREW	4		X	3/8"X1-1/4"
13	12H 294	LOCK WASHER	4		X	5/8"
14	14H 836	NUT	8		X	7/8"
15	12H 245	LOCK WASHER	8		X	7/8"
16	24H 1433	WASHER	8		X	29/32"X2-1/4"X. 250
17	T 33929	SPACER	8		X	
18	08H 4647	CAP SCREW	8		X	7/8"X13-1/2"
19	24H 1895	WASHER	8		X	25/32"X3-7/8"X. 060"
20	AT 33516	RUBBER MOUNT	4		X	REAR
21	T 34495	SUPPORT	2		X	REAR
22	AT 33517	RUBBER MOUNT	4		X	REAR
23	24H 1894	WASHER	4		X	25/32"X3"X. 250"
24	19H 2026	CAP SCREW	4		X	3/4"X4"
25	24H 1378	WASHER	4		X	11/16"X1-1/2"X. 134"
26	AT 33508	RUBBER MOUNT	2		X	FRONT
27	24H 1393	WASHER	2		X	25/32"X1-3/8"X. 180"

OPERATOR'S CAB-ROOF
CABINE DU CONDUCTEUR - TOLE DE TOIT
KABINE-DACHHAUBE
CABINA - TETTO
CABINA PARA EL CONDUCTOR - TECHO
FORARHYTT - TAKLUCKA
L 61004

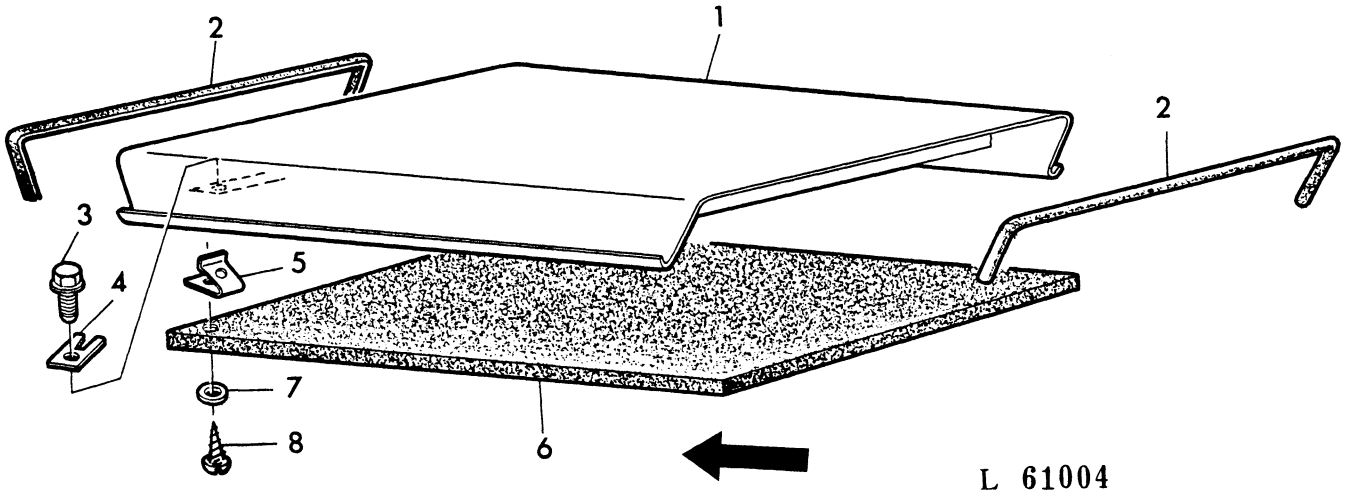

KEY	PART NO.	DESCRIPTION	QTY	SERIAL NO.	JD310	REMARKS
1	AL 24620	ROOF	1		X	
2	T 30865	WEATHERSTRIP	2		X	
3	37H 139	SCREW	12		X	5/16"X1-1/8"
	37M 7032	SCREW	12		X	8X30MM
4	L 30036	SPACER	AR		X	
5	L 29993	RETAINER	34		X	
6	AL 24607	FOAM PAD	1		X	
7	L 29994	WASHER	34		X	
8	37M 7023	SCREW	34		X	B4,8X25MM

OPERATOR'S CAP - SIDE FRAMES
CABINE DU CONDUCTEUR - CHASSIS LATERAUX
KABINE-SEITENRAHMEN
CABINA - TRAVERSE LATERALI
CABINA PARA EL CONDUCTOR - BASTIDORES LATERALES
FORARHYTT - SIDORAMAR
L 13274

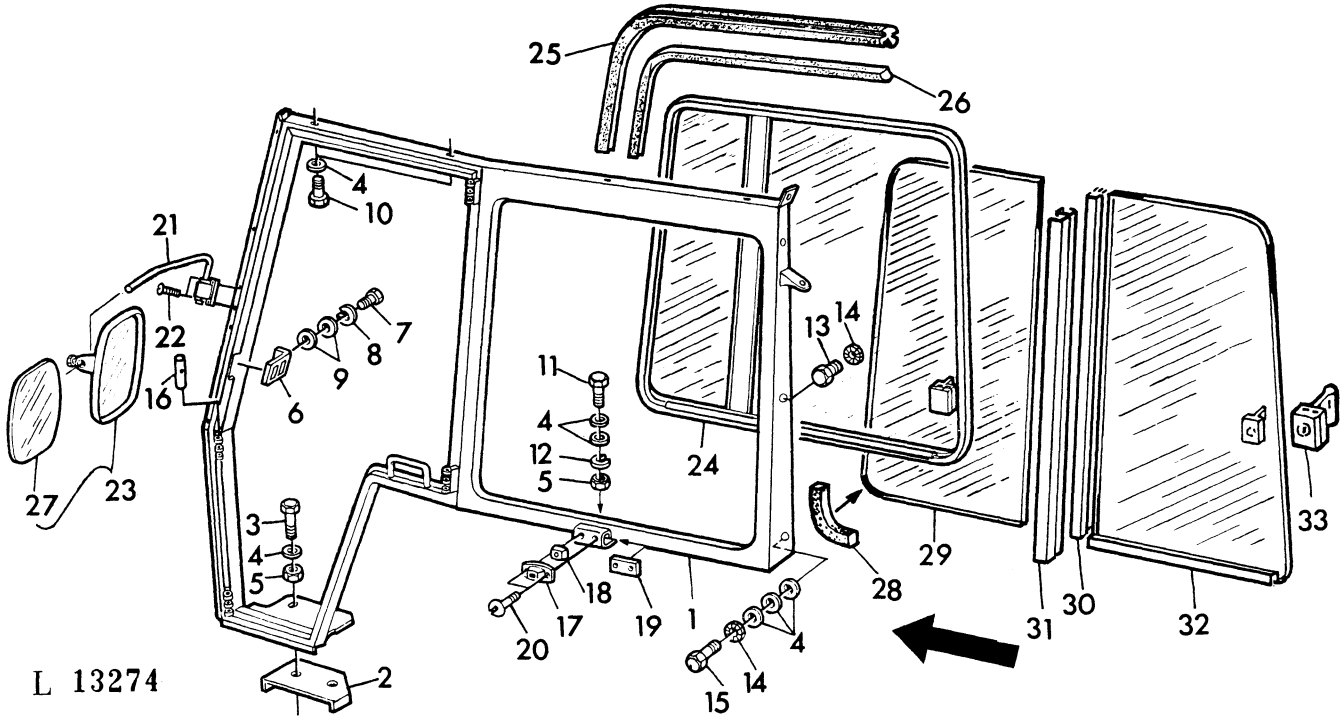

KEY	PART NO.	DESCRIPTION	QTY	SERIAL NO.	JD310	REMARKS
1	AL 24613	FRAME	1		X	R.H.
	AL 24651	FRAME	1		X	L.H.
2	L 30166	SPACER	1		X	R.H.
	L 30167	SPACER	1		X	L.H.
3	19H 1800	CAP SCREW	12		X	3/8"X1-1/2"
4	24H 1305	WASHER	4		X	13/32"X13/16"X.060"
5	14H 812	NUT	4		X	3/8"
6	L 30124	STOP	2		X	
7	19H 1948	CAP SCREW	4		X	1/4"X3/4"
8	12H 302	LOCK WASHER	4		X	1/4"
9	24H 1287	WASHER	8		X	9/32"X5/8"X.060"
10	19H 1936	CAP SCREW	8		X	3/8"X3/4"
11	19H 1732	CAP SCREW	4		X	3/8"X1-1/4"
12	12H 304	LOCK WASHER	4		X	3/8"
13	19H 2021	CAP SCREW	2		X	3/8"X5/8"
14	12H 331	LOCK WASHER	4		X	3/8"
15	19H 1731	CAP SCREW	2		X	3/8"X1"
16	L 29945	PIN	4		X	
17	L 30017	RETAINER	2		X	
18	L 30018	ARRESTOR	2		X	
19	L 29968	STRAP	2		X	
20	21M 7179	SCREW	4		X	5X12MM
21	AL 25050	RETAINER	1		X	L.H. SUB. FOR AL19220
	AL 25636	RETAINER	1		X	R.H. SUB. FOR AL19219, AL25049
22	21H 1210	SCREW	4		X	1/4"X3/4"
23	AL 30781	REAR VIEW MIRROR	2		X	INCL. KEY 27, SUB. FOR AL18361, AL25043
24	AL 24594	WINDOW	1		X	L.H.
	AL 24595	WINDOW	1		X	R.H.
25	L 30003	WEATHERSTRIP	1		X	
26	L 30002	WEATHERSTRIP	1		X	
27	L 32040	REAR VIEW MIRROR	2		X	
28	L 32037	WEATHERSTRIP	2		X	
29	L 32034	WINDOW	2		X	
30	L 32035	WEATHERSTRIP	2		X	
31	L 32036	WEATHERSTRIP	2		X	
32	AL 27234	WINDOW	1		X	L.H.
	AL 27235	WINDOW	1		X	R.H.
33	L 31521	HANDLE	2		X	

OPERATOR'S CAB - FRONT FRAME
CABINE DU CONDUCTEUR - CADRE AVANT
KABINE - FRONTRAHMEN
CABINA - TELAIO ANTERIORE
CABINA PARA EL CONDUCTOR - BASTIDOR DELANTERO
FORARHYTT - FRAMRE RAM
L 13813

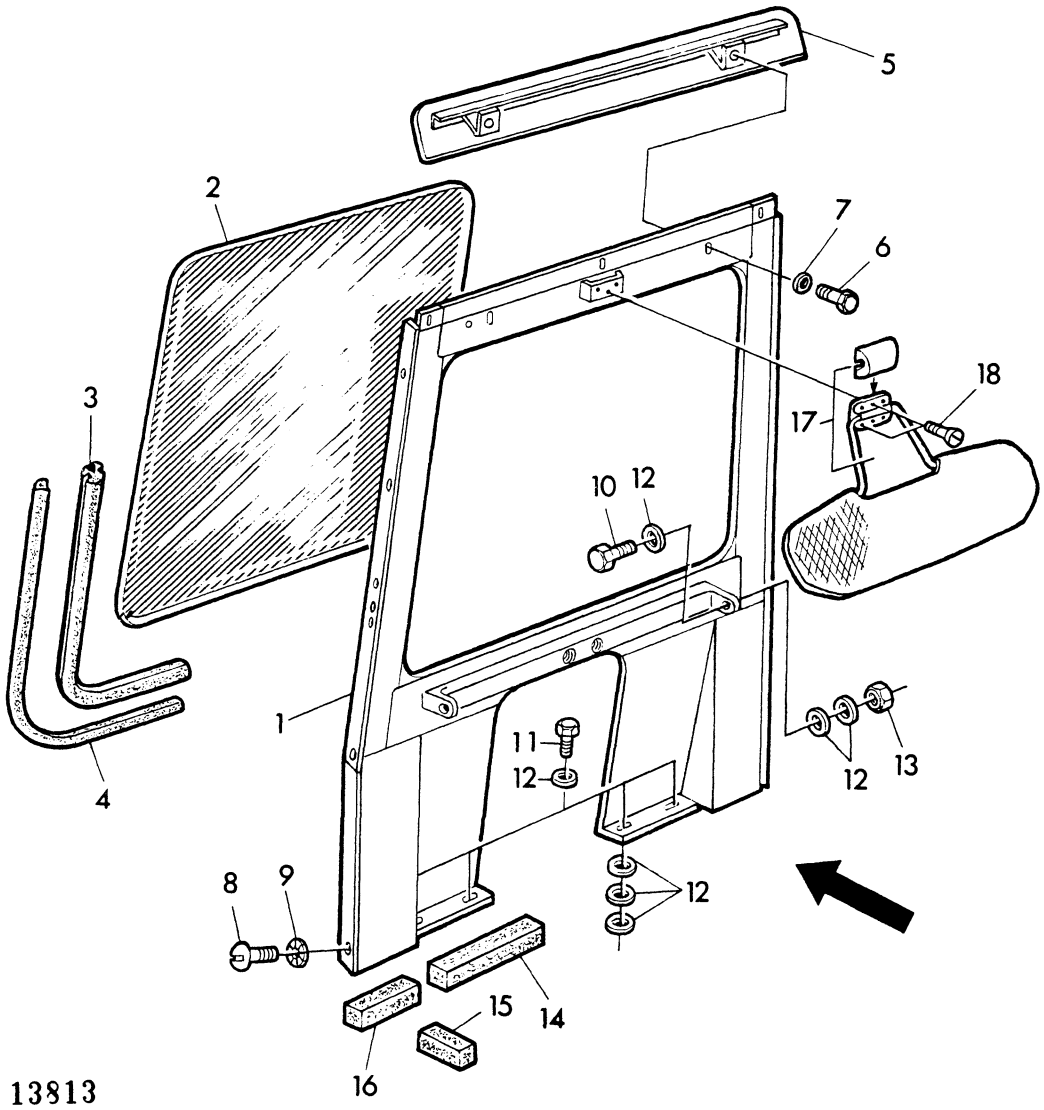

KEY	PART NO.	DESCRIPTION	QTY	SERIAL NO.	JD310	REMARKS
1	AL 24642	FRAME	1		X	
2	L 30138	WINDSHIELD	1		X	
3	L 29997	WEATHERSTRIP	1		X	
4	L 29998	WEATHERSTRIP	1		X	
5	AL 24596	SHIELD	1		X	
6	19H 1227	CAP SCREW	2		X	1/4"X1/2"
7	24H 1287	WASHER	2		X	9/32"X5/8"X. 060"
8	21H 1321	SCREW	13		X	3/8"X3/4"
9	12H 331	LOCK WASHER	13		X	3/8"
10	19H 1732	CAP SCREW	2		X	3/8"X1-1/4"
11	19H 1800	CAP SCREW	4		X	3/8"X1-1/2"
12	24H 1305	WASHER	16		X	13/32"X13/16"X. 060"
13	14H 812	NUT	2		X	3/8"
14	L 29999	FOAM PAD	2		X	NSEP
15	L 30001	FOAM PAD	2		X	NSEP
16	L 30000	FOAM PAD	2		X	
17	AL 24801	SUN VISOR	1		X	
18	21M 7179	SCREW	3		X	5X12MM

OPERATOR'S CAB - DOOR, TOP
CABINE DU CONDUCTEUR - PORTE, HAUT
KABINE - TUER, OBEN
CABINA - PORTELLO, SUPERIORE
CABINE PARA EL CONDUCTOR - PUERTA, ALTO
FORARHYTT - DOR, OVRE
L 13826

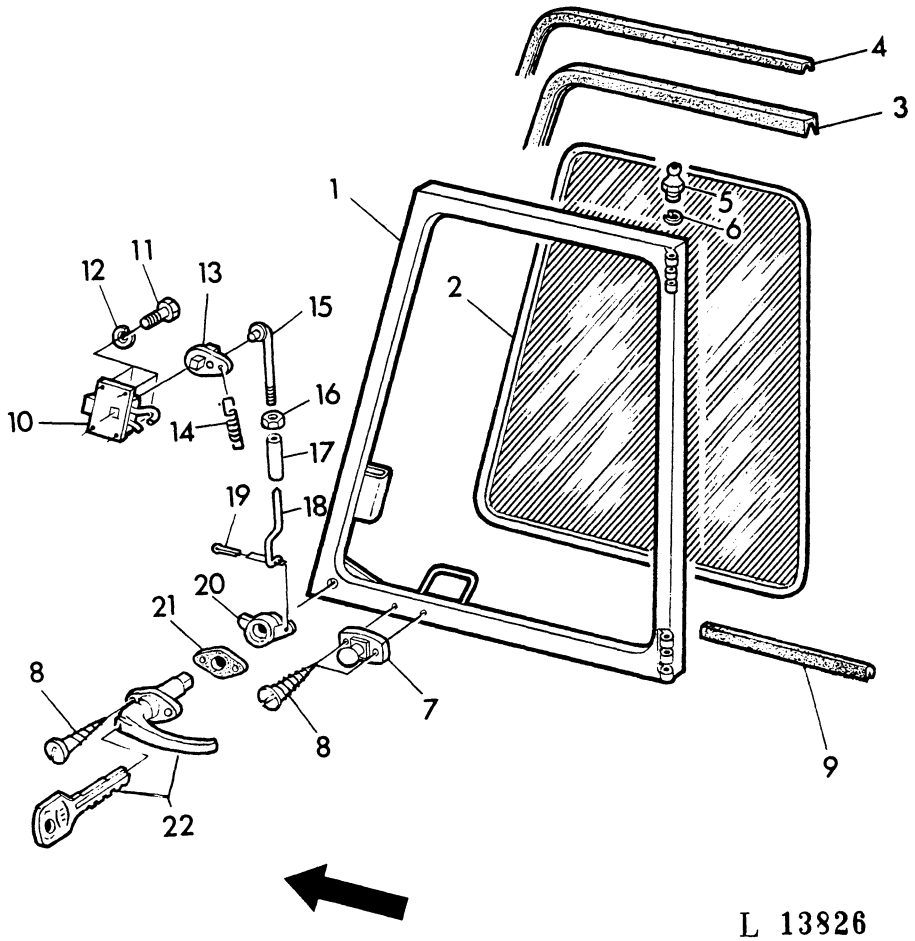

KEY	PART NO.	DESCRIPTION	QTY	SERIAL NO.	JD310	REMARKS
1	AL 24639	DOOR	1		X	R.H.
	AL 24640	DOOR	1		X	L.H.
2	L 30148	WINDOW	2		X	
3	L 30005	WEATHERSTRIP	2		X	
4	L 30006	WEATHERSTRIP	2		X	
5	L 29948	LUBRICATION FITTING	2		X	
6	12M 7081	LOCK WASHER	2		X	
7	L 30016	KNOB	2		X	
8	37M 7022	SCREW	8		X	4,8X16MM
9	L 29960	WEATHERSTRIP	2		X	
10	AL 24645	LOCK	2		X	
11	19H 1227	CAP SCREW	8		X	1/4"X1/2"
12	12H 302	LOCK WASHER	8		X	1/4"
13	AL 24632	LEVER	2		X	
14	L 30126	SPRING	2		X	
15	AL 24631	ROD	2		X	
16	14M 7009	NUT	2		X	
17	L 30072	SLEEVE	2		X	
18	L 30121	ROD	2		X	
19	11H 230	COTTER PIN	2		X	1/16"X3/8"
20	AL 24633	LEVER	1		X	L.H.
	AL 24634	LEVER	1		X	R.H.
21	L 29944	GASKET	2		X	
22	AL 25391	LOCK	1		X	KIT W/2, SUB. FOR L30071(2)

OPERATOR'S CAB - DOOR, BOTTOM
CABINE DU CONDUCTEUR - PORTE, BAS
KABINE - TUER, UNTEN
CABINA - PORTELLO, INFERIORE
CABINA PARA EL CONDUCTOR - PUERTA, BAJO
FORARHYTT - DORR, NEDRE
L 13824

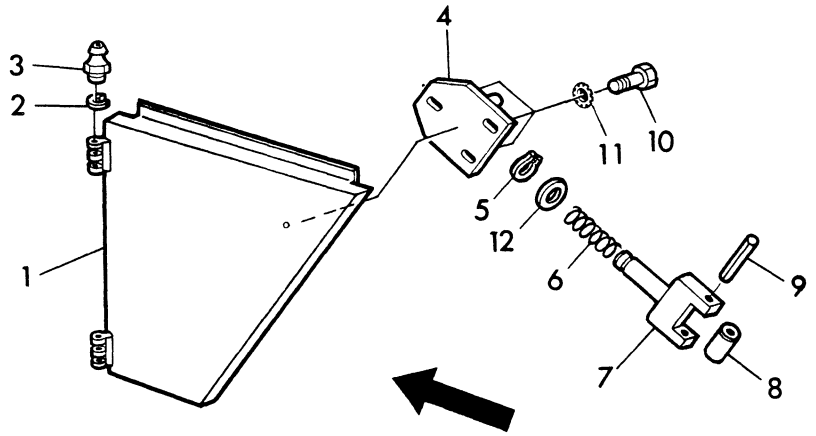

L 13824

KEY	PART NO.	DESCRIPTION	QTY	SERIAL NO.	JD310	REMARKS
1	AL 24643	DOOR	1		X	R.H.
	AL 24644	DOOR	1		X	L.H.
2	12M 7081	LOCK WASHER	2		X	
3	L 29948	LUBRICATION FITTING	2		X	
4	AL 27154	GUIDE	2		X	
5	T 20954	SNAP RING	2		X	
6	L 30092	SPRING	2		X	
7	AL 24630	YOKE	2		X	
8	L 30087	ROLLER	2		X	
9	34M 7041	SPRING PIN	2		X	6X36MM
10	19H 1227	CAP SCREW	6		X	1/4"X1/2"
11	12H 356	LOCK WASHER	6		X	1/4"
12	24H 1243	WASHER	2		X	11/32"X5/8"X.060"

OPERATOR'S CAB - REAR FRAME
CABINE DU CONDUCTEUR - CADRE ARRIERE
KABINE HECKRAHMEN
CABINA - TELAIO POSTERIORE
CABINA PARA EL CONDUCTOR - BASTIDOR TRASERO
FORARHYTT - BAKRE RAM
L 13834

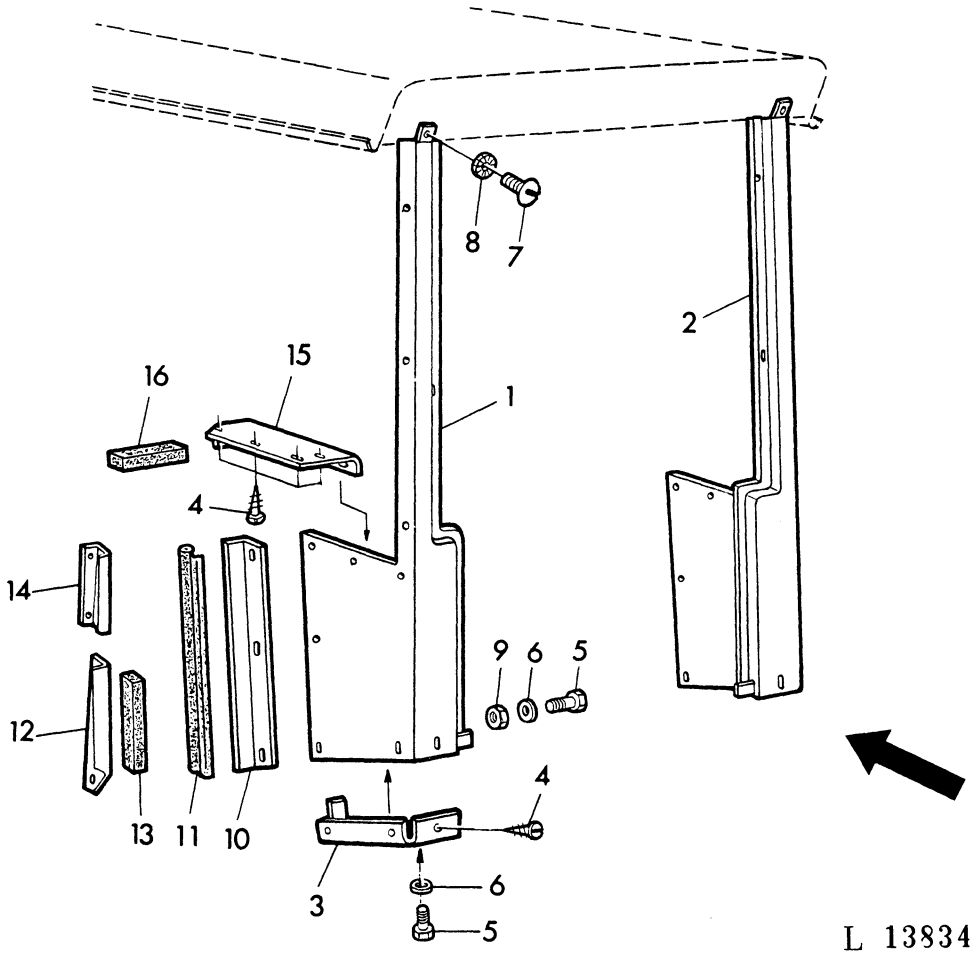

KEY	PART NO.	DESCRIPTION	QTY	SERIAL NO.	JD310	REMARKS
1	AL 24652	POST	1		X	
2	AL 24653	POST	1		X	
3	AL 24623	BRACKET	1		X	L.H.
	AL 24624	BRACKET	1		X	R.H.
4	21M 7196	SCREW	12		X	4,8X16MM
5	19H 1919	CAP SCREW	12		X	1/4"X5/8"
6	24H 1287	WASHER	12		X	9/32"X5/8"X.060"
7	21H 1321	SCREW	2		X	3/8"X3/4"
8	12H 331	LOCK WASHER	2		X	3/8"
9	14H 786	NUT	8		X	1/4"
10	L 30009	RETAINER	1		X	R.H.
	L 30010	RETAINER	1		X	L.H.
11	L 29980	WEATHERSTRIP	2		X	
12	AL 24605	RETAINER	1		X	R.H. ASSY, INCL. KEY 13
	AL 24606	RETAINER	1		X	L.H. ASSY, INCL. KEY 13
13	L 30008	FOAM PAD	2		X	
14	L 30047	SUPPORT	1		X	R.H.
	L 30048	SUPPORT	1		X	L.H.
15	L 30055	SUPPORT	1		X	L.H.
	L 30056	SUPPORT	1		X	R.H.
16	L 29982	FOAM PAD	2		X	

COWL / DASH
AUVENT DU TABLEAU DE BORD / TABLEAU DE BORD
ARMATURENWAND / ARMATURENBLECH
PANNELLO PORTA-STRUMENTI / CRUSCOTTO E RIVESTIMENTO
TABLERO DE INSTRUMENTOS / REVESTIMIENTO
INSTRUMENTPANEL / PANELPLAT
L 31450

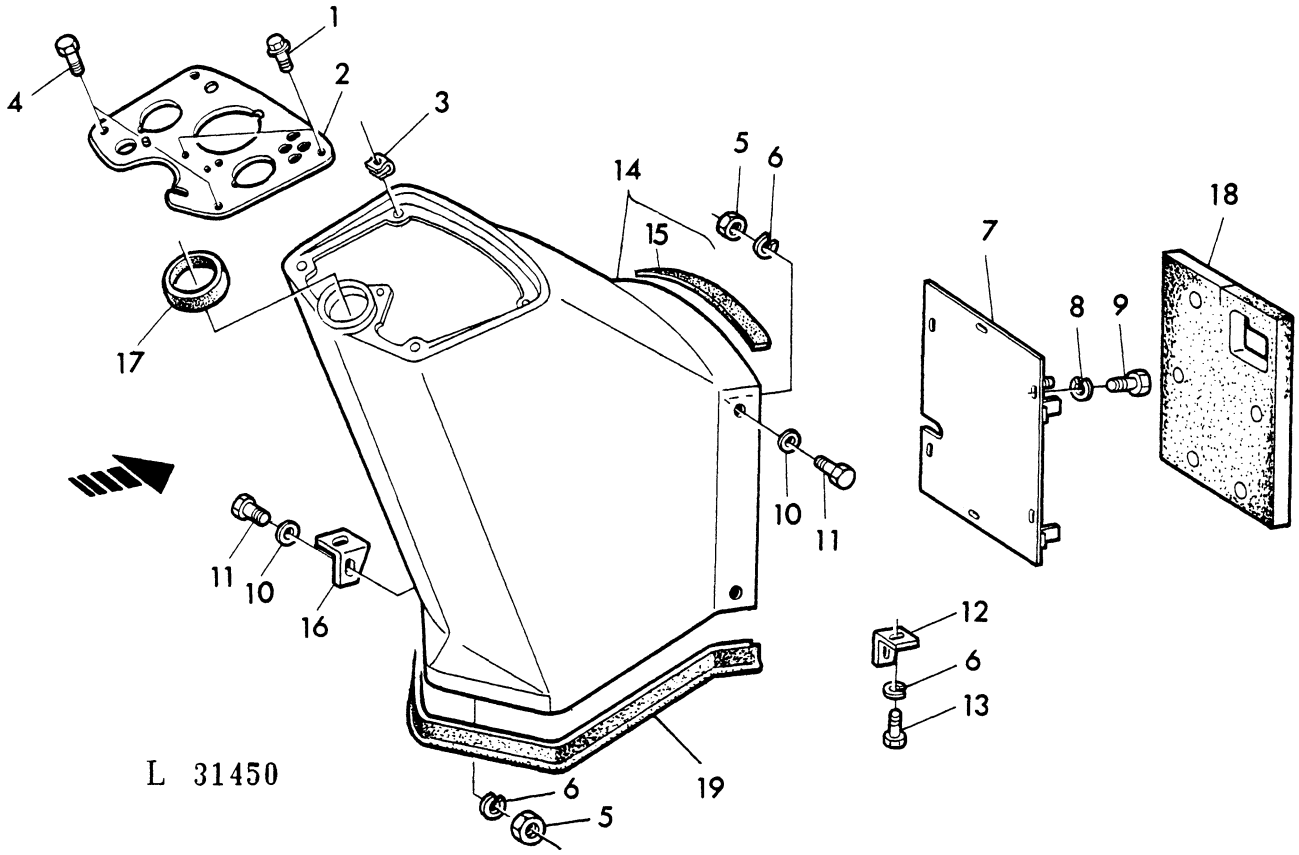

KEY	PART NO.	DESCRIPTION	QTY	SERIAL NO.	JD310	REMARKS
1	37H 24	SCREW	3		X	1/4"X3/4"
2	AL 24492	INSTRUMENT PANEL	1	-214775	X	
	AL 27854	INSTRUMENT PANEL	1	214776-	X	
3	W 14541	NUT	3		X	SUB. FOR T33634
4	T 23876	CAP SCREW	2		X	
5	14H 812	NUT	6		X	3/8"
6	12H 304	LOCK WASHER	6		X	3/8"
7	AL 24569	COVER	1		X	FRONT
8	12H 302	LOCK WASHER	6		X	1/4"
9	19H 1919	CAP SCREW	6		X	1/4"X5/8"
10	24H 1305	WASHER	4		X	13/32"X13/16"X. 060"
11	19H 2284	CAP SCREW	4		X	3/8"X7/8"
12	T 33631	RETAINER	1		X	R. H.
13	19H 2021	CAP SCREW	2		X	3/8"X5/8"
14	AL 25054	COWL	1		X	ASSY, INCL. KEY 15
	L 30284	COWL	1		X	(A)
15	T 31659	FOAM PAD	1		X	
16	T 33632	RETAINER	1		X	L. H.
17	T 33617	GROMMET	1	-248211	X	
	T 48195	GROMMET	1	248212-	X	
18	L 32497	BARRIER	1		X	
19	L 34162	WEATHERSTRIP	1		X	SUB. FOR T31657

(A) WITH OPERATOR'S CAB
AVEC CABINE
BEI KABINE
CON CABINA
CON CABINA
MED FORARHYTT

COWL SUPPORT
SUPPORT D'AUVENT
ARMATURENWANDTRAEGER
SUPPORTO DEL ALLOGGIAMENTO PANNELLO PORTA-STRUMENTI
APOYO DE LA CAJA DEL TABLERO DE INSTRUMENTOS
STOD FOR INSTRUMENTPANEL
L 31425

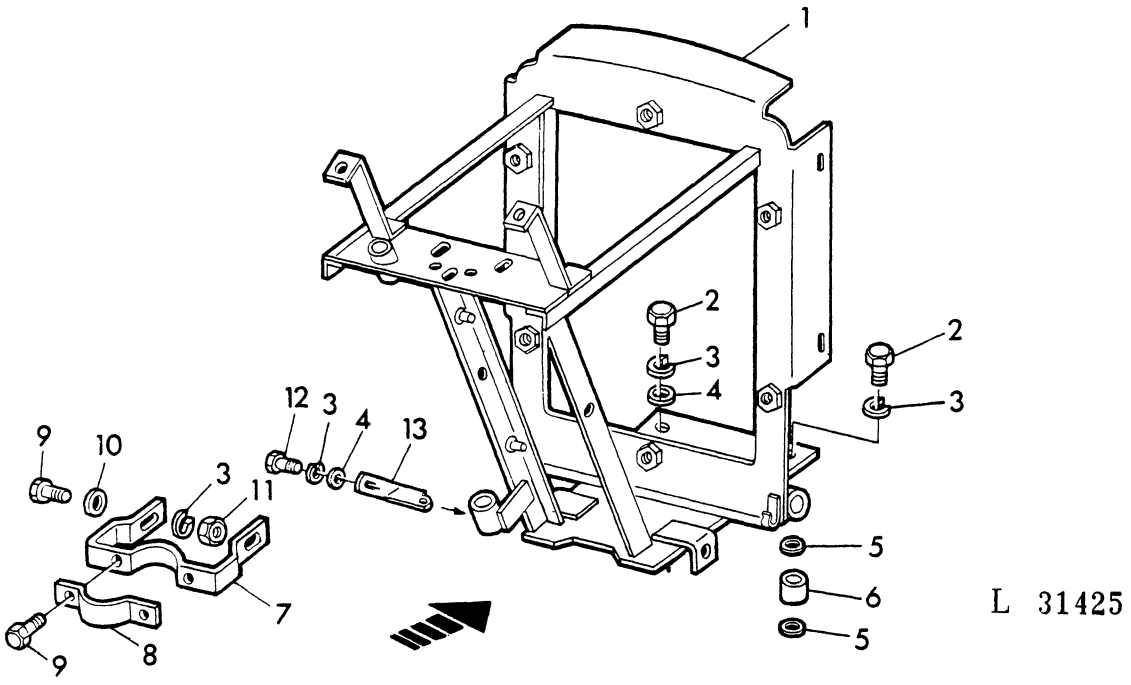

KEY	PART NO.	DESCRIPTION	QTY	SERIAL NO.	JD310	REMARKS
1	AL 30665	SUPPORT	1		X	SUB. FOR AT32747, AL28269
2	19H 1800	CAP SCREW	2		X	3/8"X1-1/2"
	19H 1731	CAP SCREW	2		X	3/8"X1"
3	12H 304	LOCK WASHER	8		X	3/8"
4	24H 1307	WASHER	3		X	13/32"X1"X.060"
5	24M 7028	WASHER	4		X	10,5X21X2MM
6	28H 862	SPACER	2		X	
7	T 33629	BRACKET	1		X	
8	T 33630	CLAMP	1		X	
9	19H 2552	CAP SCREW	4		X	3/8"X1-1/8"
10	24H 1305	WASHER	2		X	13/32"X13/16"X.060"
11	14H 812	NUT	4		X	3/8"
12	19H 1731	CAP SCREW	2		X	3/8"X1"
13	T 30781	RETAINER	1		X	

FOOT STEP
MARCHES D'ACCES
TRITTSTUFE
PREDELLINO
ESTRIBO
FOTSTEG
L 13830

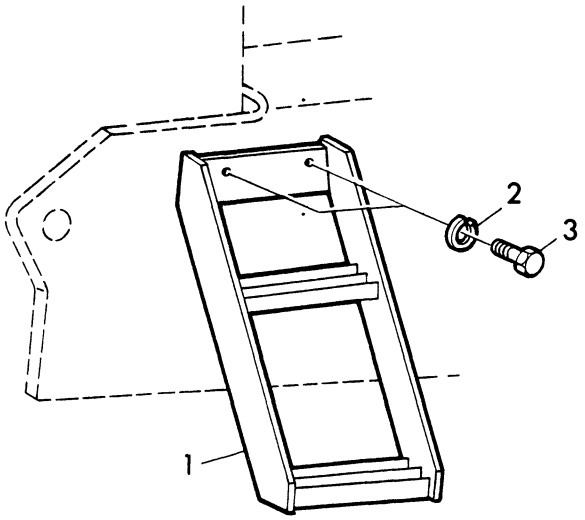

L 13830

KEY	PART NO.	DESCRIPTION	QTY	SERIAL NO.	JD3100	REMARKS
1	AT 43597	STEP	2		X	
2	12H 301	LOCK WASHER	4		X	1/2"
3	19H 1792	CAP SCREW	4		X	1/2"X1"

OPERATOR'S CAB - REAR FOLDING WINDOW
CABINE DU CONDUCTEUR - GLACE ARRIERE OUVRABLE
KABINE - HECKKLAPPFENSTER
CABINA - FINESTRINO POSTERIORE RIBALTABILE
CABINA PARA EL CONDUCTOR - VENTANA ABATIBLE TRASERA
FORARHYTT - OPNINGSBART BAKFONSTER
L 15001

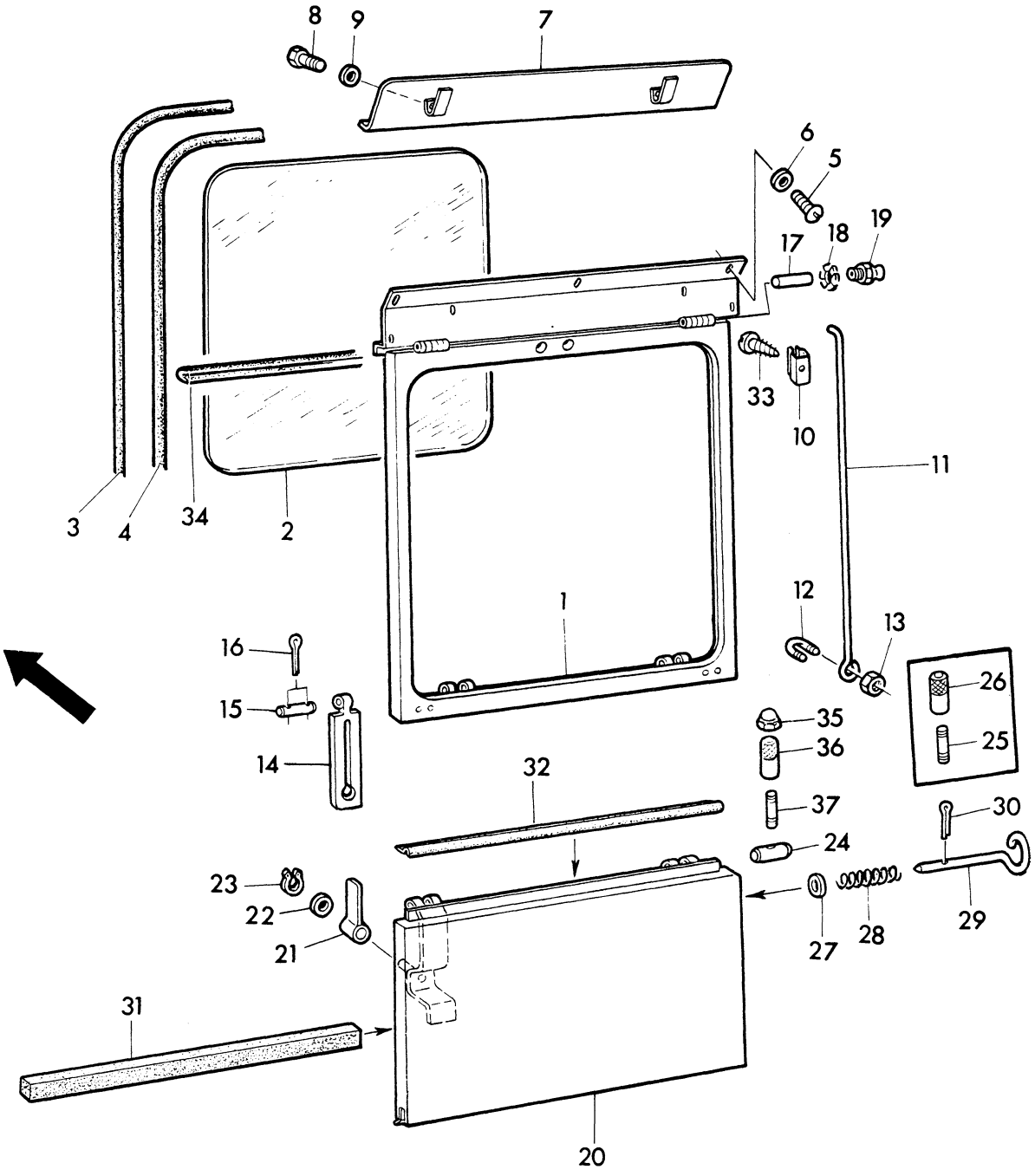

L 15001

KEY	PART NO.	DESCRIPTION	QTY	SERIAL NO.	JD310	REMARKS
1	AL 24641	FRAME	1		X	
2	L 30139	WINDOW	1		X	
3	L 30015	WEATHERSTRIP	1		X	
4	L 30014	WEATHERSTRIP	1		X	
5	21H 1321	SCREW	3		X	3/8"X3/4"
6	12H 331	LOCK WASHER	3		X	3/8"
7	AL 24596	SHIELD	1		X	
8	19H 1227	CAP SCREW	2		X	1/4"X1/2"
9	24H 1287	WASHER	2		X	9/32X5/8"X.060"
10	L 30038	CLIP	1		X	
11	AL 24598	ROD	1		X	
12	L 30041	U-BOLT	1		X	
13	14H 786	NUT	2		X	1/4"
14	L 30043	STRAP	2		X	
15	L 30033	PIN	2		X	
16	11H 233	COTTER PIN	4		X	3/32"X1/2"
17	L 29945	PIN	2		X	
18	12M 7081	LOCK WASHER	2		X	
19	L 29948	LUBRICATION FITTING	2		X	
20	AL 24638	DOOR	1		X	
21	AL 24625	STRAP	2		X	
22	24H 1243	WASHER	2		X	11/32"X5/8"X.060" SUB. FOR 24M7055
23	T 20954	SNAP RING	2		X	
24	L 30034	PIN	2		X	
25	L 30040	STUD	2		X	ORD L31708, L31709, 14H673
26	L 30046	NUT	2		X	ORD L31708, L31709, 14H673
27	L 29966	WASHER	2		X	
28	L 30039	SPRING	2		X	
29	L 30035	PIN	2		X	
30	11H 233	COTTER PIN	2		X	3/32"X1/2"
31	L 31293	FOAM PAD	1		X	SUB. FOR L29991
32	L 29985	WEATHERSTRIP	1		X	
33	37M 6497	SCREW	2		X	B3, 5X9, 5MM
34	L 30969	WEATHERSTRIP	1		X	
35	14H 673	NUT	2		X	1/4"
36	L 31709	NUT	2		X	
37	L 31708	STUD	2		X	

OPERATOR'S CAB-SEALING STRIPS
CABINE DU CONDUCTEUR-GARNITURES
KABINE - DICHTUNGSPROFILE
CABINA-STRISCIE DI ISOLAMENTO
CABINA PARA EL CONDUCTOR-EMPAQUETADURAS
FORARHYTT-TATNINGSLISTER
L 13823

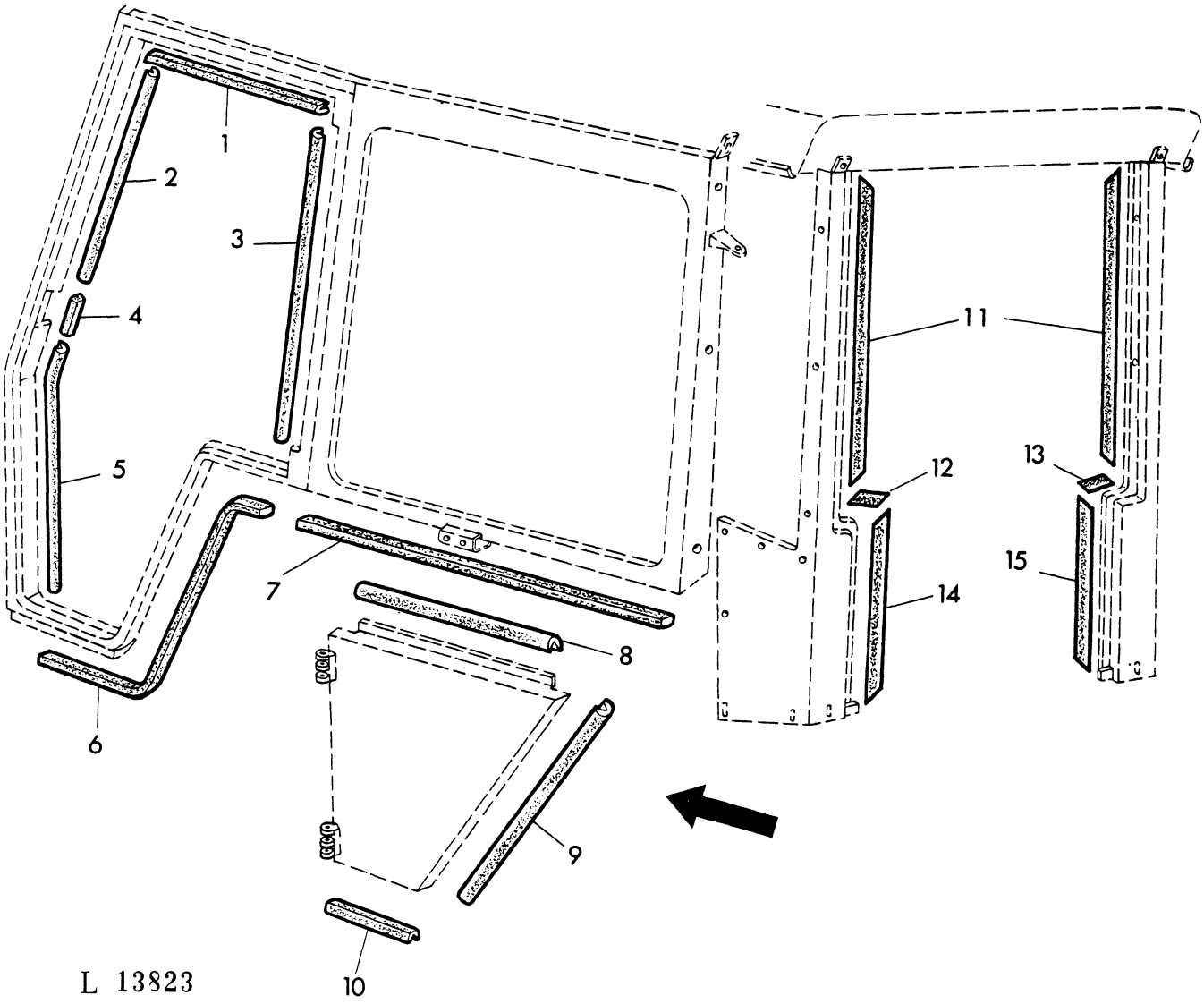

KEY		PART NO.	DESCRIPTION	QTY	SERIAL NO.	JD310	REMARKS
1	L	29953	WEATHERSTRIP	2		X	
2	L	29954	WEATHERSTRIP	1		X	R.H.
	L	29958	WEATHERSTRIP	1		X	L.H.
3	L	29956	WEATHERSTRIP	1		X	R.H.
	L	29959	WEATHERSTRIP	1		X	L.H.
4	L	29957	STRIP	2		X	
5	L	29955	WEATHERSTRIP	2		X	
6	L	31207	STRIP	2		X	SUB. FOR L29995
7	L	29996	STRIP	2		X	
8	L	29949	WEATHERSTRIP	2		X	
9	L	29961	WEATHERSTRIP	1		X	R.H.
	L	29963	WEATHERSTRIP	1		X	L.H.
10	L	29962	WEATHERSTRIP	1		X	R.H.
	L	29964	WEATHERSTRIP	1		X	L.H.
11	L	29984	WEATHERSTRIP	1		X	
12	L	29986	WEATHERSTRIP	1		X	L.H.
13	L	29987	WEATHERSTRIP	1		X	R.H.
14	L	29988	WEATHERSTRIP	1		X	L.H.
15	L	29989	WEATHERSTRIP	1		X	R.H.

OPERATOR'S CAB-SPACER
CABINE DU CONDUCTEUR-ENTRETOISE
KABINE - ZWISCHENBLECH
CABINA-DISTANZIALE
CABINA PARA EL CONDUCTOR-ESPACIADOR
FORARHYTT-MELLANLAGG
L 13820

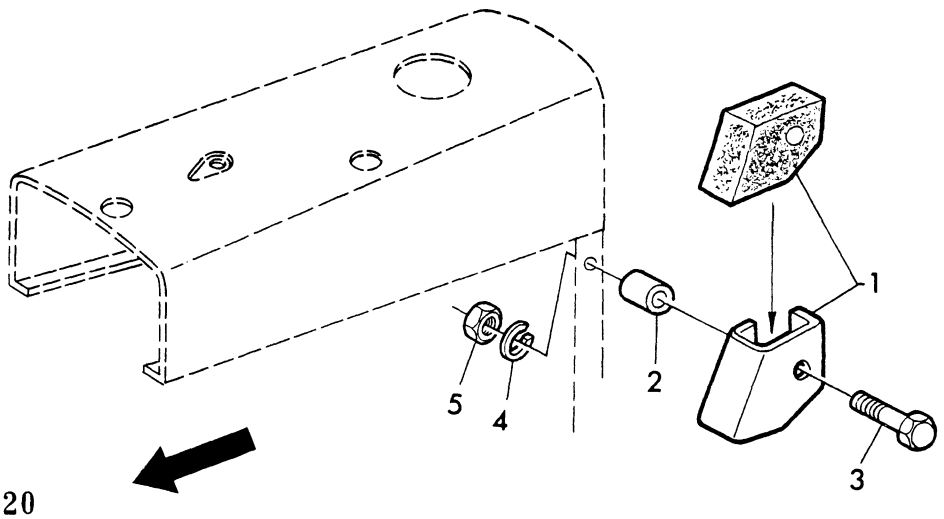

L 13820

KEY	PART NO.	DESCRIPTION	QTY	SERIAL NO.	JD310	REMARKS
1	AL 25059	SHIELD	1		X	L.H.
	AL 25060	SHIELD	1		X	R.H.
2	L 30649	SPACER	2		X	
3	19H 1726	CAP SCREW	2		X	3/8"X2-1/4"
4	12H 304	LOCK WASHER	2		X	3/8"
5	14H 812	NUT	2		X	3/8"

PART-NUMBER REFERENCE BESTELL-NR. NO PARTICOLARE NO DE LA PIEZA RESERVDELSNR.	GRID COORD. KOORD. COORD. COORD. RUTA	KEY REP. TEIL COD. REF. KOD	PAGE PAGE SEITE PAGINE PAGINA SIDA
L 29916	2A 22	6	80- 16
L 29944	2D 04	21	90- 13
L 29945	2C 24	16	90- 9
	2D 14	17	90- 23
L 29948	2D 04	5	90- 13
	2D 05	3	90- 14
	2D 14	19	90- 23
L 29949	2D 16	8	90- 25
L 29953	2D 16	1	90- 25
L 29954	2D 16	2	90- 25
L 29955	2D 16	5	90- 25
L 29956	2D 16	3	90- 25
L 29957	2D 16	4	90- 25
L 29958	2D 16	2	90- 25
L 29959	2D 16	3	90- 25
L 29960	2D 04	9	90- 13
L 29961	2D 16	9	90- 25
L 29962	2D 16	10	90- 25
L 29963	2D 16	9	90- 25
L 29964	2D 16	10	90- 25
L 29966	2D 14	27	90- 23
L 29968	2C 24	19	90- 9
L 29980	2D 08	11	90- 17
L 29982	2D 08	16	90- 17
L 29984	2D 16	11	90- 25
L 29985	2D 14	32	90- 23
L 29986	2D 16	12	90- 25
L 29987	2D 16	13	90- 25
L 29988	2D 16	14	90- 25
L 29989	2D 16	15	90- 25
L 29993	2C 21	5	90- 6
L 29994	2C 21	7	90- 6
L 29996	2D 16	7	90- 25
L 29997	2D 02	3	90- 11
L 29998	2D 02	4	90- 11
L 29999	2D 02	14	90- 11
L 30000	2D 02	16	90- 11
L 30001	2D 02	15	90- 11
L 30002	2C 24	26	90- 9
L 30003	2C 24	25	90- 9
L 30004	2C 18	2	90- 3
L 30005	2D 04	3	90- 13
L 30006	2D 04	4	90- 13
L 30008	2D 08	13	90- 17
L 30009	2D 08	10	90- 17
L 30010	2D 08	10	90- 17
L 30014	2D 14	4	90- 23
L 30015	2D 14	3	90- 23
L 30016	2D 04	7	90- 13
L 30017	2C 24	17	90- 9
L 30018	2C 24	18	90- 9
L 30019	2D 18	7	90- 27
L 30020	2D 18	6	90- 27
L 30033	2D 14	15	90- 23
L 30034	2D 14	24	90- 23
L 30035	2D 14	29	90- 23
L 30036	2C 21	4	90- 6
L 30038	2D 14	10	90- 23
L 30039	2D 14	28	90- 23
L 30040	2D 14	25	90- 23
L 30041	2D 14	12	90- 23
L 30043	2D 14	14	90- 23
L 30046	2D 14	26	90- 23
L 30047	2D 08	14	90- 17
L 30048	2D 08	14	90- 17
L 30055	2D 08	15	90- 17
L 30056	2D 08	15	90- 17
L 30072	2D 04	17	90- 13
L 30087	2D 05	8	90- 14
L 30092	2D 05	6	90- 14
L 30121	2D 04	18	90- 13
L 30124	2C 24	6	90- 9
L 30126	2D 04	14	90- 13
L 30138	2D 02	2	90- 11
L 30139	2D 14	2	90- 23
L 30148	2D 04	2	90- 13
L 30166	2C 24	2	90- 9
L 30167	2C 24	2	90- 9
L 30263	1G 08	30	50- 45
L 30283	2B 20	7	80- 39
L 30284	2D 10	14	90- 19
L 30286	2E 02	1	90- 35
L 30287	2E 02	6	90- 35
	2E 08	6	90- 41
L 30517	2A 19	18	80- 13
	2A 21	16	80- 15
L 30627	1B 22	22	30- 9
L 30630	2D 20	6	90- 29
L 30631	2D 20	7	90- 29
L 30633	2E 02	5	90- 35
L 30649	2D 17	2	90- 26
L 30655	1D 12	2	40- 17
L 30656	1B 22	11	30- 9
L 30661	1D 10	13	40- 15
L 30665	2E 04	1	90- 37
L 30666	2E 04	2	90- 37
L 30667	2E 04	3	90- 37
L 30668	2E 04	11	90- 37
L 30669	2E 04	12	90- 37
L 30670	2E 05	1	90- 38
L 30671	2E 05	2	90- 38
L 30672	2E 04	5	90- 37
L 30673	2E 04	4	90- 37
L 30674	2E 04	7	90- 37
L 30675	2E 04	8	90- 37
L 30676	2E 04	6	90- 37
L 30677	2E 04	10	90- 37
L 30678	2E 04	9	90- 37
L 30679	2E 05	4	90- 38
L 30680	2E 05	5	90- 38
L 30681	2E 05	3	90- 38
L 30682	2E 04	15	90- 37
L 30694	2C 06	15	80- 49
L 30695	1E 14	5	50- 3
	1F 12	39	50- 25
L 30787	2D 20	9	90- 29
L 30788	2D 20	8	90- 29
L 30789	1B 16	13	30- 3
L 30790	1B 16	12	30- 3
L 30791	1B 16	14	30- 3
L 30823	2B 16	11	80- 35
L 30844	2E 10	35	90- 43
L 30845	2B 22	6	80- 41
L 30860	1D 06	4	40- 11
L 30861	1D 06	39	40- 11
L 30862	1D 06	7	40- 11
L 30863	1D 06	22	40- 11
L 30864	1D 06	35	40- 11
L 30865	1D 06	36	40- 11
L 30866	1D 06	37	40- 11
L 30867	1D 06	38	40- 11
L 30868	1D 06	34	40- 11
L 30869	1D 06	33	40- 11
L 30885	2C 04	14	80- 47
L 30893	2E 10	6	90- 43
L 30894	2E 10	8	90- 43
L 30895	2E 10	10	90- 43
L 30896	2E 10	14	90- 43
L 30897	2E 10	22	90- 43
L 30898	2E 10	24	90- 43
L 30899	2E 10	25	90- 43
L 30900	2E 10	26	90- 43
L 30901	2E 08	2	90- 41
L 30902	2E 08	3	90- 41
L 30903	2E 08	4	90- 41
L 30904	2E 08	9	90- 41
L 30905	2E 08	10	90- 41
L 30906	2E 08	14	90- 41
L 30907	2E 08	15	90- 41
L 30908	2E 08	16	90- 41
L 30909	2E 08	17	90- 41
L 30910	2E 08	18	90- 41
L 30911	2E 08	19	90- 41
L 30912	2E 08	20	90- 41
L 30913	2E 08	21	90- 41
L 30914	2E 08	22	90- 41
L 30915	2E 08	23	90- 41
L 30916	2E 08	26	90- 41
L 30917	2E 08	27	90- 41
L 30918	2E 08	30	90- 41
L 30919	2E 08	31	90- 41
L 30920	2E 08	32	90- 41
L 30957	1H 24	18	70- 5
L 30958	2A 25	19	80- 19
L 30959	1B 22	24	30- 9

PART-NUMBER REFERENCE BESTELL-NR. NO PARTICOLARE NO DE LA PIEZA RESERVDELSNR.	GRID COORD. KOORD. COORD. COORD. RUTA	KEY REP. TEIL COD. REF. KOD	PAGE PAGE SEITE PAGINE PAGINA SIDA
L 30966	2B 16	10	80- 35
L 30967	2B 16	15	80- 35
L 30969	2D 14	34	90- 23
L 31074	2C 18	17	90- 3
L 31075	2C 18	18	90- 3
L 31077	1F 15	6	50- 28
L 31111	1E 02	16	40- 31
L 31124	1I 02	1	70- 7
L 31125	2B 14	20	80- 33
L 31144	1B 16	11	30- 3
L 31207	2D 16	6	90- 25
L 31257	1D 02	18	40- 7
L 31263	2D 22	2	90- 31
L 31264	2D 22	4	90- 31
L 31265	2E 04	16	90- 37
L 31266	2E 04	17	90- 37
L 31267	2B 06	27	80- 25
L 31268	2E 08	19	90- 41
L 31286	2E 05	12	90- 38
L 31287	2E 05	13	90- 38
L 31288	2E 05	10	90- 38
L 31289	2E 05	11	90- 38
L 31290	2E 05	14	90- 38
L 31291	2E 05	15	90- 38
L 31292	2E 05	7	90- 38
L 31293	2D 14	31	90- 23
L 31369	2E 08	37	90- 41
L 31372	2E 05	6	90- 38
L 31375	2E 05	17	90- 38
L 31376	2E 05	18	90- 38
L 31424	2B 20	12	80- 39
L 31425	2B 22	8	80- 41
L 31426	2B 22	10	80- 41
L 31434	1G 16	24	60- 3
L 31503	1F 18	4	50- 31
L 31521	2C 24	33	90- 9
L 31679	2A 22	3	80- 16
L 31703	2C 06	16	80- 49
L 31706	2A 15	29	80- 9
L 31708	2D 14	37	90- 23
L 31709	2D 14	36	90- 23
L 31727	2E 18	21	90- 51
L 31728	2E 16	19	90- 49
L 31729	2E 18	8	90- 51
L 31730	2E 18	22	90- 51
L 31731	2E 18	6	90- 51
L 31738	2E 16	5	90- 49
L 31739	2E 16	7	90- 49
L 31740	2E 18	4	90- 51
L 31774	1D 24	16	40- 29
	1E 02	20	40- 31
L 31775	1D 24	15	40- 29
L 31777	1E 02	19	40- 31
L 31778	1E 02	21	40- 31
L 31780	1E 02	18	40- 31
L 31781	1E 02	18	40- 31
L 31793	1G 06	18	50- 43
L 31840	1H 10	16	60- 21
L 32034	2C 24	29	90- 9
L 32035	2C 24	30	90- 9
L 32036	2C 24	31	90- 9
L 32037	2C 24	28	90- 9
L 32040	2C 24	27	90- 9
L 32144	1H 12	32	60- 23
	1H 12	45	60- 23
L 32147	1C 24	4	40- 5
L 32177	2A 12	3	80- 6
L 32178	2A 12	5	80- 6
L 32190	2B 10	9	80- 29
L 32191	2B 10	1	80- 29
L 32192	2B 10	3	80- 29
L 32193	2B 10	2	80- 29
L 32194	2B 08	21	80- 27
	2B 12	29	80- 31
L 32198	2B 10	22	80- 29
L 32199	2B 10	21	80- 29
L 32200	2B 10	22	80- 29
L 32201	2B 10	21	80- 29
L 32204	2B 08	27	80- 27
	2B 12	31	80- 31
L 32205	2B 08	16	80- 27
	2B 12	18	80- 31
L 32206	2B 08	15	80- 27
	2B 12	17	80- 31
L 32207	2B 08	12	80- 27
	2B 12	13	80- 31
L 32208	2B 10	15	80- 29
L 32211	2B 08	7	80- 27
	2B 12	9	80- 31
L 32249	2B 04	17	80- 23
L 32250	2B 04	18	80- 23
L 32253	2B 10	12	80- 29
L 32254	2B 10	13	80- 29
L 32256	2B 10	13	80- 29
L 32258	2B 04	21	80- 23
L 32259	2B 08	8	80- 27
	2B 12	10	80- 31
L 32260	2B 08	6	80- 27
L 32262	2B 12	10	80- 31
L 32263	2B 08	6	80- 27
L 32497	2D 10	18	90- 19
L 32504	1H 08	7	60- 19
L 32516	1I 12	2	70- 17
L 32536	1G 04	6	50- 41
L 32537	2B 10	20	80- 29
L 32547	1I 08	14	70- 13
L 32548	1I 08	9	70- 13
L 32568	1G 06	7	50- 43
L 32569	1G 04	9	50- 41
L 32570	1G 06	19	50- 43
L 32571	1G 06	13	50- 43
L 32618	1G 08	1	50- 45
L 32641	2B 12	7	80- 31
L 32642	2B 12	8	80- 31
L 32645	1B 02	17	20- 21
L 32690	1H 04	9	60- 15
	1H 06	2	60- 17
L 32704	1H 24	6	70- 5
L 32706	1D 24	21	40- 29
L 32707	1G 24	11	60- 11
L 32708	1G 24	13	60- 11
L 32709	1G 24	21	60- 11
L 32710	1G 24	23	60- 11
L 32725	1G 24	28	60- 11
L 32747	2B 12	20	80- 31
L 32750	2B 12	6	80- 31
L 32751	2B 12	8	80- 31
L 32752	2B 12	6	80- 31
L 32753	2B 12	9	80- 31
L 32786	2E 02	3	90- 35
	2E 02	4	90- 35
	2E 08	42	90- 41
L 32788	1G 19	5	60- 6
L 32802	1H 06	17	60- 17
L 32814	2A 15	35	80- 9
L 32815	2A 15	35	80- 9
L 32839	1G 04	6	50- 41
L 32843	1F 18	18	50- 31
L 32845	2C 06	2	80- 49
L 32957	1G 22	11	60- 9
L 33517	1H 06	12	60- 17
L 33518	1H 06	17	60- 17
L 33898	1I 04	1	70- 9
	1I 04	6	70- 9
	1I 05	2	70- 10
L 33899	1D 18	5	40- 23
L 33900	1D 18	2	40- 23
L 33919	2B 20	6	80- 39
	2B 20	7	80- 39
L 33920	2B 20	5	80- 39
	2B 20	7	80- 39
L 33921	2B 20	7	80- 39
	2B 20	4	80- 39
L 33922	2B 22	5	80- 41
L 33923	2B 22	4	80- 41
L 33924	2B 22	3	80- 41
L 34040	1H 10	16	60- 21
L 34137	2B 04	19	80- 23
L 34138	2B 04	20	80- 23
L 34162	2D 10	19	90- 19
L 34168	1G 08	23	50- 45
L 34172	2A 19	19	80- 13
	2A 21	17	80- 15
L 34174	1G 24	26	60- 11
L 34175	1G 08	27	50- 45

PART-NUMBER REFERENCE BESTELL-NR. NO PARTICOLARE NO DE LA PIEZA RESERVDELSNR.	GRID COORD. KOORD. COORD. RUTA	KEY REP. TEIL COD. REF. KOD	PAGE PAGE SEITE PAGINE PAGINA SIDA
L 34346	1G 24	27	60- 11
L 34353	1G 08	23	50- 45
L 34400	1G 08	22	50- 45
L 34432	1H 22	3	70- 3
L 34569	1H 22	7	70- 3
	1H 22	1	70- 3
L 34575	1H 22	7	70- 3
	1H 22	6	70- 3
L 34956	2B 10	18	80- 29
	2B 10	22	80- 29
L 34957	2B 10	19	80- 29
	2B 10	22	80- 29
L 34966	2B 10	18	80- 29
	2B 10	22	80- 29
L 34967	2B 10	19	80- 29
	2B 10	22	80- 29
L 35024	1F 18	14	50- 31
L 35542	1G 08	3	50- 45
L 35628	1D 08	3	40- 13
	1E 14	15	50- 3
L 35825	2E 18	4	90- 51
L 36557	1F 20	15	50- 33
L 48704	1B 20	22	30- 7
L 48705	1B 20	19	30- 7
L 48777	1B 22	13	30- 9
L 83676	1D 21	10	40- 26
	1E 02	7	40- 31
L 83677	1D 21	6	40- 26
L 84611	1E 04	5	40- 33
L 84612	1E 04	17	40- 33
L 94773	2C 08	3	80- 51
M 886T	1I 16	16	70- 21
M 1102T	1E 14	1	50- 3
	1E 14	30	50- 3
	1F 12	7	50- 25
	1F 24	1	50- 37
M 1335T	1B 16	10	30- 3
M 1746T	1A 23	24	20- 17
M 2023T	1H 01	3	60- 12
M 2054T	1G 08	29	50- 45
M 2055T	1G 08	29	50- 45
M 2291T	2B 14	10	80- 33
M 2301T	2A 17	27	80- 11
M 2392T	1B 02	22	20- 21
M 3636T	1D 04	33	40- 9
	1D 06	40	40- 11
M 3742T	1C 10	12	30- 21
M 3853T	1A 23	10	20- 17
M 4224T	1E 14	10	50- 3
M 41029	1A 21	2	20- 15
N 120831	1D 21	5	40- 26
N 31296	1I 17	7	70- 22
N 31767	1I 24	20	70- 29
N 85304	1J 02	16	70- 31
	1J 04	12	70- 33
N 130510	1J 05	2	70- 34
P 46051	1I 24	15	70- 29
	1J 02	22	70- 31
	1J 04	18	70- 33
P 46404	1F 02	4	50- 15
P 47908	1I 24	3	70- 29
	1J 02	4	70- 31
	1J 04	3	70- 33
P 48093	2A 25	5	80- 19
R 375R	1F 08	5	50- 21
R 394R	1G 02	5	50- 39
	1I 16	3	70- 21
	1J 02	17	70- 31
	1J 04	11	70- 33
R 495R	1A 11	14	20- 5
	1B 08	21	20- 27
	1H 10	10	60- 21
	1H 24	16	70- 5
R 1612R	1F 10	19	50- 23
R 1662R	1I 08	24	70- 13
R 1870R	1F 20	18	50- 33
R 1888R	1H 12	29	60- 23
R 10093	1A 09	13	20- 3
R 10184	1C 07	7	30- 18
R 10185	1C 07	5	30- 18
R 11100	1D 19	5	40- 24
R 20135	2A 17	3	80- 11
R 20498	1C 02	3	30- 13
R 21101	2A 17	23	80- 11
R 21612	1G 08	12	50- 45
R 26121	1A 09	11	20- 3
R 26125	1A 13	22	20- 7
R 26137	1H 24	27	70- 5
R 26149	1C 14	11	30- 25
	1E 14	19	50- 3
R 26149	1F 08	23	50- 21
R 26169	1F 02	20	50- 15
R 26198	1G 08	7	50- 45
R 26241	1A 09	6	20- 3
R 26286	1I 10	2	70- 15
R 26287	1B 24	8	30- 11
R 26375	1F 12	41	50- 25
R 26448	1F 04	37	50- 17
R 26493	1A 09	31	20- 3
R 26552	1F 24	4	50- 37
R 26621	1I 02	40	70- 7
R 26632	2A 19	16	80- 13
R 26858	2B 02	10	80- 21
R 26906	1F 04	8	50- 17
R 26919	1E 14	15	50- 3
R 26936	1D 10	21	40- 15
N	1H 24	26	70- 5
	1J 18	6	70- 47
N	1G 08	10	50- 45
	1H 10	23	60- 21
	1H 24	31	70- 5
	1I 02	14	70- 7
	1J 18	9	70- 47
P			
	1G 19	19	60- 6
	1H 10	14	60- 21
	1I 02	4	70- 7
	1I 12	7	70- 17
	1I 14	19	70- 19
	1F 04	37	50- 17
	1G 18	9	60- 5
	1H 04	2	60- 15
	1H 06	14	60- 17
	1H 24	7	70- 5
	1I 02	6	70- 7
R	1J 18	13	70- 47
	1A 09	31	20- 3
	1F 24	4	50- 37
	1G 03	3	50- 40
	1G 18	8	60- 5
	1I 02	16	70- 7
	1I 02	40	70- 7
	1J 18	18	70- 47
	2A 19	16	80- 13
	2A 21	14	80- 15
	2B 02	10	80- 21
	2B 18	11	80- 37
	1F 04	8	50- 17
	1F 08	18	50- 21
	1F 14	15	50- 27
	1G 19	7	60- 6
	1H 10	7	60- 21
	1H 24	36	70- 5
	1I 02	11	70- 7
	1I 05	13	70- 10
	1I 12	18	70- 17
	1I 14	17	70- 19
	1I 16	20	70- 21
	1J 10	1	70- 39
	1J 12	1	70- 41
	1J 18	7	70- 47

PART-NUMBER REFERENCE BESTELL-NR. NO PARTICOLARE NO DE LA PIEZA RESERVDELSNR.	GRID COORD. KOORD. COORD. COORD. RUTA	KEY REP. TEIL COD. REF. KOD	PAGE PAGE SEITE PAGINE PAGINA SIDA
R 27003	1F 12	14	50- 25
R 27094	1I 10	1	70- 15
R 27139	1F 05	4	50- 18
R 27145	1H 24	44	70- 5
R 27149	1H 24	2	70- 5
	1J 18	1	70- 47
R 27150	1H 24	13	70- 5
R 27159	1I 02	25	70- 7
R 27166	1A 23	2	20- 17
	1B 08	22	20- 27
	1F 08	3	50- 21
	1I 02	21	70- 7
	1J 18	15	70- 47
R 27167	1I 02	23	70- 7
R 27170	1I 02	26	70- 7
R 27172	1I 02	18	70- 7
R 27173	1I 02	24	70- 7
R 27174	1I 02	22	70- 7
	1J 18	16	70- 47
R 27175	1F 12	26	50- 25
	1G 19	10	60- 6
	1H 24	12	70- 5
	1I 16	17	70- 21
R 27181	1B 22	7	30- 9
R 27216	1I 02	15	70- 7
R 27218	1F 04	36	50- 17
	1I 02	7	70- 7
R 27237	1I 12	8	70- 17
R 27267	1G 19	18	60- 6
	1J 16	5	70- 45
R 27285	1B 08	6	20- 27
	1C 02	2	30- 13
R 27320	1E 14	12	50- 3
	1E 16	15	50- 5
	1G 16	10	60- 3
	1G 18	14	60- 5
R 27346	1B 24	10	30- 11
	1I 08	3	70- 13
R 27471	1I 02	37	70- 7
R 27472	1I 02	36	70- 7
R 27474	1F 14	16	50- 27
R 27476	1I 02	20	70- 7
R 27478	1H 24	46	70- 5
R 27479	1H 24	46	70- 5
R 27490	1F 12	16	50- 25
R 27491	1H 06	5	60- 17
R 27507	1F 04	12	50- 17
R 27528	1H 10	28	60- 21
R 27564	1I 02	19	70- 7
	1J 18	14	70- 47
R 27567	1E 14	11	50- 3
R 27649	1I 10	16	70- 15
R 27926	1H 24	10	70- 5
R 27927	1H 24	11	70- 5
R 27928	1H 24	9	70- 5
R 27928	1J 18	3	70- 47
R 27976	1F 04	31	50- 17
	1J 05	4	70- 34
R 28029	1A 19	4	20- 13
R 28084	1I 10	18	70- 15
R 28583	1C 14	5	30- 25
R 28776	1G 04	15	50- 41
	1G 19	12	60- 6
R 28781	1I 02	32	70- 7
R 28782	1I 02	31	70- 7
	1J 18	17	70- 47
R 28794	1B 18	3	30- 5
R 28799	1B 18	5	30- 5
R 29936	1H 10	9	60- 21
R 30182	1D 19	3	40- 24
R 30587	1E 22	4	50- 11
	1F 10	4	50- 23
R 30776	1I 16	13	70- 21
R 30958	1E 14	21	50- 3
	1F 08	13	50- 21
R 31250	1D 19	3	40- 24
R 31271	1C 08	3	30- 19
R 31289	1F 10	15	50- 23
R 31319	1F 04	11	50- 17
R 31378	1H 01	8	60- 12
R 31404	1E 22	13	50- 11
	1F 10	12	50- 23
R 31631	1F 04	2	50- 17
	1G 08	8	50- 45
	1I 02	15	70- 7
R 31781	1I 02	34	70- 7
R 32306	1C 14	10	30- 25
R 32344	1I 02	35	70- 7
R 32507	1G 02	3	50- 39
	1I 16	8	70- 21
R 32703	2A 19	4	80- 13
R 33059	1F 10	6	50- 23
R 33162	1I 16	19	70- 21
R 33277	1F 04	6	50- 17
R 33521	1F 04	23	50- 17
R 33976	1C 08	4	30- 19
R 34028	1F 04	30	50- 17
R 34063	1I 12	15	70- 17
R 34348	1H 24	43	70- 5
R 34349	1H 24	41	70- 5
R 34352	1B 02	20	20- 21
R 34360	1H 20	3	70- 1
R 34362	1H 20	6	70- 1
R 34394	1C 14	13	30- 25
R 34395	1C 14	12	30- 25
R 34399	1F 20	13	50- 33
R 34733	1G 02	1	50- 39
	1I 16	10	70- 21
R 34760	1C 04	8	30- 15
R 34761	1C 04	9	30- 15
R 34764	1B 08	23	20- 27
	1C 04	4	30- 15
R 34767	1B 08	24	20- 27
	1C 04	5	30- 15
R 34811	1E 23	10	50- 12
R 35226	1G 16	13	60- 3
R 35286	1H 10	3	60- 21
R 35684	1I 10	5	70- 15
R 35794	1I 10	23	70- 15
R 36075	1J 16	2	70- 45
R 36265	1F 14	10	50- 27
R 38312	1B 02	7	20- 21
R 38358	1B 20	23	30- 7
R 39067	1H 24	21	70- 5
R 39081	1E 22	11	50- 11
	1F 10	9	50- 23
R 39082	1E 22	10	50- 11
R 39085	1F 10	13	50- 23
R 39088	1F 10	10	50- 23
R 39089	1F 10	32	50- 23
R 39090	1F 10	29	50- 23
	1G 03	2	50- 40
R 39091	1F 10	31	50- 23
R 39112	1F 12	40	50- 25
	1G 19	20	60- 6
	1H 10	15	60- 21
R 39114	1E 22	2	50- 11
R 39115	1E 22	7	50- 11
R 39116	1E 22	8	50- 11
R 39117	1E 22	9	50- 11
	1F 10	5	50- 23
R 39118	1E 22	12	50- 11
R 39119	1F 10	14	50- 23
R 39123	1F 10	22	50- 23
R 39124	1F 10	23	50- 23
R 39125	1F 10	24	50- 23
R 39129	1F 10	28	50- 23
R 39132	1F 04	22	50- 17
R 39133	1F 04	20	50- 17
R 39137	1F 04	15	50- 17
R 39140	1F 04	16	50- 17
R 39145	1F 10	16	50- 23
R 39149	1F 04	13	50- 17
R 39152	1F 04	24	50- 17
R 39159	1F 04	32	50- 17
R 39161	1F 04	38	50- 17
R 39162	1F 04	39	50- 17
R 39163	1F 04	43	50- 17
R 39164	1F 04	7	50- 17
R 39166	1F 02	23	50- 15
	1F 10	3	50- 23
R 39189	1F 10	7	50- 23
R 39192	1F 10	21	50- 23
R 39193	1F 10	17	50- 23
R 39228	1H 24	23	70- 5

PART-NUMBER REFERENCE BESTELL-NR. NO PARTICOLARE NO DE LA PIEZA RESERVDELSNR.	GRID COORD. KOORD. COORD. COORD. RUTA	KEY REP. TEIL COD. REF. KOD	PAGE PAGE SEITE PAGINE PAGINA SIDA
R 39229	1F 04	18	50- 17
R 39248	1F 04	40	50- 17
R 39294	1F 04	19	50- 17
	1F 12	31	50- 25
R 39313	1F 10	8	50- 23
R 39322	1E 22	6	50- 11
R 39323	1G 19	1	60- 6
R 39324	1G 19	9	60- 6
R 39325	1E 22	14	50- 11
	1F 10	11	50- 23
R 39327	1F 06	4	50- 19
R 39332	1F 06	6	50- 19
R 39613	1B 22	2	30- 9
R 39615	1B 22	4	30- 9
R 39729	1H 24	30	70- 5
	1J 18	10	70- 47
R 39798	1I 16	1	70- 21
R 39832	1E 18	14	50- 7
R 39985	1C 08	5	30- 19
R 40072	1G 19	2	60- 6
R 40147	1F 12	32	50- 25
R 40562	1G 19	4	60- 6
R 40791	1A 11	2	20- 5
R 40808	1F 06	1	50- 19
R 40948	1C 08	6	30- 19
R 40976	1I 16	12	70- 21
R 41859	1F 14	4	50- 27
R 41877	1I 10	12	70- 15
R 42363	1A 09	4	20- 3
	1E 14	2	50- 3
R 42364	1A 17	21	20- 11
R 42451	2A 23	5	80- 17
	2A 25	6	80- 19
R 42467	1H 24	42	70- 5
R 42729	1A 13	15	20- 7
R 43475	1I 05	7	70- 10
	1I 12	13	70- 17
	1I 14	12	70- 19
R 44302	1C 07	4	30- 18
	1C 14	3	30- 25
	1E 04	2	40- 33
	1H 04	7	60- 15
	1I 08	5	70- 13
	2D 24	10	90- 33
R 44823	1H 24	1	70- 5
R 45438	1H 24	17	70- 5
R 45874	1H 24	45	70- 5
R 46414	1H 04	12	60- 15
R 46415	1D 02	9	40- 7
R 46986	1I 10	7	70- 15
R 47085	1I 10	9	70- 15
R 47086	1I 10	11	70- 15
R 47087	1I 10	10	70- 15
R 47160	1C 14	4	30- 25
R 47358	1B 24	14	30- 11
R 47438	1A 17	15	20- 11
R 47862	1G 08	11	50- 45
R 47912	1I 10	17	70- 15
R 47913	1I 10	19	70- 15
R 47998	1G 16	1	60- 3
	1G 22	1	60- 9
R 48000	1B 08	24	20- 27
	1C 04	5	30- 15
R 48071	1B 24	7	30- 11
R 48528	1G 19	5	60- 6
R 48567	1B 16	25	30- 3
R 48738	1H 24	24	70- 5
R 48767	1A 09	11	20- 3
R 48808	1I 02	33	70- 7
R 48957	1I 10	4	70- 15
R 48989	1A 25	3	20- 19
R 48993	1B 06	17	20- 25
R 49068	2A 15	24	80- 9
R 49069	2A 15	24	80- 9
R 49070	2A 15	24	80- 9
R 49072	1H 24	47	70- 5
R 49074	1I 02	43	70- 7
R 49266	1C 02	8	30- 13
R 49297	1H 24	22	70- 5
R 49298	1H 24	25	70- 5
R 49482	1E 16	20	50- 5
R 49507	1C 12	16	30- 23
R 49514	1A 23	19	20- 17
	1B 08	5	20- 27
R 49516	1A 19	16	20- 13
	1B 08	3	20- 27
R 49835	2A 17	18	80- 11
R 49838	2A 17	6	80- 11
R 49841	2A 21	11	80- 15
R 49980	1G 16	20	60- 3
R 49982	1G 16	21	60- 3
R 50110	1H 10	21	60- 21
R 50111	1H 10	16	60- 21
R 50112	1H 10	17	60- 21
R 50655	1F 20	7	50- 33
	1F 24	10	50- 37
R 50704	1H 07	3	60- 18
R 50992	2A 21	4	80- 15
R 51233	1F 20	7	50- 33
	1F 24	10	50- 37
R 51500	1G 06	7	50- 43
R 51501	1G 04	9	50- 41
R 51516	1A 15	3	20- 9
R 51726	1A 09	10	20- 3
R 51731	1A 21	3	20- 15
R 51895	1F 12	18	50- 25
R 51912	1H 24	1	70- 5
R 52251	1A 13	19	20- 7
R 52252	1A 13	20	20- 7
R 52383	2A 17	4	80- 11
R 52789	1A 11	11	20- 5
R 53169	1F 12	34	50- 25
R 53223	1A 11	13	20- 5
R 53382	1A 23	8	20- 17
R 53469	1A 23	20	20- 17
R 53540	1J 16	8	70- 45
R 53802	1F 12	13	50- 25
R 54189	1E 18	13	50- 7
R 54565	1A 13	16	20- 7
R 54579	1F 04	1	50- 17
R 54614	1A 23	11	20- 17
R 54802	1A 09	18	20- 3
R 54985	1A 13	8	20- 7
R 54998	1B 24	4	30- 11
R 55017	1E 22	15	50- 11
R 55042	1E 16	28	50- 5
R 55125	1A 25	4	20- 19
R 55126	1A 25	8	20- 19
R 55127	1A 25	9	20- 19
R 55128	1A 25	16	20- 19
R 55129	1A 25	15	20- 19
R 55299	1A 09	16	20- 3
R 55300	1A 09	16	20- 3
	1A 09	15	20- 3
R 55434	1A 25	10	20- 19
	1B 08	4	20- 27
R 55647	1A 21	7	20- 15
R 55758	1B 06	11	20- 25
R 55774	1H 07	2	60- 18
R 56455	1B 16	16	30- 3
R 56463	1H 24	16	70- 5
	1J 18	4	70- 47
R 56473	1F 18	10	50- 31
R 56749	1H 24	16	70- 5
	1H 24	15	70- 5
	1J 18	5	70- 47
R 56751	1H 24	5	70- 5
	1I 02	27	70- 7
	1J 18	2	70- 47
R 56753	1H 24	29	70- 5
	1J 18	11	70- 47
R 56754	1H 24	26	70- 5
	1J 18	6	70- 47
R 56755	1I 02	39	70- 7
	1J 18	20	70- 47
R 56756	1I 02	38	70- 7
	1J 18	19	70- 47
R 56757	1I 02	40	70- 7
	1J 18	18	70- 47
R 56947	1A 25	12	20- 19
R 57059	1A 23	5	20- 17
R 57103	1I 10	15	70- 15
R 57258	1B 24	14	30- 11
R 57332	1A 13	19	20- 7
R 57333	1A 13	20	20- 7

PART-NUMBER REFERENCE BESTELL-NR. NO PARTICOLARE NO DE LA PIEZA RESERVDELSNR.	GRID COORD. KOORD. COORD. COORD. RUTA	KEY REP. TEIL COD. REF. KOD	PAGE PAGE SEITE PAGINE PAGINA SIDA
R 57334	1A 13 19	20- 7	
R 57335	1A 13 20	20- 7	
R 57336	1A 13 19	20- 7	
R 57337	1A 13 20	20- 7	
R 58774	1I 12 4	70- 17	
R 58921	1I 08 25	70- 13	
R 59409	1A 23 3	20- 17	
R 59447	1A 11 11	20- 5	
	1B 08 1	20- 27	
R 59915	1A 17 15	20- 11	
R 60038	1I 10 8	70- 15	
R 60203	1A 25 16	20- 19	
	1A 25 15	20- 19	
	1A 25 17	20- 19	
R 60204	1A 25 5	20- 19	
	1A 25 16	20- 19	
	1A 25 15	20- 19	
R 60332	1G 19 13	60- 6	
R 60732	1H 24 42	70- 5	
R 60745	1C 04 9	30- 15	
R 60746	1B 08 23	20- 27	
	1C 04 4	30- 15	
R 60827	1C 22 2	40- 3	
R 60828	1C 22 6	40- 3	
R 61460	1B 02 30	20- 21	
R 62009	1A 19 12	20- 13	
R 62034	1C 12 7	30- 23	
R 62849	1G 06 13	50- 43	
R 63364	1F 04 17	50- 17	
R 63494	1G 19 6	60- 6	
R 63850	1G 04 7	50- 41	
R 64469	1C 22 4	40- 3	
R 65192	1I 02 37	70- 7	
R 65194	1I 02 36	70- 7	
R 65833	1A 09 9	20- 3	
R 66821	1B 24 14	30- 11	
R 68226	1A 11 8	20- 5	
	1B 08 14	20- 27	
R 69262	1I 02 37	70- 7	
R 70351	1I 02 20	70- 7	
R 70559	1I 02 37	70- 7	
	1I 02 36	70- 7	
R 72112	1A 17 15	20- 11	
T			
T 10187	1G 04 5	50- 41	
T 10400	1I 20 13	70- 25	
T 10671	1E 04 6	40- 33	
	2C 06 11	80- 49	
	2F 05 6	100- 5	
T 11234	1B 02 28	20- 21	
	1C 08 1	30- 19	
	1D 14 17	40- 19	

PART-NUMBER REFERENCE BESTELL-NR. NO PARTICOLARE NO DE LA PIEZA RESERVDELSNR.	GRID COORD. KOORD. COORD. COORD. RUTA	KEY REP. TEIL COD. REF. KOD	PAGE PAGE SEITE PAGINE PAGINA SIDA
T 11234	1D 16 6	40- 21	
	1D 18 10	40- 23	
	1H 20 5	70- 1	
	2F 03 6	100- 3	
	2F 05 10	100- 5	
T 11292	1G 18 18	60- 5	
T 11700	1E 16 22	50- 5	
T 11701	1E 16 23	50- 5	
T 12083	1E 14 29	50- 3	
	1F 12 2	50- 25	
T 12808	1F 02 24	50- 15	
T 13119	1F 08 21	50- 21	
T 13213	1A 23 25	20- 17	
	1B 08 26	20- 27	
T 13267	1E 16 24	50- 5	
T 13269	1E 16 26	50- 5	
T 13555	1G 16 15	60- 3	
T 13988	1C 08 17	30- 19	
	1C 10 15	30- 21	
T 14648	2E 12 13	90- 45	
T 15021	1C 08 16	30- 19	
	1C 10 19	30- 21	
T 15285	2A 15 17	80- 9	
T 15288	2A 15 16	80- 9	
T 15508	2E 12 4	90- 45	
T 16172	1I 05 8	70- 10	
	1I 12 10	70- 17	
	1I 14 9	70- 19	
T 16573	1F 20 2	50- 33	
T 16623	1D 19 6	40- 24	
T 16911	1F 14 11	50- 27	
T 17148	1G 16 4	60- 3	
	1G 22 4	60- 9	
T 17201	1F 18 3	50- 31	
T 17882	1F 12 9	50- 25	
T 18407	2A 22 4	80- 16	
T 18891	1A 09 30	20- 3	
	1F 12 8	50- 25	
	1G 04 8	50- 41	
T 19044	1A 09 12	20- 3	
T 19242	1F 20 11	50- 33	
T 19245	1F 20 10	50- 33	
T 19566	2C 08 2	80- 51	
T 19584	2F 03 18	100- 3	
T 19651	1B 04 2	20- 23	
	1B 06 9	20- 25	
T 19935	1E 04 20	40- 33	
	1E 18 10	50- 7	
T 19978	1B 20 7	30- 7	
T 20006	1B 08 7	20- 27	
	1B 20 2	30- 7	
T 20009	1A 21 5	20- 15	
T 20034	1A 17 5	20- 11	
T 20039	1A 11 11	20- 5	
	1B 08 1	20- 27	

PART-NUMBER REFERENCE BESTELL-NR. NO PARTICOLARE NO DE LA PIEZA RESERVDELSNR.	GRID COORD. KOORD. COORD. COORD. RUTA	KEY REP. TEIL COD. REF. KOD	PAGE PAGE SEITE PAGINE PAGINA SIDA
T 20046	1A 17 13	20- 11	
T 20050	1A 23 1	20- 17	
T 20055	1C 06 4	30- 17	
T 20071	1A 13 2	20- 7	
T 20072	1A 13 4	20- 7	
T 20073	1A 13 18	20- 7	
T 20074	1A 11 1	20- 5	
T 20077	1A 13 3	20- 7	
T 20088	1A 19 6	20- 13	
T 20091	1A 23 13	20- 17	
T 20094	1A 17 12	20- 11	
T 20111	1A 11 8	20- 5	
	1B 08 14	20- 27	
T 20129	1A 13 21	20- 7	
T 20141	1B 20 6	30- 7	
T 20155	1A 15 21	20- 9	
	1B 08 11	20- 27	
T 20159	1B 08 8	20- 27	
	1B 16 17	30- 3	
T 20166	1A 09 28	20- 3	
T 20168	1A 09 36	20- 3	
	1A 11 12	20- 5	
T 20176	1A 13 23	20- 7	
T 20204	1C 22 12	40- 3	
T 20215	1B 04 8	20- 23	
	1B 08 9	20- 27	
T 20217	1A 17 17	20- 11	
T 20219	1B 04 5	20- 23	
	1B 08 10	20- 27	
T 20243	1B 06 2	20- 25	
	1B 08 16	20- 27	
T 20252	1B 20 1	30- 7	
T 20270	1B 06 3	20- 25	
T 20271	1B 06 4	20- 25	
	1B 06 -	20- 25	
T 20272	1A 15 18	20- 9	
T 20273	1A 15 19	20- 9	
	1B 08 17	20- 27	
T 20277	1B 04 3	20- 23	
T 20294	1A 15 10	20- 9	
T 20298	1A 23 14	20- 17	
T 20304	1B 08 25	20- 27	
T 20309	1A 23 23	20- 17	
T 20310	1A 13 17	20- 7	
T 20314	1A 13 10	20- 7	
T 20315	1A 13 13	20- 7	
T 20316	1A 13 9	20- 7	
T 20317	1B 04 9	20- 23	
T 20328	1A 15 9	20- 9	
	1B 08 12	20- 27	
T 20334	1B 06 22	20- 25	
T 20336	1A 15 11	20- 9	
	1B 08 13	20- 27	
T 20362	1A 15 15	20- 9	
T 20364	1A 15 16	20- 9	

PART-NUMBER REFERENCE BESTELL-NR. NO PARTICOLARE NO DE LA PIEZA RESERVDELSNR.	GRID COORD. KOORD. COORD. RUTA	KEY REP. TEIL COD. REF. KOD	PAGE PAGE SEITE PAGINE PAGINA SIDA
T 20364	1B 08	18	20- 27
T 20693	1D 19	7	40- 24
T 20954	2D 05	5	90- 14
	2D 14	23	90- 23
T 21419	1G 08	14	50- 45
T 21424	1G 08	19	50- 45
T 21427	1G 08	24	50- 45
T 21428	1G 08	7	50- 45
	1G 08	13	50- 45
T 21429	1G 08	3	50- 45
T 21430	1G 06	8	50- 43
T 21432	1G 06	17	50- 43
T 21433	1G 06	13	50- 43
T 21434	1G 06	12	50- 43
T 21435	1G 06	12	50- 43
T 21436	1G 06	12	50- 43
T 21442	1F 15	10	50- 28
T 21443	1F 15	10	50- 28
T 21444	1F 15	10	50- 28
T 21445	1G 18	16	60- 5
T 21448	1E 18	2	50- 7
T 21527	1G 18	19	60- 5
T 21540	2A 09	6	80- 3
T 21545	2A 19	13	80- 13
T 21547	1G 08	20	50- 45
T 21564	1F 14	17	50- 27
T 21576	1H 12	11	60- 23
T 21577	1H 12	37	60- 23
T 21579	1H 12	36	60- 23
T 21583	1H 12	34	60- 23
T 21586	1H 12	30	60- 23
T 21587	1H 12	7	60- 23
T 21589	1H 12	38	60- 23
T 21590	1H 12	27	60- 23
T 21595	1H 12	12	60- 23
T 21596	1G 06	9	50- 43
T 21602	1F 24	10	50- 37
T 21603	1F 24	7	50- 37
T 21641	1F 14	14	50- 27
T 21659	1G 18	23	60- 5
T 21669	2A 15	6	80- 9
	2A 17	14	80- 11
T 21716	1G 16	18	60- 3
T 21718	1G 16	7	60- 3
T 21722	1G 18	20	60- 5
T 21771	1H 12	32	60- 23
T 21772	1H 12	39	60- 23
T 21775	1H 12	43	60- 23
T 21776	1F 12	15	50- 25
T 21806	1H 10	8	60- 21
T 21814	1H 10	20	60- 21
T 21815	1H 10	18	60- 21
T 21816	1H 10	13	60- 21
T 21840	1G 04	11	50- 41
T 21841	1G 04	10	50- 41
T 21937	1F 12	11	50- 25
T 21964	1F 18	7	50- 31
T 21965	1F 18	13	50- 31
T 21969	1F 20	3	50- 33
T 21970	1F 18	6	50- 31
	1F 20	7	50- 33
T 21975	1F 18	4	50- 31
T 21976	1F 18	8	50- 31
T 21977	1F 18	11	50- 31
T 21978	1F 20	9	50- 33
T 21980	1F 15	1	50- 28
T 21997	1E 14	24	50- 3
T 21998	1E 20	3	50- 9
	1H 12	6	60- 23
T 22080	1F 12	23	50- 25
T 22101	1H 10	11	60- 21
T 22128	1F 12	5	50- 25
T 22150	1C 10	4	30- 21
T 22151	1C 10	3	30- 21
T 22177	1E 16	6	50- 5
T 22178	1E 16	11	50- 5
T 22211	2B 06	10	80- 25
	2B 14	6	80- 33
	2B 16	19	80- 35
	2B 18	13	80- 37
T 22240	1C 10	2	30- 21
T 22242	1C 10	24	30- 21
T 22260	1G 16	8	60- 3
T 22302	1E 20	7	50- 9
T 22381	1B 02	19	20- 21
T 22383	1B 02	5	20- 21
T 22435	1F 24	9	50- 37
T 22495	1B 02	30	20- 21
T 22500	1B 02	23	20- 21
T 22505	1E 16	12	50- 5
T 22534	1C 14	7	30- 25
T 22567	1E 16	9	50- 5
T 22579	1F 08	9	50- 21
T 22580	1F 08	10	50- 21
T 22582	1F 08	4	50- 21
T 22583	1F 08	2	50- 21
T 22584	1E 14	27	50- 3
T 22585	1E 14	26	50- 3
T 22653	1F 12	20	50- 25
T 22660	1F 10	27	50- 23
T 22736	1F 24	15	50- 37
T 22753	1F 02	10	50- 15
T 22754	1F 02	6	50- 15
T 22755	1F 02	12	50- 15
T 22757	1F 02	13	50- 15
T 22823	1G 16	12	60- 3
T 22824	1G 16	14	60- 3
T 22825	1G 16	17	60- 3
T 22851	1E 14	17	50- 3
	1F 08	15	50- 21
T 22852	1G 03	14	50- 40
T 22853	1F 12	28	50- 25
T 22854	1F 12	35	50- 25
T 22862	1F 08	17	50- 21
T 22874	1G 06	14	50- 43
T 22875	1G 16	6	60- 3
T 22932	1F 08	7	50- 21
T 22933	1F 08	8	50- 21
T 22942	1A 25	2	20- 19
T 22974	1G 03	12	50- 40
T 23027	2C 10	5	80- 53
T 23118	2A 09	3	80- 3
T 23170	2A 15	3	80- 9
	2A 17	9	80- 11
T 23206	1F 02	21	50- 15
T 23207	1F 02	22	50- 15
T 23211	1E 14	14	50- 3
T 23212	1E 14	7	50- 3
T 23228	2A 15	24	80- 9
T 23229	2A 15	23	80- 9
T 23243	1F 15	7	50- 28
T 23244	1F 15	8	50- 28
T 23247	2E 10	36	90- 43
T 23262	1B 16	5	30- 3
T 23435	1A 09	17	20- 3
T 23442	1C 06	22	30- 17
T 23443	1B 08	15	20- 27
T 23474	1A 09	35	20- 3
T 23590	1A 19	17	20- 13
T 23594	1A 13	15	20- 7
T 23596	1B 08	3	20- 27
T 23604	1A 17	11	20- 11
T 23614	1A 15	8	20- 9
T 23628	1B 06	20	20- 25
T 23670	1A 09	34	20- 3
T 23671	1A 09	34	20- 3
T 23717	1I 04	1	70- 9
	1I 04	7	70- 9
	1I 04	6	70- 9
T 23876	2D 10	4	90- 19
T 23891	1A 19	2	20- 13
	1A 19	4	20- 13
T 23921	1E 23	7	50- 12
T 24151	1A 11	6	20- 5
T 24460	1B 08	2	20- 27
	1C 06	21	30- 17
T 24472	1C 04	6	30- 15
T 24521	1F 20	5	50- 33
T 24534	1B 08	5	20- 27
T 24542	1C 06	15	30- 17
T 24543	1C 06	14	30- 17
T 24544	1C 06	17	30- 17
T 24607	1C 06	7	30- 17
T 24608	1C 06	8	30- 17
T 24691	1F 20	15	50- 33

PART-NUMBER REFERENCE BESTELL-NR. NO PARTICOLARE NO DE LA PIEZA RESERVDELSNR.	GRID COORD. KOORD. COORD. COORD. RUTA	KEY REP. TEIL COD. REF. KOD	PAGE PAGE SEITE PAGINE PAGINA SIDA
T 24726	1F 20	1	50- 33
T 24728	1F 20	14	50- 33
T 24729	1F 12	4	50- 25
	1F 20	16	50- 33
T 24730	1F 18	5	50- 31
	1F 20	8	50- 33
T 24731	1F 18	9	50- 31
T 24732	1F 20	4	50- 33
T 24736	1F 20	21	50- 33
T 24737	1F 20	23	50- 33
T 24917	1F 18	18	50- 31
T 24918	1F 18	17	50- 31
T 24948	1E 16	16	50- 5
T 24955	1E 16	30	50- 5
T 24956	1E 16	28	50- 5
T 24965	1A 09	29	20- 3
	1B 08	20	20- 27
T 24999	1F 12	30	50- 25
T 25285	1H 12	40	60- 23
T 25329	1G 16	18	60- 3
T 25330	1G 16	20	60- 3
T 25332	1G 16	23	60- 3
T 25333	1G 16	22	60- 3
T 25334	1G 16	22	60- 3
T 25335	1G 16	19	60- 3
T 25418	1F 08	22	50- 21
T 25419	1F 08	16	50- 21
T 25614	1F 24	6	50- 37
T 25701	1A 09	23	20- 3
T 25741	1G 16	17	60- 3
T 25840	2A 15	8	80- 9
	2A 17	16	80- 11
T 25921	2A 15	10	80- 9
	2A 17	15	80- 11
T 25922	2A 15	9	80- 9
	2A 17	13	80- 11
T 26058	1C 06	5	30- 17
T 26197	1F 24	11	50- 37
T 26321	1A 17	24	20- 11
T 26323	1A 17	2	20- 11
T 26324	1A 17	1	20- 11
T 26325	1A 17	20	20- 11
T 26326	1A 17	6	20- 11
T 26327	1A 17	7	20- 11
T 26416	1E 14	23	50- 3
T 26550	1G 03	4	50- 40
T 26565	1A 17	9	20- 11
	1A 19	11	20- 13
	1F 12	3	50- 25
T 26929	2A 09	2	80- 3
T 27261	1B 06	7	20- 25
T 27349	1C 10	25	30- 21
T 27466	1B 22	12	30- 9
	1C 06	1	30- 17
T 27645	2E 16	9	90- 49
T 27657	1A 15	6	20- 9
T 27658	1A 15	4	20- 9
T 27671	1D 04	26	40- 9
	1D 06	26	40- 11
T 27693	1E 22	5	50- 11
T 27716	1F 24	3	50- 37
T 27764	1C 06	27	30- 17
T 27765	1C 06	26	30- 17
T 27771	1F 04	50	50- 17
T 27772	1F 04	49	50- 17
	1F 08	6	50- 21
T 27973	1C 12	12	30- 23
T 27974	1C 12	11	30- 23
T 27979	1C 12	1	30- 23
T 27986	1B 16	20	30- 3
T 27992	1I 16	18	70- 21
T 28030	1C 06	25	30- 17
T 28041	1A 13	7	20- 7
T 28433	1A 19	12	20- 13
T 28435	1A 19	13	20- 13
T 28473	1H 07	4	60- 18
T 28907	1G 08	23	50- 45
T 28908	1G 08	23	50- 45
T 29185	1C 07	8	30- 18
	1C 07	5	30- 18
	1C 07	7	30- 18
T 29208	2A 15	23	80- 9
T 29209	2A 15	24	80- 9
T 29324	1H 22	8	70- 3
T 29393	2C 06	5	80- 49
T 29394	1G 06	6	50- 43
T 29539	1C 04	2	30- 15
T 29540	1C 04	3	30- 15
T 29561	1F 15	10	50- 28
T 29562	1F 15	10	50- 28
T 29581	1E 20	16	50- 9
T 29742	1C 08	19	30- 19
	1C 10	7	30- 21
T 29801	1C 12	19	30- 23
T 29862	1G 06	12	50- 43
T 30253	1G 06	2	50- 43
T 30719	1F 12	42	50- 25
T 30720	1B 06	13	20- 25
	1B 06	20	20- 25
T 30721	1B 06	14	20- 25
	1B 06	20	20- 25
T 30738	1B 24	1	30- 11
	1C 02	5	30- 13
T 30754	1F 08	20	50- 21
T 30781	2D 11	13	90- 20
T 30865	2C 21	2	90- 6
T 30897	1B 06	5	20- 25
T 30938	1I 22	8	70- 27
T 30939	1I 22	3	70- 27
T 30940	1J 02	29	70- 31
T 30941	1J 02	27	70- 31
	1J 04	23	70- 33
T 30942	1I 24	12	70- 29
	1J 02	19	70- 31
	1J 04	14	70- 33
T 30946	1I 24	11	70- 29
	1J 02	14	70- 31
	1J 04	9	70- 33
T 30948	1J 02	21	70- 31
T 30954	1B 02	25	20- 21
T 31134	1H 08	5	60- 19
T 31290	1G 16	17	60- 3
T 31306	1A 25	14	20- 19
T 31437	1D 08	3	40- 13
T 31479	1B 02	8	20- 21
T 31647	2B 02	5	80- 21
	2B 04	11	80- 23
	2B 06	6	80- 25
T 31650	2B 02	12	80- 21
T 31651	1B 02	34	20- 21
	2B 02	13	80- 21
T 31657	2D 10	19	90- 19
T 31659	2B 02	24	80- 21
	2B 04	25	80- 23
	2B 06	12	80- 25
	2D 10	15	90- 19
T 31695	2C 06	9	80- 49
T 31749	2A 15	14	80- 9
T 31905	2F 05	2	100- 5
T 32142	1F 24	8	50- 37
T 33112	1A 25	1	20- 19
T 33113	1C 14	6	30- 25
T 33279	1A 09	20	20- 3
T 33324	1B 02	26	20- 21
T 33388	1G 04	1	50- 41
T 33389	1G 04	16	50- 41
T 33420	1C 14	1	30- 25
T 33460	2C 06	12	80- 49
T 33479	2A 11	2	80- 5
T 33480	2A 11	1	80- 5
T 33481	2A 11	3	80- 5
T 33482	2A 11	1	80- 5
T 33531	1E 20	13	50- 9
T 33533	1E 20	2	50- 9
T 33534	1E 18	5	50- 7
T 33535	1E 20	15	50- 9
T 33537	2C 06	10	80- 49
T 33547	1H 08	14	60- 19
T 33594	1F 05	1	50- 18
T 33610	2B 02	3	80- 21
	2B 04	3	80- 23
	2B 06	3	80- 25
T 33617	2D 10	17	90- 19
T 33629	2D 11	7	90- 20
T 33630	2D 11	8	90- 20

PART-NUMBER REFERENCE BESTELL-NR. NO PARTICOLARE NO DE LA PIEZA RESERVDELSNR.	GRID COORD. KOORD. COORD. COORD. RUTA	KEY REP. TEIL COD. REF. KOD	PAGE PAGE SEITE PAGINE PAGINA SIDA
T 33631	2D 10 12	90-	19
T 33632	2D 10 16	90-	19
T 33634	2D 10 3	90-	19
T 33746	1E 23 1	50-	12
T 33859	2A 25 13	80-	19
T 33860	2A 25 13	80-	19
T 33868	2E 12 12	90-	45
T 33916	2C 18 1	90-	3
T 33917	2C 18 9	90-	3
T 33918	2C 18 7	90-	3
T 33928	2B 20 11	80-	39
T 33929	2C 20 17	90-	5
T 33979	1I 20 16	70-	25
T 33980	1I 20 8	70-	25
T 33981	1I 20 20	70-	25
T 33982	1I 20 11	70-	25
T 33989	1J 10 9	70-	39
T 34019	2B 24 24	80-	43
T 34020	2B 24 23	80-	43
T 34037	2B 20 9	80-	39
T 34058	2A 23 1	80-	17
T 34059	2C 06 3	80-	49
T 34193	1C 10 20	30-	21
T 34194	1C 10 10	30-	21
T 34244	1G 16 29	60-	3
T 34245	1G 16 33	60-	3
T 34246	1G 16 28	60-	3
T 34247	1G 16 30	60-	3
T 34248	1G 16 11	60-	3
T 34253	1G 18 5	60-	5
T 34254	1G 18 24	60-	5
T 34259	1J 06 19	70-	35
	1J 07 20	70-	36
T 34409	2E 12 8	90-	45
T 34441	2A 09 7	80-	3
T 34494	2C 20 6	90-	5
T 34495	2C 20 21	90-	5
T 34517	2B 24 5	80-	43
T 34518	2B 24 8	80-	43
T 34530	1F 14 7	50-	27
T 34546	2A 15 7	80-	9
T 34548	2A 15 34	80-	9
T 34614	1J 16 7	70-	45
T 34881	1I 08 26	70-	13
T 34882	1I 14 5	70-	19
T 34887	1G 19 8	60-	6
	1H 24 37	70-	5
	1I 05 12	70-	10
	1I 12 17	70-	17
	1I 14 16	70-	19
T 34888	1I 08 14	70-	13
T 34889	1I 14 2	70-	19
T 35138	2F 03 15	100-	3
T 35306	1G 08 25	50-	45
T 35690	1B 02 16	20-	21
T 35690	1I 08 7	70-	13
T 35691	1I 08 18	70-	13
	1I 16 7	70-	21
T 35773	1B 02 35	20-	21
T 35791	1G 08 31	50-	45
T 35864	1F 10 1	50-	23
T 35887	1C 08 18	30-	19
T 35890	1E 20 5	50-	9
T 35893	1G 16 31	60-	3
T 36034	2A 09 15	80-	3
T 36035	2A 09 15	80-	3
T 36036	2A 09 15	80-	3
T 36037	2A 09 15	80-	3
T 36038	2A 09 15	80-	3
T 36048	1I 08 9	70-	13
T 36102	1H 24 37	70-	5
T 36200	1I 08 12	70-	13
T 36236	1E 14 22	50-	3
T 36247	1B 22 2	30-	9
T 36272	1I 20 21	70-	25
T 36498	2A 09 5	80-	3
T 36499	1B 02 18	20-	21
T 36502	2C 06 14	80-	49
T 36503	2C 06 2	80-	49
T 36523	1H 20 1	70-	1
T 36998	1J 06 11	70-	35
T 37027	2E 08 28	90-	41
T 37041	2E 08 33	90-	41
T 37417	2A 09 15	80-	3
T 38049	1G 08 18	50-	45
T 38065	2E 12 16	90-	45
T 38435	1G 03 7	50-	40
T 38448	1G 18 7	60-	5
T 38449	1G 18 6	60-	5
T 38454	1I 22 1	70-	27
T 38460	1I 16 23	70-	21
T 38461	1I 16 25	70-	21
T 38500	1H 10 29	60-	21
T 38555	1G 08 26	50-	45
T 38678	2F 06 7	100-	6
T 38940	2B 20 19	80-	39
T 38942	2B 20 1	80-	39
	2B 24 36	80-	43
T 38944	2B 20 15	80-	39
	2B 24 31	80-	43
T 38947	2B 20 17	80-	39
	2B 24 33	80-	43
T 39091	2A 15 18	80-	9
T 39092	2A 15 18	80-	9
T 39374	1I 17 1	70-	22
T 39375	1I 17 11	70-	22
T 39519	1E 23 12	50-	12
T 39520	1F 04 9	50-	17
T 39521	1F 04 28	50-	17
T 39805	2C 06 8	80-	49
T 39854	1E 23 2	50-	12
T 39855	1F 02 1	50-	15
T 39856	1E 23 4	50-	12
T 39877	2A 22 3	80-	16
T 40169	1F 05 2	50-	18
T 40170	1F 04 48	50-	17
T 40194	1G 16 32	60-	3
T 40308	1I 02 3	70-	7
T 40416	1J 06 5	70-	35
	1J 07 5	70-	36
T 40421	2C 06 4	80-	49
T 40635	2F 05 4	100-	5
T 40636	2F 03 5	100-	3
T 40637	2F 09 6	100-	9
T 40638	2F 09 4	100-	9
T 40728	2B 12 11	80-	31
T 40934	1E 23 6	50-	12
T 40983	2A 09 15	80-	3
T 40984	1F 21 2	50-	34
T 40985	1F 21 3	50-	34
T 42511	2C 06 12	80-	49
	2F 05 5	100-	5
T 42632	1B 22 17	30-	9
T 42955	1J 07 2	70-	36
T 42958	2F 05 8	100-	5
T 42962	2F 03 3	100-	3
T 42971	1G 18 27	60-	5
T 43602	1G 16 27	60-	3
T 44558	1H 12 21	60-	23
T 44560	1H 12 1	60-	23
T 44561	1H 12 9	60-	23
T 44566	1F 14 18	50-	27
T 44568	2B 20 7	80-	39
T 44602	1I 04 4	70-	9
T 44603	1I 04 2	70-	9
T 44604	1I 04 3	70-	9
T 44941	1I 04 8	70-	9
T 44946	1B 22 23	30-	9
T 45091	2F 09 3	100-	9
T 45260	2B 06 13	80-	25
T 45262	2B 06 9	80-	25
	2B 14 5	80-	33
	2B 18 10	80-	37
T 45263	2B 06 8	80-	25
T 45264	2B 06 7	80-	25
T 45268	2B 04 4	80-	23
	2B 06 4	80-	25
T 45270	2B 06 14	80-	25
T 45327	2B 14 9	80-	33
T 45352	2B 16 20	80-	35
T 45355	2B 14 8	80-	33
T 45357	2B 16 13	80-	35
T 45368	2B 16 13	80-	35
T 45399	2C 04 13	80-	47
T 45400	2C 04 15	80-	47

PART-NUMBER REFERENCE BESTELL-NR. NO PARTICOLARE NO DE LA PIEZA RESERVDELSNR.	GRID COORD. KOORD. COORD. COORD. RUTA	KEY REP. TEIL COD. REF. KOD	PAGE PAGE SEITE PAGINE PAGINA SIDA
T 45401	2C 04 12		80- 47
T 45402	2C 04 17		80- 47
T 45403	2C 04 16		80- 47
T 45404	2C 04 7		80- 47
T 45405	2C 02 12		80- 45
	2C 04 11		80- 47
T 45485	2B 18 12		80- 37
T 45486	2B 14 11		80- 33
T 45492	2B 16 18		80- 35
T 45493	2B 16 17		80- 35
T 45494	2B 16 14		80- 35
T 45498	2B 16 14		80- 35
T 45499	2B 16 4		80- 35
T 45500	2B 16 6		80- 35
T 45501	2B 16 7		80- 35
T 45502	2B 16 5		80- 35
T 45512	2B 16 2		80- 35
T 45513	2B 16 3		80- 35
T 45514	2B 16 5		80- 35
T 45521	2B 18 7		80- 37
T 45524	2B 18 6		80- 37
T 45525	2B 18 5		80- 37
T 45528	2B 18 2		80- 37
T 45529	2B 18 3		80- 37
T 45531	2B 18 9		80- 37
T 45540	2A 09 17		80- 3
T 45545	2C 02 2		80- 45
T 45547	2C 02 4		80- 45
T 45548	2C 02 6		80- 45
T 45553	2C 02 7		80- 45
T 45559	2C 02 5		80- 45
T 45620	2B 22 11		80- 41
T 45621	2B 22 7		80- 41
T 45622	2B 22 2		80- 41
T 45623	2B 22 1		80- 41
T 45624	2B 22 16		80- 41
T 45625	2B 22 9		80- 41
T 45627	2B 22 12		80- 41
T 45628	2B 22 13		80- 41
T 45629	2B 22 14		80- 41
T 45630	2B 22 15		80- 41
T 47072	1G 03 7		50- 40
T 47441	2F 03 11		100- 3
T 48181	1C 08 7		30- 19
T 48182	1C 08 23		30- 19
T 48191	1H 06 12		60- 17
T 48194	1G 22 17		60- 9
T 48195	2D 10 17		90- 19
T 48198	1H 01 10		60- 12
T 48199	1H 01 11		60- 12
T 48200	1H 01 12		60- 12
T 48203	1H 01 15		60- 12
T 48206	1H 01 1		60- 12
T 48207	1H 01 7		60- 12
T 48208	1H 01 6		60- 12
T 48209	1H 01 4		60- 12
T 48225	2A 17 20		80- 11
T 49189	1H 08 9		60- 19
T 49221	2B 20 1		80- 39
	2B 20 20		80- 39
T 49222	2B 20 1		80- 39
	2B 20 21		80- 39
T 49572	1H 12 24		60- 23
T 50240	1H 01 9		60- 12
T 50467	1C 10 3		30- 21
T 53267	2A 09 7		80- 3
T 54444	2A 17 5		80- 11
T 54445	2A 17 5		80- 11
T 55419	1G 08 24		50- 45
T 55420	1G 08 28		50- 45
T 55423	1F 14 13		50- 27
T 55758	1I 02 9		70- 7
T 57374	1I 02 5		70- 7
T 58193	1H 22 5		70- 3
T 58194	1H 22 3		70- 3
T 58195	1H 22 7		70- 3
T 58196	1H 22 2		70- 3
T 59690	1G 06 2		50- 43
T 60952	1I 08 26		70- 13
	1I 08 25		70- 13
T 61939	1I 08 7		70- 13
	1I 08 25		70- 13
	1I 08 -		70- 13
T 63651	1E 16 19		50- 5
T 63652	1E 16 23		50- 5
T 66936	2A 17 5		80- 11
T 66937	2A 17 5		80- 11
T 67007	1D 10 10		40- 15
	1D 10 18		40- 15
T 67294	1G 08 26		50- 45
T 68412	1E 14 17		50- 3
	1F 08 12		50- 21
T 69418	1H 22 5		70- 3
		U	
U 10136	1I 10 3		70- 15
	1J 06 16		70- 35
	1J 07 16		70- 36
U 10139	1J 06 18		70- 35
	1J 07 18		70- 36
U 10457	2F 03 2		100- 3
U 10807	2F 16 5		100- 16
U 10895	1I 20 2		70- 25
U 10897	1I 20 4		70- 25
U 11000	1I 20 3		70- 25
U 11001	1I 17 8		70- 22
	1I 20 6		70- 25
U 11003	1I 20 15		70- 25
U 11004	1I 17 3		70- 22
	1I 20 10		70- 25
U 11009	1J 14 9		70- 43
U 11061	1H 12 23		60- 23
U 11121	2F 06 2		100- 6
U 11186	1I 08 18		70- 13
	1I 08 -		70- 13
	1I 16 25		70- 21
	1I 16 -		70- 21
U 11326	1I 02 8		70- 7
	1I 22 4		70- 27
U 11336	1I 24 21		70- 29
U 11427	1I 24 6		70- 29
	1J 02 1		70- 31
U 11428	1I 24 23		70- 29
U 11498	1J 02 6		70- 31
U 11499	1J 02 8		70- 31
U 11773	2F 09 2		100- 9
U 12331	1I 10 6		70- 15
	1J 06 14		70- 35
	1J 07 14		70- 36
U 12948	2F 03 9		100- 3
U 12966	1J 06 7		70- 35
	1J 07 7		70- 36
U 13051	1J 14 5		70- 43
U 13431	1J 06 15		70- 35
	1J 07 15		70- 36
U 13449	2F 09 9		100- 9
U 13572	1J 06 4		70- 35
	1J 07 4		70- 36
U 13639	1H 24 34		70- 5
	1J 18 8		70- 47
U 14128	1J 06 10		70- 35
	1J 07 10		70- 36
U 14502	2F 09 13		100- 9
U 15097	1I 20 17		70- 25
U 15415	1I 22 5		70- 27
U 15973	1H 01 5		60- 12
U 16068	2A 15 5		80- 9
	2F 03 14		100- 3
	2F 05 9		100- 5
	2F 06 9		100- 6
	2F 09 5		100- 9
U 16406	1J 06 17		70- 35
	1J 07 17		70- 36
U 17031	2F 06 5		100- 6
U 17409	1I 05 15		70- 10
	1I 12 3		70- 17
U 20033	2F 16 10		100- 16
U 40727	1I 24 2		70- 29
	1J 02 3		70- 31
	1J 04 2		70- 33
U 40745	1J 05 5		70- 34
U 40746	1J 05 4		70- 34
U 40747	1J 05 3		70- 34

PART-NUMBER REFERENCE BESTELL-NR. NO PARTICOLARE NO DE LA PIEZA RESERVDELSNR.	GRID COORD. KOORD. COORD. COORD. RUTA	KEY REP. TEIL COD. REF. KOD	PAGE PAGE SEITE PAGINE PAGINA SIDA
U 41162	1I 24 19	70- 29	
	1J 02 25	70- 31	
	1J 04 21	70- 33	
U 41167	1I 24 22	70- 29	
U 41168	1I 24 17	70- 29	
	1J 02 23	70- 31	
	1J 04 19	70- 33	
U 41169	1I 24 13	70- 29	
	1J 02 20	70- 31	
	1J 04 15	70- 33	
U 41170	1I 24 16	70- 29	
	1J 02 31	70- 31	
U 41172	1J 02 15	70- 31	
	1J 04 13	70- 33	
U 41299	1J 04 26	70- 33	
U 41604	2F 05 7	100- 5	
U 41823	1J 06 12	70- 35	
	1J 07 12	70- 36	
U 41958	1J 06 13	70- 35	
	1J 07 13	70- 36	
U 42424	1J 06 2	70- 35	
U 42827	1I 24 9	70- 29	
	1J 02 12	70- 31	
	1J 04 7	70- 33	
U 42833	1I 24 14	70- 29	
	1J 04 17	70- 33	
U 42834	1I 24 7	70- 29	
	1J 02 10	70- 31	
	1J 04 6	70- 33	
U 42835	1I 24 10	70- 29	
	1J 02 13	70- 31	
	1J 04 8	70- 33	
U 43703	1I 17 4	70- 22	
	1I 20 7	70- 25	
	2E 12 9	90- 45	
U 44449	2F 12 4	100- 12	
U 44948	1J 07 11	70- 36	
W			
W 14541	2D 10 3	90- 19	
Z			
Z 24798	1D 04 6	40- 9	
Z 24799	1D 04 15	40- 9	
	1D 06 15	40- 11	
Z 24800	1D 04 31	40- 9	
	1D 06 31	40- 11	
Z 24801	1D 04 20	40- 9	
	1D 06 20	40- 11	
Z 24810	1D 04 17	40- 9	
	1D 06 17	40- 11	

PART-NUMBER REFERENCE BESTELL-NR. NO PARTICOLARE NO DE LA PIEZA RESERVDELSNR.	GRID COORD. KOORD. COORD. COORD. RUTA	KEY REP. TEIL COD. REF. KOD	PAGE PAGE SEITE PAGINE PAGINA SIDA
Z 31348	1G 24 1	60- 11	
Z 31349	1G 24 3	60- 11	
Z 31350	1G 24 4	60- 11	
Z 31351	1G 24 6	60- 11	
Z 31352	1G 24 8	60- 11	
Z 31353	1G 24 9	60- 11	
Z 31354	1G 24 10	60- 11	
Z 31355	1G 24 25	60- 11	
Z 31356	1G 24 12	60- 11	
Z 31358	1G 24 15	60- 11	
Z 31359	1G 24 18	60- 11	
Z 31360	1G 24 20	60- 11	
Z 31364	1G 24 24	60- 11	
Z 31452	1G 24 5	60- 11	
Z 31453	1G 24 14	60- 11	
Z 31454	1G 24 17	60- 11	
Z 31455	1G 24 33	60- 11	
Z 31456	1G 24 19	60- 11	
03			
03H 1268	2C 18 4	90- 3	
03H 1765	1C 08 11	30- 19	
	2A 23 4	80- 17	
03			
03M 7017	2E 18 25	90- 51	
03M 7099	2E 18 25	90- 51	
08			
08H 4199	2F 16 1	100- 16	
08H 4487	2B 24 15	80- 43	
08H 4647	2C 20 18	90- 5	
10			
10H 1238	2F 09 12	100- 9	
11			
11H 206	1F 02 14	50- 15	
	1H 12 19	60- 23	
	1I 17 2	70- 22	
11H 211	1E 20 10	50- 9	
	1F 02 18	50- 15	
	1G 04 4	50- 41	
	1H 12 8	60- 23	
	1I 17 6	70- 22	

PART-NUMBER REFERENCE BESTELL-NR. NO PARTICOLARE NO DE LA PIEZA RESERVDELSNR.	GRID COORD. KOORD. COORD. COORD. RUTA	KEY REP. TEIL COD. REF. KOD	PAGE PAGE SEITE PAGINE PAGINA SIDA
11H 211	1I 20 5	70- 25	
11H 216	1E 14 13	50- 3	
11H 218	2A 15 12	80- 9	
	2A 17 11	80- 11	
	2A 21 6	80- 15	
11H 230	2D 04 19	90- 13	
11H 231	1C 08 22	30- 19	
	1C 10 9	30- 21	
	1H 12 10	60- 23	
11H 233	1F 02 5	50- 15	
	2D 14 16	90- 23	
	2D 14 30	90- 23	
11H 234	1F 02 7	50- 15	
11H 236	1H 12 42	60- 23	
	2A 17 31	80- 11	
11H 239	1E 23 14	50- 12	
11H 240	1G 18 29	60- 5	
	1H 12 44	60- 23	
11H 268	2A 19 9	80- 13	
			11
11M 7023	2A 15 33	80- 9	
	2A 17 21	80- 11	
11M 7075	2B 08 11	80- 27	
	2B 12 12	80- 31	
			12
12H 304	1H 04 4	60- 15	
12H 234	2F 16 2	100- 16	
12H 236	2A 09 14	80- 3	
	2A 11 5	80- 5	
	2A 15 20	80- 9	
	2B 02 21	80- 21	
	2B 04 6	80- 23	
	2B 06 25	80- 25	
	2B 24 18	80- 43	
	2C 18 12	90- 3	
	2C 20 3	90- 5	
12H 245	2B 24 14	80- 43	
	2C 20 15	90- 5	
12H 246	1D 24 12	40- 29	
	1E 04 15	40- 33	
12H 291	1C 22 20	40- 3	
12H 293	2C 04 10	80- 47	
12H 294	1A 23 28	20- 17	
	1H 06 10	60- 17	
	1I 04 12	70- 9	
	2A 09 11	80- 3	
	2A 17 2	80- 11	
	2B 14 16	80- 33	
	2C 04 21	80- 47	

PART-NUMBER REFERENCE BESTELL-NR. NO PARTICOLARE NO DE LA PIEZA RESERVDELSNR.	GRID COORD. KOORD. COORD. COORD. RUTA	KEY REP. TEIL COD. REF. KOD	PAGE PAGE SEITE PAGINE PAGINA SIDA
12H 294	2C 18	15	90- 3
	2C 20	13	90- 5
	2F 03	8	100- 3
12H 295	1A 25	6	20- 19
	1C 06	16	30- 17
12H 297	1C 08	9	30- 19
	1G 18	22	60- 5
12H 301	1F 05	7	50- 18
	1F 12	25	50- 25
	1G 18	4	60- 5
	1G 22	13	60- 9
	1H 08	13	60- 19
	1H 12	3	60- 23
	2A 17	29	80- 11
	2A 25	16	80- 19
	2B 24	20	80- 43
	2B 24	29	80- 43
	2C 02	13	80- 45
	2C 04	18	80- 47
	2D 12	2	90- 21
	2F 13	2	100- 13
12H 302	1B 02	11	20- 21
	1C 08	15	30- 19
	1C 10	21	30- 21
	1F 04	34	50- 17
	2B 16	22	80- 35
	2B 18	19	80- 37
	2C 02	8	80- 45
	2C 24	8	90- 9
	2D 04	12	90- 13
	2D 10	8	90- 19
	2E 10	12	90- 43
12H 303	1B 02	3	20- 21
	1B 20	9	30- 7
	1C 06	19	30- 17
	1C 22	14	40- 3
	1D 21	4	40- 26
	1E 16	13	50- 5
	1I 05	6	70- 10
	1I 08	15	70- 13
	1I 12	12	70- 17
	1I 14	10	70- 19
	1I 22	2	70- 27
	1J 14	6	70- 43
	2E 12	7	90- 45
	2E 18	18	90- 51
12H 304	1A 09	24	20- 3
	1A 19	8	20- 13
	1A 23	4	20- 17
	1B 06	16	20- 25
	1B 16	8	30- 3
	1B 18	9	30- 5
	1B 22	21	30- 9
	1B 24	3	30- 11
	1C 08	13	30- 19
12H 304	1C 10	17	30- 21
	1C 12	14	30- 23
	1C 22	8	40- 3
	1D 02	10	40- 7
	1D 04	34	40- 9
	1D 06	41	40- 11
	1E 16	5	50- 5
	1E 18	7	50- 7
	1F 04	42	50- 17
	1G 18	12	60- 5
	1G 19	17	60- 6
	1G 22	9	60- 9
	1H 06	7	60- 17
	1H 10	31	60- 21
	1I 04	9	70- 9
	1I 10	21	70- 15
	1I 16	27	70- 21
	1I 17	10	70- 22
	1I 20	18	70- 25
	1J 10	8	70- 39
	2A 09	18	80- 3
	2A 13	4	80- 7
	2A 15	32	80- 9
	2A 23	6	80- 17
	2A 25	14	80- 19
	2B 02	7	80- 21
	2B 04	15	80- 23
	2B 06	16	80- 25
	2B 08	24	80- 27
	2B 12	26	80- 31
	2B 14	12	80- 33
	2B 20	13	80- 39
	2B 24	3	80- 43
	2B 24	7	80- 43
	2B 24	10	80- 43
	2C 04	5	80- 47
	2C 20	11	90- 5
	2C 24	12	90- 9
	2D 10	6	90- 19
	2D 11	3	90- 20
	2D 17	4	90- 26
	2E 08	40	90- 41
	2E 12	14	90- 45
	2F 12	2	100- 12
12H 317	2A 09	9	80- 3
12H 324	1A 09	27	20- 3
12H 325	1C 07	1	30- 18
	2E 19	4	90- 52
12H 331	1D 10	12	40- 15
	2C 24	14	90- 9
	2D 02	9	90- 11
	2D 08	8	90- 17
	2D 14	6	90- 23
12H 356	2D 05	11	90- 14
12M 1622	1C 24	17	40- 5
12M 1626	1E 02	4	40- 31
12M 3998	2E 10	16	90- 43
12M 5029	2E 10	28	90- 43
12M 6138	2F 15	8	100- 15
12M 7002	2E 08	11	90- 41
	2E 08	24	90- 41
	2E 10	30	90- 43
12M 7008	1B 20	15	30- 7
	1D 04	28	40- 9
	1D 06	28	40- 11
12M 7011	1C 24	5	40- 5
	1D 06	21	40- 11
	2D 24	4	90- 33
12M 7013	1D 04	11	40- 9
	1D 06	11	40- 11
	2E 18	9	90- 51
12M 7051	1E 20	4	50- 9
12M 7064	1C 22	18	40- 3
	1D 12	11	40- 17
	1D 21	8	40- 26
	1D 24	12	40- 29
	1E 02	10	40- 31
	1E 04	15	40- 33
12M 7066	2E 18	9	90- 51
12M 7081	2D 04	6	90- 13
	2D 05	2	90- 14
	2D 14	18	90- 23
14H 631	1C 22	17	40- 3
	1D 12	12	40- 17
	1D 21	9	40- 26
	1D 24	13	40- 29
	1E 02	9	40- 31
14H 649	1C 10	11	30- 21
14H 650	1F 02	2	50- 15
	2E 12	6	90- 45
14H 673	2D 14	35	90- 23
14H 732	1D 02	12	40- 7
	1F 02	15	50- 15
	1H 08	8	60- 19
14H 760	1A 09	3	20- 3
	2F 03	12	100- 3
14H 774	1E 20	11	50- 9
14H 778	1E 04	16	40- 33
14H 785	1B 02	2	20- 21
	1B 20	10	30- 7
	1C 06	18	30- 17
	1C 22	11	40- 3

PART-NUMBER REFERENCE BESTELL-NR. NO PARTICOLARE NO DE LA PIEZA RESERVDELSNR.	GRID COORD. KOORD. COORD. COORD. RUTA	KEY REP. TEIL COD. REF. KOD	PAGE PAGE SEITE PAGINE PAGINA SIDA
14H 785	1I 05	9	70- 10
	1I 08	8	70- 13
	1I 12	9	70- 17
	1I 14	13	70- 19
	1J 14	7	70- 43
	2C 18	6	90- 3
	2F 11	7	100- 11
14H 786	1B 02	10	20- 21
	1C 08	14	30- 19
	1C 10	22	30- 21
	1D 02	1	40- 7
	1I 08	13	70- 13
	2B 08	5	80- 27
	2B 12	5	80- 31
	2B 14	18	80- 33
	2B 16	24	80- 35
	2D 08	9	90- 17
	2D 14	13	90- 23
14H 794	2A 11	6	80- 5
	2C 18	13	90- 3
	2C 20	10	90- 5
14H 805	2F 16	3	100- 16
14H 809	1C 14	14	30- 25
	1H 12	4	60- 23
	2A 17	30	80- 11
	2A 25	17	80- 19
	2C 02	14	80- 45
	2F 03	17	100- 3
14H 812	1A 09	22	20- 3
	1B 24	5	30- 11
	1C 08	12	30- 19
	1D 02	11	40- 7
	1D 04	35	40- 9
	1D 06	42	40- 11
	1E 14	20	50- 3
	1F 08	14	50- 21
	1G 22	15	60- 9
	1H 06	8	60- 17
	1H 10	32	60- 21
	1I 04	10	70- 9
	1I 10	20	70- 15
	1I 17	9	70- 22
	2A 23	7	80- 17
	2A 25	15	80- 19
	2B 16	25	80- 35
	2B 24	12	80- 43
	2B 24	30	80- 43
	2C 24	5	90- 9
	2D 02	13	90- 11
	2D 10	5	90- 19
	2D 11	11	90- 20
	2D 17	5	90- 26
	2E 08	41	90- 41
14H 813	2C 04	9	80- 47
	2E 19	3	90- 52
14H 813	2F 12	5	100- 12
14H 821	1I 20	9	70- 25
14H 826	1A 09	14	20- 3
	1A 23	15	20- 17
	1G 04	2	50- 41
	2C 04	19	80- 47
14H 836	2B 24	13	80- 43
	2C 20	14	90- 5
14H 846	2A 15	31	80- 9
14H 850	1C 07	7	30- 18
	1C 07	9	30- 18
	1C 07	5	30- 18
	1C 10	23	30- 21
14H 856	1I 20	14	70- 25
14H 865	1D 19	8	40- 24
14H 881	1I 20	12	70- 25
14H 882	1E 16	25	50- 5
14H 902	1G 18	31	60- 5
	2A 15	11	80- 9
	2A 17	12	80- 11
14H 904	1G 16	3	60- 3
14H 918	2A 17	22	80- 11
14H 920	2A 19	8	80- 13
	2A 21	5	80- 15
14H 934	1C 07	2	30- 18
14H 971	1F 12	17	50- 25
14H 1021	1I 02	29	70- 7
14H 1039	1A 09	3	20- 3
14			
14M 1685	1E 02	3	40- 31
14M 6825	1B 20	16	30- 7
14M 7009	2B 14	21	80- 33
	2D 04	16	90- 13
14M 7027	2B 08	26	80- 27
	2B 10	4	80- 29
	2B 12	28	80- 31
	2E 08	35	90- 41
14M 7028	1D 24	6	40- 29
	2D 24	5	90- 33
14M 7060	1D 14	12	40- 19
	1D 16	3	40- 21
14M 7139	2B 08	20	80- 27
	2B 12	24	80- 31
14M 7151	1D 04	27	40- 9
	1D 06	27	40- 11
14M 7152	1D 04	12	40- 9
	1D 06	12	40- 11
14M 7208	2F 15	7	100- 15
14M 7209	1G 22	3	60- 9
15			
15H 255	1A 09	38	20- 3
	1B 16	19	30- 3
15H 275	1A 09	7	20- 3
	1A 15	2	20- 9
15H 558	1B 24	15	30- 11
15H 560	1A 23	18	20- 17
	1H 10	2	60- 21
	1I 02	17	70- 7
15H 562	1F 12	10	50- 25
15H 584	1B 06	10	20- 25
	1F 12	12	50- 25
15H 665	1A 09	2	20- 3
15			
15M 6506	1H 04	8	60- 15
	1H 06	3	60- 17
16			
16M 7014	1H 12	35	60- 23
16M 7061	2E 18	32	90- 51
16M 7066	2B 16	16	80- 35
19			
19H 2021	1H 04	5	60- 15
19H 1227	1B 02	12	20- 21
	1C 08	8	30- 19
	1G 18	21	60- 5
	2B 08	3	80- 27
	2B 10	8	80- 29
	2B 12	3	80- 31
	2B 18	18	80- 37
	2D 02	6	90- 11
	2D 04	11	90- 13
	2D 05	10	90- 14
	2D 14	8	90- 23
19H 1374	2A 15	19	80- 9
	2C 18	11	90- 3
	2C 20	2	90- 5
19H 1708	1I 04	11	70- 9
	2B 14	17	80- 33
	2C 18	16	90- 3
	2C 20	1	90- 5
19H 1715	2A 09	13	80- 3
19H 1721	1A 17	16	20- 11
	1F 12	24	50- 25
	1F 14	2	50- 27
19H 1726	1A 15	20	20- 9
	1B 04	6	20- 23

PART-NUMBER REFERENCE BESTELL-NR. NO PARTICOLARE NO DE LA PIEZA RESERVDELSNR.	GRID COORD. KOORD. COORD. COORD. RUTA	KEY REP. TEIL COD. REF. KOD	PAGE PAGE SEITE PAGINE PAGINA SIDA
19H 1726	1E 18	8	50- 7
	2D 17	3	90- 26
19H 1731	1A 13	5	20- 7
	1B 24	12	30- 11
	1D 02	14	40- 7
	1D 04	36	40- 9
	1D 06	43	40- 11
	1F 15	11	50- 28
	1F 20	19	50- 33
	1G 03	6	50- 40
	1G 03	8	50- 40
	1G 22	16	60- 9
	1I 08	22	70- 13
	2A 25	18	80- 19
	2B 14	13	80- 33
	2B 20	2	80- 39
	2B 24	2	80- 43
	2B 24	6	80- 43
	2C 24	15	90- 9
	2D 11	2	90- 20
	2D 11	12	90- 20
19H 1732	1A 23	26	20- 17
	1B 04	10	20- 23
	1B 16	18	30- 3
	1B 20	3	30- 7
	1F 15	13	50- 28
	1F 20	20	50- 33
	1G 04	14	50- 41
	1G 18	17	60- 5
	1H 06	4	60- 17
	1H 20	2	70- 1
	1H 22	4	70- 3
	1I 10	24	70- 15
	1I 16	26	70- 21
	2A 25	9	80- 19
	2B 24	9	80- 43
	2C 20	12	90- 5
	2C 24	11	90- 9
	2D 02	10	90- 11
	2E 08	38	90- 41
	2E 12	15	90- 45
19H 1733	1A 13	14	20- 7
	1A 15	23	20- 9
	1A 23	30	20- 17
19H 1734	2C 04	20	80- 47
19H 1739	1F 05	8	50- 18
19H 1741	2F 13	3	100- 13
19H 1756	2F 03	7	100- 3
19H 1777	2A 25	11	80- 19
	2B 02	18	80- 21
	2B 06	22	80- 25
19H 1782	2B 02	22	80- 21
	2B 04	5	80- 23
	2B 06	26	80- 25
19H 1791	2B 08	4	80- 27
19H 1792	2D 12	3	90- 21
19H 1800	1A 19	7	20- 13
	1A 23	21	20- 17
	1B 06	12	20- 25
	1F 15	12	50- 28
	1G 03	11	50- 40
	1G 19	14	60- 6
	2C 24	3	90- 9
	2D 02	11	90- 11
	2D 11	2	90- 20
19H 1801	1A 15	22	20- 9
	1A 23	22	20- 17
	1B 06	18	20- 25
	1F 20	17	50- 33
19H 1805	1F 14	12	50- 27
	1G 08	9	50- 45
	1H 24	38	70- 5
	2A 17	25	80- 11
19H 1813	1A 11	4	20- 5
	2E 16	2	90- 49
	2E 18	19	90- 51
19H 1815	2B 24	19	80- 43
	2B 24	28	80- 43
	2C 02	10	80- 45
	2E 13	2	90- 46
19H 1819	1B 06	19	20- 25
19H 1820	1H 12	14	60- 23
19H 1831	1F 14	3	50- 27
	1G 18	3	60- 5
	2C 04	1	80- 47
19H 1833	1H 06	11	60- 17
19H 1835	2B 24	17	80- 43
19H 1849	1B 20	24	30- 7
	1C 02	4	30- 13
	1C 22	13	40- 3
	1I 08	16	70- 13
19H 1854	1A 23	16	20- 17
	1D 14	16	40- 19
	1D 16	7	40- 21
	1D 18	11	40- 23
19H 1863	2A 17	1	80- 11
19H 1874	2F 16	6	100- 16
19H 1890	2A 09	12	80- 3
19H 1894	1C 12	15	30- 23
19H 1895	2B 02	1	80- 21
	2B 04	1	80- 23
	2B 06	1	80- 25
19H 1898	2B 12	4	80- 31
	2B 14	4	80- 33
19H 1900	1B 02	31	20- 21
	2F 11	5	100- 11
19H 1905	1I 05	5	70- 10
	1I 12	11	70- 17
	1I 14	11	70- 19
19H 1906	1B 20	8	30- 7
19H 1912	1B 06	15	20- 25
	1F 04	45	50- 17
19H 1914	1I 08	11	70- 13
19H 1919	1D 24	7	40- 29
	2C 02	9	80- 45
	2D 08	5	90- 17
	2D 10	9	90- 19
	2E 10	11	90- 43
19H 1921	1C 22	10	40- 3
19H 1924	2E 19	5	90- 52
19H 1936	1B 22	9	30- 9
	1D 02	8	40- 7
	1E 18	6	50- 7
	1H 10	30	60- 21
	1I 17	12	70- 22
	2A 13	3	80- 7
	2C 24	10	90- 9
19H 1944	1A 23	5	20- 17
	1E 18	9	50- 7
19H 1945	1I 02	13	70- 7
19H 1948	1C 08	8	30- 19
	2B 16	21	80- 35
	2C 24	7	90- 9
19H 1974	1F 14	6	50- 27
19H 1992	1F 14	9	50- 27
19H 2021	1B 16	6	30- 3
	1B 18	8	30- 5
	1D 02	17	40- 7
	1F 12	36	50- 25
	1I 20	19	70- 25
	2A 09	19	80- 3
	2B 02	8	80- 21
	2B 04	22	80- 23
	2B 06	17	80- 25
	2B 08	18	80- 27
	2B 12	22	80- 31
	2C 24	13	90- 9
	2D 10	13	90- 19
19H 2023	1A 15	24	20- 9
	1B 02	21	20- 21
19H 2026	2C 20	24	90- 5
19H 2038	1B 22	20	30- 9
19H 2113	2C 20	4	90- 5
19H 2116	1H 20	7	70- 1
19H 2117	1B 06	21	20- 25
	1E 22	16	50- 11
19H 2127	1B 06	21	20- 25
19H 2128	1A 15	13	20- 9
	1B 02	21	20- 21
	1C 22	3	40- 3
	1G 19	15	60- 6
19H 2224	1H 08	11	60- 19
	2F 13	1	100- 13
19H 2228	1A 23	3	20- 17
	1A 23	31	20- 17

PART-NUMBER REFERENCE BESTELL-NR. NO PARTICOLARE NO DE LA PIEZA RESERVDELSNR.	GRID COORD. KOORD. COORD. RUTA	KEY REP. TEIL COD. REF. KOD	PAGE PAGE SEITE PAGINE PAGINA SIDA
19H 2228	2F 03	4	100- 3
	2F 05	3	100- 5
19H 2284	1A 15	17	20- 9
	1B 16	7	30- 3
	1B 24	2	30- 11
	1C 22	7	40- 3
	1D 02	17	40- 7
	1F 10	25	50- 23
	1G 18	13	60- 5
	1H 10	35	60- 21
	2B 02	14	80- 21
	2B 04	16	80- 23
	2B 06	18	80- 25
	2B 08	23	80- 27
	2B 12	25	80- 31
	2B 20	14	80- 39
	2B 24	1	80- 43
	2C 04	4	80- 47
	2D 10	11	90- 19
	2F 12	1	100- 12
19H 2342	2F 15	3	100- 15
19H 2351	1A 19	14	20- 13
19H 2353	1H 06	18	60- 17
19H 2358	2A 09	8	80- 3
19H 2367	1F 12	21	50- 25
19H 2472	2F 09	11	100- 9
19H 2508	1G 22	14	60- 9
	1H 08	12	60- 19
	2E 16	11	90- 49
19H 2510	1E 14	4	50- 3
19H 2541	2A 15	30	80- 9
19H 2545	1A 23	29	20- 17
	1B 06	12	20- 25
	1E 18	12	50- 7
19H 2551	1C 06	23	30- 17
19H 2552	1C 10	16	30- 21
	1E 16	4	50- 5
	1E 18	11	50- 7
	1F 04	41	50- 17
	1F 06	3	50- 19
	1G 19	16	60- 6
	1H 04	11	60- 15
	1H 12	28	60- 23
	2B 24	26	80- 43
	2C 04	22	80- 47
	2D 11	9	90- 20
19H 2569	1D 21	3	40- 26
19H 2643	1F 12	22	50- 25
19H 2665	1A 15	12	20- 9
	1F 04	46	50- 17
	1G 22	8	60- 9
	1J 10	7	70- 39
19H 2710	1G 18	28	60- 5
19H 2726	1A 23	27	20- 17
	2F 03	10	100- 3
19H 2735	1E 14	6	50- 3
	1F 12	37	50- 25
19H 2853	1I 22	1	70- 27
19H 2932	1F 04	33	50- 17
19H 2935	1F 04	44	50- 17
19H 2993	1F 12	38	50- 25
	1G 08	25	50- 45
19H 2994	2F 03	19	100- 3
19H 3170	1E 14	3	50- 3
19H 3260	2A 22	5	80- 16
19H 3280	2A 22	5	80- 16
19H 3385	1A 19	1	20- 13
	1A 19	4	20- 13

19

19M 7077	2E 08	36	90- 41
19M 7162	2B 10	11	80- 29
19M 7176	1B 20	20	30- 7
19M 7177	1B 20	17	30- 7
19M 7180	1D 14	11	40- 19
	1D 16	4	40- 21
19M 7299	2B 14	22	80- 33
19M 7300	2E 08	12	90- 41
	2E 10	31	90- 43
19M 7372	2E 10	15	90- 43
19M 7376	1B 20	14	30- 7
19M 7598	2B 10	16	80- 29
	2E 10	29	90- 43
19M 7661	1G 24	26	60- 11
19M 7695	2E 18	10	90- 51
19M 7698	1G 24	22	60- 11

21

21H 1128	1D 12	10	40- 17
	1E 02	11	40- 31
21H 1210	2C 24	22	90- 9
21H 1253	1H 12	2	60- 23
21H 1293	1C 07	6	30- 18
21H 1312	1A 25	7	20- 19
21H 1317	1D 24	11	40- 29
	1E 04	14	40- 33
21H 1321	2D 02	8	90- 11
	2D 08	7	90- 17
	2D 14	5	90- 23
21H 1322	1G 03	8	50- 40
21H 1342	1D 21	7	40- 26
21H 1352	1I 24	8	70- 29
	1J 02	11	70- 31
	1J 04	5	70- 33

21

21M 1211	1D 04	10	40- 9
	1D 06	10	40- 11
21M 6041	1D 04	4	40- 9
21M 7033	1D 16	12	40- 21
21M 7034	2D 24	3	90- 33
21M 7153	2B 08	19	80- 27
	2B 12	23	80- 31
21M 7155	2B 10	6	80- 29
21M 7179	2C 24	20	90- 9
	2D 02	18	90- 11
21M 7196	2D 08	4	90- 17
21M 7198	1D 06	5	40- 11
21M 7242	1C 24	13	40- 5

22

22H 842	1H 01	13	60- 12
22H 932	1A 09	19	20- 3

24

24H 301	1C 14	15	30- 25
24H 1111	2B 02	19	80- 21
	2B 04	8	80- 23
	2B 06	23	80- 25
24H 1122	1B 02	32	20- 21
24H 1136	1C 22	15	40- 3
	2C 18	5	90- 3
	2F 11	6	100- 11
	2F 15	4	100- 15
24H 1138	2F 16	4	100- 16
24H 1162	1H 12	15	60- 23
24H 1211	2F 09	15	100- 9
24H 1227	1E 23	8	50- 12
	1G 02	6	50- 39
	1I 16	5	70- 21
24H 1243	1C 06	20	30- 17
	2D 05	12	90- 14
	2D 14	22	90- 23
24H 1272	1H 12	25	60- 23
	2F 03	16	100- 3
	2F 15	9	100- 15
24H 1283	1E 23	3	50- 12
	1G 19	3	60- 6
24H 1286	1C 08	21	30- 19
	1C 10	8	30- 21
	1F 04	51	50- 17
24H 1287	1B 02	13	20- 21
	1C 08	24	30- 19
	1I 08	10	70- 13
	2B 14	19	80- 33

PART-NUMBER REFERENCE BESTELL-NR. NO PARTICOLARE NO DE LA PIEZA RESERVDELSNR.	GRID COORD. KOORD. COORD. COORD. RUTA	KEY REP. TEIL COD. REF. KOD	PAGE PAGE SEITE PAGINE PAGINA SIDA
24H 1287	2B 16 23		80- 35
	2C 24 9		90- 9
	2D 02 7		90- 11
	2D 08 6		90- 17
	2D 14 9		90- 23
24H 1288	2B 14 2		80- 33
24H 1290	1A 15 5		20- 9
24H 1298	1I 02 26		70- 7
24H 1301	1F 04 47		50- 17
24H 1303	1A 09 21		20- 3
	1B 24 11		30- 11
	1E 20 17		50- 9
	1G 18 11		60- 5
	1I 16 28		70- 21
24H 1304	1A 15 14		20- 9
	1B 18 10		30- 5
	1B 20 4		30- 7
	1C 08 2		30- 19
	1C 22 5		40- 3
	1H 10 33		60- 21
24H 1305	1B 02 29		20- 21
	1B 22 10		30- 9
	1C 22 9		40- 3
	1F 02 25		50- 15
	1G 22 10		60- 9
	2B 02 16		80- 21
	2B 04 12		80- 23
	2B 06 20		80- 25
	2B 08 17		80- 27
	2B 12 21		80- 31
	2B 16 26		80- 35
	2B 20 8		80- 39
	2B 24 27		80- 43
	2C 24 4		90- 9
	2D 02 12		90- 11
	2D 10 10		90- 19
	2D 11 10		90- 20
24H 1307	1D 02 15		40- 7
	1G 03 5		50- 40
	2B 20 3		80- 39
	2C 04 6		80- 47
	2D 11 4		90- 20
24H 1308	2A 25 10		80- 19
	2B 24 4		80- 43
	2B 24 11		80- 43
24H 1309	2B 24 16		80- 43
24H 1312	2B 02 15		80- 21
	2B 04 14		80- 23
	2B 06 19		80- 25
24H 1338	2C 02 11		80- 45
24H 1340	1E 23 11		50- 12
24H 1341	2B 02 20		80- 21
	2B 04 7		80- 23
	2B 06 24		80- 25
24H 1349	2E 13 3		90- 46
24H 1365	2A 17 32		80- 11
24H 1367	1H 06 9		60- 17
24H 1378	2B 08 10		80- 27
	2B 12 14		80- 31
	2C 20 25		90- 5
24H 1393	2C 20 27		90- 5
24H 1396	2A 11 4		80- 5
24H 1433	2C 20 16		90- 5
24H 1451	1E 18 4		50- 7
	1H 12 16		60- 23
24H 1542	2F 06 8		100- 6
24H 1625	2B 02 2		80- 21
	2B 04 2		80- 23
	2B 06 2		80- 25
24H 1646	1D 02 2		40- 7
24H 1658	1F 02 9		50- 15
	1H 12 41		60- 23
24H 1685	1A 11 3		20- 5
	1B 02 4		20- 21
24H 1788	2C 04 2		80- 47
24H 1890	1A 17 21		20- 11
24H 1893	2C 20 9		90- 5
24H 1894	2C 20 23		90- 5
24H 1895	2C 20 19		90- 5
24H 1908	2B 14 3		80- 33
24M 1579	1D 16 13		40- 21
24M 1584	1E 02 5		40- 31
24M 7027	1C 24 6		40- 5
	2A 12 2		80- 6
	2B 08 13		80- 27
	2B 12 15		80- 31
	2E 02 9		90- 35
24M 7028	2D 11 5		90- 20
24M 7030	2E 16 10		90- 49
24M 7044	2E 18 26		90- 51
24M 7047	2E 16 10		90- 49
24M 7054	2B 10 5		80- 29
24M 7055	2B 10 10		80- 29
	2E 16 3		90- 49
	2E 18 14		90- 51
24M 7117	2E 05 9		90- 38
24M 7139	2B 08 2		80- 27
	2B 10 7		80- 29
	2B 12 2		80- 31
24M 7149	2E 18 24		90- 51
25H 72	1F 02 11		50- 15
25H 154	1H 12 22		60- 23
25H 522	1E 23 9		50- 12
25H 748	1F 04 26		50- 17
25H 827	1E 20 6		50- 9
25H 829	2F 09 10		100- 9
25M 3827	2C 06 13		80- 49
26H 72	1A 17 10		20- 11
26H 77	1G 04 12		50- 41
	1H 12 26		60- 23
28H 5	2B 14 1		80- 33
28H 860	1H 04 13		60- 15
	1H 06 6		60- 17
28H 862	2D 11 6		90- 20
28H 1514	1I 12 10		70- 17
	1I 14 9		70- 19
28H 1882	2B 14 15		80- 33
28H 2642	1F 14 8		50- 27
30H 13	1E 14 16		50- 3
31M 5226	2C 10 3		80- 53
31M 5227	2C 10 3		80- 53
31M 5964	2C 10 2		80- 53
31M 5965	2C 10 2		80- 53
31M 6953	2C 10 2		80- 53
31M 6965	2C 10 4		80- 53
34H 247	1F 12 29		50- 25
34H 251	1E 14 28		50- 3
	1F 10 26		50- 23
	1F 24 2		50- 37
34H 253	1E 16 18		50- 5
34H 264	1C 10 5		30- 21
	1J 02 7		70- 31
34H 280	1E 23 13		50- 12

FRONT WINDSHIELD WIPER
ESSUIE-GLACES AVANT
SCHEIBENWISCHER VORN
TERGICRISTALLO ANTERIORE
LIMPIA PARABRISAS FRONTAL
FRAEMRE VINDRUTETORKARE
L 13264

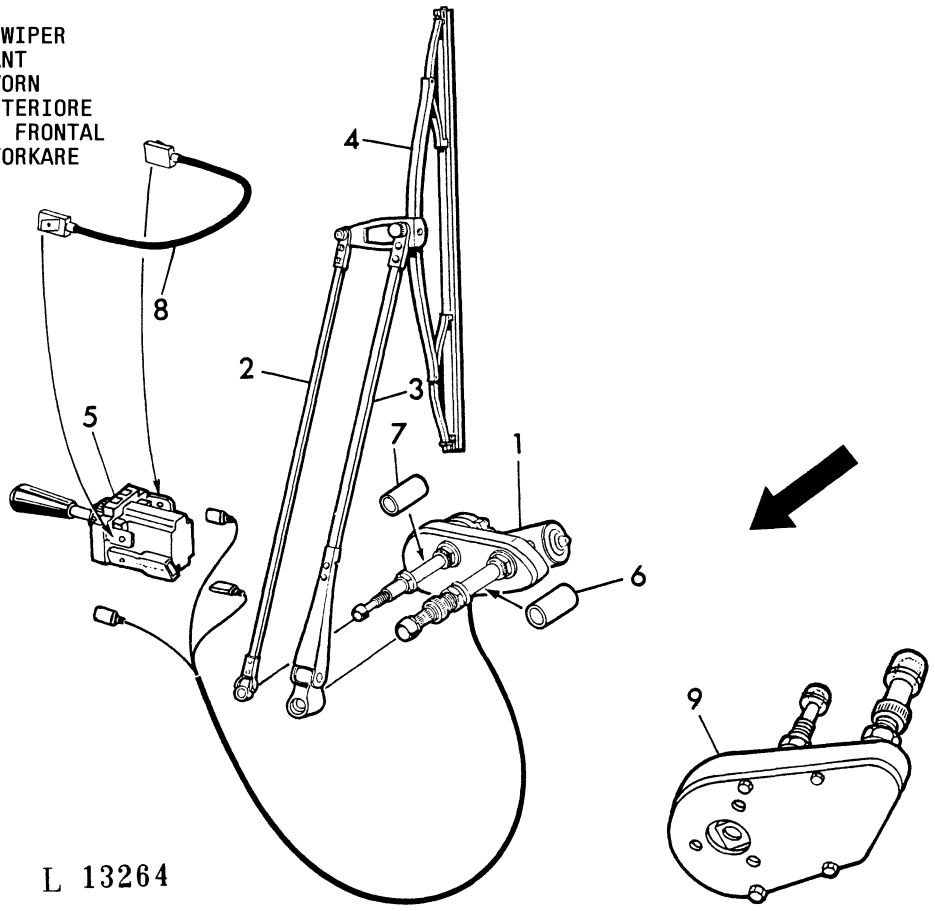

KEY	PART NO.	DESCRIPTION	QTY	SERIAL NO.	JD310	REMARKS
1	AL 24612	MOTOR	1		X	
2	AL 24611	ARM	1		X	
3	AL 24609	ARM	1		X	
4	AL 24610	WINDSHIELD WIPER	1		X	
5	AL 25051	SWITCH	1		X	
6	L 30020	SPACER	1		X	
7	L 30019	SPACER	1		X	
8	AL 25076	WIRING LEAD	1		X	
9	AL 25790	HOUSING	1		X	

REAR WINDSHIELD WIPER
ESSUIE-GLACES ARRIERE
HECKSCHEIBENWISCHER
TERGICRISTALLO POSTERIORE
LIMPIA-PARABRISAS TRASERO
BAKRE VINDRUTETORKARE
L 13262

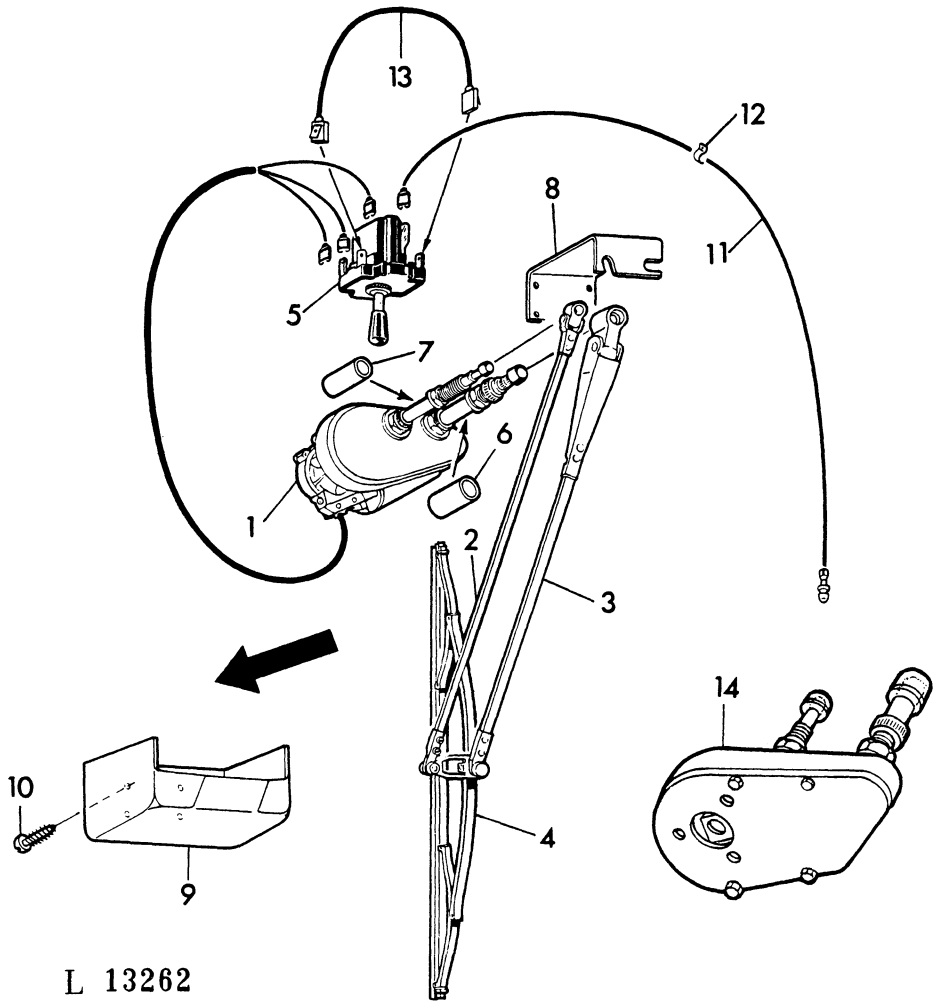

KEY	PART NO.	DESCRIPTION	QTY	SERIAL NO.	JD310	REMARKS
1	AL 25052	MOTOR	1		X	
2	AL 24196	ARM	1		X	
3	AL 24195	ARM	1		X	
4	AL 24610	WINDSHIELD WIPER	1		X	
5	AL 25051	SWITCH	1		X	
6	L 30630	SPACER	1		X	
7	L 30631	SPACER	1		X	
8	L 30788	RETAINER	1		X	
9	L 30787	HOOD	1		X	
10	37M 6497	SCREW	3		X	3,5X9,5MM
11	AL 24540	WIRING LEAD	1		X	ASSY, INCL. KEY 12
12	.....		4		X	ORD AL24540
13	AL 25076	WIRING LEAD	1		X	
14	AL 25784	HOUSING	1		X	

WINDSHIELD WIPER MOTOR
MOTEUR D'ESSIEU GLACES
SCHEIBENWISCHERMOTOR
MOTORE TERGICRISTALLO
MOTOR DE LIMPIA PARABRISAS
VINDRUTETORKARE MOTOR
L 13268

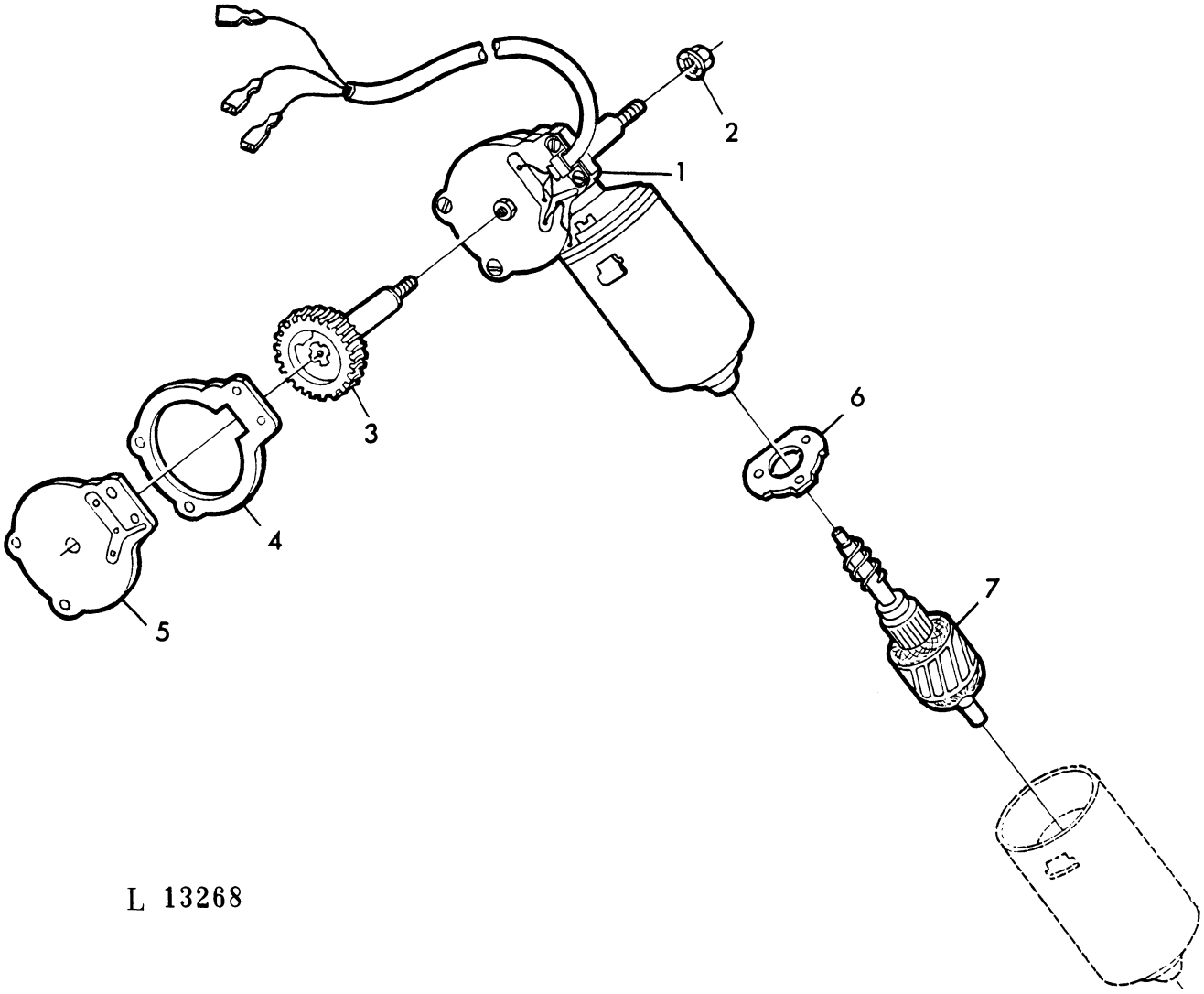

L 13268

KEY	PART NO.	DESCRIPTION	QTY	SERIAL NO.	JD310	REMARKS
1	AL 25789	MOTOR	1		X	ASSY, INCL. KEYS 2-7
2	L 31263	LOCK NUT	1		X	
3	AL 25788	DRIVE SHAFT	1		X	
4	L 31264	GASKET	1		X	
5	AL 25787	COVER	1		X	
6	AL 25786	PLATE	1		X	
7	AL 25785	ARMATURE	1		X	

WINDSHIELD-WASHER
LAVE-GLACE
SCHEIBEN-WASCHANLAGE
SPRUZZATORE PER PARABREZZA
DESPIECE DEL LAVAPARABRISAS
VINDRUTESPOLARE
L 13819

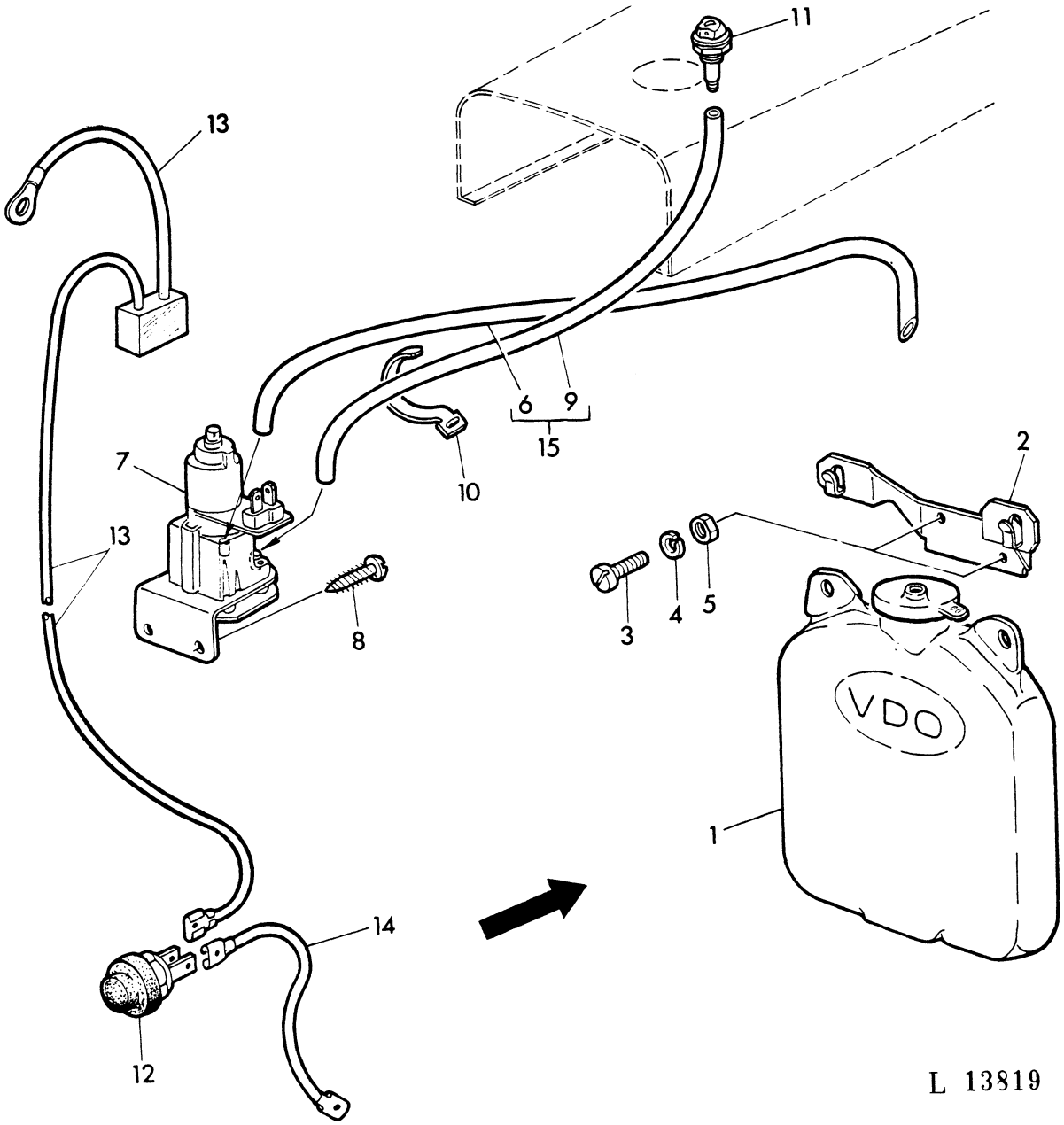

KEY	PART NO.	DESCRIPTION	QTY	SERIAL NO.	JD310	REMARKS
1	AL 25079	RESERVOIR	1		X	
2	L 28085	RETAINER	1		X	
3	21M 7034	BOLT	2		X	5X12MM
4	12M 7011	LOCK WASHER	2		X	5MM
5	14M 7028	NUT	2		X	5MM, SUB. FOR 14M7021
6	.....		1		X	LGTH=1650MM(65")ORD AL25082
7	AL 25080	PUMP	1		X	
8	37M 7024	SCREW	2		X	4,8X16MM
9	.....		1		X	LGTH=800MM(31,5")ORD AL25082
10	R 44302	BAND	1		X	
11	AL 25081	NOZZLE	1		X	
12	AL 17684	SWITCH	1		X	
13	AL 25078	WIRING HARNESS	1		X	
14	AL 25076	WIRING LEAD	1		X	
15	AL 25082	HOSE	1		X	KIT INCL. KEYS 6,9

OPERATOR'S CAB - HOOD FOR INSTRUMENT PANEL HOUSING
CABINE DU CONDUCTEUR - CAPOT POUR AUVENT DU TABLEAU DE BORD
KABINE HAUBE ZUR ARMATURENWAND
CABINA - COFANO PER ALLOGIAMENTO CRUSCOTTO
CABINA PARA EL CONDUCTOR - CAPO PARA CAJA DEL TABLERO
FORARHYTT - HUV FOR INSTRUMENTPANELHUS
L 31451

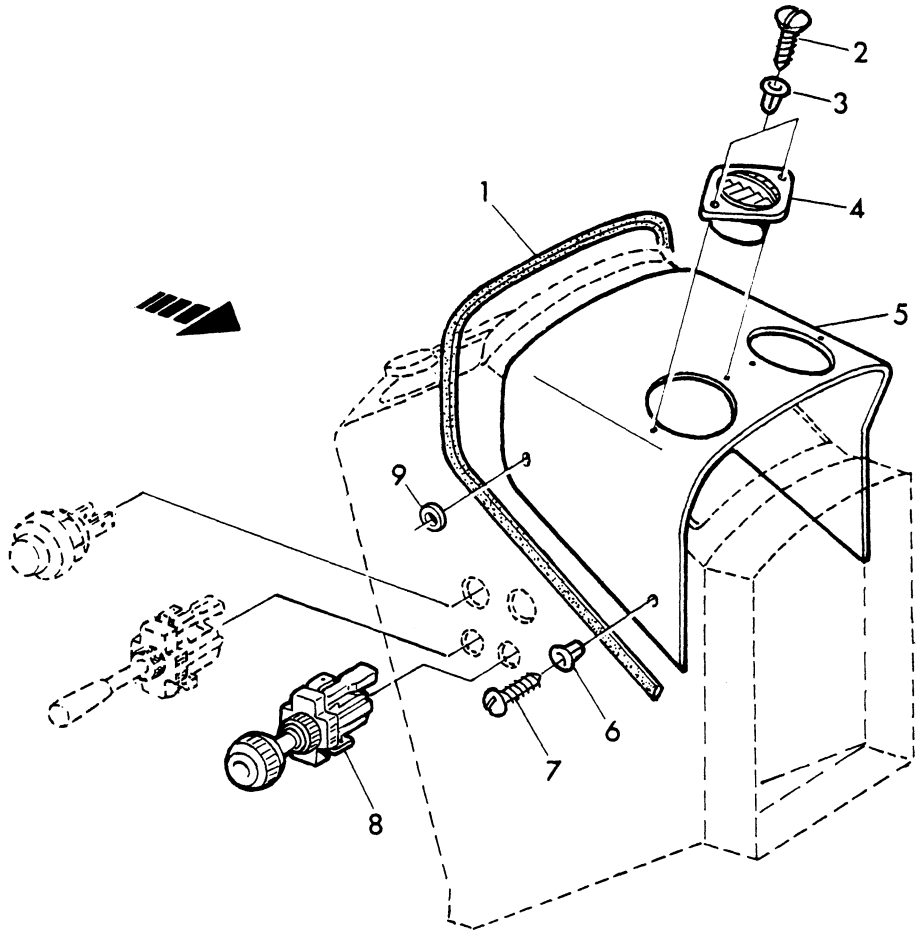

L 31451

KEY	PART NO.	DESCRIPTION	QTY	SERIAL NO.	JD310	REMARKS
1	L 30286	WEATHERSTRIP	1		X	
2	37M 7053	SCREW	4		X	2,9X16MM
3	L 32786	NUT	4		X	
4	AL 24805	AIR DUCT	2		X	ORD W/L32786(4) 37M7053(4)
5	L 30633	HOOD	1		X	SUB. FOR AL24807
6	L 30287	NUT	4		X	
7	37M 7024	SCREW	4		X	4,8X16MM
8	AL 26974	SWITCH	1		X	SUB. FOR AL25058,AL25212
9	24M 7027	LOCK WASHER	2		X	5,3X11X1MM

OPERATOR'S CAB-LINING
CABINE DU CONDUCTEUR REVETMENT INTERIEUR
KABINE - INNENVERKLEIDUNG
CABINA RIVESTMENTO INTERIORE
CABINA PARA EL CONDUCTOR REVESTIMIENTO INTERIOR
FORARHYTT-BEKLADNAD
L 13836

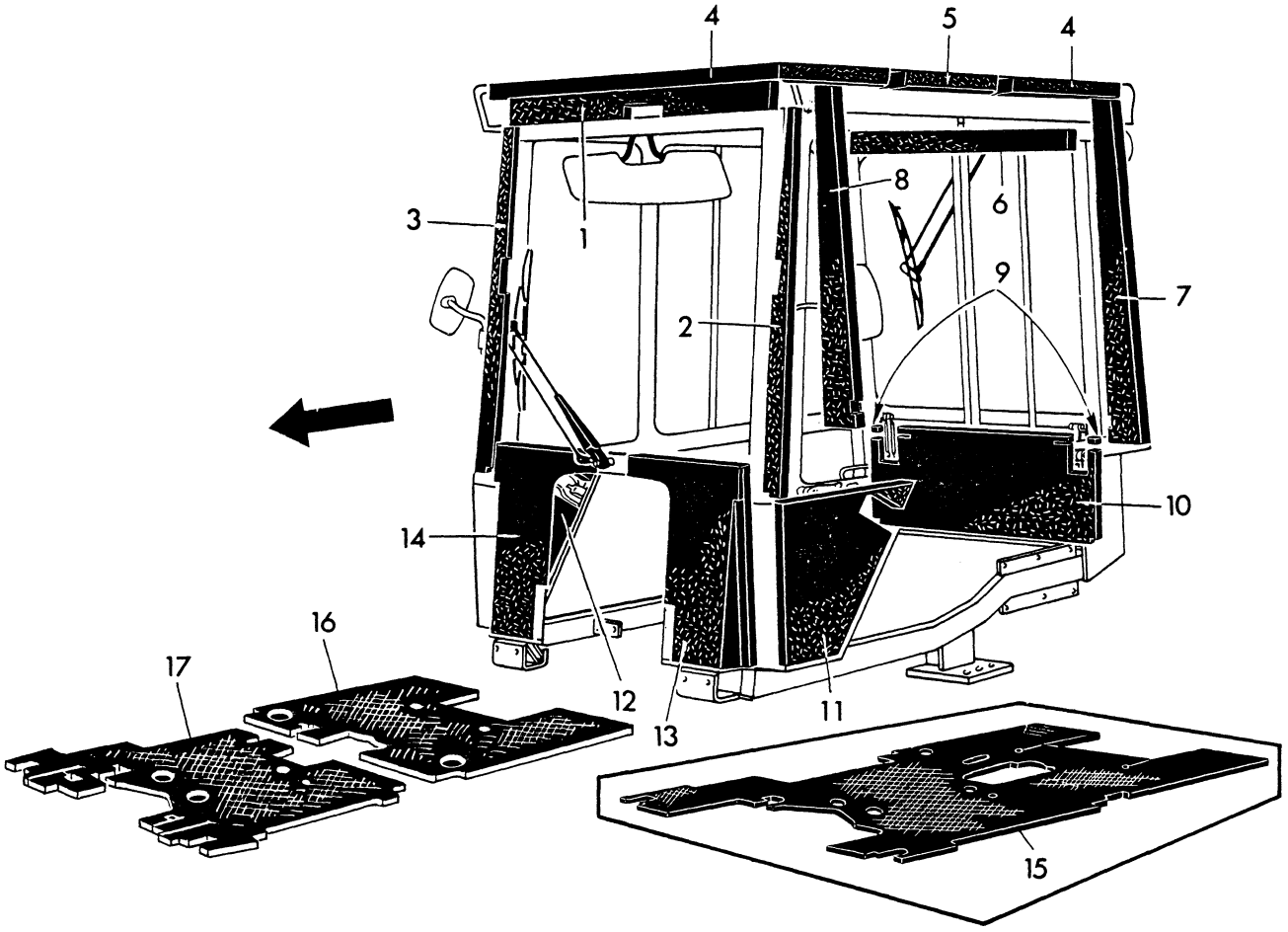

L 13836

KEY	PART NO.	DESCRIPTION	QTY	SERIAL NO.	JD310	REMARKS
1	L 30665	BARRIER	1		X	
2	L 30666	BARRIER	1		X	L.H.
3	L 30667	BARRIER	1		X	R.H.
4	L 30673	BARRIER	2		X	
5	L 30672	BARRIER	1		X	
6	L 30676	BARRIER	1		X	
7	L 30674	BARRIER	1		X	L.H.
8	L 30675	BARRIER	1		X	R.H.
9	L 30678	BARRIER	2		X	
10	L 30677	BARRIER	1		X	
11	L 30668	BARRIER	1		X	L.H.
12	L 30669	BARRIER	1		X	R.H.
13	AL 25075	BARRIER	1		X	L.H.
14	AL 25074	BARRIER	1		X	R.H.
15	L 30682	MAT	1		X	ORD L31265, L31266
16	L 31265	MAT	1		X	REAR
17	L 31266	MAT	1		X	FRONT

OPERATOR'S CAB-LINNING
CABINE DE CONDUCTEUR REVETEMENT INTERIEUR
KABINE - INNENVERKLEIDUNG
CABINA-RIVESTMENTO INTERIORE
CABINA PARA EL CONDUCTEUR REVESTIMENTO INTERIOR
FORARHYTT-BEKLADNAD
L 13837

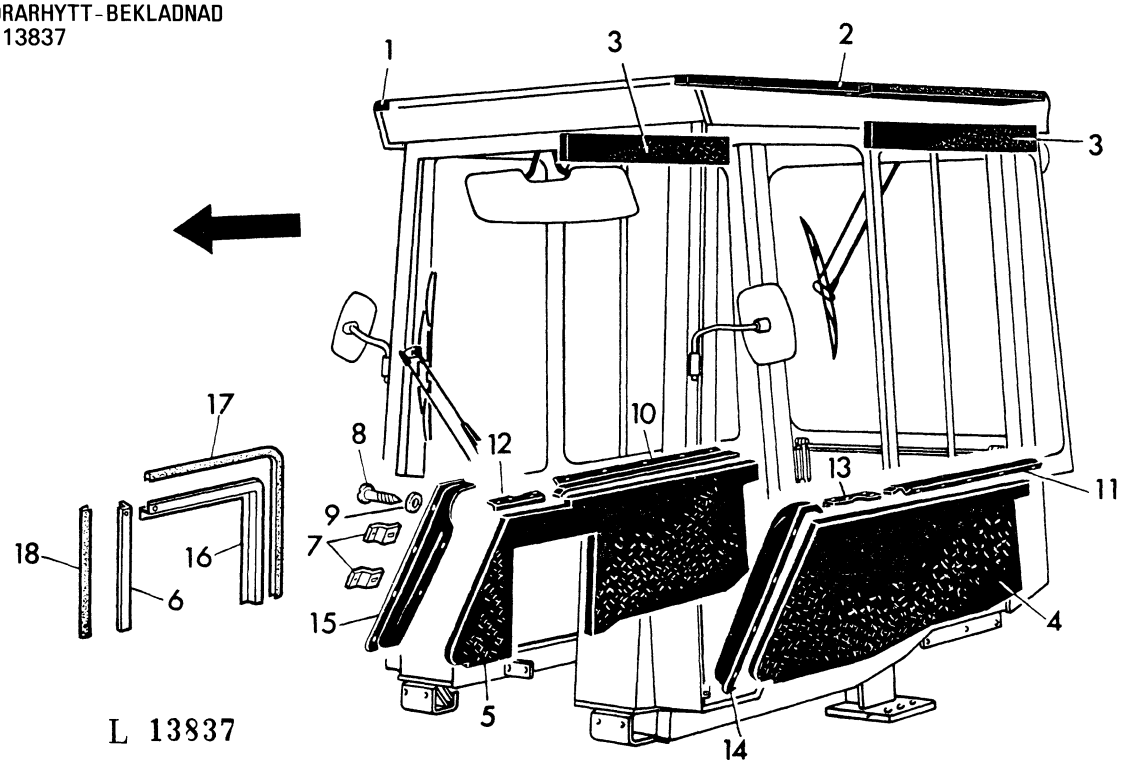

KEY	PART NO.	DESCRIPTION	QTY	SERIAL NO.	JD310	REMARKS
1	L 30670	BARRIER	1		X	L.H.
2	L 30671	BARRIER	1		X	R.H.
3	L 30681	BARRIER	1		X	
4	L 30679	BARRIER	1		X	L.H.
5	L 30680	BARRIER	1		X	R.H.
6	L 31372	BRACE	1		X	
7	L 31292	CLAMP	4		X	
8	37M 7036	SCREW	40		X	4,2X16MM
9	24M 7117	WASHER	40		X	4,3X9MM
10	L 31288	RETAINER	1		X	R.H. REAR
11	L 31289	RETAINER	1		X	L.H. REAR
12	L 31286	RETAINER	1		X	R.H. FRONT
13	L 31287	RETAINER	1		X	L.H. FRONT
14	L 31290	GUARD	1		X	L.H.
15	L 31291	GUARD	1		X	R.H.
16	AL 25941	RETAINER	1		X	
17	L 31375	WEATHERSTRIP	1		X	
18	L 31376	WEATHERSTRIP	1		X	

OPERATOR'S CAB - HEATER PARTS
CABINE DU CONDUCTEUR - ELEMENTS DU CHAUFFAGE
KABINE-HEIZUNGSTEILE
CABINA - PARTI DI RISCALDAMENTO
CABINA PARA EL CONDUCTOR - ELEMENTOS DE CALEFACCION
FORARHYTT-VARMARENS DETALJER
L 11381

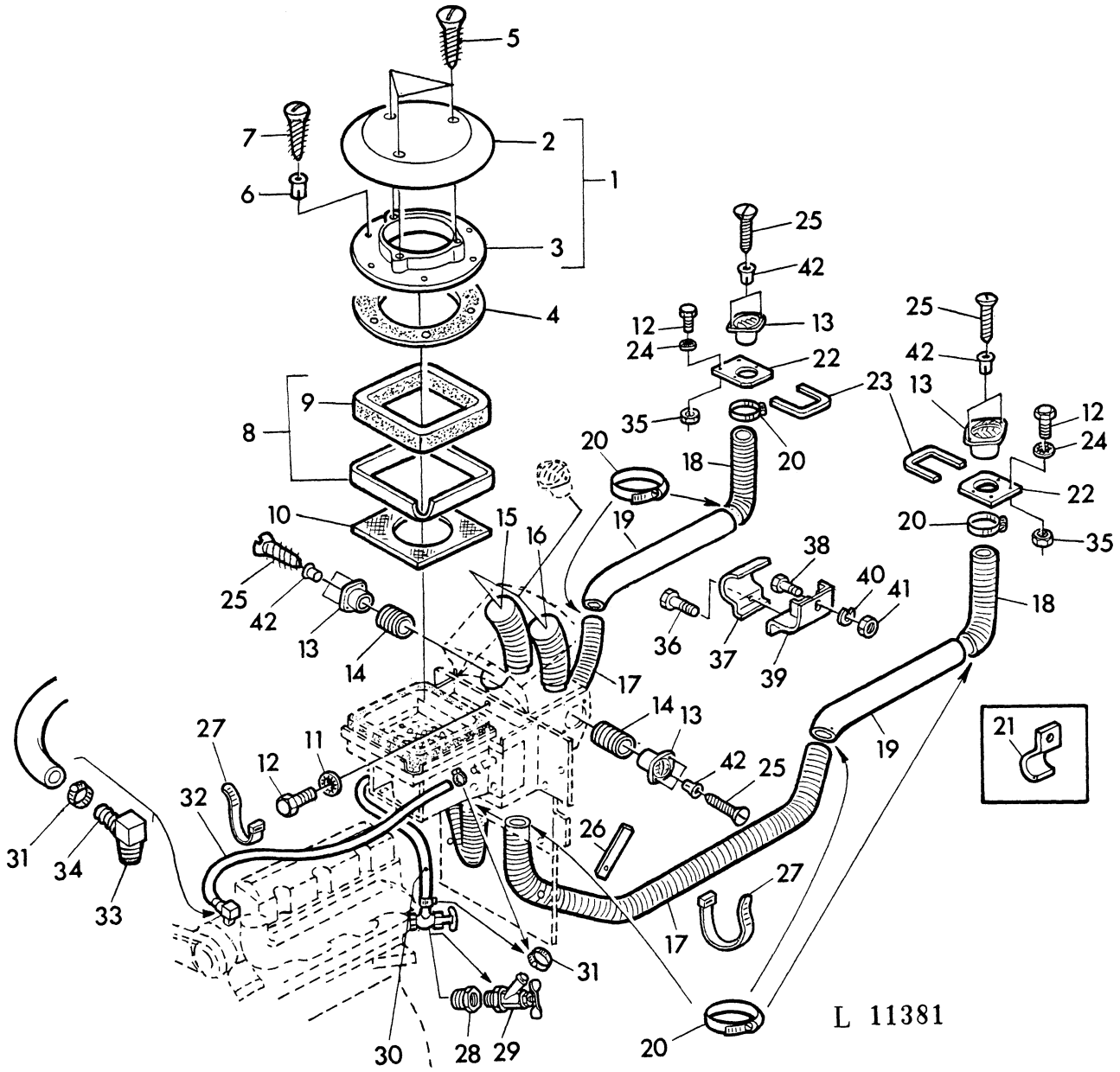

KEY	PART NO.	DESCRIPTION	QTY	SERIAL NO.	JD310	REMARKS
1	AL 25301	KIT	1		X	ASSY, INCL. KEYS 2, 3
2	L 30901	COVER	1		X	
3	L 30902	FLANGE	1		X	
4	L 30903	GASKET	1		X	
5	37M 7030	SCREW	3		X	4, 2X25MM
6	L 30287	NUT	6		X	
7	37M 6646	SCREW	6		X	4, 2X19MM
8	AL 25302	FRAME	1		X	
9	L 30904	FOAM PAD	1		X	LGTH=820MM(31.5")
10	L 30905	GASKET	1		X	
11	12M 7002	LOCK WASHER	2		X	6, 4MM
12	19M 7300	CAP SCREW	2		X	6X10MM
13	AL 24805	AIR DUCT	4		X	ORD W/37M7053(8)L32786(8)
14	L 30906	FOAM PAD	1		X	LGTH=80MM(3.15")
15	L 30907	HOSE	1		X	LGTH=200MM(7.9")
16	L 30908	HOSE	1		X	LGTH=220MM(8.8")
17	L 30909	HOSE	2		X	LGTH=1980MM(78")
18	L 30910	HOSE	2		X	LGTH=420MM(16.7")
19	L 31268	PIPE	2		X	SUB. FOR L30911
20	L 30912	CLAMP	8		X	
21	L 30913	CLAMP	4		X	ORD AL25939(2) L31369(2), 19H1732
22	L 30914	BRACKET	2		X	
23	L 30915	WEATHERSTRIP	2		X	
24	12M 7002	LOCK WASHER	4		X	6, 4MM
25	37M 7053	SCREW	8		X	2, 9X16MM
26	L 30916	STRAP	1		X	
27	L 30917	BAND	4		X	
28	T 37027	THREADED NIPPLE	1		X	
29	AT 35831	DRAIN VALVE	1		X	
30	L 30918	HOSE	1		X	LGTH=750MM(29.2")
31	L 30919	CLAMP	4		X	
32	L 30920	HOSE	1		X	LGTH=1250MM(49.25")
33	T 37041	FITTING	1		X	
34	H 23196	FITTING	1		X	
35	14M 7027	NUT	1		X	6MM
36	19M 7077	CAP SCREW	2		X	6X20MM
37	L 31369	CLAMP	2		X	
38	19H 1732	CAP SCREW	2		X	3/8"X1-1/4"
39	AL 25939	RETAINER	2		X	
40	12H 304	LOCK WASHER	2		X	3/8"
41	14H 812	NUT	2		X	3/8"
42	L 32786	NUT	8		X	

FRONT AND REAR CAB HEATING
CHAUFFAGE DE LA CABINE AVANT ET ARRIERE
VORDERE UND HINTERE KABINENHEIZUNG
RISCALDAMENTO CABINA ANTERIORE E POSTERIORE
CALEFACCION DE LA CABINA DELANTERA Y TRASERA
HYTTVARME-FRAM OCH BAK
L 13842

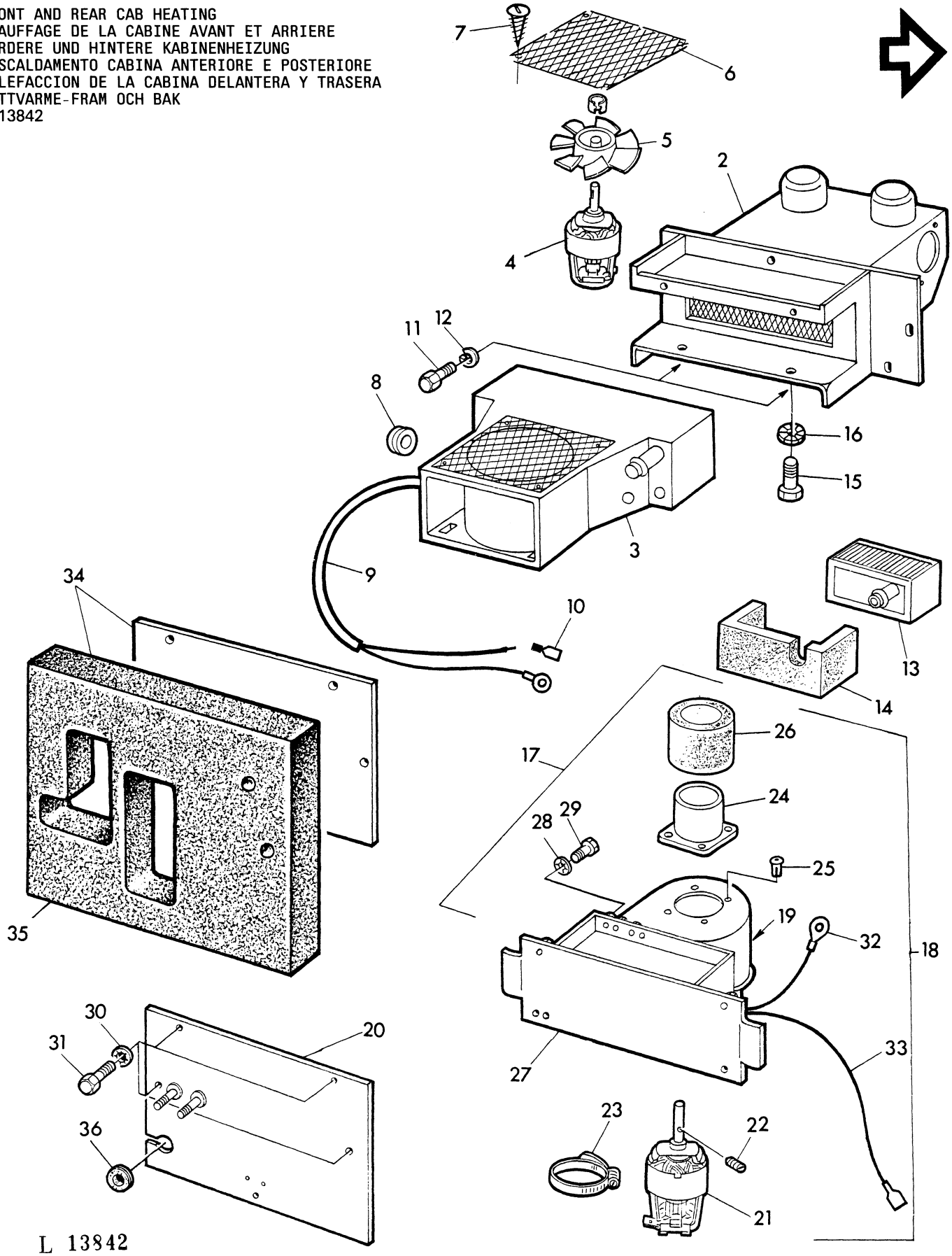

KEY	PART NO.	DESCRIPTION	QTY	SERIAL NO.	JD310	REMARKS
1	AL 25287	HEATER	1		X	ASSY, INCL. KEYS 2-14
2	AL 25288	HOUSING	1		X	
3	AL 25289	HOUSING	1		X	
4	AL 25290	MOTOR	1		X	12V
5	AL 25291	IMPELLER	1		X	
6	L 30893	SCREEN	1		X	
7	37M 6630	SCREW	6		X	
8	L 30894	GROMMET	1		X	
9	AL 25292	WIRING HARNESS	1		X	
10	L 30895	THREADED NIPPLE	1		X	
11	19H 1919	CAP SCREW	7		X	1/4"X5/8"
12	12H 302	LOCK WASHER	7		X	1/4"
13	AL 25293	HEAT EXCHANGER	2		X	
14	L 30896	FOAM PAD	2		X	
15	19M 7372	CAP SCREW	2		X	5X15MM
16	12M 3998	LOCK WASHER	2		X	5,3MM
17	AL 25294	BLOWER	1		X	ASSY,
18	AL 25295	BLOWER	1		X	ASSY, INCL. KEYS 19-33
19	AL 25296	HOUSING	1		X	ASSY, INCL. KEY 20
20	AL 25057	PLATE	1		X	
21	AL 23866	MOTOR	1		X	12V
22	L 30897	PIPE PLUG	1		X	
23	AL 25297	CLAMP	1		X	
24	L 30898	PIPE	1		X	
25	L 30899	RIVET	1		X	
26	L 30900	FOAM PAD	1		X	LGTH=50MM(1.95")
27	AL 25298	HOUSING	1		X	
28	12M 5029	LOCK WASHER	4		X	4,3MM
29	19M 7598	CAP SCREW	4		X	4X10MM
30	12M 7002	LOCK WASHER	4		X	6,4MM
31	19M 7300	CAP SCREW	4		X	6X10MM
32	AL 25299	WIRING LEAD	1		X	
33	AL 25300	WIRING LEAD	1		X	
34	AL 25251	PLATE	1		X	(A) W/L30844
35	L 30844	FOAM PAD	1		X	(A)
36	T 23247	GROMMET	1		X	

(A) FOR MACHINES WITH SOUNDPROOFING
POUR MACHINES AVEC ELEMENTS D'INSONORISATION
FUER MASCHINEN MIT SCHALLDAEMPFUNG
PER MACCHINE CON DISPOSITIVO SALVA SUONI
PARA MAQUINAS CON ELEMENTOS DE INSONORIZACION
FOR MASKINER MED LJUDABSORBENT

SEAT SUPPORT / SWIVEL
EMBASE ET PLAQUE TOURNANTE DU SIEGE
SITZTRAEGER / SCHWENKPLATTE
SUPPORTI SEDILE GIREVOLE
ARMADURA Y BALANCIN DEL ASIENTO
SVANGBART SITSFUNDAMENT
L 13816

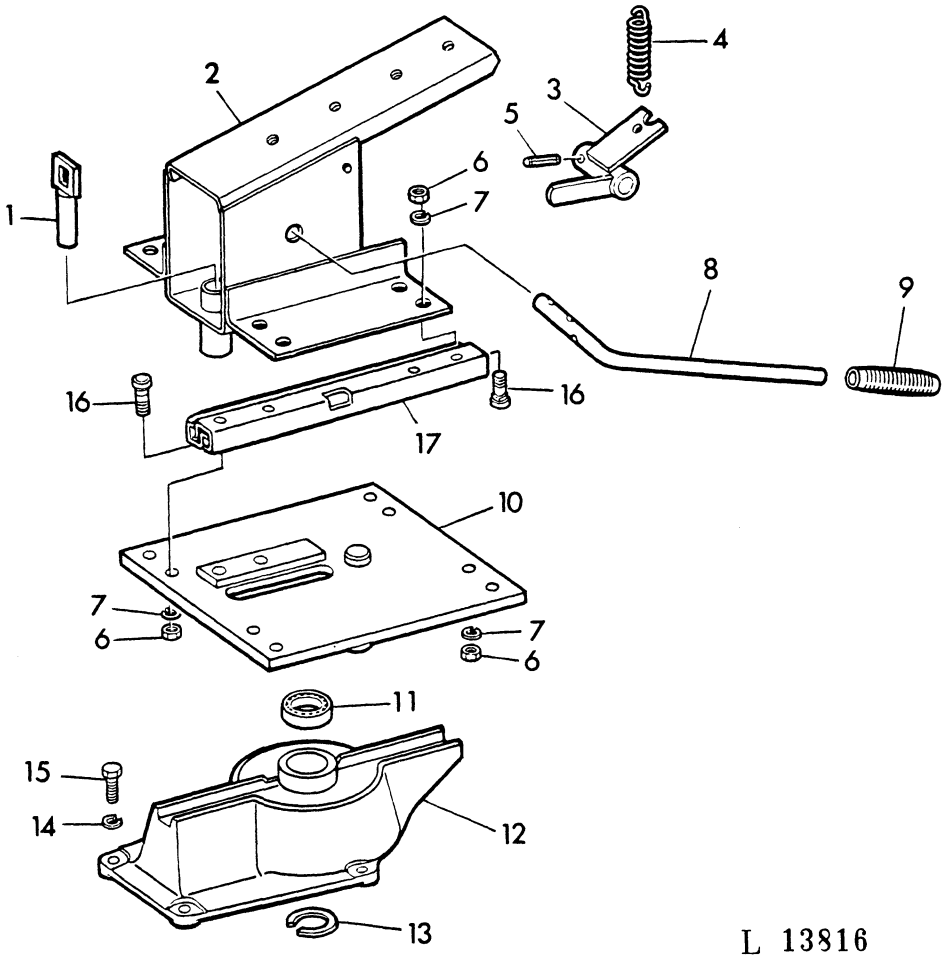

L 13816

KEY	PART NO.	DESCRIPTION	QTY	SERIAL NO.	JD310	REMARKS
1	AT 34458	PIN	1		X	
2	AL 24506	SUPPORT	1		X	ORD AT57456, AT57457
	AT 57457	SUPPORT	1		X	
3	AT 32963	LEVER	1		X	
4	T 15508	SPRING	1		X	
5	34H 298	SPRING PIN	1		X	7/32"X1-1/8"
6	14H 650	NUT	8		X	5/16"
7	12H 303	LOCK WASHER	8		X	5/16"
8	T 34409	ROD	1		X	
9	U 43703	GRIP	1		X	
10	AT 32962	PLATE	1		X	ORD AT57456, AT57457
	AT 57456	PLATE	1		X	
11	JD 8406	BEARING	1		X	
12	T 33868	SUPPORT	1		X	
13	T 14648	SNAP RING	1		X	
14	12H 304	LOCK WASHER	4		X	3/8"
15	19H 1732	CAP SCREW	4		X	3/8"X1-1/4"
16	T 38065	SCREW	8		X	
17	AT 36733	ADJUSTER	2		X	

DE LUXE SEAT
SIEGE DE LUXE
LUXUS-SITZ,
SEDILE DE LUXE
ASIENTO DE LUJO
DE LUXE SITZ
L 31452

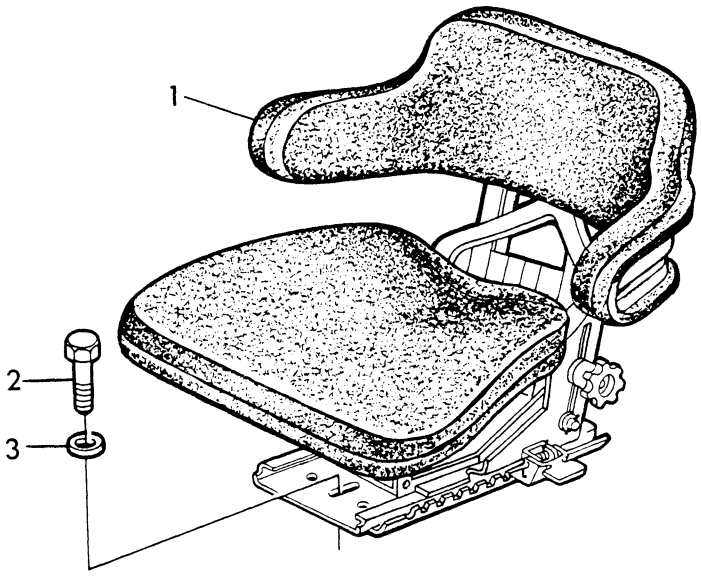

L 31452

KEY	PART NO.	DESCRIPTION	QTY	SERIAL NO.	JD310	REMARKS
1	AL 29613	SEAT	1		X	ASSY, SUB. FOR AT38314, AL26931
2	19H 1815	CAP SCREW	2		X	1/2"X1-1/4"
3	24H 1349	WASHER	2		X	9/16"X1-1/4"X. 134"

DE LUXE SEAT
SIEGE DE LUXE
LUXUS-SITZ
SEDILE DE LUXE
ASIENTO DE LUJO
DE LUXE SITZ
L 27208

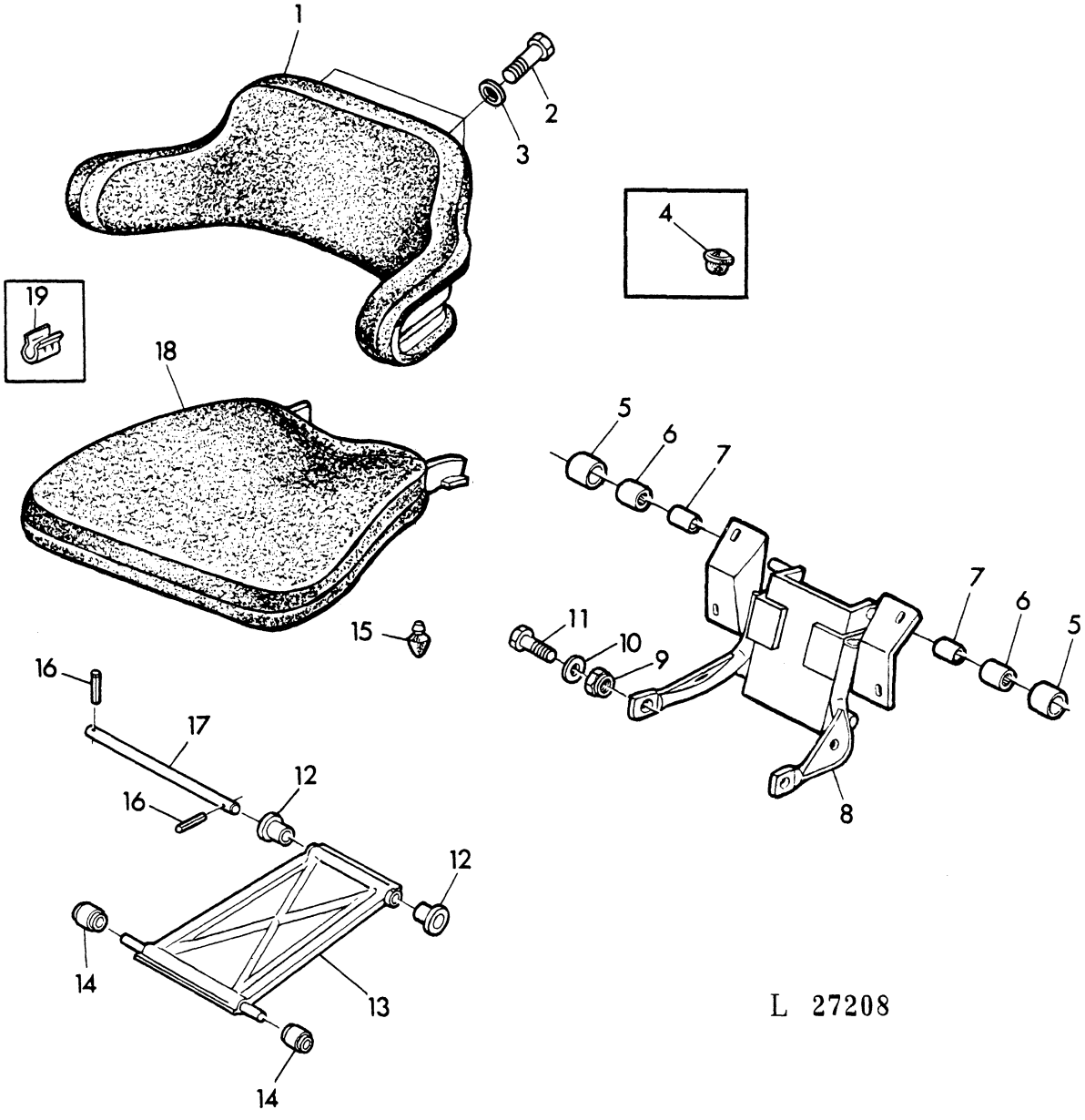

KEY	PART NO.	DESCRIPTION	QTY	SERIAL NO.	JD310	REMARKS
1	AL 30690	SEAT BACK	1		X	SUB. FOR AL19078, AL26923
2	19H 1813	CAP SCREW	4		X	5/16"X5/8"
3	24M 7055	WASHER	4		X	8, 4MM
4	L 25689	PLUG	2	-229006	X	
5	L 31738	ROLLER	2		X	
6	AL 26928	NEEDLE BEARING	2		X	
7	L 31739	ROLLER	2		X	
8	AL 26927	FRAME	1		X	FOR AL29613
	AL 24169	FRAME	1		X	FOR AL26931, SUB. FOR AL23891
9	T 27645	LOCK NUT	2		X	
10	24M 7047	WASHER	2		X	13X24X2, 5MM, SUB. FOR 24M7030
11	19H 2508	CAP SCREW	2		X	1/2"X1-3/8"
12	L 27167	BUSHING	2		X	
13	AL 24164	ARM	1		X	SUB. FOR AL19082
14	L 25686	ROLLER	2		X	
15	L 25678	BUMPER	1		X	
16	34M 3851	SPRING PIN	2		X	4X24MM
17	L 29209	SHAFT	1		X	
18	AL 26929	PAD	1		X	SUB. FOR AL23892
19	L 31728	CLAMP	16	-229006	X	
-	AL 29613	SEAT	1		X	ASSY, SUB. FOR AL26931

DE LUXE SEAT
SIEGE DE LUXE
LUXUS-SITZ
SEDILE DE LUXE
ASIENTO DE LUJO
DE LUXE SITZ
L 27209

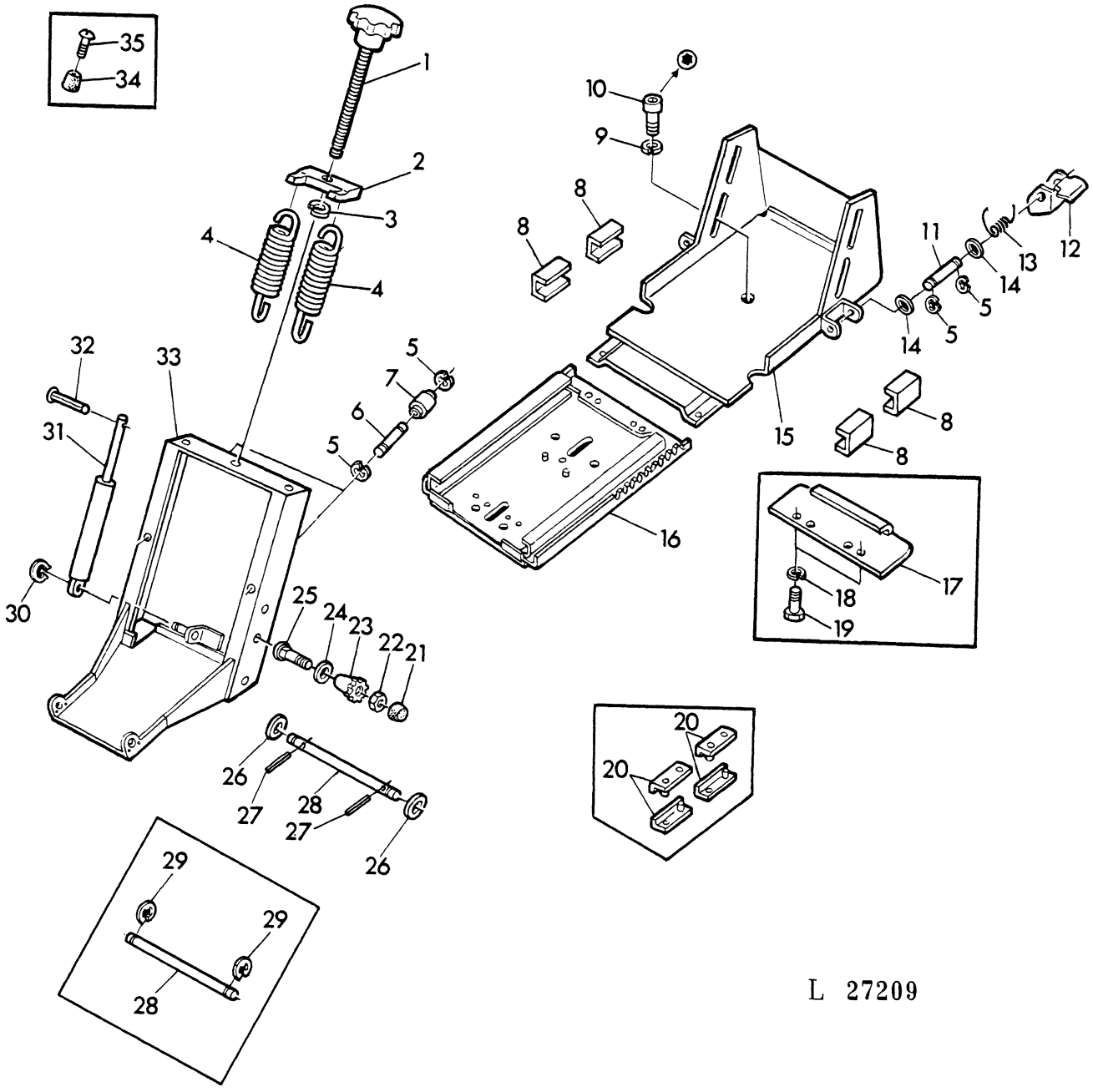

L 27209

KEY	PART NO.	DESCRIPTION	QTY	SERIAL NO.	JD310	REMARKS
1	AL 23886	ADJUSTER	1		X	
2	L 28077	SUPPORT	1		X	
3	40M 7042	SNAP RING	1		X	7MM
4	L 28076	SPRING	2		X	FOR AL26931
	L 35825	SPRING	2		X	FOR AL29613, SUB. FOR L31740
5	40M 7041	SNAP RING	6		X	5MM
6	L 31731	PIN	2		X	
7	AL 26918	ROLLER	2		X	
8	L 31729	RAIL	4		X	
9	12M 7066	LOCK WASHER	1	229007-	X	10MM, FOR AL26931
	12M 7013	LOCK WASHER	1		X	10MM, FOR AL29613
10	19M 7695	SCREW	1		X	10X20MM
11	L 29205	PIN	1		X	
12	L 29204	PAWL	1		X	
13	L 29206	SPRING	1		X	
14	24M 7055	WASHER	2		X	8, 4MM
15	AL 30691	FRAME	1		X	SUB. FOR AL23889, AL24167
16	AL 28248	PLATE	1		X	FOR AL29613
	AL 24166	PLATE	1	-229006	X	FOR AL26931, SUB. FOR AL23888
	AL 28248	PLATE	1	229007-	X	FOR AL26931
17	L 29353	STOP	1		X	SUB. FOR L29212
18	12H 303	LOCK WASHER	2		X	5/16"
19	19H 1813	CAP SCREW	AR		X	
20	L 29202	RAIL	8		X	
21	L 31727	CAP	2		X	
22	L 31730	LOCK NUT	2		X	
23	L 29211	HANDLE	2		X	
24	24M 7149	WASHER	2		X	
25	03M 7099	SCREW	2		X	10X45MM, SUB. FOR 03M7017
26	24M 7044	WASHER	2		X	13MM
27	34M 3851	SPRING PIN	2		X	4X24MM
28	L 29208	SHAFT	1		X	
29	40M 7030	SNAP RING	2		X	9MM
30	L 27166	SNAP RING	1		X	
31	AL 24165	ABSORBER	1		X	
32	16M 7061	RIVET	1		X	SUB. FOR L28081
33	AL 30692	HOUSING	1		X	SUB. FOR AL23890, AL24168
34	L 28078	BUMPER	2		X	
35	37M 7016	SCREW	2		X	4, 8X22MM
-	AL 29613	SEAT	1		X	ASSY, SUB. FOR AL26931

SAFETY BELT
CEINTURE DE SECURITE
SICHERHEITSGURT
CINTURE DI SICUREZZA
CINTURON DE SEGURIDAD
SOKERHETSBALTE
L 13815

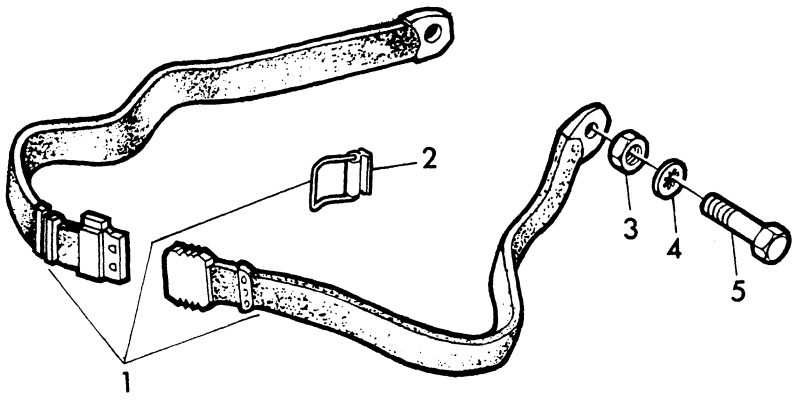

L 13815

KEY	PART NO.	DESCRIPTION	QTY	SERIAL NO.	JD310	REMARKS
1	AL 18581	SEAT BELT	1		X	ASSY, W/AL18584
2	AL 18584	BUCKLE	2		X	
3	14H 813	NUT	2		X	7/16"
4	12H 325	LOCK WASHER	2		X	7/16"
5	19H 1924	CAP SCREW	2		X	7/16"X3/4", SUB. FOR 19H2500

SECTIONAL INDEX
INDEX DE SECTION
GRUPPENINDEX
INDICE DELLA SEZIONE
INDICE DE SECCION
GRUPPSFORTECKNING
L 27560

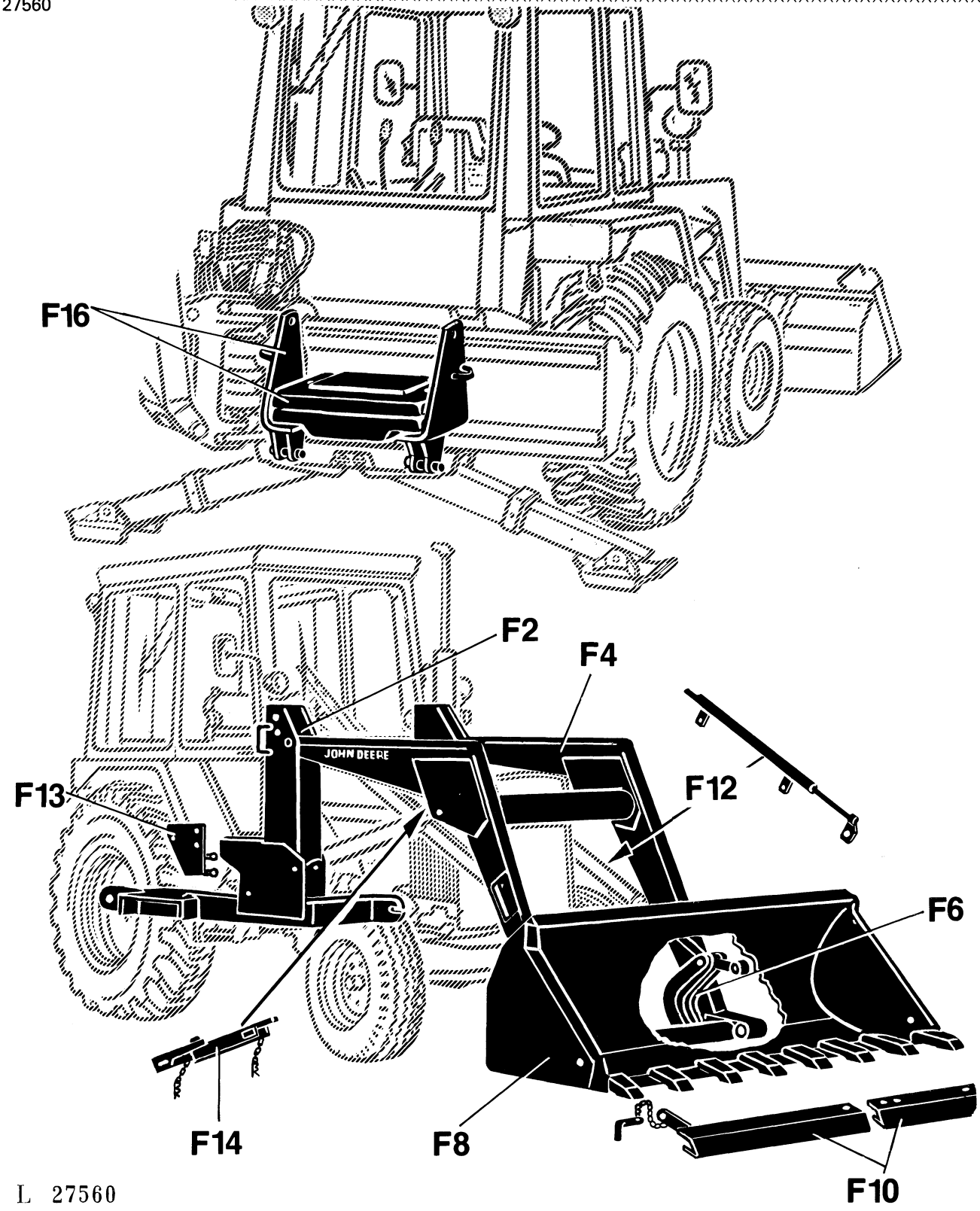

LOADER-SIDE FRAMES
CHARGEUR-BATIS LATERAUX
LADER-SEITENRAHMEN
CARICATORE-SUPPORTI LATERALI
CARGADOR-BASTIDORES LATERALES
LASTARE-SIDORAMAR
L 13841

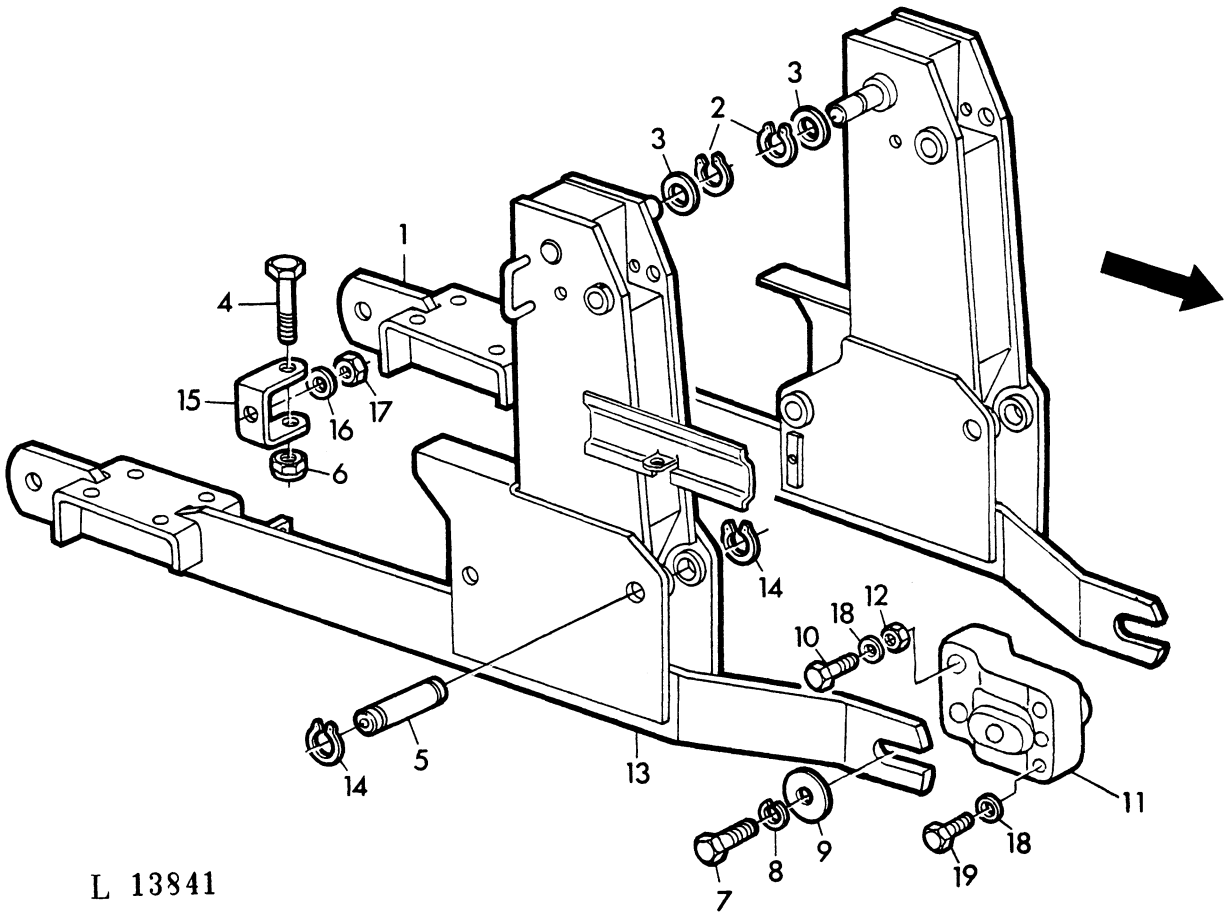

L 13841

KEY	PART NO.	DESCRIPTION	QTY	SERIAL NO.	JD310	REMARKS
1	AT 46564	FRAME	1		X	L.H. SUB.FOR AT32878
2	U 10457	SNAP RING	2		X	
3	T 42962	WASHER	2		X	SUB.FOR CDX8276
4	19H 2228	CAP SCREW	2		X	3/8"X4"
5	T 40636	PIN	2		X	
6	T 11234	LOCK NUT	2		X	
7	19H 1756	CAP SCREW	2		X	5/8"X1-1/2"
8	12H 294	LOCK WASHER	2		X	5/8"
9	U 12948	WASHER	2		X	
10	19H 2726	CAP SCREW	4		X	5/8"X4"
11	T 47441	SPACER	2		X	SUB.FOR CDX9276
12	14H 760	NUT	4		X	5/8"
13	AT 43376	FRAME	1		X	R.H.
14	U 16068	SNAP RING	4		X	
15	T 35138	RETAINER	2		X	
16	24H 1272	WASHER	2		X	9/16"X1-1/4"X.250"
17	14H 809	NUT	2		X	1/2"
18	T 19584	WASHER	6		X	
19	19H 2994	CAP SCREW	2		X	5/8"X1-1/2"

BOOM
BRAS DE LEVAGE
LADESCHWINGE
BRACCI
AGUILON
BOM
L 13843

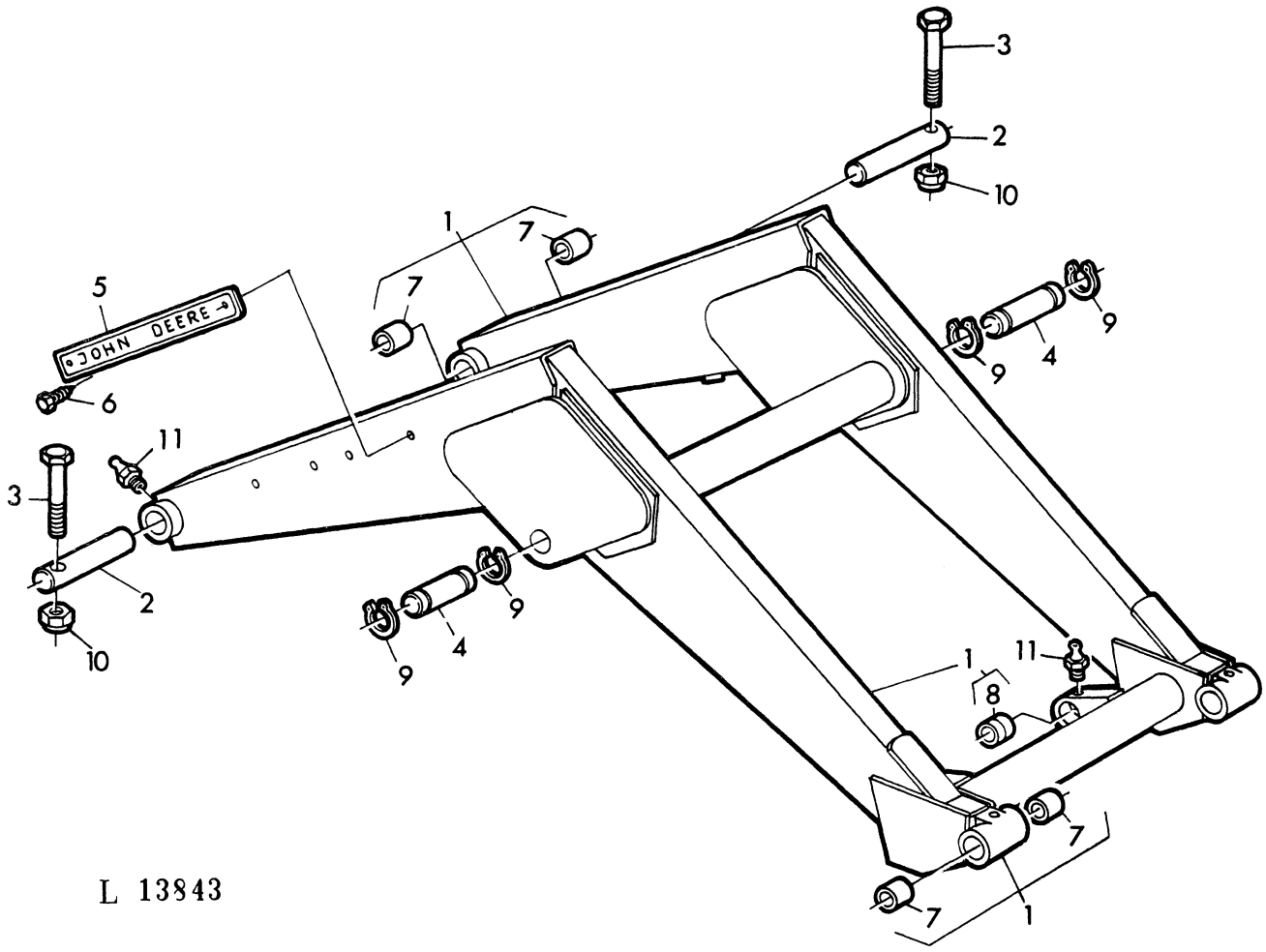

KEY	PART NO.	DESCRIPTION	QTY	SERIAL NO.	JD310	REMARKS
1	AT 45192	LOADER BOOM	1		X	ASSY, INCL. KEYS 7, 8, SUB. FOR DDX6978
2	T 31905	PIN	2		X	
3	19H 2228	CAP SCREW	2		X	3/8"X4"
4	T 40635	PIN	2		X	
5	T 42511	MEDALLION	2		X	SUB. FOR T33460
6	T 10671	CAP SCREW	6		X	
7	U 41604	BUSHING	8		X	
8	T 42958	BUSHING	2		X	
9	U 16068	SNAP RING	4		X	
10	T 11234	LOCK NUT	2		X	
11	JD 7798	LUBRICATION FITTING	4		X	1/8"

BUCKET - LINKAGE
BENNE - TRINGLERIE
LADESCHAUFEL - GESTAENGE
BENNA - LEVERAGGI
CUCHARON - VARILLAJE
SKOPA-LANKAGE
L 61136

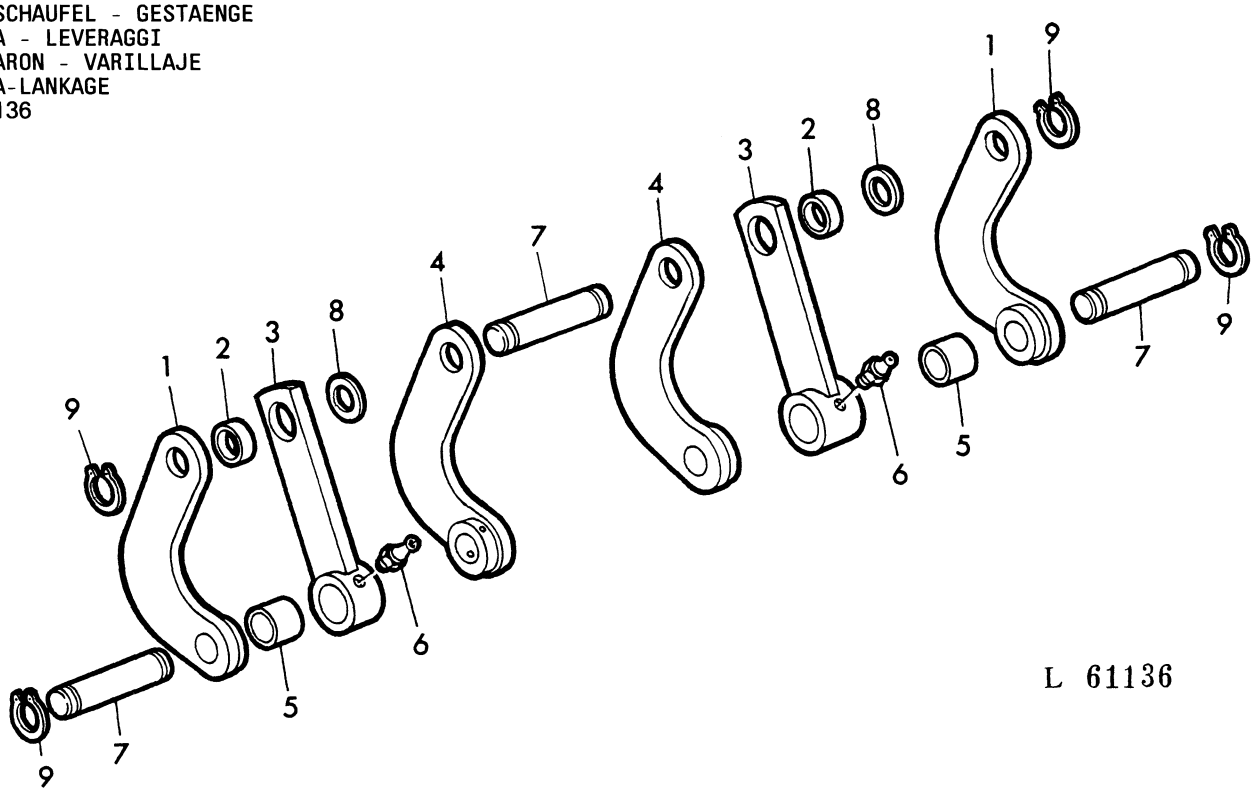

L 61136

KEY	PART NO.	DESCRIPTION	QTY	SERIAL NO.	JD3110	REMARKS
1	AT 37498	LEVER	2		X	
2	U 11121	BUSHING	2		X	
3	AT 32895	LEVER	2		X	
4	AT 37499	LEVER	2		X	
5	U 17031	BUSHING	2		X	
6	JD 7798	LUBRICATION FITTING	2		X	1/8"
7	T 38678	PIN	4		X	
8	24H 1542	WASHER	1		X	1-17/32"X3"X.312"
9	U 16068	SNAP RING	8		X	

BUCKET
BENNE
LADESCHAUFEL
BENNA
CUCHARON
SKOPA
L 13276

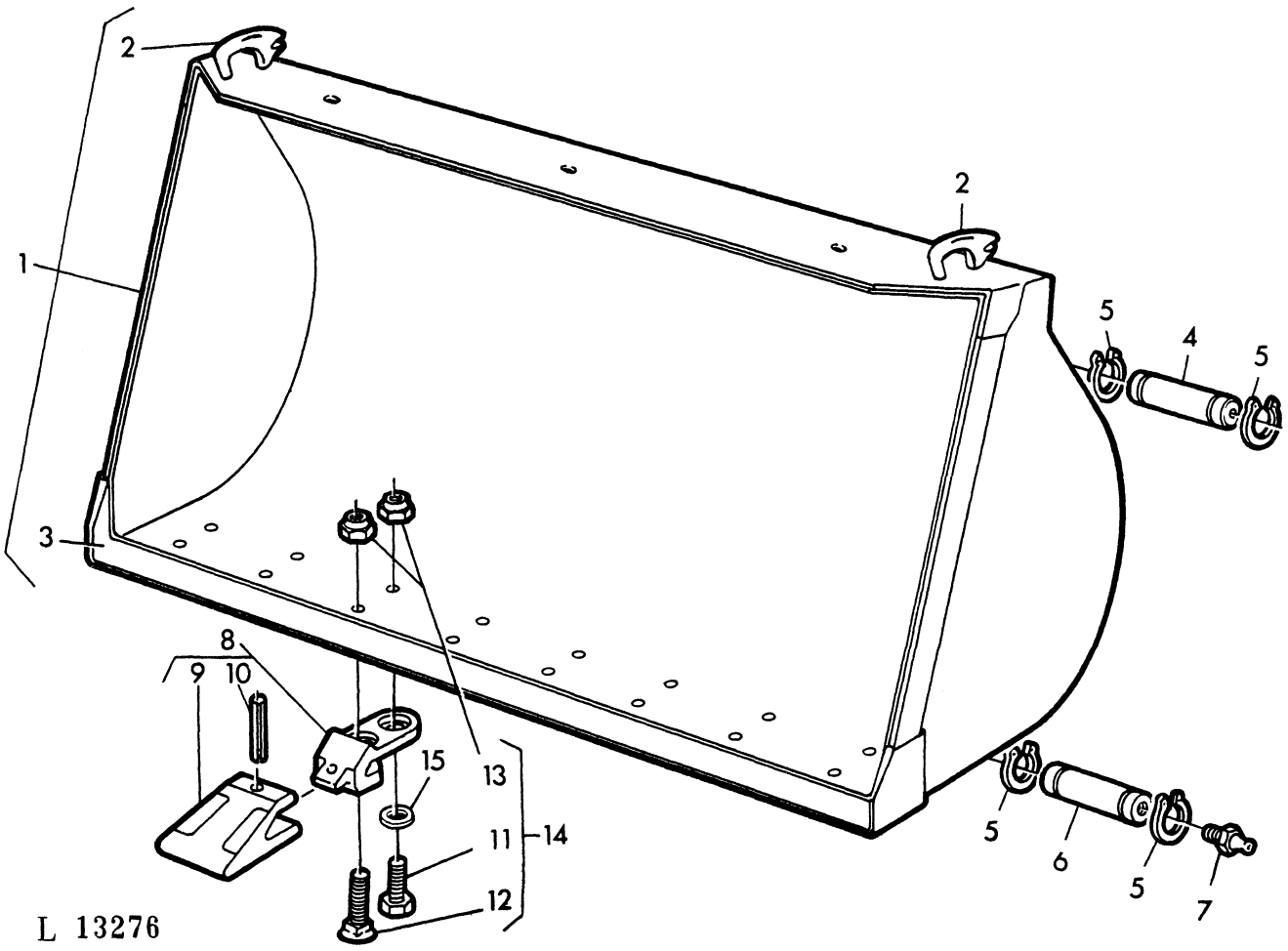

KEY	PART NO.	DESCRIPTION	QTY	SERIAL NO.	JD310	REMARKS
1	AT 44878	LOADER BUCKET	1		X	(A) INCL. KEYS 2, 3, 764L (1C. Y.) SUB. FOR DDX6170
	AT 44880	LOADER BUCKET	1		X	(A) INCL. KEYS 2, 3, 573L (3/4C. Y.) SUB. FOR DDX6145
2	U 11773	HOOK	2		X	
3	T 45091	CUTTING EDGE	1		X	SUB. FOR CDX8343
4	T 40638	PIN	2		X	
5	U 16068	SNAP RING	8		X	
6	T 40637	PIN	2		X	
7	JD 7759	LUBRICATION FITTING	2		X	
8	BU 40189	TOOTH	1		X	(A) INCL. KEYS 9, 10
9	U 13449	TOOTH	8		X	
10	25H 829	GROOVE PIN	8		X	
11	19H 2472	CAP SCREW	8		X	1/2"X1"
12	10H 1238	SCREW	8		X	1/2"X2-3/4"
13	U 14502	LOCK NUT	16		X	1/2"
14	DD 12360	KIT	1		X	(A) INCL. KEYS 11-13 SUB. FOR DDX6962
15	24H 1211	WASHER	8		X	9/16"X1-3/8"X7/64"

(A) ORDER SEPARATELY
A COMMANDER SEPAREMENT
GETRENNT BESTELLEN
ORDINARE SEPARATO
PEDIR POR SEPARADO
BESTALLES SEPARAT

BUCKET EDGE GUARD
PROTECTEUR DE LAME DE BENNE
SCHNEIDKANTENSCHUTZ DER SCHAUFEL
RIPARO LAMA BENNA
PROTECCION DEL BORDE DEL CUCHARON
SKOPSTALSSKYDD
L 11394

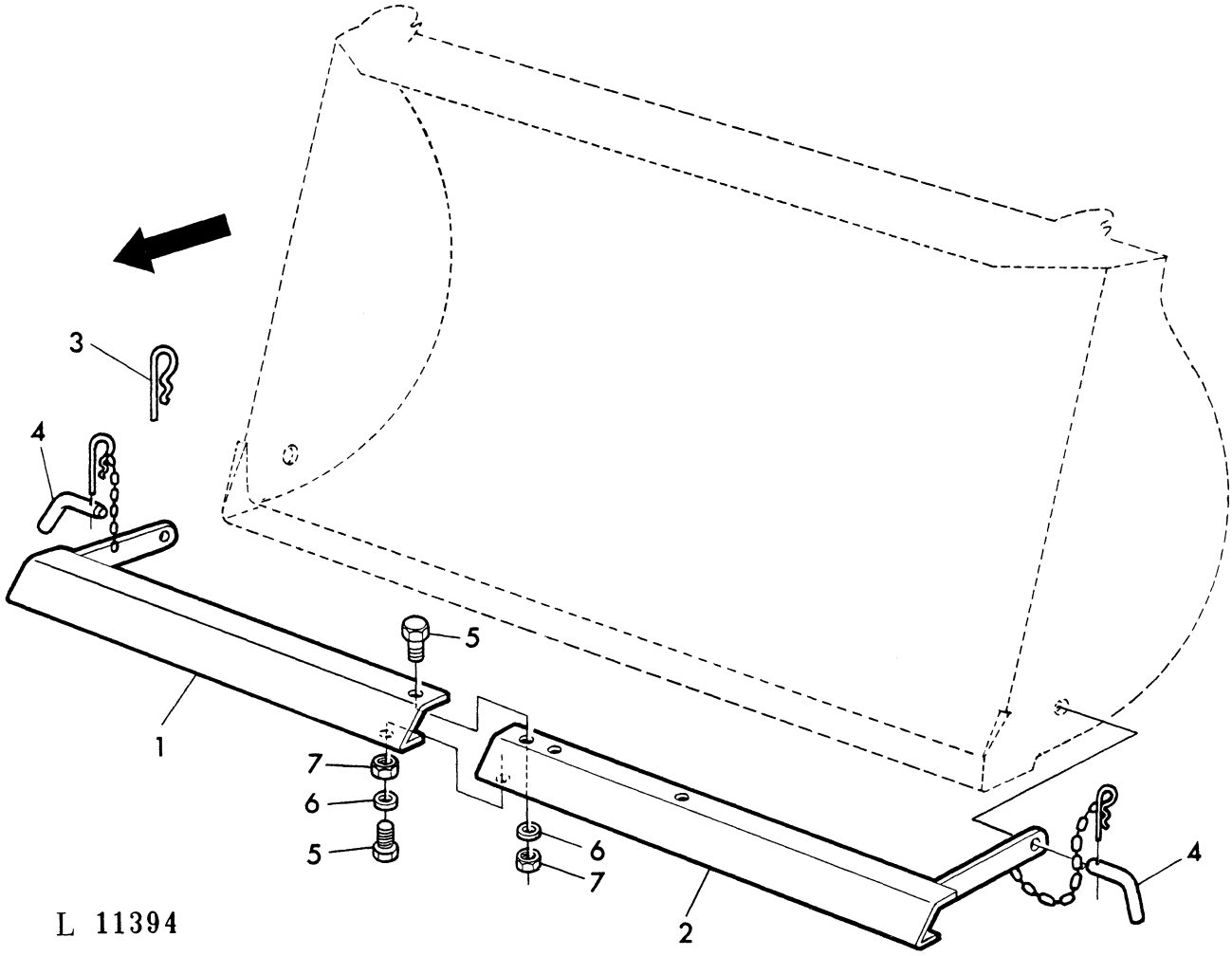

KEY	PART NO.	DESCRIPTION	QTY	SERIAL NO.	JD310	REMARKS
1	AL 25061	GUARD	1		X	R.H., ORD AL27379, AL27380
	AL 27380	GUARD	1		X	R.H.
2	AL 25062	GUARD	1		X	L.H., ORD AL27379, AL27380
	AL 27379	GUARD	1		X	L.H.
3	L 24810	CLIP	2		X	
4	L 24979	PIN	2		X	
5	19H 1900	CAP SCREW	2		X	5/16"X3/4"
6	24H 1136	WASHER	2		X	11/32"X11/16"X.060"
7	14H 785	NUT	2		X	5/16"

LOADER-BUCKET LEVEL INDICATOR
CHARGEUR - INDICATEUR DE POSITION DE LA BENNE
LADER-SCHAUFELSTELLUNGSANZEIGER
CARICATORE - INDICATORE DI POSIZIONE DELLA BENNA
CARGADOR - INDICADOR DEL NIVEL DEL CUCHARON
LASTARE-SKOPLAGESINDIKATOR
L 13833

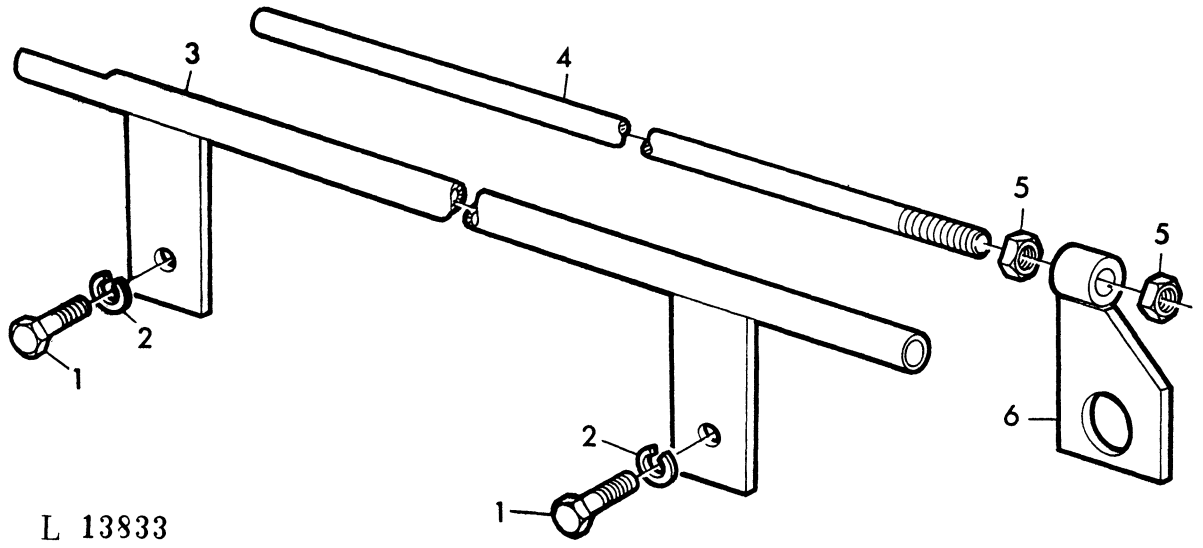

KEY	PART NO.	DESCRIPTION	QTY	SERIAL NO.	JD310	REMARKS
1	19H 2284	CAP SCREW	2		X	3/8"X7/8"
2	12H 304	LOCK WASHER	2		X	3/8"
3	AT 35472	GUIDE	1		X	
4	U 44449	ROD	1		X	
5	14H 813	NUT	2		X	7/16"
6	AT 32956	RETAINER	1		X	

LOADER-VALVE MOUNTING BRACKET
CHARGEUR-SUPPORT DU DISTRIBUTEUR DE COMMANDE
LADER-BEFESTIGUNGSWINKEL FUER STEUERGERAET
CARICATORE-SUPPORTO PER DISTRIBUTORE
CARGADOR-SOPORTE PARA LA VALVULA DE MANDO
LASTARE-STOD FOR MANOVERVENTIL
L 13846

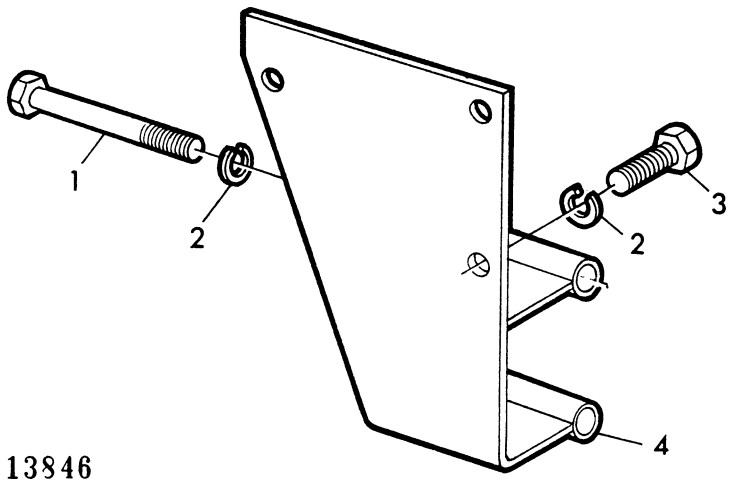

L 13846

KEY	PART NO.	DESCRIPTION	QTY	SERIAL NO.	JD3100	REMARKS
1	19H 2224	CAP SCREW	2		X	1/2"X4-3/4"
2	12H 301	LOCK WASHER	5		X	1/2"
3	19H 1741	CAP SCREW	3		X	1/2"X1-1/8"
4	AT 38160	BRACKET	1		X	

BOOM CYLINDER SAFETY DEVICE
DISPOSITIF DE SECURITE DU VERIN DES BRAS DE LEVAGE
SICHERHEITSVORRICHTUNGEN FUER ZYLINDER DER LADESCHWINGE
APPARECCHIATURA DI SICUREZZA PER IL CILINDRO DEI BRACCI
DISPOSITIVO DE SEGURIDAD DEL CILINDRO
SAKERHETSANORDNING FOR LASTARKRETSEN
L 13053

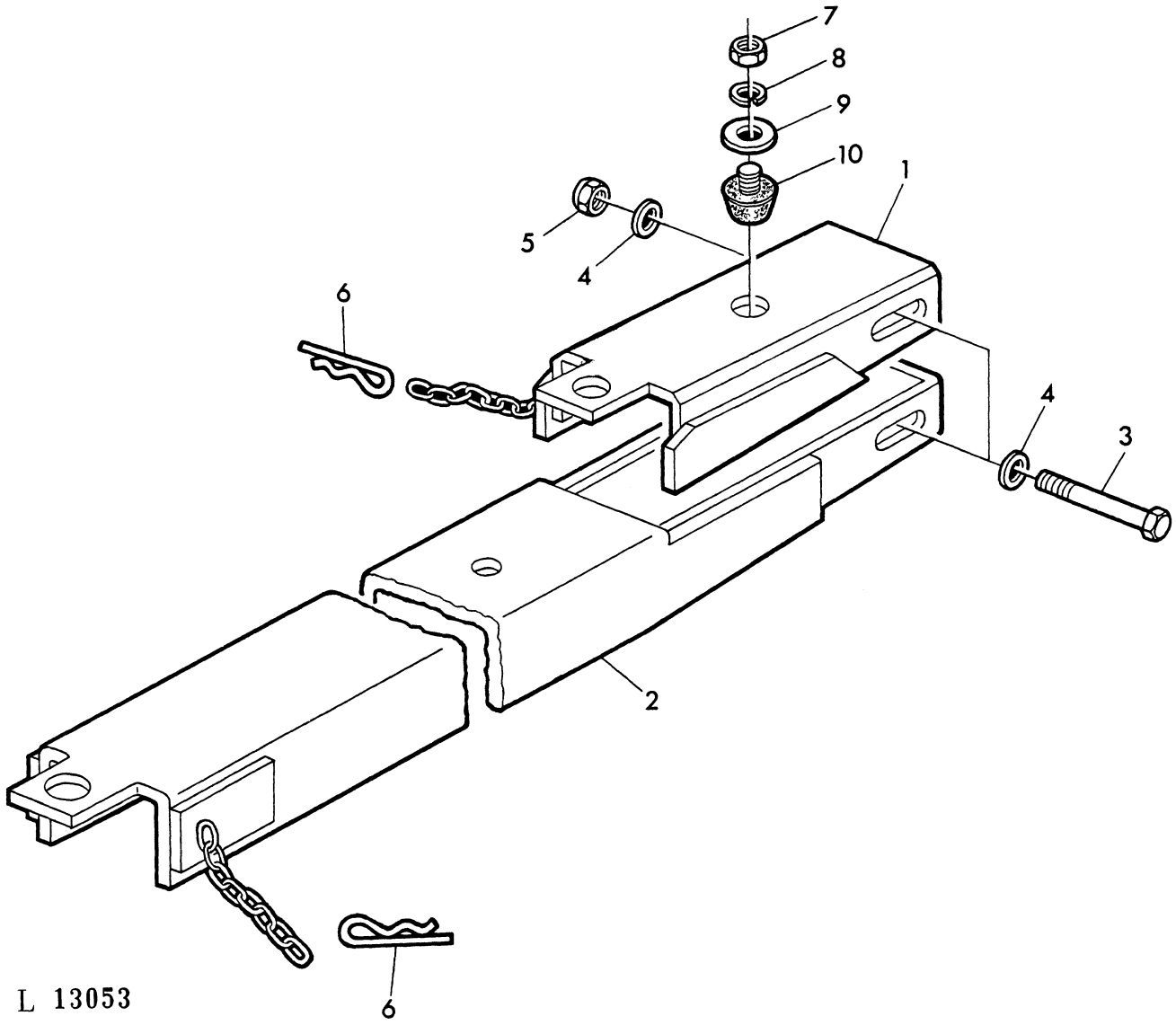

KEY	PART NO.	DESCRIPTION	QTY	SERIAL NO.	JD310	REMARKS
1	AT 52283	SUPPORT	1		X	ASSY, INCL. KEYS 7-10 SUB. FOR AT45819
2	AT 52286	SUPPORT	1		X	(A)
3	19H 2342	CAP SCREW	1		X	5/16"X4-1/2"
4	24H 1136	WASHER	4		X	11/32"X11/16"X. 060"
5	BP 12232	LOCK NUT	1		X	
6	L 24810	CLIP	1		X	
7	14M 7208	NUT	1		X	12MM
8	12M 6138	LOCK WASHER	1		X	12MM
9	24H 1272	WASHER	1		X	17/32"X1-1/4"X1/4"
10	DD 13804	BUMPER	1		X	

(A) FOR REPAIR WORK
POUR TRAVAIL DE REPARATIONS
BEI REPARATURARBEITEN
PER LAVORI DI RIPARAZIONI
PARA TRABAJO DE REPARACIONES
FOR REPARATION

REAR COUNTERWEIGHT INSTALLATION
POSE DE CONTREPOIDS A L'ARRIERE
GEGENGEWICHTSANBAU HINTEN
CONTRAPPESI POSTERIORE
INSTALACION DE CONTRAPESO TRASERA
MOVIKTSSATS FOR BAKRE
L 13849

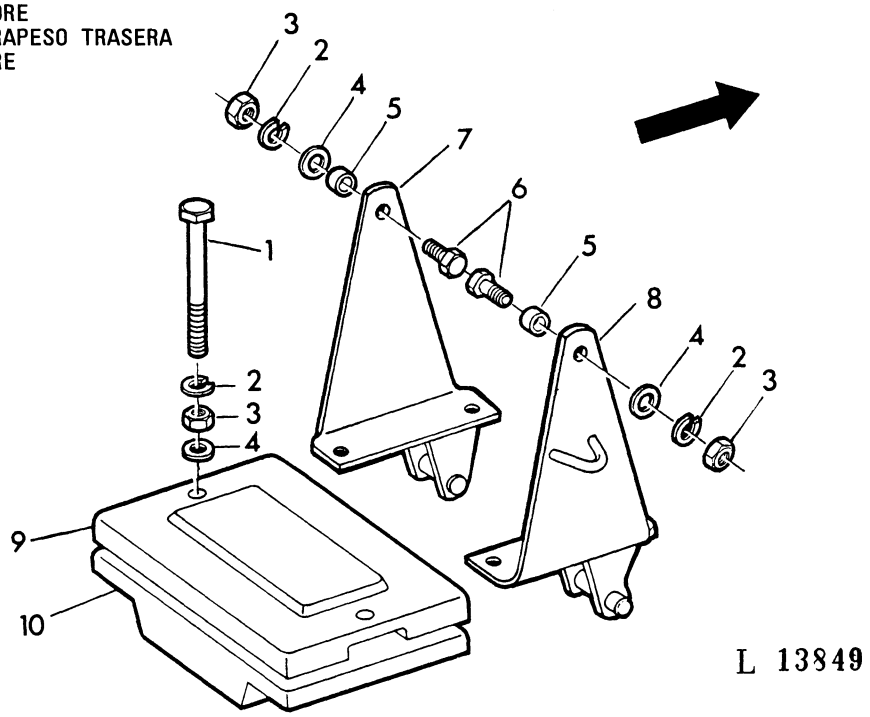

KEY	PART NO.	DESCRIPTION	QTY	SERIAL NO.	JD310	REMARKS
1	08H 4199	CAP SCREW	2		X	1"X10"
2	12H 234	LOCK WASHER	4		X	1"
3	14H 805	NUT	4		X	1"
4	24H 1138	WASHER	4		X	1-1/16"X2"
5	U 10807	SPACER	2		X	
6	19H 1874	CAP SCREW	2		X	1"X2-3/4"
7	AU 40659	BRACKET	1		X	L.H.
8	AU 40658	BRACKET	1		X	R.H.
9	8255CU	COUNTERWEIGHT	4		X	UP
10	U 20033	COUNTERWEIGHT	1		X	LOW

PART-NUMBER REFERENCE BESTELL-NR. NO PARTICOLARE NO DE LA PIEZA RESERVDELSNR.	GRID COORD. KOORD. COORD. COORD. RUTA	KEY REP. TEIL COD. REF. KOD	PAGE PAGE SEITE PAGINE PAGINA SIDA
400R	1H 10	19	60- 21
8255CU	2F 16	9	100- 16
32240	1I 24	5	70- 29
	1J 02	2	70- 31
	1J 05	2	70- 34
A			
A 120R	1A 09	39	20- 3
	1F 12	6	50- 25
A 364R	1F 20	24	50- 33
A 602R	1E 18	3	50- 7
	1H 12	17	60- 23
A 1555R	2A 19	5	80- 13
A 1556R	2A 19	7	80- 13
A 3606R	1J 06	8	70- 35
	1J 07	8	70- 36
A 3910R	1A 11	10	20- 5
A 3917R	1F 08	1	50- 21
	1G 03	9	50- 40
	1I 02	38	70- 7
	1J 18	19	70- 47
A 4231R	1I 08	23	70- 13
A 4728R	1I 10	14	70- 15
A 4730R	1A 23	6	20- 17
A 4742R	1F 10	20	50- 23
A 4808R	1F 12	33	50- 25
	1I 16	22	70- 21
A 4827R	1A 15	7	20- 9
	1F 12	19	50- 25
A 4847R	1E 14	18	50- 3
	1I 02	39	70- 7
	1J 18	20	70- 47
A 4879R	1A 09	32	20- 3
A 4881R	1B 22	19	30- 9
A 4883R	1F 02	8	50- 15
A 5146R	2A 19	10	80- 13
	2A 21	7	80- 15
AE			
AE 31723	1B 16	22	30- 3
AF			
AF 1934R	1E 16	10	50- 5
AF 3583R	1B 18	2	30- 5
AF 3584R	1B 18	4	30- 5
AL 2976T	1E 04	9	40- 33
AL 14007	1D 12	9	40- 17
AL 14235	1D 12	7	40- 17
AL 14797	1D 14	2	40- 19
AL 14896	1D 21	1	40- 26
AL 15005	1D 16	16	40- 21
AL 15006	1D 16	11	40- 21
AL 15007	1D 14	10	40- 19
	1D 16	2	40- 21
AL 17098	1E 04	25	40- 33
AL 17099	1E 04	13	40- 33
AL 17684	2D 24	12	90- 33
AL 17692	1D 14	1	40- 19
AL 18047	1B 20	12	30- 7
AL 18236	1B 20	13	30- 7
AL 18361	2C 24	23	90- 9
AL 18581	2E 19	1	90- 52
AL 18584	2E 19	2	90- 52
AL 18788	2A 13	2	80- 7
AL 18944	1D 14	6	40- 19
AL 19078	2E 16	1	90- 49
AL 19082	2E 16	13	90- 49
AL 19093	2C 10	1	80- 53
AL 19192	1D 04	8	40- 9
AL 19208	1C 24	16	40- 5
AL 19226	1C 22	19	40- 3
AL 19744	1B 18	6	30- 5
AL 19890	1D 12	4	40- 17
AL 19907	1D 10	4	40- 15
AL 23015	1D 10	11	40- 15
AL 23122	1F 24	5	50- 37
AL 23434	1C 22	21	40- 3
AL 23836	1H 10	4	60- 21
AL 23844	1D 04	2	40- 9
AL 23846	1D 04	14	40- 9
AL 23847	1D 04	13	40- 9
AL 23848	1D 04	30	40- 9
	1D 06	30	40- 11
AL 23850	1C 24	10	40- 5
AL 23851	1C 24	8	40- 5
AL 23852	1C 24	12	40- 5
AL 23853	1C 24	19	40- 5
AL 23854	1C 24	20	40- 5
AL 23855	1C 24	14	40- 5
AL 23856	1C 24	1	40- 5
AL 23857	1C 24	23	40- 5
AH			
AH 20849	1B 16	23	30- 3
AH 75164	1I 14	8	70- 19
AL			
AL 23866	2E 10	21	90- 43
AL 23886	2E 18	1	90- 51
AL 23888	2E 18	16	90- 51
AL 23889	2E 18	15	90- 51
AL 23890	2E 18	33	90- 51
AL 23891	2E 16	8	90- 49
AL 23892	2E 16	18	90- 49
AL 24042	1D 12	3	40- 17
AL 24044	2C 10	7	80- 53
AL 24059	1E 16	1	50- 5
AL 24066	1H 08	1	60- 19
AL 24067	1H 08	2	60- 19
AL 24164	2E 16	13	90- 49
AL 24165	2E 18	31	90- 51
AL 24166	2E 18	16	90- 51
AL 24167	2E 18	15	90- 51
AL 24168	2E 18	33	90- 51
AL 24169	2E 16	8	90- 49
AL 24194	1B 16	21	30- 3
AL 24195	2D 20	3	90- 29
AL 24196	2D 20	2	90- 29
AL 24238	1G 08	21	50- 45
AL 24258	2A 15	13	80- 9
AL 24294	1D 10	7	40- 15
AL 24487	1H 10	1	60- 21
AL 24488	1G 18	1	60- 5
AL 24492	2D 10	2	90- 19
AL 24496	1G 03	15	50- 40
AL 24497	1D 02	3	40- 7
AL 24498	1D 02	7	40- 7
AL 24499	1D 02	6	40- 7
AL 24504	1F 24	13	50- 37
AL 24505	1E 14	1	50- 3
AL 24506	2E 12	2	90- 45
AL 24508	2A 22	1	80- 16
AL 24509	1B 22	1	30- 9
AL 24519	1C 07	3	30- 18
AL 24524	1E 04	1	40- 33
AL 24525	1E 04	8	40- 33
AL 24526	1D 10	22	40- 15
AL 24527	1D 10	20	40- 15
AL 24528	1D 08	1	40- 13
AL 24529	1D 24	8	40- 29
AL 24532	1E 04	10	40- 33
AL 24533	1E 04	22	40- 33
AL 24534	1E 04	7	40- 33
AL 24535	1E 04	19	40- 33
AL 24537	1E 04	21	40- 33
AL 24540	1E 04	18	40- 33
	2D 20	11	90- 29
AL 24541	1D 10	8	40- 15
AL 24542	1D 10	9	40- 15
AL 24543	1D 10	14	40- 15
AL 24544	1D 24	14	40- 29
AL 24545	1D 24	14	40- 29

PART-NUMBER REFERENCE BESTELL-NR. NO PARTICOLARE NO DE LA PIEZA RESERVDELSNR.	GRID COORD. KOORD. COORD. COORD. RUTA	KEY REP. TEIL COD. REF. KOD	PAGE PAGE SEITE PAGINE PAGINA SIDA
AL 24546	1D 14	15	40- 19
	1D 16	5	40- 21
AL 24547	1D 24	4	40- 29
AL 24548	1D 24	4	40- 29
AL 24554	1E 14	9	50- 3
AL 24569	2D 10	7	90- 19
AL 24594	2C 24	24	90- 9
AL 24595	2C 24	24	90- 9
AL 24596	2D 02	5	90- 11
	2D 14	7	90- 23
AL 24598	2D 14	11	90- 23
AL 24605	2D 08	12	90- 17
AL 24606	2D 08	12	90- 17
AL 24607	2C 21	6	90- 6
AL 24609	2D 18	3	90- 27
AL 24610	2D 18	4	90- 27
	2D 20	4	90- 29
AL 24611	2D 18	2	90- 27
AL 24612	2D 18	1	90- 27
AL 24613	2C 24	1	90- 9
AL 24620	2C 21	1	90- 6
AL 24623	2D 08	3	90- 17
AL 24624	2D 08	3	90- 17
AL 24625	2D 14	21	90- 23
AL 24630	2D 05	7	90- 14
AL 24631	2D 04	15	90- 13
AL 24632	2D 04	13	90- 13
AL 24633	2D 04	20	90- 13
AL 24634	2D 04	20	90- 13
AL 24638	2D 14	20	90- 23
AL 24639	2D 04	1	90- 13
AL 24640	2D 04	1	90- 13
AL 24641	2D 14	1	90- 23
AL 24642	2D 02	1	90- 11
AL 24643	2D 05	1	90- 14
AL 24644	2D 05	1	90- 14
AL 24645	2D 04	10	90- 13
AL 24651	2C 24	1	90- 9
AL 24652	2D 08	1	90- 17
AL 24653	2D 08	2	90- 17
AL 24678	2A 09	1	80- 3
AL 24788	1E 04	23	40- 33
AL 24789	1E 04	26	40- 33
AL 24798	2C 18	8	90- 3
AL 24801	2D 02	17	90- 11
AL 24805	2E 02	4	90- 35
	2E 08	13	90- 41
AL 24807	2E 02	5	90- 35
AL 24810	2B 02	23	80- 21
AL 24811	2C 18	8	90- 3
AL 24854	1B 22	3	30- 9
AL 25009	1B 20	5	30- 7
AL 25019	2A 13	2	80- 7
AL 25022	1F 12	1	50- 25
AL 25040	1B 22	18	30- 9
AL 25043	2C 24	23	90- 9
AL 25050	2C 24	21	90- 9
AL 25051	2D 18	5	90- 27
	2D 20	5	90- 29
AL 25052	2D 20	1	90- 29
AL 25054	2D 10	14	90- 19
AL 25057	2E 10	20	90- 43
AL 25058	2E 02	8	90- 35
AL 25059	2D 17	1	90- 26
AL 25060	2D 17	1	90- 26
AL 25061	2F 11	1	100- 11
AL 25062	2F 11	2	100- 11
AL 25064	1D 12	1	40- 17
AL 25065	1E 04	4	40- 33
AL 25066	2B 02	11	80- 21
AL 25074	2E 04	14	90- 37
AL 25075	2E 04	13	90- 37
AL 25076	2D 18	8	90- 27
	2D 20	13	90- 29
	2D 24	14	90- 33
AL 25078	2D 24	13	90- 33
AL 25079	2D 24	1	90- 33
AL 25080	2D 24	7	90- 33
AL 25081	2D 24	11	90- 33
AL 25082	2D 24	15	90- 33
AL 25196	1E 04	3	40- 33
AL 25212	2E 02	8	90- 35
AL 25251	2E 10	34	90- 43
AL 25266	1D 06	2	40- 11
AL 25267	1D 06	6	40- 11
AL 25268	1D 06	8	40- 11
AL 25269	1D 06	13	40- 11
AL 25270	1D 06	14	40- 11
AL 25271	1D 06	16	40- 11
AL 25272	1D 06	24	40- 11
AL 25273	1D 06	25	40- 11
AL 25274	1D 06	29	40- 11
AL 25275	1D 06	32	40- 11
AL 25282	2B 16	8	80- 35
	2B 18	15	80- 37
AL 25287	2E 10	1	90- 43
AL 25288	2E 10	2	90- 43
AL 25289	2E 10	3	90- 43
AL 25290	2E 10	4	90- 43
AL 25291	2E 10	5	90- 43
AL 25292	2E 10	9	90- 43
AL 25293	2E 10	13	90- 43
AL 25294	2E 10	17	90- 43
AL 25295	2E 10	18	90- 43
AL 25296	2E 10	19	90- 43
AL 25297	2E 10	23	90- 43
AL 25298	2E 10	27	90- 43
AL 25299	2E 10	32	90- 43
AL 25300	2E 10	33	90- 43
AL 25301	2E 08	1	90- 41
AL 25302	2E 08	8	90- 41
AL 25352	1H 24	19	70- 5
AL 25381	2B 20	19	80- 39
	2B 24	34	80- 43
AL 25382	2B 20	18	80- 39
	2B 24	35	80- 43
AL 25391	2D 04	22	90- 13
AL 25549	1E 04	23	40- 33
AL 25550	1E 04	26	40- 33
AL 25551	1D 10	10	40- 15
AL 25588	2A 23	3	80- 17
AL 25598	1F 20	12	50- 33
AL 25633	1E 02	17	40- 31
AL 25634	1D 14	15	40- 19
	1D 16	5	40- 21
	1D 18	9	40- 23
AL 25635	1E 02	6	40- 31
AL 25636	2C 24	21	90- 9
AL 25705	1B 20	5	30- 7
AL 25765	1D 14	9	40- 19
	1D 14	8	40- 19
	1D 14	6	40- 19
	1D 14	5	40- 19
	1D 14	4	40- 19
	1D 14	3	40- 19
	1D 14	2	40- 19
	1D 14	1	40- 19
	1D 16	1	40- 21
	1D 18	1	40- 23
AL 25784	2D 20	14	90- 29
AL 25785	2D 22	7	90- 31
AL 25786	2D 22	6	90- 31
AL 25787	2D 22	5	90- 31
AL 25788	2D 22	3	90- 31
AL 25789	2D 22	1	90- 31
AL 25790	2D 18	9	90- 27
AL 25855	1G 16	18	60- 3
AL 25883	1F 24	14	50- 37
AL 25913	2C 08	7	80- 51
AL 25914	2C 08	6	80- 51
AL 25922	2A 23	9	80- 17
AL 25939	2E 08	39	90- 41
AL 25941	2E 05	16	90- 38
AL 25969	1H 10	1	60- 21
AL 26311	1G 16	25	60- 3
	1G 16	26	60- 3
AL 26312	1G 16	25	60- 3
	1G 16	26	60- 3
	1G 16	25	60- 3
AL 26879	2A 15	27	80- 9
AL 26880	2A 15	28	80- 9
AL 26918	2E 18	7	90- 51
AL 26923	2E 16	1	90- 49
AL 26927	2E 16	8	90- 49
AL 26928	2E 16	6	90- 49

PART-NUMBER REFERENCE BESTELL-NR. NO PARTICOLARE NO DE LA PIEZA RESERVDELSNR.	GRID COORD. KOORD. COORD. COORD. RUTA	KEY REP. TEIL COD. REF. KOD	PAGE PAGE SEITE PAGINE PAGINA SIDA
AL 26929	2E 16	18	90- 49
AL 26931	2E 13	1	90- 46
	2E 16	-	90- 49
	2E 18	16	90- 51
	2E 18	-	90- 51
AL 26974	2E 02	8	90- 35
AL 27007	1D 24	17	40- 29
AL 27008	1D 24	17	40- 29
AL 27009	1D 24	5	40- 29
AL 27010	1D 24	5	40- 29
AL 27154	2D 05	4	90- 14
AL 27156	1B 16	1	30- 3
AL 27159	1B 16	24	30- 3
AL 27234	2C 24	32	90- 9
AL 27235	2C 24	32	90- 9
AL 27236	2A 09	1	80- 3
AL 27274	1F 12	1	50- 25
AL 27371	1C 24	7	40- 5
AL 27372	1C 24	19	40- 5
AL 27373	1C 24	20	40- 5
AL 27374	1C 24	14	40- 5
AL 27379	2F 11	2	100- 11
AL 27380	2F 11	1	100- 11
AL 27423	1D 02	16	40- 7
AL 27426	2B 10	17	80- 29
AL 27427	2B 10	17	80- 29
AL 27428	2B 08	1	80- 27
	2B 12	1	80- 31
AL 27429	2B 08	1	80- 27
	2B 12	1	80- 31
AL 27430	2B 08	22	80- 27
	2B 12	30	80- 31
AL 27431	2B 08	22	80- 27
	2B 12	30	80- 31
AL 27432	2B 08	25	80- 27
	2B 12	27	80- 31
AL 27435	2B 08	28	80- 27
AL 27448	1I 04	5	70- 9
AL 27452	2B 10	14	80- 29
AL 27454	2B 10	14	80- 29
AL 27456	2B 04	24	80- 23
AL 27459	2B 08	9	80- 27
AL 27461	2B 08	9	80- 27
AL 27504	1I 05	14	70- 10
AL 27809	1D 21	11	40- 26
AL 27843	1F 24	14	50- 37
AL 27853	1D 20	-	40- 25
AL 27854	2D 10	2	90- 19
AL 27855	1D 10	16	40- 15
AL 27856	1D 10	18	40- 15
AL 27857	1E 04	23	40- 33
AL 27858	1D 20	1	40- 25
AL 27860	1D 20	4	40- 25
AL 27997	1I 10	22	70- 15
AL 27998	1I 14	14	70- 19
AL 28040	1I 14	7	70- 19
AL 28180	2A 22	1	80- 16
AL 28226	2A 22	1	80- 16
AL 28231	1G 03	1	50- 40
AL 28232	1G 03	15	50- 40
AL 28248	2E 18	16	90- 51
AL 28250	1G 22	6	60- 9
AL 28251	1G 24	32	60- 11
AL 28252	1H 04	10	60- 15
	1H 06	1	60- 17
AL 28253	1H 06	16	60- 17
AL 28254	1H 04	15	60- 15
AL 28255	1H 04	6	60- 15
AL 28256	1I 14	1	70- 19
AL 28258	1H 06	15	60- 17
AL 28261	1H 04	1	60- 15
AL 28268	1G 24	-	60- 11
AL 28269	2D 11	1	90- 20
AL 28270	1D 24	19	40- 29
AL 28271	1G 24	2	60- 11
AL 28272	1G 24	16	60- 11
AL 28278	1I 04	1	70- 9
AL 28281	1G 24	29	60- 11
AL 28282	1G 24	-	60- 11
AL 28327	2B 12	19	80- 31
AL 28329	2B 12	19	80- 31
AL 28457	1G 16	6	60- 3
	1G 22	5	60- 9
AL 29000	1H 06	19	60- 17
AL 29613	2E 13	1	90- 46
	2E 16	-	90- 49
	2E 18	-	90- 51
AL 29654	1H 06	20	60- 17
AL 29655	1G 22	6	60- 9
AL 29682	1D 18	8	40- 23
AL 29683	1D 16	1	40- 21
	1D 18	1	40- 23
AL 30088	1D 18	7	40- 23
AL 30089	1D 18	6	40- 23
AL 30392	1D 24	18	40- 29
	1D 24	21	40- 29
AL 30393	1G 22	6	60- 9
AL 30665	2D 11	1	90- 20
AL 30690	2E 16	1	90- 49
AL 30691	2E 18	15	90- 51
AL 30692	2E 18	33	90- 51
AL 30781	2C 24	23	90- 9
AL 30843	1C 07	3	30- 18
AL 30946	1G 18	2	60- 5
AL 31535	1D 10	17	40- 15
AL 31886	2B 10	17	80- 29
AL 31889	2B 10	17	80- 29
AL 31917	1D 02	16	40- 7
AL 31992	1B 02	6	20- 21
	1B 02	15	20- 21
AL 31992	1I 08	6	70- 13
	1I 16	24	70- 21
AL 32620	1F 14	1	50- 27
AL 32891	1D 10	16	40- 15
AL 32975	1B 16	21	30- 3
AL 33246	1F 24	14	50- 37
AL 33248	1F 24	5	50- 37
AL 33250	1F 24	12	50- 37
AL 33251	1F 24	14	50- 37
AL 33256	1F 24	14	50- 37
AL 33278	1F 24	5	50- 37
AL 33279	1F 24	14	50- 37
AL 33346	1F 24	14	50- 37
AL 33454	1D 10	16	40- 15
AL 33538	1F 24	14	50- 37
AL 33997	1F 24	14	50- 37
AL 34331	2A 09	1	80- 3
AM 531T	1E 04	24	40- 33
AN 70540	1G 18	25	60- 5
AN 85149	1J 02	18	70- 31
	1J 04	10	70- 33
AR 21059	1D 19	2	40- 24
AR 21837	1A 25	1	20- 19
	1B 04	4	20- 23
AR 21839	1I 16	24	70- 21
	1J 10	15	70- 39
	1J 16	6	70- 45
AR 21841	1B 18	11	30- 5
AR 21842	1J 10	3	70- 39
	1J 14	1	70- 43
AR 21999	1B 16	9	30- 3
AR 26480	2A 19	17	80- 13
	2A 21	15	80- 15
AR 26646	1I 02	28	70- 7
AR 26722	1G 18	33	60- 5
AR 26725	1H 04	3	60- 15
	1H 06	13	60- 17
	1H 24	8	70- 5
AR 26746	1F 05	6	50- 18
	1H 10	24	60- 21
	1H 24	33	70- 5
AR 27814	1C 14	16	30- 25
	2C 08	5	80- 51

PART-NUMBER REFERENCE BESTELL-NR. NO PARTICOLARE NO DE LA PIEZA RESERVDELSNR.	GRID COORD. KOORD. COORD. COORD. RUTA	KEY REP. TEIL COD. REF. KOD	PAGE PAGE SEITE PAGINE PAGINA SIDA
AR 27940	1C 14	8	30- 25
AR 27977	1A 19	9	20- 13
AR 28072	1G 02	2	50- 39
AR 32665	1I 12	19	70- 17
	1I 14	18	70- 19
AR 38398	1B 20	25	30- 7
AR 39040	1F 04	25	50- 17
AR 39043	1F 04	4	50- 17
AR 39064	1F 04	27	50- 17
AR 39074	1F 10	18	50- 23
AR 39077	1E 22	1	50- 11
AR 39096	1F 04	29	50- 17
AR 39099	1F 10	30	50- 23
AR 39138	1F 04	35	50- 17
AR 39180	1F 06	5	50- 19
AR 39182	1F 06	2	50- 19
AR 39183	1F 10	2	50- 23
AR 41691	1B 06	6	20- 25
AR 41785	2C 08	4	80- 51
AR 45530	1A 11	7	20- 5
AR 46054	1I 10	25	70- 15
AR 47580	1H 24	4	70- 5
AR 48499	1B 02	6	20- 21
AR 49427	1H 20	4	70- 1
AR 50040	1B 24	16	30- 11
AR 50041	1B 24	13	30- 11
AR 51745	1I 02	10	70- 7
AR 52224	1H 24	28	70- 5
	1J 18	12	70- 47
AR 52254	1I 02	30	70- 7
AR 52472	1H 24	48	70- 5
AR 52494	1I 02	12	70- 7
AR 52495	1I 02	42	70- 7
AR 52706	1F 20	22	50- 33
AR 52785	1H 24	4	70- 5
	1H 24	20	70- 5
AR 53301	1H 24	3	70- 5
AR 55186	1H 24	14	70- 5
AR 55978	1A 21	6	20- 15
AR 55980	1A 21	8	20- 15
AR 56160	1H 24	48	70- 5
AR 56290	1C 04	7	30- 15
AR 58196	1A 15	1	20- 9
AR 60559	1C 02	6	30- 13
AR 60701	1A 23	7	20- 17
AR 62194	1C 06	12	30- 17
AR 62401	1C 22	1	40- 3
	1C 24	-	40- 5
AR 62978	1A 23	9	20- 17
AR 62979	1A 23	13	20- 17
	1A 23	12	20- 17
AR 63103	1C 12	17	30- 23
AR 63104	1C 12	20	30- 23
AR 63653	1B 24	9	30- 11
AR 64415	1A 25	11	20- 19
AR 65260	1B 06	1	20- 25
AR 65440	1C 12	18	30- 23
AR 65507	1A 09	11	20- 3
	1B 08	19	20- 27
AR 67002	1C 06	9	30- 17
AR 67003	1C 06	10	30- 17
AR 67004	1C 06	11	30- 17
AR 67091	1B 24	6	30- 11
AR 67092	1C 06	6	30- 17
AR 67718	1J 18	-	70- 47
AR 67942	1A 07	1	20- 1
	1A 17	14	20- 11
	1B 08	-	20- 27
AR 67961	1A 09	1	20- 3
AR 67976	1A 19	5	20- 13
AR 68318	1A 09	11	20- 3
	1B 08	19	20- 27
AR 70436	1D 06	1	40- 11
AR 70583	1A 11	9	20- 5
AR 71990	1B 08	-	20- 27
AR 71996	1B 08	-	20- 27
AR 72875	1C 06	6	30- 17
AR 72881	1C 06	2	30- 17
	1C 06	6	30- 17
AR 73673	1C 04	7	30- 15
AR 74131	2A 17	24	80- 11
AR 74132	2A 17	28	80- 11
AR 76102	1C 06	3	30- 17
AR 76762	1H 24	14	70- 5
AR 79622	1A 13	1	20- 7
AR 79710	1I 08	4	70- 13
AR 79868	1A 21	8	20- 15
AR 80105	1B 06	11	20- 25
AR 80332	1C 06	9	30- 17
AR 82294	1A 09	33	20- 3
AR 82295	1A 09	37	20- 3
AR 84228	1B 16	22	30- 3
AR 85323	1F 14	10	50- 27
AR 85710	1C 06	24	30- 17
AR 87738	1A 21	1	20- 15
AR 88236	1C 04	7	30- 15
AR 88239	1C 04	7	30- 15
AR 89563	1C 04	7	30- 15
AR 89691	1F 14	10	50- 27
AR 90378	1I 02	42	70- 7
	1I 02	41	70- 7
AR 91660	1A 17	4	20- 11
AR 91772	1C 06	6	30- 17
AR 92893	1A 07	1	20- 1
	1A 19	15	20- 13
	1B 08	-	20- 27
AT 10611	1B 20	11	30- 7
AT 10638	1C 02	7	30- 13
AT 13740	1A 09	8	20- 3
	1B 02	24	20- 21
	1B 22	15	30- 9
AT 14264	2C 08	1	80- 51
AT 14771	1D 19	4	40- 24
AT 14927	2C 08	8	80- 51
AT 16887	1G 08	15	50- 45
AT 17464	1E 16	7	50- 5
AT 18009	1A 17	4	20- 11
AT 18016	1A 11	5	20- 5
AT 18031	1A 17	8	20- 11
AT 18055	1A 13	1	20- 7
AT 18074	1B 04	1	20- 23
AT 18815	1D 19	1	40- 24
AT 18995	1D 19	4	40- 24
AT 19509	1A 15	1	20- 9
AT 19833	1H 12	33	60- 23
AT 19858	1G 16	9	60- 3
AT 19966	1F 18	12	50- 31
AT 20027	2B 02	6	80- 21
	2B 04	23	80- 23
	2B 06	15	80- 25
AT 20055	1E 16	8	50- 5
AT 20703	1G 08	2	50- 45
AT 20728	1B 16	2	30- 3
AT 20784	1F 24	14	50- 37
AT 20786	1F 24	5	50- 37
AT 20802	1F 24	14	50- 37
AT 21108	1A 17	19	20- 11
AT 21110	1A 17	19	20- 11
AT 21112	1A 17	19	20- 11
AT 21114	1A 17	19	20- 11
AT 21122	1A 21	4	20- 15
AT 21124	1A 21	4	20- 15
AT 21126	1A 21	4	20- 15
AT 21128	1A 21	4	20- 15
AT 21130	1A 17	18	20- 11
AT 21132	1A 17	18	20- 11
AT 21134	1A 17	18	20- 11
AT 21136	1A 17	18	20- 11
AT 21138	1A 21	4	20- 15
AT 21139	1A 17	18	20- 11
AT 21140	1A 17	19	20- 11
AT 21191	1A 09	26	20- 3
AT 21226	1A 09	33	20- 3
AT 21227	1A 09	37	20- 3
AT 21534	1A 09	15	20- 3
AT 21535	1A 09	15	20- 3
	1A 09	16	20- 3
	1A 09	15	20- 3
AT 21608	1A 17	14	20- 11
AT 21622	1G 06	1	50- 43
AT 22002	1G 03	13	50- 40

PART-NUMBER REFERENCE BESTELL-NR. NO PARTICOLARE NO DE LA PIEZA RESERVDELSNR.	GRID COORD. KOORD. COORD. RUTA	KEY REP. TEIL COD. REF. KOD	PAGE PAGE SEITE PAGINE PAGINA SIDA
AT 22034	1H 07	1	60- 18
AT 22064	1E 16	2	50- 5
AT 22071	2C 10	6	80- 53
AT 22335	1F 08	11	50- 21
AT 22359	1G 03	1	50- 40
AT 22919	1A 09	26	20- 3
AT 22961	1B 04	7	20- 23
AT 22963	1B 04	7	20- 23
AT 22965	1A 19	15	20- 13
AT 23401	1D 04	1	40- 9
AT 24013	1B 04	7	20- 23
AT 24183	1G 06	1	50- 43
AT 24252	1A 17	23	20- 11
AT 24254	1A 23	17	20- 17
AT 24437	1B 16	4	30- 3
AT 24438	1B 16	3	30- 3
AT 24540	1D 12	8	40- 17
AT 24549	1D 20	2	40- 25
AT 24652	1H 10	34	60- 21
AT 24691	1D 10	5	40- 15
AT 24692	1D 10	3	40- 15
AT 24693	1D 10	1	40- 15
AT 25226	2A 22	2	80- 16
AT 25242	1J 12	9	70- 41
AT 25266	1C 14	2	30- 25
AT 25345	1I 08	4	70- 13
AT 25490	1G 16	26	60- 3
AT 25851	1J 05	6	70- 34
AT 25910	1D 04	32	40- 9
AT 25914	1D 04	25	40- 9
AT 26136	1C 12	22	30- 23
AT 26137	1C 12	21	30- 23
AT 26140	1C 12	8	30- 23
	1C 12	13	30- 23
AT 26171	1I 16	15	70- 21
AT 26172	1I 16	21	70- 21
AT 26340	2C 08	1	80- 51
AT 27078	1I 16	11	70- 21
AT 27565	1C 12	-	30- 23
AT 27614	1C 06	28	30- 17
AT 27622	1C 04	1	30- 15
	1C 04	3	30- 15
	1C 04	10	30- 15
AT 27717	1E 16	21	50- 5
AT 27917	1C 06	24	30- 17
AT 28055	1G 16	25	60- 3
AT 28064	1B 02	9	20- 21
AT 29054	1B 02	33	20- 21
AT 29387	1F 24	12	50- 37
AT 29464	1C 06	13	30- 17
AT 29531	1H 10	25	60- 21
AT 29662	1I 22	-	70- 27
AT 29928	1A 09	25	20- 3
AT 29938	1I 22	6	70- 27
	1J 02	-	70- 31
AT 29939	1I 22	7	70- 27
	1J 04	4	70- 33
	1J 04	20	70- 33
	1J 04	-	70- 33
AT 29940	1J 02	30	70- 31
	1J 04	27	70- 33
AT 29941	1I 24	-	70- 29
	1J 02	-	70- 31
	1J 04	-	70- 33
AT 29942	1I 22	-	70- 27
AT 29943	1I 22	-	70- 27
AT 30053	1F 18	12	50- 31
AT 30691	1A 19	10	20- 13
AT 31093	1A 25	13	20- 19
AT 31250	1A 13	11	20- 7
AT 31413	1C 22	16	40- 3
AT 31444	2A 13	1	80- 7
AT 31619	1B 22	5	30- 9
AT 32064	1B 22	-	30- 9
	1C 04	12	30- 15
	1C 04	-	30- 15
	1C 06	1	30- 17
	1C 06	-	30- 17
	1C 12	3	30- 23
	1C 12	1	30- 23
	1C 12	-	30- 23
AT 32146	1J 12	5	70- 41
AT 32336	1H 24	32	70- 5
AT 32489	1B 06	-	20- 25
AT 32527	1B 02	27	20- 21
AT 32581	1G 04	3	50- 41
AT 32712	1E 20	1	50- 9
AT 32713	1E 20	8	50- 9
AT 32723	1H 10	27	60- 21
AT 32724	1F 05	5	50- 18
AT 32738	1F 24	13	50- 37
AT 32747	2D 11	1	90- 20
AT 32895	2F 06	3	100- 6
AT 32915	1D 08	2	40- 13
AT 32956	2F 12	6	100- 12
AT 32962	2E 12	10	90- 45
AT 32963	2E 12	3	90- 45
AT 32968	2A 25	12	80- 19
AT 32985	2C 18	14	90- 3
AT 32986	2C 20	7	90- 5
AT 33025	1J 16	4	70- 45
AT 33031	1J 10	12	70- 39
	1J 12	6	70- 41
AT 33032	1J 12	7	70- 41
AT 33033	1J 16	9	70- 45
AT 33045	1J 12	3	70- 41
AT 33046	1J 12	4	70- 41
AT 33062	2B 24	25	80- 43
AT 33064	2B 24	22	80- 43
AT 33242	1C 08	10	30- 19
AT 33243	1C 08	20	30- 19
	1C 10	18	30- 21
AT 33245	1C 10	13	30- 21
AT 33481	1J 07	3	70- 36
AT 33507	2C 20	5	90- 5
AT 33508	2C 20	26	90- 5
AT 33516	2C 20	20	90- 5
AT 33517	2C 20	22	90- 5
AT 33887	1B 02	1	20- 21
AT 33911	1H 24	35	70- 5
AT 33916	1I 16	29	70- 21
AT 33917	1I 08	2	70- 13
AT 33918	1I 08	1	70- 13
AT 33920	1I 14	15	70- 19
AT 33921	1I 08	20	70- 13
AT 33922	1I 05	4	70- 10
	1I 12	6	70- 17
	1I 14	4	70- 19
AT 33923	1I 08	21	70- 13
AT 34203	1J 12	10	70- 41
AT 34204	1J 10	11	70- 39
AT 34205	1J 10	10	70- 39
AT 34206	1J 10	6	70- 39
AT 34291	1F 14	5	50- 27
AT 34433	1E 04	11	40- 33
AT 34437	1E 02	6	40- 31
AT 34458	2E 12	1	90- 45
AT 34670	1I 16	9	70- 21
AT 34754	1B 06	20	20- 25
AT 34862	1C 10	1	30- 21
AT 34952	1I 14	3	70- 19
AT 34953	1I 08	17	70- 13
AT 34954	1I 08	19	70- 13
AT 35002	1J 07	-	70- 36
	1J 12	8	70- 41
AT 35139	1B 22	16	30- 9
AT 35236	2B 02	9	80- 21
AT 35472	2F 12	3	100- 12
AT 35753	1J 07	19	70- 36
AT 35831	2E 08	29	90- 41
AT 35929	1J 07	-	70- 36
AT 36733	2E 12	17	90- 45
AT 36808	1I 22	9	70- 27
	1I 24	4	70- 29
	1I 24	18	70- 29
	1I 24	-	70- 29
AT 36829	1J 06	-	70- 35
AT 37037	2A 19	3	80- 13
	2A 21	3	80- 15
AT 37169	1I 02	2	70- 7
AT 37206	1G 18	10	60- 5
AT 37333	1H 10	26	60- 21
AT 37498	2F 06	1	100- 6
AT 37499	2F 06	4	100- 6
AT 37770	2B 20	10	80- 39

PART-NUMBER REFERENCE BESTELL-NR. NO PARTICOLARE NO DE LA PIEZA RESERVDELSNR.	GRID COORD. KOORD. COORD. COORD. RUTA	KEY REP. TEIL COD. REF. KOD	PAGE PAGE SEITE PAGINE PAGINA SIDA
AT 37770	2B 24	38	80- 43
AT 37772	2B 20	18	80- 39
AT 37773	2B 20	16	80- 39
	2B 24	32	80- 43
AT 37821	2A 15	26	80- 9
AT 37822	2A 15	22	80- 9
AT 37823	2A 15	1	80- 9
AT 37826	1G 18	30	60- 5
AT 38159	1I 17	5	70- 22
AT 38160	2F 13	4	100- 13
AT 38161	1J 14	2	70- 43
AT 38162	1J 14	3	70- 43
AT 38314	2E 13	1	90- 46
AT 38626	2A 22	1	80- 16
AT 38634	1I 12	14	70- 17
AT 39534	1D 02	13	40- 7
AT 39738	1E 18	1	50- 7
AT 39739	2B 20	22	80- 39
	2B 24	37	80- 43
AT 40048	1D 10	17	40- 15
AT 40588	1B 18	1	30- 5
AT 40757	1G 08	7	50- 45
AT 41099	1D 02	16	40- 7
AT 41310	1G 18	2	60- 5
AT 41895	1J 06	-	70- 35
	1J 10	5	70- 39
AT 41896	1J 06	3	70- 35
AT 41898	1J 06	20	70- 35
AT 42366	1J 16	3	70- 45
AT 43376	2F 03	13	100- 3
AT 43403	1H 12	5	60- 23
AT 43405	1H 12	20	60- 23
AT 43471	1I 05	10	70- 10
AT 43472	1I 05	2	70- 10
	1I 12	4	70- 17
AT 43473	1I 05	11	70- 10
	1I 12	16	70- 17
AT 43474	1I 05	3	70- 10
	1I 12	5	70- 17
AT 43475	1I 04	13	70- 9
AT 43476	1I 04	1	70- 9
AT 43597	2D 12	1	90- 21
AT 43599	1E 02	1	40- 31
AT 43600	1E 02	13	40- 31
AT 43601	1E 02	12	40- 31
AT 44133	2B 02	4	80- 21
	2B 04	10	80- 23
	2B 06	5	80- 25
AT 44135	2B 06	11	80- 25
AT 44188	2B 16	9	80- 35
	2B 18	16	80- 37
AT 44284	2B 14	7	80- 33
AT 44286	2B 14	7	80- 33
AT 44289	2B 14	14	80- 33
	2B 18	14	80- 37
AT 44290	2B 16	12	80- 35
AT 44292	2B 16	12	80- 35
AT 44294	2B 16	1	80- 35
AT 44296	2B 16	1	80- 35
AT 44298	2B 18	17	80- 37
AT 44299	2B 18	4	80- 37
AT 44301	2B 18	1	80- 37
AT 44303	2B 18	8	80- 37
AT 44307	2A 09	16	80- 3
AT 44308	2C 02	1	80- 45
AT 44312	2C 04	8	80- 47
AT 44313	2C 04	8	80- 47
AT 44314	2C 02	3	80- 45
AT 44387	2C 04	3	80- 47
AT 44388	2C 04	3	80- 47
AT 44541	1I 04	5	70- 9
AT 44775	2A 25	8	80- 19
AT 44776	2A 25	7	80- 19
AT 44878	2F 09	1	100- 9
AT 44880	2F 09	1	100- 9
AT 45192	2F 05	1	100- 5
AT 46554	1J 12	11	70- 41
AT 46555	1J 12	12	70- 41
AT 46564	2F 03	1	100- 3
AT 46763	1G 22	12	60- 9
AT 46766	1H 01	-	60- 12
AT 46768	1H 01	16	60- 12
AT 46769	1H 01	2	60- 12
AT 46785	2A 17	19	80- 11
AT 46786	2A 17	-	80- 11
AT 47792	2C 18	10	90- 3
AT 48593	2C 20	8	90- 5
AT 50179	1D 10	17	40- 15
AT 50338	1H 07	1	60- 18
AT 51658	1H 01	-	60- 12
AT 51878	2A 21	1	80- 15
AT 52152	2A 15	22	80- 9
AT 52153	2A 15	1	80- 9
AT 5228	2F 15	1	100- 15
AT 52283	2F 15	1	100- 15
AT 52286	2F 15	2	100- 15
AT 53556	1I 02	-	70- 7
AT 53579	2B 24	21	80- 43
AT 54132	1G 18	32	60- 5
AT 54955	1G 18	15	60- 5
AT 56984	1H 12	13	60- 23
AT 57404	1G 06	1	50- 43
AT 57405	1G 06	1	50- 43
AT 57456	2E 12	2	90- 45
	2E 12	10	90- 45
AT 57457	2E 12	2	90- 45
	2E 12	10	90- 45
AT 58574	1H 07	1	60- 18
AT 58579	1I 05	1	70- 10
	1I 12	1	70- 17
AT 59761	1I 04	6	70- 9
	1I 04	1	70- 9
AT 60365	1E 16	3	50- 5
AT 60368	1E 16	2	50- 5
AT 60373	1E 16	17	50- 5
AT 63106	1H 07	1	60- 18
AT 63366	2A 17	10	80- 11
AT 63378	1I 08	4	70- 13
AU			
AU 10997	1J 02	9	70- 31
AU 11752	1J 10	4	70- 39
AU 11753	1J 10	2	70- 39
	1J 12	2	70- 41
	1J 14	10	70- 43
AU 13295	1J 10	14	70- 39
AU 40250	1J 14	8	70- 43
AU 40400	1J 10	13	70- 39
AU 40511	1J 14	4	70- 43
AU 40528	1J 05	1	70- 34
AU 40658	2F 16	8	100- 16
AU 40659	2F 16	7	100- 16
AU 40751	1J 05	1	70- 34
AU 40752	1J 05	1	70- 34
AU 41892	1I 24	24	70- 29
AU 41959	1I 12	1	70- 17
AZ			
AZ 14504	1D 04	24	40- 9
AZ 14506	1D 04	29	40- 9
AZ 14507	1D 04	16	40- 9
AZ 20003	1G 24	-	60- 11
AZ 20006	1G 24	7	60- 11
B			
B 177R	1H 08	3	60- 19
B 190R	1F 20	26	50- 33
B 3690R	1G 16	2	60- 3
	1G 22	2	60- 9
BP			
BP 12232	2B 02	17	80- 21
	2B 04	13	80- 23
	2B 06	21	80- 25
	2F 15	5	100- 15

PART-NUMBER REFERENCE BESTELL-NR. NO PARTICOLARE NO DE LA PIEZA RESERVDELSNR.	GRID COORD. KOORD. COORD. COORD. RUTA	KEY REP. TEIL COD. REF. KOD	PAGE PAGE SEITE PAGINE PAGINA SIDA
BU			
BU 40189	2F 09	8	100- 9
C			
C 284R	1F 02	16	50- 15
C 1067R	1E 20	9	50- 9
	1F 02	17	50- 15
	1H 12	18	60- 23
C 2175R	1E 14	25	50- 3
	1F 08	12	50- 21
C 19260	1J 06	6	70- 35
	1J 07	6	70- 36
C 19261	1J 06	9	70- 35
	1J 07	9	70- 36
CD			
CD 12884	1C 12	5	30- 23
CD 12885	1C 12	7	30- 23
CD 12886	1C 12	6	30- 23
CD 12887	1C 12	9	30- 23
CD 12888	1C 12	10	30- 23
CD 12892	1C 12	2	30- 23
CD 13157	1C 12	23	30- 23
CD 13259	1B 22	14	30- 9
	1C 12	3	30- 23
CD 13979	1A 13	24	20- 7
CD 14209	2C 06	1	80- 49
CD 14210	2C 06	1	80- 49
CD 14211	2C 06	1	80- 49
CD 14725	1A 13	25	20- 7
CD 15466	1A 09	9	20- 3
CD			
CDX 8276	2F 03	3	100- 3
CDX 9276	2F 03	11	100- 3
D			
D 2361R	1F 04	5	50- 17
	1H 10	12	60- 21
DD			
DD 11381	1C 12	8	30- 23
DD 11831	1A 21	1	20- 15
DD 12060	1G 16	5	60- 3
DD 12094	1A 13	1	20- 7
DD 12098	1A 07	1	20- 1
DD 12119	1A 13	6	20- 7
DD 12360	2F 09	14	100- 9
DD 13277	1A 09	11	20- 3
	1B 08	19	20- 27
	1B 08	-	20- 27
DD 13407	1C 12	6	30- 23
	1C 12	5	30- 23
	1C 12	4	30- 23
DD 13483	1C 02	1	30- 13
DD 13804	2F 15	10	100- 15
DD 13912	1C 06	12	30- 17
DDX 6145	2F 09	1	100- 9
DDX 8087	1C 06	3	30- 17
F			
F 215R	1F 20	27	50- 33
F 534R	2A 15	25	80- 9
F 2653R	1H 12	31	60- 23
F 2861R	1F 21	1	50- 34
F 2863R	1H 08	10	60- 19
F 3171R	1F 08	19	50- 21
	1F 12	27	50- 25
	1G 19	11	60- 6
	1H 10	22	60- 21
	1H 24	5	70- 5
	1I 02	27	70- 7
	1I 14	6	70- 19
	1I 16	14	70- 21
	1J 16	1	70- 45
	1J 18	2	70- 47
F 3322R	1F 04	21	50- 17
F 3353R	1F 02	19	50- 15
F 3366R	1F 04	10	50- 17
F 3396R	1C 10	6	30- 21
F 3607R	2A 15	21	80- 9
H			
H 246R	1F 15	9	50- 28
	1G 03	10	50- 40
H 836R	1E 22	3	50- 11
H 199DN	1G 22	7	60- 9
H 2742B	1B 02	15	20- 21
	1I 08	6	70- 13
H 23196	2E 08	34	90- 41
H 26237	1J 04	24	70- 33
H 26238	1J 02	28	70- 31
	1J 04	25	70- 33
H 26239	1J 02	26	70- 31
	1J 04	22	70- 33
H 33689	1E 16	29	50- 5
H 35925	1F 14	19	50- 27
H 61022	1E 16	27	50- 5
H 61397	1J 05	3	70- 34
JD			
JD 21	2A 19	2	80- 13
	2A 21	2	80- 15
JD 3043	2A 19	1	80- 13
JD 5272	2C 06	7	80- 49
JD 5276	2C 06	7	80- 49
JD 5536	2C 06	7	80- 49
JD 5540	2C 06	7	80- 49
JD 5602	2C 06	7	80- 49
JD 5606	2C 06	7	80- 49
JD 7375	1F 15	2	50- 28
JD 7418	2A 21	12	80- 15
JD 7425	1G 06	11	50- 43
JD 7445	2A 19	14	80- 13
JD 7449	1F 15	3	50- 28
JD 7759	1G 08	6	50- 45
	2F 09	7	100- 9
JD 7763	2A 09	20	80- 3
JD 7781	2A 09	20	80- 3
JD 7788	2A 09	20	80- 3
JD 7797	1H 01	14	60- 12
JD 7798	1J 06	1	70- 35
	2A 15	4	80- 9
	2A 17	8	80- 11
	2A 19	6	80- 13
	2A 21	10	80- 15
	2F 05	11	100- 5
	2F 06	6	100- 6
JD 7799	1J 06	21	70- 35
	1J 07	1	70- 36
	2A 09	4	80- 3
	2A 17	7	80- 11
JD 7806	1H 01	17	60- 12
JD 8147	1G 06	10	50- 43
JD 8151	1G 06	10	50- 43
	1G 08	17	50- 45
JD 8171	1F 15	5	50- 28
JD 8192	1H 24	40	70- 5
JD 8206	1G 06	11	50- 43
	1G 06	16	50- 43
	1G 08	5	50- 45
	1G 08	16	50- 45
JD 8223	1H 24	39	70- 5
JD 8251	2A 19	12	80- 13

PART-NUMBER REFERENCE BESTELL-NR. NO PARTICOLARE NO DE LA PIEZA RESERVDELSNR.	GRID COORD. KOORD. COORD. COORD. RUTA	KEY REP. TEIL COD. REF. KOD	PAGE PAGE SEITE PAGINE PAGINA SIDA
JD 8251	2A 21	9	80- 15
JD 8255	1F 18	2	50- 31
JD 8267	1F 18	15	50- 31
JD 8276	1F 15	6	50- 28
JD 8406	2E 12	11	90- 45
JD 8412	2A 15	15	80- 9
JD 8720	1F 06	7	50- 19
JD 8827	2A 15	2	80- 9
JD 8929	2A 19	11	80- 13
	2A 21	8	80- 15
JD 8946	1G 06	15	50- 43
	1G 08	4	50- 45
JD 8969	2A 19	15	80- 13
	2A 21	13	80- 15
JD 8979	1F 18	16	50- 31
JD 8997	1F 18	1	50- 31
JD 9257	1B 06	8	20- 25
JD 9449	1A 19	3	20- 13
JD 9822	1F 20	12	50- 33
JD 9832	1G 16	18	60- 3
JD 9839	1F 15	4	50- 28
JD 9911	2A 15	2	80- 9
K			
K 40015	1F 14	19	50- 27
L			
L 299T	1F 02	3	50- 15
L 324T	1E 20	12	50- 9
L 372T	1E 16	14	50- 5
L 1788C	1E 14	8	50- 3
L 4027T	1F 21	5	50- 34
L 4035T	1F 21	4	50- 34
L 4667T	1C 10	14	30- 21
L 12621	2A 13	5	80- 7
L 12624	1D 12	6	40- 17
L 12807	1E 04	12	40- 33
L 13326	1D 21	2	40- 26
L 13958	1D 16	19	40- 21
L 17672	1D 16	8	40- 21
L 17674	1D 16	10	40- 21
L 18703	1D 16	14	40- 21
L 18704	1D 16	15	40- 21
L 18705	1D 16	9	40- 21
L 19144	1D 14	3	40- 19
L 19146	1D 14	5	40- 19
L 19148	1D 14	9	40- 19
L 19149	1D 14	8	40- 19
L 19651	1D 04	3	40- 9
	1D 06	3	40- 11
L 19654	1D 04	7	40- 9
L 24770	1E 02	2	40- 31
L 24810	2F 11	3	100- 11
	2F 15	6	100- 15
L 24921	1B 20	18	30- 7
L 24922	1B 20	21	30- 7
L 24979	2F 11	4	100- 11
L 25141	2A 19	6	80- 13
L 25678	2E 16	15	90- 49
L 25686	2E 16	14	90- 49
L 25689	2E 16	4	90- 49
L 26951	1D 14	7	40- 19
L 26952	1D 14	4	40- 19
L 27166	2E 18	30	90- 51
L 27167	2E 16	12	90- 49
L 27339	1C 24	21	40- 5
L 28076	2E 18	4	90- 51
L 28077	2E 18	2	90- 51
L 28078	2E 18	34	90- 51
L 28081	2E 18	32	90- 51
L 28085	2D 24	2	90- 33
L 28370	1B 18	7	30- 5
L 28371	1B 18	12	30- 5
L 28401	1F 24	7	50- 37
L 28405	1F 20	25	50- 33
L 28520	1D 12	5	40- 17
L 28660	1F 20	14	50- 33
L 28661	1F 20	9	50- 33
L 28662	1F 15	1	50- 28
L 28663	1F 18	4	50- 31
L 28664	1F 18	8	50- 31
L 28665	1F 18	11	50- 31
L 28671	1F 20	1	50- 33
L 28672	1F 15	7	50- 28
L 28673	1F 20	12	50- 33
L 28675	1F 15	5	50- 28
L 29015	1I 10	13	70- 15
L 29040	1F 15	6	50- 28
L 29041	1F 15	10	50- 28
L 29042	1F 15	10	50- 28
L 29043	1F 15	10	50- 28
L 29044	1F 15	10	50- 28
L 29048	1F 20	13	50- 33
L 29152	1D 04	23	40- 9
	1D 06	23	40- 11
L 29153	1D 04	5	40- 9
L 29154	1D 04	22	40- 9
L 29155	1D 04	21	40- 9
L 29156	1D 04	9	40- 9
	1D 06	9	40- 11
L 29157	1D 04	19	40- 9
	1D 06	19	40- 11
L 29158	1D 04	18	40- 9
	1D 06	18	40- 11
L 29159	1C 24	3	40- 5
L 29160	1C 24	11	40- 5
L 29161	1C 24	9	40- 5
L 29162	1C 24	18	40- 5
L 29163	1C 24	13	40- 5
L 29164	1C 24	15	40- 5
L 29165	1C 24	22	40- 5
L 29167	1C 24	2	40- 5
L 29197	1G 16	16	60- 3
L 29202	2E 18	20	90- 51
L 29204	2E 18	12	90- 51
L 29205	2E 18	11	90- 51
L 29206	2E 18	13	90- 51
L 29208	2E 18	28	90- 51
L 29209	2E 16	17	90- 49
L 29211	2E 18	23	90- 51
L 29212	2E 18	17	90- 51
L 29226	1G 06	4	50- 43
L 29227	1G 06	5	50- 43
L 29237	1G 08	26	50- 45
L 29244	1G 08	1	50- 45
L 29250	1G 02	8	50- 39
L 29251	1G 02	4	50- 39
	1I 16	6	70- 21
L 29252	1G 02	7	50- 39
	1I 16	4	70- 21
L 29253	1G 02	9	50- 39
	1I 16	2	70- 21
L 29260	1G 16	1	60- 3
L 29265	1B 22	6	30- 9
L 29269	1F 18	14	50- 31
L 29270	1F 18	14	50- 31
L 29271	1F 18	14	50- 31
L 29283	1F 18	6	50- 31
L 29284	1F 18	7	50- 31
	1F 20	6	50- 33
L 29353	2E 18	17	90- 51
L 29406	1G 04	15	50- 41
L 29408	2A 25	2	80- 19
L 29418	1H 08	4	60- 19
L 29831	1G 18	26	60- 5
L 29833	1G 04	6	50- 41
L 29834	1G 04	13	50- 41
L 29841	1D 02	4	40- 7
L 29843	1D 02	5	40- 7
L 29849	1B 16	15	30- 3
L 29852	2C 06	6	80- 49
L 29854	1A 09	5	20- 3
L 29871	1G 06	3	50- 43
L 29872	1F 14	1	50- 27
L 29877	2A 25	3	80- 19
L 29878	1D 24	9	40- 29
L 29883	1H 12	30	60- 23
	1H 12	32	60- 23
L 29884	1H 12	32	60- 23
	1H 12	46	60- 23
L 29915	2A 22	6	80- 16

PART-NUMBER REFERENCE BESTELL-NR. NO PARTICOLARE NO DE LA PIEZA RESERVDELSNR.	GRID COORD. KOORD. COORD. COORD. RUTA	KEY REP. TEIL COD. REF. KOD	PAGE PAGE SEITE PAGINE PAGINA SIDA
34H 283	1A 17	3	20- 11
34H 284	1E 23	5	50- 12
34H 286	1A 17	22	20- 11
34H 288	1E 20	14	50- 9
34H 298	2E 12	5	90- 45
34H 308	2A 17	17	80- 11
34H 310	1F 04	14	50- 17
34H 312	1H 08	6	60- 19
34H 330	1I 20	1	70- 25
34H 340	2A 09	10	80- 3
34H 387	1E 23	9	50- 12
34			
34M 3851	2E 16	16	90- 49
	2E 18	27	90- 51
34M 7041	2D 05	9	90- 14
37			
37H 24	1B 02	14	20- 21
	2D 10	1	90- 19
37H 29	2C 18	3	90- 3
37H 44	1C 14	9	30- 25
37H 51	2A 25	1	80- 19
37H 79	1B 02	14	20- 21
37H 139	2C 21	3	90- 6
37			
37M 6497	2D 14	33	90- 23
	2D 20	10	90- 29
37M 6630	1D 24	3	40- 29
	2E 10	7	90- 43
37M 6646	1D 24	2	40- 29
	2E 08	7	90- 41
37M 7005	2A 12	1	80- 6
37M 7006	2B 08	14	80- 27
	2B 12	16	80- 31
37M 7016	2E 18	35	90- 51
37M 7020	1B 22	8	30- 9
37M 7022	2D 04	8	90- 13
37M 7023	2C 21	8	90- 6
37M 7024	1D 10	15	40- 15
	2D 24	8	90- 33
	2E 02	7	90- 35
37M 7030	2E 08	5	90- 41
37M 7032	2C 21	3	90- 6
37M 7033	2A 23	8	80- 17
37M 7036	2E 05	8	90- 38
37M 7040	1D 10	15	40- 15
37M 7045	2A 12	4	80- 6
37M 7053	2E 02	2	90- 35
	2E 02	4	90- 35
	2E 08	25	90- 41
37M 7054	1D 24	20	40- 29
40			
40M 7030	2E 18	29	90- 51
40M 7041	2E 18	5	90- 51
40M 7042	2E 18	3	90- 51
51			
51M 4282	1F 12	33	50- 25
51M 7016	1F 12	19	50- 25
51M 7019	1F 12	19	50- 25
57			
57M 6276	1D 14	13	40- 19
	1D 16	17	40- 21
	1D 18	3	40- 23
57M 6343	1D 10	6	40- 15
57M 6394	1D 10	2	40- 15
	1D 14	14	40- 19
	1D 16	18	40- 21
	1D 18	4	40- 23
57M 7000	1D 14	13	40- 19
	1D 16	17	40- 21
	1D 18	3	40- 23
57M 7013	1D 24	10	40- 29
	1E 02	15	40- 31
57M 7014	1D 24	1	40- 29
	1E 02	14	40- 31
57M 7018	1D 10	10	40- 15
	1D 10	19	40- 15
99			
99M 6430	2C 10	1	80- 53
99M 6488	1E 02	8	40- 31
	2A 25	4	80- 19
99M 7004	1D 20	3	40- 25
99M 7009	2A 23	2	80- 17
99M 7048	1D 12	6	40- 17

PART-NUMBER REFERENCE BESTELL-NR. NO PARTICOLARE NO DE LA PIEZA RESERVDELSNR.	GRID COORD. KOORD. COORD. COORD. RUTA	KEY REP. TEIL COD. REF. KOD	PAGE PAGE SEITE PAGINE PAGINA SIDA
AL 19093	2C 10	1	80- 53
AL 26927	2E 16	8	90- 49
AL 26928	2E 16	6	90- 49
AL 28282	1G 24	-	60- 11
AL 29000	1H 06	19	60- 17
AL 29613	2E 13	1	90- 46
AL 29654	1H 06	20	60- 17
AL 29682	1D 18	8	40- 23
AL 30088	1D 18	7	40- 23
AL 30089	1D 18	6	40- 23
AL 30392	1D 24	18	40- 29
AL 30393	1G 22	6	60- 9
AL 30665	2D 11	1	90- 20
AL 30690	2E 16	1	90- 49
AL 30691	2E 18	15	90- 51
AL 30692	2E 18	33	90- 51
AL 30781	2C 24	23	90- 9
AL 30843	1C 07	3	30- 18
AL 30946	1G 18	2	60- 5
AL 31535	1D 10	17	40- 15
AL 31886	2B 10	17	80- 29
AL 31889	2B 10	17	80- 29
AL 31917	1D 02	16	40- 7
AL 31992	1B 02	6	20- 21
AL 31992	1I 08	6	70- 13
AL 32620	1F 14	1	50- 27
AL 32975	1B 16	21	30- 3
AL 33250	1F 24	12	50- 37
AL 33278	1F 24	5	50- 37
AL 33279	1F 24	14	50- 37
AL 33346	1F 24	14	50- 37
AL 33454	1D 10	16	40- 15
AL 33538	1F 24	14	50- 37
AL 33997	1F 24	14	50- 37
AL 34331	2A 09	1	80- 3
AR 58196	1A 15	1	20- 9
AR 67092	1C 06	6	30- 17
AR 76762	1H 24	14	70- 5
AR 79622	1A 13	1	20- 7
AR 84228	1B 16	22	30- 3
AR 87738	1A 21	1	20- 15
AR 89563	1C 04	7	30- 15
AR 89691	1F 14	10	50- 27
AR 91660	1A 17	4	20- 11
AR 91772	1C 06	6	30- 17
AT 25851	1J 05	6	70- 34
AT 26140	1C 12	8	30- 23
AT 32336	1H 24	32	70- 5
AT 59761	1I 04	6	70- 9
AT 60365	1E 16	3	50- 5
AT 60368	1E 16	2	50- 5
AT 60373	1E 16	17	50- 5
AT 63106	1H 07	1	60- 18
AT 63366	2A 17	10	80- 11
AT 63378	1I 08	4	70- 13
CD 14209	2C 06	1	80- 49
CD 14210	2C 06	1	80- 49
CD 14211	2C 06	1	80- 49
CD 15466	1A 09	9	20- 3
DD 13912	1C 06	12	30- 17
F 534R	2A 15	25	80- 9
JD 5602	2C 06	7	80- 49
JD 5606	2C 06	7	80- 49
JD 7781	2A 09	20	80- 3
K 40015	1F 14	19	50- 27
L 31268	2E 08	19	90- 41
L 31434	1G 16	24	60- 3
L 31738	2E 16	5	90- 49
L 31739	2E 16	7	90- 49
L 32536	1G 04	6	50- 41
L 33517	1H 06	12	60- 17
L 33518	1H 06	17	60- 17
L 33899	1D 18	5	40- 23
L 33900	1D 18	2	40- 23
L 33919	2B 20	6	80- 39
L 33920	2B 20	5	80- 39
L 33922	2B 22	5	80- 41
L 33923	2B 22	4	80- 41
L 33924	2B 22	3	80- 41
L 34040	1H 10	16	60- 21
L 34137	2B 04	19	80- 23
L 34138	2B 04	20	80- 23
L 34162	2D 10	19	90- 19
L 34168	1G 08	23	50- 45
L 34172	2A 19	19	80- 13
L 34175	1G 08	27	50- 45
L 34346	1G 24	27	60- 11
L 34353	1G 08	23	50- 45
L 34400	1G 08	22	50- 45
L 34432	1H 22	3	70- 3
L 34956	2B 10	18	80- 29
L 34957	2B 10	19	80- 29
L 34966	2B 10	18	80- 29
L 34967	2B 10	19	80- 29
L 35024	1F 18	14	50- 31
L 35542	1G 08	3	50- 45
L 35628	1D 08	3	40- 13
L 35825	2E 18	4	90- 51
L 36557	1F 20	15	50- 33
M 2392T	1B 02	22	20- 21
N 130510	1J 05	2	70- 34
R 42364	1A 17	21	20- 11
R 42729	1A 13	15	20- 7
R 49482	1E 16	20	50- 5
R 49982	1G 16	21	60- 3
R 58774	1I 12	4	70- 17
R 58921	1I 08	25	70- 13
R 62034	1C 12	7	30- 23
R 62849	1G 06	13	50- 43
R 66821	1B 24	14	30- 11
R 68226	1A 11	8	20- 5
R 69262	1I 02	37	70- 7
R 70351	1I 02	20	70- 7
R 72112	1A 17	15	20- 11
T 24917	1F 18	18	50- 31
T 25332	1G 16	23	60- 3
T 26550	1G 03	4	50- 40
T 29185	1C 07	8	30- 18
T 30720	1B 06	13	20- 25
T 30721	1B 06	14	20- 25
T 36247	1B 22	2	30- 9
T 42962	2F 03	3	100- 3
T 47441	2F 03	11	100- 3
T 63651	1E 16	19	50- 5
T 63652	1E 16	23	50- 5
T 66936	2A 17	5	80- 11
T 66937	2A 17	5	80- 11
T 67294	1G 08	26	50- 45
T 68412	1E 14	17	50- 3
T 69418	1H 22	5	70- 3
U 15415	1I 22	5	70- 27
W 14541	2D 10	3	90- 19
14H 1039	1A 09	3	20- 3
15H 665	1A 09	2	20- 3
19H 1756	2F 03	7	100- 3
19H 2127	1B 06	21	20- 25
19H 2353	1H 06	18	60- 17
19M 7661	1G 24	26	60- 11
21M 7242	1C 24	13	40- 5
24M 7028	2D 11	5	90- 20
24M 7047	2E 16	10	90- 49
34H 247	1F 12	29	50- 25
34H 251	1E 14	28	50- 3
34H 253	1E 16	18	50- 5
34H 264	1C 10	5	30- 21
34H 280	1E 23	13	50- 12
34H 283	1A 17	3	20- 11
34H 284	1E 23	5	50- 12
34H 286	1A 17	22	20- 11
34H 288	1E 20	14	50- 9
34H 298	2E 12	5	90- 45
34H 308	2A 17	17	80- 11
34H 310	1F 04	14	50- 17
34H 312	1H 08	6	60- 19
34H 330	1I 20	1	70- 25
34H 340	2A 09	10	80- 3
34M 3851	2E 16	16	90- 49
34M 7041	2D 05	9	90- 14
37H 24	1B 02	14	20- 21
37H 29	2C 18	3	90- 3
37H 44	1C 14	9	30- 25
37H 51	2A 25	1	80- 19
37H 139	2C 21	3	90- 6
37M 6497	2D 14	33	90- 23
37M 6630	1D 24	3	40- 29

PART-NUMBER REFERENCE BESTELL-NR. NO PARTICOLARE NO DE LA PIEZA RESERVDELSNR.	GRID COORD. KOORD. COORD. COORD. RUTA	KEY REP. TEIL COD. REF. KOD	PAGE PAGE SEITE PAGINE PAGINA SIDA
37M 6646	1D 24	2	40- 29
37M 7005	2A 12	1	80- 6
37M 7006	2B 08	14	80- 27
37M 7016	2E 18	35	90- 51
37M 7020	1B 22	8	30- 9
37M 7022	2D 04	8	90- 13
37M 7023	2C 21	8	90- 6
37M 7024	1D 10	15	40- 15
37M 7030	2E 08	5	90- 41
37M 7032	2C 21	3	90- 6
37M 7033	2A 23	8	80- 17
37M 7036	2E 05	8	90- 38
37M 7045	2A 12	4	80- 6
37M 7053	2E 02	2	90- 35
37M 7054	1D 24	20	40- 29
40M 7030	2E 18	29	90- 51
40M 7041	2E 18	5	90- 51
40M 7042	2E 18	3	90- 51
51M 4282	1F 12	33	50- 25
51M 7019	1F 12	19	50- 25
57M 6276	1D 14	13	40- 19
57M 6343	1D 10	6	40- 15
57M 6394	1D 10	2	40- 15
57M 7000	1D 14	13	40- 19
57M 7013	1D 24	10	40- 29
57M 7014	1D 24	1	40- 29
99M 6488	1E 02	8	40- 31
99M 7004	1D 20	3	40- 25
99M 7009	2A 23	2	80- 17
99M 7048	1D 12	6	40- 17