310G,310SG AND 315SG
BACKHOE LOADERS

RUTHZIL TRATOR COMERCIAL DE PEÇAS LTDA 11 97083-6812 ROLANDO CITRANGULO



FEVEREIRO 2006

PARTS CATALOG

310G,310SG AND 315SG BACKHOE LOADERS

PC2755 (FEB-06)

Worldwide Construction and Forestry Division
Worldwide Edition
Litho In U.S.A.(Revised)

INTRODUCTION AND CUSTOMER INFORMATION

T134142 -UN-10OCT00

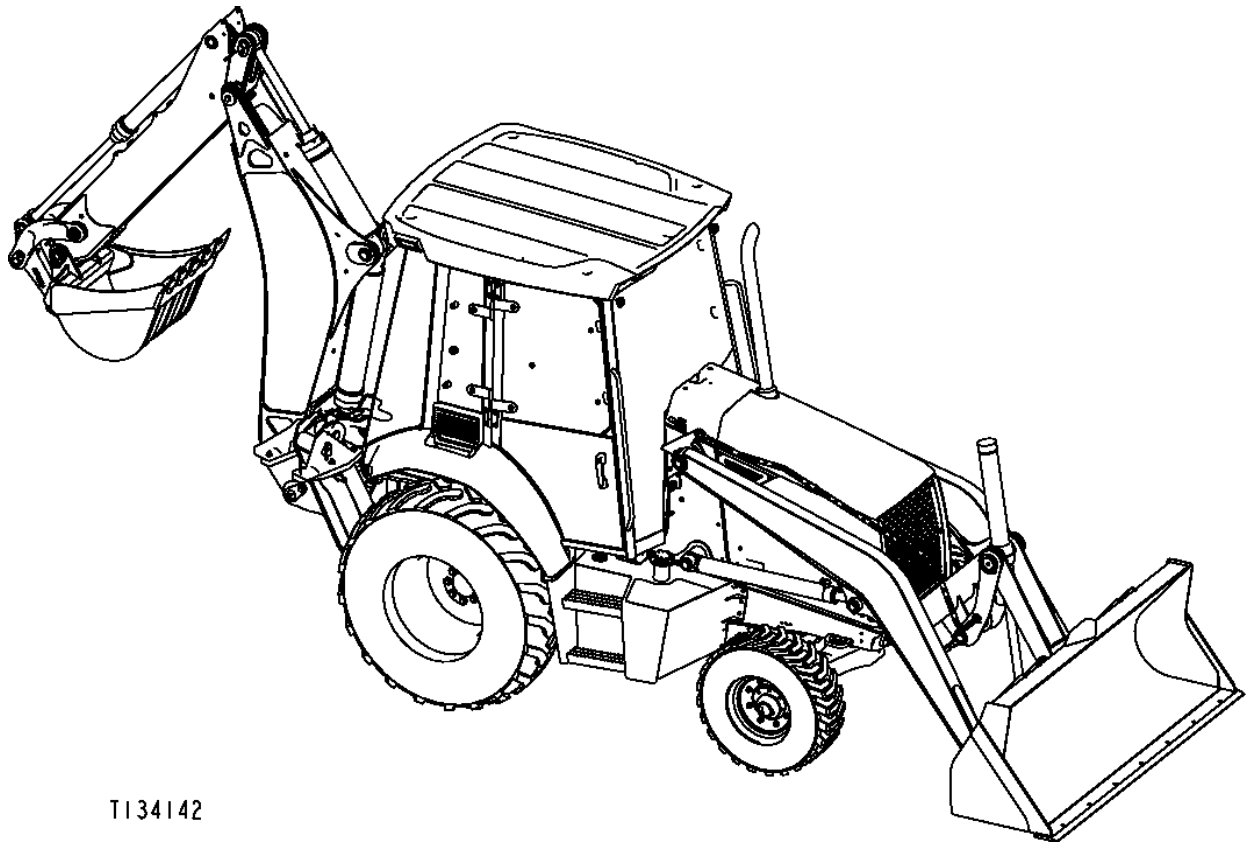

SIDE VIEW OF JOHN DEERE BACKHOE LOADER
(MANUFACTURED 2000-)

TO THE CUSTOMER

THE PART NUMBERS IN THIS PARTS CATALOG WERE CORRECT AT THE TIME YOUR CATALOG WAS PUBLISHED. IT IS OUR POLICY TO CONSTANTLY IMPROVE OUR MACHINES AND, THEREFORE, PART NUMBERS MAY CHANGE. WHEN ORDERING PARTS, VERIFY PART NUMBERS THROUGH YOUR DEALER'S

(SPECIFICATIONS AND DESIGN SUBJECT TO CHANGE WITHOUT NOTICE.)

COPYRIGHT © 2006 DEERE & COMPANY Moline, Illinois All rights reserved

ENGINE SERIAL NUMBER PLATE

T134833 -UN-23OCT00



T134833

1. DESIGNATES ENGINE MANUFACTURER	T-JOHN DEERE DUBUQUE WORKS	
1.	P-JOHN DEERE MOTORES	
2. DESIGNATES NUMBER OF CYLINDERS AND LITERS.	4045 (4.5 LITER)	
3. DESIGNATES FUEL TYPE OR SPECIAL COND.	DT NON-TURBOCHARGED DIESEL ENGINE	
	TT TURBOCHARGED DIESEL ENGINE	
4. DESIGNATES ENGINE SERIAL NUMBER	123456	
5. DESIGNATES THE ENGINE APPLICATION AND FACTORY USER.	T04045DT056	(WITHOUT TURBOCHARGER)(310G)
	^PE4045DT056	(WITHOUT TURBOCHARGER)(310G)
	T04045TT080	(WITH TURBOCHARGER)(310G)
	PE4045TT080	(WITH TURBOCHARGER)(310G)
	^T04045TT081	(WITH TURBOCHARGER)(310SG,315SG)
	^PE4045TT081	(WITH TURBOCHARGER)(310SG,315SG)
	^PE4045DT058	(WITHOUT TURBOCHARGER)(310G)
	^PE4045TT088	(WITH TURBOCHARGER)(310G)
	^PE4045TT089	(WITH TURBOCHARGER)(310SG)

SERIAL NUMBER LISTING INFORMATION

SERIAL NUMBER INFORMATION IS LISTED TO SHOW ON WHICH MACHINES EACH PART CAN BE USED; FOR EXAMPLE:

- THE PART CAN BE USED ON ALL MACHINES.
000000- THE PART CAN BE USED ON ALL MACHINES BEGINNING WITH THE SERIAL NUMBER LISTED.
-000000 THE PART CAN BE USED ON ALL MACHINES UP TO AND INCLUDING THE SERIAL NUMBER LISTED.
000000-000000 THE PART CAN BE USED ON ALL MACHINES BETWEEN AND INCLUDING THE SERIAL NUMBERS LISTED.

WHEN XXXXXX'S ARE LISTED IN PLACE OF A SERIAL NUMBER, A SERIAL NUMBER CHANGE WAS MADE BUT THE EXACT SERIAL NUMBER WAS NOT AVAILABLE WHEN THE CATALOG WAS PRODUCED.

USE OF VEHICLE SERIAL NUMBERS ON ENGINE PAGES:
PLEASE PROVIDE THE VEHICLE SERIAL NUMBER (VSN-T0450HX910011), ENGINE SERIAL NUMBER (ESN-PE4045T19 0332), AND ENGINE MODEL NO. (PE4045TT058) WHEN ORDERING REPLACEMENT PARTS. ENGINE PARTS PAGES HAV E BEEN REVISED TO DETAIL THE VSN IN THE HEADER, ENGINE MODEL NO. IN THE REMARKS SECTION, AND VEHIC LE SERIAL NO. IN THE ALPHABETICAL INDEX. PLEASE PROVIDE ALL THREE NUMBERS WHEN ORDERING ENGINE PA RTS TO INSURE EFFICIENT SERVICE.

DIRECTION ARROW

ARROWS ARE USED WITH ILLUSTRATIONS TO INDICATE THE FRONT OF THE UNIT. "RIGHT-HAND" AND "LEFT-HAND" SIDES OF THE LOADER OR TRACTOR PARTS ARE DETERMINED BY FACING IN THE DIRECTION OF MACHINE FORWARD TRAVEL

EXCEPTION: FOR ALL BACKHOE PARTS, "RIGHT-HAND" AND "LEFT-HAND" SIDES, "FRONT" AND "REAR" ARE DETERMINED WHEN SEATED FOR BACKHOE OPERATION.

BOX-ENCLOSED ILLUSTRATIONS

A KEY NUMBER, SHOWN IN THE PARTS LIST, IS ASSIGNED TO A BOX ENCLOSING ALL PARTS SOLD AS A SERVICE ASSEMBLY.

COMPLETE GOODS LISTINGS

COMPLETE GOODS ARE LISTED IN THE REMARKS COLUMN AS WHOLE GOODS.
DO NOT INCLUDE ON REPLACEMENT PARTS ORDER.

SI UNITS OF MEASURE

METRIC DIMENSIONS ARE GIVEN, WHERE APPLICABLE, THROUGHOUT THIS PARTS CATALOG.

CHANGE INDICATOR LINE

CHANGES AFFECTING THE ORDERING OF PARTS ARE IDENTIFIED BY VERTICAL LINES MARKED IN THE LEFT-HAND MARGIN OF REVISED PARTS LISTING IMAGES. A LINE IS ALSO AT THE LEFT-HAND EDGE OF THE SAME PART NUMBER IN THE NUMERICAL INDEX TO SHOW THE LOCATION OF REVISED INFORMATION.

SERIAL NUMBER LOCATIONS

EACH 310G, 310SG AND 315SG BACKHOE LOADER HAS SIX SERIAL NUMBERS, A PRODUCT IDENTIFICATION NUMBER PLATE, AN ENGINE SERIAL NUMBER PLATE, A HYDRAULIC PUMP SERIAL NUMBER PLATE, A MFWD AXLE SERIAL NUMBER PLATE, A TRANSMISSION SERIAL NUMBER PLATE, AND A REAR AXLE SERIAL NUMBER PLATE.

THE PRODUCT IDENTIFICATION NUMBER IS ON THE LEFT-HAND SIDE OF THE LOADER FRAME JUST ABOVE THE LIFT CYLINDER PIVOT BOSS.

THE ENGINE SERIAL NUMBER PLATE IS LOCATED ON THE RIGHT-HAND SIDE OF THE CYLINDER BLOCK NEAR THE FUEL PUMP.

THE MFWD AXLE SERIAL NUMBER PLATE IS LOCATED ON THE RIGHT-HAND (REAR) SIDE OF THE MFWD AXLE HOUSING.

THE REAR AXLE SERIAL NUMBER PLATE IS LOCATED ON THE RIGHT-HAND (FRONT) SIDE OF THE AXLE HOUSING.

THE TRANSMISSION SERIAL NUMBER PLATE IS LOCATED ON THE BOTTOM-REAR FACE OF THE HOUSING.

THE HYDRAULIC PUMP SERIAL NUMBER IS LOCATED ON THE BOTTOM FACE OF THE PUMP.

LEFT-HAND SIDE, RIGHT-HAND SIDE, FRONT AND REAR OF THE BACKHOE LOADER ARE VIEWED BY FACING IN THE DIRECTION OF THE BACKHOE LOADER FORWARD TRAVEL.

LEFT-HAND SIDE, RIGHT-HAND SIDE, FRONT AND REAR OF THE BACKHOE COMPONENTS ARE DETERMINED WHEN SEATED IN THE BACKHOE OPERATING POSITION.

IF PRODUCT IDENTIFICATION NUMBERS OR SERIAL NUMBERS ARE REQUIRED FOR WARRANTY CLAIMS OR CORRESPONDENCE PERTAINING TO THIS PRODUCT. IT IS EXTREMELY IMPORTANT THAT ALL CHARACTERS BE FURNISHED. THIS POINT CANNOT BE OVEREMPHASIZED.

MFWD AXLE SERIAL NUMBER PLATE

TP19438 -UN-01JAN94

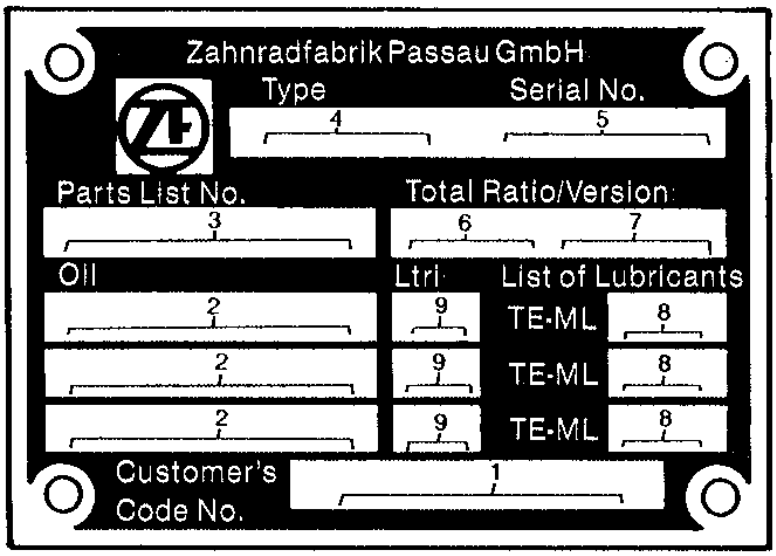

TP19438

1. DESIGNATES CUSTOMER'S CODE NUMBER	JOHN DEERE PART NUMBER
2. DESIGNATES TYPE OF LUBRICANT	M1L-L-2105B, SAE90
3. DESIGNATES ZF-PARTS-LIST NUMBER	4464 006 101
4. DESIGNATES AXLE TYPE	AP-11H
5. DESIGNATES AXLE SERIAL NUMBER	12345
6. DESIGNATES TOTAL - RATIO OF THE AXLE	20.28
7. DESIGNATES VERSION	SP. DIFF. (WITH OR WITHOUT SELF-LOCKING DIFFERENTIAL)
8. DESIGNATES LUBRICANT SPECIFICATION	05
9. DESIGNATES CAPACITY	LTR (DIFFERENTIAL CARRIER AND PLANETARY GEAR ASSEMBLY

ALPHABETICAL INDEX

GRID		PAGE
	A	
3C11	A/C PRESSURE SWITCH HARNESS	1674 - 4
3C17	A/C SWITCH	1674 - 6
3E18	ACCELERATOR PEDAL RUBBER BUMPER	1812 - 4
2C22	ACCESS COVER, INJECTION PUMP GEAR (VSN -911768) 310G (W/O TURBO)	0402 - 4
2D1	ACCESS COVER, INJECTION PUMP GEAR (VSN-910055) 310G(TURBO), 310SG, 315SG	0402 - 6
2C24	ACCESS COVER, INJECTION PUMP GEAR 310G (W/O TURBO) (VSN 911769-)	0402 - 4B
2D3	ACCESS COVER, INJECTION PUMP GEAR 310G(TURBO), 310SG, 315SG (VSN910056-)	0402 - 6B
5G11	ACCU-SWING VALVE KIT	3362 - 29A
3J21	ACCUMULATOR SEAL KIT	2160 - 24
3J23	ACCUMULATOR SEAL KIT	2160 - 26
3J21	ACCUMULATOR VALVE	2160 - 24
3J23	ACCUMULATOR VALVE	2160 - 26
5G14	ACCUMULATOR, MANIFOLD (PILOT CONTROL)	3362 - 31
3J21	ACCUMULATOR, RIDE CONTROL	2160 - 24
3J23	ACCUMULATOR, RIDE CONTROL	2160 - 26
2D1	ACESS COVER , INJECTION PUMP GEAR (VSN-910055) 310G(TURBO), 310SG, 315SG	0402 - 6
3C11	ACTUATOR DOOR RELAY	1674 - 4
2G20	ADAPTER KIT, STARTER MOTOR	0422 - 6
2G1	ADAPTER,ENGINE OIL COOLER	0419 - 2
2E15	ADAPTER,EXHAUST 310G(TURBO), 310SG, 315SG	0410 - 2
2G22	ADJUSTING STRAP, ALTERNATOR	0423 - 2
2H23	AIR CLEANER	0520 - 2
2H23	AIR CLEANER ELEMENT	0520 - 2
2H23	AIR CLEANER HOSE	0520 - 2
2H23	AIR CLEANER RESTRICTION INDICATOR SWITCH	0520 - 2
3H1	AIR CONDITIONING	1830 - 6
3H3	AIR CONDITIONING	1830 - 7A
3H3	AIR CONDITIONING (FREEZE/COMPRESSOR) SWITCH	1830 - 7A
3H8	AIR CONDITIONING COMPRESSOR	1830 - 12
3H10	AIR CONDITIONING COMPRESSOR	1830 - 14
3H8	AIR CONDITIONING COMPRESSOR MOUNTING BRACKETS	1830 - 12
3H10	AIR CONDITIONING COMPRESSOR MOUNTING BRACKETS	1830 - 14
3C19	AIR CONDITIONING COMPRESSOR DIODE	1674 - 8
3C21	AIR CONDITIONING COMPRESSOR DIODE	1674 - 9A
3H8	AIR CONDITIONING COMPRESSOR DRIVE BELT	1830 - 12
3H10	AIR CONDITIONING COMPRESSOR DRIVE BELT	1830 - 14
3H8	AIR CONDITIONING COMPRESSOR HOSES	1830 - 12
3H10	AIR CONDITIONING COMPRESSOR HOSES	1830 - 14
3H8	AIR CONDITIONING CONDENSER	1830 - 12
3H10	AIR CONDITIONING CONDENSER	1830 - 14
3C11	AIR CONDITIONING DOOR ACTUATOR RELAY	1674 - 4
3G22	AIR CONDITIONING DUCTS	1830 - 2
3G24	AIR CONDITIONING DUCTS	1830 - 4
3H8	AIR CONDITIONING RECEIVER DRYER	1830 - 12
3H10	AIR CONDITIONING RECEIVER DRYER	1830 - 14
3F23	AIR CONDITIONING THERMOSTAT SWITCH	1816 - 12
2F9	AIR INTAKE SYSTEM 310(W/O TURBO)	0414 - 3
2F7	AIR INTAKE SYSTEM 310G(TURBO), 310SG, 315SG (VSN -910055)	0414 - 1
2F8	AIR INTAKE SYSTEM 310G(TURBO),310SG,315SG (VSN 910056-)	0414 - 2
2F8	AIR INTAKE TEMPERATURE SENSOR 310G (TURBO),310SG,315SG (VSN 910056-)	0414 - 2
3G18	AIR SUSPENSION SEAT COMPRESSOR	1821 - 16
3C17	AIR SUSPENSION SEAT SWITCH	1674 - 6
3I12	ALARM SYSTEM, BACK-UP (315SG)	2004 - 4
3I10	ALARM, BACK-UP ALARM (310G,310SG)	2004 - 2
3I10	ALARM, TRAVEL WARNING (310G,310SG)	2004 - 2
3I12	ALARM, TRAVEL WARNING (315SG)	2004 - 4
3C1	ALTERNATOR	1672 - 2
2G22	ALTERNATOR ADJUSTING STRAP	0423 - 2
3C1	ALTERNATOR FAN	1672 - 2
2G22	ALTERNATOR MOUNTING BRACKETS	0423 - 2
3C1	ALTERNATOR PULLEY	1672 - 2
3C5	ANCHOR, TIE BAND MOUNT, HARNESS SERIAL NO. -XXXXXX	1673 - 4
3C7	ANCHOR, TIE BAND MOUNT, HARNESS SERIAL NO. XXXXXX-	1673 - 6
3G5	ANGLE,BACKREST ADJUSTMENT	1821 - 2
3I6	ANTENNA, RADIO	2001 - 2
4D19	ANTI-CAVITATION, BOOM SECTION	3162 - 10
4D23	ANTI-CAVITATION, BUCKET SECTION	3162 - 14
3E18	ANTI-SKID MAT	1812 - 4
5F5	ARM GRIP REPAIR KIT,EXT.DIPPER	3346 - 6
3G5	ARM RESTS	1821 - 2
4D7	ARM, LOADER LIFT	3140 - 2
3G1	ARM, PILOT CONTROLLER (LEFT SIDE)	1816 - 14
3G3	ARM, PILOT CONTROLLER (RIGHT SIDE)	1816 - 16
5F1	ARM, STANDARD	3346 - 2
3G13	ARM, SUSPENSION SEAT	1821 - 10
5F6	ARM,STABLIZER (310G,310SG)	3348 - 2
2C20	ARMS, ROCKER	0402 - 2
5J5	ATTACHMENT PLUMBING KIT	3363 - 42
3C15	AUDIBLE ALARM, QUICK COUPLER PIN ENGAGEMENT	1674 - 5C
5J3	AUGER COUPLERS (STANDARD DIPPERSTICK)	3363 - 40
5J1	AUGER COUPLERS (WITH EXTENDIBLE DIPPERSTICK)	3363 - 38
5J1	AUGER HYDRAULIC OIL LINES (WITH EXTENDIBLE DIPPERSTICK)	3363 - 38
5J3	AUGER HYDRAULICS (STANDARD DIPPERSTICK)	3363 - 40
5I7	AUXILIARY HYDRAULICS, STD. DIPPERSTICK (310G AND 310SG)	3363 - 20
5I11	AUXILIARY EQUIPMENT HYDRAULICS, EXTENDIBLE DIPPERSTICK (310G AND 310SG)	3363 - 24
5D23	AUXILIARY FUNCTION PEDAL (PILOT CONTROL)	3315 - 15A
5I13	AUXILIARY HYDRAULICS, EXT.DIPPERSTICK (315SG)	3363 - 26
5I9	AUXILIARY HYDRAULICS, STD.DIPPERSTICK (315SG)	3363 - 22
3J19	AUXILIARY OIL COOLER KIT (310G)	2160 - 22
4E1	AUXILIARY SECTION RELIEF VALVE (SERIAL NO. -913416)	3162 - 16
4E5	AUXILIARY SECTION RELIEF VALVE (SERIAL NO. 913417-)	3162 - 20
5G3	AUXILIARY SECTION, BACKHOE VALVE	3362 - 22
4E1	AUXILIARY SECTION, LOADER VALVE (SERIAL NO. -913416)	3162 - 16
4E5	AUXILIARY SECTION, LOADER VALVE (SERIAL NO. 913417-)	3162 - 20
4E3	AUXILIARY VALVE KIT, LOADER (SERIAL NO. -913416)	3162 - 18
1B22	AXLE HOUSING	0201 - 2
1B24	AXLE HOUSING	0201 - 4
1C17	AXLE HOUSING ASSEMBLY (MFWD)	0250 - 4

ALPHABETICAL INDEX - CONTINUED

GRID		PAGE
1C12	AXLE HOUSING, FRONT (WITHOUT MFWD) (SERIAL NO. 911132-)	0230 - 6
1C8	AXLE PIVOT PIN (WITHOUT MFWD) (SERIAL NO. -911131)	0230 - 2
1B22	AXLE ROLLER BEARING	0201 - 2
1B24	AXLE ROLLER BEARING	0201 - 4
1B22	AXLE SHAFT	0201 - 2
1B24	AXLE SHAFT	0201 - 4
1C13	AXLE SWIVEL HOUSING, FRONT (WITHOUT MFWD)(SERIAL NO. 911132-)	0230 - 7
1C15	AXLE, FRONT (MFWD)	0250 - 1
1C8	AXLE, FRONT (WITHOUT MFWD) (SERIAL NO. -911131)	0230 - 2
1C11	AXLE, FRONT (WITHOUT MFWD) (SERIAL NO. 911132-)	0230 - 5

B

3I10	BACK-UP ALARM SYSTEM (310G,310SG)	2004 - 2
3I12	BACK-UP ALARM SYSTEM (315SG)	2004 - 4
3G7	BACK, SEAT	1821 - 4
5E19	BACKHOE BOOM	3344 - 2
5J11	BACKHOE BOOM CYLINDER (310G)	3365 - 2
5J13	BACKHOE BOOM CYLINDER (310G)	3365 - 4
5J15	BACKHOE BOOM CYLINDER (310SG,315SG)	3365 - 6
5J17	BACKHOE BOOM CYLINDER (310SG,315SG)	3365 - 8
5J11	BACKHOE BOOM CYLINDER REPAIR KIT (310G)	3365 - 2
5J13	BACKHOE BOOM CYLINDER REPAIR KIT (310G)	3365 - 4
5J15	BACKHOE BOOM CYLINDER REPAIR KIT (310SG,315SG)	3365 - 6
5J17	BACKHOE BOOM CYLINDER REPAIR KIT (310SG,315SG)	3365 - 8
5E5	BACKHOE BOOM LOCK (310G AND 310SG)	3315 - 20
5E3	BACKHOE BOOM LOCK CONTROL LEVER (310G AND 310SG)	3315 - 18
5E7	BACKHOE BOOM LOCK CONTROL LEVER (315SG)	3315 - 22
5E7	BACKHOE BOOM LOCK CONTROL SOLENOID (315SG)	3315 - 22
5E7	BACKHOE BOOM LOCK CONTROL WIRE HARNESS (315SG)	3315 - 22
5I17	BACKHOE BOOM LOCK HYDRAULICS 315SG	3363 - 30
5E19	BACKHOE BOOM PIN	3344 - 2
5E19	BACKHOE BOOM STOP/CLAMP	3344 - 2
5E20	BACKHOE BOOM,PROTECTION KIT	3344 - 3
5D1	BACKHOE BUCKET	3302 - 14
5D3	BACKHOE BUCKET	3302 - 16
5D1	BACKHOE BUCKET CUTTING EDGE	3302 - 14
5D3	BACKHOE BUCKET CUTTING EDGE	3302 - 16
5J19	BACKHOE BUCKET CYLINDER (310G)	3365 - 10
5J20	BACKHOE BUCKET CYLINDER (310G)(SER.# 910901-925926)	3365 - 11
5J21	BACKHOE BUCKET CYLINDER (310G)(SER.# 925927-)	3365 - 12
5J24	BACKHOE BUCKET CYLINDER (310SG,315SG) SERIAL NO. -926788)	3365 - 15
5J23	BACKHOE BUCKET CYLINDER (310SG,315SG) SERIAL NO. 926130-)	3365 - 14
5J25	BACKHOE BUCKET CYLINDER (310SG,315SG) SERIAL NO. 926789-)	3365 - 16
5J22	BACKHOE BUCKET CYLINDER 310SG,315SG (SERIAL NO. -926129)	3365 - 13
5H19	BACKHOE BUCKET CYLINDER HYDRAULICS	3363 - 8
5J19	BACKHOE BUCKET CYLINDER REPAIR KIT (310G)	3365 - 10
5J20	BACKHOE BUCKET CYLINDER REPAIR KIT (310G)(SER.# 910901-925926)	3365 - 11
5J21	BACKHOE BUCKET CYLINDER REPAIR KIT (310G)(SER.# 925927-)	3365 - 12
5J24	BACKHOE BUCKET CYLINDER REPAIR KIT (310SG,315SG) SERIAL NO. -926788)	3365 - 15
5J23	BACKHOE BUCKET CYLINDER REPAIR KIT (310SG,315SG) SERIAL NO. 926130-)	3365 - 14
5J25	BACKHOE BUCKET CYLINDER REPAIR KIT (310SG,315SG) SERIAL NO. 926789-)	3365 - 16
5J22	BACKHOE BUCKET CYLINDER REPAIR KIT 310SG,315SG (SERIAL NO. -926129)	3365 - 13
5E25	BACKHOE BUCKET PIN LUBE KIT (310G)	3345 - 6
5D1	BACKHOE BUCKET PINS	3302 - 14
5D3	BACKHOE BUCKET PINS	3302 - 16
3F15	BACKHOE CONSOLE (PILOT CONTROL)	1816 - 5A
5E11	BACKHOE CONTROL LEVER CONVERSION LINKAGE (SAE PATTERN)	3315 - 26
5F10	BACKHOE CONTROL VALVE	3362 - 4
5F12	BACKHOE CONTROL VALVE	3362 - 6
5D11	BACKHOE CONTROL VALVE LINKAGE, TWO LEVER (310G AND 310SG)	3315 - 6
3F11	BACKHOE CONTROLS COVER	1816 - 2
3G1	BACKHOE CONTROLS, PILOT CONTROLLER ARM (LEFT SIDE)	1816 - 14
3G3	BACKHOE CONTROLS, PILOT CONTROLLER ARM (RIGHT SIDE)	1816 - 16
5I19	BACKHOE CYLINDER HYDRAULICS (315SG)	3363 - 32
3F13	BACKHOE LEVER COVER	1816 - 4
3F11	BACKHOE LEVERS COVER	1816 - 2
5E1	BACKHOE LINKAGE, FIFTH FN LEVER FOR THREE LEVER CONTROLS	3315 - 16
3D17	BACKHOE MAIN FRAME(315SG)	1740 - 4
5E19	BACKHOE OIL LINES CLAMP	3344 - 2
5H11	BACKHOE STABILIZER CYLINDER HYDRAULICS	3363 - 2
5H13	BACKHOE STABILIZER CYLINDER HYDRAULICS	3363 - 3A
5H15	BACKHOE STABILIZER CYLINDER HYDRAULICS, SIDESHIFT 315SE	3363 - 4
5I3	BACKHOE SWING CYLINDER HYDRAULICS (315SG)	3363 - 16
5E7	BACKHOE SWING LOCK CONTROL LEVER (315SG)	3315 - 22
5D13	BACKHOE THREE LEVER CONTROL VALVE CONVERSION KIT(310G AND 310SG)	3315 - 8
5G3	BACKHOE VALVE AUXILIARY SECTION	3362 - 22
5F16	BACKHOE VALVE BOOM SECTION	3362 - 10
5G23	BACKHOE VALVE BOOM,PILOT SECTION	3362 - 40
5F18	BACKHOE VALVE BUCKET SECTION	3362 - 12
5H1	BACKHOE VALVE BUCKET, PILOT SECTION	3362 - 42
5F20	BACKHOE VALVE CROWD SECTION	3362 - 14
5H3	BACKHOE VALVE CROWD, PILOT SECTION	3362 - 44
5F24	BACKHOE VALVE EXTENDIBLE SECTION	3362 - 18
5D7	BACKHOE VALVE MOUNTING PLATE (PILOT CONTROL)	3315 - 3A
5D5	BACKHOE VALVE MOUNTING PLATE 310G,310SG	3315 - 2

ALPHABETICAL INDEX - CONTINUED

GRID		PAGE
5D9	BACKHOE VALVE MOUNTING PLATE 315SG	3315 - 4
5F14	BACKHOE VALVE PRIORITY INLET SECTION	3362 - 8
5G1	BACKHOE VALVE SELECTIVE FLOW SECTION	3362 - 20
5F22	BACKHOE VALVE SWING SECTION	3362 - 16
5H5	BACKHOE VALVE SWING, PILOT SECTION	3362 - 46
5D11	BACKHOE VALVE TWO LEVER CONVERSION KIT (310G AND 310SG)	3315 - 6
5D15	BACKHOE, FOUR-LEVER CONTROLS, STANDARD (310G,310SG)	3315 - 10
5D13	BACKHOE, THREE LEVER CONTROL VALVE LINKAGE (310G AND 310SG)	3315 - 8
3G5	BACKREST ADJUSTMENT ANGLE	1821 - 2
2F10	BALANCER SHAFT, ENGINE 310G(TURBO), 310SG, 315SG	0415 - 2
2K18	BANK, FRONT AXLE GREASE	1370 - 2
2J23	BAR, CYLINDER SERVICE LOCK	1313 - 2
2I24	BARREL, STEERING CYLINDER (MFWD)	0960 - 12
3H12	BARRIER, HEAT AND NOISE	1834 - 2
3G16	BASE, SEAT FOR NON-SUSPENDED SEAT	1821 - 14
3G14	BASE, SEAT WITH NON-SUSPENDED SEAT	1821 - 12
3B21	BATTERIES,DUAL	1671 - 4
3H19	BATTERY BOX	1913 - 2
3B19	BATTERY CABLE, SINGLE	1671 - 2
3H19	BATTERY COVER	1913 - 2
3B23	BATTERY DISCONNECT SWITCH,MASTER	1671 - 6
3B19	BATTERY INSTALLATION, SINGLE	1671 - 2
3C3	BEACON, ROTATING	1673 - 2
3C3	BEACON, STROBE	1673 - 2
1C10	BEARING, FRONT WHEEL (WITHOUT MFWD) (SERIAL NO. -911131)	0230 - 4
1C12	BEARING,FRONT AXLE HOUSING (WITHOUT MFWD)(SERIAL NO. 911132-)	0230 - 6
2C12	BEARINGS, MAIN 310G (W/O TURBO) (VSN 911769-)	0401 - 2
2C11	BEARINGS, MAIN 310G (W/O TURBO) (VSN-911768)	0401 - 1
2C14	BEARINGS, MAIN 310G(TURBO),310SG,315SG (VSN -910055)	0401 - 4
2C15	BEARINGS, MAIN 310G(TURBO),310SG,315SG (VSN 910056-)	0401 - 6
2D6	BEARINGS,C0NNECTING ROD 310G (W/O TURBO) (VSN 911769-)	0403 - 2A
2D8	BEARINGS,C0NNECTING ROD 310G(TURBO) 310SG 315SG (VSN 910056-)	0403 - 3A
2D7	BEARINGS,C0NNECTING ROD 310G(TURBO), 310SG, 315SG (VSN-910055)	0403 - 2B
2D5	BEARINGS,C0NNECTING ROD 310G (W/O TURBO) (VSN -911768)	0403 - 2
1D14	BELL HOUSING	0341 - 1
1D15	BELL HOUSING	0341 - 2
1E5	BELLVILLEWASHER, FIRST GEAR, POWER SHIFT	0350 - 14
1E13	BELLVILLEWASHER, FORWARD, POWER SHIFT	0350 - 22
1E15	BELLVILLEWASHER, REVERSE, POWER SHIFT	0350 - 24
1E7	BELLVILLEWASHER, 2ND GEAR, POWER SHIFT	0350 - 16
1E9	BELLVILLEWASHER, 3RD GEAR, POWER SHIFT	0350 - 18
1E11	BELLVILLEWASHER, 4TH GEAR, POWER SHIFT	0350 - 20
2G24	BELT, DRIVE 310G(TURBO),310SG,315SG	0429 - 2
3G18	BELT, TETHER	1821 - 16
3H8	BELT,AIR CONDITIONING COMPRESSOR DRIVE	1830 - 12
3H10	BELT,AIR CONDITIONING COMPRESSOR DRIVE	1830 - 14
2H17	BELT,FAN DRIVE	0510 - 2
3G5	BELTS, SEAT	1821 - 2
3G14	BELTS, TETHER WITH NON-SUSPENDED SEAT	1821 - 12
1C23	BEVEL DRIVE GEAR (MFWD) (310SG,315SG)	0250 - 10
2D10	BLOCK, CYLINDER 310G(TURBO), 310SG, 315SG (VSN-910055)	0404 - 2
5E13	BLOCK, TRUNNION SWING CYLINDER, 315SG	3342 - 2
3D15	BLOCK,TRUNNION SWING CYLINDER,310G,310SG	1740 - 2
3H1	BLOWER MOTOR PRESSURIZER	1830 - 6
3H3	BLOWER MOTOR PRESSURIZER	1830 - 7A
3H15	BOLT, STRIKER, HOOD	1910 - 2
3H17	BOLT, STRIKER, HOOD	1910 - 4
5I21	BOOM CYL.KIT, CONTOLLED LOWERING DEVICE	3363 - 34
5I21	BOOM CYL.KIT, LOWERING DEVICE,CONTOLLED	3363 - 34
4F8	BOOM CYLINDER (310SG AND 315SG)(SER.# 910492-926248)	3165 - 8
5H17	BOOM CYLINDER HYDRAULIC HOSES	3363 - 6
5H17	BOOM CYLINDER HYDRAULIC OIL LINES	3363 - 6
4E15	BOOM CYLINDER HYDRAULICS, LOADER	3163 - 2
4E17	BOOM CYLINDER HYDRAULICS, LOADER	3163 - 4
4F8	BOOM CYLINDER REPAIR KIT (310SG AND 315SG)(SER.# 910492-926248)	3165 - 8
5J11	BOOM CYLINDER REPAIR KIT, BACKHOE (310G)	3365 - 2
5J13	BOOM CYLINDER REPAIR KIT, BACKHOE (310G)	3365 - 4
5J15	BOOM CYLINDER REPAIR KIT, BACKHOE (310SG,315SG)	3365 - 6
5J17	BOOM CYLINDER REPAIR KIT, BACKHOE (310SG,315SG)	3365 - 8
5J11	BOOM CYLINDER, BACKHOE (310G)	3365 - 2
5J13	BOOM CYLINDER, BACKHOE (310G)	3365 - 4
5J15	BOOM CYLINDER, BACKHOE (310SG,315SG)	3365 - 6
5J17	BOOM CYLINDER, BACKHOE (310SG,315SG)	3365 - 8
3F21	BOOM LEVER LOCK COVER	1816 - 10
3F23	BOOM LEVER LOCK COVER	1816 - 12
5E3	BOOM LOCK CONTROL LEVER (310G AND 310SG)	3315 - 18
5E5	BOOM LOCK, BACKHOE (310G AND 310SG)	3315 - 20
5E19	BOOM PIN, BACKHOE	3344 - 2
4D19	BOOM SECTION ANTI-CAVITATION RELIEF	3162 - 10
4D17	BOOM SECTION RELIEF VALVE	3162 - 8
4D19	BOOM SECTION RELIEF VALVE	3162 - 10
5F16	BOOM SECTION RELIEF VALVE	3362 - 10
5F16	BOOM SECTION, BACKHOE VALVE	3362 - 10
4D17	BOOM SECTION, LOADER VALVE	3162 - 8
4D19	BOOM SECTION, LOADER VALVE	3162 - 10
2J23	BOOM SERVICE LOCK BAR	1313 - 2
5E19	BOOM STOP/CLAMP,BACKHOE	3344 - 2
4D7	BOOM, LOADER	3140 - 2
5G23	BOOM, PILOT SECTION RELIEF VALVE	3362 - 40
5E19	BOOM,BACKHOE	3344 - 2
5G23	BOOM,PILOT SECTION, BACKHOE VALVE	3362 - 40
1D7	BOOT, TRANSMISSION SHIFTER CARROT	0315 - 2
1D11	BOOT, TRANSMISSION SHIFTER LEVER	0315 - 6
3F15	BOOT, WINCH CONTROL (PILOT CONTROL)	1816 - 5A
3D20	BOTTOM GUARD	1746 - 4
3H19	BOX, BATTERY	1913 - 2
3H19	BOX, TOOL	1913 - 2
2H23	BRACKET, AIR CLEANER MOUNTING	0520 - 2
2I9	BRACKET, ENGINE MOUNTING	0540 - 2
3I9	BRACKET, EXTERNAL REAR VIEW MIRROR	2002 - 3
3E18	BRACKET, HARNESS COVER	1812 - 4
3I13	BRACKET, HORN (SERIAL NO. -910147)	2004 - 6
3I8	BRACKET, INTERIOR REAR VIEW MIRROR	2002 - 2

ALPHABETICAL INDEX - CONTINUED

GRID		PAGE
2K1	BRACKET, LICENCE PLATE	1314 - 2
3H15	BRACKET, STRIKER BOLT	1910 - 2
3H17	BRACKET, STRIKER BOLT	1910 - 4
5D7	BRACKET,BACKHOE VALVE MOUNTING (PILOT CONTROL)	3315 - 3A
5D5	BRACKET,BACKHOE VALVE MOUNTING 310G,310SG	3315 - 2
5D9	BRACKET,BACKHOE VALVE MOUNTING 315SG	3315 - 4
3I6	BRACKET,RADIO ANTENA	2001 - 2
5D7	BRACKET,STABLIZER VALVE MOUNTING (PILOT CONTROL)	3315 - 3A
5D5	BRACKET,STABLIZER VALVE MOUNTING 310G,310SG	3315 - 2
5D9	BRACKET,STABLIZER VALVE MOUNTING 315SG	3315 - 4
1D11	BRACKET,TRANSMISSION SHIFTER LEVER	0315 - 6
3G5	BRACKETS ,SEAT	1821 - 2
2G22	BRACKETS, ALTERNATOR MOUNTING	0423 - 2
2J5	BRAKE DISK	1011 - 2
2J5	BRAKE HOUSING	1011 - 2
2J7	BRAKE LIGHT PRESSURE SWITCH	1060 - 2
2J7	BRAKE PEDAL	1060 - 2
2J5	BRAKE PISTON	1011 - 2
2J11	BRAKE SERVICE, HYDRAULICS	1060 - 6
2J7	BRAKE VALVE	1060 - 2
2J9	BRAKE VALVE	1060 - 4
2J13	BRAKE VALVE BOOST PLUMBING (CAB),310G AND 310SG	1060 - 8
2J15	BRAKE VALVE BOOST PLUMBING (ROPS),310G AND 310SG	1060 - 10
2J7	BRAKE VALVE HOUSING	1060 - 2
2J9	BRAKE VALVE HOUSING	1060 - 4
2J9	BRAKE VALVE KIT	1060 - 4
2J7	BRAKE VALVE MOUNTING PLATE	1060 - 2
2J9	BRAKE VALVE PUSH ROD	1060 - 4
2J18	BRAKE, PARK (AXLE SERIAL NO. -217496)	1111 - 2
2J20	BRAKE, PARK (AXLE SERIAL NO. 217497-)	1111 - 4
2J5	BRAKES, SERVICE	1011 - 2
3J9	BREATHER FILTER, HYDRAULIC RESERVOIR	2160 - 12
1D14	BREATHER, TRANSMISSION	0341 - 1
1D15	BREATHER, TRANSMISSION	0341 - 2
5H21	BUCKET CYLINDER HYDRAULIC HOSES (EXTENDIBLE DIPPERSTICK)	3363 - 10
5H19	BUCKET CYLINDER HYDRAULICS, BACKHOE	3363 - 8
5H19	BUCKET CYLINDER LINES, BACKHOE	3363 - 8
5J24	BUCKET CYLINDER, BACKHOE (310SG,315SG) SERIAL NO. -926788)	3365 - 15
5J23	BUCKET CYLINDER, BACKHOE (310SG,315SG) SERIAL NO. 926130-)	3365 - 14
5J25	BUCKET CYLINDER, BACKHOE (310SG,315SG) SERIAL NO. 926789-)	3365 - 16
5J22	BUCKET CYLINDER, BACKHOE 310SG,315SG (SERIAL NO. -926129)	3365 - 13
4F10	BUCKET CYLINDER, LOADER (SERIAL NO. -941225)	3165 - 10
4F12	BUCKET CYLINDER, LOADER (SERIAL NO. 941226-)	3165 - 12
4C5	BUCKET CYLINDER, MULTI-PURPOSE (SERIAL NO. -925076)	3102 - 12
4C6	BUCKET CYLINDER, MULTI-PURPOSE (SERIAL NO. 925077-)	3102 - 13
4C19	BUCKET LEVELING LINKAGE	3115 - 2
4C21	BUCKET LEVELING LINKAGE	3115 - 4
4C19	BUCKET LEVELING ROD	3115 - 2
4C21	BUCKET LEVELING ROD	3115 - 4
4C19	BUCKET LEVELING YOKE	3115 - 2
4C21	BUCKET LEVELING YOKE	3115 - 4
4D9	BUCKET LINKAGE, LOADER	3140 - 4
5E23	BUCKET LINKS AND PINS,BACKHOE (310SG AND 315SG)	3345 - 4
5E21	BUCKET LINKS AND PINS,BACKHOE (310G)	3345 - 2
5F1	BUCKET PIN	3346 - 2
4B24	BUCKET PINS,LOADER	3102 - 6
4D23	BUCKET SECTION ANTI-CAVITATION RELIEF	3162 - 14
4D21	BUCKET SECTION RELIEF VALVE	3162 - 12
4D23	BUCKET SECTION RELIEF VALVE	3162 - 14
5F18	BUCKET SECTION RELIEF VALVE	3362 - 12
5F18	BUCKET SECTION, BACKHOE VALVE	3362 - 12
4D21	BUCKET SECTION, LOADER VALVE	3162 - 12
4D23	BUCKET SECTION, LOADER VALVE	3162 - 14
5F1	BUCKET SPACER, SYNTHETIC	3346 - 2
4B20	BUCKET, LOADER .76 CUBIC METER (1.00 CUBIC YARD)	3102 - 2
4B20	BUCKET, LOADER .90 CUBIC METER (1.20 CUBIC YARD)	3102 - 2
4B20	BUCKET, LOADER .96 CUBIC METER (1.25 CUBIC YARD)	3102 - 2
4C7	BUCKET, LOADER, COUPLER .76 CUBIC METER (1.00 CUBIC YARD)	3102 - 14
4C7	BUCKET, LOADER, COUPLER .96 CUBIC METER (1.25 CUBIC YARD)	3102 - 14
4C1	BUCKET, MULTI-PURPOSE	3102 - 8
5H1	BUCKET, PILOT SECTION RELIEF VALVE	3362 - 42
5H1	BUCKET, PILOT SECTION, BACKHOE VALVE	3362 - 42
5D1	BUCKET,BACKHOE	3302 - 14
5D3	BUCKET,BACKHOE	3302 - 16
4B22	BUCKET,LOADER .86 CUBIC METER(1.13 CUBIC YARD)	3102 - 4
4B22	BUCKET,LOADER 1.00 CUBIC METER(1.30 CUBIC YARD)	3102 - 4
4C9	BUCKET,LOADER,COUPLER .86 CUBIC METER (1.13 CUBIC YARD)	3102 - 16
4C9	BUCKET,LOADER,COUPLER 1.00 CUBIC METER (1.31 CUBIC YARD)	3102 - 16
4C3	BUCKET,MULTI-PURPOSE	3102 - 10
4C11	BUCKET,MULTI-PURPOSE, COUPLER	3102 - 18
3D22	BUMPER (SERIAL NUMBER -901551)	1747 - 2
3D24	BUMPER (SERIAL NUMBER 901552-)	1747 - 4
3E1	BUMPER (SERIAL NUMBER 901552-)	1747 - 6
3E18	BUMPER, ACCELERATOR PEDAL, RUBER	1812 - 4
3D22	BUMPER, MAIN FRAME (SERIAL NUMBER -901551)	1747 - 2
3D24	BUMPER, MAIN FRAME (SERIAL NUMBER 901552-)	1747 - 4
3E1	BUMPER, MAIN FRAME (SERIAL NUMBER 901552-)	1747 - 6
5F3	BUSHING, EXTENDIBLE ARM	3346 - 4
4C3	BUSHING, MULTI-PURPOSE BUCKET CYLINDER	3102 - 10
4C11	BUSHING, MULTI-PURPOSE BUCKET CYLINDER, COUPLER	3102 - 18
1C12	BUSHING,FRONT AXLE HOUSING (WITHOUT MFWD)(SERIAL NO. 911132-)	0230 - 6
5E13	BUSHING,SLIDING FRAME,315SG	3342 - 2

C

3I6	CAB DOME LIGHT	2001 - 2

ALPHABETICAL INDEX - CONTINUED

GRID		PAGE
3E20	CAB DOOR CYLINDER	1814 - 2
3E22	CAB DOOR CYLINDER	1814 - 4
3E20	CAB DOOR HINGES	1814 - 2
3E22	CAB DOOR HINGES	1814 - 4
3E20	CAB DOORS	1814 - 2
3E22	CAB DOORS	1814 - 4
3E12	CAB FRAME	1811 - 4
3E12	CAB HEADLINER	1811 - 4
3H1	CAB HEATER	1830 - 6
3H3	CAB HEATER	1830 - 7A
3H7	CAB HEATER (20,000 BTU)	1830 - 10
3G22	CAB HEATER DUCTS	1830 - 2
3G24	CAB HEATER DUCTS	1830 - 4
3H7	CAB HEATER MOTOR (20,000 BTU)	1830 - 10
3C9	CAB MAIN WIRE HARNESS	1674 - 2
3C11	CAB MAIN WIRE HARNESS	1674 - 4
3E12	CAB MOUNTING ISOLATORS	1811 - 4
3F1	CAB REAR WINDOWS (SER.NO. -920856)	1814 - 8
3F3	CAB REAR WINDOWS (SER.NO. 920857-)	1814 - 9A
3E14	CAB ROOF	1811 - 6
3E20	CAB SIDE WINDOW LATCH	1814 - 2
3E22	CAB SIDE WINDOW LATCH	1814 - 4
3E20	CAB SIDE WINDOWS	1814 - 2
3E22	CAB SIDE WINDOWS	1814 - 4
3I3	CAB SKIRT	1927 - 2
3E24	CAB WINDSHIELD	1814 - 6
2H19	CABLE, ENGINE SPEED CONTROL	0515 - 2
2H21	CABLE, ENGINE SPEED CONTROL	0515 - 4
3H1	CABLE, HEATER VALVE CONTROL	1830 - 6
3I6	CABLE, RADIO	2001 - 2
4C19	CABLE, RETURN-TO-DIG	3115 - 2
4C19	CABLE, SELF-LEVELING	3115 - 2
3B19	CABLE, SINGLE BATTERY	1671 - 2
3H5	CABLE,HEATER VALVE CONTROL,CANOPY	1830 - 8
5E9	CABLES, STABILIZER CONTROL	3315 - 24
3B21	CABLES,DUAL BATTERY	1671 - 4
3C23	CAM/CRANKSHAFT SWITCH (FRONT WIRE HARNESS) (SN 910056-)	1674 - 9C
2C17	CAMSHAFT GEAR 310G (W/O TURBO) (VSN -911768)PE4045DT056	0402 - 1
2C17	CAMSHAFT GEAR 310G (W/O TURBO) (VSN 893079-907963)T04045DT056	0402 - 1
2C17	CAMSHAFT GEAR 310G (W/O TURBO) (VSN 911769-)T04045DT058	0402 - 1
2C18	CAMSHAFT GEAR 310G(TURBO), 310SG, 315SG (VSN -910055)	0402 - 1A
2C18	CAMSHAFT GEAR 310G(TURBO), 310SG, 315SG (VSN 893079-907963)	0402 - 1A
2C19	CAMSHAFT GEAR 310G(TURBO), 310SG, 315SG (VSN 910056-)	0402 - 1B
2C17	CAMSHAFT 310G (W/O TURBO) (VSN -911768)PE4045DT056	0402 - 1
2C17	CAMSHAFT 310G (W/O TURBO) (VSN 893079-907963)T04045DT056	0402 - 1
2C17	CAMSHAFT 310G (W/O TURBO) (VSN 911769-)T04045DT058	0402 - 1
2C18	CAMSHAFT 310G(TURBO), 310SG, 315SG (VSN -910055)	0402 - 1A
2C18	CAMSHAFT 310G(TURBO), 310SG, 315SG (VSN 893079-907963)	0402 - 1A
2C19	CAMSHAFT 310G(TURBO), 310SG, 315SG (VSN 910056-)	0402 - 1B
3C21	CAN TERMINATION RESISTOR	1674 - 9A
3C11	CAN TERMINATION RESISTORS	1674 - 4
3E10	CANOPY	1811 - 2
3H5	CANOPY HEATER	1830 - 8
3H5	CANOPY HEATER HOSE	1830 - 8
3H5	CANOPY HEATER SHUT-OFF VALVE	1830 - 8
3H5	CANOPY HEATER VALVE CONTROL CABLE	1830 - 8
2I11	CAP, FUEL TANK	0560 - 2
2H17	CAP, RADIATOR	0510 - 2
2D16	CAP,ENGINE OIL FILL INLET	0407 - 2
2D10	CAP,MAIN BEARING 310G(TURBO), 310SG, 315SG (VSN-910055)	0404 - 2
1C1	CARRIER, PLANETARY PINION	0210 - 1
2I7	CATALYTIC MUFFLER KIT	0530 - 6
2F12	CENTER HOUSING,TURBOCHARGER(VSN -910055) 310G(TURBO), 310SG, 315SG	0416 - 2
3E16	CENTER KICK PANEL, REAR	1812 - 2
2K18	CENTRAL LUBRICATION SYSTEM, FRONT AXLE	1370 - 2
1E22	CHARGE PUMP	0360 - 5
1E22	CHARGE PUMP OIL FILTER	0360 - 5
1E22	CHARGE PUMP, AXIAL BEARING	0360 - 5
3C9	CIRCUIT BREAKERS	1674 - 2
5E19	CLAMP, BACKHOE OIL LINES	3344 - 2
3J1	CLAMP,GATHERING	2160 - 6
3J3	CLAMP,GATHERING	2160 - 8
3J5	CLAMP,GATHERING	2160 - 9A
1E5	CLUTCH ASSEMBLY, FIRST GEAR, POWER SHIFT	0350 - 14
1D19	CLUTCH ASSEMBLY, FORWARD	0350 - 2
1D19	CLUTCH ASSEMBLY, PISTON	0350 - 2
1D21	CLUTCH ASSEMBLY, PISTON	0350 - 4
1D21	CLUTCH ASSEMBLY, REVERSE	0350 - 4
1E13	CLUTCH ASSEMBLY,FORWARD, POWER SHIFT	0350 - 22
1E11	CLUTCH ASSEMBLY,FOURTH GEAR, POWER SHIFT	0350 - 20
1E15	CLUTCH ASSEMBLY,REVERSE, POWER SHIFT	0350 - 24
1E7	CLUTCH ASSEMBLY,SECOND GEAR, POWER SHIFT	0350 - 16
1E9	CLUTCH ASSEMBLY,THIRD GEAR, POWER SHIFT	0350 - 18
1E9	CLUTCH BACKING PLATE, POWER SHIFT	0350 - 18
1E11	CLUTCH BACKING PLATE, POWER SHIFT	0350 - 20
1E13	CLUTCH BACKING PLATE, POWER SHIFT	0350 - 22
1E15	CLUTCH BACKING PLATE, POWER SHIFT	0350 - 24
1E5	CLUTCH CARRIER, FIRST GEAR, POWER SHIFT	0350 - 14
1E13	CLUTCH CARRIER, FORWARD, POWER SHIFT	0350 - 22
1E11	CLUTCH CARRIER, FOURTH GEAR, POWER SHIFT	0350 - 20
1E15	CLUTCH CARRIER, REVERSE, POWER SHIFT	0350 - 24
1E7	CLUTCH CARRIER, SECOND GEAR, POWER SHIFT	0350 - 16
1E9	CLUTCH CARRIER, THIRD GEAR, POWER SHIFT	0350 - 18
2J18	CLUTCH DISK, PARK BRAKE (AXLE SERIAL NO. -217496)	1111 - 2
2J20	CLUTCH DISK, PARK BRAKE (AXLE SERIAL NO. 217497-)	1111 - 4
1D19	CLUTCH HUB	0350 - 2
1D21	CLUTCH HUB	0350 - 4
1E21	COIL,CONTROL VALVE SOLENOID, SYNCHRO-SHUTTLE	0360 - 4
2H13	COLD WEATHER STARTING AID	0505 - 4
2H15	COLD WEATHER STARTING AID	0505 - 6
2H13	COLD WEATHER STARTING AID SOLENOID	0505 - 4
2H15	COLD WEATHER STARTING AID SOLENOID	0505 - 6
2I15	COLUMN, STEERING	0960 - 2
2I17	COLUMN, STEERING	0960 - 4
2I17	COLUMN, TILT STEERING	0960 - 4
3C19	COMPRESSOR DIODE, A/C	1674 - 8
3C21	COMPRESSOR DIODE, A/C	1674 - 9A
3H8	COMPRESSOR MOUNTING BRACKETS, AIR CONDITIONING	1830 - 12
3H10	COMPRESSOR MOUNTING BRACKETS, AIR CONDITIONING	1830 - 14
3H8	COMPRESSOR,AIR CONDITIONING	1830 - 12
3H10	COMPRESSOR,AIR CONDITIONING	1830 - 14
3G18	COMPRESSOR,AIR SUSPENSION SEAT	1821 - 16

ALPHABETICAL INDEX - CONTINUED

GRID		PAGE
3H8	CONDENSER,AIR CONDITIONING	1830 - 12
3H10	CONDENSER,AIR CONDITIONING	1830 - 14
2D6	CONNECTING ROD 310G (W/O TURBO) (VSN 911769-)	0403 - 2A
2D8	CONNECTING ROD 310G(TURBO) 310SG 315SG (VSN 910056-)	0403 - 3A
2D7	CONNECTING ROD 310G(TURBO), 310SG, 315SG (VSN-910055)	0403 - 2B
2D6	CONNECTING ROD BEARINGS 310G (W/O TURBO) (VSN 911769-)	0403 - 2A
2D8	CONNECTING ROD BEARINGS 310G(TURBO) 310SG 315SG (VSN 910056-)	0403 - 3A
2D7	CONNECTING ROD BEARINGS 310G(TURBO), 310SG, 315SG (VSN-910055)	0403 - 2B
2D5	CONNECTING ROD BEARINGS 310G (W/O TURBO) (VSN -911768)	0403 - 2
2D5	CONNECTING ROD 310G (W/O TURBO) (VSN -911768)	0403 - 2
2F5	CONNECTOR, SOLENOID, STANADYNE DE10 310G (W/O TURBO) (VSN 911769-)	0413 - 12
2F6	CONNECTOR, SOLENOID, STANADYNE DE10 310G(TURBO),310SG/315SG (VSN 910056-)	0413 - 13
3D10	CONNECTORS, WEATHERPACK	1674 - 20
3C9	CONSOLE WIRING HARNESS,FRONT WITH CAB	1674 - 2
3C11	CONSOLE WIRING HARNESS,SIDE WITH CAB	1674 - 4
3F15	CONSOLE, BACKHOE (PILOT CONTROL)	1816 - 5A
3F13	CONSOLE, BACKHOE CONTROL LEVER	1816 - 4
3F19	CONSOLE, FRONT	1816 - 8
5I21	CONTOLLED LOWERING DEVICE, BOOM CYL.KIT	3363 - 34
3H1	CONTROL CABLE, HEATER VALVE	1830 - 6
3H5	CONTROL CABLE, HEATER VALVE	1830 - 8
3F11	CONTROL COVER, BACKHOE, TWO LEVER	1816 - 2
5G21	CONTROL HANDLE, PILOT,BUTTON FUNTION KIT	3362 - 38
3F13	CONTROL LEVER CONSOLE, BACKHOE	1816 - 4
1D9	CONTROL LEVER, TRANSMISSION	0315 - 4
5E3	CONTROL LEVER,BACKHOE BOOM LOCK (310G AND 310SG)	3315 - 18
5E7	CONTROL LEVER,BACKHOE BOOM LOCK (315SG)	3315 - 22
5E7	CONTROL LEVER,BACKHOE SWING LOCK (315SG)	3315 - 22
5E9	CONTROL VALVE LINKAGE, STABILIZER	3315 - 24
5D13	CONTROL VALVE LINKAGE, THREE LEVER, BACKHOE (310G AND 310SG)	3315 - 8
5D11	CONTROL VALVE LINKAGE,BACKHOE, TWO LEVER (310G AND 310GS)	3315 - 6
1E19	CONTROL VALVE PISTON	0360 - 2
1E23	CONTROL VALVE PISTON, POWER SHIFT	0360 - 6
1E21	CONTROL VALVE SOLENOID COIL, SYNCHRO-SHUTTLE	0360 - 4
1E21	CONTROL VALVE SOLENOID KIT, SYNCHRO-SHUTTLE	0360 - 4
1E21	CONTROL VALVE SOLENOID, SYNCHRO-SHUTTLE	0360 - 4
5F10	CONTROL VALVE, BACKHOE	3362 - 4
5F12	CONTROL VALVE, BACKHOE	3362 - 6
4D13	CONTROL VALVE, LOADER/STABILIZER	3162 - 4
5G17	CONTROL VALVE, PILOT, LEFT	3362 - 34
5G19	CONTROL VALVE, PILOT, RIGHT	3362 - 36
1E19	CONTROL VALVE, TRANSMISSION	0360 - 2
1E23	CONTROL VALVE, TRANSMISSION, POWER SHIFT	0360 - 6
3J21	CONTROL, RIDE	2160 - 24
3J23	CONTROL, RIDE	2160 - 26
3H5	CONTROL,TEMPERATURE HEATER	1830 - 8
5I23	CONTROLLED LOWERING DEVICE,CROWD CYL.KIT	3363 - 36
3G1	CONTROLLER ARM, PILOT (LEFT SIDE)	1816 - 14
3G3	CONTROLLER ARM, PILOT (RIGHT SIDE)	1816 - 16
5G17	CONTROLLER, LEFT HAND VALVE	3362 - 34
5G19	CONTROLLER, RIGHT HAND VALVE	3362 - 36
2F3	CONTROLLER,ENGINE 310G(TURBO),310SG,315SG (VSN 910056-)	0413 - 10
2E23	CONTROLLER,ENGINE 310G(W/O TURBO)(VSN 911769-)	0413 - 6
5D15	CONTROLS, FOUR-LEVER STANDARD BACKHOE (310G,310SG)	3315 - 10
5E11	CONVERSION, BACKHOE CONTROL LEVER LINKAGE (SAE PATTERN)	3315 - 26
1D18	CONVERTER, TORQUE	0350 - 1
2H17	COOLANT RECOVERY TANK	0510 - 2
2H11	COOLANT, ENGINE HEATER	0505 - 2
3J7	COOLER LINES	2160 - 10
2I13	COOLER, FUEL	0560 - 4
3J19	COOLER, HYD. OIL KIT AND HOSES (310G)	2160 - 22
3J15	COOLER, TRANSMISSION, HYD. OIL	2160 - 18
3J17	COOLER,HYD. OIL AND HOSES (HI-AMBIENT)	2160 - 20
3J15	COOLER,HYDRAULIC OIL AND HOSES	2160 - 18
3J13	COOLER,HYDRAULIC OIL AND HOSES (310G)	2160 - 16
3E10	CORD, MANUAL HOLDER ATTACHMENT	1811 - 2
2I13	CORE, FUEL COOLER	0560 - 4
3H7	CORE, HEATER (20,000 BTU)	1830 - 10
3F1	CORNER WINDOWPANE, REAR (SER.NO. -920856)	1814 - 8
3F3	CORNER WINDOWPANE, REAR (SER.NO. 920857-)	1814 - 9A
3E4	COUNTERWEIGHT FRAME	1749 - 3
3E3	COUNTERWEIGHT, FRONT	1749 - 2
4C13	COUPLER FRAME, FORKLIFT	3103 - 2
4C7	COUPLER LOADER BUCKET .76 CUBIC METER (1.00 CUBIC YARD)	3102 - 14
4C9	COUPLER LOADER BUCKET .86 CUBIC METER (1.13 CUBIC YARD)	3102 - 16
4C7	COUPLER LOADER BUCKET .96 CUBIC METER (1.25 CUBIC YARD)	3102 - 14
4C9	COUPLER LOADER BUCKET 1.00 CUBIC METER (1.31 CUBIC YARD)	3102 - 16
4C11	COUPLER MULTI-PURPOSE BUCKET	3102 - 18
4C17	COUPLER, CYLINDER, FRONT	3104 - 4
4E23	COUPLER, FRONT	3163 - 10
4F1	COUPLER, HYDRAULIC HOSES	3163 - 12
4F1	COUPLER, HYDRAULIC LINES	3163 - 12
4C15	COUPLER, HYDRAULIC, FRONT	3104 - 2
4E23	COUPLER, LOADER BUCKET	3163 - 10
4E13	COUPLER, LOADER BUCKET VALVE	3162 - 28
5C17	COUPLER, QUICK (STANDARD) (310G)	3302 - 8
5C15	COUPLER, QUICK (STANDARD) (310SG AND 315SG)	3302 - 6
3J1	COUPLER, QUICK CONNECT	2160 - 6
3J3	COUPLER, QUICK CONNECT	2160 - 8
5C19	COUPLER, QUICK COUPLER (CASE)	3302 - 10
5C21	COUPLER, QUICK COUPLER (FORD)	3302 - 12
5C13	COUPLER, QUICK COUPLER (UNIVERSAL) (310G)	3302 - 4
5C11	COUPLER, QUICK COUPLER (UNIVERSAL) (310SG AND 315SG)	3302 - 2
5J3	COUPLERS,AUGER (STANDARD DIPPERSTICK)	3363 - 40

ALPHABETICAL INDEX - CONTINUED

GRID		PAGE
5J1	COUPLERS,AUGER (WITH EXTENDIBLE DIPPERSTICK)	3363 - 38
2C22	COVER, ACCESS, INJECTION PUMP GEAR (VSN -911768) 310G (W/O TURBO)	0402 - 4
2D1	COVER, ACCESS, INJECTION PUMP GEAR (VSN-910055) 310G(TURBO), 310SG, 315SG	0402 - 6
2C24	COVER, ACCESS, INJECTION PUMP GEAR 310G (W/O TURBO) (VSN 911769-)	0402 - 4B
2D3	COVER, ACCESS, INJECTION PUMP GEAR 310G(TURBO), 310SG, 315SG (VSN910056-)	0402 - 6B
3F11	COVER, BACKHOE CONTROLS	1816 - 2
3F13	COVER, BACKHOE LEVER	1816 - 4
3F11	COVER, BACKHOE LEVERS	1816 - 2
3H19	COVER, BATTERY	1913 - 2
3F21	COVER, BOOM LEVER LOCK	1816 - 10
3F23	COVER, BOOM LEVER LOCK	1816 - 12
3E16	COVER, FLOOR TO FRONT CONSOLE	1812 - 2
3F19	COVER, FUSE PANEL	1816 - 8
3C19	COVER, JUMP START PROTECTION	1674 - 8
3C21	COVER, JUMP START PROTECTION	1674 - 9A
3E16	COVER, LINKAGE	1812 - 2
3F23	COVER, LOADER CONTROL	1816 - 12
3H21	COVER, LOADER CONTROL VALVE PLUMBING	1913 - 4
3E16	COVER, MIDDLE FLOOR	1812 - 2
2D16	COVER, OIL FILLER OPENING	0407 - 2
3I3	COVER, OPERATOR STATION	1927 - 2
3E16	COVER, REAR FLOOR	1812 - 2
2C21	COVER, ROCKER ARM	0402 - 3
3G5	COVER, SEAT BELT	1821 - 2
1D7	COVER, SHIFT HOUSING	0315 - 2
3F21	COVER, STABILIZER CONTROL	1816 - 10
3F23	COVER, STABILIZER CONTROL	1816 - 12
3F17	COVER, STEERING COLUMN	1816 - 6
2F23	COVER, THERMOSTAT	0418 - 2
2C22	COVER, TIMING GEAR (VSN -911768) 310G (W/O TURBO)	0402 - 4
2D1	COVER, TIMING GEAR (VSN -910055) 310G(TURBO), 310SG, 315SG	0402 - 6
2D3	COVER, TIMING GEAR (VSN 910056-) 310G(TURBO), 310SG, 315SG (VSN910056-)	0402 - 6B
2C24	COVER, TIMING GEAR 310G (W/O TURBO) (VSN 911769-)	0402 - 4B
1C14	COVER, WHEEL HUB (WITHOUT MFWD) (SERIAL NO. 911132-)	0230 - 8
3B25	COVER,REMOTE START POST	1671 - 8
2C12	CRANKSHAFT 310G (W/O TURBO) (VSN 911769-)	0401 - 2
2C11	CRANKSHAFT 310G (W/O TURBO) (VSN-911768)	0401 - 1
2C14	CRANKSHAFT 310G(TURBO),310SG,315SG (VSN -910055)	0401 - 4
2C15	CRANKSHAFT 310G(TURBO),310SG,315SG (VSN 910056-)	0401 - 6
2C22	CRANKSHAFT FRONT OIL SEAL (VSN -911768) 310G (W/O TURBO)	0402 - 4
2D1	CRANKSHAFT FRONT OIL SEAL (VSN-910055) 310G(TURBO), 310SG, 315SG	0402 - 6
2C24	CRANKSHAFT FRONT OIL SEAL 310G (W/O TURBO) (VSN 911769-)	0402 - 4B
2D3	CRANKSHAFT FRONT OIL SEAL 310G(TURBO), 310SG, 315SG (VSN910056-)	0402 - 6B
2C12	CRANKSHAFT GEAR 310G (W/O TURBO) (VSN 911769-)	0401 - 2
2C11	CRANKSHAFT GEAR 310G (W/O TURBO) (VSN-911768)	0401 - 1
2C14	CRANKSHAFT GEAR 310G(TURBO),310SG,315SG (VSN -910055)	0401 - 4
2C15	CRANKSHAFT GEAR 310G(TURBO),310SG,315SG (VSN 910056-)	0401 - 6
2H2	CRANKSHAFT REAR OIL SEAL (VSN -910055)	0433 - 3
2H3	CRANKSHAFT REAR OIL SEAL (VSN 910056-)	0433 - 4
2D3	CRANKSHAFT SPEED SENSOR (VSN 910056-) 310G(TURBO), 310SG, 315SG	0402 - 6B
2C24	CRANKSHAFT SPEED SENSOR 310G (W/O TURBO) (VSN 911769-)	0402 - 4B
2C12	CRANKSHAFT TIMING WHEEL 310G (W/O TURBO) (VSN 911769-)	0401 - 2
2C11	CRANKSHAFT TIMING WHEEL 310G (W/O TURBO) (VSN-911768)	0401 - 1
2C14	CRANKSHAFT TIMING WHEEL 310G(TURBO),310SG,315SG (VSN -910055)	0401 - 4
2C15	CRANKSHAFT TIMING WHEEL 310G(TURBO),310SG,315SG (VSN 910056-)	0401 - 6
3C23	CRANKSHAFT/CAM SWITCH (FRONT WIRE HARNESS) (SN 910056-)	1674 - 9C
5I23	CROWD CYL.KIT,CONTROLLED LOWERING DEVICE	3363 - 36
5I23	CROWD CYL.KIT,LOWERING DEVICE,CONTROLLED	3363 - 36
5K1	CROWD CYLINDER	3365 - 17
5K2	CROWD CYLINDER 310SG,315SG	3365 - 18
5H23	CROWD CYLINDER HYDRAULIC HOSE	3363 - 12
5H23	CROWD CYLINDER HYDRAULIC OIL LINES	3363 - 12
5K1	CROWD CYLINDER REPAIR KIT	3365 - 17
5K2	CROWD CYLINDER REPAIR KIT 310SG,315SG	3365 - 18
5F1	CROWD PIN	3346 - 2
5F20	CROWD SECTION RELIEF VALVE	3362 - 14
5F20	CROWD SECTION, BACKHOE VALVE	3362 - 14
5F1	CROWD SPACER, SYNTHETIC	3346 - 2
5H3	CROWD, PILOT SECTION RELIEF VALVE	3362 - 44
5H3	CROWD, PILOT SECTION, BACKHOE VALVE	3362 - 44
3G5	CUSHIONS, SEAT	1821 - 2
4C9	CUTTING EDGE ,COUPLER, LOADER BUCKET .86 CUBIC METER (1.13 CUBIC YARD)	3102 - 16
4C9	CUTTING EDGE ,COUPLER, LOADER BUCKET 1.00 CUBIC METER (1.31 CUBIC YARD)	3102 - 16
5D1	CUTTING EDGE,BACKHOE BUCKET	3302 - 14
5D3	CUTTING EDGE,BACKHOE BUCKET	3302 - 16
4B20	CUTTING EDGE,LOADER BUCKET	3102 - 2
4B22	CUTTING EDGE,LOADER BUCKET	3102 - 4
4C7	CUTTING EDGE,LOADER BUCKET .76 CUBIC METER (1.00 CUBIC YARD)	3102 - 14
4C7	CUTTING EDGE,LOADER BUCKET .96 CUBIC METER (1.25 CUBIC YARD)	3102 - 14
4C1	CUTTING EDGE,MULTI-PURPOSE BUCKET	3102 - 8
2D10	CYLINDER BLOCK 310G(TURBO), 310SG, 315SG (VSN-910055)	0404 - 2
2E12	CYLINDER HEAD	0409 - 2
2E12	CYLINDER HEAD GASKET	0409 - 2
2H6	CYLINDER HEAD REMOVAL GASKET SET 310G(TURBO), 310SG, 315SG	0452 - 1
5I3	CYLINDER HYDRAULICS,BACKHOE SWING (315SG)	3363 - 16
2D6	CYLINDER LINER 310G (W/O TURBO) (VSN 911769-)	0403 - 2A
2D8	CYLINDER LINER 310G(TURBO) 310SG 315SG (VSN 910056-)	0403 - 3A
2D7	CYLINDER LINER 310G(TURBO), 310SG, 315SG (VSN-910055)	0403 - 2B
2D5	CYLINDER LINER O-RING KIT 310G (W/O TURBO) (VSN -911768)	0403 - 2
2D6	CYLINDER LINER O-RING KIT 310G (W/O TURBO) (VSN 911769-)	0403 - 2A

ALPHABETICAL INDEX - CONTINUED

GRID		PAGE
2D8	CYLINDER LINER O-RING KIT 310G(TURBO) 310SG 315SG (VSN 910056-)	0403 - 3A
2D7	CYLINDER LINER O-RING KIT 310G(TURBO), 310SG, 315SG (VSN-910055)	0403 - 2B
2D5	CYLINDER LINER 310G (W/O TURBO) (VSN -911768)	0403 - 2
5J11	CYLINDER REPAIR KIT, BACKHOE BOOM (310G)	3365 - 2
5J13	CYLINDER REPAIR KIT, BACKHOE BOOM (310G)	3365 - 4
5J15	CYLINDER REPAIR KIT, BACKHOE BOOM (310SG,315SG)	3365 - 6
5J17	CYLINDER REPAIR KIT, BACKHOE BOOM (310SG,315SG)	3365 - 8
5J19	CYLINDER REPAIR KIT, BACKHOE BUCKET (310G)	3365 - 10
5J20	CYLINDER REPAIR KIT, BACKHOE BUCKET (310G)(SER.# 910901-925926)	3365 - 11
5J21	CYLINDER REPAIR KIT, BACKHOE BUCKET (310G)(SER.# 925927-)	3365 - 12
5J24	CYLINDER REPAIR KIT, BACKHOE BUCKET (310SG,315SG) SERIAL NO. -926788)	3365 - 15
5J23	CYLINDER REPAIR KIT, BACKHOE BUCKET (310SG,315SG) SERIAL NO. 926130-)	3365 - 14
5J25	CYLINDER REPAIR KIT, BACKHOE BUCKET (310SG,315SG) SERIAL NO. 926789-)	3365 - 16
5J22	CYLINDER REPAIR KIT, BACKHOE BUCKET 310SG,315SG (SERIAL NO. -926129)	3365 - 13
5K6	CYLINDER REPAIR KIT, STABILIZER 310G (SERIAL NO. -925946)	3365 - 21
5K16	CYLINDER REPAIR KIT, STABILIZER (315SG)	3365 - 27
5K17	CYLINDER REPAIR KIT, STABILIZER (315SG) (SERIAL NO. 944156-)	3365 - 28
5K9	CYLINDER REPAIR KITS, STABILIZER 310G (SERIAL NO. XXXXXX-)	3365 - 22A
5K8	CYLINDER REPAIR KITS, STABILIZER 310G (SERIAL NO. 925947-XXXXXX)	3365 - 22
5K10	CYLINDER REPAIR KITS, STABILIZER 310SG (SER.NO.-926206)	3365 - 23
5K12	CYLINDER REPAIR KITS, STABILIZER 310SG (SER.NO.XXXXXX-)	3365 - 24A
5K11	CYLINDER REPAIR KITS, STABILIZER 310SG (SER.NO.926207-XXXXXX)	3365 - 24
5K13	CYLINDER REPAIR KITS, STABLIZER 310SG (SERIAL NO. -925993)	3365 - 25
5K15	CYLINDER REPAIR KITS, STABLIZER 310SG (SERIAL NO. XXXXXX-)	3365 - 26A
5K14	CYLINDER REPAIR KITS, STABLIZER 310SG (SERIAL NO. 925994-XXXXXX)	3365 - 26
2J23	CYLINDER ROD LOCK BAR	1313 - 2
5J11	CYLINDER, BACKHOE BOOM (310G)	3365 - 2
5J13	CYLINDER, BACKHOE BOOM (310G)	3365 - 4
5J15	CYLINDER, BACKHOE BOOM (310SG,315SG)	3365 - 6
5J17	CYLINDER, BACKHOE BOOM (310SG,315SG)	3365 - 8
5J19	CYLINDER, BACKHOE BUCKET (310G)	3365 - 10
5J20	CYLINDER, BACKHOE BUCKET (310G)(SER.# 910901-925926)	3365 - 11
5J21	CYLINDER, BACKHOE BUCKET (310G)(SER.# 925927-)	3365 - 12
5J24	CYLINDER, BACKHOE BUCKET (310SG,315SG) SERIAL NO. -926788)	3365 - 15
5J23	CYLINDER, BACKHOE BUCKET (310SG,315SG) SERIAL NO. 926130-)	3365 - 14
5J25	CYLINDER, BACKHOE BUCKET (310SG,315SG) SERIAL NO. 926789-)	3365 - 16
5J22	CYLINDER, BACKHOE BUCKET 310SG,315SG (SERIAL NO. -926129)	3365 - 13
5H19	CYLINDER, BACKHOE BUCKET HYDRAULICS	3363 - 8
5H11	CYLINDER, BACKHOE STABILIZER HYDRAULICS	3363 - 2
5H13	CYLINDER, BACKHOE STABILIZER HYDRAULICS	3363 - 3A
5H15	CYLINDER, BACKHOE STABILIZER HYDRAULICS SIDESHIFT 315SE	3363 - 4
4F8	CYLINDER, BOOM (310SG AND 315SG)(SER.# 910492-926248)	3165 - 8
5K1	CYLINDER, CROWD	3365 - 17
5K2	CYLINDER, CROWD 310SG,315SG	3365 - 18
5K19	CYLINDER, EXTENDIBLE ARM (310G)	3365 - 30
5K20	CYLINDER, EXTENDIBLE ARM (310G) (SERIAL NO. 928457-953470)	3365 - 31
5K21	CYLINDER, EXTENDIBLE ARM (310G) (SERIAL NO. 953471-)	3365 - 32
5K23	CYLINDER, EXTENDIBLE ARM (310SG,315SG)	3365 - 34
5K24	CYLINDER, EXTENDIBLE ARM (310SG,315SG)	3365 - 35
5K25	CYLINDER, EXTENDIBLE ARM (310SG,315SG)	3365 - 36
5F3	CYLINDER, EXTENDIBLE DIPPERSTICK	3346 - 4
5K19	CYLINDER, EXTENDIBLE DIPPERSTICK (310G)	3365 - 30
5K20	CYLINDER, EXTENDIBLE DIPPERSTICK (310G) (SERIAL NO. 928457-953470)	3365 - 31
5K21	CYLINDER, EXTENDIBLE DIPPERSTICK (310G) (SERIAL NO. 953471-)	3365 - 32
5K23	CYLINDER, EXTENDIBLE DIPPERSTICK (310SG,315SG)	3365 - 34
5K24	CYLINDER, EXTENDIBLE DIPPERSTICK (310SG,315SG)	3365 - 35
5K25	CYLINDER, EXTENDIBLE DIPPERSTICK (310SG,315SG)	3365 - 36
4C17	CYLINDER, FRONT COUPLER	3104 - 4
4C15	CYLINDER, HYDRAULIC FRONT COUPLER	3104 - 2
4F3	CYLINDER, LOADER BOOM LIFT (310G)(SER.# -926493)	3165 - 2
4F5	CYLINDER, LOADER BOOM LIFT (310G)(SER.# 926494-)	3165 - 4
4F9	CYLINDER, LOADER BOOM LIFT (310SG AND 315SG)(SER.# 926249-)	3165 - 9
4F6	CYLINDER, LOADER BOOM LIFT (310SG AND 315SG)(SERIAL NO. -910491)	3165 - 6
4F3	CYLINDER, LOADER BOOM LIFT PINS (310G)(SER.# -926493)	3165 - 2
5I15	CYLINDER, LOCK SIDE SHIFT 315SG	3363 - 28
4C3	CYLINDER, MULTI-PURPOSE BUCKET	3102 - 10
4C5	CYLINDER, MULTI-PURPOSE BUCKET (SERIAL NO. -925076)	3102 - 12
4C6	CYLINDER, MULTI-PURPOSE BUCKET (SERIAL NO. 925077-)	3102 - 13
2J1	CYLINDER, POWER STEERING (WITHOUT MFWD) (SERIAL NO. -911131)	0960 - 14
2J2	CYLINDER, POWER STEERING (WITHOUT MFWD) (SERIAL NO. -911131)	0960 - 16
5K6	CYLINDER, STABILIZER 310G (SERIAL NO. -925946)	3365 - 21
5K12	CYLINDER, STABILIZER 310SG (SER.NO.XXXXXX-)	3365 - 24A

ALPHABETICAL INDEX - CONTINUED

GRID		PAGE
5K11	CYLINDER, STABILIZER 310SG (SER.NO.926207-XXXXXX)	3365 - 24
5K16	CYLINDER, STABILIZER (315SG)	3365 - 27
5K17	CYLINDER, STABILIZER (315SG) (SERIAL NO. 944156-)	3365 - 28
5K13	CYLINDER, STABILIZER, EXTENDED 310SG (SERIAL NO. -925993)	3365 - 25
5K15	CYLINDER, STABILIZER, EXTENDED 310SG (SERIAL NO. XXXXXX-)	3365 - 26A
5K14	CYLINDER, STABILIZER, EXTENDED 310SG (SERIAL NO. 925994-XXXXXX)	3365 - 26
5K10	CYLINDER, STABILIZER, STANDARD 310SG (SER.NO.-926206)	3365 - 23
2I24	CYLINDER, STEERING, MECHANICAL FRONT WHEEL DRIVE (MFWD)	0960 - 12
5K3	CYLINDER, SWING	3365 - 19
5K4	CYLINDER, SWING	3365 - 19A
5K5	CYLINDER, SWING 310SG,315SG	3365 - 20
5E13	CYLINDER, SWING TRUNNION BLOCK, 315SG	3342 - 2
3E20	CYLINDER,CAB DOOR	1814 - 2
3E22	CYLINDER,CAB DOOR	1814 - 4
5I5	CYLINDER,EXTENSION,EXTENDIBLE DIPPERSTIC K HYDRAULICS	3363 - 18
1C13	CYLINDER,FRONT AXLE STEERING (WITHOUT MFWD)(SERIAL NO. 911132-)	0230 - 7
4F10	CYLINDER,LOADER BUCKET (SERIAL NO. -941225)	3165 - 10
4F12	CYLINDER,LOADER BUCKET (SERIAL NO. 941226-)	3165 - 12
5K9	CYLINDER,STABILIZER 310G (SERIAL NO. XXXXXX-)	3365 - 22A
5K8	CYLINDER,STABILIZER 310G (SERIAL NO. 925947-XXXXXX)	3365 - 22
3D15	CYLINDER,SWING TRUNNION BLOCK,310G,310SG	1740 - 2

D

2K3	DECALS	1320 - 2
2K5	DECALS	1320 - 4
2K7	DECALS	1320 - 6
2K9	DECALS	1320 - 8
3C5	DELUXE LIGHTS SERIAL NO. -XXXXXX	1673 - 4
3C7	DELUXE LIGHTS SERIAL NO. XXXXXX-	1673 - 6
3D13	DEUTSCH TERMINALS	1674 - 23
5I21	DEVICE,CONTROLLED LOWERING,BOOM CYL.KIT	3363 - 34
5I23	DEVICE,CONTROLLED LOWERING,CROWD CYL.KIT	3363 - 36
1C2	DIFFERENTIAL ASSEMBLY WITH LOCK	0210 - 2
1B22	DIFFERENTIAL HOUSING	0201 - 2
1B24	DIFFERENTIAL HOUSING	0201 - 4
1C2	DIFFERENTIAL HOUSING WITH LOCK	0210 - 2
1C6	DIFFERENTIAL LOCK PLUMBING	0210 - 6
3D3	DIFFERENTIAL LOCK PUSH BUTTON	1674 - 12
1E21	DIFFERENTIAL LOCK SOLENOID, SYNCHRO-SHUTTLE	0360 - 4
3D3	DIFFERENTIAL LOCK SWITCH	1674 - 12
1D1	DIFFERENTIAL SPIRAL BEVEL GEAR (MFWD)	0250 - 12
1C2	DIFFERENTIAL WITH LOCK	0210 - 2
1C23	DIFFERENTIAL,LIMITED SLIP (MFWD) (310SG,315SG)	0250 - 10
3C19	DIODE, A/C COMPRESSOR	1674 - 8
3C21	DIODE, A/C COMPRESSOR	1674 - 9A
3C19	DIODES	1674 - 8
3C21	DIODES	1674 - 9A
5F1	DIPPERSTICK	3346 - 2
5F3	DIPPERSTICK EXTENDIBLE	3346 - 4
5F1	DIPPERSTICK PIN	3346 - 2
5K19	DIPPERSTICK, CYLINDER EXTENDIBLE (310G)	3365 - 30
5K20	DIPPERSTICK, CYLINDER EXTENDIBLE (310G) (SERIAL NO. 928457-953470)	3365 - 31
5K21	DIPPERSTICK, CYLINDER EXTENDIBLE (310G) (SERIAL NO. 953471-)	3365 - 32
5K23	DIPPERSTICK, CYLINDER EXTENDIBLE (310SG,315SG)	3365 - 34
5K24	DIPPERSTICK, CYLINDER EXTENDIBLE (310SG,315SG)	3365 - 35
5K25	DIPPERSTICK, CYLINDER EXTENDIBLE (310SG,315SG)	3365 - 36
5F5	DIPPERSTICK,EXT. ARM GRIP REPAIR	3346 - 6
5F5	DIPPERSTICK,EXT.PROTECTION KIT	3346 - 6
2D17	DIPSTICK TUBE, ENGINE OIL	0407 - 4
1D17	DIPSTICK TUBE, TRANSMISSION	0341 - 4
2D17	DIPSTICK, ENGINE OIL	0407 - 4
2D18	DIPSTICK, ENGINE OIL PE4045DT058 (VSN 929330-)	0407 - 5
3D20	DIPSTICK, GUARD, TRANSMISSION	1746 - 4
1D17	DIPSTICK,TRANSMISSION	0341 - 4
3D17	DIRT PAD,SLIDING FRAME (315SG)	1740 - 4
1E19	DISCONNECT SOLENOID, TRANSMISSION	0360 - 2
2J5	DISK, BRAKE	1011 - 2
1D25	DOG GEAR,OUTPUT SHAFT	0350 - 8
3E12	DOME LIGHT	1811 - 4
3C11	DOOR FLAP RELAY,A/C	1674 - 4
3E22	DOOR STRAP	1814 - 4
3E22	DOOR TETHER	1814 - 4
3E18	DOOR THRESHOLD	1812 - 4
3E20	DOORS, CAB	1814 - 2
3E22	DOORS, CAB	1814 - 4
3J11	DP SWITCH KIT	2160 - 14
2K16	DRAIN PACKAGE, ENVIORMENTAL	1369 - 6
2H17	DRAIN VALVE,RADIATOR	0510 - 2
1C16	DRIVE SHAFT YOKE (MFWD)	0250 - 2
1C16	DRIVE SHAFT, UNIVERSAL (MFWD)	0250 - 2
1D13	DRIVE SHAFT,REAR(REVERSER)	0325 - 2
1C21	DRIVE,PLANETARY (MFWD)	0250 - 8
1C22	DRIVE,PLANETARY (MFWD)(310G)	0250 - 9
2G16	DRIVE,STARTER MOTOR (310G) (ENG.SER.NO. 866618-908991)	0422 - 2
2G17	DRIVE,STARTER MOTOR (310SG,315SG)(SERIAL NO. -894292)	0422 - 3
2G16	DRIVE,STARTER MOTOR (WITH TURBOCHARGER) (310G) (ENGINE SERIAL NO. -268961)	0422 - 2
2G16	DRIVE,STARTER MOTOR (WITHOUT TURBO) (310G) (ENGINE SERIAL NO. -257521)	0422 - 2
5E21	DRIVER LINK (310G)	3345 - 2
5E23	DRIVER LINK (310SG AND 315SG)	3345 - 4
3H8	DRYER,RECEIVER, AIR CONDITIONING	1830 - 12
3H10	DRYER,RECEIVER, AIR CONDITIONING	1830 - 14
3B21	DUAL BATTERIES	1671 - 4
3B21	DUAL BATTERY CABLES	1671 - 4
3G22	DUCTS, AIR CONDITIONING	1830 - 2
3G24	DUCTS, AIR CONDITIONING	1830 - 4
3G22	DUCTS, CAB HEATER	1830 - 2
3G24	DUCTS, CAB HEATER	1830 - 4

E

2E23	ECU - ENGINE CONTROLLER 310G(W/O TURBO)(VSN 911769-)	0413 - 6

ALPHABETICAL INDEX - CONTINUED

GRID		PAGE
2H17	EDGING, ISOLATOR	0510 - 2
2E10	ELBOW, ENGINE VENTILATING PE4045DT058	0408 - 4
2E15	ELBOW,EXHAUST 310G(TURBO), 310SG, 315SG	0410 - 2
3C15	ELECTRICAL, FRONT COUPLER HARNESS	1674 - 5C
3C13	ELECTRICAL, PILOT ENABLE	1674 - 5A
2H13	ELECTRONIC ETHER STARTING AID	0505 - 4
2H23	ELEMENT, AIR CLEANER	0520 - 2
2E1	ELEMENT, ENGINE OIL FILTER (VSN -911768) 310G (W/O TURBO)	0407 - 12
2E4	ELEMENT, ENGINE OIL FILTER (VSN -910055) 310G(TURBO),310SG,315SG	0407 - 16
2E6	ELEMENT, ENGINE OIL FILTER (VSN 910056-) 310G(TURBO),310SG,315SG	0407 - 18
2E3	ELEMENT, ENGINE OIL FILTER (VSN 911769-) 310G (W/O TURBO)	0407 - 14
3J11	ELEMENT, FILTER	2160 - 14
2G9	ELEMENT, FUEL FILTER 310G (TURBO),310SG, 315SG) (VSN -910055)	0420 - 8
2G3	ELEMENT, FUEL FILTER 310G (W/O TURBO) (VSN -911768)	0420 - 2
2G5	ELEMENT, FUEL FILTER 310G (W/O TURBO) (VSN 911769-)	0420 - 4
2G11	ELEMENT, FUEL FILTER 310G(TURBO), 310SG, 315SG (VSN 910056-)	0420 - 10
3I18	EMBLEM, SMV	2008 - 2
3F9	ENABLE SWITCH, REAR WIPER	1814 - 14
2I24	END CAP, STEERING CYLINDER (MFWD)	0960 - 12
2F10	ENGINE BALANCER SHAFT 310G(TURBO), 310SG, 315SG	0415 - 2
2F3	ENGINE CONTROLLER 310G(TURBO),310SG,315SG (VSN 910056-)	0413 - 10
2E23	ENGINE CONTROLLER 310G(W/O TURBO)(VSN 911769-)	0413 - 6
2E23	ENGINE CONTROLLER UNIT - ECU 310G(W/O TURBO)(VSN 911769-)	0413 - 6
2H11	ENGINE COOLANT HEATER	0505 - 2
3C19	ENGINE COOLANT TEMPERATURE SENDER	1674 - 8
3C21	ENGINE COOLANT TEMPERATURE SENDER	1674 - 9A
2F23	ENGINE COOLANT TEMPERATURE SENSOR	0418 - 2
3C23	ENGINE COOLANT TEMPERATURE SWITCH (FRONT WIRE HARNESS) (SN 910056-)	1674 - 9C
2H1	ENGINE FLYWHEEL	0433 - 2
2D9	ENGINE FRONT PLATE	0404 - 1
3C23	ENGINE FRONT WIRE HARNESS (SN 910056-)	1674 - 9C
2H7	ENGINE MAJOR OVERHAUL GASKET SET 310G(TURBO), 310SG, 315SG	0452 - 2
2I9	ENGINE MOUNT ISOLATOR	0540 - 2
2I9	ENGINE MOUNTING BRACKET	0540 - 2
2D10	ENGINE OIL BY-PASS VALVE 310G(TURBO), 310SG, 315SG (VSN-910055)	0404 - 2
2G1	ENGINE OIL COOLER	0419 - 2
2G1	ENGINE OIL COOLER ADAPTER	0419 - 2
2D17	ENGINE OIL DIPSTICK	0407 - 4
2D18	ENGINE OIL DIPSTICK PE4045DT058 (VSN 929330-)	0407 - 5
2D17	ENGINE OIL DIPSTICK TUBE	0407 - 4
2D18	ENGINE OIL DIPSTICK TUBE PE4045DT058 (VSN 929330-)	0407 - 5
2D16	ENGINE OIL FILL INLET CAP	0407 - 2
2E1	ENGINE OIL FILTER (VSN -911768) 310G (W/O TURBO)	0407 - 12
2E4	ENGINE OIL FILTER (VSN -910055) 310G(TURBO),310SG,315SG	0407 - 16
2E6	ENGINE OIL FILTER (VSN 910056-) 310G(TURBO),310SG,315SG	0407 - 18
2E3	ENGINE OIL FILTER (VSN 911769-) 310G (W/O TURBO)	0407 - 14
2E1	ENGINE OIL FILTER HEADER (VSN -911768) 310G (W/O TURBO)	0407 - 12
2E4	ENGINE OIL FILTER HEADER (VSN -910055) 310G(TURBO),310SG,315SG	0407 - 16
2E6	ENGINE OIL FILTER HEADER (VSN 910056-) 310G(TURBO),310SG,315SG	0407 - 18
2E3	ENGINE OIL FILTER HEADER (VSN 911769-) 310G (W/O TURBO)	0407 - 14
2D20	ENGINE OIL PAN 310G (W/O TURBO) (VSN -911768)(VSN 911769-)	0407 - 6
2D20	ENGINE OIL PAN 310G (W/O TURBO) (VSN 893079 - 907963)	0407 - 6
2D22	ENGINE OIL PAN 310G(TURBO),310SG,315SG (VSN 893079-907963)(VSN -910055)	0407 - 8
2D24	ENGINE OIL PAN 310G(TURBO),310SG,315SG (VSN 910056-)	0407 - 10
2C22	ENGINE OIL PRESSURE REGULATING VALVE (VSN -911768) 310G (W/O TURBO)	0402 - 4
2D1	ENGINE OIL PRESSURE REGULATING VALVE (VSN-910055) 310G(TURBO), 310SG, 315SG	0402 - 6
2D10	ENGINE OIL PRESSURE REGULATING VALVE 310G(TURBO), 310SG, 315SG (VSN-910055)	0404 - 2
3C19	ENGINE OIL PRESSURE SWITCH	1674 - 8
3C21	ENGINE OIL PRESSURE SWITCH	1674 - 9A
2E7	ENGINE OIL PUMP	0407 - 19
2E7	ENGINE OIL PUMP GEAR	0407 - 19
2E7	ENGINE OIL PUMP HOUSING	0407 - 19
2E7	ENGINE OIL PUMP INTAKE	0407 - 19
2H4	ENGINE OVERHAUL KIT	0450 - 2
2H7	ENGINE OVERHAUL KIT 310G(TURBO), 310SG, 315SG	0452 - 2
2D6	ENGINE PISTON 310G (W/O TURBO) (VSN 911769-)	0403 - 2A
2D8	ENGINE PISTON 310G(TURBO) 310SG 315SG (VSN 910056-)	0403 - 3A
2D7	ENGINE PISTON 310G(TURBO), 310SG, 315SG (VSN-910055)	0403 - 2B
2D5	ENGINE PISTON 310G (W/O TURBO) (VSN -911768)	0403 - 2
2H7	ENGINE REBUILD KIT 310G(TURBO), 310SG, 315SG	0452 - 2
2D12	ENGINE SHORT BLOCK (ENG. SER. NO. -221705)	0404 - 4
2D14	ENGINE SHORT BLOCK (ENG. SER. NO. 221706-)	0404 - 6
2D12	ENGINE SHORT BLOCK (ENG.SER.NO.866618-90 8991)	0404 - 4
3H15	ENGINE SIDE PANELS	1910 - 2
3H17	ENGINE SIDE PANELS	1910 - 4
3H15	ENGINE SIDE SHIELDS	1910 - 2
3H17	ENGINE SIDE SHIELDS	1910 - 4
2H19	ENGINE SPEED CONTROL	0515 - 2
2H21	ENGINE SPEED CONTROL	0515 - 4
2H19	ENGINE SPEED CONTROL CABLE	0515 - 2
2H21	ENGINE SPEED CONTROL CABLE	0515 - 4
2H19	ENGINE SPEED CONTROL LEVER	0515 - 2
2H21	ENGINE SPEED CONTROL LEVER	0515 - 4
2H19	ENGINE SPEED CONTROL LINKAGE	0515 - 2
2H21	ENGINE SPEED CONTROL POTENTIOMETER	0515 - 4
2H21	ENGINE SPEED SENSOR	0515 - 4
2I9	ENGINE SUPPORT	0540 - 2
2F23	ENGINE THERMOSTAT	0418 - 2
2E8	ENGINE VENTILATING HOSE (DT056, TT080/81/88/89)	0408 - 2

ALPHABETICAL INDEX - CONTINUED

GRID		PAGE
2E8	ENGINE VENTILATING SYSTEM (DT056, TT080/81/88/89)	0408 - 2
2E10	ENGINE VENTILATING SYSTEM PE4045DT058	0408 - 4
3C19	ENGINE WIRING HARNESS	1674 - 8
3C21	ENGINE WIRING HARNESS	1674 - 9A
2K16	ENVIORMENTAL DRAIN PACKAGE	1369 - 6
3C17	ETHER SWITCH	1674 - 6
3H1	EVAPORATOR	1830 - 6
3H3	EVAPORATOR	1830 - 7A
3H3	EVAPORATOR TEMPERATURE SWITCH	1830 - 7A
2E15	EXHAUST ADAPTER 310G(TURBO), 310SG, 315SG	0410 - 2
2E15	EXHAUST ELBOW 310G(TURBO), 310SG, 315SG	0410 - 2
2I5	EXHAUST EXTENSION	0530 - 4
2I3	EXHAUST EXTENSION (310G)	0530 - 2
2E14	EXHAUST MANIFOLD	0410 - 1
2E14	EXHAUST MANIFOLD GASKET	0410 - 1
2E12	EXHAUST VALVE	0409 - 2
3H1	EXPANSION VALVE	1830 - 6
3H3	EXPANSION VALVE	1830 - 7A
5I13	EXT. DIPPERSTICK AUXILIARY HYDRAULICS (315SG)	3363 - 26
5F5	EXT.DIPPER ARM GRIP REPAIR KIT	3346 - 6
5F5	EXT.DIPPERSTICK PROTECTION KIT	3346 - 6
3I1	EXTENDED GRILLE HOUSING	1921 - 4
5K19	EXTENDIBLE ARM CYLINDER (310G)	3365 - 30
5K20	EXTENDIBLE ARM CYLINDER (310G) (SERIAL NO. 928457-953470)	3365 - 31
5K21	EXTENDIBLE ARM CYLINDER (310G) (SERIAL NO. 953471-)	3365 - 32
5K23	EXTENDIBLE ARM CYLINDER (310SG,315SG)	3365 - 34
5K24	EXTENDIBLE ARM CYLINDER (310SG,315SG)	3365 - 35
5K25	EXTENDIBLE ARM CYLINDER (310SG,315SG)	3365 - 36
5F3	EXTENDIBLE ARM LOCKING PIN	3346 - 4
5F3	EXTENDIBLE ARM PAD	3346 - 4
5F3	EXTENDIBLE ARM WEARSTRIPS	3346 - 4
5D19	EXTENDIBLE DIPPER PEDAL (PILOT CONTROL)	3315 - 13A
5K19	EXTENDIBLE DIPPERSICK CYLINDER (310G)	3365 - 30
5K20	EXTENDIBLE DIPPERSICK CYLINDER (310G) (SERIAL NO. 928457-953470)	3365 - 31
5K21	EXTENDIBLE DIPPERSICK CYLINDER (310G) (SERIAL NO. 953471-)	3365 - 32
5K23	EXTENDIBLE DIPPERSICK CYLINDER (310SG,315SG)	3365 - 34
5K24	EXTENDIBLE DIPPERSICK CYLINDER (310SG,315SG)	3365 - 35
5K25	EXTENDIBLE DIPPERSICK CYLINDER (310SG,315SG)	3365 - 36
5F3	EXTENDIBLE DIPPERSTICK	3346 - 4
5I11	EXTENDIBLE DIPPERSTICK AUXILIARY HYDRAULICS (310G AND 310SG)	3363 - 24
5H21	EXTENDIBLE DIPPERSTICK BUCKET CYLINDER HYDRAULICS	3363 - 10
5I5	EXTENDIBLE DIPPERSTICK EXTENSION CYLINDER HYDRAULICS	3363 - 18
5I5	EXTENDIBLE DIPPERSTICK HYDRAULICS	3363 - 18
5I5	EXTENDIBLE DIPPERSTICK LINES	3363 - 18
5H21	EXTENDIBLE DIPPERSTICK LINES, BUCKET	3363 - 10
5F24	EXTENDIBLE SECTION, BACKHOE VALVE	3362 - 18
5I5	EXTENSION CYLINDER HYDRAULICS,EXTENDIBLE DIPPERSTICK	3363 - 18
2I5	EXTENSION, EXHAUST	0530 - 4
2I3	EXTENSION, EXHAUST (310G)	0530 - 2
3I9	EXTERNAL REAR VIEW MIRROR	2002 - 3

F

2H17	FAN DRIVE BELT	0510 - 2
2G24	FAN DRIVE BELT TENSIONER 310G(TURBO),310SG,315SG	0429 - 2
2G24	FAN DRIVE HOUSING 310G(TURBO),310SG,315SG	0429 - 2
2G24	FAN DRIVE HUB 310G(TURBO),310SG,315SG	0429 - 2
2G24	FAN DRIVE PULLEY 310G(TURBO),310SG,315SG	0429 - 2
2H17	FAN SHROUD	0510 - 2
2H17	FAN SHROUD, RADIATOR	0510 - 2
3C1	FAN, ALTERNATOR	1672 - 2
3H7	FAN, CAB HEATER (20,000 BTU)	1830 - 10
3I3	FENDERS	1927 - 2
5E1	FIFTH FN LEVER FOR THREE LEVER CONTROLS	3315 - 16
5D17	FIFTH FUNCTION FOOT CONTROL	3315 - 12
5G5	FIFTH FUNCTION MANUAL VALVE KIT (310G)	3362 - 24
5G6	FIFTH FUNCTION MANUAL VALVE KIT (310SG AND 315SG)	3362 - 25
5D17	FIFTH FUNCTION PEDAL	3315 - 12
5D19	FIFTH FUNCTION PEDAL (PILOT CONTROL)	3315 - 13A
3J11	FILTER ELEMENT	2160 - 14
5H7	FILTER ELEMENT, PILOT CONTROL	3363 - 1A
2G13	FILTER LINES, FUEL 310G (TURBO), 310SG, 315SG (VSN 910056-)	0420 - 12
2G9	FILTER LINES, FUEL 310G (TURBO),310SG, 315SG (VSN -910055)	0420 - 8
2G3	FILTER LINES, FUEL 310G (W/O TURBO) (VSN -911768)	0420 - 2
2G7	FILTER LINES, FUEL 310G (W/O TURBO) (VSN 911769-)	0420 - 6
3J9	FILTER, BREATHER, HYDRAULIC RESERVOIR	2160 - 12
1E22	FILTER, CHARGE PUMP	0360 - 5
2E1	FILTER, ENGINE OIL (VSN -911768) 310G (W/O TURBO)	0407 - 12
2E4	FILTER, ENGINE OIL (VSN -910055) 310G(TURBO),310SG,315SG	0407 - 16
2E6	FILTER, ENGINE OIL (VSN 910056-) 310G(TURBO),310SG,315SG	0407 - 18
2E3	FILTER, ENGINE OIL (VSN 911769-) 310G (W/O TURBO)	0407 - 14
3F23	FILTER, FRESH AIR	1816 - 12
2G9	FILTER, FUEL 310G (TURBO),310SG,315SG (VSN -910055)	0420 - 8
2G3	FILTER, FUEL 310G (W/O TURBO) (VSN -911768)	0420 - 2
2G5	FILTER, FUEL 310G (W/O TURBO) (VSN 911769-)	0420 - 4
2G11	FILTER, FUEL 310G(TURBO), 310SG, 315SG (VSN 910056-)	0420 - 10
3J11	FILTER, HYDRAULIC OIL	2160 - 14
1E22	FILTER, TRANSMISSION	0360 - 5
2H23	FILTERS, AIR CLEANER	0520 - 2
1E5	FIRST GEAR CLUTCH ASSEMBLY, POWER SHIFT	0350 - 14
1E5	FIRST GEAR CLUTCH CARRIER, POWER SHIFT	0350 - 14
1E5	FIRST GEAR, BELLVILLEWASHER, POWER SHIFT	0350 - 14

ALPHABETICAL INDEX - CONTINUED

GRID		PAGE
2J9	FITTINGS, BRAKE VALVE	1060 - 4
5I1	FITTINGS, SWING CYLINDER (310G,310SG)	3363 - 14
3C9	FLASHER, 12 VOLT	1674 - 2
3C9	FLASHER, 4-WAY	1674 - 2
1D18	FLEXPLATE, TORQUE CONVERTOR	0350 - 1
3E16	FLOOR COVER, REAR	1812 - 2
3E18	FLOOR HOLES, FRONT CAB MOUNT PLUGS	1812 - 4
3E16	FLOOR MATS	1812 - 2
4C23	FLOOR PLATE, LOADER LINKAGE	3115 - 6
5H7	FLOW CONTROL VALVE	3363 - 1A
2K12	FLUID ANALYSIS PRODUCTS (OILSCAN PLUS TEST KIT)	1369 - 2
2H13	FLUID, STARTING	0505 - 4
2H2	FLYWHEEL HOUSING (VSN -910055)	0433 - 3
2H3	FLYWHEEL HOUSING (VSN 910056-)	0433 - 4
2H1	FLYWHEEL RING GEAR	0433 - 2
2H1	FLYWHEEL, ENGINE	0433 - 2
1D9	FNR, RANGE SWITCH	0315 - 4
5D17	FOOT CONTROL, FIFTH FUNCTION	3315 - 12
5D21	FOOT CONTROL, SIXTH FUNCTION	3315 - 14
3D17	FOOT, STABILIZER (315SG)	1740 - 4
1D6	FORK, SHIFT	0315 - 1
4C13	FORKLIFT FORKS	3103 - 2
4C13	FORKS, PALLET	3103 - 2
4C13	FORKS,LOADER FORKLIFT	3103 - 2
1D19	FORWARD CLUTCH ASSEMBLY	0350 - 2
1E13	FORWARD CLUTCH ASSEMBLY, POWER SHIFT	0350 - 22
1E13	FORWARD CLUTCH CARRIER, POWER SHIFT	0350 - 22
1E13	FORWARD, BELLVILLEWASHER, POWERSHIFT	0350 - 22
1E19	FORWARD, NEUTRAL AND REVERSE SOLENOIDS	0360 - 2
1D9	FORWARD, NEUTRAL, REVERSE CONTROL	0315 - 4
1E11	FOURTH GEAR CLUTCH ASSEMBLY, POWER SHIFT	0350 - 20
1E11	FOURTH GEAR CLUTCH CARRIER, POWER SHIFT	0350 - 20
1E11	FOURTH GEAR, BELLVILLEWASHER, POWERSHIFT	0350 - 20
5E13	FRAME, BACKHOE SLIDING,315SG	3342 - 2
3E12	FRAME, CAB	1811 - 4
3E4	FRAME, COUNTERWEIGHT	1749 - 3
4C13	FRAME, FORKLIFT COUPLER	3103 - 2
3I1	FRAME, GRILLE, EXTENDED	1921 - 4
3D17	FRAME, MAIN FRAME (315SG)	1740 - 4
3E10	FRAME, ROPS	1811 - 2
3G13	FRAME, SCISSOR	1821 - 10
3D17	FRAME, SLIDING (315SG)	1740 - 4
5E17	FRAME, SWING 315SG	3343 - 4
3D15	FRAME,MAIN FRAME(310G,310SG)	1740 - 2
5E13	FRAME,SLIDING,315SG	3342 - 2
5E15	FRAME,SWING (310G,310SG)	3343 - 2
3H3	FREEZE/COMPRESSOR SWITCH, AIR CONDITIONING	1830 - 7A
3F23	FRESH AIR FILTER	1816 - 12
1C15	FRONT AXLE (MFWD)	0250 - 1
1C8	FRONT AXLE (WITHOUT MFWD) (SERIAL NO. -911131)	0230 - 2
1C11	FRONT AXLE (WITHOUT MFWD) (SERIAL NO. 911132-)	0230 - 5
1C17	FRONT AXLE HOUSING (MFWD)	0250 - 4
1C19	FRONT AXLE HOUSING (MFWD)	0250 - 6
1C17	FRONT AXLE HOUSING (MWFD)	0250 - 4
1C12	FRONT AXLE HOUSING (WITHOUT MFWD) (SERIAL NO. 911132-)	0230 - 6
1C19	FRONT AXLE HUB (MFWD)	0250 - 6
2K18	FRONT AXLE LUBRICATION SYSTEM	1370 - 2
1C15	FRONT AXLE PIVOT PIN (MFWD)	0250 - 1
1C11	FRONT AXLE PIVOT PIN (WITHOUT MFWD) (SERIAL NO. 911132-)	0230 - 5
1C13	FRONT AXLE SWIVEL HOUSING (WITHOUT MFWD) (SERIAL NO. 911132-)	0230 - 7
1C19	FRONT AXLE UNIVERSAL DRIVE SHAFT (MFWD)	0250 - 6
1C14	FRONT AXLE WHEEL HUB(WITHOUT MFWD) (SERIAL NO. 911132-)	0230 - 8
3F19	FRONT CONSOLE	1816 - 8
3E16	FRONT CONSOLE COVER,FLOOR	1812 - 2
3C9	FRONT CONSOLE SWITCHES	1674 - 2
3C9	FRONT CONSOLE WIRING HARNESS WITH CAB	1674 - 2
3E3	FRONT COUNTERWEIGHT	1749 - 2
4C17	FRONT COUPLER CYLINDER	3104 - 4
4E13	FRONT COUPLER VALVE	3162 - 28
4C15	FRONT COUPLER, HYDRAULIC	3104 - 2
1B17	FRONT DRIVE WHEEL (MFWD)	0110 - 4
3E16	FRONT FLOOR MAT	1812 - 2
3C9	FRONT LIGHTS SWITCH	1674 - 2
2D9	FRONT PLATE, ENGINE	0404 - 1
1B18	FRONT WHEEL (WITHOUT MFWD)	0120 - 1
1C10	FRONT WHEEL BEARING (WITHOUT MFWD) (SERIAL NO. -911131)	0230 - 4
1C10	FRONT WHEEL HUB (WITHOUT MFWD) (SERIAL NO. -911131)	0230 - 4
3F5	FRONT WINDSHIELD WIPER MOTOR	1814 - 10
3C9	FRONT WINDSHILD WIPER SWITCH	1674 - 2
2I13	FUEL COOLER, HI-AMBIENT	0560 - 4
2G9	FUEL FILTER HEATER 310G (TURBO), 310SG,315SG (VSN -910055)	0420 - 8
2G11	FUEL FILTER HEATER 310G (TURBO), 310SG, 315SG (VSN 910056-)	0420 - 10
2G3	FUEL FILTER HEATER 310G (W/O TURBO) (VSN -911768)	0420 - 2
2G5	FUEL FILTER HEATER 310G (W/O TURBO) (VSN 911769-)	0420 - 4
2G13	FUEL FILTER LINES 310G (TURBO), 310SG, 315SG (VSN 910056-)	0420 - 12
2G9	FUEL FILTER LINES 310G (TURBO),310SG, 315SG) (VSN -910055)	0420 - 8
2G3	FUEL FILTER LINES 310G (W/O TURBO) (VSN -911768)	0420 - 2
2G7	FUEL FILTER LINES 310G (W/O TURBO) (VSN 911769-)	0420 - 6
2G9	FUEL FILTER 310G (TURBO),310SG,315SG (VSN -910055)	0420 - 8
2G3	FUEL FILTER 310G (W/O TURBO) (VSN -911768)	0420 - 2
2G5	FUEL FILTER 310G (W/O TURBO) (VSN 911769-)	0420 - 4
2G11	FUEL FILTER 310G(TURBO), 310SG, 315SG (VSN 910056-)	0420 - 10
2I11	FUEL GAUGE SENDER	0560 - 2
2I11	FUEL HOSES	0560 - 2
2F3	FUEL INJECTION LINES 310G(TURBO),310SG,315SG (VSN 910056-)	0413 - 10
2E23	FUEL INJECTION LINES 310G(W/O TURBO)(VSN 911769-)	0413 - 6
2F1	FUEL INJECTION LINES 310G(TURBO),310SG, 315SG(VSN 893079-907963)(VSN-910055)	0413 - 8
2E21	FUEL INJECTION LINES 310G(W/O TURBO) (VSN 893079-907963)(VSN -911768)	0413 - 4
2E17	FUEL INJECTION NOZZLE (PE4045TT089) 310SG,315SG (VSN -943548)	0413 - 2
2E18	FUEL INJECTION NOZZLE (PE4045TT089) 310SG,315SG (VSN 943549-)	0413 - 3
2E17	FUEL INJECTION NOZZLE (TT088, 89) 310G(TURBO),310SG,315SG (VSN 910056-)	0413 - 2

ALPHABETICAL INDEX - CONTINUED

GRID		PAGE
2E16	FUEL INJECTION NOZZLE (VSN -910055) 310G(TURBO), 310SG, 315SG	0413 - 1
2E16	FUEL INJECTION NOZZLE 310G(TURBO),310SG, 315SG (VSN 893079-907963)	0413 - 1
2E19	FUEL INJECTION NOZZLE 310G(W/O TURBO) (VSN -911768)	0413 - 3A
2E19	FUEL INJECTION NOZZLE 310G(W/O TURBO) (VSN 893079-907963)	0413 - 3A
2E20	FUEL INJECTION NOZZLE 310G(W/O TURBO) (VSN 911769-)	0413 - 3B
2F3	FUEL INJECTION PUMP 310G(TURBO),310SG,315SG (VSN 910056-)	0413 - 10
2E23	FUEL INJECTION PUMP 310G(W/O TURBO)(VSN 911769-)	0413 - 6
2F3	FUEL INJECTION PUMP DRIVE GEAR 310G(TURBO),310SG,315SG (VSN 910056-)	0413 - 10
2E21	FUEL INJECTION PUMP DRIVE GEAR 310G(W/O TURBO)(VSN -911768)	0413 - 4
2E21	FUEL INJECTION PUMP DRIVE GEAR 310G(W/O TURBO)(VSN 893079-907963)	0413 - 4
2E23	FUEL INJECTION PUMP DRIVE GEAR 310G(W/O TURBO)(VSN 911769-)	0413 - 6
2F1	FUEL INJECTION PUMP DRIVE 310G(TURBO) 310SG,315SG (VSN-910055)	0413 - 8
2F1	FUEL INJECTION PUMP DRIVE 310G(TURBO) 310SG,315SG(VSN 893079-907963)	0413 - 8
2F1	FUEL INJECTION PUMP 310G(TURBO),310SG, 315SG(VSN 893079-907963)(VSN-910055)	0413 - 8
2E21	FUEL INJECTION PUMP 310G(W/O TURBO) (VSN 893079-907963)(VSN -911768)	0413 - 4
2F3	FUEL INJECTION SYSTEM 310G(TURBO),310SG,315SG (VSN 910056-)	0413 - 10
2E23	FUEL INJECTION SYSTEM 310G(W/O TURBO)(VSN 911769-)	0413 - 6
2F1	FUEL INJECTION SYSTEM 310G(TURBO),310SG, 315SG(VSN 893079-907963)(VSN-910055)	0413 - 8
2E21	FUEL INJECTION SYSTEM 310G(W/O TURBO) (VSN 893079-907963)(VSN -911768)	0413 - 4
2G9	FUEL LINE FILTER 310G (TURBO),310SG, 315SG (VSN -910055)	0420 - 8
2G3	FUEL LINE FILTER 310G (W/O TURBO) (VSN -911768)	0420 - 2
2G13	FUEL LINES, FILTER 310G (TURBO), 310SG, 315SG (VSN 910056-)	0420 - 12
2G7	FUEL LINES, FILTER 310G (W/O TURBO) (VSN 911769-)	0420 - 6
2I11	FUEL TANK	0560 - 2
2I11	FUEL TANK CAP	0560 - 2
2I11	FUEL TANK STRAINER	0560 - 2
3C23	FUEL TEMPERATURE SENSOR (FRONT WIRE HARNESS) (SN 910056-)	1674 - 9C
2F5	FUEL TEMPERATURE SENSOR, STANADYNE DE10 310G (W/O TURBO) (VSN 911769-)	0413 - 12
2F6	FUEL TEMPERATURE SENSOR, STANADYNE DE10 310G(TURBO),310SG/315SG (VSN 910056-)	0413 - 13
2G15	FUEL TRANSFER PUMP	0421 - 2
2G15	FUEL TRANSFER PUMP PUSH ROD	0421 - 2
3C9	FUSE PANEL	1674 - 2
3F19	FUSE PANEL COVER	1816 - 8
3C9	FUSES	1674 - 2

G

2H19	GAS PEDAL	0515 - 2
2H21	GAS PEDAL	0515 - 4
2H6	GASKET SET, CYLINDER HEAD REMOVAL 310G(TURBO), 310SG, 315SG	0452 - 1
2H7	GASKET SET,ENGINE MAJOR OVERHAUL 310G(TURBO), 310SG, 315SG	0452 - 2
2H6	GASKET SET,IN CHASSIS OVERHAUL 310G(TURBO), 310SG, 315SG	0452 - 1
2E12	GASKET, CYLINDER HEAD	0409 - 2
2E14	GASKET, EXHAUST MANIFOLD	0410 - 1
1E21	GASKET, INTERMEDIATE PLATE, SYNCHRO-SHUTTLE	0360 - 4
2C22	GASKET, TIMING GEAR COVER (VSN -911768) 310G (W/O TURBO)	0402 - 4
2C24	GASKET, TIMING GEAR COVER 310G (W/O TURBO)) (VSN 911769-)	0402 - 4B
2D3	GASKET, TIMING GEAR COVER (VSN 910056-) 310G(TURBO), 310SG, 315SG	0402 - 6B
2D1	GASKET, TIMING GEAR COVER (VSN-910055) 310G(TURBO), 310SG, 315SG	0402 - 6
2F12	GASKET, TURBOCHARGER (VSN -910055) 310G(TURBO), 310SG, 315SG	0416 - 2
2F14	GASKET, TURBOCHARGER 310G(TURBO), 310SG, 315SG (VSN 910056-)	0416 - 4
2D20	GASKET,OIL PAN 310G (W/O TURBO) (VSN -911768)(VSN 911769-)	0407 - 6
2D20	GASKET,OIL PAN 310G (W/O TURBO) (VSN 893079 - 907963)	0407 - 6
2D22	GASKET,OIL PAN 310G(TURBO),310SG,315SG	0407 - 8
2D24	GASKET,OIL PAN 310G(TURBO),310SG,315SG (VSN 910056-)	0407 - 10
2C21	GASKET,ROCKER ARM COVER	0402 - 3
1E21	GASKET,TRANSMISSION CONTROL VALVE, SYNCHRO-SHUTTLE	0360 - 4
1F3	GASKETS, INTERMEDIATE PLATE, POWER SHIFT	0360 - 10
3J1	GATHERING CLAMP	2160 - 6
3J3	GATHERING CLAMP	2160 - 8
3J5	GATHERING CLAMP	2160 - 9A
1D6	GEAR SHIFTERS	0315 - 1
2C17	GEAR, CAMSHAFT 310G (W/O TURBO) (VSN -911768)PE4045DT056	0402 - 1
2C17	GEAR, CAMSHAFT 310G (W/O TURBO) (VSN 893079-907963)T04045DT056	0402 - 1
2C17	GEAR, CAMSHAFT 310G (W/O TURBO) (VSN 911769-)T04045DT058	0402 - 1
2C18	GEAR, CAMSHAFT 310G(TURBO), 310SG, 315SG (VSN -910055)	0402 - 1A
2C18	GEAR, CAMSHAFT 310G(TURBO), 310SG, 315SG (VSN 893079-907963)	0402 - 1A
2C19	GEAR, CAMSHAFT 310G(TURBO), 310SG, 315SG (VSN 910056-)	0402 - 1B
2C12	GEAR, CRANKSHAFT 310G (W/O TURBO) (VSN 911769-)	0401 - 2
2C11	GEAR, CRANKSHAFT 310G (W/O TURBO) (VSN-911768)	0401 - 1
2C14	GEAR, CRANKSHAFT 310G(TURBO),310SG,315SG (VSN -910055)	0401 - 4
2C15	GEAR, CRANKSHAFT 310G(TURBO),310SG,315SG (VSN 910056-)	0401 - 6
2E7	GEAR, ENGINE OIL PUMP	0407 - 19
2F1	GEAR, FUEL INJECTION PUMP DRIVE	0413 - 8
2F3	GEAR, FUEL INJECTION PUMP DRIVE 310G(TURBO),310SG,315SG (VSN 910056-)	0413 - 10
2E21	GEAR, FUEL INJECTION PUMP DRIVE 310G(W/O TURBO)(VSN -911768)	0413 - 4
2E21	GEAR, FUEL INJECTION PUMP DRIVE 310G(W/O TURBO)(VSN 893079-907963)	0413 - 4
2E23	GEAR, FUEL INJECTION PUMP DRIVE 310G(W/O TURBO)(VSN 911769-)	0413 - 6

ALPHABETICAL INDEX - CONTINUED

GRID		PAGE
2F1	GEAR, FUEL INJECTION PUMP DRIVE 310G (TURBO),310SG,315SG (VSN-910055)	0413 - 8
2F1	GEAR, FUEL INJECTION PUMP DRIVE 310G (TURBO),310SG,315SG(VSN 893079-907963)	0413 - 8
1E2	GEAR, INTERMEDIATE, TRANSMISSION	0350 - 10
1C21	GEAR, PLANET (MFWD)	0250 - 8
1C22	GEAR, PLANET (MFWD)(310G)	0250 - 9
1C1	GEAR, PLANETARY PINION	0210 - 1
1C1	GEAR, PLANETARY RING	0210 - 1
1C21	GEAR, RING (MFWD)	0250 - 8
1C22	GEAR, RING (MFWD)(310G)	0250 - 9
1C2	GEAR, SPIRAL BEVEL WITH LOCK	0210 - 2
1E1	GEAR, SYNCHRONIZER, 2ND	0350 - 9
1E2	GEAR, SYNCHRONIZER, 4TH	0350 - 10
1E1	GEAR, SYNCHRONIZER,1ST	0350 - 9
1E2	GEAR, SYNCHRONIZER,3RD	0350 - 10
1C23	GEAR,BEVEL DRIVE (MFWD) (310SG,315SG)	0250 - 10
1D1	GEAR,DIFFERENTIAL SPIRAL BEVEL (MFWD)	0250 - 12
2K18	GREASE BANK, FRONT AXLE	1370 - 2
5E25	GREASE KIT, POWER LINK (310G)	3345 - 6
3H23	GRILLE	1921 - 2
3H23	GRILLE HOUSING	1921 - 2
3I1	GRILLE HOUSING, EXTENDED	1921 - 4
3H23	GRILLE SCREEN	1921 - 2
3H7	GRILLE, CAB HEATER (20,000 BTU)	1830 - 10
5F5	GRIPPER TEETH, REPAIR KIT, EXT.DIPPER	3346 - 6
3C19	GROUND CABLE	1674 - 8
3C21	GROUND CABLE	1674 - 9A
3C19	GROUND STRAP	1674 - 8
3C21	GROUND STRAP	1674 - 9A
3D20	GUARD, BOTTOM	1746 - 4
3H21	GUARD, LOADER CONTROL VALVE PLUMBING	1913 - 4
3D15	GUARD, MFWD	1740 - 2
2H17	GUARD, RADIATOR FAN	0510 - 2
1D9	GUARD, REVERSER CONTROL LEVER	0315 - 4
3D17	GUARD,MFWD (315SG)	1740 - 4
3D19	GUARD,STABILIZER KIT 310G,310SG	1746 - 2

H

5J7	HAND HELD HYDRAULIC TOOL KIT (SERIAL NO. -913416)	3363 - 44
5J9	HAND HELD HYDRAULIC TOOL KIT (SERIAL NO. 913417-)	3363 - 46
3C19	HARNESS CONNECTOR KIT	1674 - 8
3C21	HARNESS CONNECTOR KIT	1674 - 9A
3E18	HARNESS COVER BRACKET	1812 - 4
3E18	HARNESS COVER BRACKET STRAP	1812 - 4
3C5	HARNESS, ANCHOR, TIE BAND MOUNT SERIAL NO. -XXXXXX	1673 - 4
3C7	HARNESS, ANCHOR, TIE BAND MOUNT SERIAL NO. XXXXXX-	1673 - 6
3C23	HARNESS, ENGINE FRONT (SN 910056-)	1674 - 9C
3C21	HARNESS, ENGINE WIRING	1674 - 9A
3C15	HARNESS, LOAD COUPLER CONTROL CHASSIS	1674 - 5C
3C15	HARNESS, LOADER COUPLER, CAB	1674 - 5C
5G15	HARNESS, PATTERN SELECTOR	3362 - 32
3C13	HARNESS, PILOT ENABLE WIRING	1674 - 5A
3D1	HARNESS, PUMP CONTROL AND RELAY	1674 - 10
3C15	HARNESS, QUICK COUPLER	1674 - 5C
3I6	HARNESS, RADIO	2001 - 2
3J21	HARNESS, RIDE CONTROL	2160 - 24
3J23	HARNESS, RIDE CONTROL	2160 - 26
3C5	HARNESS, ROOF WIRING SERIAL NO. -XXXXXX	1673 - 4
3C7	HARNESS, ROOF WIRING SERIAL NO. XXXXXX-	1673 - 6
3C11	HARNESS, SIDE CONSOLE WIRING, WITH CAB	1674 - 4
3C11	HARNESS,A/C PRESSURE SWITCH	1674 - 4
5I15	HARNESS,SIDE SHIFT LOCK CONT VALVE 315SG	3363 - 28
2E12	HEAD, CYLINDER	0409 - 2
2E1	HEADER, ENGINE OIL FILTER (VSN -911768) 310G (W/O TURBO)	0407 - 12
2E4	HEADER, ENGINE OIL FILTER (VSN -910055) 310G(TURBO),310SG,315SG	0407 - 16
2E6	HEADER, ENGINE OIL FILTER (VSN 910056-) 310G(TURBO),310SG,315SG	0407 - 18
2E3	HEADER, ENGINE OIL FILTER (VSN 911769-) 310G (W/O TURBO)	0407 - 14
3E12	HEADLINER LAMP	1811 - 4
3E12	HEADLINER, CAB	1811 - 4
3E10	HEADLINER, ROPS	1811 - 2
3G6	HEADREST, SEAT	1821 - 3
3H12	HEAT AND NOISE BARRIER	1834 - 2
3H7	HEATER CORE (20,000 BTU)	1830 - 10
3H5	HEATER HOSE, CANOPY	1830 - 8
3H5	HEATER VALVE CONTROL	1830 - 8
3H1	HEATER VALVE CONTROL CABLE	1830 - 6
3H5	HEATER VALVE CONTROL CABLE,CANOPY	1830 - 8
3H5	HEATER VALVE KNOB	1830 - 8
3H7	HEATER, CAB (20,000 BTU)	1830 - 10
3H5	HEATER, CANOPY	1830 - 8
2H11	HEATER, ENGINE COOLANT	0505 - 2
2G9	HEATER, FUEL FILTER 310G (TURBO), 310SG,315SG (VSN -910055)	0420 - 8
2G3	HEATER, FUEL FILTER 310G (W/O TURBO) (VSN -911768)	0420 - 2
2G5	HEATER, FUEL FILTER 310G (W/O TURBO) (VSN 911769-)	0420 - 4
2G11	HEATER, FUEL FILTER 310G(TURBO), 310SG, 315SG (VSN 910056-)	0420 - 10
3H5	HEATER,TEMERATURE CONTROL	1830 - 8
3G16	HEIGHT ADJUSTER FOR NON-SUSPENDED SEAT	1821 - 14
2I13	HI-AMBIENT FUEL COOLER	0560 - 4
3J17	HI-AMBIENT OIL COOLER	2160 - 20
3H1	HIGH PRESSURE SWITCH	1830 - 6
3H3	HIGH PRESSURE SWITCH	1830 - 7A
4C1	HINGE PINS, MULTI-PURPOSE BUCKET	3102 - 8
3E20	HINGES,CAB DOORS	1814 - 2
3E22	HINGES,CAB DOORS	1814 - 4
3E10	HOLDER, MANUAL	1811 - 2
3E10	HOLDER, SWING PIN	1811 - 2
3H15	HOOD	1910 - 2
3H17	HOOD	1910 - 4
3H15	HOOD LATCH	1910 - 2
3H17	HOOD LATCH	1910 - 4
2H23	HOOD STRICKER BRACKET	0520 - 2
3H15	HOOD SUPPORT	1910 - 2
3H17	HOOD SUPPORT	1910 - 4
3C23	HORN (FRONT WIRE HARNESS) (SN 910056-)	1674 - 9C
3I13	HORN (SERIAL NO. -910147)	2004 - 6
3I15	HORN (SERIAL NO. 910148-)	2004 - 8
3C17	HORN SWITCH	1674 - 6
2H23	HOSE, AIR CLEANER	0520 - 2
2E8	HOSE, ENGINE VENTILATING (DT056, TT080/81/88/89)	0408 - 2
2E10	HOSE, ENGINE VENTILATING PE4045DT058	0408 - 4
3J21	HOSE, HYDRAULIC, RIDE CONTROL	2160 - 24
3J23	HOSE, HYDRAULIC, RIDE CONTROL	2160 - 26

ALPHABETICAL INDEX - CONTINUED

GRID		PAGE
3F7	HOSE, WINDSHIELD WASHER	1814 - 12
5J5	HOSES, ATTACHMENT KIT	3363 - 42
2I11	HOSES, FUEL	0560 - 2
5J7	HOSES, HAND HELD HYDRAULIC TOOL KIT (SERIAL NO. -913416)	3363 - 44
5J9	HOSES, HAND HELD HYDRAULIC TOOL KIT (SERIAL NO. 913417-)	3363 - 46
4E15	HOSES, LOADER BOOM LIFT CYLINDER HOSES	3163 - 2
4E17	HOSES, LOADER BOOM LIFT CYLINDER HOSES	3163 - 4
4E19	HOSES, LOADER BUCKET CYLINDER HOSES	3163 - 6
4E21	HOSES, LOADER BUCKET CYLINDER HOSES	3163 - 8
3J1	HOSES, MAIN HYDRAULIC	2160 - 6
3J3	HOSES, MAIN HYDRAULIC	2160 - 8
3J5	HOSES, MAIN HYDRAULIC	2160 - 9A
3J7	HOSES, MAIN HYDRAULIC	2160 - 10
4C3	HOSES, MULTI-PURPOSE BUCKET	3102 - 10
4C11	HOSES, MULTI-PURPOSE BUCKET, COUPLER	3102 - 18
3J15	HOSES, OIL COOLER	2160 - 18
3J13	HOSES, OIL COOLER (310G)	2160 - 16
3J19	HOSES, OIL COOLER KIT (310G)	2160 - 22
3J17	HOSES, OIL COOLER, HI-AMBIENT	2160 - 20
2H17	HOSES, RADIATOR	0510 - 2
2I20	HOSES, STEERING (WITH MFWD)	0960 - 8
2I22	HOSES, STEERING (WITHOUT MFWD)	0960 - 10
4E19	HOSES, THIRD FUNCTION HYDRAULIC HOSES	3163 - 6
4E21	HOSES, THIRD FUNCTION HYDRAULIC HOSES	3163 - 8
3H8	HOSES,AIR CONDITIONING COMPRESSOR	1830 - 12
3H10	HOSES,AIR CONDITIONING COMPRESSOR	1830 - 14
3H8	HOSES,AIR CONDITIONING COMPRESSOR, RECEIVER DRYER	1830 - 12
3H10	HOSES,AIR CONDITIONING COMPRESSOR, RECEIVER DRYER	1830 - 14
3H8	HOSES,RECEIVER DRYER, AIR CONDITIONING COMPRESSOR	1830 - 12
3H10	HOSES,RECEIVER DRYER, AIR CONDITIONING COMPRESSOR	1830 - 14
1B22	HOUSING AXLE	0201 - 2
1B24	HOUSING AXLE	0201 - 4
1D14	HOUSING, BELL	0341 - 1
1D15	HOUSING, BELL	0341 - 2
2J5	HOUSING, BRAKE	1011 - 2
2J7	HOUSING, BRAKE VALVE	1060 - 2
2J9	HOUSING, BRAKE VALVE	1060 - 4
1B22	HOUSING, DIFFERENTIAL	0201 - 2
1B24	HOUSING, DIFFERENTIAL	0201 - 4
1C2	HOUSING, DIFFERENTIAL WITH LOCK	0210 - 2
2G24	HOUSING, FAN DRIVE 310G(TURBO),310SG,315SG	0429 - 2
2H3	HOUSING, FLYWHEEL (VSN 910056-)	0433 - 4
3F19	HOUSING, FRONT INSTRUMENT PANEL	1816 - 8
3H23	HOUSING, GRILLE	1921 - 2
3I1	HOUSING, GRILLE, EXTENDED	1921 - 4
5G13	HOUSING, LOCK VALVE, SIDE SHIFT (315SG)	3362 - 30
2J18	HOUSING, PARK BRAKE (AXLE SERIAL NO. -217496)	1111 - 2
2J20	HOUSING, PARK BRAKE (AXLE SERIAL NO. 217497-)	1111 - 4
3F21	HOUSING, SIDE INSTRUMENT PANEL	1816 - 10
3F23	HOUSING, SIDE INSTRUMENT PANEL	1816 - 12
1C13	HOUSING, SWIVEL, FRONT AXLE (WITHOUT MFWD)(SERIAL NO. 911132-)	0230 - 7
1D14	HOUSING, TRANSMISSION	0341 - 1
1D15	HOUSING, TRANSMISSION, POWER SHIFT	0341 - 2
2E7	HOUSING,ENGINE OIL PUMP	0407 - 19
2H2	HOUSING,FLYWHEEL (VSN -910055)	0433 - 3
1C19	HOUSING,FRONT AXLE (MFWD)	0250 - 6
1C17	HOUSING,FRONT AXLE (MWFD)	0250 - 4
1C12	HOUSING,FRONT AXLE (WITHOUT MFWD) (SERIAL NO. 911132-)	0230 - 6
1D7	HOUSING,SHIFT	0315 - 2
1D19	HUB, CLUTCH	0350 - 2
1D21	HUB, CLUTCH	0350 - 4
2G24	HUB, FAN DRIVE 310G(TURBO),310SG,315SG	0429 - 2
1C14	HUB, FRONT AXLE WHEEL (WITHOUT MFWD) (SERIAL NO. 911132-)	0230 - 8
1C10	HUB, FRONT WHEEL (WITHOUT MFWD) (SERIAL NO. -911131)	0230 - 4
1C19	HUB,FRONT AXLE (MFWD)	0250 - 6
4C3	HYDRAULIC CYLINDER,MULTI-PURPOSE BUCKET	3102 - 10
4C11	HYDRAULIC CYLINDER,MULTI-PURPOSE BUCKET	3102 - 18
4C15	HYDRAULIC FRONT COUPLER	3104 - 2
4E23	HYDRAULIC FRONT COUPLER	3163 - 10
4C17	HYDRAULIC FRONT COUPLER CYLINDER	3104 - 4
3C15	HYDRAULIC FRONT COUPLER HARNESS	1674 - 5C
4E13	HYDRAULIC FRONT COUPLER VALVE	3162 - 28
4F1	HYDRAULIC FRONT COUPLER,HOSES	3163 - 12
4F1	HYDRAULIC FRONT COUPLER,LINES	3163 - 12
3J21	HYDRAULIC HOSE, RIDE CONTROL	2160 - 24
3J23	HYDRAULIC HOSE, RIDE CONTROL	2160 - 26
5H17	HYDRAULIC HOSE,BOOM CYLINDER	3363 - 6
5H23	HYDRAULIC HOSE,CROWD CYLINDER	3363 - 12
5J5	HYDRAULIC HOSES FOR ATTACHMENT KIT	3363 - 42
5J7	HYDRAULIC HOSES, HAND HELD TOOL KIT (SERIAL NO. -913416)	3363 - 44
5J9	HYDRAULIC HOSES, HAND HELD TOOL KIT (SERIAL NO. 913417-)	3363 - 46
5H21	HYDRAULIC HOSES,BUCKET CYLINDER (EXTENDIBLE DIPPERSTICK)	3363 - 10
3J7	HYDRAULIC LINES, COOLER	2160 - 10
4E13	HYDRAULIC LOADER COUPLER VALVE	3162 - 28
4E23	HYDRAULIC LOADER COUPLER, BUCKET	3163 - 10
3J17	HYDRAULIC OIL COOLER & HOSES(HI-AMBIENT)	2160 - 20
3J15	HYDRAULIC OIL COOLER AND HOSES	2160 - 18
3J13	HYDRAULIC OIL COOLER AND HOSES (310G)	2160 - 16
3J19	HYDRAULIC OIL COOLER KIT AND HOSES(310G)	2160 - 22
3J1	HYDRAULIC OIL COOLER LINES	2160 - 6
3J3	HYDRAULIC OIL COOLER LINES	2160 - 8
3J5	HYDRAULIC OIL COOLER LINES	2160 - 9A
3J11	HYDRAULIC OIL FILTER	2160 - 14
5H17	HYDRAULIC OIL LINE,BOOM CYLINDER	3363 - 6
4E19	HYDRAULIC OIL LINES LOADER BUCKET CYLINDER	3163 - 6
4E21	HYDRAULIC OIL LINES LOADER BUCKET CYLINDER	3163 - 8
5J1	HYDRAULIC OIL LINES,AUGER (WITH EXTENDIBLE DIPPERSTICK)	3363 - 38
5H23	HYDRAULIC OIL LINES,CROWD CYLINDER	3363 - 12
4C3	HYDRAULIC OIL LINES,MULTI-PURPOSE BUCKET	3102 - 10
4C11	HYDRAULIC OIL LINES,MULTI-PURPOSE BUCKET, COUPLER	3102 - 18
4E19	HYDRAULIC OIL LINES,THIRD FUNCTION	3163 - 6
4E21	HYDRAULIC OIL LINES,THIRD FUNCTION	3163 - 8
5G9	HYDRAULIC REMOTE KIT	3362 - 28
3J9	HYDRAULIC RESERVOIR	2160 - 12
3J9	HYDRAULIC RESERVOIR BREATHER FILTER	2160 - 12
3J21	HYDRAULIC RIDE CONTROL	2160 - 24
3J23	HYDRAULIC RIDE CONTROL	2160 - 26
3I21	HYDRAULIC SYSTEM, VEHICLE MAIN	2100 - 1
4D11	HYDRAULIC VALVE, LOADER	3162 - 2
4D13	HYDRAULIC VALVE, LOADER/STABILIZER	3162 - 4

ALPHABETICAL INDEX - CONTINUED

GRID		PAGE
5I1	HYDRAULICS HOSE,SWING CYLINDER (310G,310SG)	3363 - 14
5I13	HYDRAULICS, AUXILIARY EQUIPMENT, EXT. (315SG)	3363 - 26
5I11	HYDRAULICS, AUXILIARY EQUIPMENT, EXTENDI BLE DIPPERSTICK (310G AND 310SG)	3363 - 24
5I9	HYDRAULICS, AUXILIARY EQUIPMENT, STD. (315SG)	3363 - 22
5I7	HYDRAULICS, AUXILIARY EQUIPMENT,STD. (310G AND 310SG)	3363 - 20
5H19	HYDRAULICS, BACKHOE BUCKET CYLINDER	3363 - 8
5H11	HYDRAULICS, BACKHOE STABILIZER CYLINDER	3363 - 2
5H13	HYDRAULICS, BACKHOE STABILIZER CYLINDER	3363 - 3A
5H15	HYDRAULICS, BACKHOE STABILIZER CYLINDER SIDESHIFT 315SE	3363 - 4
4E15	HYDRAULICS, LOADER BOOM CYLINDER	3163 - 2
4E17	HYDRAULICS, LOADER BOOM CYLINDER	3163 - 4
3J1	HYDRAULICS, MAIN	2160 - 6
3J3	HYDRAULICS, MAIN	2160 - 8
3J5	HYDRAULICS, MAIN	2160 - 9A
3J7	HYDRAULICS, MAIN	2160 - 10
5H9	HYDRAULICS, PILOT CONTROL	3363 - 1C
5H9	HYDRAULICS, PILOT SELECTOR VALVE	3363 - 1C
5H7	HYDRAULICS, SELECTOR VALVE (PILOT CONTROL)	3363 - 1A
2J11	HYDRAULICS, SERVICE BRAKE	1060 - 6
2I20	HYDRAULICS, STEERING VALVE (WITH MFWD)	0960 - 8
2I22	HYDRAULICS, STEERING,(WITHOUT MFWD)	0960 - 10
5J3	HYDRAULICS,AUGER (STANDARD DIPPERSTICK)	3363 - 40
5I19	HYDRAULICS,BACKHOE CYLINDERS (315SG)	3363 - 32
5I3	HYDRAULICS,BACKHOE SWING CYLINDER (315SG)	3363 - 16
5I17	HYDRAULICS,BOOM LOCK,BACKHOE 315SG	3363 - 30
2J13	HYDRAULICS,BRAKE VALVE BOOST (CAB),310G AND 310SG	1060 - 8
2J15	HYDRAULICS,BRAKE VALVE BOOST (ROPS),310G AND 310SG	1060 - 10

I

1D24	IDLER SHAFT, MFWD	0350 - 7
3C17	IGNITION SWITCH	1674 - 6
3C17	IGNITION SWITCH KEY	1674 - 6
2F21	IMPELLER,WATER PUMP 310G(TURBO), 310SG, 315SG (VSN -910055) T0/PE4045TT080,081	0417 - 3
2F22	IMPELLER,WATER PUMP 310G(TURBO, 310SG, 315SG (VSN 910056-) PE4045TT088,089	0417 - 4
2F21	IMPELLER,WATER PUMP 310G(W/O TURBO) (VSN -911768) T0/PE4045DT056	0417 - 3
2F22	IMPELLER,WATER PUMP 310G(W/O TURBO) (VSN 911769-) PE4045DT058	0417 - 4
2H6	IN CHASSIS OVERHAUL GASKET SET 310G(TURBO), 310SG, 315SG	0452 - 1
2F3	INJECTION PUMP,FUEL 310G(TURBO),310SG,315SG (VSN 910056-)	0413 - 10
2E23	INJECTION PUMP,FUEL 310G(W/O TURBO)(VSN 911769-)	0413 - 6
2D16	INLET OIL FILL	0407 - 2
5F14	INLET PRIORITY SECTION, BACKHOE VALVE	3362 - 8
4D15	INLET SECTION RELIEF VALVE	3162 - 6
4D15	INLET SECTION, LOADER VALVE	3162 - 6
2F20	INLET, WATER PUMP 310G(TURBO), 310SG, 315SG	0417 - 2
1D1	INPUT FLANGE,(MFWD)	0250 - 12
1C4	INPUT PINION, SPIRAL BEVEL	0210 - 4
1D23	INPUT SHAFT	0350 - 6
2J18	INPUT SHAFT SEAL (AXLE SERIAL NO. -217496)	1111 - 2
2J20	INPUT SHAFT SEAL (AXLE SERIAL NO. 217497-)	1111 - 4
1E3	INPUT SHAFT, POWER SHIFT	0350 - 12
3I8	INSIDE MIRROR	2002 - 2
3F21	INSTRUMENT PANEL VANDAL GUARD	1816 - 10
3F21	INSTRUMENT PANEL, SIDE	1816 - 10
3F23	INSTRUMENT PANEL, SIDE	1816 - 12
2F9	INTAKE SYSTEM, AIR 310(W/O TURBO)	0414 - 3
2F7	INTAKE SYSTEM, AIR 310G(TURBO), 310SG, 315SG (VSN -910055)	0414 - 1
2F8	INTAKE SYSTEM, AIR 310G(TURBO),310SG,315 SG (VSN 910056-)	0414 - 2
2E12	INTAKE VALVE	0409 - 2
2E7	INTAKE, ENGINE OIL PUMP	0407 - 19
3I8	INTERIOR REAR VIEW MIRROR	2002 - 2
1E2	INTERMEDIATE GEAR, TRANSMISSION	0350 - 10
1E21	INTERMEDIATE PLATE GASKETS, SYNCHRO-SHUTTLE	0360 - 4
1F3	INTERMEDIATE PLATE GASKETS, POWER SHIFT	0360 - 10
1F3	INTERMEDIATE PLATE, POWER SHIFT TRANSMIS SION	0360 - 10
1E21	INTERMEDIATE PLATE,TRANSMISSION, SYNCHRO-SHUTTLE	0360 - 4
1E2	INTERMEDIATE SHAFT, TRANSMISSION	0350 - 10
1D11	ISOLATED TRANSMISSION SHIFTER LEVER	0315 - 6
2H17	ISOLATOR EDGING	0510 - 2
2H17	ISOLATOR SEAL	0510 - 2
2I9	ISOLATOR, ENGINE MOUNT	0540 - 2
3E12	ISOLATORS, CAB MOUNTING	1811 - 4
3E10	ISOLATORS, ROPS FRAME	1811 - 2

J

5G21	JOY STICK, CONTROL VALVE, BUTTON FUNCION KIT	3362 - 38
5G17	JOY STICK, CONTROL VALVE, LEFT	3362 - 34
5G19	JOY STICK, CONTROL VALVE, RIGHT	3362 - 36
3C19	JUMP START PROTECTION COVER	1674 - 8
3C21	JUMP START PROTECTION COVER	1674 - 9A

K

3C17	KEY,IGNITION SWITCH	1674 - 6
1C8	KING PIN (WITHOUT MFWD) (SERIAL NO. -911131)	0230 - 2
1C13	KINGPIN, FRONT AXLE (WITHOUT MFWD) (SERIAL NO. 911132-)	0230 - 7
5G11	KIT, ACCU-SWING VALVE	3362 - 29A
5J5	KIT, ATTACHMENT PLUMBING KIT	3363 - 42
4E3	KIT, AUXILIARY VALVE, LOADER (SERIAL NO. -913416)	3162 - 18
5J11	KIT, BACKHOE BOOM CYLINDER REPAIR (310G)	3365 - 2
5J13	KIT, BACKHOE BOOM CYLINDER REPAIR (310G)	3365 - 4
5J15	KIT, BACKHOE BOOM CYLINDER REPAIR (310SG,315SG)	3365 - 6
5J17	KIT, BACKHOE BOOM CYLINDER REPAIR (310SG,315SG)	3365 - 8

ALPHABETICAL INDEX - CONTINUED

GRID		PAGE
5J19	KIT, BACKHOE BUCKET CYLINDER REPAIR (310G)	3365 - 10
5J20	KIT, BACKHOE BUCKET CYLINDER REPAIR (310G)(SER.# 910901-925926)	3365 - 11
5J21	KIT, BACKHOE BUCKET CYLINDER REPAIR (310G)(SER.# 925927-)	3365 - 12
5J24	KIT, BACKHOE BUCKET CYLINDER REPAIR (310SG,315SG) SERIAL NO. -926788)	3365 - 15
5J23	KIT, BACKHOE BUCKET CYLINDER REPAIR (310SG,315SG) SERIAL NO. 926130-)	3365 - 14
5J25	KIT, BACKHOE BUCKET CYLINDER REPAIR (310SG,315SG) SERIAL NO. 926789-)	3365 - 16
5J22	KIT, BACKHOE BUCKET CYLINDER REPAIR 310SG,315SG (SERIAL NO. -926129)	3365 - 13
2J9	KIT, BRAKE VALVE	1060 - 4
2I7	KIT, CATALYTIC MUFFLER	0530 - 6
2D5	KIT, CYLINDER LINER O-RING 310G (W/O TURBO) (VSN -911768)	0403 - 2
2D6	KIT, CYLINDER LINER O-RING 310G (W/O TURBO) (VSN 911769-)	0403 - 2A
2D8	KIT, CYLINDER LINER O-RING 310G(TURBO) 310SG 315SG (VSN 910056-)	0403 - 3A
2D7	KIT, CYLINDER LINER O-RING 310G(TURBO), 310SG, 315SG (VSN-910055)	0403 - 2B
3J11	KIT, DP SWITCH	2160 - 14
2H7	KIT, ENGINE OVERHAUL 310G(TURBO), 310SG, 315SG	0452 - 2
5F5	KIT, EXT.DIPPER ARM GRIP REPAIR	3346 - 6
3I1	KIT, EXTENDED GRILLE HOUSING	1921 - 4
5G5	KIT, FIFTH FUNCTION MANUAL VALVE (310G)	3362 - 24
5G6	KIT, FIFTH FUNCTION MANUAL VALVE (310SG AND 315SG)	3362 - 25
4C17	KIT, FRONT COUPLER CYLINDER REPAIR	3104 - 4
2G5	KIT, FUEL FILTER HEATER 310G (W/O TURBO) (VSN 911769-)	0420 - 4
2G11	KIT, FUEL FILTER HEATER 310G(TURBO), 310SG, 315SG (VSN 910056-)	0420 - 10
2G9	KIT, FUEL FILTER 310G (TURBO),310SG, 315SG (VSN -910055)	0420 - 8
2G3	KIT, FUEL FILTER 310G (W/O TURBO) (VSN -911768)	0420 - 2
2G5	KIT, FUEL FILTER 310G (W/O TURBO) (VSN 911769-)	0420 - 4
2G11	KIT, FUEL FILTER 310G(TURBO), 310SG, 315SG (VSN 910056-)	0420 - 10
5J7	KIT, HAND HELD HYDRAULIC TOOL KIT (SERIAL NO. -913416)	3363 - 44
5J9	KIT, HAND HELD HYDRAULIC TOOL KIT (SERIAL NO. 913417-)	3363 - 46
3C19	KIT, HARNESS CONNECTOR	1674 - 8
3C21	KIT, HARNESS CONNECTOR	1674 - 9A
5G9	KIT, HYDRAULIC REMOTE	3362 - 28
4F10	KIT, LOADER BUCKET CYLINDER REPAIR (SERIAL NO. -941225)	3165 - 10
4F12	KIT, LOADER BUCKET CYLINDER REPAIR (SERIAL NO. 941226-)	3165 - 12
2K11	KIT, LOCTITE SERVICE	1330 - 2
3I24	KIT, MAIN HYDRAULIC PUMP (310SG AND 315SG)	2160 - 4
2K14	KIT, O-RING	1369 - 4
5G15	KIT, PATTERN SELECTOR VALVE	3362 - 32
3F1	KIT, REAR WINDOW LATCH (SER.NO. -920856)	1814 - 8
3F3	KIT, REAR WINDOW LATCH (SER.NO. 920857-)	1814 - 9A
5K3	KIT, REPAIR, SWING CYLINDER	3365 - 19
5K4	KIT, REPAIR, SWING CYLINDER	3365 - 19A
3D1	KIT, SELECTIVE FLOW CONTROL	1674 - 10
5G7	KIT, SIXTH FUNCTION MANUAL VALVE (310G)	3362 - 26
5G8	KIT, SIXTH FUNCTION MANUAL VALVE (310SG AND 315SG)	3362 - 27
5K6	KIT, STABILIZER CYLINDER REPAIR 310G (SERIAL NO. -925946)	3365 - 21
5K16	KIT, STABILIZER CYLINDER REPAIR (315SG)	3365 - 27
5K17	KIT, STABILIZER CYLINDER REPAIR (315SG) (SERIAL NO. 944156-)	3365 - 28
3D19	KIT, STABILIZER GUARD 310G,310SG	1746 - 2
2G20	KIT, STARTER MOTOR ADAPTER	0422 - 6
2I19	KIT, STEERING VALVE REPAIR (SERIAL NO. -911131)	0960 - 6
3G11	KIT, SUSPENDED SEAT POSITION SENSOR	1821 - 8
1C16	KIT, UNIVERSAL DRIVE SHAFT (MFWD)	0250 - 2
2F21	KIT, WATER PUMP REPAIR 310G(TURBO),310SG 315SG (VSN -910055) T0/PE4045TT080,081	0417 - 3
2F21	KIT, WATER PUMP REPAIR 310G(W/O TURBO) (VSN -911768) T0/PE4045DT056	0417 - 3
3F1	KIT, WINDOW SEAL (SER.NO. -920856)	1814 - 8
3F3	KIT, WINDOW SEAL (SER.NO. 920857-)	1814 - 9A
3J19	KIT,AUXILIARY OIL COOLER (310G)	2160 - 22
5E20	KIT,BACKHOE BOOM PROTECTION	3344 - 3
5D11	KIT,BACKHOE TWO LEVER CONVERSION (310G AND 310SG)	3315 - 6
4F8	KIT,BOOM CYLINDER REPAIR (310SG AND 315SG)(SER.# 910492-926248)	3165 - 8
1E21	KIT,CONTROL VALVE SOLENOID, SYNCHRO-SHUTTLE	0360 - 4
5K1	KIT,CROWD CYLINDER REPAIR	3365 - 17
5K2	KIT,CROWD CYLINDER REPAIR 310SG,315SG	3365 - 18
2H7	KIT,ENGINE REBUILD 310G(TURBO), 310SG, 315SG	0452 - 2
3J21	KIT,HYDRAULIC RIDE CONTROL	2160 - 24
3J23	KIT,HYDRAULIC RIDE CONTROL	2160 - 26
4C5	KIT,MULTI-PURPOSE BUCKET CYLINDER REPAIR (SERIAL NO. -925076)	3102 - 12
4C6	KIT,MULTI-PURPOSE BUCKET CYLINDER REPAIR (SERIAL NO. 925077-)	3102 - 13
5G21	KIT,PILOT CONTROL HANDLE,BUTTON FUNCTION	3362 - 38
5E25	KIT,POWER LINK GREASE KIT (310G)	3345 - 6
5E20	KIT,PROTECTION,BACKHOE BOOM	3344 - 3
5F5	KIT,PROTECTION,EXT.DIPPERSTICK	3346 - 6
5E11	KIT,SAE BACKHOE CONTROL LINKAGE PATTERN	3315 - 26
3G7	KIT,SEAT SLIDE LATCH	1821 - 4
3G9	KIT,SLIDE PUCK SERVICE	1821 - 6
2G16	KIT,STARTER MOTOR (310G) (ENG.SER.NO. 866618-908991)	0422 - 2
2G17	KIT,STARTER MOTOR (310SG,315SG)(SERIAL NO. -894292)	0422 - 3
2G16	KIT,STARTER MOTOR (WITH TURBOCHARGER) (310G) (ENGINE SERIAL NO. -268961)	0422 - 2
2G16	KIT,STARTER MOTOR (WITHOUT TURBOCHARGER) (310G) (ENGINE SERIAL NO. -257521)	0422 - 2
2G18	KIT,STARTER MOTOR(310G W/O TURBO) (ENG.SER.NO.257522-)	0422 - 4
2G18	KIT,STARTER MOTOR(310G W/TURBO) (ENG.SER.NO.258962-)	0422 - 4
2G18	KIT,STARTER MOTOR(310SG,315SG) (ENG.SER.NO.894293-908991)	0422 - 4

ALPHABETICAL INDEX - CONTINUED

GRID		PAGE
5K5	KIT,SWING CYLINDER REPAIR 310SG,315SG	3365 - 20
3G9	KIT,SWIVEL LATCH	1821 - 6
2F22	KIT,WATER PUMP REPAIR 310G(TURBO, 310SG, 315SG (VSN 910056-) PE4045TT088,089	0417 - 4
2F22	KIT,WATER PUMP REPAIR 310G(W/O TURBO) (V SN 911769) PE4045DT058	0417 - 4
5K9	KITS, STABILIZER CYLINDER REPAIR 310G (SERIAL NO. XXXXXX-)	3365 - 22A
5K8	KITS, STABILIZER CYLINDER REPAIR 310G (SERIAL NO. 925947-XXXXXX)	3365 - 22
5K10	KITS, STABILIZER CYLINDER REPAIR 310SG (SER.NO.-926206)	3365 - 23
5K12	KITS, STABILIZER CYLINDER REPAIR 310SG (SER.NO.XXXXXX-)	3365 - 24A
5K11	KITS, STABILIZER CYLINDER REPAIR 310SG (SER.NO.926207-XXXXXX)	3365 - 24
5K13	KITS, STABILIZER CYLINDER REPAIR 310SG (SERIAL NO. -925993)	3365 - 25
5K15	KITS, STABILIZER CYLINDER REPAIR 310SG (SERIAL NO. XXXXXX-)	3365 - 26A
5K14	KITS, STABILIZER CYLINDER REPAIR 310SG (SERIAL NO. 925994-XXXXXX)	3365 - 26
4E9	KITS, STABILIZER VALVE (SERIAL NO.-913416)	3162 - 24
3H5	KNOB, HEATER VALVE	1830 - 8
1C8	KNUCKLE AND SPINDLE ASSEMBLY (WITHOUT MFWD)(SERIAL NO. -911131)	0230 - 2

L

2K3	LABELS	1320 - 2
2K5	LABELS	1320 - 4
2K7	LABELS	1320 - 6
2K9	LABELS	1320 - 8
3E12	LAMP, HEADLINER	1811 - 4
3H15	LATCH, HOOD	1910 - 2
3H17	LATCH, HOOD	1910 - 4
3F1	LATCH, REAR WINDOW (SER.NO. -920856)	1814 - 8
3F3	LATCH, REAR WINDOW (SER.NO. 920857-)	1814 - 9A
3E20	LATCH, SIDE WINDOW LATCH	1814 - 2
3E22	LATCH, SIDE WINDOW LATCH	1814 - 4
3G9	LATCH,SEAT SWIVEL	1821 - 6
3D6	LEAD, WIRE, KIT	1674 - 16
3D8	LEAD, WIRE, KIT	1674 - 18
5E11	LEVER CONVERSION LINKAGE, BACKHOE (SAE PATTERN)	3315 - 26
5E1	LEVER, FIFTH FN FOR THREE LEVER CONTROLS	3315 - 16
5D15	LEVER, FOUR-LEVER CONTROLS, STANDARD BACKHOE (310G,310SG)	3315 - 10
1D11	LEVER, ISOLATED, TRANSMISSION SHIFTER	0315 - 6
5E9	LEVER, STABILIZER	3315 - 24
4D3	LEVER, THIRD FUNCTION LOADER CONTROL	3115 - 10
4D5	LEVER, THIRD FUNCTION LOADER CONTROL	3115 - 12
5D13	LEVER, THREE, BACKHOE CONTROL VALVE (310G AND 310SG)	3315 - 8
2H19	LEVER, THROTTLE	0515 - 2
2H21	LEVER, THROTTLE	0515 - 4
1D9	LEVER, TRANSMISSION CONTROL	0315 - 4
1D11	LEVER, TRANSMISSION SHIFTER	0315 - 6
5E3	LEVER,BACKHOE BOOM LOCK CONTROL (310G AND 310SG)	3315 - 18
5E7	LEVER,BACKHOE BOOM LOCK CONTROL (315SG)	3315 - 22
5E7	LEVER,BACKHOE SWING LOCK CONTROL (315SG)	3315 - 22
2H19	LEVER,ENGINE SPEED CONTROL	0515 - 2
2H21	LEVER,ENGINE SPEED CONTROL	0515 - 4
4C23	LEVER,LOADER CONTROL VALVE	3115 - 6
4D1	LEVER,LOADER CONTROL VALVE	3115 - 8
3G7	LEVER,SEAT LUMBAR SUPPORT CONTROL	1821 - 4
3G7	LEVER,SEAT SLIDE CONTROL	1821 - 4
3G7	LEVER,SEAT SWIVEL CONTROL	1821 - 4
3F11	LEVERS, BACKHOE COVER	1816 - 2
2K1	LICENCE PLATE BRACKET	1314 - 2
2K1	LICENCE PLATE LIGHT	1314 - 2
4D7	LIFT ARM, LOADER	3140 - 2
4E15	LIFT ARM, LOADER, HYDRAULICS	3163 - 2
1D14	LIFT BRACKET, TRANSMISSION	0341 - 1
1D15	LIFT BRACKET, TRANSMISSION	0341 - 2
4F3	LIFT CYLINDER, LOADER BOOM (310G)(SER.# -926493)	3165 - 2
4F5	LIFT CYLINDER, LOADER BOOM (310G)(SER.# 926494-)	3165 - 4
4F9	LIFT CYLINDER, LOADER BOOM (310SG AND 315SG)(SER.# 926249-)	3165 - 9
4F6	LIFT CYLINDER, LOADER BOOM (310SG AND 315SG)(SERIAL NO. -910491)	3165 - 6
4F3	LIFT CYLINDER, LOADER BOOM PINS (310G)(SER.# -926493)	3165 - 2
3C9	LIGHT SWITCH, FRONT	1674 - 2
3E12	LIGHT, DOME	1811 - 4
2K1	LIGHT, LICENCE PLATE	1314 - 2
3I6	LIGHT,CAB DOME	2001 - 2
3C5	LIGHTS,STANDARD AND DELUXE SERIAL NO. -XXXXXX	1673 - 4
3C7	LIGHTS,STANDARD AND DELUXE SERIAL NO. XXXXXX-	1673 - 6
1C23	LIMITED SLIP DIFFERENTIAL (MFWD) (310SG,315SG)	0250 - 10
5F10	LINE, POWER BEYOND, HYDRAULIC	3362 - 4
5F12	LINE, POWER BEYOND, HYDRAULIC	3362 - 6
5F10	LINE, STABILIZER HYDRAULIC	3362 - 4
5F12	LINE, STABILIZER HYDRAULIC	3362 - 6
2D6	LINER, CYLINDER 310G (W/O TURBO) (VSN 911769-)	0403 - 2A
2D8	LINER, CYLINDER 310G(TURBO) 310SG 315SG (VSN 910056-)	0403 - 3A
2D7	LINER, CYLINDER 310G(TURBO), 310SG, 315SG (VSN-910055)	0403 - 2B
2D5	LINER, CYLINDER 310G (W/O TURBO) (VSN -911768)	0403 - 2
5I13	LINES, AUXILIARY EQUIPMENT, EXTENDIBLE (315SG)	3363 - 26
5I11	LINES, AUXILIARY EQUIPMENT, EXTENDIBLE D IPPERSTICK (310G AND 310SG)	3363 - 24
5I7	LINES, AUXILIARY EQUIPMENT, STANDARD (310G AND 310SG)	3363 - 20
5I9	LINES, AUXILIARY EQUIPMENT, STANDARD (315SG)	3363 - 22
5H19	LINES, BUCKET CYLINDER, BACKHOE	3363 - 8
5H21	LINES, EXTENDIBLE DIPPERSTICK, BUCKET	3363 - 10
2G13	LINES, FUEL FILTER 310G (TURBO), 310SG, 315SG (VSN 910056-)	0420 - 12
2G9	LINES, FUEL FILTER 310G (TURBO),310SG, 315SG (VSN -910055)	0420 - 8
2G3	LINES, FUEL FILTER 310G (W/O TURBO) (VSN -911768)	0420 - 2

ALPHABETICAL INDEX - CONTINUED

GRID		PAGE
2G7	LINES, FUEL FILTER 310G (W/O TURBO) (VSN 911769-)	0420 - 6
2F3	LINES, FUEL INJECTION 310G(TURBO),310SG,315SG (VSN 910056-)	0413 - 10
2E23	LINES, FUEL INJECTION 310G(W/O TURBO)(VSN 911769-)	0413 - 6
2F1	LINES, FUEL INJECTION 310G(TURBO),310SG, 315SG(VSN 893079-907963)(VSN-910055)	0413 - 8
2E21	LINES, FUEL INJECTION310G(W/O TURBO) (VSN 893079-907963)(VSN -911768)	0413 - 4
3J7	LINES, HYDRAULIC COOLER	2160 - 10
3J1	LINES, OIL COOLER, HYDRAULIC	2160 - 6
3J3	LINES, OIL COOLER, HYDRAULIC	2160 - 8
3J5	LINES, OIL COOLER, HYDRAULIC	2160 - 9A
4F1	LINES, QUICK COUPLER HYDRAULIC	3163 - 12
2J11	LINES, SERVICE BRAKE	1060 - 6
2F16	LINES, TURBOCHARGER OIL (VSN -910055) 310G(TURBO), 310SG, 315SG	0416 - 6
2F18	LINES, TURBOCHARGER OIL (VSN 910056-) 310G(TURBO), 310SG, 315SG	0416 - 8
5I5	LINES,EXTENDIBLE DIPPERSTICK	3363 - 18
5E1	LINKAGE BACKHOE, FIFTH FN LEVER FOR THREE LEVER CONTROLS	3315 - 16
5D13	LINKAGE THREE LEVER BACKHOE CONTROL VALVE (310G AND 310SG)	3315 - 8
5E11	LINKAGE, BACKHOE CONTROL (SAE PATTERN)	3315 - 26
4C19	LINKAGE, BUCKET LEVELING	3115 - 2
4C21	LINKAGE, BUCKET LEVELING	3115 - 4
2H19	LINKAGE, ENGINE SPEED CONTROL	0515 - 2
3E16	LINKAGE, FLOOR COVER	1812 - 2
5D15	LINKAGE, FOUR-LEVER CONTROL VALVE, STANDARD BACKHOE (310G,310SG)	3315 - 10
5E9	LINKAGE, STABILIZER VALVE	3315 - 24
5D11	LINKAGE, TWO LEVER BACKHOE CONTROL VALVE (310G AND 310SG)	3315 - 6
4D9	LINKAGE,LOADER BUCKET	3140 - 4
4C23	LINKAGE,LOADER CONTROL VALVE	3115 - 6
4D1	LINKAGE,LOADER CONTROL VALVE	3115 - 8
4C19	LINKAGE,RETURN-TO-DIG	3115 - 2
4C21	LINKAGE,RETURN-TO-DIG	3115 - 4
4D3	LINKAGE,THIRD FUNCTION LOADER CONTROL VALVE	3115 - 10
4D5	LINKAGE,THIRD FUNCTION LOADER CONTROL VALVE	3115 - 12
4E11	LOAD SENSE RELIEF VALVE (SER.NO.913417-)	3162 - 26
2J23	LOADER ARM SERVICE LOCK	1313 - 2
4D7	LOADER BOOM	3140 - 2
4E15	LOADER BOOM CYLINDER HYDRAULICS	3163 - 2
4E17	LOADER BOOM CYLINDER HYDRAULICS	3163 - 4
4F3	LOADER BOOM LIFT CYLINDER (310G)(SER.# -926493)	3165 - 2
4F5	LOADER BOOM LIFT CYLINDER (310G)(SER.# 926494-)	3165 - 4
4F9	LOADER BOOM LIFT CYLINDER (310SG AND 315SG)(SER.# 926249-)	3165 - 9
4F6	LOADER BOOM LIFT CYLINDER (310SG AND 315SG)(SERIAL NO. -910491)	3165 - 6
4F3	LOADER BOOM LIFT CYLINDER PINS (310G)(SER.# -926493)	3165 - 2
4F3	LOADER BOOM LIFT CYLINDER REPAIR KIT (310G)(SER.# -926493)	3165 - 2
4F5	LOADER BOOM LIFT CYLINDER REPAIR KIT (310G)(SER.# 926494-)	3165 - 4
4F9	LOADER BOOM LIFT CYLINDER REPAIR KIT (310SG AND 315SG)(SER.# 926249-)	3165 - 9
4F6	LOADER BOOM LIFT CYLINDER REPAIR KIT (310SG AND 315SG)(SERIAL NO. -910491)	3165 - 6
4E15	LOADER BOOM OIL LINES	3163 - 2
4E17	LOADER BOOM OIL LINES	3163 - 4
2J23	LOADER BOOM SERVICE LOCK	1313 - 2
4B20	LOADER BUCKET .76 CUBIC METER (1.00 CUBIC YARD)	3102 - 2
4B22	LOADER BUCKET .86 CUBIC METER(1.13 CUBIC YARD)	3102 - 4
4B20	LOADER BUCKET .90 CUBIC METER (1.20 CUBIC YARD)	3102 - 2
4B20	LOADER BUCKET .96 CUBIC METER (1.25 CUBIC YARD)	3102 - 2
4B22	LOADER BUCKET 1.00 CUBIC METER(1.30 CUBIC YARD)	3102 - 4
4C7	LOADER BUCKET COUPLER .76 CUBIC METER (1.00 CUBIC YARD)	3102 - 14
4C7	LOADER BUCKET COUPLER .96 CUBIC METER (1.25 CUBIC YARD)	3102 - 14
4B20	LOADER BUCKET CUTTING EDGE	3102 - 2
4B22	LOADER BUCKET CUTTING EDGE	3102 - 4
4F10	LOADER BUCKET CYLINDER (SERIAL NO. -941225)	3165 - 10
4F12	LOADER BUCKET CYLINDER (SERIAL NO. 941226-)	3165 - 12
4B24	LOADER BUCKET CYLINDER PINS	3102 - 6
4F10	LOADER BUCKET CYLINDER REPAIR KIT (SERIAL NO. -941225)	3165 - 10
4F12	LOADER BUCKET CYLINDER REPAIR KIT (SERIAL NO. 941226-)	3165 - 12
4F10	LOADER BUCKET HYDRAULIC CYLINDER (SERIAL NO. -941225)	3165 - 10
4F12	LOADER BUCKET HYDRAULIC CYLINDER (SERIAL NO. 941226-)	3165 - 12
4E19	LOADER BUCKET LIFT CYLINDER HYDRAULICS	3163 - 6
4E21	LOADER BUCKET LIFT CYLINDER HYDRAULICS	3163 - 8
4B24	LOADER BUCKET LINK PINS	3102 - 6
4D9	LOADER BUCKET LINKAGE	3140 - 4
4B24	LOADER BUCKET PINS	3102 - 6
4C9	LOADER BUCKET,COUPLER .86 CUBIC METER (1.13 CUBIC YARD)	3102 - 16
4C9	LOADER BUCKET,COUPLER 1.00 CUBIC METER (1.31 CUBIC YARD)	3102 - 16
3F23	LOADER CONTROL COVER	1816 - 12
4D11	LOADER CONTROL VALVE	3162 - 2
4C23	LOADER CONTROL VALVE LEVER	3115 - 6
4D1	LOADER CONTROL VALVE LEVER	3115 - 8
4C23	LOADER CONTROL VALVE LINKAGE	3115 - 6
4D1	LOADER CONTROL VALVE LINKAGE	3115 - 8
3H21	LOADER CONTROL VALVE PLUMBING SHIELD	1913 - 4
4E23	LOADER COUPLER, BUCKET	3163 - 10
4E13	LOADER COUPLER, VALVE	3162 - 28
4C13	LOADER FORKLIFT FORKS	3103 - 2
4D7	LOADER LIFT ARM	3140 - 2
4D7	LOADER LIFT ARM PIN	3140 - 2
4E15	LOADER LIFT ARM, HYDRAULICS	3163 - 2
4C23	LOADER LINKAGE, FLOOR PLATE	3115 - 6
4E3	LOADER VALVE AUXILIARY KIT (SERIAL NO. -913416)	3162 - 18
4E1	LOADER VALVE AUXILIARY SECTION (SERIAL NO. -913416)	3162 - 16
4E5	LOADER VALVE AUXILIARY SECTION (SERIAL NO. 913417-)	3162 - 20
4D17	LOADER VALVE BOOM SECTION	3162 - 8
4D19	LOADER VALVE BOOM SECTION	3162 - 10
4D21	LOADER VALVE BUCKET SECTION	3162 - 12
4D23	LOADER VALVE BUCKET SECTION	3162 - 14

ALPHABETICAL INDEX - CONTINUED

GRID		PAGE
4D15	LOADER VALVE INLET SECTION	3162 - 6
4E11	LOADER VALVE RELIEF (SER.NO.913417-)	3162 - 26
4D13	LOADER/STABILIZER CONTROL VALVE	3162 - 4
2J23	LOCK BAR, BOOM SERVICE	1313 - 2
4C15	LOCK PIN, HYDRAULIC FRONT COUPLER	3104 - 2
3D3	LOCK SWITCH, DIFFERENTIAL	1674 - 12
5G13	LOCK VALVE, SIDE SHIFT (315SG)	3362 - 30
5E5	LOCK, BACHOE BOOM (310G AND 310SG)	3315 - 20
1C2	LOCK, DIFFERENTIAL ASSEMBLY	0210 - 2
5I15	LOCK, SLIDING FRAME HYDRAULICS 315SG	3363 - 28
3F21	LOCK,VANDAL GUARD	1816 - 10
5F3	LOCKING PIN, EXTENDIBLE ARM	3346 - 4
5G13	LOCKING VALVE, SIDE SHIFT (315SG)	3362 - 30
4E11	LOCKOUT VALVE, STABILIZER (SER.NO.913417-)	3162 - 26
2K11	LOCTITE SERVICE KIT	1330 - 2
3G24	LOUVER, AIR CONDITIONING	1830 - 4
3H1	LOW PRESSURE SWITCH	1830 - 6
3H3	LOW PRESSURE SWITCH	1830 - 7A
5I21	LOWERING DEVICE,CONTOLLED, BOOM CYL.KIT	3363 - 34
5I23	LOWERING DEVICE,CONTROLLED,CROWD CYL.KIT	3363 - 36
2K18	LUBRICATION SYSTEM, FRONT AXLE	1370 - 2

M

4D21	MAGNET, RETURN-TO-DIG	3162 - 12
4D23	MAGNET, RETURN-TO-DIG	3162 - 14
2D10	MAIN BEARING CAP 310G(TURBO), 310SG, 315SG (VSN-910055)	0404 - 2
2C12	MAIN BEARINGS 310G (W/O TURBO) (VSN 911769-)	0401 - 2
2C11	MAIN BEARINGS 310G (W/O TURBO) (VSN-911768)	0401 - 1
2C14	MAIN BEARINGS 310G(TURBO),310SG,315SG (VSN -910055)	0401 - 4
2C15	MAIN BEARINGS 310G(TURBO),310SG,315SG (VSN 910056-)	0401 - 6
3D17	MAIN FRAME (315SG)	1740 - 4
3D22	MAIN FRAME BUMPER (SERIAL NUMBER -901551)	1747 - 2
3D24	MAIN FRAME BUMPER (SERIAL NUMBER 901552-)	1747 - 4
3E1	MAIN FRAME BUMPER (SERIAL NUMBER 901552-)	1747 - 6
3D15	MAIN FRAME(310G,310SG)	1740 - 2
3J1	MAIN HYDRAULIC HOSES	2160 - 6
3J3	MAIN HYDRAULIC HOSES	2160 - 8
3J5	MAIN HYDRAULIC HOSES	2160 - 9A
3J7	MAIN HYDRAULIC HOSES	2160 - 10
3I22	MAIN HYDRAULIC PUMP (310G)	2160 - 2
3I24	MAIN HYDRAULIC PUMP (310SG AND 315SG)	2160 - 4
3I24	MAIN HYDRAULIC PUMP SOLENOID VALVE (310SG AND 315SG)	2160 - 4
3J9	MAIN HYDRAULIC RESERVOIR	2160 - 12
3I24	MAIN HYDRAULIC SEAL KIT(310SG AND 315SG)	2160 - 4
3I21	MAIN HYDRAULIC SYSTEM, VEHICLE	2100 - 1
3J1	MAIN HYDRAULICS	2160 - 6
3J3	MAIN HYDRAULICS	2160 - 8
3J5	MAIN HYDRAULICS	2160 - 9A
3J7	MAIN HYDRAULICS	2160 - 10
3C9	MAIN WIRE HARNESS,CAB	1674 - 2
3C11	MAIN WIRE HARNESS,CAB	1674 - 4
5H7	MANIFOLD, PILOT ACTIVATING	3363 - 1A
5G14	MANIFOLD, PILOT CONTROL	3362 - 31
2E14	MANIFOLD,EXHAUST	0410 - 1
3E10	MANUAL HOLDER CORD	1811 - 2
3E10	MANUAL HOLDER, OPERATOR	1811 - 2
3B23	MASTER DISCONNECT BATTERY SWITCH	1671 - 6
3B23	MASTER SWITCH MOUNTING PLATE	1671 - 6
3E18	MAT, ANTI-SKID	1812 - 4
3E16	MATS, FLOOR	1812 - 2
2I24	MECHANICAL FRONT WHEEL DRIVE, STEERING CYLINDER (MFWD)	0960 - 12
3D15	MFWD GUARD	1740 - 2
3D17	MFWD GUARD (315SG)	1740 - 4
1D24	MFWD IDLER SHAFT	0350 - 7
1D25	MFWD OUTPUT SHAFT	0350 - 8
1D24	MFWD PIPE	0350 - 7
1E21	MFWD SOLENOID,SYNCHRO-SHUTTLE	0360 - 4
1F3	MFWD SOLINOID HOLE PLUG	0360 - 10
3C17	MFWD SWITCH	1674 - 6
1C15	MFWD, FRONT AXLE	0250 - 1
1C21	MFWD, PLANETARY DRIVE	0250 - 8
3E16	MIDDLE FLOOR COVER	1812 - 2
3I8	MIRROR BRACKET, INTERIOR REAR VIEW	2002 - 2
3I9	MIRROR, EXTERNAL REAR VIEW	2002 - 3
3I8	MIRROR, INTERIOR REAR VIEW	2002 - 2
3I9	MIRROR, OUTSIDE	2002 - 3
3F19	MODE DOOR	1816 - 8
3F19	MODE DOOR WIRING HARNESS	1816 - 8
4C1	MOLDBOARD,MULTI-PURPOSE BUCKET	3102 - 8
3C17	MONITOR	1674 - 6
3C17	MONITOR PANEL	1674 - 6
3C17	MONITOR PANEL SWITCHES	1674 - 6
2I9	MOTOR MOUNTS	0540 - 2
3H7	MOTOR, CAB HEATER (20,000 BTU)	1830 - 10
3F5	MOTOR, FRONT WINDSHIELD WIPER	1814 - 10
3F9	MOTOR, REAR WINDSHIELD WIPER	1814 - 14
2G16	MOTOR,STARTING (310G) (ENG.SER.NO. 866618-908991)	0422 - 2
2G17	MOTOR,STARTING (310SG,315SG)(SERIAL NO. -894292)	0422 - 3
2G16	MOTOR,STARTING (WITH TURBOCHARGER) (310G) (ENGINE SERIAL NO. -268961)	0422 - 2
2G16	MOTOR,STARTING (WITHOUT TURBOCHARGER) (310G) (ENGINE SERIAL NO. -257521)	0422 - 2
2G18	MOTOR,STARTING(310G W/O TURBO) (ENG.SER.NO.257522-)	0422 - 4
2G18	MOTOR,STARTING(310G W/TURBO) (ENG.SER.NO.258962-)	0422 - 4
2G18	MOTOR,STARTING(310SG,315SG) (ENG.SER.NO.894293-908991)	0422 - 4
3H8	MOUNTING BRACKETS, COMPRESSOR, AIR CONDITIONING	1830 - 12
3H10	MOUNTING BRACKETS, COMPRESSOR, AIR CONDITIONING	1830 - 14
5D7	MOUNTING PLATE, BACKHOE VALVE (PILOT CONTROL)	3315 - 3A
5D5	MOUNTING PLATE, BACKHOE VALVE 310G,310SG	3315 - 2
5D9	MOUNTING PLATE, BACKHOE VALVE 315SG	3315 - 4
2J7	MOUNTING PLATE, BRAKE VALVE	1060 - 2
3I6	MOUNTING PLATE, RADIO/SPEAKER	2001 - 2
5D7	MOUNTING PLATE, STABILIZER VALVE (PILOT CONTROL)	3315 - 3A
5D5	MOUNTING PLATE, STABILIZER VALVE 310G,310SG	3315 - 2

ALPHABETICAL INDEX - CONTINUED

GRID		PAGE
5D9	MOUNTING PLATE, STABILIZER VALVE 315SG	3315 - 4
3B23	MOUNTING PLATE,MASTER DISCONNECT SWITCH	1671 - 6
2I5	MUFFLER	0530 - 4
2I3	MUFFLER (310G)	0530 - 2
2I7	MUFFLER, CATALYTIC	0530 - 6
4C1	MULTI-PURPOSE BUCKET	3102 - 8
4C3	MULTI-PURPOSE BUCKET	3102 - 10
4C1	MULTI-PURPOSE BUCKET CUTTING EDGE	3102 - 8
4C5	MULTI-PURPOSE BUCKET CYLINDER (SERIAL NO. -925076)	3102 - 12
4C6	MULTI-PURPOSE BUCKET CYLINDER (SERIAL NO. 925077-)	3102 - 13
4C5	MULTI-PURPOSE BUCKET CYLINDER REPAIR KIT (SERIAL NO. -925076)	3102 - 12
4C6	MULTI-PURPOSE BUCKET CYLINDER REPAIR KIT (SERIAL NO. 925077-)	3102 - 13
4C11	MULTI-PURPOSE BUCKET CYLINDER PINS COUPLER	3102 - 18
4C3	MULTI-PURPOSE BUCKET HYDRAULIC OIL LINES	3102 - 10
4C11	MULTI-PURPOSE BUCKET HYDRAULIC OIL LINES, COUPLER	3102 - 18
4C3	MULTI-PURPOSE BUCKET HYDRAULIC CYLINDER	3102 - 10
4C11	MULTI-PURPOSE BUCKET HYDRAULIC CYLINDER, COUPLER	3102 - 18
4C1	MULTI-PURPOSE BUCKET MOLDBOARD	3102 - 8
4C11	MULTI-PURPOSE BUCKET, COUPLER	3102 - 18

N

1E22	NEEDLE BEARING, AXIAL	0360 - 5
3H12	NOISE AND HEAT BARRIER	1834 - 2
3E18	NON-SLIP SURFACING	1812 - 4
3G14	NON-SUSPENDED SEAT BASE	1821 - 12
3G16	NON-SUSPENDED SEAT HEIGHT ADJUSTER	1821 - 14
2E17	NOZZLE, FUEL INJECTION (PE4045TT089) 310SG,315SG (VSN -943548)	0413 - 2
2E18	NOZZLE, FUEL INJECTION (PE4045TT089) 310 SG,315SG (VSN 943549-)	0413 - 3
2E17	NOZZLE, FUEL INJECTION (TT088, 89) 310G(TURBO),310SG,315SG (VSN 910056-)	0413 - 2
2E16	NOZZLE, FUEL INJECTION (VSN -910055) 310G(TURBO), 310SG, 315SG	0413 - 1
2E16	NOZZLE, FUEL INJECTION 310G(TURBO),310SG 315SG (VSN 893079-907963)	0413 - 1
2E19	NOZZLE, FUEL INJECTION 310G(W/O TURBO) (VSN -911768)	0413 - 3A
2E19	NOZZLE, FUEL INJECTION 310G(W/O TURBO) (VSN 893079-907963)	0413 - 3A
2E20	NOZZLE,FUEL INJECTION 310G(W/O TURBO) (VSN 911769-)	0413 - 3B

O

2K14	O-RING KIT	1369 - 4
3J15	OIL COOLER	2160 - 18
3J13	OIL COOLER (310G)	2160 - 16
3J19	OIL COOLER KIT (310G)	2160 - 22
3J1	OIL COOLER LINES,HYDRAULIC	2160 - 6
3J3	OIL COOLER LINES,HYDRAULIC	2160 - 8
3J5	OIL COOLER LINES,HYDRAULIC	2160 - 9A
2G1	OIL COOLER, ENGINE	0419 - 2
3J17	OIL COOLER, HI-AMBIENT	2160 - 20
3J15	OIL COOLER, HYDRAULIC	2160 - 18
3J15	OIL COOLER, TRANSMISSION	2160 - 18
2D18	OIL DIPSTICK PE4045DT058 (VSN 929330-)	0407 - 5
2D16	OIL FILL INLET	0407 - 2
2D16	OIL FILLER OPENING COVER	0407 - 2
1E22	OIL FILTER, CHARGE PUMP	0360 - 5
2E1	OIL FILTER, ENGINE (VSN -911768) 310G (W/O TURBO)	0407 - 12
2E4	OIL FILTER, ENGINE (VSN -910055) 310G(TURBO),310SG,315SG	0407 - 16
2E3	OIL FILTER, ENGINE (VSN 911769-) 310G (W/O TURBO)	0407 - 14
1E22	OIL FILTER, TRANSMISSION	0360 - 5
2E6	OIL FILTER,ENGINE (VSN 910056-) 310G(TURBO),310SG,315SG	0407 - 18
4E15	OIL LINES, LOADER BOOM	3163 - 2
4E17	OIL LINES, LOADER BOOM	3163 - 4
2F16	OIL LINES, TURBOCHARGER (VSN -910055) 310G(TURBO), 310SG, 315SG	0416 - 6
2F18	OIL LINES, TURBOCHARGER (VSN 910056-) 310G(TURBO), 310SG, 315SG	0416 - 8
2D20	OIL PAN GASKET 310G (W/O TURBO) (VSN -911768)(VSN 911769-)	0407 - 6
2D20	OIL PAN GASKET 310G (W/O TURBO) (VSN 893079 - 907963)	0407 - 6
2D22	OIL PAN GASKET 310G(TURBO),310SG,315SG (VSN 893079-907963)(VSN -910055)	0407 - 8
2D24	OIL PAN GASKET 310G(TURBO),310SG,315SG (VSN 910056-)	0407 - 10
2D20	OIL PAN,ENGINE 310G (W/O TURBO) (VSN -911768)(VSN 911769-)	0407 - 6
2D20	OIL PAN,ENGINE 310G (W/O TURBO) (VSN 893079 - 907963)	0407 - 6
2D22	OIL PAN,ENGINE 310G(TURBO),310SG,315SG (VSN 893079-907963)(VSN -910055)	0407 - 8
2D24	OIL PAN,ENGINE 310G(TURBO),310SG,315SG (VSN 910056-)	0407 - 10
2K12	OILSCAN PLUS TEST KIT, FLUID ANALYSIS	1369 - 2
3E10	OPERATOR MANUAL HOLDER	1811 - 2
3I3	OPERATOR STATION SKIRTS	1927 - 2
3G20	OPERATOR'S SEAT	1821 - 18
1D25	OUTPUT SHAFT DOG GEAR	0350 - 8
1D25	OUTPUT SHAFT SCREEN	0350 - 8
1D25	OUTPUT SHAFT SLIDING SLEEVE	0350 - 8
1E9	OUTPUT SHAFT YOKE, TRANSMISSION	0350 - 18
1D25	OUTPUT SHAFT, MFWD	0350 - 8
1E17	OUTPUT SHAFT, TRANSMISSION (MFWD)	0350 - 26
1E1	OUTPUT YOKE, TRANSMISSION	0350 - 9
3I9	OUTSIDE MIRROR	2002 - 3
2H4	OVERHAUL KIT, ENGINE	0450 - 2

P

2K16	PACKAGE, ENVIORMENTAL DRAIN	1369 - 6
3G5	PAD SEAT BACK	1821 - 2
5F3	PAD,EXTENDIBLE ARM	3346 - 4
4C13	PALLET FORKS	3103 - 2
3G7	PAN, SEAT BACK	1821 - 4
2D20	PAN,ENGINE OIL 310G (W/O TURBO) (VSN -911768)(VSN 911769-)	0407 - 6
2D20	PAN,ENGINE OIL 310G (W/O TURBO) (VSN 893079 - 907963)	0407 - 6
2D22	PAN,ENGINE OIL 310G(TURBO),310SG,315SG (VSN 893079-907963)(VSN -910055)	0407 - 8
2D24	PAN,ENGINE OIL 310G(TURBO),310SG,315SG (VSN 910056-)	0407 - 10

ALPHABETICAL INDEX - CONTINUED

GRID		PAGE
3F19	PANEL, FRONT INSTRUMENT	1816 - 8
3I6	PANEL, RADIO TRIM	2001 - 2
3E16	PANEL, REAR KICK	1812 - 2
3C9	PANEL,FUSE	1674 - 2
3C17	PANEL,MONITOR	1674 - 6
3H15	PANELS, ENGINE SIDE	1910 - 2
3H17	PANELS, ENGINE SIDE	1910 - 4
2J18	PARK BRAKE (AXLE SERIAL NO. -217496)	1111 - 2
2J20	PARK BRAKE (AXLE SERIAL NO. 217497-)	1111 - 4
2J18	PARK BRAKE CLUTCH DISK (AXLE SERIAL NO. -217496)	1111 - 2
2J20	PARK BRAKE CLUTCH DISK (AXLE SERIAL NO. 217497-)	1111 - 4
2J18	PARK BRAKE HOUSING (AXLE SERIAL NO. -217496)	1111 - 2
2J20	PARK BRAKE HOUSING (AXLE SERIAL NO. 217497-)	1111 - 4
3C19	PARK BRAKE OIL PRESSURE SWITCH	1674 - 8
3C21	PARK BRAKE OIL PRESSURE SWITCH	1674 - 9A
2J18	PARK BRAKE PISTON (AXLE SERIAL NO. -217496)	1111 - 2
2J20	PARK BRAKE PISTON (AXLE SERIAL NO. 217497-)	1111 - 4
2J18	PARK BRAKE SEPERATOR PLATE (AXLE SERIAL NO. -217496)	1111 - 2
2J20	PARK BRAKE SEPERATOR PLATE (AXLE SERIAL NO. 217497-)	1111 - 4
1E21	PARK BRAKE SOLENOID, SYNCHRO-SHUTTLE	0360 - 4
5G15	PATTERN SELECTOR HARNESS	3362 - 32
5G15	PATTERN SELECTOR VALVE	3362 - 32
5G15	PATTERN SELECTOR, SWITCH	3362 - 32
5D19	PEDAL FIELD KIT, FIFTH FUNCTION (PILOT CONTROL)	3315 - 13A
5D23	PEDAL FIELD KIT, SIXTH FUNCTION (PILOT CONTROL)	3315 - 15A
5D23	PEDAL, AUXILIARY FUNCTION (PILOT CONTROL)	3315 - 15A
2J7	PEDAL, BRAKE	1060 - 2
5D19	PEDAL, EXTENDIBLE DIPPER (PILOT CONTROL)	3315 - 13A
5D17	PEDAL, FIFTH FUNCTION	3315 - 12
5D19	PEDAL, FIFTH FUNCTION (PILOT CONTROL)	3315 - 13A
3D1	PEDAL, SELECTIVE FLOW CONTROL VALVE	1674 - 10
5D21	PEDAL, SIXTH FUNCTION	3315 - 14
5D23	PEDAL, SIXTH FUNCTION (PILOT CONTROL)	3315 - 15A
2H19	PEDAL, SPEED CONTROL	0515 - 2
2H21	PEDAL, SPEED CONTROL	0515 - 4
5H7	PILOT ACTIVATING MANIFOLD	3363 - 1A
5G23	PILOT BACKHOE BOOM SECTION VALVE	3362 - 40
5H1	PILOT BACKHOE BUCKET SECTION VALVE	3362 - 42
5H3	PILOT BACKHOE CROWD SECTION VALVE	3362 - 44
5H5	PILOT BACKHOE SWING SECTION VALVE	3362 - 46
5G21	PILOT CONTROL HANDLE BUTTON FUNCTION KIT	3362 - 38
5H9	PILOT CONTROL HYDRAULICS	3363 - 1C
5G14	PILOT CONTROL MANIFOLD	3362 - 31
5G17	PILOT CONTROL VALVE, LEFT	3362 - 34
5G19	PILOT CONTROL VALVE, RIGHT	3362 - 36
3G1	PILOT CONTROLLER ARM (LEFT SIDE)	1816 - 14
3G3	PILOT CONTROLLER ARM (RIGHT SIDE)	1816 - 16
3C13	PILOT ENABLE	1674 - 5A
3C13	PILOT ENABLE SWITCH	1674 - 5A
5H9	PILOT SELECTOR VALVE HYDRAULICS	3363 - 1C
1C8	PIN, AXLE PIVOT (WITHOUT MFWD) (SERIAL NO. -911131)	0230 - 2
5E19	PIN, BACKHOE BOOM	3344 - 2
5E25	PIN, BACKHOE BUCKET LUBE KIT (310G)	3345 - 6
5F1	PIN, BUCKET	3346 - 2
5F1	PIN, CROWD	3346 - 2
5F1	PIN, DIPPERSTICK	3346 - 2
1C8	PIN, KING (WITHOUT MFWD) (SERIAL NO. -911131)	0230 - 2
1C15	PIN,FRONT AXLE PIVOT (MFWD)	0250 - 1
1C11	PIN,FRONT AXLE PIVOT (WITHOUT MFWD) (SERIAL NO. 911132-)	0230 - 5
4D7	PIN,LOADER LIFT ARM	3140 - 2
1C1	PINION GEAR, PLANETARY	0210 - 1
1C2	PINION, BEVEL WITH LOCK	0210 - 2
5E23	PINS AND BUCKET LINKS,BACKHOE (310SG AND 315SG)	3345 - 4
5E21	PINS AND BUCKET LINKS,BACKHOE (310G)	3345 - 2
5E23	PINS, BACKHOE BUCKET AND LINKS (310SG AND 315SG)	3345 - 4
5E21	PINS, BACKHOE BUCKET AND LINKS (310G)	3345 - 2
4F3	PINS, LOADER BOOM LIFT CYLINDER (310G)(SER.# -926493)	3165 - 2
4B24	PINS, LOADER BUCKET CYLINDER	3102 - 6
4B24	PINS, LOADER BUCKET LINK	3102 - 6
4C3	PINS, MULTI-PURPOSE BUCKET CYLINDER	3102 - 10
4C11	PINS, MULTI-PURPOSE BUCKET CYLINDER, COUPLER	3102 - 18
4C1	PINS, MULTI-PURPOSE BUCKET HINGE	3102 - 8
5E17	PINS, SWING FRAME 315SG	3343 - 4
5D1	PINS,BACKHOE BUCKET	3302 - 14
5D3	PINS,BACKHOE BUCKET	3302 - 16
4B24	PINS,LOADER BUCKET	3102 - 6
5F6	PINS,STABLIZER ARM (310G,310SG)	3348 - 2
5F8	PINS,STABLIZER CYLINDER	3348 - 4
5E15	PINS,SWING FRAME (310G,310SG)	3343 - 2
2I5	PIPE, EXHAUST PIPE	0530 - 4
2I3	PIPE, EXHAUST PIPE (310G)	0530 - 2
1D24	PIPE, MFWD	0350 - 7
2D6	PISTON RINGS 310G (W/O TURBO) (VSN 911769-)	0403 - 2A
2D8	PISTON RINGS 310G(TURBO) 310SG 315SG (VSN 910056-)	0403 - 3A
2D7	PISTON RINGS 310G(TURBO), 310SG, 315SG (VSN-910055)	0403 - 2B
2D5	PISTON RINGS 310G (W/O TURBO) (VSN -911768)	0403 - 2
2J5	PISTON, BRAKE	1011 - 2
2J9	PISTON, BRAKE VALVE	1060 - 4
1D19	PISTON, CLUTCH ASSEMBLY	0350 - 2
1D21	PISTON, CLUTCH ASSEMBLY	0350 - 4
2D6	PISTON, ENGINE 310G (W/O TURBO) (VSN 911769-)	0403 - 2A
2D8	PISTON, ENGINE 310G(TURBO) 310SG 315SG (VSN 910056-)	0403 - 3A
2D7	PISTON, ENGINE 310G(TURBO), 310SG, 315SG (VSN-910055)	0403 - 2B
2D5	PISTON, ENGINE 310G (W/O TURBO) (VSN -911768)	0403 - 2
2J18	PISTON, PARK BRAKE (AXLE SERIAL NO. -217496)	1111 - 2
2J20	PISTON, PARK BRAKE (AXLE SERIAL NO. 217497-)	1111 - 4

ALPHABETICAL INDEX - CONTINUED

GRID		PAGE
1F1	PISTON, RANGE SHIFT VALVE, POWER SHIFT	0360 - 8
5I15	PISTON, SLIDING FRAME LOCK 315SG	3363 - 28
1E19	PISTON, TRANSMISSION CONTROL VALVE	0360 - 2
1E23	PISTON, TRANSMISSION CONTROL VALVE, PST	0360 - 6
1D7	PIVOT, SHIFT HOUSING	0315 - 2
1C21	PLANET GEAR (MFWD)	0250 - 8
1C22	PLANET GEAR (MFWD)(310G)	0250 - 9
1C1	PLANETARY CARRIER SHAFT	0210 - 1
1C21	PLANETARY DRIVE (MFWD)	0250 - 8
1C22	PLANETARY DRIVE (MFWD)(310G)	0250 - 9
1C1	PLANETARY PINION CARRIER	0210 - 1
1C1	PLANETARY PINION GEAR	0210 - 1
1C1	PLANETARY RING GEAR	0210 - 1
5I19	PLATE, BULKHEAD	3363 - 32
2J7	PLATE,BRAKE VALVE MOUNTING	1060 - 2
1B22	PLATE,REAR AXLE HOUSING MOUNTING	0201 - 2
1B24	PLATE,REAR AXLE HOUSING MOUNTING	0201 - 4
3E18	PLUG, FRONT CAB MOUNT FLOOR HOLES	1812 - 4
2F5	PLUG, TIMING PIN HOLE, STANADYNE DE10 310G (W/O TURBO) (VSN 911769-)	0413 - 12
2F6	PLUG, TIMING PIN HOLE, STANADYNE DE10 310G(TURBO),310SG/315SG (VSN 910056-)	0413 - 13
5J5	PLUMBING KIT, ATTACHMENT	3363 - 42
2J13	PLUMBING, BRAKE VALVE BOOST (CAB),310G AND 310SG	1060 - 8
2J15	PLUMBING, BRAKE VALVE BOOST (ROPS),310G AND 310SG	1060 - 10
1C6	PLUMBING, DIFFERENTIAL LOCK	0210 - 6
3G11	POSITION SWITCH, SEAT	1821 - 8
3B25	POST,REMOTE START	1671 - 8
2H21	POTENTIOMETER, ENGINE SPEED CONTROL	0515 - 4
5F10	POWER BEYOND HYDRAULIC LINE	3362 - 4
5F12	POWER BEYOND HYDRAULIC LINE	3362 - 6
5E21	POWER LINK (310G)	3345 - 2
5E23	POWER LINK (310SG AND 315SG)	3345 - 4
5E25	POWER LINK GREASE KIT (310G)	3345 - 6
1E5	POWER SHIFT CLUTCH ASSEMBLY, FIRST GEAR	0350 - 14
1E13	POWER SHIFT CLUTCH ASSEMBLY, FORWARD	0350 - 22
1E11	POWER SHIFT CLUTCH ASSEMBLY, FOURTH GEAR	0350 - 20
1E15	POWER SHIFT CLUTCH ASSEMBLY, REVERSE	0350 - 24
1E7	POWER SHIFT CLUTCH ASSEMBLY, SECOND GEAR	0350 - 16
1E9	POWER SHIFT CLUTCH ASSEMBLY, THIRD GEAR	0350 - 18
2J1	POWER STEERING CYLINDER (WITHOUT MFWD) (SERIAL NO. -911131)	0960 - 14
2J2	POWER STEERING CYLINDER (WITHOUT MFWD) (SERIAL NO. -911131)	0960 - 16
2I1	PRE CLEANER	0520 - 4
5G14	PRESSURE REDUCING VALVE, MANIFOLD (PILOT CONTROL)	3362 - 31
2F5	PRESSURE REGULATOR, STANADYNE DE10 310G (W/O TURBO) (VSN 911769-)	0413 - 12
2F6	PRESSURE REGULATOR, STANADYNE DE10 310G(TURBO),310SG/315SG (VSN 910056-)	0413 - 13
3C23	PRESSURE SWITCH (ENGINE OIL) (SN 910056-)	1674 - 9C
3C11	PRESSURE SWITCH HARNESS, A/C	1674 - 4
2J7	PRESSURE SWITCH, BRAKE LIGHT	1060 - 2
3C19	PRESSURE, ENGINE OIL SWITCH	1674 - 8
3C21	PRESSURE, ENGINE OIL SWITCH	1674 - 9A
5F14	PRIORITY VALVE INLET SECTION, BACKHOE	3362 - 8
3H21	PROTECTION COVER, LOADER PLUMBING	1913 - 4
5E20	PROTECTION KIT,BACKHOE BOOM	3344 - 3
5F5	PROTECTION KIT,EXT.DIPPERSTICK	3346 - 6
3J15	PROTECTIVE SLEEVES	2160 - 18
3J17	PROTECTIVE SLEEVES	2160 - 20
3J13	PROTECTIVE SLEEVES (310G)	2160 - 16
3J19	PROTECTIVE SLEEVES (310G)	2160 - 22
1D23	PTO PUMP DRIVE SHAFT	0350 - 6
1E3	PTO PUMP DRIVE SHAFT, POWER SHIFT	0350 - 12
3C1	PULLEY ALTERNATOR	1672 - 2
2G24	PULLEY, FAN DRIVE 310G(TURBO),310SG,315SG	0429 - 2
2F20	PULLEY, WATER PUMP 310G(TURBO), 310SG, 315SG	0417 - 2
3D1	PUMP CONTROL RELAY AND HARNESS	1674 - 10
2E7	PUMP, ENGINE OIL	0407 - 19
2F3	PUMP, FUEL INJECTION 310G(TURBO),310SG,315SG (VSN 910056-)	0413 - 10
2E23	PUMP, FUEL INJECTION 310G(W/O TURBO)(VSN 911769-)	0413 - 6
2F1	PUMP, FUEL INJECTION 310G(TURBO),310SG, 315SG(VSN 893079-907963)(VSN-910055)	0413 - 8
2E21	PUMP, FUEL INJECTION 310G(W/O TURBO) (VSN 893079-907963)(VSN -911768)	0413 - 4
2G15	PUMP, FUEL TRANSFER	0421 - 2
3I22	PUMP, MAIN HYDRAULIC (310G)	2160 - 2
3I24	PUMP, MAIN HYDRAULIC (310SG AND 315SG)	2160 - 4
3F7	PUMP, WINDSHIELD WASHER	1814 - 12
1E22	PUMP,CHARGE	0360 - 5
2F21	PUMP,WATER 310G(TURBO), 310SG, 315SG (VSN -910055) T0/PE4045TT080,081	0417 - 3
2F22	PUMP,WATER 310G(TURBO), 310SG, 315SG (VSN 910056-) PE4045TT088,089	0417 - 4
2F21	PUMP,WATER 310G(W/O TURBO) (VSN -911768) T0/PE4045DT056	0417 - 3
2F22	PUMP,WATER 310G(W/O TURBO) (VSN 911769-) PE4045DT058	0417 - 4
3D3	PUSH BUTTON, DIFFERENTIAL LOCK	1674 - 12
2J9	PUSH ROD, BRAKE VALVE	1060 - 4
2G15	PUSH ROD,FUEL TRANSFER PUMP	0421 - 2
2C20	PUSH RODS	0402 - 2

Q

3E10	QUARTER CAB	1811 - 2
3E14	QUARTER CAB ROOF	1811 - 6
3E24	QUARTER CAB WINDSHIELD	1814 - 6
3J1	QUICK CONNECT COUPLER	2160 - 6
3J3	QUICK CONNECT COUPLER	2160 - 8
5C19	QUICK COUPLER (CASE)	3302 - 10
5C21	QUICK COUPLER (FORD)	3302 - 12
5C17	QUICK COUPLER (STANDARD) (310G)	3302 - 8
5C15	QUICK COUPLER (STANDARD) (310SG AND 315SG)	3302 - 6
5C13	QUICK COUPLER (UNIVERSAL) (310G)	3302 - 4
5C11	QUICK COUPLER (UNIVERSAL) (310SG AND 315SG)	3302 - 2
4C13	QUICK COUPLER FORKS AND FRAME	3103 - 2
3C15	QUICK COUPLER PIN ENGAGE AUDIBLE ALARM	1674 - 5C
3C15	QUICK COUPLER PIN, DISCONNECT SWITCH	1674 - 5C
3C15	QUICK COUPLER WIRING HARNESS	1674 - 5C
4F1	QUICK COUPLER, HYDRAULICS	3163 - 12
4F1	QUICK COUPLER, HYDRAULICS LINES	3163 - 12
4E23	QUICK COUPLER, LOADER BUCKET	3163 - 10
4E13	QUICK COUPLER, LOADER BUCKET VALVE	3162 - 28

ALPHABETICAL INDEX - CONTINUED

GRID		PAGE
	R	
2H17	RADIATOR	0510 - 2
2H17	RADIATOR CAP	0510 - 2
2H17	RADIATOR DRAIN VALVE	0510 - 2
2H17	RADIATOR FAN GUARD	0510 - 2
2H17	RADIATOR FAN SHROUD	0510 - 2
2H17	RADIATOR HOSES	0510 - 2
3I6	RADIO	2001 - 2
3I6	RADIO ANTENA	2001 - 2
3I6	RADIO SPEAKER	2001 - 2
1D6	RAIL, SHIFT	0315 - 1
1F1	RANGE SHIFT VALVE, POWER SHIFT	0360 - 8
1B22	REAR AXLE ASSEMBLY	0201 - 2
1B24	REAR AXLE ASSEMBLY	0201 - 4
1B22	REAR AXLE HOUSING MOUNTING PLATE	0201 - 2
1B24	REAR AXLE HOUSING MOUNTING PLATE	0201 - 4
1C4	REAR AXLE RING GEAR AND PINION	0210 - 4
1C4	REAR AXLE SPIRAL BEVEL INPUT PINION	0210 - 4
1C4	REAR AXLE YOKE	0210 - 4
3F13	REAR CONSOLE COVER FOR THREE LEVERS	1816 - 4
3F1	REAR CORNER WINDOWPANE (SER.NO. -920856)	1814 - 8
3F3	REAR CORNER WINDOWPANE (SER.NO. 920857-)	1814 - 9A
1D13	REAR DRIVE SHAFT UNIVERSAL JOINT (REVERSER)	0325 - 2
1D13	REAR DRIVE SHAFT(REVERSER)	0325 - 2
1B16	REAR DRIVE WHEEL	0110 - 3
3E16	REAR FLOOR COVER	1812 - 2
3E16	REAR FLOOR MAT	1812 - 2
3E16	REAR KICK PANEL	1812 - 2
3I9	REAR VIEW MIRROR, EXTERNAL	2002 - 3
3I8	REAR VIEW MIRROR, INTERIOR	2002 - 2
3F1	REAR WINDOW LATCH (SER.NO. -920856)	1814 - 8
3F3	REAR WINDOW LATCH (SER.NO. 920857-)	1814 - 9A
3F1	REAR WINDOW WEATHERSTRIP (SER.NO. -920856)	1814 - 8
3F3	REAR WINDOW WEATHERSTRIP (SER.NO. 920857-)	1814 - 9A
3F1	REAR WINDOWS (SER.NO. -920856)	1814 - 8
3F3	REAR WINDOWS (SER.NO. 920857-)	1814 - 9A
3F9	REAR WINDSHIELD WIPER MOTOR	1814 - 14
3F9	REAR WIPER ENABLE SWITCH	1814 - 14
3H8	RECEIVER DRYER HOSES	1830 - 12
3H10	RECEIVER DRYER HOSES	1830 - 14
3H8	RECEIVER DRYER, AIR CONDITIONING	1830 - 12
3H10	RECEIVER DRYER, AIR CONDITIONING	1830 - 14
3H1	REFRIGERANT HOSE	1830 - 6
3H3	REFRIGERANT HOSE	1830 - 7A
3H1	REFRIGERANT LINE	1830 - 6
3H3	REFRIGERANT LINE	1830 - 7A
2F5	REGULATOR, PRESSURE, STANADYNE DE10 310G (W/O TURBO) (VSN 911769-)	0413 - 12
2F6	REGULATOR, PRESSURE, STANADYNE DE10 310G(TURBO),310SG/315SG (VSN 910056-)	0413 - 13
3C11	RELAY, ACTUATOR DOOR	1674 - 4
3D1	RELAY, PUMP CONTROL AND HARNESS	1674 - 10
3C19	RELAY, STARTER	1674 - 8
3C21	RELAY, STARTER	1674 - 9A
3C11	RELAY, TIMER	1674 - 4
5J5	RELIEF VALVE, ATTACHMENT PLUMBING KIT	3363 - 42
4E1	RELIEF VALVE, AUXILIARY SECTION (SERIAL NO. -913416)	3162 - 16
4E5	RELIEF VALVE, AUXILIARY SECTION (SERIAL NO. 913417-)	3162 - 20
5G23	RELIEF VALVE, BOOM PILOT SECTION	3362 - 40
4D17	RELIEF VALVE, BOOM SECTION	3162 - 8
4D19	RELIEF VALVE, BOOM SECTION	3162 - 10
5F16	RELIEF VALVE, BOOM SECTION	3362 - 10
5H1	RELIEF VALVE, BUCKET PILOT SECTION	3362 - 42
4D21	RELIEF VALVE, BUCKET SECTION	3162 - 12
4D23	RELIEF VALVE, BUCKET SECTION	3162 - 14
5F18	RELIEF VALVE, BUCKET SECTION	3362 - 12
5H3	RELIEF VALVE, CROWD PILOT SECTION	3362 - 44
5F20	RELIEF VALVE, CROWD SECTION	3362 - 14
4D15	RELIEF VALVE, INLET SECTION	3162 - 6
4E11	RELIEF VALVE, LOADER (SER.NO.913417-)	3162 - 26
5G1	RELIEF VALVE, SELECTIVE FLOW SECTION	3362 - 20
5G13	RELIEF VALVE, SIDE SHIFT (315SG)	3362 - 30
5H5	RELIEF VALVE, SWING PILOT SECTION	3362 - 46
5F22	RELIEF VALVE, SWING SECTION	3362 - 16
3I24	RELIEF, MAIN HYDRAULIC PUMP (310SG AND 315SG)	2160 - 4
5G9	REMOTE KIT, HYDRAULIC	3362 - 28
3B25	REMOTE START POST	1671 - 8
3B25	REMOTE START POST COVER	1671 - 8
5J11	REPAIR KIT, BACKHOE BOOM CYLINDER (310G)	3365 - 2
5J13	REPAIR KIT, BACKHOE BOOM CYLINDER (310G)	3365 - 4
5J15	REPAIR KIT, BACKHOE BOOM CYLINDER (310SG,315SG)	3365 - 6
5J17	REPAIR KIT, BACKHOE BOOM CYLINDER (310SG,315SG)	3365 - 8
5J19	REPAIR KIT, BACKHOE BUCKET CYLINDER (310G)	3365 - 10
5J20	REPAIR KIT, BACKHOE BUCKET CYLINDER (310G)(SER.# 910901-925926)	3365 - 11
5J21	REPAIR KIT, BACKHOE BUCKET CYLINDER (310G)(SER.# 925927-)	3365 - 12
5J24	REPAIR KIT, BACKHOE BUCKET CYLINDER (310SG,315SG) SERIAL NO. -926788)	3365 - 15
5J23	REPAIR KIT, BACKHOE BUCKET CYLINDER (310SG,315SG) SERIAL NO. 926130-)	3365 - 14
5J25	REPAIR KIT, BACKHOE BUCKET CYLINDER (310SG,315SG) SERIAL NO. 926789-)	3365 - 16
5J22	REPAIR KIT, BACKHOE BUCKET CYLINDER 310SG,315SG (SERIAL NO. -926129)	3365 - 13
4F3	REPAIR KIT, LOADER BOOM LIFT CYLINDER (310G)(SER.# -926493)	3165 - 2
4F5	REPAIR KIT, LOADER BOOM LIFT CYLINDER (310G)(SER.# 926494-)	3165 - 4
4F9	REPAIR KIT, LOADER BOOM LIFT CYLINDER (310SG AND 315SG)(SER.# 926249-)	3165 - 9
4F6	REPAIR KIT, LOADER BOOM LIFT CYLINDER (310SG AND 315SG)(SERIAL NO. -910491)	3165 - 6
4F10	REPAIR KIT, LOADER BUCKET CYLINDER (SERIAL NO. -941225)	3165 - 10
4F12	REPAIR KIT, LOADER BUCKET CYLINDER (SERIAL NO. 941226-)	3165 - 12
5K6	REPAIR KIT, STABILIZER CYLINDER 310G (SERIAL NO. -925946)	3365 - 21
5K16	REPAIR KIT, STABILIZER CYLINDER (315SG)	3365 - 27
5K17	REPAIR KIT, STABILIZER CYLINDER (315SG) (SERIAL NO. 944156-)	3365 - 28

ALPHABETICAL INDEX - CONTINUED

GRID		PAGE
2I19	REPAIR KIT, STEERING VALVE (SERIAL NO. -911131)	0960 - 6
5K3	REPAIR KIT, SWING CYLINDER	3365 - 19
5K4	REPAIR KIT, SWING CYLINDER	3365 - 19A
5K5	REPAIR KIT, SWING CYLINDER 310SG,315SG	3365 - 20
4F8	REPAIR KIT,BOOM CYLINDER (310SG AND 315SG)(SER.# 910492-926248)	3165 - 8
5K1	REPAIR KIT,CROWD CYLINDER	3365 - 17
5K2	REPAIR KIT,CROWD CYLINDER 310SG,315SG	3365 - 18
5K9	REPAIR KITS, STABILIZER CYLINDER 310G (SERIAL NO. XXXXXX-)	3365 - 22A
5K8	REPAIR KITS, STABILIZER CYLINDER 310G (SERIAL NO. 925947-XXXXXX)	3365 - 22
5K10	REPAIR KITS, STABILIZER CYLINDER 310SG (SER.NO.-926206)	3365 - 23
5K12	REPAIR KITS, STABILIZER CYLINDER 310SG (SER.NO.XXXXXX-)	3365 - 24A
5K11	REPAIR KITS, STABILIZER CYLINDER 310SG (SER.NO.926207-XXXXXX)	3365 - 24
5K13	REPAIR KITS, STABLIIZER CYLINDER 310SG (SERIAL NO. -925993)	3365 - 25
5K15	REPAIR KITS, STABLIIZER CYLINDER 310SG (SERIAL NO. XXXXXX-)	3365 - 26A
5K14	REPAIR KITS, STABLIIZER CYLINDER 310SG (SERIAL NO. 925994-XXXXXX)	3365 - 26
3D5	REPLACEMENT, RETURN-TO-DIG	1674 - 14
3J9	RESERVOIR BREATHER FILTER, HYDRAULIC	2160 - 12
3J9	RESERVOIR, MAIN HYDRAULIC SCREEN	2160 - 12
3J9	RESERVOIR, MAIN HYDRAULICS	2160 - 12
3F7	RESERVOIR, WINDSHIELD WASHER	1814 - 12
3C23	RESISTOR (FRONT WIRE HARNESS) (SN 910056-)	1674 - 9C
3C21	RESISTOR, CAN TERMINATION	1674 - 9A
3C11	RESISTORS, CAN TERMINATION	1674 - 4
2H23	RESTRICTION INDICATOR SWITCH,AIR CLEANER	0520 - 2
4C19	RETURN-TO-DIG CABLE	3115 - 2
4C19	RETURN-TO-DIG LINKAGE	3115 - 2
4C21	RETURN-TO-DIG LINKAGE	3115 - 4
4D21	RETURN-TO-DIG MAGNET	3162 - 12
4D23	RETURN-TO-DIG MAGNET	3162 - 14
3D5	RETURN-TO-DIG SWITCH	1674 - 14
3I10	REVERSE ALARM (310G,310SG)	2004 - 2
3I12	REVERSE ALARM (315SG)	2004 - 4
1D21	REVERSE CLUTCH ASSEMBLY	0350 - 4
1E15	REVERSE CLUTCH ASSEMBLY, POWER SHIFT	0350 - 24
1E15	REVERSE CLUTCH CARRIER, POWER SHIFT	0350 - 24
1E15	REVERSE, BELLVILLEWASHER, POWERSHIFT	0350 - 24
3J21	RIDE CONTROL	2160 - 24
3J23	RIDE CONTROL	2160 - 26
3J21	RIDE CONTROL HYDRAULIC HOSE	2160 - 24
3J23	RIDE CONTROL HYDRAULIC HOSE	2160 - 26
3C17	RIDE CONTROL SWITCH	1674 - 6
1B17	RIM, FRONT WHEEL (MFWD)	0110 - 4
1B18	RIM, FRONT WHEEL (WITHOUT MFWD)	0120 - 1
1C21	RING GEAR (MFWD)	0250 - 8
1C22	RING GEAR (MFWD)(310G)	0250 - 9
1C4	RING GEAR AND PINION, REAR AXLE	0210 - 4
2H1	RING GEAR, FLYWHEEL	0433 - 2
1C1	RING GEAR, PLANETARY	0210 - 1
2D6	RINGS, PISTON 310G (W/O TURBO) (VSN 911769-)	0403 - 2A
2D8	RINGS, PISTON 310G(TURBO) 310SG 315SG (VSN 910056-)	0403 - 3A
2D7	RINGS, PISTON 310G(TURBO), 310SG, 315SG (VSN-910055)	0403 - 2B
2D5	RINGS, PISTON 310G (W/O TURBO) (VSN -911768)	0403 - 2
2C21	ROCKER ARM COVER	0402 - 3
2C21	ROCKER ARM COVER GASKET	0402 - 3
2C20	ROCKER ARM SHAFT	0402 - 2
2C20	ROCKER ARMS	0402 - 2
1C17	ROD ASSEMBLY,TIE (MFWD)	0250 - 4
4C19	ROD, BUCKET LEVELING	3115 - 2
4C21	ROD, BUCKET LEVELING	3115 - 4
2D6	ROD, CONNECTING 310G (W/O TURBO) (VSN 911769-)	0403 - 2A
2D8	ROD, CONNECTING 310G(TURBO) 310SG 315SG (VSN 910056-)	0403 - 3A
2D7	ROD, CONNECTING 310G(TURBO), 310SG, 315SG (VSN-910055)	0403 - 2B
2D5	ROD, CONNECTING 310G (W/O TURBO) (VSN -911768)	0403 - 2
2J23	ROD, CYLINDER LOCK BAR	1313 - 2
2I24	ROD, STEERING CYLINDER (MFWD)	0960 - 12
1C7	ROD, TIE, ASSEMBLY (WITHOUT MFWD)	0230 - 1
2C20	RODS, PUSH	0402 - 2
1B22	ROLLER BEARING,AXLE	0201 - 2
1B24	ROLLER BEARING,AXLE	0201 - 4
3C5	ROOF WIRING HARNESS SERIAL NO. -XXXXXX	1673 - 4
3C5	ROOF WIRING HARNESS SERIAL NO. -XXXXXX	1673 - 4
3C7	ROOF WIRING HARNESS SERIAL NO. XXXXXX-	1673 - 6
3E14	ROOF,CAB	1811 - 6
3E14	ROOF,QUARTER CAB	1811 - 6
3E14	ROOF,ROPS	1811 - 6
3E10	ROPS FRAME	1811 - 2
3E10	ROPS FRAME ISOLATORS	1811 - 2
3E10	ROPS HEADLINER	1811 - 2
3E14	ROPS ROOF	1811 - 6
3I3	ROPS SKIRT	1927 - 2
3C3	ROTATING BEACON	1673 - 2
3C3	ROTATING BEACON SWITCH	1673 - 2
3E18	RUBER BUMPER ACCELERATOR PEDAL	1812 - 4

S

5E11	SAE BACKHOE CONTROL LINKAGE PATTERN KIT	3315 - 26
5E11	SAE PATTERN, BACKHOE CONTROL LEVER	3315 - 26
3G13	SCISSOR FRAME	1821 - 10
3H7	SCREEN, CAB HEATER FAN (20,000 BTU)	1830 - 10
3H23	SCREEN, GRILLE	1921 - 2
3J9	SCREEN, MAIN HYDRAULIC RESERVOIR	2160 - 12
1D25	SCREEN, REAR,OUTPUT SHAFT	0350 - 8
2F5	SCREW, TRANSFER PUMP TAP, STANADYNE DE10 310G (W/O TURBO) (VSN 911769-)	0413 - 12
2F6	SCREW, TRANSFER PUMP TAP, STANADYNE DE10 310G(TURBO),310SG/315SG (VSN 910056-)	0413 - 13
2J18	SEAL, INPUT SHAFT (AXLE SERIAL NO. -217496)	1111 - 2
2H17	SEAL, ISOLATOR	0510 - 2
2J20	SEAL, SHAFT, INPUT (AXLE SERIAL NO. 217497-)	1111 - 4
2C22	SEAL,CRANKSHAFT FRONT OIL (VSN -911768) 310G (W/O TURBO)	0402 - 4
2D1	SEAL,CRANKSHAFT FRONT OIL (VSN-910055) 310G(TURBO), 310SG, 315SG	0402 - 6
2C24	SEAL,CRANKSHAFT FRONT OIL 310G (W/O TURBO) (VSN 911769-)	0402 - 4B

ALPHABETICAL INDEX - CONTINUED

GRID		PAGE
2D3	SEAL,CRANKSHAFT FRONT OIL 310G(TURBO), 310SG, 315SG (VSN910056-)	0402 - 6B
2H2	SEAL,CRANKSHAFT REAR OIL (VSN -910055)	0433 - 3
2H3	SEAL,CRANKSHAFT REAR OIL (VSN 910056-)	0433 - 4
1C16	SEAL,SLIDING YOKE (MFWD)	0250 - 2
3G18	SEAT ADJUSTING SWITCH	1821 - 16
3G7	SEAT BACK	1821 - 4
3G5	SEAT BACK PAD	1821 - 2
3G7	SEAT BACK PAN	1821 - 4
3G16	SEAT BASE FOR NON-SUSPENDED SEAT	1821 - 14
3G14	SEAT BASE WITH NON-SUSPENDED SEAT	1821 - 12
3G5	SEAT BELT COVER	1821 - 2
3G5	SEAT BELTS	1821 - 2
3G5	SEAT BRACKETS	1821 - 2
3G5	SEAT CUSHIONS	1821 - 2
3G7	SEAT LUMBAR SUPPORT CONTROL LEVER	1821 - 4
3G7	SEAT SLIDE CONTROL LEVER	1821 - 4
3G7	SEAT SLIDE LATCH KIT	1821 - 4
3G11	SEAT SPRING, MECHANICAL SUSPENDED	1821 - 8
3G18	SEAT SUSPENSION,SUSPENDED SEAT	1821 - 16
3G9	SEAT SWIVEL	1821 - 6
3G7	SEAT SWIVEL CONTROL LEVER	1821 - 4
3G9	SEAT SWIVEL LATCH	1821 - 6
3G20	SEAT, COMPLETE ASSEMBLY	1821 - 18
3G6	SEAT, HEADREST	1821 - 3
3G20	SEAT, OPERATOR'S	1821 - 18
5G1	SECLETIVE FLOW SECTION RELIEF VALVE	3362 - 20
1E7	SECOND GEAR CLUTCH ASSEMBLY, POWER SHIFT	0350 - 16
1E7	SECOND GEAR CLUTCH CARRIER, POWER SHIFT	0350 - 16
1E7	SECOND GEAR, BELLVILLEWASHER, POWERSHIFT	0350 - 16
3D1	SELECTIVE FLOW CONTROL KIT	1674 - 10
3D1	SELECTIVE FLOW CONTROL SWITCH	1674 - 10
3D1	SELECTIVE FLOW CONTROL WIRE HARNESS	1674 - 10
5G1	SELECTIVE FLOW SECTION, BACKHOE VALVE	3362 - 20
5H7	SELECTOR VALVE (PILOT CONTROL)	3363 - 1A
5H9	SELECTOR VALVE HYDRAULICS	3363 - 1C
5H7	SELECTOR VALVE HYDRAULICS (PILOT CONTROL)	3363 - 1A
5G15	SELECTOR VALVE, PATTERN	3362 - 32
4C19	SELF-LEVELING CABLE	3115 - 2
3C19	SENDER, ENGINE COOLANT TEMPERATURE	1674 - 8
3C21	SENDER, ENGINE COOLANT TEMPERATURE	1674 - 9A
2I11	SENDER, FUEL GAUGE	0560 - 2
3C23	SENDER, FUEL, ENGINE OIL, AIR FILTER (FRONT WIRE HARNESS) (SN 910056-)	1674 - 9C
2F8	SENSOR, AIR INTAKE TEMPERATURE 310G (TUR BO),310SG,315SG (VSN 910056-)	0414 - 2
2F23	SENSOR, ENGINE COOLANT TEMPERATURE	0418 - 2
3C23	SENSOR, FUEL TEMPERATURE (FRONT WIRE HARNESS) (SN 910056-)	1674 - 9C
2F5	SENSOR, FUEL TEMPERATURE STANADYNE DE10 310G (W/O TURBO) (VSN 911769-)	0413 - 12
2F6	SENSOR, FUEL TEMPERATURE STANADYNE DE10 310G(TURBO),310SG/315SG (VSN 910056-)	0413 - 13
2H21	SENSOR, THROTTLE POSITION	0515 - 4
2D3	SENSOR,CRANKSHAFT SPEED (VSN 910056-) 310G(TURBO), 310SG, 315SG	0402 - 6B
2C24	SENSOR,CRANKSHAFT SPEED 310G (W/O TURBO) (VSN 911769-)	0402 - 4B
3G11	SENSOR,SUSPENDED SEAT POSITION	1821 - 8
3G18	SENSOR,SUSPENDED SEAT POSITION	1821 - 16
2J18	SEPERATOR PLATE, PARK BRAKE (AXLE SERIAL NO. -217496)	1111 - 2
2J20	SEPERATOR PLATE, PARK BRAKE (AXLE SERIAL NO. 217497-)	1111 - 4
2J11	SERVICE BRAKE HYDRAULICS	1060 - 6
2J11	SERVICE BRAKE LINES	1060 - 6
2J5	SERVICE BRAKES	1011 - 2
2J23	SERVICE LOCK BAR, BOOM	1313 - 2
2J23	SERVICE LOCK, LOADER ARM	1313 - 2
1B22	SHAFT, AXLE	0201 - 2
1B24	SHAFT, AXLE	0201 - 4
2F10	SHAFT, ENGINE BALANCER 310G(TURBO), 310SG, 315SG	0415 - 2
1D24	SHAFT, IDLER, MFWD	0350 - 7
2J20	SHAFT, INPUT SEAL (AXLE SERIAL NO. 217497-)	1111 - 4
1E3	SHAFT, INPUT, POWER SHIFT	0350 - 12
1E2	SHAFT, INTERMEDIATE, TRANSMISSION	0350 - 10
1D25	SHAFT, OUTPUT, MFWD	0350 - 8
1C1	SHAFT, PLANETARY SHAFT	0210 - 1
1D23	SHAFT, PTO PUMP DRIVE	0350 - 6
1E3	SHAFT, PTO PUMP DRIVE, POWER SHIFT	0350 - 12
2C20	SHAFT, ROCKER ARM	0402 - 2
2J18	SHAFT, SEAL, INPUT (AXLE SERIAL NO. -217496)	1111 - 2
1D23	SHAFT, STATOR	0350 - 6
1E3	SHAFT, STATOR, POWER SHIFT	0350 - 12
1C21	SHAFT, SUN GEAR (MFWD)	0250 - 8
1C22	SHAFT, SUN GEAR (MFWD)(310G)	0250 - 9
3G13	SHAFT, SUSPENSION, SEAT	1821 - 10
1D23	SHAFT, TURBINE	0350 - 6
1E3	SHAFT, TURBINE, POWER SHIFT	0350 - 12
1C16	SHAFT, UNIVERSAL DRIVE (MFWD)	0250 - 2
1D23	SHAFT,INPUT	0350 - 6
1D6	SHAFTS, SHIFTER	0315 - 1
3H21	SHIELD, LOADER CONTROL VALVE PLUMBING	1913 - 4
3D20	SHIELD, TRANSMISSION DIPSTICK	1746 - 4
3H15	SHIELDS, ENGINE SIDE	1910 - 2
3H17	SHIELDS, ENGINE SIDE	1910 - 4
1D6	SHIFT FORK	0315 - 1
1D7	SHIFT HOUSING	0315 - 2
1D7	SHIFT HOUSING COVER	0315 - 2
1D7	SHIFT HOUSING PIVOT	0315 - 2
1D6	SHIFT RAIL	0315 - 1
1D7	SHIFTER LEVER CARROT, TRANSMISSION	0315 - 2
1D11	SHIFTER LEVER, ISOLATED, TRANSMISSION	0315 - 6
1D11	SHIFTER LEVER, TRANSMISSION	0315 - 6
1D6	SHIFTER SHAFTS	0315 - 1
3G11	SHOCK ABSORBER, SUSPENDED SEAT	1821 - 8
3G18	SHOCK ABSORBER,SUSPENDED SEAT	1821 - 16
2D12	SHORT BLOCK,ENGINE (ENG. SER. NO. -221705)	0404 - 4
2D14	SHORT BLOCK,ENGINE (ENG. SER. NO. 221706-)	0404 - 6
2D12	SHORT BLOCK,ENGINE (ENG.SER.NO.866618-90 8991)	0404 - 4
2H17	SHROUD,FAN	0510 - 2
3C11	SIDE CONSOLE WIRING HARNESS WITH CAB	1674 - 4
3F21	SIDE INSTRUMENT PANEL HOUSING	1816 - 10
3F23	SIDE INSTRUMENT PANEL HOUSING	1816 - 12
3H15	SIDE PANELS, ENGINE	1910 - 2
3H17	SIDE PANELS, ENGINE	1910 - 4
3H21	SIDE SHIELD, LOADER PLUMBING	1913 - 4
3H15	SIDE SHIELDS, ENGINE	1910 - 2
3H17	SIDE SHIELDS, ENGINE	1910 - 4
5I15	SIDE SHIFT CONTROL VALVE HARNESS 315SG	3363 - 28
5I15	SIDE SHIFT LOCK 315SG	3363 - 28
5G13	SIDE SHIFT, LOCK VALVE HOUSING (315SG)	3362 - 30

ALPHABETICAL INDEX - CONTINUED

GRID		PAGE
5G13	SIDE SHIFT, LOCKING VALVE (315SG)	3362 - 30
5G13	SIDE SHIFT, SOLENOID VALVE (315SG)	3362 - 30
3E20	SIDE WINDOWS, CAB	1814 - 2
3E22	SIDE WINDOWS, CAB	1814 - 4
5H15	SIDESHIFT 315SE BACKHOE STABLIZER CYLINDER HYDRAULICS	3363 - 4
3B19	SINGLE BATTERY CABLE	1671 - 2
3B19	SINGLE BATTERY INSTALLATION	1671 - 2
5G7	SIXTH FUNCTION MANUAL VALVE KIT (310G)	3362 - 26
5G8	SIXTH FUNCTION MANUAL VALVE KIT (310SG AND 315SG)	3362 - 27
5D21	SIXTH FUNCTION PEDAL	3315 - 14
5D23	SIXTH FUNCTION PEDAL (PILOT CONTROL)	3315 - 15A
5D21	SIXTH FUNTION FOOT CONTROL	3315 - 14
3I3	SKIRTS, OPERATOR STATION	1927 - 2
3G9	SLIDE PUCK SERVICE KIT	1821 - 6
3G13	SLIDER BLOCKS, SUSPENSION SEAT	1821 - 10
3D17	SLIDING FRAME (315SG)	1740 - 4
3D17	SLIDING FRAME DIRT PAD (315SG)	1740 - 4
5I15	SLIDING FRAME LOCK 315SG	3363 - 28
5E13	SLIDING FRAME,315SG	3342 - 2
3F1	SLIDING REAR WINDOWS (SER.NO. -920856)	1814 - 8
3F3	SLIDING REAR WINDOWS (SER.NO. 920857-)	1814 - 9A
1D25	SLIDING SLEEVE, OUTPUT SHAFT	0350 - 8
1C16	SLIDING YOKE, SEAL (MFWD)	0250 - 2
3I18	SMV EMBLEM	2008 - 2
2F5	SOLENOID CONNECTOR, STANADYNE DE10 310G (W/O TURBO) (VSN 911769-)	0413 - 12
2F6	SOLENOID CONNECTOR, STANADYNE DE10 310G(TURBO),310SG/315SG (VSN 910056-)	0413 - 13
3I24	SOLENOID VALVE, MAIN HYDRAULIC PUMP (310SG AND 315SG)	2160 - 4
5G14	SOLENOID VALVE, MANIFOLD (PILOT CONTROL)	3362 - 31
1F1	SOLENOID VALVE, RANGE SHIFT,POWER SHIFT	0360 - 8
5G13	SOLENOID VALVE, SIDE SHIFT (315SG)	3362 - 30
1E19	SOLENOID VALVE, TRANSMISSION	0360 - 2
1E23	SOLENOID VALVE, TRANSMISSION,POWER SHIFT	0360 - 6
1E21	SOLENOID, CONTROL VALVE, SYNCHRO-SHUTTLE	0360 - 4
1E21	SOLENOID, DIFFERENTIAL LOCK, SYNCHRO-SHUTTLE	0360 - 4
1E19	SOLENOID, FORWARD, NEUTRAL, REVERSE	0360 - 2
1E21	SOLENOID, MFWD,SYNCHRO-SHUTTLE	0360 - 4
1E21	SOLENOID, PARK BRAKE, SYNCHRO-SHUTTLE	0360 - 4
4D21	SOLENOID, RETURN-TO-DIG	3162 - 12
4D23	SOLENOID, RETURN-TO-DIG	3162 - 14
1E19	SOLENOID, TRANSMISSION DISCONNECT	0360 - 2
5E7	SOLENOID,BACKHOE BOOM LOCK CONTROL (315SG)	3315 - 22
2H13	SOLENOID,COLD WEATHER STARTING AID	0505 - 4
2H15	SOLENOID,COLD WEATHER STARTING AID	0505 - 6
2G16	SOLENOID,STARTER MOTOR (310G) (ENG.SER.NO. 866618-908991)	0422 - 2
2G17	SOLENOID,STARTER MOTOR (310SG,315SG)(SERIAL NO. -894292)	0422 - 3
2G16	SOLENOID,STARTER MOTOR (WITHOUT TURBO) (310G) (ENGINE SERIAL NO. -257521)	0422 - 2
2G16	SOLENOID,STARTER MOTOR(WITH TURBOCHARGER (310G) (ENGINE SERIAL NO. -268961)	0422 - 2
5F1	SPACER, SYNTHETIC BUCKET	3346 - 2
5F1	SPACER, SYNTHETIC CROWD	3346 - 2
1B16	SPACER, WHEEL	0110 - 3
5F8	SPACERS, STABILIZER CYLINDER	3348 - 4
3I6	SPEAKER, RADIO	2001 - 2
2H19	SPEED CONTROL ENGINE	0515 - 2
2H21	SPEED CONTROL ENGINE	0515 - 4
2H19	SPEED CONTROL PEDAL	0515 - 2
2H21	SPEED CONTROL PEDAL	0515 - 4
2H21	SPEED SENSOR, ENGINE	0515 - 4
1C8	SPINDLE AND KNUCKLE ASSEMBLY (WITHOUT MFWD)(SERIAL NO. -911131)	0230 - 2
1D1	SPIRAL BEVEL GEAR,DIFFGERENTIAL (MFWD)	0250 - 12
1C4	SPIRAL BEVEL INPUT PINION	0210 - 4
3G11	SPRING, MECHANICAL SUSPENDED SEAT	1821 - 8
3G18	SPRING, SUSPENSION SEAT	1821 - 16
2E12	SPRING,VALVE	0409 - 2
3D17	STABILIZER (315SG)	1740 - 4
5F6	STABILIZER ARM (310G,310SG)	3348 - 2
5F6	STABILIZER ARM PINS (310G,310SG)	3348 - 2
5E9	STABILIZER CONTROL CABLES	3315 - 24
3F21	STABILIZER CONTROL COVER	1816 - 10
3F23	STABILIZER CONTROL COVER	1816 - 12
5K6	STABILIZER CYLINDER 310G (SERIAL NO. -925946)	3365 - 21
5K9	STABILIZER CYLINDER 310G (SERIAL NO. XXXXXX-)	3365 - 22A
5K8	STABILIZER CYLINDER 310G (SERIAL NO. 925947-XXXXXX)	3365 - 22
5K12	STABILIZER CYLINDER 310SG (SER.NO.XXXXXX-)	3365 - 24A
5K11	STABILIZER CYLINDER 310SG (SER.NO.926207-XXXXXX)	3365 - 24
5K16	STABILIZER CYLINDER (315SG)	3365 - 27
5K17	STABILIZER CYLINDER (315SG) (SERIAL NO. 944156-)	3365 - 28
5H15	STABILIZER CYLINDER HYDRAULICS, SIDESHIFT 315SE BACKHOE	3363 - 4
5H11	STABILIZER CYLINDER HYDRAULICS, BACKHOE	3363 - 2
5H13	STABILIZER CYLINDER HYDRAULICS, BACKHOE	3363 - 3A
5F8	STABILIZER CYLINDER PINS	3348 - 4
5K6	STABILIZER CYLINDER REPAIR KIT 310G (SERIAL NO. -925946)	3365 - 21
5K16	STABILIZER CYLINDER REPAIR KIT (315SG)	3365 - 27
5K17	STABILIZER CYLINDER REPAIR KIT (315SG) (SERIAL NO. 944156-)	3365 - 28
5K9	STABILIZER CYLINDER REPAIR KITS 310G (SERIAL NO. XXXXXX-)	3365 - 22A
5K8	STABILIZER CYLINDER REPAIR KITS 310G (SERIAL NO. 925947-XXXXXX)	3365 - 22
5K10	STABILIZER CYLINDER REPAIR KITS 310SG (SER.NO.-926206)	3365 - 23
5K12	STABILIZER CYLINDER REPAIR KITS 310SG (SER.NO.XXXXXX-)	3365 - 24A
5K11	STABILIZER CYLINDER REPAIR KITS 310SG (SER.NO.926207-XXXXXX)	3365 - 24
5K13	STABILIZER CYLINDER REPAIR KITS 310SG (SERIAL NO. -925993)	3365 - 25
5F8	STABILIZER CYLINDER SPACERS	3348 - 4
5K13	STABILIZER CYLINDER, EXTENDED 310SG (SERIAL NO. -925993)	3365 - 25
5K15	STABILIZER CYLINDER, EXTENDED 310SG (SERIAL NO. XXXXXX-)	3365 - 26A
5K14	STABILIZER CYLINDER, EXTENDED 310SG (SERIAL NO. 925994-XXXXXX)	3365 - 26

ALPHABETICAL INDEX - CONTINUED

GRID		PAGE
5K10	STABILIZER CYLINDER, STANDARD 310SG (SER.NO.-926206)	3365 - 23
3D17	STABILIZER FOOT (315SG)	1740 - 4
3D19	STABILIZER GUARD KIT 310G,310SG	1746 - 2
5F10	STABILIZER HYDRAULIC LINE	3362 - 4
5F12	STABILIZER HYDRAULIC LINE	3362 - 6
5E9	STABILIZER LEVER	3315 - 24
5E9	STABILIZER LINKAGE	3315 - 24
4E11	STABILIZER LOCKOUT VALVE (SER.NO.913417-)	3162 - 26
4E7	STABILIZER VALVE (SERIAL NO.-913416)	3162 - 22
4E9	STABILIZER VALVE (SERIAL NO.-913416)	3162 - 24
4E9	STABILIZER VALVE KITS (SERIAL NO.-913416)	3162 - 24
5E9	STABILIZER VALVE LINKAGE	3315 - 24
5D7	STABILIZER VALVE MOUNTING PLATE (PILOT CONTROL)	3315 - 3A
5D5	STABILIZER VALVE MOUNTING PLATE 310G,310SG	3315 - 2
5D9	STABILIZER VALVE MOUNTING PLATE 315SG	3315 - 4
4E11	STABILIZER VALVE RELIEF (SER.NO.913417-)	3162 - 26
4D13	STABILIZER/LOADER CONTROL VALVE	3162 - 4
4E11	STABILIZER/LOADER VALVE (SER.NO.913417-)	3162 - 26
5K15	STABLIIZER CYLINDER REPAIR KITS 310SG (SERIAL NO. XXXXXX-)	3365 - 26A
5K14	STABLIIZER CYLINDER REPAIR KITS 310SG (SERIAL NO. 925994-XXXXXX)	3365 - 26
5F6	STABLIZER ARM STREET PAD (310G,310SG)	3348 - 2
5F1	STANDARD ARM	3346 - 2
5I7	STANDARD DIPPERSTICK AUXILIARY HYDRAULIC (310G AND 310SG)	3363 - 20
5I9	STANDARD DIPPERSTICK AUXILIARY HYDRAULIC (315SG)	3363 - 22
3C5	STANDARD LIGHTS SERIAL NO. -XXXXXX	1673 - 4
3C7	STANDARD LIGHTS SERIAL NO. XXXXXX-	1673 - 6
2G20	STARTER MOTOR ADAPTER KIT	0422 - 6
2G16	STARTER MOTOR DRIVE, (310G) (ENG.SER.NO. 866618-908991)	0422 - 2
2G17	STARTER MOTOR DRIVE, (310SG,315SG)(SERIAL NO. -894292)	0422 - 3
2G16	STARTER MOTOR DRIVE, (WITH TURBOCHARGER) (310G) (ENGINE SERIAL NO. -268961)	0422 - 2
2G16	STARTER MOTOR DRIVE,(WITHOUT TURBO) (310G) (ENGINE SERIAL NO. -257521)	0422 - 2
2G16	STARTER MOTOR KIT (310G) (ENG.SER.NO. 866618-908991)	0422 - 2
2G17	STARTER MOTOR KIT (310SG,315SG)(SERIAL NO. -894292)	0422 - 3
2G16	STARTER MOTOR KIT (WITH TURBOCHARGER) (310G) (ENGINE SERIAL NO. -268961)	0422 - 2
2G16	STARTER MOTOR KIT (WITHOUT TURBOCHARGER) (310G) (ENGINE SERIAL NO. -257521)	0422 - 2
2G18	STARTER MOTOR KIT(310G W/O TURBO) (ENG.SER.NO.257522-)	0422 - 4
2G18	STARTER MOTOR KIT(310G W/TURBO) (ENG.SER.NO.258962-)	0422 - 4
2G18	STARTER MOTOR KIT(310SG,315SG) (ENG.SER.NO.894293-908991)	0422 - 4
2G16	STARTER MOTOR SOLENOID (310G) (ENG.SER.NO. 866618-908991)	0422 - 2
2G17	STARTER MOTOR SOLENOID (310SG,315SG)(SERIAL NO. -894292)	0422 - 3
2G16	STARTER MOTOR SOLENOID (WITHOUT TURBO) (310G) (ENGINE SERIAL NO. -257521)	0422 - 2
2G16	STARTER MOTOR SOLENOID(WITH TURBOCHARGER (310G) (ENGINE SERIAL NO. -268961)	0422 - 2
3C19	STARTER RELAY	1674 - 8
3C21	STARTER RELAY	1674 - 9A
3C19	STARTER,JUMP START PROTECTION COVER	1674 - 8
3C21	STARTER,JUMP START PROTECTION COVER	1674 - 9A
2H13	STARTING AID, COLD WEATHER	0505 - 4
2H15	STARTING AID, COLD WEATHER	0505 - 6
2H13	STARTING FLUID	0505 - 4
2G16	STARTING MOTOR (310G) (ENG.SER.NO. 866618-908991)	0422 - 2
2G17	STARTING MOTOR (310SG,315SG)(SERIAL NO. -894292)	0422 - 3
2G16	STARTING MOTOR (WITH TURBOCHARGER) (310G) (ENGINE SERIAL NO. -268961)	0422 - 2
2G16	STARTING MOTOR (WITHOUT TURBOCHARGER) (310G) (ENGINE SERIAL NO. -257521)	0422 - 2
2G18	STARTING MOTOR(310G W/O TURBO) (ENG.SER.NO.257522-)	0422 - 4
2G18	STARTING MOTOR(310G W/TURBO) (ENG.SER.NO.268962-)	0422 - 4
2G18	STARTING MOTOR(310SG,315SG) (ENG.SER.NO.894293-908991)	0422 - 4
1D23	STATOR SHAFT	0350 - 6
1E3	STATOR SHAFT, POWER SHIFT	0350 - 12
2I15	STEERING COLUMN	0960 - 2
2I17	STEERING COLUMN	0960 - 4
3F17	STEERING COLUMN COVER	1816 - 6
2I17	STEERING COLUMN, TILT	0960 - 4
1C13	STEERING CYLINDER, FRONT AXLE (WITHOUT MFWD)(SERIAL NO. 911132-)	0230 - 7
2I24	STEERING CYLINDER, MECHANICAL FRONT WHEEL DRIVE (MFWD)	0960 - 12
2J1	STEERING CYLINDER, POWER (WITHOUT MFWD) (SERIAL NO. -911131)	0960 - 14
2J2	STEERING CYLINDER, POWER (WITHOUT MFWD) (SERIAL NO. -911131)	0960 - 16
2I20	STEERING HOSES (WITH MFWD)	0960 - 8
2I22	STEERING HYDRAULICS (WITHOUT MFWD)	0960 - 10
2I20	STEERING VALVE (WITH MFWD)	0960 - 8
2I22	STEERING VALVE (WITHOUT MFWD)	0960 - 10
2I20	STEERING VALVE HYDRAULICS (WITH MFWD)	0960 - 8
2I19	STEERING VALVE REPAIR KIT (SERIAL NO. -911131)	0960 - 6
2I15	STEERING WHEEL	0960 - 2
2I17	STEERING WHEEL	0960 - 4
1B18	STEM, VALVE (WITHOUT MFWD)	0120 - 1
2J7	STOP LIGHT SWITCH	1060 - 2
5E19	STOP, BACKHOE BOOM	3344 - 2
2I11	STRAINER, FUEL TANK	0560 - 2
3E18	STRAP, HARNESS COVER BRACKET	1812 - 4
3E22	STRAP,DOOR	1814 - 4
5F6	STREET PAD,STABLIZER ARM (310G,310SG)	3348 - 2
2H23	STRICKER, BRACKET FOR HOOD	0520 - 2
3H15	STRIKER BOLT, HOOD	1910 - 2
3H17	STRIKER BOLT, HOOD	1910 - 4
3C3	STROBE BEACON	1673 - 2
1C19	STUDS, WHEEL (MFWD)	0250 - 6
1D14	SUCTION PIPE, TRANSMISSION	0341 - 1
1D15	SUCTION PIPE, TRANSMISSION	0341 - 2
1C21	SUN GEAR SHAFT (MFWD)	0250 - 8

ALPHABETICAL INDEX - CONTINUED

GRID		PAGE
1C22	SUN GEAR SHAFT (MFWD)(310G)	0250 - 9
3I16	SUN VISOR	2007 - 2
3D12	SUPPLEMENTARY TERMINALS, CONNECTORS AND REPAIR CONDUIT	1674 - 22
2I9	SUPPORT, ENGINE	0540 - 2
3H15	SUPPORT, HOOD	1910 - 2
3H17	SUPPORT, HOOD	1910 - 4
3E18	SURFACING, NON-SLIP	1812 - 4
3G11	SUSPENDED SEAT POSITION SENSOR	1821 - 8
3G18	SUSPENDED SEAT POSITION SENSOR	1821 - 16
3G11	SUSPENDED SEAT POSITION SWITCH	1821 - 8
3G11	SUSPENDED SEAT SHOCK ABSORBER	1821 - 8
3G18	SUSPENDED SEAT SHOCK ABSORBER	1821 - 16
3G11	SUSPENDED SEAT SUSPENSION	1821 - 8
3G18	SUSPENDED SEAT SUSPENSION	1821 - 16
3G11	SUSPENDED SEAT TETHER BELT	1821 - 8
3G13	SUSPENSION ARM, SEAT	1821 - 10
3G13	SUSPENSION SEAT SLIDER BLOCKS	1821 - 10
3G13	SUSPENSION SHAFT, SEAT	1821 - 10
3G11	SUSPENSION,SUSPENDED SEAT	1821 - 8
5K3	SWING CYLINDER	3365 - 19
5K4	SWING CYLINDER	3365 - 19A
5K5	SWING CYLINDER 310SG,315SG	3365 - 20
5I1	SWING CYLINDER FITTINGS (310G,310SG)	3363 - 14
5I1	SWING CYLINDER HYDRAULIC HOSE (310G,310SG)	3363 - 14
5I3	SWING CYLINDER HYDRAULICS,BACKHOE (315SG)	3363 - 16
5K3	SWING CYLINDER REPAIR KIT	3365 - 19
5K4	SWING CYLINDER REPAIR KIT	3365 - 19A
5K5	SWING CYLINDER REPAIR KIT 310SG,315SG	3365 - 20
3D15	SWING CYLINDER TRUNNION BLOCK,310G,310SG	1740 - 2
5E13	SWING CYLINDER TRUNNION BLOCK,315SG	3342 - 2
5E15	SWING FRAME (310G,310SG)	3343 - 2
5E15	SWING FRAME PINS (310G,310SG)	3343 - 2
5E17	SWING FRAME PINS 315SG	3343 - 4
5E17	SWING FRAME 315SG	3343 - 4
5E7	SWING LOCK CONTROL LEVER AND LINKAGE (315SG)	3315 - 22
3E10	SWING PIN HOLDER	1811 - 2
5F22	SWING SECTION RELIEF VALVE	3362 - 16
5F22	SWING SECTION, BACKHOE VALVE	3362 - 16
5G11	SWING VALVE ACCU-SWING KIT	3362 - 29A
5H5	SWING, PILOT SECTION RELIEF VALVE	3362 - 46
5H5	SWING, PILOT SECTION, BACKHOE VALVE	3362 - 46
3C17	SWITCH, A/C	1674 - 6
3C11	SWITCH, A/C PRESSURE HARNESS	1674 - 4
3H3	SWITCH, AIR CONDITIONING (FREEZE/COMPRESSOR)	1830 - 7A
3F23	SWITCH, AIR CONDITIONING THERMOSTAT	1816 - 12
3C17	SWITCH, AIR SUSPENSION SEAT	1674 - 6
2J7	SWITCH, BRAKE LIGHT, PRESSURE	1060 - 2
3C23	SWITCH, CAM/CRANKSHAFT (FRONT WIRE HARNESS) (SN 910056-)	1674 - 9C
3D3	SWITCH, DIFFERENTIAL LOCK	1674 - 12
3C23	SWITCH, ENGINE COOLANT TEMPERATURE (FRONT WIRE HARNESS) (SN 910056-)	1674 - 9C
3C19	SWITCH, ENGINE OIL PRESSURE	1674 - 8
3C21	SWITCH, ENGINE OIL PRESSURE	1674 - 9A
3C17	SWITCH, ETHER	1674 - 6
1D9	SWITCH, FORWARD, NEUTRAL, REVERSE	0315 - 4
3C9	SWITCH, FRONT LIGHTS	1674 - 2
3H1	SWITCH, HIGH PRESSURE	1830 - 6
3H3	SWITCH, HIGH PRESSURE	1830 - 7A
3C17	SWITCH, HORN	1674 - 6
3H1	SWITCH, LOW PRESSURE	1830 - 6
3H3	SWITCH, LOW PRESSURE	1830 - 7A
3C17	SWITCH, MFWD	1674 - 6
3C19	SWITCH, PARK BRAKE OIL PRESSURE	1674 - 8
3C21	SWITCH, PARK BRAKE OIL PRESSURE	1674 - 9A
5G15	SWITCH, PATTERN SELECTOR	3362 - 32
3C13	SWITCH, PILOT ENABLE	1674 - 5A
3C15	SWITCH, PIN DISCONNECT, QUICK COUPLER	1674 - 5C
3C23	SWITCH, PRESSURE (ENGINE OIL) (SN 910056-)	1674 - 9C
3F9	SWITCH, REAR WIPER ENABLE	1814 - 14
3D5	SWITCH, RETURN-TO-DIG	1674 - 14
3C17	SWITCH, RIDE CONTROL	1674 - 6
3C3	SWITCH, ROTATING BEACON	1673 - 2
3G18	SWITCH, SEAT ADJUSTING	1821 - 16
2J7	SWITCH, STOP LIGHT	1060 - 2
3G11	SWITCH, SUSPENDED SEAT POSITION KIT	1821 - 8
3C17	SWITCH, TEMPERATURE CONTROL	1674 - 6
1D9	SWITCH, TRANSMISSION CONTROL LEVER	0315 - 4
3C9	SWITCH, TURN SIGNAL	1674 - 2
3C9	SWITCH, WARNING LIGHTS	1674 - 2
3F7	SWITCH, WINDSHIELD WASHER	1814 - 12
3B23	SWITCH,BATTERY,MASTER DISCONNECT	1671 - 6
3C9	SWITCH,FRONT WINDSHIELD WIPER	1674 - 2
3C17	SWITCH,IGNITION	1674 - 6
3D1	SWITCH,SELECTIVE FLOW CONTROL VALVE PEDAL	1674 - 10
2G18	SWITCH,STARTER MOTOR(310G W/O TURBO) (ENG.SER.NO.257522-)	0422 - 4
2G18	SWITCH,STARTER MOTOR(310G W/TURBO) (ENG.SER.NO.258962-)	0422 - 4
2G18	SWITCH,STARTER MOTOR(310SG,315SG) (ENG.SER.NO.894293-908991)	0422 - 4
3C9	SWITCHES, FRONT CONSOLE	1674 - 2
3C23	SWITCHES, FRONT WIRING HARNESS (SN 910056-)	1674 - 9C
3C17	SWITCHES,MONITOR PANEL	1674 - 6
1C13	SWIVEL HOUSING,FRONT AXLE (WITHOUT MFWD)(SERIAL NO. 911132-)	0230 - 7
3G9	SWIVEL SEAT	1821 - 6
3G9	SWIVEL SERVICE KIT	1821 - 6
1E1	SYNCHRONIZER GEAR, 1ST	0350 - 9
1E1	SYNCHRONIZER GEAR, 2ND	0350 - 9
1E2	SYNCHRONIZER GEAR, 3RD	0350 - 10
1E2	SYNCHRONIZER GEAR, 4TH	0350 - 10
5F1	SYNTHETIC BUCKET SPACER	3346 - 2
5F1	SYNTHETIC CROWD SPACER	3346 - 2
2F3	SYSTEM, FUEL INJECTION 310G(TURBO),310SG,315SG (VSN 910056-)	0413 - 10
2E23	SYSTEM, FUEL INJECTION 310G(W/O TURBO)(VSN 911769-)	0413 - 6
2F1	SYSTEM, FUEL INJECTION 310G(TURBO),310SG 315SG(VSN 893079-907963)(VSN-910055)	0413 - 8
2E21	SYSTEM, FUEL INJECTION 310G(W/O TURBO) (VSN 893079-907963)(VSN -911768)	0413 - 4

T

2I11	TANK, FUEL	0560 - 2
2H17	TANK,COOLANT RECOVERY	0510 - 2
5D1	TEETH, BACKHOE BUCKET	3302 - 14
5D3	TEETH, BACKHOE BUCKET	3302 - 16
3C17	TEMPERATURE CONTROL SWITCH	1674 - 6

ALPHABETICAL INDEX - CONTINUED

GRID		PAGE
3H5	TEMPERATURE CONTROL,HEATER	1830 - 8
3C23	TEMPERATURE SENSOR, FUEL (FRONT WIRE HARNESS) (SN 910056-)	1674 - 9C
2F5	TEMPERATURE SENSOR, FUEL, STANADYNE DE10 310G (W/O TURBO) (VSN 911769-)	0413 - 12
2F6	TEMPERATURE SENSOR, FUEL, STANADYNE DE10 310G(TURBO),310SG/315SG (VSN 910056-)	0413 - 13
3C19	TEMPERATURE, TORQUE CONVERTER	1674 - 8
3C21	TEMPERATURE, TORQUE CONVERTER	1674 - 9A
2G24	TENSIONER, FAN DRIVE BELT 310G(TURBO),310SG,315SG	0429 - 2
3D13	TERMINALS, DEUTSCH	1674 - 23
3D12	TERMINALS, SUPPLEMENTARY	1674 - 22
3D10	TERMINALS, WEATHERPACK	1674 - 20
3C11	TERMINATION RESISTORS, CAN	1674 - 4
3C21	TERMINATION RESISTORS, CAN	1674 - 9A
2K12	TEST KIT, FLUID ANALYSIS PRODUCTS (OILSCAN)	1369 - 2
3G18	TETHER BELT	1821 - 16
3G11	TETHER BELT,SUSPENDED SEAT	1821 - 8
3G14	TETHER BELTS WITH NON-SUSPENDED SEAT	1821 - 12
3E10	TETHER KIT, OPERATOR MANUAL	1811 - 2
3E22	TETHER, DOOR	1814 - 4
2F23	THERMOSTAT COVER	0418 - 2
2F23	THERMOSTAT COVER TUBE	0418 - 2
3F23	THERMOSTAT SWITCH, AIR CONDITIONING	1816 - 12
2F23	THERMOSTAT, ENGINE	0418 - 2
4E19	THIRD FUCTION HYDRAULIC OIL LINES	3163 - 6
4E21	THIRD FUCTION HYDRAULIC OIL LINES	3163 - 8
4D3	THIRD FUNCTION LOADER CONTROL VALVE LINKAGE	3115 - 10
4D5	THIRD FUNCTION LOADER CONTROL VALVE LINKAGE	3115 - 12
1E9	THIRD GEAR CLUTCH ASSEMBLY, POWER SHIFT	0350 - 18
1E9	THIRD GEAR CLUTCH CARRIER, POWER SHIFT	0350 - 18
1E9	THIRD GEAR, BELLVILLEWASHER, POWERSHIFT	0350 - 18
5D13	THREE LEVER BACKHOE CONTROL VALVE LINKAGE (310G AND 310SG)	3315 - 8
3E18	THRESHOLD, DOOR	1812 - 4
2H19	THROTTLE LEVER	0515 - 2
2H21	THROTTLE LEVER	0515 - 4
2H21	THROTTLE SENSOR	0515 - 4
3C5	TIE BAND MOUNT ANCHOR, HARNESS SERIAL NO. -XXXXXX	1673 - 4
3C7	TIE BAND MOUNT ANCHOR, HARNESS SERIAL NO. XXXXXX-	1673 - 6
1C17	TIE ROD ASSEMBLY (MFWD)	0250 - 4
1C7	TIE ROD ASSEMBLY (WITHOUT MFWD)	0230 - 1
2I17	TILT STEERING COLUMN	0960 - 4
3C11	TIMER RELAY	1674 - 4
2C22	TIMING GEAR COVER (VSN -911768) 310G (W/O TURBO)	0402 - 4
2D1	TIMING GEAR COVER (VSN -910055) 310G(TURBO), 310SG, 315SG	0402 - 6
2D3	TIMING GEAR COVER (VSN 910056-) 310G(TURBO), 310SG, 315SG	0402 - 6B
2C22	TIMING GEAR COVER GASKET (VSN -911768) 310G (W/O TURBO)	0402 - 4
2D1	TIMING GEAR COVER GASKET (VSN-910055) 310G(TURBO), 310SG, 315SG	0402 - 6
2C24	TIMING GEAR COVER GASKET 310G (W/O TURBO) (VSN 911769-)	0402 - 4B
2D3	TIMING GEAR COVER GASKET (VSN 910056-) 310G(TURBO), 310SG, 315SG	0402 - 6B
2C24	TIMING GEAR COVER 310G (W/O TURBO) (VSN 911769-)	0402 - 4B
2F5	TIMING PIN HOLE PLUG, STANADYNE DE10 310G (W/O TURBO) (VSN 911769-)	0413 - 12
2F6	TIMING PIN HOLE PLUG, STANADYNE DE10 310G(TURBO),310SG/315SG (VSN 910056-)	0413 - 13
2C12	TIMING, CRANKSHAFT WHEEL 310G (W/O TURBO) (VSN 911769-)	0401 - 2
2C11	TIMING, CRANKSHAFT WHEEL 310G (W/O TURBO) (VSN-911768)	0401 - 1
2C14	TIMING, CRANKSHAFT WHEEL 310G(TURBO),310SG,315SG (VSN -910055)	0401 - 4
2C15	TIMING, CRANKSHAFT WHEEL 310G(TURBO),310SG,315SG (VSN 910056-)	0401 - 6
3H19	TOOL BOX	1913 - 2
5J7	TOOL KIT, HAND HELD HYDRAULIC (SERIAL NO. -913416)	3363 - 44
5J9	TOOL KIT, HAND HELD HYDRAULIC (SERIAL NO. 913417-)	3363 - 46
5D1	TOOTH, BACKHOE BUCKET	3302 - 14
5D3	TOOTH, BACKHOE BUCKET	3302 - 16
1D18	TORQUE CONVERTER	0350 - 1
3C19	TORQUE CONVERTER TEMPERATURE	1674 - 8
3C21	TORQUE CONVERTER TEMPERATURE	1674 - 9A
1D18	TORQUE CONVERTOR FLEXPLATE	0350 - 1
2K3	TRADEMARKS	1320 - 2
2K5	TRADEMARKS	1320 - 4
2K7	TRADEMARKS	1320 - 6
2K9	TRADEMARKS	1320 - 8
2F5	TRANSFER PUMP TAP SCREW, STANADYNE DE10 310G (W/O TURBO) (VSN 911769-)	0413 - 12
2F6	TRANSFER PUMP TAP SCREW, STANADYNE DE10 310G(TURBO),310SG/315SG (VSN 910056-)	0413 - 13
1D17	TRANSMISSION	0341 - 4
1D14	TRANSMISSION BREATHER	0341 - 1
1D15	TRANSMISSION BREATHER	0341 - 2
1D9	TRANSMISSION CONTROL LEVER	0315 - 4
1D9	TRANSMISSION CONTROL LEVER SWITCH	0315 - 4
1E19	TRANSMISSION CONTROL VALVE	0360 - 2
1F3	TRANSMISSION CONTROL VALVE SOLENOID, POWER SHIFT	0360 - 10
1E23	TRANSMISSION CONTROL VALVE, POWER SHIFT	0360 - 6
1D17	TRANSMISSION DIPSTICK	0341 - 4
3D20	TRANSMISSION DIPSTICK GUARD	1746 - 4
1D17	TRANSMISSION DIPSTICK TUBE	0341 - 4
1E19	TRANSMISSION DISCONNECT SOLENOID	0360 - 2
1D14	TRANSMISSION HOUSING	0341 - 1
1D15	TRANSMISSION HOUSING, POWER SHIFT	0341 - 2
1E21	TRANSMISSION INTERMEDIATE PLATE, SYNCHRO-SHUTTLE	0360 - 4
1F3	TRANSMISSION INTERMEDIATE PLATE, POWER SHIFT	0360 - 10
1D14	TRANSMISSION LIFT BRACKET	0341 - 1
1D15	TRANSMISSION LIFT BRACKET	0341 - 2
1E22	TRANSMISSION OIL FILTER	0360 - 5
1E17	TRANSMISSION OUTPUT SHAFT (MFWD)	0350 - 26
1E9	TRANSMISSION OUTPUT SHAFT YOKE	0350 - 18
1E1	TRANSMISSION OUTPUT YOKE	0350 - 9
3D20	TRANSMISSION SHIELD	1746 - 4
1D7	TRANSMISSION SHIFTER CARROT BOOT	0315 - 2
1D11	TRANSMISSION SHIFTER LEVER	0315 - 6
1D11	TRANSMISSION SHIFTER LEVER BOOT	0315 - 6
1D11	TRANSMISSION SHIFTER LEVER BRACKET	0315 - 6
1D7	TRANSMISSION SHIFTER LEVER CARROT	0315 - 2
1D11	TRANSMISSION SHIFTER LEVER, ISOLATED	0315 - 6
1E19	TRANSMISSION SOLENOID VALVE	0360 - 2
1E23	TRANSMISSION SOLENOID VALVE, POWER SHIFT	0360 - 6
1D14	TRANSMISSION SUCTION PIPE	0341 - 1
1D15	TRANSMISSION SUCTION PIPE	0341 - 2

ALPHABETICAL INDEX - CONTINUED

GRID		PAGE
1E2	TRANSMISSION, INTERMEDIATE GEAR	0350 - 10
3J15	TRANSMISSION, OIL COOLER	2160 - 18
3I10	TRAVEL WARNING ALARM (310G,310SG)	2004 - 2
3I12	TRAVEL WARNING ALARM (315SG)	2004 - 4
5I19	TRUNION BULKHEAD PLATE	3363 - 32
5E13	TRUNNION BLOCK, SWING CYLINDER, 315SG	3342 - 2
3D15	TRUNNION BLOCK,SWING CYLINDER,310G,310SG	1740 - 2
2E10	TUBE, ENGINE VENTILATING PE4045DT058	0408 - 4
1D17	TUBE, TRANSMISSION DIPSTICK	0341 - 4
2F23	TUBE,THERMOSTAT COVER	0418 - 2
1D23	TURBINE SHAFT	0350 - 6
1E3	TURBINE SHAFT, POWER SHIFT	0350 - 12
2F12	TURBOCHARGER (VSN -910055) 310G(TURBO), 310SG, 315SG	0416 - 2
2F12	TURBOCHARGER CENTER HOUSING(VSN -910055) 310G(TURBO), 310SG, 315SG	0416 - 2
2F12	TURBOCHARGER GASKET (VSN -910055) 310G(TURBO), 310SG, 315SG	0416 - 2
2F14	TURBOCHARGER GASKET 310G(TURBO), 310SG, 315SG (VSN 910056-)	0416 - 4
2F16	TURBOCHARGER OIL LINES (VSN -910055) 310G(TURBO), 310SG, 315SG	0416 - 6
2F18	TURBOCHARGER OIL LINES (VSN 910056-) 310G(TURBO), 310SG, 315SG	0416 - 8
2F14	TURBOCHARGER 310G(TURBO), 310SG, 315SG (VSN 910056-)	0416 - 4
3C9	TURN SIGNAL SWITCH	1674 - 2
3F11	TWO LEVER BACKHOE CONTROL COVER	1816 - 2
5D11	TWO LEVER BACKHOE CONTROL VALVE LINKAGE (310G AND 310SG)	3315 - 6

U

1C16	UNIVERSAL DRIVE SHAFT (MFWD)	0250 - 2
1C16	UNIVERSAL DRIVE SHAFT KIT (MFWD)	0250 - 2
1C19	UNIVERSAL DRIVE SHAFT,FRONT AXLE (MFWD)	0250 - 6
2J18	UNIVERSAL JOINT YOKE (AXLE SERIAL NO. -217496)	1111 - 2
2J20	UNIVERSAL JOINT YOKE (AXLE SERIAL NO. 217497-)	1111 - 4
1D13	UNIVERSAL JOINT,REAR DRIVE SHAFT (REVERSER)	0325 - 2

V

5E9	VALVE LINKAGE, STABILIZER	3315 - 24
5D7	VALVE MOUNTING PLATE, BACKHOE (PILOT CONTROL)	3315 - 3A
5D5	VALVE MOUNTING PLATE, BACKHOE 310G,310SG	3315 - 2
5D9	VALVE MOUNTING PLATE, BACKHOE 315SG	3315 - 4
5D7	VALVE MOUNTING PLATE, STABILIZER (PILOT CONTROL)	3315 - 3A
5D5	VALVE MOUNTING PLATE, STABILIZER 310G,310SG	3315 - 2
5D9	VALVE MOUNTING PLATE, STABILIZER 315SG	3315 - 4
2E12	VALVE SPRING	0409 - 2
1B17	VALVE STEM	0110 - 4
1B18	VALVE STEM (WITHOUT MFWD)	0120 - 1
5G11	VALVE, ACCU-SWING KIT	3362 - 29A
4E3	VALVE, AUXILIARY KIT, LOADER (SERIAL NO. -913416)	3162 - 18
5G3	VALVE, BACKHOE AUXILIARY SECTION	3362 - 22
5F16	VALVE, BACKHOE BOOM SECTION	3362 - 10
5G23	VALVE, BACKHOE BOOM, PILOT SECTION	3362 - 40
5F18	VALVE, BACKHOE BUCKET SECTION	3362 - 12
5H1	VALVE, BACKHOE BUCKET, PILOT SECTION	3362 - 42
5F10	VALVE, BACKHOE CONTROL	3362 - 4
5F12	VALVE, BACKHOE CONTROL	3362 - 6
5F20	VALVE, BACKHOE CROWD SECTION	3362 - 14
5H3	VALVE, BACKHOE CROWD, PILOT SECTION	3362 - 44
5F24	VALVE, BACKHOE EXTENDIBLE SECTION	3362 - 18
5F14	VALVE, BACKHOE INLET PRIORITY SECTION	3362 - 8
5G1	VALVE, BACKHOE SELECTIVE FLOW SECTION	3362 - 20
5F22	VALVE, BACKHOE SWING SECTION	3362 - 16
5H5	VALVE, BACKHOE SWING, PILOT SECTION	3362 - 46
2J7	VALVE, BRAKE	1060 - 2
2J9	VALVE, BRAKE	1060 - 4
3H5	VALVE, CANOPY HEATER SHUT-OFF	1830 - 8
2C22	VALVE, ENGINE OIL PRESSURE REGULATING (VSN -911768) 310G (W/O TURBO)	0402 - 4
2D1	VALVE, ENGINE OIL PRESSURE REGULATING (VSN-910055) 310G(TURBO), 310SG, 315SG	0402 - 6
2D10	VALVE, ENGINE OIL PRESSURE REGULATING 310G(TURBO), 310SG, 315SG (VSN-910055)	0404 - 2
2E12	VALVE, EXHAUST	0409 - 2
5G5	VALVE, FIFTH FUNCTION MANUAL KIT (310G)	3362 - 24
5G6	VALVE, FIFTH FUNCTION MANUAL KIT (310SG AND 315SG)	3362 - 25
5H7	VALVE, FLOW CONTROL	3363 - 1A
2E12	VALVE, INTAKE	0409 - 2
4E1	VALVE, LOADER AUXILIARY SECTION (SERIAL NO. -913416)	3162 - 16
4E5	VALVE, LOADER AUXILIARY SECTION (SERIAL NO. 913417-)	3162 - 20
4D17	VALVE, LOADER BOOM SECTION	3162 - 8
4D19	VALVE, LOADER BOOM SECTION	3162 - 10
4D21	VALVE, LOADER BUCKET SECTION	3162 - 12
4D23	VALVE, LOADER BUCKET SECTION	3162 - 14
4D11	VALVE, LOADER CONTROL	3162 - 2
4D13	VALVE, LOADER/STABILIZER CONTROL	3162 - 4
5G13	VALVE, LOCKING, SIDE SHIFT (315SG)	3362 - 30
5G15	VALVE, PATTERN SELECTOR	3362 - 32
5G21	VALVE, PILOT CONTROL HANDLE BUTTON KIT	3362 - 38
5G17	VALVE, PILOT CONTROLLER, LEFT	3362 - 34
5G19	VALVE, PILOT CONTROLLER, RIGHT	3362 - 36
5G14	VALVE, PRESSURE REDUCING, MANIFOLD (PILOT CONTROL)	3362 - 31
4E13	VALVE, QUICK COUPLER BUCKET	3162 - 28
1F1	VALVE, RANGE SHIFT, POWER SHIFT	0360 - 8
5G13	VALVE, RELIEF, SIDE SHIFT (315SG)	3362 - 30
5G7	VALVE, SIXTH FUNCTION MANUAL KIT (310G)	3362 - 26
5G8	VALVE, SIXTH FUNCTION MANUAL KIT (310SG AND 315SG)	3362 - 27
5G14	VALVE, SOLENOID (MANIFOLD) (PILOT CONTROL)	3362 - 31
5G13	VALVE, SOLENOID SIDE SHIFT (315SG)	3362 - 30
4E13	VALVE, SOLINOID FRONT COUPLER	3162 - 28
4E7	VALVE, STABILIZER (SERIAL NO.-913416)	3162 - 22
4E9	VALVE, STABILIZER (SERIAL NO.-913416)	3162 - 24
4E11	VALVE, STABILIZER LOCKOUT (SER.NO.913417-)	3162 - 26

ALPHABETICAL INDEX - CONTINUED

GRID		PAGE
4E11	VALVE, STABILIZER/LOADER (SER.NO.913417-)	3162 - 26
2I20	VALVE, STEERING (WITH MFWD)	0960 - 8
2I22	VALVE, STEERING (WITHOUT MFWD)	0960 - 10
1E19	VALVE, TRANSMISSION CONTROL	0360 - 2
1E23	VALVE, TRANSMISSION CONTROL, POWER SHIFT	0360 - 6
1E19	VALVE, TRANSMISSION SOLENOID	0360 - 2
1E23	VALVE, TRANSMISSION SOLENOID,POWER SHIFT	0360 - 6
2J13	VALVE,BRAKE VALVE BOOST HYDRAULICS (CAB),310G AND 310SG	1060 - 8
2J15	VALVE,BRAKE VALVE BOOST HYDRAULICS (ROPS),310G AND 310SG	1060 - 10
2D10	VALVE,ENGINE OIL BY-PASS 310G(TURBO), 310SG, 315SG (VSN-910055)	0404 - 2
3F21	VANDAL GUARD LOCK	1816 - 10
3F21	VANDAL GUARD,INSTRUMENT PANEL	1816 - 10
3I21	VEHICLE MAIN HYDRAULIC SYSTEM	2100 - 1
3C19	VEHICLE WIRING HARNESS	1674 - 8
3C21	VEHICLE WIRING HARNESS	1674 - 9A
2E8	VENTILATING SYSTEM, ENGINE (DT056, TT080/81/88/89)	0408 - 2
2E10	VENTILATING SYSTEM, ENGINE PE4045DT058	0408 - 4
3I16	VISOR, SUN	2007 - 2

W

3I10	WARNING ALARM, TRAVEL (310G,310SG)	2004 - 2
3I12	WARNING ALARM, TRAVEL (315SG)	2004 - 4
3C9	WARNING LIGHTS SWITCH	1674 - 2
3F7	WASHER, WINDSHIELD RESERVOIR	1814 - 12
2F21	WATER PUMP IMPELLER 310G(TURBO), 310SG, 315SG (VSN -910055) T0/PE4045TT080,081	0417 - 3
2F22	WATER PUMP IMPELLER 310G(TURBO, 310SG, 315SG (VSN 910056-) PE4045TT088,089	0417 - 4
2F22	WATER PUMP IMPELLER 310G(W/O TURBO (VSN 911769) PE4045DT058	0417 - 4
2F21	WATER PUMP IMPELLER 310G(W/O TURBO) (VSN -911768) T0/PE4045DT056	0417 - 3
2F20	WATER PUMP INLET 310G(TURBO), 310SG, 315SG	0417 - 2
2F20	WATER PUMP PULLEY 310G(TURBO), 310SG, 315SG	0417 - 2
2F21	WATER PUMP REPAIR KIT 310G(TURBO), 310SG 315SG (VSN -910055) T0/PE4045TT080,081	0417 - 3
2F22	WATER PUMP REPAIR KIT 310G(TURBO, 310SG, 315SG (VSN 910056-) PE4045TT088,089	0417 - 4
2F21	WATER PUMP REPAIR KIT 310G(W/O TURBO) (VSN -911768) T0/PE4045DT056	0417 - 3
2F22	WATER PUMP REPAIR KIT 310G(W/O TURBO) (V SN 911769) PE4045DT058	0417 - 4
2F21	WATER PUMP 310G(TURBO), 310SG, 315SG (VSN -910055) T0/PE4045TT080,081	0417 - 3
2F22	WATER PUMP 310G(TURBO), 310SG, 315SG (VSN 910056-) PE4045TT088,089	0417 - 4
2F21	WATER PUMP 310G(W/O TURBO) (VSN -911768) T0/PE4045DT056	0417 - 3
2F22	WATER PUMP 310G(W/O TURBO) (VSN 911769-) PE4045DT058	0417 - 4
5F3	WEARSTRIPS, EXTENDIBLE ARM	3346 - 4
3D10	WEATHERPACK CONNECTORS	1674 - 20
3D10	WEATHERPACK TERMINALS	1674 - 20
3F1	WEATHERSTRIP, REAR WINDOW (SER.NO. -920856)	1814 - 8
3F3	WEATHERSTRIP, REAR WINDOW (SER.NO. 920857-)	1814 - 9A
5G9	WET CAP KIT, HYDRAULIC	3362 - 28
1C10	WHEEL HUB, FRONT (WITHOUT MFWD) (SERIAL NO. -911131)	0230 - 4
1C14	WHEEL HUB, FRONT AXLE (WITHOUT MFWD) (SERIAL NO. 911132-)	0230 - 8
1B16	WHEEL SPACER	0110 - 3
1C19	WHEEL STUDS (MFWD)	0250 - 6
1B17	WHEEL, DRIVE, FRONT (MFWD)	0110 - 4
1B16	WHEEL, DRIVE, REAR	0110 - 3
1B18	WHEEL, FRONT (WITHOUT MFWD)	0120 - 1
2I15	WHEEL, STEERING	0960 - 2
2I17	WHEEL, STEERING	0960 - 4
2C12	WHEEL,CRANKSHAFT TIMING 310G (W/O TURBO) (VSN 911769-)	0401 - 2
2C11	WHEEL,CRANKSHAFT TIMING 310G (W/O TURBO) (VSN-911768)	0401 - 1
2C14	WHEEL,CRANKSHAFT TIMING 310G(TURBO),310SG,315SG (VSN -910055)	0401 - 4
2C15	WHEEL,CRANKSHAFT TIMING 310G(TURBO),310SG,315SG (VSN 910056-)	0401 - 6
3F15	WINCH CONTROL BOOT (PILOT CONTROL)	1816 - 5A
3E20	WINDOW, CAB SIDE	1814 - 2
3E22	WINDOW, CAB SIDE	1814 - 4
3F1	WINDOWPANE, REAR CORNER (SER.NO. -920856)	1814 - 8
3F3	WINDOWPANE, REAR CORNER (SER.NO. 920857-)	1814 - 9A
3F1	WINDOWS, REAR (SER.NO. -920856)	1814 - 8
3F3	WINDOWS, REAR (SER.NO. 920857-)	1814 - 9A
3F7	WINDSHIELD WASHER HOSE	1814 - 12
3F7	WINDSHIELD WASHER PUMP	1814 - 12
3F7	WINDSHIELD WASHER SWITCH	1814 - 12
3F5	WINDSHIELD WIPER MOTOR, FRONT	1814 - 10
3F9	WINDSHIELD WIPER MOTOR, REAR	1814 - 14
3C9	WINDSHIELD WIPER SWITCH, FRONT	1674 - 2
3E24	WINDSHIELD, CAB OR QUARTER CAB	1814 - 6
3F7	WINDSHIELD, WASHER RESERVOIR	1814 - 12
3F5	WINDSHILD WIPER BLADE, FRONT	1814 - 10
3F9	WINDSHILD WIPER BLADE, REAR	1814 - 14
3F5	WIPER BLADE, FRONT	1814 - 10
3F9	WIPER BLADE, REAR	1814 - 14
3F5	WIPER MOTOR, FRONT WINDSHIELD	1814 - 10
3F9	WIPER MOTOR, REAR WINDSHIELD	1814 - 14
3C9	WIPER SWITCH, FRONT WINDSHIELD	1674 - 2
5E7	WIRE HARNESS,BACKHOE BOOM LOCK CONTROL (315SG)	3315 - 22
3D1	WIRE HARNESS,SELECTIVE FLOW CONTROL	1674 - 10
3D6	WIRE LEAD KIT	1674 - 16
3D8	WIRE LEAD KIT	1674 - 18
3C9	WIRING HARNESS FRONT CONSOLE WITH CAB	1674 - 2
3C11	WIRING HARNESS SIDE CONSOLE WITH CAB	1674 - 4
3C19	WIRING HARNESS, ENGINE	1674 - 8
3C21	WIRING HARNESS, ENGINE	1674 - 9A
3C23	WIRING HARNESS, ENGINE FRONT (SN 910056-)	1674 - 9C
3C5	WIRING HARNESS, ROOF SERIAL NO. -XXXXXX	1673 - 4
3C7	WIRING HARNESS, ROOF SERIAL NO. XXXXXX-	1673 - 6
3C19	WIRING HARNESS, VEHICLE	1674 - 8
3C21	WIRING HARNESS, VEHICLE	1674 - 9A

ALPHABETICAL INDEX - CONTINUED

GRID		PAGE
3C15	WIRING HARNESS,FRONT COUPLER	1674 - 5C
3F19	WIRING HARNESS,MODE DOOR	1816 - 8
3C13	WIRING HARNESS,PILOT ENABLE	1674 - 5A

Y

4C19	YOKE, BUCKET LEVELING	3115 - 2
4C21	YOKE, BUCKET LEVELING	3115 - 4
1C16	YOKE, DRIVE SHAFT (MFWD)	0250 - 2
1C4	YOKE, REAL AXLE	0210 - 4
2J18	YOKE, REAR AXLE (AXLE SERIAL NO. -217496)	1111 - 2
1E1	YOKE, TRANSMISSION OUTPUT	0350 - 9
1E9	YOKE, TRANSMISSION OUTPUT SHAFT	0350 - 18
1C4	YOKE, UNIVERSAL JOINT	0210 - 4
2J18	YOKE, UNIVERSAL JOINT (AXLE SERIAL NO. -217496)	1111 - 2
2J20	YOKE, UNIVERSAL JOINT (AXLE SERIAL NO. 217497-)	1111 - 4
1C16	YOKE,SEAL,SLIDING (MFWD)	0250 - 2

REAR DRIVE WHEEL

TP50501 -UN-17OCT96

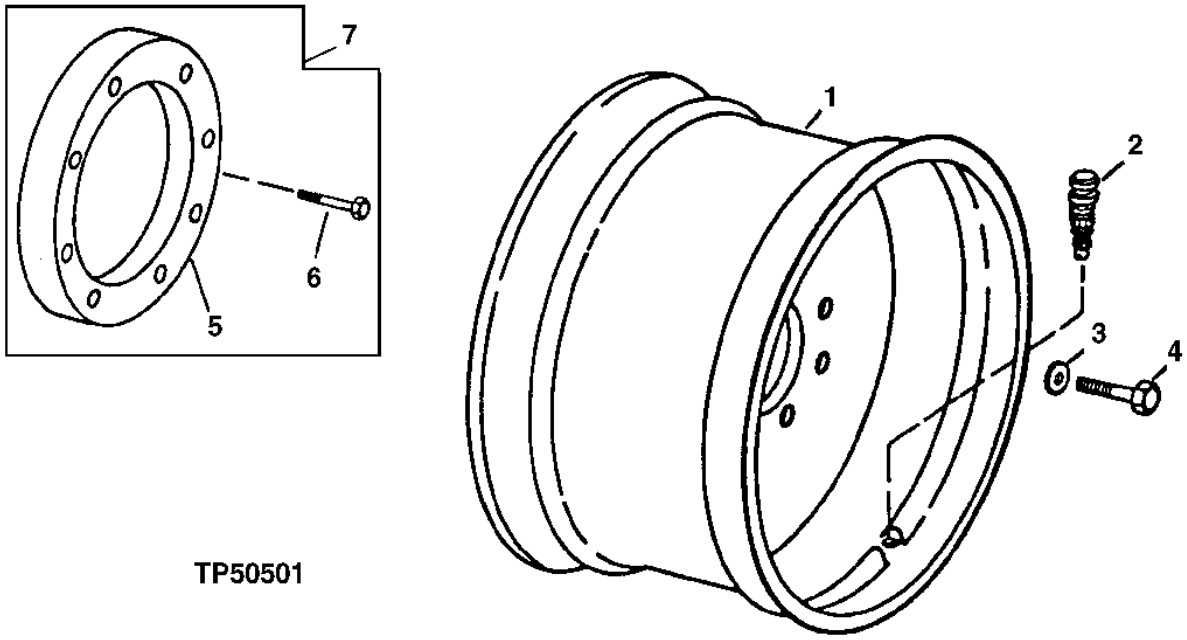

TP50501

KEY	PART NO.	PART NAME	QTY	SERIAL NO.	310G	315SG	REMARKS
1	AT309100	WHEEL	1			X	(SUB FOR AT124371) (ALSO ORDER (8) 19H2431) (FOR 16.9 X 28 TIRE)
	AT320204	WHEEL	1		X	X	X (FOR 19.5L X 24 TIRE) (SUB FOR AT66805, AT300165 AND AT309110)
	AT309102	WHEEL	1		X	X	(FOR 16.9 X 24 AND 17.5L X 24 TIRES) (SUB FOR AT141444)
2	AT25226	TIRE VALVE STEM	1		X	X	X (WITH CALCIUM CHLORIDE)
	AN132749	TIRE VALVE STEM	1		X	X	X (TUBELESS) (WITHOUT CALCIUM CHLORIDE)
3	R54124	WASHER	8		X	X	X
4	19H2717	CAP SCREW	8		X	X	X 3/4" X 1-3/4"
	19H2431	CAP SCREW	8				X 3/4" X 2-1/4", (USE WITH AT309100)
5	T66860	SPACER	2		X	X	X
6	19H3196	CAP SCREW	16		X	X	X 3/4" X 4"
7	AT179287	WHEEL KIT	1		X	X	X WHEEL SPACER (WHOLE GOODS)

FRONT DRIVE WHEEL

TP50502 -UN-17OCT96

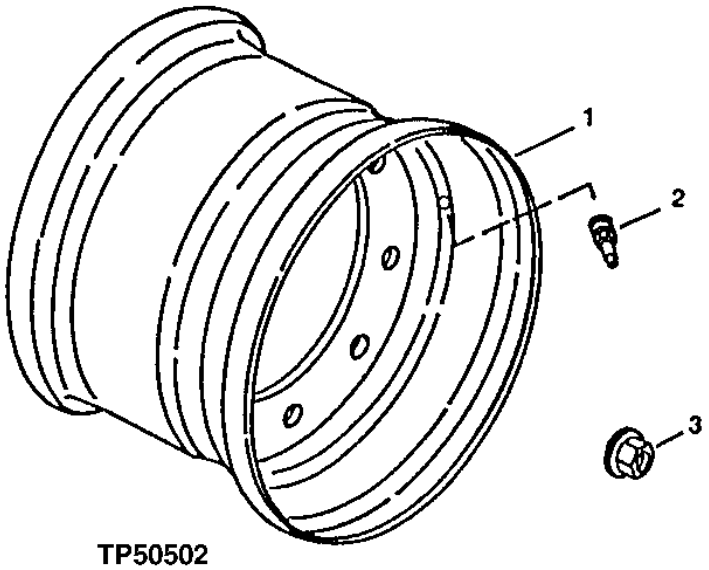

TP50502

KEY	PART NO.	PART NAME	QTY	SERIAL NO.	310G	315SG	315SG	REMARKS
1	AT309104	WHEEL	1			X	X	(FOR 12.5/80 X 18 TIRE) (SUB FOR AT169550)
	AT309105	WHEEL	1		X			(FOR 12 X 16.5 TIRE) (SUB FOR AT178499)
2	AN132749	TIRE VALVE STEM	1		X	X	X	(TUBELESS)
3	14M7332	FLANGE NUT	8		X	X	X	M18

FRONT WHEEL
(WITHOUT MECHANICAL FRONT WHEEL DRIVE)

TP3190 -UN-01JAN94

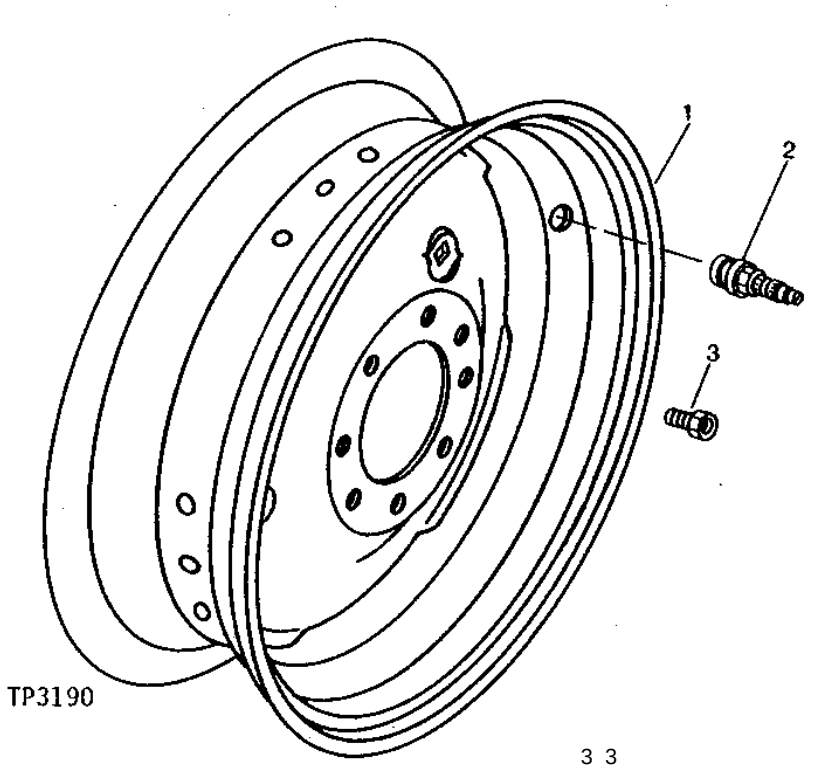

KEY	PART NO.	PART NAME	QTY	SERIAL NO.	310G	315SG	REMARKS
1	AT309111	WHEEL	1		X	X	(FOR 11L X 15 TIRE) (SUB FOR AT51878)
	AT310291	WHEEL	1		X	X X	(FOR 11L X 16 TIRE) (SUB FOR JD3216)
2	AN132749	TIRE VALVE STEM	1		X	X X	(TUBELESS) (WITHOUT CALCIUM CHLORIDE)
3	JD21	BOLT	8	-911131	X	X X	
	JD27	BOLT	8	911132-	X	X X	

DIFFERENTIAL HOUSING, AXLE HOUSING AND SHAFT

T142285 -UN-25MAY01

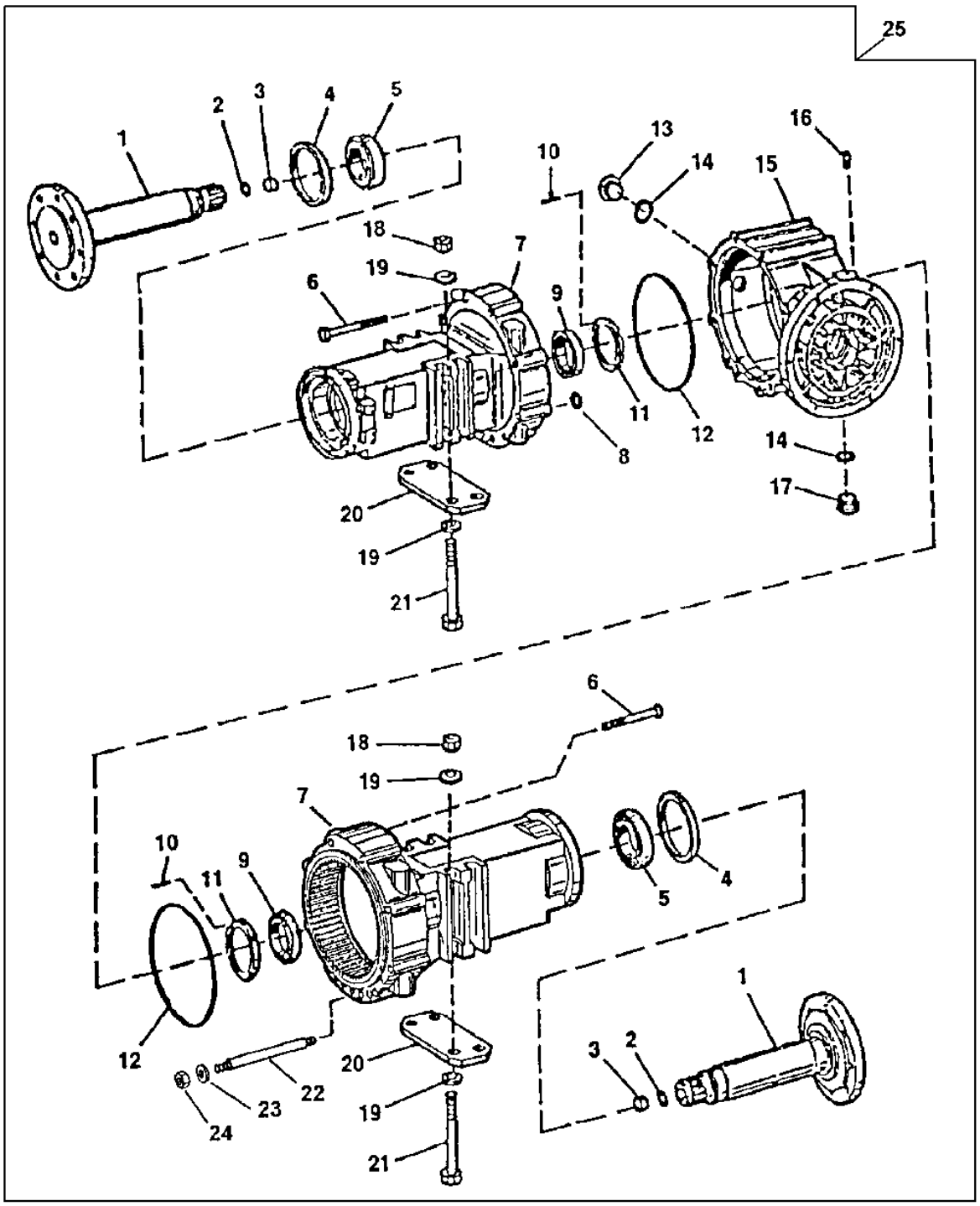

T142285

DIFFERENTIAL HOUSING, AXLE HOUSING AND SHAFT

KEY	PART NO.	PART NAME	QTY	AXLE SERIAL NO.	310G	315SG	REMARKS
1	T154951	SHAFT	2		X	X	
2	R75384	SHIM	AR		X	X	.3 MM
	R75383	SHIM	AR		X	X	.5 MM
	R75382	SOLID SHIM	AR		X	X	1.0 MM
	T183496	SOLID SHIM	AR		X	X	2.0 MM
	R75385	SOLID SHIM	AR		X	X	3.0 MM
3	R79132	PIN	2		X	X	
4	AT179502	SEAL	2		X	X	
5	AT179500	TAPERED ROLLER BEARING	2		X	X	
6	19M7677	CAP SCREW	16		X	X	M16 X 240
7	AT179499	HOUSING	2		X	X	
8	T159373	O-RING	2		X	X	
9	AT179501	TAPERED ROLLER BEARING	2		X	X	
10	T164844	GROOVE PIN	2		X	X	(SUB FOR AT186927, ALSO ORDER INSTR. T184401)
11	T185444	NUT	2		X	X	(SUB FOR T159371)
12	T159362	O-RING	2		X	X	
13	15M7030	PIPE PLUG	1		X	X	
14	L55580	O-RING	2		X	X	
15	T164998	HOUSING	1	-217496	X	X	
	T188279	HOUSING	1	217497-	X	X	
16	AL32877	VENT	1		X	X	BREATHER
17	L56822	PIPE PLUG	1		X	X	
18	14M7315	NUT	8		X	X	M20
19	N231749	WASHER	16		X	X	
20	T147269	PLATE	2		X	X	
21	19M8001	CAP SCREW	8		X	X	M20 X 260
22	T159388	STUD	4		X	X	
23	T159386	WASHER	4		X	X	
24	T159389	NUT	4		X	X	

DIFFERENTIAL HOUSING, AXLE HOUSING AND SHAFT

T142285 -UN-25MAY01

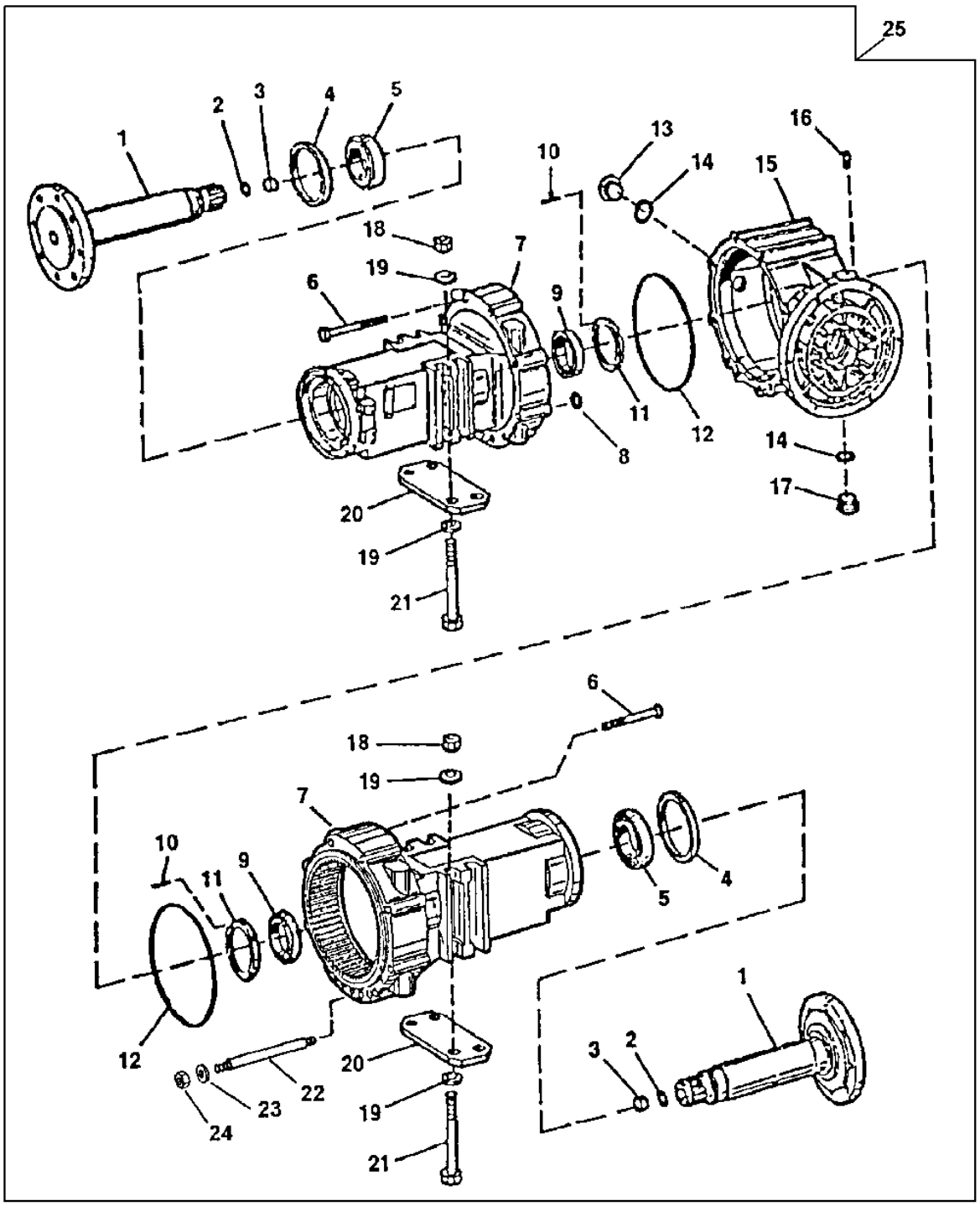

T142285

DIFFERENTIAL HOUSING, AXLE HOUSING AND SHAFT

KEY	PART NO.	PART NAME	QTY	AXLE SERIAL NO.	310G	310SG	315SG	REMARKS
25	.....	REAR AXLE	1	-217496	X	X	X	CONVENIENCE ASSEMBLY (AT192627 NO LONGER AVAILABLE) (SUB AT184406) (ALSO INCLUDES PLANETARY PINION CARRIER, RING GEAR ASSEMBLY, DIFFERENTIAL ASSEMBLY WITH LOCK SERVICE BRAKE, PARK BRAKE ASSEMBLY AND INPUT YOKE)
	.....	REAR AXLE	1	217497-	X	X	X	CONVENIENCE ASSEMBLY (AT195851 NO LONGER AVAILABLE) (SUB AT195929) (ALSO INCLUDES PLANETARY PINION CARRIER, RING GEAR ASSEMBLY, DIFFERENTIAL ASSEMBLY WITH LOCK SERVICE BRAKE, PARK BRAKE ASSEMBLY AND INPUT YOKE)
	AT184406	REAR AXLE	1	-217496	X	X	X	REMANUFACTURED, (SUB FOR AT192627) (ALSO INCLUDES PLANETARY PINION CARRIER, RING GEAR ASSEMBLY, DIFFERENTIAL ASSEMBLY WITH LOCK SERVICE BRAKE, PARK BRAKE ASSEMBLY AND INPUT YOKE)
	AT195929	REAR AXLE	1	217497-	X	X	X	REMANUFACTURED, (SUB FOR AT195851) (ALSO INCLUDES PLANETARY PINION CARRIER, RING GEAR ASSEMBLY,DIFFERENTIAL ASSEMBLY WITH LOCK SERVICE BRAKE, PARK BRAKE ASSEMBLY AND INPUT YOKE)

MEMORANDA

PLANETARY PINION CARRIER

T199252 -UN-22APR04

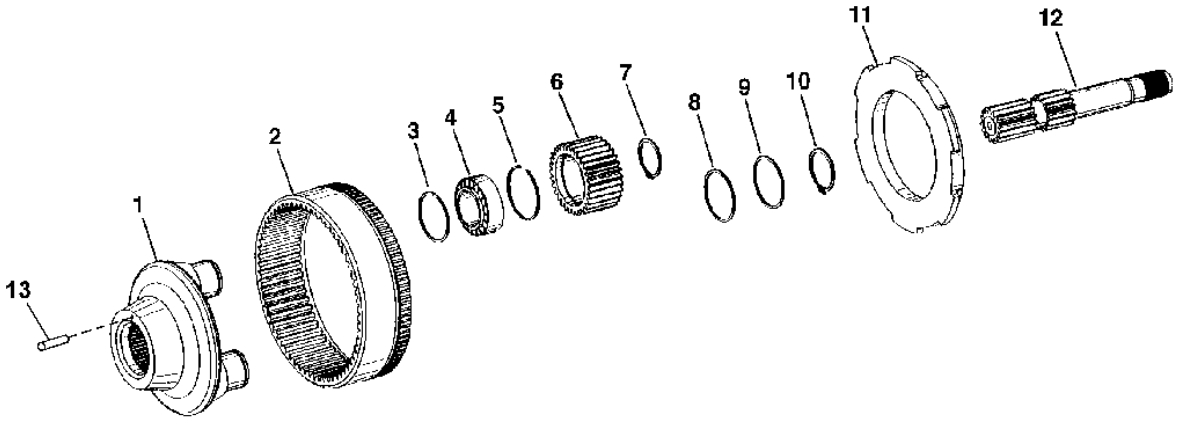

T199252

KEY	PART NO.	PART NAME	QTY	SERIAL NO.	310G	315SG	REMARKS
1	T166084	PLANET PINION CARRIER	1		X	X X	
2	.....	HOUSING	1		X	X X	AXLE, RING GEAR, (ORDER AT179499)
3	T183922	WASHER	6		X	X X	
4	AT179538	TAPERED ROLLER BEARING	3		X	X X	
5	T183923	SNAP RING	6		X	X X	
6	T183921	PLANET PINION	3		X	X X	
7	L110729	SNAP RING	3		X	X X	
8	T159518	THRUST WASHER	1		X	X X	
9	T159525	SHIM	1		X	X X	0.2 MM
	T159523	SHIM	1		X	X X	0.3 MM
	T159522	SHIM	1		X	X X	0.5 MM
	T161249	SHIM	1		X	X X	1.5 MM
	T161248	SHIM	1		X	X X	2.0 MM
10	T159519	SNAP RING	1		X	X X	
11	T166085	PLATE	1		X	X X	
12	T154952	SHAFT	1		X	X X	
13	T164844	GROOVE PIN	2		X	X X	(SUB FOR AT186927, ALSO ORDER INSTR. T184401)

DIFFERENTIAL ASSEMBLY WITH LOCK

T138067 -UN-16FEB01

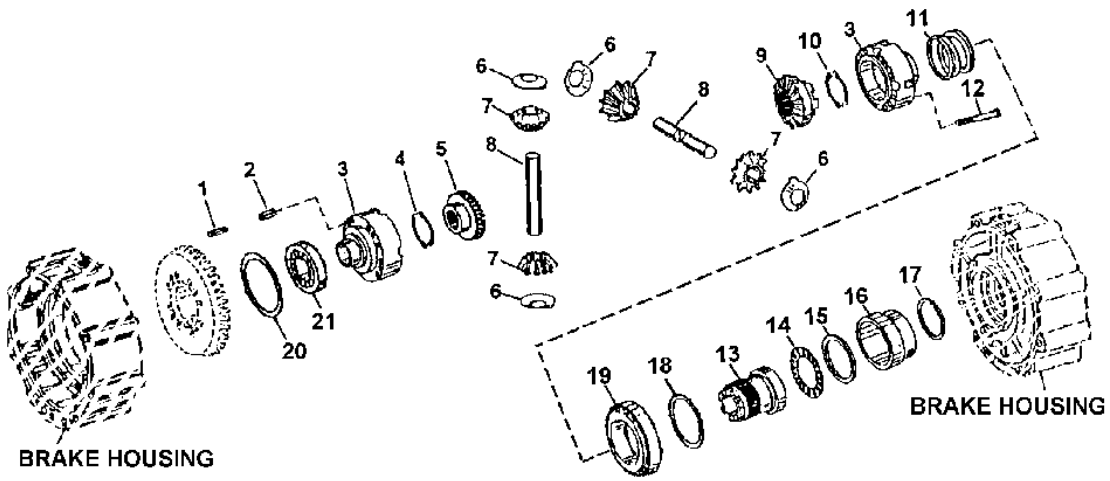

T138067

DIFFERENTIAL ASSEMBLY WITH LOCK

KEY	PART NO.	PART NAME	QTY	SERIAL NO.	310G	310SG	315SG	REMARKS
1	T159359	SPRING PIN	4		X	X	X	
2	T159358	SPRING PIN	4		X	X	X	
3	AT186312	DIFFERENTIAL	1		X	X	X	(CONTAINS LEFT AND RIGHT SIDE)
4	T163374	THRUST WASHER	1		X	X	X	(RING GEAR SIDE)
5	T159348	BEVEL GEAR	1		X	X	X	
6	T210077	THRUST WASHER	4		X	X	X	(SUB FOR T159351)
7	T159350	BEVEL GEAR	4		X	X	X	
8	T210078	PINION SHAFT	2		X	X	X	(SUB FOR T164431)
9	T163810	BEVEL GEAR	1		X	X	X	
10	T163375	THRUST WASHER	1		X	X	X	(DIFF LOCK SIDE)
11	T159341	SPRING	1		X	X	X	
12	19M8771	SCREW	12		X	X	X	M14 X 120
13	T166336	SHIFT COLLAR	1		X	X	X	
14	AT179498	NEEDLE BEARING	1		X	X	X	
15	T159344	SEAL	1		X	X	X	
16	T159343	PISTON	1		X	X	X	
17	T159346	SEAL	1		X	X	X	
18	T159444	SHIM	1		X	X	X	0.1 MM
	T159445	SHIM	1		X	X	X	0.15 MM
	T159443	SHIM	1		X	X	X	0.2 MM
	T159440	SHIM	1		X	X	X	0.3 MM
	T159441	SHIM	1		X	X	X	0.5 MM
	T159442	SHIM	1		X	X	X	1.0 MM
	T159446	SHIM	1		X	X	X	1.1 MM
	T159447	SHIM	1		X	X	X	1.2 MM
	T159448	SHIM	1		X	X	X	1.3 MM
	T159449	SHIM	1		X	X	X	1.4 MM
	T159450	SHIM	1		X	X	X	1.5 MM
	T159451	SHIM	1		X	X	X	1.6 MM
	T159452	SHIM	1		X	X	X	1.7 MM
	T159453	SHIM	1		X	X	X	1.8 MM
	T159457	SHIM	1		X	X	X	2.8 MM
	T159459	SHIM	1		X	X	X	3.0 MM
	T159461	SHIM	1		X	X	X	3.2 MM
	T159463	SHIM	1		X	X	X	3.4 MM
19	AT179504	TAPERED ROLLER BEARING	1		X	X	X	LEFT
20	T161247	SHIM	1		X	X	X	0.20 MM
	T161246	SHIM	1		X	X	X	0.30 MM
	T161245	SHIM	1		X	X	X	0.40 MM
	T161244	SHIM	1		X	X	X	0.50 MM
	T161243	SHIM	1		X	X	X	0.70 MM
	T161242	SHIM	1		X	X	X	0.75 MM
	T161241	SHIM	1		X	X	X	0.80 MM
	T161240	SHIM	1		X	X	X	0.85 MM
	T161239	SHIM	1		X	X	X	0.90 MM
	T161238	SHIM	1		X	X	X	0.95 MM
21	AT179505	TAPERED ROLLER BEARING	1		X	X	X	RIGHT

SPIRAL BEVEL INPUT PINION AND RING GEAR SET

TP58173 -UN-21FEB00

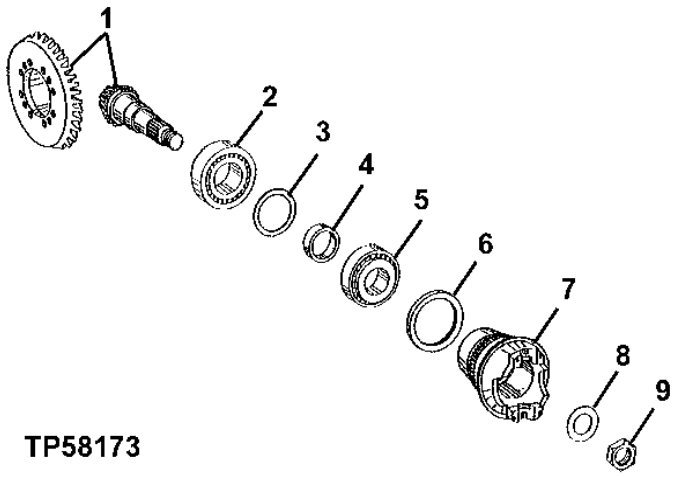

SPIRAL BEVEL INPUT PINION AND RING GEAR SET

KEY	PART NO.	PART NAME	QTY	SERIAL NO.	310G	310SG	315SG	REMARKS
1	AT171644	BEVEL GEAR DRIVE	1		X	X	X	
2	AT176491	CYLINDRICAL ROLLER BEARING	1		X	X	X	
3	T159310	SHIM	1		X	X	X	1.2 MM
	T159315	SHIM	1		X	X	X	1.3 MM
	T159314	SHIM	1		X	X	X	1.4 MM
	T159309	SHIM	1		X	X	X	1.5 MM
	T159313	SHIM	1		X	X	X	1.6 MM
	T159308	SHIM	1		X	X	X	1.8 MM
	T159311	SHIM	1		X	X	X	1.9 MM
	T159307	SHIM	1		X	X	X	2.0 MM
4	T159322	RING	1		X	X	X	16.40 MM
	T159323	RING	1		X	X	X	16.50 MM
	T183482	SOLID SHIM	1		X	X	X	16.56 MM
	T159324	RING	1		X	X	X	16.60 MM
	T183483	SOLID SHIM	1		X	X	X	16.62 MM
	T183484	SOLID SHIM	1		X	X	X	16.64 MM
	T183485	SOLID SHIM	1		X	X	X	16.68 MM
	T159325	RING	1		X	X	X	16.70 MM
	T183486	SOLID SHIM	1		X	X	X	16.72 MM
	T183487	SOLID SHIM	1		X	X	X	16.74 MM
	.....	RING	1		X	X	X	16.75 MM
	T183489	SOLID SHIM	1		X	X	X	16.76 MM
	T183490	SOLID SHIM	1		X	X	X	16.78 MM
	T159326	RING	1		X	X	X	16.80 MM
	T183491	SOLID SHIM	1		X	X	X	16.82 MM
	.....	RING	1		X	X	X	16.83 MM
	T183492	SOLID SHIM	1		X	X	X	16.84 MM
	T159334	RING	1		X	X	X	16.86 MM
	T183493	SOLID SHIM	1		X	X	X	16.88 MM
	.....	RING	1		X	X	X	16.89 MM
	T183494	SOLID SHIM	1		X	X	X	16.90 MM
	T159327	RING	1		X	X	X	16.92 MM
	T183495	SOLID SHIM	1		X	X	X	16.94 MM
	.....	RING	1		X	X	X	16.95 MM
	T159337	RING	1		X	X	X	16.98 MM
	.....	RING	1		X	X	X	17.01 MM
	T159338	RING	1		X	X	X	17.04 MM
	.....	RING	1		X	X	X	17.07 MM
	T159329	RING	1		X	X	X	17.10 MM
	T159330	RING	1		X	X	X	17.20 MM
	T159331	RING	1		X	X	X	17.30 MM
	T159332	RING	1		X	X	X	17.40 MM
5	AL79794	TAPERED ROLLER BEARING	1		X	X	X	
6	AT179537	SEAL	1		X	X	X	
7	T158437	UNIVERSAL JOINT YOKE	1	-902702	X	X	X	
	T188229	UNIVERSAL JOINT YOKE	1	902703-	X	X	X	
8	T159316	WASHER	1		X	X	X	
9	T159317	NUT	1		X	X	X	

DIFFERENTIAL LOCK PLUMBING

T154477 -UN-30APR02

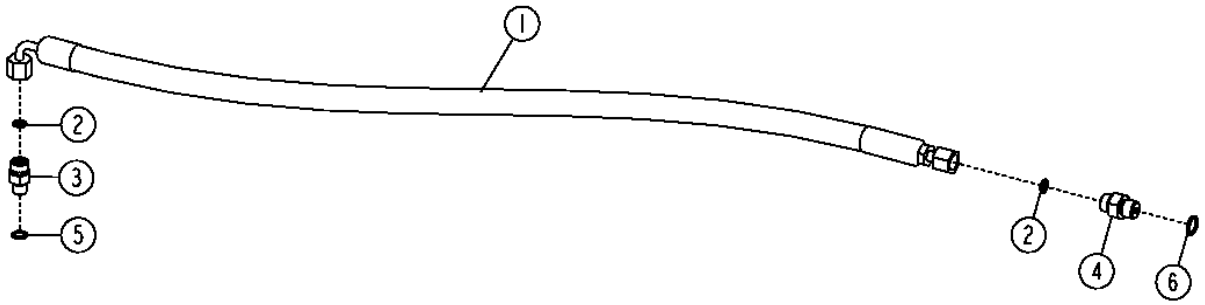

T154477

KEY	PART NO.	PART NAME	QTY	SERIAL NO.	REMARKS
1	AT171637	HYDRAULIC HOSE - FABRICATE	1	-951252	9/16" X 915 MM (36") X 9/16"
	AT309683	HYDRAULIC HOSE - FABRICATE	1	951253-	9/16" X 934 MM (36-3/4") X 9/16"
2	T77814	O-RING	2		
3	38H1159	ADAPTER FITTING	1	-951252	
	38H1003	ELBOW FITTING	1	951253-	90 DEGREE
4	38H1168	ADAPTER FITTING	1		
5	R28782	O-RING	1		
6	R26448	O-RING	1		

TIE ROD ASSEMBLY
(WITHOUT MECHANICAL FRONT WHEEL DRIVE)
(SERIAL NO. -911131)

TP15881 -UN-01JAN94

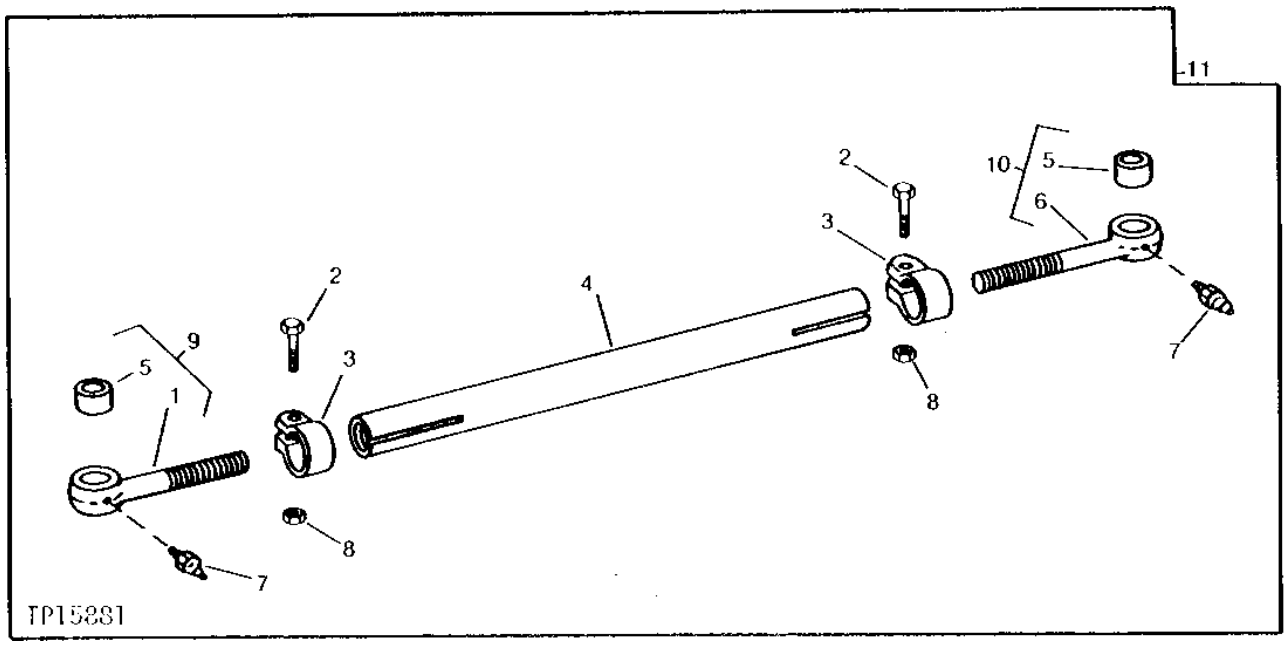

KEY	PART NO.	PART NAME	QTY	SERIAL NO.	310G	315SG	REMARKS
1	.....	BOLT	1		X	X X	LEFT (LEFT-HAND THREAD)
2	19H3208	CAP SCREW	2		X	X X	5/8" X 3"
3	T69360	CLIP	2		X	X X	
4	T81963	TUBE	1		X	X X	
5	T79786	BUSHING	2		X	X X	
6	.....	BOLT	1		X	X X	RIGHT (RIGHT-HAND THREAD)
7	JD7797	LUBRICATION FITTING	2		X	X X	1/4"
8	U14555	LOCK NUT	2		X	X X	
9	AT79756	BOLT	1		X	X X	LEFT (LEFT-HAND THREAD)
10	AT79755	BOLT	1		X	X X	RIGHT (RIGHT-HAND THREAD)
11	AT79754	TIE ROD	1		X	X X	

FRONT AXLE, SPINDLE AND KNUCKLE ASSEMBLY
(WITHOUT MECHANICAL FRONT WHEEL DRIVE)
(SERIAL NO. -911131)

TP58040 -UN-04JUN99

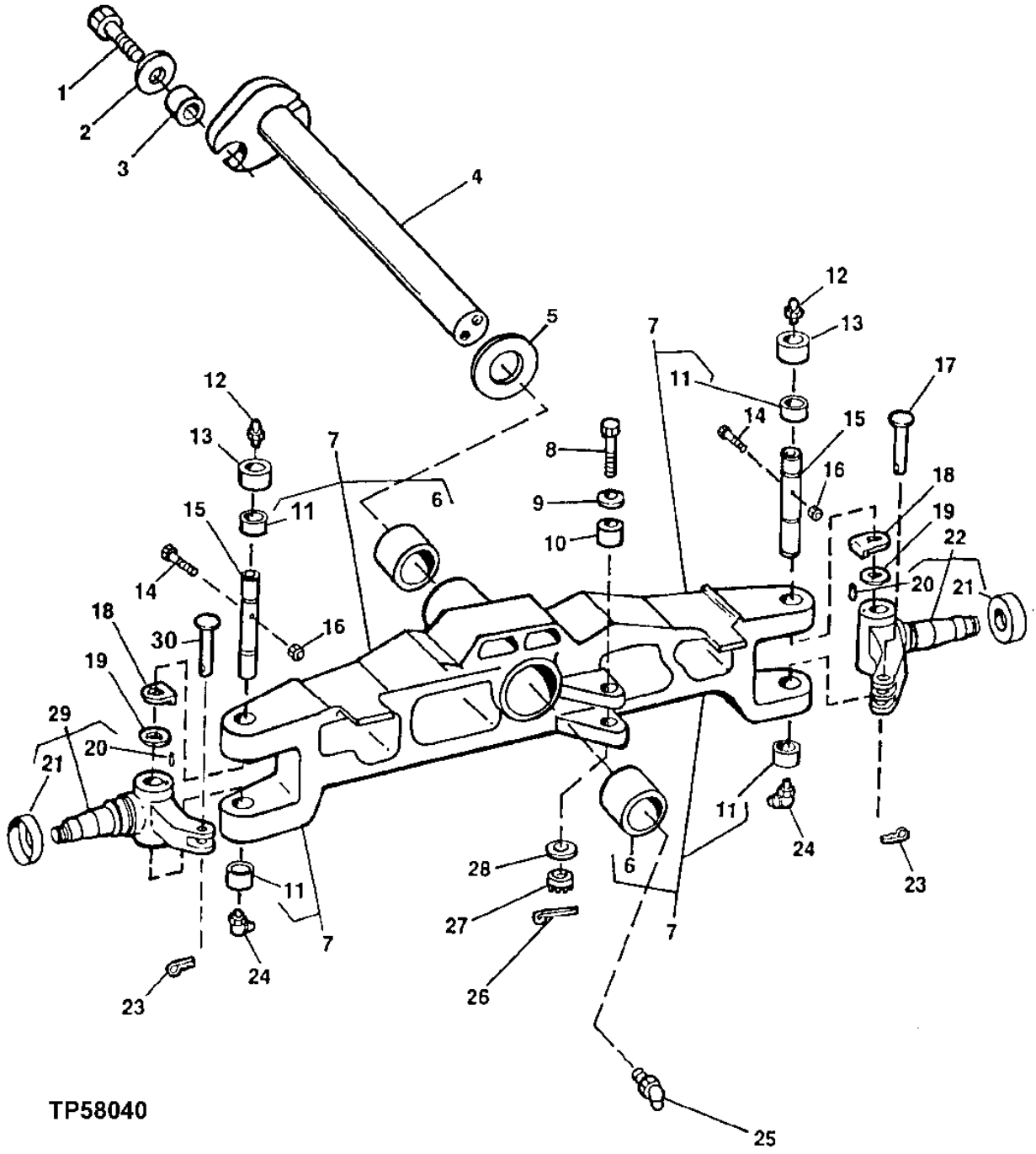

FRONT AXLE, SPINDLE AND KUNCKLE ASSEMBLY
(WITHOUT MECHANICAL FRONT WHEEL DRIVE)
(SERIAL NO. -911131)

KEY	PART NO.	PART NAME	QTY	SERIAL NO.	310G	310SG	315SG	REMARKS
1	19M7488	CAP SCREW	1		X	X	X	M16 X 40
2	T119912	WASHER	1		X	X	X	
3	T18145	BUSHING	1		X	X	X	
4	AT164442	PIN	2		X	X	X	
5	R46973	THRUST WASHER	AR		X	X	X	
6	T140211	BUSHING	2		X	X	X	
7	.....	FRONT AXLE	1		X	X	X	(AT176216 NO LONGER AVAILABLE) (MARKED T158828) (SUB AT307741) (ALSO ORDER AT197852 AND T125615)
8	19M6575	CAP SCREW	1		X	X	X	M12 X 110
9	24H1162	WASHER	2		X	X	X	17/32" X 1-1/4" X 0.060"
10	T100813	BUSHING	1		X	X	X	
11	T140207	BUSHING	4		X	X	X	
12	T162396	LUBRICATION FITTING	2		X	X	X	
13	T69027	SEAL	2		X	X	X	
14	19H3445	CAP SCREW	2		X	X	X	3/8" X 3-3/4"
15	T184816	KINGPIN	2		X	X	X	
16	T11234	LOCK NUT	2		X	X	X	
17	T69355	PIN	1		X	X	X	
18	T69364	THRUST WASHER	2		X	X	X	
19	T69363	THRUST WASHER	2		X	X	X	
20	34M7117	SPRING PIN	2		X	X	X	5 X 10 MM
21	R20255	DUST SHIELD	2		X	X	X	
22	AT182390	KNUCKLE	1		X	X	X	R.H. (MARKED T148467)
23	11M7030	COTTER PIN	2		X	X	X	5 X 40 MM
24	T162396	LUBRICATION FITTING	2		X	X	X	
25	JD7838	ADAPTER FITTING	2		X	X	X	
26	11M7086	COTTER PIN	1		X	X	X	2.500 X 50 MM
27	14M7184	NUT	1		X	X	X	M12
28	24H1162	WASHER	2		X	X	X	17/32" X 1-1/4" X 0.060"
29	AT182391	KNUCKLE	1		X	X	X	L.H. (MARKED T148468)
30	T69354	PIN	1		X	X	X	

FRONT WHEEL HUB
(WITHOUT MECHANICAL FOUR WHEEL DRIVE)
(SERIAL NO. -911131)

TP3225 -UN-01JAN94

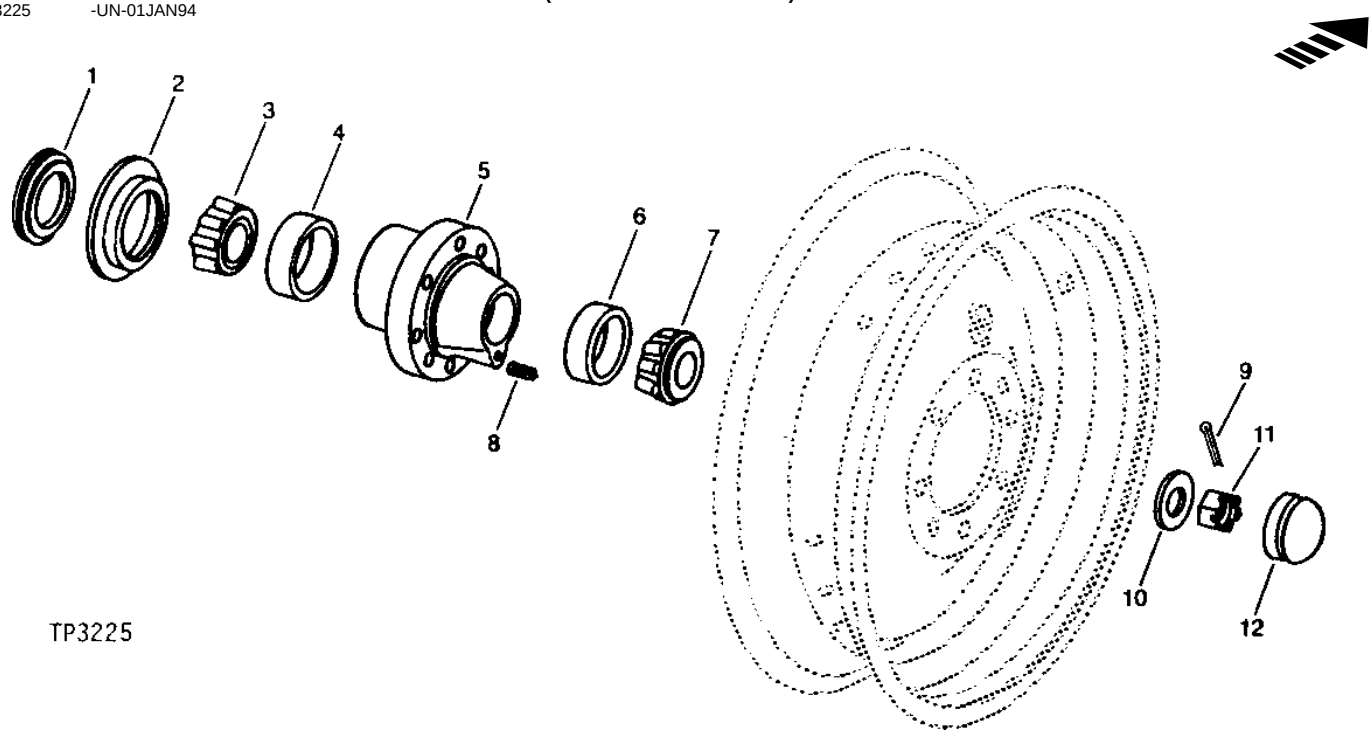

KEY	PART NO.	PART NAME	QTY	SERIAL NO.	310G	310SG	315SG	REMARKS
1	AR26480	SEAL	1		X	X	X	
2	R26632	BUSHING	1		X	X	X	
3	JD9041	BEARING CONE	1		X	X	X	
4	JD9170	BEARING CUP	1		X	X	X	
5	R49841	HUB	1		X	X	X	
6	JD8251	BEARING CUP	1		X	X	X	
7	JD8929	BEARING CONE	1		X	X	X	
8	22H841	SET SCREW	1		X	X	X	1/4" X 1/4"
9	11M7030	COTTER PIN	1		X	X	X	5 X 40 MM
10	T75506	WASHER	1		X	X	X	
11	14M7519	NUT	1		X	X	X	M24
12	R50992	CAP	1		X	X	X	

STANDARD FRONT AXLE
(WITHOUT MECHANICAL FRONT WHEEL DRIVE)
(SERIAL NO. 911132-)

T196995 -UN-07JAN04

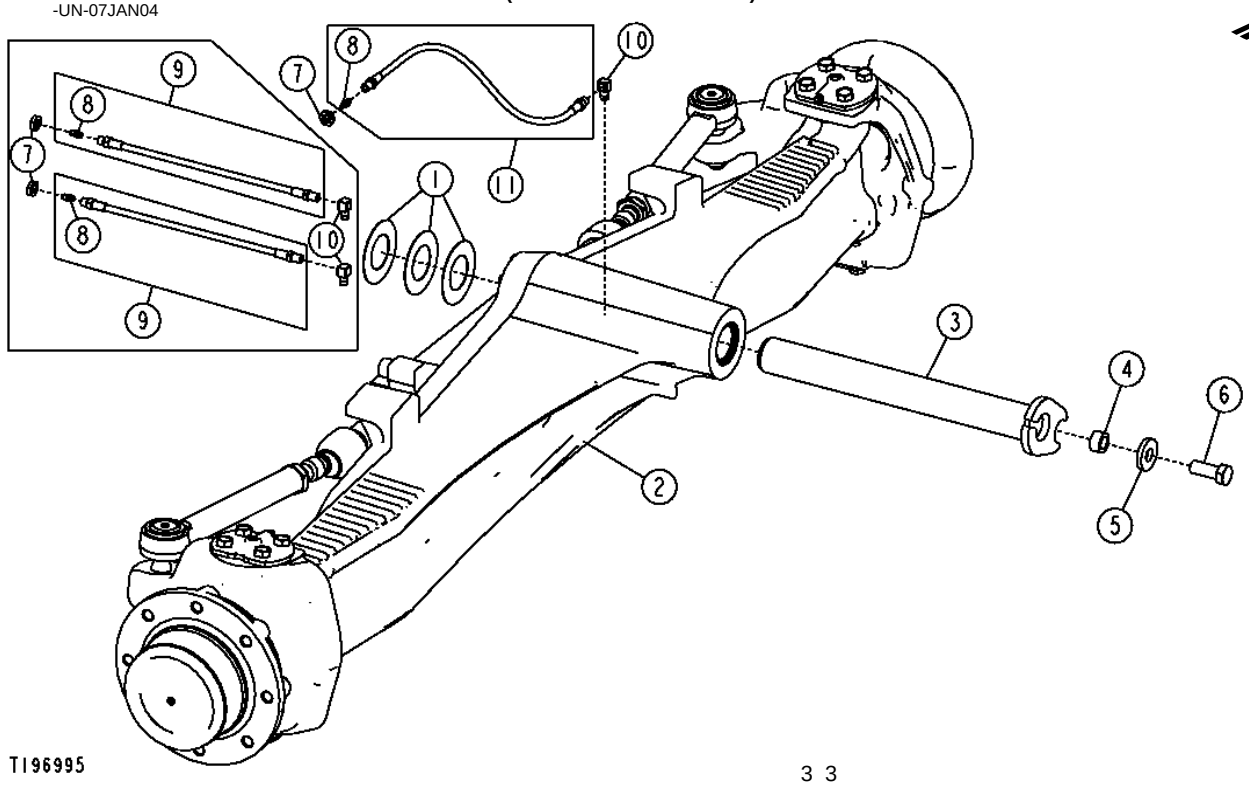

KEY	PART NO.	PART NAME	QTY	SERIAL NO.	310G	315SG	REMARKS
1	R46973	THRUST WASHER	3		X X X		
2	.....	FRONT AXLE	1	-926720	X X X		(AT196428 NO LONGER AVAILABLE) (SUB AT307741) (ALSO ORDER T125615)
							(COMPONENTS ON FOLLOWING PAGES)
	AT307741	FRONT AXLE	1	926721-	X X X		CONVENIENCE ASSEMBLY
3	AT164442	PIN	1	-926720	X X X		
	AT306684	PIN	1	926721-	X X X		
4	T18145	BUSHING	1		X X X		
5	T119912	WASHER	1		X X X		
6	19M7488	CAP SCREW	1		X X X		M16 X 40
7	E12379	NUT	2		X X X		
8	JD7797	LUBRICATION FITTING	2		X X X		
9	AT173254	HYDRAULIC HOSE	2	-926720	X X X		
10	JD7838	ADAPTER FITTING	2		X X X		
11	AT224949	HOSE	1	926721-	X X X		STANDARD AND MFWD AXLE

STANDARD FRONT AXLE HOUSING
(WITHOUT MECHANICAL FRONT WHEEL DRIVE)
(SERIAL NO. 911132-)

T188859 -UN-27MAR03

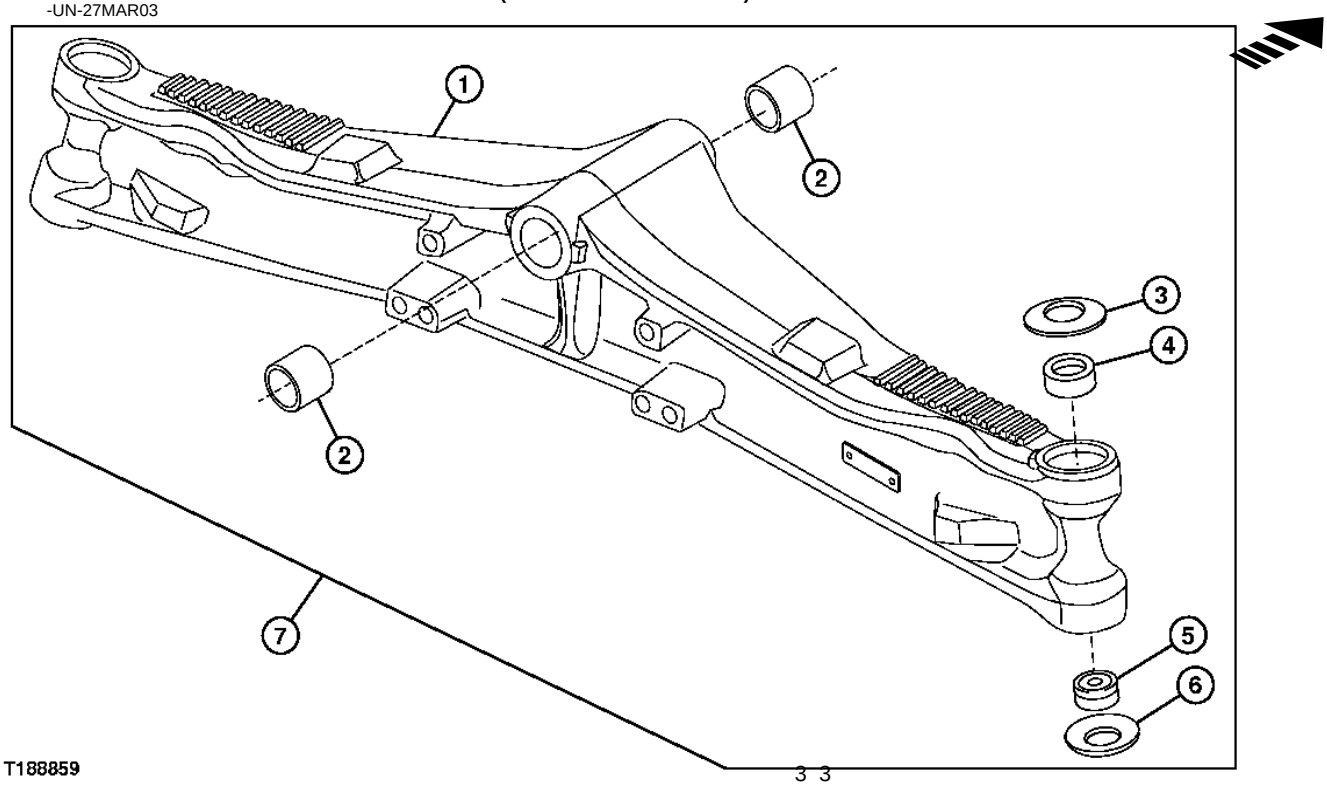

T188859

KEY	PART NO.	PART NAME	QTY	SERIAL NO.	310G	310SG	315SG	REMARKS
1	T206520	AXLE	1		X	X	X	(SUB FOR T190750)
2	T202499	BUSHING	2		X	X	X	(SUB FOR (2) T140211, THIS APPLICATION)
3	R121593	WASHER	2		X	X	X	
4	R204271	BUSHING	2		X	X	X	(SUB FOR R113780, THIS APPLICATION)
5	RE45896	BEARING	2		X	X	X	
6	R121594	WASHER	2		X	X	X	
7	.....	FRONT AXLE	1	-926720	X	X	X	(AT196428 NO LONGER AVAILABLE) (SUB AT307741) (ALSO ORDER T125615) (ADDITIONAL COMPONENTS ON FOLLOWING PAGES)
	AT307741	FRONT AXLE	1	926721-	X	X	X	CONVENIENCE ASSEMBLY

SWIVEL HOUSINGS AND STEERING CYLINDER
(WITHOUT MECHANICAL FRONT WHEEL DRIVE)
(SERIAL NO. 911132-)

T188860 -UN-27MAR03

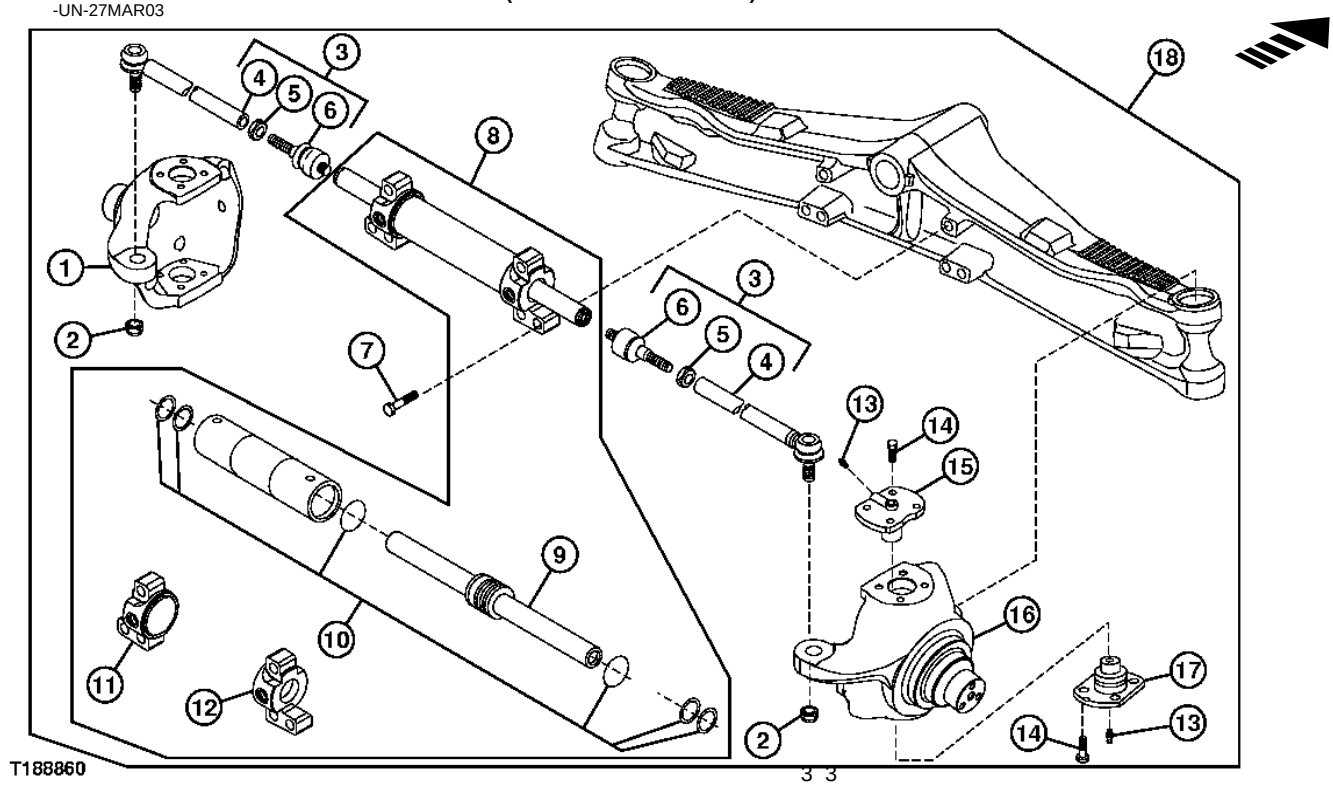

KEY	PART NO.	PART NAME	QTY	SERIAL NO.	310G	310SG	315SG	REMARKS
1	T190745	HOUSING	1		X	X	X	L.H.
2	AT280268	LOCK NUT	2		X	X	X	M20
3	AT198602	TIE ROD	2		X	X	X	
4	T191428	TIE ROD	2		X	X	X	
5	14M7309	NUT	2		X	X	X	M24
6	T191427	BALL JOINT	2		X	X	X	
7	T116290	BOLT	6		X	X	X	M20 X 80
8	AT198598	CYLINDER	1		X	X	X	
9	AT280869	ROD	1		X	X	X	
10	T191430	SEAL KIT	1		X	X	X	
11	.....	HYDRAULIC CYLINDER CAP	1		X	X	X	L.H.
12	.....	HYDRAULIC CYLINDER CAP	1		X	X	X	R.H.
13	R140070	LUBRICATION FITTING	4		X	X	X	
14	19M8011	CAP SCREW	16		X	X	X	M12 X 30
15	RE57471	TRUNNION	2		X	X	X	
	R122218	SPACER	AR		X	X	X	
16	T190746	HOUSING	1		X	X	X	R.H.
17	RE57472	TRUNNION	2		X	X	X	
18	.....	FRONT AXLE	1	-926720	X	X	X	CONVENIENCE ASSEMBLY (AT196428 NO LONGER AVAILABLE) (SUB AT307741) (ALSO ORDER T125615) (ADDITIONAL COMPONENTS ON PREVIOUS AND FOLLOWING PAGES)
	AT307741	FRONT AXLE	1	926721-	X	X	X	

WHEEL HUB
(WITHOUT MECHANICAL FRONT WHEEL DRIVE)
(SERIAL NO. 911132-)

T188861 -UN-27MAR03

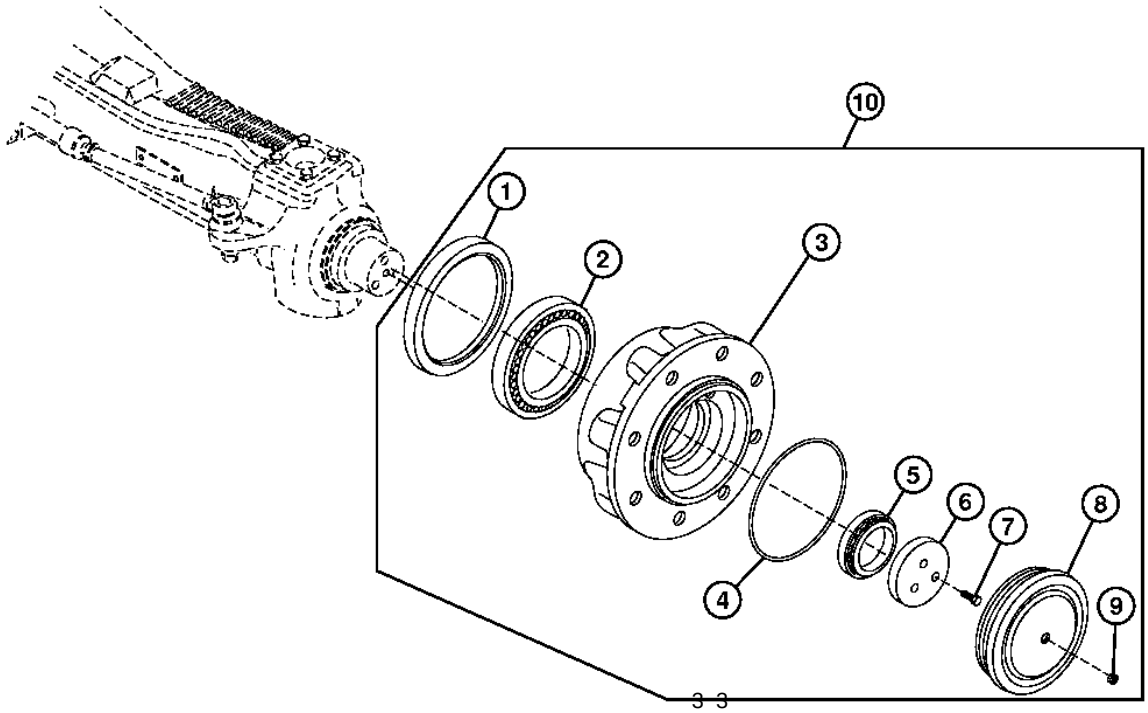

T188861

KEY	PART NO.	PART NAME	QTY	SERIAL NO.	310G	310SG	315SG	REMARKS
1	AT280866	SEAL	2		X	X	X	
2	AT196169	BEARING	2		X	X	X	
3	T190749	HUB	2		X	X	X	
4	T188441	O-RING	2		X	X	X	
5	JD10063	TAPERED ROLLER BEARING	2		X	X	X	
6	T188442	RING	2		X	X	X	
7	19M8011	CAP SCREW	6		X	X	X	M12 X 30
8	T188448	CAP	2		X	X	X	
9	R121079	PLUG	2		X	X	X	
10	.....	FRONT AXLE	1	-926720	X	X	X	(AT196428 NO LONGER AVAILABLE) (SUB AT307741) (ALSO ORDER T125615) (ADDITIONAL COMPONENTS ON PREVIOUS PAGES)
	AT307741	FRONT AXLE	1	926721-	X	X	X	CONVENIENCE ASSEMBLY

FRONT AXLE
(MECHANICAL FRONT WHEEL DRIVE)

TP57965 -UN-11NOV98

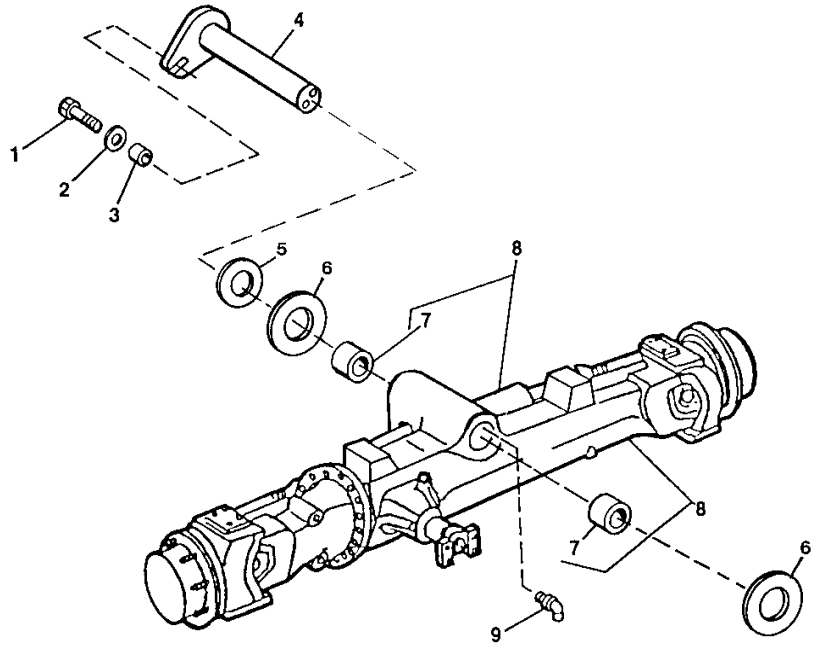

TP57965

KEY	PART NO.	PART NAME	QTY	SERIAL NO.	310G	315SG	REMARKS
1	19M7488	CAP SCREW	1		X X X		M16 X 40
2	T119912	WASHER	1		X X X		
3	T18145	BUSHING	1		X X X		
4	AT164442	PIN	1	-928777	X X X		
	AT306684	PIN	1	928778-	X X X		
5	R46973	THRUST WASHER	AR		X X X		45.212 X 82.550 X 0.914 MM
6	T80027	THRUST WASHER	2		X X X		
7	T140211	BUSHING	2		X X X		
8	.....	FRONT AXLE	1	-928777	X		(AT178113 NO LONGER AVAILABLE) (SUB AT307737) (ALSO ORDER T125615)
	AT307737	FRONT AXLE	1	928778-	X		
	.....	FRONT AXLE	1	-928777		X X	(AT171134 NO LONGER AVAILABLE) (SUB AT307739) (ALSO ORDER T125615)
	AT307739	FRONT AXLE	1	928778-		X X	
9	JD7838	LUBRICATION FITTING	2		X X X		

DRIVE SHAFT
(MECHANICAL FRONT WHEEL DRIVE)

TP57917 -UN-10SEP98

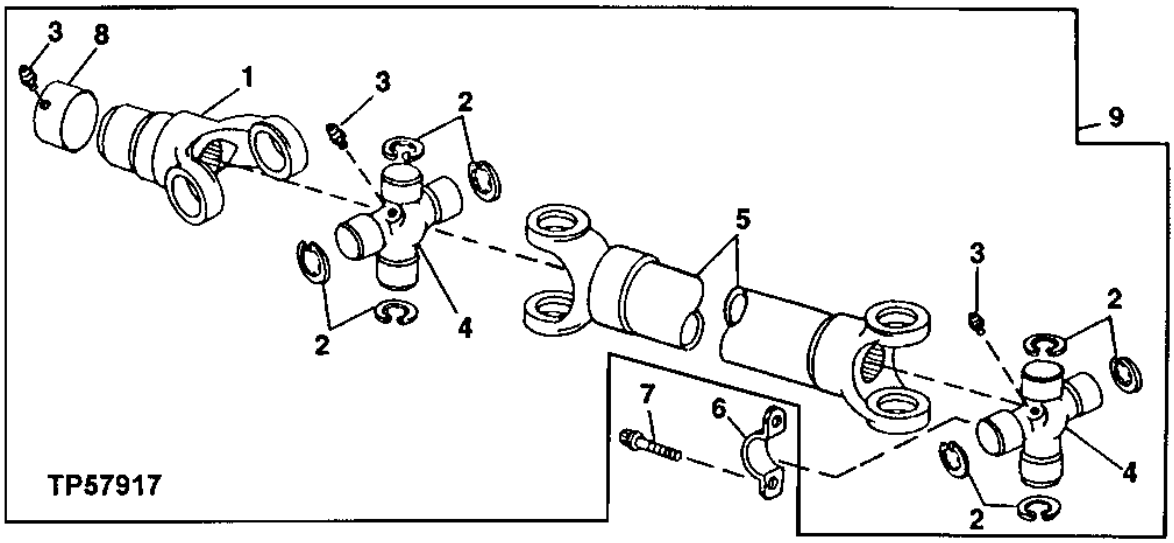

KEY	PART NO.	PART NAME	QTY	SERIAL NO.	310G	310SG	315SG	REMARKS
1	AT179596	UNIVERSAL JOINT YOKE	1		X	X	X	
2	N119316	SNAP RING	6		X	X	X	
3	JD7797	LUBRICATION FITTING	1		X	X	X	
4	AT178387	KIT	2		X	X	X	(U-JOINT) GREASEABLE
	AT178389	KIT	2		X	X	X	(U-JOINT) LUBED FOR LIFE
5	.....	DRIVE SHAFT	1		X	X	X	
6	T69938	HALF CLAMP	2		X	X	X	
7	T113128	SCREW	4		X	X	X	
8	AT179590	SEAL	1		X	X	X	(SLIDING YOKE)
9	AT182735	UNIVERSAL DRIVESHAFT	1		X	X	X	LUBED FOR LIFE

MEMORANDA

FRONT AXLE HOUSING AND TIE RODS
(MECHANICAL FRONT WHEEL DRIVE)

TP58193 -UN-22MAR00

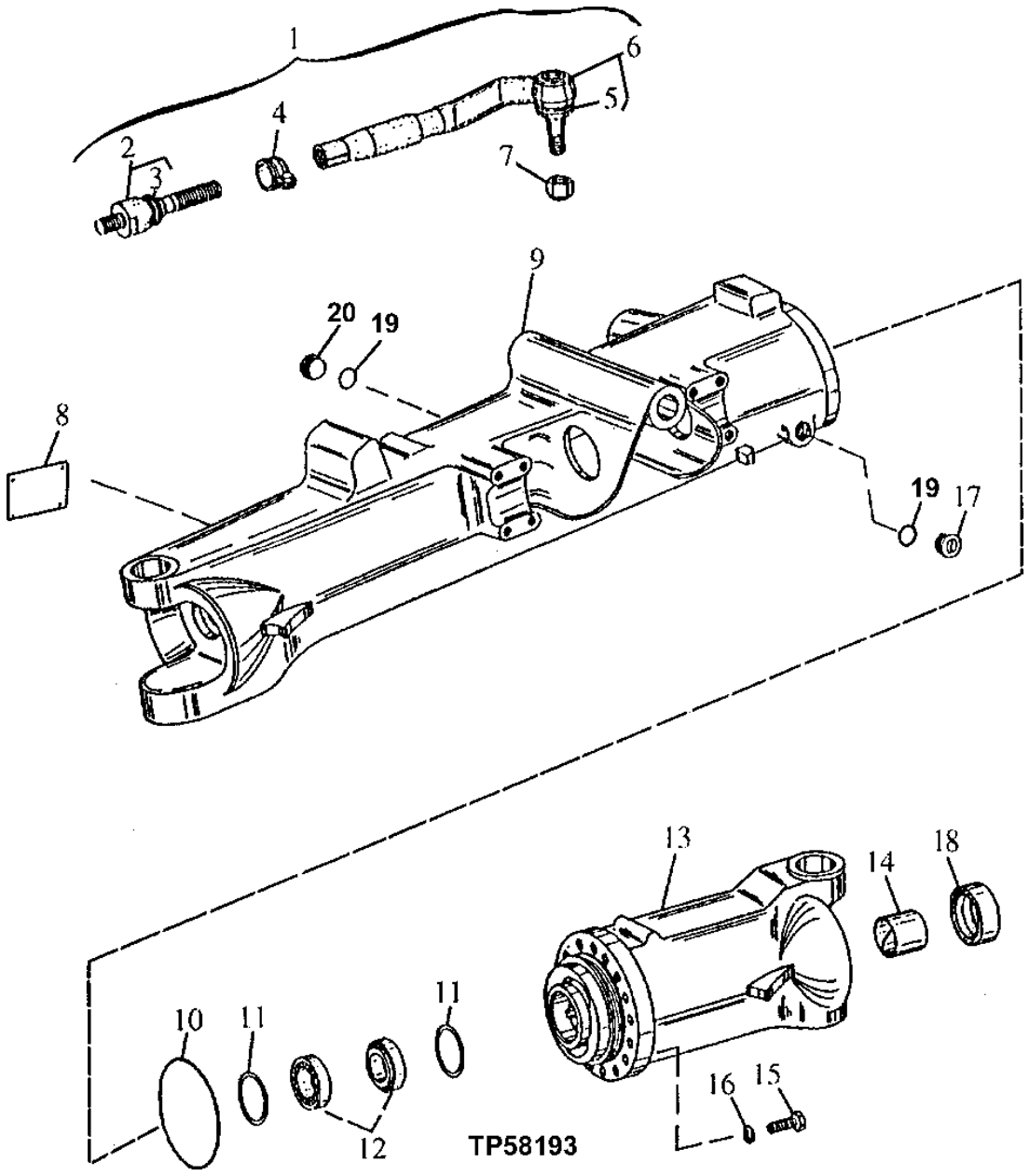

FRONT AXLE HOUSING AND TIE RODS
(MECHANICAL FRONT WHEEL DRIVE)

KEY	PART NO.	PART NAME	QTY	SERIAL NO.	310G	310SG	315SG	REMARKS
1	AT309304	TIE ROD	1		X	X	X	L.H. (ALSO ORDER L55605) (SUB FOR AT170205)
	AT309303	TIE ROD	1		X	X	X	R.H. (NOT ILLUSTRATED) (ALSO ORDER L55605) (SUB FOR AT170204)
2	AL80542	TIE ROD	1		X	X	X	END
3	AL113451	BOOT	1		X	X	X	
4	AT309307	CLAMP	1		X	X	X	(SUB FOR AT170209)
	L55605	NUT	1		X	X	X	M24
5	AL113460	BOOT	1		X	X	X	
6	AT309305	TIE ROD	1		X	X	X	L.H. (ALSO ORDER L55605) (SUB FOR AT170206)
	AT309306	TIE ROD	1		X	X	X	R.H. (NOT ILLUSTRATED) (ALSO ORDER L55605) (SUB FOR AT170208)
7	14M7513	LOCK NUT	1		X	X	X	M22
8	.....	SERIAL NUMBER PLATE	1		X	X	X	
9	T206432	HOUSING	1		X	X	X	R.H. (SUB FOR T151262)
10	L40306	O-RING	1		X	X	X	
11	L100141	WASHER	AR		X	X	X	1.15MM (0.0453")
	L100145	WASHER	AR		X	X	X	1.35MM (0.0531")
	L61263	WASHER	AR		X	X	X	1.50MM (0.0591")
	L61267	WASHER	AR		X	X	X	1.70MM (0.0669)
	L61271	WASHER	AR		X	X	X	1.90MM (0.0748")
	L61275	WASHER	AR		X	X	X	2.10MM (0.0827")
	T183518	SOLID SHIM	AR		X	X	X	2.65MM
	T183519	SOLID SHIM	AR		X	X	X	2.70MM
	T183520	SOLID SHIM	AR		X	X	X	2.75MM
	T183521	SOLID SHIM	AR		X	X	X	2.80MM
	T183522	SOLID SHIM	AR		X	X	X	2.85MM
	T183523	SOLID SHIM	AR		X	X	X	2.90MM
	T183524	SOLID SHIM	AR		X	X	X	2.95MM
	T183525	SOLID SHIM	AR		X	X	X	3.00MM
	T183526	SOLID SHIM	AR		X	X	X	3.10MM
	T183527	SOLID SHIM	AR		X	X	X	3.35MM
	T183528	SOLID SHIM	AR		X	X	X	3.40MM
12	AL79808	TAPERED ROLLER BEARING	2		X	X	X	
13	T151089	HOUSING	1		X	X	X	L.H.
14	L114558	BUSHING	2		X	X	X	
15	T151261	CAP SCREW	15		X	X	X	
16	L40014	WASHER	15		X	X	X	15 X 23.700 X 3 MM
17	L56822	PIPE PLUG	1		X	X	X	
18	L110233	SEAL	2		X	X	X	
19	L55580	O-RING	2		X	X	X	
20	15M7030	PIPE PLUG	1		X	X	X	

FRONT AXLE HOUSINGS,HUBS AND UNIVERSAL JOINTS
(MECHANICAL FRONT WHEEL DRIVE)

T144555 -UN-14AUG01

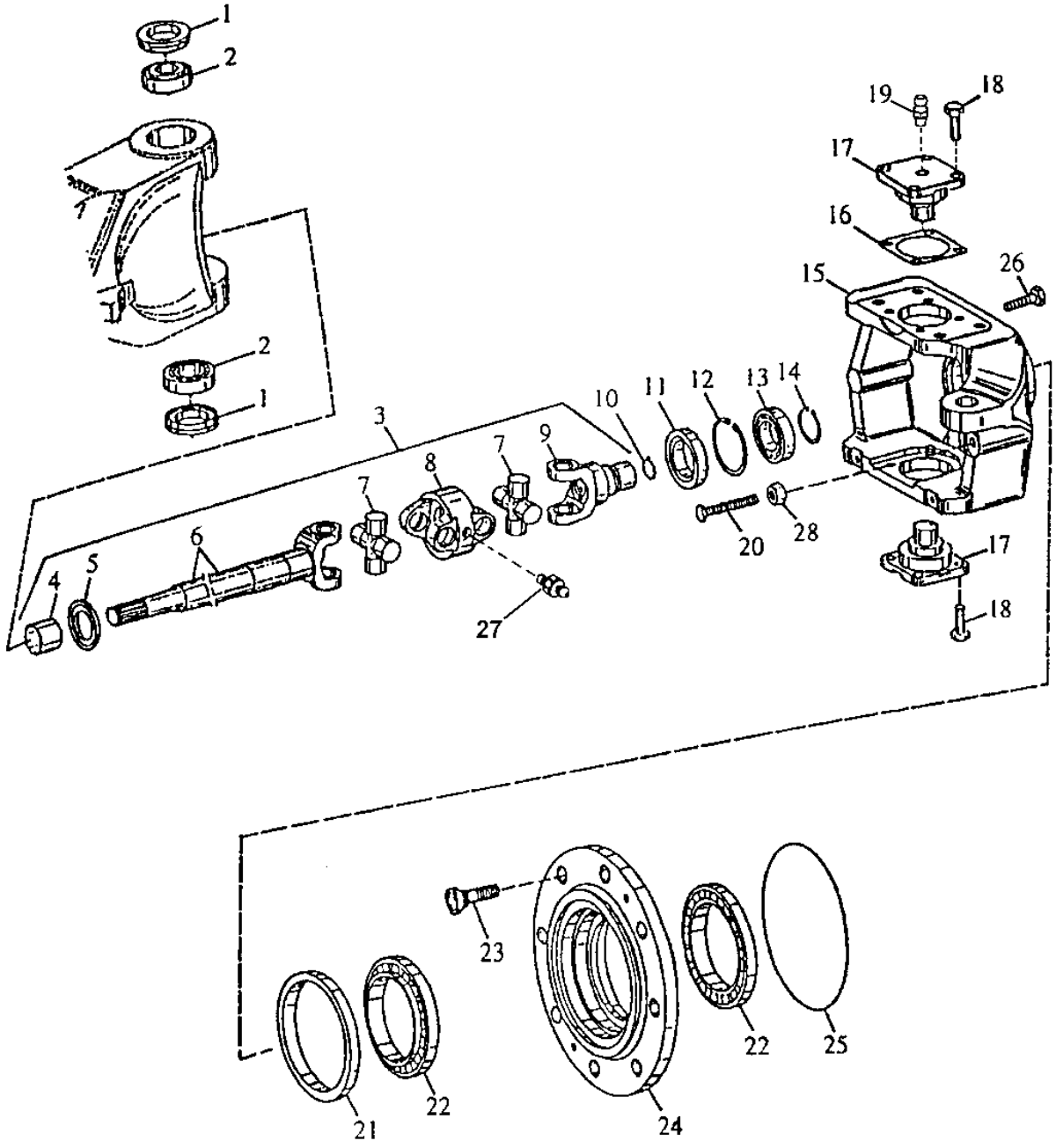

T144555

FRONT AXLE HOUSINGS,HUBS AND UNIVERSAL JOINTS
(MECHANICAL FRONT WHEEL DRIVE)

KEY	PART NO.	PART NAME	QTY	SERIAL NO.	310G	310SG	315SG	REMARKS
1	AL79902	SEAL	2		X	X	X	
2	AL79901	TAPERED ROLLER BEARING	2		X	X	X	
3	AT167118	UNIVERSAL DRIVESHAFT	1		X	X	X	L.H.
	AT167119	UNIVERSAL DRIVESHAFT	1		X	X	X	R.H. (NOT ILLUSTRATED)
4	L100636	BUSHING	1		X	X	X	
5	L100635	SHEET	1		X	X	X	
6	T153722	SHAFT	1		X	X	X	L.H.
	T153721	SHAFT	1		X	X	X	R.H. (NOT ILLUSTRATED)
7	L100632	CROSS AND BEARING ASSEMBLY	2		X	X	X	
8	L100633	YOKE	1		X	X	X	
9	T153720	UNIVERSAL JOINT	1		X	X	X	
10	L40276	SNAP RING	1		X	X	X	
11	AL79951	SEAL	1		X	X	X	
12	40M5099	SNAP RING	1		X	X	X	
13	R115119	BALL BEARING	1		X	X	X	
14	T151264	SNAP RING	1		X	X	X	
15	T151088	HOUSING	1		X	X	X	L.H.
	T151087	HOUSING	1		X	X	X	R.H. (NOT ILLUSTRATED)
16	L100102	SHIM	AR		X	X	X	0.2 MM
	T166150	SHIM	AR		X	X	X	0.5 MM
	T166149	SHIM	AR		X	X	X	0.7 MM
	L100106	SHIM	AR		X	X	X	0.8 MM
	T166145	SHIM	AR		X	X	X	0.9 MM
	T166148	SHIM	AR		X	X	X	1.1 MM
	T166147	SHIM	AR		X	X	X	1.2 MM
	T166146	SHIM	AR		X	X	X	1.3 MM
	L100109	SHIM	AR		X	X	X	1.6 MM
17	T188397	PIN	2		X	X	X	(SUB FOR T151074, THIS APPLICATION) (ALSO ORDER 58M5573)
18	19M8011	CAP SCREW	8		X	X	X	
19	58M5573	LUBRICATION FITTING	2		X	X	X	
20	L100239	SCREW	1		X	X	X	
21	AL79950	SEAL	1		X	X	X	
22	JD10249	TAPERED ROLLER BEARING	2		X	X	X	
23	L55598	WHEEL BOLT	8		X	X	X	
24	L100238	HUB	1		X	X	X	
25	L40317	O-RING	1		X	X	X	
26	19M8738	CAP SCREW	8		X	X	X	M10 X 45, RING GEAR TO HOUSING
27	58M5574	LUBRICATION FITTING	2		X	X	X	
28	14M7345	NUT	1		X	X	X	M14

PLANETARY DRIVE
(MECHANICAL FRONT WHEEL DRIVE)

TP57920 -UN-09SEP98

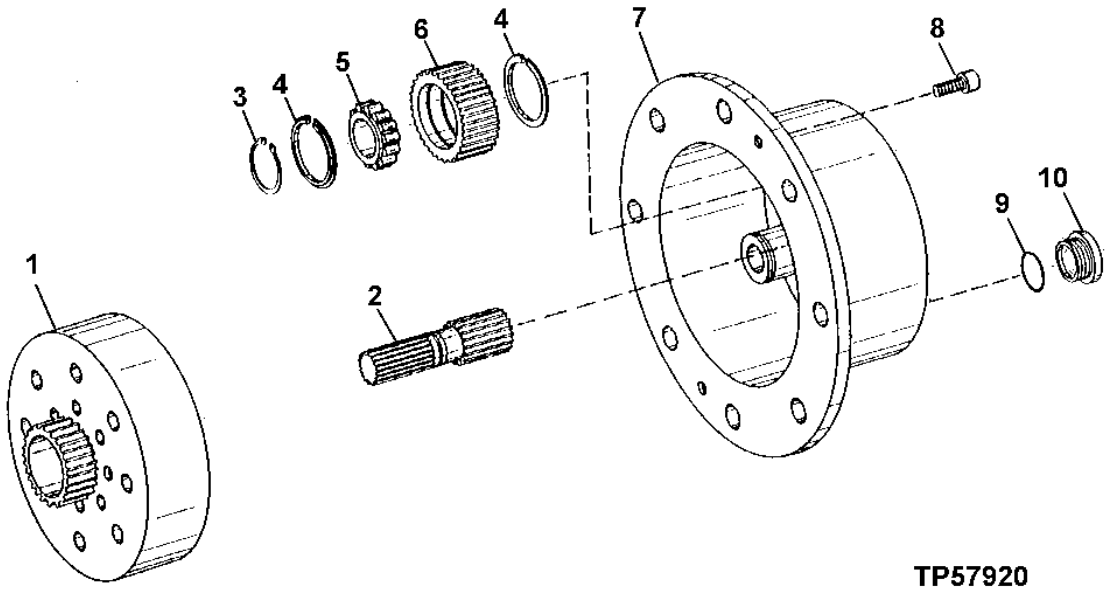

KEY	PART NO.	PART NAME	QTY	SERIAL NO.	310G	315SG	REMARKS
1	L110235	RING GEAR	1		X	X X	
2	T151065	PINION SHAFT	1		X	X X	
3	40M4624	SNAP RING	3		X	X X	
4	L41159	SNAP RING	6		X	X X	
5	JD10250	CYLINDRICAL ROLLER BEARING	3		X	X X	
6	L79728	PLANET PINION	3		X	X X	
7	L100168	PLANET PINION CARRIER	1		X	X X	
8	19M5039	SCREW	2		X	X X	M10 X 20
9	L55580	O-RING	1		X	X X	
10	L100240	FITTING PLUG	1		X	X X	

OPEN DIFFERENTIAL
(MECHANICAL FRONT WHEEL DRIVE)
(310G)

TP57922 -UN-09SEP98

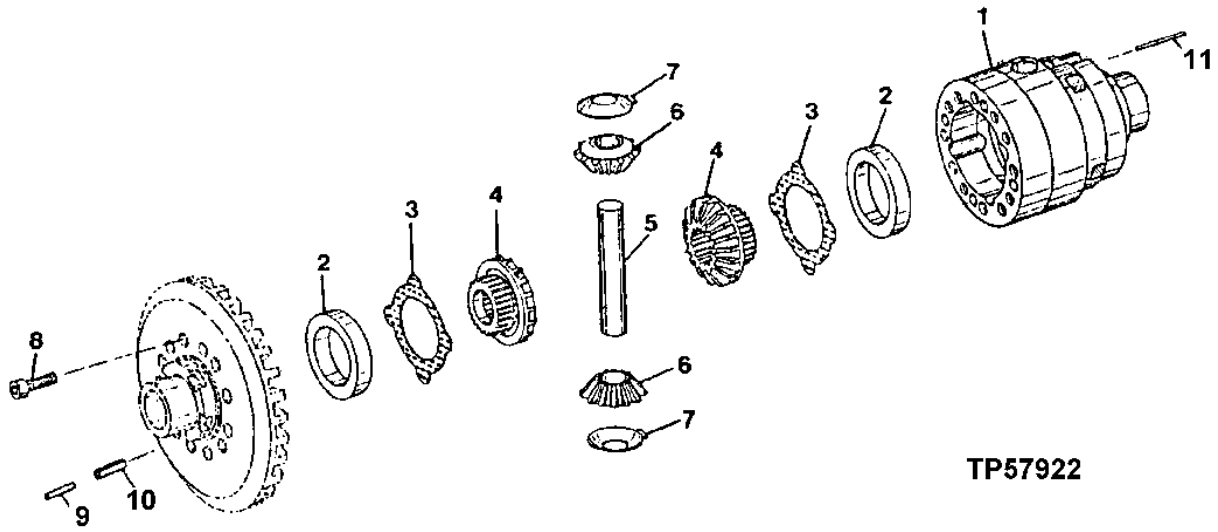

KEY	PART NO.	PART NAME	QTY	SERIAL NO.	310G	310SG	315SG	REMARKS
1	L112197	HOUSING	1		X			(ALSO ORDER 34M7119) (SUB FOR T151080)
2	T162043	SPACER	2		X			13.5 MM
	T162044	SPACER	2		X			13.6 MM
	T162045	SPACER	2		X			13.7 MM
3	T162046	THRUST WASHER	2		X			
4	T151075	BEVEL GEAR DRIVE	2		X			
5	L60104	PIN FASTENER	1		X			
6	T116851	BEVEL GEAR	2		X			
7	L60103	THRUST WASHER	2		X			
8	19M8533	SCREW	12		X			M10 X 25, (SUB FOR T151077)
9	34M7224	SPRING PIN	4		X			8 X 26 MM
10	L100158	SPRING PIN	4		X			
11	34M7119	SPRING PIN	1		X			5 X 65 MM, (USE WITH L112197)
	34M5723	SPRING PIN	1		X			5 X 55 MM, (USE WITH T151080)

LIMITED SLIP DIFFERENTIAL
(MECHANICAL FRONT WHEEL DRIVE)
(310SG AND 315SG)

TP44518 -UN-01JAN94

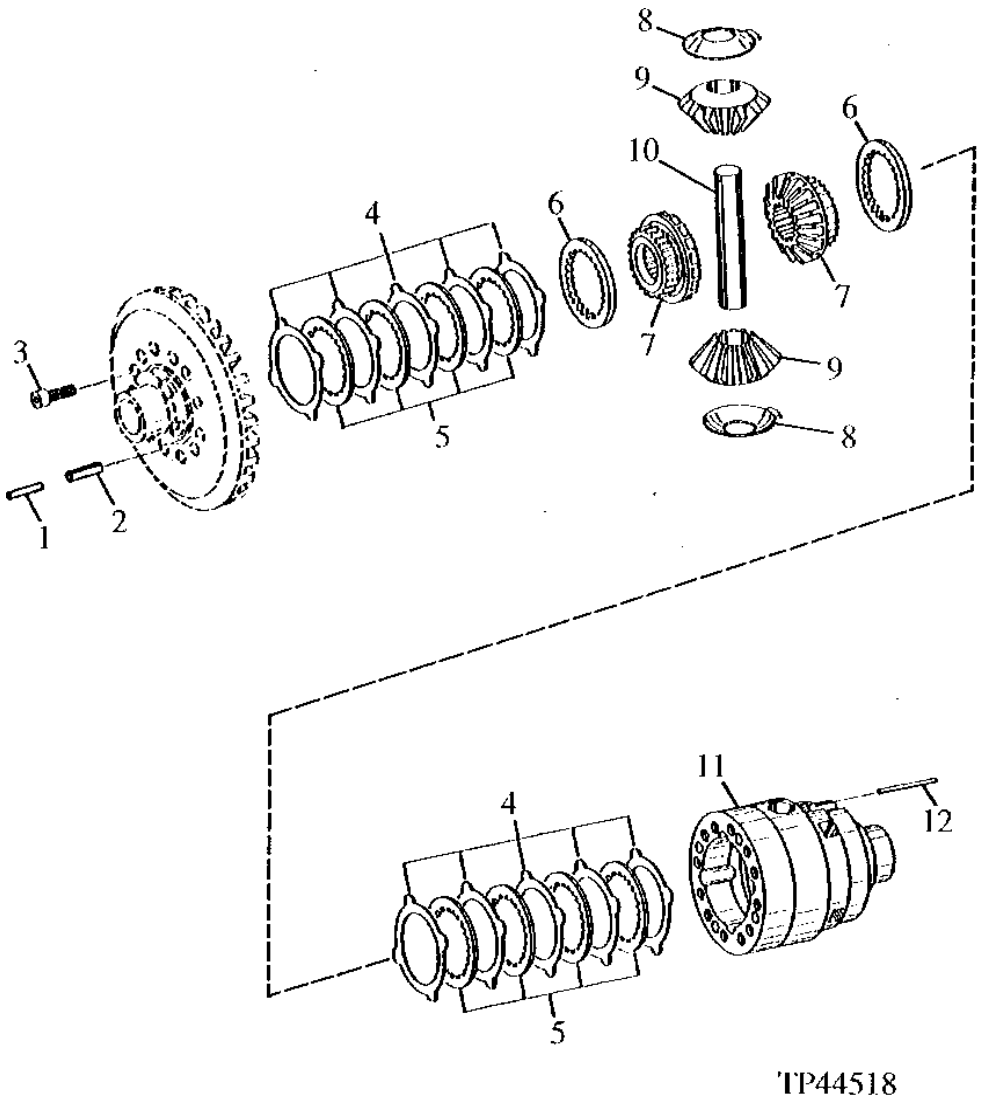

TP44518

LIMITED SLIP DIFFERENTIAL
(MECHANICAL FRONT WHEEL DRIVE)
(310SG AND 315SG)

KEY	PART NO.	PART NAME	QTY	SERIAL NO.	310G	310SG	315SG	REMARKS
1	34M7224	SPRING PIN	4			X	X	8 X 26 MM
2	L100158	SPRING PIN	4			X	X	
3	19M8533	SCREW	12			X	X	(SUB FOR T151077)
4	L100150	DISK WITH OUTER SPLINE	AR			X	X	1.0MM (0.0394")
	L100151	DISK WITH OUTER SPLINE	AR			X	X	1.1MM (0.0433")
	L100152	DISK WITH OUTER SPLINE	AR			X	X	1.2MM (0.0472")
5	L100153	DISK WITH INNER SPLINE	8			X	X	
6	L100154	THRUST WASHER	2			X	X	
7	T151075	BEVEL GEAR DRIVE	2			X	X	
8	L60103	THRUST WASHER	2			X	X	
9	T116851	BEVEL GEAR	2			X	X	
10	L60104	PIN FASTENER	1			X	X	
11	L112197	HOUSING	1			X	X	(ALSO ORDER 34M5723) (SUB FOR T151080)
12	34M5723	SPRING PIN	1			X	X	5 X 55 MM

SPIRAL BEVEL GEAR AND INPUT FLANGE
(MECHANICAL FRONT WHEEL DRIVE)

TP44517 -UN-01JAN94

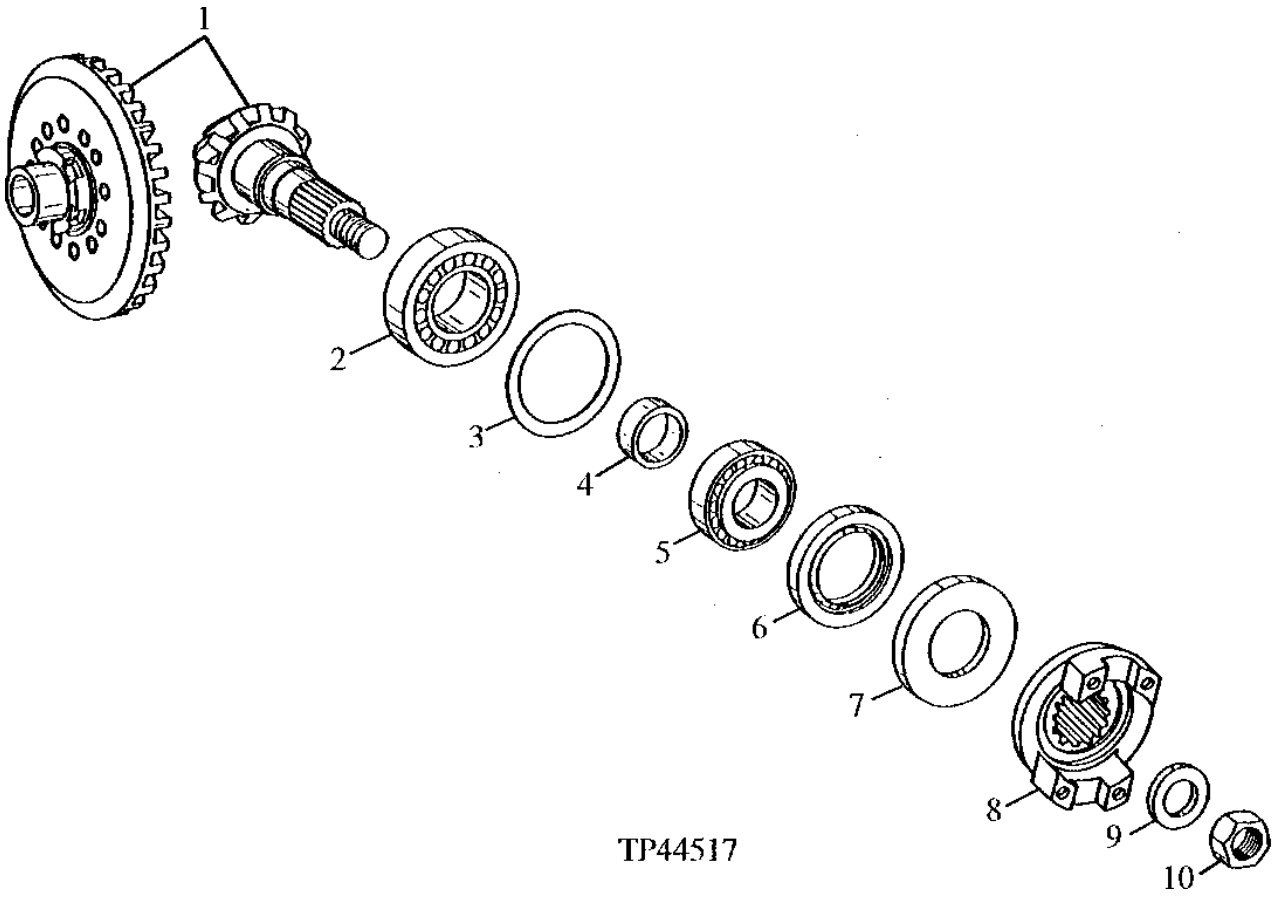

SPIRAL BEVEL GEAR AND INPUT FLANGE
(MECHANICAL FRONT WHEEL DRIVE)

KEY	PART NO.	PART NAME	QTY	SERIAL NO.	310G	310SG	315SG	REMARKS
1	AT178112	RING GEAR AND PINION	1		X			
	AT178002	BEVEL GEAR DRIVE	1			X	X	
2	AL79794	TAPERED ROLLER BEARING	1		X	X	X	
3	L55606	SHIM	AR		X	X	X	0.650 MM (0.026")
	L55610	WASHER	AR		X	X	X	72 X 88.600 X 0.850 MM (2.835" X 3.488" X 0.033")
	L40982	WASHER	AR		X	X	X	72 X 88.600 X 1 MM (2.835" X 3.488" X 0.039")
	L40985	WASHER	AR		X	X	X	72 X 88.600 X 1.150 MM (2.835" X 3.488" X 0.045")
	L40988	WASHER	AR		X	X	X	72 X 88.600 X 1.300 MM (2.835" X 3.488" X 0.051")
	L40991	WASHER	AR		X	X	X	72 X 88.600 X 1.450 MM (2.835" X 3.488" X 0.057")
	L40994	WASHER	AR		X	X	X	72 X 88.600 X 1.600 MM (2.835" X 3.488" X 0.063")
4	L100057	SPACER	AR		X	X	X	15.10MM (0.5945")
	L100092	SPACER	AR		X	X	X	15.33MM (0.6035")
	L100060	SPACER	AR		X	X	X	15.40MM (0.6063")
	L100089	SPACER	AR		X	X	X	15.46MM (0.6089")
	L100096	SPACER	AR		X	X	X	15.48MM (0.6094")
	L100086	SPACER	AR		X	X	X	15.63MM (0.6154")
	T183508	SPACER	AR		X	X	X	15.69MM
	L100063	SPACER	AR		X	X	X	15.70MM (0.6181")
	T183509	SPACER	AR		X	X	X	15.72MM
	L100083	SPACER	AR		X	X	X	15.76MM (0.6205")
	T183510	SPACER	AR		X	X	X	15.78MM
	T183511	SPACER	AR		X	X	X	15.81MM
	T183512	SPACER	AR		X	X	X	15.84MM
	T183513	SPACER	AR		X	X	X	15.88MM
	T183514	SPACER	AR		X	X	X	15.89MM
	T183515	SPACER	AR		X	X	X	15.91MM
	L100080	SPACER	AR		X	X	X	15.93MM (0.6272)
	T183516	SPACER	AR		X	X	X	15.94MM
	T183517	SPACER	AR		X	X	X	15.97MM
	L100066	SPACER	AR		X	X	X	16,00MM (0.6299")
	L100077	SPACER	AR		X	X	X	16.06MM (0.6323")
	L100074	SPACER	AR		X	X	X	16.23MM (0.6390")
	L100069	SPACER	AR		X	X	X	16.30MM (0.6417")
5	AL111096	BEARING	1		X	X	X	
6	AL79797	SEAL	1		X	X	X	(SUB FOR AT113921)
7	L100230	GUARD	1		X	X	X	
8	T151072	FLANGE	1		X	X	X	
9	L35714	WASHER	1		X	X	X	
10	14M7498	LOCK NUT	1		X	X	X	M24

MEMORANDA

**SHIFT FORKS AND SHIFT RAILS
SYNCHRO-SHUTTLE**

TP52793 -UN-19AUG96

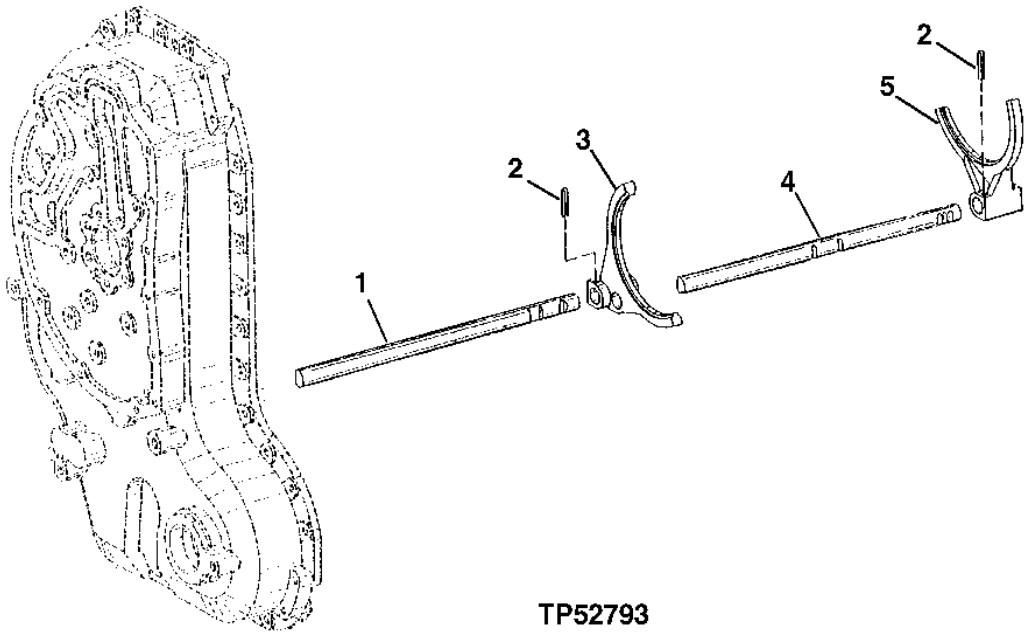

TP52793

KEY	PART NO.	PART NAME	QTY	SERIAL NO.	310G	315SG	REMARKS
1	T158817	SHIFTER	1		X	X X	1ST AND 2ND
2	T159578	SPRING PIN	4		X	X X	
3	T158815	SHIFTER	1		X	X X	1ST AND 2ND
4	T158818	SHIFTER	1		X	X X	3RD AND 4TH
5	T158816	SHIFTER	1		X	X X	3RD AND 4TH

**TRANSMISSION SHIFTER LEVER AND HOUSING
SYNCHRO-SHUTTLE**

T137914 -UN-08FEB01

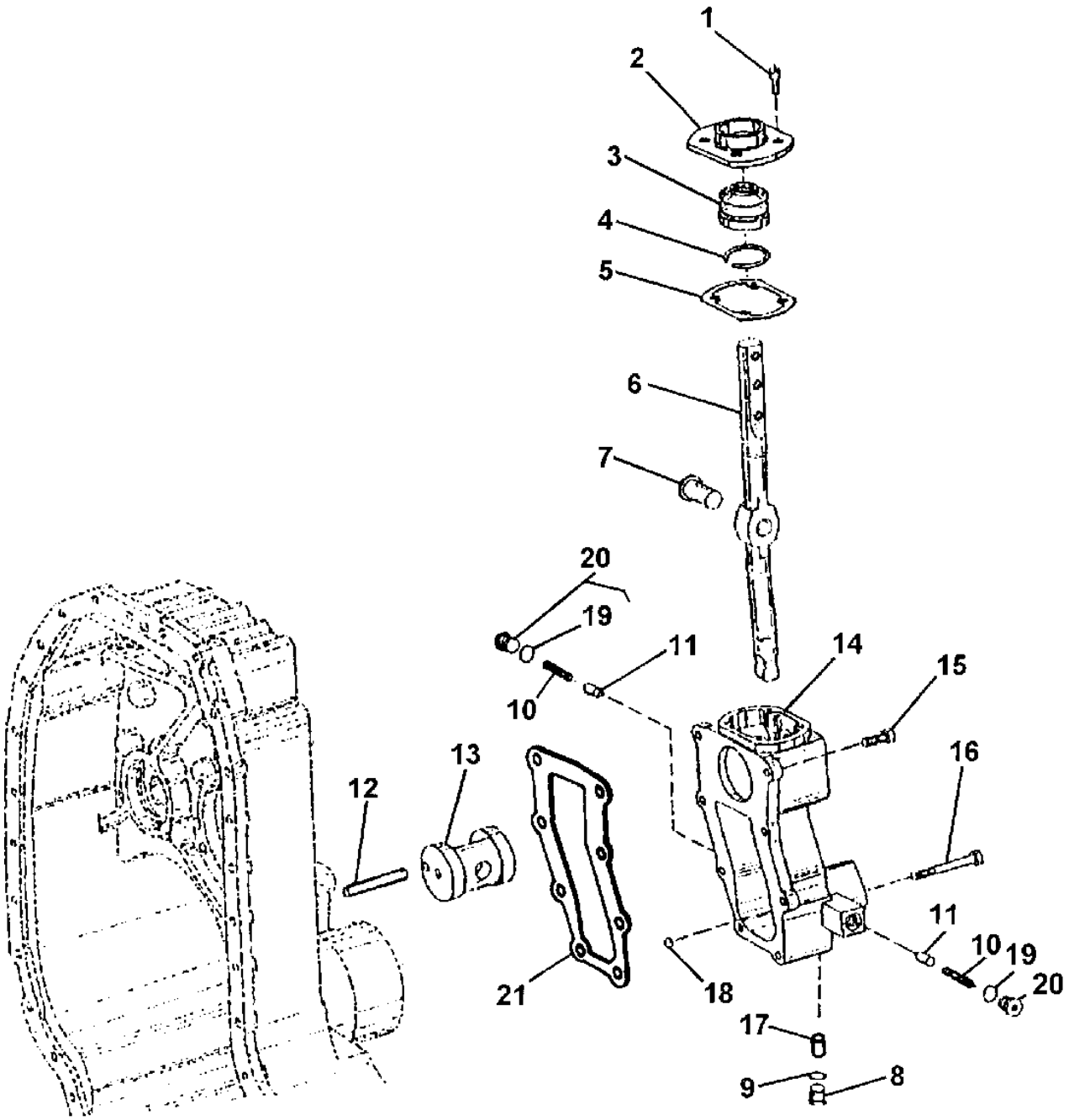

T137914

TRANSMISSION SHIFTER LEVER AND HOUSING
SYNCHRO-SHUTTLE

KEY	PART NO.	PART NAME	QTY	SERIAL NO.	310G	310SG	315SG	REMARKS
1	19M7768	SCREW	4		X	X	X	M6 X 16
2	T158785	COVER	1		X	X	X	
3	T158784	BOOT	1		X	X	X	
4	T158758	SNAP RING	1		X	X	X	
5	T158786	GASKET	1		X	X	X	
6	T154828	LEVER	1		X	X	X	
7	T158820	PIVOT	1		X	X	X	
8	AT183282	PLUG	1		X	X	X	
9	T74553	O-RING	AR		X	X	X	
10	T163869	SPRING	2		X	X	X	
11	T163868	PIN	2		X	X	X	
12	T158735	DOWEL PIN	1		X	X	X	
13	T158819	PIVOT	1		X	X	X	
14	T163867	SHIFTER	1		X	X	X	
15	19M7407	CAP SCREW	6		X	X	X	M8 X 25
16	19M7663	CAP SCREW	2		X	X	X	M8 X 70
17	T158734	DOWEL PIN	1		X	X	X	
18	L38730	BALL	1		X	X	X	
19	T74553	O-RING	2		X	X	X	
20	AT175750	PLUG	2		X	X	X	
21	T163870	GASKET	1		X	X	X	

TRANSMISSION CONTROL LEVER

T135287 -UN-08NOV00

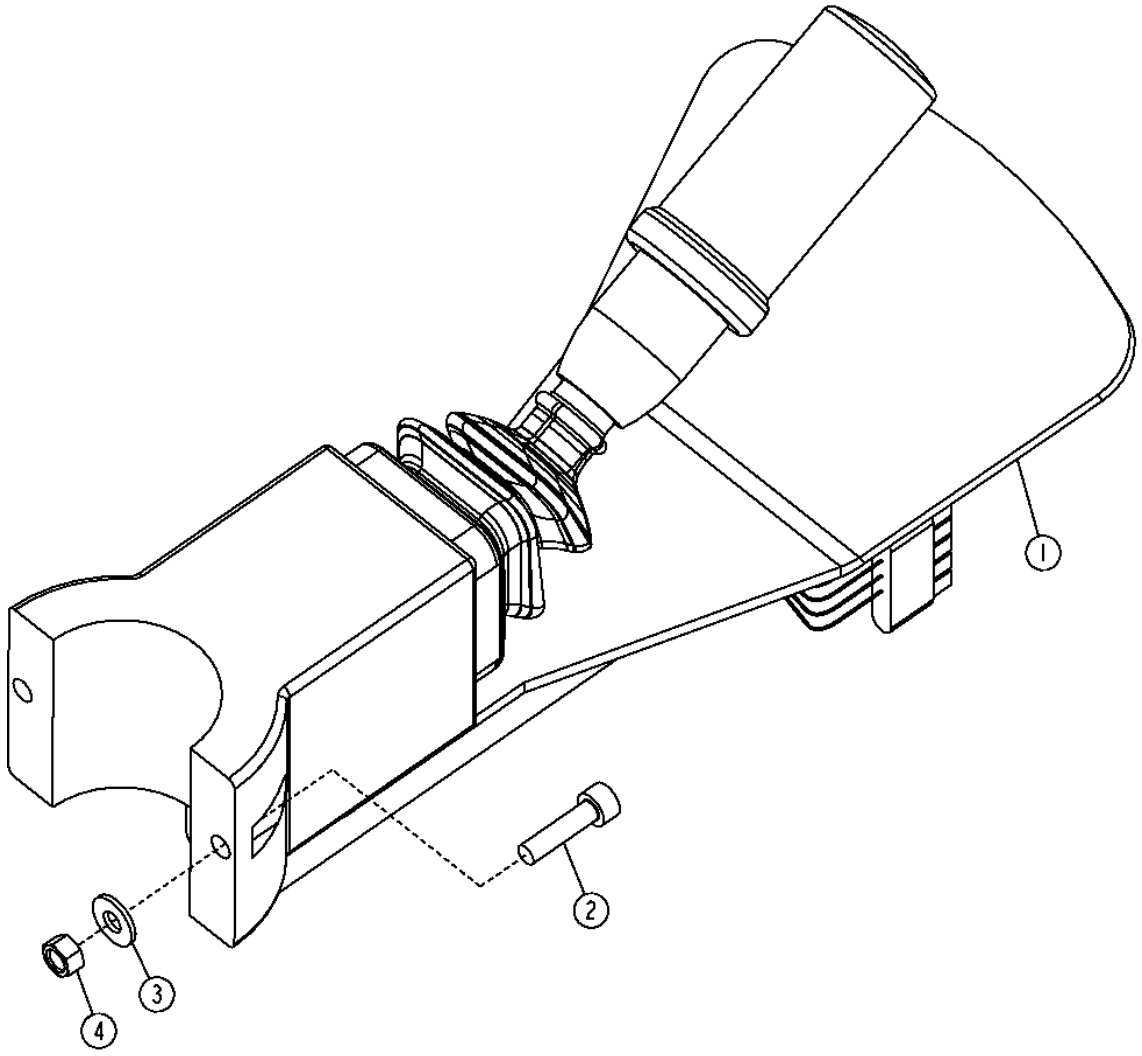

T135287

TRANSMISSION CONTROL LEVER

KEY	PART NO.	PART NAME	QTY	SERIAL NO.	310G	310SG	315SG	REMARKS
1	AT180916	SWITCH	1		X	X	X	SYNCHRO-SHUTTLE REVERSER CONTROL
	AT182520	SWITCH	1			X	X	POWER SHIFT REVERSER CONTROL
2	19M8581	SCREW	2		X	X	X	M5 X 20
3	24H1283	WASHER	2		X	X	X	
4	14M7375	FLANGE NUT	2		X	X	X	M5

TRANSMISSION SHIFTER LEVERS
STANDARD AND ISOLATED

TP58129 -UN-03OCT00

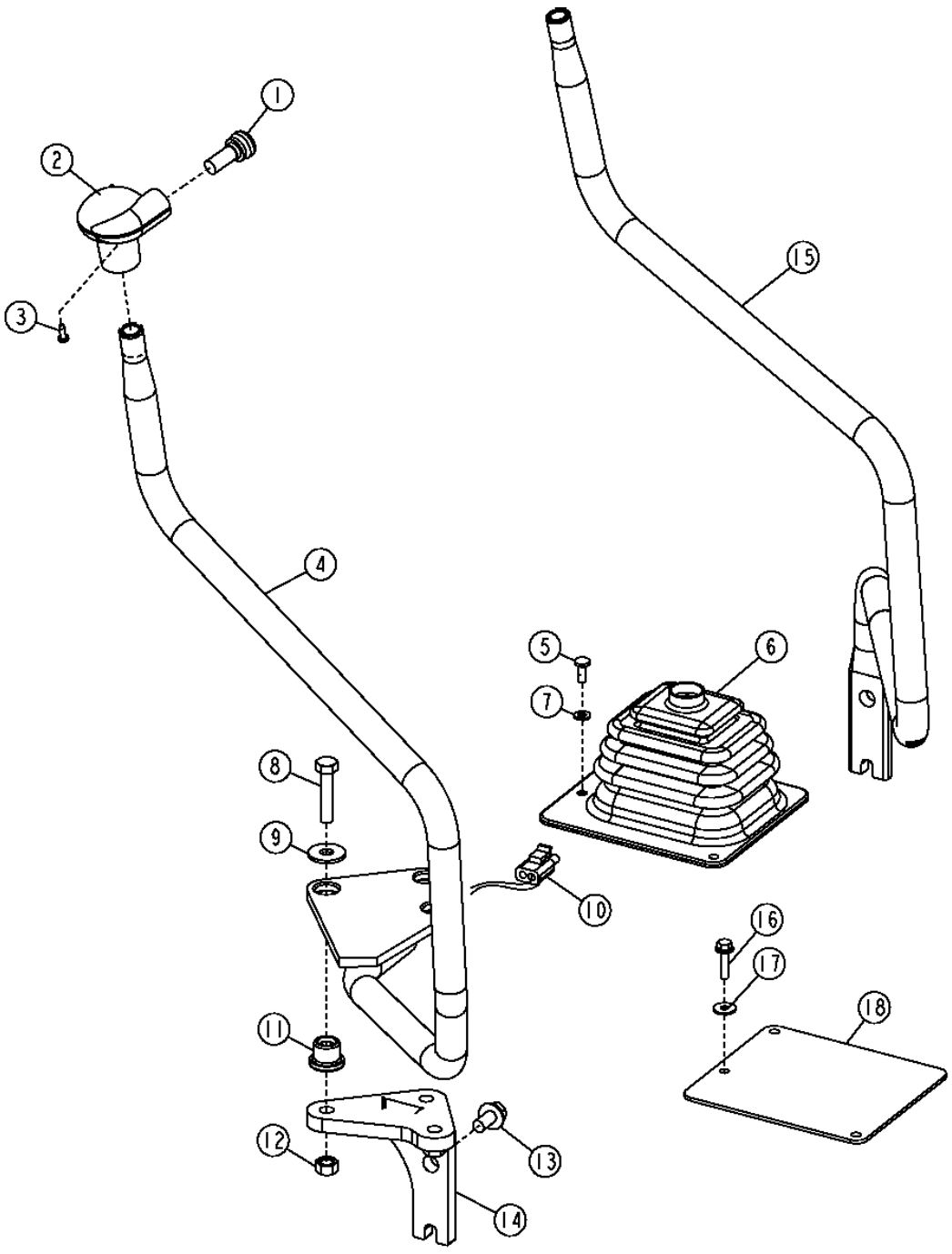

TRANSMISSION SHIFTER LEVERS
STANDARD AND ISOLATED

KEY	PART NO.	PART NAME	QTY	SERIAL NO.	310G	310SG	315SG	REMARKS
1	AT162180	SWITCH	1		X	X	X	
2	AT169304	KNOB	1		X	X	X	
3	37H95	SCREW	2		X	X	X	
4	AT189549	SHIFTER	1		X	X	X	ISOLATED
5	19M7863	SCREW	3		X	X	X	M6 X 25
6	AT189797	BOOT	1		X	X	X	
7	24M7139	WASHER	3		X	X	X	
8	19M7572	CAP SCREW	3		X	X	X	M10 X 45
9	24M7296	WASHER	3		X	X	X	
10	RE12363	ELECTRICAL CONNECTOR ASSY	1		X	X	X	
11	U42208	ISOLATOR	3		X	X	X	
12	14M7274	NUT	3		X	X	X	M10
13	19M7785	SCREW	2		X	X	X	M10 X 25
14	AT190531	SUPPORT	1		X	X	X	
15	.....	SHIFTER ROD	1		X	X	X	STANDARD, (ORDER AT189549, AT190531, (3) U42208, (3) 14M7274, (3) 19M7572, (3) 24M7296)
16	19M7863	SCREW	3			X	X	M6 X 25
17	24M7139	WASHER	3			X	X	
18	T166360	COVER	1			X	X	SHIFT LEVER HOLE

REAR DRIVESHAFT AND UNIVERSAL JOINTS

TP50532 -UN-20NOV96

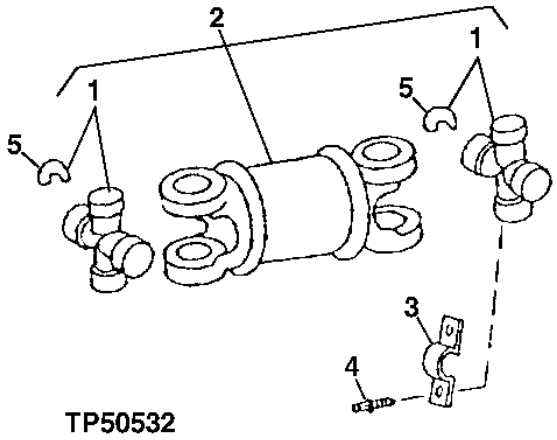

TP50532

KEY	PART NO.	PART NAME	QTY	SERIAL NO.	310G	315SG	REMARKS
1	AT178389	KIT	2		X	X X	
2	AT176080	UNIVERSAL DRIVESHAFT	1		X	X X	SYNCHRO-SHUTTLE
	AT179063	UNIVERSAL DRIVESHAFT	1			X X	POWER SHIFT
3	T69938	HALF CLAMP	4		X	X X	
4	T113128	SCREW	8		X	X X	
5	N119316	SNAP RING	4		X	X X	

TRANSMISSION HOUSING
SYNCHRO-SHUTTLE

T196027 -UN-07NOV03

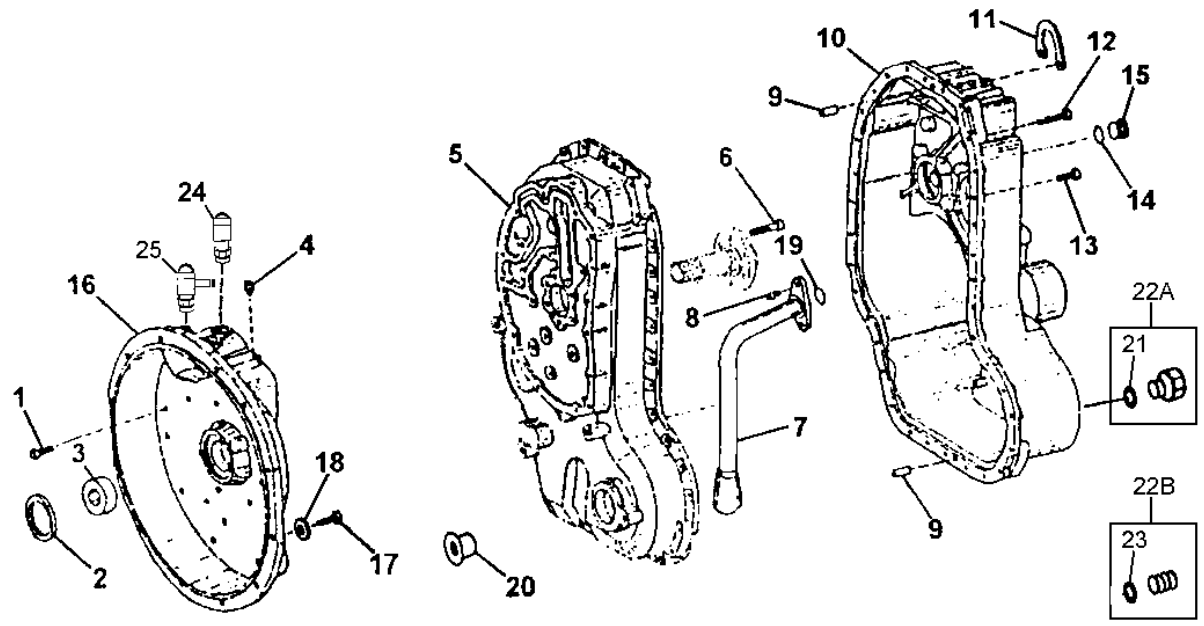

T196027

KEY	PART NO.	PART NAME	QTY	SERIAL NO.	310G	315SG	REMARKS
1	19M7168	CAP SCREW	22		X	X	M10 X 30
2	AT179316	SEAL	1		X	X	
3	T164665	BUSHING	1		X	X	
4	T116918	BREATHER	1		X	X	
5	T154129	HOUSING	1		X	X	FRONT
6	19M8213	SCREW	6		X	X	M10 X 50
7	AT179317	LINE	1		X	X	
8	19M7660	SCREW	2		X	X	M8 X 20
9	T159564	DOWEL PIN	2		X	X	
10	T154128	HOUSING	1		X	X	REAR
11	T159567	PLATE	1		X	X	
12	19M7658	CAP SCREW	6		X	X	M10 X 50
13	19M7168	CAP SCREW	29		X	X	M10 X 30
14	L53816	O-RING	1		X	X	
15	T159565	PLUG	1		X	X	
16	T154130	HOUSING	1		X	X	
17	19M7662	CAP SCREW	11		X	X	M10 X 30
18	24M7239	WASHER	12		X	X	
19	T161181	O-RING	1		X	X	
20	T159683	COVER	1		X	X	(WITHOUT MFWD)
21	R26906	O-RING	2		X	X	
22A	R27474	DRAIN PLUG	2		X	X	HEX HEAD
22B	T159565	PLUG	2		X	X	SOCKET HEAD
23	H81744	O-RING	2		X	X	
24	AT193927	HOSE FITTING	1		X	X	
25	AT186236	ELBOW FITTING	1		X	X	

TRANSMISSION HOUSING
POWER SHIFT

T196028 -UN-06NOV03

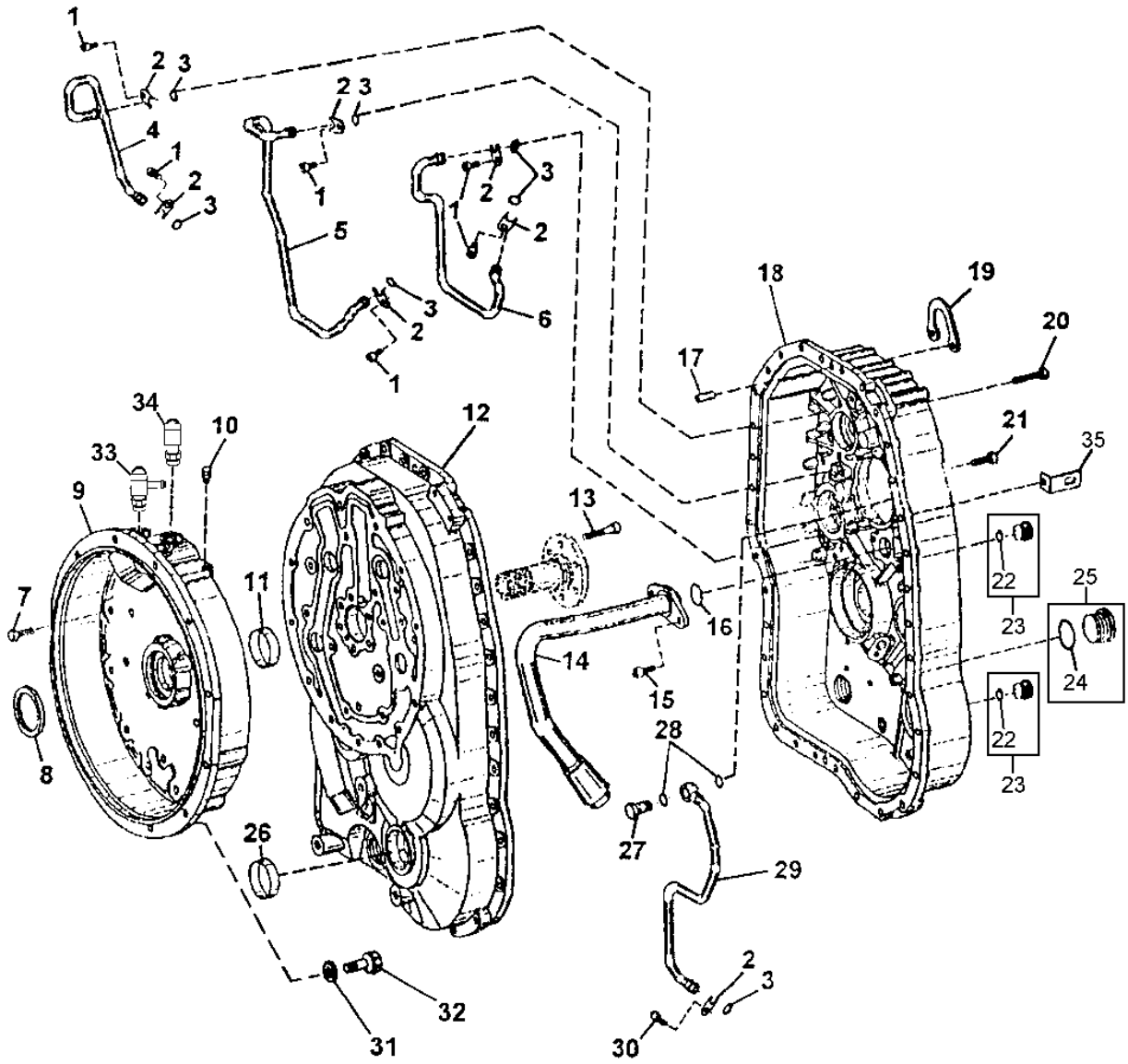

T196028

TRANSMISSION HOUSING
POWER SHIFT

KEY	PART NO.	PART NAME	QTY	SERIAL NO.	310G	310SG	315SG	REMARKS
1	T164648	CAP SCREW	6		X	X		
2	T164573	PLATE	7		X	X		
3	T161218	O-RING	7		X	X		
4	AT184060	OIL LINE	1		X	X		
5	AT184061	OIL LINE	1		X	X		
6	AT184062	OIL LINE	1		X	X		
7	T164660	SCREW	24		X	X		
8	AT179316	SEAL	1		X	X		
9	T164659	HOUSING	1		X	X		
10	T116918	BREATHER	1		X	X		
11	T164665	BUSHING	1		X	X		
12	T164657	HOUSING	1		X	X		FRONT, (ALSO ORDER T159683)
13	T164666	CAP SCREW	6		X	X		
14	AT184059	LINE	1		X	X		
15	T161182	CAP SCREW	2		X	X		
16	T161181	O-RING	1		X	X		
17	T164662	PIN	2		X	X		
18	T164658	HOUSING	1	-926902	X	X		REAR
	T164658	HOUSING	1	926903-	X	X		(ALSO ORDER AT185791 AND U13639)
19	T159567	PLATE	1		X	X		
20	T164661	SCREW	6		X	X		
21	T164660	SCREW	28		X	X		
22	H81744	O-RING	2		X	X		
23	T159565	PLUG	2		X	X		
24	U13639	O-RING	1		X	X		
25	AT185791	PLUG	1		X	X		
26	T159683	COVER	1		X	X		MFWD OUTPUT SHAFT HOLE PLUG
27	T164703	CAP SCREW	1		X	X		
28	T164704	O-RING	2		X	X		
29	AT183995	OIL LINE	1		X	X		
30	T164648	CAP SCREW	1		X	X		
31	24M7239	WASHER	12		X	X		
32	19M7662	CAP SCREW	12		X	X		M10 X 30
33	AT186237	TEE FITTING	1		X	X		
34	AH64349	HOSE FITTING	1		X	X		
35	T164671	BRACKET	2		X	X		

TRANSMISSION, DIPSTICK AND TUBE

T196901 -UN-18DEC03

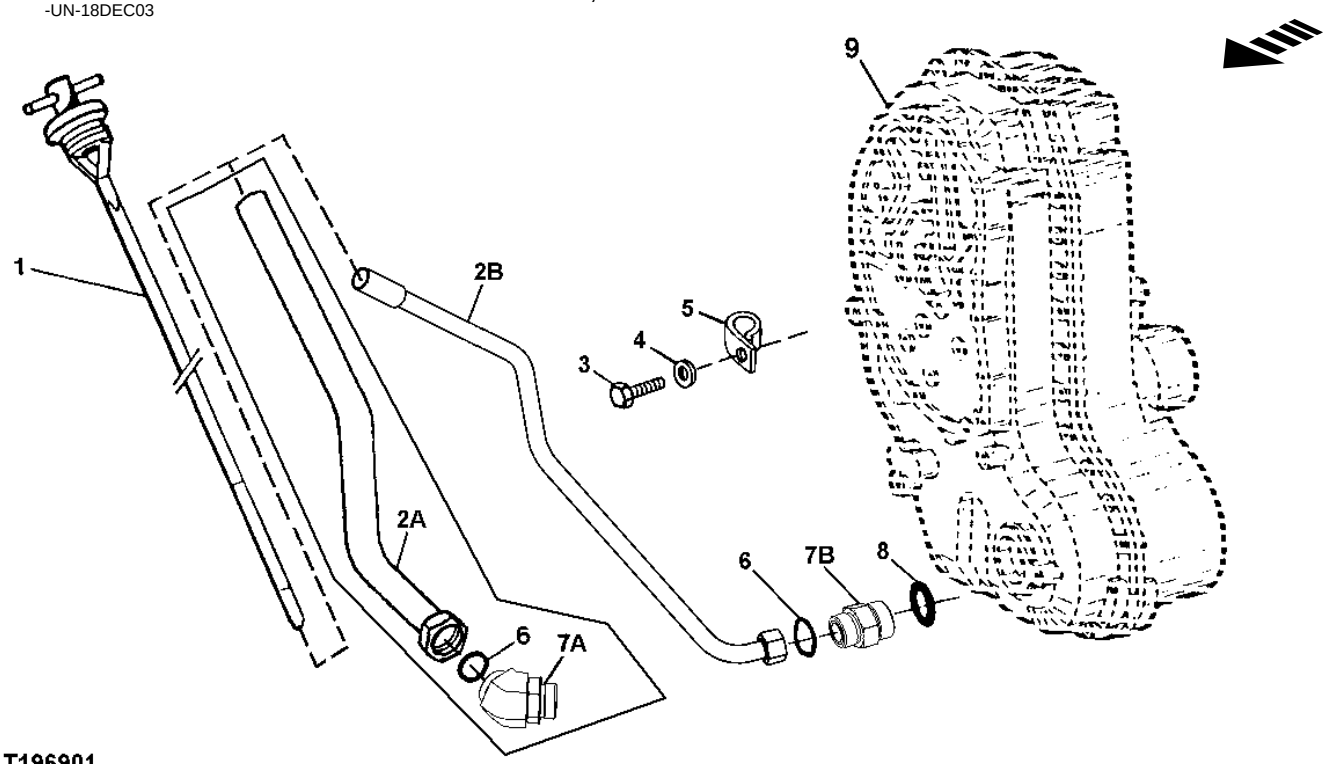

T196901

KEY	PART NO.	PART NAME	QTY	SERIAL NO.	310G	315SG	REMARKS
1	AT174898	DIPSTICK	1		X	X X	
2A	AT174365	DIPSTICK TUBE	1	-925932	X	X X	
2B	AT302258	DIPSTICK TUBE	1	925933-	X	X X	
3	19M7938	CAP SCREW	1	-925932	X	X X	M10 X 20
	19M8291	SCREW	1	925933-	X	X X	M8 X 35
4	24M7028	WASHER	1		X	X X	
5	T26955	CLAMP	1	-925932	X	X X	
	T102934	CLAMP	1	925933-	X	X X	
6	T78612	O-RING	1	-925932	X	X X	
	T76938	O-RING	1	925933-	X	X X	
7A	38H1050	ELBOW FITTING	1	-925932	X	X X	
7B	38H1180	ADAPTER FITTING	1	925933-	X	X X	
8	U13639	O-RING	1		X	X X	
9	AT171544	TRANSMISSION	1		X	X X	SYNCHRO-SHUTTLE (CONVENIENCE ASSEMBLY) (WITH MFWD)(ALSO INCLUDES TORQUE CONVERTOR, BELL HOUSING,TRANSMISSION CONTROL VALVE, TRANSMISSION SOLENOIDS,CHARGE PUMP AND OIL FILTER)
	AT171541	TRANSMISSION	1		X	X X	SYNCHRO-SHUTTLE (CONVENIENCE ASSEMBLY) (WITHOUT MFWD)(ALSO INCLUDES TORQUE CONVERTOR ,BELL HOUSING,TRANSMISSION CONTROL VALVE, TRANSMISSION SOLENOIDS,CHARGE PUMP AND FILTER)
	AT168400	TRANSMISSION	1			X X	POWER SHIFT (CONVENIENCE ASSEMBLY) (WITH MFWD)(ALSO INCLUDES TORQUE CONVERTOR, BELL HOUSING,TRANSMISSION CONTROL VALVE, TRANSMISSION SOLENOIDS,CHARGE PUMP AND OIL FILTER)
	AT168397	TRANSMISSION	1			X X	POWER SHIFT (CONVENIENCE ASSEMBLY) (WITHOUT MFWD)(ALSO INCLUDES TORQUE CONVERTOR ,BELL HOUSING,TRANSMISSION CONTROL VALVE, TRANSMISSION SOLENOIDS,CHARGE PUMP AND FILTER)

TORQUE CONVERTOR

TP69688 -UN-14SEP00

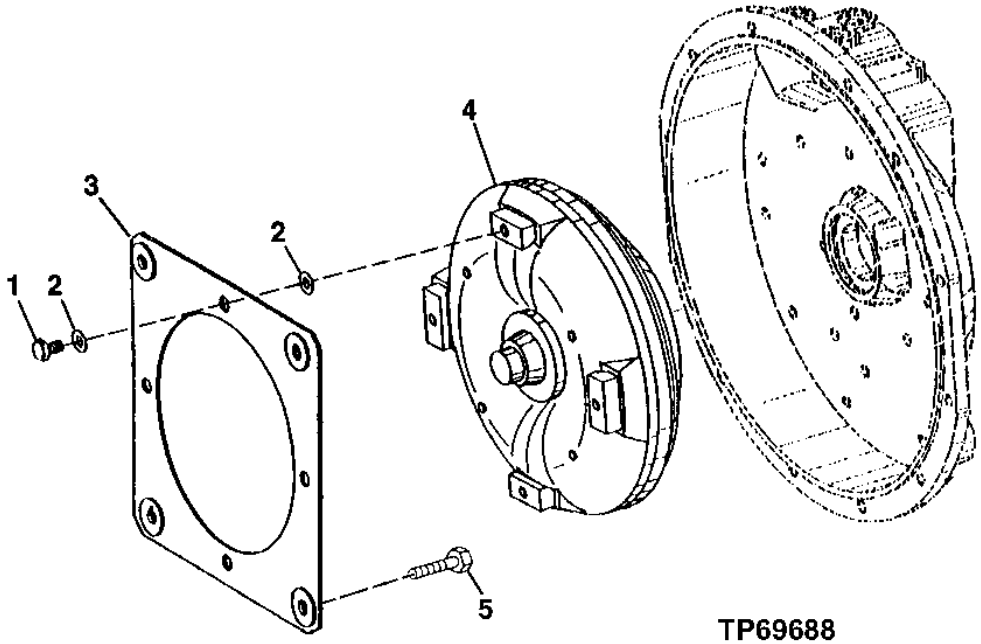

TP69688

KEY	PART NO.	PART NAME	QTY	SERIAL NO.	310G	315SG	REMARKS
1	19M8289	CAP SCREW	4		X	X X	M10 X 16
2	T155324	PLATE	8		X	X X	
3	AT179312	PLATE	2		X	X X	
4	AT196803	TORQUE CONVERTER	1		X	X X	(SUB FOR AT172763, THIS APPLICATION)
5	19M7402	CAP SCREW	4		X	X X	M10 X 25

FORWARD CLUTCH ASSEMBLY
SYNCHRO-SHUTTLE

TP57805 -UN-18NOV97

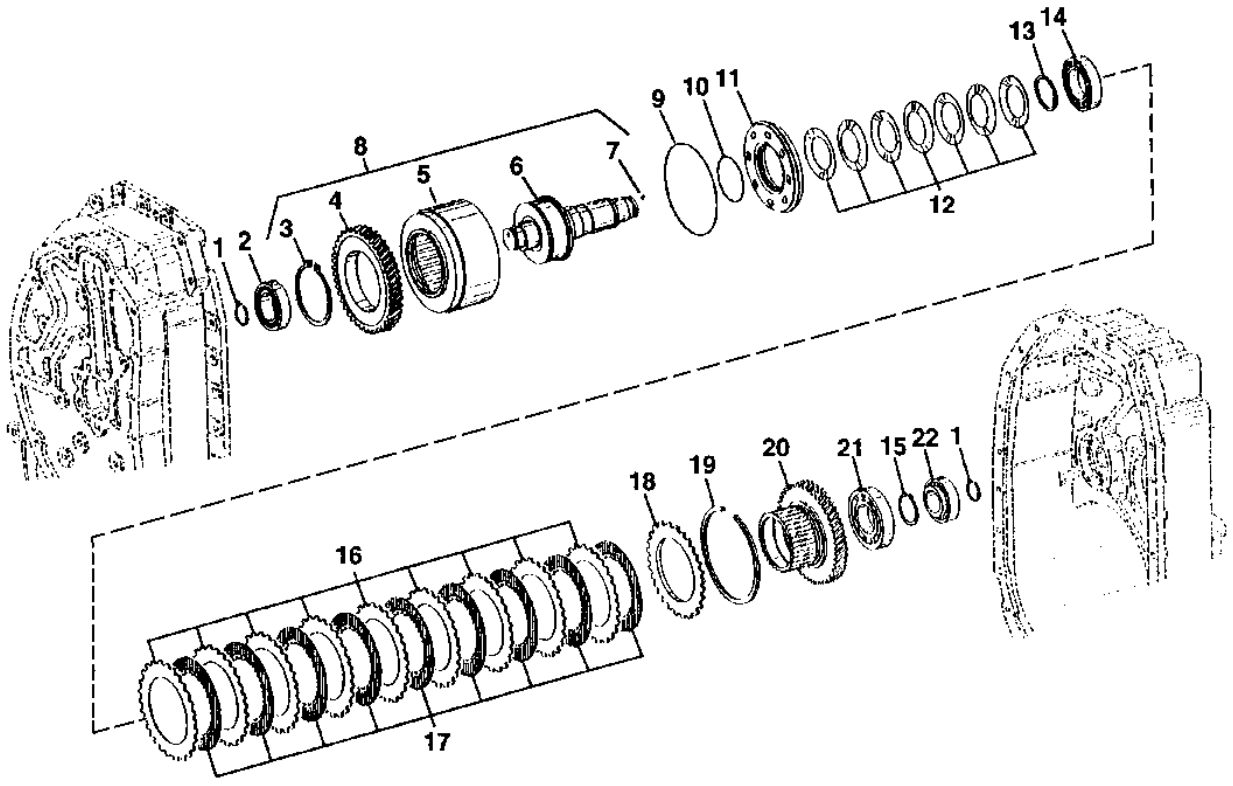

TP57805

FORWARD CLUTCH ASSEMBLY
SYNCHRO-SHUTTLE

KEY	PART NO.	PART NAME	QTY	SERIAL NO.	310G	310SG	315SG	REMARKS
1	T158742	RING	2		X	X	X	
2	AT179472	TAPERED ROLLER BEARING	1		X	X	X	
3	.....	SNAP RING	1		X	X	X	
4	.....	GEAR	1		X	X	X	
5	.....	CLUTCH	1		X	X	X	
6	.....	SHAFT	1		X	X	X	
7	.....	BALL	1		X	X	X	
8	AT175733	CLUTCH	1		X	X	X	
9	.....	RING	1		X	X	X	(SUB AT193704) (T158739 NO LONGER AVAILABLE)
10	.....	RING	1		X	X	X	(SUB AT193704) (T158743 NO LONGER AVAILABLE)
11	AT193704	PISTON	1		X	X	X	(SUB FOR T158789)
12	T158775	DISK SPRING	7		X	X	X	
13	T158756	WASHER	1		X	X	X	
14	AT179469	TAPERED ROLLER BEARING	1		X	X	X	
15	T161193	SNAP RING	1		X	X	X	2.5MM
	T161192	SNAP RING	1		X	X	X	2.6MM
	T161191	SNAP RING	1		X	X	X	2.7MM
	T161190	SNAP RING	1		X	X	X	2.8MM
	T161189	SNAP RING	1		X	X	X	2.9MM
	T161188	SNAP RING	1		X	X	X	3.0MM
	T161187	SNAP RING	1		X	X	X	3.1MM
	T161186	SNAP RING	1		X	X	X	3.2MM
16	T158801	CLUTCH PLATE	9		X	X	X	
17	AT179473	DISK WITH INNER SPLINE	9		X	X	X	
18	T161147	PLATE	1		X	X	X	
19	T159570	SNAP RING	1		X	X	X	2.0 MM
	T159569	SNAP RING	1		X	X	X	2.5 MM
	T159568	SNAP RING	1		X	X	X	3.0 MM
	T158778	SNAP RING	1		X	X	X	3.5 MM
	T161183	SNAP RING	1		X	X	X	4.0 MM
20	T158802	HUB	1		X	X	X	
21	AT179470	TAPERED ROLLER BEARING	1		X	X	X	
22	AT179471	TAPERED ROLLER BEARING	1		X	X	X	

REVERSE CLUTCH ASSEMBLY
SYNCHRO-SHUTTLE

TP57806 -UN-18NOV97

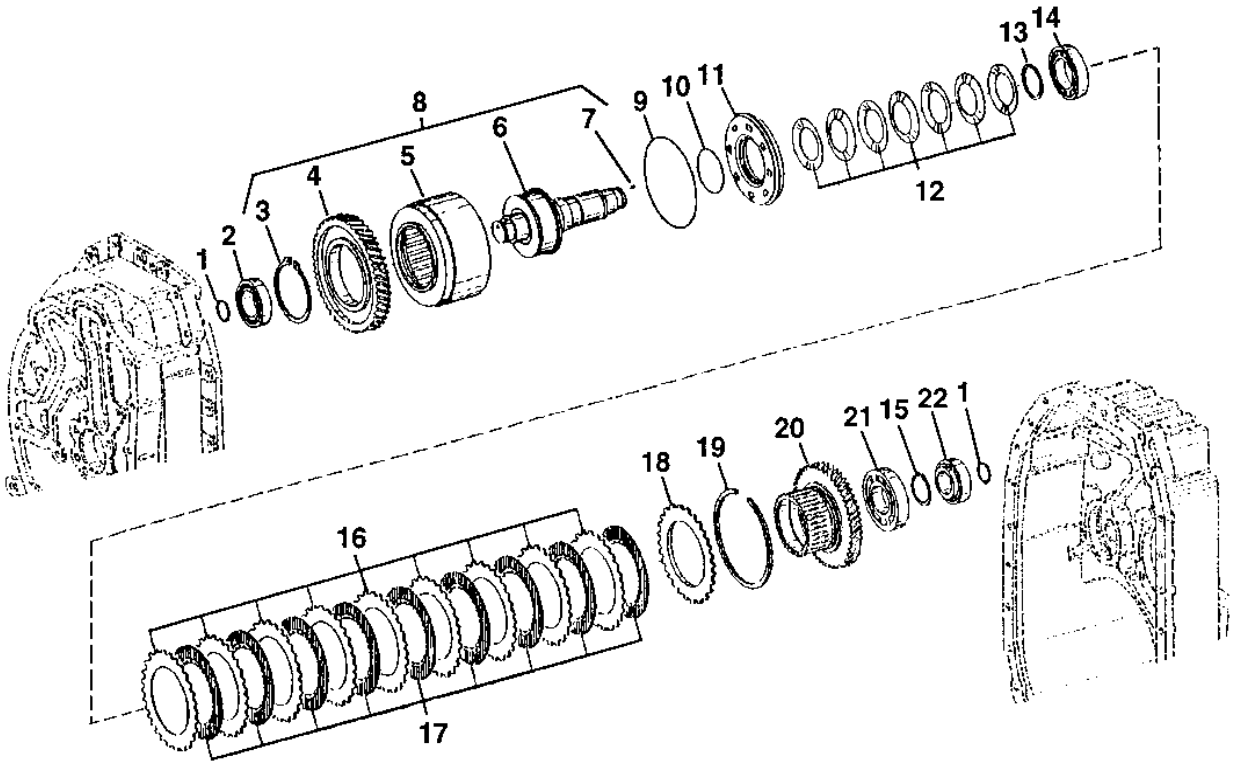

TP57806

REVERSE CLUTCH ASSEMBLY
SYNCHRO-SHUTTLE

KEY	PART NO.	PART NAME	QTY	SERIAL NO.	310G	310SG	315SG	REMARKS
1	T158742	RING	2		X	X	X	
2	AT179472	TAPERED ROLLER BEARING	1		X	X	X	
3	.....	SNAP RING	1		X	X	X	
4	.....	GEAR	1		X	X	X	
5	.....	CLUTCH	1		X	X	X	
6	.....	SHAFT	1		X	X	X	
7	.....	BALL	1		X	X	X	
8	AT175734	CLUTCH	1		X	X	X	
9	.....	RING	1		X	X	X	(SUB AT193704) (T158739 NO LONGER AVAILABLE)
10	.....	RING	1		X	X	X	(SUB AT193704) (T158743 NO LONGER AVAILABLE)
11	AT193704	PISTON	1		X	X	X	(SUB FOR T158789)
12	T158775	DISK SPRING	7		X	X	X	
13	T158756	WASHER	1		X	X	X	
14	AT179469	TAPERED ROLLER BEARING	1		X	X	X	
15	T161193	SNAP RING	1		X	X	X	2.5MM
	T161192	SNAP RING	1		X	X	X	2.6MM
	T161191	SNAP RING	1		X	X	X	2.7MM
	T161190	SNAP RING	1		X	X	X	2.8MM
	T161189	SNAP RING	1		X	X	X	2.9MM
	T161188	SNAP RING	1		X	X	X	3.0MM
	T161187	SNAP RING	1		X	X	X	3.1MM
	T161186	SNAP RING	1		X	X	X	3.2MM
16	T158801	CLUTCH PLATE	9		X	X	X	
17	AT179473	DISK WITH INNER SPLINE	9		X	X	X	
18	T161147	PLATE	1		X	X	X	
19	T159570	SNAP RING	1		X	X	X	2.0 MM
	T159569	SNAP RING	1		X	X	X	2.5 MM
	T159568	SNAP RING	1		X	X	X	3.0 MM
	T158778	SNAP RING	1		X	X	X	3.5 MM
20	T158802	HUB	1		X	X	X	
21	AT179470	TAPERED ROLLER BEARING	1		X	X	X	
22	AT179471	TAPERED ROLLER BEARING	1		X	X	X	

INPUT SHAFTS
SYNCHRO-SHUTTLE

TP69689 -UN-14SEP00

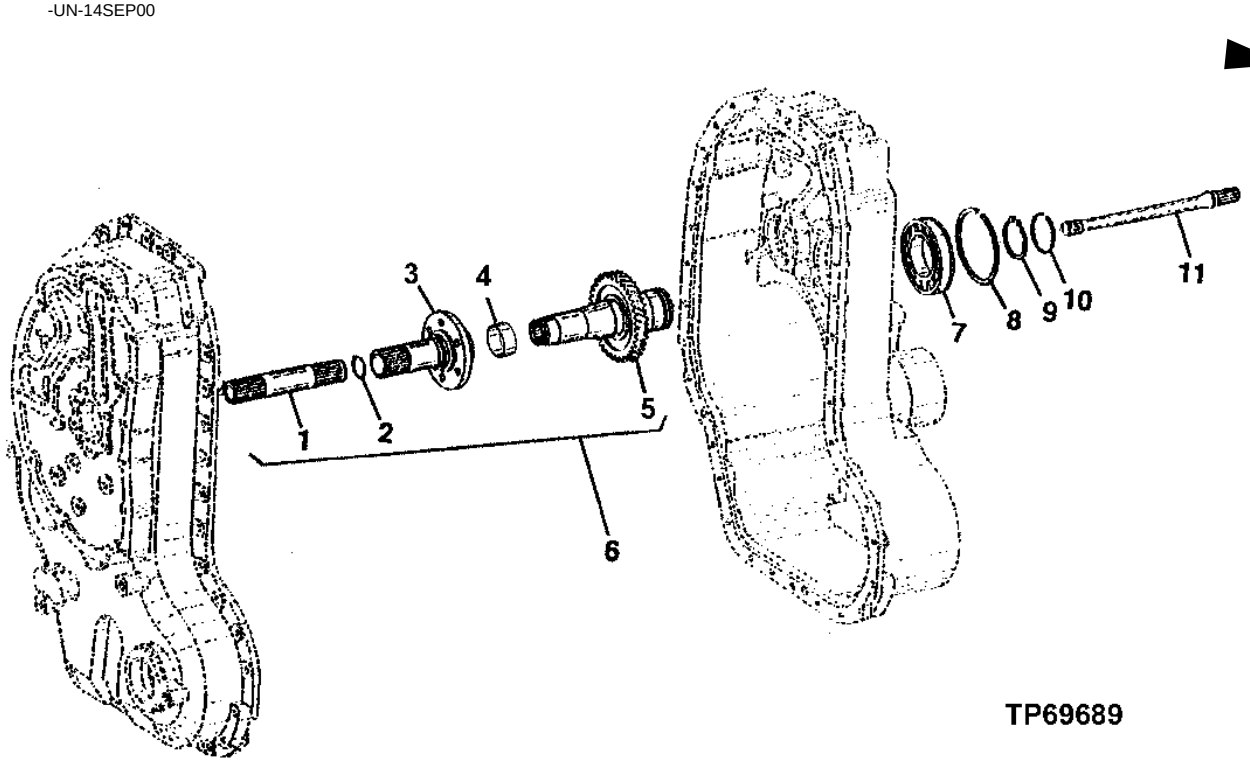

KEY	PART NO.	PART NAME	QTY	SERIAL NO.	310G	310SG	315SG	REMARKS
1	.....	SHAFT	1		X	X	X	
2	T158720	SNAP RING	1		X	X	X	
3	T164654	SHAFT	1		X	X	X	
4	T164655	BUSHING	1		X	X	X	
5	.....	SHAFT	1		X	X	X	
6	AT187711	SHAFT	1		X	X	X	
7	AT179314	BALL BEARING	1		X	X	X	
8	T158717	SNAP RING	1		X	X	X	
9	T158718	SNAP RING	1		X	X	X	
10	T158740	PACKING	1		X	X	X	
11	T155259	SHAFT	1		X	X	X	

MFWD IDLER SHAFT,SYNCHRO SHUTTLE
IDLER SHAFT, MFWD, SYNCHRO SHUTTLE

TP52784 -UN-22OCT96

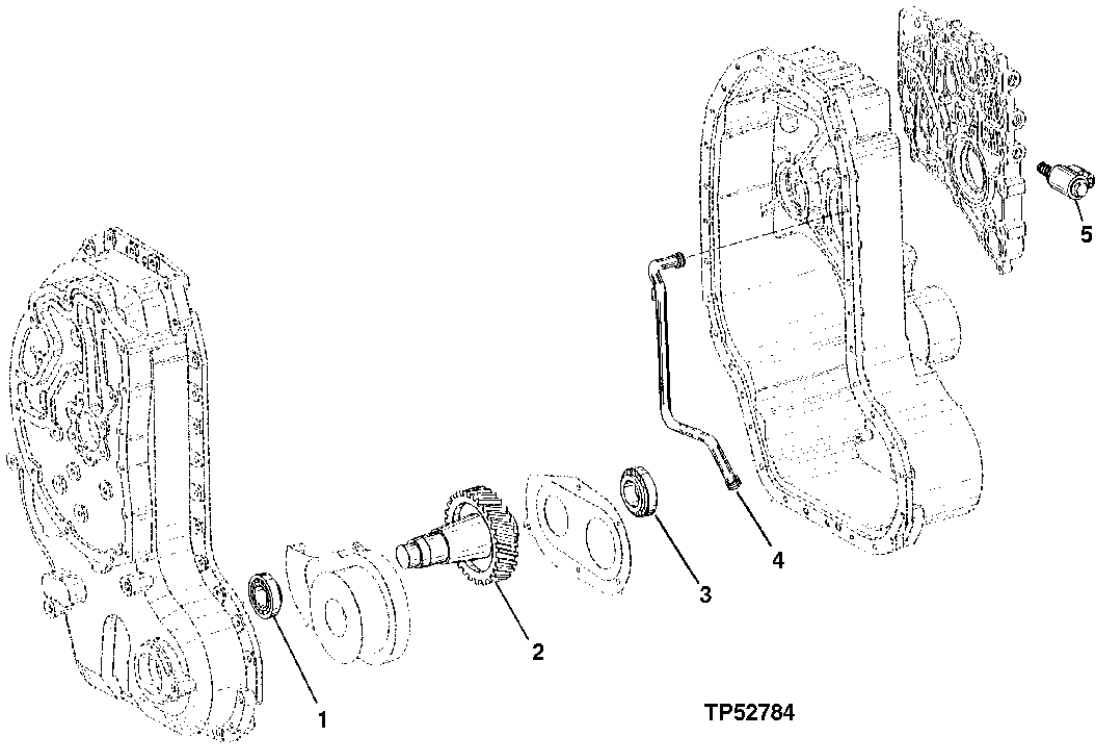

TP52784

KEY	PART NO.	PART NAME	QTY	SERIAL NO.	310G 315SG	REMARKS
1	AT179471	TAPERED ROLLER BEARING	1		X X X	
2	T158714	SHAFT	1		X X X	
3	AT179468	TAPERED ROLLER BEARING	1		X X X	
4	AT179467	OIL LINE	1		X X X	
	T161218	O-RING	2		X X X	
5	AT177703	SOLENOID VALVE	2		X X X	DIFFERENTIAL LOCK, PARK BRAKE, MFWD
	.....	SOLENOID	1		X X X	(AT179318 NO LONGER AVAILABLE) (SERVICED IN AT177703)
	AT179319	ELECTRICAL COIL	1		X X X	
	AT179320	O-RING KIT	1		X X X	
	T161144	NUT	1		X X X	

MFWD OUTPUT SHAFT, SYNCHRO SHUTTLE
OUTPUT SHAFT, MFWD, SYNCHRO SHUTTLE

TP52785 -UN-19AUG96

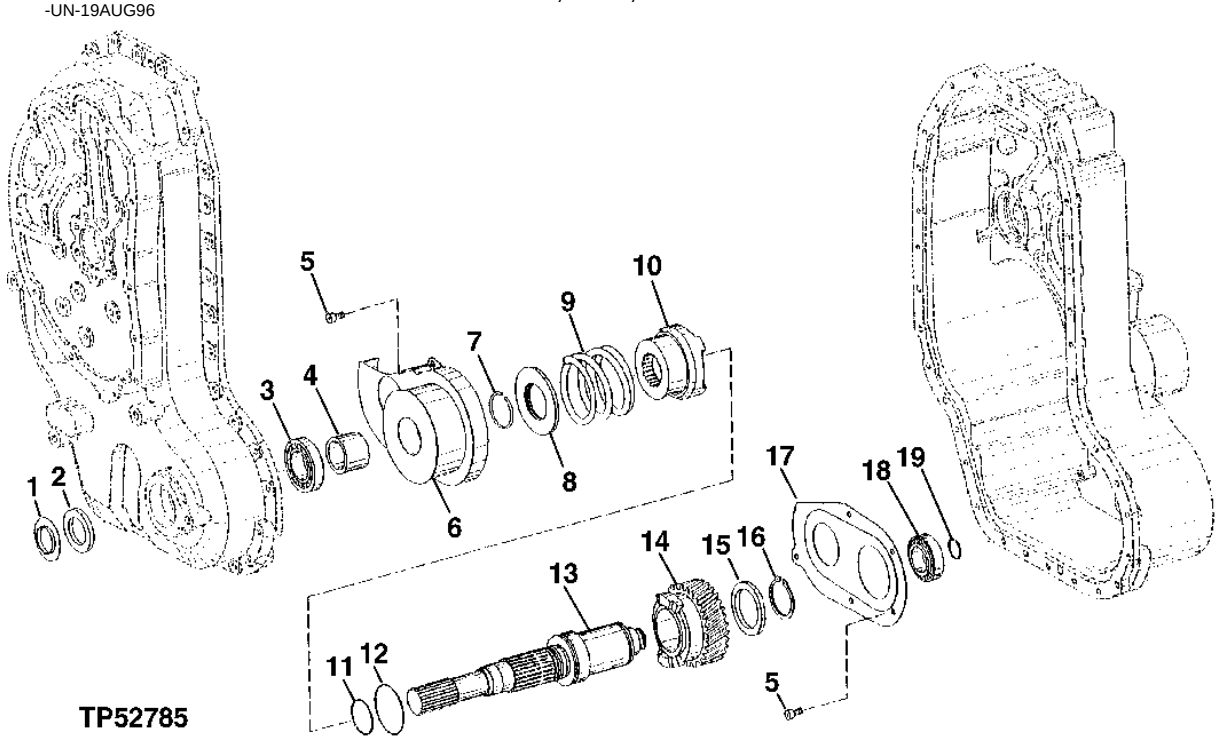

KEY	PART NO.	PART NAME	QTY	SERIAL NO.	310G	310SG	315SG	REMARKS
1	T159572	SEAL	1		X	X	X	
2	AT179466	SEAL	1		X	X	X	
3	AT179468	TAPERED ROLLER BEARING	1		X	X	X	
4	T159571	BUSHING	1		X	X	X	
5	19M7931	SCREW	6		X	X	X	M8 X 16
6	T158861	SCREEN	1		X	X	X	
7	T158722	SNAP RING	1		X	X	X	
8	T158855	END PLATE	1		X	X	X	
9	T158762	SPRING	1		X	X	X	
10	T158859	SLEEVE	1		X	X	X	
11	T158745	RING	1		X	X	X	
12	T158744	RING	1		X	X	X	
13	T158858	SHAFT	1		X	X	X	
14	T158860	SPUR GEAR	1		X	X	X	
15	T158760	THRUST WASHER	1		X	X	X	
16	L78069	RING	1		X	X	X	
17	T158864	SCREEN	1		X	X	X	
18	AT179472	TAPERED ROLLER BEARING	1		X	X	X	
19	T158742	RING	1		X	X	X	

OUTPUT SHAFT GROUP
SYNCHRO-SHUTTLE

TP52790 -UN-19AUG96

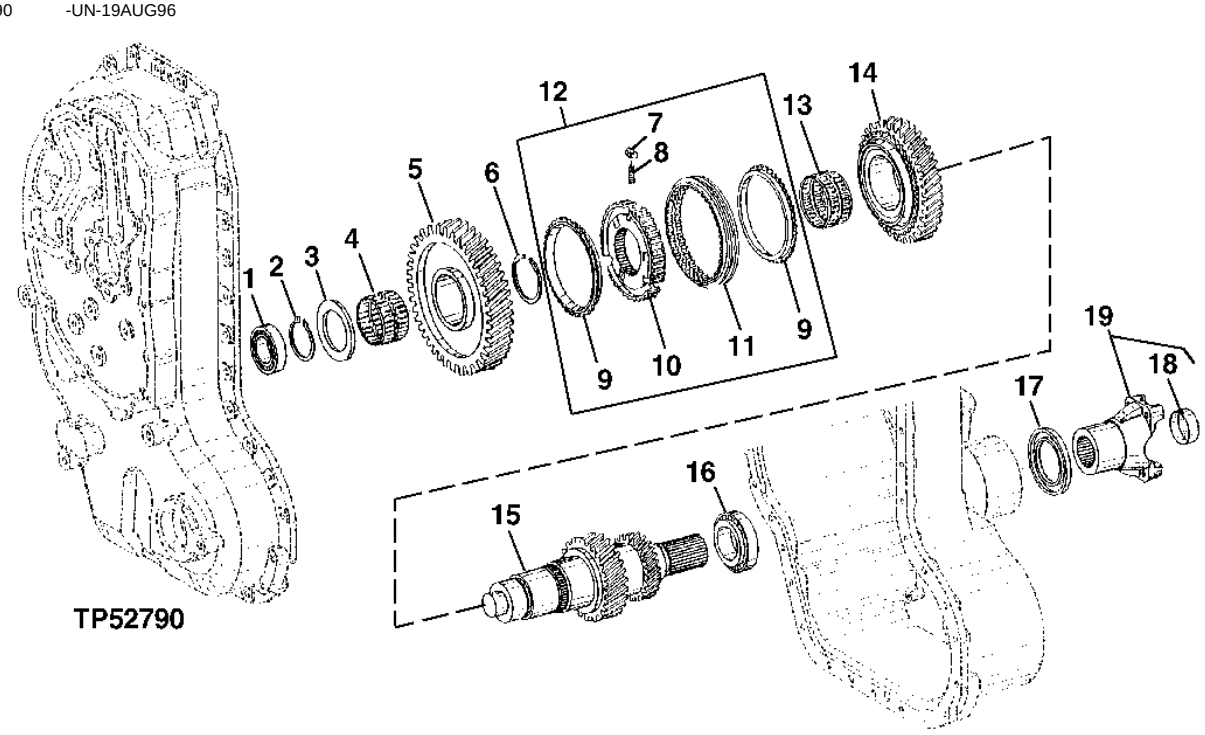

KEY	PART NO.	PART NAME	QTY	SERIAL NO.	310G	310SG	315SG	REMARKS
1	AT179472	TAPERED ROLLER BEARING	1		X	X	X	
2	T158718	SNAP RING	1		X	X	X	
3	T158748	THRUST WASHER	1		X	X	X	
4	AT179482	NEEDLE BEARING	1		X	X	X	
5	T165399	GEAR	1		X	X	X	FIRST GEAR
6	T159577	SNAP RING	1		X	X	X	1.8MM
	T159576	SNAP RING	1		X	X	X	1.9MM
	T159575	SNAP RING	1		X	X	X	
	T159574	SNAP RING	1		X	X	X	2.1MM
	T158777	SNAP RING	1		X	X	X	2.2MM
7	.....	DETENT	3		X	X	X	
8	.....	SPRING	3		X	X	X	
9	.....	RING	2		X	X	X	
10	.....	HUB	1		X	X	X	
11	.....	SHIFT COLLAR	1		X	X	X	
12	AT175748	SYNCHRONIZER	1		X	X	X	
13	AT179483	NEEDLE BEARING	1		X	X	X	
14	T165400	GEAR	1		X	X	X	SECOND GEAR
15	T158811	SHAFT	1		X	X	X	
16	AT179485	TAPERED ROLLER BEARING	1		X	X	X	
17	AT179481	SEAL	1		X	X	X	
18	.....	PLUG	1		X	X	X	
19	AT177701	UNIVERSAL JOINT YOKE	1		X	X	X	

INTERMEDIATE SHAFT GROUP
SYNCHRO-SHUTTLE

TP52792 -UN-19AUG96

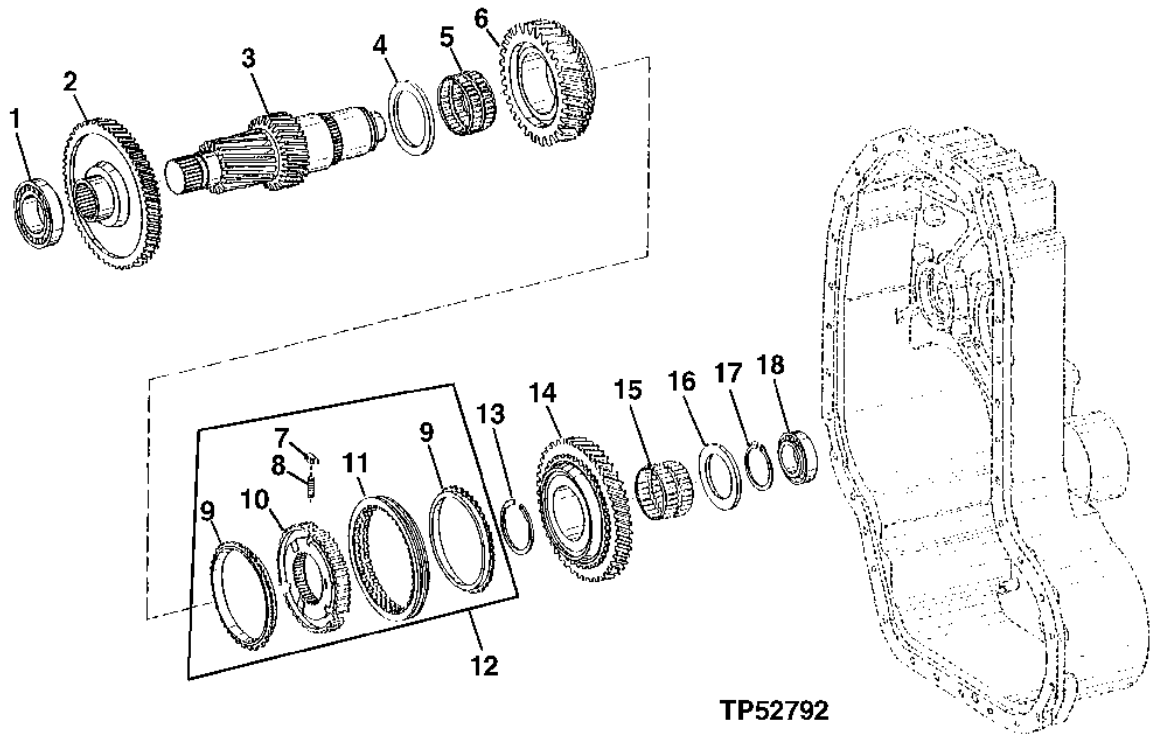

TP52792

KEY	PART NO.	PART NAME	QTY	SERIAL NO.	310G	315SG	315SG	REMARKS
1	AT179485	TAPERED ROLLER BEARING	1		X	X	X	
2	T158805	GEAR	1		X	X	X	
3	T158806	SHAFT	1		X	X	X	
4	T158747	THRUST WASHER	1		X	X	X	
5	AT179483	NEEDLE BEARING	1		X	X	X	
6	AT179490	GEAR	1		X	X	X	THIRD GEAR
7	.....	DETENT	3		X	X	X	
8	.....	SPRING	3		X	X	X	
9	.....	RING	2		X	X	X	
10	.....	HUB	1		X	X	X	
11	.....	SHIFT COLLAR	1		X	X	X	
12	AT175748	SYNCHRONIZER	1		X	X	X	
13	T159577	SNAP RING	1		X	X	X	1.8MM
	T159576	SNAP RING	1		X	X	X	1.9MM
	T159575	SNAP RING	1		X	X	X	
	T159574	SNAP RING	1		X	X	X	2.1MM
	T158777	SNAP RING	1		X	X	X	2.2MM
14	T165401	GEAR	1		X	X	X	FOURTH GEAR
15	AT179482	NEEDLE BEARING	1		X	X	X	
16	T158748	THRUST WASHER	1		X	X	X	
17	T158718	SNAP RING	1		X	X	X	
18	AT179472	TAPERED ROLLER BEARING	1		X	X	X	

MEMORANDA

TRANSMISSION INPUT SHAFT
POWER SHIFT

TP58038 -UN-18MAY99

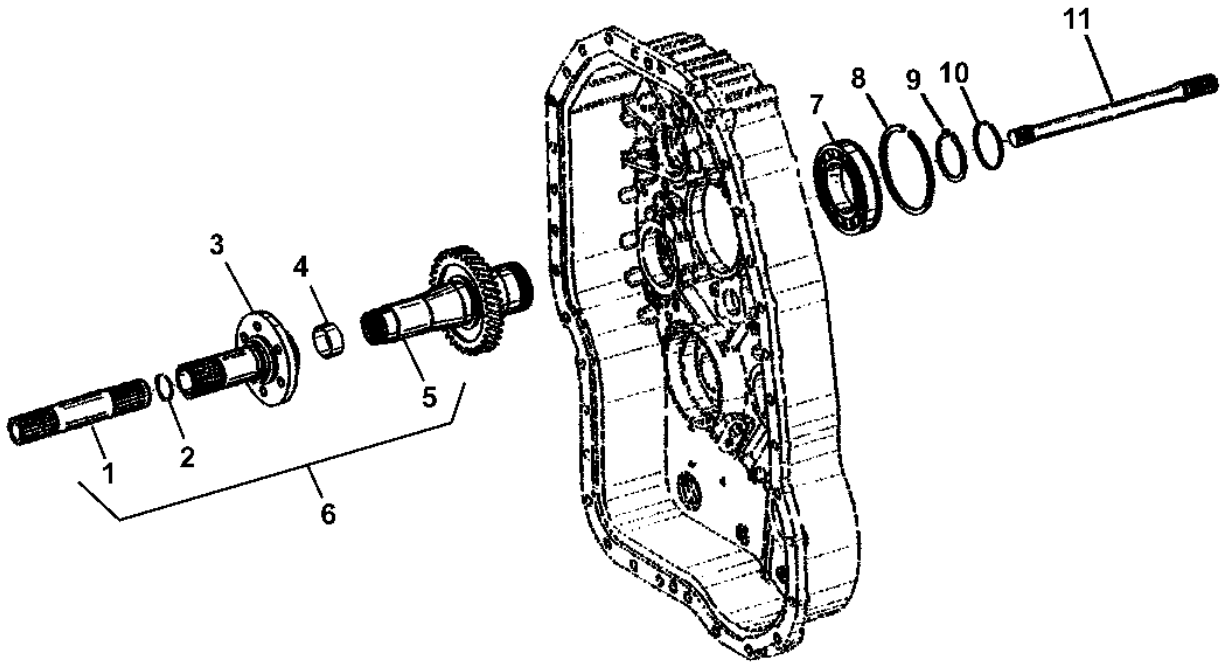

TP58038

TRANSMISSION INPUT SHAFT
POWER SHIFT

KEY	PART NO.	PART NAME	QTY	SERIAL NO.	310G	310SG	315SG	REMARKS
1	.....	SHAFT	1			X	X	
2	T158720	SNAP RING	1			X	X	
3	T164654	SHAFT	1			X	X	
4	T164655	BUSHING	1			X	X	
5	.....	SHAFT	1			X	X	
6	AT187711	SHAFT	1			X	X	
7	AT179314	BALL BEARING	1			X	X	
8	T158717	SNAP RING	1			X	X	
9	T158718	SNAP RING	1			X	X	
10	T158740	PACKING	1			X	X	
11	T155259	SHAFT	1			X	X	

FIRST GEAR CLUTCH ASSEMBLY
POWER SHIFT

TP57927 -UN-16SEP98

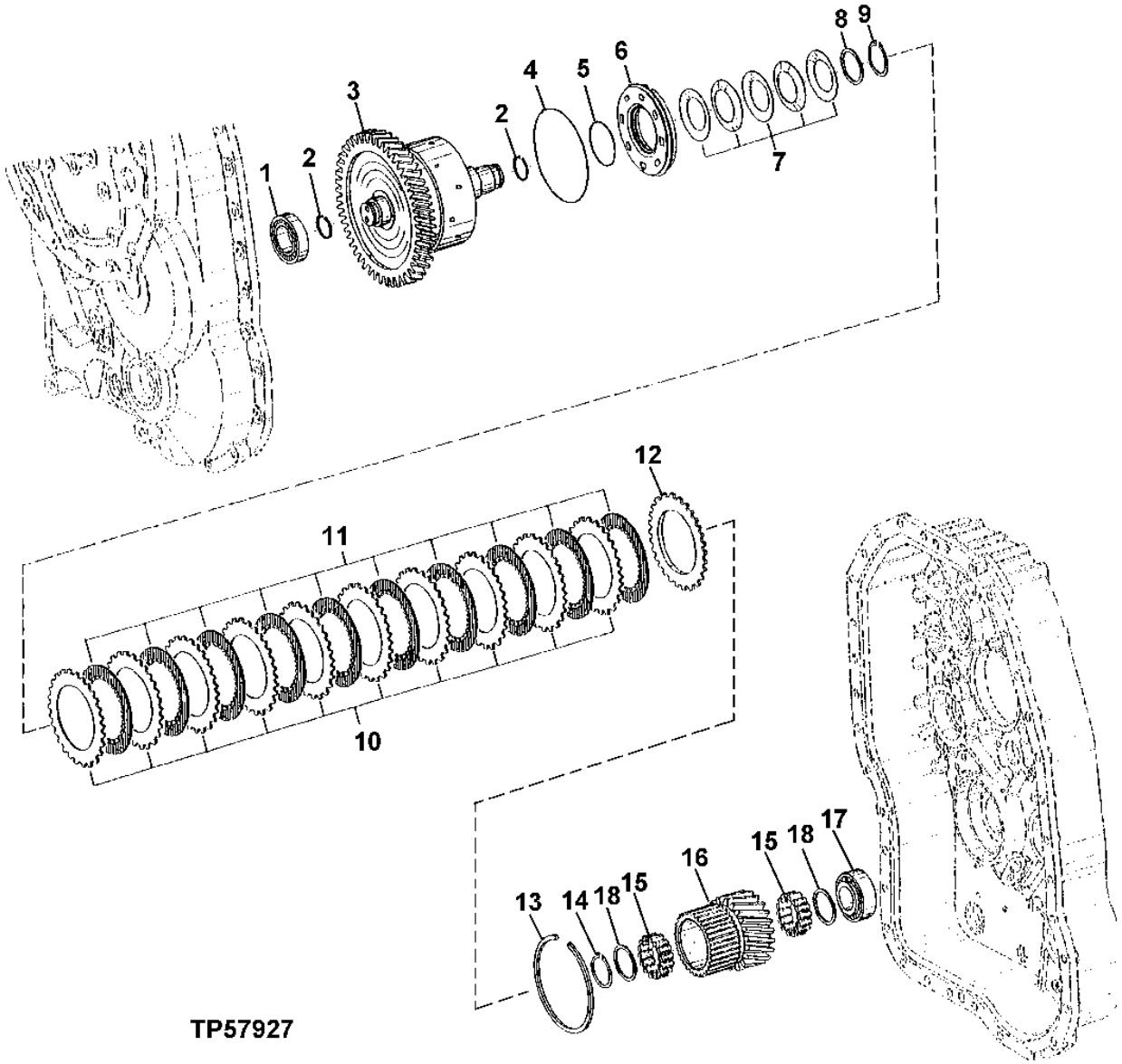

FIRST GEAR CLUTCH ASSEMBLY
POWER SHIFT

KEY	PART NO.	PART NAME	QTY	SERIAL NO.	310G	310SG	315SG	REMARKS
1	AT179472	TAPERED ROLLER BEARING	1			X	X	
2	T158742	RING	2			X	X	
3	AT184048	DRUM	1			X	X	DISK CARRIER
4	.....	RING	1			X	X	(SUB AT193704) (T158739 NO LONGER AVAILABLE)
5	.....	RING	1			X	X	(SUB AT193704) (T158743 NO LONGER AVAILABLE)
6	AT193704	PISTON	1			X	X	(SUB FOR T158789)
7	T158775	DISK SPRING	5			X	X	
8	T164712	SHIM	1			X	X	2 MM
9	40M7058	SNAP RING	1			X	X	
10	T158801	CLUTCH PLATE	10			X	X	
11	T164626	DISK	10			X	X	
12	T161147	PLATE	1			X	X	
13	T161183	SNAP RING	1			X	X	4 MM
	T158778	SNAP RING	1			X	X	3.5 MM
	T159568	SNAP RING	1			X	X	3 MM
	T159569	SNAP RING	1			X	X	2.5 MM
	T159570	SNAP RING	1			X	X	2 MM
14	40M7058	SNAP RING	1			X	X	
15	AT185793	ROLLER	2			X	X	
16	T164640	GEAR	1			X	X	
17	AT184052	ROLLER	1			X	X	
18	T166062	THRUST WASHER	2			X	X	

SECOND GEAR CLUTCH ASSEMBLY
POWER SHIFT

TP57928 -UN-16SEP98

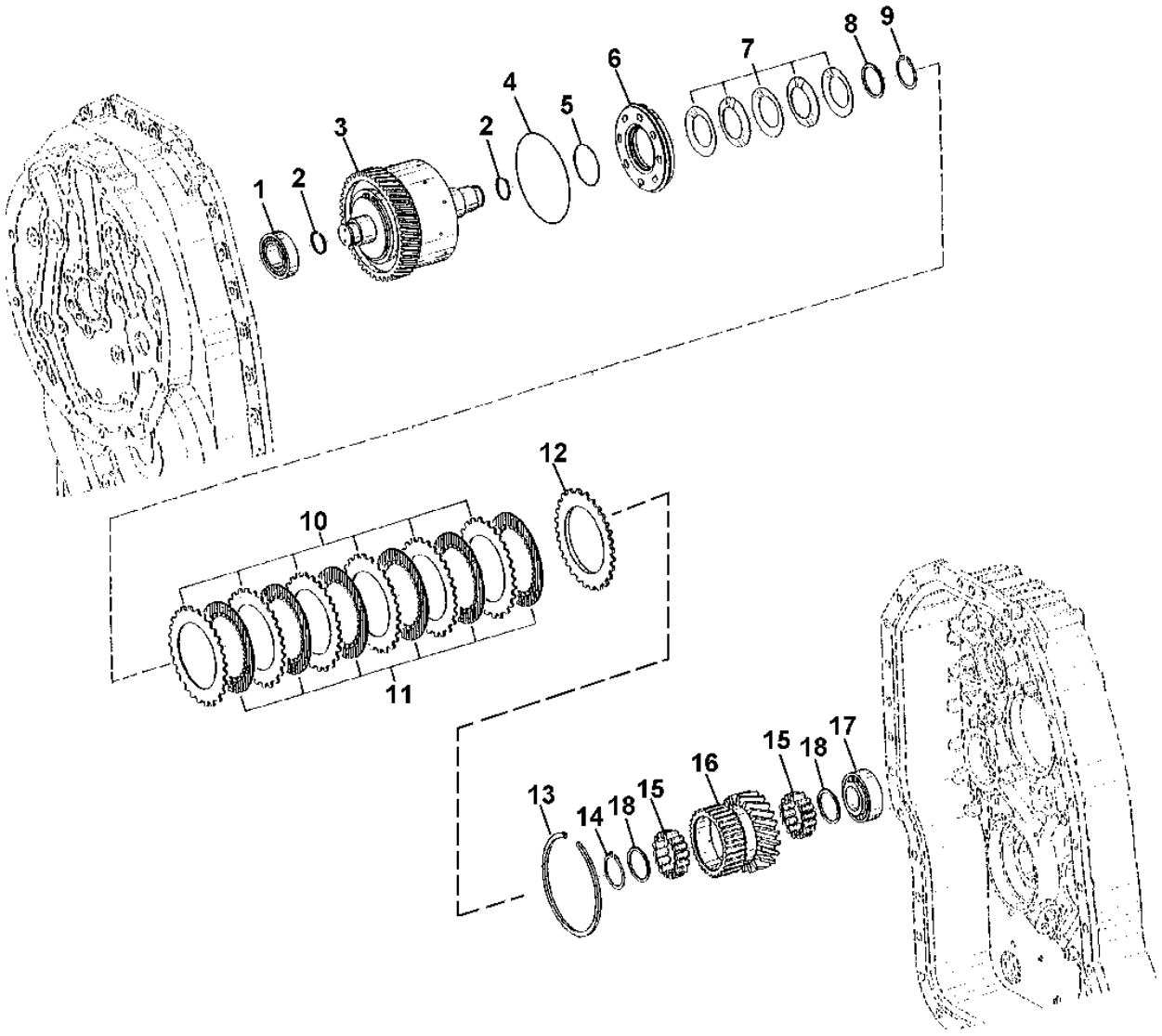

TP57928

SECOND GEAR CLUTCH ASSEMBLY
POWER SHIFT

KEY	PART NO.	PART NAME	QTY	SERIAL NO.	310G	310SG	315SG	REMARKS
1	AT179472	TAPERED ROLLER BEARING	1		X	X		
2	T158742	RING	2		X	X		
3	AT184053	DRUM	1		X	X		DISK CARRIER
4	.....	RING	1		X	X		(SUB AT193704) (T158739 NO LONGER AVAILABLE)
5	.....	RING	1		X	X		(SUB AT193704) (T158743 NO LONGER AVAILABLE)
6	AT193704	PISTON	1		X	X		(SUB FOR T158789)
7	T158775	DISK SPRING	5		X	X		
8	T164712	SHIM	1		X	X		
9	40M7058	SNAP RING	1		X	X		2 MM
10	T158801	CLUTCH PLATE	6		X	X		
11	T164626	DISK	6		X	X		
12	T161147	PLATE	1		X	X		
13	T161183	SNAP RING	1		X	X		4 MM
	T158778	SNAP RING	1		X	X		3.5 MM
	T159568	SNAP RING	1		X	X		3 MM
	T159569	SNAP RING	1		X	X		2.5 MM
	T159570	SNAP RING	1		X	X		2 MM
14	40M7058	SNAP RING	1		X	X		
15	AT185793	ROLLER	2		X	X		
16	T164643	GEAR	1		X	X		
17	AT184052	ROLLER BEARING	1		X	X		
18	T166062	SNAP RING	2		X	X		

THIRD GEAR CLUTCH ASSEMBLY
POWER SHIFT

TP57929 -UN-18SEP98

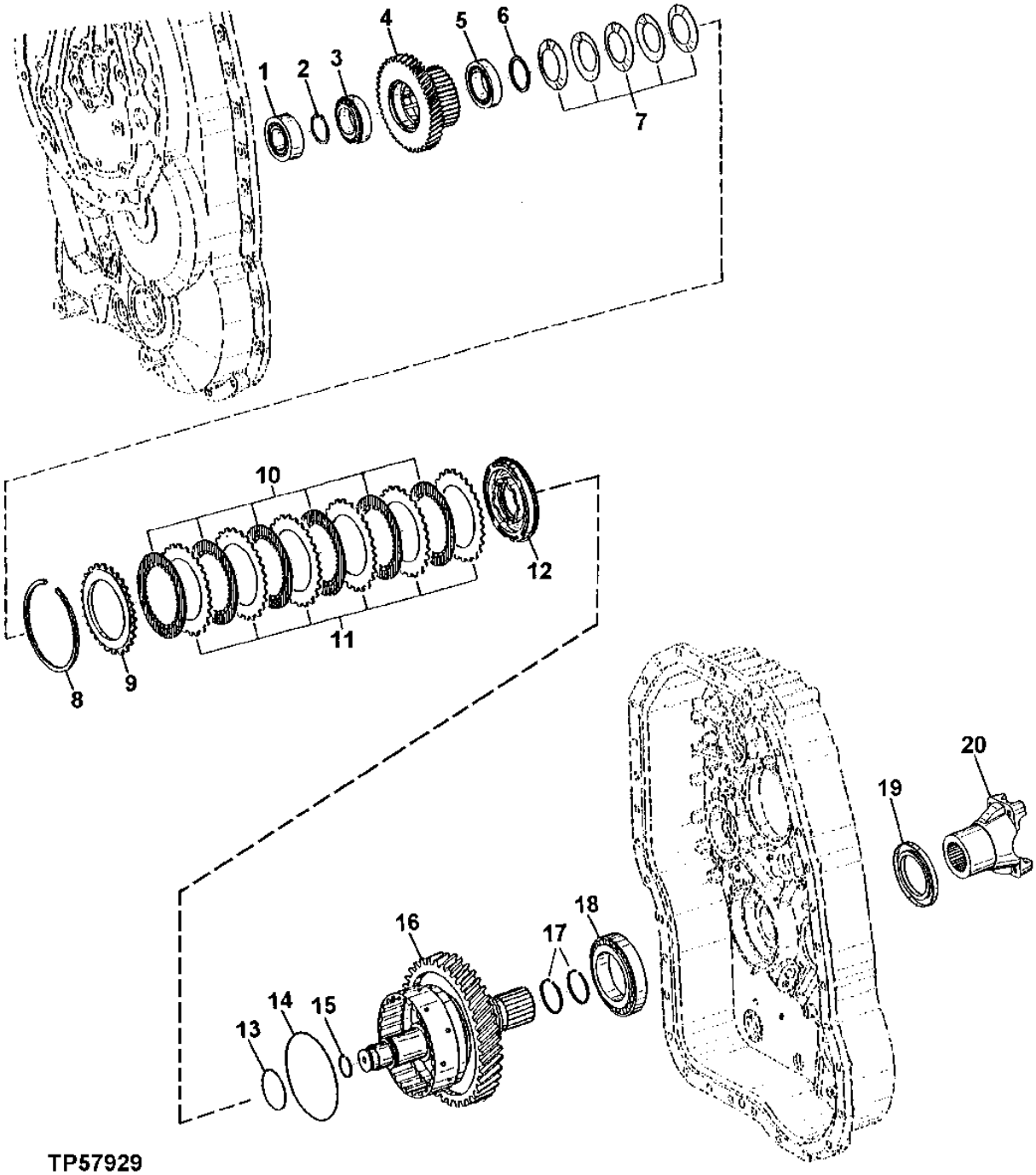

THIRD GEAR CLUTCH ASSEMBLY
POWER SHIFT

KEY	PART NO.	PART NAME	QTY	SERIAL NO.	310G	310SG	315SG	REMARKS
1	AT184052	ROLLER BEARING	1		X	X		
2	T161186	SNAP RING	1		X	X		3.2 MM
	T161187	SNAP RING	1		X	X		3.1 MM
	T161188	SNAP RING	1		X	X		3 MM
	T161189	SNAP RING	1		X	X		2.9 MM
	T161190	SNAP RING	1		X	X		2.8 MM
	T161191	SNAP RING	1		X	X		2.7 MM
	T161192	SNAP RING	1		X	X		2.6 MM
	T161193	SNAP RING	1		X	X		2.5 MM
	T164628	SNAP RING	1		X	X		2.3 MM
	T164629	SNAP RING	1		X	X		2.2 MM
	T164630	SNAP RING	1		X	X		2.1 MM
3	AT179470	TAPERED ROLLER BEARING	1		X	X		
4	T166065	GEAR	1		X	X		
5	AT179469	TAPERED ROLLER BEARING	1		X	X		
6	T158756	WASHER	1		X	X		
7	T158775	DISK SPRING	5		X	X		
8	T161183	SNAP RING	1		X	X		4 MM
	T158778	SNAP RING	1		X	X		3.5 MM
	T159568	SNAP RING	1		X	X		3 MM
	T159569	SNAP RING	1		X	X		2.5 MM
	T159570	SNAP RING	1		X	X		2 MM
9	T161147	PLATE	1		X	X		2 MM
10	T164626	DISK	6		X	X		
11	T158801	CLUTCH PLATE	6		X	X		
12	AT193704	PISTON	1		X	X		(SUB FOR T158789)
13	.....	RING	1		X	X		(SUB AT193704) (T158743 NO LONGER AVAILABLE)
14	.....	RING	1		X	X		(SUB AT193704) (T158739 NO LONGER AVAILABLE)
15	T158742	RING	1		X	X		
16	AT184055	DRUM	1		X	X		DISK CARRIER
17	T164646	O-RING	2		X	X		
18	AT184056	ROLLER BEARING	1		X	X		
19	AT179481	SEAL	1		X	X		
20	AT177701	UNIVERSAL JOINT YOKE	1		X	X		

FOURTH GEAR CLUTCH ASSEMBLY
POWER SHIFT

TP57932 -UN-16SEP98

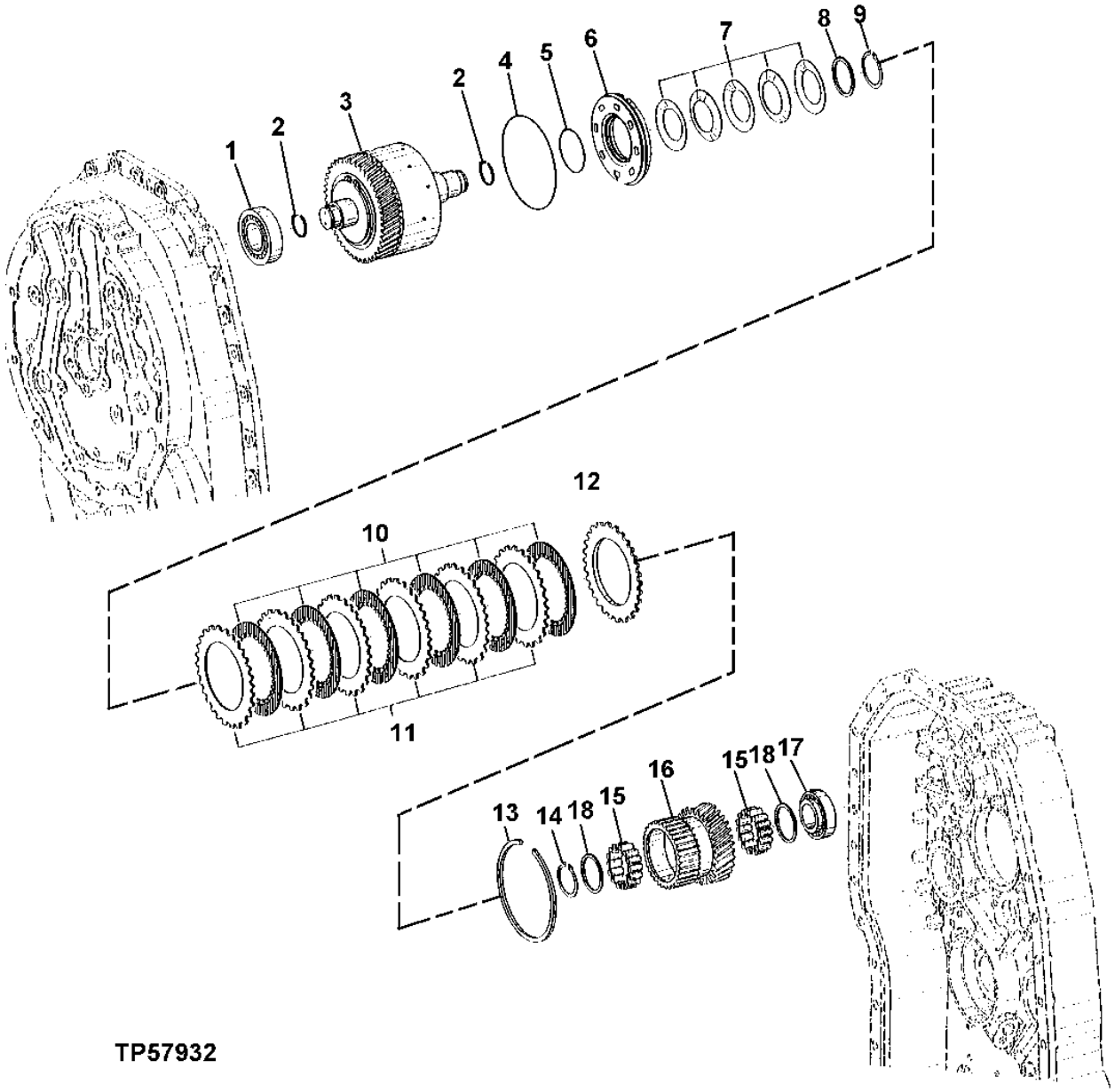

FOURTH GEAR CLUTCH ASSEMBLY
POWER SHIFT

KEY	PART NO.	PART NAME	QTY	SERIAL NO.	310G	310SG	315SG	REMARKS
1	AT184042	BEARING	1			X	X	
2	T158742	RING	2			X	X	
3	AT184057	DRUM	1			X	X	DISK CARRIER
4	.....	RING	1			X	X	(SUB AT193704) (T158739 NO LONGER AVAILABLE)
5	.....	RING	1			X	X	(SUB AT193704) (T158743 NO LONGER AVAILABLE)
6	AT193704	PISTON	1			X	X	(SUB FOR T158789)
7	T158775	DISK SPRING	5			X	X	
8	T164712	SHIM	1			X	X	
9	40M7058	SNAP RING	1			X	X	2 MM
10	T158801	CLUTCH PLATE	6			X	X	
11	T164626	DISK	6			X	X	
12	T161147	PLATE	1			X	X	
13	T161183	SNAP RING	1			X	X	4 MM
	T158778	SNAP RING	1			X	X	3.5 MM
	T159568	SNAP RING	1			X	X	3 MM
	T159569	SNAP RING	1			X	X	2.5 MM
	T159570	SNAP RING	1			X	X	2 MM
14	40M7058	SNAP RING	1			X	X	
15	AT185793	ROLLER	2			X	X	
16	T164647	GEAR	1			X	X	
17	AT179471	TAPERED ROLLER BEARING	1			X	X	
18	T166062	THRUST WASHER	2			X	X	

FORWARD CLUTCH ASSEMBLY
POWER SHIFT

TP57933 -UN-15SEP98

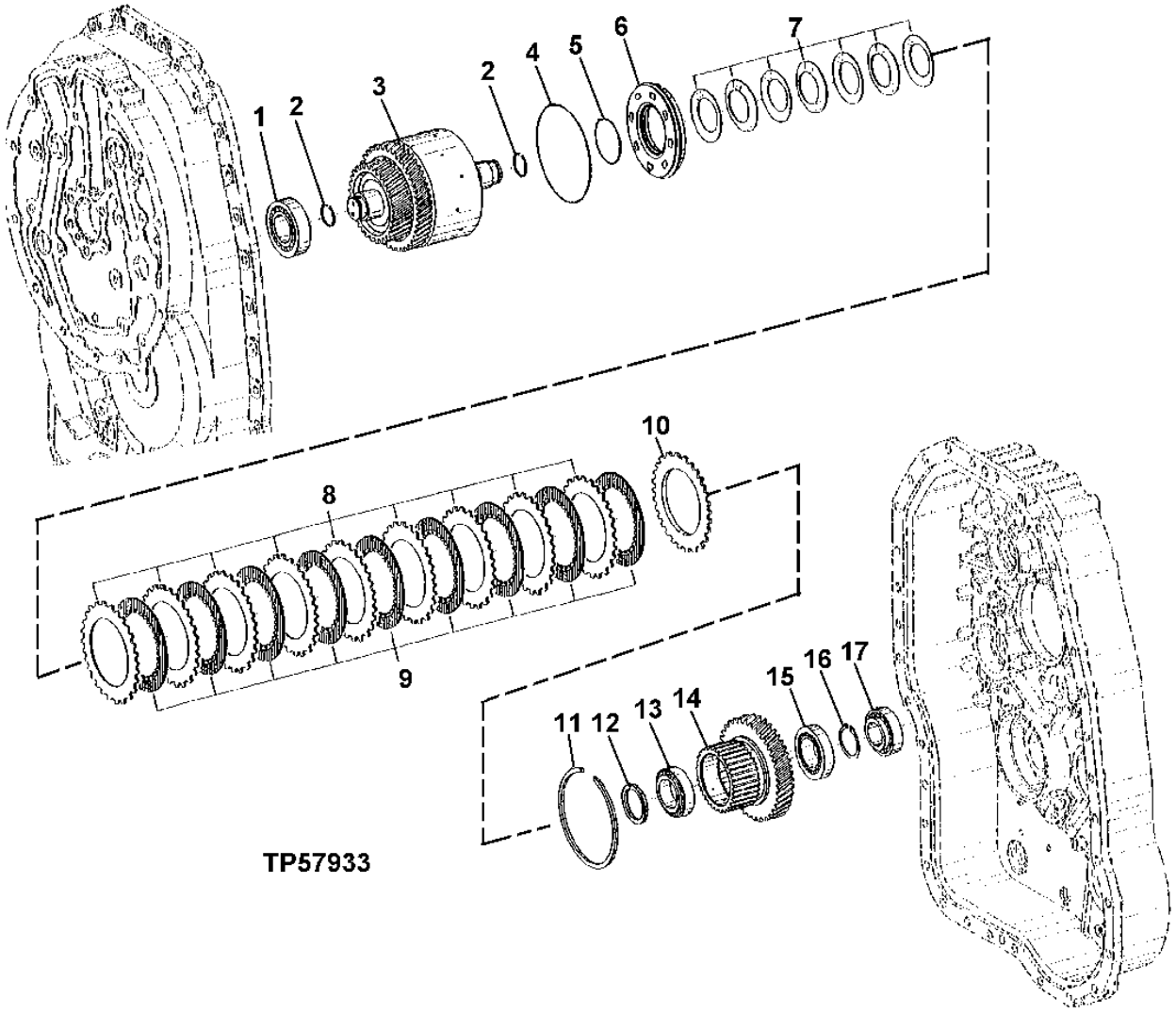

FORWARD CLUTCH ASSEMBLY
POWER SHIFT

KEY	PART NO.	PART NAME	QTY	SERIAL NO.	310G	310SG	315SG	REMARKS
1	AT184042	BEARING	1		X	X		
2	T158742	RING	2		X	X		
3	AT184043	DRUM	1		X	X		DISK CARRIER
4	.....	RING	1		X	X		(SUB AT193704) (T158739 NO LONGER AVAILABLE)
5	.....	RING	1		X	X		(SUB AT193704) (T158743 NO LONGER AVAILABLE)
6	AT193704	PISTON	1		X	X		(SUB FOR T158789)
7	T158775	DISK SPRING	7		X	X		
8	T158801	CLUTCH PLATE	9		X	X		
9	AT179473	DISK WITH INNER SPLINE	9		X	X		
10	T161147	PLATE	1		X	X		
11	T161183	SNAP RING	1		X	X		4 MM
	T158778	SNAP RING	1		X	X		3.5 MM
	T159568	SNAP RING	1		X	X		3 MM
	T159569	SNAP RING	1		X	X		2.5 MM
	T159570	SNAP RING	1		X	X		2 MM
12	T158756	WASHER	1		X	X		
13	AT179469	TAPERED ROLLER BEARING	1		X	X		
14	T164711	GEAR	1		X	X		
15	AT179470	TAPERED ROLLER BEARING	1		X	X		
16	T161186	SNAP RING	1		X	X		3.2 MM
	T161187	SNAP RING	1		X	X		3.1 MM
	T161188	SNAP RING	1		X	X		3 MM
	T161189	SNAP RING	1		X	X		2.9 MM
	T161190	SNAP RING	1		X	X		2.8 MM
	T161191	SNAP RING	1		X	X		2.7 MM
	T161192	SNAP RING	1		X	X		2.6 MM
	T161193	SNAP RING	1		X	X		2.5 MM
	T164628	SNAP RING	1		X	X		2.3 MM
	T164629	SNAP RING	1		X	X		2.2 MM
	T164630	SNAP RING	1		X	X		2.1 MM
17	AT179471	TAPERED ROLLER BEARING	1		X	X		

REVERSE CLUTCH ASSEMBLY
POWER SHIFT

TP57934 -UN-15SEP98

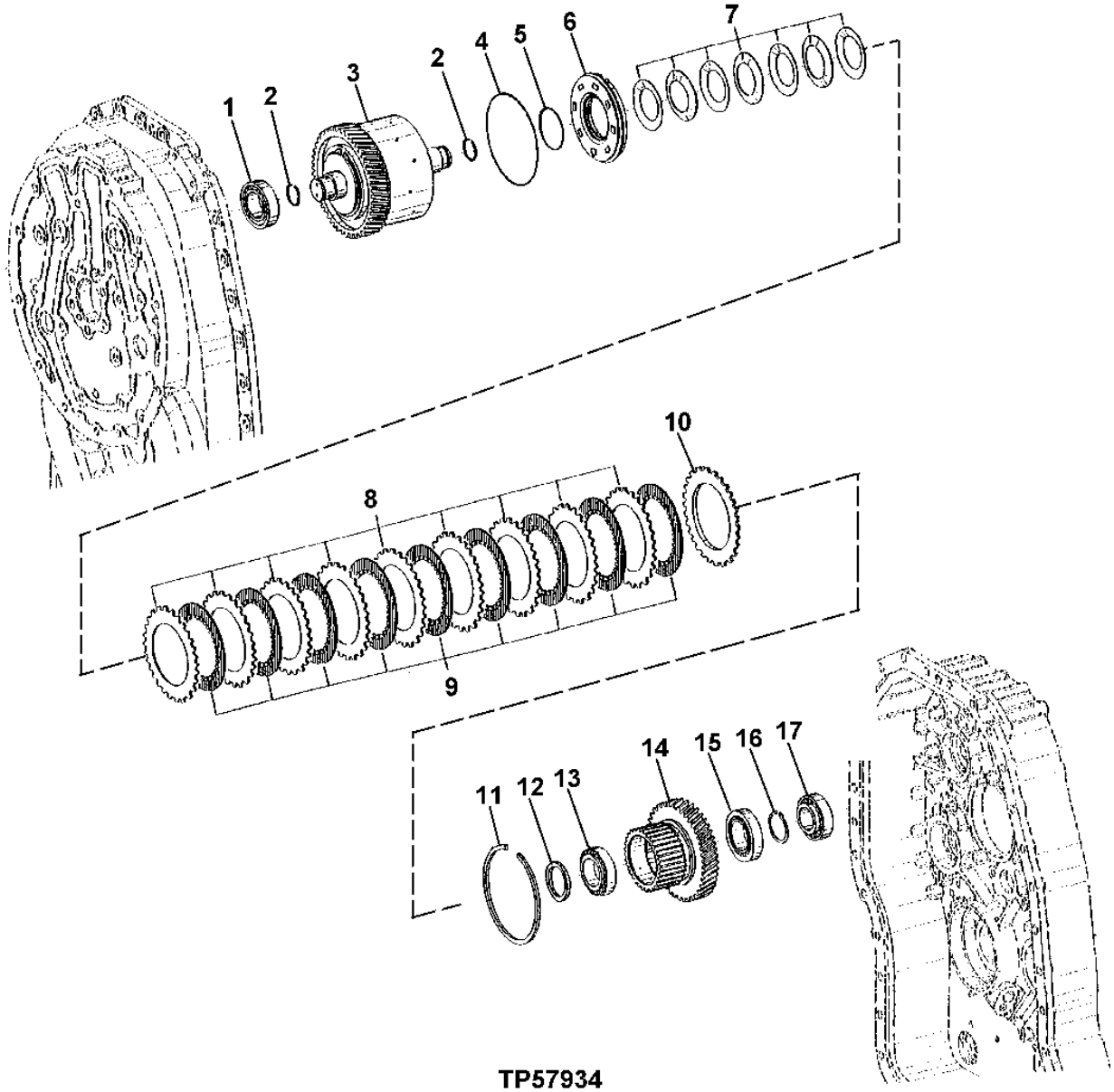

TP57934

REVERSE CLUTCH ASSEMBLY
POWER SHIFT

KEY	PART NO.	PART NAME	QTY	SERIAL NO.	310G	310SG	315SG	REMARKS
1	AT179472	TAPERED ROLLER BEARING	1		X	X		
2	T158742	RING	2		X	X		
3	AT184045	DRUM	1		X	X		DISK CARRIER
4	.....	RING	1		X	X		(SUB AT193704) (T158739 NO LONGER AVAILABLE)
5	.....	RING	1		X	X		(SUB AT193704) (T158743 NO LONGER AVAILABLE)
6	AT193704	PISTON	1		X	X		(SUB FOR T158789)
7	T158775	DISK SPRING	7		X	X		
8	T158801	CLUTCH PLATE	9		X	X		
9	AT179473	DISK WITH INNER SPLINE	9		X	X		
10	T161147	PLATE	1		X	X		
11	T161183	SNAP RING	1		X	X		4 MM
	T158778	SNAP RING	1		X	X		3.5 MM
	T159568	SNAP RING	1		X	X		3 MM
	T159569	SNAP RING	1		X	X		2.5 MM
	T159570	SNAP RING	1		X	X		2 MM
12	T158756	WASHER	1		X	X		
13	AT179469	TAPERED ROLLER BEARING	1		X	X		
14	T164711	DISK	1		X	X		
15	AT179470	TAPERED ROLLER BEARING	1		X	X		
16	T161186	SNAP RING	1		X	X		3.2 MM
	T161187	SNAP RING	1		X	X		3.1 MM
	T161188	SNAP RING	1		X	X		3 MM
	T161189	SNAP RING	1		X	X		2.9 MM
	T161190	SNAP RING	1		X	X		2.8 MM
	T161191	SNAP RING	1		X	X		2.7 MM
	T161192	SNAP RING	1		X	X		2.6 MM
	T161193	SNAP RING	1		X	X		2.5 MM
	T164628	SNAP RING	1		X	X		2.3 MM
	T164629	SNAP RING	1		X	X		2.2 MM
	T164630	SNAP RING	1		X	X		2.1 MM
17	AT179471	TAPERED ROLLER BEARING	1		X	X		

TRANSMISSION OUTPUT SHAFT
POWER SHIFT
(WITH MECHANICAL FRONT WHEEL DRIVE)

TP57935 -UN-16SEP98

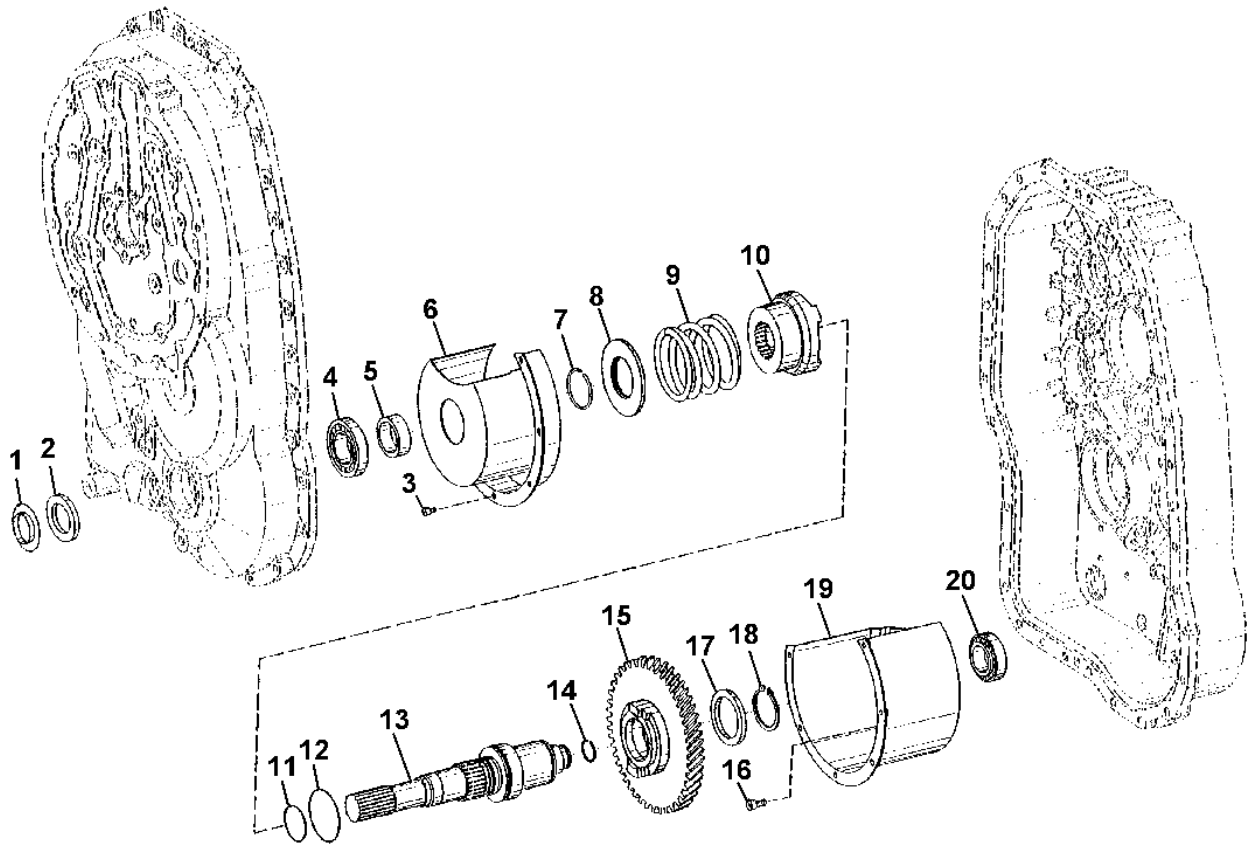

TP57935

TRANSMISSION OUTPUT SHAFT
POWER SHIFT
(WITH MECHANICAL FRONT WHEEL DRIVE)

KEY	PART NO.	PART NAME	QTY	SERIAL NO.	310G	310SG	315SG	REMARKS
1	T159572	SEAL	1		X	X		
2	AT179466	SEAL	1		X	X		
3	T166078	SCREW	6		X	X		
4	AT179468	TAPERED ROLLER BEARING	1		X	X		
5	T164572	BUSHING	1		X	X		
6	T164576	SCREEN	1		X	X		
7	T158722	SNAP RING	1		X	X		
8	T158855	END PLATE	1		X	X		
9	T158762	SPRING	1		X	X		
10	T158859	SLEEVE	1		X	X		
11	T158744	RING	1		X	X		
12	T158745	RING	1		X	X		
13	T164574	SHAFT	1		X	X		
14	T158742	RING	1		X	X		
15	T164575	GEAR	1		X	X		
16	19M7931	SCREW	3		X	X		M8 X 16
17	T158760	THRUST WASHER	1		X	X		
18	L78069	RING	1		X	X		
19	T184918	SCREEN	1		X	X		
20	AT179472	TAPERED ROLLER BEARING	1		X	X		

TRANSMISSION CONTROL VALVE GROUP
SYNCHRO-SHUTTLE

T150759 -UN-31JAN02

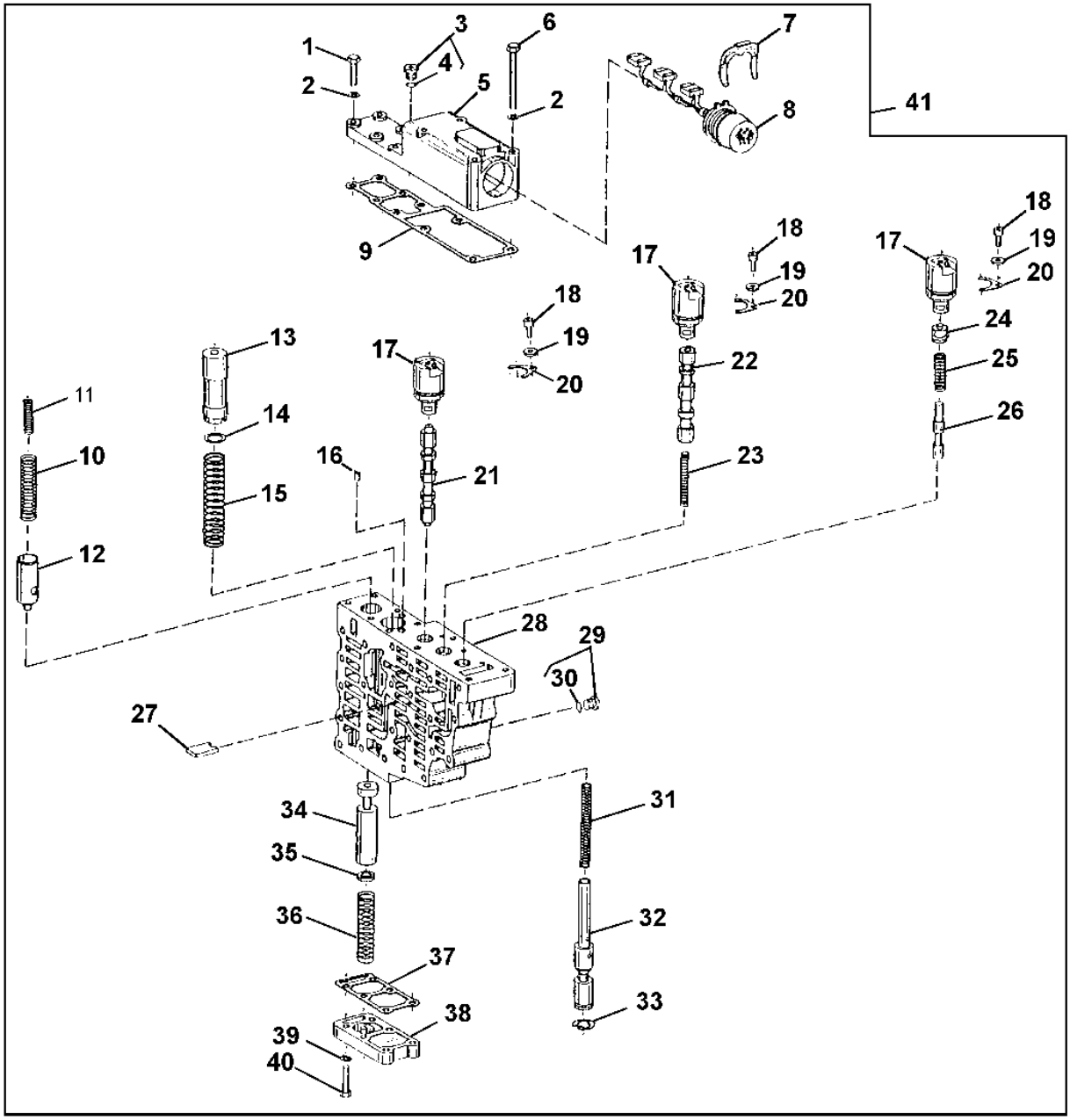

T150759

TRANSMISSION CONTROL VALVE GROUP
SYNCHRO-SHUTTLE

KEY	PART NO.	PART NAME	QTY	SERIAL NO.	310G	310SG	315SG	REMARKS
1	T159593	CAP SCREW	6		X	X	X	
2	T161204	WASHER	AR		X	X	X	
3	T161194	PLUG	1		X	X	X	(INCLUDES ORING)
4	L11698	O-RING	1		X	X	X	
5	T185606	COVER	1		X	X	X	
6	T159607	CAP SCREW	4		X	X	X	
7	T161207	CLAMP	1		X	X	X	
8	AT179492	WIRING HARNESS	1		X	X	X	
9	T159604	GASKET	1		X	X	X	
10	T159584	SPRING	1		X	X	X	
11	T188173	SPRING	1		X	X	X	
12	.....	PISTON	1		X	X	X	(T159583 AND T161196, SHIM NO LONGER AVAILABLE) (SUB T188172)
	T188172	PISTON	1		X	X	X	
13	T162947	PISTON	1		X	X	X	
14	T164584	SPACER	1		X	X	X	0.2 MM
	T164583	SPACER	1		X	X	X	0.3 MM
	T164582	SPACER	1		X	X	X	0.5 MM
	T161203	SHIM	1		X	X	X	1.0 MM
	T164581	SPACER	1		X	X	X	2.0 MM
15	T161202	SPRING	1		X	X	X	
16	T164577	ORIFICE	1		X	X	X	
17	AT179491	SOLENOID VALVE	3		X	X	X	FORWARD, NEUTRAL CLUTCH DISCONNECT,REVERSE
18	T164693	SCREW	3		X	X	X	
19	T144487	WASHER	3		X	X	X	
20	T144486	PLATE	3		X	X	X	
21	AT182947	PISTON	1		X	X	X	
22	T159595	PISTON	1		X	X	X	
23	T159596	SPRING	1		X	X	X	
24	T159599	PLUG	1		X	X	X	
25	T159598	SPRING	1		X	X	X	
26	T159597	PISTON	1		X	X	X	
27	T159600	PLATE	1		X	X	X	
28	T159582	HOUSING	1		X	X	X	
29	T161194	PLUG	7		X	X	X	(INCLUDES ORING)
30	L11698	O-RING	7		X	X	X	
31	T159589	SPRING	1		X	X	X	
32	T159587	PISTON	1		X	X	X	
33	T159588	LOCK WASHER	1		X	X	X	
34	T164579	PISTON	1		X	X	X	
35	T161200	SPACER	AR		X	X	X	2.4 MM
	T161199	SPACER	AR		X	X	X	2.8 MM
	T161198	SPACER	AR		X	X	X	3.2 MM
	T161197	SPACER	AR		X	X	X	3.6 MM
36	T159586	SPRING	1		X	X	X	
37	T159591	GASKET	1		X	X	X	
38	T159592	COVER	1		X	X	X	
39	T161204	WASHER	6		X	X	X	
40	T159593	CAP SCREW	6		X	X	X	
41	AT195752	HYD ACTUATED CONTROL VALVE	1		X	X	X	(SUB FOR AT179447)

TRANSMISSSION INTERMEDIATE PLATE AND GASKET
SYNCHRO-SHUTTLE

TP69690 -UN-14SEP00

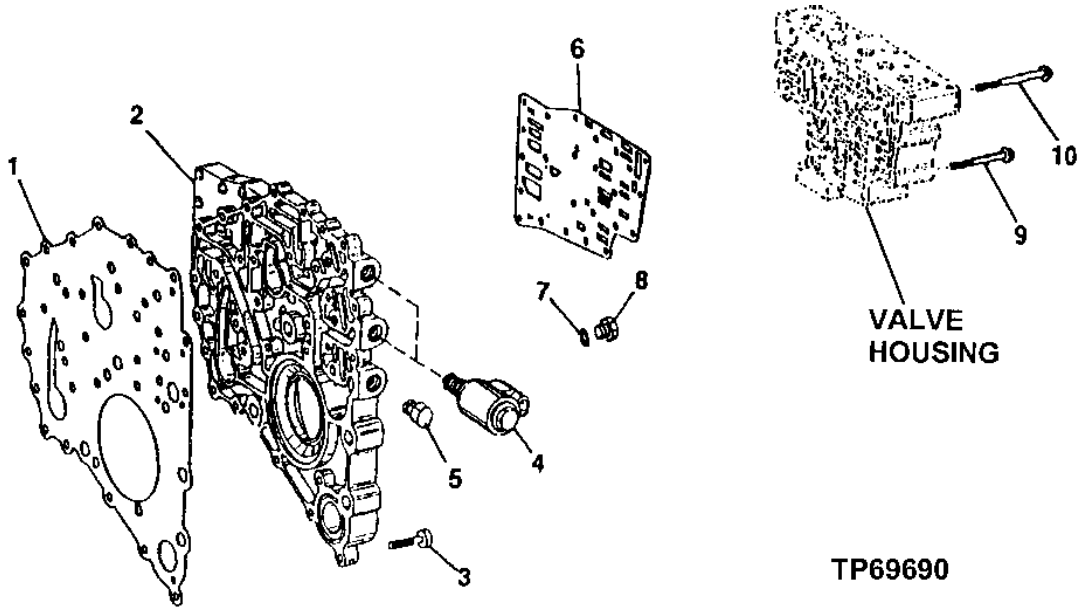

KEY	PART NO.	PART NAME	QTY	SERIAL NO.	310G	310SG	315SG	REMARKS
1	T184586	GASKET	1		X	X	X	
2	T186041	HOUSING	1		X	X	X	
3	T161208	CAP SCREW	30		X	X	X	
4	AT177703	SOLENOID VALVE	2		X	X	X	DIFFERENTIAL LOCK, PARK BRAKE, MFWD
	.....	SOLENOID	1		X	X	X	(AT179318 NO LONGER AVAILABLE) (SERVICED IN AT177703)
	AT179319	ELECTRICAL COIL	1		X	X	X	
	AT179320	O-RING KIT	1		X	X	X	
	T161144	NUT	1		X	X	X	
5	T159684	PLUG	1		X	X	X	
6	AT192550	PLATE	1		X	X	X	(NO GASKETS REQUIRED)
7	R26286	O-RING	1		X	X	X	
8	R27094	DRAIN PLUG	1		X	X	X	
9	T159607	CAP SCREW	19		X	X	X	
10	T159613	CAP SCREW	4		X	X	X	

TRANSMISSION CHARGE PUMP

TP57925 -UN-14SEP98

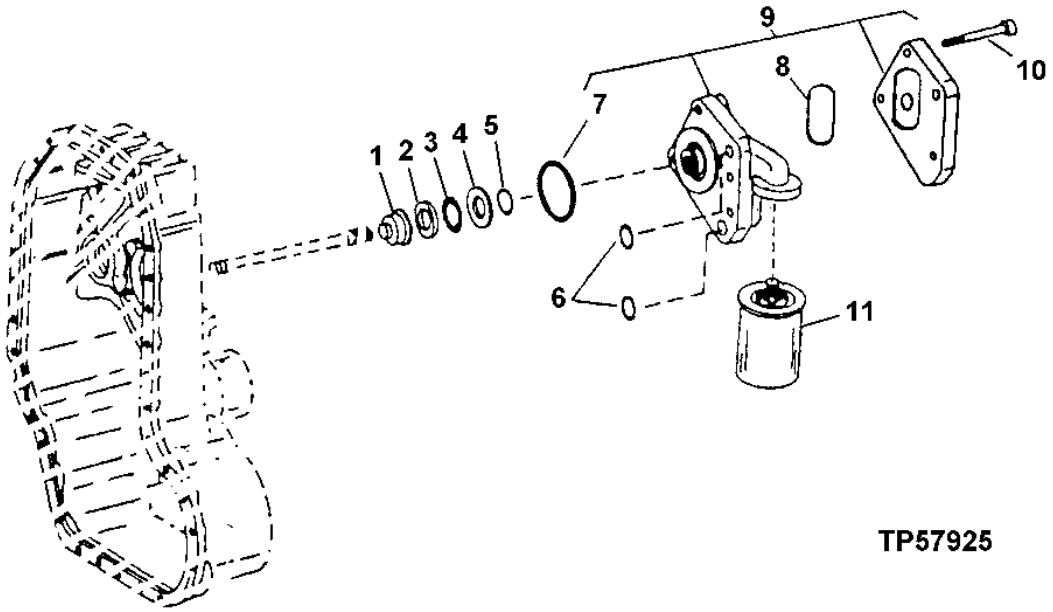

KEY	PART NO.	PART NAME	QTY	SERIAL NO.	310G	310SG	315SG	REMARKS
1	T166077	STOP	1		X	X	X	
2	T158732	DISK	1		X	X	X	
3	AT179153	NEEDLE BEARING	1		X	X	X	
4	T158749	THRUST WASHER	1		X	X	X	
5	T141689	O-RING	1		X	X	X	
6	T19854	O-RING	2		X	X	X	
7	T162446	PACKING	1		X	X	X	
8	T162935	O-RING	1		X	X	X	
9	AT186167	HYDRAULIC PUMP	1		X	X	X	
10	T158754	CAP SCREW	4		X	X	X	
11	AT179323	OIL FILTER	1		X	X	X	

TRANSMISSION CONTROL VALVE GROUP
POWER SHIFT

T150758 -UN-05FEB02

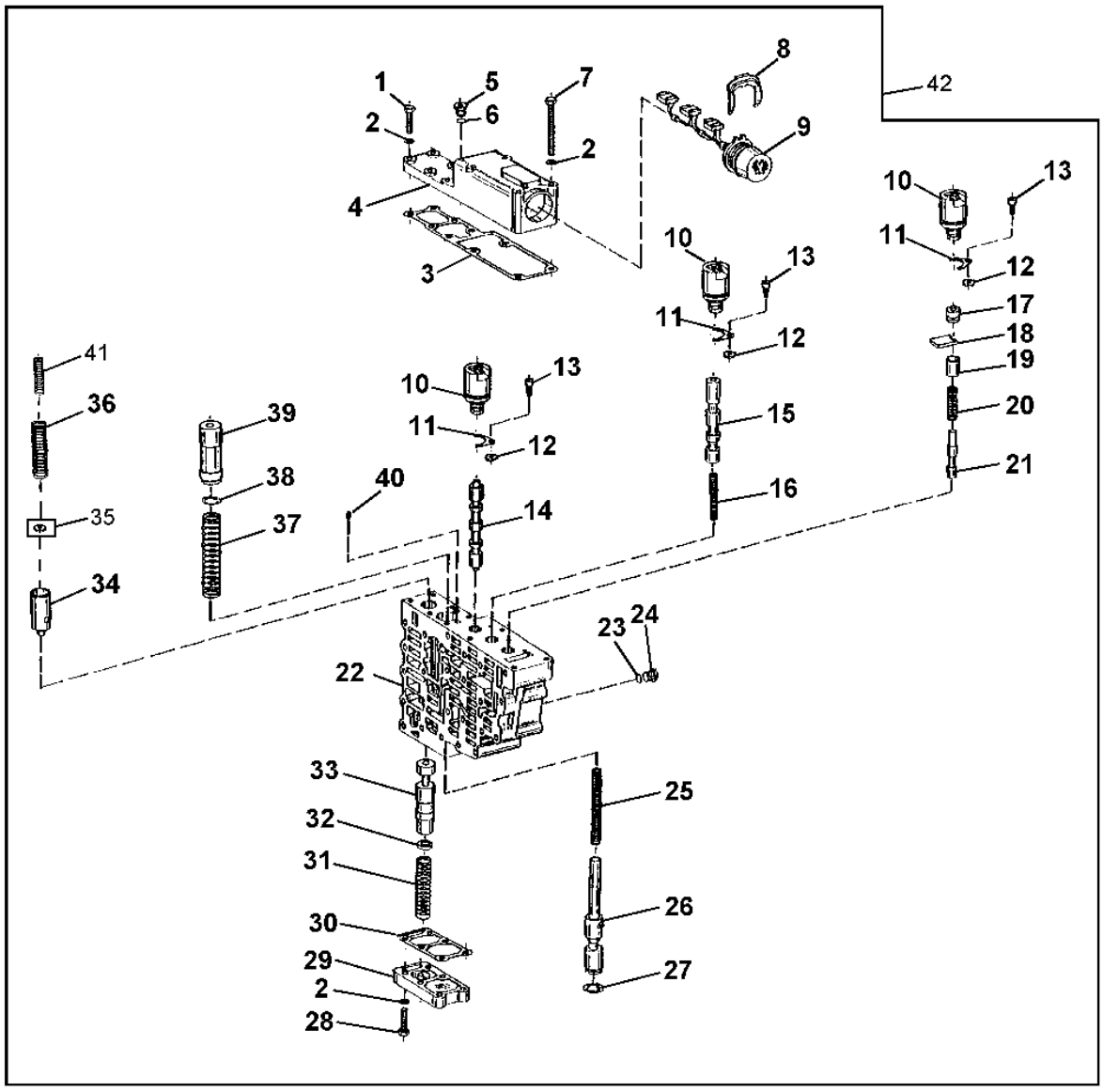

T150758

TRANSMISSION CONTROL VALVE GROUP
POWER SHIFT

KEY	PART NO.	PART NAME	QTY	SERIAL NO.	310G	310SG	315SG	REMARKS
1	T159593	CAP SCREW	6		X	X		
2	T161204	WASHER	16		X	X		
3	T159604	GASKET	1		X	X		
4	T185606	COVER	1		X	X		
5	T161194	PLUG	3		X	X		
6	L11698	O-RING	3		X	X		
7	T159607	CAP SCREW	4		X	X		
8	T161207	CLAMP	1		X	X		
9	AT179492	WIRING HARNESS	1		X	X		
10	AT179491	SOLENOID VALVE	3		X	X		FORWARD, NEUTRAL, REVERSE
11	T144486	PLATE	3		X	X		
12	T144487	WASHER	3		X	X		
13	T164693	SCREW	3		X	X		
14	AT182947	PISTON	1		X	X		
15	T164578	PISTON	1		X	X		
16	T159596	SPRING	1		X	X		
17	T159599	PLUG	1		X	X		
18	T159600	PLATE	1		X	X		
19	T164585	SPACER	1		X	X		
20	T159598	SPRING	1		X	X		
21	T159597	PISTON	1		X	X		
22	T159582	HOUSING	1		X	X		
23	L11698	O-RING	5		X	X		
24	T161194	PLUG	5		X	X		
25	T159589	SPRING	1		X	X		
26	T159587	PISTON	1		X	X		
27	T159588	LOCK WASHER	1		X	X		
28	T159593	CAP SCREW	6		X	X		
29	T159592	COVER	1		X	X		
30	T159591	GASKET	1		X	X		
31	T159586	SPRING	1		X	X		
32	T161200	SPACER	1		X	X		2.4 MM
	T161199	SPACER	1		X	X		2.8 MM
	T161198	SPACER	1		X	X		3.2 MM
	T161197	SPACER	1		X	X		3.6 MM
33	T164579	PISTON	1		X	X		
34	.....	PISTON	1		X	X		(SUB T188172 AND T188173) (T159583 NO LONGER AVAILABLE)
	T188172	PISTON	1		X	X		
35	.....	SPACER	1		X	X		(SUB T188172 AND T188173) (T161196 NO LONGER AVAILABLE)
36	T159584	SPRING	1		X	X		
37	T161202	SPRING	1		X	X		
38	T164584	SPACER	1		X	X		.2 MM
	T164583	SPACER	1		X	X		.3 MM
	T164582	SPACER	1		X	X		.5 MM
	T161203	SHIM	1		X	X		1 MM
	T164581	SPACER	1		X	X		2 MM
39	T162947	PISTON	1		X	X		
40	T164577	ORIFICE	1		X	X		
41	T188173	SPRING	1		X	X		
42	AT195753	HYD ACTUATED CONTROL VALVE	1		X	X		(SUB FOR AT183972)

RANGE SHIFT VALVE GROUP
POWER SHIFT

TP57938 -UN-17SEP98

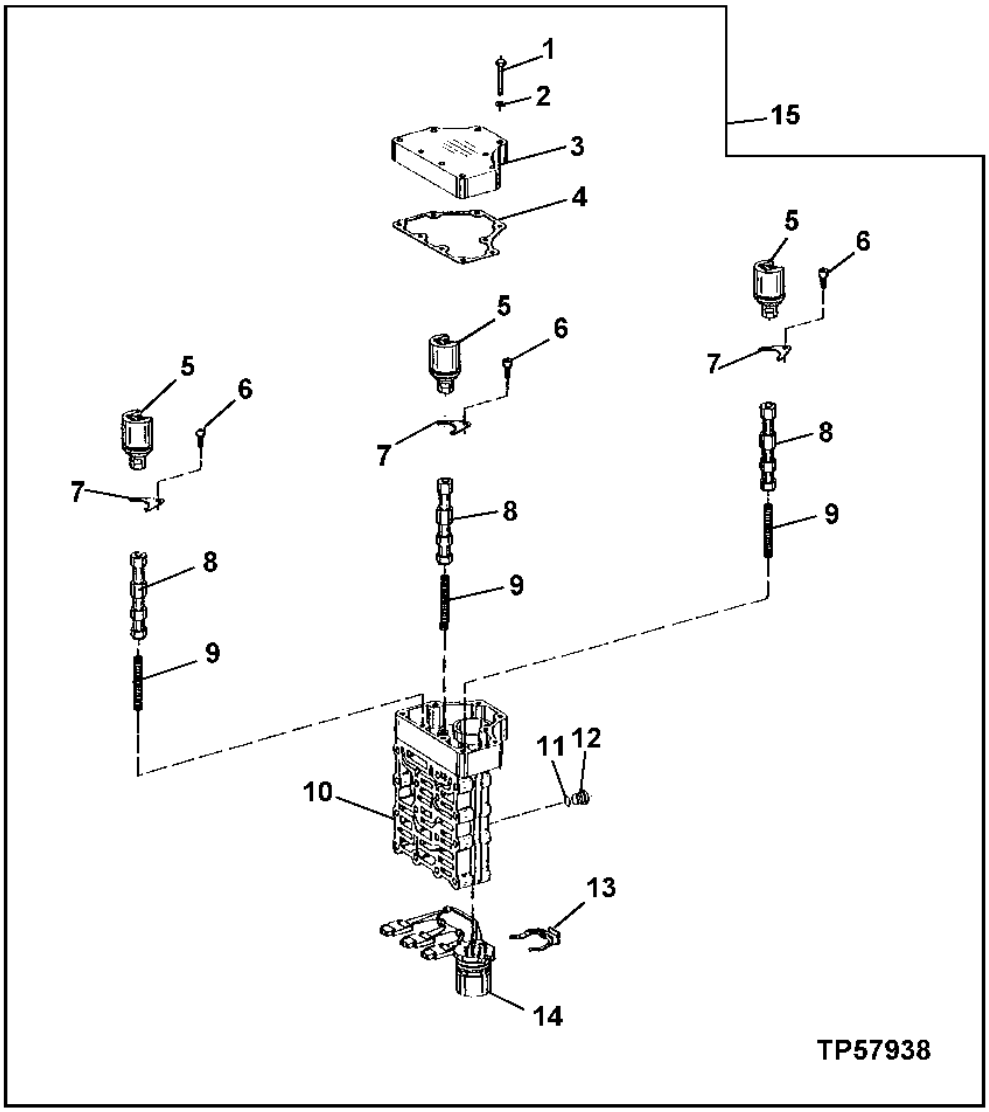

RANGE SHIFT VALVE GROUP
POWER SHIFT

KEY	PART NO.	PART NAME	QTY	SERIAL NO.	310G	310SG	315SG	REMARKS
1	T166066	CAP SCREW	9			X	X	
2	T164702	WASHER	9			X	X	
3	T164611	COVER	1			X	X	
4	T164612	GASKET	1			X	X	
5	AT179491	SOLENOID VALVE	3			X	X	
6	T164693	SCREW	3			X	X	
7	T144486	PLATE	3			X	X	
8	T164610	PISTON	3			X	X	
9	T159596	SPRING	3			X	X	
10	T164609	HOUSING	1			X	X	
11	L11698	RING	4			X	X	
12	T161194	PLUG	4			X	X	
13	T161207	CLAMP	1			X	X	
14	AT184007	WIRING HARNESS	1			X	X	
15	AT183973	HYD ACTUATED CONTROL VALVE	1			X	X	

TRANSMISSION INTERMEDIATE PLATE AND GASKETS
POWER SHIFT

T143501 -UN-29JUN01

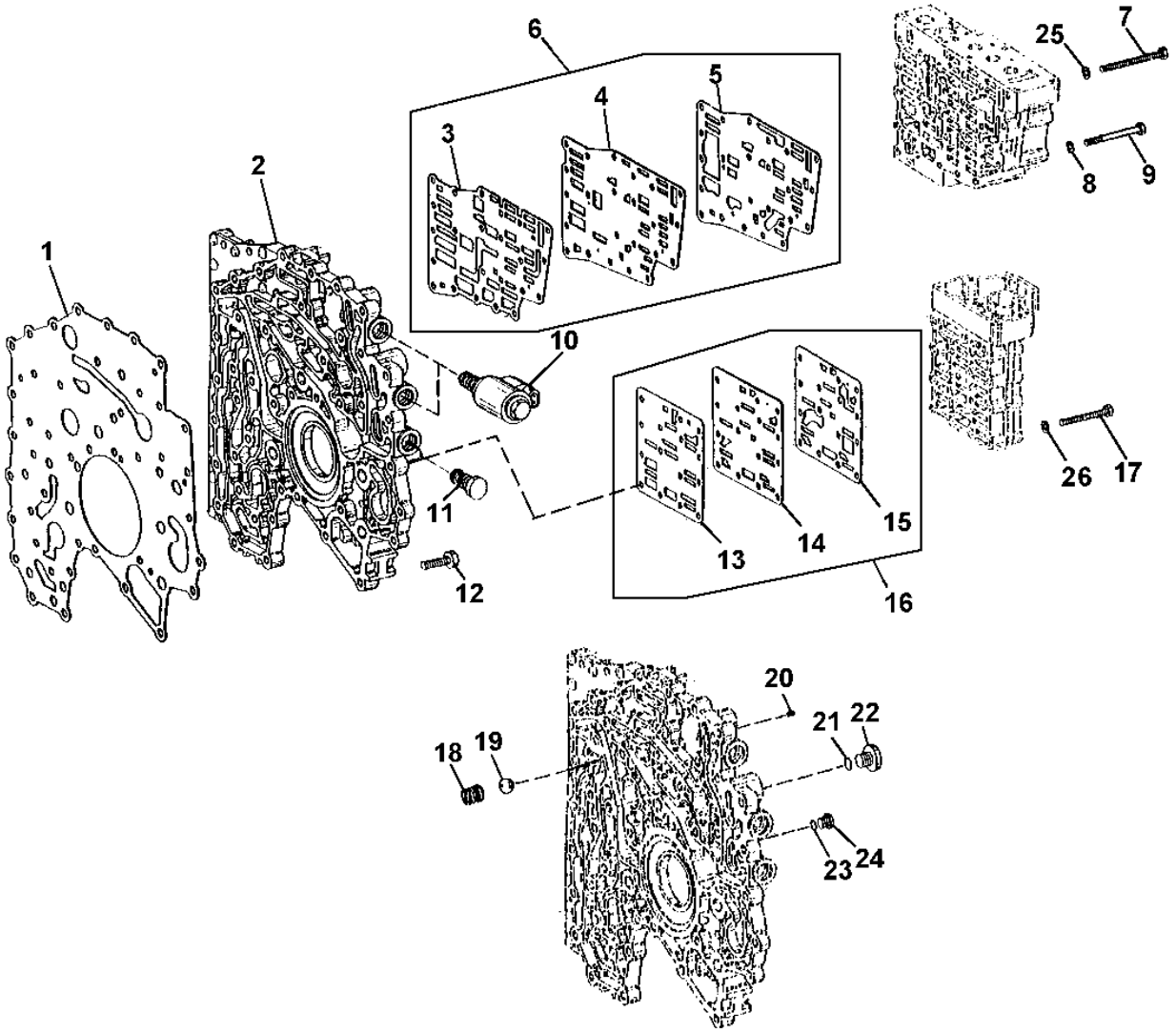

T143501

TRANSMISSION INTERMEDIATE PLATE AND GASKETS
POWER SHIFT

KEY	PART NO.	PART NAME	QTY	SERIAL NO.	310G	310SG	315SG	REMARKS
1	T164592	GASKET	1		X	X		
2	T186560	HOUSING	1		X	X		(SUB FOR T164591)
3	.....	GASKET	1		X	X		(SUB AT192552) (ALSO ORDER (19) T159607) (SUB FOR T159612)
4	.....	PLATE	1		X	X		(SUB AT192552) (ALSO ORDER (19) T159607) (SUB FOR T164595)
5	.....	GASKET	1		X	X		(SUB AT192552) (ALSO ORDER (19) T159607) (SUB FOR T164596)
6	AT192552	PLATE	1		X	X		(SUB FOR T159612, T164595 AND T164596) (ALSO ORDER (19) T159607)
7	T159613	CAP SCREW	4		X	X		
8	T161204	WASHER	19		X	X		
9	T159607	CAP SCREW	19		X	X		
10	AT177703	SOLENOID VALVE	2		X	X		
	.....	SOLENOID	2		X	X		(AT179318 NO LONGER AVAILABLE) (SERVICED IN AT177703)
	AT179319	ELECTRICAL COIL	2		X	X		
	AT179320	O-RING KIT	2		X	X		
	T161144	NUT	2		X	X		
11	T159684	PLUG	1		X	X		MFWD SOLINOID HOLE PLUG
12	T161208	CAP SCREW	43		X	X		
13	.....	GASKET	1		X	X		(SUB AT192553) (ALSO ORDER (19) T159607) (SUB FOR T164597)
14	.....	PLATE	1		X	X		(SUB AT192553) (ALSO ORDER (19) T159607) (SUB FOR T164598)
15	.....	GASKET	1		X	X		(SUB AT192553) (ALSO ORDER (19) T159607) (SUB FOR T164599)
16	AT192553	PLATE	1		X	X		(SUB FOR T164597, T164598, T164599) (ALSO ORDER (19) T159607)
17	T164686	CAP SCREW	15		X	X		
18	T144494	COMPRESSION SPRING	1		X	X		
19	T144493	BALL	1		X	X		
20	T164577	ORIFICE	1		X	X		
21	R26286	O-RING	1		X	X		
22	R27094	DRAIN PLUG	1		X	X		
23	L11698	O-RING	1		X	X		
24	T161194	PLUG	1		X	X		
25	T161204	WASHER	4		X	X		
26	T161204	WASHER	15		X	X		

MEMORANDA

CRANKSHAFT, GEAR AND MAIN BEARINGS 310G (W/O TURBO) (VSN -911768) TO/PE4405DT056

T155453 -UN-05JUN02

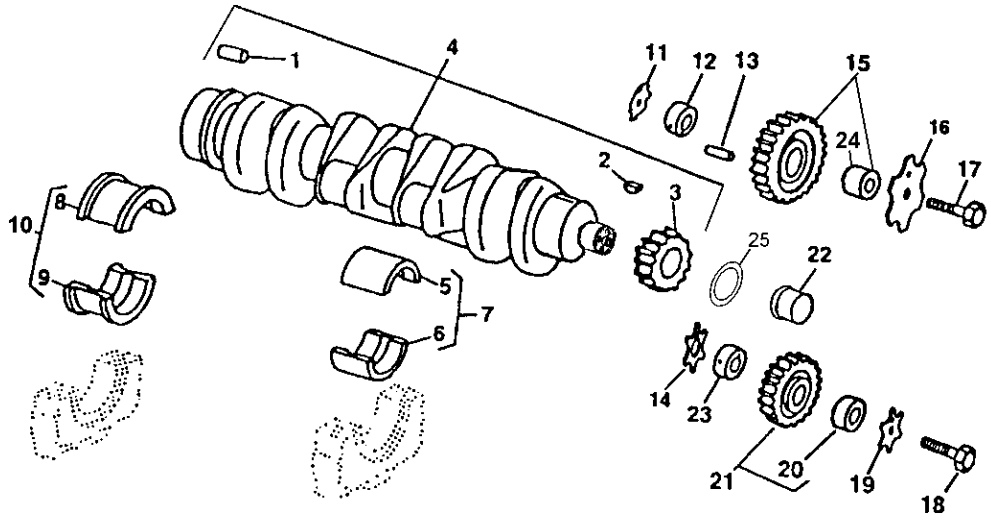

T155453

KEY	PART NO.	PART NAME	QTY	ENGINE SERIAL NO.	310G	315SG	REMARKS
1	R48685	DOWEL PIN	1		X		12.700 X 28.448 MM (1/2" X 1.120")
2	26M4224	SHAFT KEY	1	-903066	X		4 X 16 MM
	R505609	SHAFT KEY	1	903067-	X		
3	R120631	GEAR	1		X		(30 TEETH)
4	RE50618	CRANKSHAFT	1	-903066	X		(MARKED R113596) (SUB RE504638 AND RE516340)
	RE504638	CRANKSHAFT	1	903067-	X		(MARKED R113596) (ALSO ORDER RE516340)
5	.....	BEARING	4		X		STANDARD UPPER, (MARKED R123561)
	.....	BEARING	4		X		UNDERSIZE UPPER .254 MM, (MARKED R130576)
6	.....	BEARING	4		X		STANDARD LOWER, (MARKED R123562)
	.....	BEARING	4		X		UNDERSIZE LOWER .254 MM, (MARKED R130577)
7	RE65165	BEARING KIT	4		X		STANDARD
	RE65911	BEARING	4		X		UNDERSIZE .254 MM
8	.....	BEARING	1		X		STANDARD UPPER, (MARKED R123563)
	.....	BEARING	1		X		UNDERSIZE UPPER .254 MM, (MARKED R130574)
9	.....	BEARING	1		X		STANDARD LOWER, (MARKED R123564)
	.....	BEARING	1		X		UNDERSIZE LOWER .254 MM, (MARKED R130575)
10	RE65168	BEARING KIT	1		X		STANDARD
	RE65912	THRUST BEARING	1		X		UNDERSIZE .254 MM
11	R101225	THRUST WASHER	1		X		
12	R109863	SHAFT	1		X		
13	34H288	SPRING PIN	1		X		
14	R101225	THRUST WASHER	1		X		
15	RE500631	GEAR	1		X		(MARKED R500363)
16	R131283	THRUST WASHER	1		X		
17	19M8844	SCREW	1		X		M10 X 60
18	19M8966	SCREW	1		X		M10 X 50
19	R131283	THRUST WASHER	1		X		
20	R114193	BUSHING	1		X		
21	RE56369	GEAR	1		X		
22	RE59811	SLEEVE	1		X		
23	R114194	SHAFT	1		X		
24	T20034	BUSHING	1		X		
25	RE516340	KIT	1	903067-	X		

CRANKSHAFT, GEAR, AND MAIN BEARINGS 310G (W/O TURBO) (VSN 911769-) PE4045DT058

T145419 -UN-12NOV01

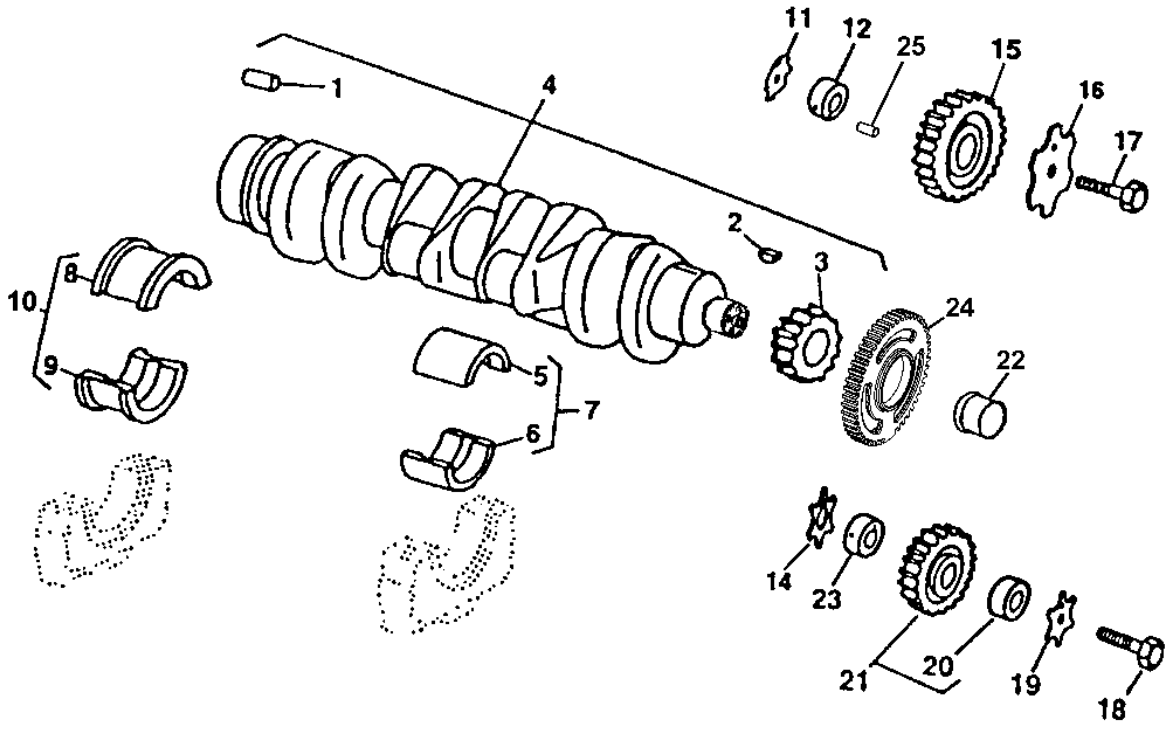

T145419

CRANKSHAFT, GEAR, AND MAIN BEARINGS 310G (W/O TURBO) (VSN 911769-) PE4045DT058

KEY	PART NO.	PART NAME	QTY	ENGINE SERIAL NO.	310G	310SG	315SG	REMARKS
1	R48685	DOWEL PIN	1		X			12.700 X 28.448 MM (1/2" X 1.120")
2	R505609	SHAFT KEY	1		X			
3	R120631	GEAR	1		X			(30 TEETH)
4	RE504638	CRANKSHAFT	1		X			(MARKED R113596) (ALSO ORDER RE59811)
5	.....	BEARING	4		X			(STANDARD UPPER) (MARKED R123561)
	.....	BEARING	4		X			(UNDERSIZE UPPER .254 MM) (MARKED R130576)
6	.....	BEARING	4		X			STANDARD LOWER (MARKED R123562)
	.....	BEARING	4		X			UNDERSIZE LOWER .254MM (MARKED R130577)
7	RE65165	BEARING KIT	4		X			STANDARD
	RE65911	BEARING	4		X			UNDERSIZE .254MM
8	.....	BEARING	1		X			STANDARD UPPER (MARKED R123563)
	.....	BEARING	1		X			UNDERSIZE UPPER .254MM (MARKED R130574)
9	.....	BEARING	1		X			STANDARD LOWER, (MARKED R123564)
	.....	BEARING	1		X			UNDERSIZE LOWER .254MM (MARKED R130575)
10	RE65168	BEARING KIT	1		X			STANDARD
	RE65912	THRUST BEARING	1		X			UNDERSIZE .254MM
11	R123174	LOCK WASHER	1		X			
12	R120641	SHAFT	1		X			
14	R101225	THRUST WASHER	1		X			
15	RE56313	GEAR	1		X			(MARKED R500563)
16	R131206	THRUST WASHER	1		X			
17	19M8997	SCREW	1		X			M10 X 65
18	19M8966	SCREW	1		X			M10 X 50
19	R131283	THRUST WASHER	1		X			
20	R114193	BUSHING	1		X			
21	RE56369	GEAR	1		X			
22	RE59811	SLEEVE	1		X			
23	R114194	SHAFT	1		X			
24	R501489	WHEEL SPEED SENSOR	1		X			CRANKSHAFT TIMING
25	34H288	SPRING PIN	1		X			

CRANKSHAFT, GEAR AND MAIN BEARINGS 310G(TURBO),310SG,315SG (VSN -910055) TO/PE4045TT080, TO/PE4045TT081

T155453 -UN-05JUN02

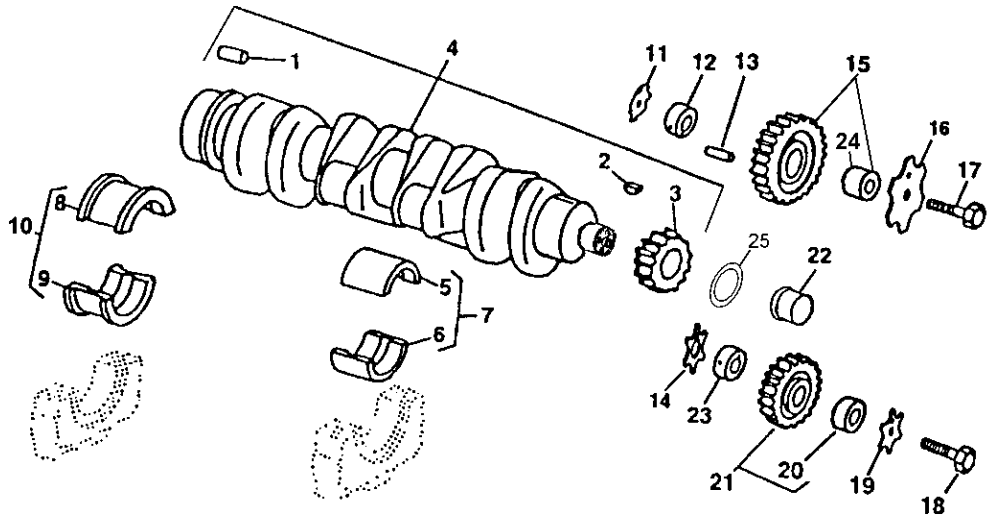

T155453

KEY	PART NO.	PART NAME	QTY	ENGINE SERIAL NO.	310G	315SG	REMARKS
1	R48685	DOWEL PIN	1		X X X		12.700 X 28.448 MM (1/2" X 1.120")
2	26M4224	SHAFT KEY	1	-903066	X X X		4 X 16 MM
	R505609	SHAFT KEY	1	903067-			
3	R120631	GEAR	1		X X X		(30 TEETH)
4	RE50618	CRANKSHAFT	1	-903066	X X X		(MARKED R113596) (SUB RE504638 AND RE516340)
	RE504638	CRANKSHAFT	1	903067-			(MARKED R113596) (ALSO ORDER RE516340)
5	.....	BEARING	4		X X X		STANDARD UPPER, (MARKED R123561)
	.....	BEARING	4		X X X		UNDERSIZE UPPER .254 MM, (MARKED R130576)
6	.....	BEARING	4		X X X		STANDARD LOWER, (MARKED R123562)
	.....	BEARING	4		X X X		UNDERSIZE LOWER .254 MM, (MARKED R130577)
7	RE65165	BEARING KIT	4		X X X		STANDARD
	RE65911	BEARING	4		X X X		UNDERSIZE .254 MM
8	.....	BEARING	1		X X X		STANDARD UPPER, (MARKED R123563)
	.....	BEARING	1		X X X		UNDERSIZE UPPER .254 MM, (MARKED R130574)
9	.....	BEARING	1		X X X		STANDARD LOWER, (MARKED R123564)
	.....	BEARING	1		X X X		UNDERSIZE LOWER .254 MM, (MARKED R130575)
10	RE65168	BEARING KIT	1		X X X		STANDARD
	RE65912	THRUST BEARING	1		X X X		UNDERSIZE .254 MM
11	R101225	THRUST WASHER	1		X X X		
12	R109863	SHAFT	1		X X X		
13	34H288	SPRING PIN	1		X X X		
14	R101225	THRUST WASHER	1		X X X		
15	RE500631	GEAR	1		X X X		(MARKED R500363)
16	R131283	THRUST WASHER	1		X X X		
17	19M8844	SCREW	1		X X X		M10 X 60
18	19M8966	SCREW	1		X X X		M10 X 50
19	R131283	THRUST WASHER	1		X X X		
20	R114193	BUSHING	1		X X X		
21	RE56369	GEAR	1		X X X		
22	RE59811	SLEEVE	1		X X X		
23	R114194	SHAFT	1		X X X		
24	T20034	BUSHING	1				
25	RE516340	KIT	1	903067-			

MEMORANDA

CRANKSHAFT, GEAR, AND MAIN BEARINGS 310G(TURBO),310SG,315SG
(VSN 910056-) PE4045TT088, PE4045TT089

T145419 -UN-12NOV01

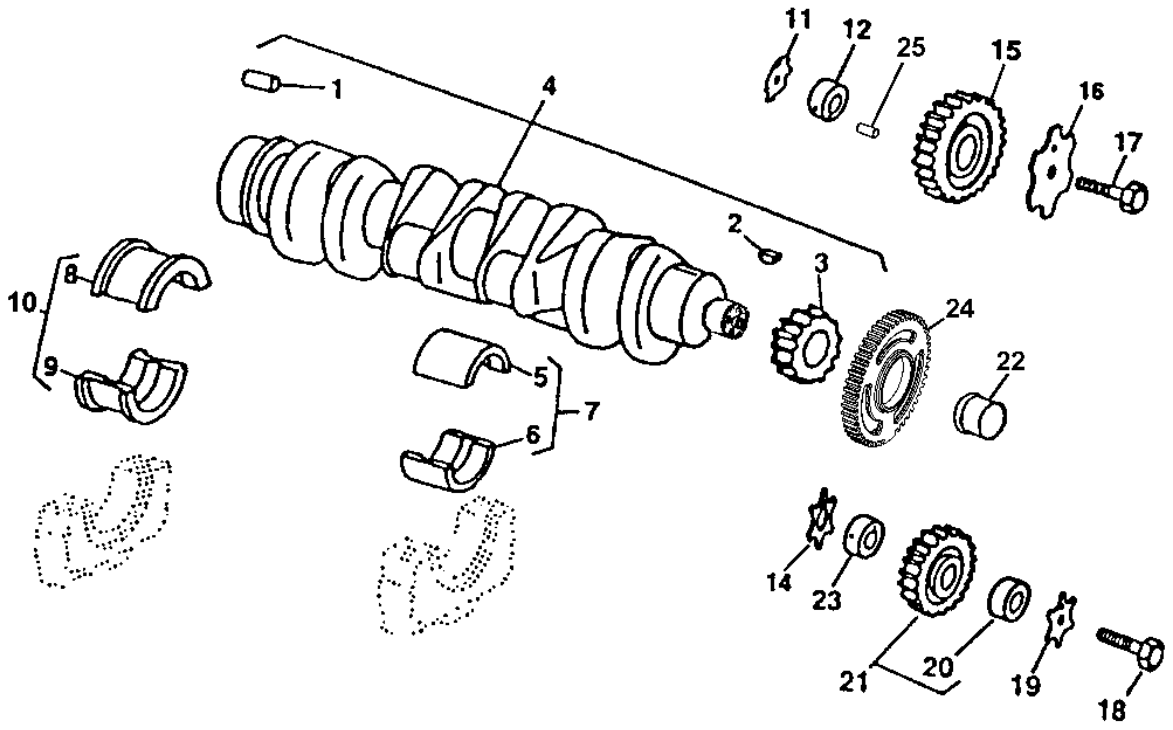

T145419

CRANKSHAFT, GEAR, AND MAIN BEARINGS 310G(TURBO),310SG,315SG
(VSN 910056-) PE4045TT088, PE4045TT089

KEY	PART NO.	PART NAME	QTY	ENGINE SERIAL NO.	310G	310SG	315SG	REMARKS
1	R48685	DOWEL PIN	1		X	X	X	12.700 X 28.448 MM (1/2" X 1.120")
2	R505609	SHAFT KEY	1		X	X	X	
3	R120631	GEAR	1		X	X	X	(30 TEETH)
4	RE504638	CRANKSHAFT	1		X	X	X	(MARKED R113596) (ALSO ORDER RE59811)
5	.....	BEARING	4		X	X	X	(STANDARD UPPER) (MARKED R123561)
	.....	BEARING	4		X	X	X	(UNDERSIZE UPPER .254 MM) (MARKED R130576)
6	.....	BEARING	4		X	X	X	STANDARD LOWER (MARKED R123562)
	.....	BEARING	4		X	X	X	UNDERSIZE LOWER .254MM (MARKED R130577)
7	RE65165	BEARING KIT	4		X	X	X	STANDARD
	RE65911	BEARING	4		X	X	X	UNDERSIZE .254MM
8	.....	BEARING	1		X	X	X	STANDARD UPPER (MARKED R123563)
	.....	BEARING	1		X	X	X	UNDERSIZE UPPER .254MM (MARKED R130574)
9	.....	BEARING	1		X	X	X	STANDARD LOWER, (MARKED R123564)
	.....	BEARING	1		X	X	X	UNDERSIZE LOWER .254MM (MARKED R130575)
10	RE65168	BEARING KIT	1		X	X	X	STANDARD
	RE65912	THRUST BEARING	1		X	X	X	UNDERSIZE .254MM
11	R123174	LOCK WASHER	1		X	X	X	
12	R120641	SHAFT	1		X	X	X	
14	R101225	THRUST WASHER	1		X	X	X	
15	RE56313	GEAR	1		X	X	X	(MARKED R500563)
16	R131206	THRUST WASHER	1		X	X	X	
17	19M8997	SCREW	1		X	X	X	M10 X 65
18	19M8966	SCREW	1		X	X	X	M10 X 50
19	R131283	THRUST WASHER	1		X	X	X	
20	R114193	BUSHING	1		X	X	X	
21	RE56369	GEAR	1		X	X	X	
22	RE59811	SLEEVE	1		X	X	X	
23	R114194	SHAFT	1		X	X	X	
24	R501489	WHEEL SPEED SENSOR	1		X	X	X	CRANKSHAFT TIMING
25	34H288	SPRING PIN	1		X	X	X	

MEMORANDA

CAMSHAFT 310G (W/O TURBO)
(VSN 893079-907963)T04045DT056
(VSN -911768)PE4045DT056 (VSN 911769-)PE4045DT058

TP69520 -UN-02JUN00

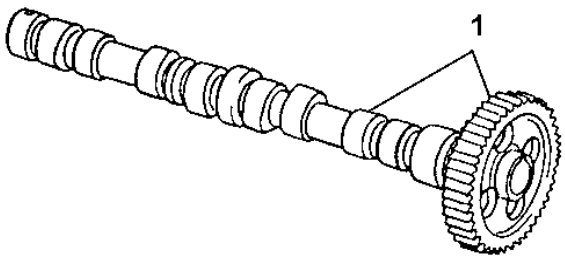

TP69520

KEY	PART NO.	PART NAME	QTY	ENGINE SERIAL NO.	310G	310SG	315SG	REMARKS
1	RE56375	CAMSHAFT	1		X			(WITH GEAR AND KEY) (MARKED R135439) (WITH AND WITHOUT TURBOCHARGER)

CAMSHAFT 310G(TURBO), 310SG, 315SG
(VSN 893079-907963) T04045TT080, T04045TT081
(VSN -910055) PE4045TT080, PE4045TT081

TP69520 -UN-02JUN00

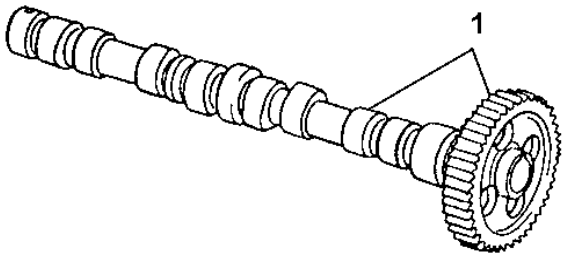

TP69520

KEY	PART NO.	PART NAME	QTY	ENGINE SERIAL NO.	310G	310SG	315SG	REMARKS
1	RE56375	CAMSHAFT	1	-221705	X	X	X	(WITH GEAR AND KEY) (MARKED R135439) (WITH AND WITHOUT TURBOCHARGER)

CAMSHAFT 310G(TURBO), 310SG, 315SG
(VSN 910056-) PE4045TT088, PE4045TT089

TP69520 -UN-02JUN00

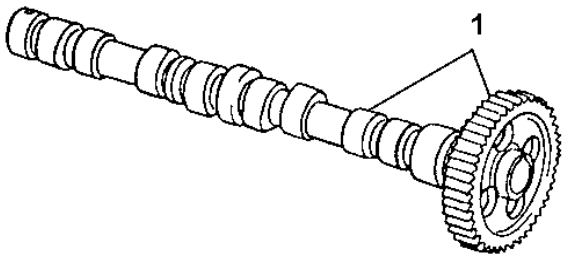

TP69520

KEY	PART NO.	PART NAME	QTY	ENGINE SERIAL NO.	310G	315SG	REMARKS
1	RE507595	CAMSHAFT	1	221706-	X	X X	(WITH GEAR AND KEY) (MARKED R135439) (WITH AND WITHOUT TURBOCHARGER)

ROCKER ARM SHAFT, PUSH RODS AND ROCKER ARMS
T0/PE4045DT056, T0/PE4045TT080, T0/PE4045TT081, PE4045DT058, PE4045TT088, PE4045TT089

TP49263 -UN-20JUN95

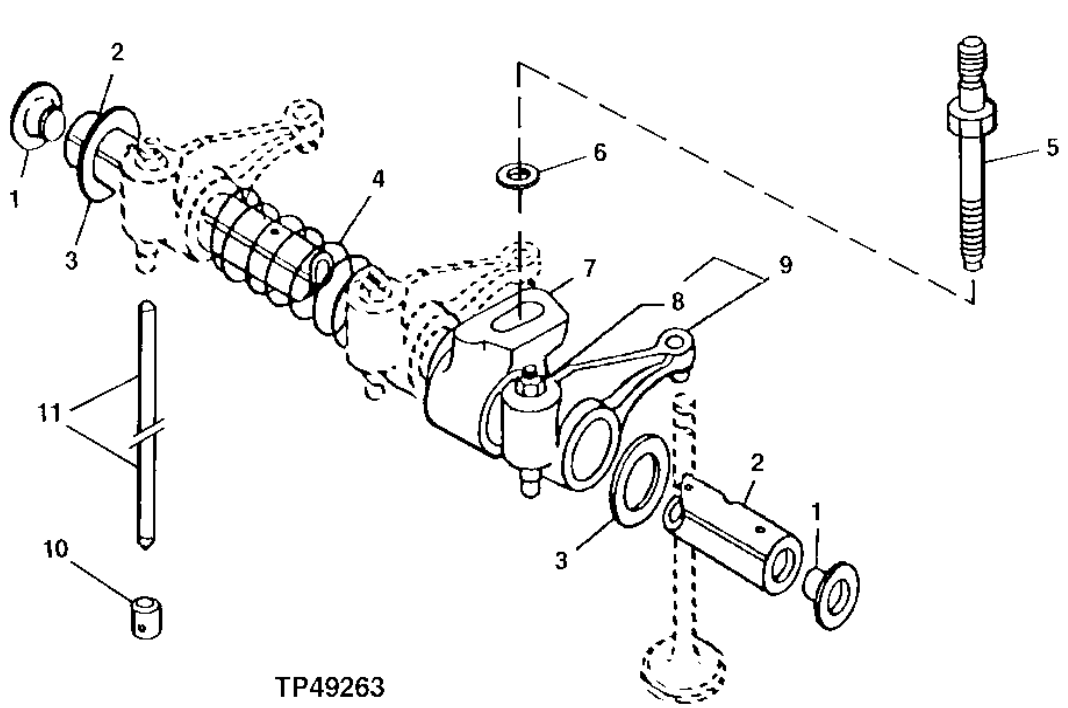

TP49263

KEY	PART NO.	PART NAME	QTY	ENGINE SERIAL NO.	310G	315SG	REMARKS
1	R54565	PLUG	2		X	X X	
2	R123513	ROCKER ARM SHAFT	1		X	X X	
3	T20316	WASHER	2		X	X X	
4	T20314	SPRING	3		X	X X	
5	R123271	STUD	4		X	X X	
6	24M7346	WASHER	4		X	X X	
7	R123161	SUPPORT	4		X	X X	
8	14M7148	NUT	1		X	X X	M10
9	RE68695	ROCKER ARM	8		X	X X	
10	R123565	CAM FOLLOWER	8		X	X X	
11	R107731	PUSH ROD	8		X	X X	

ROCKER ARM COVER AND GASKET

TP69529 -UN-26JUL00

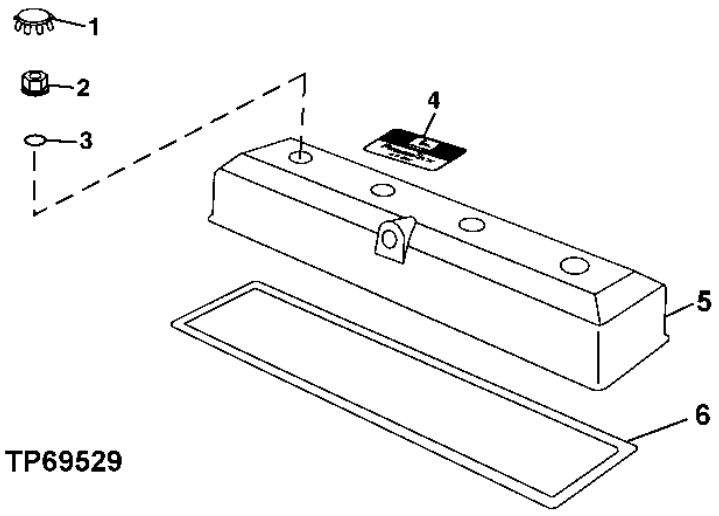

KEY	PART NO.	PART NAME	QTY	ENGINE SERIAL NO.	310G	315SG	REMARKS
1	H23125	PLUG	4		X	X X	
2	R123574	NUT	4		X	X X	
3	R123575	O-RING	4		X	X X	
4	R116324	MEDALLION	1		X	X X	
5	RE502969	VALVE COVER	1		X	X X	
6	R123542	GASKET	1		X	X X	

TIMING GEAR COVER, GASKET AND OIL PRESSURE REGULATING VALVE
310G (W/O TURBO) (VSN -911768) T0/PE4045DT056

TP68676 -UN-31JAN00

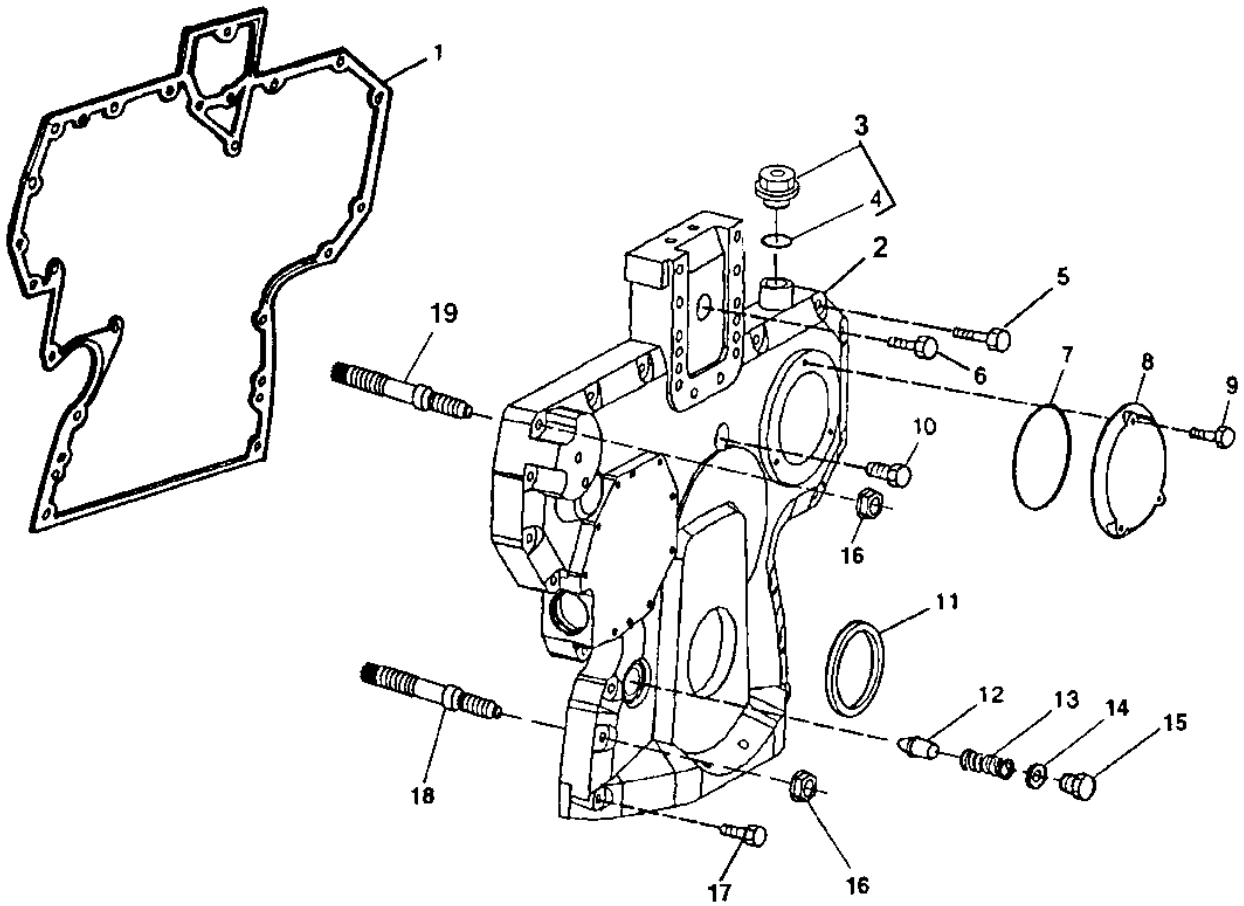

TP68676

TIMING GEAR COVER,GASKET AND OIL PRESSURE REGULATING VALVE
310G (W/O TURBO) (VSN -911768)

KEY	PART NO.	PART NAME	QTY	ENGINE SERIAL NO.	310G	315SG	315SG	REMARKS
1	R136516	GASKET	1		X	X	X	
2	R505462	COVER	1		X	X	X	(SUB FOR R134531) (SUB R504725 AND RE515978)
3	RE501938	PLUG	1		X	X	X	(WITHOUT TACHOMETER SENSOR)
4	51M7044	O-RING	1		X	X	X	17.300 X 2.200 MM
5	19M8317	SCREW	6		X	X	X	M8 X 40
	19M7801	SCREW	1		X	X	X	M8 X 60
	19M7867	SCREW	1		X	X	X	M8 X 25
	RE67239	SCREW	1		X	X	X	
6	19M8291	SCREW	1		X	X	X	M8 X 35
7	R121424	O-RING	1		X	X	X	
8	R121411	COVER	1		X	X	X	
9	19M7775	SCREW	3		X	X	X	M6 X 16
10	19M7801	SCREW	1		X	X	X	M8 X 60
11	RE516340	KIT	1		X	X	X	(MARKED RE52346 OR RE505515) (SUB FOR RE59810)
12	R83169	VALVE	1	-889024	X	X	X	
13	R131425	SPRING	1	-889024	X	X	X	
14	A4827R	WASHER	1	-889024	X	X	X	
15	R91692	PLUG	1	-889024	X	X	X	OIL PRESSURE REGULATING
16	14M7296	FLANGE NUT	6		X	X	X	M10
17	19M7979	SCREW	2		X	X	X	M8 X 55
18	R123584	STUD	4		X	X	X	
19	R134518	STUD	2		X	X	X	

TIMING GEAR COVER 310G (W/O TURBO)
(VSN 911769-) PE4045DT058

T145747 -UN-02OCT01

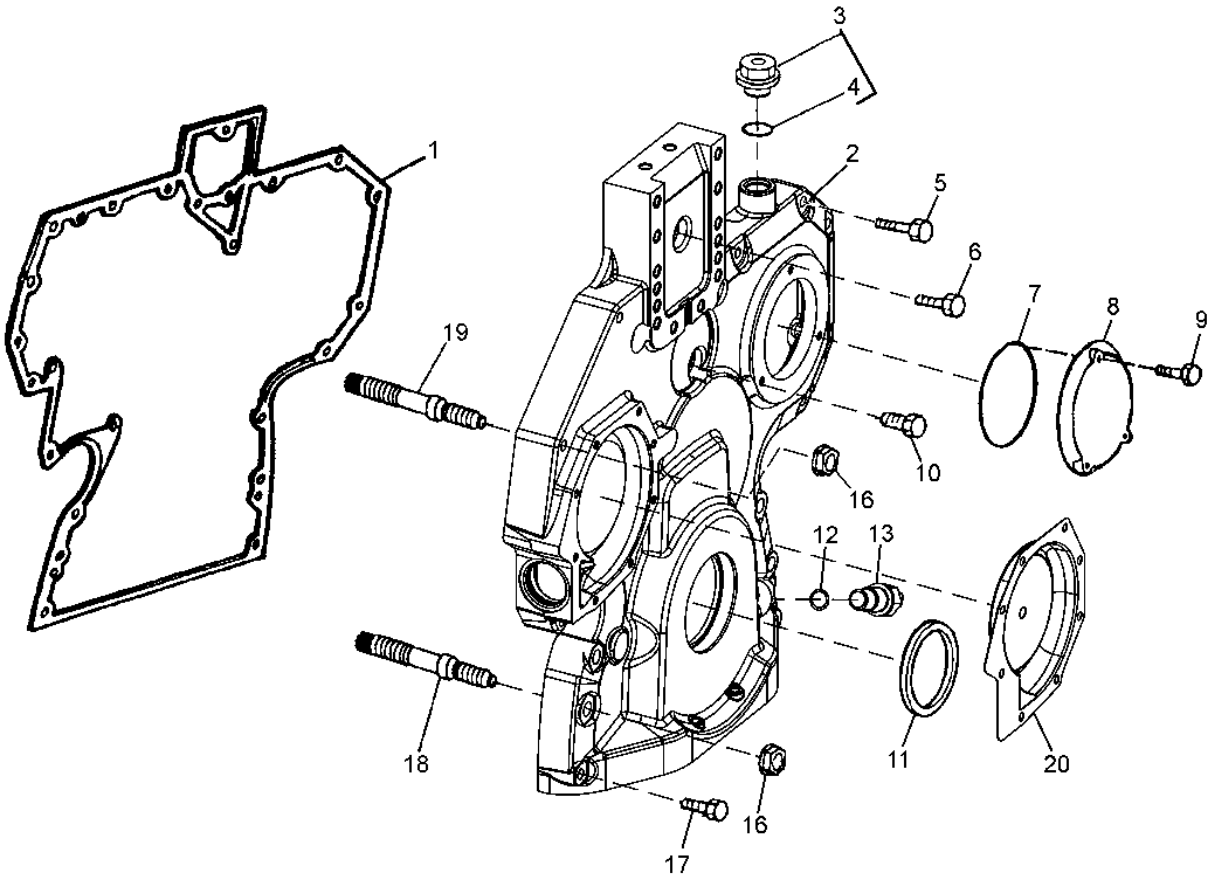

T145747

TIMING GEAR COVER 310G (W/O TURBO)
(VSN 911769-) PE4045DT058

KEY	PART NO.	PART NAME	QTY	ENGINE SERIAL NO.	310G	310SG	315SG	REMARKS
1	R136516	GASKET	1		X			
2	R504725	COVER	1		X			
3	RE501938	PLUG	1		X			(WITHOUT TACHOMETER SENSOR)
4	51M7044	O-RING	1		X			17.300 X 2.200 MM
5	19M8317	SCREW	6		X			M8 X 40
	19M7867	SCREW	1		X			M8 X 25
	RE67239	SCREW	1		X			
6	19M8291	SCREW	1		X			M8 X 35
7	R121424	O-RING	1		X			
8	R121411	COVER	1		X			
9	19M7775	SCREW	3		X			M6 X 16
10	19M7801	SCREW	1		X			M8 X 60
11	RE516340	KIT	1		X			(MARKED RE52346 OR RE505515) (SUB FOR RE59810)
12	51M7044	O-RING	1		X			17.300 X 2.200 MM
13	RE519144	SENSOR	1		X			(SUB FOR RE508195) (CRANKSHAFT SPEED SENSOR)
	RE517370	FITTING	1		X			(SUB FOR RE501938) (WITHOUT CRANKSHAFT SPEED SENSOR)
14	RE505501	BLEED VALVE	1		X			
15	RE515978	KIT	1		X			
16	14M7296	FLANGE NUT	6		X			M10
17	19M7979	SCREW	2		X			M8 X 55
18	R123584	STUD	4		X			
19	R134518	STUD	2		X			
20	RE508566	KIT	1		X			(WATER PUMP INSERT REPAIR)

TIMING GEAR COVER, GASKET AND OIL PRESSURE REGULATING VALVE
310G(TURBO), 310SG, 315SG
(VSN -910055) T0/PE4045TT080, T0/PE4045TT081

TP68676 -UN-31JAN00

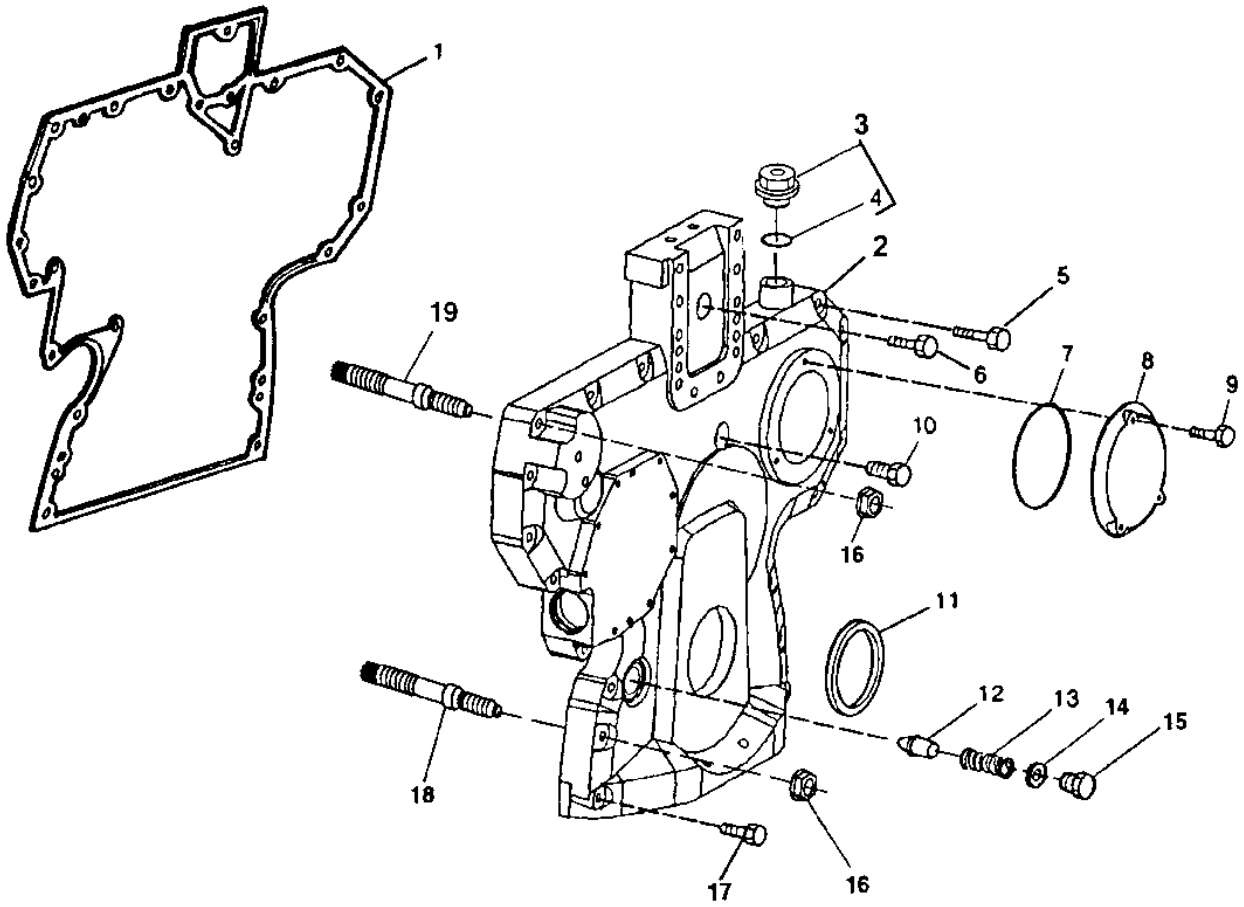

TP68676

TIMING GEAR COVER,GASKET AND OIL PRESSURE REGULATING VALVE
310G(TURBO), 310SG, 315 SG
(VSN -910055) T0/PE4045TT080, T0/PE4045TT081

KEY	PART NO.	PART NAME	QTY	ENGINE SERIAL NO.	310G	310SG	315SG	REMARKS
1	R136516	GASKET	1		X	X	X	
2	R505462	COVER	1		X	X	X	(SUB FOR R134531) (SUB R504725 AND RE515978)
3	RE501938	PLUG	1		X	X	X	(WITHOUT TACHOMETER SENSOR)
4	51M7044	O-RING	1		X	X	X	17.300 X 2.200 MM
5	19M8317	SCREW	6		X	X	X	M8 X 40
	19M7801	SCREW	1		X	X	X	M8 X 60
	19M7867	SCREW	1		X	X	X	M8 X 25
	RE67239	SCREW	1		X	X	X	
6	19M8291	SCREW	1		X	X	X	M8 X 35
7	R121424	O-RING	1		X	X	X	
8	R121411	COVER	1		X	X	X	
9	19M7775	SCREW	3		X	X	X	M6 X 16
10	19M7801	SCREW	1		X	X	X	M8 X 60
11	RE516340	SEAL	1		X	X	X	(MARKED RE52346 OR RE505515) (SUB FOR RE59810)
12	R83169	VALVE	1	-889024	X	X	X	
13	R131425	SPRING	1	-889024	X	X	X	
14	A4827R	WASHER	1	-889024	X	X	X	
15	R91692	PLUG	1	-889024	X	X	X	OIL PRESSURE REGULATING
16	14M7296	FLANGE NUT	6		X	X	X	M10
17	19M7979	SCREW	2		X	X	X	M8 X 55
18	R123584	STUD	4		X	X	X	
19	R134518	STUD	2		X	X	X	

TIMING GEAR COVER 310G(TURBO), 310SG, 315SG
(VSN 910056-) PE4045TT088, PE4045TT089

T145747 -UN-02OCT01

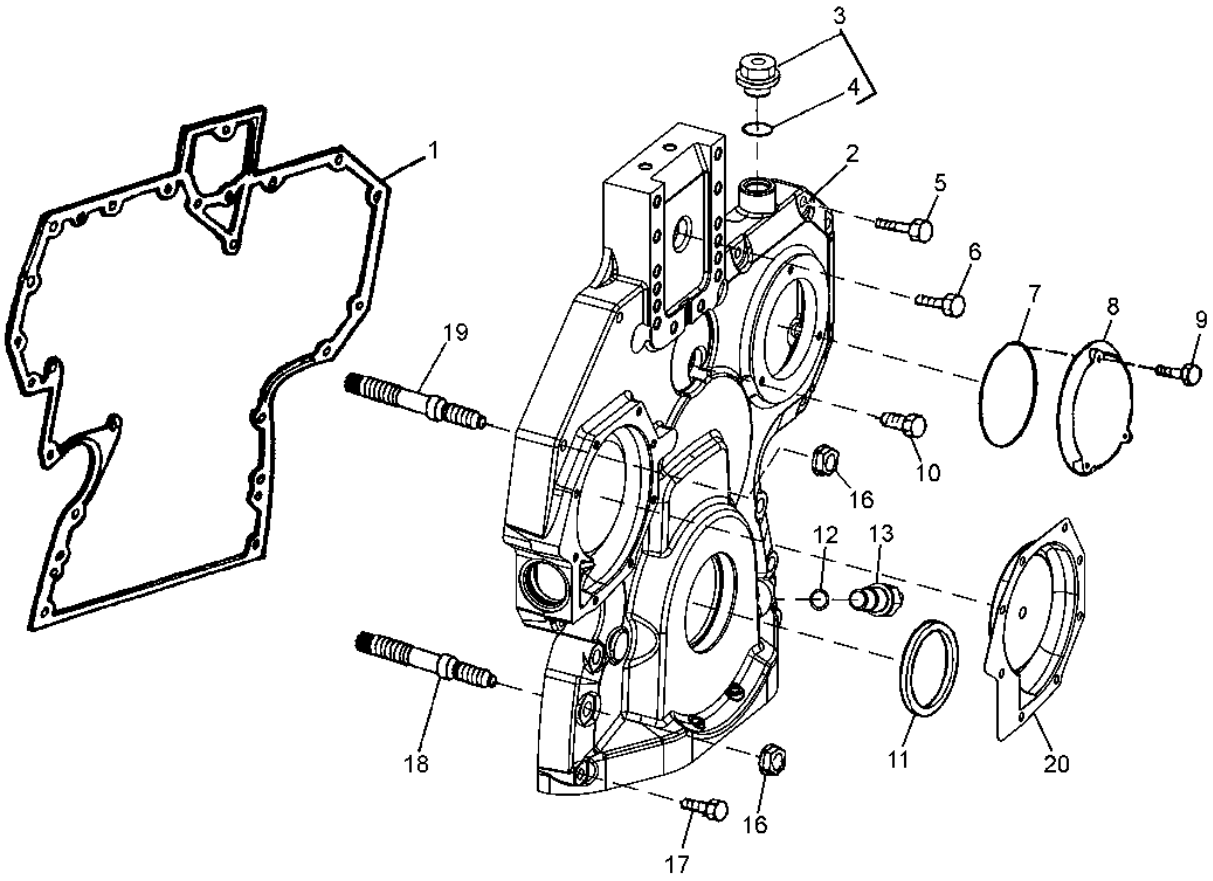

T145747

TIMING GEAR COVER 310G(TURBO), 310SG, 315SG
(VSN 910056-) PE4045TT088, PE4045TT089

KEY	PART NO.	PART NAME	QTY	ENGINE SERIAL NO.	310G	310SG	315SG	REMARKS
1	R136516	GASKET	1		X	X	X	
2	R504725	COVER	1		X	X	X	
3	RE501938	PLUG	1		X	X	X	(WITHOUT TACHOMETER SENSOR)
4	51M7044	O-RING	1		X	X	X	17.300 X 2.200 MM
5	19M8317	SCREW	6		X	X	X	M8 X 40
	19M7867	SCREW	1		X	X	X	M8 X 25
	RE67239	SCREW	1		X	X	X	
6	19M8291	SCREW	1		X	X	X	M8 X 35
7	R121424	O-RING	1		X	X	X	
8	R121411	COVER	1		X	X	X	
9	19M7775	SCREW	3		X	X	X	M6 X 16
10	19M7801	SCREW	1		X	X	X	M8 X 60
11	RE516340	SEAL	1		X	X	X	(MARKED RE52346 OR RE505515) (SUB FOR RE59810)
12	51M7044	O-RING	1		X	X	X	17.300 X 2.200 MM
13	RE519144	SENSOR	1		X	X	X	(SUB FOR RE508195) (CRANKSHAFT SPEED SENSOR)
	RE517370	FITTING	1		X			(SUB FOR RE501938) (WITHOUT CRANKSHAFT SPEED SENSOR)
14	RE505501	BLEED VALVE	1		X	X	X	
15	RE515978	KIT	1		X	X	X	
16	14M7296	FLANGE NUT	6		X	X	X	M10
17	19M7979	SCREW	2		X	X	X	M8 X 55
18	R123584	STUD	4		X	X	X	
19	R134518	STUD	2		X	X	X	
20	RE508566	KIT	1		X	X	X	(WATER PUMP INSERT REPAIR)

PISTON, PISTON AND CYLINDER LINER KIT, CONNECTING RODS AND CONNECTING ROD BEARINGS 310G (W/O TURBO) (VSN -911768) T0/PE4045DT056

TP49283 -UN-17JUL95

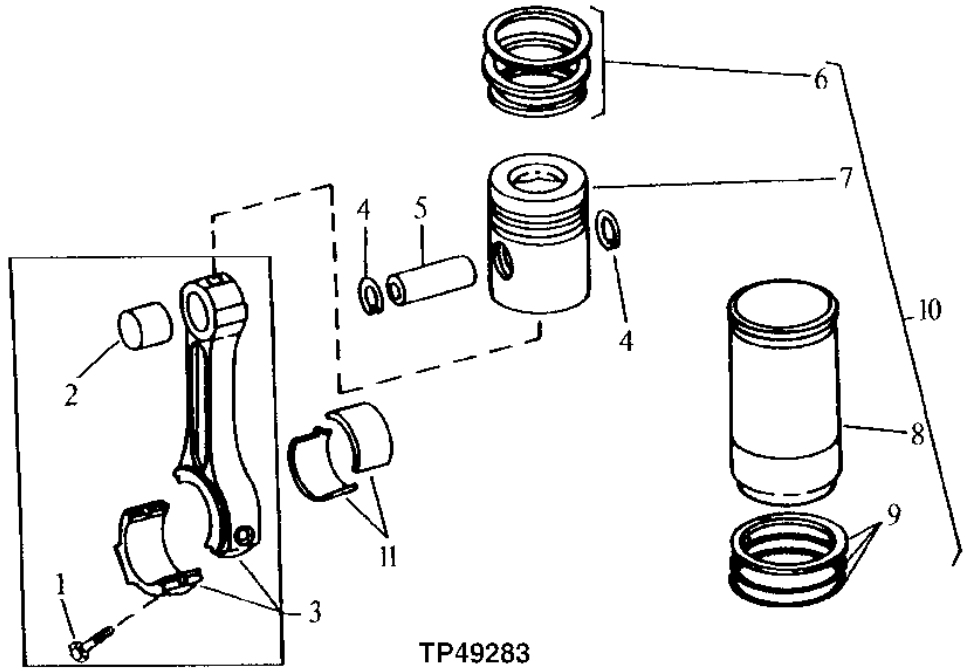

KEY	PART NO.	PART NAME	QTY	ENGINE SERIAL NO.	310G	310SG	315SG	REMARKS
1	R501124	SCREW	8		X	X	X	
2	R123960	BUSHING	4		X	X	X	
3	RE500002	CONNECTING ROD	4		X	X	X	(MARKED RE500000)
4	M41029	SNAP RING	8		X	X	X	
5	R123178	PISTON PIN	4		X	X	X	
6	RE66271	PISTON RING KIT	4		X	X	X	
7	.....	PISTON	4		X	X	X	FURNISH RE65966 (WITHOUT TURBOCHARGER)
8	.....	CYLINDER LINER	4		X	X	X	FURNISH RE65966 (WITHOUT TURBOCHARGER)
9	AR65507	O-RING KIT	4		X	X	X	CYLINDER LINER
10	RE505110	PISTON-LINER KIT	4		X			PISTON WITH LINER (WITHOUT TURBOCHARGER) (SUB FOR RE65966)
11	RE65908	BEARING	4		X	X	X	STANDARD
	RE65909	BEARING	4		X	X	X	.010" UNDERSIZE

PISTON, PISTON AND CYLINDER LINER KIT, CONNECTING RODS AND CONNECTING ROD BEARINGS 310G (W/O TURBO) (VSN 911769-) PE4045DT058

TP49283 -UN-17JUL95

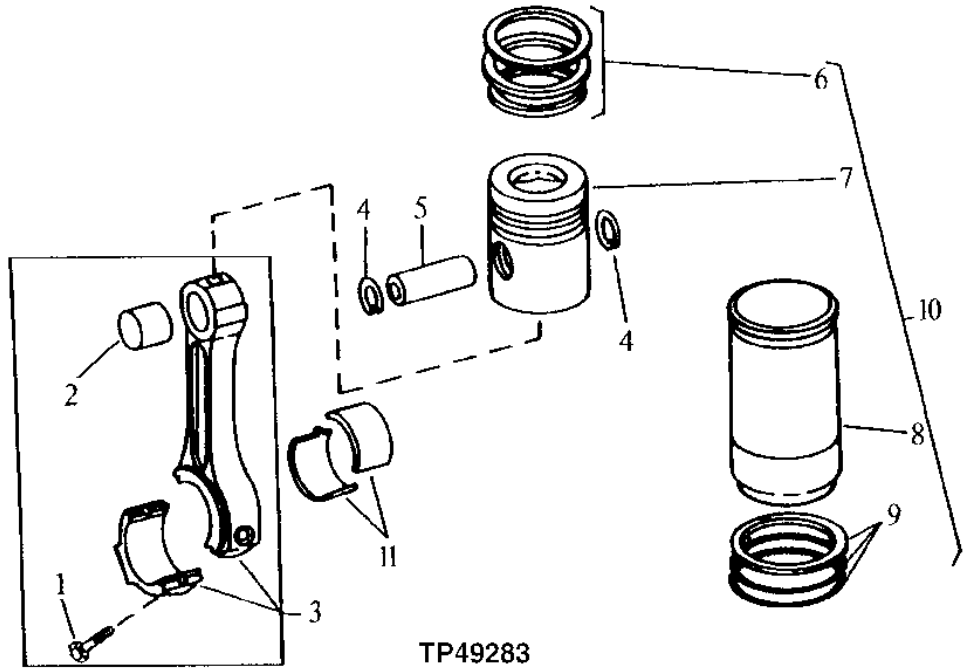

KEY	PART NO.	PART NAME	QTY	ENGINE SERIAL NO.	310G	310SG	315SG	REMARKS
1	R501124	SCREW	8		X	X	X	
2	R123960	BUSHING	4		X	X	X	
3	RE500002	CONNECTING ROD	4		X	X	X	(MARKED RE500000)
4	M41029	SNAP RING	8		X	X	X	
5	R123178	PISTON PIN	4		X	X	X	
6	RE66271	PISTON RING KIT	4		X			(WITHOUT TURBOCHARGER)
7	.....	PISTON	4		X	X	X	FURNISH RE65966 (WITHOUT TURBOCHARGER)
8	.....	CYLINDER LINER	4		X	X	X	FURNISH RE65966 (WITHOUT TURBOCHARGER)
9	AR65507	O-RING KIT	4		X	X	X	CYLINDER LINER
10	RE505110	PISTON-LINER KIT	4		X			PISTON WITH LINER (WITHOUT TURBOCHARGER) (SUB FOR RE65966)
11	RE65908	BEARING	4		X	X	X	STANDARD
	RE65909	BEARING	4		X	X	X	.010" UNDERSIZE

PISTON, PISTON AND CYLINDER LINER KIT, CONNECTING RODS AND CONNECTING ROD BEARINGS 310G(TURBO), 310SG, 315SG (VSN -910055) T0/PE4045TT080, T0/PE4045TT081

TP49283 -UN-17JUL95

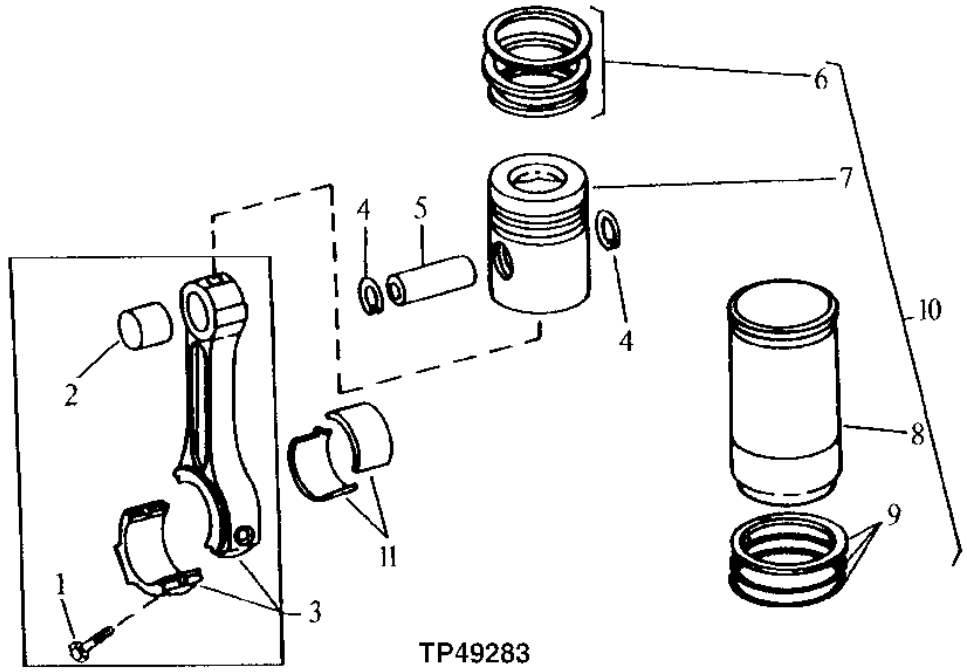

KEY	PART NO.	PART NAME	QTY	ENGINE SERIAL NO.	310G	310SG	315SG	REMARKS
1	R501124	SCREW	8		X	X	X	
2	R123960	BUSHING	4		X	X	X	
3	RE500002	CONNECTING ROD	4		X	X	X	(MARKED RE500000)
4	M41029	SNAP RING	8		X	X	X	
5	R123178	PISTON PIN	4		X	X	X	
6	RE66271	PISTON RING KIT	4		X	X	X	
7	.....	PISTON	4		X	X	X	FURNISH RE505111 (WITH TURBOCHARGER)
8	.....	CYLINDER LINER	4		X	X	X	FURNISH RE505111 (WITH TURBOCHARGER)
9	AR65507	O-RING KIT	4		X	X	X	CYLINDER LINER
10	RE505111	PISTON-LINER KIT	4		X	X	X	PISTON WITH LINER (WITH TURBOCHARGER)
11	RE65908	BEARING	4		X	X	X	STANDARD
	RE65909	BEARING	4		X	X	X	.010" UNDERSIZE

PISTON, PISTON AND CYLINDER LINER KIT, CONNECTING RODS AND CONNECTING ROD BEARINGS 310G(TURBO), 310SG, 315SG (VSN 910056-) PE4045TT088, PE4045T089

TP49283 -UN-17JUL95

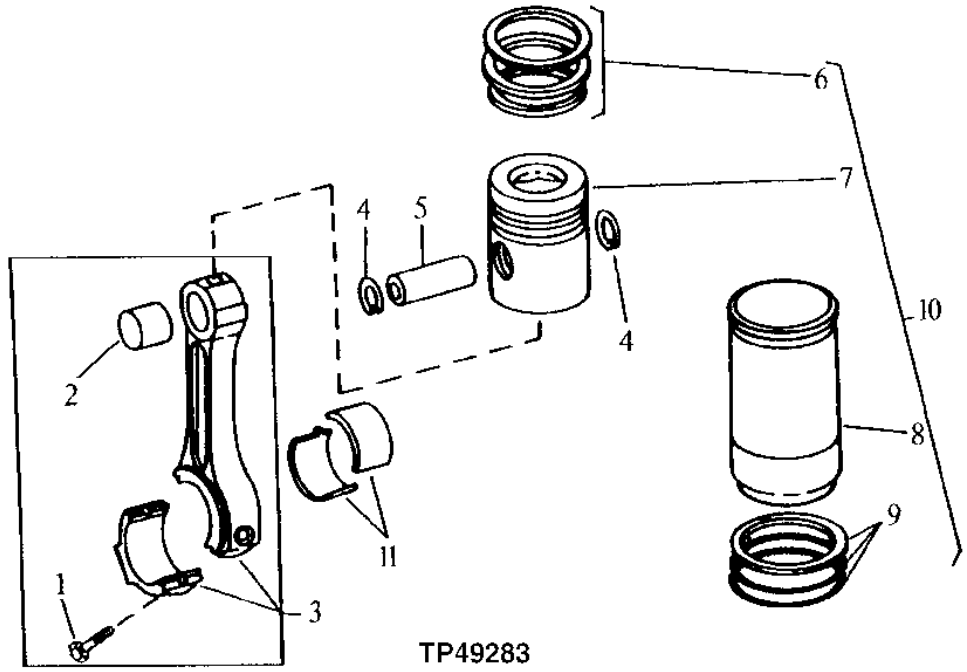

KEY	PART NO.	PART NAME	QTY	ENGINE SERIAL NO.	310G	310SG	315SG	REMARKS
1	R501124	SCREW	8		X	X	X	
2	R123960	BUSHING	4		X	X	X	
3	RE500002	CONNECTING ROD	4		X	X	X	(MARKED RE500000)
4	M41029	SNAP RING	8		X	X	X	
5	R123178	PISTON PIN	4		X	X	X	
6	RE507852	PISTON RING KIT	4		X	X	X	(WITH TURBOCHARGER)
7	.....	PISTON	4		X	X	X	FURNISH RE507920 (WITH TURBOCHARGER)
8	.....	CYLINDER LINER	4		X	X	X	FURNISH RE507920 (WITH TURBOCHARGER)
9	AR65507	O-RING KIT	4		X	X	X	CYLINDER LINER
10	RE507920	PISTON-LINER KIT	4		X	X	X	PISTON WITH LINER (WITH TURBOCHARGER)
11	RE65908	BEARING	4		X	X	X	STANDARD
	RE65909	BEARING	4		X	X	X	.010" UNDERSIZE

MEMORANDA

ENGINE FRONT PLATE

T145836 -UN-21SEP01

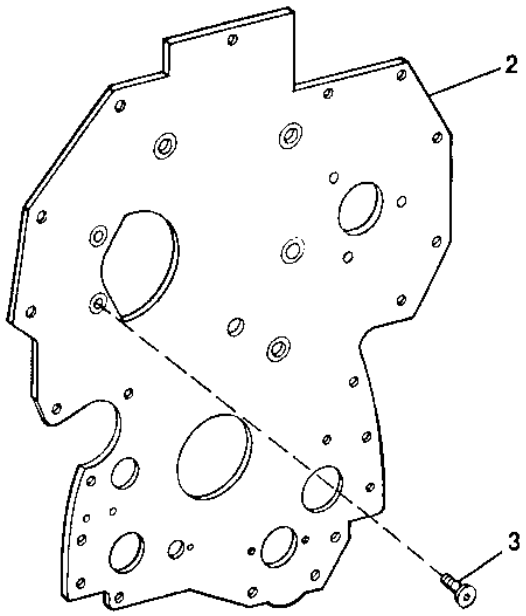

T145836

KEY	PART NO.	PART NAME	QTY	ENGINE SERIAL NO.	310G	315SG	311SG	REMARKS
2	R134527	PLATE	1		X	X	X	
3	R136475	SCREW	4		X	X	X	

CYLINDER BLOCK AND MAIN BEARING CAP, 310G(TURBO), 310SG, 315SG (VSN -910055) T0/PE4045TT080, T0/PE4045TT081

T146036 -UN-01OCT01

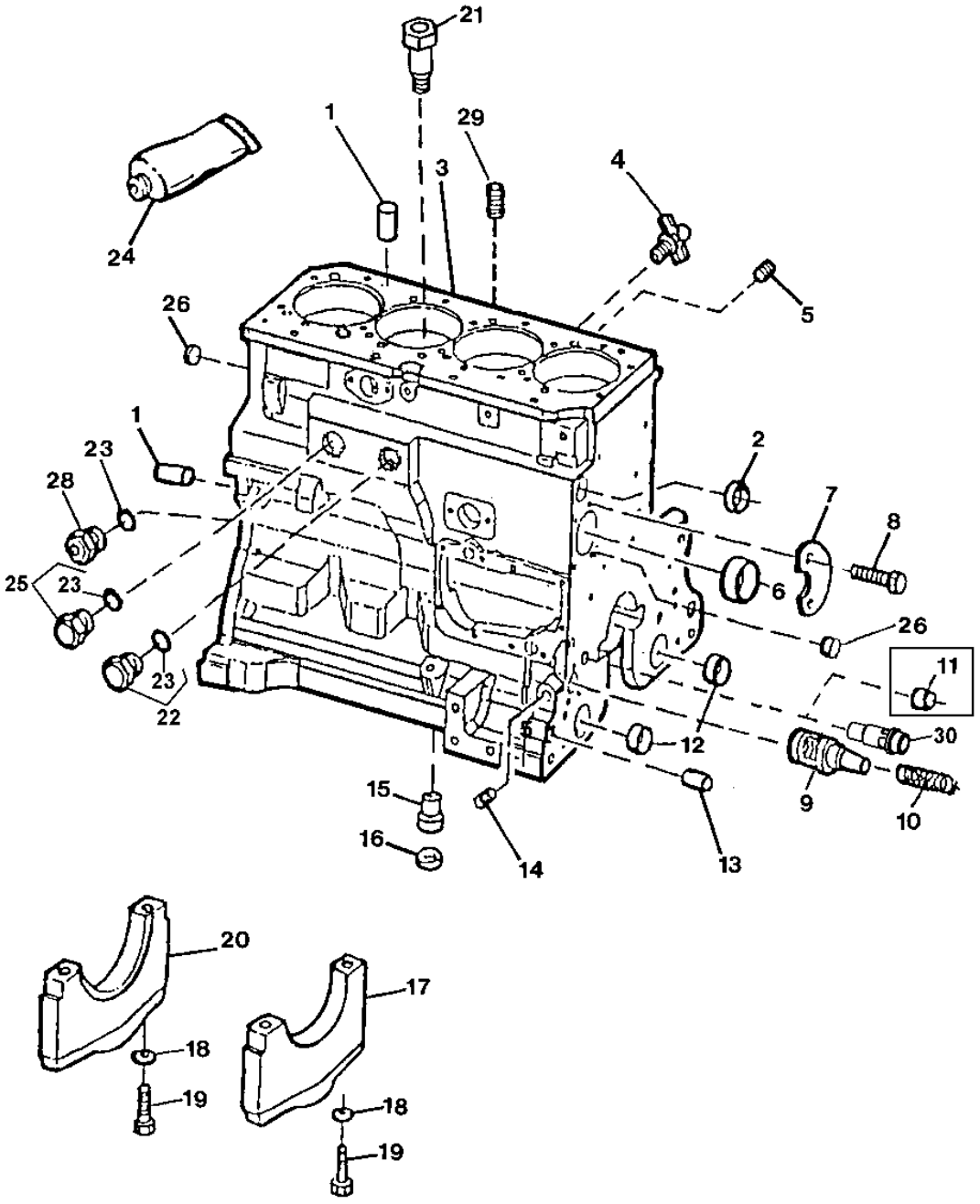

T146036

CYLINDER BLOCK AND MAIN BEARING CAP, 310G(TURBO), 310SG, 315SG (VSN -910055) T0/PE4045TT080, T0/PE4045TT081

KEY	PART NO.	PART NAME	QTY	ENGINE SERIAL NO.	310G	310SG	315SG	REMARKS
1	R48685	DOWEL PIN	4		X	X	X	
2	R116466	PLUG	1		X	X	X	
3	.....	CYLINDER BLOCK	1	-221705	X	X	X	(MARKED R115081) (ORDER RE516100 OR RE516099)
4	AT13740	DRAIN VALVE	1		X	X	X	
5	R104592	PIPE PLUG	5		X	X	X	
6	R119874	BUSHING	1		X	X	X	CAMSHAFT
7	R132518	PLATE	1		X	X	X	
8	19M8999	SCREW	2		X	X	X	M8 X 25
9	R121043	VALVE	1		X	X	X	ENGINE OIL BY-PASS
10	R111137	SPRING	1		X	X	X	
11	R26493	BUSHING	1	-221705	X	X	X	OIL PRESSURE REGULATING
12	R115299	BUSHING	6		X	X	X	BALANCER SHAFT
13	R26650	DOWEL PIN	2		X	X	X	
14	15H623	PIPE PLUG	1		X	X	X	
15	R115390	BUSHING	1		X	X	X	
16	R75892	O-RING	1		X	X	X	
17	R114241	BEARING CAP	4		X	X	X	
18	T20168	WASHER	10		X	X	X	
19	T23474	CAP SCREW	10		X	X	X	
20	R132186	BEARING CAP	1		X	X	X	
21	R131182	ORIFICE	4		X	X	X	
22	RE508185	FITTING	1		X	X	X	
23	U13639	O-RING	2		X	X	X	
24	PM38655	SEALANT	1		X	X	X	(SUB FOR TY6304) (LIQUID GASKET)
25	RE508185	FITTING	1		X	X	X	WITHOUT CAB HEATER
26	T18891	PLUG	2		X	X	X	
28	R123616	PLUG	1		X	X	X	WITH CAB HEATER
29	RE57836	PIPE PLUG	1		X	X	X	1/2", (SUB FOR 15H624) (WITHOUT TURBOCHARGER)
30	RE505501	BLEED VALVE	1	221706-	X	X	X	(OIL PRESSURE REGULATING)

ENGINE SHORT BLOCK
(ENGINE SERIAL NO. 866618-908991) T04045DT056, T04045TT080, T04045TT081
(ENGINE SERIAL NO. -221705) PE4045DT056, PE4045TT080, PE4045TT081

T156111 -UN-13JUN02

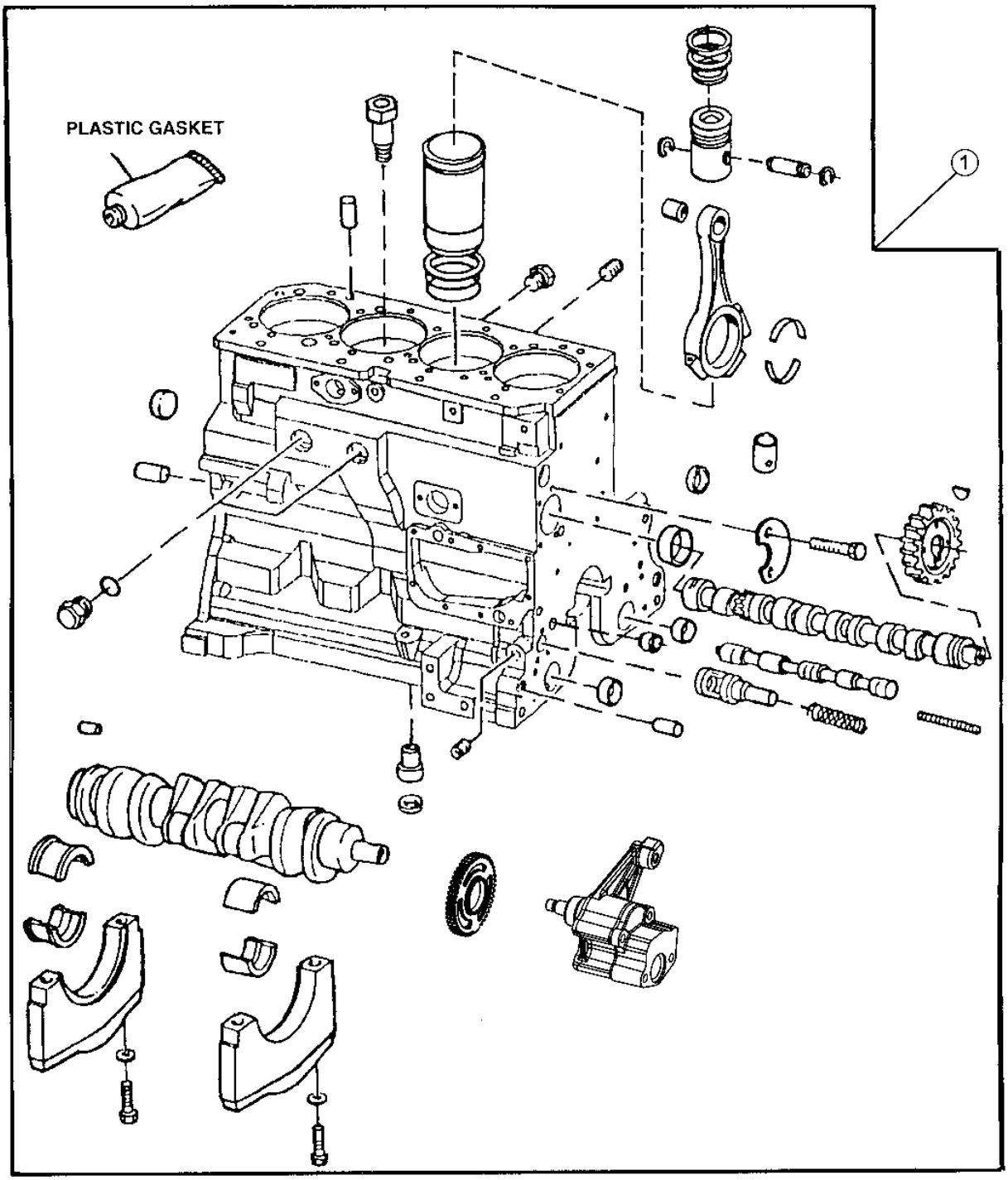

T156111

ENGINE SHORT BLOCK
(ENGINE SERIAL NO. 866618-908991) T04045DT056, T04045TT080, T04045TT081
(ENGINE SERIAL NO. -221705) PE4045DT056, PE4045TT080, T04045TT081

KEY	PART NO.	PART NAME	QTY	ENGINE SERIAL NO.	310G	315SG	315SG	REMARKS
1	RE516099	SHORT BLOCK ASSEMBLY	1		X	X	X	(MARKED R115081) (SUB FOR RE65953) (WITH TURBOCHARGER) (DOES NOT INCLUDE FRONT PLATE)
	RE516100	SHORT BLOCK ASSEMBLY	1		X			(MARKED R115081) (SUB FOR RE65951) (WITHOUT TURBOCHARGER) (DOES NOT INCLUDE FRONT PLATE)

ENGINE SHORT BLOCK
(ENGINE SERIAL NO. 221706-)
PE4045DT058, PE4045TT088, PE4045TT089

T156111 -UN-13JUN02

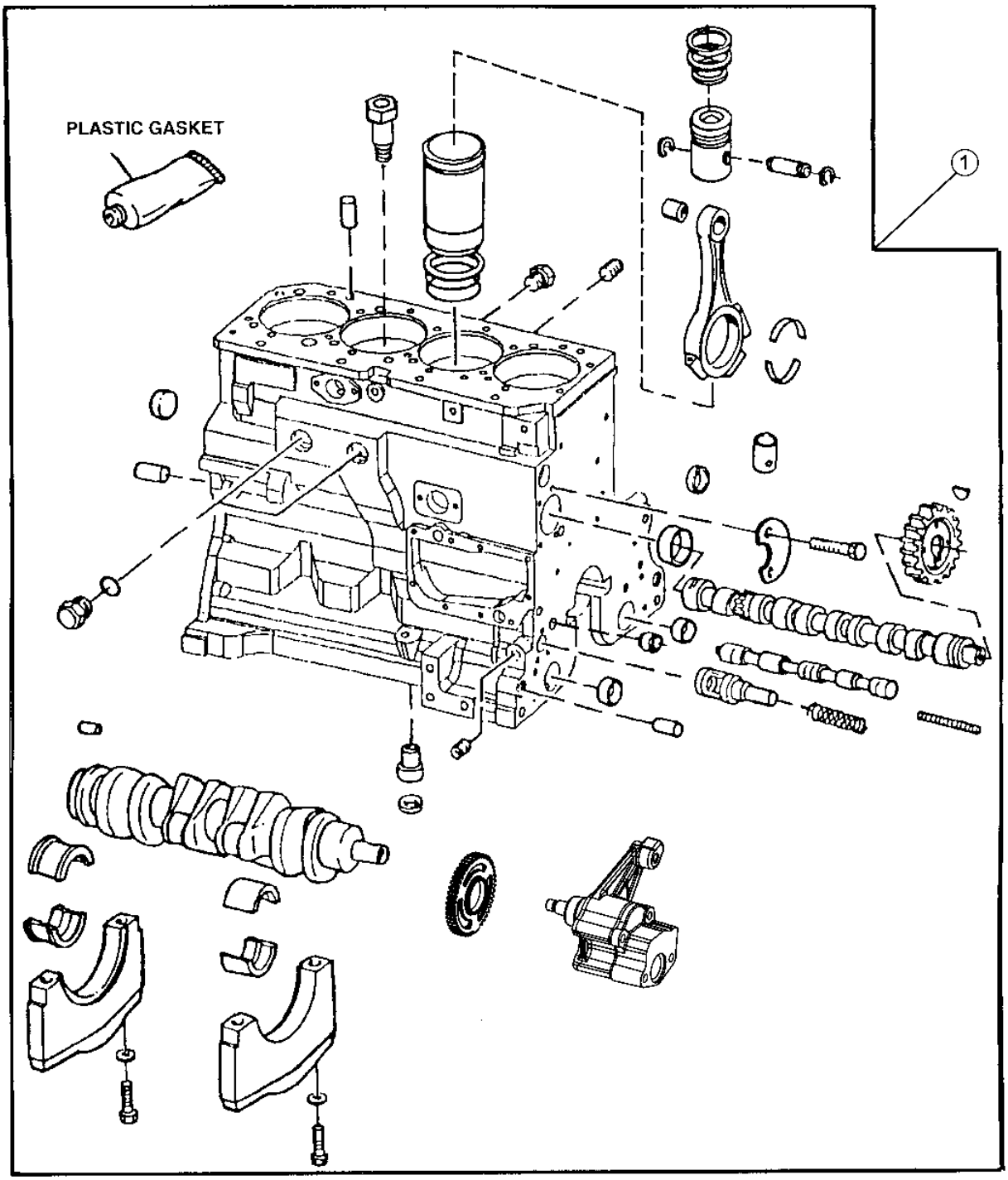

T156111

ENGINE SHORT BLOCK
(ENGINE SERIAL NO. 221706-)
PE4045DT058, PE4045TT088, PE4045TT089

KEY	PART NO.	PART NAME	QTY	ENGINE SERIAL NO.	310G	315SG	315SG	REMARKS
1	RE520023	SHORT BLOCK ASSEMBLY	1		X	X	X	(WITH TURBOCHARGER)
	RE520031	SHORT BLOCK ASSEMBLY	1		X			(WITHOUT TURBOCHARGER)

ENGINE OIL FILLER INLET
T0/PE4045DT056, T0/PE4045TT080, T0/PE4045TT081, PE4045DT058, PE4045TT088, PE4045TT089

TP69531 -UN-26JUL00

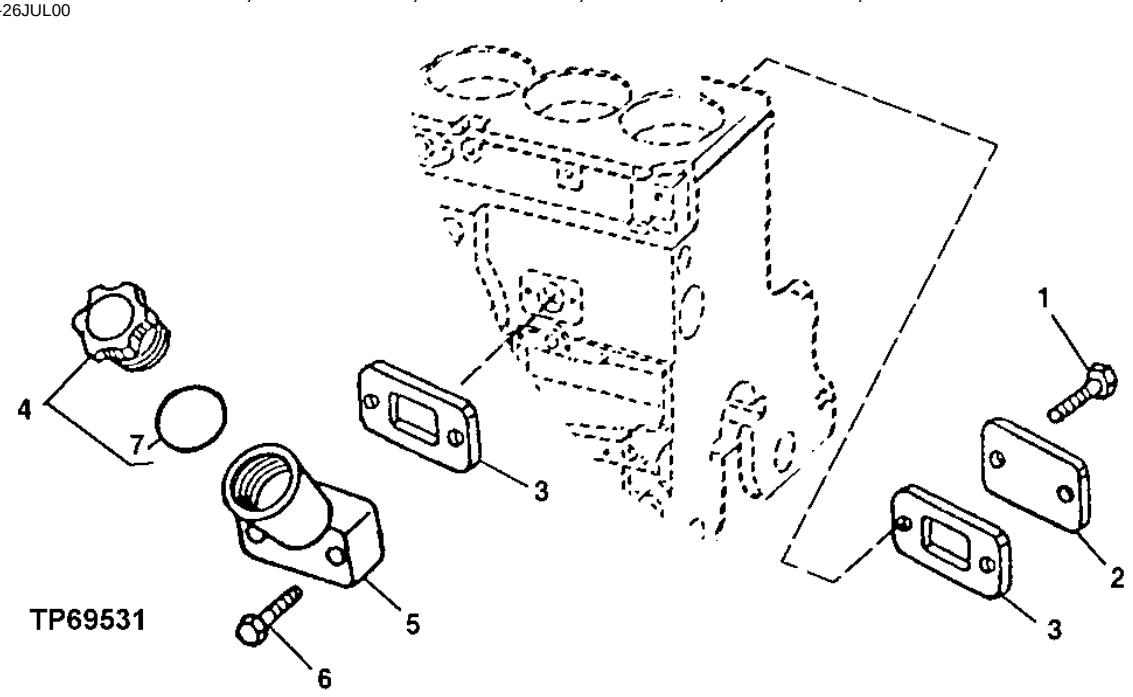

KEY	PART NO.	PART NAME	QTY	ENGINE SERIAL NO.	310G	315SG	REMARKS
1	RE67238	SCREW	2		X	X X	M8 X 20 (WITH PRE-APPLIED SEALANT)
2	R116296	COVER	1		X	X X	
3	R136495	GASKET	2		X	X X	
4	RE500005	FILLER CAP	1		X	X X	
5	RE501377	FILLER NECK	1		X	X X	
6	RE67239	SCREW	2		X	X X	M8 X 100 (WITH PRE-APPLIED SEALANT)
7	R502902	PACKING	1		X	X X	

MEMORANDA

ENGINE OIL DIPSTICK AND DIPSTICK TUBE
T0/PE4045DT056, T0/PE4045TT080, T0/PE4045TT081, PE4045TT088 ,PE4045TT089 (VSN-929329) PE45DT058

TP49535 -UN-03JAN97

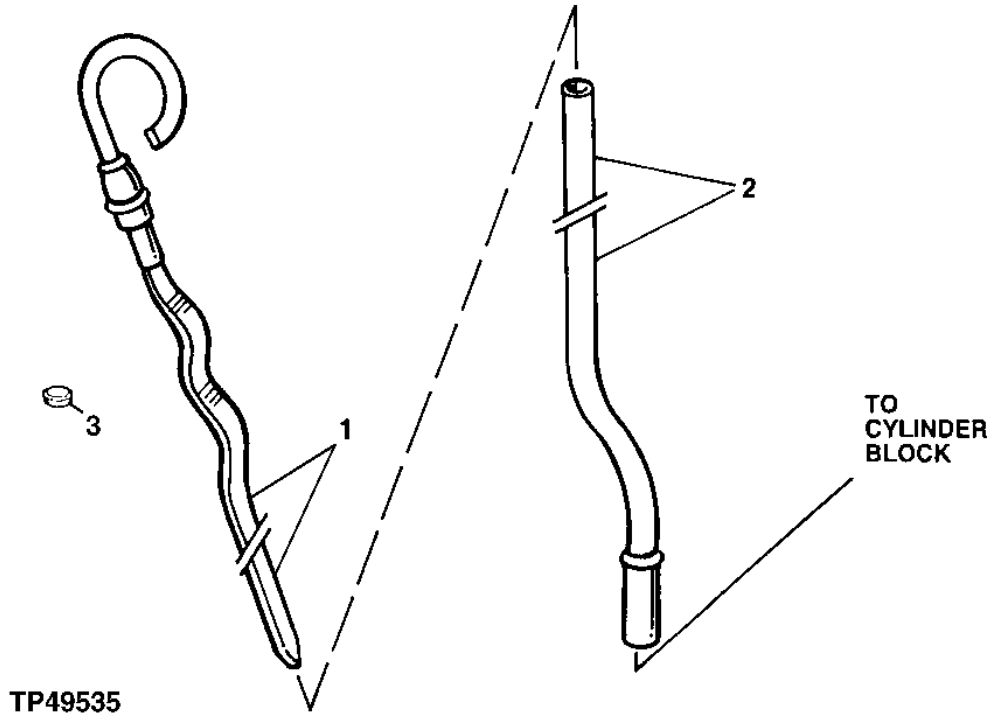

KEY	PART NO.	PART NAME	QTY	ENGINE SERIAL NO.	310G	315SG	REMARKS
1	RE69243	DIPSTICK	1		X	X X	
2	R502604	DIPSTICK TUBE	1		X	X X	
3	R502725	PLUG	1		X	X X	

ENGINE OIL DIPSTICK
(VSN 929330-)PE4045DT058

RGP10106 -UN-19SEP03

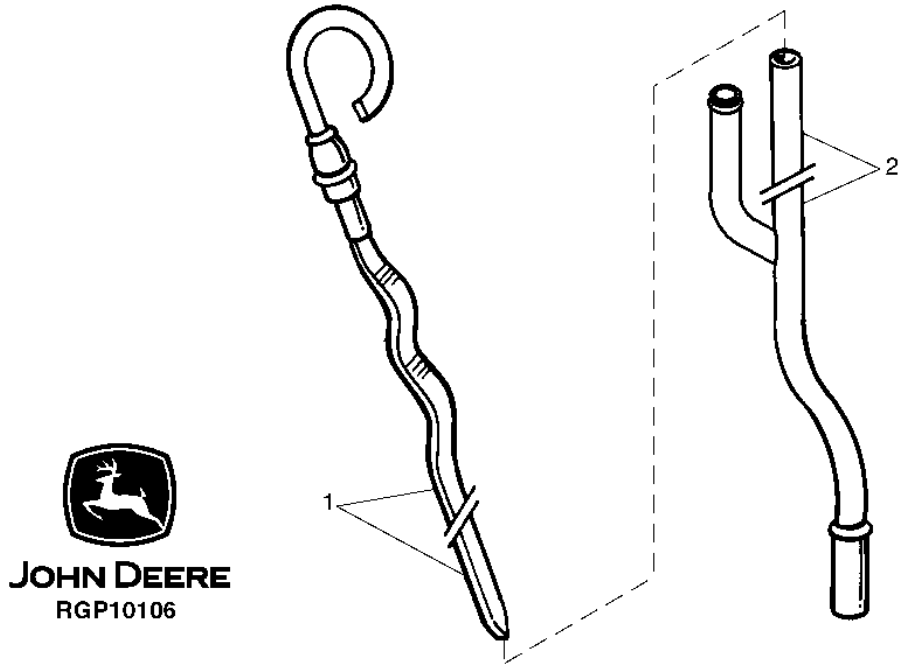

KEY	PART NO.	PART NAME	QTY	ENGINE SERIAL NO.	310G	315SG	REMARKS
1	RE69243	DIPSTICK	1		X		
2	RE522078	DIPSTICK TUBE	1		X		

MEMORANDA

ENGINE OIL PAN AND GASKET 310G(TURBO), 310SG, 315SG
(VSN 893079-907963) T04045TT080, T04045TT081
(VSN -910055) PE4045TT080, PE4045TT081

KEY	PART NO.	PART NAME	QTY	ENGINE SERIAL NO.	310G	310SG	315SG	REMARKS
1	R123352	GASKET	1		X	X	X	
2	RE59439	OIL PAN	1		X	X	X	
3	19M7866	SCREW	6		X	X	X	M8 X 20, (SUB FOR 19M8062)
4	19M8163	CAP SCREW	22		X	X	X	M8 X 16
5	RE46685	PLUG	1		X	X	X	
6	51M7043	O-RING	1		X	X	X	15.300 X 2.200 MM

ENGINE OIL PAN AND GASKET 310G (W/O TURBO)
(VSN 893079-907963)T04045DT056
(VSN -911768)PE4045DT056 (VSN 911769-)PE4045DT058

T145710 -UN-21SEP01

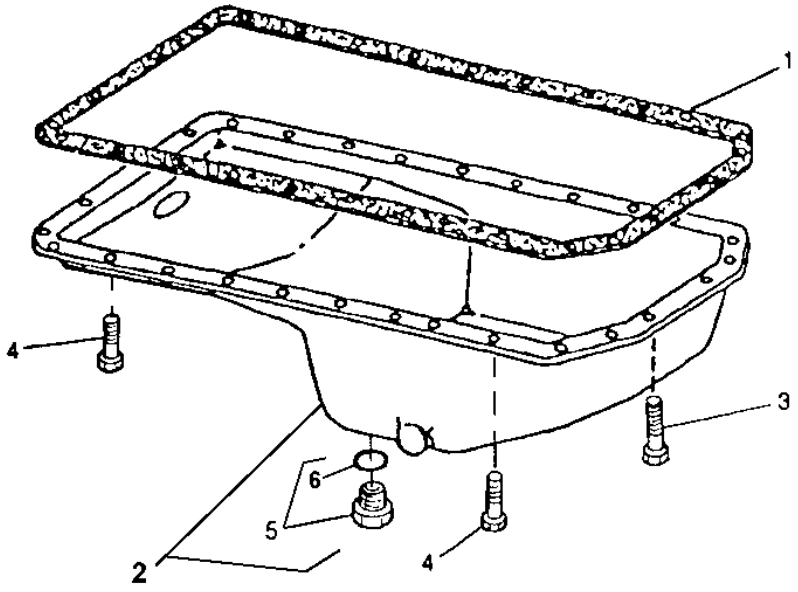

T145710

ENGINE OIL PAN AND GASKET 310G (W/O TURBO)
(VSN 893079 - 907963) T04045DT056
(VSN -911768)PE4045DT056 (VSN 911769-)PE4045DT058

KEY	PART NO.	PART NAME	QTY	ENGINE SERIAL NO.	310G	315SG	315SG	REMARKS
1	R123352	GASKET	1		X			
2	RE59439	OIL PAN	1		X			
3	19M7866	SCREW	6		X			M8 X 20, (SUB FOR 19M8062)
4	19M8163	CAP SCREW	22		X			M8 X 16
5	RE46685	PLUG	1		X			
6	51M7043	O-RING	1		X			15.300 X 2.200 MM

**ENGINE OIL PAN AND GASKET 310G(TURBO), 310SG, 315SG
(VSN 893079-907963) T04045TT080, T04045TT081
(VSN -910055) PE4045TT080, PE4045TT081**

T145710 -UN-21SEP01

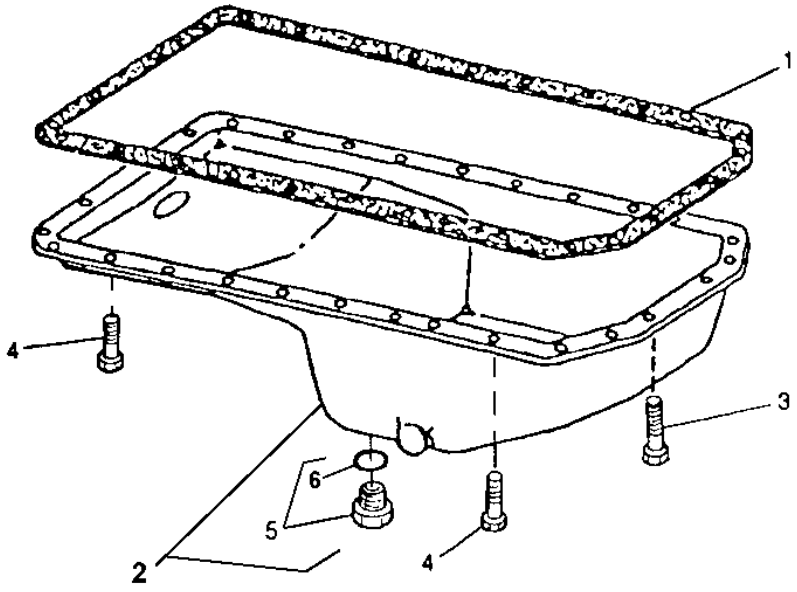

T145710

ENGINE OIL PAN AND GASKET 310G(TURBO), 310SG, 315SG
(VSN 893079-907963) T04045TT080, T04045TT081
(VSN -910055) PE4045TT080, PE4045TT081

KEY	PART NO.	PART NAME	QTY	ENGINE SERIAL NO.	310G	310SG	315SG	REMARKS
1	R123352	GASKET	1		X	X	X	
2	RE59439	OIL PAN	1		X	X	X	
3	19M7866	SCREW	6		X	X	X	M8 X 20, (SUB FOR 19M8062)
4	19M8163	CAP SCREW	22		X	X	X	M8 X 16
5	RE46685	PLUG	1		X	X	X	
6	51M7043	O-RING	1		X	X	X	15.300 X 2.200 MM

ENGINE OIL PAN 310G(TURBO), 310SG, 315SG
(VSN 910056-) PE4045TT088, PE4045TT089

T145708 -UN-21SEP01

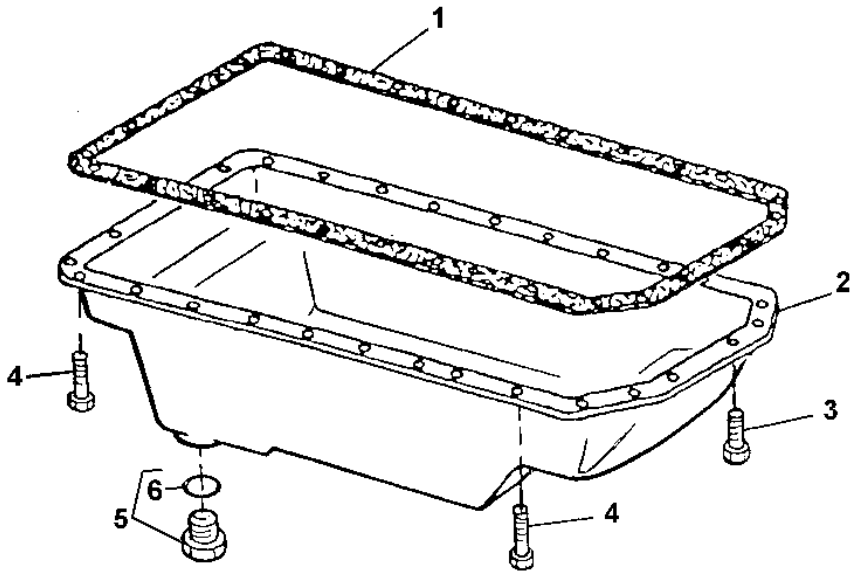

T145708

ENGINE OIL PAN 310G(TURBO), 310SG, 315SG
(VSN 910056-) PE4045TT088, PE4045TT089

KEY	PART NO.	PART NAME	QTY	ENGINE SERIAL NO.	310G	310SG	315SG	REMARKS
1	R123352	GASKET	1		X	X	X	
2	RE59545	OIL PAN	1		X	X	X	
3	19M7866	SCREW	6		X	X	X	M8 X 20, (SUB FOR 19M8062)
4	19M8163	CAP SCREW	22		X	X	X	M8 X 16
5	RE46685	PLUG	1		X	X	X	
6	51M7043	O-RING	1		X	X	X	15.300 X 2.200 MM

ENGINE OIL FILTER AND OIL FILTER HEADER 310G (W/O TURBO)
(VSN -911768) T0/PE4045DT056

TP69533 -UN-07AUG00

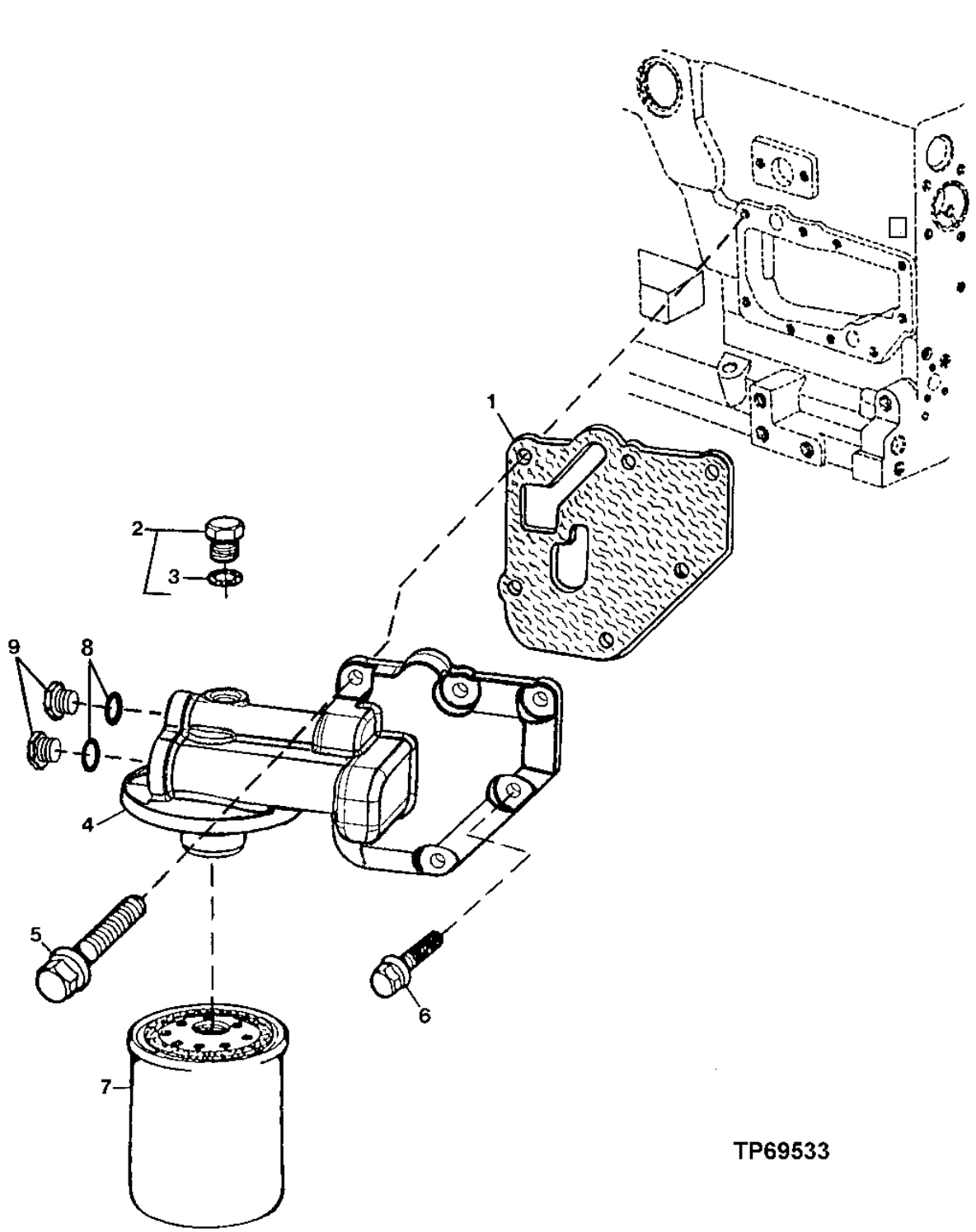

**ENGINE OIL FILTER AND OIL FILTER HEADER 310G (W/O TURBO)
(VSN -911768) T0/PE4045DT056**

KEY	PART NO.	PART NAME	QTY	ENGINE SERIAL NO.	310G	310SG	315SG	REMARKS
1	R500374	GASKET	1		X			
2	RE52242	DRAIN PLUG	1		X			
3	51M7042	O-RING	1		X			13.300 X 2.200 MM
4	RE500133	FILTER HEAD	1		X			
5	19M7802	SCREW	5		X			M8 X 65
6	RE67238	SCREW	1		X			M8 X 20 (WITH PRE-APPLIED SEALANT)
7	RE59754	OIL FILTER	1		X			
8	51M7045	O-RING	2		X			19.300 X 2.200 MM
9	R116115	FITTING	2		X			

ENGINE OIL FILTER AND OIL FILTER HEADER 310G (W/O TURBO)
(VSN 911769-) PE4045DT058

T145377 -UN-14SEP01

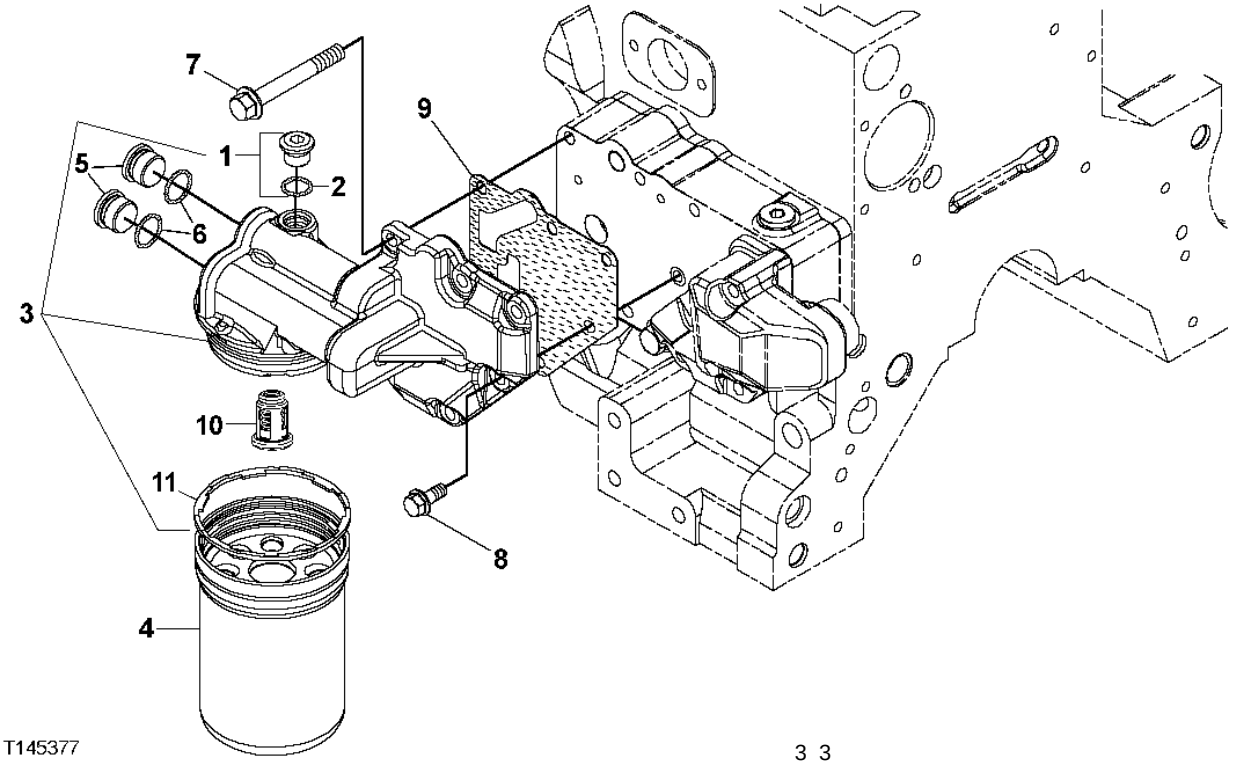

KEY	PART NO.	PART NAME	QTY	ENGINE SERIAL NO.	310G	315SG	315SG	REMARKS
1	RE52242	DRAIN PLUG	1		X			M16 X 1.5
2	51M7042	O-RING	1		X			13.300 X 2.200 MM
3	RE504564	FILTER HEAD	1		X			(MARKED R502505)
4	RE504836	OIL FILTER	1		X			(ALSO ORDER R502513)
5	R116115	FITTING	2		X			
6	51M7045	O-RING	2		X			19.300 X 2.200 MM
7	19M7802	SCREW	5		X			M8 X 65
8	RE67238	SCREW	1		X			M8 X 20, (WITH PRE-APPLIED SEALANT)
9	R500374	GASKET	1		X			
10	RE504543	VALVE	1		X			
11	R502513	SEAL	1		X			

MEMORANDA

ENGINE OIL FILTER AND OIL FILTER HEADER 310G(TURBO), 310SG, 315SG (VSN -910055) T0/PE4045TT080,T0/PE4045TT081

TP69533 -UN-07AUG00

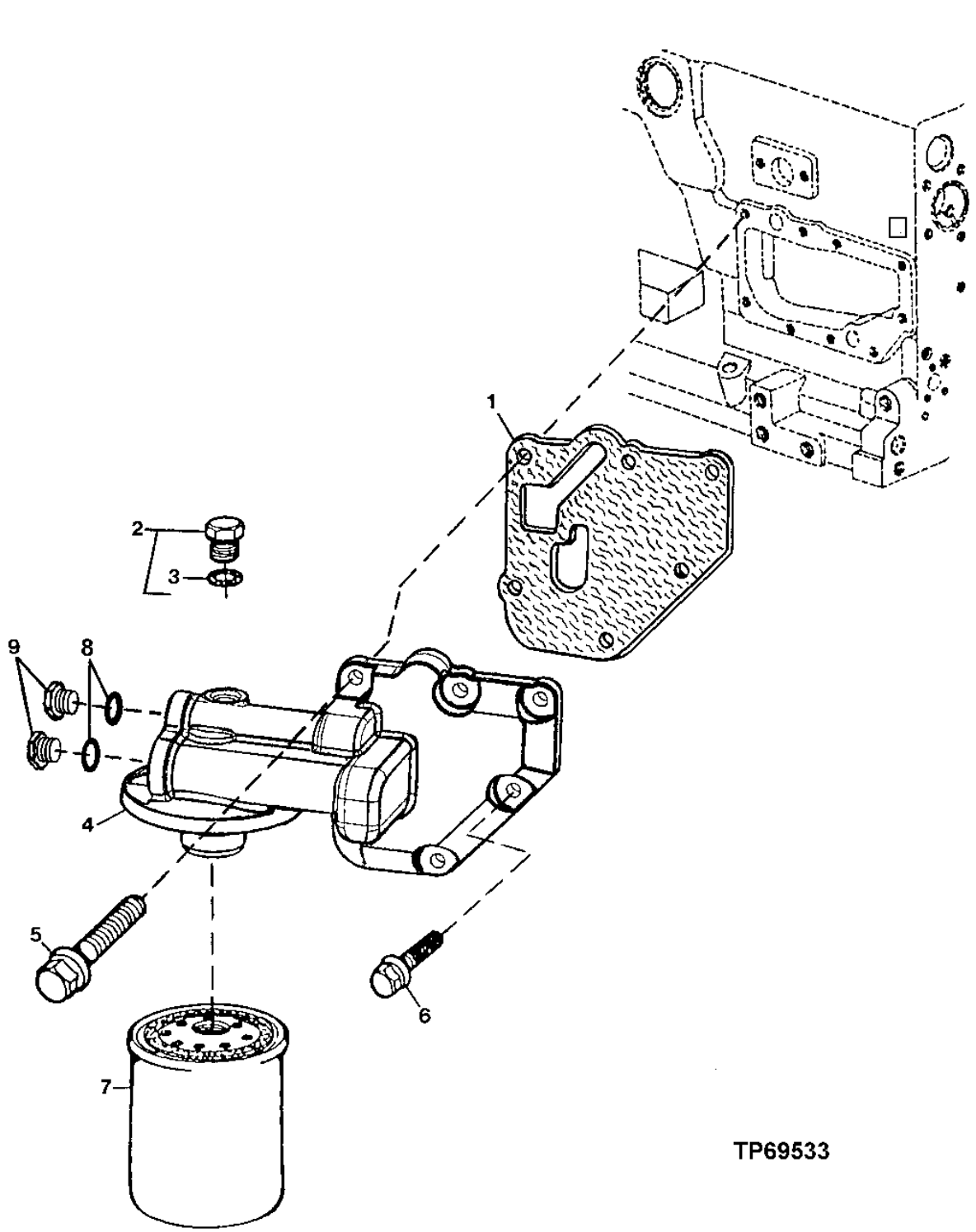

ENGINE OIL FILTER AND OIL FILTER HEADER 310G(TURBO), 310SG, 315SG (VSN -910055) T0/PE4045TT080,T0/PE4045TT081

KEY	PART NO.	PART NAME	QTY	ENGINE SERIAL NO.	310G	310SG	315SG	REMARKS
1	R500374	GASKET	1		X	X	X	
2	RE52242	DRAIN PLUG	1		X	X	X	
3	51M7042	O-RING	1		X	X	X	13.300 X 2.200 MM
4	RE500133	FILTER HEAD	1		X	X	X	
5	19M7802	SCREW	5		X	X	X	M8 X 65
6	RE67238	SCREW	1		X	X	X	M8 X 20 (WITH PRE-APPLIED SEALANT)
7	RE59754	OIL FILTER	1		X	X	X	
	RE67764	OIL FILTER	1		X	X	X	(HIGH CAPACITY OIL FILTER)
8	51M7045	O-RING	2		X	X	X	19.300 X 2.200 MM
9	R116115	FITTING	2		X	X	X	

ENGINE OIL FILTER AND OIL FILTER HEADER 310G(TURBO), 310SG, 315SG
(VSN 910056-) PE4045TT088,PE4045TT089

T145377 -UN-14SEP01

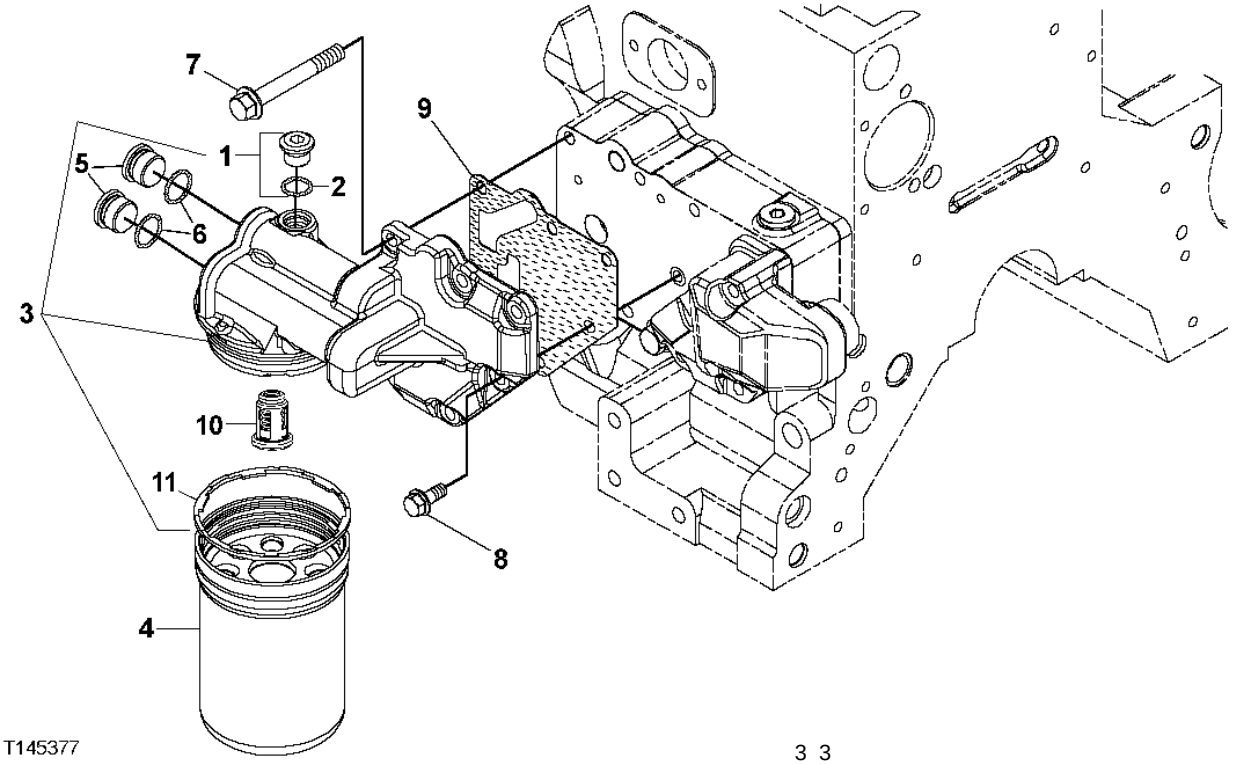

KEY	PART NO.	PART NAME	QTY	ENGINE SERIAL NO.	310G	315SG	REMARKS
1	RE52242	DRAIN PLUG	1		X	X X	M16 X 1.5
2	51M7042	O-RING	1		X	X X	13.300 X 2.200 MM
3	RE504564	FILTER HEAD	1		X	X X	(MARKED R502505)
4	RE504836	OIL FILTER	1		X	X X	(ALSO ORDER R502513)
5	R116115	FITTING	2		X	X X	
6	51M7045	O-RING	2		X	X X	19.300 X 2.200 MM
7	19M7802	SCREW	5		X	X X	M8 X 65
8	RE67238	SCREW	1		X	X X	M8 X 20, (WITH PRE-APPLIED SEALANT)
9	R500374	GASKET	1		X	X X	
10	RE504543	VALVE	1		X	X X	
11	R502513	SEAL	1		X	X X	

ENGINE OIL PUMP AND OIL PUMP INTAKE
T0/PE4045DT056, T0/PE4045TT080, T0/PE4045TT081, PE4045DT058, PE4045TT088, PE4045TT089

TP49570 -UN-17FEB97

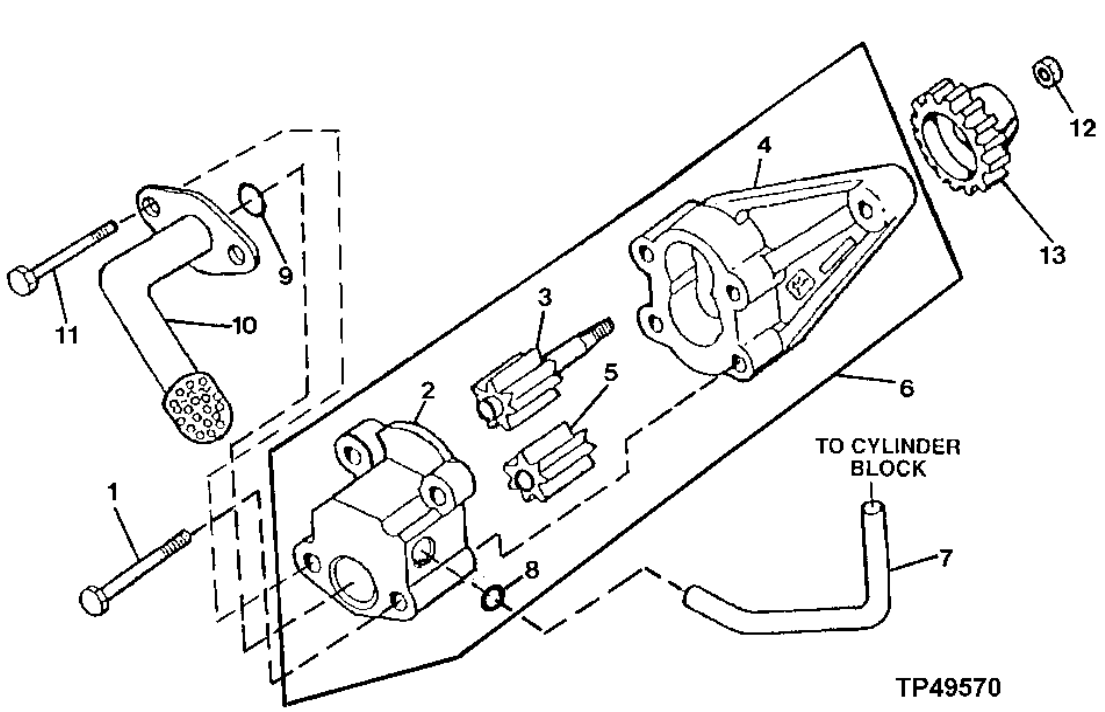

KEY	PART NO.	PART NAME	QTY	ENGINE SERIAL NO.	310G	315SG	REMARKS
1	19M8987	SCREW	2		X X X		M8 X 65
2	.....	COVER	1		X X X		
3	.....	GEAR	1		X X X		
4	.....	HOUSING	1		X X X		
5	.....	GEAR	1		X X X		
6	RE504914	OIL PUMP	1		X X X		(MARKED R502867)
7	R121376	TUBE	1		X X X		
8	R97185	O-RING	1		X X X		
9	R61871	O-RING	1		X X X		
10	RE70073	OIL PUMP INTAKE	1	-221705	X X X		
	RE57619	OIL PUMP INTAKE	1	221706-	X X X		PE4045TT089
	RE57619	OIL PUMP INTAKE	1	224566-	X		PE4045TT088
	RE70073	OIL PUMP INTAKE	1	241601-	X		PE4045DT058 (WITHOUT TURBOCHARGER)
11	19M8986	SCREW	2		X X X		M8 X 100
12	14M7066	NUT	1		X X X		M12
13	R120638	GEAR	1		X X X		(30 TEETH)

ENGINE VENTILATING SYSTEM
T0/PE4045DT056, T0/PE4045TT080, T0/PE4045TT081, PE 4045TT088, PE4045TT089

TP49041 -UN-06SEP95

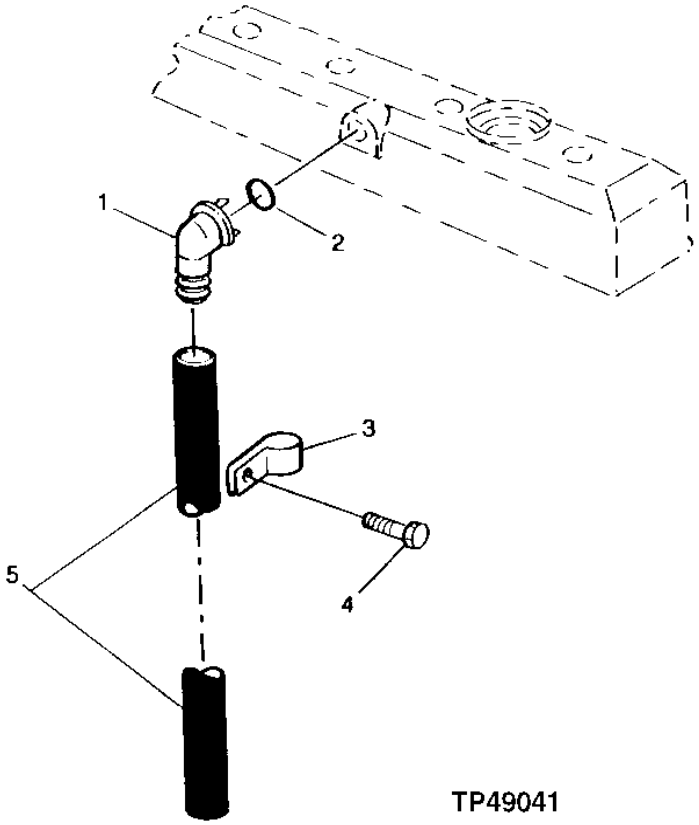

TP49041

ENGINE VENTILATING SYSTEM
T0/PE4045DT056, T0/PE4045TT080, T0/PE4045TT081, PE4045DT058, PE4045TT088, PE4045TT089

KEY	PART NO.	PART NAME	QTY	ENGINE SERIAL NO.	310G	315SG	315SG	REMARKS
1	R120467	ELBOW FITTING	1		X	X	X	
2	R72328	O-RING	1		X	X	X	
3	R72659	CLAMP	1		X	X	X	
4	19M7866	SCREW	1		X	X	X	M8 X 20
5	TY24401	BULK HOSE	1		X	X	X	

ENGINE VENTILATING SYSTEM
310G (W/O TURBO)
(VSN 929330-) PE4045DT058

RGP10105 -UN-19SEP03

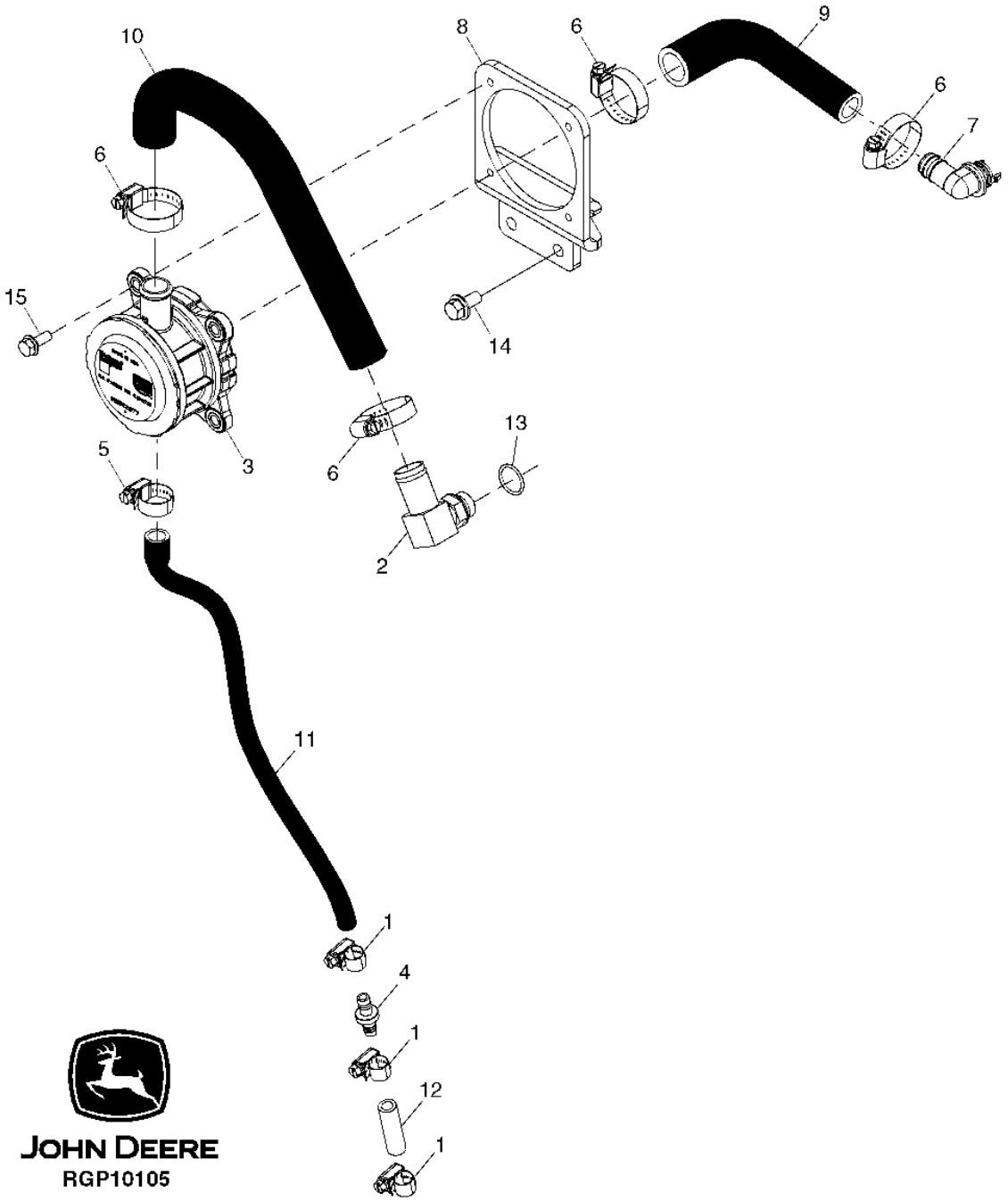

ENGINE VENTILATING SYSTEM
310G (W/O TURBO)
(VSN 929330-) PE4045DT058

KEY	PART NO.	PART NAME	QTY	ENGINE SERIAL NO.	310G	315SG	REMARKS
1	TY22464	CLAMP	3		X		
2	AT196258	ELBOW FITTING	1		X		
3	RE522766	IMPACTOR	1		X		(SUB FOR RE522077)
4	RE522079	CHECK VALVE	1		X		
5	RE65978	CLAMP	1		X		
6	AR21839	CLAMP	4		X		
7	R120467	ELBOW FITTING	1		X		
8	R519244	BRACKET	1		X		
9	R519273	HOSE	1		X		
10	R519274	HOSE	1		X		
11	R519275	HOSE	1		X		
12	R519286	HOSE	1		X		
13	R72328	O-RING	1		X		
14	19M7784	SCREW	4		X		M10 X 20
15	19M7866	SCREW	4		X		M8 X 20

CYLINDER HEAD, HEAD GASKET AND VALVES
T0/PE4045DT056, T0/PE4045TT080, T0/PE4045TT081, PE4045DT058, PE4045TT088, PE4045TT089

T149672 -UN-10JAN02

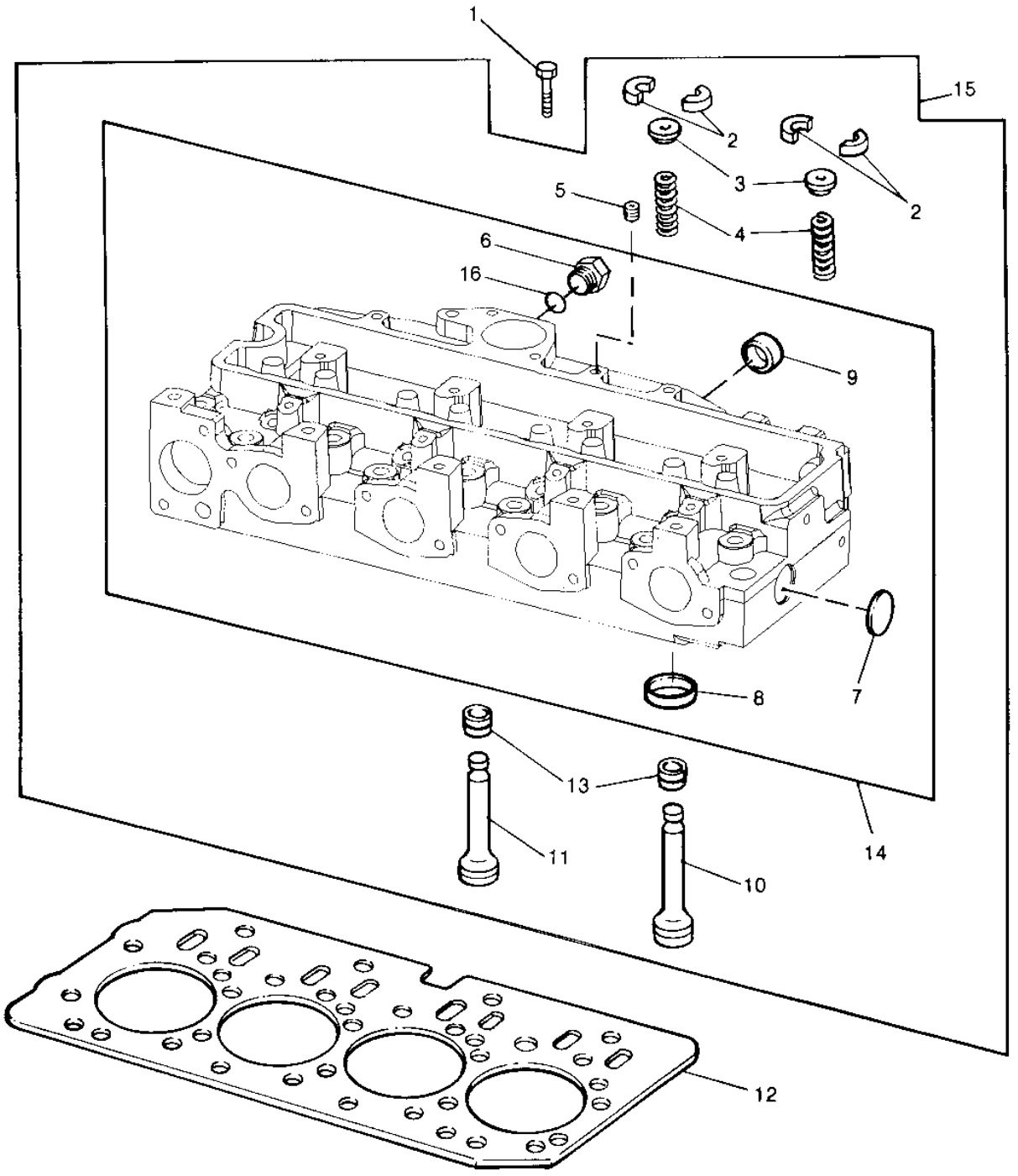

T149672

CYLINDER HEAD, HEAD GASKET AND VALVES
T0/PE4045DT056, T0/PE4045TT080, T0/PE4045TT081, PE4045DT058, PE4045TT088, PE4045TT089

KEY	PART NO.	PART NAME	QTY	ENGINE SERIAL NO.	310G	310SG	315SG	REMARKS
1	R85363	CAP SCREW	18		X	X	X	
2	R91889	RETAINER	16		X	X	X	
3	RE60005	ROTATOR	8		X	X	X	
4	R26125	SPRING	8		X	X	X	
5	R104592	PIPE PLUG	1		X	X	X	
6	T58477	FITTING	1		X	X	X	
	R26906	O-RING	1		X	X	X	
7	CD16284	PLUG	1		X	X	X	
8	R98063	VALVE SEAT INSERT	4		X	X	X	STANDARD SIZE INTAKE VALVE
	R98335	VALVE SEAT INSERT	4		X	X	X	OVERSIZE INTAKE VALVE
	R85687	VALVE SEAT INSERT	4		X	X	X	STANDARD SIZE EXHAUST VALVE
	R93910	VALVE SEAT INSERT	4		X	X	X	OVERSIZE EXHAUST VALVE
9	R43409	PLUG	2		X	X	X	
10	R90692	EXHAUST VALVE	4		X	X	X	STANDARD
11	R98062	INTAKE VALVE	4		X	X	X	STANDARD
12	R116515	ENGINE CYLINDER HEAD GASKET	1		X	X	X	
13	RE31617	SEAL	8		X	X	X	
14	.....	CYLINDER HEAD	1		X	X	X	(MARKED R121402)
15	RE57234	CYLINDER HEAD	1		X	X	X	(MARKED R121402)
16	R26906	O-RING	1		X	X	X	

MEMORANDA

EXHAUST MANIFOLD AND GASKET
T0/PE4045DT056, T0/PE4045TT080, T0/PE4045TT081, PE4045DT058, PE4045TT088, PE4045TT089

TP49344 -UN-22NOV95

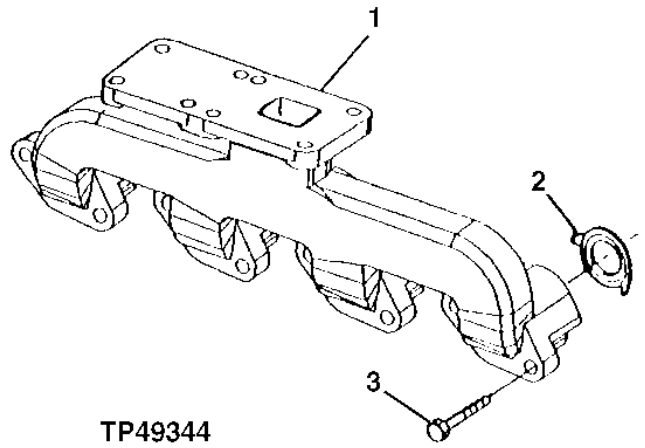

KEY	PART NO.	PART NAME	QTY	ENGINE SERIAL NO.	310G	315SG	REMARKS
1	R132261	EXHAUST MANIFOLD	1		X	X X	
2	R90658	GASKET	4		X	X X	
3	19M7810	SCREW	8		X	X X	M10 X 80

EXHAUST ELBOW 310G(TURBO), 310SG, 315SG
(VSN -910055) T0/PE4045TT080, T0/PE4045TT081
(VSN 910056-) PE4045TT088, PE4045TT089

TP49256 -UN-15MAY95

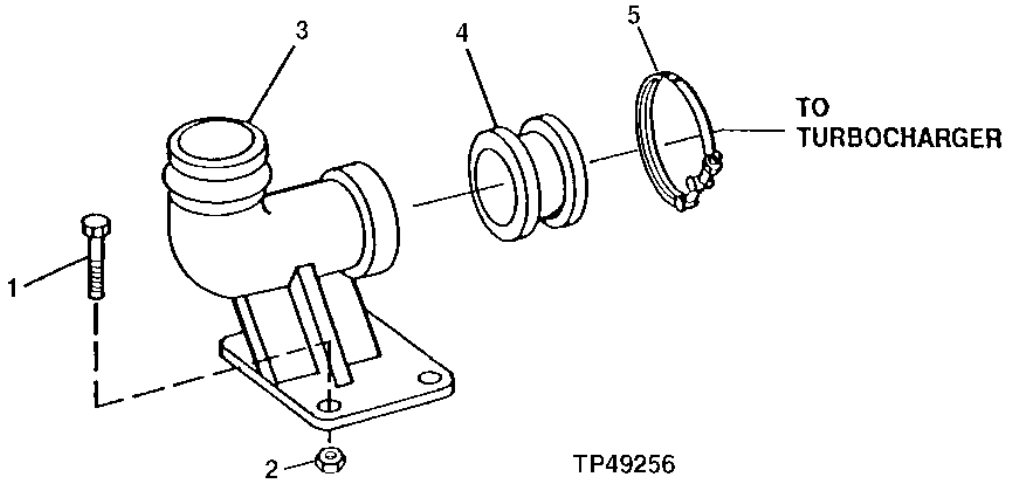

KEY	PART NO.	PART NAME	QTY	ENGINE SERIAL NO.	310G	310SG	315SG	REMARKS
1	19M8162	SCREW	4		X	X	X	M10 X 40
2	14M7296	FLANGE NUT	4		X	X	X	M10
3	R123246	PIPE ELBOW	1		X	X	X	
4	R87732	ADAPTER FITTING	1		X	X	X	
5	RE40048	CLAMP	1		X	X	X	

FUEL INJECTION NOZZLE 310G(TURBO), 310SG, 315SG
(VSN 893079-907963) T04045TT080, TO4045TT081
(VSN -910055) PE4045TT088, PE4045TT089

TP48976 -UN-26OCT96

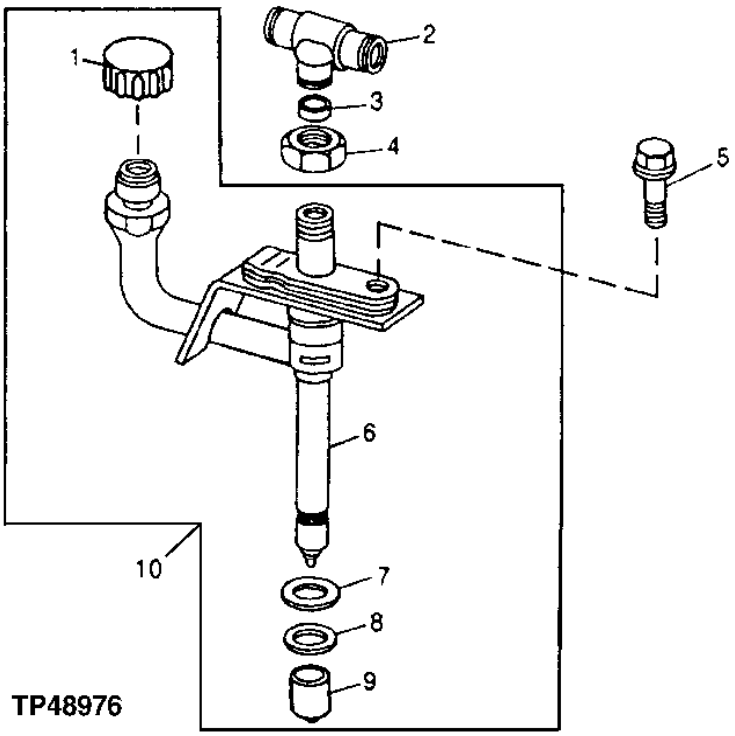

KEY	PART NO.	PART NAME	QTY	ENGINE SERIAL NO.	310G	310SG	315SG	REMARKS
1	.....	CAP (HAT)	1		X	X	X	
2	R71963	TEE FITTING	1		X	X	X	
3	R79605	WASHER	1		X	X	X	
4	R79604	TUBE NUT	1		X	X	X	
5	R116366	SCREW	1		X	X	X	
6	.....	NOZZLE	1		X	X	X	
7	R92352	PACKING	1		X	X	X	
8	R48000	SEAL	1		X	X	X	(USE WITH OVERSIZE NOZZLE BORE) (NOT INCLUDED WITH RE48786)
	R500390	WASHER	1		X	X	X	(USE WITH STANDARD NOZZLE BORE)
9	T24472	CAP	1		X	X	X	
10	RE48786	INJECTION NOZZLE	1		X	X	X	
	SE500826	NOZZLE	1		X	X	X	(INCLUDES 4 REMANUFACTURED NOZZLES)

FUEL INJECTION NOZZLE 310G(TURBO), 310SG, 315SG
(VSN 910056-) PE4045TT088, PE4045TT089
(VSN -943548) PE4045TT089

RGP10096 -UN-28AUG03

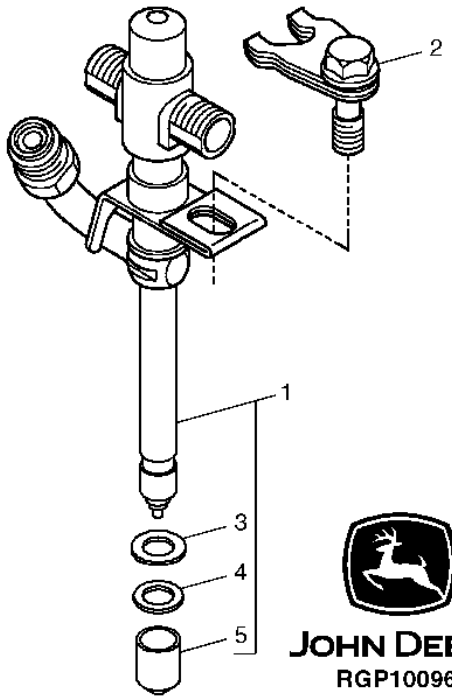

KEY	PART NO.	PART NAME	QTY	ENGINE SERIAL NO.	310G	310SG	315SG	REMARKS
1	RE507766	INJECTION NOZZLE	4		X	X	X	
	SE500830	NOZZLE	1		X	X	X	(REMANUFACTURED)(PACKAGE OF FOUR)
2	RE508716	CLAMP	4		X	X	X	
3	R92352	PACKING	1		X	X	X	
4	R500390	WASHER	1		X	X	X	
5	T24472	CAP	1		X	X	X	

FUEL INJECTION NOZZLE 310SG, 315SG
(VSN 943549-) T04045TT089

TP48976 -UN-26OCT96

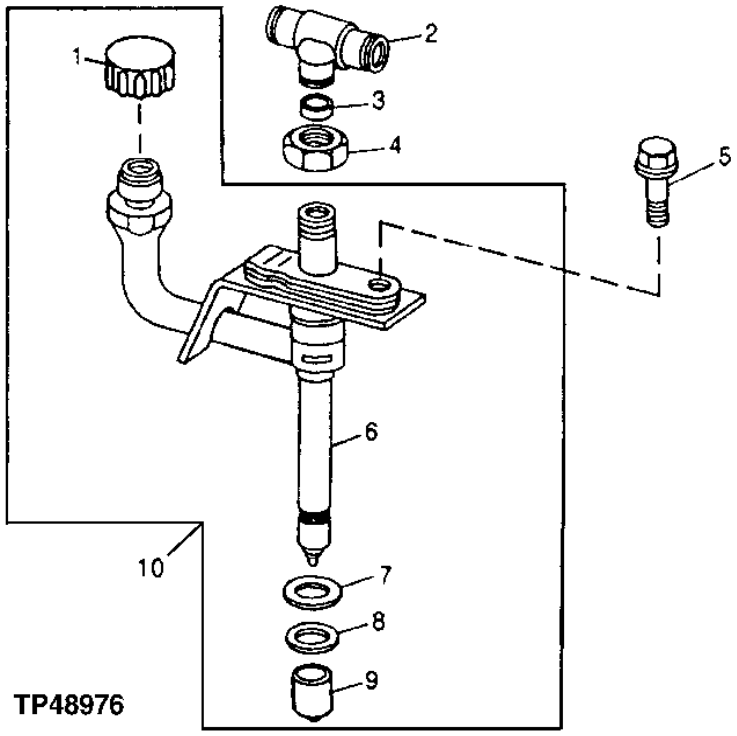

KEY	PART NO.	PART NAME	QTY	ENGINE SERIAL NO.	310G	315SG	REMARKS
1	.....	CAP (HAT)	1		X	X	
2	R71963	TEE FITTING	1		X	X	
3	R79605	WASHER	1		X	X	
4	R79604	TUBE NUT	1		X	X	
5	R116366	SCREW	1		X	X	
6	.....	NOZZLE	1		X	X	
7	R92352	PACKING	1		X	X	
8	R48000	SEAL	1		X	X	(USE WITH OVERSIZE NOZZLE BORE) (NOT INCLUDED WITH RE48786)
	R500390	WASHER	1		X	X	(USE WITH STANDARD NOZZLE BORE)
9	T24472	CAP	1		X	X	
10	RE48786	INJECTION NOZZLE	1		X	X	
	SE500826	NOZZLE	1		X	X	(INCLUDES 4 REMANUFACTURED NOZZLES)

FUEL INJECTION NOZZLE 310G (W/O TURBO)
(VSN 893079-907963) T04045DT056
(VSN -911768) T4045DT056

TP48976 -UN-26OCT96

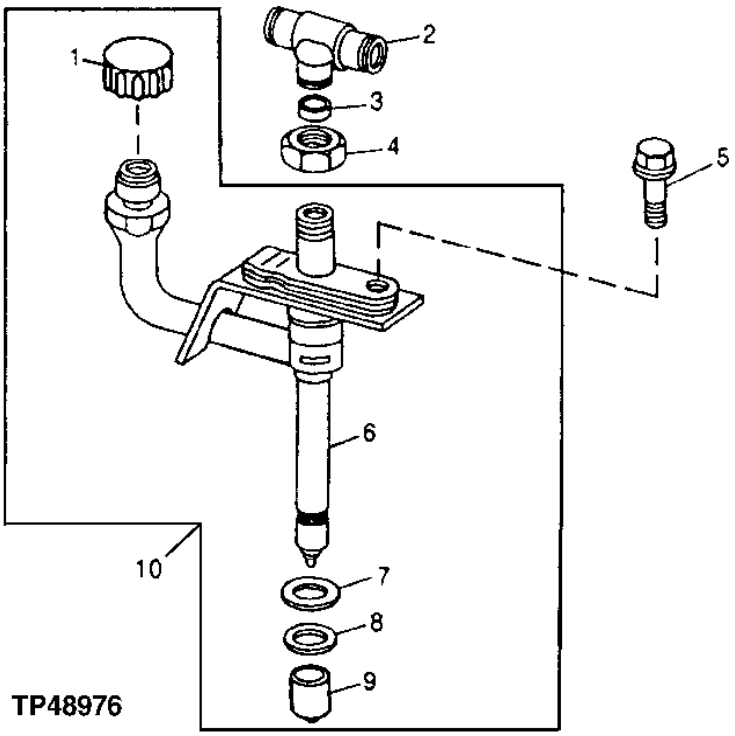

KEY	PART NO.	PART NAME	QTY	ENGINE SERIAL NO.	310G	310SG	315SG	REMARKS
1	.....	CAP (HAT)	1		X			
2	R71963	TEE FITTING	1		X			
3	R79605	WASHER	1		X			
4	R79604	TUBE NUT	1		X			
5	R116366	SCREW	1		X			
6	.....	NOZZLE	1		X			
7	R92352	PACKING	1		X			
8	R48000	SEAL	1		X			(USE WITH OVERSIZE NOZZLE BORE)
	R500390	WASHER	1		X			(USE WITH STANDARD NOZZLE BORE)
9	T24472	CAP	1		X			
10	RE60062	INJECTION NOZZLE	1		X			
	SE500828	NOZZLE	1		X	X	X	(INCLUDES 4 REMANUFACTURED NOZZLES)

FUEL INJECTION NOZZLE 310G (W/O TURBO)
(VSN 911769-) PE4045DT058

T145165 -UN-04SEP01

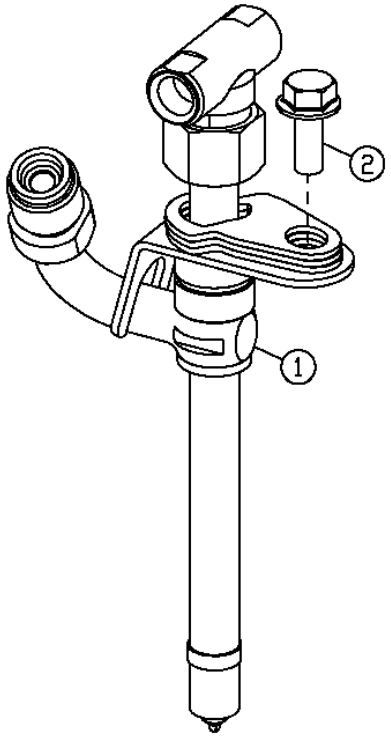

T145165

KEY	PART NO.	PART NAME	QTY	ENGINE SERIAL NO.	310G	315SG	315SG	REMARKS
1	RE515684	INJECTION NOZZLE	1		X			
2	R116366	SCREW	1		X			

FUEL INJECTION SYSTEM 310G (W/O TURBO)
(VSN 893079-907963) T04045DT056, T04045TT080, T04045TT081 (VSN -911768) PE4045DT058

TP59234 -UN-09OCT97

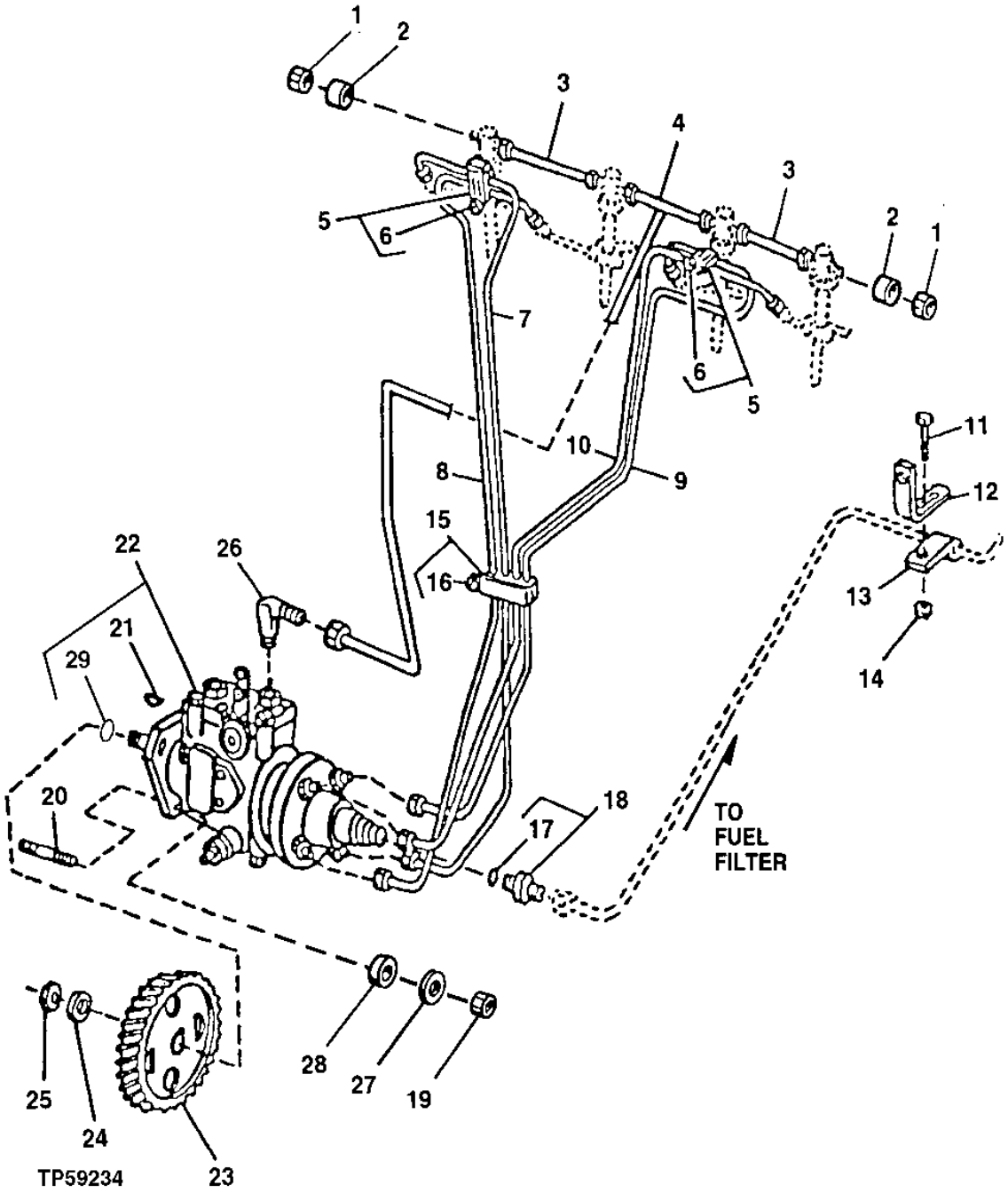

FUEL INJECTION SYSTEM 310G (W/O TURBO)
(VSN 893079-907963) T04045DT056, T04045TT080, T04045TT081 (VSN -911768) PE4045DT058

KEY	PART NO.	PART NAME	QTY	ENGINE SERIAL NO.	310G	315SG	REMARKS
1	AR85519	PLUG	2		X	X X	
2	R123593	TUBE NUT	2		X	X X	
3	RE68748	TUBE	2		X	X X	
	R51936	SEALING WASHER	2		X	X X	(NOT ILLUSTRATED)
4	RE70848	FUEL LINE	1		X	X X	LEAK-OFF
	R51936	SEALING WASHER	3		X	X X	(NOT ILLUSTRATED)
5	RE19797	CLAMP	2		X	X X	
6	19M7300	CAP SCREW	2		X	X X	M6 X 10
7	RE59447	FUEL LINE	1		X	X X	NO. 1
8	RE59448	FUEL LINE	1		X	X X	NO. 2
9	RE59449	FUEL LINE	1		X	X X	NO. 3
10	RE59450	FUEL LINE	1		X	X X	NO. 4
11	19M7865	SCREW	1		X	X X	M8 X 16, NO. 2
12	R116116	BRACKET	1		X	X X	
13	T14050	CLAMP	1		X	X X	
14	14M7298	FLANGE NUT	1		X	X X	M8
15	RE19799	CLAMP	1		X	X X	
16	19M7300	CAP SCREW	1		X	X X	M6 X 10
17	51M7040	O-RING	1		X	X X	9.300 X 2.200 MM, (METRIC)
	R26286	O-RING	1		X	X X	(SAE)
18	RE60029	ADAPTER FITTING	1		X	X X	(M12X1.5)
	RE59487	FITTING	1	-706976	X	X X	(SAE)
19	14M7273	NUT	3		X	X X	M8
20	R116386	STUD	3		X	X X	
21	26H10	SHAFT KEY	1		X	X X	5/32" X 5/8"
22	RE502380	FUEL INJECTION PUMP	1		X		(A) (WITHOUT TURBOCHARGER)(STANADYNE)
	SE500685	FUEL INJECTION PUMP	1		X		(A) (REMANUFACTURED)
23	R132267	GEAR	1		X	X X	(60 TEETH)
24	R132874	WASHER	1		X	X X	
25	R91360	NUT	1		X	X X	M14
26	R67364	ELBOW FITTING	1		X	X X	
27	12M7065	LOCK WASHER	3		X	X X	8 MM
28	T27860	WASHER	3		X	X X	
29	T16318	O-RING	1		X		
	R502076	O-RING	1			X X	

(A) SEE YOUR AUTHORIZED PUMP REPAIR STATION FOR INTERNAL PARTS

FUEL INJECTION PUMP,FUEL INJECTION LINES AND ENGINE CONTROLLER
310G (W/O TURBO)
(VSN 911769-) PE4045DT058

T157487 -UN-18JUL02

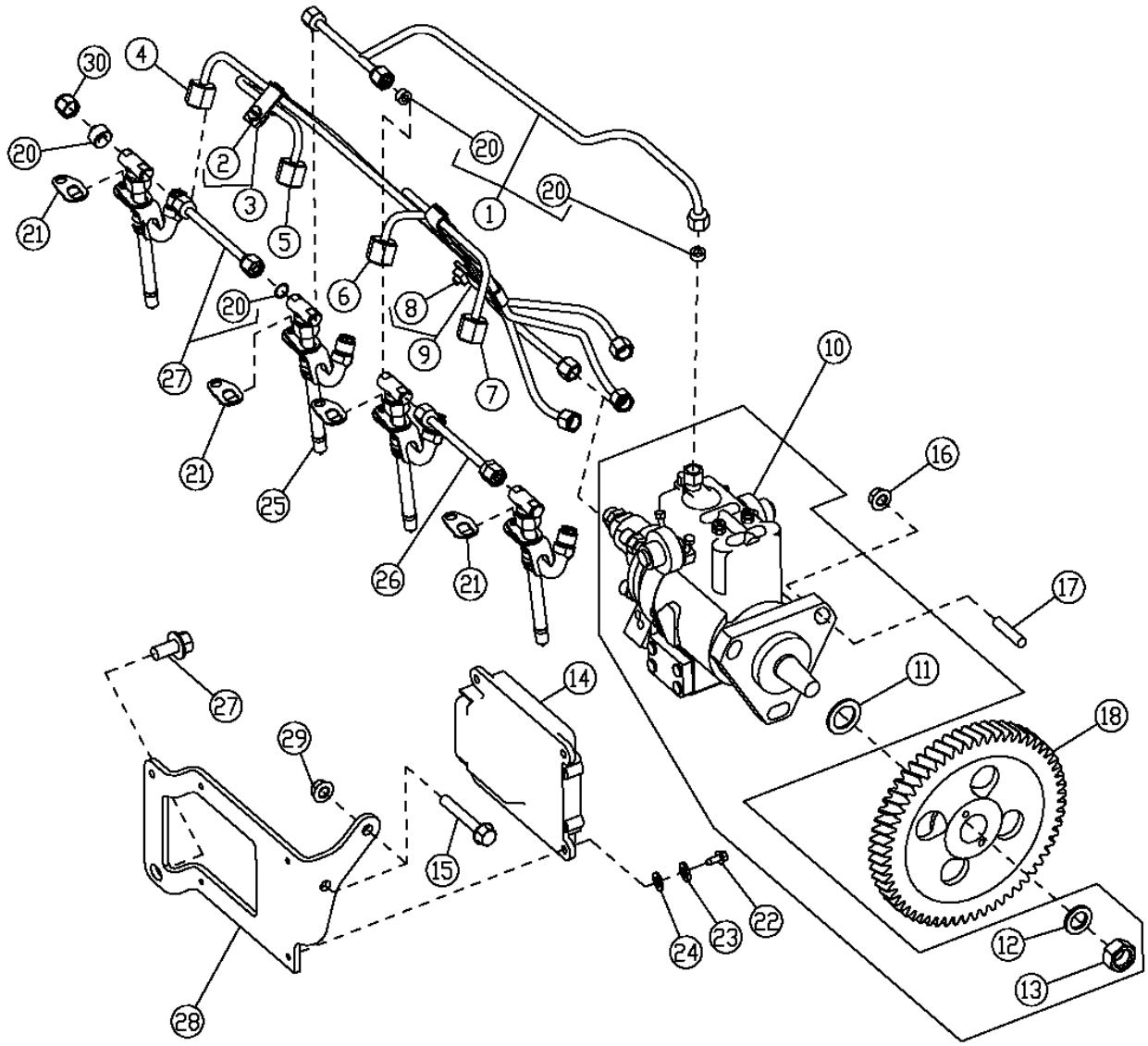

FUEL INJECTION PUMP,FUEL INJECTION LINES AND ENGINE CONTROLLER
310G (W/O TURBO)
(VSN 911769-) PE4045DT058

KEY	PART NO.	PART NAME	QTY	ENGINE SERIAL NO.	310G	315SG	315SG	REMARKS
1	RE507598	FUEL LINE	1		X	X	X	
2	19M6614	CAP SCREW	2		X	X	X	M6 X 12
3	RE19797	CLAMP	2		X	X	X	
4	RE507646	FUEL LINE	1		X	X	X	NO.1
5	RE507647	FUEL LINE	1		X	X	X	NO.2
6	RE507648	FUEL LINE	1		X	X	X	NO.3
7	RE507649	FUEL LINE	1		X	X	X	NO.4
8	19M6614	CAP SCREW	1		X	X	X	M6 X 12
9	RE19799	CLAMP	1		X	X	X	
10	RE518087	FUEL INJECTION PUMP	1		X	X	X	(SUB FOR RE515464) (12V)
11	R502076	O-RING	1		X	X	X	
12	R132874	WASHER	1		X	X	X	
13	R91360	NUT	1		X	X	X	M14
14	RE522527	ENGINE CONTROLLER	1		X	X	X	(SUB FOR RE518176) (WHEN ENGINE CONTROLLER IS BEING REPLACED YOU MUST PROVIDE THE ENGINE SERIAL NUMBER)
15	19M7979	SCREW	2		X	X	X	M8 X 55
16	14M7298	FLANGE NUT	3		X	X	X	M8
17	R116386	STUD	3		X	X	X	
18	R505472	GEAR	1		X	X	X	
19	R123593	TUBE NUT	1		X	X	X	
20	R51936	SEALING WASHER	6		X	X	X	
21	RE508716	CLAMP	4		X	X	X	
22	19M7640	CAP SCREW	4		X	X	X	M5 X 12
23	12H316	LOCK WASHER	4		X	X	X	5.486 MM
24	24M7027	WASHER	4		X	X	X	5.300 X 10 X 1 MM
25	RE507766	INJECTION NOZZLE	4		X	X	X	
26	RE68748	TUBE	2		X	X	X	
27	19M7784	SCREW	2		X	X	X	M10 X 20
28	R503520	BRACKET	1		X	X	X	
29	14M7298	FLANGE NUT	2		X	X	X	M8
30	AR85519	PLUG	2		X	X	X	

FUEL INJECTION SYSTEM 310G (TURBO), 310SG, 315SG
(VSN 893079-907963) T04045DT056, T04045TT080, T04045TT081
(VSN -910055) PE4045TT088, PE4045TT089

TP59234 -UN-09OCT97

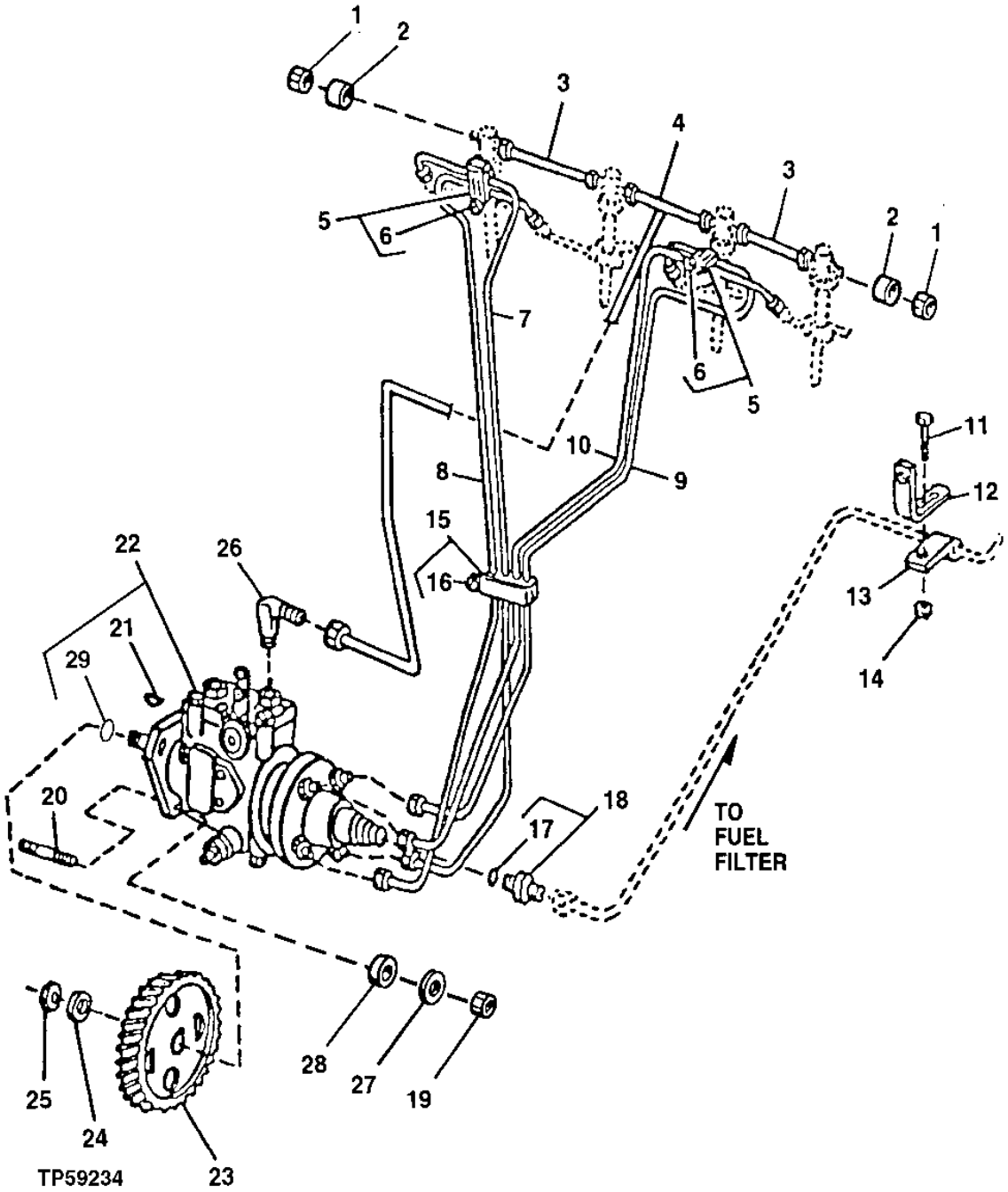

FUEL INJECTION SYSTEM 310G (TURBO), 310SG, 315SG
(VSN 893079-907963) T04045DT056, T04045TT080, T04045TT081
(VSN -910055) PE4045TT088, PE4045TT089

KEY	PART NO.	PART NAME	QTY	ENGINE SERIAL NO.	310G	310SG	315SG	REMARKS
1	AR85519	PLUG	2		X	X	X	
2	R123593	TUBE NUT	2		X	X	X	
3	RE68748	TUBE	2		X	X	X	
	R51936	SEALING WASHER	2		X	X	X	(NOT ILLUSTRATED)
4	RE70848	FUEL LINE	1		X	X	X	LEAK-OFF
	R51936	SEALING WASHER	3		X	X	X	(NOT ILLUSTRATED)
5	RE19797	CLAMP	2		X	X	X	
6	19M7300	CAP SCREW	2		X	X	X	M6 X 10
7	RE59447	FUEL LINE	1		X	X	X	NO. 1
8	RE59448	FUEL LINE	1		X	X	X	NO. 2
9	RE59449	FUEL LINE	1		X	X	X	NO. 3
10	RE59450	FUEL LINE	1		X	X	X	NO. 4
11	19M7865	SCREW	1		X	X	X	M8 X 16, NO. 2
12	R116116	BRACKET	1		X	X	X	
13	T14050	CLAMP	1		X	X	X	
14	14M7298	FLANGE NUT	1		X	X	X	M8
15	RE19799	CLAMP	1		X	X	X	
16	19M7300	CAP SCREW	1		X	X	X	M6 X 10
17	51M7040	O-RING	1		X	X	X	9.300 X 2.200 MM, (METRIC)
	R26286	O-RING	1		X	X	X	(SAE)
18	RE60029	ADAPTER FITTING	1		X	X	X	(M12X1.5)
	RE59487	FITTING	1	-706976	X	X	X	(SAE)
19	14M7273	NUT	3		X	X	X	M8
20	R116386	STUD	3		X	X	X	
21	26H10	SHAFT KEY	1		X	X	X	5/32" X 5/8"
22	RE502378	FUEL INJECTION PUMP	1			X	X	(A) (WITH TURBOCHARGER)(STANADYNE)
	SE500683	FUEL INJECTION PUMP	1			X	X	(A) (REMANUFACTURED)
	RE502377	FUEL INJECTION PUMP	1		X			(A) (WITH TURBOCHARGER)(STANADYNE)
23	R132267	GEAR	1		X	X	X	(60 TEETH)
24	R132874	WASHER	1		X	X	X	
25	R91360	NUT	1		X	X	X	M14
26	R67364	ELBOW FITTING	1		X	X	X	
27	12M7065	LOCK WASHER	3		X	X	X	8 MM
28	T27860	WASHER	3		X	X	X	
29	T16318	O-RING	1		X			
	R502076	O-RING	1			X	X	

(A) SEE YOUR AUTHORIZED PUMP REPAIR STATION FOR INTERNAL PARTS

FUEL INJECTION PUMP,FUEL INJECTION LINES AND ENGINE CONTROLLER
310G(TURBO), 310SG, 315SG
(VSN 910056-) PE4045TT088, PE4045TT089

T157487 -UN-18JUL02

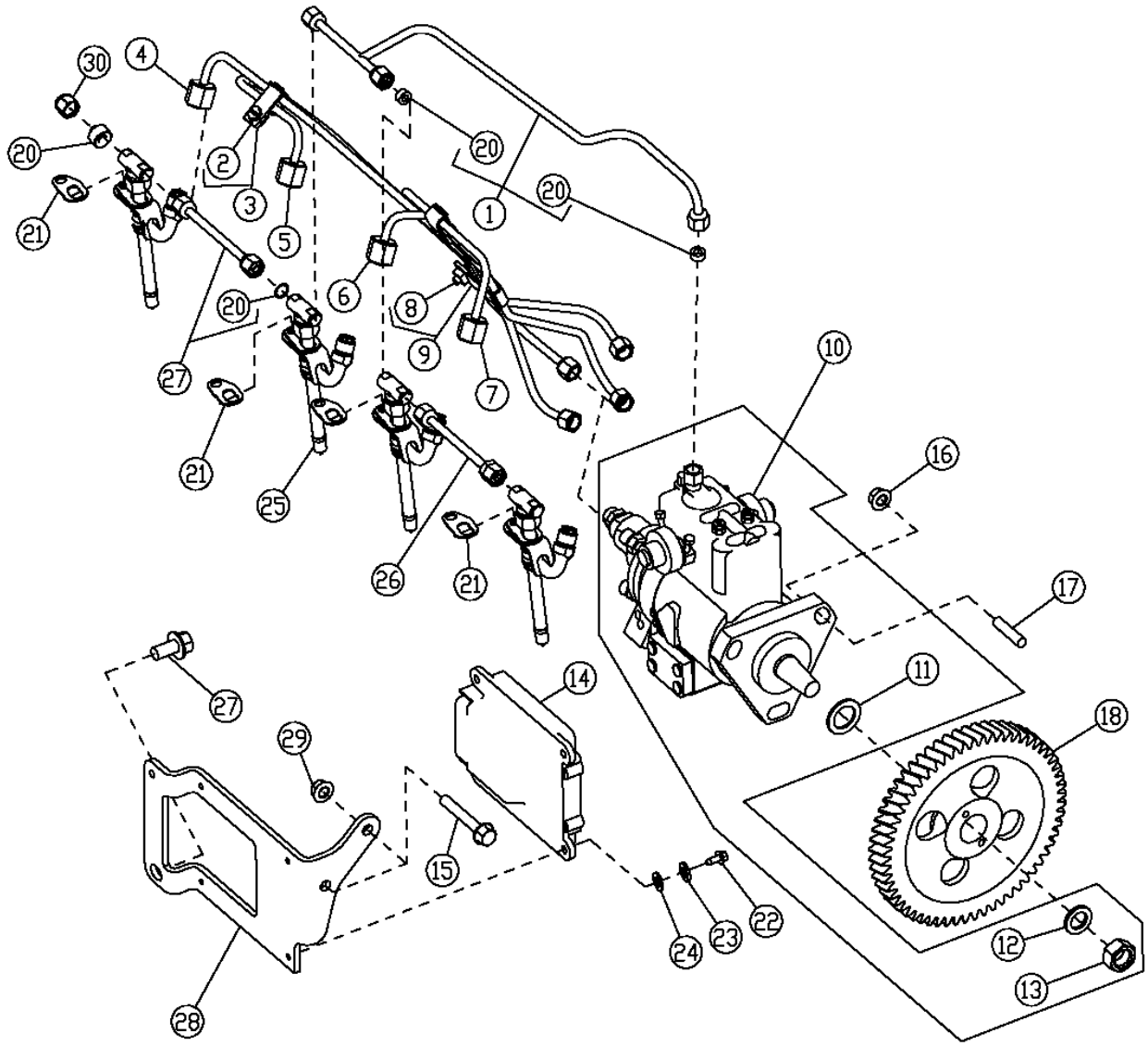

FUEL INJECTION PUMP,FUEL INJECTION LINES AND ENGINE CONTROLLER
310G(TURBO), 310SG, 315SG
(VSN 910056-) PE4045TT088, PE4045TT089

KEY	PART NO.	PART NAME	QTY	ENGINE SERIAL NO.	310G	310SG	315SG	REMARKS
1	RE507598	FUEL LINE	1		X	X	X	
2	19M6614	CAP SCREW	2		X	X	X	M6 X 12
3	RE19797	CLAMP	2		X	X	X	
4	RE507646	FUEL LINE	1		X	X	X	NO.1
5	RE507647	FUEL LINE	1		X	X	X	NO.2
6	RE507648	FUEL LINE	1		X	X	X	NO.3
7	RE507649	FUEL LINE	1		X	X	X	NO.4
8	19M6614	CAP SCREW	1		X	X	X	M6 X 12
9	RE19799	CLAMP	1		X	X	X	
10	RE518087	FUEL INJECTION PUMP	1		X	X	X	(SUB FOR RE515464) (12V)
11	R502076	O-RING	1		X	X	X	
12	R132874	WASHER	1		X	X	X	
13	R91360	NUT	1		X	X	X	M14
14	RE522527	ENGINE CONTROLLER	1		X	X	X	(SUB FOR RE518176) (WHEN ENGINE CONTROLLER IS BEING REPLACED YOU MUST PROVIDE THE ENGINE SERIAL NUMBER)
15	19M7979	SCREW	2		X	X	X	M8 X 55
16	14M7298	FLANGE NUT	3		X	X	X	M8
17	R116386	STUD	3		X	X	X	
18	R505472	GEAR	1		X	X	X	
19	R123593	TUBE NUT	1		X	X	X	
20	R51936	SEALING WASHER	6		X	X	X	
21	RE508716	CLAMP	4		X	X	X	
22	19M7640	CAP SCREW	4		X	X	X	M5 X 12
23	12H316	LOCK WASHER	4		X	X	X	5.486 MM
24	24M7027	WASHER	4		X	X	X	5.300 X 10 X 1 MM
25	RE507766	INJECTION NOZZLE	4		X	X	X	
26	RE68748	TUBE	2		X	X	X	
27	19M7784	SCREW	2		X	X	X	M10 X 20
28	R503520	BRACKET	1		X	X	X	
29	14M7298	FLANGE NUT	2		X	X	X	M8
30	AR85519	PLUG	2		X	X	X	

FUEL INJECTION PUMP STANADYNE DE10 SERVICE KITS
310G (W/O TURBO)
(VSN 911469-) PE4045DT058

CDP45922 -UN-09DEC03

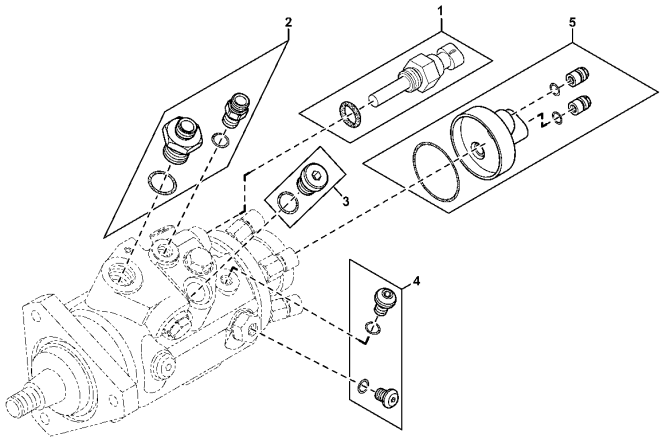

CDP45922

KEY	PART NO.	PART NAME	QTY	ENGINE SERIAL NO.	310G	310SG	315SG	REMARKS
1	RE521822	KIT	1		X			(FUEL TEMPERATURE SENSOR)
2	RE521823	KIT	1		X			(PRESSURE REGULATOR AND FUEL INLET CONNECTOR)
3	RE521824	KIT	1		X			(TIMING PIN HOLE PLUG)
4	RE521825	KIT	1		X			(TRANSFER PUMP TAP SCREW AND VENT WIRE ACCESS SCREW)
5	RE522109	KIT	1		X			(SOLENOID CONNECTOR ASSEMBLY)

FUEL INJECTION PUMP STANADYNE DE10 SERVICE KITS
310G (TURBO), 310SG, 315SG (VSN 910056-)
PE4045TT088, PE4045TT089

CDP45922 -UN-09DEC03

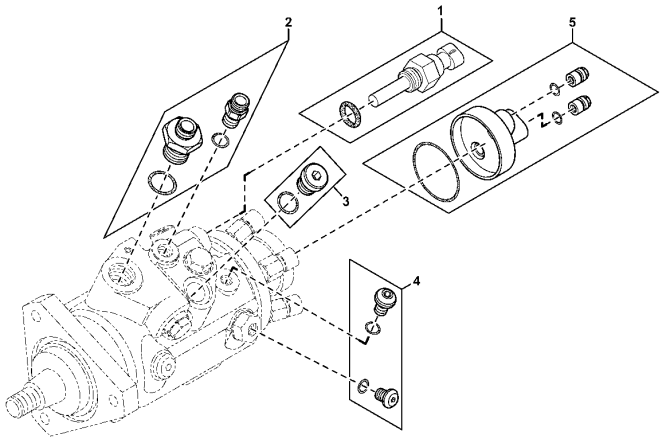

CDP45922

KEY	PART NO.	PART NAME	QTY	ENGINE SERIAL NO.	310G	310SG	315SG	REMARKS
1	RE521822	KIT	1		X	X	X	(FUEL TEMPERATURE SENSOR)
2	RE521823	KIT	1		X	X	X	(PRESSURE REGULATOR AND FUEL INLET CONNECTOR)
3	RE521824	KIT	1		X	X	X	(TIMING PIN HOLE PLUG)
4	RE521825	KIT	1		X	X	X	(TRANSFER PUMP TAP SCREW AND VENT WIRE ACCESS SCREW)
5	RE522109	KIT	1		X	X	X	(SOLENOID CONNECTOR ASSEMBLY)

MEMORANDA

AIR INTAKE SYSTEM 310G(TURBO), 310SG, 315SG
(VSN -910055) T0/PE4045TT080, T0/PE4045TT081

T141378 -UN-18APR01

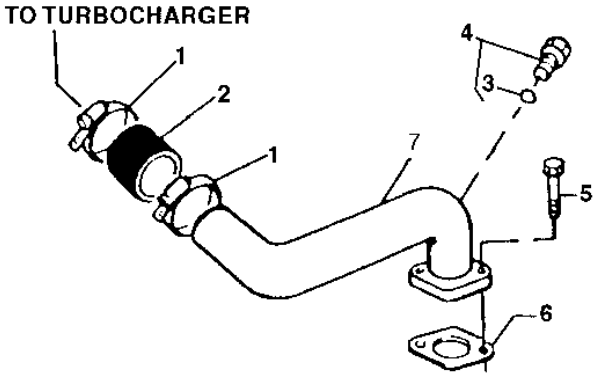

T141378

KEY	PART NO.	PART NAME	QTY	ENGINE SERIAL NO.	310G	315SG	REMARKS
1	R110531	CLAMP	2		X	X X	
2	R500596	HOSE	1		X	X X	
3	51M7039	O-RING	1		X	X X	8.100 X 1.600 MM
4	RE60071	FITTING	1		X	X X	(SUB FOR RE502903)
5	19M7785	SCREW	2		X	X X	M10 X 25
6	R81275	GASKET	1		X	X X	
7	RE506662	TUBE	1		X	X X	(AIR INLET)

AIR INTAKE SYSTEM 310G(TURBO), 310SG, 315SG
(VSN 910056-) T0/PE4045TT080, TO/PE4045TT081

T149086 -UN-13DEC01

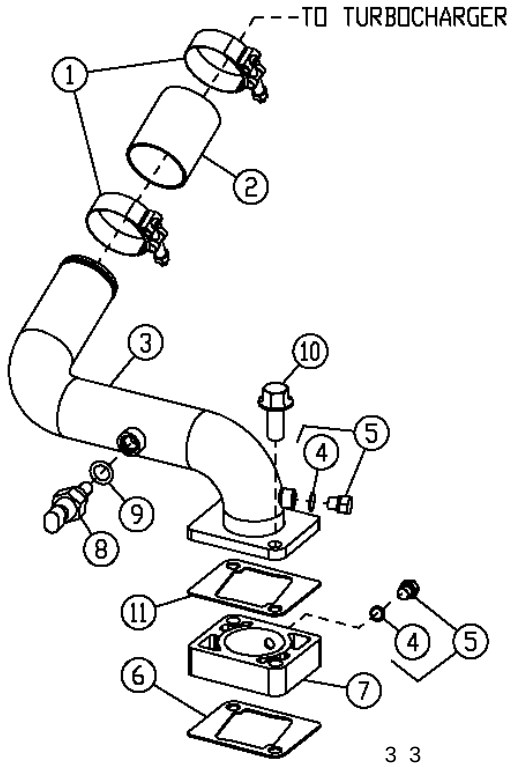

T149086

KEY	PART NO.	PART NAME	QTY	ENGINE SERIAL NO.	310G	315SG	REMARKS
1	R110531	CLAMP	2		X	X X	
2	R500596	HOSE	1		X	X X	
3	RE506949	STRUCTURAL TUBING	1		X	X X	
4	51M7039	O-RING	2		X	X X	8.100 X 1.600 MM
5	RE60071	FITTING	2		X	X X	
6	R81275	GASKET	1		X	X X	
7	R501472	SPACER	1		X	X X	(AIR INLET) (ALSO ORDER (2) R81275)
8	RE61812	SENSOR	1		X	X X	(AIR INTAKE TEMPERATURE)
9	51M7041	O-RING	1		X	X X	11.300 X 2.200 MM
10	19M8292	SCREW	2		X	X X	M10 X 50
11	R81275	GASKET	1		X	X X	

AIR INTAKE SYSTEM 310G (W/O TURBO)
T0/PE4045DT056

TP49444 -UN-14AUG96

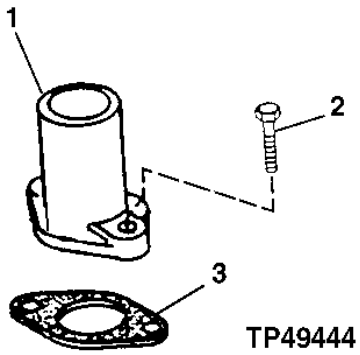

KEY	PART NO.	PART NAME	QTY	ENGINE SERIAL NO.	310G	310SG	315SG	REMARKS
1	R123569	INTAKE MANIFOLD	1		X			
2	R500394	SCREW	2		X			
3	R81275	GASKET	1		X			

ENGINE BALANCER SHAFT 310G(TURBO), 310SG, 315SG
T0/PE4045TT080, T0/PE4045TT081

T149536 -UN-03JAN02

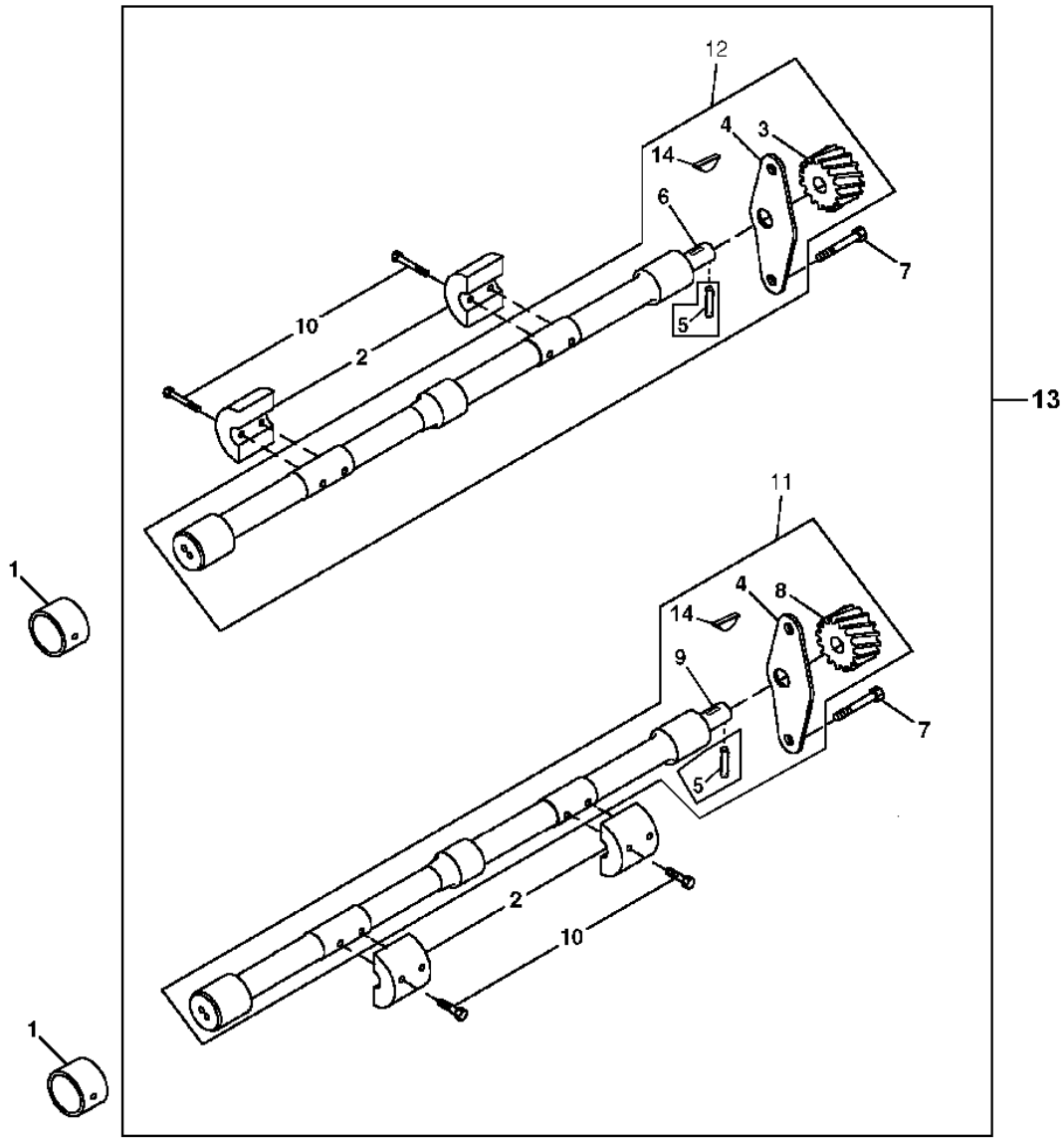

T149536

ENGINE BALANCER SHAFT 310G(TURBO), 310SG, 315SG
T0/PE4045TT080, T0/PE4045TT081

KEY	PART NO.	PART NAME	QTY	SERIAL NO.	310G	310SG	315SG	REMARKS
1	R115299	BUSHING	6		X	X	X	
2	R500265	WEIGHT	4		X	X	X	
3	.....	GEAR	1		X	X	X	L.H. (15 TEETH)
4	.....	PLATE	2		X	X	X	
5	34M7089	DOWEL PIN	2	-782945	X	X	X	4 X 12 MM
6	.....	BALANCER SHAFT	1		X	X	X	L.H.
7	19M8998	SCREW	4		X	X	X	M8 X 12 (HS, HEAD MARKED 10.9)
8	.....	GEAR	1		X	X	X	R.H. (15 TEETH)
9	.....	BALANCER SHAFT	1		X	X	X	R.H.
10	19M8882	SCREW	8		X	X	X	M8 X 40 (HS, HEAD MARKED 10.9)
11	RE500448	BALANCER SHAFT	1		X	X	X	R.H.
12	RE500449	BALANCER SHAFT	1		X	X	X	L.H.
13	RE504741	BALANCER SHAFT	1		X	X	X	KIT
14	R133303	SHAFT KEY	2	782946-	X	X	X	

TURBOCHARGER AND GASKET 310G(TURBO), 310SG, 315SG (VSN -910055) T0/PE4045TT080, T0/PE4045TT081

TP49341 -UN-27SEP96

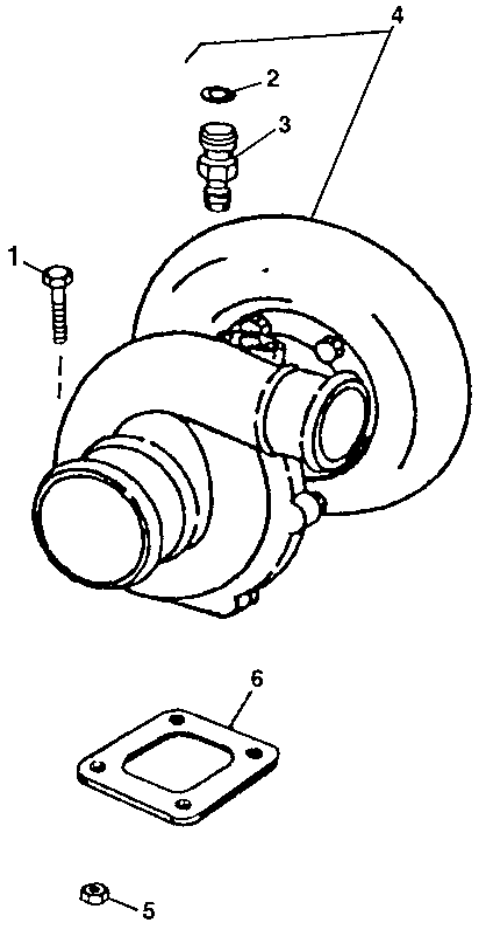

TP49341

TURBOCHARGER AND GASKET 310G(TURBO), 310SG, 315SG
(VSN -910055) T0/PE4045TT080, T0/PE4045TT081

KEY	PART NO.	PART NAME	QTY	ENGINE SERIAL NO.	310G	310SG	315SG	REMARKS
1	19M8162	SCREW	4		X	X	X	M10 X 40
2	R63548	O-RING	1		X	X	X	
3	M87733	ADAPTER FITTING	1		X	X	X	
4	RE505047	TURBOCHARGER	1		X	X	X	
5	14M7296	FLANGE NUT	4		X	X	X	M10
6	R92097	GASKET	1		X	X	X	

TURBOCHARGER AND GASKET 310G(TURBO), 310SG, 315SG
(VSN 910056-)T0/PE4045TT080,T0/PE4045TT081, T0/PE4045TT088

T155121 -UN-22MAY02

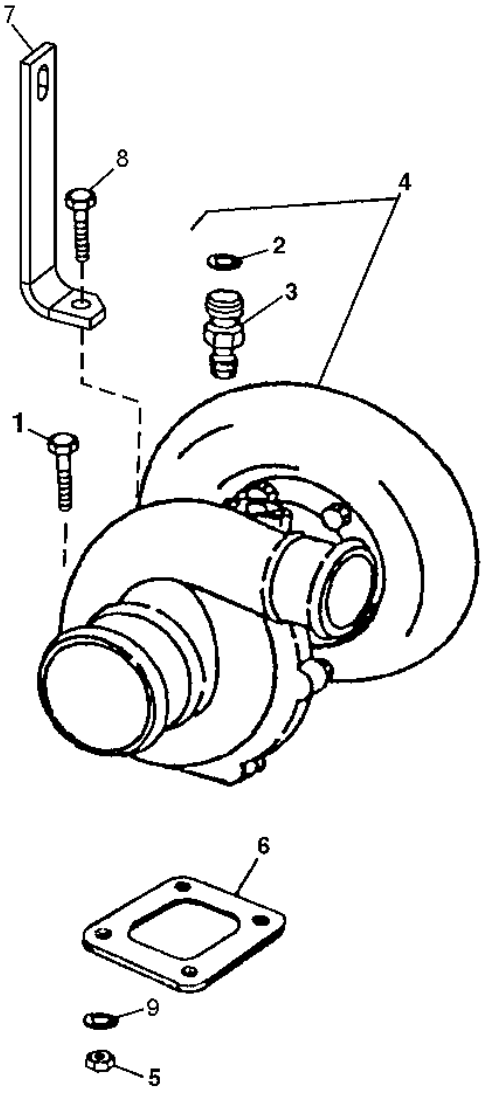

T145833

TURBOCHARGER AND GASKET 310G(TURBO), 310SG, 315SG
(VSN 910056-)T0/PE4045TT080,T0/PE4045TT081, T0/PE4045TT088

KEY	PART NO.	PART NAME	QTY	ENGINE SERIAL NO.	310G	310SG	315SG	REMARKS
1	19M8162	SCREW	4		X	X	X	M10 X 40
2	R63548	O-RING	1		X	X	X	
3	M87733	ADAPTER FITTING	1		X	X	X	
4	RE509572	TURBOCHARGER	1	-406329	X			(REMANUFACTURED) (BORG-WARNER)
	RE509572	TURBOCHARGER	1	-432748		X	X	(REMANUFACTURED) (BORG-WARNER)
	RE505047	TURBOCHARGER	1	406330-	X			(CZ)
	SE501155	TURBOCHARGER	1	432749-		X	X	(CZ)
5	14M7296	FLANGE NUT	4		X	X	X	
6	R92097	GASKET	1		X	X	X	
7	T68098	ANGLE	1		X	X	X	
8	19M8292	SCREW	1		X	X	X	
9	24M7096	WASHER	4		X	X	X	10.500 X 18 X 1.600 MM

TURBOCHARGER OIL LINES 310G(TURBO), 310SG, 315SG (VSN -910055) T0/PE4045TT080, T0/PE4045TT081

TP54936 -UN-11DEC96

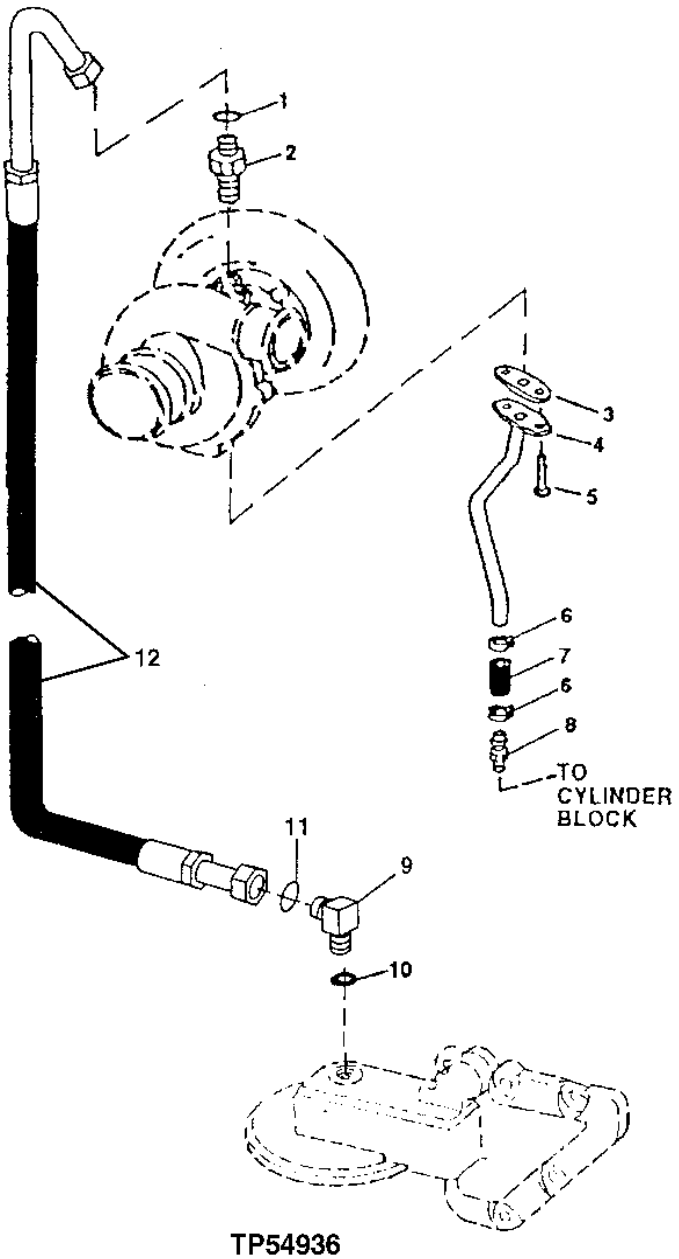

TP54936

TURBOCHARGER OIL LINES 310G(TURBO), 310SG, 315SG (VSN -910055) T0/PE4045TT080, T0/PE4045TT081

KEY	PART NO.	PART NAME	QTY	ENGINE SERIAL NO.	310G	310SG	315SG	REMARKS
1	R63548	O-RING	1		X	X	X	
2	M87733	ADAPTER FITTING	1		X	X	X	
3	R123570	GASKET	1		X	X	X	
4	RE59547	OIL LINE	1		X	X	X	
5	19M7866	SCREW	2		X	X	X	M8 X 20
6	RE65978	CLAMP	2		X	X	X	
7	.....	HOSE	1		X	X	X	(MAKE FROM R120013 BULK MATERIAL)
8	RE54885	HOSE FITTING	1		X	X	X	
9	38H5154	ELBOW FITTING	1		X	X	X	
10	51M7042	O-RING	1		X	X	X	
11	T77613	O-RING	1		X	X	X	
12	RE501260	OIL LINE	1		X	X	X	

TURBOCHARGER OIL LINES 310G(TURBO), 310SG, 315SG
(VSN 910056-) T0/PE4045TT080, T0/PE4045TT081

TP54936 -UN-11DEC96

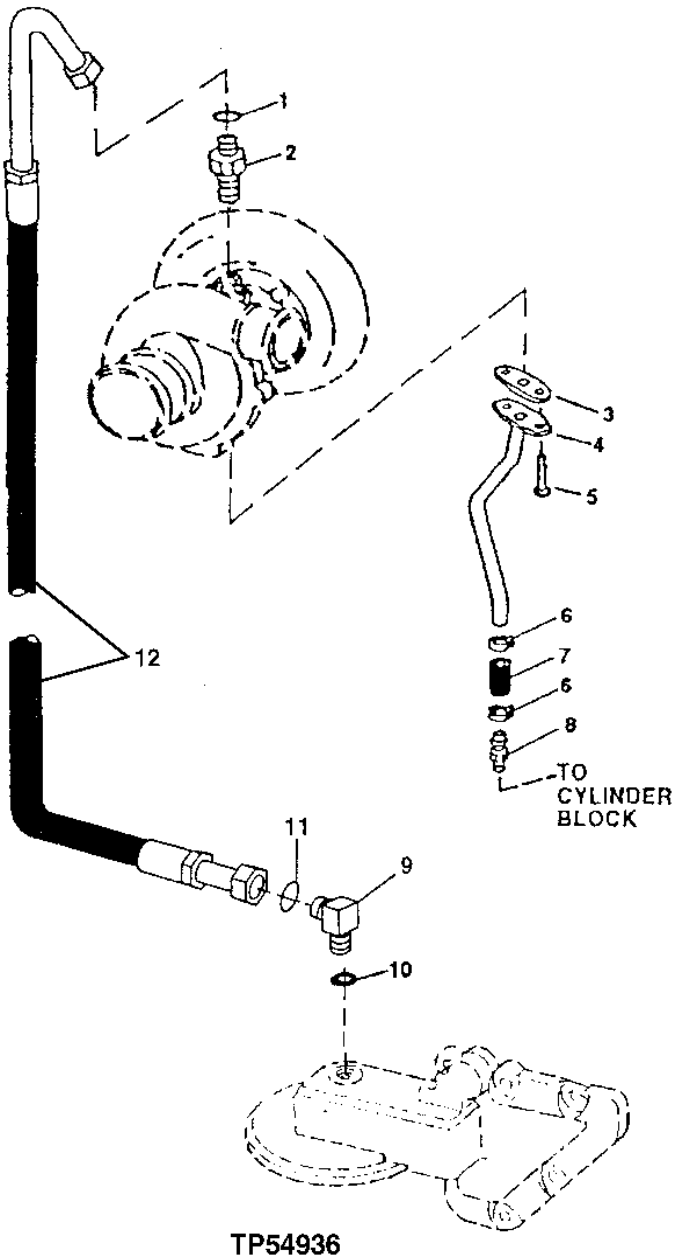

TP54936

TURBOCHARGER OIL LINES 310G(TURBO), 310SG, 315SG
(VSN 910056-) T0/PE4045TT080, T0/PE4045TT081, OR T0/PE4045TT088

KEY	PART NO.	PART NAME	QTY	ENGINE SERIAL NO.	310G	310SG	315SG	REMARKS
1	R63548	O-RING	1		X	X	X	
2	M87733	ADAPTER FITTING	1		X	X	X	
3	R503891	GASKET	1	-406329	X	X	X	(USE WITH RE509572)
	R123570	GASKET	1	406330-	X	X	X	(USE WITH RE505047)
4	RE509555	OIL LINE	1	-406329	X	X	X	(USE WITH RE509572)
	RE59547	OIL LINE	1	406330-	X	X	X	(USE WITH RE505047)
5	19M7862	SCREW	2	-406329	X	X	X	M6 X 20, (USE WITH RE509572)
	19M7866	SCREW	2	406330-	X	X	X	M8 X 20, (USE WITH RE505047)
6	RE65978	CLAMP	2		X	X	X	
7	.....	HOSE	1		X	X	X	(MAKE FROM R120013 BULK MATERIAL)
8	RE54885	HOSE FITTING	1		X	X	X	
9	38H5154	ELBOW FITTING	1		X	X	X	
10	R63548	O-RING	1		X	X	X	
11	T77613	O-RING	1		X	X	X	
12	RE501260	OIL LINE	1		X	X	X	

WATER PUMP INLET AND PULLEY

TP49372 -UN-18JAN96

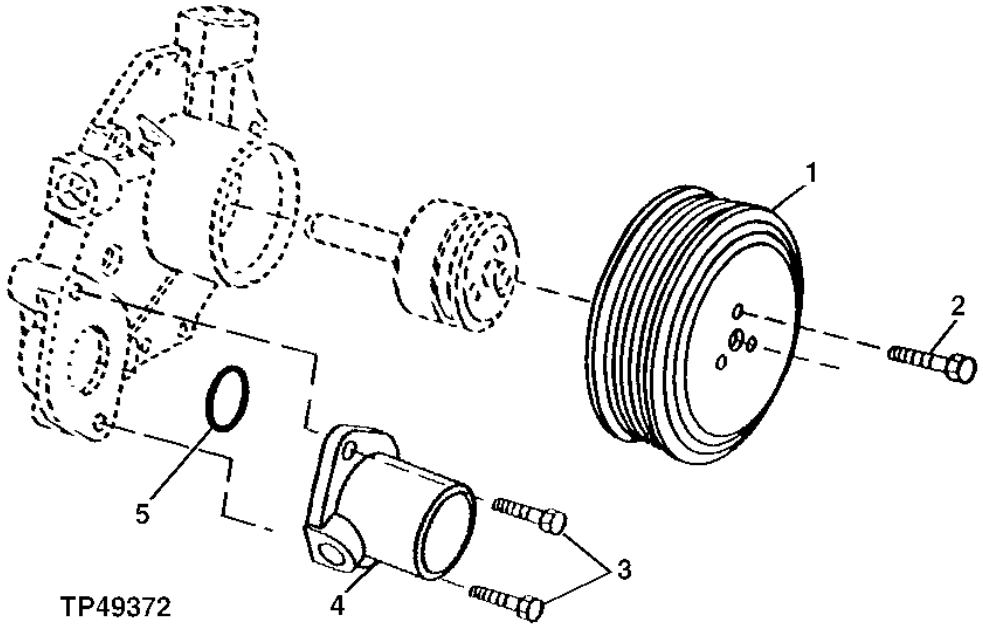

KEY	PART NO.	PART NAME	QTY	ENGINE SERIAL NO.	310G	315SG	315SG	REMARKS
1	R121038	PULLEY	1		X	X	X	
2	19M7774	SCREW	3		X	X	X	M6 X 12
3	19M7867	SCREW	2		X	X	X	M8 X 25
4	R121634	HOUSING	1		X	X	X	
5	R89944	O-RING	1		X	X	X	

WATER PUMP AND WATER PUMP REPAIR KIT
310G(W/O TURBO) (VSN -911768) T0/PE4045DT056 - 310G(TURBO), 310SG, 315SG (VSN -910055) T0/PE4045TT080, T0/PE4045TT081

TP69534 -UN-18JUL00

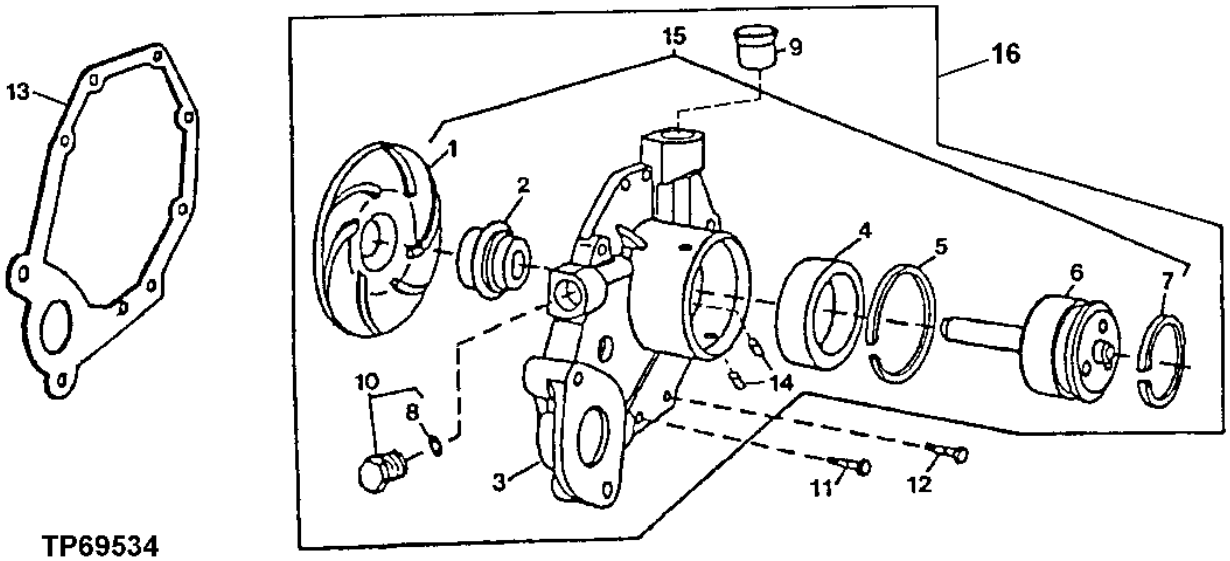

TP69534

KEY	PART NO.	PART NAME	QTY	ENGINE SERIAL NO.	310G	310SG	315SG	REMARKS
1	.....	IMPELLER	1		X	X	X	
2	.....	SEAL	1		X	X	X	
3	.....	HOUSING	1		X	X	X	
4	.....	BALL BEARING	1		X	X	X	
5	.....	RING	1		X	X	X	
6	.....	SHAFT	1		X	X	X	
7	A364R	SNAP RING	1		X	X	X	
8	51M7043	O-RING	1		X	X	X	15.300 X 2.200 MM
9	R123226	GASKET	1		X	X	X	
10	RE46685	PLUG	1		X	X	X	
11	19M7796	SCREW	3		X	X	X	M6 X 30
12	19M7863	SCREW	5		X	X	X	M6 X 25
13	R123417	GASKET	1		X	X	X	
14	R100369	FILTER	2		X	X	X	
15	RE71240	KIT	1		X	X	X	
16	RE500737	WATER PUMP	1		X	X	X	(MARKED R500401) (SUB RE505981 AND RE508566)

WATER PUMP AND WATER PUMP REPAIR KIT
310G(W/O TURBO) (VSN 911769-) PE4045DT058 - 310G(TURBO),
310SG, 315SG (VSN 910056-) PE4045TT088, PE4045TT089

T149718 -UN-07JAN02

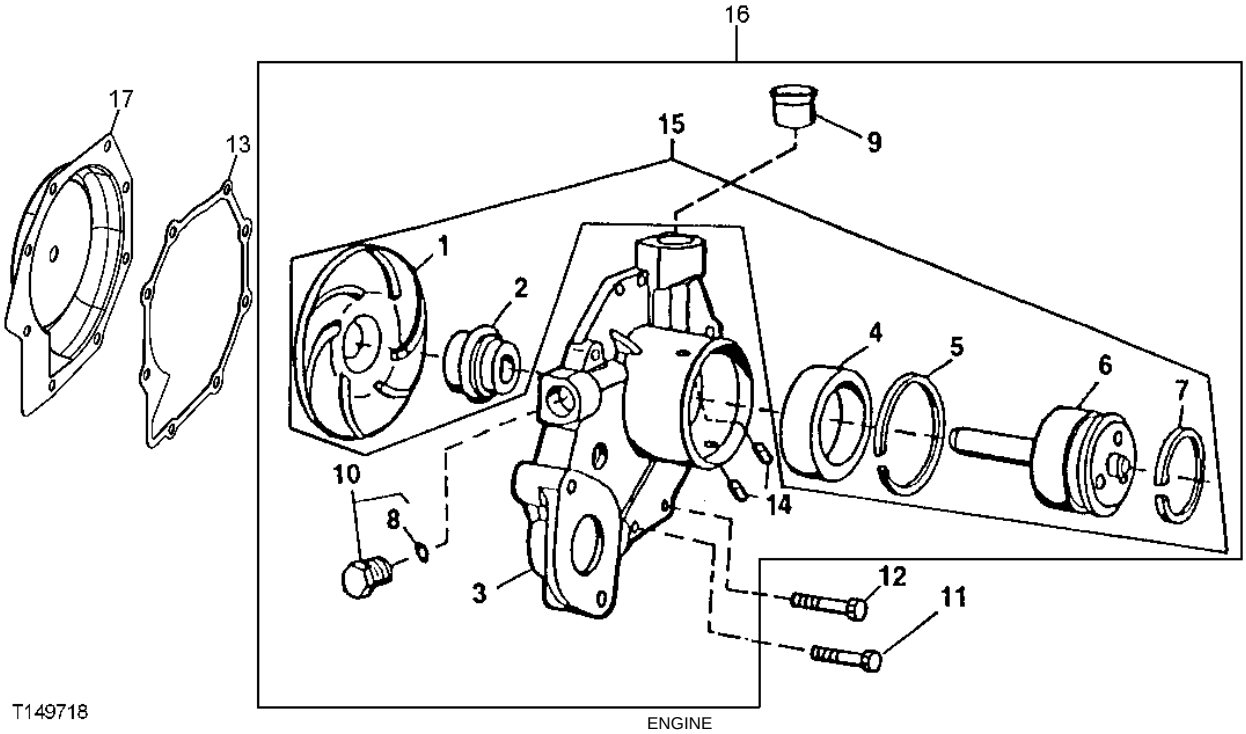

T149718

KEY	PART NO.	PART NAME	QTY	ENGINE SERIAL NO.	REMARKS
1	.....	IMPELLER	1		(MARKED R121036)
2	.....	SEAL	1		(MARKED R503509)
3	.....	HOUSING	1		
4	.....	BALL BEARING	1		
5	.....	RING	1		
6	.....	SHAFT	1		
7	A364R	SNAP RING	1		
8	51M7043	O-RING	1		15.300 X 2.200 MM
9	R123226	GASKET	1		
10	RE46685	PLUG	1		
11	19M7863	SCREW	5		M6 X 25
12	19M7796	SCREW	3		M6 X 30
13	R123417	GASKET	1		
14	R100369	FILTER	2		
15	RE70962	KIT	1		
16	RE505981	WATER PUMP	1		(MARKED R503509)
17	RE508566	KIT	1		(WATER PUMP INSERT REPAIR)

MEMORANDA

THERMOSTAT,THERMOSTAT COVER AND COOLANT TEMERATURE SENSOR

T165949 -UN-05MAR03

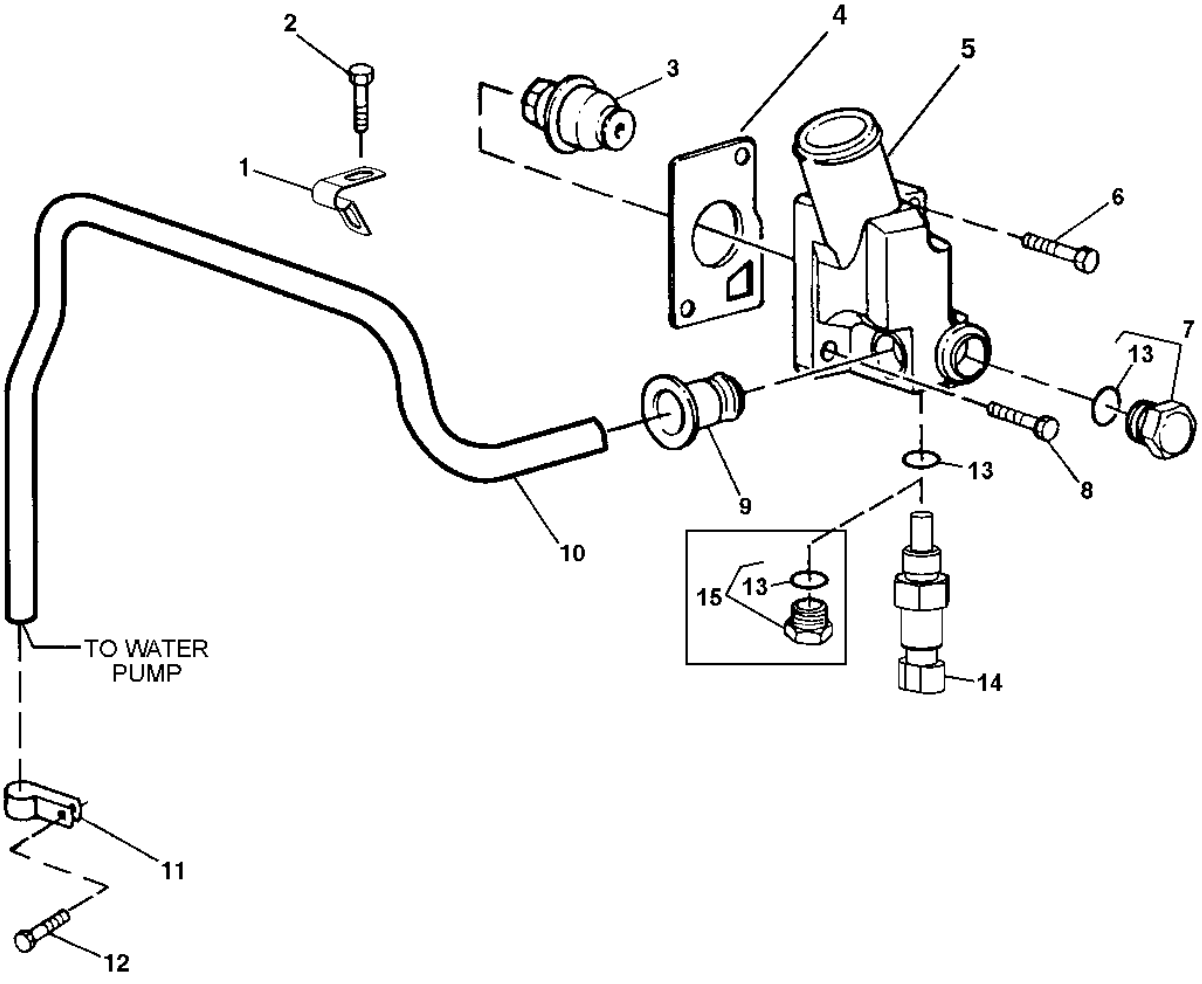

T165949

THERMOSTAT,THERMOSTAT COVER AND COOLANT TEMPERATURE SENSOR

KEY	PART NO.	PART NAME	QTY	ENGINE SERIAL NO.	310G	315SG	REMARKS
1	R123323	CLAMP	1		X	X X	
2	19M7788	SCREW	1		X	X X	M12 X 25
3	RE522076	THERMOSTAT	1		X	X X	82° C (180° F) (SUB FOR RE506300)
4	R502814	GASKET	1		X	X X	(SUB FOR R135896)
5	R131016	COVER	1		X	X X	
6	19M8292	SCREW	1		X	X X	M10 X 50
7	RE46684	PLUG	1		X	X X	
8	19M7786	SCREW	1		X	X X	M10 X 30
9	R123226	GASKET	1		X	X X	
10	R501144	TUBE	1		X	X X	
11	R123324	CLAMP	1		X	X X	
12	19M7801	SCREW	1		X	X X	M8 X 60
13	51M7041	O-RING	2		X	X X	11.300 X 2.200 MM
14	RE52722	SENSOR	1	221706-		X	(ENGINE COOLANT TEMPERATURE) PE4045TT089
	RE52722	SENSOR	1	224069-		X	PE4045TT089
	RE52722	SENSOR	1	224566-	X		PE4045TT088
	RE52722	SENSOR	1	241601-	X		PE4045DT058
15	RE46684	PLUG	1	-221705		X X	
	RE46684	PLUG	1		X		

ENGINE OIL COOLER AND ADAPTER

T145726 -UN-21SEP01

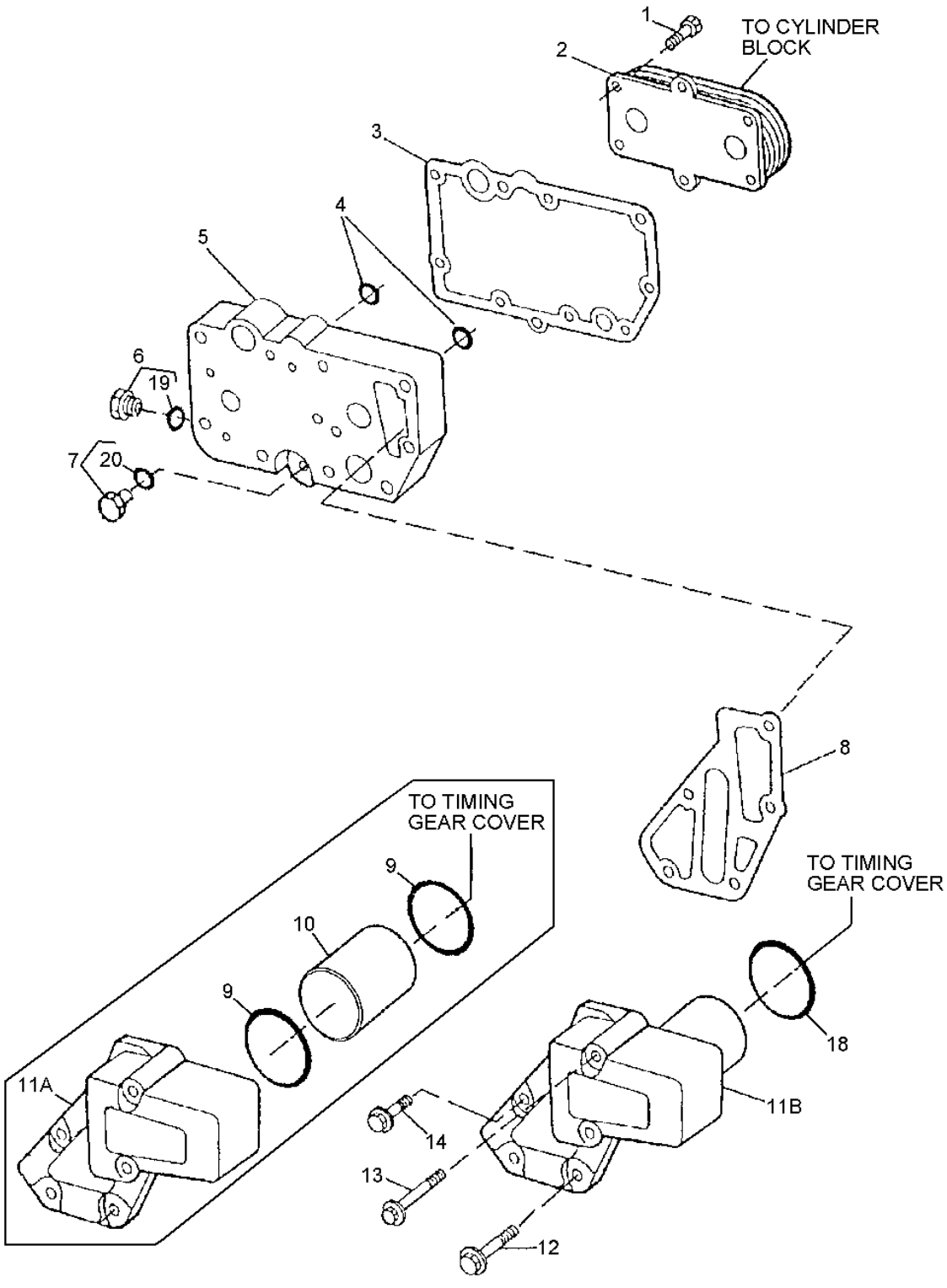

ENGINE OIL COOLER AND ADAPTER 310G(TURBO), 310SG, 315SG
T0/PE4045TT080, TO/PE4045TT081

KEY	PART NO.	PART NAME	QTY	ENGINE SERIAL NO.	310G	310SG	315SG	REMARKS
1	RE67231	SCREW	6		X	X	X	M6 X 16 (WITH PRE-APPLIED SEALANT)
2	RE59296	OIL COOLER	1		X	X	X	(5 PLATE)
	RE522820	OIL COOLER	1		X	X	X	(5-PLATE TESTED ASSEMBLY)
3	R123501	GASKET	1		X	X	X	
4	T122075	O-RING	2		X	X	X	
5	R123471	HOUSING	1		X	X	X	
6	RE46686	PLUG	1		X	X	X	
7	RE46685	PLUG	1		X	X	X	
8	R501428	GASKET	1		X	X	X	
9	R61105	O-RING	2	-873088	X	X	X	
10	R115252	TUBE	1	-873088	X	X	X	
11A	R135177	ADAPTER FITTING	1	-873088	X	X	X	(SUB R502811)
11B	R502811	ADAPTER FITTING	1	873089-	X	X	X	
12	19M7802	SCREW	2		X	X	X	M8 X 65
13	19M7970	SCREW	2		X	X	X	M8 X 100
14	RE67238	SCREW	1		X	X	X	M8 X 20 (WITH PRE-APPLIED SEALANT)
18	R504734	O-RING	1	873089-	X	X	X	
19	51M7040	O-RING	1		X	X	X	9.300 X 2.200 MM
20	51M7043	O-RING	1		X	X	X	15.300 X 2.200 MM

FUEL FILTER, AND LINES 310G (W/O TURBO)
(VSN -911768) T0/PE4045DT056

T152603 -UN-13MAR02

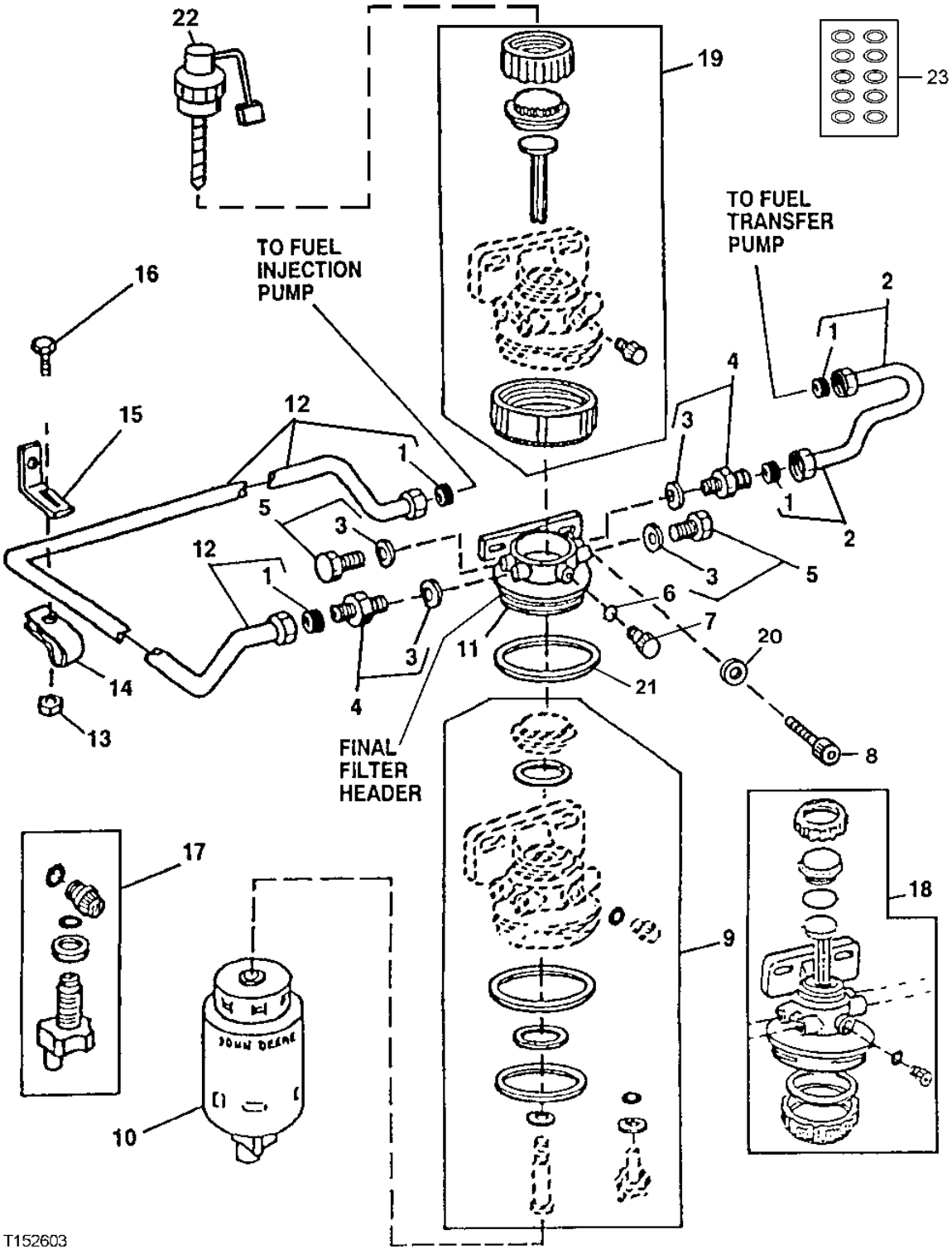

**FUEL FILTER, AND LINES 310G (W/O TURBO)
(VSN -911768) T0/PE4045DT056**

KEY	PART NO.	PART NAME	QTY	ENGINE SERIAL NO.	310G	310SG	315SG	REMARKS
1	R74012	SEALING WASHER	4		X			
2	RE60037	FUEL LINE	1		X			
3	51M7040	O-RING	1		X			(METRIC)
	R26286	O-RING	1		X			(SAE)
4	RE60029	ADAPTER FITTING	2		X			(M12X1.5)
	RE59487	FITTING	2		X			(SAE)
5	RE56323	PLUG	2		X			
6	R113562	O-RING	1		X			
7	R113563	DRAIN PLUG	1		X			(ALSO ORDER R113562)
8	19M8328	SCREW	1		X			
9	RE516553	SEAL KIT	1		X			(SUB FOR RE50752) FUEL FILTER
10	RE62418	FUEL FILTER	1		X			INCLUDES DRAIN VALVE
11	.....	FILTER HEAD	1		X			(FURNISH RE70358)
12	RE60025	FUEL LINE	1		X			
13	14M7298	FLANGE NUT	1		X			M8
14	T14050	CLAMP	1		X			
15	R116116	BRACKET	1		X			
16	19M7865	SCREW	1		X			M8 X 16
17	RE60854	KIT	1		X			DRAIN VALVE
18	RE70358	KIT	1		X			FINAL FILTER
19	RE51649	SEAL KIT	1		X			FUEL FILTER
20	24M7096	WASHER	2		X			10.500 X 18 X 1.600 MM
21	R113565	O-RING	1		X			
22	RE51648	KIT	1		X			FUEL FILTER HEATER (12-VOLT)
23	RE516513	KIT	1		X			(WITH HAND PRIMER) (CONTAINS 10 O-RINGS)
	RE516512	KIT	1		X			(WITHOUT HAND PRIMER) (CONTAINS 10 O-RINGS)

FUEL FILTER 310G (W/O TURBO)
(VSN 911769-) PE4045DT058

T152601 -UN-13MAR02

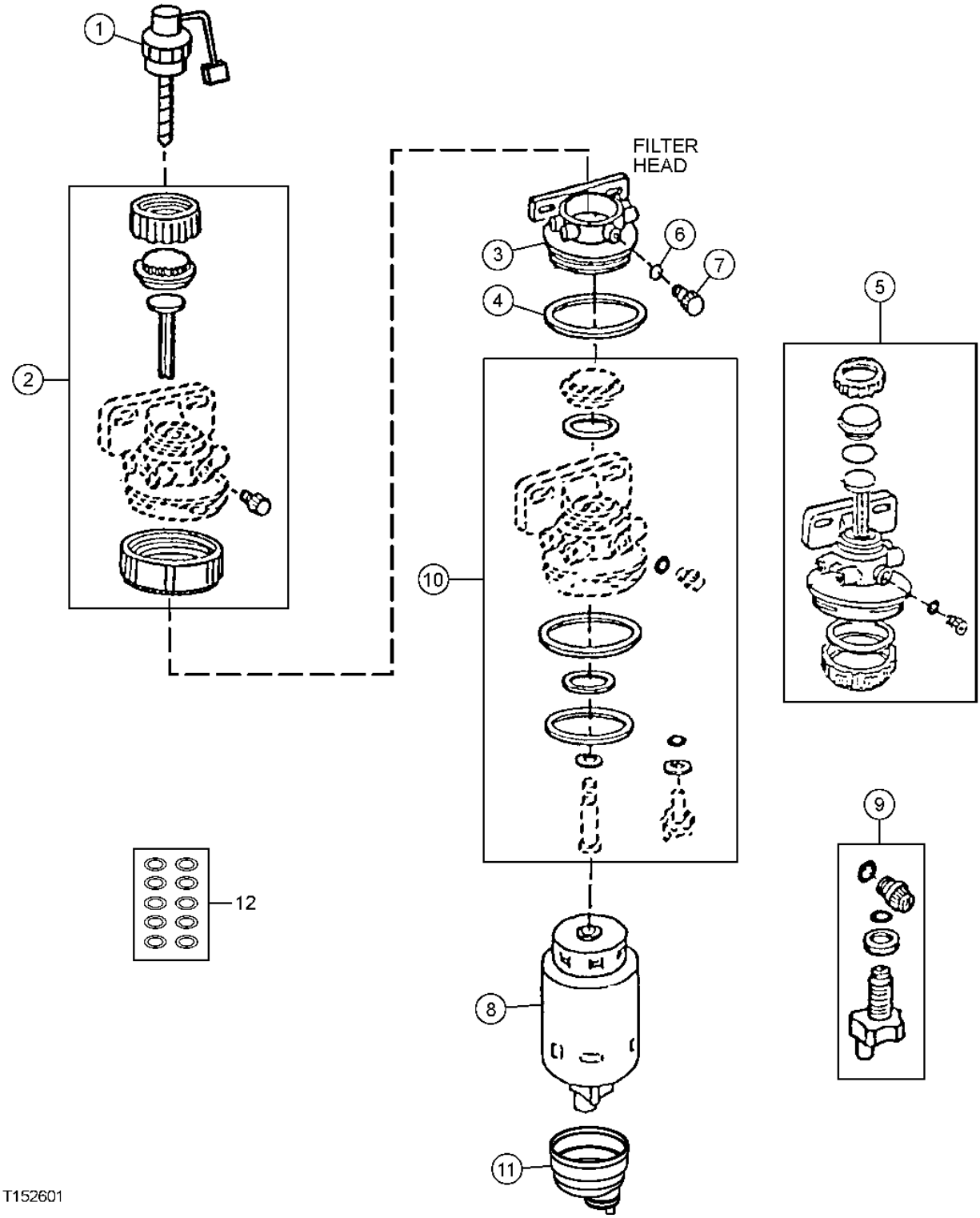

FUEL FILTER 310G (W/O TURBO)
(VSN 911769-) PE4045DT058

KEY	PART NO.	PART NAME	QTY	ENGINE SERIAL NO.	310G	310SG	315SG	REMARKS
1	RE51648	KIT	1		X			FUEL FILTER HEATER (12-VOLT)
2	RE51649	SEAL KIT	1		X			FUEL FILTER
3	.....	FILTER HEAD	1		X			(FURNISH RE509794)
4	RE516512	KIT	1		X			
5	RE509794	KIT	1		X			FUEL FILTER
6	R113562	O-RING	1		X			
7	R113563	DRAIN PLUG	1		X			(ALSO ORDER R113562)
8	RE509031	FILTER ELEMENT	1		X			
9	RE60854	KIT	1		X			DRAIN VALVE
10	RE516553	SEAL KIT	1		X			(SUB FOR RE50752)
11	RE51650	SEDIMENT BOWL	1		X			
12	RE516513	KIT	1		X			(WITH HAND PRIMER) (CONTAINS 10 O-RINGS)
	RE516512	KIT	1		X			(WITHOUT HAND PRIMER) (CONTAINS 10 O-RINGS)

FUEL FILTER LINES, 310G (W/O TURBO)
(VSN 911769-) PE4045DT058

T146073 -UN-03OCT01

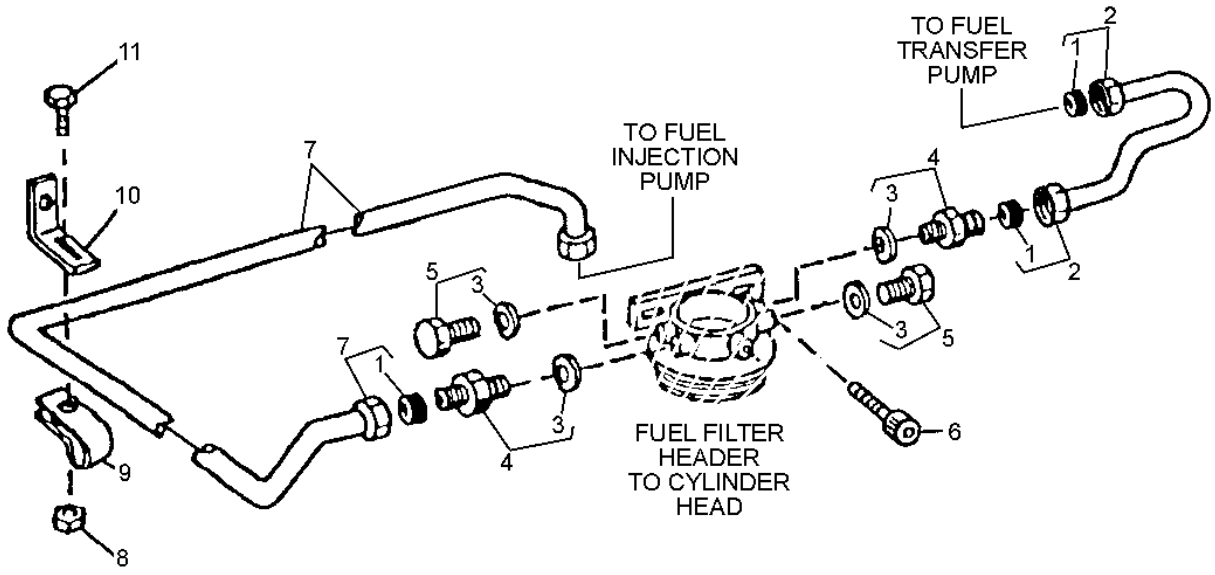

T146073

FUEL FILTER LINES, 310G (W/O TURBO)
(VSN 911769-) PE4045DT058

KEY	PART NO.	PART NAME	QTY	ENGINE SERIAL NO.	310G	310SG	315SG	REMARKS
1	R74012	SEALING WASHER	4		X			
2	RE60037	FUEL LINE	1		X			
3	51M7040	O-RING	1		X			(METRIC)
	R26286	O-RING	1		X			(SAE)
4	RE60029	ADAPTER FITTING	2		X			(M12X1.5)
	RE59487	FITTING	2		X			(SAE)
5	RE46686	PLUG	2		X			
6	19M7784	SCREW	2		X			M10 X 20
7	RE507597	FUEL LINE	1		X			
8	14M7298	FLANGE NUT	1		X			M8
9	T14050	CLAMP	1		X			
10	R116116	BRACKET	1		X			
11	19M7865	SCREW	1		X			M8 X 16

FUEL FILTER, AND LINES 310G(TURBO),310SG,315SG (VSN -910055) T0/PE4045TT080,T0/PE4045TT081

T152603 -UN-13MAR02

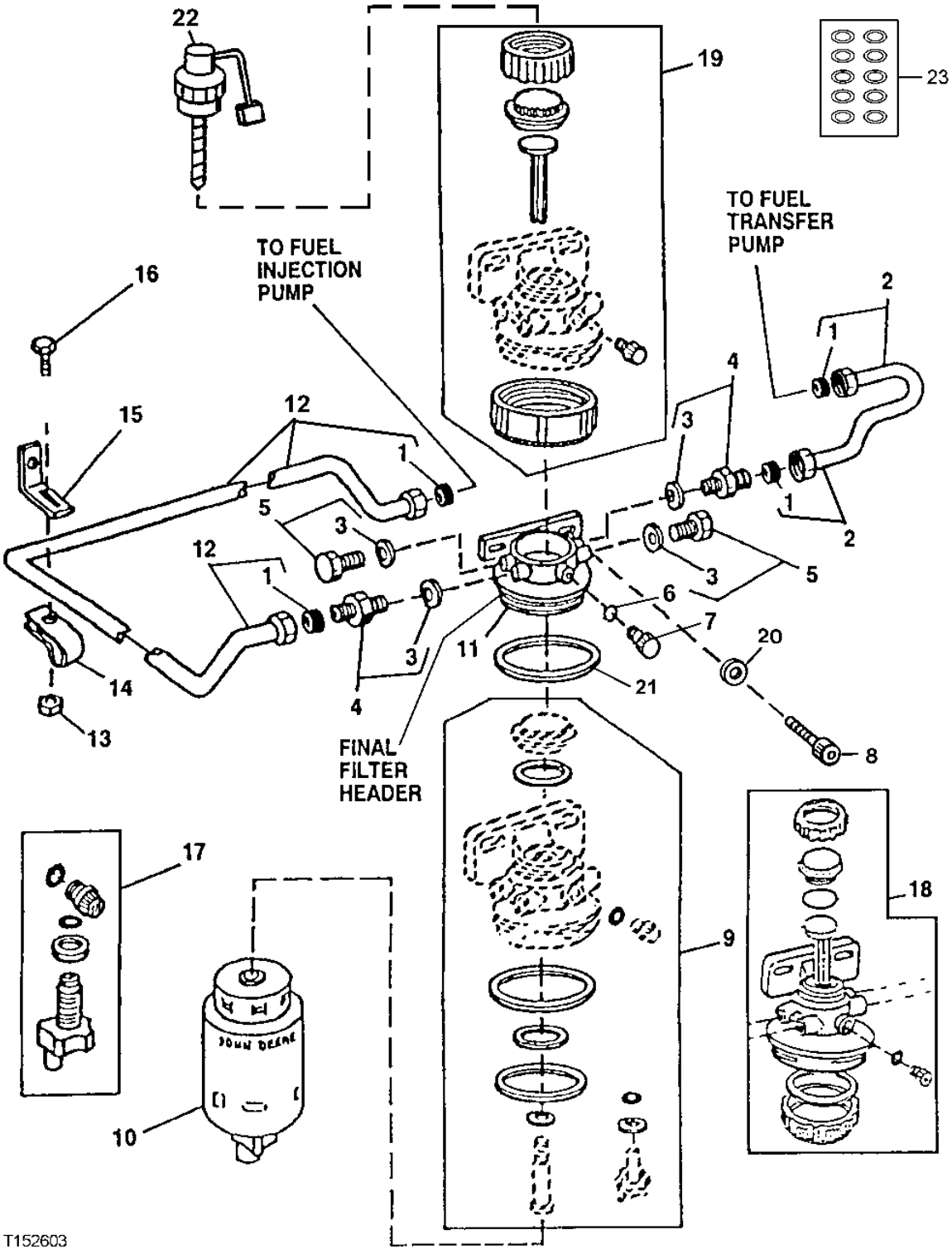

FUEL FILTER, AND LINES 310G(TURBO),310SG,315SG (VSN -910055) T0/PE4045TT080,T0/PE4045TT081

KEY	PART NO.	PART NAME	QTY	ENGINE SERIAL NO.	310G	310SG	315SG	REMARKS
1	R74012	SEALING WASHER	4		X	X	X	
2	RE60037	FUEL LINE	1		X	X	X	
3	51M7040	O-RING	1		X	X	X	(METRIC)
	R26286	O-RING	1		X	X	X	(SAE)
4	RE60029	ADAPTER FITTING	2		X	X	X	(M12X1.5)
	RE59487	FITTING	2		X	X	X	(SAE)
5	RE56323	PLUG	2		X	X	X	
6	R113562	O-RING	1		X	X	X	
7	R113563	DRAIN PLUG	1		X	X	X	(ALSO ORDER R113562)
8	19M8328	SCREW	1		X	X	X	
9	RE516553	SEAL KIT	1		X	X	X	(SUB FOR RE50752) FUEL FILTER
10	RE62418	FUEL FILTER	1		X	X	X	INCLUDES DRAIN VALVE
11	.....	FILTER HEAD	1		X	X	X	(FURNISH RE70358)
12	RE60025	FUEL LINE	1		X	X	X	
13	14M7298	FLANGE NUT	1		X	X	X	M8
14	T14050	CLAMP	1		X	X	X	
15	R116116	BRACKET	1		X	X	X	
16	19M7865	SCREW	1		X	X	X	M8 X 16
17	RE60854	KIT	1		X	X	X	DRAIN VALVE
18	RE70358	KIT	1		X	X	X	FINAL FILTER
19	RE51649	SEAL KIT	1		X	X	X	FUEL FILTER
20	24M7096	WASHER	2		X	X	X	10.500 X 18 X 1.600 MM
21	R113565	O-RING	1		X	X	X	
22	RE51648	KIT	1		X	X	X	FUEL FILTER HEATER (12-VOLT)
23	RE516513	KIT	1		X	X	X	(WITH HAND PRIMER) (CONTAINS 10 O-RINGS)
	RE516512	KIT	1		X	X	X	(WITHOUT HAND PRIMER) (CONTAINS 10 O-RINGS)

FUEL FILTER 310G (TURBO), 310SG, 315SG
(VSN 910056-) PE4045TT088, PE4045TT089

T152601 -UN-13MAR02

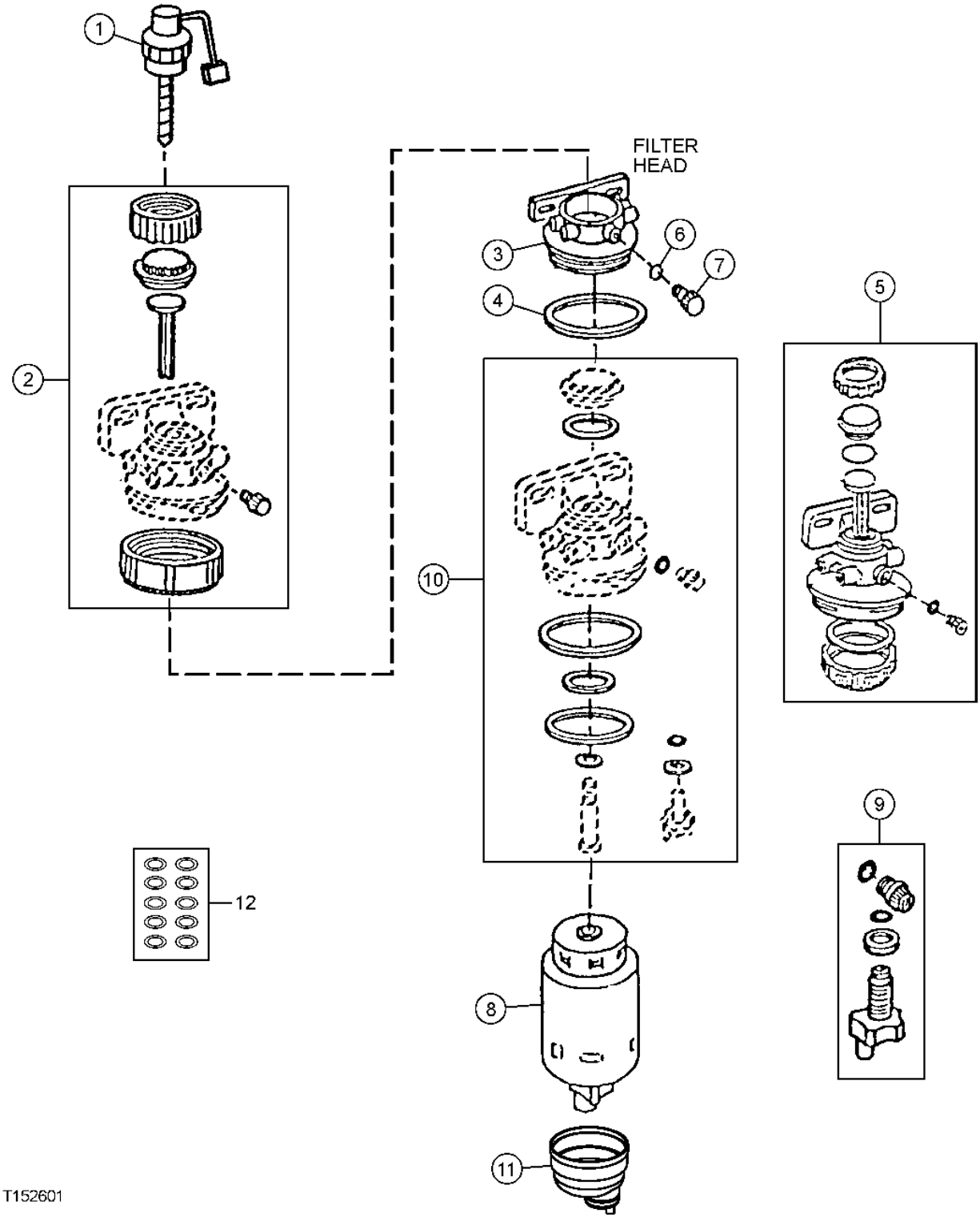

FUEL FILTER 310G (TURBO), 310SG, 315SG
(VSN 910056-) PE4045TT088, PE4045TT089

KEY	PART NO.	PART NAME	QTY	ENGINE SERIAL NO.	310G	310SG	315SG	REMARKS
1	RE51648	KIT	1		X	X	X	FUEL FILTER HEATER (12-VOLT)
2	RE51649	SEAL KIT	1		X	X	X	FUEL FILTER
3	.....	FILTER HEAD	1		X	X	X	(FURNISH RE509794)
4	RE516512	KIT	1		X	X	X	
5	RE509794	KIT	1		X	X	X	FUEL FILTER
6	R113562	O-RING	1		X	X	X	
7	R113563	DRAIN PLUG	1		X	X	X	(ALSO ORDER R113562)
8	RE509031	FILTER ELEMENT	1		X	X	X	
9	RE60854	KIT	1		X	X	X	DRAIN VALVE
10	RE516553	SEAL KIT	1		X	X	X	(SUB FOR RE50752)
11	RE51650	SEDIMENT BOWL	1		X	X	X	
12	RE516513	KIT	1		X	X	X	(WITH HAND PRIMER) (CONTAINS 10 O-RINGS)
	RE516512	KIT	1		X	X	X	(WITHOUT HAND PRIMER) (CONTAINS 10 O-RINGS)

FUEL FILTER LINES 310G (TURBO), 310SG, 315SG
(VSN 910056-) PE4045TT088, PE4045TT089

T146073 -UN-03OCT01

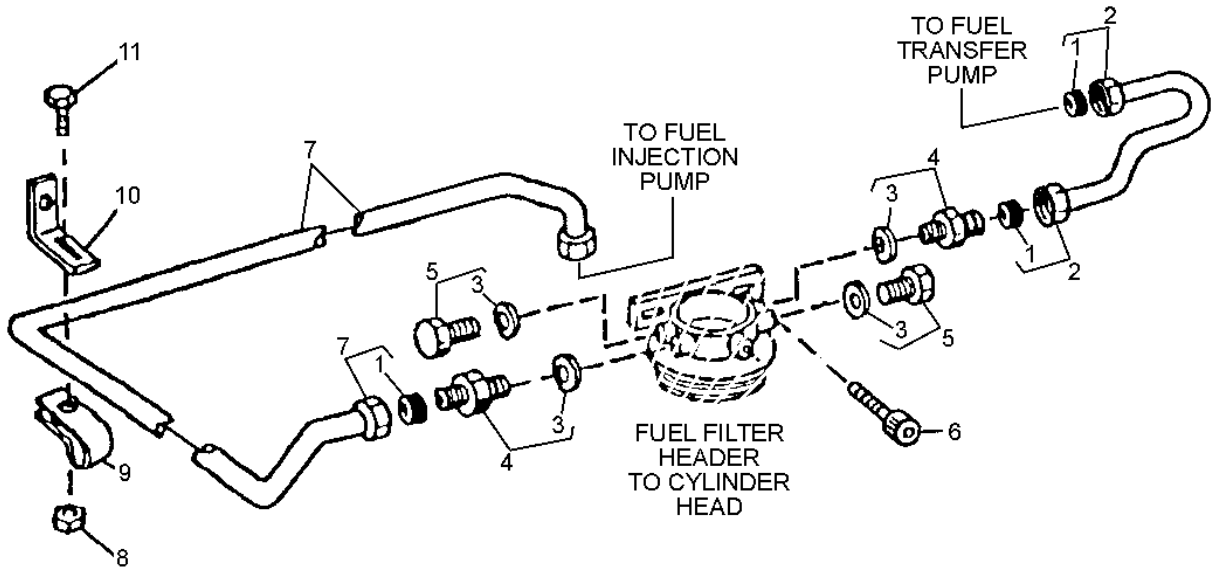

T146073

FUEL FILTER LINES 310G (TURBO), 310SG, 315SG
(VSN 910056-) PE4045TT088, PE4045TT089

KEY	PART NO.	PART NAME	QTY	ENGINE SERIAL NO.	310G	310SG	315SG	REMARKS
1	R74012	SEALING WASHER	4		X	X	X	
2	RE60037	FUEL LINE	1		X	X	X	
3	51M7040	O-RING	1		X	X	X	(METRIC)
	R26286	O-RING	1		X	X	X	(SAE)
4	RE60029	ADAPTER FITTING	2		X	X	X	(M12X1.5)
	RE59487	FITTING	2		X	X	X	(SAE)
5	RE46686	PLUG	2		X	X	X	
6	19M7784	SCREW	2		X	X	X	M10 X 20
7	RE507597	FUEL LINE	1		X	X	X	
8	14M7298	FLANGE NUT	1		X	X	X	M8
9	T14050	CLAMP	1		X	X	X	
10	R116116	BRACKET	1		X	X	X	
11	19M7865	SCREW	1		X	X	X	M8 X 16

FUEL TRANSFER PUMP

TP69536 -UN-18JUL00

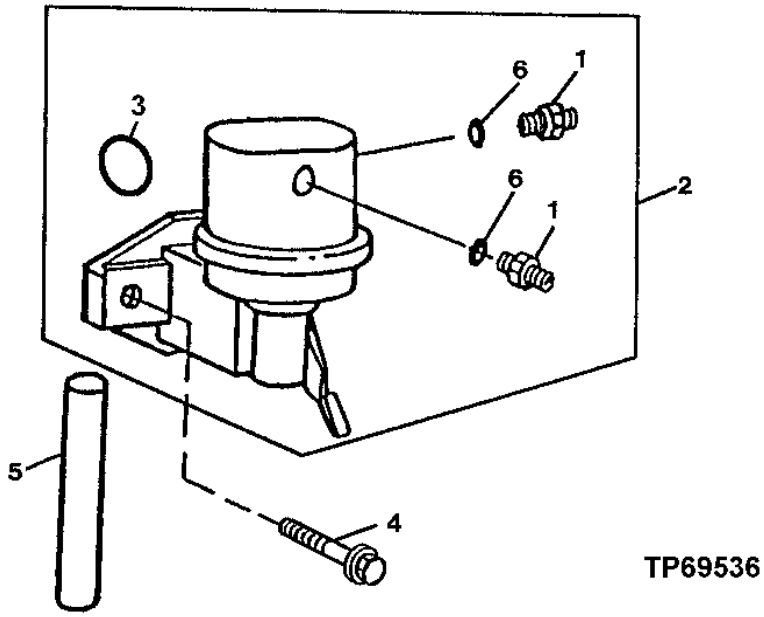

TP69536

KEY	PART NO.	PART NAME	QTY	ENGINE SERIAL NO.	310G	315SG	REMARKS
1	R500270	FITTING	2		X	X X	
2	RE66153	FUEL PUMP	1		X	X X	
3	R123273	O-RING	1		X	X X	
4	RE504233	CAP SCREW	2		X	X X	
5	R133405	PUSH ROD	1		X	X X	
6	R500271	O-RING	2		X	X X	

MEMORANDA

STARTING MOTOR AND ATTACHING PARTS (ISKRA) (310G)
(ENGINE SERIAL NO.866618-908991)
(ENGINE SERIAL NO. -268961) (WITH TURBOCHARGER)
(ENGINE SERIAL NO. -257521) (WITHOUT TURBOCHARGER)
T04045TT080, PE4045TT080, PE4045TT088, PE4045DT056, PE4045DT058

T145842 -UN-21SEP01

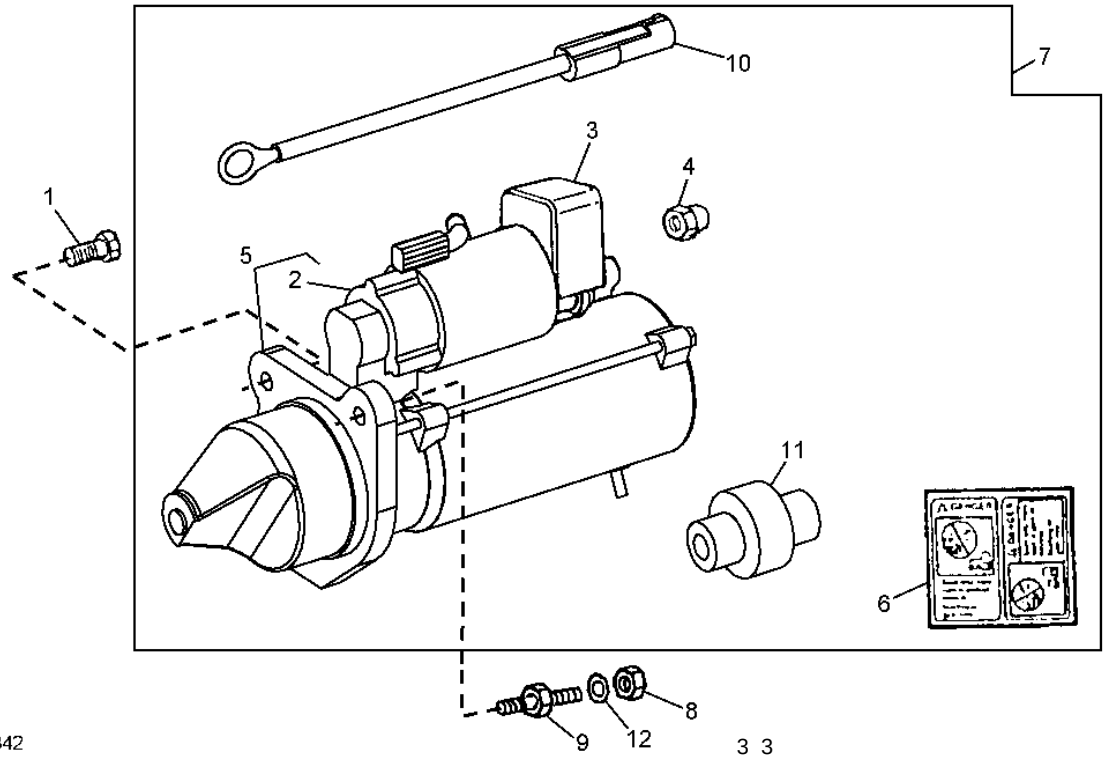

T145842

KEY	PART NO.	PART NAME	QTY	ENGINE SERIAL NO.	310G	315SG	315SG	REMARKS
1	19M7786	SCREW	2		X			M10 X 30
2	RE515428	SOLENOID	1		X			(SUB FOR RE507637)
3	R135431	COVER	1		X			
4	R135432	NUT	1		X			
5	.....	STARTER MOTOR	1		X			(12 VOLT)
6	T146102	LABEL	1		X			
7	.....	STARTER MOTOR KIT	1		X			(SUB FOR RE501767, THIS APPLICATION) (SUB RE506105 AND AT196314)
8	14M7296	FLANGE NUT	1		X			M10
9	R503419	STUD	1		X			
10	RE505400	BATTERY CABLE	1		X			
11	RE515688	STARTER MOTOR DRIVE	1		X			(SUB FOR RE507638)
12	12M7033	LOCK WASHER	1		X			10.500 MM

STARTING MOTOR AND ATTACHING PARTS (ISKRA) (310SG AND 315SG)
(ENGINE SERIAL NO. -894292)
T04045TT081, PE4045TT081

T135657 -UN-27NOV00

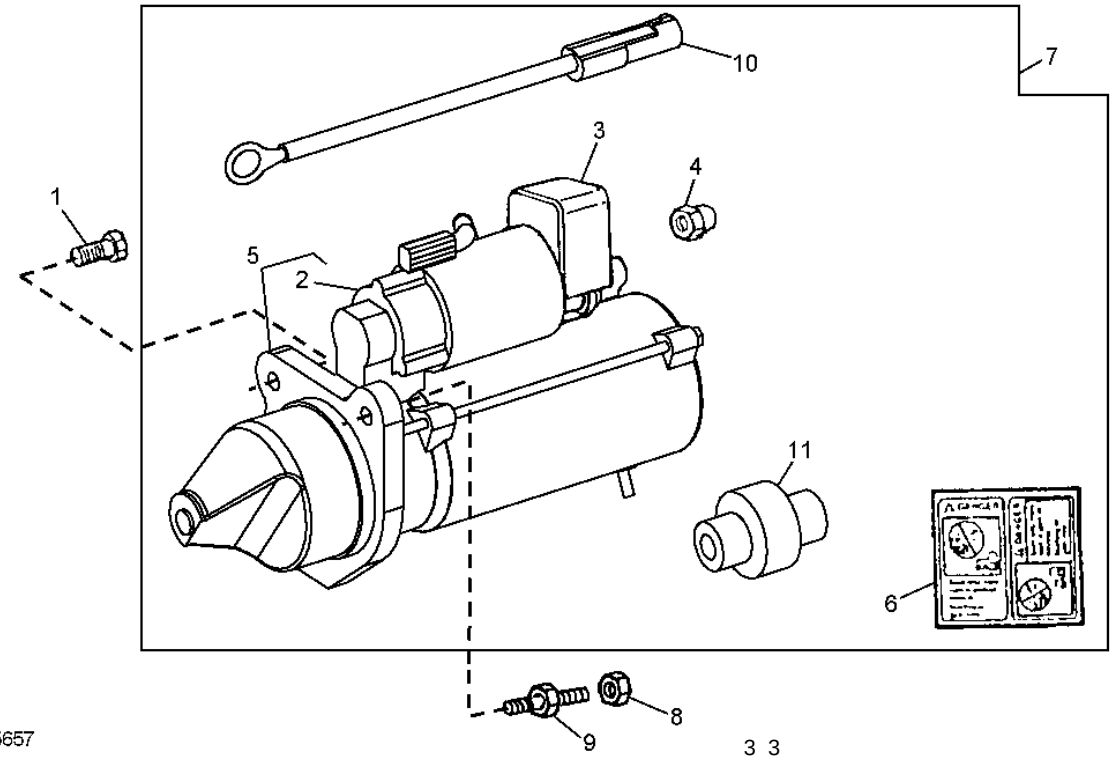

KEY	PART NO.	PART NAME	QTY	ENGINE SERIAL NO.	310G	315SG	REMARKS
1	19M7786	SCREW	2		X	X	M10 X 30
2	RE515428	SOLENOID	1		X	X	(SUB FOR RE507637)
3	R135431	COVER	1		X	X	
4	R135432	NUT	1		X	X	
5	.....	STARTER MOTOR	1		X	X	(12 VOLT)
6	T146102	LABEL	1		X	X	
7	.....	STARTER MOTOR KIT	1		X	X	(SUB RE506105 AND AT196314)
8	14M7296	FLANGE NUT	1		X	X	M10
9	R503419	STUD	1		X	X	
10	RE505400	BATTERY CABLE	1		X	X	
11	RE515688	STARTER MOTOR DRIVE	1		X	X	(SUB FOR RE507638)

STARTING MOTOR (DENSO)
(ENGINE SERIAL NO.894293-908991) (310SG AND 315SG) T04045TT081
(ENGINE SERIAL NO.268962-) (310G WITH TURBOCHARGER) PE4045TT080, PE4045TT088
(ENGINE SERIAL NO.257522-) (310G WITHOUT TURBOCHARGER) PE4045DT058

T149124 -UN-14DEC01

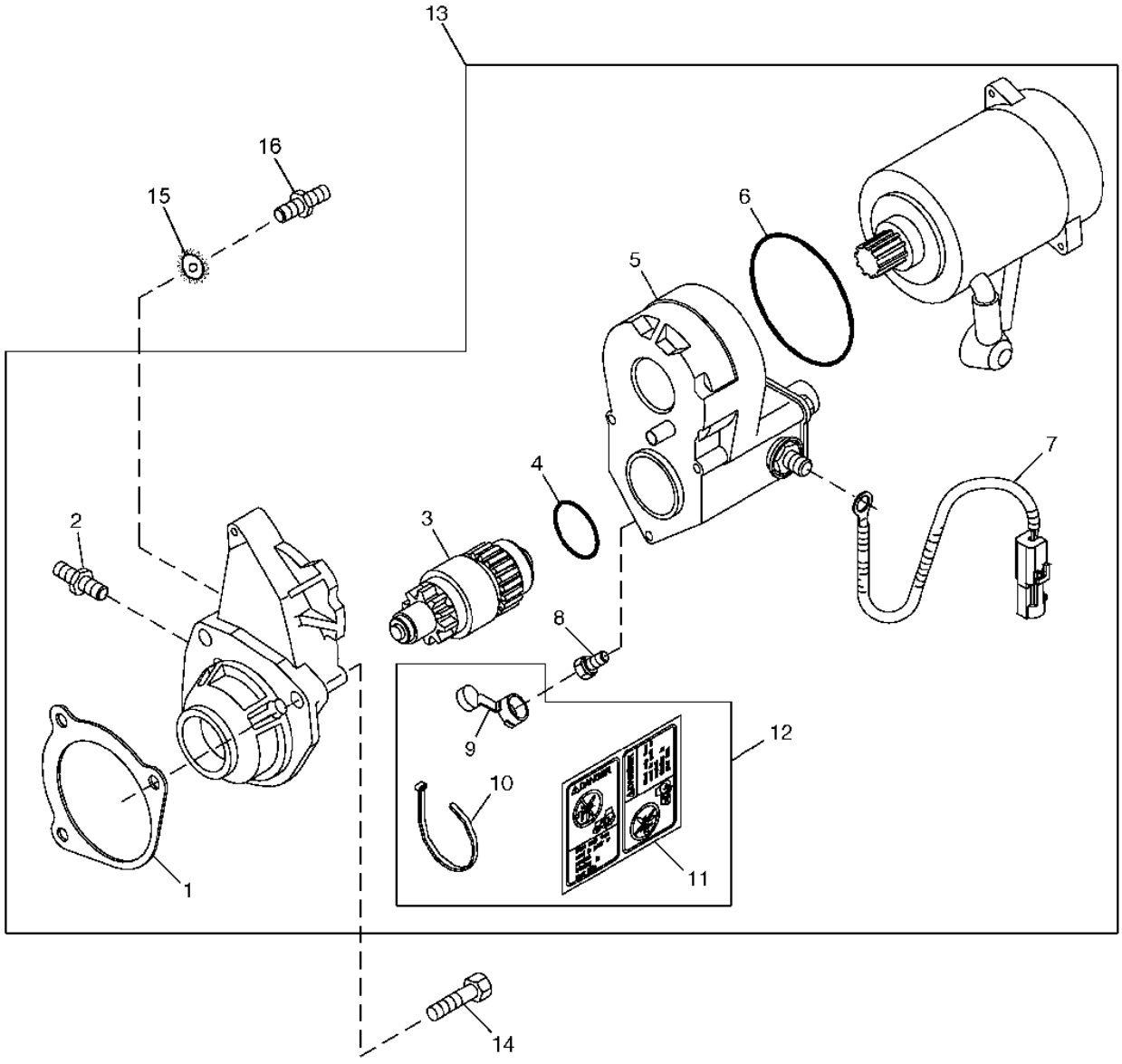

T149124

KEY	PART NO.	PART NAME	QTY	ENGINE SERIAL NO.	310G	310SG	315SG	REMARKS
1	R53108	GASKET	1		X	X	X	NOT USED IN THIS APPLICATION
2	R136052	STUD	1		X	X	X	
3	RE70487	CLUTCH	1		X	X	X	
4	R135510	O-RING	1		X	X	X	
5	RE70486	SWITCH	1		X	X	X	
6	R135509	SEAL	1		X	X	X	
7	RE505400	WIRING HARNESS	1		X	X	X	
8	RE71256	SCREW WITH WASHER	1		X	X	X	
9	.....	COVER	1		X	X	X	(ORDER RE70756)

STARTER MOTOR ADAPTER KIT (TO CONVERT ISKRA STARTER TO DENSO STARTER)
T0/PE4045DT056, T0/PE4045TT080, T0/PE4045TT081, PE045DT058, PE4045TT088,PE4045TT089

T143910 -UN-16JUL01

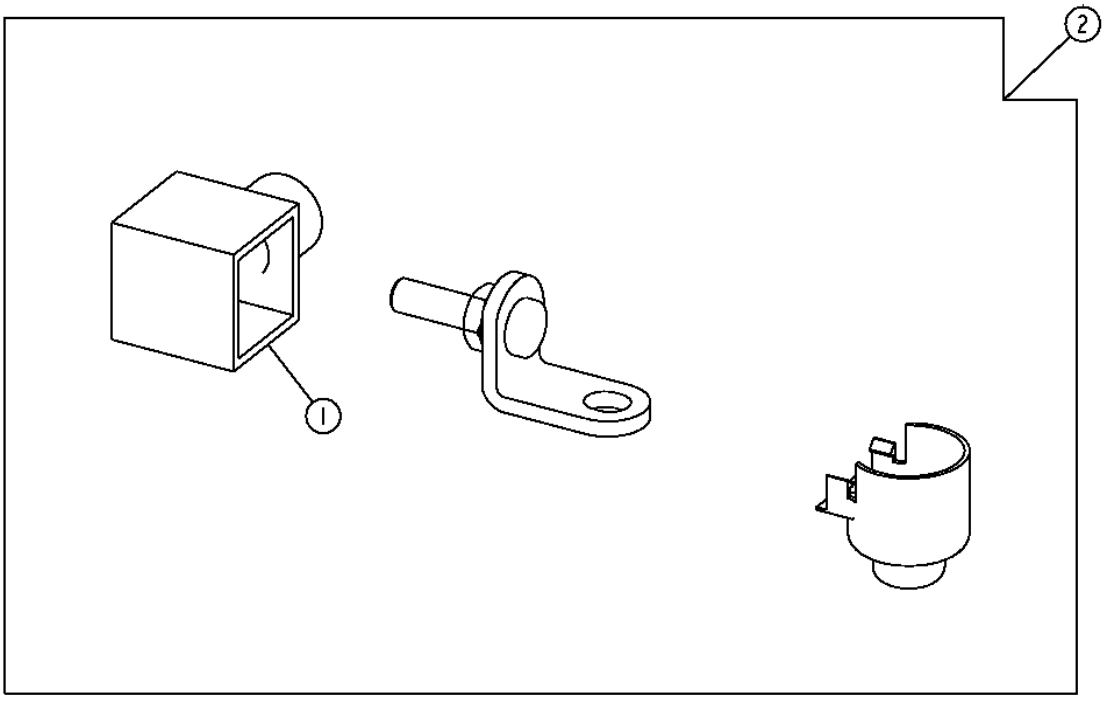

T143910

STARTER MOTOR ADAPTER KIT (TO CONVERT ISKRA STARTER TO DENSO STARTER)
T0/PE4045DT056, T0/PE4045TT080, T0/PE4045TT081, PE4045DT058, PE4045TT088, PE4045TT089

KEY	PART NO.	PART NAME	QTY	SERIAL NO.	310G	310SG	315SG	REMARKS
1	T129165	BOOT	1		X	X	X	
2	AT196314	KIT	1		X	X	X	(ALSO ORDER RE506105 STARTER MOTOR KIT)

ALTERNATOR MOUNTING BRACKETS

TP69537 -UN-26JUL00

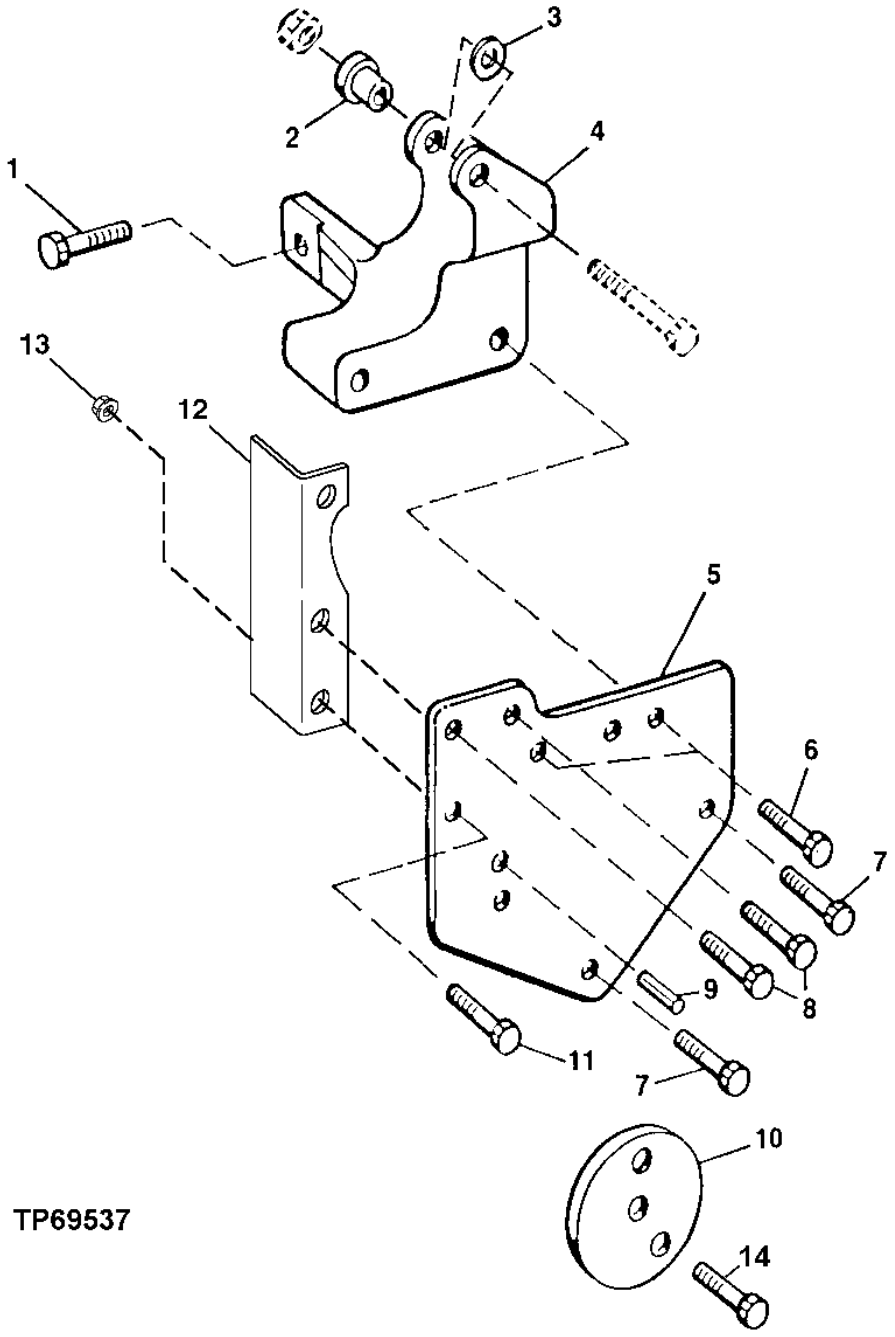

ALTERNATOR MOUNTING BRACKETS

KEY	PART NO.	PART NAME	QTY	ENGINE SERIAL NO.	310G	315SG	REMARKS
1	19M7786	SCREW	2		X	X X	M10 X 30 (HS, HEAD MARKED 10.9)
2	R100377	BUSHING	1		X	X X	
3	R64525	THRUST WASHER	1		X	X X	
4	R132166	BRACKET	1		X	X X	
5	R133978	SUPPORT	1		X	X X	
6	19M7785	SCREW	2		X	X X	M10 X 25 (HS, HEAD MARKED 10.9)
7	19M7801	SCREW	2		X	X X	M8 X 60 (HS, HEAD MARKED 10.9)
8	19M7786	SCREW	2		X	X X	M10 X 30 (HS, HEAD MARKED 10.9)
9	34M7061	SPRING PIN	1		X	X X	8 X 20 MM
10	R500322	SPACER	1		X	X X	
11	19M7786	SCREW	4		X	X X	M10 X 30 (HS, HEAD MARKED 10.9)
12	R500531	STRAP	1		X	X X	
13	14M7296	FLANGE NUT	2		X	X X	M10
14	19M7811	SCREW	1		X	X X	M10 X 90

FAN DRIVE HOUSING,PULLEYS, DRIVE BELT AND TENSIONERS
310G(TURBO),310SG,315SG T0/PE4045TT080, T0/PE4045TT081

TP69539 -UN-26JUL00

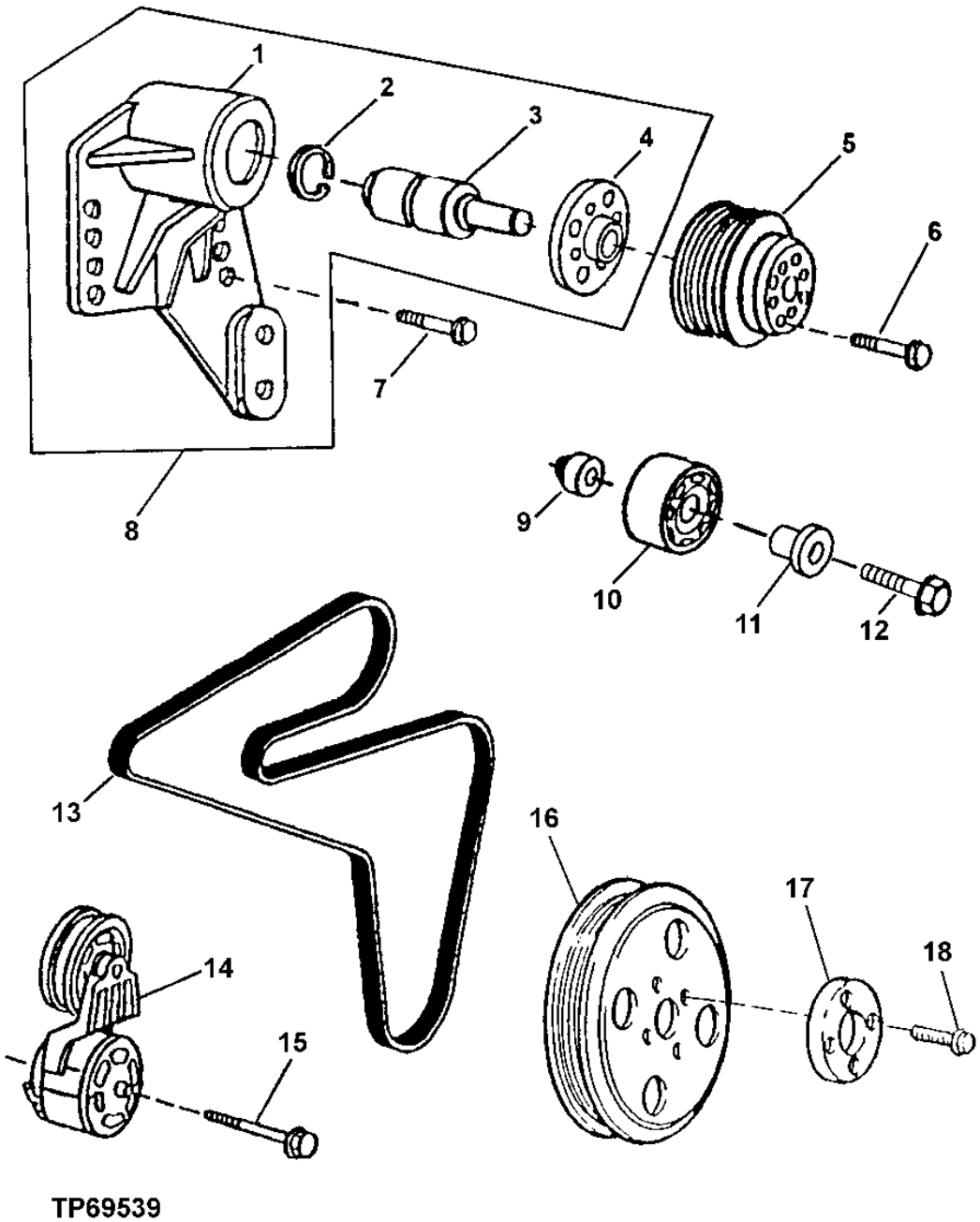

TP69539

FAN DRIVE HOUSING,PULLEYS, DRIVE BELT AND TENSIONERS
310G(TURBO),310SG,315SG T0/PE4045TT080, T0/PE4045TT081

KEY	PART NO.	PART NAME	QTY	ENGINE SERIAL NO.	310G	310SG	315SG	REMARKS
1	.....	HOUSING	1		X	X	X	(MARKED R500304)
2	H80753	SNAP RING	1		X	X	X	
3	.....	BALL BEARING	1		X	X	X	
4	.....	HUB	1		X	X	X	(MARKED R500598)
5	R128660	PULLEY	1		X	X	X	
6	19M8197	CAP SCREW	4		X	X	X	M10 X 85
7	19M7835	SCREW	4		X	X	X	M10 X 35
8	RE500539	HUB	1		X	X	X	(MARKED R500304)
9	R500320	SPACER	1		X	X	X	(WITH AIR CONDITIONING)
10	RE505264	PULLEY	1		X	X	X	(WITH AIR CONDITIONING)
11	R502079	SLEEVE	1		X	X	X	(WITH AIR CONDITIONING)
12	19M7808	SCREW	1		X	X	X	M10 X 65, (WITH AIR CONDITIONING)
13	R504023	V-BELT	1		X	X	X	(WITH AIR CONDITIONING)
	R504022	V-BELT	1		X	X	X	(WITHOUT AIR CONDITIONING)
14	.....	TIGHTENER	1	-259046	X	X	X	(RE70535 NO LONGER AVAILABLE) (SUB RE518097) (ALSO ORDER R516623)
	RE518097	TIGHTENER	1	259047-	X	X	X	
15	19M7811	SCREW	2		X	X	X	M10 X 90
16	R133295	PULLEY	1		X	X	X	
17	R500649	FLANGE	1		X	X	X	
18	R121897	BOLT	1		X	X	X	

ENGINE FLYWHEEL

TP69538 -UN-18JUL00

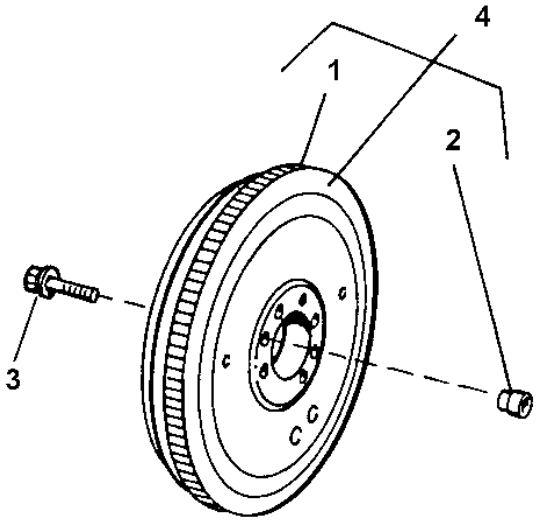

TP69538

KEY	PART NO.	PART NAME	QTY	ENGINE SERIAL NO.	310G	315SG	REMARKS
1	R28811	RING GEAR	1		X	X X	(129 TEETH)
2	R123521	SLEEVE	1		X	X X	
3	R135918	BOLT	4		X	X X	
4	RE500137	FLYWHEEL	4		X	X X	(MARKED R500096)

FLYWHEEL HOUSING AND CRANKSHAFT REAR OIL SEAL
(VSN -910055)

T157770 -UN-02AUG02

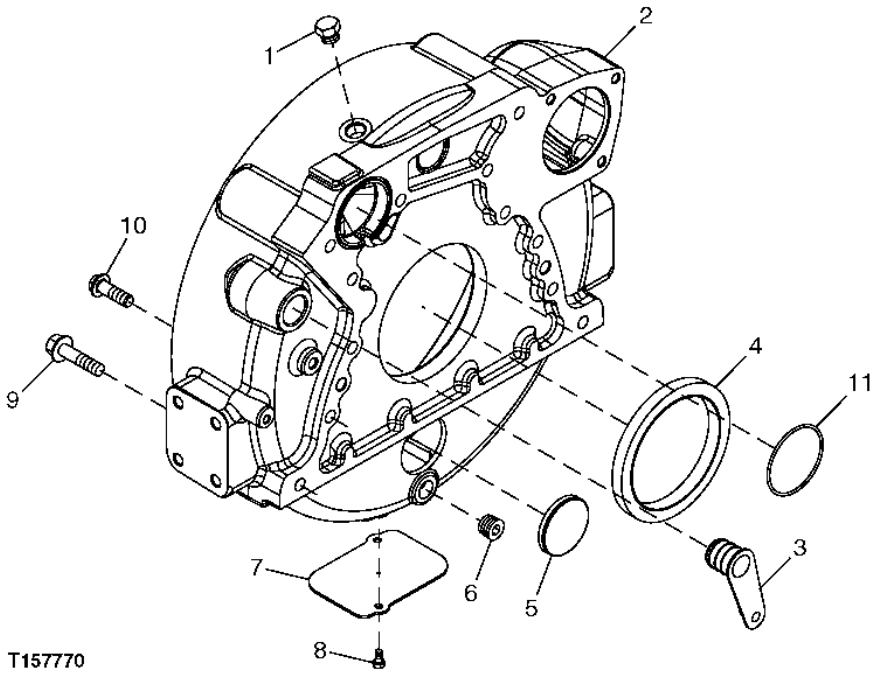

KEY	PART NO.	PART NAME	QTY	ENGINE SERIAL NO.	310G	315SG	REMARKS
1	R39112	FITTING	1		X	X X	
2	R132006	HOUSING	1	-867794	X	X X	(SUB R503451 AND R61467)
	R503451	HOUSING	1	867795-	X	X X	(ALSO ORDER R61467)
3	R131769	PLUG	1		X	X X	
4	RE44574	SEAL	1		X	X X	
5	T13518	PLUG	1		X	X X	
6	RE57836	PIPE PLUG	1		X	X X	1/2", (SUB FOR 15H624)
7	R121039	PLATE	2		X	X X	
8	19M7923	CAP SCREW	2		X	X X	M6 X 12
9	19M8306	SCREW	4		X	X X	M12 X 50
10	R135918	BOLT	8		X	X X	
11	R61467	O-RING	1	867795-	X	X X	

FLYWHEEL HOUSING
(VSN 910056-)

T158177 -UN-26SEP02

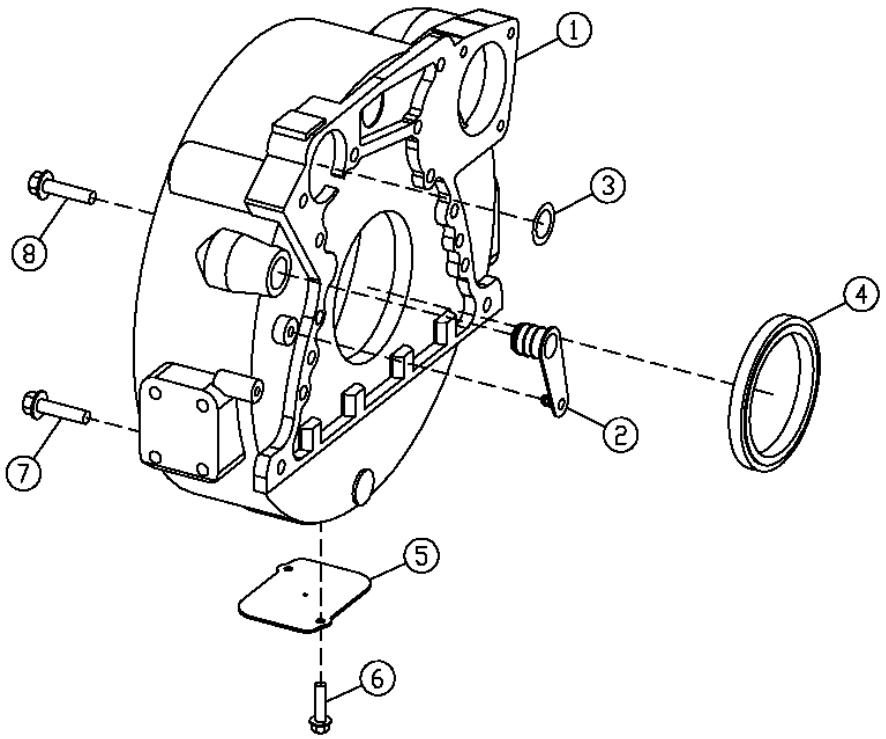

T158177

KEY	PART NO.	PART NAME	QTY	ENGINE SERIAL NO.	310G	315SG	REMARKS
1	R503449	HOUSING	1		X	X X	
2	R131769	PLUG	1		X	X X	
3	R61467	O-RING	1		X	X X	
4	RE44574	SEAL	1		X	X X	
5	R121039	PLATE	1		X	X X	
6	19M7923	CAP SCREW	2		X	X X	M6 X 12
7	19M8306	SCREW	4		X	X X	M12 X 50
8	R135918	BOLT	8		X	X X	

MEMORANDA

OVERHAUL KIT

TP28491 -UN-01JAN94

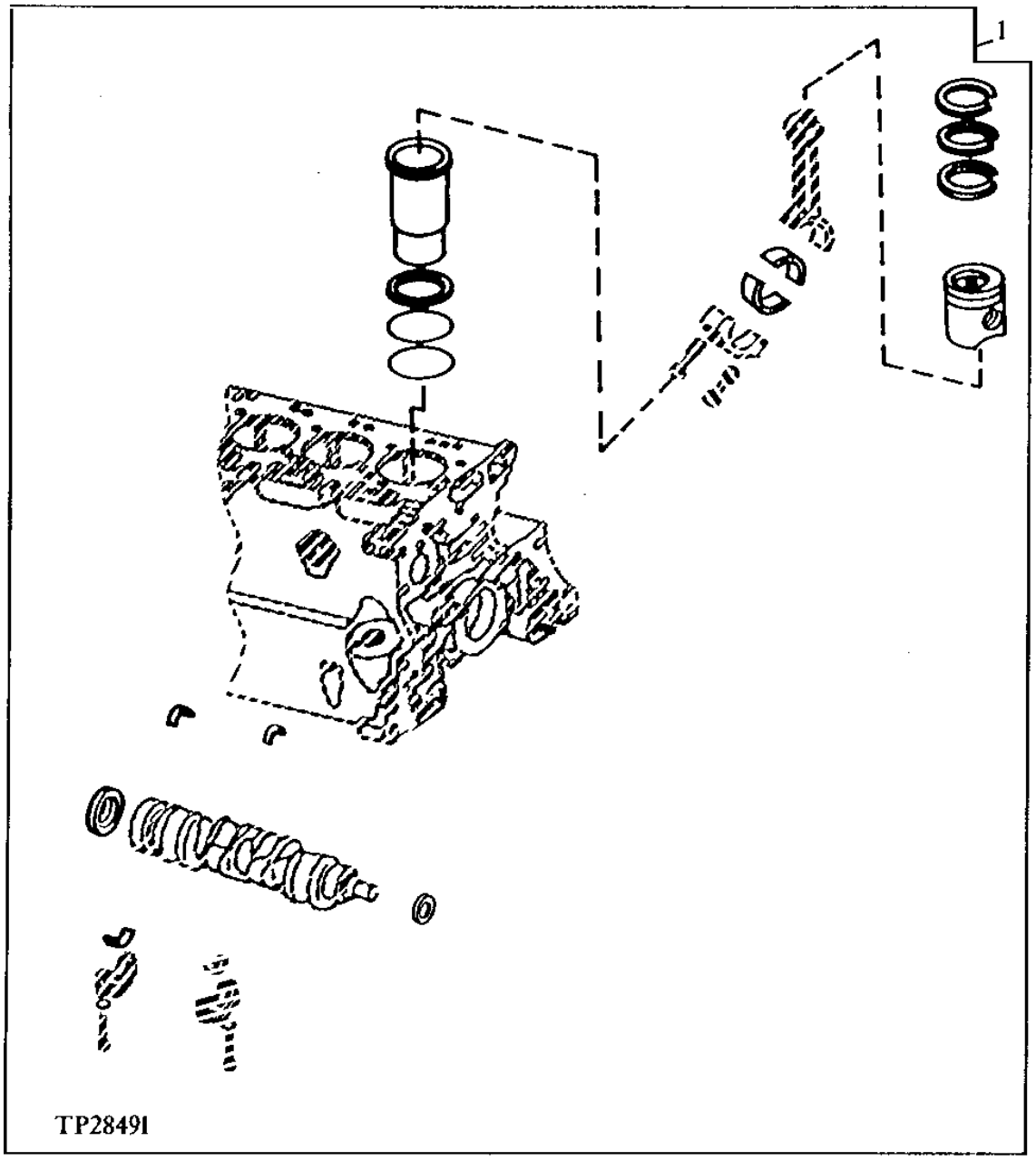

OVERHAUL KIT

KEY	PART NO.	PART NAME	QTY	ENGINE SERIAL NO.	REMARKS
1	RE527299	ENGINE OVERHAUL KIT	1		PISTON, (MARKED RE515372)

MEMORANDA

CYLINDER HEAD REMOVAL AND IN VEHICLE OVERHAUL GASKET SETS
310G(TURBO), 310SG, 315SG T0/PE4045TT080, T0/PE4045TT081

T150756 -UN-31JAN02

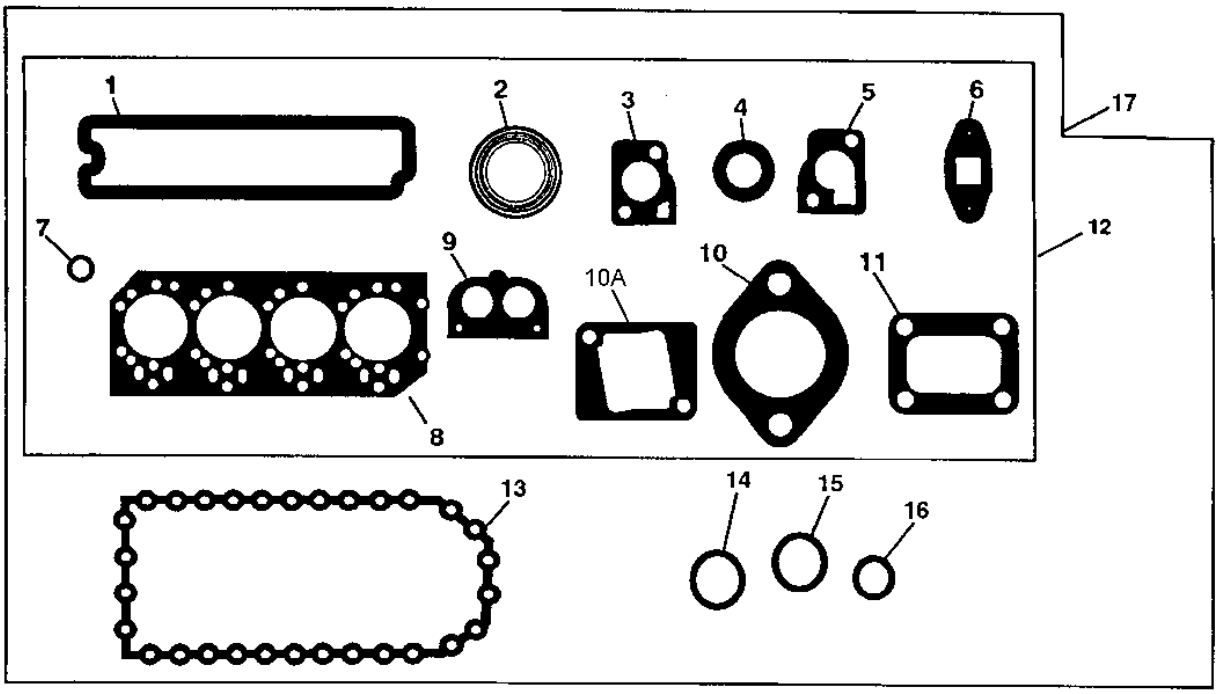

T150756

KEY	PART NO.	PART NAME	QTY	ENGINE SERIAL NO.	REMARKS
1	R123542	GASKET	1		ROCKER ARM COVER
2	R521439	GASKET	4		EXHAUST MANIFOLD, (SUB FOR R90658)
3	R502814	GASKET	1		THERMOSTAT COVER, (SUB FOR R135896)
4	R123226	GASKET	2		WATER BY-PASS TUBE
5	R123345	GASKET	1		THERMOSTAT HOUSING
6	R123570	GASKET	1		TURBOCHARGER OIL OUTLET LINE (SQUARE)
	R503891	GASKET	1		TURBOCHARGER OIL OUTLET LINE (ROUND)
7	R123575	O-RING	4		ROCKER ARM COVER HOLD DOWN STUD
8	R116515	ENGINE CYLINDER HEAD GASKET	1		CYLINDER HEAD
9	R501373	GASKET	1		THERMOSTAT COVER
10	R81275	GASKET	1		AIR INLET
10A	R133893	GASKET	1		AIR INLET
11	R92097	GASKET	1		TURBOCHARGER TO EXHAUST MANIFOLD
12	RE526670	GASKET KIT	1		CYLINDER HEAD REMOVAL, (SUB FOR RE66082)
13	R123353	GASKET	1		ENGINE OIL PAN
	R522030	GASKET	1		(STEEL, 3/8")
14	R75892	O-RING	1		OIL PUMP TUBE CONNECTOR
15	R97185	O-RING	1		OIL PUMP OUTLET TUBE TO COVER
16	R61871	O-RING	1		OIL PUMP INTAKE TUBE
17	RE526671	GASKET KIT	1		IN CHASSIS OVERHAUL, (SUB FOR RE66084)

ENGINE MAJOR OVERHAUL GASKET SET AND ENGINE OVERHAUL KIT
310G(TURBO) T0/PE4045TT080, PE4045TT088 AND 310G, PE4045DT058
310SG, 315SG T0/PE4045TT081, PE4045TT089

RGP7893 -UN-12JUL01

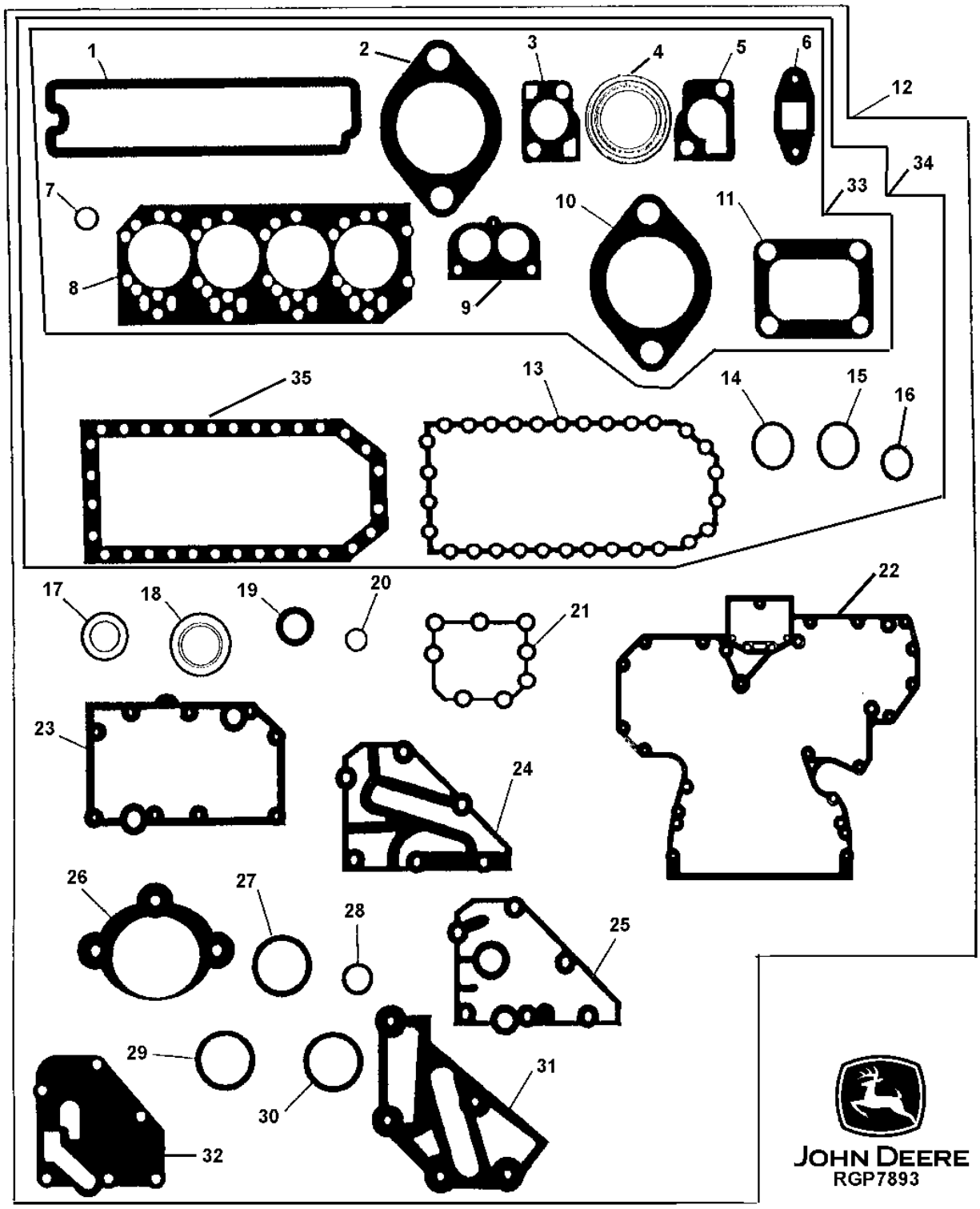

ENGINE MAJOR OVERHAUL GASKET SET AND ENGINE OVERHAUL KIT
310G(TURBO) T0/PE4045TT080, PE4045TT088 AND 310G, PE4045DT058
310SG, 315SG T0/PE4045TT081, PE4045TT089

KEY	PART NO.	PART NAME	QTY	ENGINE SERIAL NO.	310G	315SG	REMARKS
1	R123543	GASKET	1				ROCKER ARM COVER
	RE520539	GASKET KIT	1				HIGH TEMP ROCKER ARM COVER GASKET & SHIMS (NOT INCLUDED IN MAJOR KITS)
2	R521439	GASKET	4				EXHAUST MANIFOLD, (SUB FOR R90658)
3	R502814	GASKET	1				THERMOSTAT COVER
4	R123226	GASKET	2				WATER BY-PASS TUBE
5	R123345	GASKET	1				THERMOSTAT HOUSING
6	R123570	GASKET	1				TURBOCHARGER OIL OUTLET TUBE
	R503891	GASKET	1				TURBOCHARGER OIL OUTLET TUBE
7	R123575	O-RING	4				ROCKER ARM COVER HOLD DOWN STUD
8	R116515	ENGINE CYLINDER HEAD GASKET	1				CYLINDER HEAD
9	R501373	GASKET	1				THERMOSTAT COVER
10	R81275	GASKET	1				AIR INLET (OVAL)
	R133893	GASKET	1				AIR INLET (SQUARE)
11	R92097	GASKET	1				TURBOCHARAGER TO EXHAUST MANIFOLD
12	RE527042	ENGINE OVERHAUL KIT	1		X	X X	ENGINE OVERHAUL(WITH TURBOCHARGER) (CONTAINS ENGINE OVERHAUL GASKET KIT, CYLINDER LINER KIT,CONNECTING ROD BEARINGS AND CRANKSHAFT MAIN BEARINGS) (SUB FOR RE66093 AND RE507923)
	RE66092	ENGINE OVERHAUL KIT	1		X		(WITHOUT TURBOCHARGER)ENGINE REBUILD KIT (CONTAINS ENGINE MAJOR OVERHAUL GASKET KIT, CYLINDER LINER KIT,CONNECTING ROD BEARINGS AND CRANKSHAFT MAIN BEARINGS)
13	R522030	GASKET	1				ENGINE OIL PAN (NOT INCLUDED IN MAJOR KITS)
14	R75892	O-RING	1				OIL PUMP TUBE CONNECTOR
15	R97185	O-RING	1				OIL PUMP OUTLET TUBE TO COVER
16	R61871	O-RING	1				OIL PUMP INTAKE TUBE
17	A4827R	WASHER	1				OIL PRESSURE REGULATOR PLUG
18	RE44574	SEAL	1				REAR OIL SEAL
19	RE516340	KIT	1				FRONT OIL SEAL, (SUB FOR RE59810) (MARKED RE52346 OR RE505515)
20	R123273	O-RING	1				FUEL TRANSFER PUMP
21	R123417	GASKET	1				WATER PUMP
22	R136515	GASKET	1				TIMING GEAR COVER (WITH AUXILIARY DRIVE)
	R136516	GASKET	1				TIMING GEAR COVER (WITHOUT AUXILIARY DRIVE)
23	R123501	GASKET	1				OIL COOLER HOUSING
24	R502864	GASKET	1				REMOTE OIL FILTER ADAPTER
25	R123525	GASKET	1				OIL FILTER HEADER
26	R53108	GASKET	1				STARTING MOTOR
27	R72328	O-RING	4				OIL FILTER TUBES
28	R89944	O-RING	1				WATER PUMP INLET
29	R504734	O-RING	2				CONNECTOR TUBE TO TIMING GEAR COVER
30	T122075	O-RING	2				OIL COOLER TO HOUSING
31	R501428	GASKET	1				COOLANT PASSAGE ADAPTER
32	R500374	GASKET	1				OIL FILTER HEADER
33	RE526670	GASKET KIT	1				CYLINDER HEAD REMOVAL, (SUB FOR RE66082)
34	RE526671	GASKET KIT	1				IN CHASSIS OVERHAUL, (SUB FOR RE66084)
35	R123353	GASKET	1				ENGINE OIL PAN

ENGINE COOLANT HEATER

TP58143 -UN-03OCT00

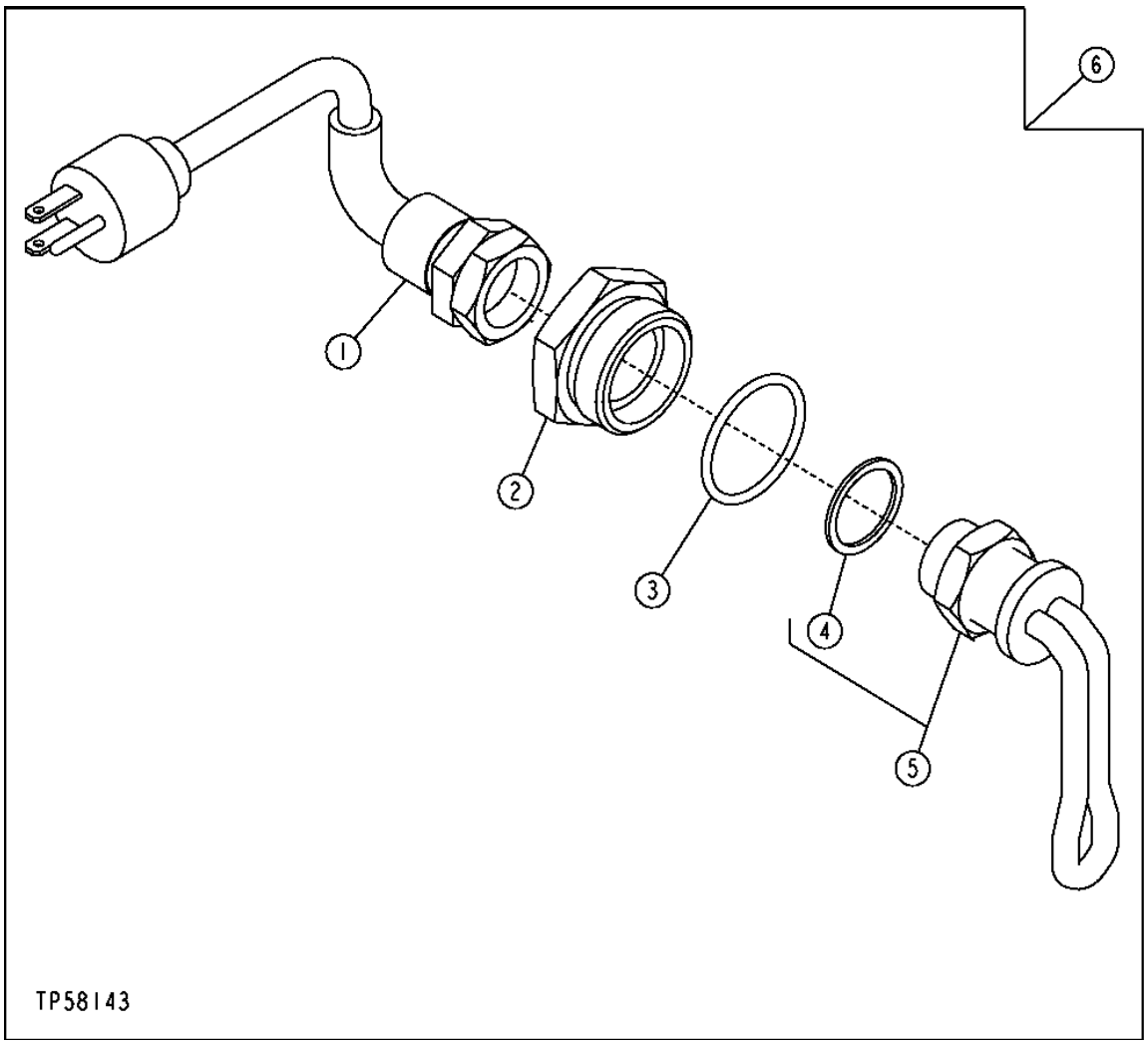

ENGINE COOLANT HEATER

KEY	PART NO.	PART NAME	QTY	SERIAL NO.	310G	315SG	315SG	REMARKS
1	AT73296	POWER CORD	1		X	X	X	
2	R54123	ADAPTER FITTING	1		X	X	X	
3	U13639	O-RING	1		X	X	X	
4	R206883	WASHER	1		X	X	X	(SUB FOR R47693)
5	RE42139	HEATING ELEMENT	1		X	X	X	
6	AT74940	COOLANT HEATER	1		X	X	X	

2H13

COLD WEATHER STARTING AID
(SERIAL NO. -910055)

T134800 -UN-08NOV00

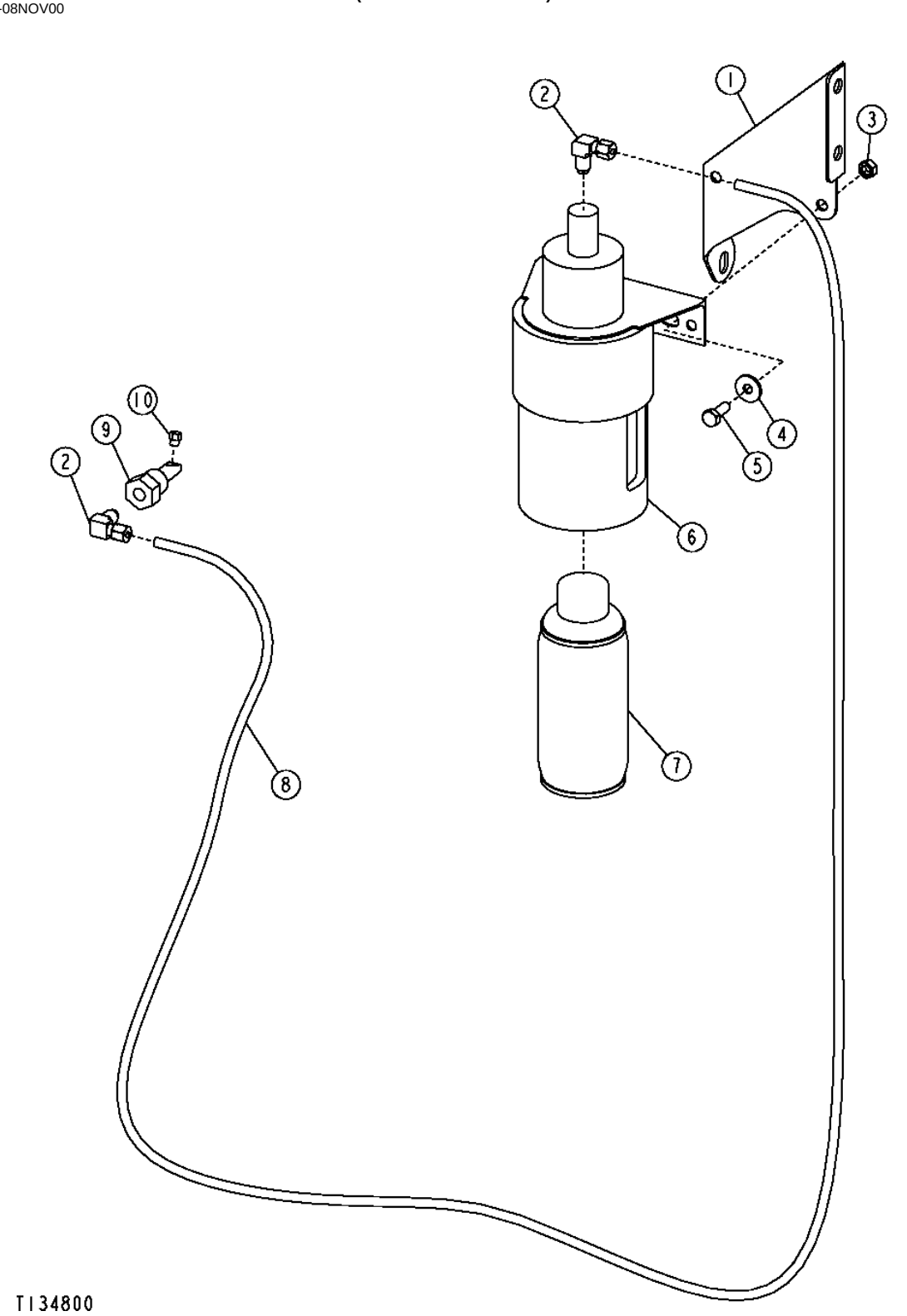

2H14

COLD WEATHER STARTING AID
(SERIAL NO. -910055)

KEY	PART NO.	PART NAME	QTY	SERIAL NO.	310G	310SG	315SG	REMARKS
1	T185387	BRACKET	1		X	X	X	
2	RE21790	ELBOW FITTING	2		X	X	X	
3	14M7272	NUT	2		X	X	X	M6
4	24M7139	WASHER	2		X	X	X	
5	19M8425	CAP SCREW	2		X	X	X	M6 X 16
6	RE48310	STARTING AID SOLENOID	1		X	X	X	
7	RE33636	STARTING FLUID	1		X	X	X	
8	.....	TUBE	1		X	X	X	(MAKE FROM T78593, BULK MATERIAL)
9	R47160	NOZZLE HOLDER	1		X	X	X	
10	T155858	NOZZLE	1		X	X	X	

2H15

COLD WEATHER STARTING AID

TP69631 -UN-20SEP00

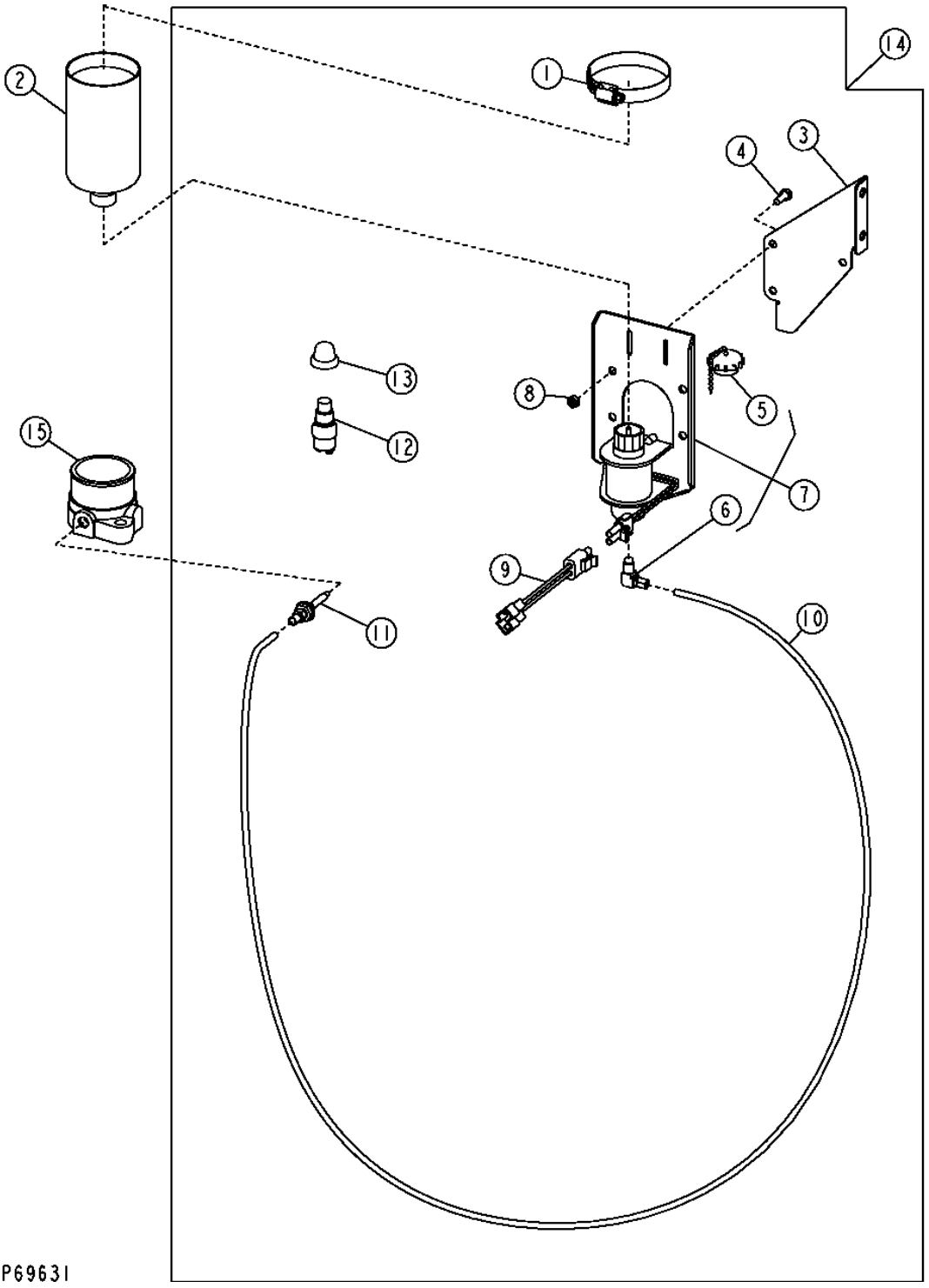

COLD WEATHER STARTING AID

KEY	PART NO.	PART NAME	QTY	SERIAL NO.	310G	315SG	REMARKS
1	AR21999	HOSE CLAMP	1		X	X X	
2	AT171162	STARTING FLUID	1		X	X X	
3	T185933	BRACKET	1		X	X X	
4	19M8425	CAP SCREW	3		X	X X	M6 X 16
5	AT171539	CAP (HAT)	1		X	X X	
6	AT181582	ELBOW FITTING	1		X	X X	
7	AT173385	STARTING AID SOLENOID	1		X	X X	
8	14M7272	NUT	3		X	X X	M6
	24M7293	WASHER	3		X	X X	6.500 X 13 X 1.600 MM
9	AT182257	WIRING HARNESS	1	-910055	X	X X	(USE WITH AT196262)
	AT199714	WIRING HARNESS	1	-910055	X	X X	(USE WITH AT199060)
10	.....	TUBE	1		X	X X	(MAKE FROM T78593 BULK MATERIAL CUT TO 1.5 FT. (457MM) LENGTH)
11	AT183222	NOZZLE	1		X	X X	
12	R39554	SWITCH	1		X	X X	
13	T55585	CAP	1		X	X X	
14	AT192153	KIT	1		X	X X	
15	R133187	INTAKE MANIFOLD	1		X		

RADIATOR, RADIATOR HOSES, FAN SHROUD AND FAN GUARD

T147477 -UN-29OCT01

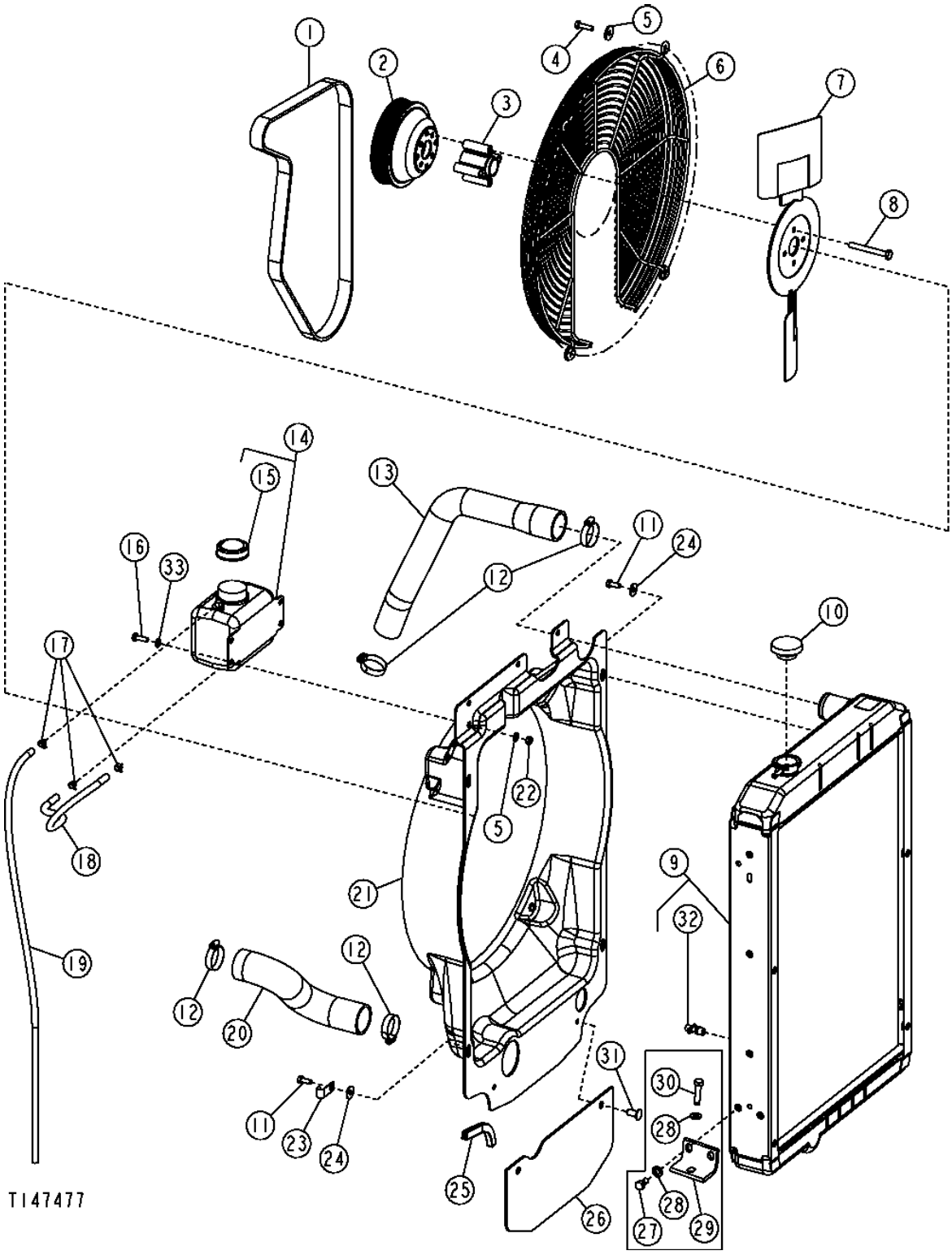

RADIATOR, RADIATOR HOSES, FAN SHROUD AND FAN GUARD

KEY	PART NO.	PART NAME	QTY	SERIAL NO.	310G	315SG	315SG	REMARKS
1	R504022	V-BELT	1		X	X	X	(WITHOUT AIR CONDITIONING)
	R504023	V-BELT	1		X	X	X	(WITH AIR CONDITIONING)
2	R128660	PULLEY	1		X	X	X	
3	T160508	SPACER	1		X	X	X	
4	19M7513	CAP SCREW	4		X	X	X	M8 X 30
5	24M7024	WASHER	4		X	X	X	(SUB FOR 24M7238, THIS APPLICATION)
6	.....	GUARD	1		X	X	X	(AT186906 NO LONGER AVAILABLE) (SUB AT195907) (ALSO ORDER (4) 24M7024)
	AT195907	GUARD	1		X	X	X	
7	AT107512	SUCTION FAN	1		X			(6 BLADE)
	AT178394	FAN	1		X	X	X	(7 BLADE)
8	19M8197	CAP SCREW	4		X	X	X	M10 X 85
9	AT184503	RADIATOR	1		X			(USE WITHOUT AIR CONDITIONING OR FLOW CONTROL)
	AT190595	RADIATOR	1		X	X	X	(USE WITH HI-AMBIENT,AND/OR SELECTIVE FLOW, AND/OR AIR CONDITIONING)
10	AT173610	FILLER CAP	1		X	X	X	
11	M86877	BOLT	4		X	X	X	M8 X 20
12	AT308555	HOSE CLAMP	4		X	X	X	(SUB FOR AR65294)
13	T155826	RADIATOR HOSE	1		X	X	X	
14	AN205068	TANK	1		X	X	X	
15	AT186925	FILLER CAP	1		X	X	X	
16	19M7881	SCREW	3		X	X	X	M8 X 20
17	R56101	CLIP	3		X	X	X	
18	.....	HOSE	1		X	X	X	(MAKE FROM TY22566, CUT TO 1.3 FT.)
19	.....	HOSE	1		X	X	X	(MAKE FROM TY22566, CUT TO 3.2 FT.)
20	T155827	HOSE	1		X	X	X	
21	AT186747	SHROUD	1		X	X	X	
22	14M7273	NUT	3		X	X	X	M8
23	AH89557	CLIP	1		X	X	X	
24	24M7298	WASHER	4		X	X	X	
25	.....	ISOLATOR	2		X	X	X	(MAKE FROM T61861, CUT TO .43 FT.)
26	T183669	DEFLECTOR	1		X	X	X	
27	19M7938	CAP SCREW	4	-903149	X	X	X	M10 X 20
28	24M7239	WASHER	6	-903149	X	X	X	
29	T164701	ANGLE	2	-903149	X	X	X	
30	19M7572	CAP SCREW	2	-903149	X	X	X	M10 X 45
31	MT2485	PLUG	2		X	X	X	FASTENER, (SUB FOR T161380)
32	AT13740	DRAIN VALVE	1		X	X	X	
33	24M7238	WASHER	6		X	X	X	

ENGINE SPEED CONTROL LINKAGE
(SERIAL NO. -910055)

T200677 -UN-04JUN04

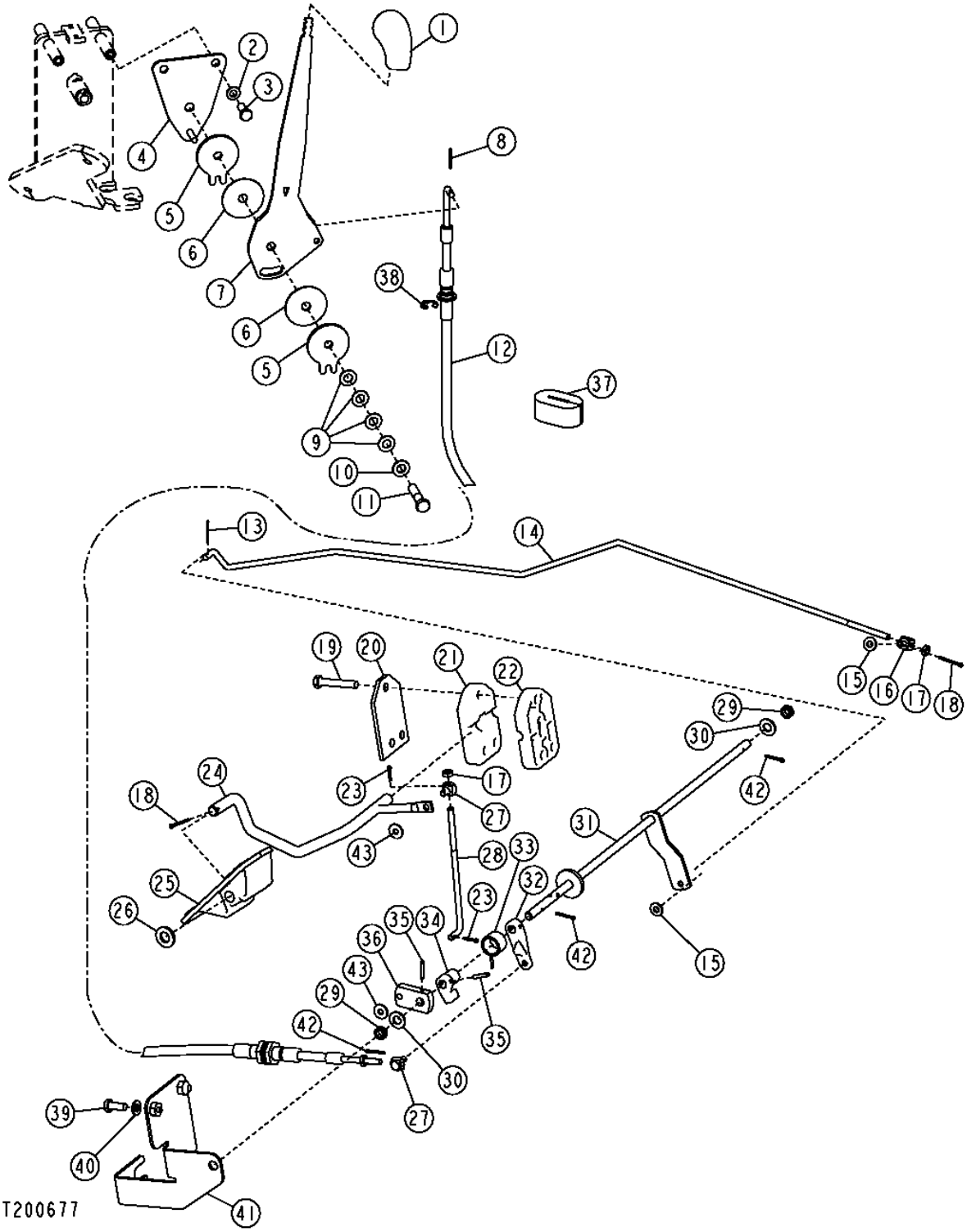

ENGINE SPEED CONTROL LINKAGE
(SERIAL NO. -910055)

KEY	PART NO.	PART NAME	QTY	SERIAL NO.	310G	310SG	315SG	REMARKS
1	M48534	KNOB	1		X	X	X	
2	24M7055	WASHER	2		X	X	X	
3	19M7139	CAP SCREW	2		X	X	X	M8 X 20
4	AT191631	BRACKET	1	-913416	X	X	X	
	AT300768	BRACKET	1	913417-	X	X	X	
5	R33976	PLATE	2		X	X	X	
6	R105812	WASHER	2		X	X	X	
7	T185491	LEVER	1		X	X	X	
8	11M7081	COTTER PIN	1		X	X	X	2.500 X 20 MM, (SUB FOR 11M7099, THIS APPLICATION)
9	12M7117	WASHER	4		X	X	X	
10	24M7028	WASHER	1		X	X	X	
11	R41920	CAP SCREW	1		X	X	X	3/8" X 1-3/4"
12	AT196338	PUSH PULL CABLE	1		X	X	X	(SUB FOR AT185848)
	24H1368	WASHER	2		X	X	X	
13	11M7077	COTTER PIN	1		X	X	X	1.600 X 25 MM
14	T166157	ROD	1		X	X	X	INJECTION PUMP
15	24H1287	WASHER	2		X	X	X	
16	T142748	SWIVEL	1		X	X	X	
17	14H649	NUT	1		X	X	X	1/4"
18	11M7082	COTTER PIN	2		X	X	X	2.500 X 25 MM
19	19M8397	CAP SCREW	3		X	X	X	M8 X 50
20	T129732	PLATE	1		X	X	X	
21	T137321	SUPPORT	1		X	X	X	
22	T137322	SUPPORT	1		X	X	X	
23	11M7009	COTTER PIN	2		X	X	X	2 X 16 MM
24	AT185836	ROD	1		X	X	X	
25	T137318	PEDAL	1		X	X	X	ACCELERATOR
26	24M7240	WASHER	1		X	X	X	
27	T213225	SWIVEL	1		X	X	X	(SUB FOR T35887, THIS APPLICATION)
28	T166174	HOOK BOLT	1		X	X	X	
29	T22241	GROMMET	2		X	X	X	
30	24H1305	WASHER	2		X	X	X	
31	AT185849	LINKAGE	1		X	X	X	
32	T22240	ARM	1		X	X	X	
33	T77165	SPRING	1		X	X	X	
34	T22150	ARM	1		X	X	X	
35	34H264	SPRING PIN	1		X	X	X	5/32" X 7/8"
36	T135342	LEVER	1		X	X	X	
37	T183217	SEAL	1		X	X	X	
38	R26871	SNAP RING	1		X	X	X	
39	19M7881	SCREW	2		X	X	X	M8 X 20
40	24M7238	WASHER	2		X	X	X	
41	AT195550	BRACKET	1		X	X	X	
42	11M7081	COTTER PIN	3		X	X	X	2.500 X 20 MM
43	24M7139	WASHER	2		X	X	X	

ENGINE SPEED CONTROL LINKAGE
SERIAL NO. 910056-)

T200896 -UN-11JUN04

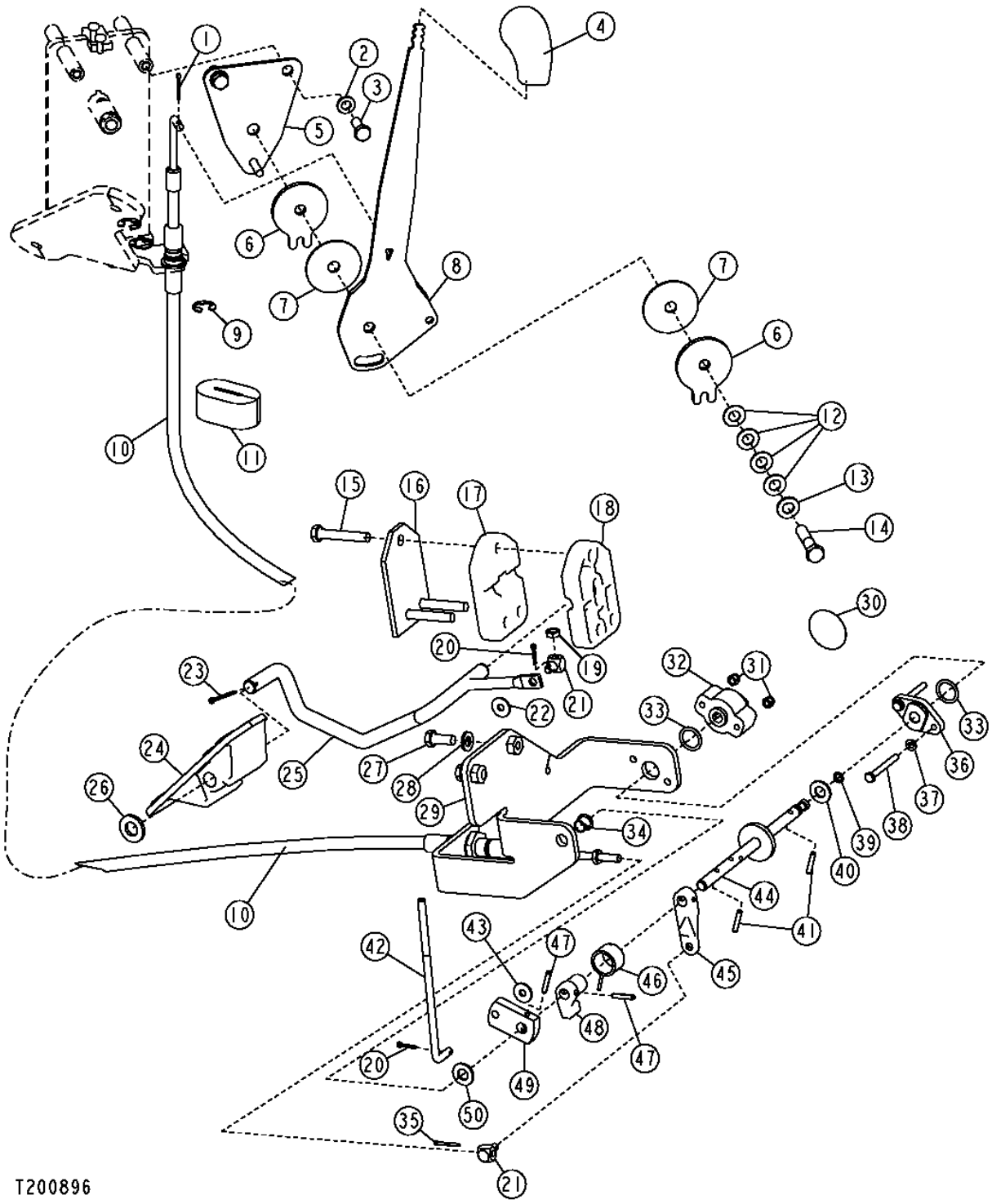

ENGINE SPEED CONTROL LINKAGE
(SERIAL NO. 910056-)

KEY	PART NO.	PART NAME	QTY	SERIAL NO.	310G	310SG	315SG	REMARKS
1	11M7081	COTTER PIN	1		X	X	X	
2	24M7055	WASHER	2		X	X	X	
3	19M7881	SCREW	2		X	X	X	M8 X 20
4	M48534	KNOB	1		X	X	X	
5	AT191631	BRACKET	1		X	X	X	
6	R33976	PLATE	2		X	X	X	
7	R105812	WASHER	2		X	X	X	
8	T185491	LEVER	1		X	X	X	
9	R106466	CLIP	1		X	X	X	
10	AT196338	PUSH PULL CABLE	1		X	X	X	
	24H1368	WASHER	2		X	X	X	
11	T183217	SEAL	1		X	X	X	
12	12M7117	WASHER	4		X	X	X	
13	24M7028	WASHER	1		X	X	X	
14	R41920	CAP SCREW	1		X	X	X	3/8" X 1-3/4"
15	19M8397	CAP SCREW	3		X	X	X	M8 X 50
16	T129732	PLATE	1		X	X	X	
17	T137321	SUPPORT	1		X	X	X	
18	T137322	SUPPORT	1		X	X	X	
19	14H649	NUT	1		X	X	X	1/4"
20	11M7009	COTTER PIN	2		X	X	X	2 X 16 MM
21	T213225	SWIVEL	2		X	X	X	(SUB FOR T35887, THIS APPLICATION)
22	24M7139	WASHER	2		X	X	X	
23	11M7082	COTTER PIN	1		X	X	X	2.500 X 25 MM
24	T137318	PEDAL	1		X	X	X	
25	AT185836	ROD	1		X	X	X	ACCELERATOR
26	24M7240	WASHER	1		X	X	X	
27	19M7881	SCREW	2		X	X	X	M8 X 20
28	24M7238	WASHER	2		X	X	X	
29	AT195421	BRACKET	1		X	X	X	
30	T186793	LABEL	1		X	X	X	GREY CIRCLE
31	14M7360	LOCK NUT	2		X	X	X	M5
32	RE56165	POTENTIOMETER	1		X	X	X	
33	P48347	O-RING	2		X	X	X	
34	T187920	BUSHING	1		X	X	X	
35	11M7081	COTTER PIN	1		X	X	X	2.500 X 20 MM
36	R86457	SUPPORT	1		X	X	X	
37	24M7027	WASHER	2		X	X	X	
38	19M8834	CAP SCREW	2		X	X	X	M5 X 45
39	A4365R	O-RING	1		X	X	X	
40	24H1305	WASHER	1		X	X	X	
41	34H264	SPRING PIN	2		X	X	X	3.962 X 22.225 MM
42	T166174	HOOK BOLT	1		X	X	X	
43	24H1287	WASHER	1		X	X	X	
44	AT192776	SHAFT	1		X	X	X	
45	T22240	ARM	1		X	X	X	
46	T77165	SPRING	1		X	X	X	
47	34H264	SPRING PIN	2		X	X	X	3.962 X 22.225 MM
48	T22150	ARM	1		X	X	X	
49	T135342	LEVER	1		X	X	X	
50	24H1305	WASHER	1		X	X	X	

AIR CLEANER,MOUNTING BRACKETS,ELEMENTS AND RESTRICTION SENSOR

T210807 -UN-09MAY05

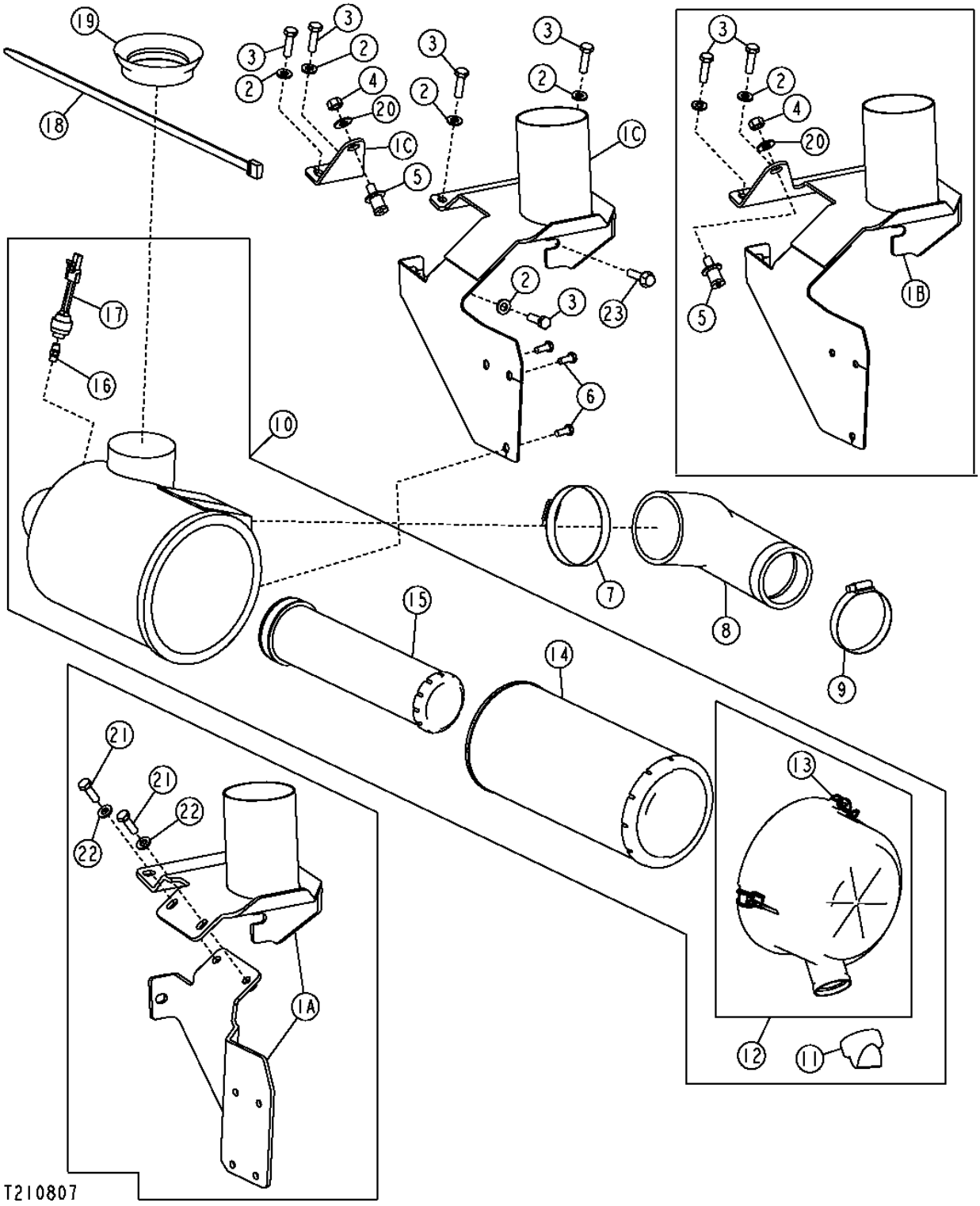

AIR CLEANER,MOUNTING BRACKETS,ELEMENTS AND RESTRICTION SENSOR

KEY	PART NO.	PART NAME	QTY	SERIAL NO.	310G	310SG	315SG	REMARKS
1A	AT184304	SUPPORT	1	-903476	X	X	X	(UPPER)
	AT187812	SUPPORT	1	-903476	X	X	X	(LOWER)
1B	AT196242	SUPPORT	1	903477-948464	X	X	X	
1C	AT322234	SUPPORT	1	948465-	X	X	X	
	T215364	ANGLE	1	948465-	X	X	X	
2	24M7239	WASHER	4		X	X	X	
3	19M7550	CAP SCREW	4		X	X	X	M10 X 35
4	14H1047	NUT	1	903477-	X	X	X	7/16"
5	AR91896	STRIKER	1	903477-	X	X	X	
6	19M7881	SCREW	3		X	X	X	M8 X 20
7	AH104837	HOSE CLAMP	1		X	X	X	(WITH TURBOCHARGER)
	TY22487	HOSE CLAMP	1		X			(WITHOUT TURBOCHARGER) (SUB FOR AR85328)
8	T164034	HOSE	1		X	X	X	(WITH TURB0CHARGER)
	T165423	SUCTION HOSE	1		X			(WITHOUT TURBOCHARGER)
9	T22489	PIN FASTENER	1		X	X	X	(SUB FOR AR85329)
10	AT186281	AIR CLEANER	1		X	X	X	
11	R48568	VALVE	1		X	X	X	
12	AT171855	COVER	1		X	X	X	
13	AT180680	LATCH	3		X	X	X	
14	KV16429	AIR FILTER	1		X	X	X	PRIMARY, (SUB FOR AT171853, THIS APPLICATION)
15	AT171854	AIR FILTER	1		X	X	X	SECONDARY
16	AR44361	FITTING	1		X	X	X	
17	AT178542	AIR RESTRICTION SENSOR	1		X	X	X	
18	N189220	TIE BAND	1		X	X	X	
19	T166091	SEAL	1		X	X	X	
20	T105740	WASHER	1	903477-	X	X	X	
21	19M7662	CAP SCREW	2	-903476	X	X	X	M10 X 30
22	24M7239	WASHER	2	-903476	X	X	X	
23	19M8320	SCREW	1		X	X	X	(SUB FOR 19M7550, THIS APPLICATION)

PRE CLEANER

T197455 -UN-29JAN04

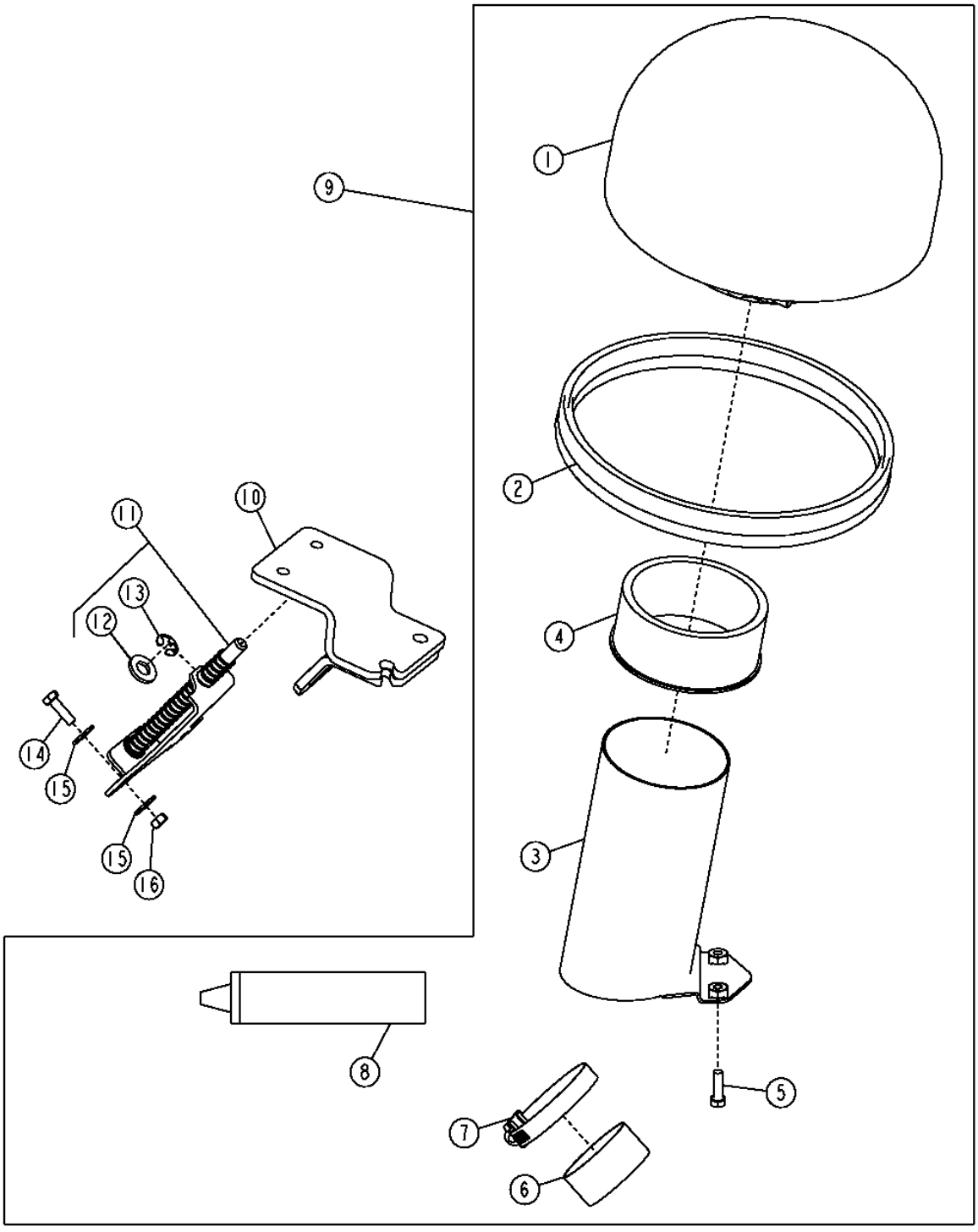

T197455

PRE CLEANER

KEY	PART NO.	PART NAME	QTY	SERIAL NO.	310G	310SG	315SG	REMARKS
1	AT220930	PRECLEANER	1		X	X	X	
2	AH140044	ISOLATOR	1		X	X	X	
3	AT191266	TUBE	1		X	X	X	
4	TY24867	KIT	1		X	X	X	ADAPTER
5	21M7351	SCREW	2		X	X	X	M6 X 20, (SUB FOR (2) 19M7077 AND (2) 24M7239, THIS APPLICATION)
6	T176553	PLUG	1		X	X	X	
7	AR40418	HOSE CLAMP	1		X	X	X	
8	TY24344	LIQUID GASKET	1		X	X	X	
9	**AT189492**	**KIT**	**1**		**X**	**X**	**X**	**PRE CLEANER**
10	.....	BRACKET	1	-903476	X	X	X	(AT192456 NO LONGER AVAILABLE) (ORDER AT189400)
11	AT191153	SPRING	1	-903476	X	X	X	
12	24M7239	WASHER	1	-903476	X	X	X	
13	R72655	SNAP RING	1	-903476	X	X	X	
14	19M7077	CAP SCREW	4	-903476	X	X	X	M6 X 20
15	24M7139	WASHER	4	-903476	X	X	X	6.400 X 18 X 1.600 MM
16	14M7272	NUT	2	-903476	X	X	X	M6

EXHAUST EXTENSION AND MUFFLER
(WITHOUT TURBOCHARGER)
(310G)

T150096 -UN-11JAN02

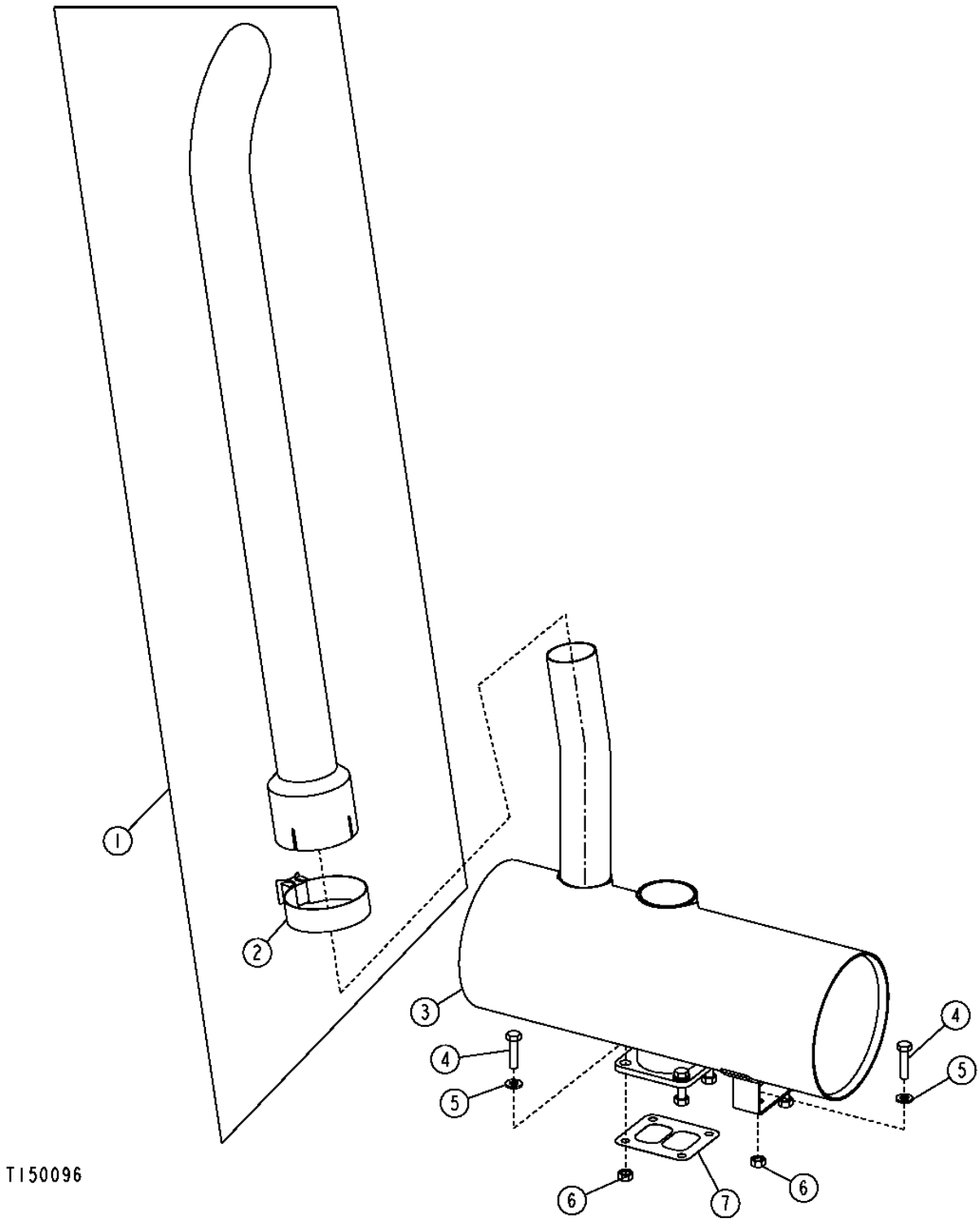

EXHAUST EXTENSION AND MUFFLER
(WITHOUT TURBOCHARGER)
(310G)

KEY	PART NO.	PART NAME	QTY	SERIAL NO.	310G	310SG	315SG	REMARKS
1	AT184716	MUFFLER EXTENSION	1		X			
2	RE52087	CLAMP	1		X			
3	AT195456	MUFFLER	1		X			(SUB FOR AT184853)
	AT185085	MUFFLER	1		X			SPARK ARRESTING
4	19M7550	CAP SCREW	6		X			M10 X 35
5	24M7296	WASHER	AR		X			
	24M7239	WASHER	6		X			
6	14M7274	NUT	6		X			M10
7	R92097	GASKET	1		X			(SUB FOR R123572, THIS APPLICATION)

EXHAUST EXTENSION AND MUFFLER (WITH TURBOCHARGER)

TP58067 -UN-04OCT00

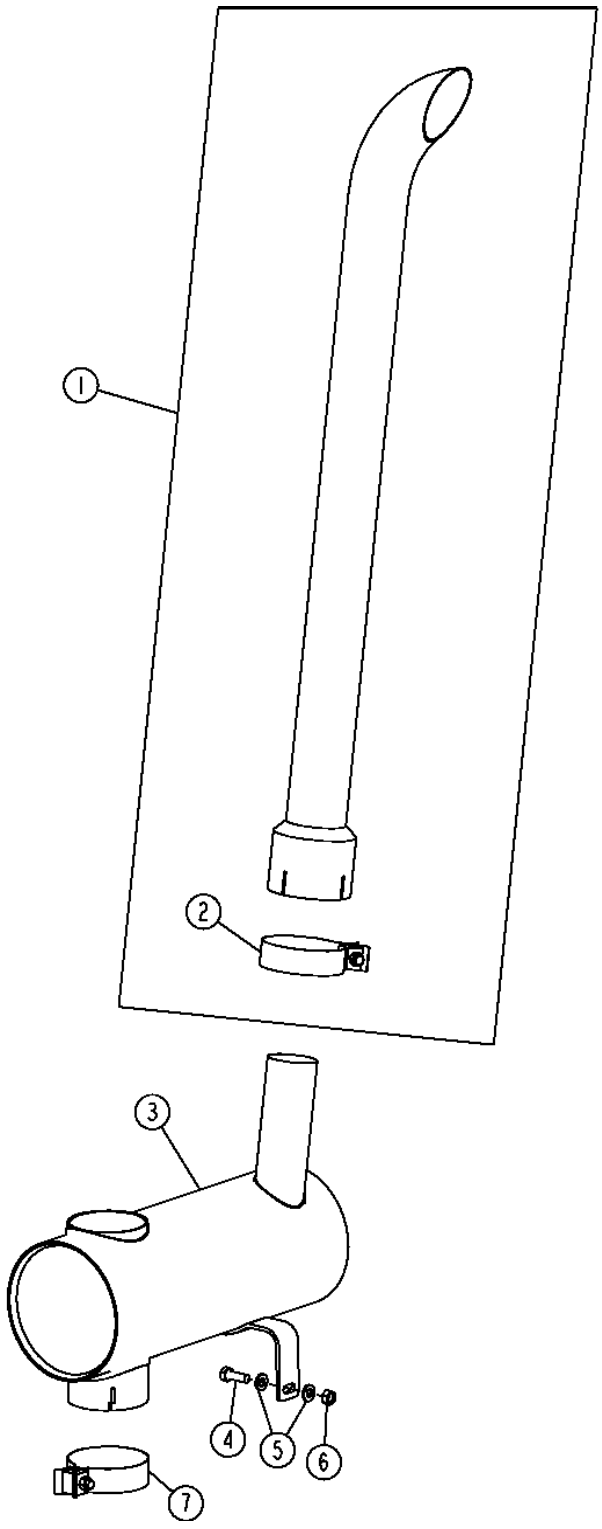

EXHAUST EXTENSION AND MUFFLER (WITH TURBOCHARGER)

KEY	PART NO.	PART NAME	QTY	SERIAL NO.	310G	310SG	315SG	REMARKS
1	AT184716	MUFFLER EXTENSION	1		X	X	X	
	AT184848	MUFFLER EXTENSION	1		X	X	X	CHROME
2	RE52087	CLAMP	1		X	X	X	
3	AT183219	MUFFLER	1		X	X	X	
4	19M7402	CAP SCREW	1		X	X	X	M10 X 25
5	24M7239	WASHER	2		X	X	X	
6	14M7274	NUT	1		X	X	X	M10
7	AT183426	CLAMP	1		X	X	X	

CATALYTIC MUFFLER FIELD KIT
(WITH TURBOCHARGER)

TX1001320 -UN-20DEC05

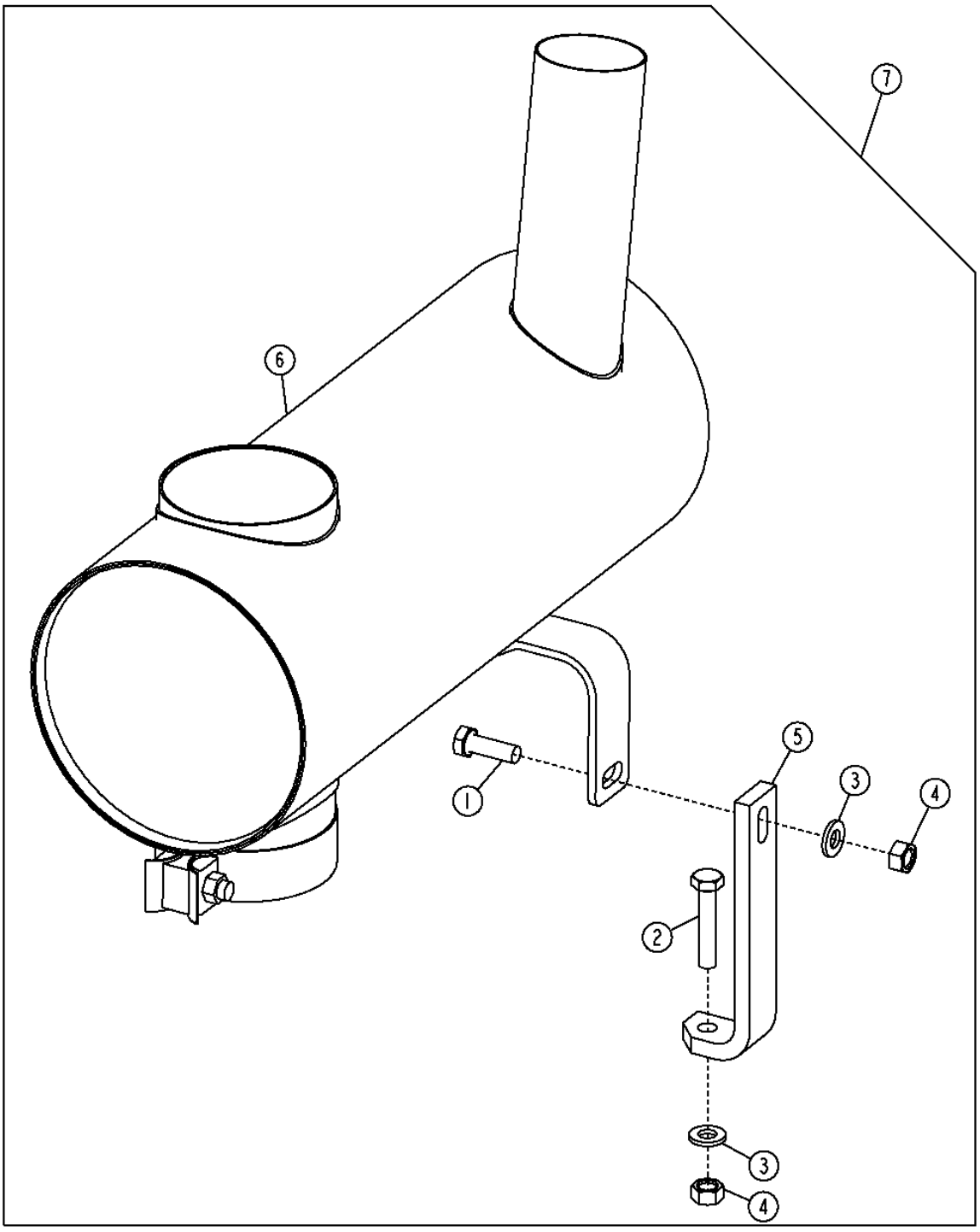

TX1001320

CATALYTIC MUFFLER FIELD KIT
(WITH TURBOCHARGER)

KEY	PART NO.	PART NAME	QTY	SERIAL NO.	310G	310SG	315SG	REMARKS
1	19M7662	CAP SCREW	1		X	X	X	M10 X 30
2	19M8600	CAP SCREW	1		X	X	X	M10 X 50
3	24M7239	WASHER	2		X	X	X	
4	14M7274	NUT	2		X	X	X	M10
5	.....	ANGLE	1		X	X	X	
6	.....	MUFFLER	1		X	X	X	
7	**AT314909**	**MUFFLER KIT**	**1**		**X**	**X**	**X**	**(WHOLE GOODS)**

ENGINE MOUNTS AND ISOLATORS

TP69661 -UN-03OCT00

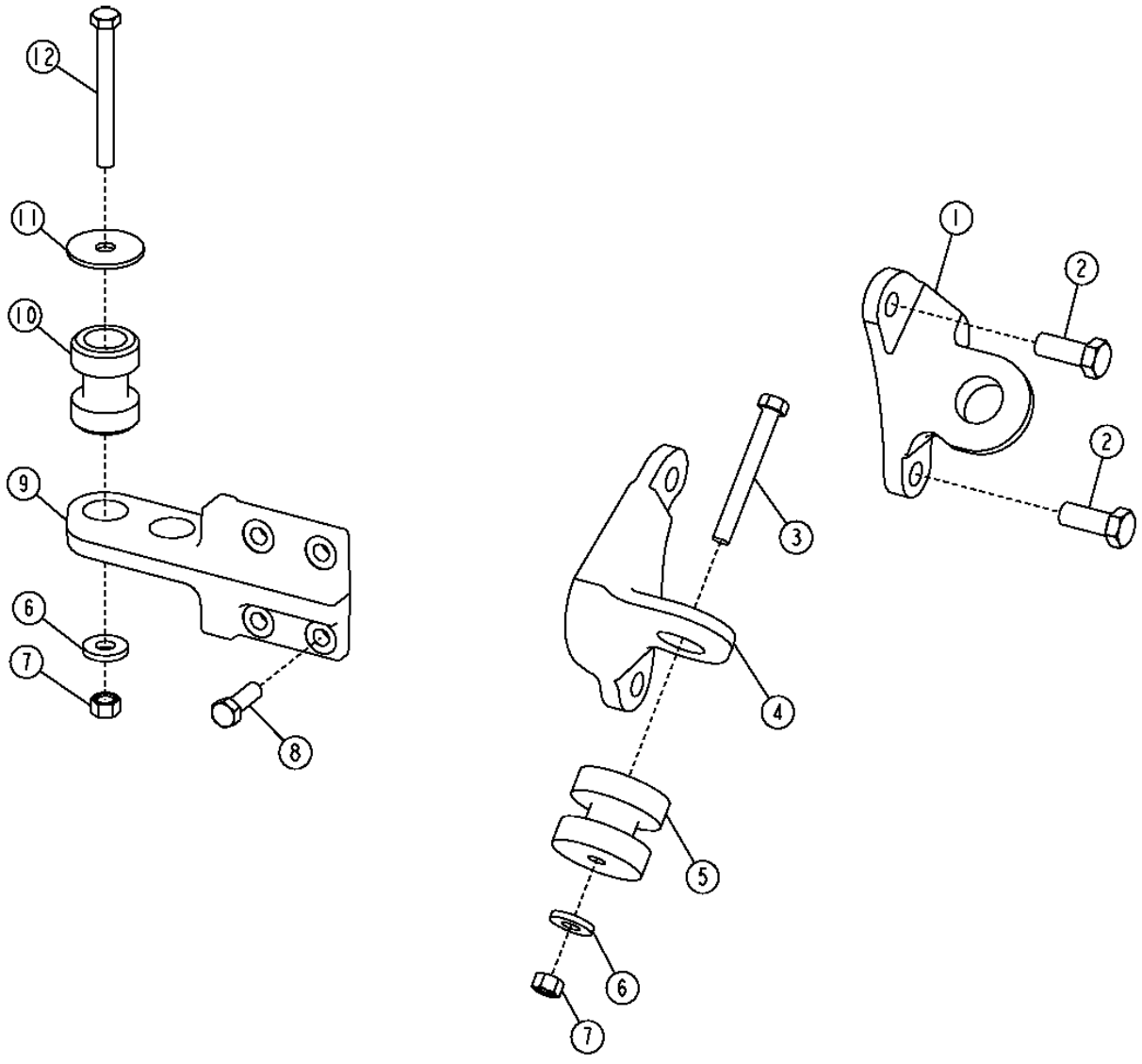

TP69661

ENGINE MOUNTS AND ISOLATORS

KEY	PART NO.	PART NAME	QTY	SERIAL NO.	310G	310SG	315SG	REMARKS
1	T187571	SUPPORT	1		X	X	X	(SUB FOR T170783)
2	19M7488	CAP SCREW	4		X	X	X	M16 X 40
3	19M7949	CAP SCREW	2		X	X	X	M12 X 100
4	T170784	SUPPORT	1		X	X	X	
5	AT173400	ISOLATOR	2		X	X	X	
6	T29342	WASHER	6		X	X	X	
7	14M7275	NUT	6		X	X	X	M12
8	19M7403	CAP SCREW	8		X	X	X	M12 X 35
9	T154449	PLATE	2		X	X	X	
10	AT175374	ISOLATOR	4		X	X	X	
11	T158648	WASHER	4		X	X	X	
12	19M7908	CAP SCREW	4		X	X	X	M12 X 110

FUEL TANK, FUEL HOSES AND FUEL GAUGE SENDER

T208284 -UN-03JUN05

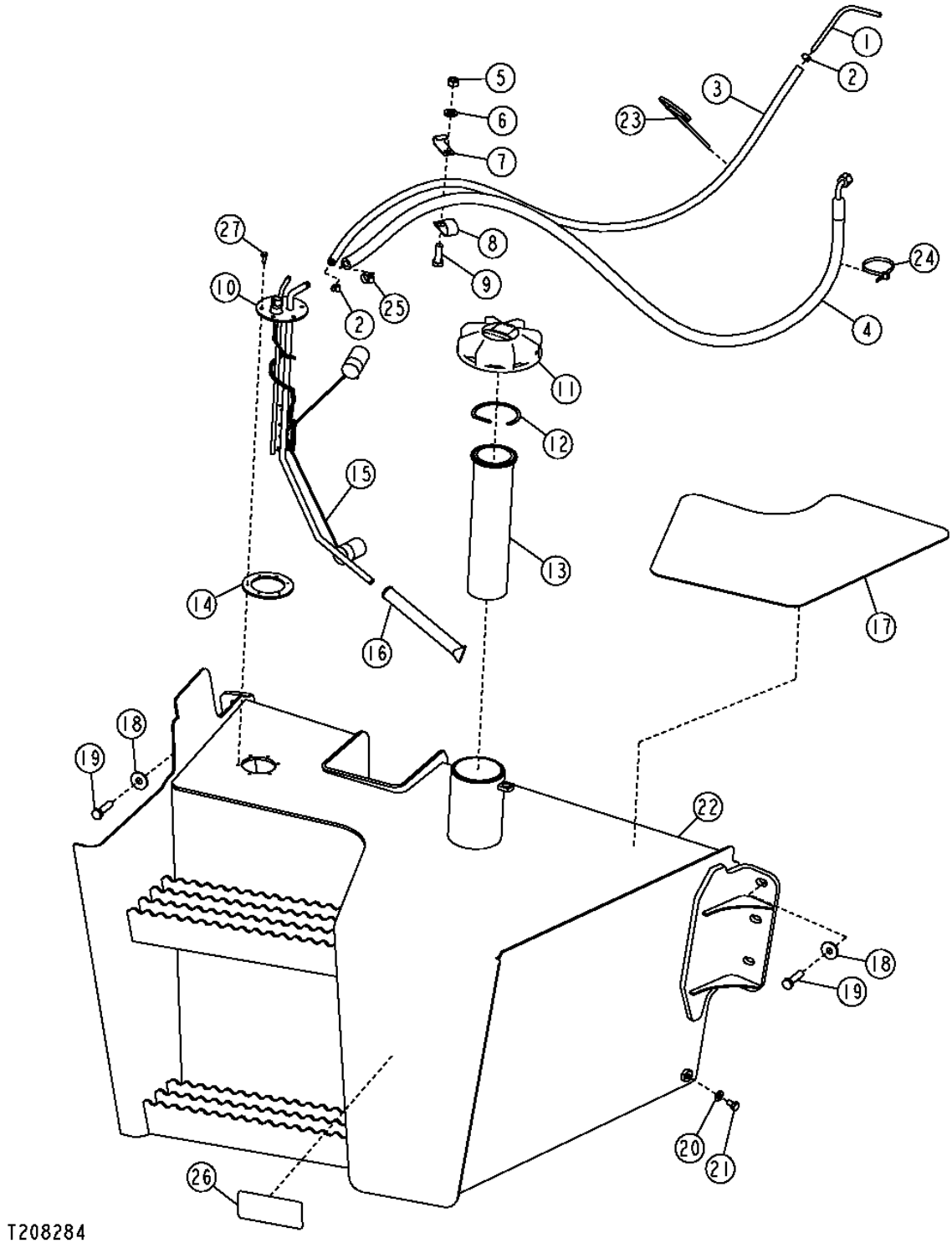

FUEL TANK, FUEL HOSES AND FUEL GAUGE SENDER

KEY	PART NO.	PART NAME	QTY	SERIAL NO.	310G	310SG	315SG	REMARKS
1	T66701	LINE	1		X	X	X	
2	TY22462	CLAMP	2		X	X	X	(SUB FOR AR48236)
3	.....	HOSE	1		X	X	X	(MAKE FROM TY22559, CUT TO 4.25 FEET)
4	AT183881	HOSE	1		X	X	X	
	E87197	PACKING	1		X	X	X	
5	14M7274	NUT	1		X	X	X	M10
6	24M7239	WASHER	1		X	X	X	
7	AH89557	CLIP	1		X	X	X	(SUB FOR T76252, THIS APPLICATION)
8	AH96317	CLIP	1		X	X	X	
9	19M7662	CAP SCREW	1		X	X	X	M10 X 30
10	37H129	SCREW	6		X	X	X	
11	AT156445	FILLER CAP	1		X	X	X	
	T103461	SEALING WASHER	1		X	X	X	
12	T39155	SNAP RING	1		X	X	X	(SERVICE ONLY)
13	AT161638	STRAINER	1		X	X	X	(SERVICE ONLY)
14	T165292	GASKET	1		X	X	X	
15	.....	FUEL SENDER	1	-926900	X	X	X	(AT183874 NO LONGER AVAILABLE) (SUB AT300958) (ALSO ORDER AT304837 AND AT65241)
	AT300958	FUEL SENDER	1	926901-	X	X	X	(ALSO ORDER AT65241)
16	AT65241	STRAINER	1		X	X	X	
	PM37485	ADHESIVE	1		X	X	X	(SUB FOR TY15969)
17	T165295	ANTI-SKID PAD	1		X	X	X	
18	24M7296	WASHER	6		X	X	X	
19	19M8637	CAP SCREW	6		X	X	X	M10 X 40
20	R463R	WASHER	1		X	X	X	
21	19H2020	CAP SCREW	1		X	X	X	5/16" X 1/2"
22	AT317805	FUEL TANK	1		X	X	X	(SUB FOR AT183389, AT195076 AND AT305426) (ALSO ORDER T165295 AND T165292)
23	H77698	TIE BAND	1		X	X	X	
24	R44302	TIE BAND	2		X	X	X	
25	AR77962	HOSE CLAMP	1		X	X	X	
26	JD5933	REFLECTOR	1		X	X	X	

FUEL COOLER
(SERIAL NO. 910059-910319)

T158034 -UN-05SEP02

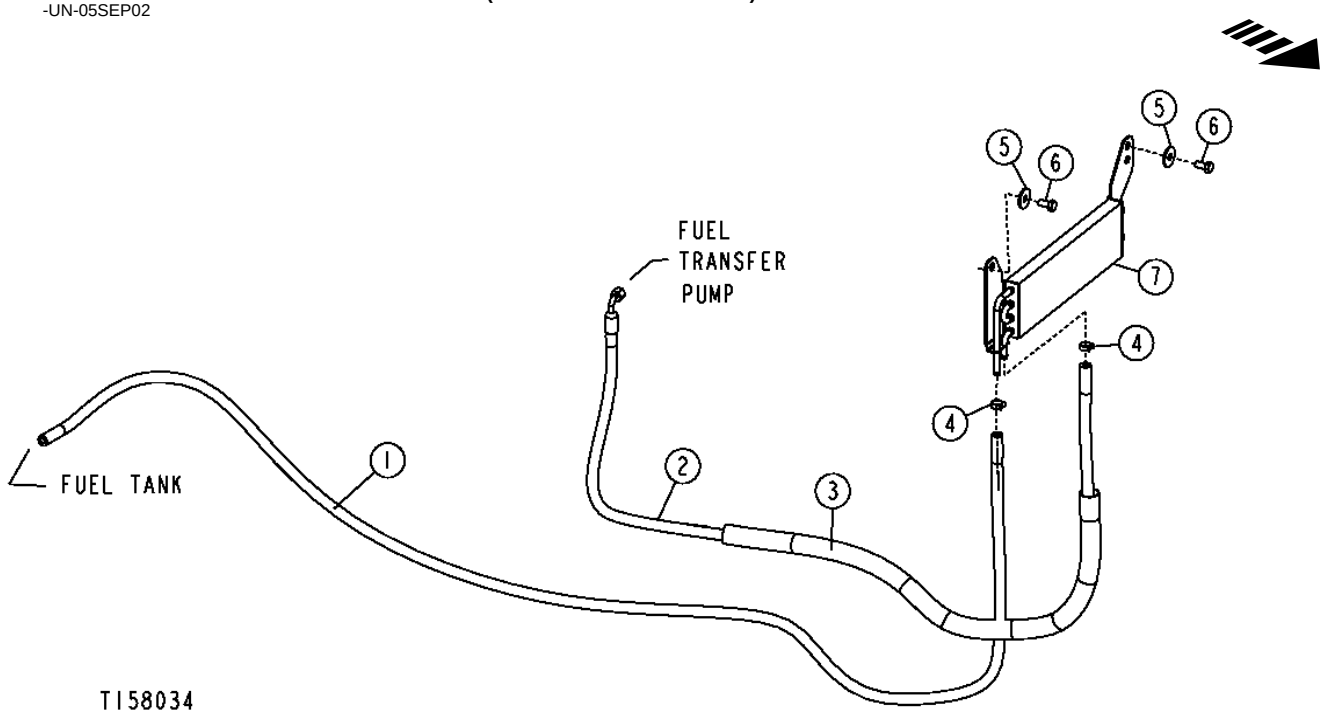

KEY	PART NO.	PART NAME	QTY	ENGINE SERIAL NO.	310G	315SG	REMARKS
1	.....	BULK HOSE	1		X	X	(MAKE FROM M87571 CUT TO 8.4 FEET)
2	AT280234	HOSE	1		X	X	
3	T185089	SLEEVE	1		X	X	
4	R97021	CLAMP	2		X	X	
5	24M7239	WASHER	2		X	X	(SUB FOR 24M7101, THIS APPLICATION)
6	19M7938	CAP SCREW	2		X	X	M10 X 20
7	AT199908	CORE	1		X	X	FUEL COOLER
	T165742	ISOLATOR	2		X	X	

MEMORANDA

STEERING WHEEL AND COLUMN

T146670 -UN-15OCT01

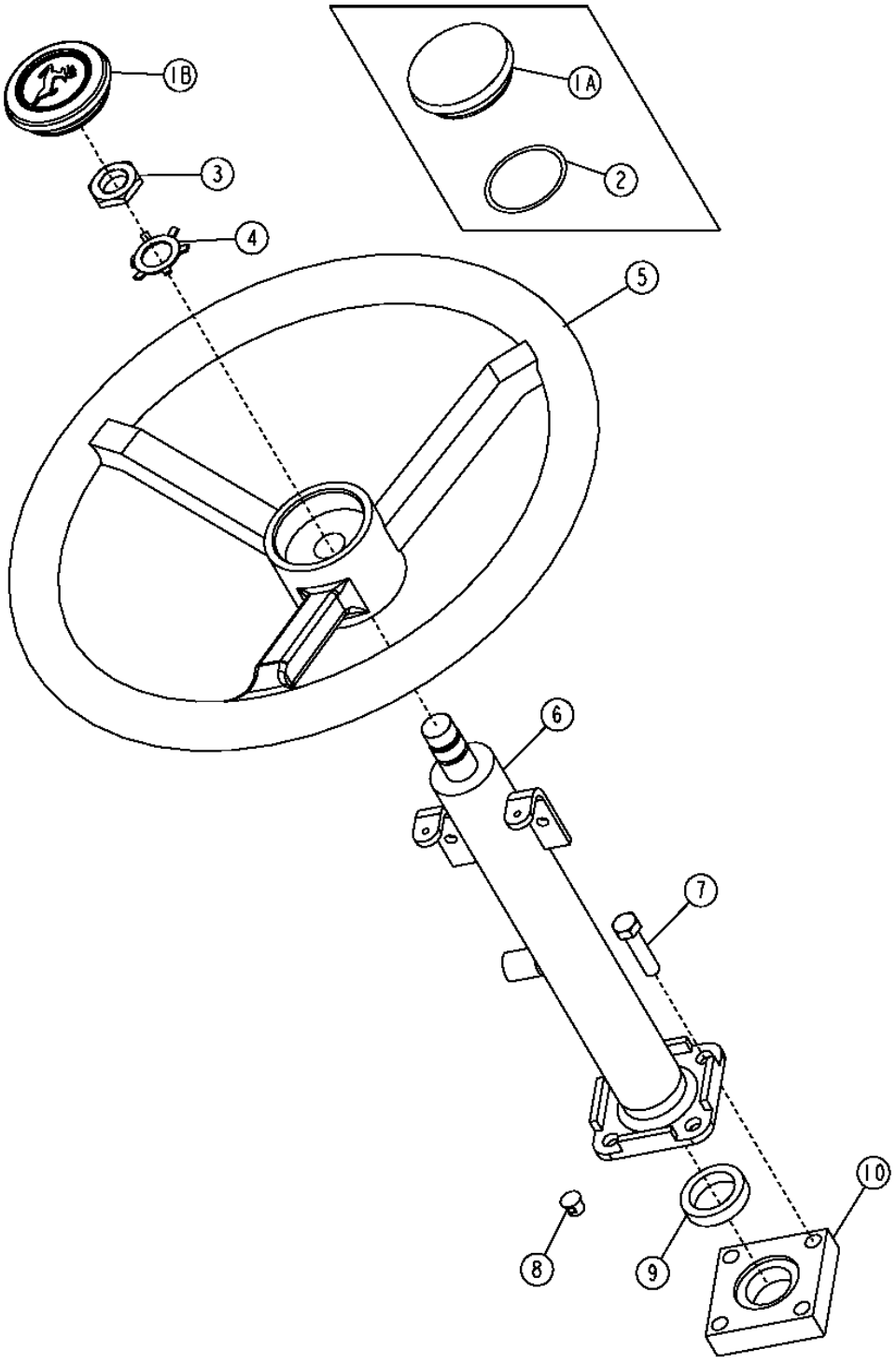

STEERING WHEEL AND COLUMN

KEY	PART NO.	PART NAME	QTY	SERIAL NO.	310G	310SG	315SG	REMARKS
1	AL155227	COVER	1		X	X	X	(SUB FOR AL118173 OR R47998)
2	P50631	O-RING	1	-902607	X	X	X	
3	T13630	NUT	1		X	X	X	
4	T17148	LOCK WASHER	1		X	X	X	
5	AT139694	STEERING WHEEL	1		X	X	X	
6	AT184728	STEERING COLUMN	1	-926969	X	X	X	
	AT307345	STEERING COLUMN	1	926970-	X	X	X	
7	19H2633	CAP SCREW	4	-911132	X	X	X	3/8" X 1-1/2"
	19M8637	CAP SCREW	4	911133-926969	X	X	X	M10 X 40
	19M7938	CAP SCREW	4	916970-	X	X	X	M10 X 20
8	H113924	PLUG	8		X	X	X	
9	T167416	WASHER	1	-926969	X	X	X	
10	T167319	ADAPTER FITTING	1	-926969	X	X	X	

STEERING WHEEL, AND TILT COLUMN

T146674 -UN-24OCT01

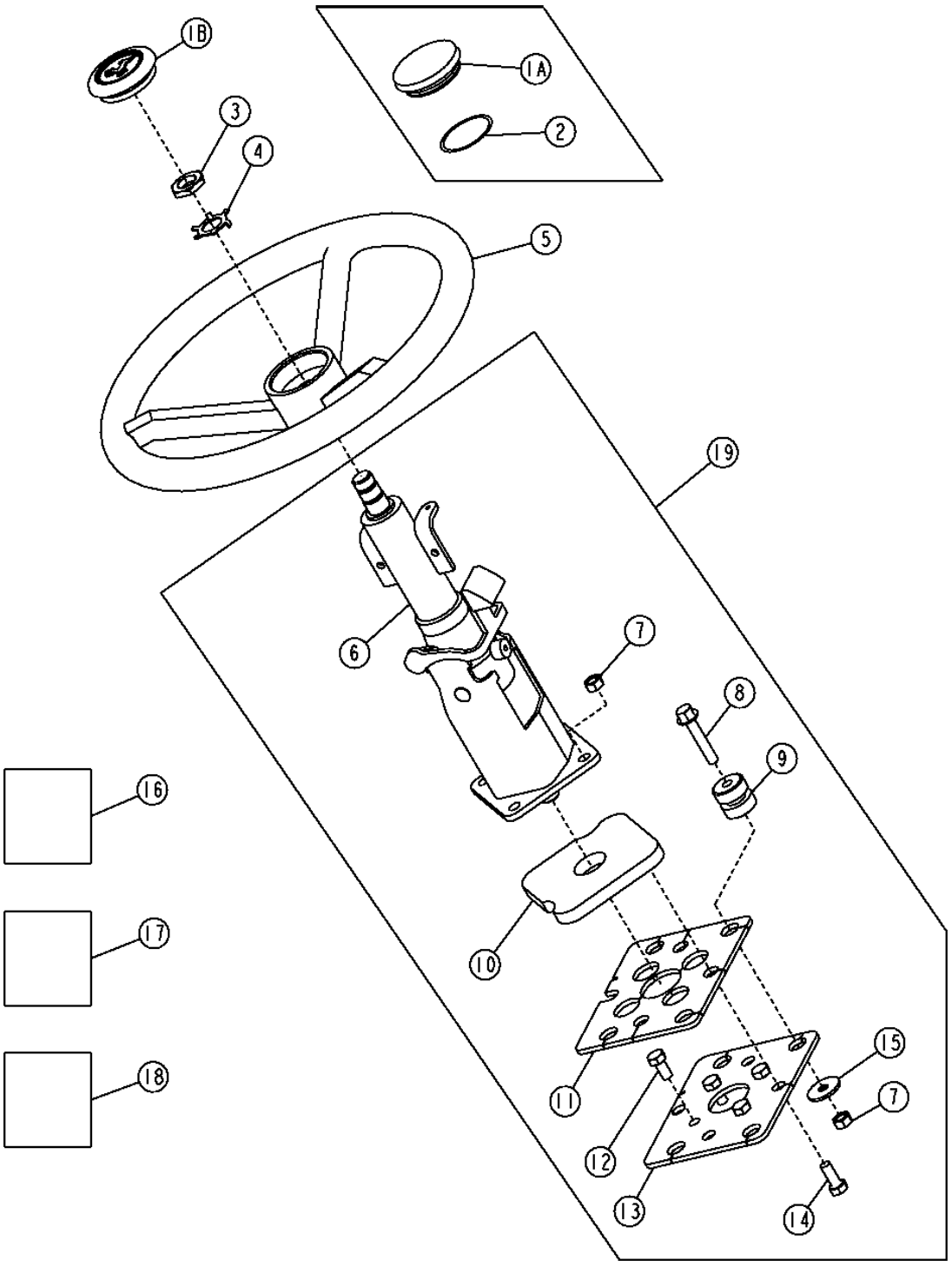

STEERING WHEEL, AND TILT COLUMN

KEY	PART NO.	PART NAME	QTY	SERIAL NO.	310G	310SG	315SG	REMARKS
1	AL155227	COVER	1		X	X	X	(SUB FOR AL118173 OR R47998)
2	P50631	O-RING	1	-902607	X	X	X	
3	T13630	NUT	1		X	X	X	
4	T17148	LOCK WASHER	1		X	X	X	
5	AT139694	STEERING WHEEL	1		X	X	X	
6	AT184397	STEERING COLUMN	1		X	X	X	
7	14M7274	NUT	8		X	X	X	M10
8	19M8528	SCREW	4		X	X	X	M10 X 55
9	AT219940	ISOLATOR	4		X	X	X	
10	T165533	GASKET	1		X	X	X	
11	T165188	PLATE	1		X	X	X	
12	19H1648	CAP SCREW	4	-911132	X	X	X	3/8" X 3/4"
	19M7938	CAP SCREW	4	911133-	X	X	X	M10 X 20
13	T165256	PLATE	1		X	X	X	
14	19M7402	CAP SCREW	4		X	X	X	M10 X 25
15	24M7101	WASHER	4		X	X	X	11 X 34 X 3 MM, (SUB FOR 24H1312, THIS APPLICATION)
16	AT192278	KIT	1		X	X	X	COLUMN TILT UP SPRING KIT
17	AT192279	KIT	1		X	X	X	LEVER RETURN SPRING KIT
18	AT192280	KIT	1		X	X	X	KNOB KIT
19	AT195686	KIT	1		X	X	X	(WHOLE GOODS) TILT STEERING

POWER STEERING VALVE SEAL REPAIR KIT
(SERIAL NO. -911131)

TP52855 -UN-16NOV96

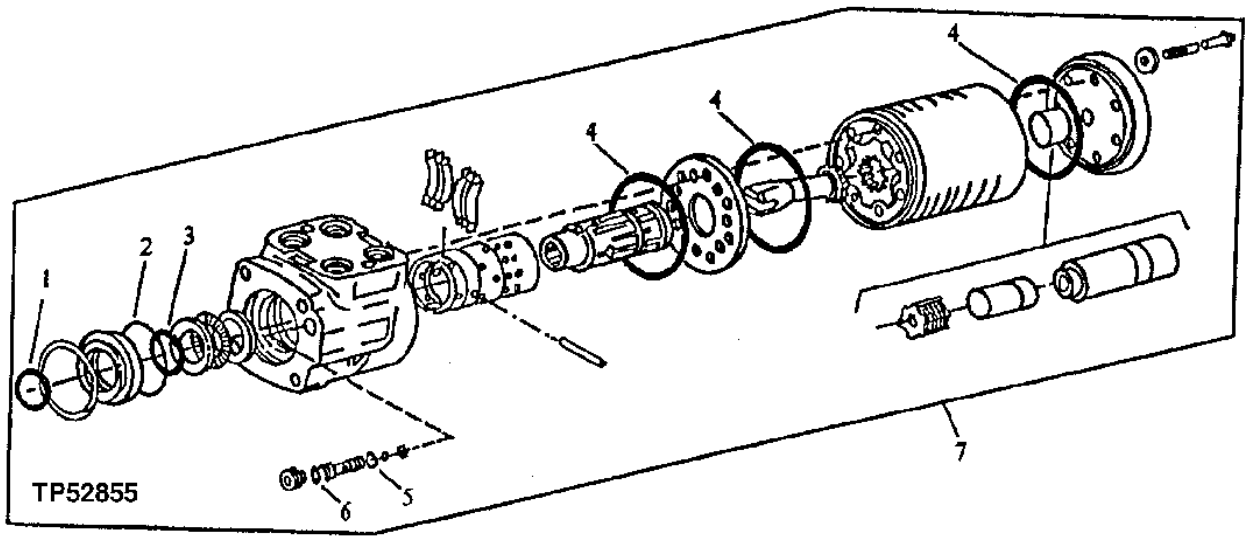

KEY	PART NO.	PART NAME	QTY	SERIAL NO.	310G	310SG	315SG	REMARKS
1	C15104	SEAL	1		X	X	X	
2	B3690R	O-RING	1		X	X	X	
3	C15107	O-RING	1		X	X	X	
4	T152288	O-RING	3		X	X	X	
5	R10093	O-RING	1		X	X	X	
6	A3917R	O-RING	1		X	X	X	
7	AT168632	SEAL KIT	1		X	X	X	

MEMORANDA

STEERING HYDRAULICS
(WITH MECHANICAL FRONT WHEEL DRIVE)

T214095 -UN-08SEP05

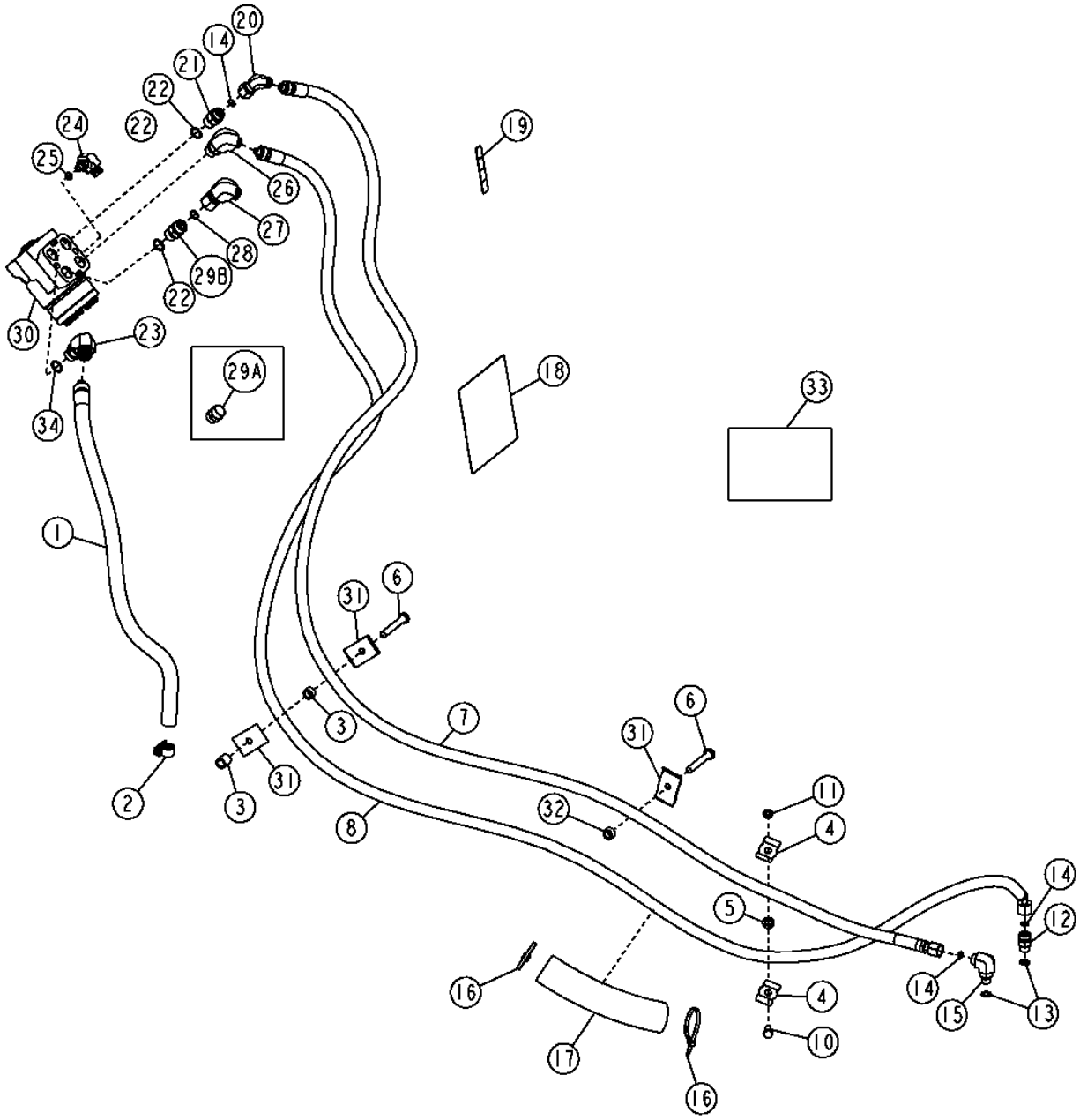

STEERING HYDRAULICS
(WITH MECHANICAL FRONT WHEEL DRIVE)

KEY	PART NO.	PART NAME	QTY	SERIAL NO.	310G	310SG	315SG	REMARKS
1	AT184900	HYDRAULIC HOSE - FABRICATE	1		X	X	X	(ALSO ORDER 62H1043 AND T77857)
	62H1043	ADAPTER FITTING	1		X	X	X	STC
2	TY22464	CLAMP	1		X	X	X	(SUB FOR AR21836)
3	28H3383	BUSHING	1	-952043	X	X	X	
	28H3421	SPACER	2	952044-	X	X	X	
4	R27491	CLAMP	2		X	X	X	
5	24M7106	WASHER	1		X	X	X	
6	19M8412	SCREW	2	-906604	X	X	X	(SUB FOR T184328)
	19M7742	CAP SCREW	2	906605-952043	X	X	X	
	19M8600	CAP SCREW	2	952044-	X	X	X	
7	AT184907	HYDRAULIC HOSE - FABRICATE	1		X	X	X	(ALSO ORDER 62H1042 AND T77613)
	62H1042	ADAPTER FITTING	1		X	X	X	STC
8	AT184908	HYDRAULIC HOSE - FABRICATE	1		X	X	X	(ALSO ORDER 62H1042 AND T77613)
	62H1042	ADAPTER FITTING	1		X	X	X	STC
9	28H3394	BUSHING	1	-952043	X	X	X	
10	19M7881	SCREW	1		X	X	X	M8 X 20
11	14M7273	NUT	1		X	X	X	M8
12	38H1160	ADAPTER FITTING	1		X	X	X	
13	R26448	O-RING	2		X	X	X	
14	T77613	O-RING	2		X	X	X	
15	38H1004	ELBOW FITTING	1		X	X	X	
16	R44302	TIE BAND	2		X	X	X	
17	.....	SLEEVE	1		X	X	X	MAKE FROM T78606 (CUT TO 254MM)
18	T184319	LABEL	1	-911132	X	X	X	HOSE
	T191425	LABEL	1	911133-	X	X	X	
19	T184320	LABEL	1		X	X	X	HOSE
20	AT195201	ELBOW FITTING	1		X	X	X	(SUB FOR AT188009)
21	38H1171	ADAPTER FITTING	1		X	X	X	
22	R26375	O-RING	4		X	X	X	
23	AT187668	ELBOW FITTING	1	-911132	X	X	X	
	38H1005	ELBOW FITTING	1	911133-	X	X	X	
24	AT188010	ELBOW FITTING	1		X	X	X	
25	R28782	O-RING	1		X	X	X	
26	AT195202	ELBOW FITTING	1		X	X	X	(SUB FOR AT188011)
27	AT195203	ELBOW FITTING	1		X	X	X	(SUB FOR AT188182)
28	T77857	O-RING	1	-911132	X	X	X	
29A	AT141527	CHECK VALVE	1	-911132	X	X	X	(CHECK VALVE)
29B	38H1161	ADAPTER FITTING	1	911133-	X	X	X	
30	AT318271	MANUAL HYDRAULIC VALVE	1	-911132	X	X	X	(SUB FOR AT173411)
	AT318271	MANUAL HYDRAULIC VALVE	1	911133-	X	X	X	(SUB FOR AT198089 AND AT307738)
	AT316249	SEAL KIT	1	911133-	X	X	X	(SUB FOR AT198090)
31	R27491	CLAMP	4	-906604	X	X	X	
	R46919	HALF CLAMP	3	906605-	X	X	X	
32	24M7106	WASHER	2	-906604	X	X	X	
	28H3412	WASHER	2	906605-952043	X	X	X	
	T166773	WASHER	1	952044-	X	X	X	
33	AT193365	KIT	1		X	X	X	STC REPAIR (-06)
	AT193366	HYDRAULIC PUMP REPAIR KIT	1		X	X	X	STC REPAIR (-08)
34	R26375	O-RING	1	-911132	X	X	X	
	T77857	O-RING	1	911133-	X	X	X	

STEERING HYDRAULICS
(WITHOUT MECHANICAL FRONT WHEEL DRIVE)

T214094 -UN-08SEP05

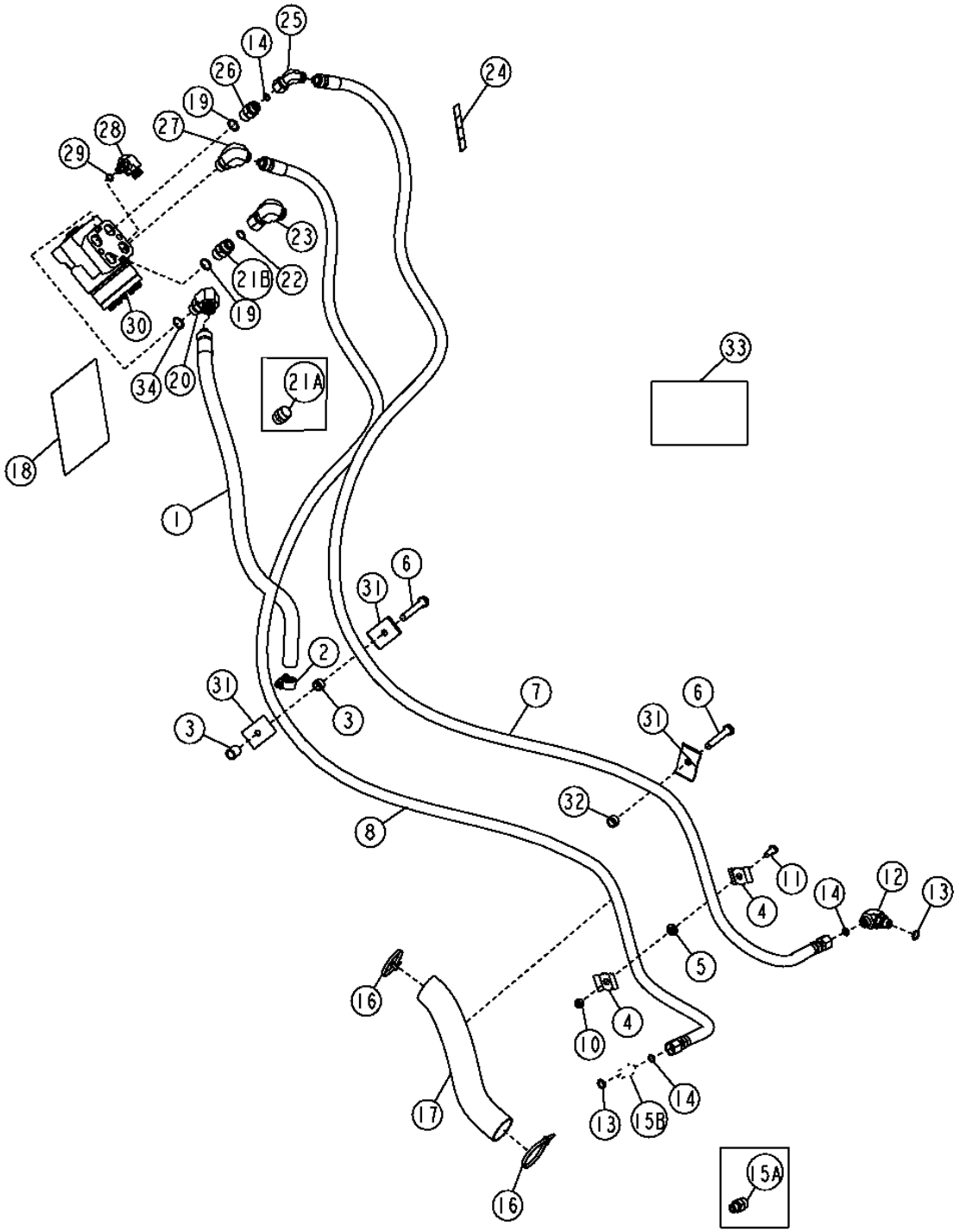

STEERING HYDRAULICS
(WITHOUT MECHANICAL FRONT WHEEL DRIVE)

KEY	PART NO.	PART NAME	QTY	SERIAL NO.	310G	310SG	315SG	REMARKS
1	AT184900	HYDRAULIC HOSE - FABRICATE	1		X	X	X	(ALSO ORDER 62H1043 AND T77857)
	62H1043	ADAPTER FITTING	1		X	X	X	STC
2	TY22464	CLAMP	1		X	X	X	(SUB FOR AR21836)
3	28H3383	BUSHING	1	-911132	X	X	X	
	28H3394	BUSHING	1	911133-952043	X	X	X	
	28H3421	SPACER	1	952044-	X	X	X	
4	R27491	CLAMP	2	-911132	X	X	X	NOT REQUIRED
5	24M7106	WASHER	1	-911132	X	X	X	NOT REQUIRED
6	19M8412	SCREW	2	-906604	X	X	X	(SUB FOR T184328)
	19M7742	CAP SCREW	2	906605-952043	X	X	X	
	19M8600	CAP SCREW	2	952044-	X	X	X	
7	AT184903	HYDRAULIC HOSE - FABRICATE	1	-911132	X	X	X	(ALSO ORDER 62H1042 AND T77613)
	AT197852	HYDRAULIC HOSE - FABRICATE	1	911133-	X	X	X	9/16" X 2 540 MM (100") X 9/16", (ALSO ORDER 62H1042 AND T77613)
	62H1042	ADAPTER FITTING	1		X	X	X	STC
8	AT184902	HYDRAULIC HOSE - FABRICATE	1		X	X	X	(ALSO ORDER 62H1042 AND T77613)
	62H1042	ADAPTER FITTING	1		X	X	X	STC
9	28H3394	BUSHING	1	-952043	X	X	X	
10	14M7273	NUT	1	-911132	X	X	X	NOT REQUIRED
11	19M7881	SCREW	1	-911132	X	X	X	NOT REQUIRED
12	38H1004	ELBOW FITTING	1		X	X	X	
13	R26448	O-RING	2		X	X	X	
14	T77613	O-RING	3		X	X	X	
15A	38H1160	ADAPTER FITTING	1	-911132	X	X	X	
15B	38H1004	ELBOW FITTING	AR	911133-	X	X	X	3/8"
	38H1010	ELBOW FITTING	AR	911133-	X	X	X	1/2"
16	R44302	TIE BAND	2		X	X	X	
17	.....	SLEEVE	1		X	X	X	(MAKE FROM T78606, CUT TO 254 MM)
18	T184319	LABEL	1	-911132	X	X	X	HOSE
	T191425	LABEL	1	911133-	X	X	X	
19	R26375	O-RING	4		X	X	X	
20	AT187668	ELBOW FITTING	1	-911132	X	X	X	
	38H1005	ELBOW FITTING	1	911133-	X	X	X	
21A	AT141527	CHECK VALVE	1	-911132	X	X	X	(CHECK VALVE)
21B	38H1161	ADAPTER FITTING	1	911133-	X	X	X	
22	T77857	O-RING	1		X	X	X	
23	AT195203	ELBOW FITTING	1		X	X	X	(SUB FOR AT188182)
24	T184320	LABEL	1		X	X	X	HOSE
25	AT195201	ELBOW FITTING	1		X	X	X	(SUB FOR AT188009)
26	38H1171	ADAPTER FITTING	1		X	X	X	
27	AT195202	ELBOW FITTING	1		X	X	X	(SUB FOR AT188011)
28	AT188010	ELBOW FITTING	1		X	X	X	
29	R28782	O-RING	1		X	X	X	
30	AT318271	MANUAL HYDRAULIC VALVE	1	-911132	X	X	X	(SUB FOR AT173411)
	AT318271	MANUAL HYDRAULIC VALVE	1	911133-	X	X	X	(SUB FOR AT198089 AND AT307738)
	AT316249	SEAL KIT	1	911133-	X	X	X	(SUB FOR AT198090)
31	R27491	CLAMP	4	-906604	X	X	X	
	R46919	HALF CLAMP	3	906605-	X	X	X	
32	24M7106	WASHER	2	-906604	X	X	X	
	28H3412	WASHER	2	906605-952043	X	X	X	
	T166773	WASHER	1	952044-	X	X	X	
33	AT193365	KIT	1		X	X	X	STC REPAIR (-06)
	AT193366	HYDRAULIC PUMP REPAIR KIT	1		X	X	X	STC REPAIR (-08)
34	R26375	O-RING	1	-911132	X	X	X	
	T77857	O-RING	1	911133-	X	X	X	

STEERING CYLINDER
(MECHANICAL FRONT WHEEL DRIVE)

T200302 -UN-26MAY04

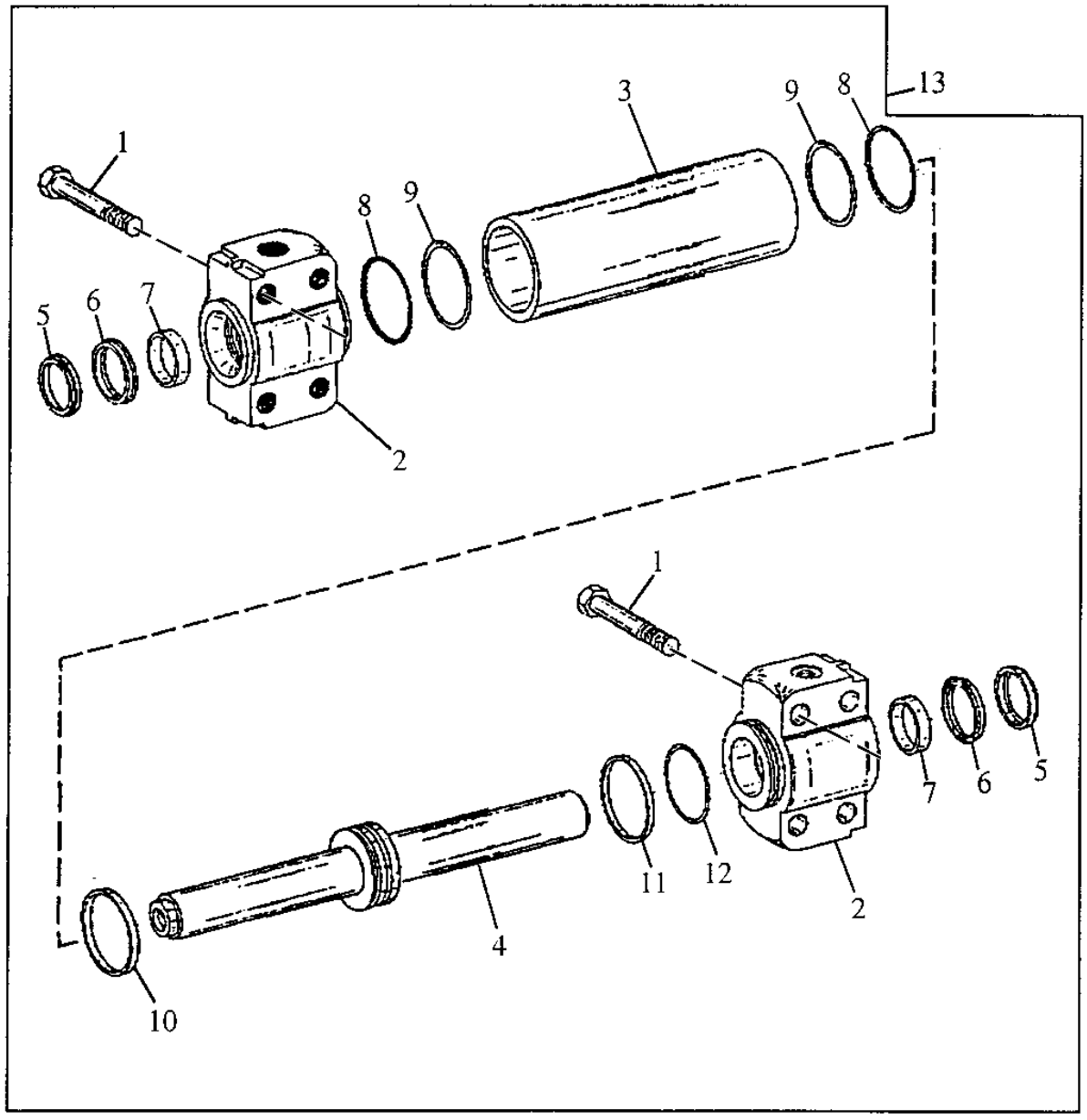

14	5,6,7,8,9,10,11,12

T200302

STEERING CYLINDER
(MECHANICAL FRONT WHEEL DRIVE)

KEY	PART NO.	PART NAME	QTY	AXLE SERIAL NO.	310G	310SG	315SG	REMARKS
1	19M8632	CAP SCREW	8		X	X	X	M16 X 75
2	T153723	HYDRAULIC CYLINDER CAP	2	-394241	X			
	.....	HYDRAULIC CYLINDER CAP	2	394242-	X			(T213799 NO LONGER AVAILABLE) (ORDER AT195570)
	T153723	HYDRAULIC CYLINDER CAP	2	-416701		X	X	
	.....	HYDRAULIC CYLINDER CAP	2	416702-		X	X	(T213799 NO LONGER AVAILABLE) (ORDER AT195570)
3	T153742	HYDRAULIC CYLINDER BARREL	1	-394241	X			
	T213800	HYDRAULIC CYLINDER BARREL	1	394242-	X			
	T153742	HYDRAULIC CYLINDER BARREL	1	-416701		X	X	
	T213800	HYDRAULIC CYLINDER BARREL	1	416702-		X	X	
4	AT195573	ROD	1	-394241	X			(SUB FOR T153743)
	.....	ROD	1	394242-	X			(AT318551 NO LONGER AVAILABLE) (ORDER AT195570)
	AT195573	ROD	1	-416701		X	X	(SUB FOR T153743)
	.....	ROD	1	416702-		X	X	(AT318551 NO LONGER AVAILABLE) (ORDER AT195570)
5	.....	SEAL	2		X	X	X	(A)
6	.....	SEAL	2		X	X	X	(A)
7	.....	GUIDE	2		X	X	X	(A)
8	.....	O-RING	2		X	X	X	(A)
9	.....	RING	2		X	X	X	(A)
10	.....	SEAL	1		X	X	X	(A)
11	.....	GUIDE	1		X	X	X	(A)
12	.....	O-RING	1		X	X	X	(A)
13	AT195570	CYLINDER	1		X	X	X	(SUB FOR AT167332)
14	T153744	HYDRAULIC CYLINDER KIT	1	-394241	X			INCLUDES ALL (A) PARTS (STEERING CYLINDER)
	T213801	HYDRAULIC CYLINDER KIT	1	394242-	X			INCLUDES ALL (A) PARTS (STEERING CYLINDER)
	T153744	HYDRAULIC CYLINDER KIT	1	-416701		X	X	INCLUDES ALL (A) PARTS (STEERING CYLINDER)
	T213801	HYDRAULIC CYLINDER KIT	1	416702-		X	X	INCLUDES ALL (A) PARTS (STEERING CYLINDER)

POWER STEERING CYLINDER
(WITHOUT MECHANICAL FRONT WHEEL DRIVE)
(SERIAL NO. -911131)

TP62410 -UN-15MAY00

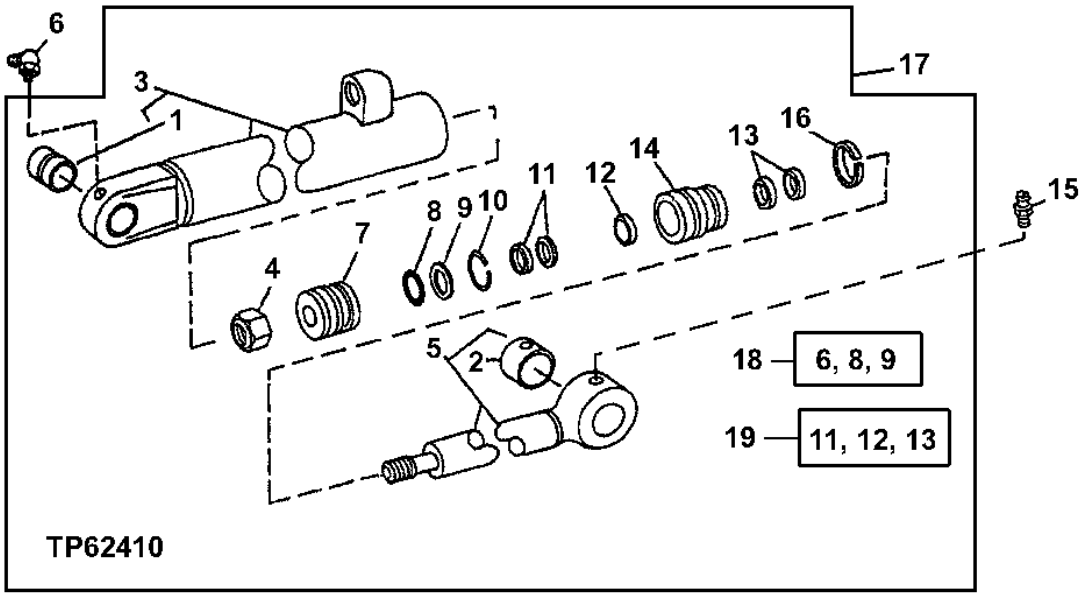

KEY	PART NO.	PART NAME	QTY	SERIAL NO.	310G	310SG	315SG	REMARKS
1	R81854	BUSHING	1		X	X	X	
2	R72700	BUSHING	1		X	X	X	
3	RE22413	HYDRAULIC CYLINDER BARREL	1		X	X	X	
4	H170534	NUT	1		X	X	X	
5	RE22415	HYDRAULIC CYLINDER ROD	1		X	X	X	
6	JD7838	ADAPTER FITTING	1		X	X	X	
7	AH138200	PISTON	1		X	X	X	WITH WEAR RINGS AND SEALS
8	H158942	O-RING	1		X	X	X	
9	R79117	WASHER	1		X	X	X	
10	R82571	SNAP RING	1		X	X	X	
11	AH151381	SEAL	1		X	X	X	
12	H158676	SEAL	1		X	X	X	
13	AH151380	SEAL	1		X	X	X	
14	H157662	HYDR. CYLINDER ROD GUIDE	1		X	X	X	
15	T162396	LUBRICATION FITTING	1		X	X	X	(ROD END)
16	R90565	SNAP RING	1		X	X	X	
17	.....	HYDRAULIC CYLINDER	1		X	X	X	(AH154780 NO LONGER AVAILABLE) (SUB AH216821)
18	AH167552	HYDRAULIC CYLINDER KIT	1		X	X	X	CYLINDER BORE REPAIR KIT
19	AH149810	HYDRAULIC CYLINDER KIT	1		X	X	X	CYLINDER ROD REPAIR KIT

MEMORANDA

POWER STEERING CYLINDER
(WITHOUT MECHANICAL FRONT WHEEL DRIVE)
(SERIAL NO. -911131)

T212092 -UN-14JUL05

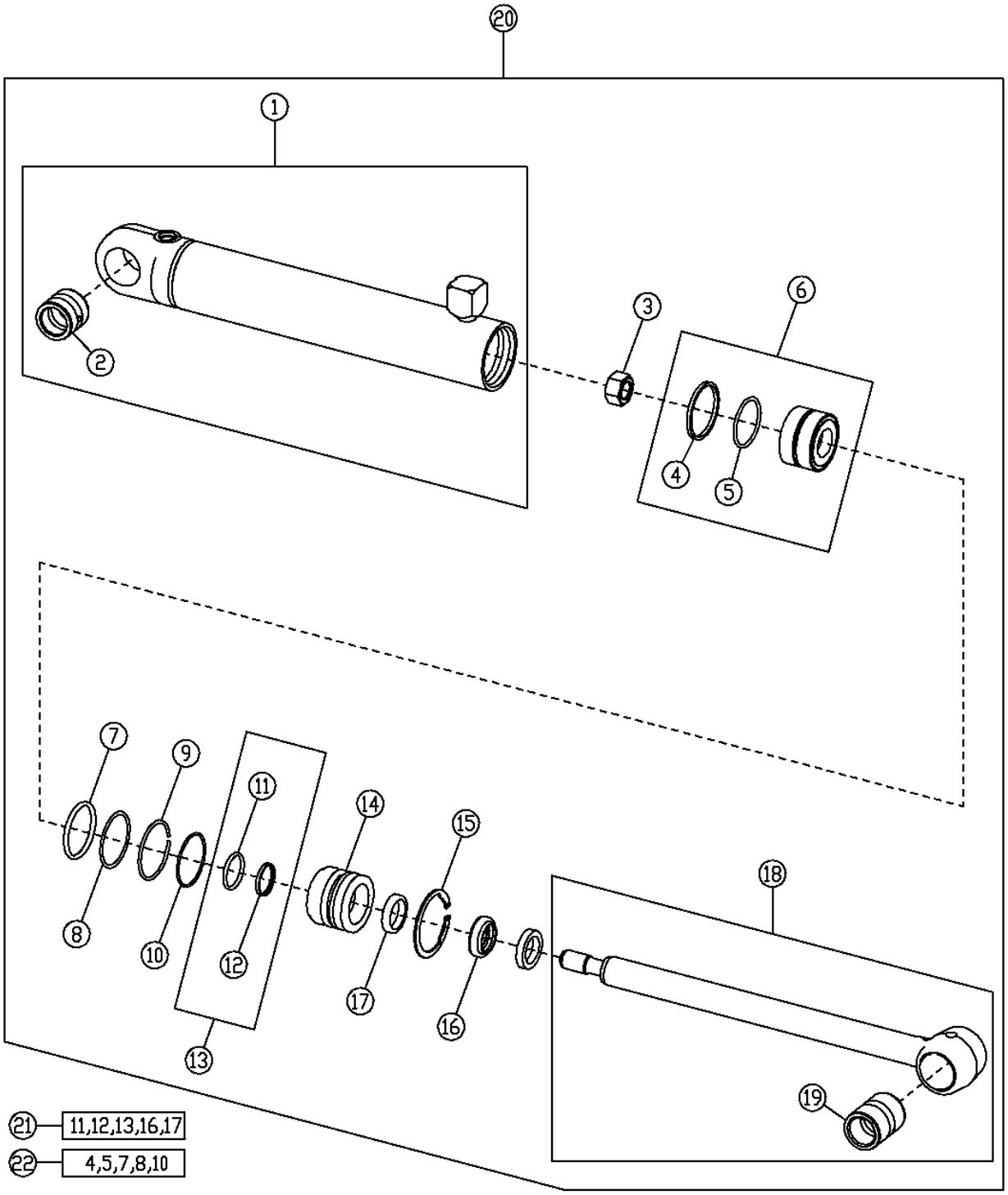

POWER STEERING CYLINDER
(WITHOUT MECHANICAL FRONT WHEEL DRIVE)
(SERIAL NO. -911131)

KEY	PART NO.	PART NAME	QTY	SERIAL NO.	REMARKS
1	AH216822	HYDRAULIC CYLINDER BARREL	1		
2	R81854	BUSHING	1		
3	H170534	NUT	1		
4	H144342	PISTON RING	1		
5	U15973	O-RING	1		
6	AH138200	PISTON	1		
7	H158942	O-RING	1		
8	R79117	WASHER	1		
9	H164359	SNAP RING	1		
10	T22828	O-RING	1		
11	H158674	SEAL	1		
12	H158675	SEAL	1		
13	AH151381	SEAL	1		
14	H157662	HYDR. CYLINDER ROD GUIDE	1		
15	R82571	SNAP RING	1		
16	AH151380	SEAL	1		
17	H158676	SEAL	1		
18	RE22415	HYDRAULIC CYLINDER ROD	1		
19	R72700	BUSHING	1		
20	AH216821	HYDRAULIC CYLINDER	1		
21	AH149810	HYDRAULIC CYLINDER KIT	1		CYLINDER BORE REPAIR KIT
22	AH167552	HYDRAULIC CYLINDER KIT	1		CYLINDER ROD REPAIR KIT

SERVICE BRAKE ASSEMBLY

T138068 -UN-16FEB01

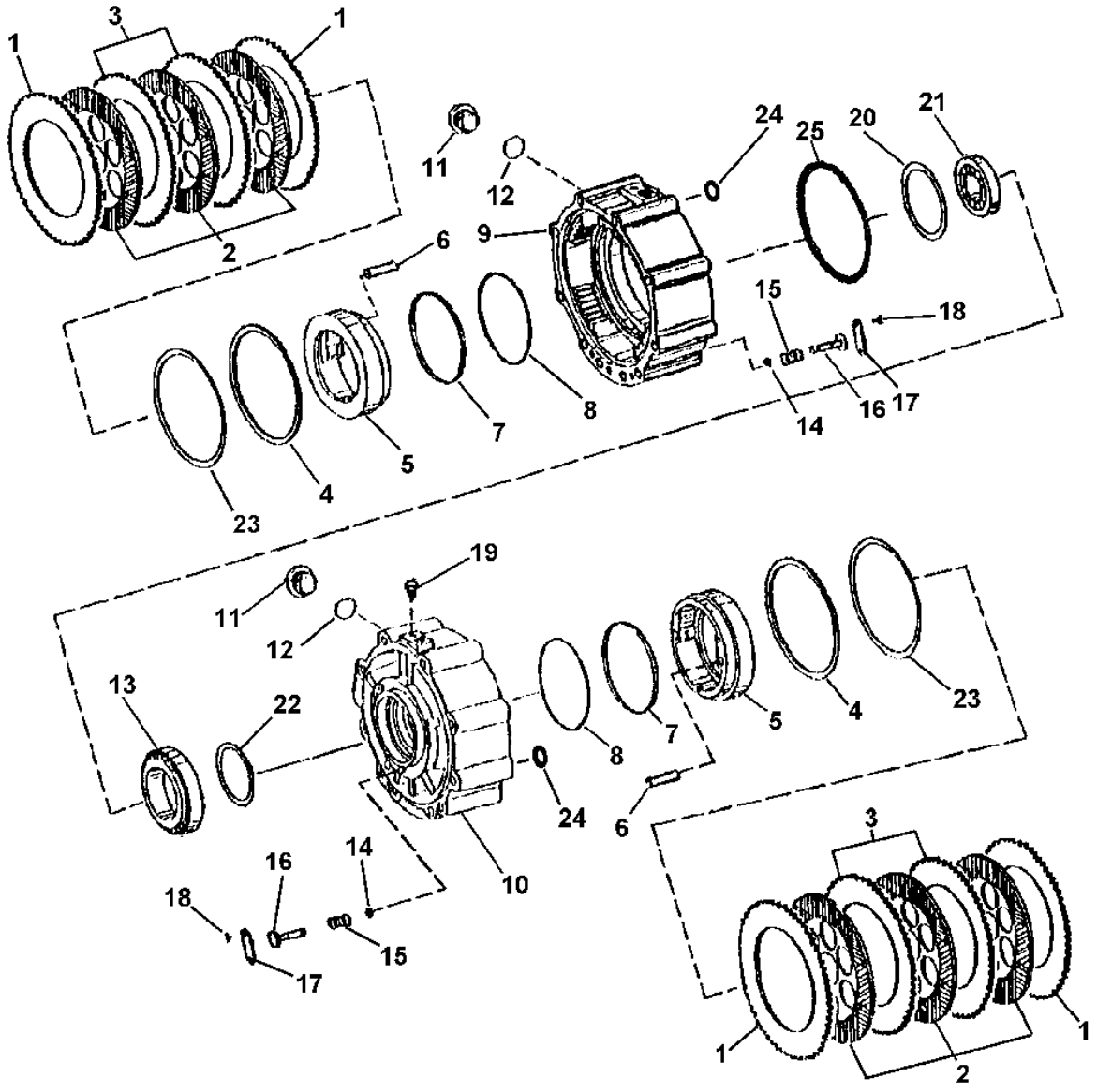

T138068

SERVICE BRAKE ASSEMBLY

KEY	PART NO.	PART NAME	QTY	SERIAL NO.	310G	310SG	315SG	REMARKS
1	T159409	PLATE	4		X	X	X	(3MM)
2	AT179503	BRAKE DISK	6		X	X	X	
3	T161233	DISK	4		X	X	X	(4MM)
4	T159402	SEAL	2		X	X	X	
5	T185443	PISTON	2		X	X	X	
6	T159399	DOWEL PIN	4		X	X	X	
7	T159400	SEAL	2		X	X	X	
8	T159401	BACK-UP RING	2		X	X	X	
9	T159396	HOUSING	1		X	X	X	RIGHT
10	T159397	HOUSING	1		X	X	X	LEFT
11	15M7030	PIPE PLUG	2		X	X	X	
12	L55580	O-RING	2		X	X	X	
13	AT179504	TAPERED ROLLER BEARING	1		X	X	X	LEFT
14	T159407	RING	6		X	X	X	
15	T159408	SPRING	6		X	X	X	
16	T159406	PIN	6		X	X	X	
17	T159398	LOCK PLATE	6		X	X	X	
18	19M8425	CAP SCREW	12		X	X	X	
19	T162517	BLEED VALVE	2		X	X	X	
20	T161247	SHIM	1		X	X	X	.20 MM
	T161246	SHIM	1		X	X	X	.30 MM
	T161245	SHIM	1		X	X	X	.40 MM
	T161244	SHIM	1		X	X	X	.50 MM
	T161243	SHIM	1		X	X	X	.70 MM
	T161242	SHIM	1		X	X	X	.75 MM
	T161241	SHIM	1		X	X	X	.80 MM
	T161240	SHIM	1		X	X	X	.85 MM
	T161239	SHIM	1		X	X	X	.90 MM
	T161238	SHIM	1		X	X	X	.95 MM
	T159435	SHIM	1		X	X	X	1.0 MM
	T159431	SHIM	1		X	X	X	1.2 MM
	T159429	SHIM	1		X	X	X	1.3 MM
	T159427	SHIM	1		X	X	X	1.4 MM
	T159425	SHIM	1		X	X	X	1.5 MM
21	AT179505	TAPERED ROLLER BEARING	1		X	X	X	RIGHT
22	T159444	SHIM	1		X	X	X	.1 MM
	T159445	SHIM	1		X	X	X	.15 MM
	T159443	SHIM	1		X	X	X	.2 MM
	T159440	SHIM	1		X	X	X	.3 MM
	T159441	SHIM	1		X	X	X	.5 MM
	T159442	SHIM	1		X	X	X	1.0 MM
	T159446	SHIM	1		X	X	X	1.1 MM
	T159447	SHIM	1		X	X	X	1.2 MM
	T159448	SHIM	1		X	X	X	1.3 MM
	T159449	SHIM	1		X	X	X	1.4 MM
	T159450	SHIM	1		X	X	X	1.5 MM
	T159451	SHIM	1		X	X	X	1.6 MM
	T159452	SHIM	1		X	X	X	1.7 MM
	T159453	SHIM	1		X	X	X	1.8 MM
	T183500	SOLID SHIM	1		X	X	X	2.15 MM
	T183502	SOLID SHIM	1		X	X	X	2.25 MM
	T183505	SOLID SHIM	1		X	X	X	2.4 MM
	T183506	SOLID SHIM	1		X	X	X	2.45 MM
	T183507	SOLID SHIM	1		X	X	X	2.5 MM
	T159457	SHIM	1		X	X	X	2.8 MM
	T159459	SHIM	1		X	X	X	3.0 MM
	T159461	SHIM	1		X	X	X	3.2 MM
	T159463	SHIM	1		X	X	X	3.4 MM
23	T159403	BACK-UP RING	2		X	X	X	
24	T159373	O-RING	8		X	X	X	
25	T159362	O-RING	1		X	X	X	

BRAKE VALVE AND PEDALS

T193968 -UN-26AUG03

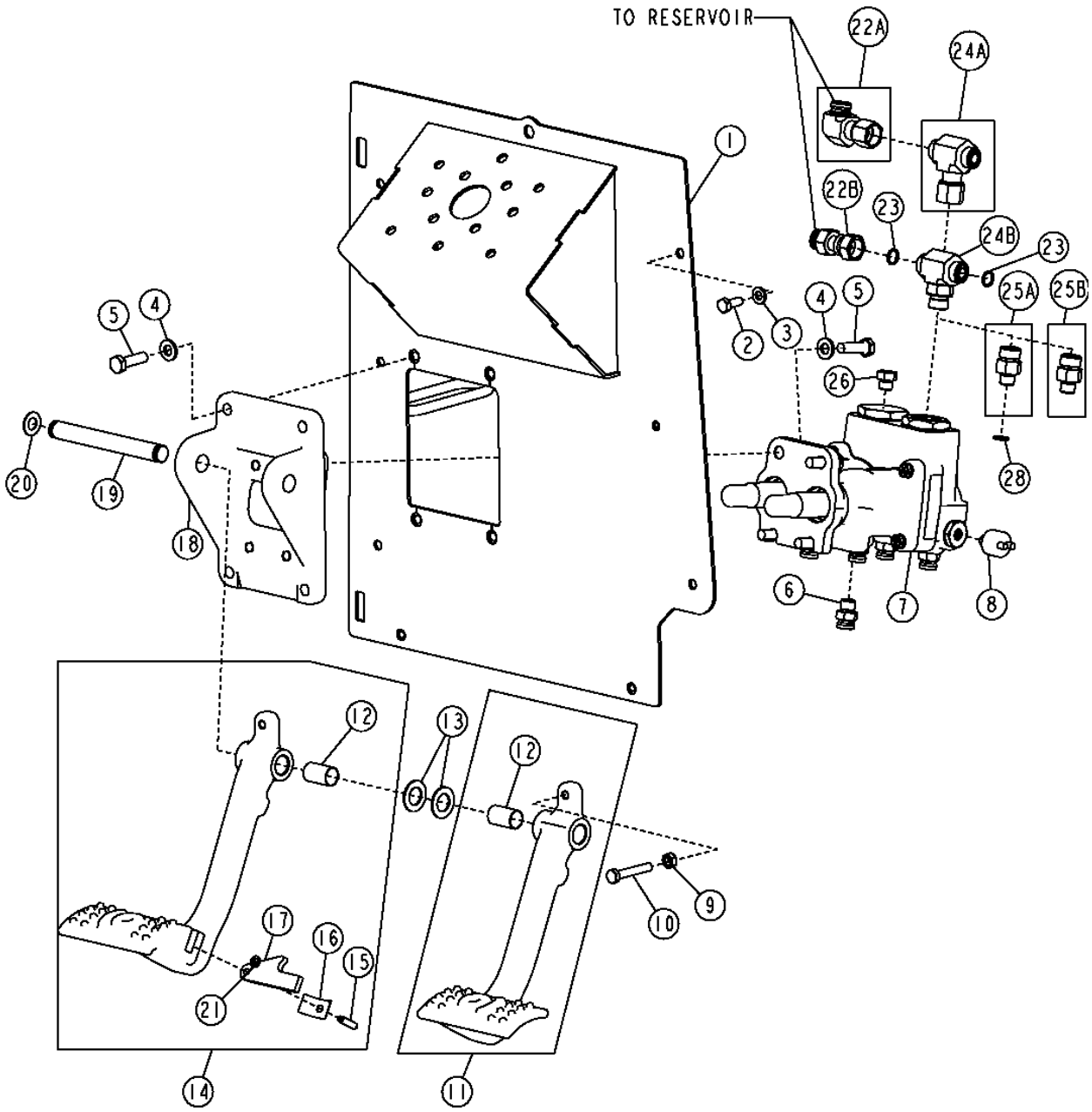

T193968

BRAKE VALVE AND PEDALS

KEY	PART NO.	PART NAME	QTY	SERIAL NO.	310G	315SG	REMARKS
1	AT186839	SUPPORT	1		X	X	
2	19M7881	SCREW	4		X	X	M8 X 20
3	24M7238	WASHER	4		X	X	
4	24M7239	WASHER	8		X	X	
5	19M7550	CAP SCREW	8		X	X	M10 X 35
6	AT187666	ADAPTER FITTING	7		X	X	
	AT193365	KIT	1		X	X	STC
7	AT304761	MANUAL HYDRAULIC VALVE	1		X	X	(SUB FOR AT184578)
8	R32548	PRESSURE SWITCH	2		X	X	(BRAKE LIGHT PRESSURE SWITCH)
9	14M7273	NUT	2		X	X	M8
10	19M7164	CAP SCREW	2		X	X	M8 X 50
11	AT184592	PEDAL	1		X	X	RIGHT
12	B177R	BUSHING	1		X	X	
13	24H1381	WASHER	2		X	X	
14	AT184579	PEDAL	1		X	X	LEFT
15	34H212	SPRING PIN	1		X	X	5/64" X 5/8"
16	R50034	LEAF SPRING	1		X	X	
17	R50879	ARM	1		X	X	
18	T166171	BRACKET	1		X	X	
19	T165282	PIN FASTENER	1		X	X	
20	F2863R	SNAP RING	2		X	X	
21	24H1285	WASHER	AR		X	X	
22A	AT195203	ELBOW FITTING	1	911133-913416	X	X	
22B	AT280459	ADAPTER FITTING	1	913417-	X	X	
23	T77857	O-RING	2	911133-	X	X	
24A	38H1039	TEE FITTING	1	911133-922272	X	X	
24B	38H1017	TEE FITTING	1	922273-	X	X	
25A	AT187666	ADAPTER FITTING	1	911133-922272	X	X	
25B	38H1173	ADAPTER FITTING	1	911133-922272	X	X	
26	R27218	FITTING PLUG	1	911133-922272	X	X	
27	T77857	O-RING	1	-922272	X	X	
	R26375	O-RING	1	922273-	X	X	
28	R26448	O-RING	1	-922272	X	X	

BRAKE VALVE ASSEMBLY

T193974 -UN-22AUG03

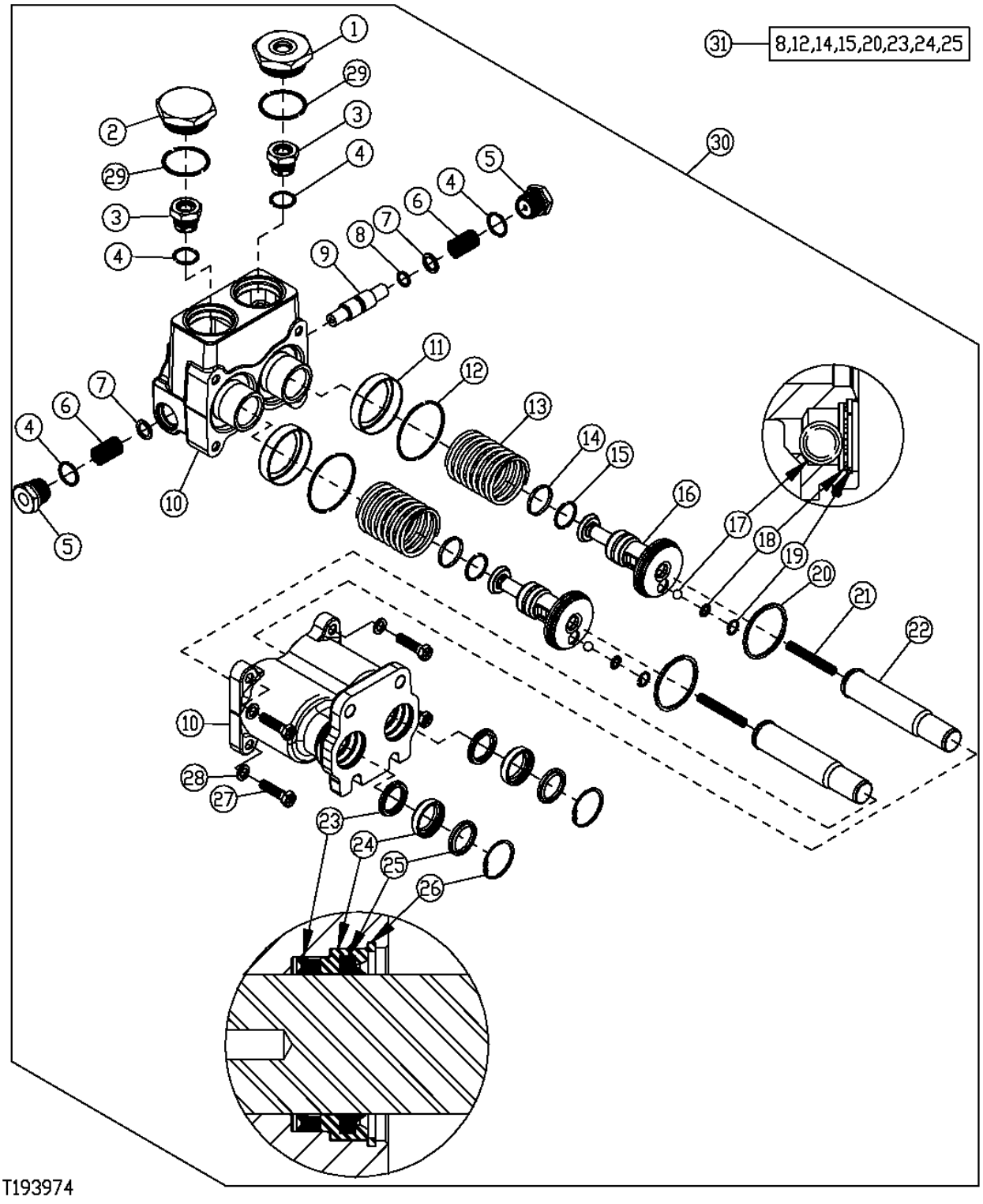

BRAKE VALVE ASSEMBLY

KEY	PART NO.	PART NAME	QTY	SERIAL NO.	310G	310SG	315SG	REMARKS
1	T183268	FITTING	1	-922272	X	X	X	
	T203385	REDUCER	1	922273-	X	X	X	
2	T183268	FITTING	1	-922272	X	X	X	
	T203374	FITTING PLUG	1	922273-	X	X	X	
3	AT188343	CHECK VALVE	2		X	X	X	
4	R26906	O-RING	4		X	X	X	
5	T185926	PLUG	2		X	X	X	
6	T183274	SPRING	2		X	X	X	
7	T183273	WASHER	2		X	X	X	
8	.....	RING	2		X	X	X	(A)
9	T183272	PISTON	1		X	X	X	
10	.....	HOUSING	1		X	X	X	(ORDER AT304761)
11	T183271	RETAINER	2		X	X	X	
12	.....	O-RING	2		X	X	X	(A)
13	T183270	SPRING	2		X	X	X	
14	.....	SEAL	2		X	X	X	(A)
15	.....	RING	2		X	X	X	(A)
16	T183276	PISTON	2		X	X	X	
17	R26552	BALL	2		X	X	X	
18	T185078	LOCK WASHER	2		X	X	X	
19	R48523	SNAP RING	2		X	X	X	
20	T183362	PISTON RING	2		X	X	X	(A)
21	T183269	SPRING	2		X	X	X	
22	AT192151	PUSH ROD	2		X	X	X	
23	.....	SEAL	2		X	X	X	(A)
24	.....	SEAL	2		X	X	X	(A)
25	T183357	RETAINER	2		X	X	X	(A)
26	M41029	SNAP RING	2		X	X	X	
27	19H1849	CAP SCREW	4		X	X	X	5/16" X 1-1/4"
28	T183310	WASHER	4		X	X	X	
29	U13639	O-RING	2		X	X	X	
30	AT304761	MANUAL HYDRAULIC VALVE	1		X	X	X	(SUB FOR AT184578)
31	AT192419	KIT	1		X	X	X	(A) (BRAKE VALVE OVERHAUL) (REQUIRES 1 KIT PER VALVE)

SERVICE BRAKE HYDRAULICS

TP58126 -UN-04OCT00

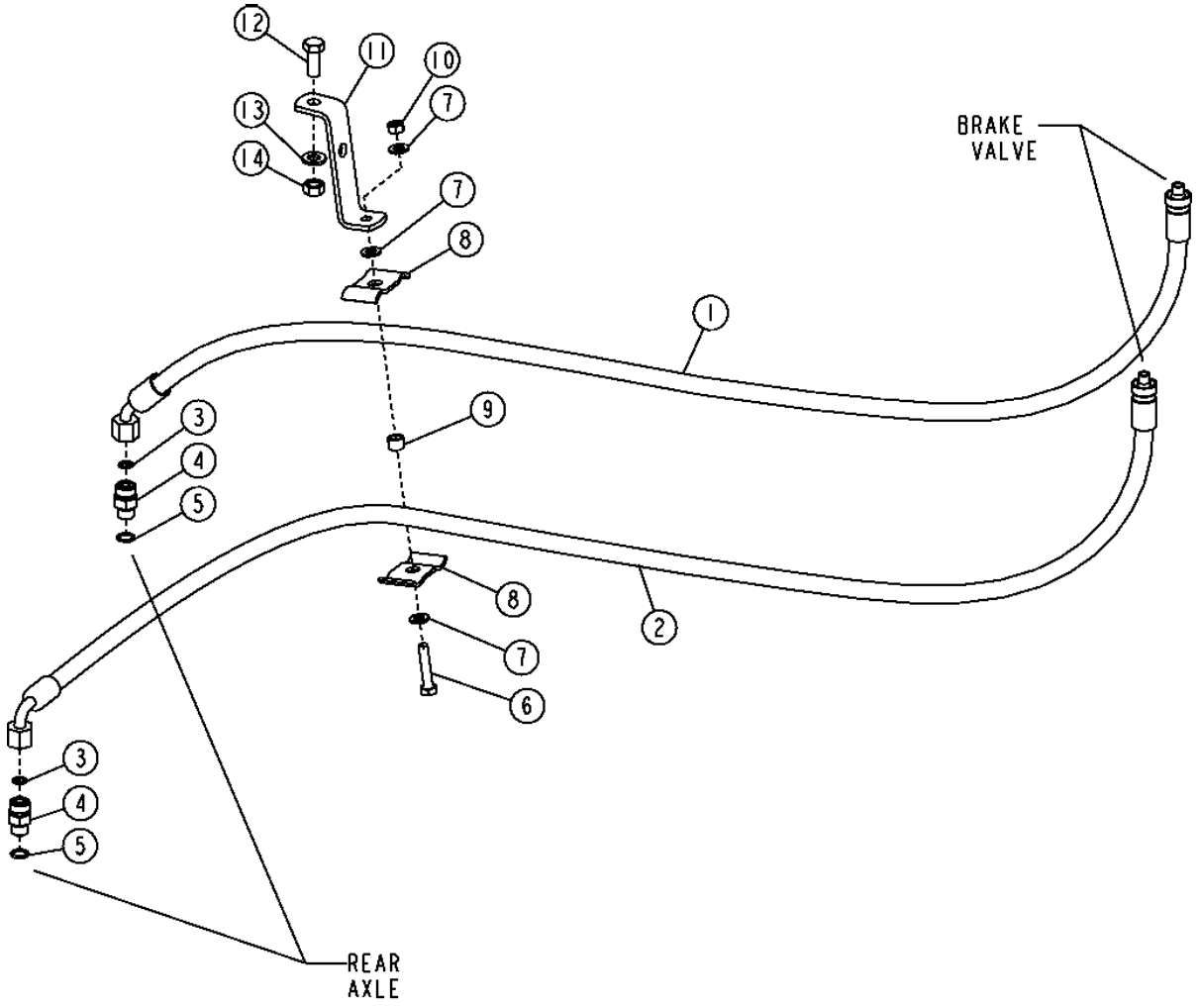

TP58126

SERVICE BRAKE HYDRAULICS

KEY	PART NO.	PART NAME	QTY	SERIAL NO.	310G	310SG	315SG	REMARKS
1	AT185513	HYDRAULIC HOSE - FABRICATE	1		X	X	X	(ALSO ORDER 62H1042 AND T77613)
	62H1042	ADAPTER FITTING	1		X	X	X	STC
2	AT184894	HYDRAULIC HOSE - FABRICATE	1		X	X	X	(ALSO ORDER 62H1042 AND T77613)
	62H1042	ADAPTER FITTING	1		X	X	X	STC
3	T77613	O-RING	2		X	X	X	
4	38H1160	ADAPTER FITTING	2		X	X	X	
5	R26448	O-RING	2		X	X	X	
6	19M7922	CAP SCREW	1		X	X	X	M8 X 40
7	24M7238	WASHER	3		X	X	X	
8	R46919	HALF CLAMP	2		X	X	X	
9	T186859	WASHER	1		X	X	X	
10	14M7273	NUT	1		X	X	X	M8
11	T158245	STRAP	1		X	X	X	
12	19M7402	CAP SCREW	1		X	X	X	M10 X 25
13	24M7239	WASHER	1		X	X	X	
14	14M7274	NUT	1		X	X	X	M10

BRAKE VALVE BOOST PLUMBING
310G AND 310SG (CAB)

T201761 -UN-19JUL04

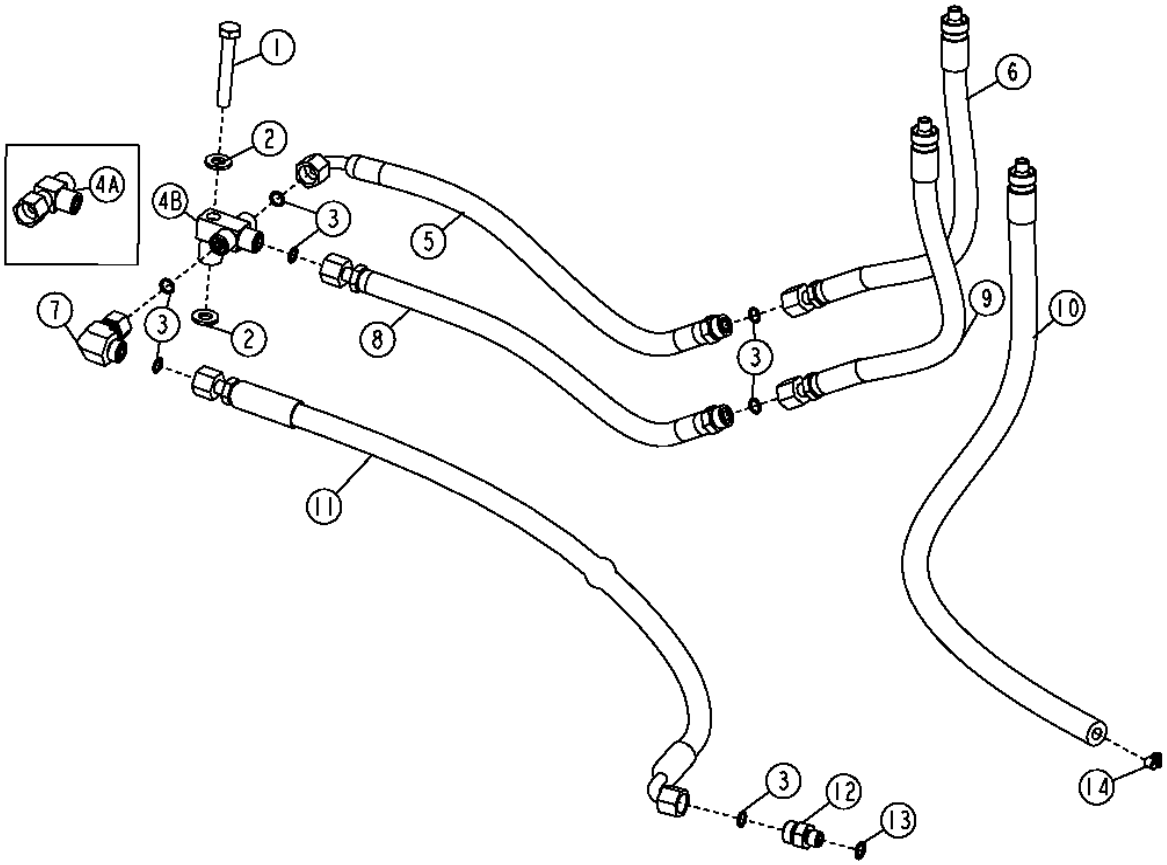

T201761

BRAKE VALVE BOOST PLUMBING
310G AND 310SG (CAB)
315SG (ROPS AND CAB)

KEY	PART NO.	PART NAME	QTY	SERIAL NO.	310G	310SG	315SG	REMARKS
1	19M7742	CAP SCREW	1	-951096	X	X	X	M10 X 65
	19M8499	CAP SCREW	1	951097-	X	X	X	M10 X 60
2	24M7239	WASHER	AR		X	X	X	
3	T77613	O-RING	7		X	X	X	
4A	AT191868	TEE FITTING	1	-940475	X	X	X	
4B	T212039	TEE FITTING	1	940476-	X	X	X	
5	AT194417	HYDRAULIC HOSE - FABRICATE	1		X	X	X	11/16" X 470 MM (18-1/2") X 11/16"
6	AT194412	HYDRAULIC HOSE - FABRICATE	1		X	X	X	(ALSO ORDER 62H1042 AND T77613)
7	38H1094	ELBOW FITTING	1		X	X	X	
8	AT194416	HYDRAULIC HOSE - FABRICATE	1		X	X	X	11/16" X 465 MM (18-1/4") X 11/16"
9	AT318113	HYDRAULIC HOSE - FABRICATE	1		X	X	X	(ALSO ORDER 62H1042 AND T77613) (SUB FOR AT194412, THIS APPLICATION)
10	AT186740	HYDRAULIC HOSE - FABRICATE	1		X	X	X	(ALSO ORDER 62H1042 AND T77613)
	62H1042	ADAPTER FITTING	1		X	X	X	STC
11	AT193981	HYDRAULIC HOSE - FABRICATE	1	-940475	X	X	X	11/16" X 540 MM (21-1/4") X 11/16"
	AT304075	HYDRAULIC HOSE - FABRICATE	1	940476-	X	X	X	9/16" X 635 MM (25") X 9/16"
12	38H1575	ADAPTER FITTING	1	-940475	X	X		
	38H1170	ADAPTER FITTING	1	940476-	X	X		
	38H1170	ADAPTER FITTING	1				X	
13	R26286	O-RING	1		X	X	X	
14	TY22462	CLAMP	1		X	X	X	(SUB FOR AR48236)

BRAKE VALVE BOOST PLUMBING
310G AND 310SG (ROPS)

T136937 -UN-06JAN01

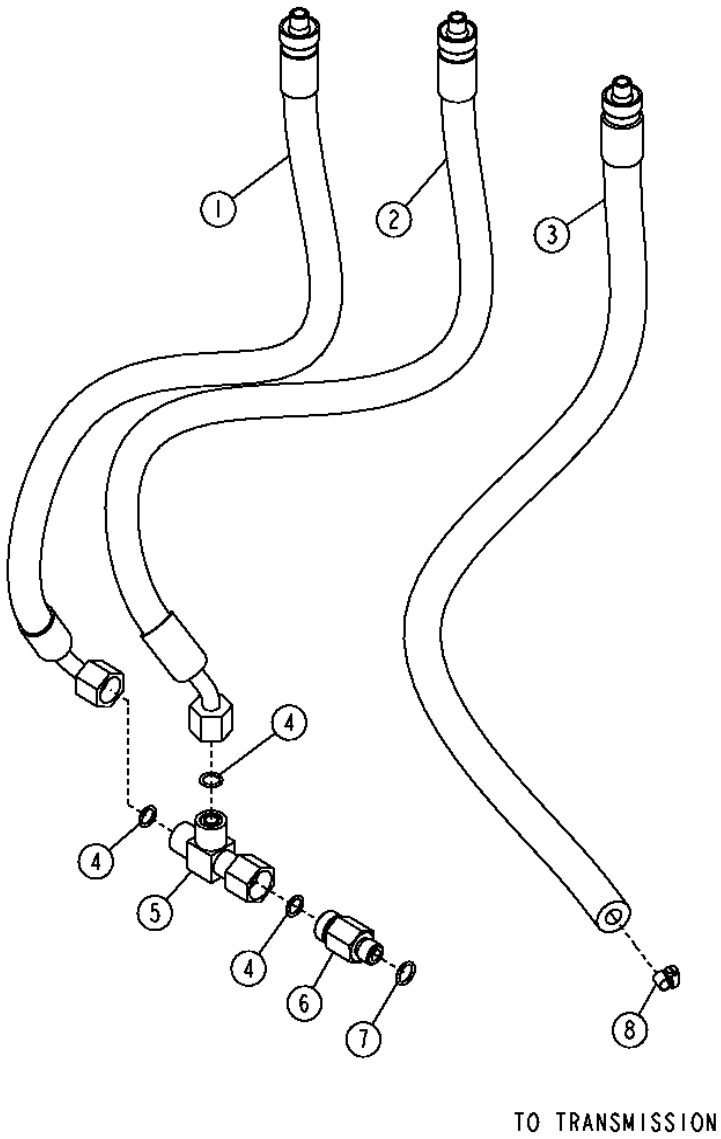

BRAKE VALVE BOOST PLUMBING
310G AND 310SG (ROPS)

KEY	PART NO.	PART NAME	QTY	SERIAL NO.	310G	310SG	315SG	REMARKS
1	AT317121	HYDRAULIC HOSE - FABRICATE	1		X	X		(ALSO ORDER 62H1042 AND T77613) (SUB FOR AT192415 AND AT192416, THIS APPLICATION)
	62H1042	ADAPTER FITTING	1		X	X		STC
2	AT192416	HYDRAULIC HOSE - FABRICATE	1		X	X		(ALSO ORDER 62H1042 AND T77613)
	62H1042	ADAPTER FITTING	1		X	X		STC
3	AT186740	HYDRAULIC HOSE - FABRICATE	1		X	X		(ALSO ORDER 62H1042 AND T77613)
	62H1042	ADAPTER FITTING	1		X	X		STC
4	T77613	O-RING	3		X	X		
5	AT192417	TEE FITTING	1		X	X		
6	T186238	ADAPTER FITTING	1		X	X		
7	R26286	O-RING	1		X	X		
8	TY22462	CLAMP	1		X	X		(SUB FOR AR48236)

PARKING BRAKE
(AXLE SERIAL NO. -217496)

T138069 -UN-16FEB01

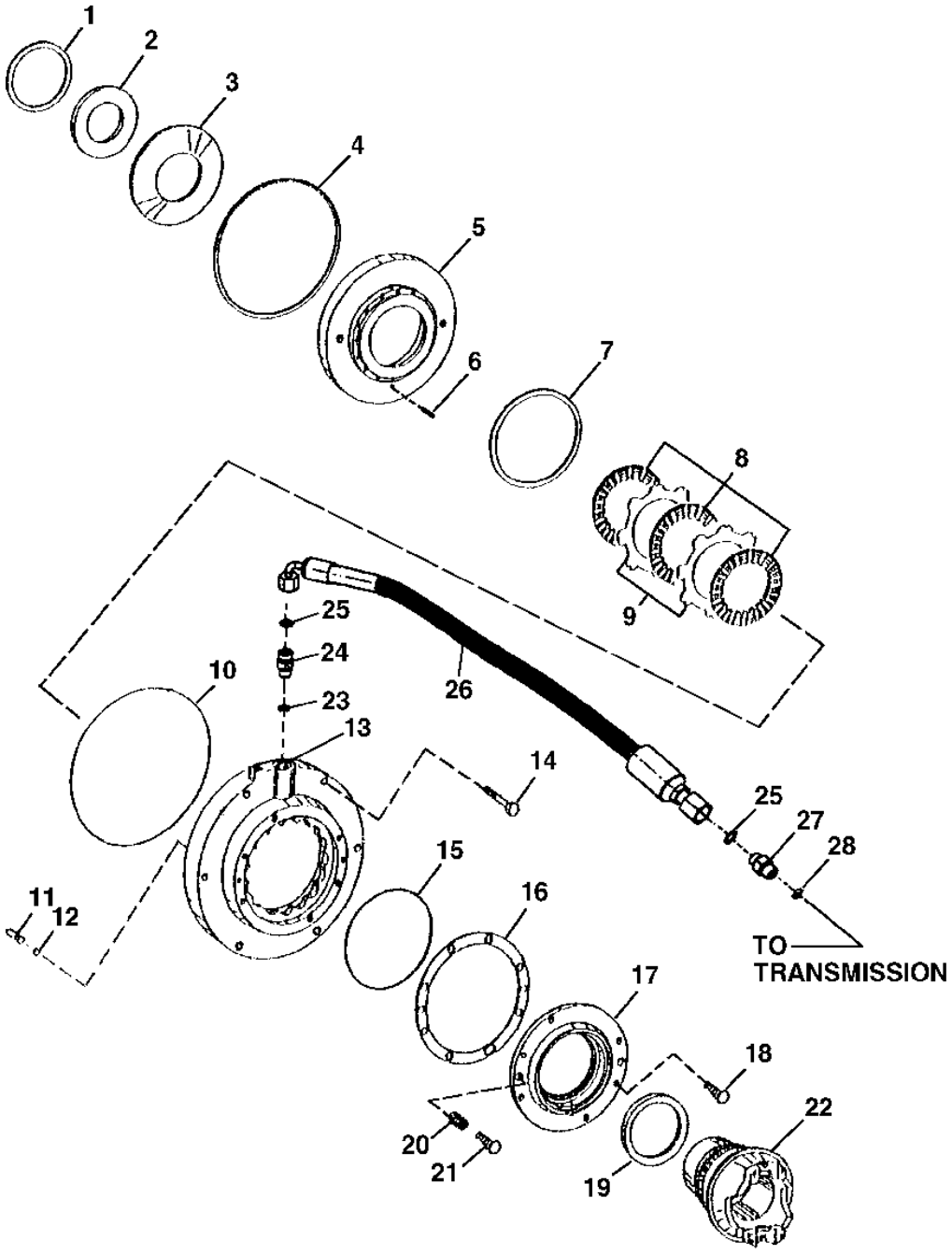

T138069

PARKING BRAKE
(AXLE SERIAL NO. -217496)

KEY	PART NO.	PART NAME	QTY	AXLE SERIAL NO.	310G	315SG	REMARKS
1	T159479	SHIM	1		X	X	0.6 MM
	T159480	SHIM	1		X	X	0.7 MM
	T159481	SHIM	1		X	X	0.8 MM
	T159482	SHIM	1		X	X	0.9 MM
	T159483	SHIM	1		X	X	2.0 MM
2	T159484	SUPPORT	1		X	X	
3	T159485	DISK SPRING	1		X	X	
4	T159478	SEAL	1		X	X	
5	T159476	PISTON	1		X	X	
6	T159473	SPRING PIN	1		X	X	
7	T159477	SEAL	1		X	X	
8	T159475	CLUTCH DISK	3		X	X	
9	T159474	PLATE	2		X	X	
10	T159472	O-RING	1		X	X	
11	T159486	PIN	2		X	X	
12	T159487	O-RING	2		X	X	
13	T159471	HOUSING	1		X	X	
14	19M7935	CAP SCREW	6		X	X	M10 X 55
15	T174398	O-RING	1		X	X	(SUB FOR T159491)
16	T159492	SHIM	1		X	X	1.0 MM
	T159493	SHIM	1		X	X	0.5 MM
	T159494	SHIM	1		X	X	0.3 MM
	T159495	SHIM	1		X	X	0.1 MM
	T159496	SHIM	1		X	X	0.15 MM
	T159497	SHIM	1		X	X	0.2 MM
17	T159490	COVER	1		X	X	
18	19M8761	SCREW	6		X	X	M10 X 22
19	AT179537	SEAL	1		X	X	
20	T159502	LOCK NUT	2		X	X	(MANUAL RELEASE-PARK BRAKE)
21	T159499	CAP SCREW	2		X	X	(MANUAL RELEASE-PARK BRAKE)
22	T158437	UNIVERSAL JOINT YOKE	1		X	X	
23	R26906	O-RING	1		X	X	
24	38H1162	ADAPTER FITTING	1		X	X	
25	T77932	O-RING	2		X	X	
26	AT179899	HYDRAULIC HOSE - FABRICATE	1		X	X	1" X 655 MM (25-3/4") X 1"
27	38H1317	FITTING	1		X	X	
28	R26375	O-RING	1		X	X	

PARKING BRAKE
(AXLE SERIAL NO. 217497-)

TP57991 -UN-09FEB99

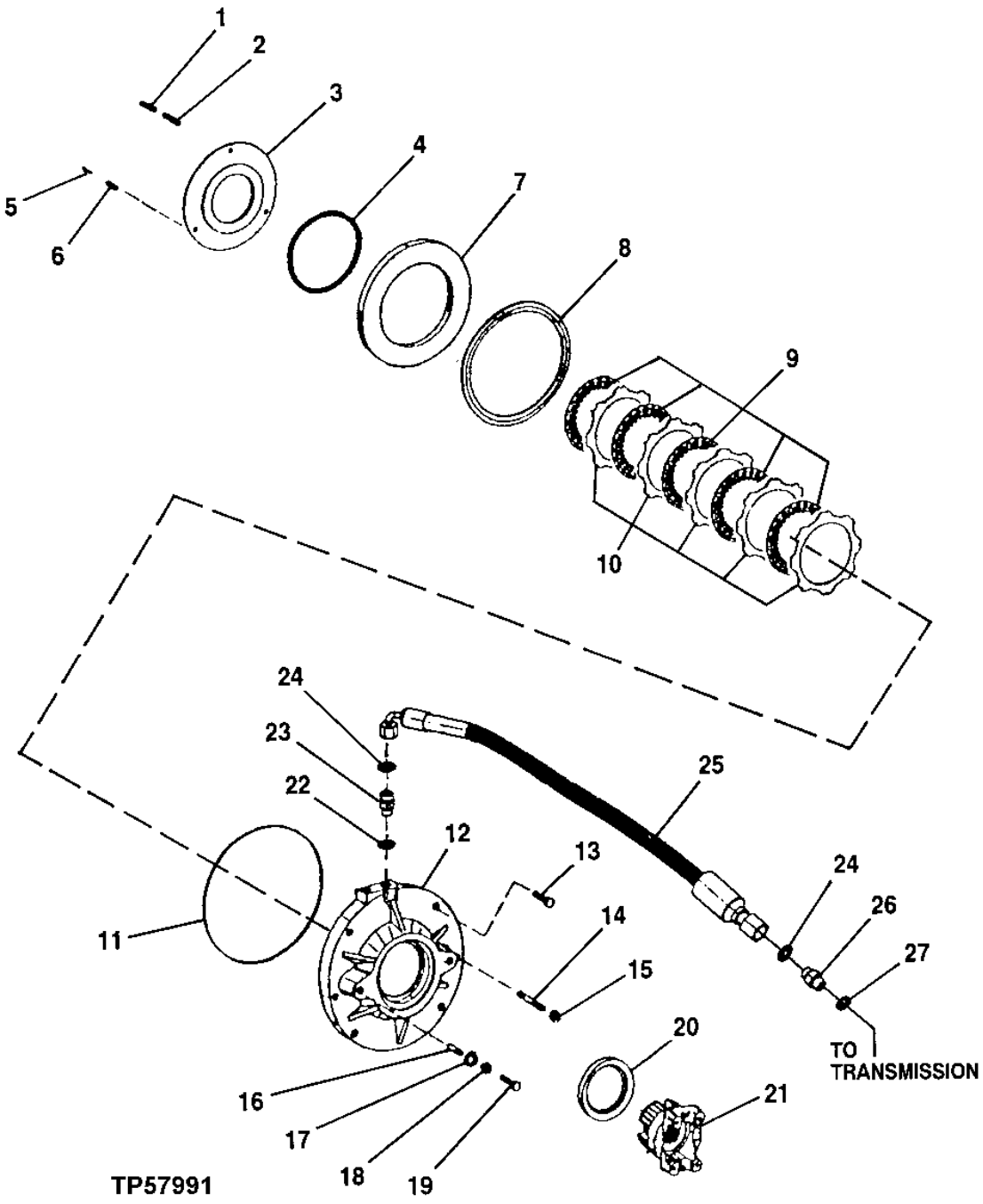

PARKING BRAKE
(AXLE SERIAL NO. 217497-)

KEY	PART NO.	PART NAME	QTY	AXLE SERIAL NO.	310G	310SG	315SG	REMARKS
1	T164917	COMPRESSION SPRING	14		X	X	X	
2	T164916	COMPRESSION SPRING	14		X	X	X	
3	T164915	PLATE	1		X	X	X	
4	T159477	SEAL	1		X	X	X	
5	T164911	PIN	1		X	X	X	
6	T159359	SPRING PIN	2		X	X	X	
7	T164914	PISTON	1		X	X	X	
8	T159478	SEAL	1		X	X	X	
9	T159475	CLUTCH DISK	3		X	X	X	
10	T159474	PLATE	3		X	X	X	
11	T164909	O-RING	1		X	X	X	
12	T188234	HOUSING	1		X	X	X	
13	19M7179	CAP SCREW	4		X	X	X	M10 X 50
14	T164912	STUD	2		X	X	X	
15	T164913	NUT	2		X	X	X	
16	T164918	PIN	2		X	X	X	
17	T159487	O-RING	2		X	X	X	
18	T159502	LOCK NUT	2		X	X	X	
19	T164922	SCREW	2		X	X	X	
20	AT179537	SEAL	1		X	X	X	
21	T188229	UNIVERSAL JOINT YOKE	1		X	X	X	
22	R26906	O-RING	1		X	X	X	
23	38H1006	ELBOW FITTING	1		X	X	X	(SUB FOR 38H1162, THIS APPLICATION)
24	T77932	O-RING	2		X	X	X	
25	AT179899	HYDRAULIC HOSE - FABRICATE	1		X	X	X	
26	38H1317	FITTING	1		X	X	X	
27	R26375	O-RING	1		X	X	X	

LOADER ARM SERVICE LOCK

T134150 -UN-30SEP00

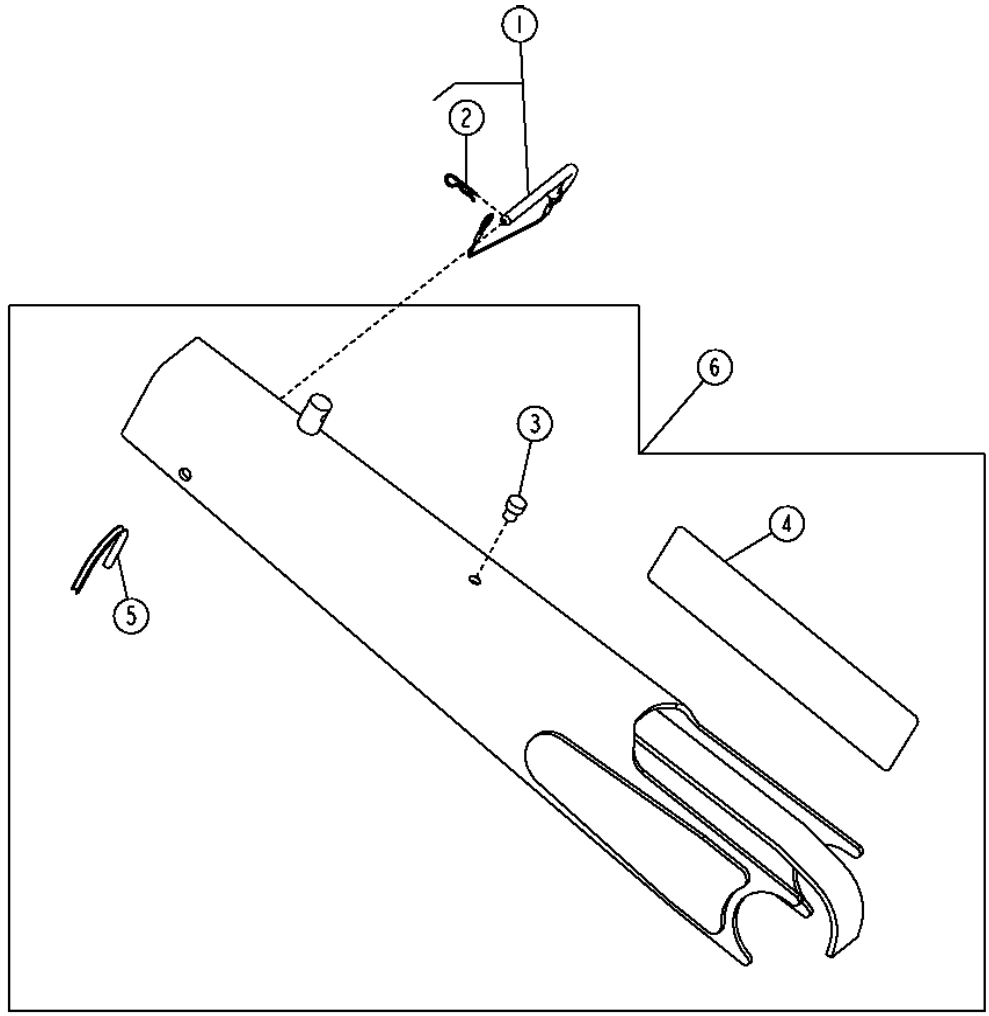

T134150

LOADER ARM SERVICE LOCK

KEY	PART NO.	PART NAME	QTY	SERIAL NO.	310G	315SG	315SG	REMARKS
1	AT195244	PIN FASTENER	1		X	X	X	(SUB FOR AT178745, THIS APPLICATION)
2	J16931	PIN	1		X	X	X	
3	T14083	BUMPER	2		X	X	X	
4	T185902	LABEL	1		X	X	X	
5	T152648	ISOLATOR	1		X	X	X	
6	AT307260	ARM	1		X	X	X	SERVICE LOCK, (SUB FOR AT192367)

LICENCE PLATE LIGHT AND BRACKET

T139757 -UN-12MAR01

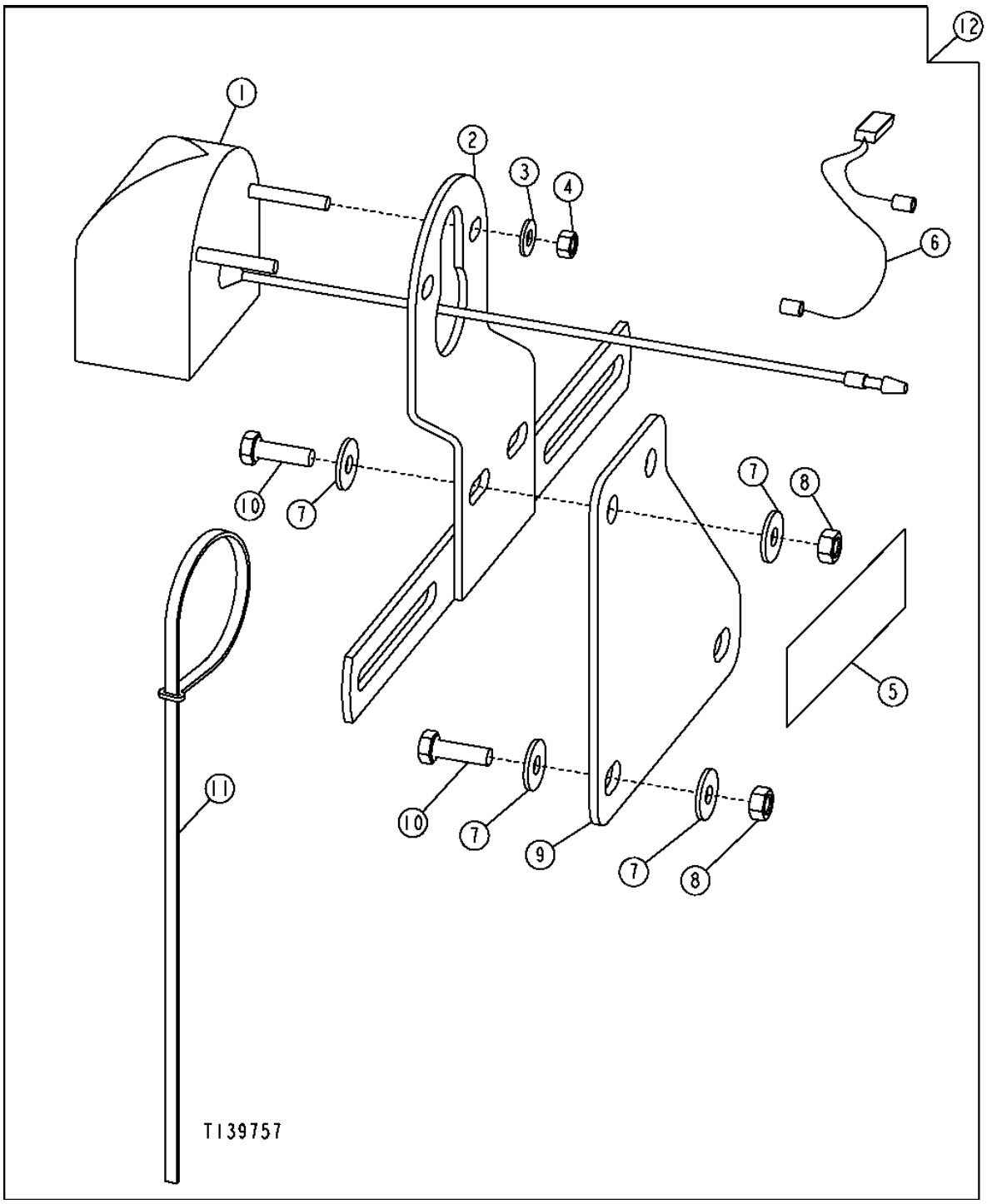

LICENCE PLATE LIGHT AND BRACKET

KEY	PART NO.	PART NAME	QTY	SERIAL NO.	310G	310SG	315SG	REMARKS
1	AT34211	LAMP	1		X	X	X	(INCLUDES (2) 24H1283 AND (2) 14M7297)
	AB2599R	BULB	1		X	X	X	
2	AT34210	BRACKET	1		X	X	X	
3	24H1283	WASHER	2		X	X	X	
4	14M7297	NUT	2		X	X	X	M5
5	JD5920	REFLECTOR	2		X	X	X	
6	AT187708	WIRING HARNESS	1		X	X	X	
7	24M7139	WASHER	8		X	X	X	
8	14M7272	NUT	4		X	X	X	M6
9	T186062	PLATE	1		X	X	X	
10	19M7077	CAP SCREW	4		X	X	X	M6 X 20
11	H77698	TIE BAND	6		X	X	X	
12	AT187707	MOUNTING PARTS	1		X	X	X	(WHOLE GOODS)

TRADEMARKS AND LABELS

T212200 -UN-15JUN05

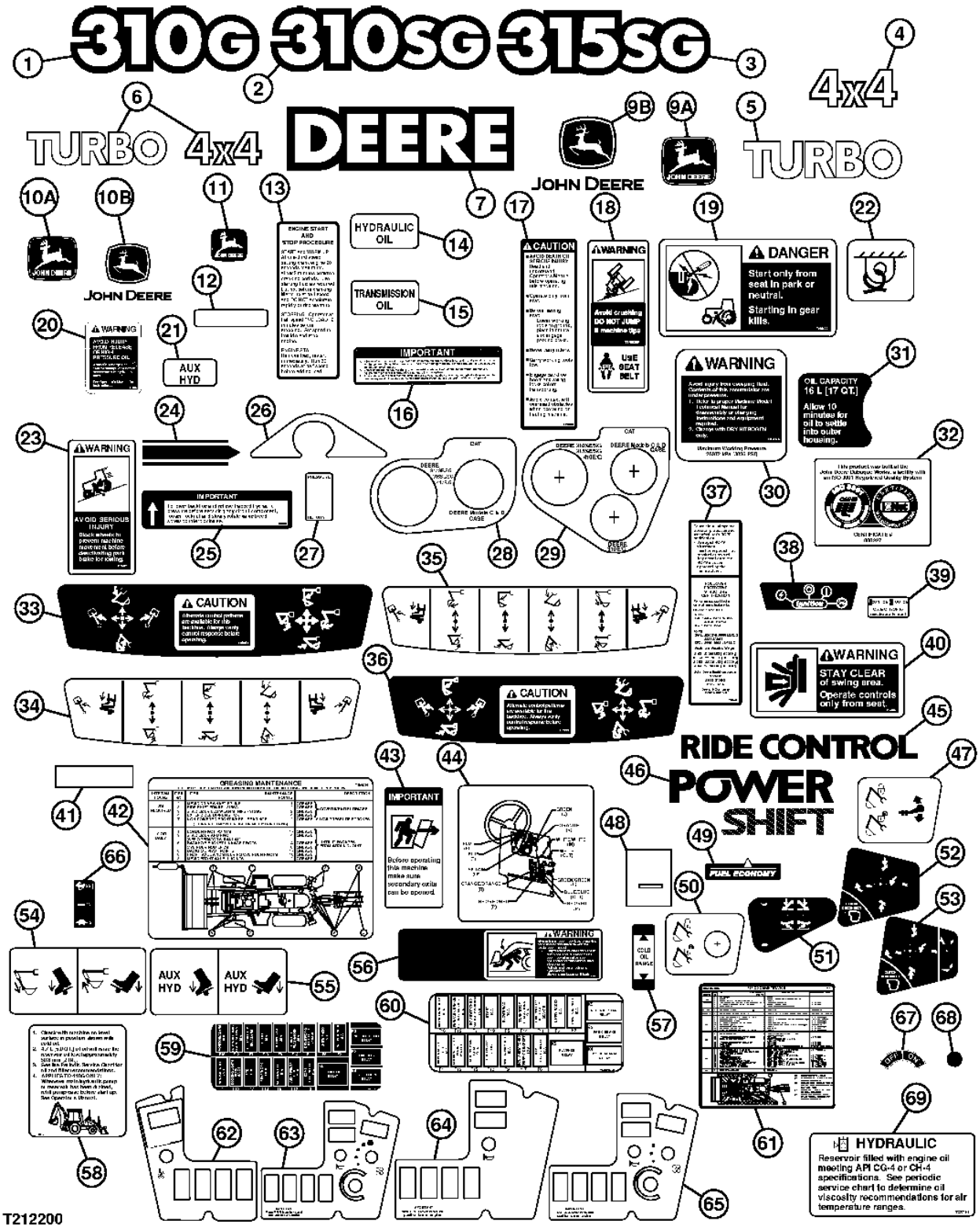

TRADEMARKS AND LABELS

KEY	PART NO.	PART NAME	QTY	SERIAL NO.	310G	310SG	315SG	REMARKS
1	T166904	LABEL	2	-951252	X			MODEL DESIGNATION, 310G
	T206952	LABEL	2	952253-	X			MODEL DESIGNATION, 310G
2	T166901	LABEL	2	-951252		X		MODEL DESIGNATION, 310SG
	T206951	LABEL	2	951253-		X		MODEL DESIGNATION, 310SG
3	T166958	LABEL	2	-951252			X	MODEL DESIGNATION, 315SG
	T206954	LABEL	2	951253-			X	MODEL DESIGNATION, 315SG
4	T165999	LABEL	2		X	X	X	4X4
5	T166001	LABEL	1		X	X	X	TURBO
6	T166002	LABEL	2		X	X	X	TURBO 4X4
7	T184759	LABEL	2		X	X	X	DEERE
	JD5836	LABEL	2		X	X	X	DEERE (BOLD OUTLINE)
8	T159815	LABEL	2				X	TRANSPORT
9A	JD5621	LABEL	1	-902607	X	X	X	LEAPING DEER
9B	JD5750	LABEL	1	902608-	X	X	X	LEAPING DEER
10A	JD5694	LABEL	1	-902607	X	X	X	LEAPING DEER
10B	JD5750	LABEL	1	902608-	X	X	X	LEAPING DEER
	JD5717	LABEL	2		X	X	X	LEAPING DEER (DOOR GLASS)
	JD5761	LABEL	1		X	X	X	LEAPING DEER (GRILLE)
11	T184519	LABEL	1	-902607	X	X	X	LEAPING DEER (WINDOW)
12	JD5920	REFLECTOR	2		X	X	X	REFLECTIVE(RED)
13	T131938	LABEL	1		X	X	X	ENGINE START AND STOP
14	T140283	LABEL	1	-951252	X	X	X	HYDRAULIC OIL
15	T140311	LABEL	1		X	X	X	TRANSMISSION OIL
16	T145560	LABEL	1		X	X	X	RECEIVER/DRYER
17	T146080	LABEL	1		X	X	X	CAUTION(SAFETY)
18	T146097	LABEL	1		X	X	X	SEAT BELT WARNING
19	T146102	LABEL	1		X	X	X	BYPASS STARTING WARNING
20	T146792	SAFETY SIGN	4		X	X	X	RIDE CONTROL
21	T149199	LABEL	1		X	X	X	(AUX.HYD.)
22	T153680	LABEL	1		X	X	X	TIE DOWN
23	T159028	LABEL	1		X	X	X	PARK BRAKE
24	T160759	LABEL	1		X	X	X	BUCKET LEVEL INDICATOR
25	T161665	LABEL	1		X	X	X	COUPLER
26	T161678	LABEL	1		X	X	X	ACCUMULATOR
27	T162404	LABEL	1		X	X	X	HAND HELD HYDRAULICS
28	T162847	LABEL	1		X	X	X	COUPLER
29	T162848	LABEL	1		X	X	X	COUPLER
30	T164124	LABEL	1		X	X	X	ACCUMULATOR
31	T164420	LABEL	1		X	X	X	OIL CAPACITY
	T164999	LABEL	1		X	X	X	OIL CAPACITY
32	.....	LABEL	1		X	X	X	ISO
33	T165584	LABEL	1		X	X	X	BACKHOE CONTROL(TWO LEVER)
34	T165585	LABEL	1		X	X	X	BACKHOE CONTROL(THREE LEVER)
	T165604	LABEL	1		X	X		BACKHOE CONTROL (FOUR LEVER)
35	T165586	LABEL	1		X	X	X	BACKHOE CONTROL LEVER(THREE LEVER)
36	T165595	LABEL	1		X	X	X	SAE CONTROL
37	T166896	LABEL	1		X	X	X	(SUB FOR T166051, THIS APPLICATION) ROPS
38	T166300	LABEL	1		X	X	X	START SWITCH
39	T166538	LABEL	1		X	X	X	FLOW CONTROL
40	T183768	LABEL	1		X	X	X	WARNING
41	T184116	LABEL	1		X	X	X	PROTECTIVE
42	T184514	LABEL	1	-951252	X	X	X	PERIODIC GREASING
	T214321	LABEL	1	951253-	X	X	X	PERIODIC GREASING
43	T184789	LABEL	1		X	X	X	EXIT UNLOCK
44	T185019	LABEL	1		X	X	X	HOSE INFORMATION
45	T185145	LABEL	1		X	X	X	RIDE CONTROL
46	T185146	LABEL	1		X	X	X	POWER SHIFT TRANSMISSION
47	T185330	LABEL	1		X	X		BOOM LOCK
	T200990	LABEL	1			X		(WITH HYDRAULIC PILOT CONTROLS)
48	T185469	LABEL	1		X	X	X	PROTECTIVE
49	T185556	LABEL	1		X	X	X	FUEL ECONMONY
50	T185640	LABEL	1				X	BOOM LOCK

TRADEMARKS AND LABELS

T212200 -UN-15JUN05

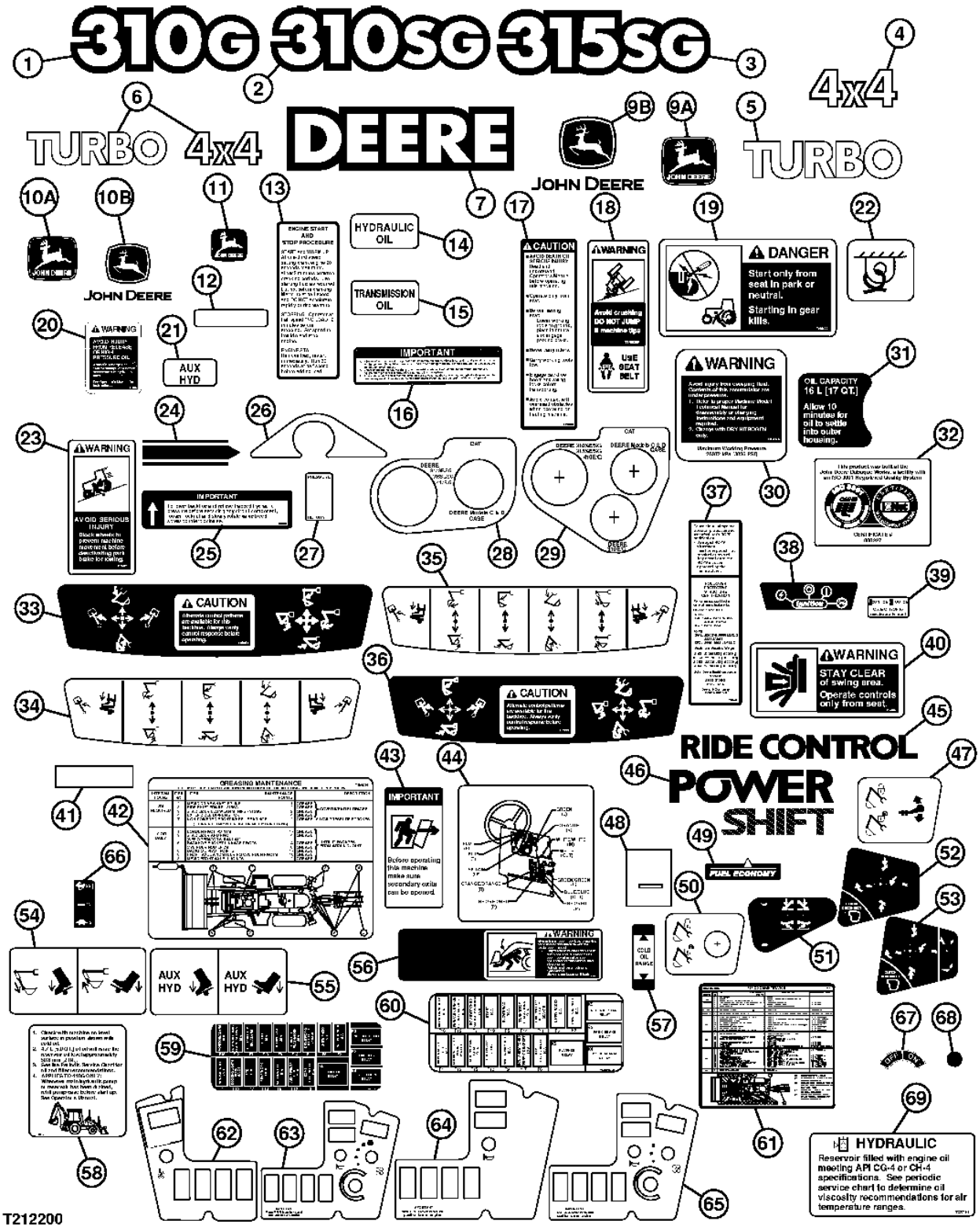

TRADEMARKS AND LABELS

KEY	PART NO.	PART NAME	QTY	SERIAL NO.	310G	310SG	315SG	REMARKS
51	T185646	LABEL	1		X	X	X	STABLIZER CONTROL
52	T185675	LABEL	1		X	X	X	LOADER CONTROL
53	T185676	LABEL	1		X	X	X	LOADER CONTROL (THREE FUNCTION)
54	T185691	LABEL	1		X	X	X	FOOT PEDAL
55	T185692	LABEL	1		X	X	X	AUXILIARY HYDRAULIC)
56	T185902	LABEL	1		X	X	X	BOOM LOCK
57	T186123	LABEL	1		X	X	X	COLD HYDRAULIC OIL RANGE
58	T186124	LABEL	1		X	X	X	HYDRAULIC OIL RESRVOIR
59	T186360	LABEL	1	-910055	X	X	X	FUSE BLOCK
60	T188817	LABEL	1	910056-951252	X	X	X	FUSE BLOCK
	T207040	LABEL	1	951253-	X	X	X	FUSE BLOCK
61	T186391	LABEL	1		X			PERIODIC MAINTENANCE (WITHOUT TURBOCHARGER)
	T186391	LABEL	1	-910055	X	X	X	PERIODIC MAINTENANCE (WITH TURBOCHARGER)
	T201293	LABEL	1	910056-943092	X	X	X	PERIODIC MAINTENANCE CHART
	T213333	LABEL	1	943093-951252	X	X	X	PERIODIC MAINTENANCE CHART
	T209529	LABEL	1	951253-	X	X	X	PERIODIC MAINTENANCE CHART
62	T186400	LABEL	1		X	X	X	INSRTUMENT PANEL L.H.
63	T186401	LABEL	1		X	X	X	INSTRUMENT PANEL R.H. (CAB)
64	T186402	LABEL	1		X	X	X	INSTRUMENT PANEL R.H. (CANOPY)
65	T186552	LABEL	1		X	X	X	INSTRUMENT PANEL R.H. (CANOPY WITH HEATER)
66	.....	LABEL	1		X	X	X	SPEED CONTROL
67	T42199	LABEL	1		X	X	X	ON/OFF
68	T186793	LABEL	9		X	X	X	GRAY CIRCLE
69	T207191	LABEL	1	951253-	X	X	X	HYDRAULIC

TRADEMARKS AND LABELS
(FRENCH AND SPANISH)

T212802 -UN-15JUL05

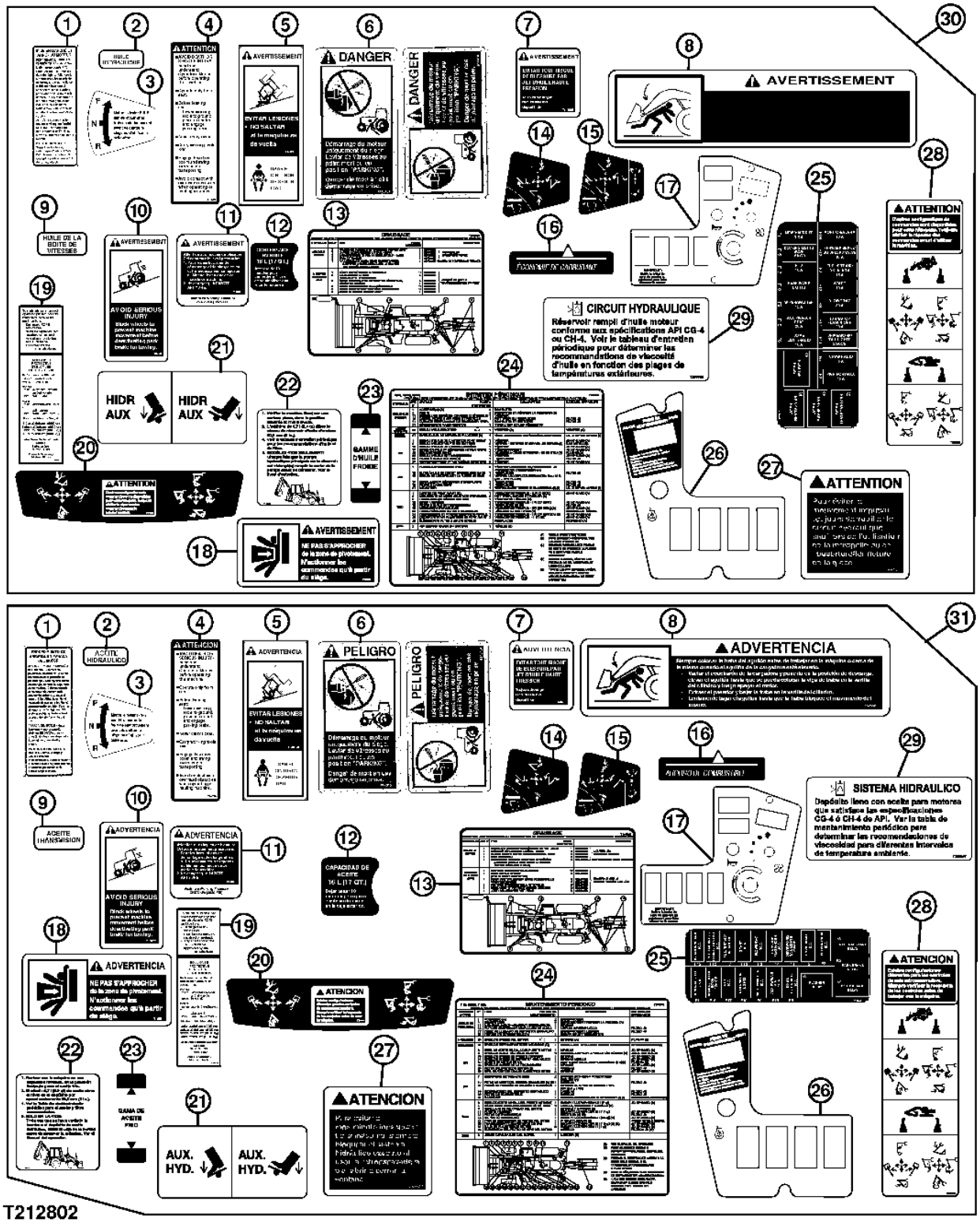

TRADEMARKS AND LABELS
(FRENCH AND SPANISH)

KEY	PART NO.	PART NAME	QTY	SERIAL NO.	310G	310SG	315SG	REMARKS
1	T139165	LABEL	1		X	X	X	ENGINE START AND STOP (FRENCH)
	T139167	LABEL	1		X	X	X	ENGINE START AND STOP (SPANISH)
2	T141093	LABEL	1		X	X	X	HYDRAULIC OIL (FRENCH)
	T141075	LABEL	1		X	X	X	HYDRAULIC OIL (SPANISH)
3	T141096	LABEL	1		X	X	X	DIRECTION CONTROL SWITCH (FRENCH)
	T141078	LABEL	1		X	X	X	DIRECTION CONTROL SWITCH (SPANISH)
4	T146095	SAFETY SIGN	1		X	X	X	CAUTION SAFETY (FRENCH)
	T146089	SAFETY SIGN	1		X	X	X	CAUTION SAFETY (SPANISH)
5	T146099	SAFETY SIGN	1		X	X	X	WARNING SEAT BELT (FRENCH)
	T146098	SAFETY SIGN	1		X	X	X	WARNING SEAT BELT (SPANISH)
6	T146104	LABEL	1		X	X	X	BY-PASS (FRENCH)
	T146106	LABEL	1		X	X	X	BY-PASS (SPANISH)
7	T146908	LABEL	1		X	X	X	WARNING (FRENCH)
	T146911	LABEL	1		X	X	X	WARNING (SPANISH)
8	T152997	LABEL	1					BOOM LOCK (FRENCH)
	T152996	LABEL	1					BOOM LOCK (SPANISH)
9	T160761	LABEL	1					TRANSMISSION OIL (FRENCH)
	T160763	LABEL	1					TRANSMISSION OIL (SPANISH)
10	T160762	LABEL	1		X	X	X	PARK BRAKE WARNING (FRENCH)
	T160769	LABEL	1		X	X	X	PARK BRAKE WARNING (SPANISH)
11	T164128	LABEL	1		X	X	X	ACCUMULATOR (FRENCH)
	T164129	LABEL	1		X	X	X	ACCUMULATOR (SPANISH)
12	.....	LABEL	1		X	X	X	AXLE OIL CAPACITY
13	T184506	LABEL	1	-951252				PERIODIC GREASING (FRENCH)
	T214323	LABEL	1	951253-				PERIODIC GREASING (FRENCH)
	T184502	LABEL	1	-951252				PERIODIC GREASING (SPANISH)
	T214322	LABEL	1	951253-				PERIODIC GREASING (SPANISH)
14	T185567	LABEL	1					LOADER CONTROL (FRENCH)
	T185545	LABEL	1					LOADER CONTROL (SPANISH)
15	T185568	LABEL	1					LOADER 4 IN 1 (FRENCH)
	T185546	LABEL	1					LOADER 4 IN 1 (SPANISH)
16	T185569	LABEL	1					FUEL ECONOMY (FRENCH)
	T185547	LABEL	1					FUEL ECONOMY (SPANISH)
17	T185570	LABEL	1					(FRENCH)
	T185548	LABEL	1					(SPANISH)
18	T185571	LABEL	1					WARNING (FRENCH)
	T185549	LABEL	1					WARNING (SPANISH)
19	T185573	LABEL	1					ROPS (FRENCH)
	T185552	LABEL	1					ROPS (SPANISH)
20	T185577	LABEL	1					BACKHOE CONTROL (FRENCH)
	T185553	LABEL	1					BACKHOE CONTROL (SPANISH)
	T188018	LABEL	1					(FRENCH) SAE
	T188019	LABEL	1					(SPANISH) SAE

THIS PARTS LISTING IS CONTINUED

TRADEMARKS AND LABELS
(FRENCH AND SPANISH)

T212802 -UN-15JUL05

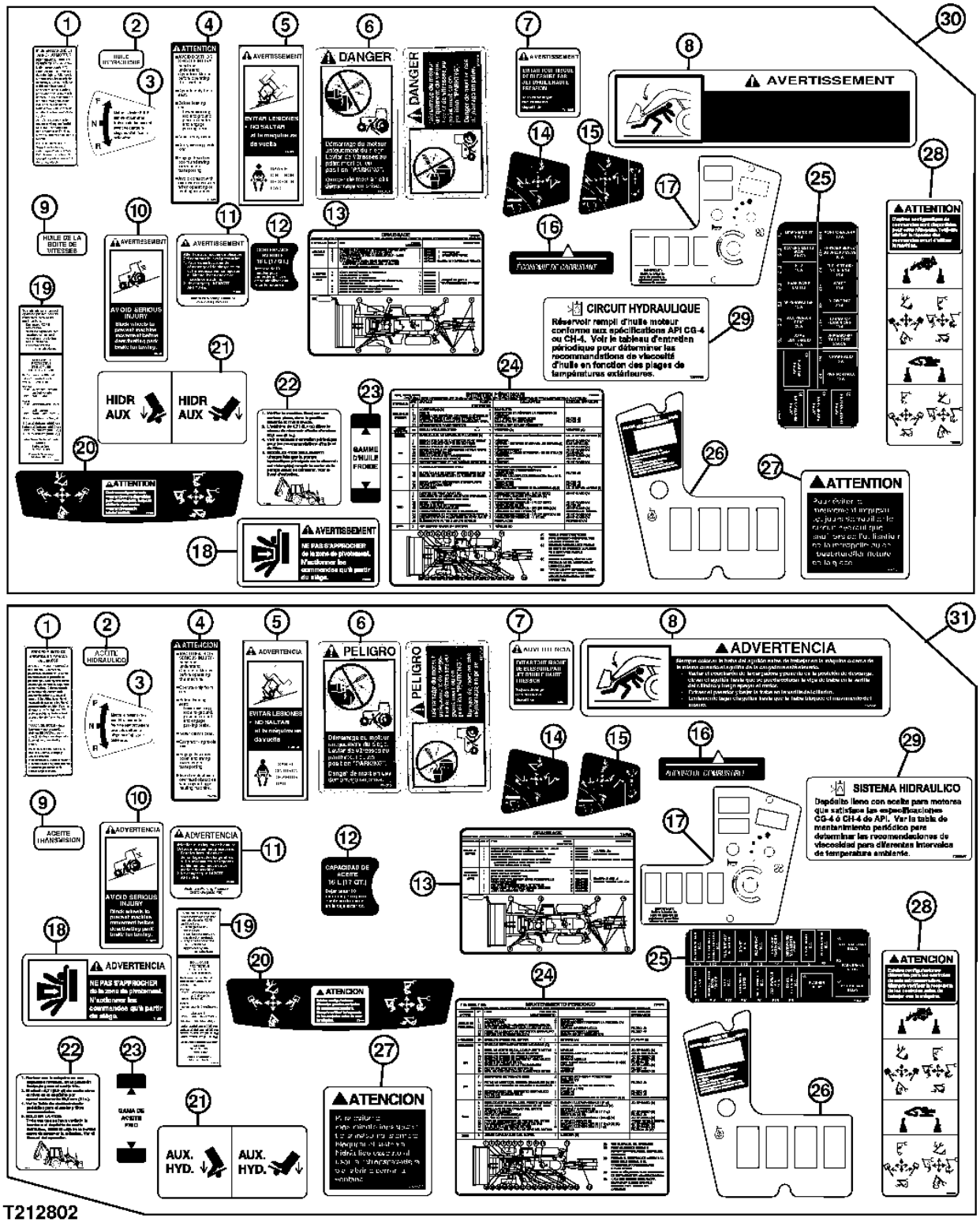

TRADEMARKS AND LABELS
(FRENCH AND SPANISH)

KEY	PART NO.	PART NAME	QTY	SERIAL NO.	310G	310SG	315SG	REMARKS
21	T185695	LABEL	1					FOOT PEDAL (FRENCH)
	T185696	LABEL	1					FOOT PEDAL (SPANISH)
22	T201286	LABEL	1					HYDRAULIC OIL RANGE (FRENCH)
	T201285	LABEL	1					HYDRAULIC OIL RANGE (SPANISH)
23	T186128	LABEL	1					HYD. OIL RANGE (FRENCH)
	T186125	LABEL	1					HYD. OIL RANGE (SPANISH)
24	T186392	LABEL	1	-910055				PERIODIC MAINTENANCE CHART (FRENCH)
	T201294	LABEL	1	910056-943092				PERIODIC MAINTENANCE CHART (FRENCH)
	T213334	LABEL	1	943093-951252				PERIODIC MAINTENANCE CHART (FRENCH)
	T209530	LABEL	1	951252-				PERIODIC MAINTENANCE CHART (FRENCH)
	T186393	LABEL	1	-910055				PERIODIC MAINTENANCE CHART (SPANISH)
	T201295	LABEL	1	910056-943092				PERIODIC MAINTENANCE CHART (SPANISH)
	T213335	LABEL	1	943093-951252				PERIODIC MAINTENANCE CHART (SPANISH)
	T209531	LABEL	1	951253-				PERIODIC MAINTENANCE CHART (SPANISH)
25	T186440	LABEL	1	-910055				FUSE BLOCK (FRENCH)
	T188819	LABEL	1	910056-951252				FUSE BLOCK (FRENCH)
	T207042	LABEL	1	951253-				FUSE BLOCK (FRENCH)
	T186439	LABEL	1	-910055				FUSE BLOCK (SPANISH)
	T188818	LABEL	1	910056-951252				FUSE BLOCK (SPANISH)
	T207041	LABEL	1	951253-				FUSE BLOCK (SPANISH)
26	T186441	LABEL	1					(FRENCH)
	T186442	LABEL	1					(SPANISH)
27	T200659	SAFETY SIGN	1					CAUTION, MOTION (FRENCH)
	T200660	SAFETY SIGN	1					CAUTION, MOTION (SPANISH)
28	T200895	SAFETY SIGN	1					BACKHOE CONTROL (FRENCH)
	T200896	SAFETY SIGN	1					BACKHOE CONTROL (SPANISH)
29	T208008	LABEL	1	951253-				HYDRAULIC RESERVOIR (FRENCH)
	T208007	LABEL	1	951253-				HYDRAULIC RESERVOIR (SPANISH)
30	.....	DECAL KIT	1					(FRENCH) (LANGUAGE KIT NO LONGER AVAILABLE)
31	.....	DECAL KIT	1					(SPANISH) (LANGUAGE KIT NO LONGER AVAILABLE)

LOCTITE SERVICE KIT
(PARTS LISTED BELOW ARE NOT ILLUSTRATED)

KEY	PART NO.	PART NAME	QTY	SERIAL NO.	REMARKS
1	TY16285	PRIMER	1		
	T43512	SEALANT	1		LOCTITE
	T43513	SEALANT	1		
	PM38655	SEALANT	1		(SUB FOR T43514) PLASTIC
	PM37485	ADHESIVE	1		(SUB FOR TY15969)

MEMORANDA

FLUID ANALYSIS PRODUCTS (OILSCAN PLUS TEST KIT)

T135474 -UN-15NOV00



T135474

FLUID ANALYSIS PRODUCTS (OILSCAN PLUS TEST KIT)

KEY	PART NO.	PART NAME	QTY	SERIAL NO.	REMARKS
1	.....	KIT	1		STANDARD ENGINE, TRANSMISSION, GEARBOXES & BASIC HYDRAULIC SYSTEM, SELF EXTRACTION 12 PER PACKAGE)(INCLUDES SPECTROCHEMICAL ANALYSIS, VISCOSITY, ° WATER, FUEL DILUTION, GLYCOL, FUEL SOOT) (AT178840 NO LONGER AVAILABLE FOR SERVICE - SUB AT180333)
	AT180333	KIT	1		STANDARD ENGINE, 4 OZ BOTTLE (10 PER PACKAGE) (SAME AS AT178840)
	.....	KIT	1		COMPREHENSIVE ENGINE W/TBN (EXTENDED DRAIN) (12 PER PACKAGE)(SAME AS AT178840 PLUS TBN) (AT178842 NO LONGER AVAILABLE FOR SERVICE - SUB AT180334)
	AT180334	KIT	1		COMPREHENSIVE ENGINE W/TBN (EXTENDED DRAIN) 4 OZ BOTTLE (10 PRT PACKAGE) (SAME AS AT178842)
	AT303189	KIT	1		COMPREHENSIVE HYDRAULIC & HYDROSTATIC SYSTEMS, 4 OZ BOTTLE (10 PER PACKAGE) (REQUIRES USE OF A SAMPLING VALVE FOR ACCURATE RESULTS) (SUB FOR AT178844)
	AT182602	ASSEMBLY LINE PARTS	1		VALVE, SAMPLING, 1000 PSI RATING, (5 PER PACKAGE) (PUSH BUTTON, 1/8" NPT MALE)
	AT182603	KIT	1		FITTING, PRESSURE REDUCING (5 PER PACKAGE) (REQUIRED FOR CIRCUIT PRESSURE OVER 100 PSI) (USED WITH AT182602) (7/16"O-RING MALE X 1/8" NPT FEMALE WITH 0.025" ORIFACE)
	IPSKIT3	PUMP	1		OIL EXTRACTION (1 PER PACKAGE)(CAN BE USED WITH AT180333 AND AT180334 KITS TO EXTRACAT OIL SAMPLE)
	DS0345	TUBE	1		500'ROLL (USED WITH IPSKIT3 PUMP TO EXTRACT SAMPLE)
	DS0346	TUBE	1		100' ROLL (USED WITH IPSKIT3 PUMP TO EXTRACT SAMPLE)

O-RING KIT

TP70402 -UN-13JUL00

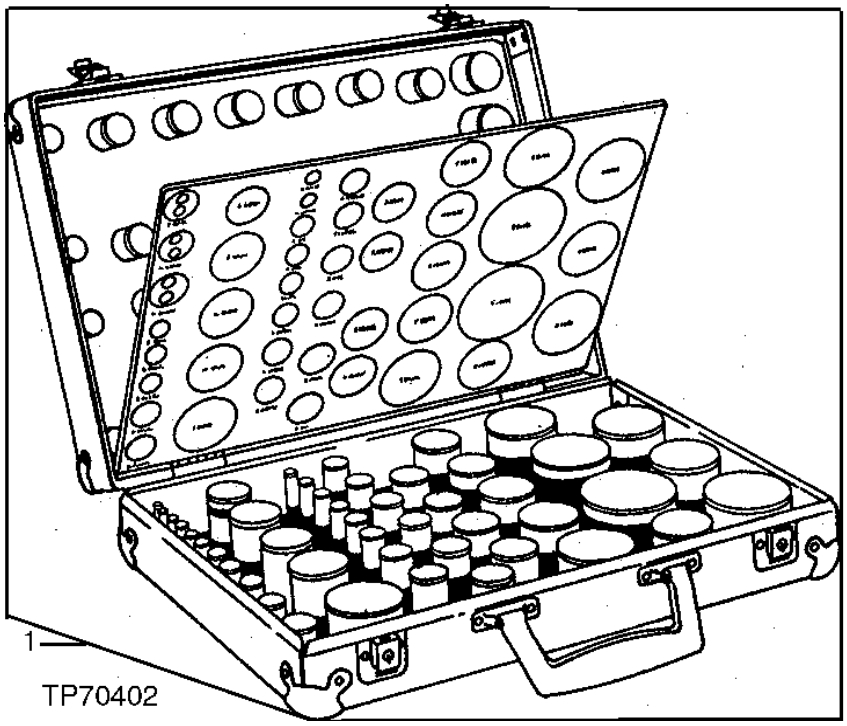

O-RING KIT

KEY	PART NO.	PART NAME	QTY	SERIAL NO.	REMARKS
1	AT130208	O-RING KIT	1		(CONTAINS FIVE OF EACH O-RING LISTED BELOW) (INCLUDES CARRYING CASE)
	A3606R	O-RING	1		
	A3917R	O-RING	1		
	A4365R	O-RING	1		
	A4730R	O-RING	1		
	B2762R	O-RING	1		
	B3690R	O-RING	1		
	F1056R	O-RING	1		
	F1870R	O-RING	1		
	U12547	O-RING	1		
	F3353R	O-RING	1		
	H35244	RING	1		
	T78313	O-RING	1		
	M4237T	O-RING	1		
	N131838	O-RING	1		
	P46051	O-RING	1		
	P48403	O-RING	1		
	P50631	O-RING	1		
	R375R	O-RING	1		
	R394R	O-RING	1		
	R459R	O-RING	1		
	R460R	O-RING	1		
	R495R	O-RING	1		
	R10093	O-RING	1		
	R26286	O-RING	1		
	R26287	O-RING	1		
	R26375	O-RING	1		
	R26448	O-RING	1		
	R26773	O-RING	1		
	R26863	O-RING	1		
	R26906	O-RING	1		
	R27166	O-RING	1		
	R27928	O-RING	1		
	R28776	O-RING	1		
	R28782	O-RING	1		
	R29463	O-RING	1		
	R29936	O-RING	1		
	R30903	O-RING	1		
	R33259	O-RING	1		
	R56461	O-RING	1		
	R48638	O-RING	1		
	R71732	O-RING	1		
	R53543	O-RING	1		
	R56463	O-RING	1		
	R56751	O-RING	1		
	R60332	O-RING	1		
	R80632	O-RING	1		
	T12275	O-RING	1		
	T13119	O-RING	1		
	T16752	O-RING	1		
	T19687	O-RING	1		
	R112857	O-RING	1		
	T25335	O-RING	1		
	T34248	O-RING	1		
	U10289	O-RING	1		
	U10746	O-RING	1		
	U10776	O-RING	1		
	U11326	O-RING	1		
	U11343	O-RING	1		
	U12037	O-RING	1		
	U12198	O-RING	1		
	U12331	O-RING	1		
	U12547	O-RING	1		
	U13639	O-RING	1		
	U15415	O-RING	1		
	U15973	O-RING	1		
	U17409	O-RING	1		
	U42111	O-RING	1		

ENVIORMENTAL DRAIN PACKAGE

TP50533 -UN-02JAN97

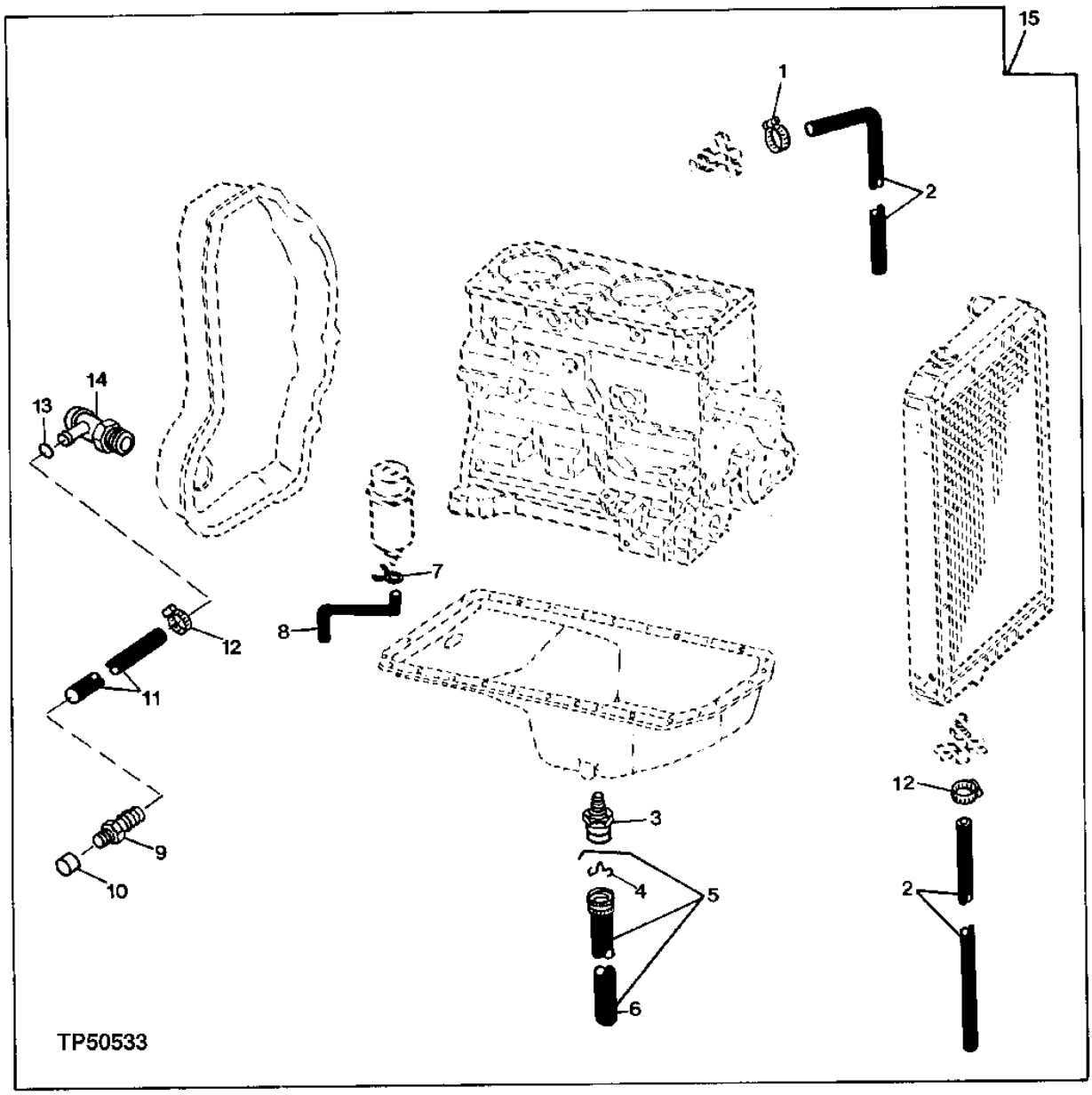

ENVIORMENTAL DRAIN PACKAGE

KEY	PART NO.	PART NAME	QTY	SERIAL NO.	310G	315SG	REMARKS
1	AR21837	CLAMP	1		X	X	
2	T161002	HOSE	2		X	X	
3	AT179995	DRAIN VALVE	1		X	X	
4	T161615	PIN	1		X	X	
5	AT179996	HOSE	1		X	X	
6	.....	HYDRAULIC HOSE	1		X	X	MAKE FROM T60811 BULK MATERIAL CUT TO LENGTH
7	T13254	CLAMP	1		X	X	
8	T161093	HOSE	1		X	X	
9	H23196	FITTING	1		X	X	
10	15H3	FITTING	1		X	X	
11	.....	HYDRAULIC HOSE	1		X	X	MAKE FROM T60811 BULK MATERIAL CUT TO LENGTH
12	RE65978	CLAMP	2		X	X	
13	R26906	O-RING	1		X	X	
14	AT152180	DRAIN VALVE	1		X	X	
15	AT179053	MOUNTING PARTS	1		X	X	(WHOLE GOODS)

FRONT AXLE AND STEERING CYLINDER LUBRICATION SYSTEM
(SERIAL NO. -911131)

TP57956 -UN-28OCT98

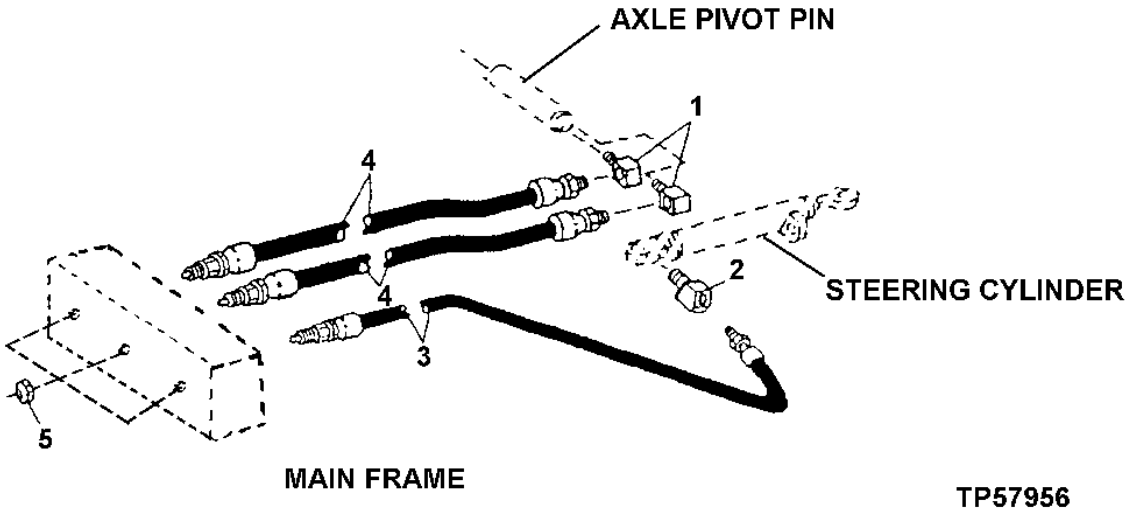

KEY	PART NO.	PART NAME	QTY	SERIAL NO.	310G	310SG	315SG	REMARKS
1	JD7838	ADAPTER FITTING	2		X	X	X	
2	JD7838	ADAPTER FITTING	1		X	X	X	
3	AT173254	HYDRAULIC HOSE	1		X	X	X	
4	AT173254	HYDRAULIC HOSE	2		X	X	X	
5	E12379	NUT	3		X	X	X	

MEMORANDA

SINGLE BATTERY INSTALLATION

T145407 -UN-20SEP01

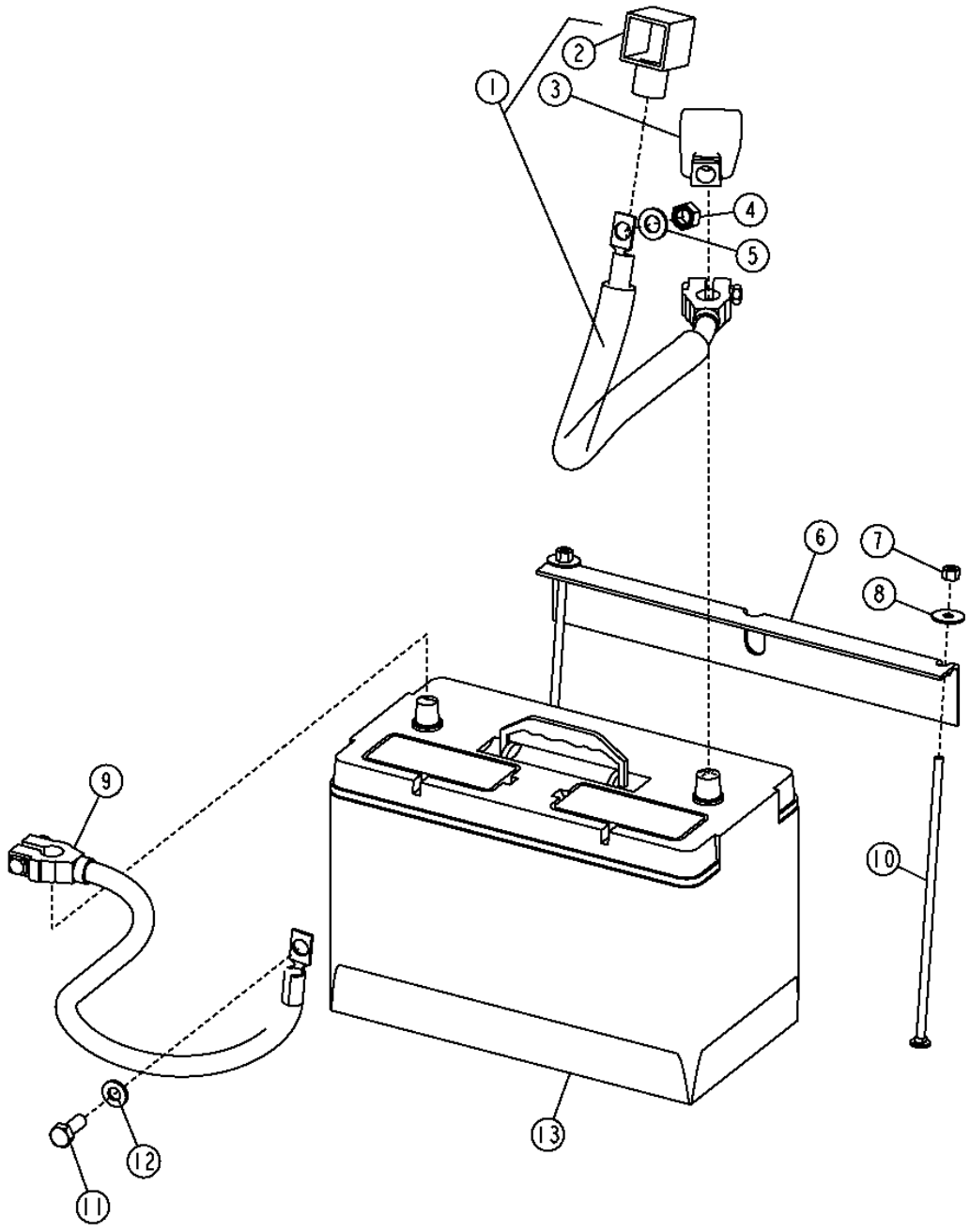

SINGLE BATTERY INSTALLATION

KEY	PART NO.	PART NAME	QTY	SERIAL NO.	310G	310SG	315SG	REMARKS
1	AT195996	BATTERY CABLE	1	-917119	X			POSITIVE (WITH TURBOCHARGER) (SUB FOR AT185689)
	AT195996	BATTERY CABLE	1	-916367	X			POSITIVE (WITHOUT TURBOCHARGER)
	AT196446	BATTERY CABLE	1	917120-	X			POSITIVE (WITH TURBOCHARGER) (SUB FOR AT185689)
	AT196446	BATTERY CABLE	1	916368-	X			POSITIVE (WITHOUT TURBOCHARGER)
	AT196446	BATTERY CABLE	1			X	X	
2	T129165	BOOT	1			X	X	
3	T107117	COVER	1		X	X	X	
4	14M7275	NUT	1		X	X	X	M12
5	24M7047	WASHER	1		X	X	X	
6	T121288	ANGLE	1		X	X	X	
7	M40333	LOCK NUT	2		X	X	X	1/4"
8	24H1288	WASHER	2		X	X	X	
9	AT195995	BATTERY CABLE	1		X	X	X	NEGATIVE, (SUB FOR AT185690)
10	03H2208	BOLT	2		X	X	X	1/4" X 9-1/4"
11	19M7402	CAP SCREW	1		X	X	X	M10 X 25
12	24M7239	WASHER	2		X	X	X	
13	TY6128	DRY CHARGED BATTERY	1		X	X	X	(WARRANTY NO. AT132864) (950 CCA) (SUB FOR TY21766, THIS APPLICATION)

DUAL BATTERY INSTALLATION

T145408 -UN-20SEP01

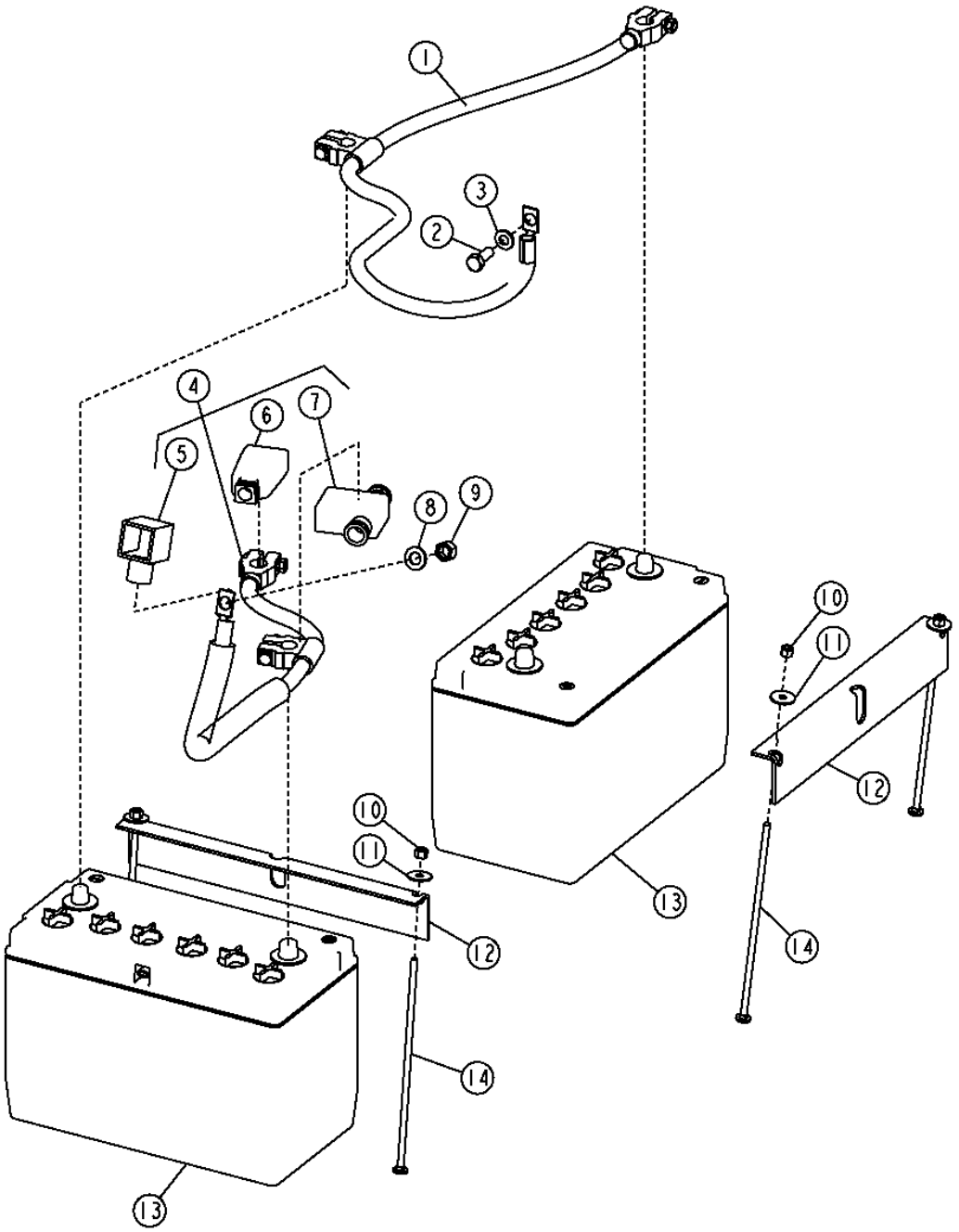

T145408

DUAL BATTERY INSTALLATION

KEY	PART NO.	PART NAME	QTY	SERIAL NO.	310G	310SG	315SG	REMARKS
1	AT195911	BATTERY CABLE	1		X	X	X	NEGATIVE, (SUB FOR AT191817)
2	19M7402	CAP SCREW	1		X	X	X	M10 X 25
3	24M7239	WASHER	1		X	X	X	
4	AT195910	BATTERY CABLE	1	-917119	X			POSITIVE (WITH TURBOCHARGER) (SUB FOR AT185691)
	AT195910	BATTERY CABLE	1	-916367	X			POSITIVE (WITHOUT TURBOCHARGER)
	AT196447	BATTERY CABLE	1	917120-	X			POSITIVE (WITH TURBOCHARGER) (SUB FOR AT185691)
	AT196447	BATTERY CABLE	1	916368-	X			POSITIVE (WITHOUT TURBOCHARGER)
	AT195910	BATTERY CABLE	1	-902007		X	X	POSITIVE
	AT196447	BATTERY CABLE	1	902008-		X	X	
5	T129165	BOOT	1			X	X	
6	T107117	COVER	1		X	X	X	
7	T107116	COVER	1		X	X	X	
8	24M7047	WASHER	1		X	X	X	
9	14M7275	NUT	1		X	X	X	
10	M40333	LOCK NUT	4		X	X	X	6.350 MM
11	24H1288	WASHER	4		X	X	X	
12	T121288	ANGLE	2		X	X	X	
13	TY6128	DRY CHARGED BATTERY	2		X	X	X	(WARRANTY NO. AT132864) (950 CCA) (SUB FOR TY21766, THIS APPLICATION)
14	03H2208	BOLT	4		X	X	X	1/4" X 9-1/4"

MASTER BATTERY DISCONNECT

T152635 -UN-21MAR02

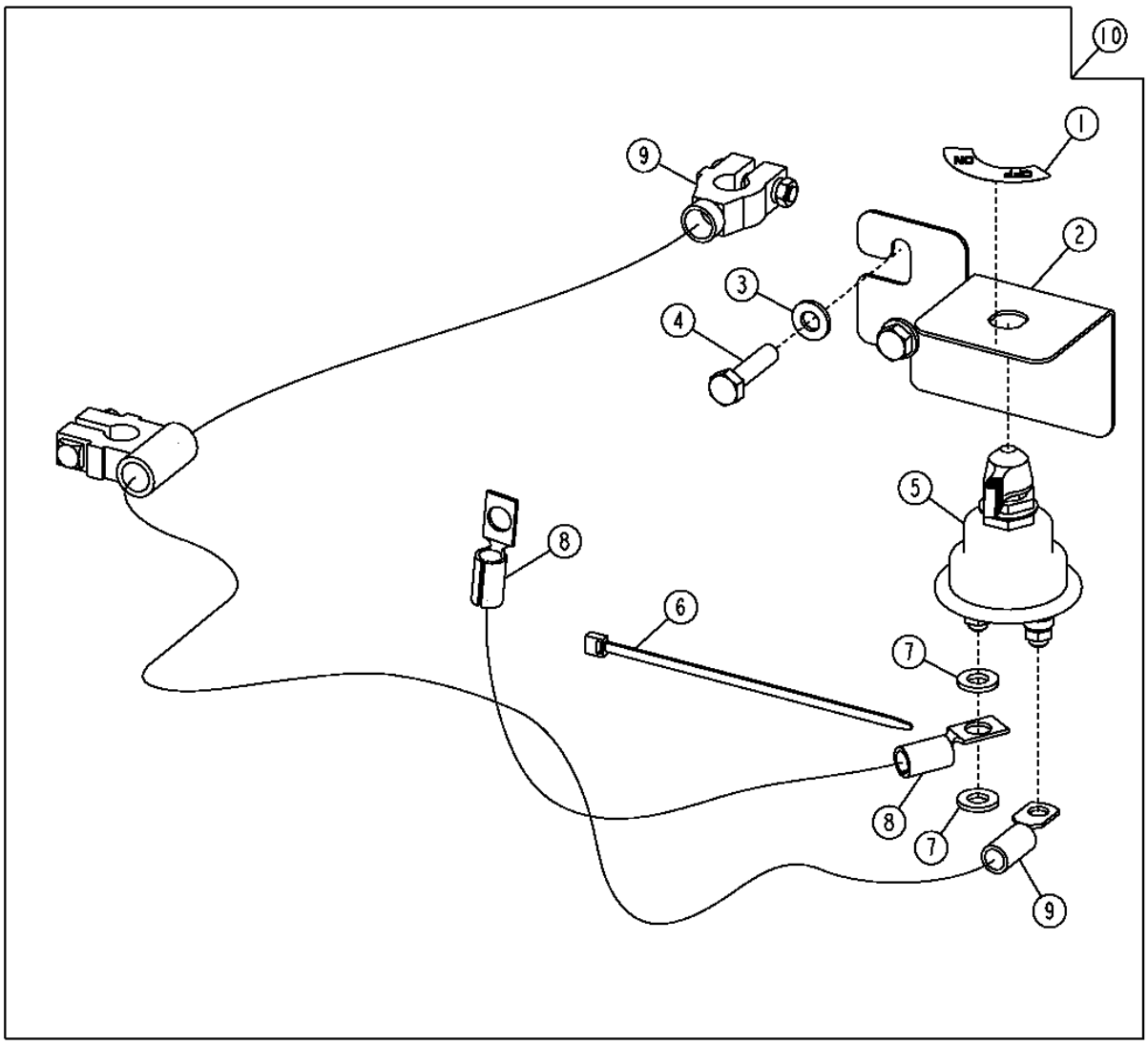

T152635

MASTER BATTERY DISCONNECT

KEY	PART NO.	PART NAME	QTY	SERIAL NO.	310G	310SG	315SG	REMARKS
1	T42199	LABEL	1		X	X	X	
2	T190658	BRACKET	1		X	X	X	
3	24M7239	WASHER	2		X	X	X	
4	19M7806	SCREW	2		X	X	X	M10 X 50, (SUB FOR 19M7384)
5	AT41188	SWITCH	1		X	X	X	
6	R44302	TIE BAND	1		X	X	X	
7	.....	WASHER	2		X	X	X	
8	AR67069	GROUND CABLE	1		X	X	X	
9	AT197922	BATTERY CABLE	1		X	X	X	
10	AT198096	KIT	1		X	X	X	WHOLE GOODS, (SUB FOR AT186452, THIS APPLICATION)

REMOTE START POST

T144950 -UN-20AUG01

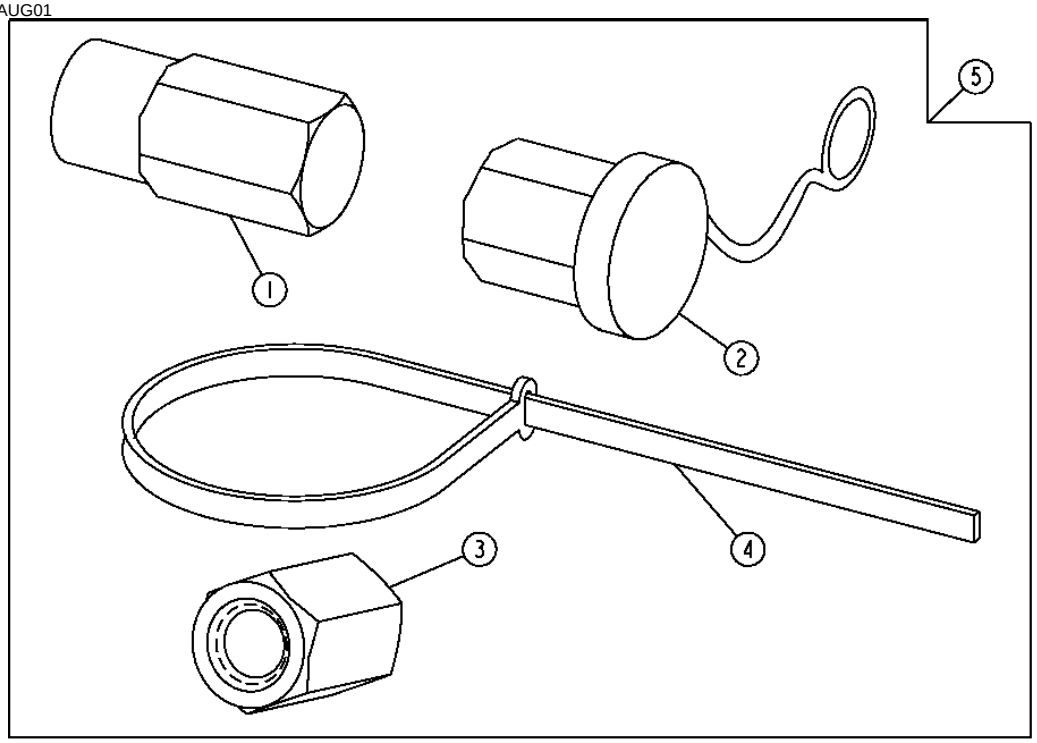

T144950

KEY	PART NO.	PART NAME	QTY	SERIAL NO.	310G	311SG	315SG	REMARKS
1	T172353	TERMINAL	1		X	X	X	ISKRA
2	T134104	COVER	1		X	X	X	REMOTE START POST
3	E64052	NUT	1		X	X	X	DENSO, (SUB FOR T174530)
4	H77698	TIE BAND	1		X	X	X	
5	AT186213	KIT	1		X	X	X	(WHOLE GOODS)

MEMORANDA

ALTERNATOR

T152387 -UN-03APR02

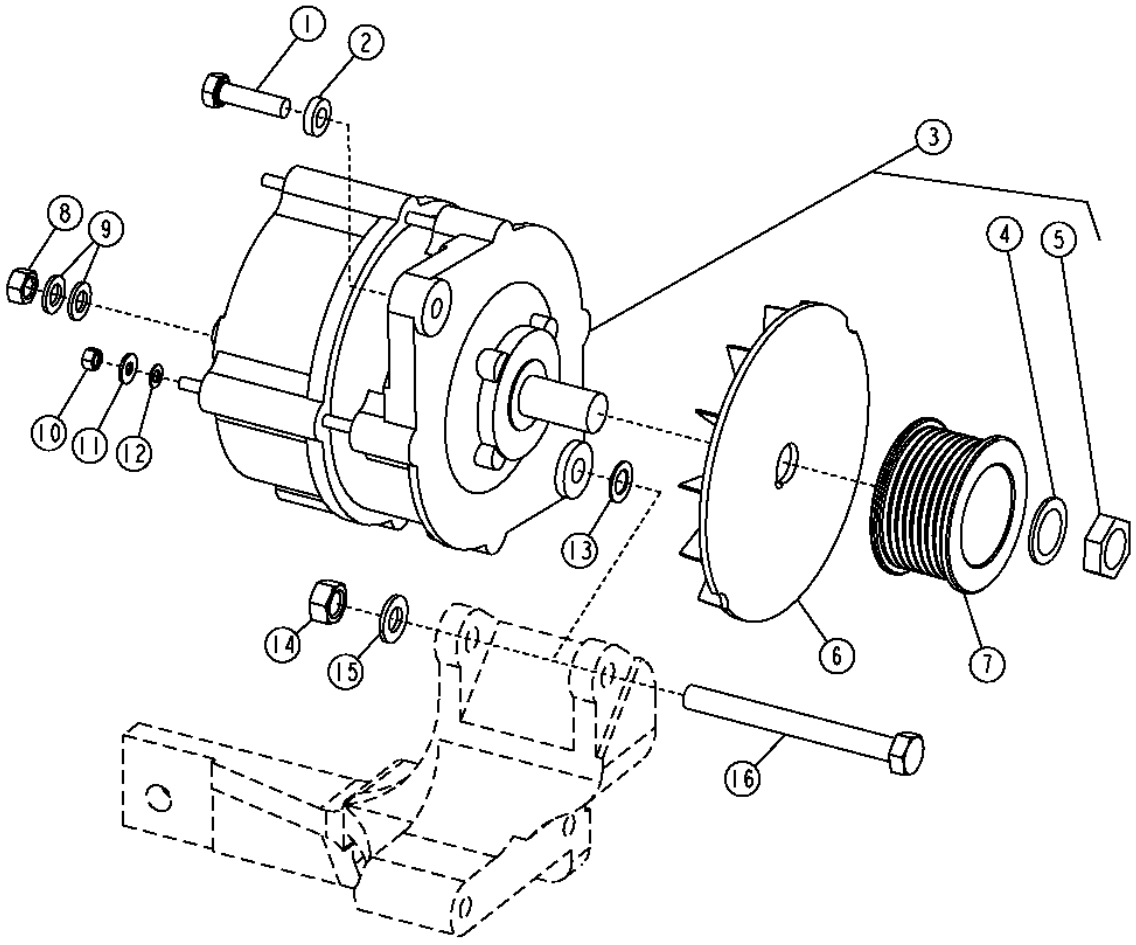

T152387

ALTERNATOR

KEY	PART NO.	PART NAME	QTY	SERIAL NO.	310G	315SG	REMARKS
1	19M7513	CAP SCREW	1		X	X	M8 X 30
2	R48808	WASHER	1		X	X	
3	AH137883	ALTERNATOR	1		X	X	12 VOLT 95 AMPERE, (SUB FOR AT220394)
	TY24485	ALTERNATOR	1		X	X	12 VOLT 95 AMPERE (REMANUFACTURED) (SUB FOR TY6750)
	AT173624	ALTERNATOR	1		X	X	12 VOLT 65 AMPERE, (SUB FOR AT220393) (SUB TY6799)
	H144094	VOLTAGE REGULATOR	1		X	X	
	H144095	CAPACITOR	1		X	X	
	L33993	FAN	1		X	X	
	TY6799	ALTERNATOR	1		X	X	12 VOLT 65 AMPERE (REMANUFACTURED)
4	T10745	WASHER	1		X	X	
5	14M7158	NUT	1		X	X	M16
6	T158584	FAN	1		X	X	
7	R501486	PULLEY	1		X	X	
8	14M7273	NUT	1		X	X	M8
9	24M7036	WASHER	2		X	X	
10	14M7297	NUT	2		X	X	M5
11	24H1283	WASHER	1		X	X	
12	12M7060	WASHER	3		X	X	
13	R64525	THRUST WASHER	1		X	X	
14	14M7274	NUT	1		X	X	M10
15	24M7028	WASHER	1		X	X	
16	19M8093	CAP SCREW	1		X	X	M10 X 100

ROTATING BEACON

T209083 -UN-11MAR05

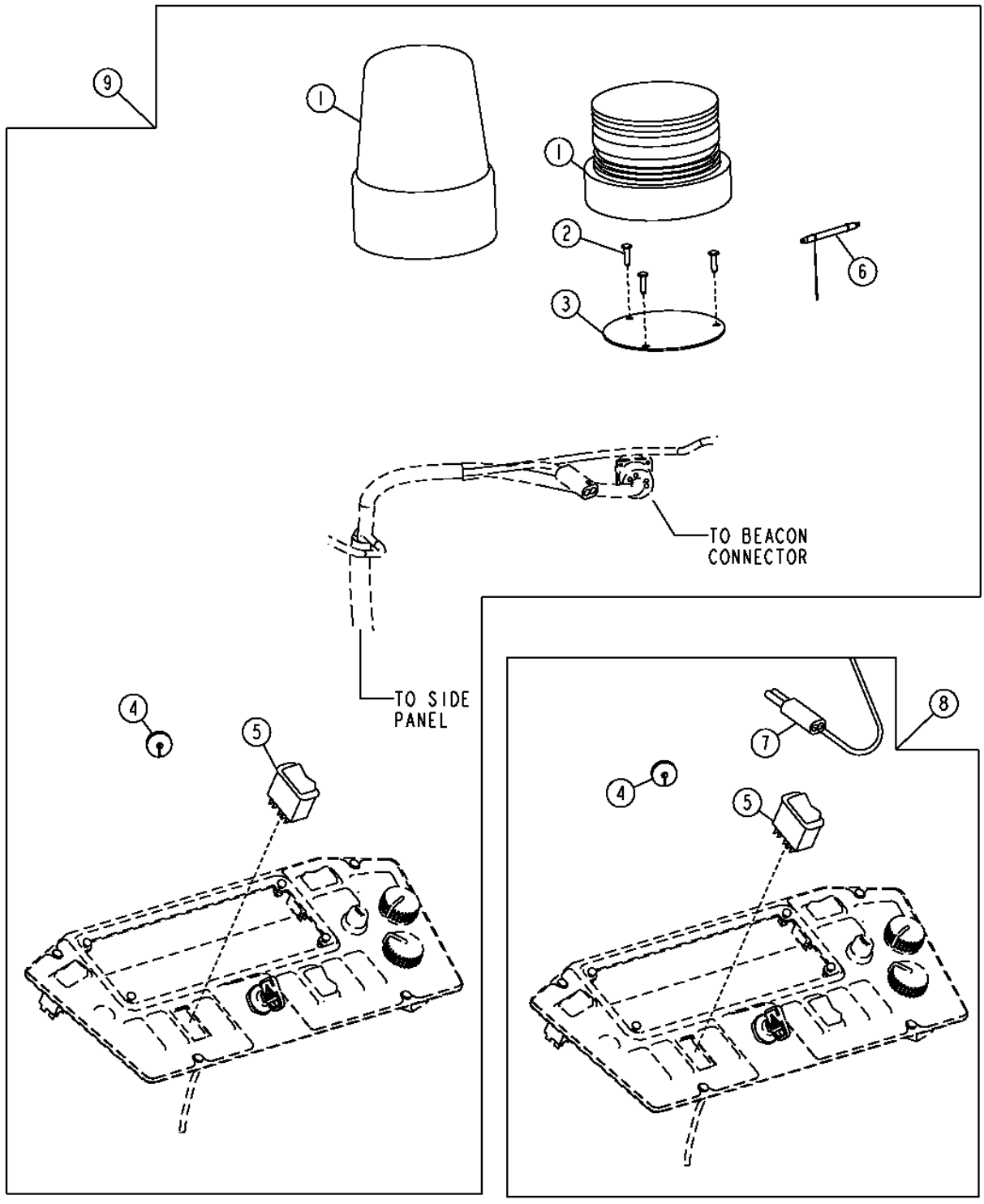

T209083

ROTATING BEACON

KEY	PART NO.	PART NAME	QTY	SERIAL NO.	310G	315SG	REMARKS
1	AT187816	STROBE LIGHT	1		X	X	STROBE
	AT194822	REVOLVING LIGHT DOME	1		X	X	ROTATING BEACON
	AT310650	REVOLVING LIGHT	1		X	X	BEACON
2	37M7218	SCREW	3		X	X	
3	T167214	PLATE	1		X	X	
4	T74952	GROMMET	1		X	X	
5	AT175603	TOGGLE/ROCKER SWITCH	1		X	X	
6	PML377	STROBE LIGHT	1		X	X	12 VOLT
7	AT195461	ROOF WIRING HARNESS	1		X	X	
8	**AT195462**	**KIT**	**1**		**X**	**X**	**(WHOLE GOODS) WIRING KIT**
9	AT187815	KIT	1		X	X	(WHOLE GOODS) STROBE LIGHT
	AT194821	KIT	1		X	X	(WHOLE GOODS) ROTATING BEACON

STANDARD LIGHTS, DELUXE LIGHTS AND ROOF HARNESS
(SERIAL NO. -XXXXXX)

T138541 -UN-22FEB01

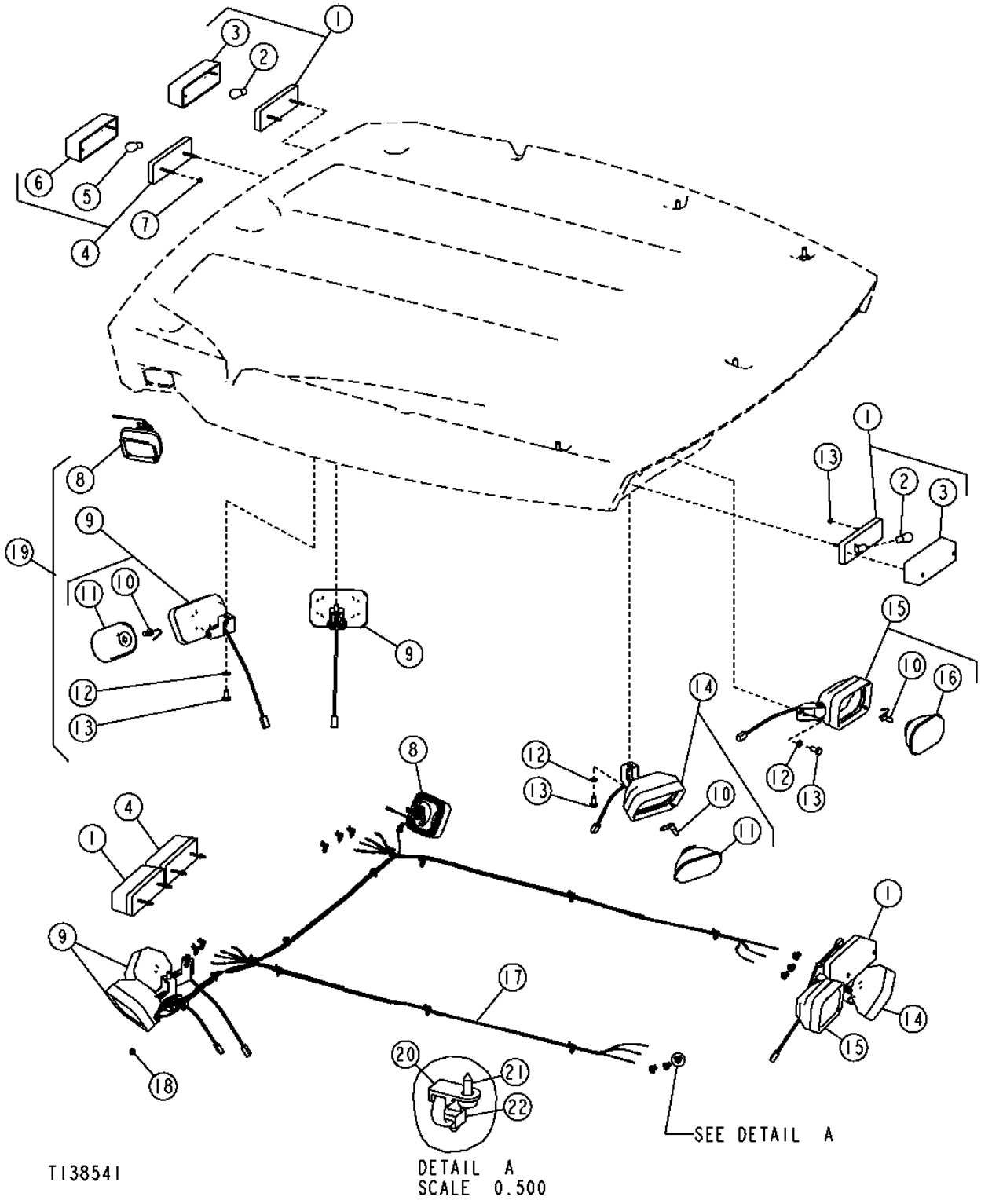

STANDARD LIGHTS, DELUXE LIGHTS AND ROOF HARNESS
(SERIAL NO. -XXXXXX)

KEY	PART NO.	PART NAME	QTY	SERIAL NO.	310G	310SG	315SG	REMARKS
1	AT184736	LAMP	4		X	X	X	(WARNING)
2	AD2062R	BULB	4		X	X	X	
3	T165542	LENS	4		X	X	X	(AMBER)
4	AT184737	LAMP	2		X	X	X	(STOP/TAIL)
5	AR48041	BULB	2		X	X	X	
6	T165543	LENS	2		X	X	X	(RED)
7	14M7375	FLANGE NUT	12		X	X	X	M5
8	AT187868	LAMP	2		X	X	X	(DOCKING)
	AT130104	BULB	2		X	X	X	(HALOGEN LONG LIFE)
	AT191409	LENS	2		X	X	X	
9	AT191875	LAMP	4		X	X	X	(WORK)
10	AT130104	BULB	4		X	X	X	(HALOGEN LONG LIFE)
11	AT191408	LENS	4		X	X	X	
12	24M7239	WASHER	8		X	X	X	(SUB FOR 24M7096, THIS APPLICATION)
13	19M8324	CAP SCREW	8		X	X	X	M10 X 16
14	AT192460	LAMP	2		X	X	X	(WORK)
	AT130104	BULB	2		X	X	X	(HALOGEN LONG LIFE)
	AT191408	LENS	2		X	X	X	
15	AT184972	LAMP	1		X	X	X	(RIGHT)
	AT185451	LAMP	1		X	X	X	(LEFT)
16	AT191407	LENS	2		X	X	X	(WITH REFLECTOR)
17	AT191873	ROOF WIRING HARNESS	1		X	X	X	
18	R41440	GROMMET	2		X	X	X	
19	AT192242	KIT	1		X	X	X	WHOLE GOODS
20	T187394	ANCHOR	30		X	X	X	(SUB FOR (4) T185713 AND (5) T185714)
21	T185769	SCREW	30		X	X	X	
22	R44302	TIE BAND	30		X	X	X	

STANDARD LIGHTS, DELUXE LIGHTS AND ROOF HARNESS
(SERIAL NO. XXXXXX-)

T214124 -UN-12SEP05

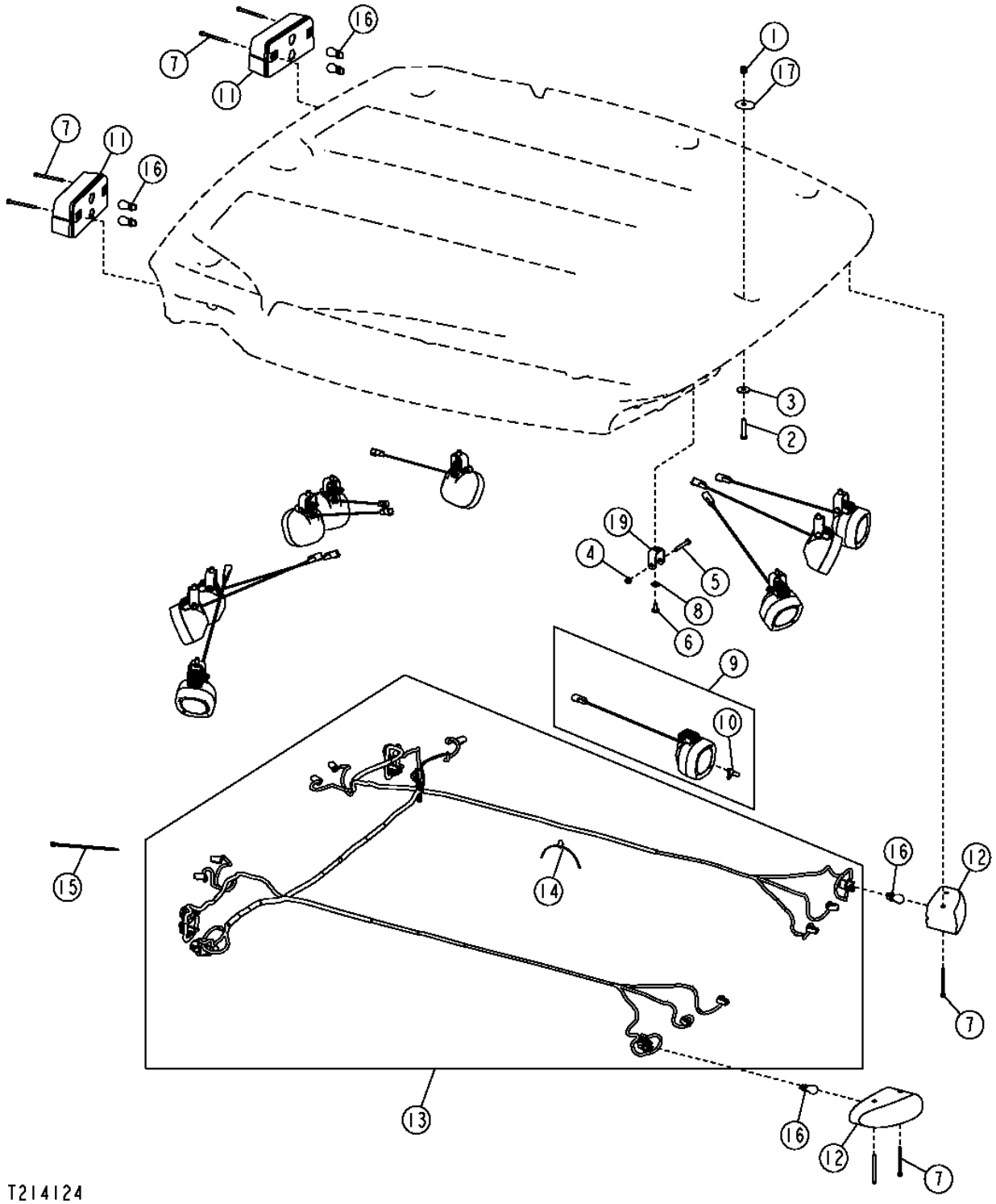

STANDARD LIGHTS, DELUXE LIGHTS AND ROOF HARNESS
(SERIAL NO. XXXXXX-)

KEY	PART NO.	PART NAME	QTY	SERIAL NO.	310G	310SG	315SG	REMARKS
1	14M7517	LOCK NUT	8		X	X	X	M10
2	19M8600	CAP SCREW	8		X	X	X	M10 X 50
3	24M7101	WASHER	8		X	X	X	
4	14M7426	LOCK NUT	10		X	X	X	M8
5	19M7165	CAP SCREW	10		X	X	X	M8 X 55
6	19M8324	CAP SCREW	10		X	X	X	M10 X 16
7	19M8482	SCREW	8		X	X	X	M6 X 80
8	24M7239	WASHER	10		X	X	X	
9	AT323301	FLOODLAMP	10		X	X	X	(SUB FOR AT323744, THIS APPLICATION)
10	AT130104	BULB	10		X	X	X	(HALOGEN LONG LIFE)
11	AT324938	STOP LIGHT	2		X	X	X	
12	AT326622	LAMP	2		X	X		(WARNING LAMP)
	AT326622	LAMP	2	-XXXXXX			X	(WARNING LAMP)
13	AT321365	ROOF WIRING HARNESS	1		X	X	X	(DELUXE LIGHTS)
	AT326166	ROOF WIRING HARNESS	1		X	X		(STANDARD LIGHTS)
	AT326166	ROOF WIRING HARNESS	1	-XXXXXX			X	(STANDARD LIGHTS)
	AT326932	ROOF WIRING HARNESS	1	XXXXXX-			X	
14	T209627	CLAMP	23		X	X	X	
15	R44302	TIE BAND	10		X	X	X	
16	RE49778	BULB	6		X	X	X	
17	M115279	PLUG	1		X	X	X	
18	T185664	SEALING WASHER	8		X	X	X	

FRONT CONSOLE WIRING HARNESSES

T149792 -UN-08JAN02

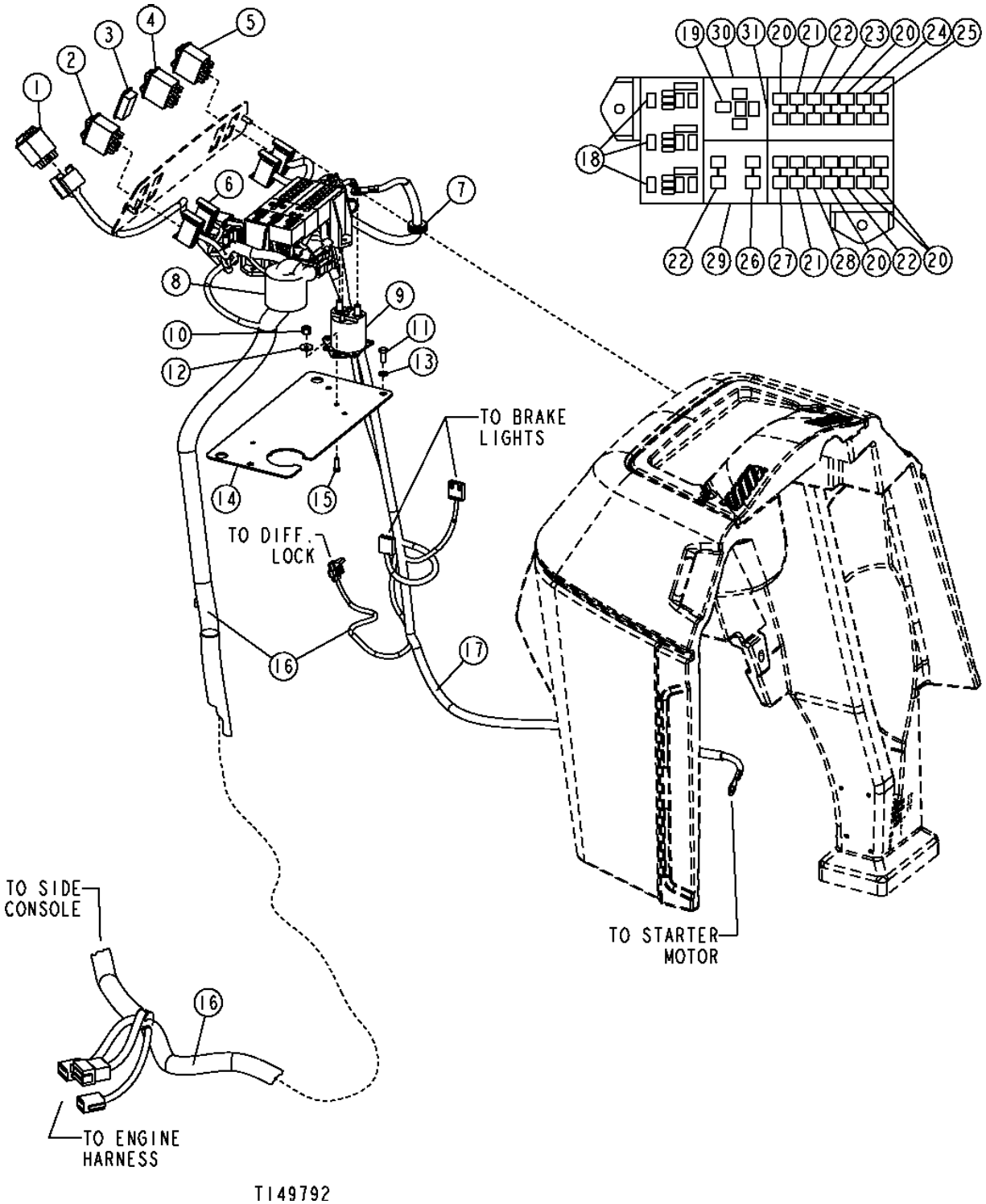

FRONT CONSOLE WIRING HARNESSES

KEY	PART NO.	PART NAME	QTY	SERIAL NO.	310G	310SG	315SG	REMARKS
1	AT175300	SWITCH	1		X	X	X	TURN SIGNAL
	T162380	BULB	1		X	X	X	
2	AT175071	SWITCH	1		X	X	X	FRONT WIPER
	AT175072	SWITCH	1		X	X	X	FRONT WASHER
3	.....	PLUG	1		X	X	X	(T163309 NLA) (SUB T207060)
	M115279	PLUG	1		X	X	X	SMALL BLANK
4	AT175070	SWITCH	1		X	X	X	WARNING
5	AT175069	SWITCH	1		X	X	X	LIGHTS
6	AT191701	WIRING HARNESS	1		X	X	X	QUARTER CAB WIPER HARNESS
7	M85517	GROMMET	1		X	X	X	
8	T166244	BUSHING	1		X	X	X	
9	AR73144	RELAY	1		X	X	X	
10	14M7375	FLANGE NUT	2		X	X	X	M5
11	19M7775	SCREW	2		X	X	X	M6 X 16, (SUB FOR 19M8425, THIS APPLICATION)
12	.....	WASHER	2		X	X	X	(24M7210 NO LONGER REQUIRED)
13	.....	WASHER	2		X	X	X	(24M7054 NO LONGER REQUIRED)
14	T206491	PLATE	1		X	X	X	(SUB FOR T183600) (ALSO ORDER T186793)
15	19M7372	CAP SCREW	2		X	X	X	M5 X 16
16	AT185980	WIRING HARNESS	1	-910055	X	X	X	CAB WITH SYNCHRO-SHUTTLE TRANSMISSION
	AT194865	WIRING HARNESS	1	910056-951252	X	X	X	CAB WITH SYNCHRO-SHUTTLE TRANSMISSION
	AT308208	WIRING HARNESS	1	951253-	X	X		CAB WITH SYNCHRO-SHUTTLE TRANSMISSION
	AT308208	WIRING HARNESS	1	951253-XXXXXX			X	CAB WITH SYNCHRO-SHUTTLE TRANSMISSION
	AT327441	WIRING HARNESS	1	XXXXXX-			X	CAB WITH SYNCHRO-SHUTTLE TRANSMISSION
	AT185981	WIRING HARNESS	1	-910055	X	X	X	CANOPY OR QUARTER CAB WITH SYNCHRO-SHUTTLE TRANSMISSION
	AT303579	WIRING HARNESS	1	910056-951252	X	X	X	CANOPY OR QUARTER CAB WITH SYNCHRO-SHUTTLE TRANSMISSION, (SUB FOR AT194866)
	AT308148	WIRING HARNESS	1	951253-	X	X	X	CANOPY WITH SYNCHRO-SHUTTLE TRANSMISSION
	AT199372	WIRING HARNESS	1	-910055		X	X	CAB WITH POWER SHIFT TRANSMISSION, (SUB FOR AT186625)
	AT194867	WIRING HARNESS	1	910056-951252		X	X	CAB WITH POWER SHIFT TRANSMISSION
	AT310730	WIRING HARNESS	1	951253-		X	X	CAB WITH POWER SHIFT TRANSMISSION
	AT303575	WIRING HARNESS	1	-910055		X	X	CANOPY OR QUARTER CAB WITH POWER SHIFT, (SUB FOR AT186626)
	AT303580	WIRING HARNESS	1	910056-951252		X	X	CANOPY OR QUARTER CAB WITH POWER SHIFT, (SUB FOR AT194868)
	AT310728	WIRING HARNESS	1	951253-		X	X	CANOPY WITH POWER SHIFT TRANSMISSION
17	AT196390	WIRING HARNESS	1		X	X	X	(SUB FOR AT192769)
18	AT310980	RELAY	3	-941732	X	X	X	(SUB FOR AT189041)
	AT310980	RELAY	3	-939834	X	X	X	(SUB FOR AT189041)
	AT310980	RELAY	3	-942024	X	X	X	(SUB FOR AT189041)
	AT308380	RELAY	3	941733-	X	X	X	USE WITH AT194865 ABOVE SER. NO. BREAK
	AT308380	RELAY	3	941733-	X	X	X	USE WITH AT303580 ABOVE SER. NO. BREAK
	AT308380	RELAY	3	939835-	X	X	X	USE WITH AT303579 ABOVE SER. NO. BREAK
	AT308380	RELAY	3	942024-	X	X	X	USE WITH AT194867 ABOVE SER. NO. BREAK
19	AT163088	FLASHER	1		X	X	X	
20	57M7121	FUSE	5		X	X	X	10 AMP
21	57M7120	FUSE	2		X	X	X	20 AMP
22	99M7065	FUSE	3		X	X	X	15 AMP
23	T103834	CIRCUIT BREAKER	1		X	X	X	
24	T108357	CIRCUIT BREAKER	1		X	X	X	
25	99M7064	FUSE	1		X	X	X	7-1/2 AMP
26	57M7125	FUSE	1		X	X	X	5 AMP
27	T102780	CIRCUIT BREAKER	1		X	X	X	
28	57M7146	FUSE	1		X	X	X	30 AMP
29	T190197	MODULE	1		X	X	X	
30	T190198	RELAY MODULE	1		X	X	X	
31	T190199	WEDGE	AR		X	X	X	

SIDE CONSOLE WIRING HARNESSES

T203892 -UN-04NOV04

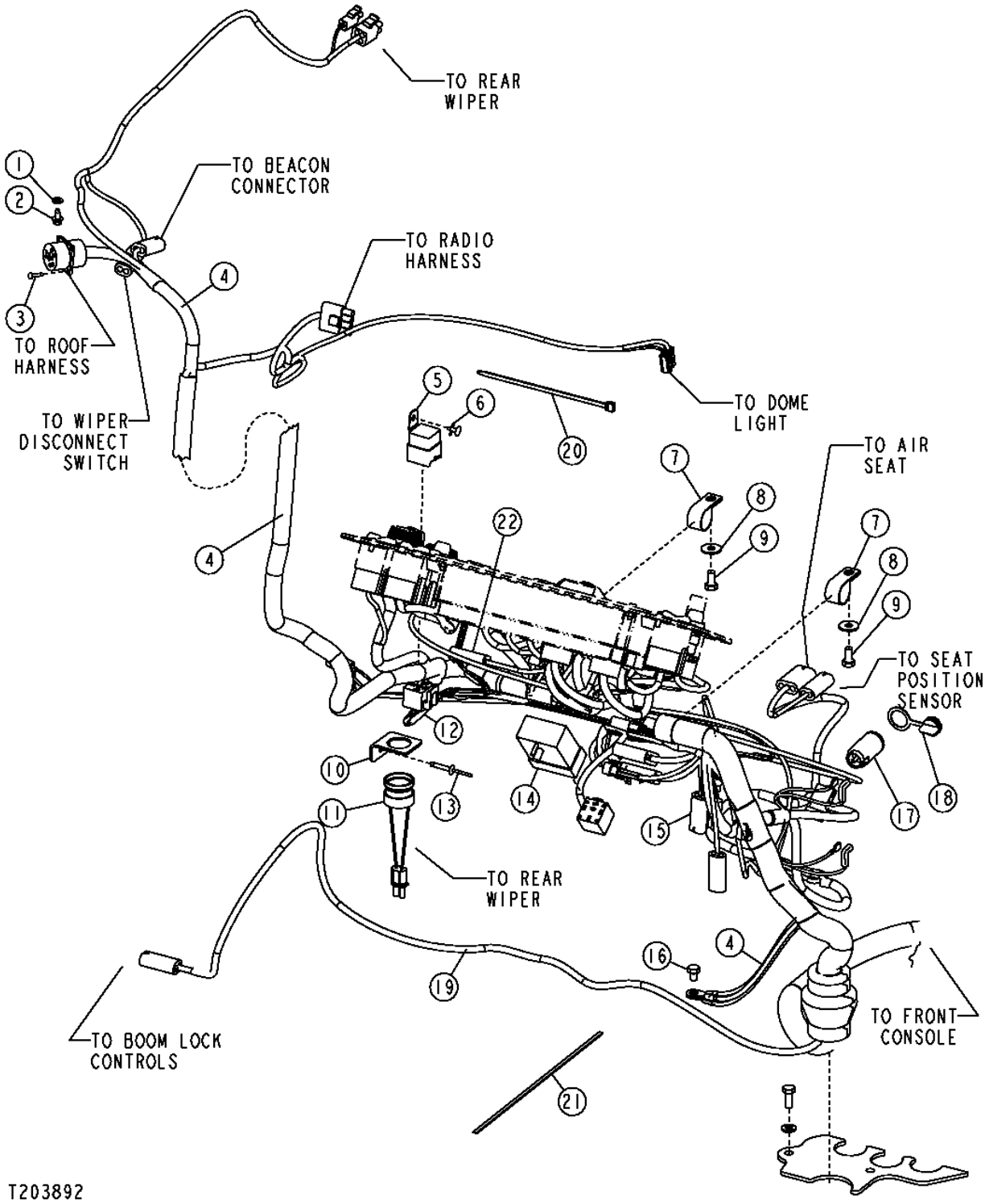

SIDE CONSOLE WIRING HARNESSES

KEY	PART NO.	PART NAME	QTY	SERIAL NO.	310G	310SG	315SG	REMARKS
1	24M7054	WASHER	1		X	X	X	6.400 X 12 X 1.600 MM
2	37M7089	SCREW	1		X	X	X	M6 X 12
3	37M7066	SCREW	4		X	X	X	
4	AT185980	WIRING HARNESS	1	-910055	X	X	X	CAB WITH SYNCHRO-SHUTTLE TRANSMISSION
	AT194865	WIRING HARNESS	1	910056-951252	X	X	X	CAB WITH SYNCHRO-SHUTTLE TRANSMISSION
	AT308208	WIRING HARNESS	1	951253-	X	X		CAB WITH SYNCHRO-SHUTTLE TRANSMISSION
	AT308208	WIRING HARNESS	1	951253-XXXXXX			X	CAB WITH SYNCHRO-SHUTTLE TRANSMISSION
	AT327441	WIRING HARNESS	1	XXXXXX-			X	CAB WITH SYNCHRO-SHUTTLE TRANSMISSION
	AT185981	WIRING HARNESS	1	-910055	X	X	X	CANOPY OR QUARTER CAB WITH SYNCHRO-SHUTTLE TRANSMISSION
	AT303579	WIRING HARNESS	1	910056-951252	X	X	X	CANOPY OR QUARTER CAB WITH SYNCHRO-SHUTTLE TRANSMISSION, (SUB FOR AT194866)
	AT308148	WIRING HARNESS	1	951253-	X	X	X	CANOPY WITH SYNCHRO-SHUTTLE TRANSMISSION
	AT199372	WIRING HARNESS	1	-910055		X	X	CAB WITH POWER SHIFT TRANSMISSION, (SUB FOR AT186625)
	AT194867	WIRING HARNESS	1	910056-951252		X	X	CAB WITH POWER SHIFT TRANSMISSION
	AT310730	WIRING HARNESS	1	951253-		X	X	CAB WITH POWER SHIFT TRANSMISSION
	AT303575	WIRING HARNESS	1	-910055		X	X	CANOPY OR QUARTER CAB WITH POWER SHIFT, (SUB FOR AT186626)
	AT303580	WIRING HARNESS	1	910056-951252		X	X	CANOPY OR QUARTER CAB WITH POWER SHIFT, (SUB FOR AT194868)
	AT310728	WIRING HARNESS	1	951253-		X	X	CANOPY WITH POWER SHIFT TRANSMISSION
5	AT75769	RELAY	1		X	X	X	AIR CONDITION ACTUATOR DOOR
6	T184345	RIVET	1		X	X	X	
7	T102934	CLAMP	2		X	X	X	
8	24M7207	WASHER	2		X	X	X	8.400 X 24 X 2 MM
9	19M7932	CAP SCREW	2		X	X	X	M8 X 16
10	T166344	BRACKET	1		X	X	X	
11	AT178526	AUDIBLE WARNING ALARM	1		X	X	X	WARNING
12	AT191747	WIRING HARNESS	1	-925506	X	X	X	A/C SWITCH TO CONSOLE HARNESS CONNECTOR
	AT302727	WIRING HARNESS	1	925507-	X	X	X	A/C SWITCH TO CONSOLE HARNESS CONNECTOR
13	T184345	RIVET	1		X	X	X	
14	AT180485	RELAY MODULE	1		X	X	X	TIMER RELAY
15	AT189174	WIRING HARNESS	1		X	X	X	RIDE CONTROL
16	19M7008	CAP SCREW	1		X	X	X	M8 X 10
17	AT78633	HOUSING	3		X	X	X	
18	R131671	PLUG	3		X	X	X	
19	AT191953	POWER SUPPLY	2		X	X	X	
20	R44302	TIE BAND	14		X	X	X	
21	H77698	TIE BAND	6		X	X	X	
22	57M8131	RESISTOR NETWORK	1	910056-	X	X	X	CAN RESISTOR

PILOT ENABLE ELECTRICAL

T165340 -UN-13FEB03

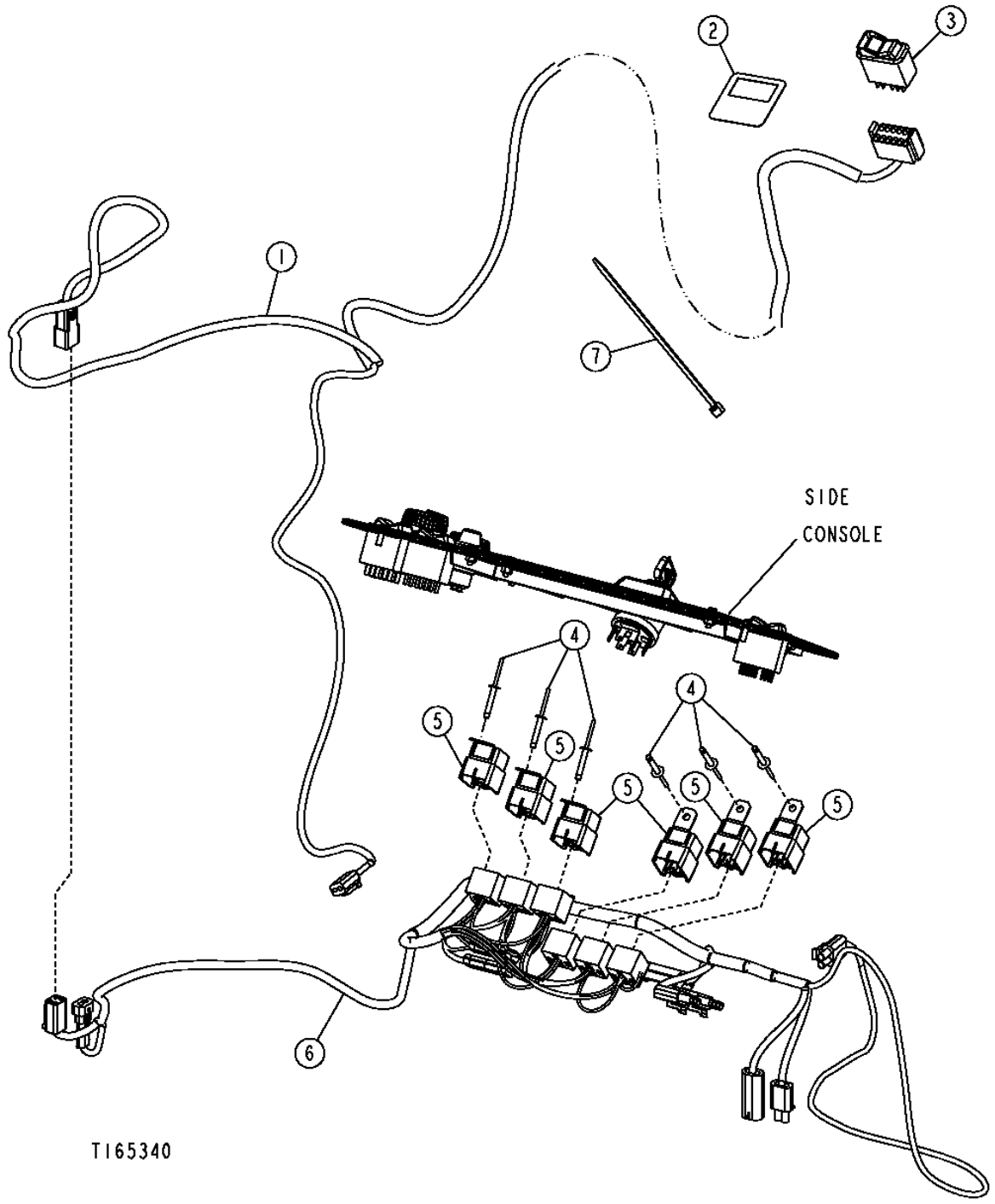

PILOT ENABLE ELECTRICAL

KEY	PART NO.	PART NAME	QTY	SERIAL NO.	310G	310SG	315SG	REMARKS
1	.....	CAB WIRING HARNESS	1	-918287		X		(AT199016 NO LONGER AVAILABLE) (SUB AT302625) (ALSO ORDER 57M7535, 57M7618, (4) R78065, 57M7628, 57M7619 AND (4) R78066)
	AT302625	CAB WIRING HARNESS	1	918288-	X	X		
2	T200424	LABEL	1		X	X		
3	AT301427	SWITCH	1		X	X		
4	T184345	RIVET	6		X	X		
5	AT75769	RELAY	6		X	X		
6	AT302628	WIRING HARNESS	1		X	X		(SUB FOR AT198844)
7	R44302	TIE BAND	1		X	X		

HYDRAULIC FRONT COUPLER HARNESS
ELECTRICAL

T205502 -UN-29NOV04

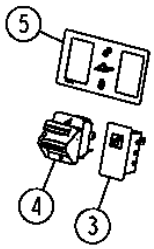

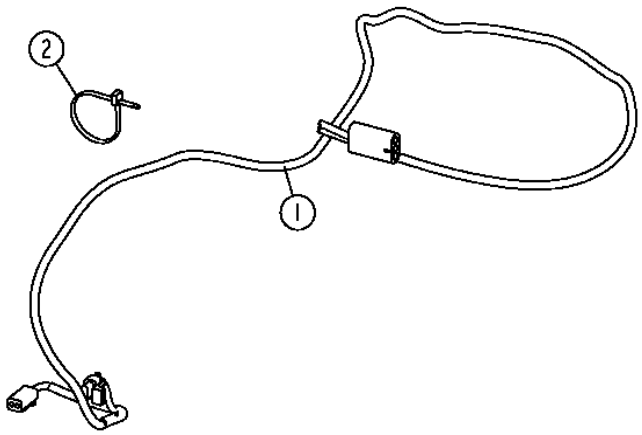

T205502

HYDRAULIC FRONT COUPLER HARNESS
ELECTRICAL

KEY	PART NO.	PART NAME	QTY	SERIAL NO.	310G	310SG	315SG	REMARKS
1	AT308440	WIRING HARNESS	1		X	X	X	LOADER COUPLER
	AT308473	WIRING HARNESS	1		X	X	X	LOAD COUPLER CONTROL CHASSIS
	14M7303	FLANGE NUT	1		X	X	X	M6
	21M7247	SCREW	1		X	X	X	M6 X 35
	24M7139	WASHER	1		X	X	X	
	24M7239	WASHER	1		X	X	X	
	AE44436	HORN	1		X	X	X	AUDIBLE ALARM, COUPLER PIN ENGAGEMENT
	AT308237	RELAY MODULE	1		X	X	X	
	AT308475	WIRING HARNESS	1		X	X	X	LOADER COUPLER CAB
	T206695	BRACKET	1		X	X	X	ALARM MOUNTING
	H77698	TIE BAND	1		X	X	X	
	T186793	LABEL	1		X	X	X	GRAY CIRCLE
2	R44302	TIE BAND	4		X	X	X	
3	AT311598	INDICATOR LAMP	1		X	X	X	PIN DISCONNECT
4	AT225952	SWITCH	1		X	X	X	PIN DISCONNECT
5	T209212	LABEL	1		X	X	X	ENABLE/DISABLE

MONITOR PANEL WITH MONITOR,SWITCHES AND LABELS

T192707 -UN-18JUL03

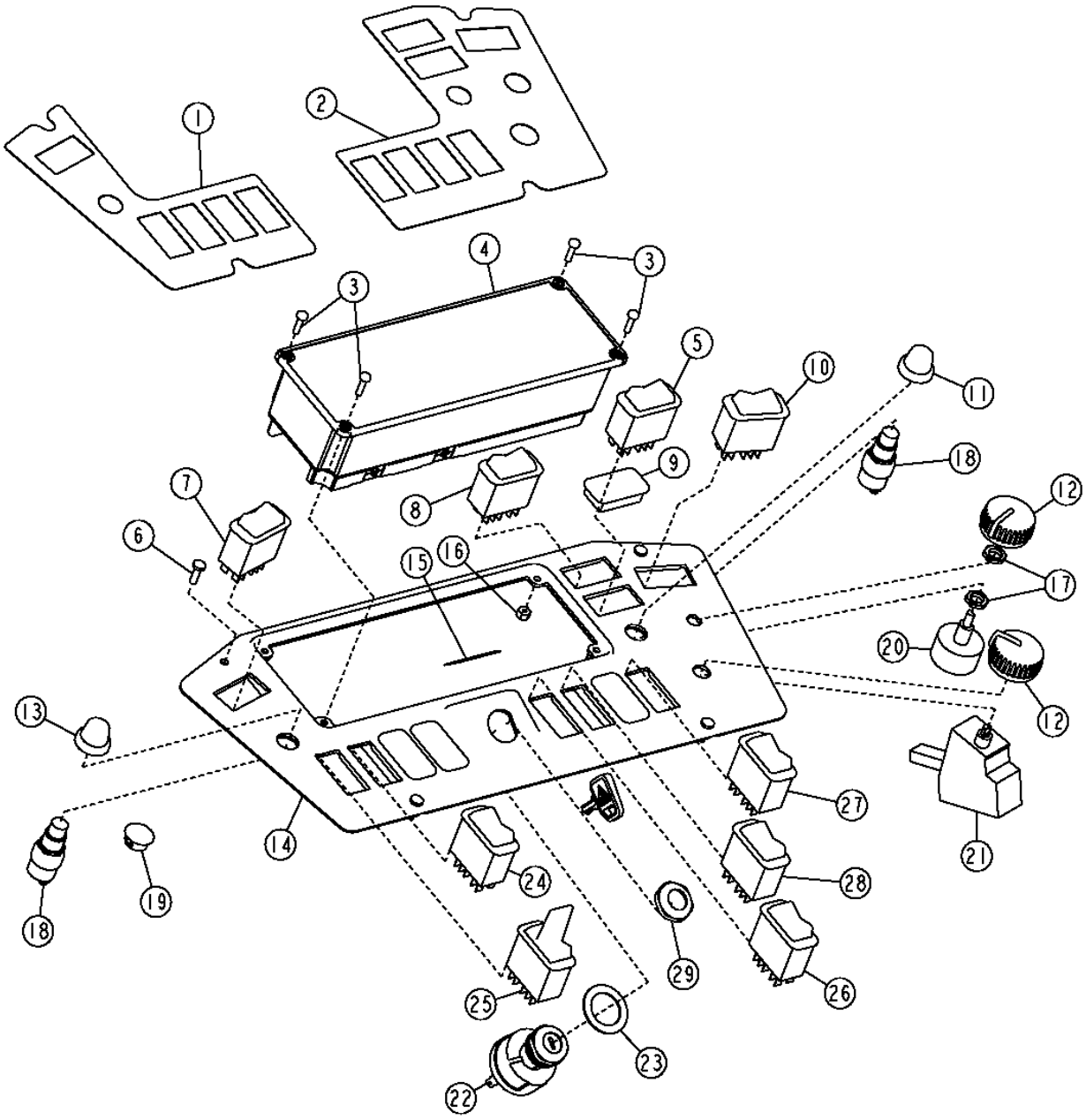

T192707

MONITOR PANEL WITH MONITOR,SWITCHES AND LABELS

KEY	PART NO.	PART NAME	QTY	SERIAL NO.	310G	310SG	315SG	REMARKS
1	T186400	LABEL	1		X	X	X	L.H.
2	T186401	LABEL	1		X	X	X	R.H.
3	T82791	SCREW	4		X	X	X	4.166 X 16.002 MM
4	AT309994	MONITOR	1		X	X	X	(SUB FOR AT191861, AT197381, AT194491, AT300131 AND AT304971)
	AT310630	LAMP	AR		X	X	X	
5	AT189473	ROTARY SWITCH	1		X	X	X	DOCKING LIGHT
6	21M7271	SCREW	4		X	X	X	M5 X 16
7	AT189088	SWITCH	1		X	X	X	PARK BRAKE
8	AT189473	ROTARY SWITCH	1		X	X	X	REAR LIGHT
9	.....	PLUG	9		X	X	X	(T163309 NLA) (SUB T207060)
10	AT189630	ROTARY SWITCH	1	-919463	X	X	X	REAR WIPER
	AT199633	TOGGLE/ROCKER SWITCH	1	919464-	X	X	X	PATTERN SELECT
11	T55501	CAP	1		X	X	X	
12	R111632	KNOB	2		X	X	X	
13	T55585	CAP	1		X	X	X	
14	T167065	INSTRUMENT PANEL	1		X	X	X	
15	T166300	LABEL	1		X	X	X	START SWITCH
16	M63431	LOCK NUT	4		X	X	X	4.166 MM
17	R44165	LOCK NUT	2		X	X	X	7/16"
18	R39554	SWITCH	1		X	X	X	ETHER OR HORN
19	T154361	PLUG	1		X	X	X	
20	RE43497	CONTROL	1		X	X	X	FAN SPEED
21	RE46742	AC/HEAT TEMPERATURE SWITCH	1		X	X	X	TEMPERATURE CONTROL
	12H292	LOCK WASHER	1		X	X	X	
	14H934	NUT	1		X	X	X	7/16"
22	AT195301	SWITCH	1		X	X	X	IGNITION, (SUB FOR AT145931)
	AT145929	KEY	1	-902604	X	X	X	
	AT195302	KEY	1	902605-	X	X	X	
	R44342	NUT	1		X	X	X	1"
23	24H1441	WASHER	1		X	X	X	(SUB FOR R52725)
24	AT184335	SWITCH	1		X	X	X	RIDE CONTROL
25	AT189692	SWITCH	1		X	X	X	MFWD
26	AT189145	SWITCH	1		X	X	X	AIR SEAT
27	AT192716	TOGGLE/ROCKER SWITCH	1		X	X	X	A/C SWITCH
28	AT304561	ROTARY SWITCH	1	919464-	X	X	X	REAR WIPER
29	R44302	TIE BAND	1		X	X	X	

ENGINE WIRING HARNESS

T203895 -UN-04NOV04

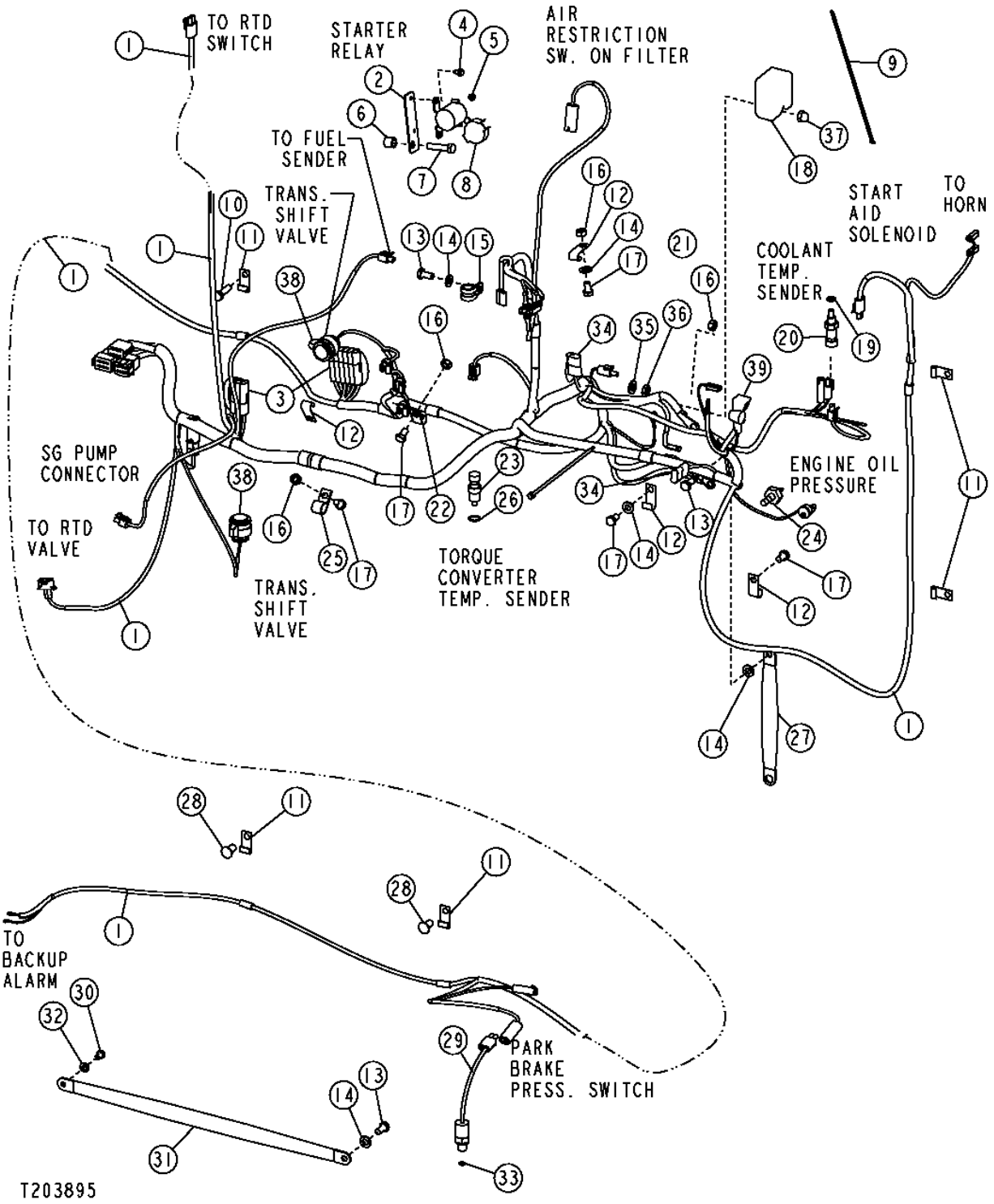

ENGINE WIRING HARNESS

KEY	PART NO.	PART NAME	QTY	SERIAL NO.	310G	310SG	315SG	REMARKS
1	AT196261	WIRING HARNESS	1	-901683	X	X	X	SYNCHRO-SHUTTLE TRANSMISSION, (SUB FOR AT185677) (ALSO ORDER AT196246)
	AT196261	WIRING HARNESS	1	901684-910055	X	X	X	SYNCHRO-SHUTTLE TRANSMISSION
	.....	WIRING HARNESS	1	910056-926900	X	X	X	SYNCHRO-SHUTTLE TRANSMISSION (AT194862 NO LONGER AVAILABLE) (SUB AT304824) (ALSO ORDER AT304837, 57M7254, (2) R104846 AND (2) 57M7289)
	AT304824	WIRING HARNESS	1	926901-951252	X	X	X	SYNCHRO-SHUTTLE TRANSMISSION
	AT308322	WIRING HARNESS	1	951253-	X	X	X	SYNCHRO-SHUTTLE TRANSMISSION
	.....	WIRING HARNESS	1	-901683		X	X	POWER SHIFT TRANSMISSION (AT199060 NO LONGER AVAILABLE) (SUB FOR AT185678, AT196262) (ALSO ORDER AT196246) (SUB AT304826) (ALSO ORDER AT304837, 57M7254, (2) R104846, (2) 57M7289)
	.....	WIRING HARNESS	1	901684-910055		X	X	POWER SHIFT TRANSMISSION (AT199060 NO LONGER AVAILABLE) (SUB FOR AT196262) (SUB AT304826) (ALSO ORDER AT304837, 57M7254, (2) R104846, (2) 57M7289)
	AT304826	WIRING HARNESS	1	-910055		X	X	POWER SHIFT TRANSMISSION
	.....	WIRING HARNESS	1	910056-926835		X	X	POWER SHIFT TRANSMISSION (AT194864 NO LONGER AVAILABLE) (SUB AT304825) (ALSO ORDER AT304837, 57M7254, (2) R104846, (2) 57M7289)
	AT304825	WIRING HARNESS	1	926836-951252		X	X	POWER SHIFT TRANSMISSION
	AT308319	WIRING HARNESS	1	951253-		X	X	POWER SHIFT TRANSMISSION

ENGINE WIRING HARNESS

T203895 -UN-04NOV04

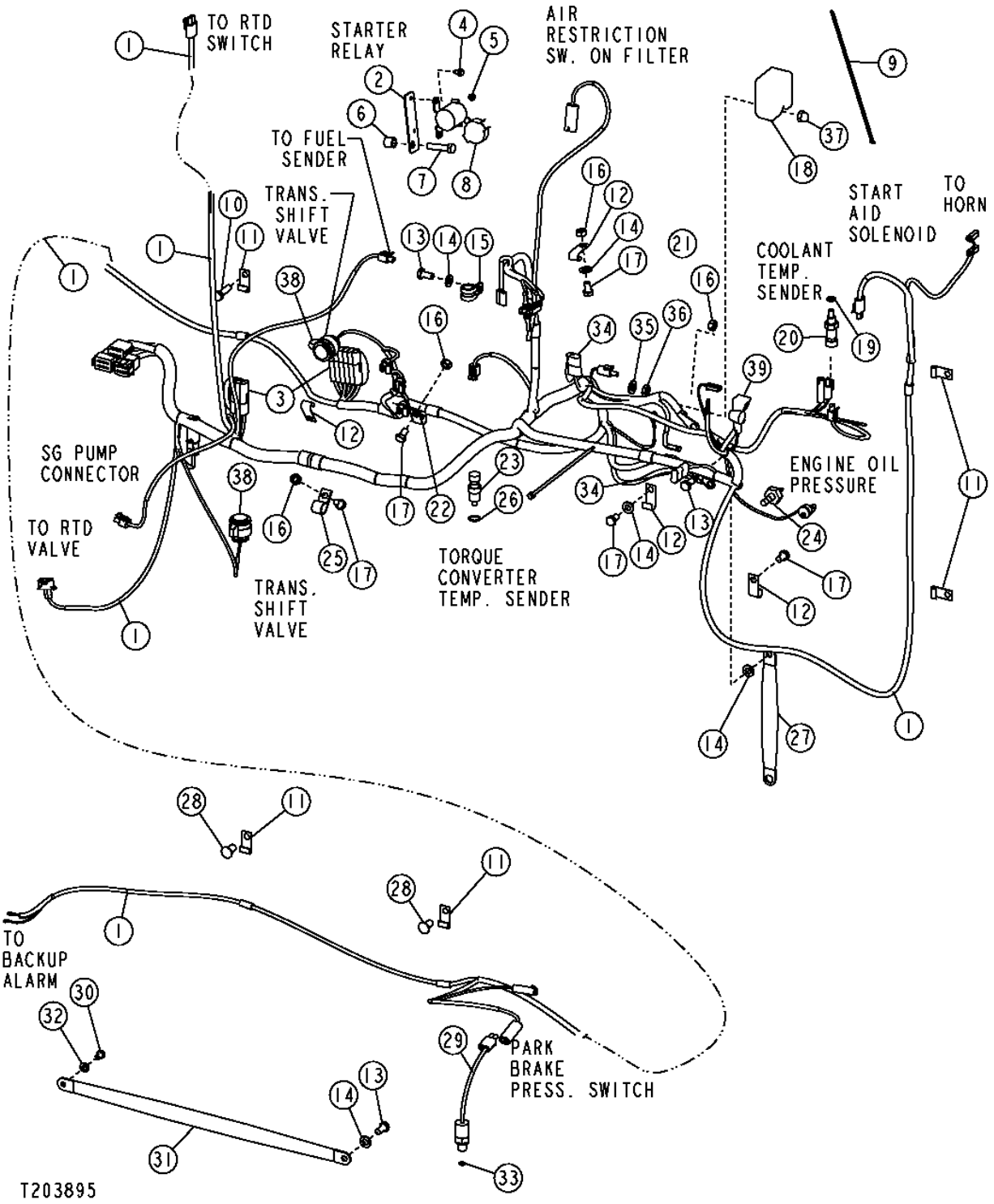

ENGINE WIRING HARNESS

KEY	PART NO.	PART NAME	QTY	SERIAL NO.	310G	310SG	315SG	REMARKS
2	T184676	STRAP	1		X	X	X	
3	AR94101	DIODE	AR		X	X	X	DIFF LOCK, MFWD, PARK BRAKE, REVERSE, AND FORWARD SOLENOIDS
4	37H116	SCREW	2		X	X	X	
5	14M7272	NUT	2		X	X	X	M6
	24M7088	WASHER	2		X	X	X	
6	28H3381	SPACER	1		X	X	X	
7	19M7572	CAP SCREW	1		X	X	X	M10 X 45
8	AT141011	RELAY	1		X	X	X	
9	R44302	TIE BAND	2		X	X	X	
11	T19935	CLAMP	5		X	X	X	
12	AH89557	CLIP	4		X	X	X	
13	19M7938	CAP SCREW	2		X	X	X	M10 X 20
14	24M7239	WASHER	3		X	X	X	
15	T76252	CLAMP	1		X	X	X	
16	14M7274	NUT	4		X	X	X	M10, STARTER
17	19M7557	CAP SCREW	5		X	X	X	M10 X 16
18	R135431	COVER	1		X			
	R135431	COVER	1	-866615		X	X	
19	51M7041	O-RING	1		X	X	X	
20	RE52722	SENSOR	1		X	X	X	ENGINE COOLANT TEMPERATURE
	51M7041	O-RING	1		X	X	X	
22	T75197	CLAMP	1		X	X	X	
23	AT183823	SENDER	1		X	X	X	TORQUE CONVERTER TEMPERATURE
24	AT85174	SWITCH	1		X	X	X	ENGINE OIL PRESSURE
25	T74416	CLAMP	1		X	X	X	
26	R26375	O-RING	1		X	X	X	
27	AT167399	GROUND CABLE	1		X	X	X	GROUND
28	MT2485	PLUG	3		X	X	X	FASTENER, (SUB FOR T161380)
29	AT159811	SWITCH	1		X	X	X	PARK BRAKE OIL PRESSURE
30	19M7008	CAP SCREW	1		X	X	X	M8 X 10
31	AT180705	GROUND CABLE	1		X	X	X	GROUND
32	24M7238	WASHER	1		X	X	X	
33	51M7039	O-RING	1		X	X	X	
34	AT103399	DIODE	2		X	X	X	ALTERNATOR, STARTER, A/C COMPRESSOR AND PARK BRAKE RELAY
35	24M7047	WASHER	1	-910055	X	X	X	(SYNCHRO SHUTTLE TRANSMISSION)
	24M7047	WASHER	1					(POWER SHIFT TRANSMISSION)
36	14M7415	NUT	1		X	X	X	M12, (POWER SHIFT TRANSMISSION)
37	R135432	NUT	1		X			STARTER COVER
	R135432	NUT	1	-866615		X	X	
38	AT180706	KIT	1		X	X	X	HARNESS CONNECTOR (16 PIN FEMALE END)
	.....	CONNECTOR	6		X	X	X	(ORDER AT180706)
	.....	SEAL	6		X	X	X	(ORDER AT180706)
	.....	PLUG	14		X	X	X	(ORDER AT180706)
	.....	CONNECTOR	1		X	X	X	(ORDER AT180706)
39	57M8131	RESISTOR NETWORK	1		X	X	X	CAN RISISTOR

ENGINE FRONT HARNESS
(SERIAL NO. 910056-)

T196984 -UN-17DEC03

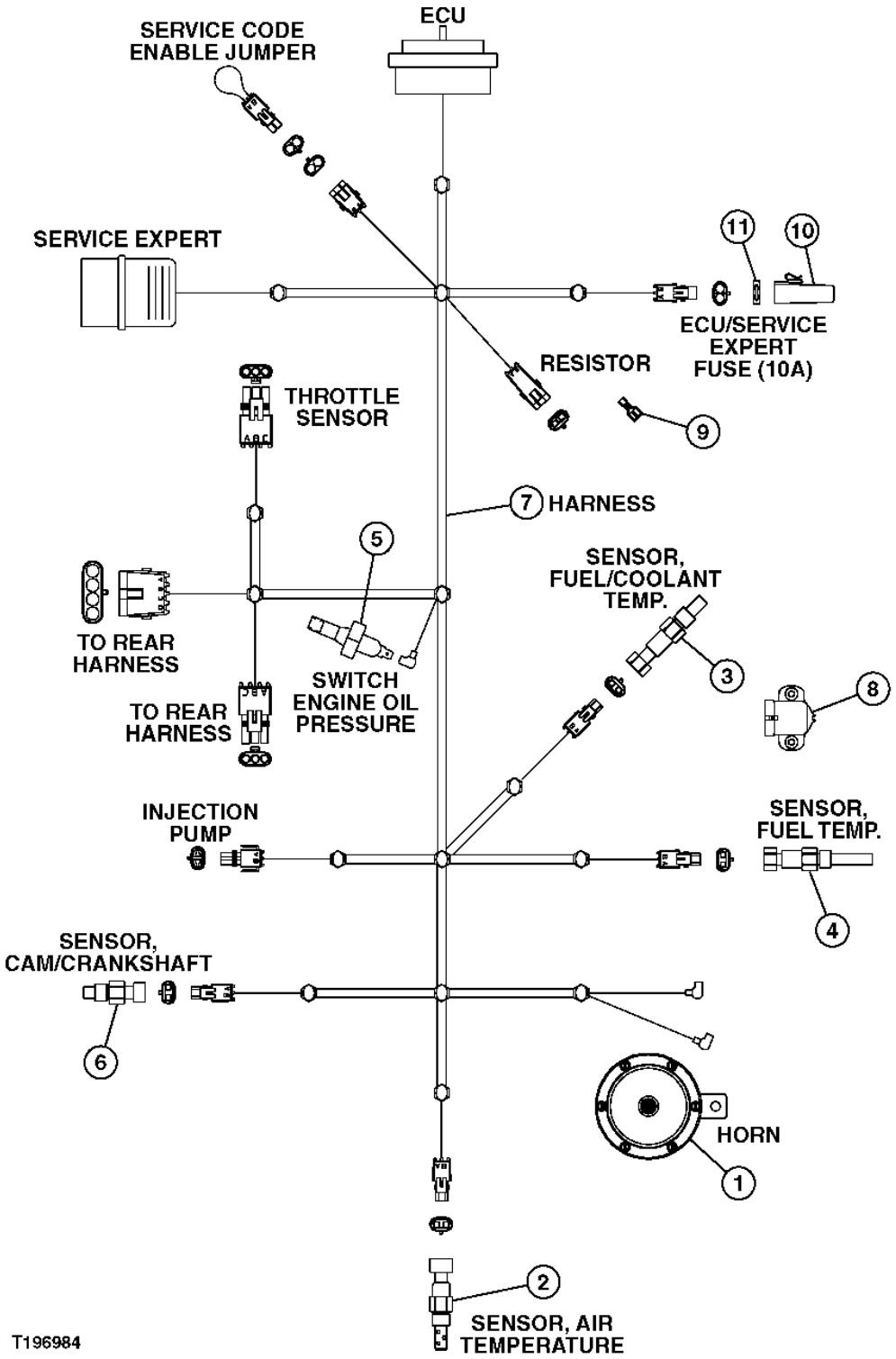

ENGINE FRONT HARNESS
(SERIAL NO. 910056-)

KEY	PART NO.	PART NAME	QTY	SERIAL NO.	REMARKS
1	AT226281	HORN	1		
2	RE61812	SENSOR	1		AIR TEMPERATURE
3	RE521822	KIT	1		FUEL/COOLANT TEMPERATURE
4	AH156144	COOLANT TEMPERATURE SENSOR	1		
5	AT85174	SWITCH	1		ENGINE OIL PRESSURE
6	RE519144	SENSOR	1		CAM/CRANKSHAFT, (SENSOR CRANKSHAFT POSITION) (SENSOR CRANKSHAFT SPEED)
7	.....	WIRING HARNESS	1		
8	RE56165	POTENTIOMETER	1		
9	AT190929	RESISTOR	1		
10	57M8487	ELECTRICAL CONNECTOR CAP	1		
11	57M7121	FUSE	1		(10 AMP)

SELECTIVE FLOW CONTROL AND PUMP CONTROL WIRE HARNESS

T142458 -UN-01JUN01

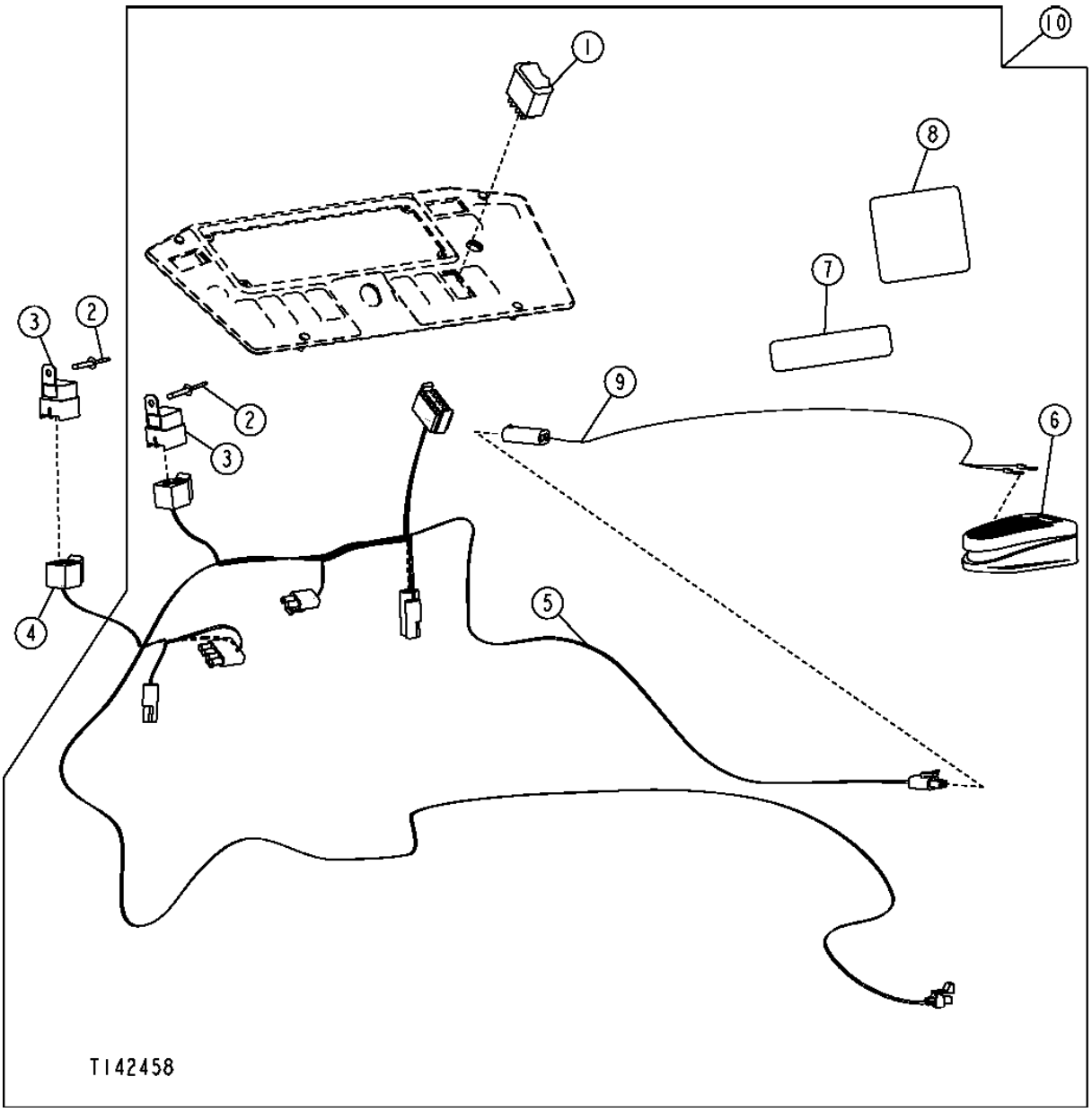

SELECTIVE FLOW CONTROL AND PUMP CONTROL WIRE HARNESS

KEY	PART NO.	PART NAME	QTY	SERIAL NO.	310G	315SG	315SG	REMARKS
1	AT175604	SWITCH	1		X	X	X	
2	T184345	RIVET	2		X	X	X	4.780 MM
3	AT75769	RELAY	2		X	X	X	
4	AT189801	WIRING HARNESS	1		X	X	X	PUMP CONTROL VALVE
5	AT187797	WIRING HARNESS	1		X	X	X	FLOW CONTROL VALVE
6	AT82210	SWITCH	1		X	X	X	
7	.....	LABEL	1		X	X	X	(AUX HYD) (T149199 NO LONGER AVAILABLE)
8	T166538	LABEL	1		X	X	X	(FLOW CONTROL)
9	AT156431	WIRING HARNESS	1		X	X	X	
10	**AT186689**	**KIT**	**1**		**X**	**X**	**X**	**(WHOLE GOODS) (INCLUDES AT192384, AT190234, AT186297, AT191037, AT193881 AND AT300928) KIT ALSO INCLUDES TIE BOLTS. WHEN THIS KIT IS ADDED TO AN EXISTING 6 FUNCTION VALVE, ORDER (2) T159263 AND T159264 ,7 FUNCTION TIE BOLTS.**

DIFFERENTIAL LOCK SWITCH

TP58124 -UN-03OCT00

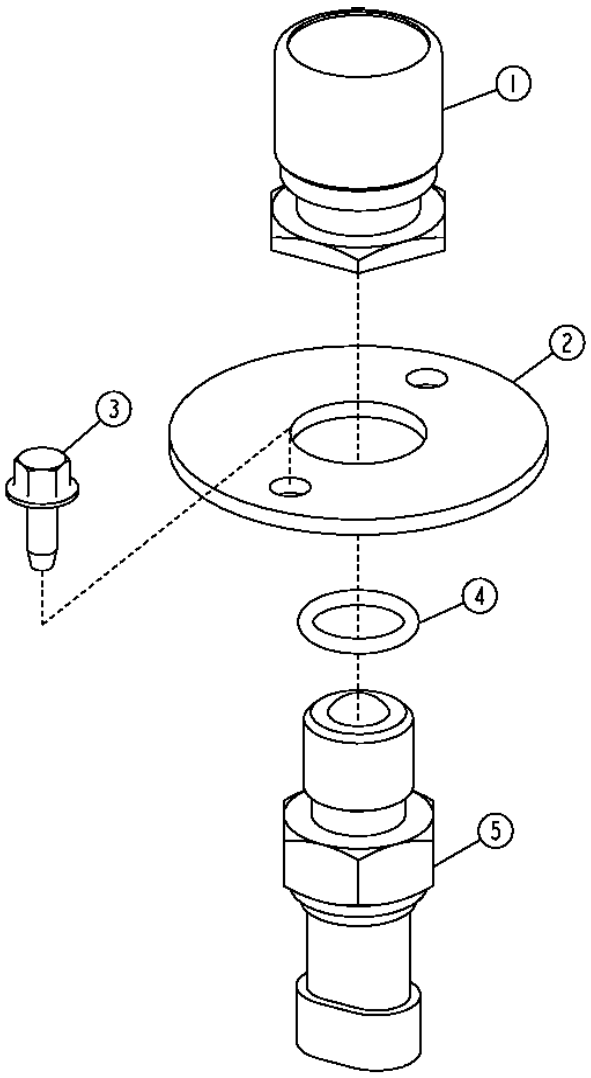

TP58124

DIFFERENTIAL LOCK SWITCH

KEY	PART NO.	PART NAME	QTY	SERIAL NO.	310G	310SG	315SG	REMARKS
1	RE43637	ACTUATOR	1		X	X	X	
2	T186024	PLATE	1		X	X	X	
3	37M7059	SCREW	2		X	X	X	M5 X 12
4	51M7042	O-RING	1		X	X	X	
5	RE46534	SWITCH	1		X	X	X	(DIFFERENTIAL LOCK)

RETURN-TO-DIG SWITCH

T144515 -UN-14AUG01

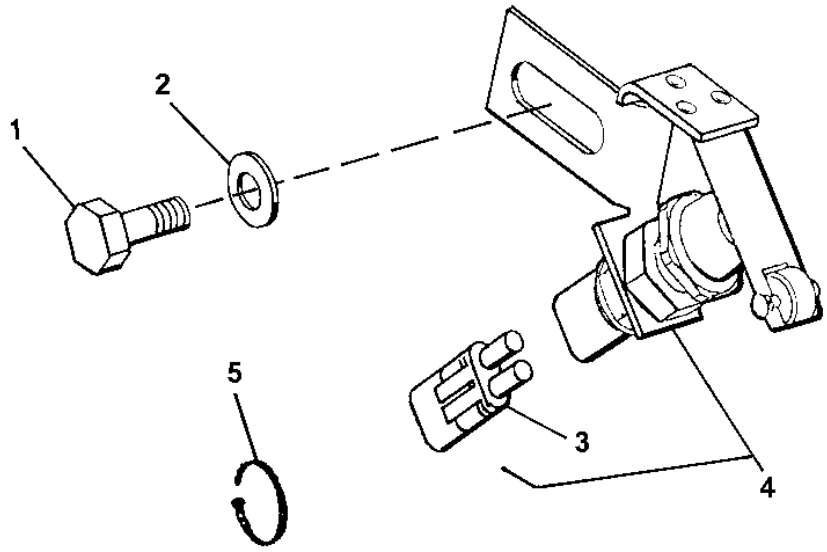

T144515

KEY	PART NO.	PART NAME	QTY	SERIAL NO.	310G	315SG	315SG	REMARKS
1	19M8017	CAP SCREW	1		X	X	X	M12 X 20
2	24M7047	WASHER	1		X	X	X	13 X 24 X 2.500 MM
3	RE12363	ELECTRICAL CONNECTOR ASSY	1		X	X	X	
4	AT183246	SWITCH	1		X	X	X	
5	R44302	TIE BAND	AR		X	X	X	

MEMORANDA

WIRE LEAD KIT

TP24072 -UN-01JAN94

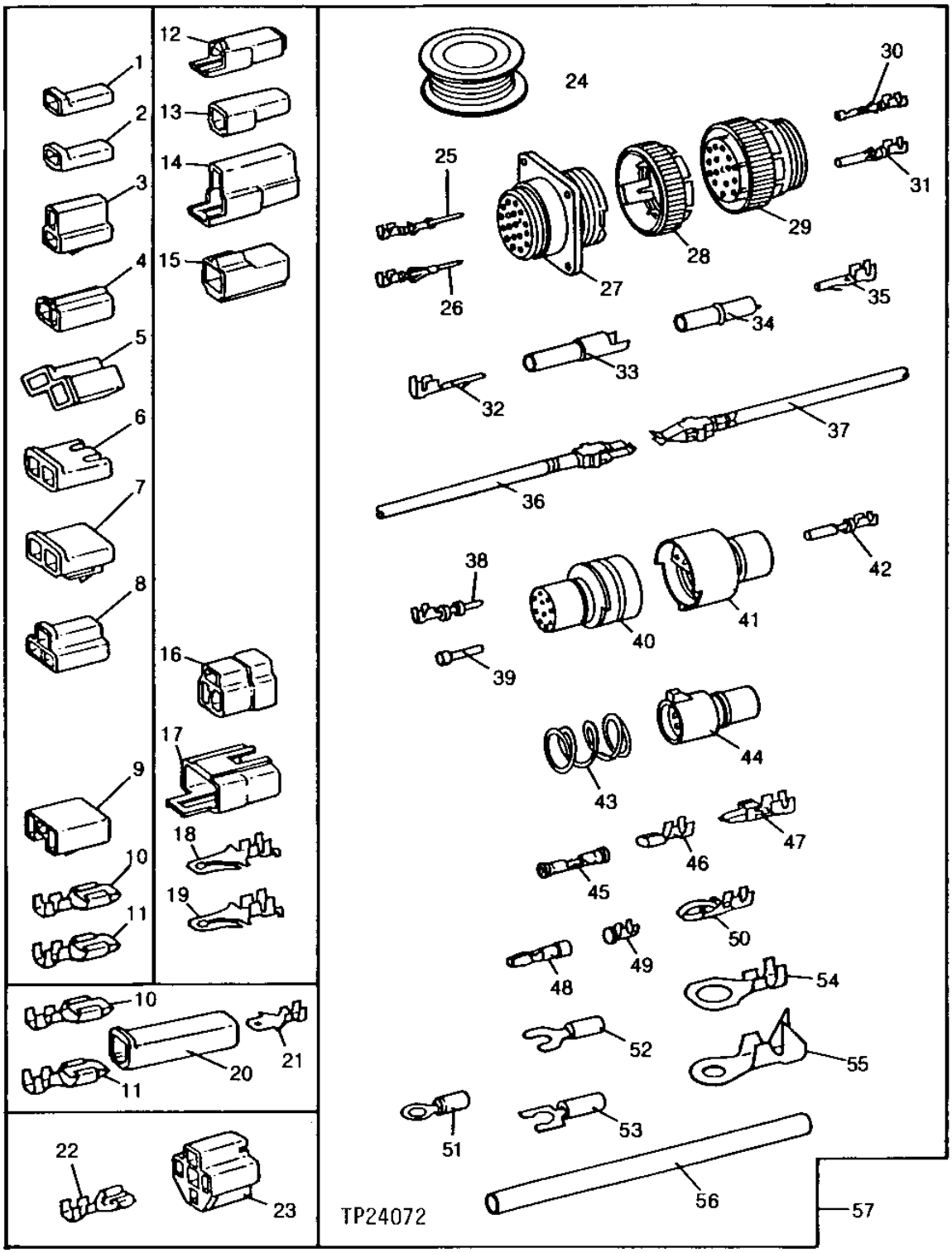

WIRE LEAD KIT

KEY	PART NO.	PART NAME	QTY	SERIAL NO.	310G	310SG	315SG	REMARKS
1	T28583	ELEC. CONNECTOR HOUSING	1		X	X	X	(B)
2	M43835	ELECTRICAL CONNECTOR ASSY	1		X	X	X	(B)
3	R77476	ELECTRICAL CONNECTOR ASSY	1		X	X	X	(A)
4	R77477	ELEC. CONNECTOR HOUSING	1		X	X	X	(A)
5	R77479	ELECTRICAL CONNECTOR ASSY	1		X	X	X	(A)
6	R77480	ELECTRICAL CONNECTOR ASSY	1		X	X	X	(A)
7	R77481	ELECTRICAL CONNECTOR ASSY	1		X	X	X	(A)
8	R77482	ELECTRICAL CONNECTOR ASSY	1		X	X	X	
9	H104855	ELECTRICAL CONNECTOR ASSY	1		X	X	X	
10	U46662	ELEC. CONNECTOR TERMINAL	1		X	X	X	(E) (F)
11	N115096	TERMINAL	1		X	X	X	(G) (PKG. OF 15)
12	T28585	ELECTRICAL CONNECTOR ASSY	1		X	X	X	(B)
13	R77475	ELECTRICAL CONNECTOR ASSY	1		X	X	X	(B)
14	T28586	ELECTRICAL CONNECTOR ASSY	1		X	X	X	(A)
15	R77478	ELECTRICAL CONNECTOR ASSY	1		X	X	X	(A)
16	R77483	ELECTRICAL CONNECTOR ASSY	1		X	X	X	
17	R48887	ELECTRICAL CONNECTOR ASSY	1		X	X	X	
18	T34067	ELEC. CONNECTOR TERMINAL	1		X	X	X	(E) (F)
19	R77484	ELEC. CONNECTOR TERMINAL	1		X	X	X	(G) (PKG. OF 15)
20	U46370	ELECTRICAL CONNECTOR ASSY	1		X	X	X	(B)
21	R77485	ELEC. CONNECTOR TERMINAL	1		X	X	X	(C) (F)
22	R77486	ELEC. CONNECTOR TERMINAL	1		X	X	X	(E) (F)
23	R77487	ELECTRICAL CONNECTOR ASSY	1		X	X	X	(B)
24	R66321	WIRING LEAD	1		X	X	X	15M (50 FT.) 10 GA.
	R66320	WIRING LEAD	1		X	X	X	30.5M (100 FT.) 12 GA.
	R77501	WIRE	1		X	X	X	30.5M (100 FT.) 14 GA.
	R77500	WIRE	1		X	X	X	30.5M (100 FT.) 16 GA.
	R77499	WIRE	1		X	X	X	30.5M (100 FT.) 18 GA.
	R77498	WIRE	1		X	X	X	30.5M (100 FT.) 20 GA.
25	R77462	ELEC. CONNECTOR TERMINAL	1		X	X	X	(PKG. OF 40) (20-22 OR 24 GA. WIRE)
26	R77464	ELEC. CONNECTOR TERMINAL	1		X	X	X	(H) (PKG. OF 50)
27	R77456	ELEC. CONNECTOR TERMINAL	1		X	X	X	(37 WAY)
28	R77458	ELEC.CONNECT LOCKING DEVICE	1		X	X	X	(A) (SIZE 23)
	R77459	ELEC.CONNECT LOCKING DEVICE	1		X	X	X	(A) (SIZE 17)
	R77460	ELEC.CONNECT LOCKING DEVICE	1		X	X	X	(A) (SIZE 13)
	R77461	ELEC.CONNECT LOCKING DEVICE	1		X	X	X	(A) (SIZE 11)
29	R77457	ELEC. CONNECTOR TERMINAL	1		X	X	X	(37 WAY)
30	R77463	ELEC. CONNECTOR TERMINAL	1		X	X	X	(PKG. OF 40) (20-22 OR 24 GA. WIRE)
31	R77465	ELEC. CONNECTOR TERMINAL	1		X	X	X	(H) (PKG. OF 50)
32	R77468	ELEC. CONNECTOR TERMINAL	1		X	X	X	(PKG. OF 5)
33	R77466	ELECTRICAL CONNECTOR ASSY	1		X	X	X	(A)
34	R77467	ELECTRICAL CONNECTOR ASSY	1		X	X	X	(A)

(A) PKG. OF 2
(B) PKG. OF 3
(C) PKG. OF 10
(D) PKG. OF 20
(E) PKG. OF 25
(F) 14 OR 16 GA. WIRE
(G) 10 OR 12 GA. WIRE
(H) 14-16 OR 18 GA. WIRE

THIS PARTS LISTING IS CONTINUED

WIRE LEAD KIT

TP24072 -UN-01JAN94

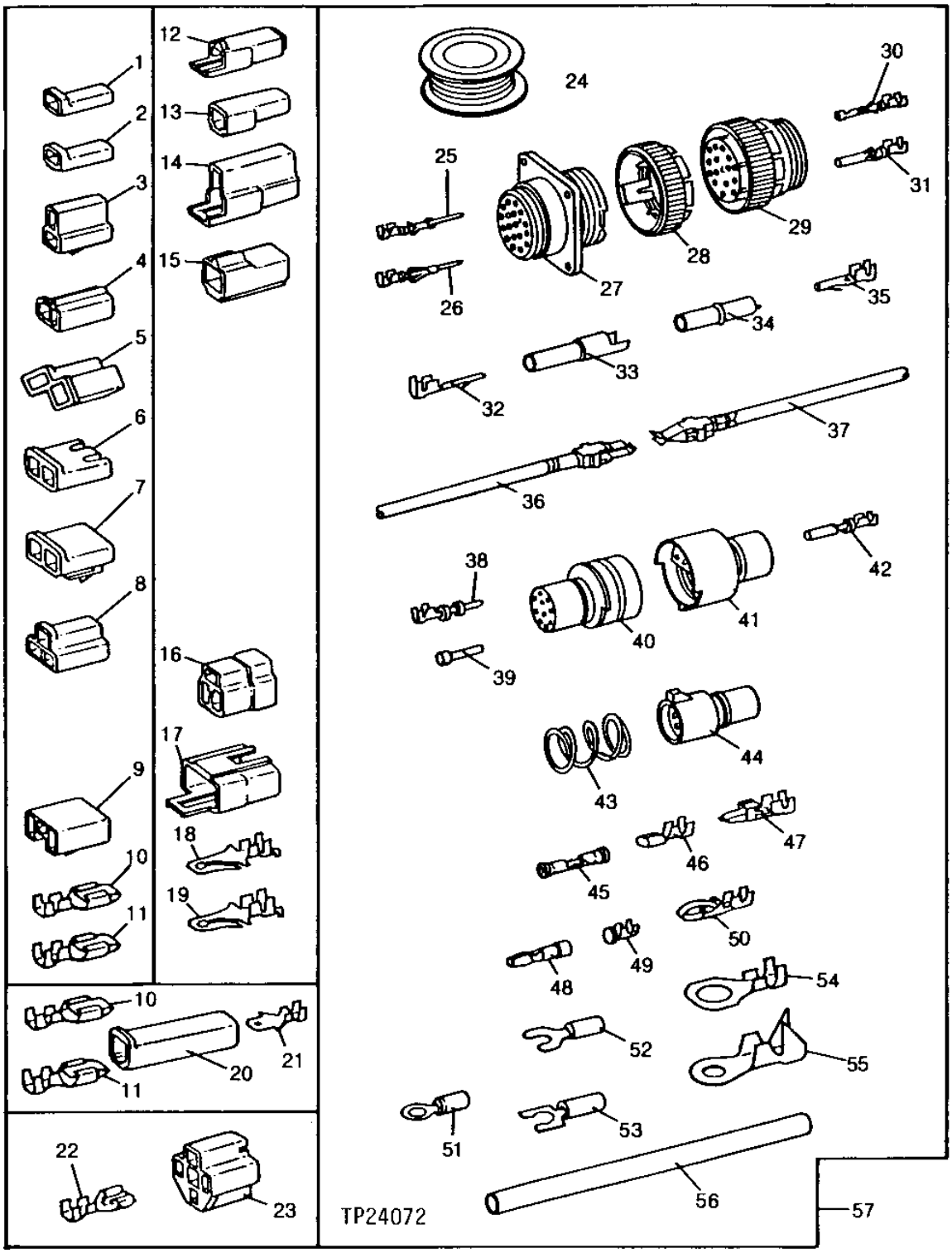

WIRE LEAD KIT

KEY	PART NO.	PART NAME	QTY	SERIAL NO.	310G	310SG	315SG	REMARKS
35	R77469	ELEC. CONNECTOR TERMINAL	1		X	X	X	(PKG. OF 5)
36	RE11156	ELEC. CONNECTOR TERMINAL	1		X	X	X	(B) (MALE)
37	RE11157	ELEC. CONNECTOR TERMINAL	1		X	X	X	(B) (FEMALE)
38	R70222	ELEC. CONNECTOR TERMINAL	1		X	X	X	(D) (H)
39	R70221	ELEC. CONNECTOR TERMINAL	1		X	X	X	(E)
40	R70219	PLUG	1		X	X	X	(A) (10 WAY)
	R70217	PLUG	1		X	X	X	(A) (7 WAY)
	R70215	PLUG	1		X	X	X	(A) (4 WAY)
	R70213	ELEC. CONNECTOR HOUSING	1		X	X	X	(A) (3 WAY)
	R70211	ELECTRICAL CONNECTOR ASSY	1		X	X	X	(A) (2 WAY)
41	R70218	ELEC. CONNECTOR TERMINAL	1		X	X	X	(A) (10 WAY)
	R70216	ELEC. CONNECTOR TERMINAL	1		X	X	X	(A) (7 WAY)
	R70214	ELEC. CONNECTOR TERMINAL	1		X	X	X	(A) (4 WAY)
	R70212	ELEC. CONNECTOR TERMINAL	1		X	X	X	(A) (3 WAY)
	R70210	ELEC. CONNECTOR TERMINAL	1		X	X	X	(A) (2 WAY)
42	AR91793	ELEC. CONNECTOR TERMINAL	1		X	X	X	(D)
43	R30378	SPRING	1		X	X	X	(C)
44	R77474	ELECTRICAL CONNECTOR ASSY	1		X	X	X	(A) (6 WAY)
45	R77470	ELEC. CONNECTOR TERMINAL	1		X	X	X	SPLICE (PKG. OF 15) (16-18-20 OR 22 GA. WIRE)
	R77471	ELEC. CONNECTOR TERMINAL	1		X	X	X	(C) (G) SPLICE
	R77472	ELEC. CONNECTOR TERMINAL	1		X	X	X	(A) SPLICE (8 GA. WIRE)
	R77473	ELEC. CONNECTOR TERMINAL	1		X	X	X	(A) SPLICE (6 GA. WIRE)
46	R65607	ELEC. CONNECTOR TERMINAL	1		X	X	X	(C) (18 OR 20 GA. WIRE)
47	U46664	ELEC. CONNECTOR TERMINAL	1		X	X	X	(C) (F)
48	R32026	ELEC. CONNECTOR TERMINAL	1		X	X	X	(D) (F)
49	R65602	ELEC. CONNECTOR TERMINAL	1		X	X	X	(C) (16 OR 18 GA. WIRE)
50	R70220	ELEC. CONNECTOR TERMINAL	1		X	X	X	(C) (18 OR 20 GA. WIRE)
51	R77489	ELEC. CONNECTOR TERMINAL	1		X	X	X	(D) (14-16-18 OR 20 GA. WIRE) (NO. 10 EYELET)
	R77493	ELEC. CONNECTOR TERMINAL	1		X	X	X	(D) (G) (NO. 10 EYELET)
	R77488	ELEC. CONNECTOR TERMINAL	1		X	X	X	(D) (14-16-18 OR 20 GA. WIRE) (3/8" EYELET)
	R77490	ELEC. CONNECTOR TERMINAL	1		X	X	X	(D) (G) (1/2" EYELET)
52	R77496	ELEC. CONNECTOR TERMINAL	1		X	X	X	(D) (F) (NO. 8 SPADE)
	R77495	ELEC. CONNECTOR TERMINAL	1		X	X	X	(D) (18 GA. WIRE) (NO. 10 SPADE)
53	R77497	ELEC. CONNECTOR TERMINAL	1		X	X	X	(D) (F) (NO. 6 SPADE)
54	R77491	ELEC. CONNECTOR TERMINAL	1		X	X	X	(D) (G) (3/8" EYELET)
	R77492	ELEC. CONNECTOR TERMINAL	1		X	X	X	(D) (G) (1/4" EYELET)
55	R77494	ELEC. CONNECTOR TERMINAL	1		X	X	X	(D) (6 OR 8 GA. WIRE) (1/4" EYELET)
56	R77502	TUBE	1		X	X	X	(PKG. OF 8) 3/8" (HEAT SHRINK)
	R77503	TUBE	1		X	X	X	(PKG. OF 8) 3/16" (HEAT SHRINK)
57	TY26194	KIT	1		X	X	X	(SUB FOR RE11154) (SUB FOR PM797NA)

(A) PKG. OF 2
(B) PKG. OF 3
(C) PKG. OF 10
(D) PKG. OF 20
(E) PKG. OF 25
(F) 14 OR 16 GA. WIRE
(G) 10 OR 12 GA. WIRE
(H) 14-16 OR 18 GA. WIRE

WEATHERPACK TERMINALS AND CONNECTORS

TP17921 -UN-01JAN94

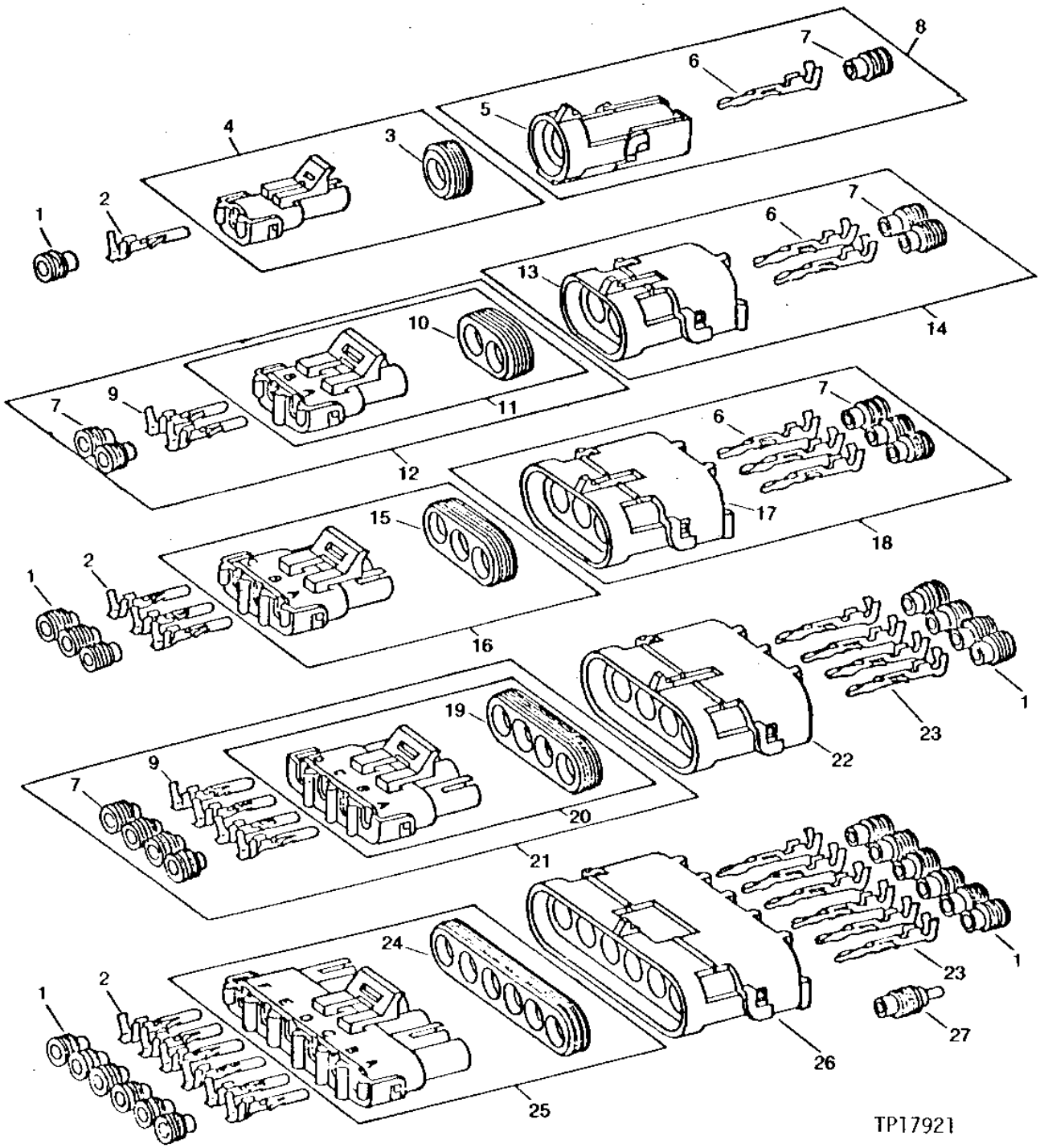

WEATHERPACK TERMINALS AND CONNECTORS - CONTINUED

KEY	PART NO.	PART NAME	QTY	TRACTOR SERIAL NO.	310G	310SG	315SG	REMARKS
1	R78063	ELEC. CONNECTOR SEAL	1		X	X	X	(PKG. OF 40) (16 GA. WIRE) (GRAY)
	R78059	ELECTRICAL CONNECTOR ASSY	1		X	X	X	(PKG. OF 40) (18 OR 20 GA. WIRE) (GREEN)
	R78062	ELEC. CONNECTOR ACCESSORY	1		X	X	X	(PKG. OF 40) (14 GA. WIRE) (BLUE)
2	R78057	ELEC. CONNECTOR TERMINAL	1		X	X	X	(PKG. OF 40) (18 OR 20 GA. WIRE) (NO. 19)
	R78060	ELEC. CONNECTOR TERMINAL	1		X	X	X	(PKG. OF 40) (14 OR 16 GA. WIRE) (NO. 15)
3	R78047	SEAL	1		X	X	X	(PKG. OF 5)
4	RE12362	ELECTRICAL CONNECTOR ASSY	1		X	X	X	(PKG. OF 3)
5	R78052	ELECTRICAL CONNECTOR ASSY	1		X	X	X	(PKG. OF 3)
6	R78061	ELEC. CONNECTOR TERMINAL	1		X	X	X	(PKG. OF 40) (14 OR 16 GA. WIRE) (NO. 15)
7	R78063	ELEC. CONNECTOR SEAL	1		X	X	X	(PKG. OF 40) (16 GA. WIRE) (GRAY)
8	RE12334	ELECTRICAL CONNECTOR ASSY	1		X	X	X	
9	R78060	ELEC. CONNECTOR TERMINAL	1		X	X	X	(PKG. OF 40) (14 OR 16 GA. WIRE) (NO. 15)
10	R78048	ELEC. CONNECTOR ACCESSORY	1		X	X	X	(PKG. OF 5)
11	RE12363	ELECTRICAL CONNECTOR ASSY	1		X	X	X	(PKG. OF 3)
12	RE12331	ELECTRICAL CONNECTOR ASSY	1		X	X	X	
13	R78053	ELECTRICAL CONNECTOR ASSY	1		X	X	X	(PKG. OF 3)
14	RE12330	ELECTRICAL CONNECTOR ASSY	1		X	X	X	
15	R78049	SEAL	1		X	X	X	(PKG. OF 5)
16	RE12364	ELECTRICAL CONNECTOR ASSY	1		X	X	X	(PKG. OF 3)
17	R78054	ELECTRICAL CONNECTOR ASSY	1		X	X	X	(PKG. OF 3)
18	RE12332	ELECTRICAL CONNECTOR ASSY	1		X	X	X	
19	R78050	SEAL	1		X	X	X	(PKG. OF 5)
20	RE12365	ELECTRICAL CONNECTOR ASSY	1		X	X	X	(PKG. OF 2)
21	RE12333	ELECTRICAL CONNECTOR ASSY	1		X	X	X	
22	R78055	ELECTRICAL CONNECTOR ASSY	1		X	X	X	(PKG. OF 2)
23	R78061	ELEC. CONNECTOR TERMINAL	1		X	X	X	(PKG. OF 40) (14 OR 16 GA. WIRE) (NO. 15)
	R78058	ELEC. CONNECTOR TERMINAL	1		X	X	X	(PKG. OF 40) (18 OR 20 GA. WIRE) (NO. 19)
24	R78051	SEAL	1		X	X	X	(PKG. OF 5)
25	RE12366	ELECTRICAL CONNECTOR ASSY	1		X	X	X	(PKG. OF 2)
26	R78056	ELECTRICAL CONNECTOR ASSY	1		X	X	X	(PKG. OF 2)
27	R78064	ELEC. CONNECTOR CAVITY PLUG	1		X	X	X	(PKG. OF 40)

SUPPLEMENTARY TERMINALS, CONNECTORS AND REPAIR CONDUIT

TP24539 -UN-01JAN94

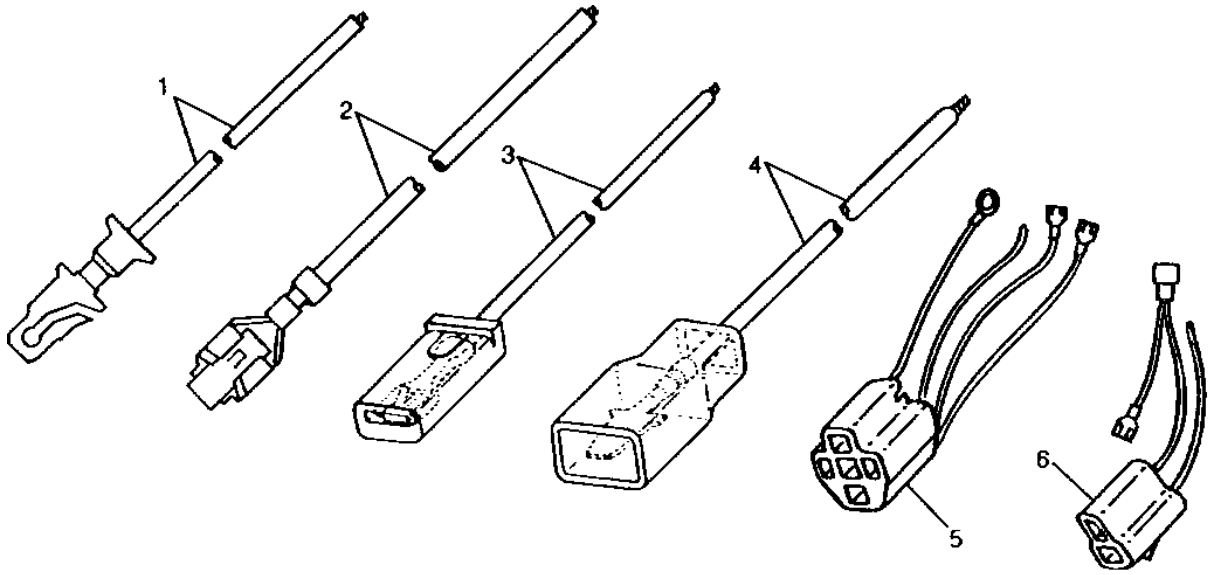

TP24539

KEY	PART NO.	PART NAME	QTY	SERIAL NO.	310E	315SE	REMARKS
1	AR65005	ELEC. CONNECTOR TERMINAL	1		X	X	
2	AR65006	ELEC. CONNECTOR TERMINAL	1		X	X	
3	R32024	WIRING LEAD	1		X	X	
4	R32025	WIRING LEAD	1		X	X	
5	RE21730	ELECTRICAL CONNECTOR ASSY	1		X	X	(ILLUSTRATED)
	RE21731	ELECTRICAL CONNECTOR ASSY	1		X	X	
6	RE21732	ELECTRICAL CONNECTOR ASSY	1		X	X	
	R93219	CONDUIT	1		X	X	0.3 X 3048 MM (1/4" X 120")
	R93220	CONDUIT	1		X	X	10.4 X 2048 MM (13/32" X 120")
	R93221	CONDUIT	1		X	X	15.9 X 3048 MM (5/8" X 120")
	R93222	CONDUIT	1		X	X	25.4 X 3048 MM (1" X 120")

DEUTSCH TERMINALS

TP24540 -UN-01JAN94

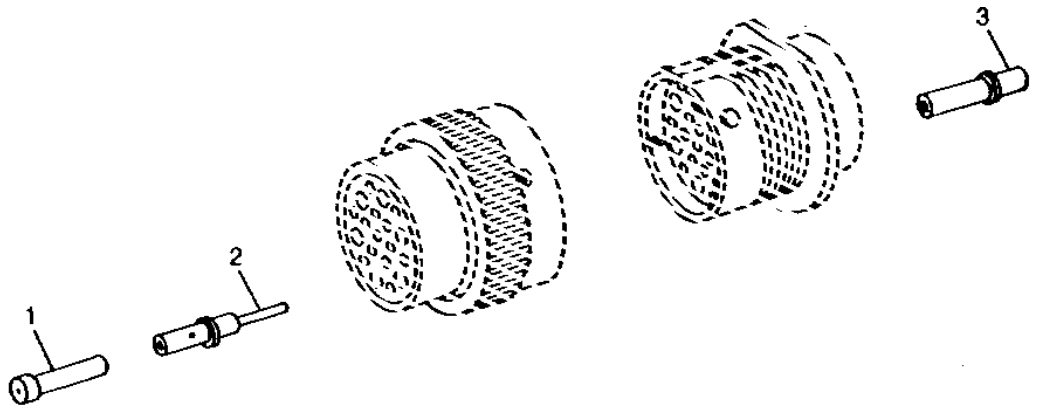

TP24540

KEY	PART NO.	PART NAME	QTY	SERIAL NO.	310G	310SG	315SG	REMARKS
1	R78069	ELEC. CONNECTOR TERMINAL	3		X	X	X	(PKG OF 40)
2	R78066	ELEC. CONNECTOR TERMINAL	14		X	X	X	(PKG OF 40) (16 OR 18 GA WIRE)
	R78068	ELEC. CONNECTOR TERMINAL	4		X	X	X	(PKG OF 40) (12 OR 14 GA WIRE)
3	R78065	ELEC. CONNECTOR TERMINAL	14		X	X	X	(PKG OF 40) (16 OR 18 GA WIRE)
	R78067	ELEC. CONNECTOR TERMINAL	4		X	X	X	(PKG OF 40) (12 OR 14 GA WIRE)

MAIN FRAME
(310G AND 310SG)

T214536 -UN-21SEP05

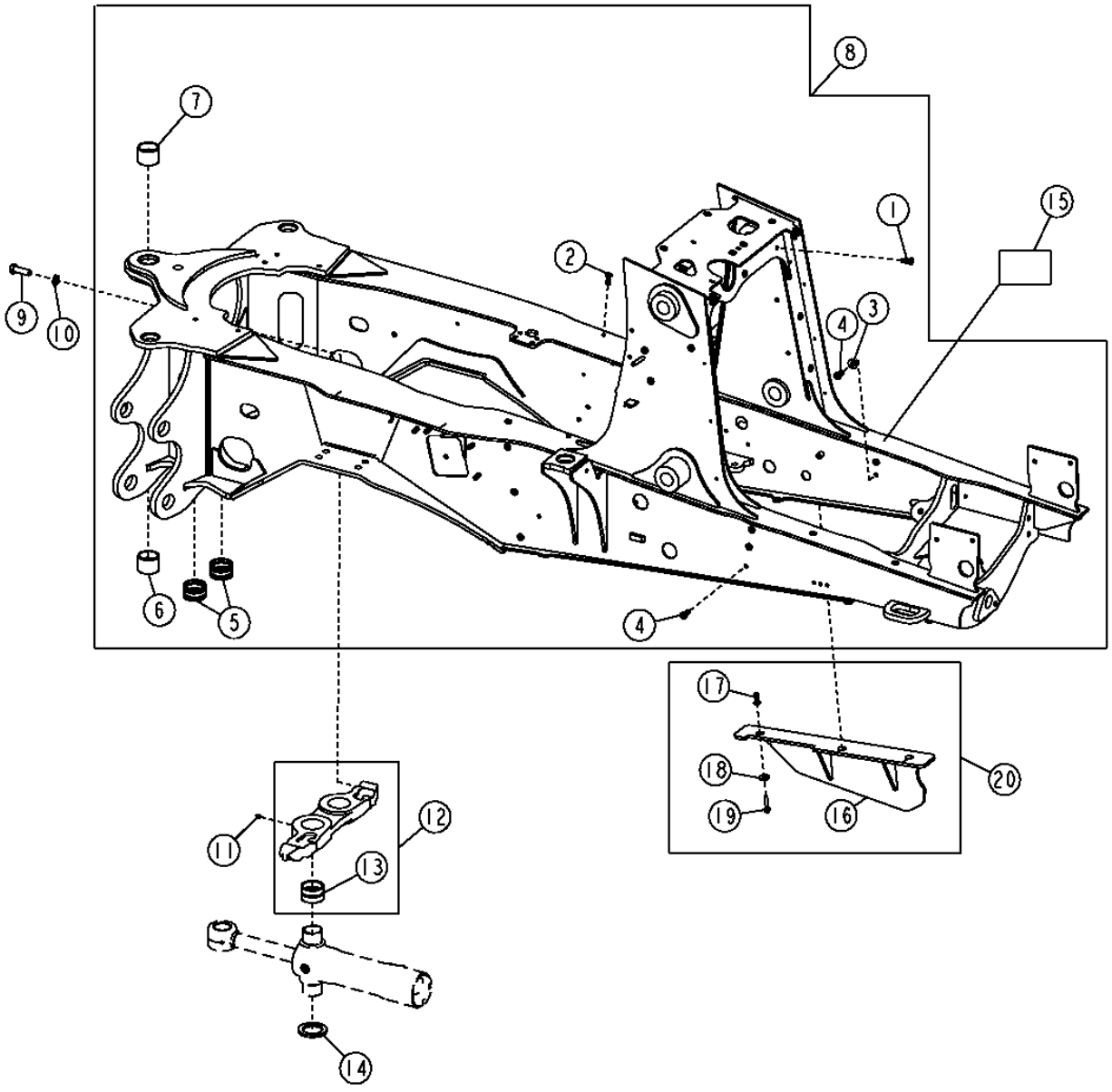

T214536

MAIN FRAME
(310G AND 310SG)

KEY	PART NO.	PART NAME	QTY	SERIAL NO.	310G	310SG	315SG	REMARKS
1	T148410	NUT	20		X			M10, 8MM PLATE
	T148410	NUT	17			X		M10, 8MM PLATE
2	T148411	NUT	7		X			M10, 10MM PLATE
	T148411	NUT	16			X		M10, 10MM PLATE
3	24H1211	WASHER	5		X			
4	T148409	NUT	23		X	X		M10, 6MM PLATE
5	T147070	BUSHING	2		X	X		
6	T148313	BUSHING	1		X			
	T154621	BUSHING	1			X		
7	T159832	BUSHING	1	-901551	X			
	T148313	BUSHING	1	901552-	X			
	T154621	BUSHING	1			X		
8	AT197231	MAIN FRAME	1		X			CONVENIENCE ASSEMBLY, (ALSO ORDER T146102) (SUB FOR AT184777 AND AT197232)
	AT197247	MAIN FRAME	1			X		CONVENIENCE ASSEMBLY, (ALSO ORDER T146102) (SUB FOR AT183899 AND AT197248)
9	19M8224	CAP SCREW	4		X	X		M20 X 60
10	T83426	WASHER	4		X	X		
11	T162396	LUBRICATION FITTING	6		X	X		
12	AT169804	TRUNNION	1		X	X		
13	T153303	BUSHING	2		X	X		
14	T148387	WASHER	2		X	X		
15	T146102	LABEL	1		X	X		BYPASS STARTING WARNING
16	AT315263	GUARD	1		X	X		
17	T148410	NUT	3		X	X		
18	24M7226	WASHER	3		X	X		
19	19M7806	SCREW	3		X	X		
20	**AT323348**	**KIT**	**1**		**X**	**X**		**MFWD GUARD**

MAIN FRAME WITH STABILIZER
(315SG)

T214554 -UN-20SEP05

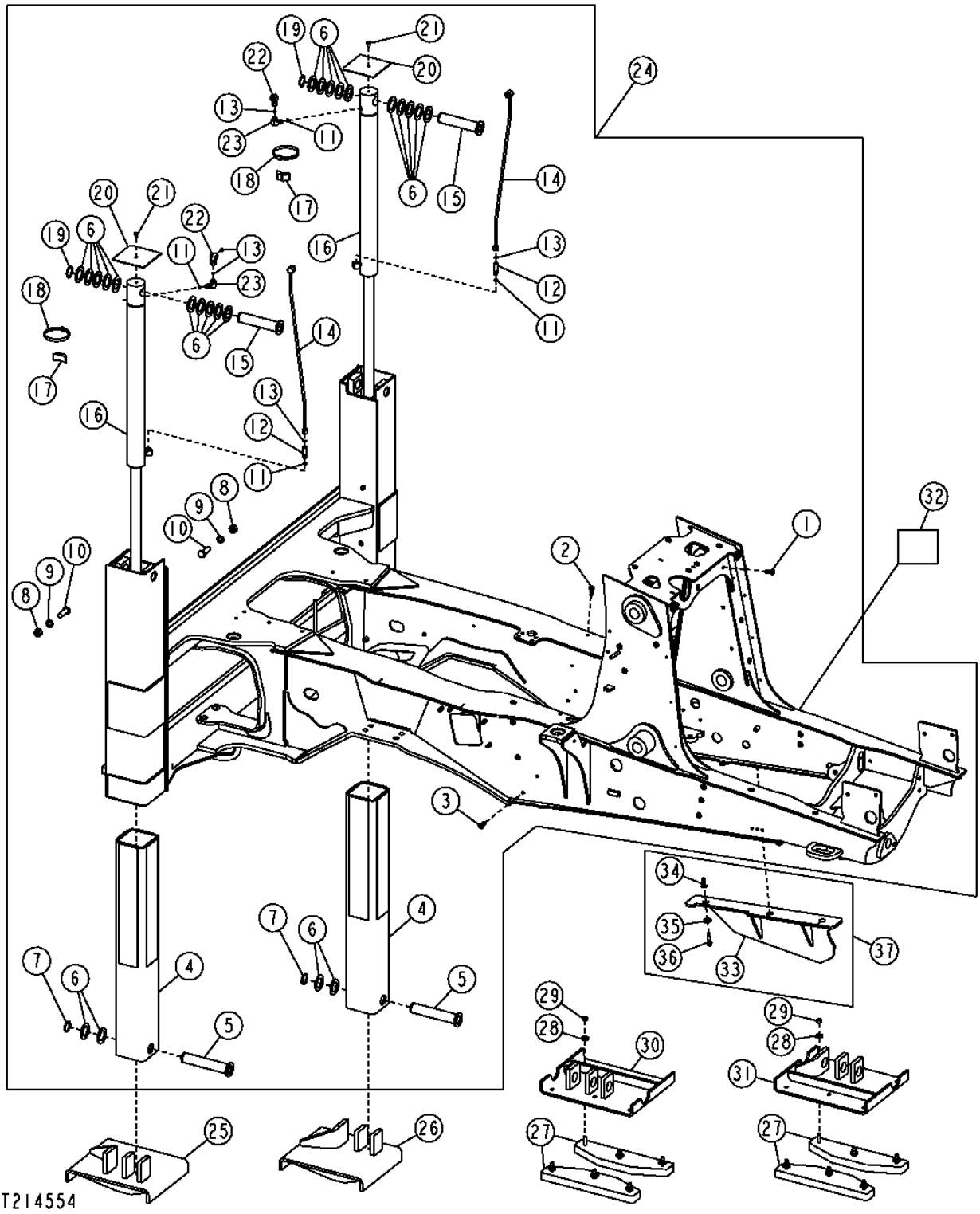

THIS PARTS LISTING IS CONTINUED

MAIN FRAME WITH STABILIZER (315SG)

KEY	PART NO.	PART NAME	QTY	SERIAL NO.	310G	315SG	REMARKS
1	T148410	NUT	18			X	M10
2	T148411	NUT	7			X	M10
3	T148409	NUT	23			X	M10
4	AT145849	ARM	2			X	
5	AT186254	PIN	2			X	
6	24H1571	WASHER	24			X	
7	U12167	SNAP RING	2			X	
8	14M7277	NUT	2			X	M20
9	14M7335	NUT	2			X	M20
10	19M8002	CAP SCREW	2			X	M20 X 55
11	R26448	O-RING	4			X	
12	38H1160	ADAPTER FITTING	2	-944155		X	
	38H1212	ADAPTER FITTING	2	944156-		X	
13	T77613	O-RING	2			X	
14	AT178683	LINE	2			X	
15	AT135084	PIN FASTENER	2			X	
16	AH211348	HYDRAULIC CYLINDER	2			X	(SUB FOR AH154788)
17	T181801	CLAMP	2			X	(SUB FOR T101624, THIS APPLICATION)
18	AR21842	CLAMP	2			X	
19	40M7180	SNAP RING	2			X	
20	T126013	STRAP	2			X	
21	19M8324	CAP SCREW	2			X	M10 X 16
22	38H1094	ELBOW FITTING	2			X	
23	38H1004	ELBOW FITTING	2			X	
24	AT197255	MAIN FRAME	1			X	CONVENIENCE ASSEMBLY, (ALSO ORDER T146102) (SUB FOR AT186630 AND AT197256)
25	AT172419	STABILIZER	1			X	DIRT PAD L.H.
26	AT172420	STABILIZER	1			X	DIRT PAD R.H.
27	AT195669	STREET PAD	4			X	
28	T29342	WASHER	12			X	
29	14H809	NUT	12			X	1/2"
30	AT182588	STABILIZER	1			X	STREET PAD L.H.
31	AT182587	STABILIZER	1			X	STREET PAD R.H.
32	T146102	LABEL	1			X	BYPASS STARTING WARNING
33	AT315263	GUARD	1			X	
34	T148410	NUT	3			X	M10
35	24M7226	WASHER	3			X	
36	19M7806	SCREW	3			X	M10 X 50
37	**AT323348**	**KIT**	**1**			**X**	

STABILIZER CYLINDER GUARD KIT

TP58027 -UN-30APR99

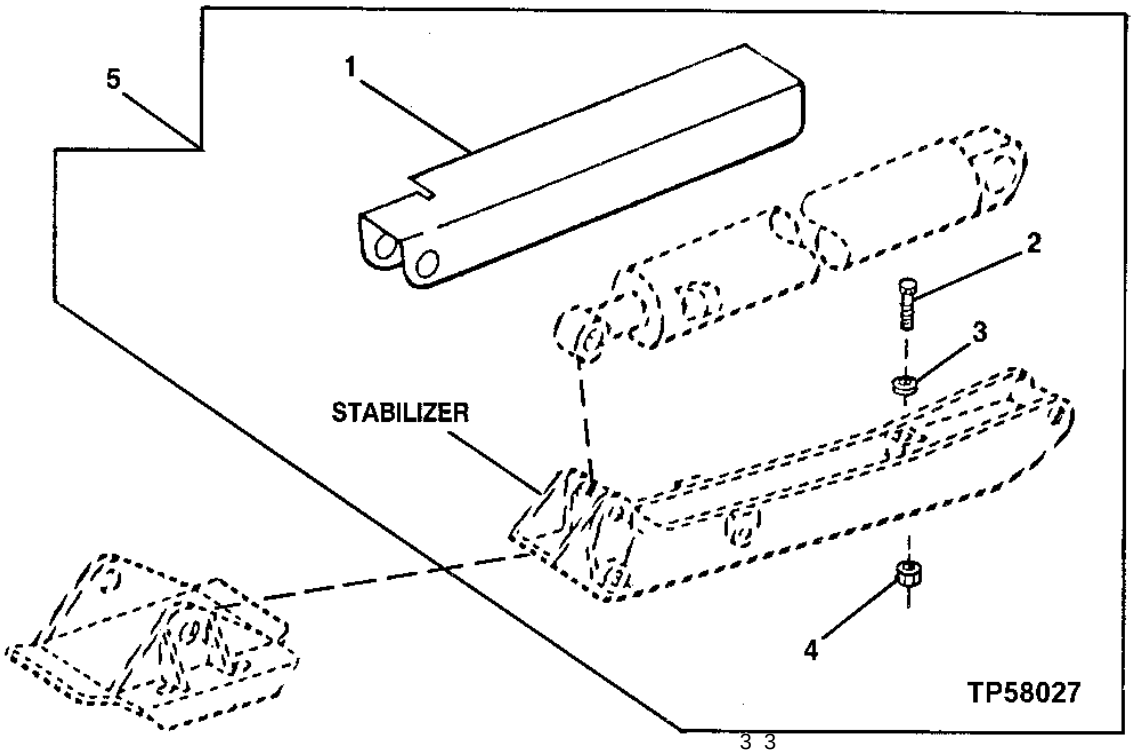

KEY	PART NO.	PART NAME	QTY	SERIAL NO.	310G	315SG	REMARKS
1	T203361	COVER	1		X	X	(RIGHT) (SUB FOR T185989)
	T203362	COVER	1		X	X	(LEFT) (SUB FOR T185990)
2	19H2261	CAP SCREW	1		X	X	5/8" X 2-1/2"
3	24M7241	WASHER	7		X	X	17 X 34 X 4 MM
	T75815	WASHER	AR		X	X	
4	.....	NUT	1		X	X	
5	**AT305073**	**KIT**	**1**		**X**	**X**	**(WHOLE GOODS) (SUB FOR AT192188)**

MEMORANDA

BOTTOM GUARD

T143527 -UN-30NOV01

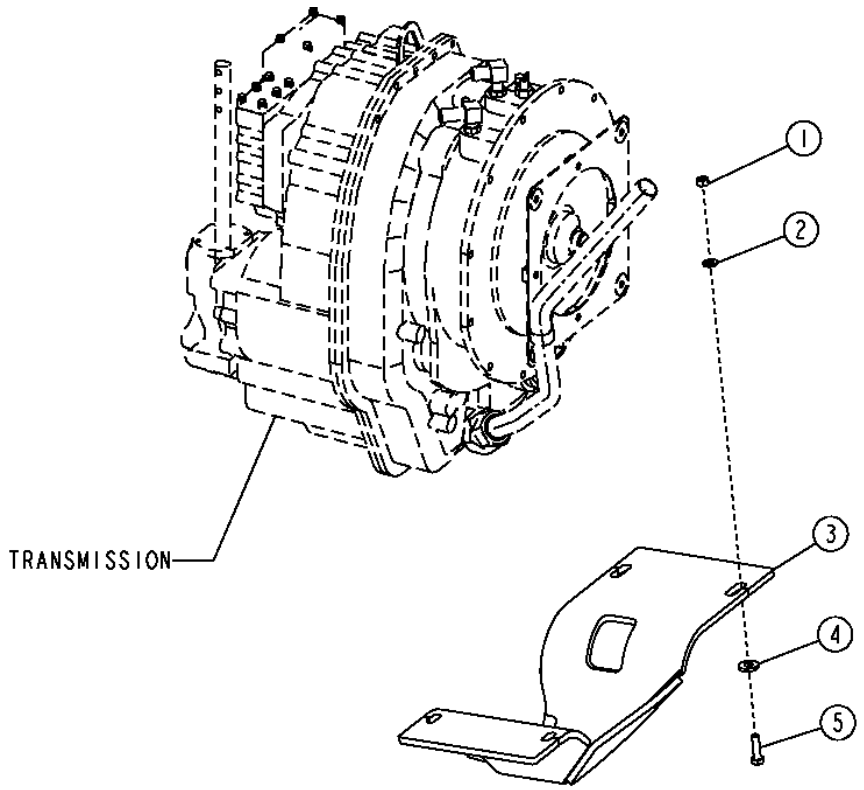

T143527

BOTTOM GUARD

KEY	PART NO.	PART NAME	QTY	SERIAL NO.	310G	310SG	315SG	REMARKS
1	14M7274	NUT	4		X	X	X	M10
2	24M7239	WASHER	4		X	X	X	
3	AT178315	GUARD	1		X	X	X	
4	24H1886	WASHER	4		X	X	X	
5	19M7550	CAP SCREW	4		X	X	X	M10 X 35

BUMPER
(SERIAL NUMBER -901551)

TP69619 -UN-05OCT00

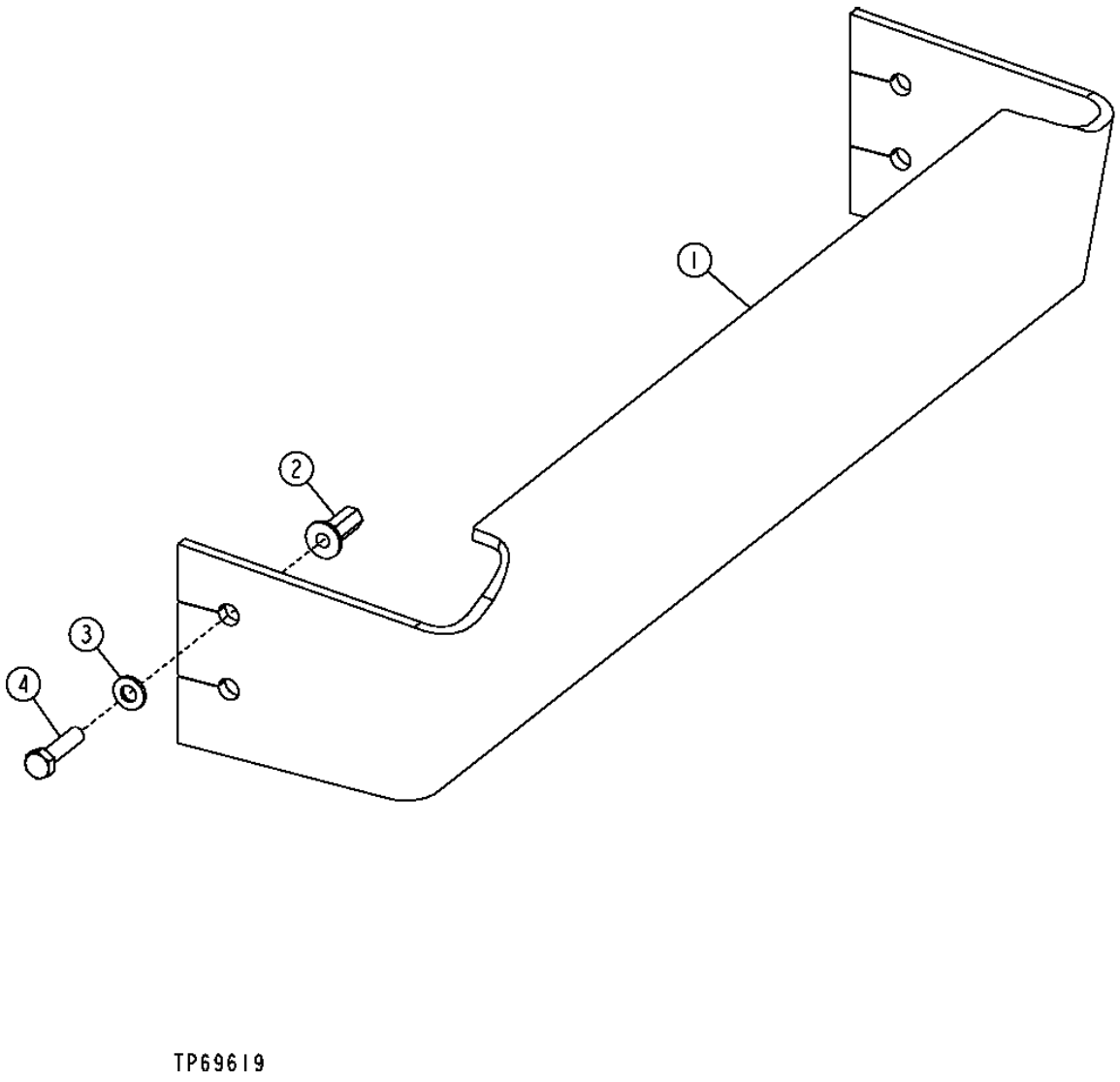

TP69619

BUMPER
(SERIAL NUMBER -901551)

KEY	PART NO.	PART NAME	QTY	SERIAL NO.	310G	315SG	REMARKS
1	.....	BUMPER	1		X	X X	(T166329 NO LONGER AVAILABLE) (SUB T188360, (2) 24H1368 AND (2) 19M8029)
2	T148409	NUT	4		X	X X	M10
3	24M7239	WASHER	4		X	X X	
4	19M8637	CAP SCREW	4		X	X X	M10 X 40

BUMPER
(SERIAL NUMBER 901552-)

T211914 -UN-22JUN05

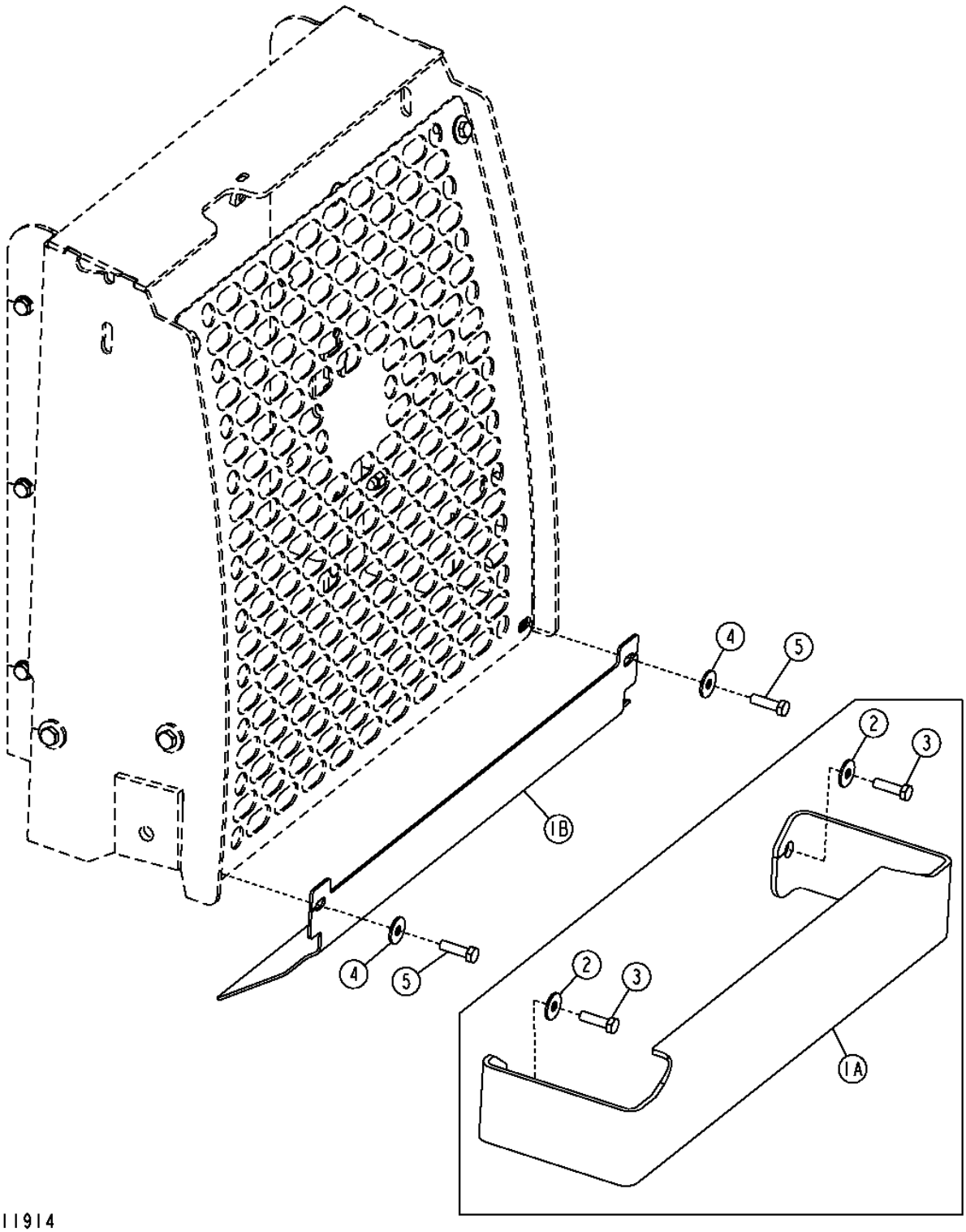

BUMPER
(SERIAL NUMBER 901552-)

KEY	PART NO.	PART NAME	QTY	SERIAL NO.	310G	310SG	315SG	REMARKS
1A	.....	BUMPER	1	-950460	X	X	X	(T188360 NO LONGER AVAILABLE) (SUB T214677)
1B	T214677	BUMPER	1	950461-	X	X	X	
2	24H1368	WASHER	2		X	X	X	
3	19M8029	CAP SCREW	2		X	X	X	M16 X 30
4	24M7296	WASHER	2		X	X	X	10.500 X 30 X 2.500 MM
5	19M7550	CAP SCREW	2		X	X	X	M10 X 35

BUMPER
(SERIAL NUMBER 901552-)

T211927 -UN-17JUN05

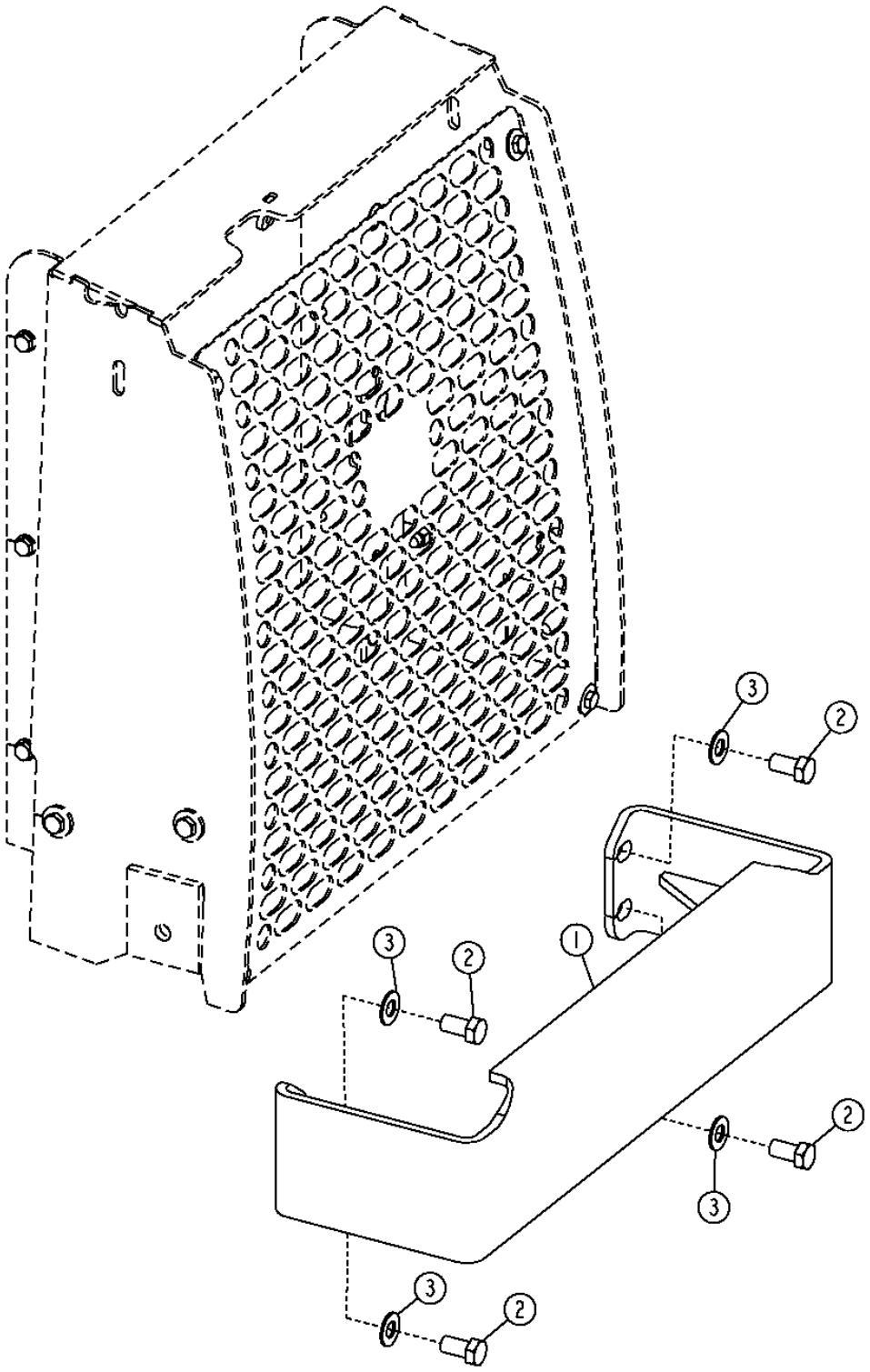

BUMPER
(SERIAL NUMBER 901552-)

KEY	PART NO.	PART NAME	QTY	SERIAL NO.	310G	310SG	315SG	REMARKS
1	AT321040	BUMPER	1		X	X	X	
2	19M8029	CAP SCREW	4		X	X	X	M16 X 30
3	24H1368	WASHER	4		X	X	X	16.662 X 33.325 X 2.286 MM

FRONT COUNTERWEIGHT

TP58100 -UN-06OCT00

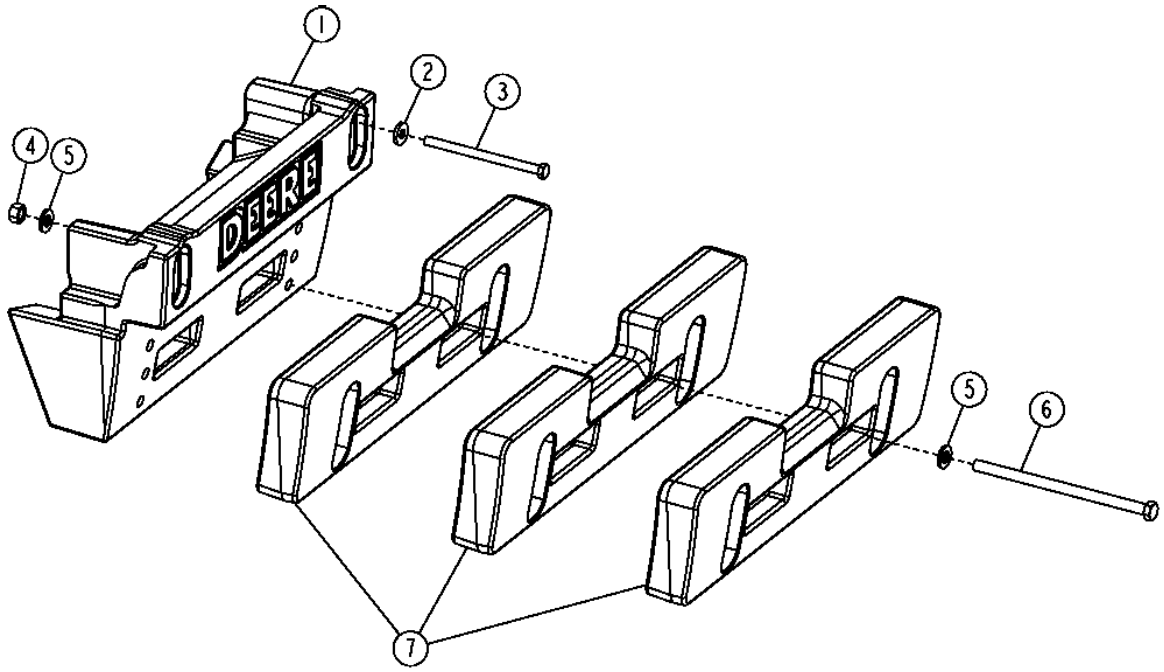

TP58100

FRONT COUNTERWEIGHT

KEY	PART NO.	PART NAME	QTY	SERIAL NO.	310G	310SG	315SG	REMARKS
1	T165950	COUNTERWEIGHT	1		X	X	X	(WHOLE GOODS) (400 LB.) PRIMARY COUNTERWEIGHT
	T165525	COUNTERWEIGHT	1		X	X	X	(WHOLE GOODS) (600 LB.) PRIMARY COUNTERWEIGHT
2	T119912	WASHER	4		X	X	X	(USE WITH PRIMARY COUNTERWEIGHT)
3	19M9027	BOLT	4		X	X	X	M16 X 240, (USE WITH PRIMARY COUNTERWEIGHT)
4	14M7277	NUT	2		X	X	X	M20, (USE WITH ADDITIONAL COUNTERWEIGHT)
5	T151797	WASHER	4		X	X	X	(USE WITH ADDITIONAL COUNTERWEIGHT) (SUB FOR 24M7242, THIS APPLICATION)
6	19M7645	BOLT	2		X	X	X	M20 X 200, (USE WITH T165739) (250 LB.) ADDITIONAL COUNTERWEIGHT
	19M8389	BOLT	2		X	X	X	M20 X 280, (USE WITH (2) T165739) (250 LB.) ADDITIONAL COUNTERWEIGHTS
	19M8817	BOLT	2		X	X	X	M20 X 360, (USE WITH (3) T165739) (250 LB.) ADDITIONAL COUNTERWEIGHT
7	T165739	COUNTERWEIGHT	1		X	X	X	(WHOLE GOODS) (250 LB.) ADDITIONAL COUNTERWEIGHT

ROPS CANOPY OR QUARTER CAB, HEADLINER AND MOUNTING ISOLATORS

TP58120 -UN-05OCT00

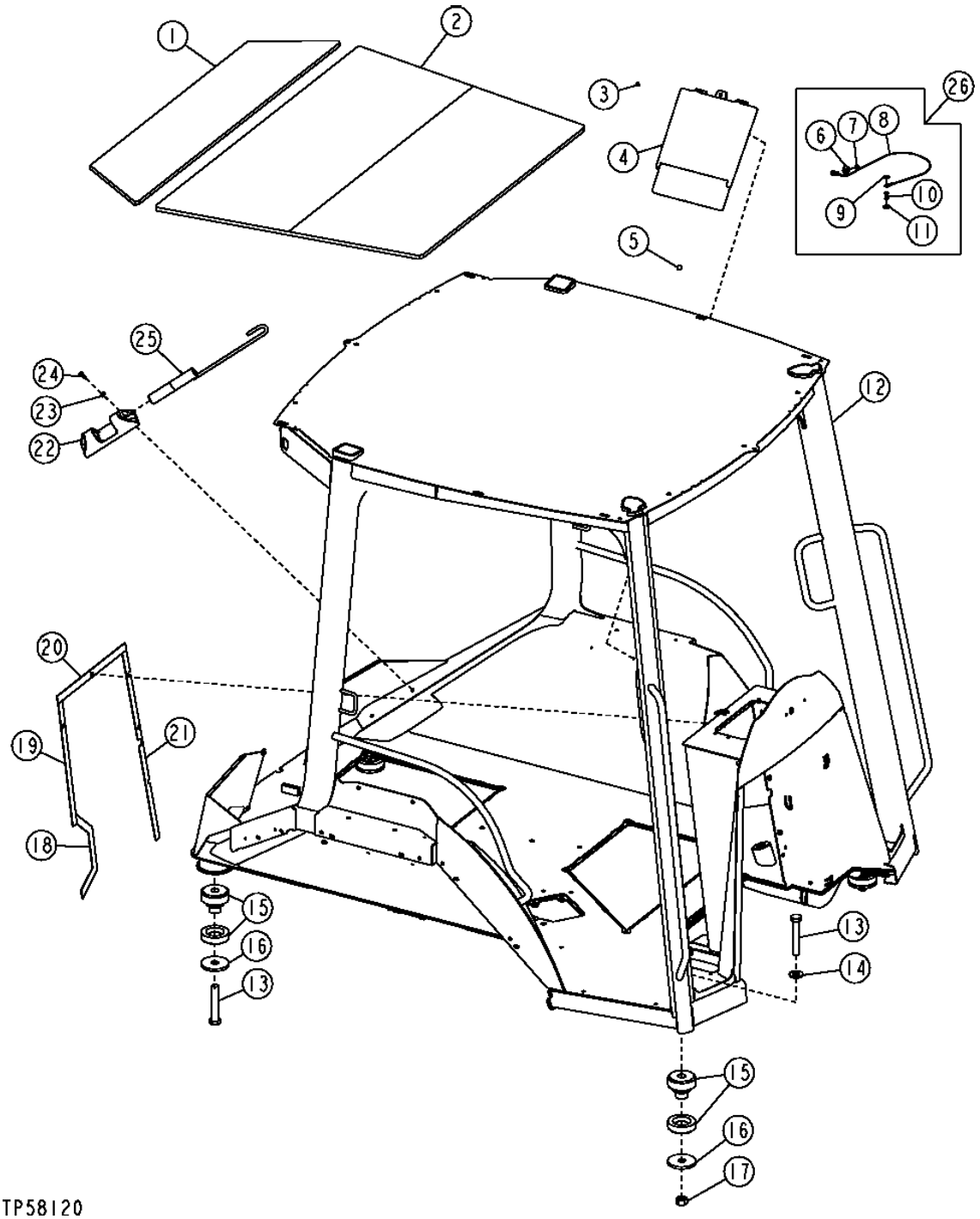

ROPS CANOPY OR QUARTER CAB, HEADLINER AND MOUNTING ISOLATORS

KEY	PART NO.	PART NAME	QTY	SERIAL NO.	310G	310SG	315SG	REMARKS
1	T186029	HEADLINER	1		X	X	X	REAR HEADLINER
2	T186030	HEADLINER	1		X	X	X	FRONT HEADLINER
3	R79033	RIVET	2		X	X	X	
4	AT195894	HOLDER	1		X	X	X	(SUB FOR RE14246, THIS APPLICATION)
5	R55326	RIVET	1		X	X	X	
6	24M7100	WASHER	1		X	X	X	
7	.....	SCREW	1		X	X	X	
8	AT164804	CABLE	1		X	X	X	
9	24M7139	WASHER	1		X	X	X	
10	AT164803	BOLT	1		X	X	X	
11	24M7139	WASHER	1		X	X	X	
12	AT188965	FRAME	1	-903163	X	X	X	(INCLUDES T166896) (ALSO ORDER AT195550 AND (2) 19M7881 AND (2) 24M7238) (SUB FOR AT185757)
	AT188965	FRAME	1	903164-	X	X	X	(INCLUDES T166896) (SUB FOR AT185757)
	AT304887	FRAME	1		X	X	X	(PILOT CONTROL) (INCLUDES T166896)
13	19M7883	SCREW	4		X	X	X	M20 X 120
14	24M7242	WASHER	2		X	X	X	
15	AT165288	ISOLATOR	4		X	X	X	
16	T101807	WASHER	4		X	X	X	
17	14M7277	NUT	2		X	X	X	M20
18	T185785	GASKET	1		X	X	X	
19	T185784	ISOLATOR	1		X	X	X	
20	T185782	GASKET	1		X	X	X	
21	T185783	GASKET	1		X	X	X	
22	T141234	HOLDER	1		X	X	X	
23	24M7238	WASHER	2		X	X	X	
24	21M7310	SCREW	2		X	X	X	(SUB FOR T134895, THIS APPLICATION)
25	AT150725	PIN FASTENER	1		X	X	X	SWING PIN
26	AT192032	KIT	1		X	X	X	(WHOLE GOODS) (OPERATOR MANUAL TETHER KIT)

CAB FRAME, HEADLINER AND CAB MOUNTING ISOLATORS

TP58119 -UN-06OCT00

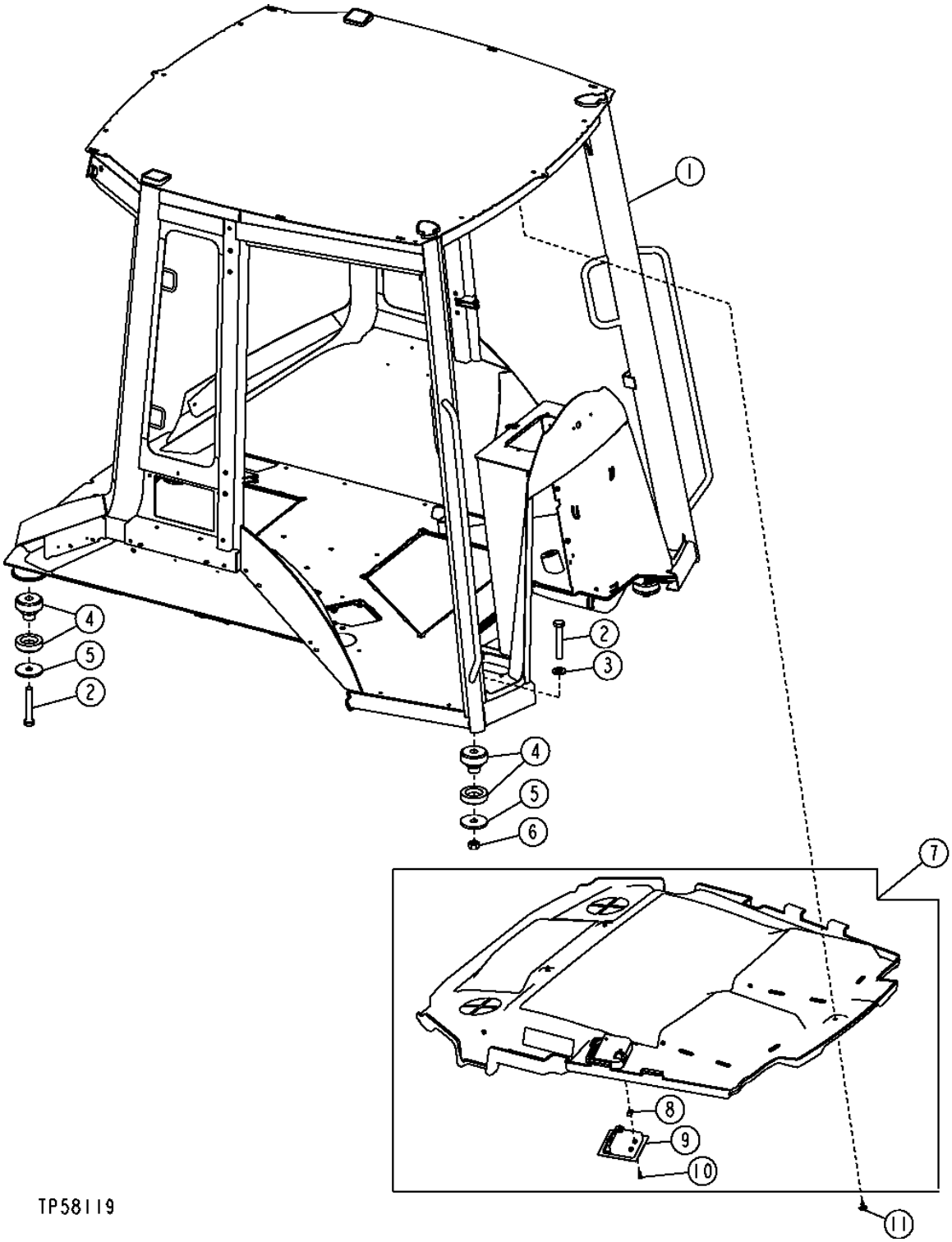

CAB FRAME, HEADLINER AND CAB MOUNTING ISOLATORS

KEY	PART NO.	PART NAME	QTY	SERIAL NO.	310G	310SG	315SG	REMARKS
1	AT187096	FRAME	1	-903163	X	X	X	(ALSO ORDER AT195550 AND (2) 19M7881 AND (2) 24M7238) (SUB FOR AT184761)
	AT187096	FRAME	1	903164-	X	X	X	(LEVER CONTROL) (SUB FOR AT184761)
	AT199734	FRAME	1		X	X	X	(PILOT CONTROL) (SUB FOR AT199735)
2	19M7883	SCREW	4		X	X	X	M20 X 120
3	24M7242	WASHER	2		X	X	X	
4	AT165288	ISOLATOR	4		X	X	X	
5	T101807	WASHER	4		X	X	X	
6	14M7277	NUT	2		X	X	X	M20
7	.....	HEADLINER	1	-951252	X	X	X	WITHOUT RADIO (AT185498 NO LONGER AVAILABLE) (SUB AT321004) (ALSO ORDER AT326356 AND AT320544)
	.....	HEADLINER	1	-951252	X	X	X	WITH RADIO (AT185499 NO LONGER AVAILABLE) (SUB AT321005) (ALSO ORDER AT326356 AND AT320544)
	AT321004	HEADLINER	1	951253-	X	X	X	WITHOUT RADIO
	AT321005	HEADLINER	1	951253-	X	X	X	WITH RADIO
8	M84972	NUT	2	-951252	X	X	X	
9	.....	LAMP	1	-951252	X	X	X	(AT185500 NO LONGER AVAILABLE) (SUB AT320544 AND AT326356)
	AT320544	LAMP	1	951253-	X	X	X	
10	T134895	SELF-LOCKING SCREW	2	-951252	X	X	X	
11	.....	PLUG	9	-921525	X	X	X	(T184892 NO LONGER USED) (SUB (9) MT2485) (DRILL HOLE TO 10MM)
	MT2485	PLUG	9	921526-	X	X	X	FASTENER
12	AT326356	CAB WIRING HARNESS	1	-951252	X	X	X	(NOT ILLUSTRATED)
13	AT192414	BULB	1	951253-	X	X	X	(NOT ILLUSTRATED)

ROOF WITH CAB,QUARTER CAB OR ROPS

T138530 -UN-22FEB01

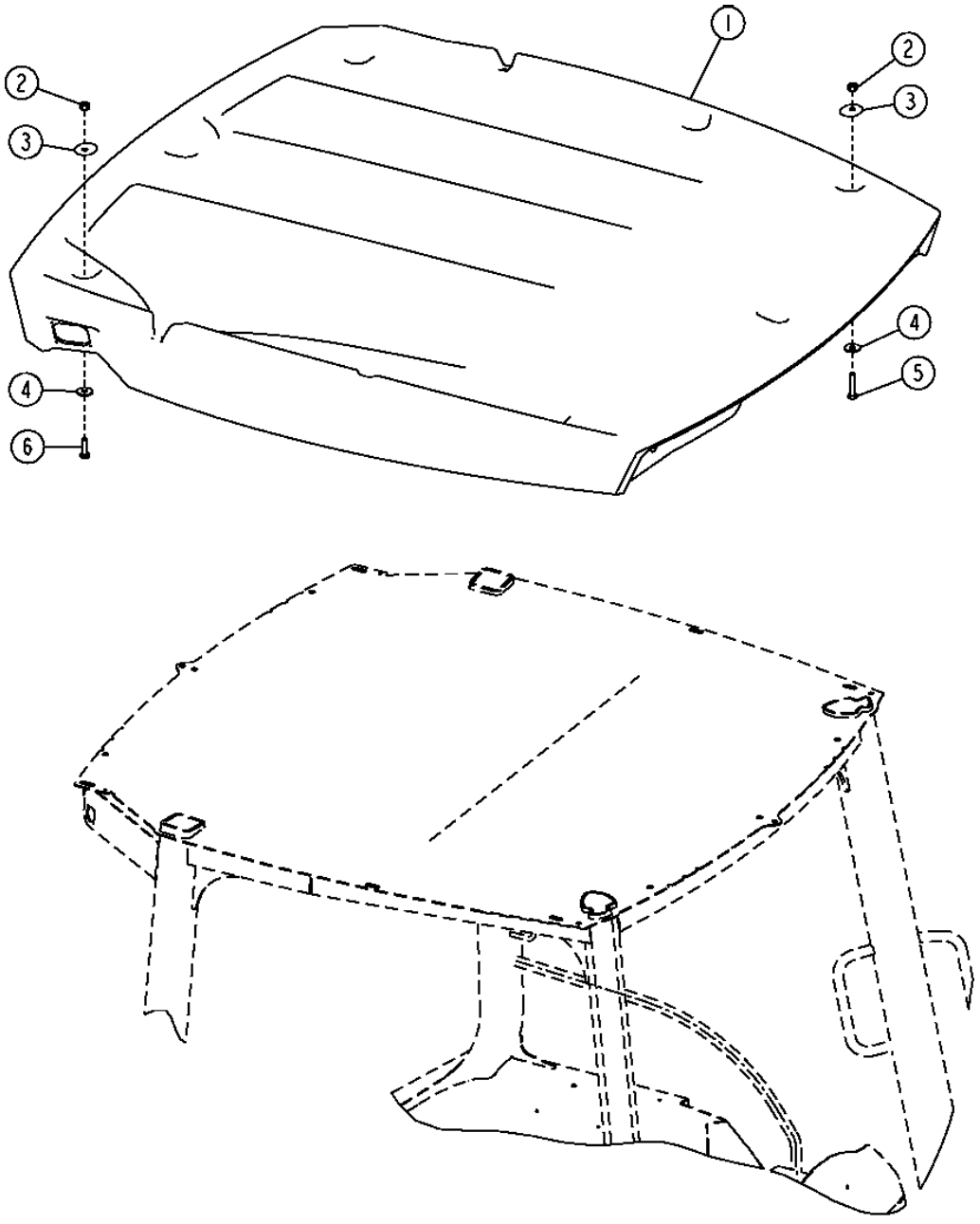

ROOF WITH CAB,QUARTER CAB OR ROPS

KEY	PART NO.	PART NAME	QTY	SERIAL NO.	310G	315SG	REMARKS
1	T185328	ROOF	1	-XXXXXX	X	X X	(WITH DELUXE LIGHTING)(YELLOW)
	T185329	ROOF	1	-XXXXXX	X	X X	(WITH STANDARD LIGHTING)(YELLOW)
	T215487	ROOF	1	XXXXXX-	X	X X	(WITH STANDARD AND DELUXE LIGHTING) (YELLOW)
2	14M7517	LOCK NUT	8		X	X X	M10
3	T185664	SEALING WASHER	8		X	X X	
4	24M7101	WASHER	7		X	X X	
5	19M8600	CAP SCREW	3		X	X X	M10 X 50, (SUB FOR 19M7550, THIS APPLICATION)
6	19M8600	CAP SCREW	5		X	X X	M10 X 50

FLOOR RAMPS, FLOOR MATS AND ANTI-SKID MATS

T136077 -UN-05DEC00

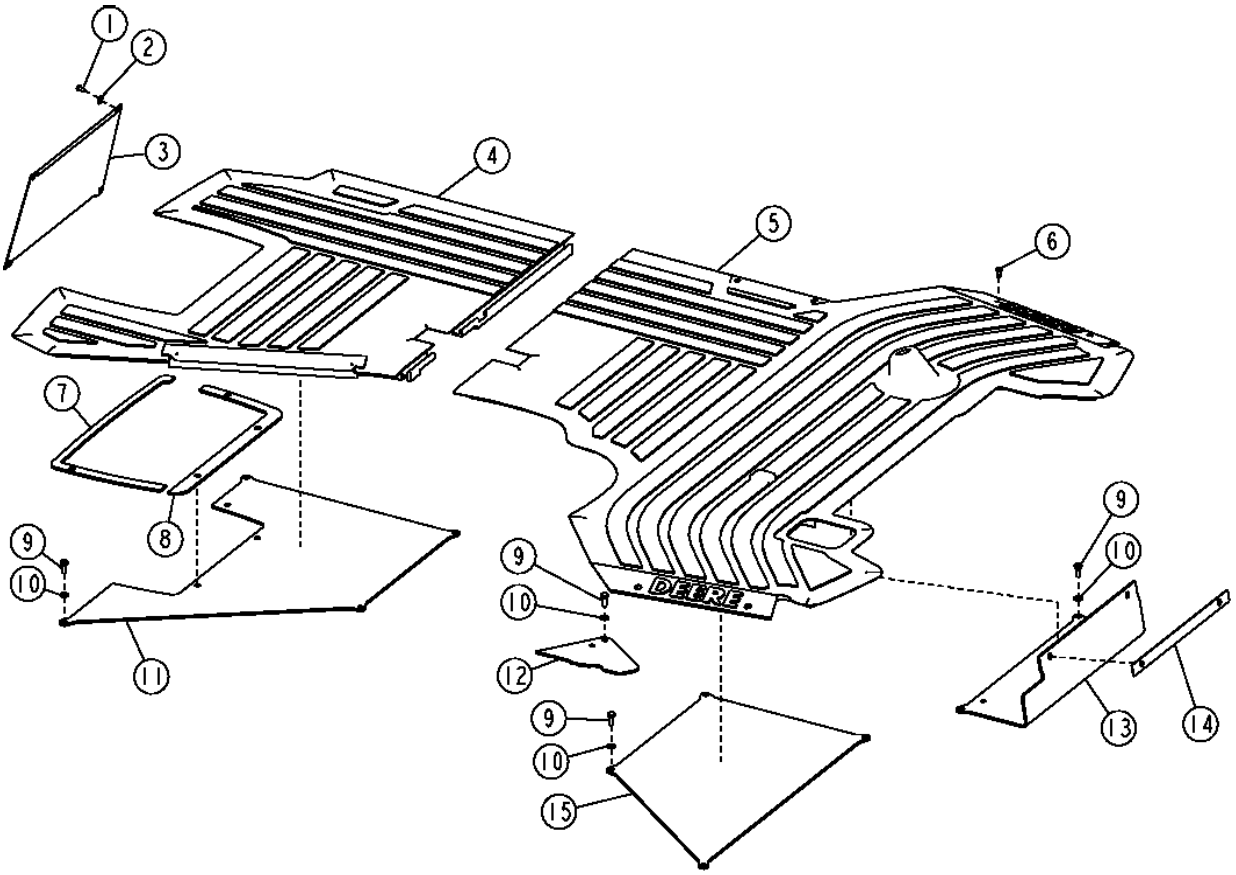

T136077

FLOOR RAMPS, FLOOR MATS AND ANTI-SKID MATS

KEY	PART NO.	PART NAME	QTY	SERIAL NO.	310G	310SG	315SG	REMARKS
1	19M7923	CAP SCREW	4		X	X	X	M6 X 12
2	24M7139	WASHER	4		X	X	X	
3	T203458	PANEL	1		X	X	X	(SUB FOR T185524)
4	T166000	MAT	1		X	X	X	REAR
	T188726	MAT	1		X	X	X	REAR FLOOR (PILOT CONTROLS)
5	T165969	MAT	1		X	X	X	FRONT
6	T133674	SELF-LOCKING SCREW	4		X	X	X	M6 X 16, (SUB FOR 21M7292, THIS APPLICATION)
7	T185773	GASKET	1		X	X	X	
8	T185774	GASKET	1		X	X	X	(LEVER CONTROLS)
	T191142	GASKET	1		X	X	X	(PILOT CONTROLS)
9	19M7881	SCREW	13		X	X	X	M8 X 20
10	24M7238	WASHER	13		X	X	X	
11	AT186321	COVER	1		X	X	X	REAR
	AT196294	COVER	1		X	X	X	REAR (PILOT CONTROLS)
12	AT191976	COVER	1	-913416	X	X	X	LINKAGE
	AT197479	COVER	1	913417-	X	X	X	LINKAGE
	AT193881	COVER	1	-913416	X	X	X	LINKAGE, WITH RIDE CONTROL, SEL.FLOW VALVE OR HYDRAULIC FRONT COUPLER
	AT300928	COVER	1	913417-	X	X	X	LINKAGE, WITH RIDE CONTROL, SEL.FLOW VALVE OR HYDRAULIC FRONT COUPLER
13	T188565	COVER	1		X	X	X	FRONT, (SUB FOR T185666)
14	T185775	GASKET	1		X	X	X	
15	T165948	COVER	1		X	X	X	MIDDLE

FLOOR COVERS AND NON SLIP SURFACING

T136112 -UN-05DEC00

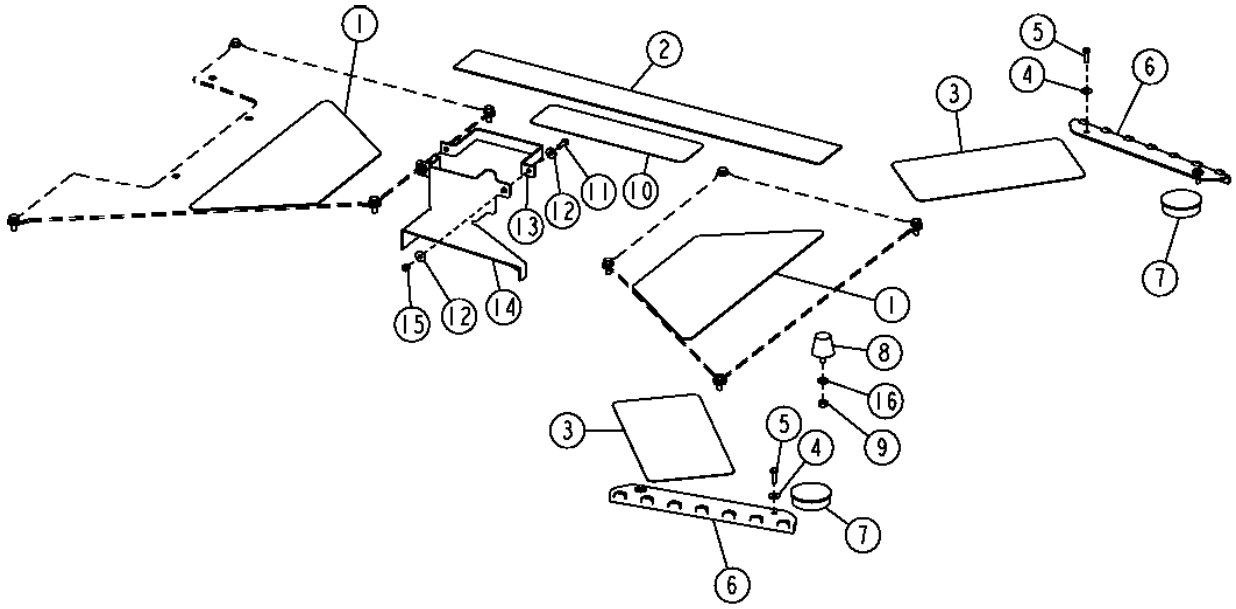

T136112

FLOOR COVERS AND NON SLIP SURFACING

KEY	PART NO.	PART NAME	QTY	SERIAL NO.	310G	310SG	315SG	REMARKS
1	T166997	MAT	2		X			ANTI-SLIP
2	T100787	MAT	1		X			ANTI-SLIP
3	T25838	MAT	2		X			ANTI-SLIP
4	.....	WASHER	4		X			(24M7139 NO LONGER REQUIRED)
5	19M7775	SCREW	4		X			M6 X 16, (SUB FOR 19M7077, THIS APPLICATION)
6	T185757	STEP	2		X			THRESHOLD
7	T184528	PLUG	2		X			
8	AT36635	BUMPER	1		X			ACCELERATOR PEDAL
9	14H650	NUT	1		X			5/16"
10	T158428	MAT	1		X			ANTI-SLIP
11	19M7775	SCREW	2		X			M6 X 16, (SUB FOR 19M7077 AND 19M7862, THIS APPLICATION)
12	.....	WASHER	4		X			(24M7139 NO LONGER REQUIRED)
13	T185466	STRAP	1		X			
14	T185465	BRACKET	1		X			
15	14M7303	FLANGE NUT	2		X			M6, (SUB FOR 14M7272, THIS APPLICATION)
16	24M7238	WASHER	1		X			

DOORS AND SIDE WINDOWS FOR CAB

T145767 -UN-20SEP01

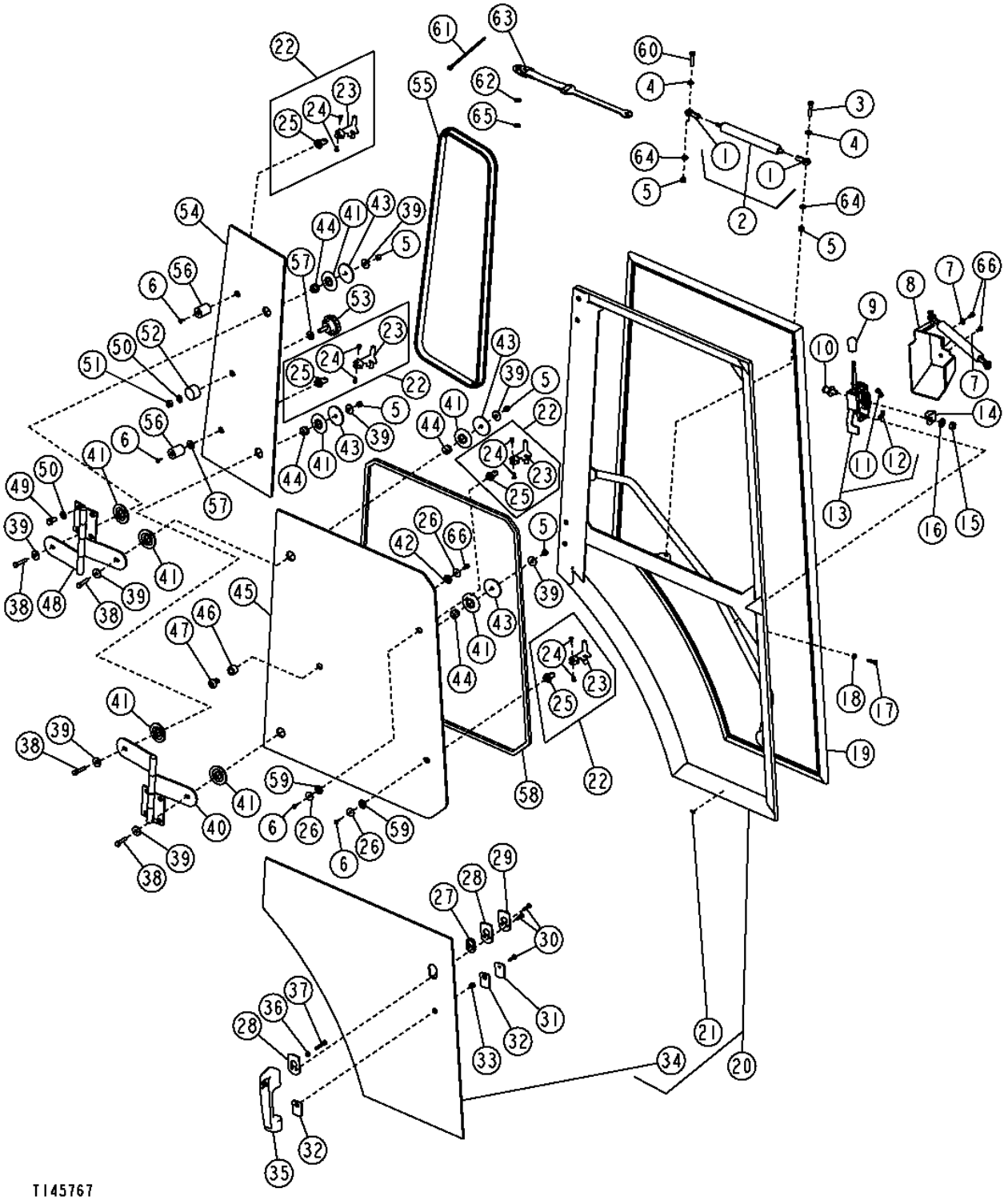

DOORS AND SIDE WINDOWS FOR CABS

KEY	PART NO.	PART NAME	QTY	SERIAL NO.	310G	310SG	315SG	REMARKS
1	AW24539	END	2	-904214	X	X	X	
	AM102062	LINK END	2	904215-	X	X	X	
2	.....	CYLINDER	1	-904214	X	X	X	(AT193621 NO LONGER AVAILABLE) (SUB AT194718, 19M7922, (4) 24M7238) (SUB FOR AT184407)
	AT194718	CYLINDER	1	904215-	X	X	X	
3	19M7922	CAP SCREW	1		X	X	X	M8 X 40
4	24M7238	WASHER	2		X	X	X	
5	14M7426	LOCK NUT	6		X	X	X	M8
6	T133674	SELF-LOCKING SCREW	4	-902299	X	X	X	
	T188806	SCREW	4	902300-	X	X	X	
7	.....	WASHER	2		X	X	X	
8	T165095	COVER	1		X	X	X	RIGHT
	T165096	COVER	1		X	X	X	LEFT
9	T133487	KNOB	1		X	X	X	
10	AR91896	STRIKER	1		X	X	X	
11	T161373	CLIP	1		X	X	X	
12	R26491	CLIP	1		X	X	X	
13	AT145792	LATCH	1		X	X	X	RIGHT
	AT184767	LATCH	1		X	X	X	LEFT
14	T135583	GUARD	1		X	X	X	STRICKER
15	14H1047	NUT	1		X	X	X	7/16"
16	T105740	WASHER	1		X	X	X	
17	19H1914	CAP SCREW	2		X	X	X	1/4" X 1"
18	24H1287	WASHER	2		X	X	X	
19	AT184652	ISOLATOR	1		X	X	X	RIGHT
	AT184719	ISOLATOR	1		X	X	X	LEFT
20	AT194627	DOOR	1		X	X	X	RIGHT
	AT194628	DOOR	1		X	X	X	LEFT
21	T135675	STAND-OFF	7		X	X	X	
22	.....	LATCH	4	-902299	X	X	X	(AT118766 NO LONGER AVAILABLE) (SUB AT196522 AND T188806)
	AT196522	LATCH	4	902300-	X	X	X	
23	T119153	LATCH	1		X	X	X	
24	A48970	DUAL LOCK FASTENER	2		X	X	X	
25	.....	BASE	1		X	X	X	
26	24H1288	WASHER	3		X	X	X	
27	T175645	SPACER	1		X	X	X	
28	T175642	GROMMET	2		X	X	X	
29	T175641	PLATE	1		X	X	X	
30	T134895	SELF-LOCKING SCREW	3		X	X	X	
31	T175644	PLATE	1		X	X	X	
32	T175643	GROMMET	2		X	X	X	
33	T175646	SPACER	1		X	X	X	
34	T165158	WINDOWPANE	1		X	X	X	RIGHT
	T165336	WINDOWPANE	1		X	X	X	LEFT

THIS PARTS LISTING IS CONTINUED

DOORS AND SIDE WINDOWS FOR CAB

T145767 -UN-20SEP01

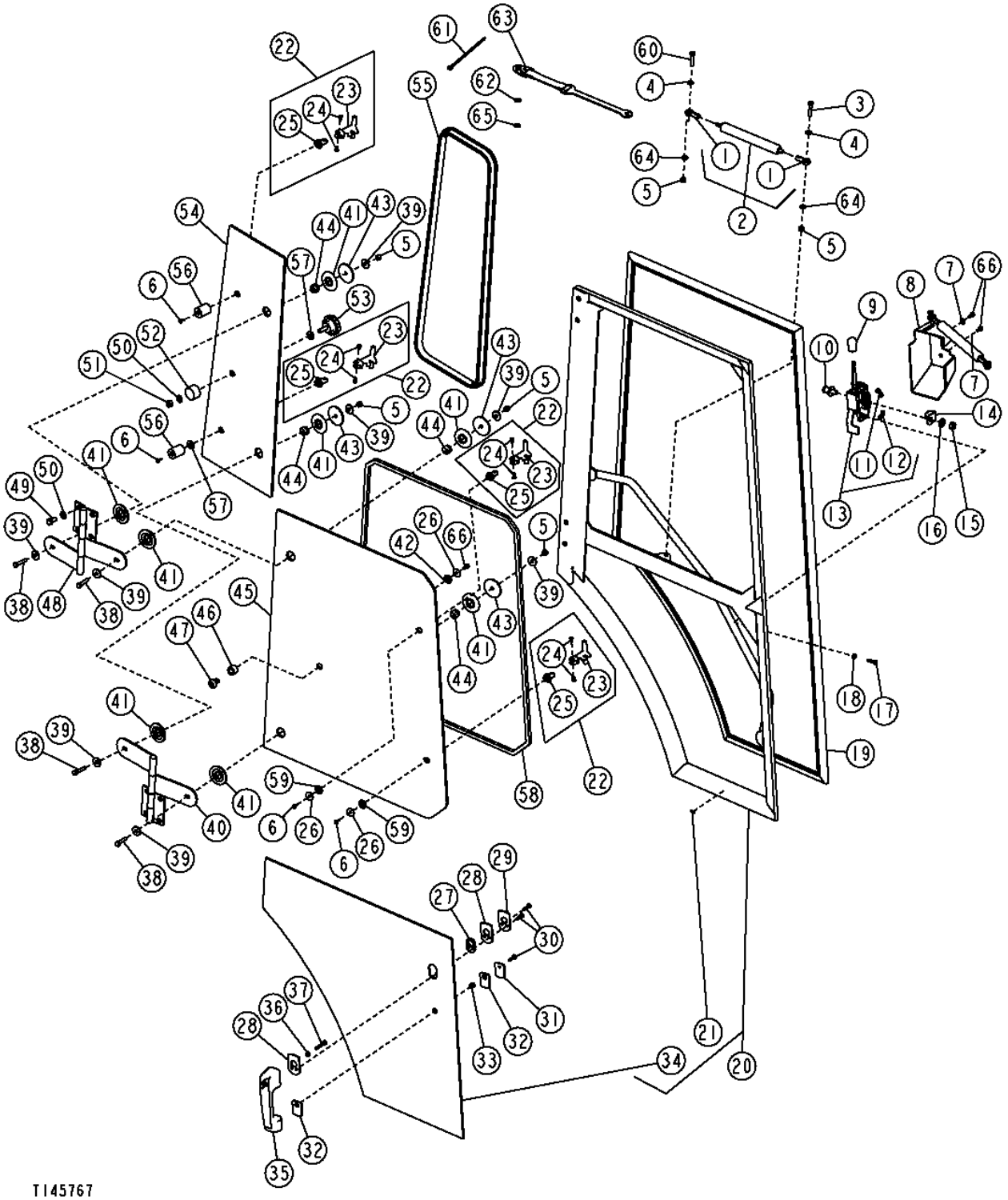

DOORS AND SIDE WINDOWS FOR CABS

KEY	PART NO.	PART NAME	QTY	SERIAL NO.	310G	310SG	315SG	REMARKS
35	AT220317	HANDLE	1		X	X	X	
36	14H786	NUT	1		X	X	X	
37	T166035	SCREW	1		X	X	X	
38	19M7922	CAP SCREW	4		X	X	X	M8 X 40
39	24M7024	WASHER	8		X	X	X	
40	AT184524	HINGE	2		X	X	X	LOWER R.H. AND UPPER L.H.
41	T158081	WASHER	8		X	X	X	
42	T76832	WASHER	1		X	X	X	
43	T185678	WASHER	4		X	X	X	
44	T158358	BUSHING	4		X	X	X	
45	T164707	WINDOWPANE	1		X	X	X	RIGHT AND LEFT
46	T186017	BUSHING	1		X	X	X	
47	T186016	BUSHING	1		X	X	X	
48	AT184651	HINGE	2		X	X	X	LOWER L.H. AND UPPER R.H.
49	19M7938	CAP SCREW	8		X	X	X	M10 X 20
50	24M7239	WASHER	8		X	X	X	
51	14M7167	LOCK NUT	1		X	X	X	M10
52	T76830	GUARD	1		X	X	X	
53	AT75311	KNOB	1		X	X	X	
54	T164706	WINDOWPANE	1		X	X	X	RIGHT
	T166060	WINDOWPANE	1		X	X	X	LEFT
55	T164710	ISOLATOR	1		X	X	X	RIGHT
	T164709	ISOLATOR	1		X	X	X	LEFT
56	T186018	BUMPER	2		X	X	X	
57	R52921	WASHER	2		X	X	X	PLASTIC
	T76833	WASHER	2		X	X	X	RUBBER
58	T165357	ISOLATOR	1		X	X	X	
59	T76833	WASHER	2		X	X	X	
60	19M8397	CAP SCREW	1	-904214	X	X	X	M8 X 50
	19M7922	CAP SCREW	1	904215-	X	X	X	M8 X 40
61	R44302	TIE BAND	1	-904214	X	X	X	
62	M87534	SPRING WASHER	1	-904214	X	X	X	
63	.....	STRAP	1	-904214	X	X	X	(AT194407 NO LONGER AVAILABLE) (SUB AT194718, 19M7922 AND (4) 24M7238)
64	24M7298	WASHER	2	-904214	X	X	X	
	24M7238	WASHER	2	904215-	X	X	X	
65	28H1511	WASHER	1	-904214	X	X	X	
66	T133674	SELF-LOCKING SCREW	3		X	X	X	

WINDSHIELD GLASS FOR CAB OR QUARTER CAB

TP69621 -UN-05OCT00

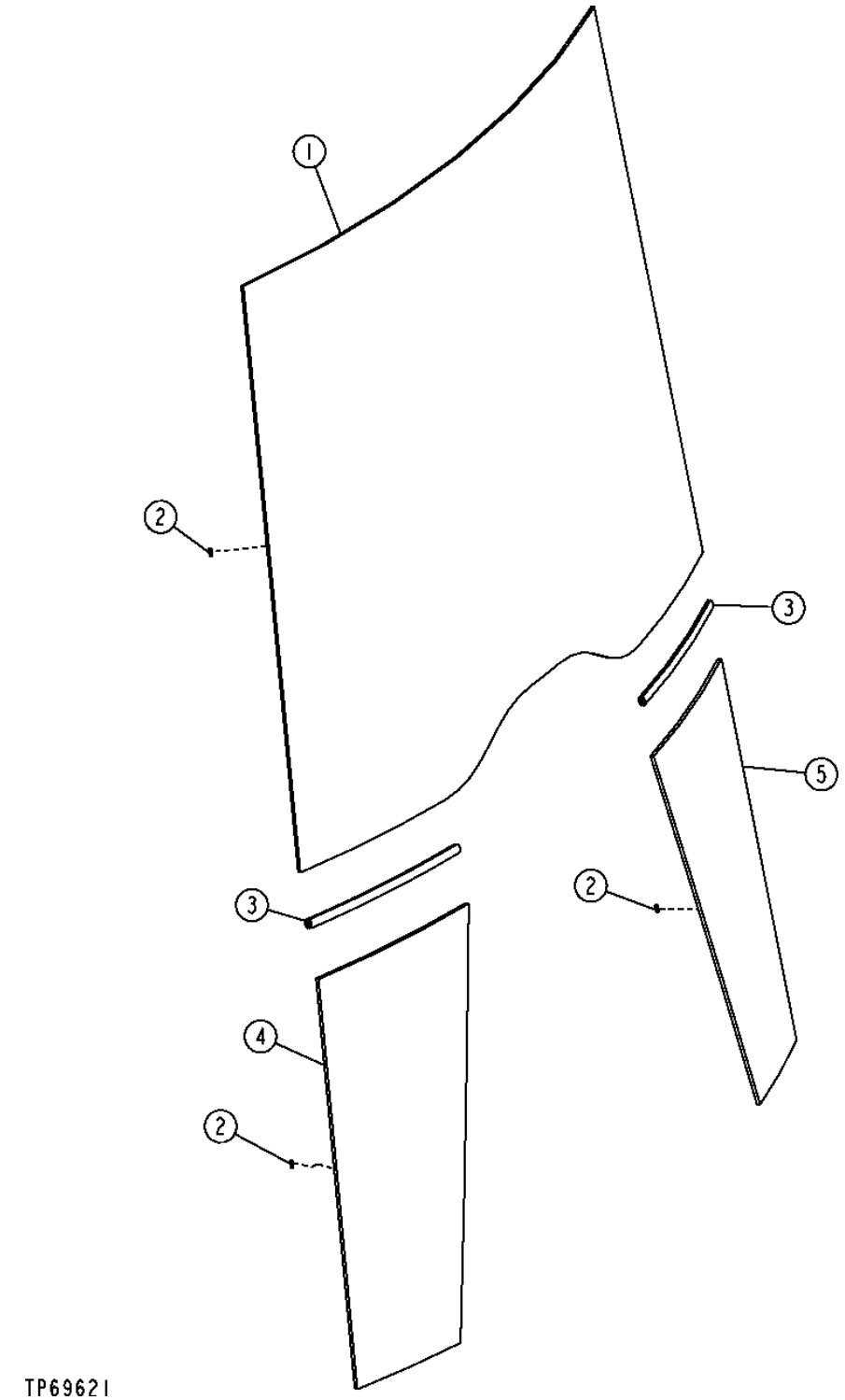

WINDSHIELD GLASS FOR CAB OR QUARTER CAB

KEY	PART NO.	PART NAME	QTY	SERIAL NO.	310G	315SG	315SG	REMARKS
1	T191071	WINDOWPANE	1		X	X	X	(SUB FOR T164694)
2	T135675	STAND-OFF	22		X	X	X	
3	T164697	ISOLATOR	2		X	X	X	
4	T191072	WINDOWPANE	1		X	X	X	LOWER RIGHT, (SUB FOR T164695)
5	T191073	WINDOWPANE	1		X	X	X	LOWER LEFT, (SUB FOR T164696)

SLIDING REAR WINDOWS AND CORNER WINDOWPANES (SER.NO. -920856)

T152680 -UN-14MAR02

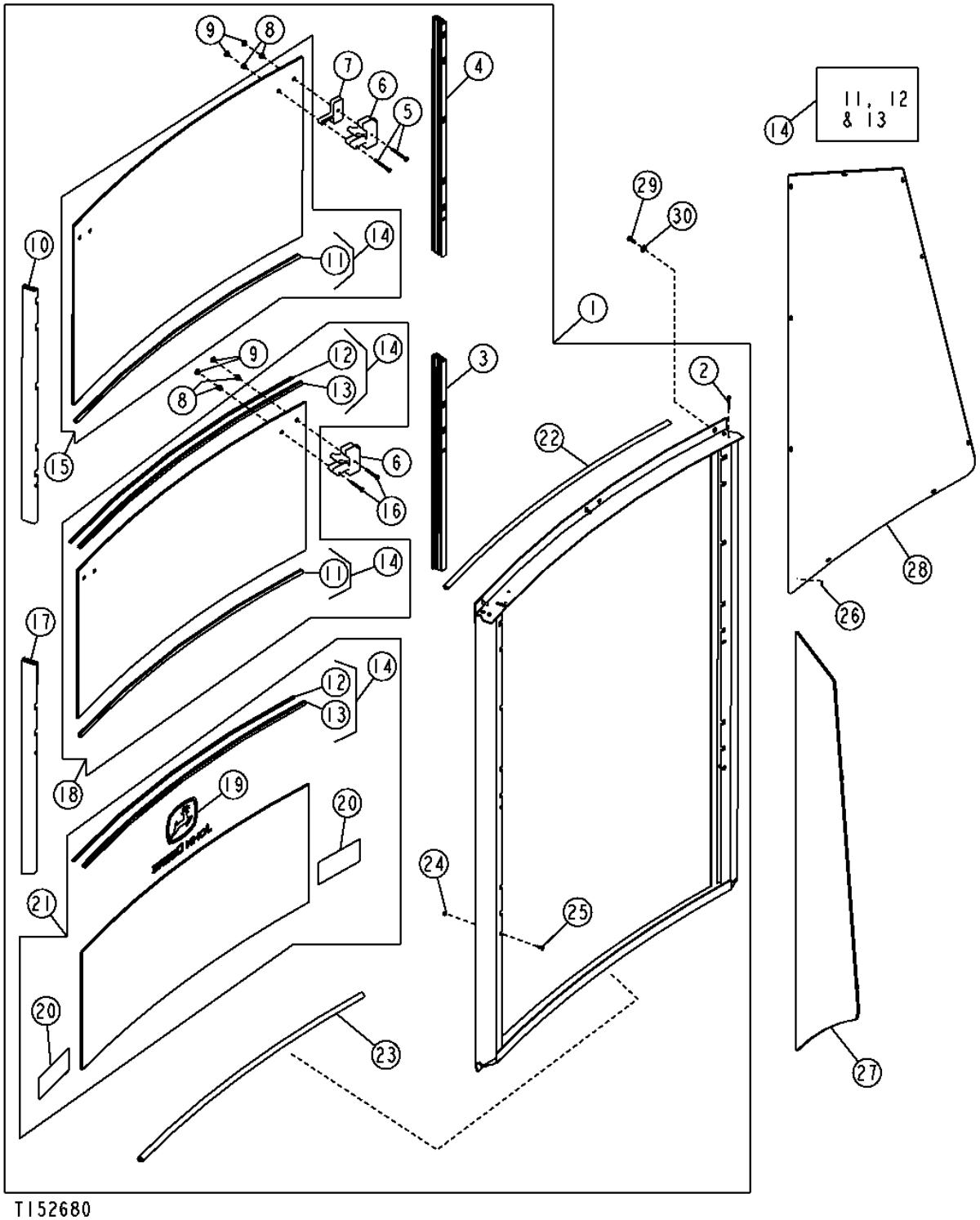

SLIDING REAR WINDOWS AND CORNER WINDOWPANES (SER.NO. -920856)

KEY	PART NO.	PART NAME	QTY	SERIAL NO.	310G	315SG	REMARKS
1	.....	WINDOW	1		X	X X	CONVENIENCE ASSEMBLY (AT184089 NO LONGER AVAILABLE) (SUB AT302812)
2	T164698	SCREW	8		X	X X	
3	AT190194	GUIDE	1		X	X X	(BOTTOM LEFT WINDOW)
4	AT190193	GUIDE	1		X	X X	(TOP LEFT WINDOW)
5	T166368	SCREW	2		X	X X	
6	AT309347	LATCH	1		X	X X	(LEFT AND RIGHT) (DOES NOT INCLUDE HARDWARE) (SUB FOR AT196391)
7	T165561	SPACER	1		X	X X	
8	T166371	GROMMET	2		X	X X	
9	T187765	INSERT	2		X	X X	(SUB FOR T166370)
10	AT190191	GUIDE	1		X	X X	(TOP RIGHT WINDOW)
11	.....	SEAL	1		X	X X	(A) (ORDER AT190490)
12	.....	WEATHERSTRIP	1		X	X X	(A) (ORDER AT190490)
13	.....	SEAL	1		X	X X	(A) (ORDER AT190490)
14	AT190490	KIT	1		X	X X	(A) ONE KIT WILL SERVICE THE MIDDLE WINDOW, TWO KITS WILL SERVICE ALL THREE WINDOWS
15	AT189176	WINDOW	1		X	X X	(UPPER WINDOW)
16	T166369	SCREW	2		X	X X	
17	AT190192	GUIDE	1		X	X X	(BOTTOM RIGHT WINDOW)
18	AT189175	WINDOW	1		X	X X	(MIDDLE WINDOW)
19	JD5694	LABEL	1	-902607	X	X X	LEAPING DEER
	JD5750	LABEL	1	902608-	X	X X	LEAPING DEER
20	T183768	LABEL	2		X	X X	WARNING
21	AT187036	WINDOW	1		X	X X	(LOWER WINDOW)
22	T166881	WEATHERSTRIP	1		X	X X	
23	T187780	ISOLATOR	1		X	X X	(SUB FOR T166881, THIS APPLICATION)
24	T185378	NUT	2		X	X X	
25	T185377	SCREW	2		X	X X	
26	T135675	STAND-OFF	22		X	X X	
27	T164705	WINDOWPANE	1		X	X X	(RIGHT REAR CORNER)
28	T164708	WINDOWPANE	1		X	X X	(LEFT REAR CORNER)
29	19M7775	SCREW	6		X	X X	M6 X 16
30	24M7139	WASHER	6		X	X X	

SLIDING REAR WINDOWS AND CORNER WINDOWPANES (SERIAL NO. 920857-)

T200471 -UN-28MAY04

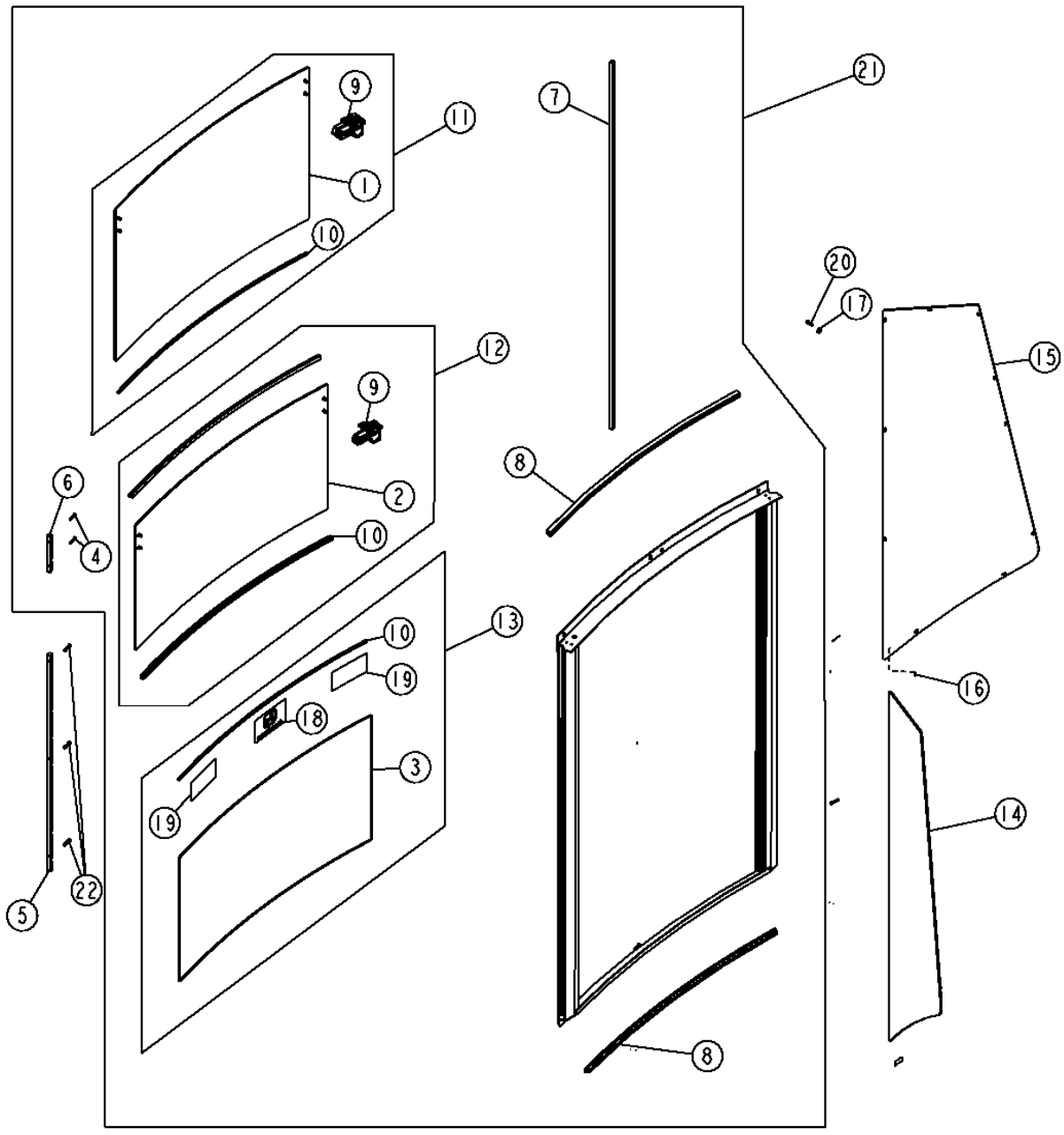

T200471

SLIDING REAR WINDOWS AND CORNER WINDOWPANES (SERIAL NO. 920857-)

KEY	PART NO.	PART NAME	QTY	SERIAL NO.	310G	310SG	315SG	REMARKS
1	T201955	WINDOWPANE	1		X	X	X	
2	T201954	WINDOWPANE	1		X	X	X	
3	T201953	WINDOWPANE	1		X	X	X	
4	T201952	SCREW	10		X	X	X	
5	T201957	FRAME	2		X	X	X	
6	T201956	FRAME	2		X	X	X	
7	T201958	WEATHERSTRIP	2		X	X	X	
8	T201968	GASKET	2		X	X	X	
9	AT302817	LATCH	1		X	X	X	(INCLUDES HARDWARE AND (1) LATCH)
	21H1395	SCREW	2		X	X	X	0.164" X 2", (TOP WINDOW)
	21H1367	SCREW	2		X	X	X	0.164" X 1-3/8", (MIDDLE WINDOW)
	T166371	GROMMET	2		X	X	X	
	T223289	INSERT	2		X	X	X	0.164"
10	AT307770	SEAL	1		X	X	X	
11	AT302816	WINDOW	1		X	X	X	
12	AT302815	WINDOW	1		X	X	X	
13	AT302813	WINDOW	1		X	X	X	
14	T164705	WINDOWPANE	1		X	X	X	(RIGHT REAR CORNER)
15	T164708	WINDOWPANE	1		X	X	X	(LEFT REAR CORNER)
16	T135675	STAND-OFF	22		X	X	X	
17	24M7139	WASHER	6		X	X	X	
18	JD5750	LABEL	1		X	X	X	
19	T183768	LABEL	1		X	X	X	
20	19M7775	SCREW	6		X	X	X	M6 X 16, (SUB FOR 19M7077 AND 19M7862, THIS APPLICATION)
21	AT302812	WINDOW	1		X	X	X	(ALSO ORDER (2) T201957 AND (6) T208077) CONVENIENCE ASSEMBLY
22	T208077	SCREW	6		X	X	X	

FRONT WINDSHIELD WIPER SYSTEM

T137150 -UN-30JAN01

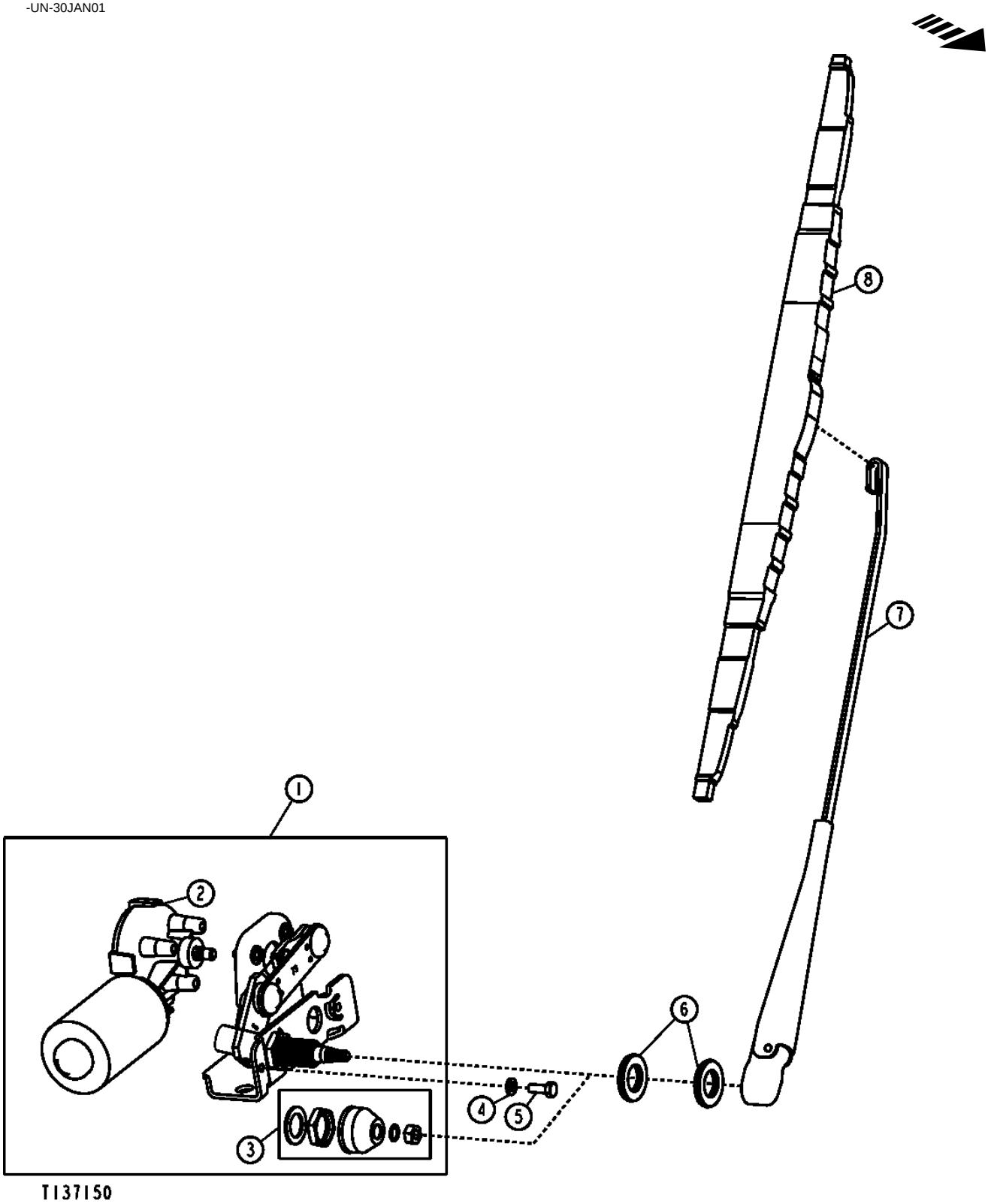

FRONT WINDSHIELD WIPER SYSTEM

KEY	PART NO.	PART NAME	QTY	SERIAL NO.	310G	310SG	315SG	REMARKS
1	.....	WIPER MOTOR	1	-895627	X	X	X	(AT189103 NO LONGER AVAILABLE) (SUB AT192587 AND (2) 19M8425)
	.....	WIPER MOTOR	1	895628-XXXXXX	X	X	X	(SUB AT323014) (AT192587 NO LONGER AVAILABLE)
2	AT189101	WIPER MOTOR	1		X	X	X	
3	RE40049	KIT	1		X	X	X	
4	12H302	LOCK WASHER	2	-895627	X	X	X	1/4"
5	19H2651	CAP SCREW	2	-895627	X	X	X	1/4" X 3/4"
	19M7775	SCREW	2	895628-	X	X	X	M6 X 16, (SUB FOR 19M8425, THIS APPLICATION)
6	T183664	WASHER	2	-XXXXXX	X	X	X	
7	AT323012	WIPER ARM	1		X	X	X	(SUB FOR AT184965)
8	AL153661	WIPER BLADE	1		X	X	X	(SUB FOR AT184966)

FRONT WINDSHIELD WASHER RESERVOIR AND PUMP

TP58145 -UN-05OCT00

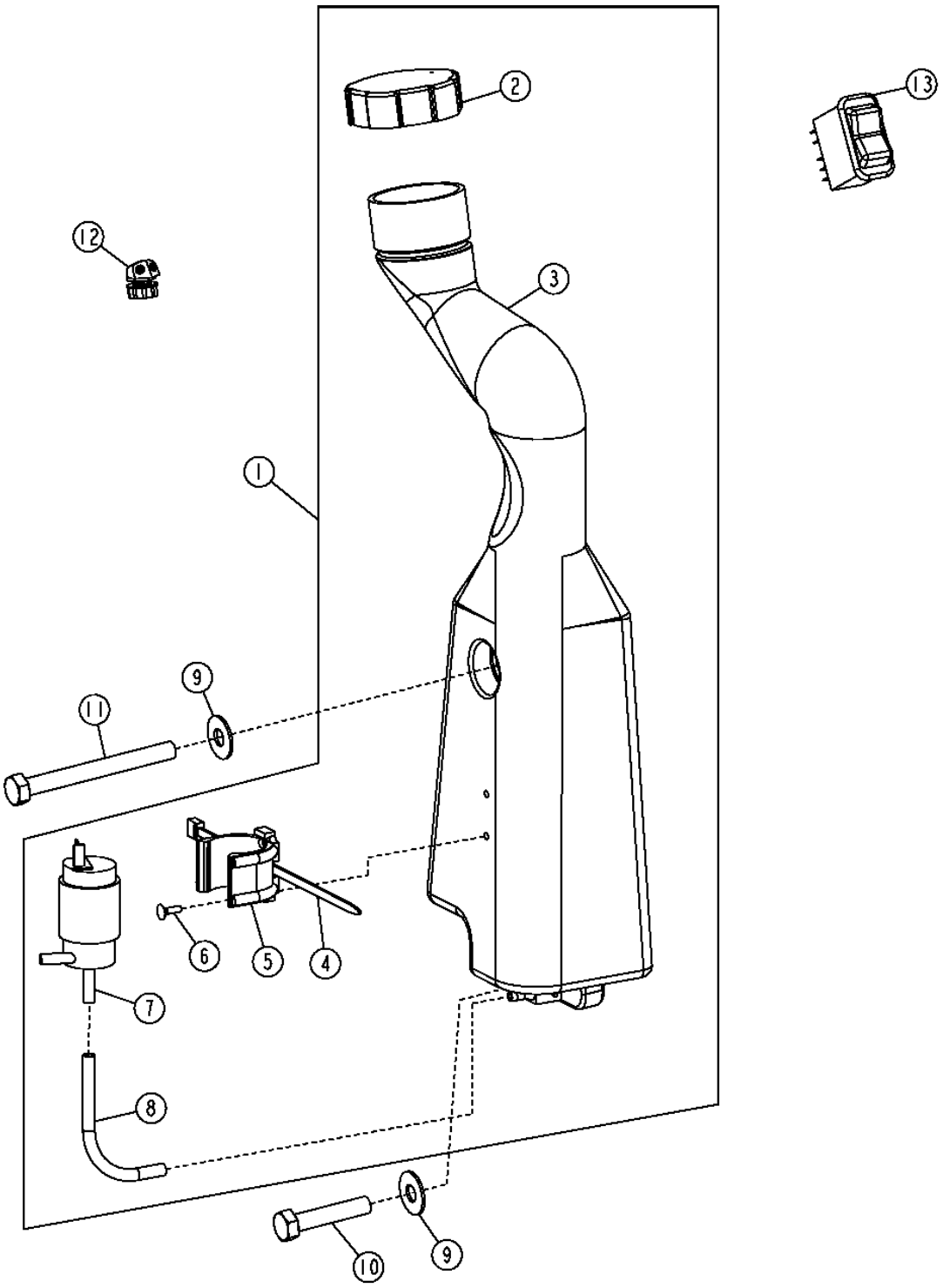

FRONT WINDSHIELD WASHER RESERVOIR AND PUMP

KEY	PART NO.	PART NAME	QTY	SERIAL NO.	310G	315SG	315SG	REMARKS
1	AT187710	WINDSHIELD WASHER	1		X	X	X	
2	AT173193	CAP	1		X	X	X	(SUB FOR AT189043)
3	T179055	RESERVOIR	1		X	X	X	
4	R44302	TIE BAND	1		X	X	X	
5	T183344	BRACKET	1		X	X	X	
6	R116089	SCREW	2		X	X	X	0.138" X 1/2"
7	AT174348	PUMP	1		X	X	X	
8	.....	HOSE	1		X	X	X	(MAKE FROM R120653 BULK MATERIAL, CUT TO LENGTH)
9	24H1307	WASHER	2		X	X	X	
10	R151507	CAP SCREW	1		X	X	X	M10 X 50
11	M132832	CAP SCREW	1		X	X	X	M10 X 100
12	AT188766	NOZZLE	1		X	X	X	
13	AT175072	ROTARY SWITCH	1		X	X	X	

REAR WINDSHIELD WIPER SYSTEM

T192678 -UN-09JUL03

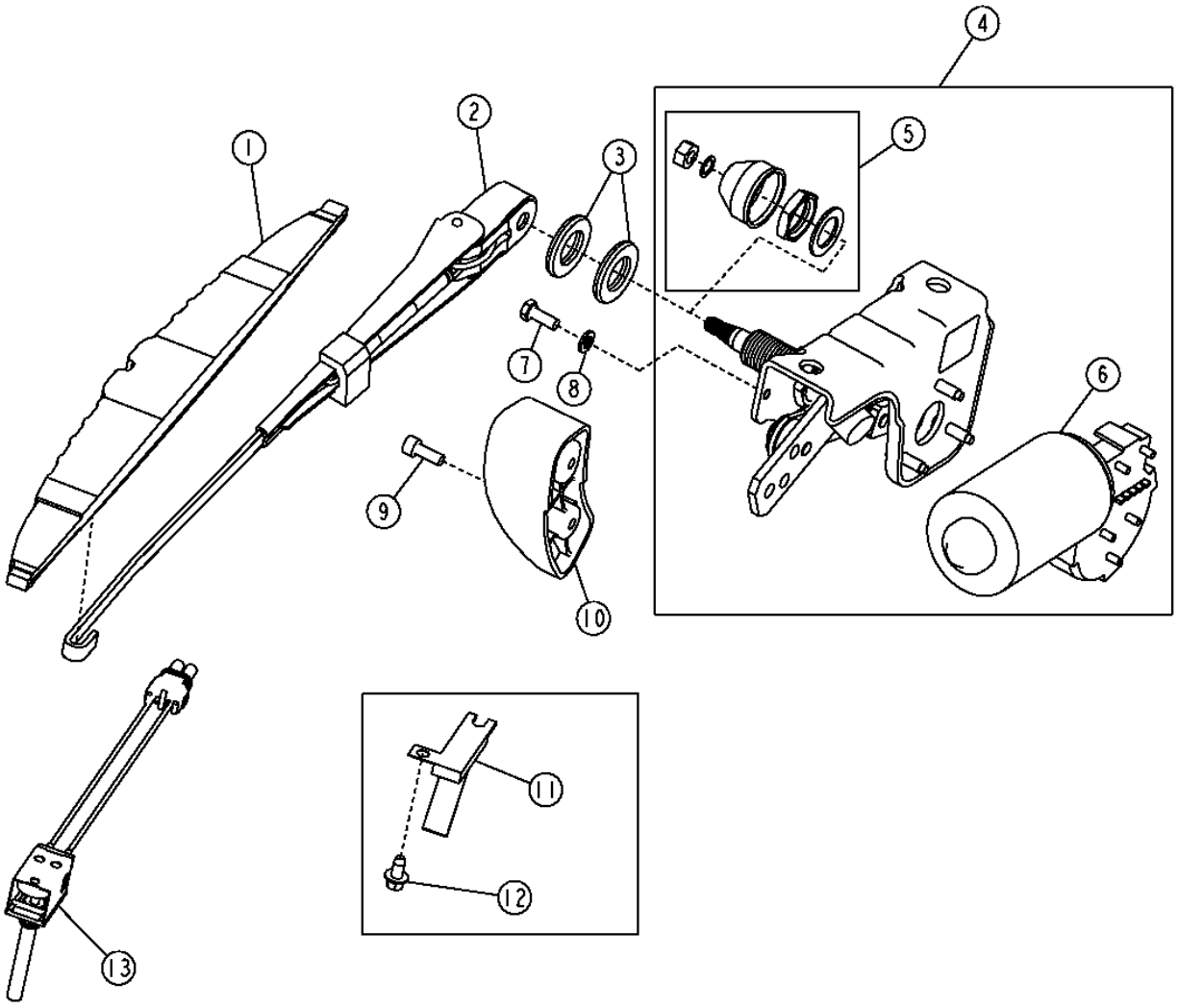

T192678

REAR WINDSHIELD WIPER SYSTEM

KEY	PART NO.	PART NAME	QTY	SERIAL NO.	310G	315SG	REMARKS
1	AT304631	WIPER BLADE	1		X	X X	(SUB FOR AT184970)
2	AT184969	WIPER ARM	1		X	X X	
3	T183664	WASHER	2	-XXXXXX	X	X X	
4	.....	WIPER MOTOR	1	-895627	X	X X	(AT184968 NO LONGER AVAILABLE) (SUB AT194279 AND (2) 19M8425)
	.....	WIPER MOTOR	1	895628-XXXXXX	X	X X	(INCLUDES DRIVE ASSEMBLY) (AT194279 NO LONGER AVAILABLE)
	AT323015	WIPER MOTOR	1	XXXXXX-	X	X X	
5	RE40049	KIT	1		X	X X	
6	AT189101	WIPER MOTOR	1		X	X X	
7	19H2651	CAP SCREW	2	-895627	X	X X	1/4" X 3/4"
	19M7775	SCREW	2	895628-	X	X X	M6 X 16, (SUB FOR 19M8425, THIS APPLICATION)
8	12H302	LOCK WASHER	2	-895627	X	X X	
9	19M8553	SCREW	2		X	X X	M6 X 16
10	AT187229	RAMP	1		X	X X	
11	AT186913	SWITCH	1	-920856	X	X X	
12	37M7089	SCREW	2	-920856	X	X X	M6 X 12
13	AT305685	PUSH SWITCH	1	920857-	X	X X	

BACKHOE CONTROL CONSOLE
TWO LEVER

TP58177 -UN-12AUG00

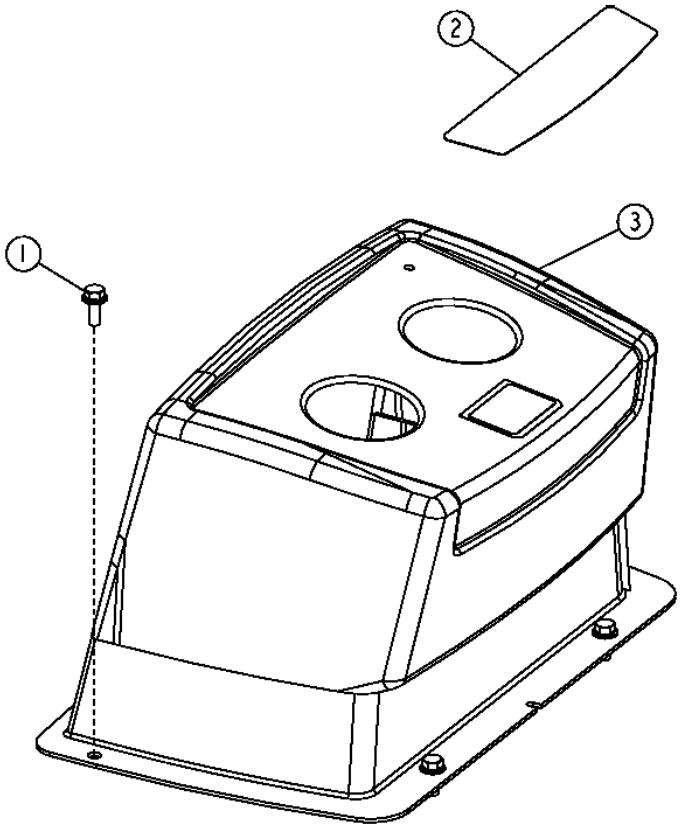

TP58177

BACKHOE CONTROL CONSOLE
TWO LEVER

KEY	PART NO.	PART NAME	QTY	SERIAL NO.	310G	310SG	315SG	REMARKS
1	19M7866	SCREW	4		X	X	X	M8 X 20
2	T165584	LABEL	1		X	X		
3	AT189269	COVER	1		X	X		
	AT193375	COVER	1				X	
	AT189270	COVER	1		X	X		WITH RIGHT PEDAL
	AT193526	COVER	1				X	WITH RIGHT PEDAL
	AT189271	COVER	1		X	X		WITH LEFT AND RIGHT PEDAL

BACKHOE CONTROL LEVER CONSOLE, MULTIPLE LEVERS

TP69618 -UN-12AUG00

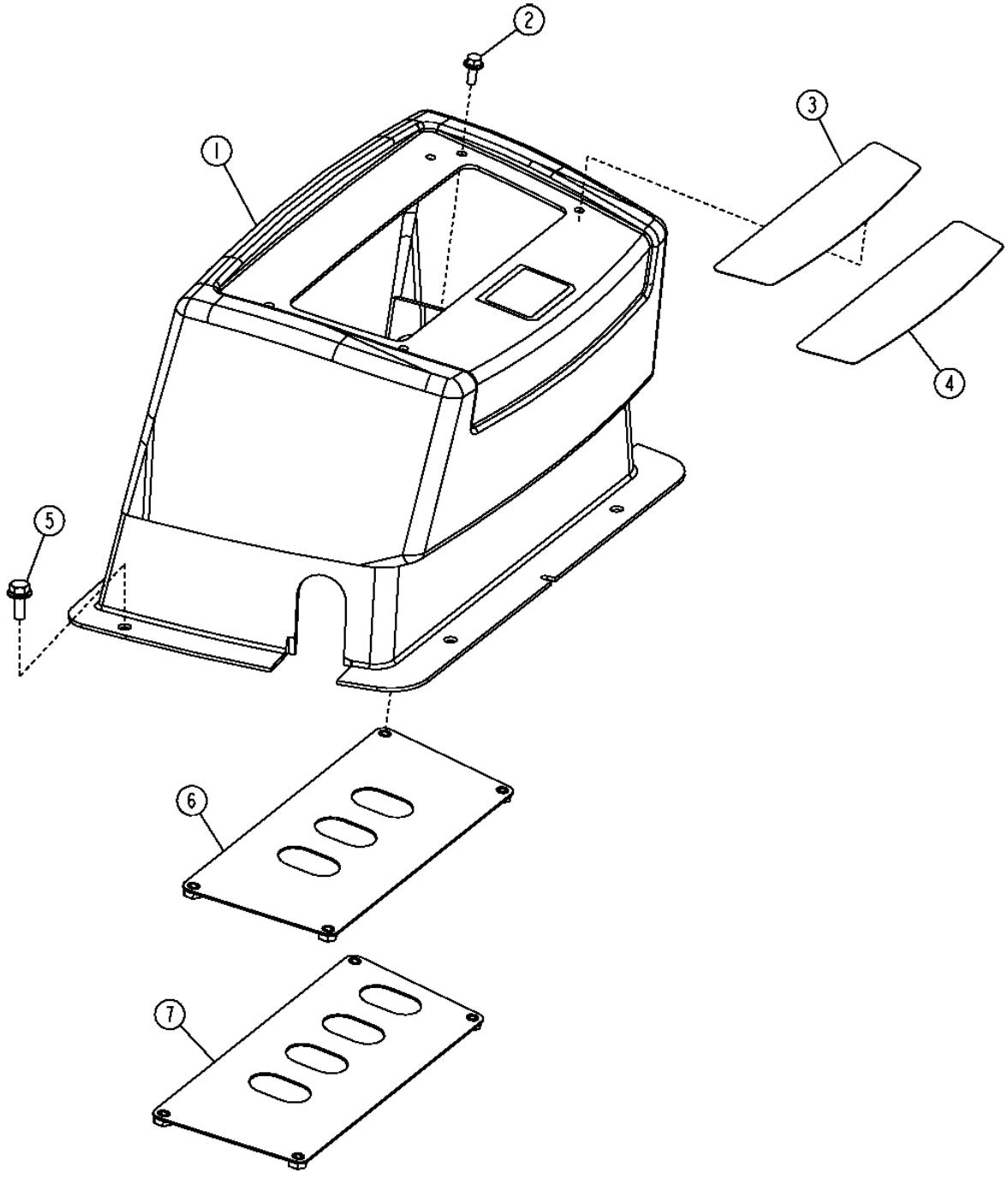

BACKHOE CONTROL LEVER CONSOLE, MULTIPLE LEVERS

KEY	PART NO.	PART NAME	QTY	SERIAL NO.	310G	310SG	315SG	REMARKS
1	AT189272	COVER	1		X	X		
2	19M7775	SCREW	4		X	X		M6 X 16
3	T165585	LABEL	1		X	X		THREE LEVER
4	T165586	LABEL	1		X	X		THREE LEVER WITH EXTENDIBLE
5	19M7866	SCREW	4		X	X		M8 X 20
6	AT186045	COVER	1	-952137	X	X		THREE LEVER
	AT312121	COVER	1	952138-	X	X		THREE LEVER
7	AT186050	COVER	1	-944916	X	X		THREE LEVER WITH EXTENDIBLE
	AT311929	COVER	1	944917-	X	X		THREE LEVER WITH EXTENDIBLE

**BACKHOE CONSOLE
(PILOT CONTROL)**

T165569 -UN-18FEB03

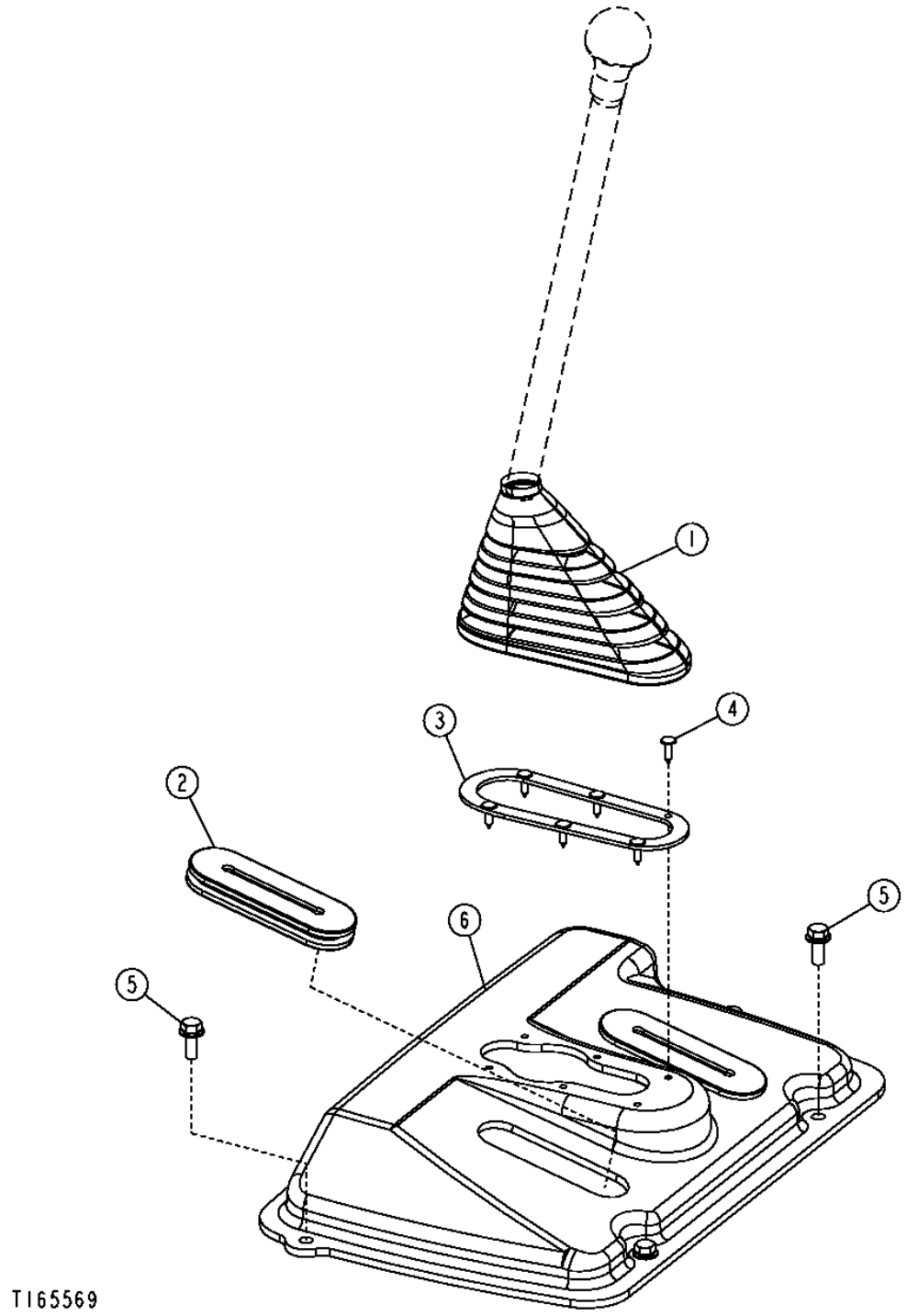

**BACKHOE CONSOLE
(PILOT CONTROL)**

KEY	PART NO.	PART NAME	QTY	SERIAL NO.	310G	310SG	315SG	REMARKS
1	T183468	BOOT	1		X	X		
2	T200095	GROMMET	AR		X	X		
3	T183404	RING	1		X	X		
4	T183882	CLIP	6		X	X		
5	19M7866	SCREW	4		X	X		
6	T200092	COVER	1		X	X		(NO PEDALS)
	T200093	COVER	1		X	X		(ONE PEDAL)
	T200094	COVER	1		X	X		(TWO PEDALS)

STEERING COLUMN COVERS

TP58083 -UN-05OCT00

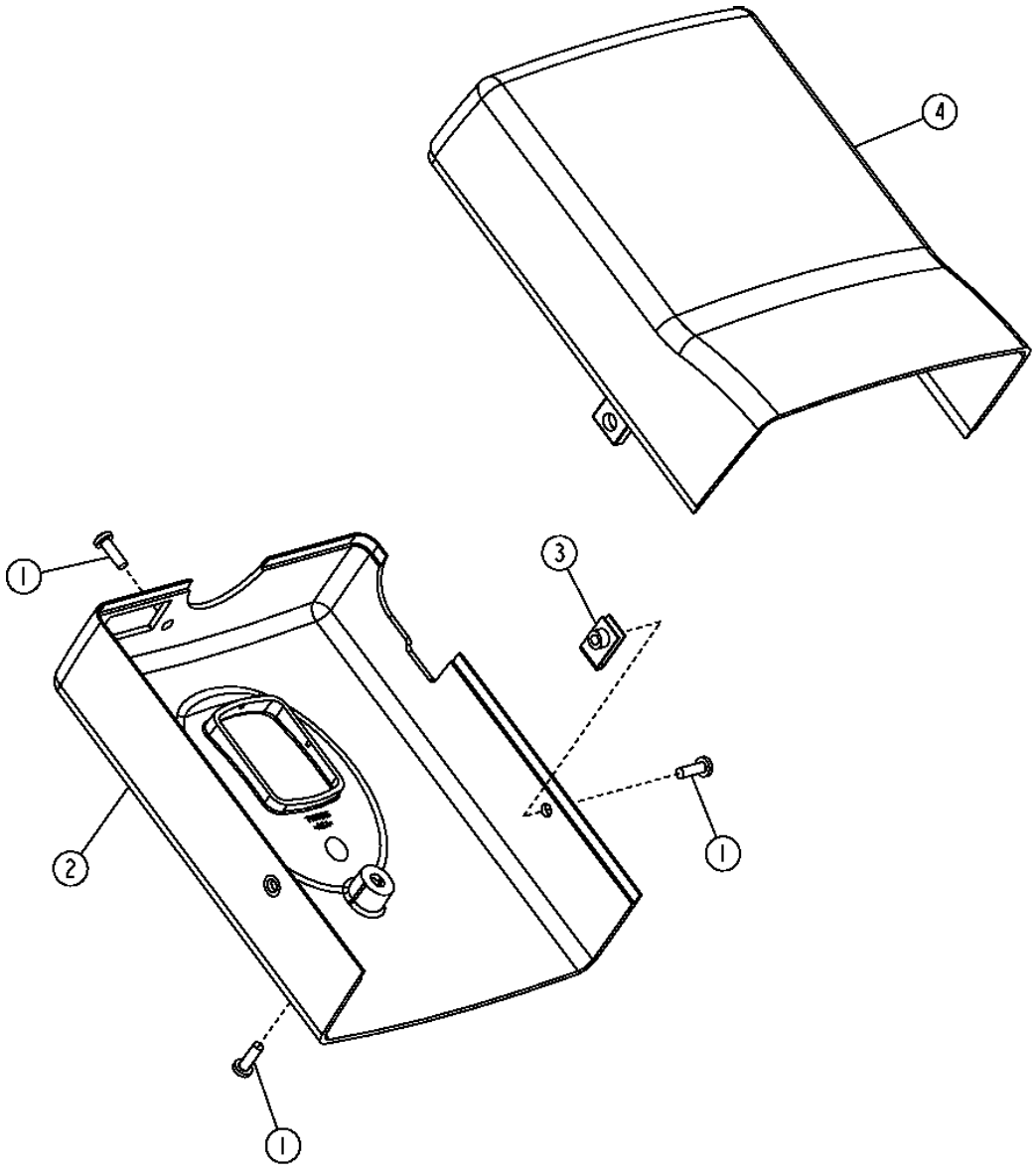

TP58083

STEERING COLUMN COVERS

KEY	PART NO.	PART NAME	QTY	SERIAL NO.	310G	315SG	315SG	REMARKS
1	21M7271	SCREW	5		X	X	X	M5 X 16
2	T166213	COVER	1		X	X	X	STANDARD
	T166213	COVER	1		X	X	X	TILT, (SUB FOR T166215)
3	R117892	NUT	2		X	X	X	
4	T166211	COVER	1		X	X	X	

FRONT CONSOLE FOR CAB AND CANOPY

T209250 -UN-11MAR05

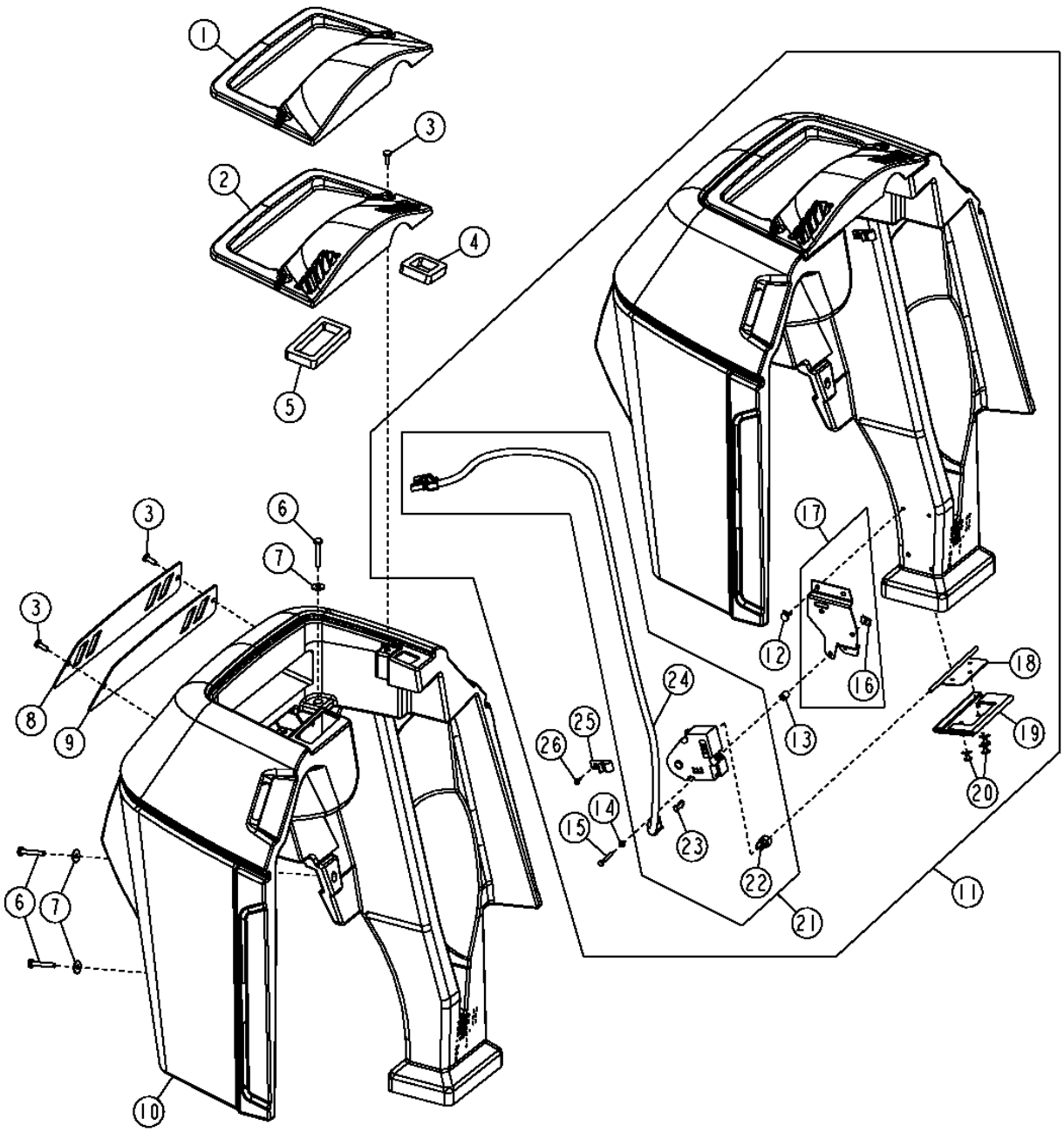

FRONT CONSOLE FOR CAB AND CANOPY

KEY	PART NO.	PART NAME	QTY	SERIAL NO.	310G	315SG	REMARKS
1	T183706	PANEL	1		X	X	(CANOPY)
2	T167083	PANEL	1		X	X	(CAB)
3	T133674	SELF-LOCKING SCREW	2		X	X	M6 X 16, (SUB FOR 21M7292, THIS APPLICATION)
4	T184008	ISOLATOR	1		X	X	LEFT
5	T184009	ISOLATOR	1		X	X	RIGHT
6	T134874	SELF-LOCKING SCREW	6		X	X	M6 X 40, (SUB FOR 21M7403, THIS APPLICATION)
7	24H1821	WASHER	4		X	X	(SUB FOR 24H1646)
8	T206457	PANEL	1		X	X	(CAB) (SUB FOR T167150)
9	T206457	PANEL	1		X	X	(CANOPY) (SUB FOR T167149)
10	T167082	COVER	1		X	X	(CAB)
	T167119	COVER	1		X	X	(CANOPY/ROPS)
11	AT191629	COVER	1		X	X	(WITH AIR CONDITIONING)
12	T184345	RIVET	3		X	X	
13	T134586	SPACER	1		X	X	
14	24M7117	WASHER	3		X	X	
15	19M7715	CAP SCREW	3		X	X	M4 X 30
16	T185742	NUT	3		X	X	
17	AT191877	BRACKET	1		X	X	
18	AT191826	GATE	1		X	X	
19	AT191688	PLATE	1		X	X	(WITH SEAL)
20	T184345	RIVET	3		X	X	
21	AT191876	ACTUATOR	1		X	X	
22	T185485	ADAPTER FITTING	1		X	X	
23	T186022	ELECTRICAL CONNECTOR ASSY	1		X	X	
24	AT191919	WIRING HARNESS	1		X	X	
25	T185743	CLIP	3		X	X	
26	T185769	SCREW	3		X	X	

SIDE INSTRUMENT PANEL HOUSING AND STABILIZER LEVER COVER (CANOPY)

T137242 -UN-05MAR02

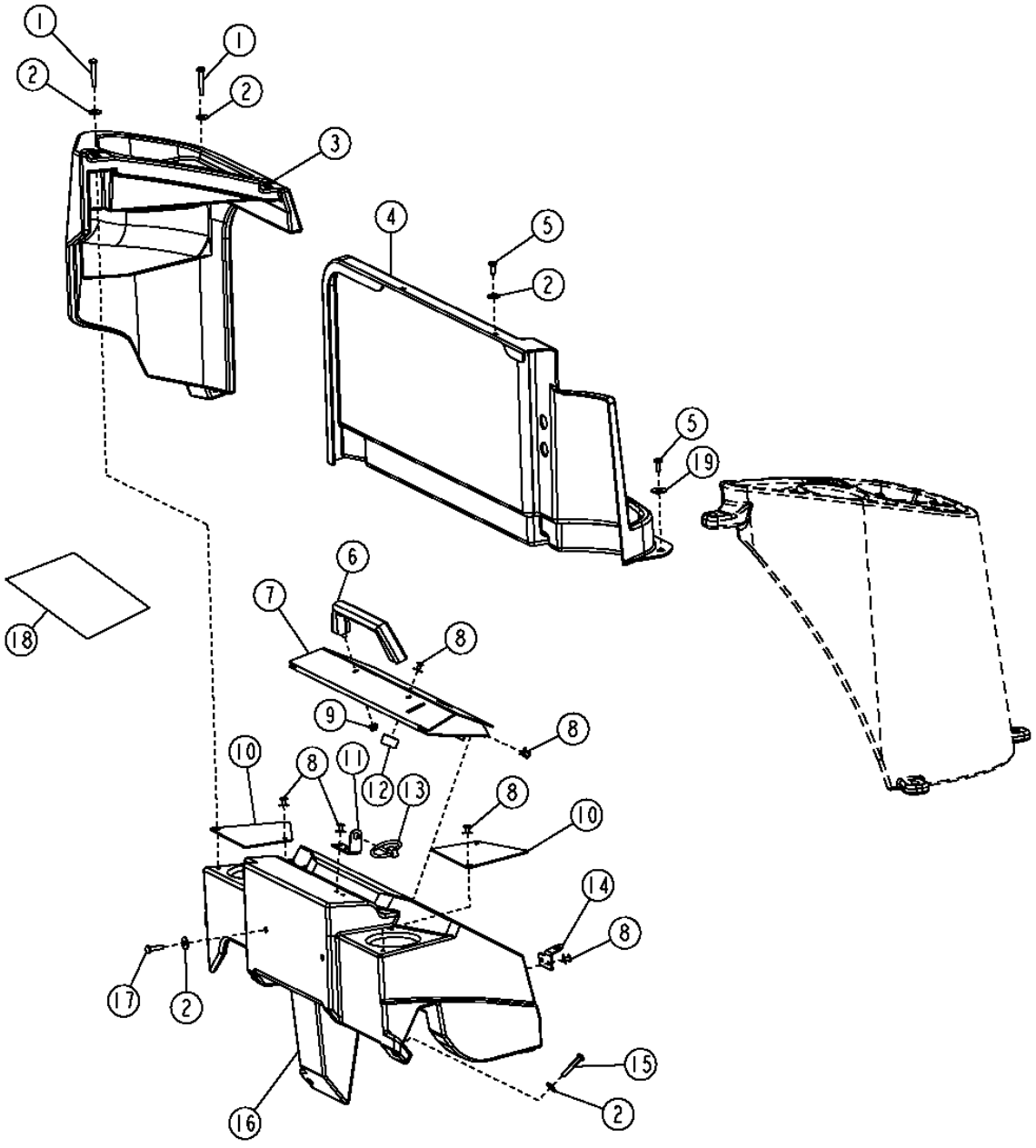

SIDE INSTRUMENT PANEL HOUSING AND STABILIZER LEVER COVER (CANOPY)

KEY	PART NO.	PART NAME	QTY	SERIAL NO.	310G	310SG	315SG	REMARKS
1	T134874	SELF-LOCKING SCREW	3		X	X	X	M6 X 40, (SUB FOR 21M7403, THIS APPLICATION)
2	24H1646	WASHER	9		X	X	X	
3	T185619	COVER	1		X	X	X	STABILIZER CONTROL
	AT304324	COVER	1		X	X		PILOT CONTROL COVER
4	AT304593	COVER	1		X	X	X	CENTER, (SUB FOR T166875)
5	T133674	SELF-LOCKING SCREW	5		X	X	X	M6 X 16
6	AM118928	HANDLE	1		X	X	X	
7	AT192122	COVER	1		X	X	X	VANDAL PROTECTION
8	T184345	RIVET	13		X	X	X	
9	14M7303	FLANGE NUT	2		X	X	X	M6
10	T185654	PANEL	2		X	X	X	
11	T185905	ANGLE	1		X	X	X	
12	T134896	BUMPER	1		X	X	X	VANDAL PROTECTION
13	M72598	QUICK LOCK PIN	1		X	X	X	
14	T183151	STRAP	1		X	X	X	
15	T134874	SELF-LOCKING SCREW	2		X	X	X	M6 X 40
16	T185653	HOUSING	1		X	X	X	INSTRUMENT PANEL
17	T134895	SELF-LOCKING SCREW	2		X	X	X	M6 X 25
18	T186552	LABEL	1		X	X	X	TEMPERATURE AND FAN SPEED CONTROL
19	24M7207	WASHER	3		X	X	X	

SIDE INSTRUMENT PANEL HOUSING AND STABILIZER CONTROL COVER (CAB)

T147548 -UN-30OCT01

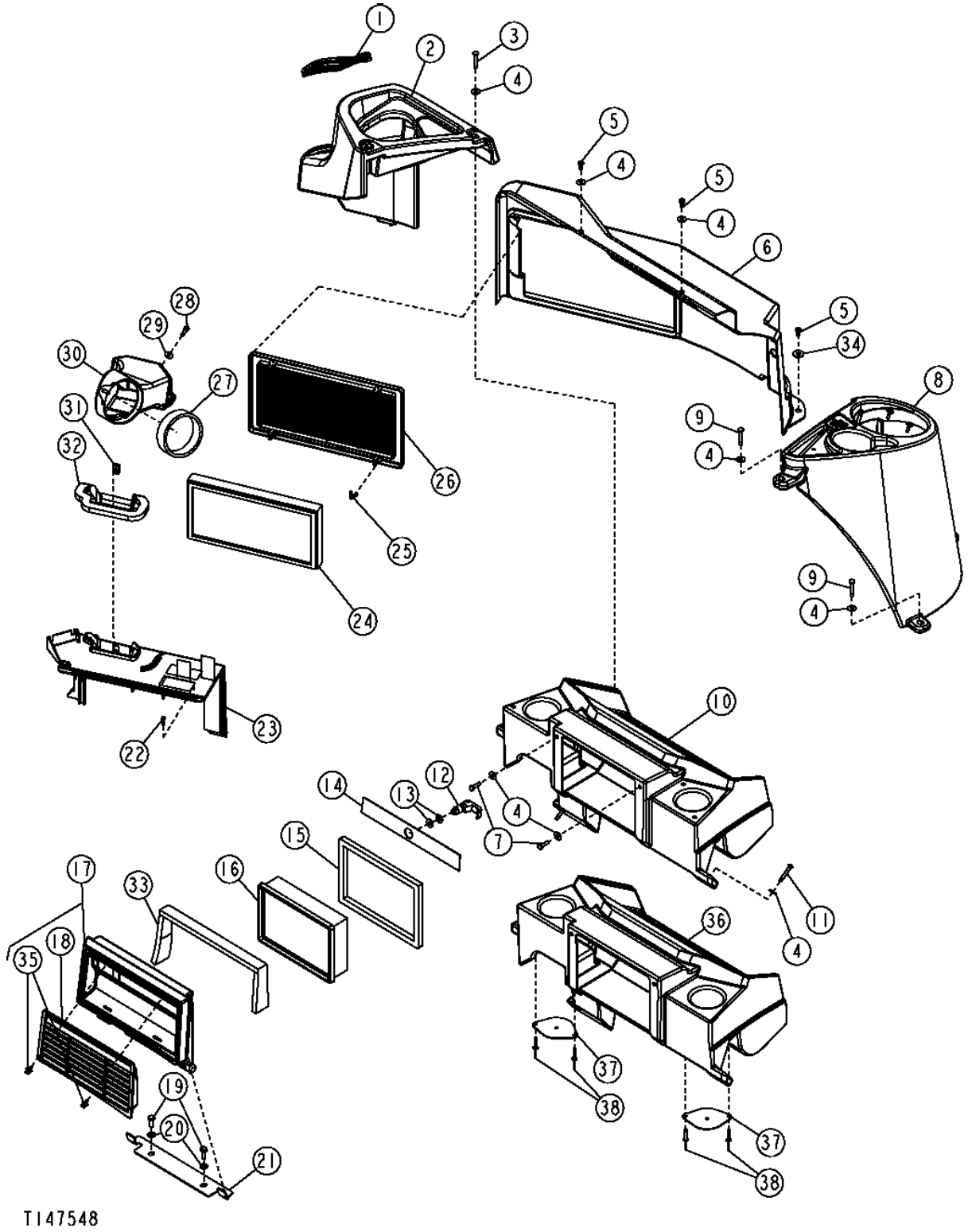

SIDE INSTRUMENT PANEL HOUSING AND STABILIZER CONTROL COVER (CAB)

KEY	PART NO.	PART NAME	QTY	SERIAL NO.	310G	310SG	315SG	REMARKS
1	.....	ISOLATOR	1		X	X	X	(MAKE FROM T58056, CUT TO 445 MM)
2	T185494	COVER	1		X	X	X	STABILIZER CONTROL
	AT304891	COVER	1		X	X		STABILIZER CONTROL (FOR PILOT CONTROL WITH SELECTOR VALVE) (SUB FOR AT280255)
	.....	PLUG	1					(SUB T207060) (T163309 NLA) (SELECTOR VALVE SWITCH PLUG)
3	T134874	SELF-LOCKING SCREW	3		X	X		M6 X 40, (SUB FOR 21M7403, THIS APPLICATION)
4	24H1821	WASHER	12		X	X	X	
5	T133674	SELF-LOCKING SCREW	5		X	X	X	M6 X 16, (SUB FOR 21M7292, THIS APPLICATION)
6	T166874	COVER	1		X	X	X	CENTER
7	T134895	SELF-LOCKING SCREW	2		X	X	X	M6 X 25
8	T185493	COVER	1		X	X	X	LOADER CONTROL
9	T134874	SELF-LOCKING SCREW	3		X	X	X	M6 X 40, (SUB FOR 21M7403, THIS APPLICATION)
10	T185495	HOUSING	1		X	X	X	INSTRUMENT PANEL (AIR CONDITIONING)
11	T134874	SELF-LOCKING SCREW	2		X	X	X	M6 X 40
12	AT222150	LATCH	1		X	X	X	
13	24H1136	WASHER	2		X	X	X	
14	T185896	ISOLATOR	1		X	X	X	
15	T185770	ISOLATOR	1		X	X	X	
16	AT191102	AIR FILTER	1		X	X	X	FRESH AIR
17	AT185396	COVER	1		X	X	X	FRESH AIR
18	T165808	GRILLE	1		X	X	X	
19	19M7881	SCREW	2		X	X	X	M8 X 20
20	24M7238	WASHER	2		X	X	X	
21	T184164	BRACKET	1		X	X	X	
22	T184620	SCREW	4		X	X	X	
23	T164620	HOUSING	1		X	X	X	TOP ACCESS
24	AT184590	AIR FILTER	1		X	X	X	
25	R120160	CLIP	4		X	X	X	
26	T164621	GRILLE	1		X	X	X	
27	T185844	ISOLATOR	1		X	X	X	
28	19M7933	CAP SCREW	2		X	X	X	M6 X 25
29	24M7139	WASHER	2		X	X	X	
30	T166322	AIR DUCT	1		X	X	X	
31	M84972	NUT	1		X	X	X	
32	T184370	SEAL	1		X	X	X	
33	T187110	ISOLATOR	1		X	X	X	
34	24M7207	WASHER	3		X	X	X	
35	T184214	RIVET	2		X	X	X	
36	T185651	HOUSING	1		X	X	X	INSTRUMENT PANEL (HEATER)
37	T185652	PANEL	2		X	X	X	
38	T184345	RIVET	4		X	X	X	

**PILOT CONTROLLER ARM
(LEFT SIDE)**

T212891 -UN-25JUL05

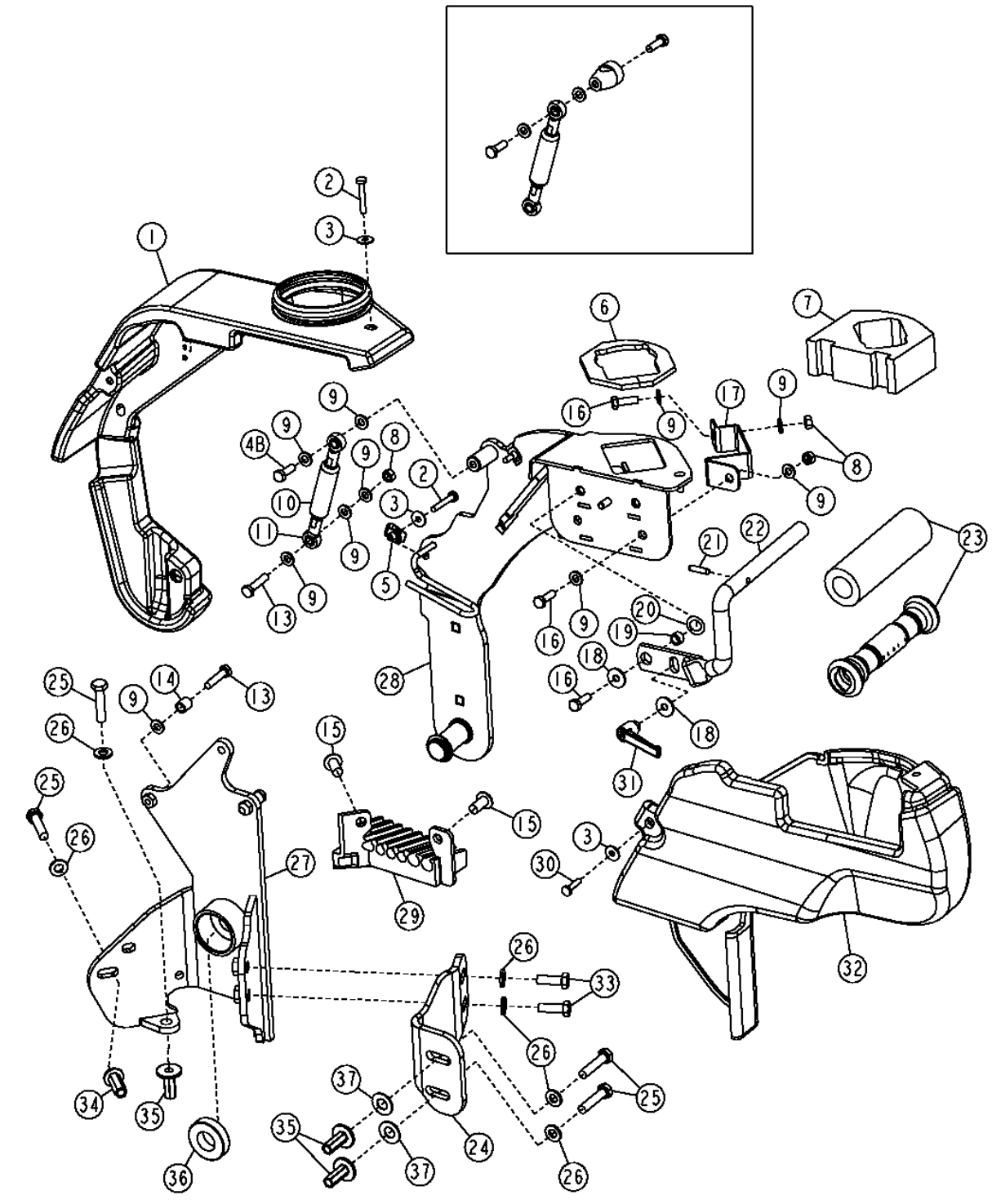

PILOT CONTROLLER ARM
(LEFT SIDE)

KEY	PART NO.	PART NAME	QTY	SERIAL NO.	310G	310SG	315SG	REMARKS
1	AT199591	COVER	1		X	X		
2	T134874	SELF-LOCKING SCREW	3		X	X		M6 X 40
3	24H1646	WASHER	5		X	X		
4A	.....	CAP SCREW	2	-943052	X	X		
4B	19M7407	CAP SCREW	1	943053-	X	X		M8 X 25
5	R120332	NUT	2		X	X		
6	T190998	ISOLATOR	1		X	X		
7	T190999	ISOLATOR	1		X	X		
8	14M7273	NUT	4		X	X		M8
9	24M7238	WASHER	9		X	X		
10	AT280674	GAS OPERATED CYLINDER	1		X	X		
11	AM102062	LINK END	2		X	X		
12	T213244	BUSHING	1	-943052	X	X		
13	19M8008	CAP SCREW	3		X	X		M8 X 35
14	28H3376	SPACER	2		X	X		
15	MT2485	PLUG	2		X	X		FASTENER, (SUB FOR T161380)
16	19M7407	CAP SCREW	3		X	X		M8 X 25
17	T190868	STRAP	1		X	X		
18	24M7298	WASHER	2		X	X		
19	28H3392	WASHER	1		X	X		
20	M87534	SPRING WASHER	1		X	X		
21	T190956	PIN	1		X	X		
22	AT300750	BRACKET	1		X	X		
23	AT303853	SLEEVE	1		X	X		
24	T190912	SUPPORT	1		X	X		
25	19M7572	CAP SCREW	4		X	X		M10 X 45
26	24M7239	WASHER	5		X	X		
27	AT198778	SUPPORT	1		X	X		
28	AT198777	ARM	1		X	X		
29	T190960	GUIDE	1		X	X		
30	T134895	SELF-LOCKING SCREW	2		X	X		M6 X 25
31	AT227063	LEVER	1		X	X		
32	AT199592	COVER	1		X	X		
33	19M7662	CAP SCREW	2		X	X		M10 X 30
34	T148410	NUT	2		X	X		M10
35	H173411	NUT	3		X	X		M10
36	JD10373	BALL BEARING	2		X	X		
37	24H1261	WASHER	2		X	X		

PILOT CONTROLLER ARM
(RIGHT SIDE)

T199111 -UN-07APR04

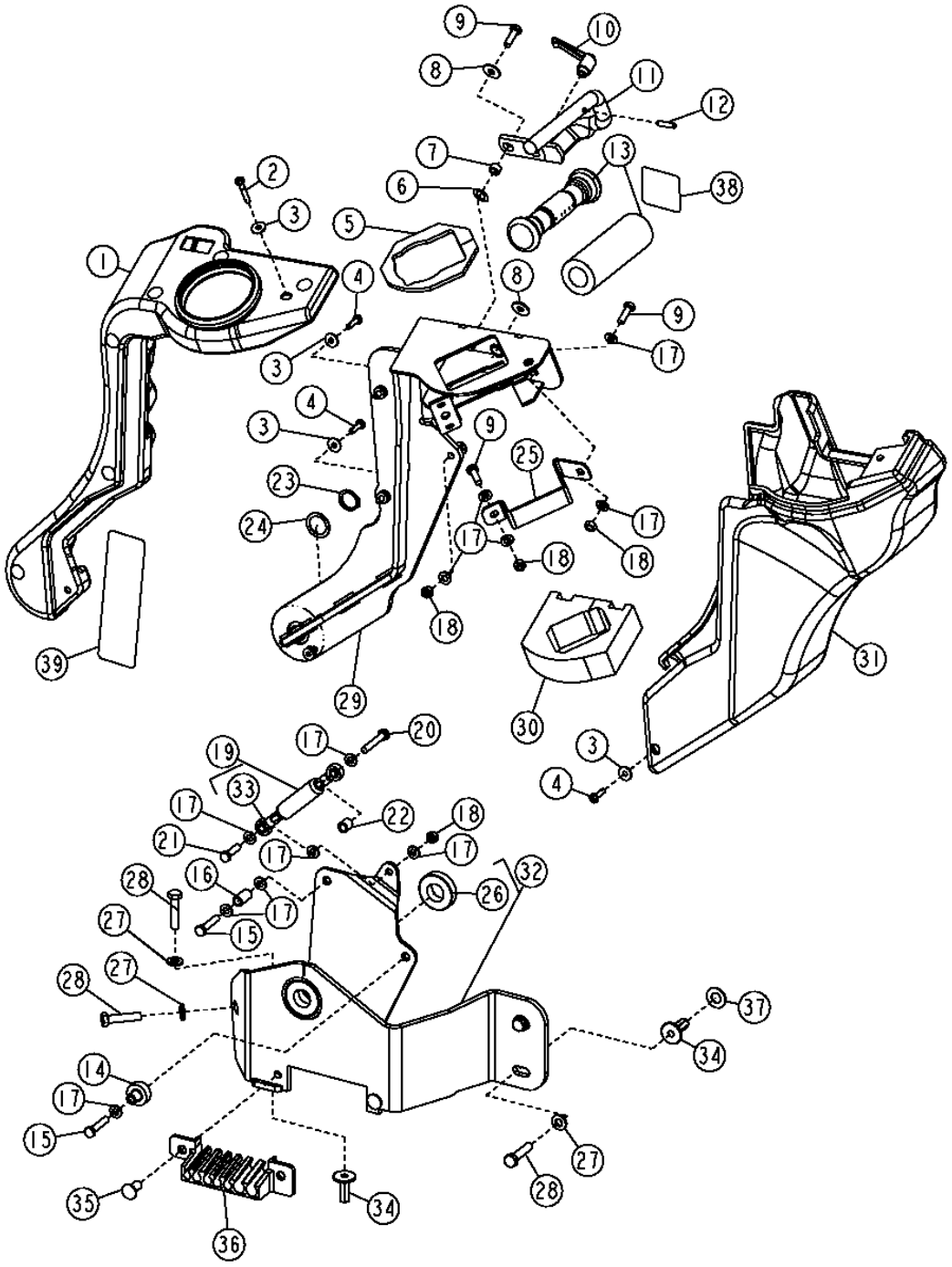

T199111

PILOT CONTROLLER ARM
(RIGHT SIDE)

KEY	PART NO.	PART NAME	QTY	SERIAL NO.	310G	310SG	315SG	REMARKS
1	AT199594	COVER	1			X		
2	T134874	SELF-LOCKING SCREW	1			X		M6 X 40
3	24H1646	WASHER	5			X		
4	T134895	SELF-LOCKING SCREW	4			X		M6 X 25
5	T191000	ISOLATOR	1			X		
6	M87534	SPRING WASHER	1			X		
7	28H3392	WASHER	1			X		
8	24M7298	WASHER	2			X		
9	19M7407	CAP SCREW	3			X		M8 X 25
10	AT227063	LEVER	1			X		
11	AT300885	BRACKET	1			X		
12	T190956	PIN	1			X		
13	AT303853	SLEEVE	1			X		
14	T202720	BUSHING	1			X		
15	19M7922	CAP SCREW	2			X		M8 X 40
16	28H3390	SPACER	1			X		
17	24M7238	WASHER	14			X		
18	14M7273	NUT	4			X		M8
19	AT280674	GAS OPERATED CYLINDER	1			X		
20	19M8397	CAP SCREW	1			X		M8 X 50
21	19M7513	CAP SCREW	1			X		M8 X 30
22	28H3376	SPACER	1			X		
23	W23122	SNAP RING	1			X		
24	24H1844	WASHER	1			X		
25	T190868	STRAP	1			X		
26	JD10373	BALL BEARING	2			X		
27	24M7239	WASHER	5			X		
28	19M7572	CAP SCREW	4			X		M10 X 45
29	AT198776	ARM	1			X		
30	T190999	ISOLATOR	1			X		
31	AT199595	COVER	1			X		
32	AT198865	SUPPORT	1			X		
33	AM102062	LINK END	2			X		
34	H173411	NUT	6			X		M10
35	MT2485	PLUG	2			X		FASTENER, (SUB FOR T161380)
36	T190964	GUIDE	1			X		
37	24H1261	WASHER	2			X		
38	T200658	SAFETY SIGN	1			X		
39	T200781	LABEL	1			X		(BACKHOE CONTROLS DECAL)

SEATS,SEAT BELTS,AND ARM REST

T160495 -UN-21OCT02

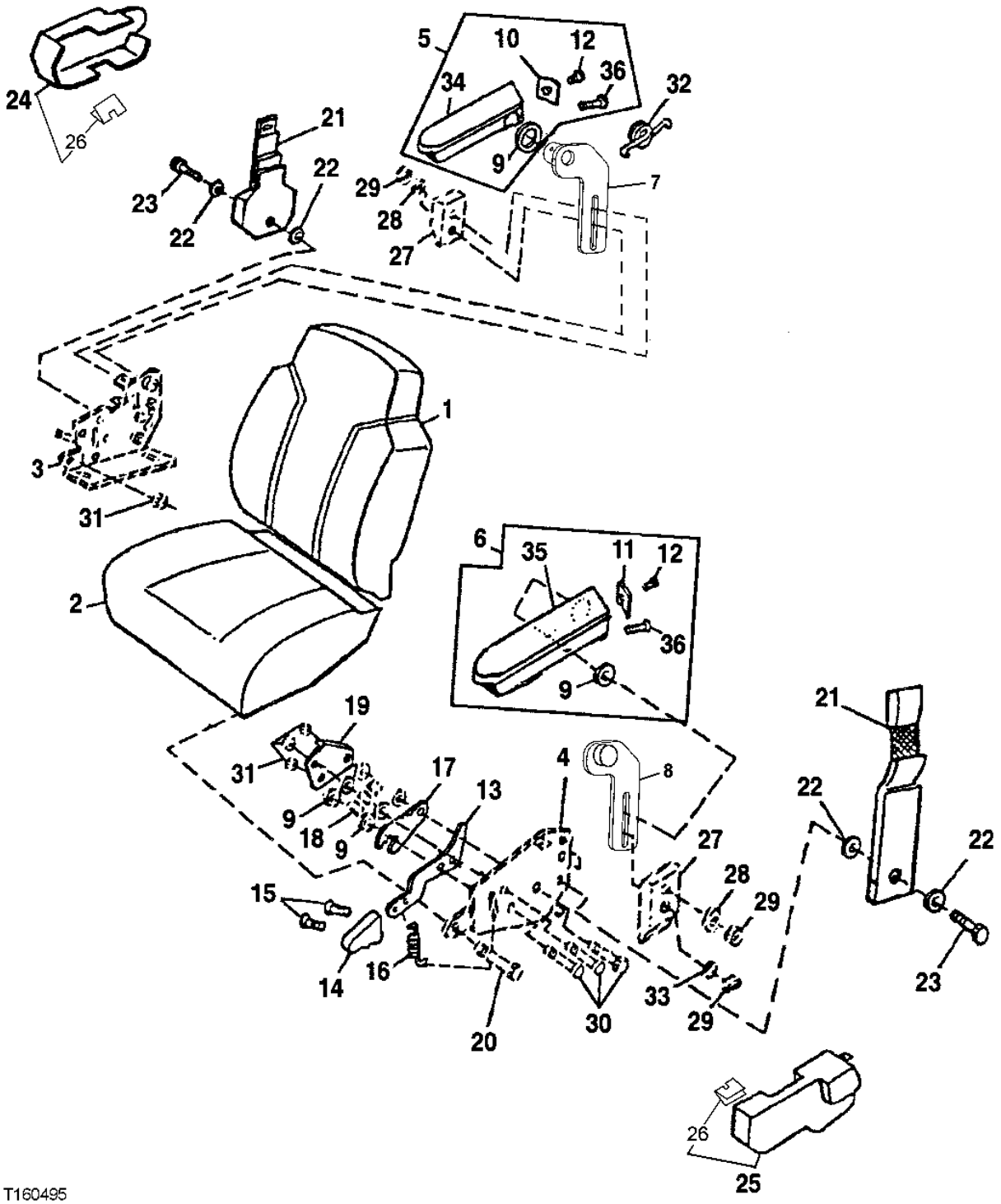

T160495

SEATS,SEAT BELTS,AND ARM RESTS

KEY	PART NO.	PART NAME	QTY	SERIAL NO.	310G	310SG	315SG	REMARKS
1	AT308796	CUSHION	1		X	X	X	(BACK PAD,CLOTH) (SUB FOR AT221020)
	AT221016	PAD	1		X	X	X	(BACK PAD,VINYL)
	T171686	CLIP	4		X	X	X	
	AT308797	CUSHION	AR		X	X	X	(HEADREST OPTIONAL) (NOT ILLUSTRATED)
2	AT308795	CUSHION	1		X	X	X	(SEAT PAD, CLOTH) (SUB FOR AT221019)
	AT221015	SEAT	1		X	X	X	(SEAT PAD, VINYL)
3	.....	PLATE	1		X	X	X	(RIGHT BACKREST ANGLE ADJUSTMENT)
4	.....	PLATE	1		X	X	X	(LEFT BACKREST ANGLE ADJUSTMENT)
5	AT312730	ARMREST	1		X	X	X	(RIGHT HAND) (SUB FOR AT186152)
6	AT312728	ARMREST	1		X	X	X	(LEFT HAND) (SUB FOR AT186156)
7	AT189059	BRACKET	1		X	X	X	(R.H. ARM REST ASSEMBLY)
8	AT189030	BRACKET	1		X	X	X	(L.H. ARM REST ASSEMBLY)
9	T120545	WASHER	2		X	X	X	(WAVE)
10	T166226	PLATE	1		X	X	X	(R.H. COVER PLATE)
11	T166227	PLATE	1		X	X	X	(L.H. COVER PLATE)
12	T120543	SCREW	2		X	X	X	(SET SCREW)
13	AT209225	KIT	1		X	X	X	(RECLINER KIT) INCLUDES EXTENSION SPRING, TORSION SPRING, BACKING PLATE, LATCH, SPACERS AND HARDWARE.
	.....	LEVER	1		X	X	X	
14	AT209025	KIT	1		X	X	X	(KNOB AND SCREW) (RECLINER)
15	37H121	SCREW	2		X	X	X	(RECLINER KNOB)
16	.....	SPRING	1		X	X	X	(TILT LEVER)
17	.....	LATCH	1		X	X	X	(RECLINER-SAW TOOTH)
18	.....	SPACER	3		X	X	X	(BETWEEN SMALL AND LARGE PLATE) (TILT LEVER)
19	.....	PLATE	1		X	X	X	(SMALL 3 -HOLE INSIDE PLATE)
20	19H1813	CAP SCREW	2		X	X	X	5/16" X 5/8", (TILT LEVER)
	24H1136	WASHER	2		X	X	X	
21	AT179423	SEAT BELT	1		X	X	X	(2 INCH) (ALSO ORDER (4) T105740 AND (2) 19H2109)
	AT308199	SEAT BELT	1		X	X	X	(3 INCH) (ALSO ORDER (4) T105740 AND (2) 19H2109) (SUB FOR AT178065)
22	T105740	WASHER	4		X	X	X	(SEAT BELT)
23	19H2109	CAP SCREW	2		X	X	X	7/16" X 1-1/4", (SEAT BELT)
24	T160896	COVER	1		X	X	X	(SEAT BELT - RIGHT) REQUIRES SCREWS
25	T163962	COVER	1		X	X	X	(SUB FOR T160895, THIS APPLICATION) (SEAT BELT - LEFT) REQUIRES SCREWS
26	.....	CLIP	1		X	X	X	
27	.....	SPACER	2		X	X	X	
28	.....	WASHER	4		X	X	X	
29	.....	NUT	4		X	X	X	
30	19H1914	CAP SCREW	3		X	X	X	1/4" X 1"
	24H1287	WASHER	6		X	X	X	
31	M453T	LOCK NUT	3		X	X	X	1/4", (RECLINER)
32	.....	SPRING	1		X	X	X	SEAT BACK
33	.....	WASHER	2		X	X	X	
34	.....	ARMREST	1		X	X	X	(RIGHT HAND)
35	.....	ARMREST	1		X	X	X	(LEFT HAND)
36	T120544	SCREW	2		X	X	X	

SEAT SLIDE ,SEAT SWIVEL AND LUMBAR ADJUSTER CONTROL LEVERS

T144454 -UN-08AUG01

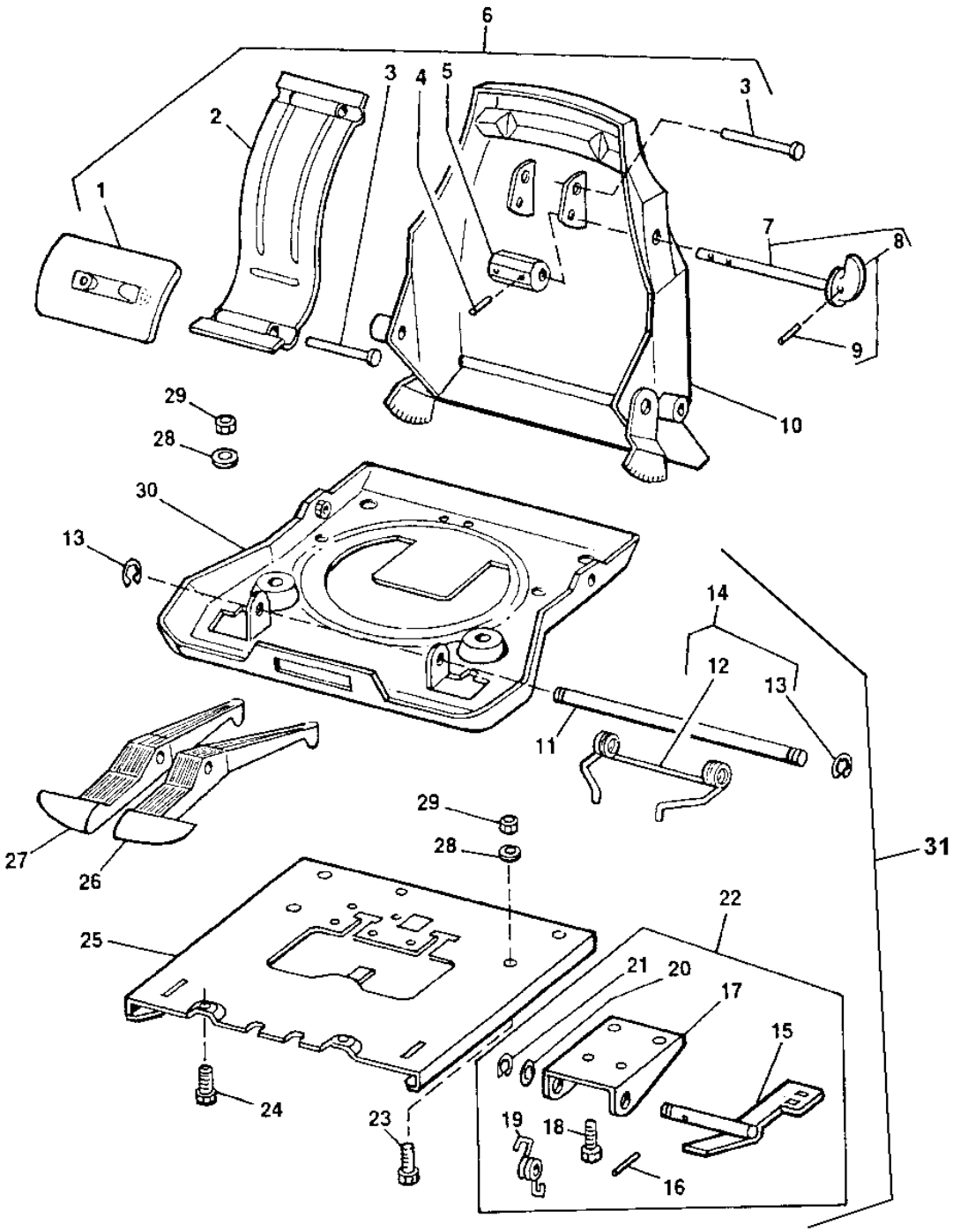

T144454

SEAT SLIDE,SEAT SWIVEL AND LUMBAR ADJUSTER CONTROL LEVERS

KEY	PART NO.	PART NAME	QTY	SERIAL NO.	310G	310SG	315SG	REMARKS
1	.....	PADDLE	1		X	X	X	
2	.....	TORSION SPRING	1		X	X	X	
3	.....	NAIL	2		X	X	X	
4	34H387	SPRING PIN	1		X	X	X	3/16" X 3/4"
5	.....	CAM	1		X	X	X	
6	AT209026	KIT	1		X	X	X	(LUMBAR ADJUSTER)
7	.....	KNOB	1		X	X	X	WITH SHAFT(LUMBAR ADJUSTER)
8	AT209024	KIT	1		X	X	X	(LUMBAR ADJUSTER KNOB)
9	34H262	SPRING PIN	1		X	X	X	5/32" X 3/4"
10	AT280583	PAN	1		X	X	X	
11	.....	SHAFT	1		X	X	X	
12	.....	SPRING	1		X	X	X	(DOUBLE TORSION)
13	R72655	SNAP RING	2		X	X	X	
14	AT179688	KIT	1		X	X	X	(SLIDE LATCH SPRING)
15	.....	LATCH	1		X	X	X	
16	34H262	SPRING PIN	1		X	X	X	5/32" X 3/4"
17	.....	BRACKET	1		X	X	X	
18	19H1227	CAP SCREW	4		X	X	X	1/4" X 1/2"
19	.....	SPRING	1		X	X	X	
20	24H1305	WASHER	2		X	X	X	
21	R72655	SNAP RING	1		X	X	X	
22	AT179691	KIT	1		X	X	X	(SLIDE CONTROL)
23	.....	BOLT	3		X	X	X	
24	.....	CAP SCREW	2		X	X	X	
25	.....	PLATE	1		X	X	X	
26	.....	CONTROL LEVER	1		X	X	X	(SWIVEL) (ORDER AT179692)
27	.....	CONTROL LEVER	1		X	X	X	(FORE-AFT) (ORDER AT179691)
28	.....	WASHER	2		X	X	X	
29	.....	NUT	2		X	X	X	
30	AT191620	PAN	1		X	X	X	
31	AT179686	KIT	1		X	X	X	ALSO INCLUDES SWIVEL SERVICE KIT, SWIVEL LATCH KIT AND SLIDE PUCK

**SEAT SWIVEL AND SWIVEL LATCH
(WITH OR WITHOUT SUSPENDED SEAT)**

T138328 -UN-20FEB01

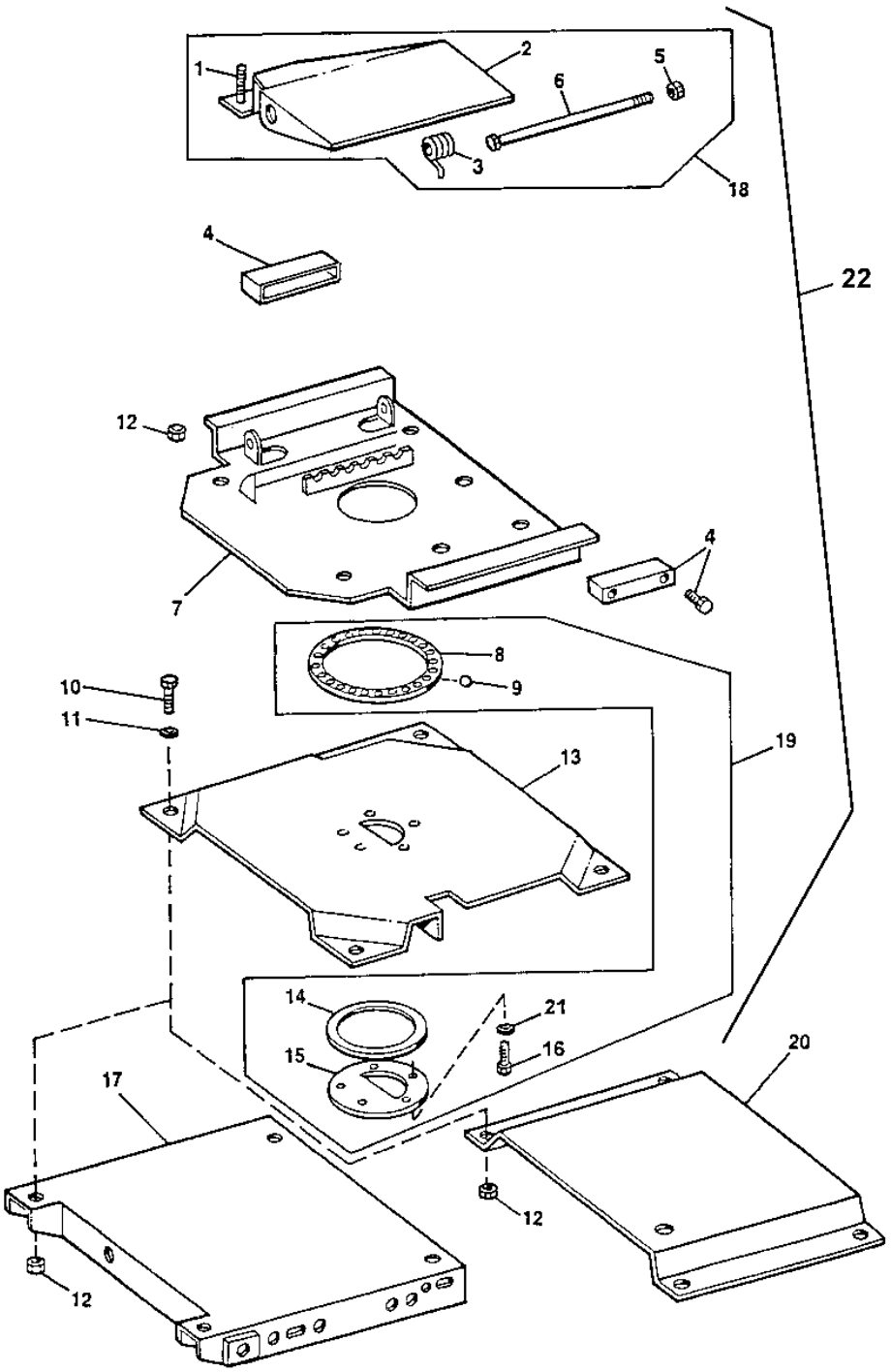

SEAT SWIVEL AND SWIVEL LATCH
(WITH OR WITHOUT SUSPEDED SEAT)

KEY	PART NO.	PART NAME	QTY	SERIAL NO.	310G	310SG	315SG	REMARKS
1	.....	CLIP	1		X	X	X	
2	.....	LOCK PLATE	1		X	X	X	
3	.....	SPRING	1		X	X	X	
4	AT209020	KIT	1		X	X	X	(SLIDE PUCK)
5	M47031	LOCK NUT	1		X	X	X	(SUB FOR (2) R72655, THIS APPLICATION)
6	.....	BOLT	1		X	X	X	3/8-16 X 8.5
7	.....	PLATE	1		X	X	X	(TOP SWIVEL)
8	.....	RETAINER	1		X	X	X	(BALL BEARING)
9	M87261	BALL	24		X	X	X	BEARING
10	19M7402	CAP SCREW	4		X	X	X	M10 X 25
11	24M7239	WASHER	4		X	X	X	
12	M47031	LOCK NUT	4		X	X	X	9.525 MM
13	.....	PLATE	1		X	X	X	(BOTTOM SWIVEL)
14	.....	PLATE	1		X	X	X	(BEARING)
15	.....	PLATE	1		X	X	X	(RETAINING)
16	.....	BOLT	5		X	X	X	(SHOULDER)
17	.....	TRAY	1		X	X	X	(UPPER)(WITH SUSPENDED SEAT)
18	AT179692	KIT	1		X	X	X	(SWIVEL LATCH)
19	AT179687	KIT	1		X	X	X	(SWIVEL)
20	.....	PLATFORM	1		X	X	X	(WITH NON SUSPENDED SEAT)
	AT186701	PLATE	1		X	X	X	(AIR SUSPENSION TO SWIVEL)
21	24M6504	WASHER	5		X	X	X	
22	AT179686	KIT	1		X	X	X	ALSO INCLUDES SLIDE LATCH KIT AND SLIDE CONTROL KIT

**SEAT SUSPENSION AND SHOCK ABSORBER
(WITH SUSPENDED SEAT)**

TP50540 -UN-02JAN97

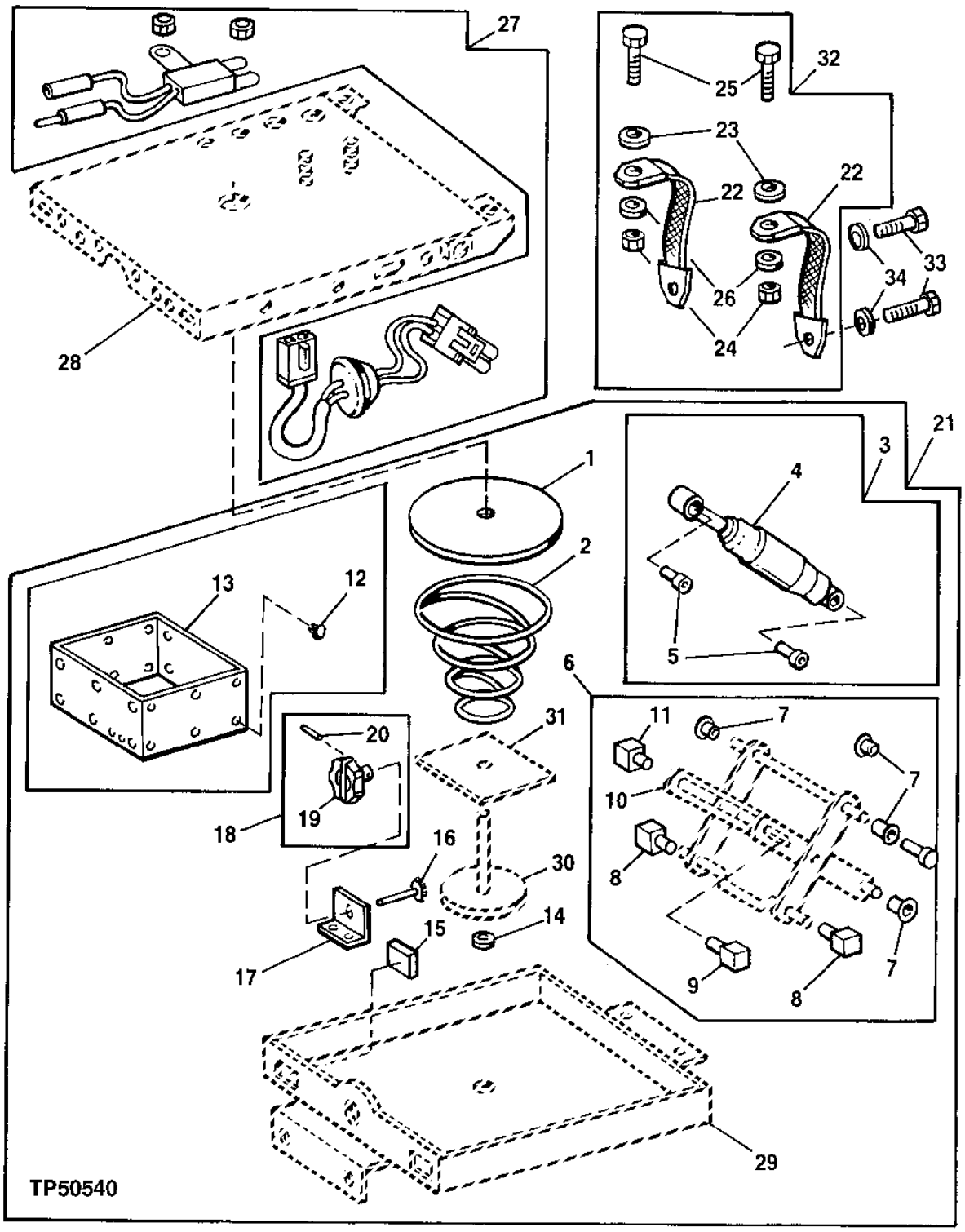

SEAT SUSPENSION AND SHOCK ABSORBER
(WITH SUSPENDED SEAT)

KEY	PART NO.	PART NAME	QTY	SERIAL NO.	310G	310SG	315SG	REMARKS
1	T55208	PAD	1		X	X	X	
2	AT125801	SPRING	1		X	X	X	(REGULAR)
	T160315	SPRING	1		X	X	X	(HEAVY DUTY)
3	AT175436	KIT	1		X	X	X	(SHOCK ABSORBER)
4	.....	ABSORBER	1		X	X	X	(SHOCK)
5	T55222	BUSHING	2		X	X	X	(SHOCK ABSORBER)
6	AT106397	KIT	1		X	X	X	(BEARING/BUSHING)
7	.....	BUSHING	4		X	X	X	
8	.....	PILLOW BLOCK	2		X	X	X	
9	.....	PILLOW BLOCK	1		X	X	X	
10	.....	FRAME	1		X	X	X	(SCISSOR)
11	.....	PILLOW BLOCK	1		X	X	X	
12	T63798	PLUG	25		X	X	X	(FASTENER)
13	AT179699	BOOT	1		X	X	X	(VINYL)
14	T158481	WASHER	1		X	X	X	
15	T55224	BUMPER	2		X	X	X	
16	AT175353	GEAR	1		X	X	X	
17	T55214	ANGLE	1		X	X	X	
18	AT125805	KIT	1		X	X	X	(ADJUSTING KNOB)
19	AT125829	KNOB	1		X	X	X	
20	25H729	GROOVE PIN	1		X	X	X	(ADJUSTING KNOB)
21	AT186150	KIT	1		X	X	X	(GUARDIAN SUSPENSION)
22	.....	BELT	2		X	X	X	(TETHER)
23	M1340T	WASHER	2		X	X	X	(TETHER)
24	M47031	LOCK NUT	2		X	X	X	9.525 MM, (TETHER)
25	19H2676	CAP SCREW	2		X	X	X	3/8" X 1", (TETHER)
26	24H1305	WASHER	2		X	X	X	(TETHER)
27	AT179694	KIT	1		X	X	X	(SEAT POSITION SWITCH) (2 BLACK WIRES - 8")
	AT304775	KIT	1		X	X	X	(FORWARD SEAT POSITION SWITCH) (2 BLACK WIRES - 28.5") (SUB FOR AT192687)
	AT304776	KIT	1		X	X	X	(REAR SEAT POSITION SWITCH) (WITH PILOT CONTROLS) (INCLUDES AT196793)
	AT196793	SWITCH	1		X	X	X	(REAR SEAT POSITION) (WITH PILOT CONTROLS) (2 GRAY - 28.5")
28	.....	TRAY	1		X	X	X	(UPPER)
29	.....	TRAY	1		X	X	X	(LOWER)
30	.....	GEAR	1		X	X	X	(LARGE BASE)
31	.....	PLATE	1		X	X	X	(SPRING SUPPORT)
32	AT179693	KIT	1		X	X	X	(TETHER BELT SET)
33	19M7402	CAP SCREW	4		X	X	X	M10 X 25
34	24M7239	WASHER	4		X	X	X	

SEAT SUSPENSION ARMS AND SHAFTS

TP67583 -UN-20AUG99

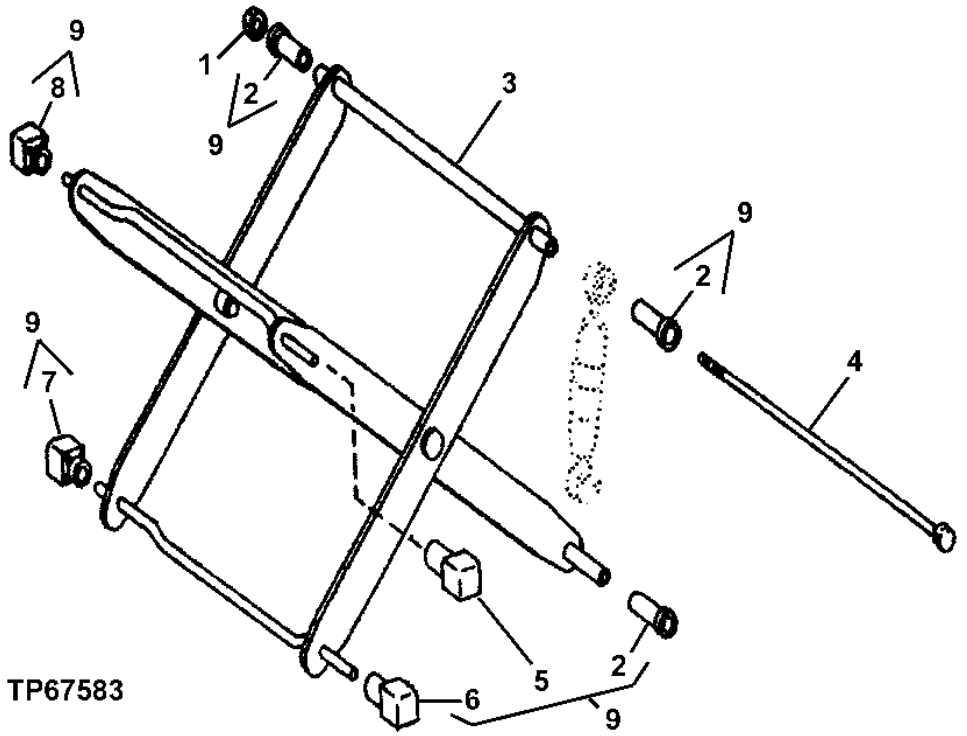

KEY	PART NO.	PART NAME	QTY	SERIAL NO.	REMARKS
1	BP12214	RETAINER	2		
2	.....	BUSHING	4		
3	AT191619	ARM	1		(SCISSOR) (ALSO ORDER AT106397)
4	E67574	SHAFT	2		
5	.....	END	1		(SLIDER BLOCK)
6	.....	END	1		(SLIDER BLOCK)
7	.....	END	1		(SLIDER BLOCK)
8	.....	END	1		(SLIDER BLOCK)
9	AT106397	BEARING KIT	1		(BEARING)

MEMORANDA

SEAT BASE AND TETHER BELT
(WITH NON-SUSPENDED SEAT)

T134229 -UN-06OCT00

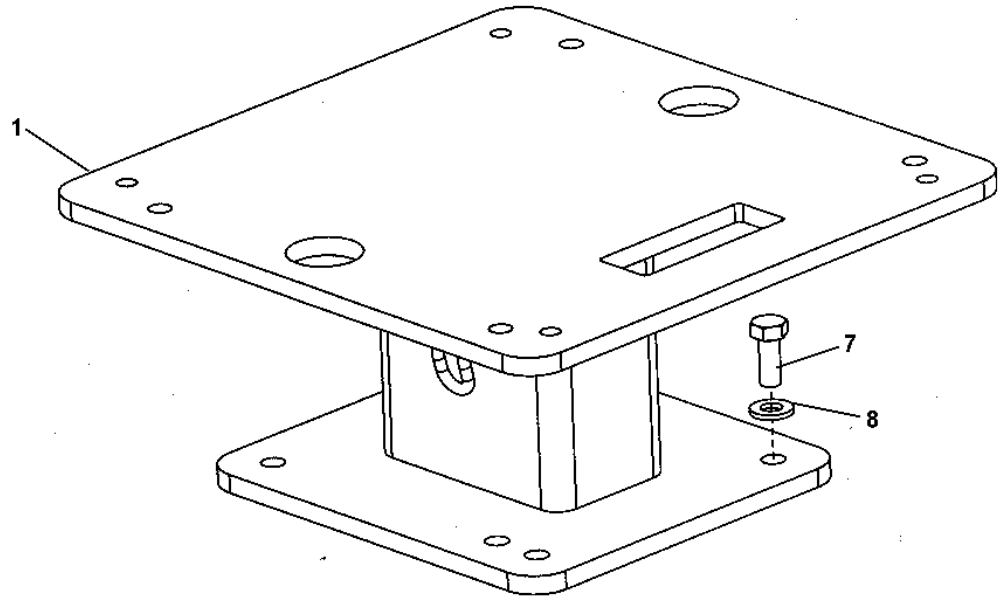

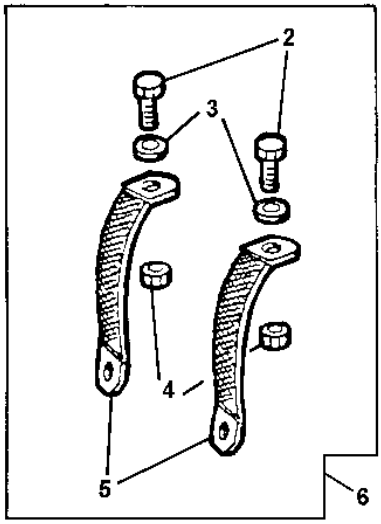

T134229

SEAT BASE AND TETHER BELT
(WITH NON-SUSPENDED SEAT)

KEY	PART NO.	PART NAME	QTY	SERIAL NO.	310G	310SG	315SG	REMARKS
1	AT184609	BASE	1		X	X	X	
2	19H2676	CAP SCREW	2		X	X	X	3/8" X 1"
3	24H1305	WASHER	2		X	X	X	
4	M47031	LOCK NUT	2		X	X	X	
5	.....	BELT	4		X	X	X	
6	AT179714	KIT	1		X	X	X	TETHER BELT
7	19M7402	CAP SCREW	4		X	X	X	M10 X 25
8	24M7239	WASHER	4		X	X	X	

**SEAT BASE AND HEIGHT ADJUSTER
(WITH NON-SUSPENDED SEAT)**

T137895 -UN-08FEB01

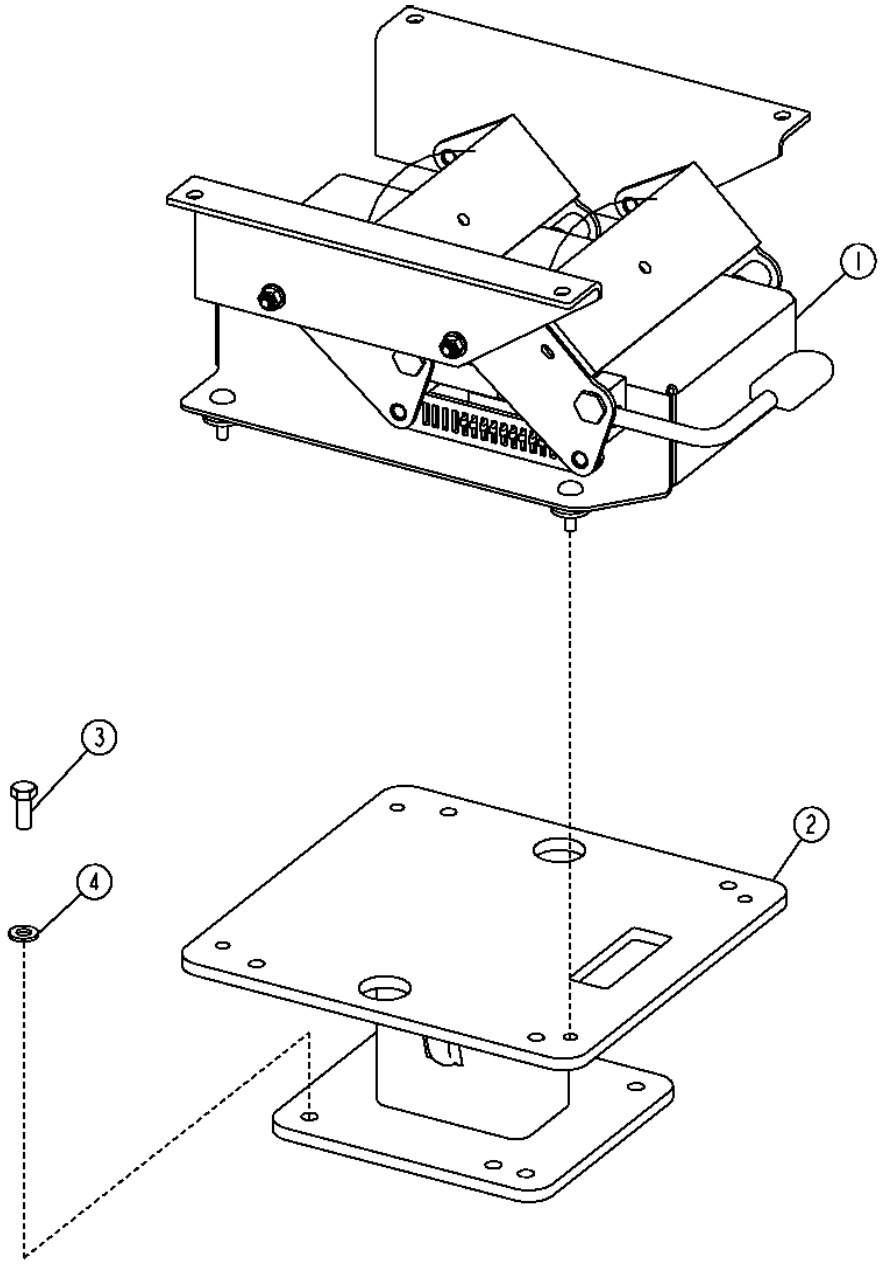

T137895

SEAT BASE AND HEIGHT ADJUSTER
(WITH NON-SUSPENDED SEAT)

KEY	PART NO.	PART NAME	QTY	SERIAL NO.	310G	310SG	315SG	REMARKS
1	AT186204	ADJUSTER	1		X	X	X	
2	AT184609	BASE	1		X	X	X	
3	19M7402	CAP SCREW	4		X	X	X	M10 X 25
4	24M7239	WASHER	4		X	X	X	

AIR SUSPENSION SEAT AND SHOCK ABSORBER
(SERIAL NO. 849689-)

TP57915 -UN-31AUG98

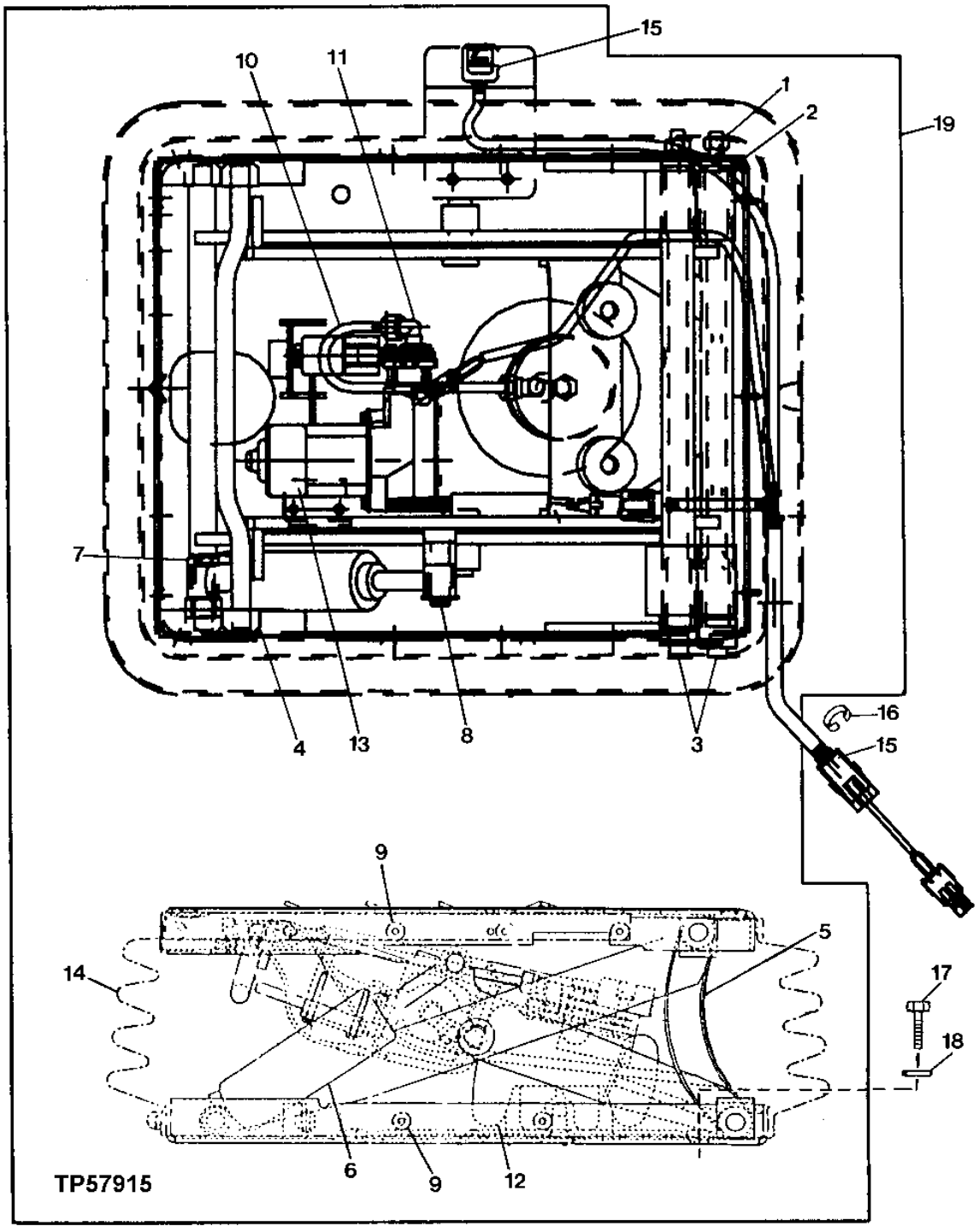

AIR SUSPENSION SEAT AND SHOCK ABSORBER
(SERIAL NO. 849689-)

KEY	PART NO.	PART NAME	QTY	SERIAL NO.	REMARKS
1	.....	LOCK NUT	2		(A)
2	.....	SHAFT	4		(A)
3	.....	BEARING	2		(A)
4	AT173314	SEAT BEARING ROLLER KIT	1		SUSPENSION ROLLER KIT
5	AT173315	KIT	1		TETHER BELT SERVICE KIT
6	.....	ABSORBER	1		(B)
7	.....	BEARING	2		(B)
8	.....	BOLT	1		(B)
9	AT173321	SEAT SUSPENSION BOOT KIT	1		BOOT CLIP SERVICE KIT
10	.....	LINE	1		(C)
11	.....	FITTING	2		(C)
12	AT208486	KIT	1		AIR SPRING SEAT KIT, (AIR BLADDER SPRING)
	AT208483	HOUSING	1		LOWER HOUSING WELDMENT KIT
13	AT198694	KIT	1		COMPRESSOR KIT
14	AT208491	KIT	1		BOOT SERVICE KIT (INCLUDES AT173321)
15	AT183810	KIT	1		SUSPENSION SWITCH KIT
16	T164714	GROMMET	1		
17	19M7402	CAP SCREW	4		
18	24M7239	WASHER	4		
19	AT186224	SEAT SUSPENSION	1		(ALSO ORDER AT189145) AIR (INCLUDES AT208485)
	AT208485	ARM	1		(NOT ILLUSTRATED) (AIR SUSPENSION ARM WELDMENT)
20	T55224	BUMPER	1		(NOT ILLUSTRATED)
..	AT173313	SHAFT	1		INCLUDES ALL (A) PARTS (SUSPENSION SHAFT SERVICE)
..	AT182954	KIT	1		INCLUDES ALL (B) PARTS (SUSPENSION SHOCK SERVICE)
..	AT208493	FITTING KIT	1		INCLUDES ALL (C) PARTS (AIRLINE/FITTING SERVICE)

SUSPENSION SEAT

TX1000637 -UN-18JAN06

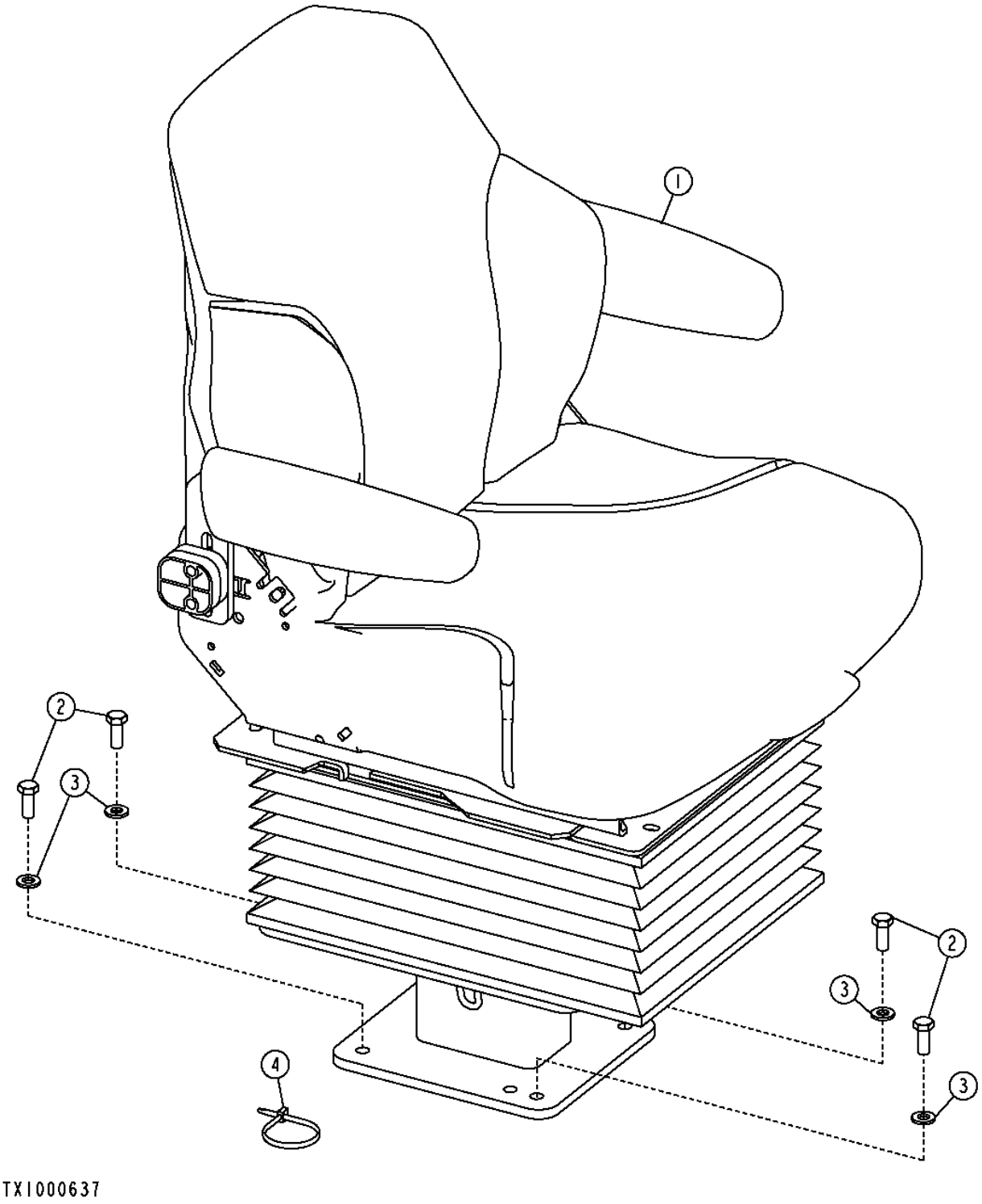

SUSPENSION SEAT

KEY	PART NO.	PART NAME	QTY	SERIAL NO.	310G	315SG	315SG	REMARKS
1	**AT196286**	**SEAT**	**1**		**X**	**X**	**X**	**CLOTH, AIR SUSPENSION (CONVENIENCE ASSEMBLY)**
	AT196561	**SEAT**	**1**		**X**	**X**	**X**	**CLOTH, MECHANICAL SUSPENSION (CONVENIENCE ASSEMBLY)**
	AT196559	**SEAT**	**1**		**X**	**X**	**X**	**VINYL, MECHANICAL SUSPENSION (CONVENIENCE ASSEMBLY)**
2	19M7402	CAP SCREW	4		X	X	X	M10 X 25
3	24M7239	WASHER	4		X	X	X	
4	R44302	TIE BAND	1		X	X	X	

CAB HEATER AND AIR CONDITIONING DUCTING

T142008 -UN-10MAY01

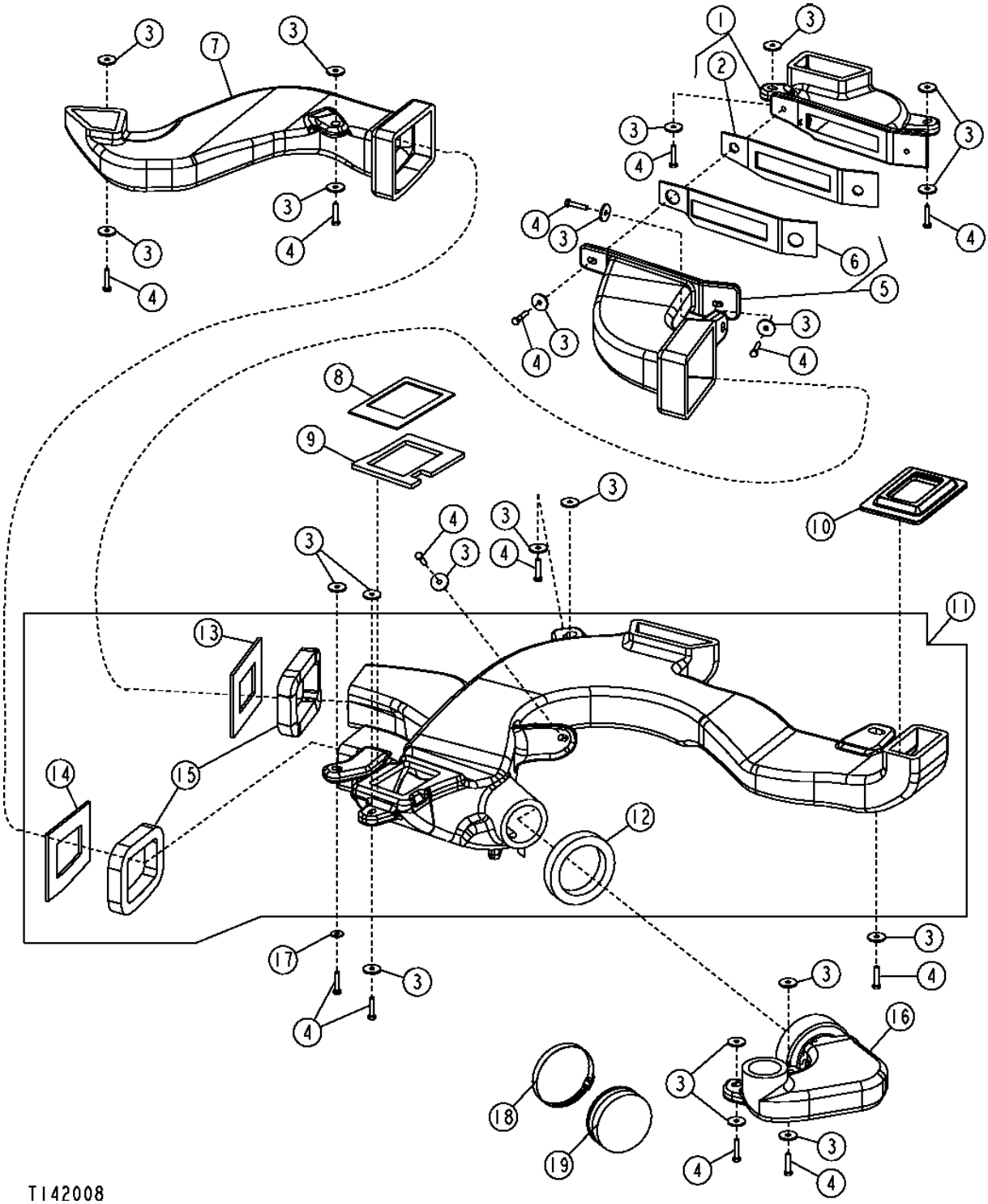

CAB HEATER AND AIR CONDITIONING DUCTING

KEY	PART NO.	PART NAME	QTY	SERIAL NO.	310G	315SG	315SG	REMARKS
1	AT188307	AIR DUCT	1		X	X	X	(LEFT REAR)
2	T185841	ISOLATOR	1		X	X	X	
3	24H1296	WASHER	21		X	X	X	
4	19M7922	CAP SCREW	15		X	X	X	M8 X 40
5	AT192074	AIR DUCT	1		X	X	X	(REAR CONNECTOR)
6	T185840	ISOLATOR	1		X	X	X	
7	T167325	AIR DUCT	1		X	X	X	(RIGHT REAR)
8	T185842	ISOLATOR	1		X	X	X	
9	T185843	ISOLATOR	1		X	X	X	
10	T185850	ISOLATOR	1		X	X	X	
11	AT188306	AIR DUCT	1		X	X	X	(MAIN BOTTOM)
12	T185867	ISOLATOR	1		X	X	X	
13	T185779	ISOLATOR	1		X	X	X	
14	T185780	ISOLATOR	1		X	X	X	
15	T185866	ISOLATOR	2		X	X	X	
16	T167324	AIR DUCT	1		X	X	X	(RIGHT FRONT)
17	24M7207	WASHER	1		X	X	X	
18	TY22490	HOSE CLAMP	1		X	X	X	
19	T185673	CAP	1		X	X	X	

CAB HEATER AND AIR CONDITIONING DUCTING

T137941 -UN-10MAY01

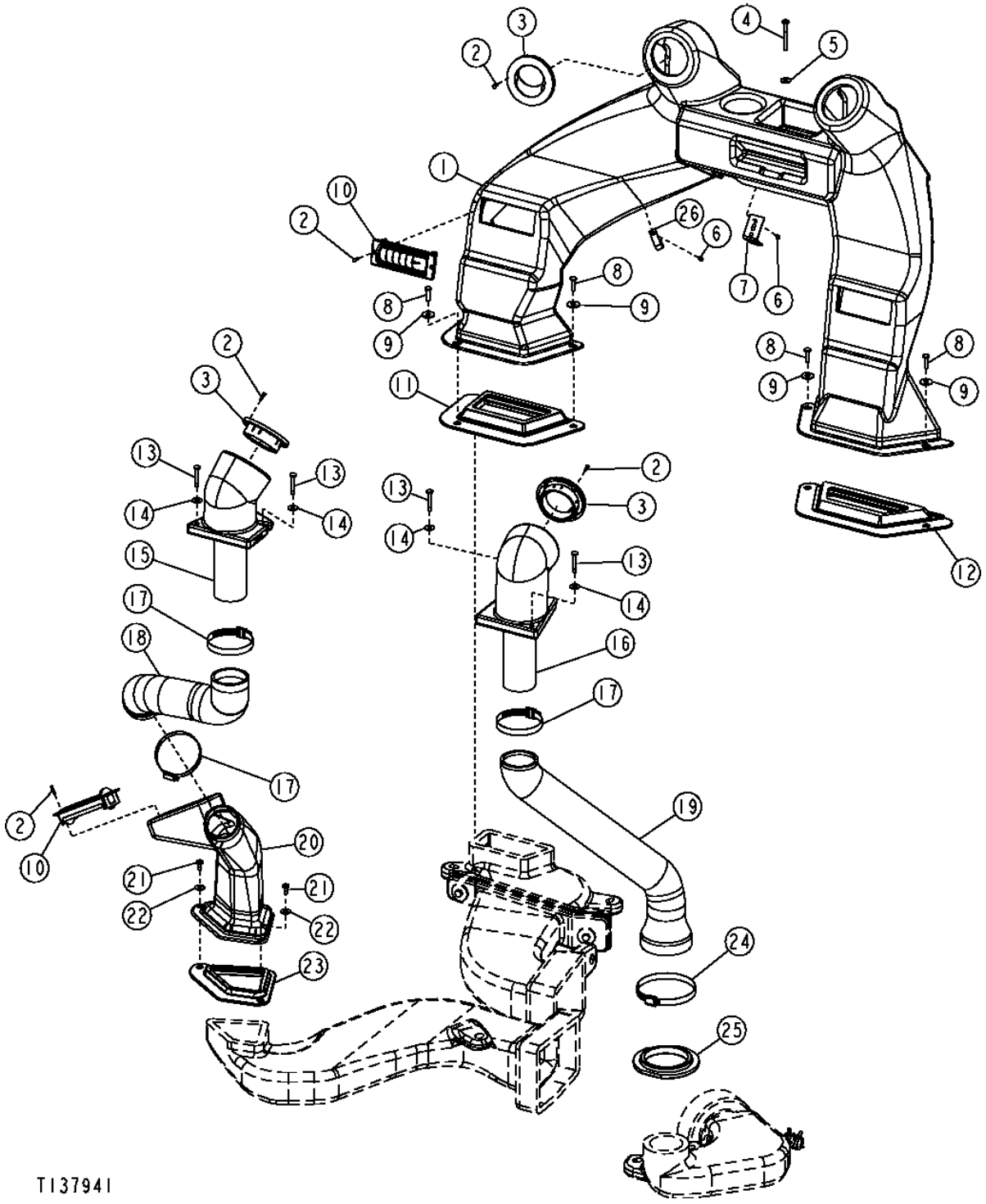

CAB HEATER AND AIR CONDITIONING DUCTING

KEY	PART NO.	PART NAME	QTY	SERIAL NO.	310G	315SG	REMARKS
1	T185540	AIR DUCT	1		X	X	(LEFT FENDER) WITH AIR CONDITIONING
	T185744	AIR DUCT	1		X	X	(LEFT FENDER) WITHOUT AIR CONDITIONING
2	37M7333	SCREW	22		X	X	
3	AT151036	LOUVER	4		X	X	
4	T186873	SELF-LOCKING SCREW	1		X	X	
5	24H1821	WASHER	1		X	X	
6	T185769	SCREW	5		X	X	
7	T183560	BRACKET	1		X	X	
8	21M7310	SCREW	4		X	X	M6 X 25, (SUB FOR T134895, THIS APPLICATION)
9	24M7207	WASHER	4		X	X	
10	AT177227	LOUVER	AR		X	X	
11	T185848	ISOLATOR	1		X	X	
12	T185849	ISOLATOR	1		X	X	
13	T134874	SELF-LOCKING SCREW	4		X	X	M6 X 40, (SUB FOR 21M7403, THIS APPLICATION)
14	24H1821	WASHER	4		X	X	
15	T185479	AIR DUCT	1		X	X	(REAR EXTENSION)
16	T185478	AIR DUCT	1		X	X	(FRONT EXTENSION)
17	AR62936	CLAMP	3		X	X	
18	T185482	AIR DUCT	1		X	X	(REAR UPPER)
19	T185480	AIR DUCT	1		X	X	(FRONT)
20	T185481	AIR DUCT	1		X	X	(REAR LOWER)
21	21M7310	SCREW	6		X	X	M6 X 25, (SUB FOR T134895 AND T133674, THIS APPLICATION)
22	24H1821	WASHER	2		X	X	
23	T185847	ISOLATOR	1		X	X	
24	AR21842	CLAMP	1		X	X	
25	T185846	ISOLATOR	1		X	X	
26	T185743	CLIP	3		X	X	

HEATER, AIR CONDITIONING WITH PRESSURIZER

T197624 -UN-03FEB04

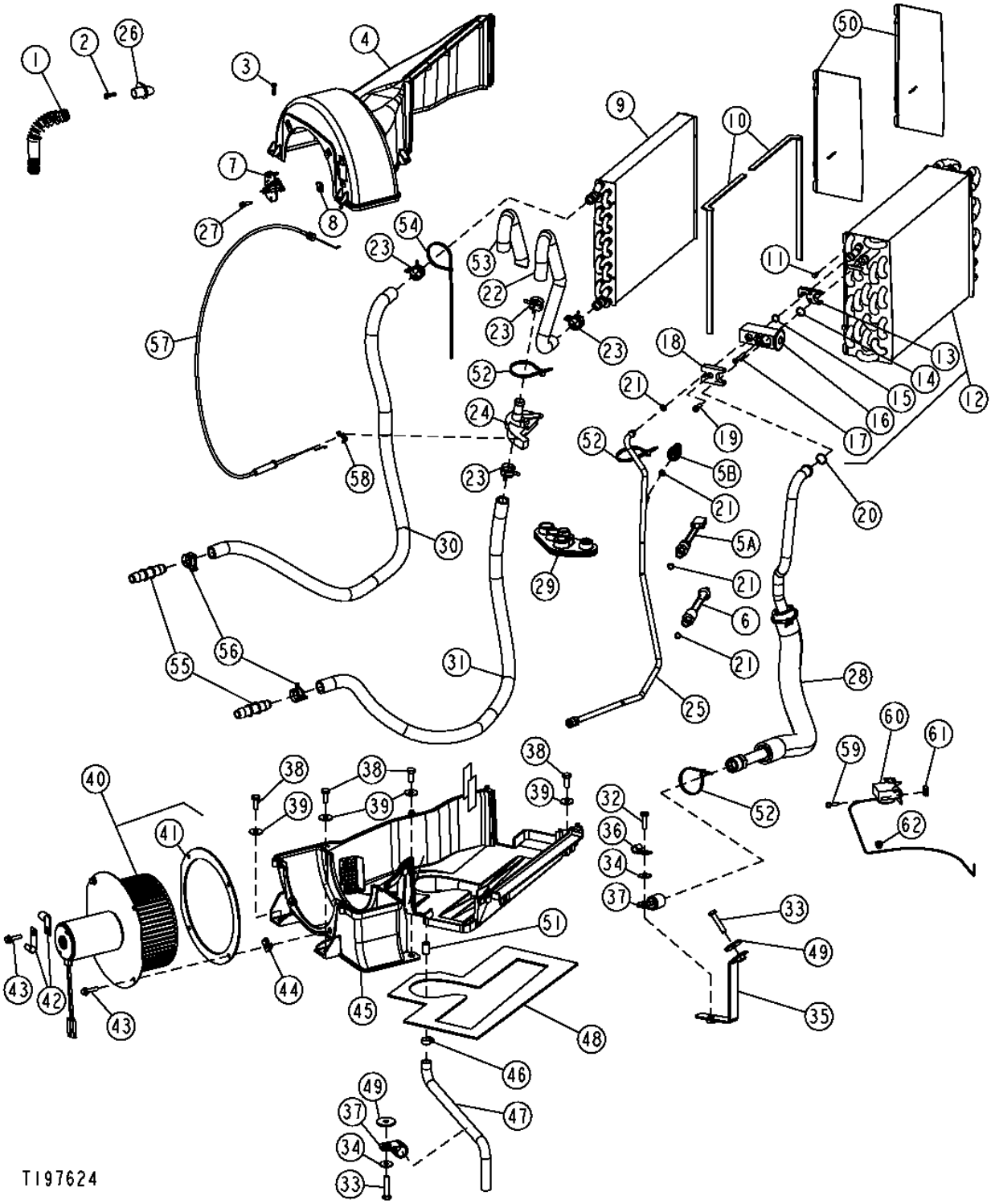

HEATER, AIR CONDITIONING WITH PRESSURIZER

KEY	PART NO.	PART NAME	QTY	SERIAL NO.	310G	315SG	REMARKS
1	T165169	HOSE	1	-926427	X	X	
2	T184620	SCREW	1	-926427	X	X	
3	T184620	SCREW	9		X	X	
4	T164619	HOUSING	1	-926427	X	X	(TOP)
	T205969	HOUSING	1	926428-	X	X	
5A	RE155938	PRESSURE SWITCH	1	-843495	X	X	
5B	RE157329	SWITCH	1	843496-	X	X	
6	RE60888	PRESSURE SWITCH	1	-843495	X	X	
7	AT210515	RESISTOR	1		X	X	
8	R50279	NUT	2		X	X	
9	AT191993	CORE	1		X	X	(HEATER)
10	T184369	SEAL	2		X	X	
11	H85092	SCREW	4		X	X	
12	AT191994	EVAPORATOR	1		X	X	
13	T181522	PLATE	1		X	X	(SUB FOR T186760)
14	R33259	O-RING	1		X	X	
15	R113050	O-RING	1		X	X	
16	RE174764	VALVE	1		X	X	(EXPANSION) (SUB FOR AT189639, THIS APPLICATION)
17	PT11778	BOLT	2		X	X	
18	R125223	PLATE	1		X	X	
19	19M8553	SCREW	1		X	X	M6 X 16
20	T143169	O-RING	1		X	X	
21	R10093	O-RING	3		X	X	
22	T185789	RADIATOR HOSE	1		X	X	
23	T184924	HOSE CLAMP	4		X	X	
24	AT193500	HAND OPERATED VALVE	1		X	X	(WATER)
25	AT192033	LINE	1	-843495	X	X	(LIQUID REFRIGERANT)
	AT303214	LINE	1	843496-	X	X	(LIQUID REFRIGERANT)
26	RE36133	TUBE	1	-926427	X	X	(AIR OUTLET)
27	37M7073	SCREW	2		X	X	
28	AT191990	REFRIGERANT HOSE	1		X	X	
29	T166297	GROMMET	1		X	X	
30	.....	BULK HOSE	1		X	X	(MAKE FROM T60811, CUT TO 33 INCHES)
31	.....	BULK HOSE	1		X	X	(MAKE FROM T60811, CUT TO 38 INCHES)
32	19M7407	CAP SCREW	1		X	X	M8 X 25
33	19M7922	CAP SCREW	2		X	X	M8 X 40
34	24M7207	WASHER	2		X	X	
35	AT192509	BRACKET	1		X	X	
36	T13814	CLAMP	1		X	X	
37	T70659	CLAMP	2		X	X	
38	19M7881	SCREW	4		X	X	M8 X 20
39	24M7207	WASHER	4		X	X	
40	.....	BLOWER MOTOR	1	-926427	X	X	(AT195731 NO LONGER AVAILABLE) (PRESSURIZER) (SUB AT307691) (SUB FOR AT184530)
	AT307691	BLOWER MOTOR	1	926428-	X	X	

THIS PARTS LISTING IS CONTINUED

HEATER, AIR CONDITIONING WITH PRESSURIZER

T197624 -UN-03FEB04

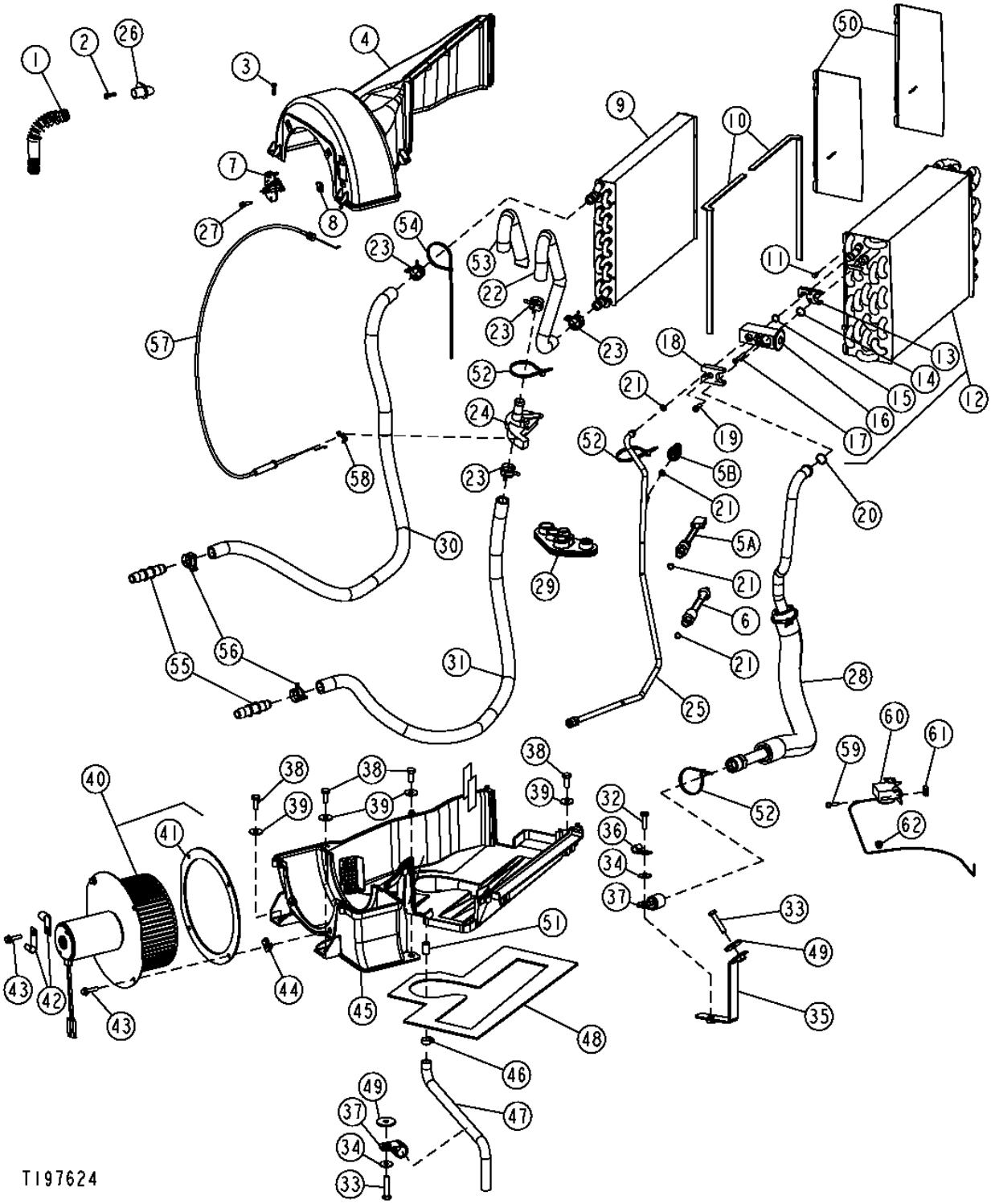

HEATER, AIR CONDITIONING WITH PRESSURIZER

KEY	PART NO.	PART NAME	QTY	SERIAL NO.	310G	315SG	REMARKS
41	T184368	SEAL	2		X	X	
42	AH89557	CLIP	2		X	X	
43	T178251	CAP SCREW	4		X	X	
44	M84972	NUT	5		X	X	
45	T164618	HOUSING	1		X	X	(BOTTOM)
46	AR77962	HOSE CLAMP	1		X	X	
47	AT186304	HOSE	1		X	X	(CONDENSATE)
48	T185845	ISOLATOR	1		X	X	
49	24H1296	WASHER	2		X	X	
50	T184414	SHEET	2		X	X	
51	T184415	PLUG	1		X	X	
52	R44302	TIE BAND	4		X	X	
53	T186766	HOSE GUARD	1		X	X	
54	H77698	TIE BAND	1		X	X	
55	T160492	ELEC. CONNECTOR ACCESSORY	2		X	X	
56	R117721	CLAMP	2		X	X	
57	AT186289	CABLE	1		X	X	(HEATER CONTROL)
58	L57881	CLIP	1		X	X	
59	37M7073	SCREW	2		X	X	
60	RE198074	TEMPERATURE SWITCH	1		X	X	A/C THERMOSTAT SWITH, (SUB FOR AH144020)
61	R50279	NUT	2		X	X	
62	T178971	GROMMET	1		X	X	

CANOPY HEATER,HOSES AND HEATER CONTROL

T134910 -UN-08NOV00

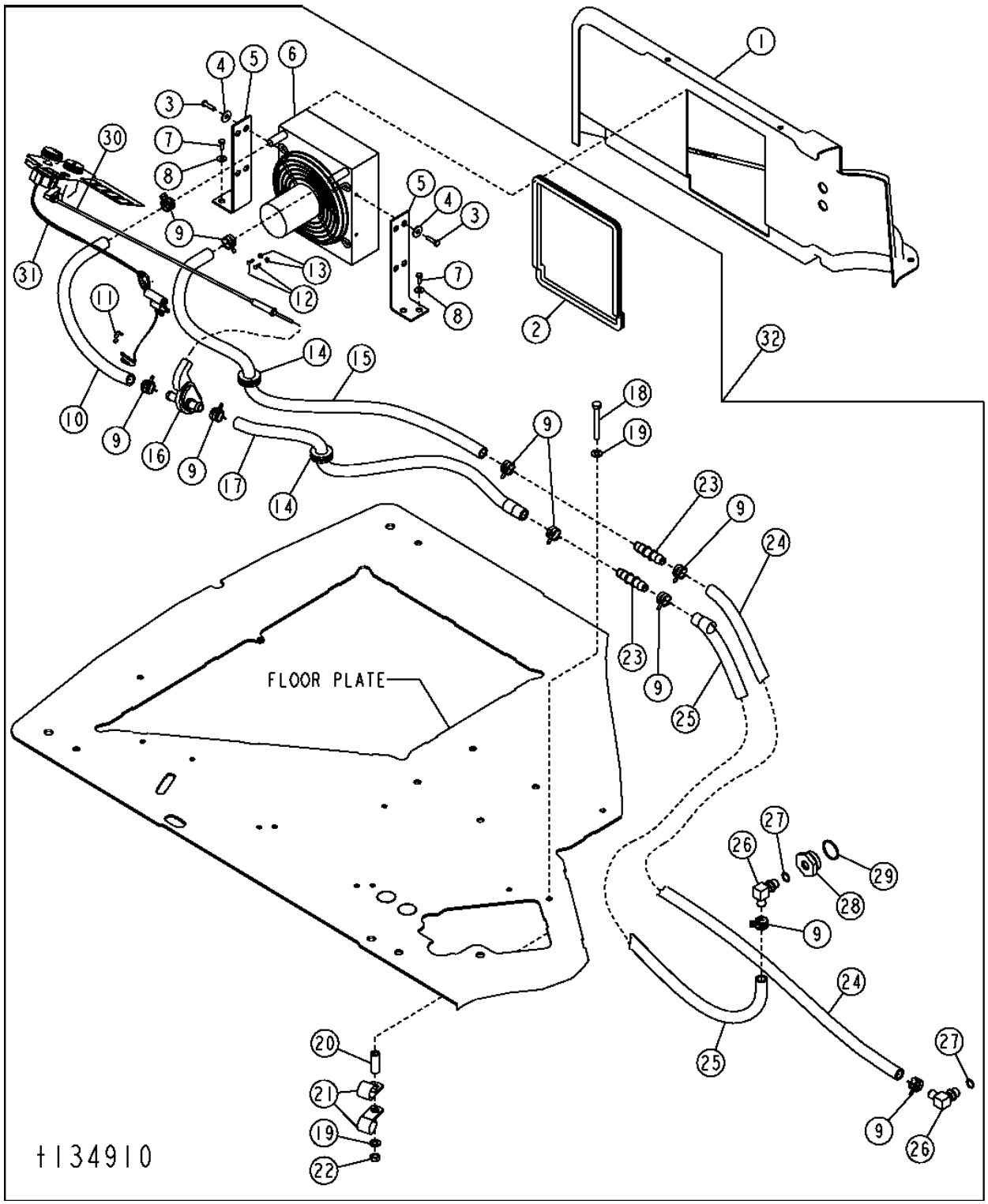

CANOPY HEATER,HOSES AND HEATER CONTROL

KEY	PART NO.	PART NAME	QTY	SERIAL NO.	310G	315SG	REMARKS
1	AT304593	COVER	1		X	X	(SUB FOR T185763)
2	.....	ISOLATOR	1		X	X	(MAKE FROM T58056 BULK MATERIAL, CUT TO 3.23 FT. (986 MM)
3	19H1914	CAP SCREW	4		X	X	1/4" X 1"
4	24H1287	WASHER	4		X	X	
5	T185762	BRACKET	2		X	X	
6	AT169175	HEATER	1		X	X	
7	19M8425	CAP SCREW	4		X	X	M6 X 16
8	24M7139	WASHER	4		X	X	
9	R117721	CLAMP	10		X	X	
10	.....	HOSE	1		X	X	(MAKE FROM T60811 BULK MATERIAL, CUT TO 1.37 FT. (416MM)
11	L57881	CLIP	1		X	X	
12	21H1290	SCREW	2		X	X	0.138" X 1/2", CONNECTS HEATER UNIT ELECTRICAL EYELETS TO VEHICLE HARNESS
13	14H1026	NUT	2		X	X	0.138"
14	T58739	GROMMET	2		X	X	
15	.....	HOSE	1		X	X	(MAKE FROM T60811 BULK MATERIAL, CUT TO 2.92 FT. (890MM)
16	AT193500	HAND OPERATED VALVE	1		X	X	(TEMPERATURE/HEATER)
17	.....	HOSE	1		X	X	(MAKE FROM T60811 BULK MATERIAL, CUT TO 2.21 FT. (675MM)
18	19M8081	CAP SCREW	1		X	X	M10 X 80
19	24M7239	WASHER	2		X	X	
20	T101975	BUSHING	1		X	X	
21	R46667	CLAMP	2		X	X	
22	14M7274	NUT	1		X	X	M10
23	T160492	ELEC. CONNECTOR ACCESSORY	2		X	X	
24	.....	BULK HOSE	1		X	X	(MAKE FROM T60811 CUT TO 6' LENGTH)
25	.....	BULK HOSE	1		X	X	(MAKE FROM T60811 CUT TO 5.2' LENGTH)
26	AT174697	PIPE ELBOW	2		X	X	
27	51M7043	O-RING	2		X	X	
28	R123616	PLUG	1		X	X	
29	U13639	O-RING	1		X	X	
30	AT186289	CABLE	1		X	X	
31	AT191507	MOTOR WIRING HARNESS	1		X	X	
32	**AT192200**	**COOLANT HEATER**	**1**		**X**	**X**	**(WHOLE GOODS)**

CAB HEATER
(20,000 BTU)

TP32349 -UN-01JAN94

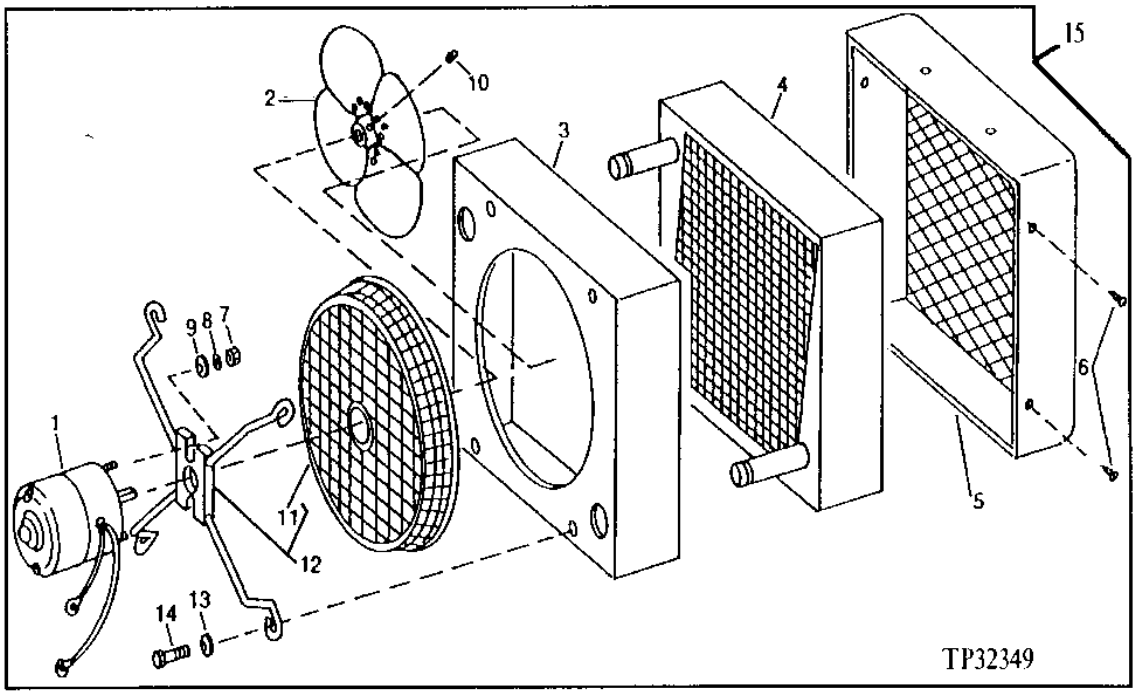

KEY	PART NO.	PART NAME	QTY	SERIAL NO.	310G	315SG	REMARKS
1	AT169180	ELECTRIC MOTOR	1		X	X	
2	AT112810	FAN	1		X	X	
3	.....	CASE	1		X	X	(ORDER AT169175)
4	AT156440	CORE	1		X	X	
	AT169929	HEATING ELEMENT	1		X	X	(NOT ILLUSTRATED)
5	.....	SHROUD	1		X	X	(ORDER AT169175)
6	37H43	SCREW	4		X	X	
7	14H778	NUT	2		X	X	0.190"
8	12M7060	WASHER	2		X	X	
9	24H1283	WASHER	2		X	X	
10	22H897	SET SCREW	1		X	X	1/4" X 1/4"
11	.....	SCREEN	1		X	X	(ORDER T114774)
12	T114774	GUARD	1		X	X	
13	24H1287	WASHER	4		X	X	
14	19H1227	CAP SCREW	4		X	X	1/4" X 1/2"
15	AT169175	HEATER	1		X	X	

MEMORANDA

AIR CONDITIONING COMPRESSOR, MOUNTING BRACKETS, RECEIVER DRYER,CONDENSER AND HOSES

T212917 -UN-21JUL05

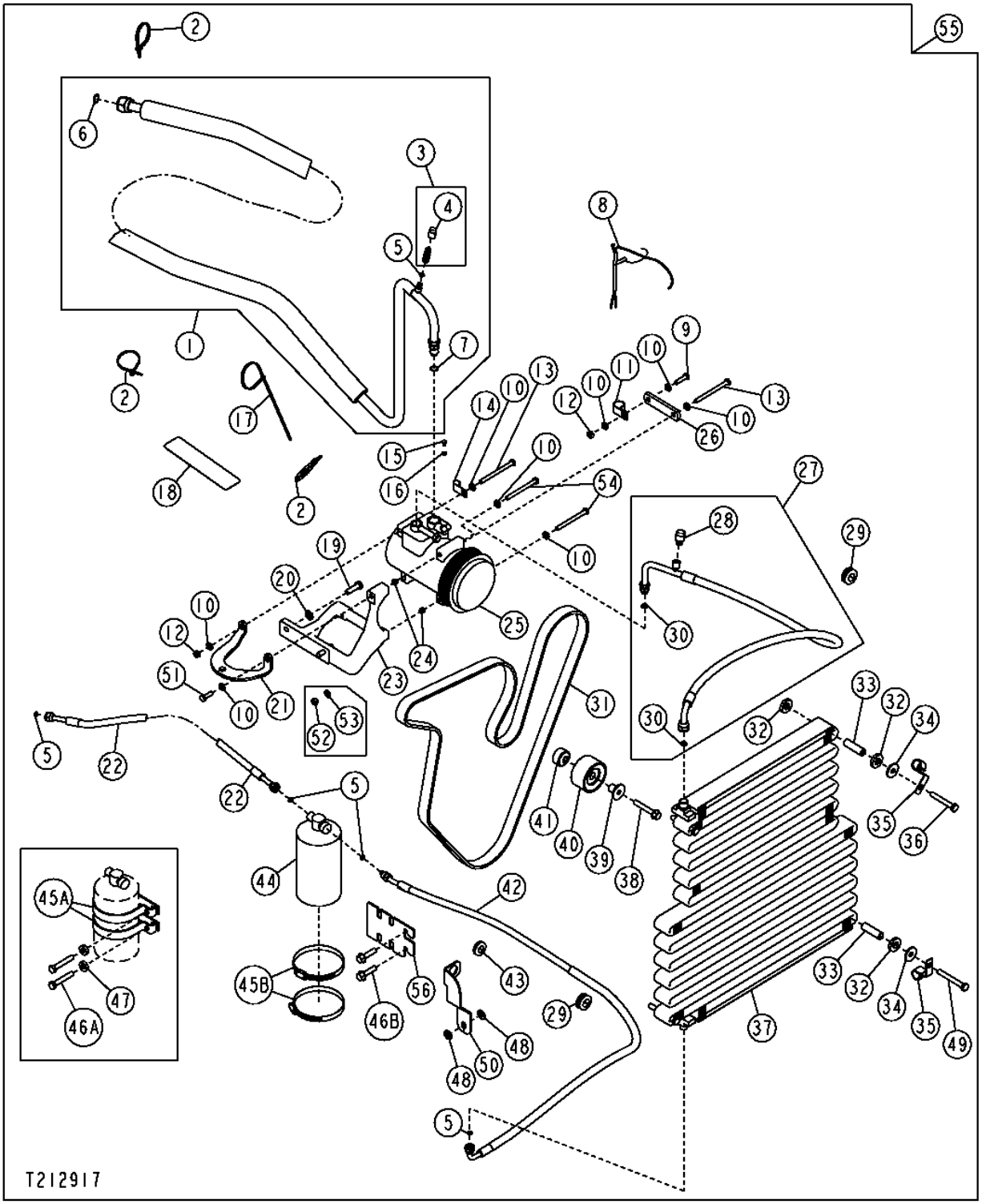

AIR CONDITIONING COMPRESSOR, MOUNTING BRACKETS, RECEIVER DRYER,CONDENSER AND HOSES

KEY	PART NO.	PART NAME	QTY	SERIAL NO.	310G	315SG	315SG	REMARKS
1	AT188368	REFRIGERANT HOSE	1		X	X	X	
2	R44302	TIE BAND	3		X	X	X	
3	AT181530	FLOW CONTROL HYD. VALVE	1		X	X	X	(LOW SIDE)
4	T162557	CAP	1		X	X	X	
5	R10093	O-RING	8		X	X	X	
6	T143169	O-RING	1		X	X	X	
7	R33259	O-RING	1		X	X	X	
8	AT190658	AC COMPRESSOR WRG HARNESS	1		X	X	X	
9	19M7513	CAP SCREW	1		X	X	X	M8 X 30
10	24M7238	WASHER	11		X	X	X	
11	T78787	CLAMP	1		X	X	X	
12	14M7273	NUT	1		X	X	X	M8
13	19M8456	CAP SCREW	2		X	X	X	M8 X 100
14	AH89557	CLIP	1		X	X	X	(SUB FOR T19935, THIS APPLICATION)
15	21M7283	SCREW	1		X	X	X	M5 X 8
16	12H316	LOCK WASHER	1		X	X	X	
17	H77698	TIE BAND	1		X	X	X	
18	T145560	LABEL	1		X	X	X	
19	19M7402	CAP SCREW	2	-901696	X	X	X	M10 X 25
	19M7550	CAP SCREW	2	901697-	X	X	X	M10 X 35
20	24M7239	WASHER	2		X	X	X	
21	R132690	SUPPORT	1	-901696	X	X	X	
	R504191	BRACKET	1	901697-	X	X	X	
22	AT188369	REFRIGERANT HOSE	1		X	X	X	
23	.....	BRACKET	1		X	X	X	(AT180350 NO LONGER AVAILABLE) (SUB R504192) (ALSO ORDER R504191, 19M7407, (2) 19M7550, (3) 19M8539)
	R504192	BRACKET	1	901697-	X	X	X	
24	34M7189	SPRING PIN	1		X	X	X	11 X 8 MM
25	RE46609	COMPRESSOR	1		X	X	X	NEW
	TY6764	COMPRESSOR	1		X	X	X	REMANUFACURED
26	M86533	STRAP	1		X	X	X	
27	AT199081	REFRIGERANT HOSE	1		X	X	X	(SUB FOR AT186263)
28	AT178930	HYDRAULIC CYLINDER PORT	1		X	X	X	
29	R137851	GROMMET	2	-903152	X	X	X	
	T190177	GROMMET	2	903153-	X	X	X	
30	R113050	O-RING	2		X	X	X	
31	R504023	V-BELT	1		X	X	X	
32	T158424	WASHER	11		X	X	X	RUBBER
33	L3483N	BUSHING	4		X	X	X	
34	24M7101	WASHER	4		X	X	X	
35	AT192168	CLAMP	2		X	X	X	
36	19M7328	CAP SCREW	2		X	X	X	M10 X 70
37	AT184522	VAPOR CONDENSER	1		X	X	X	
38	19M7808	SCREW	1		X	X	X	M10 X 65
39	R502079	SLEEVE	1		X	X	X	

AIR CONDITIONING COMPRESSOR, MOUNTING BRACKETS, RECEIVER DRYER,CONDENSER AND HOSES

T212917 -UN-21JUL05

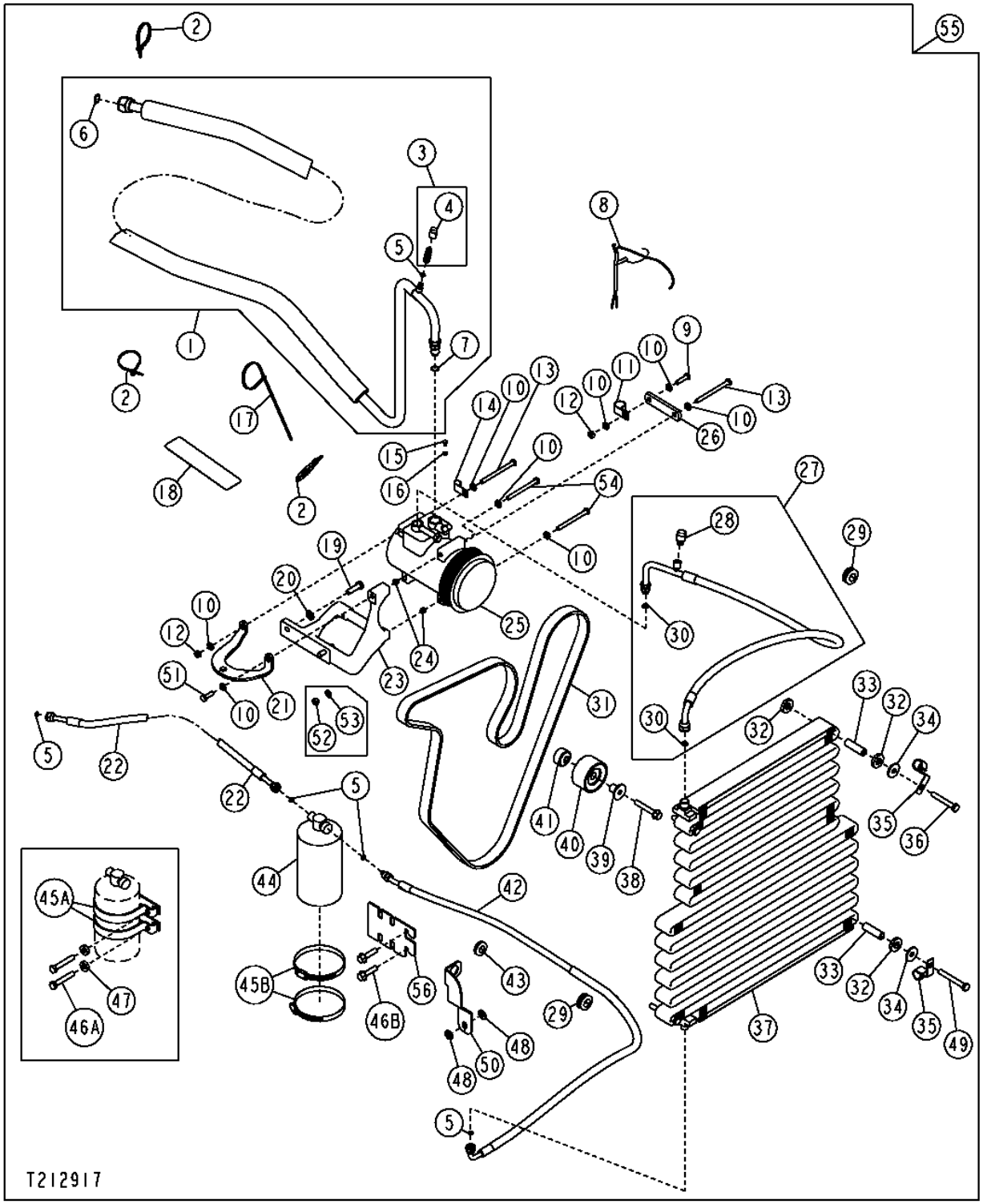

AIR CONDITIONING COMPRESSOR, MOUNTING BRACKETS, RECEIVER DRYER,CONDENSER AND HOSES

KEY	PART NO.	PART NAME	QTY	SERIAL NO.	310G	315SG	REMARKS
40	RE505264	PULLEY	1		X	X X	
41	R500320	SPACER	1		X	X X	
42	AT193499	REFRIGERANT HOSE	1		X	X X	
43	R115350	GROMMET	1		X	X X	
44	AT162848	RECEIVER-DRYER	1		X	X X	
45A	T190438	CLAMP	2	-951252	X	X X	
45B	AR21842	CLAMP	2	951253-	X	X X	
46A	19M7384	CAP SCREW	2	-952252	X	X X	M10 X 60
46B	19M7806	SCREW	2	951253-	X	X X	M10 X 50, (SUB FOR 19M7804)
47	24H1781	WASHER	2	-951252	X	X X	
48	24M7239	WASHER	1		X	X X	
49	19M8049	CAP SCREW	2		X	X X	M10 X 80
50	T185949	BRACKET	1		X	X X	
51	19M7407	CAP SCREW	1	901697-	X	X X	
52	14M7273	NUT	1	-901696	X	X X	M8
53	24M7238	WASHER	1	-901696	X	X X	
54	19M8456	CAP SCREW	2	-901696	X	X X	M8 X 100
	19M8539	CAP SCREW	2	901697-	X	X X	M8 X 90
55	AT187439	KIT	1		X		(WHOLE GOODS) WITH FIELD INSTALLLED FLOW CONTROL, INCLUDES INSULATED DUCT WORK, (INCLUDES AT178394, AT192656 AND T187606)
	AT187442	KIT	1		X		(WHOLE GOODS) WITH FLOW CONTROL, INCLUDES INSULATED DUCT WORK, (INCLUDES AT192656)
	AT187442	KIT	1			X X	(WHOLE GOODS) WITH BASE COOLING, INCLUDES INSULATED DUCT WORK, (INCLUDES AT192656)
	AT187440	KIT	1			X X	(WHOLE GOODS) WITH HIGH AMBIENT COOLING, INCLUDES INSULATED DUCT WORK
56	T212352	BRACKET	1	951253-			FURNISH (2) T190438 & (2) 19M7875

HEAT AND NOISE BARRIER

T145246 -UN-04SEP01

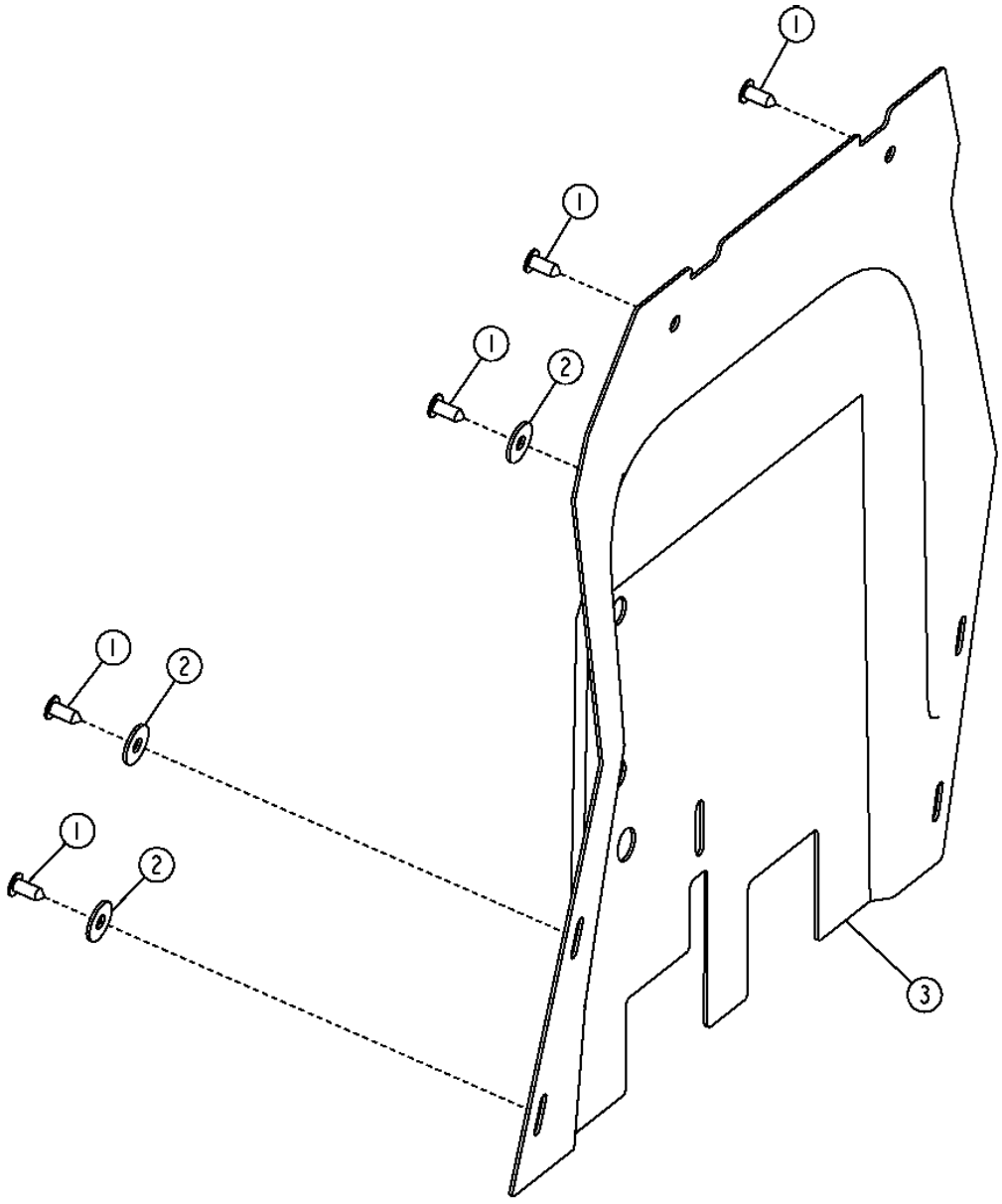

T145246

HEAT AND NOISE BARRIER

KEY	PART NO.	PART NAME	QTY	SERIAL NO.	310G	315SG	REMARKS
1	MT2485	PLUG	5		X	X X	FASTENER, (SUB FOR 19M7662, THIS APPLICATION) (SUB FOR T161380)
2	24M7180	WASHER	3		X	X X	
3	T185663	PANEL	1	-913416	X	X X	
	T191101	ISOLATOR	1	913417-	X	X X	

3H15

HOOD AND ENGINE SIDE PANELS

T147911 -UN-29NOV01

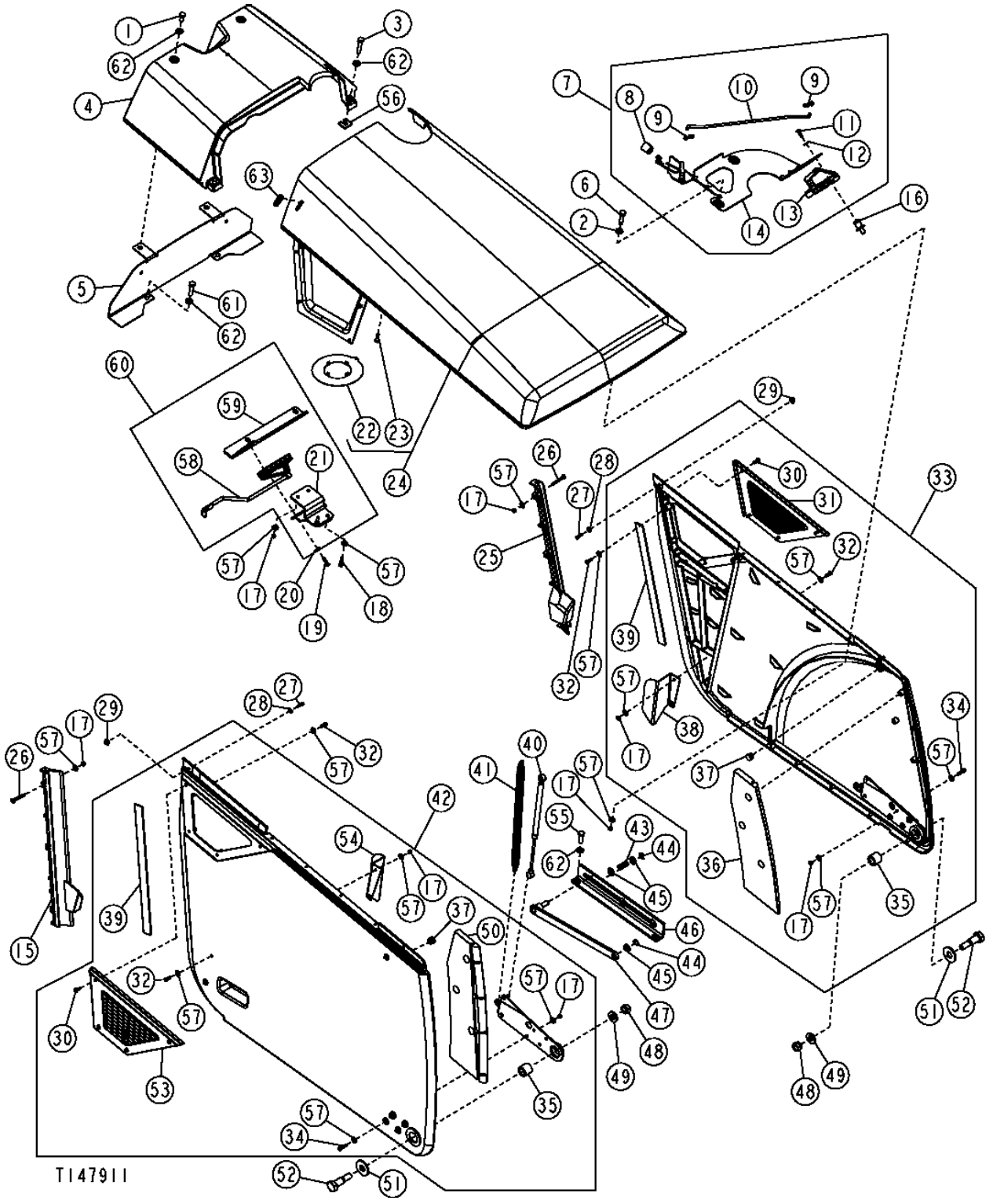

THIS PARTS LISTING IS CONTINUED

HOOD AND ENGINE SIDE PANELS

KEY	PART NO.	PART NAME	QTY	SERIAL NO.	310G	310SG	315SG	REMARKS
1	19M7938	CAP SCREW	2		X	X	X	M10 X 20
2	24M7239	WASHER	3	-903476	X	X	X	
3	19M8600	CAP SCREW	2		X	X	X	M10 X 50
4	T165982	HOOD	1	-903476	X	X	X	
	T209334	HOOD	1	903477-	X	X	X	(SUB FOR T188707)
5	AT302803	SUPPORT	1		X	X	X	(SUB FOR AT185683)
6	19M8637	CAP SCREW	3	-903476	X	X	X	M10 X 40
7	.....	LATCH	1	-903476	X	X	X	(SUB AT196815) (ALSO ORDER (2) 14M7272, (2) 19M7874, (2) 19M7933, (4) 24M7139) ORDER ATTACHING HARDWARE
8	T133487	KNOB	1	-903476	X	X	X	
9	T161373	CLIP	2	-903476	X	X	X	
10	T165973	ROD	1	-903476	X	X	X	
11	19M7077	CAP SCREW	2	-903476	X	X	X	M6 X 20
12	24M7139	WASHER	1	-903476	X	X	X	
13	AT185680	LATCH	1	-903476	X	X	X	
14	.....	LATCH	1	-903476	X	X	X	(AT191557 NO LONGER AVAILABLE) (SUB AT196815)
15	T165976	GUIDE	1		X	X	X	RIGHT
16	AR91896	STRIKER	1	-903476	X	X	X	
17	14M7272	NUT	28		X	X	X	M6
18	19M7874	CAP SCREW	2		X	X	X	M6 X 30
19	14H1047	NUT	1	-903476	X	X	X	7/16"
	19M7933	CAP SCREW	2	903477-	X	X	X	M6 X 25
20	T105740	WASHER	1	-903476	X	X	X	
	24M7139	WASHER	2	903477-	X	X	X	
21	AT189400	BRACKET	1	-903476	X	X	X	STIKER BOLT
	T201591	BRACKET	1	903477-	X	X	X	(SUB FOR AT195339)
22	.....	PLATE	1		X	X	X	
23	T187272	SCREW	4		X	X	X	(SUB FOR T165985)
24	.....	HOOD	1	-903476	X	X	X	(AT185537 NO LONGER AVAILABLE) (SUB AT311787 AND T188642)
	.....	HOOD	1	-903476	X	X	X	(AT196355 NO LONGER AVAILABLE) (SUB AT311787, T188642 AND AT196815)
	AT311787	HOOD	1	903477-	X	X	X	
25	T184393	GUIDE	1		X	X	X	LEFT
26	19M9100	SCREW	6		X	X	X	M6 X 50
27	19M7373	CAP SCREW	4		X	X	X	M5 X 20
28	24M7138	WASHER	4		X	X	X	
29	T183773	NUT	4		X	X	X	
30	21M7246	SCREW	8		X	X	X	M6 X 16
31	T165916	LOUVER	1		X	X	X	LEFT
32	19M8425	CAP SCREW	12		X	X	X	M6 X 16

3H17

HOOD AND ENGINE SIDE PANELS

T147911 -UN-29NOV01

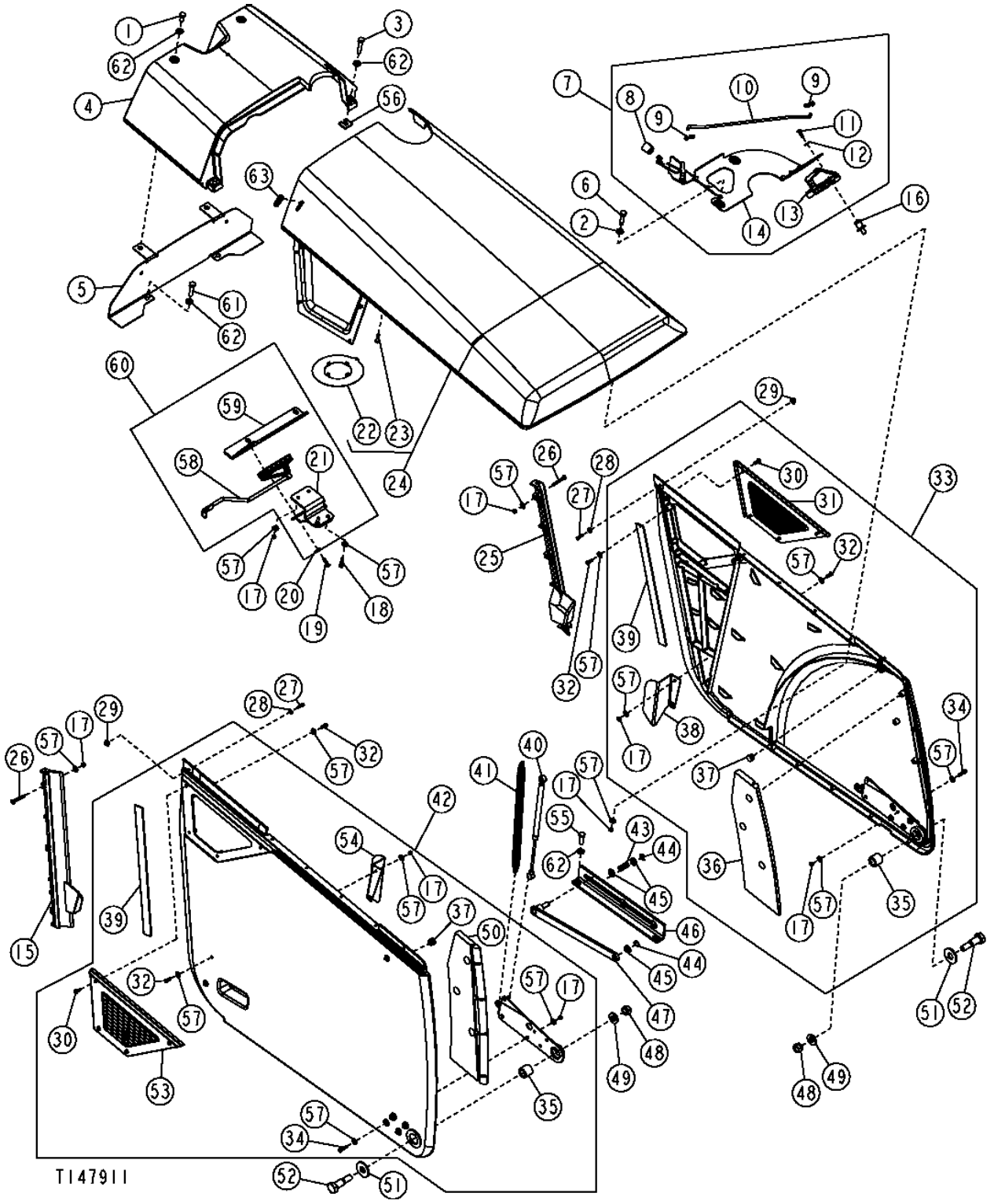

THIS PARTS LISTING IS CONTINUED

HOOD AND ENGINE SIDE PANELS

KEY	PART NO.	PART NAME	QTY	SERIAL NO.	310G	310SG	315SG	REMARKS
33	AT311786	PANEL	1		X	X	X	LEFT SIDE, (SUB FOR AT185539)
34	19M7933	CAP SCREW	10		X	X	X	M6 X 25
35	T165911	BUSHING	2		X	X	X	
36	.....	SHIELD	1		X	X	X	(T183781 NO LONGER AVAILABLE) LEFT SIDE
37	T165997	INSERT	2		X	X	X	
38	T184788	BRACKET	1		X	X	X	LEFT GUIDE
39	T184116	LABEL	2		X	X	X	
40	AT311334	GAS OPERATED CYLINDER	1		X	X	X	(SUB FOR AT191760)
41	T165977	EXTENSION SPRING	2		X	X	X	
42	AT311785	PANEL	1		X	X	X	RIGHT SIDE, (SUB FOR AT185538)
43	T165981	COMPRESSION SPRING	1		X	X	X	
44	R26871	SNAP RING	2		X	X	X	
45	24M7047	WASHER	3		X	X	X	
46	T165978	GUIDE	1		X	X	X	
47	AT189661	BAR	1		X	X	X	
48	14M7328	LOCK NUT	2		X	X	X	M16
49	24M7241	WASHER	2		X	X	X	
50	.....	SHIELD	1		X	X	X	(T183780 NO LONGER AVAILABLE) RIGHT SIDE
51	24H1236	WASHER	2		X	X	X	
52	T165975	BOLT	2		X	X	X	
53	T165915	LOUVER	1		X	X	X	RIGHT
54	T184787	BRACKET	1		X	X	X	RIGHT GUIDE
55	19M7662	CAP SCREW	2		X	X	X	M10 X 30
56	.....	SHIM	AR		X	X	X	
57	24M7139	WASHER	52		X	X	X	
58	AT196358	LATCH	1	903477-	X	X	X	
59	.....	BRACKET	1	903477-	X	X	X	
60	AT196815	KIT	1		X	X	X	(INCLUDES T188642)
61	19M8637	CAP SCREW	2		X	X	X	M10 X 40
62	24M7239	WASHER	8		X	X	X	
63	T188642	GROMMET	1	903477-	X	X	X	

BATTERY ENCLOSURE AND TOOL BOX

T208285 -UN-25FEB05

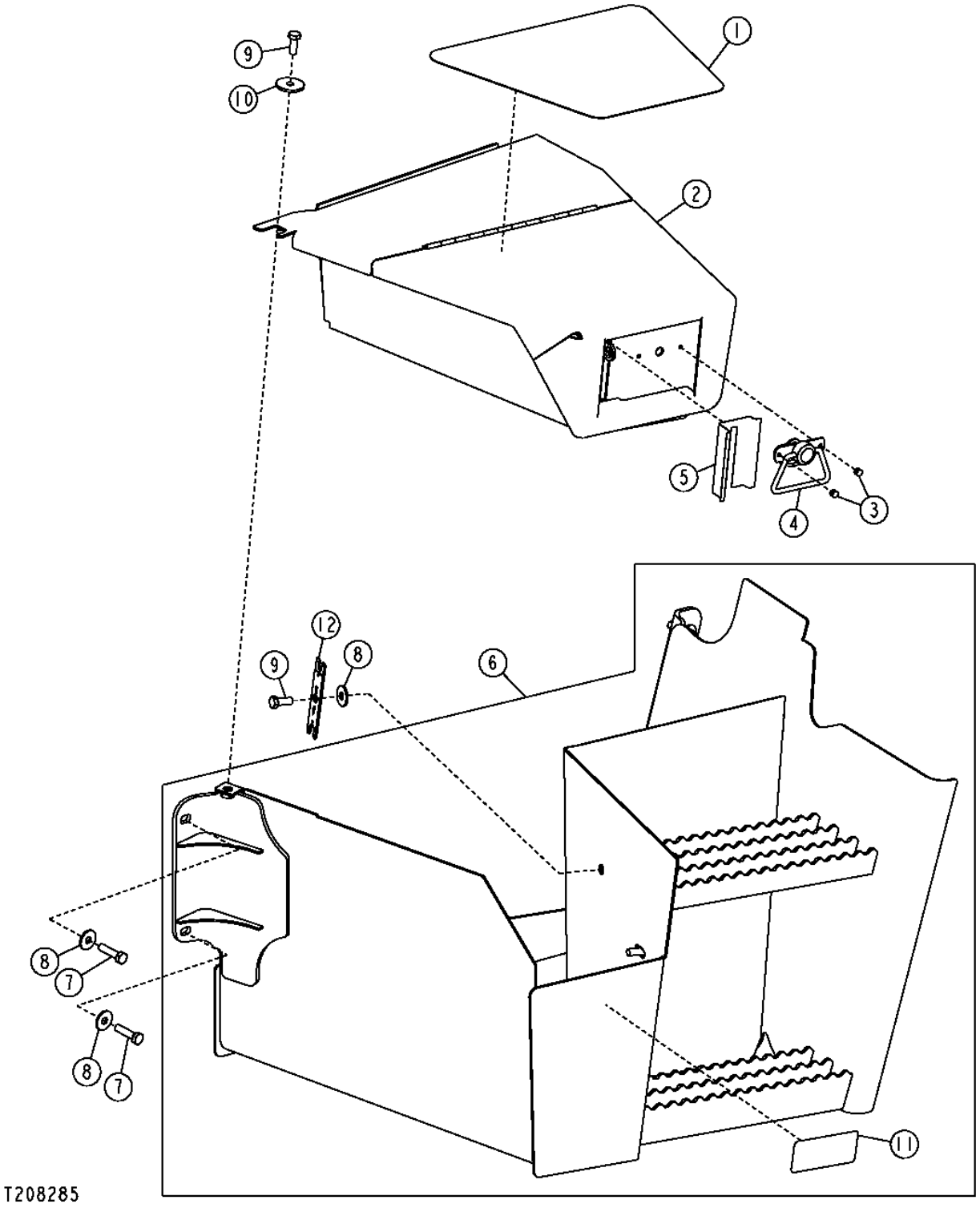

BATTERY ENCLOSURE AND TOOL BOX

KEY	PART NO.	PART NAME	QTY	SERIAL NO.	310G	315SG	315SG	REMARKS
1	T165290	ANTI-SKID PAD	1		X	X	X	
2	AT183428	TOOLBOX	1		X	X	X	
3	M63200	RIVET	2		X	X	X	
4	T185360	LATCH	1		X	X	X	(ALSO ORDER (2) M63200)
5	T185469	LABEL	1		X	X	X	PROTECTIVE
6	AT183411	BATTERY BOX	1		X	X	X	
7	19M8637	CAP SCREW	4		X	X	X	M10 X 40
8	24M7296	WASHER	6		X	X	X	
9	19M7402	CAP SCREW	3		X	X	X	M10 X 25, (SUB FOR 19M7938)
10	24H1718	WASHER	1		X	X	X	
11	JD5933	REFLECTOR	1		X	X	X	
12	T212304	TOOL	1		X	X	X	STC

LOADER PLUMBING SHIELD

T135722 -UN-21APR04

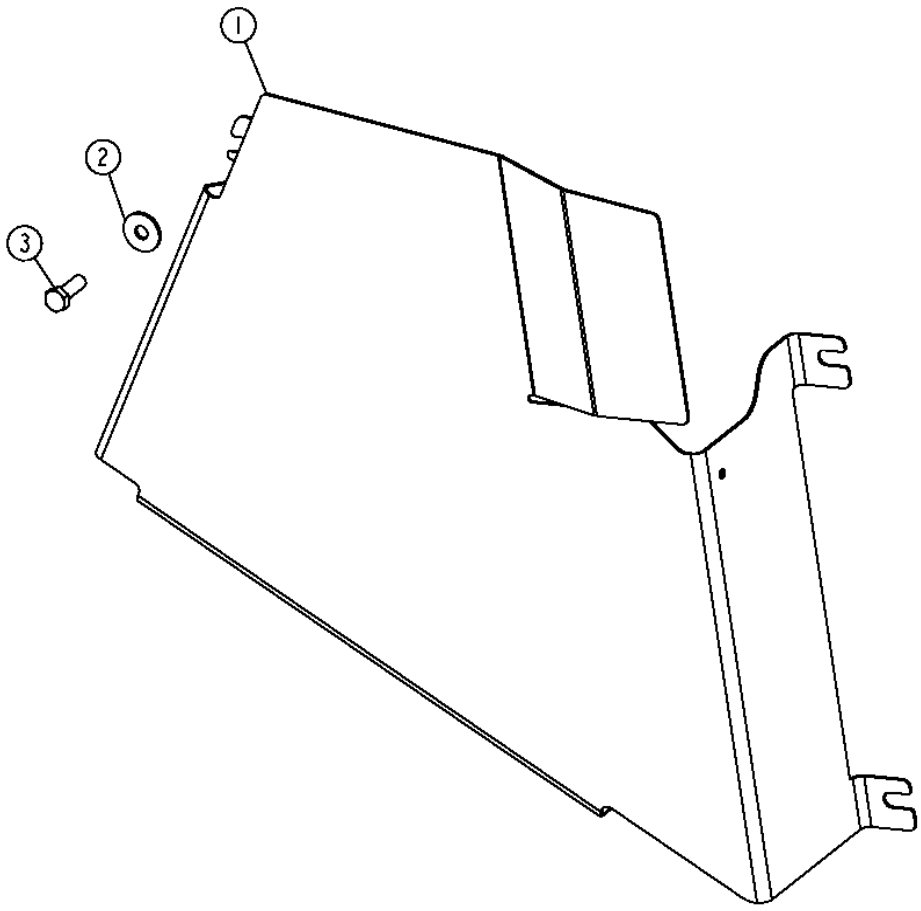

LOADER PLUMBING SHIELD

KEY	PART NO.	PART NAME	QTY	SERIAL NO.	310G	310SG	315SG	REMARKS
1	T206525	SHIELD	1	-944620	X	X	X	(SUB FOR T166531)
	T206908	SHIELD	1	944621-	X	X	X	
2	24M7296	WASHER	1		X	X	X	
3	19M7662	CAP SCREW	1		X	X	X	M10 X 30

GRILLE AND GRILLE HOUSING

TP58071 -UN-06SEP00

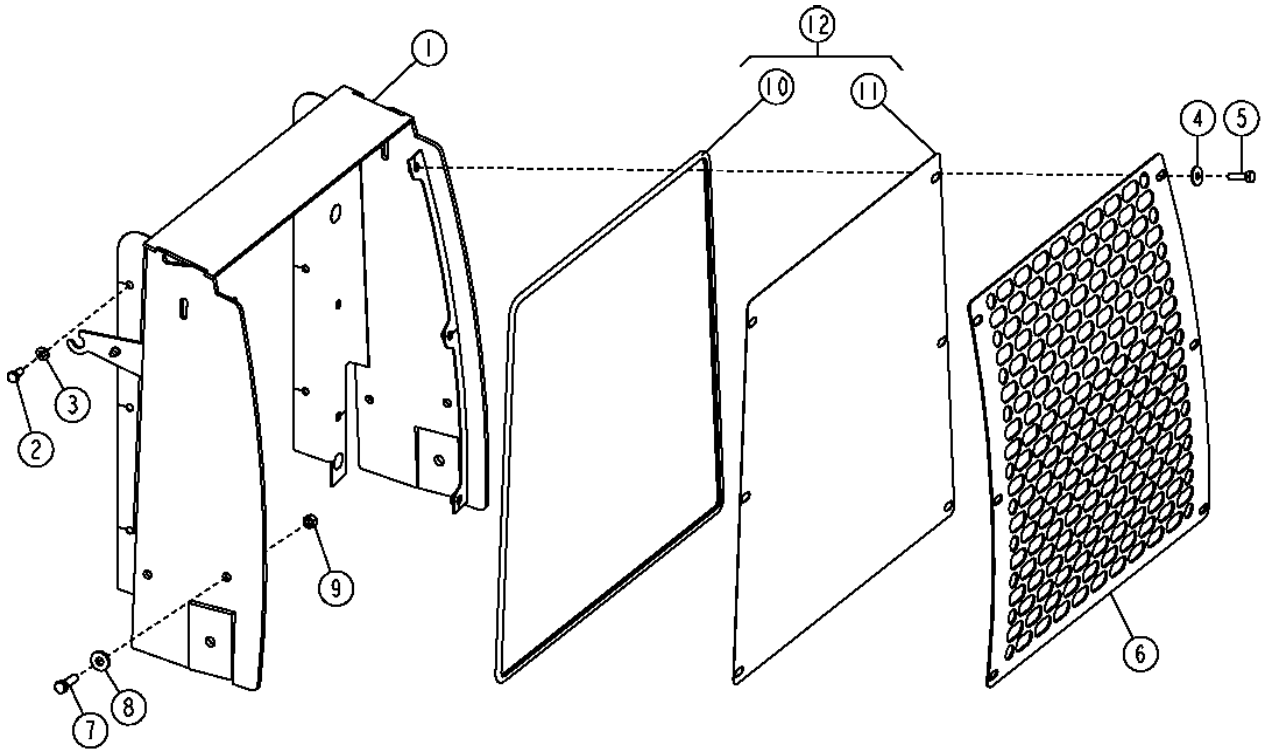

TP58071

GRILLE AND GRILLE HOUSING

KEY	PART NO.	PART NAME	QTY	SERIAL NO.	310G	310SG	315SG	REMARKS
1	AT197001	KIT	1	-903149	X	X	X	(SUB FOR AT185004)
	AT195872	FRAME	1	903150-	X	X	X	
2	19M7938	CAP SCREW	6		X	X	X	M10 X 20
3	24M7239	WASHER	6		X	X	X	
4	24M7296	WASHER	6		X	X	X	
5	19M7550	CAP SCREW	6		X	X	X	M10 X 35
6	T165896	SCREEN	1		X	X	X	
7	19M7493	CAP SCREW	4		X	X	X	M12 X 40
8	T29342	WASHER	4		X	X	X	
9	14M7275	NUT	4		X	X	X	M12
10	.....	MOLDING	1		X	X	X	(MAKE FROM T58056, CUT TO 8.74 FEET)
11	AT189091	SCREEN	1		X	X	X	(TRASH SCREEN)
12	AT189090	SCREEN	1		X	X	X	WHOLE GOODS

EXTENDED GRILLE HOUSING

T212960 -UN-25JUL05

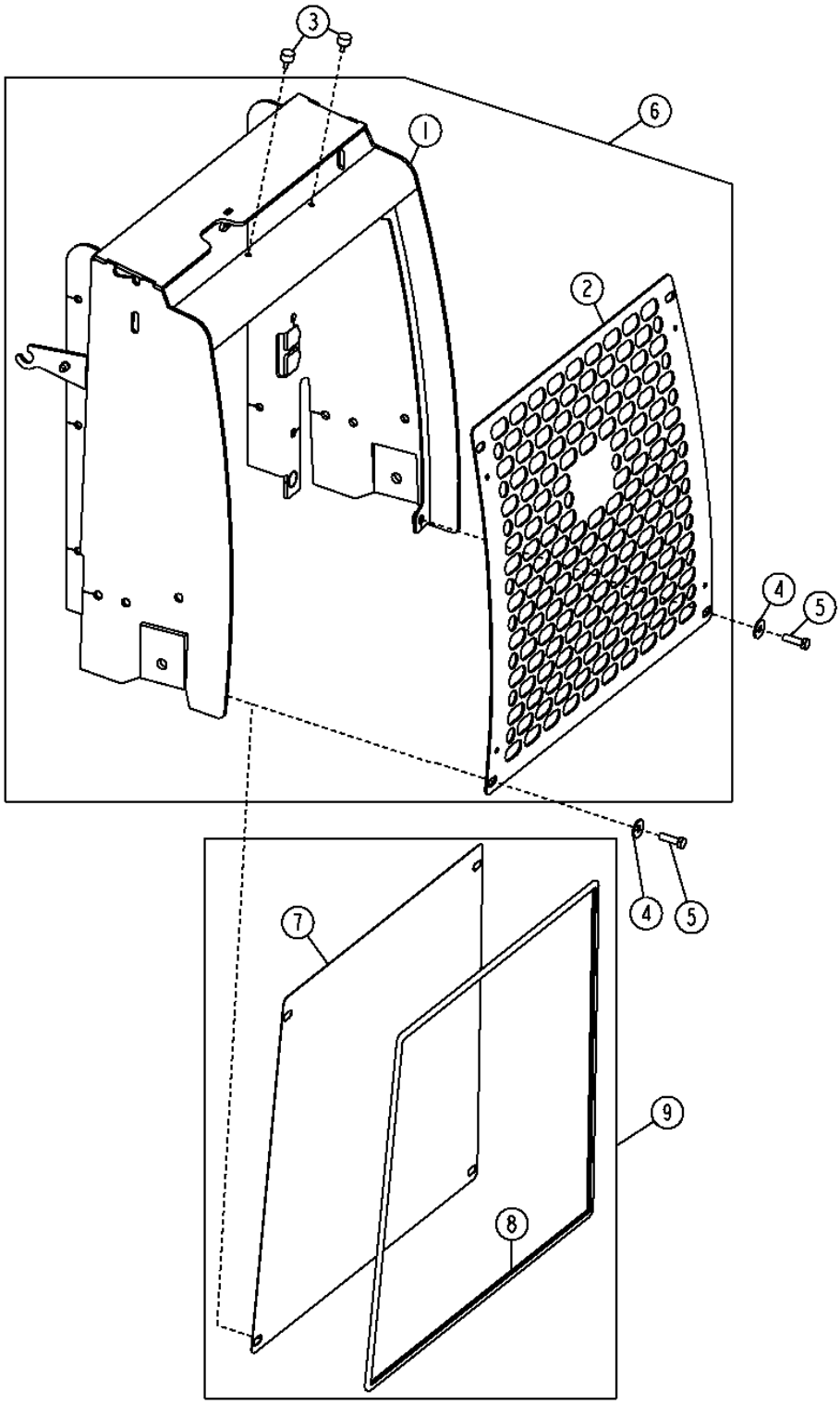

EXTENDED GRILLE HOUSING

KEY	PART NO.	PART NAME	QTY	SERIAL NO.	310G	315SG	REMARKS
1	AT316227	FRAME	1		X	X X	
2	T210544	GRILLE	1		X	X X	
	JD5761	LABEL	1		X	X X	LEAPING DEER
3	H158596	BUMPER	2		X	X X	
4	24M7296	WASHER	4		X	X X	
5	19M7550	CAP SCREW	4		X	X X	M10 X 35
6	AT323124	KIT	1		X	X X	(WHOLE GOODS)
7	AT322743	SCREEN	1		X	X X	(TRASH SCREEN)
8	.....	MOLDING	1		X	X X	(MAKE FROM T58056, CUT TO 8.38 FEET)
9	AT322742	SCREEN	1		X	X X	(WHOLE GOODS)

OPERATOR STATION FENDERS AND SKIRTS

TP58069 -UN-05OCT00

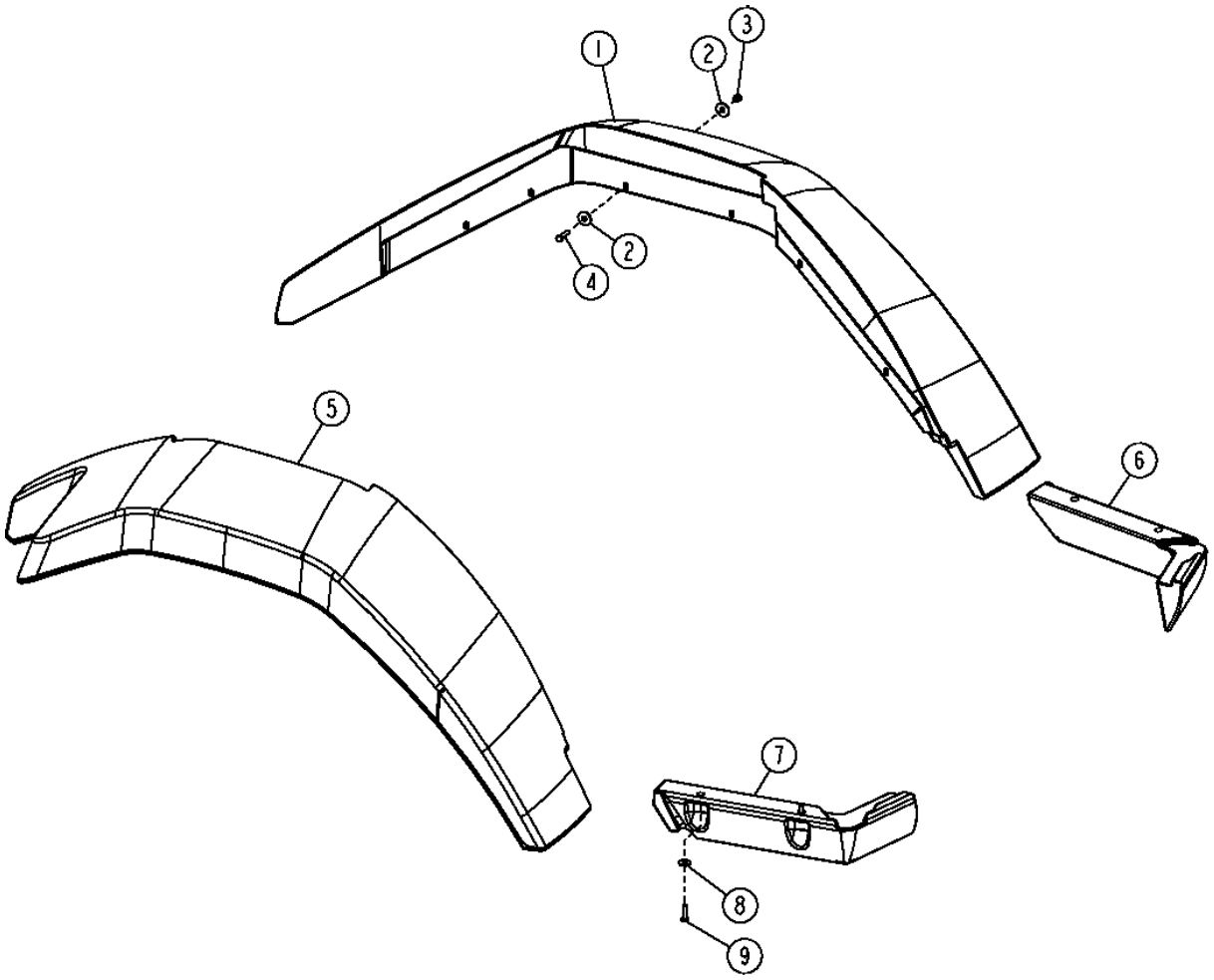

TP58069

OPERATOR STATION FENDERS AND SKIRTS

KEY	PART NO.	PART NAME	QTY	SERIAL NO.	310G	310SG	315SG	REMARKS
1	T177187	FENDER	1		X	X	X	LEFT
2	24M7296	WASHER	24		X	X	X	
3	14M7426	LOCK NUT	12		X	X	X	M8
4	19M7513	CAP SCREW	12		X	X	X	M8 X 30
5	T165870	FENDER	1		X	X	X	RIGHT
6	T166331	COVER	1			X	X	LEFT (SERVICE ONLY)
7	T166332	COVER	1			X	X	RIGHT (SERVICE ONLY)
8	24M7298	WASHER	4			X	X	
9	19M7513	CAP SCREW	4			X	X	M8 X 30

RADIO,RADIO ANTENA,SPEAKERS AND WIRE HARNESS
(FOR USE WITH CAB ONLY)

T214602 -UN-21SEP05

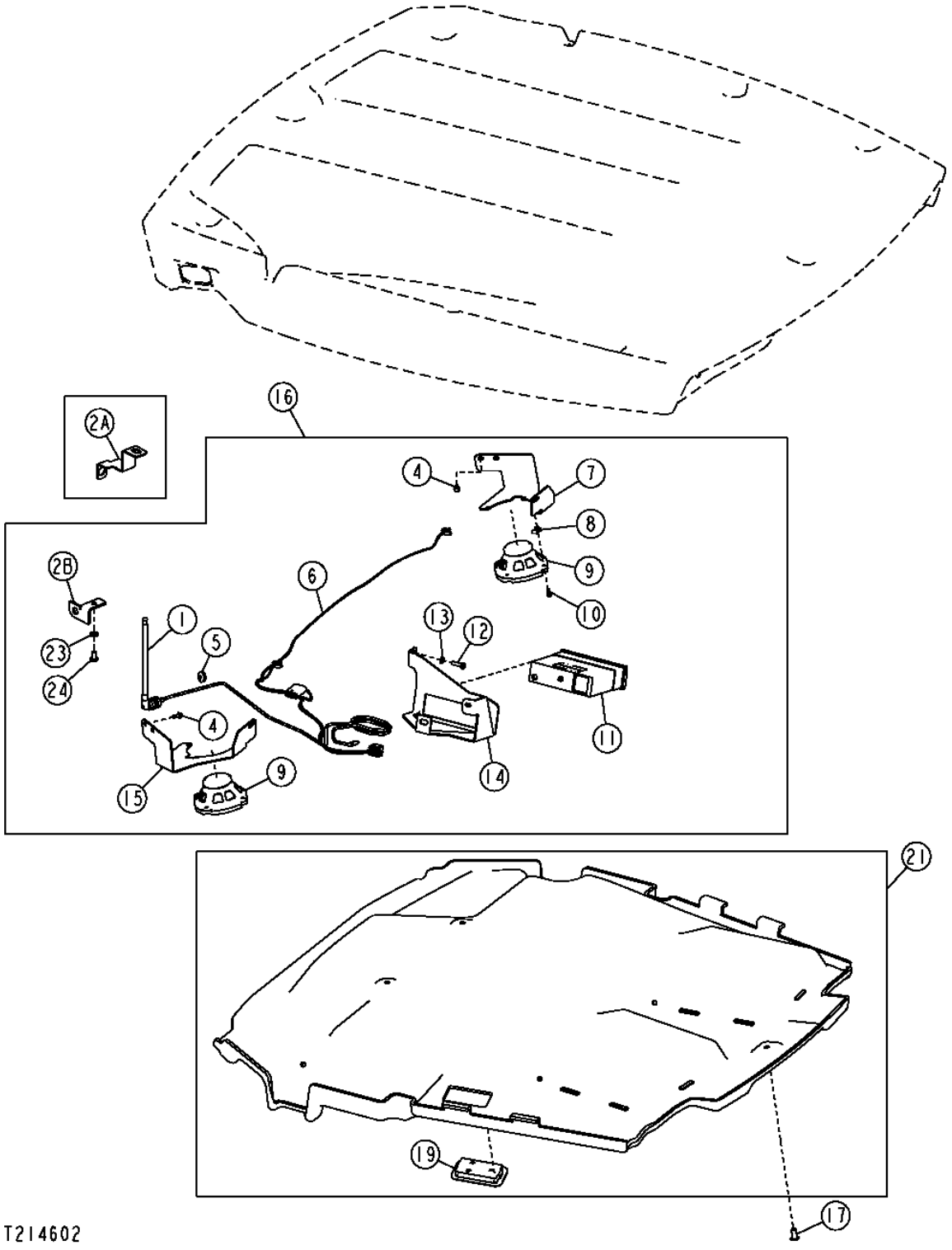

RADIO,RADIO ANTENA,SPEAKERS AND WIRE HARNESS
(FOR USE WITH CAB ONLY)

KEY	PART NO.	PART NAME	QTY	SERIAL NO.	310G	315SG	REMARKS
1	AT199388	ANTENNA	1		X	X	(SUB FOR AT185366)
2A	T167232	BRACKET	1	-951253	X	X	
2B	T204635	BRACKET	1	951254-	X	X	
3	24M7054	WASHER	6		X	X	
4	19M7775	SCREW	6		X	X	M6 X 16, (SUB FOR 19M7933, THIS APPLICATION)
5	T74952	GROMMET	1		X	X	
6	AT191575	WIRING HARNESS	1		X	X	
7	T186443	BRACKET	1		X	X	
8	R117892	NUT	6		X	X	RADIO/SPEAKER MOUNTING
9	AT188759	SPEAKER	2		X	X	
10	21M7271	SCREW	6		X	X	M5 X 16
11	RE190139	RADIO	1		X	X	AM/FM STEREO, (SUB FOR AT192956, THIS APPLICATION)
12	19M7513	CAP SCREW	2		X	X	M8 X 30
13	24M7238	WASHER	2		X	X	
14	T165951	BRACKET	1		X	X	
15	T186444	BRACKET	1		X	X	
16	**AT192217**	**RADIO**	**1**		**X**	**X**	**(WHOLE GOODS)**
17	.....	PLUG	9	-921525	X	X	(T184892 NO LONGER USED) (SUB (9) MT2485) (DRILL HOLE TO 10MM)
	MT2485	PLUG	9	921526-	X	X	FASTENER, (SUB FOR T161380)
18	M84972	NUT	2	-951253	X	X	
19	.....	HEADLINER	1	-951253	X	X	(AT185500 NO LONGER AVAILABLE) (SUB AT320544) (ALSO ORDER AT326356)
	AT320544	LAMP	1	951254-			
20	T134895	SELF-LOCKING SCREW	1	-951253	X	X	
21	.....	HEADLINER	1	-951253	X	X	HEADLINER FOR RADIO (AT185499 NO LONGER AVAILABLE) (SUB AT321005) (ALSO ORDER AT326356 AND AT320544)
	AT321005	HEADLINER	1	951254-	X	X	
22	AT326356	CAB WIRING HARNESS	1	-951253	X	X	
23	24M7239	WASHER	1	951254-	X	X	
24	19M8324	CAP SCREW	1	951254-	X	X	

INTERIOR REAR VIEW MIRROR

T145088 -UN-24AUG01

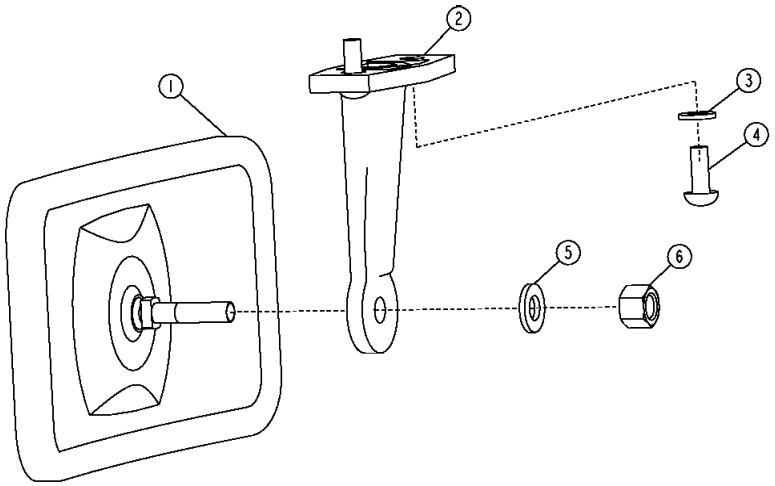

T145088

KEY	PART NO.	PART NAME	QTY	SERIAL NO.	310G	315SG	315SG	REMARKS
1	AT222333	REAR VIEW MIRROR	1		X	X	X	(RECOMMENDED FOR USE IN HIGHLY CORROSIVE INVIRONMENT)
	AT196427	REAR VIEW MIRROR	1		X	X	X	
2	L75379	BRACKET	1		X	X	X	
3	24M7054	WASHER	2		X	X	X	(SUB FOR 24M7293, THIS APPLICATION)
4	21M7246	SCREW	2		X	X	X	M6 X 16
5	24M7238	WASHER	1		X	X	X	
6	14M7426	LOCK NUT	1		X	X	X	M8

EXTERNAL MIRROR

T146538 -UN-11OCT01

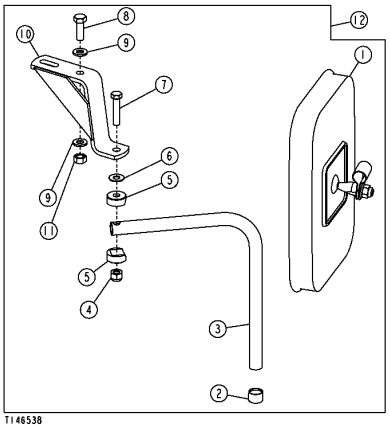

KEY	PART NO.	PART NAME	QTY	SERIAL NO.	310G	310SG	315SG	REMARKS
1	AT103919	REAR VIEW MIRROR	2		X	X	X	
2	T128437	CAP	2		X	X	X	
3	T148817	TUBE	2		X	X	X	
4	T11234	LOCK NUT	2		X	X	X	3/8"
5	T115030	HALF CLAMP	4		X	X	X	
6	T60920	WASHER	2		X	X	X	
7	19H3217	CAP SCREW	2		X	X	X	3/8" X 1-3/4"
8	19M7662	CAP SCREW	2		X	X	X	M10 X 30
9	24M7239	WASHER	4		X	X	X	
10	AT195814	BRACKET	1		X	X	X	LEFT, (SUB FOR T166898)
	AT195815	BRACKET	1		X	X	X	RIGHT, (SUB FOR T166898)
11	14M7274	NUT	2		X	X	X	M10
12	AT186155	REAR VIEW MIRROR	1		X	X	X	

BACK-UP ALARM SYSTEM
(310G AND 310SG)

T160035 -UN-01OCT02

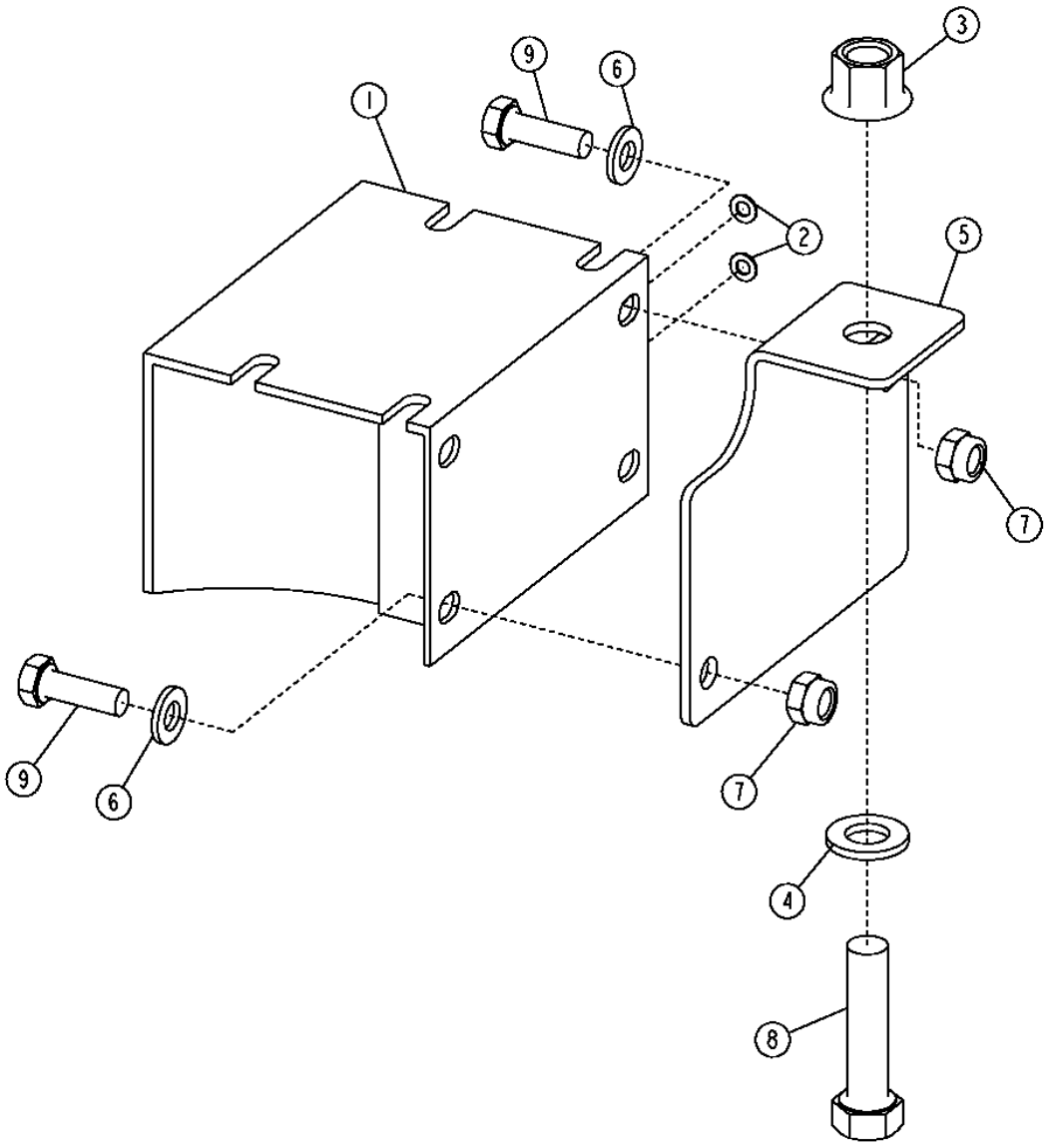

T160035

BACK-UP ALARM SYSTEM
(310G AND 310SG)

KEY	PART NO.	PART NAME	QTY	SERIAL NO.	310G	310SG	315SG	REMARKS
1	AT120461	TRAVEL WARNING ALARM	1		X	X		
2	12M7084	LOCK WASHER	2		X	X		
3	14M7401	LOCK NUT	1		X	X		M12
4	24M7047	WASHER	1		X	X		
5	T161368	BRACKET	1		X	X		
6	24M7238	WASHER	2		X	X		
7	14M7426	LOCK NUT	2		X	X		M8
8	19M7496	CAP SCREW	1		X	X		M12 X 45, (SUB FOR 19M7631 AND 19M7361, THIS APPLICATION)
9	19M7407	CAP SCREW	2		X	X		M8 X 25

BACK-UP ALARM SYSTEM
(315SG)

TP50607 -UN-19MAR97

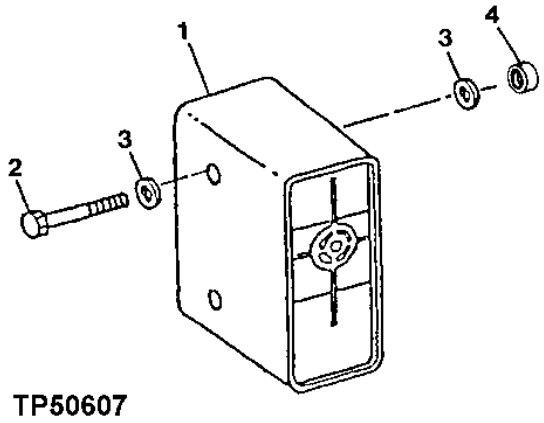

KEY	PART NO.	PART NAME	QTY	SERIAL NO.	310G	310SG	315SG	REMARKS
1	AT78534	TRAVEL WARNING ALARM	1				X	
2	N275275	CAP SCREW	2				X	M10 X 125
3	24M7239	WASHER	2				X	
4	28H2547	SPACER	2				X	

MEMORANDA

HORN
(SERIAL NO. -910147)

TP58115 -UN-09OCT00

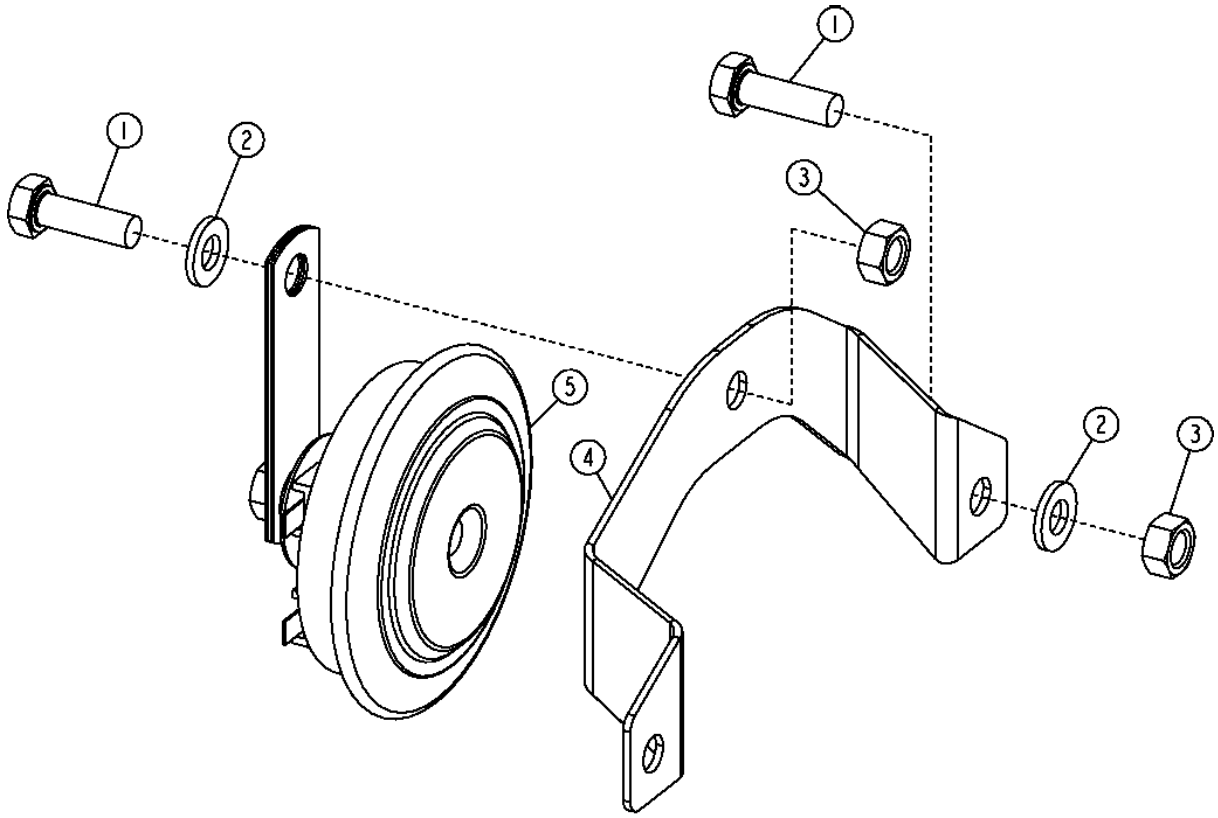

TP58115

HORN
(SERIAL NO. -910147)

KEY	PART NO.	PART NAME	QTY	SERIAL NO.	310G	310SG	315SG	REMARKS
1	M86877	BOLT	2		X	X	X	M8 X 20
2	24M7238	WASHER	2		X	X	X	
3	14M7273	NUT	2		X	X	X	M8
4	T185699	BRACKET	1		X	X	X	
5	AT226281	HORN	1		X	X	X	(SUB FOR AT222276)

HORN
(SERIAL NO. 910148-)

T154411 -UN-29APR02

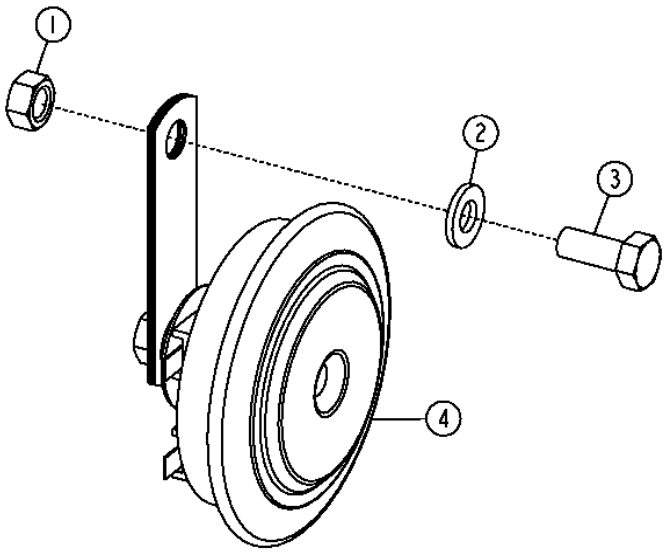

T154411

KEY	PART NO.	PART NAME	QTY	SERIAL NO.	310G	315SG	REMARKS
1	14M7273	NUT	1		X	X X	M8
2	24M7238	WASHER	1		X	X X	
3	M86877	BOLT	1		X	X X	M8 X 20
4	AT226281	HORN	1		X	X X	(12V) (SUB FOR AT222276)

MEMORANDA

SUN VISOR

TP58072 -UN-09OCT00

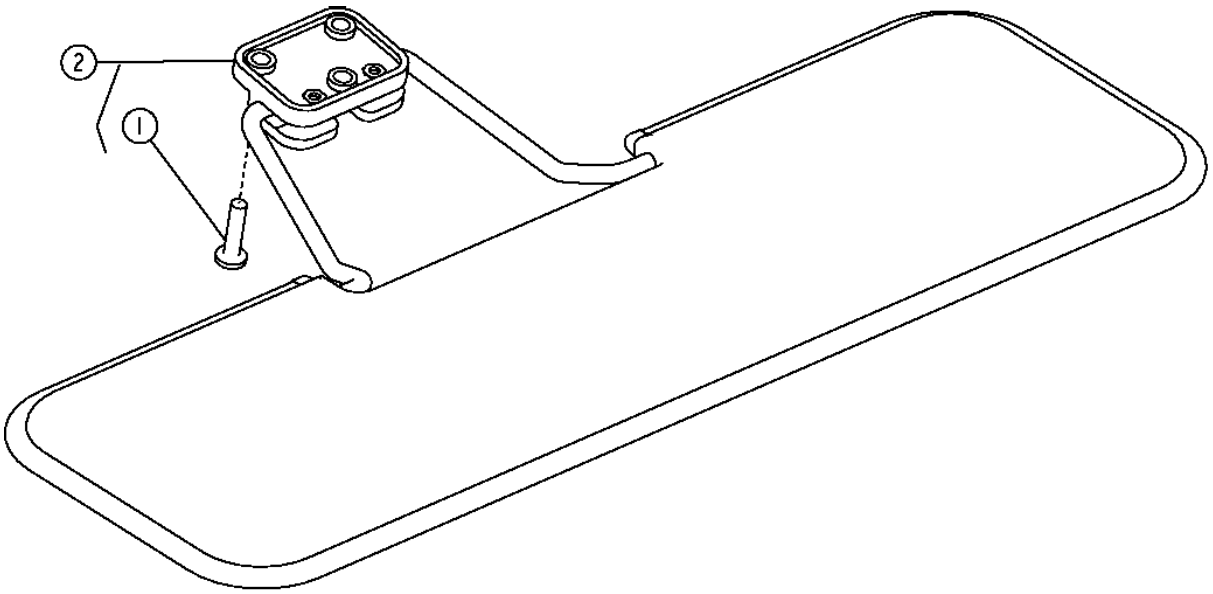

TP58072

SUN VISOR

KEY	PART NO.	PART NAME	QTY	SERIAL NO.	310G	315SG	315SG	REMARKS
1	T134895	SELF-LOCKING SCREW	3		X	X	X	M6 X 25
2	AT186307	SUN VISOR	1		X	X	X	WHOLE GOODS

SMV EMBLEM

TP69633 -UN-09OCT00

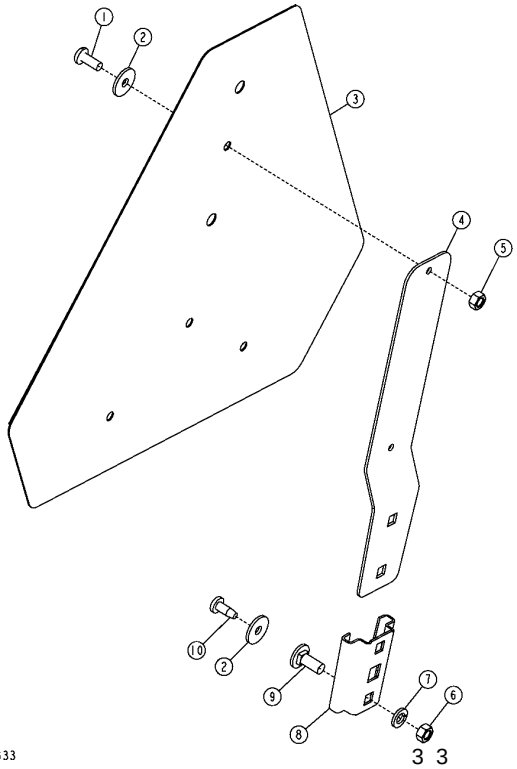

KEY	PART NO.	PART NAME	QTY	SERIAL NO.	310G	310SG	315SG	REMARKS
1	21H1302	SCREW	2		X	X	X	1/4" X 5/8"
2	24M7100	WASHER	4		X	X	X	
3	JD5930	SMV EMBLEM	1		X	X	X	
4	JD5404	BRACKET	1		X	X	X	
5	14H786	NUT	2		X	X	X	1/4"
6	14H785	NUT	2		X	X	X	5/16"
7	12M7065	LOCK WASHER	2		X	X	X	
8	JD126	BRACKET	1		X	X	X	
9	03H1268	BOLT	2		X	X	X	5/16" X 3/4"
10	37M7074	SCREW	2		X	X	X	

VEHICLE HYDRAULIC SYSTEM

TP69676 -UN-09OCT00

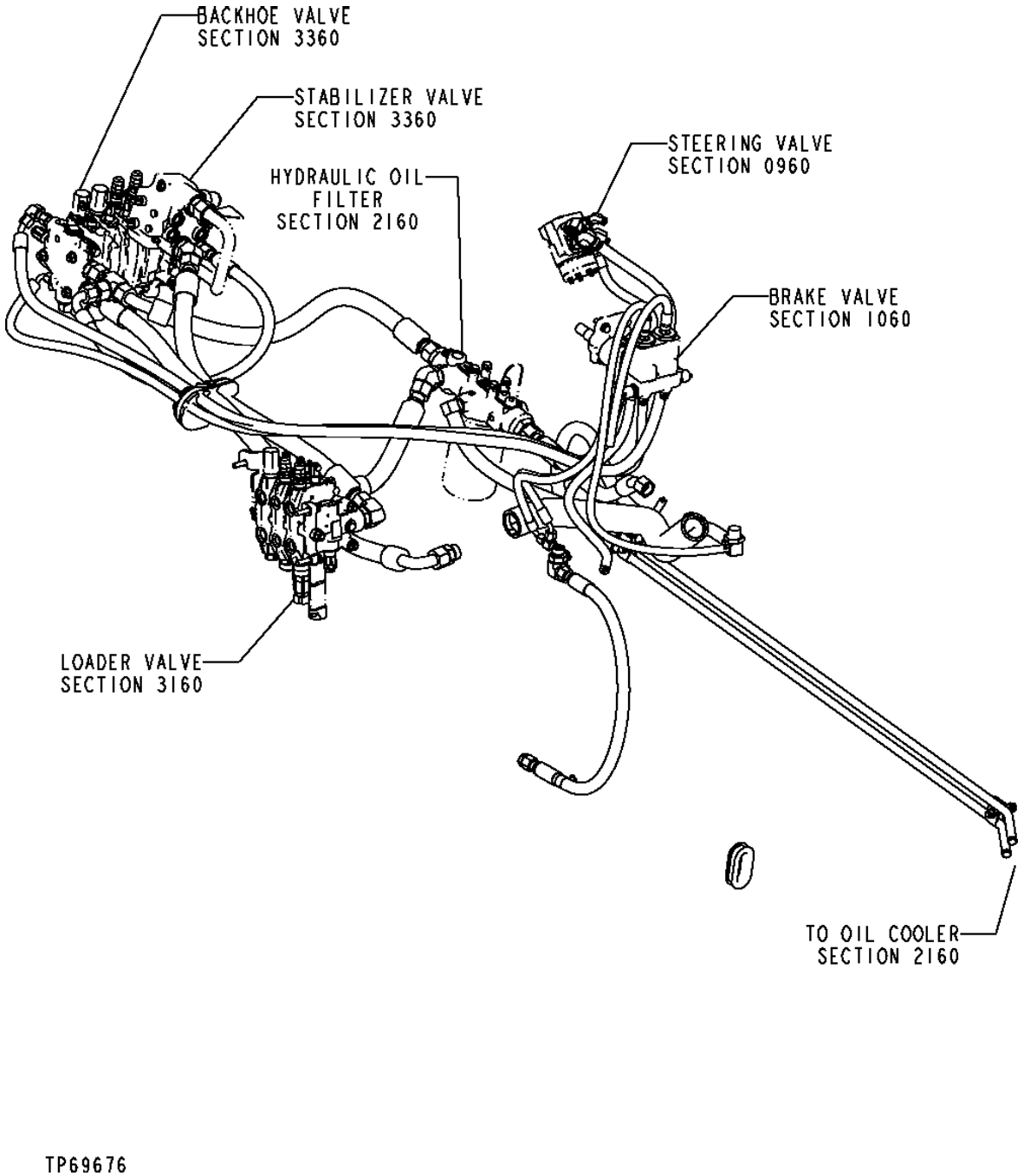

MAIN HYDRAULIC PUMP
(310G)

T137562 -UN-24JAN01

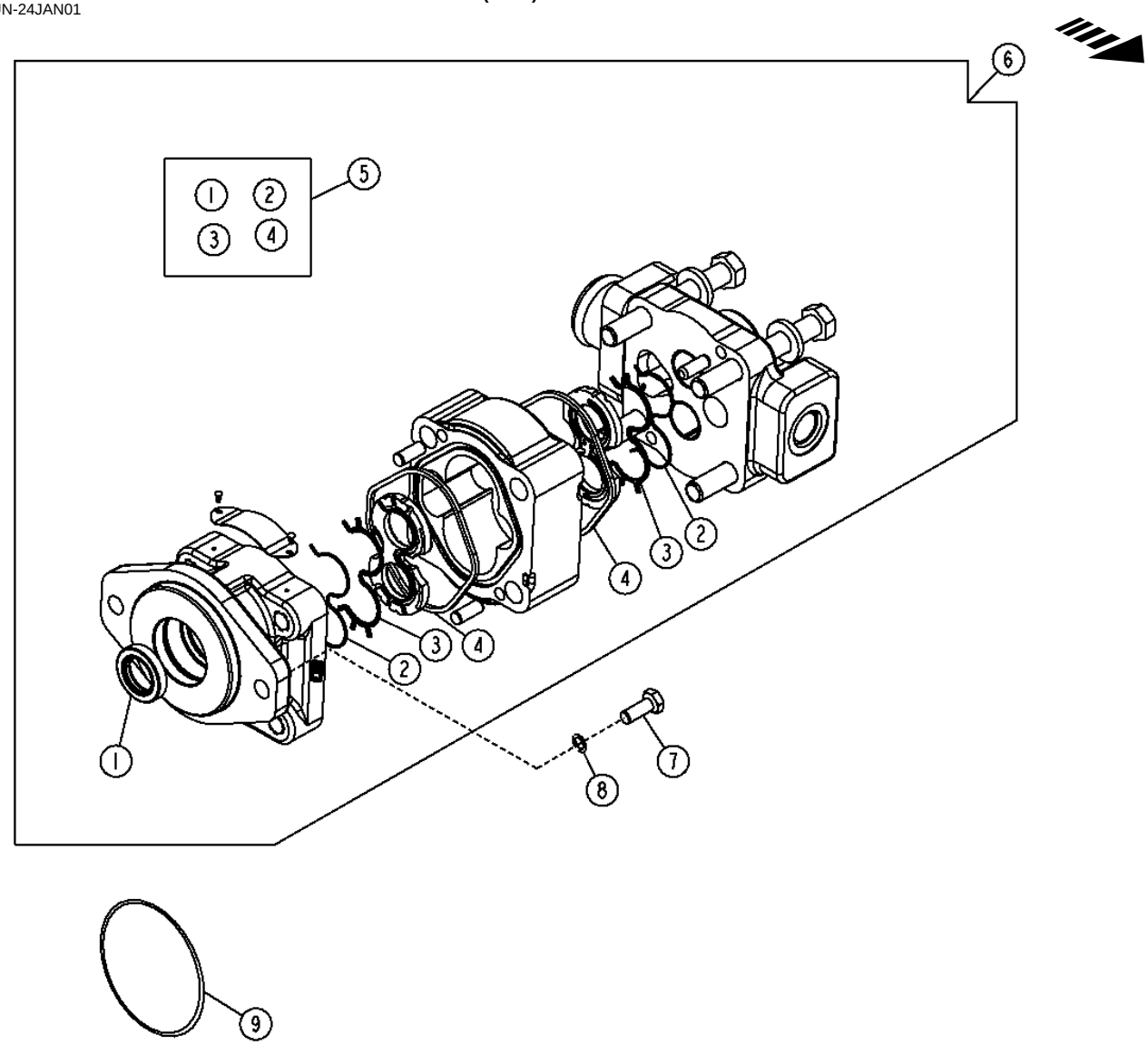

T137562

MAIN HYDRAULIC PUMP
(310G)

KEY	PART NO.	PART NAME	QTY	SERIAL NO.	310G	310SG	315SG	REMARKS
1	.....	SEAL	2		X			
2	.....	BACK-UP RING	2		X			
3	.....	SEAL	2		X			
4	.....	SEAL	2		X			
5	AT199930	SEAL KIT	1		X			(P330) (SUB FOR AT170052)
6	AT179792	HYDRAULIC PUMP	1		X			(SUB FOR AT182078)
7	19M7403	CAP SCREW	2		X			M12 X 35
8	24M7240	WASHER	2		X			
9	F37030242	O-RING	1		X			

MAIN HYDRAULIC PUMP
(310SG AND 315SG)

TP69695 -UN-04OCT00

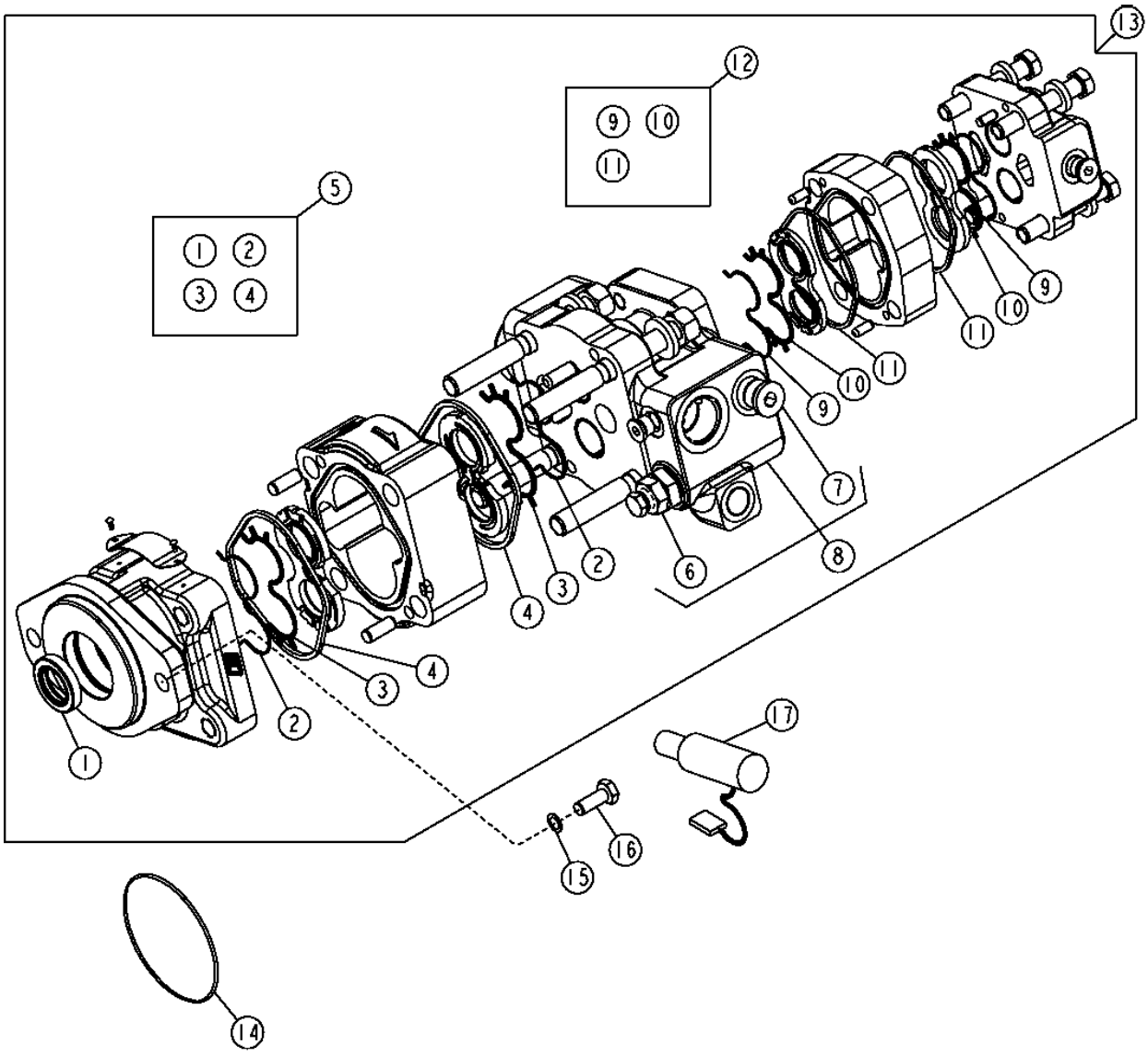

TP69695

MAIN HYDRAULIC PUMP
(310SG AND 315SG)

KEY	PART NO.	PART NAME	QTY	SERIAL NO.	310G	310SG	315SG	REMARKS
1	.....	SEAL	1			X	X	
2	.....	BACK-UP RING	2			X	X	
3	.....	SEAL	2			X	X	
4	.....	SEAL	2			X	X	
5	AT199930	SEAL KIT	1			X	X	(P330) (SUB FOR AT170052)
6	AT317385	PRESSURE RELIEF VALVE	1			X	X	(2900 PSI) (SUB FOR AT181937)
	T164075	SPRING	1			X	X	UNLOADER SPOOL SPRING
7	AT180530	CHECK VALVE	1			X	X	CHECK
	R26906	O-RING	1			X	X	
	R27474	DRAIN PLUG	1			X	X	
8	AT317442	PUMP/VALVE CONTROLLER	1			X	X	UNLOADER, (SUB FOR AT192455) (INCLUDES AT199938)
	AT199938	SEAL KIT	1			X	X	UNLOADER, (SUB FOR AT178608)
9	.....	BACK-UP RING	2			X	X	
10	.....	SEAL	2			X	X	
11	.....	SEAL	2			X	X	
12	AT199931	SEAL KIT	1			X	X	(P315) (SUB FOR AT170053)
13	AT317640	PUMP	1			X	X	(SUB FOR AT183664)
14	F37030242	O-RING	1			X	X	
15	24M7240	WASHER	2			X	X	
16	19M7403	CAP SCREW	2			X	X	M12 X 35
17	RE32530	SOLENOID VALVE	1			X	X	DESTROKE
	R26375	O-RING	1			X	X	
	T40308	O-RING	1			X	X	
	T57374	BACK-UP RING	1			X	X	

MAIN HYDRAULIC SYSTEM
(SERIAL NO. -913416)

T159003 -UN-07SEP02

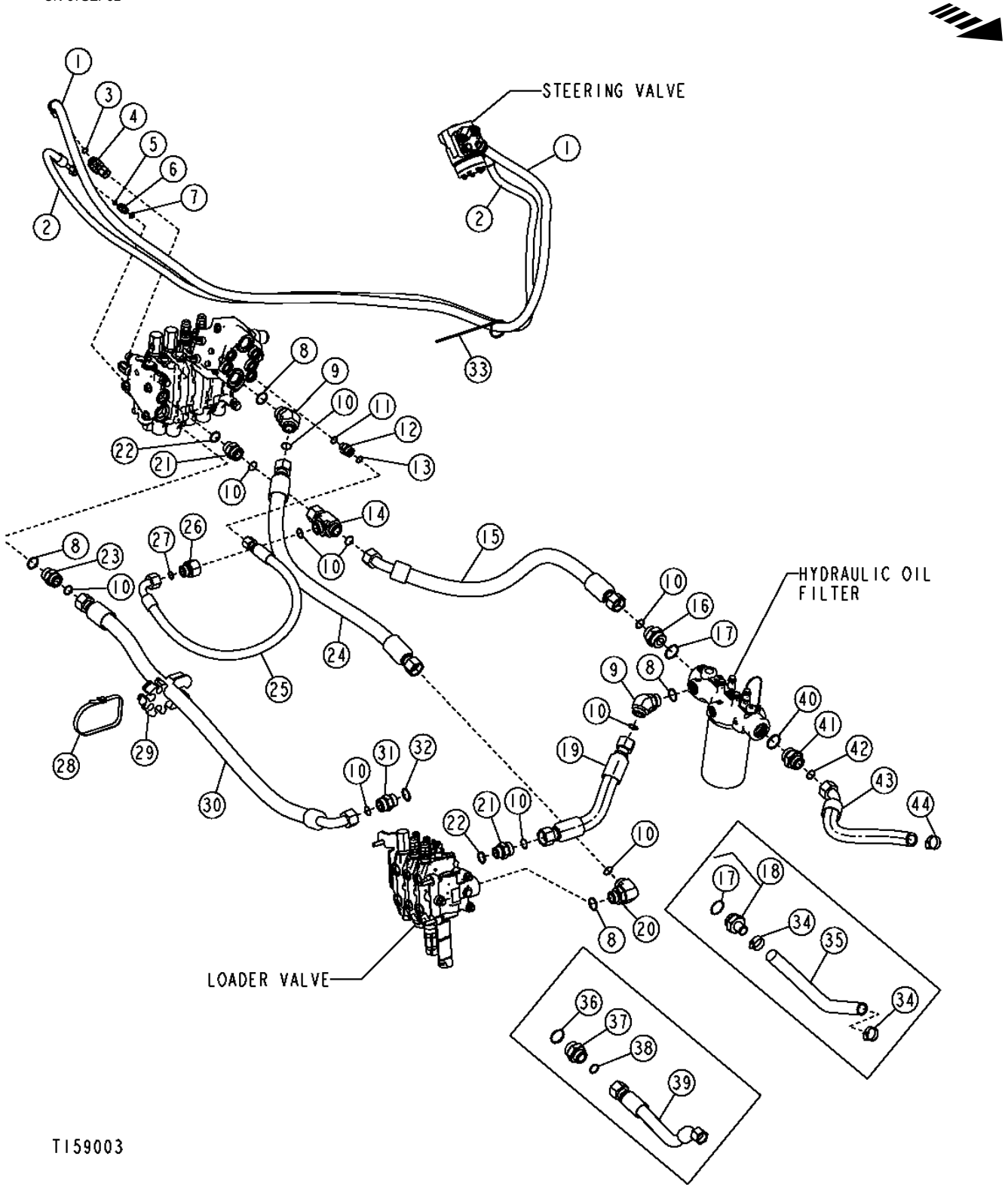

MAIN HYDRAULIC SYSTEM
(SERIAL NO. -913416)

KEY	PART NO.	PART NAME	QTY	SERIAL NO.	310G	310SG	315SG	REMARKS
1	AT184952	HYDRAULIC HOSE - FABRICATE	1		X	X	X	(ALSO ORDER 62H1043 AND T77857)
	62H1043	ADAPTER FITTING	1		X	X	X	STC
2	AT184951	HYDRAULIC HOSE - FABRICATE	1		X	X	X	(ALSO ORDER 62H1042 AND T77613)
	62H1042	ADAPTER FITTING	1		X	X	X	STC
3	T77857	O-RING	1		X	X	X	
4	38H1095	ELBOW FITTING	1		X	X	X	
5	T77613	O-RING	1		X	X	X	
6	38H1160	ADAPTER FITTING	1		X	X	X	
7	R26448	O-RING	1		X	X	X	
8	R29936	O-RING	4		X	X	X	
9	38H1073	ELBOW FITTING	2		X			
	38H1049	ELBOW FITTING	2			X	X	
10	T77858	O-RING	6		X			
	T76938	O-RING	6			X	X	
11	R26375	O-RING	1		X	X	X	
12	38H1317	FITTING	1		X	X	X	
13	T77932	O-RING	1		X	X	X	
14	38H1033	TEE FITTING	1		X			
	38H1002	TEE FITTING	1			X		
	38H1002	TEE FITTING	AR				X	(NOT ILLUSTRATED)
15	AT191046	HYDRAULIC HOSE - FABRICATE	1		X			1-7/16" X 860 MM (33-3/4") X 1-3/16"
	AT190829	HYDRAULIC HOSE - FABRICATE	1			X		1-7/16" X 800 MM (31-1/2") X 1-7/16", WITH AUXILIARY HYDRAULICS
	AT186357	HYDRAULIC HOSE - FABRICATE	1			X		1-7/16" X 850 MM (33-1/2") X 1-7/16", WITHOUT AUXILIARY HYDRAULICS
	AT190829	HYDRAULIC HOSE - FABRICATE	1				X	1-7/16" X 800 MM (31-1/2") X 1-7/16", WITH AUXILIARY HYDRAULICS, (SUB FOR AT191236, THIS APPLICATION)
	AT190829	HYDRAULIC HOSE - FABRICATE	1				X	1-7/16" X 800 MM (31-1/2") X 1-7/16", WITHOUT AUXILIARY HYDRAULICS
16	38H1180	ADAPTER FITTING	1		X	X	X	
17	U13639	O-RING	1	-909422	X	X	X	
18	.....	ADAPTER FITTING	1	905529-909422	X	X	X	(AT198196 NO LONGER AVAILABLE) (SUB T191313, U13639, T76938, AT280598 AND AH105968)
19	AT186428	HYDRAULIC HOSE - FABRICATE	1		X			1-3/16" X 410 MM (16-1/4") X 1-3/16"
	AT199334	HYDRAULIC HOSE - FABRICATE	1			X	X	1-7/16" X 400 MM (15-3/4") X 1-7/16", (SUB FOR AT186358)
20	38H1052	ELBOW FITTING	1		X			
	38H1037	ELBOW FITTING	1			X	X	
21	38H1343	ADAPTER FITTING	2		X			
	38H1346	ADAPTER FITTING	2			X	X	
22	U17409	O-RING	2		X	X	X	
23	38H1194	ADAPTER FITTING	1		X			
	38H1164	ADAPTER FITTING	1			X	X	
24	AT186427	HYDRAULIC HOSE - FABRICATE	1		X			1-3/16" X 975 MM (38-1/2") X 1-3/16"
	AT185609	HYDRAULIC HOSE - FABRICATE	1			X	X	1-7/16" X 985 MM (38-3/4") X 1-7/16"
25	AT186359	HYDRAULIC HOSE - FABRICATE	1		X	X		1" X 860 MM (33-3/4") X 1-3/16"
	AT191237	HYDRAULIC HOSE - FABRICATE	1				X	1" X 565 MM (22-1/4") X 1", (NOT ILLUSTRATED)

THIS PARTS LISTING IS CONTINUED

MAIN HYDRAULIC SYSTEM
(SERIAL NO. -913416)

T159003 -UN-07SEP02

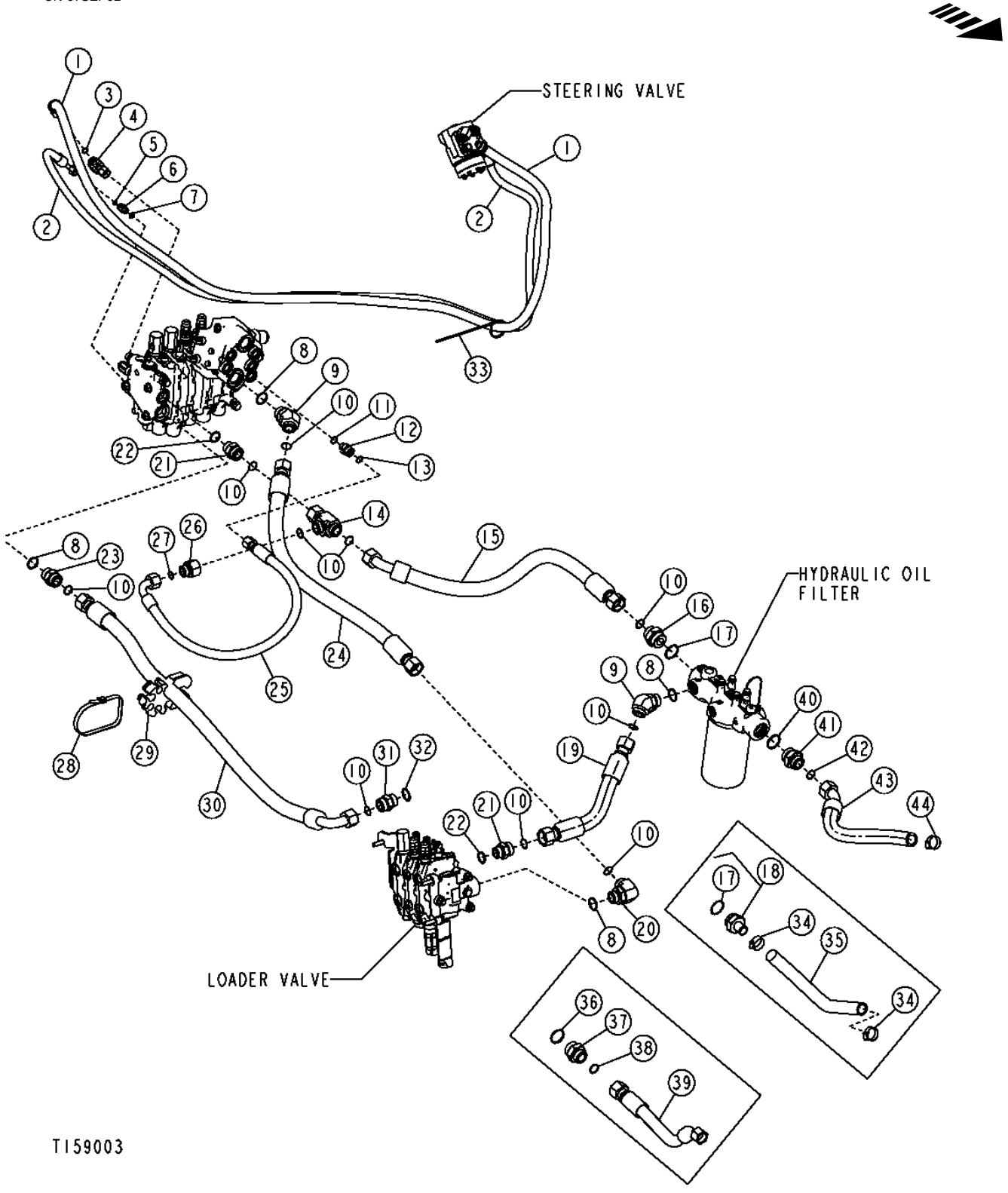

MAIN HYDRAULIC SYSTEM
(SERIAL NO. -913416)

KEY	PART NO.	PART NAME	QTY	SERIAL NO.	310G	310SG	315SG	REMARKS
26	38H1483	REDUCER	1		X	X		
	38H1476	REDUCER	2				X	(NOT ILLUSTRATED)
27	T77858	O-RING	1		X	X		
	T77932	O-RING	1				X	(NOT ILLUSTRATED)
28	N189220	TIE BAND	1		X	X	X	
29	T167142	HOSE CLAMP	1		X			GATHERING CLAMP
	T165940	HOSE CLAMP	1	-911132		X	X	GATHERING CLAMP, (SUB FOR T165940)
	T190669	HOSE CLAMP	1	911133-		X	X	
30	AT187709	HYDRAULIC HOSE - FABRICATE	1		X			1-3/16" X 1 281 MM (50-1/2") X 1-3/16"
	AT185586	HYDRAULIC HOSE - FABRICATE	1			X	X	1-7/16" X 1 305 MM (51-1/2") X 1-7/16"
31	38H1163	ADAPTER FITTING	1		X			
	38H1164	ADAPTER FITTING	1			X	X	
32	U12547	O-RING	1		X			
	R29936	O-RING	1			X	X	
33	H77698	TIE BAND	1		X	X	X	
34	AH105968	HOSE CLAMP	2	905529-909422	X	X	X	
35	T139131	HOSE	1	905529-909422	X	X	X	660MM
36	U13639	O-RING	1	-905528	X	X	X	
37	38H1180	ADAPTER FITTING	1	-905528	X	X	X	
38	T76938	O-RING	1	-905528	X	X	X	
39	AT190561	HYDRAULIC HOSE - FABRICATE	1	-905528	X	X	X	1-7/16" X 615 MM (24-1/4") X 1-3/16"
40	U13639	O-RING	1	909423-	X	X	X	
41	T191313	ORIFICE	1	909423-	X	X	X	
42	T76938	O-RING	1	909423-	X	X	X	
43	AT280598	HYDRAULIC HOSE - FABRICATE	1	909423-	X	X	X	
44	AH105968	HOSE CLAMP	1	909423-	X	X	X	

MAIN HYDRAULIC SYSTEM
(SERIAL NO. 913417-)

T196733 -UN-03DEC03

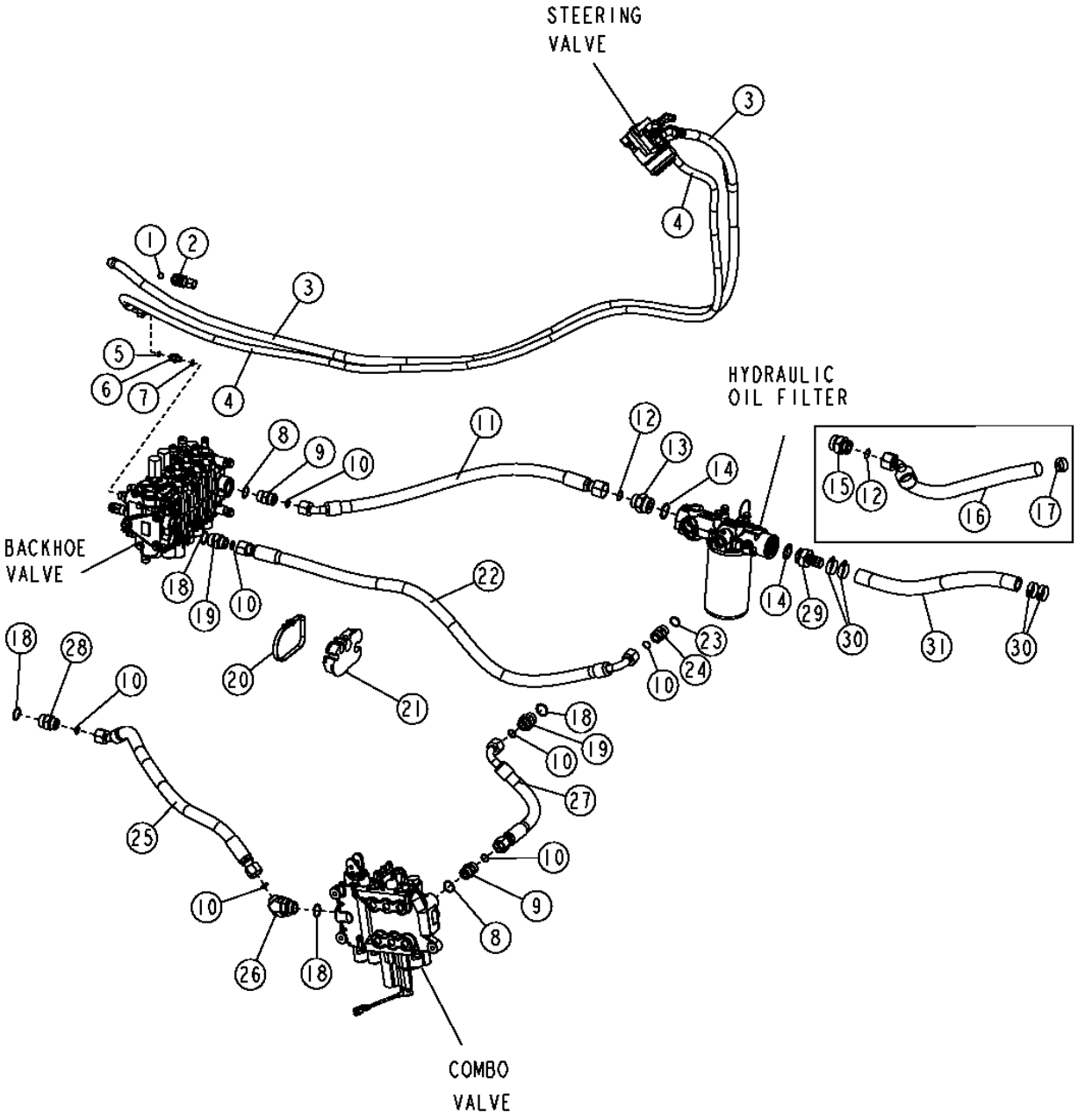

MAIN HYDRAULIC SYSTEM
(SERIAL NO. 913417-)

KEY	PART NO.	PART NAME	QTY	SERIAL NO.	310G	310SG	315SG	REMARKS
1	T77857	O-RING	1		X	X	X	
2	38H1095	ELBOW FITTING	1		X	X	X	
3	AT184952	HYDRAULIC HOSE - FABRICATE	1		X	X	X	
4	AT184951	HYDRAULIC HOSE - FABRICATE	1		X	X	X	
5	T77613	O-RING	1		X	X	X	
6	38H1160	ADAPTER FITTING	1		X	X	X	
7	R26448	O-RING	1		X	X	X	
8	U17409	O-RING	2		X	X	X	
9	38H1343	ADAPTER FITTING	2		X			
	38H1346	ADAPTER FITTING	2			X	X	
10	T77858	O-RING	7		X			
	T76938	O-RING	7			X	X	
11	AT190762	HYDRAULIC HOSE - FABRICATE	1		X			1-3/16" X 710 MM (28") X 1-7/16", WITH AUXILIARY HYDRAULICS
	AT196400	HYDRAULIC HOSE - FABRICATE	1		X			1" X 953 MM (37-1/2") X 13/16", WITHOUT AUXILIARY HYDRAULICS
	AT300759	HYDRAULIC HOSE - FABRICATE	1			X	X	1-7/16" X 870 MM (34-1/4") X 1-7/16", WITH AUXILIARY HYDRAULICS
	AT196320	HYDRAULIC HOSE - FABRICATE	1			X	X	1" X 965 MM (38") X 1", WITHOUT AUXILIARY HYDRAULICS
12	T76938	O-RING	2		X	X	X	
13	38H1180	ADAPTER FITTING	1		X	X	X	
14	U13639	O-RING	2		X	X	X	
15	T191313	ORIFICE	1	-909422	X	X	X	
16	AT280598	HYDRAULIC HOSE - FABRICATE	1	-909422	X	X	X	
17	AH105968	HOSE CLAMP	1	-909422	X	X	X	
18	R29936	O-RING	1		X	X	X	
19	38H1194	ADAPTER FITTING	2		X			
	38H1164	ADAPTER FITTING	2			X	X	
20	N189220	TIE BAND	1		X	X	X	
21	T167142	HOSE CLAMP	1		X			
	T190669	HOSE CLAMP	1		X			(WITH PILOT CONTROLS
	T190669	HOSE CLAMP	1			X	X	
22	AT303066	HYDRAULIC HOSE - FABRICATE	1		X			1-3/16" X 1 295 MM (51") X 1-3/16", (SUB FOR AT196399, THIS APPLICATION)
	AT303065	HYDRAULIC HOSE - FABRICATE	1			X	X	1-7/16" X 1 295 MM (51") X 1-7/16", (SUB FOR AT196318, THIS APPLICATION)
23	U12547	O-RING	1		X			
	R29936	O-RING	1			X	X	
24	38H1163	ADAPTER FITTING	1		X			(SUB FOR 38H1007, THIS APPLICATION)
	38H1164	ADAPTER FITTING	1			X	X	(SUB FOR 38H1037, THIS APPLICATION)
25	AT196397	HYDRAULIC HOSE - FABRICATE	1		X			13/16" X 864 MM (34") X 13/16"
	AT318647	HYDRAULIC HOSE - FABRICATE	1		X			1-3/16" X 826 MM (32-1/2") X 1-7/16", (PILOT CONTROL)
	AT196319	HYDRAULIC HOSE - FABRICATE	1			X	X	1" X 826 MM (32-1/2") X 1"
26	38H1073	ELBOW FITTING	1		X			
	38H1049	ELBOW FITTING	1			X	X	
27	AT196398	HYDRAULIC HOSE - FABRICATE	1		X			13/16" X 495 MM (19-1/2") X 13/16"
	AT196321	HYDRAULIC HOSE - FABRICATE	1			X	X	1" X 495 MM (19-1/2") X 1"
28	38H1194	ADAPTER FITTING	1		X			
	38H1216	ADAPTER FITTING	1		X			(PILOT CONTROL)
	38H1216	ADAPTER FITTING	1			X	X	
29	T208467	FITTING	1	909423-	X	X	X	(SUB FOR T204992)
30	AT300153	HOSE CLAMP	4	909423-	X	X	X	
31	TY22556	HOSE	1	909423-	X	X	X	(CUT TO 2.25 FT.)

MAIN HYDRAULIC SYSTEM

T192803 -UN-23JUL03

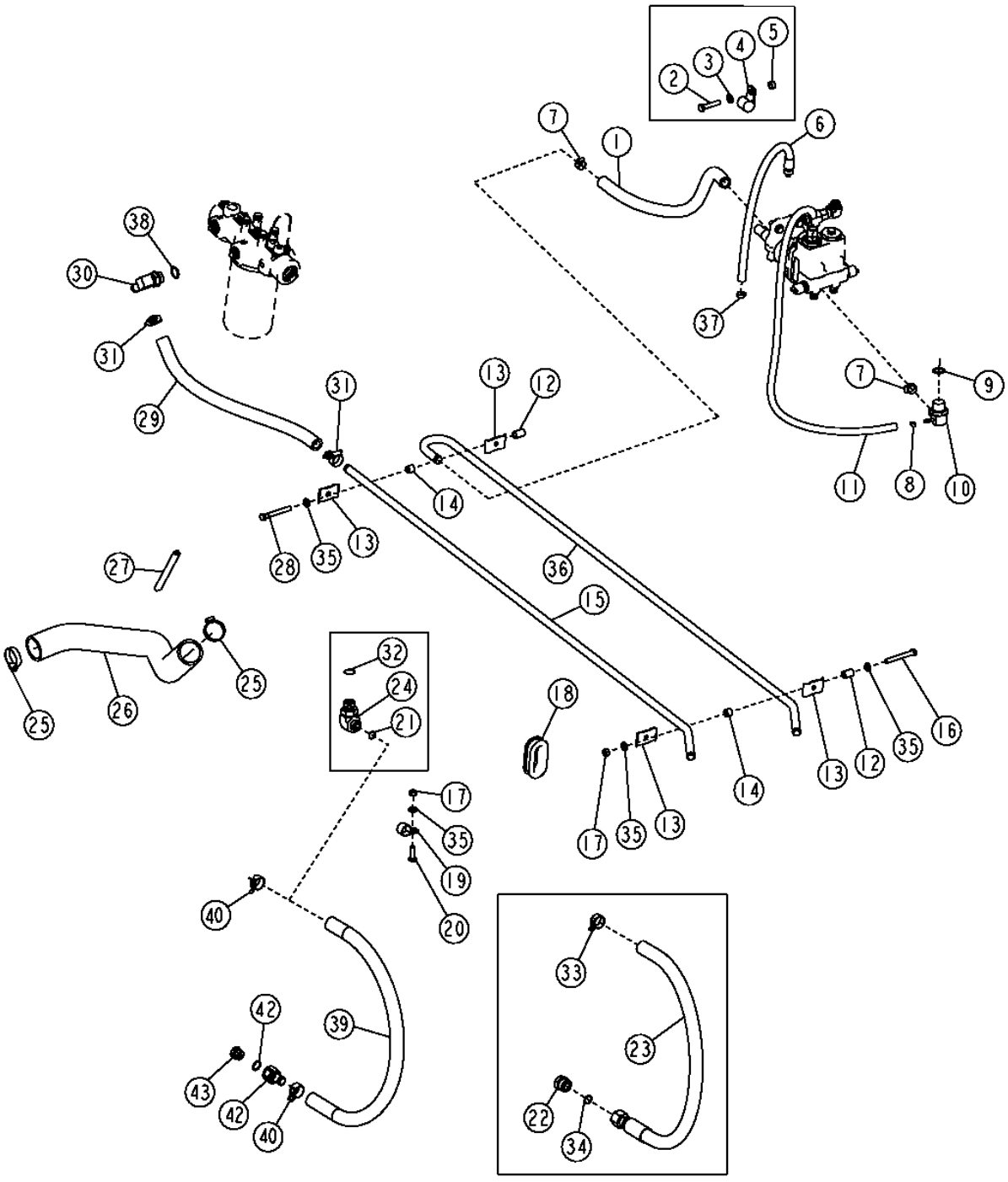

T192803

MAIN HYDRAULIC SYSTEM

KEY	PART NO.	PART NAME	QTY	SERIAL NO.	310G	310SG	315SG	REMARKS
1	.....	HOSE	1		X	X	X	(MAKE FROM T78497, CUT TO 322MM LENGTH)
2	19M8600	CAP SCREW	2	-902890	X	X	X	M10 X 50
3	24M7239	WASHER	2	-902890	X	X	X	
4	R46667	CLAMP	2	-902890	X	X	X	
5	28H3412	WASHER	2	-902890	X	X	X	
6	AT185078	HYDRAULIC HOSE - FABRICATE	1	-911132	X	X	X	(ALSO ORDER 62H1042 AND T77613)
	AT101779	HYDRAULIC HOSE - FABRICATE	1	911133-	X	X	X	STC
7	AT301917	HOSE CLAMP	2		X	X	X	(SUB FOR RE65978)
8	TY22462	CLAMP	1		X	X	X	(SUB FOR AR48236)
9	U12547	O-RING	1	-911132	X	X	X	
10	AT187779	TEE FITTING	1	-911132	X	X	X	
11	AT185077	HYDRAULIC HOSE - FABRICATE	1	-911132	X	X	X	(ALSO ORDER 62H1042 AND T77613)
	AT280598	HYDRAULIC HOSE - FABRICATE	1	911133-	X	X	X	STC
	62H1042	ADAPTER FITTING	1	-911132	X	X	X	
12	H141836	BUSHING	2		X	X	X	
13	R46919	HALF CLAMP	4		X	X	X	
14	T126052	SPACER	2		X	X	X	
15	T183913	OIL TUBE	1		X	X	X	UPPER
16	19M8081	CAP SCREW	1		X	X	X	M10 X 80
17	14M7274	NUT	2		X	X	X	M10
18	T158476	GROMMET	1		X	X	X	
19	T102934	CLAMP	1		X	X	X	
20	19M7662	CAP SCREW	1		X	X	X	M10 X 30
21	T77932	O-RING	1	-902890	X	X	X	
22	38H1148	FITTING PLUG	1	-902890	X	X	X	
	38H1149	FITTING PLUG	1	902891-923038	X	X	X	
23	AT191884	HYDRAULIC HOSE - FABRICATE	1	-902890	X	X	X	
	AT196814	HYDRAULIC HOSE - FABRICATE	1	902891-923038	X	X	X	
24	38H1404	ELBOW FITTING	1	-902890	X	X	X	
25	AT308555	HOSE CLAMP	2		X	X	X	(SUB FOR AR65294)
26	AT186170	SUCTION HOSE	1		X	X	X	
27	.....	MOLDING	1	-902890	X	X	X	(MAKE FROM T61861, CUT TO LENGTH)
28	19M8081	CAP SCREW	1		X	X	X	M10 X 80
29	.....	HOSE	1		X	X	X	(MAKE FROM T78497, CUT TO 622MM LENGTH)
30	AH61472	HOSE FITTING	1		X	X	X	
31	AT301917	HOSE CLAMP	4		X	X	X	(SUB FOR RE65978 AND AT196496)
32	U12547	O-RING	1	-902890	X	X	X	
33	T185826	CLAMP	1	902891-923038	X	X	X	
34	T77932	O-RING	1	-902890	X	X	X	
	T77858	O-RING	1	902891-923038	X	X	X	
35	24M7239	WASHER	4		X	X	X	
36	.....	OIL TUBE	1	-902890	X	X	X	LOWER, (SUB T188573)
	T188573	OIL TUBE	1	902891-	X	X	X	LOWER
37	AR77962	HOSE CLAMP	1	-911132	X	X	X	
38	U12547	O-RING	1		X	X	X	
39	.....	BULK HOSE	1	923039-	X	X	X	(FURNISH T78497, CUT TO 32 IN.) (SUB FOR T203949)
40	T185826	CLAMP	2	923039-	X	X	X	
41	T190892	HOSE FITTING	1	923039-	X	X	X	
42	R26906	O-RING	1	923039-	X	X	X	
43	R27474	DRAIN PLUG	1	923039-	X	X	X	

MAIN HYDRAULIC SYSTEM RESERVOIR

T146344 -UN-01FEB02

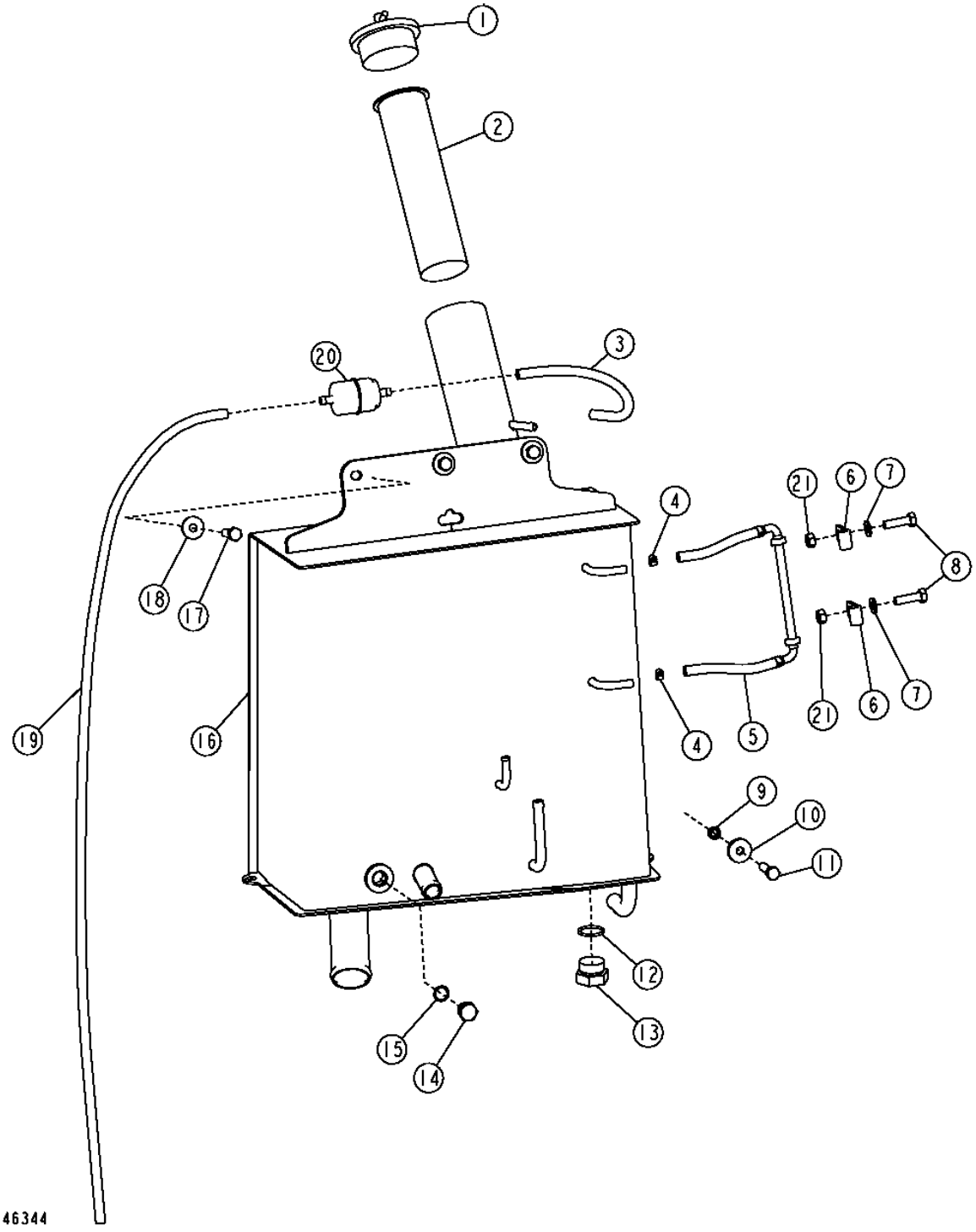

MAIN HYDRAULIC SYSTEM RESERVOIR

KEY	PART NO.	PART NAME	QTY	SERIAL NO.	310G	315SG	REMARKS
1	AT174743	FILLER CAP	1		X	X	
2	AT161638	STRAINER	1		X	X	(SERVICE ONLY)
3	.....	HOSE	1		X	X	MAKE FROM M87571, BULK MATERIAL CUT TO LENGTH)
4	AR77962	HOSE CLAMP	2		X	X	
5	AT199541	LEVEL GAUGE	1		X	X	
6	T185683	CLIP	2		X	X	
7	24M7239	WASHER	2		X	X	
8	19M7662	CAP SCREW	2		X	X	M10 X 30
9	T184657	SPACER	1		X	X	
10	24H1311	WASHER	1		X	X	
11	19M8637	CAP SCREW	1		X	X	M10 X 40
12	R29936	O-RING	1	-913416	X	X	
	R26375	O-RING	1	913417-	X	X	
13	R36636	FITTING PLUG	1	-913416	X	X	
	R39112	FITTING	1	913417-	X	X	
14	R39112	FITTING	1		X	X	
15	R26375	O-RING	1		X	X	
16	AT184082	HYDRAULIC RESERVOIR	1	-905457	X	X	
	AT196813	HYDRAULIC RESERVOIR	1	905458-911132	X	X	
	AT280396	HYDRAULIC RESERVOIR	1	911133-913416	X	X	
	.....	HYDRAULIC RESERVOIR	1	913417-909422	X	X	(AT197542 NO LONGER AVAILABLE) (SUB AT305766) (ALSO ORDER T208467, (4) AT300153 AND TY22556)
	AT305766	HYDRAULIC RESERVOIR	1	909423-	X	X	
17	19M8637	CAP SCREW	3		X	X	M10 X 40
18	24M7296	WASHER	3		X	X	
19	.....	HOSE	1		X	X	(MAKE FROM M87571, BULK MATERIAL CUT TO LENGTH)
20	AT101565	AIR FILTER	1		X	X	BREATHER (INSTALL WITH FLOW ARROW POINTING TOWARD RESERVOIR)
21	14M7274	NUT	2		X	X	M10

HYDRAULIC OIL FILTER

T203720 -UN-03NOV04

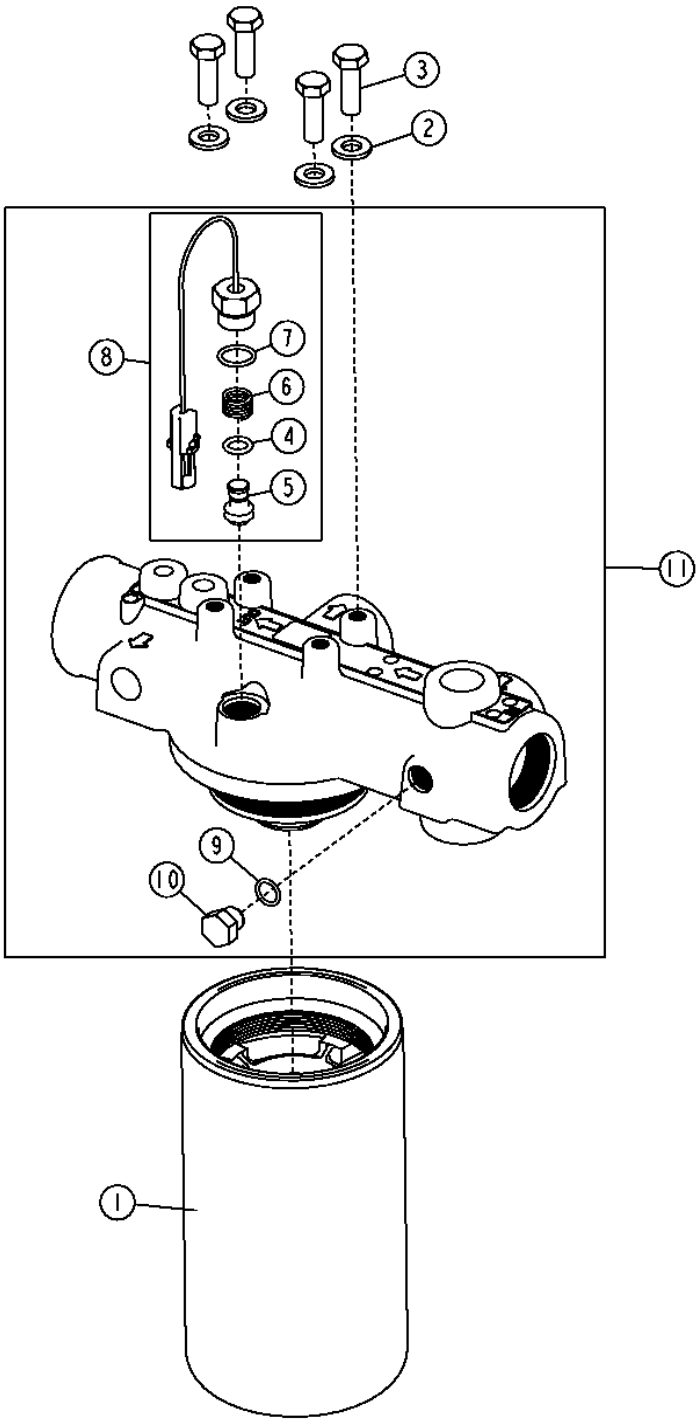

T203720

HYDRAULIC OIL FILTER

KEY	PART NO.	PART NAME	QTY	SERIAL NO.	310G	315SG	REMARKS
1	AT308274	OIL FILTER	1		X	X X	(SUB FOR AT189924, AT195915 AND AT228474)
2	24M7239	WASHER	4		X	X X	
3	19M7662	CAP SCREW	4	-951097	X	X X	M10 X 30
	19M7402	CAP SCREW	4	951098-	X	X X	M10 X 25
4	T186154	O-RING	1		X	X X	
5	.....	PISTON	1		X	X X	
6	.....	SPRING	1		X	X X	
7	R26375	O-RING	1		X	X X	
8	AT192373	KIT	1		X	X X	
9	R26448	O-RING	1		X	X X	
10	R27218	FITTING PLUG	1		X	X X	
11	AT192374	FILTER HEAD	1		X	X X	

HYDRAULIC OIL COOLER AND HOSES
(310G)
WITHOUT FLOW CONTROL

T161947 -UN-22NOV02

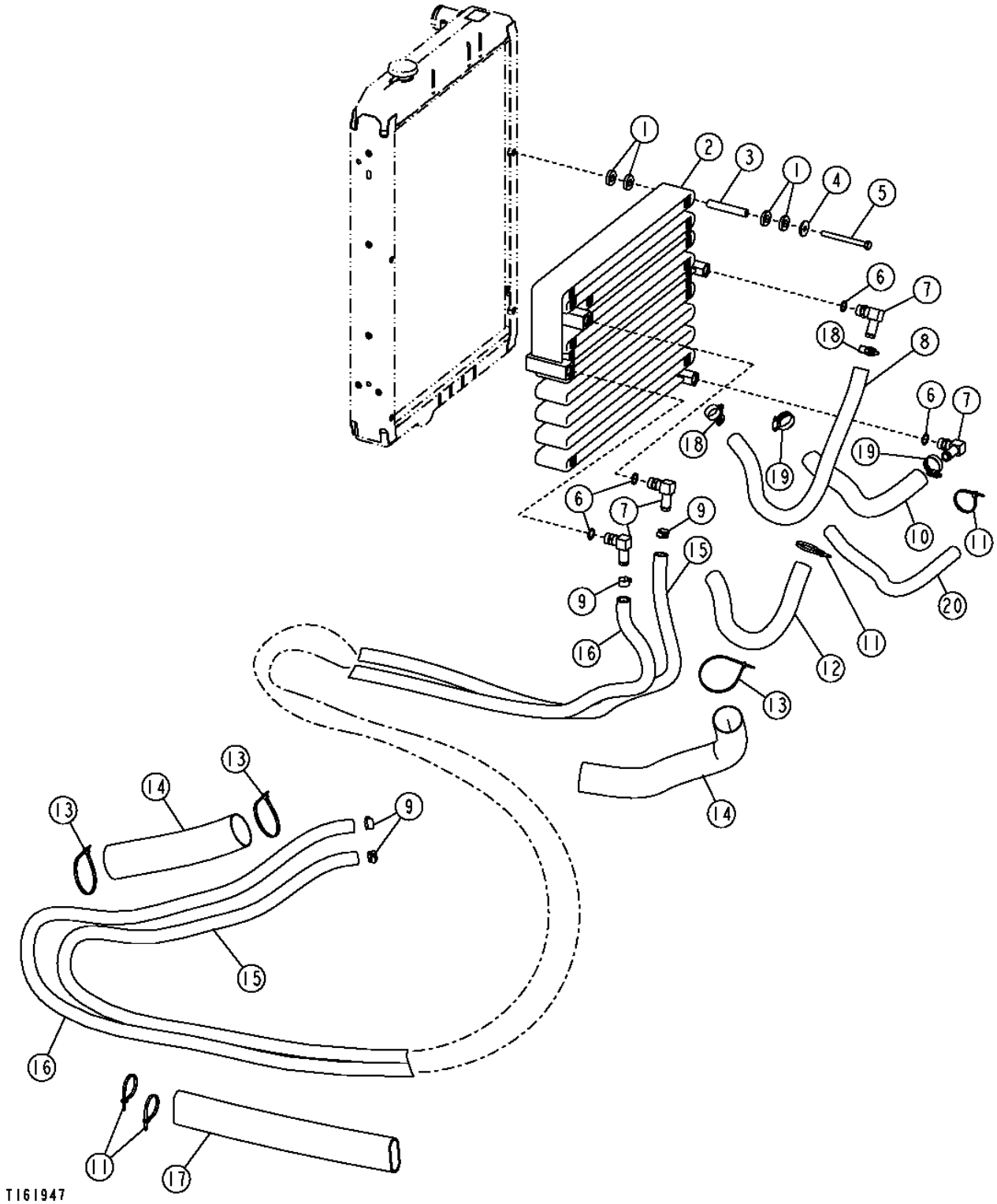

HYDRAULIC OIL COOLER AND HOSES
(310G)
WITHOUT FLOW CONTROL

KEY	PART NO.	PART NAME	QTY	SERIAL NO.	310G	310SG	315SG	REMARKS
1	T158424	WASHER	16		X			RUBBER
2	AT187869	OIL COOLER	1		X			
3	B28851	SPACER	4		X			
4	24M7101	WASHER	4		X			
5	19M8166	CAP SCREW	4		X			M10 X 110
6	R26906	O-RING	4		X			
7	AH64349	HOSE FITTING	4		X			
8	.....	HYDRAULIC HOSE	1		X			(MAKE FROM T78497, CUT TO 2.75 FT.)
9	AT301917	HOSE CLAMP	4		X			(SUB FOR RE65978)
10	T191469	HOSE	1		X			(CUT TO 2.7 FT.)
11	R44302	TIE BAND	4		X			
12	T185189	HOSE GUARD	1		X			
13	N198516	TIE BAND	3		X			
14	T161463	SLEEVE	2		X			
15	.....	HYDRAULIC HOSE	1		X			(MAKE FROM T78497, CUT TO 10.83 FT.)
16	.....	HYDRAULIC HOSE	1		X			(MAKE FROM T78497, CUT TO 10.66 FT.)
17	.....	HOSE SLEEVE - FABRICATE	2		X			(CUT FROM T78606 TO 254MM) (SUB FOR T161464)
18	AT301917	HOSE CLAMP	4		X			(SUB FOR AT196496)
19	AT300153	HOSE CLAMP	2		X			(SUB FOR RE65978, THIS APPLICATION) (SUB FOR AT304913)
20	T161463	SLEEVE	1		X			(SUB FOR T185189, THIS APPLICATION)

**HYDRAULIC OIL COOLER AND HOSES
(310G) WITH FACTORY FLOW CONTROL
(310SG, 315SG) STANDARD EQUIPMENT**

T146574 -UN-11OCT01

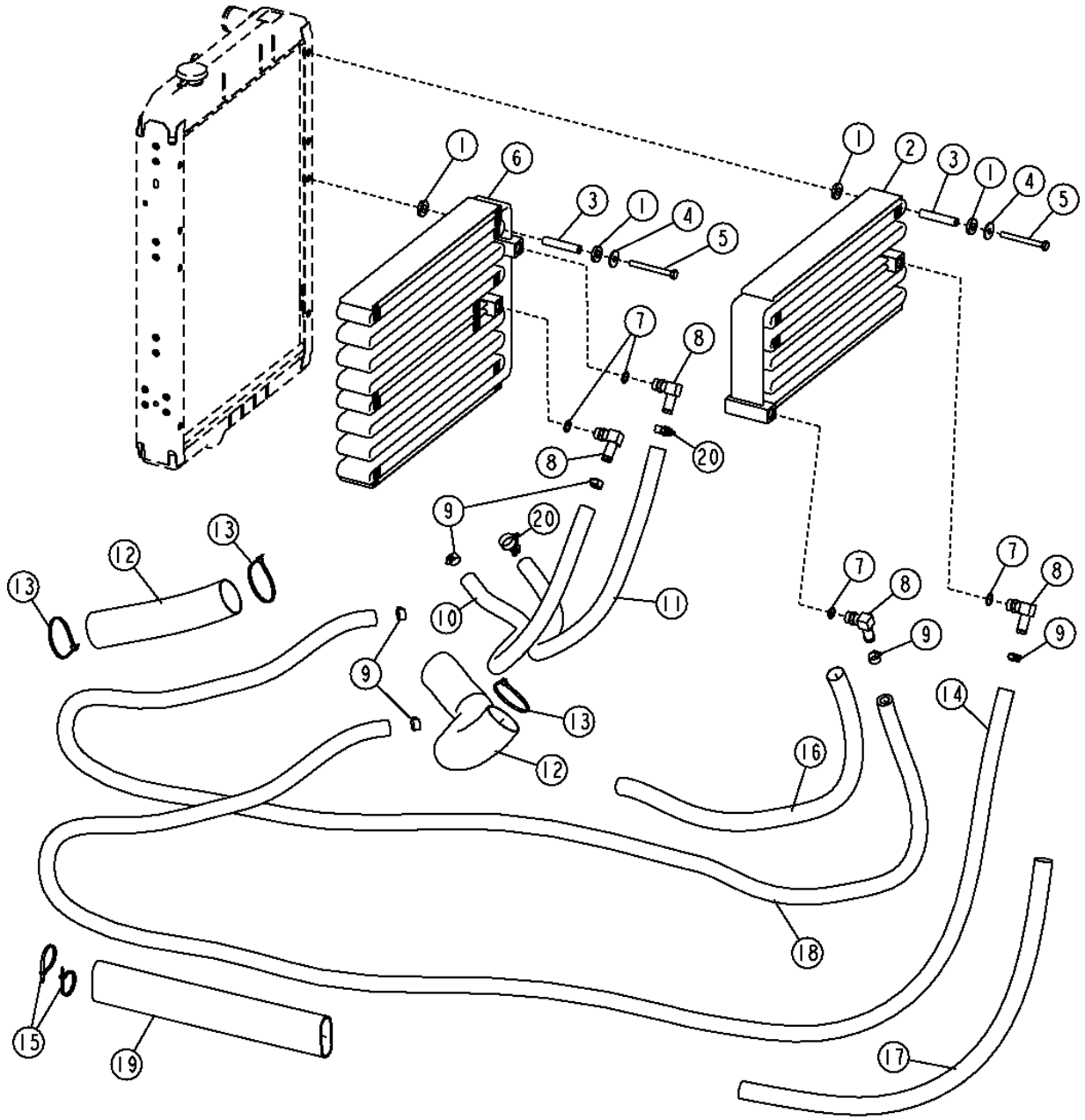

**HYDRAULIC OIL COOLER AND HOSES
(310G) WITH FACTORY FLOW CONTROL
(310SG, 315SG) STANDARD EQUIPMENT**

KEY	PART NO.	PART NAME	QTY	SERIAL NO.	310G	310SG	315SG	REMARKS
1	T158424	WASHER	16		X	X	X	RUBBER
2	AT178693	OIL COOLER	1		X	X	X	TRANSMISSION
3	N117290	SPACER	8		X	X	X	
4	24M7101	WASHER	8		X	X	X	
5	19M8093	CAP SCREW	8		X	X	X	M10 X 100
6	AT177204	OIL COOLER	1		X	X	X	HYDRAULIC
7	R26906	O-RING	4		X	X	X	
8	AH64349	HOSE FITTING	4		X	X	X	
9	AT301917	HOSE CLAMP	6		X	X	X	(SUB FOR RE65978)
10	.....	HYDRAULIC HOSE	1		X	X	X	(MAKE FROM T78497, CUT TO 2.5 FT.)
11	.....	HYDRAULIC HOSE	4		X	X	X	(MAKE FROM T78497, CUT TO 3 FT.)
12	T161463	SLEEVE	2		X	X	X	
13	N198516	TIE BAND	3		X	X	X	
14	.....	HYDRAULIC HOSE	1		X	X	X	(MAKE FROM T78497, CUT TO 11.7 FT.)
15	R44302	TIE BAND	2		X	X	X	
16	T185090	SLEEVE	1		X	X	X	CODURA
17	T185089	SLEEVE	1		X	X	X	CODURA
18	.....	HOSE	1		X	X	X	(MAKE FROM T78497, CUT TO 11.6 FT.)
19	.....	HOSE SLEEVE - FABRICATE	2		X	X	X	(CUT FROM T78606 TO 254MM) (SUB FOR T161464)
20	AT301917	HOSE CLAMP	4		X	X	X	(SUB FOR AT196496)

**HYDRAULIC OIL COOLER AND HOSES
(HI-AMBIENT)**

T146585 -UN-11OCT01

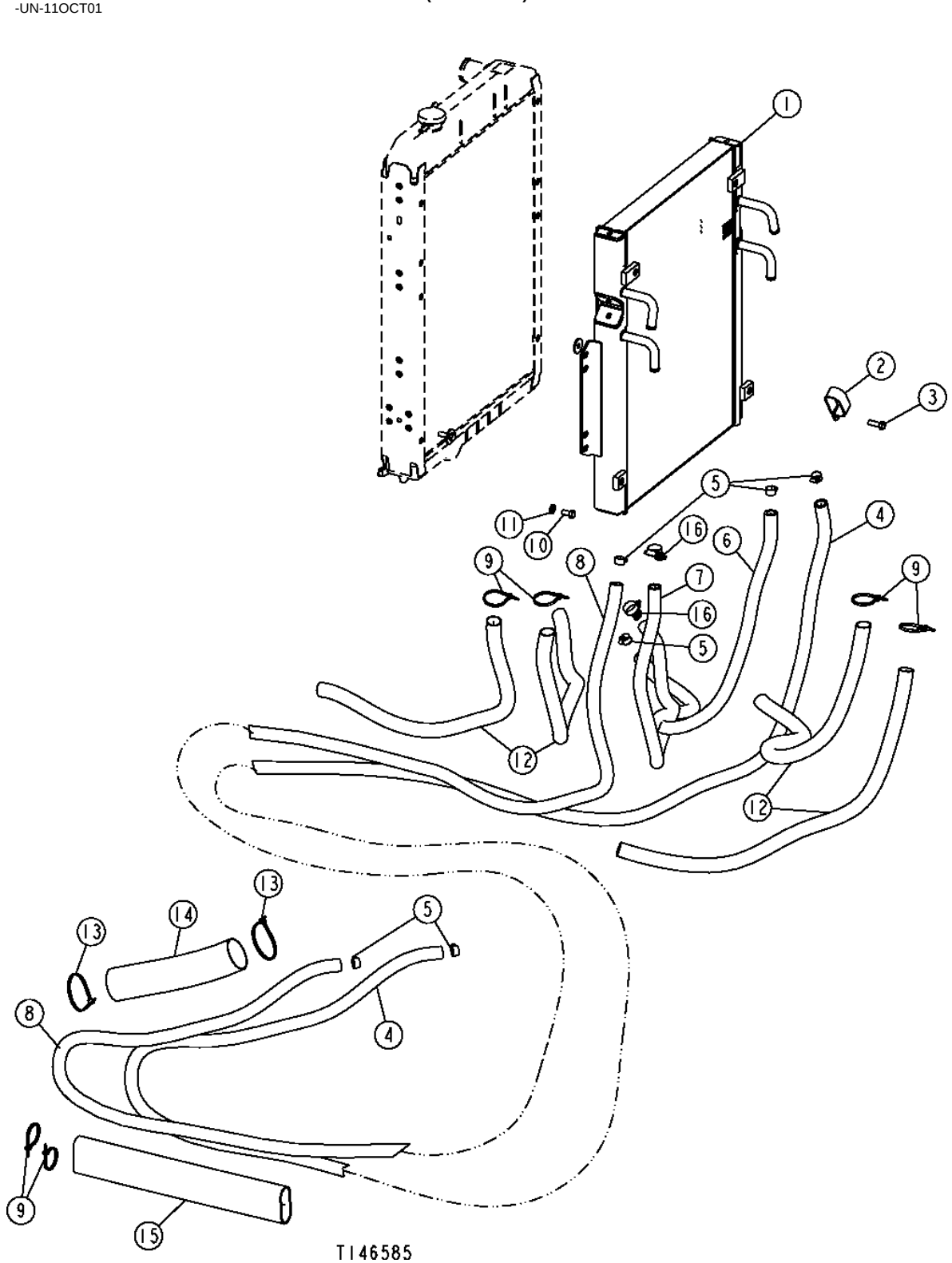

HYDRAULIC OIL COOLER AND HOSES
(HI-AMBIENT)

KEY	PART NO.	PART NAME	QTY	SERIAL NO.	310G	310SG	315SG	REMARKS
1	AT192656	OIL COOLER	1		X	X	X	(SUB FOR AT184519)
2	T185154	CLAMP	2		X	X	X	
3	19M7662	CAP SCREW	2		X	X	X	M10 X 30
4	.....	HYDRAULIC HOSE	1		X	X	X	(MAKE FROM T78497, CUT TO 11.88 FT.)
5	AT301917	HOSE CLAMP	6		X	X	X	(SUB FOR RE65978)
6	.....	HYDRAULIC HOSE	1		X	X	X	(MAKE FROM T78497, CUT TO 3.58 FT.)
7	.....	HYDRAULIC HOSE	1		X	X	X	(MAKE FROM T78497, CUT TO 3.75 FT.)
8	.....	HYDRAULIC HOSE	1		X	X	X	(MAKE FROM T78497, CUT TO 11.4 FT.)
9	R44302	TIE BAND	6		X	X	X	
10	19M7402	CAP SCREW	4		X	X	X	M10 X 25
11	24M7239	WASHER	4		X	X	X	
12	T185089	SLEEVE	4		X	X	X	
13	N198516	TIE BAND	2		X	X	X	
14	T161463	SLEEVE	1		X	X	X	
15	.....	HOSE SLEEVE - FABRICATE	2		X	X	X	(CUT FROM T78606 TO 254MM) (SUB FOR T161464)
16	AT301917	HOSE CLAMP	4		X	X	X	(SUB FOR AT196496)

AUXILIARY HYDRAULIC OIL COOLER KIT
(310G)

TP69705 -UN-04OCT00

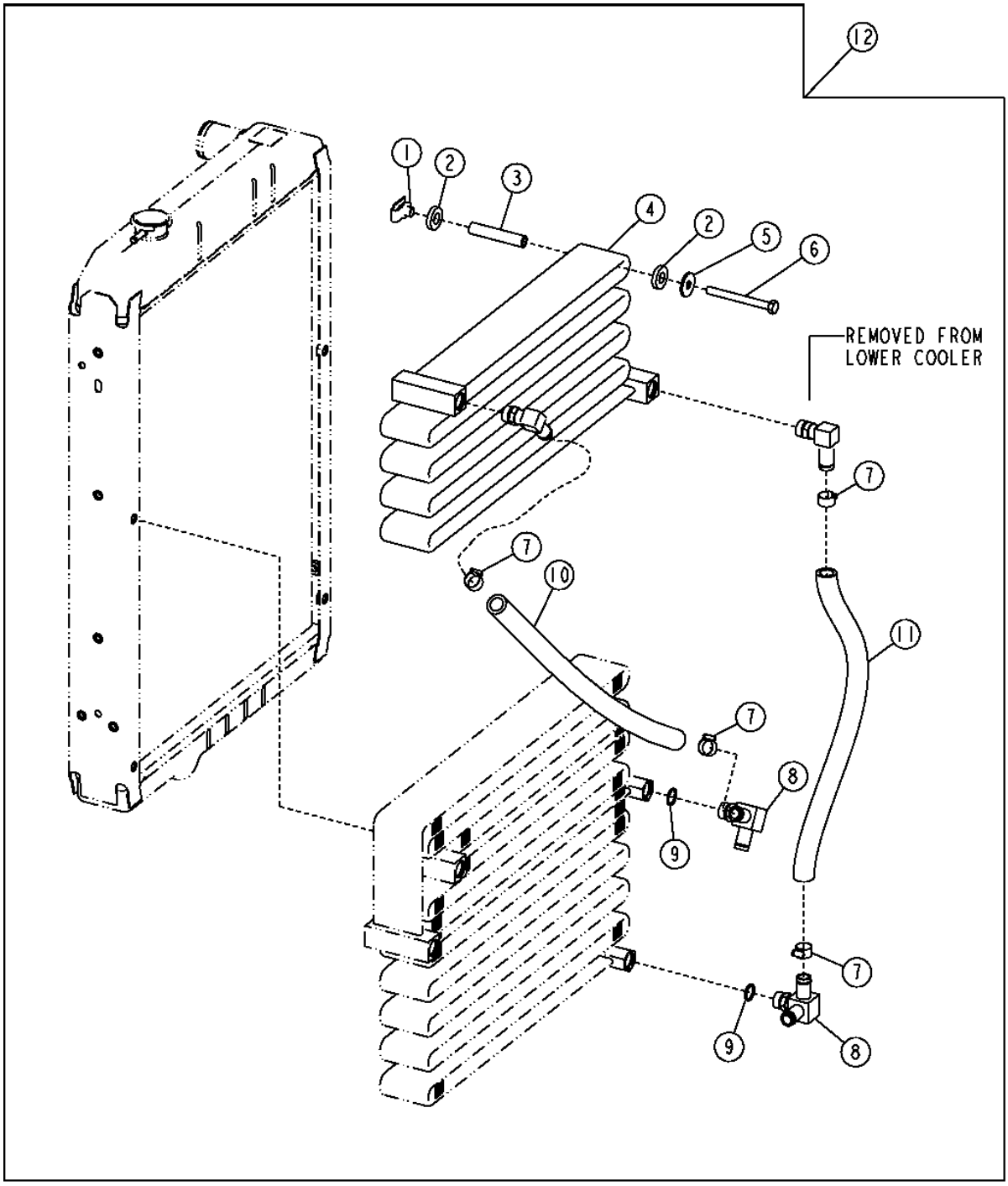

TP69705

AUXILIARY HYDRAULIC OIL COOLER KIT
(310G)

KEY	PART NO.	PART NAME	QTY	SERIAL NO.	310G	310SG	315SG	REMARKS
1	H146457	NUT	4		X			
2	T158424	WASHER	8		X			RUBBER
3	N117290	SPACER	4		X			
4	AT186929	OIL COOLER	1		X			
5	24M7101	WASHER	4		X			11 X 34 X 3 MM
6	19M8166	CAP SCREW	4		X			M10 X 110
7	AT301917	HOSE CLAMP	4		X			(SUB FOR RE65978)
8	AT190758	TEE FITTING	2		X			
9	R26906	O-RING	2		X			
10	T167328	HOSE	1		X			
11	T167328	HOSE	1		X			
12	AT191759	KIT	1		X			(WHOLE GOODS) AUXILIARY OIL COOLER

RIDE CONTROL
(SERIAL NO. -911132)

T141414 -UN-18APR01

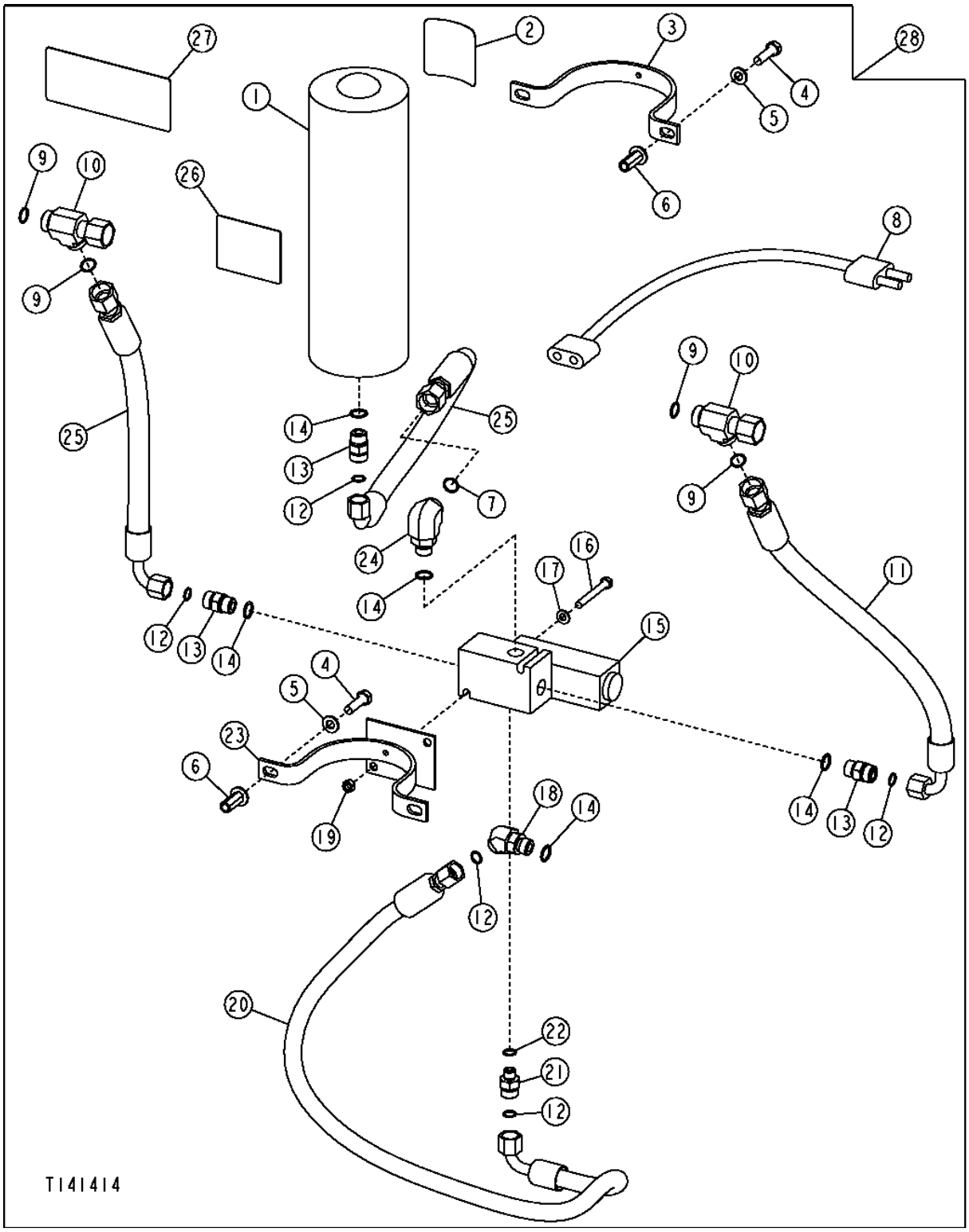

RIDE CONTROL
(SERIAL NO. -911132)

KEY	PART NO.	PART NAME	QTY	SERIAL NO.	310G	310SG	315SG	REMARKS
1	AT188819	PNEUMATIC ACCUMULATOR	1	-902361	X	X	X	
	AT196351	HYDRAULIC ACCUMULATOR	1	902362-	X	X	X	
	AT161527	SEAL KIT	1	-902361	X	X	X	(NOT ILLUSTRATED)
	AT161528	HYD ACTUATED CONTROL VALVE	1	-902361	X	X	X	(NOT ILLUSTRATED)
	T146481	CAP	1	-902361	X	X	X	(NOT ILLUSTRATED)
	AT196760	KIT	1	902362-	X	X	X	(NOT ILLUSTRATED) (SCHRADER VALVE SERVICE KIT)
2	T164124	LABEL	1		X	X	X	ENGLISH ACCUMULATOR WARNING
	.....	LABEL KIT	1		X	X	X	FRENCH LABEL KIT
	.....	LABEL KIT	1		X	X	X	SPANISH LABEL KIT
3	T166761	CLAMP	1		X	X	X	
4	19M7550	CAP SCREW	4		X	X	X	M10 X 35
5	24M7239	WASHER	4		X	X	X	
6	T148409	NUT	4		X	X	X	M10
7	T77932	O-RING	1		X	X	X	
8	AT183590	WIRING HARNESS	1		X	X	X	
9	T77932	O-RING	4		X	X	X	
10	38H1032	TEE FITTING	2		X	X	X	
11	AT186898	HYDRAULIC HOSE - FABRICATE	1		X	X	X	
12	T77857	O-RING	5		X	X	X	
13	38H1161	ADAPTER FITTING	3		X	X	X	
14	R26375	O-RING	5		X	X	X	
15	.....	SOLENOID HYDRAULIC VALVE	1		X	X	X	(SUB AT310818) (ALSO ORDER AT199646 AND (2) 19M7663) (SUB FOR AT191176, THIS APPLICATION) (SUB FOR AT198760)
	19H3070	SCREW	4		X	X	X	0.190" X 1-1/4"
	AT184161	ELECTRICAL COIL	1		X	X	X	
	N203255	NUT	1		X	X	X	
	AT172179	SEAL KIT	1		X	X	X	
16	19M8402	CAP SCREW	2		X	X	X	M8 X 65
17	24M7238	WASHER	2		X	X	X	
18	38H1046	ELBOW FITTING	1		X	X	X	
19	14M7273	NUT	2		X	X	X	M8
20	AT188401	HYDRAULIC HOSE - FABRICATE	1		X	X	X	
21	38H1173	ADAPTER FITTING	1		X	X	X	
22	R26448	O-RING	1		X	X	X	
23	AT189210	CLAMP	1		X	X	X	
24	38H1405	ELBOW FITTING	1		X	X	X	
25	AT186899	HYDRAULIC HOSE - FABRICATE	2		X	X	X	
26	T146792	SAFETY SIGN	1		X	X	X	HIGH PRESSURE OIL WARNING
27	T185145	LABEL	2		X	X	X	RIDE CONTROL
28	.....	KIT	1		X	X	X	(WHOLE GOODS) (AT185950 NO LONGER AVAILABLE) (INCLUDES AT193881, T162238 AND T70341) (SUB FOR AT280742) (SUB AT309385)

RIDE CONTROL
(SERIAL NO. 911133-)

T164160 -UN-17JAN03

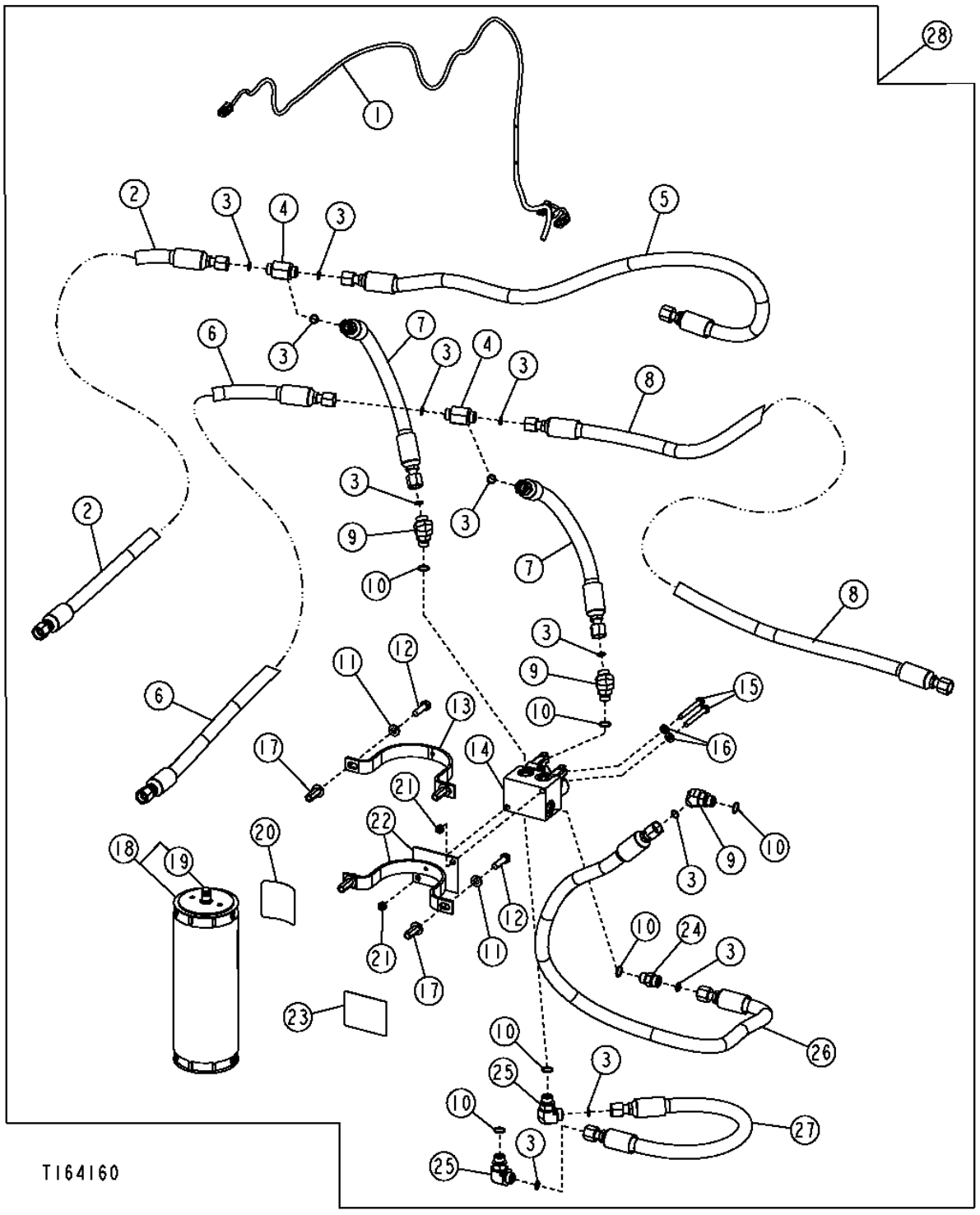

RIDE CONTROL
(SERIAL NO. 911133-)

KEY	PART NO.	PART NAME	QTY	SERIAL NO.	310G	315SG	REMARKS
1	AT199646	WIRING HARNESS	1		X	X	
2	AT199643	HYDRAULIC HOSE - FABRICATE	1		X	X	9/16" X 927 MM (36-1/2") X 9/16"
3	T77857	O-RING	12		X	X	
4	38H1032	TEE FITTING	2	-913416	X	X	
	38H1206	TEE FITTING	2	913417-	X	X	
5	AT199645	HYDRAULIC HOSE - FABRICATE	1		X	X	13/16" X 1 143 MM (45") X 13/16"
6	AT199642	HYDRAULIC HOSE - FABRICATE	1		X	X	13/16" X 889 MM (35") X 13/16"
7	AT280509	HYDRAULIC HOSE - FABRICATE	2	-913416	X	X	1" X 394 MM (15-1/2") X 13/16"
	AT199639	HYDRAULIC HOSE - FABRICATE	2	913417-	X	X	13/16" X 419 MM (16-1/2") X 13/16"
8	AT199644	HYDRAULIC HOSE - FABRICATE	1		X	X	13/16" X 1 499 MM (59") X 13/16"
9	38H1161	ADAPTER FITTING	2	-913416	X	X	(STRAIGHT FITTING)
	38H1046	ELBOW FITTING	2	913417-	X	X	(45 DEGREE FITTING)
10	R26375	O-RING	6		X	X	
11	24M7239	WASHER	4		X	X	
12	19M7550	CAP SCREW	4		X	X	
13	T166761	CLAMP	1		X	X	
14	AT310818	SOLENOID HYDRAULIC VALVE	1		X	X	(SUB FOR AT198760)
	AT280440	SOLENOID HYDRAULIC VALVE	2				CARTRIDGE
	AT280441	SOLENOID VALVE COIL	2				COIL
	E71998	BACK-UP RING	2				
	R28776	O-RING	2				
	R47151	O-RING	2				
	14M7477	NUT	2				M18
15	19M7663	CAP SCREW	2		X	X	
16	24M7238	WASHER	2		X	X	
17	T148409	NUT	4		X	X	
18	AT196351	HYDRAULIC ACCUMULATOR	1		X	X	
19	AT196760	KIT	1		X	X	
20	T164124	LABEL	1		X	X	
21	14M7273	NUT	2		X	X	
22	AT189210	CLAMP	1		X	X	
23	T146792	SAFETY SIGN	1		X	X	
24	38H1161	ADAPTER FITTING	1		X	X	
25	38H1005	ELBOW FITTING	2		X	X	
26	AT199641	HYDRAULIC HOSE - FABRICATE	1		X	X	13/16" X 1 168 MM (46") X 13/16"
27	AT199640	HYDRAULIC HOSE - FABRICATE	1		X	X	13/16" X 533 MM (21") X 13/16"
28	**AT309385**	**KIT**	**1**		**X**	**X**	**(USE FOR PRE AND POST COMBO VALVE) (INCLUDES AT300928, AT193881, AT184335 AND AT189174) (SUB FOR AT197238) (KIT INCLUDES HOSES)**

LOADER BUCKET AND CUTTING EDGE
.76 CUBIC METER (1.00 CUBIC YARD)
.90 CUBIC METER (1.20 CUBIC YARD)
.96 CUBIC METER (1.25 CUBIC YARD)

TP69675 -UN-10OCT00

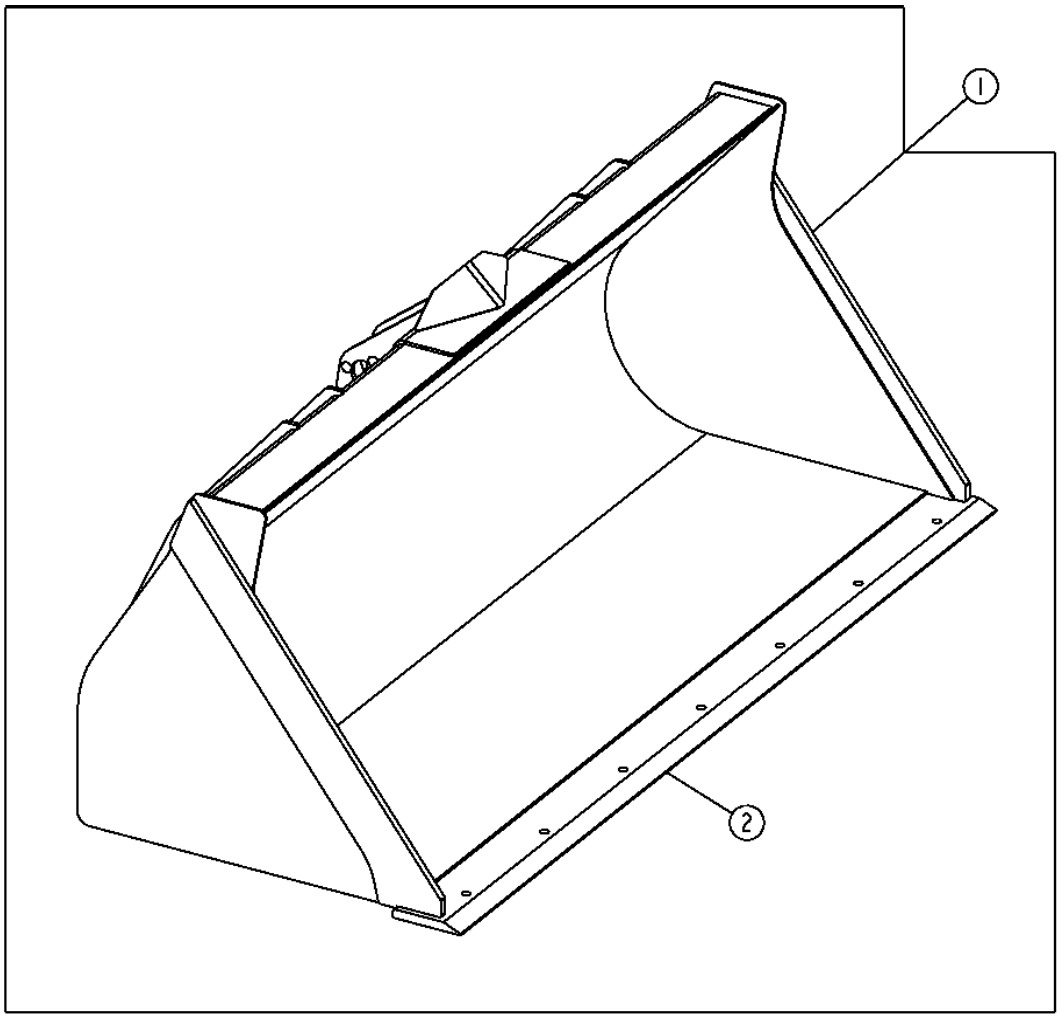

TP69675

LOADER BUCKET AND CUTTING EDGE
.76 CUBIC METER (1.00 CUBIC YARD)
.90 CUBIC METER (1.20 CUBIC YARD)
.96 CUBIC METER (1.25 CUBIC YARD)

KEY	PART NO.	PART NAME	QTY	SERIAL NO.	310G	310SG	315SG	REMARKS
1	**AT308040**	**LOADER BUCKET**	**1**		**X**			**.76 CUBIC METER (1.00 CUBIC YARD) (WHOLE GOODS) (MARKED AT308040) (USE WITH (2) T204908, (2) 14M7319 AND (2) 19M7949) (SUB FOR AT184738) (MARKED AT184738)**
	AT308188	**LOADER BUCKET**	**1**		**X**	**X**	**X**	**.90 CUBIC METER (1.20 CUBIC YARD) (WHOLE GOODS) (MARKED AT308188) (USE WITH (2) T204908, (2) 14M7319 AND (2) 19M7949) (SUB FOR AT185524) (MARKED AT185524)**
	AT308076	**LOADER BUCKET**	**1**	**941415-**	**X**	**X**	**X**	**.96 CUBIC METER (1.25 CUBIC YARD) (WHOLE GOODS) (MARKED AT308076) (USE WITH (2) T204908, (2) 14M7319 AND (2) 19M7949) (SUB FOR AT185522) (MARKED AT185522)**
2	T150487	CUTTING EDGE	1		X	X	X	(WELDED ON) SBF

LOADER BUCKET AND CUTTING EDGE
.86 CUBIC METER (1.13 CUBIC YARD)
1.00 CUBIC METER (1.30 CUBIC YARD)

TP58156 -UN-10OCT00

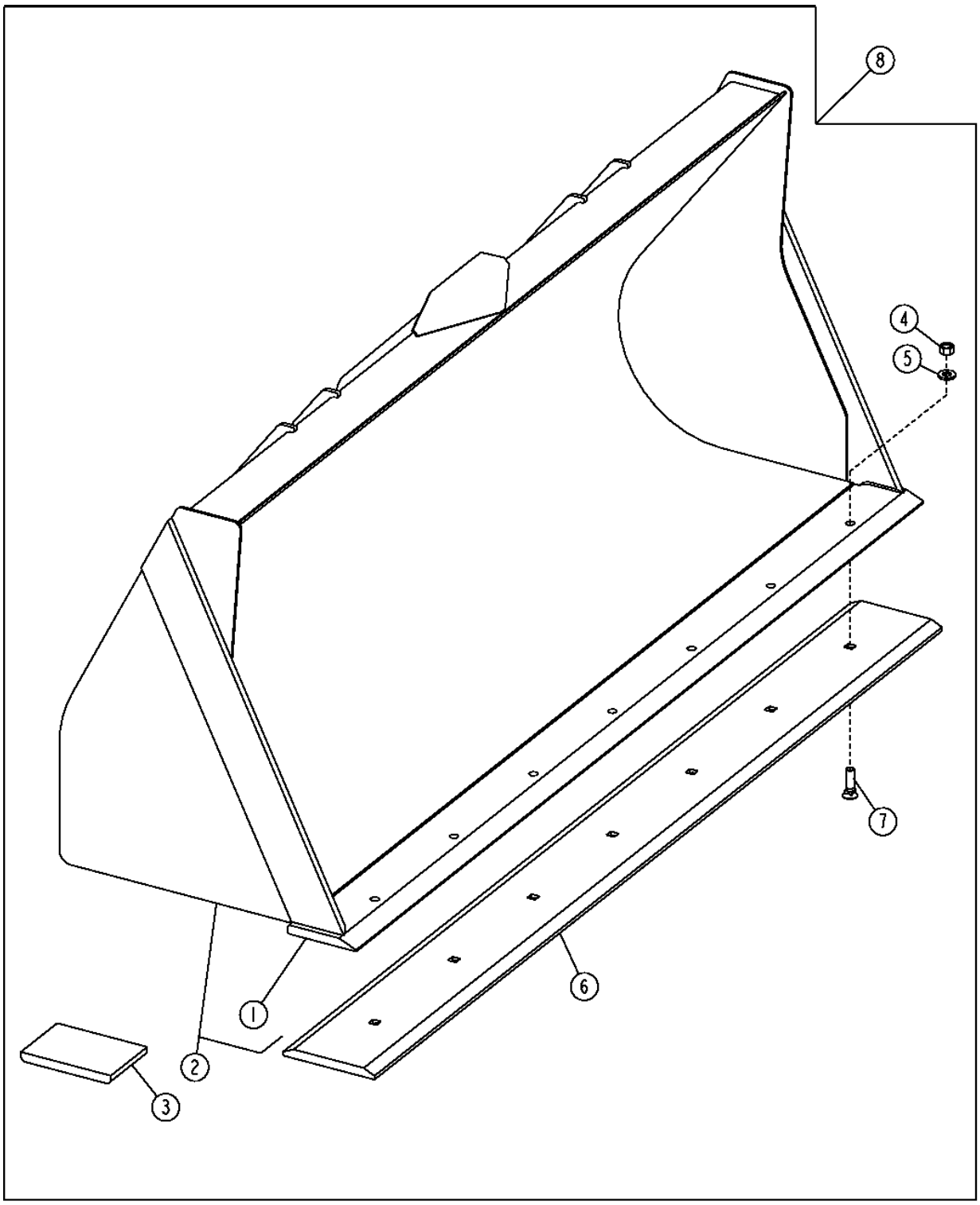

TP58156

LOADER BUCKET AND CUTTING EDGE
.76 CUBIC METER (1.00 CUBIC YARD),LESS SKID PLATES
.86 CUBIC METER (1.13 CUBIC YARD)
1.00 CUBIC METER (1.30 CUBIC YARD)

KEY	PART NO.	PART NAME	QTY	SERIAL NO.	310G	310SG	315SG	REMARKS
1	T150487	CUTTING EDGE	1		X	X	X	(1.13 CUBIC YARD) SBF
	T118768	CUTTING EDGE	1			X	X	(1.30 CUBIC YARD) 3/4" SBF
2	.....	LOADER BUCKET	1		X	X	X	
3	T147296	SHOE	2		X	X	X	
4	14H1039	NUT	8		X	X	X	5/8"
5	24M7241	WASHER	8		X	X	X	17 X 34 X 4 MM
6	T150517	CUTTING EDGE	1		X	X	X	(AUXILIARY) 3/4 THICK X 8 INCH DBF X 86 INCH, (ALSO ORDER (7) 09H1759, (7) 14H1039 AND (7) 24M7241)
	T150517HD	DURA-MAX TM CUTTING EDGE	1		X	X	X	(AUXILIARY) 1" THICK X 8 INCH DBF X 86 INCH, (ALSO ORDER (7) 09H1764, (7) 14H1039 AND (7) 24M7241)
	T84194	CUTTING EDGE	1			X	X	(AUXILIARY) 3/4 THICK X 8 INCH DBF X 92 3/8 INCH LONG, (ALSO ORDER (8) 09H1759, (8) 14H1039 AND (8) 24M7241)
	T84194HD	DURA-MAX TM CUTTING EDGE	1			X	X	(AUXILIARY) 1" THICK X 8 INCH DBF X 92 3/8 INCH LONG, (ALSO ORDER (8) 09H1764, (8) 14H1039 AND (8) 24M7241)
7	09H1759	BOLT	8		X	X	X	5/8" X 2-1/4"
	09H1764	BOLT	8		X	X	X	5/8" X 2-1/2"
8	.....	LOADER BUCKET	1		X	X		0.76 CUBIC METER (1.00 CUBIC YARD),LESS SKID PLATES (AT307632 NO LONGER OFFERED)
	AT308071	**LOADER BUCKET**	**1**		**X**	**X**	**X**	**0.86 CUBIC METER (1.13 CUBIC YARD) (WHOLE GOODS) (USE WITH (2) T204908, (2) 14M7319 AND (2) 19M7949) (SUB FOR AT185526)**
	AT308080	**LOADER BUCKET**	**1**			**X**	**X**	**1.00 CUBIC METER (1.30 CUBIC YARD) (WHOLE GOODS) (MARKED AT308080) (USE WITH (2) T204908, (2) 14M7319 AND (2) 19M7949) (SUB FOR AT185519) (MARKED AT185519)**
	.....	LOADER BUCKET	1	-944081		X	X	FRONT COUPLER BUCKET (AT180838 NO LONGER AVAILABLE)
	.....	LOADER BUCKET	1	-944081	X	X	X	FRONT COUPLER BUCKET (AT180839 NO LONGER AVAILABLE)

LOADER BUCKET PINS

T201154 -UN-25JUN04

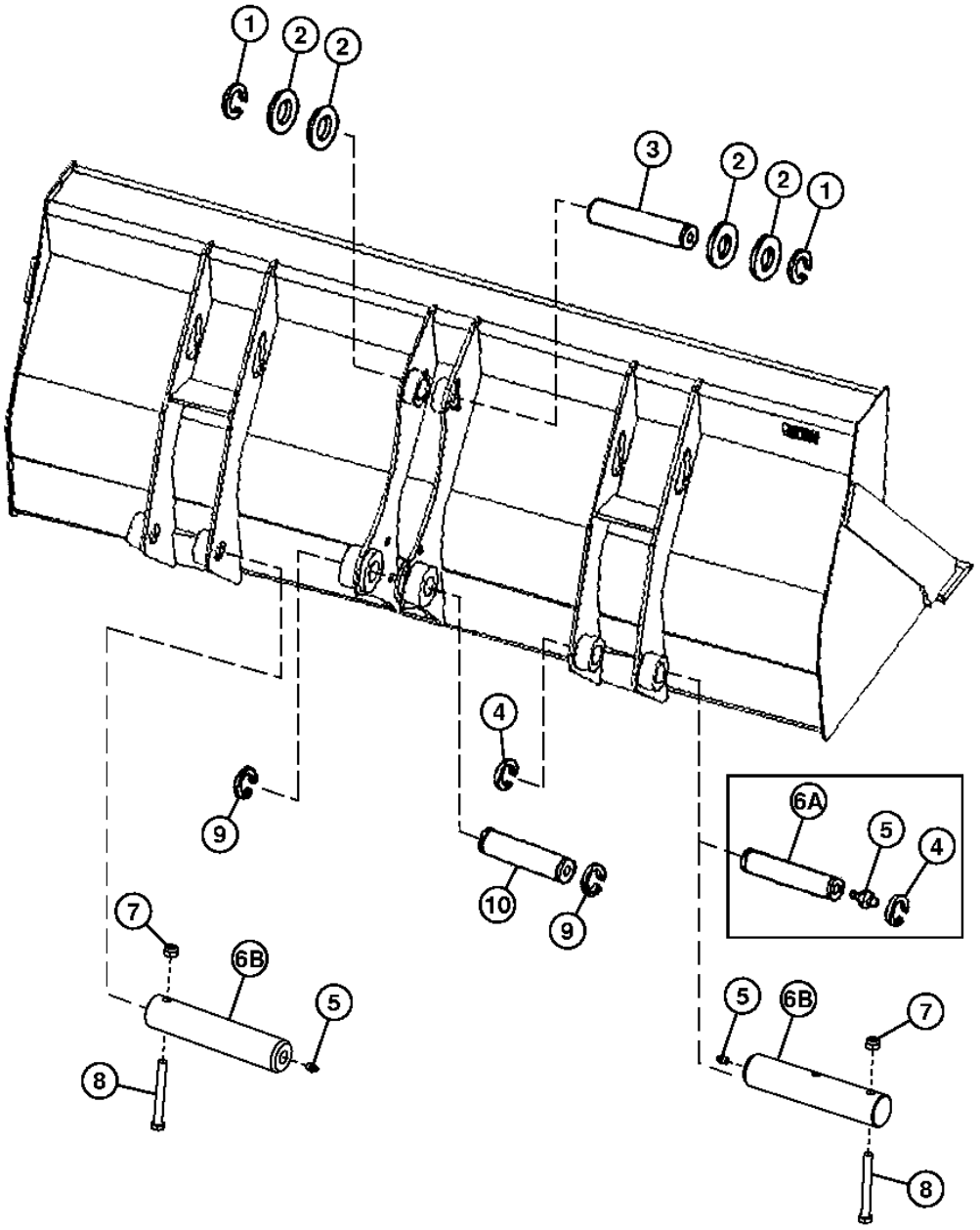

T201154

LOADER BUCKET PINS

KEY	PART NO.	PART NAME	QTY	SERIAL NO.	310G	310SG	315SG	REMARKS
1	40M7066	SNAP RING	2		X	X	X	
2	T161036	WASHER	4		X	X	X	2.205" X 3.150" X 0.079"
3	T165333	PIN FASTENER	1		X	X	X	54.475 X 246 MM (2.145" X 9.685")
4	40M7166	SNAP RING	2	-941414	X	X	X	
5	T162396	LUBRICATION FITTING	2		X	X	X	
6A	T154360	PIN FASTENER	2		X			(USE WITH BUCKET MARKED AT184738)
	T154360	PIN FASTENER	2		X	X	X	(USE WITH BUCKET MARKED AT185524)
	T154360	PIN FASTENER	2	-941414	X	X	X	(USE WITH BUCKET MARKED AT185522)
	T154360	PIN FASTENER	2	-940584	X	X	X	(USE WITH BUCKET MARKED AT185526)
	T154360	PIN FASTENER	2	-940629		X	X	(USE WITH BUCKET MARKED AT185519)
	T154360	PIN FASTENER	2	-941159	X	X	X	(USE WITH BUCKET MARKED AT189703)
	T154360	PIN FASTENER	2	-941020	X	X	X	(USE WITH BUCKET MARKED AT189702)
	T154360	PIN FASTENER	2	-940899		X	X	(USE WITH BUCKET MARKED AT189699)
6B	T204908	PIN FASTENER	2		X			(USE WITH BUCKET MARKED AT308040)
	T204908	PIN FASTENER	2		X	X	X	(USE WITH BUCKET MARKED AT308188)
	T204908	PIN FASTENER	2	941415-	X	X	X	(USE WITH BUCKET MARKED AT308076)
	T204908	PIN FASTENER	2	940585-	X	X	X	(USE WITH BUCKET MARKED AT308071)
	T204908	PIN FASTENER	2	940630-	X	X	X	(USE WITH BUCKET MARKED AT308080)
	T204908	PIN FASTENER	2	941160-	X	X	X	(USE WITH BUCKET MARKED AT308049)
	T204908	PIN FASTENER	2	941021-	X	X	X	(USE WITH BUCKET MARKED AT308095)
	T204908	PIN FASTENER	2	940900-		X	X	(USE WITH BUCKET MARKED AT308099)
7	14M7319	LOCK NUT	2		X	X	X	M12
8	19M7949	CAP SCREW	2		X	X	X	M12 X 100
9	40M7166	SNAP RING	2		X	X	X	
10	T165332	PIN FASTENER	1		X	X	X	49.475 X 244.600 MM

MULTI-PURPOSE BUCKET MOLDBOARD, CUTTING EDGE AND HINGE

T201293 -UN-29JUN04

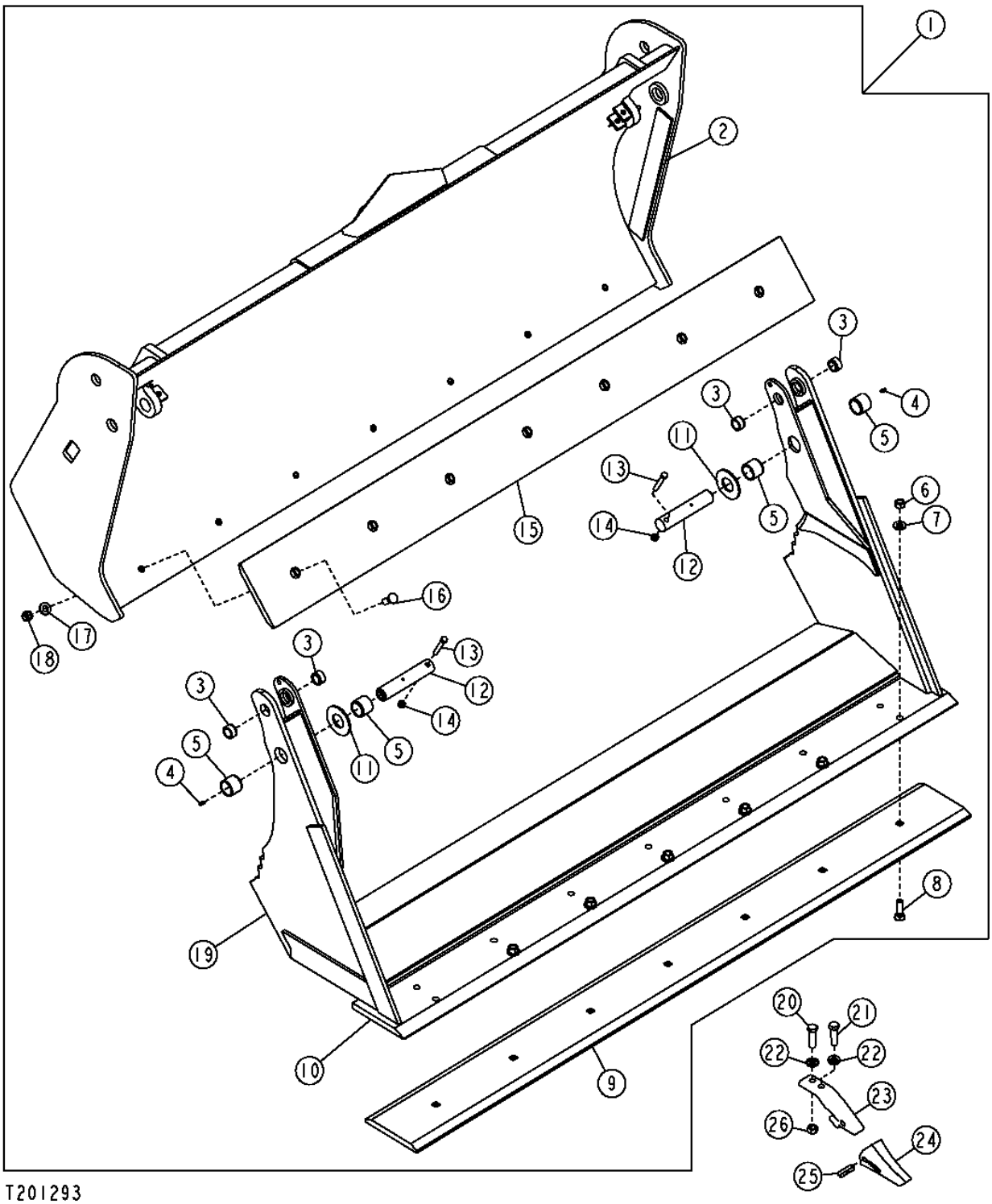

MULTI-PURPOSE BUCKET MOLDBOARD, CUTTING EDGE AND HINGE

KEY	PART NO.	PART NAME	QTY	SERIAL NO.	310G	315SG	REMARKS
1	**AT308042**	**MULTI-PURPOSE BUCKET**	**1**	**941160-**	**X**	**X X**	**(2083MM - 82 INCH) INCLUDES CYLINDERS, LINES AND HOSES (WHOLE GOODS) (MARKED AT308049) (USE WITH (2) T204908, (2) 14M7319 AND (2) 19M7949) (SUB FOR AT186370)**
	AT308191	**MULTI-PURPOSE BUCKET**	**1**	**941021-**	**X**	**X X**	**(2184MM - 86 INCH) INCLUDES CYLINDERS, LINES AND HOSES (WHOLE GOODS) (MARKED AT308095) (USE WITH (2) T204908, (2) 14M7319 AND (2) 19M7949) (SUB FOR AT185634)**
	AT308193	**MULTI-PURPOSE BUCKET**	**1**	**940900-**		**X X**	**(2337MM - 92 INCH) INCLUDES CYLINDERS, LINES AND HOSES (WHOLE GOODS) (MARKED AT308099) (USE WITH (2) T204908, (2) 14M7319 AND (2) 19M7949) (SUB FOR AT185639)**
2	.....	MOLDBOARD	1		X	X X	(ORDER AT308042, AT308191 OR AT308193)
3	T166433	BUSHING	4		X	X X	
4	JD7797	LUBRICATION FITTING	2		X	X X	
5	T128533	BUSHING	4		X	X X	
6	14H1039	NUT	8		X	X X	5/8"
7	24M7241	WASHER	8		X	X X	
8	09H1759	BOLT	8		X	X X	5/8" X 2-1/4"
	09H1764	BOLT	8		X	X X	
9	T166437	CUTTING EDGE	1		X	X X	(82 INCH) AUXILIARY
	T150517	CUTTING EDGE	1		X	X X	(86 INCH) AUXILIARY
	T150517HD	DURA-MAX TM CUTTING EDGE	1		X	X X	(86 INCH) AUXILIARY
	T84194	CUTTING EDGE	1			X X	(92 INCH) AUXILIARY
	T84194HD	DURA-MAX TM CUTTING EDGE	1			X X	(92 INCH) AUXILIARY
10	T166419	CUTTING EDGE	1		X	X X	(82 INCH)
	T166455	CUTTING EDGE	1		X	X X	(86 INCH)
	T128538	CUTTING EDGE	1			X X	(92 INCH)
11	24H1554	WASHER	2		X	X X	
12	T167059	PIN	2		X	X X	
13	19H2106	CAP SCREW	2		X	X X	7/16" X 2-3/4"
14	K40006	LOCK NUT	2		X	X X	7/16"
15	T143802	CUTTING EDGE	1		X	X X	(82 INCH)
	T166454	CUTTING EDGE	1		X	X X	(86 INCH)
	T143802	CUTTING EDGE	1			X X	(92 INCH)
16	09H1776	BOLT	8		X	X X	5/8" X 1-3/4"
17	24M7241	WASHER	8		X	X X	
18	14H1039	NUT	8		X	X X	5/8"
19	.....	HINGE	1		X	X X	(ORDER AT308042, AT308191 OR AT308193)
20	19H3244	CAP SCREW	1		X	X X	5/8" X 2-1/4"
21	19H2599	CAP SCREW	1		X	X X	5/8" X 2-1/2"
22	24H1367	WASHER	2		X	X X	
23	T221X230	ADAPTER FITTING	1		X	X X	
24	T230SP	TOOTH	1		X	X X	
25	T23P	PIN	1		X	X X	
26	14H1039	NUT	1		X	X X	

MULTI-PURPOSE BUCKET,BUCKET CYLINDER AND HYDRAULIC OIL LINES

T153162 -UN-10APR02

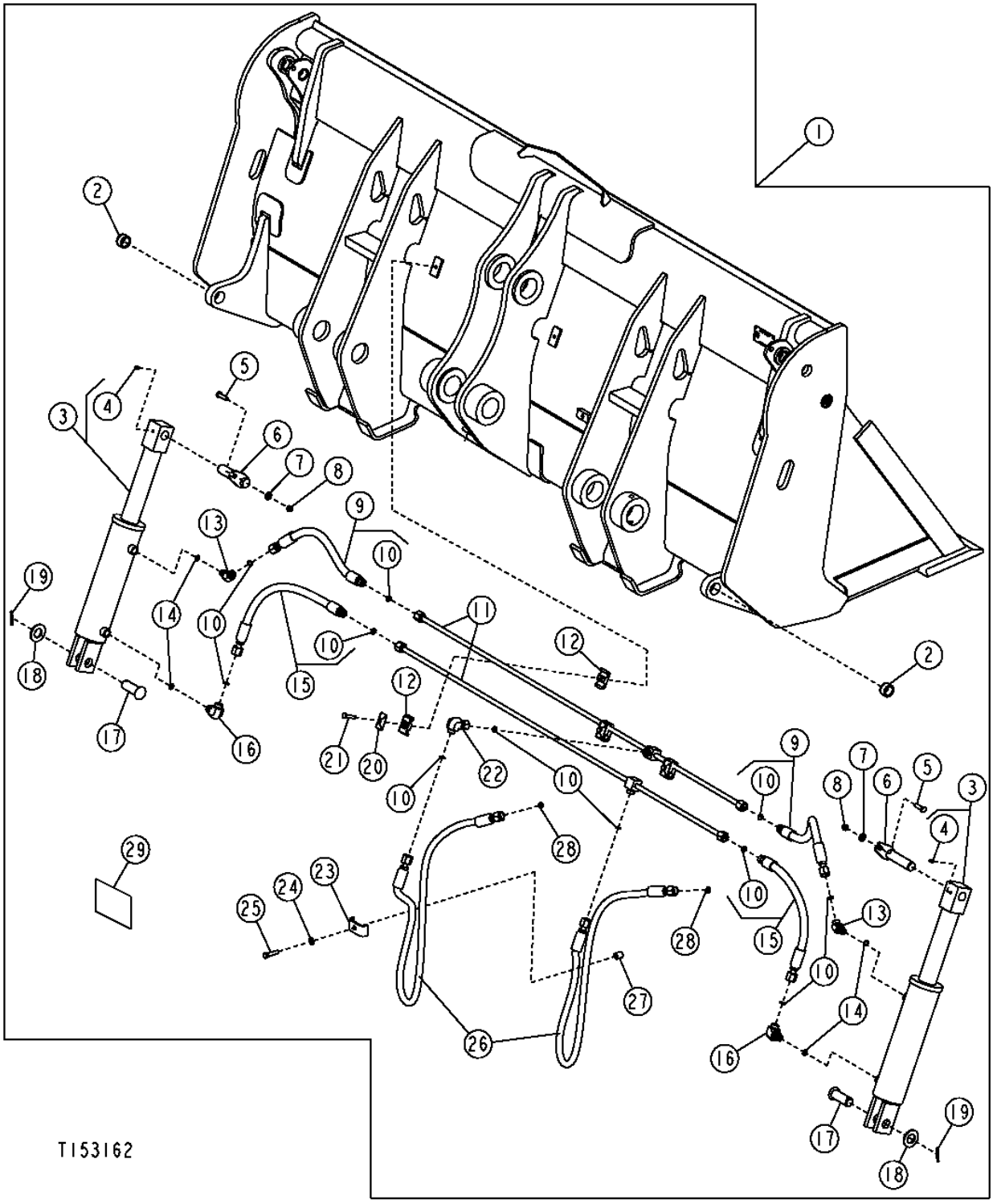

MULTI-PURPOSE BUCKET,BUCKET CYLINDER AND HYDRAULIC OIL LINES

KEY	PART NO.	PART NAME	QTY	SERIAL NO.	310G	310SG	315SG	REMARKS
1	**AT308042**	**MULTI-PURPOSE BUCKET**	**1**		**X**	**X**	**X**	**(2083MM - 82 INCH) INCLUDES CYLINDERS, LINES AND HOSES (WHOLE GOODS) (USE WITH (2) T204908, (2) 14M7319 AND (2) 19M7949) (SUB FOR AT186370)**
	AT308191	**MULTI-PURPOSE BUCKET**	**1**		**X**	**X**	**X**	**(2184MM - 86 INCH) INCLUDES CYLINDERS, LINES AND HOSES (WHOLE GOODS) (USE WITH (2) T204908, (2) 14M7319 AND (2) 19M7949) (SUB FOR AT185634)**
	AT308193	**MULTI-PURPOSE BUCKET**	**1**			**X**	**X**	**(2337MM - 92 INCH) INCLUDES CYLINDERS, LINES AND HOSES (WHOLE GOODS) (USE WITH (2) T204908, (2) 14M7319 AND (2) 19M7949) (SUB FOR AT185639)**
2	T166433	BUSHING	2		X	X	X	
3	AT190880	CYLINDER	2	-925076	X	X	X	
	A24073	BUSHING	8	-925076	X	X	X	1" X 1-1/4" X 0.780"
	AH210737	HYDRAULIC CYLINDER	2	925077-	X	X	X	
4	JD7797	LUBRICATION FITTING	2	-925076	X	X	X	
	JD7844	LUBRICATION FITTING	2	925077-	X	X	X	
5	19H3239	CAP SCREW	2		X	X	X	3/8" X 1-1/4"
6	AT190900	PIN	2		X	X	X	
7	24M7239	WASHER	2		X	X	X	
8	T54568	LOCK NUT	2		X	X	X	3/8"
9	AT189822	HYDRAULIC HOSE - FABRICATE	2		X	X	X	
	AT190628	HYDRAULIC HOSE - FABRICATE	2		X	X	X	13/16" X 241 MM (9-1/2") X 13/16"
	AT189822	HYDRAULIC HOSE - FABRICATE	2			X	X	
10	T77857	O-RING	AR		X	X	X	
11	AT189819	LINE	2		X	X	X	
12	H135156	CLAMP	6		X	X	X	
13	38H1521	ELBOW FITTING	2		X	X	X	
14	R26448	O-RING	4		X	X	X	
15	AT189822	HYDRAULIC HOSE - FABRICATE	2		X	X	X	(82 INCH)
	AT190702	HYDRAULIC HOSE - FABRICATE	2		X	X	X	(86 INCH)
	AT190701	HYDRAULIC HOSE - FABRICATE	2			X	X	(92 INCH)
16	38H1314	ELBOW FITTING	2		X	X	X	
17	.....	PIN	2	-925076	X	X	X	(T185041 NO LONGER AVAILABLE) (SUB T191318) (ALSO ORDER (6) 24H1138)
	T191318	PIN FASTENER	2	925077-	X	X	X	
18	24H1138	WASHER	2		X	X	X	
19	11M7030	COTTER PIN	2		X	X	X	
20	H121168	PLATE	3		X	X	X	
21	19H3552	CAP SCREW	3		X	X	X	5/16" X 1-1/2"
22	38H1095	ELBOW FITTING	1		X	X	X	
23	T27022	CLAMP	1		X	X	X	(SUB FOR U40398, THIS APPLICATION)
24	24M7106	WASHER	1		X	X	X	
25	19H2633	CAP SCREW	1		X	X	X	3/8" X 1-1/2"
26	AT175198	HYDRAULIC HOSE - FABRICATE	2	-913426	X	X	X	13/16" X 1 170 MM (46") X 13/16"
	AT172386	HYDRAULIC HOSE - FABRICATE	2	913427-	X	X	X	13/16" X 1 170 MM (46") X 1"
27	28H3383	BUSHING	1		X	X	X	
28	T77857	O-RING	2		X	X	X	
29	T160759	LABEL	1		X	X	X	BUCKET LEVEL INDICATOR

MULTI-PURPOSE BUCKET CYLINDER
(SERIAL NO. -925076)

TP62438 -UN-06JUL00

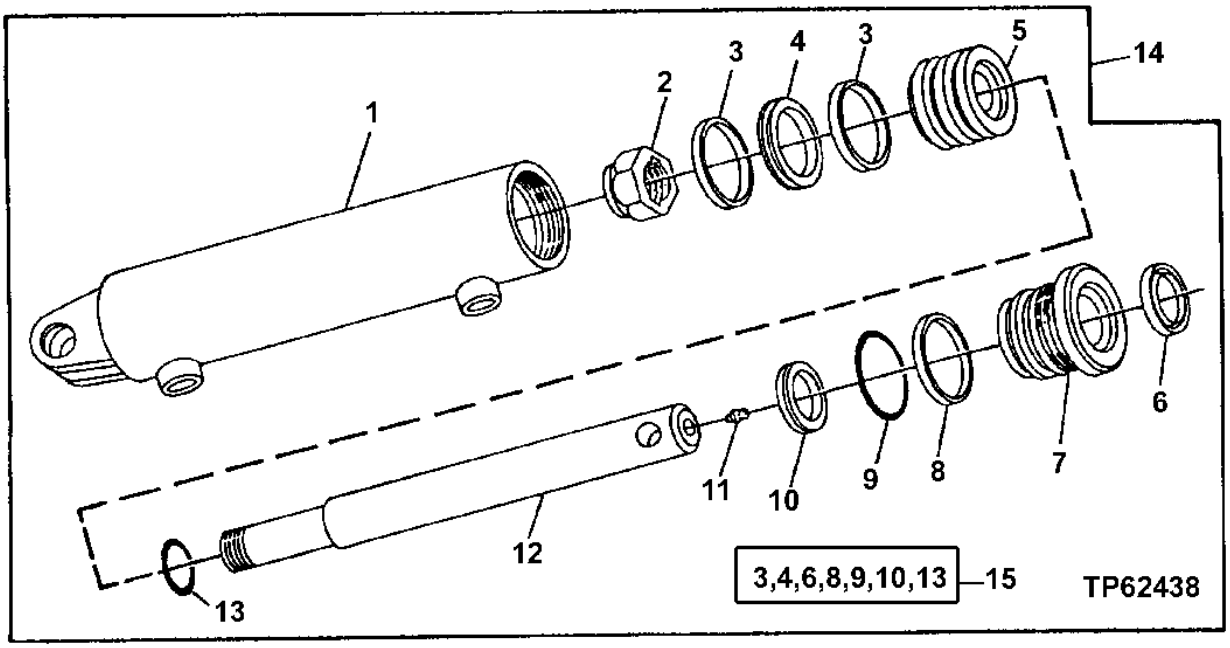

KEY	PART NO.	PART NAME	QTY	SERIAL NO.	310G	310SG	315SG	REMARKS
1	AT190881	BARREL	1		X	X	X	
2	H29619	LOCK NUT	1		X	X	X	
3	.....	WEAR RING	2		X	X	X	
4	.....	SEAL	1		X	X	X	
5	T163117	PISTON	1		X	X	X	
6	.....	SEAL	1		X	X	X	
7	T163116	HYDR. CYLINDER ROD GUIDE	1		X	X	X	
8	.....	BACK-UP RING	1		X	X	X	
9	.....	O-RING	1		X	X	X	
10	.....	SEAL	1		X	X	X	
11	JD7797	LUBRICATION FITTING	1		X	X	X	
12	T163118	HYDRAULIC CYLINDER ROD	1		X	X	X	
13	.....	O-RING	1		X	X	X	
14	.....	CYLINDER	1		X	X	X	(AT190880 NO LONGER AVAILABLE) (SUB (2) AH210737, (2) T191318 AND (6) 24H1138)
15	AT190898	KIT	1		X	X	X	

MULTI-PURPOSE BUCKET CYLINDER AND REPAIR KIT
(SERIAL NO. 925077-)

T197121 -UN-08JAN04

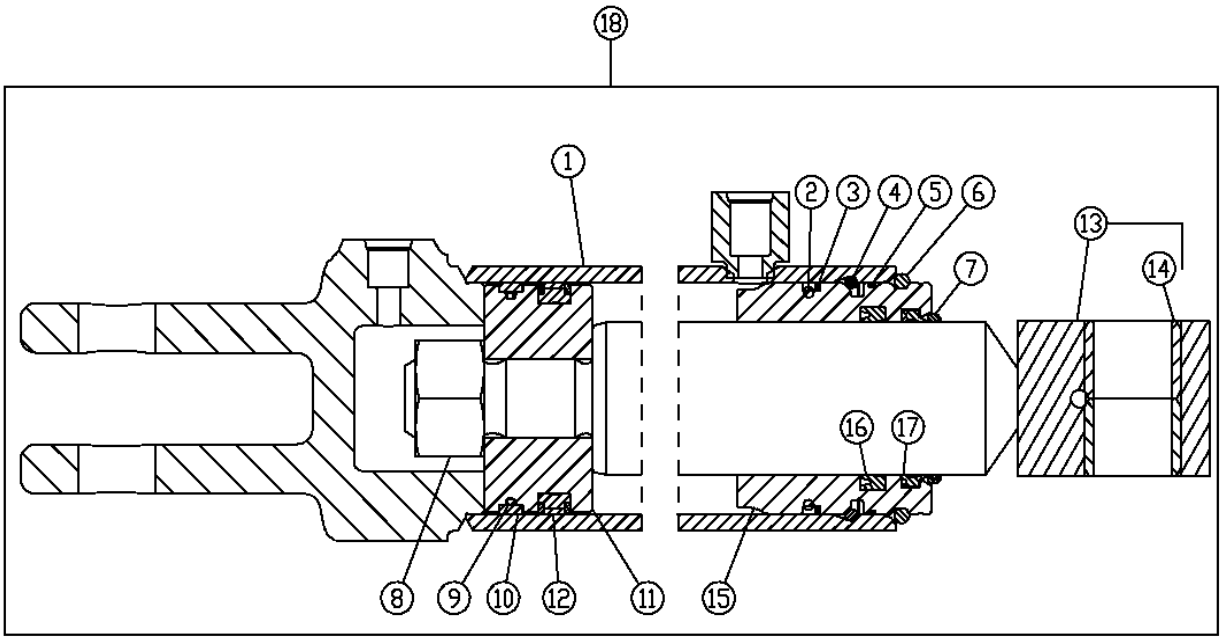

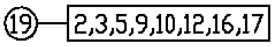

T197121

KEY	PART NO.	PART NAME	QTY	SERIAL NO.	REMARKS
1	.....	HYDRAULIC CYLINDER BARREL	1		
2	T14065	O-RING	1		
3	.....	RING	2		
4	H177854	SNAP RING	1		
5	.....	O-RING	1		
6	H180927	SNAP RING	1		
7	.....	O-RING	1		
8	14H1112	NUT	1		1", (SUB FOR H179692)
9	.....	WEAR RING	1		
10	.....	O-RING	1		
11	.....	PISTON	1		
12	.....	PISTON RING	1		
13	.....	ROD	1		
14	.....	BUSHING	1		
15	.....	HYDR. CYLINDER ROD GUIDE	1		
16	H152203	SEAL	1		
17	.....	SEAL	1		
18	AH210737	HYDRAULIC CYLINDER	1		
19	AH209022	HYDRAULIC CYLINDER KIT	1		KIT

COUPLER LOADER BUCKET AND CUTTING EDGE
.76 CUBIC METER (1.00 CUBIC YARD)
.96 CUBIC METER (1.25 CUBIC YARD)

TP69675 -UN-10OCT00

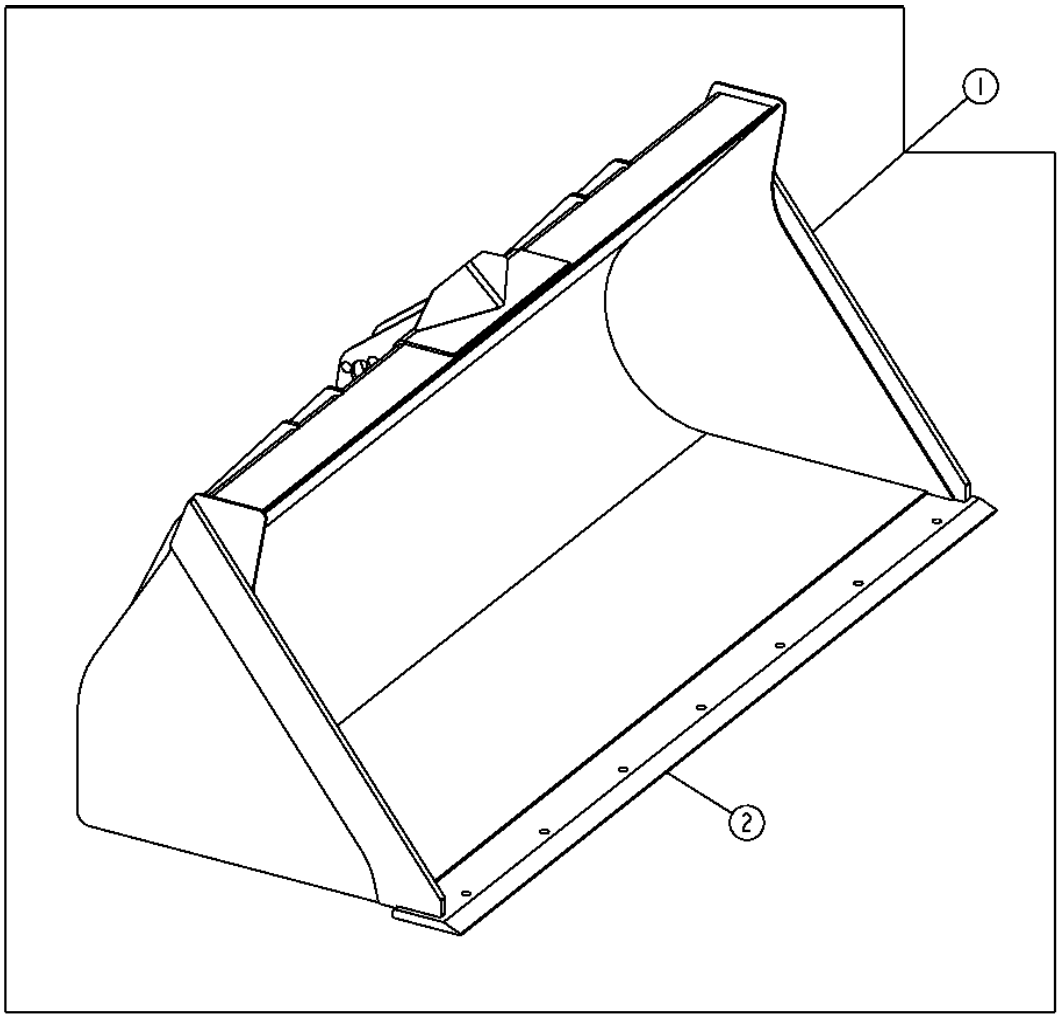

TP69675

COUPLER LOADER BUCKET AND CUTTING EDGE
.76 CUBIC METER (1.00 CUBIC YARD)
.96 CUBIC METER (1.25 CUBIC YARD)

KEY	PART NO.	PART NAME	QTY	SERIAL NO.	310G	315SG	REMARKS
1	.....	LOADER BUCKET	1		X	X	.76 CUBIC METER (1.00 CUBIC YARD), FRONT COUPLER BUCKET, (AT309208 NO LONGER AVAILABLE) (MARKED AT308968)
	AT308968	**LOADER BUCKET**	**1**		**X**	**X**	**.96 CUBIC METER (1.25 CUBIC YARD), FRONT COUPLER BUCKET, (WHOLE GOODS) (MARKED AT308968)**
2	T150487	CUTTING EDGE	1		X	X	(WELDED ON) SBF

COUPLER LOADER BUCKET AND CUTTING EDGE
.86 CUBIC METER (1.13 CUBIC YARD)
1.00 CUBIC METER (1.31 CUBIC YARD)

TP58156 -UN-10OCT00

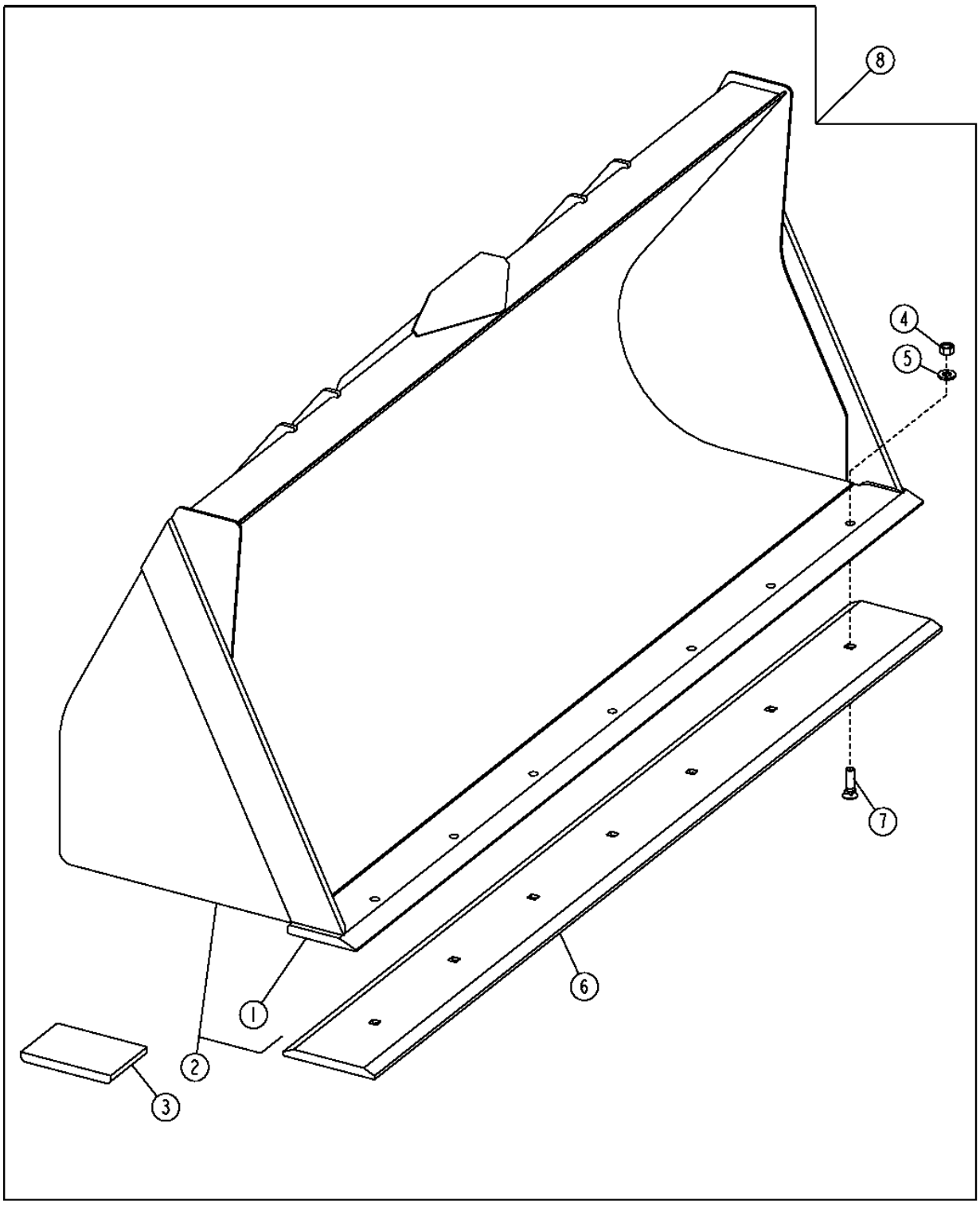

TP58156

COUPLER LOADER BUCKET AND CUTTING EDGE
.86 CUBIC METER (1.13 CUBIC YARD)
1.00 CUBIC METER (1.31 CUBIC YARD)

KEY	PART NO.	PART NAME	QTY	SERIAL NO.	310G	315SG	REMARKS
1	T150487	CUTTING EDGE	1		X	X	(1.13 CUBIC YARD) 3/4" SBF
	T118768	CUTTING EDGE	1		X	X	(1.31 CUBIC YARD) 3/4" SBF
2	.....	LOADER BUCKET	1		X	X	
3	T147296	SHOE	2		X	X	
4	14H1039	NUT	8		X	X	5/8"
5	24M7241	WASHER	8		X	X	
6	T150517	CUTTING EDGE	1		X	X	(AUXILIARY) 3/4 THICK X 8 INCH DBF X 86 INCH LONG (1.13 CUBIC YARD)
	T150517HD	DURA-MAX TM CUTTING EDGE	1		X	X	(AUXILIARY) 1" THICK X 8 INCH DBF X 86 INCH LONG (1.13 CUBIC YARD)
	T84194	CUTTING EDGE	1		X	X	(AUXILIARY) 3/4 THICK X 8 INCH DBF X 92 3/8 INCH LONG (1.31 CUBIC YARD)
	T84194HD	DURA-MAX TM CUTTING EDGE	1		X	X	(AUXILIARY) 1" THICK X 8 INCH DBF X 92 3/8 INCH LONG (1.31 CUBIC YARD)
7	09H1759	BOLT	8		X	X	5/8" X 2-1/4"
	09H1764	BOLT	8		X	X	5/8" X 2-1/2"
8	**AT308970**	**LOADER BUCKET**	**1**		**X**	**X**	**.86 CUBIC METER (1.13 CUBIC YARD), FRONT COUPLER BUCKET, (WHOLE GOODS) (MARKED AT308970)**
	AT308966	**LOADER BUCKET**	**1**		**X**	**X**	**1.00 CUBIC METER (1.31 CUBIC YARD), FRONT COUPLER BUCKET, (WHOLE GOODS) (MARKED AT308966)**

QUICK COUPLER MULTI-PURPOSE BUCKET, CYLINDERS AND HYDRAULIC OIL LINES

T205143 -UN-23NOV04

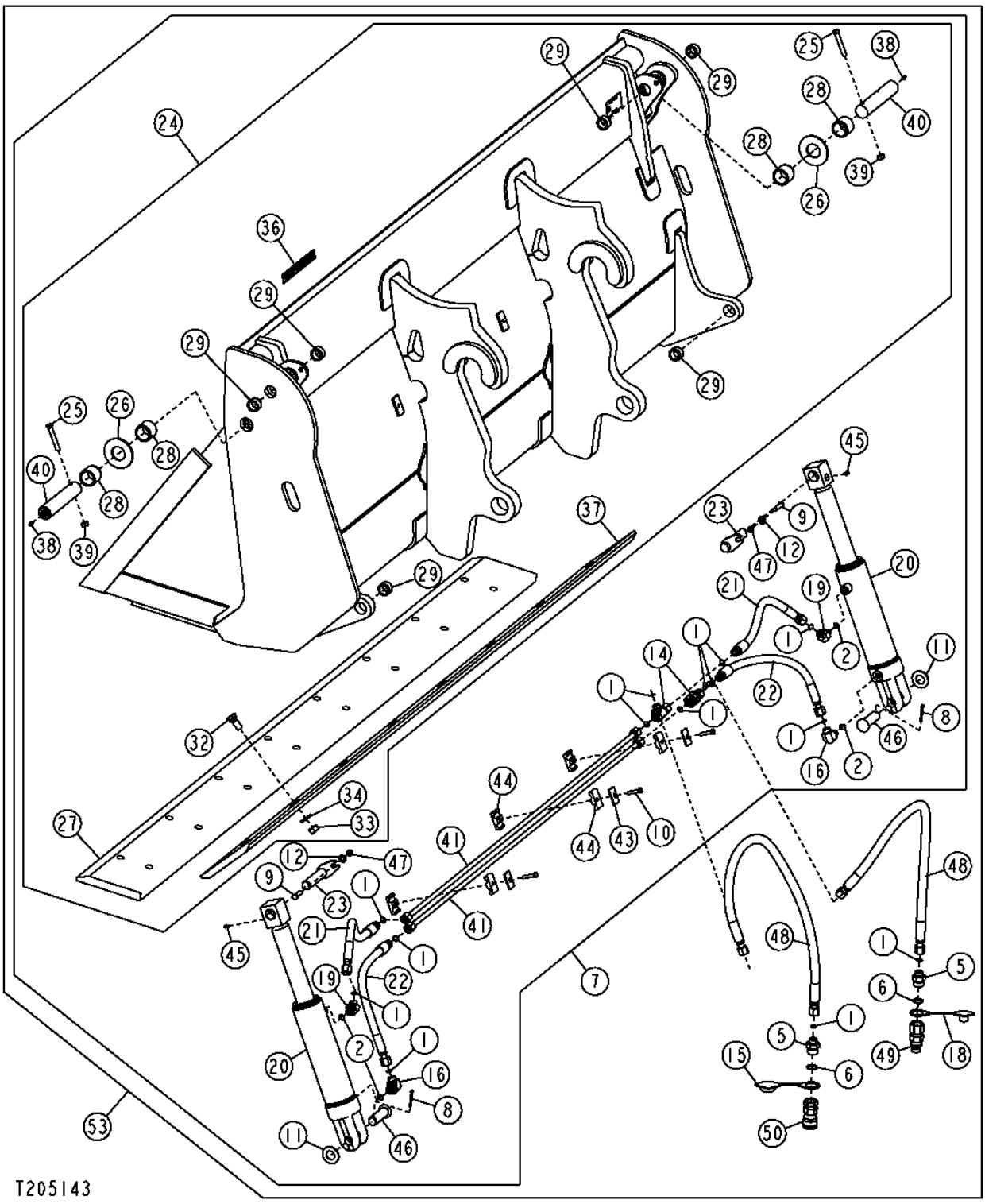

QUICK COUPLER MULTI-PURPOSE BUCKET, CYLINDERS AND HYDRAULIC OIL LINES

KEY	PART NO.	PART NAME	QTY	SERIAL NO.	310G	310SG	315SG	REMARKS
1	T77857	O-RING	9		X	X	X	
2	R26448	O-RING	2		X	X	X	
3	19H2633	CAP SCREW	1		X	X	X	3/8" X 1-1/2"
5	38H1175	ADAPTER FITTING	2		X	X	X	
6	U12547	O-RING	1		X	X	X	
7	.....	MULTI-PURPOSE BUCKET	1		X	X	X	(ORDER AT308972 OR AT308974)
8	11M7030	COTTER PIN	2		X	X	X	0.197" X 1.575"
9	19H3239	CAP SCREW	2		X	X	X	3/8" X 1-1/4"
10	19H3552	CAP SCREW	3		X	X	X	5/16" X 1-1/2"
11	24H1138	WASHER	2		X	X	X	
12	24M7239	WASHER	2		X	X	X	
13	T162396	LUBRICATION FITTING	2		X	X	X	
14	38H1031	TEE FITTING	1		X	X	X	
15	T188879	BOOT	1		X	X	X	
16	38H1314	ELBOW FITTING	1		X	X	X	
17	38H1148	FITTING PLUG	1		X	X	X	
18	T188880	BOOT	1		X	X	X	
19	38H1521	ELBOW FITTING	1		X	X	X	
20	AH210737	HYDRAULIC CYLINDER	2		X	X	X	
21	AT190628	HYDRAULIC HOSE - FABRICATE	2		X	X	X	13/16" X 241 MM (9-1/2") X 13/16", (86 INCH)
	AT189822	HYDRAULIC HOSE - FABRICATE	2		X	X	X	(92 INCH)
22	AT190702	HYDRAULIC HOSE - FABRICATE	2		X	X	X	13/16" X 407 MM (16") X 13/16", (86 INCH)
	AT190701	HYDRAULIC HOSE - FABRICATE	2		X	X	X	13/16" X 470 MM (18-1/2") X 13/16", (92 INCH)
23	AT190900	PIN	2		X	X	X	
24	.....	MOLDBOARD	1		X	X	X	(ORDER AT308972 OR AT308974)
25	19H2106	CAP SCREW	2		X	X	X	7/16" X 2-3/4"
26	24H1554	WASHER	2		X	X	X	
27	T166455	CUTTING EDGE	1		X	X	X	WELDED ON (86 INCH)
	T150517	CUTTING EDGE	1		X	X	X	AUXILIARY (86 INCH)
	T128538	CUTTING EDGE	1		X	X	X	WELDED ON (92 INCH)
	T84194	CUTTING EDGE	1		X	X	X	AUXILIARY (92 INCH)
28	T128533	BUSHING	4		X	X	X	
29	T166433	BUSHING	2		X	X	X	
32	09H1776	BOLT	8		X	X	X	5/8" X 1-3/4", MOLDBOARD
	09H1759	BOLT	8		X	X	X	5/8" X 2-1/4", AUXILIARY
33	14H1039	NUT	8		X	X	X	5/8"
34	24M7241	WASHER	8		X	X	X	
36	T213143	LABEL	1		X	X	X	WORKSITE PRO, (SUB FOR KV22121)
37	T166454	CUTTING EDGE	1		X	X	X	(86 INCH) DBF
	T143804	CUTTING EDGE	1		X	X	X	(92 INCH) DBF
38	JD7797	LUBRICATION FITTING	2		X	X	X	
39	K40006	LOCK NUT	2		X	X	X	7/16"
40	T167059	PIN	2		X	X	X	
41	AT311143	TUBE	2		X	X	X	
42	38H1354	TUBE NUT	2		X	X	X	
43	H121168	PLATE	3		X	X	X	
44	H135156	CLAMP	6		X	X	X	
45	JD7844	LUBRICATION FITTING	2		X	X	X	
46	T191318	PIN FASTENER	2		X	X	X	
47	T54568	LOCK NUT	2		X	X	X	3/8"
48	AT172386	HYDRAULIC HOSE - FABRICATE	2		X	X	X	13/16" X 1 170 MM (46") X 1"
	T77932	O-RING	2		X	X	X	
	AT309986	HYDRAULIC HOSE - FABRICATE	1		X	X	X	UPPER
	AT309934	HYDRAULIC HOSE - FABRICATE	1		X	X	X	LOWER
49	AT312470	HYD. QUICK-CONNECT COUPLER	1		X	X	X	
	KV11305	HYD. QUICK-CONNECT COUPLER	1		X	X	X	
	T77932	O-RING	1		X	X	X	
	T80306	NUT	1		X	X	X	
50	KV14216	HYD. QUICK-CONNECT COUPLER	1		X	X	X	
	KV11304	HYD. QUICK-CONNECT COUPLER	1		X	X	X	
53	**AT308972**	**MULTI-PURPOSE BUCKET**	**1**		**X**	**X**	**X**	**(2184MM - 86 INCH) (WHOLE GOODS)**
	AT308974	**MULTI-PURPOSE BUCKET**	**1**		**X**	**X**	**X**	**(2337MM - 92 INCH) (WHOLE GOODS)**

QUICK COUPLER FORKS AND FRAME

T197666 -UN-19FEB04

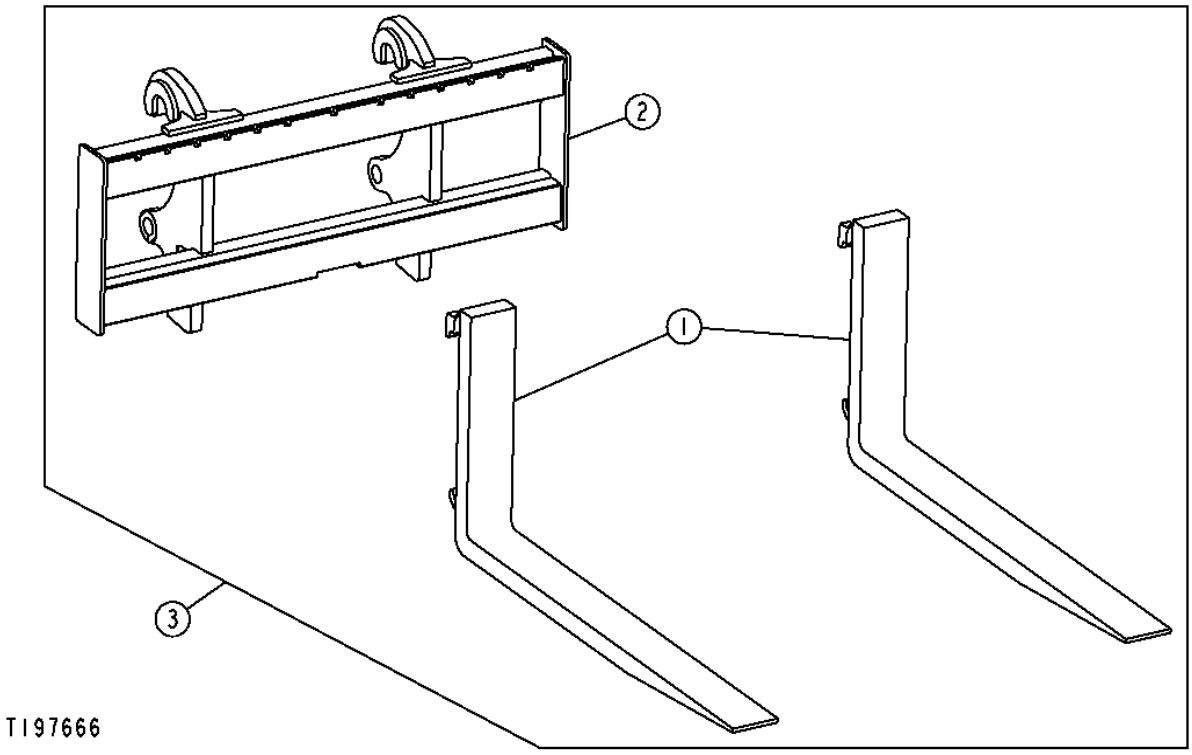

QUICK COUPLER FORKS AND FRAME

KEY	PART NO.	PART NAME	QTY	SERIAL NO.	310G	315SG	315SG	REMARKS
1	AT308925	FORK	1		X	X	X	CONVENIENCE ASSEMBLY (48 INCH)
	AT308926	FORK	1		X	X	X	CONVENIENCE ASSEMBLY (60 INCH)
2	AT308910	FORK	1		X	X	X	CONVENIENCE ASSEMBLY
3	**AT308138**	**FORKLIFT**	**1**		**X**	**X**	**X**	**(48 INCH)**
	AT308139	**FORKLIFT**	**1**		**X**	**X**	**X**	**(60 INCH)**

HYDRAULIC FRONT COUPLER

T209829 -UN-11APR05

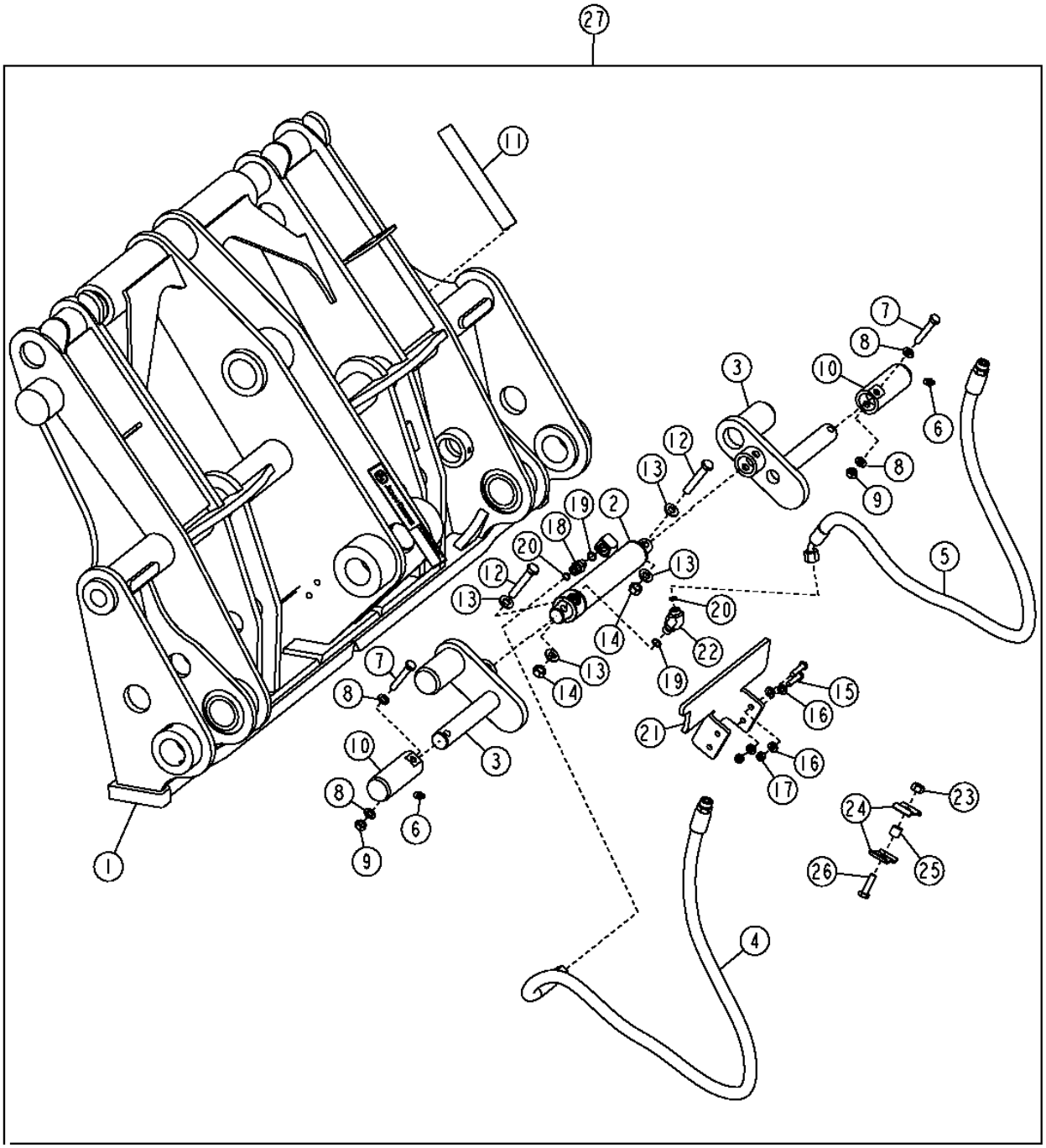

T209829

HYDRAULIC FRONT COUPLER

KEY	PART NO.	PART NAME	QTY	SERIAL NO.	310G	315SG	REMARKS
1	.....	QUICK COUPLER	1		X	X	(ORDER AT307916)
2	AH217348	HYDRAULIC CYLINDER	1		X	X	
3	AT307106	PIN FASTENER	2		X	X	
4	AT309746	HYDRAULIC HOSE - FABRICATE	1		X	X	11/16" X 1 245 MM (49") X 11/16"
5	AT309747	HYDRAULIC HOSE - FABRICATE	1		X	X	11/16" X 1 125 MM (44-1/4") X 11/16"
6	T162396	LUBRICATION FITTING	2		X	X	
7	19M8499	CAP SCREW	2		X	X	M10 X 60
8	24M7346	WASHER	4		X	X	
9	14M7274	NUT	2		X	X	M10
10	T205017	PIN	2		X	X	
11	T213143	LABEL	1		X	X	
12	19M7753	CAP SCREW	2		X	X	M12 X 70
13	24M7240	WASHER	4		X	X	
14	14M7275	NUT	2		X	X	M12
15	19M8008	CAP SCREW	4		X	X	M8 X 35
16	24M7238	WASHER	8		X	X	
17	14M7273	NUT	4		X	X	M8
18	38H1160	ADAPTER FITTING	1		X	X	
19	R26448	O-RING	2		X	X	
20	T77613	O-RING	2		X	X	
21	T213288	BRACKET	1		X	X	
22	38H1045	ELBOW FITTING	1		X	X	
23	14M7274	NUT	1		X	X	
24	R46919	HALF CLAMP	2		X	X	
25	28H3381	SPACER	1		X	X	
26	19M7550	CAP SCREW	1		X	X	
27	**AT307916**	**KIT**	**1**		**X**	**X**	**(WHOLE GOODS) KIT INCLUDES, HYDRAULIC LINES, FITTINGS, SOLENOID VALVE, HARNESS, SWITHCES AND, HARDWARE.**

FRONT COUPLER CYLINDER

T206287 -UN-06JAN05

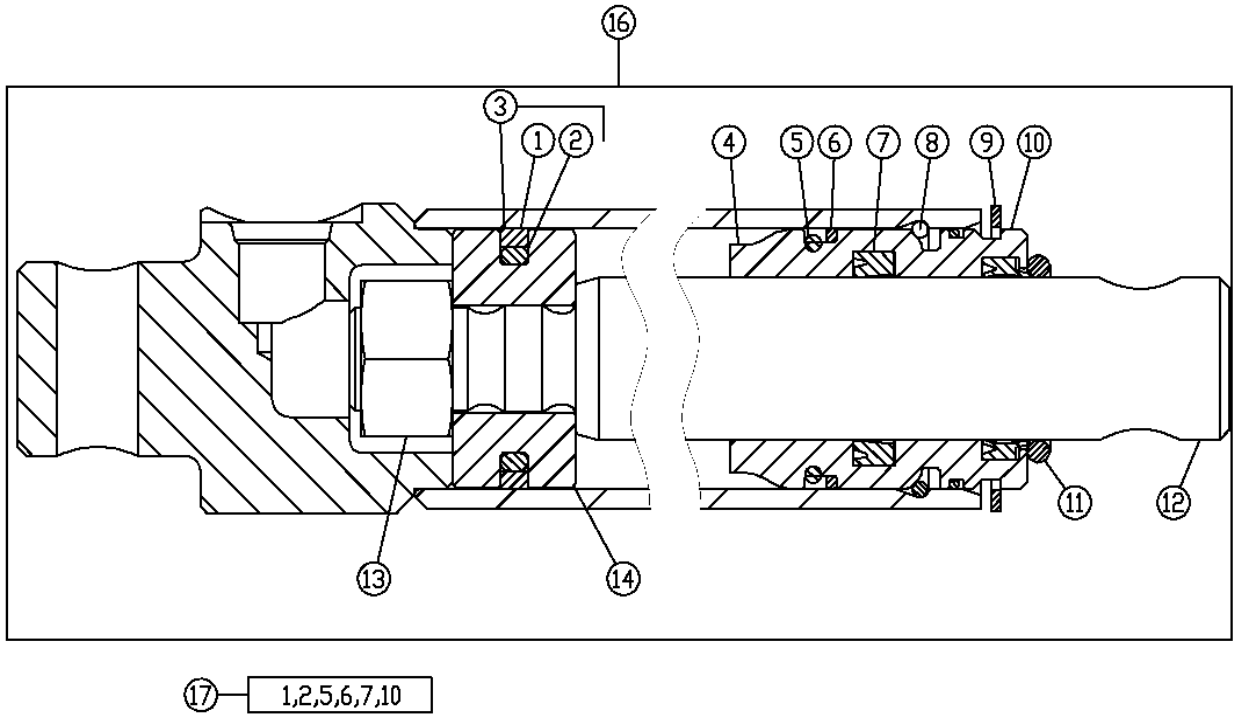

T206287

FRONT COUPLER CYLINDER

KEY	PART NO.	PART NAME	QTY	SERIAL NO.	310G	310SG	315SG	REMARKS
1	.....	SEAL	1		X	X	X	
2	.....	O-RING	1		X	X	X	
3	AH176230	SEAL	1		X	X	X	
4	H173205	HYDR. CYLINDER ROD GUIDE	1		X	X	X	
5	M4125T	O-RING	1		X	X	X	
6	H162312	BACK-UP RING	1		X	X	X	
7	H158676	SEAL	1		X	X	X	
8	H173206	RING	1		X	X	X	
9	H173207	SNAP RING	1		X	X	X	
10	H164925	SEAL	1		X	X	X	
11	P45750	O-RING	1		X	X	X	
12	.....	ROD	1		X	X	X	
13	14H1083	NUT	1		X	X	X	5/8"
14	H173199	PISTON	1		X	X	X	
15	.....	HYDRAULIC CYLINDER BARREL	1		X	X	X	
16	AH217348	HYDRAULIC CYLINDER	1		X	X	X	
17	AH176272	HYDRAULIC CYLINDER KIT	1		X	X	X	

BUCKET LEVELING AND RETURN-TO-DIG LINKAGE
(SERIAL NO. -913416)

T144118 -UN-07SEP01

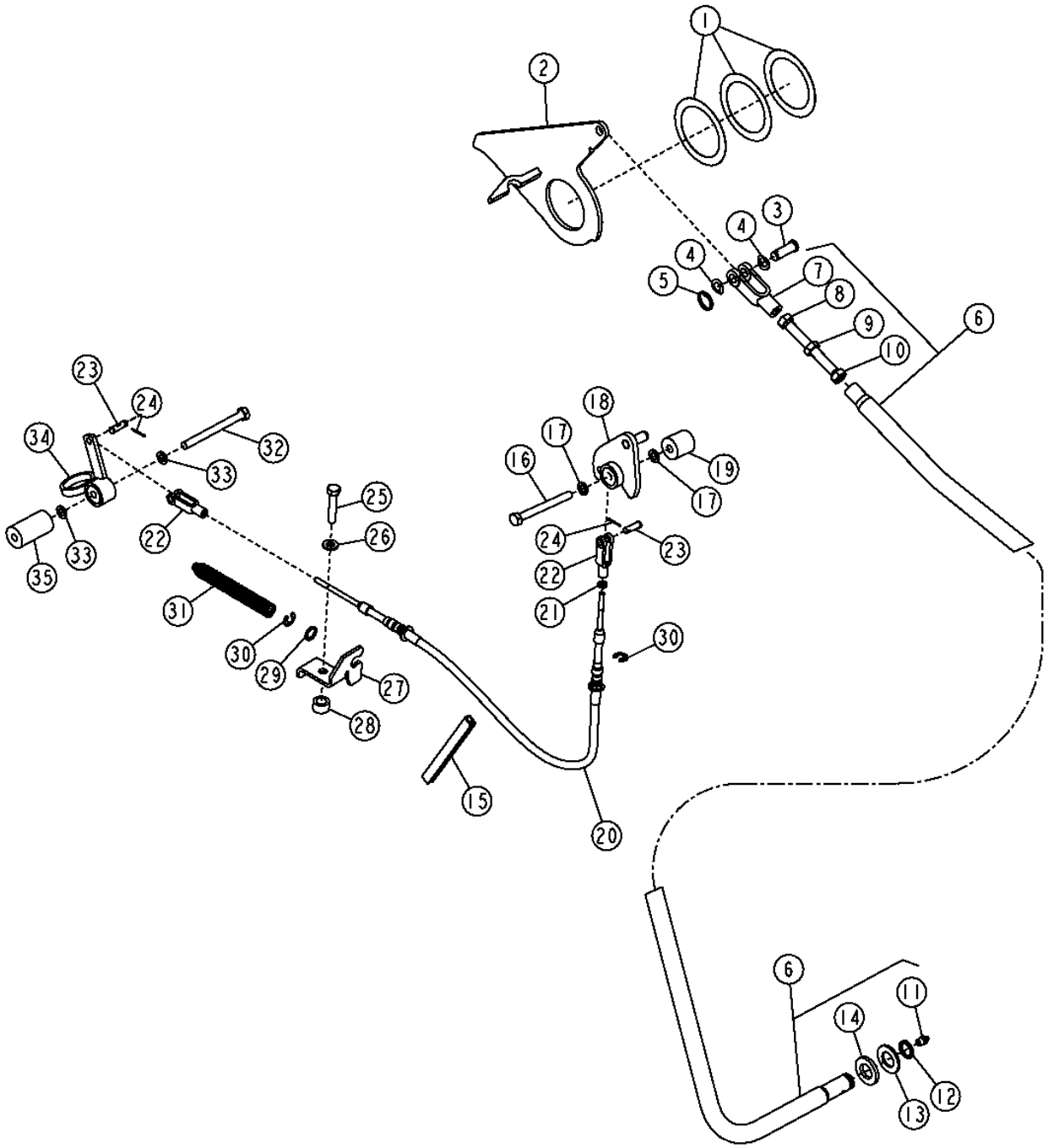

BUCKET LEVELING AND RETURN-TO-DIG LINKAGE
(SERIAL NO. -913416)

KEY	PART NO.	PART NAME	QTY	SERIAL NO.	310G	310SG	315SG	REMARKS
1	T161497	SHIM	3		X	X	X	
2	AT185957	BRACKET	1		X	X	X	
3	R72855	PIN FASTENER	1		X	X	X	
4	T146757	WASHER	2		X	X	X	
5	T148182	RING	1		X	X	X	
6	AT184682	TUBE	1		X	X	X	
7	T159981	YOKE	1		X	X	X	
8	14H881	NUT	1		X	X	X	1/2"
9	T159980	STUD	1		X	X	X	
10	14H856	NUT	1		X	X	X	1/2"
11	T162396	LUBRICATION FITTING	1		X	X	X	
12	5787YT	SNAP RING	1		X	X	X	
13	24H1659	WASHER	1		X	X	X	
14	T160720	WASHER	1		X	X	X	
15	.....	MOLDING	1		X	X	X	(T61861 BULK MATERIAL, CUT TO 152MM)
16	19M8093	CAP SCREW	1		X	X	X	M10 X 100
17	24M7096	WASHER	2		X	X	X	
18	AT185440	BELLCRANK	1		X	X	X	(INCLUDES AA34134)
	AA34134	BALL BEARING	1		X	X	X	(NOT ILLUSTRATED)
19	T184873	BUSHING	1		X	X	X	
20	.....	CABLE	1	-894048	X	X	X	(AT184341 NO LONGER AVAILABLE) (SUB AT196333 AND AT194487)
	AT196333	PUSH PULL CABLE	1	894049-	X	X	X	(SUB FOR AT194488)
21	14H649	NUT	1		X	X	X	1/4"
22	T184870	YOKE	2		X	X	X	
23	P10456	PIN FASTENER	2		X	X	X	
24	11M7078	COTTER PIN	2		X	X	X	2 X 20 MM
25	19M8600	CAP SCREW	1		X	X	X	M10 X 50
26	24M7239	WASHER	1		X	X	X	
27	T186082	BRACKET	1		X	X	X	
28	T186083	SPACER	1		X	X	X	
29	24M7228	WASHER	1		X	X	X	
30	R26871	SNAP RING	2		X	X	X	(SUB FOR R106466)
31	T185700	COMPRESSION SPRING	1		X	X	X	
32	19M8166	CAP SCREW	1		X	X	X	M10 X 110
33	24M7096	WASHER	2		X	X	X	
34	.....	BELLCRANK	1	-894048	X	X	X	(AT191023 NO LONGER AVAILABLE) (SUB AT194487 AND AT196333)
	AT194487	BELLCRANK	1	894049-	X	X	X	(INCLUDES AA34134)
	AA34134	BALL BEARING	1	894049-	X	X	X	(NOT ILLUSTRATED)
35	T164953	SPACER	1		X	X	X	

BUCKET LEVELING AND RETURN-TO-DIG LINKAGE
(SERIAL NO. 913417-)

T194558 -UN-03SEP03

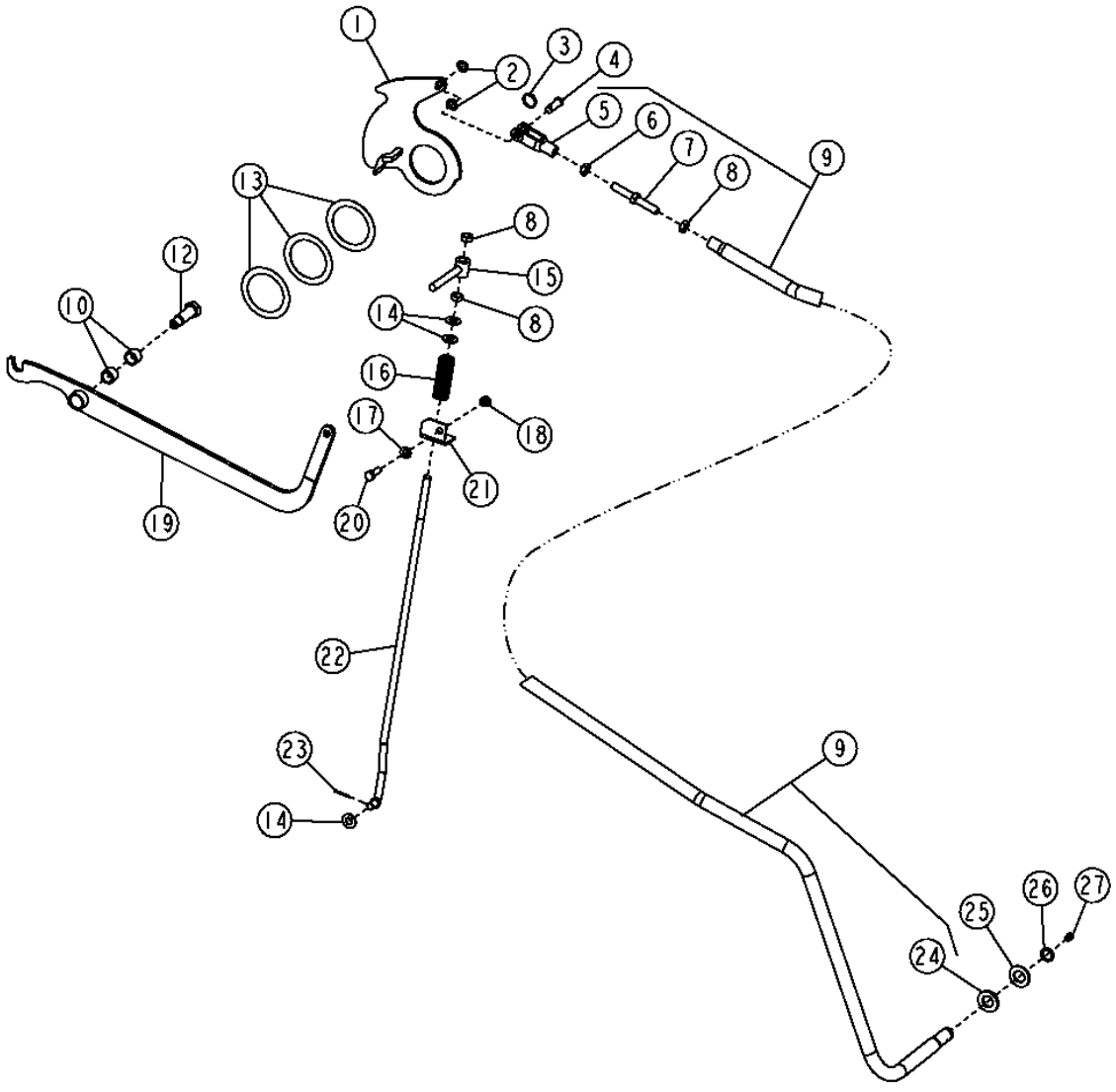

T194558

BUCKET LEVELING AND RETURN-TO-DIG LINKAGE
(SERIAL NO. 913417-)

KEY	PART NO.	PART NAME	QTY	SERIAL NO.	310G	310SG	315SG	REMARKS
1	AT197105	PLATE	1		X	X	X	
2	T146757	WASHER	2		X	X	X	
3	T148182	RING	1		X	X	X	
4	R72855	PIN FASTENER	1		X	X	X	
5	T159981	YOKE	1		X	X	X	
6	14H881	NUT	1		X	X	X	
7	T159980	STUD	1		X	X	X	
8	14H856	NUT	3		X	X	X	
9	AT184682	TUBE	1		X	X	X	
10	JD9954	CYLINDRICAL ROLLER BEARING	2		X	X	X	
12	T191285	BOLT	1		X	X	X	
13	T161497	SHIM	3		X	X	X	
14	24H1111	WASHER	3		X	X	X	
15	AT326922	LINK	1		X	X	X	(SUB FOR AT300159)
16	T190992	COMPRESSION SPRING	1		X	X	X	
17	24M7239	WASHER	1		X	X	X	
18	14M7274	NUT	1		X	X	X	
19	AT199335	ARM	1		X	X	X	
20	19M7662	CAP SCREW	1		X	X	X	
21	T190357	SUPPORT	1		X	X	X	
22	T191226	ROD	1		X	X	X	
23	11M7082	COTTER PIN	1		X	X	X	(SUB FOR R46528, THIS APPLICATION)
24	T160720	WASHER	1		X	X	X	
25	24H1659	WASHER	1		X	X	X	
26	5787YT	SNAP RING	1		X	X	X	
27	T162396	LUBRICATION FITTING	1		X	X	X	

LOADER CONTROL VALVE LINKAGE
(SERIAL NO. -913416)

T158663 -UN-20AUG02

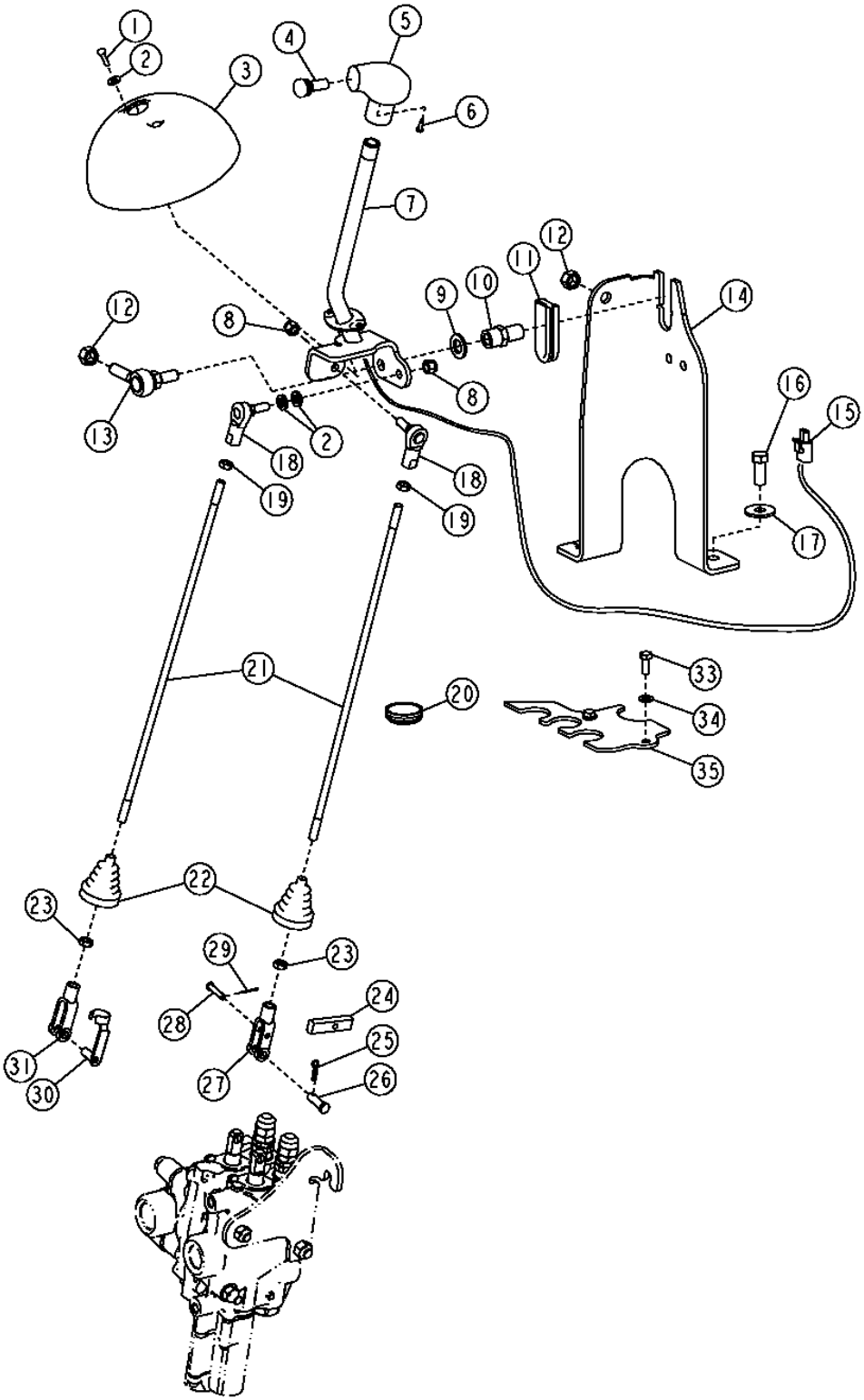

LOADER CONTROL VALVE LINKAGE
(SERIAL NO. -913416)

KEY	PART NO.	PART NAME	QTY	SERIAL NO.	310G	310SG	315SG	REMARKS
1	21H1406	SCREW	2		X	X	X	0.190" X 3/4"
2	T83061	WASHER	2		X	X	X	
3	T166899	COVER	1		X	X	X	
4	AT162180	SWITCH	1		X	X	X	
5	AT171550	KNOB	1		X	X	X	
6	37H95	SCREW	2		X	X	X	
7	AT184156	LEVER	1		X	X	X	
8	M68954	LOCK NUT	2		X	X	X	3/8"
9	24M7053	WASHER	1		X	X	X	
10	T187072	SPACER	1		X	X	X	(SUB FOR T167104)
11	T167192	INSERT	1		X	X	X	
12	14H865	NUT	2		X	X	X	1/2"
13	AT124107	BALL JOINT	1		X	X	X	
14	T165299	SUPPORT	1		X	X	X	
15	RE12363	ELECTRICAL CONNECTOR ASSY	1		X	X	X	
16	19M8011	CAP SCREW	2		X	X	X	M12 X 30
17	24M7180	WASHER	2		X	X	X	
18	AT169087	BALL JOINT	2		X	X	X	
19	14H774	NUT	2		X	X	X	3/8"
20	T185711	PLUG	2		X	X	X	THIRD FUNCTION
21	T164257	ROD	2		X	X	X	
22	T185710	BOOT	2		X	X	X	
23	14H913	NUT	2		X	X	X	3/8"
24	T184821	STRAP	1		X	X	X	
25	R46528	SPRING LOCKING PIN	1		X	X	X	
26	R65563	PIN FASTENER	1		X	X	X	
27	T185004	YOKE	1		X	X	X	(L.H.)
28	45M7036	PIN FASTENER	1		X	X	X	
29	11M7093	COTTER PIN	1		X	X	X	1.600 X 20 MM
30	T183617	PIN FASTENER	1		X	X	X	
31	T140328	YOKE	1		X	X	X	(L.H.)
32	24M7106	WASHER	2		X	X	X	
33	19M7881	SCREW	2		X	X	X	M8 X 20
34	24M7238	WASHER	2		X	X	X	
35	T185748	PLATE	1		X	X	X	

LOADER CONTROL VALVE LINKAGE
(SERIAL NO. 913417-)

T164098 -UN-16JAN03

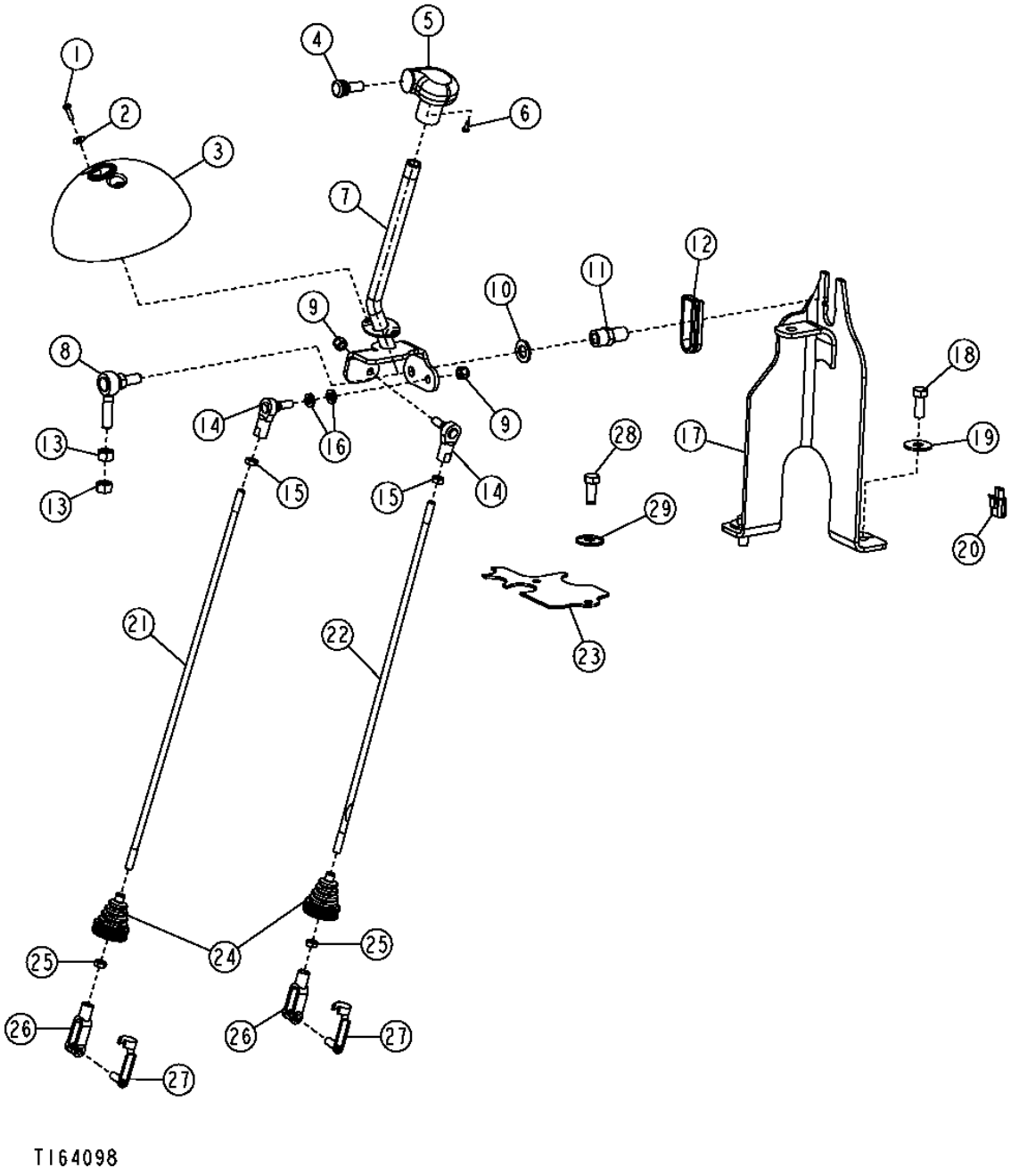

LOADER CONTROL VALVE LINKAGE
(SERIAL NO. 913417-)

KEY	PART NO.	PART NAME	QTY	SERIAL NO.	310G	310SG	315SG	REMARKS
1	21H1406	SCREW	2		X	X	X	0.190" X 3/4"
2	T83061	WASHER	2		X	X	X	
3	T166899	COVER	1		X	X	X	
4	AT162180	SWITCH	1		X	X	X	
5	AT171550	KNOB	1		X	X	X	
6	37H95	SCREW	2		X	X	X	
7	AT196591	LEVER	1		X	X	X	
8	AT124107	BALL JOINT	1		X	X	X	
9	M68954	LOCK NUT	2		X	X	X	9.525 MM
10	24M7053	WASHER	1		X	X	X	
11	T187072	SPACER	1		X	X	X	
12	T167192	INSERT	1		X	X	X	
13	14H865	NUT	2		X	X	X	1/2"
14	AT169087	BALL JOINT	2		X	X	X	
15	14H774	NUT	2		X	X	X	3/8"
16	24M7106	WASHER	2		X	X	X	10 X 18 X 2.500 MM
17	AT196590	CONTROL SUPPORT	1		X	X	X	
18	19M8011	CAP SCREW	2		X	X	X	M12 X 30
19	24M7180	WASHER	2		X	X	X	
20	RE12363	ELECTRICAL CONNECTOR ASSY	1		X	X	X	
21	T188976	STUD	1		X	X	X	
22	T188976	STUD	1		X	X	X	
23	T190473	PLATE	1		X	X	X	
24	T185710	BOOT	2		X	X	X	
25	14H913	NUT	2		X	X	X	3/8"
26	T140328	YOKE	2		X	X	X	
27	T183617	PIN FASTENER	2		X	X	X	
28	19M7881	SCREW	2		X	X	X	M8 X 20
29	24M7238	WASHER	2		X	X	X	

THIRD FUNCTION LOADER CONTROL VALVE LINKAGE
(SERIAL NO. -913416)

T154270 -UN-23APR02

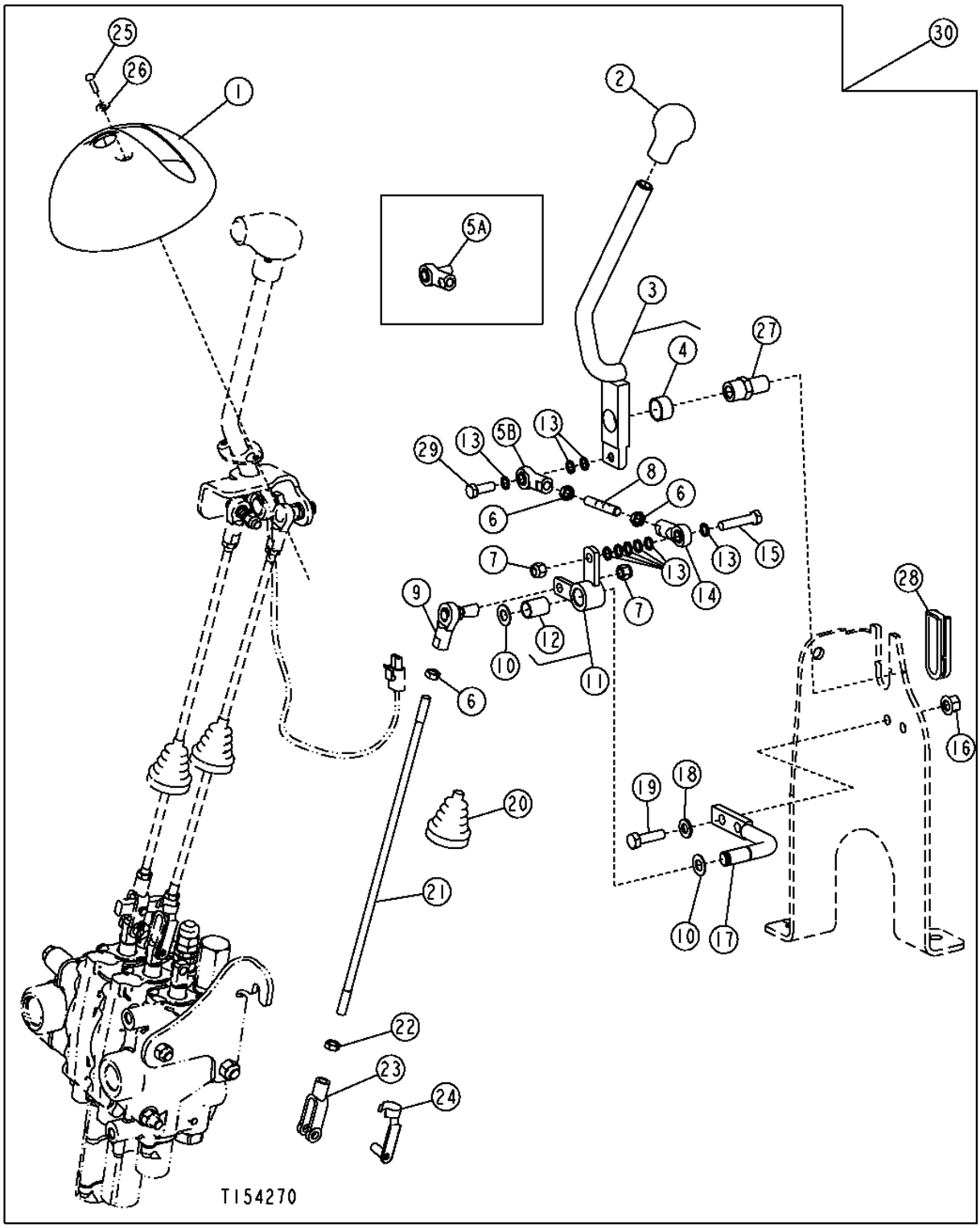

THIRD FUNCTION LOADER CONTROL VALVE LINKAGE
(SERIAL NO. -913416)

KEY	PART NO.	PART NAME	QTY	SERIAL NO.	310G	310SG	315SG	REMARKS
1	T166900	COVER	1		X	X	X	
2	T133291	KNOB	1		X	X	X	
3	AT192261	LEVER	1		X	X	X	
4	L4694T	BUSHING	1		X	X	X	
5A	.....	BALL JOINT	1	-906331	X	X	X	(AT192684 NO LONGER AVAILABLE) (SUB AE37072, 19H2987, 19H2960, (5) 24H1301)
5B	AE37072	LINK END	1	906332-	X	X	X	
6	14H774	NUT	3		X	X	X	3/8"
7	M68954	LOCK NUT	2		X	X	X	3/8"
8	T165431	STUD	1		X	X	X	
9	AT169087	BALL JOINT	1		X	X	X	
10	F2863R	SNAP RING	2		X	X	X	
11	AT184744	BELLCRANK	1		X	X	X	
12	U12857	BUSHING	1		X	X	X	
13	24H1301	WASHER	4	-906331	X	X	X	
	24H1301	WASHER	9	906332-	X	X	X	
14	AE37072	LINK END	1		X	X	X	
15	19H2544	CAP SCREW	1	-906331	X	X	X	3/8" X 1-1/2"
	19H2960	CAP SCREW	1	906332-	X	X	X	3/8" X 1-3/4"
16	14M7400	LOCK NUT	2		X	X	X	M10
17	T185338	SUPPORT	1		X	X	X	
18	24M7239	WASHER	2		X	X	X	
19	19M7550	CAP SCREW	2		X	X	X	M10 X 35
20	T185710	BOOT	1		X	X	X	
21	T164259	STUD	1		X	X	X	
22	14H913	NUT	1		X	X	X	3/8"
23	T140328	YOKE	1		X	X	X	
24	T183617	PIN FASTENER	1		X	X	X	
25	21H1406	SCREW	2		X	X	X	0.190" X 3/4"
26	T83061	WASHER	2		X	X	X	
27	T187072	SPACER	1		X	X	X	
28	T167192	INSERT	1		X	X	X	
29	19H2987	CAP SCREW	1	906332-	X	X	X	3/8" X 1"
30	**AT194369**	**KIT**	**1**		**X**	**X**	**X**	**(WHOLE GOODS) INCLUDES HYDRAULIC OIL LINES, ADAPTERS AND ATTACHING HARDWARE. (ALSO ORDER AT192185)**

THIRD FUNCTION LOADER CONTROL VALVE LINKAGE
(SERIAL NO. 913417-)

T164102 -UN-16JAN03

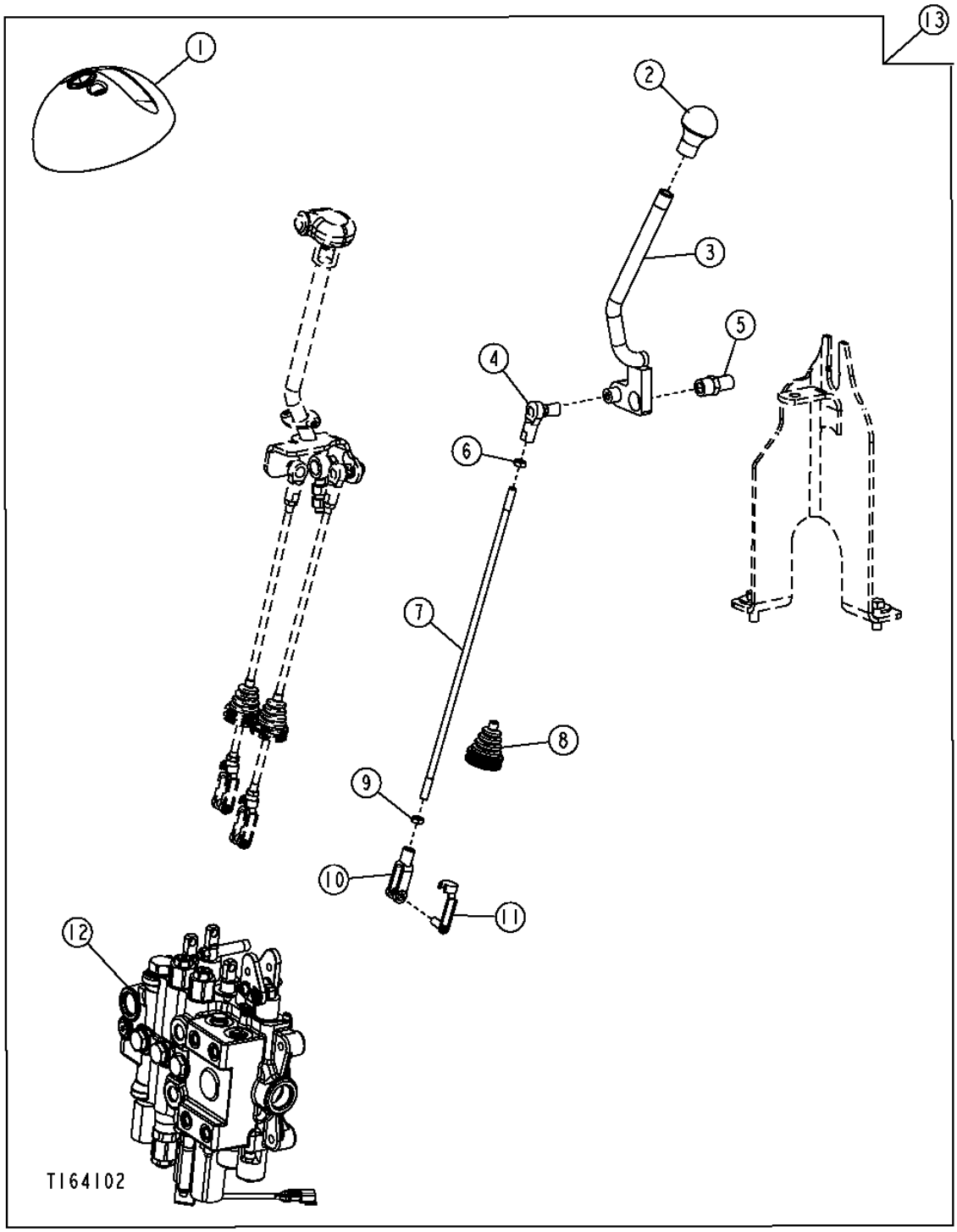

THIRD FUNCTION LOADER CONTROL VALVE LINKAGE
(SERIAL NO. 913417-)

KEY	PART NO.	PART NAME	QTY	SERIAL NO.	REMARKS
1	T166900	COVER	1		
2	T133291	KNOB	1		
3	AT196596	LEVER	1		
4	AT169087	BALL JOINT	1		
5	L4694T	BUSHING	1		
6	14H774	NUT	1		3/8"
7	T188976	STUD	1		
8	T185710	BOOT	1		
9	14H913	NUT	1		3/8"
10	T140328	YOKE	1		
11	T183617	PIN FASTENER	1		
12	AT196624	CONTROL VALVE	1		(CONVENIENCE ASSEMBLY)
13	**AT197236**	**KIT**	**1**		**(WHOLE GOODS) INCLUDES HYDRAULIC OIL LINES, ADAPTERS AND ATTACHING HARDWARE.**

LOADER LIFT ARM

T152287 -UN-05MAR02

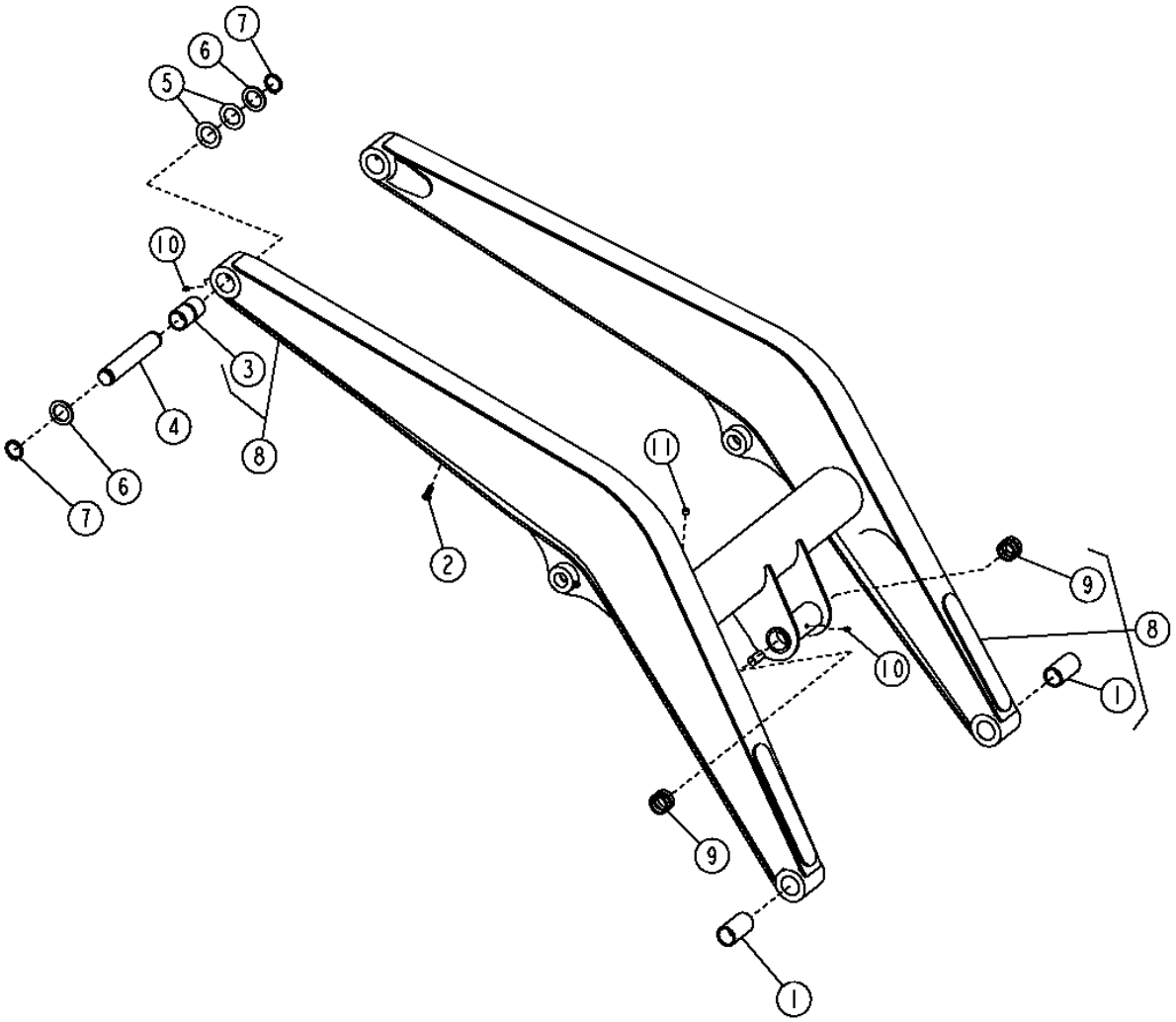

LOADER LIFT ARM

KEY	PART NO.	PART NAME	QTY	SERIAL NO.	310G	310SG	315SG	REMARKS
1	T154165	BUSHING	2		X	X	X	
2	T148411	NUT	1		X	X	X	M10, (KREMNUT)(BLACK NO.10 FOR 10 MM PLATE)
3	T154166	BUSHING	2		X	X	X	(SERIAL NO. 9084382 REQUIRES T154764)
4	T154352	PIN	2		X	X	X	49.475 X 296.600 MM (1.948" X 11.677") (SERIAL NO. 908382 REQUIRES T154769)
5	24H1589	WASHER	6		X	X	X	(SERIAL NO. 908382 REQUIRES 24H1679)
6	T75815	WASHER	4		X	X	X	(SERIAL NO. 908382 REQUIRES T75816)
7	T61226	SNAP RING	4		X	X	X	(SERIAL NO. 908382 REQUIRES T158181)
8	.....	LOADER BOOM	1	-896864	X	X	X	(AT184843 NO LONGER AVAILABLE) (SUB AT315189) (ALSO ORDER (2) T187275, (2) T187276 AND (2) 19M7784) (SUB FOR AT199740, THIS APPLICATION)
	AT315189	LIFT ARM	1	896865-	X	X	X	(SERIAL NO. 908382 REQUIRES AT314739)
9	T154058	BUSHING	2		X	X	X	
10	T162396	LUBRICATION FITTING	3		X	X	X	

LOADER BUCKET LINKAGE

TP58139 -UN-10OCT00

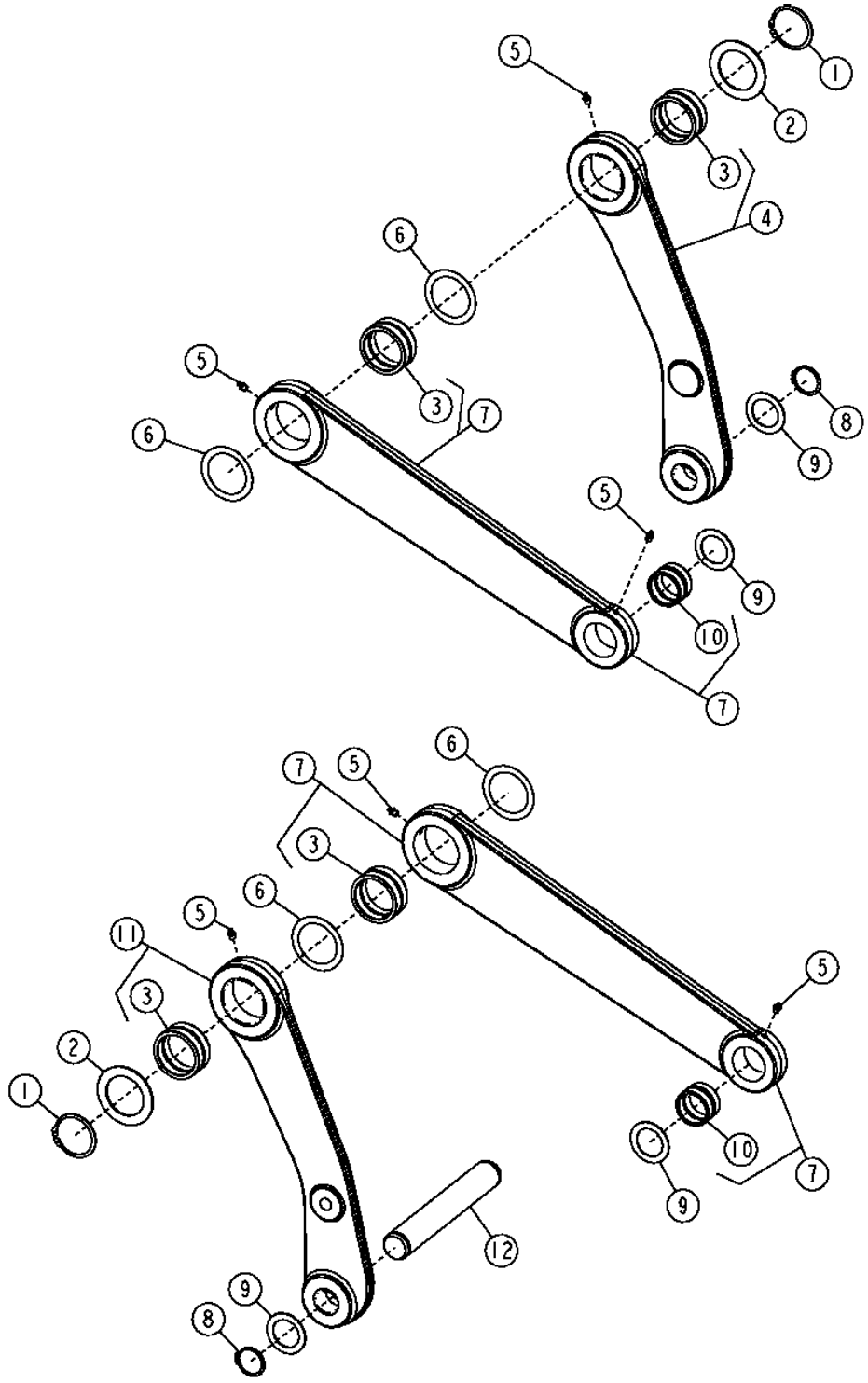

LOADER BUCKET LINKAGE

KEY	PART NO.	PART NAME	QTY	SERIAL NO.	310G	310SG	315SG	REMARKS
1	40M7217	SNAP RING	2		X	X	X	
2	T158579	WASHER	2		X	X	X	
3	T165310	BUSHING	4		X	X	X	
4	AT184647	LINK	1		X	X	X	LEFT
5	T162396	LUBRICATION FITTING	6		X	X	X	
6	T161497	SHIM	6		X	X	X	
7	AT184064	LINK	2		X	X	X	
8	40M7166	SNAP RING	2		X	X	X	
9	24H1595	WASHER	4		X	X	X	
10	T183356	BUSHING	2		X	X	X	
11	AT184646	LINK	1		X	X	X	RIGHT
12	T165314	PIN	1		X	X	X	49.475 X 330.100 MM (1.948" X 12.996")

LOADER CONTROL VALVE
(HUSCO)
(SERIAL NO. -913416)

TP69641 -UN-06OCT00

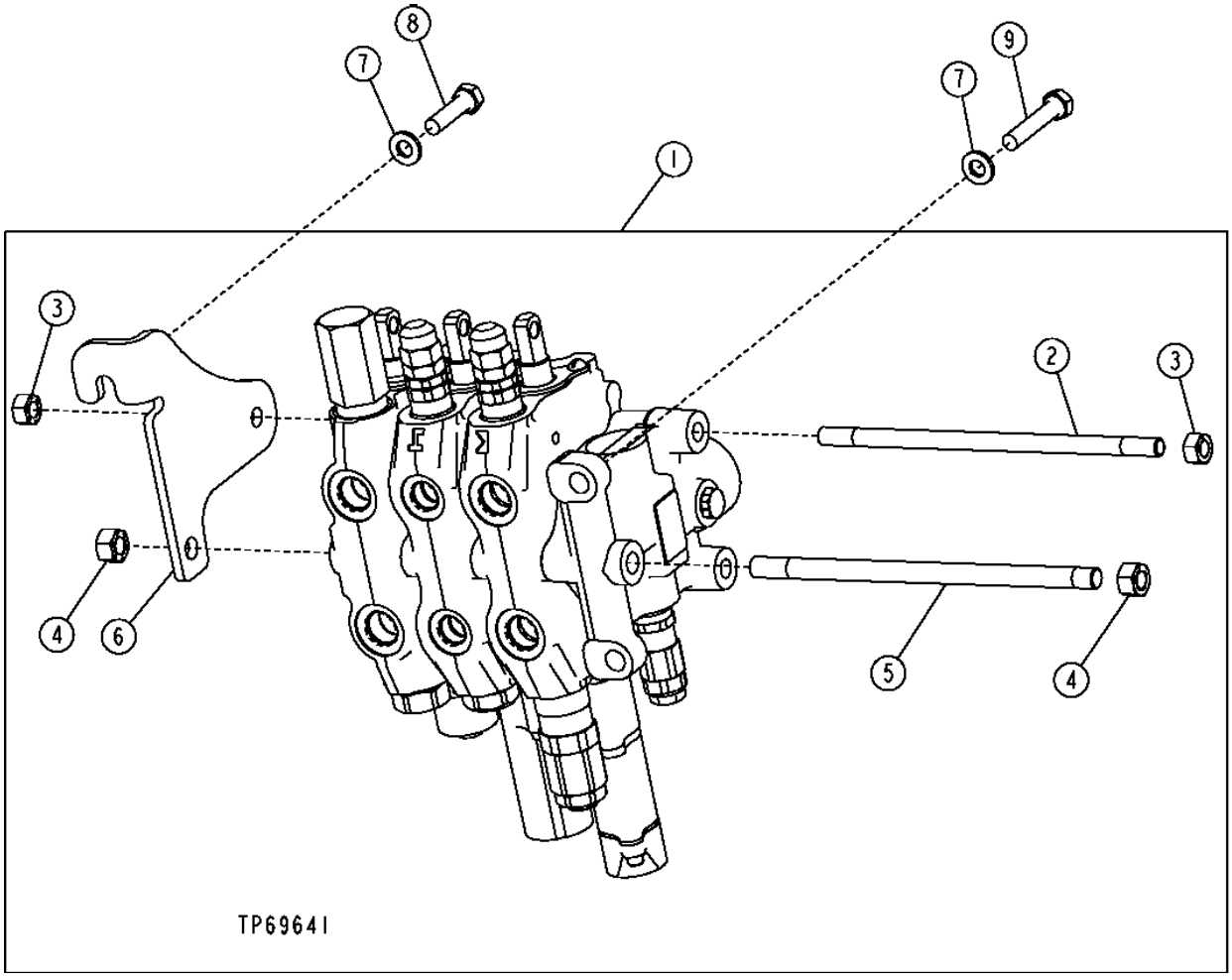

LOADER CONTROL VALVE
(HUSCO)
(SERIAL NO. -913416)

KEY	PART NO.	PART NAME	QTY	SERIAL NO.	310G	315SG	REMARKS
1	.....	RELIEF VALVE	1		X	X	(TWO FUNCTION) (AT184003 NO LONGER AVAILABLE) ORDER COMPONENTS
	.....	RELIEF VALVE	1		X	X	(THREE FUNCTION) (AT184005 NO LONGER AVAILABLE) ORDER COMPONENTS
2	T185982	STUD	2		X	X	(TWO FUNCTION)
	T186319	STUD	2		X	X	(THREE FUNCTION)
3	14H807	NUT	4		X	X	7/16"
4	14H865	NUT	2		X	X	1/2"
5	T185985	STUD	1		X	X	(TWO FUNCTION)
	T121238	STUD	1		X	X	(THREE FUNCTION)
6	T164088	BRACKET	1		X	X	
7	24M7239	WASHER	3		X	X	
8	19M8637	CAP SCREW	1		X	X	M10 X 40
9	19M7935	CAP SCREW	2		X	X	M10 X 55

LOADER/STABILIZER CONTROL VALVE
(HUSCO)
(SERIAL NO. 913417-)

T206864 -UN-28JAN05

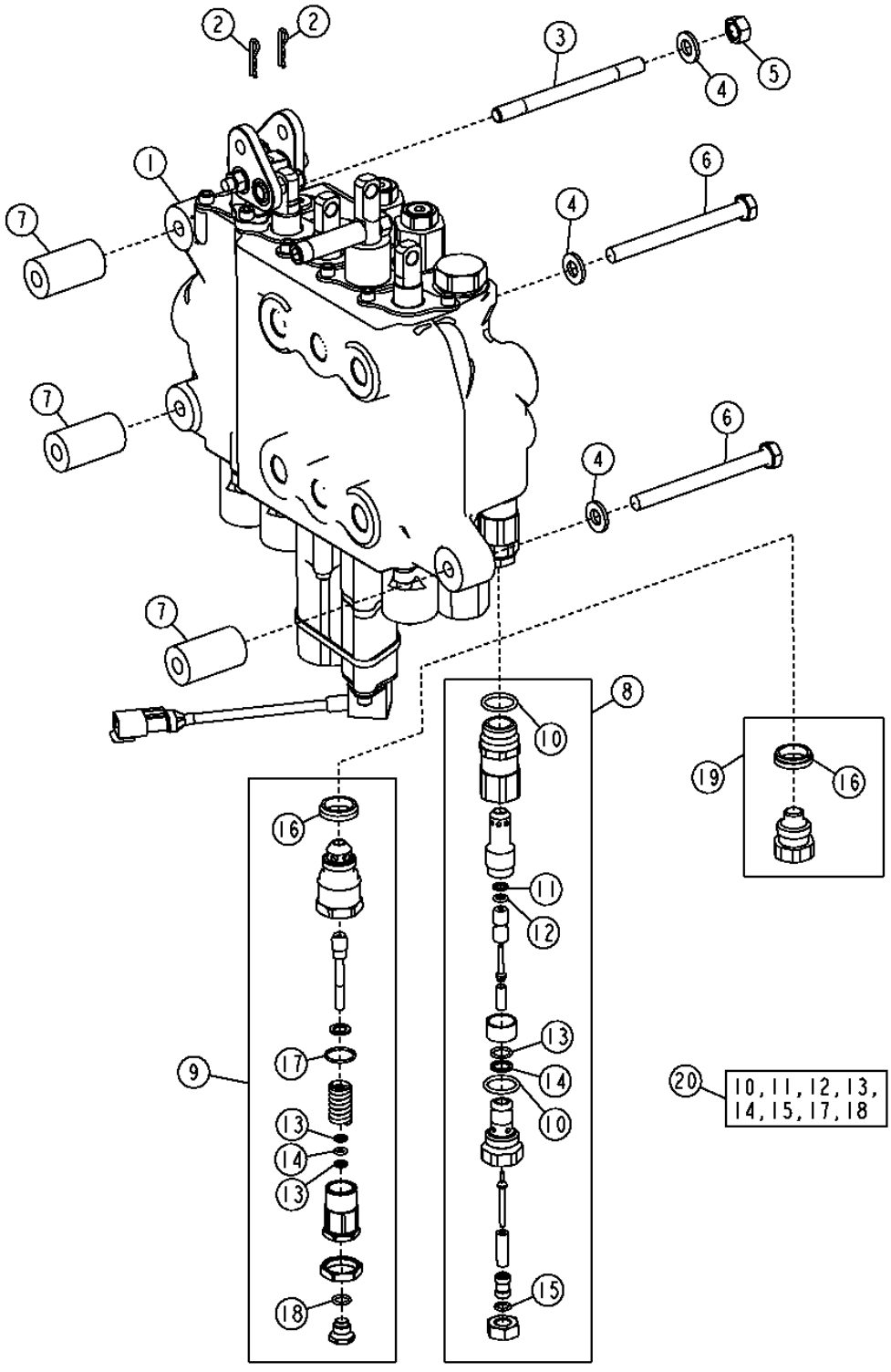

T206864

LOADER/STABILIZER CONTROL VALVE
(HUSCO)
(SERIAL NO. 913417-)

KEY	PART NO.	PART NAME	QTY	SERIAL NO.	310G	310SG	315SG	REMARKS
1	AT196622	SPOOL VALVE	1		X	X	X	(FOUR FUNCTION) (CONVENIENCE ASSEMBLY)
	AT196624	SPOOL VALVE	1		X	X	X	(FIVE FUNCTION) (CONVENIENCE ASSEMBLY)
2	R46528	SPRING LOCKING PIN	2		X	X	X	
3	T190300	STUD	1		X	X	X	
4	24M7239	WASHER	3		X	X	X	
5	14M7274	NUT	1		X	X	X	M10
6	19M8166	CAP SCREW	2		X	X	X	M10 X 110
7	T190296	SPACER	3		X	X	X	
8	.....	PRESSURE RELIEF VALVE	1	-943225	X			(AT172945 NO LONGER AVAILABLE) (2650 PSI) (SUB AT316301)
9	AT316301	PRESSURE RELIEF VALVE	1	943226-	X			(2800 PSI)
10	KV12858	O-RING	2		X			
11	.....	BACK-UP RING	1		X			
12	.....	O-RING	1		X			
13	.....	O-RING	1		X			
14	.....	BACK-UP RING	1		X			
15	R79060	O-RING	1		X			
16	T183756	SEAL	1		X	X	X	
17	.....	O-RING	1		X			
18	.....	O-RING	1		X			
19	AT78527	PLUG	1			X	X	
20	AT314538	SEAL KIT	1		X	X	X	(7/8 INCH RELIEF VALVE SEAL) (SUB FOR AT189413)
	AT314539	SEAL KIT	1		X	X	X	(1 1/16 INCH RELIEF VALVE SEAL) (SUB FOR AT189413)

**INLET SECTION
LOADER VALVE
(SERIAL NO. -913416)**

TP69644 -UN-06OCT00

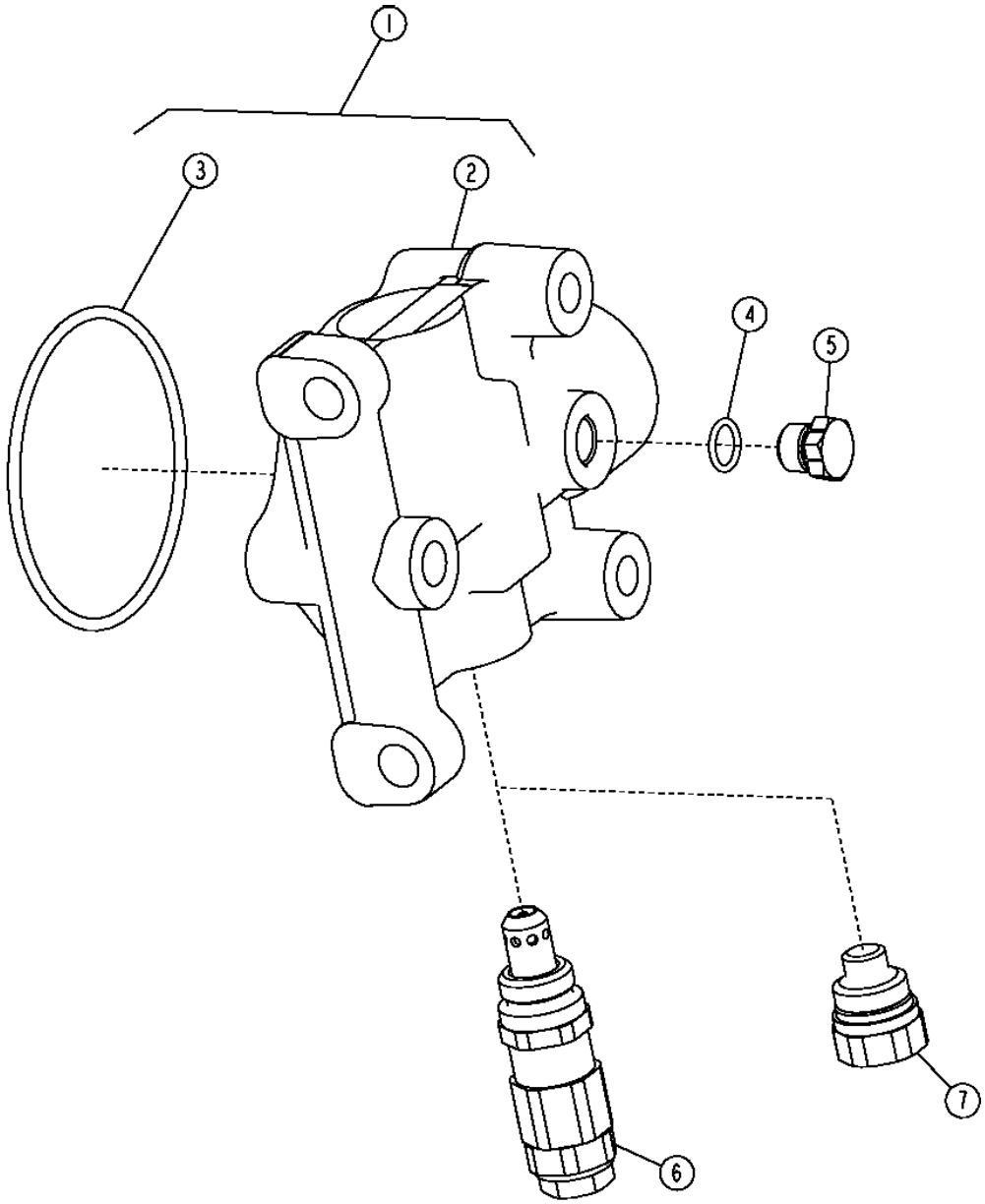

TP69644

INLET SECTION
LOADER VALVE
(SERIAL NO. -913416)

KEY	PART NO.	PART NAME	QTY	SERIAL NO.	310G	310SG	315SG	REMARKS
1	AT185939	SPOOL VALVE	1		X	X	X	
2	.....	HOUSING	1		X	X	X	
3	T118685	O-RING	1		X	X	X	
4	R26448	O-RING	1		X	X	X	
5	R27218	FITTING PLUG	1		X	X	X	
6	AT318530	PRESSURE RELIEF VALVE	1	-910055	X			(2650 PSI) (SUB FOR AT172945)
	AT316301	PRESSURE RELIEF VALVE	1	910056-	X			(2800 PSI) (SUB FOR AT172945)
	AT184547	PRESSURE RELIEF VALVE	1	-910055		X		
7	AT78527	PLUG	1	910056-		X		
	AT78527	PLUG	1				X	

**BOOM SECTION
LOADER VALVE
(SERIAL NO. -913416)**

T142256 -UN-18MAY01

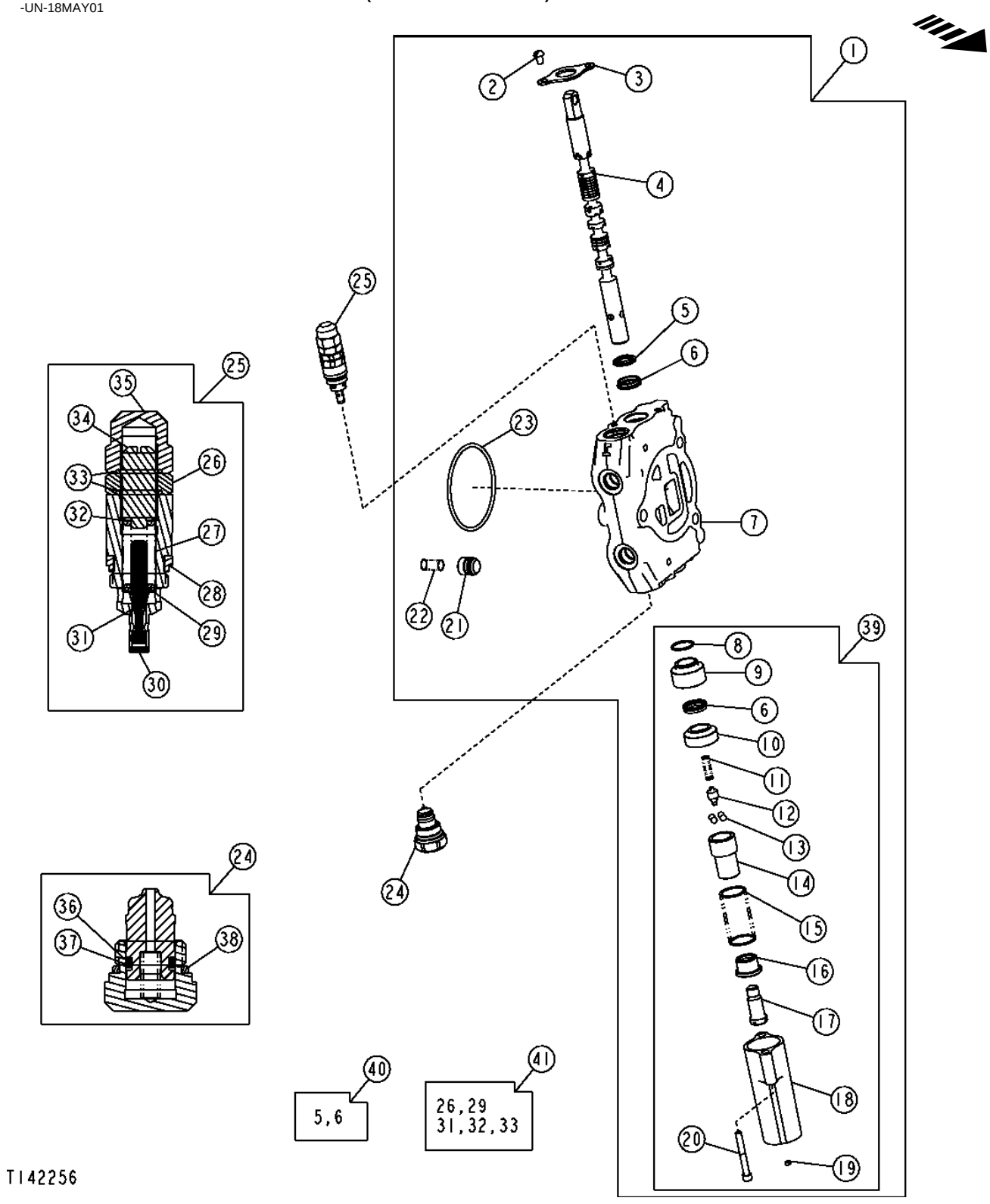

BOOM SECTION
LOADER VALVE
(SERIAL NO. -913416)

KEY	PART NO.	PART NAME	QTY	SERIAL NO.	310G	310SG	315SG	REMARKS
1	AT191715	VALVE	1		X	X	X	(2 FUNCTION)
	AT191707	HYD ACTUATED CONTROL VALVE	1		X	X	X	(3 FUNCTION)
2	21H1352	SCREW	2		X	X	X	1/4" X 3/8"
3	T81524	PLATE	1		X	X	X	
4	.....	SPOOL VALVE	1		X	X	X	
5	.....	SEAL	2		X	X	X	
6	.....	SEAL	2		X	X	X	
7	.....	HOUSING	1		X	X	X	
8	.....	O-RING	1		X	X	X	
9	T152404	SLEEVE	1		X	X	X	
10	T152401	SLEEVE	1		X	X	X	
11	.....	SPRING	1		X	X	X	
12	T118715	CAM	1		X	X	X	
13	T81535	BALL	4		X	X	X	
14	T118708	SEAT	1		X	X	X	
15	T118884	SPRING	1		X	X	X	
16	T118709	SEAT	1		X	X	X	
17	T118711	END	1		X	X	X	
18	T152398	CAP	1		X	X	X	
19	T118799	FILTER	1		X	X	X	
20	T118712	SCREW	2		X	X	X	
21	T152406	POPPET	1		X	X	X	(2 FUNCTION)
	T81538	POPPET	1		X	X	X	(3 FUNCTION)
22	T152407	SPRING	1		X	X	X	(2 FUNCTION)
	T81539	SPRING	1		X	X	X	(3 FUNCTION)
23	T118685	O-RING	1		X	X	X	
24	AT169373	CHECK VALVE	1		X	X	X	
25	AT174217	PRESSURE RELIEF VALVE	1		X	X	X	(5000 PSI)
26	T67424	NUT	1		X	X	X	
27	.....	SPRING	1		X	X	X	
28	T183756	SEAL	1		X	X	X	
29	.....	RETAINER	1		X	X	X	
30	.....	PLUG	1		X	X	X	
31	.....	POPPET	1		X	X	X	
32	.....	SHIM	1		X	X	X	
33	.....	O-RING	2		X	X	X	
34	.....	SCREW	1		X	X	X	
35	T67425	NUT	1		X	X	X	
36	.....	BACK-UP RING	1		X	X	X	
37	.....	O-RING	1		X	X	X	
38	T118681	O-RING	1		X	X	X	
39	AT192372	DETENT	1		X	X	X	POSITIONER
40	AT280406	SEAL KIT	1		X	X	X	(SPOOL SEAL) (SUB FOR AT178372)
41	AT314538	SEAL KIT	1		X	X	X	(7/8 INCH RELIEF VALVE SEAL) (SUB FOR AT189413)
	AT314539	SEAL KIT	1		X	X	X	(1 1/16 INCH RELIEF VALVE SEAL) (SUB FOR AT189413)

BOOM SECTION
LOADER/STABILIZER VALVE
(SERIAL NO. 913417-)

T163271 -UN-27DEC02

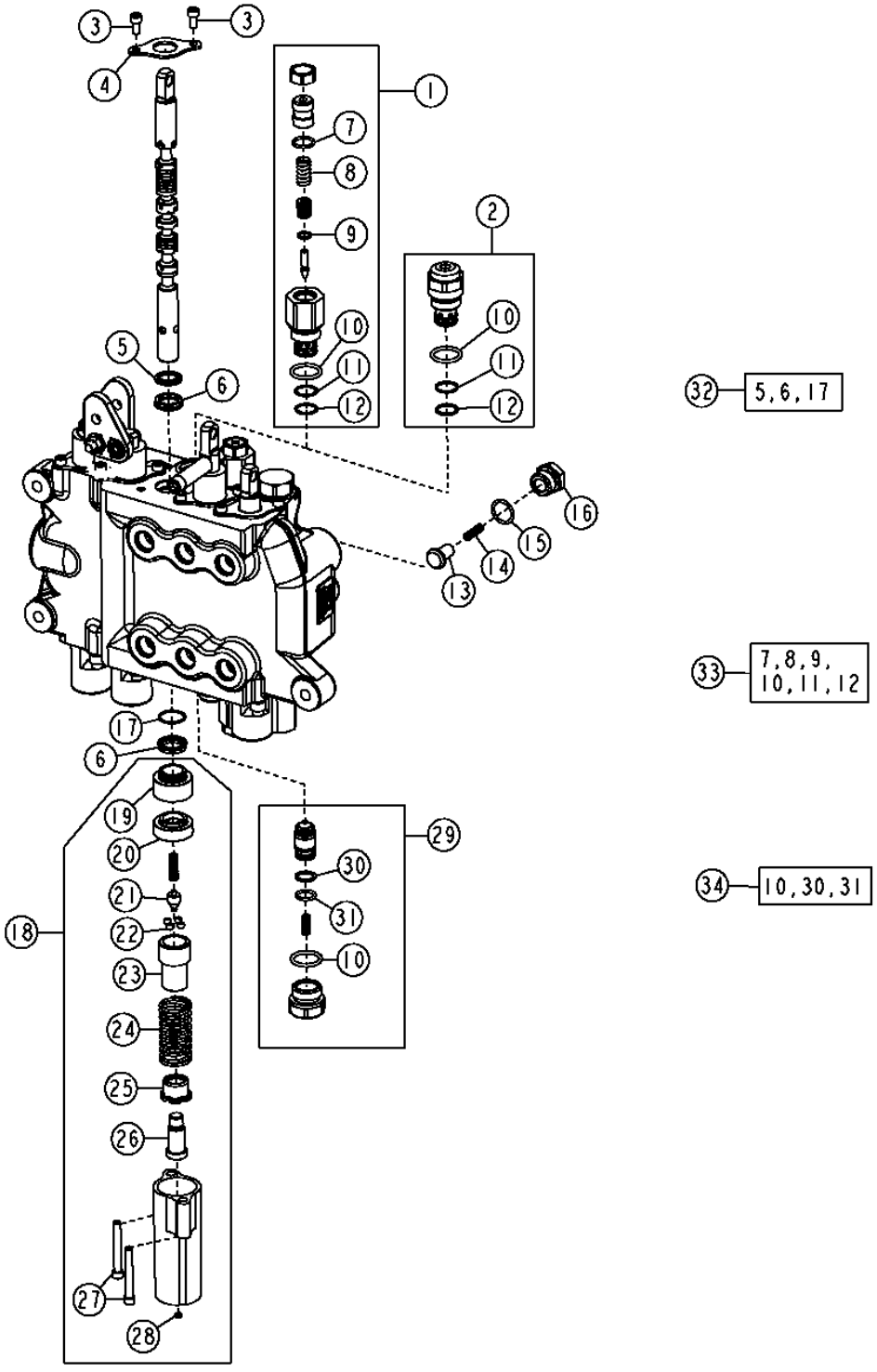

BOOM SECTION
LOADER/STABILIZER VALVE
(SERIAL NO. 913417-)

KEY	PART NO.	PART NAME	QTY	SERIAL NO.	310G	310SG	315SG	REMARKS
1	AT300803	PRESSURE RELIEF VALVE	1		X	X	X	(NOT ANTI-CAVITATION) (5000 PSI)
2	AT301128	PRESSURE RELIEF VALVE	1		X	X	X	(ANTI-CAVITATION) (5000 PSI)
3	21H1352	SCREW	2		X	X	X	1/4" X 3/8"
4	T81524	PLATE	1		X	X	X	
5	.....	SEAL	1		X	X	X	
6	.....	SEAL	2		X	X	X	
7	.....	O-RING	1		X	X	X	
8	.....	SPRING	1		X	X	X	
9	R63548	O-RING	1		X	X	X	
10	T118681	O-RING	3		X	X	X	
11	.....	BACK-UP RING	2		X	X	X	
12	T107887	O-RING	2		X	X	X	
13	T118694	POPPET	1		X	X	X	
14	T118693	SPRING	1		X	X	X	
15	R26906	O-RING	1		X	X	X	
16	T118692	SEAT	1		X	X	X	
17	.....	O-RING	1		X	X	X	
18	AT192372	DETENT	1		X	X	X	
19	T152404	SLEEVE	1		X	X	X	
20	T152401	SLEEVE	1		X	X	X	
21	T118715	CAM	1		X	X	X	
22	T81535	BALL	4		X	X	X	
23	T118708	VALVE SEAT INSERT	1		X	X	X	
24	T118884	SPRING	1		X	X	X	
25	T118709	VALVE SEAT INSERT	1		X	X	X	
26	T118711	END	1		X	X	X	
27	T118712	SCREW	2		X	X	X	
28	T118799	FILTER	1		X	X	X	
29	AT169373	CHECK VALVE	1		X	X	X	
30	.....	BACK-UP RING	1		X	X	X	
31	.....	O-RING	1		X	X	X	
32	AT280406	SEAL KIT	1		X	X	X	(SPOOL SEAL) (SUB FOR AT178372)
33	AT300801	SEAL KIT	2		X	X	X	
34	AT314538	SEAL KIT	1		X	X	X	(7/8 INCH RELIEF VALVE SEAL) (SUB FOR AT189413)
	AT314539	SEAL KIT	1		X	X	X	(1 1/16 INCH RELIEF VALVE SEAL) (SUB FOR AT189413)

**BUCKET SECTION
LOADER VALVE
(SERIAL NO. -913416)**

T149039 -UN-08JAN02

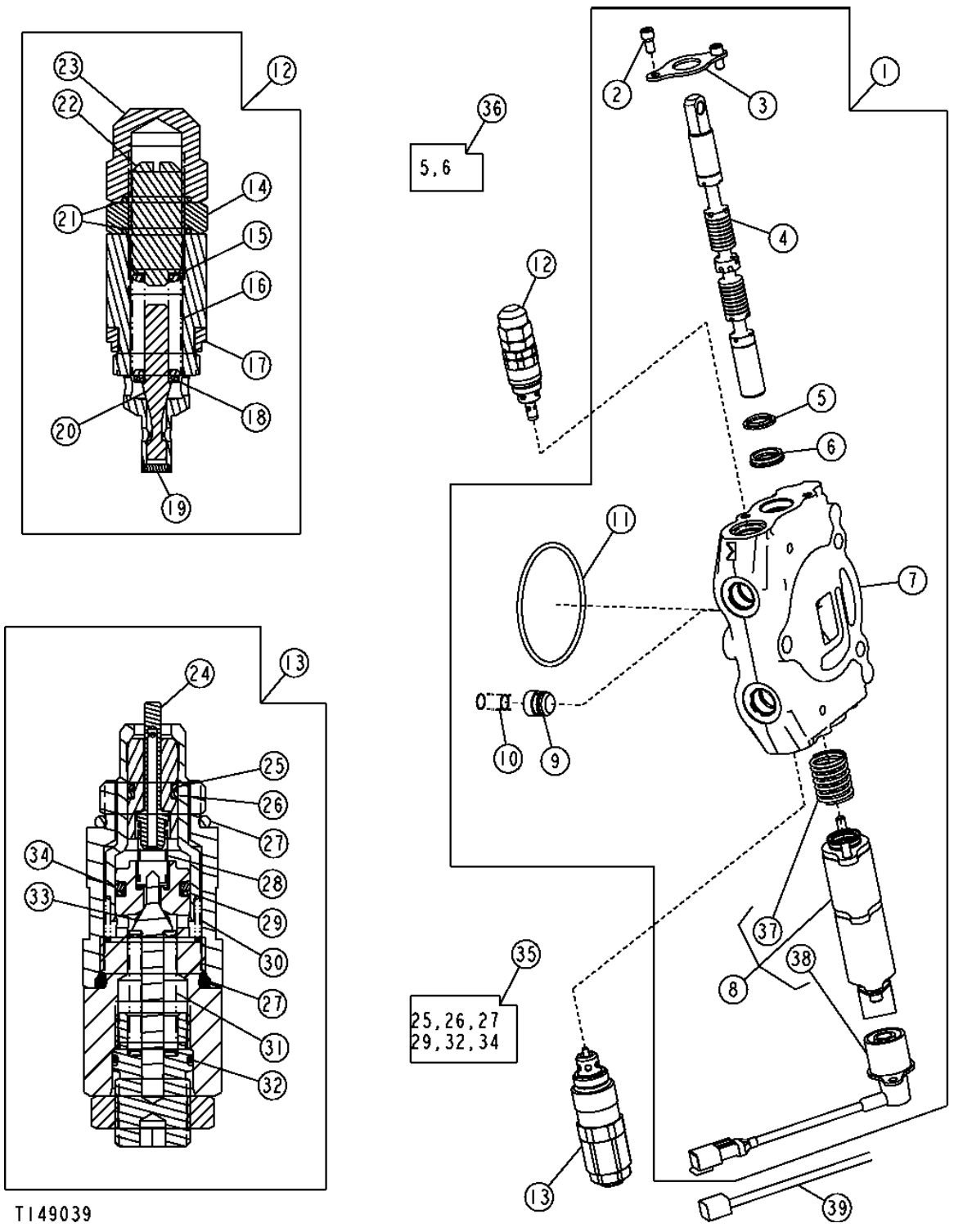

BUCKET SECTION
LOADER VALVE
(SERIAL NO. -913416)

KEY	PART NO.	PART NAME	QTY	SERIAL NO.	310G	310SG	315SG	REMARKS
1	AT170218	CONTROL VALVE	1		X	X	X	
2	21H1352	SCREW	2		X	X	X	1/4" X 3/8"
3	T81524	PLATE	1		X	X	X	
4	.....	SPOOL VALVE	1		X	X	X	
5	.....	SEAL	2		X	X	X	
6	.....	SEAL	2		X	X	X	
7	.....	HOUSING	1		X	X	X	
8	AT196245	DETENT	1	-901683	X	X	X	(ALSO ORDER AT183590) (SUB FOR AT178326) (SEE D-TAC SOL 51993)
	AT196245	DETENT	1	901684-	X	X	X	
9	T81538	POPPET	1		X	X	X	
10	T81539	SPRING	1		X	X	X	
11	T118685	O-RING	1		X	X	X	
12	AT172937	PRESSURE RELIEF VALVE	1		X	X	X	(4600 PSI)
13	AT192457	PRESSURE RELIEF VALVE	1		X	X	X	(4600 PSI)
14	T67424	NUT	1		X	X	X	
15	.....	SHIM	1		X	X	X	
16	.....	SPRING	1		X	X	X	
17	T183756	SEAL	1		X	X	X	
18	.....	RETAINER	1		X	X	X	
19	.....	PLUG	1		X	X	X	
20	.....	POPPET	1		X	X	X	
21	.....	O-RING	2		X	X	X	
22	.....	SCREW	1		X	X	X	
23	T67425	NUT	1		X	X	X	
24	.....	POPPET	1		X	X	X	
25	.....	BACK-UP RING	1		X	X	X	
26	.....	O-RING	1		X	X	X	
27	T118681	O-RING	2		X	X	X	
28	.....	SPRING	1		X	X	X	
29	.....	BACK-UP RING	1		X	X	X	
30	.....	SPRING	1		X	X	X	
31	.....	SPRING	1		X	X	X	
32	.....	O-RING	1		X	X	X	
33	.....	POPPET	1		X	X	X	
34	.....	O-RING	1		X	X	X	
35	AT314538	SEAL KIT	1		X	X	X	7/8 INCH RELIEF VALVE SEAL KIT, (SUB FOR AT189413)
	AT314539	SEAL KIT	1		X	X	X	1 1/16 INCH RELIEF VALVE SEAL KIT, (SUB FOR AT189413)
36	AT280406	SEAL KIT	1		X	X	X	(SPOOL SEAL) (SUB FOR AT178372)
37	T134881	SPRING	1		X	X	X	
38	AT196246	MAGNET	1		X	X	X	
39	AT183590	WIRING HARNESS	1	-901683	X	X	X	(SEE D-TAC SOL 51993)

BUCKET SECTION
LOADER/STABILIZER VALVE
(SERIAL NO. 913417-)

T163249 -UN-27DEC02

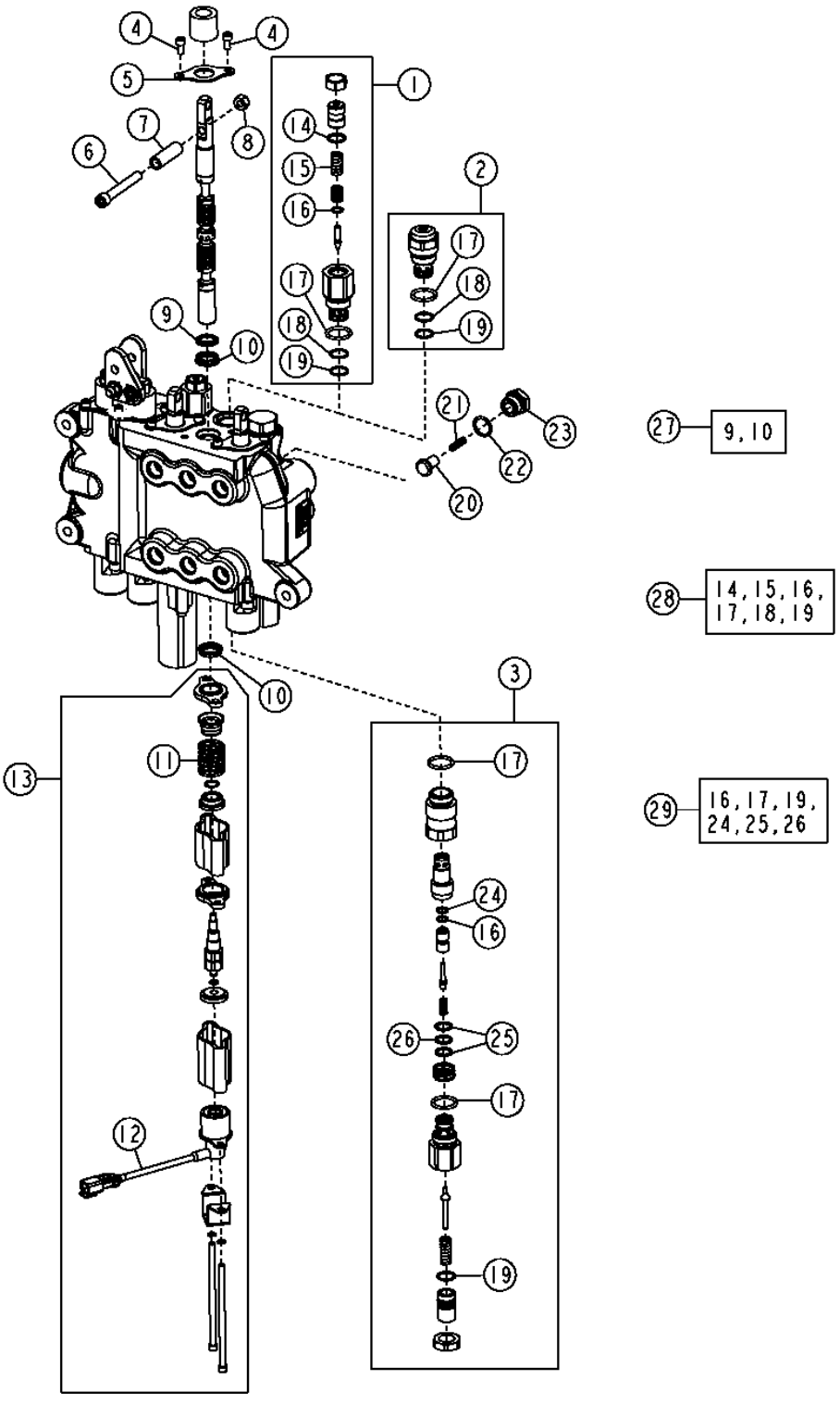

BUCKET SECTION
LOADER/STABILIZER VALVE
(SERIAL NO. 913417-)

KEY	PART NO.	PART NAME	QTY	SERIAL NO.	310G	310SG	315SG	REMARKS
1	AT301526	PRESSURE RELIEF VALVE	1		X	X	X	(NOT ANTI-CAVITATION) (4600 PSI)
2	AT301527	PRESSURE RELIEF VALVE	1		X	X	X	(ANTI-CAVITATION) (4600 PSI)
3	AT192457	PRESSURE RELIEF VALVE	1		X	X	X	(4600 PSI)
4	21H1352	SCREW	2		X	X	X	1/4" X 3/8"
5	T81524	PLATE	1		X	X	X	
6	19H3317	SCREW	1		X	X	X	3/8" X 2-3/4"
7	T190795	TUBE	1		X	X	X	
8	14H1076	NUT	1		X	X	X	3/8"
9	.....	SEAL	1		X	X	X	
10	.....	SEAL	2		X	X	X	
11	T134881	SPRING	1		X	X	X	
12	AT196246	MAGNET	1		X	X	X	
13	AT196245	DETENT	1		X	X	X	
14	.....	O-RING	1		X	X	X	
15	.....	SPRING	1		X	X	X	
16	R63548	O-RING	2		X	X	X	
17	T118681	O-RING	4		X	X	X	
18	.....	BACK-UP RING	2		X	X	X	
19	T107887	O-RING	3		X	X	X	
20	T118694	POPPET	1		X	X	X	
21	T118693	SPRING	1		X	X	X	
22	R26906	O-RING	1		X	X	X	
23	T118692	PLUG	1		X	X	X	
24	T150958	BACK-UP RING	1		X	X	X	
25	.....	BACK-UP RING	2		X	X	X	
26	.....	O-RING	1		X	X	X	
27	AT280406	SEAL KIT	1		X	X	X	(SPOOL SEAL) (SUB FOR AT178372)
28	AT300801	SEAL KIT	2		X	X	X	
29	AT314538	SEAL KIT	1					7/8 INCH RELIEF VALVE SEAL KIT, (SUB FOR AT189413)
	AT314539	SEAL KIT	1					1 1/16 INCH RELIEF VALVE SEAL KIT, (SUB FOR AT189413)

AUXILIARY SECTION
LOADER VALVE
(SERIAL NO. -913416)

T215713 -UN-10OCT05

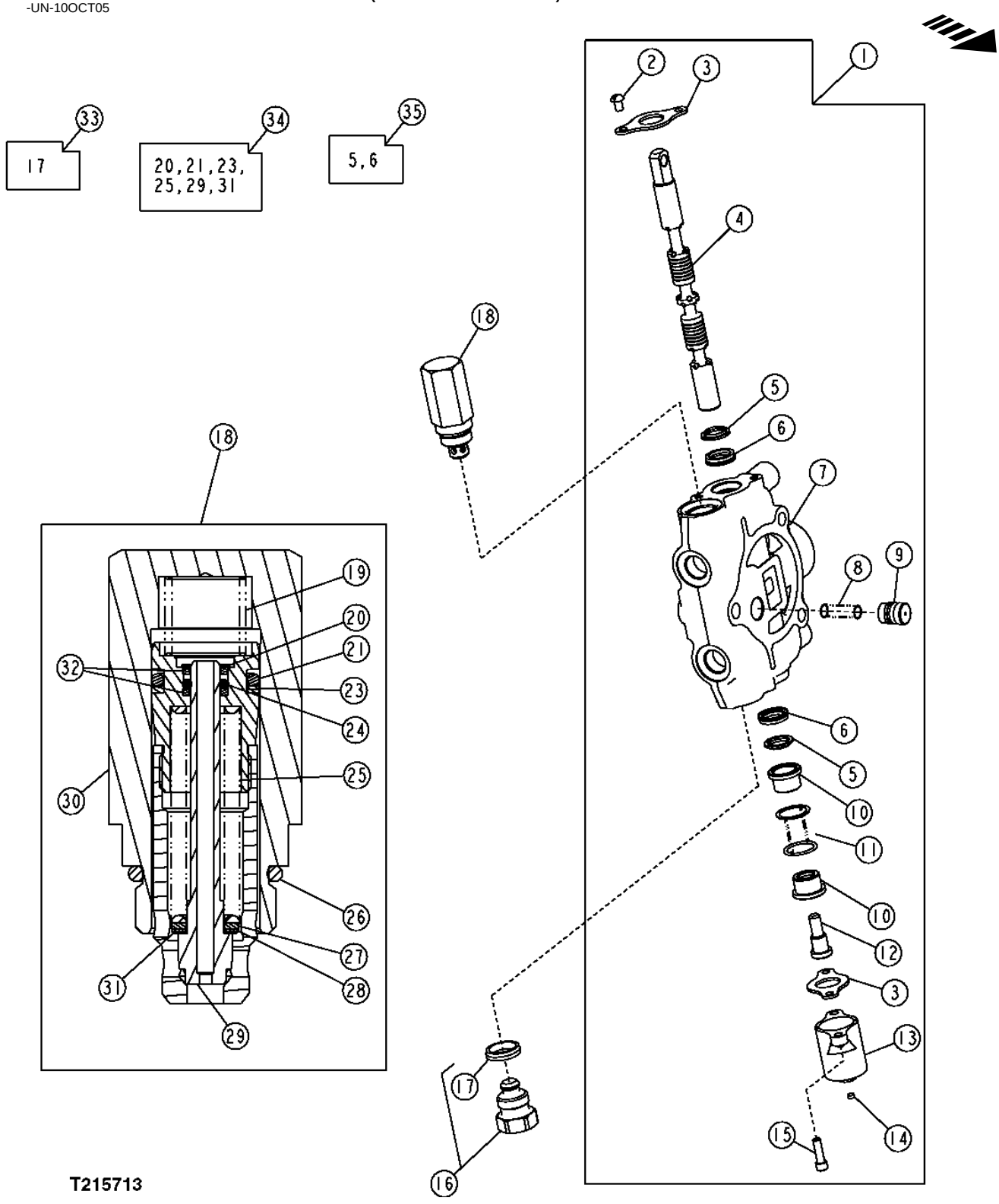

T215713

AUXILIARY SECTION
LOADER VALVE
(SERIAL NO. -913416)

KEY	PART NO.	PART NAME	QTY	SERIAL NO.	310G	310SG	315SG	REMARKS
1	AT191711	SPOOL VALVE	1		X	X	X	
2	21H1352	SCREW	2		X	X	X	1/4" X 3/8"
3	T81524	PLATE	1		X	X	X	
4	.....	SPOOL VALVE	1		X	X	X	
5	.....	SEAL	2		X	X	X	
6	.....	SEAL	2		X	X	X	
7	.....	HOUSING	1		X	X	X	
8	T152407	SPRING	1		X	X	X	
9	T152406	POPPET	1		X	X	X	
10	T81540	RETAINER	2		X	X	X	
11	T118879	SPRING	1		X	X	X	
12	T81541	SCREW	1		X	X	X	
13	T118808	CAP	1		X	X	X	
14	T118799	FILTER	1	-906011	X	X	X	
15	19H3554	SCREW	2		X	X	X	1/4" X 0.880"
16	AT83174	PLUG	1		X	X	X	
17	T183757	SEAL	1		X	X	X	
18	AT182377	PRESSURE RELIEF VALVE	1		X	X	X	(3800 PSI)
19	T118867	SPRING	1		X	X	X	
20	.....	RETAINER	1		X	X	X	
21	.....	O-RING	1		X	X	X	
22	.....	O-RING	1		X	X	X	
23	.....	BACK-UP RING	1		X	X	X	
24	.....	O-RING	1		X	X	X	
25	.....	SPRING	1		X	X	X	
26	T118681	O-RING	1		X	X	X	
27	.....	WASHER	1		X	X	X	
28	.....	WASHER	1		X	X	X	
29	.....	POPPET	1		X	X	X	
30	T118866	HOUSING	1		X	X	X	
31	.....	WASHER	1		X	X	X	
32	.....	BACK-UP RING	2		X	X	X	
33	AT314538	SEAL KIT	1					7/8 INCH RELIEF VALVE SEAL KIT, (SUB FOR AT189413)
	AT314539	SEAL KIT	1					1 1/16 INCH RELIEF VALVE SEAL KIT, (SUB FOR AT189413)
34	AT178362	KIT	1		X	X	X	(RELIEF VALVE CARTRIDGE)
35	AT280406	SEAL KIT	1		X	X	X	(SPOOL SEAL) (SUB FOR AT178372)

**AUXILIARY VALVE KIT
LOADER VALVE
(SERIAL NO. -913416)**

T135702 -UN-28NOV00

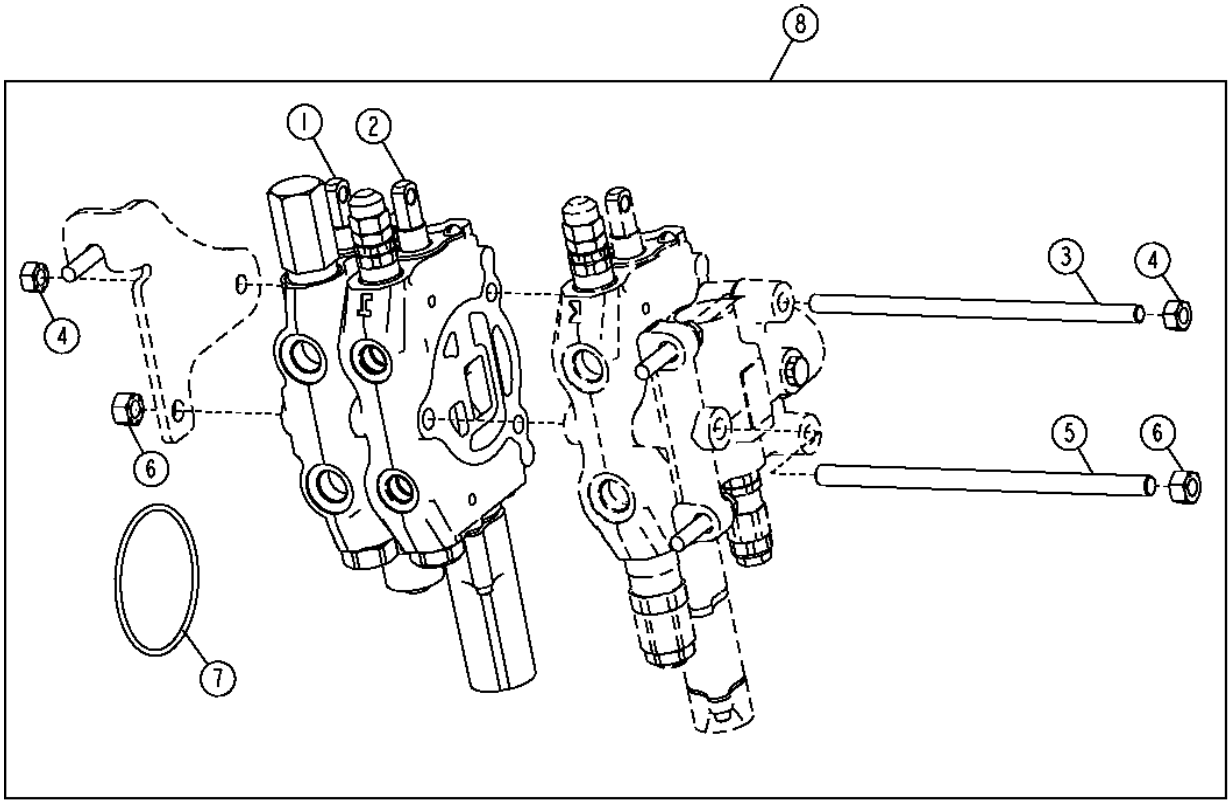

T135702

AUXILIARY VALVE KIT
LOADER VALVE
(SERIAL NO. -913416)

KEY	PART NO.	PART NAME	QTY	SERIAL NO.	310G	315SG	REMARKS
1	AT191711	SPOOL VALVE	1		X	X X	AUXILIARY SECTION
2	AT191707	HYD ACTUATED CONTROL VALVE	1		X	X X	BOOM SECTION
3	T186319	STUD	2		X	X X	
4	14H807	NUT	4		X	X X	7/16"
5	T121238	STUD	1		X	X X	
6	14H865	NUT	2		X	X X	1/2"
7	T118685	O-RING	2		X	X X	
8	**AT192185**	**KIT**	**1**		**X**	**X X**	**(WHOLE GOODS) (INCLUDES AT182377) (ALSO ORDER AT194369)**

**AUXILIARY SECTION
LOADER/STABILIZER VALVE
(SERIAL NO. 913417-)**

T163042 -UN-06JAN03

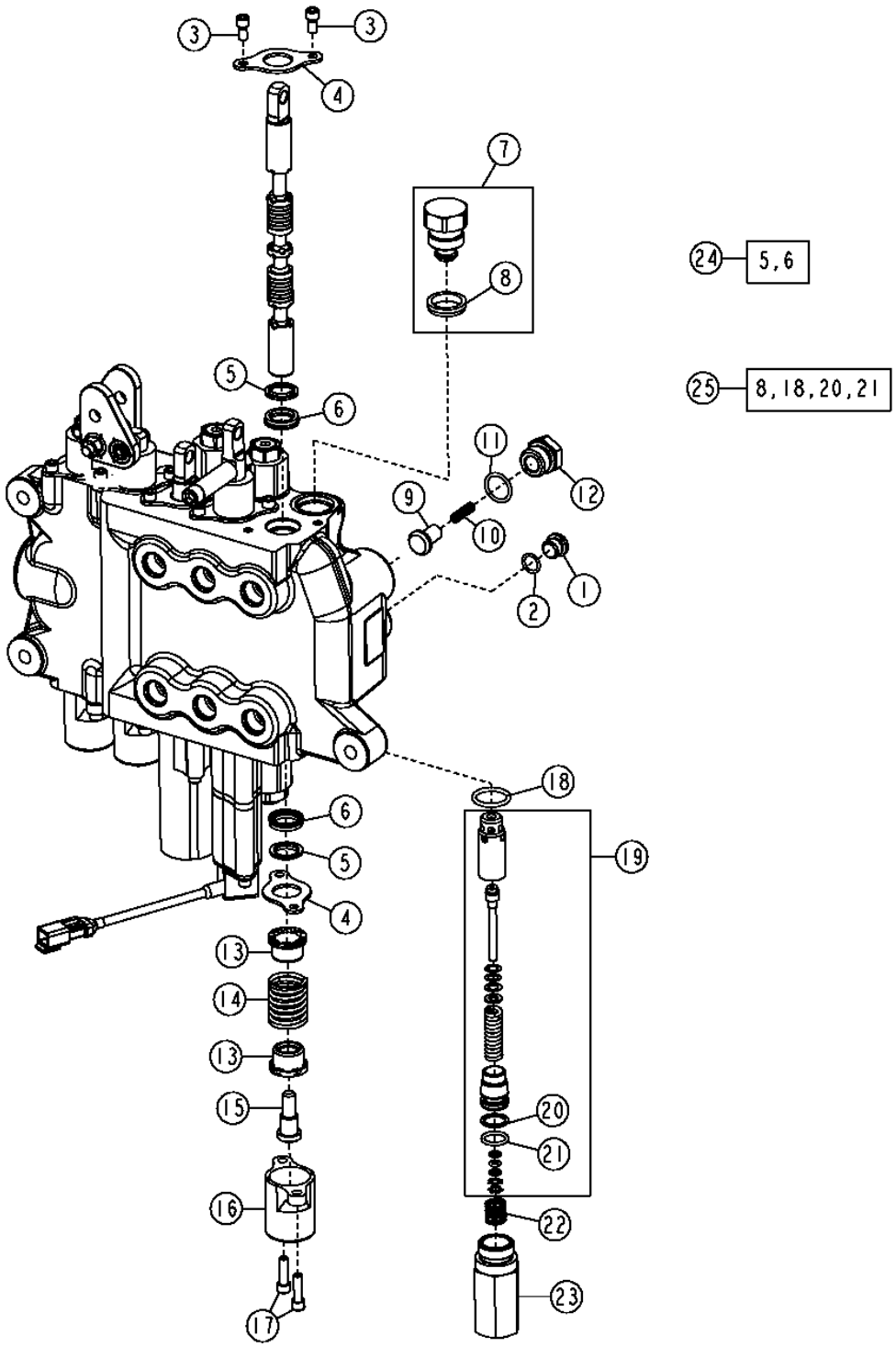

T163042

AUXILIARY SECTION
LOADER/STABILIZER VALVE
(SERIAL NO. 913417-)

KEY	PART NO.	PART NAME	QTY	SERIAL NO.	310G	310SG	315SG	REMARKS
1	R111493	FITTING PLUG	1		X	X	X	
2	T70177	O-RING	1		X	X	X	
3	21H1352	SCREW	2		X	X	X	
4	T81524	PLATE	2		X	X	X	
5	.....	SEAL	2		X	X	X	
6	.....	SEAL	2		X	X	X	
7	AT83174	PLUG	1		X	X	X	
8	T183757	SEAL	1		X	X	X	
9	T118694	POPPET	1		X	X	X	
10	T118693	SPRING	1		X	X	X	
11	R26906	O-RING	1		X	X	X	
12	T118692	PLUG	1		X	X	X	
13	T81540	RETAINER	2		X	X	X	
14	T118879	SPRING	1		X	X	X	
15	T81541	SCREW	1		X	X	X	
16	T118808	CAP	1		X	X	X	
17	19H3554	SCREW	2		X	X	X	1/4" X 0.880"
18	T118681	O-RING	1		X	X	X	
19	AT178362	KIT	1		X	X	X	
20	.....	BACK-UP RING	1		X	X	X	
21	.....	O-RING	1		X	X	X	
22	T118867	SPRING	1		X	X	X	
23	T118866	HOUSING	1		X	X	X	
24	AT280406	SEAL KIT	1		X	X	X	(SPOOL SEAL) (SUB FOR AT178372)
25	AT314538	SEAL KIT	1		X	X	X	7/8 INCH RELIEF VALVE SEAL KIT, (SUB FOR AT189413)
	AT314539	SEAL KIT	1		X	X	X	1 1/16 INCH RELIEF VALVE SEAL KIT, (SUB FOR AT189413)

STABILIZER VALVE
(EATON)
(SERIAL NO. -913416)

T144119 -UN-17JUL01

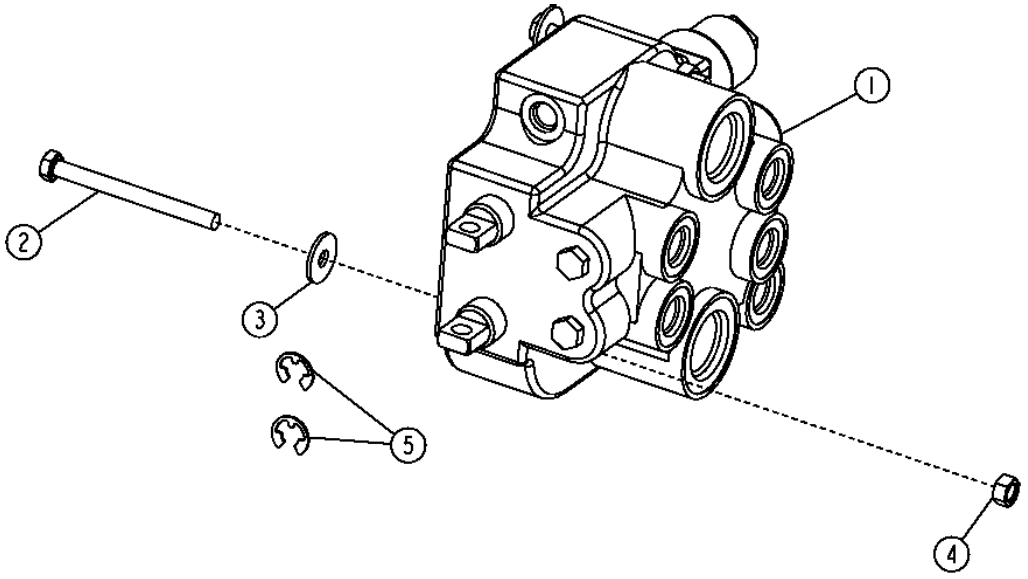

T144119

STABILIZER VALVE
(EATON)
(SERIAL NO. -913416)

KEY	PART NO.	PART NAME	QTY	SERIAL NO.	310G	310SG	315SG	REMARKS
1	AT190330	SPOOL VALVE	1		X	X	X	
2	19M8539	CAP SCREW	2		X	X	X	M8 X 90
3	24M7298	WASHER	2		X	X	X	
4	14M7273	NUT	2		X	X	X	M8
5	R26871	SNAP RING	2		X	X	X	(SUB FOR R106466)

STABILIZER VALVE
(EATON)
(SERIAL NO. -913416)

TP69707 -UN-29SEP00

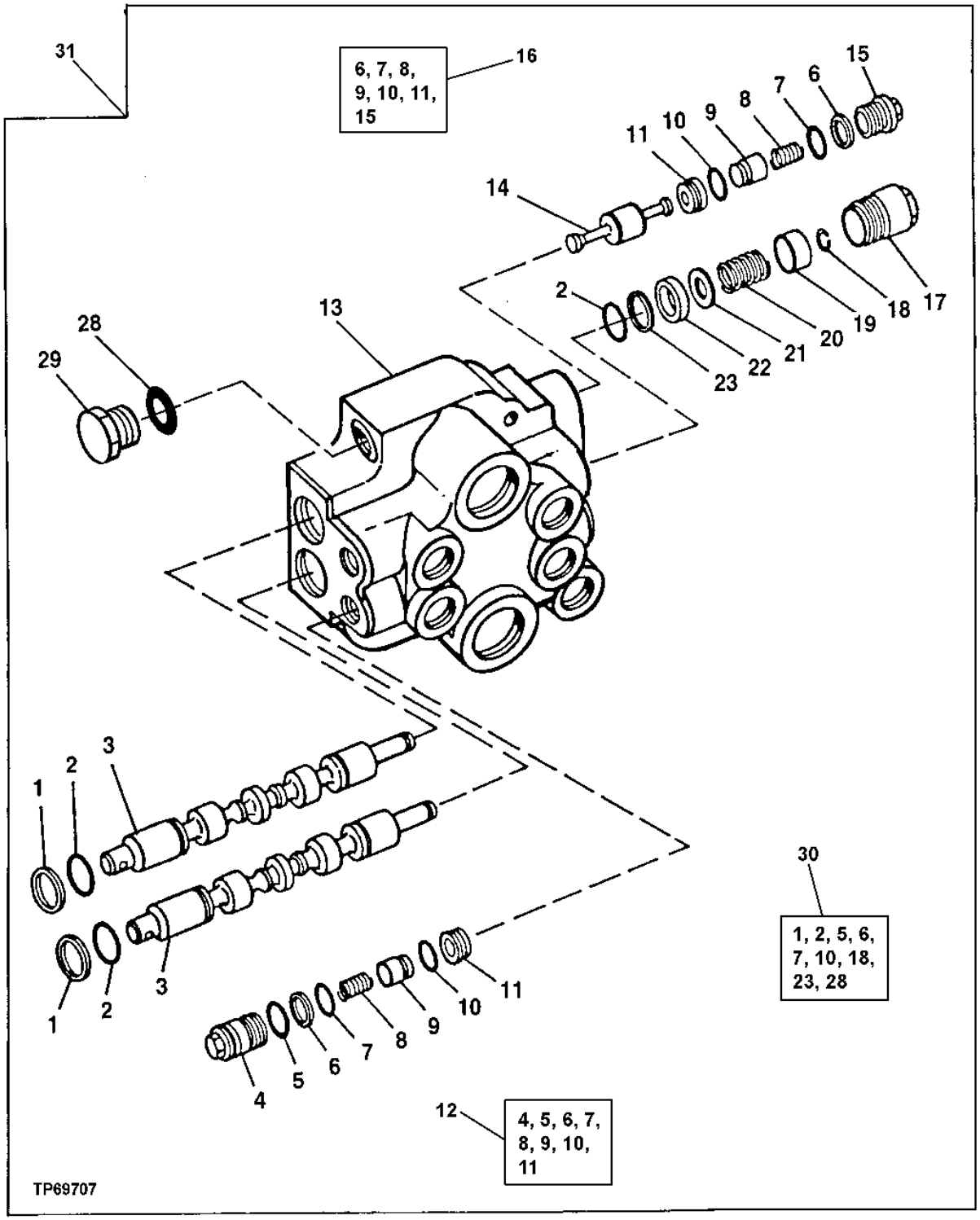

STABILIZER VALVE
(EATON)
(SERIAL NO. -913416)

KEY	PART NO.	PART NAME	QTY	SERIAL NO.	310G	310SG	315SG	REMARKS
1	T127265	SEAL	2		X	X	X	
2	T127268	O-RING	4		X	X	X	
3	.....	VALVE SPOOL	2		X	X	X	(SUB AT190330)
4	.....	RETAINER	2		X	X	X	(SUB AT190334)
5	R116031	O-RING	2		X	X	X	
6	T154187	BACK-UP RING	4		X	X	X	
7	R72328	O-RING	4		X	X	X	
8	.....	SPRING	4		X	X	X	(SUB AT190333 AND AT190334)
9	.....	POPPET	4		X	X	X	(SUB AT190333 AND AT190334)
10	R56464	O-RING	4		X	X	X	
11	.....	SEAT	4		X	X	X	(SUB AT190333 AND AT190334)
12	AT190334	KIT	2		X	X	X	(THERMAL RELIEF)
13	.....	HOUSING	1		X	X	X	(SUB AT190330)
14	T127257	PLUNGER	2		X	X	X	
15	.....	RETAINER	2		X	X	X	(SUB AT190333)
16	AT190333	KIT	2		X	X	X	(STANDARD)
17	AT135767	CAP	2		X	X	X	
18	T127263	SNAP RING	2		X	X	X	
19	T127261	RETAINER	2		X	X	X	
20	MG272321	SPRING	2		X	X	X	
21	T127264	WASHER	2		X	X	X	
22	T127260	SPACER	2		X	X	X	
23	R73530	BACK-UP RING	2		X	X	X	
24	19M8539	CAP SCREW	2		X	X	X	M8 X 90
25	24M7298	WASHER	2		X	X	X	
26	24M7298	WASHER	2		X	X	X	
27	14M7273	NUT	2		X	X	X	M8
28	R26448	O-RING	1		X	X	X	
29	T54967	FITTING PLUG	1		X	X	X	
30	AT190741	SEAL KIT	1		X	X	X	
31	AT190330	SPOOL VALVE	1		X	X	X	

STABILIZER/LOADER VALVE
(HUSCO)
(SERIAL NO. 913417-)

TX1001608 -UN-21DEC05

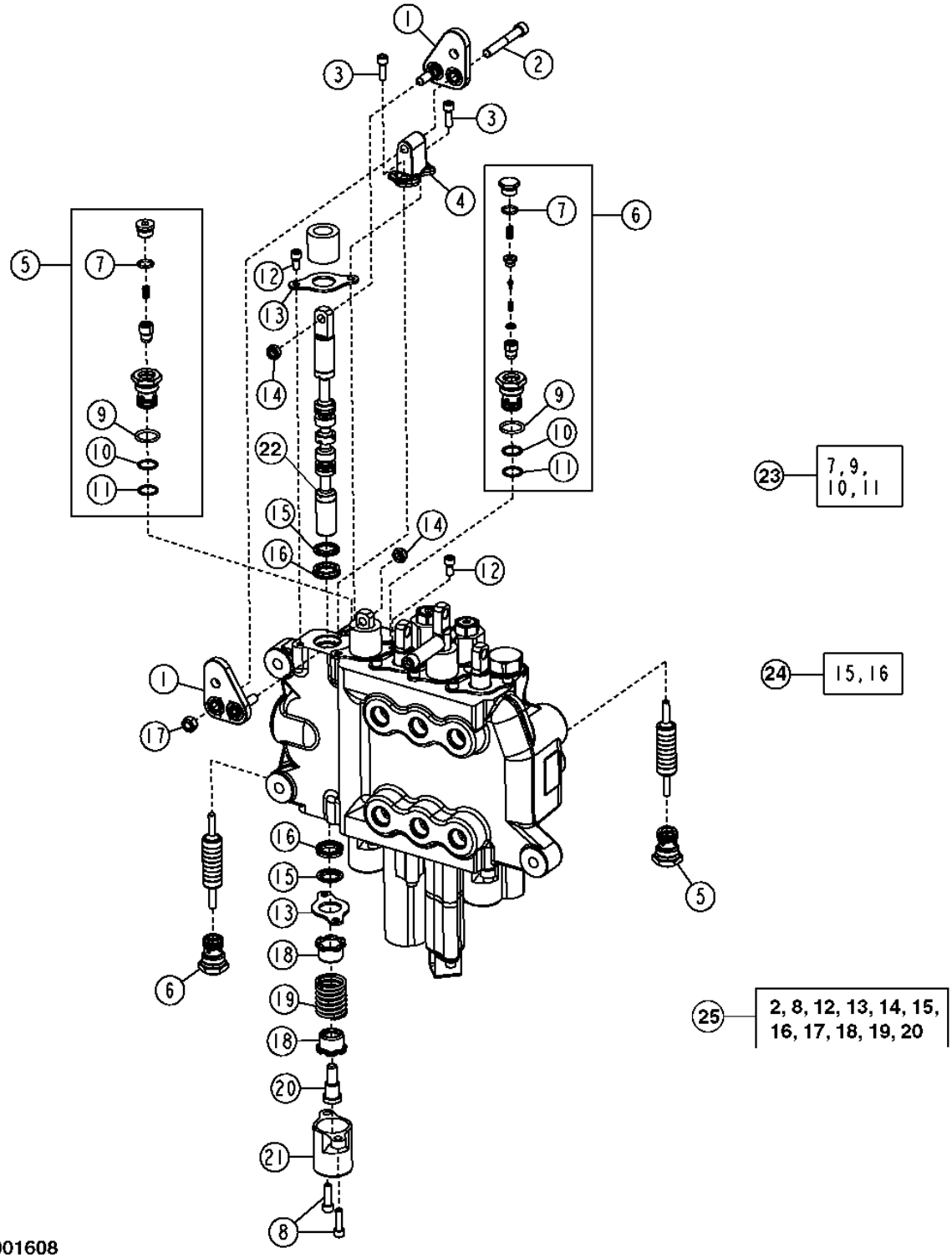

TX1001608

STABILIZER/LOADER VALVE
(HUSCO)
(SERIAL NO. 913417-)

KEY	PART NO.	PART NAME	QTY	SERIAL NO.	310G	310SG	315SG	REMARKS
1	AT199656	BELLCRANK	1		X	X	X	
2	M1036T	SCREW	1		X	X	X	5/16" X 2-1/4", (SUB FOR 19H3152, THIS APPLICATION)
3	19H2924	SCREW	2		X	X	X	1/4" X 3/4"
4	AT199657	BASE	1		X	X	X	
5	AT199652	VALVE	2		X	X	X	LOCKOUT (WITHOUT THERMAL RELIEF VALVE)
6	AT199654	VALVE	2		X	X	X	LOCKOUT (WITH THERMAL RELIEF VALVE) (SUB FOR AT328231)
7	T70177	O-RING	2		X	X	X	
8	19H3554	SCREW	4		X	X	X	1/4" X 0.880"
9	R26906	O-RING	4		X	X	X	
10	.....	O-RING	4		X	X	X	
11	.....	BACK-UP RING	4		X	X	X	
12	21H1352	SCREW	4		X	X	X	1/4" X 3/8"
13	T81524	PLATE	4		X	X	X	
14	R11151	LOCK NUT	2		X	X	X	
15	.....	SEAL	4		X	X	X	
16	.....	SEAL	4		X	X	X	
17	14H785	NUT	1		X	X	X	5/16"
18	T81540	RETAINER	4		X	X	X	
19	T118683	SPRING	2		X	X	X	
20	T81541	SCREW	2		X	X	X	3/8" X 1-5/16"
21	T118808	CAP	2		X	X	X	
22	.....	SPOOL	2		X	X	X	
23	AT196924	SEAL KIT	4		X	X	X	
24	AT280406	SEAL KIT	2		X	X	X	(SPOOL SEAL)
25	**AT328623**	**KIT**	**1**	**-952532**	**X**	**X**	**X**	

HYDRAULIC FRONT COUPLER VALVE

T209330 -UN-10MAR05

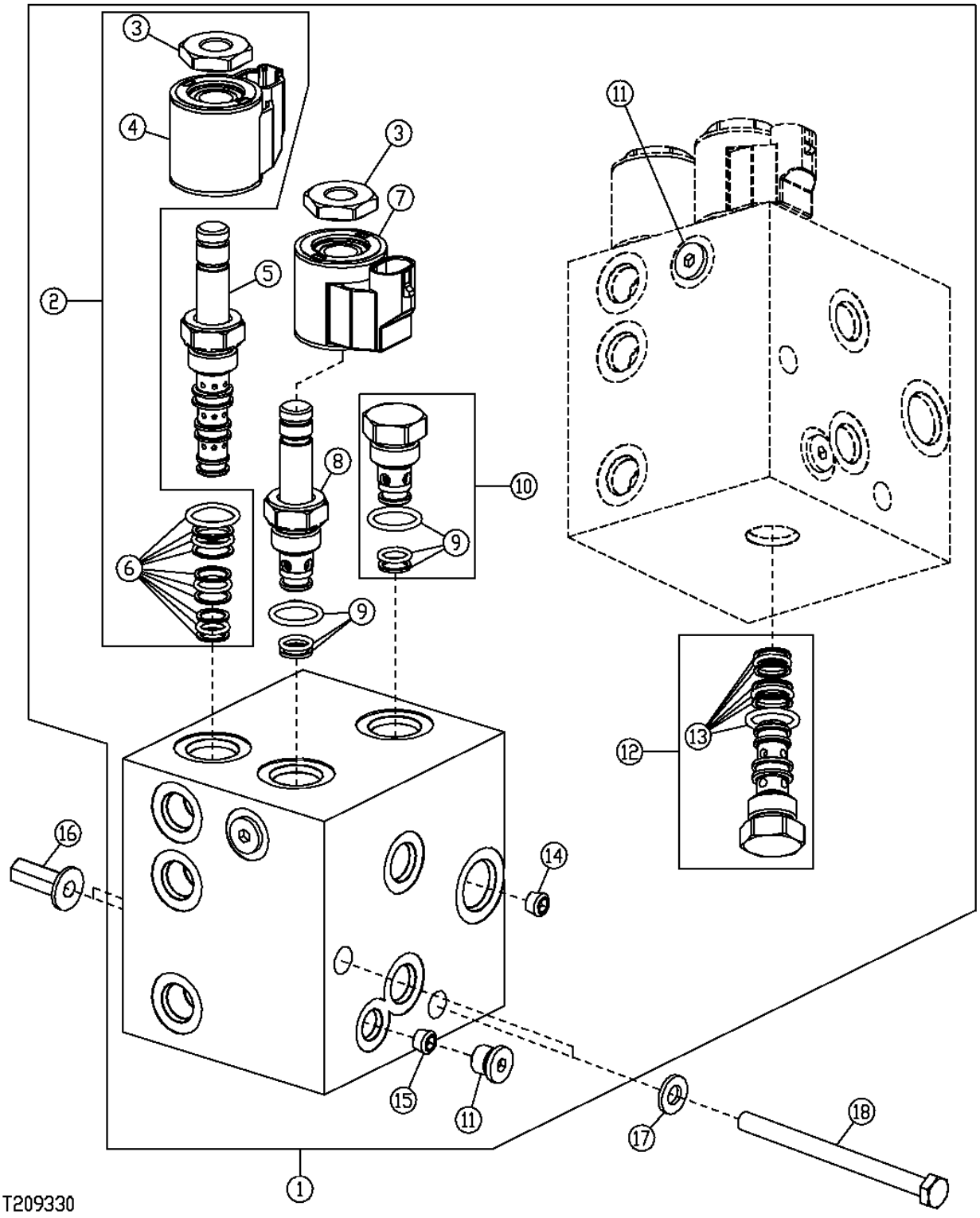

HYDRAULIC FRONT COUPLER VALVE

KEY	PART NO.	PART NAME	QTY	SERIAL NO.	310G	315SG	REMARKS
1	AT309458	SOLENOID VALVE	1		X	X X	
	T187815	O-RING	1		X	X X	
2	AT301765	SOLENOID VALVE	1		X	X X	
3	T181306	NUT	1		X	X X	
4	AT301767	ELECTRICAL COIL	1		X	X X	
5	AT195922	HYD ACTUATED CONTROL VALVE	1		X	X X	
6	AT301766	O-RING KIT	1		X	X X	
7	AT195144	SOLENOID VALVE COIL	1		X	X X	
8	AT307315	SOLENOID VALVE	1		X	X X	
9	AT224862	SEAL KIT	1		X	X X	
10	AT224570	CHECK VALVE	1		X	X X	
11	.....	PLUG	2		X	X X	
12	AT195140	CHECK VALVE	1		X	X X	
13	AT195141	SEAL KIT	1		X	X X	
14	.....	ORIFICE	1		X	X X	
15	.....	ORIFICE	1		X	X X	
16	T148409	NUT	2		X	X X	M10, (FOR 6MM PLATE)
17	24M7239	WASHER	2		X	X X	
18	19M7638	CAP SCREW	2		X	X X	M10 X 130

LOADER BOOM LIFT CYLINDER HYDRAULICS
(SERIAL NO. -913416)

T137075 -UN-13FEB01

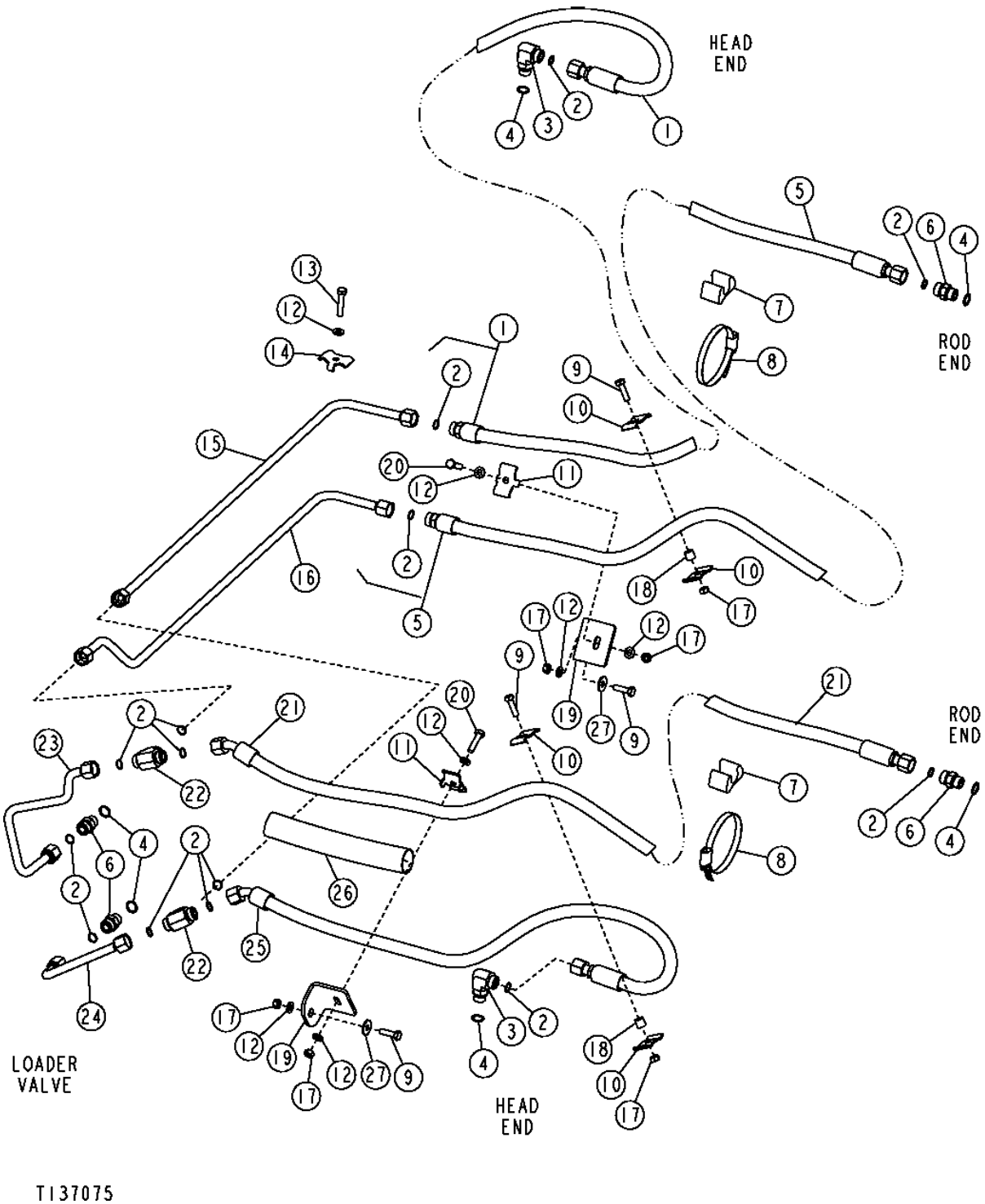

LOADER BOOM LIFT CYLINDER HYDRAULICS
(SERIAL NO. -913416)

KEY	PART NO.	PART NAME	QTY	SERIAL NO.	310G	310SG	315SG	REMARKS
1	AT189423	HYDRAULIC HOSE - FABRICATE	1		X	X	X	1" X 1 270 MM (50") X 1"
2	T77932	O-RING	14		X	X	X	
3	38H1006	ELBOW FITTING	2		X	X	X	
4	R26906	O-RING	6		X	X	X	
5	AT185799	HYDRAULIC HOSE - FABRICATE	1		X	X	X	1" X 1 598 MM (63") X 1"
6	38H1162	ADAPTER FITTING	4		X	X	X	
7	T105773	GUIDE	2		X	X	X	
8	C16054	CLAMP	2		X	X	X	
9	19M7550	CAP SCREW	4		X	X	X	M10 X 35
10	R46919	HALF CLAMP	4		X	X	X	
11	KV22609	CLAMP	2		X	X	X	(SUB FOR T160550)
12	24M7239	WASHER	7		X	X	X	
13	19M8600	CAP SCREW	1		X	X	X	M10 X 50
14	T159954	CLAMP	1		X	X	X	
15	AT183721	OIL LINE	1		X	X	X	
16	AT183722	OIL LINE	1		X	X	X	
17	14M7274	NUT	6		X	X	X	M10
18	28H3381	SPACER	2		X	X	X	
19	T165864	ANGLE	2		X	X	X	
20	19M8637	CAP SCREW	2		X	X	X	M10 X 40
21	AT185797	HYDRAULIC HOSE - FABRICATE	1		X	X	X	1" X 1 670 MM (65-3/4") X 1"
22	38H1207	TEE FITTING	2		X	X	X	
23	AT183717	OIL LINE	1		X	X	X	
24	AT183718	OIL LINE	1		X	X	X	
25	AT185798	HYDRAULIC HOSE - FABRICATE	1		X	X	X	1" X 1 350 MM (53-1/4") X 1"
26	.....	SLEEVE	2		X	X	X	
27	24M7296	WASHER	2		X	X	X	

LOADER BOOM LIFT CYLINDER HYDRAULICS
(SERIAL NO. 913417-)

T163734 -UN-10JAN03

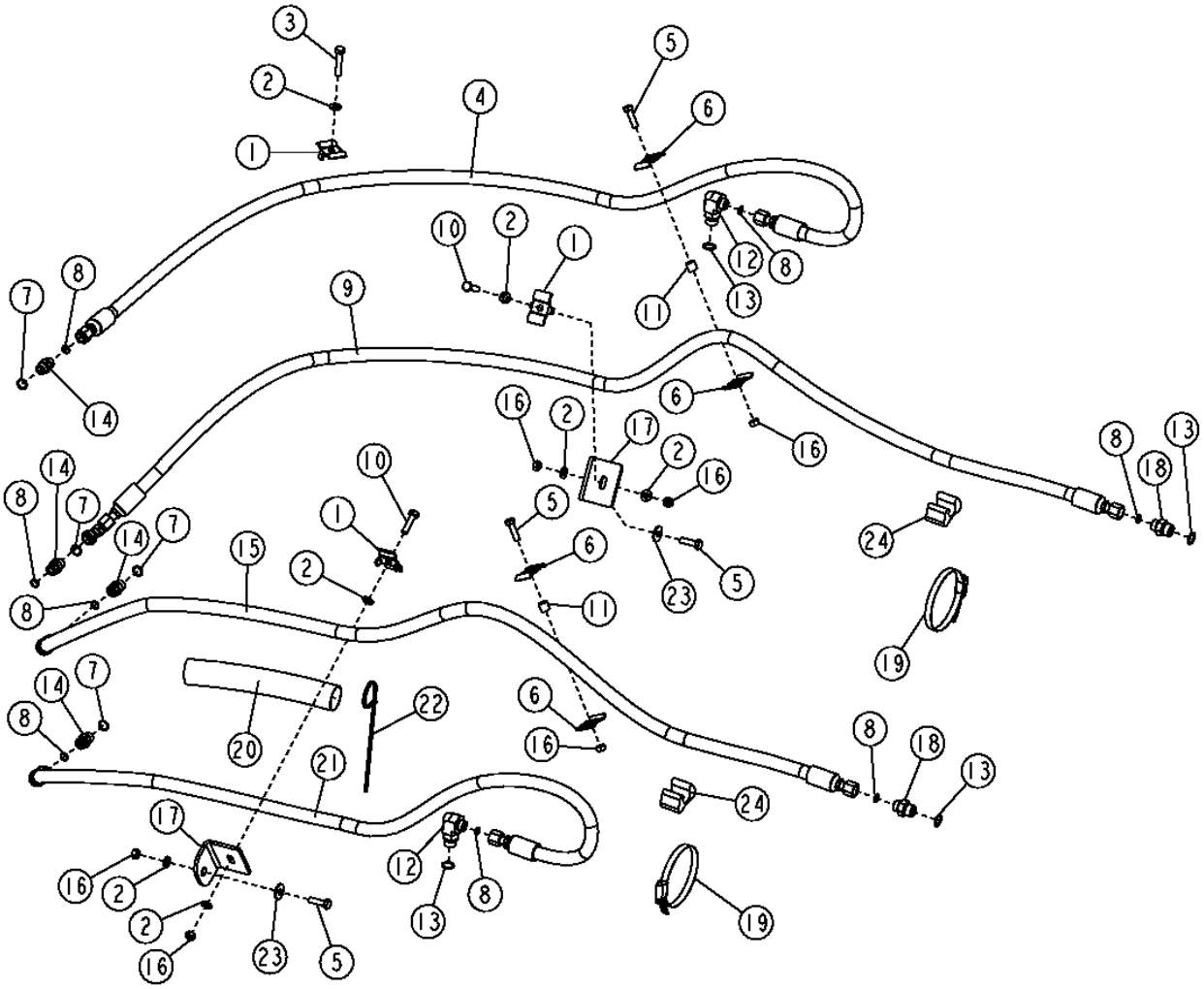

T163734

LOADER BOOM LIFT CYLINDER HYDRAULICS
(SERIAL NO. 913417-)

KEY	PART NO.	PART NAME	QTY	SERIAL NO.	310G	310SG	315SG	REMARKS
1	KV22609	CLAMP	3		X	X	X	(SUB FOR T160550)
2	24M7239	WASHER	6		X	X	X	
3	19M8600	CAP SCREW	1		X	X	X	M10 X 50
4	AT197654	HYDRAULIC HOSE - FABRICATE	1		X	X	X	13/16" X 2 105 MM (82-3/4") X 13/16"
5	19M7550	CAP SCREW	4		X	X	X	M10 X 35
6	R46919	HALF CLAMP	4		X	X	X	
7	R26375	O-RING	3		X	X	X	
8	T77857	O-RING	8		X	X	X	
9	AT197647	HYDRAULIC HOSE - FABRICATE	1		X	X	X	13/16" X 2 410 MM (95") X 13/16"
10	19M8637	CAP SCREW	2		X	X	X	M10 X 40
11	28H3381	SPACER	2		X	X	X	
12	38H1012	ELBOW FITTING	2		X	X	X	
13	R26906	O-RING	4		X	X	X	
14	38H1161	ADAPTER FITTING	4		X	X	X	
15	AT197645	HYDRAULIC HOSE - FABRICATE	1		X	X	X	13/16" X 2 110 MM (83") X 13/16"
16	14M7274	NUT	6		X	X	X	M10
17	T165864	ANGLE	2		X	X	X	
18	38H1174	ADAPTER FITTING	2		X	X	X	
19	AR21842	CLAMP	2		X	X	X	(SUB FOR C16054, THIS APPLICATION)
20	.....	HOSE GUARD	2		X	X	X	(MAKE FROM T78606, CUT TO 254MM)
21	AT197646	HYDRAULIC HOSE - FABRICATE	1		X	X	X	13/16" X 1 755 MM (69") X 13/16"
22	H77698	TIE BAND	2		X	X	X	
23	24M7296	WASHER	2		X	X	X	
24	T105773	GUIDE	2		X	X	X	

LOADER BUCKET CYLINDER AND THIRD FUNCTION HYDRAULICS
(SERIAL NO. -913416)

T188368 -UN-10MAR03

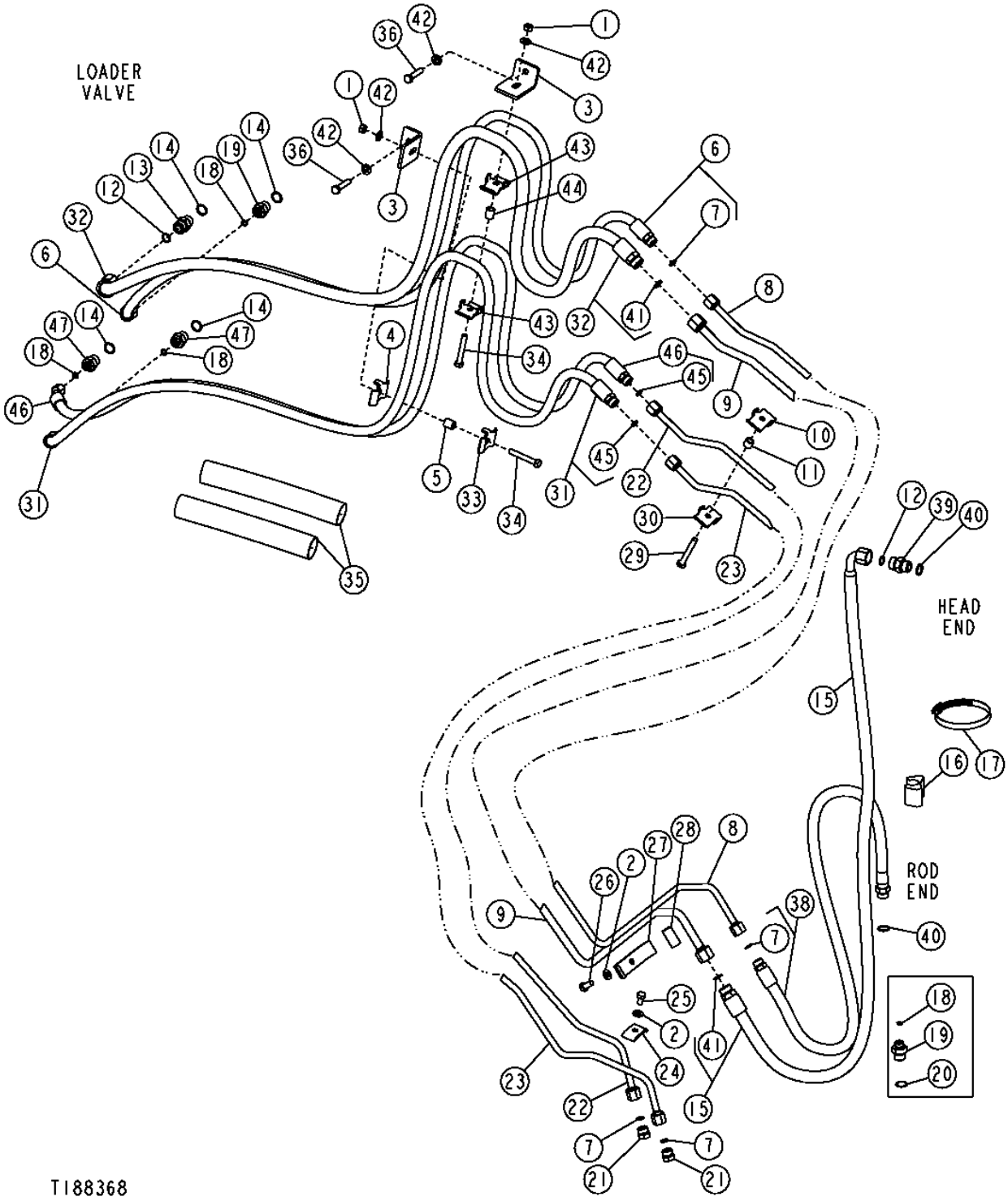

LOADER BUCKET CYLINDER AND THIRD FUNCTION HYDRAULICS
(SERIAL NO. -913416)

KEY	PART NO.	PART NAME	QTY	SERIAL NO.	310G	310SG	315SG	REMARKS
1	14M7274	NUT	2		X	X	X	M10
2	24M7239	WASHER	2		X	X	X	
3	T202050	ANGLE	2	-913416	X	X	X	(SUB FOR T166245)
4	T160548	CLAMP	1	-913416	X	X	X	
5	28H3383	BUSHING	1	-913416	X	X	X	
6	AT186856	HYDRAULIC HOSE - FABRICATE	1	-913416	X	X	X	11/16" X 2 147 MM (84-1/2") X 13/16"
7	T77857	O-RING	4		X	X	X	
8	AT185976	OIL LINE	1	-913416	X	X	X	
9	AT185977	OIL LINE	1	-913416	X	X	X	
10	T159952	CLAMP	1		X	X	X	
11	T126052	SPACER	1	-913416	X	X	X	
12	T77932	O-RING	2	-913416	X	X	X	
13	38H1162	ADAPTER FITTING	1	-913416	X	X	X	
14	R26906	O-RING	4	-913417	X	X	X	
15	AT173128	HYDRAULIC HOSE - FABRICATE	1	-913416	X	X	X	1" X 1 628 MM (64") X 1"
16	T105773	GUIDE	1		X	X	X	
17	AU12450	HOSE CLAMP	1		X	X	X	
18	T77613	O-RING	4	-901979	X	X	X	
	T77613	O-RING	3	901980-	X	X	X	
19	38H1172	ADAPTER FITTING	1	-901979	X	X	X	
	38H1171	ADAPTER FITTING	1	901980-	X	X	X	
20	R26906	O-RING	1	-901979	X	X	X	
21	38H1148	FITTING PLUG	2		X	X	X	
22	AT185978	OIL LINE	1	-913416	X	X	X	
23	AT185979	OIL LINE	1	-913416	X	X	X	
24	U10516	HOSE CLAMP	1		X	X	X	
25	19M8324	CAP SCREW	1		X	X	X	M10 X 16
26	19M7938	CAP SCREW	1		X	X	X	
27	T105720	CLAMP	1		X	X	X	
28	.....	HOSE GUARD	1		X	X	X	(MAKE FROM T78606, CUT TO 254 MM)
29	19M7875	CAP SCREW	1		X	X	X	
30	T159950	CLAMP	1		X	X	X	
31	AT186858	HYDRAULIC HOSE - FABRICATE	1		X	X	X	
32	AT190748	HYDRAULIC HOSE - FABRICATE	1		X	X	X	
33	T160549	CLAMP	2		X	X	X	
34	19M7742	CAP SCREW	2		X	X	X	
35	.....	SLEEVE	1		X	X	X	(MAKE FROM T78606, CUT TO 254 MM)
36	19M8600	CAP SCREW	2		X	X	X	
37	H77698	TIE BAND	6		X	X	X	
38	AT173120	HYDRAULIC HOSE - FABRICATE	1	-901979	X	X	X	
	AT196853	HYDRAULIC HOSE - FABRICATE	1	901980-	X	X	X	
39	38H1162	ADAPTER FITTING	1		X	X	X	
40	R26906	O-RING	2		X	X	X	
41	T77932	O-RING	2		X	X	X	
42	24M7239	WASHER	4		X	X	X	
43	T160548	CLAMP	1		X	X	X	
44	28H3383	BUSHING	1		X	X	X	
45	T77857	O-RING	2		X	X	X	
46	AT186858	HYDRAULIC HOSE - FABRICATE	1		X	X	X	
47	38H1161	ADAPTER FITTING	2		X	X	X	

LOADER BUCKET CYLINDER AND THIRD FUNCTION HYDRAULICS
(SERIAL NO. 913417-)

T188377 -UN-11MAR03

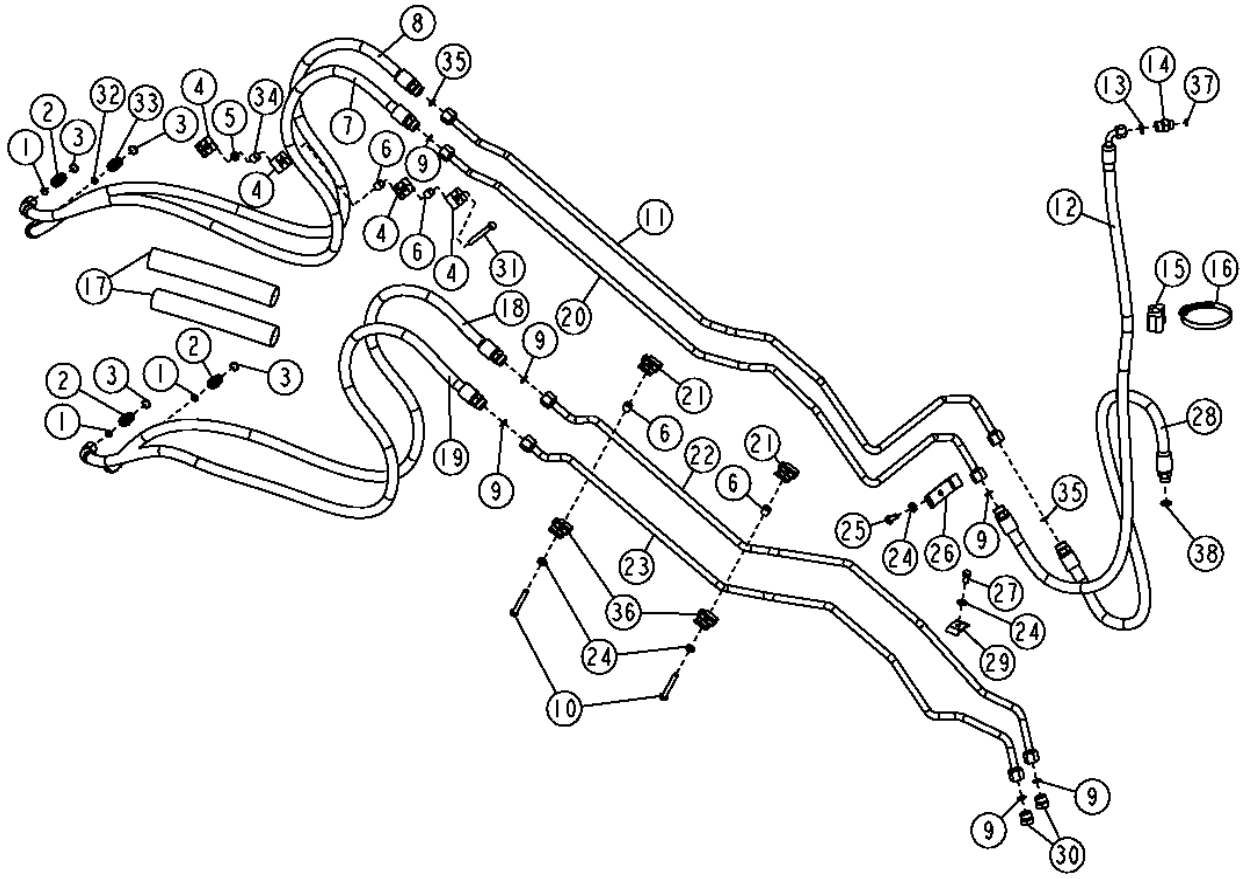

LOADER BUCKET CYLINDER AND THIRD FUNCTION HYDRAULICS
(SERIAL NO. 913417-)

KEY	PART NO.	PART NAME	QTY	SERIAL NO.	310G	310SG	315SG	REMARKS
1	T77857	O-RING	3		X	X	X	
2	38H1161	ADAPTER FITTING	3		X	X	X	
3	R26375	O-RING	4		X	X	X	
4	R46919	HALF CLAMP	4		X	X	X	
5	14M7274	NUT	1		X	X	X	M10
6	28H3381	SPACER	4		X	X	X	
7	AT198258	HYDRAULIC HOSE - FABRICATE	1		X	X	X	13/16" X 1 867 MM (73-1/2") X 1"
8	AT301476	HYDRAULIC HOSE - FABRICATE	1		X	X	X	11/16" X 1 892 MM (74-1/2") X 13/16"
9	T77932	O-RING	6		X	X	X	
10	19M7875	CAP SCREW	2		X	X	X	M10 X 70
11	AT197648	OIL LINE	1		X	X	X	
12	AT197760	HYDRAULIC HOSE - FABRICATE	1		X	X	X	13/16" X 1 584 MM (62-1/4") X 1"
13	T77857	O-RING	1		X	X	X	
14	38H1174	ADAPTER FITTING	1		X	X	X	
15	T105773	GUIDE	1		X	X	X	
16	AU12450	HOSE CLAMP	1		X	X	X	
17	.....	HOSE GUARD	2		X	X	X	(MAKE FROM T78606, CUT TO 254 MM)
18	AT198260	HYDRAULIC HOSE - FABRICATE	1		X	X	X	13/16" X 1 822 MM (71-3/4") X 1"
19	AT198254	HYDRAULIC HOSE - FABRICATE	1		X	X	X	5/8" X 1 835 MM (72-1/4") X 11/16"
20	AT197649	OIL LINE	1		X	X	X	
21	T159952	CLAMP	2		X	X	X	
22	AT198253	OIL LINE	1		X	X	X	
23	AT198251	OIL LINE	1		X	X	X	
24	24M7239	WASHER	4		X	X	X	
25	19M7938	CAP SCREW	1		X	X	X	M10 X 20
26	T105720	CLAMP	1		X	X	X	
27	19M7938	CAP SCREW	1		X	X	X	M10 X 20
28	AT173120	HYDRAULIC HOSE - FABRICATE	1		X	X	X	11/16" X 1 226 MM (48-1/4") X 13/16", (SUB FOR AT196853, THIS APPLICATION) (ALSO ORDER 38H1172, R26906, AND T77613) (NOT SHOWN)
29	U10516	HOSE CLAMP	1		X	X	X	
30	38H1148	FITTING PLUG	2		X	X	X	
31	19M8081	CAP SCREW	1		X	X	X	M10 X 80
32	T77613	O-RING	1		X	X	X	
33	38H1171	ADAPTER FITTING	1		X	X	X	
34	28H3394	BUSHING	1		X	X	X	
35	T77857	O-RING	2		X	X	X	
36	T159954	CLAMP	2		X	X	X	
37	R26906	O-RING	1		X	X	X	
38	R26906	O-RING	1		X	X	X	

HYDRAULIC FRONT COUPLER
(SERIAL NO. -944081)

T195700 -UN-07NOV03

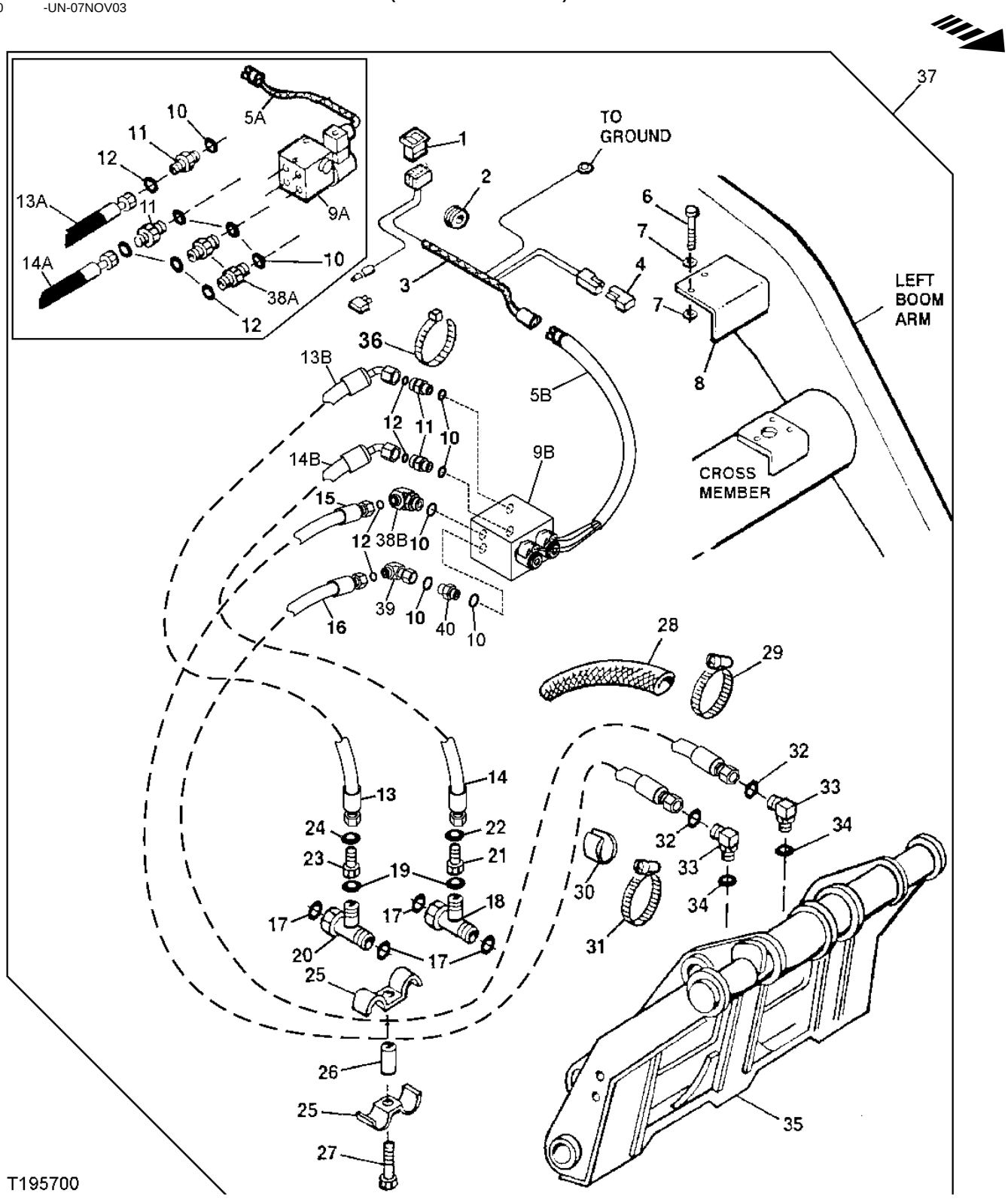

HYDRAULIC FRONT COUPLER
(SERIAL NO. -944081)

KEY	PART NO.	PART NAME	QTY	SERIAL NO.	310G	310SG	315SG	REMARKS
1	AT181292	SWITCH	1		X	X	X	
2	N30256	GROMMET	1		X	X	X	
	T70341	GROMMET	1		X	X	X	
3	AT193699	CAB WIRING HARNESS	1		X	X	X	(ALSO ORDER AT300857) (SUB FOR AT185877)
4	AR94101	DIODE	1		X	X	X	
5A	AT185876	WIRING HARNESS	1	-913970	X	X	X	(ALSO ORDER AT193699)
5B	AT300857	WIRING HARNESS	1	913971-	X	X	X	(ALSO ORDER AT193699)
6	19M8456	CAP SCREW	2		X	X	X	M8 X 100, (SUB FOR 19M7763, THIS APPLICATION)
7	24M7238	WASHER	4		X	X	X	8.700 X 17 X 2 MM, (SUB FOR 24M7250, THIS APPLICATION)
8	T200540	COVER	1		X	X	X	(SUB FOR A36518 FROM JRB)
9A	AT181422	VALVE	1	-913970	X	X	X	
9B	AT300855	VALVE	1	913971-	X	X	X	
	AT224865	SOLENOID VALVE COIL	1	913871-				
	AT301016	CHECK VALVE	3	913871-				
	AT301017	SOLENOID VALVE	1	913871-				
	AT301019	ELECTRICAL COIL	1	913871-				
	AT301020	SOLENOID VALVE	1	913871-				
	T181306	NUT	2	913871-				
10	R26448	O-RING	4		X	X	X	
11	38H1168	ADAPTER FITTING	2		X	X	X	
12	T77814	O-RING	4		X	X	X	
13A	AT195862	HYDRAULIC HOSE	1	-913970	X	X	X	(SUB FOR AT194784, THIS APPLICATION)
13B	AT300860	HYDRAULIC HOSE	1	913971-	X	X	X	
14A	AT195862	HYDRAULIC HOSE	1	-913970	X	X	X	(SUB FOR AT194784, THIS APPLICATION)
14B	AT300860	HYDRAULIC HOSE	1	913971-	X	X	X	
15	AT194785	HYDRAULIC HOSE	1		X	X	X	
16	AT194786	HYDRAULIC HOSE	1		X	X	X	
17	T77932	O-RING	4		X	X	X	
18	38H1031	TEE FITTING	1		X	X	X	
19	T77857	O-RING	2		X	X	X	
20	38H1032	TEE FITTING	1		X	X	X	
21	38H1471	REDUCER	1					(410G ONLY)
22	T77932	O-RING	1					(410G ONLY)
23	38H1471	REDUCER	1		X	X	X	
24	T77613	O-RING	1		X	X	X	
25	R46919	HALF CLAMP	2		X	X	X	
26	28H1878	SPACER	1		X	X	X	
27	19M7179	CAP SCREW	1		X	X	X	
28	T162439	HOSE GUARD	1		X	X	X	
29	AR21842	CLAMP	2		X	X	X	
30	.....	BULK HOSE	2		X	X	X	(MAKE FROM T60811 BULK MATERIAL)
31	AR21839	CLAMP	2		X	X	X	
32	T77613	O-RING	2		X	X	X	
33	38H1009	ELBOW FITTING	2		X	X	X	
34	R26448	O-RING	2		X	X	X	
35	.....	QUICK COUPLER	1		X	X	X	
36	H77698	TIE BAND	12		X	X	X	
37	.....	KIT	1		X	X	X	(AT300853 NO LONGER AVAILABLE) (SUB FOR AT185635 AND AT194410)
38A	38H1168	ADAPTER FITTING	2	-913970	X	X	X	(PORT A & B)
38B	38H1009	ELBOW FITTING	1	913971-	X	X	X	(PORT A)
39	38H1093	ELBOW FITTING	1	913971-	X	X	X	(PORT B)
40	38H1168	ADAPTER FITTING	1	913971-	X	X	X	(PORT B)

HYDRAULIC FRONT COUPLER

T209883 -UN-11APR05

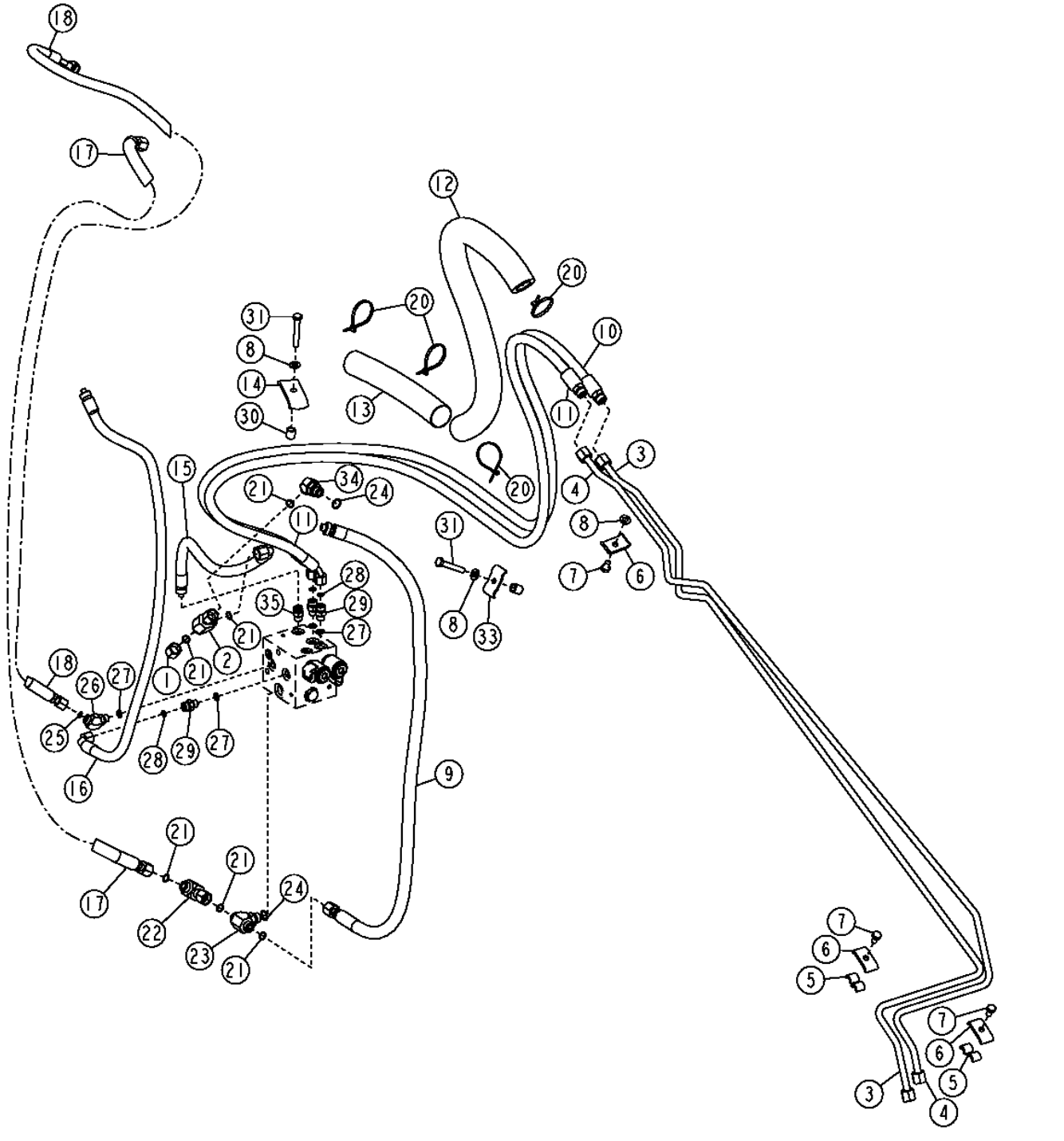

HYDRAULIC FRONT COUPLER

KEY	PART NO.	PART NAME	QTY	SERIAL NO.	REMARKS
1	38H1416	FITTING	1		
2	38H1031	TEE FITTING	1		
3	AT309663	OIL LINE	1		
4	AT309662	OIL LINE	1		
5	.....	ISOLATOR	4		
6	U10516	HOSE CLAMP	3		
7	19M8324	CAP SCREW	3		M10 X 16
8	24M7239	WASHER	5		
9	AT309694	HYDRAULIC HOSE - FABRICATE	1		
10	AT311651	HYDRAULIC HOSE - FABRICATE	1		11/16" X 2 045 MM (80-1/2") X 13/16"
11	AT308506	HYDRAULIC HOSE - FABRICATE	1		11/16" X 1 994 MM (78-1/2") X 13/16"
12	T185089	SLEEVE	1		
13	T78606	HOSE GUARD	2		(CUT TO 254MM)
14	T190979	HALF CLAMP	1		
15	AT309679	HYDRAULIC HOSE - FABRICATE	1		
16	AT309682	HYDRAULIC HOSE - FABRICATE	1		
17	AT309696	HYDRAULIC HOSE - FABRICATE	1		
18	AT309690	HYDRAULIC HOSE - FABRICATE	1		
20	R44302	TIE BAND	4		
21	T77857	O-RING	5		
22	38H1095	ELBOW FITTING	1		
23	38H1017	TEE FITTING	1		
24	R26375	O-RING	2		
25	T77613	O-RING	1		
26	38H1045	ELBOW FITTING	1		
27	R26448	O-RING	2		
28	T77613	O-RING	1		
29	38H1160	ADAPTER FITTING	1		
30	28H1522	SPACER	1		
31	19M7742	CAP SCREW	2		M10 X 65
32	28H3383	BUSHING	2		
33	R46919	HALF CLAMP	1		
34	38H1046	ELBOW FITTING	1		
35	AT187666	ADAPTER FITTING	1		

BOOM CYLINDER AND REPAIR KITS
(310G)
(SERIAL NO. -926493)

T148462 -UN-28NOV01

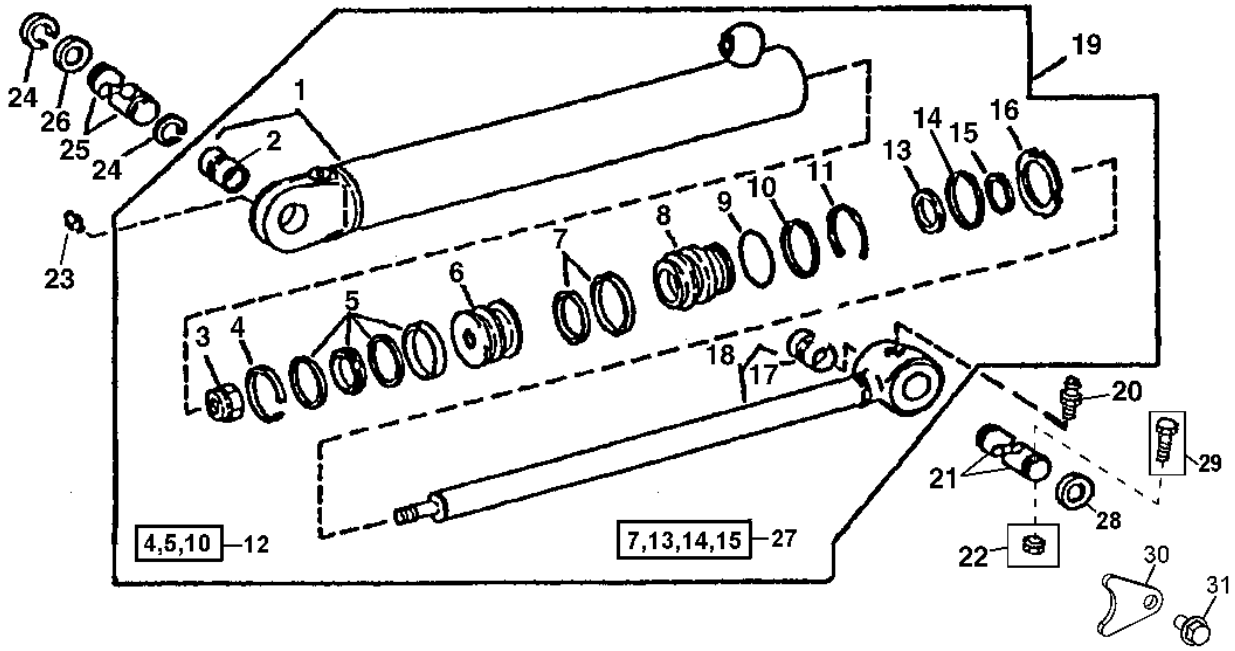

T148462

BOOM CYLINDER AND REPAIR KITS
(310G)
(SERIAL NO. -926493)

KEY	PART NO.	PART NAME	QTY	SERIAL NO.	310G	310SG	315SG	REMARKS
1	AH146876	HYDRAULIC CYLINDER BARREL	1		X			
2	H159941	BUSHING	1		X			
3	H170538	NUT	1		X			
4	R81777	WEAR RING	1	-902497	X			
5	RE20345	SEAL	1	-902497	X			
6	H145359	PISTON	1	-902497	X			
	AH165826	PISTON	1	902498-926493	X			
	R98323	SEAL	1	902498-926493	X			
	R98322	SEAL	1	902498-926493	X			
7	AH146561	SEAL	1		X			
8	H152345	HYDR. CYLINDER ROD GUIDE	1		X			
9	T12582	O-RING	1		X			
10	R81864	BACK-UP RING	1		X			
11	R81789	RING	1		X			
12	AH212091	HYDRAULIC CYLINDER KIT	1	-902497	X			(SUB FOR AH149842) CYLINDER BORE REPAIR KIT
13	H152203	SEAL	1		X			
14	H152794	WEAR RING	1		X			
15	AH146557	SEAL	1		X			
16	R81795	NUT	1		X			
17	H151542	BUSHING	1	-902497	X			
18	AH146875	HYDRAULIC CYLINDER ROD	1		X			
19	AH146874	HYDRAULIC CYLINDER	1	-902497	X			
	.....	HYDRAULIC CYLINDER	1	902498-926493	X			(AH174222 NLA) (SUB AH211203)
20	T162396	LUBRICATION FITTING	1		X			STRAIGHT
21	T186354	PIN	2	-896864	X			
	T187275	PIN FASTENER	2	896865-	X			
22	14M7168	LOCK NUT	2	-896864	X			M12
23	T162396	LUBRICATION FITTING	1		X			
24	T61226	SNAP RING	4		X			
25	T158132	PIN	1		X			
26	T75815	WASHER	AR		X			1.988" X 2.953" X 0.197"
27	AH210484	HYDRAULIC CYLINDER KIT	1		X			CYLINDER ROD REPAIR KIT, (SUB FOR AH148164)
28	24H1577	WASHER	8	-896864	X			
29	19M7949	CAP SCREW	2	-896864	X			M12 X 100
30	T187276	PLATE	1	896865-	X			RETAINER
31	19M7784	SCREW	1	896865-	X			

BOOM CYLINDER AND REPAIR KITS
(310G)
(SERIAL NO. 926494-)

T196129 -UN-10NOV03

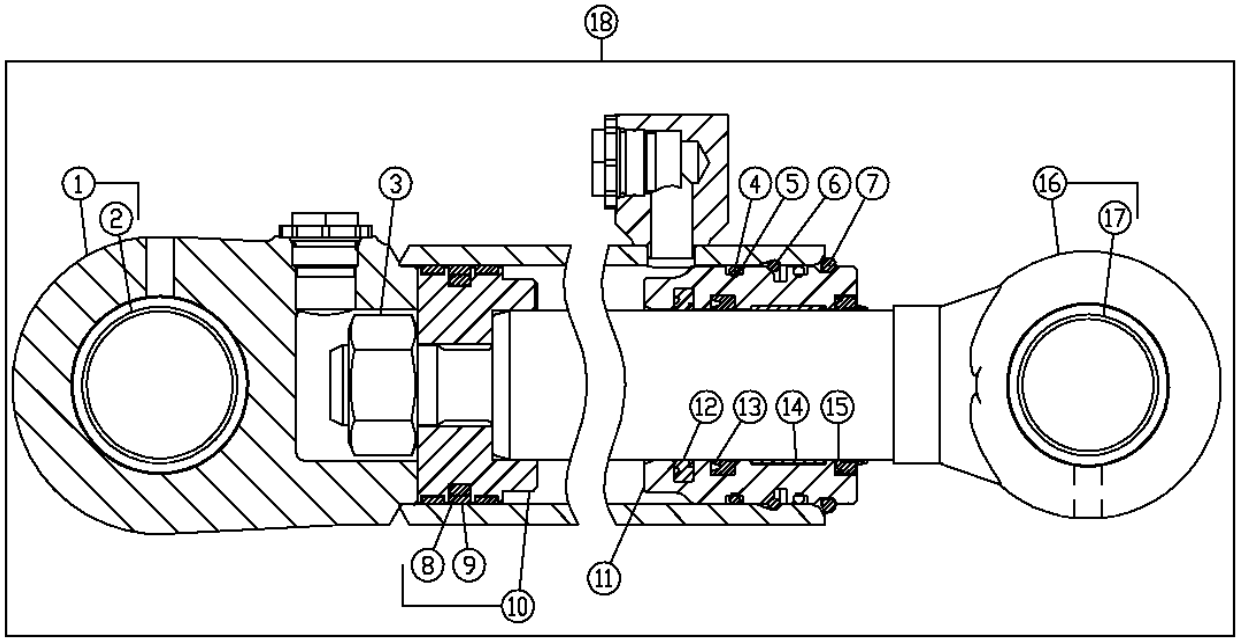

19-12,13,14,15 20-5,8,9

T196129

KEY	PART NO.	PART NAME	QTY	SERIAL NO.	310G	310SG	315SG	REMARKS
1	AH211204	HYDRAULIC CYLINDER BARREL	1		X			
2	H159941	BUSHING	1		X			
3	H170538	NUT	1		X			
4	T12582	O-RING	2		X			
5	R81864	BACK-UP RING	1		X			
6	.....	SNAP RING	1		X			
7	.....	SNAP RING	1		X			
8	R98323	SEAL	1		X			
9	R98322	SEAL	1		X			
10	AH165826	PISTON	1		X			
11	H209221	HYDR. CYLINDER ROD GUIDE	1		X			
12	AH146561	SEAL	1		X			
13	H152203	SEAL	1		X			
14	H208987	WEAR RING	1		X			
15	AH146557	SEAL	1		X			
16	AH146875	HYDRAULIC CYLINDER ROD	1		X			
17	H151542	BUSHING	1		X			
18	AH211203	HYDRAULIC CYLINDER	1		X			
19	AH210484	HYDRAULIC CYLINDER KIT	1		X			ROD SEAL KIT
20	AH212092	HYDRAULIC CYLINDER KIT	1		X			BORE SEAL KIT

MEMORANDA

BOOM CYLINDER AND REPAIR KITS
(310SG AND 315SG)
(SERIAL NO. -910491)

T148462 -UN-28NOV01

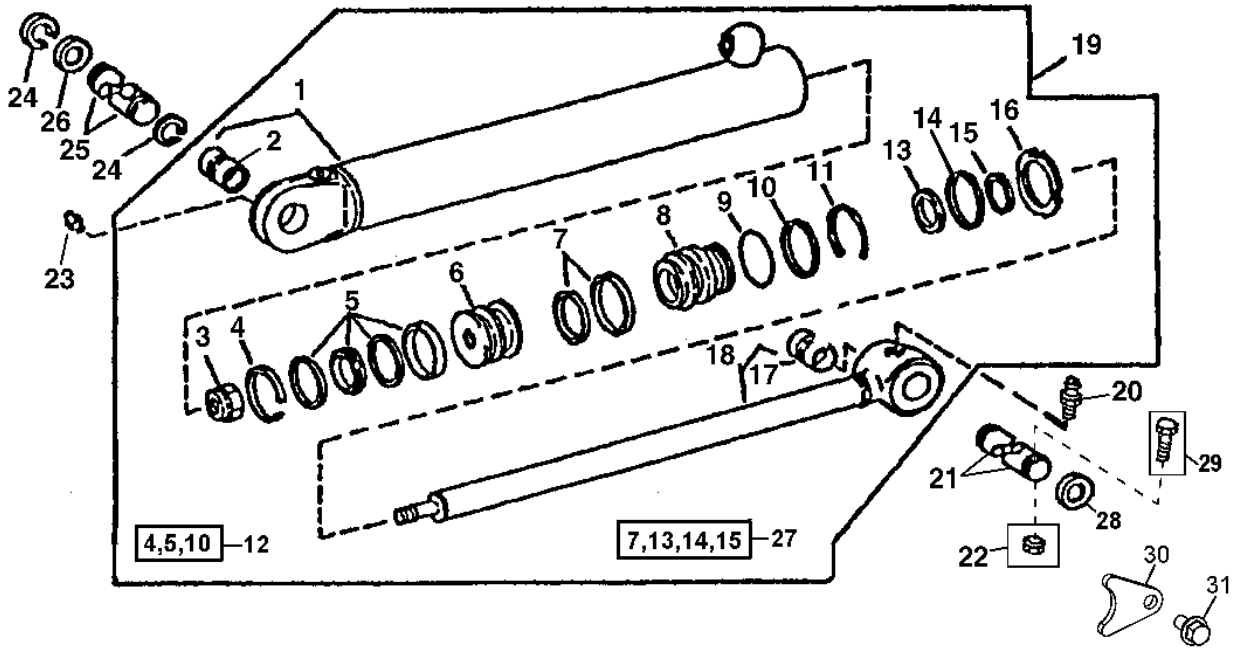

T148462

BOOM CYLINDER AND REPAIR KITS
(310SG AND 315SG)
(SERIAL NO. -910491)

KEY	PART NO.	PART NAME	QTY	SERIAL NO.	310G	315SG	REMARKS
1	AH146876	HYDRAULIC CYLINDER BARREL	1		X	X	
2	H159941	BUSHING	1		X	X	
3	H170538	NUT	1		X	X	
4	R81777	WEAR RING	1		X	X	
5	RE20345	SEAL	1		X	X	
6	H145359	PISTON	1		X	X	
7	AH146561	SEAL	1		X	X	
8	H152345	HYDR. CYLINDER ROD GUIDE	1		X	X	
9	T12582	O-RING	1		X	X	
10	R81864	BACK-UP RING	1		X	X	
11	R81789	RING	1		X	X	
12	AH212091	HYDRAULIC CYLINDER KIT	1		X	X	(SUB FOR AH149842) CYLINDER BORE REPAIR KIT
13	H152203	SEAL	1		X	X	
14	H152794	WEAR RING	1		X	X	
15	AH146557	SEAL	1		X	X	
16	R81795	NUT	1		X	X	
17	H151542	BUSHING	1		X	X	
18	AH146875	HYDRAULIC CYLINDER ROD	1		X	X	
19	.....	HYDRAULIC CYLINDER	1		X	X	(AH146874 NO LONGER AVAILABLE) (SUB AH211206)
20	T162396	LUBRICATION FITTING	1		X	X	STRAIGHT
21	T186354	PIN	2	-896864	X	X	
	T187275	PIN FASTENER	2	896865-	X	X	
22	14M7168	LOCK NUT	2	-896864	X	X	M12
23	T162396	LUBRICATION FITTING	1		X	X	
24	T61226	SNAP RING	4		X	X	
25	T158132	PIN	1		X	X	
26	T75815	WASHER	AR		X	X	1.988" X 2.953" X 0.197"
27	AH210484	HYDRAULIC CYLINDER KIT	1		X	X	CYLINDER ROD REPAIR KIT, (SUB FOR AH148164)
28	24H1577	WASHER	8	-896864	X	X	
29	19M7949	CAP SCREW	2	-896864	X	X	M12 X 100
30	T187276	PLATE	1	896865-	X	X	RETAINER
31	19M7784	SCREW	1	896865-	X	X	

BOOM LIFT CYLINDER
(310SG AND 315SG)
(SERIAL NO. 910492-926248)

T212490 -UN-06JUL05

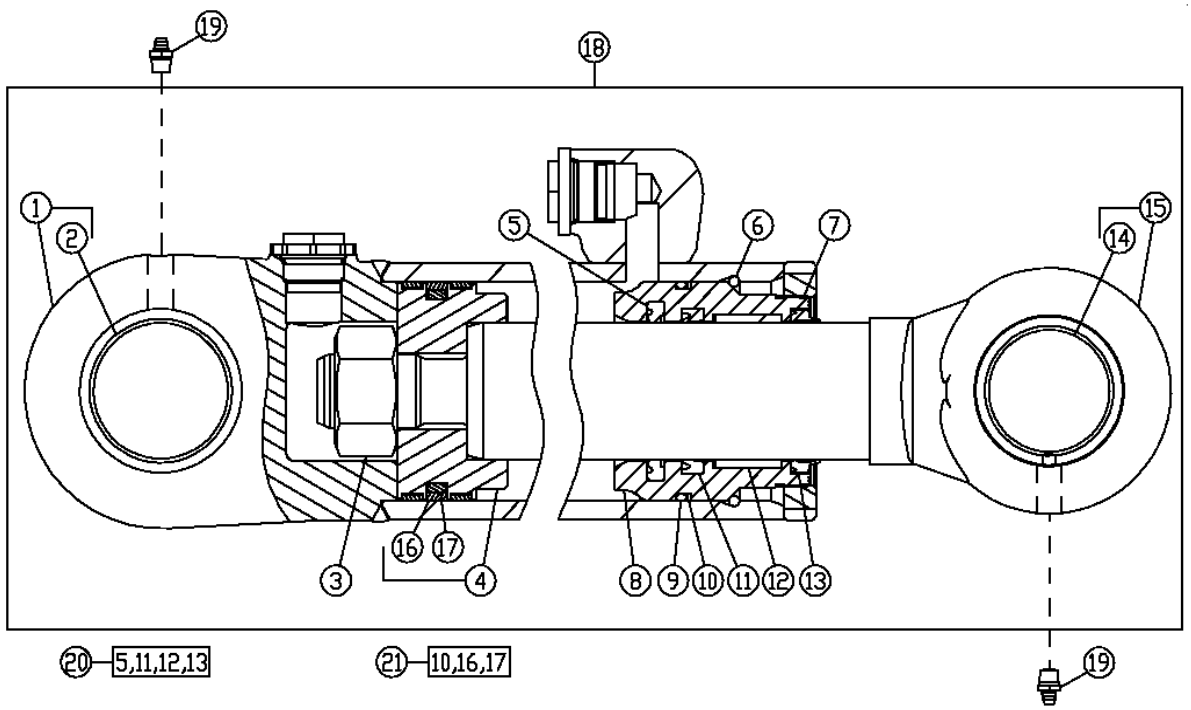

T212490

KEY	PART NO.	PART NAME	QTY	SERIAL NO.	310G	310SG	315SG	REMARKS
1	AH146876	HYDRAULIC CYLINDER BARREL	1			X	X	
2	H159941	BUSHING	1			X	X	
3	H170538	NUT	1			X	X	
4	AH165826	PISTON	1			X	X	
5	AH146561	SEAL	1			X	X	
6	R81789	RING	1			X	X	
7	R81795	NUT	1			X	X	
8	H152345	HYDR. CYLINDER ROD GUIDE	1			X	X	
9	T12582	O-RING	1			X	X	
10	R81864	BACK-UP RING	1			X	X	
11	H152203	SEAL	1			X	X	
12	H152794	WEAR RING	1			X	X	
13	AH146557	SEAL	1			X	X	
14	H151542	BUSHING	1			X	X	
15	AH146875	HYDRAULIC CYLINDER ROD	1			X	X	
16	R98322	SEAL	1			X	X	
17	R98323	SEAL	1			X	X	
18	.....	HYDRAULIC CYLINDER	1			X	X	(AH207401 NO LONGER AVAILABLE) (SUB AH211206)
19	T162396	LUBRICATION FITTING	2			X	X	
20	AH210484	HYDRAULIC CYLINDER KIT	1			X	X	CYLINDER ROD SEAL KIT, (SUB FOR AH148164)
21	AH212092	HYDRAULIC CYLINDER KIT	1			X	X	CYLINDER BORE SEAL KIT, (SUB FOR AH202080)

BOOM CYLINDER AND REPAIR KITS
(310SG AND 315SG)
(SERIAL NO. 926249-)

T196129 -UN-10NOV03

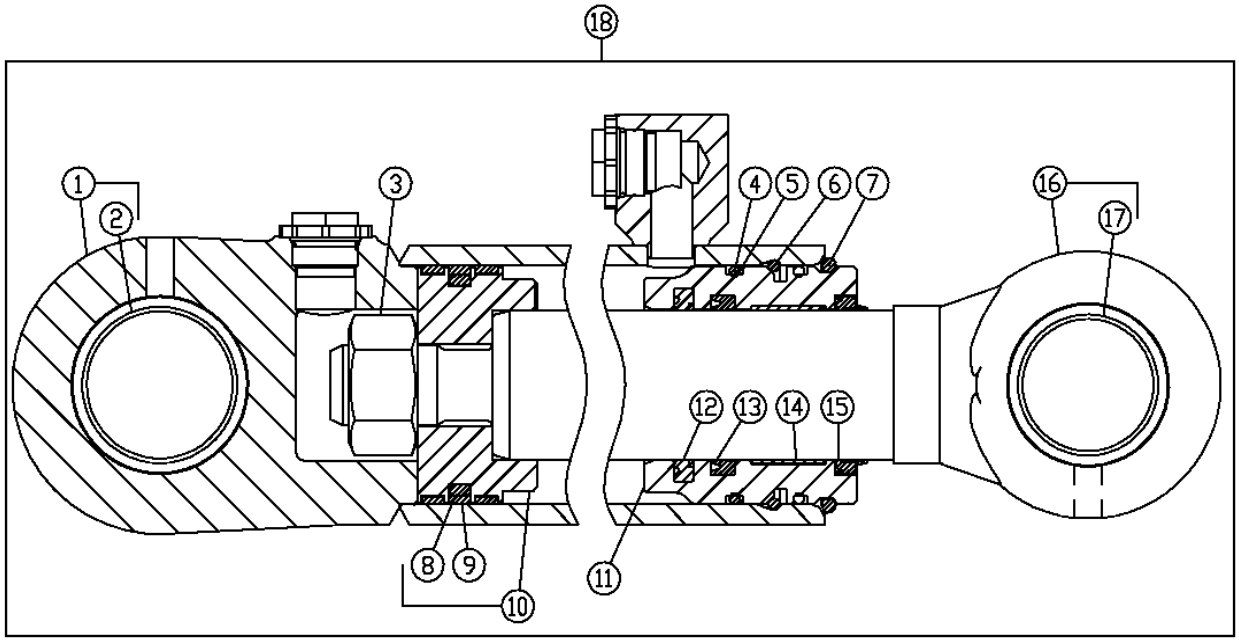

19-12,13,14,15 20-5,8,9

T196129

KEY	PART NO.	PART NAME	QTY	SERIAL NO.	310G	310SG	315SG	REMARKS
1	AH211204	HYDRAULIC CYLINDER BARREL	1			X	X	
2	H159941	BUSHING	1			X	X	
3	H170538	NUT	1			X	X	
4	T12582	O-RING	2			X	X	
5	R81864	BACK-UP RING	1			X	X	
6	H170216	SNAP RING	1			X	X	
7	H180787	SNAP RING	1			X	X	
8	R98323	SEAL	1			X	X	
9	R98322	SEAL	1			X	X	
10	AH165826	PISTON	1			X	X	
11	H209221	HYDR. CYLINDER ROD GUIDE	1			X	X	
12	AH146561	SEAL	1			X	X	(SUB FOR AH149842)
13	H152203	SEAL	1			X	X	
14	H208987	WEAR RING	1			X	X	
15	AH146557	SEAL	1			X	X	
16	AH146875	HYDRAULIC CYLINDER ROD	1			X	X	
17	H151542	BUSHING	1			X	X	
18	AH211206	HYDRAULIC CYLINDER	1			X	X	
19	AH210484	HYDRAULIC CYLINDER KIT	1			X	X	ROD SEAL KIT
20	AH212092	HYDRAULIC CYLINDER KIT	1			X	X	BORE SEAL KIT

LOADER BUCKET CYLINDER AND REPAIR KIT
(SERIAL NO. -941225)

TP62470 -UN-26SEP00

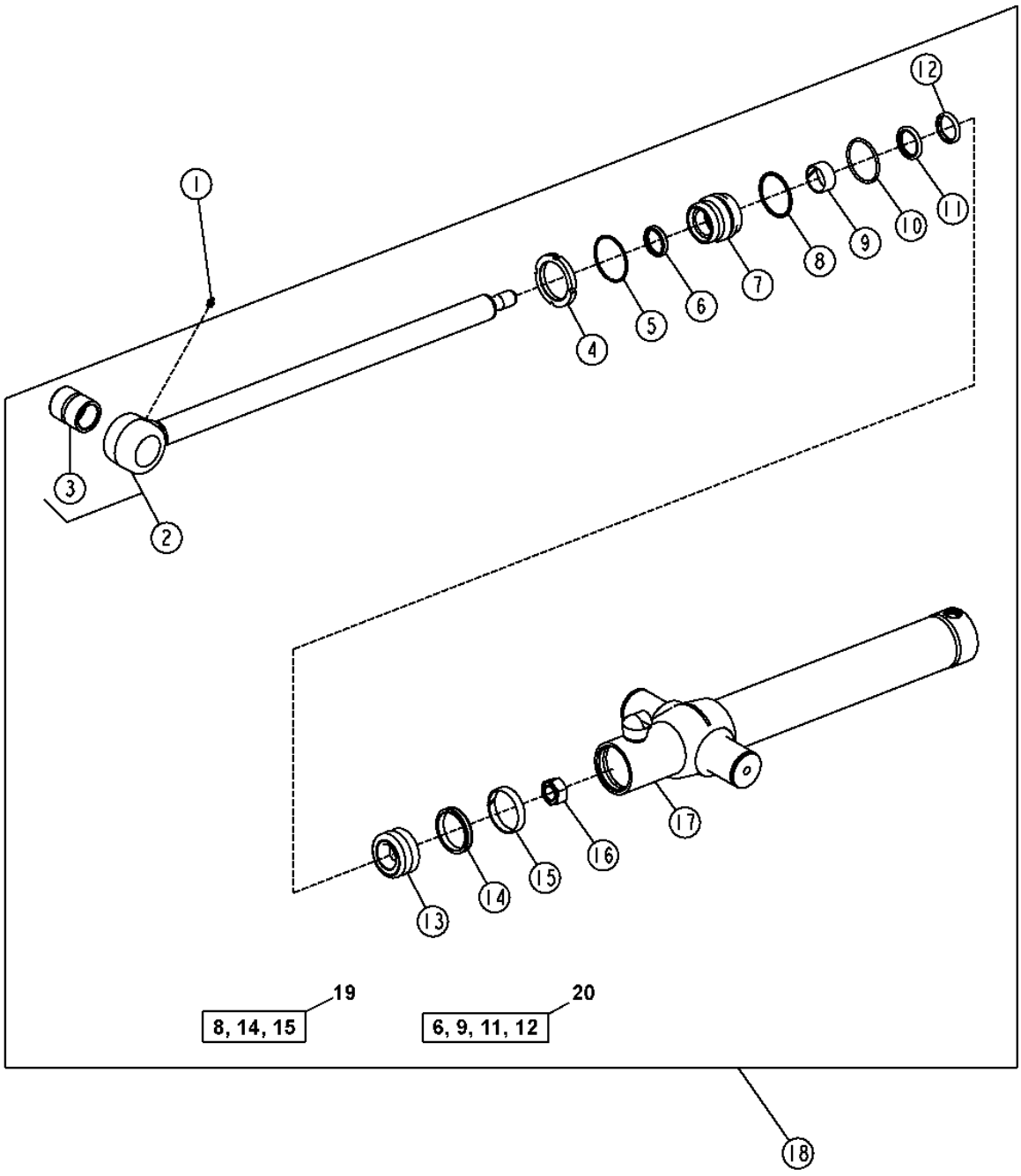

TP62470

LOADER BUCKET CYLINDER AND REPAIR KIT
(SERIAL NO. -941225)

KEY	PART NO.	PART NAME	QTY	SERIAL NO.	310G	310SG	315SG	REMARKS
1	T162396	LUBRICATION FITTING	1		X	X	X	
2	AH162040	END	1		X	X	X	
3	H151594	BUSHING	1		X	X	X	
4	R81794	NUT	1		X	X	X	
5	R81788	RING	1		X	X	X	
6	AH146557	SEAL	1		X	X	X	
7	H154352	HYDR. CYLINDER ROD GUIDE	1		X	X	X	
8	R79101	BACK-UP RING	1		X	X	X	
9	H152794	WEAR RING	1		X	X	X	
10	F1430R	O-RING	1		X	X	X	
11	AH146561	SEAL	1		X	X	X	
12	H152203	SEAL	1		X	X	X	
13	H142090	PISTON	1		X	X	X	
14	RE20344	SEAL	1		X	X	X	
15	R81776	WEAR RING	1		X	X	X	
16	H170539	NUT	1		X	X	X	
17	AH173568	HYDRAULIC CYLINDER BARREL	1		X	X	X	(SUB FOR AH171229)
18	.....	HYDRAULIC CYLINDER	1		X	X	X	(AH173567 NO LONGER AVAILABLE) (SUB AH216338)
19	AH212096	HYDRAULIC CYLINDER KIT	1		X	X	X	(SUB FOR AH149843) CYLINDER BORE REPAIR KIT
20	AH210484	HYDRAULIC CYLINDER KIT	1		X	X	X	CYLINDER ROD REPAIR KIT, (SUB FOR AH148164)

LOADER BUCKET CYLINDER AND REPAIR KIT
(SERIAL NO. 941226-)

T202938 -UN-16SEP04

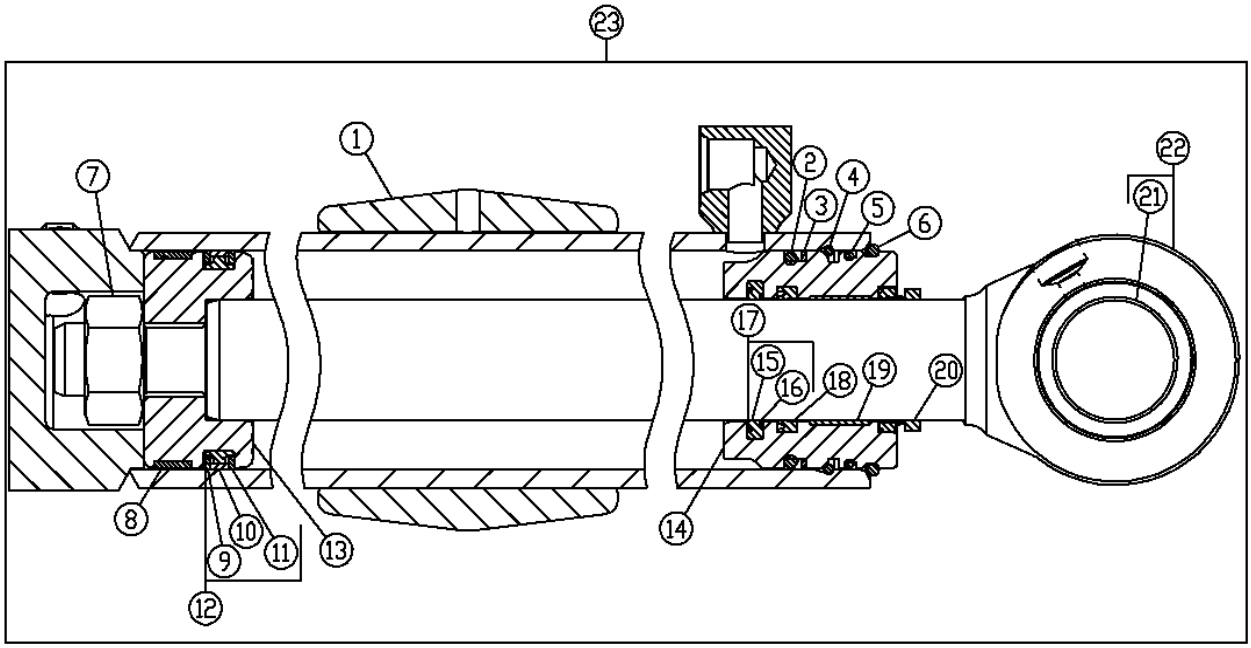

24-17,18,19,20 25-3,5,8,12

T202938

LOADER BUCKET CYLINDER AND REPAIR KIT
(SERIAL NO. 941226-)

KEY	PART NO.	PART NAME	QTY	SERIAL NO.	310G	310SG	315SG	REMARKS
1	AH216339	HYDRAULIC CYLINDER BARREL	1		X	X	X	
2	F1430R	O-RING	1		X	X	X	
3	R79101	BACK-UP RING	1		X	X	X	
4	H180103	SNAP RING	1		X	X	X	
5	.....	O-RING	1		X	X	X	
6	H206859	SNAP RING	1		X	X	X	
7	H170539	NUT	1		X	X	X	
8	R81776	WEAR RING	1		X	X	X	
9	.....	SEAL	1		X	X	X	
10	.....	BACK-UP RING	1		X	X	X	
11	.....	SEAL	1		X	X	X	
12	RE20344	SEAL	1		X	X	X	
13	H142090	PISTON	1		X	X	X	
14	H208631	HYDR. CYLINDER ROD GUIDE	1		X	X	X	
15	.....	SEAL	1		X	X	X	
16	.....	SEAL	1		X	X	X	
17	AH146561	SEAL	1		X	X	X	
18	H152203	SEAL	1		X	X	X	
19	H208987	WEAR RING	1		X	X	X	
20	AH146557	SEAL	1		X	X	X	
21	H151594	BUSHING	1		X	X	X	
22	AH162040	END	1		X	X	X	
23	AH216338	HYDRAULIC CYLINDER	1		X	X	X	
24	AH210484	HYDRAULIC CYLINDER KIT	1		X	X	X	CYLINDER ROD REPAIR KIT
25	AH212096	HYDRAULIC CYLINDER KIT	1		X	X	X	CYLINDER BORE REPAIR KIT

**QUICK COUPLER
(UNIVERSAL)
(310SG AND 315SG)**

T151499 -UN-14FEB02

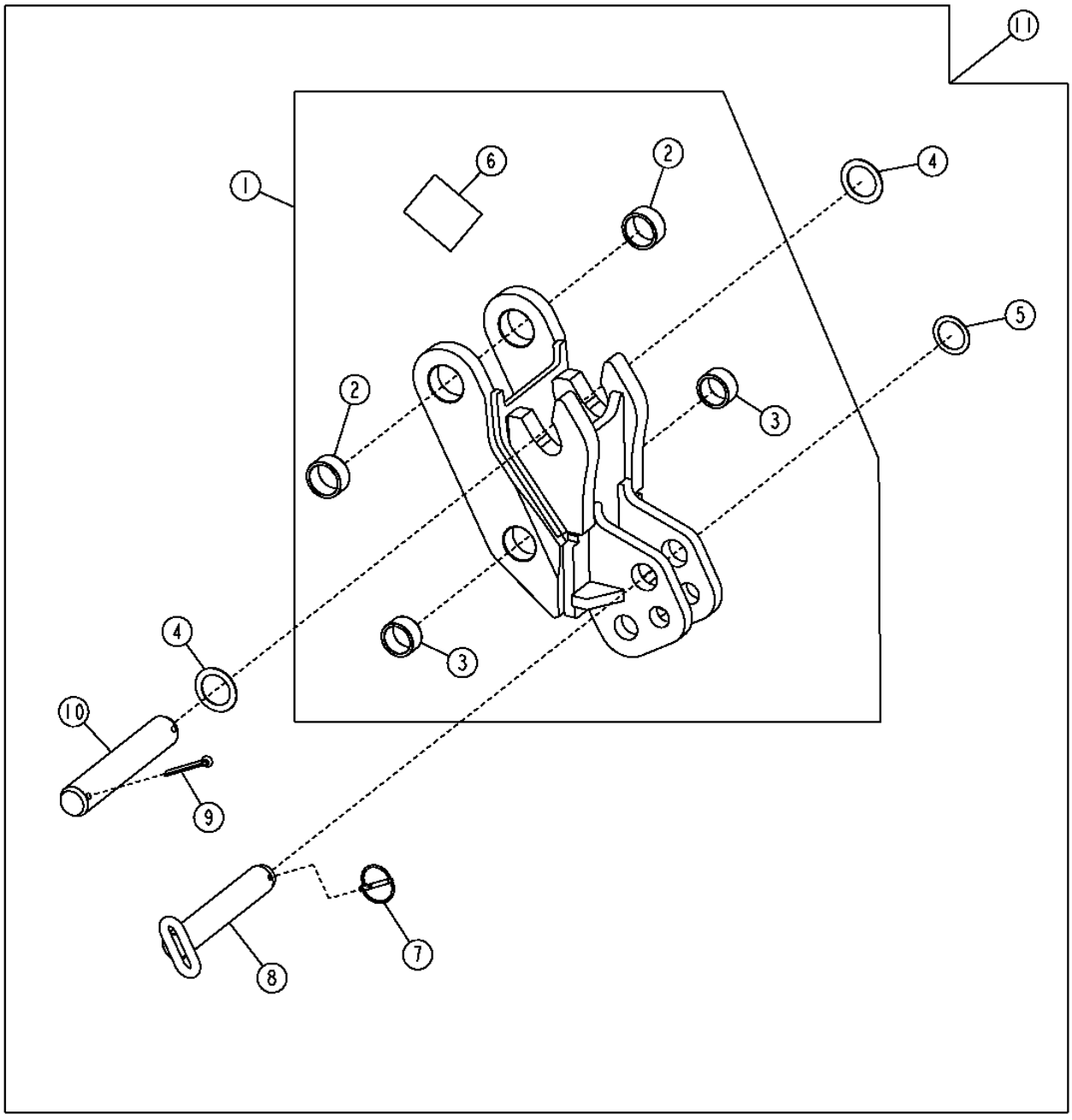

T151499

QUICK COUPLER (UNIVERSAL) (310SG AND 315SG)

KEY	PART NO.	PART NAME	QTY	SERIAL NO.	310G	310SG	315SG	REMARKS
1	AT192106	QUICK COUPLER	1			X	X	
2	T187117	BUSHING	2			X	X	
3	T187116	BUSHING	2			X	X	
4	T161036	WASHER	2			X	X	
5	24H1683	WASHER	1			X	X	
6	T162847	LABEL	1			X	X	
7	AR83396	QUICK LOCK PIN	1			X	X	
8	AT192111	PIN	1			X	X	
9	11H227	COTTER PIN	2			X	X	
10	T185832	PIN FASTENER	1			X	X	
11	AT192092	QUICK COUPLER	1			X	X	(WHOLE GOODS)

**QUICK COUPLER
(UNIVERSAL)
(310G)**

T151498 -UN-14FEB02

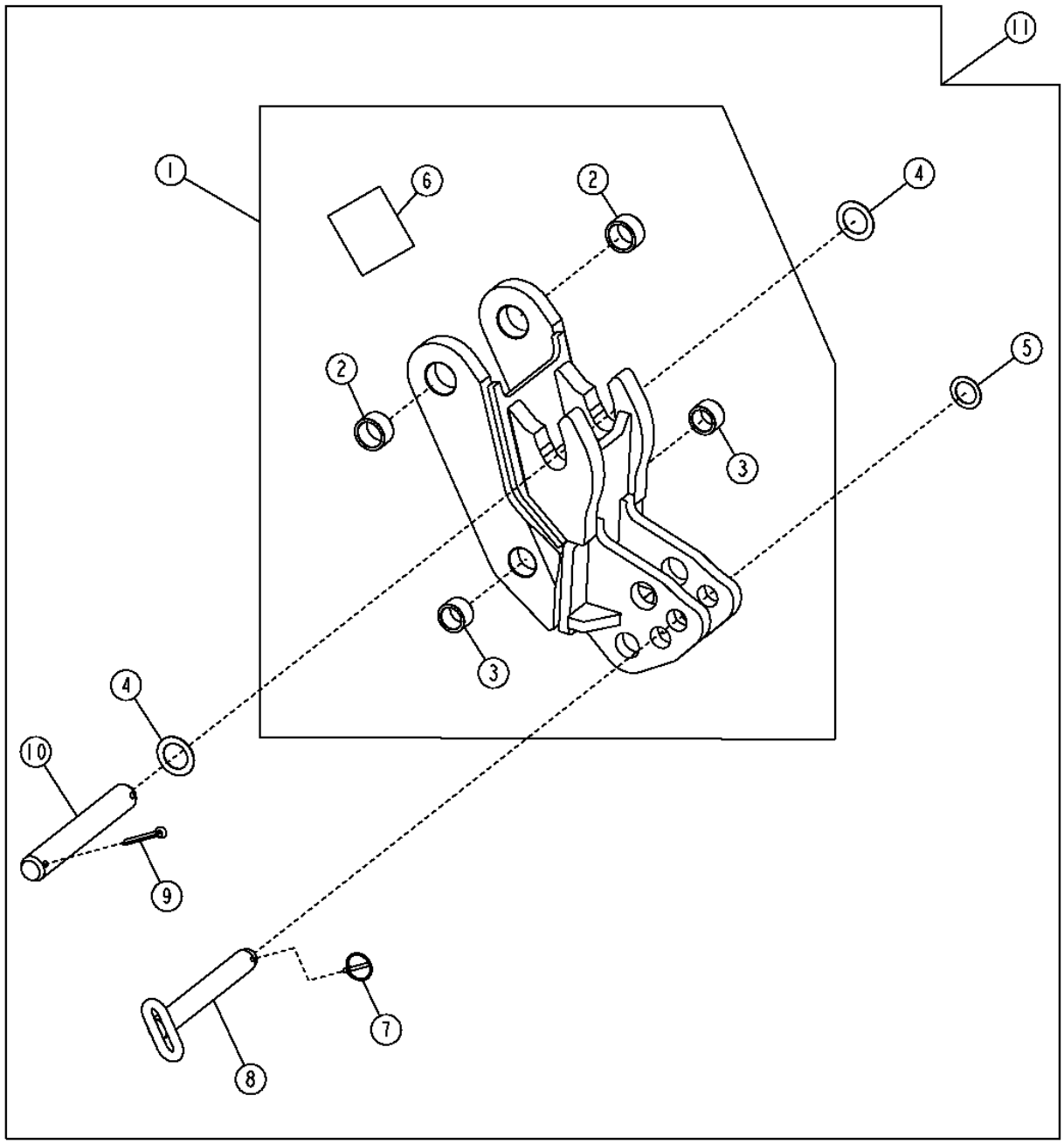

T151498

QUICK COUPLER (UNIVERSAL) (310G)

KEY	PART NO.	PART NAME	QTY	SERIAL NO.	310G	310SG	315SG	REMARKS
1	AT192104	QUICK COUPLER	1		X			
2	T187115	BUSHING	2		X			
3	T187114	BUSHING	2		X			
4	24H1574	WASHER	2		X			
5	24H1536	WASHER	1		X			
6	T162848	LABEL	1		X			
7	AA21292	QUICK LOCK PIN	1		X			
8	AT178072	PIN	1		X			
9	11H221	COTTER PIN	2		X			
10	T185830	PIN FASTENER	1		X			
11	AT192088	QUICK COUPLER	1		X			(WHOLE GOODS)

**QUICK COUPLER
(STANDARD)
(310SG AND 315SG)**

T151505 -UN-14FEB02

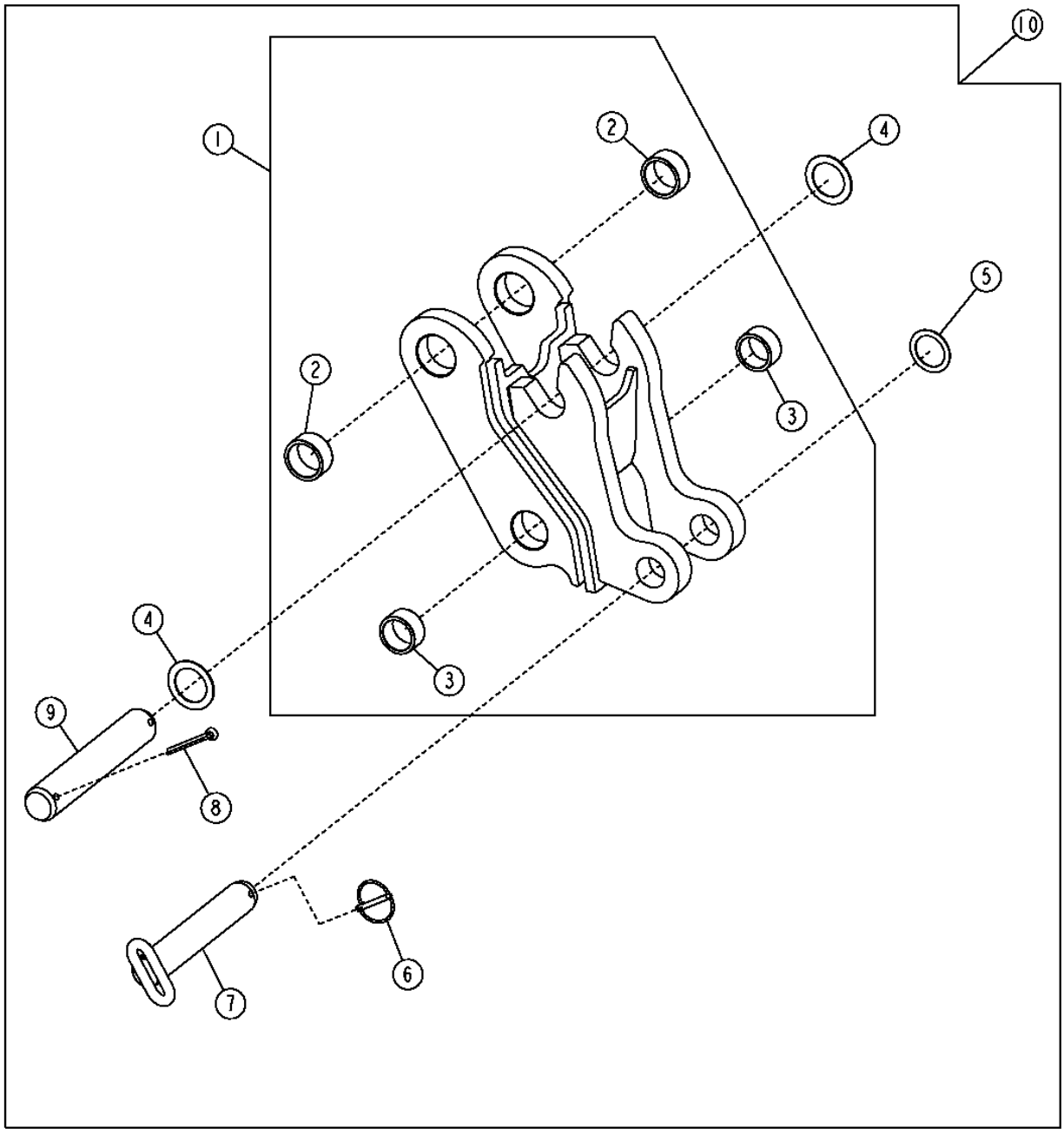

T151505

QUICK COUPLER (STANDARD) (310SG AND 315SG)

KEY	PART NO.	PART NAME	QTY	SERIAL NO.	310G	310SG	315SG	REMARKS
1	AT192107	QUICK COUPLER	1			X	X	
2	T187117	BUSHING	2			X	X	
3	T187116	BUSHING	2			X	X	
4	T161036	WASHER	2			X	X	
5	24H1683	WASHER	1			X	X	
6	AR83396	QUICK LOCK PIN	1			X	X	
7	AT192111	PIN	1			X	X	
8	11H227	COTTER PIN	2			X	X	
9	T185832	PIN FASTENER	1			X	X	
10	AT192093	QUICK COUPLER	1			X	X	(WHOLE GOODS)

QUICK COUPLER
(STANDARD)
(310G)

T151505 -UN-14FEB02

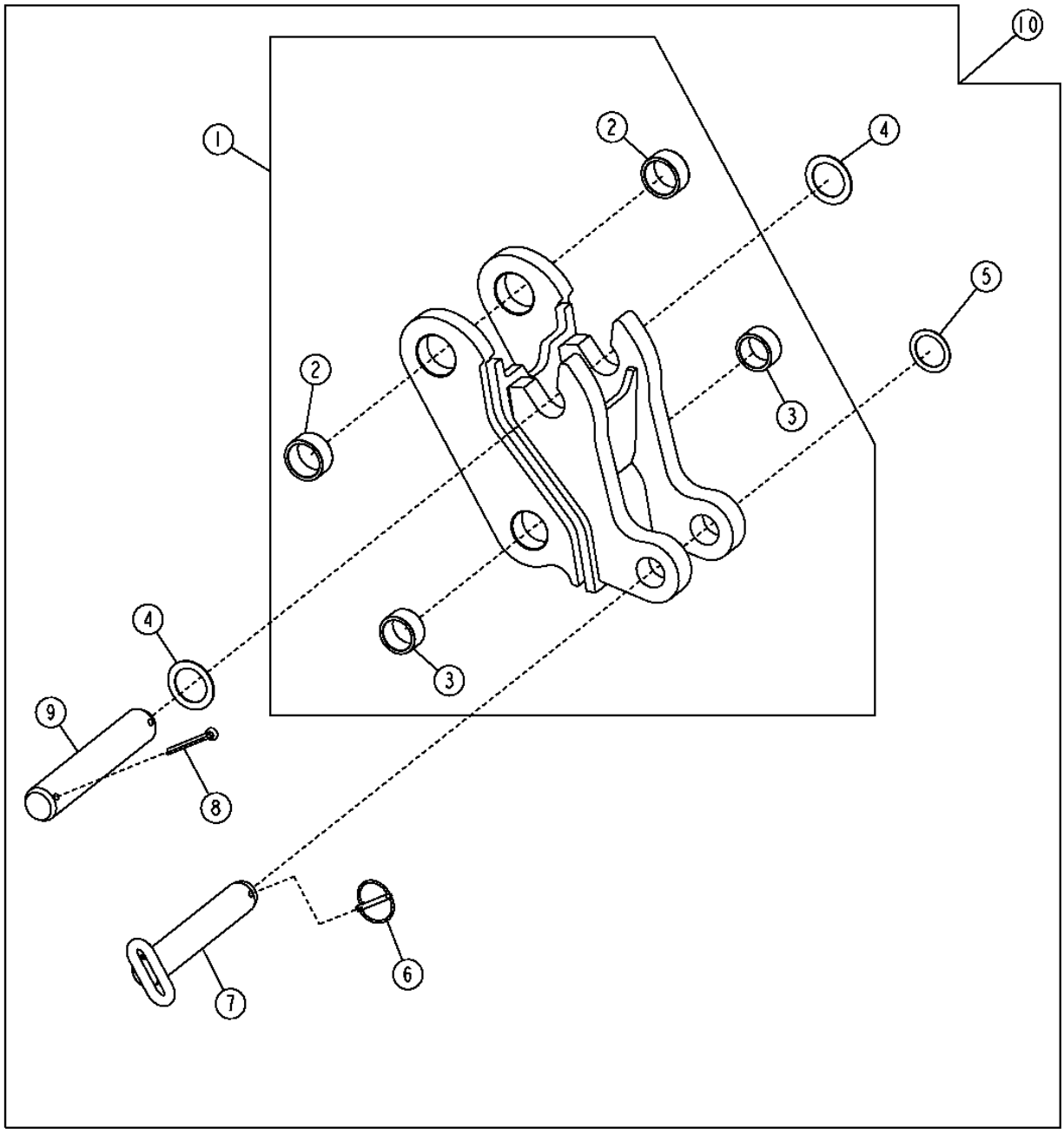

T151505

QUICK COUPLER (STANDARD) (310G)

KEY	PART NO.	PART NAME	QTY	SERIAL NO.	310G	310SG	315SG	REMARKS
1	.....	QUICK COUPLER	1		X			(ORDER AT192090)
2	T187115	BUSHING	2		X			
3	T187114	BUSHING	2		X			
4	24H1574	WASHER	2		X			
5	24H1536	WASHER	1		X			
6	AA21292	QUICK LOCK PIN	1		X			
7	AT178072	PIN	1		X			
8	11H221	COTTER PIN	2		X			
9	T185830	PIN FASTENER	1		X			
10	AT192090	QUICK COUPLER	1		X			(WHOLE GOODS)

QUICK COUPLER (CASE)

TP69671 -UN-05SEP00

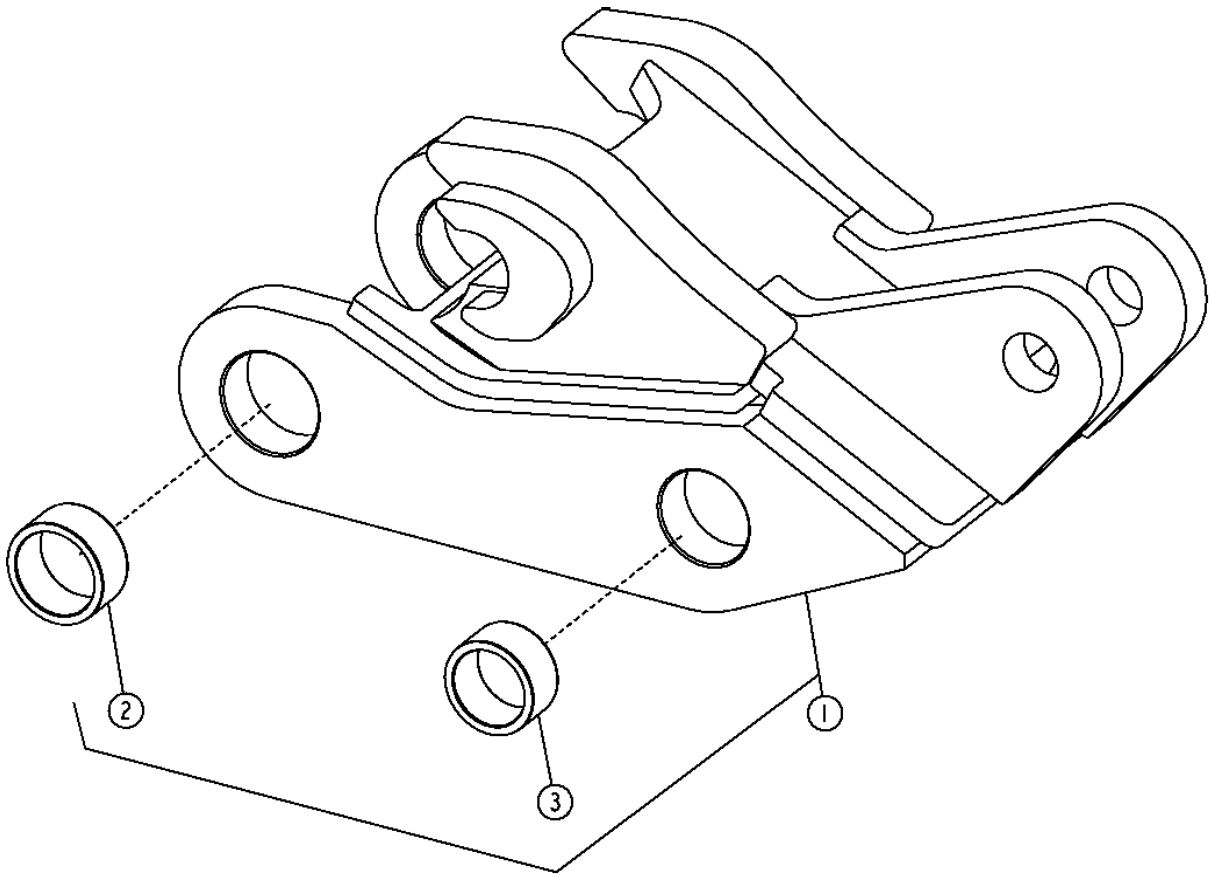

TP69671

QUICK COUPLER (CASE)

KEY	PART NO.	PART NAME	QTY	SERIAL NO.	310G	310SG	315SG	REMARKS
1	.....	QUICK COUPLER	1		X			(WHOLE GOODS)(AT192091 NO LONGER AVAILABLE)
	.....	QUICK COUPLER	1			X	X	(WHOLE GOODS)(AT192094 NO LONGER AVAILABLE)
2	T187115	BUSHING	2		X			
	T187117	BUSHING	2			X	X	
3	T187114	BUSHING	2		X			
	T187116	BUSHING	2			X	X	

QUICK COUPLER (FORD)

TP69672 -UN-05SEP00

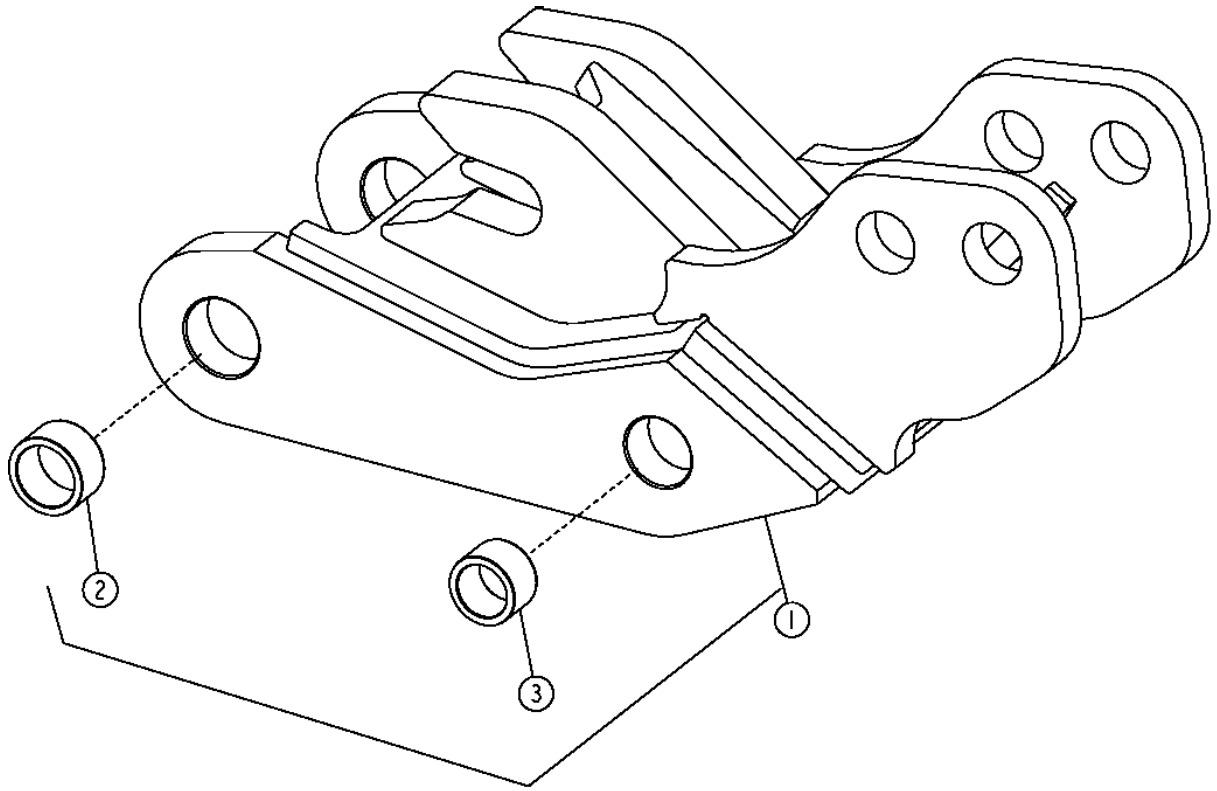

TP69672

QUICK COUPLER (FORD)

KEY	PART NO.	PART NAME	QTY	SERIAL NO.	310G	310SG	315SG	REMARKS
1	.....	QUICK COUPLER	1		X			(WHOLE GOODS) (AT192089 NO LONGER AVAILABLE)
2	T187115	BUSHING	2		X			
3	T187114	BUSHING	2		X			

BACKHOE BUCKETS AND PINS

T214797 -UN-22SEP05

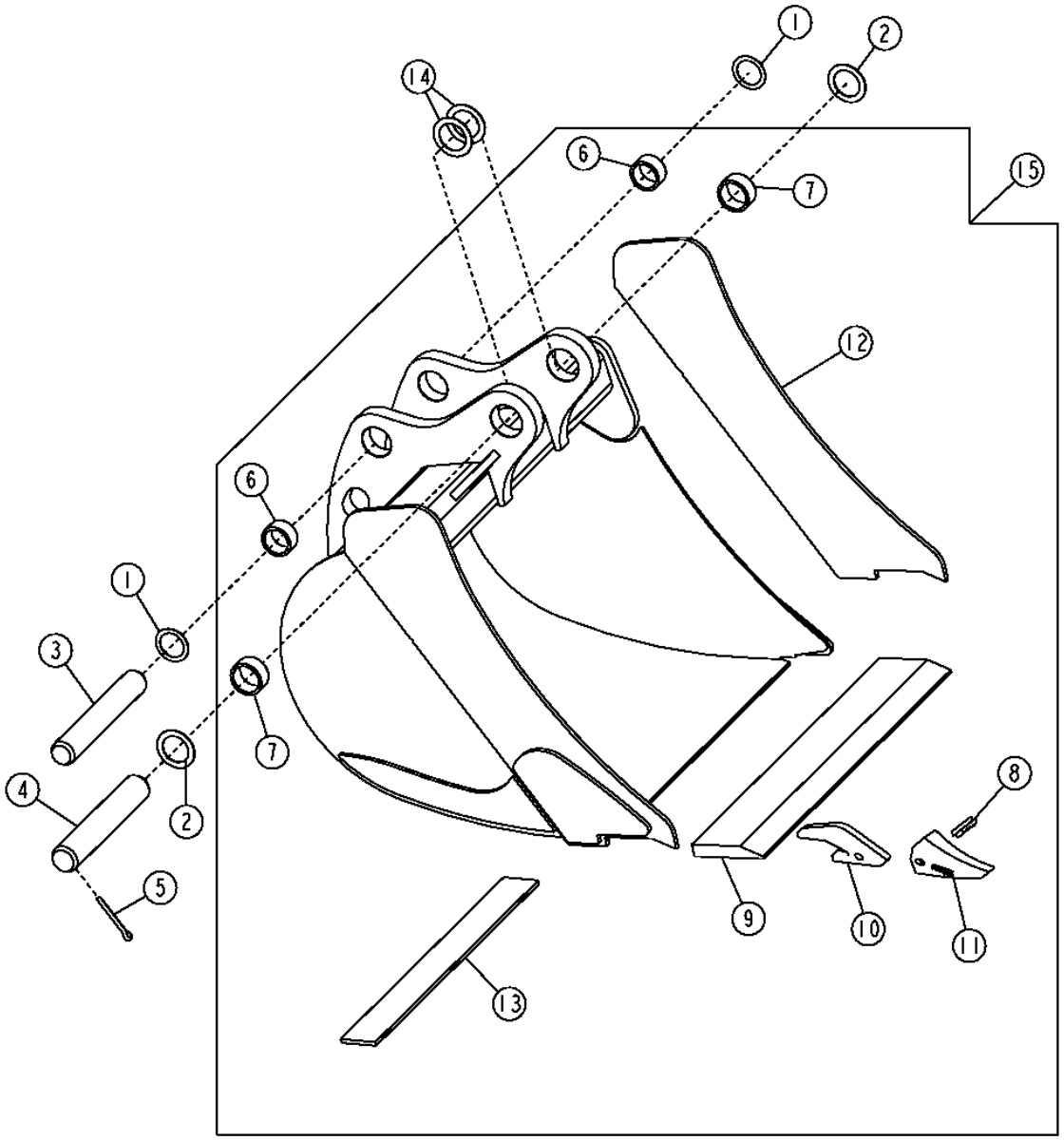

T214797

BACKHOE BUCKETS AND PINS

KEY	PART NO.	PART NAME	QTY	SERIAL NO.	310G	315SG	REMARKS
1	24H1683	WASHER	2			X X	
	24H1536	WASHER	2		X		
2	T161036	WASHER	3			X X	2.205" X 3.150" X 0.079"
3	T185831	PIN FASTENER	1			X X	49.475 X 320 MM
	T185829	PIN FASTENER	1		X		38.100 X 320 MM
4	T185832	PIN FASTENER	1			X X	54.475 X 320 MM
	T185830	PIN FASTENER	1		X		44.475 X 320 MM
5	11H227	COTTER PIN	4			X X	
	11H221	COTTER PIN	4		X		
6	T187114	BUSHING	2		X		
	T187116	BUSHING	2			X X	
7	T187115	BUSHING	2		X		
	T187117	BUSHING	2			X X	
8	TF23P	PIN	AR		X	X X	(FLEX)
9	T161279	CUTTING EDGE	1		X	X X	(A)(CUT TO LENGTH)
	T161759	CUTTING EDGE	1		X		(B)(CUT TO LENGTH)
	T161319	CUTTING EDGE	1		X	X X	(C)(CUT TO LENGTH)
10	U43792	BUCKET TOOTH ADAPTER	AR		X	X X	
11	TF23D	TOOTH	AR		X	X X	(TIP)
12	T159197	PLATE	2		X		
	T162535	PLATE	2		X	X X	
	T162553	PLATE	2			X X	
	T162569	PLATE	2		X	X X	
13	.....	WEAR PLATE	AR			X X	(USE WITH SEVERE DUTY BUCKETS) 1020 HR STEEL - 692 X 76 X 8 MM
14	24H1679	WASHER	3			X X	2-17/64" X 3-1/4" X 0.060"
	24H1574	WASHER	2		X		1-13/16" X 2-3/4" X 0.060"
15	AT192004	BACKHOE BUCKET	1		X		(A) 304MM (12") HEAVY DUTY 3.3 CUBIC FEET, (CONTAINS (2) T162535) (WHOLE GOODS)
	AT192011	BACKHOE BUCKET	1			X X	(A) 304MM (12") HEAVY DUTY 3.3 CUBIC FEET, (CONTAINS (2) T162535) (WHOLE GOODS)
	AT192005	BACKHOE BUCKET	1		X		(B) 457MM (18") STANDARD 4.6 CUBIC FEET, (CONTAINS (2) T159197) (WHOLE GOODS)
	AT192006	BACKHOE BUCKET	1		X		(A) 457MM (18") HEAVY DUTY 5.1 CUBIC FEET, (CONTAINS (2) T162535) (WHOLE GOODS)
	AT192012	BACKHOE BUCKET	1			X X	(A) 457MM (18") HEAVY DUTY 5.1 CUBIC FEET, (CONTAINS (2) T162535) (WHOLE GOODS)
	AT192013	BACKHOE BUCKET	1			X X	(A) 457MM (18") SEVERE DUTY 5.1 CUBIC FEET, (CONTAINS (2) T162553) (WHOLE GOODS)

THIS PARTS LISTING IS CONTINUED

BACKHOE BUCKETS AND PINS

T214797 -UN-22SEP05

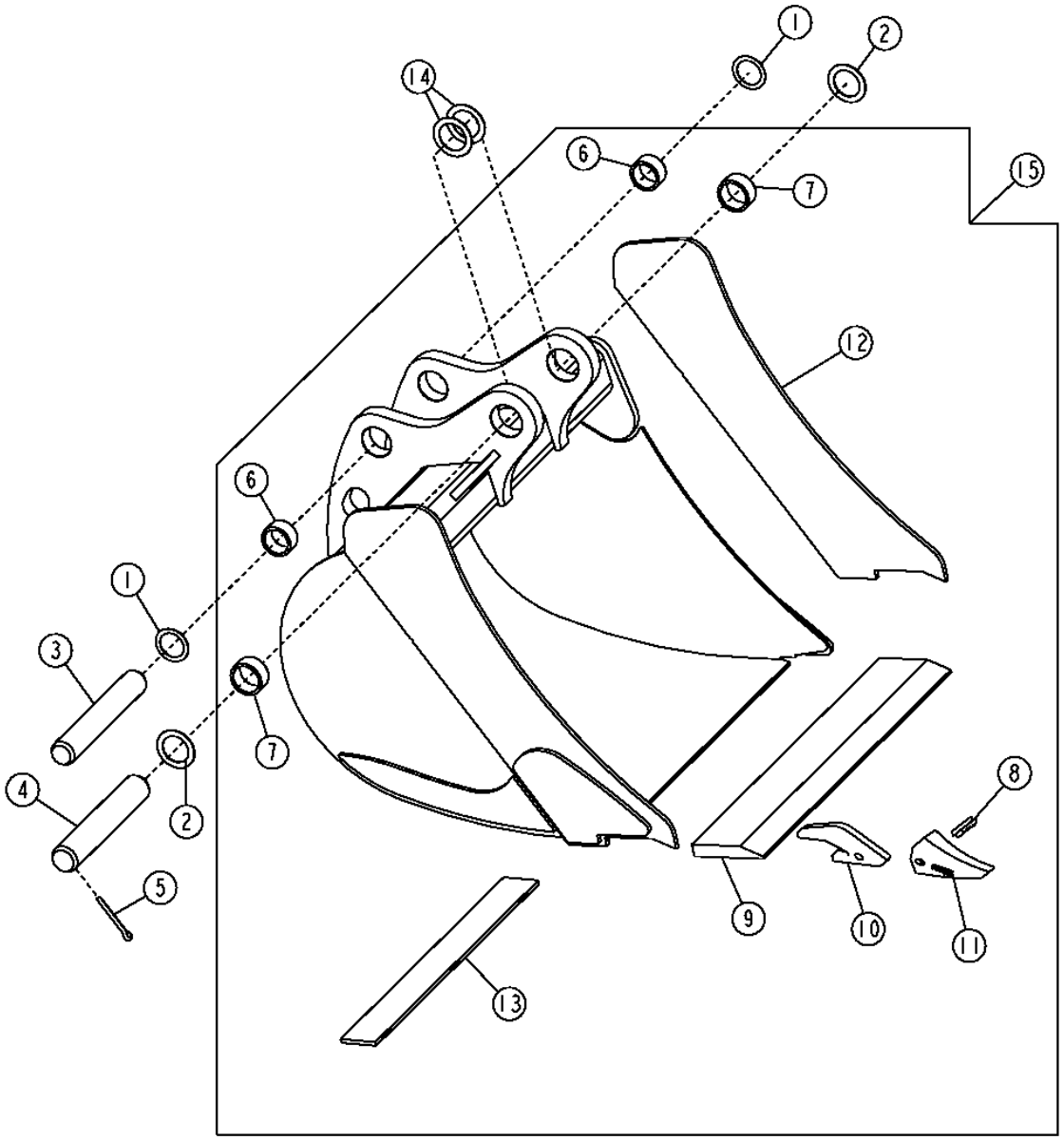

T214797

BACKHOE BUCKETS AND PINS

KEY	PART NO.	PART NAME	QTY	SERIAL NO.	310G	310SG	315SG	REMARKS
15	AT192007	BACKHOE BUCKET	1		X			(B) 610MM (24") STANDARD 6.5 CUBIC FEET, (CONTAINS (2) T159197) (WHOLE GOODS)
	AT192014	BACKHOE BUCKET	1			X	X	(A) 610MM (24") STANDARD 7.5 CUBIC FEET, (CONTAINS (2) T162535) (WHOLE GOODS)
	AT192015	BACKHOE BUCKET	1			X	X	(A) 610MM (24") HEAVY DUTY 7.5 CUBIC FEET, (CONTAINS (2) T162535) (WHOLE GOODS)
	AT192016	BACKHOE BUCKET	1			X	X	(A) 610MM (24") SEVERE DUTY 7.5 CUBIC FEET, (CONTAINS (2) T162553) (WHOLE GOODS)
	AT192008	BACKHOE BUCKET	1		X			(A) 610MM (24") HEAVY DUTY 7.5 CUBIC FEET, (CONTAINS (2) T162535) (WHOLE GOODS)
	AT192009	BACKHOE BUCKET	1		X			(A) 610MM (24") HEAVY DUTY 8.8 CUBIC FEET, (CONTAINS (2) T162569) (WHOLE GOODS)
	AT192017	BACKHOE BUCKET	1			X	X	(A) 610MM (24") HEAVY DUTY 8.8 CUBIC FEET, (CONTAINS (2) T162569) (WHOLE GOODS)
	AT192018	BACKHOE BUCKET	1			X	X	(A) 610MM (24") SEVERE DUTY 8.8 CUBIC FEET, (CONTAINS (2) T162569) (WHOLE GOODS)
	AT192010	BACKHOE BUCKET	1		X			(C) 762MM (30") HEAVY DUTY 10.0 CUBIC FEET, (CONTAINS (2) T162535) (WHOLE GOODS)
	AT192019	BACKHOE BUCKET	1			X	X	(C) 762MM (30") HEAVY DUTY 10.0 CUBIC FEET, (CONTAINS (2) T162535) (WHOLE GOODS)
	AT192020	BACKHOE BUCKET	1			X	X	(C) 762MM (30") SEVERE DUTY 10.0 CUBIC FEET, (CONTAINS (2) T162553) (WHOLE GOODS)
	AT192022	BACKHOE BUCKET	1			X	X	(C) 914MM (36") DITCHING 12.5 CUBIC FEET, (CONTAINS (2) T162553) (WHOLE GOODS)
	AT192021	BACKHOE BUCKET	1			X	X	(C) 914MM (36") HEAVY DUTY 12.5 CUBIC FEET, (CONTAINS (2) T162553) (WHOLE GOODS)

**BACKHOE VALVE MOUNTING PLATE
(310G AND 310SG)**

T134496 -UN-10OCT00

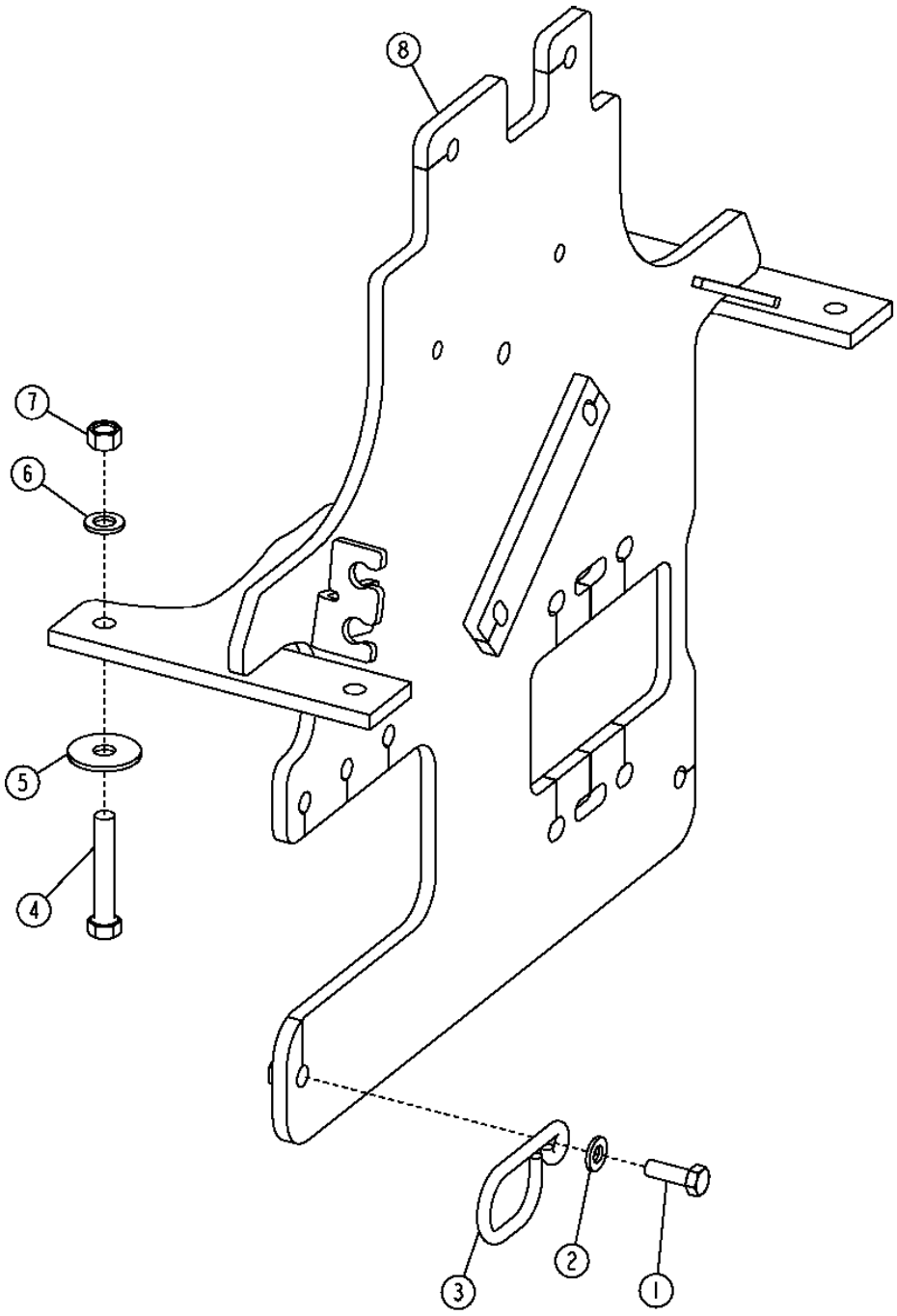

**BACKHOE VALVE MOUNTING PLATE
(310G AND 310SG)**

KEY	PART NO.	PART NAME	QTY	SERIAL NO.	310G	310SG	315SG	REMARKS
1	19M7662	CAP SCREW	2		X	X		M10 X 30
2	24M7239	WASHER	2		X	X		
3	T166223	GUIDE	2		X	X		
4	19M8348	CAP SCREW	4		X	X		M12 X 65, (SUB FOR 19M7753, THIS APPLICATION)
5	T187044	WASHER	4		X	X		
6	24M7345	WASHER	4		X	X		
7	14M7275	NUT	4		X	X		M12
8	AT184404	SUPPORT	1	-913416	X	X		
	AT197134	SUPPORT	1	913417-940475	X	X		
	AT309864	SUPPORT	1	940476-	X	X		

BACKHOE VALVE MOUNTING PLATE
(PILOT CONTROL)

T165712 -UN-20FEB03

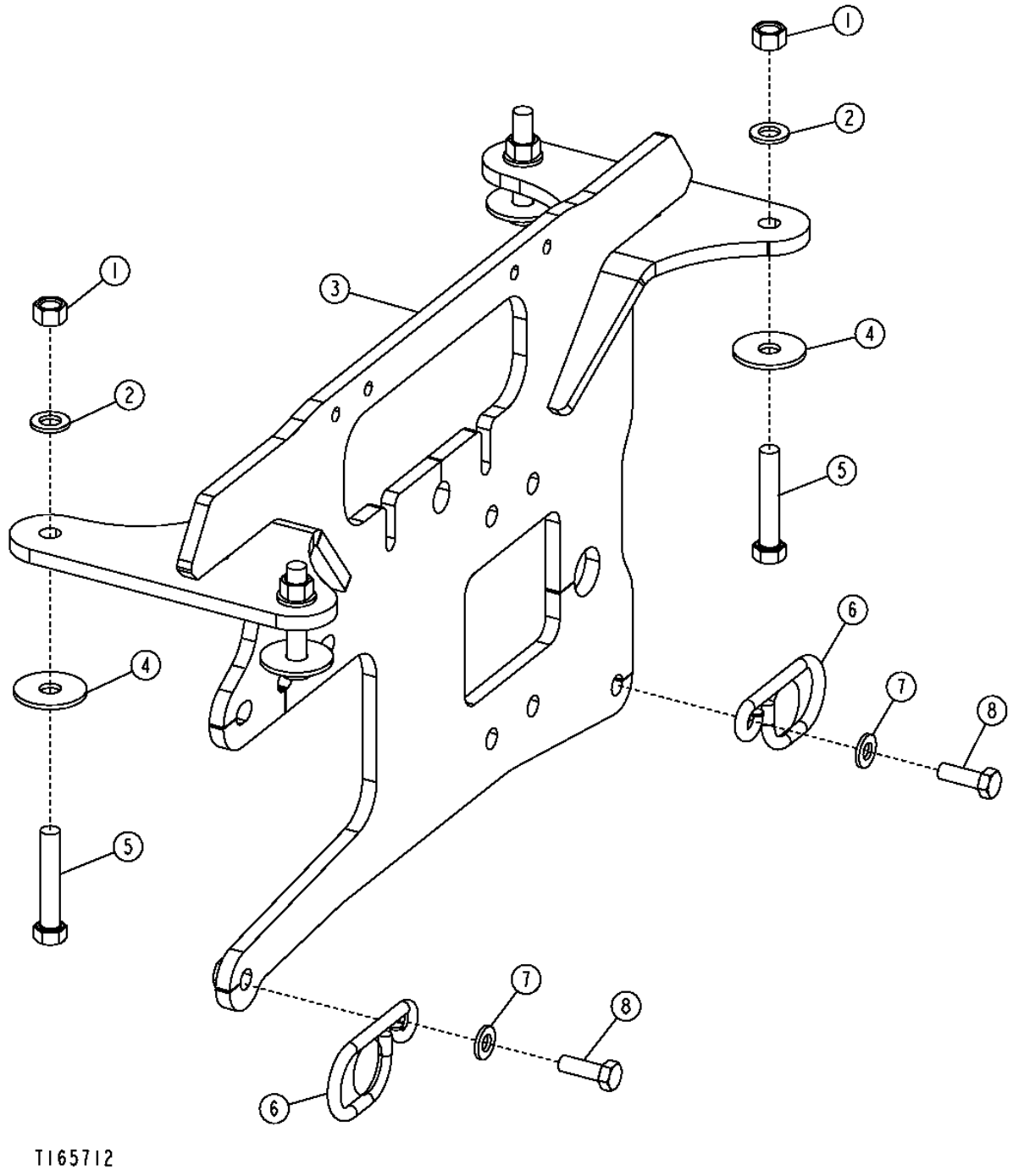

**BACKHOE VALVE MOUNTING PLATE
(PILOT CONTROL)**

KEY	PART NO.	PART NAME	QTY	SERIAL NO.	310G	310SG	315SG	REMARKS
1	14M7275	NUT	4		X	X		M12
2	24M7345	WASHER	4		X	X		
3	AT314672	BRACKET	1		X	X		(SUB FOR AT300045)
4	T187044	WASHER	4		X	X		
5	19M8348	CAP SCREW	4		X	X		M12 X 65
6	T166223	GUIDE	2		X	X		
7	24M7239	WASHER	2		X	X		
8	19M7662	CAP SCREW	2		X	X		M10 X 30

BACKHOE VALVE MOUNTING PLATE
(315SG)

TP69668 -UN-07SEP00

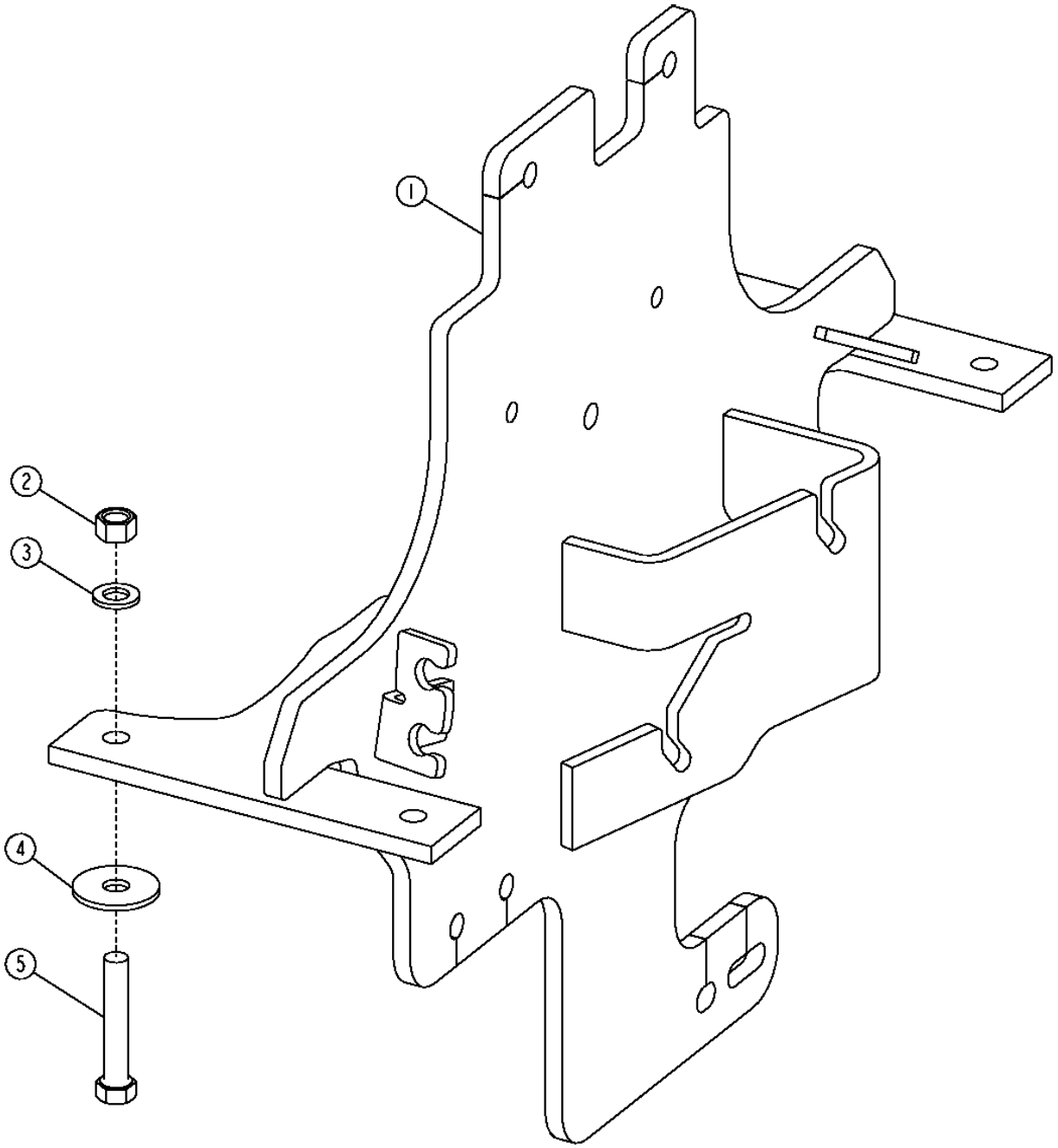

TP69668

BACKHOE VALVE MOUNTING PLATE
(315SG)

KEY	PART NO.	PART NAME	QTY	SERIAL NO.	310G	315SG	REMARKS
1	AT189093	SUPPORT	1			X	
2	14M7275	NUT	4			X	M12
3	24M7345	WASHER	4			X	
4	24H1346	WASHER	4			X	
5	19M7753	CAP SCREW	4			X	M12 X 70

TWO LEVER BACKHOE CONTROL VALVE LINKAGE AND CONVERSION KIT (310G AND 310SG)

T193153 -UN-15JUL03

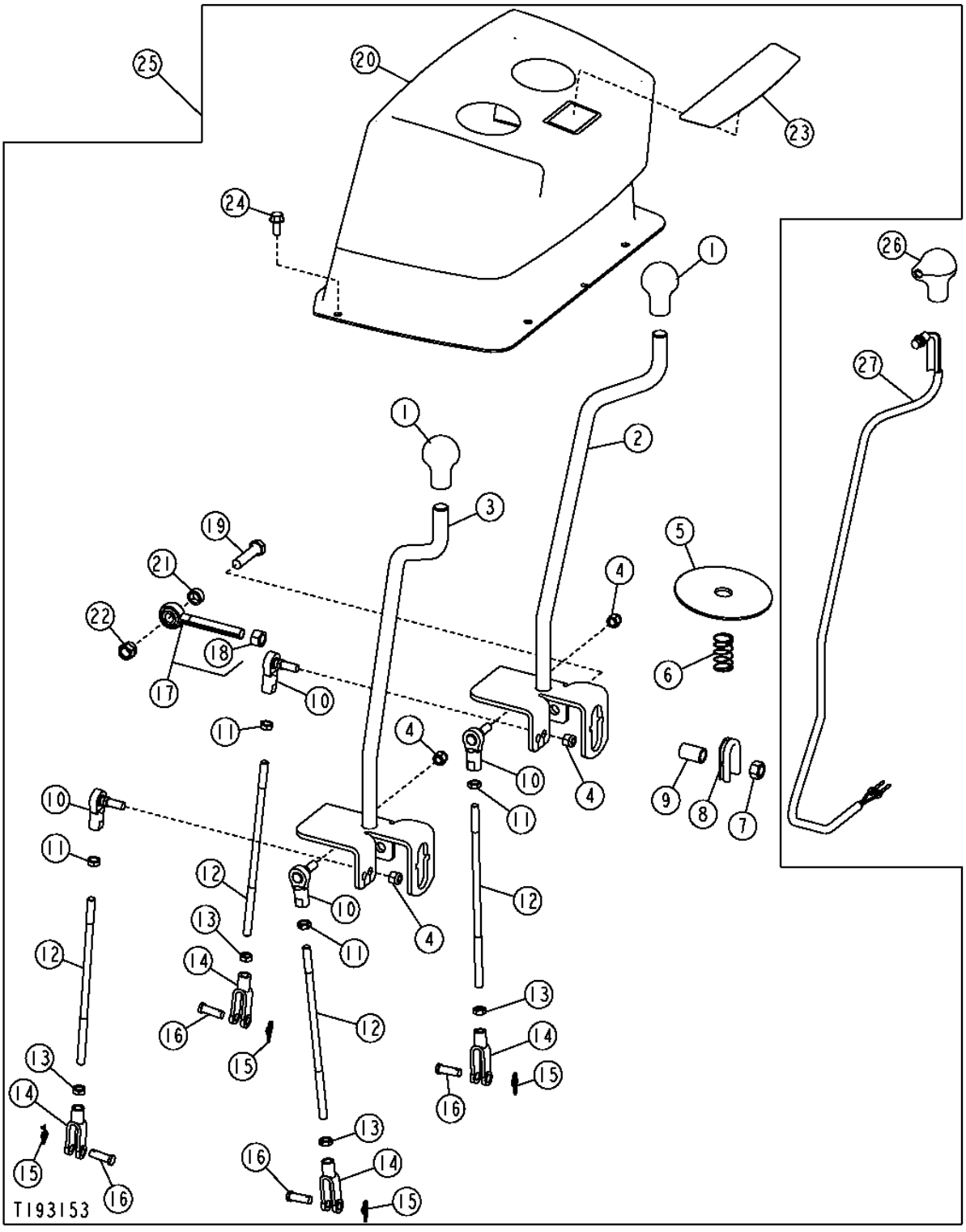

TWO LEVER BACKHOE CONTROL VALVE LINKAGE AND CONVERSION KIT (310G AND 310SG)

KEY	PART NO.	PART NAME	QTY	SERIAL NO.	310G	310SG	315SG	REMARKS
1	T133291	KNOB	2		X	X	X	
2	AT184599	LEVER	1		X	X	X	(RIGHT HAND)
3	AT184598	LEVER	1		X	X	X	(LEFT HAND)
4	M68954	LOCK NUT	4		X	X	X	3/8"
5	T165590	DUST SHIELD	2		X	X	X	
6	T185085	SPRING	2		X	X	X	
7	14H865	NUT	2		X	X	X	1/2"
8	T188639	GROMMET	2		X	X	X	(SUB FOR T166749)
9	T166772	SPACER	2		X	X	X	
10	AT169087	BALL JOINT	4		X	X	X	
11	14H774	NUT	4		X	X	X	3/8"
12	T165697	ROD	4		X	X	X	
13	14H913	NUT	4		X	X	X	3/8"
14	T140328	YOKE	4		X	X	X	
15	T202956	RETAINER	4		X	X	X	(SUB FOR R46528, THIS APPLICATION)
16	R65563	PIN FASTENER	4		X	X	X	
17	AT300152	LINK END	2		X	X	X	(SUB FOR AT186382)
18	14H865	NUT	1		X	X	X	1/2"
19	19M7361	CAP SCREW	2		X	X	X	M12 X 50
20	AT189269	COVER	1		X	X	X	
21	T166773	WASHER	2		X	X	X	
22	14M7313	LOCK NUT	2		X	X	X	M12
23	T165584	LABEL	1		X	X	X	
24	19M7866	SCREW	4		X	X	X	M8 X 20
25	**AT185624**	**LINKAGE**	**1**		**X**	**X**	**X**	**(WHOLE GOODS) TWO LEVER BACKHOE VALVE CONVERSION KIT**
26	AT157986	KNOB	1				X	
27	AT145984	SWITCH	1				X	

THREE LEVER CONTROL VALVE LINKAGE AND CONVERSION KIT (310G AND 310SG)

T193127 -UN-15JUL03

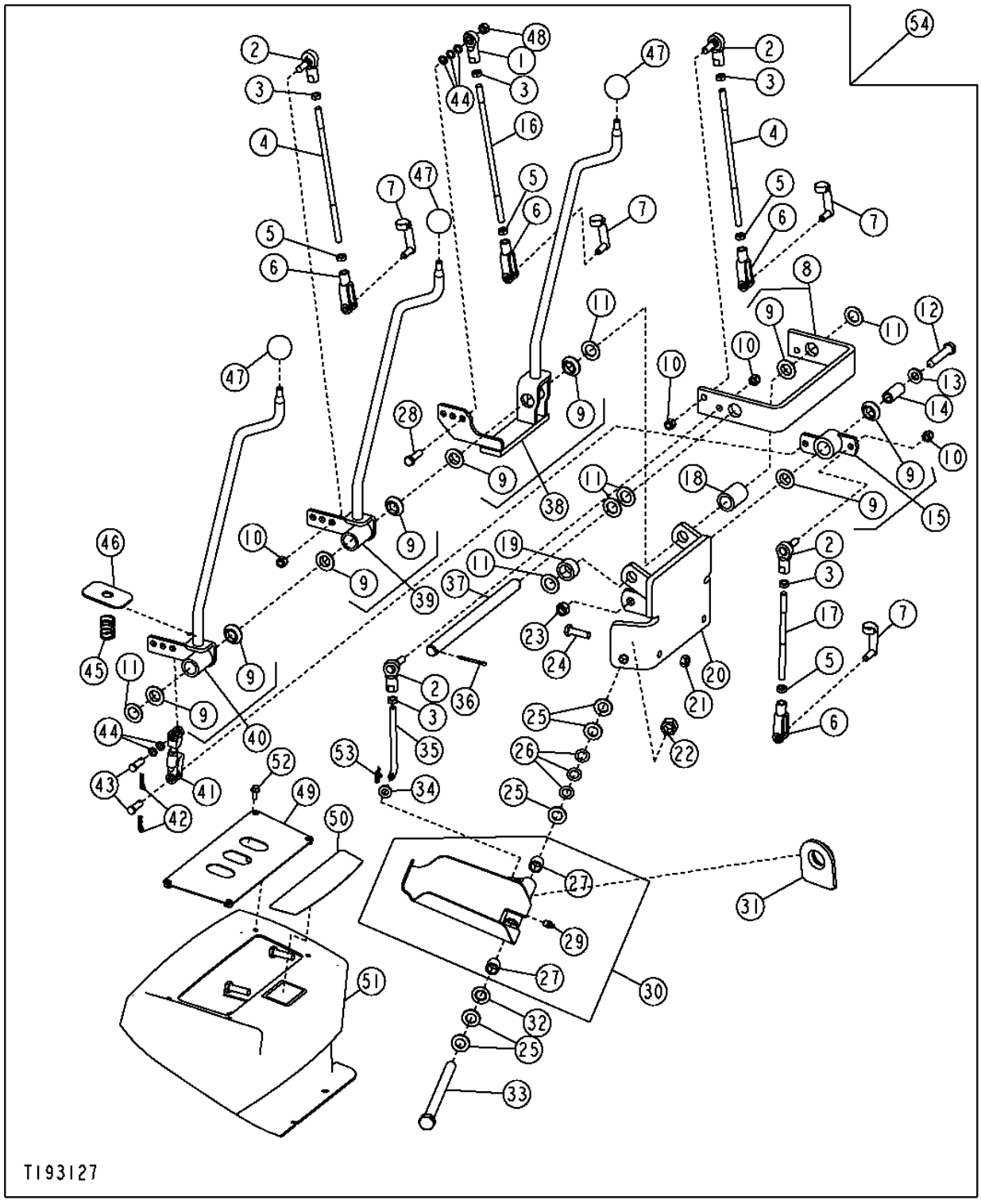

THREE LEVER CONTROL VALVE LINKAGE AND CONVERSION KIT

KEY	PART NO.	PART NAME	QTY	SERIAL NO.	310G	310SG	315SG	REMARKS
1	AE37072	LINK END	1		X	X		
2	AT169087	BALL JOINT	4		X	X		
3	14H774	NUT	5		X	X		3/8"
4	T165697	ROD	2		X	X		
5	14H913	NUT	4		X	X		3/8"
6	T140328	YOKE	4		X	X		
7	T183617	PIN FASTENER	4		X	X		
8	AT185340	BRACKET	1		X	X		
9	T166097	BEARING	10		X	X		
10	M68954	LOCK NUT	7		X	X		9.525 MM
11	24H1391	WASHER	8		X	X		
12	19M7363	CAP SCREW	1		X	X		M12 X 60
13	24M7240	WASHER	1		X	X		
14	T166031	SPACER	1		X	X		
15	AT186043	BELLCRANK	1	-940584	X	X		
	AT309186	BELLCRANK	1	940585-	X	X		
16	T165788	ROD	1		X	X		
17	T165787	ROD	1		X	X		
18	T185648	SPACER	1	-940584	X	X		
	T207484	SPACER	2	940585-	X	X		
19	T167247	SPACER	1		X	X		
20	AT185339	SUPPORT	1		X	X		
21	14M7274	NUT	2		X	X		M10
22	U14555	LOCK NUT	2		X	X		5/8"
23	14M7275	NUT	1		X	X		M12
24	19M7550	CAP SCREW	2		X	X		M10 X 35
25	24M7053	WASHER	10		X	X		
26	M87534	SPRING WASHER	6		X	X		
27	T58109	BUSHING	2		X	X		
28	19H3239	CAP SCREW	1		X	X		3/8" X 1-1/4"
29	T162396	LUBRICATION FITTING	1		X	X		
30	AT185749	PEDAL	1		X	X		LEFT FOOT
	AT185750	PEDAL	1		X	X		RIGHT FOOT (NOT ILLUSTRATED)
31	T166224	GROMMET	1		X	X		
32	AT48016	SEAL	1		X	X		
33	19H3323	CAP SCREW	1		X	X		5/8" X 8"
34	24M7239	WASHER	1		X	X		
35	T165785	ROD	1		X	X		
36	11M7087	COTTER PIN	1	-940584	X	X		
	U17408	RING	2	940585-	X	X		
37	T167248	PIN	1	-940584	X	X		
	T207309	PIN	1	940585-	X	X		
38	AT185338	CONTROL LEVER	1	-940584	X	X		
	AT309185	CONTROL LEVER	1	940585-	X	X		
39	AT185337	LEVER	1	-940584	X	X		
	AT309184	CONTROL LEVER	1	940585-	X	X		
40	AT187885	CONTROL LEVER	1	-940584	X	X		
	AT309184	CONTROL LEVER	1	940585-	X	X		
41	AT188077	LINK	1	-940584	X	X		
	AT309413	LINK	1	940585-	X	X		
42	R46528	SPRING LOCKING PIN	2		X	X		
43	R65563	PIN FASTENER	2		X	X		
44	M359T	WASHER	5		X	X		
45	T165591	SPRING	1		X	X		
46	T183149	COVER	1		X	X		
47	39M1709	KNOB	1		X	X		
48	H129201	LOCK NUT	1		X	X		3/8"
49	AT186045	COVER	1	-XXXXXX	X	X		
	AT312121	COVER	1	XXXXXX-	X	X		
50	T165585	LABEL	1		X	X		
51	AT189272	COVER	1		X	X		
52	19M7775	SCREW	4		X	X		M6 X 16
53	T202956	RETAINER	2		X	X		(SUB FOR R46528, THIS APPLICATION)
54	.....	KIT	1	-940584	X	X		(AT185626 NO LONGER AVAILABLE) (SUB AT309739)
	AT309739	**KIT**	**1**	**940585-**	**X**	**X**		**(WHOLE GOODS)**

5D15

FOUR LEVER CONTROL VALVE LINKAGE

T198881 -UN-08APR04

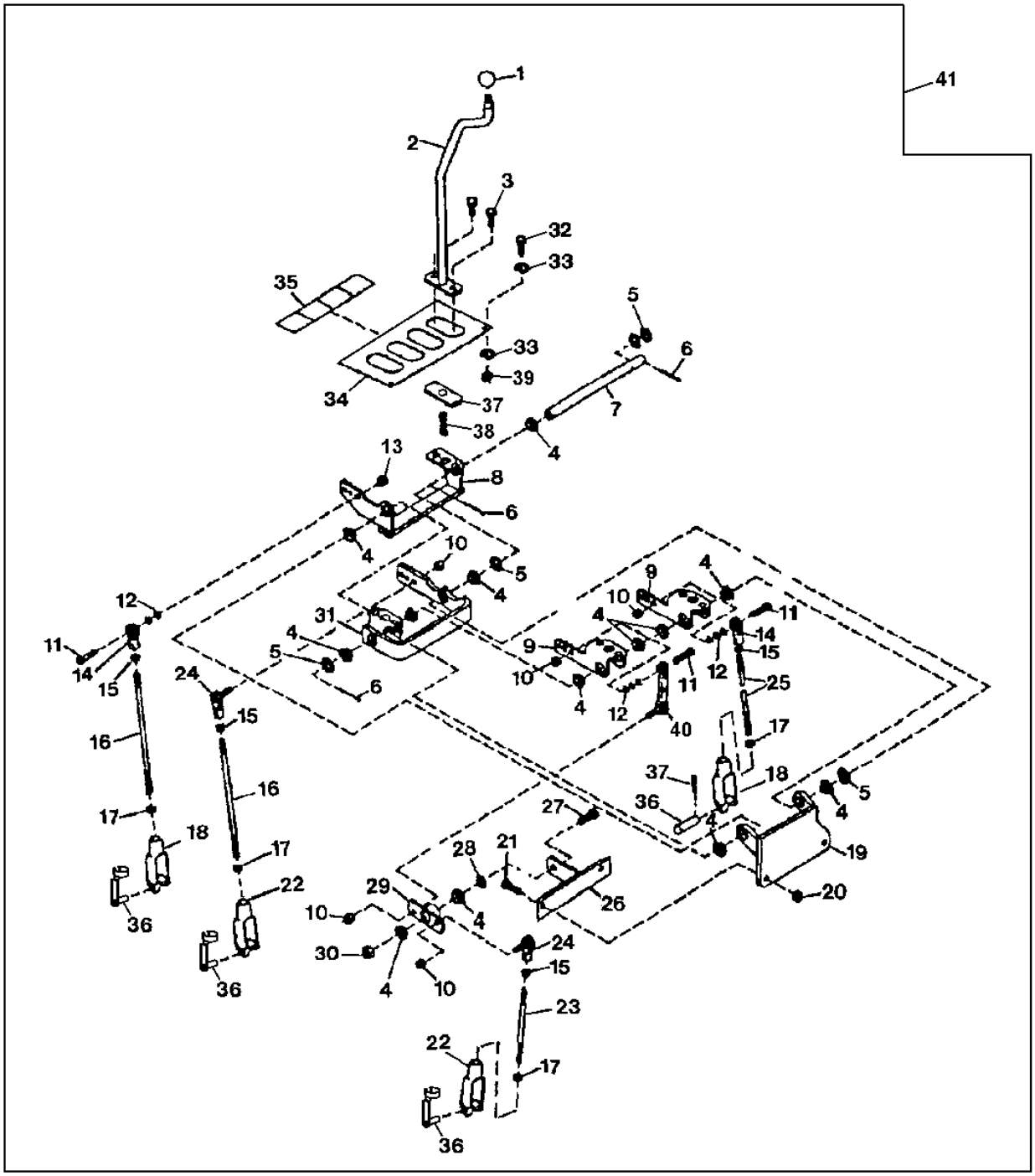

T198881

5D16

FOUR LEVER CONTROL VALVE LINKAGE

KEY	PART NO.	PART NAME	QTY	SERIAL NO.	310G	310SG	315SG	REMARKS
1	T35233	GRIP	4		X	X		
2	AT169512	LEVER	4		X	X		
3	19M7402	CAP SCREW	8		X	X		M10 X 25
4	T125808	BUSHING	11		X	X		
5	24H1746	WASHER	4		X	X		
6	11M7087	COTTER PIN	2		X	X		4 X 40 MM
7	T188268	SHAFT	1		X	X		(SUB FOR T140650, THIS APPLICATION)
8	AT150763	BASE	1		X	X		
9	AT150762	BASE	2		X	X		
10	M68954	LOCK NUT	4		X	X		3/8"
11	19H3239	CAP SCREW	2		X	X		3/8" X 1-1/4"
12	M359T	WASHER	10		X	X		
13	H129201	LOCK NUT	2		X	X		3/8"
14	AE37072	LINK END	2		X	X		
15	14H774	NUT	4		X	X		3/8"
16	T148741	ROD	2		X	X		266MM
	T165788	ROD	2		X	X		256MM
17	14H913	NUT	4		X	X		3/8"
18	T140328	YOKE	2		X	X		
19	AT194686	SUPPORT	1		X	X		
20	14M7274	NUT	2		X	X		M10
21	19M8600	CAP SCREW	2		X	X		M10 X 50
22	T140328	YOKE	2		X	X		
23	T187530	ROD	1		X	X		170MM
	T158812	ROD	1		X	X		152MM
24	AT169087	BALL JOINT	2		X	X		
25	T165697	ROD	1		X	X		250MM
	T158810	ROD	1		X	X		250MM
26	AT194684	SUPPORT	1		X	X		69MM FROM RIGHT END TO TAB
	AT196839	SUPPORT	1		X	X		79MM FROM RIGHT END TO TAB
27	19H3030	CAP SCREW	1		X	X		1/2" X 1-1/4"
28	24M7047	WASHER	1		X	X		
29	AT158197	BELLCRANK	1		X	X		
30	T141126	SPACER	1		X	X		
31	AT195877	BASE	1		X	X		(SUB FOR AT150764, THIS APPLICATION)
32	T133674	SELF-LOCKING SCREW	4		X	X		M6 X 16
33	24H1646	WASHER	8		X	X		
34	AT196419	PANEL	4		X	X		(SUB FOR T187505)
35	T165604	LABEL	1		X	X		CONTROL LEVER
36	T183617	PIN FASTENER	4		X	X		
37	T183149	COVER	4		X	X		
38	T165591	SPRING	4		X	X		
39	14M7272	NUT	4		X	X		M6
40	AT158198	LINK	1		X	X		
41	AT185628	KIT	1		X	X		(WHOLE GOODS)

5D17

FIFTH FUNCTION PEDAL

T193181 -UN-16JUL03

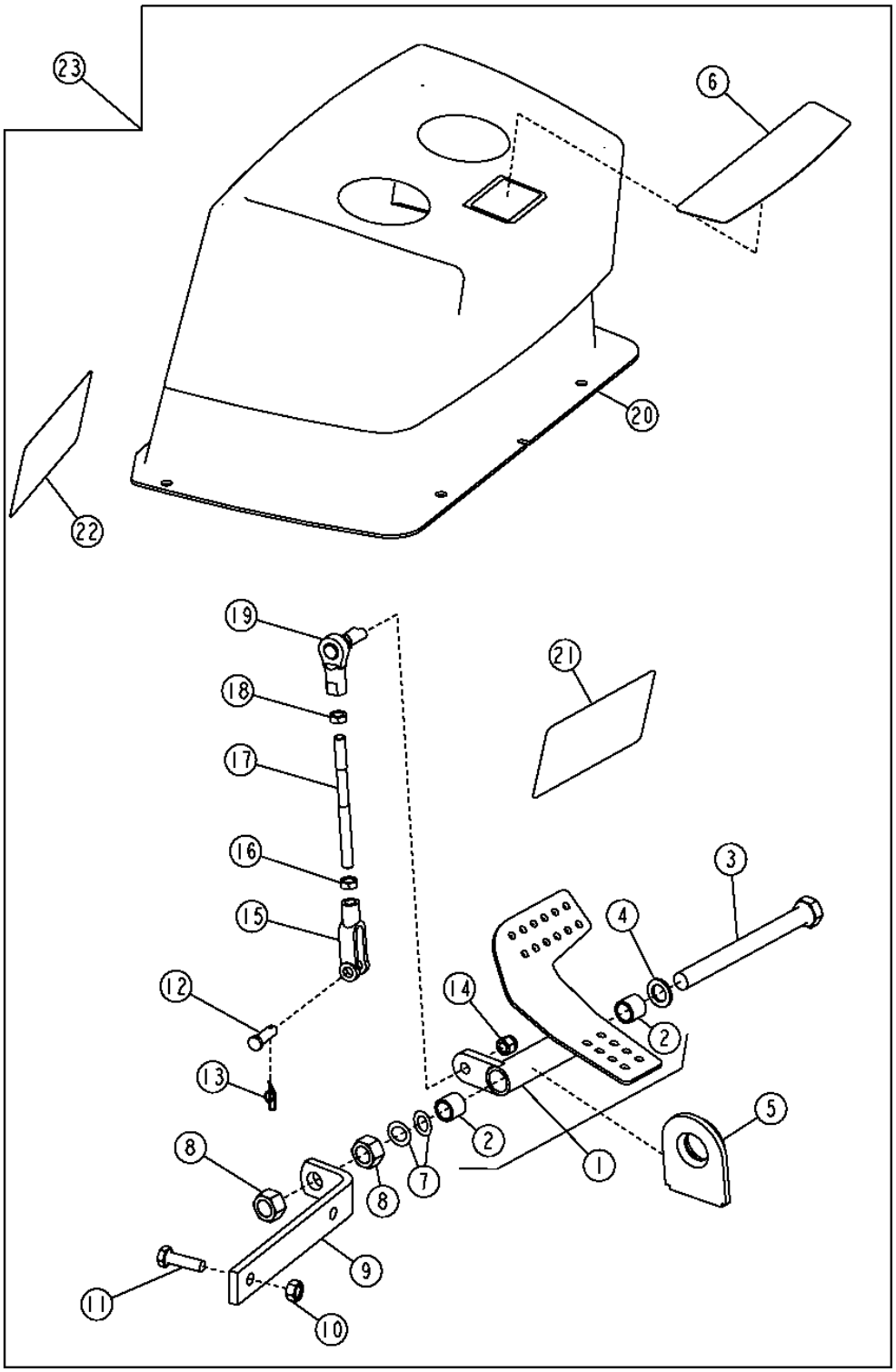

5D18

FIFTH FUNCTION PEDAL

KEY	PART NO.	PART NAME	QTY	SERIAL NO.	310G	310SG	315SG	REMARKS
1	AT191446	PEDAL	1		X	X	X	
2	T58109	BUSHING	2		X	X	X	
3	19H3450	CAP SCREW	1		X	X	X	5/8" X 6-3/4"
4	N119479	WASHER	1		X	X	X	(SUB FOR R64059)
5	T166224	GROMMET	1		X	X	X	
6	T165584	LABEL	1		X	X	X	
7	M87534	SPRING WASHER	2		X	X	X	
8	14H1039	NUT	2		X	X	X	5/8"
9	T183548	ANGLE	1		X	X	X	
10	14M7274	NUT	2		X	X	X	M10
11	19M7550	CAP SCREW	2		X	X	X	M10 X 35
12	R65563	PIN FASTENER	1		X	X	X	
13	T202956	RETAINER	1		X	X	X	(SUB FOR R46528, THIS APPLICATION)
14	M68954	LOCK NUT	1		X	X	X	3/8"
15	T140328	YOKE	1		X	X	X	
16	14H913	NUT	1		X	X	X	3/8"
17	T184129	ROD	1		X	X	X	
18	14H774	NUT	1		X	X	X	3/8"
19	AT169087	BALL JOINT	1		X	X	X	
20	AT189270	COVER	1		X	X	X	
21	T185691	LABEL	1		X	X	X	(FOR USE WITH EXPENDABLE DIPPERSTICK)
22	T185692	LABEL	1		X	X	X	(FOR USE WITHOUT EXTENDABLE DIPPERSTICK)
23	**AT185625**	**KIT**	**1**		**X**	**X**	**X**	

FIFTH FUNCTION PEDAL
(PILOT CONTROL)

T165817 -UN-25FEB03

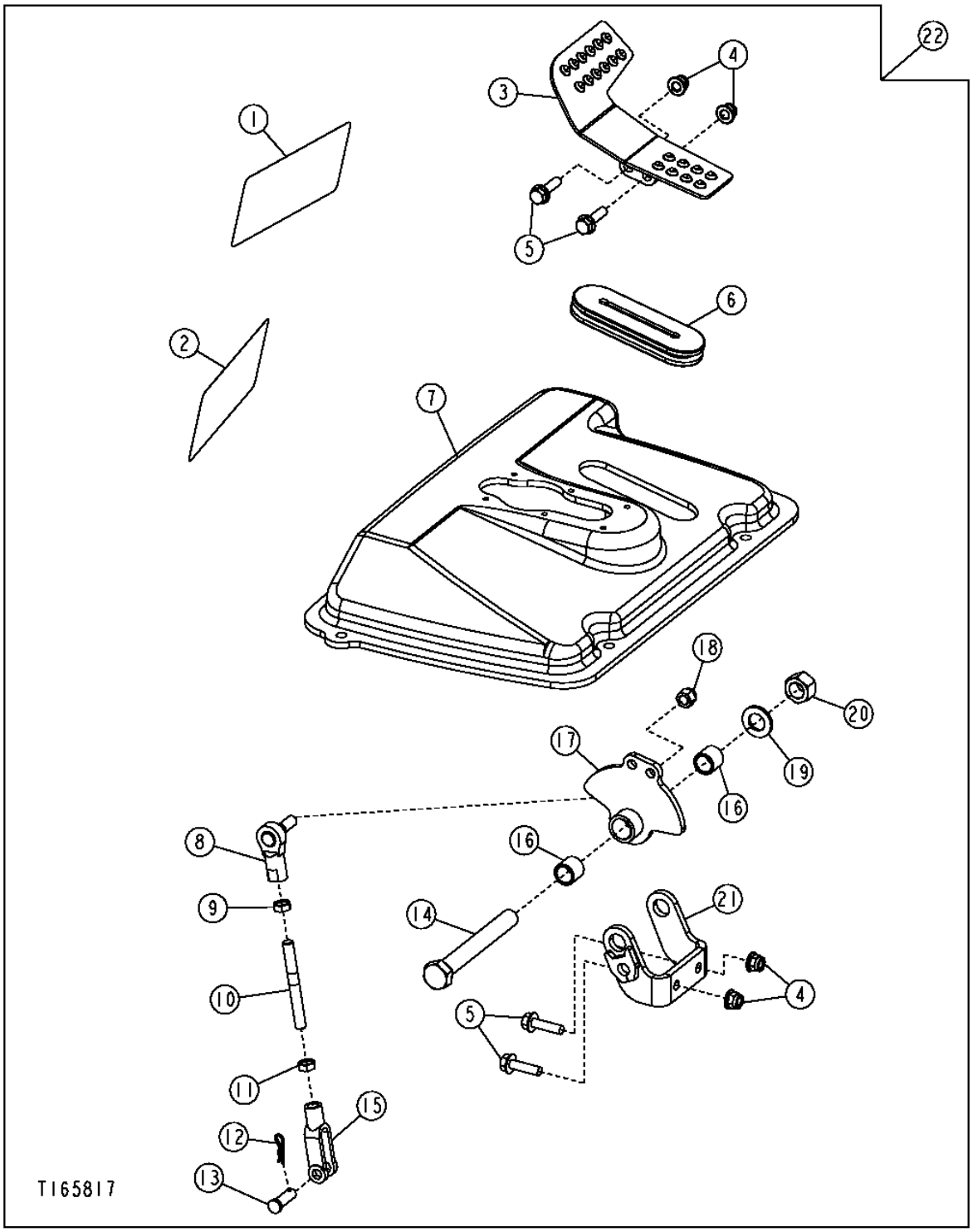

FIFTH FUNCTION PEDAL
(PILOT CONTROL)

KEY	PART NO.	PART NAME	QTY	SERIAL NO.	310G	310SG	315SG	REMARKS
1	T185691	LABEL	1		X	X		
2	T185692	LABEL	1		X	X		
3	AT300058	PEDAL	1		X	X		
4	14M7396	LOCK NUT	4		X	X		M8
5	19M7868	SCREW	4		X	X		M8 X 30
6	T200095	GROMMET	1		X	X		
7	T200093	COVER	1		X	X		
8	AT169087	BALL JOINT	1		X	X		
9	14H774	NUT	1		X	X		3/8"
10	T200078	STUD	1		X	X		
11	14H913	NUT	1		X	X		3/8"
12	T202956	RETAINER	1		X	X		(SUB FOR R46528, THIS APPLICATION)
13	R65563	PIN FASTENER	1		X	X		
14	19H3353	CAP SCREW	1		X	X		5/8" X 5"
15	T140328	YOKE	1		X	X		
16	T58109	BUSHING	2		X	X		
17	AT300056	PIVOT	1		X	X		
18	M68954	LOCK NUT	1		X	X		3/8"
19	24M7053	WASHER	1		X	X		
20	U14555	LOCK NUT	1		X	X		5/8"
21	AT300060	BRACKET	1		X	X		
22	**AT301484**	**KIT**	**1**		**X**	**X**		

SIXTH FUNCTION PEDAL
(310G AND 310SG)

T193198 -UN-21JUL03

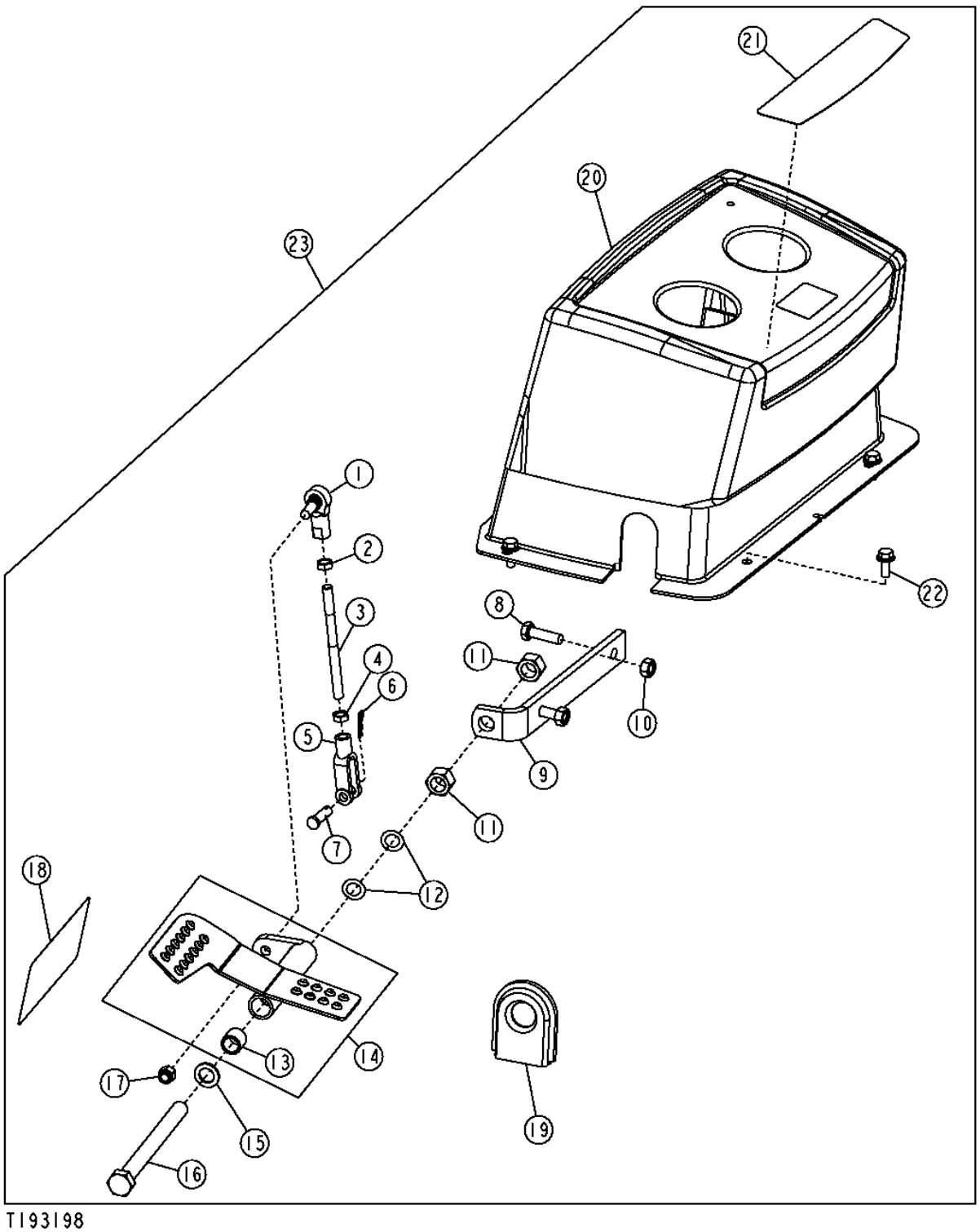

SIXTH FUNCTION PEDAL
(310G AND 310SG)

KEY	PART NO.	PART NAME	QTY	SERIAL NO.	310G	310SG	315SG	REMARKS
1	AT169087	BALL JOINT	1		X	X		
2	14H774	NUT	1		X	X		3/8"
3	T184129	ROD	1		X	X		
4	14H913	NUT	1		X	X		3/8"
5	T140328	YOKE	1		X	X		
6	T202956	RETAINER	1		X	X		(SUB FOR R46528, THIS APPLICATION)
7	R65563	PIN FASTENER	1		X	X		
8	19M7550	CAP SCREW	2		X	X		M10 X 35
9	T184133	ANGLE	1		X	X		
10	14M7274	NUT	2		X	X		M10
11	14H1039	NUT	2		X	X		5/8"
12	M87534	SPRING WASHER	2		X	X		
13	T58109	BUSHING	2		X	X		
14	AT190073	PEDAL	1		X	X		
15	N119479	WASHER	1		X	X		(SUB FOR R64059)
16	19H3450	CAP SCREW	1		X	X		5/8" X 6-3/4"
17	M68954	LOCK NUT	1		X	X		3/8"
18	T185692	LABEL	1		X	X		
19	T166224	GROMMET	1		X	X		
20	AT189271	COVER	1		X	X		
21	T165584	LABEL	1		X	X		
22	19M7866	SCREW	4		X	X		M8 X 20
23	**AT185629**	**KIT**	**1**		**X**	**X**		

**SIXTH FUNCTION PEDAL
(PILOT CONTROL)**

T165820 -UN-25FEB03

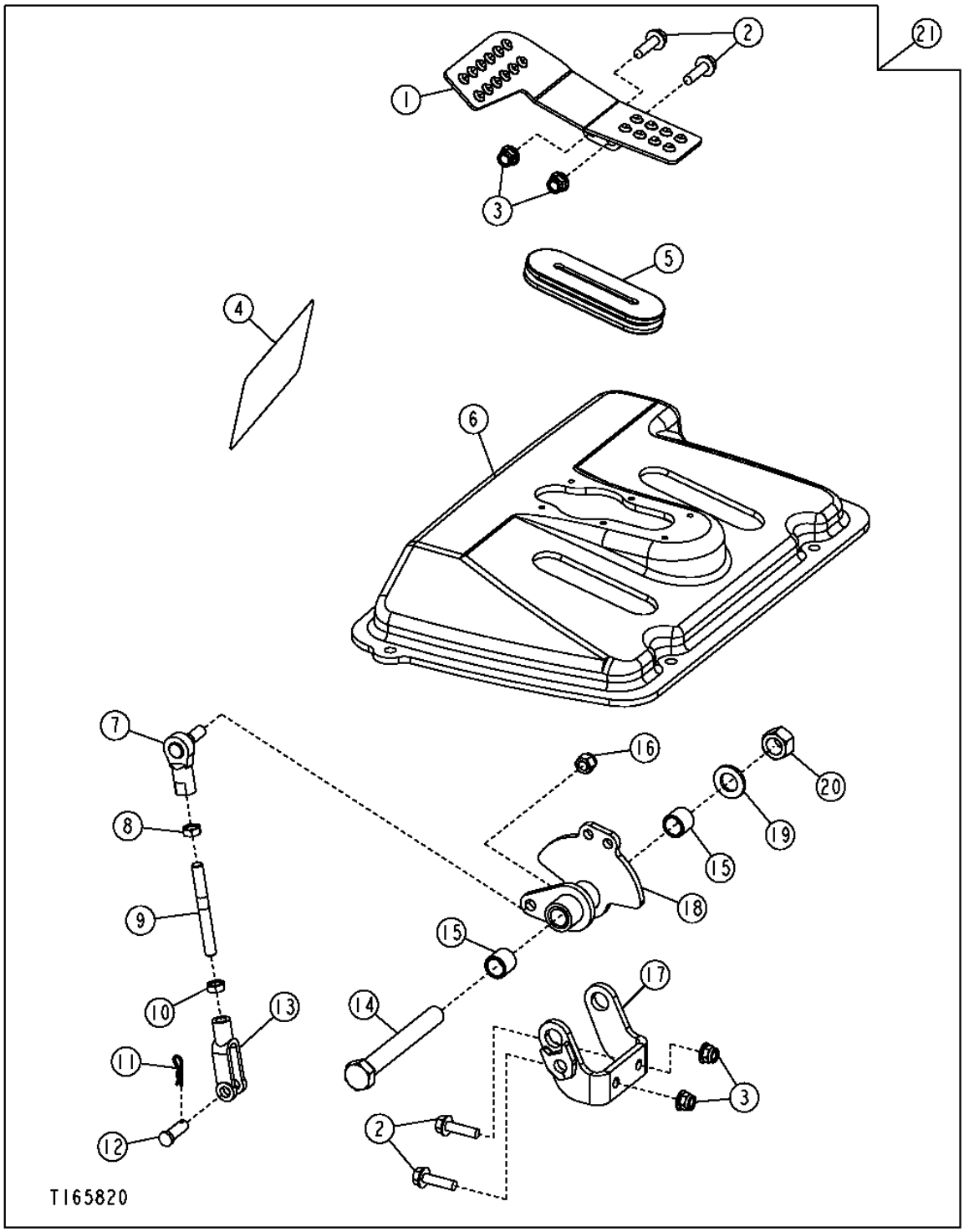

SIXTH FUNCTION PEDAL
(PILOT CONTROL)

KEY	PART NO.	PART NAME	QTY	SERIAL NO.	310G	310SG	315SG	REMARKS
1	AT300057	PEDAL	1		X	X		
2	19M7868	SCREW	4		X	X		M8 X 30
3	14M7396	LOCK NUT	4		X	X		M8
4	T185692	LABEL	1		X	X		
5	T200095	GROMMET	1		X	X		
6	T200094	COVER	1		X	X		
7	AT169087	BALL JOINT	1		X	X		
8	14H774	NUT	1		X	X		3/8"
9	T200078	STUD	1		X	X		
10	14H913	NUT	1		X	X		3/8"
11	R46528	SPRING LOCKING PIN	1		X	X		
12	R65563	PIN FASTENER	1		X	X		
13	T140328	YOKE	1		X	X		
14	19H3353	CAP SCREW	1		X	X		5/8" X 5"
15	T58109	BUSHING	2		X	X		
16	M68954	LOCK NUT	1		X	X		3/8"
17	AT300060	BRACKET	1		X	X		
18	AT300055	PIVOT	1		X	X		
19	24M7053	WASHER	1		X	X		
20	U14555	LOCK NUT	1		X	X		5/8"
21	**AT301485**	**KIT**	**1**		**X**	**X**		

FIFTH FN LEVER FOR THREE LEVER CONTROLS AND CONVERSION KIT

TP69704 -UN-02OCT00

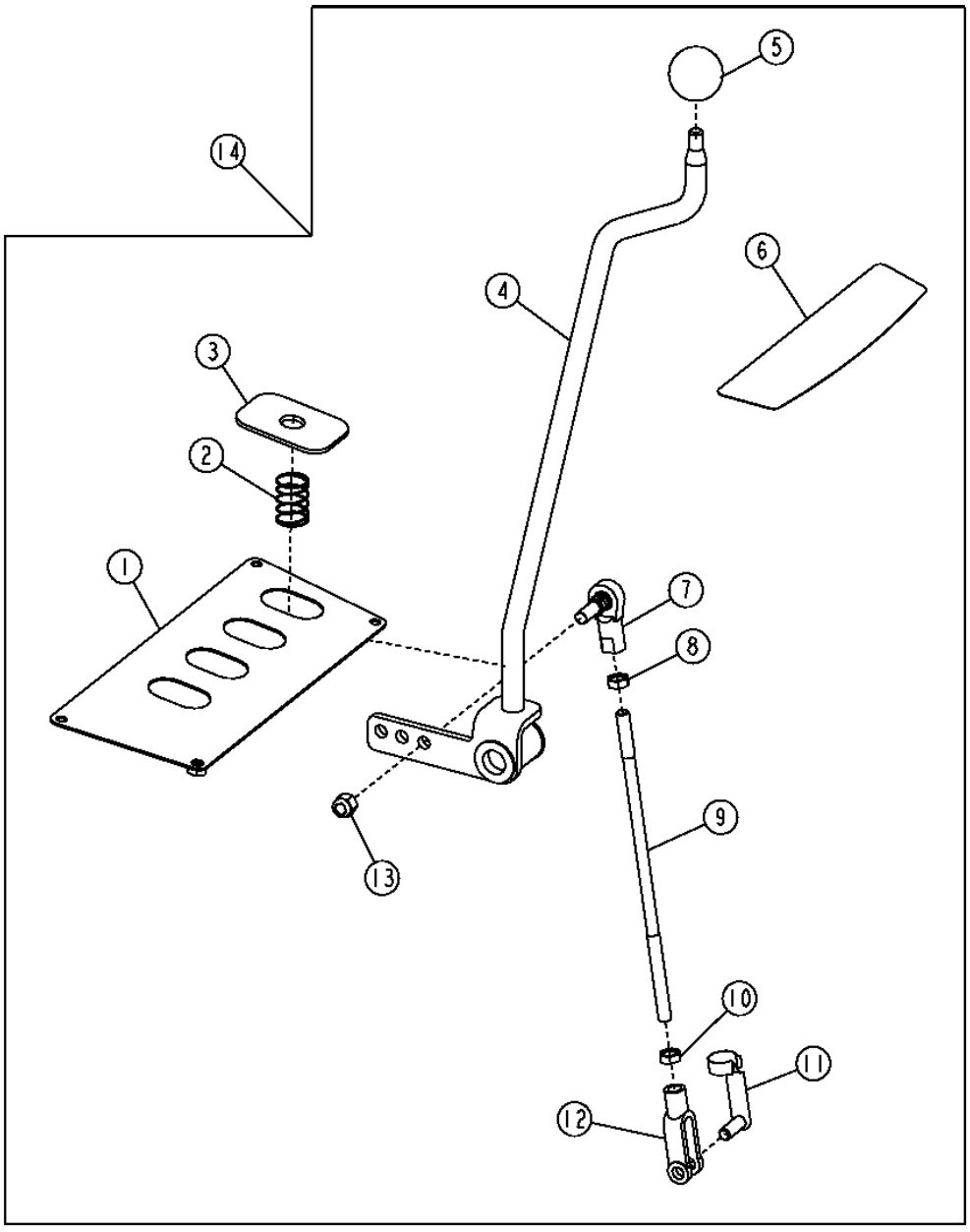

TP69704

FIFTH FN LEVER FOR THREE LEVER CONTROLS AND CONVERSION KIT

KEY	PART NO.	PART NAME	QTY	SERIAL NO.	310G	315SG	REMARKS
1	AT186050	COVER	1	-944916	X	X X	
	AT311929	COVER	1	944917-	X	X X	
2	T165591	SPRING	1		X	X X	
3	T209588	COVER	1		X	X X	(SUB FOR T183149, THIS APPLICATION)
4	AT189580	CONTROL LEVER	1	-940584	X	X X	
	AT309190	CONTROL LEVER	1	940585-	X	X X	
5	39M1709	KNOB	1		X	X X	
6	T165586	LABEL	1		X	X X	
7	AT169087	BALL JOINT	1		X	X X	(SUB FOR AT49300)
8	14H774	NUT	1		X	X X	3/8"
9	T165697	ROD	1		X	X X	
10	14H913	NUT	1		X	X X	3/8"
11	T183617	PIN FASTENER	1		X	X X	
12	T140328	YOKE	1		X	X X	
13	M68954	LOCK NUT	1		X	X X	
14	**AT185627**	**CONTROL LEVER**	**1**	**-940584**	**X**	**X X**	**(WHOLE GOODS) FIFTH FUNCTION LEVER CONVERSION KIT**
	AT309740	**CONTROL LEVER**	**1**	**940585-**	**X**	**X X**	**(WHOLE GOODS) FIFTH FUNCTION LEVER CONVERSION KIT**

BACKHOE BOOM LOCK CONTROL LEVER AND LINKAGE
(310G AND 310SG)

T160156 -UN-03OCT02

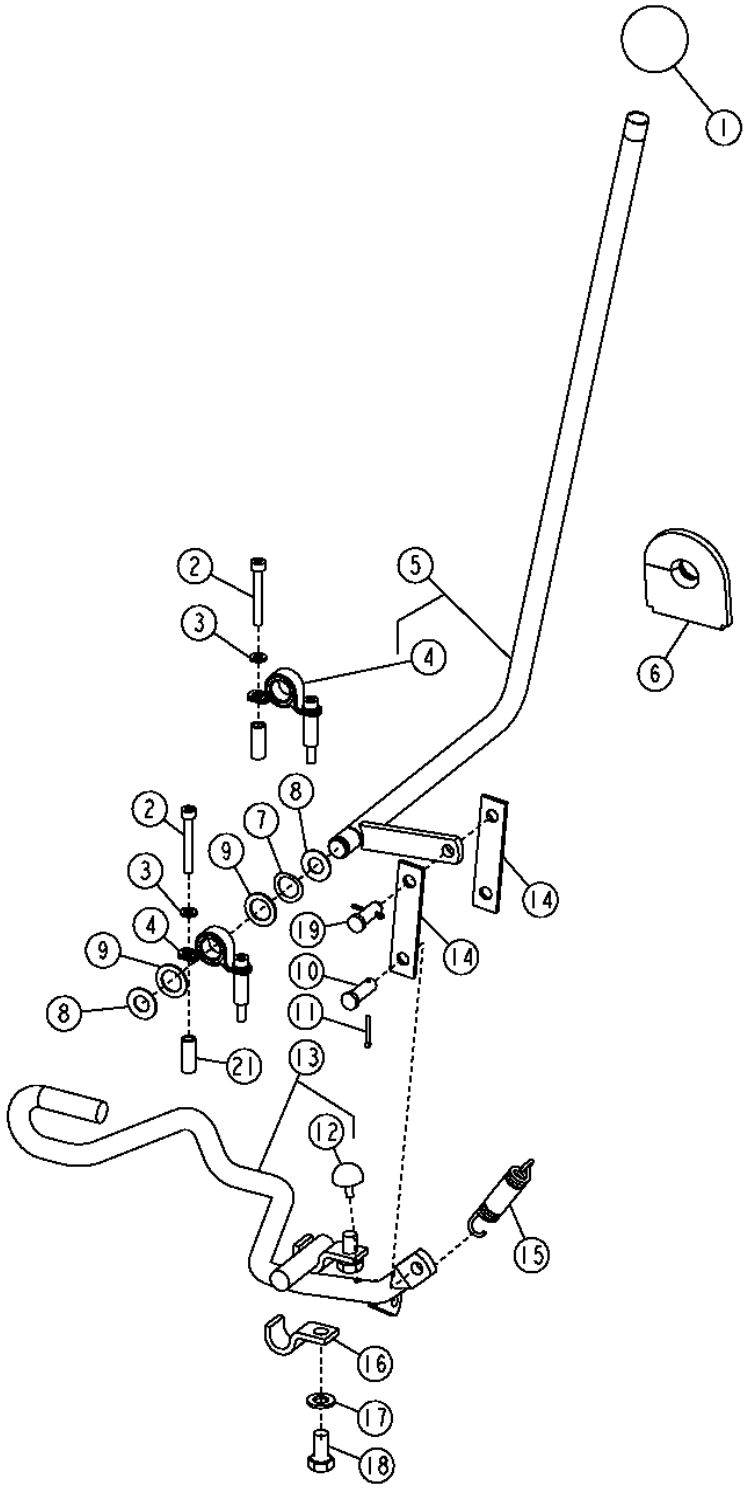

BACKHOE BOOM LOCK CONTROL LEVER AND LINKAGE
(310G AND 310SG)

KEY	PART NO.	PART NAME	QTY	SERIAL NO.	310G	310SG	315SG	REMARKS
1	T185309	KNOB	1		X	X		(MANUAL CONTROL)
	T133291	KNOB	1		X	X		(PILOT CONTROL)
2	19M7603	SCREW	4	-911194	X	X		M6 X 20, (SUB FOR 19M8627, THIS APPLICATION)
	19M8713	SCREW	4	911195-	X	X		M6 X 45
3	24M7054	WASHER	4		X	X		
4	AT195620	BEARING WITH HOUSING	2		X	X		(SUB FOR AT185317)
5	AT195623	LEVER	1		X	X		(STANDARD CONTROLS) (SUB FOR AT185311)
	AT196387	LEVER	1		X	X		(PILOT CONTROLS)
6	T177623	GROMMET	1		X	X		
7	T166237	SPRING WASHER	1		X	X		
8	F2863R	SNAP RING	2		X	X		
9	24H1658	WASHER	1		X	X		(STANDARD CONTROLS)
	24H1658	WASHER	3		X	X		(PILOT CONTROLS)
10	M40569	PIN FASTENER	1		X	X		(SUB FOR R65563, THIS APPLICATION)
11	11M7081	COTTER PIN	2		X	X		(SUB FOR R46528 AND 11M7078, THIS APPLICATION)
12	AT185847	BUMPER	1		X	X		
13	AT185315	ROD	1		X	X		
14	.....	LINK	1	-903254	X	X		(AT191528 NO LONGER AVAILABLE) (SUB (2) T188356) (ALSO ORDER (2) M40569 AND (2) 11M7078)
	T188356	STRAP	2	903255-	X	X		
15	T24509	SPRING	1		X	X		
16	T157785	CLAMP	2		X	X		
17	24M7040	WASHER	2		X	X		11 X 20 X 2 MM
18	19M7938	CAP SCREW	2		X	X		M10 X 20
19	M40569	PIN FASTENER	1		X	X		(SUB FOR R65563, THIS APPLICATION)
20	24H1658	WASHER	1	-903254	X	X		
21	28H1921	BUSHING	4	911195-	X	X		

BACKHOE BOOM LOCK
(310G AND 310SG)

T157614 -UN-17JUL02

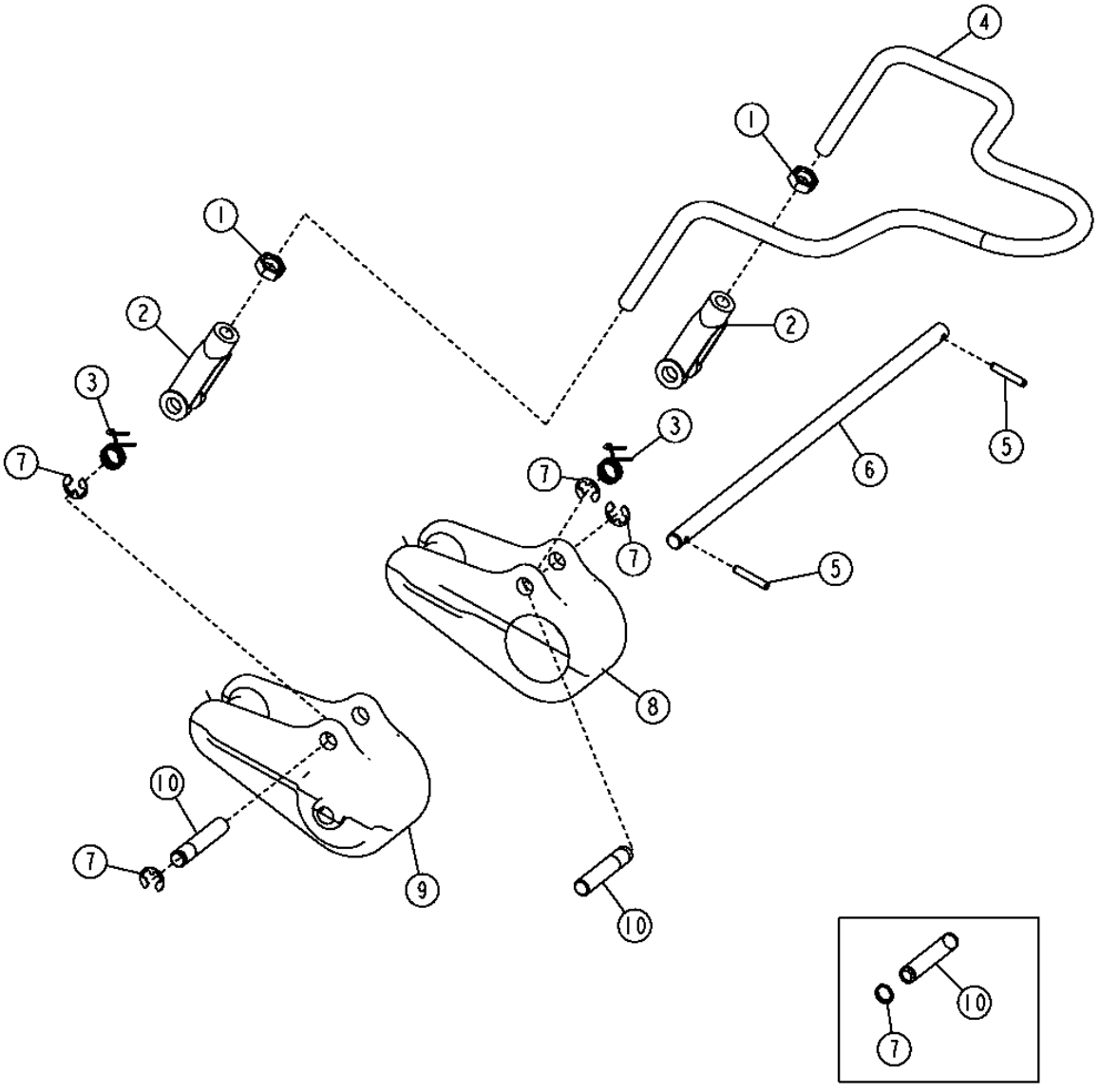

BACKHOE BOOM LOCK
(310G AND 310SG)

KEY	PART NO.	PART NAME	QTY	SERIAL NO.	310G	310SG	315SG	REMARKS
1	14H856	NUT	2		X	X		1/2"
2	T121474	YOKE	2		X	X		
3	T160589	SPRING	2		X	X		
4	T157762	ROD	1		X	X		
5	34M7141	SPRING PIN	2		X	X		
6	T160515	PIN	1		X	X		
7	T161598	SNAP RING	4	-910310	X	X		
	R26871	SNAP RING	4	910311-	X	X		
	24M7047	WASHER	AR	910311-	X			13 X 24 X 2.500 MM
8	T186005	LOCK	1		X	X		L.H. (SUB FOR T160638)
9	T186006	LOCK	1		X	X		R.H. (SUB FOR T160639)
10	.....	PIN	2	-910310	X	X		(T158397 NO LONGER AVAILABLE) (SUB (2) T186000) (ALSO ORDER (4) R26871)
	T186000	PIN	2	910311-	X	X		

BACKHOE BOOM LOCK CONTROL LEVER AND LINKAGE (315SG)

TP69697 -UN-10OCT00

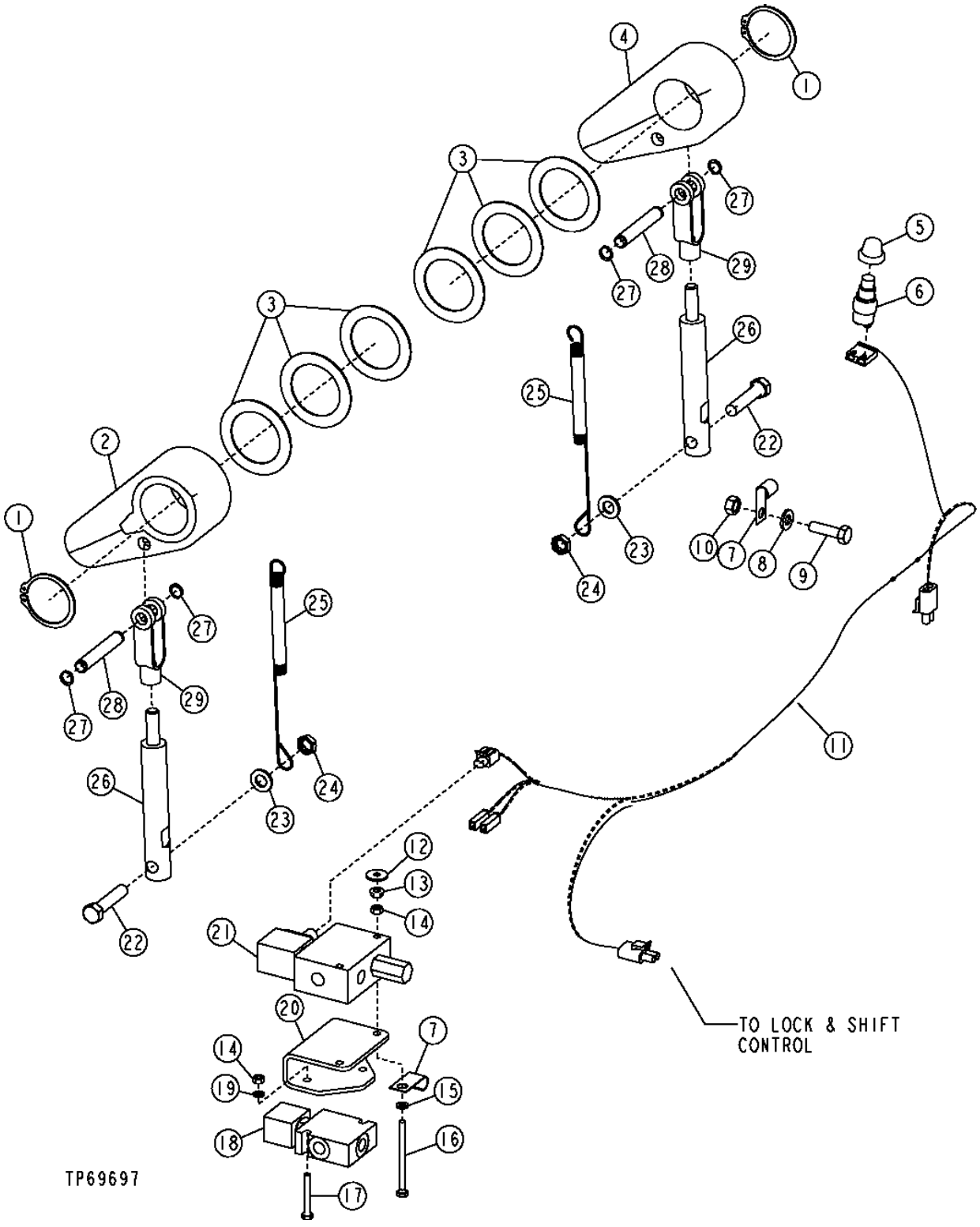

BACKHOE BOOM LOCK CONTROL LEVER AND LINKAGE
(315SG)

KEY	PART NO.	PART NAME	QTY	SERIAL NO.	310G	310SG	315SG	REMARKS
1	40M7066	SNAP RING	2				X	
2	T161012	LOCK	1				X	
3	24H1679	WASHER	6	-XXXXXX			X	
	24H1679	WASHER	2	XXXXXX-			X	
4	T161011	LOCK	1				X	
5	AR47374	CAP	1				X	
6	R39554	SWITCH	1				X	
7	AH89557	CLIP	2				X	
8	24M7239	WASHER	1				X	
9	19M7550	CAP SCREW	1				X	M10 X 35
10	14M7274	NUT	1				X	M10
11	AT194343	WIRING HARNESS	1				X	
12	24H1288	WASHER	2				X	
13	14M7303	FLANGE NUT	2				X	M6
14	14M7272	NUT	4				X	M6
15	24M7088	WASHER	2				X	
16	19M8880	CAP SCREW	2				X	M6 X 80
17	19M8321	SCREW	2				X	M6 X 45
18	AT179029	SOLENOID VALVE	1				X	BACKHOE BOOM LOCK VALVE
19	24M7088	WASHER	2				X	
20	T184957	BRACKET	1				X	
21	AT183556	SOLENOID HYDRAULIC VALVE	1				X	SIDE SHIFT SLIDE LOCKING VALVE
22	19M7362	CAP SCREW	2				X	M12 X 55
23	24M7047	WASHER	2				X	
24	14M7415	NUT	2				X	M12
25	T160590	SPRING	2				X	
26	AH171683	HYDRAULIC CYLINDER	2				X	
27	T161598	SNAP RING	4				X	
28	T161013	PIN	2				X	
29	T121474	YOKE	2				X	

STABILIZER VALVE LINKAGE

T197646 -UN-20FEB04

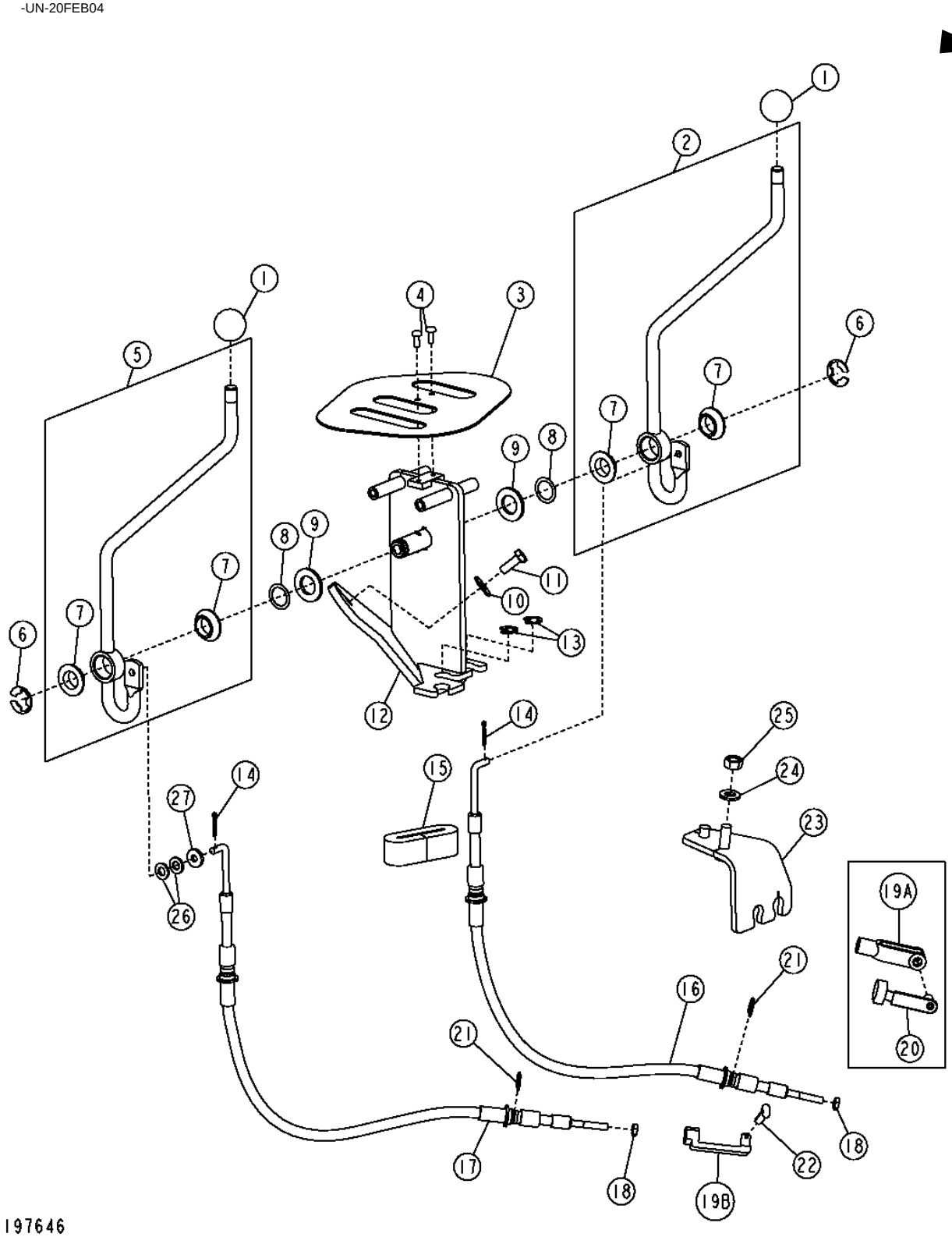

STABILIZER VALVE LINAKGE

KEY	PART NO.	PART NAME	QTY	SERIAL NO.	310G	310SG	315SG	REMARKS
1	T185766	KNOB	2		X	X	X	
2	AT185851	CONTROL LEVER	1	-913416	X	X	X	
	AT300770	CONTROL LEVER	1	913417-	X	X	X	
3	T185496	PLATE	1		X	X	X	
4	21H1316	SCREW	2		X	X	X	0.190" X 1/2", (SUB FOR 21H1406, THIS APPLICATION)
5	AT185851	CONTROL LEVER	1	-913416	X	X	X	
	AT300771	CONTROL LEVER	1	913417-	X	X	X	
6	R27434	SNAP RING	2		X	X	X	
7	T166097	BEARING	4		X	X	X	
8	R26081	WASHER	2		X	X	X	
9	24H1392	WASHER	2		X	X	X	
10	24M7207	WASHER	2		X	X	X	
11	19M7376	CAP SCREW	2		X	X	X	M8 X 22
12	AT186983	BRACKET	1	-913416	X	X	X	
	AT300769	BRACKET	1	913417-	X	X	X	
13	R26871	SNAP RING	2		X	X	X	(SUB FOR R106466, THIS APPLICATION)
14	11M7081	COTTER PIN	2		X	X	X	2.500 X 20 MM
15	T183905	SEAL	1		X	X	X	
16	AT196336	PUSH PULL CABLE	1	-913416	X	X	X	(RIGHT STABILIZER) (SUB FOR AT185855)
	AT196606	PUSH PULL CABLE	1	913417-	X	X	X	
17	AT196337	PUSH PULL CABLE	1	-913416	X	X	X	(LEFT STABILIZER) (SUB FOR AT185856)
	AT196606	PUSH PULL CABLE	1	913417-	X	X	X	
18	14H649	NUT	2		X	X	X	1/4"
19A	T166102	YOKE	2	-913416	X	X	X	
19B	T191245	SWIVEL	2	913417-	X	X	X	
20	T183617	PIN FASTENER	2	-913416	X	X	X	
21	R26871	SNAP RING	4		X	X	X	(SUB FOR R106466)
22	11M7081	COTTER PIN	1	913417-	X	X	X	
23	AT280363	BRACKET	1	913417-	X	X	X	
24	24M7239	WASHER	1	913417-	X	X	X	
25	14M7274	NUT	1	913417-	X	X	X	M10
26	24M7238	WASHER	2		X	X	X	
27	24H1923	WASHER	1		X	X	X	

SAE BACKHOE CONTROL LINKAGE PATTERN KIT

T156583 -UN-25JUN02

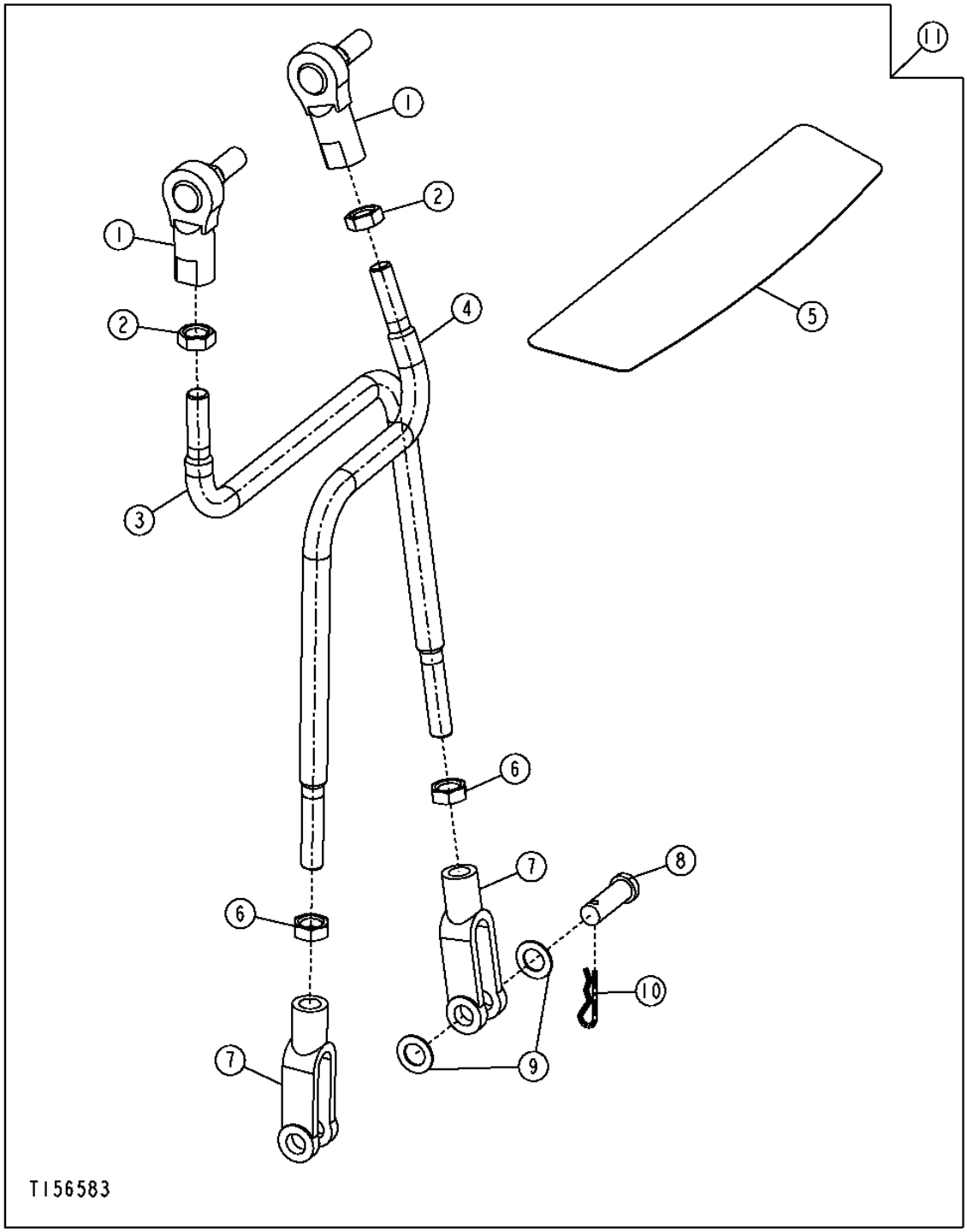

SAE BACKHOE CONTROL LINKAGE PATTERN KIT

KEY	PART NO.	PART NAME	QTY	SERIAL NO.	310G	310SG	315SG	REMARKS
1	AT169087	BALL JOINT	1		X	X		(SUB FOR AT49300)
2	14H774	NUT	1		X	X		3/8"
3	T191445	ROD	1		X	X		(T183884 NO LONGER AVAILABLE)
4	T183885	STUD	1		X	X		
5	T165595	LABEL	1		X	X		BACKHOE CONTROL
6	14H913	NUT	1		X	X		3/8"
7	T140328	YOKE	1		X	X		
8	R65563	PIN FASTENER	2		X	X		
9	24H1302	WASHER	6		X	X		13/32" X 11/16" X 0.035"
10	T202956	RETAINER	2		X	X		(SUB FOR R46528, THIS APPLICATION)
11	AT301434	KIT	1		X	X		(WHOLE GOODS)

SLIDING FRAME
(315SG)

T135394 -UN-11JAN01

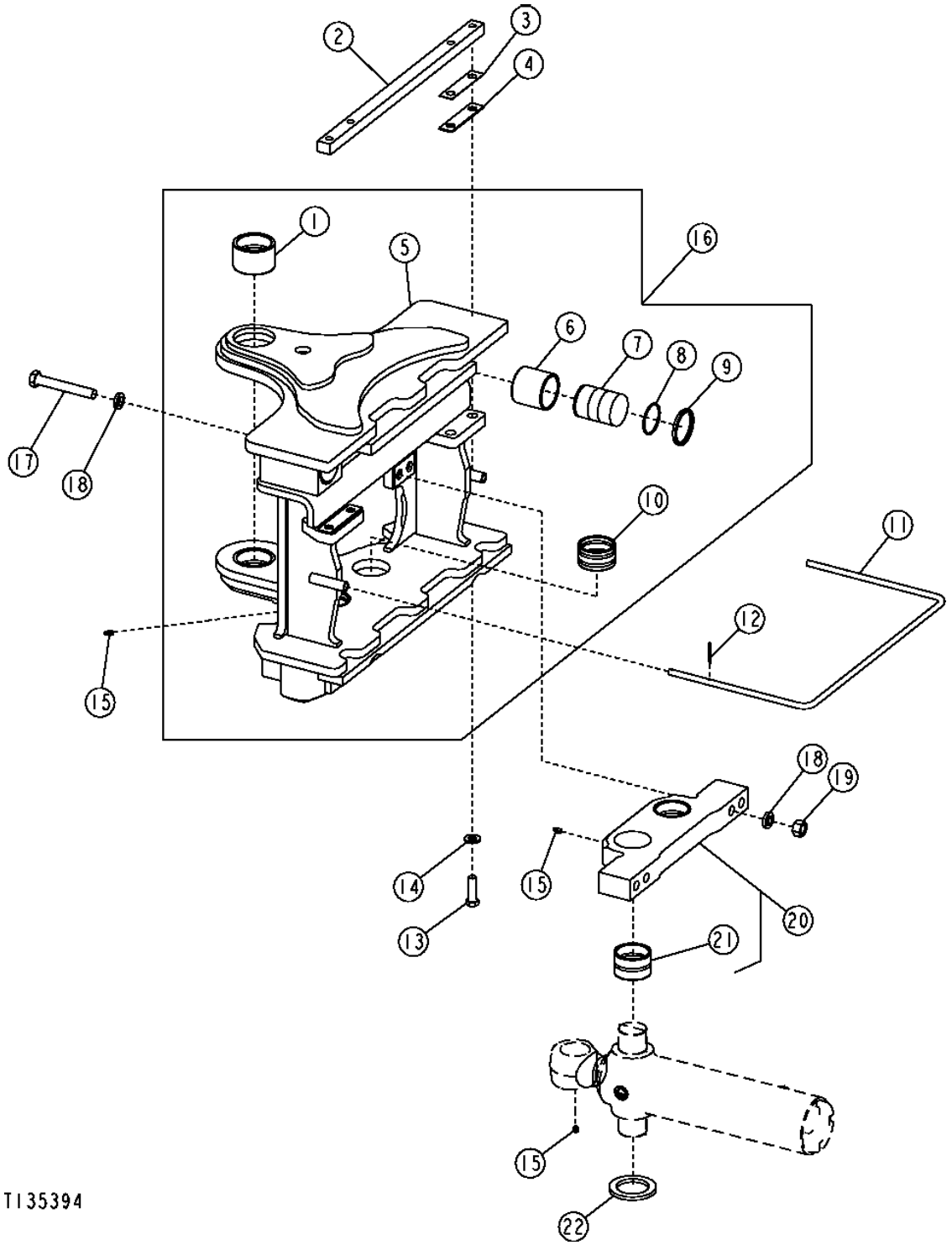

SLIDING FRAME
(315SG)

KEY	PART NO.	PART NAME	QTY	SERIAL NO.	310G	310SG	315SG	REMARKS
1	T154621	BUSHING	2			X		(SWING FRAME MOUNTING)
2	T106066	BAR	1			X		(LOCK BAR)
3	T106399	STRAP	2			X		(.042" THICK) (LOCKBAR)
4	T106398	STRAP	6			X		(.125" THICK) (LOCKBAR)
5	.....	FRAME	1			X		SLIDING (WITH BUSHINGS)
6	T161813	BUSHING	4			X		(LOCK CYLINDER BORES)
7	T166535	PISTON	4			X		(LOCKING CYLINDER)
8	AT186563	SEAL KIT	4			X		
9	T157277	SEAL	4			X		(LOCK CYLINDER BORE)
10	T147070	BUSHING	2			X		(SWING CYLINDER MOUNTING)
11	T161770	ROD	1			X		(PROTECTION)
12	11M7012	COTTER PIN	4			X		(PROTECTION ROD)
13	19M8295	CAP SCREW	4			X		M16 X 55
14	24M7241	WASHER	4			X		
15	T162396	LUBRICATION FITTING	4			X		(LOWER GREASE PASSAGE)
16	AT182935	FRAME	1			X		SLIDING (WITH PISTON)
17	19M7907	SCREW	4			X		M20 X 140
18	T83426	WASHER	8			X		
19	14M7277	NUT	4			X		M20
20	AT175921	PLATE	1			X		
21	T153303	BUSHING	2			X		
22	T148387	WASHER	2			X		

**SWING FRAME AND PINS
(310G AND 310SG)**

T214212 -UN-19SEP05

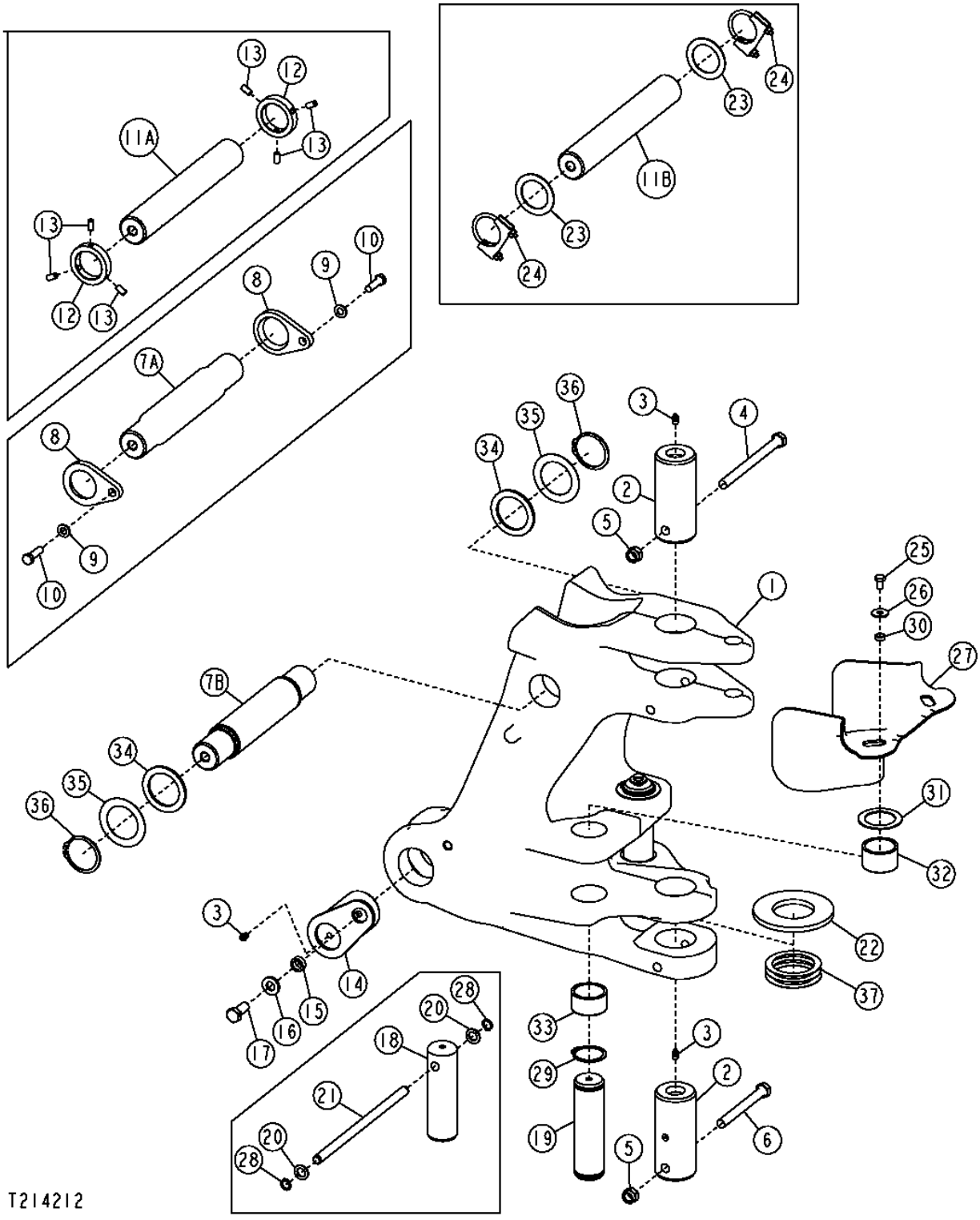

SWING FRAME AND PINS
(310G AND 310SG)

KEY	PART NO.	PART NAME	QTY	SERIAL NO.	310G	310SG	315SG	REMARKS
1	T161594	FRAME	1		X			
	.....	FRAME	1	-928871		X		(T161593 NO LONGER AVAILABLE) (SUB AT302030) (ALSO ORDER (2) T201971, (4) 40M7066, (2) T161036 AND (2) AT306499)
	AT302030	FRAME	1	928872-		X		(INCLUDES (2) T201361 AND (2) T201362)
2	T159118	PIN FASTENER	2		X			STANDARD
	T153531	PIN FASTENER	2			X		STANDARD
	T165563	PIN	2			X		OVERSIZED
	T205810	PIN FASTENER	2			X		CHROME
3	T162396	LUBRICATION FITTING	4		X	X		
4	19M8021	CAP SCREW	1		X	X		M16 X 200
5	14M7328	LOCK NUT	2		X	X		M16
6	19M7954	CAP SCREW	1		X	X		M16 X 150
7A	.....	PIN FASTENER	1	-952166		X		(T160567 NLA) (SUB T217548) (ALSO ORDER (2) 24H1616, (2) 24H1615 AND (2) 40M7120)
7B	T217548	PIN	1	952167-		X		
8	T159986	RETAINER	2	-952166		X		
9	24M7047	WASHER	2	-952166		X		
10	19M7493	CAP SCREW	2	-952166		X		M12 X 40
11A	T160568	PIN	1	-912528	X			
11B	T186001	PIN	1	912529-	X			
12	T160067	SPACER	2	-912528	X			
13	T161608	SCREW	6	-912528	X			3/8" X 3/4"
14	AT176115	PIN	2	-928871	X			STANDARD
	AT306500	PIN	2	928872-	X			
	AT170043	PIN	2	-928871		X		STANDARD
	AT184058	PIN FASTENER	2	-928871		X		OVERSIZED
	AT306499	PIN	2	928872-		X		
15	T215678	BUSHING	2		X	X		(SUB FOR M2649DN, THIS APPLICATION)
16	24M7241	WASHER	2		X	X		
17	19M8035	CAP SCREW	2		X	X		M16 X 35
18	T154821	PIN	2	-911128	X	X		STANDARD
	T200240	PIN FASTENER	2	911129-	X			STANDARD
	T200240	PIN FASTENER	2	-928871		X		
	T164669	PIN FASTENER	2	-911128	X	X		OVERSIZED
	T200853	PIN FASTENER	2	911129-	X			OVERSIZED
	T200853	PIN FASTENER	2	-928871		X		
19	T201971	PIN	2	928872-		X		
20	24M7097	WASHER	2		X			
	24M7097	WASHER	2	-928871		X		
21	T159800	PIN	1		X			
	T159800	PIN	1	-928871		X		
22	T205873	THRUST WASHER	1		X			(SUB FOR (2) T159119)
	T205875	THRUST WASHER	1			X		(SUB FOR (2) T154712)
23	T161036	WASHER	2	912529-	X			
24	AM118997	CLAMP	2	912529-	X			
25	19M8324	CAP SCREW	2	911129-	X	X		M10 X 16
26	24M7296	WASHER	2	911129-	X	X		
27	T190925	HOSE GUARD	1	911129-	X	X		
28	N105572	SNAP RING	2		X			
	N105572	SNAP RING	2	-928871		X		
29	40M7066	SNAP RING	4	928872-		X		(SUB FOR T116400)
30	H140456	WASHER	2	924055-	X	X		
31	T161036	WASHER	2	928872-		X		
32	T201361	BUSHING	2	928872-		X		
33	T201362	BUSHING	2	928872-		X		
34	24H1616	WASHER	2	952167-		X		
35	24H1615	WASHER	2	952167-		X		
36	40M7120	SNAP RING	2	952167-		X		
37	T161497	SHIM	3			X		0.020"

SWING FRAME AND PINS
(315SG)

TX1001442 -UN-20DEC05

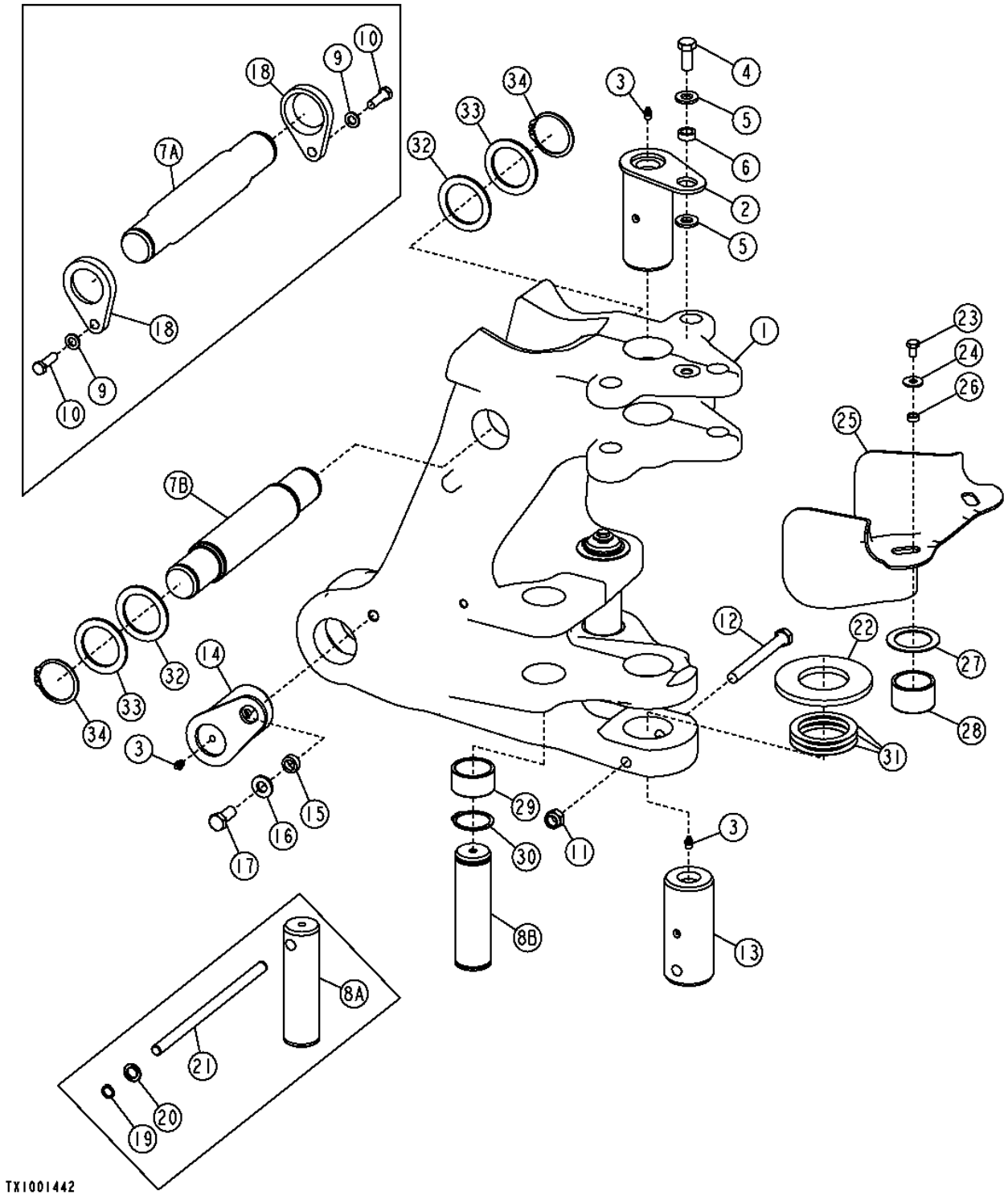

SWING FRAME AND PINS
(315SG)

KEY	PART NO.	PART NAME	QTY	SERIAL NO.	310G	310SG	315SG	REMARKS
1	.....	FRAME	1	-932609			X	(T160218 NO LONGER AVAILABLE) (SUB AT329694) (ALSO ORDER (2) T201971, (4) 40M7066, (2) T161036) (ALSO ORDER T223076, (2) 24H1616, (2) 24H1615 AND (2) 40M7120)
	.....	FRAME	1	932610-XXXXXX			X	(AT303155 NO LONGER AVAILABLE) (SUB AT329694, T223076, (2) 24H1616, (2) 24H1615 AND (2) 40M7120)
	AT329694	FRAME	1	XXXXXX-			X	(INCLUDES (2) T201361 AND (2) T201362)
2	AT177790	PIN FASTENER	1				X	STANDARD
3	T162396	LUBRICATION FITTING	4				X	
4	19M8035	CAP SCREW	1				X	M16 X 35
5	24M7241	WASHER	2				X	
6	T215678	BUSHING	1				X	(SUB FOR M2649DN, THIS APPLICATION)
7A	.....	PIN	1	-XXXXXX			X	(T154708 NO LONGER AVAILABLE) (SUB T223076, (2) 24H1615, (2) 24H1616 AND (2) 40M7120)
7B	T223076	PIN	1	XXXXXX-			X	
8A	T154821	PIN	2	-911128			X	
	T200240	PIN FASTENER	2	911129-932609			X	
8B	T201971	PIN	2	928610-			X	
9	24M7047	WASHER	2	-XXXXXX			X	
10	19M7493	CAP SCREW	2	-XXXXXX			X	M12 X 40
11	14M7328	LOCK NUT	1				X	M16, (SUB FOR M2649DN, THIS APPLICATION)
12	19M7954	CAP SCREW	1				X	M16 X 150
13	T153531	PIN FASTENER	1				X	STANDARD
	T205810	PIN FASTENER	1				X	CHROME
14	AT170043	PIN	2	-932609			X	
	AT306499	PIN	2	932610-			X	
15	T215678	BUSHING	2				X	
16	24M7241	WASHER	2				X	
17	19M8035	CAP SCREW	2				X	M16 X 35
18	T159986	RETAINER	2	-XXXXXX			X	
19	N105572	SNAP RING	2	-928871			X	
20	24M7097	WASHER	2	-928871			X	
21	T159800	PIN	1	-928871			X	
22	T205875	THRUST WASHER	1				X	(SUB FOR (2) T154712 AND (2) T159188)
23	19M8324	CAP SCREW	2	911129-			X	M10 X 16
24	24M7296	WASHER	2	911129-			X	
25	T190925	HOSE GUARD	1	911129-			X	
26	H140456	WASHER	2	924055-			X	
27	T161036	WASHER	2	928872-			X	
28	T201361	BUSHING	2	928872-			X	
29	T201362	BUSHING	2	928872-			X	
30	40M7066	SNAP RING	4	928872-			X	(SUB FOR T116400)
31	T161497	SHIM	3				X	0.508 MM
32	24H1616	WASHER	2	XXXXXX-			X	
33	24H1615	WASHER	2	XXXXXX-			X	
34	40M7120	SNAP RING	2	XXXXXX-			X	

BACKHOE BOOM AND PINS

TX1000309 -UN-17NOV05

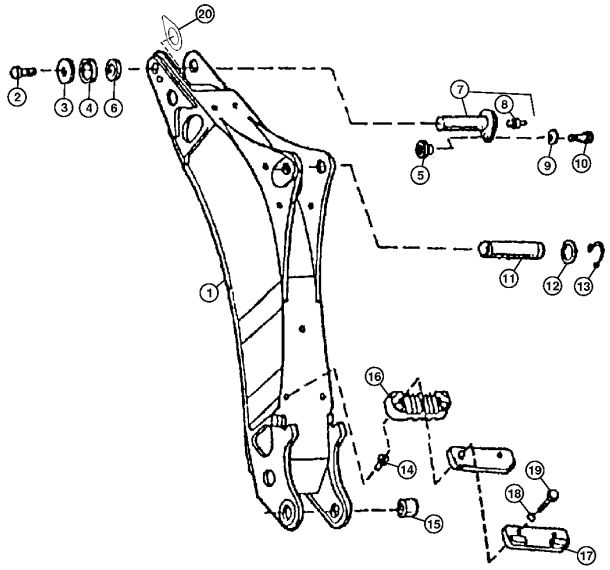

TX1000309

KEY	PART NO.	PART NAME	QTY	SERIAL NO.	310G	315SG	315SG	REMARKS
1	AT184993	BACKHOE BOOM	1		X			(ALSO ORDER (5) T148409)
	AT184989	BACKHOE BOOM	1			X		(ALSO ORDER (5) T148410)
	AT190358	BACKHOE BOOM	1				X	(ALSO ORDER (5) T148410)
2	19M7597	CAP SCREW	1		X	X	X	M20 X 50, (SUB FOR 19M8224, THIS APPLICATION)
3	T101807	WASHER	1		X	X	X	
4	T22826	SHIM	AR			X	X	0.030"
5	T188568	BUSHING	1		X	X	X	(SUB FOR T157922)
6	T48613	SHIM	4		X			0.762 MM
	24H1616	WASHER	AR			X	X	65.075 X 95.250 X 0.914 MM
7	AT196407	PIN	1		X			(SUB FOR AT176075)
	AT197726	PIN	1			X	X	(SUB FOR AT171702)
8	T162396	LUBRICATION FITTING	1		X	X	X	1/8"
9	T29342	WASHER	1		X	X	X	
10	19M8935	CAP SCREW	1		X	X	X	M12 X 16
11	T159089	PIN	1		X			54.475 X 267 MM
	T153608	PIN	1			X	X	64.475 X 267 MM
12	T161036	WASHER	2		X			56 X 80 X 2 MM
	24H1635	WASHER	2			X	X	2-5/8" X 3-3/8" X 0.120"
	24H1616	WASHER	AR			X	X	65.075 X 95.250 X 0.914 MM
13	40M7066	SNAP RING	2		X			
	40M7120	SNAP RING	2			X	X	
14	T148409	NUT	5		X			(KREMNUT)(GOLD NO.6 FOR 6 MM PLATE)
	T148410	NUT	5			X	X	(KREMNUT)(RED NO.8 FOR 8 MM PLATE)
15	T164182	BUSHING	2		X			
	T164183	BUSHING	2			X	X	
16	AT178025	CLAMP	1		X	X	X	
17	AT176635	STOP	1		X			
	AT175993	STOP	1			X	X	
18	24M7239	WASHER	2		X	X	X	
19	19M8183	CAP SCREW	2		X	X	X	
20	T208510	WASHER	2			X	X	

BACKHOE BOOM PROTECTION KIT

T145191 -UN-07SEP01

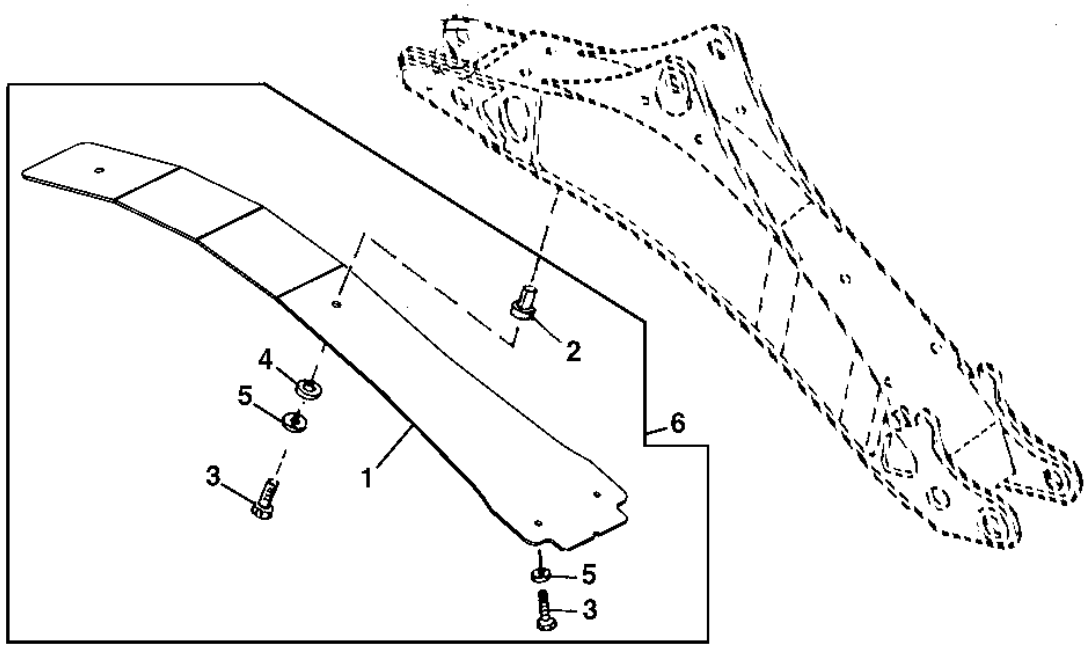

T145191

KEY	PART NO.	PART NAME	QTY	SERIAL NO.	310G	315SG	331SG	REMARKS
1	.....	PLATE	1		X			(AT179448 NO LONGER AVAILABLE) (SUB AT311060)
	.....	PLATE	1			X	X	(AT179465 NO LONGER AVAILABLE) (SUB AT310062)
2	T148409	NUT	4		X	X	X	M10, (KREMNUT)(GOLD NO.6 FOR 6 MM PLATE)
3	19M8637	CAP SCREW	4		X	X	X	M10 X 40
4	28H1519	WASHER	2		X	X	X	0.493" X 0.675" X 3/8"
5	24M7296	WASHER	4		X	X	X	10.500 X 30 X 2.500 MM
6	**AT311060**	**KIT**	**1**		**X**			**BOOM PROTECTION (AT178411 NO LONGER AVAILABLE)**
	AT310062	**KIT**	**1**			**X**	**X**	**BOOM PROTECTION (AT179464 NO LONGER AVALILABLE)**

BACKHOE BUCKET LINKS AND PINS
(310G)

T137819 -UN-01FEB01

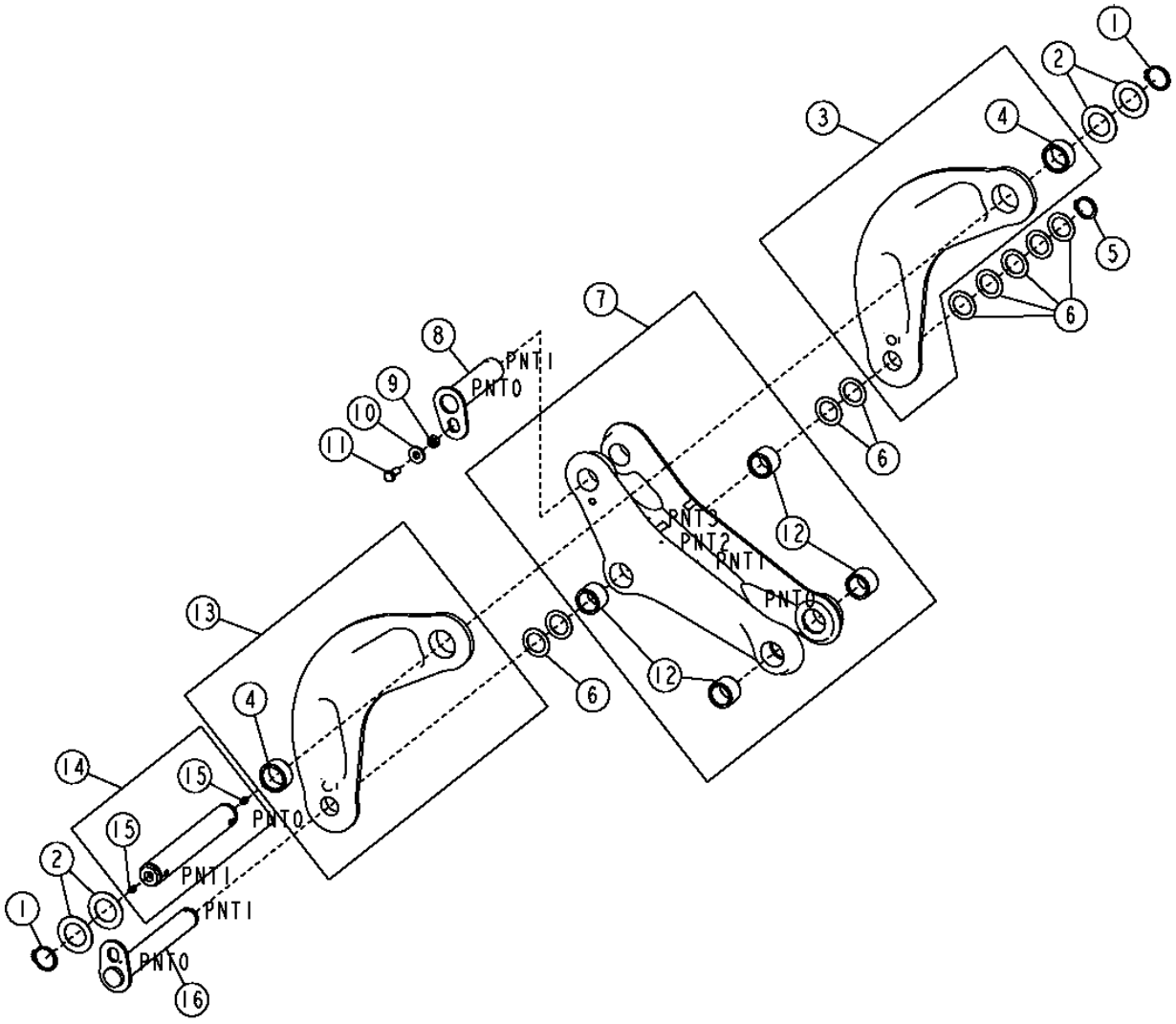

BACKHOE BUCKET LINKS AND PINS
(310G)

KEY	PART NO.	PART NAME	QTY	SERIAL NO.	310G	310SG	315SG	REMARKS
1	40M7180	SNAP RING	2		X			
2	24H1576	WASHER	4		X			
3	AT181713	LINK	1		X			
4	T166714	BUSHING	2		X			
5	T161583	SNAP RING	1		X			
6	24H1536	WASHER	9		X			
7	AT183068	LINK	1		X			
8	AT176537	PIN	1		X			
9	28H3418	WASHER	1		X			
10	T29342	WASHER	1		X			
11	19M7872	CAP SCREW	1		X			M12 X 25
12	T105988	BUSHING	4		X			
13	AT181712	LINK	1		X			
14	AT176538	PIN	1		X			
15	T162396	LUBRICATION FITTING	2		X			
16	AT176536	PIN	1		X			

**BACKHOE BUCKET LINKS AND PINS
(310SG AND 315SG)**

T214079 -UN-03NOV05

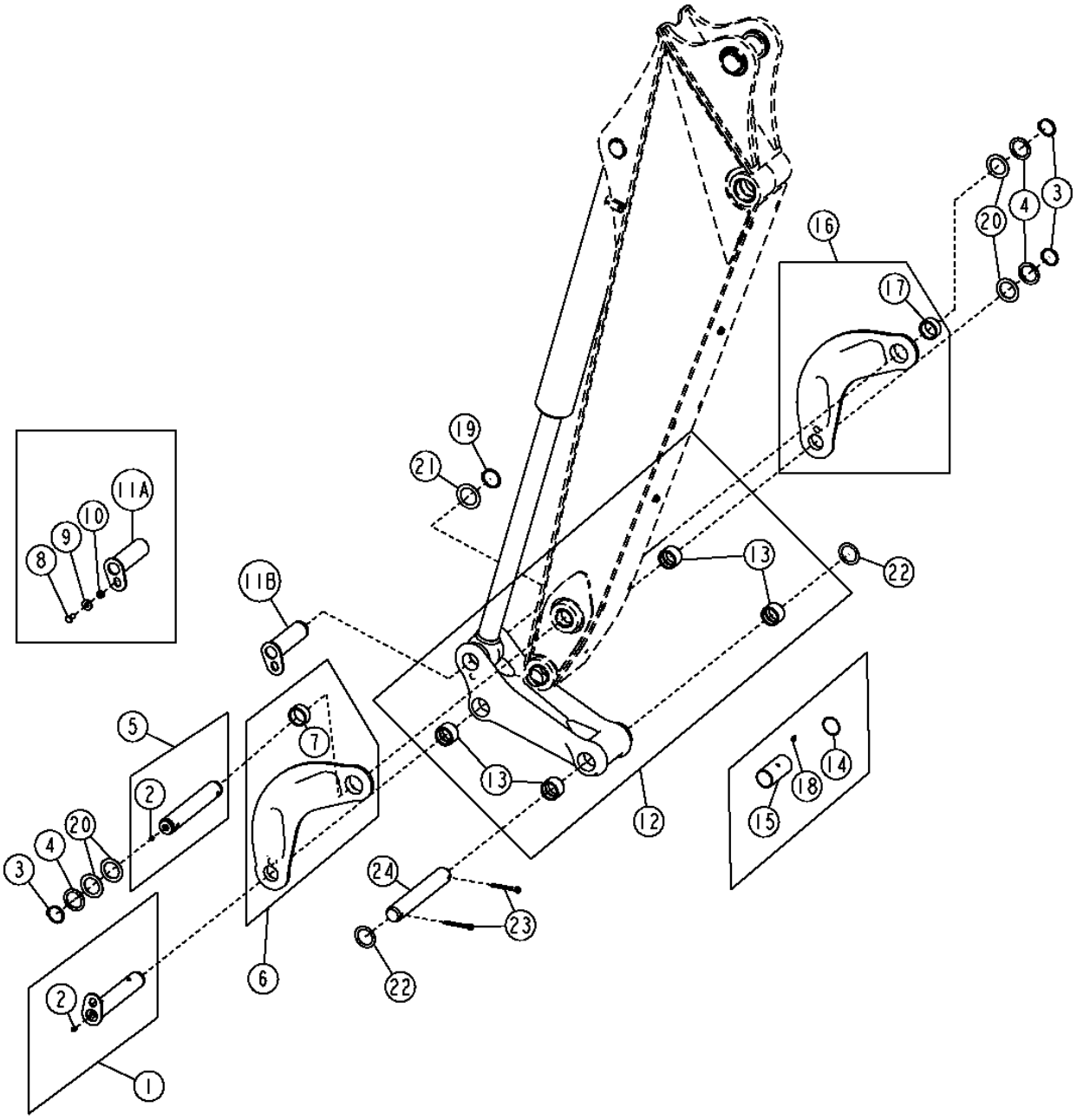

T214079

BACKHOE BUCKET LINKS AND PINS
(310SG AND 315SG)

KEY	PART NO.	PART NAME	QTY	SERIAL NO.	310G	310SG	315SG	REMARKS
1	AT171077	PIN	1			X	X	
2	T162396	LUBRICATION FITTING	4			X	X	
3	40M7166	SNAP RING	3			X	X	
4	24H1594	WASHER	AR			X	X	
	24H1595	WASHER	AR			X	X	
5	AT171079	PIN	1			X	X	
6	AT181714	LINK	1			X	X	
7	T166715	BUSHING	1			X	X	
8	19M7872	CAP SCREW	1			X	X	M12 X 25
9	T29342	WASHER	1			X	X	
10	28H3418	WASHER	1			X	X	
11A	.....	PIN	1	-XXXXXX		X	X	(SUB AT324237) (AT171078 NO LONGER AVAILABLE)
11B	AT324237	PIN FASTENER	1	XXXXXX-		X	X	
12	.....	LINK	1	-927744		X	X	(SUB AT324138) (ALSO ORDER AT324237, T161036 AND 40M7066) (AT192121 NO LONGER AVAILABLE)
	.....	LINK	1	927945-XXXXXX		X	X	(SUB AT324138) (ALSO ORDER AT324237, T161036 AND 40M7066) R 05 (AT192121 NO LONGER AVAILABLE)
	AT324138	LINK	1	XXXXXX-		X	X	
13	T154273	BUSHING	4			X	X	
14	R30916	O-RING	2	-927744		X	X	
15	T187184	STRUCTURAL TUBING	1	-927744		X	X	(SUB FOR T185904)
16	AT181715	LINK	1			X	X	
17	T166715	BUSHING	1			X	X	
18	JD7798	LUBRICATION FITTING	2			X	X	
19	40M7066	SNAP RING	1	XXXXXX-				
20	24H1595	WASHER	3	XXXXXX-				
21	T161036	WASHER	1	XXXXXX-				
22	24H1683	WASHER	2	XXXXXX-				
23	11H227	COTTER PIN	4					
24	T185831	PIN FASTENER	1	XXXXXX-				49.475 X 320 MM

BACKHOE BUCKET GREASE KIT (310G)

T138386 -UN-22FEB01

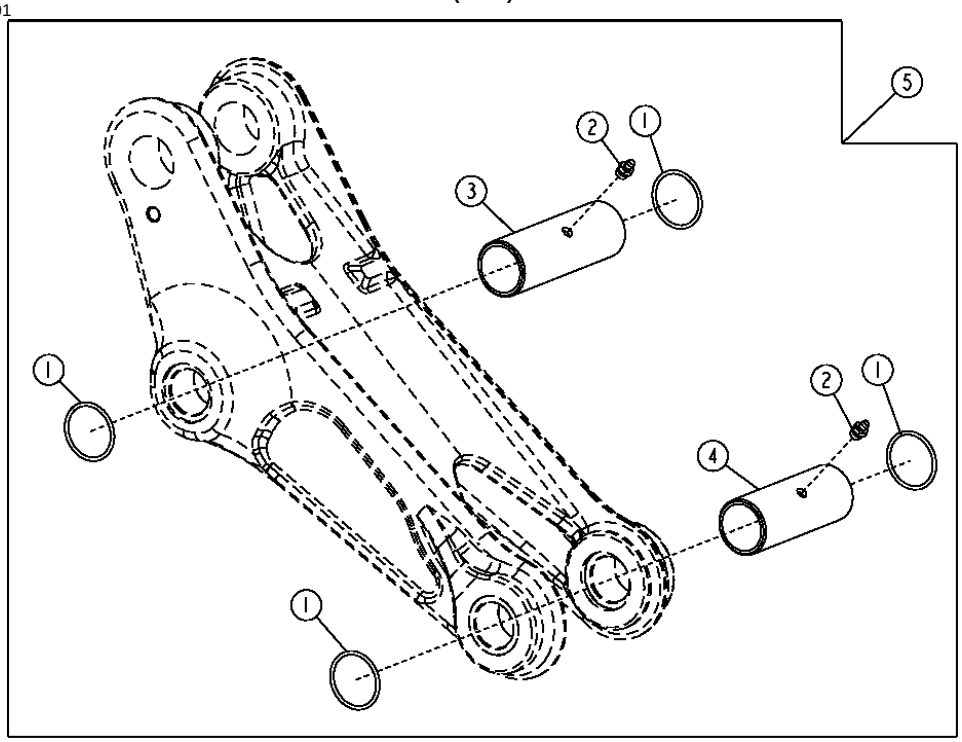

T138386

KEY	PART NO.	PART NAME	QTY	SERIAL NO.	310G	315SG	REMARKS
1	R26773	O-RING	4		X		
2	T162396	LUBRICATION FITTING	4		X		
3	.....	STRUCTURAL TUBING	1		X		(SUB AT194493)
4	.....	STRUCTURAL TUBING	1		X		(SUB AT194493)
5	AT194493	KIT	1		X		WHOLE GOODS (BACKHOE BUCKET GREASE KIT) (SUB FOR AT190174)

MEMORANDA

STANDARD ARM AND PINS

T199816 -UN-11MAY04

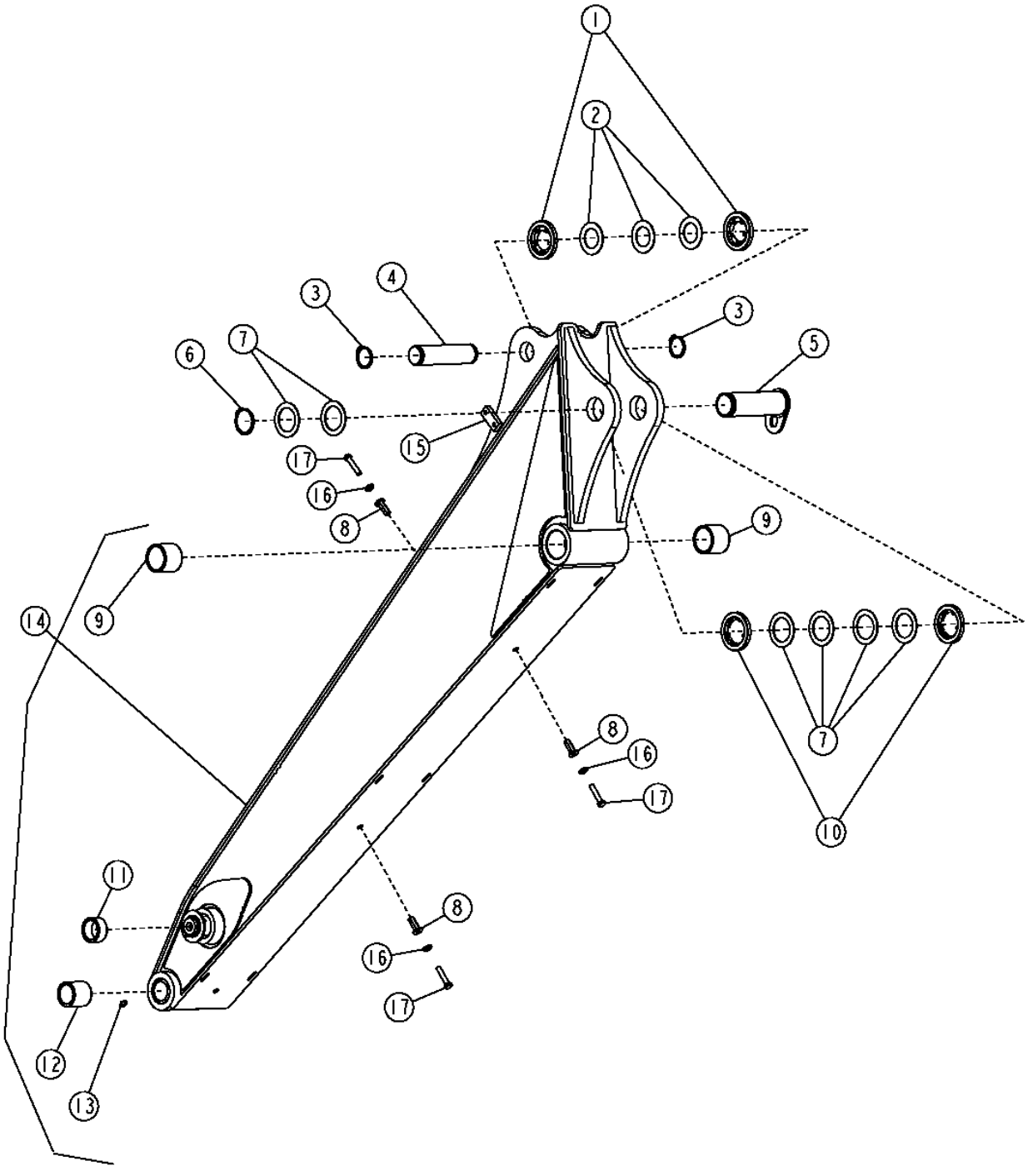

STANDARD ARM AND PINS

KEY	PART NO.	PART NAME	QTY	SERIAL NO.	310G	310SG	315SG	REMARKS
1	T160304	SPACER	2		X			
	T160300	WEAR PLATE	2			X	X	
	T161036	WASHER	AR		X	X	X	
	24H1679	WASHER	AR			X	X	
2	24H1576	WASHER	4		X			
3	40M7180	SNAP RING	2		X			
	40M7066	SNAP RING	2			X	X	
4	T159281	PIN	1		X			STANDARD
	T153567	PIN	1			X	X	STANDARD
5	AT176533	PIN	1		X			
	AT169831	PIN	1			X	X	
6	40M7066	SNAP RING	1		X			
	40M7120	SNAP RING	1			X	X	
7	T161036	WASHER	AR		X			
	24H1635	WASHER	AR			X	X	2-5/8" X 3-3/8" X 0.120"
8	T148410	NUT	8		X	X	X	M10
	T148409	NUT	2		X	X	X	M10
9	T162582	BUSHING	2		X			
	T162581	BUSHING	2			X	X	
10	T160303	SPACER	2		X			
	T160302	SPACER	2			X	X	
	T160299	WEAR PLATE	2				X	
11	T166714	BUSHING	2		X			
	T166715	BUSHING	2			X	X	
12	T166716	BUSHING	2		X			
	T166686	BUSHING	2			X	X	
13	T162396	LUBRICATION FITTING	1		X	X	X	
14	AT303024	DIPPERSTICK	1		X			(SUB FOR AT176405 AND AT195463)
	AT171019	DIPPERSTICK	1			X		
	AT175820	DIPPERSTICK	1				X	
15	T159853	STRAP	1		X	X	X	
16	24M7239	WASHER	10		X	X	X	
17	19M8600	CAP SCREW	10		X	X	X	M10 X 50

EXTENDIBLE ARM AND LOCKING PIN

T212824 -UN-19JUL05

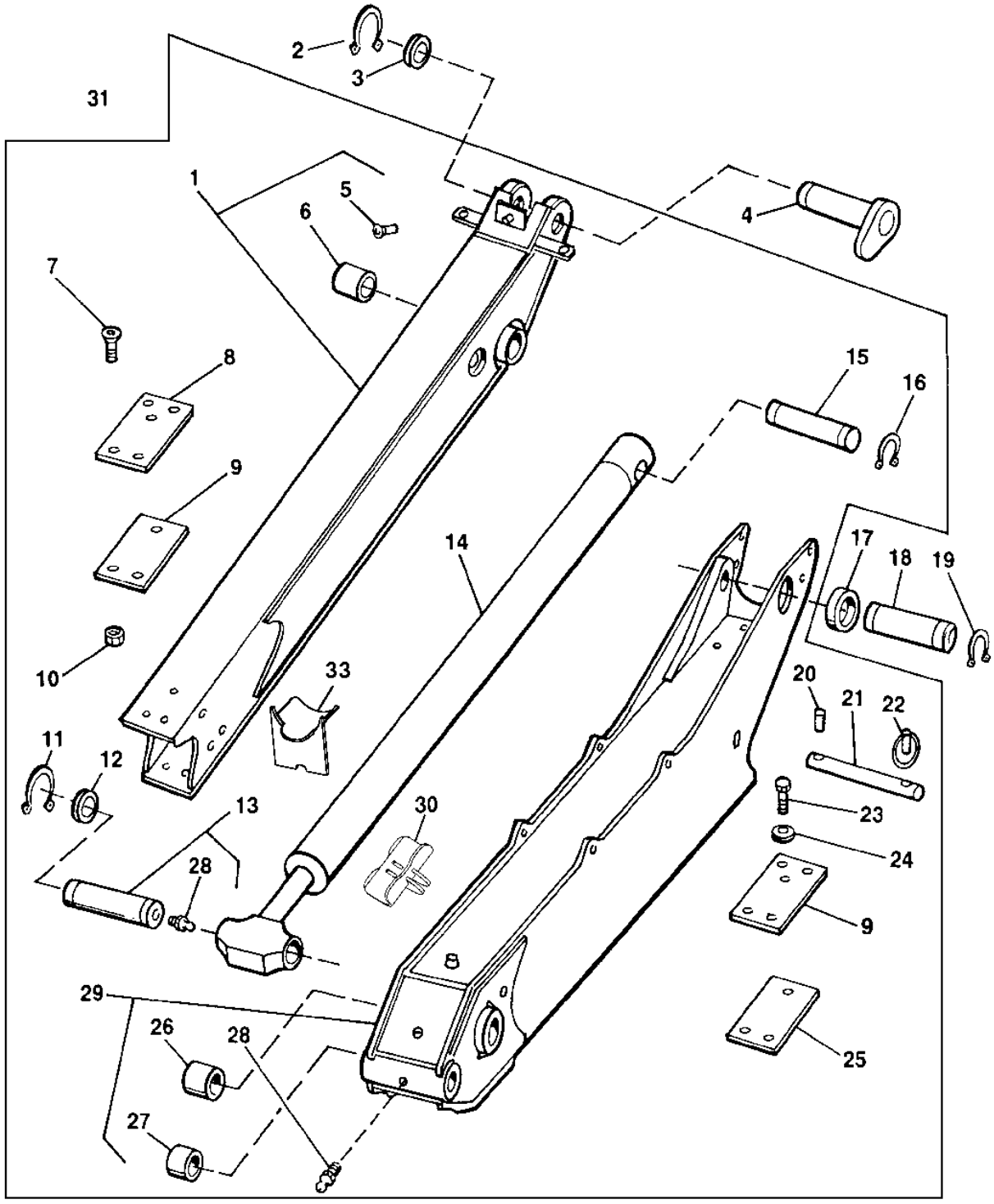

T212824

EXTENDIBLE ARM AND LOCKING PIN

KEY	PART NO.	PART NAME	QTY	SERIAL NO.	310G	315SG	REMARKS
1	AT176579	DIPPERSTICK	1		X		(STATIONARY MEMBER)
	AT175284	DIPPERSTICK	1			X	(STATIONARY MEMBER)
	AT175812	DIPPERSTICK	1			X	(STATIONARY MEMBER)
2	40M7066	SNAP RING	1		X		
	40M7120	SNAP RING	1			X	X
3	24H1679	WASHER	1		X		
	24H1635	WASHER	1			X	X
4	AT176533	PIN	1		X		
	AT169831	PIN	1			X	X
5	T148410	NUT	1		X	X	X M10, (KREMNUT)(RED NO.8 FOR 8 MM PLATE)
6	T162582	BUSHING	2		X		
	T162581	BUSHING	2			X	X
7	19M7666	SCREW	12		X	X	X M10 X 40
8	T157792	WEAR PLATE	4		X	X	X
9	T216970	SHIM	AR		X	X	X (SUB FOR T157796)
10	14M7400	LOCK NUT	12		X	X	X M10
11	40M7066	SNAP RING	2		X		
	40M7166	SNAP RING	2			X	X
12	24H1576	WASHER	2		X		
	24H1594	WASHER	2			X	X
13	AT176538	PIN	1		X		
	AT171079	PIN	1			X	X
14	.....	HYDRAULIC CYLINDER	1		X		(AH175181 NO LONGER AVAILABLE) (SUB FOR AH152472) (SUB AH218606)
	.....	HYDRAULIC CYLINDER	1			X	X (AH152473, AH175182 AND AH207281 NO LONGER AVAILABLE) (SUB AH211361)
15	T160384	PIN	1		X		
	T160384	PIN	1			X	X
16	40M7179	SNAP RING	2		X	X	X
17	T160304	SPACER	2		X		SYNTHETIC
	T160300	WEAR PLATE	AR			X	X SYNTHETIC
	24H1679	WASHER	AR			X	X
18	T159281	PIN	1		X		
	T153567	PIN	1			X	X
19	40M7180	SNAP RING	2		X		
	40M7066	SNAP RING	2			X	X
20	34M7054	SPRING PIN	1		X	X	X 10 X 50 MM
21	T153322	PIN	1		X	X	X
22	AR83396	QUICK LOCK PIN	1		X	X	X
23	19H2472	CAP SCREW	6		X	X	X 1/2" X 1"
24	24M7240	WASHER	12		X	X	X
25	AT173933	WEAR PLATE	2		X	X	X
26	T166714	BUSHING	2		X		
	T166715	BUSHING	2			X	X
27	T166716	BUSHING	2		X		
	T166686	BUSHING	2			X	X
28	T162396	LUBRICATION FITTING	7		X	X	X
29	AT176578	DIPPERSTICK	1		X		(EXTENDING MEMBER)
	AT175283	DIPPERSTICK	1			X	X (EXTENDING MEMBER)
30	.....	GUIDE	1		X	X	X
31	AT179903	ARM	1		X		(WHOLE GOODS) INCLUDES HYDRAULIC HOSES,FITTINGS, CLAMPS AND HARDWARE CONTAINED INSIDE OF THE EXTENDIBLE ARM.
	AT179902	ARM	1			X	(WHOLE GOODS) INCLUDES HYDRAULIC HOSES,FITTINGS, CLAMPS AND HARDWARE CONTAINED INSIDE OF THE EXTENDABLE ARM.
	AT179905	ARM	1			X	(WHOLE GOODS) INCLUDES HYDRAULIC HOSES,FITTINGS, CLAMPS AND HARDWARE CONTAINED INSIDE OF THE EXTENDABLE ARM.
32	T215257	SHIM	AR		X	X	X
33	.....	GUIDE	1		X	X	X

PROTECTION AND ARM GRIP KIT
(EXTENDIBLE DIPPERSTICK)

TP57776 -UN-30SEP97

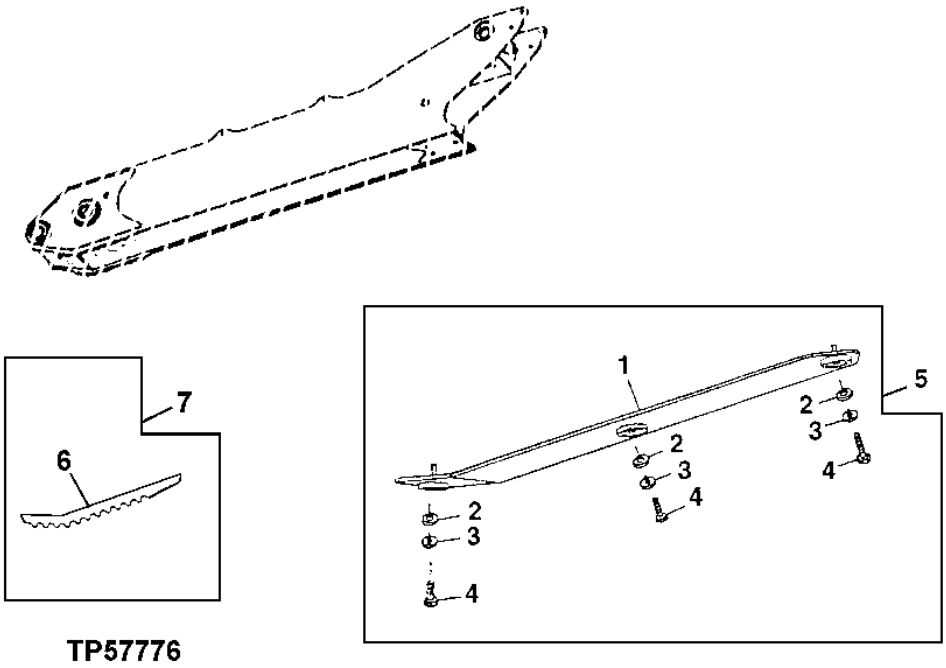

TP57776

KEY	PART NO.	PART NAME	QTY	SERIAL NO.	310G	315SG	REMARKS
1	AT179617	PLATE	1		X	X X	(PROTECTION)
2	T188568	BUSHING	3		X	X X	(SUB FOR T157922)
3	24M7180	WASHER	3		X	X X	13 X 37 X 3 MM
4	19M8935	CAP SCREW	3		X	X X	M12 X 16
5	AT179105	KIT	1		X	X X	(WHOLE GOODS) PROTECTION (EXTENDIBLE DIPPERSTICK)
6	.....	GRIP	2		X		FURNISH AT182190
	.....	GRIP	2			X X	FURNISH AT182193
7	AT182190	KIT	1		X		(WHOLE GOODS) GRIPPER TEETH (EXTENDIBLE DIPPER)
	AT182193	KIT	1			X X	(WHOLE GOODS) GRIPPER TEETH (EXTENDIBLE DIPPER)

MEMORANDA

STABILIZER ARMS,FEET AND PINS
(310G AND 310SG)

T195391 -UN-08OCT03

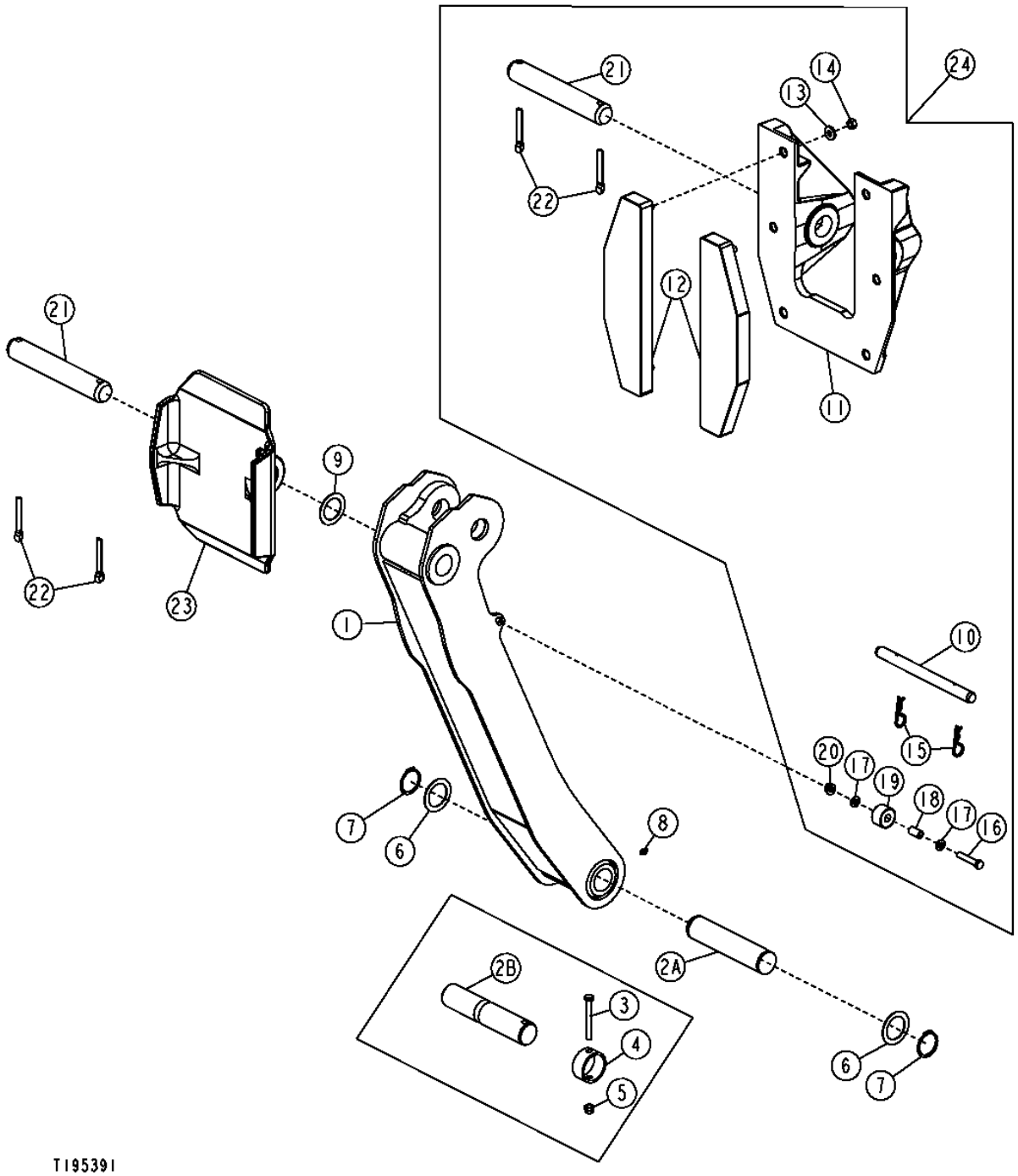

STABILIZER ARMS,FEET AND PINS
(310G AND 310SG)

KEY	PART NO.	PART NAME	QTY	SERIAL NO.	310G	310SG	315SG	REMARKS
1	AT193495	STABILIZER	2	-916460	X			
	AT196190	STABILIZER	2	916461-	X			(SUB FOR AT190828)
	AT196190	STABILIZER	2			X		
	AT196204	STABILIZER	2				X	EXTENDED, (SUB FOR AT185062)
2A	T201909	PIN FASTENER	2		X	X		(SUB FOR T163109, THIS APPLICATION)
2B	T204869	PIN	2		X	X		(SEE DTAC SOL 61248)
3	19M7949	CAP SCREW	2		X	X		M12 X 100, (SEE DTAC SOL 61248)
4	T205897	SPACER	2		X	X		(SEE DTAC SOL 61248)
5	14M7313	LOCK NUT	2		X	X		M12, (SEE DTAC SOL 61248)
6	T161036	WASHER	4		X	X		
7	40M7066	SNAP RING	4		X	X		
8	T162396	LUBRICATION FITTING	2		X	X		
9	24H1595	WASHER	4		X	X		2-1/16" X 3" X 0.075"
10	T184988	PIN FASTENER	2	-916460	X			
	T184988	PIN FASTENER	2			X		
11	T206569	STABILIZER FOOT	2		X	X		(SUB FOR T166258, THIS APPLICATION)
12	AT195669	STREET PAD	4		X	X		(SUB FOR AT192120)
13	T29342	WASHER	12		X	X		
14	14H1040	NUT	12		X	X		1/2", (SUB FOR 14H826, THIS APPLICATION)
15	A3581R	SPRING LOCKING PIN	4	-916460	X			
	A3581R	SPRING LOCKING PIN	4			X		
16	19M8348	CAP SCREW	2	916461-	X			M12 X 65
17	24M7240	WASHER	4	916461-	X			
18	28H3387	BUSHING	2	916461-	X			
19	AT197876	STOP	2	916461-	X			
20	H137329	LOCK NUT	2	916461-	X			
21	T69472	PIN FASTENER	2		X	X		
22	11H270	COTTER PIN	4		X	X		12.700 X 76.200 MM
23	T126867	STABILIZER FOOT	2		X	X		
24	AT157327	KIT	1		X	X		(WHOLE GOODS) REVERSIBLE STREET PAD

STABILIZER CYLINDER PINS AND SPACERS

TP57843 -UN-25MAR98

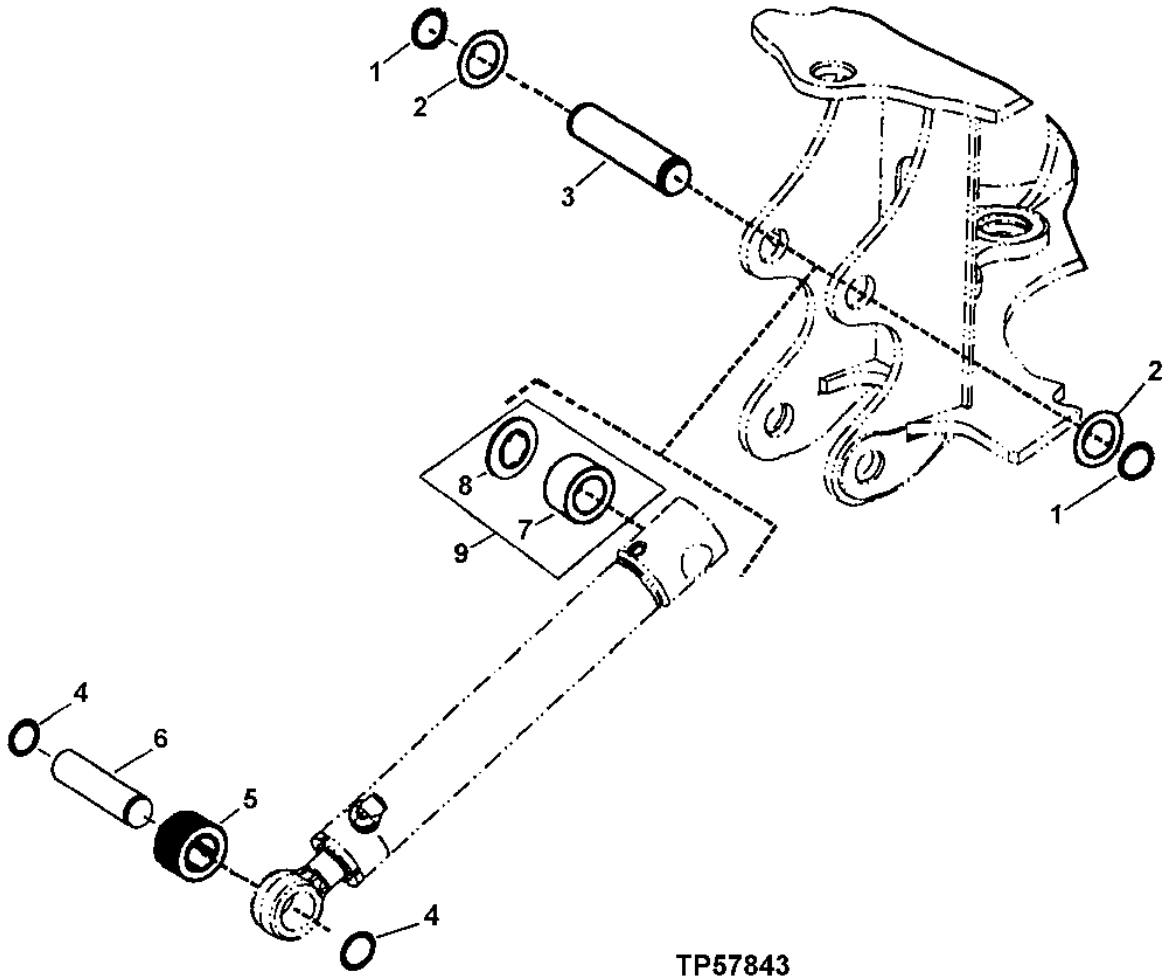

TP57843

STABILIZER CYLINDER PINS AND SPACERS

KEY	PART NO.	PART NAME	QTY	SERIAL NO.	310G	310SG	315SG	REMARKS
1	40M7066	SNAP RING	2		X	X		
2	T161036	WASHER	2		X	X		
3	T161027	PIN	1	-902115	X			
	T163109	PIN FASTENER	1	902116-	X			
	T163109	PIN FASTENER	1			X		
4	40M7166	SNAP RING	2		X	X		
5	T188777	SPACER	1		X	X		(HOSE SEGMENT) (SUB FOR T164087, T164086 AND T189080)
6	T127437	PIN FASTENER	1		X	X		
7	.....	WEAR PLATE	1	-902508	X	X		
8	T160303	SPACER	1	-902508	X	X		
9	AT181327	KIT	1	-902508	X	X		BARREL END

BACKHOE CONTROL VALVE
(310G)
(HUSCO)

TP69623 -UN-02OCT00

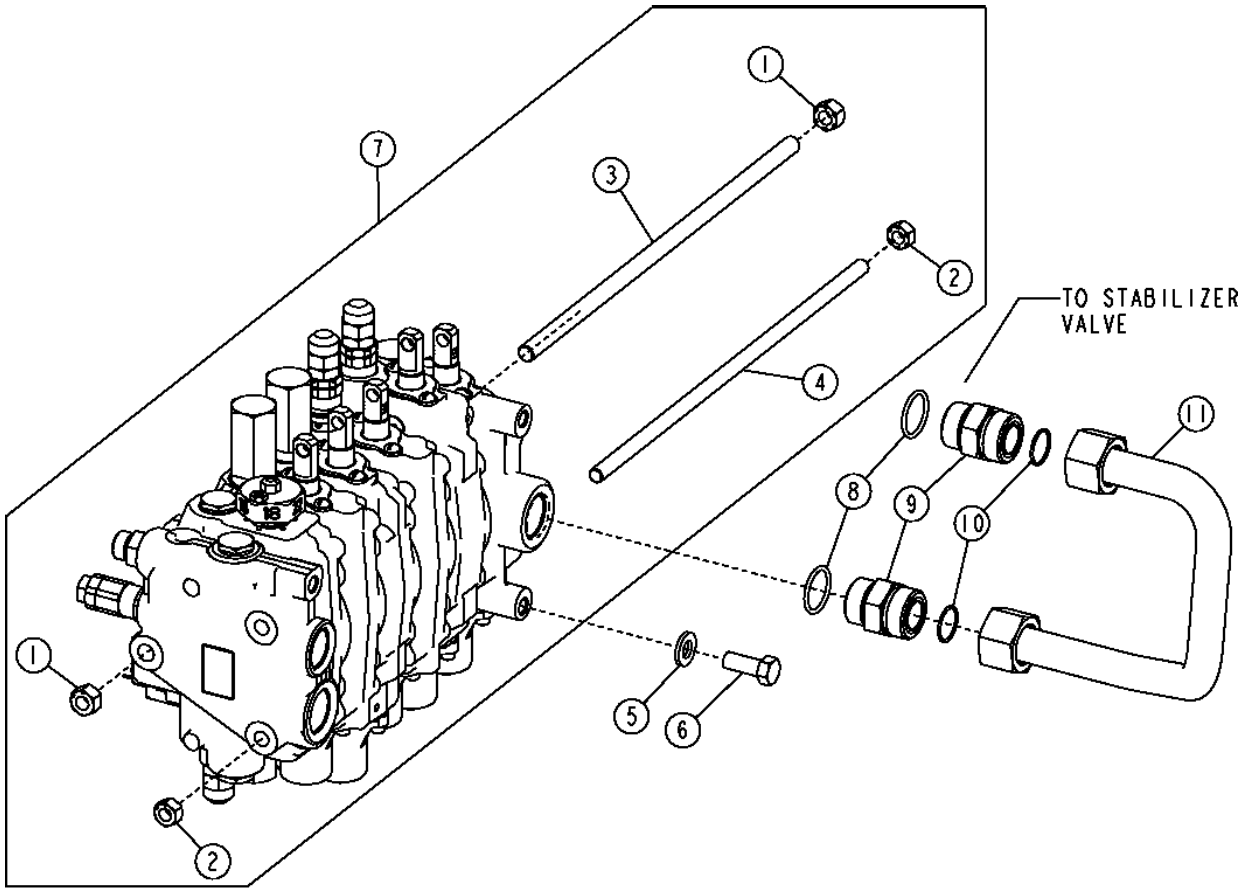

TP69623

BACKHOE CONTROL VALVE
(310G)
(HUSCO)

KEY	PART NO.	PART NAME	QTY	SERIAL NO.	310G	310SG	315SG	REMARKS
1	14H865	NUT	2		X			1/2"
2	14H807	NUT	4		X			7/16"
3	T160628	STUD	1		X			(4 FUNCTION)
	T140699	STUD	1		X			(5 FUNCTION)
	T140700	STUD	1		X			(6 FUNCTION)
	T159264	STUD	1		X			(7 FUNCTION)
4	T160629	STUD	2		X			(4 FUNCTION)
	T118695	STUD	2		X			(5 FUNCTION)
	T118697	STUD	2		X			(6 FUNCTION)
	T159263	STUD	2		X			(7 FUNCTION)
5	24M7240	WASHER	3		X			
6	19M8011	CAP SCREW	3		X			M12 X 30
7	AT300570	CONTROL VALVE	1		X			CONVENIENCE ASSEMBLY (4 FUNCTION) (SUB FOR AT186069)
	AT317783	CONTROL VALVE	1		X			(PILOT CONTROL) CONVENIENCE ASSEMBLY (4 FUNCTION)
	AT300574	CONTROL VALVE	1		X			CONVENIENCE ASSEMBLY (5 FUNCTION WITH MANUAL AUXILIARY) (SUB FOR AT186070)
	AT317784	CONTROL VALVE	1		X			(PILOT CONTROL) CONVENIENCE ASSEMBLY (4 FUNCTION WITH SELECTIVE FLOW AUXILIARY)
	AT304502	CONTROL VALVE	1		X			CONVENIENCE ASSEMBLY (5 FUNCTION WITH SELECTIVE FLOW AUXILIARY)
	AT317786	CONTROL VALVE	1		X			(PILOT CONTROL) CONVENIENCE ASSEMBLY (5 FUNCTION WITH SELECTIVE FLOW AUXILIARY)
	AT300575	CONTROL VALVE	1		X			CONVENIENCE ASSEMBLY (6 FUNCTION WITH SELECTIVE FLOW AUXILIARY) (SUB FOR AT186071)
	AT317785	CONTROL VALVE	1		X			(PILOT CONTROL) CONVENIENCE ASSEMBLY (6 FUNCTION WITH SELECTIVE FLOW AUXILIARY) (SUB FOR AT186071)
	.....	CONTROL VALVE	1		X			(6 FUNCTION WITH MANUAL AUXILIARY) (AT300577 NO LONGER AVAILABLE) (SUB FOR AT186998)
	.....	CONTROL VALVE	1		X			(7 FUNCTION) (AT300579 NO LONGER AVAILABLE) (SUB FOR AT188353)
8	R29936	O-RING	2	-913416	X			
9	38H1164	ADAPTER FITTING	2	-913416	X			
10	T76938	O-RING	2	-913416	X			
11	AT186298	OIL LINE	1	-913416	X			(4 FUNCTION)
	AT186297	OIL LINE	1	-913416	X			(5,6 AND 7 FUNCTION)

**BACKHOE CONTROL VALVE
(310SG AND 315SG)
(HUSCO)**

TP69623 -UN-02OCT00

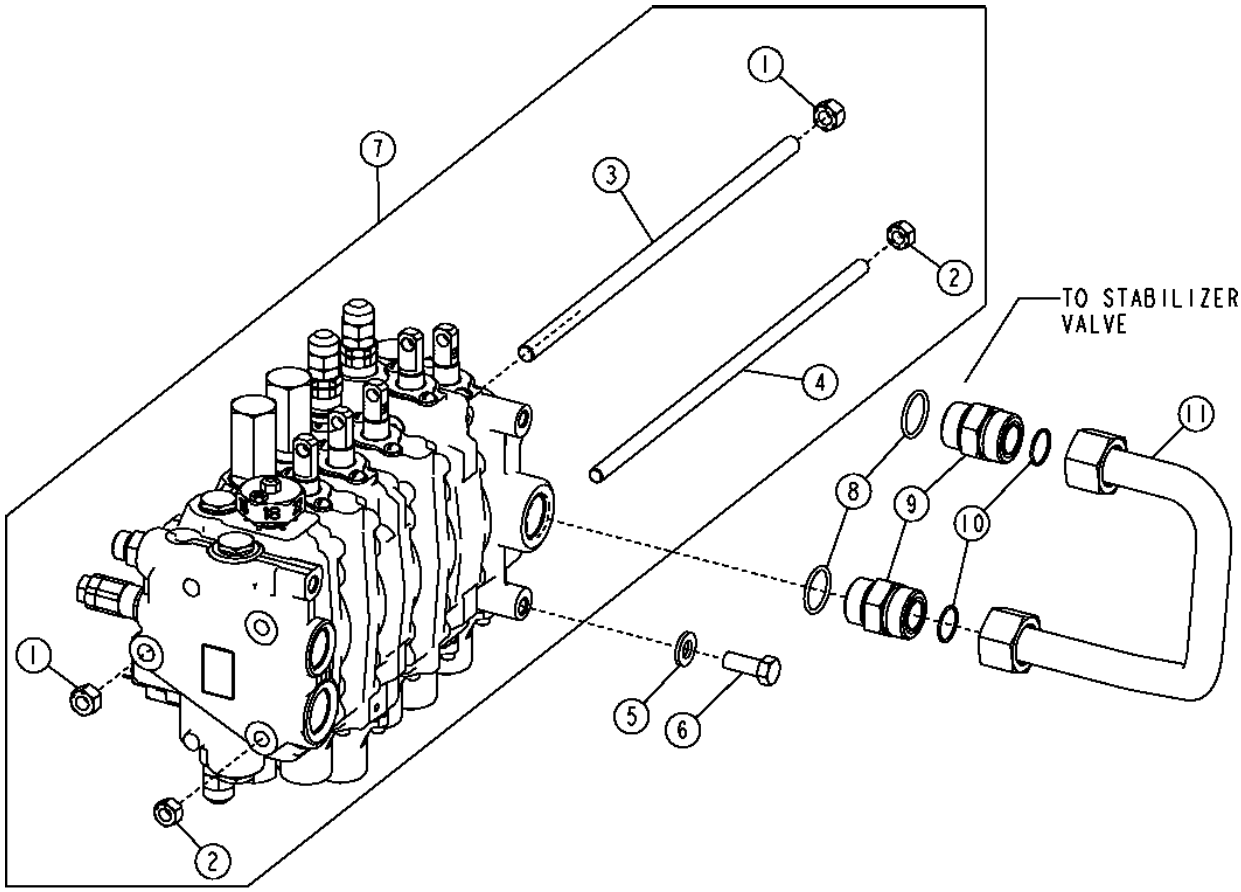

TP69623

**BACKHOE CONTROL VALVE
(310SG AND 315SG)
(HUSCO)**

KEY	PART NO.	PART NAME	QTY	SERIAL NO.	310G	310SG	315SG	REMARKS
1	14H865	NUT	2			X	X	1/2"
2	14H807	NUT	4			X	X	7/16"
3	T160628	STUD	1			X	X	(4 FUNCTION)
	T140699	STUD	1			X	X	(5 FUNCTION)
	T140700	STUD	1			X	X	(6 FUNCTION)
	T159264	STUD	1			X	X	(7 FUNCTION)
4	T160629	STUD	2			X	X	(4 FUNCTION)
	T118695	STUD	2			X	X	(5 FUNCTION)
	T118697	STUD	2			X	X	(6 FUNCTION)
	T118679	TUBE	2			X		
	T159263	STUD	2			X	X	(7 FUNCTION)
5	24M7240	WASHER	3			X	X	
6	19M8011	CAP SCREW	3			X	X	M12 X 30
7	AT300583	CONTROL VALVE	1			X	X	CONVENIENCE ASSEMBLY (4 FUNCTION) (SUB FOR AT183997)
	AT196633	CONTROL VALVE	1			X		(PILOT CONTROL) CONVENIENCE ASSEMBLY (4 FUNCTION)
	.....	CONTROL VALVE	1	-913424		X	X	CONVENIENCE ASSEMBLY (5 FUNCTION) (AT183999 NO LONGER AVAILABLE) (SUB AT300585)
	AT300585	CONTROL VALVE	1	913425-		X	X	CONVENIENCE ASSEMBLY (5 FUNCTION)
	AT196634	CONTROL VALVE	1			X		(PILOT CONTROL) CONVENIENCE ASSEMBLY (5 FUNCTION)
	.....	CONTROL VALVE	1	-913424		X	X	(6 FUNCTION WITH SELECTIVE FLOW) (AT184001 NO LONGER AVAILABLE) (SUB AT300587)
	AT300587	CONTROL VALVE	1	913425-		X	X	CONVENIENCE ASSEMBLY (6 FUNCTION WITH SELECTIVE FLOW)
	.....	CONTROL VALVE	1			X		(6 FUNCTION WITH MANUAL AUXILIARY) (AT300589 NO LONGER AVAILABLE) (SUB FOR AT186073)
	AT196636	CONTROL VALVE	1			X		(PILOT CONTROL) CONVENIENCE ASSEMBLY (6 FUNCTION WITH MANUAL AUXILIARY)
	AT196635	CONTROL VALVE	1			X		(PILOT CONTROL) CONVENIENCE ASSEMBLY (6 FUNCTION WITH SELECTIVE FLOW)
	.....	CONTROL VALVE	1	-913424		X		CONVENIENCE ASSEMBLY (7 FUNCTION) (AT188350 USE IF AVAILABLE) (SUB AT300591)
	AT300591	CONTROL VALVE	1	913425-		X		CONVENIENCE ASSEMBLY (7 FUNCTION)
	AT196637	CONTROL VALVE	1			X		(PILOT CONTROL) CONVENIENCE ASSEMBLY (7 FUNCTION)
8	R29936	O-RING	2	-913416		X	X	
9	38H1164	ADAPTER FITTING	2	-913416		X	X	
10	T76938	O-RING	2	-913416		X	X	
11	AT186298	OIL LINE	1	-913416		X		(4 FUNCTION)
	AT191036	OIL LINE	1	-913416			X	(4 FUNCTION)
	AT186297	OIL LINE	1	-913416		X		(5,6 AND 7 FUNCTION)
	AT191037	OIL LINE	1	-913416			X	(5 AND 6 FUNCTION)

PRIORITY INLET SECTION
BACKHOE VALVE

T196617 -UN-24NOV03

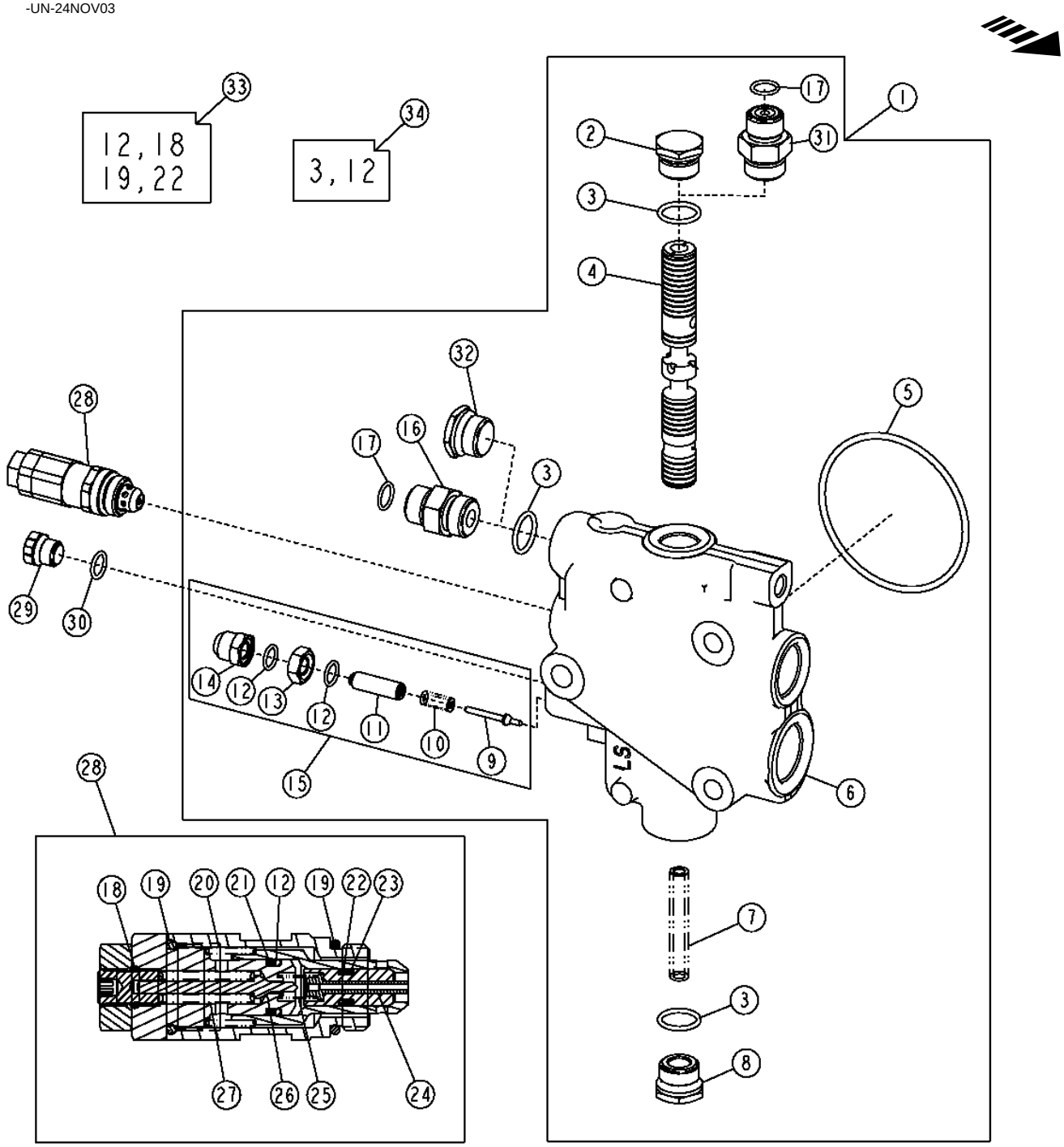

PRIORITY INLET SECTION
BACKHOE VALVE

KEY	PART NO.	PART NAME	QTY	SERIAL NO.	310G	310SG	315SG	REMARKS
1	AT191768	VALVE SPOOL	1		X	X	X	
2	T76502	FITTING	1		X	X		
3	R26906	O-RING	3		X	X	X	
4	.....	SPOOL VALVE	1		X	X	X	
5	T118685	O-RING	1		X	X	X	
6	.....	HOUSING	1		X	X	X	
7	T152374	SPRING	1		X	X	X	
8	T160613	PLUG	1		X	X	X	
9	.....	POPPET	1		X	X	X	
10	.....	COMPRESSION SPRING	1		X	X	X	
11	.....	SCREW	1		X	X	X	
12	.....	RING	2		X	X	X	
13	.....	NUT	1		X	X	X	
14	.....	NUT	1		X	X	X	
15	AT168671	PRESSURE RELIEF VALVE	1		X	X	X	(LOAD SENSE RELIEF)
16	38H1174	ADAPTER FITTING	1		X	X		(SUB FOR T164387, THIS APPLICATION)
17	T77857	O-RING	2		X	X	X	
18	.....	O-RING	1		X	X	X	
19	.....	O-RING	1		X	X	X	
20	.....	SPRING	1		X	X	X	
21	.....	BACK-UP RING	1		X	X	X	
22	.....	O-RING	1		X	X	X	
23	.....	BACK-UP RING	1		X	X	X	
24	.....	PISTON	1		X	X	X	
25	.....	SPRING	1		X	X	X	
26	.....	POPPET	1		X	X	X	
27	.....	SPRING	1		X	X	X	
28	AT316302	PRESSURE RELIEF VALVE	1		X	X	X	(3625 PSI) (SUB FOR AT178471)
29	R27218	FITTING PLUG	1		X	X	X	
30	R26448	O-RING	1		X	X	X	
31	T164387	FITTING	1				X	(ORIFICE)
32	T76502	FITTING	1				X	
33	AT314538	SEAL KIT	1		X	X	X	(7/8 INCH RELIEF VALVE SEAL) (SUB FOR AT189413)
34	AT280406	SEAL KIT	1		X	X	X	(SPOOL SEAL) (SUB FOR AT178372)

BOOM SECTION
BACKHOE VALVE

T165282 -UN-13FEB03

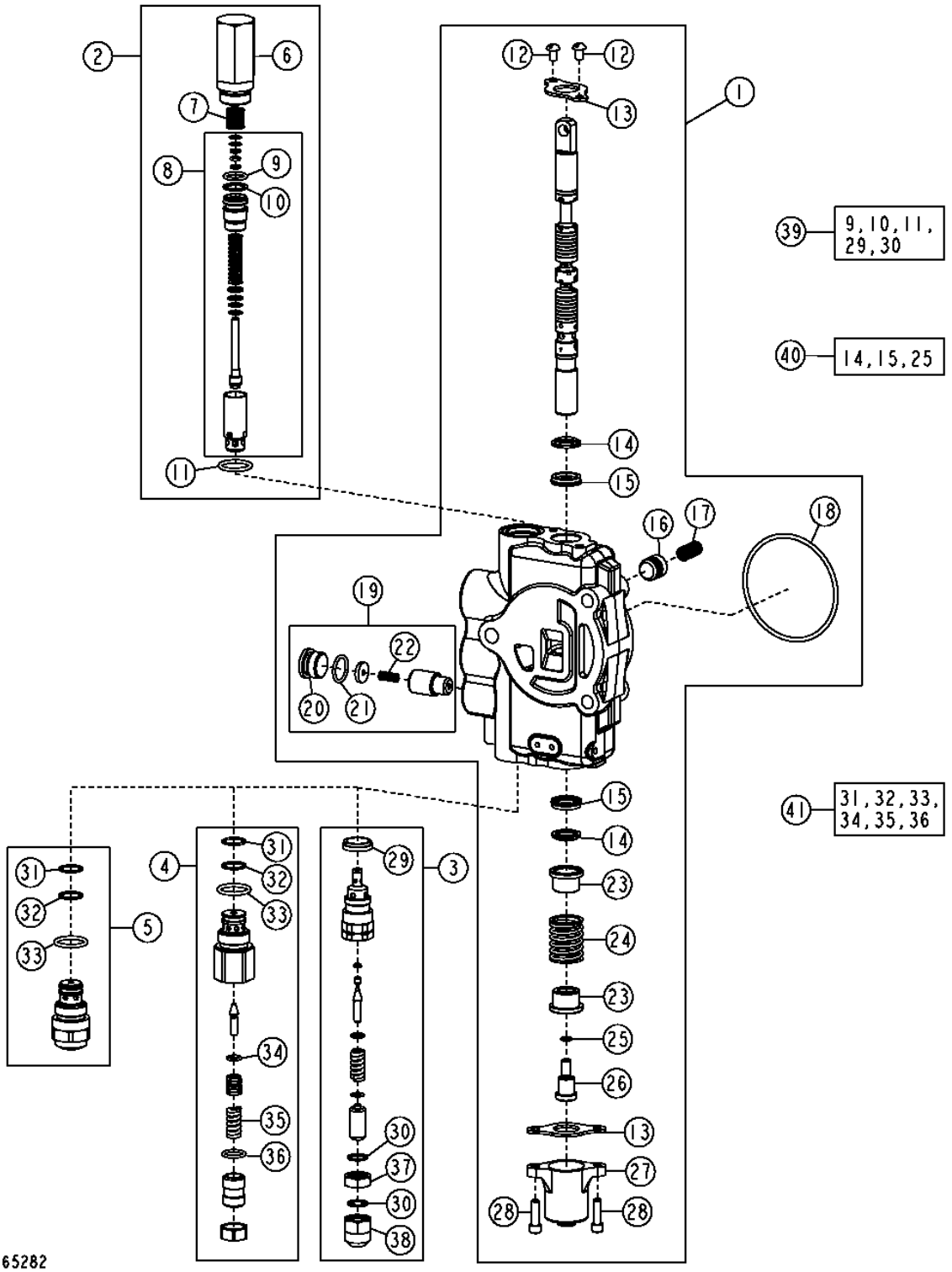

BOOM SECTION
BACKHOE VALVE

KEY	PART NO.	PART NAME	QTY	SERIAL NO.	310G	310SG	315SG	REMARKS
1	AT301789	HYD ACTUATED CONTROL VALVE	1		X			(SUB FOR AT191719)
	AT301783	HYD ACTUATED CONTROL VALVE	1			X	X	(SUB FOR AT191716)
2	AT171403	PRESSURE RELIEF VALVE	1		X	X	X	(2150 PSI)
3	AT174217	PRESSURE RELIEF VALVE	1	-913416	X			(5000 PSI) (7/8" PORT) (NOT ANTI-CAVITATION)
	AT182248	PRESSURE RELIEF VALVE	1	-913416		X	X	(5500 PSI) (7/8" PORT) (NOT ANTI-CAVITATION) (SUB FOR AT174217, THIS APPLICATION)
4	AT300803	PRESSURE RELIEF VALVE	1	913417-	X			(5000 PSI) (1 1/16" PORT) (NOT ANTI-CAVITATION)
	AT301447	PRESSURE RELIEF VALVE	1	913417-		X	X	(5500 PSI) (1 1/16" PORT) (NOT ANTI-CAVITATION)
5	AT301128	PRESSURE RELIEF VALVE	1	913417-	X			(5000 PSI) (1 1/16" PORT) (ANTI-CAVITATION)
	AT301487	PRESSURE RELIEF VALVE	1	913417-		X	X	(5500 PSI) (1 1/16" PORT) (ANTI-CAVITATION)
6	T118866	HOUSING	1		X	X	X	
7	T118867	SPRING	1		X	X	X	
8	AT178363	SEAL KIT	1		X	X	X	
9	.....	O-RING	1		X	X	X	
10	.....	BACK-UP RING	1		X	X	X	
11	T118681	O-RING	1		X	X	X	
12	21H1352	SCREW	2		X	X	X	1/4" X 3/8"
13	T81524	PLATE	2		X	X	X	
14	.....	SEAL	2		X	X	X	
15	.....	SEAL	2		X	X	X	
16	T81538	POPPET	1		X	X	X	
17	T81539	SPRING	1		X	X	X	
18	T118685	O-RING	1		X	X	X	
19	AT178371	SEAL KIT	1		X	X	X	(DRIFT CHECK)
20	T201424	PLUG	1		X	X	X	
21	R26906	O-RING	1		X	X	X	
22	R111238	SPRING	1		X	X	X	
23	T81540	RETAINER	2		X	X	X	
24	T160518	COMPRESSION SPRING	1		X	X	X	
25	R30903	O-RING	1		X	X	X	
26	T160519	SCREW	1		X	X	X	
27	T118808	CAP	1		X	X	X	
28	19H3554	SCREW	2		X	X	X	
29	T183756	SEAL	1		X	X	X	
30	.....	O-RING	2		X	X	X	
31	T107887	O-RING	2		X	X	X	
32	.....	BACK-UP RING	2		X	X	X	
33	T118681	O-RING	2		X	X	X	
34	R63548	O-RING	1		X	X	X	
35	.....	SPRING	1		X	X	X	
36	.....	O-RING	1		X	X	X	
37	T67424	NUT	1		X	X	X	
38	T67425	NUT	1		X	X	X	
39	AT314538	SEAL KIT	1		X	X	X	7/8 INCH RELIEF VALVE SEAL KIT, (SUB FOR AT189413)
	AT314539	SEAL KIT	1		X	X	X	1 1/16 INCH RELIEF VALVE SEAL KIT, (SUB FOR AT189413)
40	AT280406	SEAL KIT	1		X	X	X	(SPOOL SEAL) (SUB FOR AT178372)
41	AT300801	SEAL KIT	1		X	X	X	(SEAL AND SPRING)

BUCKET SECTION
BACKHOE VALVE

T198417 -UN-10MAR04

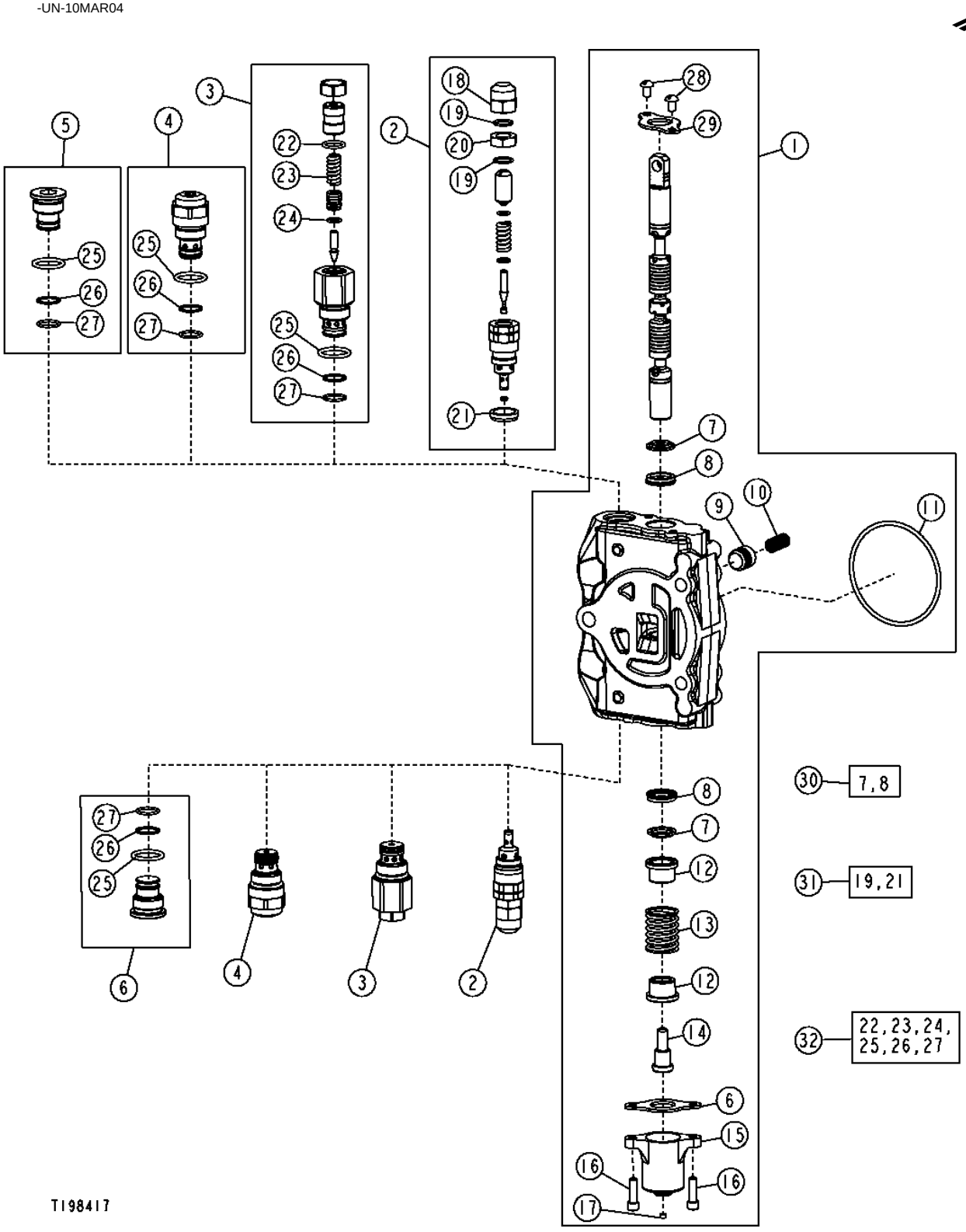

BUCKET SECTION
BACKHOE VALVE

KEY	PART NO.	PART NAME	QTY	SERIAL NO.	310G	310SG	315SG	REMARKS
1	.....	HYD ACTUATED CONTROL VALVE	1	-913416	X			(AT191705 NO LONGER AVAILABLE) (SUB AT301786)
	AT301786	HYD ACTUATED CONTROL VALVE	1	913417-	X			
	.....	HYD ACTUATED CONTROL VALVE	1	-913416		X	X	(AT170232 NO LONGER AVAILABLE) (SUB AT301782)
	AT301782	HYD ACTUATED CONTROL VALVE	1	913417-		X	X	
2	AT172937	PRESSURE RELIEF VALVE	2	-913416	X	X	X	(7/8" PORT) (4600 PSI) (NOT ANTI-CAVITATION)
3	AT301526	PRESSURE RELIEF VALVE	2	913417-925502	X	X	X	(1 1/16" PORT) (4 AND 5 FUNCTION) (4600 PSI) (NOT ANTI-CAVITATION)
	AT301526	PRESSURE RELIEF VALVE	2	913417-	X	X	X	(1 1/16" PORT) (6 AND 7 FUNCTION) (4600 PSI) (NOT ANTI-CAVITATION)
	AT301526	PRESSURE RELIEF VALVE	1	927954-	X	X	X	(1 1/16" PORT) (4 AND 5 FUNCTION) (4600 PSI) (NOT ANTI-CAVITATION)
4	AT301527	PRESSURE RELIEF VALVE	2	913417-925502	X	X	X	(1 1/16" PORT) (4 AND 5 FUNCTION) (4600 PSI) (ANTI-CAVITATION) (SUB FOR AT301127)
	AT301527	PRESSURE RELIEF VALVE	2	913417-	X	X	X	(1 1/16" PORT) (6 AND 7 FUNCTION) (4600 PSI) (ANTI-CAVITATION)
	AT301527	PRESSURE RELIEF VALVE	1	927954-	X	X	X	(1 1/16" PORT) (4 AND 5 FUNCTION) (4600 PSI) (ANTI-CAVITATION)
5	.....	PLUG	1	925503-927953	X	X	X	(4 AND 5 FUNCTION) (SUB AT301526 OR AT301527)
6	AT307332	PLUG	2	925503-	X	X	X	(4 AND 5 FUNCTION)
7	.....	SEAL	2		X	X	X	
8	.....	SEAL	2		X	X	X	
9	T81538	POPPET	1		X	X	X	
10	T81539	SPRING	1		X	X	X	
11	T118685	O-RING	1		X	X	X	
12	T81540	RETAINER	2		X	X	X	
13	T160518	COMPRESSION SPRING	1		X	X	X	
14	T81541	SCREW	1		X	X	X	
15	T118808	CAP	1		X	X	X	
16	19H3554	SCREW	2		X	X	X	1/4" X 0.880"
17	T118799	FILTER	1	-906011	X	X	X	
18	T67425	NUT	1		X	X	X	
19	.....	O-RING	2		X	X	X	
20	T67424	NUT	2		X	X	X	
21	T183756	SEAL	1		X	X	X	
22	.....	O-RING	2		X	X	X	
23	.....	SPRING	2		X	X	X	
24	R63548	O-RING	2		X	X	X	
25	T118681	O-RING	4		X	X	X	
26	.....	BACK-UP RING	4		X	X	X	
27	T107887	O-RING	4		X	X	X	
28	21H1352	SCREW	2		X	X	X	1/4" X 3/8"
29	T81524	PLATE	2		X	X	X	
30	AT280406	SEAL KIT	1		X	X	X	(SPOOL SEAL) (SUB FOR AT178372)
31	AT314538	SEAL KIT	1		X	X	X	(7/8 INCH RELIEF VALVE SEAL) (SUB FOR AT189413)
	AT314539	SEAL KIT	1		X	X	X	1 1/16 INCH RELIEF VALVE SEAL KIT, (SUB FOR AT189413)
32	AT300801	SEAL KIT	1		X	X	X	

CROWD SECTION
BACKHOE VALVE

T165495 -UN-19FEB03

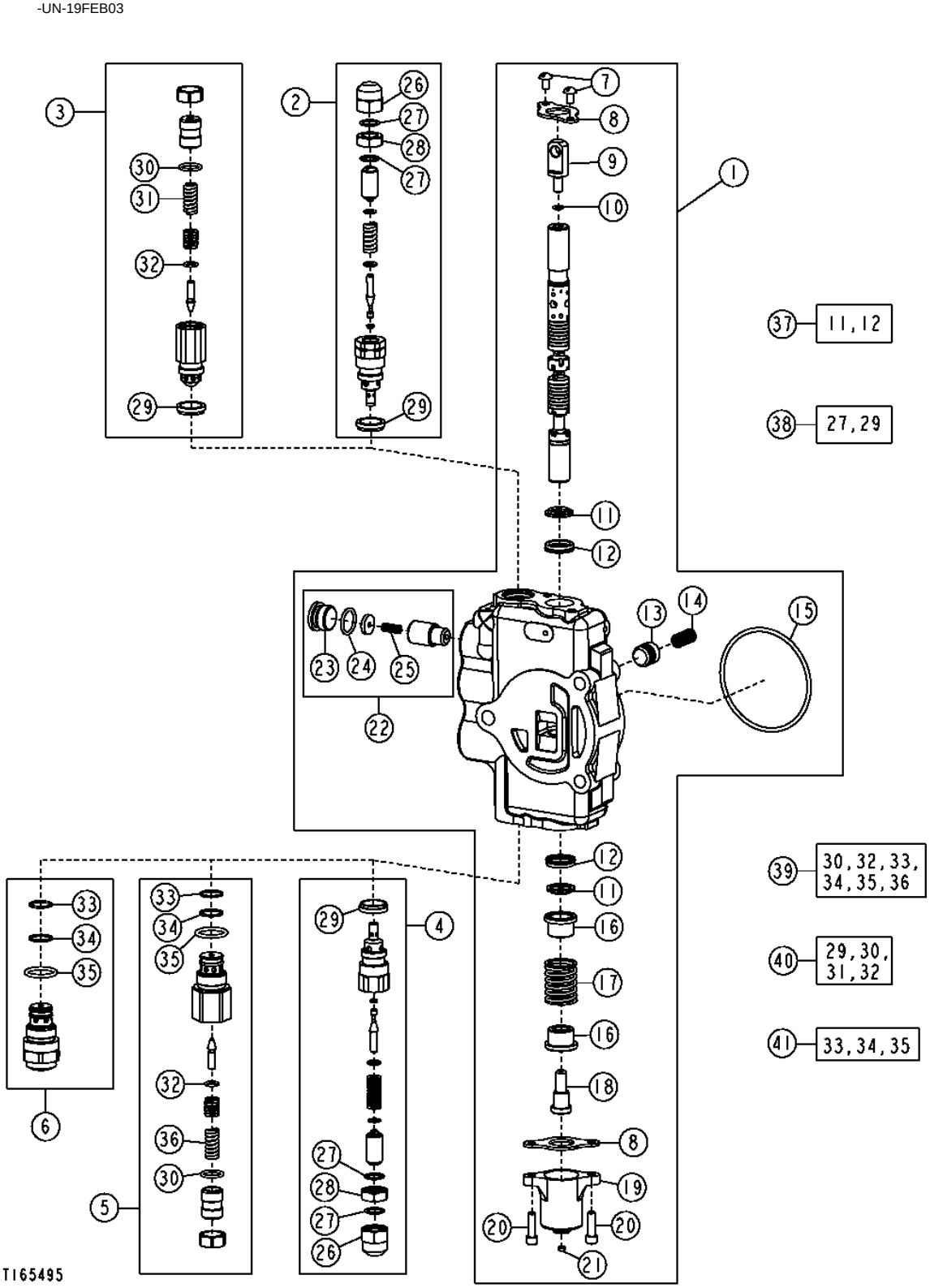

CROWD SECTION
BACKHOE VALVE

KEY	PART NO.	PART NAME	QTY	SERIAL NO.	310G	310SG	315SG	REMARKS
1	AT301788	VALVE SPOOL	1		X			(4 FUNCTION)AND(5 FUNCTION WITH SELECTIVE FLOW AND/OR L.H. MANUAL AUXILIARY) (SUB FOR AT191713)
	AT301776	VALVE SPOOL	1			X	X	(4 FUNCTION) (SUB FOR AT191718)
	AT301787	VALVE SPOOL	1		X			(5,6 AND 7 FUNCTION WITH EXT. DIPPERSTICK OR R.H. MANUAL AUXILIARY) (SUB FOR AT191706)
	AT301784	VALVE SPOOL	1			X	X	(5,6 AND 7 FUNCTION) (SUB FOR AT191717)
2	AT171404	PRESSURE RELIEF VALVE	1	-913416	X	X	X	(4750 PSI) (7/8" PORT)
	AT171404	PRESSURE RELIEF VALVE	1	915641-	X	X	X	(4750 PSI) (7/8" PORT)
3	AT302113	PRESSURE RELIEF VALVE	1	913417-915640	X	X	X	(4750 PSI) (7/8" PORT) (NOT ANTI-CAVITATION)
4	AT171405	PRESSURE RELIEF VALVE	1	-913416	X	X	X	(3800 PSI) (7/8" PORT)
5	.....	PRESSURE RELIEF VALVE	1	913417-915640	X	X	X	(3800 PSI) (1 1/16" PORT) (NOT ANTI-CAVITATION) (AT301750 NO LONGER AVAILABLE, SUB AT303954)
	AT303954	PRESSURE RELIEF VALVE	1	915641-	X	X	X	(3800 PSI) (1 1/16" PORT) (NOT ANTI-CAVITATION)
6	AT301751	PRESSURE RELIEF VALVE	1	913417-	X	X	X	(3800 PSI) (1 1/16" PORT) (ANTI-CAVITATION)
7	21H1352	SCREW	2		X	X	X	1/4" X 3/8"
8	T81524	PLATE	2		X	X	X	
9	T160702	END	1		X	X	X	
10	R30903	O-RING	1		X	X	X	
11	.....	SEAL	2		X	X	X	
12	.....	SEAL	2		X	X	X	
13	T152406	POPPET	1		X	X	X	(4 FUNCTION)
	T81538	POPPET	1		X	X	X	
14	T152407	SPRING	1		X	X	X	(4 FUNCTION)
	T81539	SPRING	1		X	X	X	
15	T118685	O-RING	1		X	X	X	
16	T81540	RETAINER	2		X	X	X	
17	T160518	COMPRESSION SPRING	1		X	X	X	
18	T81541	SCREW	1		X	X	X	
19	T118808	CAP	1		X	X	X	
20	19H3554	SCREW	2		X	X	X	1/4" X 0.880"
21	T118799	FILTER	1	-906011	X	X	X	
22	AT194687	KIT	1		X	X	X	(DRIFT CHECK) (SUB FOR AT178371, THIS APPLICATION)
23	T201424	PLUG	1		X	X	X	
24	R26906	O-RING	1		X	X	X	
25	R111238	SPRING	1		X	X	X	
26	T67425	NUT	2		X	X	X	
27	.....	O-RING	4		X	X	X	
28	T67424	NUT	2		X	X	X	
29	T183756	SEAL	3		X	X	X	
30	.....	O-RING	2		X	X	X	
31	.....	SPRING	1		X	X	X	
32	R63548	O-RING	2		X	X	X	
33	T107887	O-RING	2		X	X	X	
34	.....	BACK-UP RING	2		X	X	X	
35	T118681	O-RING	2		X	X	X	
36	.....	SPRING	1		X	X	X	
37	AT280406	SEAL KIT	1		X	X	X	(SPOOL SEAL) (SUB FOR AT178372)
38	AT314538	SEAL KIT	1		X	X	X	(7/8 INCH RELIEF VALVE SEAL) (SUB FOR AT189413)
	AT314539	SEAL KIT	1		X	X	X	1 1/16 INCH RELIEF VALVE SEAL KIT, (SUB FOR AT189413)
39	AT301749	SEAL KIT	1	913417-915640	X	X	X	(USE WITH AT301750)
	AT300801	SEAL KIT	1	915641-	X	X	X	(USE WITH AT303954)
40	AT302108	SEAL KIT	1		X	X	X	
41	AT301749	SEAL KIT	1		X	X	X	

SWING SECTION
BACKHOE VALVE

TP69627 -UN-02OCT00

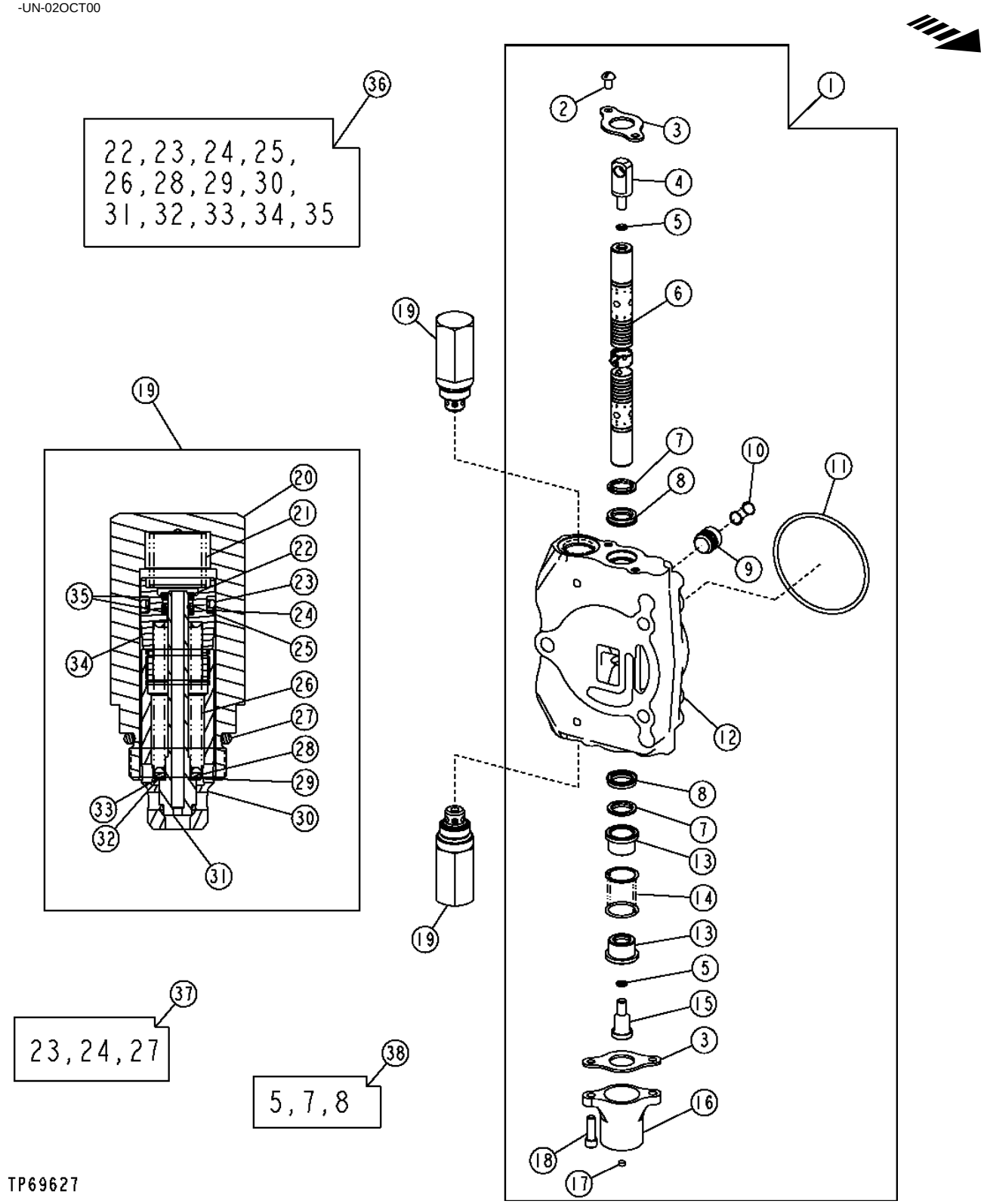

SWING SECTION
BACKHOE VALVE

KEY	PART NO.	PART NAME	QTY	SERIAL NO.	310G	310SG	315SG	REMARKS
1	AT191709	VALVE SPOOL	1		X			(4,5 AND 6 FUNCTION)
	AT191708	VALVE SPOOL	1		X			(6 AND 7 FUNCTION WITH MANUAL AUXILIARY)
	AT170221	VALVE SPOOL	1			X	X	(4,5 AND 6 FUNCTION)
	AT179109	SPOOL VALVE	1			X		(6 AND 7 FUNCTION WITH MANUAL AUXILIARY)
2	21H1352	SCREW	2		X	X	X	1/4" X 3/8"
3	T81524	PLATE	2		X	X	X	
4	T160702	END	1		X	X	X	
5	R30903	O-RING	2		X	X	X	
6	.....	SPOOL VALVE	1		X	X	X	
7	.....	SEAL	2		X	X	X	
8	.....	SEAL	2		X	X	X	
9	T81539	SPRING	1		X	X	X	
10	T118685	O-RING	1		X	X	X	
11	T81538	POPPET	1		X	X	X	
12	.....	HOUSING	1		X	X	X	
13	T81540	RETAINER	2		X	X	X	
14	T160518	COMPRESSION SPRING	1		X	X	X	
15	T160519	SCREW	1		X	X	X	
16	T118808	CAP	1		X	X	X	
17	T118799	FILTER	1	-906011	X	X	X	
18	19H3554	SCREW	2		X	X	X	1/4" X 0.880"
19	AT182377	PRESSURE RELIEF VALVE	2		X	X	X	(3800 PSI)
20	T118866	HOUSING	1		X	X	X	
21	T118867	SPRING	1		X	X	X	
22	.....	SNAP RING	1		X	X	X	
23	.....	O-RING	1		X	X	X	
24	.....	BACK-UP RING	1		X	X	X	
25	.....	O-RING	1		X	X	X	
26	.....	SPRING	1		X	X	X	
27	T118681	O-RING	1		X	X	X	
28	.....	WASHER	1		X	X	X	
29	.....	WASHER	1		X	X	X	
30	.....	SLEEVE	1		X	X	X	
31	.....	POPPET	1		X	X	X	
32	.....	WASHER	1		X	X	X	
33	.....	WASHER	1		X	X	X	
34	.....	SCREW	1		X	X	X	
35	.....	BACK-UP RING	1		X	X	X	
36	AT178362	SEAL KIT	1		X	X	X	(RELIEF VALVE)
37	AT314538	SEAL KIT	1		X	X	X	7/8 INCH RELIEF VALVE SEAL KIT, (SUB FOR AT189413)
	AT314539	SEAL KIT	1		X	X	X	1 1/16 INCH RELIEF VALVE SEAL KIT, (SUB FOR AT189413)
38	AT280406	SEAL KIT	1		X	X	X	(SPOOL SEAL) (SUB FOR AT178372)

EXTENDIBLE SECTION
BACKHOE VALVE

TP69638 -UN-02OCT00

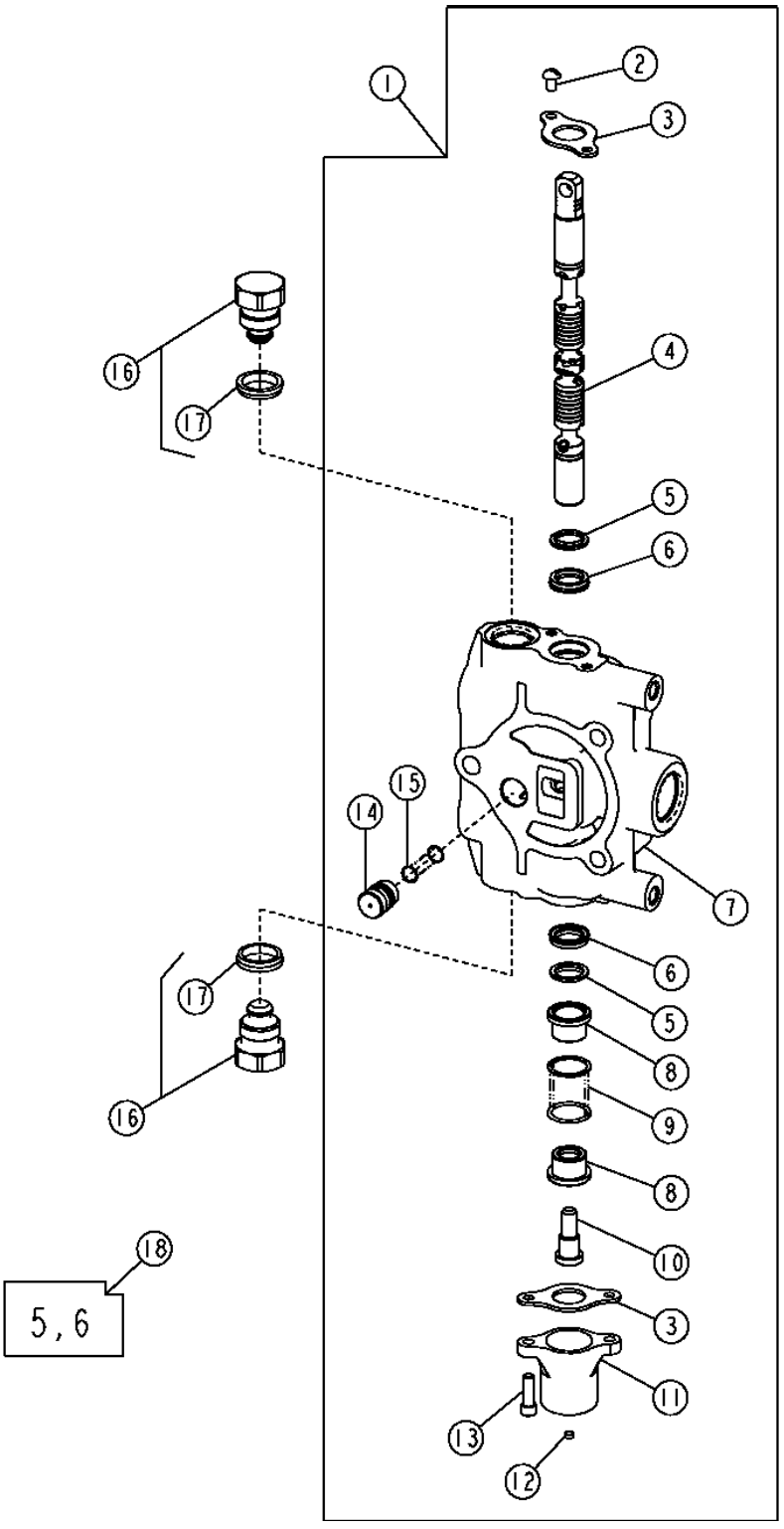

EXTENDIBLE SECTION
BACKHOE VALVE

KEY	PART NO.	PART NAME	QTY	SERIAL NO.	310G	310SG	315SG	REMARKS
1	AT191712	VALVE SPOOL	1		X			(5,6 AND 7 FUNCTION)
	AT191704	VALVE SPOOL	1			X	X	(5,6 AND 7 FUNCTION)
2	21H1352	SCREW	2		X	X	X	1/4" X 3/8"
3	T81524	PLATE	2		X	X	X	
4	.....	SPOOL VALVE	1		X	X	X	
5	.....	SEAL	2		X	X	X	
6	.....	SEAL	2		X	X	X	
7	.....	HOUSING	1		X	X	X	
8	T81540	RETAINER	2		X	X	X	
9	T160518	COMPRESSION SPRING	1		X	X	X	
10	T81541	SCREW	1		X	X	X	
11	T118808	CAP	1		X	X	X	
12	T118799	FILTER	1	-906011	X	X	X	
13	19H3554	SCREW	2		X	X	X	1/4" X 0.880"
14	T152406	POPPET	1		X	X	X	
15	T152407	SPRING	1		X	X	X	
16	AT83174	PLUG	2		X	X	X	
17	T183757	SEAL	1		X	X	X	
18	AT280406	SEAL KIT	1		X	X	X	(SPOOL SEAL) (SUB FOR AT178372)

SELECTIVE FLOW SECTION
BACKHOE VALVE

T165707 -UN-20FEB03

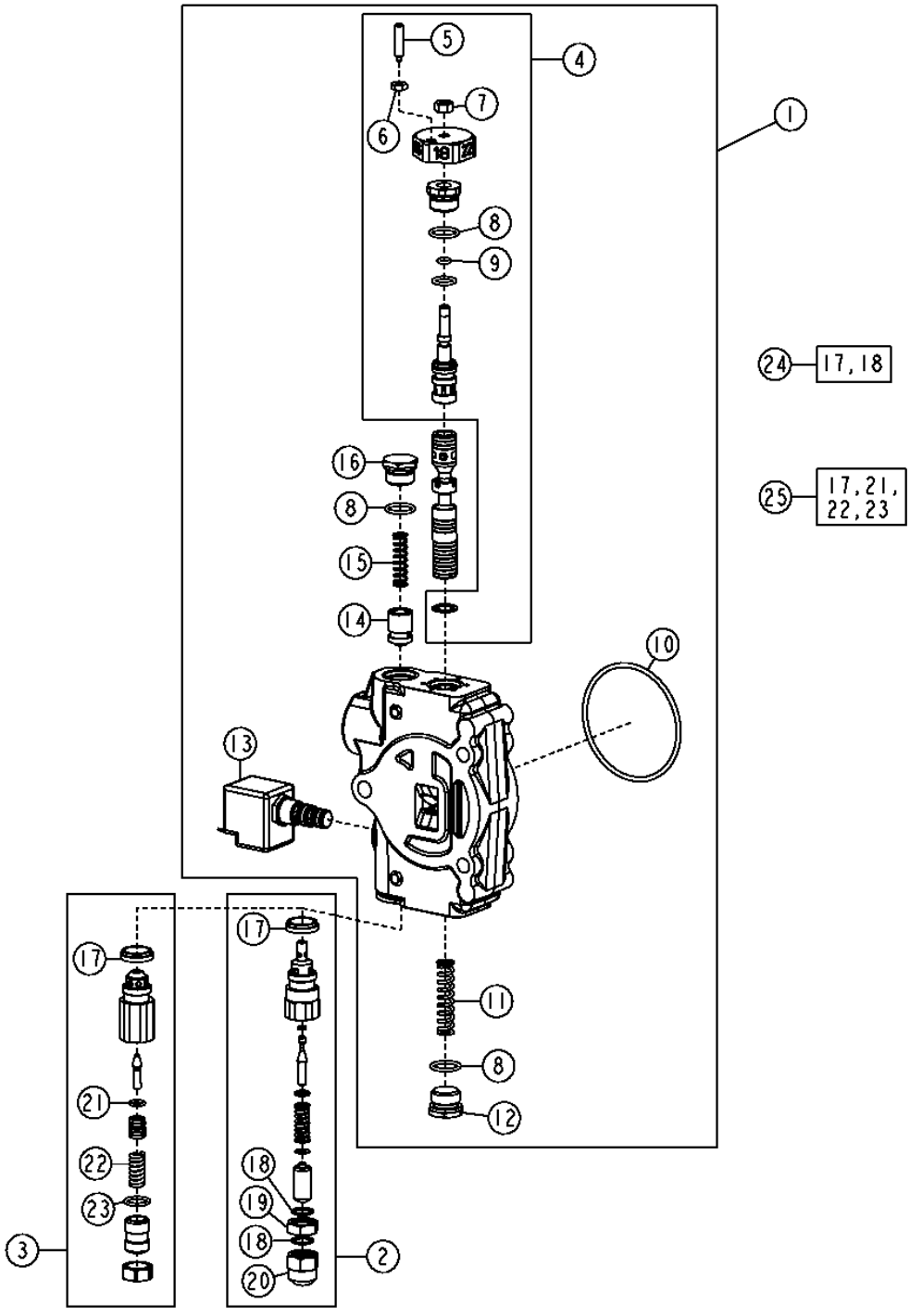

SELECTIVE FLOW SECTION
BACKHOE VALVE

KEY	PART NO.	PART NAME	QTY	SERIAL NO.	310G	310SG	315SG	REMARKS
1	AT192384	VALVE SPOOL	1		X	X	X	
2	AT190234	PRESSURE RELIEF VALVE	1	-913416	X	X	X	(2900 PSI)
	AT190234	PRESSURE RELIEF VALVE	1	915641-	X	X	X	(2900 PSI)
3	AT301748	PRESSURE RELIEF VALVE	1	913417-915640	X	X	X	(2900 PSI)
4	AT192385	HAND OPERATED VALVE	1		X	X	X	(FLOW ADJUSTMENT)
5	T160663	PLUNGER	1		X	X	X	
6	14H786	NUT	1		X	X	X	1/4"
7	14H785	NUT	1		X	X	X	5/16"
8	R26906	O-RING	3		X	X	X	
9	R10093	O-RING	1		X	X	X	
10	T118685	O-RING	1		X	X	X	
11	T184356	SPRING	1		X	X	X	
12	T76502	FITTING	1		X	X	X	
13	AT174923	HYD ACTUATED CONTROL VALVE	1		X	X	X	
	AT178475	SEAL KIT	1		X	X	X	(SOLENOID VALVE)
14	T184271	POPPET	1		X	X	X	
15	T160520	SPRING	1		X	X	X	
16	T160613	PLUG	1		X	X	X	
17	T183756	SEAL	1		X	X	X	
18	.....	O-RING	2		X	X	X	
19	T67424	NUT	1		X	X	X	
20	T67425	NUT	1		X	X	X	
21	R63548	O-RING	1		X	X	X	
22	.....	SPRING	1		X	X	X	
23	.....	O-RING	1		X	X	X	
24	AT314538	SEAL KIT	1		X	X	X	7/8 INCH RELIEF VALVE SEAL KIT, (SUB FOR AT189413)
	AT314539	SEAL KIT	1		X	X	X	1 1/16 INCH RELIEF VALVE SEAL KIT, (SUB FOR AT189413)
25	AT301227	SEAL KIT	1		X	X	X	(RELIEF VALVE SEAL AND SPRING)

AUXILIARY SECTION
BACKHOE VALVE

TP69638 -UN-02OCT00

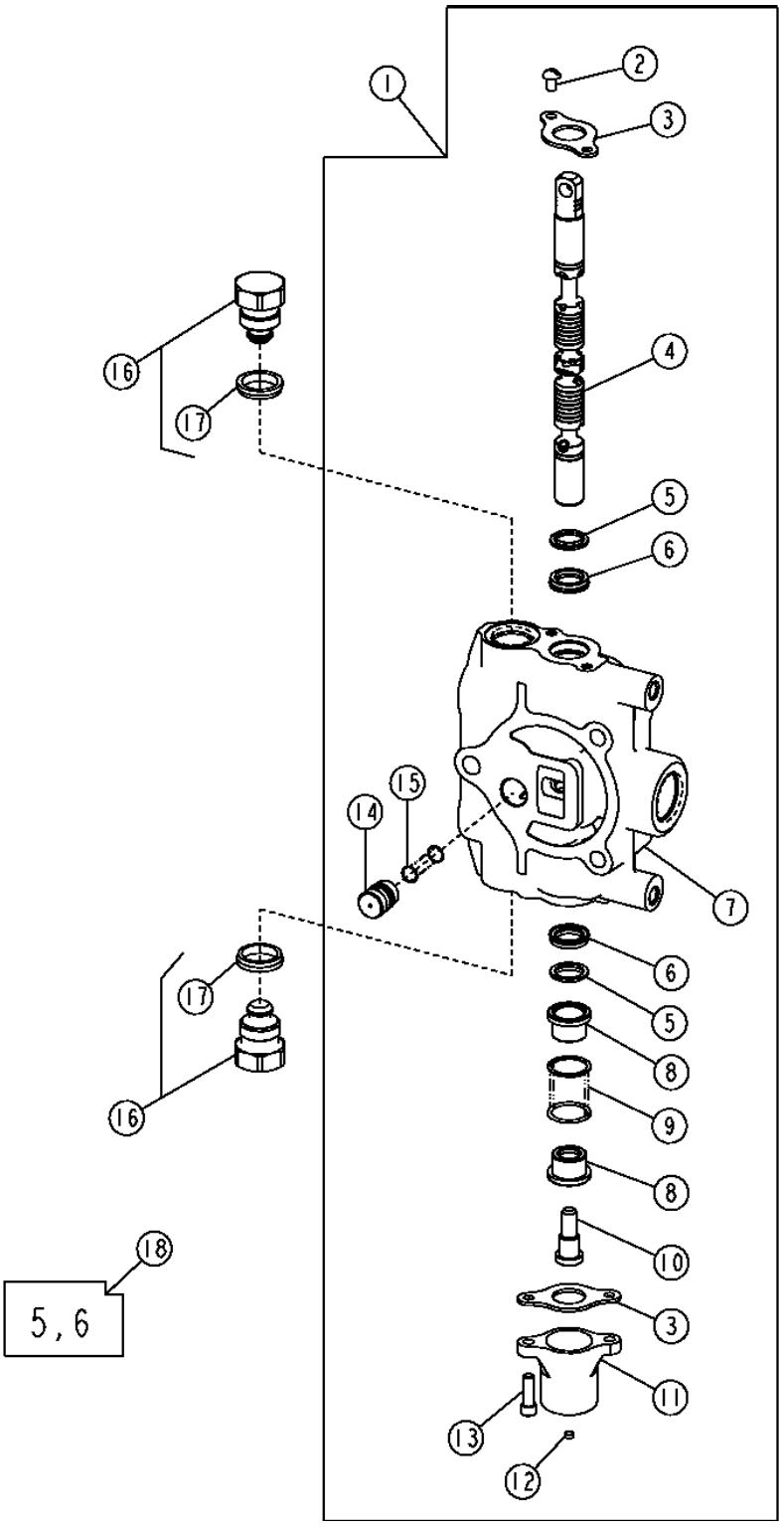

AUXILIARY SECTION
BACKHOE VALVE

KEY	PART NO.	PART NAME	QTY	SERIAL NO.	310G	310SG	315SG	REMARKS
1	AT191710	SPOOL VALVE	1		X			
	AT189168	SPOOL VALVE	1			X		
2	21H1352	SCREW	2		X	X		1/4" X 3/8"
3	T81524	PLATE	2		X	X		
4	.....	SPOOL VALVE	1		X	X		
5	.....	SEAL	2		X	X		
6	.....	SEAL	2		X	X		
7	.....	HOUSING	1		X	X		
8	T81540	RETAINER	2		X	X		
9	T160518	COMPRESSION SPRING	1		X	X		
10	T81541	SCREW	1		X	X		
11	T118808	CAP	1		X	X		
12	T118799	FILTER	1	-906011	X	X		
13	19H3554	SCREW	2		X	X		1/4" X 0.880"
14	T152406	POPPET	1		X	X		
15	T152407	SPRING	1		X	X		
16	AT83174	PLUG	2		X	X		
17	T183757	SEAL	1		X	X		
18	R26906	O-RING	2		X	X		
19	R27175	PLUG	2		X	X		(SUB FOR R27474)
20	AT280406	SEAL KIT	1		X	X		(SPOOL SEAL) (SUB FOR AT178372)

FIFTH FUNCTION MANUAL VALVE KIT
(310G)

TP52860 -UN-22NOV96

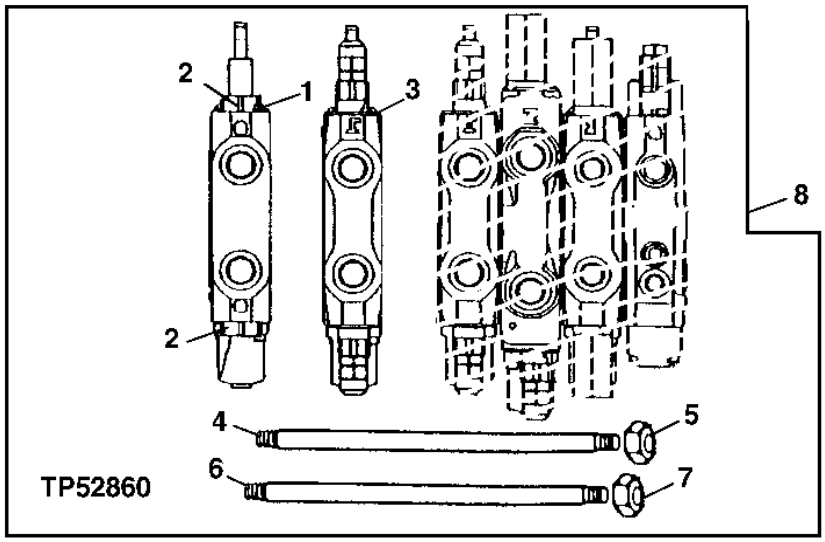

KEY	PART NO.	PART NAME	QTY	SERIAL NO.	310G	310SG	315SG	REMARKS
1	AT191712	VALVE	1		X			(EXTENDIBLE DIPPERSTICK VALVE SECTION) (COMPONENTS ON ANOTHER PAGE)
2	AT83174	PLUG	2		X			
	T183757	SEAL	2		X			
3	.....	VALVE	1		X			(CROWD VALVE SECTION) (COMPONENTS ON ANOTHER PAGE)
4	T118695	STUD	2		X			7/16" X 13-1/4"
5	14H807	NUT	4		X			7/16"
6	T140699	STUD	1		X			1/2" X 13-1/4"
7	14H865	NUT	2		X			1/2"
8	**AT192247**	**KIT**	**1**		**X**			**(WHOLE GOODS) (INCLUDES AT186297)**

FIFTH FUNCTION MANUAL VALVE KIT
(310SG AND 315SG)

TP52860 -UN-22NOV96

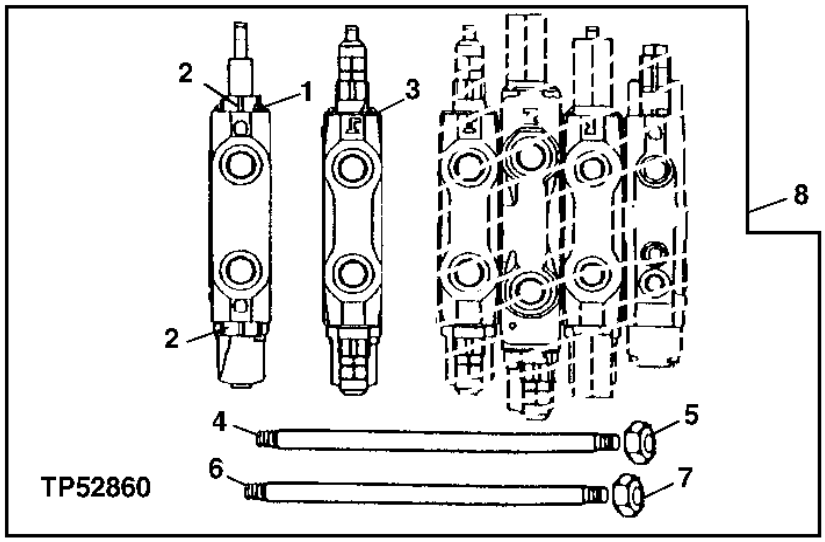

KEY	PART NO.	PART NAME	QTY	SERIAL NO.	310G	315SG	REMARKS
1	AT191704	HYD ACTUATED CONTROL VALVE	1		X	X	(EXTENDIBLE DIPPERSTICK VALVE SECTION) (COMPONENTS ON ANOTHER PAGE)
2	AT83174	PLUG	2		X	X	
	T183757	SEAL	2		X	X	
3	.....	VALVE	1		X	X	(CROWD VALVE SECTION) (COMPONENTS ON ANOTHER PAGE) (AT191717 NO LONGER AVAILABLE) (SUB AT301784)
4	T118695	STUD	2		X	X	7/16" X 13-1/4"
5	14H807	NUT	4		X	X	7/16"
6	T140699	STUD	1		X	X	1/2" X 13-1/4"
7	14H865	NUT	2		X	X	1/2"
8	**AT192189**	**KIT**	**1**		**X**	**X**	**(WHOLE GOODS) (INCLUDES AT186297 AND AT191037)**

SIXTH FUNCTION MANUAL AND PILOT CONTROL KITS (310G)

TP52862 -UN-22NOV96

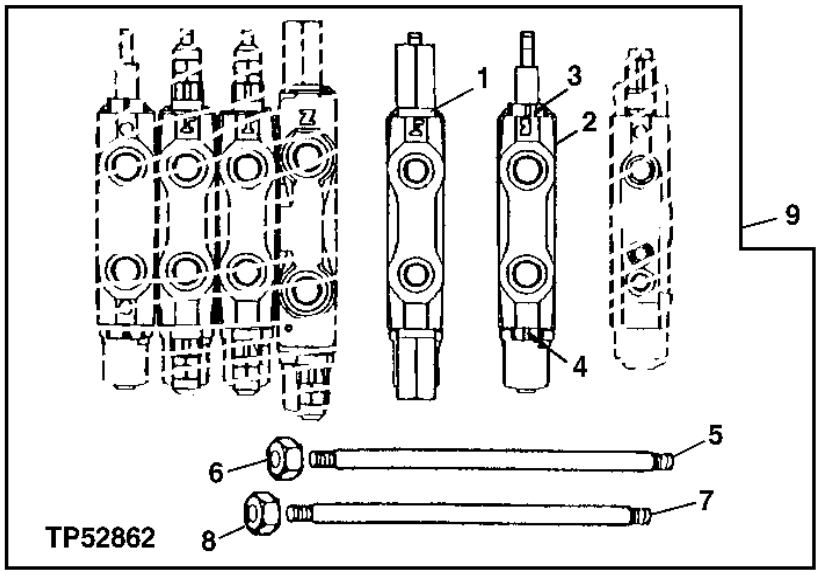

KEY	PART NO.	PART NAME	QTY	SERIAL NO.	310G	310SG	315SG	REMARKS
1	AT191708	HYD ACTUATED CONTROL VALVE	1		X			(SWING) MANUAL CONTROLS
	AT323398	HYD ACTUATED CONTROL VALVE	1		X			(SWING) PILOT CONTROLS
2	AT191710	VALVE	1		X			(AUXILIARY)
3	AT83174	PLUG	3		X			
	T183757	SEAL	1		X			
4	AT83174	PLUG	1		X			
5	T118695	STUD	2		X			(USED WHEN ADDING TO 4-FUNCTION VALVE)
	T118697	STUD	2		X			(USED WHEN ADDING TO 5-FUNCTION VALVE)
6	14H807	NUT	4		X			7/16"
7	T140699	STUD	1		X			(USED WHEN ADDING TO 4-FUNCTION VALVE)
	T140700	STUD	1		X			(USED WHEN ADDING TO 5-FUNCTION VALVE)
8	14H865	NUT	2		X			1/2"
9	**AT192334**	**KIT**	**1**		**X**			**(WHOLE GOODS) (INCLUDES AT186297)**
	AT320497	**KIT**	**1**		**X**			**(WHOLE GOODS) (FOR PILOT APPLICATION)**

SIXTH FUNCTION MANUAL AND PILOT CONTROL KIT (310SG AND 315SG)

TP52863 -UN-22NOV96

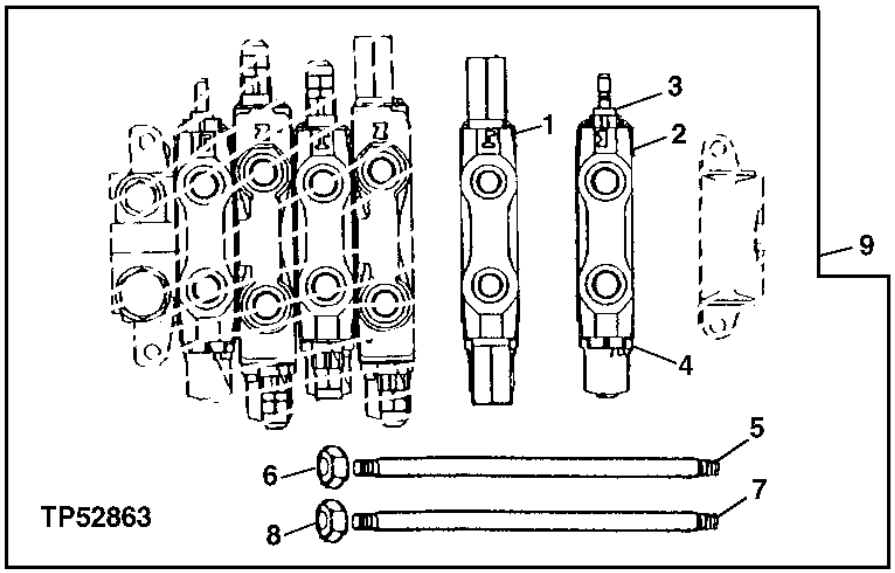

KEY	PART NO.	PART NAME	QTY	SERIAL NO.	310G	310SG	315SG	REMARKS
1	AT179109	SPOOL VALVE	1			X	X	(MANUAL SWING CONTROL)
	AT300805	SPOOL VALVE	1			X	X	(PILOT SWING CONTROL)
2	AT189168	VALVE	1			X	X	(AUXILIARY)
3	AT83174	PLUG	1			X	X	
4	AT83174	PLUG	1			X	X	
	T183757	SEAL	1			X	X	
5	T118695	STUD	2			X	X	(USED WHEN ADDING TO THE 4-FUNCTION VALVE)
	T118697	STUD	2			X	X	(USED WHEN ADDING TO THE 5-FUNCTION VALVE)
6	14H807	NUT	4			X	X	7/16"
7	T140699	STUD	1			X	X	(USED WHEN ADDING TO THE 4-FUNCTION VALVE)
	T140700	STUD	1			X	X	(USED WHEN ADDING TO THE 5-FUNCTION VALVE)
8	14H865	NUT	2			X	X	1/2"
9	AT192239	KIT	1			X	X	(WHOLE GOODS) (MANUAL CONTROL) (INCLUDES AT186297)
	AT307664	KIT	1			X	X	(WHOLE GOODS) (PILOT CONTROL)

HYDRAULIC REMOTE KIT

T143055 -UN-19JUN01

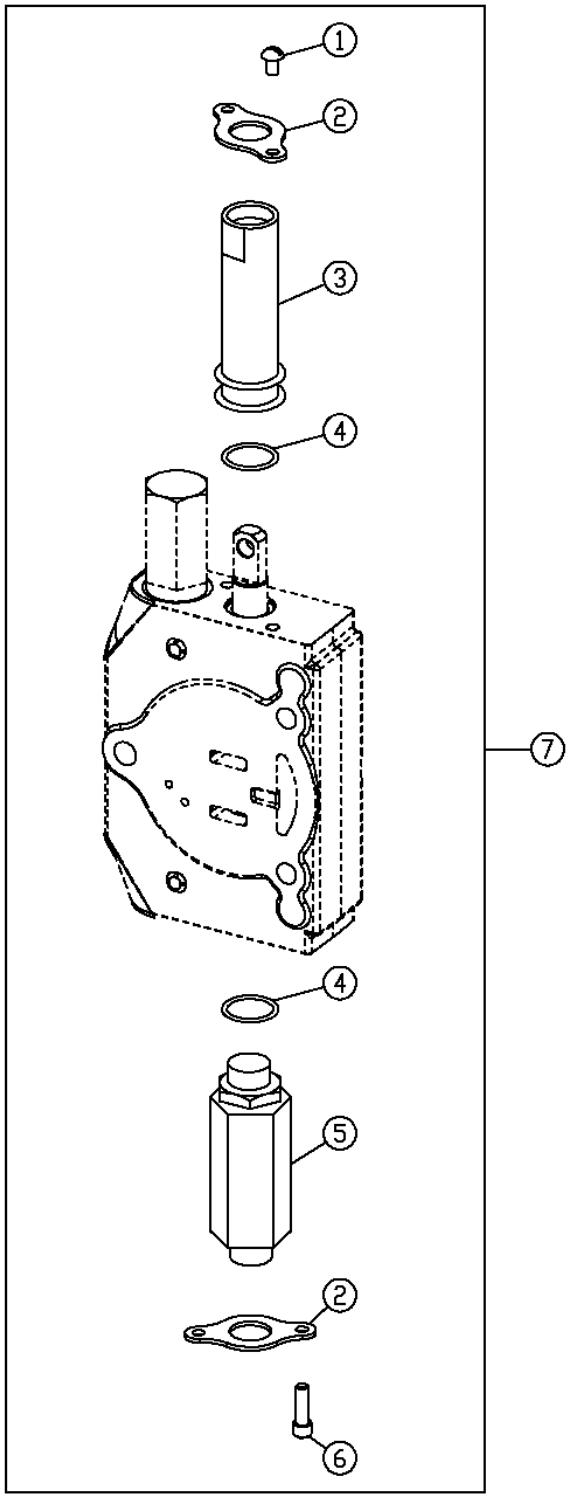

T143055

HYDRAULIC REMOTE KIT

KEY	PART NO.	PART NAME	QTY	SERIAL NO.	310G	310SG	315SG	REMARKS
1	.....	SCREW	2		X	X	X	
2	.....	PLATE	2		X	X	X	
3	.....	SLEEVE	1		X	X	X	
4	U15192	O-RING	2		X	X	X	
5	.....	HOUSING	1		X	X	X	
6	.....	SCREW	2		X	X	X	
7	AT181856	KIT	1		X	X	X	(REQUIRES ADDITIONAL CUSTOM COMPONENTS)

ACCU-SWING VALVE

T201568 -UN-07JUL04

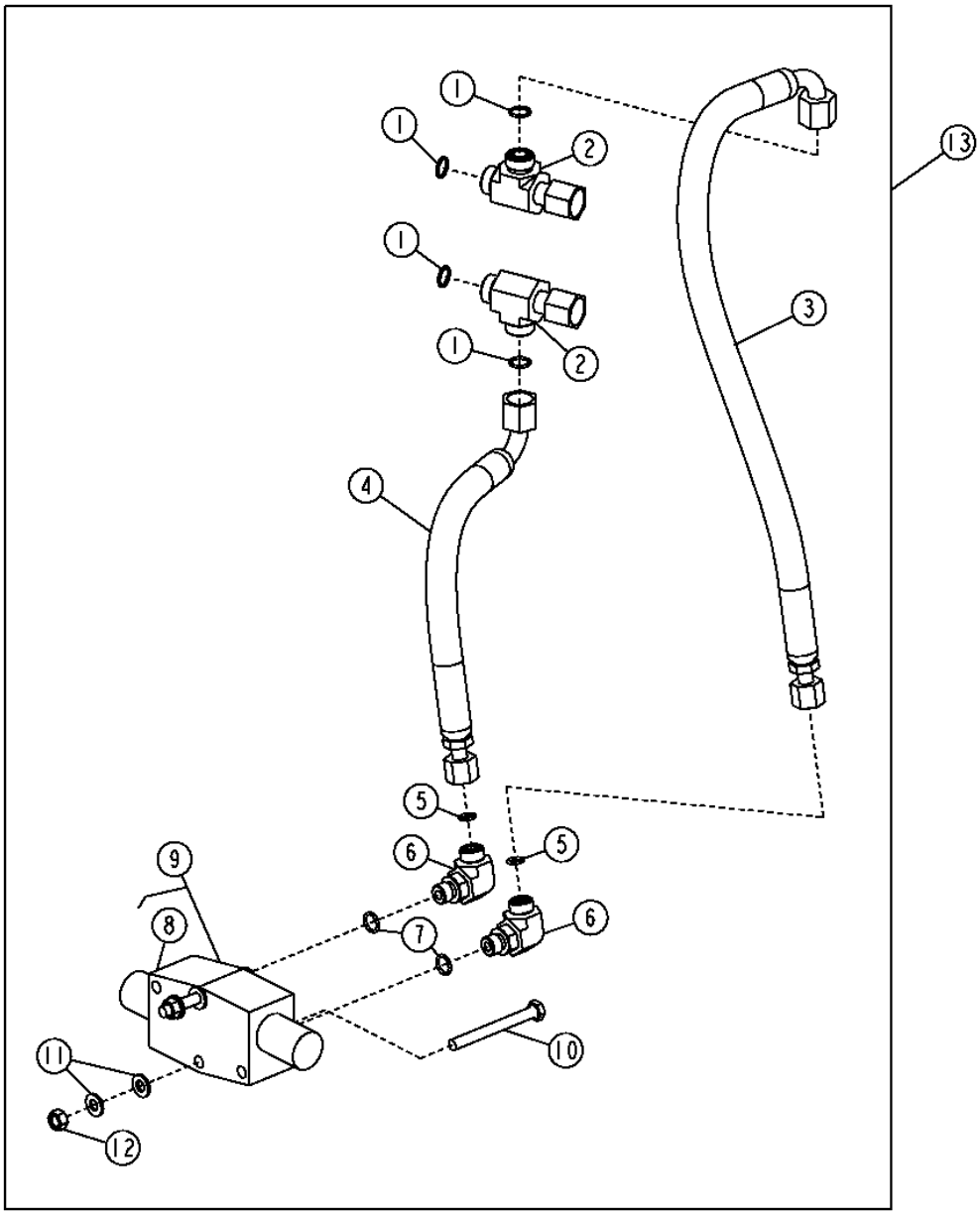

T201568

5G12

ACCU-SWING VALVE

KEY	PART NO.	PART NAME	QTY	SERIAL NO.	310G	310SG	315SG	REMARKS
1	T77857	O-RING	4		X	X		
2	38H1031	TEE FITTING	2		X	X		
3	AT312919	HYDRAULIC HOSE	1		X	X		9/16" X 552 MM (21-3/4") X 9/16"
4	AT312918	HYDRAULIC HOSE	1		X	X		9/16" X 386 MM (15-1/4") X 9/16"
5	T77613	O-RING	2		X	X		
6	38H1004	ELBOW FITTING	2		X	X		
7	R26448	O-RING	2		X	X		
8	AT314127	SEAL KIT	1		X	X		
9	AT312944	VALVE	1		X	X		
10	19M7663	CAP SCREW	2		X	X		M8 X 70
11	24M7238	WASHER	4		X	X		8.700 X 17 X 2 MM
12	14M7273	NUT	2		X	X		M8
13	**AT312949**	**KIT**	**1**		**X**	**X**		**(INCLUDES AT312918 AND AT312919)**

LOCKING CONTROL VALVE (315SG)

TP40413 -UN-01JAN94

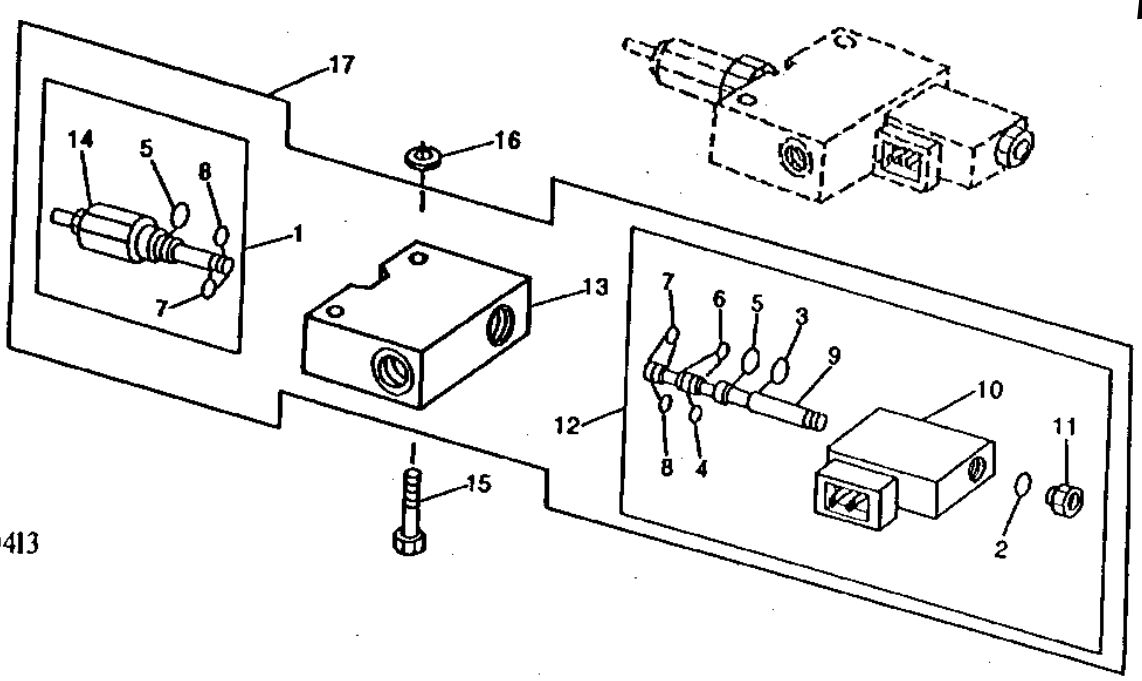

KEY	PART NO.	PART NAME	QTY	SERIAL NO.	310G	315SG	REMARKS
1	AT183592	PRESSURE RELIEF VALVE	1			X	
2	R26375	O-RING	1			X	
3	P50883	RING	1			X	
4	R33259	O-RING	1			X	
5	R26906	O-RING	2			X	
6	T101764	BACK-UP RING	2			X	
7	T101763	SHIM	4			X	
8	R28776	O-RING	3			X	
9	.....	SPOOL VALVE	1			X	
10	.....	HOUSING	1			X	
11	.....	FITTING	1			X	
12	.....	SOLENOID VALVE	1			X	(12-VOLT)
13	.....	HOUSING	1			X	
14	.....	RELIEF VALVE	1			X	
15	19M7529	CAP SCREW	2			X	M6 X 55
16	24M7293	WASHER	2			X	
17	AT183556	SOLENOID HYDRAULIC VALVE	1			X	

PILOT CONTROL MANIFOLD (SPAM VALVE)

T198598 -UN-22MAR04

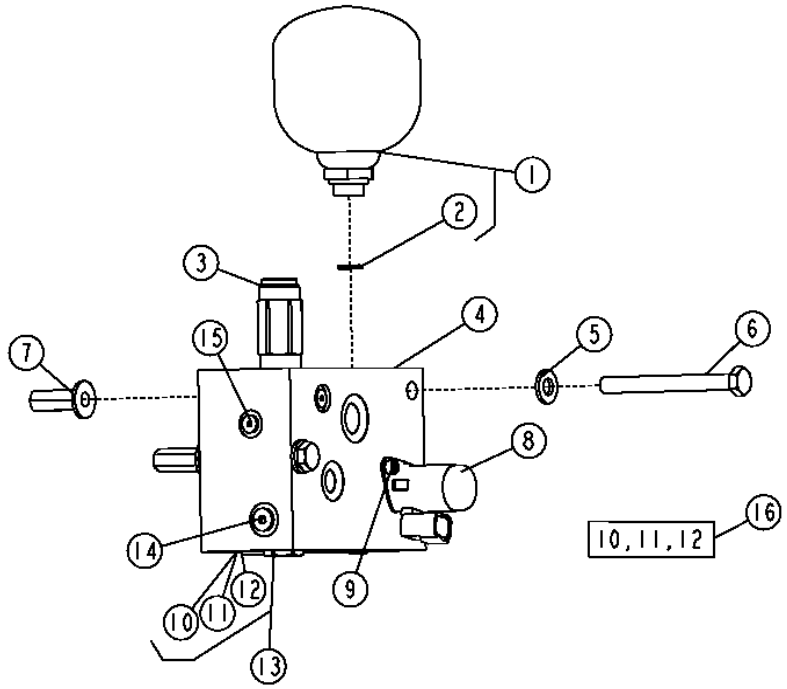

KEY	PART NO.	PART NAME	QTY	SERIAL NO.	310G	315SG	REMARKS
1	AT195957	PNEUMATIC ACCUMULATOR	1		X	X	
2	R26448	O-RING	1		X	X	
3	AT313708	HYDRAULIC PRESSURE VALVE	1		X	X	(SUB FOR AT300230)
4	.....	FLOW CONTROL HYD. VALVE	1	-943092	X	X	(AT197769 NO LONGER AVAILABLE) (INCLUDES AT224570, AT300230, AT49216, KV25678 AND (6) T105368)
	AT306550	FLOW CONTROL HYD. VALVE	1	943093-	X	X	(SUB AT306550) (ALSO ORDER AT187669 AND AT317350) (INCLUDES AT224570, AT313708, AT49216, KV25678, 0344046 AND (6) T105368)
5	24M7239	WASHER	2		X	X	
6	19M8093	CAP SCREW	2		X	X	M10 X 100
7	T148410	NUT	2		X	X	M10
8	KV25678	SOLENOID VALVE	1		X	X	(SUB FOR AT300254)
9	0344046	BOLT	2		X	X	(SUB FOR AT121123)
10	.....	BACK-UP RING	1		X	X	
11	.....	O-RING	1		X	X	
12	.....	O-RING	1		X	X	
13	AT224570	CHECK VALVE	1		X	X	(MARKED CV08)
14	AT49216	FITTING PLUG	1		X	X	(INCLUDES R26448)
15	T105368	FITTING PLUG	6		X	X	
16	AT300255	SEAL KIT	1		X	X	

**PATTERN SELECTOR VALVE
(PILOT CONTROL)**

T193763 -UN-06AUG03

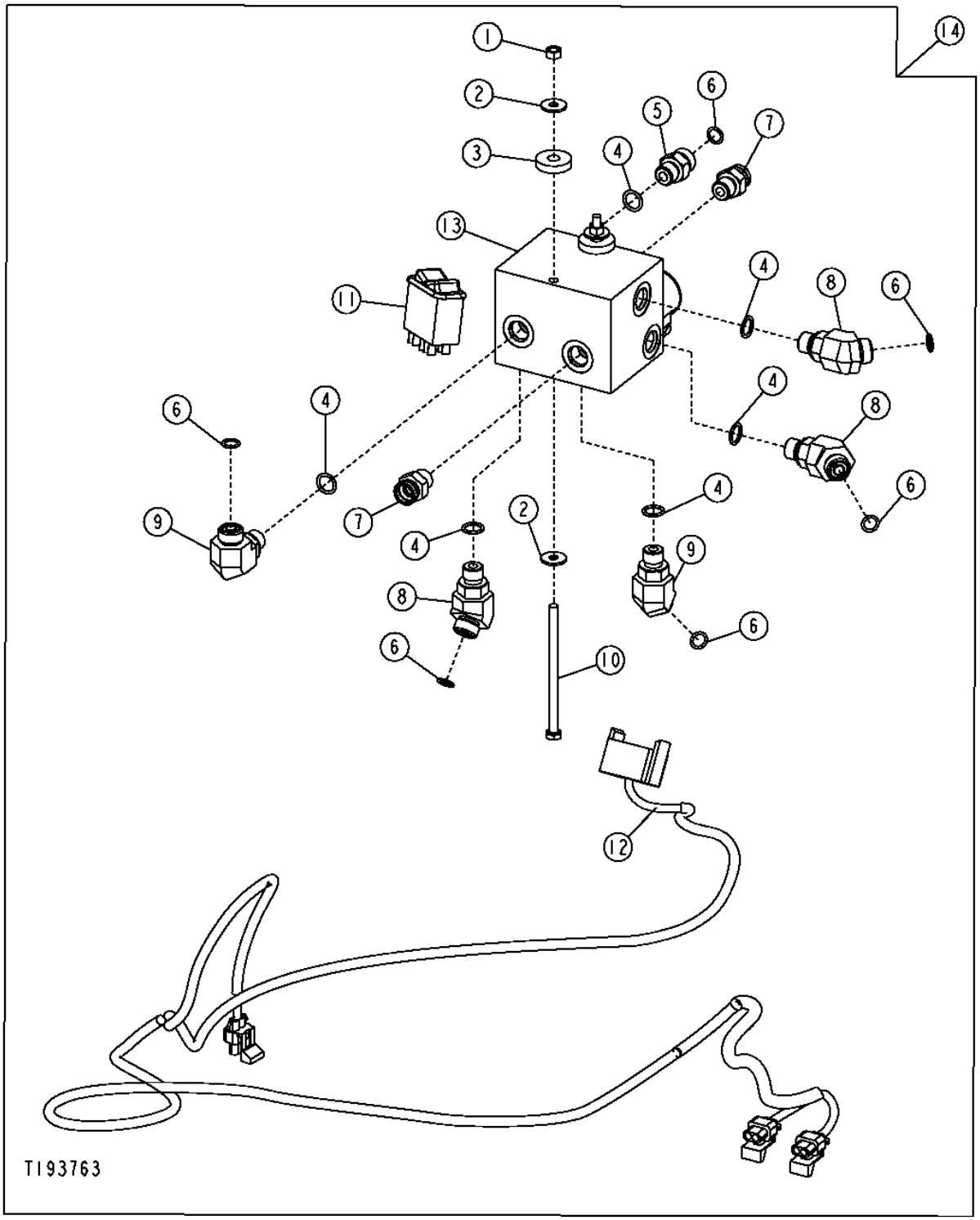

5G16

PATTERN SELECTOR VALVE
(PILOT CONTROL)

KEY	PART NO.	PART NAME	QTY	SERIAL NO.	310G	310SG	315SG	REMARKS
1	14M7272	NUT	2		X	X		M6
2	24M7139	WASHER	4		X	X		
3	24H1621	WASHER	2		X	X		
4	R26448	O-RING	6		X	X		
5	38H1160	ADAPTER FITTING	4		X	X		
6	T77613	O-RING	6		X	X		
7	AT187666	ADAPTER FITTING	2		X	X		
	AT193365	KIT	2		X	X		STC REPAIR
8	38H1045	ELBOW FITTING	3		X	X		
9	38H1004	ELBOW FITTING	4		X	X		(90 DEGREE FITTING)
10	19M9090	CAP SCREW	2		X	X		
11	AT199633	TOGGLE/ROCKER SWITCH	1		X	X		
12	AT198847	WIRING HARNESS	1		X	X		
13	AT199065	FLOW CONTROL HYD. VALVE	1		X	X		
	AT195144	SOLENOID VALVE COIL	2		X	X		
	AT195922	HYD ACTUATED CONTROL VALVE	2		X	X		
14	**AT197165**	**KIT**	**1**		**X**	**X**		

PILOT CONTROLLER VALVE
(LEFT HAND)

T188654 -UN-18MAR03

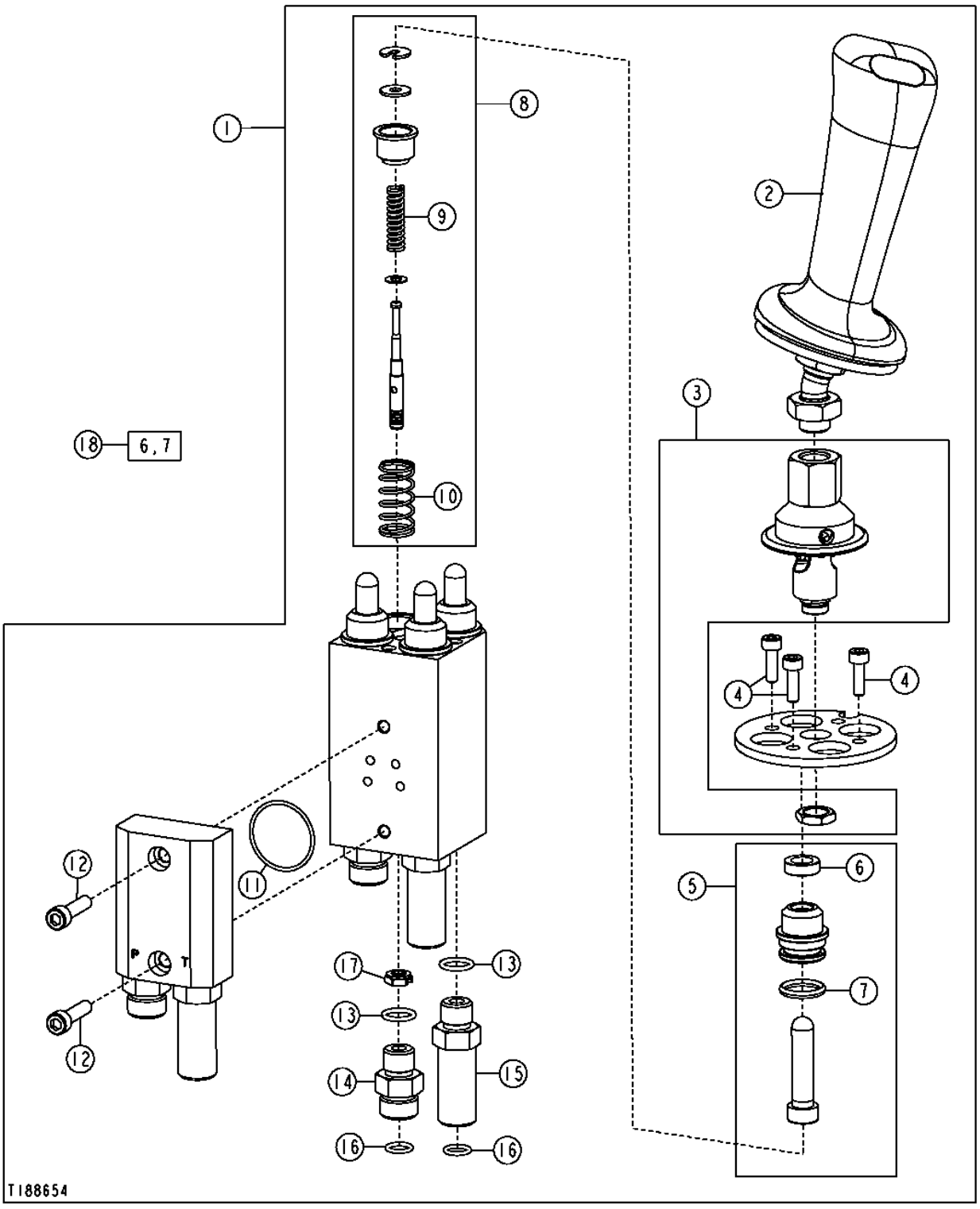

PILOT CONTROLLER VALVE
(LEFT HAND)

KEY	PART NO.	PART NAME	QTY	SERIAL NO.	310G	310SG	315SG	REMARKS
1	AT303890	HYDR./PILOT CONTROL VALVE	1		X	X		(LEFT HAND) (SUB FOR AT198617)
	T190825	BOOT	1		X	X		(NOT ILLUSTRATED)
2	AT198768	HANDLE	1		X	X		
3	AT198773	KIT	1		X	X		
4	T190824	SCREW	3		X	X		
5	AT198770	KIT	4		X	X		
6	.....	SEAL	4		X	X		
7	.....	O-RING	4		X	X		
8	AT307187	SPOOL VALVE	4		X	X		(SUB FOR AT198772) (SUB FOR AT303892)
9	.....	SPRING	4		X	X		
10	.....	SPRING	4		X	X		
11	T190819	O-RING	1		X	X		
12	T190820	CAP SCREW	2		X	X		
13	R26448	O-RING	6		X	X		
14	38H1160	ADAPTER FITTING	3		X	X		
15	38H1212	ADAPTER FITTING	3		X	X		
16	T77613	O-RING	6		X	X		
17	T200956	ORIFICE	1		X	X		(ONLY USED IN PORT 4, BOOM DOWN FUNCTION)
18	AT198771	KIT	4		X	X		

**PILOT CONTROLLER VALVE
(RIGHT HAND)**

T188655 -UN-18MAR03

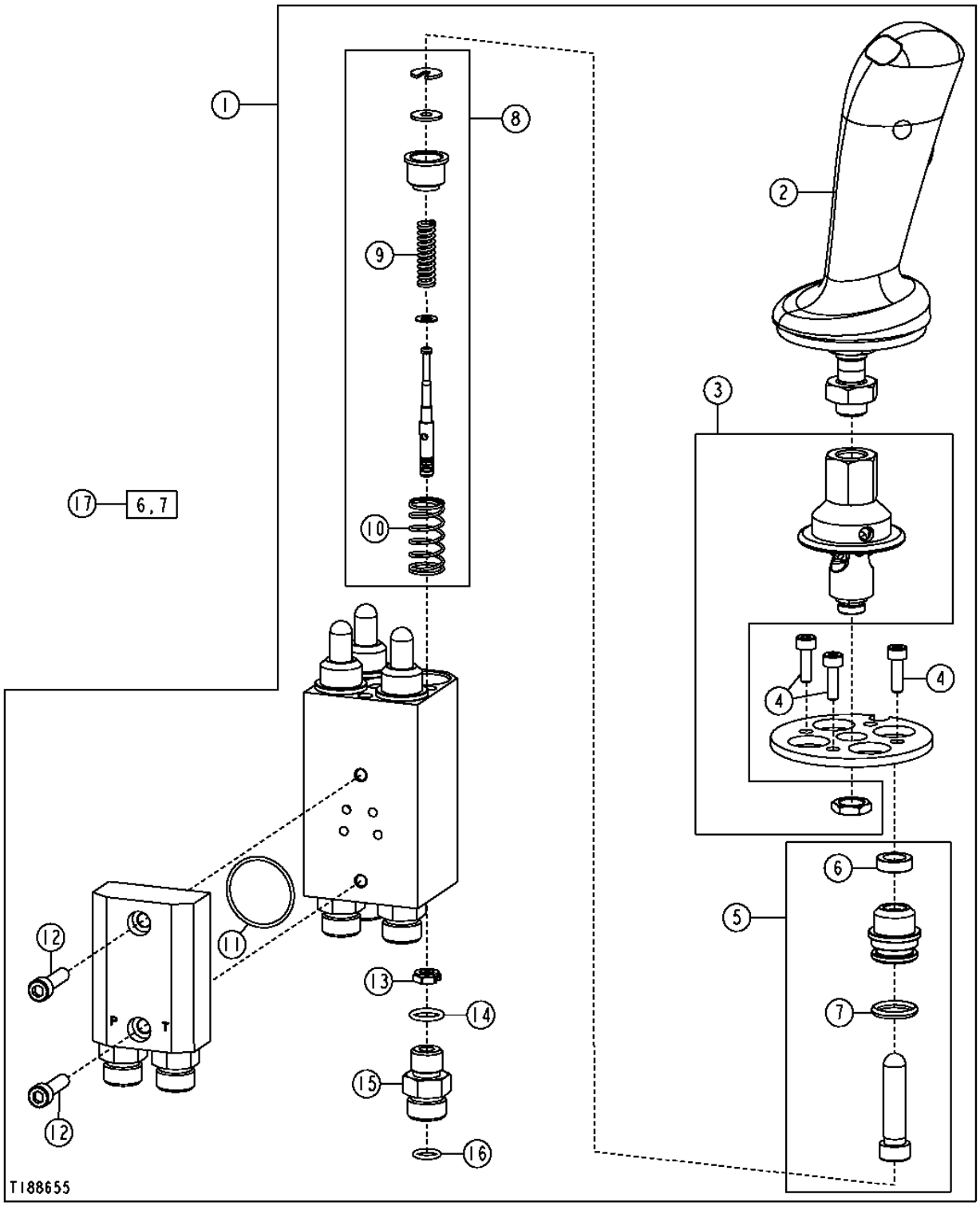

PILOT CONTROLLER VALVE
(RIGHT HAND)

KEY	PART NO.	PART NAME	QTY	SERIAL NO.	310G	310SG	315SG	REMARKS
1	AT303891	HYDR./PILOT CONTROL VALVE	1		X	X		(RIGHT HAND) (SUB FOR AT198618)
	T190825	BOOT	1		X	X		(NOT ILLUSTRATED)
2	AT198774	HANDLE	1		X	X		
3	AT198773	KIT	1		X	X		
4	T190824	SCREW	3		X	X		
5	AT198770	KIT	4		X	X		
6	.....	SEAL	4		X	X		
7	.....	O-RING	4		X	X		
8	AT307187	SPOOL VALVE	4		X	X		(SUB FOR AT198772) (SUB FOR AT303892)
9	.....	SPRING	4		X	X		
10	.....	SPRING	4		X	X		
11	T190819	O-RING	1		X	X		
12	T190820	CAP SCREW	2		X	X		
13	T200956	ORIFICE	1		X	X		(ONLY USED IN PORT 2, CROWD OUT FUNCTION)
14	R26448	O-RING	6		X	X		
15	38H1160	ADAPTER FITTING	6		X	X		
16	T77613	O-RING	6		X	X		
17	AT198771	KIT	4		X	X		

PILOT CONTROL HANDLE BUTTON FUNCTION KIT

T202931 -UN-30SEP04

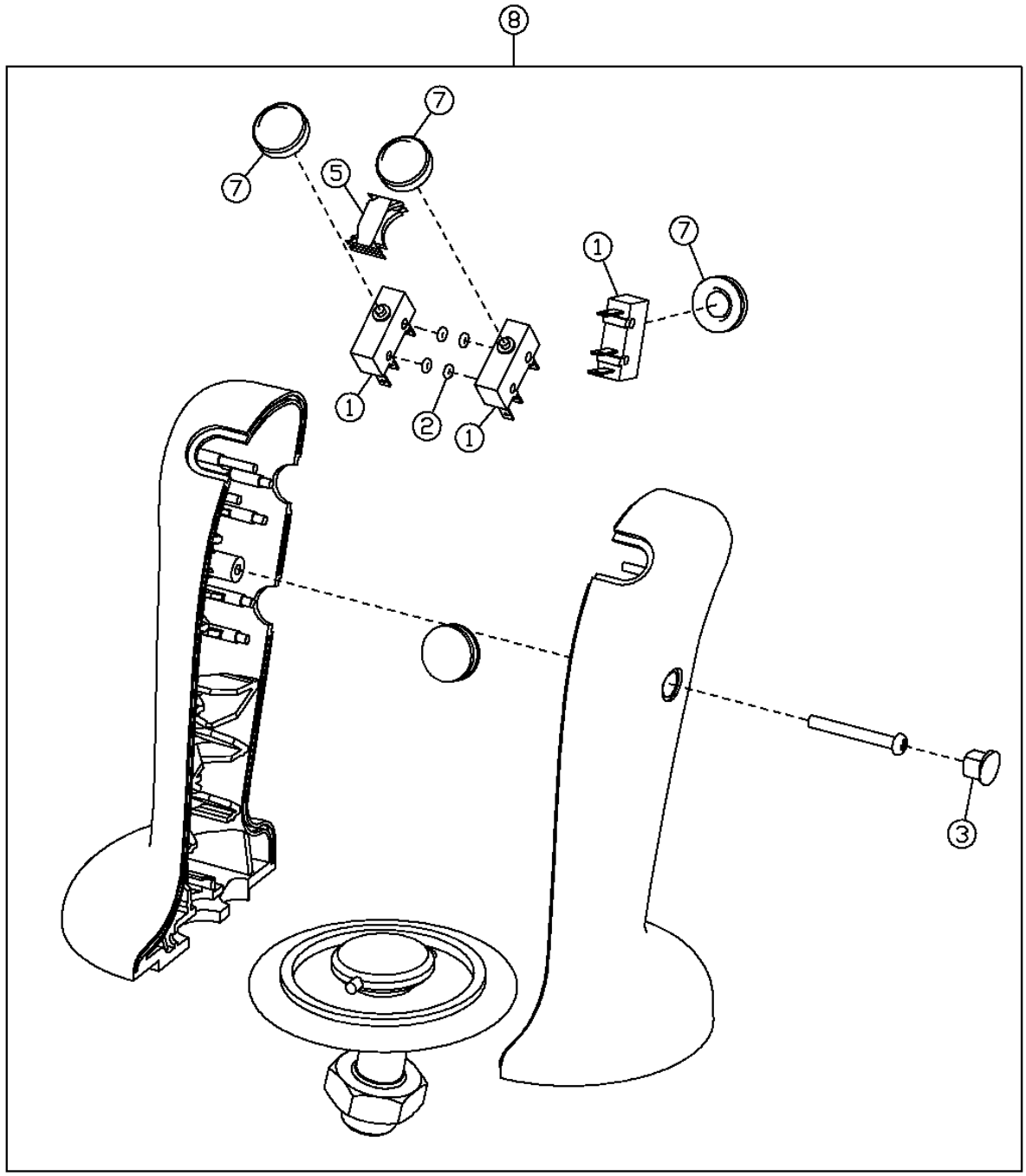

T202931

PILOT CONTROL HANDLE BUTTON FUNCTION KIT

KEY	PART NO.	PART NAME	QTY	SERIAL NO.	310G	310SG	315SG	REMARKS
1	.....	SWITCH	4		X	X		
2	.....	O-RING	4		X	X		
3	.....	PLUG	1		X	X		
4	.....	TIE BAND	1		X	X		
5	.....	SPACER	1		X	X		
6	.....	WIRING HARNESS	1		X	X		
7	.....	PUSH BUTTON	4		X	X		
8	AT314668	KIT	1		X	X		(BUTTON HANDLE)

BOOM SECTION, PILOT
BACKHOE VALVE

T188687 -UN-19MAR03

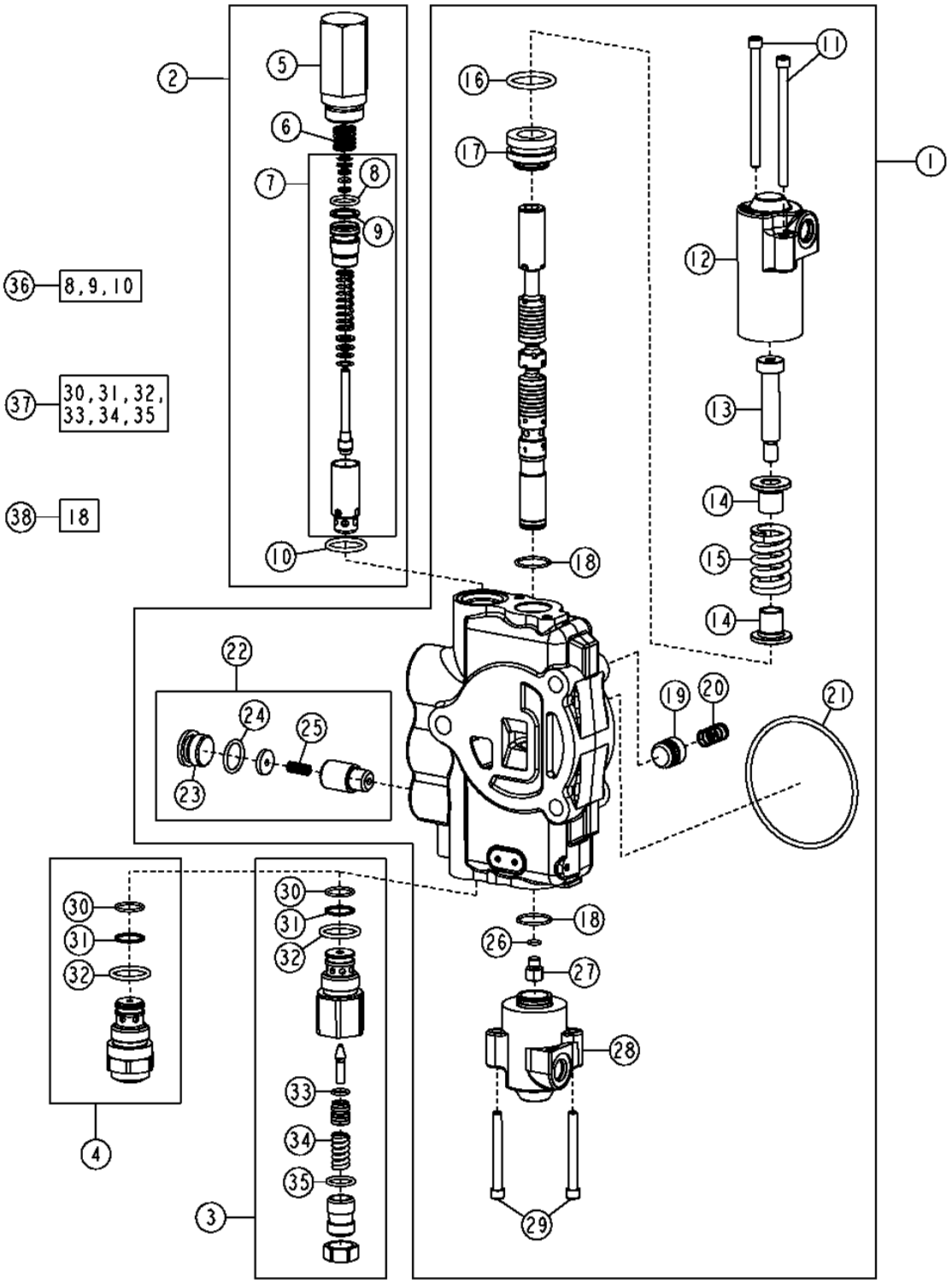

BOOM SECTION, PILOT
BACKHOE VALVE

KEY	PART NO.	PART NAME	QTY	SERIAL NO.	310G	310SG	315SG	REMARKS
1	AT320370	VALVE	1		X			
	AT300827	VALVE	1			X		
2	AT171403	PRESSURE RELIEF VALVE	1		X	X		(2150 PSI)
3	AT300803	PRESSURE RELIEF VALVE	1		X			(5000 PSI) (NOT ANTI-CAVITATION)
	AT301447	PRESSURE RELIEF VALVE	1			X		(5500 PSI) (NOT ANTI-CAVITATION)
4	AT301128	PRESSURE RELIEF VALVE	1		X			(5000 PSI) (ANTI-CAVITATION)
	AT301487	PRESSURE RELIEF VALVE	1			X		(5500 PSI) (ANTI-CAVITATION)
5	T118866	HOUSING	1		X	X		
6	T118867	SPRING	1		X	X		
7	AT178363	SEAL KIT	1		X	X		
8	.....	O-RING	1		X	X		
9	.....	BACK-UP RING	1		X	X		
10	T118681	O-RING	1		X	X		
11	T191335	SCREW	2		X	X		
12	T201072	CAP	1		X	X		
13	790107100	SCREW	1		X	X		
14	T201306	RETAINER	2		X	X		
15	T201071	COMPRESSION SPRING	1		X	X		
16	T191346	O-RING	1		X	X		
17	790106800	RETAINER	1		X	X		
18	T213059	O-RING	2		X	X		
19	T81538	POPPET	1		X	X		
20	T81539	SPRING	1		X	X		
21	T118685	O-RING	1		X	X		
22	AT178371	SEAL KIT	1		X	X		(DRIFT CHECK)
23	T201424	PLUG	1		X	X		
24	R26906	O-RING	1		X	X		
25	R111238	SPRING	1		X	X		
26	R30903	O-RING	1		X	X		
27	T191336	PLUG	1		X	X		
28	T201069	CAP	1		X	X		
29	T191334	SCREW	2		X	X		
30	T107887	O-RING	2		X	X		
31	.....	BACK-UP RING	2		X	X		
32	T118681	O-RING	2		X	X		
33	R63548	O-RING	1		X	X		
34	.....	SPRING	1		X	X		
35	.....	O-RING	1		X	X		
36	AT314538	SEAL KIT	1					7/8 INCH RELIEF VALVE SEAL KIT, (SUB FOR AT189413)
	AT314539	SEAL KIT	1					1 1/16 INCH RELIEF VALVE SEAL KIT, (SUB FOR AT189413)
37	AT300801	SEAL KIT	1		X	X		(SEAL AND SPRING)
38	AT280406	SEAL KIT	1		X	X		(SPOOL SEAL) (SUB FOR AT178372)

**BUCKET SECTION, PILOT
BACKHOE VALVE**

T198418 -UN-10MAR04

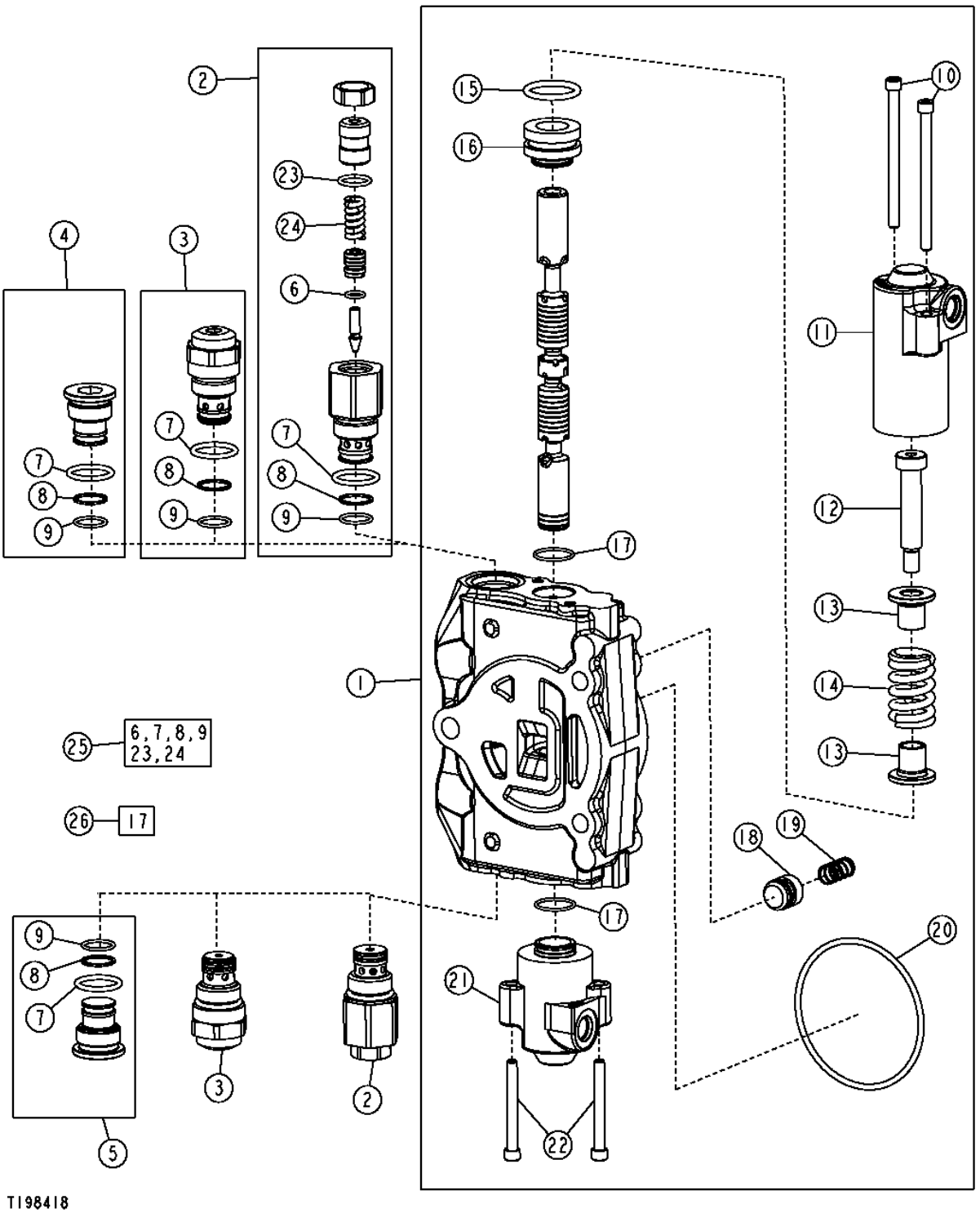

BUCKET SECTION, PILOT
BACKHOE VALVE

KEY	PART NO.	PART NAME	QTY	SERIAL NO.	310G	310SG	315SG	REMARKS
1	AT320369	VALVE	1		X			
	AT300825	VALVE	1			X		
2	AT301526	PRESSURE RELIEF VALVE	2	-926295		X		(1 1/16" PORT) (4600 PSI) (4 AND 5 FUNCTION) (NOT ANTI-CAVITATION)
	AT301526	PRESSURE RELIEF VALVE	2		X	X		(1 1/16" PORT) (4600 PSI) (6 AND 7 FUNCTION) (NOT ANTI-CAVITATION)
	AT301526	PRESSURE RELIEF VALVE	1	927954-	X	X	X	(1 1/16" PORT) (4 AND 5 FUNCTION) (4600 PSI) (NOT ANTI-CAVITATION)
3	AT301527	PRESSURE RELIEF VALVE	2	-926295		X		(1 1/16" PORT) (4600 PSI) (4 AND 5 FUNCTION) (ANTI-CAVITATION) (SUB FOR AT301127)
	AT301527	PRESSURE RELIEF VALVE	2		X	X		(1 1/16" PORT) (4600 PSI) (6 AND 7 FUNCTION) (ANTI-CAVITATION) (SUB FOR AT301127)
	AT301527	PRESSURE RELIEF VALVE	1	927954-	X	X	X	(1 1/16" PORT) (4 AND 5 FUNCTION) (4600 PSI) (ANTI-CAVITATION)
4	.....	PLUG	2	926296-927953		X		(4 AND 5 FUNCTION) (SUB AT301526 OR AT301527)
5	AT307332	PLUG	2	925503-	X	X	X	(4 AND 5 FUNCTION)
6	R63548	O-RING	2		X	X		
7	T118681	O-RING	4		X	X		
8	.....	BACK-UP RING	4		X	X		
9	T107887	O-RING	4		X	X		
10	T191335	SCREW	2		X	X		
11	T201072	CAP	1		X	X		
12	790107100	SCREW	1		X	X		
13	T201306	RETAINER	2		X	X		
14	T201071	COMPRESSION SPRING	1		X	X		
15	T191346	O-RING	1		X	X		
16	790106800	RETAINER	1		X	X		
17	.....	O-RING	2		X	X		
18	T81538	POPPET	1		X	X		
19	T81539	SPRING	1		X	X		
20	T118685	O-RING	1		X	X		
21	T201069	CAP	1		X	X		
22	T191334	SCREW	2		X	X		
23	.....	O-RING	2		X	X		
24	.....	SPRING	2		X	X		
25	AT300801	SEAL KIT	1		X	X		(SEAL AND SPRING)
26	AT280406	SEAL KIT	1		X	X		(SPOOL SEAL) (SUB FOR AT178372)

**CROWD SECTION, PILOT
BACKHOE VALVE**

T192141 -UN-02SEP03

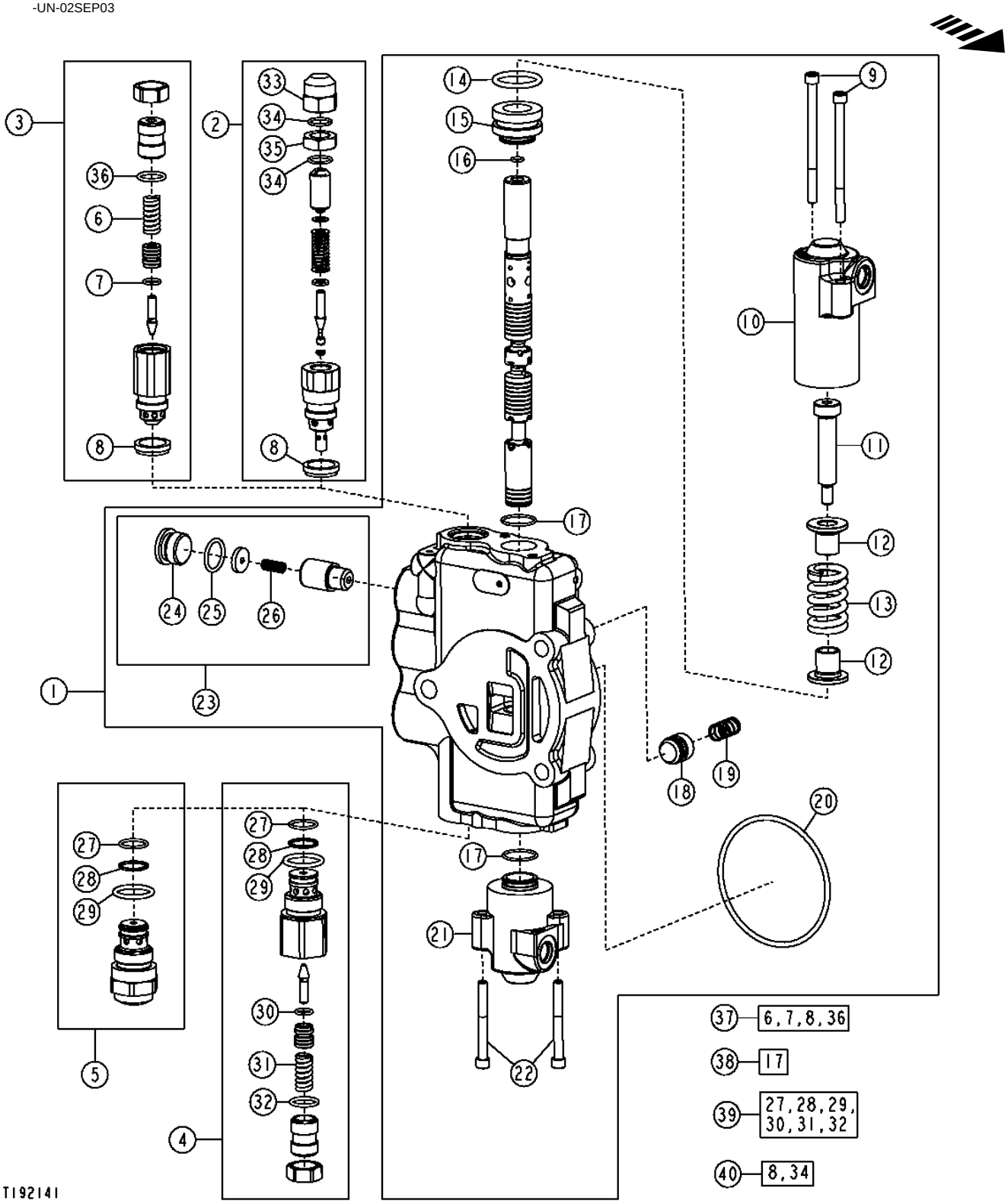

**CROWD SECTION, PILOT
BACKHOE VALVE**

KEY	PART NO.	PART NAME	QTY	SERIAL NO.	310G	310SG	315SG	REMARKS
1	AT320372	VALVE	1		X			(4 AND 5 FUNCTION)
	AT320378	VALVE	1		X			(5 AND 6 FUNCTION WITH SELECTIVE FLOW AULILIARY)
	AT302103	VALVE	1			X		(4 FUNCTION)
	AT300828	VALVE	1			X		(5,6 AND 7 FUNCTION)
2	AT171404	PRESSURE RELIEF VALVE	1	915641-	X	X		(4750 PSI) (7/8" PORT) (NOT ANTI-CAVITATION)
3	AT302113	PRESSURE RELIEF VALVE	1	-915640		X		(4750 PSI) (7/8" PORT) (NOT ANTI-CAVITATION)
4	.....	PRESSURE RELIEF VALVE	1	-915640		X		(AT301750 NO LONGER AVAILABLE, SUB AT303954) (3800 PSI) (1 1/16" PORT) (NOT ANTI-CAVITATION)
	AT303954	PRESSURE RELIEF VALVE	1	915641-	X	X		(3800 PSI) (1 1/16" PORT) (NOT ANTI-CAVITATION)
5	AT301751	PRESSURE RELIEF VALVE	1		X	X		(3800 PSI) (1 1/16" PORT) (ANTI-CAVITATION)
6	.....	SPRING	1		X	X		
7	R63548	O-RING	1		X	X		
8	T183756	SEAL	2		X	X		
9	T191335	SCREW	2		X	X		
10	T201072	CAP	1		X	X		
11	T191337	SCREW	1		X	X		
12	T201306	RETAINER	2		X	X		
13	T201071	COMPRESSION SPRING	1		X	X		(4 FUNCTION) (SUB FOR T191338)
	T201071	COMPRESSION SPRING	1		X	X		(5,6 AND 7 FUNCTION)
14	T191346	O-RING	1		X	X		
15	790106800	RETAINER	1		X	X		
16	R30903	O-RING	1		X	X		
17	.....	O-RING	2		X	X		
18	T152406	POPPET	1		X	X		(4 FUNCTION)
	T81538	POPPET	1		X	X		(5,6 AND 7 FUNCTION)
19	T152407	SPRING	1		X	X		(4 FUNCTION)
	T81539	SPRING	1		X	X		(5,6 AND 7 FUNCTION)
20	T118685	O-RING	1		X	X		
21	T201069	CAP	1		X	X		
22	T191334	SCREW	2		X	X		
23	AT178371	SEAL KIT	1		X	X		(DRIFT CHECK)
24	T201424	PLUG	1		X	X		
25	R26906	O-RING	1		X	X		
26	R111238	SPRING	1		X	X		
27	T107887	O-RING	2		X	X		
28	.....	BACK-UP RING	2		X	X		
29	T118681	O-RING	2		X	X		
30	R63548	O-RING	1		X	X		
31	.....	SPRING	1		X	X		
32	.....	O-RING	1		X	X		
33	T67425	NUT	1		X	X		
34	.....	O-RING	2		X	X		
35	T67424	NUT	1		X	X		
36	.....	RING	1		X	X		
37	AT302108	SEAL KIT	1		X	X		
38	AT280406	SEAL KIT	1		X	X		(SUB FOR AT178372)
39	AT301749	SEAL KIT	1	-915640		X		(USE WITH AT301750)
	AT300801	SEAL KIT	1	915641-	X	X		(USE WITH AT303954)
40	AT314538	SEAL KIT	1		X	X		7/8 INCH RELIEF VALVE SEAL KIT, (SUB FOR AT189413)
	AT314539	SEAL KIT	1		X	X		1 1/16 INCH RELIEF VALVE SEAL KIT, (SUB FOR AT189413)

SWING SECTION, PILOT
BACKHOE VALVE

T188872 -UN-22MAR03

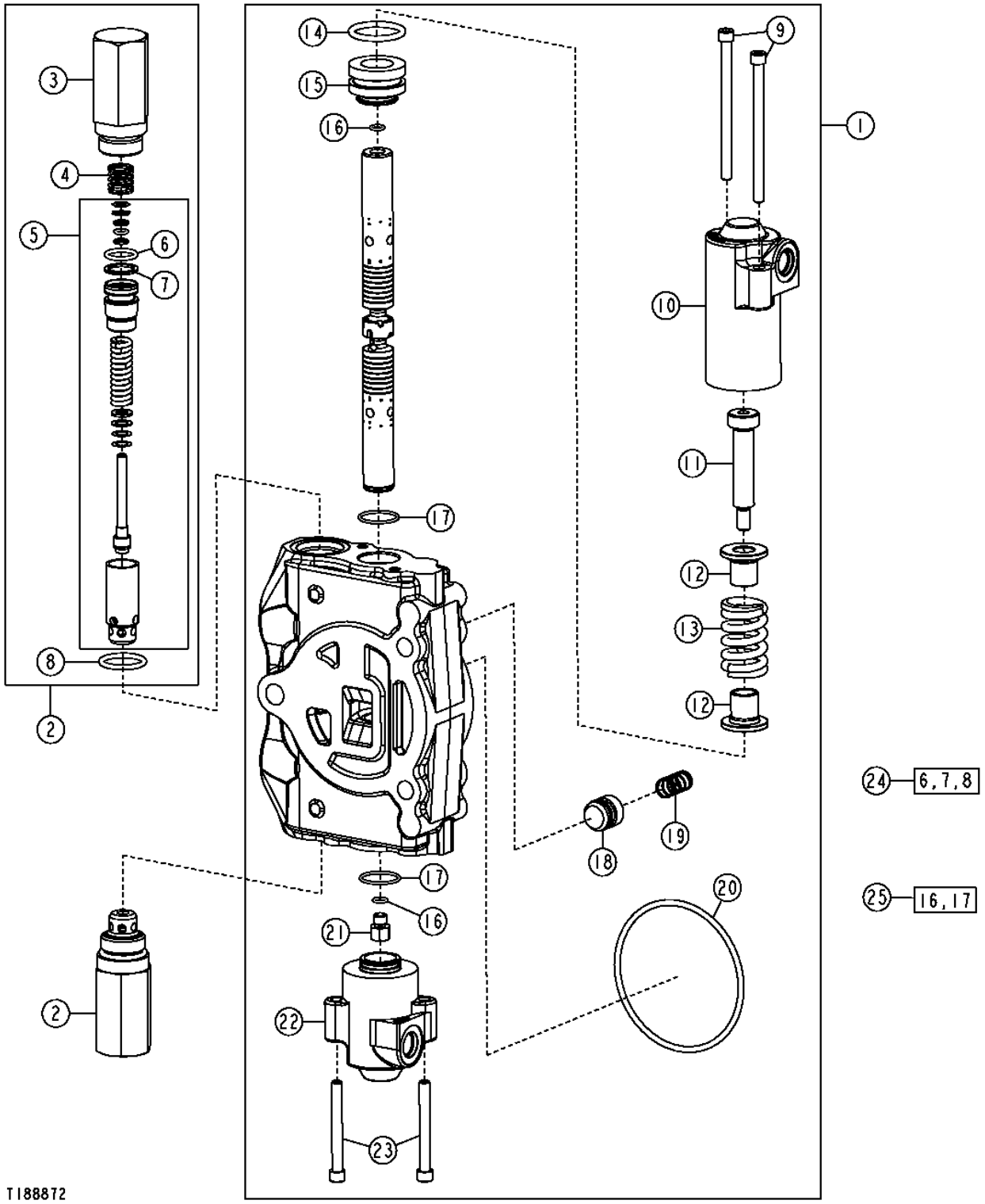

SWING SECTION, PILOT
BACKHOE VALVE

KEY	PART NO.	PART NAME	QTY	SERIAL NO.	310G	310SG	315SG	REMARKS
1	AT320371	VALVE	1		X			(4,5 FUNCTION AND 4,6 FUNCTION (W/FLOW CONTROL AUX.))
	AT323398	VALVE	1		X			(6 FUNCTION)
	AT301763	VALVE	1			X		(4,5,AND 6 FUNCTION (W/FLOW CONTROL AUX.))
	AT300805	VALVE	1			X		(6 AND 7 FUNCTION (W/MANUAL AUX.)
2	AT182377	PRESSURE RELIEF VALVE	2		X	X		(3800 PSI)
3	T118866	HOUSING	2		X	X		
4	T118867	SPRING	2		X	X		
5	AT178362	SEAL KIT	2		X	X		(RELIEF VALVE SEAL)
6	.....	O-RING	2		X	X		
7	.....	BACK-UP RING	2		X	X		
8	T118681	O-RING	2		X	X		
9	T191335	SCREW	2		X	X		
10	T201072	CAP	1		X	X		
11	T191337	SCREW	1		X	X		
12	T201306	RETAINER	2		X	X		
13	T201071	COMPRESSION SPRING	1		X	X		(4,5 AND 6 (W/FLOW CONTROL AUX.) FUNCTION) (SUB FOR T191338)
	T201071	SPRING	1		X	X		(6 (W/MANUAL AUX.) AND 7 FUNCTION)
14	T191346	O-RING	1		X	X		
15	790106800	RETAINER	1		X	X		
16	R30903	O-RING	2		X	X		
17	T213059	O-RING	2		X	X		
18	T81538	POPPET	1		X	X		
19	T81539	SPRING	1		X	X		
20	T118685	O-RING	1		X	X		
21	T191336	PLUG	1		X	X		
22	T201069	CAP	1		X	X		
23	T191334	SCREW	2		X	X		
24	AT314538	SEAL KIT	1		X	X		7/8 INCH RELIEF VALVE SEAL KIT, (SUB FOR AT189413)
	AT314539	SEAL KIT	1		X	X		1 1/16 INCH RELIEF VALVE SEAL KIT, (SUB FOR AT189413)
25	AT280406	SEAL KIT	1		X	X		(SPOOL SEAL) (SUB FOR AT178372)

PILOT CONTROL HYDRAULICS WITH SELECTOR VALVE

T204633 -UN-18NOV04

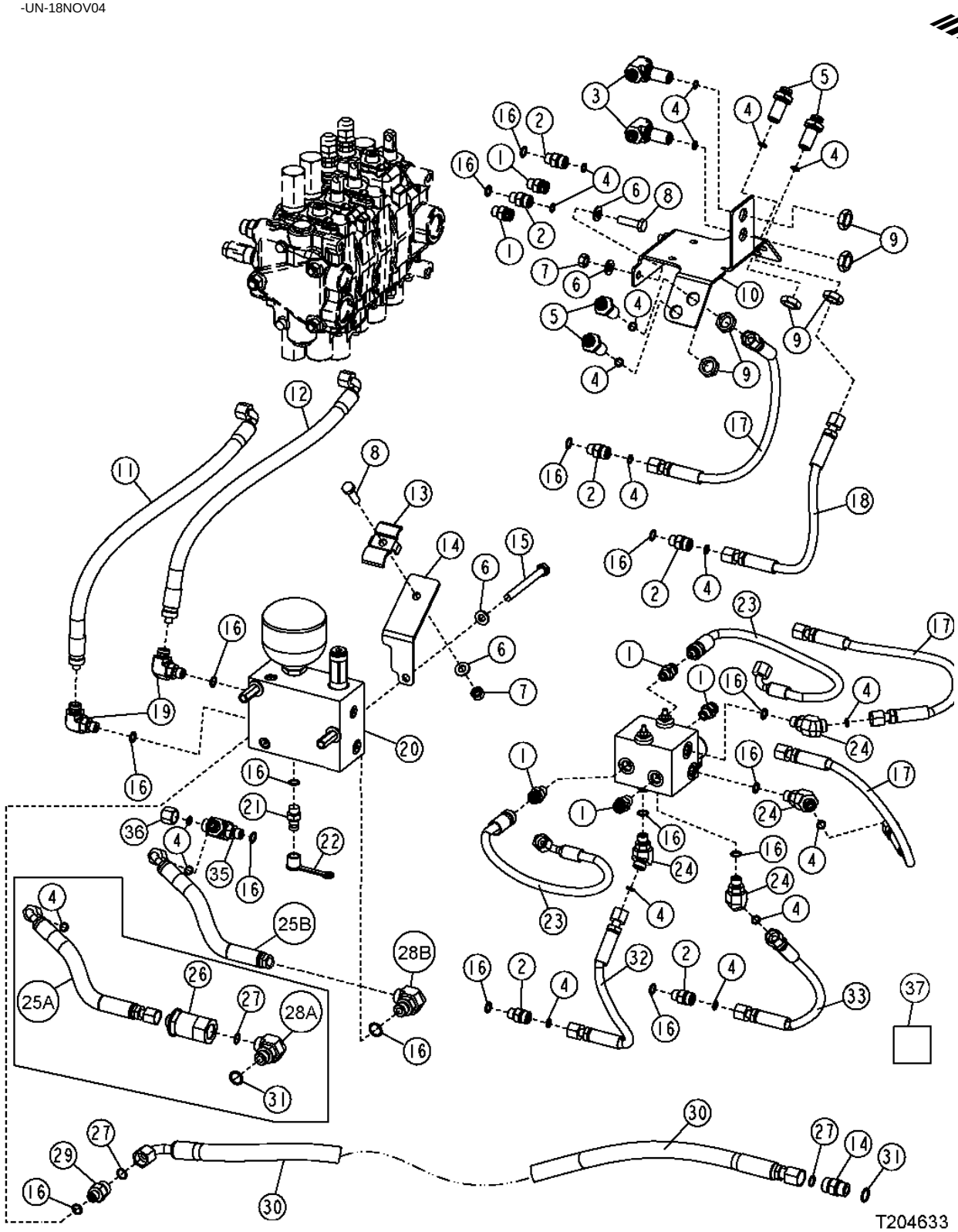

PILOT CONTROL HYDRAULICS WITH SELECTOR VALVE

KEY	PART NO.	PART NAME	QTY	SERIAL NO.	310G	310SG	315SG	REMARKS
1	AT187666	ADAPTER FITTING	6		X	X		
2	38H1160	ADAPTER FITTING	6		X	X		
3	AT199496	TEE FITTING	2		X	X		
4	T77613	O-RING	18		X	X		
5	AT199495	FITTING	4		X	X		
6	24M7239	WASHER	6		X	X		
7	14M7274	NUT	3		X	X		
8	19M7550	CAP SCREW	3		X	X		
9	T81029	NUT	6		X	X		
10	T190311	BRACKET	1		X	X		
11	AT197210	HYDRAULIC HOSE - FABRICATE	1		X	X		11/16" X 510 MM (20") X 11/16", (ALSO ORDER 62H1042 AND T77613)
12	AT197211	HYDRAULIC HOSE - FABRICATE	1		X	X		(ALSO ORDER 62H1042 AND T77613)
13	T160548	CLAMP	1		X	X		
14	T190993	BRACKET	1		X	X		
15	19M8093	CAP SCREW	1		X	X		M10 X 100
16	R26448	O-RING	12		X	X		
17	AT197208	HYDRAULIC HOSE - FABRICATE	3		X	X		11/16" X 400 MM (15-3/4") X 11/16"
18	AT197209	HYDRAULIC HOSE - FABRICATE	1		X	X		11/16" X 362 MM (14-1/4") X 11/16"
19	AT187669	ADAPTER FITTING	2		X	X		
20	.....	FLOW CONTROL HYD. VALVE	1	-943092	X	X		(AT197769 NO LONGER AVAILABLE) (SUB AT306550) (ALSO ORDER AT187669, AT317350, 62H1042 AND T77613)
	AT306550	FLOW CONTROL HYD. VALVE	1	943093-	X	X		
21	AH125760	HYD. QUICK-CONNECT COUPLER	1		X	X		
22	R77175	COVER	1		X	X		
23	AT280200	HYDRAULIC HOSE - FABRICATE	2		X	X		(ALSO ORDER 62H1042 AND T77613)
24	38H1045	ELBOW FITTING	4		X	X		
25A	AT305773	HYDRAULIC HOSE - FABRICATE	1	-943092		X		11/16" X 330 MM (13") X 11/16", (SUB FOR AT197212, THIS APPLICATION)
25B	AT317350	HYDRAULIC HOSE - FABRICATE	1	093043-	X			
26	AT183869	FILTER ELEMENT	1	-943092		X		(USE WITH AT197769)
27	T77857	O-RING	3		X	X		
28A	38H1005	ELBOW FITTING	1	-943092		X		
28B	AT187669	ADAPTER FITTING	1	943093-	X	X		
29	38H1173	ADAPTER FITTING	1		X	X		
30	AT300742	HYDRAULIC HOSE - FABRICATE	1		X	X		13/16" X 1 633 MM (64-1/4") X 13/16"
31	R26375	O-RING	2		X	X		
32	AT198417	HYDRAULIC HOSE - FABRICATE	1		X	X		11/16" X 299 MM (11-3/4") X 11/16"
33	AT198416	HYDRAULIC HOSE - FABRICATE	1		X	X		11/16" X 299 MM (11-3/4") X 11/16"
34	38H1161	ADAPTER FITTING	1		X	X		
35	38H1023	TEE FITTING	1		X	X		(SUB FOR 38H1160, THIS APPLICATION)
36	38H1415	FITTING	1		X	X		
37	AT193365	KIT	1		X	X		STC REPAIR (-06)
	AT193366	HYDRAULIC PUMP REPAIR KIT	1		X	X		STC REPAIR (-08)

PILOT CONTROL HYDRAULICS

T165883 -UN-27FEB03

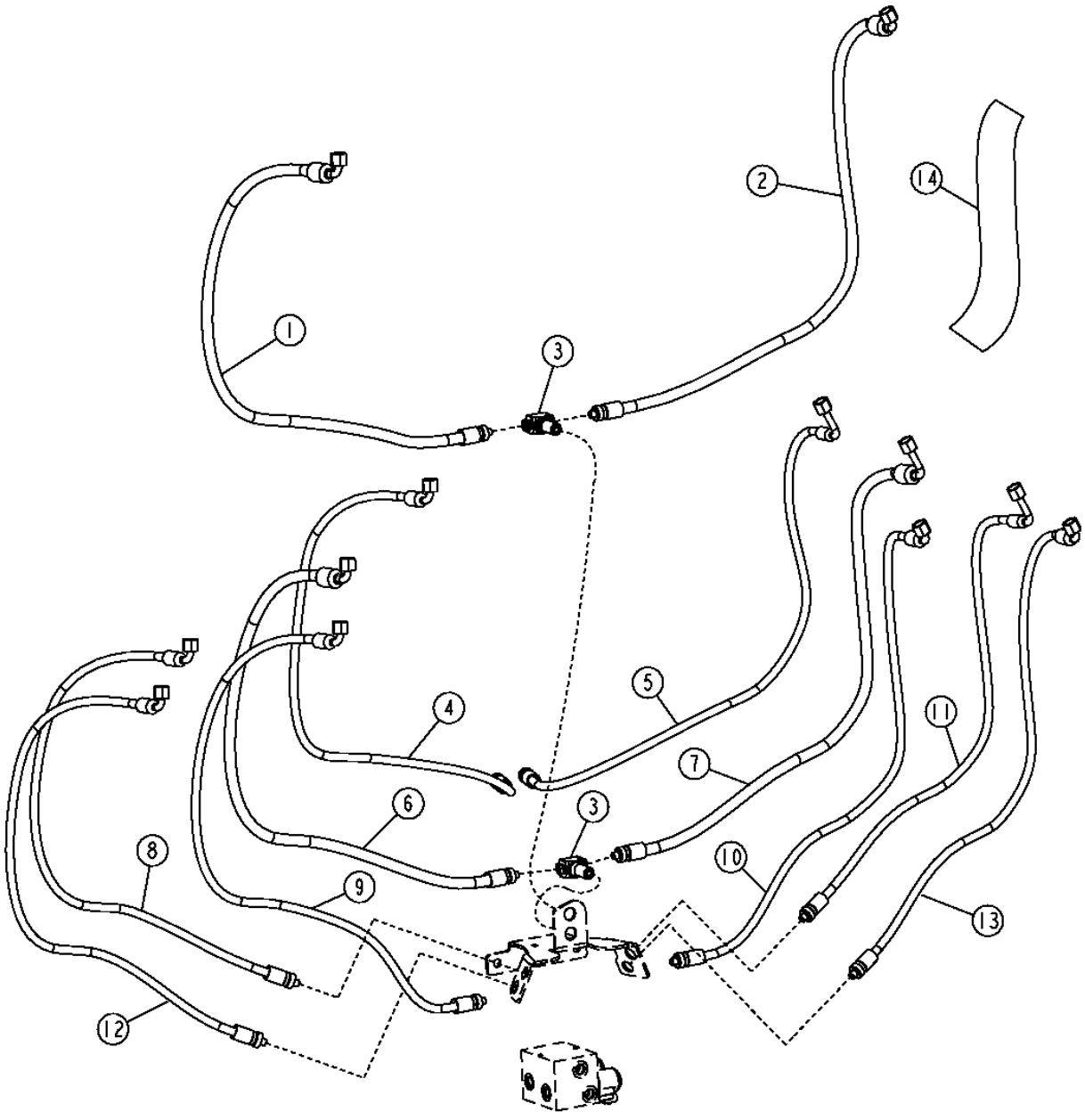

PILOT CONTROL HYDRAULICS

KEY	PART NO.	PART NAME	QTY	SERIAL NO.	310G	310SG	315SG	REMARKS
1	AT198350	HYDRAULIC HOSE - FABRICATE	1		X	X		11/16" X 1 048 MM (41-1/4") X 11/16", (ALSO ORDER 62H1042 AND T77613)
2	AT198355	HYDRAULIC HOSE - FABRICATE	1		X	X		11/16" X 1 033 MM (40-3/4") X 11/16", (ALSO ORDER 62H1042 AND T77613)
3	AT199496	TEE FITTING	2		X	X		
4	AT198351	HYDRAULIC HOSE - FABRICATE	1		X	X		11/16" X 1 100 MM (43-1/4") X 11/16", (ALSO ORDER 62H1042 AND T77613)
5	AT198360	HYDRAULIC HOSE - FABRICATE	1		X	X		11/16" X 1 070 MM (42-1/4") X 11/16", (ALSO ORDER 62H1042 AND T77613)
6	AT198349	HYDRAULIC HOSE - FABRICATE	1		X	X		11/16" X 1 075 MM (42-1/4") X 11/16", (ALSO ORDER 62H1042 AND T77613)
7	AT198356	HYDRAULIC HOSE - FABRICATE	1		X	X		11/16" X 1 015 MM (40") X 11/16", (ALSO ORDER 62H1042 AND T77613)
8	AT198352	HYDRAULIC HOSE - FABRICATE	1		X	X		11/16" X 1 005 MM (39-1/2") X 11/16", (ALSO ORDER 62H1042 AND T77613)
9	AT198354	HYDRAULIC HOSE - FABRICATE	1		X	X		11/16" X 1 125 MM (44-1/4") X 11/16", (ALSO ORDER 62H1042 AND T77613)
10	AT198358	HYDRAULIC HOSE - FABRICATE	1		X	X		11/16" X 1 021 MM (40-1/4") X 11/16", (ALSO ORDER 62H1042 AND T77613)
11	AT198357	HYDRAULIC HOSE - FABRICATE	1		X	X		11/16" X 938 MM (37") X 11/16", (ALSO ORDER 62H1042 AND T77613)
12	AT198353	HYDRAULIC HOSE - FABRICATE	1		X	X		11/16" X 1 047 MM (41-1/4") X 11/16", (ALSO ORDER 62H1042 AND T77613)
13	AT198359	HYDRAULIC HOSE - FABRICATE	1		X	X		11/16" X 981 MM (38-1/2") X 11/16", (ALSO ORDER 62H1042 AND T77613)
14	T201656	HOSE GUARD	1		X	X		

STABILIZER CYLINDER HYDRAULICS
(310G AND 310SG)
(SERIAL NO. -913416)

TP52870 -UN-02DEC96

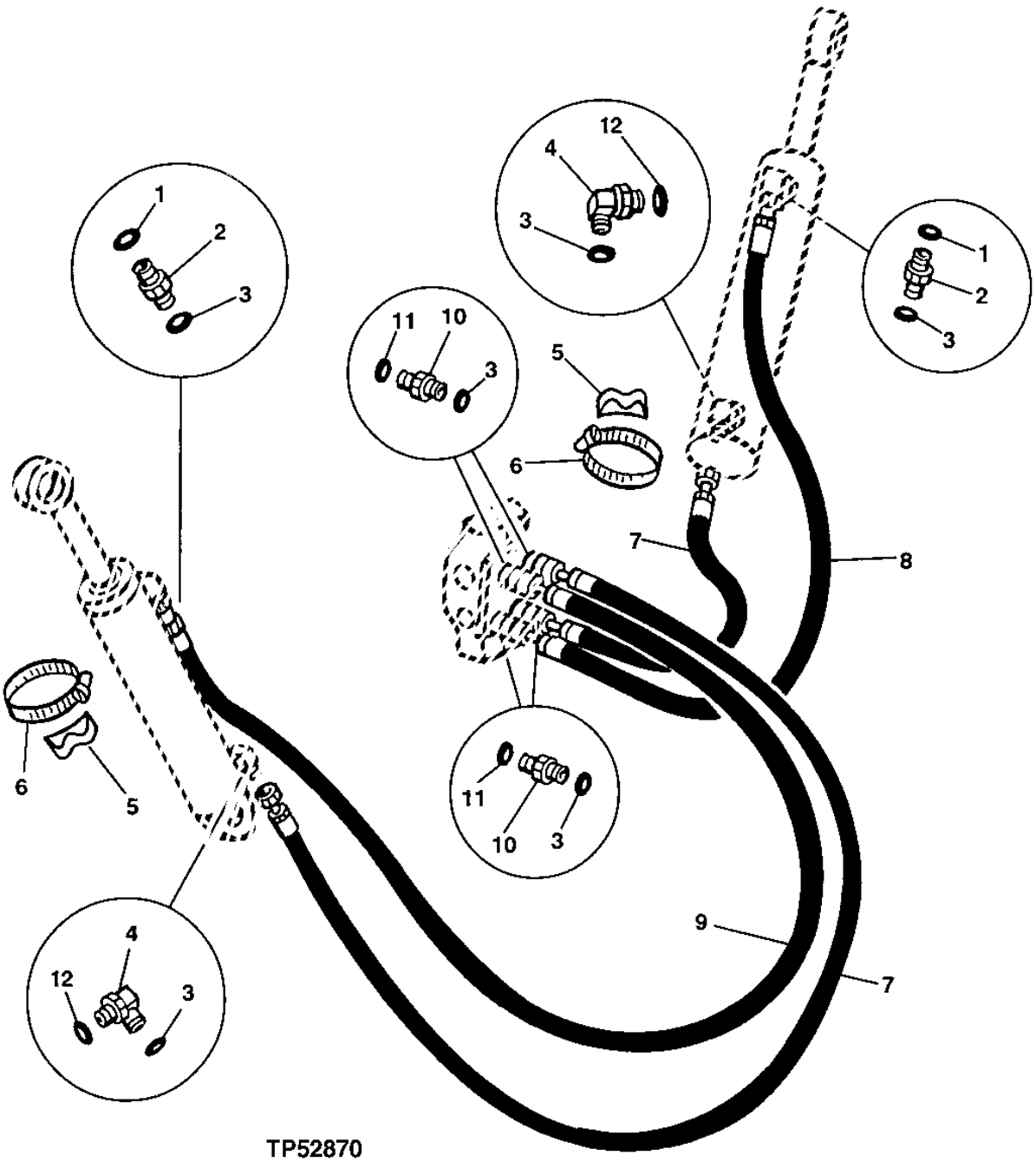

STABILIZER CYLINDER HYDRAULICS
(310G AND 310SG)
(SERIAL NO. -913416)

KEY	PART NO.	PART NAME	QTY	SERIAL NO.	310G	310SG	315SG	REMARKS
1	R26906	O-RING	2		X	X		
2	38H1172	ADAPTER FITTING	2		X	X		
3	T77613	O-RING	8		X	X		
4	38H1010	ELBOW FITTING	2		X	X		
5	T105774	GUIDE	2		X	X		
6	AR21842	CLAMP	2		X			
	C16054	CLAMP	2				X	
7	AT175446	HYDRAULIC HOSE - FABRICATE	2		X	X		11/16" X 1 147 MM (45-1/4") X 11/16"
8	AT176478	HYDRAULIC HOSE - FABRICATE	1		X	X		11/16" X 1 604 MM (63-1/4") X 11/16"
9	AT172610	HYDRAULIC HOSE - FABRICATE	1		X	X		11/16" X 1 714 MM (67-1/2") X 11/16"
10	38H1171	ADAPTER FITTING	4		X	X		
11	R26906	O-RING	4		X	X		
12	R26375	O-RING	2		X	X		

STABILIZER CYLINDER HYDRAULICS
(310G AND 310SG)
(SERIAL NO. 913417-)

T163469 -UN-06JAN03

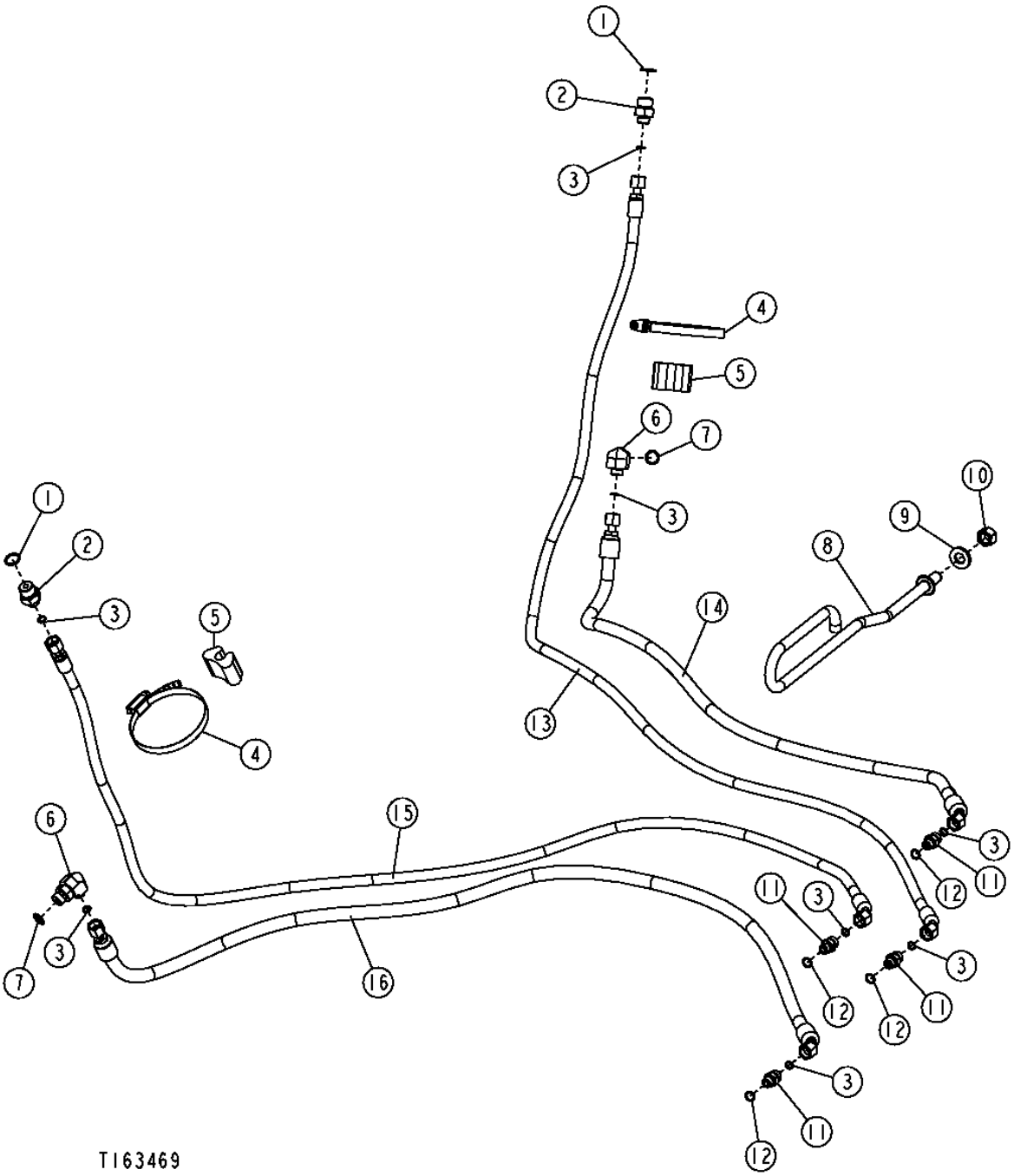

STABILIZER CYLINDER HYDRAULICS
(310G AND 310SG)
(SERIAL NO. 913417-)

KEY	PART NO.	PART NAME	QTY	SERIAL NO.	310G	310SG	315SG	REMARKS
1	R26906	O-RING	2	-XXXXXX	X	X		
	R26448	O-RING	2	XXXXXX-	X	X		
2	38H1172	ADAPTER FITTING	2	-XXXXXX	X	X		
	38H1160	ADAPTER FITTING	2	XXXXXX-	X	X		
3	T77613	O-RING	8		X	X		
4	AR21842	CLAMP	2		X			(SUB FOR C16054, THIS APPLICATION)
	C16054	CLAMP	2				X	
5	T105774	GUIDE	2		X	X		
6	38H1010	ELBOW FITTING	2	-XXXXXX	X	X		
	38H1004	ELBOW FITTING	2	XXXXXX-	X	X		
7	R26375	O-RING	2	-XXXXXX	X	X		
	R26448	O-RING	2	XXXXXX-	X	X		
8	T200362	HOSE SUPPORT	1		X	X		
9	24M7241	WASHER	1		X	X		
10	14M7276	NUT	1		X	X		
11	38H1160	ADAPTER FITTING	4		X	X		
12	R26448	O-RING	4		X	X		
13	AT197068	HYDRAULIC HOSE - FABRICATE	1		X	X		
14	AT197067	HYDRAULIC HOSE - FABRICATE	1		X	X		
15	AT196525	HYDRAULIC HOSE - FABRICATE	1		X	X		
16	AT196526	HYDRAULIC HOSE - FABRICATE	1		X	X		

5H15

STABILIZER CYLINDER HYDRAULICS
(315SG)

T163559 -UN-15JAN03

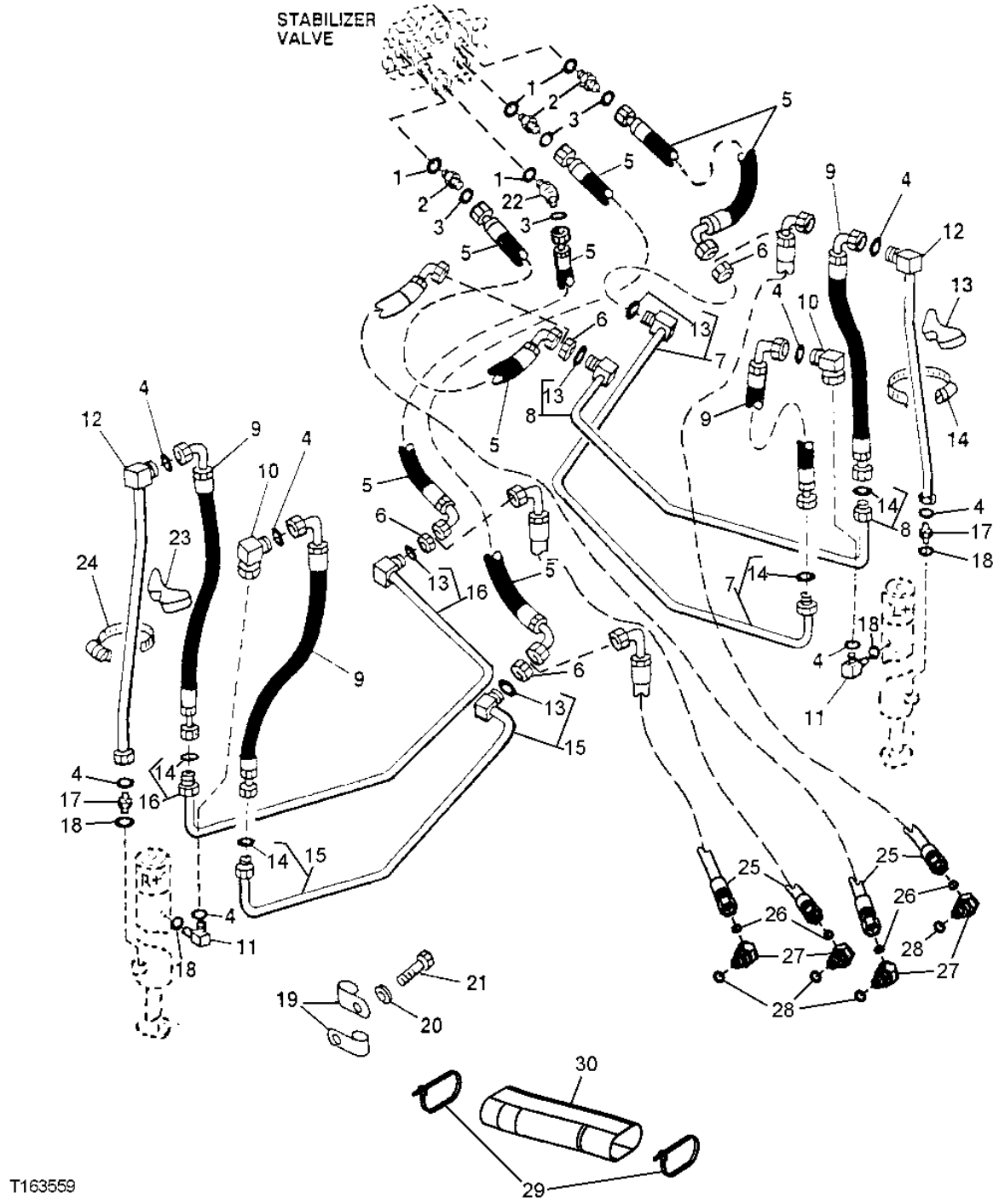

STABILIZER CYLINDER HYDRAULICS
(315SG)

KEY	PART NO.	PART NAME	QTY	SERIAL NO.	310G	310SG	315SG	REMARKS
1	R26375	O-RING	4	-913416			X	
2	38H1445	ADAPTER FITTING	3	-913416			X	
3	T77814	O-RING	4	-913416			X	
4	T77613	O-RING	8				X	
5	AT191252	HYDRAULIC HOSE - FABRICATE	4	-913416			X	
6	14H832	NUT	4				X	9/16"
7	AT196755	OIL LINE	1				X	(SUB FOR AT176542)
8	AT196754	OIL LINE	1				X	(SUB FOR AT176540)
9	AT171098	HYDRAULIC HOSE - FABRICATE	4				X	
10	38H1094	ELBOW FITTING	2				X	
11	38H1004	ELBOW FITTING	2				X	
12	AT178683	LINE	2				X	
13	T77814	O-RING	4				X	
14	T77613	O-RING	4				X	
15	AT196756	OIL LINE	1				X	(SUB FOR AT176543)
16	AT196757	OIL LINE	1				X	(SUB FOR AT176544)
17	38H1160	ADAPTER FITTING	2	-944155			X	
	38H1212	ADAPTER FITTING	2	944156-			X	
18	R26448	O-RING	4				X	
19	T38545	CLAMP	4				X	
20	24M7055	WASHER	2				X	8.400 X 16 X 1.600 MM
21	19M7932	CAP SCREW	2				X	M8 X 16
22	38H1582	ELBOW FITTING	1	-913416			X	45 DEGREE
23	T181801	CLAMP	2				X	(SUB FOR T101624, THIS APPLICATION)
24	AR21842	CLAMP	2				X	
25	AT196527	HYDRAULIC HOSE - FABRICATE	4	913417-			X	
26	T77613	O-RING	4	913417-			X	
27	38H1045	ELBOW FITTING	4	913417-			X	
28	R26448	O-RING	4	913417-			X	
29	N198516	TIE BAND	2	913417-			X	
30	.....	HOSE GUARD	2	913417-			X	(SUB FOR T161463, THIS APPLICATION) (MAKE FROM T78606, CUT TO 254 MM)

BOOM CYLINDER HYDRAULIC HOSES AND OIL LINES

T136774 -UN-27DEC00

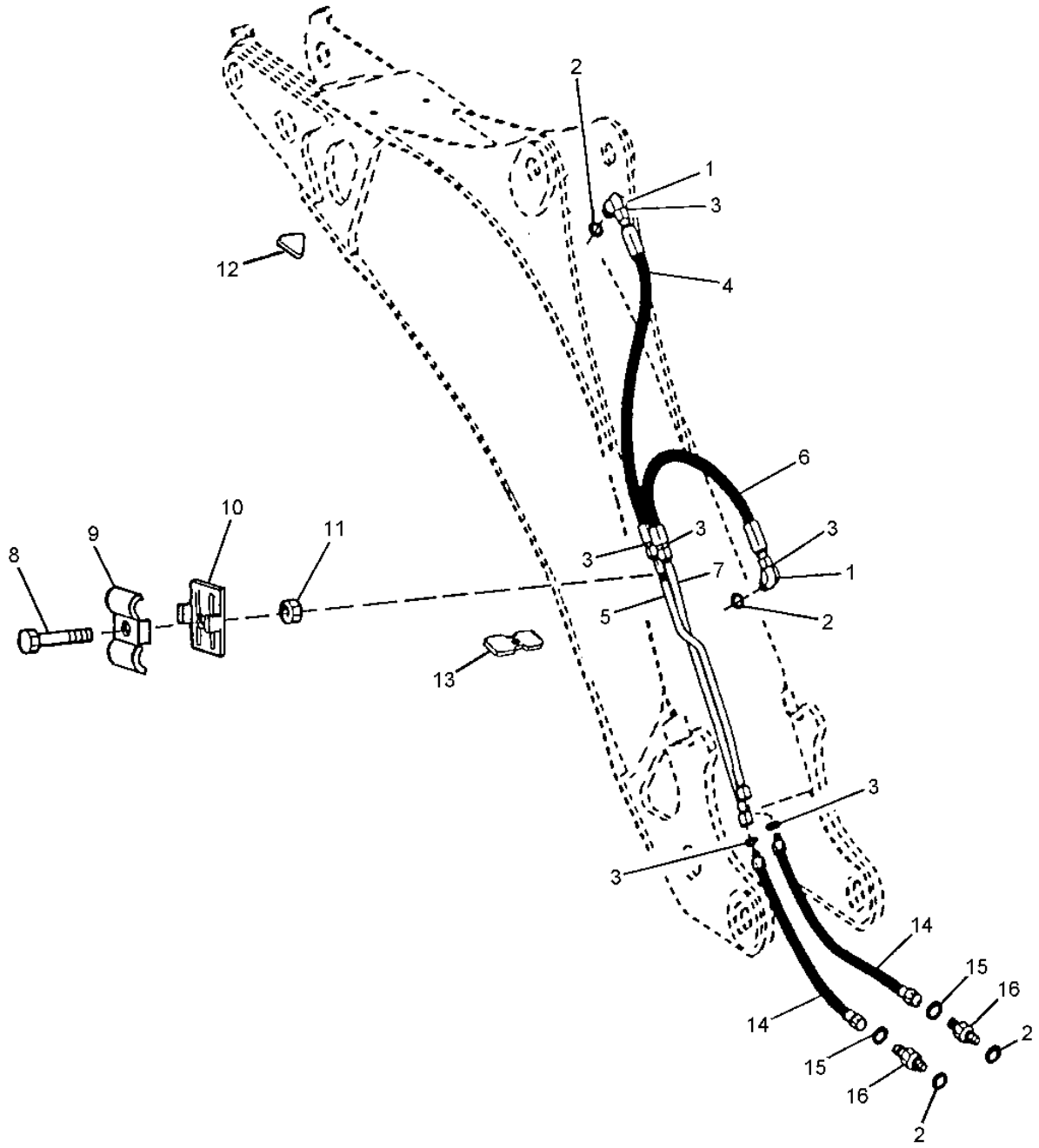

T136774

BOOM CYLINDER HYDRAULIC HOSES AND OIL LINES

KEY	PART NO.	PART NAME	QTY	SERIAL NO.	310G	310SG	315SG	REMARKS
1	38H1006	ELBOW FITTING	2		X	X	X	
2	R26906	O-RING	4		X	X	X	
3	T77932	O-RING	6		X	X	X	
4	AT174355	HYDRAULIC HOSE - FABRICATE	1		X	X	X	1" X 825 MM (32-1/2") X 1"
5	AT174208	OIL LINE	1		X	X	X	
6	AT179083	HYDRAULIC HOSE - FABRICATE	1		X	X	X	1" X 850 MM (33-1/2") X 1"
7	AT174209	OIL LINE	1		X	X	X	
8	19M7550	CAP SCREW	1		X	X	X	M10 X 35
9	T159954	CLAMP	1		X	X	X	
10	T159956	CLAMP	1		X	X	X	
11	14M7274	NUT	1		X	X	X	
12	T165742	ISOLATOR	1		X	X	X	
13	T165740	ISOLATOR	2		X	X	X	
14	AT177603	HYDRAULIC HOSE - FABRICATE	2	-911128	X	X		1" X 1 080 MM (42-1/2") X 1"
	AT280343	HYDRAULIC HOSE - FABRICATE	2	911129-	X	X		1" X 1 080 MM (42-1/2") X 1"
	AT180152	HYDRAULIC HOSE - FABRICATE	2	-911128			X	13/16" X 1 056 MM (41-1/2") X 1"
	AT280346	HYDRAULIC HOSE - FABRICATE	2	911129-			X	1" X 1 056 MM (41-1/2") X 1"
15	T77932	O-RING	2		X	X		
	T77857	O-RING	2				X	
16	38H1162	ADAPTER FITTING	2		X	X		
	38H1174	ADAPTER FITTING	2				X	

BUCKET CYLINDER HYDRAULIC HOSES,OIL LINES AND FITTINGS (STANDARD DIPPERSTICK)

TX1001365 -UN-15DEC05

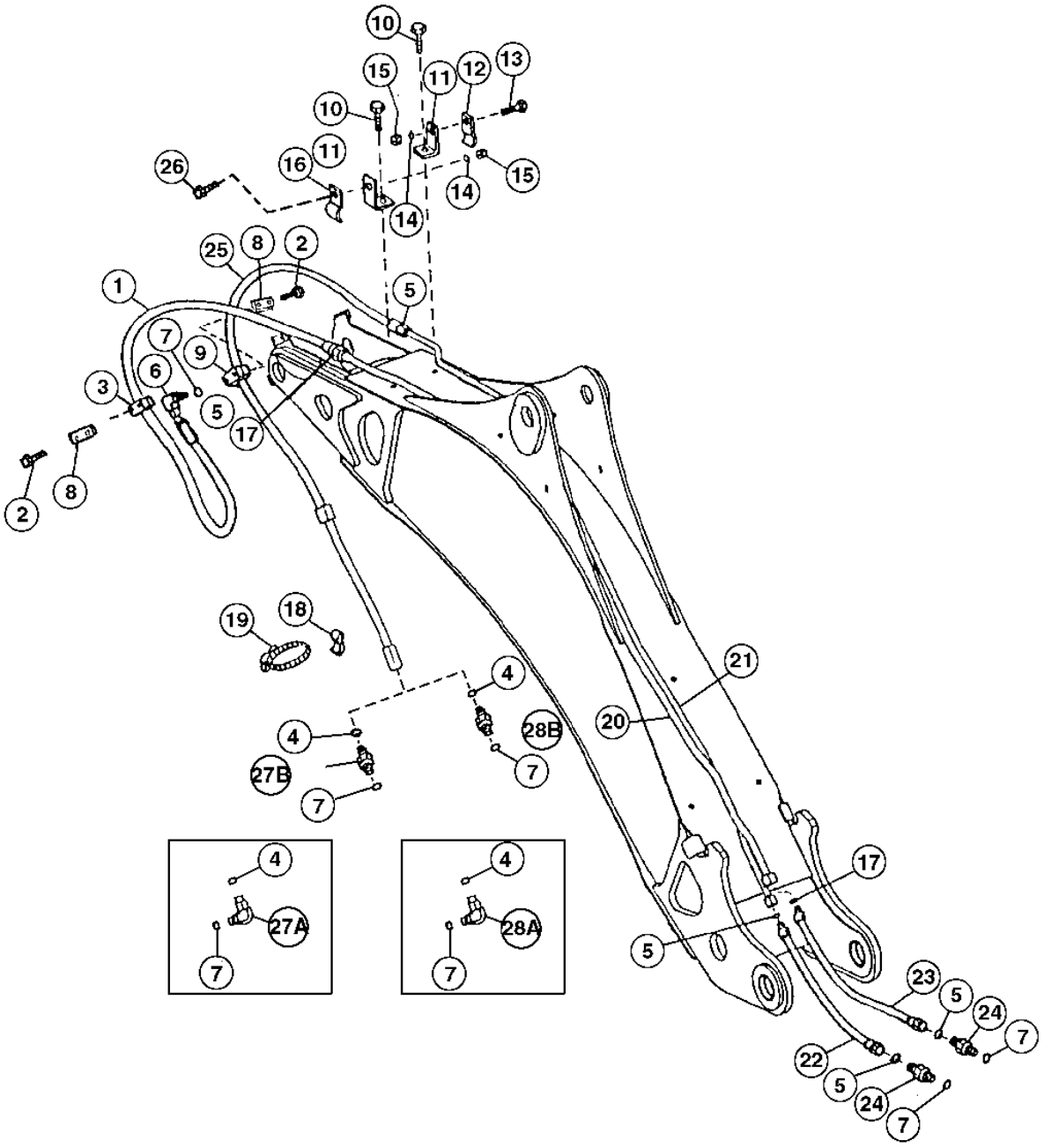

TX1001365

BUCKET CYLINDER HYDRAULIC HOSES,OIL LINES AND FITTINGS (STANDARD DIPPERSTICK)

KEY	PART NO.	PART NAME	QTY	SERIAL NO.	310G	310SG	315SG	REMARKS
1	AT174393	HYDRAULIC HOSE - FABRICATE	1		X	X	X	1" X 1 600 MM (63") X 1-3/16"
2	19M7981	CAP SCREW	4		X	X	X	M8 X 55
3	T162004	CLAMP	2		X	X	X	
4	T77932	O-RING	2		X	X	X	
5	T77932	O-RING	4		X	X	X	
6	38H1006	ELBOW FITTING	1		X	X	X	
	38H1404	ELBOW FITTING	1			X	X	USE WITH HEAVY DUTY CYLINDER
7	R26906	O-RING	4		X	X	X	
	U12547	O-RING	1			X	X	USE WITH HEAVY DUTY CYLINDER
8	T162005	STRAP	2		X	X	X	
9	T162003	CLAMP	2		X	X	X	
10	19M7550	CAP SCREW	2		X	X	X	M10 X 35
11	T202050	ANGLE	2		X	X	X	(SUB FOR T159829, THIS APPLICATION)
12	R46919	HALF CLAMP	1		X	X		
	U12288	CLAMP	1				X	
13	19M7550	CAP SCREW	1		X	X	X	M10 X 35
14	24M7239	WASHER	2		X	X	X	
15	14M7274	NUT	2		X	X	X	M10
16	T160376	CLAMP	1		X	X	X	
17	T77858	O-RING	2		X	X	X	
18	T105773	GUIDE	1		X	X	X	
19	AR21842	CLAMP	1		X			
	C16054	CLAMP	1			X	X	
20	AT176968	OIL LINE	1		X			
	AT174330	OIL LINE	1			X	X	
21	AT176969	OIL LINE	1		X			
	AT174336	OIL LINE	1			X	X	
22	AT177603	HYDRAULIC HOSE - FABRICATE	1	-911128	X	X		1" X 1 080 MM (42-1/2") X 1" LOWER TUBE
	AT280343	HYDRAULIC HOSE - FABRICATE	1	911129-	X	X		1" X 1 080 MM (42-1/2") X 1"
	AT180152	HYDRAULIC HOSE - FABRICATE	1	-911128			X	13/16" X 1 056 MM (41-1/2") X 1", LOWER
								TUBE / ROD END
	AT280346	HYDRAULIC HOSE - FABRICATE	1	911129-			X	1" X 1 056 MM (41-1/2") X 1"
23	AT177604	HYDRAULIC HOSE - FABRICATE	1	-911128	X	X		1" X 1 080 MM (42-1/2") X 1-3/16" UPPER
								TUBE
	AT280344	HYDRAULIC HOSE - FABRICATE	1	911129-	X	X		1" X 1 080 MM (42-1/2") X 1-3/16"
	AT181591	HYDRAULIC HOSE - FABRICATE	1	-911128			X	1" X 1 140 MM (45") X 1-3/16", UPPER
								TUBE / HEAD END
	AT280347	HYDRAULIC HOSE - FABRICATE	1	911129-			X	1" X 1 140 MM (45") X 1-3/16"
24	38H1214	ADAPTER FITTING	2		X	X		
25	AT174394	HYDRAULIC HOSE - FABRICATE	1		X	X	X	1" X 1 734 MM (68-1/4") X 1"
26	19M7550	CAP SCREW	1		X	X	X	M10 X 35
	28H3394	BUSHING	1			X		
27A	38H1006	ELBOW FITTING	1	-910900	X			
27B	38H1162	ADAPTER FITTING	1	910901-	X			
28A	38H1006	ELBOW FITTING	1	-926129		X	X	
28B	38H1162	ADAPTER FITTING	1	926130-		X	X	

BUCKET CYLINDER HYDRAULIC HOSES,OIL LINES AND FITTINGS (EXTENDIBLE DIPPERSTICK)

TX1001367 -UN-15DEC05

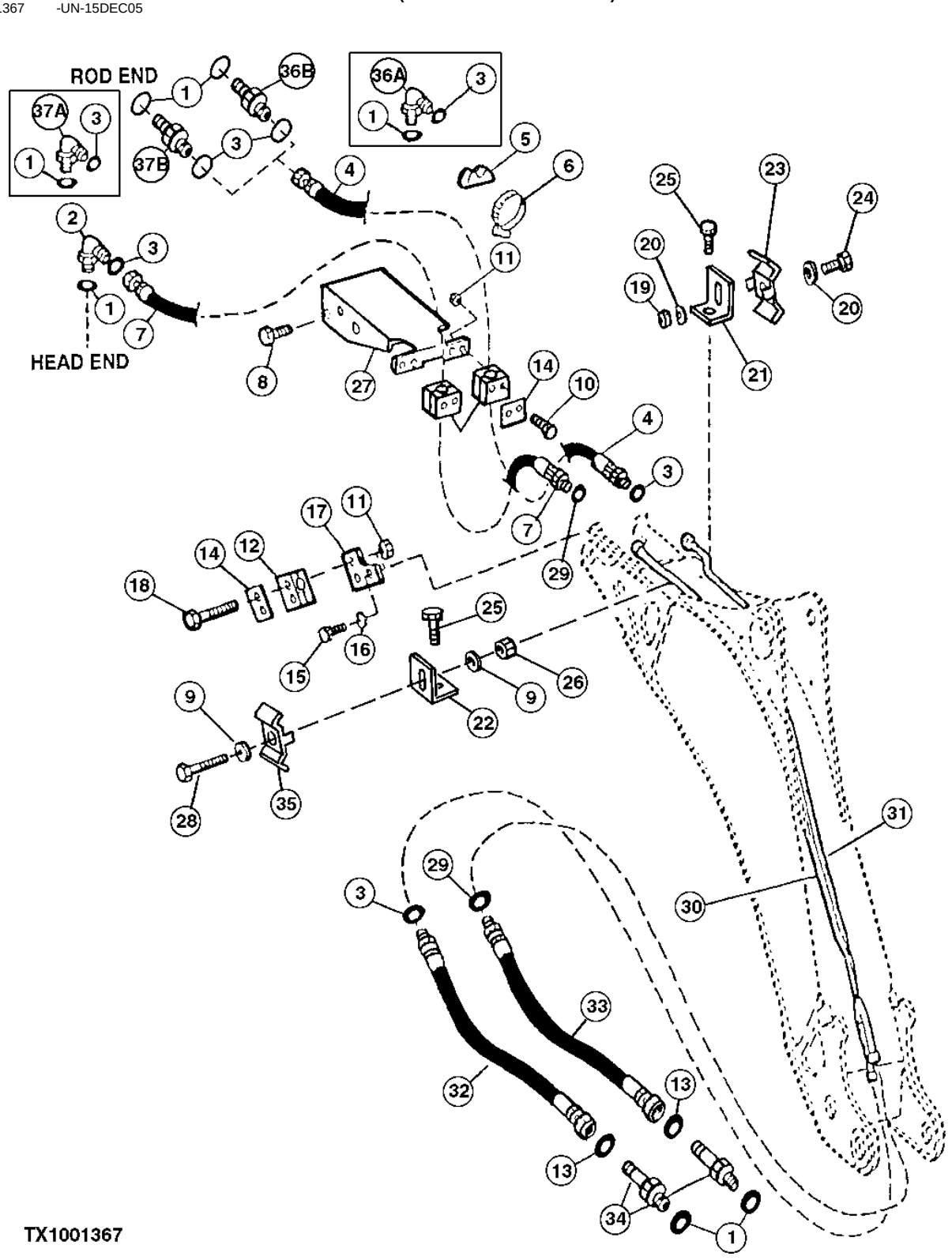

BUCKET CYLINDER HYDRAULIC HOSES,OIL LINES AND FITTINGS (EXTENDIBLE DIPPERSTICK)

KEY	PART NO.	PART NAME	QTY	SERIAL NO.	310G	310SG	315SG	REMARKS
1	R26906	O-RING	4		X	X	X	
2	38H1006	ELBOW FITTING	1		X	X	X	
3	T77932	O-RING	6		X	X	X	
4	AT170172	HYDRAULIC HOSE - FABRICATE	1		X	X	X	1" X 2 892 MM (113-3/4") X 1"
5	T105773	GUIDE	1		X	X	X	
6	AR21842	CLAMP	1		X			
	C16054	CLAMP	1			X	X	
7	AT170173	HYDRAULIC HOSE - FABRICATE	1		X	X	X	1" X 2 000 MM (78-3/4") X 1-3/16"
8	T165889	SCREW	4		X	X	X	M10 X 30
9	24M7239	WASHER	2		X	X	X	10.700 X 21 X 2.500 MM
10	19M7185	CAP SCREW	4		X	X	X	M8 X 60
11	14M7426	LOCK NUT	4		X	X	X	
12	T162004	CLAMP	8		X	X	X	
13	T77932	O-RING	2		X	X	X	
14	T162005	STRAP	4		X	X	X	
15	19M7932	CAP SCREW	2		X	X	X	M8 X 16
16	24M7238	WASHER	2		X	X	X	
17	T161342	PLATE	2		X	X	X	
18	19M7185	CAP SCREW	2		X	X	X	M8 X 60
19	14M7274	NUT	2		X	X	X	M10
20	24M7239	WASHER	4		X	X	X	
21	T202050	ANGLE	1		X	X	X	(SUB FOR T159829, THIS APPLICATION)
22	T202050	ANGLE	1		X	X	X	(SUB FOR T159829, THIS APPLICATION)
23	T159954	CLAMP	1		X	X	X	
24	19M7550	CAP SCREW	2		X	X	X	M10 X 35
25	19M7550	CAP SCREW	2		X	X	X	M10 X 35
26	14M7274	NUT	2		X	X	X	M10
27	AT179233	BRACKET	1		X			
	AT179046	HOSE SUPPORT	1			X	X	
28	19M7662	CAP SCREW	2		X	X	X	M10 X 30
29	T77858	O-RING	2		X	X	X	
30	AT176968	OIL LINE	1		X			
	AT174330	OIL LINE	1			X	X	
31	AT176969	OIL LINE	1		X			
	AT174336	OIL LINE	1			X	X	
32	AT177603	HYDRAULIC HOSE - FABRICATE	1	-911128	X	X		1" X 1 080 MM (42-1/2") X 1", LOWER TUBE
	AT280343	HYDRAULIC HOSE - FABRICATE	1	911129-	X	X		1" X 1 080 MM (42-1/2") X 1"
	AT180152	HYDRAULIC HOSE - FABRICATE	1	-911128			X	13/16" X 1 056 MM (41-1/2") X 1", LOWER TUBE/ROD END
	AT280346	HYDRAULIC HOSE - FABRICATE	1	911129-			X	1" X 1 056 MM (41-1/2") X 1"
33	AT177604	HYDRAULIC HOSE - FABRICATE	1	-911128	X	X		1" X 1 080 MM (42-1/2") X 1-3/16", UPPER TUBE
	AT280344	HYDRAULIC HOSE - FABRICATE	1	911129-	X	X		1" X 1 080 MM (42-1/2") X 1-3/16"
	AT181591	HYDRAULIC HOSE - FABRICATE	1	-911128			X	1" X 1 140 MM (45") X 1-3/16", UPPER TUBE/HEAD END, (SUB FOR AT180153)
	AT280347	HYDRAULIC HOSE - FABRICATE	1	911129-			X	1" X 1 140 MM (45") X 1-3/16"
34	38H1214	ADAPTER FITTING	2		X	X		
35	T160554	CLAMP	1		X	X		
36A	38H1006	ELBOW FITTING	1	-910900	X			
36B	38H1162	ADAPTER FITTING	1	910901-	X			
37A	38H1006	ELBOW FITTING	1	-926129		X	X	
37B	38H1162	ADAPTER FITTING	1	926130-		X	X	

CROWD CYLINDER HYDRAULIC HOSES AND OIL LINES

T196761 -UN-18DEC03

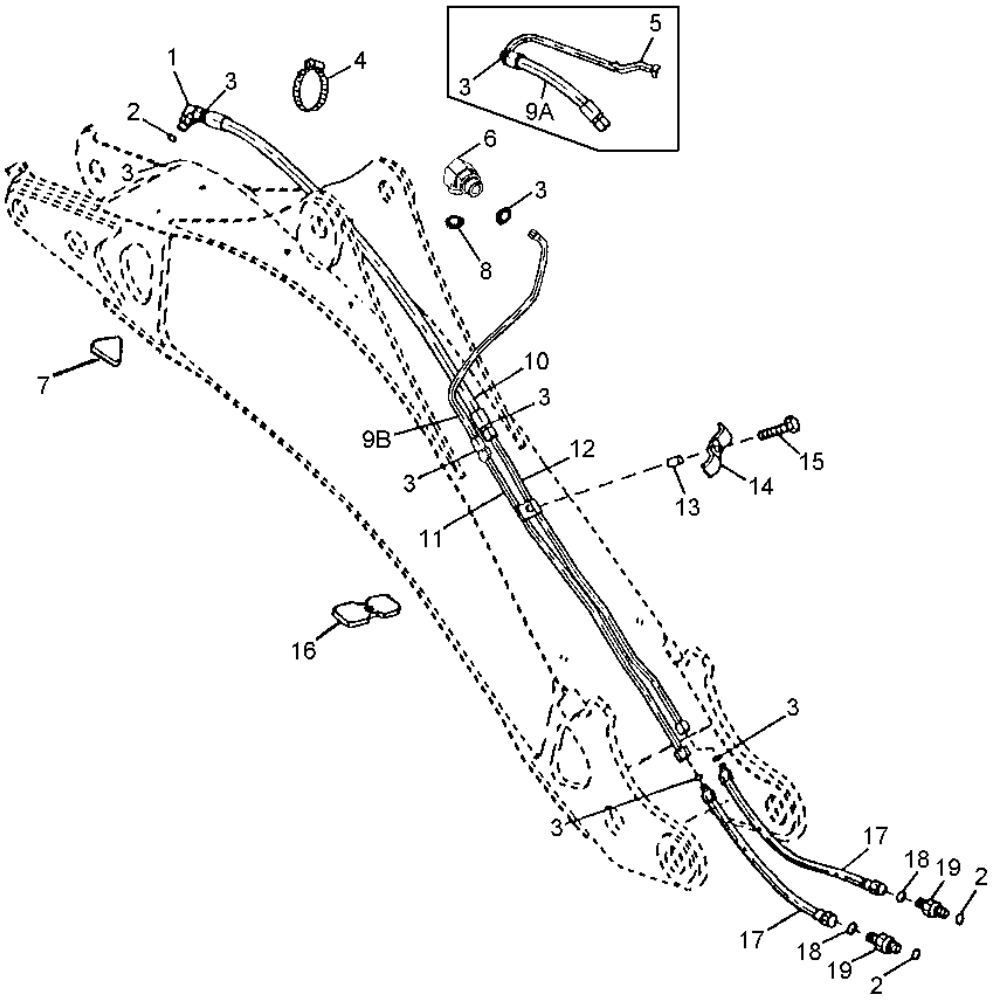

T196761

CROWD CYLINDER HYDRAULIC HOSES AND OIL LINES

KEY	PART NO.	PART NAME	QTY	SERIAL NO.	310G	315SG	REMARKS
1	38H1006	ELBOW FITTING	1		X	X X	
2	R26906	O-RING	3		X	X X	
3	T77932	O-RING	7		X	X X	
4	C16054	CLAMP	1	-925501	X	X X	
	R76477	TIE BAND	1		X	X X	(SUB FOR A49232)
5	AT177540	OIL LINE	1	-925501	X	X X	
6	38H1404	ELBOW FITTING	1		X	X X	
7	T165742	ISOLATOR	2		X	X X	
8	U12547	O-RING	1		X	X X	
9A	.....	HYDRAULIC HOSE - FABRICATE	1	-925501	X	X X	(AT179835 NO LONGER AVAILABLE) (SUB AT179083)
9B	AT179083	HYDRAULIC HOSE - FABRICATE	1	925502-	X	X X	1" X 850 MM (33-1/2") X 1"
10	AT174353	HYDRAULIC HOSE - FABRICATE	1		X	X X	1" X 1 245 MM (49") X 1"
11	AT174268	OIL LINE	1		X	X X	
12	AT174269	OIL LINE	1		X	X X	
13	28H3421	SPACER	1		X	X X	
14	T159954	CLAMP	1		X	X X	
15	19M7572	CAP SCREW	1		X	X X	M10 X 45
16	T165740	ISOLATOR	2		X	X X	
17	AT177603	HYDRAULIC HOSE - FABRICATE	2	-811128	X	X	1" X 1 080 MM (42-1/2") X 1"
	AT280343	HYDRAULIC HOSE - FABRICATE	2	811129-	X	X	1" X 1 080 MM (42-1/2") X 1"
	AT180152	HYDRAULIC HOSE - FABRICATE	2	-811128		X	13/16" X 1 056 MM (41-1/2") X 1"
	AT280346	HYDRAULIC HOSE - FABRICATE	2	811129-		X	1" X 1 056 MM (41-1/2") X 1"
18	T77932	O-RING	2		X	X	
	T77857	O-RING	2			X	
19	38H1214	ADAPTER FITTING	2		X	X	
	38H1174	ADAPTER FITTING	2			X	

SWING CYLINDER HYDRAULIC HOSES AND FITTINGS
(310G AND 310SG)

TP52821 -UN-01OCT96

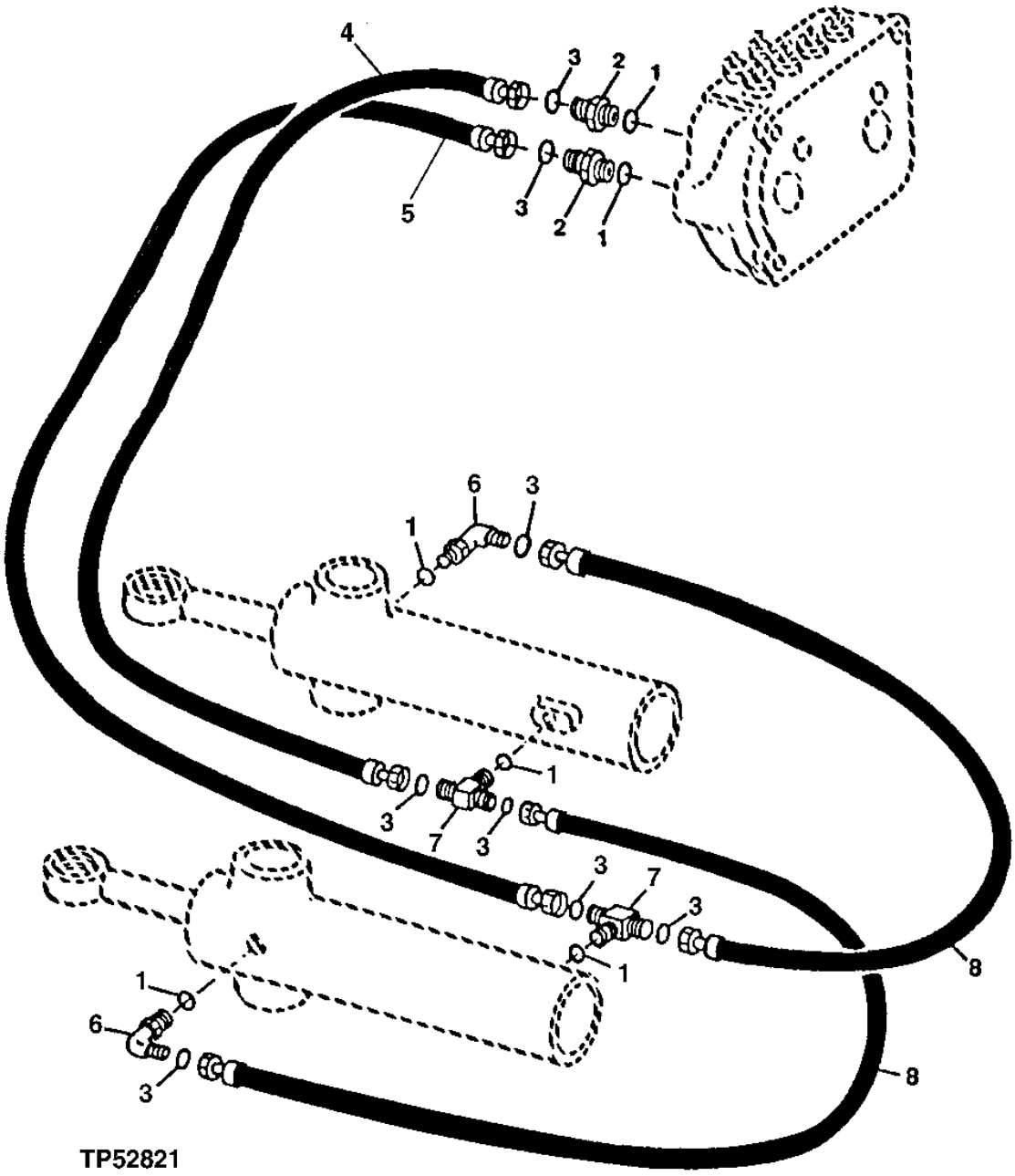

SWING CYLINDER HYDRAULIC HOSES AND FITTINGS
(310G AVD 310SG)

KEY	PART NO.	PART NAME	QTY	SERIAL NO.	310G	310SG	315SG	REMARKS
1	R26375	O-RING	6		X	X		
2	38H1161	ADAPTER FITTING	2		X	X		
3	T77857	O-RING	8		X	X		
4	AT176157	HYDRAULIC HOSE - FABRICATE	1		X	X		13/16" X 880 MM (34-3/4") X 13/16"
5	AT171758	HYDRAULIC HOSE - FABRICATE	1		X	X		13/16" X 813 MM (32") X 13/16"
6	38H1005	ELBOW FITTING	2		X	X		
7	38H1017	TEE FITTING	2		X	X		
8	AT171759	HYDRAULIC HOSE - FABRICATE	2		X	X		13/16" X 914 MM (36") X 13/16"

SWING CYLINDER HYDRAULICS
(315SG)

T136725 -UN-03JAN01

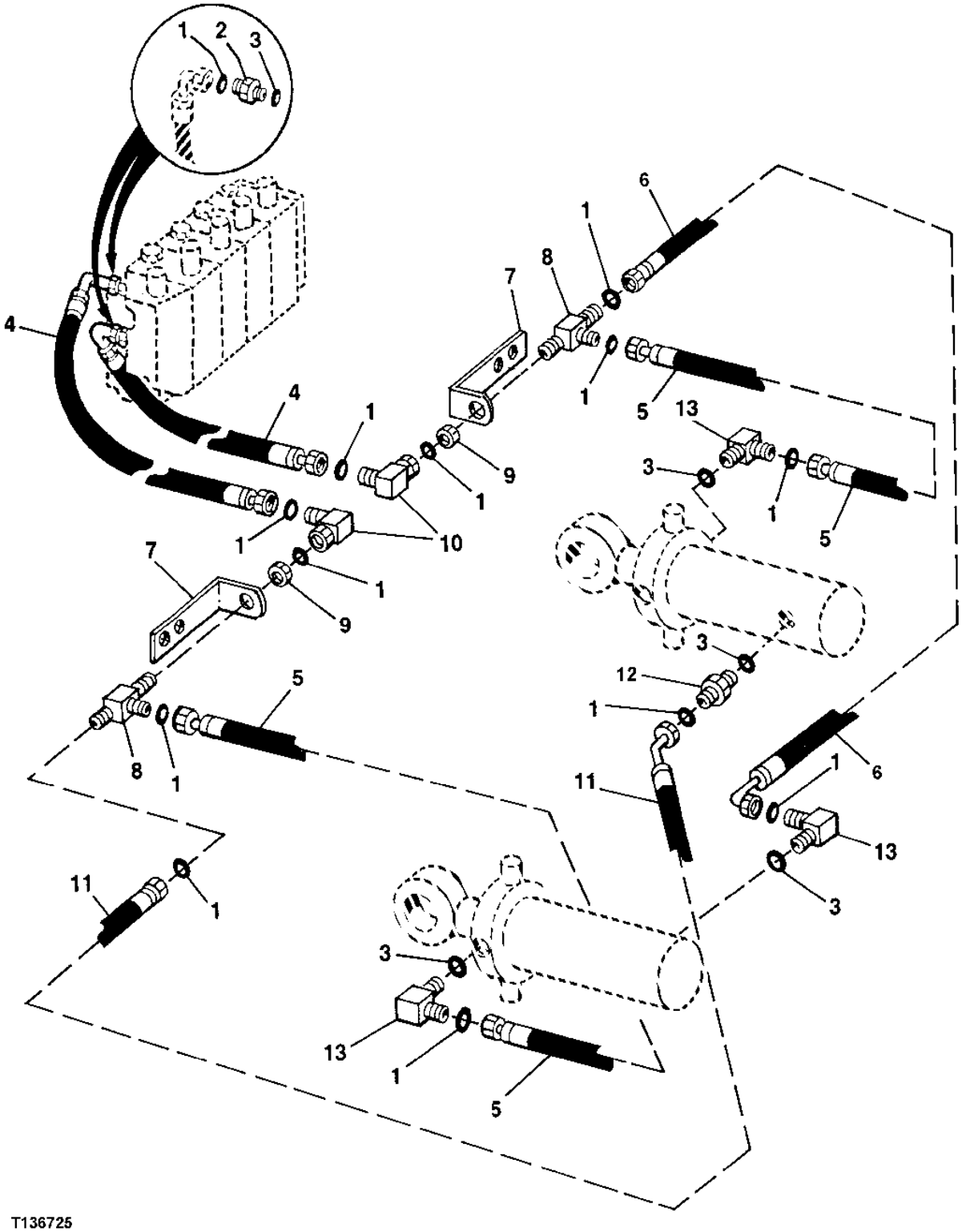

SWING CYLINDER HYDRAULICS
(315SG)

KEY	PART NO.	PART NAME	QTY	SERIAL NO.	310G	315SG	REMARKS
1	T77613	O-RING	16			X	
2	38H1171	ADAPTER FITTING	2			X	
3	R26375	O-RING	6			X	
4	AT191140	HYDRAULIC HOSE - FABRICATE	2			X	11/16" X 2 285 MM (90") X 11/16"
5	AT182599	HYDRAULIC HOSE - FABRICATE	2			X	11/16" X 525 MM (20-3/4") X 11/16"
6	AT182598	HYDRAULIC HOSE - FABRICATE	1			X	11/16" X 735 MM (29") X 11/16"
7	T163455	BRACKET	2			X	
8	38H1503	TEE FITTING	2			X	
9	T81029	NUT	2			X	11/16"
10	38H1094	ELBOW FITTING	2			X	
11	AT182597	HYDRAULIC HOSE - FABRICATE	1			X	11/16" X 775 MM (30-1/2") X 11/16"
12	38H1171	ADAPTER FITTING	1			X	
13	38H1010	ELBOW FITTING	3			X	

EXTENSION CYLINDER HYDRAULIC HOSES,OIL LINES AND FITTINGS (EXTENDIBLE DIPPERSTICK)

T154144 -UN-18APR02

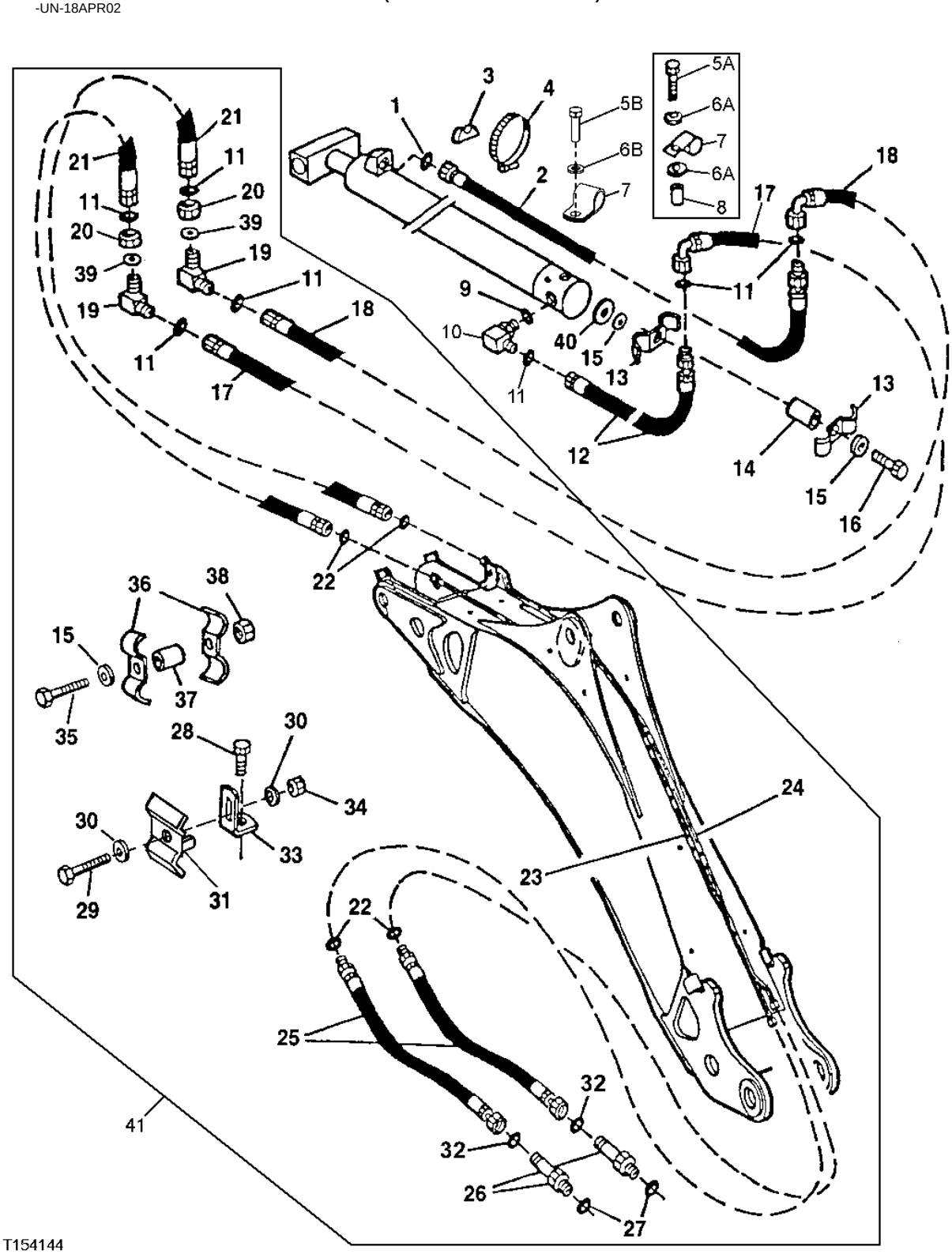

EXTENSION CYLINDER HYDRAULIC HOSES,OIL LINES AND FITTINGS (EXTENDIBLE DIPPERSTICK)

KEY	PART NO.	PART NAME	QTY	SERIAL NO.	310G	310SG	315SG	REMARKS
1	R26448	O-RING	1		X	X	X	
2	AT172255	HYDRAULIC HOSE - FABRICATE	2		X	X	X	9/16" X 1 815 MM (71-1/2") X 13/16"
3	T105774	GUIDE	1		X	X	X	
4	AR21841	CLAMP	1		X	X	X	
5A	19M7513	CAP SCREW	1	-906309	X	X	X	M8 X 30
5B	M86877	BOLT	1	906310-	X	X	X	M8 X 20
6A	24M7238	WASHER	2	-906309	X	X	X	
6B	24M7238	WASHER	1	906310-	X	X	X	
7	T24959	CLAMP	1		X	X	X	
8	R54701	SPACER	1	-906309	X	X	X	
9	R26375	O-RING	1		X	X	X	
10	38H1005	ELBOW FITTING	1		X	X	X	
11	T77857	O-RING	7		X	X	X	
12	AT172256	HYDRAULIC HOSE - FABRICATE	1		X	X	X	13/16" X 590 MM (23-1/4") X 13/16"
13	R46919	HALF CLAMP	2		X	X	X	
14	T126052	SPACER	1		X	X	X	
15	24M7239	WASHER	4		X	X	X	
16	19M7935	CAP SCREW	1		X	X	X	M10 X 55
17	AT179238	HYDRAULIC HOSE	1		X	X	X	13/16" X 460 MM (18") X 13/16"
18	AT179238	HYDRAULIC HOSE	1		X	X	X	13/16" X 460 MM (18") X 13/16"
19	38H1323	ELBOW FITTING	2		X	X	X	
20	T78716	NUT	2		X	X	X	13/16"
21	AT178413	HYDRAULIC HOSE - FABRICATE	2		X	X	X	13/16" X 1 200 MM (47-1/4") X 1", (SUB FOR AT178405)
22	T77932	O-RING	4		X	X	X	
23	AT176982	OIL LINE	1		X			UPPER TUBE
	AT174339	OIL LINE	1			X	X	UPPER TUBE
24	AT176983	LINE	1		X			LOWER TUBE
	AT174340	OIL LINE	1			X	X	LOWER TUBE
25	AT177603	HYDRAULIC HOSE - FABRICATE	2	-911128	X	X		1" X 1 080 MM (42-1/2") X 1"
	AT280343	HYDRAULIC HOSE - FABRICATE	2	911129-	X	X		1" X 1 080 MM (42-1/2") X 1"
	AT180152	HYDRAULIC HOSE - FABRICATE	2	-911128			X	13/16" X 1 056 MM (41-1/2") X 1"
	AT280346	HYDRAULIC HOSE - FABRICATE	2	911129-			X	1" X 1 056 MM (41-1/2") X 1"
26	38H1214	ADAPTER FITTING	2		X	X		
	38H1174	ADAPTER FITTING	2				X	
27	R26906	O-RING	2		X	X	X	
28	19M7550	CAP SCREW	2		X	X	X	M10 X 35
29	19M7550	CAP SCREW	2		X	X	X	M10 X 35
30	24M7239	WASHER	4		X	X	X	
31	T160554	CLAMP	1		X	X	X	LEFT
	T159954	CLAMP	1		X	X	X	RIGHT
32	T77932	O-RING	2		X	X		
	T77857	O-RING	2				X	
33	T202050	ANGLE	2		X	X	X	(SUB FOR T159829, THIS APPLICATION)
34	14M7274	NUT	2		X	X	X	M10
35	19M8637	CAP SCREW	2		X	X	X	M10 X 40
36	R46919	HALF CLAMP	4		X	X	X	
37	28H3381	SPACER	2		X	X	X	
38	14M7274	NUT	2		X	X	X	M10
39	24M7396	WASHER	4		X	X	X	21 X 34 X 3 MM
40	T29342	WASHER	1		X	X	X	13.487 X 31.750 X 4.572 MM
41	AT178784	KIT	1		X			(WHOLE GOODS) (INCLUDES AT170172, AT170173, (8) T147187 AND AT179233) (ALSO INCLUDES BUCKET CYLINDER CLAMPS AND HARDWARE)
	AT191548	KIT	1			X	X	(WHOLE GOODS) (INCLUDES AT170172, AT170173, (8) T147187 AND AT179046) (ALSO INCLUDES BUCKET CYLINDER CLAMPS AND HARDWARE)

AUXILIARY EQUIPMENT HYDRAULICS
(STANDARD DIPPERSTICK)
(310G AND 310SG)

T210119 -UN-05APR05

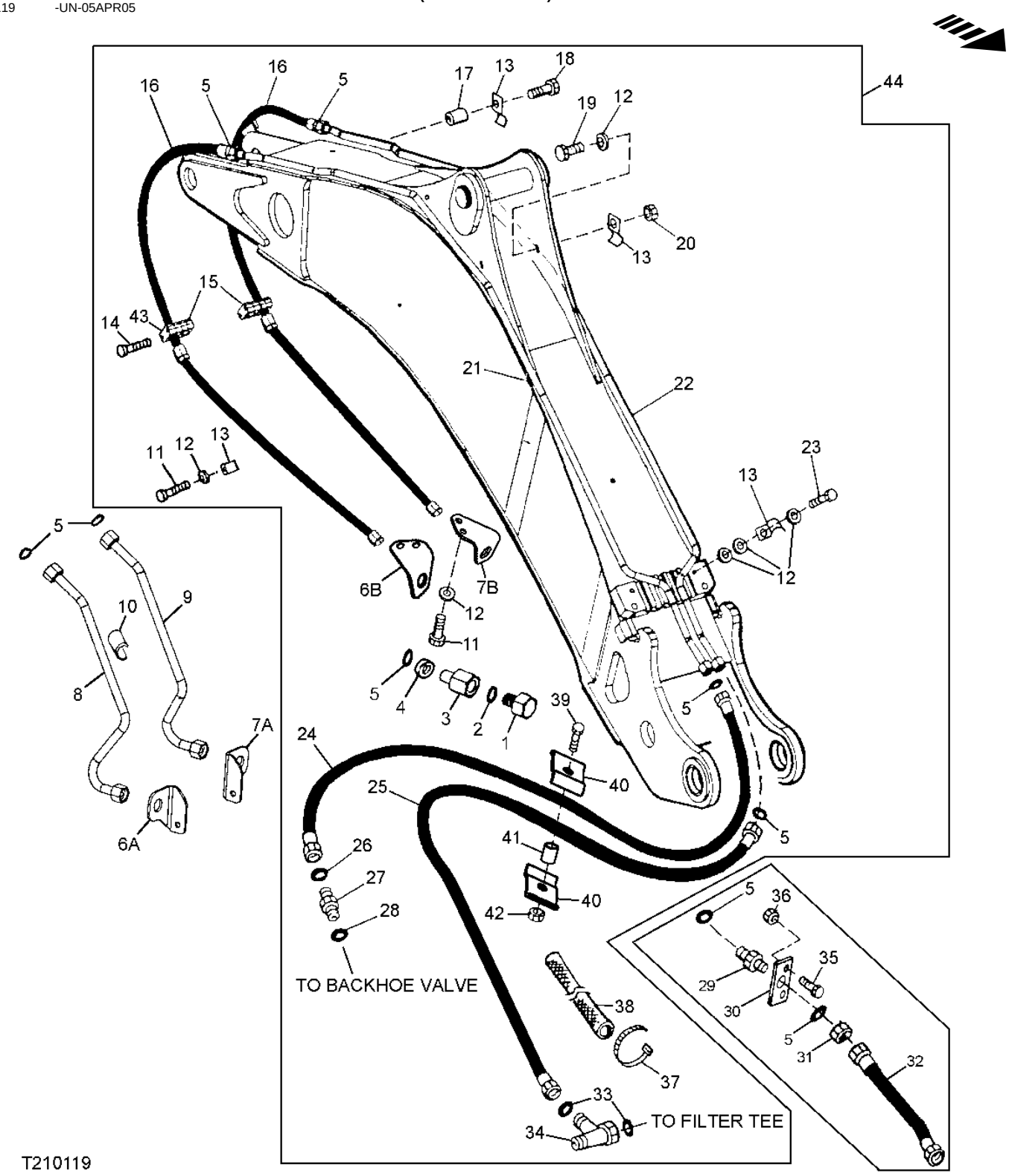

AUXILIARY EQUIPMENT HYDRAULICS
(STANDARD DIPPERSTICK)
(310G AND 310SG)

KEY	PART NO.	PART NAME	QTY	SERIAL NO.	310G	310SG	315SG	REMARKS
1	R27175	DRAIN PLUG	2		X	X		
2	U12547	O-RING	2		X	X		
3	T163702	REDUCER	2		X	X		
4	T78707	NUT	2		X	X		
5	T77858	O-RING	10		X	X		
6A	T162682	BRACKET	1	-940475	X	X		
6B	T205636	BRACKET	1	940476-	X	X		
7A	T162681	BRACKET	1	-940475	X	X		
7B	T205637	BRACKET	1	940476-	X	X		
8	AT181680	OIL LINE	1	-940475	X			
	AT181885	OIL LINE	1	-940475		X		
9	AT181679	OIL LINE	1	-940475	X			
	AT181884	OIL LINE	1	-940475		X		
10	T107029	CONDUIT	2		X	X		.812 MAX X .500 ID HOSE
11	19M7662	CAP SCREW	AR		X	X		M10 X 30
12	24M7239	WASHER	AR		X	X		
13	T160376	CLAMP	12		X	X		
14	19M8456	CAP SCREW	4	-952642	X	X		M8 X 100
	24M7238	WASHER	4	-952642	X	X		
	19M8006	SCREW	4	952643-	X	X		M8 X 120
	14M7298	FLANGE NUT	4	952643-	X	X		M8
15	T162004	CLAMP	4		X	X		
16	AT179036	HYDRAULIC HOSE - FABRICATE	2	-940475	X	X		1-3/16" X 1 092 MM (43") X 1-3/16"
	AT310257	HYDRAULIC HOSE - FABRICATE	2	940476-	X	X		13/16" X 1 691 MM (66-1/2") X 13/16"
17	T126052	SPACER	2		X	X		
18	19M7572	CAP SCREW	2		X	X		M10 X 45
19	03M7192	BOLT	4		X	X		M10 X 30
20	14M7274	NUT	4		X	X		
21	AT179031	HYDRAULIC LINE	1	-952642	X			
	AT329520	HYDRAULIC LINE	1	953643-	X			
	AT178376	HYDRAULIC LINE	1			X		
22	AT179030	HYDRAULIC LINE	1	-952642	X			
	AT329519	HYDRAULIC LINE	1	953643-	X			
	AT178375	HYDRAULIC LINE	1			X		
23	19M8183	CAP SCREW	2		X	X		M10 X 90
24	AT179033	HYDRAULIC HOSE - FABRICATE	1	-911128	X	X		1" X 1 207 MM (47-1/2") X 1-3/16"
	AT280350	HYDRAULIC HOSE - FABRICATE	1	911129-	X	X		1" X 1 207 MM (47-1/2") X 1-3/16"
25	AT191859	HYDRAULIC HOSE - FABRICATE	1	-911128	X	X		1-3/16" X 1 321 MM (52") X 1"
	AT280345	HYDRAULIC HOSE - FABRICATE	1	911129-940475	X	X		1-3/16" X 1 321 MM (52") X 1-3/16"
	AT309710	HYDRAULIC HOSE - FABRICATE	1	940476-	X	X		13/16" X 2 057 MM (81") X 13/16"
26	T77932	O-RING	1		X	X		
27	38H1329	ADAPTER FITTING	1		X	X		
28	U12547	O-RING	1		X	X		
29	38H1276	ADAPTER FITTING	1	-940475	X	X		
30	T184579	STRAP	1	-913416	X	X		
31	T78707	NUT	1	-940475	X	X		1-3/16"
32	AT190762	HYDRAULIC HOSE - FABRICATE	1	-940475	X	X		1-3/16" X 710 MM (28") X 1-7/16"
33	T76938	O-RING	2		X	X		
34	38H1002	TEE FITTING	1		X	X		
35	19M7662	CAP SCREW	2	-913416	X	X		
36	14M7274	NUT	2	-913416	X	X		
37	H77698	TIE BAND	2	940476-	X	X		
38	.....	CONDUIT	1	940476-	X	X		(MAKE FROM T107029, CUT TO 14.190")
39	19M8637	CAP SCREW	1	940476-	X	X		M10 X 40
40	R46919	HALF CLAMP	2	940476-	X	X		
41	28H3416	BUSHING	1	940476-	X	X		0.493" X 0.675" X 13/16"
42	14M7274	NUT	1	940476-	X	X		M10
43	T162005	STRAP	2		X	X		
44	.....	KIT	1	-940475	X			(AT197243 NO LONGER AVAILABLE) (SUB FOR AT190653) (SUB AT329662)
	AT329662	**KIT**	**1**	**940476-**	**X**			**(WHOLE GOODS) (SUB FOR AT309706)**
	AT197253	**KIT**	**1**	**-940475**		**X**		**(WHOLE GOODS) (SUB FOR AT191838)**
	AT309567	**KIT**	**1**	**940476-**		**X**		**(WHOLE GOODS)**

**AUXILIARY EQUIPMENT HYDRAULICS
(STANDARD DIPPERSTICK)
(315SG)**

T202514 -UN-09SEP04

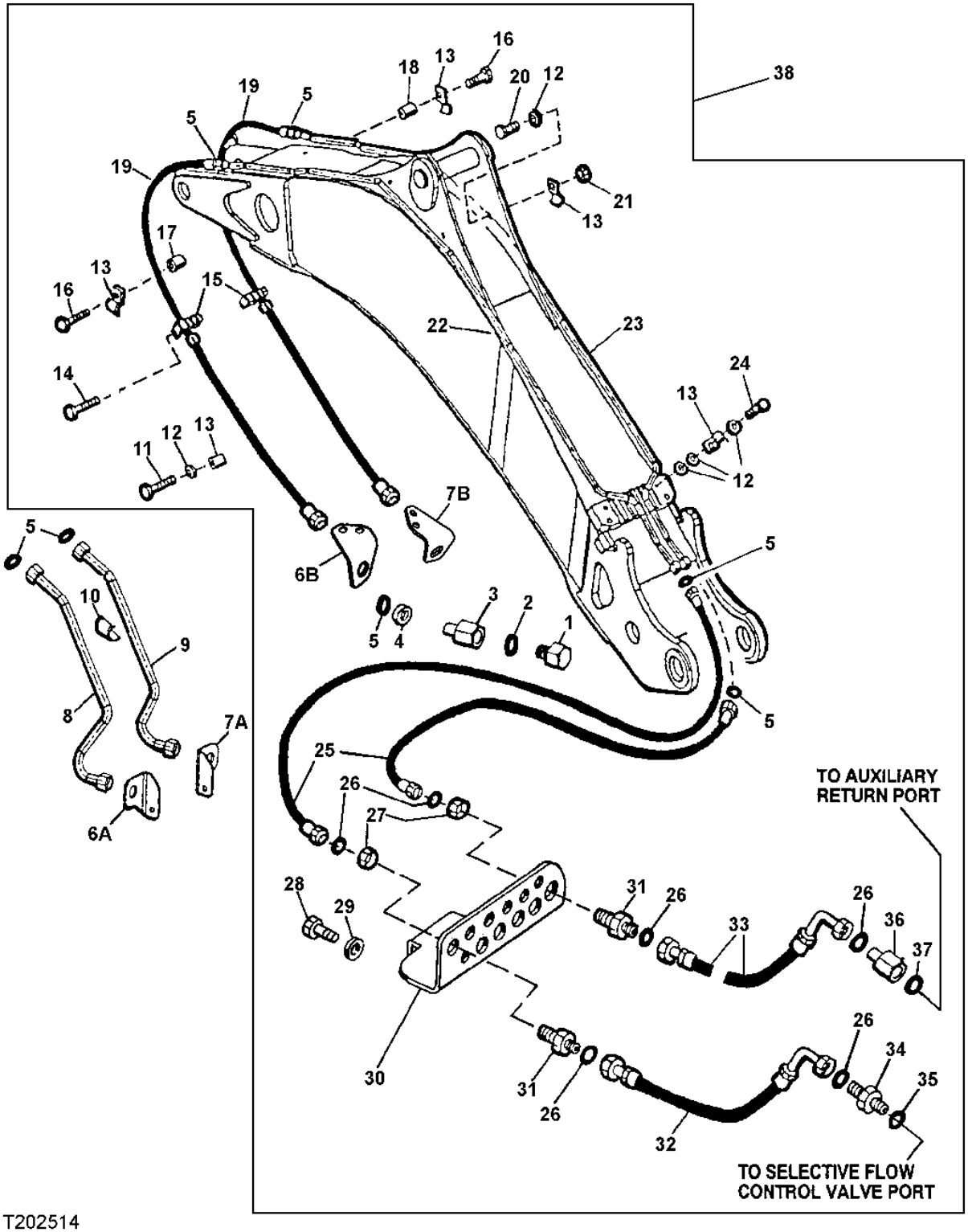

T202514

AUXILIARY EQUIPMENT HYDRAULICS
(STANDARD DIPPERSTICK)
(315SG)

KEY	PART NO.	PART NAME	QTY	SERIAL NO.	310G	315SG	REMARKS
1	R27175	PLUG	2			X	
2	U12547	O-RING	2			X	
3	T163702	REDUCER	2			X	
4	T78707	NUT	2			X	
5	T77858	O-RING	8			X	
6A	T162682	BRACKET	1	-940475		X	
6B	T205636	BRACKET	1	940476-		X	
7A	T162681	BRACKET	1	-940475		X	
7B	T205637	BRACKET	1	940476-		X	
8	AT181885	HYDRAULIC LINE	1	-940475		X	
9	AT181884	HYDRAULIC LINE	1	-940475		X	
10	.....	ISOLATOR	2			X	.812 MAX X .500 ID HOSE
11	19M7662	CAP SCREW	4			X	M10 X 30
12	24M7239	WASHER	AR			X	
13	T160376	CLAMP	10			X	
14	19M8456	CAP SCREW	4			X	M8 X 100
15	T162004	CLAMP	4			X	
16	19M7572	CAP SCREW	2			X	M10 X 45
17	28H3383	SPACER	1			X	
18	T126052	SPACER	1			X	
19	AT179036	HYDRAULIC HOSE - FABRICATE	2	-940475		X	1-3/16" X 1 092 MM (43") X 1-3/16"
	AT310257	HYDRAULIC HOSE - FABRICATE	2	940476-		X	13/16" X 1 691 MM (66-1/2") X 13/16"
20	03M7192	BOLT	4			X	M10 X 30
21	14M7274	NUT	4			X	M10
22	AT178376	OIL LINE	1			X	
23	AT178375	OIL LINE	1			X	
24	19M8183	CAP SCREW	2			X	M10 X 90
25	AT181591	HYDRAULIC HOSE - FABRICATE	2	-911128		X	1" X 1 140 MM (45") X 1-3/16"
	AT280347	HYDRAULIC HOSE - FABRICATE	2	911129-		X	1" X 1 140 MM (45") X 1-3/16"
26	T77932	O-RING	6			X	
27	T80306	NUT	2			X	1"
28	19M7872	CAP SCREW	2			X	M12 X 25
29	24M7047	WASHER	2			X	
30	T163225	PLATE	1			X	(NOT INCLUDED IN KIT)
31	38H1286	ADAPTER FITTING	2			X	
32	AT191146	HYDRAULIC HOSE - FABRICATE	1			X	1" X 2 400 MM (94-1/2") X 1"
33	AT191147	HYDRAULIC HOSE - FABRICATE	1			X	1" X 1 885 MM (74-1/4") X 1"
34	38H1162	ADAPTER FITTING	1			X	
35	R26906	O-RING	1			X	
36	38H1476	REDUCER	1			X	
37	R29936	O-RING	1			X	
38	**AT197259**	**KIT**	**1**	**-940475**		**X**	**(WHOLE GOODS) (SUB FOR AT191545)**
	AT309577	**KIT**	**1**	**940476-**		**X**	**(WHOLE GOODS)**

AUXILIARY EQUIPMENT HYDRAULICS
(EXTENDIBLE DIPPERSTICK)
(310G AND 310SG)

T210120 -UN-05APR05

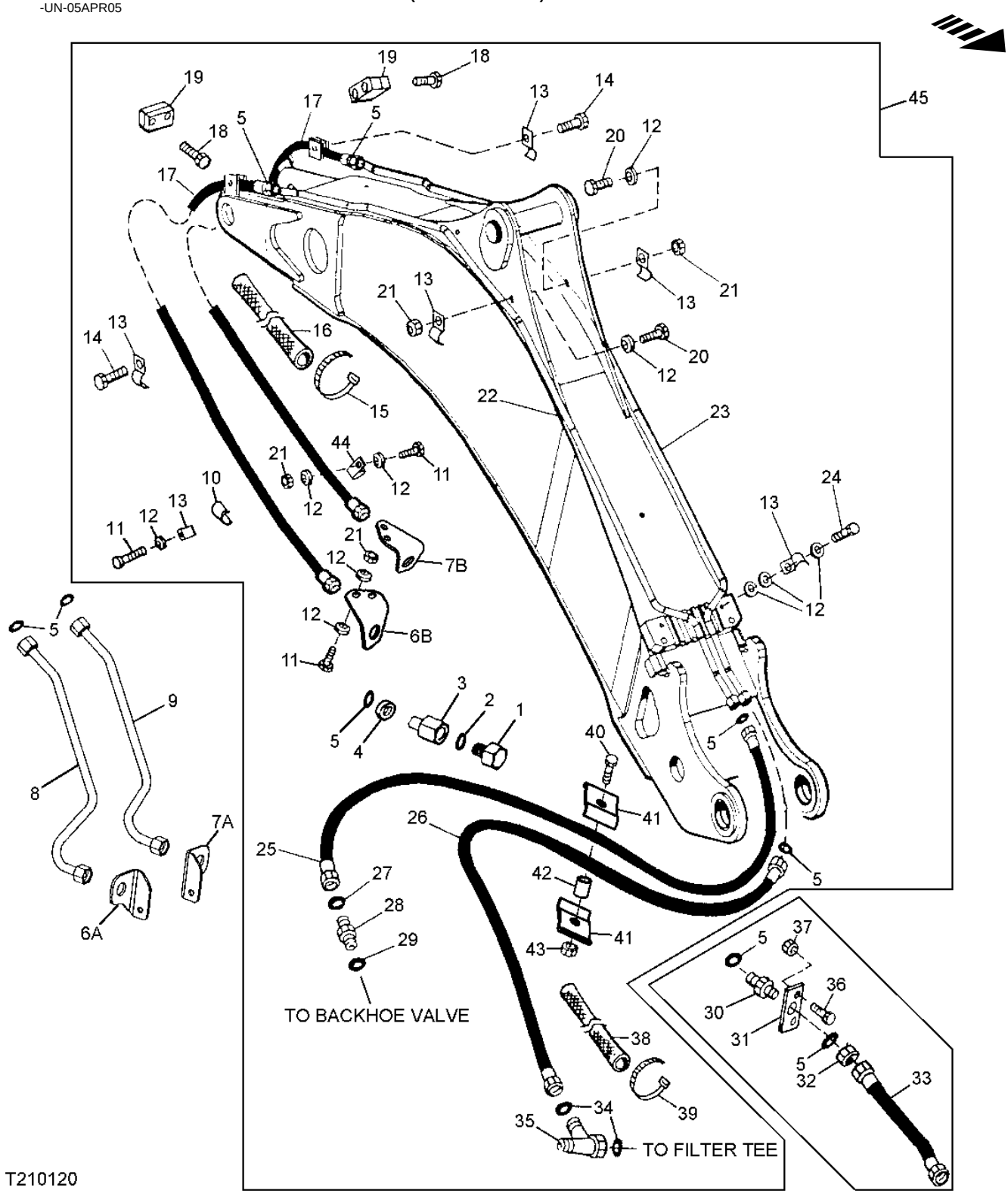

AUXILIARY EQUIPMENT HYDRAULICS
(EXTENDIBLE DIPPERSTICK)
(310G AND 310SG)

KEY	PART NO.	PART NAME	QTY	SERIAL NO.	310G	310SG	315SG	REMARKS
1	R27175	PLUG	2		X	X		
2	U12547	O-RING	2		X	X		
3	T163702	REDUCER	2		X	X		
4	T78707	NUT	2		X	X		
5	T77858	O-RING	10		X	X		
6A	T166781	BRACKET	1	-940475	X	X		
6B	T205636	BRACKET	1	940476-	X	X		
7A	T166780	BRACKET	1	-940475	X	X		
7B	T205637	BRACKET	1	940476-	X	X		
8	AT186920	HYDRAULIC LINE	1	-940475	X	X		
9	AT186915	HYDRAULIC LINE	1	-940475	X	X		
10	T189065	HOSE	2	-940475	X	X		(SUB FOR T153193, THIS APPLICATION)
11	19M7662	CAP SCREW	AR		X	X		M10 X 30
12	24M7239	WASHER	AR		X	X		
13	T160376	CLAMP	10		X	X		
14	19M7572	CAP SCREW	2		X	X		M10 X 45
15	H77698	TIE BAND	4		X	X		
16	T161365	SLEEVE	2		X	X		FABRIC
17	AT179399	HYDRAULIC HOSE - FABRICATE	2		X	X		1-3/16" X 2 443 MM (96-1/4") X 1-3/16"
18	19M8456	CAP SCREW	8		X	X		M8 X 100
19	T162004	CLAMP	8		X	X		
20	03M7192	BOLT	4		X	X		M10 X 30
21	14M7274	NUT	AR		X	X		M10
22	AT179031	OIL LINE	1	-952642	X			
	AT329520	OIL LINE	1	952643-	X			
	AT178376	OIL LINE	1			X		
23	AT179030	OIL LINE	1	-952642	X			
	AT329519	OIL LINE	1	952643-	X			
	AT178375	OIL LINE	1			X		
24	19M8093	CAP SCREW	2		X	X		M10 X 100, (SUB FOR 19M8183, THIS APPLICATION)
25	AT179033	HYDRAULIC HOSE - FABRICATE	1	-911128	X	X		1" X 1 207 MM (47-1/2") X 1-3/16"
	AT280350	HYDRAULIC HOSE - FABRICATE	1	911129-	X	X		1" X 1 207 MM (47-1/2") X 1-3/16"
26	AT191859	HYDRAULIC HOSE - FABRICATE	1	-911128	X	X		1-3/16" X 1 321 MM (52") X 1"
	AT280345	HYDRAULIC HOSE - FABRICATE	1	911129-940475	X	X		1-3/16" X 1 321 MM (52") X 1-3/16"
	AT309710	HYDRAULIC HOSE - FABRICATE	1	940476-	X	X		13/16" X 2 057 MM (81") X 13/16"
27	T77932	O-RING	3		X	X		
28	38H1329	ADAPTER FITTING	1		X	X		
29	U12547	O-RING	1		X	X		
30	38H1276	ADAPTER FITTING	1	-940475	X	X		
31	T184579	STRAP	1	-913416	X	X		
32	T78707	NUT	1	-940475	X	X		1-3/16"
33	AT190762	HYDRAULIC HOSE - FABRICATE	1	-940475	X	X		
34	T76938	O-RING	2		X	X		
35	38H1002	TEE FITTING	1		X	X		
36	19M7662	CAP SCREW	2	-913416	X	X		
37	14M7274	NUT	2	-913416	X	X		
38	.....	CONDUIT	1	940476-	X	X		(MAKE FROM T107029, CUT TO LENGTH)
39	H77698	TIE BAND	2	940476-	X	X		
40	19M8637	CAP SCREW	1	940476-	X	X		M10 X 40
41	R46919	HALF CLAMP	2	940476-	X	X		
42	28H3416	BUSHING	1	940476-	X	X		0.493" X 0.675" X 13/16"
43	14M7274	NUT	1	940476-	X	X		M10
44	T102934	CLAMP	2	940476-	X	X		
45	.....	KIT	1	-940475	X			(AT197245 NO LONGER AVAILABLE) (SUB FOR AT190655) (SUB AT329663)
	AT329663	**KIT**	**1**	**940476-**	**X**			**(WHOLE GOODS) (SUB FOR AT309707)**
	AT197254	**KIT**	**1**	**-940475**		**X**		**(WHOLE GOODS) (SUB FOR AT191839)**
	AT309568	**KIT**	**1**	**940476-**		**X**		**(WHOLE GOODS)**

AUXILIARY EQUIPMENT HYDRAULICS
(EXTENDIBLE DIPPERSTICK)
(315SG)

T202522 -UN-09SEP04

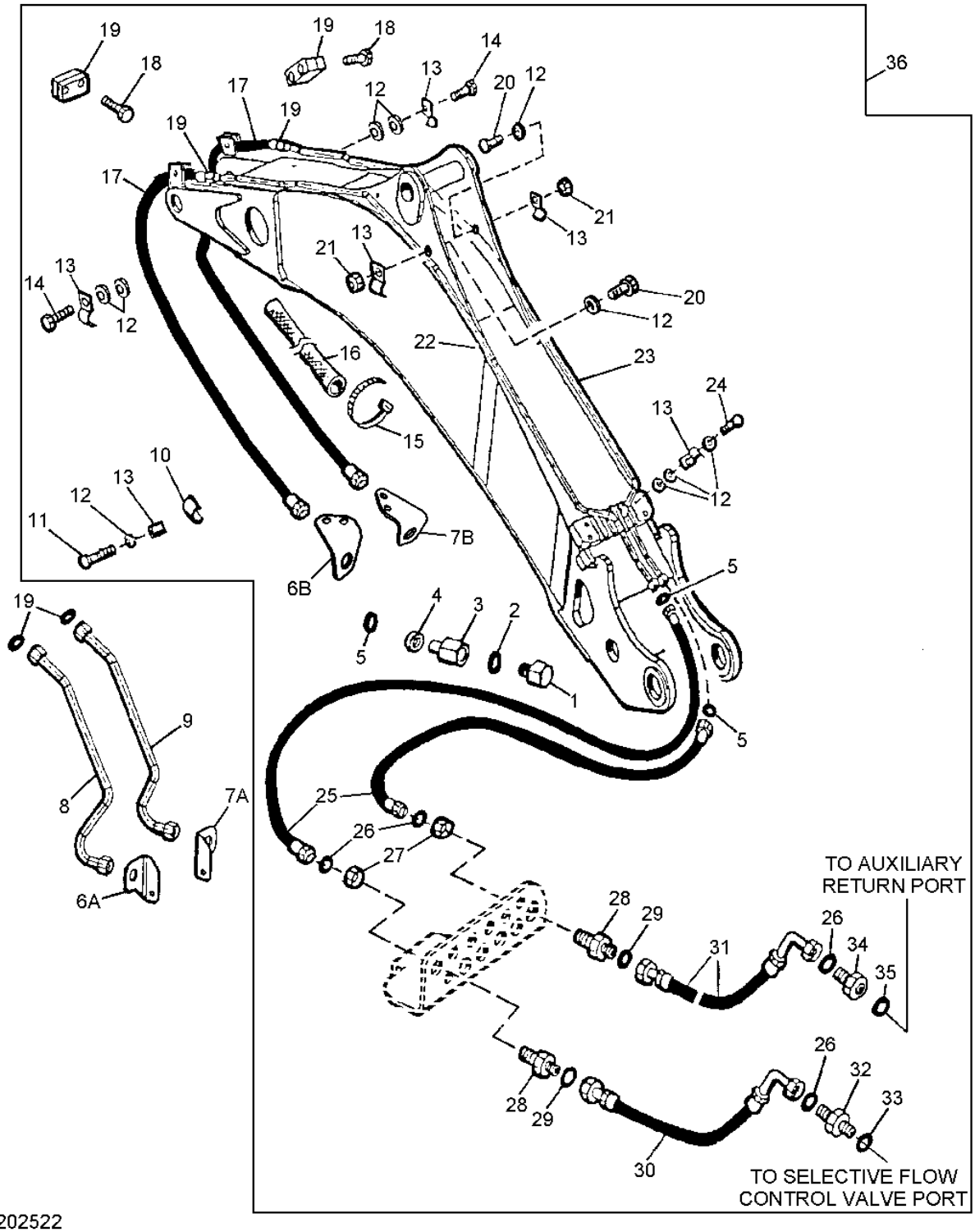

AUXILIARY EQUIPMENT HYDRAULICS
(EXTENDIBLE DIPPERSTICK)
(315SG)

KEY	PART NO.	PART NAME	QTY	SERIAL NO.	310G	315SG	REMARKS
1	R27175	PLUG	2			X	
2	U12547	O-RING	2			X	
3	T163702	REDUCER	2			X	
4	T78707	NUT	2			X	
5	T77858	O-RING	8			X	
6A	T166781	BRACKET	1	-940475		X	
6B	T205636	BRACKET	1	940476-		X	
7A	T166780	BRACKET	1	-940475		X	
7B	T205637	BRACKET	1	940476-		X	
8	AT186915	HYDRAULIC LINE	1	-940475		X	
9	AT186920	HYDRAULIC LINE	1	-940475		X	
10	.....	ISOLATOR	2			X	.812 MAX X .500 ID HOSE
11	19M7662	CAP SCREW	4			X	M10 X 30
12	24M7239	WASHER	AR			X	
13	T160376	CLAMP	10			X	
14	19M7572	CAP SCREW	2			X	M10 X 45
15	H77698	TIE BAND	4			X	
16	T161365	SLEEVE	2			X	FABRIC
17	AT179399	HYDRAULIC HOSE - FABRICATE	2	-940475		X	1-3/16" X 2 443 MM (96-1/4") X 1-3/16"
	AT308466	HYDRAULIC HOSE - FABRICATE	2	940476-		X	1-3/16" X 3 322 MM (130-3/4") X 1-3/16"
18	19M8456	CAP SCREW	8			X	M8 X 100
19	T162004	CLAMP	8			X	
20	03M7192	BOLT	4			X	M10 X 30
21	14M7274	NUT	4			X	M10
22	AT178376	OIL LINE	1			X	
23	AT178375	OIL LINE	1			X	
24	19M8183	CAP SCREW	2			X	M10 X 90
25	AT181591	HYDRAULIC HOSE - FABRICATE	2	-911128		X	1" X 1 140 MM (45") X 1-3/16"
	AT280347	HYDRAULIC HOSE - FABRICATE	2	911129-		X	1" X 1 140 MM (45") X 1-3/16"
26	T77932	O-RING	4			X	
27	T80306	NUT	2			X	1"
28	38H1286	ADAPTER FITTING	2			X	
29	R26906	O-RING	2			X	
30	AT191146	HYDRAULIC HOSE - FABRICATE	1			X	1" X 2 400 MM (94-1/2") X 1"
31	AT191147	HYDRAULIC HOSE - FABRICATE	1			X	1" X 1 885 MM (74-1/4") X 1"
32	38H1162	ADAPTER FITTING	1			X	
33	R26906	O-RING	1			X	
34	38H1476	REDUCER	1			X	
35	T76938	O-RING	1			X	
36	**AT197260**	**KIT**	**1**	**-940475**		**X**	**(WHOLE GOODS) (SUB FOR AT191546)**
	AT309579	**KIT**	**1**	**940476-**		**X**	**(WHOLE GOODS)**

**SIDE SHIFT LOCK HYDRAULICS
(315SG)**

T194680 -UN-15SEP03

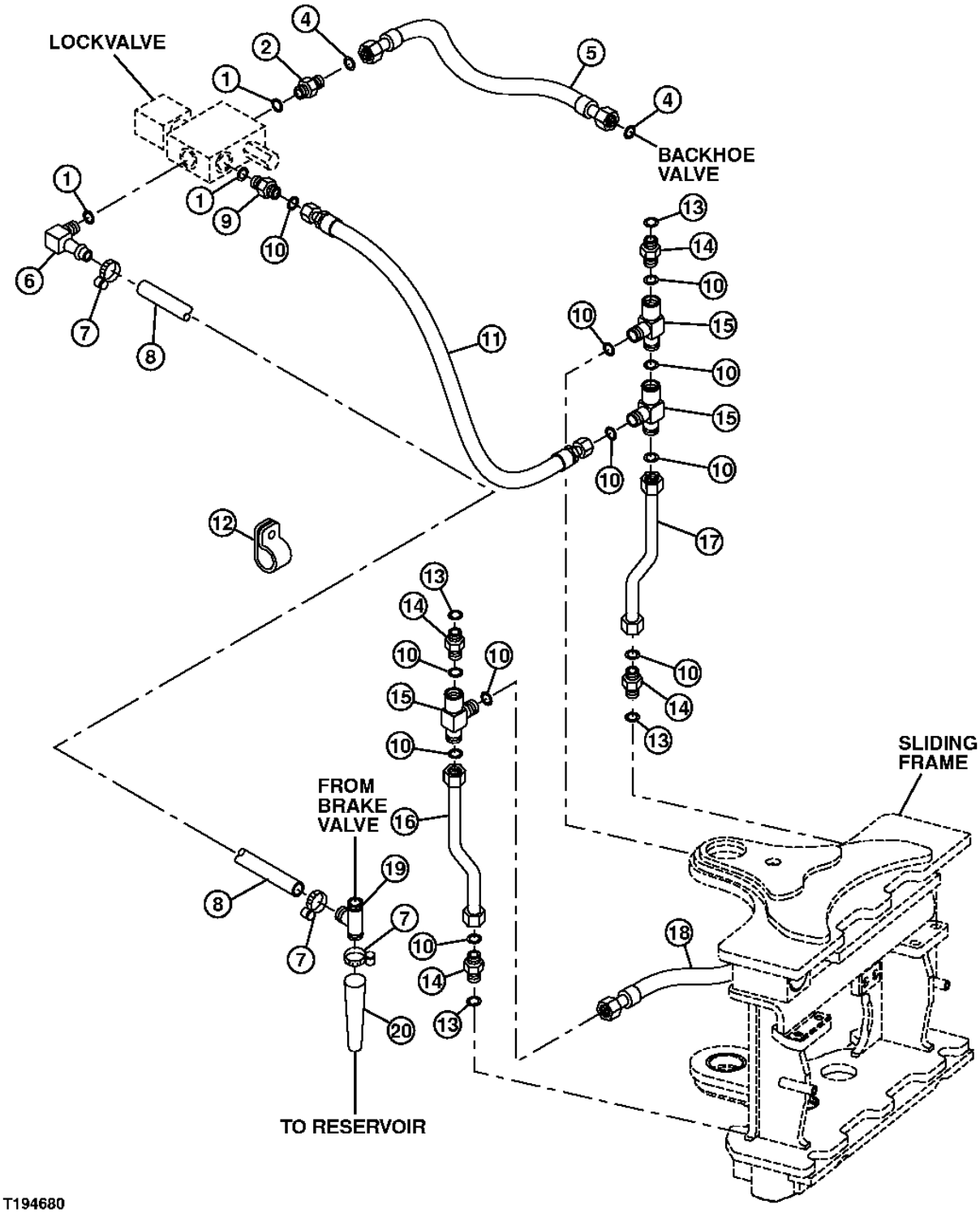

SIDE SHIFT LOCK HYDRAULICS
(315SG)

KEY	PART NO.	PART NAME	QTY	SERIAL NO.	310G	310SG	315SG	REMARKS
1	R26448	O-RING	3				X	
2	AT81867	CHECK VALVE	1				X	
3	38H1004	ELBOW FITTING	1				X	
4	T77613	O-RING	2				X	
5	AT189408	HYDRAULIC HOSE - FABRICATE	1				X	11/16" X 500 MM (19-3/4") X 11/16"
6	AR64705	ELBOW FITTING	1	-911132			X	
	AT68978	ELBOW FITTING	1	911133-			X	
7	TY22462	CLAMP	4	-911132			X	(SUB FOR AR48236)
	AR21836	CLAMP	4	911133-			X	
8	.....	HOSE	AR	-911132			X	(MAKE FROM M87571 CUT TO 8'6" LENGTH)
	.....	HOSE	AR	911133-			X	(MAKE FROM T168383 CUT TO 8'5" LENGTH)
9	38H1168	ADAPTER FITTING	1				X	
10	T77814	O-RING	12				X	
11	AT189407	HYDRAULIC HOSE - FABRICATE	1				X	9/16" X 2 465 MM (97") X 9/16"
12	T74416	CLAMP	1				X	
13	R28782	O-RING	4				X	
14	38H1159	ADAPTER FITTING	4				X	
15	38H1029	TEE FITTING	3				X	
16	AT176522	LINE	1				X	
17	AT176521	LINE	1				X	
18	AT177433	LINE	1				X	
19	XN8TUB8	TEE FITTING	1				X	(SUB FOR M86863, THIS APPLICATION)
20	.....	HOSE	AR				X	(MAKE FROM M87571 CUT TO 6" LENGTH

BACKHOE BOOM LOCK VALVE HYDRAULICS
(315SG)

T146162 -UN-12OCT01

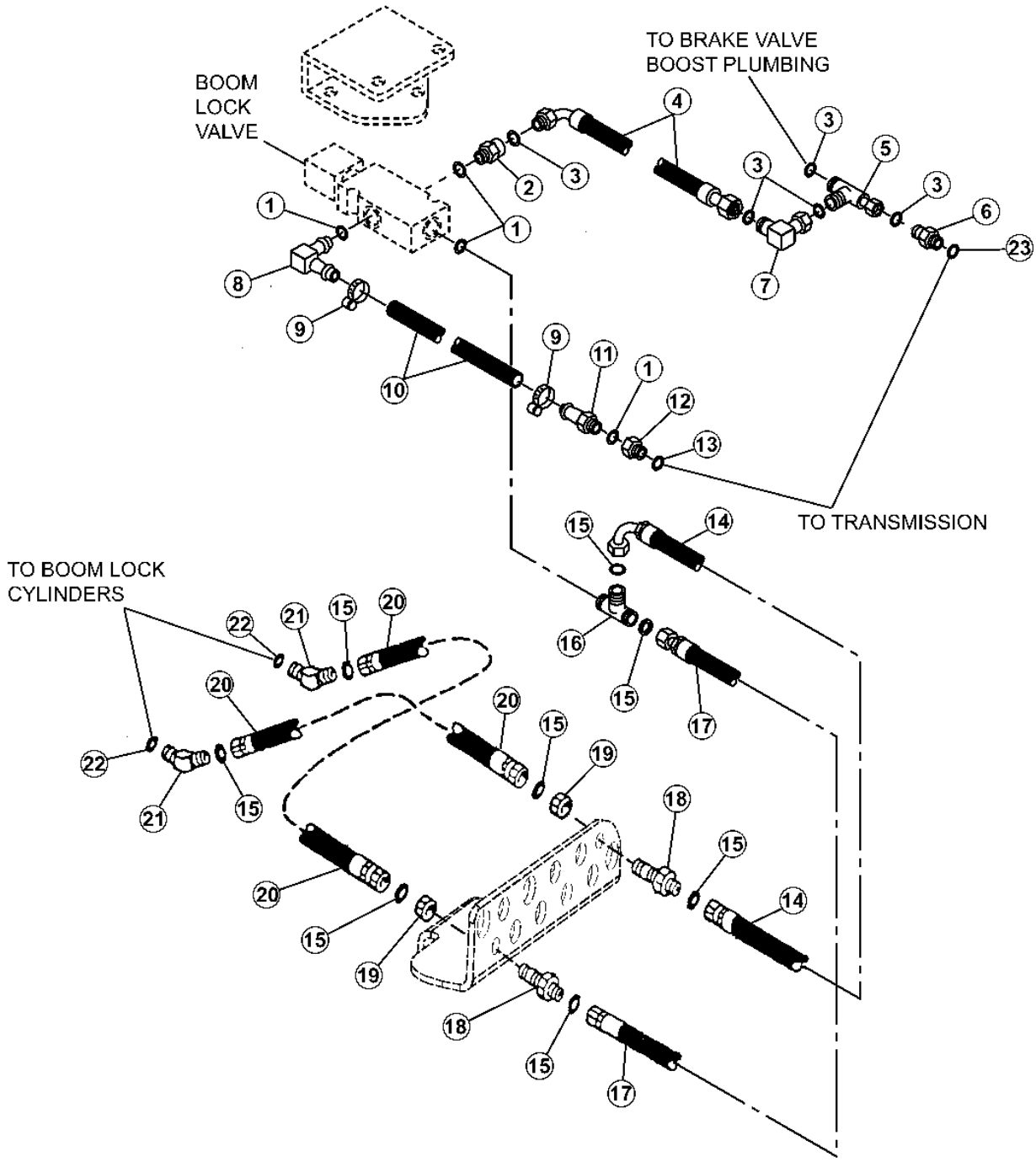

BACKHOE BOOM LOCK VALVE HYDRAULICS (315SG)

KEY	PART NO.	PART NAME	QTY	SERIAL NO.	310G	315SG	REMARKS
1	R26448	O-RING	4			X	
2	38H1160	ADAPTER FITTING	1			X	
3	T77613	O-RING	5			X	
4	AT189403	HYDRAULIC HOSE - FABRICATE	1			X	11/16" X 1 930 MM (76") X 11/16"
5	38H1030	TEE FITTING	1			X	
6	38H1170	ADAPTER FITTING	1			X	
7	38H1094	ELBOW FITTING	1			X	
8	AR64705	ELBOW FITTING	1			X	
9	TY22462	CLAMP	2			X	(SUB FOR AR48236)
10	.....	HOSE	AR			X	MAKE FROM M87571 BULK MATERIAL CUT TO 1800 MM
11	T65295	HOSE FITTING	1			X	
12	R32247	ADAPTER FITTING	1			X	
13	R26906	O-RING	1			X	
14	AT189405	HYDRAULIC HOSE - FABRICATE	1			X	9/16" X 2 250 MM (88-1/2") X 9/16"
15	T77814	O-RING	8			X	
16	38H1425	TEE FITTING	1			X	
17	AT189404	HYDRAULIC HOSE - FABRICATE	1			X	9/16" X 2 250 MM (88-1/2") X 9/16"
18	38H1284	ADAPTER FITTING	2			X	
19	14H832	NUT	2			X	9/16"
20	AT180147	HYDRAULIC HOSE - FABRICATE	2	-911128		X	9/16" X 610 MM (24") X 9/16"
	AT280348	HYDRAULIC HOSE - FABRICATE	2	911129-		X	9/16" X 610 MM (24") X 9/16"
21	38H1044	ELBOW FITTING	2			X	45 DEGREE
22	R28782	O-RING	2			X	
23	R26286	O-RING	1			X	

BACKHOE CYLINDER HYDRAULICS
(315SG)

T154999 -UN-17MAY02

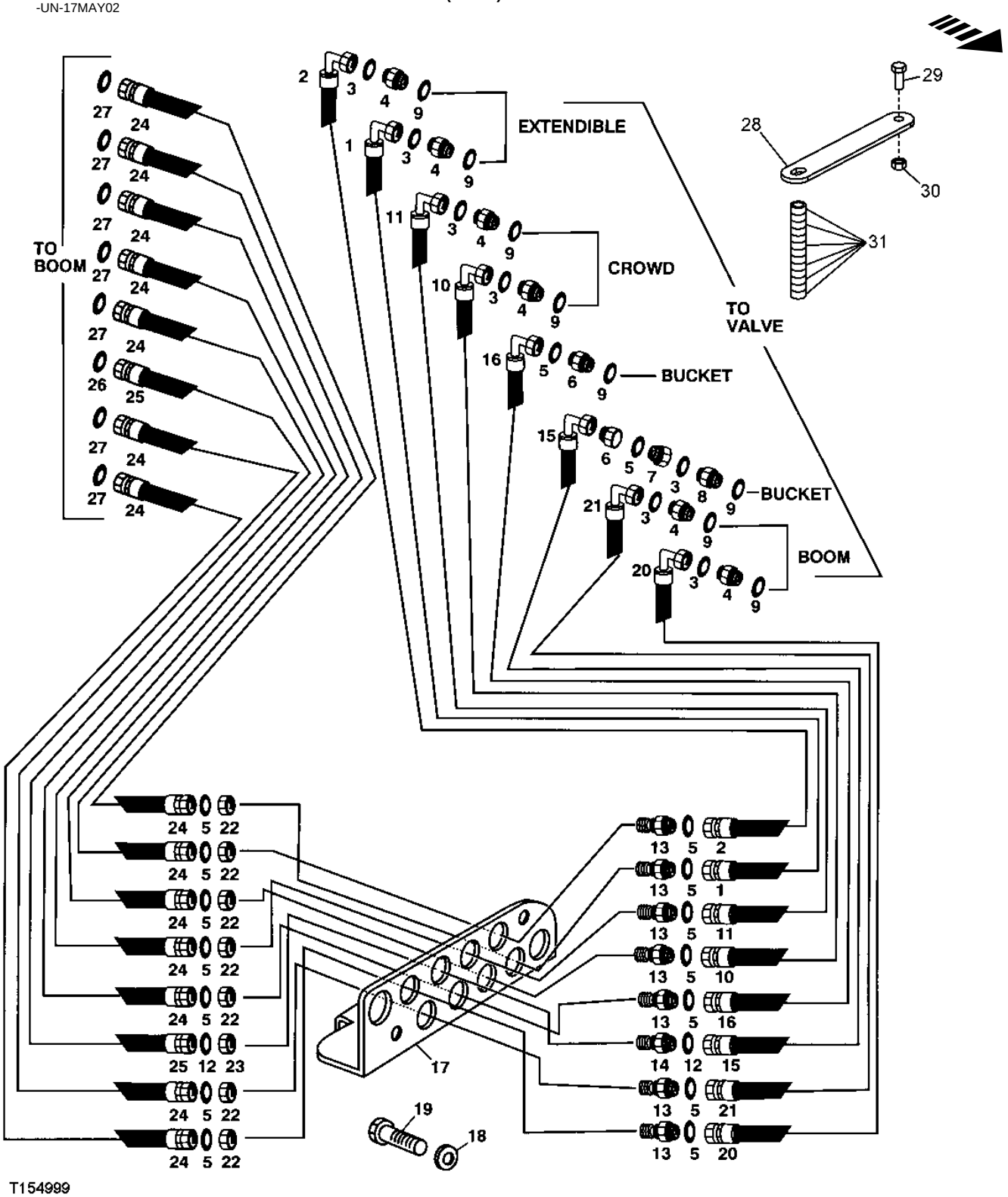

BACKHOE CYLINDER HYDRAULICS
(315SG)

KEY	PART NO.	PART NAME	QTY	SERIAL NO.	310G	310SG	315SG	REMARKS
1	AT191143	HYDRAULIC HOSE - FABRICATE	1				X	13/16" X 2 400 MM (94-1/2") X 13/16"
2	AT191143	HYDRAULIC HOSE - FABRICATE	1				X	13/16" X 2 400 MM (94-1/2") X 13/16"
3	T77932	O-RING	8				X	
4	38H1174	ADAPTER FITTING	6				X	
5	T77857	O-RING	15				X	
6	38H1162	ADAPTER FITTING	1				X	
7	38H1471	REDUCER	1				X	
8	38H1162	ADAPTER FITTING	1				X	
9	R26906	O-RING	8				X	
10	AT191143	HYDRAULIC HOSE - FABRICATE	1				X	13/16" X 2 400 MM (94-1/2") X 13/16"
11	AT191143	HYDRAULIC HOSE - FABRICATE	1				X	13/16" X 2 400 MM (94-1/2") X 13/16"
12	T77932	O-RING	2				X	
13	38H1275	ADAPTER FITTING	7				X	
14	38H1286	ADAPTER FITTING	1				X	
15	AT191143	HYDRAULIC HOSE - FABRICATE	1				X	13/16" X 2 400 MM (94-1/2") X 13/16"
16	AT191146	HYDRAULIC HOSE - FABRICATE	1				X	1" X 2 400 MM (94-1/2") X 1"
17	T163225	PLATE	1				X	
18	24M7047	WASHER	2				X	
19	19M7872	CAP SCREW	2				X	M12 X 25
20	AT191143	HYDRAULIC HOSE - FABRICATE	1				X	13/16" X 2 400 MM (94-1/2") X 13/16"
21	AT191143	HYDRAULIC HOSE - FABRICATE	1				X	13/16" X 2 400 MM (94-1/2") X 13/16"
22	T78716	NUT	7				X	13/16"
23	T80306	NUT	1				X	1"
24	AT180152	HYDRAULIC HOSE - FABRICATE	7	-911128			X	13/16" X 1 056 MM (41-1/2") X 1"
	AT280346	HYDRAULIC HOSE - FABRICATE	7	911129-			X	1" X 1 056 MM (41-1/2") X 1"
25	AT181591	HYDRAULIC HOSE - FABRICATE	1	-911128			X	1" X 1 140 MM (45") X 1-3/16"
	AT280347	HYDRAULIC HOSE - FABRICATE	1	911129-			X	1" X 1 140 MM (45") X 1-3/16"
26	T77858	O-RING	1				X	
27	T77932	O-RING	7				X	
28	T185681	STRAP	1				X	
29	19M7402	CAP SCREW	1				X	M10 X 25
30	14M7274	NUT	1				X	M10
31	T185682	SPACER	13				X	

CONTROLLED LOAD LOWERING DEVISE, BOOM CYLINDER KIT

T140912 -UN-09APR01

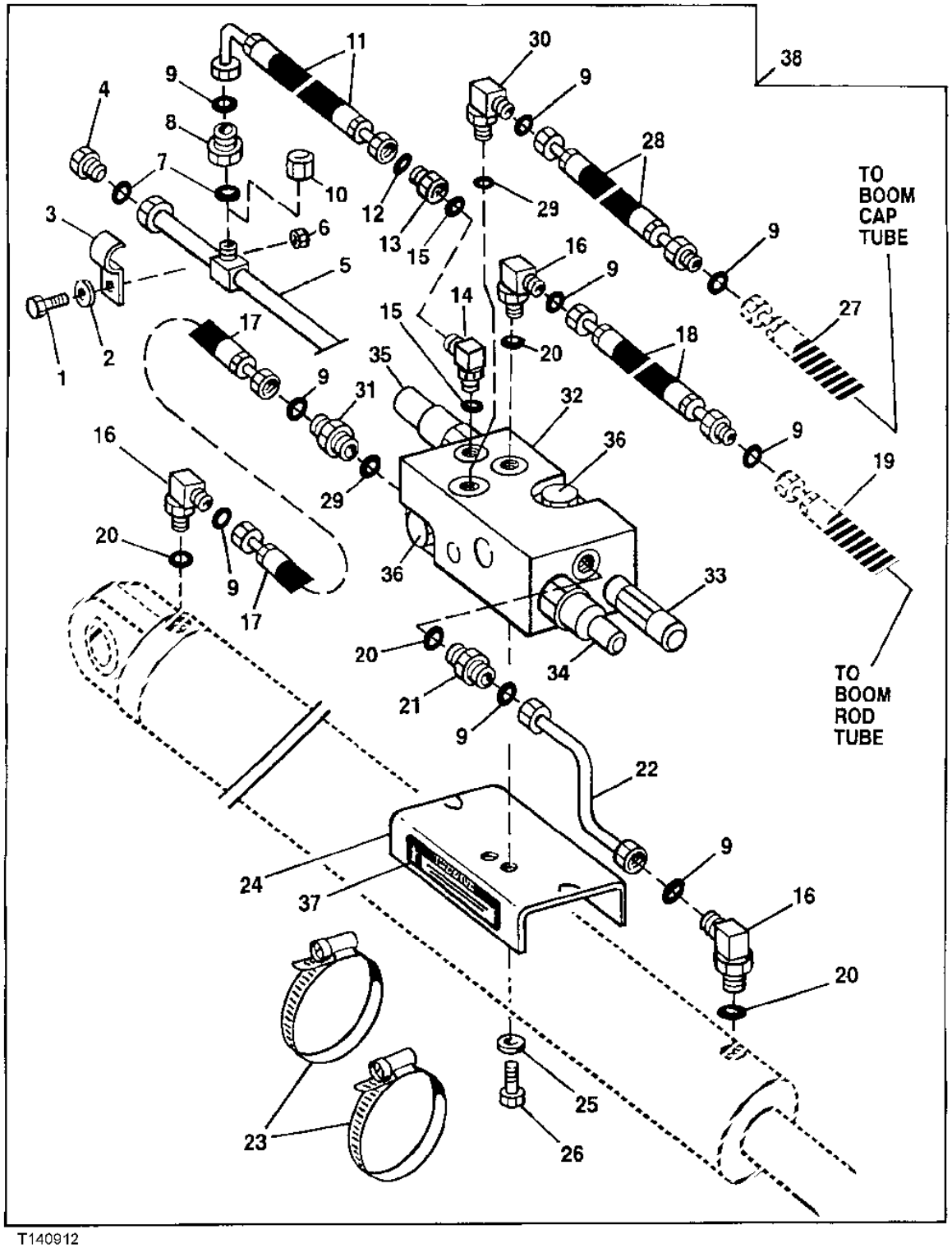

T140912

CONTROLLED LOAD LOWERING DEVICE, BOOM CYLINDER KIT

KEY	PART NO.	PART NAME	QTY	SERIAL NO.	310G	315SG	REMARKS
1	03M7192	BOLT	2		X	X X	M10 X 30, (RETURN LINE)
2	24M7239	WASHER	2		X	X X	(MOUNTING BRACKET SCREWS)
3	T160376	CLAMP	4		X	X X	(RIGHT SIDE BOOM LINE)
4	38H1149	FITTING PLUG	1		X	X X	(RETURN LINE)
5	AT180204	OIL LINE	1		X		(RIGHT SIDE OF BOOM)
	AT180667	OIL LINE	1			X X	(RIGHT SIDE OF BOOM)
6	14M7274	NUT	4		X	X X	M10, (RETURN LINE)
7	T77858	O-RING	6		X	X X	
8	38H1482	REDUCER	1		X	X X	(RETURN LINE)
9	T77932	O-RING	11		X	X X	
10	38H1418	FITTING	1		X	X X	(TEE CAP WHEN CROWD CLLD IS NOT REQUIRED)
11	AT180208	HYDRAULIC HOSE - FABRICATE	1		X	X X	13/16" X 803 MM (31-1/2") X 1", (PORT "M")
12	T77857	O-RING	2		X	X X	(PORT "M")
13	38H1161	ADAPTER FITTING	1		X	X X	(PORT "M")
14	38H1095	ELBOW FITTING	1		X	X X	(PORT "M")
15	R26375	O-RING	1		X	X X	
16	38H1006	ELBOW FITTING	1		X	X X	(PORT "B")
17	AT180209	HYDRAULIC HOSE - FABRICATE	1		X	X X	(PORT "FB")
18	AT180212	HYDRAULIC HOSE - FABRICATE	1		X	X X	1" X 825 MM (32-1/2") X 1", (PORT "B")
19	.....	OIL LINE	1		X	X X	(TO BOOM ROD TUBE)
20	R26906	O-RING	2		X	X X	(PORT "B" (1) - PORT "M" (1))
21	38H1162	ADAPTER FITTING	1		X	X X	(PORT "ANN")
22	AT180205	OIL LINE	1		X	X X	(PORT "ANN")
23	AR85327	CLAMP	2		X		(MOUNTING PLATE)
	TY22493	HOSE CLAMP	2			X X	(SUB FOR AR89602, THIS APPLICATION)
24	T161769	PLATE	1		X	X X	(TO BOOM CYLINDER)
25	24M7239	WASHER	6		X	X X	(RETURN LINE)
26	19H1134	CAP SCREW	2		X	X X	3/8" X 3/4", (MOUNTING BRACKET)
27	.....	OIL LINE	1		X	X X	(TO BOOM CAP TUBE)
28	AT180212	HYDRAULIC HOSE - FABRICATE	1		X	X X	1" X 825 MM (32-1/2") X 1", (PORT "A")
29	U12547	O-RING	2		X	X X	(PORT "FB" (1) - PORT "A" (1))
30	38H1404	ELBOW FITTING	1		X	X X	(PORT "A")
31	38H1329	ADAPTER FITTING	1		X	X X	(PORT "FB")
32	AT175125	HYD ACTUATED CONTROL VALVE	1		X	X X	CONTROLLED LOAD LOWERING DEVICE (BOOM)
33	AT180076	PRESSURE RELIEF VALVE	1		X	X X	RELIEF (5000 PSI)
	AT180081	SEAL KIT	1		X	X X	
34	AT180077	HYD ACTUATED CONTROL VALVE	1		X	X X	SEQUENCE (550 PSI)
	AT180082	SEAL KIT	1		X	X X	
35	AT180078	HYD ACTUATED CONTROL VALVE	1		X	X X	LOAD CONTROL (325 PSI)
	AT180083	SEAL KIT	1		X	X X	
36	AT180079	CHECK VALVE	1		X	X X	CHECK
	AT180086	SEAL KIT	1		X	X X	
37	T161665	LABEL	1		X	X X	(SERVICE VALVE)
38	AT194444	KIT	1		X		(WHOLE GOODS) (SUB FOR AT178788) (ALSO INCLUDES ADDITIONAL HYDRAULIC HOSES, FITTINGS AND MISCELANEOUS PARTS)
	AT194445	KIT	1			X X	(WHOLE GOODS) (SUB FOR AT178768) (ALSO INCLUDES ADDITIONAL HYDRAULIC HOSES, FITTINGS AND MISCELLANEOUS PARTS)

CONTROLLED LOAD LOWERING DEVISE, CROWD CYLINDER KIT

TP50604 -UN-03APR97

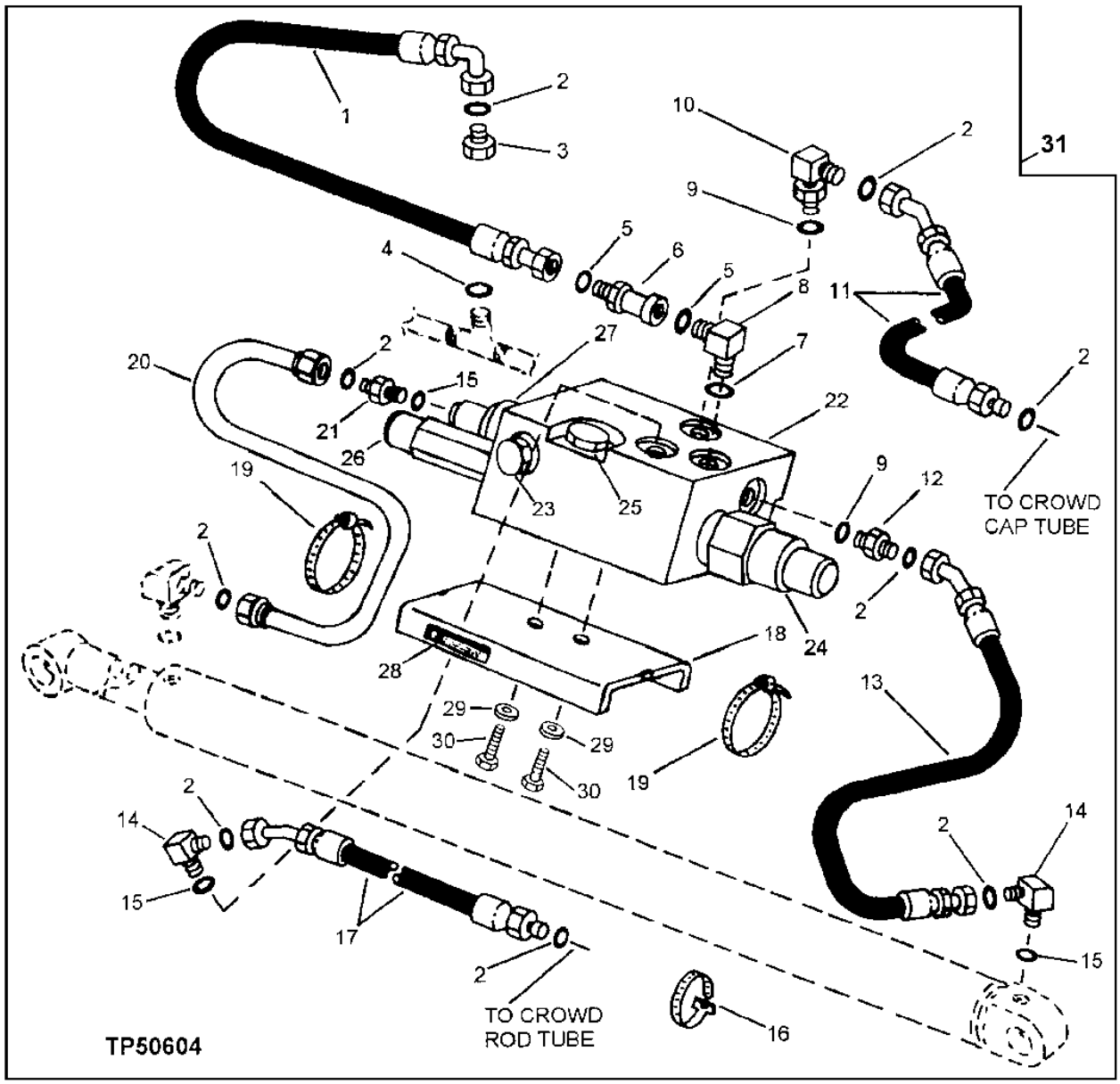

CONTROLLED LOAD LOWERING DEVICE, CROWD CYLINDER KIT

KEY	PART NO.	PART NAME	QTY	SERIAL NO.	310G	315SG	REMARKS
1	AT180210	HYDRAULIC HOSE - FABRICATE	1		X	X X	13/16" X 592 MM (23-1/4") X 1", (PORT "M")
2	T77932	O-RING	9		X	X X	
3	38H1482	REDUCER	1		X	X X	(RETURN LINE)
4	T77858	O-RING	1		X	X X	(BRAZES FITTING-RETURN LINE)
5	T77857	O-RING	2		X	X X	(PORT "M" HOSE ENDS)
6	38H1095	ELBOW FITTING	1		X	X X	(PORT "M")
7	R26375	O-RING	1		X	X X	(PORT "M")
8	38H1161	ADAPTER FITTING	1		X	X X	(PORT "M")
9	U12547	O-RING	2		X	X X	(PORT "FB" (1) - PORT "A" (1))
10	38H1404	ELBOW FITTING	1		X	X X	(PORT "A")
11	AT180213	HYDRAULIC HOSE - FABRICATE	1		X	X X	(PORT "A")
12	38H1329	ADAPTER FITTING	1		X	X X	(PORT "FB")
13	AT180211	HYDRAULIC HOSE - FABRICATE	1		X		1" X 310 MM (12-1/4") X 1", (PORT "FB")
	AT180658	HYDRAULIC HOSE - FABRICATE	1			X X	1" X 368 MM (14-1/2") X 1", (PORT "FB")
14	38H1006	ELBOW FITTING	1		X	X X	(PORT "B")
	38H1006	ELBOW FITTING	1		X		(CROWD HEAD END)
15	R26906	O-RING	2		X	X X	(PORT "B" (1) - PORT "ANN" (1)
	R26906	O-RING	1		X		(HEAD END OF CROWD CYLINDER)
16	R44302	TIE BAND	1		X	X X	(TIE PORT "A" AND PORT "B" HOSES)
17	AT180214	HYDRAULIC HOSE - FABRICATE	1		X	X X	(PORT "B")
18	T161769	PLATE	1		X	X X	(TO CROWD CYLINDER)
19	AR85327	CLAMP	2		X		(MOUNTING PLATE)
	TY22493	HOSE CLAMP	2			X X	(SUB FOR AR89602, THIS APPLICATION)
20	AT180206	OIL LINE	1		X	X X	(PORT "ANN")
21	38H1162	ADAPTER FITTING	1		X	X X	(PORT "ANN")
22	AT175126	HYD ACTUATED CONTROL VALVE	1		X	X X	(CONTROLLED LOAD LOWERING DEVICE - CROWD)
23	.....	SCREW	1		X	X X	ADJUSTABLE (CLLD)
	.....	SEAL	1		X	X X	LOCK NUT (CLLD VALVE)
24	AT180088	HYD ACTUATED CONTROL VALVE	1		X	X X	LOAD CONTROL (400 PSI)
	AT180083	SEAL KIT	1		X	X X	
25	AT180087	HYD ACTUATED CONTROL VALVE	1		X	X X	
	AT180082	SEAL KIT	1		X	X X	
26	AT180076	PRESSURE RELIEF VALVE	1		X	X X	RELIEF (5000 PSI)
	AT180081	SEAL KIT	1		X	X X	
27	AT180079	CHECK VALVE	1		X	X X	SEQUENCE (450 PSI)
	AT180086	SEAL KIT	1		X	X X	
28	T161665	LABEL	1		X	X X	(SERVICE VALVE)
29	24M7239	WASHER	2		X	X X	(MOUNTING BRACKET SCREWS)
30	19H1134	CAP SCREW	2		X	X X	(MOUNTING BRACKET)
31	AT178789	KIT	1		X		(AT178789 NO LONGER OFFERED)
	AT178769	KIT	1			X X	(WHOLE GOODS) (ALSO INCLUDES ADDITIONAL HYDRAULIC HOSES, FITTINGS AND MISCELLANEOUS PARTS)

**AUGER HYDRAULIC OIL LINES AND HOSES
(EXTENDIBLE DIPPERSTICK)**

TP62419 -UN-05JUN00

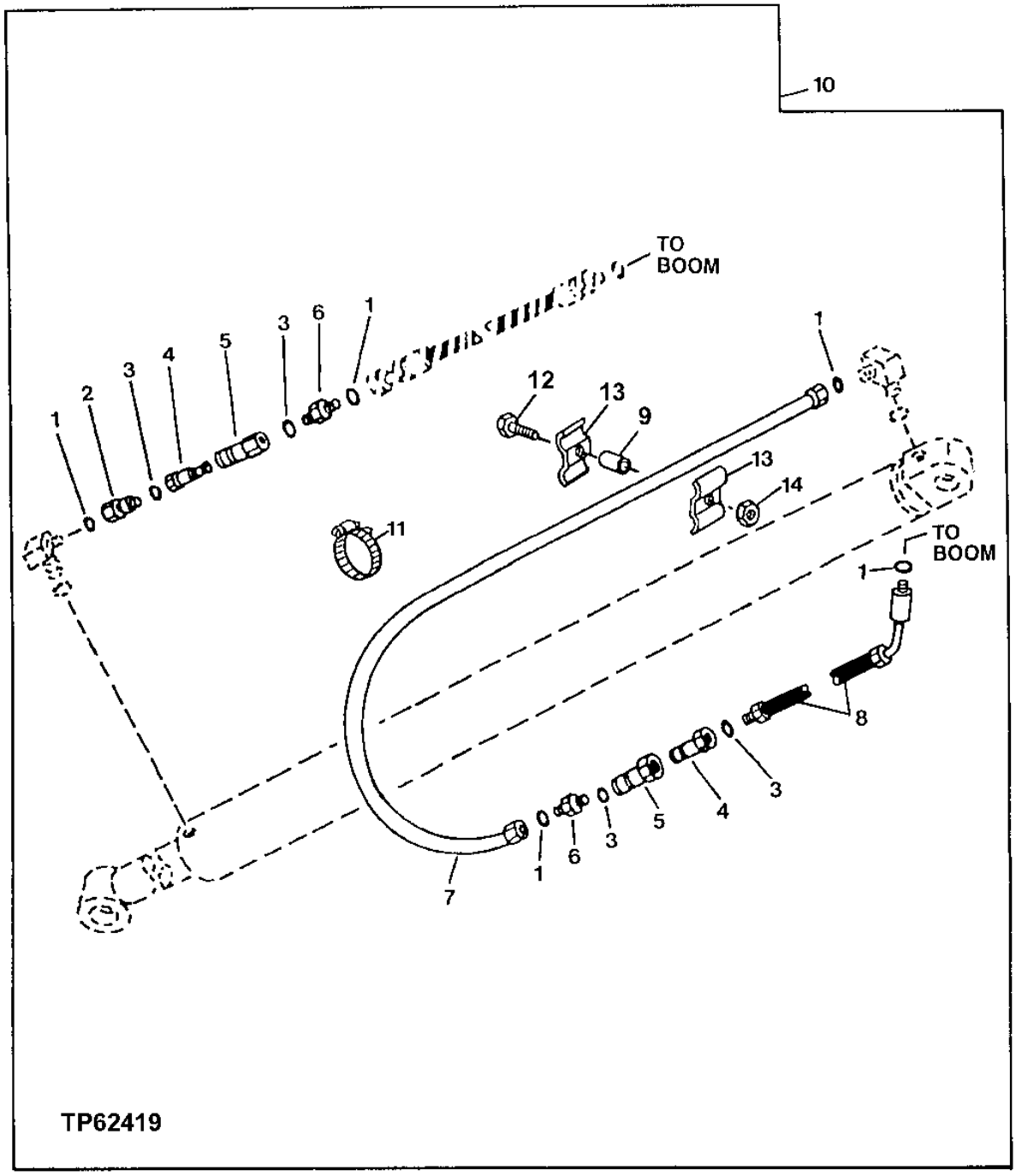

AUGER HYDRAULIC OIL LINES AND HOSES
(EXTENDIBLE DIPPERSTICK)

KEY	PART NO.	PART NAME	QTY	SERIAL NO.	310G	310SG	315SG	REMARKS
1	T77932	O-RING	5		X	X	X	15.596 X 1.778 MM (0.614" X 0.070")
2	38H1069	FITTING	1		X	X	X	(SWIVEL)
3	R26906	O-RING	4		X	X	X	19.177 X 2.464 MM (0.755" X 0.097")
4	XH4-63-T10	HYDR.QUICK COUPLER SOCKET	2		X	X	X	
5	XH4-62-T10	HYDR.QUICK COUPLER PLUG	2		X	X	X	
6	38H1162	ADAPTER FITTING	2		X	X	X	(STRAIGHT)
7	AT177540	OIL LINE	1		X	X	X	
8	AT184494	HYDRAULIC HOSE - FABRICATE	1		X	X		
9	28H3383	BUSHING	1		X	X		0.493" X 0.675" X 3/4"
10	AT180828	KIT	1		X	X	X	(WHOLE GOODS)
11	AR21842	CLAMP	1		X	X	X	
12	19M7550	CAP SCREW	1		X	X		M10 X 35
13	R46919	HALF CLAMP	2		X	X	X	
14	14M7274	NUT	1		X	X	X	M10

AUGER HYDRAULICS
(STANDARD DIPPERSTICK)

TP50651 -UN-31JUL00

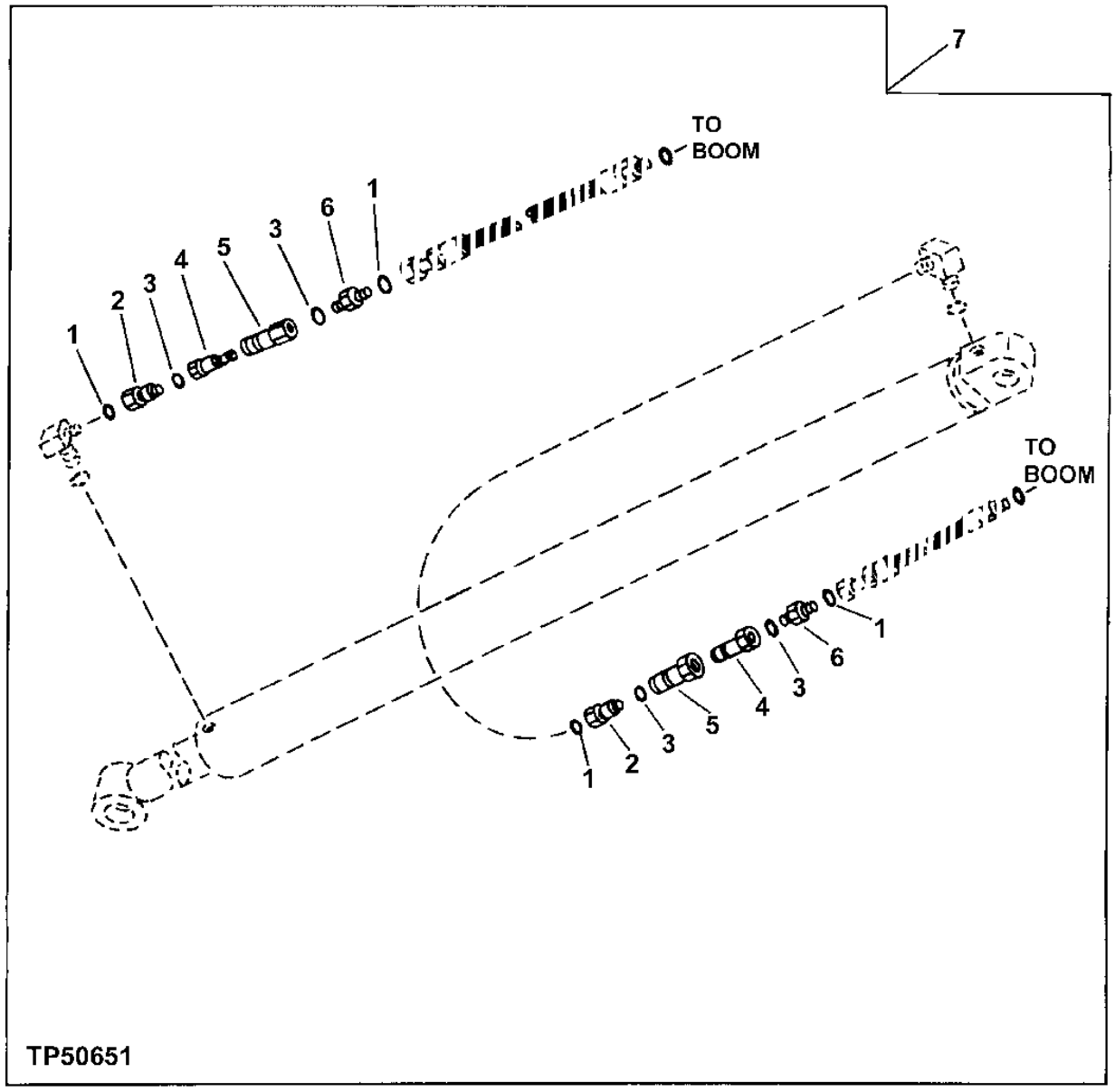

AUGER HYDRAULICS
(STANDARD DIPPERSTICK)

KEY	PART NO.	PART NAME	QTY	SERIAL NO.	310G	310SG	315SG	REMARKS
1	T77932	O-RING	4		X	X	X	15.596 X 1.778 MM (0.614" X 0.070")
2	38H1069	FITTING	2		X	X	X	(SWIVEL)
3	R26906	O-RING	4		X	X	X	19.177 X 2.464 MM (0.755" X 0.097")
4	XH4-63-T10	HYDR.QUICK COUPLER SOCKET	2		X	X	X	
5	XH4-62-T10	HYDR.QUICK COUPLER PLUG	2		X	X	X	
6	38H1162	ADAPTER FITTING	2		X	X	X	
7	AT181192	KIT	1		X	X	X	(WHOLE GOODS)

ATTACHMENT PLUMBING KIT

T141784 -UN-02MAY01

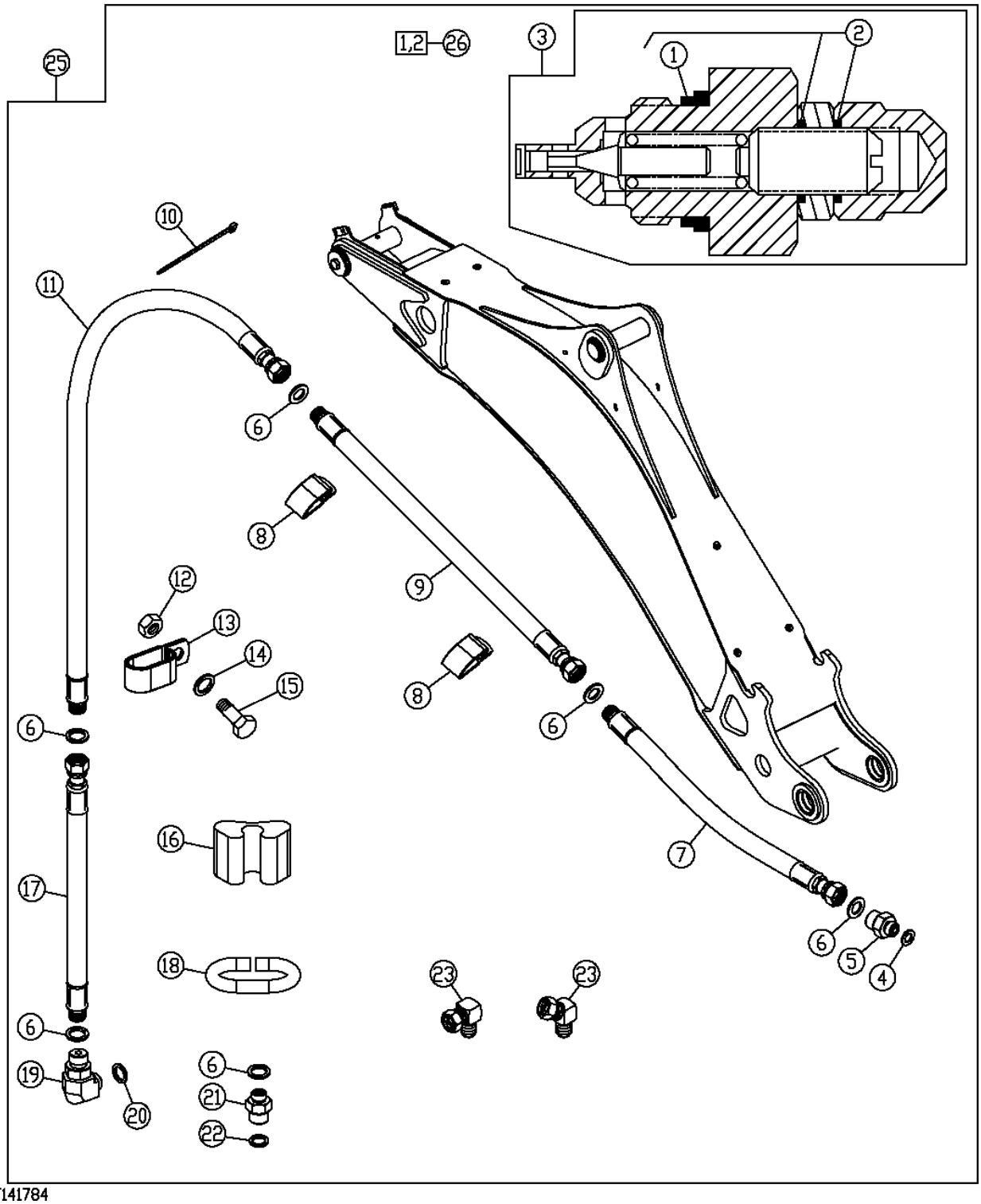

ATTACHMENT PLUMBING KIT

KEY	PART NO.	PART NAME	QTY	SERIAL NO.	310G	310SG	315SG	REMARKS
1	T183757	SEAL	2		X	X		
2	T150961	O-RING	4		X	X		
3	AT170061	PRESSURE RELIEF VALVE	2		X	X		
4	R26906	O-RING	2		X	X		
5	38H1172	ADAPTER FITTING	2		X	X		
6	T77613	O-RING	10		X	X		
7	AT194378	HYDRAULIC HOSE - FABRICATE	2		X	X		11/16" X 1 156 MM (45-1/2") X 11/16"
8	T24959	CLAMP	14		X	X		
9	AT194379	HYDRAULIC HOSE - FABRICATE	2		X			11/16" X 2 146 MM (84-1/2") X 11/16"
	AT194393	HYDRAULIC HOSE - FABRICATE	2			X		11/16" X 2 235 MM (88") X 11/16"
10	R44302	TIE BAND	10		X	X		
11	AT194398	HYDRAULIC HOSE - FABRICATE	2		X			11/16" X 1 778 MM (70") X 11/16", (STANDARD DIPPERSTICK)
	AT194394	HYDRAULIC HOSE - FABRICATE	2			X		11/16" X 1 905 MM (75") X 11/16", (STANDARD DIPPERSTICK)
	AT194395	HYDRAULIC HOSE - FABRICATE	2		X	X		11/16" X 2 794 MM (110") X 11/16", (EXTENDABLE DIPPERSTICK)
12	14M7400	LOCK NUT	4		X	X		M10
13	R49921	CLAMP	2		X	X		
14	24M7040	WASHER	4		X	X		
15	19M7938	CAP SCREW	4		X	X		M10 X 20
16	T105774	GUIDE	4		X	X		
17	AT194397	HYDRAULIC HOSE - FABRICATE	2		X	X		11/16" X 1 778 MM (70") X 11/16", (STANDARD AND EXTENDABLE) (THUMB OR CLAMP)
	AT194396	HYDRAULIC HOSE - FABRICATE	2		X			1/4" X 1 651 MM (65") X 11/16", (STANDARD DIPPERSTICK) (SWINGER)
	AT194392	HYDRAULIC HOSE - FABRICATE	2		X			1/4" X 1 613 MM (63-1/2") X 11/16", (EXTENDABLE DIPPERSTICK) (SWINGER)
18	T159976	GUIDE	2		X	X		
19	38H1010	ELBOW FITTING	1		X	X		(THUMB OR CLAMP)
20	R26375	O-RING	1		X	X		
21	38H1172	ADAPTER FITTING	1		X	X		(THUMB OR CLAMP)
22	R26906	O-RING	1		X	X		
23	AP22688	HOSE FITTING	2		X	X		(SWINGER)
24	AM3762T	ELBOW FITTING	1		X	X		(SWINGER)
25	AT194368	KIT	1		X	X		(WHOLE GOODS)

HAND HELD HYDRAULIC TOOL KIT (SERIAL NO. -913416)

T142428 -UN-31MAY01

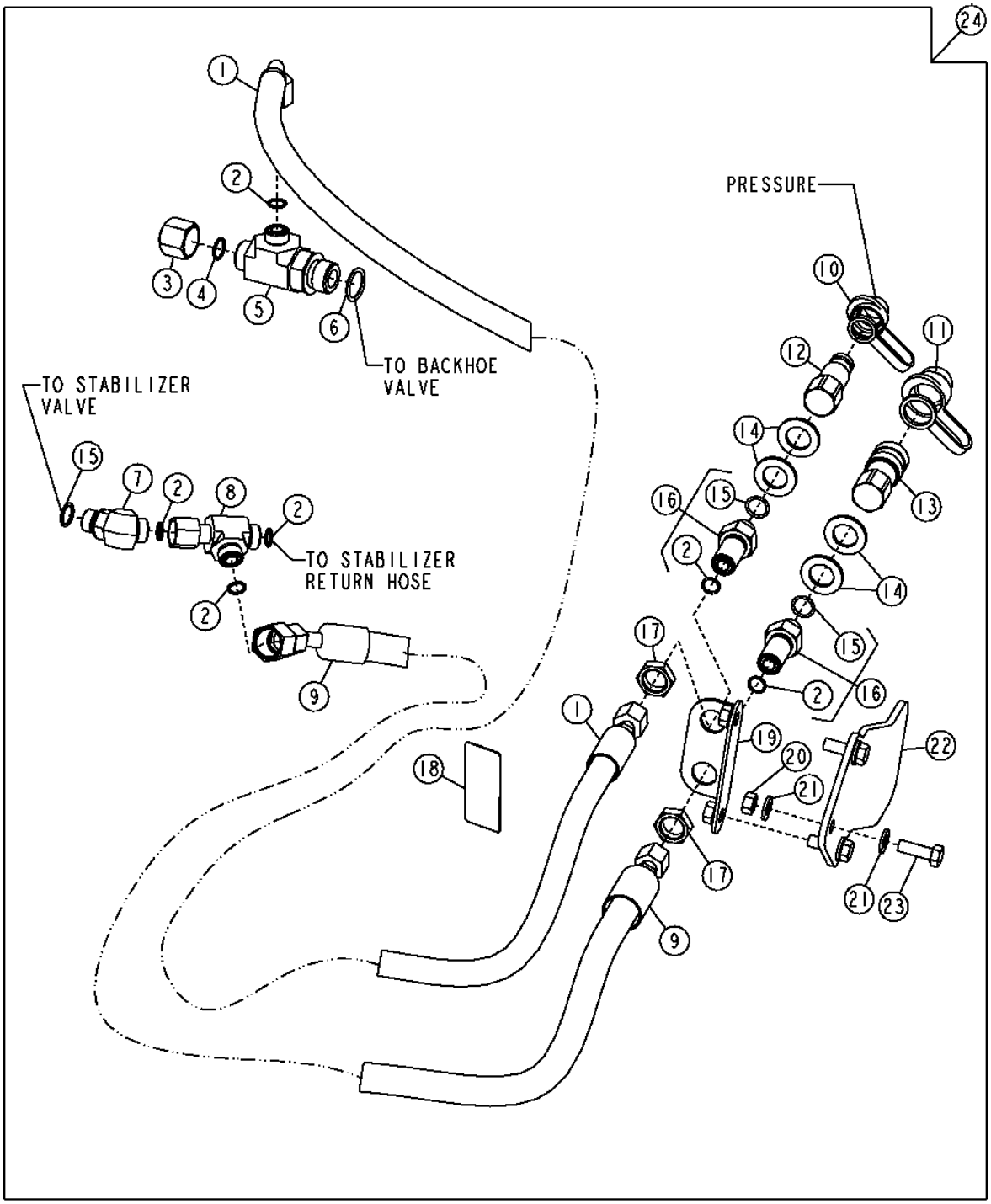

T141874

HAND HELD HYDRAULIC TOOL KIT (SERIAL NO. -913416)

KEY	PART NO.	PART NAME	QTY	SERIAL NO.	310G	310SG	315SG	REMARKS
1	AT192154	HYDRAULIC HOSE - FABRICATE	1		X	X		13/16" X 3 560 MM (140-1/4") X 13/16"
2	T77857	O-RING	7		X	X		
3	38H1417	FITTING	1		X	X		
4	T77932	O-RING	2		X	X		
5	38H1390	TEE FITTING	1		X	X		
6	U12547	O-RING	1		X	X		
7	38H1032	TEE FITTING	1		X	X		
8	38H1471	REDUCER	1		X	X		
9	AT192155	HYDRAULIC HOSE - FABRICATE	1		X	X		13/16" X 2 890 MM (113-3/4") X 13/16"
10	.....	COVER	1		X	X		PARKER HANNIFIN NR-37
11	.....	COVER	1		X	X		PARKER HANNIFIN NR-50
12	.....	HYD. QUICK-CONNECT COUPLER	1		X	X		PARKER HANNIFIN FF-372-87O
13	.....	HYD. QUICK-CONNECT COUPLER	1		X	X		PARKER HANNIFIN FF-371-87O
14	24M7090	WASHER	4		X	X		
15	R26375	O-RING	2		X	X		
16	.....	ADAPTER FITTING	2		X	X		(ORDER M135646, R26375 AND T77857)
17	T78716	NUT	2		X	X		13/16"
18	T162404	LABEL	1		X	X		(HAND HELD HYDRAULICS)
19	T186282	BRACKET	1		X	X		
20	14M7274	NUT	3		X	X		M10
21	24M7239	WASHER	6		X	X		
22	T186474	GUARD	1		X	X		
23	19M7662	CAP SCREW	3		X	X		M10 X 30
24	.....	KIT	1		X	X		(AT190118 NO LONGER AVAILABLE)

HAND HELD HYDRAULIC TOOL KIT (SERIAL NO. 913417-)

T189646 -UN-29APR03

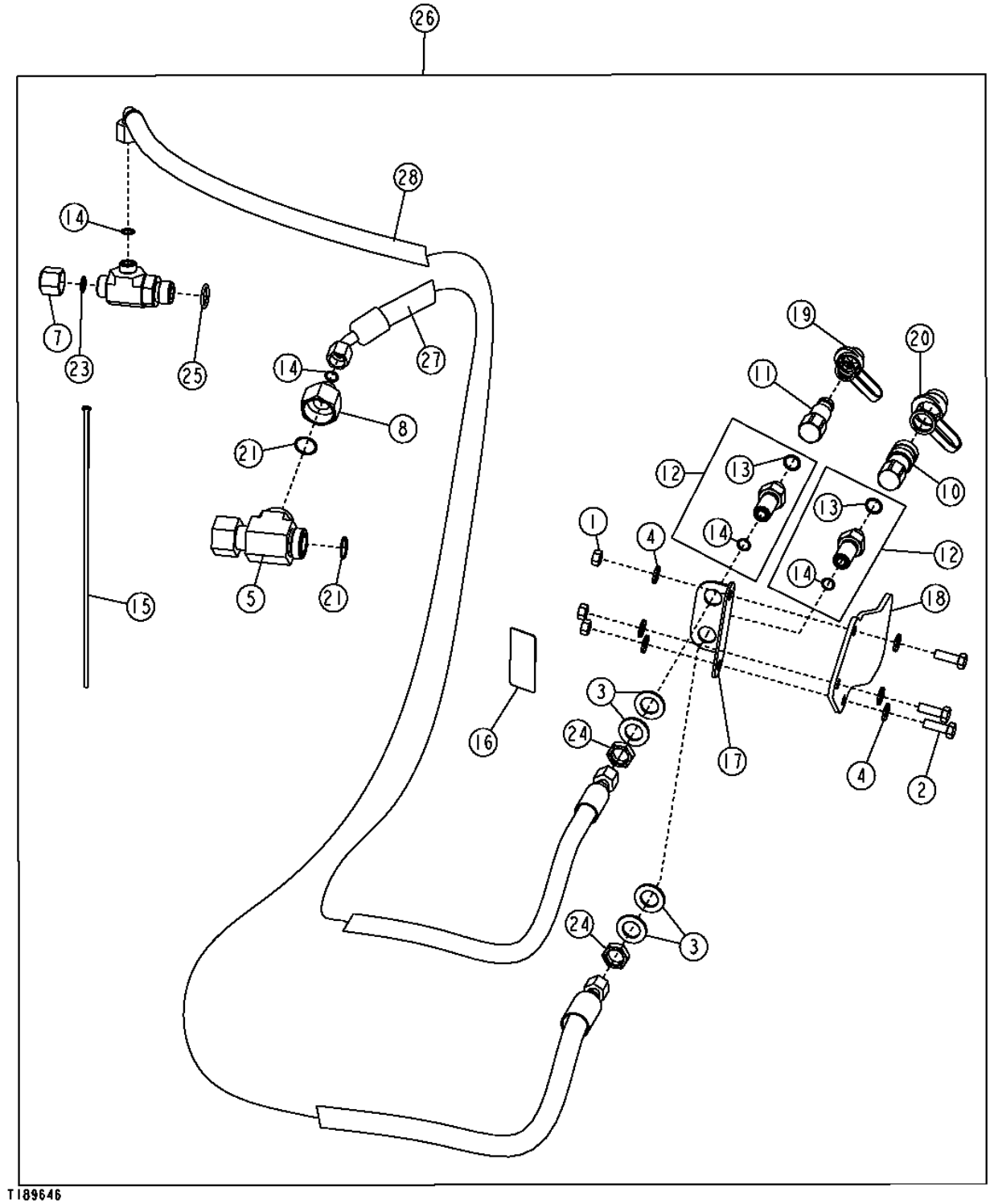

HAND HELD HYDRAULIC TOOL KIT (SERIAL NO. 913417-)

KEY	PART NO.	PART NAME	QTY	SERIAL NO.	310G	310SG	315SG	REMARKS
1	14M7274	NUT	3		X	X		
2	19M7662	CAP SCREW	3		X	X		
3	24M7090	WASHER	4		X	X		
4	24M7239	WASHER	6		X	X		
5	38H1002	TEE FITTING	1			X		
	38H1532	TEE FITTING	1		X			
6	38H1358	TUBE NUT	1		X	X		
7	38H1417	FITTING	1		X	X		
8	38H1475	REDUCER	1		X	X		
	38H1358	TUBE NUT	1		X	X		
10	AT181185	HYD. QUICK-CONNECT COUPLER	1		X	X		
11	AT181186	HYD. QUICK-CONNECT COUPLER	1		X	X		
12	AT192637	ADAPTER FITTING	2		X	X		
13	R26375	O-RING	2		X	X		
14	T77857	O-RING	4		X	X		
15	H77698	TIE BAND	15		X	X		
16	T162404	LABEL	1		X	X		
17	T186282	BRACKET	1		X	X		
18	T186474	GUARD	1		X	X		
19	.....	COVER	1		X	X		PROTECTIVE COVER 3/8 (ORDER XNR-37 THRU JD SERVICE PARTS)
20	.....	COVER	1		X	X		PROTECTIVE COVER 1/2 (ORDER X-NR50 THRU JD SERVICE PARTS)
21	T76938	O-RING	2			X		
	T77858	O-RING	1		X			
23	T77932	O-RING	1		X	X		
24	T78716	NUT	2		X	X		
25	U12547	O-RING	1		X	X		
26	**AT197246**	**KIT**	**1**		**X**	**X**		
27	AT192155	HYDRAULIC HOSE - FABRICATE	1		X	X		
28	AT192154	HYDRAULIC HOSE - FABRICATE	1		X	X		

BOOM CYLINDER
(310G)
(SERIAL NO. 926129)

TP62420 -UN-05JUN00

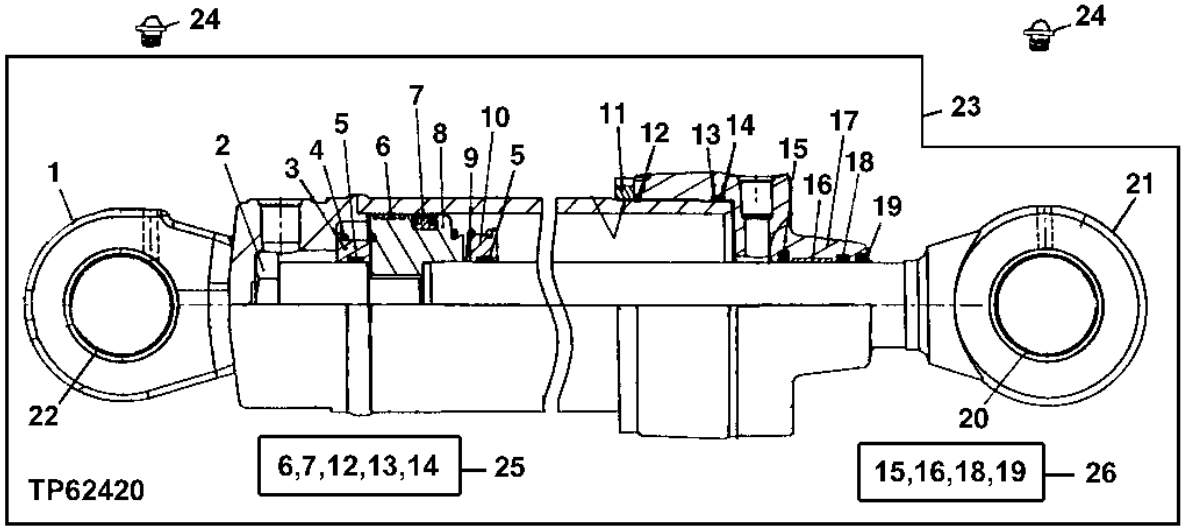

BOOM CYLINDER
(310G)
(SERIAL NO. -926129)

KEY	PART NO.	PART NAME	QTY	SERIAL NO.	310G	310SG	315SG	REMARKS
1	AH149750	HYDRAULIC CYLINDER BARREL	1		X			
2	H151833	NUT	1		X			
3	H151832	PISTON	1		X			CUSHION
4	H140818	SPRING	1		X			
5	H151831	RING	2		X			
6	H155543	SCRAPER RING	1		X			
7	AH138082	SEAL	1		X			
8	H157081	PISTON	1		X			
9	H169161	SPRING	1		X			
10	H151830	PISTON	1		X			CUSHION
11	H180431	NUT	1		X			(SUB FOR H155483, THIS APPLICATION)
12	C11884	O-RING	1		X			
13	H155540	BACK-UP RING	1		X			
14	T41356	O-RING	1		X			(SUB FOR H155539)
15	AH146562	SEAL	1		X			
16	H152795	WEAR RING	1		X			
17	H155423	HYDR. CYLINDER ROD GUIDE	1		X			
18	H152204	SEAL	1		X			
19	AH146558	SEAL	1		X			
20	H155420	BUSHING	1		X			
21	AH149751	HYDRAULIC CYLINDER ROD	1		X			(INCLUDES H155420)
22	H158062	BUSHING	2		X			
23	.....	HYDRAULIC CYLINDER	1		X			(AH149625 NO LONGER AVAILABLE) (SUB AH211131)
24	T162396	LUBRICATION FITTING	3		X			
25	AH149845	KIT	1		X			CYLINDER BORE REPAIR KIT
26	AH149814	HYDRAULIC CYLINDER KIT	1		X			CYLINDER ROD REPAIR KIT

BOOM CYLINDER
(310G)
(SERIAL NO. 926130-)

T195656 -UN-07NOV03

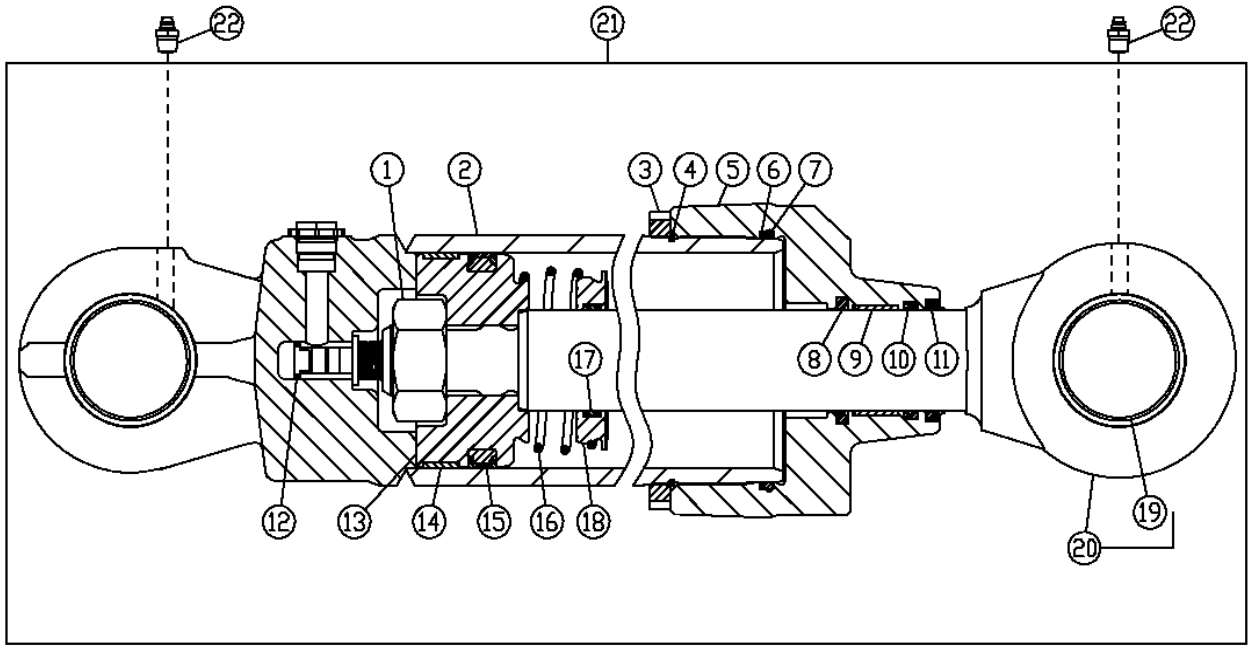

T195656

BOOM CYLINDER
(310G)
(SERIAL NO. 926130-)

KEY	PART NO.	PART NAME	QTY	SERIAL NO.	310G	310SG	315SG	REMARKS
1	H209712	NUT	1		X			
2	AH211133	HYDRAULIC CYLINDER BARREL	1		X			
3	H180431	NUT	1		X			
4	C11884	O-RING	1		X			
5	H155423	HYDR. CYLINDER ROD GUIDE	1		X			
6	H155540	BACK-UP RING	1		X			
7	T41356	O-RING	1		X			
8	AH146562	SEAL	1		X			
9	H152795	WEAR RING	1		X			
10	H152204	SEAL	1		X			
11	AH146558	SEAL	1		X			
12	AH216853	SCREW	1		X			(SUB FOR AH210719)
13	H157081	PISTON	1		X			
14	H155543	SCRAPER RING	1		X			
15	AH138082	SEAL	1		X			
16	H169161	SPRING	1		X			
17	H151831	RING	1		X			
18	H151830	PISTON	1		X			
19	H155420	BUSHING	1		X			
20	AH211135	ROD	1		X			
21	AH211131	HYDRAULIC CYLINDER	1		X			
22	T162396	LUBRICATION FITTING	2		X			
23	AH149814	KIT	1		X			(ROD SEAL KIT)
24	AH149845	KIT	1		X			(BORE SEAL KIT)

BOOM CYLINDER
(310SG AND 315SG)
(SERIAL NO. -926129)

TP62427 -UN-13JUN00

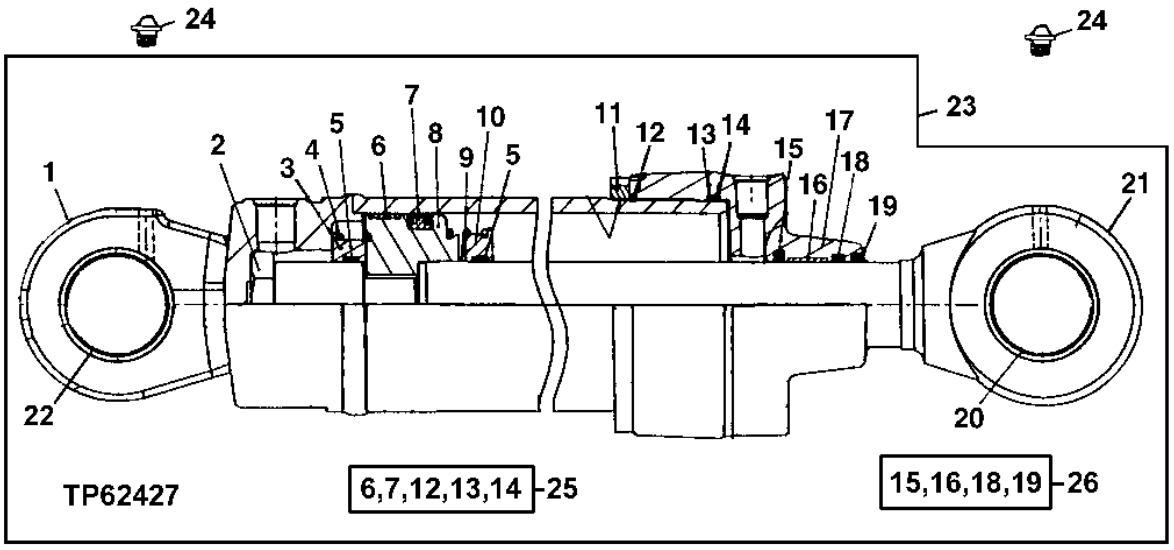

5J16

BOOM CYLINDER
(310SG AND 315SG)
(SERIAL NO. -926129)

KEY	PART NO.	PART NAME	QTY	SERIAL NO.	310G	315SG	REMARKS
1	AH149662	HYDRAULIC CYLINDER BARREL	1		X	X	
2	H151833	NUT	1		X	X	
3	H151832	PISTON	1		X	X	CUSHION
4	H140818	SPRING	1		X	X	
5	H151831	RING	2		X	X	
6	H154900	SCRAPER RING	1		X	X	
7	AH138083	SEAL	1		X	X	
8	H157083	PISTON	1		X	X	
9	H169161	SPRING	1		X	X	
10	H151830	PISTON	1		X	X	CUSHION
11	H180433	NUT	1		X	X	(SUB FOR H154901, THIS APPLICATION)
12	T105469	O-RING	1		X	X	
13	H154898	BACK-UP RING	1		X	X	
14	R77857	RING	1		X	X	(SUB FOR H154897)
15	AH146562	SEAL	1		X	X	
16	H152795	WEAR RING	1		X	X	
17	H155738	HYDR. CYLINDER ROD GUIDE	1		X	X	
18	H152204	SEAL	1		X	X	
19	AH146558	SEAL	1		X	X	
20	H152140	BUSHING	1		X	X	
21	AH175515	HYDRAULIC CYLINDER ROD	1		X	X	(SUB FOR AH148174, THIS APPLICATION)
22	H150964	BUSHING	2		X	X	
23	.....	HYDRAULIC CYLINDER	1		X	X	(AH175513 NO LONGER AVAILABLE) (SUB AH211132) (SUB FOR AH149624)
24	T162396	LUBRICATION FITTING	3		X	X	
25	AH149847	KIT	1		X	X	CYLINDER BORE REPAIR KIT
26	AH149814	HYDRAULIC CYLINDER KIT	1		X	X	CYLINDER ROD REPAIR KIT

BOOM CYLINDER
(310SG,315SG)
(SERIAL NO. 926130-)

T195686 -UN-07NOV03

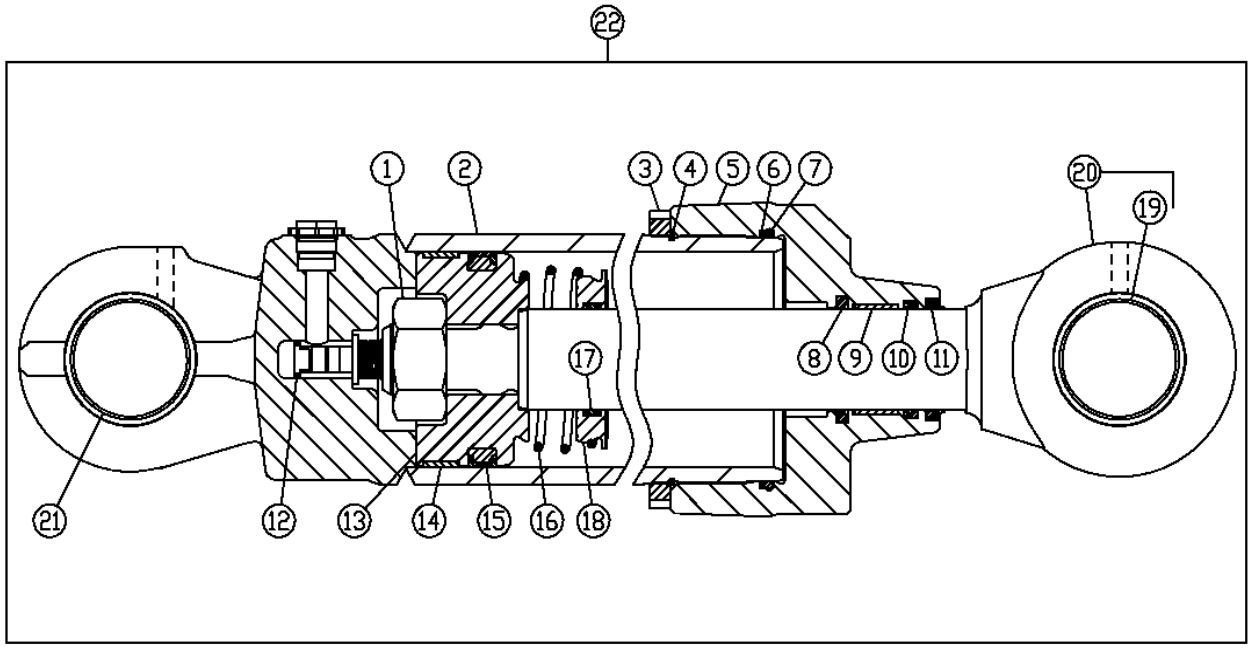

23 - 8,9,10,11

24 - 4,6,7,14,15

T195686

BOOM CYLINDER
(310SG,315SG)
(SERIAL NO. 926130-)

KEY	PART NO.	PART NAME	QTY	SERIAL NO.	310G	310SG	315SG	REMARKS
1	H209712	NUT	1			X	X	
2	AH211134	HYDRAULIC CYLINDER BARREL	1			X	X	(INCLUDES (2) H150964)
3	H180433	NUT	1			X	X	
4	T105469	O-RING	1			X	X	
5	H155738	HYDR. CYLINDER ROD GUIDE	1			X	X	
6	H154898	BACK-UP RING	1			X	X	
7	R77857	RING	1			X	X	
8	AH146562	SEAL	1			X	X	
9	H152795	WEAR RING	1			X	X	
10	H152204	SEAL	1			X	X	
11	AH146558	SEAL	1			X	X	
12	AH216869	SCREW	1			X	X	(SUB FOR AH210719)
13	H180397	PISTON	1			X	X	
14	H154900	SCRAPER RING	1			X	X	
15	AH138083	SEAL	1			X	X	
16	H169161	SPRING	1			X	X	
17	H151831	RING	1			X	X	
18	H151830	PISTON	1			X	X	
19	H152140	BUSHING	1			X	X	
20	AH211138	HYDRAULIC CYLINDER ROD	1			X	X	
21	H150964	BUSHING	2			X	X	
22	AH211132	HYDRAULIC CYLINDER	1			X	X	
23	AH149814	KIT	1			X	X	(ROD SEAL KIT)
24	AH149847	KIT	1			X	X	(BORE SEAL KIT)

BUCKET CYLINDER
(310G)
(SERIAL NO. -910900)

TP62424 -UN-08JUN00

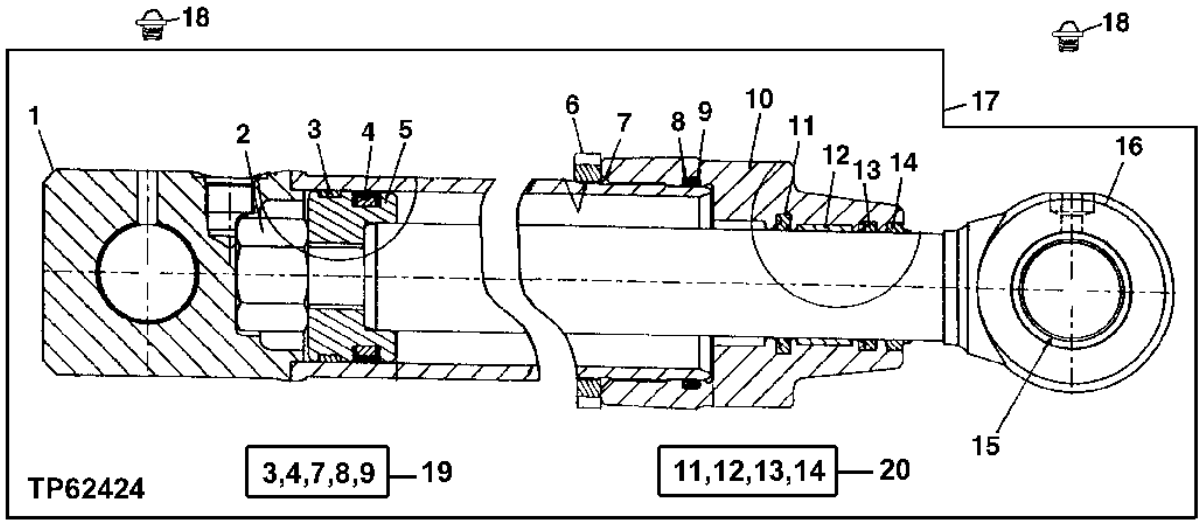

KEY	PART NO.	PART NAME	QTY	SERIAL NO.	310G	310SG	315SG	REMARKS
1	AH148551	HYDRAULIC CYLINDER BARREL	1		X			
2	H155513	NUT	1		X			
3	R81777	WEAR RING	1		X			
4	RE20345	SEAL	1		X			
5	H155520	PISTON	1		X			
6	H180569	NUT	1		X			(SUB FOR H155512, THIS APPLICATION)
7	P48403	O-RING	1		X			
8	H155548	BACK-UP RING	1		X			
9	F950R	O-RING	1		X			(SUB FOR H155547)
10	H155424	HYDR. CYLINDER ROD GUIDE	1		X			
11	AH146561	SEAL	1		X			
12	H152794	WEAR RING	1		X			
13	H152203	SEAL	1		X			
14	AH146557	SEAL	1		X			
15	H155419	BUSHING	1		X			
16	AH148553	HYDRAULIC CYLINDER ROD	1		X			
17	.....	HYDRAULIC CYLINDER	1		X			(AH148437 NO LONGER AVAILABLE) (SUB AH209080)
18	T162396	LUBRICATION FITTING	2		X			
19	AH212091	HYDRAULIC CYLINDER KIT	1		X			(SUB FOR AH149842) CYLINDER BORE REPAIR KIT
20	AH210484	HYDRAULIC CYLINDER KIT	1		X			CYLINDER ROD REPAIR KIT, (SUB FOR AH148164)

BUCKET CYLINDER
(310G)
(SERIAL NO. 910901-925926)

T161609 -UN-18NOV02

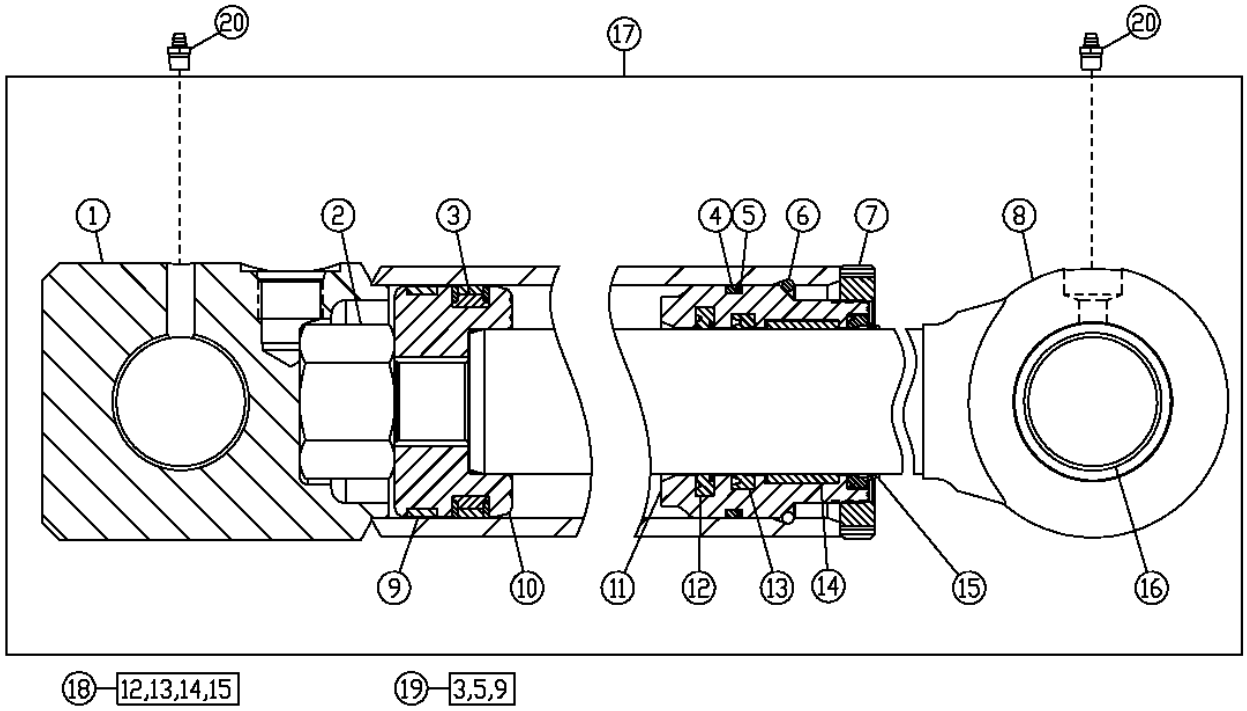

T161609

KEY	PART NO.	PART NAME	QTY	SERIAL NO.	310G	310SG	315SG	REMARKS
1	AH207411	HYDRAULIC CYLINDER BARREL	1		X			
2	H155513	NUT	1		X			
3	RE20345	SEAL	1		X			
4	T12582	O-RING	1		X			
5	R81864	BACK-UP RING	1		X			
6	R81789	RING	1		X			
7	R81795	NUT	1		X			
8	AH148553	HYDRAULIC CYLINDER ROD	1		X			
9	R81777	WEAR RING	1		X			
10	H155520	PISTON	1		X			
11	H152345	HYDR. CYLINDER ROD GUIDE	1		X			
12	AH146561	SEAL	1		X			
13	H152203	SEAL	1		X			
14	H152794	WEAR RING	1		X			
15	AH146557	SEAL	1		X			
16	H155419	BUSHING	1		X			
17	.....	HYDRAULIC CYLINDER	1		X			(AH206649 NO LONGER AVAILABLE) (SUB AH209080)
18	AH210484	HYDRAULIC CYLINDER KIT	1		X			(SUB FOR AH148164)
19	AH212091	HYDRAULIC CYLINDER KIT	1		X			(SUB FOR AH149842)
20	T162396	LUBRICATION FITTING	2		X			

BUCKET CYLINDER
(310G)
(SERIAL NO. 925927-)

T199107 -UN-13APR04

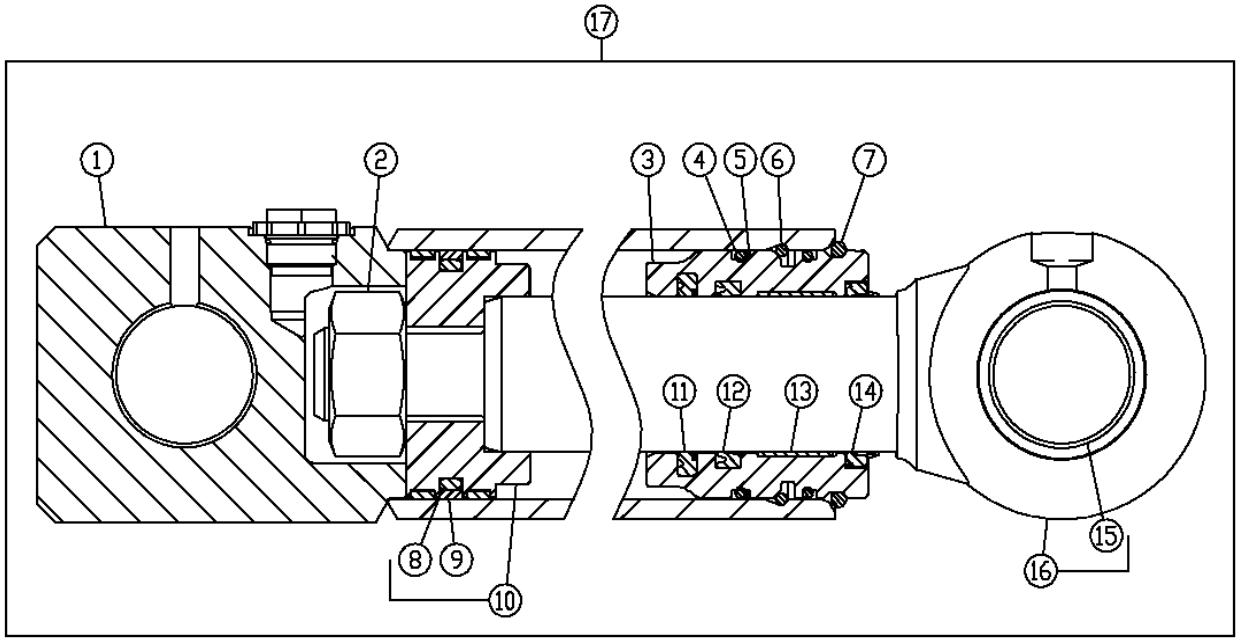

18-11,12,13,14 19-5,8,9

T199107

KEY	PART NO.	PART NAME	QTY	SERIAL NO.	310G	310SG	315SG	REMARKS
1	AH209081	HYDRAULIC CYLINDER BARREL	1		X			
2	H170539	NUT	1		X			
3	H209221	HYDR. CYLINDER ROD GUIDE	1		X			
4	T12582	O-RING	1		X			
5	R81864	BACK-UP RING	1		X			
6	H170216	SNAP RING	1		X			
7	H180787	SNAP RING	1		X			
8	R98323	SEAL	1		X			
9	R98322	SEAL	1		X			
10	AH173410	PISTON	1		X			
11	AH146561	SEAL	1		X			
12	H152203	SEAL	1		X			
13	H208987	WEAR RING	1		X			
14	AH146557	SEAL	1		X			
15	H155419	BUSHING	1		X			
16	AH209082	HYDRAULIC CYLINDER ROD	1		X			
17	AH209080	HYDRAULIC CYLINDER	1		X			
18	AH210484	HYDRAULIC CYLINDER KIT	1		X			ROD
19	AH212092	HYDRAULIC CYLINDER KIT	1		X			BORE

BUCKET CYLINDER
(310SG AND 315SG)
(SERIAL NO. -926129)

TP62437 -UN-29JUN00

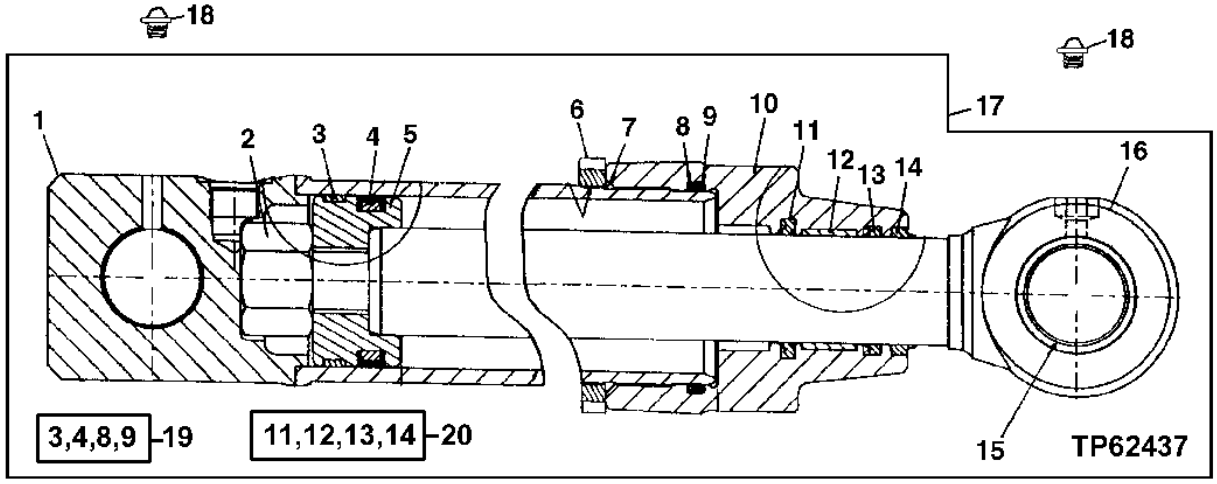

KEY	PART NO.	PART NAME	QTY	SERIAL NO.	310SG	315SG	REMARKS
1	AH150209	HYDRAULIC CYLINDER BARREL	1		X	X	
2	H151815	NUT	1		X	X	
3	R81776	WEAR RING	1		X	X	
4	RE20344	SEAL	1		X	X	
5	H150976	PISTON	1		X	X	
6	H151816	NUT	1		X	X	
7	H154380	O-RING	1		X	X	
8	H151889	BACK-UP RING	1		X	X	
9	R74657	O-RING	1		X	X	(SUB FOR H154381)
10	H155718	HYDR. CYLINDER ROD GUIDE	1		X	X	
11	AH146562	SEAL	1		X	X	
12	H152795	WEAR RING	1		X	X	
13	H152204	SEAL	1		X	X	
14	AH146558	SEAL	1		X	X	
15	H154269	BUSHING	1		X	X	
16	AH146271	HYDRAULIC CYLINDER ROD	1		X	X	
17	.....	HYDRAULIC CYLINDER	1		X	X	(AH149790 NO LONGER AVAILABLE) (SUB AH208379)
18	T162396	LUBRICATION FITTING	2		X	X	
19	AH212096	HYDRAULIC CYLINDER KIT	1		X	X	(SUB FOR AH149843) CYLINDER BORE REPAIR KIT
20	AH149814	HYDRAULIC CYLINDER KIT	1		X	X	CYLINDER ROD REPAIR KIT

BUCKET CYLINDER AND REPAIR KIT
(310SG AND 315SG)
(SERIAL NO. 926130-)

T202327 -UN-27AUG04

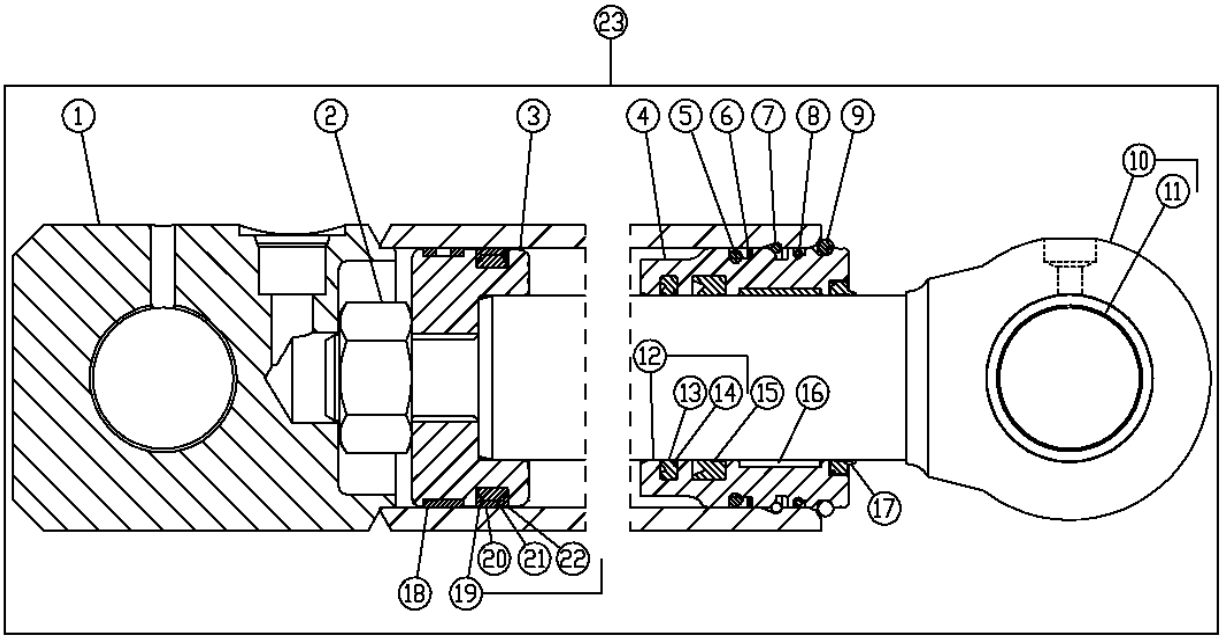

24 — 12,13,14,15,16,17

25 — 6,8,18,19,20,21,22

T202327

KEY	PART NO.	PART NAME	QTY	SERIAL NO.	REMARKS
1	AH209078	HYDRAULIC CYLINDER BARREL	1		
2	H170540	LOCK NUT	1		
3	H150976	PISTON	1		
4	H209264	HYDR. CYLINDER ROD GUIDE	1		
5	F1430R	O-RING	1		
6	R79101	BACK-UP RING	1		
7	H180103	SNAP RING	1		
8	.....	O-RING	1		
9	H206859	SNAP RING	1		
10	AH209079	HYDRAULIC CYLINDER ROD	1		
11	H180402	BUSHING	1		
12	AH146562	SEAL	1		
13	.....	SEAL	1		
14	.....	BACK-UP RING	1		
15	H152204	SEAL	1		
16	H152795	WEAR RING	1		
17	AH146558	SEAL	1		
18	R81776	WEAR RING	1		
19	RE20344	SEAL	1		
20	.....	SEAL	1		
21	.....	SEAL	1		
22	.....	BACK-UP RING	2		
23	AH208379	HYDRAULIC CYLINDER	1		
24	AH149814	HYDRAULIC CYLINDER KIT	1		CYLINDER ROD REPAIR KIT
25	AH212096	HYDRAULIC CYLINDER KIT	1		CYLINDER BORE REPAIR KIT

BUCKET CYLINDER AND REPAIR KIT
(SERIAL NO. -926788)
(HEAVY DUTY)
(310SG AND 315SG)

TP62469 -UN-26SEP00

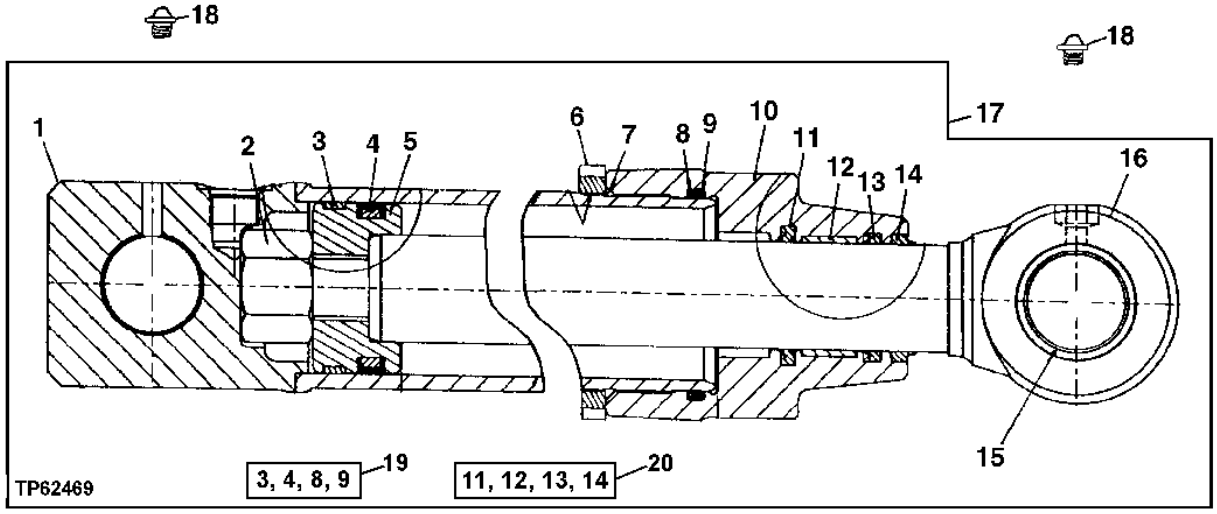

KEY	PART NO.	PART NAME	QTY	SERIAL NO.	310G	310SG	315SG	REMARKS
1	AH150211	HYDRAULIC CYLINDER BARREL	1		X	X		
2	H151815	NUT	1		X	X		
3	R81775	WEAR RING	1		X	X		
4	RE20343	SEAL	1		X	X		
5	H151893	PISTON	1		X	X		
6	H180430	NUT	1		X	X		(SUB FOR H151892, THIS APPLICATION)
7	H154382	O-RING	1		X	X		
8	H152065	BACK-UP RING	1		X	X		
9	E49244	O-RING	1		X	X		(SUB FOR H154383)
10	H155740	HYDR. CYLINDER ROD GUIDE	1		X	X		
11	AH146563	SEAL	1		X	X		
12	H152796	WEAR RING	1		X	X		
13	H152205	SEAL	1		X	X		
14	AH146559	SEAL	1		X	X		
15	H154269	BUSHING	1		X	X		
16	AH146318	HYDRAULIC CYLINDER ROD	1		X	X		
17	AH149791	HYDRAULIC CYLINDER	1		X	X		
18	T162396	LUBRICATION FITTING	2		X	X		
19	AH212101	HYDRAULIC CYLINDER KIT	1		X		X	(SUB FOR AH149844) CYLINDER BORE REPAIR KIT
20	AH149815	HYDRAULIC CYLINDER KIT	1		X	X		CYLINDER ROD REPAIR KIT

BUCKET CYLINDER AND REPAIR KIT
(SERIAL NO. 926789-)
(HEAVY DUTY)
(310SG AND 315SG)

T202327 -UN-27AUG04

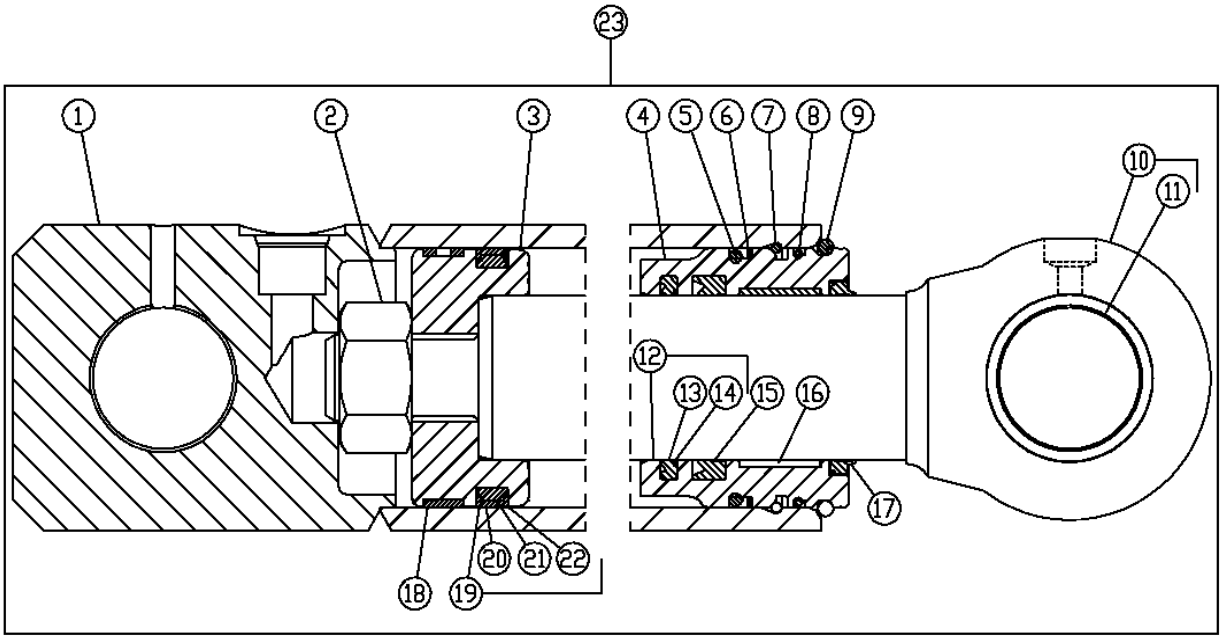

24 — 12,13,14,15,16,17

25 — 6,8,18,19,20,21,22

T202327

KEY	PART NO.	PART NAME	QTY	SERIAL NO.	310G	315SG	REMARKS
1	AH220523	HYDRAULIC CYLINDER BARREL	1		X	X	(SUB FOR AH206725)
2	H170540	LOCK NUT	1		X	X	
3	H151893	PISTON	1		X	X	
4	H206792	HYDR. CYLINDER ROD GUIDE	1		X	X	
5	F950R	O-RING	1		X	X	
6	R81862	BACK-UP RING	1		X	X	
7	H180094	SNAP RING	1		X	X	
8	.....	O-RING	1		X	X	
9	H180080	SNAP RING	1		X	X	
10	AH209083	HYDRAULIC CYLINDER ROD	1		X	X	
11	H180402	BUSHING	1		X	X	
12	AH146563	SEAL	1		X	X	
13	.....	SEAL	1		X	X	
14	.....	BACK-UP RING	1		X	X	
15	H152205	SEAL	1		X	X	
16	H152796	WEAR RING	1		X	X	
17	AH146559	SEAL	1		X	X	
18	R81775	WEAR RING	1		X	X	
19	RE20343	SEAL	1		X	X	
20	.....	SEAL	1		X	X	
21	.....	SEAL	1		X	X	
22	.....	BACK-UP RING	2		X	X	
23	AH220526	HYDRAULIC CYLINDER	1		X	X	(SUB FOR AH206726)
24	AH149815	HYDRAULIC CYLINDER KIT	1		X	X	CYLINDER ROD REPAIR KIT
25	AH212101	HYDRAULIC CYLINDER KIT	1		X	X	CYLINDER BORE REPAIR KIT, (SUB FOR AH212102, THIS APPLICATION)

CROWD CYLINDER
(310G)

TP62421 -UN-05JUN00

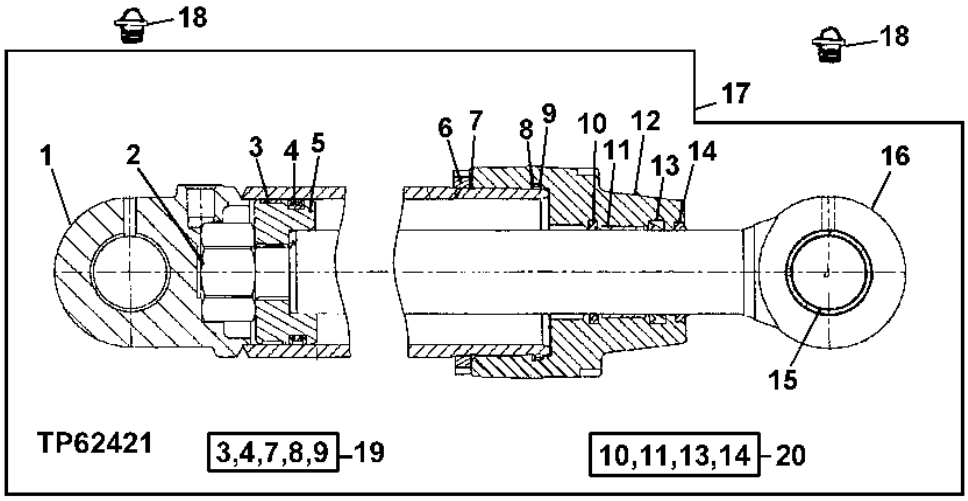

KEY	PART NO.	PART NAME	QTY	SERIAL NO.	310G	310SG	315SG	REMARKS
1	AH157977	HYDRAULIC CYLINDER BARREL	1		X			
2	H151894	NUT	1		X			
3	H155543	SCRAPER RING	1		X			
4	AH138082	SEAL	1		X			
5	H164464	PISTON	1		X			
6	H180431	NUT	1		X			(SUB FOR H155483, THIS APPLICATION)
7	C11884	O-RING	1		X			
8	H155540	BACK-UP RING	1		X			
9	T41356	O-RING	1		X			(SUB FOR H155539)
10	AH146563	SEAL	1		X			
11	H152796	WEAR RING	1		X			
12	H156929	HYDR. CYLINDER ROD GUIDE	1		X			
13	H152205	SEAL	1		X			
14	AH146559	SEAL	1		X			
15	H158947	BUSHING	1		X			
16	AH157979	HYDRAULIC CYLINDER ROD	1		X			
17	AH157980	HYDRAULIC CYLINDER	1		X			
18	T162396	LUBRICATION FITTING	2		X			
19	AH149845	KIT	1		X			CYLINDER BORE REPAIR KIT
20	AH149815	HYDRAULIC CYLINDER KIT	1		X			CYLINDER ROD REPAIR KIT

CROWD CYLINDER

TP62434 -UN-22JUN00

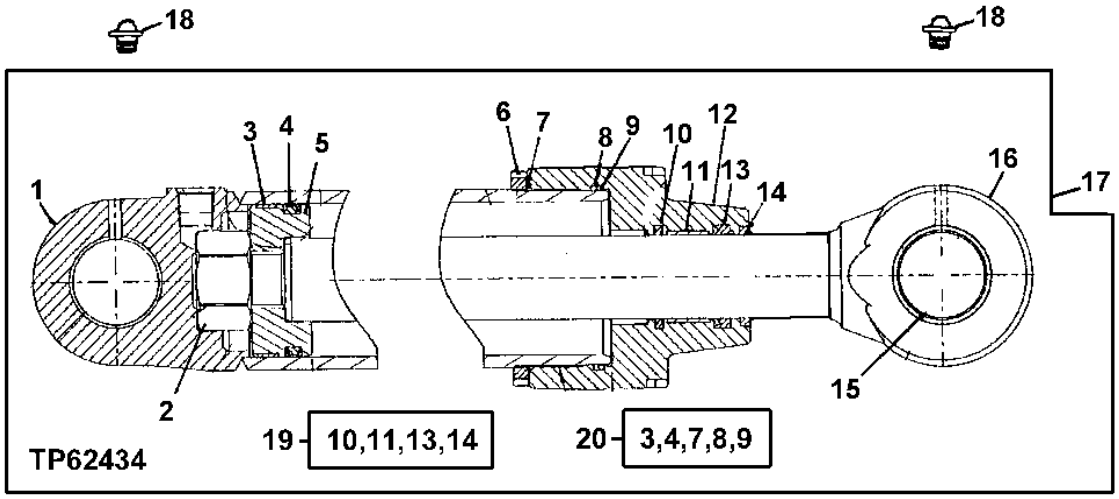

KEY	PART NO.	PART NAME	QTY	SERIAL NO.	310G	315SG	REMARKS
1	AH158576	HYDRAULIC CYLINDER BARREL	1		X	X	
2	H170372	NUT	1		X	X	
3	R82095	WEAR RING	1		X	X	
4	RE20809	SEAL	1		X	X	
5	H170371	PISTON	1		X	X	
6	H151781	NUT	1		X	X	
7	T12275	O-RING	1		X	X	
8	H151891	BACK-UP RING	1		X	X	
9	T38485	O-RING	1		X	X	(SUB FOR H154385)
10	AH146563	SEAL	1		X	X	
11	H152796	WEAR RING	1		X	X	
12	H155769	HYDR. CYLINDER ROD GUIDE	1		X	X	
13	H152205	SEAL	1		X	X	
14	AH146559	SEAL	1		X	X	
15	H151820	BUSHING	1		X	X	
16	AH162394	ROD	1		X	X	
17	AH164137	CYLINDER	1		X	X	
18	T162396	LUBRICATION FITTING	2		X	X	
19	AH149815	HYDRAULIC CYLINDER KIT	1		X	X	CYLINDER ROD REPAIR KIT
20	AH212103	HYDRAULIC CYLINDER KIT	1		X	X	(SUB FOR AH149846) CYLINDER BORE REPAIR KIT

SWING CYLINDER
(310G)
(SERIAL NO. -XXXXXX)

TP62422 -UN-05JUN00

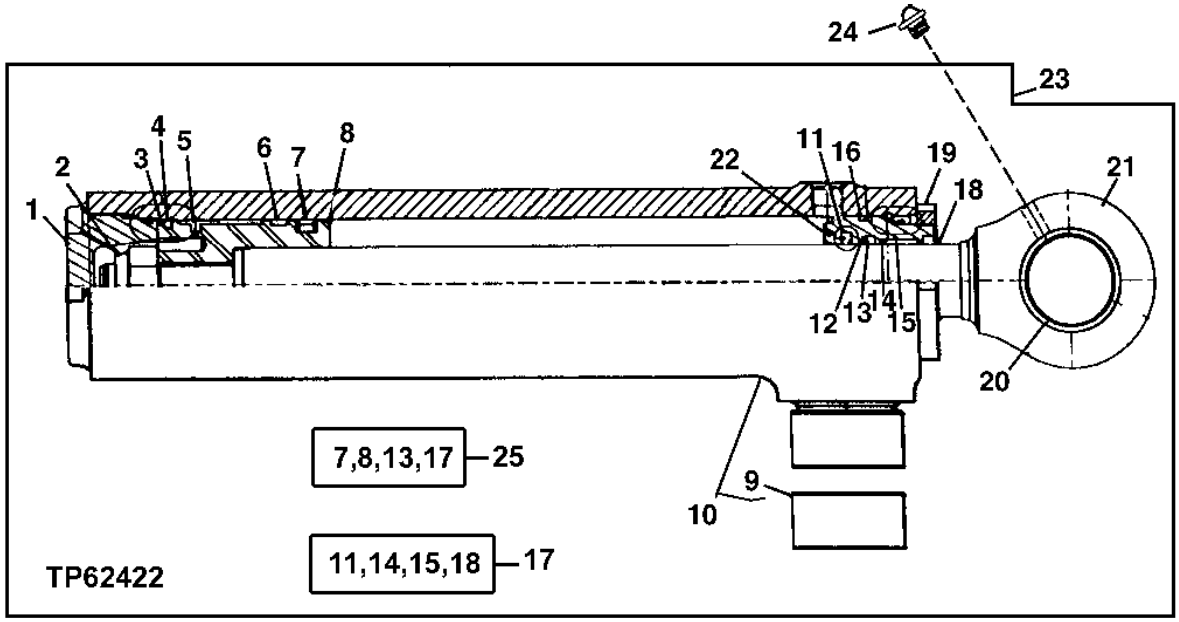

KEY	PART NO.	PART NAME	QTY	SERIAL NO.	310G	310SG	315SG	REMARKS
1	H158090	HYDRAULIC CYLINDER CAP	1		X			
2	H170538	NUT	1		X			
3	H168275	BACK-UP RING	1		X			
4	M4237T	O-RING	1		X			
5	R81797	RING	1		X			
6	R81777	WEAR RING	1		X			
7	RE20345	SEAL	1		X			
8	H151641	PISTON	1		X			
9	H151328	BUSHING	2		X			
10	AH146065	HYDRAULIC CYLINDER BARREL	1		X			
11	AH146560	SEAL	1		X			
12	T12582	O-RING	1		X			
13	R81864	BACK-UP RING	1		X			
14	H152202	SEAL	1		X			
15	H152793	BACK-UP RING	1		X			
16	R81789	RING	1		X			
17	AH149813	HYDRAULIC CYLINDER KIT	1		X			CYLINDER ROD REPAIR KIT
18	AH146556	SEAL	1		X			
19	R81795	NUT	1		X			
20	H154269	BUSHING	1		X			
21	AH146062	HYDRAULIC CYLINDER ROD	1		X			
22	H157510	HYDR. CYLINDER ROD GUIDE	1		X			
23	AH172882	HYDRAULIC CYLINDER	1		X			(SUB AH145994)
24	T162396	LUBRICATION FITTING	3		X			
25	AH149842	HYDRAULIC CYLINDER KIT	1		X			CYLINDER BORE REPAIR KIT

SWING CYLINDER
(310G)
(SERIAL NO. XXXXXX-)

TP62422 -UN-05JUN00

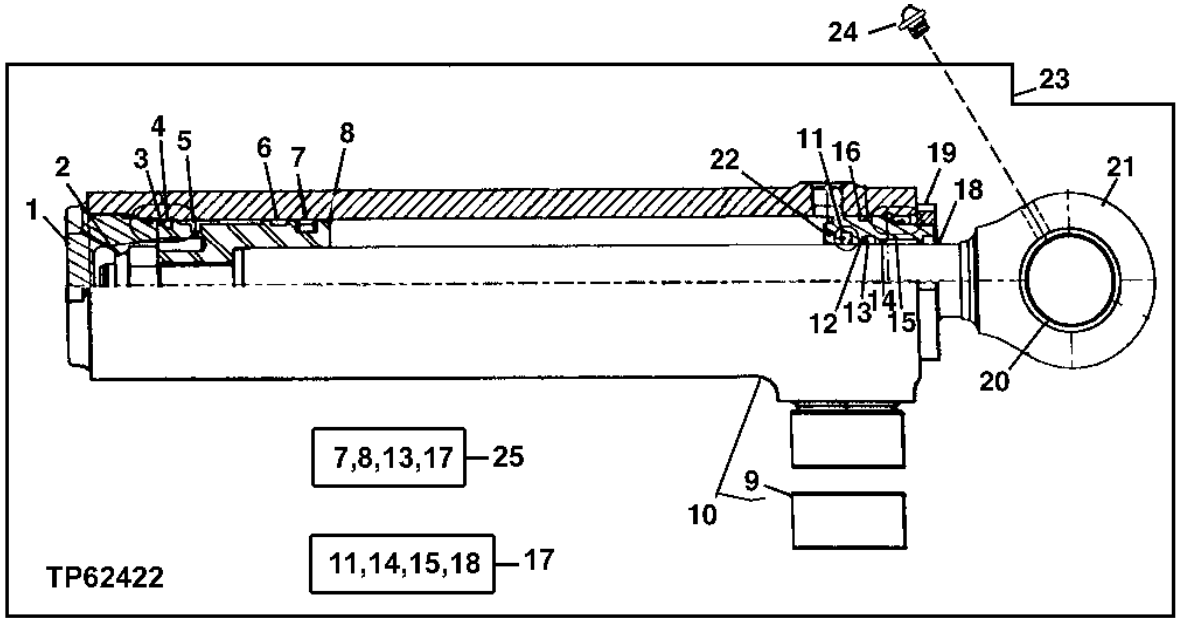

KEY	PART NO.	PART NAME	QTY	SERIAL NO.	310G	310SG	315SG	REMARKS
1	AH172882	HYDRAULIC CYLINDER	1		X			

MEMORANDA

**SWING CYLINDER
(310SG AND 315SG)**

TP62435 -UN-27JUN00

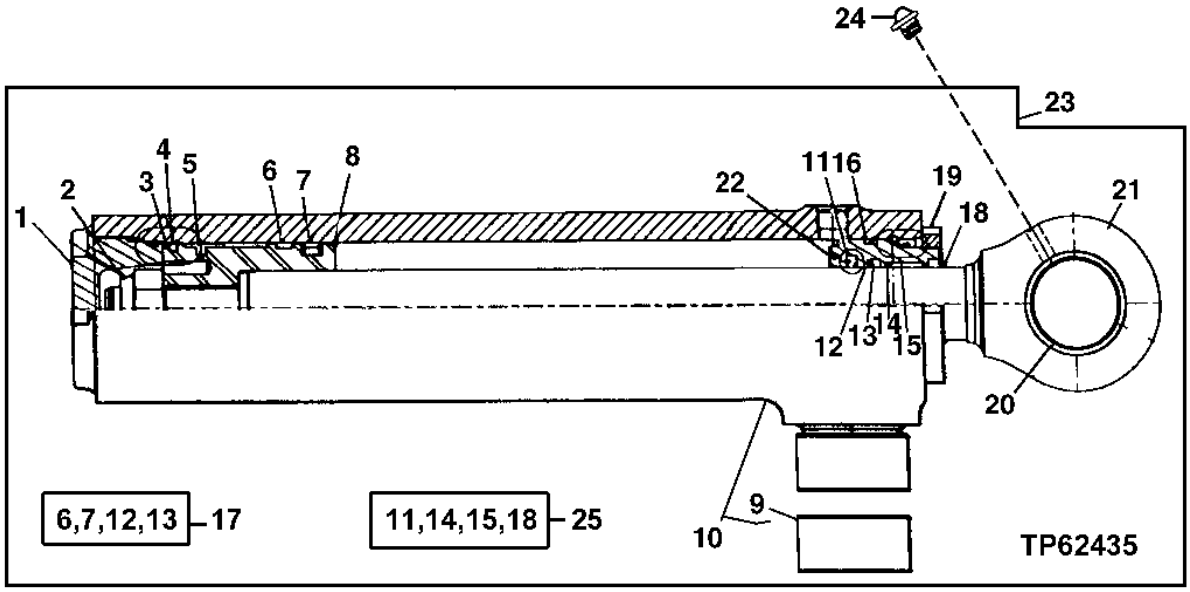

KEY	PART NO.	PART NAME	QTY	SERIAL NO.	310G	310SG	315SG	REMARKS
1	H156486	HYDRAULIC CYLINDER CAP	1			X	X	
2	H170539	NUT	1			X	X	
3	H154373	BACK-UP RING	1			X	X	
4	P48403	O-RING	1			X	X	
5	H150947	PISTON RING	1			X	X	
6	R81776	WEAR RING	1			X	X	
7	RE20344	SEAL	1			X	X	
8	H154372	PISTON	1			X	X	
9	H151328	BUSHING	2			X	X	
10	AH147889	HYDRAULIC CYLINDER BARREL	1			X	X	
11	AH146561	SEAL	1			X	X	
12	R83576	O-RING	1			X	X	
13	R79101	BACK-UP RING	1			X	X	
14	H152203	SEAL	1			X	X	
15	H152794	WEAR RING	1			X	X	
16	R81788	RING	1			X	X	
17	AH212096	HYDRAULIC CYLINDER KIT	1			X	X	CYLINDER BORE REPAIR KIT, (SUB FOR AH149843)
18	AH146557	SEAL	1			X	X	
19	R81794	NUT	1			X	X	
20	H180402	BUSHING	1			X	X	(SUB FOR H142209)
21	AH147893	HYDRAULIC CYLINDER ROD	1			X	X	
22	H154352	HYDR. CYLINDER ROD GUIDE	1			X	X	
23	AH173163	HYDRAULIC CYLINDER	1			X	X	(SUB FOR AH147888)
24	T162396	LUBRICATION FITTING	3			X	X	
25	AH210484	HYDRAULIC CYLINDER KIT	1			X	X	CYLINDER ROD REPAIR KIT, (SUB FOR AH148164)

STABILIZER CYLINDER (SERIAL NO. -925946)
(310G)

TX1001642 -UN-28DEC05

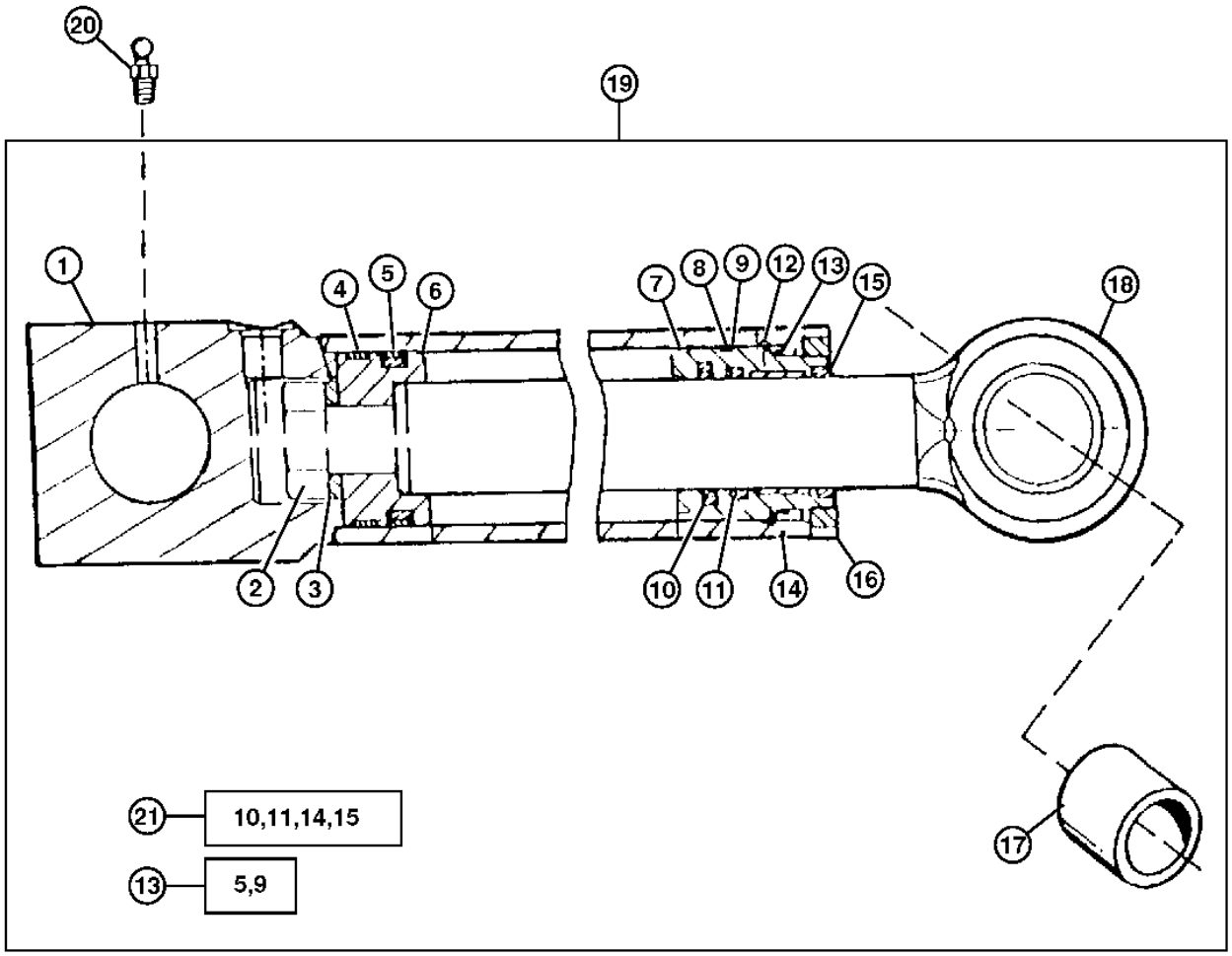

TX1001642

STABILIZER CYLINDER
(310G)
(SERIAL NO. -925946)

KEY	PART NO.	PART NAME	QTY	SERIAL NO.	310G	310SG	315SG	REMARKS
1	AH149974	HYDRAULIC CYLINDER BARREL	1		X			(L.H.)
	AH149975	HYDRAULIC CYLINDER BARREL	1		X			(R.H.)
2	19M8353	CAP SCREW	1		X			M30 X 80
3	H145175	WASHER	1		X			
4	R81777	WEAR RING	1	-902497	X			
5	RE20345	SEAL	1	-902497	X			
	R98322	SEAL	1	902498-	X			
	R98323	SEAL	1	902498-	X			
6	H155520	PISTON	1	-902497	X			
	AH173410	PISTON	1	902498-	X			(INCLUDES WEAR WINGS AND SEALS) (SEE DTAC SOLUTION 69663 IF S/N IS BETWEEN, 913417 - 952532)
7	H152345	HYDR. CYLINDER ROD GUIDE	1		X			
8	T12582	O-RING	1		X			
9	R81864	BACK-UP RING	1		X			
10	AH146561	SEAL	1		X			
11	H152203	SEAL	1		X			
12	R81789	RING	1		X			
13	AH212091	HYDRAULIC CYLINDER KIT	1	-902497	X			CYLINDER BORE REPAIR KIT
	AH212092	HYDRAULIC CYLINDER KIT	1	902498-	X			(SUB FOR AH202080) CYLINDER BORE REPAIR KIT
14	H152794	WEAR RING	1		X			
15	AH146557	SEAL	1		X			
16	R81795	NUT	1		X			
17	H154404	BUSHING	1	-902497	X			
18	AH147902	HYDRAULIC CYLINDER ROD	1		X			
19	.....	HYDRAULIC CYLINDER	1	-902497	X			(L.H.) (SUB AH176122)
	.....	HYDRAULIC CYLINDER	1	902498-	X			(L.H.) (AH176122 NLA) (SUB AH219499) (ALSO ORDER 38H1160, 38H1004, (2) T77613 AND (2) R26448)
	.....	HYDRAULIC CYLINDER	1	-902497	X			(R.H.) (SUB AH173202)
	.....	HYDRAULIC CYLINDER	1	902498-	X			(R.H.) (SUB AH219500) (ALSO ORDER 38H1160, 38H1004, (2) T77613 AND (2) R26448)
20	T162396	LUBRICATION FITTING	1		X			
21	AH210484	HYDRAULIC CYLINDER KIT	1		X			CYLINDER ROD REPAIR KIT, (SUB FOR AH148164)

MEMORANDA

STABILIZER CYLINDER
(310G)
(SERIAL NO. 925947-951995)

T196166 -UN-10NOV03

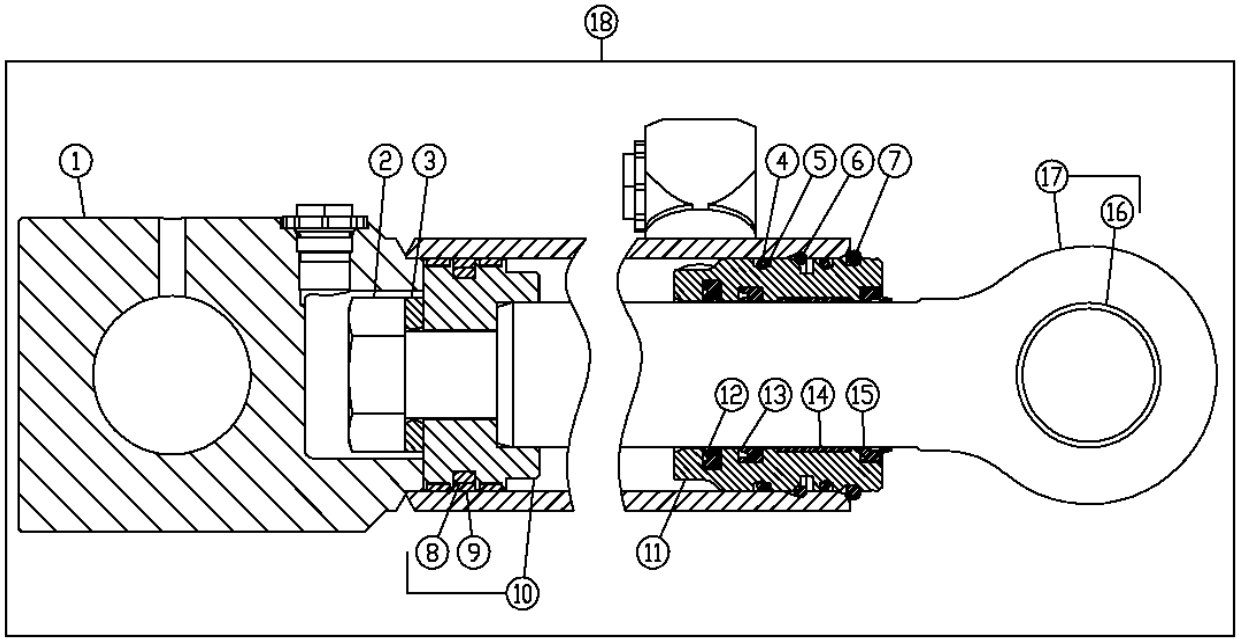

19-12,13,14,15 20-5,8,9

T196166

KEY	PART NO.	PART NAME	QTY	SERIAL NO.	310G	310SG	315SG	REMARKS
1	AH211197	HYDRAULIC CYLINDER BARREL	1		X			(L.H.)
	AH211199	HYDRAULIC CYLINDER BARREL	1		X			(R.H.)
2	19M8353	CAP SCREW	1		X			M30 X 80
3	H145175	WASHER	1		X			
4	T12582	O-RING	1		X			
5	R81864	BACK-UP RING	1		X			
6	H170216	SNAP RING	1		X			
7	H180787	SNAP RING	1		X			
8	R98323	SEAL	1		X			
9	R98322	SEAL	1		X			
10	AH173410	PISTON	1		X			(SEE DTAC SOLUTION 69663 IF S/N IS BETWEEN, 913417 - 952532)
11	H209221	HYDR. CYLINDER ROD GUIDE	1		X			
12	AH146561	SEAL	1		X			
13	H152203	SEAL	1		X			
14	H208987	WEAR RING	1		X			
15	AH146557	SEAL	1		X			
16	H154404	BUSHING	1		X			
17	AH147902	HYDRAULIC CYLINDER ROD	1		X			
18	.....	HYDRAULIC CYLINDER	1		X			(L.H.) (AH211196 NO LONGER AVAILABLE) (SUB AH219499) (ALSO ORDER 38H1160, 38H1004, (2) T77613 AND (2) R26448)
	.....	HYDRAULIC CYLINDER	1		X			(R.H.) (AH211198 NO LONGER AVAILABLE) (SUB AH219500) (ALSO ORDER 38H1160, 38H1004, (2) T77613 AND (2) R26448)
19	AH210484	HYDRAULIC CYLINDER KIT	1		X			ROD SEAL KIT
20	AH212092	HYDRAULIC CYLINDER KIT	1		X			BORE SEAL KIT

STABILIZER CYLINDER
(310G)
(SERIAL NO. 951996-)

T196166 -UN-10NOV03

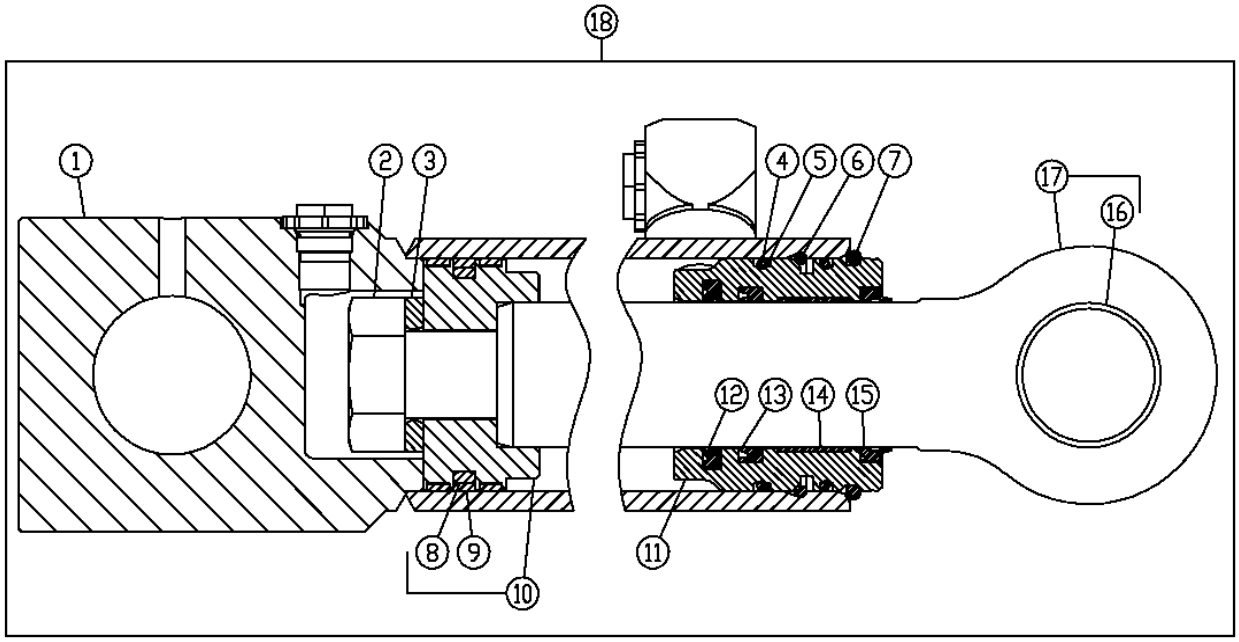

19-12,13,14,15 20-5,8,9

T196166

KEY	PART NO.	PART NAME	QTY	SERIAL NO.	310G	310SG	315SG	REMARKS
1	AH219503	HYDRAULIC CYLINDER BARREL	1		X			(L.H.)
	AH219504	HYDRAULIC CYLINDER BARREL	1		X			(R.H.)
2	19M8353	CAP SCREW	1		X			M30 X 80
3	H145175	WASHER	1		X			
4	T12582	O-RING	1		X			
5	R81864	BACK-UP RING	1		X			
6	H170216	SNAP RING	1		X			
7	H180787	SNAP RING	1		X			
8	R98323	SEAL	1		X			
9	R98322	SEAL	1		X			
10	AH173410	PISTON	1		X			(SEE DTAC SOLUTION 69663 IF S/N IS BETWEEN, 913417 - 952532)
11	H209221	HYDR. CYLINDER ROD GUIDE	1		X			
12	AH146561	SEAL	1		X			
13	H152203	SEAL	1		X			
14	H208987	WEAR RING	1		X			
15	AH146557	SEAL	1		X			
16	H154404	BUSHING	1		X			
17	AH147902	HYDRAULIC CYLINDER ROD	1		X			
18	AH219499	HYDRAULIC CYLINDER	1		X			(L.H.) (SEE DTAC SOLUTION 69663 IF S/N IS BETWEEN, 913417 - 952532)
	AH219500	HYDRAULIC CYLINDER	1		X			(R.H.) (SEE DTAC SOLUTION 69663 IF S/N IS BETWEEN, 913417 - 952532)
19	AH210484	HYDRAULIC CYLINDER KIT	1		X			ROD SEAL KIT
20	AH212092	HYDRAULIC CYLINDER KIT	1		X			BORE SEAL KIT

MEMORANDA

STABILIZER CYLINDER
(STANDARD STABILIZER)
(SERIAL NO. -926206)
(310SG)

TP62436 -UN-27JUN00

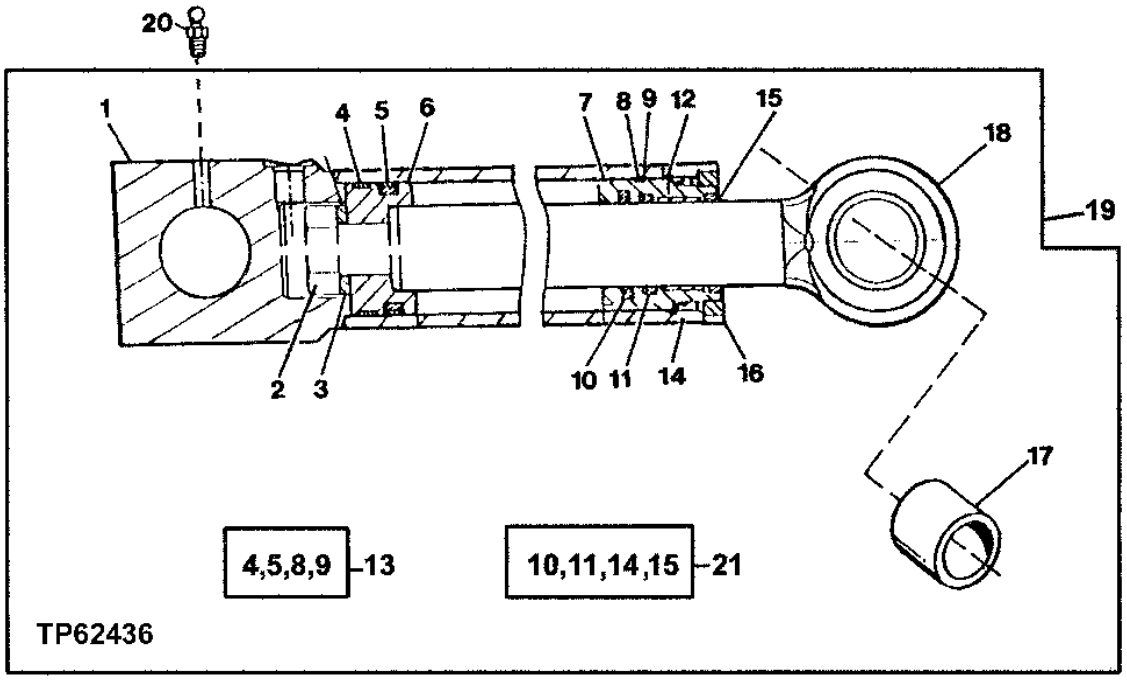

KEY	PART NO.	PART NAME	QTY	SERIAL NO.	310G	315SG	REMARKS
1	AH147901	HYDRAULIC CYLINDER BARREL	1		X		(L.H.)
	AH147900	HYDRAULIC CYLINDER BARREL	1		X		(R.H.)
2	19M8353	CAP SCREW	1		X		M30 X 80
3	H145175	WASHER	1		X		
4	R81776	WEAR RING	1		X		
5	RE20344	SEAL	1		X		
6	H142090	PISTON	1		X		
7	H154352	HYDR. CYLINDER ROD GUIDE	1		X		
8	R83576	O-RING	1		X		
9	R79101	BACK-UP RING	1		X		
10	AH146561	SEAL	1		X		
11	H152203	SEAL	1		X		
12	R81788	RING	1		X		
13	AH212096	HYDRAULIC CYLINDER KIT	1		X		CYLINDER BORE REPAIR KIT, (SUB FOR AH149843)
14	H152794	WEAR RING	1		X		
15	AH146557	SEAL	1		X		
16	R81794	NUT	1		X		
17	H154404	BUSHING	1	-910855	X		
18	AH147902	HYDRAULIC CYLINDER ROD	1		X		
19	.....	HYDRAULIC CYLINDER	1		X		(L.H.) (AH207327 NO LONGER AVAILABLE) (SUB FOR AH147863) (SUB AH210901)
	.....	HYDRAULIC CYLINDER	1		X		(R.H.) (AH207328 NO LONGER AVAILABLE) (SUB FOR AH147864) (SUB AH210902)
20	T162396	LUBRICATION FITTING	1		X		
21	AH210484	HYDRAULIC CYLINDER KIT	1		X		CYLINDER ROD REPAIR KIT, (SUB FOR AH148164)

STABILIZER CYLINDER
(STANDARD STABILIZER)
(SERIAL NO. 926207-952148)
(310SG)

T195668 -UN-07NOV03

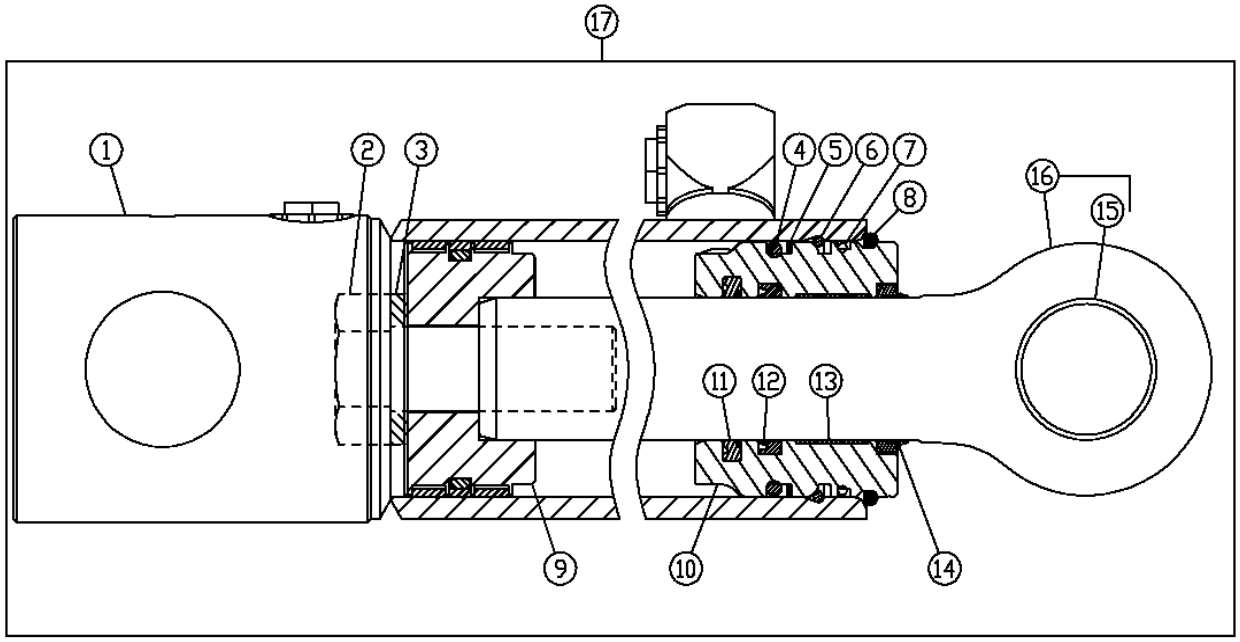

18-11,12,13,14 19-5,7

T195668

KEY	PART NO.	PART NAME	QTY	SERIAL NO.	310G	315SG	REMARKS
1	AH210999	HYDRAULIC CYLINDER BARREL	1		X		(L.H.)
	AH211000	HYDRAULIC CYLINDER BARREL	1		X		(R.H.)
2	19M8353	CAP SCREW	1		X		M30 X 80
3	H145175	WASHER	1		X		
4	F1430R	O-RING	1		X		
5	R79101	BACK-UP RING	1		X		
6	H180103	SNAP RING	1		X		
7	H181114	O-RING	1		X		
8	H206859	SNAP RING	1		X		
9	AH205060	PISTON	1		X		(SEE DTAC SOLUTION 69663 IF S/N IS BETWEEN, 913417 - 952532)
10	H208631	HYDR. CYLINDER ROD GUIDE	1		X		
11	AH146561	SEAL	1		X		
12	H152203	SEAL	1		X		
13	H208987	WEAR RING	1		X		
14	AH146557	SEAL	1		X		
15	H154404	BUSHING	1		X		
16	AH147902	HYDRAULIC CYLINDER ROD	1		X		
17	AH210901	HYDRAULIC CYLINDER	1		X		(L.H.)
	AH210902	HYDRAULIC CYLINDER	1		X		(R.H.)
18	AH210484	HYDRAULIC CYLINDER KIT	1		X		CYLINDER ROD REPAIR KIT
19	AH212097	HYDRAULIC CYLINDER KIT	1		X		CYLINDER BORE REPAIR KIT

STABILIZER CYLINDER
(STANDARD STABILIZER)
(SERIAL NO. 952149-)
(310SG)

T195668 -UN-07NOV03

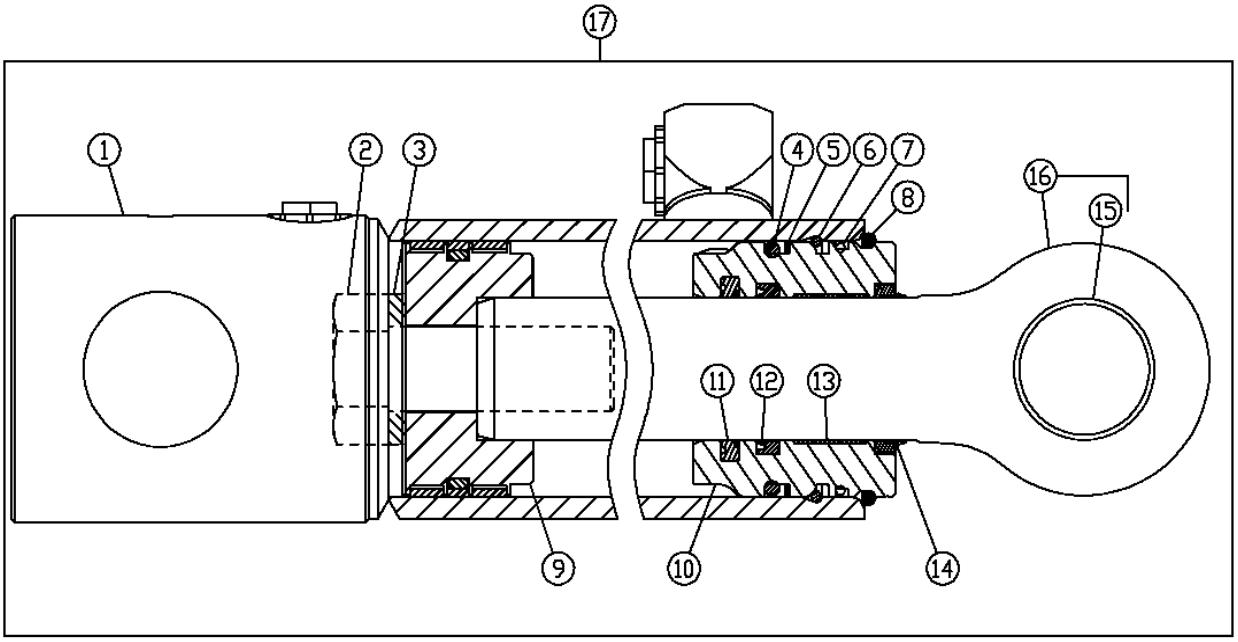

18 - 11,12,13,14 19 - 5,7

T195668

KEY	PART NO.	PART NAME	QTY	SERIAL NO.	310G	315SG	REMARKS
1	AH219539	HYDRAULIC CYLINDER BARREL	1		X		(L.H.)
	AH219540	HYDRAULIC CYLINDER BARREL	1		X		(R.H.)
2	19M8353	CAP SCREW	1		X		M30 X 80
3	H145175	WASHER	1		X		
4	F1430R	O-RING	1		X		
5	R79101	BACK-UP RING	1		X		
6	H180103	SNAP RING	1		X		
7	H181114	O-RING	1		X		
8	H206859	SNAP RING	1		X		
9	AH205060	PISTON	1		X		(SEE DTAC SOLUTION 69663 IF S/N IS BETWEEN, 913417 - 952532)
10	H208631	HYDR. CYLINDER ROD GUIDE	1		X		
11	AH146561	SEAL	1		X		
12	H152203	SEAL	1		X		
13	H208987	WEAR RING	1		X		
14	AH146557	SEAL	1		X		
15	H154404	BUSHING	1		X		
16	AH147902	HYDRAULIC CYLINDER ROD	1		X		
17	AH219537	HYDRAULIC CYLINDER	1		X		(L.H.) (SEE DTAC SOLUTION 69663 IF S/N IS BETWEEN, 913417 - 952532)
	AH219538	HYDRAULIC CYLINDER	1		X		(R.H.) (SEE DTAC SOLUTION 69663 IF S/N IS BETWEEN, 913417 - 952532)
18	AH210484	HYDRAULIC CYLINDER KIT	1		X		CYLINDER ROD REPAIR KIT
19	AH212097	HYDRAULIC CYLINDER KIT	1		X		CYLINDER BORE REPAIR KIT

MEMORANDA

STABILIZER CYLINDER AND REPAIR KIT
(EXTENDED STABILIZER)
(SERIAL NO. -925993)
(310SG)

T213908 -UN-26AUG05

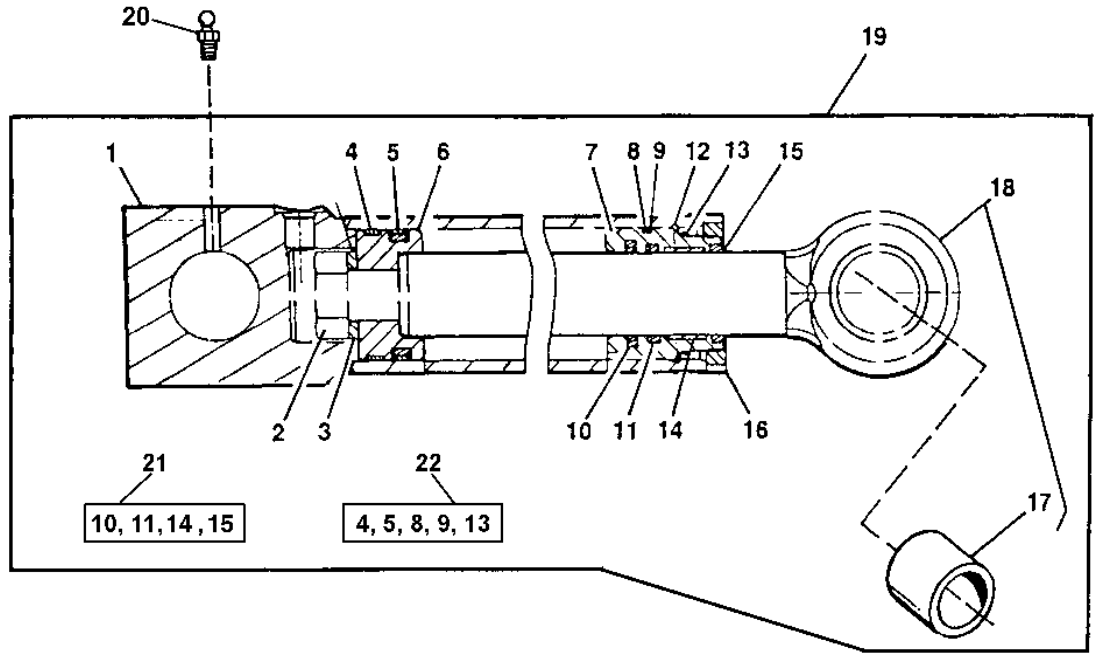

T213908

KEY	PART NO.	PART NAME	QTY	SERIAL NO.	310G	315SG	REMARKS
1	AH148676	HYDRAULIC CYLINDER BARREL	1		X		(L.H.)
	AH148677	HYDRAULIC CYLINDER BARREL	1		X		(R.H.)
2	19M8353	CAP SCREW	1		X		M30 X 80
3	H145175	WASHER	1		X		
4	R81775	WEAR RING	1		X		
5	RE20343	SEAL	1		X		
6	H145456	PISTON	1		X		
7	H157978	HYDR. CYLINDER ROD GUIDE	1		X		
8	R83577	O-RING	1		X		
9	R81862	BACK-UP RING	1		X		
10	AH146561	SEAL	1		X		
11	H152203	SEAL	1		X		
12	R81787	RING	1		X		
13	R91731	RING	AR		X		
14	H152794	WEAR RING	1		X		
15	AH146557	SEAL	1		X		
16	R81793	NUT	1		X		
17	H154404	BUSHING	1		X		
18	AH147902	HYDRAULIC CYLINDER ROD	1		X		
19	.....	HYDRAULIC CYLINDER	1		X		(L.H.) (AH148674 NO LONGER AVAILABLE) (SUB AH219541)
	.....	HYDRAULIC CYLINDER	1		X		(R.H.) (AH148675 NO LONGER AVAILABLE) (SUB AH209138)
20	T162396	LUBRICATION FITTING	1		X		
21	AH210484	HYDRAULIC CYLINDER KIT	1		X		CYLINDER ROD REPAIR KIT, (SUB FOR AH148164)
22	AH212101	HYDRAULIC CYLINDER KIT	1		X		(SUB FOR AH149844) CYLINDER BORE REPAIR KIT

STABILIZER CYLINDER AND REPAIR KIT
(EXTENDED STABILIZER)
(SERIAL NO. 925994-952006)
(310SG)

T196176 -UN-10NOV03

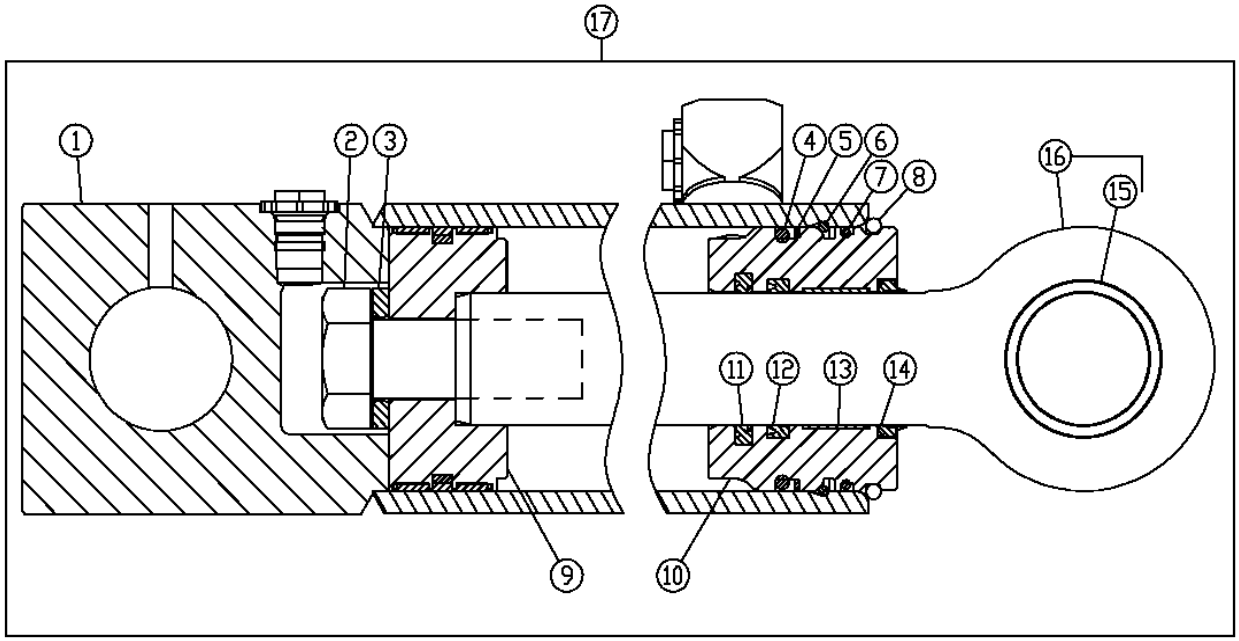

18 11,12,13,14 19 5,7

T196176

KEY	PART NO.	PART NAME	QTY	SERIAL NO.	310G	315SG	REMARKS
1	AH209134	HYDRAULIC CYLINDER BARREL	1		X		(L.H.)
	AH209140	HYDRAULIC CYLINDER BARREL	1		X		(R.H.)
2	19M8353	CAP SCREW	1		X		M30 X 80
3	H145175	WASHER	1		X		
4	F950R	O-RING	1		X		
5	R81862	BACK-UP RING	1		X		
6	H180094	SNAP RING	1		X		
7	.....	O-RING	1		X		
8	H180080	SNAP RING	1		X		
9	AH205062	PISTON	1		X		
10	H208995	HYDR. CYLINDER ROD GUIDE	1		X		
11	AH146561	SEAL	1		X		
12	H152203	SEAL	1		X		
13	H208987	WEAR RING	1		X		
14	AH146557	SEAL	1		X		
15	H154404	BUSHING	1		X		
16	AH147902	HYDRAULIC CYLINDER ROD	1		X		
17	.....	HYDRAULIC CYLINDER	1		X		(L.H.) (AH209133 NO LONGER AVAILABLE) (SUB AH219541)
	AH209138	HYDRAULIC CYLINDER	1		X		(R.H.)
18	AH210484	HYDRAULIC CYLINDER KIT	1		X		ROD SEAL KIT
19	AH212102	HYDRAULIC CYLINDER KIT	1		X		BORE SEAL KIT

STABILIZER CYLINDER AND REPAIR KIT
(EXTENDED STABILIZER)
(SERIAL NO. 952007-)
(310SG)

T196176 -UN-10NOV03

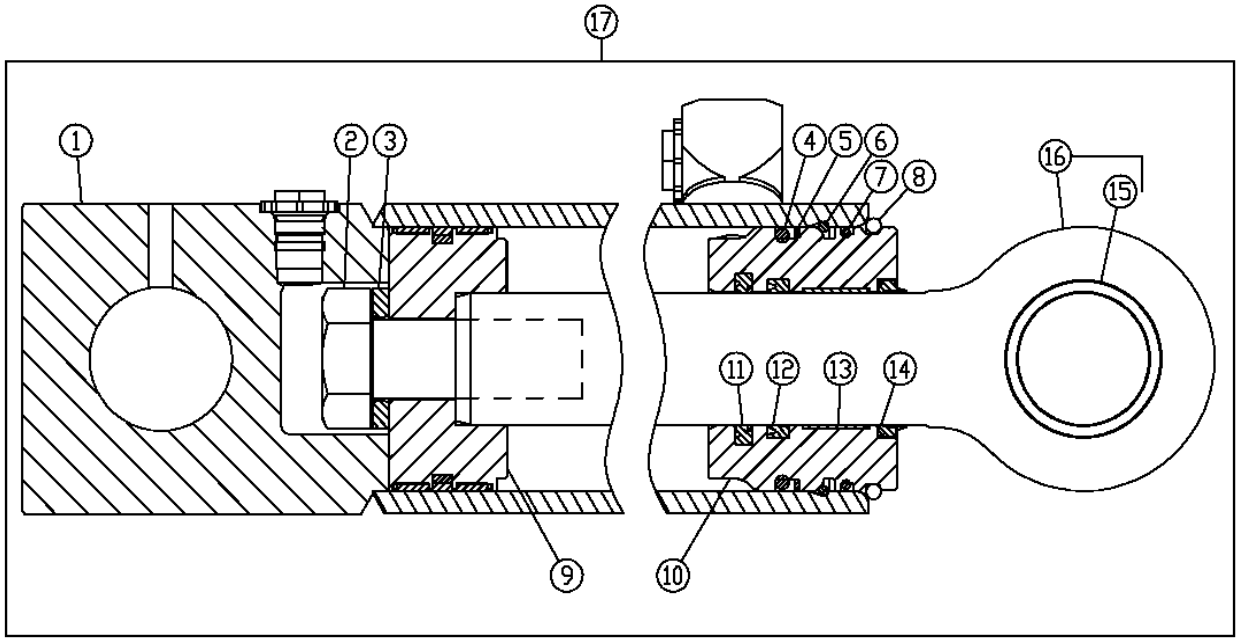

18 11,12,13,14 19 5,7

T196176

KEY	PART NO.	PART NAME	QTY	SERIAL NO.	310G	315SG	REMARKS
1	AH219543	HYDRAULIC CYLINDER BARREL	1		X		(L.H.)
	AH219544	HYDRAULIC CYLINDER BARREL	1		X		(R.H.)
2	19M8353	CAP SCREW	1		X		M30 X 80
3	H145175	WASHER	1		X		
4	F950R	O-RING	1		X		
5	R81862	BACK-UP RING	1		X		
6	H180094	SNAP RING	1		X		
7	.....	O-RING	1		X		
8	H180080	SNAP RING	1		X		
9	AH205062	PISTON	1		X		
10	H208995	HYDR. CYLINDER ROD GUIDE	1		X		
11	AH146561	SEAL	1		X		
12	H152203	SEAL	1		X		
13	H208987	WEAR RING	1		X		
14	AH146557	SEAL	1		X		
15	H154404	BUSHING	1		X		
16	AH147902	HYDRAULIC CYLINDER ROD	1		X		
17	AH219541	HYDRAULIC CYLINDER	1		X		(L.H.)
	AH219542	HYDRAULIC CYLINDER	1		X		(R.H.)
18	AH210484	HYDRAULIC CYLINDER KIT	1		X		ROD SEAL KIT
19	AH212102	HYDRAULIC CYLINDER KIT	1		X		BORE SEAL KIT

MEMORANDA

STABILIZER CYLINDER
(315SG)
(SERIAL NO. -944155)

T145457 -UN-18SEP01

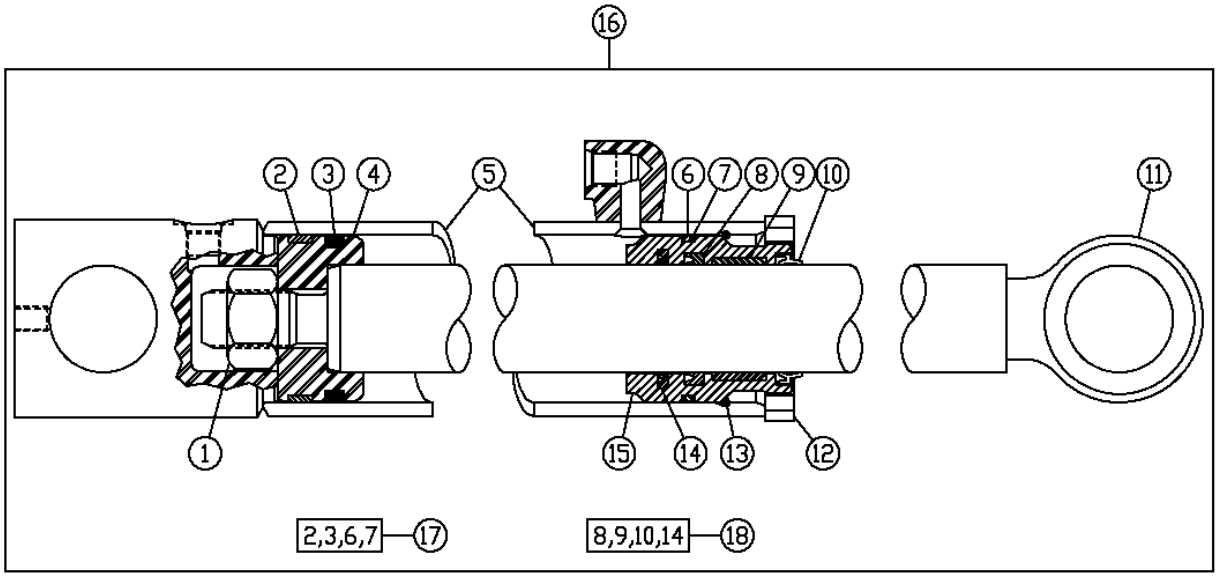

T145457

KEY	PART NO.	PART NAME	QTY	SERIAL NO.	310G	315SG	REMARKS
1	H170537	NUT	1			X	M24
2	R81774	SCRAPER RING	1			X	(BK)
3	RE20342	SEAL	1			X	(BK)
4	R86380	PISTON	1			X	
5	RE32173	HYDRAULIC CYLINDER BARREL	1			X	
6	R83469	O-RING	1			X	(BK)
7	R81195	BACK-UP RING	1			X	(BK)
8	H152202	SEAL	1			X	(RK)
9	H152793	BACK-UP RING	1			X	(RK)
10	AH146556	SEAL	1			X	(RK)
11	RE32175	HYDRAULIC CYLINDER ROD	1			X	
12	R81792	NUT	1			X	
13	R81786	RING	1			X	
14	AH146560	SEAL	1			X	(RK)
15	H154402	HYDR. CYLINDER ROD GUIDE	1			X	
16	.....	HYDRAULIC CYLINDER	1			X	(AH154788 NO LONGER AVAILABLE) (SUB AH211348)
17	AH212089	HYDRAULIC CYLINDER KIT	1			X	CYLINDER BORE REPAIR KIT (BK) (SUB FOR RE20428)
18	AH149813	HYDRAULIC CYLINDER KIT	1			X	CYLINDER ROD REPAIR KIT (RK)

STABILIZER CYLINDER
(315SG)
(SERIAL NO. 944156-)

T209067 -UN-10MAR05

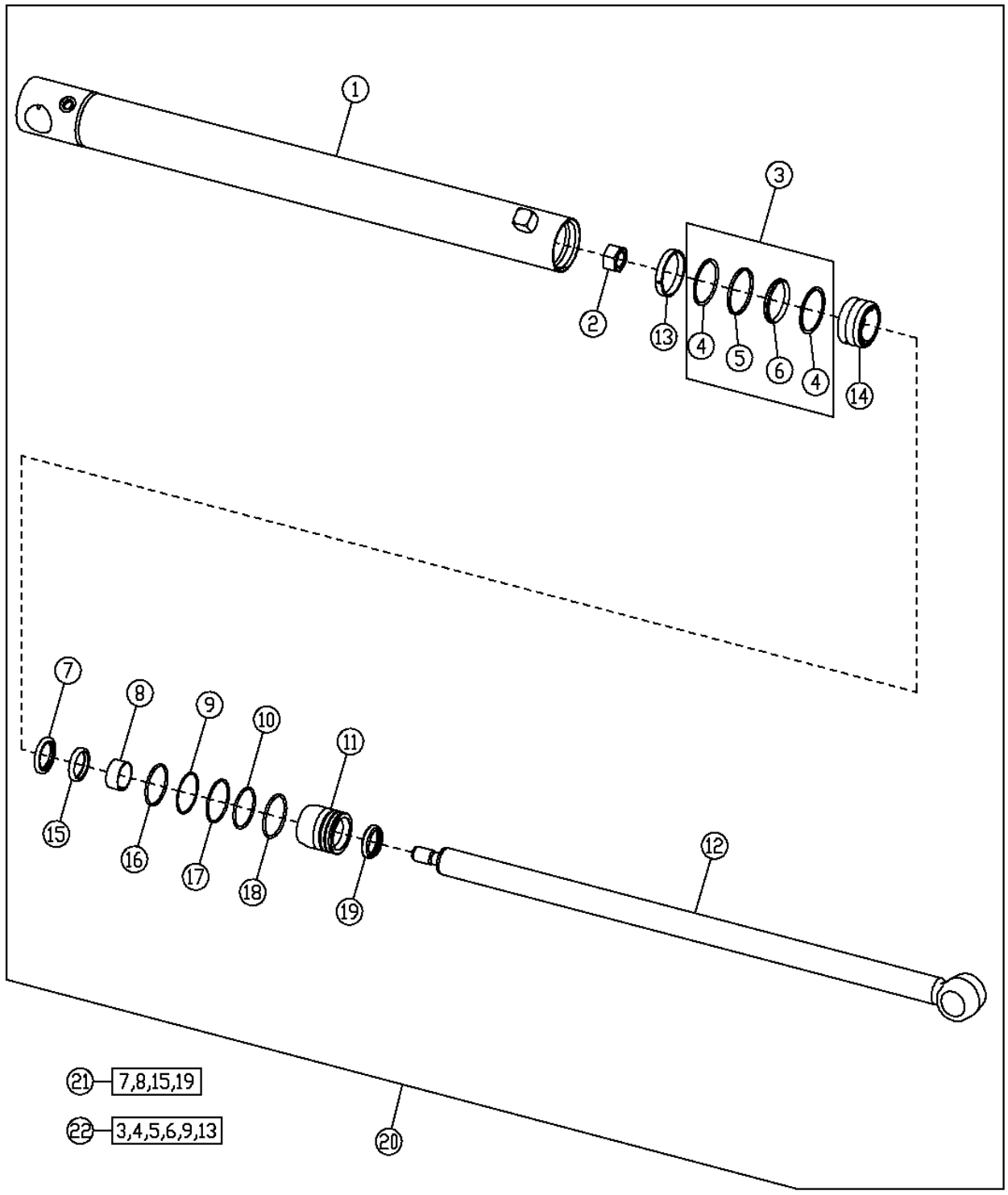

STABILIZER CYLINDER
(315SG)
(SERIAL NO. 944156-)

KEY	PART NO.	PART NAME	QTY	SERIAL NO.	310G	315SG	REMARKS
1	AH211349	HYDRAULIC CYLINDER BARREL	1			X	
2	H170537	NUT	1			X	
3	RE20342	SEAL	1			X	
4	.....	BACK-UP RING	2			X	
5	.....	SEAL	1			X	
6	.....	SEAL	1			X	
7	AH146560	SEAL	1			X	
8	H157898	WEAR RING	1			X	
9	R81195	BACK-UP RING	1			X	
10	U12198	O-RING	1			X	
11	H210941	HYDR. CYLINDER ROD GUIDE	1			X	
12	RE32175	HYDRAULIC CYLINDER ROD	1			X	
13	R81774	SCRAPER RING	1			X	
14	R86380	PISTON	1			X	
15	H152202	SEAL	1			X	
16	R83469	O-RING	1			X	
17	H178765	SNAP RING	1			X	
18	H179657	SNAP RING	1			X	
19	AH146556	SEAL	1			X	
20	AH211348	HYDRAULIC CYLINDER	1			X	
21	AH149813	HYDRAULIC CYLINDER KIT	1			X	ROD SEAL KIT
22	AH212089	HYDRAULIC CYLINDER KIT	1			X	BORE SEAL KIT

EXTENDIBLE DIPPERSTICK CYLINDER
(310G)
(SERIAL NO. -928456)

T194037 -UN-22AUG03

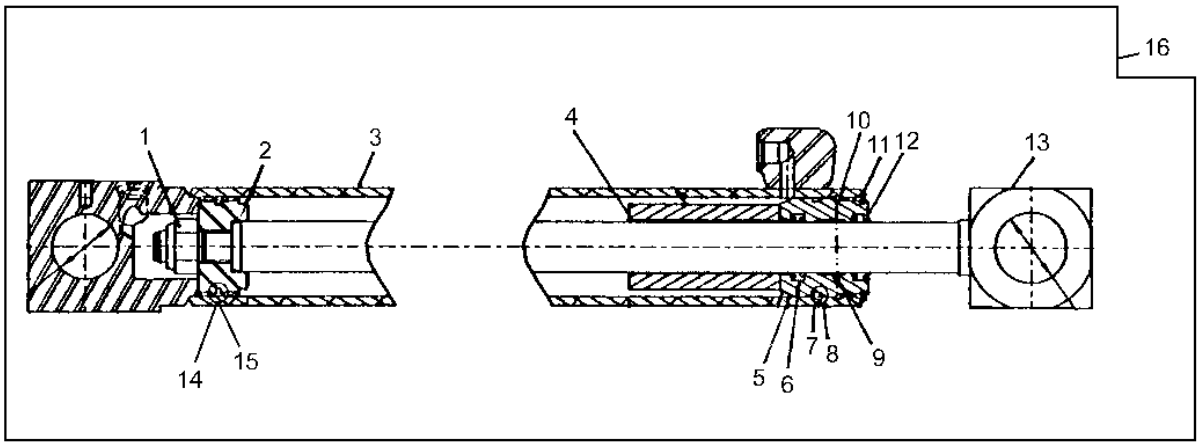



T194037

KEY	PART NO.	PART NAME	QTY	SERIAL NO.	310G	310SG	315SG	REMARKS
1	H170535	NUT	1		X			
2	AH142159	PISTON	1		X			
3	AH152475	HYDRAULIC CYLINDER BARREL	1		X			
4	H150291	BUSHING	1		X			
5	H154109	HYDR. CYLINDER ROD GUIDE	1		X			
6	AH148643	SEAL	1		X			(RK)
7	R93633	O-RING	1		X			(BK)
8	U13461	BACK-UP RING	1		X			(BK)
9	H156058	WEAR RING	1		X			(RK)
10	R86387	SNAP RING	1		X			
11	R90265	SNAP RING	1		X			
12	AH150452	SEAL	1		X			(RK)
13	AH175518	HYDRAULIC CYLINDER ROD	1		X			(SUB FOR AH148620)
14	R90237	RING	1		X			(BK)
15	U40708	O-RING	1		X			(BK)
16	.....	HYDRAULIC CYLINDER	1		X			(AH175181 NO LONGER AVAILABLE) (SUB FOR AH152472) (SUB AH218606)
17	AH168286	HYDRAULIC CYLINDER KIT	1		X			(ROD) INCLUDES ALL (RK) PARTS
18	AH212088	HYDRAULIC CYLINDER KIT	1		X			(BORE) INCLUDES ALL (BK) PARTS, (SUB FOR RE33412)

EXTENDIBLE DIPPERSTICK CYLINDER
(310G)
(SERIAL NO. 928457-953470)

T209542 -UN-14MAR05

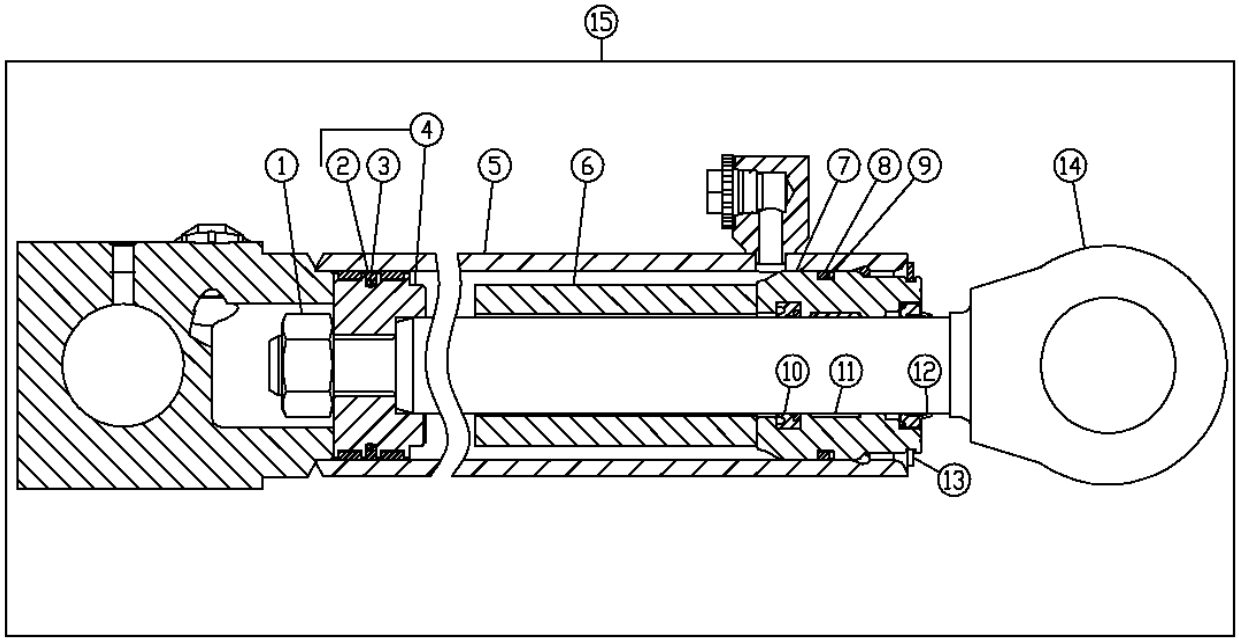

16-10,11,12 17-2,3,8,9

T209542

KEY	PART NO.	PART NAME	QTY	SERIAL NO.	310G	310SG	315SG	REMARKS
1	H170535	NUT	1		X			
2	U40708	O-RING	1		X			
3	R90237	RING	1		X			
4	AH142159	PISTON	1		X			
5	AH211332	HYDRAULIC CYLINDER BARREL	1		X			
6	H150291	BUSHING	1		X			
7	H154109	HYDR. CYLINDER ROD GUIDE	1		X			
8	R93633	O-RING	1		X			
9	U13461	BACK-UP RING	1		X			
10	AH148643	SEAL	1		X			
11	H156058	WEAR RING	1		X			
12	AH150452	SEAL	1		X			
13	R90265	SNAP RING	1		X			
14	AH175518	HYDRAULIC CYLINDER ROD	1		X			
15	.....	HYDRAULIC CYLINDER	1		X			(AH211331 NO LONGER AVAILABLE) (SUB AH218606)
16	AH168286	HYDRAULIC CYLINDER KIT	1		X			(ROD SEAL KIT)
17	AH212088	HYDRAULIC CYLINDER KIT	1		X			(BORE SEAL KIT)

EXTENDIBLE DIPPERSTICK CYLINDER
(310G)
(SERIAL NO. 953471-)

T214591 -UN-22SEP05

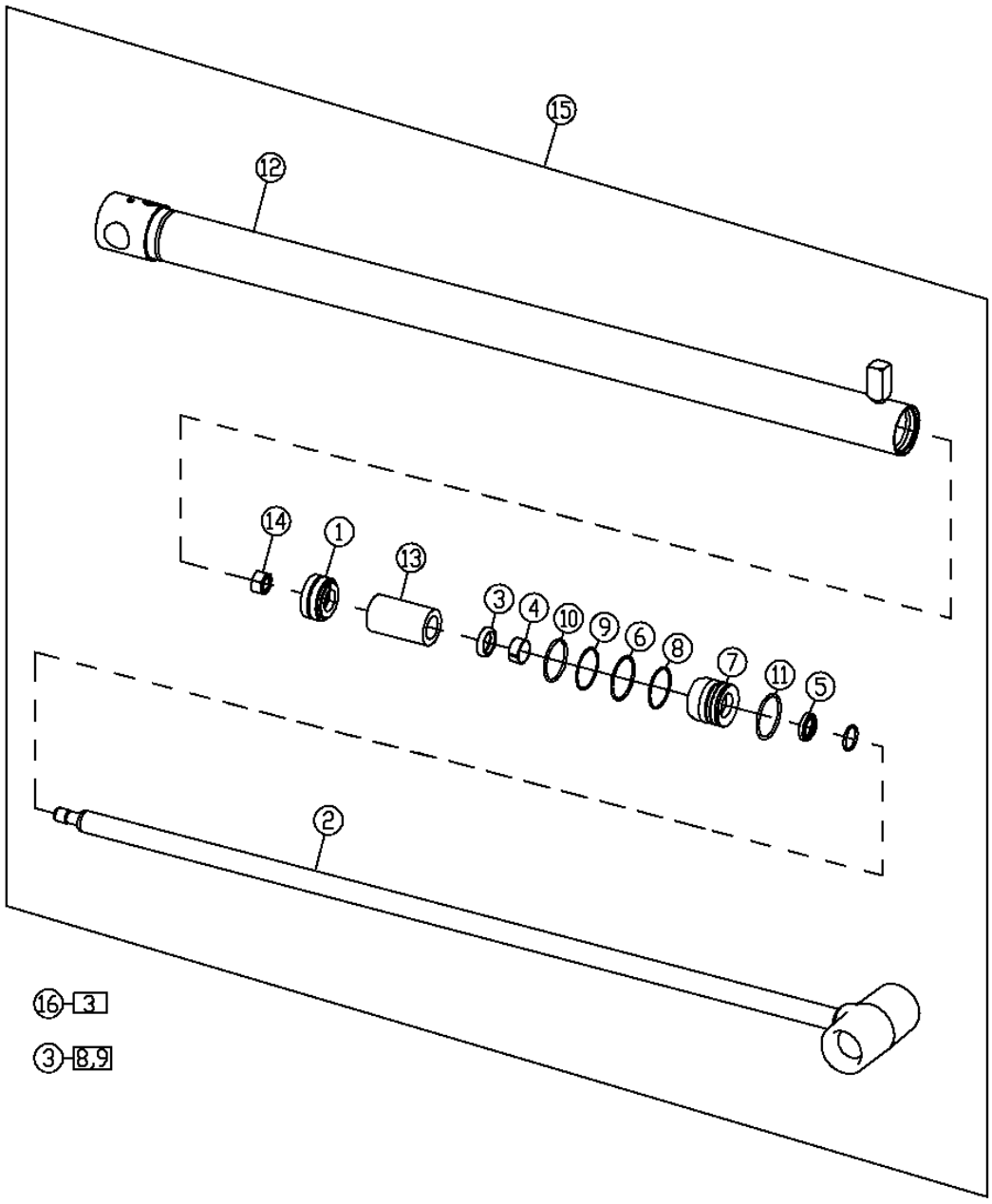

T214591

EXTENDIBLE DIPPERSTICK CYLINDER
(310G)
(SERIAL NO. 953471-)

KEY	PART NO.	PART NAME	QTY	SERIAL NO.	310G	310SG	315SG	REMARKS
1	AH142159	PISTON	1		X			
2	AH175518	HYDRAULIC CYLINDER ROD	1		X			
3	H154514	SEAL	1		X			
4	H156058	WEAR RING	2		X			
5	H156586	SEAL	1		X			
6	H164982	SNAP RING	1		X			
7	H210874	HYDR. CYLINDER ROD GUIDE	1		X			
8	H63262	O-RING	1		X			
9	U13461	BACK-UP RING	1		X			
10	.....	SEAL	1		X			
11	H211156	SNAP RING	1		X			
12	AH218608	HYDRAULIC CYLINDER BARREL	1		X			
13	H150291	BUSHING	1		X			
14	H170535	NUT	1		X			
15	AH218606	HYDRAULIC CYLINDER	1		X			
16	AH148823	KIT	1		X			(ROD SEAL KIT)
17	AH212088	KIT	1		X			(BORE SEAL KIT)

EXTENDIBLE DIPPERSTICK CYLINDER
(310SG AND 315SG)
(SERIAL NO. -910900)

T136793 -UN-29DEC00

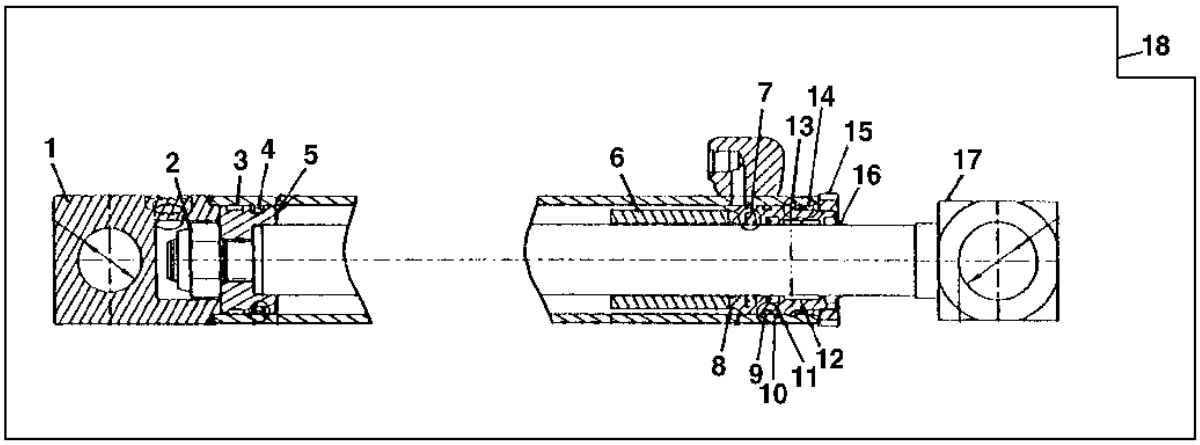

7,11,12,16–19 3,4,9,10,14–20

T136793

KEY	PART NO.	PART NAME	QTY	SERIAL NO.	310G	315SG	REMARKS
1	AH152476	HYDRAULIC CYLINDER BARREL	1		X	X	
2	R81866	NUT	1		X	X	
3	R81774	SCRAPER RING	1		X	X	(BK)
4	RE20342	SEAL	1		X	X	(BK)
5	R86085	PISTON	1		X	X	
6	H151790	BUSHING	1		X	X	
7	AH146560	SEAL	1		X	X	(RK)
8	H154402	HYDR. CYLINDER ROD GUIDE	1		X	X	
9	R83469	O-RING	1		X	X	(BK)
10	R81195	BACK-UP RING	1		X	X	(BK)
11	H152202	SEAL	1		X	X	(RK)
12	H152793	BACK-UP RING	1		X	X	(RK)
13	R81786	RING	1		X	X	
14	R91728	BACK-UP RING	AR		X	X	(BK)
15	R81792	NUT	1		X	X	
16	AH146556	SEAL	1		X	X	(RK)
17	AH146248	ROD	1	-903324	X	X	
	AH175519	HYDRAULIC CYLINDER ROD	1	903325-	X	X	
18	.....	HYDRAULIC CYLINDER	1		X	X	(AH152473 AND AH175182 NO LONGER AVAILABLE) (SUB AH211361)
19	AH149813	HYDRAULIC CYLINDER KIT	1		X	X	INCLUDES ALL (RK) PARTS (ROD SEAL)
20	AH212089	HYDRAULIC CYLINDER KIT	1		X	X	INCLUDES ALL (BK) PARTS (BORE SEAL) (SUB FOR RE20428)

EXTENDIBLE DIPPERSTICK CYLINDER
(310SG AND 315SG)
(SERIAL NO. 910901-926427)

T161774 -UN-18NOV02

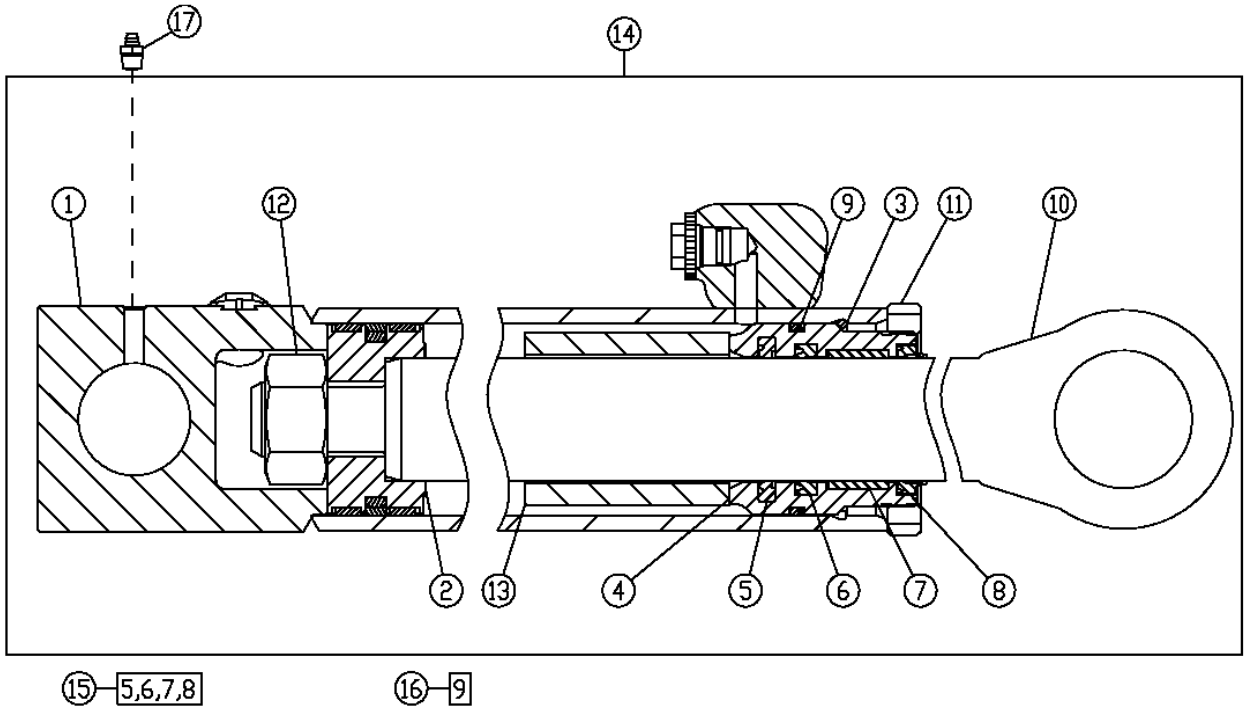

T161774

KEY	PART NO.	PART NAME	QTY	SERIAL NO.	310SG	315SG	REMARKS
1	AH152476	HYDRAULIC CYLINDER BARREL	1		X	X	
2	AH165962	PISTON	1		X	X	
3	R81786	RING	1		X	X	
4	H154402	HYDR. CYLINDER ROD GUIDE	1		X	X	
5	AH146560	SEAL	1		X	X	
6	H152202	SEAL	1		X	X	
7	H152793	BACK-UP RING	1		X	X	
8	AH146556	SEAL	1		X	X	
9	R81195	BACK-UP RING	1		X	X	
10	AH175519	HYDRAULIC CYLINDER ROD	1		X	X	
11	R81792	NUT	1		X	X	
12	H170538	NUT	1		X	X	
13	H151790	BUSHING	1		X	X	
14	.....	HYDRAULIC CYLINDER	1		X	X	(AH207281 NO LONGER AVAILABLE) (SUB AH211361)
15	AH149813	HYDRAULIC CYLINDER KIT	1		X	X	
16	AH212090	HYDRAULIC CYLINDER KIT	1		X	X	(SUB FOR AH202070)
17	T162396	LUBRICATION FITTING	1		X	X	

THIS PARTS LISTING IS CONTINUED

EXTENDIBLE DIPPERSTICK CYLINDER
(310SG AND 315SG)
(SERIAL NO. 926428-)

T195663 -UN-07NOV03

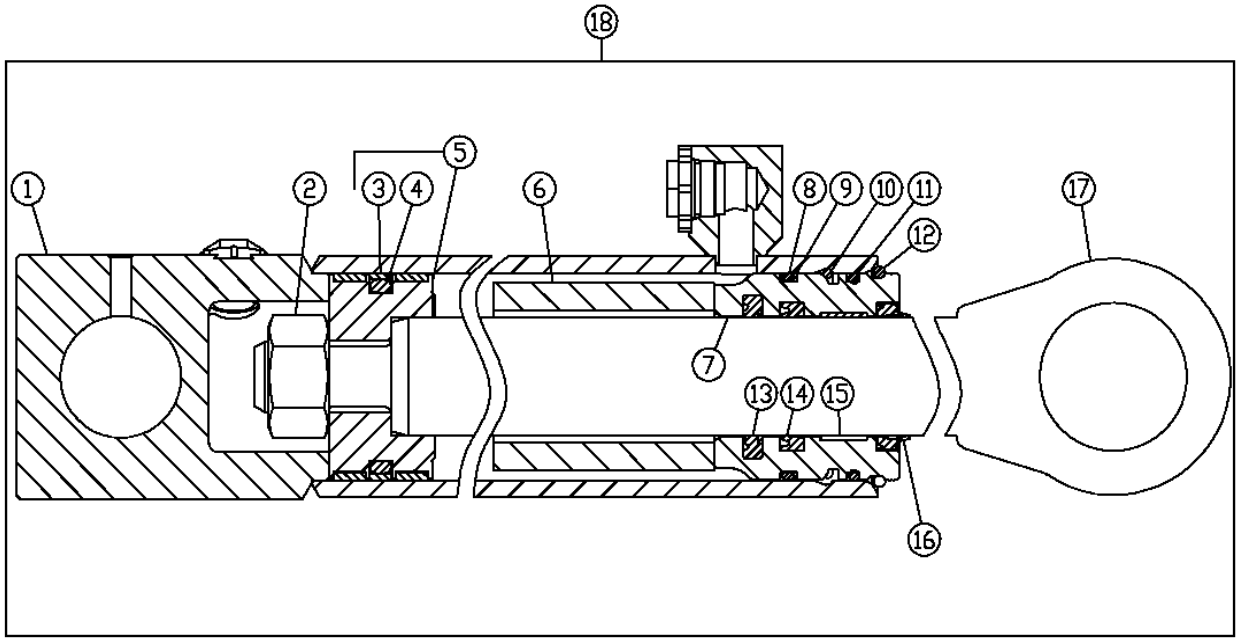

19-13,14,16 20-3,4,8,9,11

T195663

KEY	PART NO.	PART NAME	QTY	SERIAL NO.	310G	315SG	REMARKS
1	AH211362	HYDRAULIC CYLINDER BARREL	1		X	X	
2	H170537	NUT	1		X	X	
3	R98325	SEAL	1		X	X	
4	R98324	SEAL	1		X	X	
5	AH158623	PISTON	1		X	X	
6	.....	SPACER	1		X	X	
7	H210939	HYDR. CYLINDER ROD GUIDE	1		X	X	
8	R83469	O-RING	1		X	X	
9	R81195	BACK-UP RING	1		X	X	
10	H178765	SNAP RING	1		X	X	
11	U12198	O-RING	1		X	X	
12	H179657	SNAP RING	1		X	X	
13	AH148608	SEAL	1		X	X	
14	H155655	SEAL	1		X	X	
15	H157897	WEAR RING	1		X	X	(SUB FOR H157947)
16	AH150453	SEAL	1		X	X	
17	AH211926	HYDRAULIC CYLINDER ROD	1		X	X	
18	AH211361	HYDRAULIC CYLINDER	1		X	X	
19	AH149194	HYDRAULIC CYLINDER KIT	1		X	X	(ROD SEAL KIT)
20	AH212090	HYDRAULIC CYLINDER KIT	1		X	X	(BORE SEAL KIT)

THIS PARTS LISTING IS CONTINUED

NUMERICAL INDEX

PART NO.	GRID	KEY	PAGE
AA21292	5C14	7	3302 - 5
AA21292	5C18	6	3302 - 9
AA34134	4C20	18	3115 - 3
AA34134	4C20	34	3115 - 3
AB2599R	2K2	1	1314 - 3
AD2062R	3C6	2	1673 - 5
AE37072	4D4	5A	3115 - 11
AE37072	4D4	5B	3115 - 11
AE37072	4D4	14	3115 - 11
AE37072	5D14	1	3315 - 9
AE37072	5D16	14	3315 - 11
AE44436	3C16	1	1674 - 5D
AH104837	2H24	7	0520 - 3
AH105968	3J2	18	2160 - 7
AH105968	3J4	34	2160 - 9
AH105968	3J4	44	2160 - 9
AH105968	3J6	17	2160 - 9B
AH125760	5H8	21	3363 - 1B
AH137883	3C2	3	1672 - 3
AH138082	5J12	7	3365 - 3
AH138082	5J14	15	3365 - 5
AH138082	5K1	4	3365 - 17
AH138083	5J16	7	3365 - 7
AH138083	5J18	15	3365 - 9
AH138200	2J1	7	0960 - 14
AH138200	2J3	6	0960 - 17
AH140044	2I2	2	0520 - 5
AH142159	5K19	2	3365 - 30
AH142159	5K20	4	3365 - 31
AH142159	5K22	1	3365 - 33
AH144020	3H4	60	1830 - 7B
AH145994	5K3	23	3365 - 19
AH146062	5K3	21	3365 - 19
AH146065	5K3	10	3365 - 19
AH146248	5K23	17	3365 - 34
AH146271	5J22	16	3365 - 13
AH146318	5J24	16	3365 - 15
AH146556	5K3	18	3365 - 19
AH146556	5K16	10	3365 - 27
AH146556	5K18	19	3365 - 29
AH146556	5K23	16	3365 - 34
AH146556	5K24	8	3365 - 35
AH146557	4F4	15	3165 - 3
AH146557	4F5	15	3165 - 4
AH146557	4F7	15	3165 - 7
AH146557	4F8	13	3165 - 8
AH146557	4F9	15	3165 - 9
AH146557	4F11	6	3165 - 11
AH146557	4F13	20	3165 - 13
AH146557	5J19	14	3365 - 10
AH146557	5J20	15	3365 - 11
AH146557	5J21	14	3365 - 12
AH146557	5K5	18	3365 - 20
AH146557	5K7	15	3365 - 21A
AH146557	5K8	15	3365 - 22
AH146557	5K9	15	3365 - 22A
AH146557	5K10	15	3365 - 23
AH146557	5K11	14	3365 - 24
AH146557	5K12	14	3365 - 24A
AH146557	5K13	15	3365 - 25
AH146557	5K14	14	3365 - 26
AH146557	5K15	14	3365 - 26A
AH146558	5J12	19	3365 - 3
AH146558	5J14	11	3365 - 5
AH146558	5J16	19	3365 - 7
AH146558	5J18	11	3365 - 9
AH146558	5J22	14	3365 - 13
AH146558	5J23	17	3365 - 14
AH146559	5J24	14	3365 - 15
AH146559	5J25	17	3365 - 16
AH146559	5K1	14	3365 - 17
AH146559	5K2	14	3365 - 18
AH146560	5K3	11	3365 - 19
AH146560	5K16	14	3365 - 27
AH146560	5K18	7	3365 - 29
AH146560	5K23	7	3365 - 34
AH146560	5K24	5	3365 - 35
AH146561	4F4	7	3165 - 3
AH146561	4F5	12	3165 - 4
AH146561	4F7	7	3165 - 7
AH146561	4F8	5	3165 - 8
AH146561	4F9	12	3165 - 9
AH146561	4F11	11	3165 - 11
AH146561	4F13	17	3165 - 13
AH146561	5J19	11	3365 - 10
AH146561	5J20	12	3365 - 11
AH146561	5J21	11	3365 - 12
AH146561	5K5	11	3365 - 20
AH146561	5K7	10	3365 - 21A
AH146561	5K8	12	3365 - 22
AH146561	5K9	12	3365 - 22A
AH146561	5K10	10	3365 - 23
AH146561	5K11	11	3365 - 24
AH146561	5K12	11	3365 - 24A
AH146561	5K13	10	3365 - 25
AH146561	5K14	11	3365 - 26
AH146561	5K15	11	3365 - 26A
AH146562	5J12	15	3365 - 3
AH146562	5J14	8	3365 - 5
AH146562	5J16	15	3365 - 7
AH146562	5J18	8	3365 - 9
AH146562	5J22	11	3365 - 13
AH146562	5J23	12	3365 - 14
AH146563	5J24	11	3365 - 15
AH146563	5J25	12	3365 - 16
AH146563	5K1	10	3365 - 17
AH146563	5K2	10	3365 - 18
AH146874	4F4	19	3165 - 3
AH146874	4F7	19	3165 - 7
AH146875	4F4	18	3165 - 3
AH146875	4F5	16	3165 - 4
AH146875	4F7	18	3165 - 7
AH146875	4F8	15	3165 - 8
AH146875	4F9	16	3165 - 9
AH146876	4F4	1	3165 - 3
AH146876	4F7	1	3165 - 7
AH146876	4F8	1	3165 - 8
AH147863	5K10	19	3365 - 23
AH147864	5K10	19	3365 - 23
AH147888	5K5	23	3365 - 20
AH147889	5K5	10	3365 - 20
AH147893	5K5	21	3365 - 20
AH147900	5K10	1	3365 - 23
AH147901	5K10	1	3365 - 23
AH147902	5K7	18	3365 - 21A
AH147902	5K8	17	3365 - 22
AH147902	5K9	17	3365 - 22A
AH147902	5K10	18	3365 - 23
AH147902	5K11	16	3365 - 24
AH147902	5K12	16	3365 - 24A
AH147902	5K13	18	3365 - 25
AH147902	5K14	16	3365 - 26
AH147902	5K15	16	3365 - 26A
AH148164	4F4	27	3165 - 3
AH148164	4F7	27	3165 - 7
AH148164	4F8	20	3165 - 8
AH148164	4F11	20	3165 - 11
AH148164	5J19	20	3365 - 10
AH148164	5J20	18	3365 - 11
AH148164	5K5	25	3365 - 20
AH148164	5K7	21	3365 - 21A
AH148164	5K10	21	3365 - 23
AH148164	5K13	21	3365 - 25
AH148174	5J16	21	3365 - 7
AH148437	5J19	17	3365 - 10
AH148551	5J19	1	3365 - 10
AH148553	5J19	16	3365 - 10
AH148553	5J20	8	3365 - 11
AH148608	5K25	13	3365 - 36
AH148620	5K19	13	3365 - 30
AH148643	5K19	6	3365 - 30
AH148643	5K20	10	3365 - 31
AH148674	5K13	19	3365 - 25
AH148675	5K13	19	3365 - 25
AH148676	5K13	1	3365 - 25
AH148677	5K13	1	3365 - 25
AH148823	5K22	16	3365 - 33
AH149194	5K25	19	3365 - 36
AH149624	5J16	23	3365 - 7
AH149625	5J12	23	3365 - 3
AH149662	5J16	1	3365 - 7
AH149750	5J12	1	3365 - 3
AH149751	5J12	21	3365 - 3
AH149790	5J22	17	3365 - 13
AH149791	5J24	17	3365 - 15
AH149810	2J1	19	0960 - 14
AH149810	2J3	21	0960 - 17
AH149813	5K3	17	3365 - 19
AH149813	5K16	18	3365 - 27
AH149813	5K18	21	3365 - 29
AH149813	5K23	19	3365 - 34
AH149813	5K24	15	3365 - 35
AH149814	5J12	26	3365 - 3
AH149814	5J14	23	3365 - 5
AH149814	5J16	26	3365 - 7
AH149814	5J18	23	3365 - 9
AH149814	5J22	20	3365 - 13
AH149814	5J23	24	3365 - 14
AH149815	5J24	20	3365 - 15
AH149815	5J25	24	3365 - 16
AH149815	5K1	20	3365 - 17
AH149815	5K2	19	3365 - 18
AH149842	4F4	12	3165 - 3
AH149842	4F7	12	3165 - 7
AH149842	4F9	12	3165 - 9
AH149842	5J19	19	3365 - 10
AH149842	5J20	19	3365 - 11
AH149842	5K3	25	3365 - 19
AH149843	4F11	19	3165 - 11
AH149843	5J22	19	3365 - 13
AH149843	5K5	17	3365 - 20
AH149843	5K10	13	3365 - 23
AH149844	5J24	19	3365 - 15
AH149844	5K13	22	3365 - 25
AH149845	5J12	25	3365 - 3
AH149845	5J14	24	3365 - 5
AH149845	5K1	19	3365 - 17
AH149846	5K2	20	3365 - 18
AH149847	5J16	25	3365 - 7
AH149847	5J18	24	3365 - 9
AH149974	5K7	1	3365 - 21A

NUMERICAL INDEX - CONTINUED

PART NO.	GRID	KEY	PAGE
AH149975	5K7	1	3365 - 21A
AH150209	5J22	1	3365 - 13
AH150211	5J24	1	3365 - 15
AH150452	5K19	12	3365 - 30
AH150452	5K20	12	3365 - 31
AH150453	5K25	16	3365 - 36
AH151380	2J1	13	0960 - 14
AH151380	2J3	16	0960 - 17
AH151381	2J1	11	0960 - 14
AH151381	2J3	13	0960 - 17
AH152472	5F4	14	3346 - 5
AH152472	5K19	16	3365 - 30
AH152473	5F4	14	3346 - 5
AH152473	5K23	18	3365 - 34
AH152475	5K19	3	3365 - 30
AH152476	5K23	1	3365 - 34
AH152476	5K24	1	3365 - 35
AH154780	2J1	17	0960 - 14
AH154788	3D18	16	1740 - 5
AH154788	5K16	16	3365 - 27
AH156144	3C24	4	1674 - 9D
AH157977	5K1	1	3365 - 17
AH157979	5K1	16	3365 - 17
AH157980	5K1	17	3365 - 17
AH158576	5K2	1	3365 - 18
AH158623	5K25	5	3365 - 36
AH162040	4F11	2	3165 - 11
AH162040	4F13	22	3165 - 13
AH162394	5K2	16	3365 - 18
AH164137	5K2	17	3365 - 18
AH165826	4F4	6	3165 - 3
AH165826	4F5	10	3165 - 4
AH165826	4F8	4	3165 - 8
AH165826	4F9	10	3165 - 9
AH165962	5K24	2	3365 - 35
AH167552	2J1	18	0960 - 14
AH167552	2J3	22	0960 - 17
AH168286	5K19	17	3365 - 30
AH168286	5K20	16	3365 - 31
AH171229	4F11	17	3165 - 11
AH171683	5E8	26	3315 - 23
AH172882	5K3	23	3365 - 19
AH172882	5K4	1	3365 - 19A
AH173163	5K5	23	3365 - 20
AH173202	5K7	19	3365 - 21A
AH173410	5J21	10	3365 - 12
AH173410	5K7	6	3365 - 21A
AH173410	5K8	10	3365 - 22
AH173410	5K9	10	3365 - 22A
AH173567	4F11	18	3165 - 11
AH173568	4F11	17	3165 - 11
AH174222	4F4	19	3165 - 3
AH175181	5F4	14	3346 - 5
AH175181	5K19	16	3365 - 30
AH175182	5F4	14	3346 - 5
AH175513	5J16	23	3365 - 7
AH175515	5J16	21	3365 - 7
AH175518	5K19	13	3365 - 30
AH175518	5K20	14	3365 - 31
AH175518	5K22	2	3365 - 33
AH175519	5K23	17	3365 - 34
AH175519	5K24	10	3365 - 35
AH176122	5K7	19	3365 - 21A
AH176230	4C18	3	3104 - 5
AH176272	4C18	17	3104 - 5
AH202070	5K24	16	3365 - 35
AH202080	4F8	21	3165 - 8
AH202080	5K7	13	3365 - 21A
AH205060	5K11	9	3365 - 24
AH205060	5K12	9	3365 - 24A
AH205062	5K14	9	3365 - 26
AH205062	5K15	9	3365 - 26A
AH206649	5J20	17	3365 - 11
AH206725	5J25	1	3365 - 16
AH206726	5J25	23	3365 - 16
AH207281	5F4	14	3346 - 5
AH207281	5K24	14	3365 - 35
AH207327	5K10	19	3365 - 23
AH207328	5K10	19	3365 - 23
AH207401	4F8	18	3165 - 8
AH207411	5J20	1	3365 - 11
AH208379	5J22	17	3365 - 13
AH208379	5J23	23	3365 - 14
AH209022	4C6	19	3102 - 13
AH209078	5J23	1	3365 - 14
AH209079	5J23	10	3365 - 14
AH209080	5J19	17	3365 - 10
AH209080	5J20	17	3365 - 11
AH209080	5J21	17	3365 - 12
AH209081	5J21	1	3365 - 12
AH209082	5J21	16	3365 - 12
AH209083	5J25	10	3365 - 16
AH209133	5K14	17	3365 - 26
AH209134	5K14	1	3365 - 26
AH209138	5K13	19	3365 - 25
AH209138	5K14	17	3365 - 26
AH209140	5K14	1	3365 - 26
AH210484	4F4	27	3165 - 3
AH210484	4F5	19	3165 - 4
AH210484	4F7	27	3165 - 7
AH210484	4F8	20	3165 - 8
AH210484	4F9	19	3165 - 9
AH210484	4F11	20	3165 - 11
AH210484	4F13	24	3165 - 13
AH210484	5J19	20	3365 - 10
AH210484	5J20	18	3365 - 11
AH210484	5J21	18	3365 - 12
AH210484	5K5	25	3365 - 20
AH210484	5K7	21	3365 - 21A
AH210484	5K8	19	3365 - 22
AH210484	5K9	19	3365 - 22A
AH210484	5K10	21	3365 - 23
AH210484	5K11	18	3365 - 24
AH210484	5K12	18	3365 - 24A
AH210484	5K13	21	3365 - 25
AH210484	5K14	18	3365 - 26
AH210484	5K15	18	3365 - 26A
AH210719	5J14	12	3365 - 5
AH210719	5J18	12	3365 - 9
AH210737	4C4	3	3102 - 11
AH210737	4C5	14	3102 - 12
AH210737	4C6	18	3102 - 13
AH210737	4C12	20	3102 - 19
AH210901	5K10	19	3365 - 23
AH210901	5K11	17	3365 - 24
AH210902	5K10	19	3365 - 23
AH210902	5K11	17	3365 - 24
AH210999	5K11	1	3365 - 24
AH211000	5K11	1	3365 - 24
AH211131	5J12	23	3365 - 3
AH211131	5J14	21	3365 - 5
AH211132	5J16	23	3365 - 7
AH211132	5J18	22	3365 - 9
AH211133	5J14	2	3365 - 5
AH211134	5J18	2	3365 - 9
AH211135	5J14	20	3365 - 5
AH211138	5J18	20	3365 - 9
AH211196	5K8	18	3365 - 22
AH211197	5K8	1	3365 - 22
AH211198	5K8	18	3365 - 22
AH211199	5K8	1	3365 - 22
AH211203	4F4	19	3165 - 3
AH211203	4F5	18	3165 - 4
AH211204	4F5	1	3165 - 4
AH211204	4F9	1	3165 - 9
AH211206	4F7	19	3165 - 7
AH211206	4F8	18	3165 - 8
AH211206	4F9	18	3165 - 9
AH211331	5K20	15	3365 - 31
AH211332	5K20	5	3365 - 31
AH211348	3D18	16	1740 - 5
AH211348	5K16	16	3365 - 27
AH211348	5K18	20	3365 - 29
AH211349	5K18	1	3365 - 29
AH211361	5F4	14	3346 - 5
AH211361	5K23	18	3365 - 34
AH211361	5K24	14	3365 - 35
AH211361	5K25	18	3365 - 36
AH211362	5K25	1	3365 - 36
AH211926	5K25	17	3365 - 36
AH212088	5K19	18	3365 - 30
AH212088	5K20	17	3365 - 31
AH212088	5K22	17	3365 - 33
AH212089	5K16	17	3365 - 27
AH212089	5K18	22	3365 - 29
AH212089	5K23	20	3365 - 34
AH212090	5K24	16	3365 - 35
AH212090	5K25	20	3365 - 36
AH212091	4F4	12	3165 - 3
AH212091	4F7	12	3165 - 7
AH212091	5J19	19	3365 - 10
AH212091	5J20	19	3365 - 11
AH212091	5K7	13	3365 - 21A
AH212092	4F5	20	3165 - 4
AH212092	4F8	21	3165 - 8
AH212092	4F9	20	3165 - 9
AH212092	5J21	19	3365 - 12
AH212092	5K7	13	3365 - 21A
AH212092	5K8	20	3365 - 22
AH212092	5K9	20	3365 - 22A
AH212096	4F11	19	3165 - 11
AH212096	4F13	25	3165 - 13
AH212096	5J22	19	3365 - 13
AH212096	5J23	25	3365 - 14
AH212096	5K5	17	3365 - 20
AH212096	5K10	13	3365 - 23
AH212097	5K11	19	3365 - 24
AH212097	5K12	19	3365 - 24A
AH212101	5J24	19	3365 - 15
AH212101	5J25	25	3365 - 16
AH212101	5K13	22	3365 - 25
AH212102	5J25	25	3365 - 16
AH212102	5K14	19	3365 - 26
AH212102	5K15	19	3365 - 26A
AH212103	5K2	20	3365 - 18
AH216338	4F11	18	3165 - 11
AH216338	4F13	23	3165 - 13
AH216339	4F13	1	3165 - 13
AH216821	2J1	17	0960 - 14
AH216821	2J3	20	0960 - 17
AH216822	2J3	1	0960 - 17

NUMERICAL INDEX - CONTINUED

PART NO.	GRID	KEY	PAGE
AH216853	5J14	12	3365 - 5
AH216869	5J18	12	3365 - 9
AH217348	4C16	2	3104 - 3
AH217348	4C18	16	3104 - 5
AH218606	5F4	14	3346 - 5
AH218606	5K19	16	3365 - 30
AH218606	5K20	15	3365 - 31
AH218606	5K22	15	3365 - 33
AH218608	5K22	12	3365 - 33
AH219499	5K7	19	3365 - 21A
AH219499	5K8	18	3365 - 22
AH219499	5K9	18	3365 - 22A
AH219500	5K7	19	3365 - 21A
AH219500	5K8	18	3365 - 22
AH219500	5K9	18	3365 - 22A
AH219503	5K9	1	3365 - 22A
AH219504	5K9	1	3365 - 22A
AH219537	5K12	17	3365 - 24A
AH219538	5K12	17	3365 - 24A
AH219539	5K12	1	3365 - 24A
AH219540	5K12	1	3365 - 24A
AH219541	5K13	19	3365 - 25
AH219541	5K14	17	3365 - 26
AH219541	5K15	17	3365 - 26A
AH219542	5K15	17	3365 - 26A
AH219543	5K15	1	3365 - 26A
AH219544	5K15	1	3365 - 26A
AH220523	5J25	1	3365 - 16
AH220526	5J25	23	3365 - 16
AH61472	3J8	30	2160 - 11
AH64349	1D16	34	0341 - 3
AH64349	3J14	7	2160 - 17
AH64349	3J16	8	2160 - 19
AH89557	2H18	23	0510 - 3
AH89557	2I12	7	0560 - 3
AH89557	3C22	12	1674 - 9B
AH89557	3H4	42	1830 - 7B
AH89557	3H9	14	1830 - 13
AH89557	5E8	7	3315 - 23
AH96317	2I12	8	0560 - 3
AL111096	1D2	5	0250 - 13
AL113451	1C18	3	0250 - 5
AL113460	1C18	5	0250 - 5
AL118173	2I16	1	0960 - 3
AL118173	2I18	1	0960 - 5
AL153661	3F6	8	1814 - 11
AL155227	2I16	1	0960 - 3
AL155227	2I18	1	0960 - 5
AL32877	1B23	16	0201 - 3
AL79794	1C5	5	0210 - 5
AL79794	1D2	2	0250 - 13
AL79797	1D2	6	0250 - 13
AL79808	1C18	12	0250 - 5
AL79901	1C20	2	0250 - 7
AL79902	1C20	1	0250 - 7
AL79950	1C20	21	0250 - 7
AL79951	1C20	11	0250 - 7
AL80542	1C18	2	0250 - 5
AM102062	3E21	1	1814 - 3
AM102062	3G2	11	1816 - 15
AM102062	3G4	33	1816 - 17
AM118928	3F22	6	1816 - 11
AM118997	5E16	24	3343 - 3
AM3762T	5J6	24	3363 - 43
AN132749	1B16	2	0110 - 3
AN132749	1B17	2	0110 - 4
AN132749	1B18	2	0120 - 1
AN205068	2H18	14	0510 - 3
AP22688	5J6	23	3363 - 43
AR21836	2I21	2	0960 - 9
AR21836	2I23	2	0960 - 11
AR21836	5I16	7	3363 - 29
AR21837	2K17	1	1369 - 7
AR21839	2E11	6	0408 - 5
AR21839	4E24	31	3163 - 11
AR21841	5I6	4	3363 - 19
AR21842	3D18	18	1740 - 5
AR21842	3G25	24	1830 - 5
AR21842	3H11	45B	1830 - 15
AR21842	4E18	19	3163 - 5
AR21842	4E24	29	3163 - 11
AR21842	5H12	6	3363 - 3
AR21842	5H14	4	3363 - 3B
AR21842	5H16	24	3363 - 5
AR21842	5H20	19	3363 - 9
AR21842	5H22	6	3363 - 11
AR21842	5J2	11	3363 - 39
AR21999	2H16	1	0505 - 7
AR26480	1C10	1	0230 - 4
AR40418	2I2	7	0520 - 5
AR44361	2H24	16	0520 - 3
AR47374	5E8	5	3315 - 23
AR48041	3C6	5	1673 - 5
AR48236	2I12	2	0560 - 3
AR48236	2J14	14	1060 - 9
AR48236	2J16	8	1060 - 11
AR48236	3J8	8	2160 - 11
AR48236	5I16	7	3363 - 29
AR48236	5I18	9	3363 - 31
AR62936	3G25	17	1830 - 5
AR64705	5I16	6	3363 - 29
AR64705	5I18	8	3363 - 31
AR65005	3D12	1	1674 - 22
AR65006	3D12	2	1674 - 22
AR65294	2H18	12	0510 - 3
AR65294	3J8	25	2160 - 11
AR65507	2D5	9	0403 - 2
AR65507	2D6	9	0403 - 2A
AR65507	2D7	9	0403 - 2B
AR65507	2D8	9	0403 - 3A
AR67069	3B24	8	1671 - 7
AR73144	3C10	9	1674 - 3
AR77962	2I12	25	0560 - 3
AR77962	3H4	46	1830 - 7B
AR77962	3J8	37	2160 - 11
AR77962	3J10	4	2160 - 13
AR83396	5C12	7	3302 - 3
AR83396	5C16	6	3302 - 7
AR83396	5F4	22	3346 - 5
AR85327	5I22	23	3363 - 35
AR85327	5I24	19	3363 - 37
AR85328	2H24	7	0520 - 3
AR85329	2H24	9	0520 - 3
AR85519	2E22	1	0413 - 5
AR85519	2E24	30	0413 - 7
AR85519	2F2	1	0413 - 9
AR85519	2F4	30	0413 - 11
AR89602	5I22	23	3363 - 35
AR89602	5I24	19	3363 - 37
AR91793	3D9	42	1674 - 19
AR91896	2H24	5	0520 - 3
AR91896	3E21	10	1814 - 3
AR91896	3H16	16	1910 - 3
AR94101	3C22	3	1674 - 9B
AR94101	4E24	4	3163 - 11
AT101565	3J10	20	2160 - 13
AT101779	3J8	6	2160 - 11
AT103399	3C22	34	1674 - 9B
AT103919	3I9	1	2002 - 3
AT106397	3G12	6	1821 - 9
AT106397	3G13	3	1821 - 10
AT106397	3G13	9	1821 - 10
AT107512	2H18	7	0510 - 3
AT112810	3H7	2	1830 - 10
AT113921	1D2	6	0250 - 13
AT118766	3E21	22	1814 - 3
AT120461	3I11	1	2004 - 3
AT121123	5G14	9	3362 - 31
AT124107	4C24	13	3115 - 7
AT124107	4D2	8	3115 - 9
AT124371	1B16	1	0110 - 3
AT125801	3G12	2	1821 - 9
AT125805	3G12	18	1821 - 9
AT125829	3G12	19	1821 - 9
AT130104	3C6	8	1673 - 5
AT130104	3C6	10	1673 - 5
AT130104	3C6	14	1673 - 5
AT130104	3C8	10	1673 - 7
AT130208	2K15	1	1369 - 5
AT132864	3B20	13	1671 - 3
AT132864	3B22	13	1671 - 5
AT135084	3D18	15	1740 - 5
AT135767	4E10	17	3162 - 25
AT13740	2D11	4	0404 - 3
AT13740	2H18	32	0510 - 3
AT139694	2I16	5	0960 - 3
AT139694	2I18	5	0960 - 5
AT141011	3C22	8	1674 - 9B
AT141444	1B16	1	0110 - 3
AT141527	2I21	29A	0960 - 9
AT141527	2I23	21A	0960 - 11
AT145792	3E21	13	1814 - 3
AT145849	3D18	4	1740 - 5
AT145929	3C18	22	1674 - 7
AT145931	3C18	22	1674 - 7
AT145984	5D12	27	3315 - 7
AT150725	3E11	25	1811 - 3
AT150762	5D16	9	3315 - 11
AT150763	5D16	8	3315 - 11
AT150764	5D16	31	3315 - 11
AT151036	3G25	3	1830 - 5
AT152180	2K17	14	1369 - 7
AT156431	3D2	9	1674 - 11
AT156440	3H7	4	1830 - 10
AT156445	2I12	11	0560 - 3
AT157327	5F7	24	3348 - 3
AT157986	5D12	26	3315 - 7
AT158197	5D16	29	3315 - 11
AT158198	5D16	40	3315 - 11
AT159811	3C22	29	1674 - 9B
AT161527	3J22	1	2160 - 25
AT161528	3J22	1	2160 - 25
AT161638	2I12	13	0560 - 3
AT161638	3J10	2	2160 - 13
AT162180	1D12	1	0315 - 7
AT162180	4C24	4	3115 - 7
AT162180	4D2	4	3115 - 9
AT162848	3H11	44	1830 - 15
AT163088	3C10	19	1674 - 3
AT164442	1C9	4	0230 - 3
AT164442	1C11	3	0230 - 5

NUMERICAL INDEX - CONTINUED

PART NO.	GRID	KEY	PAGE
AT164442	1C15	4	0250 - 1
AT164803	3E11	10	1811 - 3
AT164804	3E11	8	1811 - 3
AT165288	3E11	15	1811 - 3
AT165288	3E13	4	1811 - 5
AT167118	1C20	3	0250 - 7
AT167119	1C20	3	0250 - 7
AT167332	2I25	13	0960 - 13
AT167399	3C22	27	1674 - 9B
AT168397	1D17	9	0341 - 4
AT168400	1D17	9	0341 - 4
AT168632	2I19	7	0960 - 6
AT168671	5F15	15	3362 - 9
AT169087	4C24	18	3115 - 7
AT169087	4D2	14	3115 - 9
AT169087	4D4	9	3115 - 11
AT169087	4D6	4	3115 - 13
AT169087	5D12	10	3315 - 7
AT169087	5D14	2	3315 - 9
AT169087	5D16	24	3315 - 11
AT169087	5D18	19	3315 - 13
AT169087	5D20	8	3315 - 13B
AT169087	5D22	1	3315 - 15
AT169087	5D24	7	3315 - 15B
AT169087	5E2	7	3315 - 17
AT169087	5E12	1	3315 - 27
AT169175	3H6	6	1830 - 9
AT169175	3H7	3	1830 - 10
AT169175	3H7	5	1830 - 10
AT169175	3H7	15	1830 - 10
AT169180	3H7	1	1830 - 10
AT169304	1D12	2	0315 - 7
AT169373	4D18	24	3162 - 9
AT169373	4D20	29	3162 - 11
AT169512	5D16	2	3315 - 11
AT169550	1B17	1	0110 - 4
AT169804	3D16	12	1740 - 3
AT169831	5F2	5	3346 - 3
AT169831	5F4	4	3346 - 5
AT169929	3H7	4	1830 - 10
AT170043	5E16	14	3343 - 3
AT170043	5E18	14	3343 - 5
AT170052	3I23	5	2160 - 3
AT170052	3I25	5	2160 - 5
AT170053	3I25	12	2160 - 5
AT170061	5J6	3	3363 - 43
AT170172	5H22	4	3363 - 11
AT170172	5I6	41	3363 - 19
AT170173	5H22	7	3363 - 11
AT170173	5I6	41	3363 - 19
AT170204	1C18	1	0250 - 5
AT170205	1C18	1	0250 - 5
AT170206	1C18	6	0250 - 5
AT170208	1C18	6	0250 - 5
AT170209	1C18	4	0250 - 5
AT170218	4D22	1	3162 - 13
AT170221	5F23	1	3362 - 17
AT170232	5F19	1	3362 - 13
AT171019	5F2	14	3346 - 3
AT171077	5E24	1	3345 - 5
AT171078	5E24	11A	3345 - 5
AT171079	5E24	5	3345 - 5
AT171079	5F4	13	3346 - 5
AT171098	5H16	9	3363 - 5
AT171134	1C15	8	0250 - 1
AT171162	2H16	2	0505 - 7
AT171403	5F17	2	3362 - 11
AT171403	5G24	2	3362 - 41
AT171404	5F21	2	3362 - 15
AT171404	5H4	2	3362 - 45
AT171405	5F21	4	3362 - 15
AT171539	2H16	5	0505 - 7
AT171541	1D17	9	0341 - 4
AT171544	1D17	9	0341 - 4
AT171550	4C24	5	3115 - 7
AT171550	4D2	5	3115 - 9
AT171637	1C6	1	0210 - 6
AT171644	1C5	1	0210 - 5
AT171702	5E19	7	3344 - 2
AT171758	5I2	5	3363 - 15
AT171759	5I2	8	3363 - 15
AT171853	2H24	14	0520 - 3
AT171854	2H24	15	0520 - 3
AT171855	2H24	12	0520 - 3
AT172179	3J22	15	2160 - 25
AT172255	5I6	2	3363 - 19
AT172256	5I6	12	3363 - 19
AT172386	4C4	26	3102 - 11
AT172386	4C12	48	3102 - 19
AT172419	3D18	25	1740 - 5
AT172420	3D18	26	1740 - 5
AT172610	5H12	9	3363 - 3
AT172763	1D18	4	0350 - 1
AT172937	4D22	12	3162 - 13
AT172937	5F19	2	3362 - 13
AT172945	4D16	6	3162 - 7
AT173120	4E20	38	3163 - 7
AT173120	4E22	28	3163 - 9
AT173128	4E20	15	3163 - 7
AT173193	3F8	2	1814 - 13
AT173254	1C11	9	0230 - 5
AT173254	2K18	3	1370 - 2
AT173254	2K18	4	1370 - 2
AT173313	3G19	..	1821 - 17
AT173314	3G19	4	1821 - 17
AT173315	3G19	5	1821 - 17
AT173321	3G19	9	1821 - 17
AT173321	3G19	14	1821 - 17
AT173385	2H16	7	0505 - 7
AT173400	2I10	5	0540 - 3
AT173411	2I21	30	0960 - 9
AT173411	2I23	30	0960 - 11
AT173610	2H18	10	0510 - 3
AT173624	3C2	3	1672 - 3
AT173933	5F4	25	3346 - 5
AT174208	5H18	5	3363 - 7
AT174209	5H18	7	3363 - 7
AT174217	4D18	25	3162 - 9
AT174217	5F17	3	3362 - 11
AT174268	5H24	11	3363 - 13
AT174269	5H24	12	3363 - 13
AT174330	5H20	20	3363 - 9
AT174330	5H22	30	3363 - 11
AT174336	5H20	21	3363 - 9
AT174336	5H22	31	3363 - 11
AT174339	5I6	23	3363 - 19
AT174340	5I6	24	3363 - 19
AT174348	3F8	7	1814 - 13
AT174353	5H24	10	3363 - 13
AT174355	5H18	4	3363 - 7
AT174365	1D17	2A	0341 - 4
AT174393	5H20	1	3363 - 9
AT174394	5H20	25	3363 - 9
AT174697	3H6	26	1830 - 9
AT174743	3J10	1	2160 - 13
AT174898	1D17	1	0341 - 4
AT174923	5G2	13	3362 - 21
AT175069	3C10	5	1674 - 3
AT175070	3C10	4	1674 - 3
AT175071	3C10	2	1674 - 3
AT175072	3C10	2	1674 - 3
AT175072	3F8	13	1814 - 13
AT175125	5I22	32	3363 - 35
AT175126	5I24	22	3363 - 37
AT175198	4C4	26	3102 - 11
AT175283	5F4	29	3346 - 5
AT175284	5F4	1	3346 - 5
AT175300	3C10	1	1674 - 3
AT175353	3G12	16	1821 - 9
AT175374	2I10	10	0540 - 3
AT175436	3G12	3	1821 - 9
AT175446	5H12	7	3363 - 3
AT175603	3C4	5	1673 - 3
AT175604	3D2	1	1674 - 11
AT175733	1D20	8	0350 - 3
AT175734	1D22	8	0350 - 5
AT175748	1E1	12	0350 - 9
AT175748	1E2	12	0350 - 10
AT175750	1D8	20	0315 - 3
AT175812	5F4	1	3346 - 5
AT175820	5F2	14	3346 - 3
AT175921	5E14	20	3342 - 3
AT175993	5E19	17	3344 - 2
AT176075	5E19	7	3344 - 2
AT176080	1D13	2	0325 - 2
AT176115	5E16	14	3343 - 3
AT176157	5I2	4	3363 - 15
AT176216	1C9	7	0230 - 3
AT176405	5F2	14	3346 - 3
AT176478	5H12	8	3363 - 3
AT176491	1C5	2	0210 - 5
AT176521	5I16	17	3363 - 29
AT176522	5I16	16	3363 - 29
AT176533	5F2	5	3346 - 3
AT176533	5F4	4	3346 - 5
AT176536	5E22	16	3345 - 3
AT176537	5E22	8	3345 - 3
AT176538	5E22	14	3345 - 3
AT176538	5F4	13	3346 - 5
AT176540	5H16	8	3363 - 5
AT176542	5H16	7	3363 - 5
AT176543	5H16	15	3363 - 5
AT176544	5H16	16	3363 - 5
AT176578	5F4	29	3346 - 5
AT176579	5F4	1	3346 - 5
AT176635	5E19	17	3344 - 2
AT176968	5H20	20	3363 - 9
AT176968	5H22	30	3363 - 11
AT176969	5H20	21	3363 - 9
AT176969	5H22	31	3363 - 11
AT176982	5I6	23	3363 - 19
AT176983	5I6	24	3363 - 19
AT177204	3J16	6	2160 - 19
AT177227	3G25	10	1830 - 5
AT177433	5I16	18	3363 - 29
AT177540	5H24	5	3363 - 13
AT177540	5J2	7	3363 - 39
AT177603	5H18	14	3363 - 7
AT177603	5H20	22	3363 - 9
AT177603	5H22	32	3363 - 11
AT177603	5H24	17	3363 - 13

NUMERICAL INDEX - CONTINUED

PART NO.	GRID	KEY	PAGE
AT177603	5I6	25	3363 - 19
AT177604	5H20	23	3363 - 9
AT177604	5H22	33	3363 - 11
AT177701	1E1	19	0350 - 9
AT177701	1E10	20	0350 - 19
AT177703	1D24	5	0350 - 7
AT177703	1E21	4	0360 - 4
AT177703	1F4	10	0360 - 11
AT177790	5E18	2	3343 - 5
AT178002	1D2	1	0250 - 13
AT178025	5E19	16	3344 - 2
AT178065	3G6	21	1821 - 3
AT178072	5C14	8	3302 - 5
AT178072	5C18	7	3302 - 9
AT178112	1D2	1	0250 - 13
AT178113	1C15	8	0250 - 1
AT178315	3D21	3	1746 - 5
AT178326	4D22	8	3162 - 13
AT178362	4E2	34	3162 - 17
AT178362	4E6	19	3162 - 21
AT178362	5F23	36	3362 - 17
AT178362	5H6	5	3362 - 47
AT178363	5F17	8	3362 - 11
AT178363	5G24	7	3362 - 41
AT178371	5F17	19	3362 - 11
AT178371	5F21	22	3362 - 15
AT178371	5G24	22	3362 - 41
AT178371	5H4	23	3362 - 45
AT178372	4D18	40	3162 - 9
AT178372	4D20	32	3162 - 11
AT178372	4D22	36	3162 - 13
AT178372	4D24	27	3162 - 15
AT178372	4E2	35	3162 - 17
AT178372	4E6	24	3162 - 21
AT178372	5F15	34	3362 - 9
AT178372	5F17	40	3362 - 11
AT178372	5F19	30	3362 - 13
AT178372	5F21	37	3362 - 15
AT178372	5F23	38	3362 - 17
AT178372	5F25	18	3362 - 19
AT178372	5G4	20	3362 - 23
AT178372	5G24	38	3362 - 41
AT178372	5H2	26	3362 - 43
AT178372	5H4	38	3362 - 45
AT178372	5H6	25	3362 - 47
AT178375	5I8	22	3363 - 21
AT178375	5I10	23	3363 - 23
AT178375	5I12	23	3363 - 25
AT178375	5I14	23	3363 - 27
AT178376	5I8	21	3363 - 21
AT178376	5I10	22	3363 - 23
AT178376	5I12	22	3363 - 25
AT178376	5I14	22	3363 - 27
AT178387	1C16	4	0250 - 2
AT178389	1C16	4	0250 - 2
AT178389	1D13	1	0325 - 2
AT178394	2H18	7	0510 - 3
AT178394	3H11	55	1830 - 15
AT178405	5I6	21	3363 - 19
AT178411	5E20	6	3344 - 3
AT178413	5I6	21	3363 - 19
AT178471	5F15	28	3362 - 9
AT178475	5G2	13	3362 - 21
AT178499	1B17	1	0110 - 4
AT178526	3C12	11	1674 - 5
AT178542	2H24	17	0520 - 3
AT178608	3I25	8	2160 - 5
AT178683	3D18	14	1740 - 5
AT178683	5H16	12	3363 - 5
AT178693	3J16	2	2160 - 19
AT178745	2J24	1	1313 - 3
AT178768	5I22	38	3363 - 35
AT178769	5I24	31	3363 - 37
AT178784	5I6	41	3363 - 19
AT178788	5I22	38	3363 - 35
AT178789	5I24	31	3363 - 37
AT178840	2K13	1	1369 - 3
AT178842	2K13	1	1369 - 3
AT178844	2K13	1	1369 - 3
AT178930	3H9	28	1830 - 13
AT179029	5E8	18	3315 - 23
AT179030	5I8	22	3363 - 21
AT179030	5I12	23	3363 - 25
AT179031	5I8	21	3363 - 21
AT179031	5I12	22	3363 - 25
AT179033	5I8	24	3363 - 21
AT179033	5I12	25	3363 - 25
AT179036	5I8	16	3363 - 21
AT179036	5I10	19	3363 - 23
AT179046	5H22	27	3363 - 11
AT179046	5I6	41	3363 - 19
AT179053	2K17	15	1369 - 7
AT179063	1D13	2	0325 - 2
AT179083	5H18	6	3363 - 7
AT179083	5H24	9A	3363 - 13
AT179083	5H24	9B	3363 - 13
AT179105	5F5	5	3346 - 6
AT179109	5F23	1	3362 - 17
AT179109	5G8	1	3362 - 27
AT179153	1E22	3	0360 - 5
AT179233	5H22	27	3363 - 11
AT179233	5I6	41	3363 - 19
AT179238	5I6	17	3363 - 19
AT179238	5I6	18	3363 - 19
AT179287	1B16	7	0110 - 3
AT179312	1D18	3	0350 - 1
AT179314	1D23	7	0350 - 6
AT179314	1E4	7	0350 - 13
AT179316	1D14	2	0341 - 1
AT179316	1D16	8	0341 - 3
AT179317	1D14	7	0341 - 1
AT179319	1D24	5	0350 - 7
AT179319	1E21	4	0360 - 4
AT179319	1F4	10	0360 - 11
AT179320	1D24	5	0350 - 7
AT179320	1E21	4	0360 - 4
AT179320	1F4	10	0360 - 11
AT179323	1E22	11	0360 - 5
AT179399	5I12	17	3363 - 25
AT179399	5I14	17	3363 - 27
AT179423	3G6	21	1821 - 3
AT179447	1E20	41	0360 - 3
AT179448	5E20	1	3344 - 3
AT179464	5E20	6	3344 - 3
AT179465	5E20	1	3344 - 3
AT179466	1D25	2	0350 - 8
AT179466	1E18	2	0350 - 27
AT179467	1D24	4	0350 - 7
AT179468	1D24	3	0350 - 7
AT179468	1D25	3	0350 - 8
AT179468	1E18	4	0350 - 27
AT179469	1D20	14	0350 - 3
AT179469	1D22	14	0350 - 5
AT179469	1E10	5	0350 - 19
AT179469	1E14	13	0350 - 23
AT179469	1E16	13	0350 - 25
AT179470	1D20	21	0350 - 3
AT179470	1D22	21	0350 - 5
AT179470	1E10	3	0350 - 19
AT179470	1E14	15	0350 - 23
AT179470	1E16	15	0350 - 25
AT179471	1D20	22	0350 - 3
AT179471	1D22	22	0350 - 5
AT179471	1D24	1	0350 - 7
AT179471	1E12	17	0350 - 21
AT179471	1E14	17	0350 - 23
AT179471	1E16	17	0350 - 25
AT179472	1D20	2	0350 - 3
AT179472	1D22	2	0350 - 5
AT179472	1D25	18	0350 - 8
AT179472	1E1	1	0350 - 9
AT179472	1E2	18	0350 - 10
AT179472	1E6	1	0350 - 15
AT179472	1E8	1	0350 - 17
AT179472	1E16	1	0350 - 25
AT179472	1E18	20	0350 - 27
AT179473	1D20	17	0350 - 3
AT179473	1D22	17	0350 - 5
AT179473	1E14	9	0350 - 23
AT179473	1E16	9	0350 - 25
AT179481	1E1	17	0350 - 9
AT179481	1E10	19	0350 - 19
AT179482	1E1	4	0350 - 9
AT179482	1E2	15	0350 - 10
AT179483	1E1	13	0350 - 9
AT179483	1E2	5	0350 - 10
AT179485	1E1	16	0350 - 9
AT179485	1E2	1	0350 - 10
AT179490	1E2	6	0350 - 10
AT179491	1E20	17	0360 - 3
AT179491	1E24	10	0360 - 7
AT179491	1F2	5	0360 - 9
AT179492	1E20	8	0360 - 3
AT179492	1E24	9	0360 - 7
AT179498	1C3	14	0210 - 3
AT179499	1B23	7	0201 - 3
AT179499	1C1	2	0210 - 1
AT179500	1B23	5	0201 - 3
AT179501	1B23	9	0201 - 3
AT179502	1B23	4	0201 - 3
AT179503	2J6	2	1011 - 3
AT179504	1C3	19	0210 - 3
AT179504	2J6	13	1011 - 3
AT179505	1C3	21	0210 - 3
AT179505	2J6	21	1011 - 3
AT179537	1C5	6	0210 - 5
AT179537	2J19	19	1111 - 3
AT179537	2J21	20	1111 - 5
AT179538	1C1	4	0210 - 1
AT179590	1C16	8	0250 - 2
AT179596	1C16	1	0250 - 2
AT179617	5F5	1	3346 - 6
AT179686	3G8	31	1821 - 5
AT179686	3G10	22	1821 - 7
AT179687	3G10	19	1821 - 7
AT179688	3G8	14	1821 - 5
AT179691	3G8	22	1821 - 5
AT179691	3G8	27	1821 - 5
AT179692	3G8	26	1821 - 5
AT179692	3G10	18	1821 - 7
AT179693	3G12	32	1821 - 9

NUMERICAL INDEX - CONTINUED

PART NO.	GRID	KEY	PAGE
AT179694	3G12	27	1821 - 9
AT179699	3G12	13	1821 - 9
AT179714	3G15	6	1821 - 13
AT179792	3I23	6	2160 - 3
AT179835	5H24	9A	3363 - 13
AT179899	2J19	26	1111 - 3
AT179899	2J21	25	1111 - 5
AT179902	5F4	31	3346 - 5
AT179903	5F4	31	3346 - 5
AT179905	5F4	31	3346 - 5
AT179995	2K17	3	1369 - 7
AT179996	2K17	5	1369 - 7
AT180076	5I22	33	3363 - 35
AT180076	5I24	26	3363 - 37
AT180077	5I22	34	3363 - 35
AT180078	5I22	35	3363 - 35
AT180079	5I22	36	3363 - 35
AT180079	5I24	27	3363 - 37
AT180081	5I22	33	3363 - 35
AT180081	5I24	26	3363 - 37
AT180082	5I22	34	3363 - 35
AT180082	5I24	25	3363 - 37
AT180083	5I22	35	3363 - 35
AT180083	5I24	24	3363 - 37
AT180086	5I22	36	3363 - 35
AT180086	5I24	27	3363 - 37
AT180087	5I24	25	3363 - 37
AT180088	5I24	24	3363 - 37
AT180147	5I18	20	3363 - 31
AT180152	5H18	14	3363 - 7
AT180152	5H20	22	3363 - 9
AT180152	5H22	32	3363 - 11
AT180152	5H24	17	3363 - 13
AT180152	5I6	25	3363 - 19
AT180152	5I20	24	3363 - 33
AT180153	5H22	33	3363 - 11
AT180204	5I22	5	3363 - 35
AT180205	5I22	22	3363 - 35
AT180206	5I24	20	3363 - 37
AT180208	5I22	11	3363 - 35
AT180209	5I22	17	3363 - 35
AT180210	5I24	1	3363 - 37
AT180211	5I24	13	3363 - 37
AT180212	5I22	18	3363 - 35
AT180212	5I22	28	3363 - 35
AT180213	5I24	11	3363 - 37
AT180214	5I24	17	3363 - 37
AT180333	2K13	1	1369 - 3
AT180334	2K13	1	1369 - 3
AT180350	3H9	23	1830 - 13
AT180485	3C12	14	1674 - 5
AT180530	3I25	7	2160 - 5
AT180658	5I24	13	3363 - 37
AT180667	5I22	5	3363 - 35
AT180680	2H24	13	0520 - 3
AT180705	3C22	31	1674 - 9B
AT180706	3C22	38	1674 - 9B
AT180828	5J2	10	3363 - 39
AT180838	4B23	8	3102 - 5
AT180839	4B23	8	3102 - 5
AT180916	1D10	1	0315 - 5
AT181185	5J10	10	3363 - 47
AT181186	5J10	11	3363 - 47
AT181192	5J4	7	3363 - 41
AT181292	4E24	1	3163 - 11
AT181327	5F9	9	3348 - 5
AT181422	4E24	9A	3163 - 11
AT181530	3H9	3	1830 - 13
AT181582	2H16	6	0505 - 7
AT181591	5H20	23	3363 - 9
AT181591	5H22	33	3363 - 11
AT181591	5I10	25	3363 - 23
AT181591	5I14	25	3363 - 27
AT181591	5I20	25	3363 - 33
AT181679	5I8	9	3363 - 21
AT181680	5I8	8	3363 - 21
AT181712	5E22	13	3345 - 3
AT181713	5E22	3	3345 - 3
AT181714	5E24	6	3345 - 5
AT181715	5E24	16	3345 - 5
AT181856	5G10	7	3362 - 29
AT181884	5I8	9	3363 - 21
AT181884	5I10	9	3363 - 23
AT181885	5I8	8	3363 - 21
AT181885	5I10	8	3363 - 23
AT181937	3I25	6	2160 - 5
AT182078	3I23	6	2160 - 3
AT182190	5F5	7	3346 - 6
AT182193	5F5	7	3346 - 6
AT182248	5F17	3	3362 - 11
AT182257	2H16	9	0505 - 7
AT182377	4E2	18	3162 - 17
AT182377	4E4	8	3162 - 19
AT182377	5F23	19	3362 - 17
AT182377	5H6	2	3362 - 47
AT182390	1C9	22	0230 - 3
AT182391	1C9	29	0230 - 3
AT182520	1D10	1	0315 - 5
AT182587	3D18	31	1740 - 5
AT182588	3D18	30	1740 - 5
AT182597	5I4	11	3363 - 17
AT182598	5I4	6	3363 - 17
AT182599	5I4	5	3363 - 17
AT182602	2K13	1	1369 - 3
AT182603	2K13	1	1369 - 3
AT182735	1C16	9	0250 - 2
AT182935	5E14	16	3342 - 3
AT182947	1E20	21	0360 - 3
AT182947	1E24	14	0360 - 7
AT182954	3G19	..	1821 - 17
AT183068	5E22	7	3345 - 3
AT183219	2I6	3	0530 - 5
AT183222	2H16	11	0505 - 7
AT183246	3D5	4	1674 - 14
AT183282	1D8	8	0315 - 3
AT183389	2I12	22	0560 - 3
AT183411	3H20	6	1913 - 3
AT183426	2I6	7	0530 - 5
AT183428	3H20	2	1913 - 3
AT183556	5E8	21	3315 - 23
AT183556	5G13	17	3362 - 30
AT183590	3J22	8	2160 - 25
AT183590	4D22	8	3162 - 13
AT183590	4D22	39	3162 - 13
AT183592	5G13	1	3362 - 30
AT183664	3I25	13	2160 - 5
AT183717	4E16	23	3163 - 3
AT183718	4E16	24	3163 - 3
AT183721	4E16	15	3163 - 3
AT183722	4E16	16	3163 - 3
AT183810	3G19	15	1821 - 17
AT183823	3C22	23	1674 - 9B
AT183869	5H8	26	3363 - 1B
AT183874	2I12	15	0560 - 3
AT183881	2I12	4	0560 - 3
AT183899	3D16	8	1740 - 3
AT183972	1E24	42	0360 - 7
AT183973	1F2	15	0360 - 9
AT183995	1D16	29	0341 - 3
AT183997	5F13	7	3362 - 7
AT183999	5F13	7	3362 - 7
AT184001	5F13	7	3362 - 7
AT184003	4D12	1	3162 - 3
AT184005	4D12	1	3162 - 3
AT184007	1F2	14	0360 - 9
AT184042	1E12	1	0350 - 21
AT184042	1E14	1	0350 - 23
AT184043	1E14	3	0350 - 23
AT184045	1E16	3	0350 - 25
AT184048	1E6	3	0350 - 15
AT184052	1E6	17	0350 - 15
AT184052	1E8	17	0350 - 17
AT184052	1E10	1	0350 - 19
AT184053	1E8	3	0350 - 17
AT184055	1E10	16	0350 - 19
AT184056	1E10	18	0350 - 19
AT184057	1E12	3	0350 - 21
AT184058	5E16	14	3343 - 3
AT184059	1D16	14	0341 - 3
AT184060	1D16	4	0341 - 3
AT184061	1D16	5	0341 - 3
AT184062	1D16	6	0341 - 3
AT184064	4D10	7	3140 - 5
AT184082	3J10	16	2160 - 13
AT184089	3F2	1	1814 - 9
AT184156	4C24	7	3115 - 7
AT184161	3J22	15	2160 - 25
AT184304	2H24	1A	0520 - 3
AT184335	3C18	24	1674 - 7
AT184335	3J24	28	2160 - 27
AT184341	4C20	20	3115 - 3
AT184397	2I18	6	0960 - 5
AT184404	5D6	8	3315 - 3
AT184406	1B25	25	0201 - 5
AT184407	3E21	2	1814 - 3
AT184494	5J2	8	3363 - 39
AT184503	2H18	9	0510 - 3
AT184519	3J18	1	2160 - 21
AT184522	3H9	37	1830 - 13
AT184524	3E23	40	1814 - 5
AT184530	3H2	40	1830 - 7
AT184547	4D16	6	3162 - 7
AT184578	2J8	7	1060 - 3
AT184578	2J10	30	1060 - 5
AT184579	2J8	14	1060 - 3
AT184590	3F24	24	1816 - 13
AT184592	2J8	11	1060 - 3
AT184598	5D12	3	3315 - 7
AT184599	5D12	2	3315 - 7
AT184609	3G15	1	1821 - 13
AT184609	3G17	2	1821 - 15
AT184646	4D10	11	3140 - 5
AT184647	4D10	4	3140 - 5
AT184651	3E23	48	1814 - 5
AT184652	3E21	19	1814 - 3
AT184682	4C20	6	3115 - 3
AT184682	4C22	9	3115 - 5
AT184716	2I4	1	0530 - 3
AT184716	2I6	1	0530 - 5
AT184719	3E21	19	1814 - 3
AT184728	2I16	6	0960 - 3

NUMERICAL INDEX - CONTINUED

PART NO.	GRID	KEY	PAGE
AT184736	3C6	1	1673 - 5
AT184737	3C6	4	1673 - 5
AT184738	4B21	1	3102 - 3
AT184738	4B25	6A	3102 - 7
AT184744	4D4	11	3115 - 11
AT184761	3E13	1	1811 - 5
AT184767	3E21	13	1814 - 3
AT184777	3D16	8	1740 - 3
AT184843	4D8	8	3140 - 3
AT184848	2I6	1	0530 - 5
AT184853	2I4	3	0530 - 3
AT184894	2J12	2	1060 - 7
AT184900	2I21	1	0960 - 9
AT184900	2I23	1	0960 - 11
AT184902	2I23	8	0960 - 11
AT184903	2I23	7	0960 - 11
AT184907	2I21	7	0960 - 9
AT184908	2I21	8	0960 - 9
AT184951	3J2	2	2160 - 7
AT184951	3J6	4	2160 - 9B
AT184952	3J2	1	2160 - 7
AT184952	3J6	3	2160 - 9B
AT184965	3F6	7	1814 - 11
AT184966	3F6	8	1814 - 11
AT184968	3F10	4	1814 - 15
AT184969	3F10	2	1814 - 15
AT184970	3F10	1	1814 - 15
AT184972	3C6	15	1673 - 5
AT184989	5E19	1	3344 - 2
AT184993	5E19	1	3344 - 2
AT185004	3H24	1	1921 - 3
AT185062	5F7	1	3348 - 3
AT185077	3J8	11	2160 - 11
AT185078	3J8	6	2160 - 11
AT185085	2I4	3	0530 - 3
AT185311	5E4	5	3315 - 19
AT185315	5E4	13	3315 - 19
AT185317	5E4	4	3315 - 19
AT185337	5D14	39	3315 - 9
AT185338	5D14	38	3315 - 9
AT185339	5D14	20	3315 - 9
AT185340	5D14	8	3315 - 9
AT185366	3I7	1	2001 - 3
AT185396	3F24	17	1816 - 13
AT185440	4C20	18	3115 - 3
AT185451	3C6	15	1673 - 5
AT185498	3E13	7	1811 - 5
AT185499	3E13	7	1811 - 5
AT185499	3I7	21	2001 - 3
AT185500	3E13	9	1811 - 5
AT185500	3I7	19	2001 - 3
AT185513	2J12	1	1060 - 7
AT185519	4B23	8	3102 - 5
AT185519	4B25	6A	3102 - 7
AT185522	4B21	1	3102 - 3
AT185522	4B25	6A	3102 - 7
AT185524	4B21	1	3102 - 3
AT185524	4B25	6A	3102 - 7
AT185526	4B23	8	3102 - 5
AT185526	4B25	6A	3102 - 7
AT185537	3H16	24	1910 - 3
AT185538	3H18	42	1910 - 5
AT185539	3H18	33	1910 - 5
AT185586	3J4	30	2160 - 9
AT185609	3J2	24	2160 - 7
AT185624	5D12	25	3315 - 7
AT185625	5D18	23	3315 - 13
AT185626	5D14	54	3315 - 9
AT185627	5E2	14	3315 - 17
AT185628	5D16	41	3315 - 11
AT185629	5D22	23	3315 - 15
AT185634	4C2	1	3102 - 9
AT185634	4C4	1	3102 - 11
AT185635	4E24	37	3163 - 11
AT185639	4C2	1	3102 - 9
AT185639	4C4	1	3102 - 11
AT185677	3C20	1	1674 - 9
AT185678	3C20	1	1674 - 9
AT185680	3H16	13	1910 - 3
AT185683	3H16	5	1910 - 3
AT185689	3B20	1	1671 - 3
AT185690	3B20	9	1671 - 3
AT185691	3B22	4	1671 - 5
AT185749	5D14	30	3315 - 9
AT185750	5D14	30	3315 - 9
AT185757	3E11	12	1811 - 3
AT185791	1D16	18	0341 - 3
AT185791	1D16	25	0341 - 3
AT185793	1E6	15	0350 - 15
AT185793	1E8	15	0350 - 17
AT185793	1E12	15	0350 - 21
AT185797	4E16	21	3163 - 3
AT185798	4E16	25	3163 - 3
AT185799	4E16	5	3163 - 3
AT185836	2H20	24	0515 - 3
AT185836	2H22	25	0515 - 5
AT185847	5E4	12	3315 - 19
AT185848	2H20	12	0515 - 3
AT185849	2H20	31	0515 - 3
AT185851	5E10	2	3315 - 25
AT185851	5E10	5	3315 - 25
AT185855	5E10	16	3315 - 25
AT185856	5E10	17	3315 - 25
AT185876	4E24	5A	3163 - 11
AT185877	4E24	3	3163 - 11
AT185939	4D16	1	3162 - 7
AT185950	3J22	28	2160 - 25
AT185957	4C20	2	3115 - 3
AT185976	4E20	8	3163 - 7
AT185977	4E20	9	3163 - 7
AT185978	4E20	22	3163 - 7
AT185979	4E20	23	3163 - 7
AT185980	3C10	16	1674 - 3
AT185980	3C12	4	1674 - 5
AT185981	3C10	16	1674 - 3
AT185981	3C12	4	1674 - 5
AT186043	5D14	15	3315 - 9
AT186045	3F14	6	1816 - 5
AT186045	5D14	49	3315 - 9
AT186050	3F14	7	1816 - 5
AT186050	5E2	1	3315 - 17
AT186069	5F11	7	3362 - 5
AT186070	5F11	7	3362 - 5
AT186071	5F11	7	3362 - 5
AT186073	5F13	7	3362 - 7
AT186150	3G12	21	1821 - 9
AT186152	3G6	5	1821 - 3
AT186155	3I9	12	2002 - 3
AT186156	3G6	6	1821 - 3
AT186167	1E22	9	0360 - 5
AT186170	3J8	26	2160 - 11
AT186204	3G17	1	1821 - 15
AT186213	3B25	5	1671 - 8
AT186224	3G19	19	1821 - 17
AT186236	1D14	25	0341 - 1
AT186237	1D16	33	0341 - 3
AT186254	3D18	5	1740 - 5
AT186263	3H9	27	1830 - 13
AT186281	2H24	10	0520 - 3
AT186289	3H4	57	1830 - 7B
AT186289	3H6	30	1830 - 9
AT186297	3D2	10	1674 - 11
AT186297	5F11	11	3362 - 5
AT186297	5F13	11	3362 - 7
AT186297	5G5	8	3362 - 24
AT186297	5G6	8	3362 - 25
AT186297	5G7	9	3362 - 26
AT186297	5G8	9	3362 - 27
AT186298	5F11	11	3362 - 5
AT186298	5F13	11	3362 - 7
AT186304	3H4	47	1830 - 7B
AT186307	3I17	2	2007 - 3
AT186312	1C3	3	0210 - 3
AT186321	3E17	11	1812 - 3
AT186357	3J2	15	2160 - 7
AT186358	3J2	19	2160 - 7
AT186359	3J2	25	2160 - 7
AT186370	4C2	1	3102 - 9
AT186370	4C4	1	3102 - 11
AT186382	5D12	17	3315 - 7
AT186427	3J2	24	2160 - 7
AT186428	3J2	19	2160 - 7
AT186452	3B24	10	1671 - 7
AT186563	5E14	8	3342 - 3
AT186625	3C10	16	1674 - 3
AT186625	3C12	4	1674 - 5
AT186626	3C10	16	1674 - 3
AT186626	3C12	4	1674 - 5
AT186630	3D18	24	1740 - 5
AT186689	3D2	10	1674 - 11
AT186701	3G10	20	1821 - 7
AT186740	2J14	10	1060 - 9
AT186740	2J16	3	1060 - 11
AT186747	2H18	21	0510 - 3
AT186839	2J8	1	1060 - 3
AT186856	4E20	6	3163 - 7
AT186858	4E20	31	3163 - 7
AT186858	4E20	46	3163 - 7
AT186898	3J22	11	2160 - 25
AT186899	3J22	25	2160 - 25
AT186906	2H18	6	0510 - 3
AT186913	3F10	11	1814 - 15
AT186915	5I12	9	3363 - 25
AT186915	5I14	8	3363 - 27
AT186920	5I12	8	3363 - 25
AT186920	5I14	9	3363 - 27
AT186925	2H18	15	0510 - 3
AT186927	1B23	10	0201 - 3
AT186927	1C1	13	0210 - 1
AT186929	3J20	4	2160 - 23
AT186983	5E10	12	3315 - 25
AT186998	5F11	7	3362 - 5
AT187036	3F2	21	1814 - 9
AT187096	3E13	1	1811 - 5
AT187229	3F10	10	1814 - 15
AT187439	3H11	55	1830 - 15
AT187440	3H11	55	1830 - 15
AT187442	3H11	55	1830 - 15
AT187666	2J8	6	1060 - 3
AT187666	2J8	25A	1060 - 3
AT187666	4F2	35	3163 - 13

NUMERICAL INDEX - CONTINUED

PART NO.	GRID	KEY	PAGE
AT187666	5G16	7	3362 - 33
AT187666	5H8	1	3363 - 1B
AT187668	2I21	23	0960 - 9
AT187668	2I23	20	0960 - 11
AT187669	5G14	4	3362 - 31
AT187669	5H8	19	3363 - 1B
AT187669	5H8	20	3363 - 1B
AT187669	5H8	28B	3363 - 1B
AT187707	2K2	12	1314 - 3
AT187708	2K2	6	1314 - 3
AT187709	3J4	30	2160 - 9
AT187710	3F8	1	1814 - 13
AT187711	1D23	6	0350 - 6
AT187711	1E4	6	0350 - 13
AT187779	3J8	10	2160 - 11
AT187797	3D2	5	1674 - 11
AT187812	2H24	1A	0520 - 3
AT187815	3C4	9	1673 - 3
AT187816	3C4	1	1673 - 3
AT187868	3C6	8	1673 - 5
AT187869	3J14	2	2160 - 17
AT187885	5D14	40	3315 - 9
AT188009	2I21	20	0960 - 9
AT188009	2I23	25	0960 - 11
AT188010	2I21	24	0960 - 9
AT188010	2I23	28	0960 - 11
AT188011	2I21	26	0960 - 9
AT188011	2I23	27	0960 - 11
AT188077	5D14	41	3315 - 9
AT188182	2I21	27	0960 - 9
AT188182	2I23	23	0960 - 11
AT188306	3G23	11	1830 - 3
AT188307	3G23	1	1830 - 3
AT188343	2J10	3	1060 - 5
AT188350	5F13	7	3362 - 7
AT188353	5F11	7	3362 - 5
AT188368	3H9	1	1830 - 13
AT188369	3H9	22	1830 - 13
AT188401	3J22	20	2160 - 25
AT188759	3I7	9	2001 - 3
AT188766	3F8	12	1814 - 13
AT188819	3J22	1	2160 - 25
AT188965	3E11	12	1811 - 3
AT189030	3G6	8	1821 - 3
AT189041	3C10	18	1674 - 3
AT189043	3F8	2	1814 - 13
AT189059	3G6	7	1821 - 3
AT189088	3C18	7	1674 - 7
AT189090	3H24	12	1921 - 3
AT189091	3H24	11	1921 - 3
AT189093	5D10	1	3315 - 5
AT189101	3F6	2	1814 - 11
AT189101	3F10	6	1814 - 15
AT189103	3F6	1	1814 - 11
AT189145	3C18	26	1674 - 7
AT189145	3G19	19	1821 - 17
AT189168	5G4	1	3362 - 23
AT189168	5G8	2	3362 - 27
AT189174	3C12	15	1674 - 5
AT189174	3J24	28	2160 - 27
AT189175	3F2	18	1814 - 9
AT189176	3F2	15	1814 - 9
AT189210	3J22	23	2160 - 25
AT189210	3J24	22	2160 - 27
AT189269	3F12	3	1816 - 3
AT189269	5D12	20	3315 - 7
AT189270	3F12	3	1816 - 3
AT189270	5D18	20	3315 - 13
AT189271	3F12	3	1816 - 3
AT189271	5D22	20	3315 - 15
AT189272	3F14	1	1816 - 5
AT189272	5D14	51	3315 - 9
AT189400	2I2	10	0520 - 5
AT189400	3H16	21	1910 - 3
AT189403	5I18	4	3363 - 31
AT189404	5I18	17	3363 - 31
AT189405	5I18	14	3363 - 31
AT189407	5I16	11	3363 - 29
AT189408	5I16	5	3363 - 29
AT189413	4D14	20	3162 - 5
AT189413	4D18	41	3162 - 9
AT189413	4D20	34	3162 - 11
AT189413	4D22	35	3162 - 13
AT189413	4D24	29	3162 - 15
AT189413	4E2	33	3162 - 17
AT189413	4E6	25	3162 - 21
AT189413	5F15	33	3362 - 9
AT189413	5F17	39	3362 - 11
AT189413	5F19	31	3362 - 13
AT189413	5F21	38	3362 - 15
AT189413	5F23	37	3362 - 17
AT189413	5G2	24	3362 - 21
AT189413	5G24	36	3362 - 41
AT189413	5H4	40	3362 - 45
AT189413	5H6	24	3362 - 47
AT189423	4E16	1	3163 - 3
AT189473	3C18	5	1674 - 7
AT189473	3C18	8	1674 - 7
AT189492	2I2	9	0520 - 5
AT189549	1D12	4	0315 - 7
AT189549	1D12	15	0315 - 7
AT189580	5E2	4	3315 - 17
AT189630	3C18	10	1674 - 7
AT189639	3H2	16	1830 - 7
AT189661	3H18	47	1910 - 5
AT189692	3C18	25	1674 - 7
AT189699	4B25	6A	3102 - 7
AT189702	4B25	6A	3102 - 7
AT189703	4B25	6A	3102 - 7
AT189797	1D12	6	0315 - 7
AT189801	3D2	4	1674 - 11
AT189819	4C4	11	3102 - 11
AT189822	4C4	9	3102 - 11
AT189822	4C4	15	3102 - 11
AT189822	4C12	21	3102 - 19
AT189924	3J12	1	2160 - 15
AT190073	5D22	14	3315 - 15
AT190118	5J8	24	3363 - 45
AT190174	5E25	5	3345 - 6
AT190191	3F2	10	1814 - 9
AT190192	3F2	17	1814 - 9
AT190193	3F2	4	1814 - 9
AT190194	3F2	3	1814 - 9
AT190234	3D2	10	1674 - 11
AT190234	5G2	2	3362 - 21
AT190330	4E8	1	3162 - 23
AT190330	4E10	3	3162 - 25
AT190330	4E10	13	3162 - 25
AT190330	4E10	31	3162 - 25
AT190333	4E10	8	3162 - 25
AT190333	4E10	9	3162 - 25
AT190333	4E10	11	3162 - 25
AT190333	4E10	15	3162 - 25
AT190333	4E10	16	3162 - 25
AT190334	4E10	4	3162 - 25
AT190334	4E10	8	3162 - 25
AT190334	4E10	9	3162 - 25
AT190334	4E10	11	3162 - 25
AT190334	4E10	12	3162 - 25
AT190358	5E19	1	3344 - 2
AT190490	3F2	11	1814 - 9
AT190490	3F2	12	1814 - 9
AT190490	3F2	13	1814 - 9
AT190490	3F2	14	1814 - 9
AT190531	1D12	14	0315 - 7
AT190531	1D12	15	0315 - 7
AT190561	3J4	39	2160 - 9
AT190595	2H18	9	0510 - 3
AT190628	4C4	9	3102 - 11
AT190628	4C12	21	3102 - 19
AT190653	5I8	44	3363 - 21
AT190655	5I12	45	3363 - 25
AT190658	3H9	8	1830 - 13
AT190701	4C4	15	3102 - 11
AT190701	4C12	22	3102 - 19
AT190702	4C4	15	3102 - 11
AT190702	4C12	22	3102 - 19
AT190741	4E10	30	3162 - 25
AT190748	4E20	32	3163 - 7
AT190758	3J20	8	2160 - 23
AT190762	3J6	11	2160 - 9B
AT190762	5I8	32	3363 - 21
AT190762	5I12	33	3363 - 25
AT190828	5F7	1	3348 - 3
AT190829	3J2	15	2160 - 7
AT190880	4C4	3	3102 - 11
AT190880	4C5	14	3102 - 12
AT190881	4C5	1	3102 - 12
AT190898	4C5	15	3102 - 12
AT190900	4C4	6	3102 - 11
AT190900	4C12	23	3102 - 19
AT190929	3C24	9	1674 - 9D
AT191023	4C20	34	3115 - 3
AT191036	5F13	11	3362 - 7
AT191037	3D2	10	1674 - 11
AT191037	5F13	11	3362 - 7
AT191037	5G6	8	3362 - 25
AT191046	3J2	15	2160 - 7
AT191102	3F24	16	1816 - 13
AT191140	5I4	4	3363 - 17
AT191143	5I20	1	3363 - 33
AT191143	5I20	2	3363 - 33
AT191143	5I20	10	3363 - 33
AT191143	5I20	11	3363 - 33
AT191143	5I20	15	3363 - 33
AT191143	5I20	20	3363 - 33
AT191143	5I20	21	3363 - 33
AT191146	5I10	32	3363 - 23
AT191146	5I14	30	3363 - 27
AT191146	5I20	16	3363 - 33
AT191147	5I10	33	3363 - 23
AT191147	5I14	31	3363 - 27
AT191153	2I2	11	0520 - 5
AT191176	3J22	15	2160 - 25
AT191236	3J2	15	2160 - 7
AT191237	3J2	25	2160 - 7
AT191252	5H16	5	3363 - 5
AT191266	2I2	3	0520 - 5
AT191407	3C6	16	1673 - 5
AT191408	3C6	11	1673 - 5
AT191408	3C6	14	1673 - 5

NUMERICAL INDEX - CONTINUED

PART NO.	GRID	KEY	PAGE
AT191409	3C6	8	1673 - 5
AT191446	5D18	1	3315 - 13
AT191507	3H6	31	1830 - 9
AT191528	5E4	14	3315 - 19
AT191545	5I10	38	3363 - 23
AT191546	5I14	36	3363 - 27
AT191548	5I6	41	3363 - 19
AT191557	3H16	14	1910 - 3
AT191575	3I7	6	2001 - 3
AT191619	3G13	3	1821 - 10
AT191620	3G8	30	1821 - 5
AT191629	3F20	11	1816 - 9
AT191631	2H20	4	0515 - 3
AT191631	2H22	5	0515 - 5
AT191688	3F20	19	1816 - 9
AT191701	3C10	6	1674 - 3
AT191704	5F25	1	3362 - 19
AT191704	5G6	1	3362 - 25
AT191705	5F19	1	3362 - 13
AT191706	5F21	1	3362 - 15
AT191707	4D18	1	3162 - 9
AT191707	4E4	2	3162 - 19
AT191708	5F23	1	3362 - 17
AT191708	5G7	1	3362 - 26
AT191709	5F23	1	3362 - 17
AT191710	5G4	1	3362 - 23
AT191710	5G7	2	3362 - 26
AT191711	4E2	1	3162 - 17
AT191711	4E4	1	3162 - 19
AT191712	5F25	1	3362 - 19
AT191712	5G5	1	3362 - 24
AT191713	5F21	1	3362 - 15
AT191715	4D18	1	3162 - 9
AT191716	5F17	1	3362 - 11
AT191717	5F21	1	3362 - 15
AT191717	5G6	3	3362 - 25
AT191718	5F21	1	3362 - 15
AT191719	5F17	1	3362 - 11
AT191747	3C12	12	1674 - 5
AT191759	3J20	12	2160 - 23
AT191760	3H18	40	1910 - 5
AT191768	5F15	1	3362 - 9
AT191817	3B22	1	1671 - 5
AT191826	3F20	18	1816 - 9
AT191838	5I8	44	3363 - 21
AT191839	5I12	45	3363 - 25
AT191859	5I8	25	3363 - 21
AT191859	5I12	26	3363 - 25
AT191861	3C18	4	1674 - 7
AT191868	2J14	4A	1060 - 9
AT191873	3C6	17	1673 - 5
AT191875	3C6	9	1673 - 5
AT191876	3F20	21	1816 - 9
AT191877	3F20	17	1816 - 9
AT191884	3J8	23	2160 - 11
AT191919	3F20	24	1816 - 9
AT191953	3C12	19	1674 - 5
AT191976	3E17	12	1812 - 3
AT191990	3H2	28	1830 - 7
AT191993	3H2	9	1830 - 7
AT191994	3H2	12	1830 - 7
AT192004	5D2	15	3302 - 15
AT192005	5D2	15	3302 - 15
AT192006	5D2	15	3302 - 15
AT192007	5D4	15	3302 - 17
AT192008	5D4	15	3302 - 17
AT192009	5D4	15	3302 - 17
AT192010	5D4	15	3302 - 17
AT192011	5D2	15	3302 - 15
AT192012	5D2	15	3302 - 15
AT192013	5D2	15	3302 - 15
AT192014	5D4	15	3302 - 17
AT192015	5D4	15	3302 - 17
AT192016	5D4	15	3302 - 17
AT192017	5D4	15	3302 - 17
AT192018	5D4	15	3302 - 17
AT192019	5D4	15	3302 - 17
AT192020	5D4	15	3302 - 17
AT192021	5D4	15	3302 - 17
AT192022	5D4	15	3302 - 17
AT192032	3E11	26	1811 - 3
AT192033	3H2	25	1830 - 7
AT192074	3G23	5	1830 - 3
AT192088	5C14	11	3302 - 5
AT192089	5C22	1	3302 - 13
AT192090	5C18	1	3302 - 9
AT192090	5C18	10	3302 - 9
AT192091	5C20	1	3302 - 11
AT192092	5C12	11	3302 - 3
AT192093	5C16	10	3302 - 7
AT192094	5C20	1	3302 - 11
AT192104	5C14	1	3302 - 5
AT192106	5C12	1	3302 - 3
AT192107	5C16	1	3302 - 7
AT192111	5C12	8	3302 - 3
AT192111	5C16	7	3302 - 7
AT192120	5F7	12	3348 - 3
AT192121	5E24	12	3345 - 5
AT192122	3F22	7	1816 - 11
AT192151	2J10	22	1060 - 5
AT192153	2H16	14	0505 - 7
AT192154	5J8	1	3363 - 45
AT192154	5J10	28	3363 - 47
AT192155	5J8	9	3363 - 45
AT192155	5J10	27	3363 - 47
AT192168	3H9	35	1830 - 13
AT192185	4D4	30	3115 - 11
AT192185	4E4	8	3162 - 19
AT192188	3D19	5	1746 - 2
AT192189	5G6	8	3362 - 25
AT192200	3H6	32	1830 - 9
AT192217	3I7	16	2001 - 3
AT192239	5G8	9	3362 - 27
AT192242	3C6	19	1673 - 5
AT192247	5G5	8	3362 - 24
AT192261	4D4	3	3115 - 11
AT192278	2I18	16	0960 - 5
AT192279	2I18	17	0960 - 5
AT192280	2I18	18	0960 - 5
AT192334	5G7	9	3362 - 26
AT192367	2J24	6	1313 - 3
AT192372	4D18	39	3162 - 9
AT192372	4D20	18	3162 - 11
AT192373	3J12	8	2160 - 15
AT192374	3J12	11	2160 - 15
AT192384	3D2	10	1674 - 11
AT192384	5G2	1	3362 - 21
AT192385	5G2	4	3362 - 21
AT192414	3E13	13	1811 - 5
AT192415	2J16	1	1060 - 11
AT192416	2J16	1	1060 - 11
AT192416	2J16	2	1060 - 11
AT192417	2J16	5	1060 - 11
AT192419	2J10	31	1060 - 5
AT192455	3I25	8	2160 - 5
AT192456	2I2	10	0520 - 5
AT192457	4D22	13	3162 - 13
AT192457	4D24	3	3162 - 15
AT192460	3C6	14	1673 - 5
AT192509	3H2	35	1830 - 7
AT192550	1E21	6	0360 - 4
AT192552	1F4	3	0360 - 11
AT192552	1F4	4	0360 - 11
AT192552	1F4	5	0360 - 11
AT192552	1F4	6	0360 - 11
AT192553	1F4	13	0360 - 11
AT192553	1F4	14	0360 - 11
AT192553	1F4	15	0360 - 11
AT192553	1F4	16	0360 - 11
AT192587	3F6	1	1814 - 11
AT192627	1B25	25	0201 - 5
AT192637	5J10	12	3363 - 47
AT192656	3H11	55	1830 - 15
AT192656	3J18	1	2160 - 21
AT192684	4D4	5A	3115 - 11
AT192687	3G12	27	1821 - 9
AT192716	3C18	27	1674 - 7
AT192769	3C10	17	1674 - 3
AT192776	2H22	44	0515 - 5
AT192956	3I7	11	2001 - 3
AT193365	2I21	33	0960 - 9
AT193365	2I23	33	0960 - 11
AT193365	2J8	6	1060 - 3
AT193365	5G16	7	3362 - 33
AT193365	5H8	37	3363 - 1B
AT193366	2I21	33	0960 - 9
AT193366	2I23	33	0960 - 11
AT193366	5H8	37	3363 - 1B
AT193375	3F12	3	1816 - 3
AT193495	5F7	1	3348 - 3
AT193499	3H11	42	1830 - 15
AT193500	3H2	24	1830 - 7
AT193500	3H6	16	1830 - 9
AT193526	3F12	3	1816 - 3
AT193621	3E21	2	1814 - 3
AT193699	4E24	3	3163 - 11
AT193699	4E24	5A	3163 - 11
AT193699	4E24	5B	3163 - 11
AT193704	1D20	9	0350 - 3
AT193704	1D20	10	0350 - 3
AT193704	1D20	11	0350 - 3
AT193704	1D22	9	0350 - 5
AT193704	1D22	10	0350 - 5
AT193704	1D22	11	0350 - 5
AT193704	1E6	4	0350 - 15
AT193704	1E6	5	0350 - 15
AT193704	1E6	6	0350 - 15
AT193704	1E8	4	0350 - 17
AT193704	1E8	5	0350 - 17
AT193704	1E8	6	0350 - 17
AT193704	1E10	12	0350 - 19
AT193704	1E10	13	0350 - 19
AT193704	1E10	14	0350 - 19
AT193704	1E12	4	0350 - 21
AT193704	1E12	5	0350 - 21
AT193704	1E12	6	0350 - 21
AT193704	1E14	4	0350 - 23
AT193704	1E14	5	0350 - 23
AT193704	1E14	6	0350 - 23
AT193704	1E16	4	0350 - 25
AT193704	1E16	5	0350 - 25

NUMERICAL INDEX - CONTINUED

PART NO.	GRID	KEY	PAGE
AT193704	1E16	6	0350 - 25
AT193881	3D2	10	1674 - 11
AT193881	3E17	12	1812 - 3
AT193881	3J22	28	2160 - 25
AT193881	3J24	28	2160 - 27
AT193927	1D14	24	0341 - 1
AT193981	2J14	11	1060 - 9
AT194279	3F10	4	1814 - 15
AT194343	5E8	11	3315 - 23
AT194368	5J6	25	3363 - 43
AT194369	4D4	30	3115 - 11
AT194369	4E4	8	3162 - 19
AT194378	5J6	7	3363 - 43
AT194379	5J6	9	3363 - 43
AT194392	5J6	17	3363 - 43
AT194393	5J6	9	3363 - 43
AT194394	5J6	11	3363 - 43
AT194395	5J6	11	3363 - 43
AT194396	5J6	17	3363 - 43
AT194397	5J6	17	3363 - 43
AT194398	5J6	11	3363 - 43
AT194407	3E23	63	1814 - 5
AT194410	4E24	37	3163 - 11
AT194412	2J14	6	1060 - 9
AT194412	2J14	9	1060 - 9
AT194416	2J14	8	1060 - 9
AT194417	2J14	5	1060 - 9
AT194444	5I22	38	3363 - 35
AT194445	5I22	38	3363 - 35
AT194487	4C20	20	3115 - 3
AT194487	4C20	34	3115 - 3
AT194488	4C20	20	3115 - 3
AT194491	3C18	4	1674 - 7
AT194493	5E25	3	3345 - 6
AT194493	5E25	4	3345 - 6
AT194493	5E25	5	3345 - 6
AT194627	3E21	20	1814 - 3
AT194628	3E21	20	1814 - 3
AT194684	5D16	26	3315 - 11
AT194686	5D16	19	3315 - 11
AT194687	5F21	22	3362 - 15
AT194718	3E21	2	1814 - 3
AT194718	3E23	63	1814 - 5
AT194784	4E24	13A	3163 - 11
AT194784	4E24	14A	3163 - 11
AT194785	4E24	15	3163 - 11
AT194786	4E24	16	3163 - 11
AT194821	3C4	9	1673 - 3
AT194822	3C4	1	1673 - 3
AT194862	3C20	1	1674 - 9
AT194864	3C20	1	1674 - 9
AT194865	3C10	16	1674 - 3
AT194865	3C10	18	1674 - 3
AT194865	3C12	4	1674 - 5
AT194866	3C10	16	1674 - 3
AT194866	3C12	4	1674 - 5
AT194867	3C10	16	1674 - 3
AT194867	3C10	18	1674 - 3
AT194867	3C12	4	1674 - 5
AT194868	3C10	16	1674 - 3
AT194868	3C12	4	1674 - 5
AT195076	2I12	22	0560 - 3
AT195140	4E14	12	3162 - 29
AT195141	4E14	13	3162 - 29
AT195144	4E14	7	3162 - 29
AT195144	5G16	13	3362 - 33
AT195201	2I21	20	0960 - 9
AT195201	2I23	25	0960 - 11
AT195202	2I21	26	0960 - 9
AT195202	2I23	27	0960 - 11
AT195203	2I21	27	0960 - 9
AT195203	2I23	23	0960 - 11
AT195203	2J8	22A	1060 - 3
AT195244	2J24	1	1313 - 3
AT195301	3C18	22	1674 - 7
AT195302	3C18	22	1674 - 7
AT195339	3H16	21	1910 - 3
AT195421	2H22	29	0515 - 5
AT195456	2I4	3	0530 - 3
AT195461	3C4	7	1673 - 3
AT195462	3C4	8	1673 - 3
AT195463	5F2	14	3346 - 3
AT195550	2H20	41	0515 - 3
AT195550	3E11	12	1811 - 3
AT195550	3E13	1	1811 - 5
AT195570	2I25	2	0960 - 13
AT195570	2I25	4	0960 - 13
AT195570	2I25	13	0960 - 13
AT195573	2I25	4	0960 - 13
AT195620	5E4	4	3315 - 19
AT195623	5E4	5	3315 - 19
AT195669	3D18	27	1740 - 5
AT195669	5F7	12	3348 - 3
AT195686	2I18	19	0960 - 5
AT195731	3H2	40	1830 - 7
AT195752	1E20	41	0360 - 3
AT195753	1E24	42	0360 - 7
AT195814	3I9	10	2002 - 3
AT195815	3I9	10	2002 - 3
AT195851	1B25	25	0201 - 5
AT195862	4E24	13A	3163 - 11
AT195862	4E24	14A	3163 - 11
AT195872	3H24	1	1921 - 3
AT195877	5D16	31	3315 - 11
AT195894	3E11	4	1811 - 3
AT195907	2H18	6	0510 - 3
AT195910	3B22	4	1671 - 5
AT195911	3B22	1	1671 - 5
AT195915	3J12	1	2160 - 15
AT195922	4E14	5	3162 - 29
AT195922	5G16	13	3362 - 33
AT195929	1B25	25	0201 - 5
AT195957	5G14	1	3362 - 31
AT195995	3B20	9	1671 - 3
AT195996	3B20	1	1671 - 3
AT196169	1C14	2	0230 - 8
AT196190	5F7	1	3348 - 3
AT196204	5F7	1	3348 - 3
AT196242	2H24	1B	0520 - 3
AT196245	4D22	8	3162 - 13
AT196245	4D24	13	3162 - 15
AT196246	3C20	1	1674 - 9
AT196246	4D22	38	3162 - 13
AT196246	4D24	12	3162 - 15
AT196258	2E11	2	0408 - 5
AT196261	3C20	1	1674 - 9
AT196262	2H16	9	0505 - 7
AT196262	3C20	1	1674 - 9
AT196286	3G21	1	1821 - 19
AT196294	3E17	11	1812 - 3
AT196314	2G16	7	0422 - 2
AT196314	2G17	7	0422 - 3
AT196314	2G21	2	0422 - 7
AT196318	3J6	22	2160 - 9B
AT196319	3J6	25	2160 - 9B
AT196320	3J6	11	2160 - 9B
AT196321	3J6	27	2160 - 9B
AT196333	4C20	20	3115 - 3
AT196333	4C20	34	3115 - 3
AT196336	5E10	16	3315 - 25
AT196337	5E10	17	3315 - 25
AT196338	2H20	12	0515 - 3
AT196338	2H22	10	0515 - 5
AT196351	3J22	1	2160 - 25
AT196351	3J24	18	2160 - 27
AT196355	3H16	24	1910 - 3
AT196358	3H18	58	1910 - 5
AT196387	5E4	5	3315 - 19
AT196390	3C10	17	1674 - 3
AT196391	3F2	6	1814 - 9
AT196397	3J6	25	2160 - 9B
AT196398	3J6	27	2160 - 9B
AT196399	3J6	22	2160 - 9B
AT196400	3J6	11	2160 - 9B
AT196407	5E19	7	3344 - 2
AT196419	5D16	34	3315 - 11
AT196427	3I8	1	2002 - 2
AT196428	1C11	2	0230 - 5
AT196428	1C12	7	0230 - 6
AT196428	1C13	18	0230 - 7
AT196428	1C14	10	0230 - 8
AT196446	3B20	1	1671 - 3
AT196447	3B22	4	1671 - 5
AT196496	3J8	31	2160 - 11
AT196496	3J14	18	2160 - 17
AT196496	3J16	20	2160 - 19
AT196496	3J18	16	2160 - 21
AT196522	3E21	22	1814 - 3
AT196525	5H14	15	3363 - 3B
AT196526	5H14	16	3363 - 3B
AT196527	5H16	25	3363 - 5
AT196559	3G21	1	1821 - 19
AT196561	3G21	1	1821 - 19
AT196590	4D2	17	3115 - 9
AT196591	4D2	7	3115 - 9
AT196596	4D6	3	3115 - 13
AT196606	5E10	16	3315 - 25
AT196606	5E10	17	3315 - 25
AT196622	4D14	1	3162 - 5
AT196624	4D6	12	3115 - 13
AT196624	4D14	1	3162 - 5
AT196633	5F13	7	3362 - 7
AT196634	5F13	7	3362 - 7
AT196635	5F13	7	3362 - 7
AT196636	5F13	7	3362 - 7
AT196637	5F13	7	3362 - 7
AT196754	5H16	8	3363 - 5
AT196755	5H16	7	3363 - 5
AT196756	5H16	15	3363 - 5
AT196757	5H16	16	3363 - 5
AT196760	3J22	1	2160 - 25
AT196760	3J24	19	2160 - 27
AT196793	3G12	27	1821 - 9
AT196803	1D18	4	0350 - 1
AT196813	3J10	16	2160 - 13
AT196814	3J8	23	2160 - 11
AT196815	3H16	7	1910 - 3
AT196815	3H16	14	1910 - 3
AT196815	3H16	24	1910 - 3
AT196815	3H18	60	1910 - 5
AT196839	5D16	26	3315 - 11

NUMERICAL INDEX - CONTINUED

PART NO.	GRID	KEY	PAGE
AT196853	4E20	38	3163 - 7
AT196853	4E22	28	3163 - 9
AT196924	4E12	23	3162 - 27
AT197001	3H24	1	1921 - 3
AT197067	5H14	14	3363 - 3B
AT197068	5H14	13	3363 - 3B
AT197105	4C22	1	3115 - 5
AT197134	5D6	8	3315 - 3
AT197165	5G16	14	3362 - 33
AT197208	5H8	17	3363 - 1B
AT197209	5H8	18	3363 - 1B
AT197210	5H8	11	3363 - 1B
AT197211	5H8	12	3363 - 1B
AT197212	5H8	25A	3363 - 1B
AT197231	3D16	8	1740 - 3
AT197232	3D16	8	1740 - 3
AT197236	4D6	13	3115 - 13
AT197238	3J24	28	2160 - 27
AT197243	5I8	44	3363 - 21
AT197245	5I12	45	3363 - 25
AT197246	5J10	26	3363 - 47
AT197247	3D16	8	1740 - 3
AT197248	3D16	8	1740 - 3
AT197253	5I8	44	3363 - 21
AT197254	5I12	45	3363 - 25
AT197255	3D18	24	1740 - 5
AT197256	3D18	24	1740 - 5
AT197259	5I10	38	3363 - 23
AT197260	5I14	36	3363 - 27
AT197381	3C18	4	1674 - 7
AT197479	3E17	12	1812 - 3
AT197542	3J10	16	2160 - 13
AT197645	4E18	15	3163 - 5
AT197646	4E18	21	3163 - 5
AT197647	4E18	9	3163 - 5
AT197648	4E22	11	3163 - 9
AT197649	4E22	20	3163 - 9
AT197654	4E18	4	3163 - 5
AT197726	5E19	7	3344 - 2
AT197760	4E22	12	3163 - 9
AT197769	5G14	4	3362 - 31
AT197769	5H8	20	3363 - 1B
AT197769	5H8	26	3363 - 1B
AT197852	1C9	7	0230 - 3
AT197852	2I23	7	0960 - 11
AT197876	5F7	19	3348 - 3
AT197922	3B24	9	1671 - 7
AT198089	2I21	30	0960 - 9
AT198089	2I23	30	0960 - 11
AT198090	2I21	30	0960 - 9
AT198090	2I23	30	0960 - 11
AT198096	3B24	10	1671 - 7
AT198196	3J2	18	2160 - 7
AT198251	4E22	23	3163 - 9
AT198253	4E22	22	3163 - 9
AT198254	4E22	19	3163 - 9
AT198258	4E22	7	3163 - 9
AT198260	4E22	18	3163 - 9
AT198349	5H10	6	3363 - 1D
AT198350	5H10	1	3363 - 1D
AT198351	5H10	4	3363 - 1D
AT198352	5H10	8	3363 - 1D
AT198353	5H10	12	3363 - 1D
AT198354	5H10	9	3363 - 1D
AT198355	5H10	2	3363 - 1D
AT198356	5H10	7	3363 - 1D
AT198357	5H10	11	3363 - 1D
AT198358	5H10	10	3363 - 1D
AT198359	5H10	13	3363 - 1D
AT198360	5H10	5	3363 - 1D
AT198416	5H8	33	3363 - 1B
AT198417	5H8	32	3363 - 1B
AT198598	1C13	8	0230 - 7
AT198602	1C13	3	0230 - 7
AT198617	5G18	1	3362 - 35
AT198618	5G20	1	3362 - 37
AT198694	3G19	13	1821 - 17
AT198760	3J22	15	2160 - 25
AT198760	3J24	14	2160 - 27
AT198768	5G18	2	3362 - 35
AT198770	5G18	5	3362 - 35
AT198770	5G20	5	3362 - 37
AT198771	5G18	18	3362 - 35
AT198771	5G20	17	3362 - 37
AT198772	5G18	8	3362 - 35
AT198772	5G20	8	3362 - 37
AT198773	5G18	3	3362 - 35
AT198773	5G20	3	3362 - 37
AT198774	5G20	2	3362 - 37
AT198776	3G4	29	1816 - 17
AT198777	3G2	28	1816 - 15
AT198778	3G2	27	1816 - 15
AT198844	3C14	6	1674 - 5B
AT198847	5G16	12	3362 - 33
AT198865	3G4	32	1816 - 17
AT199016	3C14	1	1674 - 5B
AT199060	2H16	9	0505 - 7
AT199060	3C20	1	1674 - 9
AT199065	5G16	13	3362 - 33
AT199081	3H9	27	1830 - 13
AT199334	3J2	19	2160 - 7
AT199335	4C22	19	3115 - 5
AT199372	3C10	16	1674 - 3
AT199372	3C12	4	1674 - 5
AT199388	3I7	1	2001 - 3
AT199495	5H8	5	3363 - 1B
AT199496	5H8	3	3363 - 1B
AT199496	5H10	3	3363 - 1D
AT199541	3J10	5	2160 - 13
AT199591	3G2	1	1816 - 15
AT199592	3G2	32	1816 - 15
AT199594	3G4	1	1816 - 17
AT199595	3G4	31	1816 - 17
AT199633	3C18	10	1674 - 7
AT199633	5G16	11	3362 - 33
AT199639	3J24	7	2160 - 27
AT199640	3J24	27	2160 - 27
AT199641	3J24	26	2160 - 27
AT199642	3J24	6	2160 - 27
AT199643	3J24	2	2160 - 27
AT199644	3J24	8	2160 - 27
AT199645	3J24	5	2160 - 27
AT199646	3J22	15	2160 - 25
AT199646	3J24	1	2160 - 27
AT199652	4E12	5	3162 - 27
AT199654	4E12	6	3162 - 27
AT199656	4E12	1	3162 - 27
AT199657	4E12	4	3162 - 27
AT199714	2H16	9	0505 - 7
AT199734	3E13	1	1811 - 5
AT199735	3E13	1	1811 - 5
AT199740	4D8	8	3140 - 3
AT199908	2I13	7	0560 - 4
AT199930	3I23	5	2160 - 3
AT199930	3I25	5	2160 - 5
AT199931	3I25	12	2160 - 5
AT199938	3I25	8	2160 - 5
AT208483	3G19	12	1821 - 17
AT208485	3G19	19	1821 - 17
AT208486	3G19	12	1821 - 17
AT208491	3G19	14	1821 - 17
AT208493	3G19	..	1821 - 17
AT209020	3G10	4	1821 - 7
AT209024	3G8	8	1821 - 5
AT209025	3G6	14	1821 - 3
AT209026	3G8	6	1821 - 5
AT209225	3G6	13	1821 - 3
AT210515	3H2	7	1830 - 7
AT219940	2I18	9	0960 - 5
AT220317	3E23	35	1814 - 5
AT220393	3C2	3	1672 - 3
AT220394	3C2	3	1672 - 3
AT220930	2I2	1	0520 - 5
AT221015	3G6	2	1821 - 3
AT221016	3G6	1	1821 - 3
AT221019	3G6	2	1821 - 3
AT221020	3G6	1	1821 - 3
AT222150	3F24	12	1816 - 13
AT222276	3I14	5	2004 - 7
AT222276	3I15	4	2004 - 8
AT222333	3I8	1	2002 - 2
AT224570	4E14	10	3162 - 29
AT224570	5G14	4	3362 - 31
AT224570	5G14	13	3362 - 31
AT224862	4E14	9	3162 - 29
AT224865	4E24	9B	3163 - 11
AT224949	1C11	11	0230 - 5
AT225952	3C16	4	1674 - 5D
AT226281	3C24	1	1674 - 9D
AT226281	3I14	5	2004 - 7
AT226281	3I15	4	2004 - 8
AT227063	3G2	31	1816 - 15
AT227063	3G4	10	1816 - 17
AT228474	3J12	1	2160 - 15
AT25226	1B16	2	0110 - 3
AT280200	5H8	23	3363 - 1B
AT280234	2I13	2	0560 - 4
AT280255	3F24	2	1816 - 13
AT280268	1C13	2	0230 - 7
AT280343	5H18	14	3363 - 7
AT280343	5H20	22	3363 - 9
AT280343	5H22	32	3363 - 11
AT280343	5H24	17	3363 - 13
AT280343	5I6	25	3363 - 19
AT280344	5H20	23	3363 - 9
AT280344	5H22	33	3363 - 11
AT280345	5I8	25	3363 - 21
AT280345	5I12	26	3363 - 25
AT280346	5H18	14	3363 - 7
AT280346	5H20	22	3363 - 9
AT280346	5H22	32	3363 - 11
AT280346	5H24	17	3363 - 13
AT280346	5I6	25	3363 - 19
AT280346	5I20	24	3363 - 33
AT280347	5H20	23	3363 - 9
AT280347	5H22	33	3363 - 11
AT280347	5I10	25	3363 - 23
AT280347	5I14	25	3363 - 27
AT280347	5I20	25	3363 - 33
AT280348	5I18	20	3363 - 31
AT280350	5I8	24	3363 - 21

NUMERICAL INDEX - CONTINUED

PART NO.	GRID	KEY	PAGE
AT280350	5I12	25	3363 - 25
AT280363	5E10	23	3315 - 25
AT280396	3J10	16	2160 - 13
AT280406	4D18	40	3162 - 9
AT280406	4D20	32	3162 - 11
AT280406	4D22	36	3162 - 13
AT280406	4D24	27	3162 - 15
AT280406	4E2	35	3162 - 17
AT280406	4E6	24	3162 - 21
AT280406	4E12	24	3162 - 27
AT280406	5F15	34	3362 - 9
AT280406	5F17	40	3362 - 11
AT280406	5F19	30	3362 - 13
AT280406	5F21	37	3362 - 15
AT280406	5F23	38	3362 - 17
AT280406	5F25	18	3362 - 19
AT280406	5G4	20	3362 - 23
AT280406	5G24	38	3362 - 41
AT280406	5H2	26	3362 - 43
AT280406	5H4	38	3362 - 45
AT280406	5H6	25	3362 - 47
AT280440	3J24	14	2160 - 27
AT280441	3J24	14	2160 - 27
AT280459	2J8	22B	1060 - 3
AT280509	3J24	7	2160 - 27
AT280583	3G8	10	1821 - 5
AT280598	3J2	18	2160 - 7
AT280598	3J4	43	2160 - 9
AT280598	3J6	16	2160 - 9B
AT280598	3J8	11	2160 - 11
AT280674	3G2	10	1816 - 15
AT280674	3G4	19	1816 - 17
AT280742	3J22	28	2160 - 25
AT280866	1C14	1	0230 - 8
AT280869	1C13	9	0230 - 7
AT300045	5D8	3	3315 - 3B
AT300055	5D24	18	3315 - 15B
AT300056	5D20	17	3315 - 13B
AT300057	5D24	1	3315 - 15B
AT300058	5D20	3	3315 - 13B
AT300060	5D20	21	3315 - 13B
AT300060	5D24	17	3315 - 15B
AT300131	3C18	4	1674 - 7
AT300152	5D12	17	3315 - 7
AT300153	3J6	30	2160 - 9B
AT300153	3J10	16	2160 - 13
AT300153	3J14	19	2160 - 17
AT300159	4C22	15	3115 - 5
AT300165	1B16	1	0110 - 3
AT300230	5G14	3	3362 - 31
AT300230	5G14	4	3362 - 31
AT300254	5G14	8	3362 - 31
AT300255	5G14	16	3362 - 31
AT300570	5F11	7	3362 - 5
AT300574	5F11	7	3362 - 5
AT300575	5F11	7	3362 - 5
AT300577	5F11	7	3362 - 5
AT300579	5F11	7	3362 - 5
AT300583	5F13	7	3362 - 7
AT300585	5F13	7	3362 - 7
AT300587	5F13	7	3362 - 7
AT300589	5F13	7	3362 - 7
AT300591	5F13	7	3362 - 7
AT300742	5H8	30	3363 - 1B
AT300750	3G2	22	1816 - 15
AT300759	3J6	11	2160 - 9B
AT300768	2H20	4	0515 - 3
AT300769	5E10	12	3315 - 25
AT300770	5E10	2	3315 - 25
AT300771	5E10	5	3315 - 25
AT300801	4D20	33	3162 - 11
AT300801	4D24	28	3162 - 15
AT300801	5F17	41	3362 - 11
AT300801	5F19	32	3362 - 13
AT300801	5F21	39	3362 - 15
AT300801	5G24	37	3362 - 41
AT300801	5H2	25	3362 - 43
AT300801	5H4	39	3362 - 45
AT300803	4D20	1	3162 - 11
AT300803	5F17	4	3362 - 11
AT300803	5G24	3	3362 - 41
AT300805	5G8	1	3362 - 27
AT300805	5H6	1	3362 - 47
AT300825	5H2	1	3362 - 43
AT300827	5G24	1	3362 - 41
AT300828	5H4	1	3362 - 45
AT300853	4E24	37	3163 - 11
AT300855	4E24	9B	3163 - 11
AT300857	4E24	3	3163 - 11
AT300857	4E24	5B	3163 - 11
AT300860	4E24	13B	3163 - 11
AT300860	4E24	14B	3163 - 11
AT300885	3G4	11	1816 - 17
AT300928	3D2	10	1674 - 11
AT300928	3E17	12	1812 - 3
AT300928	3J24	28	2160 - 27
AT300958	2I12	15	0560 - 3
AT301016	4E24	9B	3163 - 11
AT301017	4E24	9B	3163 - 11
AT301019	4E24	9B	3163 - 11
AT301020	4E24	9B	3163 - 11
AT301127	5F19	4	3362 - 13
AT301127	5H2	3	3362 - 43
AT301128	4D20	2	3162 - 11
AT301128	5F17	5	3362 - 11
AT301128	5G24	4	3362 - 41
AT301227	5G2	25	3362 - 21
AT301427	3C14	3	1674 - 5B
AT301434	5E12	11	3315 - 27
AT301447	5F17	4	3362 - 11
AT301447	5G24	3	3362 - 41
AT301476	4E22	8	3163 - 9
AT301484	5D20	22	3315 - 13B
AT301485	5D24	21	3315 - 15B
AT301487	5F17	5	3362 - 11
AT301487	5G24	4	3362 - 41
AT301526	4D24	1	3162 - 15
AT301526	5F19	3	3362 - 13
AT301526	5F19	5	3362 - 13
AT301526	5H2	2	3362 - 43
AT301526	5H2	4	3362 - 43
AT301527	4D24	2	3162 - 15
AT301527	5F19	4	3362 - 13
AT301527	5F19	5	3362 - 13
AT301527	5H2	3	3362 - 43
AT301527	5H2	4	3362 - 43
AT301748	5G2	3	3362 - 21
AT301749	5F21	39	3362 - 15
AT301749	5F21	41	3362 - 15
AT301749	5H4	39	3362 - 45
AT301750	5F21	5	3362 - 15
AT301750	5F21	39	3362 - 15
AT301750	5H4	4	3362 - 45
AT301750	5H4	39	3362 - 45
AT301751	5F21	6	3362 - 15
AT301751	5H4	5	3362 - 45
AT301763	5H6	1	3362 - 47
AT301765	4E14	2	3162 - 29
AT301766	4E14	6	3162 - 29
AT301767	4E14	4	3162 - 29
AT301776	5F21	1	3362 - 15
AT301782	5F19	1	3362 - 13
AT301783	5F17	1	3362 - 11
AT301784	5F21	1	3362 - 15
AT301784	5G6	3	3362 - 25
AT301786	5F19	1	3362 - 13
AT301787	5F21	1	3362 - 15
AT301788	5F21	1	3362 - 15
AT301789	5F17	1	3362 - 11
AT301917	3J8	7	2160 - 11
AT301917	3J8	31	2160 - 11
AT301917	3J14	9	2160 - 17
AT301917	3J14	18	2160 - 17
AT301917	3J16	9	2160 - 19
AT301917	3J16	20	2160 - 19
AT301917	3J18	5	2160 - 21
AT301917	3J18	16	2160 - 21
AT301917	3J20	7	2160 - 23
AT302030	5E16	1	3343 - 3
AT302103	5H4	1	3362 - 45
AT302108	5F21	40	3362 - 15
AT302108	5H4	37	3362 - 45
AT302113	5F21	3	3362 - 15
AT302113	5H4	3	3362 - 45
AT302258	1D17	2B	0341 - 4
AT302625	3C14	1	1674 - 5B
AT302628	3C14	6	1674 - 5B
AT302727	3C12	12	1674 - 5
AT302803	3H16	5	1910 - 3
AT302812	3F2	1	1814 - 9
AT302812	3F4	21	1814 - 9B
AT302813	3F4	13	1814 - 9B
AT302815	3F4	12	1814 - 9B
AT302816	3F4	11	1814 - 9B
AT302817	3F4	9	1814 - 9B
AT303024	5F2	14	3346 - 3
AT303065	3J6	22	2160 - 9B
AT303066	3J6	22	2160 - 9B
AT303155	5E18	1	3343 - 5
AT303189	2K13	1	1369 - 3
AT303214	3H2	25	1830 - 7
AT303575	3C10	16	1674 - 3
AT303575	3C12	4	1674 - 5
AT303579	3C10	16	1674 - 3
AT303579	3C10	18	1674 - 3
AT303579	3C12	4	1674 - 5
AT303580	3C10	16	1674 - 3
AT303580	3C10	18	1674 - 3
AT303580	3C12	4	1674 - 5
AT303853	3G2	23	1816 - 15
AT303853	3G4	13	1816 - 17
AT303890	5G18	1	3362 - 35
AT303891	5G20	1	3362 - 37
AT303892	5G18	8	3362 - 35
AT303892	5G20	8	3362 - 37
AT303954	5F21	5	3362 - 15
AT303954	5F21	39	3362 - 15
AT303954	5H4	4	3362 - 45
AT303954	5H4	39	3362 - 45
AT304075	2J14	11	1060 - 9
AT304324	3F22	3	1816 - 11

NUMERICAL INDEX - CONTINUED

PART NO.	GRID	KEY	PAGE
AT304502	5F11	7	3362 - 5
AT304561	3C18	28	1674 - 7
AT304593	3F22	4	1816 - 11
AT304593	3H6	1	1830 - 9
AT304631	3F10	1	1814 - 15
AT304761	2J8	7	1060 - 3
AT304761	2J10	10	1060 - 5
AT304761	2J10	30	1060 - 5
AT304775	3G12	27	1821 - 9
AT304776	3G12	27	1821 - 9
AT304824	3C20	1	1674 - 9
AT304825	3C20	1	1674 - 9
AT304826	3C20	1	1674 - 9
AT304837	2I12	15	0560 - 3
AT304837	3C20	1	1674 - 9
AT304887	3E11	12	1811 - 3
AT304891	3F24	2	1816 - 13
AT304913	3J14	19	2160 - 17
AT304971	3C18	4	1674 - 7
AT305073	3D19	5	1746 - 2
AT305426	2I12	22	0560 - 3
AT305685	3F10	13	1814 - 15
AT305766	3J10	16	2160 - 13
AT305773	5H8	25A	3363 - 1B
AT306499	5E16	1	3343 - 3
AT306499	5E16	14	3343 - 3
AT306499	5E18	14	3343 - 5
AT306500	5E16	14	3343 - 3
AT306550	5G14	4	3362 - 31
AT306550	5H8	20	3363 - 1B
AT306684	1C11	3	0230 - 5
AT306684	1C15	4	0250 - 1
AT307106	4C16	3	3104 - 3
AT307187	5G18	8	3362 - 35
AT307187	5G20	8	3362 - 37
AT307260	2J24	6	1313 - 3
AT307315	4E14	8	3162 - 29
AT307332	5F19	6	3362 - 13
AT307332	5H2	5	3362 - 43
AT307345	2I16	6	0960 - 3
AT307632	4B23	8	3102 - 5
AT307664	5G8	9	3362 - 27
AT307691	3H2	40	1830 - 7
AT307737	1C15	8	0250 - 1
AT307738	2I21	30	0960 - 9
AT307738	2I23	30	0960 - 11
AT307739	1C15	8	0250 - 1
AT307741	1C9	7	0230 - 3
AT307741	1C11	2	0230 - 5
AT307741	1C12	7	0230 - 6
AT307741	1C13	18	0230 - 7
AT307741	1C14	10	0230 - 8
AT307770	3F4	10	1814 - 9B
AT307916	4C16	1	3104 - 3
AT307916	4C16	27	3104 - 3
AT308040	4B21	1	3102 - 3
AT308040	4B25	6B	3102 - 7
AT308042	4C2	1	3102 - 9
AT308042	4C2	2	3102 - 9
AT308042	4C2	19	3102 - 9
AT308042	4C4	1	3102 - 11
AT308049	4B25	6B	3102 - 7
AT308049	4C2	1	3102 - 9
AT308071	4B23	8	3102 - 5
AT308071	4B25	6B	3102 - 7
AT308076	4B21	1	3102 - 3
AT308076	4B25	6B	3102 - 7
AT308080	4B23	8	3102 - 5
AT308080	4B25	6B	3102 - 7
AT308095	4B25	6B	3102 - 7
AT308095	4C2	1	3102 - 9
AT308099	4B25	6B	3102 - 7
AT308099	4C2	1	3102 - 9
AT308138	4C14	3	3103 - 3
AT308139	4C14	3	3103 - 3
AT308148	3C10	16	1674 - 3
AT308148	3C12	4	1674 - 5
AT308188	4B21	1	3102 - 3
AT308188	4B25	6B	3102 - 7
AT308191	4C2	1	3102 - 9
AT308191	4C2	2	3102 - 9
AT308191	4C2	19	3102 - 9
AT308191	4C4	1	3102 - 11
AT308193	4C2	1	3102 - 9
AT308193	4C2	2	3102 - 9
AT308193	4C2	19	3102 - 9
AT308193	4C4	1	3102 - 11
AT308199	3G6	21	1821 - 3
AT308208	3C10	16	1674 - 3
AT308208	3C12	4	1674 - 5
AT308237	3C16	1	1674 - 5D
AT308274	3J12	1	2160 - 15
AT308319	3C20	1	1674 - 9
AT308322	3C20	1	1674 - 9
AT308380	3C10	18	1674 - 3
AT308440	3C16	1	1674 - 5D
AT308466	5I14	17	3363 - 27
AT308473	3C16	1	1674 - 5D
AT308475	3C16	1	1674 - 5D
AT308506	4F2	11	3163 - 13
AT308555	2H18	12	0510 - 3
AT308555	3J8	25	2160 - 11
AT308795	3G6	2	1821 - 3
AT308796	3G6	1	1821 - 3
AT308797	3G6	1	1821 - 3
AT308910	4C14	2	3103 - 3
AT308925	4C14	1	3103 - 3
AT308926	4C14	1	3103 - 3
AT308966	4C10	8	3102 - 17
AT308968	4C8	1	3102 - 15
AT308970	4C10	8	3102 - 17
AT308972	4C12	7	3102 - 19
AT308972	4C12	24	3102 - 19
AT308972	4C12	53	3102 - 19
AT308974	4C12	7	3102 - 19
AT308974	4C12	24	3102 - 19
AT308974	4C12	53	3102 - 19
AT309100	1B16	1	0110 - 3
AT309100	1B16	4	0110 - 3
AT309102	1B16	1	0110 - 3
AT309104	1B17	1	0110 - 4
AT309105	1B17	1	0110 - 4
AT309110	1B16	1	0110 - 3
AT309111	1B18	1	0120 - 1
AT309184	5D14	39	3315 - 9
AT309184	5D14	40	3315 - 9
AT309185	5D14	38	3315 - 9
AT309186	5D14	15	3315 - 9
AT309190	5E2	4	3315 - 17
AT309208	4C8	1	3102 - 15
AT309303	1C18	1	0250 - 5
AT309304	1C18	1	0250 - 5
AT309305	1C18	6	0250 - 5
AT309306	1C18	6	0250 - 5
AT309307	1C18	4	0250 - 5
AT309347	3F2	6	1814 - 9
AT309385	3J22	28	2160 - 25
AT309385	3J24	28	2160 - 27
AT309413	5D14	41	3315 - 9
AT309458	4E14	1	3162 - 29
AT309567	5I8	44	3363 - 21
AT309568	5I12	45	3363 - 25
AT309577	5I10	38	3363 - 23
AT309579	5I14	36	3363 - 27
AT309662	4F2	4	3163 - 13
AT309663	4F2	3	3163 - 13
AT309679	4F2	15	3163 - 13
AT309682	4F2	16	3163 - 13
AT309683	1C6	1	0210 - 6
AT309690	4F2	18	3163 - 13
AT309694	4F2	9	3163 - 13
AT309696	4F2	17	3163 - 13
AT309706	5I8	44	3363 - 21
AT309707	5I12	45	3363 - 25
AT309710	5I8	25	3363 - 21
AT309710	5I12	26	3363 - 25
AT309739	5D14	54	3315 - 9
AT309740	5E2	14	3315 - 17
AT309746	4C16	4	3104 - 3
AT309747	4C16	5	3104 - 3
AT309864	5D6	8	3315 - 3
AT309934	4C12	48	3102 - 19
AT309986	4C12	48	3102 - 19
AT309994	3C18	4	1674 - 7
AT310062	5E20	1	3344 - 3
AT310062	5E20	6	3344 - 3
AT310257	5I8	16	3363 - 21
AT310257	5I10	19	3363 - 23
AT310291	1B18	1	0120 - 1
AT310630	3C18	4	1674 - 7
AT310650	3C4	1	1673 - 3
AT310728	3C10	16	1674 - 3
AT310728	3C12	4	1674 - 5
AT310730	3C10	16	1674 - 3
AT310730	3C12	4	1674 - 5
AT310818	3J22	15	2160 - 25
AT310818	3J24	14	2160 - 27
AT310980	3C10	18	1674 - 3
AT311060	5E20	1	3344 - 3
AT311060	5E20	6	3344 - 3
AT311143	4C12	41	3102 - 19
AT311334	3H18	40	1910 - 5
AT311598	3C16	3	1674 - 5D
AT311651	4F2	10	3163 - 13
AT311785	3H18	42	1910 - 5
AT311786	3H18	33	1910 - 5
AT311787	3H16	24	1910 - 3
AT311929	3F14	7	1816 - 5
AT311929	5E2	1	3315 - 17
AT312121	3F14	6	1816 - 5
AT312121	5D14	49	3315 - 9
AT312470	4C12	49	3102 - 19
AT312728	3G6	6	1821 - 3
AT312730	3G6	5	1821 - 3
AT312918	5G12	4	3362 - 29B
AT312918	5G12	13	3362 - 29B
AT312919	5G12	3	3362 - 29B
AT312919	5G12	13	3362 - 29B
AT312944	5G12	9	3362 - 29B
AT312949	5G12	13	3362 - 29B
AT313708	5G14	3	3362 - 31

NUMERICAL INDEX - CONTINUED

PART NO.	GRID	KEY	PAGE
AT313708	5G14	4	3362 - 31
AT314127	5G12	8	3362 - 29B
AT314538	4D14	20	3162 - 5
AT314538	4D18	41	3162 - 9
AT314538	4D20	34	3162 - 11
AT314538	4D22	35	3162 - 13
AT314538	4D24	29	3162 - 15
AT314538	4E2	33	3162 - 17
AT314538	4E6	25	3162 - 21
AT314538	5F15	33	3362 - 9
AT314538	5F17	39	3362 - 11
AT314538	5F19	31	3362 - 13
AT314538	5F21	38	3362 - 15
AT314538	5F23	37	3362 - 17
AT314538	5G2	24	3362 - 21
AT314538	5G24	36	3362 - 41
AT314538	5H4	40	3362 - 45
AT314538	5H6	24	3362 - 47
AT314539	4D14	20	3162 - 5
AT314539	4D18	41	3162 - 9
AT314539	4D20	34	3162 - 11
AT314539	4D22	35	3162 - 13
AT314539	4D24	29	3162 - 15
AT314539	4E2	33	3162 - 17
AT314539	4E6	25	3162 - 21
AT314539	5F17	39	3362 - 11
AT314539	5F19	31	3362 - 13
AT314539	5F21	38	3362 - 15
AT314539	5F23	37	3362 - 17
AT314539	5G2	24	3362 - 21
AT314539	5G24	36	3362 - 41
AT314539	5H4	40	3362 - 45
AT314539	5H6	24	3362 - 47
AT314668	5G22	8	3362 - 39
AT314672	5D8	3	3315 - 3B
AT314739	4D8	8	3140 - 3
AT314909	2I8	7	0530 - 7
AT315189	4D8	8	3140 - 3
AT315263	3D16	16	1740 - 3
AT315263	3D18	33	1740 - 5
AT316227	3I2	1	1921 - 5
AT316249	2I21	30	0960 - 9
AT316249	2I23	30	0960 - 11
AT316301	4D14	8	3162 - 5
AT316301	4D14	9	3162 - 5
AT316301	4D16	6	3162 - 7
AT316302	5F15	28	3362 - 9
AT317121	2J16	1	1060 - 11
AT317350	5G14	4	3362 - 31
AT317350	5H8	20	3363 - 1B
AT317350	5H8	25B	3363 - 1B
AT317385	3I25	6	2160 - 5
AT317442	3I25	8	2160 - 5
AT317640	3I25	13	2160 - 5
AT317783	5F11	7	3362 - 5
AT317784	5F11	7	3362 - 5
AT317785	5F11	7	3362 - 5
AT317786	5F11	7	3362 - 5
AT317805	2I12	22	0560 - 3
AT318113	2J14	9	1060 - 9
AT318271	2I21	30	0960 - 9
AT318271	2I23	30	0960 - 11
AT318530	4D16	6	3162 - 7
AT318551	2I25	4	0960 - 13
AT318647	3J6	25	2160 - 9B
AT320204	1B16	1	0110 - 3
AT320369	5H2	1	3362 - 43
AT320370	5G24	1	3362 - 41
AT320371	5H6	1	3362 - 47
AT320372	5H4	1	3362 - 45
AT320378	5H4	1	3362 - 45
AT320497	5G7	9	3362 - 26
AT320544	3E13	7	1811 - 5
AT320544	3E13	9	1811 - 5
AT320544	3I7	19	2001 - 3
AT320544	3I7	21	2001 - 3
AT321004	3E13	7	1811 - 5
AT321005	3E13	7	1811 - 5
AT321005	3I7	21	2001 - 3
AT321040	3E2	1	1747 - 7
AT321365	3C8	13	1673 - 7
AT322234	2H24	1C	0520 - 3
AT322742	3I2	9	1921 - 5
AT322743	3I2	7	1921 - 5
AT323012	3F6	7	1814 - 11
AT323014	3F6	1	1814 - 11
AT323015	3F10	4	1814 - 15
AT323124	3I2	6	1921 - 5
AT323301	3C8	9	1673 - 7
AT323348	3D16	20	1740 - 3
AT323348	3D18	37	1740 - 5
AT323398	5G7	1	3362 - 26
AT323398	5H6	1	3362 - 47
AT323744	3C8	9	1673 - 7
AT324138	5E24	12	3345 - 5
AT324237	5E24	11A	3345 - 5
AT324237	5E24	11B	3345 - 5
AT324237	5E24	12	3345 - 5
AT324938	3C8	11	1673 - 7
AT326166	3C8	13	1673 - 7
AT326356	3E13	7	1811 - 5
AT326356	3E13	9	1811 - 5
AT326356	3E13	12	1811 - 5
AT326356	3I7	19	2001 - 3
AT326356	3I7	21	2001 - 3
AT326356	3I7	22	2001 - 3
AT326622	3C8	12	1673 - 7
AT326922	4C22	15	3115 - 5
AT326932	3C8	13	1673 - 7
AT327441	3C10	16	1674 - 3
AT327441	3C12	4	1674 - 5
AT328231	4E12	6	3162 - 27
AT328623	4E12	25	3162 - 27
AT329519	5I8	22	3363 - 21
AT329519	5I12	23	3363 - 25
AT329520	5I8	21	3363 - 21
AT329520	5I12	22	3363 - 25
AT329662	5I8	44	3363 - 21
AT329663	5I12	45	3363 - 25
AT329694	5E18	1	3343 - 5
AT34210	2K2	2	1314 - 3
AT34211	2K2	1	1314 - 3
AT36635	3E19	8	1812 - 5
AT41188	3B24	5	1671 - 7
AT48016	5D14	32	3315 - 9
AT49216	5G14	4	3362 - 31
AT49216	5G14	14	3362 - 31
AT49300	5E2	7	3315 - 17
AT49300	5E12	1	3315 - 27
AT51878	1B18	1	0120 - 1
AT65241	2I12	15	0560 - 3
AT65241	2I12	16	0560 - 3
AT66805	1B16	1	0110 - 3
AT68978	5I16	6	3363 - 29
AT73296	2H12	1	0505 - 3
AT74940	2H12	6	0505 - 3
AT75311	3E23	53	1814 - 5
AT75769	3C12	5	1674 - 5
AT75769	3C14	5	1674 - 5B
AT75769	3D2	3	1674 - 11
AT78527	4D14	19	3162 - 5
AT78527	4D16	7	3162 - 7
AT78534	3I12	1	2004 - 4
AT78633	3C12	17	1674 - 5
AT79754	1C7	11	0230 - 1
AT79755	1C7	10	0230 - 1
AT79756	1C7	9	0230 - 1
AT81867	5I16	2	3363 - 29
AT82210	3D2	6	1674 - 11
AT83174	4E2	16	3162 - 17
AT83174	4E6	7	3162 - 21
AT83174	5F25	16	3362 - 19
AT83174	5G4	16	3362 - 23
AT83174	5G5	2	3362 - 24
AT83174	5G6	2	3362 - 25
AT83174	5G7	3	3362 - 26
AT83174	5G7	4	3362 - 26
AT83174	5G8	3	3362 - 27
AT83174	5G8	4	3362 - 27
AT85174	3C22	24	1674 - 9B
AT85174	3C24	5	1674 - 9D
AU12450	4E20	17	3163 - 7
AU12450	4E22	16	3163 - 9
AW24539	3E21	1	1814 - 3
A24073	4C4	3	3102 - 11
A3581R	5F7	15	3348 - 3
A3606R	2K15	1	1369 - 5
A364R	2F21	7	0417 - 3
A364R	2F22	7	0417 - 4
A3917R	2I19	6	0960 - 6
A3917R	2K15	1	1369 - 5
A4365R	2H22	39	0515 - 5
A4365R	2K15	1	1369 - 5
A4730R	2K15	1	1369 - 5
A4827R	2C23	14	0402 - 4A
A4827R	2D2	14	0402 - 6A
A4827R	2H8	17	0452 - 3
A48970	3E21	24	1814 - 3
A49232	5H24	4	3363 - 13
BP12214	3G13	1	1821 - 10
B177R	2J8	12	1060 - 3
B2762R	2K15	1	1369 - 5
B28851	3J14	3	2160 - 17
B3690R	2I19	2	0960 - 6
B3690R	2K15	1	1369 - 5
CD16284	2E13	7	0409 - 3
CV08	5G14	13	3362 - 31
C11884	5J12	12	3365 - 3
C11884	5J14	4	3365 - 5
C11884	5K1	7	3365 - 17
C15104	2I19	1	0960 - 6
C15107	2I19	3	0960 - 6
C16054	4E16	8	3163 - 3
C16054	4E18	19	3163 - 5
C16054	5H12	6	3363 - 3
C16054	5H14	4	3363 - 3B
C16054	5H20	19	3363 - 9
C16054	5H22	6	3363 - 11
C16054	5H24	4	3363 - 13
DS0345	2K13	1	1369 - 3
DS0346	2K13	1	1369 - 3

NUMERICAL INDEX - CONTINUED

PART NO.	GRID	KEY	PAGE
E12379	1C11	7	0230 - 5
E12379	2K18	5	1370 - 2
E49244	5J24	9	3365 - 15
E64052	3B25	3	1671 - 8
E67574	3G13	4	1821 - 10
E71998	3J24	14	2160 - 27
E87197	2I12	4	0560 - 3
F1056R	2K15	1	1369 - 5
F1430R	4F11	10	3165 - 11
F1430R	4F13	2	3165 - 13
F1430R	5J23	5	3365 - 14
F1430R	5K11	4	3365 - 24
F1430R	5K12	4	3365 - 24A
F1870R	2K15	1	1369 - 5
F2863R	2J8	20	1060 - 3
F2863R	4D4	10	3115 - 11
F2863R	5E4	8	3315 - 19
F3353R	2K15	1	1369 - 5
F37030242	3I23	9	2160 - 3
F37030242	3I25	14	2160 - 5
F950R	5J19	9	3365 - 10
F950R	5J25	5	3365 - 16
F950R	5K14	4	3365 - 26
F950R	5K15	4	3365 - 26A
H104855	3D7	9	1674 - 17
H113924	2I16	8	0960 - 3
H121168	4C4	20	3102 - 11
H121168	4C12	43	3102 - 19
H129201	5D14	48	3315 - 9
H129201	5D16	13	3315 - 11
H135156	4C4	12	3102 - 11
H135156	4C12	44	3102 - 19
H137329	5F7	20	3348 - 3
H140456	5E16	30	3343 - 3
H140456	5E18	26	3343 - 5
H140818	5J12	4	3365 - 3
H140818	5J16	4	3365 - 7
H141836	3J8	12	2160 - 11
H142090	4F11	13	3165 - 11
H142090	4F13	13	3165 - 13
H142090	5K10	6	3365 - 23
H142209	5K5	20	3365 - 20
H144094	3C2	3	1672 - 3
H144095	3C2	3	1672 - 3
H144342	2J3	4	0960 - 17
H145175	5K7	3	3365 - 21A
H145175	5K8	3	3365 - 22
H145175	5K9	3	3365 - 22A
H145175	5K10	3	3365 - 23
H145175	5K11	3	3365 - 24
H145175	5K12	3	3365 - 24A
H145175	5K13	3	3365 - 25
H145175	5K14	3	3365 - 26
H145175	5K15	3	3365 - 26A
H145359	4F4	6	3165 - 3
H145359	4F7	6	3165 - 7
H145456	5K13	6	3365 - 25
H146457	3J20	1	2160 - 23
H150291	5K19	4	3365 - 30
H150291	5K20	6	3365 - 31
H150291	5K22	13	3365 - 33
H150947	5K5	5	3365 - 20
H150964	5J16	22	3365 - 7
H150964	5J18	2	3365 - 9
H150964	5J18	21	3365 - 9
H150976	5J22	5	3365 - 13
H150976	5J23	3	3365 - 14
H151328	5K3	9	3365 - 19
H151328	5K5	9	3365 - 20
H151542	4F4	17	3165 - 3
H151542	4F5	17	3165 - 4
H151542	4F7	17	3165 - 7
H151542	4F8	14	3165 - 8
H151542	4F9	17	3165 - 9
H151594	4F11	3	3165 - 11
H151594	4F13	21	3165 - 13
H151641	5K3	8	3365 - 19
H151781	5K2	6	3365 - 18
H151790	5K23	6	3365 - 34
H151790	5K24	13	3365 - 35
H151815	5J22	2	3365 - 13
H151815	5J24	2	3365 - 15
H151816	5J22	6	3365 - 13
H151820	5K2	15	3365 - 18
H151830	5J12	10	3365 - 3
H151830	5J14	18	3365 - 5
H151830	5J16	10	3365 - 7
H151830	5J18	18	3365 - 9
H151831	5J12	5	3365 - 3
H151831	5J14	17	3365 - 5
H151831	5J16	5	3365 - 7
H151831	5J18	17	3365 - 9
H151832	5J12	3	3365 - 3
H151832	5J16	3	3365 - 7
H151833	5J12	2	3365 - 3
H151833	5J16	2	3365 - 7
H151889	5J22	8	3365 - 13
H151891	5K2	8	3365 - 18
H151892	5J24	6	3365 - 15
H151893	5J24	5	3365 - 15
H151893	5J25	3	3365 - 16
H151894	5K1	2	3365 - 17
H152065	5J24	8	3365 - 15
H152140	5J16	20	3365 - 7
H152140	5J18	19	3365 - 9
H152202	5K3	14	3365 - 19
H152202	5K16	8	3365 - 27
H152202	5K18	15	3365 - 29
H152202	5K23	11	3365 - 34
H152202	5K24	6	3365 - 35
H152203	4C6	16	3102 - 13
H152203	4F4	13	3165 - 3
H152203	4F5	13	3165 - 4
H152203	4F7	13	3165 - 7
H152203	4F8	11	3165 - 8
H152203	4F9	13	3165 - 9
H152203	4F11	12	3165 - 11
H152203	4F13	18	3165 - 13
H152203	5J19	13	3365 - 10
H152203	5J20	13	3365 - 11
H152203	5J21	12	3365 - 12
H152203	5K5	14	3365 - 20
H152203	5K7	11	3365 - 21A
H152203	5K8	13	3365 - 22
H152203	5K9	13	3365 - 22A
H152203	5K10	11	3365 - 23
H152203	5K11	12	3365 - 24
H152203	5K12	12	3365 - 24A
H152203	5K13	11	3365 - 25
H152203	5K14	12	3365 - 26
H152203	5K15	12	3365 - 26A
H152204	5J12	18	3365 - 3
H152204	5J14	10	3365 - 5
H152204	5J16	18	3365 - 7
H152204	5J18	10	3365 - 9
H152204	5J22	13	3365 - 13
H152204	5J23	15	3365 - 14
H152205	5J24	13	3365 - 15
H152205	5J25	15	3365 - 16
H152205	5K1	13	3365 - 17
H152205	5K2	13	3365 - 18
H152345	4F4	8	3165 - 3
H152345	4F7	8	3165 - 7
H152345	4F8	8	3165 - 8
H152345	5J20	11	3365 - 11
H152345	5K7	7	3365 - 21A
H152793	5K3	15	3365 - 19
H152793	5K16	9	3365 - 27
H152793	5K23	12	3365 - 34
H152793	5K24	7	3365 - 35
H152794	4F4	14	3165 - 3
H152794	4F7	14	3165 - 7
H152794	4F8	12	3165 - 8
H152794	4F11	9	3165 - 11
H152794	5J19	12	3365 - 10
H152794	5J20	14	3365 - 11
H152794	5K5	15	3365 - 20
H152794	5K7	14	3365 - 21A
H152794	5K10	14	3365 - 23
H152794	5K13	14	3365 - 25
H152795	5J12	16	3365 - 3
H152795	5J14	9	3365 - 5
H152795	5J16	16	3365 - 7
H152795	5J18	9	3365 - 9
H152795	5J22	12	3365 - 13
H152795	5J23	16	3365 - 14
H152796	5J24	12	3365 - 15
H152796	5J25	16	3365 - 16
H152796	5K1	11	3365 - 17
H152796	5K2	11	3365 - 18
H154109	5K19	5	3365 - 30
H154109	5K20	7	3365 - 31
H154269	5J22	15	3365 - 13
H154269	5J24	15	3365 - 15
H154269	5K3	20	3365 - 19
H154352	4F11	7	3165 - 11
H154352	5K5	22	3365 - 20
H154352	5K10	7	3365 - 23
H154372	5K5	8	3365 - 20
H154373	5K5	3	3365 - 20
H154380	5J22	7	3365 - 13
H154381	5J22	9	3365 - 13
H154382	5J24	7	3365 - 15
H154383	5J24	9	3365 - 15
H154385	5K2	9	3365 - 18
H154402	5K16	15	3365 - 27
H154402	5K23	8	3365 - 34
H154402	5K24	4	3365 - 35
H154404	5K7	17	3365 - 21A
H154404	5K8	16	3365 - 22
H154404	5K9	16	3365 - 22A
H154404	5K10	17	3365 - 23
H154404	5K11	15	3365 - 24
H154404	5K12	15	3365 - 24A
H154404	5K13	17	3365 - 25
H154404	5K14	15	3365 - 26
H154404	5K15	15	3365 - 26A
H154514	5K22	3	3365 - 33
H154897	5J16	14	3365 - 7
H154898	5J16	13	3365 - 7
H154898	5J18	6	3365 - 9

NUMERICAL INDEX - CONTINUED

PART NO.	GRID	KEY	PAGE
H154900	5J16	6	3365 - 7
H154900	5J18	14	3365 - 9
H154901	5J16	11	3365 - 7
H155419	5J19	15	3365 - 10
H155419	5J20	16	3365 - 11
H155419	5J21	15	3365 - 12
H155420	5J12	20	3365 - 3
H155420	5J12	21	3365 - 3
H155420	5J14	19	3365 - 5
H155423	5J12	17	3365 - 3
H155423	5J14	5	3365 - 5
H155424	5J19	10	3365 - 10
H155483	5J12	11	3365 - 3
H155483	5K1	6	3365 - 17
H155512	5J19	6	3365 - 10
H155513	5J19	2	3365 - 10
H155513	5J20	2	3365 - 11
H155520	5J19	5	3365 - 10
H155520	5J20	10	3365 - 11
H155520	5K7	6	3365 - 21A
H155539	5J12	14	3365 - 3
H155539	5K1	9	3365 - 17
H155540	5J12	13	3365 - 3
H155540	5J14	6	3365 - 5
H155540	5K1	8	3365 - 17
H155543	5J12	6	3365 - 3
H155543	5J14	14	3365 - 5
H155543	5K1	3	3365 - 17
H155547	5J19	9	3365 - 10
H155548	5J19	8	3365 - 10
H155655	5K25	14	3365 - 36
H155718	5J22	10	3365 - 13
H155738	5J16	17	3365 - 7
H155738	5J18	5	3365 - 9
H155740	5J24	10	3365 - 15
H155769	5K2	12	3365 - 18
H156058	5K19	9	3365 - 30
H156058	5K20	11	3365 - 31
H156058	5K22	4	3365 - 33
H156486	5K5	1	3365 - 20
H156586	5K22	5	3365 - 33
H156929	5K1	12	3365 - 17
H157081	5J12	8	3365 - 3
H157081	5J14	13	3365 - 5
H157083	5J16	8	3365 - 7
H157510	5K3	22	3365 - 19
H157662	2J1	14	0960 - 14
H157662	2J3	14	0960 - 17
H157897	5K25	15	3365 - 36
H157898	5K18	8	3365 - 29
H157947	5K25	15	3365 - 36
H157978	5K13	7	3365 - 25
H158062	5J12	22	3365 - 3
H158090	5K3	1	3365 - 19
H158596	3I2	3	1921 - 5
H158674	2J3	11	0960 - 17
H158675	2J3	12	0960 - 17
H158676	2J1	12	0960 - 14
H158676	2J3	17	0960 - 17
H158676	4C18	7	3104 - 5
H158942	2J1	8	0960 - 14
H158942	2J3	7	0960 - 17
H158947	5K1	15	3365 - 17
H159941	4F4	2	3165 - 3
H159941	4F5	2	3165 - 4
H159941	4F7	2	3165 - 7
H159941	4F8	2	3165 - 8
H159941	4F9	2	3165 - 9
H162312	4C18	6	3104 - 5
H164359	2J3	9	0960 - 17
H164464	5K1	5	3365 - 17
H164925	4C18	10	3104 - 5
H164982	5K22	6	3365 - 33
H168275	5K3	3	3365 - 19
H169161	5J12	9	3365 - 3
H169161	5J14	16	3365 - 5
H169161	5J16	9	3365 - 7
H169161	5J18	16	3365 - 9
H170216	4F9	6	3165 - 9
H170216	5J21	6	3365 - 12
H170216	5K8	6	3365 - 22
H170216	5K9	6	3365 - 22A
H170371	5K2	5	3365 - 18
H170372	5K2	2	3365 - 18
H170534	2J1	4	0960 - 14
H170534	2J3	3	0960 - 17
H170535	5K19	1	3365 - 30
H170535	5K20	1	3365 - 31
H170535	5K22	14	3365 - 33
H170537	5K16	1	3365 - 27
H170537	5K18	2	3365 - 29
H170537	5K25	2	3365 - 36
H170538	4F4	3	3165 - 3
H170538	4F5	3	3165 - 4
H170538	4F7	3	3165 - 7
H170538	4F8	3	3165 - 8
H170538	4F9	3	3165 - 9
H170538	5K3	2	3365 - 19
H170538	5K24	12	3365 - 35
H170539	4F11	16	3165 - 11
H170539	4F13	7	3165 - 13
H170539	5J21	2	3365 - 12
H170539	5K5	2	3365 - 20
H170540	5J23	2	3365 - 14
H170540	5J25	2	3365 - 16
H173199	4C18	14	3104 - 5
H173205	4C18	4	3104 - 5
H173206	4C18	8	3104 - 5
H173207	4C18	9	3104 - 5
H173411	3G2	35	1816 - 15
H173411	3G4	34	1816 - 17
H177854	4C6	4	3102 - 13
H178765	5K18	17	3365 - 29
H178765	5K25	10	3365 - 36
H179657	5K18	18	3365 - 29
H179657	5K25	12	3365 - 36
H179692	4C6	8	3102 - 13
H180080	5J25	9	3365 - 16
H180080	5K14	8	3365 - 26
H180080	5K15	8	3365 - 26A
H180094	5J25	7	3365 - 16
H180094	5K14	6	3365 - 26
H180094	5K15	6	3365 - 26A
H180103	4F13	4	3165 - 13
H180103	5J23	7	3365 - 14
H180103	5K11	6	3365 - 24
H180103	5K12	6	3365 - 24A
H180397	5J18	13	3365 - 9
H180402	5J23	11	3365 - 14
H180402	5J25	11	3365 - 16
H180402	5K5	20	3365 - 20
H180430	5J24	6	3365 - 15
H180431	5J12	11	3365 - 3
H180431	5J14	3	3365 - 5
H180431	5K1	6	3365 - 17
H180433	5J16	11	3365 - 7
H180433	5J18	3	3365 - 9
H180569	5J19	6	3365 - 10
H180787	4F9	7	3165 - 9
H180787	5J21	7	3365 - 12
H180787	5K8	7	3365 - 22
H180787	5K9	7	3365 - 22A
H180927	4C6	6	3102 - 13
H181114	5K11	7	3365 - 24
H181114	5K12	7	3365 - 24A
H206792	5J25	4	3365 - 16
H206859	4F13	6	3165 - 13
H206859	5J23	9	3365 - 14
H206859	5K11	8	3365 - 24
H206859	5K12	8	3365 - 24A
H208631	4F13	14	3165 - 13
H208631	5K11	10	3365 - 24
H208631	5K12	10	3365 - 24A
H208987	4F5	14	3165 - 4
H208987	4F9	14	3165 - 9
H208987	4F13	19	3165 - 13
H208987	5J21	13	3365 - 12
H208987	5K8	14	3365 - 22
H208987	5K9	14	3365 - 22A
H208987	5K11	13	3365 - 24
H208987	5K12	13	3365 - 24A
H208987	5K14	13	3365 - 26
H208987	5K15	13	3365 - 26A
H208995	5K14	10	3365 - 26
H208995	5K15	10	3365 - 26A
H209221	4F5	11	3165 - 4
H209221	4F9	11	3165 - 9
H209221	5J21	3	3365 - 12
H209221	5K8	11	3365 - 22
H209221	5K9	11	3365 - 22A
H209264	5J23	4	3365 - 14
H209712	5J14	1	3365 - 5
H209712	5J18	1	3365 - 9
H210874	5K22	7	3365 - 33
H210939	5K25	7	3365 - 36
H210941	5K18	11	3365 - 29
H211156	5K22	11	3365 - 33
H23125	2C21	1	0402 - 3
H23196	2K17	9	1369 - 7
H29619	4C5	2	3102 - 12
H35244	2K15	1	1369 - 5
H63262	5K22	8	3365 - 33
H77698	2I12	23	0560 - 3
H77698	2K2	11	1314 - 3
H77698	3B25	4	1671 - 8
H77698	3C12	21	1674 - 5
H77698	3C16	1	1674 - 5D
H77698	3H4	54	1830 - 7B
H77698	3H9	17	1830 - 13
H77698	3J4	33	2160 - 9
H77698	4E18	22	3163 - 5
H77698	4E20	37	3163 - 7
H77698	4E24	36	3163 - 11
H77698	5I8	37	3363 - 21
H77698	5I12	15	3363 - 25
H77698	5I12	39	3363 - 25
H77698	5I14	15	3363 - 27
H77698	5J10	15	3363 - 47
H80753	2G25	2	0429 - 3
H81744	1D14	23	0341 - 1
H81744	1D16	22	0341 - 3

NUMERICAL INDEX - CONTINUED

PART NO.	GRID	KEY	PAGE
H85092	3H2	11	1830 - 7
IPSKIT3	2K13	1	1369 - 3
JD10063	1C14	5	0230 - 8
JD10249	1C20	22	0250 - 7
JD10250	1C21	5	0250 - 8
JD10373	3G2	36	1816 - 15
JD10373	3G4	26	1816 - 17
JD126	3I18	8	2008 - 2
JD21	1B18	3	0120 - 1
JD27	1B18	3	0120 - 1
JD3216	1B18	1	0120 - 1
JD5404	3I18	4	2008 - 2
JD5621	2K4	9A	1320 - 3
JD5694	2K4	10A	1320 - 3
JD5694	3F2	19	1814 - 9
JD5717	2K4	10B	1320 - 3
JD5750	2K4	9B	1320 - 3
JD5750	2K4	10B	1320 - 3
JD5750	3F2	19	1814 - 9
JD5750	3F4	18	1814 - 9B
JD5761	2K4	10B	1320 - 3
JD5761	3I2	2	1921 - 5
JD5836	2K4	7	1320 - 3
JD5920	2K2	5	1314 - 3
JD5920	2K4	12	1320 - 3
JD5930	3I18	3	2008 - 2
JD5933	2I12	26	0560 - 3
JD5933	3H20	11	1913 - 3
JD7797	1C7	7	0230 - 1
JD7797	1C11	8	0230 - 5
JD7797	1C16	3	0250 - 2
JD7797	4C2	4	3102 - 9
JD7797	4C4	4	3102 - 11
JD7797	4C5	11	3102 - 12
JD7797	4C12	38	3102 - 19
JD7798	5E24	18	3345 - 5
JD7838	1C9	25	0230 - 3
JD7838	1C11	10	0230 - 5
JD7838	1C15	9	0250 - 1
JD7838	2J1	6	0960 - 14
JD7838	2K18	1	1370 - 2
JD7838	2K18	2	1370 - 2
JD7844	4C4	4	3102 - 11
JD7844	4C12	45	3102 - 19
JD8251	1C10	6	0230 - 4
JD8929	1C10	7	0230 - 4
JD9041	1C10	3	0230 - 4
JD9170	1C10	4	0230 - 4
JD9954	4C22	10	3115 - 5
J16931	2J24	2	1313 - 3
KV11304	4C12	50	3102 - 19
KV11305	4C12	49	3102 - 19
KV12858	4D14	10	3162 - 5
KV14216	4C12	50	3102 - 19
KV16429	2H24	14	0520 - 3
KV22121	4C12	36	3102 - 19
KV22609	4E16	11	3163 - 3
KV22609	4E18	1	3163 - 5
KV25678	5G14	4	3362 - 31
KV25678	5G14	8	3362 - 31
K40006	4C2	14	3102 - 9
K40006	4C12	39	3102 - 19
L100057	1D2	4	0250 - 13
L100060	1D2	4	0250 - 13
L100063	1D2	4	0250 - 13
L100066	1D2	4	0250 - 13
L100069	1D2	4	0250 - 13
L100074	1D2	4	0250 - 13
L100077	1D2	4	0250 - 13
L100080	1D2	4	0250 - 13
L100083	1D2	4	0250 - 13
L100086	1D2	4	0250 - 13
L100089	1D2	4	0250 - 13
L100092	1D2	4	0250 - 13
L100096	1D2	4	0250 - 13
L100102	1C20	16	0250 - 7
L100106	1C20	16	0250 - 7
L100109	1C20	16	0250 - 7
L100141	1C18	11	0250 - 5
L100145	1C18	11	0250 - 5
L100150	1C24	4	0250 - 11
L100151	1C24	4	0250 - 11
L100152	1C24	4	0250 - 11
L100153	1C24	5	0250 - 11
L100154	1C24	6	0250 - 11
L100158	1C22	10	0250 - 9
L100158	1C24	2	0250 - 11
L100168	1C21	7	0250 - 8
L100230	1D2	7	0250 - 13
L100238	1C20	24	0250 - 7
L100239	1C20	20	0250 - 7
L100240	1C21	10	0250 - 8
L100632	1C20	7	0250 - 7
L100633	1C20	8	0250 - 7
L100635	1C20	5	0250 - 7
L100636	1C20	4	0250 - 7
L110233	1C18	18	0250 - 5
L110235	1C21	1	0250 - 8
L110729	1C1	7	0210 - 1
L112197	1C22	1	0250 - 9
L112197	1C22	11	0250 - 9
L112197	1C24	11	0250 - 11
L114558	1C18	14	0250 - 5
L11698	1E20	4	0360 - 3
L11698	1E20	30	0360 - 3
L11698	1E24	6	0360 - 7
L11698	1E24	23	0360 - 7
L11698	1F2	11	0360 - 9
L11698	1F4	23	0360 - 11
L33993	3C2	3	1672 - 3
L3483N	3H9	33	1830 - 13
L35714	1D2	9	0250 - 13
L38730	1D8	18	0315 - 3
L40014	1C18	16	0250 - 5
L40276	1C20	10	0250 - 7
L40306	1C18	10	0250 - 5
L40317	1C20	25	0250 - 7
L40982	1D2	3	0250 - 13
L40985	1D2	3	0250 - 13
L40988	1D2	3	0250 - 13
L40991	1D2	3	0250 - 13
L40994	1D2	3	0250 - 13
L41159	1C21	4	0250 - 8
L4694T	4D4	4	3115 - 11
L4694T	4D6	5	3115 - 13
L53816	1D14	14	0341 - 1
L55580	1B23	14	0201 - 3
L55580	1C18	19	0250 - 5
L55580	1C21	9	0250 - 8
L55580	2J6	12	1011 - 3
L55598	1C20	23	0250 - 7
L55605	1C18	1	0250 - 5
L55605	1C18	4	0250 - 5
L55605	1C18	6	0250 - 5
L55606	1D2	3	0250 - 13
L55610	1D2	3	0250 - 13
L56822	1B23	17	0201 - 3
L56822	1C18	17	0250 - 5
L57881	3H4	58	1830 - 7B
L57881	3H6	11	1830 - 9
L60103	1C22	7	0250 - 9
L60103	1C24	8	0250 - 11
L60104	1C22	5	0250 - 9
L60104	1C24	10	0250 - 11
L61263	1C18	11	0250 - 5
L61267	1C18	11	0250 - 5
L61271	1C18	11	0250 - 5
L61275	1C18	11	0250 - 5
L75379	3I8	2	2002 - 2
L78069	1D25	16	0350 - 8
L78069	1E18	18	0350 - 27
L79728	1C21	6	0250 - 8
MAKE	4E24	30	3163 - 11
MG272321	4E10	20	3162 - 25
MT2485	2H18	31	0510 - 3
MT2485	3C22	28	1674 - 9B
MT2485	3E13	11	1811 - 5
MT2485	3G2	15	1816 - 15
MT2485	3G4	35	1816 - 17
MT2485	3H13	1	1834 - 3
MT2485	3I7	17	2001 - 3
M1036T	4E12	2	3162 - 27
M115279	3C8	17	1673 - 7
M115279	3C10	3	1674 - 3
M132832	3F8	11	1814 - 13
M1340T	3G12	23	1821 - 9
M135646	5J8	16	3363 - 45
M2649DN	5E16	15	3343 - 3
M2649DN	5E18	6	3343 - 5
M2649DN	5E18	11	3343 - 5
M359T	5D14	44	3315 - 9
M359T	5D16	12	3315 - 11
M40333	3B20	7	1671 - 3
M40333	3B22	10	1671 - 5
M40569	5E4	10	3315 - 19
M40569	5E4	14	3315 - 19
M40569	5E4	19	3315 - 19
M41029	2D5	4	0403 - 2
M41029	2D6	4	0403 - 2A
M41029	2D7	4	0403 - 2B
M41029	2D8	4	0403 - 3A
M41029	2J10	26	1060 - 5
M4125T	4C18	5	3104 - 5
M4237T	2K15	1	1369 - 5
M4237T	5K3	4	3365 - 19
M43835	3D7	2	1674 - 17
M453T	3G6	31	1821 - 3
M47031	3G10	5	1821 - 7
M47031	3G10	12	1821 - 7
M47031	3G12	24	1821 - 9
M47031	3G15	4	1821 - 13
M48534	2H20	1	0515 - 3
M48534	2H22	4	0515 - 5
M63200	3H20	3	1913 - 3
M63200	3H20	4	1913 - 3
M63431	3C18	16	1674 - 7
M68954	4C24	8	3115 - 7
M68954	4D2	9	3115 - 9
M68954	4D4	7	3115 - 11
M68954	5D12	4	3315 - 7
M68954	5D14	10	3315 - 9

NUMERICAL INDEX - CONTINUED

PART NO.	GRID	KEY	PAGE
M68954	5D16	10	3315 - 11
M68954	5D18	14	3315 - 13
M68954	5D20	18	3315 - 13B
M68954	5D22	17	3315 - 15
M68954	5D24	16	3315 - 15B
M68954	5E2	13	3315 - 17
M72598	3F22	13	1816 - 11
M84972	3E13	8	1811 - 5
M84972	3F24	31	1816 - 13
M84972	3H4	44	1830 - 7B
M84972	3I7	18	2001 - 3
M85517	3C10	7	1674 - 3
M86533	3H9	26	1830 - 13
M86863	5I16	19	3363 - 29
M86877	2H18	11	0510 - 3
M86877	3I14	1	2004 - 7
M86877	3I15	3	2004 - 8
M86877	5I6	5B	3363 - 19
M87261	3G10	9	1821 - 7
M87534	3E23	62	1814 - 5
M87534	3G2	20	1816 - 15
M87534	3G4	6	1816 - 17
M87534	5D14	26	3315 - 9
M87534	5D18	7	3315 - 13
M87534	5D22	12	3315 - 15
M87571	2I13	1	0560 - 4
M87571	3J10	3	2160 - 13
M87571	3J10	19	2160 - 13
M87571	5I16	8	3363 - 29
M87571	5I16	20	3363 - 29
M87571	5I18	10	3363 - 31
M87733	2F13	3	0416 - 3
M87733	2F15	3	0416 - 5
M87733	2F17	2	0416 - 7
M87733	2F19	2	0416 - 9
N105572	5E16	28	3343 - 3
N105572	5E18	19	3343 - 5
N115096	3D7	11	1674 - 17
N117290	3J16	3	2160 - 19
N117290	3J20	3	2160 - 23
N119316	1C16	2	0250 - 2
N119316	1D13	5	0325 - 2
N119479	5D18	4	3315 - 13
N119479	5D22	15	3315 - 15
N131838	2K15	1	1369 - 5
N189220	2H24	18	0520 - 3
N189220	3J4	28	2160 - 9
N189220	3J6	20	2160 - 9B
N198516	3J14	13	2160 - 17
N198516	3J16	13	2160 - 19
N198516	3J18	13	2160 - 21
N198516	5H16	29	3363 - 5
N203255	3J22	15	2160 - 25
N231749	1B23	19	0201 - 3
N275275	3I12	2	2004 - 4
N30256	4E24	2	3163 - 11
PML377	3C4	6	1673 - 3
PM37485	2I12	16	0560 - 3
PM37485	2K11	1	1330 - 2
PM38655	2D11	24	0404 - 3
PM38655	2K11	1	1330 - 2
PM797NA	3D9	57	1674 - 19
PT11778	3H2	17	1830 - 7
P10456	4C20	23	3115 - 3
P45750	4C18	11	3104 - 5
P46051	2K15	1	1369 - 5
P48347	2H22	33	0515 - 5
P48403	2K15	1	1369 - 5
P48403	5J19	7	3365 - 10
P48403	5K5	4	3365 - 20
P50631	2I16	2	0960 - 3
P50631	2I18	2	0960 - 5
P50631	2K15	1	1369 - 5
P50883	5G13	3	3362 - 30
RE11154	3D9	57	1674 - 19
RE11156	3D9	36	1674 - 19
RE11157	3D9	37	1674 - 19
RE12330	3D11	14	1674 - 21
RE12331	3D11	12	1674 - 21
RE12332	3D11	18	1674 - 21
RE12333	3D11	21	1674 - 21
RE12334	3D11	8	1674 - 21
RE12362	3D11	4	1674 - 21
RE12363	1D12	10	0315 - 7
RE12363	3D5	3	1674 - 14
RE12363	3D11	11	1674 - 21
RE12363	4C24	15	3115 - 7
RE12363	4D2	20	3115 - 9
RE12364	3D11	16	1674 - 21
RE12365	3D11	20	1674 - 21
RE12366	3D11	25	1674 - 21
RE14246	3E11	4	1811 - 3
RE155938	3H2	5A	1830 - 7
RE157329	3H2	5B	1830 - 7
RE174764	3H2	16	1830 - 7
RE190139	3I7	11	2001 - 3
RE19797	2E22	5	0413 - 5
RE19797	2E24	3	0413 - 7
RE19797	2F2	5	0413 - 9
RE19797	2F4	3	0413 - 11
RE19799	2E22	15	0413 - 5
RE19799	2E24	9	0413 - 7
RE19799	2F2	15	0413 - 9
RE19799	2F4	9	0413 - 11
RE198074	3H4	60	1830 - 7B
RE20342	5K16	3	3365 - 27
RE20342	5K18	3	3365 - 29
RE20342	5K23	4	3365 - 34
RE20343	5J24	4	3365 - 15
RE20343	5J25	19	3365 - 16
RE20343	5K13	5	3365 - 25
RE20344	4F11	14	3165 - 11
RE20344	4F13	12	3165 - 13
RE20344	5J22	4	3365 - 13
RE20344	5J23	19	3365 - 14
RE20344	5K5	7	3365 - 20
RE20344	5K10	5	3365 - 23
RE20345	4F4	5	3165 - 3
RE20345	4F7	5	3165 - 7
RE20345	5J19	4	3365 - 10
RE20345	5J20	3	3365 - 11
RE20345	5K3	7	3365 - 19
RE20345	5K7	5	3365 - 21A
RE20428	5K16	17	3365 - 27
RE20428	5K23	20	3365 - 34
RE20809	5K2	4	3365 - 18
RE21730	3D12	5	1674 - 22
RE21731	3D12	5	1674 - 22
RE21732	3D12	6	1674 - 22
RE21790	2H14	2	0505 - 5
RE22413	2J1	3	0960 - 14
RE22415	2J1	5	0960 - 14
RE22415	2J3	18	0960 - 17
RE31617	2E13	13	0409 - 3
RE32173	5K16	5	3365 - 27
RE32175	5K16	11	3365 - 27
RE32175	5K18	12	3365 - 29
RE32530	3I25	17	2160 - 5
RE33412	5K19	18	3365 - 30
RE33636	2H14	7	0505 - 5
RE36133	3H2	26	1830 - 7
RE40048	2E15	5	0410 - 2
RE40049	3F6	3	1814 - 11
RE40049	3F10	5	1814 - 15
RE42139	2H12	5	0505 - 3
RE43497	3C18	20	1674 - 7
RE43637	3D4	1	1674 - 13
RE44574	2H2	4	0433 - 3
RE44574	2H3	4	0433 - 4
RE44574	2H8	18	0452 - 3
RE45896	1C12	5	0230 - 6
RE46534	3D4	5	1674 - 13
RE46609	3H9	25	1830 - 13
RE46684	2F24	7	0418 - 3
RE46684	2F24	15	0418 - 3
RE46685	2D19	5	0407 - 5B
RE46685	2D21	5	0407 - 7
RE46685	2D23	5	0407 - 9
RE46685	2D25	5	0407 - 11
RE46685	2F21	10	0417 - 3
RE46685	2F22	10	0417 - 4
RE46685	2G2	7	0419 - 3
RE46686	2G2	6	0419 - 3
RE46686	2G8	5	0420 - 7
RE46686	2G14	5	0420 - 13
RE46742	3C18	21	1674 - 7
RE48310	2H14	6	0505 - 5
RE48786	2E16	8	0413 - 1
RE48786	2E16	10	0413 - 1
RE48786	2E18	8	0413 - 3
RE48786	2E18	10	0413 - 3
RE49778	3C8	16	1673 - 7
RE500000	2D5	3	0403 - 2
RE500000	2D6	3	0403 - 2A
RE500000	2D7	3	0403 - 2B
RE500000	2D8	3	0403 - 3A
RE500002	2D5	3	0403 - 2
RE500002	2D6	3	0403 - 2A
RE500002	2D7	3	0403 - 2B
RE500002	2D8	3	0403 - 3A
RE500005	2D16	4	0407 - 2
RE500133	2E2	4	0407 - 13
RE500133	2E5	4	0407 - 17
RE500137	2H1	4	0433 - 2
RE500448	2F11	11	0415 - 3
RE500449	2F11	12	0415 - 3
RE500539	2G25	8	0429 - 3
RE500631	2C11	15	0401 - 1
RE500631	2C14	15	0401 - 4
RE500737	2F21	16	0417 - 3
RE501260	2F17	12	0416 - 7
RE501260	2F19	12	0416 - 9
RE501377	2D16	5	0407 - 2
RE501767	2G16	7	0422 - 2
RE501938	2C23	3	0402 - 4A
RE501938	2C25	3	0402 - 5A
RE501938	2C25	13	0402 - 5A
RE501938	2D2	3	0402 - 6A
RE501938	2D4	3	0402 - 7A
RE501938	2D4	13	0402 - 7A
RE502377	2F2	22	0413 - 9

NUMERICAL INDEX - CONTINUED

PART NO.	GRID	KEY	PAGE
RE502378	2F2	22	0413 - 9
RE502380	2E22	22	0413 - 5
RE502903	2F7	4	0414 - 1
RE502969	2C21	5	0402 - 3
RE504233	2G15	4	0421 - 2
RE504543	2E3	10	0407 - 14
RE504543	2E6	10	0407 - 18
RE504564	2E3	3	0407 - 14
RE504564	2E6	3	0407 - 18
RE504638	2C11	4	0401 - 1
RE504638	2C13	4	0401 - 3
RE504638	2C14	4	0401 - 4
RE504638	2C16	4	0401 - 7
RE504741	2F11	13	0415 - 3
RE504836	2E3	4	0407 - 14
RE504836	2E6	4	0407 - 18
RE504914	2E7	6	0407 - 19
RE505047	2F13	4	0416 - 3
RE505047	2F15	4	0416 - 5
RE505047	2F19	3	0416 - 9
RE505047	2F19	4	0416 - 9
RE505047	2F19	5	0416 - 9
RE505110	2D5	10	0403 - 2
RE505110	2D6	10	0403 - 2A
RE505111	2D7	10	0403 - 2B
RE505264	2G25	10	0429 - 3
RE505264	3H11	40	1830 - 15
RE505400	2G16	10	0422 - 2
RE505400	2G17	10	0422 - 3
RE505400	2G19	7	0422 - 5
RE505501	2C25	14	0402 - 5A
RE505501	2D4	14	0402 - 7A
RE505501	2D11	30	0404 - 3
RE505515	2C23	11	0402 - 4A
RE505515	2C25	11	0402 - 5A
RE505515	2D2	11	0402 - 6A
RE505515	2D4	11	0402 - 7A
RE505515	2H8	19	0452 - 3
RE505981	2F21	16	0417 - 3
RE505981	2F22	16	0417 - 4
RE506105	2G16	7	0422 - 2
RE506105	2G17	7	0422 - 3
RE506105	2G21	2	0422 - 7
RE50618	2C11	4	0401 - 1
RE50618	2C14	4	0401 - 4
RE506300	2F24	3	0418 - 3
RE506662	2F7	7	0414 - 1
RE506949	2F8	3	0414 - 2
RE50752	2G4	9	0420 - 3
RE50752	2G6	10	0420 - 5
RE50752	2G10	9	0420 - 9
RE50752	2G12	10	0420 - 11
RE507595	2C19	1	0402 - 1B
RE507597	2G8	7	0420 - 7
RE507597	2G14	7	0420 - 13
RE507598	2E24	1	0413 - 7
RE507598	2F4	1	0413 - 11
RE507637	2G16	2	0422 - 2
RE507637	2G17	2	0422 - 3
RE507638	2G16	11	0422 - 2
RE507638	2G17	11	0422 - 3
RE507646	2E24	4	0413 - 7
RE507646	2F4	4	0413 - 11
RE507647	2E24	5	0413 - 7
RE507647	2F4	5	0413 - 11
RE507648	2E24	6	0413 - 7
RE507648	2F4	6	0413 - 11
RE507649	2E24	7	0413 - 7
RE507649	2F4	7	0413 - 11
RE507766	2E17	1	0413 - 2
RE507766	2E24	25	0413 - 7
RE507766	2F4	25	0413 - 11
RE507852	2D8	6	0403 - 3A
RE507920	2D8	10	0403 - 3A
RE507923	2H8	12	0452 - 3
RE508185	2D11	22	0404 - 3
RE508185	2D11	25	0404 - 3
RE508195	2C25	13	0402 - 5A
RE508195	2D4	13	0402 - 7A
RE508566	2C25	20	0402 - 5A
RE508566	2D4	20	0402 - 7A
RE508566	2F21	16	0417 - 3
RE508566	2F22	17	0417 - 4
RE508716	2E17	2	0413 - 2
RE508716	2E24	21	0413 - 7
RE508716	2F4	21	0413 - 11
RE509031	2G6	8	0420 - 5
RE509031	2G12	8	0420 - 11
RE509555	2F19	4	0416 - 9
RE509572	2F15	4	0416 - 5
RE509572	2F19	3	0416 - 9
RE509572	2F19	4	0416 - 9
RE509572	2F19	5	0416 - 9
RE509794	2G6	3	0420 - 5
RE509794	2G6	5	0420 - 5
RE509794	2G12	3	0420 - 11
RE509794	2G12	5	0420 - 11
RE515372	2H5	1	0450 - 3
RE515428	2G16	2	0422 - 2
RE515428	2G17	2	0422 - 3
RE515464	2E24	10	0413 - 7
RE515464	2F4	10	0413 - 11
RE515684	2E20	1	0413 - 3B
RE515688	2G16	11	0422 - 2
RE515688	2G17	11	0422 - 3
RE515978	2C23	2	0402 - 4A
RE515978	2C25	15	0402 - 5A
RE515978	2D2	2	0402 - 6A
RE515978	2D4	15	0402 - 7A
RE516099	2D11	3	0404 - 3
RE516099	2D13	1	0404 - 5
RE516100	2D11	3	0404 - 3
RE516100	2D13	1	0404 - 5
RE516340	2C11	4	0401 - 1
RE516340	2C11	25	0401 - 1
RE516340	2C14	4	0401 - 4
RE516340	2C14	25	0401 - 4
RE516340	2C23	11	0402 - 4A
RE516340	2C25	11	0402 - 5A
RE516340	2D2	11	0402 - 6A
RE516340	2D4	11	0402 - 7A
RE516340	2H8	19	0452 - 3
RE51648	2G4	22	0420 - 3
RE51648	2G6	1	0420 - 5
RE51648	2G10	22	0420 - 9
RE51648	2G12	1	0420 - 11
RE51649	2G4	19	0420 - 3
RE51649	2G6	2	0420 - 5
RE51649	2G10	19	0420 - 9
RE51649	2G12	2	0420 - 11
RE51650	2G6	11	0420 - 5
RE51650	2G12	11	0420 - 11
RE516512	2G4	23	0420 - 3
RE516512	2G6	4	0420 - 5
RE516512	2G6	12	0420 - 5
RE516512	2G10	23	0420 - 9
RE516512	2G12	4	0420 - 11
RE516512	2G12	12	0420 - 11
RE516513	2G4	23	0420 - 3
RE516513	2G6	12	0420 - 5
RE516513	2G10	23	0420 - 9
RE516513	2G12	12	0420 - 11
RE516553	2G4	9	0420 - 3
RE516553	2G6	10	0420 - 5
RE516553	2G10	9	0420 - 9
RE516553	2G12	10	0420 - 11
RE517370	2C25	13	0402 - 5A
RE517370	2D4	13	0402 - 7A
RE518087	2E24	10	0413 - 7
RE518087	2F4	10	0413 - 11
RE518097	2G25	14	0429 - 3
RE518176	2E24	14	0413 - 7
RE518176	2F4	14	0413 - 11
RE519144	2C25	13	0402 - 5A
RE519144	2D4	13	0402 - 7A
RE519144	3C24	6	1674 - 9D
RE520023	2D15	1	0404 - 7
RE520031	2D15	1	0404 - 7
RE520539	2H8	1	0452 - 3
RE52087	2I4	2	0530 - 3
RE52087	2I6	2	0530 - 5
RE521822	2F5	1	0413 - 12
RE521822	2F6	1	0413 - 13
RE521822	3C24	3	1674 - 9D
RE521823	2F5	2	0413 - 12
RE521823	2F6	2	0413 - 13
RE521824	2F5	3	0413 - 12
RE521824	2F6	3	0413 - 13
RE521825	2F5	4	0413 - 12
RE521825	2F6	4	0413 - 13
RE522076	2F24	3	0418 - 3
RE522077	2E11	3	0408 - 5
RE522078	2D18	2	0407 - 5
RE522079	2E11	4	0408 - 5
RE522109	2F5	5	0413 - 12
RE522109	2F6	5	0413 - 13
RE52242	2E2	2	0407 - 13
RE52242	2E3	1	0407 - 14
RE52242	2E5	2	0407 - 17
RE52242	2E6	1	0407 - 18
RE522527	2E24	14	0413 - 7
RE522527	2F4	14	0413 - 11
RE522766	2E11	3	0408 - 5
RE522820	2G2	2	0419 - 3
RE52346	2C23	11	0402 - 4A
RE52346	2C25	11	0402 - 5A
RE52346	2D2	11	0402 - 6A
RE52346	2D4	11	0402 - 7A
RE52346	2H8	19	0452 - 3
RE526670	2H6	12	0452 - 1
RE526670	2H8	33	0452 - 3
RE526671	2H6	17	0452 - 1
RE526671	2H8	34	0452 - 3
RE527042	2H8	12	0452 - 3
RE52722	2F24	14	0418 - 3
RE52722	3C22	20	1674 - 9B
RE527299	2H5	1	0450 - 3
RE54885	2F17	8	0416 - 7
RE54885	2F19	8	0416 - 9
RE56165	2H22	32	0515 - 5
RE56165	3C24	8	1674 - 9D

NUMERICAL INDEX - CONTINUED

PART NO.	GRID	KEY	PAGE
RE56313	2C13	15	0401 - 3
RE56313	2C16	15	0401 - 7
RE56323	2G4	5	0420 - 3
RE56323	2G10	5	0420 - 9
RE56369	2C11	21	0401 - 1
RE56369	2C13	21	0401 - 3
RE56369	2C14	21	0401 - 4
RE56369	2C16	21	0401 - 7
RE56375	2C17	1	0402 - 1
RE56375	2C18	1	0402 - 1A
RE57234	2E13	15	0409 - 3
RE57471	1C13	15	0230 - 7
RE57472	1C13	17	0230 - 7
RE57619	2E7	10	0407 - 19
RE57836	2D11	29	0404 - 3
RE57836	2H2	6	0433 - 3
RE59296	2G2	2	0419 - 3
RE59439	2D19	2	0407 - 5B
RE59439	2D21	2	0407 - 7
RE59439	2D23	2	0407 - 9
RE59447	2E22	7	0413 - 5
RE59447	2F2	7	0413 - 9
RE59448	2E22	8	0413 - 5
RE59448	2F2	8	0413 - 9
RE59449	2E22	9	0413 - 5
RE59449	2F2	9	0413 - 9
RE59450	2E22	10	0413 - 5
RE59450	2F2	10	0413 - 9
RE59487	2E22	18	0413 - 5
RE59487	2F2	18	0413 - 9
RE59487	2G4	4	0420 - 3
RE59487	2G8	4	0420 - 7
RE59487	2G10	4	0420 - 9
RE59487	2G14	4	0420 - 13
RE59545	2D25	2	0407 - 11
RE59547	2F17	4	0416 - 7
RE59547	2F19	4	0416 - 9
RE59754	2E2	7	0407 - 13
RE59754	2E5	7	0407 - 17
RE59810	2C23	11	0402 - 4A
RE59810	2C25	11	0402 - 5A
RE59810	2D2	11	0402 - 6A
RE59810	2D4	11	0402 - 7A
RE59810	2H8	19	0452 - 3
RE59811	2C11	22	0401 - 1
RE59811	2C13	22	0401 - 3
RE59811	2C14	22	0401 - 4
RE59811	2C16	22	0401 - 7
RE60005	2E13	3	0409 - 3
RE60025	2G4	12	0420 - 3
RE60025	2G10	12	0420 - 9
RE60029	2E22	18	0413 - 5
RE60029	2F2	18	0413 - 9
RE60029	2G4	4	0420 - 3
RE60029	2G8	4	0420 - 7
RE60029	2G10	4	0420 - 9
RE60029	2G14	4	0420 - 13
RE60037	2G4	2	0420 - 3
RE60037	2G8	2	0420 - 7
RE60037	2G10	2	0420 - 9
RE60037	2G14	2	0420 - 13
RE60062	2E19	10	0413 - 3A
RE60071	2F7	4	0414 - 1
RE60071	2F8	5	0414 - 2
RE60854	2G4	17	0420 - 3
RE60854	2G6	9	0420 - 5
RE60854	2G10	17	0420 - 9
RE60854	2G12	9	0420 - 11
RE60888	3H2	6	1830 - 7
RE61812	2F8	8	0414 - 2
RE61812	3C24	2	1674 - 9D
RE62418	2G4	10	0420 - 3
RE62418	2G10	10	0420 - 9
RE65165	2C11	7	0401 - 1
RE65165	2C13	7	0401 - 3
RE65165	2C14	7	0401 - 4
RE65165	2C16	7	0401 - 7
RE65168	2C11	10	0401 - 1
RE65168	2C13	10	0401 - 3
RE65168	2C14	10	0401 - 4
RE65168	2C16	10	0401 - 7
RE65908	2D5	11	0403 - 2
RE65908	2D6	11	0403 - 2A
RE65908	2D7	11	0403 - 2B
RE65908	2D8	11	0403 - 3A
RE65909	2D5	11	0403 - 2
RE65909	2D6	11	0403 - 2A
RE65909	2D7	11	0403 - 2B
RE65909	2D8	11	0403 - 3A
RE65911	2C11	7	0401 - 1
RE65911	2C13	7	0401 - 3
RE65911	2C14	7	0401 - 4
RE65911	2C16	7	0401 - 7
RE65912	2C11	10	0401 - 1
RE65912	2C13	10	0401 - 3
RE65912	2C14	10	0401 - 4
RE65912	2C16	10	0401 - 7
RE65951	2D13	1	0404 - 5
RE65953	2D13	1	0404 - 5
RE65966	2D5	10	0403 - 2
RE65966	2D6	10	0403 - 2A
RE65978	2E11	5	0408 - 5
RE65978	2F17	6	0416 - 7
RE65978	2F19	6	0416 - 9
RE65978	2K17	12	1369 - 7
RE65978	3J8	7	2160 - 11
RE65978	3J8	31	2160 - 11
RE65978	3J14	9	2160 - 17
RE65978	3J14	19	2160 - 17
RE65978	3J16	9	2160 - 19
RE65978	3J18	5	2160 - 21
RE65978	3J20	7	2160 - 23
RE66082	2H6	12	0452 - 1
RE66082	2H8	33	0452 - 3
RE66084	2H6	17	0452 - 1
RE66084	2H8	34	0452 - 3
RE66092	2H8	12	0452 - 3
RE66093	2H8	12	0452 - 3
RE66153	2G15	2	0421 - 2
RE66271	2D5	6	0403 - 2
RE66271	2D6	6	0403 - 2A
RE66271	2D7	6	0403 - 2B
RE67231	2G2	1	0419 - 3
RE67238	2D16	1	0407 - 2
RE67238	2E2	6	0407 - 13
RE67238	2E3	8	0407 - 14
RE67238	2E5	6	0407 - 17
RE67238	2E6	8	0407 - 18
RE67238	2G2	14	0419 - 3
RE67239	2C23	5	0402 - 4A
RE67239	2C25	5	0402 - 5A
RE67239	2D2	5	0402 - 6A
RE67239	2D4	5	0402 - 7A
RE67239	2D16	6	0407 - 2
RE67764	2E5	7	0407 - 17
RE68695	2C20	9	0402 - 2
RE68748	2E22	3	0413 - 5
RE68748	2E24	26	0413 - 7
RE68748	2F2	3	0413 - 9
RE68748	2F4	26	0413 - 11
RE69243	2D17	1	0407 - 4
RE69243	2D18	1	0407 - 5
RE70073	2E7	10	0407 - 19
RE70358	2G4	11	0420 - 3
RE70358	2G4	18	0420 - 3
RE70358	2G10	11	0420 - 9
RE70358	2G10	18	0420 - 9
RE70486	2G19	5	0422 - 5
RE70487	2G19	3	0422 - 5
RE70535	2G25	14	0429 - 3
RE70756	2G19	9	0422 - 5
RE70848	2E22	4	0413 - 5
RE70848	2F2	4	0413 - 9
RE70962	2F22	15	0417 - 4
RE71240	2F21	15	0417 - 3
RE71256	2G19	8	0422 - 5
R100369	2F21	14	0417 - 3
R100369	2F22	14	0417 - 4
R100377	2G23	2	0423 - 3
R10093	2I19	5	0960 - 6
R10093	2K15	1	1369 - 5
R10093	3H2	21	1830 - 7
R10093	3H9	5	1830 - 13
R10093	5G2	9	3362 - 21
R101225	2C11	11	0401 - 1
R101225	2C11	14	0401 - 1
R101225	2C13	14	0401 - 3
R101225	2C14	11	0401 - 4
R101225	2C14	14	0401 - 4
R101225	2C16	14	0401 - 7
R104592	2D11	5	0404 - 3
R104592	2E13	5	0409 - 3
R104846	3C20	1	1674 - 9
R105812	2H20	6	0515 - 3
R105812	2H22	7	0515 - 5
R106466	2H22	9	0515 - 5
R106466	4C20	30	3115 - 3
R106466	4E8	5	3162 - 23
R106466	5E10	13	3315 - 25
R106466	5E10	21	3315 - 25
R107731	2C20	11	0402 - 2
R109863	2C11	12	0401 - 1
R109863	2C14	12	0401 - 4
R110531	2F7	1	0414 - 1
R110531	2F8	1	0414 - 2
R111137	2D11	10	0404 - 3
R111238	5F17	22	3362 - 11
R111238	5F21	25	3362 - 15
R111238	5G24	25	3362 - 41
R111238	5H4	26	3362 - 45
R111493	4E6	1	3162 - 21
R11151	4E12	14	3162 - 27
R111632	3C18	12	1674 - 7
R112857	2K15	1	1369 - 5
R113050	3H2	15	1830 - 7
R113050	3H9	30	1830 - 13
R113562	2G4	6	0420 - 3
R113562	2G4	7	0420 - 3
R113562	2G6	6	0420 - 5
R113562	2G6	7	0420 - 5
R113562	2G10	6	0420 - 9

NUMERICAL INDEX - CONTINUED

PART NO.	GRID	KEY	PAGE
R113562	2G10	7	0420 - 9
R113562	2G12	6	0420 - 11
R113562	2G12	7	0420 - 11
R113563	2G4	7	0420 - 3
R113563	2G6	7	0420 - 5
R113563	2G10	7	0420 - 9
R113563	2G12	7	0420 - 11
R113565	2G4	21	0420 - 3
R113565	2G10	21	0420 - 9
R113596	2C11	4	0401 - 1
R113596	2C14	4	0401 - 4
R113780	1C12	4	0230 - 6
R114193	2C11	20	0401 - 1
R114193	2C13	20	0401 - 3
R114193	2C14	20	0401 - 4
R114193	2C16	20	0401 - 7
R114194	2C11	23	0401 - 1
R114194	2C13	23	0401 - 3
R114194	2C14	23	0401 - 4
R114194	2C16	23	0401 - 7
R114241	2D11	17	0404 - 3
R115081	2D11	3	0404 - 3
R115081	2D13	1	0404 - 5
R115119	1C20	13	0250 - 7
R115252	2G2	10	0419 - 3
R115299	2D11	12	0404 - 3
R115299	2F11	1	0415 - 3
R115350	3H11	43	1830 - 15
R115390	2D11	15	0404 - 3
R116031	4E10	5	3162 - 25
R116089	3F8	6	1814 - 13
R116115	2E2	9	0407 - 13
R116115	2E3	5	0407 - 14
R116115	2E5	9	0407 - 17
R116115	2E6	5	0407 - 18
R116116	2E22	12	0413 - 5
R116116	2F2	12	0413 - 9
R116116	2G4	15	0420 - 3
R116116	2G8	10	0420 - 7
R116116	2G10	15	0420 - 9
R116116	2G14	10	0420 - 13
R116296	2D16	2	0407 - 2
R116324	2C21	4	0402 - 3
R116366	2E16	5	0413 - 1
R116366	2E18	5	0413 - 3
R116366	2E19	5	0413 - 3A
R116366	2E20	2	0413 - 3B
R116386	2E22	20	0413 - 5
R116386	2E24	17	0413 - 7
R116386	2F2	20	0413 - 9
R116386	2F4	17	0413 - 11
R116466	2D11	2	0404 - 3
R116515	2E13	12	0409 - 3
R116515	2H6	8	0452 - 1
R116515	2H8	8	0452 - 3
R117721	3H4	56	1830 - 7B
R117721	3H6	9	1830 - 9
R117892	3F18	3	1816 - 7
R117892	3I7	8	2001 - 3
R119874	2D11	6	0404 - 3
R120160	3F24	25	1816 - 13
R120332	3G2	5	1816 - 15
R120467	2E9	1	0408 - 3
R120467	2E11	7	0408 - 5
R120631	2C11	3	0401 - 1
R120631	2C13	3	0401 - 3
R120631	2C14	3	0401 - 4
R120631	2C16	3	0401 - 7
R120638	2E7	13	0407 - 19
R120641	2C13	12	0401 - 3
R120641	2C16	12	0401 - 7
R120653	3F8	8	1814 - 13
R121036	2F22	1	0417 - 4
R121038	2F20	1	0417 - 2
R121039	2H2	7	0433 - 3
R121039	2H3	5	0433 - 4
R121043	2D11	9	0404 - 3
R121079	1C14	9	0230 - 8
R121376	2E7	7	0407 - 19
R121402	2E13	14	0409 - 3
R121402	2E13	15	0409 - 3
R121411	2C23	8	0402 - 4A
R121411	2C25	8	0402 - 5A
R121411	2D2	8	0402 - 6A
R121411	2D4	8	0402 - 7A
R121424	2C23	7	0402 - 4A
R121424	2C25	7	0402 - 5A
R121424	2D2	7	0402 - 6A
R121424	2D4	7	0402 - 7A
R121593	1C12	3	0230 - 6
R121594	1C12	6	0230 - 6
R121634	2F20	4	0417 - 2
R121897	2G25	18	0429 - 3
R122218	1C13	15	0230 - 7
R123161	2C20	7	0402 - 2
R123174	2C13	11	0401 - 3
R123174	2C16	11	0401 - 7
R123178	2D5	5	0403 - 2
R123178	2D6	5	0403 - 2A
R123178	2D7	5	0403 - 2B
R123178	2D8	5	0403 - 3A
R123226	2F21	9	0417 - 3
R123226	2F22	9	0417 - 4
R123226	2F24	9	0418 - 3
R123226	2H6	4	0452 - 1
R123226	2H8	4	0452 - 3
R123246	2E15	3	0410 - 2
R123271	2C20	5	0402 - 2
R123273	2G15	3	0421 - 2
R123273	2H8	20	0452 - 3
R123323	2F24	1	0418 - 3
R123324	2F24	11	0418 - 3
R123345	2H6	5	0452 - 1
R123345	2H8	5	0452 - 3
R123352	2D19	1	0407 - 5B
R123352	2D21	1	0407 - 7
R123352	2D23	1	0407 - 9
R123352	2D25	1	0407 - 11
R123353	2H6	13	0452 - 1
R123353	2H8	35	0452 - 3
R123417	2F21	13	0417 - 3
R123417	2F22	13	0417 - 4
R123417	2H8	21	0452 - 3
R123471	2G2	5	0419 - 3
R123501	2G2	3	0419 - 3
R123501	2H8	23	0452 - 3
R123513	2C20	2	0402 - 2
R123521	2H1	2	0433 - 2
R123525	2H8	25	0452 - 3
R123542	2C21	6	0402 - 3
R123542	2H6	1	0452 - 1
R123543	2H8	1	0452 - 3
R123561	2C11	5	0401 - 1
R123561	2C14	5	0401 - 4
R123562	2C11	6	0401 - 1
R123562	2C14	6	0401 - 4
R123563	2C11	8	0401 - 1
R123563	2C14	8	0401 - 4
R123564	2C11	9	0401 - 1
R123564	2C13	9	0401 - 3
R123564	2C14	9	0401 - 4
R123564	2C16	9	0401 - 7
R123565	2C20	10	0402 - 2
R123569	2F9	1	0414 - 3
R123570	2F17	3	0416 - 7
R123570	2F19	3	0416 - 9
R123570	2H6	6	0452 - 1
R123570	2H8	6	0452 - 3
R123572	2I4	7	0530 - 3
R123574	2C21	2	0402 - 3
R123575	2C21	3	0402 - 3
R123575	2H6	7	0452 - 1
R123575	2H8	7	0452 - 3
R123584	2C23	18	0402 - 4A
R123584	2C25	18	0402 - 5A
R123584	2D2	18	0402 - 6A
R123584	2D4	18	0402 - 7A
R123593	2E22	2	0413 - 5
R123593	2E24	19	0413 - 7
R123593	2F2	2	0413 - 9
R123593	2F4	19	0413 - 11
R123616	2D11	28	0404 - 3
R123616	3H6	28	1830 - 9
R123960	2D5	2	0403 - 2
R123960	2D6	2	0403 - 2A
R123960	2D7	2	0403 - 2B
R123960	2D8	2	0403 - 3A
R125223	3H2	18	1830 - 7
R128660	2G25	5	0429 - 3
R128660	2H18	2	0510 - 3
R130574	2C11	8	0401 - 1
R130574	2C13	8	0401 - 3
R130574	2C14	8	0401 - 4
R130574	2C16	8	0401 - 7
R130575	2C11	9	0401 - 1
R130575	2C13	9	0401 - 3
R130575	2C14	9	0401 - 4
R130575	2C16	9	0401 - 7
R130576	2C11	5	0401 - 1
R130576	2C14	5	0401 - 4
R130577	2C11	6	0401 - 1
R130577	2C14	6	0401 - 4
R131016	2F24	5	0418 - 3
R131182	2D11	21	0404 - 3
R131206	2C13	16	0401 - 3
R131206	2C16	16	0401 - 7
R131283	2C11	16	0401 - 1
R131283	2C11	19	0401 - 1
R131283	2C13	19	0401 - 3
R131283	2C14	16	0401 - 4
R131283	2C14	19	0401 - 4
R131283	2C16	19	0401 - 7
R131425	2C23	13	0402 - 4A
R131425	2D2	13	0402 - 6A
R131671	3C12	18	1674 - 5
R131769	2H2	3	0433 - 3
R131769	2H3	2	0433 - 4
R132006	2H2	2	0433 - 3
R132166	2G23	4	0423 - 3
R132186	2D11	20	0404 - 3
R132261	2E14	1	0410 - 1

NUMERICAL INDEX - CONTINUED

PART NO.	GRID	KEY	PAGE
R132267	2E22	23	0413 - 5
R132267	2F2	23	0413 - 9
R132518	2D11	7	0404 - 3
R132690	3H9	21	1830 - 13
R132874	2E22	24	0413 - 5
R132874	2E24	12	0413 - 7
R132874	2F2	24	0413 - 9
R132874	2F4	12	0413 - 11
R133187	2H16	15	0505 - 7
R133295	2G25	16	0429 - 3
R133303	2F11	14	0415 - 3
R133405	2G15	5	0421 - 2
R133893	2H6	10A	0452 - 1
R133893	2H8	10	0452 - 3
R133978	2G23	5	0423 - 3
R134518	2C23	19	0402 - 4A
R134518	2C25	19	0402 - 5A
R134518	2D2	19	0402 - 6A
R134518	2D4	19	0402 - 7A
R134527	2D9	2	0404 - 1
R134531	2C23	2	0402 - 4A
R134531	2D2	2	0402 - 6A
R135177	2G2	11A	0419 - 3
R135431	2G16	3	0422 - 2
R135431	2G17	3	0422 - 3
R135431	3C22	18	1674 - 9B
R135432	2G16	4	0422 - 2
R135432	2G17	4	0422 - 3
R135432	3C22	37	1674 - 9B
R135439	2C17	1	0402 - 1
R135439	2C18	1	0402 - 1A
R135439	2C19	1	0402 - 1B
R135509	2G19	6	0422 - 5
R135510	2G19	4	0422 - 5
R135896	2F24	4	0418 - 3
R135896	2H6	3	0452 - 1
R135918	2H1	3	0433 - 2
R135918	2H2	10	0433 - 3
R135918	2H3	8	0433 - 4
R136052	2G19	2	0422 - 5
R136475	2D9	3	0404 - 1
R136495	2D16	3	0407 - 2
R136515	2H8	22	0452 - 3
R136516	2C23	1	0402 - 4A
R136516	2C25	1	0402 - 5A
R136516	2D2	1	0402 - 6A
R136516	2D4	1	0402 - 7A
R136516	2H8	22	0452 - 3
R137851	3H9	29	1830 - 13
R140070	1C13	13	0230 - 7
R151507	3F8	10	1814 - 13
R20255	1C9	21	0230 - 3
R204271	1C12	4	0230 - 6
R206883	2H12	4	0505 - 3
R26081	5E10	8	3315 - 25
R26125	2E13	4	0409 - 3
R26286	1E21	7	0360 - 4
R26286	1F4	21	0360 - 11
R26286	2E22	17	0413 - 5
R26286	2F2	17	0413 - 9
R26286	2G4	3	0420 - 3
R26286	2G8	3	0420 - 7
R26286	2G10	3	0420 - 9
R26286	2G14	3	0420 - 13
R26286	2J14	13	1060 - 9
R26286	2J16	7	1060 - 11
R26286	2K15	1	1369 - 5
R26286	5I18	23	3363 - 31
R26287	2K15	1	1369 - 5
R26375	2I21	22	0960 - 9
R26375	2I21	34	0960 - 9
R26375	2I23	19	0960 - 11
R26375	2I23	34	0960 - 11
R26375	2J8	27	1060 - 3
R26375	2J19	28	1111 - 3
R26375	2J21	27	1111 - 5
R26375	2K15	1	1369 - 5
R26375	3C22	26	1674 - 9B
R26375	3I25	17	2160 - 5
R26375	3J2	11	2160 - 7
R26375	3J10	12	2160 - 13
R26375	3J10	15	2160 - 13
R26375	3J12	7	2160 - 15
R26375	3J22	14	2160 - 25
R26375	3J24	10	2160 - 27
R26375	4E18	7	3163 - 5
R26375	4E22	3	3163 - 9
R26375	4F2	24	3163 - 13
R26375	5G13	2	3362 - 30
R26375	5H8	31	3363 - 1B
R26375	5H12	12	3363 - 3
R26375	5H14	7	3363 - 3B
R26375	5H16	1	3363 - 5
R26375	5I2	1	3363 - 15
R26375	5I4	3	3363 - 17
R26375	5I6	9	3363 - 19
R26375	5I22	15	3363 - 35
R26375	5I24	7	3363 - 37
R26375	5J6	20	3363 - 43
R26375	5J8	15	3363 - 45
R26375	5J8	16	3363 - 45
R26375	5J10	13	3363 - 47
R26448	1C6	6	0210 - 6
R26448	2I21	13	0960 - 9
R26448	2I23	13	0960 - 11
R26448	2J8	28	1060 - 3
R26448	2J12	5	1060 - 7
R26448	2K15	1	1369 - 5
R26448	3D18	11	1740 - 5
R26448	3J2	7	2160 - 7
R26448	3J6	7	2160 - 9B
R26448	3J12	9	2160 - 15
R26448	3J22	22	2160 - 25
R26448	4C4	14	3102 - 11
R26448	4C12	2	3102 - 19
R26448	4C16	19	3104 - 3
R26448	4D16	4	3162 - 7
R26448	4E10	28	3162 - 25
R26448	4E24	10	3163 - 11
R26448	4E24	34	3163 - 11
R26448	4F2	27	3163 - 13
R26448	5F15	30	3362 - 9
R26448	5G12	7	3362 - 29B
R26448	5G14	2	3362 - 31
R26448	5G14	14	3362 - 31
R26448	5G16	4	3362 - 33
R26448	5G18	13	3362 - 35
R26448	5G20	14	3362 - 37
R26448	5H8	16	3363 - 1B
R26448	5H14	1	3363 - 3B
R26448	5H14	7	3363 - 3B
R26448	5H14	12	3363 - 3B
R26448	5H16	18	3363 - 5
R26448	5H16	28	3363 - 5
R26448	5I6	1	3363 - 19
R26448	5I16	1	3363 - 29
R26448	5I18	1	3363 - 31
R26448	5K7	19	3365 - 21A
R26448	5K8	18	3365 - 22
R26491	3E21	12	1814 - 3
R26493	2D11	11	0404 - 3
R26552	2J10	17	1060 - 5
R26632	1C10	2	0230 - 4
R26650	2D11	13	0404 - 3
R26773	2K15	1	1369 - 5
R26773	5E25	1	3345 - 6
R26863	2K15	1	1369 - 5
R26871	2H20	38	0515 - 3
R26871	3H18	44	1910 - 5
R26871	4C20	30	3115 - 3
R26871	4E8	5	3162 - 23
R26871	5E6	7	3315 - 21
R26871	5E6	10	3315 - 21
R26871	5E10	13	3315 - 25
R26871	5E10	21	3315 - 25
R26906	1D14	21	0341 - 1
R26906	2E13	6	0409 - 3
R26906	2E13	16	0409 - 3
R26906	2J10	4	1060 - 5
R26906	2J19	23	1111 - 3
R26906	2J21	22	1111 - 5
R26906	2K15	1	1369 - 5
R26906	2K17	13	1369 - 7
R26906	3I25	7	2160 - 5
R26906	3J8	42	2160 - 11
R26906	3J14	6	2160 - 17
R26906	3J16	7	2160 - 19
R26906	3J20	9	2160 - 23
R26906	4D20	15	3162 - 11
R26906	4D24	22	3162 - 15
R26906	4E6	11	3162 - 21
R26906	4E12	9	3162 - 27
R26906	4E16	4	3163 - 3
R26906	4E18	13	3163 - 5
R26906	4E20	14	3163 - 7
R26906	4E20	20	3163 - 7
R26906	4E20	40	3163 - 7
R26906	4E22	37	3163 - 9
R26906	4E22	38	3163 - 9
R26906	5F15	3	3362 - 9
R26906	5F17	21	3362 - 11
R26906	5F21	24	3362 - 15
R26906	5G2	8	3362 - 21
R26906	5G4	18	3362 - 23
R26906	5G13	5	3362 - 30
R26906	5G24	24	3362 - 41
R26906	5H4	25	3362 - 45
R26906	5H12	1	3363 - 3
R26906	5H12	11	3363 - 3
R26906	5H14	1	3363 - 3B
R26906	5H18	2	3363 - 7
R26906	5H20	7	3363 - 9
R26906	5H22	1	3363 - 11
R26906	5H24	2	3363 - 13
R26906	5I6	27	3363 - 19
R26906	5I10	35	3363 - 23
R26906	5I14	29	3363 - 27
R26906	5I14	33	3363 - 27
R26906	5I18	13	3363 - 31
R26906	5I20	9	3363 - 33
R26906	5I22	20	3363 - 35

NUMERICAL INDEX - CONTINUED

PART NO.	GRID	KEY	PAGE
R26906	5I24	15	3363 - 37
R26906	5J2	3	3363 - 39
R26906	5J4	3	3363 - 41
R26906	5J6	4	3363 - 43
R26906	5J6	22	3363 - 43
R27094	1E21	8	0360 - 4
R27094	1F4	22	0360 - 11
R27166	2K15	1	1369 - 5
R27175	5G4	19	3362 - 23
R27175	5I8	1	3363 - 21
R27175	5I10	1	3363 - 23
R27175	5I12	1	3363 - 25
R27175	5I14	1	3363 - 27
R27218	2J8	26	1060 - 3
R27218	3J12	10	2160 - 15
R27218	4D16	5	3162 - 7
R27218	5F15	29	3362 - 9
R27434	5E10	6	3315 - 25
R27474	1D14	22A	0341 - 1
R27474	3I25	7	2160 - 5
R27474	3J8	43	2160 - 11
R27474	5G4	19	3362 - 23
R27491	2I21	4	0960 - 9
R27491	2I21	31	0960 - 9
R27491	2I23	4	0960 - 11
R27491	2I23	31	0960 - 11
R27928	2K15	1	1369 - 5
R28776	2K15	1	1369 - 5
R28776	3J24	14	2160 - 27
R28776	5G13	8	3362 - 30
R28782	1C6	5	0210 - 6
R28782	2I21	25	0960 - 9
R28782	2I23	29	0960 - 11
R28782	2K15	1	1369 - 5
R28782	5I16	13	3363 - 29
R28782	5I18	22	3363 - 31
R28811	2H1	1	0433 - 2
R29463	2K15	1	1369 - 5
R29936	2K15	1	1369 - 5
R29936	3J2	8	2160 - 7
R29936	3J4	32	2160 - 9
R29936	3J6	18	2160 - 9B
R29936	3J6	23	2160 - 9B
R29936	3J10	12	2160 - 13
R29936	5F11	8	3362 - 5
R29936	5F13	8	3362 - 7
R29936	5I10	37	3363 - 23
R30378	3D9	43	1674 - 19
R30903	2K15	1	1369 - 5
R30903	5F17	25	3362 - 11
R30903	5F21	10	3362 - 15
R30903	5F23	5	3362 - 17
R30903	5G24	26	3362 - 41
R30903	5H4	16	3362 - 45
R30903	5H6	16	3362 - 47
R30916	5E24	14	3345 - 5
R32024	3D12	3	1674 - 22
R32025	3D12	4	1674 - 22
R32026	3D9	48	1674 - 19
R32247	5I18	12	3363 - 31
R32548	2J8	8	1060 - 3
R33259	2K15	1	1369 - 5
R33259	3H2	14	1830 - 7
R33259	3H9	7	1830 - 13
R33259	5G13	4	3362 - 30
R33976	2H20	5	0515 - 3
R33976	2H22	6	0515 - 5
R36636	3J10	13	2160 - 13
R375R	2K15	1	1369 - 5
R39112	2H2	1	0433 - 3
R39112	3J10	13	2160 - 13
R39112	3J10	14	2160 - 13
R394R	2K15	1	1369 - 5
R39554	2H16	12	0505 - 7
R39554	3C18	18	1674 - 7
R39554	5E8	6	3315 - 23
R41440	3C6	18	1673 - 5
R41920	2H20	11	0515 - 3
R41920	2H22	14	0515 - 5
R43409	2E13	9	0409 - 3
R44165	3C18	17	1674 - 7
R44302	2I12	24	0560 - 3
R44302	2I21	16	0960 - 9
R44302	2I23	16	0960 - 11
R44302	3B24	6	1671 - 7
R44302	3C6	22	1673 - 5
R44302	3C8	15	1673 - 7
R44302	3C12	20	1674 - 5
R44302	3C14	7	1674 - 5B
R44302	3C16	2	1674 - 5D
R44302	3C18	29	1674 - 7
R44302	3C22	9	1674 - 9B
R44302	3D5	5	1674 - 14
R44302	3E23	61	1814 - 5
R44302	3F8	4	1814 - 13
R44302	3G21	4	1821 - 19
R44302	3H4	52	1830 - 7B
R44302	3H9	2	1830 - 13
R44302	3J14	11	2160 - 17
R44302	3J16	15	2160 - 19
R44302	3J18	9	2160 - 21
R44302	4F2	20	3163 - 13
R44302	5I24	16	3363 - 37
R44302	5J6	10	3363 - 43
R44342	3C18	22	1674 - 7
R459R	2K15	1	1369 - 5
R460R	2K15	1	1369 - 5
R463R	2I12	20	0560 - 3
R46528	4C22	23	3115 - 5
R46528	4C24	25	3115 - 7
R46528	4D14	2	3162 - 5
R46528	5D12	15	3315 - 7
R46528	5D14	42	3315 - 9
R46528	5D14	53	3315 - 9
R46528	5D18	13	3315 - 13
R46528	5D20	12	3315 - 13B
R46528	5D22	6	3315 - 15
R46528	5D24	11	3315 - 15B
R46528	5E4	11	3315 - 19
R46528	5E12	10	3315 - 27
R46667	3H6	21	1830 - 9
R46667	3J8	4	2160 - 11
R46919	2I21	31	0960 - 9
R46919	2I23	31	0960 - 11
R46919	2J12	8	1060 - 7
R46919	3J8	13	2160 - 11
R46919	4C16	24	3104 - 3
R46919	4E16	10	3163 - 3
R46919	4E18	6	3163 - 5
R46919	4E22	4	3163 - 9
R46919	4E24	25	3163 - 11
R46919	4F2	33	3163 - 13
R46919	5H20	12	3363 - 9
R46919	5I6	13	3363 - 19
R46919	5I6	36	3363 - 19
R46919	5I8	40	3363 - 21
R46919	5I12	41	3363 - 25
R46919	5J2	13	3363 - 39
R46973	1C9	5	0230 - 3
R46973	1C11	1	0230 - 5
R46973	1C15	5	0250 - 1
R47151	3J24	14	2160 - 27
R47160	2H14	9	0505 - 5
R47693	2H12	4	0505 - 3
R47998	2I16	1	0960 - 3
R47998	2I18	1	0960 - 5
R48000	2E16	8	0413 - 1
R48000	2E18	8	0413 - 3
R48000	2E19	8	0413 - 3A
R48523	2J10	19	1060 - 5
R48568	2H24	11	0520 - 3
R48638	2K15	1	1369 - 5
R48685	2C11	1	0401 - 1
R48685	2C13	1	0401 - 3
R48685	2C14	1	0401 - 4
R48685	2C16	1	0401 - 7
R48685	2D11	1	0404 - 3
R48808	3C2	2	1672 - 3
R48887	3D7	17	1674 - 17
R495R	2K15	1	1369 - 5
R49841	1C10	5	0230 - 4
R49921	5J6	13	3363 - 43
R500096	2H1	4	0433 - 2
R500265	2F11	2	0415 - 3
R500270	2G15	1	0421 - 2
R500271	2G15	6	0421 - 2
R500304	2G25	1	0429 - 3
R500304	2G25	8	0429 - 3
R500320	2G25	9	0429 - 3
R500320	3H11	41	1830 - 15
R500322	2G23	10	0423 - 3
R50034	2J8	16	1060 - 3
R500363	2C11	15	0401 - 1
R500363	2C14	15	0401 - 4
R500374	2E2	1	0407 - 13
R500374	2E3	9	0407 - 14
R500374	2E5	1	0407 - 17
R500374	2E6	9	0407 - 18
R500374	2H8	32	0452 - 3
R500390	2E16	8	0413 - 1
R500390	2E17	4	0413 - 2
R500390	2E18	8	0413 - 3
R500390	2E19	8	0413 - 3A
R500394	2F9	2	0414 - 3
R500401	2F21	16	0417 - 3
R500531	2G23	12	0423 - 3
R500596	2F7	2	0414 - 1
R500596	2F8	2	0414 - 2
R500598	2G25	4	0429 - 3
R500649	2G25	17	0429 - 3
R501124	2D5	1	0403 - 2
R501124	2D6	1	0403 - 2A
R501124	2D7	1	0403 - 2B
R501124	2D8	1	0403 - 3A
R501144	2F24	10	0418 - 3
R501373	2H6	9	0452 - 1
R501373	2H8	9	0452 - 3
R501428	2G2	8	0419 - 3
R501428	2H8	31	0452 - 3
R501472	2F8	7	0414 - 2
R501486	3C2	7	1672 - 3

NUMERICAL INDEX - CONTINUED

PART NO.	GRID	KEY	PAGE
R501489	2C13	24	0401 - 3
R501489	2C16	24	0401 - 7
R502076	2E22	29	0413 - 5
R502076	2E24	11	0413 - 7
R502076	2F2	29	0413 - 9
R502076	2F4	11	0413 - 11
R502079	2G25	11	0429 - 3
R502079	3H9	39	1830 - 13
R502513	2E3	4	0407 - 14
R502513	2E3	11	0407 - 14
R502513	2E6	4	0407 - 18
R502513	2E6	11	0407 - 18
R502604	2D17	2	0407 - 4
R502725	2D17	3	0407 - 4
R50279	3H2	8	1830 - 7
R50279	3H4	61	1830 - 7B
R502811	2G2	11A	0419 - 3
R502811	2G2	11B	0419 - 3
R502814	2F24	4	0418 - 3
R502814	2H6	3	0452 - 1
R502814	2H8	3	0452 - 3
R502864	2H8	24	0452 - 3
R502867	2E7	6	0407 - 19
R502902	2D16	7	0407 - 2
R503419	2G16	9	0422 - 2
R503419	2G17	9	0422 - 3
R503449	2H3	1	0433 - 4
R503451	2H2	2	0433 - 3
R503509	2F22	16	0417 - 4
R503520	2E24	28	0413 - 7
R503520	2F4	28	0413 - 11
R503891	2F19	3	0416 - 9
R503891	2H6	6	0452 - 1
R503891	2H8	6	0452 - 3
R504022	2G25	13	0429 - 3
R504022	2H18	1	0510 - 3
R504023	2G25	13	0429 - 3
R504023	2H18	1	0510 - 3
R504023	3H9	31	1830 - 13
R504191	3H9	21	1830 - 13
R504191	3H9	23	1830 - 13
R504192	3H9	23	1830 - 13
R504725	2C23	2	0402 - 4A
R504725	2C25	2	0402 - 5A
R504725	2D2	2	0402 - 6A
R504725	2D4	2	0402 - 7A
R504734	2G2	18	0419 - 3
R504734	2H8	29	0452 - 3
R505462	2C23	2	0402 - 4A
R505462	2D2	2	0402 - 6A
R505472	2E24	18	0413 - 7
R505472	2F4	18	0413 - 11
R505609	2C11	2	0401 - 1
R505609	2C13	2	0401 - 3
R505609	2C14	2	0401 - 4
R505609	2C16	2	0401 - 7
R50879	2J8	17	1060 - 3
R50992	1C10	12	0230 - 4
R516623	2G25	14	0429 - 3
R519244	2E11	8	0408 - 5
R519273	2E11	9	0408 - 5
R519274	2E11	10	0408 - 5
R519275	2E11	11	0408 - 5
R519286	2E11	12	0408 - 5
R51936	2E22	3	0413 - 5
R51936	2E22	4	0413 - 5
R51936	2E24	20	0413 - 7
R51936	2F2	3	0413 - 9
R51936	2F2	4	0413 - 9
R51936	2F4	20	0413 - 11
R521439	2H6	2	0452 - 1
R521439	2H8	2	0452 - 3
R522030	2H6	13	0452 - 1
R522030	2H8	13	0452 - 3
R52725	3C18	23	1674 - 7
R52921	3E23	57	1814 - 5
R53108	2G19	1	0422 - 5
R53108	2H8	26	0452 - 3
R53543	2K15	1	1369 - 5
R54123	2H12	2	0505 - 3
R54124	1B16	3	0110 - 3
R54565	2C20	1	0402 - 2
R54701	5I6	8	3363 - 19
R55326	3E11	5	1811 - 3
R56101	2H18	17	0510 - 3
R56461	2K15	1	1369 - 5
R56463	2K15	1	1369 - 5
R56464	4E10	10	3162 - 25
R56751	2K15	1	1369 - 5
R60332	2K15	1	1369 - 5
R61105	2G2	9	0419 - 3
R61467	2H2	2	0433 - 3
R61467	2H2	11	0433 - 3
R61467	2H3	3	0433 - 4
R61871	2E7	9	0407 - 19
R61871	2H6	16	0452 - 1
R61871	2H8	16	0452 - 3
R63548	2F13	2	0416 - 3
R63548	2F15	2	0416 - 5
R63548	2F17	1	0416 - 7
R63548	2F19	1	0416 - 9
R63548	2F19	10	0416 - 9
R63548	4D20	9	3162 - 11
R63548	4D24	16	3162 - 15
R63548	5F17	34	3362 - 11
R63548	5F19	24	3362 - 13
R63548	5F21	32	3362 - 15
R63548	5G2	21	3362 - 21
R63548	5G24	33	3362 - 41
R63548	5H2	6	3362 - 43
R63548	5H4	7	3362 - 45
R63548	5H4	30	3362 - 45
R64059	5D18	4	3315 - 13
R64059	5D22	15	3315 - 15
R64525	2G23	3	0423 - 3
R64525	3C2	13	1672 - 3
R65563	4C24	26	3115 - 7
R65563	5D12	16	3315 - 7
R65563	5D14	43	3315 - 9
R65563	5D18	12	3315 - 13
R65563	5D20	13	3315 - 13B
R65563	5D22	7	3315 - 15
R65563	5D24	12	3315 - 15B
R65563	5E4	10	3315 - 19
R65563	5E4	19	3315 - 19
R65563	5E12	8	3315 - 27
R65602	3D9	49	1674 - 19
R65607	3D9	46	1674 - 19
R66320	3D7	24	1674 - 17
R66321	3D7	24	1674 - 17
R67364	2E22	26	0413 - 5
R67364	2F2	26	0413 - 9
R70210	3D9	41	1674 - 19
R70211	3D9	40	1674 - 19
R70212	3D9	41	1674 - 19
R70213	3D9	40	1674 - 19
R70214	3D9	41	1674 - 19
R70215	3D9	40	1674 - 19
R70216	3D9	41	1674 - 19
R70217	3D9	40	1674 - 19
R70218	3D9	41	1674 - 19
R70219	3D9	40	1674 - 19
R70220	3D9	50	1674 - 19
R70221	3D9	39	1674 - 19
R70222	3D9	38	1674 - 19
R71732	2K15	1	1369 - 5
R71963	2E16	2	0413 - 1
R71963	2E18	2	0413 - 3
R71963	2E19	2	0413 - 3A
R72328	2E9	2	0408 - 3
R72328	2E11	13	0408 - 5
R72328	2H8	27	0452 - 3
R72328	4E10	7	3162 - 25
R72655	2I2	13	0520 - 5
R72655	3G8	13	1821 - 5
R72655	3G8	21	1821 - 5
R72655	3G10	5	1821 - 7
R72659	2E9	3	0408 - 3
R72700	2J1	2	0960 - 14
R72700	2J3	19	0960 - 17
R72855	4C20	3	3115 - 3
R72855	4C22	4	3115 - 5
R73530	4E10	23	3162 - 25
R74012	2G4	1	0420 - 3
R74012	2G8	1	0420 - 7
R74012	2G10	1	0420 - 9
R74012	2G14	1	0420 - 13
R74657	5J22	9	3365 - 13
R75382	1B23	2	0201 - 3
R75383	1B23	2	0201 - 3
R75384	1B23	2	0201 - 3
R75385	1B23	2	0201 - 3
R75892	2D11	16	0404 - 3
R75892	2H6	14	0452 - 1
R75892	2H8	14	0452 - 3
R76477	5H24	4	3363 - 13
R77175	5H8	22	3363 - 1B
R77456	3D7	27	1674 - 17
R77457	3D7	29	1674 - 17
R77458	3D7	28	1674 - 17
R77459	3D7	28	1674 - 17
R77460	3D7	28	1674 - 17
R77461	3D7	28	1674 - 17
R77462	3D7	25	1674 - 17
R77463	3D7	30	1674 - 17
R77464	3D7	26	1674 - 17
R77465	3D7	31	1674 - 17
R77466	3D7	33	1674 - 17
R77467	3D7	34	1674 - 17
R77468	3D7	32	1674 - 17
R77469	3D9	35	1674 - 19
R77470	3D9	45	1674 - 19
R77471	3D9	45	1674 - 19
R77472	3D9	45	1674 - 19
R77473	3D9	45	1674 - 19
R77474	3D9	44	1674 - 19
R77475	3D7	13	1674 - 17
R77476	3D7	3	1674 - 17
R77477	3D7	4	1674 - 17
R77478	3D7	15	1674 - 17
R77479	3D7	5	1674 - 17

NUMERICAL INDEX - CONTINUED

PART NO.	GRID	KEY	PAGE
R77480	3D7	6	1674 - 17
R77481	3D7	7	1674 - 17
R77482	3D7	8	1674 - 17
R77483	3D7	16	1674 - 17
R77484	3D7	19	1674 - 17
R77485	3D7	21	1674 - 17
R77486	3D7	22	1674 - 17
R77487	3D7	23	1674 - 17
R77488	3D9	51	1674 - 19
R77489	3D9	51	1674 - 19
R77490	3D9	51	1674 - 19
R77491	3D9	54	1674 - 19
R77492	3D9	54	1674 - 19
R77493	3D9	51	1674 - 19
R77494	3D9	55	1674 - 19
R77495	3D9	52	1674 - 19
R77496	3D9	52	1674 - 19
R77497	3D9	53	1674 - 19
R77498	3D7	24	1674 - 17
R77499	3D7	24	1674 - 17
R77500	3D7	24	1674 - 17
R77501	3D7	24	1674 - 17
R77502	3D9	56	1674 - 19
R77503	3D9	56	1674 - 19
R77857	5J16	14	3365 - 7
R77857	5J18	7	3365 - 9
R78047	3D11	3	1674 - 21
R78048	3D11	10	1674 - 21
R78049	3D11	15	1674 - 21
R78050	3D11	19	1674 - 21
R78051	3D11	24	1674 - 21
R78052	3D11	5	1674 - 21
R78053	3D11	13	1674 - 21
R78054	3D11	17	1674 - 21
R78055	3D11	22	1674 - 21
R78056	3D11	26	1674 - 21
R78057	3D11	2	1674 - 21
R78058	3D11	23	1674 - 21
R78059	3D11	1	1674 - 21
R78060	3D11	2	1674 - 21
R78060	3D11	9	1674 - 21
R78061	3D11	6	1674 - 21
R78061	3D11	23	1674 - 21
R78062	3D11	1	1674 - 21
R78063	3D11	1	1674 - 21
R78063	3D11	7	1674 - 21
R78064	3D11	27	1674 - 21
R78065	3C14	1	1674 - 5B
R78065	3D13	3	1674 - 23
R78066	3C14	1	1674 - 5B
R78066	3D13	2	1674 - 23
R78067	3D13	3	1674 - 23
R78068	3D13	2	1674 - 23
R78069	3D13	1	1674 - 23
R79033	3E11	3	1811 - 3
R79060	4D14	15	3162 - 5
R79101	4F11	8	3165 - 11
R79101	4F13	3	3165 - 13
R79101	5J23	6	3365 - 14
R79101	5K5	13	3365 - 20
R79101	5K10	9	3365 - 23
R79101	5K11	5	3365 - 24
R79101	5K12	5	3365 - 24A
R79117	2J1	9	0960 - 14
R79117	2J3	8	0960 - 17
R79132	1B23	3	0201 - 3
R79604	2E16	4	0413 - 1
R79604	2E18	4	0413 - 3
R79604	2E19	4	0413 - 3A
R79605	2E16	3	0413 - 1
R79605	2E18	3	0413 - 3
R79605	2E19	3	0413 - 3A
R80632	2K15	1	1369 - 5
R81195	5K16	7	3365 - 27
R81195	5K18	9	3365 - 29
R81195	5K23	10	3365 - 34
R81195	5K24	9	3365 - 35
R81195	5K25	9	3365 - 36
R81275	2F7	6	0414 - 1
R81275	2F8	6	0414 - 2
R81275	2F8	7	0414 - 2
R81275	2F8	11	0414 - 2
R81275	2F9	3	0414 - 3
R81275	2H6	10	0452 - 1
R81275	2H8	10	0452 - 3
R81774	5K16	2	3365 - 27
R81774	5K18	13	3365 - 29
R81774	5K23	3	3365 - 34
R81775	5J24	3	3365 - 15
R81775	5J25	18	3365 - 16
R81775	5K13	4	3365 - 25
R81776	4F11	15	3165 - 11
R81776	4F13	8	3165 - 13
R81776	5J22	3	3365 - 13
R81776	5J23	18	3365 - 14
R81776	5K5	6	3365 - 20
R81776	5K10	4	3365 - 23
R81777	4F4	4	3165 - 3
R81777	4F7	4	3165 - 7
R81777	5J19	3	3365 - 10
R81777	5J20	9	3365 - 11
R81777	5K3	6	3365 - 19
R81777	5K7	4	3365 - 21A
R81786	5K16	13	3365 - 27
R81786	5K23	13	3365 - 34
R81786	5K24	3	3365 - 35
R81787	5K13	12	3365 - 25
R81788	4F11	5	3165 - 11
R81788	5K5	16	3365 - 20
R81788	5K10	12	3365 - 23
R81789	4F4	11	3165 - 3
R81789	4F7	11	3165 - 7
R81789	4F8	6	3165 - 8
R81789	5J20	6	3365 - 11
R81789	5K3	16	3365 - 19
R81789	5K7	12	3365 - 21A
R81792	5K16	12	3365 - 27
R81792	5K23	15	3365 - 34
R81792	5K24	11	3365 - 35
R81793	5K13	16	3365 - 25
R81794	4F11	4	3165 - 11
R81794	5K5	19	3365 - 20
R81794	5K10	16	3365 - 23
R81795	4F4	16	3165 - 3
R81795	4F7	16	3165 - 7
R81795	4F8	7	3165 - 8
R81795	5J20	7	3365 - 11
R81795	5K3	19	3365 - 19
R81795	5K7	16	3365 - 21A
R81797	5K3	5	3365 - 19
R81854	2J1	1	0960 - 14
R81854	2J3	2	0960 - 17
R81862	5J25	6	3365 - 16
R81862	5K13	9	3365 - 25
R81862	5K14	5	3365 - 26
R81862	5K15	5	3365 - 26A
R81864	4F4	10	3165 - 3
R81864	4F5	5	3165 - 4
R81864	4F7	10	3165 - 7
R81864	4F8	10	3165 - 8
R81864	4F9	5	3165 - 9
R81864	5J20	5	3365 - 11
R81864	5J21	5	3365 - 12
R81864	5K3	13	3365 - 19
R81864	5K7	9	3365 - 21A
R81864	5K8	5	3365 - 22
R81864	5K9	5	3365 - 22A
R81866	5K23	2	3365 - 34
R82095	5K2	3	3365 - 18
R82571	2J1	10	0960 - 14
R82571	2J3	15	0960 - 17
R83169	2C23	12	0402 - 4A
R83169	2D2	12	0402 - 6A
R83469	5K16	6	3365 - 27
R83469	5K18	16	3365 - 29
R83469	5K23	9	3365 - 34
R83469	5K25	8	3365 - 36
R83576	5K5	12	3365 - 20
R83576	5K10	8	3365 - 23
R83577	5K13	8	3365 - 25
R85363	2E13	1	0409 - 3
R85687	2E13	8	0409 - 3
R86085	5K23	5	3365 - 34
R86380	5K16	4	3365 - 27
R86380	5K18	14	3365 - 29
R86387	5K19	10	3365 - 30
R86457	2H22	36	0515 - 5
R87732	2E15	4	0410 - 2
R89944	2F20	5	0417 - 2
R89944	2H8	28	0452 - 3
R90237	5K19	14	3365 - 30
R90237	5K20	3	3365 - 31
R90265	5K19	11	3365 - 30
R90265	5K20	13	3365 - 31
R90565	2J1	16	0960 - 14
R90658	2E14	2	0410 - 1
R90658	2H6	2	0452 - 1
R90658	2H8	2	0452 - 3
R90692	2E13	10	0409 - 3
R91360	2E22	25	0413 - 5
R91360	2E24	13	0413 - 7
R91360	2F2	25	0413 - 9
R91360	2F4	13	0413 - 11
R91692	2C23	15	0402 - 4A
R91692	2D2	15	0402 - 6A
R91728	5K23	14	3365 - 34
R91731	5K13	13	3365 - 25
R91889	2E13	2	0409 - 3
R92097	2F13	6	0416 - 3
R92097	2F15	6	0416 - 5
R92097	2H6	11	0452 - 1
R92097	2H8	11	0452 - 3
R92097	2I4	7	0530 - 3
R92352	2E16	7	0413 - 1
R92352	2E17	3	0413 - 2
R92352	2E18	7	0413 - 3
R92352	2E19	7	0413 - 3A
R93219	3D12	6	1674 - 22
R93220	3D12	6	1674 - 22
R93221	3D12	6	1674 - 22
R93222	3D12	6	1674 - 22

NUMERICAL INDEX - CONTINUED

PART NO.	GRID	KEY	PAGE
R93633	5K19	7	3365 - 30
R93633	5K20	8	3365 - 31
R93910	2E13	8	0409 - 3
R97021	2I13	4	0560 - 4
R97185	2E7	8	0407 - 19
R97185	2H6	15	0452 - 1
R97185	2H8	15	0452 - 3
R98062	2E13	11	0409 - 3
R98063	2E13	8	0409 - 3
R98322	4F4	6	3165 - 3
R98322	4F5	9	3165 - 4
R98322	4F8	16	3165 - 8
R98322	4F9	9	3165 - 9
R98322	5J21	9	3365 - 12
R98322	5K7	5	3365 - 21A
R98322	5K8	9	3365 - 22
R98322	5K9	9	3365 - 22A
R98323	4F4	6	3165 - 3
R98323	4F5	8	3165 - 4
R98323	4F8	17	3165 - 8
R98323	4F9	8	3165 - 9
R98323	5J21	8	3365 - 12
R98323	5K7	5	3365 - 21A
R98323	5K8	8	3365 - 22
R98323	5K9	8	3365 - 22A
R98324	5K25	4	3365 - 36
R98325	5K25	3	3365 - 36
R98335	2E13	8	0409 - 3
SE500683	2F2	22	0413 - 9
SE500685	2E22	22	0413 - 5
SE500826	2E16	10	0413 - 1
SE500826	2E18	10	0413 - 3
SE500828	2E19	10	0413 - 3A
SE500830	2E17	1	0413 - 2
SE501155	2F15	4	0416 - 5
TF23D	5D2	11	3302 - 15
TF23P	5D2	8	3302 - 15
TY15969	2I12	16	0560 - 3
TY15969	2K11	1	1330 - 2
TY16285	2K11	1	1330 - 2
TY21766	3B20	13	1671 - 3
TY21766	3B22	13	1671 - 5
TY22462	2I12	2	0560 - 3
TY22462	2J14	14	1060 - 9
TY22462	2J16	8	1060 - 11
TY22462	3J8	8	2160 - 11
TY22462	5I16	7	3363 - 29
TY22462	5I18	9	3363 - 31
TY22464	2E11	1	0408 - 5
TY22464	2I21	2	0960 - 9
TY22464	2I23	2	0960 - 11
TY22487	2H24	7	0520 - 3
TY22490	3G23	18	1830 - 3
TY22493	5I22	23	3363 - 35
TY22493	5I24	19	3363 - 37
TY22556	3J6	31	2160 - 9B
TY22556	3J10	16	2160 - 13
TY22559	2I12	3	0560 - 3
TY22566	2H18	18	0510 - 3
TY22566	2H18	19	0510 - 3
TY24344	2I2	8	0520 - 5
TY24401	2E9	5	0408 - 3
TY24485	3C2	3	1672 - 3
TY24867	2I2	4	0520 - 5
TY26194	3D9	57	1674 - 19
TY6128	3B20	13	1671 - 3
TY6128	3B22	13	1671 - 5
TY6304	2D11	24	0404 - 3
TY6750	3C2	3	1672 - 3
TY6764	3H9	25	1830 - 13
TY6799	3C2	3	1672 - 3
T100787	3E19	2	1812 - 5
T100813	1C9	10	0230 - 3
T101624	3D18	17	1740 - 5
T101624	5H16	23	3363 - 5
T101763	5G13	7	3362 - 30
T101764	5G13	6	3362 - 30
T101807	3E11	16	1811 - 3
T101807	3E13	5	1811 - 5
T101807	5E19	3	3344 - 2
T101975	3H6	20	1830 - 9
T102780	3C10	27	1674 - 3
T102934	1D17	5	0341 - 4
T102934	3C12	7	1674 - 5
T102934	3J8	19	2160 - 11
T102934	5I12	44	3363 - 25
T103461	2I12	11	0560 - 3
T103834	3C10	23	1674 - 3
T105368	5G14	4	3362 - 31
T105368	5G14	15	3362 - 31
T105469	5J16	12	3365 - 7
T105469	5J18	4	3365 - 9
T105720	4E20	27	3163 - 7
T105720	4E22	26	3163 - 9
T105740	2H24	20	0520 - 3
T105740	3E21	16	1814 - 3
T105740	3G6	21	1821 - 3
T105740	3G6	22	1821 - 3
T105740	3H16	20	1910 - 3
T105773	4E16	7	3163 - 3
T105773	4E18	24	3163 - 5
T105773	4E20	16	3163 - 7
T105773	4E22	15	3163 - 9
T105773	5H20	18	3363 - 9
T105773	5H22	5	3363 - 11
T105774	5H12	5	3363 - 3
T105774	5H14	5	3363 - 3B
T105774	5I6	3	3363 - 19
T105774	5J6	16	3363 - 43
T105988	5E22	12	3345 - 3
T106066	5E14	2	3342 - 3
T106398	5E14	4	3342 - 3
T106399	5E14	3	3342 - 3
T107029	5I8	10	3363 - 21
T107029	5I8	38	3363 - 21
T107029	5I12	38	3363 - 25
T107116	3B22	7	1671 - 5
T107117	3B20	3	1671 - 3
T107117	3B22	6	1671 - 5
T10745	3C2	4	1672 - 3
T107887	4D20	12	3162 - 11
T107887	4D24	19	3162 - 15
T107887	5F17	31	3362 - 11
T107887	5F19	27	3362 - 13
T107887	5F21	33	3362 - 15
T107887	5G24	30	3362 - 41
T107887	5H2	9	3362 - 43
T107887	5H4	27	3362 - 45
T108357	3C10	24	1674 - 3
T11234	1C9	16	0230 - 3
T11234	3I9	4	2002 - 3
T113128	1C16	7	0250 - 2
T113128	1D13	4	0325 - 2
T114774	3H7	11	1830 - 10
T114774	3H7	12	1830 - 10
T115030	3I9	5	2002 - 3
T116290	1C13	7	0230 - 7
T116400	5E16	29	3343 - 3
T116400	5E18	30	3343 - 5
T116851	1C22	6	0250 - 9
T116851	1C24	9	0250 - 11
T116918	1D14	4	0341 - 1
T116918	1D16	10	0341 - 3
T118679	5F13	4	3362 - 7
T118681	4D18	38	3162 - 9
T118681	4D20	10	3162 - 11
T118681	4D22	27	3162 - 13
T118681	4D24	17	3162 - 15
T118681	4E2	26	3162 - 17
T118681	4E6	18	3162 - 21
T118681	5F17	11	3362 - 11
T118681	5F17	33	3362 - 11
T118681	5F19	25	3362 - 13
T118681	5F21	35	3362 - 15
T118681	5F23	27	3362 - 17
T118681	5G24	10	3362 - 41
T118681	5G24	32	3362 - 41
T118681	5H2	7	3362 - 43
T118681	5H4	29	3362 - 45
T118681	5H6	8	3362 - 47
T118683	4E12	19	3162 - 27
T118685	4D16	3	3162 - 7
T118685	4D18	23	3162 - 9
T118685	4D22	11	3162 - 13
T118685	4E4	7	3162 - 19
T118685	5F15	5	3362 - 9
T118685	5F17	18	3362 - 11
T118685	5F19	11	3362 - 13
T118685	5F21	15	3362 - 15
T118685	5F23	10	3362 - 17
T118685	5G2	10	3362 - 21
T118685	5G24	21	3362 - 41
T118685	5H2	20	3362 - 43
T118685	5H4	20	3362 - 45
T118685	5H6	20	3362 - 47
T118692	4D20	16	3162 - 11
T118692	4D24	23	3162 - 15
T118692	4E6	12	3162 - 21
T118693	4D20	14	3162 - 11
T118693	4D24	21	3162 - 15
T118693	4E6	10	3162 - 21
T118694	4D20	13	3162 - 11
T118694	4D24	20	3162 - 15
T118694	4E6	9	3162 - 21
T118695	5F11	4	3362 - 5
T118695	5F13	4	3362 - 7
T118695	5G5	4	3362 - 24
T118695	5G6	4	3362 - 25
T118695	5G7	5	3362 - 26
T118695	5G8	5	3362 - 27
T118697	5F11	4	3362 - 5
T118697	5F13	4	3362 - 7
T118697	5G7	5	3362 - 26
T118697	5G8	5	3362 - 27
T118708	4D18	14	3162 - 9
T118708	4D20	23	3162 - 11
T118709	4D18	16	3162 - 9
T118709	4D20	25	3162 - 11
T118711	4D18	17	3162 - 9
T118711	4D20	26	3162 - 11
T118712	4D18	20	3162 - 9

NUMERICAL INDEX - CONTINUED

PART NO.	GRID	KEY	PAGE
T118712	4D20	27	3162 - 11
T118715	4D18	12	3162 - 9
T118715	4D20	21	3162 - 11
T118768	4B23	1	3102 - 5
T118768	4C10	1	3102 - 17
T118799	4D18	19	3162 - 9
T118799	4D20	28	3162 - 11
T118799	4E2	14	3162 - 17
T118799	5F19	17	3362 - 13
T118799	5F21	21	3362 - 15
T118799	5F23	17	3362 - 17
T118799	5F25	12	3362 - 19
T118799	5G4	12	3362 - 23
T118808	4E2	13	3162 - 17
T118808	4E6	16	3162 - 21
T118808	4E12	21	3162 - 27
T118808	5F17	27	3362 - 11
T118808	5F19	15	3362 - 13
T118808	5F21	19	3362 - 15
T118808	5F23	16	3362 - 17
T118808	5F25	11	3362 - 19
T118808	5G4	11	3362 - 23
T118866	4E2	30	3162 - 17
T118866	4E6	23	3162 - 21
T118866	5F17	6	3362 - 11
T118866	5F23	20	3362 - 17
T118866	5G24	5	3362 - 41
T118866	5H6	3	3362 - 47
T118867	4E2	19	3162 - 17
T118867	4E6	22	3162 - 21
T118867	5F17	7	3362 - 11
T118867	5F23	21	3362 - 17
T118867	5G24	6	3362 - 41
T118867	5H6	4	3362 - 47
T118879	4E2	11	3162 - 17
T118879	4E6	14	3162 - 21
T118884	4D18	15	3162 - 9
T118884	4D20	24	3162 - 11
T119153	3E21	23	1814 - 3
T119912	1C9	2	0230 - 3
T119912	1C11	5	0230 - 5
T119912	1C15	2	0250 - 1
T119912	3E4	2	1749 - 3
T120543	3G6	12	1821 - 3
T120544	3G6	36	1821 - 3
T120545	3G6	9	1821 - 3
T121238	4D12	5	3162 - 3
T121238	4E4	5	3162 - 19
T121288	3B20	6	1671 - 3
T121288	3B22	12	1671 - 5
T121474	5E6	2	3315 - 21
T121474	5E8	29	3315 - 23
T122075	2G2	4	0419 - 3
T122075	2H8	30	0452 - 3
T12275	2K15	1	1369 - 5
T12275	5K2	7	3365 - 18
T125615	1C9	7	0230 - 3
T125615	1C11	2	0230 - 5
T125615	1C12	7	0230 - 6
T125615	1C13	18	0230 - 7
T125615	1C14	10	0230 - 8
T125615	1C15	8	0250 - 1
T125808	5D16	4	3315 - 11
T12582	4F4	9	3165 - 3
T12582	4F5	4	3165 - 4
T12582	4F7	9	3165 - 7
T12582	4F8	9	3165 - 8
T12582	4F9	4	3165 - 9
T12582	5J20	4	3365 - 11
T12582	5J21	4	3365 - 12
T12582	5K3	12	3365 - 19
T12582	5K7	8	3365 - 21A
T12582	5K8	4	3365 - 22
T12582	5K9	4	3365 - 22A
T126013	3D18	20	1740 - 5
T126052	3J8	14	2160 - 11
T126052	4E20	11	3163 - 7
T126052	5I6	14	3363 - 19
T126052	5I8	17	3363 - 21
T126052	5I10	18	3363 - 23
T126867	5F7	23	3348 - 3
T127257	4E10	14	3162 - 25
T127260	4E10	22	3162 - 25
T127261	4E10	19	3162 - 25
T127263	4E10	18	3162 - 25
T127264	4E10	21	3162 - 25
T127265	4E10	1	3162 - 25
T127268	4E10	2	3162 - 25
T127437	5F9	6	3348 - 5
T128437	3I9	2	2002 - 3
T128533	4C2	5	3102 - 9
T128533	4C12	28	3102 - 19
T128538	4C2	10	3102 - 9
T128538	4C12	27	3102 - 19
T129165	2G21	1	0422 - 7
T129165	3B20	2	1671 - 3
T129165	3B22	5	1671 - 5
T129732	2H20	20	0515 - 3
T129732	2H22	16	0515 - 5
T13119	2K15	1	1369 - 5
T131938	2K4	13	1320 - 3
T13254	2K17	7	1369 - 7
T133291	4D4	2	3115 - 11
T133291	4D6	2	3115 - 13
T133291	5D12	1	3315 - 7
T133291	5E4	1	3315 - 19
T133487	3E21	9	1814 - 3
T133487	3H16	8	1910 - 3
T133674	3E17	6	1812 - 3
T133674	3E21	6	1814 - 3
T133674	3E23	66	1814 - 5
T133674	3F20	3	1816 - 9
T133674	3F22	5	1816 - 11
T133674	3F24	5	1816 - 13
T133674	3G25	21	1830 - 5
T133674	5D16	32	3315 - 11
T134104	3B25	2	1671 - 8
T134586	3F20	13	1816 - 9
T134874	3F20	6	1816 - 9
T134874	3F22	1	1816 - 11
T134874	3F22	15	1816 - 11
T134874	3F24	3	1816 - 13
T134874	3F24	9	1816 - 13
T134874	3F24	11	1816 - 13
T134874	3G2	2	1816 - 15
T134874	3G4	2	1816 - 17
T134874	3G25	13	1830 - 5
T134881	4D22	37	3162 - 13
T134881	4D24	11	3162 - 15
T134895	3E11	24	1811 - 3
T134895	3E13	10	1811 - 5
T134895	3E21	30	1814 - 3
T134895	3F22	17	1816 - 11
T134895	3F24	7	1816 - 13
T134895	3G2	30	1816 - 15
T134895	3G4	4	1816 - 17
T134895	3G25	8	1830 - 5
T134895	3G25	21	1830 - 5
T134895	3I7	20	2001 - 3
T134895	3I17	1	2007 - 3
T134896	3F22	12	1816 - 11
T13518	2H2	5	0433 - 3
T135342	2H20	36	0515 - 3
T135342	2H22	49	0515 - 5
T135583	3E21	14	1814 - 3
T135675	3E21	21	1814 - 3
T135675	3E25	2	1814 - 7
T135675	3F2	26	1814 - 9
T135675	3F4	16	1814 - 9B
T13630	2I16	3	0960 - 3
T13630	2I18	3	0960 - 5
T137318	2H20	25	0515 - 3
T137318	2H22	24	0515 - 5
T137321	2H20	21	0515 - 3
T137321	2H22	17	0515 - 5
T137322	2H20	22	0515 - 3
T137322	2H22	18	0515 - 5
T13814	3H2	36	1830 - 7
T139131	3J4	35	2160 - 9
T139165	2K8	1	1320 - 7
T139167	2K8	1	1320 - 7
T140207	1C9	11	0230 - 3
T140211	1C9	6	0230 - 3
T140211	1C12	2	0230 - 6
T140211	1C15	7	0250 - 1
T140283	2K4	14	1320 - 3
T140311	2K4	15	1320 - 3
T140328	4C24	31	3115 - 7
T140328	4D2	26	3115 - 9
T140328	4D4	23	3115 - 11
T140328	4D6	10	3115 - 13
T140328	5D12	14	3315 - 7
T140328	5D14	6	3315 - 9
T140328	5D16	18	3315 - 11
T140328	5D16	22	3315 - 11
T140328	5D18	15	3315 - 13
T140328	5D20	15	3315 - 13B
T140328	5D22	5	3315 - 15
T140328	5D24	13	3315 - 15B
T140328	5E2	12	3315 - 17
T140328	5E12	7	3315 - 27
T14050	2E22	13	0413 - 5
T14050	2F2	13	0413 - 9
T14050	2G4	14	0420 - 3
T14050	2G8	9	0420 - 7
T14050	2G10	14	0420 - 9
T14050	2G14	9	0420 - 13
T14065	4C6	2	3102 - 13
T140650	5D16	7	3315 - 11
T140699	5F11	3	3362 - 5
T140699	5F13	3	3362 - 7
T140699	5G5	6	3362 - 24
T140699	5G6	6	3362 - 25
T140699	5G7	7	3362 - 26
T140699	5G8	7	3362 - 27
T140700	5F11	3	3362 - 5
T140700	5F13	3	3362 - 7
T140700	5G7	7	3362 - 26
T140700	5G8	7	3362 - 27
T14083	2J24	3	1313 - 3
T141075	2K8	2	1320 - 7

NUMERICAL INDEX - CONTINUED

PART NO.	GRID	KEY	PAGE
T141078	2K8	3	1320 - 7
T141093	2K8	2	1320 - 7
T141096	2K8	3	1320 - 7
T141126	5D16	30	3315 - 11
T141234	3E11	22	1811 - 3
T141689	1E22	5	0360 - 5
T142748	2H20	16	0515 - 3
T143169	3H2	20	1830 - 7
T143169	3H9	6	1830 - 13
T143802	4C2	15	3102 - 9
T143804	4C12	37	3102 - 19
T144486	1E20	20	0360 - 3
T144486	1E24	11	0360 - 7
T144486	1F2	7	0360 - 9
T144487	1E20	19	0360 - 3
T144487	1E24	12	0360 - 7
T144493	1F4	19	0360 - 11
T144494	1F4	18	0360 - 11
T145560	2K4	16	1320 - 3
T145560	3H9	18	1830 - 13
T146080	2K4	17	1320 - 3
T146089	2K8	4	1320 - 7
T146095	2K8	4	1320 - 7
T146097	2K4	18	1320 - 3
T146098	2K8	5	1320 - 7
T146099	2K8	5	1320 - 7
T146102	2G16	6	0422 - 2
T146102	2G17	6	0422 - 3
T146102	2K4	19	1320 - 3
T146102	3D16	8	1740 - 3
T146102	3D16	15	1740 - 3
T146102	3D18	24	1740 - 5
T146102	3D18	32	1740 - 5
T146104	2K8	6	1320 - 7
T146106	2K8	6	1320 - 7
T146481	3J22	1	2160 - 25
T146757	4C20	4	3115 - 3
T146757	4C22	2	3115 - 5
T146792	2K4	20	1320 - 3
T146792	3J22	26	2160 - 25
T146792	3J24	23	2160 - 27
T146908	2K8	7	1320 - 7
T146911	2K8	7	1320 - 7
T147070	3D16	5	1740 - 3
T147070	5E14	10	3342 - 3
T147187	5I6	41	3363 - 19
T147269	1B23	20	0201 - 3
T147296	4B23	3	3102 - 5
T147296	4C10	3	3102 - 17
T148182	4C20	5	3115 - 3
T148182	4C22	3	3115 - 5
T148313	3D16	6	1740 - 3
T148313	3D16	7	1740 - 3
T148387	3D16	14	1740 - 3
T148387	5E14	22	3342 - 3
T148409	3D16	4	1740 - 3
T148409	3D18	3	1740 - 5
T148409	3D23	2	1747 - 3
T148409	3J22	6	2160 - 25
T148409	3J24	17	2160 - 27
T148409	4E14	16	3162 - 29
T148409	5E19	1	3344 - 2
T148409	5E19	14	3344 - 2
T148409	5E20	2	3344 - 3
T148409	5F2	8	3346 - 3
T148410	3D16	1	1740 - 3
T148410	3D16	17	1740 - 3
T148410	3D18	1	1740 - 5
T148410	3D18	34	1740 - 5
T148410	3G2	34	1816 - 15
T148410	5E19	1	3344 - 2
T148410	5E19	14	3344 - 2
T148410	5F2	8	3346 - 3
T148410	5F4	5	3346 - 5
T148410	5G14	7	3362 - 31
T148411	3D16	2	1740 - 3
T148411	3D18	2	1740 - 5
T148411	4D8	2	3140 - 3
T148467	1C9	22	0230 - 3
T148468	1C9	29	0230 - 3
T148741	5D16	16	3315 - 11
T148817	3I9	3	2002 - 3
T149199	2K4	21	1320 - 3
T149199	3D2	7	1674 - 11
T150487	4B21	2	3102 - 3
T150487	4B23	1	3102 - 5
T150487	4C8	2	3102 - 15
T150487	4C10	1	3102 - 17
T150517	4B23	6	3102 - 5
T150517	4C2	9	3102 - 9
T150517	4C10	6	3102 - 17
T150517	4C12	27	3102 - 19
T150517HD	4B23	6	3102 - 5
T150517HD	4C2	9	3102 - 9
T150517HD	4C10	6	3102 - 17
T150958	4D24	24	3162 - 15
T150961	5J6	2	3363 - 43
T151065	1C21	2	0250 - 8
T151072	1D2	8	0250 - 13
T151074	1C20	17	0250 - 7
T151075	1C22	4	0250 - 9
T151075	1C24	7	0250 - 11
T151077	1C22	8	0250 - 9
T151077	1C24	3	0250 - 11
T151080	1C22	1	0250 - 9
T151080	1C22	11	0250 - 9
T151080	1C24	11	0250 - 11
T151087	1C20	15	0250 - 7
T151088	1C20	15	0250 - 7
T151089	1C18	13	0250 - 5
T151261	1C18	15	0250 - 5
T151262	1C18	9	0250 - 5
T151264	1C20	14	0250 - 7
T151797	3E4	5	1749 - 3
T152288	2I19	4	0960 - 6
T152374	5F15	7	3362 - 9
T152398	4D18	18	3162 - 9
T152401	4D18	10	3162 - 9
T152401	4D20	20	3162 - 11
T152404	4D18	9	3162 - 9
T152404	4D20	19	3162 - 11
T152406	4D18	21	3162 - 9
T152406	4E2	9	3162 - 17
T152406	5F21	13	3362 - 15
T152406	5F25	14	3362 - 19
T152406	5G4	14	3362 - 23
T152406	5H4	18	3362 - 45
T152407	4D18	22	3162 - 9
T152407	4E2	8	3162 - 17
T152407	5F21	14	3362 - 15
T152407	5F25	15	3362 - 19
T152407	5G4	15	3362 - 23
T152407	5H4	19	3362 - 45
T152648	2J24	5	1313 - 3
T152996	2K8	8	1320 - 7
T152997	2K8	8	1320 - 7
T153193	5I12	10	3363 - 25
T153303	3D16	13	1740 - 3
T153303	5E14	21	3342 - 3
T153322	5F4	21	3346 - 5
T153531	5E16	2	3343 - 3
T153531	5E18	13	3343 - 5
T153567	5F2	4	3346 - 3
T153567	5F4	18	3346 - 5
T153608	5E19	11	3344 - 2
T153680	2K4	22	1320 - 3
T153720	1C20	9	0250 - 7
T153721	1C20	6	0250 - 7
T153722	1C20	6	0250 - 7
T153723	2I25	2	0960 - 13
T153742	2I25	3	0960 - 13
T153743	2I25	4	0960 - 13
T153744	2I25	14	0960 - 13
T154058	4D8	9	3140 - 3
T154128	1D14	10	0341 - 1
T154129	1D14	5	0341 - 1
T154130	1D14	16	0341 - 1
T154165	4D8	1	3140 - 3
T154166	4D8	3	3140 - 3
T154187	4E10	6	3162 - 25
T154273	5E24	13	3345 - 5
T154352	4D8	4	3140 - 3
T154360	4B25	6A	3102 - 7
T154361	3C18	19	1674 - 7
T154449	2I10	9	0540 - 3
T154621	3D16	6	1740 - 3
T154621	3D16	7	1740 - 3
T154621	5E14	1	3342 - 3
T154708	5E18	7A	3343 - 5
T154712	5E16	22	3343 - 3
T154712	5E18	22	3343 - 5
T154764	4D8	3	3140 - 3
T154769	4D8	4	3140 - 3
T154821	5E16	18	3343 - 3
T154821	5E18	8A	3343 - 5
T154828	1D8	6	0315 - 3
T154951	1B23	1	0201 - 3
T154952	1C1	12	0210 - 1
T155259	1D23	11	0350 - 6
T155259	1E4	11	0350 - 13
T155324	1D18	2	0350 - 1
T155826	2H18	13	0510 - 3
T155827	2H18	20	0510 - 3
T155858	2H14	10	0505 - 5
T157277	5E14	9	3342 - 3
T157762	5E6	4	3315 - 21
T157785	5E4	16	3315 - 19
T157792	5F4	8	3346 - 5
T157796	5F4	9	3346 - 5
T157922	5E19	5	3344 - 2
T157922	5F5	2	3346 - 6
T158081	3E23	41	1814 - 5
T158132	4F4	25	3165 - 3
T158132	4F7	25	3165 - 7
T158181	4D8	7	3140 - 3
T158245	2J12	11	1060 - 7
T158358	3E23	44	1814 - 5
T158397	5E6	10	3315 - 21
T158424	3H9	32	1830 - 13
T158424	3J14	1	2160 - 17
T158424	3J16	1	2160 - 19

NUMERICAL INDEX - CONTINUED

PART NO.	GRID	KEY	PAGE
T158424	3J20	2	2160 - 23
T158428	3E19	10	1812 - 5
T158437	1C5	7	0210 - 5
T158437	2J19	22	1111 - 3
T158476	3J8	18	2160 - 11
T158481	3G12	14	1821 - 9
T158579	4D10	2	3140 - 5
T158584	3C2	6	1672 - 3
T158648	2I10	11	0540 - 3
T158714	1D24	2	0350 - 7
T158717	1D23	8	0350 - 6
T158717	1E4	8	0350 - 13
T158718	1D23	9	0350 - 6
T158718	1E1	2	0350 - 9
T158718	1E2	17	0350 - 10
T158718	1E4	9	0350 - 13
T158720	1D23	2	0350 - 6
T158720	1E4	2	0350 - 13
T158722	1D25	7	0350 - 8
T158722	1E18	7	0350 - 27
T158732	1E22	2	0360 - 5
T158734	1D8	17	0315 - 3
T158735	1D8	12	0315 - 3
T158739	1D20	9	0350 - 3
T158739	1D22	9	0350 - 5
T158739	1E6	4	0350 - 15
T158739	1E8	4	0350 - 17
T158739	1E10	14	0350 - 19
T158739	1E12	4	0350 - 21
T158739	1E14	4	0350 - 23
T158739	1E16	4	0350 - 25
T158740	1D23	10	0350 - 6
T158740	1E4	10	0350 - 13
T158742	1D20	1	0350 - 3
T158742	1D22	1	0350 - 5
T158742	1D25	19	0350 - 8
T158742	1E6	2	0350 - 15
T158742	1E8	2	0350 - 17
T158742	1E10	15	0350 - 19
T158742	1E12	2	0350 - 21
T158742	1E14	2	0350 - 23
T158742	1E16	2	0350 - 25
T158742	1E18	14	0350 - 27
T158743	1D20	10	0350 - 3
T158743	1D22	10	0350 - 5
T158743	1E6	5	0350 - 15
T158743	1E8	5	0350 - 17
T158743	1E10	13	0350 - 19
T158743	1E12	5	0350 - 21
T158743	1E14	5	0350 - 23
T158743	1E16	5	0350 - 25
T158744	1D25	12	0350 - 8
T158744	1E18	11	0350 - 27
T158745	1D25	11	0350 - 8
T158745	1E18	12	0350 - 27
T158747	1E2	4	0350 - 10
T158748	1E1	3	0350 - 9
T158748	1E2	16	0350 - 10
T158749	1E22	4	0360 - 5
T158754	1E22	10	0360 - 5
T158756	1D20	13	0350 - 3
T158756	1D22	13	0350 - 5
T158756	1E10	6	0350 - 19
T158756	1E14	12	0350 - 23
T158756	1E16	12	0350 - 25
T158758	1D8	4	0315 - 3
T158760	1D25	15	0350 - 8
T158760	1E18	17	0350 - 27
T158762	1D25	9	0350 - 8
T158762	1E18	9	0350 - 27
T158775	1D20	12	0350 - 3
T158775	1D22	12	0350 - 5
T158775	1E6	7	0350 - 15
T158775	1E8	7	0350 - 17
T158775	1E10	7	0350 - 19
T158775	1E12	7	0350 - 21
T158775	1E14	7	0350 - 23
T158775	1E16	7	0350 - 25
T158777	1E1	6	0350 - 9
T158777	1E2	13	0350 - 10
T158778	1D20	19	0350 - 3
T158778	1D22	19	0350 - 5
T158778	1E6	13	0350 - 15
T158778	1E8	13	0350 - 17
T158778	1E10	8	0350 - 19
T158778	1E12	13	0350 - 21
T158778	1E14	11	0350 - 23
T158778	1E16	11	0350 - 25
T158784	1D8	3	0315 - 3
T158785	1D8	2	0315 - 3
T158786	1D8	5	0315 - 3
T158789	1D20	11	0350 - 3
T158789	1D22	11	0350 - 5
T158789	1E6	6	0350 - 15
T158789	1E8	6	0350 - 17
T158789	1E10	12	0350 - 19
T158789	1E12	6	0350 - 21
T158789	1E14	6	0350 - 23
T158789	1E16	6	0350 - 25
T158801	1D20	16	0350 - 3
T158801	1D22	16	0350 - 5
T158801	1E6	10	0350 - 15
T158801	1E8	10	0350 - 17
T158801	1E10	11	0350 - 19
T158801	1E12	10	0350 - 21
T158801	1E14	8	0350 - 23
T158801	1E16	8	0350 - 25
T158802	1D20	20	0350 - 3
T158802	1D22	20	0350 - 5
T158805	1E2	2	0350 - 10
T158806	1E2	3	0350 - 10
T158810	5D16	25	3315 - 11
T158811	1E1	15	0350 - 9
T158812	5D16	23	3315 - 11
T158815	1D6	3	0315 - 1
T158816	1D6	5	0315 - 1
T158817	1D6	1	0315 - 1
T158818	1D6	4	0315 - 1
T158819	1D8	13	0315 - 3
T158820	1D8	7	0315 - 3
T158828	1C9	7	0230 - 3
T158855	1D25	8	0350 - 8
T158855	1E18	8	0350 - 27
T158858	1D25	13	0350 - 8
T158859	1D25	10	0350 - 8
T158859	1E18	10	0350 - 27
T158860	1D25	14	0350 - 8
T158861	1D25	6	0350 - 8
T158864	1D25	17	0350 - 8
T159028	2K4	23	1320 - 3
T159089	5E19	11	3344 - 2
T159118	5E16	2	3343 - 3
T159119	5E16	22	3343 - 3
T159188	5E18	22	3343 - 5
T159197	5D2	12	3302 - 15
T159197	5D2	15	3302 - 15
T159197	5D4	15	3302 - 17
T159263	3D2	10	1674 - 11
T159263	5F11	4	3362 - 5
T159263	5F13	4	3362 - 7
T159264	5F11	3	3362 - 5
T159264	5F13	3	3362 - 7
T159281	5F2	4	3346 - 3
T159281	5F4	18	3346 - 5
T159307	1C5	3	0210 - 5
T159308	1C5	3	0210 - 5
T159309	1C5	3	0210 - 5
T159310	1C5	3	0210 - 5
T159311	1C5	3	0210 - 5
T159313	1C5	3	0210 - 5
T159314	1C5	3	0210 - 5
T159315	1C5	3	0210 - 5
T159316	1C5	8	0210 - 5
T159317	1C5	9	0210 - 5
T159322	1C5	4	0210 - 5
T159323	1C5	4	0210 - 5
T159324	1C5	4	0210 - 5
T159325	1C5	4	0210 - 5
T159326	1C5	4	0210 - 5
T159327	1C5	4	0210 - 5
T159329	1C5	4	0210 - 5
T159330	1C5	4	0210 - 5
T159331	1C5	4	0210 - 5
T159332	1C5	4	0210 - 5
T159334	1C5	4	0210 - 5
T159337	1C5	4	0210 - 5
T159338	1C5	4	0210 - 5
T159341	1C3	11	0210 - 3
T159343	1C3	16	0210 - 3
T159344	1C3	15	0210 - 3
T159346	1C3	17	0210 - 3
T159348	1C3	5	0210 - 3
T159350	1C3	7	0210 - 3
T159351	1C3	6	0210 - 3
T159358	1C3	2	0210 - 3
T159359	1C3	1	0210 - 3
T159359	2J21	6	1111 - 5
T159362	1B23	12	0201 - 3
T159362	2J6	25	1011 - 3
T159371	1B23	11	0201 - 3
T159373	1B23	8	0201 - 3
T159373	2J6	24	1011 - 3
T159386	1B23	23	0201 - 3
T159388	1B23	22	0201 - 3
T159389	1B23	24	0201 - 3
T159396	2J6	9	1011 - 3
T159397	2J6	10	1011 - 3
T159398	2J6	17	1011 - 3
T159399	2J6	6	1011 - 3
T159400	2J6	7	1011 - 3
T159401	2J6	8	1011 - 3
T159402	2J6	4	1011 - 3
T159403	2J6	23	1011 - 3
T159406	2J6	16	1011 - 3
T159407	2J6	14	1011 - 3
T159408	2J6	15	1011 - 3
T159409	2J6	1	1011 - 3
T159425	2J6	20	1011 - 3
T159427	2J6	20	1011 - 3
T159429	2J6	20	1011 - 3
T159431	2J6	20	1011 - 3

NUMERICAL INDEX - CONTINUED

PART NO.	GRID	KEY	PAGE
T159435	2J6	20	1011 - 3
T159440	1C3	18	0210 - 3
T159440	2J6	22	1011 - 3
T159441	1C3	18	0210 - 3
T159441	2J6	22	1011 - 3
T159442	1C3	18	0210 - 3
T159442	2J6	22	1011 - 3
T159443	1C3	18	0210 - 3
T159443	2J6	22	1011 - 3
T159444	1C3	18	0210 - 3
T159444	2J6	22	1011 - 3
T159445	1C3	18	0210 - 3
T159445	2J6	22	1011 - 3
T159446	1C3	18	0210 - 3
T159446	2J6	22	1011 - 3
T159447	1C3	18	0210 - 3
T159447	2J6	22	1011 - 3
T159448	1C3	18	0210 - 3
T159448	2J6	22	1011 - 3
T159449	1C3	18	0210 - 3
T159449	2J6	22	1011 - 3
T159450	1C3	18	0210 - 3
T159450	2J6	22	1011 - 3
T159451	1C3	18	0210 - 3
T159451	2J6	22	1011 - 3
T159452	1C3	18	0210 - 3
T159452	2J6	22	1011 - 3
T159453	1C3	18	0210 - 3
T159453	2J6	22	1011 - 3
T159457	1C3	18	0210 - 3
T159457	2J6	22	1011 - 3
T159459	1C3	18	0210 - 3
T159459	2J6	22	1011 - 3
T159461	1C3	18	0210 - 3
T159461	2J6	22	1011 - 3
T159463	1C3	18	0210 - 3
T159463	2J6	22	1011 - 3
T159471	2J19	13	1111 - 3
T159472	2J19	10	1111 - 3
T159473	2J19	6	1111 - 3
T159474	2J19	9	1111 - 3
T159474	2J21	10	1111 - 5
T159475	2J19	8	1111 - 3
T159475	2J21	9	1111 - 5
T159476	2J19	5	1111 - 3
T159477	2J19	7	1111 - 3
T159477	2J21	4	1111 - 5
T159478	2J19	4	1111 - 3
T159478	2J21	8	1111 - 5
T159479	2J19	1	1111 - 3
T159480	2J19	1	1111 - 3
T159481	2J19	1	1111 - 3
T159482	2J19	1	1111 - 3
T159483	2J19	1	1111 - 3
T159484	2J19	2	1111 - 3
T159485	2J19	3	1111 - 3
T159486	2J19	11	1111 - 3
T159487	2J19	12	1111 - 3
T159487	2J21	17	1111 - 5
T159490	2J19	17	1111 - 3
T159491	2J19	15	1111 - 3
T159492	2J19	16	1111 - 3
T159493	2J19	16	1111 - 3
T159494	2J19	16	1111 - 3
T159495	2J19	16	1111 - 3
T159496	2J19	16	1111 - 3
T159497	2J19	16	1111 - 3
T159499	2J19	21	1111 - 3
T159502	2J19	20	1111 - 3
T159502	2J21	18	1111 - 5
T159518	1C1	8	0210 - 1
T159519	1C1	10	0210 - 1
T159522	1C1	9	0210 - 1
T159523	1C1	9	0210 - 1
T159525	1C1	9	0210 - 1
T159564	1D14	9	0341 - 1
T159565	1D14	15	0341 - 1
T159565	1D14	22B	0341 - 1
T159565	1D16	23	0341 - 3
T159567	1D14	11	0341 - 1
T159567	1D16	19	0341 - 3
T159568	1D20	19	0350 - 3
T159568	1D22	19	0350 - 5
T159568	1E6	13	0350 - 15
T159568	1E8	13	0350 - 17
T159568	1E10	8	0350 - 19
T159568	1E12	13	0350 - 21
T159568	1E14	11	0350 - 23
T159568	1E16	11	0350 - 25
T159569	1D20	19	0350 - 3
T159569	1D22	19	0350 - 5
T159569	1E6	13	0350 - 15
T159569	1E8	13	0350 - 17
T159569	1E10	8	0350 - 19
T159569	1E12	13	0350 - 21
T159569	1E14	11	0350 - 23
T159569	1E16	11	0350 - 25
T159570	1D20	19	0350 - 3
T159570	1D22	19	0350 - 5
T159570	1E6	13	0350 - 15
T159570	1E8	13	0350 - 17
T159570	1E10	8	0350 - 19
T159570	1E12	13	0350 - 21
T159570	1E14	11	0350 - 23
T159570	1E16	11	0350 - 25
T159571	1D25	4	0350 - 8
T159572	1D25	1	0350 - 8
T159572	1E18	1	0350 - 27
T159574	1E1	6	0350 - 9
T159574	1E2	13	0350 - 10
T159575	1E1	6	0350 - 9
T159575	1E2	13	0350 - 10
T159576	1E1	6	0350 - 9
T159576	1E2	13	0350 - 10
T159577	1E1	6	0350 - 9
T159577	1E2	13	0350 - 10
T159578	1D6	2	0315 - 1
T159582	1E20	28	0360 - 3
T159582	1E24	22	0360 - 7
T159583	1E20	12	0360 - 3
T159583	1E24	34	0360 - 7
T159584	1E20	10	0360 - 3
T159584	1E24	36	0360 - 7
T159586	1E20	36	0360 - 3
T159586	1E24	31	0360 - 7
T159587	1E20	32	0360 - 3
T159587	1E24	26	0360 - 7
T159588	1E20	33	0360 - 3
T159588	1E24	27	0360 - 7
T159589	1E20	31	0360 - 3
T159589	1E24	25	0360 - 7
T159591	1E20	37	0360 - 3
T159591	1E24	30	0360 - 7
T159592	1E20	38	0360 - 3
T159592	1E24	29	0360 - 7
T159593	1E20	1	0360 - 3
T159593	1E20	40	0360 - 3
T159593	1E24	1	0360 - 7
T159593	1E24	28	0360 - 7
T159595	1E20	22	0360 - 3
T159596	1E20	23	0360 - 3
T159596	1E24	16	0360 - 7
T159596	1F2	9	0360 - 9
T159597	1E20	26	0360 - 3
T159597	1E24	21	0360 - 7
T159598	1E20	25	0360 - 3
T159598	1E24	20	0360 - 7
T159599	1E20	24	0360 - 3
T159599	1E24	17	0360 - 7
T159600	1E20	27	0360 - 3
T159600	1E24	18	0360 - 7
T159604	1E20	9	0360 - 3
T159604	1E24	3	0360 - 7
T159607	1E20	6	0360 - 3
T159607	1E21	9	0360 - 4
T159607	1E24	7	0360 - 7
T159607	1F4	3	0360 - 11
T159607	1F4	4	0360 - 11
T159607	1F4	5	0360 - 11
T159607	1F4	6	0360 - 11
T159607	1F4	9	0360 - 11
T159607	1F4	13	0360 - 11
T159607	1F4	14	0360 - 11
T159607	1F4	15	0360 - 11
T159607	1F4	16	0360 - 11
T159612	1F4	3	0360 - 11
T159612	1F4	6	0360 - 11
T159613	1E21	10	0360 - 4
T159613	1F4	7	0360 - 11
T159683	1D14	20	0341 - 1
T159683	1D16	12	0341 - 3
T159683	1D16	26	0341 - 3
T159684	1E21	5	0360 - 4
T159684	1F4	11	0360 - 11
T159800	5E16	21	3343 - 3
T159800	5E18	21	3343 - 5
T159815	2K4	8	1320 - 3
T159829	5H20	11	3363 - 9
T159829	5H22	21	3363 - 11
T159829	5H22	22	3363 - 11
T159829	5I6	33	3363 - 19
T159832	3D16	7	1740 - 3
T159853	5F2	15	3346 - 3
T159950	4E20	30	3163 - 7
T159952	4E20	10	3163 - 7
T159952	4E22	21	3163 - 9
T159954	4E16	14	3163 - 3
T159954	4E22	36	3163 - 9
T159954	5H18	9	3363 - 7
T159954	5H22	23	3363 - 11
T159954	5H24	14	3363 - 13
T159954	5I6	31	3363 - 19
T159956	5H18	10	3363 - 7
T159976	5J6	18	3363 - 43
T159980	4C20	9	3115 - 3
T159980	4C22	7	3115 - 5
T159981	4C20	7	3115 - 3
T159981	4C22	5	3115 - 5
T159986	5E16	8	3343 - 3
T159986	5E18	18	3343 - 5
T160067	5E16	12	3343 - 3

NUMERICAL INDEX - CONTINUED

PART NO.	GRID	KEY	PAGE
T160218	5E18	1	3343 - 5
T160299	5F2	10	3346 - 3
T160300	5F2	1	3346 - 3
T160300	5F4	17	3346 - 5
T160302	5F2	10	3346 - 3
T160303	5F2	10	3346 - 3
T160303	5F9	8	3348 - 5
T160304	5F2	1	3346 - 3
T160304	5F4	17	3346 - 5
T160315	3G12	2	1821 - 9
T160376	5H20	16	3363 - 9
T160376	5I8	13	3363 - 21
T160376	5I10	13	3363 - 23
T160376	5I12	13	3363 - 25
T160376	5I14	13	3363 - 27
T160376	5I22	3	3363 - 35
T160384	5F4	15	3346 - 5
T160492	3H4	55	1830 - 7B
T160492	3H6	23	1830 - 9
T160508	2H18	3	0510 - 3
T160515	5E6	6	3315 - 21
T160518	5F17	24	3362 - 11
T160518	5F19	13	3362 - 13
T160518	5F21	17	3362 - 15
T160518	5F23	14	3362 - 17
T160518	5F25	9	3362 - 19
T160518	5G4	9	3362 - 23
T160519	5F17	26	3362 - 11
T160519	5F23	15	3362 - 17
T160520	5G2	15	3362 - 21
T160548	4E20	4	3163 - 7
T160548	4E20	43	3163 - 7
T160548	5H8	13	3363 - 1B
T160549	4E20	33	3163 - 7
T160550	4E16	11	3163 - 3
T160550	4E18	1	3163 - 5
T160554	5H22	35	3363 - 11
T160554	5I6	31	3363 - 19
T160567	5E16	7A	3343 - 3
T160568	5E16	11A	3343 - 3
T160589	5E6	3	3315 - 21
T160590	5E8	25	3315 - 23
T160613	5F15	8	3362 - 9
T160613	5G2	16	3362 - 21
T160628	5F11	3	3362 - 5
T160628	5F13	3	3362 - 7
T160629	5F11	4	3362 - 5
T160629	5F13	4	3362 - 7
T160638	5E6	8	3315 - 21
T160639	5E6	9	3315 - 21
T160663	5G2	5	3362 - 21
T160702	5F21	9	3362 - 15
T160702	5F23	4	3362 - 17
T160720	4C20	14	3115 - 3
T160720	4C22	24	3115 - 5
T160759	2K4	24	1320 - 3
T160759	4C4	29	3102 - 11
T160761	2K8	9	1320 - 7
T160762	2K8	10	1320 - 7
T160763	2K8	9	1320 - 7
T160769	2K8	10	1320 - 7
T160895	3G6	25	1821 - 3
T160896	3G6	24	1821 - 3
T161002	2K17	2	1369 - 7
T161011	5E8	4	3315 - 23
T161012	5E8	2	3315 - 23
T161013	5E8	28	3315 - 23
T161027	5F9	3	3348 - 5
T161036	4B25	2	3102 - 7
T161036	5C12	4	3302 - 3
T161036	5C16	4	3302 - 7
T161036	5D2	2	3302 - 15
T161036	5E16	1	3343 - 3
T161036	5E16	23	3343 - 3
T161036	5E16	31	3343 - 3
T161036	5E18	1	3343 - 5
T161036	5E18	27	3343 - 5
T161036	5E19	12	3344 - 2
T161036	5E24	12	3345 - 5
T161036	5E24	21	3345 - 5
T161036	5F2	1	3346 - 3
T161036	5F2	7	3346 - 3
T161036	5F7	6	3348 - 3
T161036	5F9	2	3348 - 5
T161093	2K17	8	1369 - 7
T161144	1D24	5	0350 - 7
T161144	1E21	4	0360 - 4
T161144	1F4	10	0360 - 11
T161147	1D20	18	0350 - 3
T161147	1D22	18	0350 - 5
T161147	1E6	12	0350 - 15
T161147	1E8	12	0350 - 17
T161147	1E10	9	0350 - 19
T161147	1E12	12	0350 - 21
T161147	1E14	10	0350 - 23
T161147	1E16	10	0350 - 25
T161181	1D14	19	0341 - 1
T161181	1D16	16	0341 - 3
T161182	1D16	15	0341 - 3
T161183	1D20	19	0350 - 3
T161183	1E6	13	0350 - 15
T161183	1E8	13	0350 - 17
T161183	1E10	8	0350 - 19
T161183	1E12	13	0350 - 21
T161183	1E14	11	0350 - 23
T161183	1E16	11	0350 - 25
T161186	1D20	15	0350 - 3
T161186	1D22	15	0350 - 5
T161186	1E10	2	0350 - 19
T161186	1E14	16	0350 - 23
T161186	1E16	16	0350 - 25
T161187	1D20	15	0350 - 3
T161187	1D22	15	0350 - 5
T161187	1E10	2	0350 - 19
T161187	1E14	16	0350 - 23
T161187	1E16	16	0350 - 25
T161188	1D20	15	0350 - 3
T161188	1D22	15	0350 - 5
T161188	1E10	2	0350 - 19
T161188	1E14	16	0350 - 23
T161188	1E16	16	0350 - 25
T161189	1D20	15	0350 - 3
T161189	1D22	15	0350 - 5
T161189	1E10	2	0350 - 19
T161189	1E14	16	0350 - 23
T161189	1E16	16	0350 - 25
T161190	1D20	15	0350 - 3
T161190	1D22	15	0350 - 5
T161190	1E10	2	0350 - 19
T161190	1E14	16	0350 - 23
T161190	1E16	16	0350 - 25
T161191	1D20	15	0350 - 3
T161191	1D22	15	0350 - 5
T161191	1E10	2	0350 - 19
T161191	1E14	16	0350 - 23
T161191	1E16	16	0350 - 25
T161192	1D20	15	0350 - 3
T161192	1D22	15	0350 - 5
T161192	1E10	2	0350 - 19
T161192	1E14	16	0350 - 23
T161192	1E16	16	0350 - 25
T161193	1D20	15	0350 - 3
T161193	1D22	15	0350 - 5
T161193	1E10	2	0350 - 19
T161193	1E14	16	0350 - 23
T161193	1E16	16	0350 - 25
T161194	1E20	3	0360 - 3
T161194	1E20	29	0360 - 3
T161194	1E24	5	0360 - 7
T161194	1E24	24	0360 - 7
T161194	1F2	12	0360 - 9
T161194	1F4	24	0360 - 11
T161196	1E20	12	0360 - 3
T161196	1E24	35	0360 - 7
T161197	1E20	35	0360 - 3
T161197	1E24	32	0360 - 7
T161198	1E20	35	0360 - 3
T161198	1E24	32	0360 - 7
T161199	1E20	35	0360 - 3
T161199	1E24	32	0360 - 7
T161200	1E20	35	0360 - 3
T161200	1E24	32	0360 - 7
T161202	1E20	15	0360 - 3
T161202	1E24	37	0360 - 7
T161203	1E20	14	0360 - 3
T161203	1E24	38	0360 - 7
T161204	1E20	2	0360 - 3
T161204	1E20	39	0360 - 3
T161204	1E24	2	0360 - 7
T161204	1F4	8	0360 - 11
T161204	1F4	25	0360 - 11
T161204	1F4	26	0360 - 11
T161207	1E20	7	0360 - 3
T161207	1E24	8	0360 - 7
T161207	1F2	13	0360 - 9
T161208	1E21	3	0360 - 4
T161208	1F4	12	0360 - 11
T161218	1D16	3	0341 - 3
T161218	1D24	4	0350 - 7
T161233	2J6	3	1011 - 3
T161238	1C3	20	0210 - 3
T161238	2J6	20	1011 - 3
T161239	1C3	20	0210 - 3
T161239	2J6	20	1011 - 3
T161240	1C3	20	0210 - 3
T161240	2J6	20	1011 - 3
T161241	1C3	20	0210 - 3
T161241	2J6	20	1011 - 3
T161242	1C3	20	0210 - 3
T161242	2J6	20	1011 - 3
T161243	1C3	20	0210 - 3
T161243	2J6	20	1011 - 3
T161244	1C3	20	0210 - 3
T161244	2J6	20	1011 - 3
T161245	1C3	20	0210 - 3
T161245	2J6	20	1011 - 3
T161246	1C3	20	0210 - 3
T161246	2J6	20	1011 - 3
T161247	1C3	20	0210 - 3
T161247	2J6	20	1011 - 3
T161248	1C1	9	0210 - 1

NUMERICAL INDEX - CONTINUED

PART NO.	GRID	KEY	PAGE
T161249	1C1	9	0210 - 1
T161279	5D2	9	3302 - 15
T161319	5D2	9	3302 - 15
T161342	5H22	17	3363 - 11
T161365	5I12	16	3363 - 25
T161365	5I14	16	3363 - 27
T161368	3I11	5	2004 - 3
T161373	3E21	11	1814 - 3
T161373	3H16	9	1910 - 3
T161380	2H18	31	0510 - 3
T161380	3C22	28	1674 - 9B
T161380	3G2	15	1816 - 15
T161380	3G4	35	1816 - 17
T161380	3H13	1	1834 - 3
T161380	3I7	17	2001 - 3
T161463	3J14	14	2160 - 17
T161463	3J14	20	2160 - 17
T161463	3J16	12	2160 - 19
T161463	3J18	14	2160 - 21
T161463	5H16	30	3363 - 5
T161464	3J14	17	2160 - 17
T161464	3J16	19	2160 - 19
T161464	3J18	15	2160 - 21
T161497	4C20	1	3115 - 3
T161497	4C22	13	3115 - 5
T161497	4D10	6	3140 - 5
T161497	5E16	37	3343 - 3
T161497	5E18	31	3343 - 5
T161583	5E22	5	3345 - 3
T161593	5E16	1	3343 - 3
T161594	5E16	1	3343 - 3
T161598	5E6	7	3315 - 21
T161598	5E8	27	3315 - 23
T161608	5E16	13	3343 - 3
T161615	2K17	4	1369 - 7
T161665	2K4	25	1320 - 3
T161665	5I22	37	3363 - 35
T161665	5I24	28	3363 - 37
T161678	2K4	26	1320 - 3
T161759	5D2	9	3302 - 15
T161769	5I22	24	3363 - 35
T161769	5I24	18	3363 - 37
T161770	5E14	11	3342 - 3
T161813	5E14	6	3342 - 3
T162003	5H20	9	3363 - 9
T162004	5H20	3	3363 - 9
T162004	5H22	12	3363 - 11
T162004	5I8	15	3363 - 21
T162004	5I10	15	3363 - 23
T162004	5I12	19	3363 - 25
T162004	5I14	19	3363 - 27
T162005	5H20	8	3363 - 9
T162005	5H22	14	3363 - 11
T162005	5I8	43	3363 - 21
T162043	1C22	2	0250 - 9
T162044	1C22	2	0250 - 9
T162045	1C22	2	0250 - 9
T162046	1C22	3	0250 - 9
T162238	3J22	28	2160 - 25
T162380	3C10	1	1674 - 3
T162396	1C9	12	0230 - 3
T162396	1C9	24	0230 - 3
T162396	2J1	15	0960 - 14
T162396	3D16	11	1740 - 3
T162396	4B25	5	3102 - 7
T162396	4C12	13	3102 - 19
T162396	4C16	6	3104 - 3
T162396	4C20	11	3115 - 3
T162396	4C22	27	3115 - 5
T162396	4D8	10	3140 - 3
T162396	4D10	5	3140 - 5
T162396	4F4	20	3165 - 3
T162396	4F4	23	3165 - 3
T162396	4F7	20	3165 - 7
T162396	4F7	23	3165 - 7
T162396	4F8	19	3165 - 8
T162396	4F11	1	3165 - 11
T162396	5D14	29	3315 - 9
T162396	5E14	15	3342 - 3
T162396	5E16	3	3343 - 3
T162396	5E18	3	3343 - 5
T162396	5E19	8	3344 - 2
T162396	5E22	15	3345 - 3
T162396	5E24	2	3345 - 5
T162396	5E25	2	3345 - 6
T162396	5F2	13	3346 - 3
T162396	5F4	28	3346 - 5
T162396	5F7	8	3348 - 3
T162396	5J12	24	3365 - 3
T162396	5J14	22	3365 - 5
T162396	5J16	24	3365 - 7
T162396	5J19	18	3365 - 10
T162396	5J20	20	3365 - 11
T162396	5J22	18	3365 - 13
T162396	5J24	18	3365 - 15
T162396	5K1	18	3365 - 17
T162396	5K2	18	3365 - 18
T162396	5K3	24	3365 - 19
T162396	5K5	24	3365 - 20
T162396	5K7	20	3365 - 21A
T162396	5K10	20	3365 - 23
T162396	5K13	20	3365 - 25
T162396	5K24	17	3365 - 35
T162404	2K4	27	1320 - 3
T162404	5J8	18	3363 - 45
T162404	5J10	16	3363 - 47
T162439	4E24	28	3163 - 11
T162446	1E22	7	0360 - 5
T162517	2J6	19	1011 - 3
T162535	5D2	12	3302 - 15
T162535	5D2	15	3302 - 15
T162535	5D4	15	3302 - 17
T162553	5D2	12	3302 - 15
T162553	5D2	15	3302 - 15
T162553	5D4	15	3302 - 17
T162557	3H9	4	1830 - 13
T162569	5D2	12	3302 - 15
T162569	5D4	15	3302 - 17
T162581	5F2	9	3346 - 3
T162581	5F4	6	3346 - 5
T162582	5F2	9	3346 - 3
T162582	5F4	6	3346 - 5
T162681	5I8	7A	3363 - 21
T162681	5I10	7A	3363 - 23
T162682	5I8	6A	3363 - 21
T162682	5I10	6A	3363 - 23
T162847	2K4	28	1320 - 3
T162847	5C12	6	3302 - 3
T162848	2K4	29	1320 - 3
T162848	5C14	6	3302 - 5
T162935	1E22	8	0360 - 5
T162947	1E20	13	0360 - 3
T162947	1E24	39	0360 - 7
T163109	5F7	2A	3348 - 3
T163109	5F9	3	3348 - 5
T163116	4C5	7	3102 - 12
T163117	4C5	5	3102 - 12
T163118	4C5	12	3102 - 12
T16318	2E22	29	0413 - 5
T16318	2F2	29	0413 - 9
T163225	5I10	30	3363 - 23
T163225	5I20	17	3363 - 33
T163309	3C10	3	1674 - 3
T163309	3C18	9	1674 - 7
T163309	3F24	2	1816 - 13
T163374	1C3	4	0210 - 3
T163375	1C3	10	0210 - 3
T163455	5I4	7	3363 - 17
T163702	5I8	3	3363 - 21
T163702	5I10	3	3363 - 23
T163702	5I12	3	3363 - 25
T163702	5I14	3	3363 - 27
T163810	1C3	9	0210 - 3
T163867	1D8	14	0315 - 3
T163868	1D8	11	0315 - 3
T163869	1D8	10	0315 - 3
T163870	1D8	21	0315 - 3
T163962	3G6	25	1821 - 3
T164034	2H24	8	0520 - 3
T164075	3I25	6	2160 - 5
T164086	5F9	5	3348 - 5
T164087	5F9	5	3348 - 5
T164088	4D12	6	3162 - 3
T164124	2K4	30	1320 - 3
T164124	3J22	2	2160 - 25
T164124	3J24	20	2160 - 27
T164128	2K8	11	1320 - 7
T164129	2K8	11	1320 - 7
T164182	5E19	15	3344 - 2
T164183	5E19	15	3344 - 2
T164257	4C24	21	3115 - 7
T164259	4D4	21	3115 - 11
T164387	5F15	16	3362 - 9
T164387	5F15	31	3362 - 9
T164420	2K4	31	1320 - 3
T164431	1C3	8	0210 - 3
T164572	1E18	5	0350 - 27
T164573	1D16	2	0341 - 3
T164574	1E18	13	0350 - 27
T164575	1E18	15	0350 - 27
T164576	1E18	6	0350 - 27
T164577	1E20	16	0360 - 3
T164577	1E24	40	0360 - 7
T164577	1F4	20	0360 - 11
T164578	1E24	15	0360 - 7
T164579	1E20	34	0360 - 3
T164579	1E24	33	0360 - 7
T164581	1E20	14	0360 - 3
T164581	1E24	38	0360 - 7
T164582	1E20	14	0360 - 3
T164582	1E24	38	0360 - 7
T164583	1E20	14	0360 - 3
T164583	1E24	38	0360 - 7
T164584	1E20	14	0360 - 3
T164584	1E24	38	0360 - 7
T164585	1E24	19	0360 - 7
T164591	1F4	2	0360 - 11
T164592	1F4	1	0360 - 11
T164595	1F4	4	0360 - 11
T164595	1F4	6	0360 - 11
T164596	1F4	5	0360 - 11

NUMERICAL INDEX - CONTINUED

PART NO.	GRID	KEY	PAGE
T164596	1F4	6	0360 - 11
T164597	1F4	13	0360 - 11
T164597	1F4	16	0360 - 11
T164598	1F4	14	0360 - 11
T164598	1F4	16	0360 - 11
T164599	1F4	15	0360 - 11
T164599	1F4	16	0360 - 11
T164609	1F2	10	0360 - 9
T164610	1F2	8	0360 - 9
T164611	1F2	3	0360 - 9
T164612	1F2	4	0360 - 9
T164618	3H4	45	1830 - 7B
T164619	3H2	4	1830 - 7
T164620	3F24	23	1816 - 13
T164621	3F24	26	1816 - 13
T164626	1E6	11	0350 - 15
T164626	1E8	11	0350 - 17
T164626	1E10	10	0350 - 19
T164626	1E12	11	0350 - 21
T164628	1E10	2	0350 - 19
T164628	1E14	16	0350 - 23
T164628	1E16	16	0350 - 25
T164629	1E10	2	0350 - 19
T164629	1E14	16	0350 - 23
T164629	1E16	16	0350 - 25
T164630	1E10	2	0350 - 19
T164630	1E14	16	0350 - 23
T164630	1E16	16	0350 - 25
T164640	1E6	16	0350 - 15
T164643	1E8	16	0350 - 17
T164646	1E10	17	0350 - 19
T164647	1E12	16	0350 - 21
T164648	1D16	1	0341 - 3
T164648	1D16	30	0341 - 3
T164654	1D23	3	0350 - 6
T164654	1E4	3	0350 - 13
T164655	1D23	4	0350 - 6
T164655	1E4	4	0350 - 13
T164657	1D16	12	0341 - 3
T164658	1D16	18	0341 - 3
T164659	1D16	9	0341 - 3
T164660	1D16	7	0341 - 3
T164660	1D16	21	0341 - 3
T164661	1D16	20	0341 - 3
T164662	1D16	17	0341 - 3
T164665	1D14	3	0341 - 1
T164665	1D16	11	0341 - 3
T164666	1D16	13	0341 - 3
T164669	5E16	18	3343 - 3
T164671	1D16	35	0341 - 3
T164686	1F4	17	0360 - 11
T164693	1E20	18	0360 - 3
T164693	1E24	13	0360 - 7
T164693	1F2	6	0360 - 9
T164694	3E25	1	1814 - 7
T164695	3E25	4	1814 - 7
T164696	3E25	5	1814 - 7
T164697	3E25	3	1814 - 7
T164698	3F2	2	1814 - 9
T164701	2H18	29	0510 - 3
T164702	1F2	2	0360 - 9
T164703	1D16	27	0341 - 3
T164704	1D16	28	0341 - 3
T164705	3F2	27	1814 - 9
T164705	3F4	14	1814 - 9B
T164706	3E23	54	1814 - 5
T164707	3E23	45	1814 - 5
T164708	3F2	28	1814 - 9
T164708	3F4	15	1814 - 9B
T164709	3E23	55	1814 - 5
T164710	3E23	55	1814 - 5
T164711	1E14	14	0350 - 23
T164711	1E16	14	0350 - 25
T164712	1E6	8	0350 - 15
T164712	1E8	8	0350 - 17
T164712	1E12	8	0350 - 21
T164714	3G19	16	1821 - 17
T164844	1B23	10	0201 - 3
T164844	1C1	13	0210 - 1
T164909	2J21	11	1111 - 5
T164911	2J21	5	1111 - 5
T164912	2J21	14	1111 - 5
T164913	2J21	15	1111 - 5
T164914	2J21	7	1111 - 5
T164915	2J21	3	1111 - 5
T164916	2J21	2	1111 - 5
T164917	2J21	1	1111 - 5
T164918	2J21	16	1111 - 5
T164922	2J21	19	1111 - 5
T164953	4C20	35	3115 - 3
T164998	1B23	15	0201 - 3
T164999	2K4	31	1320 - 3
T165095	3E21	8	1814 - 3
T165096	3E21	8	1814 - 3
T165158	3E21	34	1814 - 3
T165169	3H2	1	1830 - 7
T165188	2I18	11	0960 - 5
T165256	2I18	13	0960 - 5
T165282	2J8	19	1060 - 3
T165290	3H20	1	1913 - 3
T165292	2I12	14	0560 - 3
T165292	2I12	22	0560 - 3
T165295	2I12	17	0560 - 3
T165295	2I12	22	0560 - 3
T165299	4C24	14	3115 - 7
T165310	4D10	3	3140 - 5
T165314	4D10	12	3140 - 5
T165332	4B25	10	3102 - 7
T165333	4B25	3	3102 - 7
T165336	3E21	34	1814 - 3
T165357	3E23	58	1814 - 5
T165399	1E1	5	0350 - 9
T165400	1E1	14	0350 - 9
T165401	1E2	14	0350 - 10
T165423	2H24	8	0520 - 3
T165431	4D4	8	3115 - 11
T165525	3E4	1	1749 - 3
T165533	2I18	10	0960 - 5
T165542	3C6	3	1673 - 5
T165543	3C6	6	1673 - 5
T165561	3F2	7	1814 - 9
T165563	5E16	2	3343 - 3
T165584	2K4	33	1320 - 3
T165584	3F12	2	1816 - 3
T165584	5D12	23	3315 - 7
T165584	5D18	6	3315 - 13
T165584	5D22	21	3315 - 15
T165585	2K4	34	1320 - 3
T165585	3F14	3	1816 - 5
T165585	5D14	50	3315 - 9
T165586	2K4	35	1320 - 3
T165586	3F14	4	1816 - 5
T165586	5E2	6	3315 - 17
T165590	5D12	5	3315 - 7
T165591	5D14	45	3315 - 9
T165591	5D16	38	3315 - 11
T165591	5E2	2	3315 - 17
T165595	2K4	36	1320 - 3
T165595	5E12	5	3315 - 27
T165604	2K4	34	1320 - 3
T165604	5D16	35	3315 - 11
T165697	5D12	12	3315 - 7
T165697	5D14	4	3315 - 9
T165697	5D16	25	3315 - 11
T165697	5E2	9	3315 - 17
T165739	3E4	6	1749 - 3
T165739	3E4	7	1749 - 3
T165740	5H18	13	3363 - 7
T165740	5H24	16	3363 - 13
T165742	2I13	7	0560 - 4
T165742	5H18	12	3363 - 7
T165742	5H24	7	3363 - 13
T165785	5D14	35	3315 - 9
T165787	5D14	17	3315 - 9
T165788	5D14	16	3315 - 9
T165788	5D16	16	3315 - 11
T165808	3F24	18	1816 - 13
T165864	4E16	19	3163 - 3
T165864	4E18	17	3163 - 5
T165870	3I4	5	1927 - 3
T165889	5H22	8	3363 - 11
T165896	3H24	6	1921 - 3
T165911	3H18	35	1910 - 5
T165915	3H18	53	1910 - 5
T165916	3H16	31	1910 - 3
T165940	3J4	29	2160 - 9
T165948	3E17	15	1812 - 3
T165950	3E4	1	1749 - 3
T165951	3I7	14	2001 - 3
T165969	3E17	5	1812 - 3
T165973	3H16	10	1910 - 3
T165975	3H18	52	1910 - 5
T165976	3H16	15	1910 - 3
T165977	3H18	41	1910 - 5
T165978	3H18	46	1910 - 5
T165981	3H18	43	1910 - 5
T165982	3H16	4	1910 - 3
T165985	3H16	23	1910 - 3
T165997	3H18	37	1910 - 5
T165999	2K4	4	1320 - 3
T166000	3E17	4	1812 - 3
T166001	2K4	5	1320 - 3
T166002	2K4	6	1320 - 3
T166031	5D14	14	3315 - 9
T166035	3E23	37	1814 - 5
T166051	2K4	37	1320 - 3
T166060	3E23	54	1814 - 5
T166062	1E6	18	0350 - 15
T166062	1E8	18	0350 - 17
T166062	1E12	18	0350 - 21
T166065	1E10	4	0350 - 19
T166066	1F2	1	0360 - 9
T166077	1E22	1	0360 - 5
T166078	1E18	3	0350 - 27
T166084	1C1	1	0210 - 1
T166085	1C1	11	0210 - 1
T166091	2H24	19	0520 - 3
T166097	5D14	9	3315 - 9
T166097	5E10	7	3315 - 25
T166102	5E10	19A	3315 - 25
T166145	1C20	16	0250 - 7

NUMERICAL INDEX - CONTINUED

PART NO.	GRID	KEY	PAGE
T166146	1C20	16	0250 - 7
T166147	1C20	16	0250 - 7
T166148	1C20	16	0250 - 7
T166149	1C20	16	0250 - 7
T166150	1C20	16	0250 - 7
T166157	2H20	14	0515 - 3
T166171	2J8	18	1060 - 3
T166174	2H20	28	0515 - 3
T166174	2H22	42	0515 - 5
T166211	3F18	4	1816 - 7
T166213	3F18	2	1816 - 7
T166215	3F18	2	1816 - 7
T166223	5D6	3	3315 - 3
T166223	5D8	6	3315 - 3B
T166224	5D14	31	3315 - 9
T166224	5D18	5	3315 - 13
T166224	5D22	19	3315 - 15
T166226	3G6	10	1821 - 3
T166227	3G6	11	1821 - 3
T166237	5E4	7	3315 - 19
T166244	3C10	8	1674 - 3
T166245	4E20	3	3163 - 7
T166258	5F7	11	3348 - 3
T166297	3H2	29	1830 - 7
T166300	2K4	38	1320 - 3
T166300	3C18	15	1674 - 7
T166322	3F24	30	1816 - 13
T166329	3D23	1	1747 - 3
T166331	3I4	6	1927 - 3
T166332	3I4	7	1927 - 3
T166336	1C3	13	0210 - 3
T166344	3C12	10	1674 - 5
T166360	1D12	18	0315 - 7
T166368	3F2	5	1814 - 9
T166369	3F2	16	1814 - 9
T166370	3F2	9	1814 - 9
T166371	3F2	8	1814 - 9
T166371	3F4	9	1814 - 9B
T166419	4C2	10	3102 - 9
T166433	4C2	3	3102 - 9
T166433	4C4	2	3102 - 11
T166433	4C12	29	3102 - 19
T166437	4C2	9	3102 - 9
T166454	4C2	15	3102 - 9
T166454	4C12	37	3102 - 19
T166455	4C2	10	3102 - 9
T166455	4C12	27	3102 - 19
T166531	3H22	1	1913 - 5
T166535	5E14	7	3342 - 3
T166538	2K4	39	1320 - 3
T166538	3D2	8	1674 - 11
T166686	5F2	12	3346 - 3
T166686	5F4	27	3346 - 5
T166714	5E22	4	3345 - 3
T166714	5F2	11	3346 - 3
T166714	5F4	26	3346 - 5
T166715	5E24	7	3345 - 5
T166715	5E24	17	3345 - 5
T166715	5F2	11	3346 - 3
T166715	5F4	26	3346 - 5
T166716	5F2	12	3346 - 3
T166716	5F4	27	3346 - 5
T166749	5D12	8	3315 - 7
T166761	3J22	3	2160 - 25
T166761	3J24	13	2160 - 27
T166772	5D12	9	3315 - 7
T166773	2I21	32	0960 - 9
T166773	2I23	32	0960 - 11
T166773	5D12	21	3315 - 7
T166780	5I12	7A	3363 - 25
T166780	5I14	7A	3363 - 27
T166781	5I12	6A	3363 - 25
T166781	5I14	6A	3363 - 27
T166874	3F24	6	1816 - 13
T166875	3F22	4	1816 - 11
T166881	3F2	22	1814 - 9
T166881	3F2	23	1814 - 9
T166896	2K4	37	1320 - 3
T166896	3E11	12	1811 - 3
T166898	3I9	10	2002 - 3
T166899	4C24	3	3115 - 7
T166899	4D2	3	3115 - 9
T166900	4D4	1	3115 - 11
T166900	4D6	1	3115 - 13
T166901	2K4	2	1320 - 3
T166904	2K4	1	1320 - 3
T166958	2K4	3	1320 - 3
T166997	3E19	1	1812 - 5
T167059	4C2	12	3102 - 9
T167059	4C12	40	3102 - 19
T167065	3C18	14	1674 - 7
T167082	3F20	10	1816 - 9
T167083	3F20	2	1816 - 9
T167104	4C24	10	3115 - 7
T167119	3F20	10	1816 - 9
T167142	3J4	29	2160 - 9
T167142	3J6	21	2160 - 9B
T167149	3F20	9	1816 - 9
T167150	3F20	8	1816 - 9
T167192	4C24	11	3115 - 7
T167192	4D2	12	3115 - 9
T167192	4D4	28	3115 - 11
T167214	3C4	3	1673 - 3
T167232	3I7	2A	2001 - 3
T167247	5D14	19	3315 - 9
T167248	5D14	37	3315 - 9
T167319	2I16	10	0960 - 3
T167324	3G23	16	1830 - 3
T167325	3G23	7	1830 - 3
T167328	3J20	10	2160 - 23
T167328	3J20	11	2160 - 23
T167416	2I16	9	0960 - 3
T16752	2K15	1	1369 - 5
T168383	5I16	8	3363 - 29
T170783	2I10	1	0540 - 3
T170784	2I10	4	0540 - 3
T17148	2I16	4	0960 - 3
T17148	2I18	4	0960 - 5
T171686	3G6	1	1821 - 3
T172353	3B25	1	1671 - 8
T174398	2J19	15	1111 - 3
T174530	3B25	3	1671 - 8
T175641	3E21	29	1814 - 3
T175642	3E21	28	1814 - 3
T175643	3E21	32	1814 - 3
T175644	3E21	31	1814 - 3
T175645	3E21	27	1814 - 3
T175646	3E21	33	1814 - 3
T176553	2I2	6	0520 - 5
T177187	3I4	1	1927 - 3
T177623	5E4	6	3315 - 19
T178251	3H4	43	1830 - 7B
T178971	3H4	62	1830 - 7B
T179055	3F8	3	1814 - 13
T181306	4E14	3	3162 - 29
T181306	4E24	9B	3163 - 11
T18145	1C9	3	0230 - 3
T18145	1C11	4	0230 - 5
T18145	1C15	3	0250 - 1
T181522	3H2	13	1830 - 7
T181801	3D18	17	1740 - 5
T181801	5H16	23	3363 - 5
T183149	5D14	46	3315 - 9
T183149	5D16	37	3315 - 11
T183149	5E2	3	3315 - 17
T183151	3F22	14	1816 - 11
T183217	2H20	37	0515 - 3
T183217	2H22	11	0515 - 5
T183268	2J10	1	1060 - 5
T183268	2J10	2	1060 - 5
T183269	2J10	21	1060 - 5
T183270	2J10	13	1060 - 5
T183271	2J10	11	1060 - 5
T183272	2J10	9	1060 - 5
T183273	2J10	7	1060 - 5
T183274	2J10	6	1060 - 5
T183276	2J10	16	1060 - 5
T183310	2J10	28	1060 - 5
T183344	3F8	5	1814 - 13
T183356	4D10	10	3140 - 5
T183357	2J10	25	1060 - 5
T183362	2J10	20	1060 - 5
T183404	3F16	3	1816 - 5B
T183468	3F16	1	1816 - 5B
T183482	1C5	4	0210 - 5
T183483	1C5	4	0210 - 5
T183484	1C5	4	0210 - 5
T183485	1C5	4	0210 - 5
T183486	1C5	4	0210 - 5
T183487	1C5	4	0210 - 5
T183489	1C5	4	0210 - 5
T183490	1C5	4	0210 - 5
T183491	1C5	4	0210 - 5
T183492	1C5	4	0210 - 5
T183493	1C5	4	0210 - 5
T183494	1C5	4	0210 - 5
T183495	1C5	4	0210 - 5
T183496	1B23	2	0201 - 3
T183500	2J6	22	1011 - 3
T183502	2J6	22	1011 - 3
T183505	2J6	22	1011 - 3
T183506	2J6	22	1011 - 3
T183507	2J6	22	1011 - 3
T183508	1D2	4	0250 - 13
T183509	1D2	4	0250 - 13
T183510	1D2	4	0250 - 13
T183511	1D2	4	0250 - 13
T183512	1D2	4	0250 - 13
T183513	1D2	4	0250 - 13
T183514	1D2	4	0250 - 13
T183515	1D2	4	0250 - 13
T183516	1D2	4	0250 - 13
T183517	1D2	4	0250 - 13
T183518	1C18	11	0250 - 5
T183519	1C18	11	0250 - 5
T183520	1C18	11	0250 - 5
T183521	1C18	11	0250 - 5
T183522	1C18	11	0250 - 5
T183523	1C18	11	0250 - 5
T183524	1C18	11	0250 - 5
T183525	1C18	11	0250 - 5

NUMERICAL INDEX - CONTINUED

PART NO.	GRID	KEY	PAGE
T183526	1C18	11	0250 - 5
T183527	1C18	11	0250 - 5
T183528	1C18	11	0250 - 5
T183548	5D18	9	3315 - 13
T183560	3G25	7	1830 - 5
T183600	3C10	14	1674 - 3
T183617	4C24	30	3115 - 7
T183617	4D2	27	3115 - 9
T183617	4D4	24	3115 - 11
T183617	4D6	11	3115 - 13
T183617	5D14	7	3315 - 9
T183617	5D16	36	3315 - 11
T183617	5E2	11	3315 - 17
T183617	5E10	20	3315 - 25
T183664	3F6	6	1814 - 11
T183664	3F10	3	1814 - 15
T183669	2H18	26	0510 - 3
T183706	3F20	1	1816 - 9
T183756	4D14	16	3162 - 5
T183756	4D18	28	3162 - 9
T183756	4D22	17	3162 - 13
T183756	5F17	29	3362 - 11
T183756	5F19	21	3362 - 13
T183756	5F21	29	3362 - 15
T183756	5G2	17	3362 - 21
T183756	5H4	8	3362 - 45
T183757	4E2	17	3162 - 17
T183757	4E6	8	3162 - 21
T183757	5F25	17	3362 - 19
T183757	5G4	17	3362 - 23
T183757	5G5	2	3362 - 24
T183757	5G6	2	3362 - 25
T183757	5G7	3	3362 - 26
T183757	5G8	4	3362 - 27
T183757	5J6	1	3363 - 43
T183768	2K4	40	1320 - 3
T183768	3F2	20	1814 - 9
T183768	3F4	19	1814 - 9B
T183773	3H16	29	1910 - 3
T183780	3H18	50	1910 - 5
T183781	3H18	36	1910 - 5
T183882	3F16	4	1816 - 5B
T183884	5E12	3	3315 - 27
T183885	5E12	4	3315 - 27
T183905	5E10	15	3315 - 25
T183913	3J8	15	2160 - 11
T183921	1C1	6	0210 - 1
T183922	1C1	3	0210 - 1
T183923	1C1	5	0210 - 1
T184008	3F20	4	1816 - 9
T184009	3F20	5	1816 - 9
T184116	2K4	41	1320 - 3
T184116	3H18	39	1910 - 5
T184129	5D18	17	3315 - 13
T184129	5D22	3	3315 - 15
T184133	5D22	9	3315 - 15
T184164	3F24	21	1816 - 13
T184214	3F24	35	1816 - 13
T184271	5G2	14	3362 - 21
T184319	2I21	18	0960 - 9
T184319	2I23	18	0960 - 11
T184320	2I21	19	0960 - 9
T184320	2I23	24	0960 - 11
T184328	2I21	6	0960 - 9
T184328	2I23	6	0960 - 11
T184345	3C12	6	1674 - 5
T184345	3C12	13	1674 - 5
T184345	3C14	4	1674 - 5B
T184345	3D2	2	1674 - 11
T184345	3F20	12	1816 - 9
T184345	3F20	20	1816 - 9
T184345	3F22	8	1816 - 11
T184345	3F24	38	1816 - 13
T184356	5G2	11	3362 - 21
T184368	3H4	41	1830 - 7B
T184369	3H2	10	1830 - 7
T184370	3F24	32	1816 - 13
T184393	3H16	25	1910 - 3
T184414	3H4	50	1830 - 7B
T184415	3H4	51	1830 - 7B
T184502	2K8	13	1320 - 7
T184506	2K8	13	1320 - 7
T184514	2K4	42	1320 - 3
T184519	2K4	11	1320 - 3
T184528	3E19	7	1812 - 5
T184579	5I8	30	3363 - 21
T184579	5I12	31	3363 - 25
T184586	1E21	1	0360 - 4
T184620	3F24	22	1816 - 13
T184620	3H2	2	1830 - 7
T184620	3H2	3	1830 - 7
T184657	3J10	9	2160 - 13
T184676	3C22	2	1674 - 9B
T184759	2K4	7	1320 - 3
T184787	3H18	54	1910 - 5
T184788	3H18	38	1910 - 5
T184789	2K4	43	1320 - 3
T184816	1C9	15	0230 - 3
T184821	4C24	24	3115 - 7
T184870	4C20	22	3115 - 3
T184873	4C20	19	3115 - 3
T184892	3E13	11	1811 - 5
T184892	3I7	17	2001 - 3
T184918	1E18	19	0350 - 27
T184924	3H2	23	1830 - 7
T184957	5E8	20	3315 - 23
T184988	5F7	10	3348 - 3
T185004	4C24	27	3115 - 7
T185019	2K4	44	1320 - 3
T185041	4C4	17	3102 - 11
T185078	2J10	18	1060 - 5
T185085	5D12	6	3315 - 7
T185089	2I13	3	0560 - 4
T185089	3J16	17	2160 - 19
T185089	3J18	12	2160 - 21
T185089	4F2	12	3163 - 13
T185090	3J16	16	2160 - 19
T185145	2K4	45	1320 - 3
T185145	3J22	27	2160 - 25
T185146	2K4	46	1320 - 3
T185154	3J18	2	2160 - 21
T185189	3J14	12	2160 - 17
T185189	3J14	20	2160 - 17
T185309	5E4	1	3315 - 19
T185328	3E15	1	1811 - 7
T185329	3E15	1	1811 - 7
T185330	2K4	47	1320 - 3
T185338	4D4	17	3115 - 11
T185360	3H20	4	1913 - 3
T185377	3F2	25	1814 - 9
T185378	3F2	24	1814 - 9
T185387	2H14	1	0505 - 5
T185443	2J6	5	1011 - 3
T185444	1B23	11	0201 - 3
T185465	3E19	14	1812 - 5
T185466	3E19	13	1812 - 5
T185469	2K4	48	1320 - 3
T185469	3H20	5	1913 - 3
T185478	3G25	16	1830 - 5
T185479	3G25	15	1830 - 5
T185480	3G25	19	1830 - 5
T185481	3G25	20	1830 - 5
T185482	3G25	18	1830 - 5
T185485	3F20	22	1816 - 9
T185491	2H20	7	0515 - 3
T185491	2H22	8	0515 - 5
T185493	3F24	8	1816 - 13
T185494	3F24	2	1816 - 13
T185495	3F24	10	1816 - 13
T185496	5E10	3	3315 - 25
T185524	3E17	3	1812 - 3
T185540	3G25	1	1830 - 5
T185545	2K8	14	1320 - 7
T185546	2K8	15	1320 - 7
T185547	2K8	16	1320 - 7
T185548	2K8	17	1320 - 7
T185549	2K8	18	1320 - 7
T185552	2K8	19	1320 - 7
T185553	2K8	20	1320 - 7
T185556	2K4	49	1320 - 3
T185567	2K8	14	1320 - 7
T185568	2K8	15	1320 - 7
T185569	2K8	16	1320 - 7
T185570	2K8	17	1320 - 7
T185571	2K8	18	1320 - 7
T185573	2K8	19	1320 - 7
T185577	2K8	20	1320 - 7
T185606	1E20	5	0360 - 3
T185606	1E24	4	0360 - 7
T185619	3F22	3	1816 - 11
T185640	2K4	50	1320 - 3
T185646	2K6	51	1320 - 5
T185648	5D14	18	3315 - 9
T185651	3F24	36	1816 - 13
T185652	3F24	37	1816 - 13
T185653	3F22	16	1816 - 11
T185654	3F22	10	1816 - 11
T185663	3H13	3	1834 - 3
T185664	3C8	18	1673 - 7
T185664	3E15	3	1811 - 7
T185666	3E17	13	1812 - 3
T185673	3G23	19	1830 - 3
T185675	2K6	52	1320 - 5
T185676	2K6	53	1320 - 5
T185678	3E23	43	1814 - 5
T185681	5I20	28	3363 - 33
T185682	5I20	31	3363 - 33
T185683	3J10	6	2160 - 13
T185691	2K6	54	1320 - 5
T185691	5D18	21	3315 - 13
T185691	5D20	1	3315 - 13B
T185692	2K6	55	1320 - 5
T185692	5D18	22	3315 - 13
T185692	5D20	2	3315 - 13B
T185692	5D22	18	3315 - 15
T185692	5D24	4	3315 - 15B
T185695	2K10	21	1320 - 9
T185696	2K10	21	1320 - 9
T185699	3I14	4	2004 - 7
T185700	4C20	31	3115 - 3
T185710	4C24	22	3115 - 7

NUMERICAL INDEX - CONTINUED

PART NO.	GRID	KEY	PAGE
T185710	4D2	24	3115 - 9
T185710	4D4	20	3115 - 11
T185710	4D6	8	3115 - 13
T185711	4C24	20	3115 - 7
T185713	3C6	20	1673 - 5
T185714	3C6	20	1673 - 5
T185742	3F20	16	1816 - 9
T185743	3F20	25	1816 - 9
T185743	3G25	26	1830 - 5
T185744	3G25	1	1830 - 5
T185748	4C24	35	3115 - 7
T185757	3E19	6	1812 - 5
T185762	3H6	5	1830 - 9
T185763	3H6	1	1830 - 9
T185766	5E10	1	3315 - 25
T185769	3C6	21	1673 - 5
T185769	3F20	26	1816 - 9
T185769	3G25	6	1830 - 5
T185770	3F24	15	1816 - 13
T185773	3E17	7	1812 - 3
T185774	3E17	8	1812 - 3
T185775	3E17	14	1812 - 3
T185779	3G23	13	1830 - 3
T185780	3G23	14	1830 - 3
T185782	3E11	20	1811 - 3
T185783	3E11	21	1811 - 3
T185784	3E11	19	1811 - 3
T185785	3E11	18	1811 - 3
T185789	3H2	22	1830 - 7
T185826	3J8	33	2160 - 11
T185826	3J8	40	2160 - 11
T185829	5D2	3	3302 - 15
T185830	5C14	10	3302 - 5
T185830	5C18	9	3302 - 9
T185830	5D2	4	3302 - 15
T185831	5D2	3	3302 - 15
T185831	5E24	24	3345 - 5
T185832	5C12	10	3302 - 3
T185832	5C16	9	3302 - 7
T185832	5D2	4	3302 - 15
T185840	3G23	6	1830 - 3
T185841	3G23	2	1830 - 3
T185842	3G23	8	1830 - 3
T185843	3G23	9	1830 - 3
T185844	3F24	27	1816 - 13
T185845	3H4	48	1830 - 7B
T185846	3G25	25	1830 - 5
T185847	3G25	23	1830 - 5
T185848	3G25	11	1830 - 5
T185849	3G25	12	1830 - 5
T185850	3G23	10	1830 - 3
T185866	3G23	15	1830 - 3
T185867	3G23	12	1830 - 3
T185896	3F24	14	1816 - 13
T185902	2J24	4	1313 - 3
T185902	2K6	56	1320 - 5
T185904	5E24	15	3345 - 5
T185905	3F22	11	1816 - 11
T185926	2J10	5	1060 - 5
T185933	2H16	3	0505 - 7
T185949	3H11	50	1830 - 15
T185982	4D12	2	3162 - 3
T185985	4D12	5	3162 - 3
T185989	3D19	1	1746 - 2
T185990	3D19	1	1746 - 2
T186000	5E6	10	3315 - 21
T186001	5E16	11B	3343 - 3
T186005	5E6	8	3315 - 21
T186006	5E6	9	3315 - 21
T186016	3E23	47	1814 - 5
T186017	3E23	46	1814 - 5
T186018	3E23	56	1814 - 5
T186022	3F20	23	1816 - 9
T186024	3D4	2	1674 - 13
T186029	3E11	1	1811 - 3
T186030	3E11	2	1811 - 3
T186041	1E21	2	0360 - 4
T186062	2K2	9	1314 - 3
T186082	4C20	27	3115 - 3
T186083	4C20	28	3115 - 3
T186123	2K6	57	1320 - 5
T186124	2K6	58	1320 - 5
T186125	2K10	23	1320 - 9
T186128	2K10	23	1320 - 9
T186154	3J12	4	2160 - 15
T186238	2J16	6	1060 - 11
T186282	5J8	19	3363 - 45
T186282	5J10	17	3363 - 47
T186319	4D12	2	3162 - 3
T186319	4E4	3	3162 - 19
T186354	4F4	21	3165 - 3
T186354	4F7	21	3165 - 7
T186360	2K6	59	1320 - 5
T186391	2K6	61	1320 - 5
T186392	2K10	24	1320 - 9
T186393	2K10	24	1320 - 9
T186400	2K6	62	1320 - 5
T186400	3C18	1	1674 - 7
T186401	2K6	63	1320 - 5
T186401	3C18	2	1674 - 7
T186402	2K6	64	1320 - 5
T186439	2K10	25	1320 - 9
T186440	2K10	25	1320 - 9
T186441	2K10	26	1320 - 9
T186442	2K10	26	1320 - 9
T186443	3I7	7	2001 - 3
T186444	3I7	15	2001 - 3
T186474	5J8	22	3363 - 45
T186474	5J10	18	3363 - 47
T186552	2K6	65	1320 - 5
T186552	3F22	18	1816 - 11
T186560	1F4	2	0360 - 11
T186760	3H2	13	1830 - 7
T186766	3H4	53	1830 - 7B
T186793	2H22	30	0515 - 5
T186793	2K6	68	1320 - 5
T186793	3C10	14	1674 - 3
T186793	3C16	1	1674 - 5D
T186859	2J12	9	1060 - 7
T186873	3G25	4	1830 - 5
T187044	5D6	5	3315 - 3
T187044	5D8	4	3315 - 3B
T187072	4C24	10	3115 - 7
T187072	4D2	11	3115 - 9
T187072	4D4	27	3115 - 11
T187110	3F24	33	1816 - 13
T187114	5C14	3	3302 - 5
T187114	5C18	3	3302 - 9
T187114	5C20	3	3302 - 11
T187114	5C22	3	3302 - 13
T187114	5D2	6	3302 - 15
T187115	5C14	2	3302 - 5
T187115	5C18	2	3302 - 9
T187115	5C20	2	3302 - 11
T187115	5C22	2	3302 - 13
T187115	5D2	7	3302 - 15
T187116	5C12	3	3302 - 3
T187116	5C16	3	3302 - 7
T187116	5C20	3	3302 - 11
T187116	5D2	6	3302 - 15
T187117	5C12	2	3302 - 3
T187117	5C16	2	3302 - 7
T187117	5C20	2	3302 - 11
T187117	5D2	7	3302 - 15
T187184	5E24	15	3345 - 5
T187272	3H16	23	1910 - 3
T187275	4D8	8	3140 - 3
T187275	4F4	21	3165 - 3
T187275	4F7	21	3165 - 7
T187276	4D8	8	3140 - 3
T187276	4F4	30	3165 - 3
T187276	4F7	30	3165 - 7
T187394	3C6	20	1673 - 5
T187505	5D16	34	3315 - 11
T187530	5D16	23	3315 - 11
T187571	2I10	1	0540 - 3
T187606	3H11	55	1830 - 15
T187765	3F2	9	1814 - 9
T187780	3F2	23	1814 - 9
T187815	4E14	1	3162 - 29
T187920	2H22	34	0515 - 5
T188018	2K8	20	1320 - 7
T188019	2K8	20	1320 - 7
T188172	1E20	12	0360 - 3
T188172	1E24	34	0360 - 7
T188172	1E24	35	0360 - 7
T188173	1E20	11	0360 - 3
T188173	1E24	34	0360 - 7
T188173	1E24	35	0360 - 7
T188173	1E24	41	0360 - 7
T188229	1C5	7	0210 - 5
T188229	2J21	21	1111 - 5
T188234	2J21	12	1111 - 5
T188268	5D16	7	3315 - 11
T188279	1B23	15	0201 - 3
T188356	5E4	14	3315 - 19
T188360	3D23	1	1747 - 3
T188360	3D25	1A	1747 - 5
T188397	1C20	17	0250 - 7
T188441	1C14	4	0230 - 8
T188442	1C14	6	0230 - 8
T188448	1C14	8	0230 - 8
T188565	3E17	13	1812 - 3
T188568	5E19	5	3344 - 2
T188568	5F5	2	3346 - 6
T188573	3J8	36	2160 - 11
T188639	5D12	8	3315 - 7
T188642	3H16	24	1910 - 3
T188642	3H18	60	1910 - 5
T188642	3H18	63	1910 - 5
T188707	3H16	4	1910 - 3
T188726	3E17	4	1812 - 3
T188777	5F9	5	3348 - 5
T188806	3E21	6	1814 - 3
T188806	3E21	22	1814 - 3
T188817	2K6	60	1320 - 5
T188818	2K10	25	1320 - 9
T188819	2K10	25	1320 - 9
T188879	4C12	15	3102 - 19
T188880	4C12	18	3102 - 19
T18891	2D11	26	0404 - 3

NUMERICAL INDEX - CONTINUED

PART NO.	GRID	KEY	PAGE
T188976	4D2	21	3115 - 9
T188976	4D2	22	3115 - 9
T188976	4D6	7	3115 - 13
T189065	5I12	10	3363 - 25
T189080	5F9	5	3348 - 5
T190177	3H9	29	1830 - 13
T190197	3C10	29	1674 - 3
T190198	3C10	30	1674 - 3
T190199	3C10	31	1674 - 3
T190296	4D14	7	3162 - 5
T190300	4D14	3	3162 - 5
T190311	5H8	10	3363 - 1B
T190357	4C22	21	3115 - 5
T190438	3H11	45A	1830 - 15
T190438	3H11	56	1830 - 15
T190473	4D2	23	3115 - 9
T190658	3B24	2	1671 - 7
T190669	3J4	29	2160 - 9
T190669	3J6	21	2160 - 9B
T190745	1C13	1	0230 - 7
T190746	1C13	16	0230 - 7
T190749	1C14	3	0230 - 8
T190750	1C12	1	0230 - 6
T190795	4D24	7	3162 - 15
T190819	5G18	11	3362 - 35
T190819	5G20	11	3362 - 37
T190820	5G18	12	3362 - 35
T190820	5G20	12	3362 - 37
T190824	5G18	4	3362 - 35
T190824	5G20	4	3362 - 37
T190825	5G18	1	3362 - 35
T190825	5G20	1	3362 - 37
T190868	3G2	17	1816 - 15
T190868	3G4	25	1816 - 17
T190892	3J8	41	2160 - 11
T190912	3G2	24	1816 - 15
T190925	5E16	27	3343 - 3
T190925	5E18	25	3343 - 5
T190956	3G2	21	1816 - 15
T190956	3G4	12	1816 - 17
T190960	3G2	29	1816 - 15
T190964	3G4	36	1816 - 17
T190979	4F2	14	3163 - 13
T190992	4C22	16	3115 - 5
T190993	5H8	14	3363 - 1B
T190998	3G2	6	1816 - 15
T190999	3G2	7	1816 - 15
T190999	3G4	30	1816 - 17
T191000	3G4	5	1816 - 17
T191071	3E25	1	1814 - 7
T191072	3E25	4	1814 - 7
T191073	3E25	5	1814 - 7
T191101	3H13	3	1834 - 3
T191142	3E17	8	1812 - 3
T191226	4C22	22	3115 - 5
T191245	5E10	19B	3315 - 25
T191285	4C22	12	3115 - 5
T191313	3J2	18	2160 - 7
T191313	3J4	41	2160 - 9
T191313	3J6	15	2160 - 9B
T191318	4C4	17	3102 - 11
T191318	4C5	14	3102 - 12
T191318	4C12	46	3102 - 19
T191334	5G24	29	3362 - 41
T191334	5H2	22	3362 - 43
T191334	5H4	22	3362 - 45
T191334	5H6	23	3362 - 47
T191335	5G24	11	3362 - 41
T191335	5H2	10	3362 - 43
T191335	5H4	9	3362 - 45
T191335	5H6	9	3362 - 47
T191336	5G24	27	3362 - 41
T191336	5H6	21	3362 - 47
T191337	5H4	11	3362 - 45
T191337	5H6	11	3362 - 47
T191338	5H4	13	3362 - 45
T191338	5H6	13	3362 - 47
T191346	5G24	16	3362 - 41
T191346	5H2	15	3362 - 43
T191346	5H4	14	3362 - 45
T191346	5H6	14	3362 - 47
T191425	2I21	18	0960 - 9
T191425	2I23	18	0960 - 11
T191427	1C13	6	0230 - 7
T191428	1C13	4	0230 - 7
T191430	1C13	10	0230 - 7
T191445	5E12	3	3315 - 27
T191469	3J14	10	2160 - 17
T19687	2K15	1	1369 - 5
T19854	1E22	6	0360 - 5
T19935	3C22	11	1674 - 9B
T19935	3H9	14	1830 - 13
T200078	5D20	10	3315 - 13B
T200078	5D24	9	3315 - 15B
T200092	3F16	6	1816 - 5B
T200093	3F16	6	1816 - 5B
T200093	5D20	7	3315 - 13B
T200094	3F16	6	1816 - 5B
T200094	5D24	6	3315 - 15B
T200095	3F16	2	1816 - 5B
T200095	5D20	6	3315 - 13B
T200095	5D24	5	3315 - 15B
T200240	5E16	18	3343 - 3
T200240	5E18	8A	3343 - 5
T20034	2C11	24	0401 - 1
T20034	2C14	24	0401 - 4
T200362	5H14	8	3363 - 3B
T200424	3C14	2	1674 - 5B
T200540	4E24	8	3163 - 11
T200658	3G4	38	1816 - 17
T200659	2K10	27	1320 - 9
T200660	2K10	27	1320 - 9
T200781	3G4	39	1816 - 17
T200853	5E16	18	3343 - 3
T200895	2K10	28	1320 - 9
T200896	2K10	28	1320 - 9
T200956	5G18	17	3362 - 35
T200956	5G20	13	3362 - 37
T200990	2K4	47	1320 - 3
T201069	5G24	28	3362 - 41
T201069	5H2	21	3362 - 43
T201069	5H4	21	3362 - 45
T201069	5H6	22	3362 - 47
T201071	5G24	15	3362 - 41
T201071	5H2	14	3362 - 43
T201071	5H4	13	3362 - 45
T201071	5H6	13	3362 - 47
T201072	5G24	12	3362 - 41
T201072	5H2	11	3362 - 43
T201072	5H4	10	3362 - 45
T201072	5H6	10	3362 - 47
T201285	2K10	22	1320 - 9
T201286	2K10	22	1320 - 9
T201293	2K6	61	1320 - 5
T201294	2K10	24	1320 - 9
T201295	2K10	24	1320 - 9
T201306	5G24	14	3362 - 41
T201306	5H2	13	3362 - 43
T201306	5H4	12	3362 - 45
T201306	5H6	12	3362 - 47
T201361	5E16	1	3343 - 3
T201361	5E16	32	3343 - 3
T201361	5E18	1	3343 - 5
T201361	5E18	28	3343 - 5
T201362	5E16	1	3343 - 3
T201362	5E16	33	3343 - 3
T201362	5E18	1	3343 - 5
T201362	5E18	29	3343 - 5
T201424	5F17	20	3362 - 11
T201424	5F21	23	3362 - 15
T201424	5G24	23	3362 - 41
T201424	5H4	24	3362 - 45
T201591	3H16	21	1910 - 3
T201656	5H10	14	3363 - 1D
T20168	2D11	18	0404 - 3
T201909	5F7	2A	3348 - 3
T201952	3F4	4	1814 - 9B
T201953	3F4	3	1814 - 9B
T201954	3F4	2	1814 - 9B
T201955	3F4	1	1814 - 9B
T201956	3F4	6	1814 - 9B
T201957	3F4	5	1814 - 9B
T201957	3F4	21	1814 - 9B
T201958	3F4	7	1814 - 9B
T201968	3F4	8	1814 - 9B
T201971	5E16	1	3343 - 3
T201971	5E16	19	3343 - 3
T201971	5E18	1	3343 - 5
T201971	5E18	8B	3343 - 5
T202050	4E20	3	3163 - 7
T202050	5H20	11	3363 - 9
T202050	5H22	21	3363 - 11
T202050	5H22	22	3363 - 11
T202050	5I6	33	3363 - 19
T202499	1C12	2	0230 - 6
T202720	3G4	14	1816 - 17
T202956	5D12	15	3315 - 7
T202956	5D14	53	3315 - 9
T202956	5D18	13	3315 - 13
T202956	5D20	12	3315 - 13B
T202956	5D22	6	3315 - 15
T202956	5E12	10	3315 - 27
T20314	2C20	4	0402 - 2
T20316	2C20	3	0402 - 2
T203361	3D19	1	1746 - 2
T203362	3D19	1	1746 - 2
T203374	2J10	2	1060 - 5
T203385	2J10	1	1060 - 5
T203458	3E17	3	1812 - 3
T203949	3J8	39	2160 - 11
T204635	3I7	2B	2001 - 3
T204869	5F7	2B	3348 - 3
T204908	4B21	1	3102 - 3
T204908	4B23	8	3102 - 5
T204908	4B25	6B	3102 - 7
T204908	4C2	1	3102 - 9
T204908	4C4	1	3102 - 11
T204992	3J6	29	2160 - 9B
T205017	4C16	10	3104 - 3
T205636	5I8	6B	3363 - 21
T205636	5I10	6B	3363 - 23

NUMERICAL INDEX - CONTINUED

PART NO.	GRID	KEY	PAGE
T205636	5I12	6B	3363 - 25
T205636	5I14	6B	3363 - 27
T205637	5I8	7B	3363 - 21
T205637	5I10	7B	3363 - 23
T205637	5I12	7B	3363 - 25
T205637	5I14	7B	3363 - 27
T205810	5E16	2	3343 - 3
T205810	5E18	13	3343 - 5
T205873	5E16	22	3343 - 3
T205875	5E16	22	3343 - 3
T205875	5E18	22	3343 - 5
T205897	5F7	4	3348 - 3
T205969	3H2	4	1830 - 7
T206432	1C18	9	0250 - 5
T206457	3F20	8	1816 - 9
T206457	3F20	9	1816 - 9
T206491	3C10	14	1674 - 3
T206520	1C12	1	0230 - 6
T206525	3H22	1	1913 - 5
T206569	5F7	11	3348 - 3
T206695	3C16	1	1674 - 5D
T206908	3H22	1	1913 - 5
T206951	2K4	2	1320 - 3
T206952	2K4	1	1320 - 3
T206954	2K4	3	1320 - 3
T207040	2K6	60	1320 - 5
T207041	2K10	25	1320 - 9
T207042	2K10	25	1320 - 9
T207060	3C10	3	1674 - 3
T207060	3C18	9	1674 - 7
T207060	3F24	2	1816 - 13
T207191	2K6	69	1320 - 5
T207309	5D14	37	3315 - 9
T207484	5D14	18	3315 - 9
T208007	2K10	29	1320 - 9
T208008	2K10	29	1320 - 9
T208077	3F4	21	1814 - 9B
T208077	3F4	22	1814 - 9B
T208467	3J6	29	2160 - 9B
T208467	3J10	16	2160 - 13
T208510	5E19	20	3344 - 2
T209212	3C16	5	1674 - 5D
T209334	3H16	4	1910 - 3
T209529	2K6	61	1320 - 5
T209530	2K10	24	1320 - 9
T209531	2K10	24	1320 - 9
T209588	5E2	3	3315 - 17
T209627	3C8	14	1673 - 7
T210077	1C3	6	0210 - 3
T210078	1C3	8	0210 - 3
T210544	3I2	2	1921 - 5
T212039	2J14	4B	1060 - 9
T212304	3H20	12	1913 - 3
T212352	3H11	56	1830 - 15
T213059	5G24	18	3362 - 41
T213059	5H6	17	3362 - 47
T213143	4C12	36	3102 - 19
T213143	4C16	11	3104 - 3
T213225	2H20	27	0515 - 3
T213225	2H22	21	0515 - 5
T213244	3G2	12	1816 - 15
T213288	4C16	21	3104 - 3
T213333	2K6	61	1320 - 5
T213334	2K10	24	1320 - 9
T213335	2K10	24	1320 - 9
T213799	2I25	2	0960 - 13
T213800	2I25	3	0960 - 13
T213801	2I25	14	0960 - 13
T214321	2K4	42	1320 - 3
T214322	2K8	13	1320 - 7
T214323	2K8	13	1320 - 7
T214677	3D25	1A	1747 - 5
T214677	3D25	1B	1747 - 5
T215257	5F4	32	3346 - 5
T215364	2H24	1C	0520 - 3
T215487	3E15	1	1811 - 7
T215678	5E16	15	3343 - 3
T215678	5E18	6	3343 - 5
T215678	5E18	15	3343 - 5
T216970	5F4	9	3346 - 5
T217548	5E16	7A	3343 - 3
T217548	5E16	7B	3343 - 3
T221X230	4C2	23	3102 - 9
T22150	2H20	34	0515 - 3
T22150	2H22	48	0515 - 5
T22240	2H20	32	0515 - 3
T22240	2H22	45	0515 - 5
T22241	2H20	29	0515 - 3
T223076	5E18	1	3343 - 5
T223076	5E18	7A	3343 - 5
T223076	5E18	7B	3343 - 5
T223289	3F4	9	1814 - 9B
T22489	2H24	9	0520 - 3
T22826	5E19	4	3344 - 2
T22828	2J3	10	0960 - 17
T23P	4C2	25	3102 - 9
T230SP	4C2	24	3102 - 9
T23474	2D11	19	0404 - 3
T24472	2E16	9	0413 - 1
T24472	2E17	5	0413 - 2
T24472	2E18	9	0413 - 3
T24472	2E19	9	0413 - 3A
T24509	5E4	15	3315 - 19
T24959	5I6	7	3363 - 19
T24959	5J6	8	3363 - 43
T25335	2K15	1	1369 - 5
T25838	3E19	3	1812 - 5
T26955	1D17	5	0341 - 4
T27022	4C4	23	3102 - 11
T27860	2E22	28	0413 - 5
T27860	2F2	28	0413 - 9
T28583	3D7	1	1674 - 17
T28585	3D7	12	1674 - 17
T28586	3D7	14	1674 - 17
T29342	2I10	6	0540 - 3
T29342	3D18	28	1740 - 5
T29342	3H24	8	1921 - 3
T29342	5E19	9	3344 - 2
T29342	5E22	10	3345 - 3
T29342	5E24	9	3345 - 5
T29342	5F7	13	3348 - 3
T29342	5I6	40	3363 - 19
T34067	3D7	18	1674 - 17
T34248	2K15	1	1369 - 5
T35233	5D16	1	3315 - 11
T35887	2H20	27	0515 - 3
T35887	2H22	21	0515 - 5
T38485	5K2	9	3365 - 18
T38545	5H16	19	3363 - 5
T39155	2I12	12	0560 - 3
T40308	3I25	17	2160 - 5
T41356	5J12	14	3365 - 3
T41356	5J14	7	3365 - 5
T41356	5K1	9	3365 - 17
T42199	2K6	67	1320 - 5
T42199	3B24	1	1671 - 7
T43512	2K11	1	1330 - 2
T43513	2K11	1	1330 - 2
T43514	2K11	1	1330 - 2
T48613	5E19	6	3344 - 2
T54568	4C4	8	3102 - 11
T54568	4C12	47	3102 - 19
T54967	4E10	29	3162 - 25
T55208	3G12	1	1821 - 9
T55214	3G12	17	1821 - 9
T55222	3G12	5	1821 - 9
T55224	3G12	15	1821 - 9
T55224	3G19	20	1821 - 17
T55501	3C18	11	1674 - 7
T55585	2H16	13	0505 - 7
T55585	3C18	13	1674 - 7
T57374	3I25	17	2160 - 5
T58056	3F24	1	1816 - 13
T58056	3H6	2	1830 - 9
T58056	3H24	10	1921 - 3
T58109	5D14	27	3315 - 9
T58109	5D18	2	3315 - 13
T58109	5D20	16	3315 - 13B
T58109	5D22	13	3315 - 15
T58109	5D24	15	3315 - 15B
T58477	2E13	6	0409 - 3
T58739	3H6	14	1830 - 9
T60811	3H2	30	1830 - 7
T60811	3H2	31	1830 - 7
T60811	3H6	10	1830 - 9
T60811	3H6	15	1830 - 9
T60811	3H6	17	1830 - 9
T60811	3H6	24	1830 - 9
T60811	3H6	25	1830 - 9
T60920	3I9	6	2002 - 3
T61226	4D8	7	3140 - 3
T61226	4F4	24	3165 - 3
T61226	4F7	24	3165 - 7
T61861	2H18	25	0510 - 3
T61861	3J8	27	2160 - 11
T61861	4C20	15	3115 - 3
T63798	3G12	12	1821 - 9
T65295	5I18	11	3363 - 31
T66701	2I12	1	0560 - 3
T66860	1B16	5	0110 - 3
T67424	4D18	26	3162 - 9
T67424	4D22	14	3162 - 13
T67424	5F17	37	3362 - 11
T67424	5F19	20	3362 - 13
T67424	5F21	28	3362 - 15
T67424	5G2	19	3362 - 21
T67424	5H4	35	3362 - 45
T67425	4D18	35	3162 - 9
T67425	4D22	23	3162 - 13
T67425	5F17	38	3362 - 11
T67425	5F19	18	3362 - 13
T67425	5F21	26	3362 - 15
T67425	5G2	20	3362 - 21
T67425	5H4	33	3362 - 45
T68098	2F15	7	0416 - 5
T69027	1C9	13	0230 - 3
T69354	1C9	30	0230 - 3
T69355	1C9	17	0230 - 3
T69360	1C7	3	0230 - 1
T69363	1C9	19	0230 - 3
T69364	1C9	18	0230 - 3

NUMERICAL INDEX - CONTINUED

PART NO.	GRID	KEY	PAGE
T69472	5F7	21	3348 - 3
T69938	1C16	6	0250 - 2
T69938	1D13	3	0325 - 2
T70177	4E6	2	3162 - 21
T70177	4E12	7	3162 - 27
T70341	3J22	28	2160 - 25
T70341	4E24	2	3163 - 11
T70659	3H2	37	1830 - 7
T74416	3C22	25	1674 - 9B
T74416	5I16	12	3363 - 29
T74553	1D8	9	0315 - 3
T74553	1D8	19	0315 - 3
T74952	3C4	4	1673 - 3
T74952	3I7	5	2001 - 3
T75197	3C22	22	1674 - 9B
T75506	1C10	10	0230 - 4
T75815	3D19	3	1746 - 2
T75815	4D8	6	3140 - 3
T75815	4F4	26	3165 - 3
T75815	4F7	26	3165 - 7
T75816	4D8	6	3140 - 3
T76252	2I12	7	0560 - 3
T76252	3C22	15	1674 - 9B
T76502	5F15	2	3362 - 9
T76502	5F15	32	3362 - 9
T76502	5G2	12	3362 - 21
T76830	3E23	52	1814 - 5
T76832	3E23	42	1814 - 5
T76833	3E23	57	1814 - 5
T76833	3E23	59	1814 - 5
T76938	1D17	6	0341 - 4
T76938	3J2	10	2160 - 7
T76938	3J2	18	2160 - 7
T76938	3J4	38	2160 - 9
T76938	3J4	42	2160 - 9
T76938	3J6	10	2160 - 9B
T76938	3J6	12	2160 - 9B
T76938	5F11	10	3362 - 5
T76938	5F13	10	3362 - 7
T76938	5I8	33	3363 - 21
T76938	5I12	34	3363 - 25
T76938	5I14	35	3363 - 27
T76938	5J10	21	3363 - 47
T77165	2H20	33	0515 - 3
T77165	2H22	46	0515 - 5
T77613	2F17	11	0416 - 7
T77613	2F19	11	0416 - 9
T77613	2I21	7	0960 - 9
T77613	2I21	8	0960 - 9
T77613	2I21	14	0960 - 9
T77613	2I23	7	0960 - 11
T77613	2I23	8	0960 - 11
T77613	2I23	14	0960 - 11
T77613	2J12	1	1060 - 7
T77613	2J12	2	1060 - 7
T77613	2J12	3	1060 - 7
T77613	2J14	3	1060 - 9
T77613	2J14	6	1060 - 9
T77613	2J14	9	1060 - 9
T77613	2J14	10	1060 - 9
T77613	2J16	1	1060 - 11
T77613	2J16	2	1060 - 11
T77613	2J16	3	1060 - 11
T77613	2J16	4	1060 - 11
T77613	3D18	13	1740 - 5
T77613	3J2	2	2160 - 7
T77613	3J2	5	2160 - 7
T77613	3J6	5	2160 - 9B
T77613	3J8	6	2160 - 11
T77613	3J8	11	2160 - 11
T77613	4C16	20	3104 - 3
T77613	4E20	18	3163 - 7
T77613	4E22	32	3163 - 9
T77613	4E24	24	3163 - 11
T77613	4E24	32	3163 - 11
T77613	4F2	25	3163 - 13
T77613	4F2	28	3163 - 13
T77613	5G12	5	3362 - 29B
T77613	5G16	6	3362 - 33
T77613	5G18	16	3362 - 35
T77613	5G20	16	3362 - 37
T77613	5H8	4	3363 - 1B
T77613	5H8	11	3363 - 1B
T77613	5H8	12	3363 - 1B
T77613	5H8	20	3363 - 1B
T77613	5H8	23	3363 - 1B
T77613	5H10	1	3363 - 1D
T77613	5H10	2	3363 - 1D
T77613	5H10	4	3363 - 1D
T77613	5H10	5	3363 - 1D
T77613	5H10	6	3363 - 1D
T77613	5H10	7	3363 - 1D
T77613	5H10	8	3363 - 1D
T77613	5H10	9	3363 - 1D
T77613	5H10	10	3363 - 1D
T77613	5H10	11	3363 - 1D
T77613	5H10	12	3363 - 1D
T77613	5H10	13	3363 - 1D
T77613	5H12	3	3363 - 3
T77613	5H14	3	3363 - 3B
T77613	5H16	4	3363 - 5
T77613	5H16	14	3363 - 5
T77613	5H16	26	3363 - 5
T77613	5I4	1	3363 - 17
T77613	5I16	4	3363 - 29
T77613	5I18	3	3363 - 31
T77613	5J6	6	3363 - 43
T77613	5K7	19	3365 - 21A
T77613	5K8	18	3365 - 22
T77814	1C6	2	0210 - 6
T77814	4E24	12	3163 - 11
T77814	5H16	3	3363 - 5
T77814	5H16	13	3363 - 5
T77814	5I16	10	3363 - 29
T77814	5I18	15	3363 - 31
T77857	2I21	1	0960 - 9
T77857	2I21	28	0960 - 9
T77857	2I21	34	0960 - 9
T77857	2I23	1	0960 - 11
T77857	2I23	22	0960 - 11
T77857	2I23	34	0960 - 11
T77857	2J8	23	1060 - 3
T77857	2J8	27	1060 - 3
T77857	3J2	1	2160 - 7
T77857	3J2	3	2160 - 7
T77857	3J6	1	2160 - 9B
T77857	3J22	12	2160 - 25
T77857	3J24	3	2160 - 27
T77857	4C4	10	3102 - 11
T77857	4C4	28	3102 - 11
T77857	4C12	1	3102 - 19
T77857	4E18	8	3163 - 5
T77857	4E20	7	3163 - 7
T77857	4E20	45	3163 - 7
T77857	4E22	1	3163 - 9
T77857	4E22	13	3163 - 9
T77857	4E22	35	3163 - 9
T77857	4E24	19	3163 - 11
T77857	4F2	21	3163 - 13
T77857	5F15	17	3362 - 9
T77857	5G12	1	3362 - 29B
T77857	5H8	27	3363 - 1B
T77857	5H18	15	3363 - 7
T77857	5H24	18	3363 - 13
T77857	5I2	3	3363 - 15
T77857	5I6	11	3363 - 19
T77857	5I6	32	3363 - 19
T77857	5I20	5	3363 - 33
T77857	5I22	12	3363 - 35
T77857	5I24	5	3363 - 37
T77857	5J8	2	3363 - 45
T77857	5J8	16	3363 - 45
T77857	5J10	14	3363 - 47
T77858	3J2	10	2160 - 7
T77858	3J4	27	2160 - 9
T77858	3J6	10	2160 - 9B
T77858	3J8	34	2160 - 11
T77858	5H20	17	3363 - 9
T77858	5H22	29	3363 - 11
T77858	5I8	5	3363 - 21
T77858	5I10	5	3363 - 23
T77858	5I12	5	3363 - 25
T77858	5I14	5	3363 - 27
T77858	5I20	26	3363 - 33
T77858	5I22	7	3363 - 35
T77858	5I24	4	3363 - 37
T77858	5J10	21	3363 - 47
T77932	2J19	25	1111 - 3
T77932	2J21	24	1111 - 5
T77932	3J2	13	2160 - 7
T77932	3J4	27	2160 - 9
T77932	3J8	21	2160 - 11
T77932	3J8	34	2160 - 11
T77932	3J22	7	2160 - 25
T77932	3J22	9	2160 - 25
T77932	4C12	48	3102 - 19
T77932	4C12	49	3102 - 19
T77932	4E16	2	3163 - 3
T77932	4E20	12	3163 - 7
T77932	4E20	41	3163 - 7
T77932	4E22	9	3163 - 9
T77932	4E24	17	3163 - 11
T77932	4E24	22	3163 - 11
T77932	5H18	3	3363 - 7
T77932	5H18	15	3363 - 7
T77932	5H20	4	3363 - 9
T77932	5H20	5	3363 - 9
T77932	5H22	3	3363 - 11
T77932	5H22	13	3363 - 11
T77932	5H24	3	3363 - 13
T77932	5H24	18	3363 - 13
T77932	5I6	22	3363 - 19
T77932	5I6	32	3363 - 19
T77932	5I8	26	3363 - 21
T77932	5I10	26	3363 - 23
T77932	5I12	27	3363 - 25
T77932	5I14	26	3363 - 27
T77932	5I20	3	3363 - 33
T77932	5I20	12	3363 - 33
T77932	5I20	27	3363 - 33
T77932	5I22	9	3363 - 35

NUMERICAL INDEX - CONTINUED

PART NO.	GRID	KEY	PAGE
T77932	5I24	2	3363 - 37
T77932	5J2	1	3363 - 39
T77932	5J4	1	3363 - 41
T77932	5J8	4	3363 - 45
T77932	5J10	23	3363 - 47
T78313	2K15	1	1369 - 5
T78497	3J8	1	2160 - 11
T78497	3J8	29	2160 - 11
T78497	3J8	39	2160 - 11
T78497	3J14	8	2160 - 17
T78497	3J14	15	2160 - 17
T78497	3J16	10	2160 - 19
T78497	3J16	14	2160 - 19
T78497	3J16	18	2160 - 19
T78497	3J18	4	2160 - 21
T78497	3J18	6	2160 - 21
T78497	3J18	7	2160 - 21
T78497	3J18	8	2160 - 21
T78593	2H14	8	0505 - 5
T78593	2H16	10	0505 - 7
T78606	2I21	17	0960 - 9
T78606	2I23	17	0960 - 11
T78606	3J14	17	2160 - 17
T78606	3J16	19	2160 - 19
T78606	3J18	15	2160 - 21
T78606	4E18	20	3163 - 5
T78606	4F2	13	3163 - 13
T78612	1D17	6	0341 - 4
T78707	5I8	4	3363 - 21
T78707	5I8	31	3363 - 21
T78707	5I10	4	3363 - 23
T78707	5I12	4	3363 - 25
T78707	5I12	32	3363 - 25
T78707	5I14	4	3363 - 27
T78716	5I6	20	3363 - 19
T78716	5I20	22	3363 - 33
T78716	5J8	17	3363 - 45
T78716	5J10	24	3363 - 47
T78787	3H9	11	1830 - 13
T79786	1C7	5	0230 - 1
T80027	1C15	6	0250 - 1
T80306	4C12	49	3102 - 19
T80306	5I10	27	3363 - 23
T80306	5I14	27	3363 - 27
T80306	5I20	23	3363 - 33
T81029	5H8	9	3363 - 1B
T81029	5I4	9	3363 - 17
T81524	4D18	3	3162 - 9
T81524	4D20	4	3162 - 11
T81524	4D22	3	3162 - 13
T81524	4D24	5	3162 - 15
T81524	4E2	3	3162 - 17
T81524	4E6	4	3162 - 21
T81524	4E12	13	3162 - 27
T81524	5F17	13	3362 - 11
T81524	5F19	29	3362 - 13
T81524	5F21	8	3362 - 15
T81524	5F23	3	3362 - 17
T81524	5F25	3	3362 - 19
T81524	5G4	3	3362 - 23
T81535	4D18	13	3162 - 9
T81535	4D20	22	3162 - 11
T81538	4D18	21	3162 - 9
T81538	4D22	9	3162 - 13
T81538	5F17	16	3362 - 11
T81538	5F19	9	3362 - 13
T81538	5F21	13	3362 - 15
T81538	5F23	11	3362 - 17
T81538	5G24	19	3362 - 41
T81538	5H2	18	3362 - 43
T81538	5H4	18	3362 - 45
T81538	5H6	18	3362 - 47
T81539	4D18	22	3162 - 9
T81539	4D22	10	3162 - 13
T81539	5F17	17	3362 - 11
T81539	5F19	10	3362 - 13
T81539	5F21	14	3362 - 15
T81539	5F23	9	3362 - 17
T81539	5G24	20	3362 - 41
T81539	5H2	19	3362 - 43
T81539	5H4	19	3362 - 45
T81539	5H6	19	3362 - 47
T81540	4E2	10	3162 - 17
T81540	4E6	13	3162 - 21
T81540	4E12	18	3162 - 27
T81540	5F17	23	3362 - 11
T81540	5F19	12	3362 - 13
T81540	5F21	16	3362 - 15
T81540	5F23	13	3362 - 17
T81540	5F25	8	3362 - 19
T81540	5G4	8	3362 - 23
T81541	4E2	12	3162 - 17
T81541	4E6	15	3162 - 21
T81541	4E12	20	3162 - 27
T81541	5F19	14	3362 - 13
T81541	5F21	18	3362 - 15
T81541	5F25	10	3362 - 19
T81541	5G4	10	3362 - 23
T81963	1C7	4	0230 - 1
T82791	3C18	3	1674 - 7
T83061	4C24	2	3115 - 7
T83061	4D2	2	3115 - 9
T83061	4D4	26	3115 - 11
T83426	3D16	10	1740 - 3
T83426	5E14	18	3342 - 3
T84194	4B23	6	3102 - 5
T84194	4C2	9	3102 - 9
T84194	4C10	6	3102 - 17
T84194	4C12	27	3102 - 19
T84194HD	4B23	6	3102 - 5
T84194HD	4C2	9	3102 - 9
T84194HD	4C10	6	3102 - 17
U10289	2K15	1	1369 - 5
U10516	4E20	24	3163 - 7
U10516	4E22	29	3163 - 9
U10516	4F2	6	3163 - 13
U10746	2K15	1	1369 - 5
U10776	2K15	1	1369 - 5
U11326	2K15	1	1369 - 5
U11343	2K15	1	1369 - 5
U12037	2K15	1	1369 - 5
U12167	3D18	7	1740 - 5
U12198	2K15	1	1369 - 5
U12198	5K18	10	3365 - 29
U12198	5K25	11	3365 - 36
U12288	5H20	12	3363 - 9
U12331	2K15	1	1369 - 5
U12547	2K15	1	1369 - 5
U12547	3J4	32	2160 - 9
U12547	3J6	23	2160 - 9B
U12547	3J8	9	2160 - 11
U12547	3J8	32	2160 - 11
U12547	3J8	38	2160 - 11
U12547	4C12	6	3102 - 19
U12547	5H20	7	3363 - 9
U12547	5H24	8	3363 - 13
U12547	5I8	2	3363 - 21
U12547	5I8	28	3363 - 21
U12547	5I10	2	3363 - 23
U12547	5I12	2	3363 - 25
U12547	5I12	29	3363 - 25
U12547	5I14	2	3363 - 27
U12547	5I22	29	3363 - 35
U12547	5I24	9	3363 - 37
U12547	5J8	6	3363 - 45
U12547	5J10	25	3363 - 47
U12857	4D4	12	3115 - 11
U13461	5K19	8	3365 - 30
U13461	5K20	9	3365 - 31
U13461	5K22	9	3365 - 33
U13639	1D16	18	0341 - 3
U13639	1D16	24	0341 - 3
U13639	1D17	8	0341 - 4
U13639	2D11	23	0404 - 3
U13639	2H12	3	0505 - 3
U13639	2J10	29	1060 - 5
U13639	2K15	1	1369 - 5
U13639	3H6	29	1830 - 9
U13639	3J2	17	2160 - 7
U13639	3J2	18	2160 - 7
U13639	3J4	36	2160 - 9
U13639	3J4	40	2160 - 9
U13639	3J6	14	2160 - 9B
U14555	1C7	8	0230 - 1
U14555	5D14	22	3315 - 9
U14555	5D20	20	3315 - 13B
U14555	5D24	20	3315 - 15B
U15192	5G10	4	3362 - 29
U15415	2K15	1	1369 - 5
U15973	2J3	5	0960 - 17
U15973	2K15	1	1369 - 5
U17408	5D14	36	3315 - 9
U17409	2K15	1	1369 - 5
U17409	3J2	22	2160 - 7
U17409	3J6	8	2160 - 9B
U40398	4C4	23	3102 - 11
U40708	5K19	15	3365 - 30
U40708	5K20	2	3365 - 31
U42111	2K15	1	1369 - 5
U42208	1D12	11	0315 - 7
U42208	1D12	15	0315 - 7
U43792	5D2	10	3302 - 15
U46370	3D7	20	1674 - 17
U46662	3D7	10	1674 - 17
U46664	3D9	47	1674 - 19
W23122	3G4	23	1816 - 17
XH4-62-T10	5J2	5	3363 - 39
XH4-62-T10	5J4	5	3363 - 41
XH4-63-T10	5J2	4	3363 - 39
XH4-63-T10	5J4	4	3363 - 41
XN8TUB8	5I16	19	3363 - 29
0344046	5G14	4	3362 - 31
0344046	5G14	9	3362 - 31
51993	4D22	8	3162 - 13
51993	4D22	39	3162 - 13
5787YT	4C20	12	3115 - 3
5787YT	4C22	26	3115 - 5
61248	5F7	2B	3348 - 3
61248	5F7	3	3348 - 3
61248	5F7	4	3348 - 3
61248	5F7	5	3348 - 3

NUMERICAL INDEX - CONTINUED

PART NO.	GRID	KEY	PAGE
790106800	5G24	17	3362 - 41
790106800	5H2	16	3362 - 43
790106800	5H4	15	3362 - 45
790106800	5H6	15	3362 - 47
790107100	5G24	13	3362 - 41
790107100	5H2	12	3362 - 43

PART NO.	GRID	KEY	PAGE

PART NO.	GRID	KEY	PAGE