CATERPILLAR®

SEBP4947-03
September 2008

RUTHZIL TRATOR COMERCIAL DE PEÇAS LTDA 11 97083-6812 ROLANDO

Parts Manual

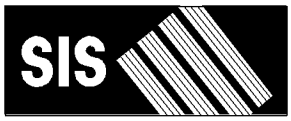

See "General Information" for New Parts Manual Features.

311D LRR Excavator

CLA1-Up (Machine)
JKH1-Up (Engine)

Powered By C4.2 Engine

Product and Dealer Information

Note: For product identification plate locations, see the section “Product Identification Information” in the Operation and Maintenance Manual.

Delivery Date: _____

Product Information

Model: _____

Product Identification Number: _____

Engine Serial Number: _____

Transmission Serial Number: _____

Generator Serial Number: _____

Attachment Serial Numbers: _____

Attachment Information: _____

Customer Equipment Number: _____

Dealer Equipment Number: _____

Dealer Information

Name: _____ Branch: _____

Address: _____

_____

_____

	Dealer Contact	Phone Number	Hours
Sales:	_____	_____	_____
Parts:	_____	_____	_____
Service:	_____	_____	_____

MEMORANDA

TABLE OF CONTENTS

Name	Page
GENERAL INFORMATION	A5
REPAIR ALTERNATIVES	A8
SUPPLEMENTAL COOLANT ADDITIVES	A9
MAINTENANCE PARTS	A10
INDEX	A13
MACHINE ARRANGEMENT	1
CHASSIS AR	1
GENERAL AR	1
INSTALLATION AR-BLADE	2
SPECIAL AR	3
ENGINE ARRANGEMENT	6
ENGINE AR	6
ENGINE AR-COMPLETE	8
INSTALLATION AR-ENGINE	13
BASIC ENGINE	14
CAMSHAFT GP	14
COVER GP-VALVE MECHANISM	15
CRANKSHAFT GP	17
CYLINDER BLOCK GP	18
CYLINDER HEAD AS	23
CYLINDER HEAD GP	24
FLYWHEEL GP	25
GEAR GP-FRONT	26
HOUSING GP-FLYWHEEL	27
HOUSING GP-FRONT	28
MOUNTING GP-ALTERNATOR	30
MOUNTING GP-ENGINE	31
MOUNTING GP-STARTING MOTOR	33
PAN GP-OIL	34
PISTON & ROD GP	36
PULLEY AS-IDLER	37
PULLEY GP-FAN & ALT DRIVE	38
PULLEY GP-IDLER	40
VALVE MECHANISM GP	41
LUBRICATION SYSTEM	43
ADAPTER GP-REMOTE OIL FILTER	43
BREATHER GP	44
LINES GP-ENGINE OIL	45
LINES GP-TURBOCHARGER OIL	46
COOLING SYSTEM	47
COOLER GP-ENGINE OIL	47
COOLING AR-HIGH AMBIENT TEMP	48
FAN GP-SUCTION	49
LINES GP-WATER	50
PUMP GP-WATER	52
RADIATOR & HYD OIL COOLER GP	54
AIR INLET AND EXHAUST SYSTEM	60
AIR CLEANER GP	60
LINES GP-AIR	65
LINES GP-MUFFLER DRAIN	66
LINES GP-TURBOCHARGER AIR	68
MANIFOLD GP-EXHAUST	69
MANIFOLD GP-INLET	70
MUFFLER GP	71
PRECLEANER AR	73
TURBOCHARGER GP	74
FUEL SYSTEM	76
CAP GP-FUEL FILLER	76
FILTER GP-FUEL	77
FILTER GP-WATER SEP & FUEL	80
INJECTOR GP-FUEL	81
LINES GP-FUEL	82
LINES GP-FUEL INJECTION	85
PUMP & MTG GP-FUEL TRANSFER	87
PUMP AR-FUEL TRANSFER	88
PUMP AR-REFUELING	88
PUMP GP-FUEL TRANSFER	89
PUMP GP-REFUELING	92
TANK & MTG GP-FUEL	94
TANK GP-FUEL	96
VALVE GP-FUEL SHUTOFF	105
ELECTRICAL AND STARTING SYSTEM	106
ALARM GP	106
ALARM GP-TRAVEL	107
ALTERNATOR GP-CHARGING	108
BATTERY & WIRING GP	110
BATTERY GP	116
BLOCK GP-JUNCTION	117
CAMERA & MOUNTING GP	118
CAMERA AR	119
CAMERA GP	120
CONTROL & MTG GP-COMMUNICATION	123
CONTROL & MTG GP-ENGINE ELEK	126
CONTROL & MTG GP-MACHINE	127
ELECTRONICS GP-COMMUNICATION	128
ELECTRONICS GP-MACHINE	128
ELECTRONICS GP-MONITOR	129
FASTENER GP-WIRING HARNESS	130
INSTALLATION AR-COMMUNICATION	135
INSTALLATION GP-SECURITY	136
KIT-BRACKET	138
LAMP GP-FLOOD	139
LIGHTING GP-FLOOD	140
MOUNTING GP-SENSOR	151
PANEL & MTG GP-CIRCUIT BREAKER	152
PANEL GP-CIRCUIT BREAKER	154
PANEL GP-SWITCH	158

TABLE OF CONTENTS

Name	Page
SENSOR & MTG GP-POSITION	166
SENSOR GP-ENGINE	168
SENSOR GP-LIQUID LEVEL	170
SENSOR GP-POSITION	171
STARTING AR-COLD WEATHER	173
STARTING MOTOR GP-ELECTRIC	174
SWITCH GP-DISCONNECT	176
SWITCH GP-MAGNETIC	177
SWITCH GP-POSITION	179
SWITCH GP-REFUELING	180
SWITCH GP-ROTARY	181
SWITCH GP-START	183
SWITCH GP-TOGGLE	184
SWITCH GP-WIPER	185
WIRING GP-AUX START RECEPTACLE	186
WIRING GP-AUXILIARY CONTROL	188
WIRING GP-BOOM	193
WIRING GP-CAB	196
WIRING GP-CAMERA	206
WIRING GP-CHASSIS	207
WIRING GP-COMMUNICATION	210
WIRING GP-CONSOLE	213
WIRING GP-CONVERTER	217
WIRING GP-ELECTRONIC CONTROL	220
WIRING GP-FINE SWING	223
WIRING GP-FUEL SYSTEM	225
WIRING GP-GRADE CONTROL	226
WIRING GP-HAMMER	227
WIRING GP-HEATER	228
WIRING GP-MEDIUM PRESSURE	229
WIRING GP-OVERLOAD WARNING	231
WIRING GP	233
WIRING GP-PLATFORM	235
WIRING GP-COUPLER	239
WIRING GP-QUICK COUPLER	240
POWER TRAIN	242
FINAL DRIVE GP	242
POWER TRAIN AR	245
SPROCKET GP	246
FRAME AND BODY	247
BOX & MOUNTING GP	247
BOX GP-FUEL TRANSFER	248
BUMPER GP	250
COUNTERWEIGHT AR	251
COUNTERWEIGHT GP	252
COVER GP-ACCESS	264
COVER GP-CONTROL VALVE	269
COVER GP-HOOD	270
DOOR GP-ACCESS	271
FENDER GP	275
FIREWALL GP	277
FRAME GP-UPPER	279
GEAR & BEARING GP-SWING	283
GUARD GP-BOTTOM	287
GUARD GP-FRONT	289
GUARD GP-SWIVEL	290
HANDRAIL GP	291
HOOD & GUARD GP	294
HOOD GP	295
HOOD GP-ENGINE	300
SHEET AS-SOUND SUPPRESSION	306
STEP GP	310
STORAGE GP-VANDALISM GUARD	312
SUPPORT GP-HOOD	314
UNDERCARRIAGE	317
FRAME AR-UNDERCARRIAGE	317
FRAME AS-UNDERCARRIAGE	318
GUARD GP-TRACK GUIDE	320
GUARD GP-TRAVEL MOTOR	321
IDLER GP-FRONT	323
LINK AS-TRACK	327
ROLLER AR-TRACK & CARRIER	328
ROLLER GP-TRACK CARRIER	329
ROLLER GP-TRACK-SINGLE FLANGE	330
TRACK ADJUSTER & RECOIL GP	331
TRACK GP	335
HYDRAULIC SYSTEM	340
ACCUMULATOR GP-HYDRAULIC	340
CONTROL AR-AUXILIARY	345
CONTROL AR-COUPLER	347
CONTROL AR-FINE SWING	348
COUPLING GP-FLEXIBLE	349
COUPLING GP-PUMP	350
COVER GP-PUMP	351
CYLINDER & LINES GP-BLADE	352
CYLINDER & LINES GP-BOOM	352
CYLINDER & LINES GP-BUCKET	353
CYLINDER & LINES GP-STICK	353
CYLINDER & SEAL GP-BLADE	354
CYLINDER & SEAL GP-BOOM	356
CYLINDER & SEAL GP-BUCKET	357
CYLINDER & SEAL GP-STICK	359
CYLINDER GP-BLADE	360
CYLINDER GP-BOOM	364
CYLINDER GP-BUCKET	366
CYLINDER GP-COUPLER	370
CYLINDER GP-STICK	371
DRIVE GP-SWING	374
FASTENER GP-SWING & FINAL DR	383
FILTER & LINES GP-HYDRAULIC	384
FILTER & MTG GP-OIL	387
FILTER & VALVE GP-PILOT	389
FILTER AR-HYDRAULIC	390
FILTER GP-OIL	391
FITTING GP-HYDRAULIC	397

TABLE OF CONTENTS

Name	Page
GAUGE GP-SIGHT	399
GUARD GP-CYLINDER	400
HEAD GP-PUMP	402
HYDRAULIC AR	404
LINES AR-AUXILIARY HYDRAULIC	404
LINES AR-QUICK COUPLER	405
LINES GP-AUXILIARY HYDRAULIC	406
LINES GP-BLADE CYLINDER	419
LINES GP-BOOM	423
LINES GP-BOOM CYLINDER	429
LINES GP-BUCKET CYLINDER	436
LINES GP-CONTROL	437
LINES GP-COUPLER	441
LINES GP-FRONT	447
LINES GP-HYDRAULIC OIL COOLER	465
LINES GP-PILOT	468
LINES GP-PUMP	530
LINES GP-STICK	540
LINES GP-STICK CYLINDER	543
LINES GP-TRAVEL MOTOR	546
MANIFOLD GP-CONTROL	548
MOTOR GP-PISTON	551
MOUNTING GP-LINES	558
MOUNTING GP-VALVE	559
PUMP & MTG GP-AUXILIARY	561
PUMP & MTG GP-MAIN HYDRAULIC	562
PUMP GP-PISTON	563
SCREEN GP-HYDRAULIC	566
SPOOL GP-CONTROL VALVE	567
SWIVEL GP	576
TANK & FILTER GP-HYDRAULIC	579
TANK & MTG GP-HYDRAULIC	581
VALVE & MTG GP-CONTROL	582
VALVE AR	586
VALVE AR-ALT PATTERN CONTROL	586
VALVE AR-CHECK & RELIEF	586
VALVE AR-LOAD CONTROL	586
VALVE AS-MANUAL	588
VALVE GP-BANK	589
VALVE GP-CHECK	590
VALVE GP-CONTROL	591
VALVE GP-LOAD CONTROL	599
VALVE GP-MAIN CONTROL	605
VALVE GP-PILOT	611
VALVE GP-PRESSURE REDUCING	624
VALVE GP-RELIEF	625
VALVE GP-SELECTOR	632
VALVE GP-SHUTTLE	633
VALVE GP-SOLENOID	638
VALVE GP-SOLENOID & MANIFOLD	649
VALVE GP-SOLENOID & PRESS REDC	651
VALVE GP-TRAVEL COUNTERBALANCE	655
IMPLEMENTS	657
BOOM AR	657
BOOM AR-1 PIECE LONG	657
BOOM GP	658
LINES GP-GREASE	664
LINKAGE AR-BUCKET	669
LINKAGE GP-BUCKET	670
STICK AR	677
STICK GP-HOE	678
WORK TOOLS	683
ADJUSTER GP-BUCKET	683
BLADE & MOUNTING GP	684
BLADE GP-STRAIGHT	689
BUCKET & ADJUSTER GP	692
BUCKET AR-EXCAVATION	692
BUCKET AS	694
BUCKET AS-DITCH CLEANING	699
BUCKET AS-EXCAVATION	700
BUCKET AS-HEAVY DUTY ROCK	702
BUCKET GP	703
BUCKET GP-DITCH CLEANING	704
COUPLER AR-QUICK	705
COUPLER GP-QUICK	706
EDGE GP-CUTTING	707
PIN GP-BUCKET	707
PIN GP-COUPLER	708
SIDECUTTER GP	709
TIP GP-LONG	710
OPERATOR STATION	712
ADJUSTER GP-SEAT	712
AIR CONDITIONER & MOUNTING GP	714
AIR CONDITIONER AR	716
AIR CONDITIONER GP	717
ANTENNA & MOUNTING GP	720
ARMREST GP	722
BRACKET GP-MIRROR	724
BRACKET GP-MOUNTING	725
CAB GP	726
COIL GP-EVAPORATOR	750
COMPRESSOR GP-REFRIGERANT	752
CONDENSER & MTG GP-REFRIGERANT	754
CONDENSER GP-REFRIGERANT	755
CONSOLE GP-OPERATOR	756
CONTROL & MTG GP-JOYSTICK	764
CONTROL & MTG GP-PEDAL	769
CONTROL GP-BLADE	770
CONTROL GP-FOOT	771
CONTROL GP-HANDLE	772
CONTROL GP-HEAT & AIR COND	778
CONTROL GP-HYDRAULIC PEDAL	779
CONTROL GP-JOYSTICK	781
CONTROL GP-PEDAL	791

TABLE OF CONTENTS

Name	Page
COVER GP-CAB	792
COVER GP-STORAGE	793
DOOR & MTG GP-CAB	795
DOOR GP-CAB	796
DUCT GP-CAB AIR	807
FLOOR MAT	808
FLOOR MAT GP	814
FRAME GP-UPPER FRONT WINDOW	815
GUARD AR-OVERHEAD	817
GUARD AR-VANDALISM	817
GUARD GP-FRONT WINDOW	818
GUARD GP-OVERHEAD	825
GUARD GP-VANDALISM	827
HATCH GP-ROOF	829
HEADREST AS-SEAT	831
HEATER & MTG GP-CAB	834
HEATER AR	836
HORN GP-ELECTRIC	837
INSTALLATION AR	839
INSTALLATION GP-RADIO	840
KIT-CONSOLE ADJUSTMENT	844
KIT-SEAT SUSPENSION	845
LEVER GP-AIR & TEMP CONTROL	847
LINES GP-AIR CONDITIONER	848
LINES GP-HEATER	851
LITERATURE GP	853
MIRROR GP-REAR VIEW	854
MONITOR & MTG GP-OPERATOR	859
MONITOR GP-OPERATOR	860
MOUNTING GP-ANTENNA	861
MOUNTING GP-PLATFORM	863
OPERATOR AR	865
PEDAL AR-AUXILIARY	865
PEDAL AR-THIRD	865
PLATFORM GP-OPERATOR	866
RADIO GP-COMMUNICATION	867
SCREEN GP-SUN	868
SEAT & MOUNTING GP	869
SEAT BELT GP	872
SEAT GP	878
SEAT GP-SUSPENSION	893
SUPPORT GP-SEAT	899
SUSPENSION GP-SEAT	902
VISOR GP-CAB	909
VISOR GP-PROTECTION	910
WASHER GP-WINDOW	911
WINDOW AS-FRONT	914
WINDOW GP-CAB	915
WINDOW GP-DOOR	924
WINDOW GP-REAR	926
WIPER & WASHER GP-WINDOW	929
WIPER AR-WINDOW	931
WIPER GP-WINDOW	932

Name	Page
SERVICE EQUIPMENT AND SUPPLIES	934
FILM GP	934
PLATE & FILM GP	949
PART NUMBER INDEX	B1

GENERAL INFORMATION

1. MACHINE IDENTIFICATION

Caterpillar machines are identified by Product Identification Numbers (PIN). Some components included in a machine may be identified by Serial Numbers (S/N). Typical components that will be serialized include engines, transmissions, bulldozers, and rippers. The machine and engine are further identified by arrangement numbers and in some cases modification numbers. These numbers are shown on the product identification plate(s) and on the master plate in the operator's compartment.

Caterpillar dealers need all of these numbers to determine accurate parts identification.

SIS *New Feature*

Effective First Quarter 2001 the Caterpillar Product Identification Number (PIN) changed from 8 to 17 characters. In an effort to provide uniform equipment identification, Caterpillar and other construction equipment manufacturers are moving to comply with the latest version of the product identification numbering standard. Non-road machine PINs are defined by ISO 10261. The new PIN format will apply to all Caterpillar machines and generator sets. The PIN plates and frame marking will display the 17 character PIN. The new format will look like the following:

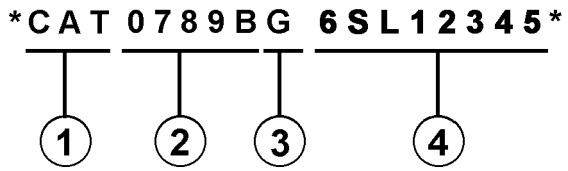

Where:

1. Caterpillar's World Manufacturing Code (characters 1-3)

2. Machine Descriptor (characters 4-8)

3. Check Character (character 9)

4. Machine Indicator Section (MIS) or Product Sequence Number (characters 10-17). These were previously referred to as the Serial Number.

Machines and generator sets produced before First Quarter 2001 will maintain their 8 character PIN format.

Components such as engines, transmissions, axles, etc. and work tools will continue to use an 8 character Serial Number (S/N).

2. ORDERING PARTS

⚠ WARNING

When replacement parts are required for this product Caterpillar recommends using Caterpillar replacement parts or parts with equivalent specifications including, but not limited to, physical dimensions, type, strength and material.

Failure to heed this warning can lead to premature failures, product damage, personal injury or death.

Quality Caterpillar replacement parts are available from Caterpillar dealers throughout the world. Their parts inventories are up to date and include all parts normally required to protect your investment in Caterpillar machines. Dealers may offer repair kits or remanufactured parts to allow selection of the most effective repair alternative for a particular situation. When ordering parts, your order should specify the quantity, part number, part name, and the serial number/product identification number of the machine for which the parts are needed.

3. PARTS MANUAL ORGANIZATION

Product information in this manual is presented as "information elements" that represent all of the components for the specific model. Engine Arrangement and Seat Group are examples of information elements. The information elements are organized alphabetically by part name and secondarily by part number within each major section of the manual.

4. TABLE OF CONTENTS

A table of contents (TOC) is found at the beginning of the manual. The TOC lists each section of the manual with a complete list of all information elements organized as they appear in the manual. Page numbers are provided for quick reference to detailed parts identification illustrations and serviceable consist lists.

5. MAINTENANCE PARTS INDEX

The Maintenance Parts Index, located near the beginning of the manual, references most frequently used maintenance part numbers, providing description, quantity, usage and page number. This information is organized alphabetically by part description.

6. INDEX

The index located near the front of the manual is an alphabetical listing of all information elements included in the manual. Page numbers are provided for quick reference to detailed parts identification illustrations and serviceable consist lists.

7. PART NUMBER INDEX

A numerical index listing all part numbers and the corresponding page number(s) appears at the back of the manual.

8. CAPTIONS

Captions located at the beginning of each information element identify the part number and part name along with additional descriptive information. PIN and S/N information found in each caption should be used to select correct information for a specific machine. Field replacement options, identification of optional attachment components, and where used ("part of") information is also provided.

The first line of a caption is shown in larger type font to indicate the beginning of an information element. Captions for additional pages that may be required to illustrate an information element will be shown in standard type font and will include the term *(contd.)* .

9. NON-SERVICED PARTS

In some instances it is necessary to display non-serviced parts that are a link to a lower level serviceable consist lists. These non-serviced part numbers are shown in *italic* type indicating that they are not available.

10. PARTS LIST REFERENCE NUMBERS

Numbers shown in the Ref No column correspond to numbers used in the associated graphic(s). An alphabetic suffix may be added to a reference number to identify lower level consist items. Numbers shown in the Graphic Ref column refer to the graphic number identifier displayed in the lower left corner of each illustration. The Graphic Ref number may be used in combination with the item Ref No to determine the correct part number. There may be intentional omission of a Ref No in a consist list as information is updated to reflect the latest serviceable part numbers.

11. INDENTED PART NAMES

When a part name is indented in a parts list, it is part of (included in) the group or assembly under which it is indented.

12. ILLUSTRATION REFERENCE LETTERS

When necessary, illustrations contain reference letters (A, B, C etc.) that are intended to track lines and harnesses from one point to another. They are also used to show where to reconnect illustrations that have been separated.

13. ABBREVIATIONS AND SYMBOLS

O.D. – Outside Diameter
I.D. – Inside Diameter
A – Not Part Of This Group
B – Use As Required
C – Change From Previous Type
D – Order By The Meter
E – Order By The Centimeter
F – Not Shown
G – Order By The Inch
I – Refer To Hydraulic Information System
M – Metric Part
R – Remfg Part May Be Available
Y – Separate Illustration
Z – Not Serviced Separately

SIS *New Feature*

14. DESCRIPTION OF TYPE CHANGES

Type - A type is defined as any configuration change that requires an additional Information Element for an Arrangement, Group, or Assembly. If serial number breaks for types are not available, a type # (Type 1, Type 2, etc.) will be displayed in the caption. These "type" changes are identified with a "C" note (change from previous type) in the Parts List. Only the "types" that apply to this Parts Manual will be included. Additional types may exist causing "C" notes to appear on an Information Element when no other types are shown.

15.<END>

This symbol indicates the end of an information element.

NOTE:

Continuing improvement and advancement of product design may cause changes to your machine which may not be included in this publication. Whenever a question arises regarding your caterpillar product or this publication, please consult your caterpillar dealer for the latest available information.

FRAME AND BODY

8E-3299 PLATFORM GP-CAB

PIN 3SK1-99999

SMCS-7253 100090751

NOTE	REF NO	GRAPHIC REF	PART NUMBER	QTY	PART NAME 1 2 3 4 5 6 (PRODUCT LEVEL)	SEE PAGE
	*	1	3T-3953	1	PLATE AS	
	2	1	6E-2992	25	BOLT (3/8-16X.750IN)	
	3	1	6F-1976	41	WASHER-HARD (3MM THK)	
	4	1	9F-1444	2	SUPPORT AS-FOOT	
	5	1	7P-2229	18	BOLT (1/2-13X1IN)	
		1	6F-	18	WASHER-HARD (4MM THK)	
	6	1	8E-6136		COVER AS-LH	
		1	9F-2978	6	NUT-WELD (3/8-16 THD)	
		1	1P-0188	1	CLIP	
	7	1	7S-3411	4	COVER	
	8	1	9J-0498	18	SCREW-HEAD (3/8-16X.875IN)	
	9	1	-4474	1	COVER	
		1	8E-897		GASKET	
	10	1	8E-3249	1		
		1	8E-3250	1	GASKET	
	11	1	3T-3638	1	HANDHOLD	
	12	1	8E-8978	1	COVER AS	
		1	9F-2978	8	NUT-WELD (3/8-16 THD)	
		1	8E-8979	1	GASKET	
	13	1	7T-0131	1	FLOORPLATE AS	
		1	1F-0748	4	NUT-WELD (1/2-13 THD)	
	14	1	7V-8067	1	PLUG-BUTTON	
	15	1	7T-0136	1	PLATE AS	
		1	9F-2978	5	NUT-WELD (3/8-16 THD)	
	16	1	7T-8066	1	COVER	
		1	7T-8779	1	GASKET	
	17	1	3T-3861	1	PLATE AS	
	18	1	6T-8364	4	BOLT (1/4-20X.625IN)	
M		1	9T-4205	4	WASHER-HARD (2MM THK)	
	19	1	6L-8494	1	FLOOR MAT	
	20	1	8E-8846	1	MODULE AS-OPERATOR	
	21	1	3T-3834	1	HANDHOLD	
	22	1	9F-8671	2	PLUG	
	23	2	6T-8364	4	BOLT (1/4-20X.625IN)	
M		2	9T-4205	4	WASHER-HARD (2MM THK)	
	24	2	6E-3062	17	BOLT (3/8-16X.750IN)	
	26	2	6F-1976	21	WASHER-HARD (3MM THK)	
	26	2	7T-0135	1	SEAL	
	27	2	7X-0975	2	BOLT (3/4-10X5IN)	
		2	7X-0682	2	WASHER-HARD (6MM THK)	
	28	2	3T-3452	2	PLATE	
	29	2	3T-8290	1	PLATE AS	
		2	7S-8828	8	SPACER	
	30	2	3T-8281	1	SEAL	
	31	2	7S-8817	1	GASKET	
	32	2	7S-8816	1	COVER AS	
		2	2R-3276	2	WASHER	
		2	6F-8626	2	SCREW-KNURLED	
	33	2	9W-3429	1	COVER	
	34	2	8E-8697	1	COVER	
	35	2	6D-3931	8	SCREW-SOCKET HEAD	
	36	2	9W-3142	8	MOUNTING	
	37	2	9W-8027	2	PLATE	
	38	2	7X-0990	2	BOLT (7/8-9X5IN)	
		2	7X-0672	2	WASHER-HARD	
	39	2	4L-8454	4	BOLT (3/8-16X1.0IN)	
	40	2	3T-4788	1	COVER	

12 FRAME AND BODY 1 of 4 SELP4570-01

FRAME AND BODY

8E-3299 PLATFORM GP-CAB (contd.)

100090751

NOTE	REF NO	GRAPHIC REF	PART NUMBER	QTY	PART NAME 1 2 3 4 5 6 (PRODUCT LEVEL)	SEE PAGE
	41	2	6E-2516	1	COVER	
	42	2	7T-0134	1	PLATE	
	43	2	7T-0138	1	GASKET	
	44	2	7S-8724	1	GASKET	
	45	2	7S-8723	1	COVER	
	46	2	6V-1950	2	PLUG-BUTTON	

M-METRIC PART

SELP4570-01 2 of 4 FRAME AND BODY 13

FRAME AND BODY

8E-3299 PLATFORM GP-CAB (contd.)

100090751

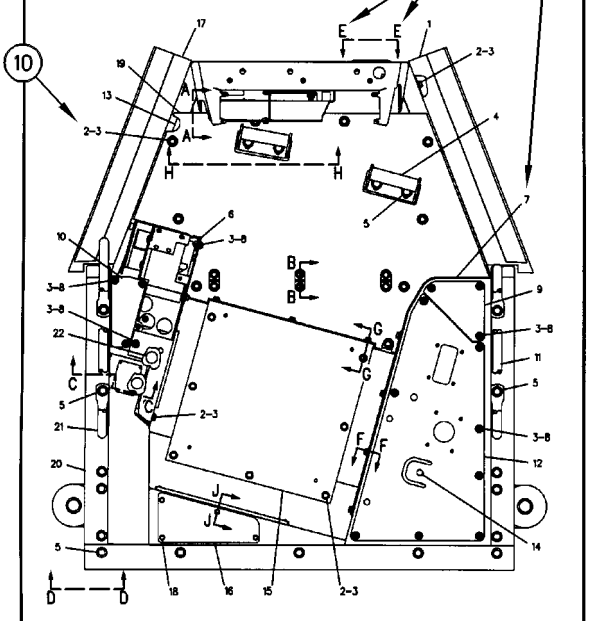

14 FRAME AND BODY 3 of 4 SELP4570-01

FRAME AND BODY

8E-3299 PLATFORM GP-CAB (contd.)

100090751

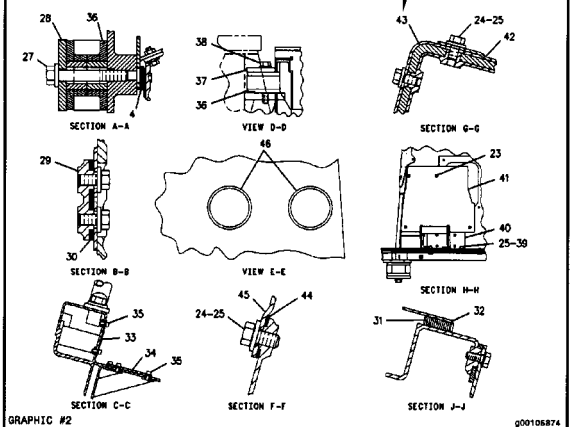

SELP4570-01 4 of 4 FRAME AND BODY 15

REPAIR ALTERNATIVES

REMANUFACTURED COMPONENTS

As an option when making repairs consider Caterpillar Remanufactured Components. Components that are available through the Caterpillar Remanufactured Program are identified three ways in the parts book:

- with the letter R in the note field of the parts list
- with an R* at the beginning of the first line of the caption
- with an *R at the end of the first line of the caption

Typical components included in the Remanufacturing Program include:

ALTERNATORS
CONNECTING RODS
CRANKSHAFTS - UNDERSIZE
CRANKSHAFTS - UPGRADE TO NEW
CYLINDER HEADS
ELECTRONIC CONTROL MODULES (ECM)
ELECTRONIC SENSORS
FUEL INJECTORS
FUEL NOZZLES
FUEL PUMPS
GOVERNORS
OIL PUMPS
PISTONS
SHORT BLOCKS
STARTERS
TURBOCHARGERS - COMPLETE
TURBOCHARGER CARTRIDGES
WATER PUMPS

Caterpillar Remanufactured engines for many engine arrangements are also available.

SUPPLEMENTAL COOLANT ADDITIVES

CUSTOMER BENEFITS:

Protects against cavitation, foam, erosion, corrosion, and scale buildup in cooling systems.

- Provides measured coolant conditioner.

DESCRIPTION:

Additives deplete from the coolant with normal operation. For this reason, Supplemental Coolant Additives (SCA) must be added to all heavy duty coolants at regular intervals. In addition, when not using a fully formulated, pre-charged antifreeze, like Caterpillar's DEAC, an initial charge of SCA must be added to the cooling system. The amount of SCA added to the system is dependent on the capacity of the system.

The SCA for initial fill is provided as a liquid. SCA's for maintenance intervals are available in liquid form and as a spin-on element. (No Spin-on available for 3600 Family of Engines)

NOTE:

The amount of SCA added at initial fill is not the same as the amount added at maintenance intervals.

The coolant additive elements can be used with any ethylene or propylene glycol type antifreeze which meets ASTM D4985 or ASTM D5345 Specifications.

NOTE:

For use with standard heavy duty coolant only, not for use with Extended Life Coolant.

PARTS NEEDED:

Cooling System Capacity		Liquid SCA at Initial Fill	Liquid SCA at Maintenance*	Spin-on SCA Maintenance Element*
Liters	Gallons			
22-30	(6-8)	3P-2044 (1)	6V-3542 (1)	111-2370 (1)
30-38	(8-10)	3P-2044 (1) 6V-3542 (1)	111-2372 (1)	111-2369 (1)
38-49	(10-13)	3P-2044 (1) 8T-1589 (1)	111-2372 (1)	111-2369 (1)
49-64	(13-17)	3P-2044 (2)	8T-1589 (1)	9N-3368 (1)
64-83	(17-22)	3P-2044 (2) 8T-1589 (1)	111-2372 (1) 6V-3542 (1)	111-2371 (1)
83-114	(22-30)	3P-2044 (3) 8T-1589 (1)	3P-2044 (1)	9N-3718 (1)
114-163	(30-43)	3P-2044 (5)	3P-2044 (1) 6V-3542 (1)	111-2371 (2)
163-242	(43-64)	3P-2044 (8)	3P-2044 (2)	9N-3718 (2)

** Normal maintenance period is 250 hrs. See your Operation and Maintenance Manual for complete coolant maintenance instructions.*

( ) Indicates quantity required.

MAINTENANCE PARTS

DESCRIPTION	PART NUMBER	QTY	WHERE USED	PAGE
AIR INLET AND EXHAUST SYSTEM				
FILTER ELEMENT AS-AIR (PRIMARY)	131-8902	1	AIR CLEANER GP	61
FILTER ELEMENT AS-AIR (SECONDARY)	131-8903	1	AIR CLEANER GP	61
FILTER ELEMENT-AIR (PRIMARY)	108-0671	1	AIR CLEANER GP	64
FILTER ELEMENT-AIR (SECONDARY)	108-0672	1	AIR CLEANER GP	64
BASIC ENGINE				
BELT-SERPENTINE	310-9543	1	PULLEY GP-FAN & ALT DRIVE	39
	310-9592	1	PULLEY GP-FAN & ALT DRIVE	38
CAP (ENGINE OIL FILLER)	294-1708	1	COVER GP-VALVE MECHANISM	15
GASKET (VALVE COVER)	296-4694	1	COVER GP-VALVE MECHANISM	15
PLUG-DRAIN (ENGINE OIL PAN)	5I-5607	1	PAN GP-OIL	34
COOLING SYSTEM				
CAP AS (COOLANT RECOVERY)	171-3369	1	RADIATOR & HYD OIL COOLER GP	57
CAP AS-RADIATOR	245-9212	1	RADIATOR & HYD OIL COOLER GP	54
GASKET (WATER TEMPERATURE REGULATOR)	294-1780	1	LINES GP-WATER	50
	5I-7735	1	LINES GP-WATER	50
HOSE-RADIATOR (LOWER) (LOWER RADIATOR)	305-7591	1	RADIATOR & HYD OIL COOLER GP	57
HOSE-RADIATOR (UPPER) (UPPER RADIATOR)	265-3654	1	RADIATOR & HYD OIL COOLER GP	57
REGULATOR-TEMPERATURE (COOLANT)	5I-8010	1	LINES GP-WATER	50

MAINTENANCE PARTS

DESCRIPTION	PART NUMBER	QTY	WHERE USED	PAGE
ELECTRICAL AND STARTING SYSTEM				
BATTERY (12-VOLT, MAINTENANCE FREE, WET)	3T-5760	2	BATTERY & WIRING GP	110
	9X-3404	2	BATTERY GP	116
CAP AS-FILLER (BATTERY)	123-1373	6	BATTERY & WIRING GP	110
CIRCUIT BREAKER AS (60-AMPERE) (ALTERNATOR)	171-2208	1	PANEL GP-CIRCUIT BREAKER	154
		1	PANEL GP-CIRCUIT BREAKER	156
CIRCUIT BREAKER AS (80-AMPERE) (MAIN)	171-2210	1	PANEL GP-CIRCUIT BREAKER	154
		1	PANEL GP-CIRCUIT BREAKER	156
FUSE (10-AMPERE)	113-8490	20	WIRING GP-CAB	196
FUSE (15-AMPERE)	113-8491	5	WIRING GP-CAB	196
FUSE (15-AMPERE) (ACCUGRADE, SOLENOID RESISTOR)	113-8491	1	WIRING GP-CAB	203
FUSE (20-AMPERE)	113-8492	3	WIRING GP-CAB	196
FUSE (25-AMPERE)	113-8493	3	WIRING GP-CAB	196
FUSE (30-AMPERE)	124-3548	2	WIRING GP-CAB	196
FUSE (5-AMPERE)	141-2759	7	WIRING GP-CAB	196
KEY (BATTERY DISCONNECT)	8H-5306	1	SWITCH GP-DISCONNECT	176
KEY AS-ELECTRONIC (SECURITY)	206-5162	2	INSTALLATION GP-SECURITY	136
LAMP AS (24-VOLT, 3-WATT)	170-9324	1	PANEL GP-SWITCH	158
		1	PANEL GP-SWITCH	160
LAMP-HALOGEN (24-VOLT, 65-WATT)	9X-3463	1	LAMP GP-FLOOD	139
		1	LIGHTING GP-FLOOD	140
		1	LIGHTING GP-FLOOD	147
		1	LIGHTING GP-FLOOD	149
LAMP-HALOGEN (24-VOLT, 65-WATT) (CANOPY)	9X-3463	1	LIGHTING GP-FLOOD	141
FUEL SYSTEM				
CAP GP-FUEL FILLER (EXTREME SERVICE, LOCKABLE)	164-4858	1	TANK GP-FUEL	97
		1	TANK GP-FUEL	99
		1	TANK GP-FUEL	101
		1	TANK GP-FUEL	103
FILTER (ADVANCED EFFICIENCY) (FUEL)	1R-0751	2	FILTER GP-FUEL	77
FILTER AS-WATER SEP & FUEL (PRIMARY)	326-1644	1	FILTER GP-WATER SEP & FUEL	80
GASKET (FUEL PRIMING PUMP)	294-1820	1	FILTER GP-FUEL	77
STRAINER AS-FUEL (FLOAT GAUGE)	303-9933	1	TANK GP-FUEL	97
		1	TANK GP-FUEL	99
		1	TANK GP-FUEL	101
		1	TANK GP-FUEL	103

MAINTENANCE PARTS

DESCRIPTION	PART NUMBER	QTY	WHERE USED	PAGE
HYDRAULIC SYSTEM				
BREATHER (SWING DRIVE)	4H-6112	1	DRIVE GP-SWING	381
BREATHER AS (SWING DRIVE)	267-6744	1	DRIVE GP-SWING	381
	267-6856	1	DRIVE GP-SWING	376
		1	DRIVE GP-SWING	378
BREATHER GP (HYDRAULIC TANK)	227-0590	1	TANK & FILTER GP-HYDRAULIC	579
FILTER AS-ENGINE OIL (STANDARD EFFICIENCY)	1R-0739	1	FILTER & MTG GP-OIL	387
FILTER ELEMENT AS-OIL (HYDRAULIC RETURN)	179-9806	1	FILTER GP-OIL	391
FILTER ELEMENT AS-OIL (HYDRAULIC)	216-6676	1	FILTER GP-OIL	395
FILTER-OIL (ADVANCED EFFICIENCY) (HYDRAULIC)	5I-8670	1	FILTER & VALVE GP-PILOT	389
FILTER-OIL (ADVANCED EFFICIENCY) (HYDRAULIC, CASE DRAIN)	093-7521	1	FILTER GP-OIL	396
PLUG-DRAIN (HYDRAULIC TANK)	4B-7739	1	TANK & FILTER GP-HYDRAULIC	579
SCREEN AS (HYDRAULIC TANK)	209-6002	1	SCREEN GP-HYDRAULIC	566
LUBRICATION SYSTEM				
BREATHER (CRANKCASE)	5I-7725	1	BREATHER GP	44
OPERATOR STATION				
BLADE AS-WIPER (275-MM) (LOWER)	4I-5021	1	WIPER & WASHER GP-WINDOW	929
BLADE AS-WIPER (600-MM) (UPPER)	161-3670	1	WIPER GP-WINDOW	932
CAP AS (WINDOW WASHER)	178-5431	1	WASHER GP-WINDOW	911
FILTER ELEMENT-CAB AIR	293-1184	1	DUCT GP-CAB AIR	807
FILTER ELEMENT-CAB AIR (AIR CONDITIONER)	245-7823	1	AIR CONDITIONER GP	717
FUSE (5-AMPERE) (RADIO)	141-2759	1	INSTALLATION GP-RADIO	841
KEY (CORPORATE)	278-1585	2	LITERATURE GP	853
LAMP (24-VOLT, 10-WATT) (DOME)	201-4417	1	CAB GP	736
		1	CAB GP	740
LAMP AS-DOME	176-1986	1	CAB GP	736
		1	CAB GP	740
RECEIVER DRYER AS (REFRIGERANT)	176-1902	1	LINES GP-AIR CONDITIONER	848
SEAT BELT GP	327-6540	1	SEAT BELT GP	876
	327-6541	1	SEAT BELT GP	877
SEAT BELT GP (RETRACTABLE, 3-IN)	235-9020	1	SEAT BELT GP	874
SEAT BELT GP (RETRACTABLE, 46-MM)	273-5446	1	SEAT BELT GP	873
V-BELT (REFRIGERANT COMPRESSOR)	255-3016	1	COMPRESSOR GP-REFRIGERANT	753

INDEX

Name	Page
A	
ACCUMULATOR GP-HYDRAULIC–CHARGED	340 341 342 343 344 345
ADAPTER GP-REMOTE OIL FILTER–ENGINE	43
ADJUSTER GP-BUCKET	683
ADJUSTER GP-SEAT (UPPER SLIDE)	902 903 904
ADJUSTER GP-SEAT–LOWER SLIDE	713
ADJUSTER GP-SEAT–UPPER SLIDE	712
AFTERCOOLER AS	54
AIR CLEANER GP	60 61 62 64
AIR CONDITIONER & MOUNTING GP	714
AIR CONDITIONER AR	716
AIR CONDITIONER GP	717
ALARM GP	106 107
ALARM GP-TRAVEL	107
ALTERNATOR GP-CHARGING	108
ANTENNA & MOUNTING GP–PRODUCT LINK, ANTENNA	720
ARMREST GP–LH	723
ARMREST GP–RH	722
B	
BATTERY & WIRING GP	110
BATTERY (12-VOLT, MAINTENANCE FREE, WET)	110 116
BATTERY GP–COLD WEATHER	116
BELT-SERPENTINE	38 39
BLADE & MOUNTING GP	684 685 687
BLADE AS-WIPER (275-MM) (LOWER)	929
BLADE AS-WIPER (600-MM) (UPPER)	932
BLADE GP-STRAIGHT	689 690 691
BLOCK GP-JUNCTION–BATTERY	117
BOOM AR	657
BOOM AR-1 PIECE LONG	657
BOOM GP	658 660
BOOM GP–ACCUGRADE READY	662
BOX & MOUNTING GP	247
BOX GP-FUEL TRANSFER	248 249
BRACKET GP-MIRROR	724
BRACKET GP-MOUNTING	902 903
BRACKET GP-MOUNTING (SUSPENSION SEAT)	904
BRACKET GP-MOUNTING–SUSPENSION SEAT	725
BREATHER (CRANKCASE)	44
BREATHER (SWING DRIVE)	381
BREATHER AS (SWING DRIVE)	376 378 381
BREATHER GP (HYDRAULIC TANK)	579
BREATHER GP–CRANKCASE	44
BUCKET & ADJUSTER GP–EXCAVATION	692
BUCKET & ADJUSTER GP–HEAVY DUTY ROCK	692
BUCKET AR-EXCAVATION	692 693
BUCKET AS	694 695 696 697 698
BUCKET AS-DITCH CLEANING	699
BUCKET AS-EXCAVATION	701
BUCKET AS-EXCAVATION–HEAVY-DUTY ROCK	700
BUCKET AS-HEAVY DUTY ROCK	702
BUCKET GP	703 704
BUCKET GP-DITCH CLEANING	704
BUMPER GP–STEEL	250
C	
CAB GP	726 728 730 732 746 748
CAB GP–EXTERIOR	736 740
CAB GP–INTERIOR	734 744
CAMERA & MOUNTING GP	118
CAMERA AR–CAMERA	119
CAMERA GP	120 121
CAMSHAFT GP	14

INDEX

Name	Page
CAP (ENGINE OIL FILLER)	15
CAP AS (COOLANT RECOVERY)	57
CAP AS (WINDOW WASHER)	911
CAP AS-FILLER (BATTERY)	110
CAP AS-RADIATOR	54
CAP GP-FUEL FILLER (EXTREME SERVICE, LOCKABLE)	97
	99
	101
	103
CAP GP-FUEL FILLER–EXTREME SERVICE, LOCKABLE	76
CHASSIS AR	1
CIRCUIT BREAKER AS (60-AMPERE) (ALTERNATOR)	154
	156
CIRCUIT BREAKER AS (80-AMPERE) (MAIN)	154
	156
COIL GP-EVAPORATOR	750
COMPRESSOR GP-REFRIGERANT	752
	753
CONDENSER & MTG GP-REFRIGERANT	754
CONDENSER GP-REFRIGERANT	755
CONSOLE GP-OPERATOR	756
	758
CONSOLE GP-OPERATOR–LH	762
CONSOLE GP-OPERATOR–RH	760
CONTROL & MTG GP-COMMUNICATION–PRODUCT LINK 121SR	124
CONTROL & MTG GP-COMMUNICATION–PRODUCT LINK 321SR	123
CONTROL & MTG GP-ENGINE ELEK	126
CONTROL & MTG GP-JOYSTICK	768
CONTROL & MTG GP-JOYSTICK–3-BUTTON, TRIGGER SWITCH	766
	767
CONTROL & MTG GP-JOYSTICK–WITH SLIDE CONTROL	764
	765
CONTROL & MTG GP-MACHINE	127
CONTROL & MTG GP-PEDAL–LH	769
CONTROL AR-AUXILIARY–AUX PUMP, MED PRESSURE VALVE	346
CONTROL AR-AUXILIARY–AUXILIARY READY, COMB FUNCTION	346
CONTROL AR-AUXILIARY–FOOT SWITCH	347
CONTROL AR-AUXILIARY–JOYSTICK WITH SLIDE CONTROL	345
CONTROL AR-AUXILIARY–JOYSTICK, 3-BUTTON, TRIGGER SW	345
CONTROL AR-AUXILIARY–MEDIUM PRESSURE	347
CONTROL AR-AUXILIARY–SYSTEM 20, WORK TOOL PRIORITY	346
CONTROL AR-COUPLER	347
CONTROL AR-FINE SWING	348
CONTROL GP-BLADE	770
CONTROL GP-FOOT–LH	771
CONTROL GP-HANDLE–JOYSTICK, LH	772
	775
	777
CONTROL GP-HANDLE–JOYSTICK, RH	773
	774
	776
CONTROL GP-HEAT & AIR COND–AIR INLET	778
CONTROL GP-HYDRAULIC PEDAL–THIRD PEDAL, STRAIGHT TRAVEL	780
CONTROL GP-HYDRAULIC PEDAL–TRAVEL	779
CONTROL GP-JOYSTICK–LH	782
	784
	786
	788
	790
CONTROL GP-JOYSTICK–RH	781
	783
	785
	787
	789
CONTROL GP-PEDAL–ELECTRIC	791
CONTROL GP-UNPROGRAMMED	126
	127
CONTROL-REFUELING PUMP	89
	92
COOLER GP-ENGINE OIL	47
COOLING AR-HIGH AMBIENT TEMP	48
CORE AS-ENGINE OIL COOLER	47
CORE AS-HEATER	717
CORE AS-OIL COOLER	54
CORE AS-RADIATOR	54
COUNTERWEIGHT AR	251
COUNTERWEIGHT GP	252
	253
	254
	255
	256
	257
	258
	259
	260
	261
	263
COUNTERWEIGHT GP–5401-LBS (2450-KG)	262
COUPLER AR-QUICK	705
COUPLER GP-QUICK	706
COUPLING GP-FLEXIBLE	349
COUPLING GP-PUMP	350
COVER GP-ACCESS	268
COVER GP-ACCESS–ENGINE OIL DIPSTICK	264
COVER GP-ACCESS–HAMMER	265
COVER GP-ACCESS–UPPER	266

INDEX

Name	Page
	267
COVER GP-CAB–REAR	792
COVER GP-CONTROL VALVE	269
COVER GP-HOOD–PRECLEANER	270
COVER GP-PUMP	351
COVER GP-STORAGE	793
	794
COVER GP-VALVE MECHANISM	15
CRANKSHAFT GP	17
CYLINDER & LINES GP-BLADE–LH	352
CYLINDER & LINES GP-BLADE–RH	352
CYLINDER & LINES GP-BOOM–LH	352
CYLINDER & LINES GP-BOOM–RH	352
CYLINDER & LINES GP-BUCKET	353
CYLINDER & LINES GP-STICK	353
CYLINDER & SEAL GP-BLADE–LH	354
CYLINDER & SEAL GP-BLADE–RH	355
CYLINDER & SEAL GP-BOOM	356
CYLINDER & SEAL GP-BUCKET	357
	358
CYLINDER & SEAL GP-STICK	359
CYLINDER BLOCK GP	18
	21
CYLINDER GP-BLADE–LH	360
CYLINDER GP-BLADE–RH	362
CYLINDER GP-BOOM	364
CYLINDER GP-BUCKET	366
	368
CYLINDER GP-COUPLER	370
CYLINDER GP-STICK	371
CYLINDER HEAD AS	23
CYLINDER HEAD GP	24

D

Name	Page
DOOR & MTG GP-CAB	795
DOOR GP-ACCESS	271
DOOR GP-ACCESS–HYDRAULIC PUMP	273
DOOR GP-ACCESS–RADIATOR	274
DOOR GP-CAB	796
	798
	800
	803
	806
DRIVE GP-SWING–WITH MOTOR	376
	378
	380
	381
	382
DRIVE GP-SWING–WITHOUT MOTOR	374
DUCT GP-CAB AIR	807

E

Name	Page
EDGE GP-CUTTING	707
ELECTRONICS GP-COMMUNICATION–PRODUCT LINK 300	128
ELECTRONICS GP-MACHINE	128
ELECTRONICS GP-MACHINE–HIGH AMBIENT	128
ELECTRONICS GP-MONITOR	129
ENGINE AR	6
	7
ENGINE AR-COMPLETE	8
	9
	10
	11
	12

F

Name	Page
FAN GP-SUCTION	49
FASTENER GP-SWING & FINAL DR	383
FASTENER GP-WIRING HARNESS	133
FASTENER GP-WIRING HARNESS–BLADE	134
FASTENER GP-WIRING HARNESS–FOOT SWITCH	131
FASTENER GP-WIRING HARNESS–JOYSTICK	132
FASTENER GP-WIRING HARNESS–PEDAL CONTROL	130
FENDER GP	275
FILM GP	946
FILM GP–CONTROL PATTERN CHANGE, 2-WAY	942
FILM GP–CONTROL PATTERN, QUICK CHANGE	940
FILM GP–FUEL TRANSFER PUMP	944
FILM GP–HAMMER CONTROL, FOOT SWITCH	939
FILM GP–OPERATOR CONTROLS, NOTICE	935
	937
FILM GP–OVERLOAD WARNING DEVICE	948
FILM GP–PEDAL, LH	938
FILM GP–QUICK COUPLER	943
FILM GP–SECONDARY EXIT	934
FILM GP–WORK AREA VISUAL SYSTEM, REAR	947
FILM-CERTIFICATION (OPS GUARD, READ OMM)	825
FILM-CERTIFICATION (OPS GUARD, READ OMM, ENGLISH)	823
FILM-INFORMATION (24-VOLT)	950
FILM-INFORMATION (LIFT EYE LOCATION)	946
FILM-INSTRUCTION (COLD WEATHER)	116
FILM-INSTRUCTION (HYDRAULIC OIL RETURN FILTER)	391
FILM-INSTRUCTION (MACHINE SECURITY, CONSOLE)	162
	164

INDEX

Name	Page
FILM-INSTRUCTION (OPERATOR CONTROLS, READ OMM)	865, 938
FILM-INSTRUCTION (PULL RING, ALTERNATE EXIT)	950, 955
FILM-WARNING (HIGH PRESSURE CYLINDER)	344
FILM-WARNING (HOT FLUID UNDER PRESSURE, U.S.)	960
FILM-WARNING (NO WELD, NO DRILL, READ OMM)	823
FILM-WARNING (PRODUCT LINK RADIO, INTL)	124
FILM-WARNING (PRODUCT LINK RADIO, U.S.)	124
FILM-WARNING (SEAT BELT, U.S.)	960
FILTER & LINES GP-HYDRAULIC	384
FILTER & MTG GP-OIL	387
FILTER & VALVE GP-PILOT–HYDRAULIC OIL	389
FILTER (ADVANCED EFFICIENCY) (FUEL)	77
FILTER AR-HYDRAULIC	390
FILTER AS-ENGINE OIL (STANDARD EFFICIENCY)	387
FILTER AS-WATER SEP & FUEL (PRIMARY)	80
FILTER ELEMENT AS-AIR (PRIMARY)	61
FILTER ELEMENT AS-AIR (SECONDARY)	61
FILTER ELEMENT AS-OIL (HYDRAULIC RETURN)	391
FILTER ELEMENT AS-OIL (HYDRAULIC)	395
FILTER ELEMENT-AIR (PRIMARY)	64
FILTER ELEMENT-AIR (SECONDARY)	64
FILTER ELEMENT-CAB AIR	807
FILTER ELEMENT-CAB AIR (AIR CONDITIONER)	717
FILTER GP-FUEL	77
FILTER GP-OIL–HYDRAULIC	395
FILTER GP-OIL–HYDRAULIC RETURN	391, 393
FILTER GP-OIL–HYDRAULIC, CASE DRAIN	396
FILTER GP-WATER SEP & FUEL	80
FILTER-OIL (ADVANCED EFFICIENCY) (HYDRAULIC)	389
FILTER-OIL (ADVANCED EFFICIENCY) (HYDRAULIC, CASE DRAIN)	396
FINAL DRIVE GP	243
FINAL DRIVE GP–WITH MOTOR	242
FIREWALL GP	277
FITTING GP-HYDRAULIC	397
FITTING GP-HYDRAULIC–SWING MOTOR	398
FLOOR MAT	808, 809, 810, 811, 812, 813, 814
FLOOR MAT GP–ACCUGRADE	814
FLYWHEEL GP	25
FRAME AR-UNDERCARRIAGE	317
FRAME AS-UNDERCARRIAGE	318, 319
FRAME GP-UPPER	279
FRAME GP-UPPER–ACCUGRADE READY	281
FRAME GP-UPPER FRONT WINDOW	815
FUSE (10-AMPERE)	196
FUSE (15-AMPERE)	196
FUSE (15-AMPERE) (ACCUGRADE, SOLENOID RESISTOR)	203
FUSE (20-AMPERE)	196
FUSE (25-AMPERE)	196
FUSE (30-AMPERE)	196
FUSE (5-AMPERE)	196
FUSE (5-AMPERE) (RADIO)	841

G

Name	Page
GASKET (FUEL PRIMING PUMP)	77
GASKET (VALVE COVER)	15
GASKET (WATER TEMPERATURE REGULATOR)	50
GAUGE GP-SIGHT–HYDRAULIC OIL LEVEL	399
GAUGE-OIL LEVEL (DIPSTICK) (ENGINE)	34
GAUGE-OIL LEVEL (SWING DRIVE)	376, 378, 381
GEAR & BEARING GP-SWING	283, 285
GEAR GP-FRONT	26
GENERAL AR	1
GUARD AR-OVERHEAD–FOG	817
GUARD AR-VANDALISM	817
GUARD GP-BOTTOM	287
GUARD GP-BOTTOM–HEAVY DUTY	288
GUARD GP-CYLINDER	401
GUARD GP-CYLINDER–BLADE	400
GUARD GP-FRONT	289
GUARD GP-FRONT WINDOW	823
GUARD GP-FRONT WINDOW–FULL	818, 820
GUARD GP-FRONT WINDOW–LOWER	822
GUARD GP-OVERHEAD	825
GUARD GP-SWIVEL	290
GUARD GP-TRACK GUIDE	320
GUARD GP-TRAVEL MOTOR	321, 322
GUARD GP-VANDALISM–CAB	827, 828

INDEX

Name	Page
H	
HANDRAIL GP	291
	293
HARNESS AS-AUXILIARY	205
HARNESS AS-CAB	196
	203
HARNESS AS-CHASSIS	207
HARNESS AS-CHASSIS (MAIN)	110
HARNESS AS-CONSOLE	164
HARNESS AS-CONSOLE (LH)	213
HARNESS AS-CONSOLE (RH)	158
	160
	162
	215
HARNESS AS-CONTROL	202
	210
	212
	228
HARNESS AS-CONTROL (GRADE CONTROL)	194
HARNESS AS-CONTROL (PRODUCT LINK)	210
HARNESS AS-ENGINE	220
HARNESS AS-ENGINE (FUEL INJECTORS)	220
HARNESS AS-FRONT	226
HARNESS AS-HEATER	834
HARNESS AS-HEATER & AIR COND	717
HARNESS AS-HEATER & AIR COND (AIR CONDITIONER, LOW SIDE)	714
HARNESS AS-HEATER & AIR COND (CONTROL PANEL SWITCHES)	714
	834
HARNESS AS-LIGHTING	144
	146
	147
	149
HARNESS AS-LIGHTING (CAB FLOODLIGHTS, FRONT)	140
	141
HARNESS AS-OPERATOR CONTROLS	771
HARNESS AS-PLATFORM	235
HARNESS AS-POWER (RADIO)	841
HARNESS AS-PUMP	202
	225
	227
HARNESS AS-RADIO	843
HARNESS AS-SOLENOID	203
	223
	238
	240
HARNESS AS-SWITCH (SECONDARY SHUTDOWN)	235
HARNESS AS-VALVE	188
	191
	193
	229
	230
	231
	232
	233
HARNESS AS-WIRING	138
	205
HARNESS AS-WIRING (HORN)	838
HARNESS AS-WIRING (QUICK COUPLER SWITCH)	184
HARNESS AS-WIRING (SERVICE CONNECTOR)	210
	212
HATCH GP-ROOF	829
	830
HEAD GP-PUMP	402
HEADREST AS-SEAT	832
	833
HEADREST AS-SEAT–CLOTH	831
HEATER & MTG GP-CAB	834
HEATER (24-VOLT)	70
HEATER AR	836
HOOD & GUARD GP	294
HOOD GP	295
	296
	299
HOOD GP–GPS	297
HOOD GP-ENGINE	300
	301
	302
	303
	304
	305
HORN GP-ELECTRIC	837
	838
HOSE-RADIATOR (LOWER) (LOWER RADIATOR)	57
HOSE-RADIATOR (UPPER) (UPPER RADIATOR)	57
HOUSING GP-FLYWHEEL	27
HOUSING GP-FRONT	28
HYDRAULIC AR	404
I	
IDLER GP-FRONT	323
	324
IDLER GP-FRONT–LH	326
IDLER GP-FRONT–RH	325
INDICATOR AS-AIR FILTER CHANGE (AIR RESTRICTION)	64
INDICATOR AS-AIR FILTER CHANGE (AIR RESTRICTION) (SERVICE)	61
INJECTOR GP-FUEL	81
INSTALLATION AR	839

INDEX

Name	Page
INSTALLATION AR-BLADE	2
INSTALLATION AR-COMMUNICATION–PRODUCT LINK 121SR	135
INSTALLATION AR-COMMUNICATION–PRODUCT LINK 321SR	135
INSTALLATION AR-ENGINE	13
INSTALLATION GP-RADIO	840, 841, 843
INSTALLATION GP-SECURITY	136

K

KEY (BATTERY DISCONNECT)	176
KEY (CORPORATE)	853
KEY AS-ELECTRONIC (SECURITY)	136
KIT-BRACKET–PRODUCT LINK 121SR, 321SR	138
KIT-CONSOLE ADJUSTMENT	844
KIT-SEAT SUSPENSION	846
KIT-SEAT SUSPENSION–SEAT HEIGHT	845

L

LAMP (24-VOLT, 10-WATT) (DOME)	736, 740
LAMP AS (24-VOLT, 3-WATT)	158, 160
LAMP AS-DOME	736, 740
LAMP GP-FLOOD	139, 140, 147
LAMP GP-FLOOD (CANOPY)	141, 149
LAMP-HALOGEN (24-VOLT, 65-WATT)	139, 140, 147, 149
LAMP-HALOGEN (24-VOLT, 65-WATT) (CANOPY)	141
LEVER GP-AIR & TEMP CONTROL	847
LIGHTING GP-FLOOD	143
LIGHTING GP-FLOOD–BOOM, LH	144
LIGHTING GP-FLOOD–BOOM, RH	146
LIGHTING GP-FLOOD–CAB	147
LIGHTING GP-FLOOD–CAB GUARD	140, 141
LIGHTING GP-FLOOD–TIMER-ON DELAY	149
LINES AR-AUXILIARY HYDRAULIC–HIGH PRESSURE, REACH BOOM	404
LINES AR-AUXILIARY HYDRAULIC–MEDIUM PRESSURE	404
LINES AR-QUICK COUPLER–REACH BOOM	405
LINES GP-AIR	65
LINES GP-AIR CONDITIONER	848
LINES GP-AUXILIARY HYDRAULIC–BOOM, MEDIUM PRESSURE	408
LINES GP-AUXILIARY HYDRAULIC–HIGH PRESSURE	410, 413, 416
LINES GP-AUXILIARY HYDRAULIC–HIGH PRESSURE, REACH BOOM	406
LINES GP-AUXILIARY HYDRAULIC–MEDIUM PRESSURE	411, 414, 417
LINES GP-BLADE CYLINDER–BLADE	421
LINES GP-BLADE CYLINDER–LH	419
LINES GP-BLADE CYLINDER–RH	420
LINES GP-BOOM	426
LINES GP-BOOM–AUXILIARY READY	425
LINES GP-BOOM CYLINDER	429
LINES GP-BOOM CYLINDER–BOOM LOWERING CONTROL	432
LINES GP-BOOM CYLINDER–LH	434
LINES GP-BOOM CYLINDER–RH	435
LINES GP-BOOM–REACH BOOM, STICK LOAD CONTROL	423
LINES GP-BOOM–WITHOUT AUXILIARY	428
LINES GP-BUCKET CYLINDER	436
LINES GP-CONTROL–FRONT	437
LINES GP-CONTROL–REAR	439
LINES GP-COUPLER	441, 442, 444, 446
LINES GP-COUPLER–REACH BOOM	443
LINES GP-ENGINE OIL	45
LINES GP-FRONT–HAMMER, RETURN	463
LINES GP-FRONT–MEDIUM PRESSURE	455, 461
LINES GP-FRONT–QUICK COUPLER	447, 451
LINES GP-FRONT–SYSTEM 20, WORK TOOL PRIORITY	457
LINES GP-FRONT–SYSTEM 23, COMBINED FUNCTION	459
LINES GP-FUEL	82
LINES GP-FUEL INJECTION	85
LINES GP-GREASE	664, 666, 667
LINES GP-HEATER	851
LINES GP-HYDRAULIC OIL COOLER	465
LINES GP-MUFFLER DRAIN	66
LINES GP-PILOT–2-WAY	476
LINES GP-PILOT–4-WAY	478
LINES GP-PILOT–ACCUGRADE	527

INDEX

Name	Page
LINES GP-PILOT–BLADE	494
LINES GP-PILOT–BOOM LOWERING CONTROL	522
LINES GP-PILOT–INITIAL SERVICE	525
LINES GP-PILOT–JOYSTICK, PEDALS	470, 473
LINES GP-PILOT–MAIN CONTROL VALVE	482
LINES GP-PILOT–MAIN CONTROL VALVE, MANIFOLD	485
LINES GP-PILOT–MEDIUM PRESSURE	521, 523
LINES GP-PILOT–PUMP CONTROL	491, 508, 513
LINES GP-PILOT–PUMP CONTROL, SHUTTLE VALVE	468
LINES GP-PILOT–STICK LOWERING CONTROL	517, 519
LINES GP-PILOT–SYSTEM 20, WORK TOOL PRIORITY	498, 503
LINES GP-PILOT–THIRD PEDAL	493
LINES GP-PILOT–THIRD PEDAL, TRAVEL LEVERS	480
LINES GP-PUMP	530, 532
LINES GP-PUMP–AUXILIARY PUMP	536
LINES GP-PUMP–BLADE	538
LINES GP-PUMP–SYSTEM 20, WORK TOOL PRIORITY	534
LINES GP-STICK	540, 541, 542
LINES GP-STICK CYLINDER	545
LINES GP-STICK CYLINDER–STICK LOWERING CONTROL	543
LINES GP-TRAVEL MOTOR	546
LINES GP-TURBOCHARGER AIR	68
LINES GP-TURBOCHARGER OIL	46
LINES GP-WATER	50
LINK AS-TRACK	327
LINKAGE AR-BUCKET–WITH LIFTING EYE	669
LINKAGE AR-BUCKET–WITHOUT LIFTING EYE	669
LINKAGE GP-BUCKET	670, 672
LINKAGE GP-BUCKET–COUPLER	676
LINKAGE GP-BUCKET–WITH LIFTING EYE	674
LITERATURE GP	853

M

Name	Page
MANIFOLD GP-CONTROL–PILOT OIL SUPPLY	548, 549, 550
MANIFOLD GP-EXHAUST	69
MANIFOLD GP-INLET	70
MIRROR GP-REAR VIEW	854, 855, 856, 857, 858
MODULE GP-INTERFACE (KEY)	136
MONITOR & MTG GP-OPERATOR	859, 865
MONITOR GP-OPERATOR	860
MOTOR AS (WIPER)	932
MOTOR GP-PISTON	551, 556
MOTOR GP-PISTON–SWING DRIVE	554
MOUNTING GP-ALTERNATOR	30
MOUNTING GP-ANTENNA	861
MOUNTING GP-ENGINE	31
MOUNTING GP-LINES	558
MOUNTING GP-PLATFORM	863
MOUNTING GP-SENSOR–INCLINATION	151
MOUNTING GP-STARTING MOTOR	33
MOUNTING GP-VALVE	559
MUFFLER GP	71

O

Name	Page
OPERATOR AR	865

P

Name	Page
PADLOCK GP	94
PAN GP-OIL	34
PANEL & MTG GP-CIRCUIT BREAKER	152, 153
PANEL GP-CIRCUIT BREAKER	154, 156
PANEL GP-SWITCH–ENGINE SPEED, START	158, 160, 162, 164
PEDAL AR-AUXILIARY–LH	865
PEDAL AR-THIRD	865
PIN GP-BUCKET	707
PIN GP-COUPLER	708
PISTON & ROD GP	36
PLATE & FILM GP	949, 950, 955, 960, 963
PLATE-IDENTIFICATION (CAT)	694, 695

INDEX

Name	Page
PLATE-WARNING (HIGH PRESSURE CYLINDER)	331, 332
PLATFORM GP-OPERATOR	866
PLUG-DRAIN (ENGINE OIL PAN)	34
PLUG-DRAIN (HYDRAULIC TANK)	579
POWER TRAIN AR	245
PRECLEANER AR	73
PROBE AS-LIQUID LEVEL (WATER SEPARATOR)	170
PULLEY AS-IDLER	37
PULLEY GP-FAN & ALT DRIVE	39
PULLEY GP-FAN & ALT DRIVE–WITH IDLER PULLEY	38
PULLEY GP-IDLER	40
PUMP & MTG GP-AUXILIARY–MEDIUM PRESSURE	561
PUMP & MTG GP-FUEL TRANSFER	87
PUMP & MTG GP-MAIN HYDRAULIC	562
PUMP AR-FUEL TRANSFER	88
PUMP AR-REFUELING	88
PUMP GP-FUEL TRANSFER	87, 89, 90
PUMP GP-GEAR	563
PUMP GP-PISTON	563
PUMP GP-REFUELING	92
PUMP GP-WATER	52

R

Name	Page
RADIATOR & HYD OIL COOLER GP	54, 57
RADIO GP-COMMUNICATION–PRODUCT LINK 121SR	867
RECEIVER DRYER AS (REFRIGERANT)	848
REGULATOR AS-VOLTAGE	108
REGULATOR-TEMPERATURE (COOLANT)	50
RELAY (24-VOLT) (BOOM FLOODLIGHT)	196
RELAY (24-VOLT) (CAB FLOODLIGHT)	196
RELAY (24-VOLT) (CHASSIS LIGHT)	196
RELAY (24-VOLT) (HORN)	196
RELAY (24-VOLT) (NEUTRAL START)	196
RELAY (24-VOLT) (TRAVEL ALARM)	196
RELAY (24-VOLT) (WORK TOOL)	202
RELAY (BLOWER)	778
RELAY (COMPRESSOR CLUTCH)	778
RELAY AS (WIPER)	932
ROLLER AR-TRACK & CARRIER	328
ROLLER GP-TRACK CARRIER	329
ROLLER GP-TRACK-SINGLE FLANGE	330

S

Name	Page
SCREEN AS (HYDRAULIC TANK)	566
SCREEN GP-HYDRAULIC	566
SCREEN GP-SUN	868
SEAT & MOUNTING GP–HIGH BACK, TILT	870, 871
SEAT & MOUNTING GP–LOW BACK WITH TILT	869
SEAT BELT GP	876, 877
SEAT BELT GP (RETRACTABLE, 3-IN)	874
SEAT BELT GP (RETRACTABLE, 46-MM)	873
SEAT BELT GP–RETRACTABLE	872, 876, 877
SEAT BELT GP–RETRACTABLE, 3-IN	874
SEAT BELT GP–RETRACTABLE, 46-MM	873, 875
SEAT GP	898
SEAT GP–HIGH BACK, TILT	879, 892
SEAT GP–HIGH BACK, WITH HEATER	880
SEAT GP–LOW BACK WITH TILT	878
SEAT GP–LOW BACK, TILT	881, 882, 883, 884, 885, 887, 889, 891
SEAT GP–LOW BACK, VINYL	886, 888, 890
SEAT GP-SUSPENSION–AIR SUSP, HIGH BACK, WITH HTR	895, 897
SEAT GP-SUSPENSION–HIGH BACK, TILT	894, 898
SEAT GP-SUSPENSION–LOW BACK, TILT	893
SENDER AS-TEMPERATURE (HYDRAULIC OIL)	579
SENSOR & MTG GP-POSITION–BOOM	167
SENSOR & MTG GP-POSITION–STICK	166
SENSOR AS (AMBIENT AIR TEMP)	717
SENSOR AS-FUEL LEVEL	97, 99, 101, 103
SENSOR AS-LIQUID LEVEL (WATER SEPARATOR)	170
SENSOR AS-POSITION (BUCKET)	368
SENSOR AS-PRESSURE (1-PUMP/2-PUMP, 1-WAY FLOW)	432
SENSOR AS-PRESSURE (ACTION INPUT, BOOM UP)	527

INDEX

Name	Page
SENSOR AS-PRESSURE (AUXILIARY HYDRAULIC)	406
SENSOR AS-PRESSURE (PUMP CONTROL)	491
SENSOR AS-TEMPERATURE (AIR)	778
SENSOR AS-TEMPERATURE (COOLANT)	717
SENSOR GP-ENGINE	168
SENSOR GP-LIQUID LEVEL (WATER IN FUEL)	172
SENSOR GP-LIQUID LEVEL–WATER IN FUEL	170
SENSOR GP-POSITION	171
SENSOR GP-POSITION (BOOM)	167
SENSOR GP-POSITION (STICK)	166
SENSOR GP-POSITION–WATER SEPARATOR	172
SENSOR GP-PRESSURE (AIR INLET MANIFOLD)	168
SENSOR GP-PRESSURE (ENGINE OIL)	168
SENSOR GP-PRESSURE (FUEL MANIFOLD)	168
SENSOR GP-PRESSURE (FUEL)	168
SENSOR GP-SPEED (ENGINE)	168
SENSOR GP-SPEED (FUEL PUMP)	87
SENSOR GP-TEMPERATURE (AIR INLET)	168
SENSOR GP-TEMPERATURE (ENGINE COOLANT)	168
SENSOR GP-TEMPERATURE (FUEL)	168
SENSOR-TEMPERATURE (AMBIENT AIR)	714
	834
SHEET AS-SOUND SUPPRESSION	306
	307
	308
	309
SIDECUTTER GP	709
SOFTWARE GP-COMMUNICATION (PRODUCT LINK 121SR)	867
SOFTWARE GP-COMMUNICATION (PRODUCT LINK 300)	128
SOFTWARE GP-MONITOR	129
SPECIAL AR–ACCUGRADE	3
	5
SPECIAL AR–E-CEILING, SET	4
SPOOL GP-CONTROL VALVE–BOOM II	575
SPOOL GP-CONTROL VALVE–BUCKET	574
SPOOL GP-CONTROL VALVE–COMBINED FLOW	571
SPOOL GP-CONTROL VALVE–STICK	570
SPOOL GP-CONTROL VALVE–STICK I	569
SPOOL GP-CONTROL VALVE–STICK II	568
SPOOL GP-CONTROL VALVE–SWING PRIORITY	572
SPOOL GP-CONTROL VALVE–TRAVEL, RH, LH	573
SPOOL GP-CONTROL VALVE–WORK TOOL	567
SPRING AS-GAS	823
SPRING AS-GAS (ENGINE HOOD)	301
SPROCKET GP	246
STARTING AR-COLD WEATHER	173
STARTING MOTOR GP-ELECTRIC	174
STEP GP	310
	311
STICK AR	677
STICK GP-HOE	678
	679
	680
	681
STICK GP-HOE–ACCUGRADE READY	682
STORAGE GP-VANDALISM GUARD	312
STRAINER AS-FUEL (FLOAT GAUGE)	97
	99
	101
	103
SUN VISOR	909
SUPPORT GP-HOOD	314
	315
SUPPORT GP-SEAT	899
	900
	901
SUSPENSION GP-SEAT	898
	902
	903
	905
	906
	907
	908
SUSPENSION GP-SEAT–AIR	904
SWITCH (LIQUID LEVEL) (FUEL)	180
SWITCH (WINDOW LOWER LIMIT)	915
SWITCH AS (FILTER BYPASS)	395
SWITCH AS-FOOT (WORK TOOL)	771
SWITCH AS-LIMIT (HYDRAULIC LOCKOUT)	179
SWITCH AS-LIQUID LEVEL (ENGINE OIL)	34
SWITCH AS-LIQUID LEVEL (HYDRAULIC OIL)	579
SWITCH AS-MAGNETIC (24-VOLT) (HEATER RELAY)	156
SWITCH AS-MAGNETIC (24-VOLT) (MAIN RELAY)	196
SWITCH AS-PRESSURE (ACTION INPUT, 2-WAY PATTERN)	494
	499
	504
SWITCH AS-PRESSURE (HYDRAULIC OIL)	486
	579
SWITCH AS-PRESSURE (IMPLEMENT, SWING)	468
	476
SWITCH AS-PRESSURE (PILOT, BOOM UP)	508
	513
SWITCH AS-PRESSURE (REFRIGERANT)	848
SWITCH AS-PUSH BUTTON (HORN)	772

INDEX

Name	Page
SWITCH AS-PUSH BUTTON (MANUAL LOW IDLE)	773
SWITCH AS-ROCKER (FINE SWING)	196, 223
SWITCH AS-ROCKER (HEATED SEAT)	895
SWITCH AS-ROCKER (LEVELING)	197
SWITCH AS-ROCKER (LOWER WASHER)	185
SWITCH AS-ROCKER (OVERLOAD WARNING)	231, 232, 233
SWITCH AS-ROCKER (RADIO MUTE)	841, 843
SWITCH AS-ROCKER (WIPER, LOWER)	185
SWITCH AS-ROLLER (LOWER WASHER/WIPER, DISABLE)	929
SWITCH AS-TOGGLE (ACCUGRADE BACKUP)	203
SWITCH AS-TOGGLE (AUTO/MANUAL ENG SPEED CONTROL)	215
SWITCH AS-TOGGLE (MANUAL ENGINE SPEED CONTROL)	215
SWITCH AS-TOGGLE (QUICK COUPLER)	184
SWITCH AS-TOGGLE (SECONDARY SHUTDOWN)	235
SWITCH AS-TOGGLE (WORK TOOL PRIORITY)	202
SWITCH GP-DISCONNECT–BATTERY	176
SWITCH GP-MAGNETIC (24-VOLT) (AIR INLET HEATER RELAY)	177
SWITCH GP-MAGNETIC–AIR INLET HEATER RELAY	177
SWITCH GP-MAGNETIC–START RELAY	178
SWITCH GP-POSITION–HYDRAULIC LOCKOUT	179
SWITCH GP-REFUELING (FUEL TANK SHUTOFF)	90
SWITCH GP-REFUELING–FUEL TANK SHUTOFF	180
SWITCH GP-ROTARY (THROTTLE POSITION)	158, 160, 162, 164
SWITCH GP-ROTARY–THROTTLE POSITION	181, 182
SWITCH GP-START–ENGINE, KEY	183
SWITCH GP-TOGGLE–QUICK COUPLER	184
SWITCH GP-WIPER–LOWER	185
SWITCH-MAGNETIC (24-VOLT) (START RELAY)	196
SWIVEL GP	576, 577
TANK & FILTER GP-HYDRAULIC	579
TANK & MTG GP-FUEL	94, 95
TANK & MTG GP-HYDRAULIC	581
TANK GP-FUEL	96, 97, 99, 101, 103
TIP GP-LONG	710, 711
TRACK ADJUSTER & RECOIL GP	333, 334
TRACK ADJUSTER & RECOIL GP–LH	332
TRACK ADJUSTER & RECOIL GP–RH	331
TRACK GP	339
TRACK GP–2-REQUIRED	335, 336, 337, 338, 339
TURBOCHARGER GP	74, 75
V-BELT (REFRIGERANT COMPRESSOR)	753
VALVE & MTG GP-CONTROL	582, 583, 584, 585
VALVE AR–4-WAY PATTERN	586
VALVE AR-ALT PATTERN CONTROL–2-WAY	586
VALVE AR-CHECK & RELIEF–STICK LOWERING CONTROL	586
VALVE AR-LOAD CONTROL–BOOM LOWERING CONTROL	586
VALVE AR-LOAD CONTROL–BOOM LOWERING, OVERLOAD WARNING	587
VALVE AS-MANUAL–AUXILIARY, SHUTOFF	588
VALVE AS-RELIEF (ENGINE OIL PRESSURE)	43
VALVE AS-RELIEF (LINE, MEDIUM PRESSURE)	589
VALVE GP-BANK–MEDIUM PRESSURE	589
VALVE GP-CHECK (HYD CYLINDER, QUICK COUPLER)	370
VALVE GP-CHECK–RETURN FILTER	590
VALVE GP-CONTROL	591, 594, 596
VALVE GP-CONTROL–2-PUMP, 1-WAY	592, 598
VALVE GP-COUNTERBALANCE	655

INDEX

Name	Page
VALVE GP-FLOW CONTROL (MEDIUM PRESSURE)	594, 596
VALVE GP-FLUID SAMPLING (ENGINE COOLANT)	50
VALVE GP-FUEL SHUTOFF	105
VALVE GP-LOAD CONTROL–BOOM, LH	599
VALVE GP-LOAD CONTROL–BOOM, RH	601
VALVE GP-LOAD CONTROL–STICK	603
VALVE GP-MAIN CONTROL–2-BANK	605
VALVE GP-PILOT	611
VALVE GP-PILOT (ALT PATTERN CONTROL, 2-WAY)	476
VALVE GP-PILOT (THIRD PEDAL, STRAIGHT TRAVEL)	780
VALVE GP-PILOT–JOYSTICK	613, 618, 620
VALVE GP-PILOT RELIEF (HYDRAULIC FILTER)	389
VALVE GP-PILOT–TRAVEL	616
VALVE GP-PILOT–WITHOUT SHUTTLE	622
VALVE GP-PRESSURE REDUCING–BOOM PRIORITY	624
VALVE GP-PRIORITY (FLOW DIVIDER VALVE)	534
VALVE GP-RELIEF	628, 629, 630, 631
VALVE GP-RELIEF (AUXILIARY PUMP)	589
VALVE GP-RELIEF–LINE	627
VALVE GP-RELIEF–MAIN	625
VALVE GP-RELIEF–TRACTION CONTROL	626
VALVE GP-SELECTOR	632
VALVE GP-SHUTTLE	633, 634, 636
VALVE GP-SHUTTLE–1-PUMP/2-PUMP	635
VALVE GP-SHUTTLE–PILOT	637
VALVE GP-SOLENOID	498, 503, 563, 639, 640, 641, 642, 647, 653, 654
VALVE GP-SOLENOID & MANIFOLD (QUICK COUPLER)	447, 451
VALVE GP-SOLENOID & MANIFOLD–QUICK COUPLER	649
VALVE GP-SOLENOID & PRESS REDC	485, 650, 651, 653, 654
VALVE GP-SOLENOID & PRESS REDC (WORK TOOL CONTROL)	498, 503
VALVE GP-SOLENOID & PRESS REDC–WORK TOOL CONTROL	652
VALVE GP-SOLENOID & RELIEF (AUXILIARY, COMBINED FN, LH)	406
VALVE GP-SOLENOID & RELIEF (AUXILIARY, COMBINED FN, RH)	406
VALVE GP-SOLENOID (24-VOLT) (FINE SWING)	648
VALVE GP-SOLENOID (AUXILIARY, 1-PUMP/2-PUMP)	508, 513
VALVE GP-SOLENOID (AUXILIARY, 1-WAY/2-WAY FLOW)	651
VALVE GP-SOLENOID (AUXILIARY, COMBINED FUNCTION)	652
VALVE GP-SOLENOID (FINE SWING)	376
VALVE GP-SOLENOID (HYDRAULIC LOCKOUT)	549, 550
VALVE GP-SOLENOID (NEG FLOW CONT, PROPN RED VALVE)	498, 503, 509, 514
VALVE GP-SOLENOID (PRESSURE REDUCING)	508, 513, 523, 643, 645
VALVE GP-SOLENOID (SWING BRAKE RELEASE)	549, 550
VALVE GP-SOLENOID (TRAVEL SPEED)	549, 550
VALVE GP-SOLENOID–FINE SWING	646, 648
VALVE GP-SOLENOID–NEG FLOW CONT, PROPN RED VALVE	643
VALVE GP-SOLENOID–NEGATIVE FLOW CONTROL	644
VALVE GP-SOLENOID–PRESSURE REDUCING	638, 645
VALVE GP-TRAVEL COUNTERBALANCE	655
VALVE MECHANISM GP	41
VALVE-FILL	334

INDEX

Name	Page
VALVE-RELIEF	334
VISOR GP-CAB	909
VISOR GP-PROTECTION–RAIN	910

W

WASHER GP-WINDOW	911
WASHER GP-WINDOW–LOWER	912
WINDOW AS-FRONT–UPPER	914
WINDOW GP-CAB	923
WINDOW GP-CAB–FRONT, LOWER	918
WINDOW GP-CAB–FRONT, UPPER	915
WINDOW GP-CAB–LOWER	919
WINDOW GP-CAB–REAR	921
WINDOW GP-CAB–SIDE, REAR	922
WINDOW GP-DOOR	924
WINDOW GP-REAR	926 928
WIPER & WASHER GP-WINDOW–LOWER	929
WIPER AR-WINDOW	931
WIPER GP-WINDOW–FRONT, UPPER	932
WIRING GP–OVERLOAD WARNING	233
WIRING GP-AUX START RECEPTACLE–JUMP START	186
WIRING GP-AUXILIARY CONTROL	191
WIRING GP-AUXILIARY CONTROL–SYSTEM 20, WORK TOOL PRIORITY	188
WIRING GP-BOOM	193
WIRING GP-BOOM–ACCUGRADE, BOOM	194
WIRING GP-CAB	196
WIRING GP-CAB–ACCUGRADE READY	203
WIRING GP-CAB–REAR VISION CAMERA	205
WIRING GP-CAB–SYSTEM 20, WORK TOOL PRIORITY	202
WIRING GP-CAMERA–REAR VISION CAMERA	206
WIRING GP-CHASSIS–ACCUGRADE	207
WIRING GP-COMMUNICATION–PRODUCT LINK 121SR	212
WIRING GP-COMMUNICATION–PRODUCT LINK 321SR	210
WIRING GP-CONSOLE	214
WIRING GP-CONSOLE–LH	213
WIRING GP-CONSOLE–RH	215
WIRING GP-CONVERTER	217 219
WIRING GP-COUPLER	239
WIRING GP-ELECTRONIC CONTROL	220
WIRING GP-FINE SWING	223
WIRING GP-FUEL SYSTEM–REFUELING	225
WIRING GP-GRADE CONTROL–ACCUGRADE, STICK	226
WIRING GP-HAMMER–RETURN FILTER	227
WIRING GP-HEATER	228
WIRING GP-MEDIUM PRESSURE	229
	230
WIRING GP-OVERLOAD WARNING	231 232
WIRING GP-PLATFORM	235
WIRING GP-PLATFORM–ACCUGRADE	238
WIRING GP-QUICK COUPLER–QUICK COUPLER	240

MACHINE ARRANGEMENT

260-7231 CHASSIS AR

S/N: CLA1-UP

PART OF 260-7228 GENERAL AR

SMCS-7000 **i02926511**

NOTE	PART NUMBER	QTY	PART NAME 1 2 3 4 5 6 (PRODUCT LEVEL)	SEE PAGE
Y	*283-2600*	1	BATTERY & WIRING GP	110
Y	*293-7050*	1	BOX & MOUNTING GP	247
Y	*320-5457*	1	COUNTERWEIGHT GP	258
Y	*293-6990*	1	COVER GP-CONTROL VALVE	269
Y	*293-6989*	1	FENDER GP	275
Y	*278-9264*	1	FRAME GP-UPPER	279
Y	*283-3659*	1	GUARD GP-BOTTOM	287
Y	*307-7740*	1	HANDRAIL GP	291
Y	*283-3664*	1	HOOD & GUARD GP	294
Y	*275-6874*	1	HORN GP-ELECTRIC	837
Y	*275-7014*	1	LIGHTING GP-FLOOD	143
Y	*273-5348*	1	LINES GP-AIR CONDITIONER	848
Y	*283-3739*	1	LINES GP-FUEL	82
Y	*275-3667*	1	LITERATURE GP	853
Y	*184-8807*	1	MIRROR GP-REAR VIEW	854
Y	*245-7811*	1	MOUNTING GP-PLATFORM	863
Y	*273-5363*	1	OPERATOR AR	865
Y	*260-7234*	1	PLATE & FILM GP	950
Y	*283-3675*	1	TANK & MTG GP-FUEL	94
Y	*319-1399*	1	WIRING GP-HEATER	228

Y-SEPARATE ILLUSTRATION

<END>

260-7228 GENERAL AR

S/N: CLA1-UP

SMCS-7000 **i02903531**

NOTE	PART NUMBER	QTY	PART NAME 1 2 3 4 5 6 (PRODUCT LEVEL)	SEE PAGE
Y	*260-7231*	1	CHASSIS AR	1
Y	*279-7576*	1	ELECTRONICS GP-MACHINE	128
Y	*221-8861*	1	ELECTRONICS GP-MONITOR	129
Y	**279-7797**	1	ENGINE AR-COMPLETE	8
Y	*283-8799*	1	FRAME AR-UNDERCARRIAGE	317
Y	*270-5992*	1	HYDRAULIC AR	404
Y	*279-7830*	1	INSTALLATION AR-ENGINE	13
Y	*267-6849*	1	POWER TRAIN AR	245

Y-SEPARATE ILLUSTRATION

<END>

MACHINE ARRANGEMENT

283-8789 INSTALLATION AR-BLADE

S/N: CLA1-UP

AN ATTACHMENT

SMCS-6060 **i02942391**

NOTE	PART NUMBER	QTY	PART NAME 1 2 3 4 5 6 (PRODUCT LEVEL)	SEE PAGE
Y	*316-8851*	1	CONTROL GP-BLADE	770
Y	*274-2678*	1	CYLINDER & LINES GP-BLADE (LH)	352
Y	*274-2679*	1	CYLINDER & LINES GP-BLADE (RH)	352
Y	*291-7764*	1	FASTENER GP-WIRING HARNESS (BLADE)	134
Y	**278-9284**	1	FRAME AS-UNDERCARRIAGE	319
Y	*199-4573*	1	GEAR & BEARING GP-SWING	285
Y	*289-7814*	1	GUARD GP-CYLINDER (BLADE)	400
Y	*282-7397*	1	LINES GP-BLADE CYLINDER	421
Y	*282-7399*	1	LINES GP-PILOT	494
Y	*286-6396*	1	LINES GP-PUMP	538
Y	*194-8936*	1	PLATE & FILM GP	949
Y	*259-0917*	1	PUMP & MTG GP-AUXILIARY (MEDIUM PRESSURE)	561

Y-SEPARATE ILLUSTRATION

<END>

MACHINE ARRANGEMENT

301-2552 SPECIAL AR–ACCUGRADE

S/N: CLA1-UP
OUTSIDE JAPAN
AN ATTACHMENT

SMCS-7000 **i02983849**

NOTE	PART NUMBER	QTY	PART NAME 1 2 3 4 5 6 (PRODUCT LEVEL)	SEE PAGE
Y	*308-8811*	1	BOOM GP	662
Y	*307-8071*	1	COUNTERWEIGHT GP	255
Y	*283-6173*	1	CYLINDER & LINES GP-BOOM (LH)	352
Y	*283-6174*	1	CYLINDER & LINES GP-BOOM (RH)	352
Y	*310-1789*	1	CYLINDER & LINES GP-BUCKET	353
Y	*289-7724*	1	CYLINDER & LINES GP-STICK	353
Y	*305-0399*	1	FLOOR MAT GP	814
Y	*308-8787*	1	FRAME GP-UPPER	281
Y	*295-9675*	1	GUARD GP-CYLINDER	401
Y	*309-5747*	1	GUARD GP-FRONT	289
Y	*307-8067*	1	HOOD GP	295
Y	*283-2602*	1	LIGHTING GP-FLOOD (BOOM, LH)	144
Y	*282-7394*	1	LINES GP-BOOM	426
Y	*282-4483*	1	LINES GP-GREASE	664
Y	*284-7070*	1	LINES GP-GREASE	666
Y	*307-5147*	1	LINES GP-PILOT (ACCUGRADE)	527
Y	*194-0335*	1	LINES GP-STICK	542
Y	*278-9293*	1	LINKAGE GP-BUCKET	674
Y	*270-5603*	1	MOUNTING GP-ANTENNA (ACCUGRADE)	861
Y	*309-5741*	1	MOUNTING GP-SENSOR (INCLINATION)	151
Y	*309-5745*	1	SENSOR & MTG GP-POSITION	166
Y	*309-5773*	1	SENSOR & MTG GP-POSITION	167
Y	*308-8814*	1	STICK GP-HOE	682
Y	*299-2697*	1	WIRING GP-CAB (ACCUGRADE READY)	203
Y	*306-8535*	1	WIRING GP-CHASSIS	207
Y	*306-8536*	1	WIRING GP-BOOM	194
Y	*306-8511*	1	WIRING GP-GRADE CONTROL (ACCUGRADE, STICK)	226
Y	*306-8509*	1	WIRING GP-PLATFORM	238
	290-9378	1	PANEL-CONTROL (SWITCH)	

Y-SEPARATE ILLUSTRATION

<END>

MACHINE ARRANGEMENT

301-2555 SPECIAL AR–E-CEILING, SET

S/N: CLA1-UP
ACCUGRADE
AN ATTACHMENT

SMCS-7000 **i02988427**

NOTE	PART NUMBER	QTY	PART NAME 1 2 3 4 5 6 (PRODUCT LEVEL)	SEE PAGE
Y	*308-8811*	1	BOOM GP	662
Y	*283-6173*	1	CYLINDER & LINES GP-BOOM (LH)	352
Y	*283-6174*	1	CYLINDER & LINES GP-BOOM (RH)	352
Y	*310-1789*	1	CYLINDER & LINES GP-BUCKET	353
Y	*289-7724*	1	CYLINDER & LINES GP-STICK	353
Y	*305-0399*	1	FLOOR MAT GP	814
Y	*308-8787*	1	FRAME GP-UPPER	281
Y	*295-9675*	1	GUARD GP-CYLINDER	401
Y	*309-5747*	1	GUARD GP-FRONT	289
Y	*307-8070*	1	HOOD GP	299
Y	*283-2602*	1	LIGHTING GP-FLOOD (BOOM, LH)	144
Y	*282-7394*	1	LINES GP-BOOM	426
Y	*282-4483*	1	LINES GP-GREASE	664
Y	*284-7070*	1	LINES GP-GREASE	666
Y	*307-5147*	1	LINES GP-PILOT (ACCUGRADE)	527
Y	*194-0335*	1	LINES GP-STICK	542
Y	*278-9293*	1	LINKAGE GP-BUCKET	674
Y	*309-5745*	1	SENSOR & MTG GP-POSITION (STICK)	166
Y	*309-5773*	1	SENSOR & MTG GP-POSITION (BOOM)	167
Y	*308-8814*	1	STICK GP-HOE	682
Y	*299-2697*	1	WIRING GP-CAB (ACCUGRADE READY)	203
Y	*306-8535*	1	WIRING GP-CHASSIS	207
Y	*306-8536*	1	WIRING GP-BOOM	194
Y	*306-8511*	1	WIRING GP-GRADE CONTROL (ACCUGRADE, STICK)	226
Y	*306-8509*	1	WIRING GP-PLATFORM	238
	290-9378	1	PANEL-CONTROL (SWITCH)	

Y-SEPARATE ILLUSTRATION

<END>

MACHINE ARRANGEMENT

301-2647 SPECIAL AR–ACCUGRADE

S/N: CLA1-UP

FOR USE WITH 283-8793–PAGE 48, 283-8819–PAGE 48, 283-8820–PAGE 48

AN ATTACHMENT

SMCS-7000 **i02995247**

NOTE	PART NUMBER	QTY	PART NAME 1 2 3 4 5 6 (PRODUCT LEVEL)	SEE PAGE
Y	*308-8811*	1	BOOM GP	662
Y	*307-8071*	1	COUNTERWEIGHT GP	255
Y	*283-6173*	1	CYLINDER & LINES GP-BOOM (LH)	352
Y	*283-6174*	1	CYLINDER & LINES GP-BOOM (RH)	352
Y	*310-1789*	1	CYLINDER & LINES GP-BUCKET	353
Y	*289-7724*	1	CYLINDER & LINES GP-STICK	353
Y	*305-0399*	1	FLOOR MAT GP	814
Y	*308-8787*	1	FRAME GP-UPPER	281
Y	*295-9675*	1	GUARD GP-CYLINDER	401
Y	*309-5747*	1	GUARD GP-FRONT	289
Y	*307-8069*	1	HOOD GP	297
Y	*283-2602*	1	LIGHTING GP-FLOOD (BOOM, LH)	144
Y	*282-7394*	1	LINES GP-BOOM	426
Y	*282-4483*	1	LINES GP-GREASE	664
Y	*284-7070*	1	LINES GP-GREASE	666
Y	*307-5147*	1	LINES GP-PILOT (ACCUGRADE)	527
Y	*194-0335*	1	LINES GP-STICK	542
Y	*278-9293*	1	LINKAGE GP-BUCKET	674
Y	*270-5603*	1	MOUNTING GP-ANTENNA (ACCUGRADE)	861
Y	*309-5741*	1	MOUNTING GP-SENSOR (INCLINATION)	151
Y	*309-5745*	1	SENSOR & MTG GP-POSITION (STICK)	166
Y	*309-5773*	1	SENSOR & MTG GP-POSITION (BOOM)	167
Y	*308-8814*	1	STICK GP-HOE	682
Y	*299-2697*	1	WIRING GP-CAB (ACCUGRADE READY)	203
Y	*306-8535*	1	WIRING GP-CHASSIS	207
Y	*306-8536*	1	WIRING GP-BOOM	194
Y	*306-8511*	1	WIRING GP-GRADE CONTROL (ACCUGRADE, STICK)	226
Y	*306-8509*	1	WIRING GP-PLATFORM	238
	290-9378	1	PANEL-CONTROL (SWITCH)	

Y-SEPARATE ILLUSTRATION

<END>

ENGINE ARRANGEMENT

279-7805 ENGINE AR

S/N: JKH1-UP

PART OF 279-7797, 279-7800, 279-7802, 279-7803, 279-7804 ENGINE AR-COMPLETE

ALSO AN ATTACHMENT

SMCS-1000 **i02926667**

NOTE	PART NUMBER	QTY	PART NAME 1 2 3 4 5 6 (PRODUCT LEVEL)	SEE PAGE
Y	*296-4792*	1	ADAPTER GP-REMOTE OIL FILTER	43
Y	*310-9546*	1	BREATHER GP (CRANKCASE)	44
Y	*305-4955*	1	CAMSHAFT GP	14
Y	*296-4800*	1	CONTROL & MTG GP-ENGINE ELEK	126
Y	*296-4782*	1	COOLER GP-ENGINE OIL	47
Y	*296-4786*	1	COVER GP-VALVE MECHANISM	15
Y	*296-4789*	1	CRANKSHAFT GP	17
Y	*296-4787*	1	CYLINDER BLOCK GP	21
Y	*296-4784*	1	CYLINDER HEAD GP	24
Y	*310-9549*	1	FAN GP-SUCTION	49
Y	*296-4794*	1	FILTER GP-FUEL	77
Y	*296-4783*	1	FLYWHEEL GP	25
Y	*296-4651*	1	GEAR GP-FRONT	26
Y	*296-4803*	1	HOUSING GP-FLYWHEEL	27
Y	*296-4788*	1	HOUSING GP-FRONT	28
Y	*310-9609*	1	INJECTOR GP-FUEL	81
Y	*296-4781*	1	LINES GP-ENGINE OIL	45
Y	*296-4793*	1	LINES GP-FUEL INJECTION	85
Y	*296-4777*	1	LINES GP-TURBOCHARGER OIL	46
Y	*296-4795*	1	LINES GP-WATER	50
Y	*296-4791*	1	MANIFOLD GP-EXHAUST	69
Y	*296-4790*	1	MANIFOLD GP-INLET	70
Y	*296-4798*	1	MOUNTING GP-ALTERNATOR	30
Y	*296-4637*	1	MOUNTING GP-STARTING MOTOR	33
Y	*310-9551*	1	MUFFLER GP	71
Y	*296-4780*	1	PAN GP-OIL	34
Y	*296-4796*	1	PISTON & ROD GP	36
Y	*305-4680*	1	PUMP & MTG GP-FUEL TRANSFER	87
Y	*296-4655*	1	PUMP GP-WATER	52
Y	*296-4802*	1	SENSOR GP-ENGINE	168
Y	*310-9620*	1	TURBOCHARGER GP	75
Y	*305-4954*	1	VALVE MECHANISM GP	41
Y	*296-4801*	1	WIRING GP-ELECTRONIC CONTROL	220
	315-2761	1	ELECTRONICS GP-ENGINE RATINGS	

Y-SEPARATE ILLUSTRATION

ENGINE ARRANGEMENT

279-7847 ENGINE AR

S/N: CLA1-UP

AN ATTACHMENT

SMCS-1000 **i03190421**

NOTE	PART NUMBER	QTY	PART NAME 1 2 3 4 5 6 (PRODUCT LEVEL)	SEE PAGE
Y	**279-7803**	1	ENGINE AR-COMPLETE	11

Y-SEPARATE ILLUSTRATION

ENGINE ARRANGEMENT

279-7797 ENGINE AR-COMPLETE

S/N: CLA1-UP

PART OF 260-7228 GENERAL AR

SMCS-1000 **i02903528**

NOTE	PART NUMBER	QTY	PART NAME 1 2 3 4 5 6 (PRODUCT LEVEL)	SEE PAGE
Y	*279-7805*	1	ENGINE AR	6
Y	*305-4944*	1	PULLEY GP-FAN & ALT DRIVE	39

Y-SEPARATE ILLUSTRATION

ENGINE ARRANGEMENT

279-7800 ENGINE AR-COMPLETE

S/N: CLA1-UP

PART OF 283-8793 COOLING AR-HIGH AMBIENT TEMP

AN ATTACHMENT

SMCS-1000 **i02903548**

NOTE	PART NUMBER	QTY	PART NAME 1 2 3 4 5 6 (PRODUCT LEVEL)	SEE PAGE
Y	*279-7805*	1	ENGINE AR	6
Y	*279-7779*	1	PULLEY GP-FAN & ALT DRIVE (WITH IDLER PULLEY)	38

Y-SEPARATE ILLUSTRATION

ENGINE ARRANGEMENT

279-7802 ENGINE AR-COMPLETE

S/N: CLA1-UP

PART OF 283-8819 COOLING AR-HIGH AMBIENT TEMP

AN ATTACHMENT

SMCS-1000 **i02903551**

NOTE	PART NUMBER	QTY	PART NAME 1 2 3 4 5 6 (PRODUCT LEVEL)	SEE PAGE
Y	*279-7805*	1	ENGINE AR	6
Y	*279-7779*	1	PULLEY GP-FAN & ALT DRIVE (WITH IDLER PULLEY)	38

Y-SEPARATE ILLUSTRATION

ENGINE ARRANGEMENT

279-7803 ENGINE AR-COMPLETE

S/N: CLA1-UP
PART OF 279-7847 ENGINE AR
AN ATTACHMENT

SMCS-1000 **i03190422**

NOTE	PART NUMBER	QTY	PART NAME 1 2 3 4 5 6 (PRODUCT LEVEL)	SEE PAGE
Y	*279-7805*	1	ENGINE AR	6
Y	*305-4944*	1	PULLEY GP-FAN & ALT DRIVE	39

Y-SEPARATE ILLUSTRATION

ENGINE ARRANGEMENT

279-7804 ENGINE AR-COMPLETE

S/N: CLA1-UP

PART OF 283-8820 COOLING AR-HIGH AMBIENT TEMP

AN ATTACHMENT

SMCS-1000 **i02903587**

NOTE	PART NUMBER	QTY	PART NAME 1 2 3 4 5 6 (PRODUCT LEVEL)	SEE PAGE
Y	*279-7805*	1	ENGINE AR	6
Y	*279-7779*	1	PULLEY GP-FAN & ALT DRIVE (WITH IDLER PULLEY)	38

Y-SEPARATE ILLUSTRATION

ENGINE ARRANGEMENT

279-7830 INSTALLATION AR-ENGINE

S/N: CLA1-UP

PART OF 260-7228 GENERAL AR

SMCS-1000 **i02896544**

NOTE	PART NUMBER	QTY	PART NAME 1 2 3 4 5 6 (PRODUCT LEVEL)	SEE PAGE
Y	*118-9881*	1	AIR CLEANER GP	60
Y	*310-9499*	1	COMPRESSOR GP-REFRIGERANT	753
Y	*273-5347*	1	CONDENSER & MTG GP-REFRIGERANT	754
Y	*310-9626*	1	FILTER & MTG GP-OIL	387
Y	*265-3609*	1	LINES GP-AIR	65
Y	*305-4728*	1	LINES GP-MUFFLER DRAIN	66
Y	*279-7758*	1	LINES GP-TURBOCHARGER AIR	68
Y	*255-3035*	1	MOUNTING GP-ENGINE	31
Y	*305-7600*	1	RADIATOR & HYD OIL COOLER GP	57

Y-SEPARATE ILLUSTRATION

BASIC ENGINE

305-4955 CAMSHAFT GP

S/N: JKH1-UP
PART OF 279-7805 ENGINE AR
ALSO AN ATTACHMENT

SMCS-1210 **i02790536**

NOTE	REF NO	GRAPHIC REF	PART NUMBER	QTY	PART NAME 1 2 3 4 5 6 (PRODUCT LEVEL)	SEE PAGE
	1	1	**305-4758**	1	CAMSHAFT	
	2	1	**279-7859**	8	TAPPET	
	3	1	**294-1716**	8	PUSHROD	
	4	1	**094-4628**	1	KEY	
	5	1	**5I-7650**	1	PLATE	
M	6	1	**6V-5215**	2	BOLT (M8X1.25X16-MM)	

M-METRIC PART

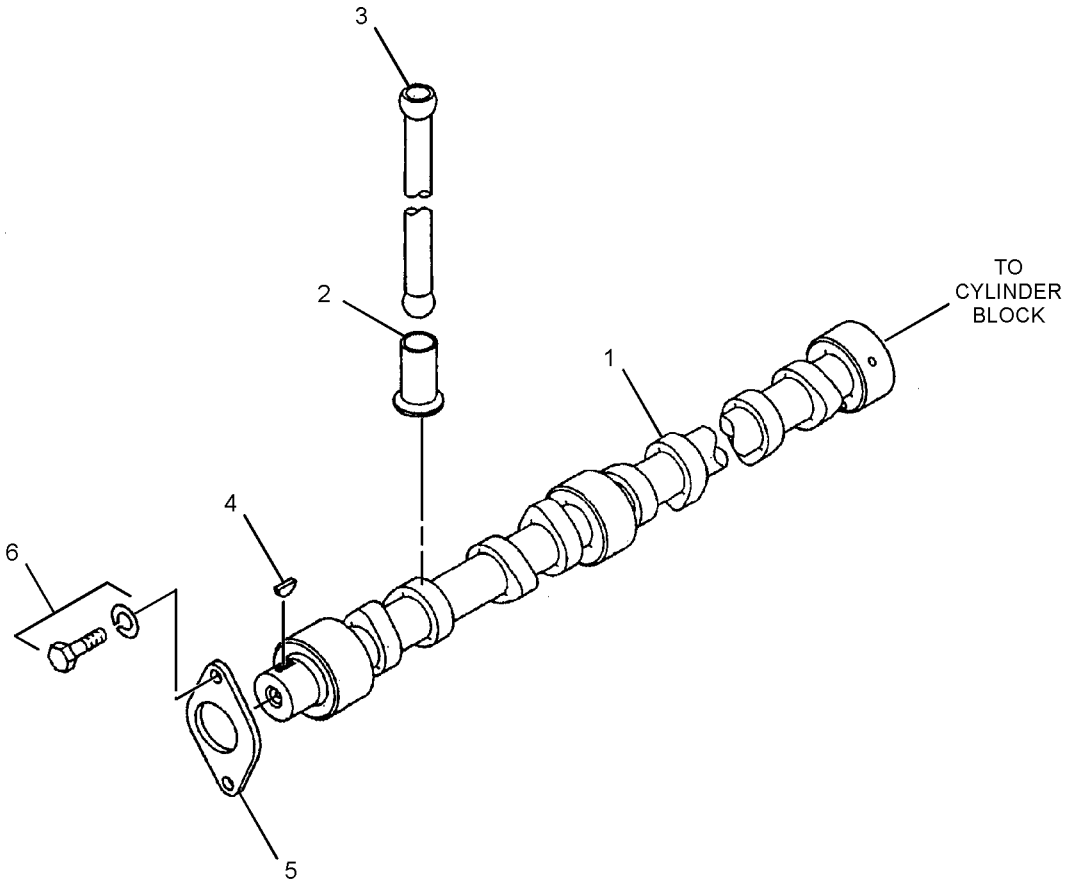

GRAPHIC #1 **<END>** g01405446

296-4786 COVER GP-VALVE MECHANISM

S/N: JKH1-UP
PART OF 279-7805 ENGINE AR
ALSO AN ATTACHMENT

SMCS-1107 **i03021616**

NOTE	REF NO	GRAPHIC REF	PART NUMBER	QTY	PART NAME 1 2 3 4 5 6 (PRODUCT LEVEL)	SEE PAGE
	1	1	**305-4767**	1	BASE-ROCKER ARM	
	2	1	**296-4692**	1	COVER-ROCKER	
	3	1	**305-4768**	1	GASKET	
	4	1	**296-4694**	1	GASKET (VALVE COVER)	
	5	1	**296-4695**	1	COVER	
	6	1	**294-1708**	1	CAP (ENGINE OIL FILLER)	
	7	1	**296-4696**	1	BRACKET	
	8	1	**294-1710**	6	BOLT (M6X1X16.2-MM)	
	9	1	**294-1711**	12	WASHER	
	10	1	**096-8569**	2	BOLT (140-MM LG)	
	11	1	**294-1712**	1	SEAL	
	12	1	**8T-4224**	7	WASHER-HARD (8.8X16X2-MM THK)	
	13	1	**294-1713**	12	BOLT (M8X1.25X38.3-MM)	
	14	1	**294-1700**	12	BOLT (M8X1.25X108.3-MM)	
	15	1	**095-8799**	5	BOLT (M8X1.25X30.5-MM)	
	16	1	**294-1821**	2	BOLT (M8X1.25X35.5-MM)	
	17	1	**294-1714**	2	STUD	

296-4786 **COVER GP-VALVE MECHANISM** *(contd.)* **i03021616**

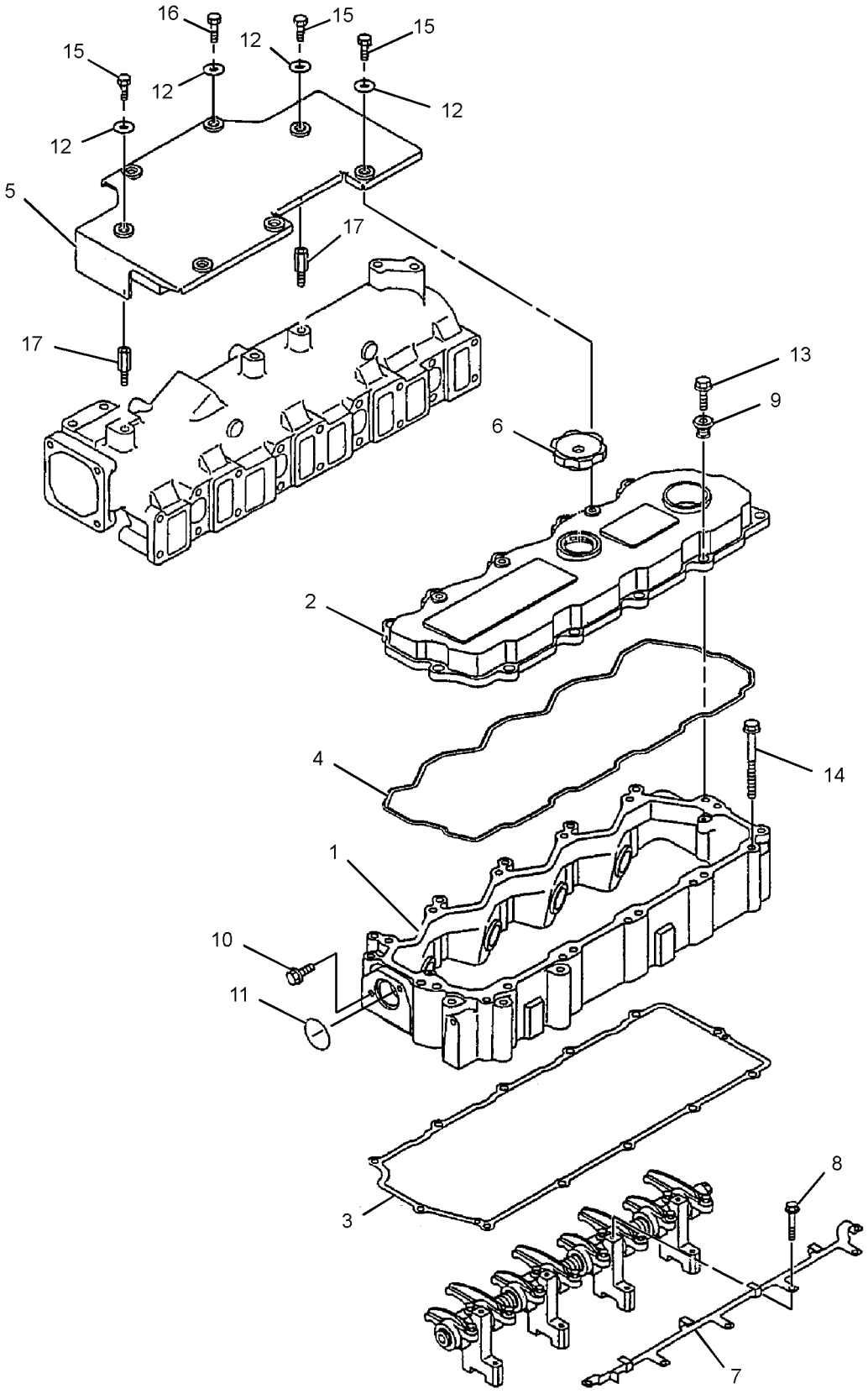

GRAPHIC #1 **<END>** g01404286

296-4789 CRANKSHAFT GP

S/N: JKH1-UP
PART OF 279-7805 ENGINE AR
ALSO AN ATTACHMENT

SMCS-1202 **i02710559**

NOTE	REF NO	GRAPHIC REF	PART NUMBER	QTY	PART NAME 1 2 3 4 5 6 (PRODUCT LEVEL)	SEE PAGE
	1	1	**296-4710**	1	CRANKSHAFT AS	
	1A	1	**294-1751**	1	GEAR (31-TEETH)	
	1B	1	**130-7596**	1	NUT	
	1C	1	**085-9513**	2	PIN	
	1D	1	**094-4628**	2	KEY	
	2	1	**233-1277**	1	PLATE	

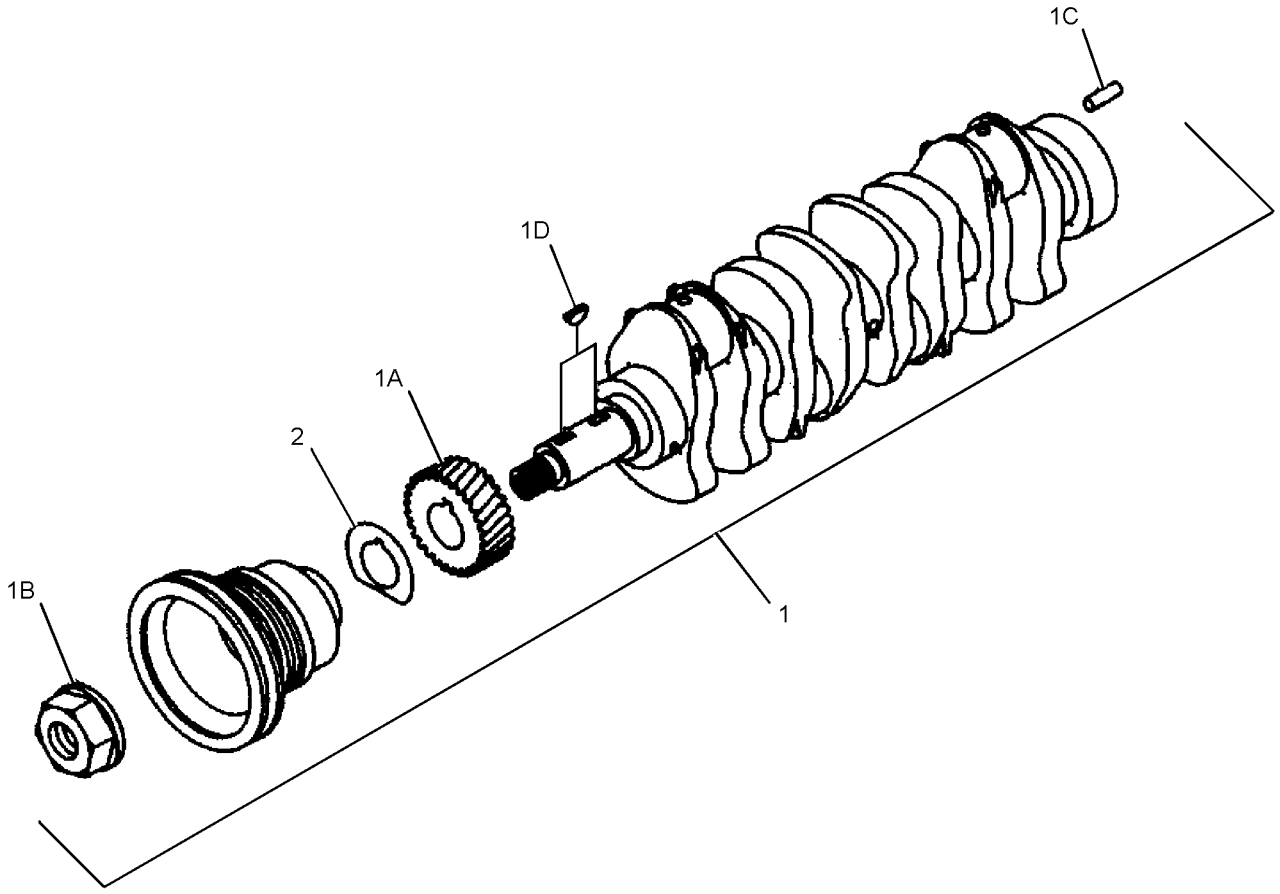

GRAPHIC #1 **<END>** g01403342

296-4699 CYLINDER BLOCK GP

S/N: JKH1-UP
PART OF 296-4787 CYLINDER BLOCK GP
ALSO AN ATTACHMENT

SMCS-1201 **i02975503**

NOTE	REF NO	GRAPHIC REF	PART NUMBER	QTY	PART NAME 1 2 3 4 5 6 (PRODUCT LEVEL)	SEE PAGE
	1	2	**4I-9664**	2	PIN	
	5	2	**5I-8009**	1	BUSHING	
	6	1	**5I-7528**	1	BUSHING	
	7	1	**5I-7529**	1	BUSHING	
	8	1	**3P-1896**	10	PLUG-CUP	
M	9	2	**094-7741**	10	BOLT-BEARING CAP (M14X2X120-MM)	
	10	2	**095-2005**	2	CAP	
	11	1	**096-3741**	7	CAP	
	12	1	**294-1720**	2	SEAL	
	13	2	**294-1722**	4	JET	
	14	1	**5I-7525**	1	PLUG	
	15	1	**5I-7505**	8	PLUG	
	16	2	**294-1721**	1	SHAFT	
	17	2	**5I-7724**	2	PIN	
	18	2	**095-2039**	1	WASHER-SPECIAL	
M	19	2	**8T-4191**	1	BOLT (M10X1.5X16-MM)	
	20	2	**099-4420**	2	PIN	
	21	1	**296-4672**	6	PIN	
	22	2	**139-7814**	4	VALVE	
	23	2	**094-9424**	8	GASKET	

M-METRIC PART

296-4699 CYLINDER BLOCK GP *(contd.)* **i02975503**

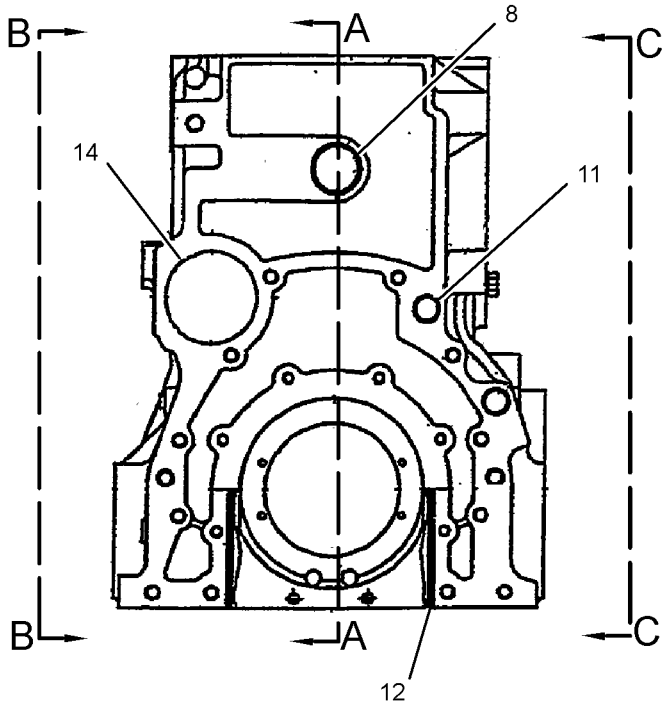

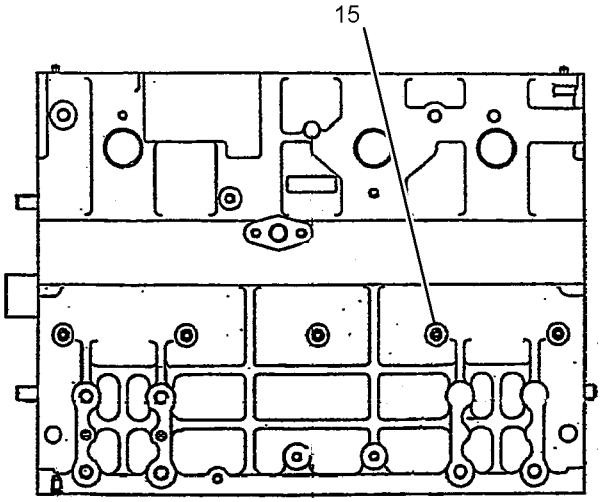

VIEW B-B

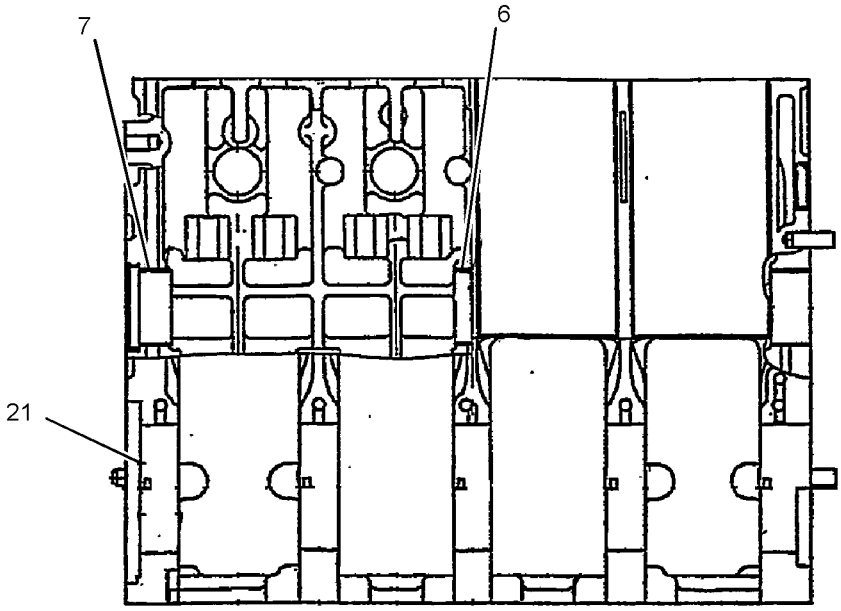

SECTION A-A

GRAPHIC #1 g01504593

296-4699 CYLINDER BLOCK GP *(contd.)* **i02975503**

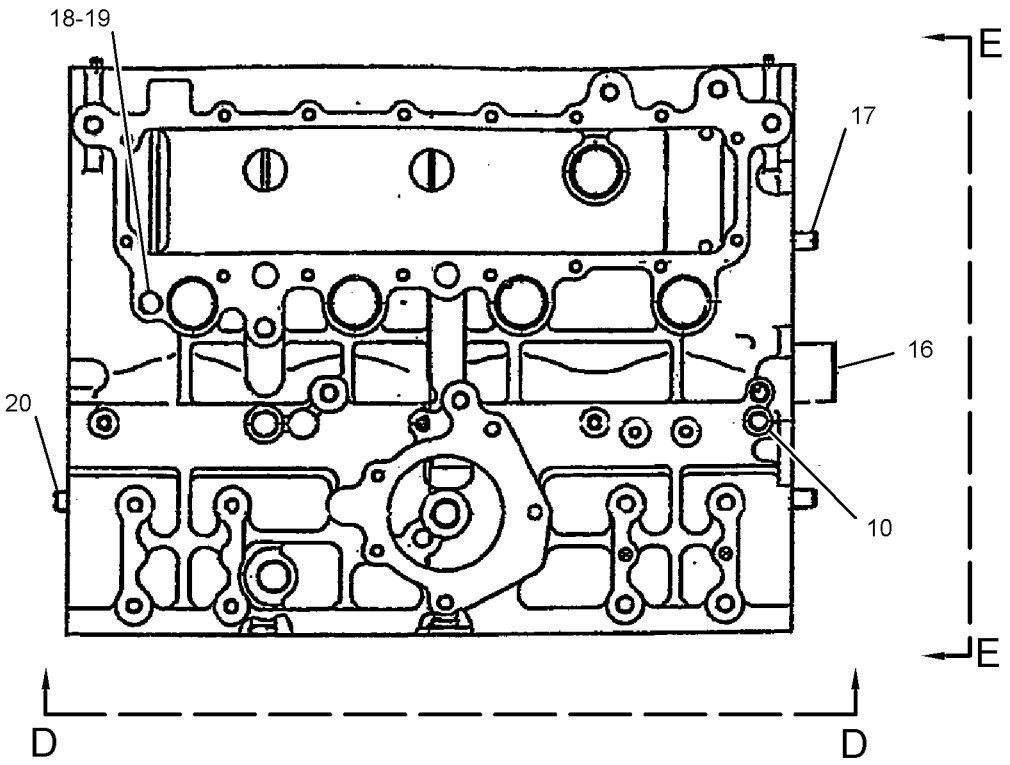

VIEW C-C

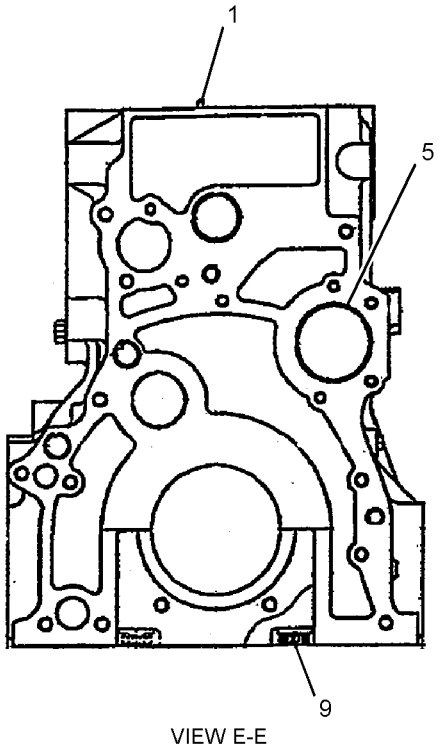

VIEW E-E

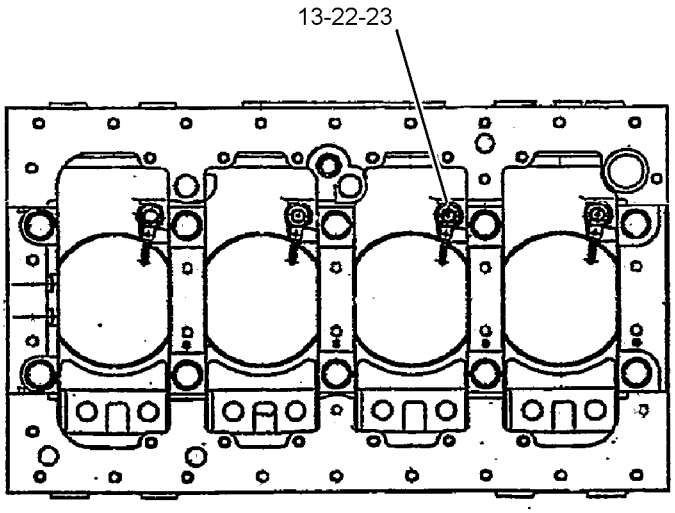

VIEW D-D

GRAPHIC #2 **<END>** g01378474

296-4787 CYLINDER BLOCK GP

S/N: JKH1-UP
PART OF 279-7805 ENGINE AR
ALSO AN ATTACHMENT

SMCS-1201 **i02837568**

NOTE	REF NO	GRAPHIC REF	PART NUMBER	QTY	PART NAME 1 2 3 4 5 6 (PRODUCT LEVEL)	SEE PAGE
	1	1	**294-1723**	1	EYE	
	2	1	**294-1724**	1	EYE	
	3	1	**5I-5181**	4	BOLT	
	5	1	**096-2501**	4	LOCKWASHER	
M	6	1	**8T-4191**	1	BOLT (M10X1.5X16-MM)	
	7	1	**095-2039**	1	WASHER-SPECIAL	
	8	1	**5I-7654**	3	PLATE (STANDARD)	
AB			**5I-7787**	3	PLATE (0.15-MM OS)	
AB			**5I-7788**	3	PLATE (0.3-MM OS)	
AB			**5I-7789**	3	PLATE (0.45-MM OS)	
	9	1	**5I-7588**	5	SET-BEARING (STANDARD)	
AB			**5I-7784**	5	SET-BEARING (0.25-MM US)	
AB			**5I-7785**	5	SET-BEARING (0.5-MM US)	
AB			**5I-7786**	5	SET-BEARING (0.75-MM US)	
Y	10	1	**296-4699**	1	CYLINDER BLOCK GP (WITH BEARINGS)	18

A-NOT PART OF THIS GROUP
B-USE AS REQUIRED
M-METRIC PART
Y-SEPARATE ILLUSTRATION

296-4787 **CYLINDER BLOCK GP** *(contd.)* **i02837568**

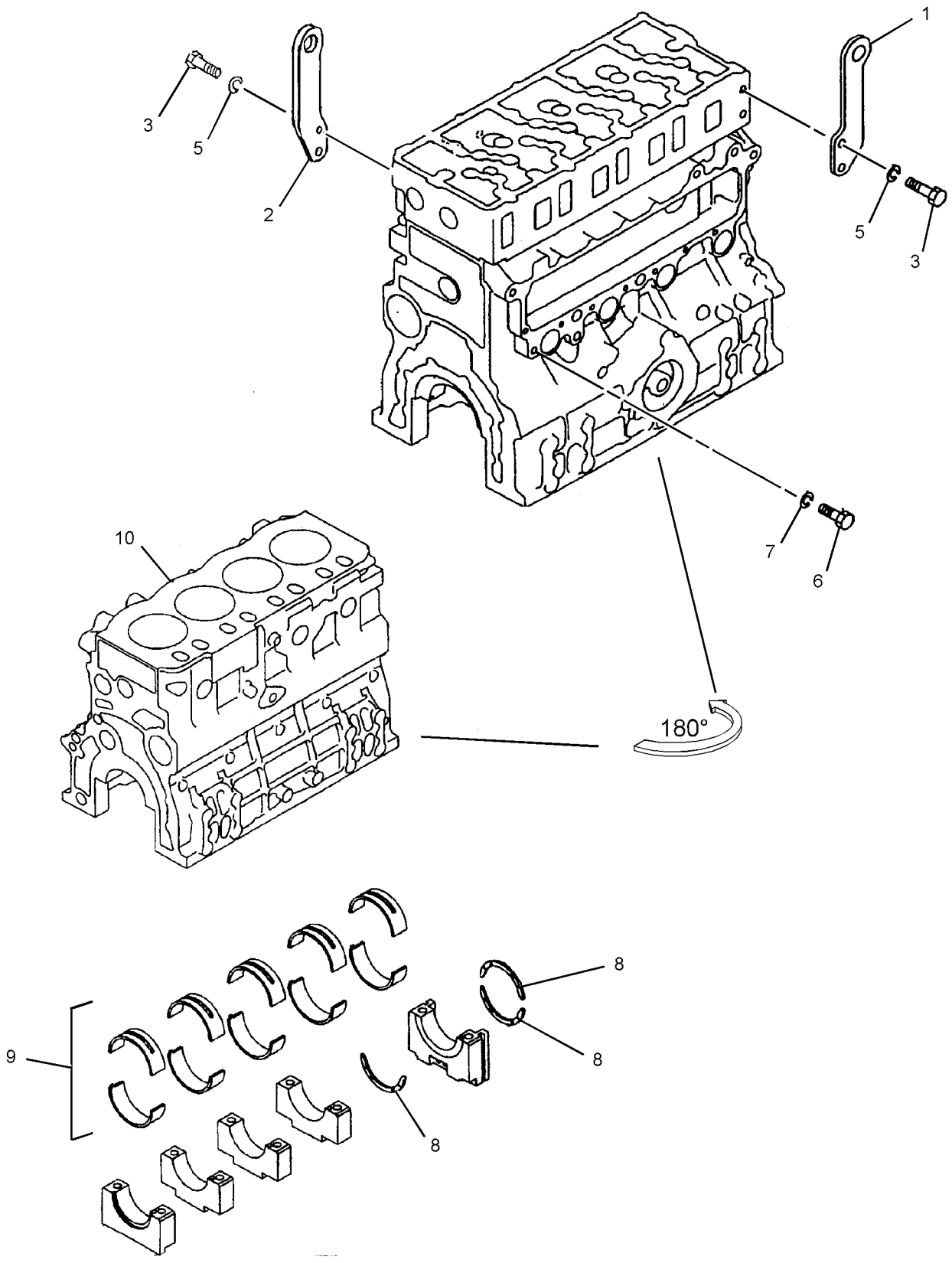

GRAPHIC #1 **<END>** g01370920

305-4766 CYLINDER HEAD AS

S/N: JKH1-UP
PART OF 296-4784 CYLINDER HEAD GP
ALSO AN ATTACHMENT

SMCS-1100 **i02996131**

NOTE	REF NO	GRAPHIC REF	PART NUMBER	QTY	PART NAME 1 2 3 4 5 6 (PRODUCT LEVEL)	SEE PAGE
	1	1	**305-4883**	8	SEAT	
	2	1	**305-4884**	8	SEAT	
	3	1	**305-4885**	16	GUIDE	
	4	1	**103-9011**	8	CAP-SEALING	
	5	1	**5I-4915**	7	CAP	
	6	1	**4I-9664**	2	PIN	

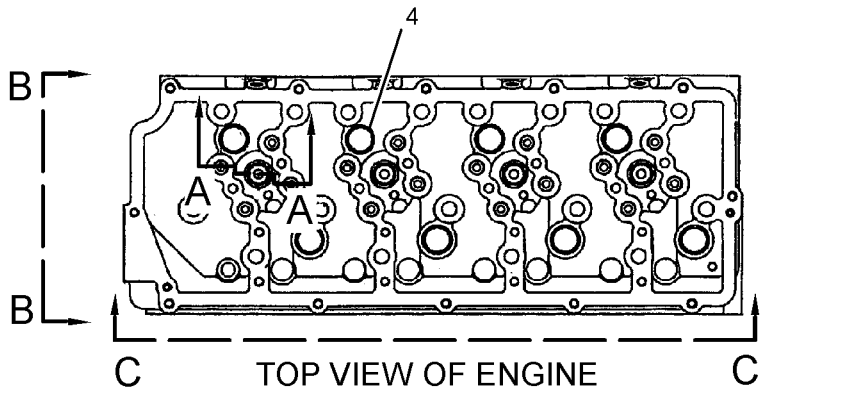

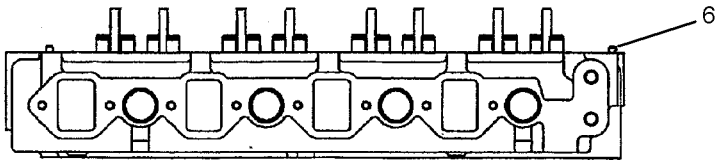

VIEW C-C

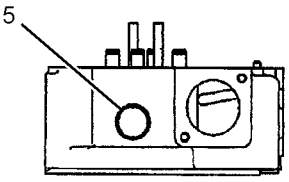

VIEW B-B

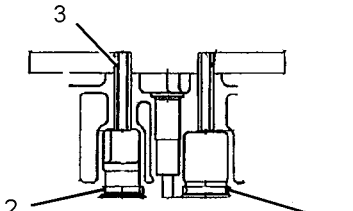

SECTION A-A

GRAPHIC #1 **<END>** g01520316

BASIC ENGINE

296-4784 CYLINDER HEAD GP

S/N: JKH1-UP
PART OF 279-7805 ENGINE AR
ALSO AN ATTACHMENT

SMCS-1100 **i02981660**

NOTE	REF NO	GRAPHIC REF	PART NUMBER	QTY	PART NAME 1 2 3 4 5 6 (PRODUCT LEVEL)	SEE PAGE
Y	1	1	**305-4766**	1	CYLINDER HEAD AS	23
	2	1	**296-4689**	1	GASKET	
	3	1	**294-1683**	17	BOLT	
	4	1	**4I-9664**	2	PIN	
	5	1	**310-9532**	8	GUIDE	

Y-SEPARATE ILLUSTRATION

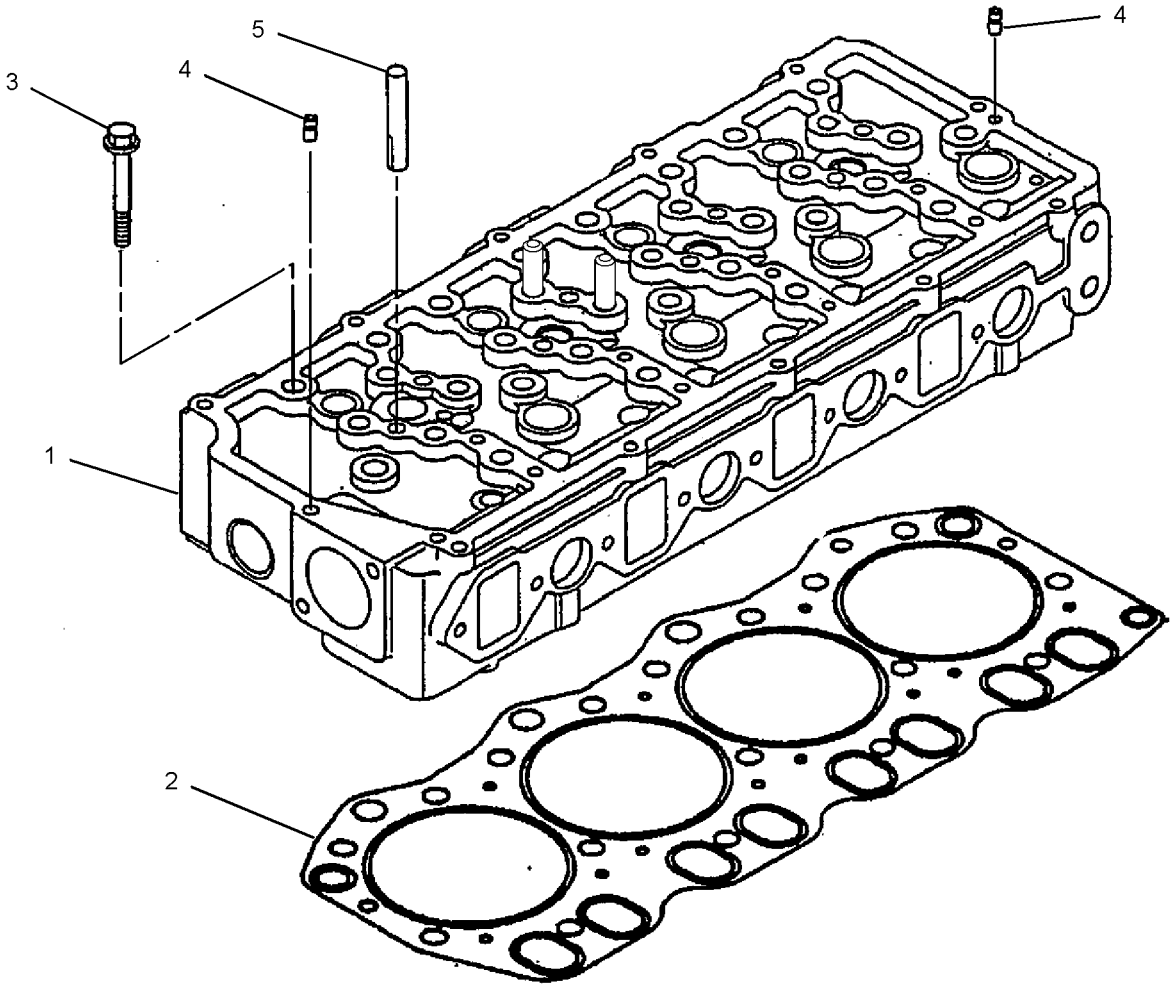

GRAPHIC #1 **<END>** g01366148

296-4783 FLYWHEEL GP

S/N: JKH1-UP
PART OF 279-7805 ENGINE AR
ALSO AN ATTACHMENT

SMCS-1156 **i02710560**

NOTE	REF NO	GRAPHIC REF	PART NUMBER	QTY	PART NAME 1 2 3 4 5 6 (PRODUCT LEVEL)	SEE PAGE
	1	1	**296-4713**	1	FLYWHEEL AS	
	1A	1	**205-6788**	1	GEAR (127-TEETH)	
	2	1	**5I-5005**	6	BOLT (M12X1.25X35-MM)	
	3	1	**096-2501**	6	LOCKWASHER	

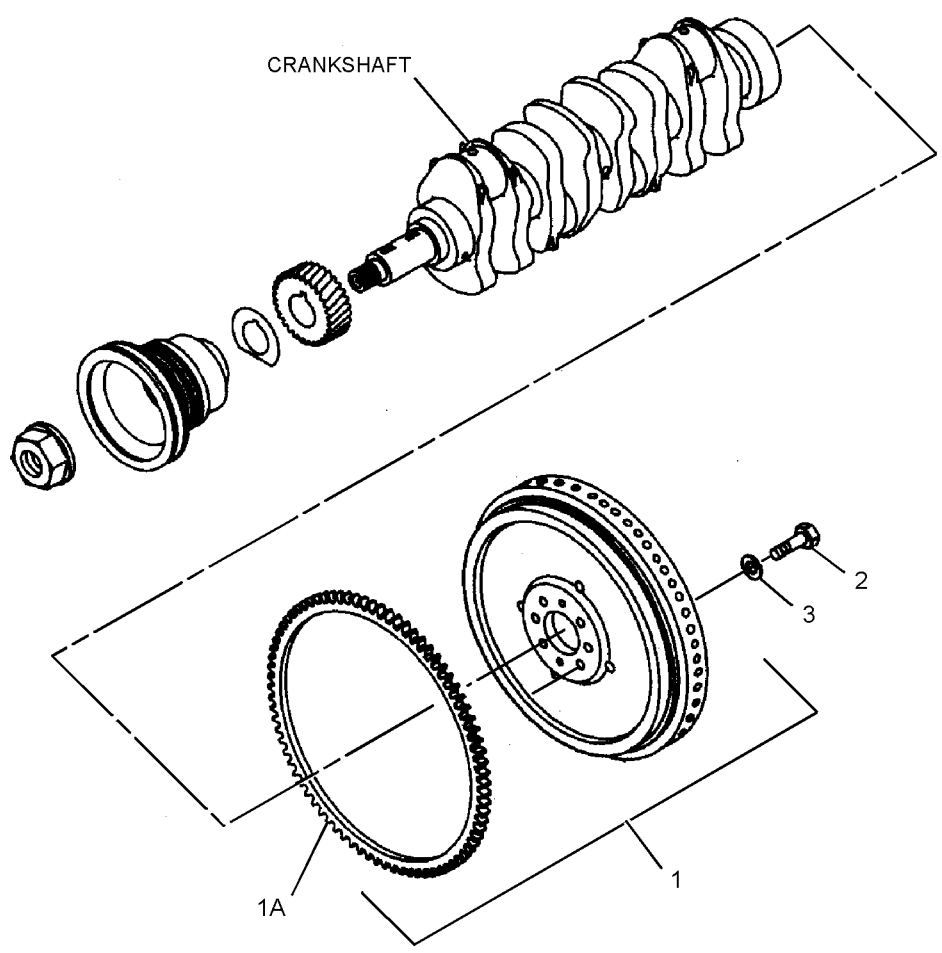

GRAPHIC #1 **<END>** g01403322

BASIC ENGINE

296-4651 GEAR GP-FRONT

S/N: JKH1-UP
PART OF 279-7805 ENGINE AR
ALSO AN ATTACHMENT

SMCS-1151, 1162, 1206 **i02981450**

NOTE	REF NO	GRAPHIC REF	PART NUMBER	QTY	PART NAME 1 2 3 4 5 6 (PRODUCT LEVEL)	SEE PAGE
	1	1	*294-1753*	1	GEAR AS-IDLER (69-TEETH)	
	1A	1	**296-4673**	1	BUSHING	
	2	1	**294-1754**	1	GEAR (62-TEETH)	
	3	1	**294-1755**	1	GEAR (62-TEETH)	
	4	1	**294-1756**	1	PLATE	
	5	1	**294-1757**	1	BOLT	

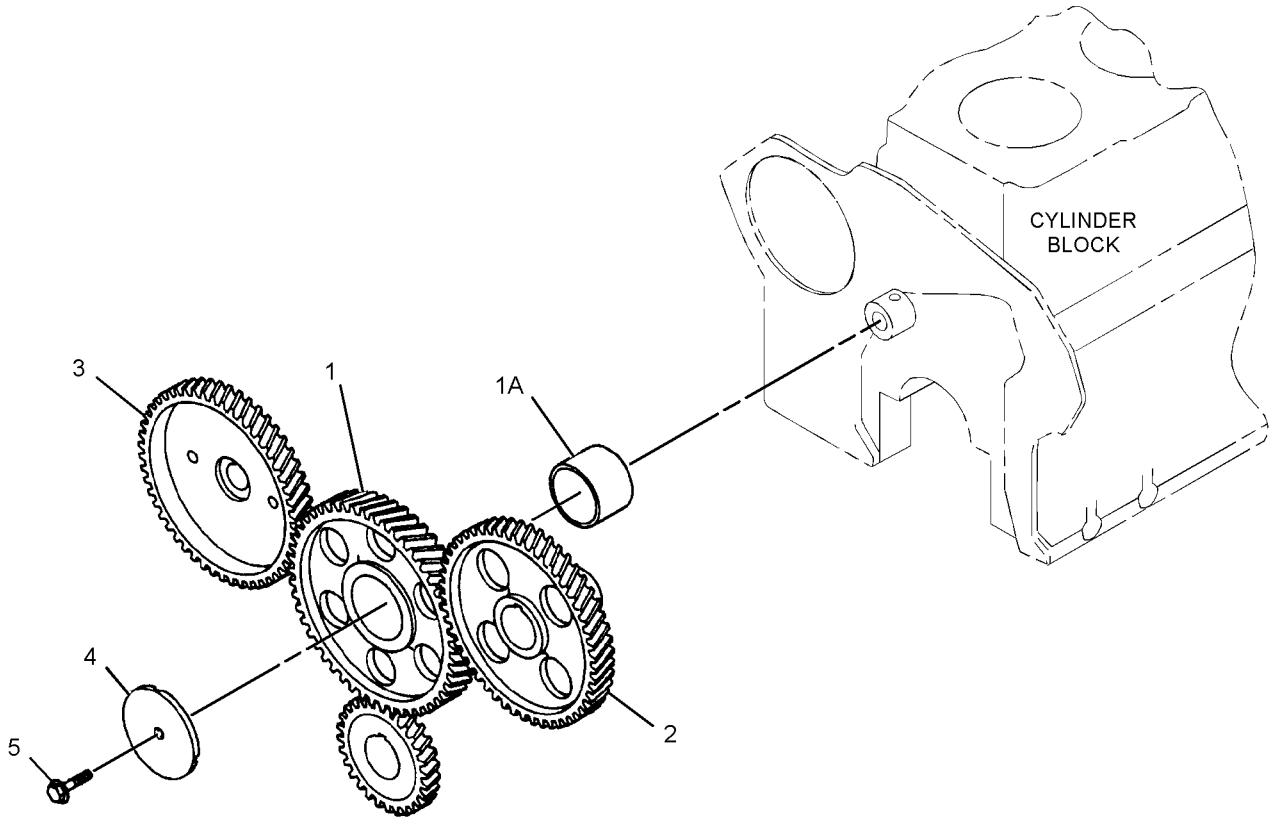

GRAPHIC #1 **<END>** g01317830

BASIC ENGINE

296-4803 HOUSING GP-FLYWHEEL

S/N: JKH1-UP
PART OF 279-7805 ENGINE AR
ALSO AN ATTACHMENT

SMCS-1157 **i02943494**

NOTE	REF NO	GRAPHIC REF	PART NUMBER	QTY	PART NAME 1 2 3 4 5 6 (PRODUCT LEVEL)	SEE PAGE
	1	1	**296-4701**	1	HOUSING	
	2	1	**5I-7660**	1	SEAL AS	
	4	1	**5I-4983**	2	STUD	
	6	1	**294-1737**	8	BOLT (M8X1.25X35.5-MM)	
	7	1	**294-1738**	2	BOLT (M10X1.5X32-MM)	
M	8	1	**294-1726**	10	BOLT (M10X1.5X37-MM)	
	9	1	**294-1739**	1	GASKET	
	10	1	**5I-7607**	1	PLUG	
M	11	1	**294-7251**	1	BOLT AS (M8X20X1-MM)	

M-METRIC PART

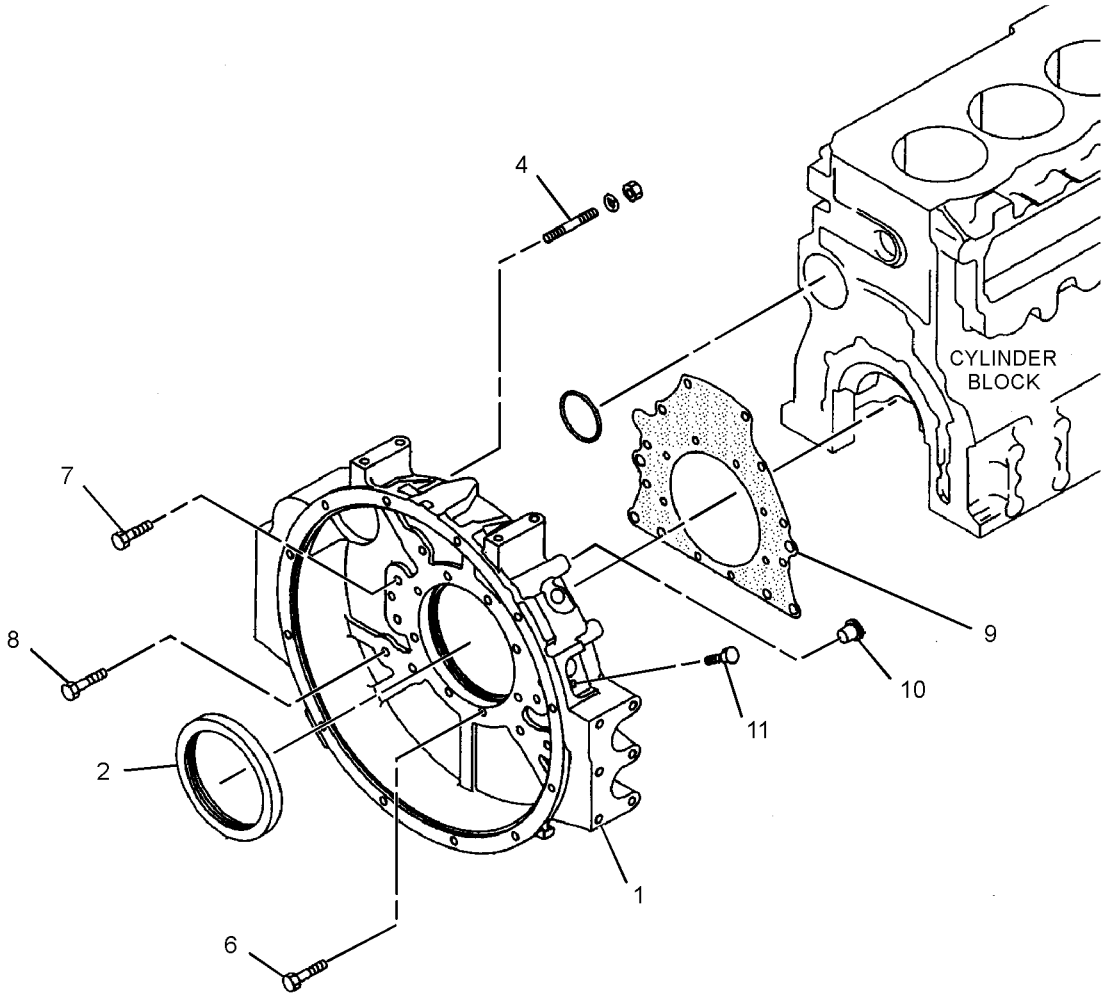

GRAPHIC #1 **<END>** g01458955

BASIC ENGINE

296-4788 HOUSING GP-FRONT

S/N: JKH1-UP
PART OF 279-7805 ENGINE AR
ALSO AN ATTACHMENT

SMCS-1151, 1162, 1206 **i02830615**

NOTE	REF NO	GRAPHIC REF	PART NUMBER	QTY	PART NAME 1 2 3 4 5 6 (PRODUCT LEVEL)	SEE PAGE
	1	1	**222-8292**	1	POINTER	
	2	1	**294-1731**	1	BOLT (M8X1.25X19.5-MM)	
	3	1	**6V-8236**	1	PIN-SPRING	
	4	1	**294-1732**	1	PLATE	
M	5	1	**6V-5215**	2	BOLT (M8X1.25X16-MM)	
	6	1	**297-7646**	2	BOLT (M8X1.25X95.5-MM)	
	7	1	**178-6538**	1	COVER AS	
M	8	1	**8T-4137**	6	BOLT (M10X1.5X20-MM)	
M	9	1	**5I-7610**	1	BOLT (M10X1.5X20-MM)	
	10	1	**297-7647**	6	BOLT (M10X1.5X77-MM)	
M	11	1	**8T-4172**	2	BOLT (M10X1.5X80-MM)	
	12	1	**5I-7896**	4	BOLT (M8X1.25X95-MM)	
	13	1	**7X-0796**	6	LOCKWASHER	
	14	1	**294-1733**	1	GASKET	
	15	1	**294-1734**	1	GASKET	
	16	1	**212-8571**	1	COVER	
	17	1	**212-8572**	1	GASKET	
	18	1	**196-8366**	1	BOLT	
	19	1	**294-1735**	5	BOLT (M8X1.25X90.5-MM)	
M	20	1	**294-7251**	6	BOLT AS (M8X20X1-MM)	
M	21	1	**294-1726**	3	BOLT (M10X1.5X37-MM)	
	22	1	**096-9435**	1	PLUG	
	23	1	**096-9532**	1	WASHER (15.8X22.5X2-MM THK)	
	24	1	**096-9528**	1	SEAL-O-RING	
	25	1	**6F-7556**	2	COVER	
	26	1	**5I-7632**	1	PIPE	
	27	1	**296-4700**	1	BODY AS	
	27A	1	**294-1728**	1	GEAR	
	27B	1	**125-2950**	1	GEAR AS (9-TEETH)	
	27C	1	**195-8225**	1	CAP (MAIN BEARING)	
	30	1	**294-1729**	1	GEAR AS	
	31	1	**5I-7656**	1	SEAL	
	32	1	**6F-7557**	2	GASKET	
	33	1	**5I-7683**	1	SPINDLE	
	34	1	**178-6537**	1	GASKET	
	35	1	**5I-7558**	1	GEAR AS (9-TEETH)	
	36	1	**096-1024**	1	BOLT AS	
	37	1	**195-8212**	1	PLUG	

M-METRIC PART

296-4788 **HOUSING GP-FRONT** *(contd.)* **i02830615**

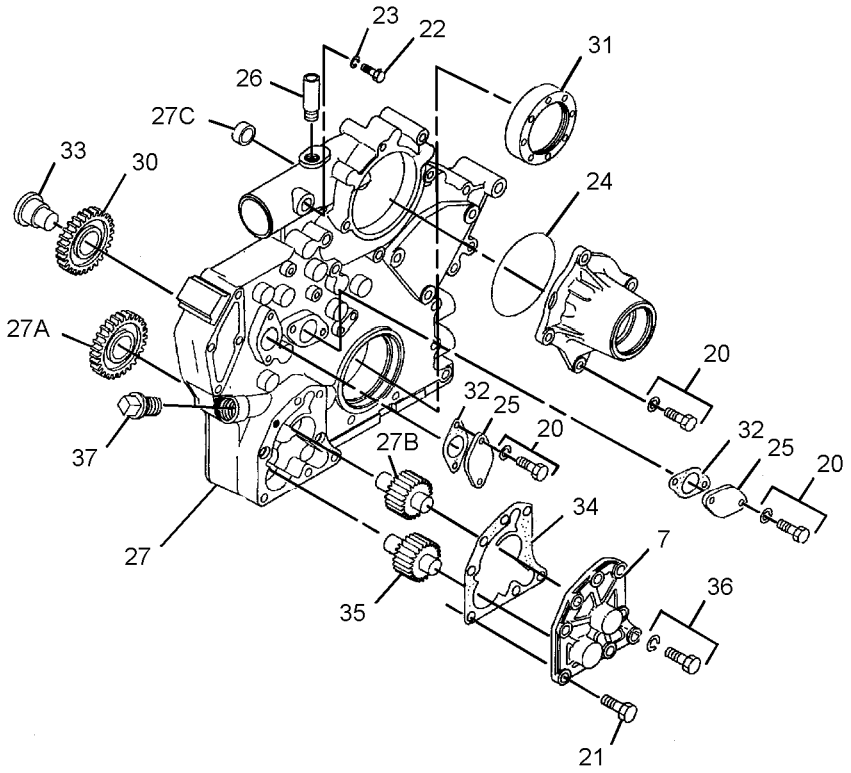

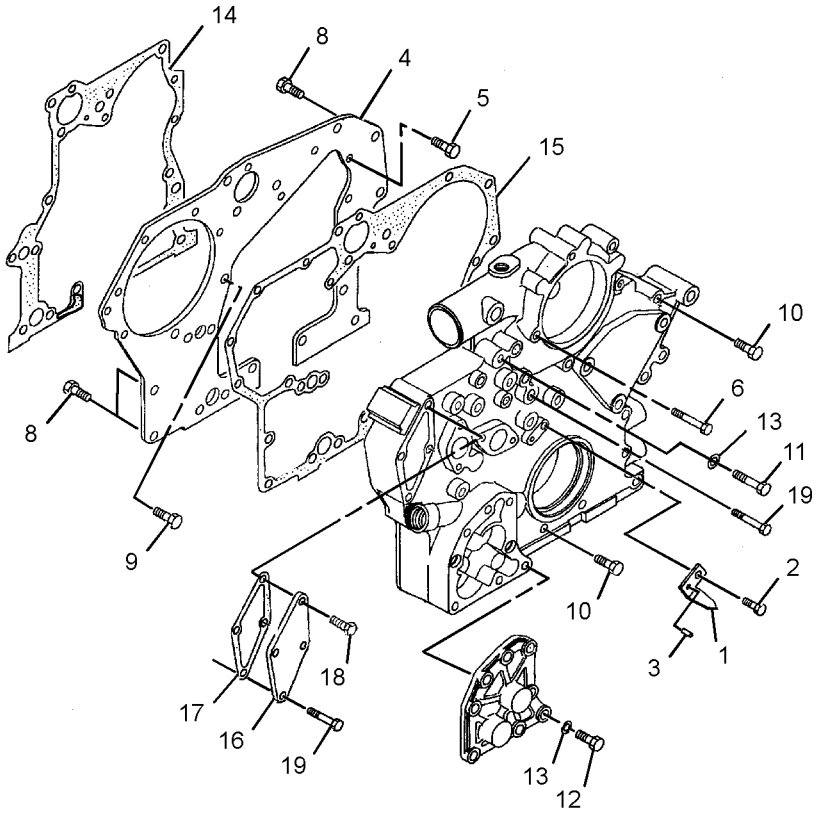

GRAPHIC #1 **<END>** g01413014

296-4798 MOUNTING GP-ALTERNATOR

S/N: JKH1-UP
PART OF 279-7805 ENGINE AR
ALSO AN ATTACHMENT

SMCS-1405 **i02944511**

NOTE	REF NO	GRAPHIC REF	PART NUMBER	QTY	PART NAME 1 2 3 4 5 6 (PRODUCT LEVEL)	SEE PAGE
	1	1	**178-6600**	1	PULLER	
	2	1	**296-4758**	1	PLATE	
	3	1	**5I-7750**	2	WASHER (12.5X25X8-MM THK)	
	4	1	**294-1860**	1	BOLT	
M	5	1	**8T-4137**	1	BOLT (M10X1.5X20-MM)	
M	6	1	**294-1861**	2	BOLT (M12X1.75X30-MM)	
	7	1	**8T-4223**	1	WASHER-HARD (13.5X25.5X3-MM THK)	
	8	1	**296-4759**	1	BOLT	
	9	1	**178-6599**	1	WASHER	
	10	1	**178-6601**	1	RING	
Y	11	1	**125-2994**	1	ALTERNATOR GP-CHARGING	108

M-METRIC PART
Y-SEPARATE ILLUSTRATION

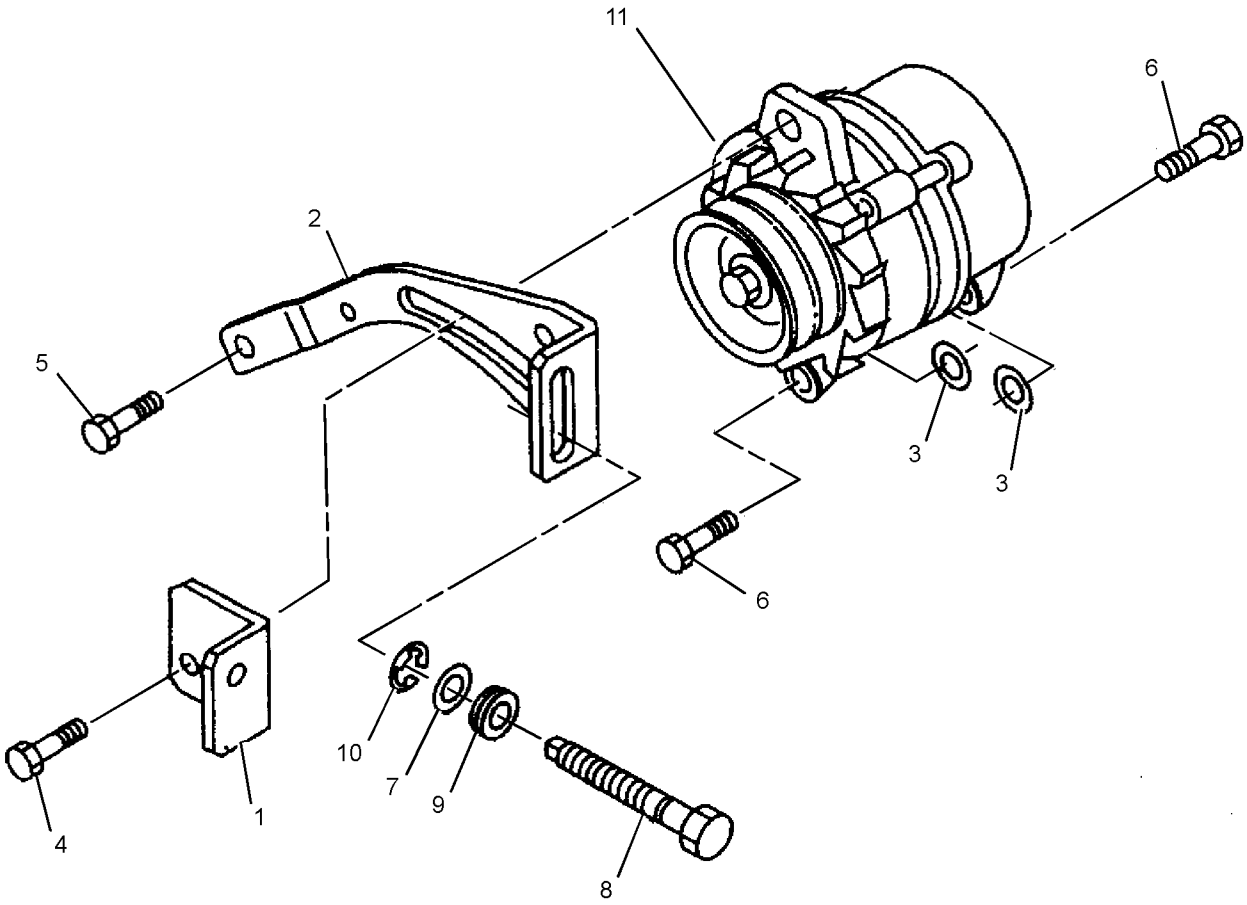

GRAPHIC #1 **<END>** g01459034

255-3035 MOUNTING GP-ENGINE

S/N: CLA1-UP

PART OF 279-7830 INSTALLATION AR-ENGINE

SMCS-1152 **i02600442**

NOTE	REF NO	GRAPHIC REF	PART NUMBER	QTY	PART NAME 1 2 3 4 5 6 (PRODUCT LEVEL)	SEE PAGE
	1	1	**099-4707**	4	WASHER (16.5X90X9-MM THK)	
	2	1	**118-9941**	4	SUPPORT AS	
	3	1	**266-6203**	1	BRACKET-FRONT (RH)	
	4	1	**266-6204**	1	BRACKET-FRONT (LH)	
	5	1	**266-6205**	1	BRACKET-REAR (RH)	
	6	1	**266-6206**	1	BRACKET-REAR (LH)	
	7	1	**266-6258**	2	MOUNT-RUBBER	
	8	1	**266-6259**	2	MOUNT-RUBBER	
	9	1	**266-6303**	2	MOUNT-RUBBER	
	10	1	**266-6304**	2	MOUNT-RUBBER	
M	11	1	**8T-4174**	4	BOLT (M16X2X120-MM)	
	12	1	**8T-4223**	16	WASHER-HARD (13.5X25.5X3-MM THK)	
M	13	1	**8T-4956**	16	BOLT (M12X1.75X35-MM)	
	14	1	**9X-8257**	8	WASHER (17.5X30X3.5-MM THK)	

M-METRIC PART

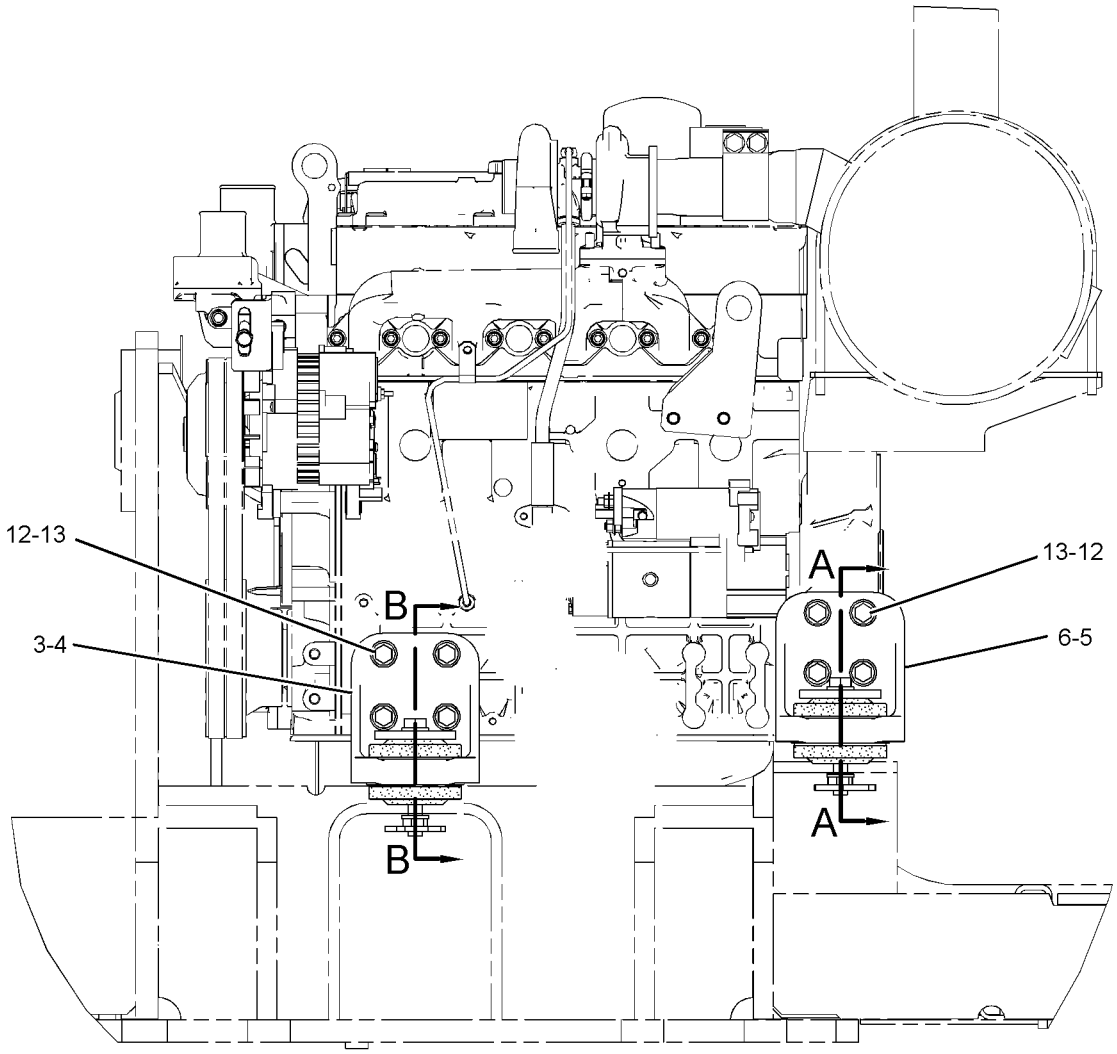

LEFT SIDE VIEW

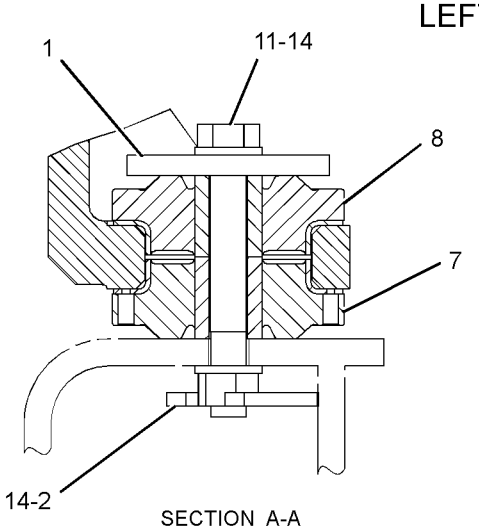

SECTION A-A

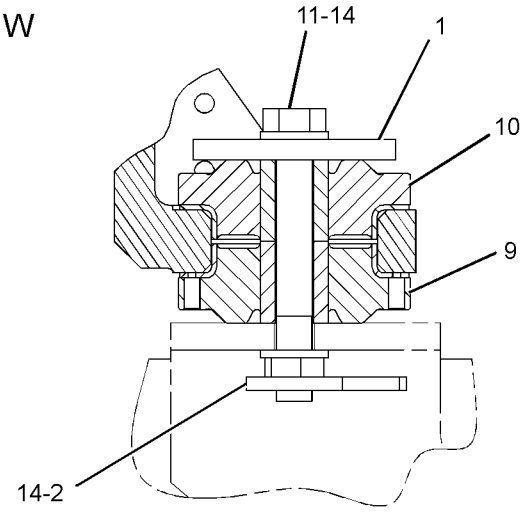

SECTION B-B

GRAPHIC #1 **<END>** g01305307

296-4637 MOUNTING GP-STARTING MOTOR

S/N: JKH1-UP
PART OF 279-7805 ENGINE AR
ALSO AN ATTACHMENT

SMCS-1453 **i02936172**

NOTE	REF NO	GRAPHIC REF	PART NUMBER	QTY	PART NAME 1 2 3 4 5 6 (PRODUCT LEVEL)	SEE PAGE
	1	1	**5I-7599**	1	SEAL-O-RING	
	2	1	**135-2369**	1	COVER	
M	3	1	**135-2370**	1	BOLT (M5X0.8X25-MM)	
	4	1	**294-1850**	1	WASHER	
	5	1	**294-1851**	1	WASHER	
Y	6	1	**272-4774**	1	STARTING MOTOR GP-ELECTRIC	174
M	7	1	**6V-8231**	2	NUT (M10X1.25-THD)	
	8	1	**7X-0796**	2	LOCKWASHER	

M-METRIC PART
Y-SEPARATE ILLUSTRATION

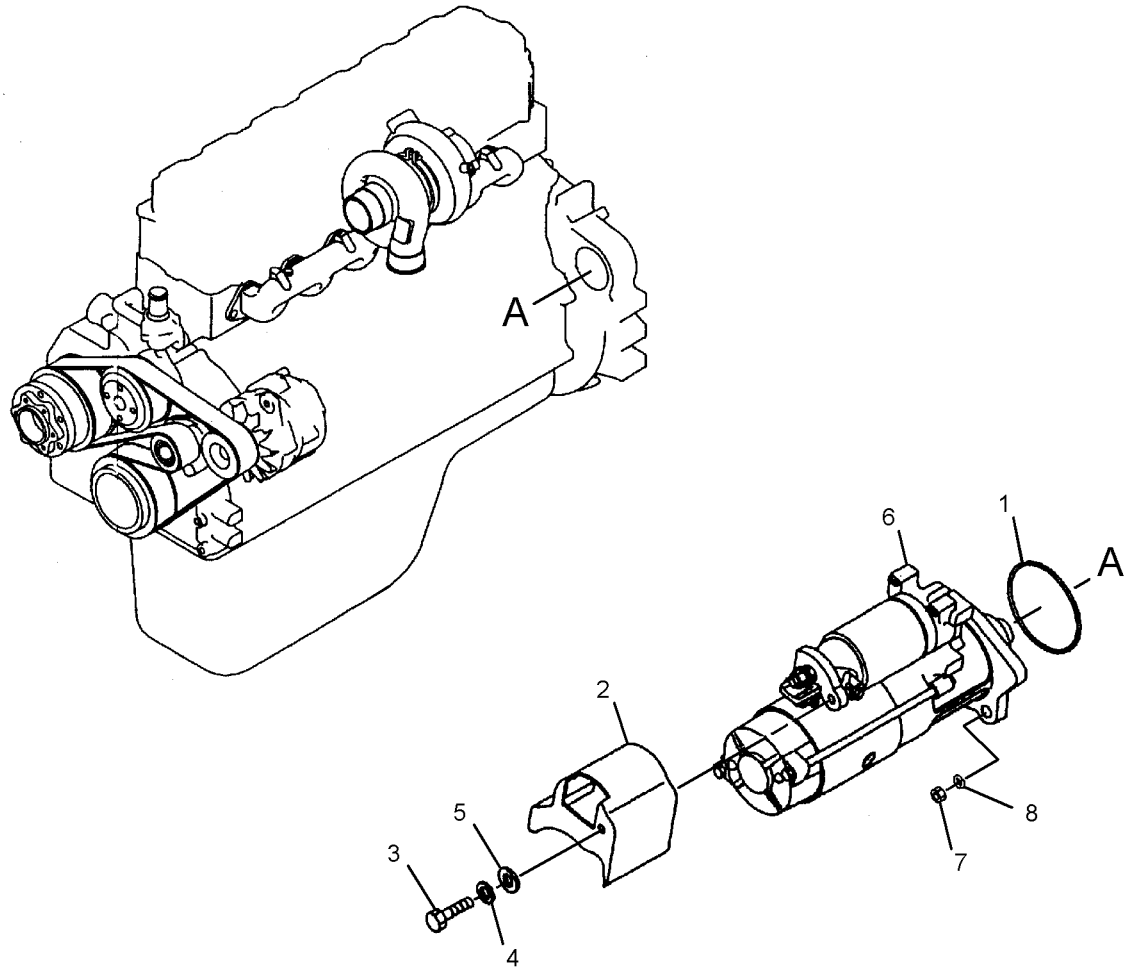

GRAPHIC #1 **<END>** g01456158

BASIC ENGINE

296-4780 PAN GP-OIL

S/N: JKH1-UP
PART OF 279-7805 ENGINE AR
ALSO AN ATTACHMENT

SMCS-1302 **i02710579**

NOTE	REF NO	GRAPHIC REF	PART NUMBER	QTY	PART NAME 1 2 3 4 5 6 (PRODUCT LEVEL)	SEE PAGE
	1	1	**296-4702**	1	GUIDE	
	2	1	**296-4703**	16	BOLT	
	3	1	**5I-7663**	12	BOLT (M8X1.25X16-MM)	
	4	1	**7X-0796**	1	LOCKWASHER	
M	5	1	**6V-8231**	1	NUT (M10X1.25-THD)	
	6	1	**296-4704**	1	PAN AS	
	7	1	**183-8176**	1	VALVE	
	8	1	**5I-8067**	1	WASHER-SEALING	
	9	1	**5I-5607**	1	PLUG-DRAIN (ENGINE OIL PAN)	
	10	1	**095-2040**	1	WASHER	
	11	1	**296-4706**	1	GAUGE-OIL LEVEL (DIPSTICK) (ENGINE)	
	12	1	**5I-7842**	1	GASKET	
	13	1	**213-0677**	1	SWITCH AS-LIQUID LEVEL (ENGINE OIL)	
		1	**102-8802**	1	KIT-RECEPTACLE (2-PIN)	
					(INCLUDES RECEPTACLE AS & WEDGE)	
	14	1	**125-2968**	1	SEAL	
	15	1	**5I-4993**	1	SEAL	
	16	1	**5I-8110**	1	ELBOW	

M-METRIC PART

296-4780 **PAN GP-OIL** *(contd.)* **i02710579**

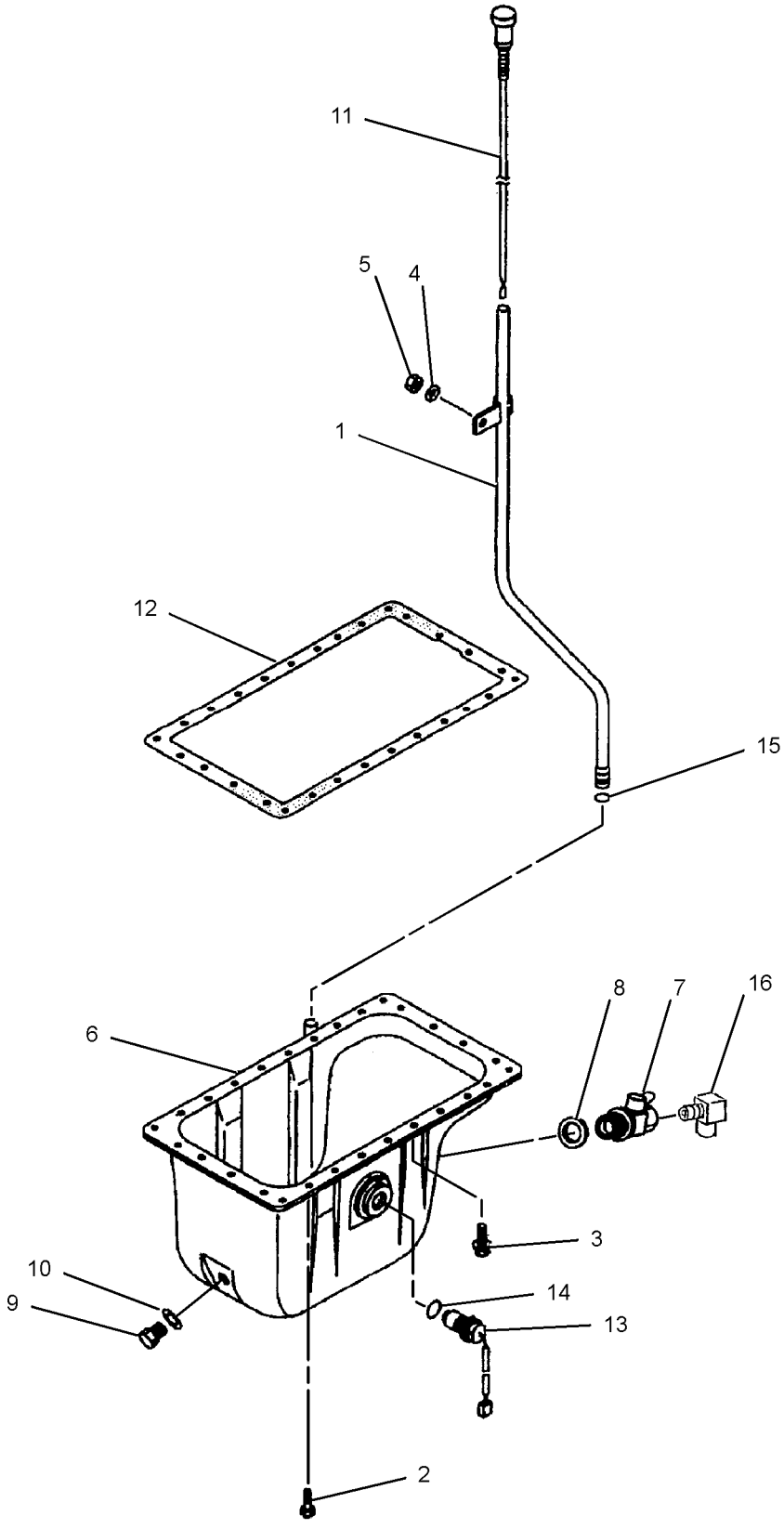

GRAPHIC #1 **<END>** g01404257

BASIC ENGINE

296-4796 PISTON & ROD GP

S/N: JKH1-UP
PART OF 279-7805 ENGINE AR
ALSO AN ATTACHMENT

SMCS-1225 **i02710557**

NOTE	REF NO	GRAPHIC REF	PART NUMBER	QTY	PART NAME 1 2 3 4 5 6 (PRODUCT LEVEL)	SEE PAGE
	1	1	**310-9489**	4	PISTON (STANDARD)	
AB			**310-9490**		PISTON (0.25-MM OS)	
AB			**310-9491**		PISTON (0.5-MM OS)	
	2	1	**094-7134**	4	PIN	
	3	1	**5I-7667**	8	RING	
J	4	1	**178-6543**	4	SET-PISTON RING (STANDARD)	
ABJ			**178-6544**		SET-PISTON RING (0.25-MM OS)	
ABJ			**178-6545**		SET-PISTON RING (0.5-MM OS)	
	5	1	**294-1747**	4	ROD AS	
					(EACH INCLUDES)	
	5A	1	**094-7154**	2	BOLT (M12X1.25-1X85-MM)	
	5B	1	**094-7516**	2	NUT (M12X1.25-THD)	
	5C	1	**296-4663**	1	BUSHING	
	6	1	**294-1748**	8	BEARING	
AB		1	**297-7648**		BEARING (0.25-MM US)	
AB		1	**297-7649**		BEARING (0.50-MM US)	
AB		1	**297-7650**		BEARING (0.75-MM US)	

A-NOT PART OF THIS GROUP
B-USE AS REQUIRED
J-INCLUDES COMPLETE SET OF RINGS FOR ONE PISTON

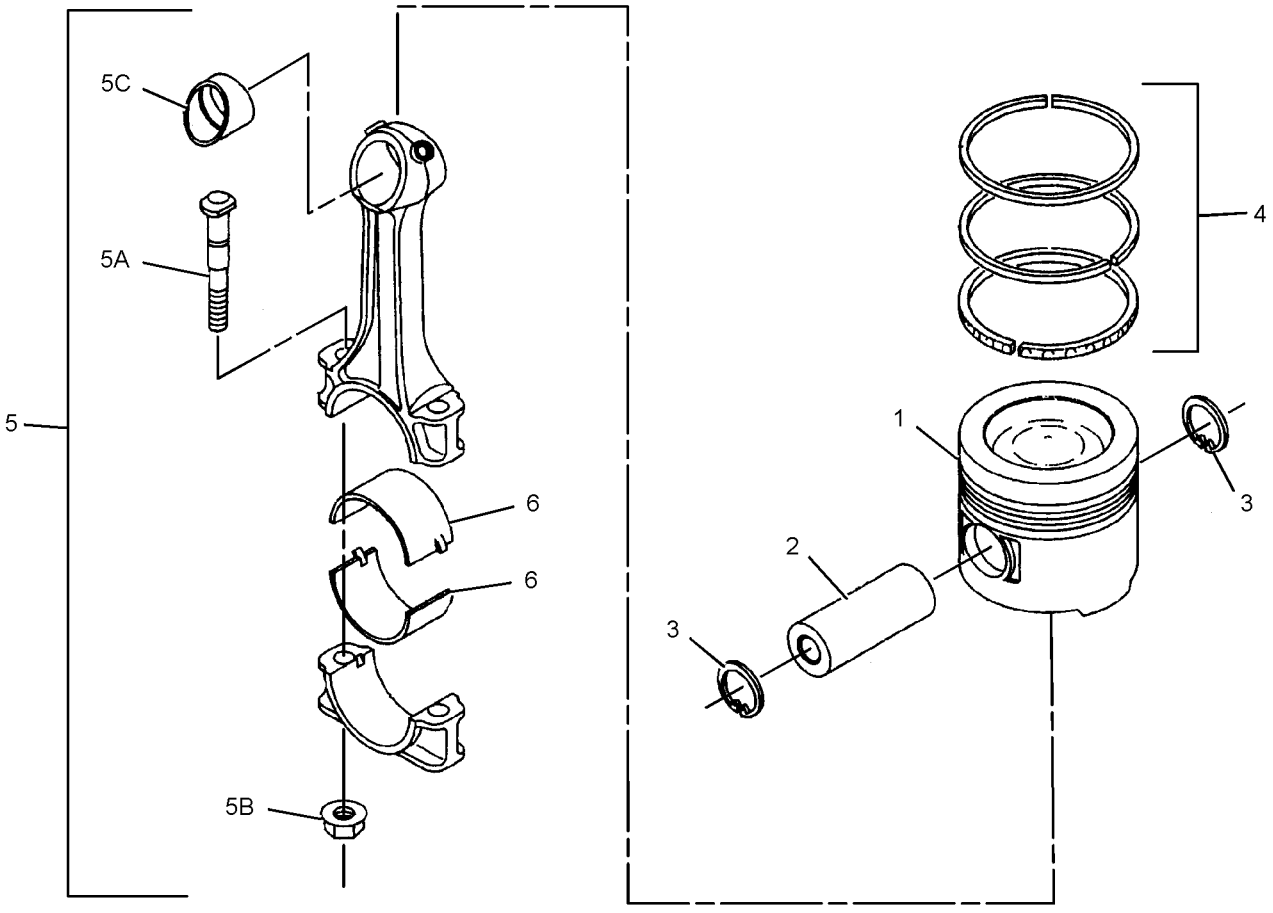

GRAPHIC #1 **<END>** g01403170

296-4738 PULLEY AS-IDLER

S/N: CLA1-UP

PART OF 279-7779 PULLEY GP-FAN & ALT DRIVE

AN ATTACHMENT

SMCS-1358 **i02719552**

NOTE	REF NO	GRAPHIC REF	PART NUMBER	QTY	PART NAME 1 2 3 4 5 6 (PRODUCT LEVEL)	SEE PAGE
	1	1	**296-4739**	1	BRACKET	
	2	1	**294-1784**	1	PULLEY	
	3	1	**294-1785**	2	BEARING	
	4	1	**294-1786**	1	RING	
	5	1	**8T-9598**	2	RING-RETAINING	

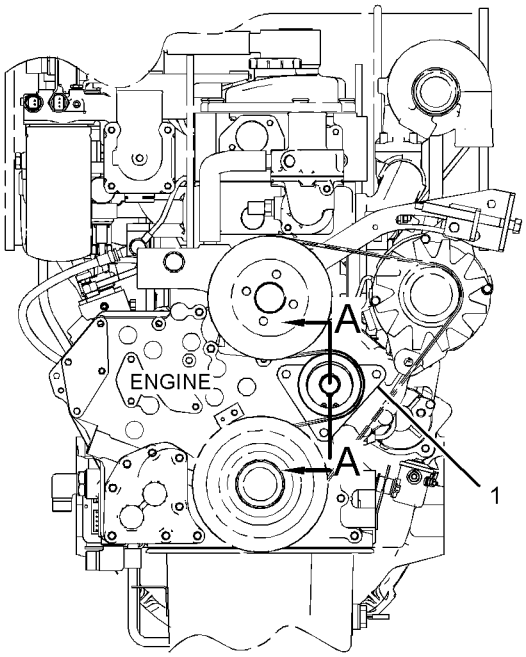

LEFT SIDE VIEW

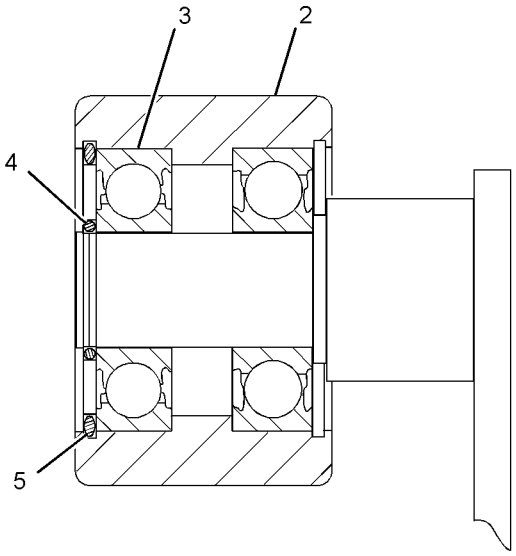

SECTION A-A

GRAPHIC #1 **<END>** g01367875

279-7779 PULLEY GP-FAN & ALT DRIVE—WITH IDLER PULLEY

S/N: CLA1-UP

PART OF 279-7800, 279-7802, 279-7804 ENGINE AR-COMPLETE

AN ATTACHMENT

SMCS-1359 **i02909181**

NOTE	REF NO	GRAPHIC REF	PART NUMBER	QTY	PART NAME 1 2 3 4 5 6 (PRODUCT LEVEL)	SEE PAGE
	1	1	**294-1738**	3	BOLT (M10X1.5X32-MM)	
Y	2	1	**296-4738**	1	PULLEY AS-IDLER	37
	3	1	**310-9538**	1	PULLEY AS	
		1	**5I-7540**	1	SLEEVE	
	4	1	**310-9591**	1	PULLEY	
	5	1	**310-9592**	1	BELT-SERPENTINE	

Y-SEPARATE ILLUSTRATION

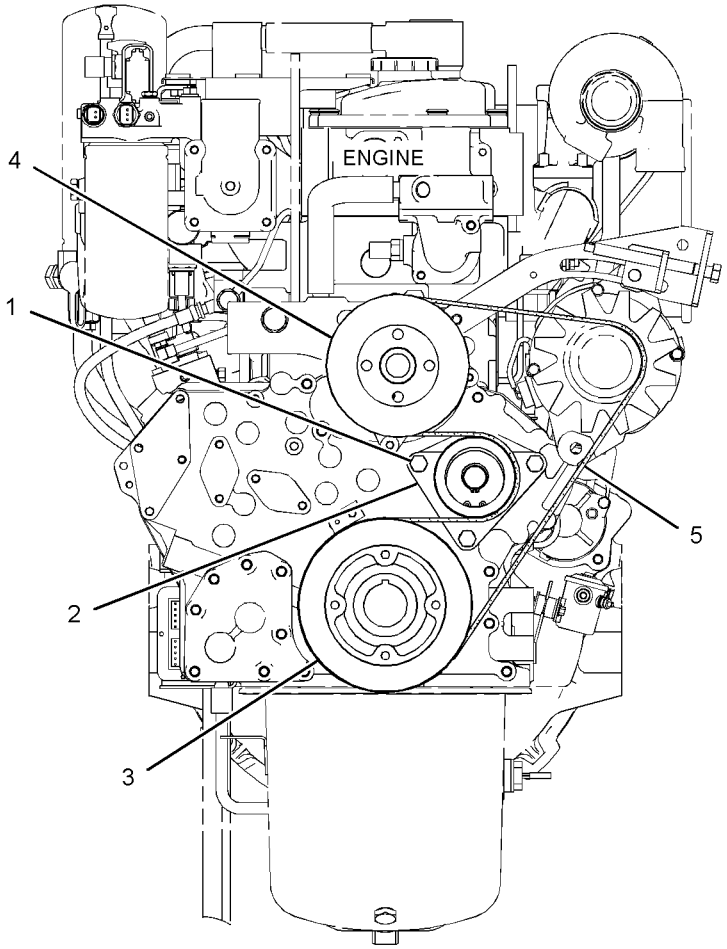

LEFT SIDE VIEW

GRAPHIC #1 **<END>** g01440271

305-4944 PULLEY GP-FAN & ALT DRIVE

S/N: CLA1-UP

PART OF 279-7797, 279-7803 ENGINE AR-COMPLETE

ALSO AN ATTACHMENT

SMCS-1359 **i02901060**

NOTE	REF NO	GRAPHIC REF	PART NUMBER	QTY	PART NAME 1 2 3 4 5 6 (PRODUCT LEVEL)	SEE PAGE
	1	1	**310-9538**	1	PULLEY AS	
		1	**5I-7540**	1	SLEEVE	
	2	1	**310-9541**	1	PULLEY	
	3	1	**310-9543**	1	BELT-SERPENTINE	

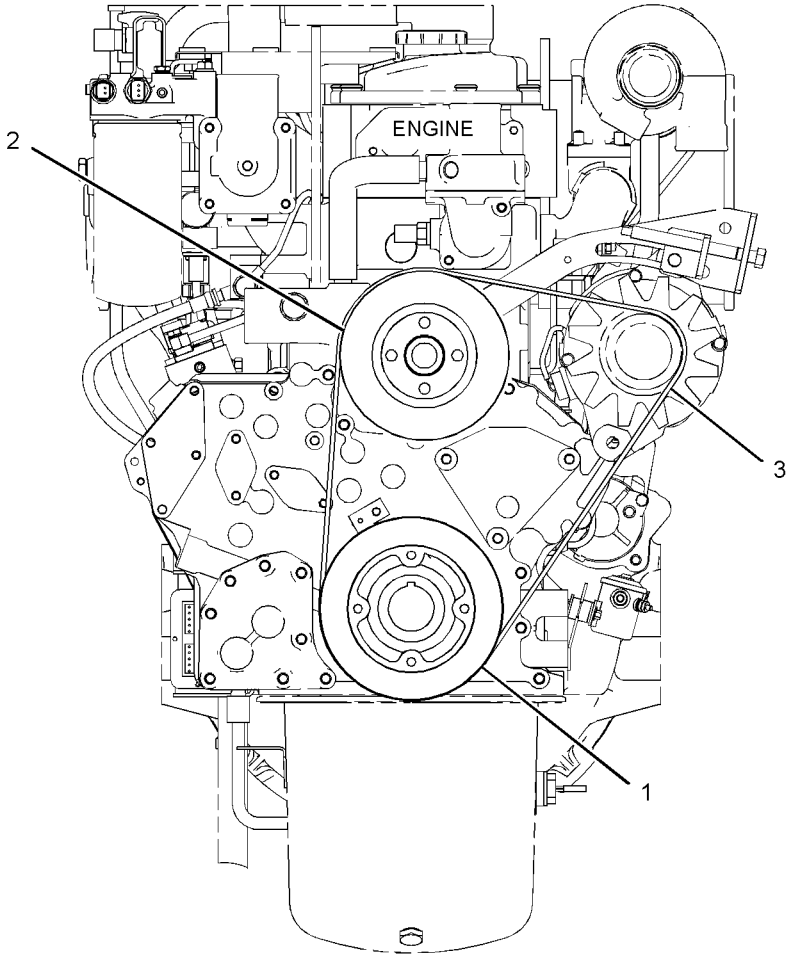

LEFT SIDE VIEW

GRAPHIC #1 **<END>** g01442345

255-3018 PULLEY GP-IDLER

S/N: CLA1-UP

PART OF 310-9499 COMPRESSOR GP-REFRIGERANT

SMCS-1358 **i02674719**

NOTE	REF NO	GRAPHIC REF	PART NUMBER	QTY	PART NAME 1 2 3 4 5 6 (PRODUCT LEVEL)	SEE PAGE
M	1	1	**255-3022**	1	NUT (M10X1.25-THD)	
	2	1	**239-6626**	1	PULLEY-IDLER	
M	3	1	**239-6627**	1	BOLT (M8X1.25X110-MM)	
	4	1	**239-6632**	1	RING-SNAP	
	5	1	**255-3020**	1	SHAFT	
	6	1	**255-3021**	1	WASHER	
	7	1	**239-6630**	1	COLLAR	
	8	1	**239-6631**	1	BEARING AS-BALL	

M-METRIC PART

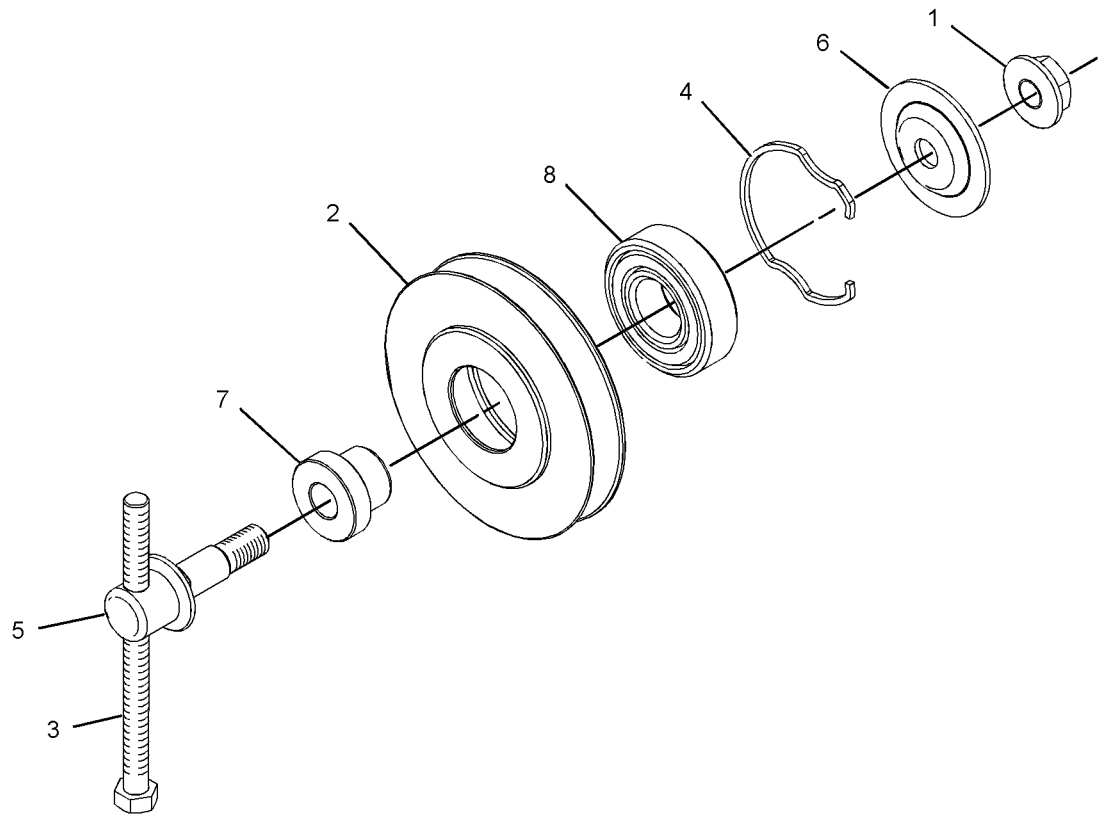

GRAPHIC #1 **<END>** g01277313

305-4954 VALVE MECHANISM GP

S/N: JKH1-UP
PART OF 279-7805 ENGINE AR
ALSO AN ATTACHMENT

SMCS-1209 **i02790534**

NOTE	REF NO	GRAPHIC REF	PART NUMBER	QTY	PART NAME 1 2 3 4 5 6 (PRODUCT LEVEL)	SEE PAGE
	1	1	**294-1684**	8	VALVE-INLET	
	2	1	**294-1685**	8	VALVE-EXHAUST	
	3	1	**294-1686**	4	BASE-ROCKER ARM	
	4	1	**294-1687**	4	BRIDGE-EXHAUST	
	5	1	**5I-7630**	8	CAP	
	6	1	**294-1688**	16	SPRING	
	7	1	**294-1689**	8	SCREW	
M	8	1	**8T-7964**	8	NUT (M6X1-THD)	
	9	1	**199-2188**	32	PIN-COTTER	
	10	1	**199-2189**	16	SEAL-VALVE STEM	
	11	1	**199-2187**	16	RETAINER	
	12	1	**305-4750**	4	BRACKET	
	13	1	**305-4751**	3	SPRING	
	14	1	**294-1693**	1	PIPE	
	15	1	**305-4931**	1	SHAFT AS-ROCKER ARM	
		1	**096-3741**	1	CAP	
	16	1	**305-4929**	4	ROCKER ARM AS	
M		1	**091-3474**	1	NUT (M8X1.25-THD)	
		1	**094-9525**	1	SCREW	
	17	1	**305-4927**	4	ROCKER ARM AS	
M		1	**091-3474**	1	NUT (M8X1.25-THD)	
		1	**094-9525**	1	SCREW	
	18	1	**294-1698**	2	WASHER	
	19	1	**294-1699**	4	BOLT	
	20	1	**305-4746**	4	BOLT	
	21	1	**294-1786**	2	RING	
	22	1	**294-1702**	1	BOLT	
	23	1	**3B-4505**	4	LOCKWASHER	
	24	1	**305-4747**	4	WASHER	

M-METRIC PART

305-4954 **VALVE MECHANISM GP** *(contd.)* **i02790534**

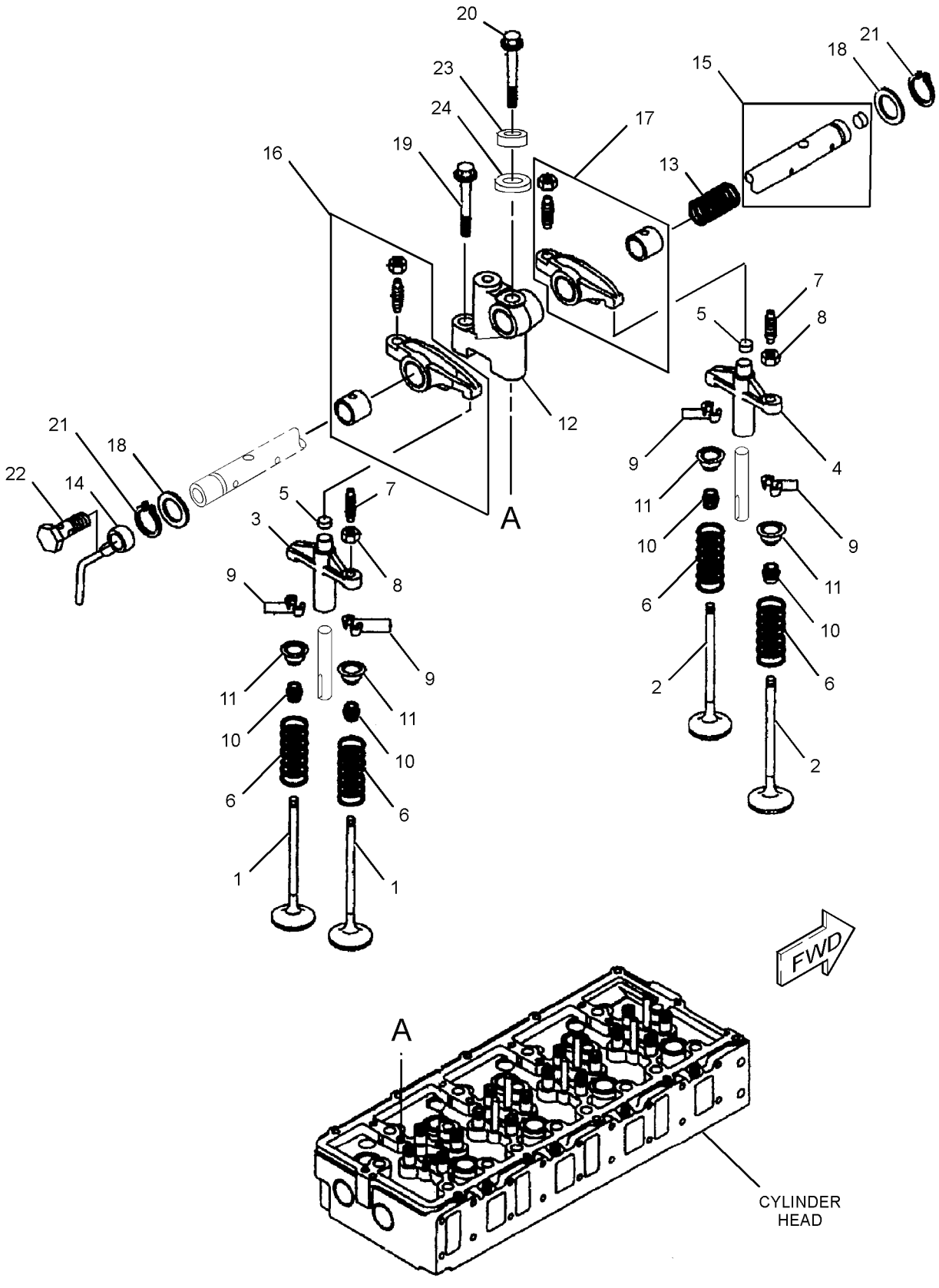

GRAPHIC #1 **<END>** g01406102

296-4792 ADAPTER GP-REMOTE OIL FILTER–ENGINE

S/N: JKH1-UP
PART OF 279-7805 ENGINE AR
ALSO AN ATTACHMENT

SMCS-1308 **i03021634**

NOTE	REF NO	GRAPHIC REF	PART NUMBER	QTY	PART NAME 1 2 3 4 5 6 (PRODUCT LEVEL)	SEE PAGE
	1	1	**5I-7864**	1	GASKET	
	2	1	**296-4728**	1	COVER AS	
	2A	1	**185-2793**	2	ELBOW	
	2B	1	**296-4729**	1	COVER	
	2C	1	**305-4892**	2	SEAL-O-RING	
	3	1	**5B-5947**	1	GASKET	
	4	1	**5I-8066**	1	VALVE AS-RELIEF (ENGINE OIL PRESSURE)	
M	5	1	**294-1726**	3	BOLT (M10X1.5X37-MM)	
	6	1	**095-8575**	2	BOLT AS	

M-METRIC PART

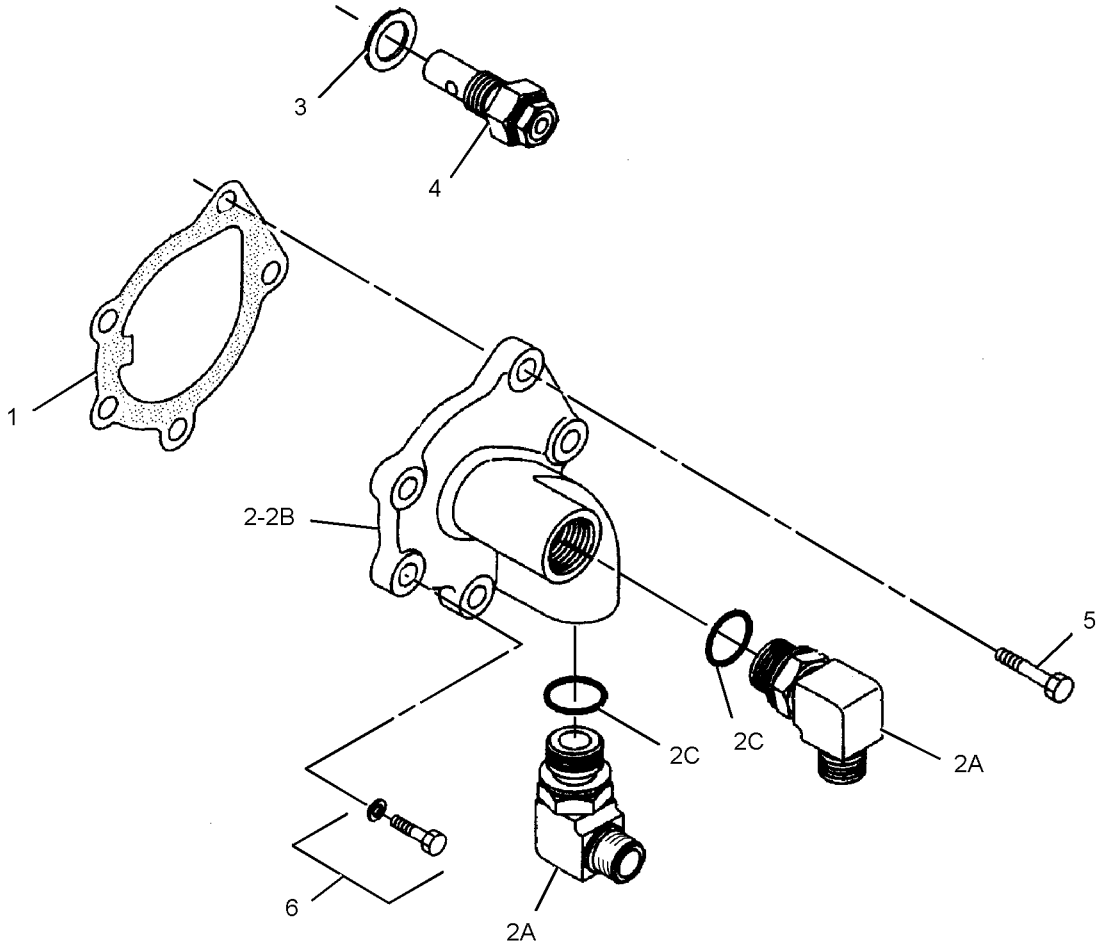

GRAPHIC #1 **<END>** g01403262

LUBRICATION SYSTEM

310-9546 BREATHER GP–CRANKCASE

S/N: JKH1-UP
PART OF 279-7805 ENGINE AR
ALSO AN ATTACHMENT

SMCS-1317 **i02896389**

NOTE	REF NO	GRAPHIC REF	PART NUMBER	QTY	PART NAME 1 2 3 4 5 6 (PRODUCT LEVEL)	SEE PAGE
	1	1	**310-9540**	1	HOSE	
	2	1	**294-1774**	1	SEAL-O-RING	
	3	1	**5I-7725**	1	BREATHER (CRANKCASE)	
	4	1	**2S-3440**	3	CLAMP-HOSE	
	5	1	**5I-7645**	1	PIPE	
	6	1	**294-1775**	2	BOLT (M10X1.5X23-MM)	
	7	1	**5I-4940**	1	TUBE (FUMES DISPOSAL)	
	8	1	**305-4771**	1	CLIP	

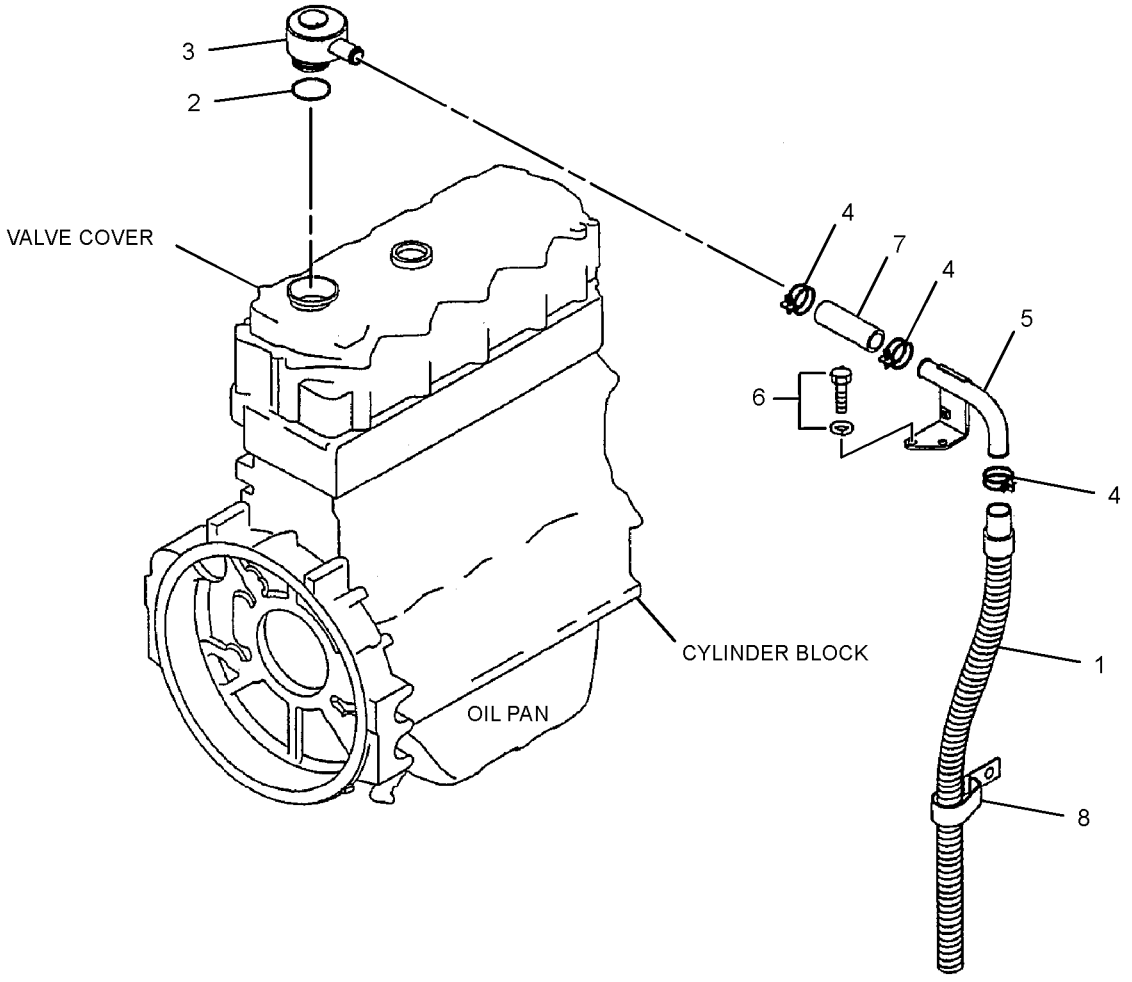

GRAPHIC #1 **<END>** g01442596

296-4781 LINES GP-ENGINE OIL

S/N: JKH1-UP
PART OF 279-7805 ENGINE AR
ALSO AN ATTACHMENT

SMCS-1307 **i02710578**

NOTE	REF NO	GRAPHIC REF	PART NUMBER	QTY	PART NAME 1 2 3 4 5 6 (PRODUCT LEVEL)	SEE PAGE
	1	1	**294-1767**	1	VALVE	
	2	1	**196-8019**	1	STRAINER	
	3	1	**5I-7642**	1	PLATE	
M	5	1	**195-8351**	1	BOLT AS (M6X1X16-MM)	
	6	1	**294-1768**	2	BOLT	
	7	1	**5I-5038**	1	SEAL-O-RING	
	8	1	**234-4796**	1	GASKET	

M-METRIC PART

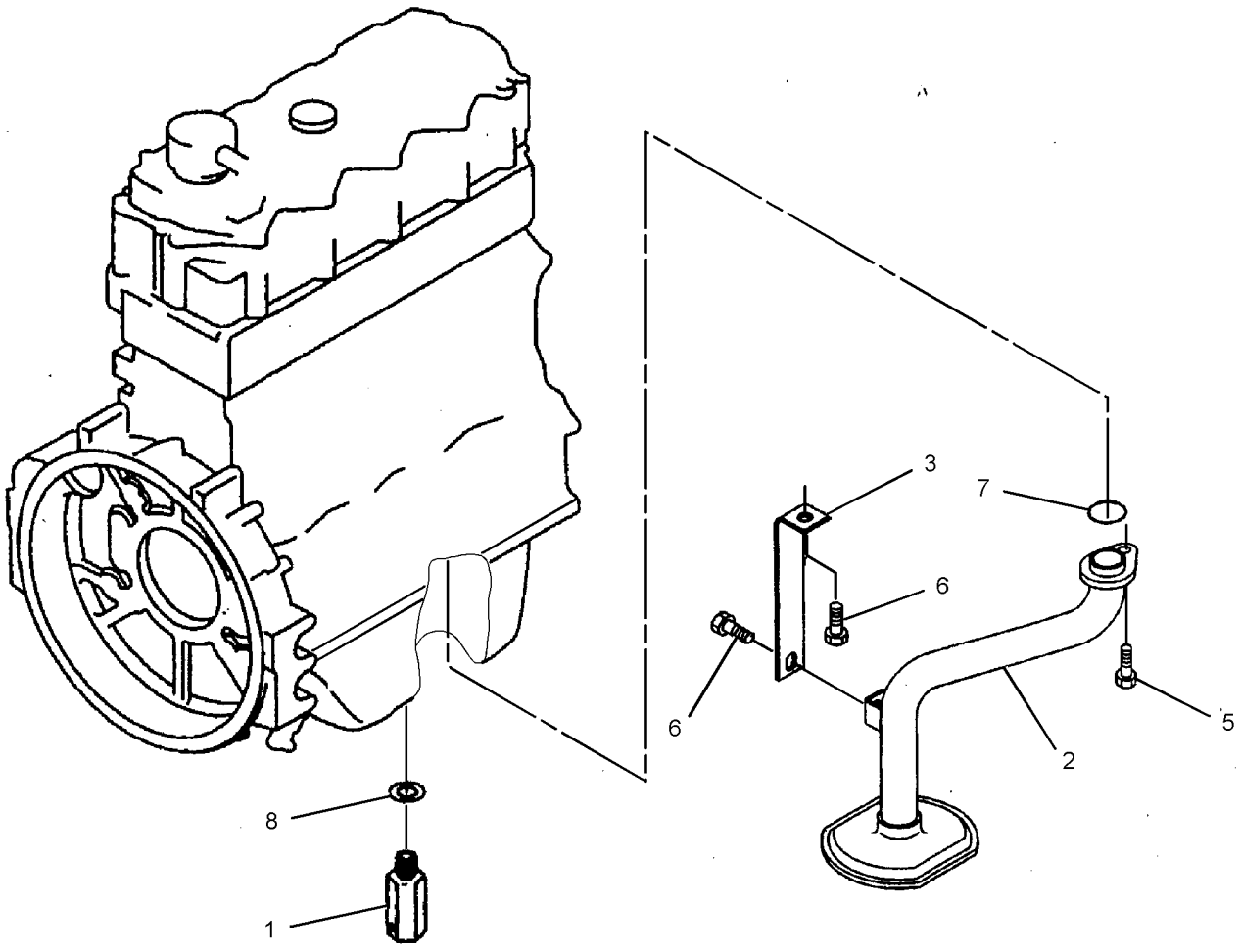

GRAPHIC #1 **<END>** g01366117

296-4777 LINES GP-TURBOCHARGER OIL

S/N: JKH1-UP
PART OF 279-7805 ENGINE AR
ALSO AN ATTACHMENT

SMCS-1052 **i03254760**

NOTE	REF NO	GRAPHIC REF	PART NUMBER	QTY	PART NAME 1 2 3 4 5 6 (PRODUCT LEVEL)	SEE PAGE
	1	1	**296-4725**	1	PIPE	
	2	1	**296-4726**	1	PIPE	
	3	1	**294-1766**	1	GASKET	
	4	1	**195-8322**	2	BOLT (M6X1X16-MM)	
	5	1	**2A-5222**	2	WASHER (10.3X15.9X1-IN)	
	6	1	**5I-7623**	1	BOLT (M10X1.25X20-MM)	
	7	1	**5I-8058**	1	CONNECTOR	
	8	1	**5I-7561**	1	GASKET	
	9	1	**196-8366**	2	BOLT	

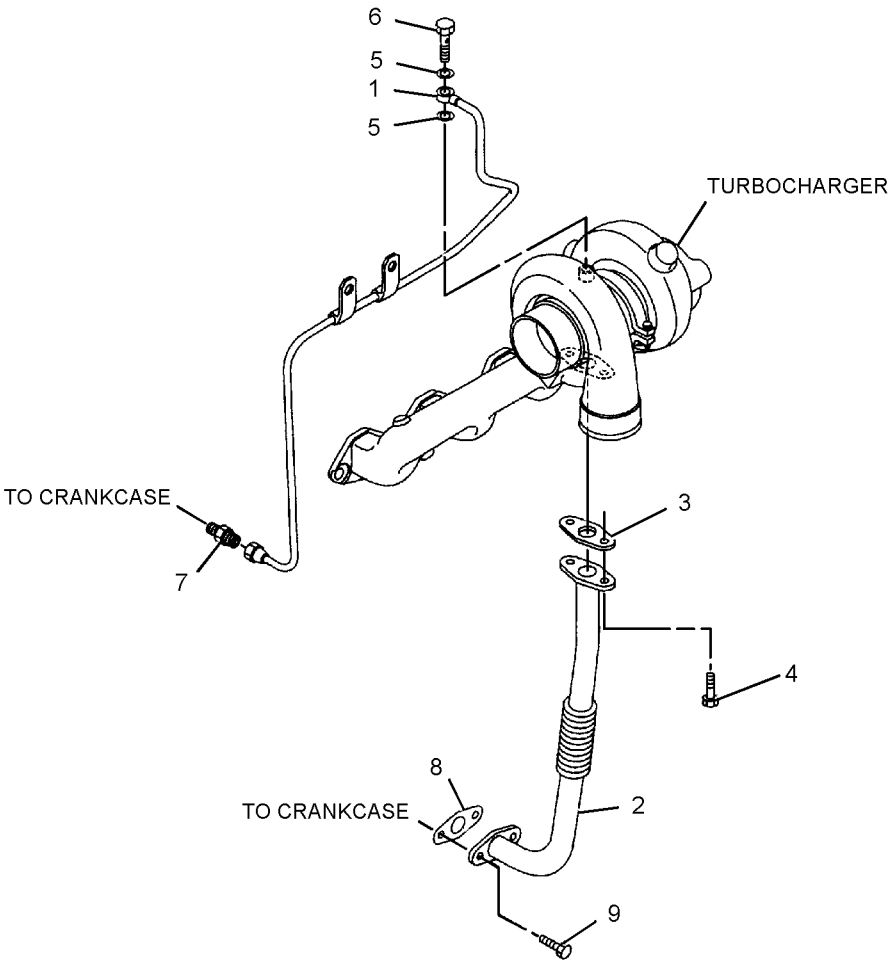

GRAPHIC #1 **<END>** g01403341

296-4782 COOLER GP-ENGINE OIL

S/N: JKH1-UP
PART OF 279-7805 ENGINE AR
ALSO AN ATTACHMENT

SMCS-1378 **i03021637**

NOTE	REF NO	GRAPHIC REF	PART NUMBER	QTY	PART NAME 1 2 3 4 5 6 (PRODUCT LEVEL)	SEE PAGE
	1	1	**196-8366**	3	BOLT	
M	2	1	**8T-4908**	9	BOLT (M8X1.25X25-MM)	
	3	1	**296-4727**	1	COVER AS	
	3A	1	**178-6572**	2	PLUG	
	4	1	**135-2403**	1	CORE AS-ENGINE OIL COOLER	
M	5	1	**5C-7261**	4	NUT (M8X1.25-THD)	
	6	1	**3B-4505**	4	LOCKWASHER	
	7	1	**5I-7862**	1	GASKET	
	8	1	**5I-7691**	2	GASKET	
	9	1	**222-8238**	1	COVER	
	10	1	**217-5589**	1	GASKET	
	11	1	**094-9267**	4	BOLT (M8X1.25X60.5-MM)	
	12	1	**294-1738**	4	BOLT (M10X1.5X32-MM)	

M-METRIC PART

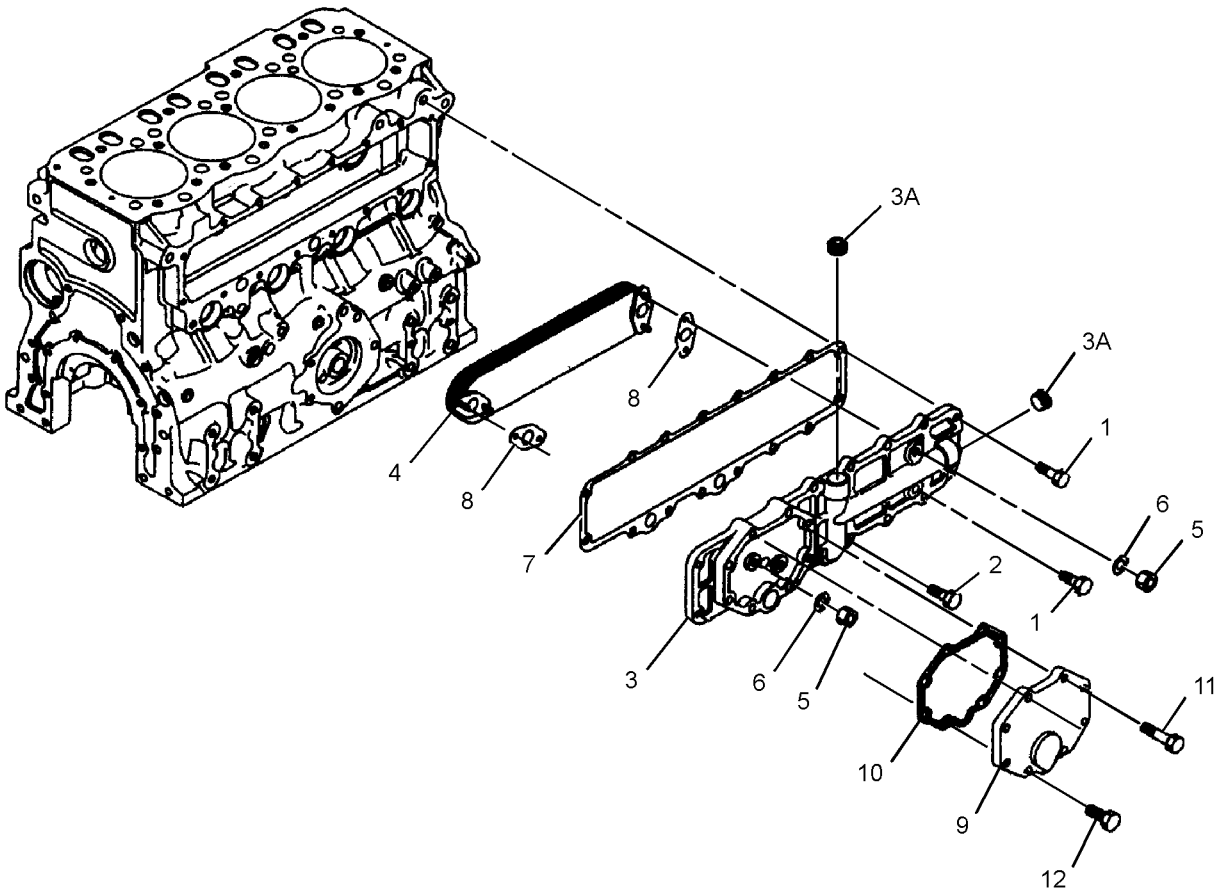

GRAPHIC #1 **<END>** g01403263

283-8793 COOLING AR-HIGH AMBIENT TEMP

S/N: CLA1-UP
NACD, LACD MARKET
AN ATTACHMENT

SMCS-1350 **i02903542**

NOTE	PART NUMBER	QTY	PART NAME 1 2 3 4 5 6 (PRODUCT LEVEL)	SEE PAGE
Y	*279-7800*	1	ENGINE AR-COMPLETE	9
Y	*283-3671*	1	HOOD GP-ENGINE	300

Y-SEPARATE ILLUSTRATION

<END>

283-8819 COOLING AR-HIGH AMBIENT TEMP

S/N: CLA1-UP
FOR APD MARKET EXCEPT CHINA
AN ATTACHMENT

SMCS-1350 **i02903550**

NOTE	PART NUMBER	QTY	PART NAME 1 2 3 4 5 6 (PRODUCT LEVEL)	SEE PAGE
Y	**279-7802**	1	ENGINE AR-COMPLETE	10
Y	*283-3671*	1	HOOD GP-ENGINE	300

Y-SEPARATE ILLUSTRATION

<END>

283-8820 COOLING AR-HIGH AMBIENT TEMP

S/N: CLA1-UP
FOR CHINA MARKET
AN ATTACHMENT

SMCS-1350 **i02903586**

NOTE	PART NUMBER	QTY	PART NAME 1 2 3 4 5 6 (PRODUCT LEVEL)	SEE PAGE
Y	**279-7804**	1	ENGINE AR-COMPLETE	12
Y	*283-3671*	1	HOOD GP-ENGINE	300

Y-SEPARATE ILLUSTRATION

<END>

310-9549 FAN GP-SUCTION

S/N: JKH1-UP
PART OF 279-7805 ENGINE AR
ALSO AN ATTACHMENT

SMCS-1356 **i02896387**

NOTE	REF NO	GRAPHIC REF	PART NUMBER	QTY	PART NAME 1 2 3 4 5 6 (PRODUCT LEVEL)	SEE PAGE
	1	1	**135-2407**	1	FAN	
	2	1	**185-8977**	2	SPACER	
M	3	1	**8T-4195**	4	BOLT (M10X1.5X30-MM)	
	4	1	**8T-4121**	4	WASHER-HARD (11X21X2.5-MM THK)	
	5	1	**7X-0796**	8	LOCKWASHER	
M	6	1	**266-6231**	4	BOLT (M10X1.5X120-MM)	
	7	1	**297-7839**	1	SPACER	

M-METRIC PART

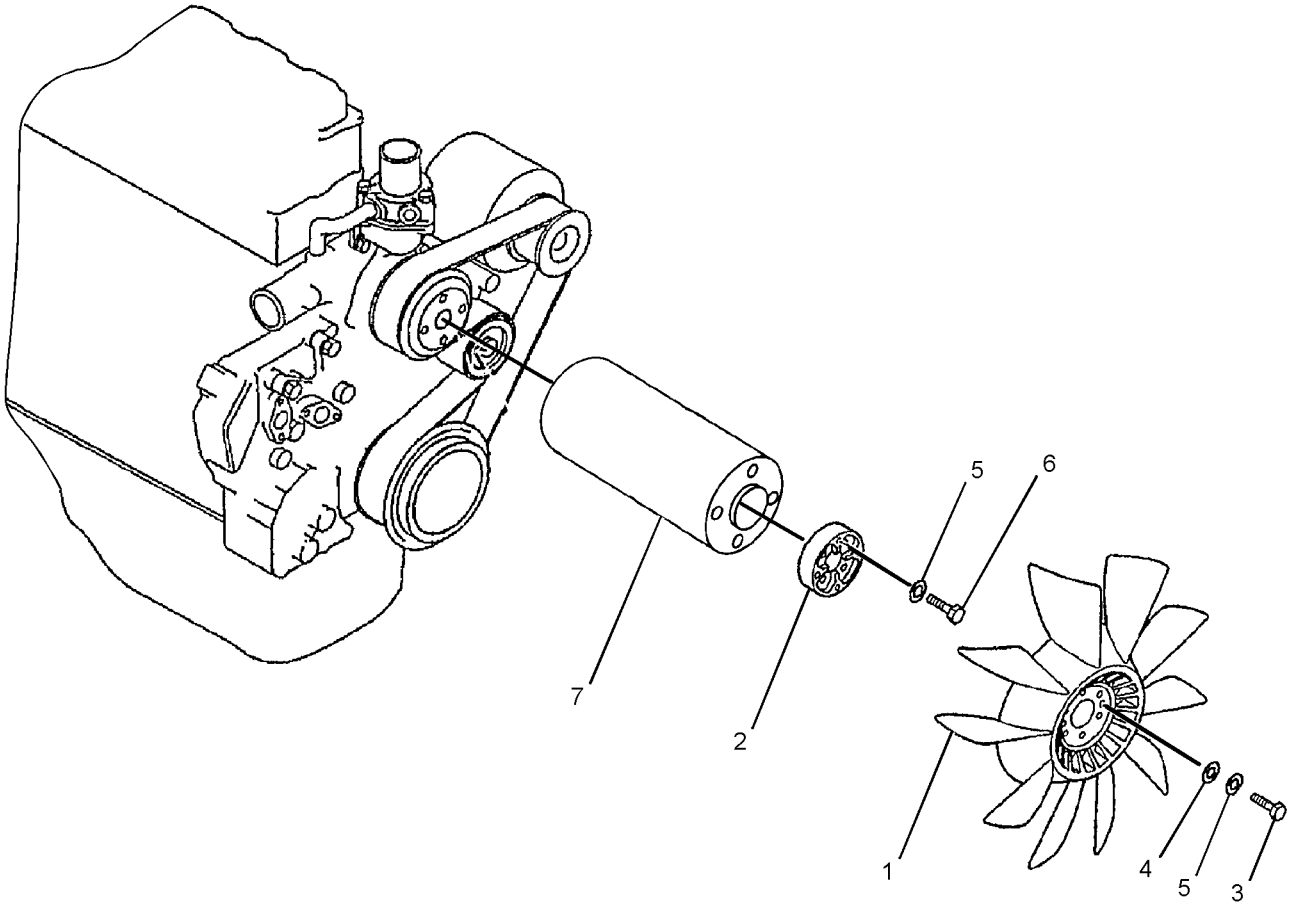

GRAPHIC #1 **<END>** g01442603

COOLING SYSTEM

296-4795 LINES GP-WATER

S/N: JKH1-UP
PART OF 279-7805 ENGINE AR
ALSO AN ATTACHMENT

SMCS-1355, 1380 **i02857243**

NOTE	REF NO	GRAPHIC REF	PART NUMBER	QTY	PART NAME 1 2 3 4 5 6 (PRODUCT LEVEL)	SEE PAGE
	1	1	**5I-7867**	1	COVER AS	
	2	1	**154-9024**	1	VALVE GP-FLUID SAMPLING (ENGINE COOLANT)	
	3	1	**157-0670**	1	CAP-DUST	
	4	1	**5I-7646**	1	ELBOW	
	5	1	**294-1777**	2	GASKET (WATER TEMPERATURE REGULATOR)	
	6	1	**5I-8056**	2	PLUG	
	7	1	**096-9532**	2	WASHER (15.8X22.5X2-MM THK)	
	8	1	*270-6338*	1	BOLT AS	
M		1	**8T-6870**	1	BOLT (M8X1.25X70-MM)	
		1	**3B-4505**	1	LOCKWASHER	
	9	1	**294-1778**	1	HOSE	
	10	1	**5I-8010**	1	REGULATOR-TEMPERATURE (COOLANT)	
	11	1	**5I-7735**	1	GASKET (WATER TEMPERATURE REGULATOR)	
	12	1	**096-8619**	3	BOLT	
	13	1	**297-7655**	1	BOLT	
	14	1	**3B-4505**	1	LOCKWASHER	
	15	1	**2S-3440**	2	CLAMP-HOSE	
	16	1	**294-1780**	1	GASKET (WATER TEMPERATURE REGULATOR)	
	17	1	**296-4733**	1	SPACER	

M-METRIC PART

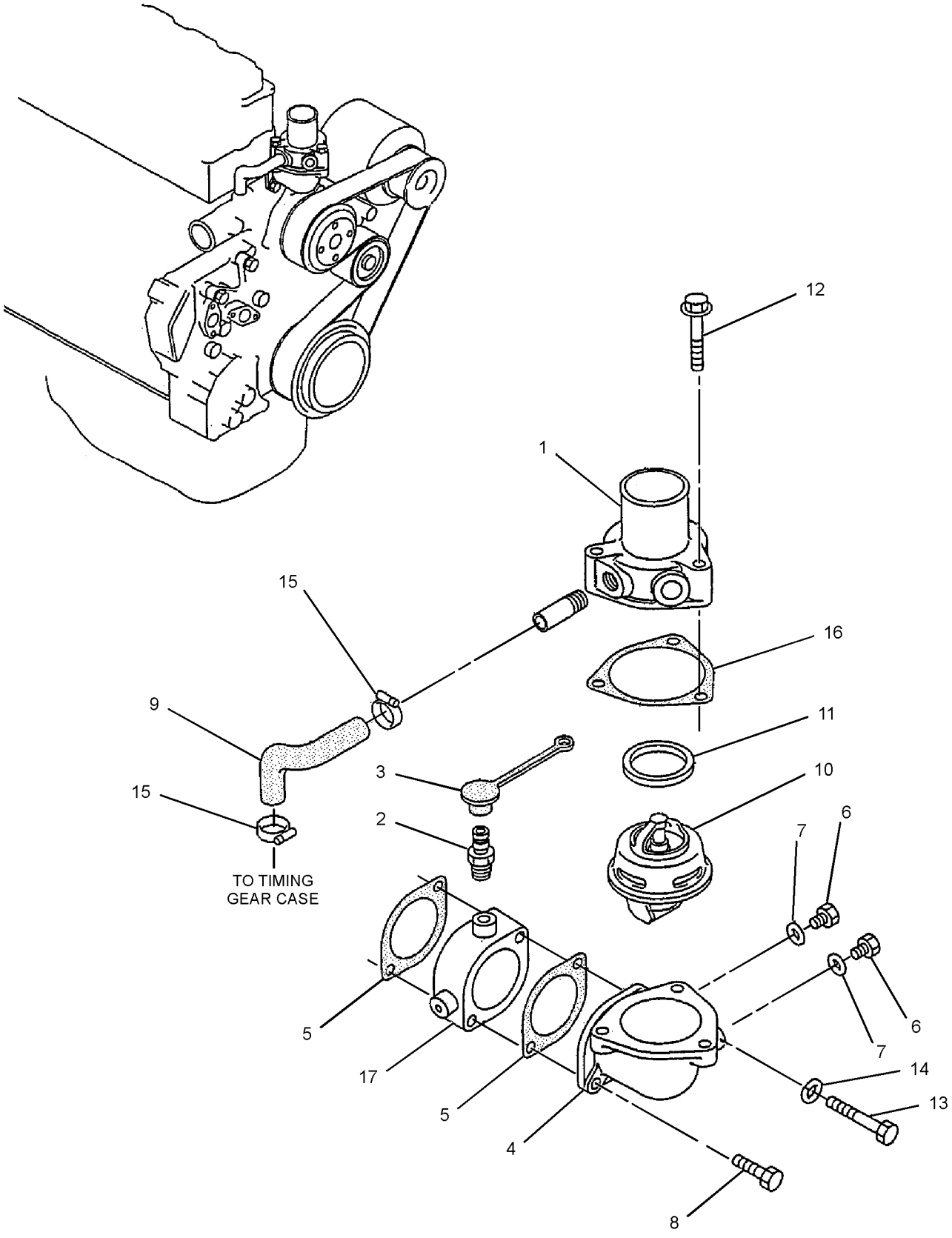

GRAPHIC #1 **<END>** g01415123

COOLING SYSTEM

296-4655 PUMP GP-WATER

S/N: JKH1-UP
PART OF 279-7805 ENGINE AR
ALSO AN ATTACHMENT

SMCS-1361 **i02618456**

NOTE	REF NO	GRAPHIC REF	PART NUMBER	QTY	PART NAME 1 2 3 4 5 6 (PRODUCT LEVEL)	SEE PAGE
	1	1	**178-6633**	1	PUMP GP-WATER	
	1A	1	**5I-7696**	1	FLANGE	
	1B	1	**178-6635**	1	SHAFT	
	1C	1	**8T-9598**	1	RING-RETAINING	
	1D	1	**5L-6326**	1	BALL BEARING (62-MM OD)	
	1E	1	**178-6634**	1	IMPELLER	
	1F	1	**5I-7697**	1	SPACER (28-MM)	
	1G	1	**2H-3814**	1	BALL BEARING (52-MM OD)	
	1H	1	**125-2947**	1	WASHER (1-MM THK)	
	1J	1	**178-6636**	1	SEAL	
	2	1	**294-1738**	7	BOLT	
	3	1	**8T-4121**	4	WASHER-HARD (11X21X2.5-MM THK)	

296-4655 **PUMP GP-WATER** *(contd.)* **i02618456**

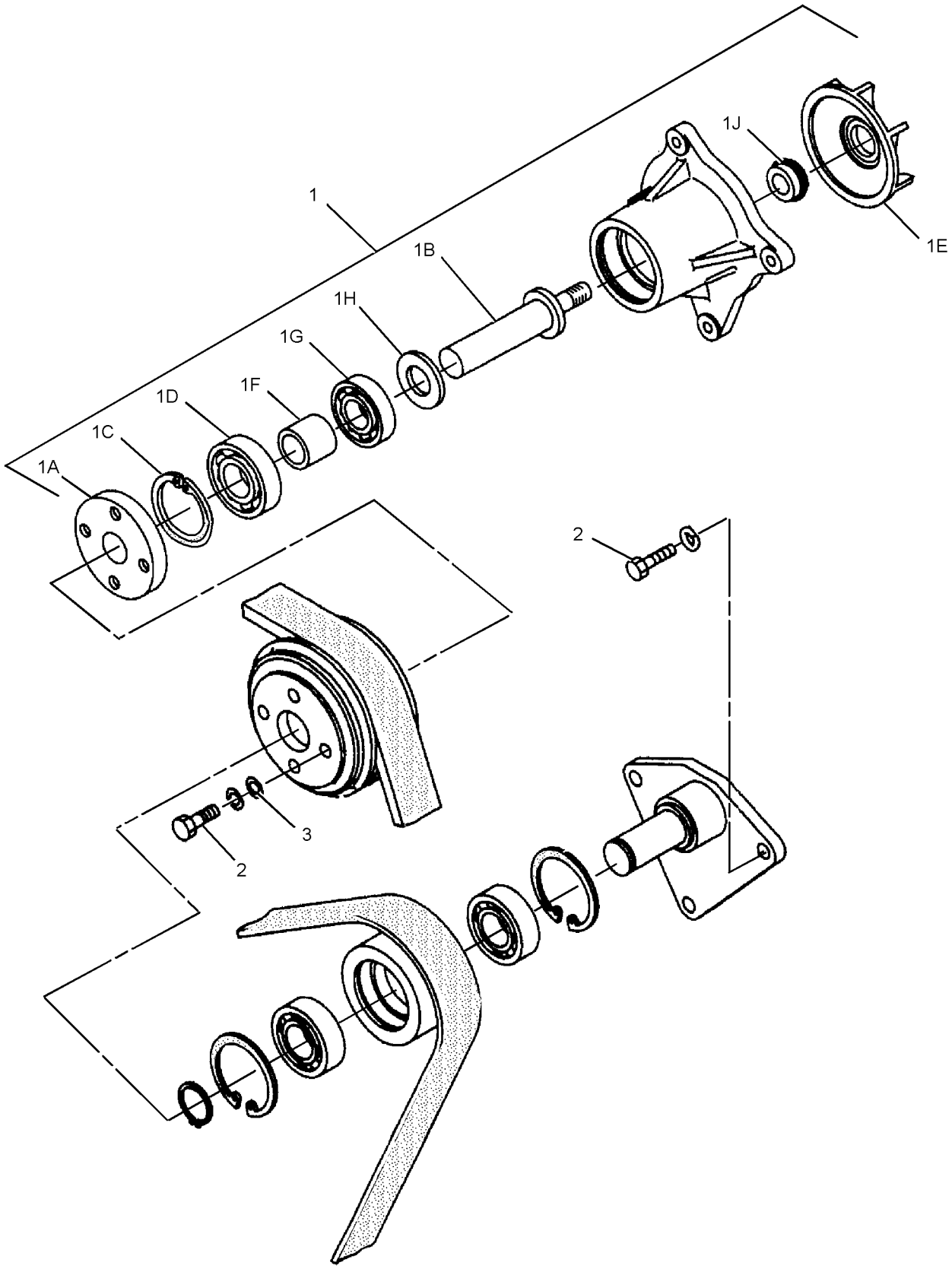

GRAPHIC #1 **<END>** g01316735

COOLING SYSTEM

265-3608 RADIATOR & HYD OIL COOLER GP

S/N: CLA1-UP

PART OF 305-7600 RADIATOR & HYD OIL COOLER GP

SMCS-1351 **i02909057**

NOTE	REF NO	GRAPHIC REF	PART NUMBER	QTY	PART NAME 1 2 3 4 5 6 (PRODUCT LEVEL)	SEE PAGE
	1	1	**5D-8159**	4	PIN AS	
M	2	1	**093-5432**	1	VALVE AS-DRAIN (COOLANT)	
	3	2	**095-1543**	2	SEAL-O-RING	
	4	1	**096-4035**	2	CLIP	
	5	2	**183-8111**	1	SEAL	
	6	2	**183-8112**	1	SEAL	
	7	2	**193-2812**	2	SEAL	
	8	1	**196-8037**	2	SEAL	
	9	1	**245-9212**	1	CAP AS-RADIATOR	
	10	2	**245-9216**	2	BOSS	
	11	2	**245-9217**	2	CUSHION-RUBBER	
	12	2	**245-9218**	2	CUSHION-RUBBER	
	13	1	**265-3630**	2	SEAL	
	14	1	**281-3533**	1	SHEET-RUBBER	
	15	1	**281-3625**	1	CORE AS-RADIATOR	
	16	1	**281-3626**	1	CORE AS-OIL COOLER	
	17	1	**281-3627**	1	AFTERCOOLER AS	
	18	1	**281-3628**	1	FRAME AS	
	19	2	**281-3629**	2	SEAL	
	20	1	**281-3630**	2	SEAL	
	21	1	**281-3631**	1	SHROUD AS	
	22	1	**281-3632**	1	SCREEN AS (OIL COOLER)	
	23	1	**281-3633**	1	SCREEN AS (RADIATOR)	
	24	1,2	**8T-4121**	6	WASHER-HARD (11X21X2.5-MM THK)	
M	25	1	**8T-4189**	13	BOLT (M8X1.25X20-MM)	
M	26	1,2	**8T-4195**	6	BOLT (M10X1.5X30-MM)	
	27	1	**8T-4224**	13	WASHER-HARD (8.8X16X2-MM THK)	
E	28	1	**7Y-1976**		HOSE-WATER (150-CM)	
E	28A	1	**7Y-1976**		HOSE-WATER (8-CM)	

E-ORDER BY THE CENTIMETER
M-METRIC PART

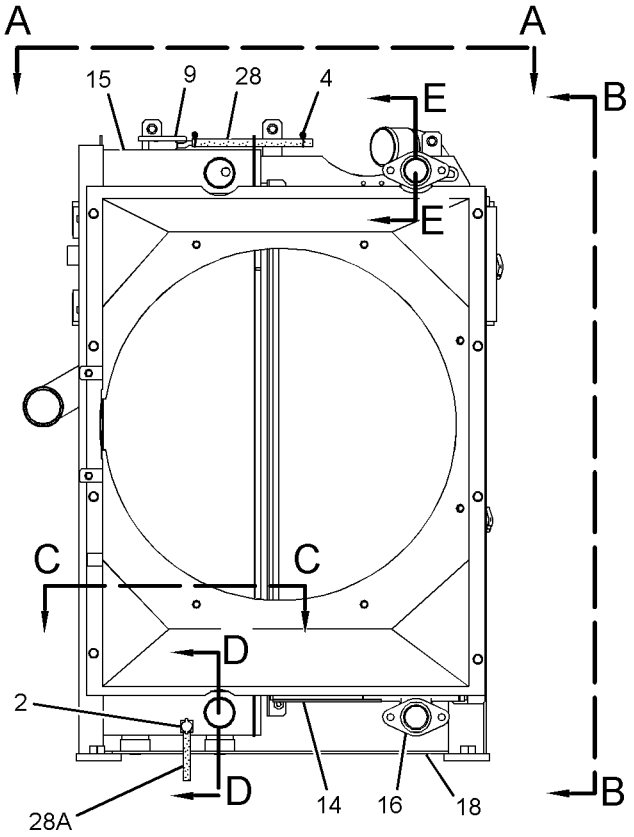

RIGHT SIDE VIEW

REFER TO ALL ILLUSTRATIONS OF
THIS GROUP FOR AUXILIARY VIEWS

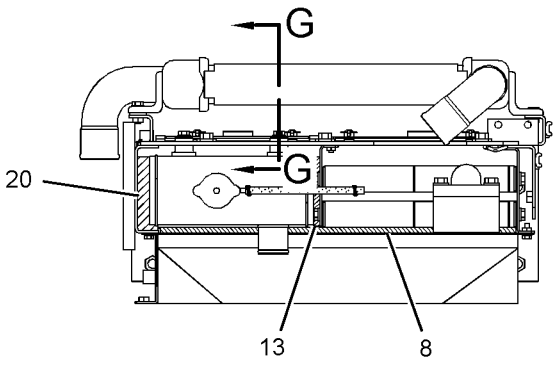

VIEW A-A

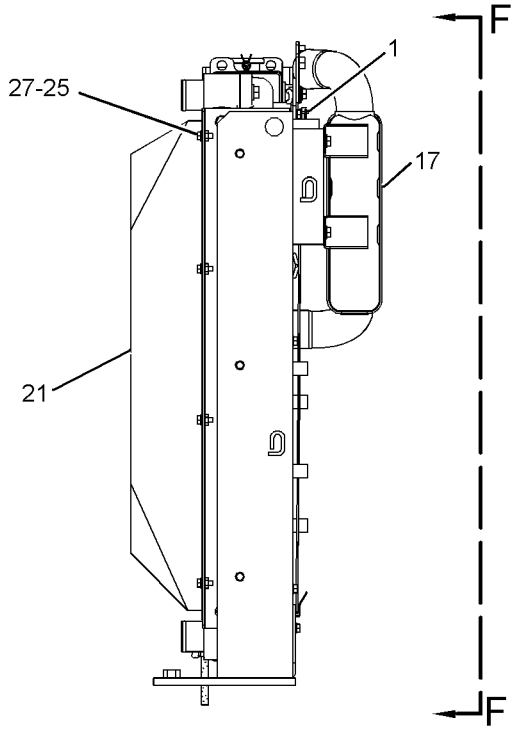

VIEW B-B

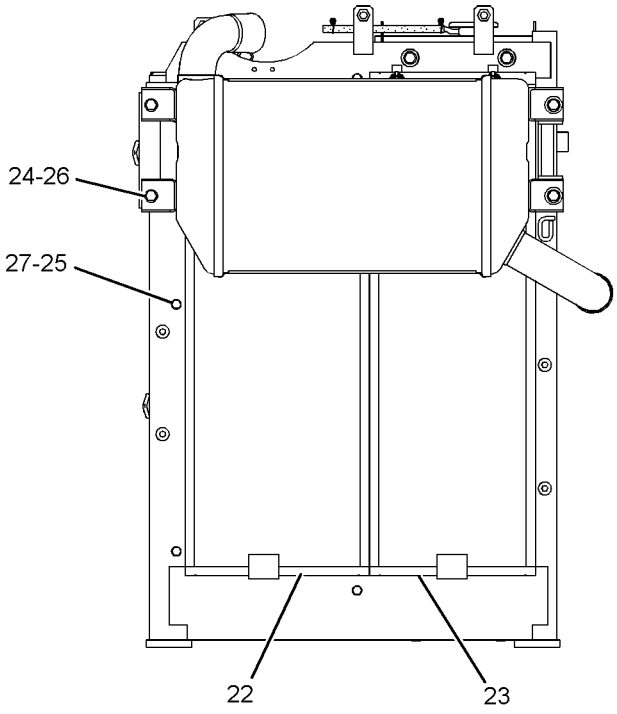

VIEW F-F

GRAPHIC #1

g01400902

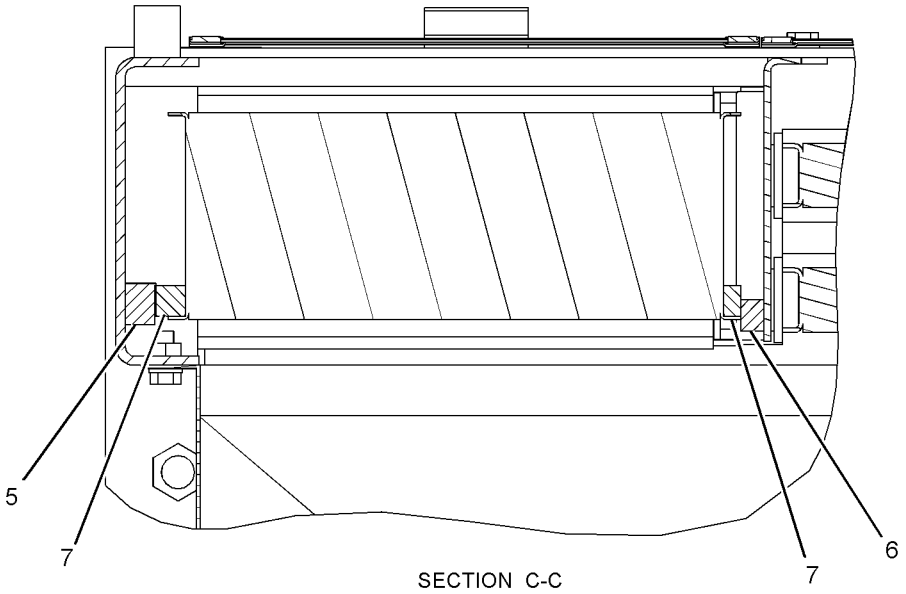

SECTION C-C

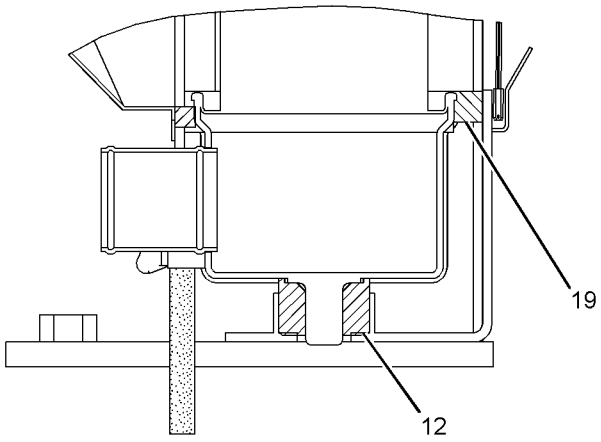

SECTION D-D

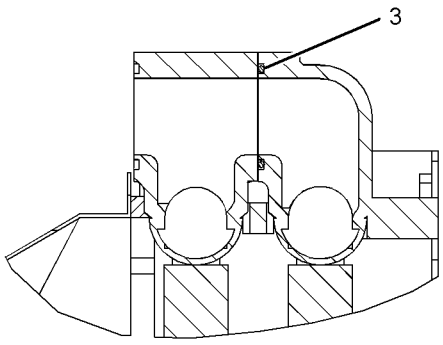

SECTION E-E

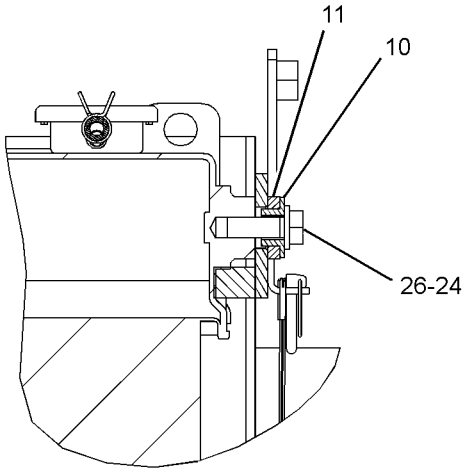

SECTION G-G

GRAPHIC #2 **<END>** g01400904

305-7600 RADIATOR & HYD OIL COOLER GP

S/N: CLA1-UP

PART OF 279-7830 INSTALLATION AR-ENGINE

SMCS-1351 **i02938675**

NOTE	REF NO	GRAPHIC REF	PART NUMBER	QTY	PART NAME 1 2 3 4 5 6 (PRODUCT LEVEL)	SEE PAGE
	1	1,2	**3S-2093**	2	STRAP-CABLE	
	2	1,2	**7I-2673**	3	STRAP-CABLE	
	3	2	**8T-4984**	1	CLAMP-HOSE	
	4	1,2	**8T-6703**	5	CLAMP-HOSE	
	5	1	**096-4035**	1	CLIP	
	6	1	**099-6607**	1	BAND	
	7	1	**178-6450**	4	SPACER (17X35X30-MM THK)	
	8	1	**245-9205**	1	TANK AS-COOLANT (RECOVERY)	
		1	**171-3369**	1	CAP AS (COOLANT RECOVERY)	
	9	2	**265-3545**	1	SEAL	
Y	10	1	**265-3608**	1	RADIATOR & HYD OIL COOLER GP	54
	11	1	**265-3654**	1	HOSE-RADIATOR (UPPER) (UPPER RADIATOR)	
	12	1	**281-3494**	1	HOSE	
	13	1	**305-7591**	1	HOSE-RADIATOR (LOWER) (LOWER RADIATOR)	
	14	2	**305-7595**	1	GUARD AS	
	15	2	**305-7596**	1	GUARD AS	
	16	2	**305-7598**	1	TUBE AS	
M	17	1	**7X-2554**	4	BOLT (M16X2X70-MM)	
	18	2	**7X-7729**	7	WASHER (11X25X3-MM THK)	
	19	2	**8T-4121**	2	WASHER-HARD (11X21X2.5-MM THK)	
M	20	2	**8T-4136**	2	BOLT (M10X1.5X25-MM)	
M	21	2	**8T-4137**	7	BOLT (M10X1.5X20-MM)	
M	22	1	**8T-4200**	2	BOLT (M8X1.25X16-MM)	
	23	1	**8T-4224**	2	WASHER-HARD (8.8X16X2-MM THK)	
E	24	1	**7Y-1976**		HOSE-WATER (65-CM)	
D	25	2	**5P-5649**		SEAL (0.1-M)	
D	26	2	**5P-9909**		SEAL (0.6-M)	
E	27	2	**3E-6602**		SEAL (11-CM)	

D-ORDER BY THE METER
E-ORDER BY THE CENTIMETER
M-METRIC PART
Y-SEPARATE ILLUSTRATION

REFER TO ALL ILLUSTRATIONS OF
THIS GROUP FOR AUXILIARY VIEWS

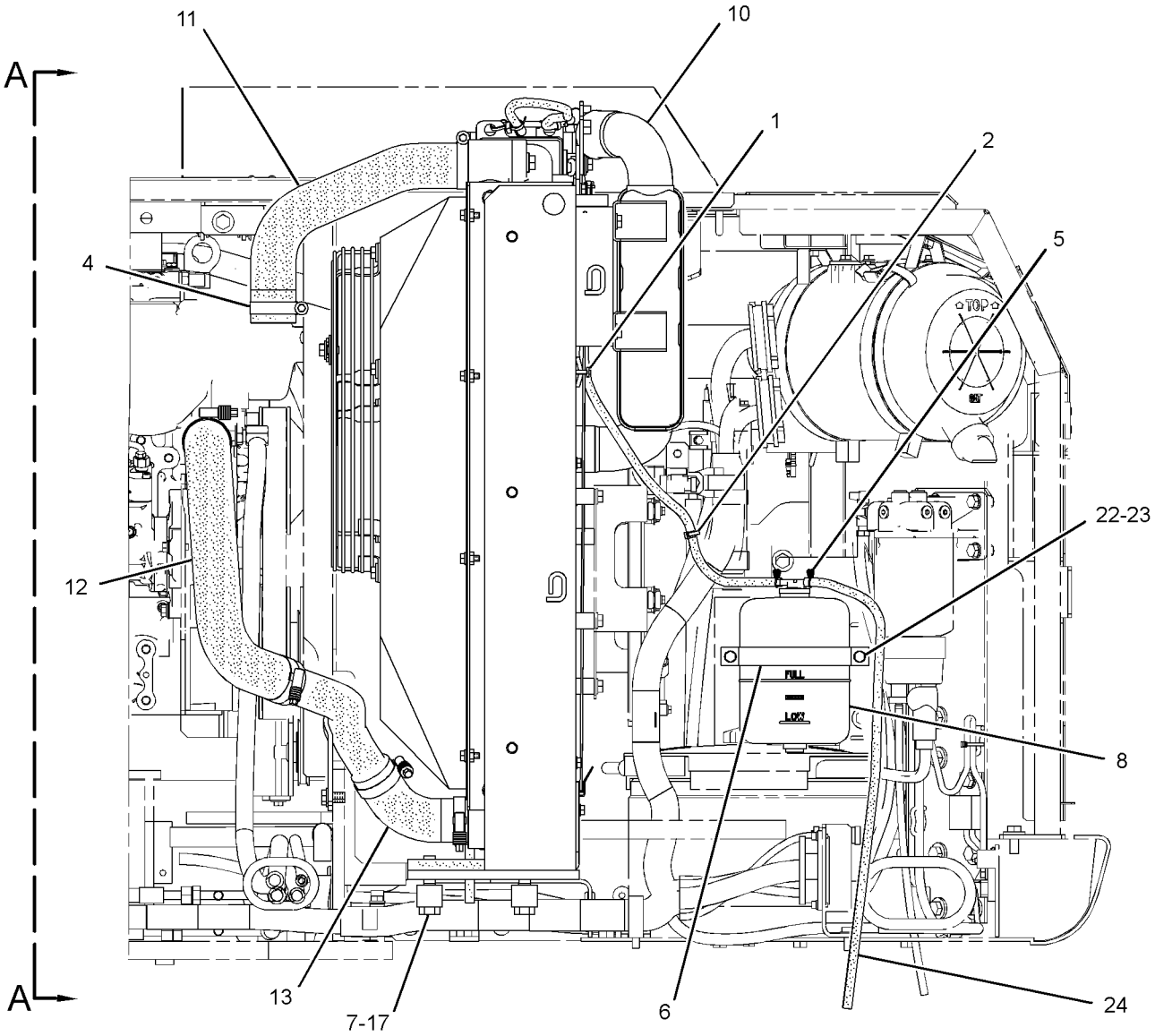

FRONT VIEW

GRAPHIC #1

g01446652

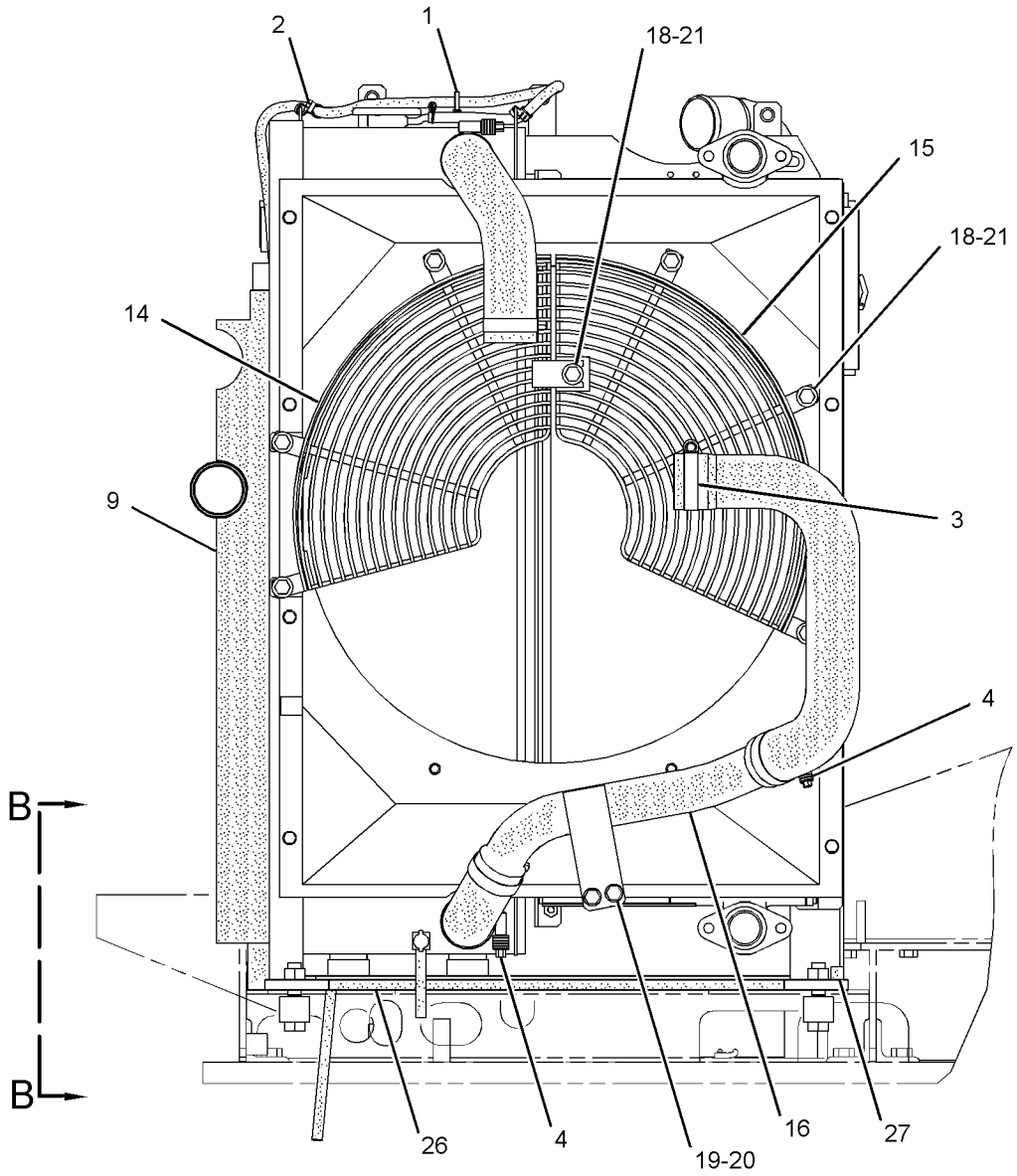

VIEW A-A

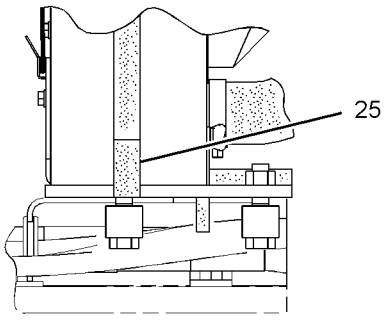

VIEW B-B

GRAPHIC #2 **<END>** g01446754

AIR INLET AND EXHAUST SYSTEM

118-9881 AIR CLEANER GP

S/N: CLA1-UP

PART OF 279-7830 INSTALLATION AR-ENGINE

SMCS-1051, 1054 **i01434364**

NOTE	REF NO	GRAPHIC REF	PART NUMBER	QTY	PART NAME 1 2 3 4 5 6 (PRODUCT LEVEL)	SEE PAGE
M	1	1	**8T-4200**	4	BOLT (M8X1.25X16-MM)	
	2	1	**8T-4224**	4	WASHER-HARD (8.8X16X2-MM THK)	
	3	1	**8T-6726**	1	CLAMP-HOSE	
	4	1	**131-8915**	1	CAP (AIR CLEANER)	
Y	5	1	**118-9882**	1	AIR CLEANER GP	61

M-METRIC PART
Y-SEPARATE ILLUSTRATION

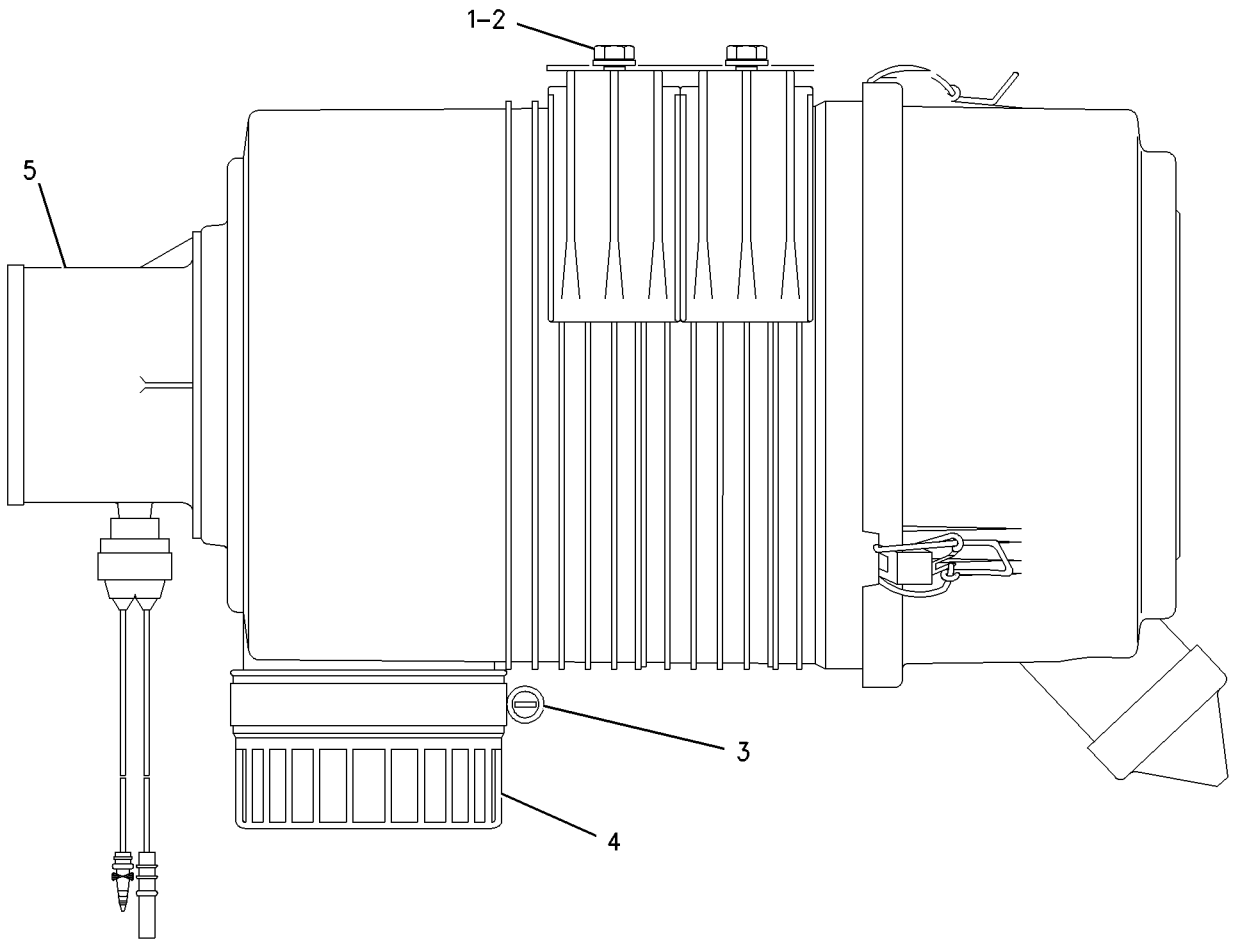

GRAPHIC #1 **<END>** g00756009

118-9882 AIR CLEANER GP

S/N: CLA1-UP

PART OF 118-9881 AIR CLEANER GP

SMCS-1051, 1054 **i02922585**

NOTE	REF NO	GRAPHIC REF	PART NUMBER	QTY	PART NAME 1 2 3 4 5 6 (PRODUCT LEVEL)	SEE PAGE
	1	1	**255-2966**	1	INDICATOR AS-AIR FILTER CHANGE (AIR RESTRICTION) (SERVICE)	
C	2	1	**310-9621**	1	COVER AS-AIR CLEANER	
	3	1	**131-8901**	1	VALVE-VACUATOR	
	4	1	**131-8902**	1	FILTER ELEMENT AS-AIR (PRIMARY)	
	5	1	**131-8903**	1	FILTER ELEMENT AS-AIR (SECONDARY)	
C	6	1	**310-9622**	1	SEAL	

C-CHANGE FROM PREVIOUS TYPE

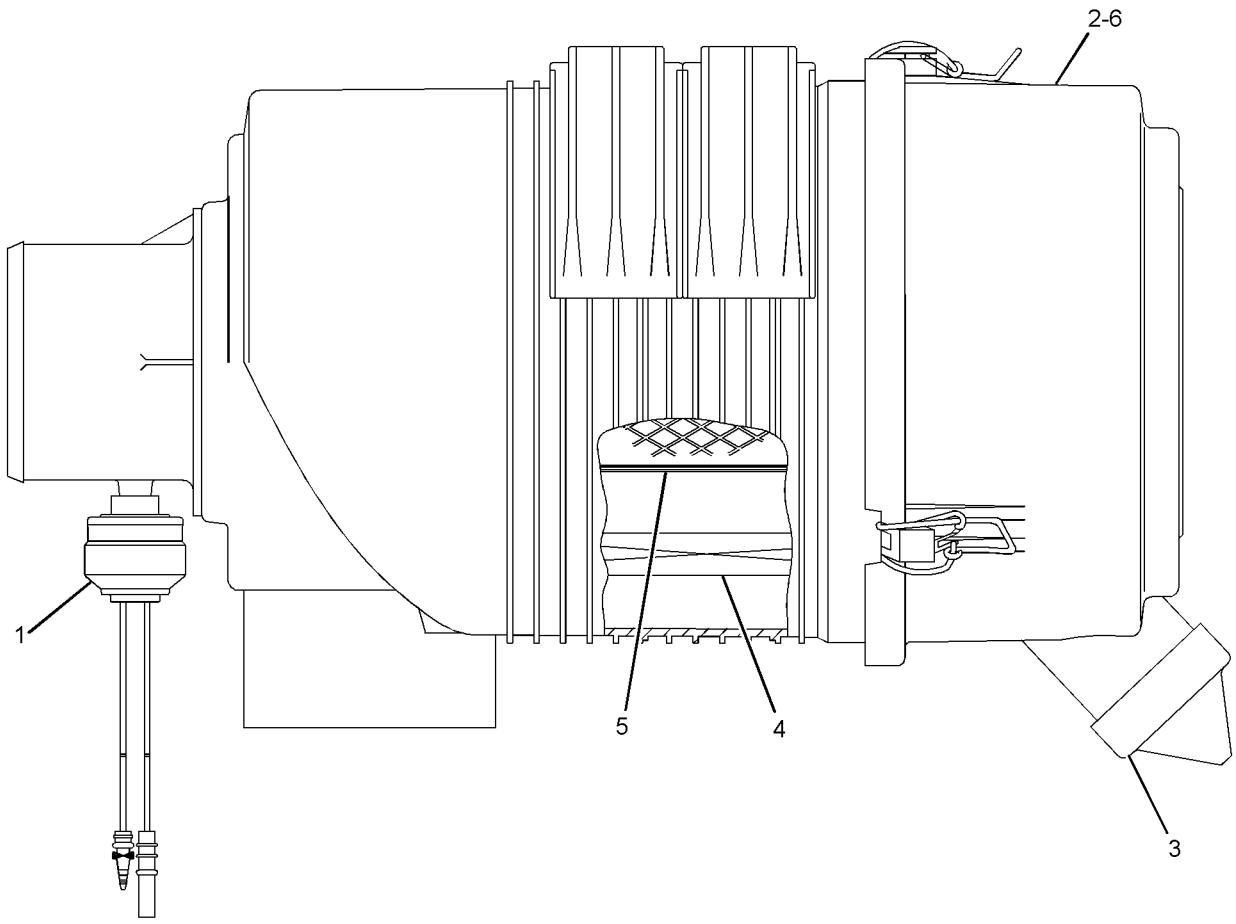

GRAPHIC #1 **<END>** g01453612

AIR INLET AND EXHAUST SYSTEM

279-7832 AIR CLEANER GP

S/N: CLA1-UP
PART OF 283-8842 PRECLEANER AR
AN ATTACHMENT

SMCS-1051, 1054 **i02997307**

NOTE	REF NO	GRAPHIC REF	PART NUMBER	QTY	PART NAME 1 2 3 4 5 6 (PRODUCT LEVEL)	SEE PAGE
	1	1	**8T-4985**	1	CLAMP-HOSE	
	2	1	**118-6948**	1	PRECLEANER GP	
		1	**1M-7250**	1	BOWL	
		1	**9M-7959**	1	CLAMP-HOSE	
		1	**9M-9439**	1	COVER AS	
Y	3	1	**310-9671**	1	AIR CLEANER GP	64
	4	1	**193-2888**	2	BAND AS	
	5	1	**193-2889**	1	CLAMP AS	
	6	1	**287-0125**	1	HOSE-AIR	
	7	1	**287-0126**	1	PLATE AS	
M		1	**8T-3597**	2	NUT-WELD (M12X1.75-THD)	
	8	1	**287-0129**	1	PLATE AS	
M		1	**8T-3597**	2	NUT-WELD (M12X1.75-THD)	
	9	1	**5P-1076**	4	WASHER-HARD (13.5X30X4-MM THK)	
	10	1	**7X-7729**	4	WASHER (11X25X3-MM THK)	
M	11	1	**8T-4137**	4	BOLT (M10X1.5X20-MM)	
M	12	1	**8T-4192**	4	BOLT (M12X1.75X25-MM)	

M-METRIC PART
Y-SEPARATE ILLUSTRATION

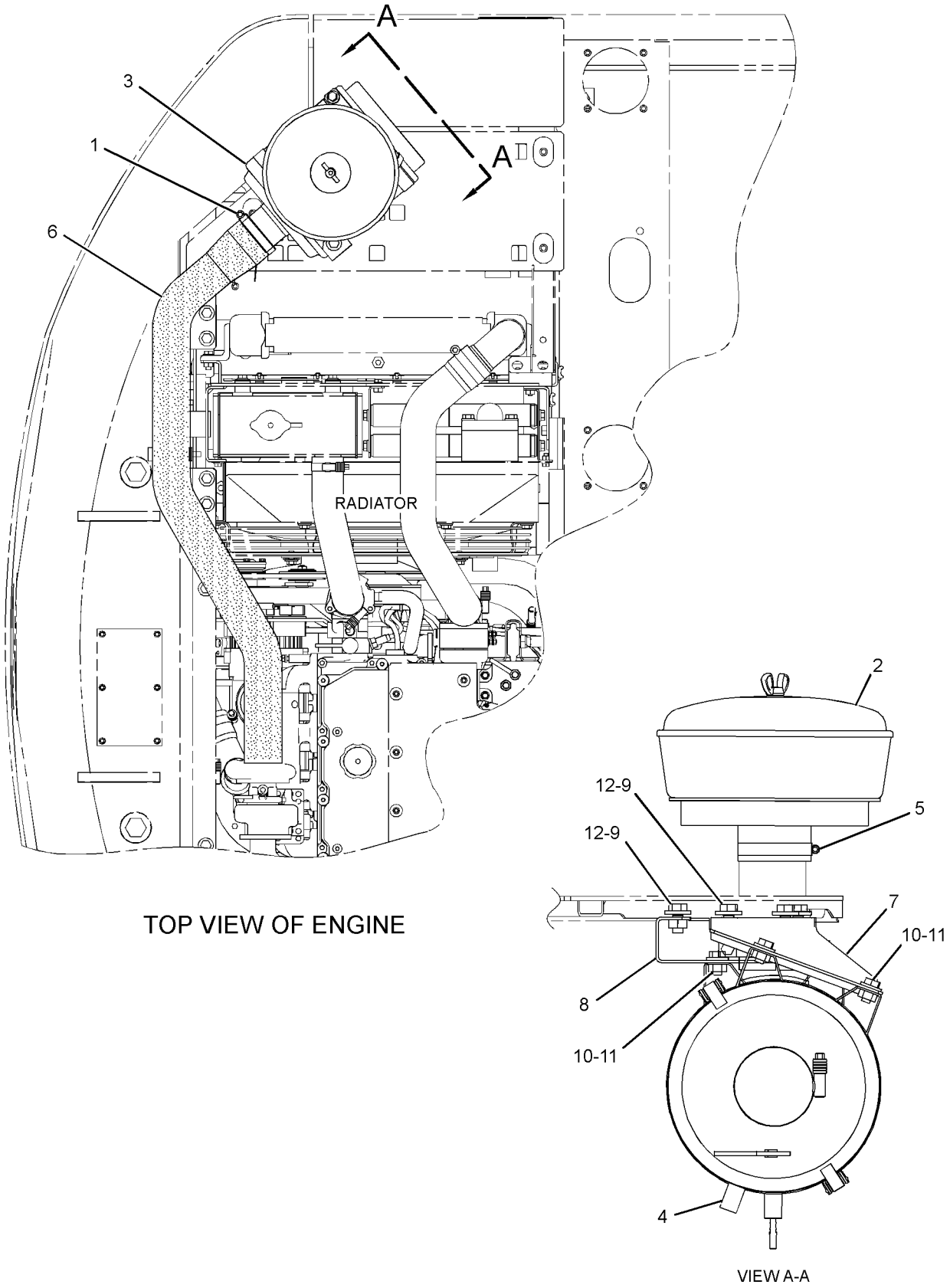

TOP VIEW OF ENGINE

VIEW A-A

GRAPHIC #1 **<END>** g01575833

AIR INLET AND EXHAUST SYSTEM

310-9671 AIR CLEANER GP

S/N: CLA1-UP
PART OF 279-7832 AIR CLEANER GP
AN ATTACHMENT

SMCS-1051, 1054 **i02998091**

NOTE	REF NO	GRAPHIC REF	PART NUMBER	QTY	PART NAME 1 2 3 4 5 6 (PRODUCT LEVEL)	SEE PAGE
	1	1	**6I-1449**	1	COVER AS	
	1A	1	**1J-2890**	1	SEAL-O-RING	
	2	1	**108-0671**	1	FILTER ELEMENT-AIR (PRIMARY)	
	3	1	**108-0672**	1	FILTER ELEMENT-AIR (SECONDARY)	
	4	1	**255-2966**	1	INDICATOR AS-AIR FILTER CHANGE (AIR RESTRICTION)	
	5	1	**5L-3233**	1	FITTING	
	6	1	**7I-2673**	1	STRAP-CABLE	

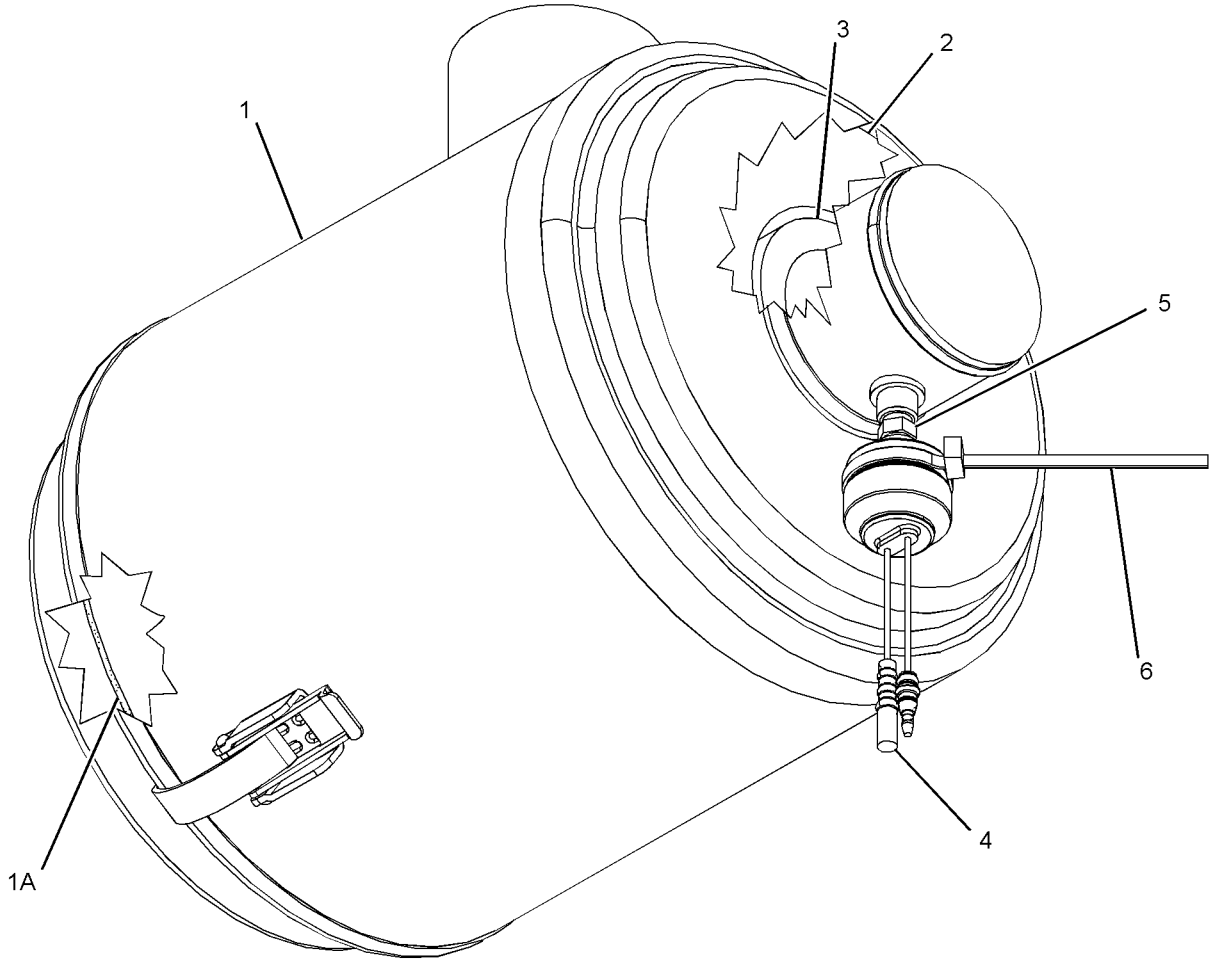

GRAPHIC #1 **<END>** g01619023

AIR INLET AND EXHAUST SYSTEM

265-3609 LINES GP-AIR

S/N: CLA1-UP

PART OF 279-7830 INSTALLATION AR-ENGINE

SMCS-1071 **i03017505**

NOTE	REF NO	GRAPHIC REF	PART NUMBER	QTY	PART NAME 1 2 3 4 5 6 (PRODUCT LEVEL)	SEE PAGE
	1	1	**8T-4984**	5	CLAMP-HOSE	
	2	1	**8T-6703**	1	CLAMP-HOSE	
	3	1	**265-3659**	1	TUBE AS	
	4	1	**265-3661**	1	HOSE	
	5	1	**265-3662**	1	HOSE	
	6	1	**265-3663**	1	PLATE AS	
	7	1	**305-7597**	1	HOSE	
	8	1	**8T-4121**	4	WASHER-HARD (11X21X2.5-MM THK)	
M	9	1	**8T-4136**	4	BOLT (M10X1.5X25-MM)	

M-METRIC PART

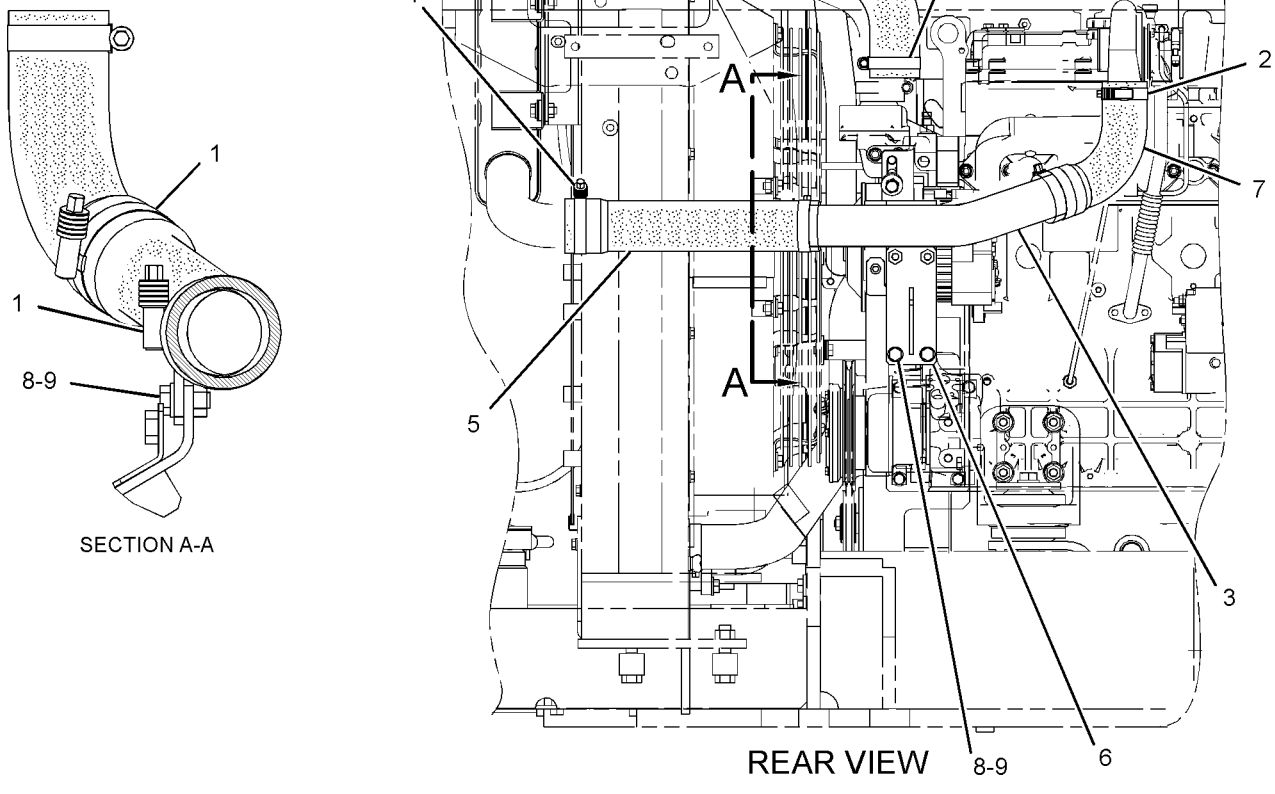

GRAPHIC #1 **<END>** g01400721

AIR INLET AND EXHAUST SYSTEM

305-4728 LINES GP-MUFFLER DRAIN

S/N: CLA1-UP

PART OF 279-7830 INSTALLATION AR-ENGINE

SMCS-1062 **i02885235**

NOTE	REF NO	GRAPHIC REF	PART NUMBER	QTY	PART NAME 1 2 3 4 5 6 (PRODUCT LEVEL)	SEE PAGE
	1	1	**3S-2093**	3	STRAP-CABLE	
	2	1	**5P-4961**	1	CLAMP-HOSE	
	3	1	**151-6641**	1	CLIP	
	4	1	**305-4729**	1	TUBE AS	
		1	**287-0118**	1	ADAPTER AS	
	5	1	**305-4730**	1	PLATE AS	
	6	1	**8T-4121**	2	WASHER-HARD (11X21X2.5-MM THK)	
M	7	1	**8T-4137**	2	BOLT (M10X1.5X20-MM)	
E	8	1	**5P-1442**		HOSE (48-CM)	

E-ORDER BY THE CENTIMETER
M-METRIC PART

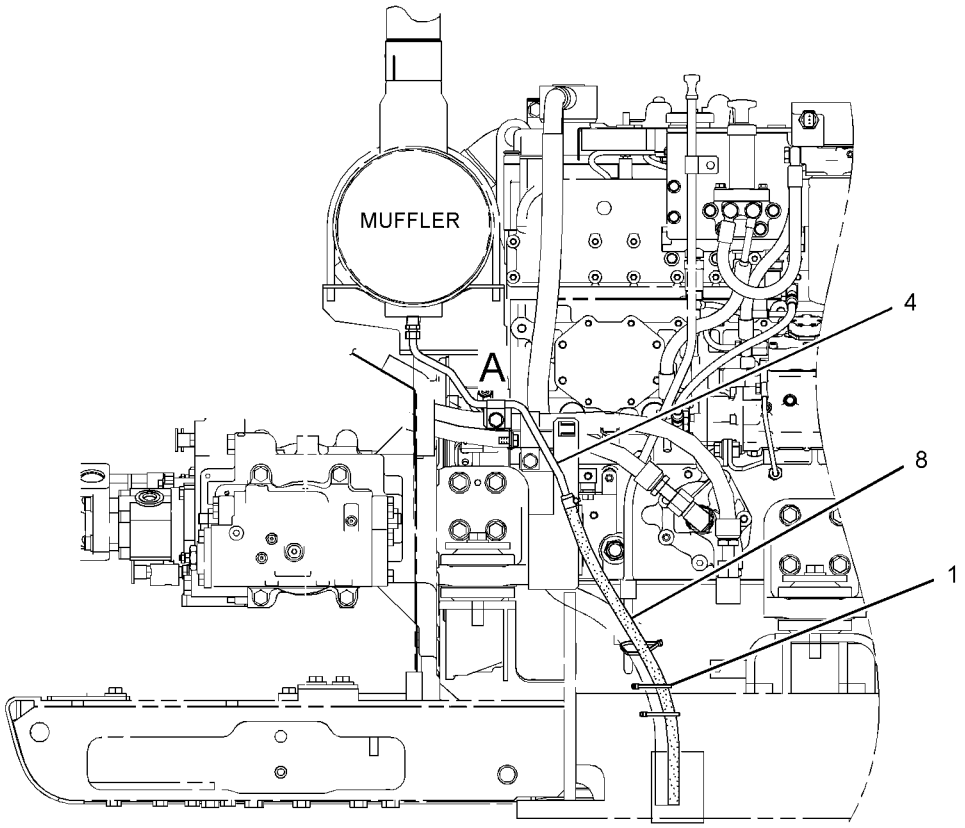

FRONT VIEW

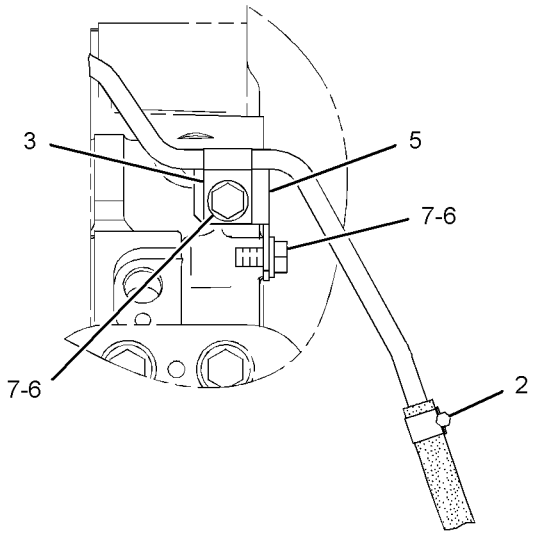

VIEW OF AREA A

GRAPHIC #1 **<END>** g01439122

AIR INLET AND EXHAUST SYSTEM

279-7758 LINES GP-TURBOCHARGER AIR

S/N: CLA1-UP

PART OF 279-7830 INSTALLATION AR-ENGINE

SMCS-1052, 1071 **i02794498**

NOTE	REF NO	GRAPHIC REF	PART NUMBER	QTY	PART NAME 1 2 3 4 5 6 (PRODUCT LEVEL)	SEE PAGE
	1	1	**8T-4984**	1	CLAMP-HOSE	
	2	1	**9X-2201**	1	CLAMP-HOSE	
	3	1	**297-7749**	1	HOSE-AIR	
	4	1	**6V-5386**	1	CLIP	
	5	1	**8T-4121**	1	WASHER-HARD (11X21X2.5-MM THK)	
M	6	1	**8T-4136**	1	BOLT (M10X1.5X25-MM)	

M-METRIC PART

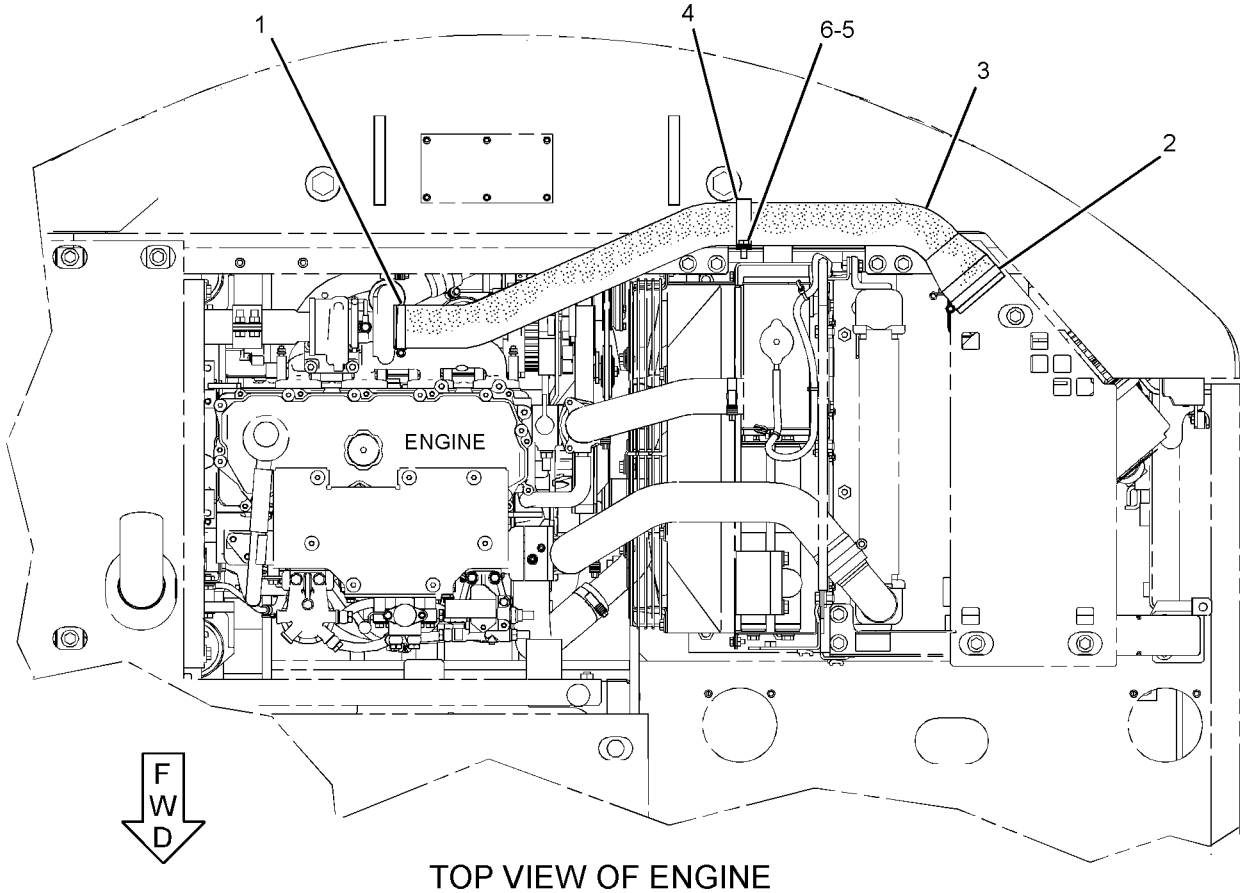

TOP VIEW OF ENGINE

GRAPHIC #1 **<END>** g01409805

296-4791 MANIFOLD GP-EXHAUST

S/N: JKH1-UP
PART OF 279-7805 ENGINE AR
ALSO AN ATTACHMENT

SMCS-1059 **i02944497**

NOTE	REF NO	GRAPHIC REF	PART NUMBER	QTY	PART NAME 1 2 3 4 5 6 (PRODUCT LEVEL)	SEE PAGE
	1	1	**279-7787**	1	MANIFOLD-EXHAUST	
	2	1	**296-4716**	2	GASKET	
M	3	1	**178-6554**	4	STUD (M10X1.5X15-MM, M10X1.25X20-MM)	
	6	1	**5I-7549**	8	STUD (M8X1.25X86-MM)	
	7	1	**5I-7550**	7	SPACER	
	8	1	**239-6604**	8	WASHER	
	9	1	**212-8489**	8	NUT	
	10	1	**095-8638**	1	WASHER-SPRING	
	11	1	**5I-7601**	1	SPACER	
M	12	1	**091-3474**	1	NUT (M8X1.25-THD)	
	13	1	**5I-5087**	1	PLUG	

M-METRIC PART

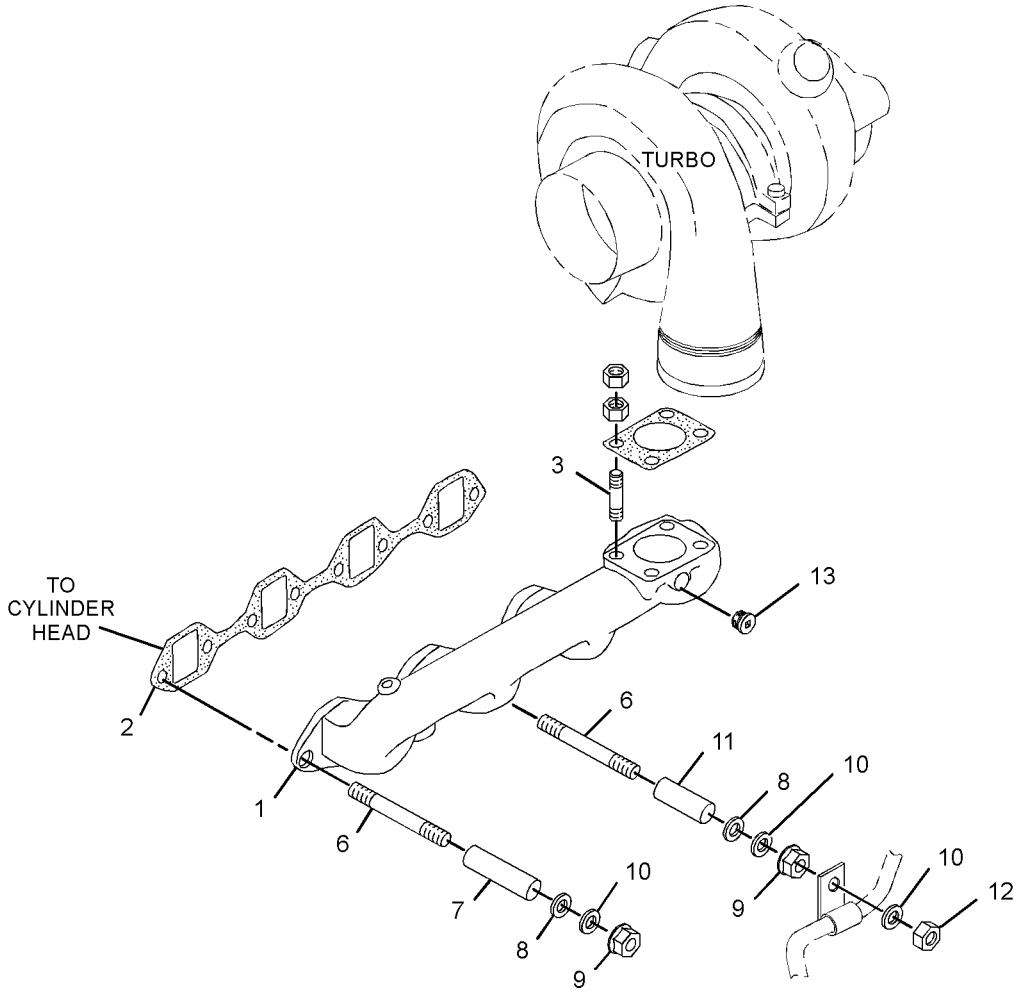

GRAPHIC #1 **<END>** g01459018

AIR INLET AND EXHAUST SYSTEM

296-4790 MANIFOLD GP-INLET

S/N: JKH1-UP
PART OF 279-7805 ENGINE AR
ALSO AN ATTACHMENT

SMCS-1058, 1090 **i03156081**

NOTE	REF NO	GRAPHIC REF	PART NUMBER	QTY	PART NAME 1 2 3 4 5 6 (PRODUCT LEVEL)	SEE PAGE
	1	1	**296-4714**	1	GASKET	
	2	1	**096-8490**	7	BOLT	
	3	1	**294-1700**	11	BOLT (M8X1.25X108.3-MM)	
	4	1	**5I-8021**	1	ELBOW AS	
		1	**5I-8023**	1	PLUG	
	5	1	**5I-7678**	1	GASKET	
	6	1	**303-6261**	4	BOLT	
	7	1	**310-9528**	1	MANIFOLD	
	8	1	**5I-7677**	1	GASKET	
	9	1	**305-4691**	1	HEATER (24-VOLT)	

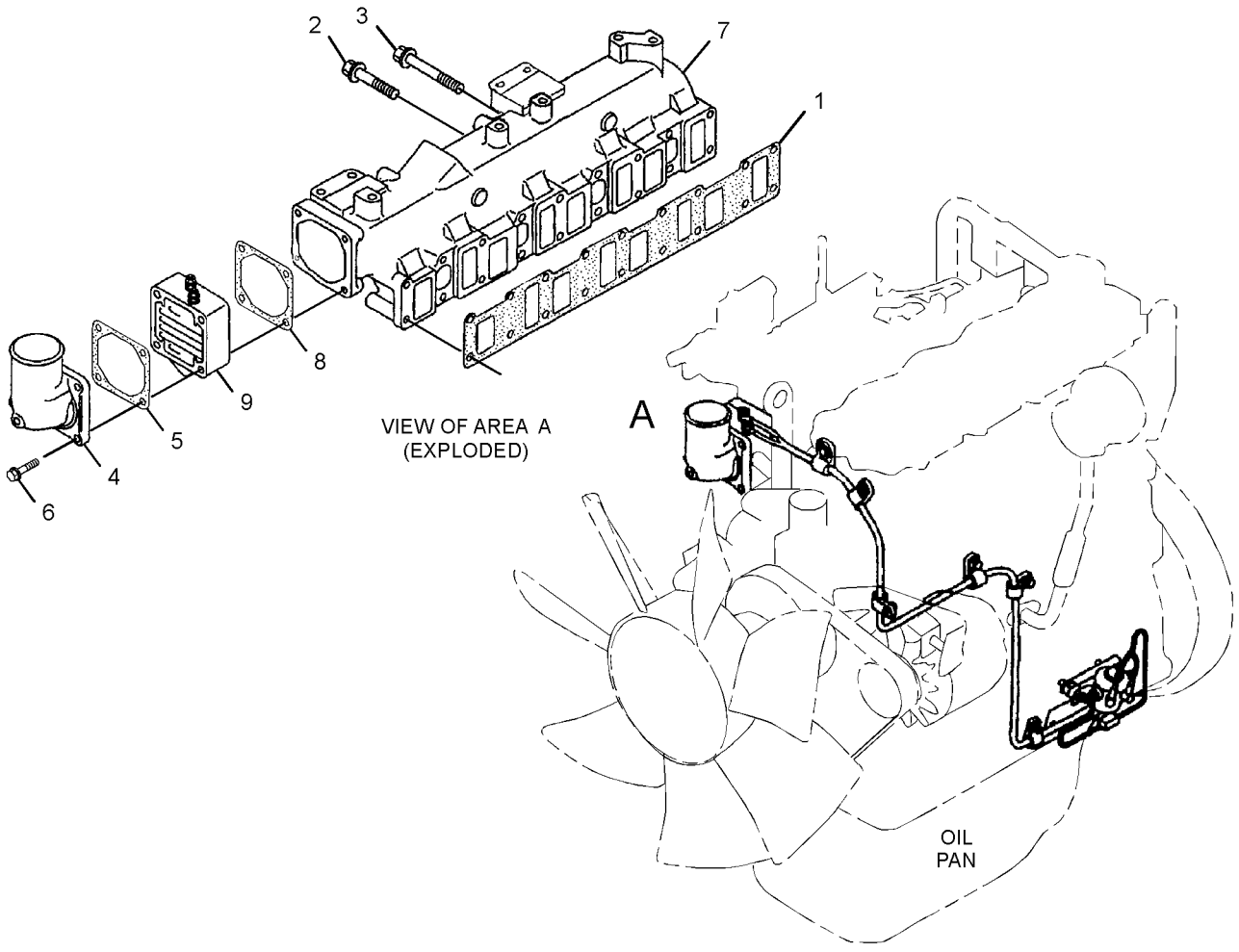

GRAPHIC #1 **<END>** g01414473

310-9551 MUFFLER GP

S/N: JKH1-UP
PART OF 279-7805 ENGINE AR
ALSO AN ATTACHMENT

SMCS-1062 **i02896392**

NOTE	REF NO	GRAPHIC REF	PART NUMBER	QTY	PART NAME 1 2 3 4 5 6 (PRODUCT LEVEL)	SEE PAGE
	1	1	**212-8491**	1	MUFFLER	
	2	1	**5I-7848**	2	U-BOLT	
	3	1	**196-8014**	1	BRACKET	
	4	1	**196-8012**	1	BRACKET	
	5	1	**5I-5597**	4	BOLT (M14X1.5X10-MM)	
M	6	1	**6V-8231**	8	NUT (M10X1.25-THD)	
	7	1	**196-8013**	1	PIPE	
	8	1	**5I-7937**	1	GASKET	
	9	1	**196-8015**	3	STUD	
	10	1	**5I-7633**	6	NUT (M10X1.25-THD)	
	11	1	**5I-7639**	1	CLAMP AS	
	12	1	**8T-4121**	8	WASHER-HARD (11X21X2.5-MM THK)	

M-METRIC PART

310-9551 **MUFFLER GP** *(contd.)* **i02896392**

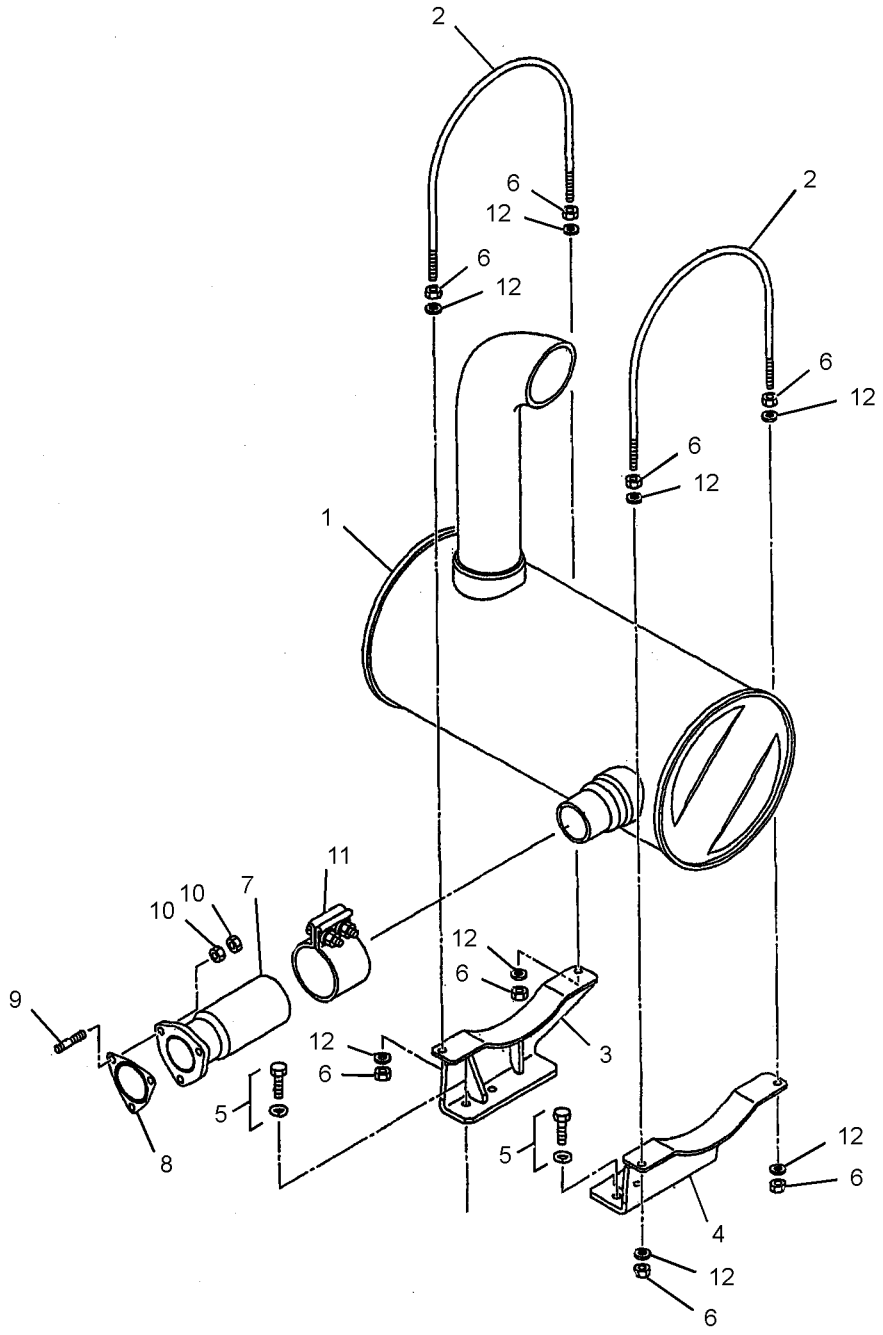

GRAPHIC #1 **<END>** g01442610

AIR INLET AND EXHAUST SYSTEM

283-8842 PRECLEANER AR

S/N: CLA1-UP
AN ATTACHMENT

SMCS-1055 **i02795943**

NOTE	PART NUMBER	QTY	PART NAME 1 2 3 4 5 6 (PRODUCT LEVEL)	SEE PAGE
Y	*279-7832*	1	AIR CLEANER GP	62
Y	*283-3672*	1	COVER GP-HOOD (PRECLEANER)	270

Y-SEPARATE ILLUSTRATION

<END>

AIR INLET AND EXHAUST SYSTEM

305-4922 TURBOCHARGER GP

S/N: JKH1-UP
PART OF 310-9620 TURBOCHARGER GP
ALSO AN ATTACHMENT

SMCS-1052, 1053 **i02896744**

NOTE	REF NO	GRAPHIC REF	PART NUMBER	QTY	PART NAME 1 2 3 4 5 6 (PRODUCT LEVEL)	SEE PAGE
	1	1	**305-4769**	1	CARTRIDGE AS	
	2	1	**5I-7941**	1	RING	
	3	1	**5I-8124**	1	SEAL	
	5	1	**305-4965**	1	COVER	
	6	1	**310-9539**	1	HOUSING	
	7	1	**5I-7942**	1	COUPLING AS	

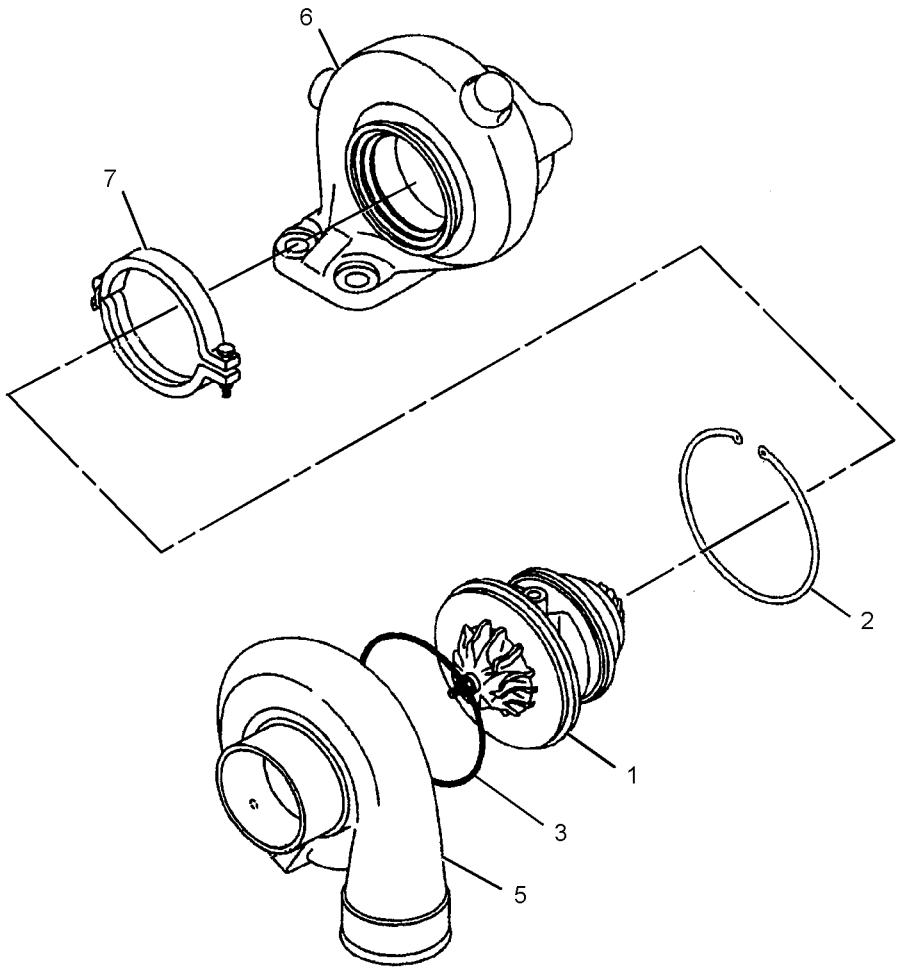

GRAPHIC #1 **<END>** g01442572

AIR INLET AND EXHAUST SYSTEM

310-9620 TURBOCHARGER GP

S/N: JKH1-UP
PART OF 279-7805 ENGINE AR
ALSO AN ATTACHMENT

SMCS-1052, 1053 **i02896385**

NOTE	REF NO	GRAPHIC REF	PART NUMBER	QTY	PART NAME 1 2 3 4 5 6 (PRODUCT LEVEL)	SEE PAGE
Y	1	1	**305-4922**	1	TURBOCHARGER GP	74
	2	1	**5I-7933**	1	GASKET	
	3	1	**5I-7633**	8	NUT (M10X1.25-THD)	

Y-SEPARATE ILLUSTRATION

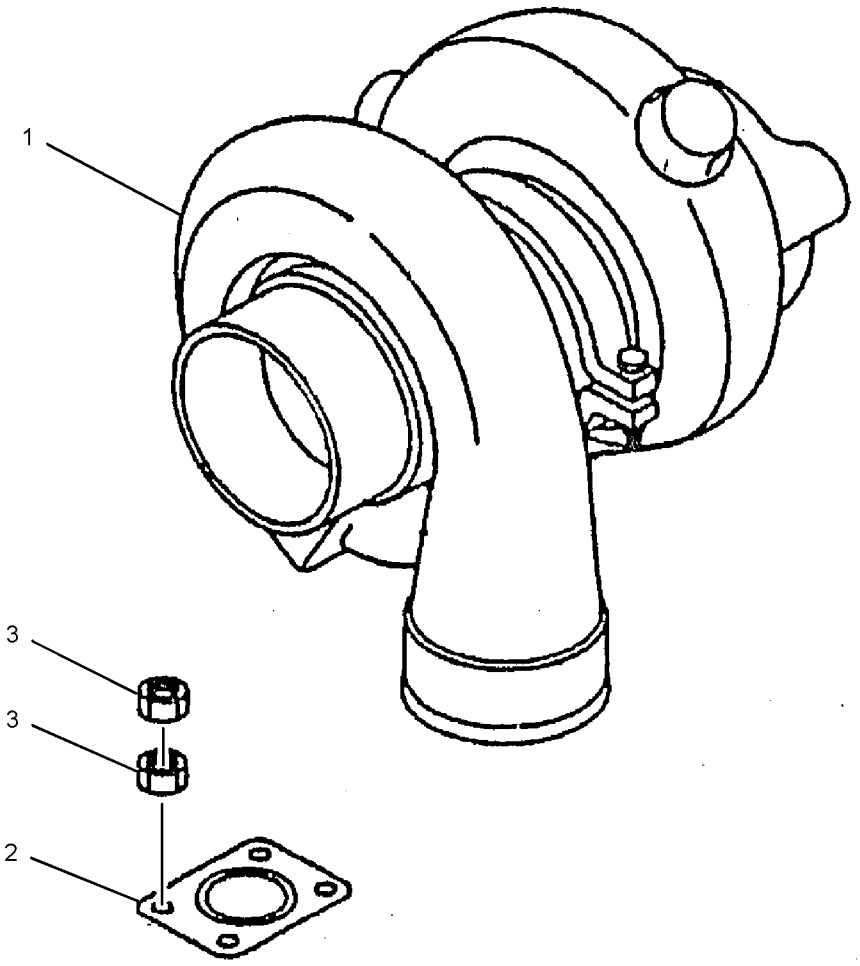

GRAPHIC #1 **<END>** g01442580

164-4858 CAP GP-FUEL FILLER–EXTREME SERVICE, LOCKABLE

S/N: CLA1-UP

PART OF 330-1389, 330-1390, 330-1393, 330-1394 TANK GP-FUEL

ALSO AN ATTACHMENT

SMCS-1273 **i02959244**

NOTE	REF NO	GRAPHIC REF	PART NUMBER	QTY	PART NAME 1 2 3 4 5 6 (PRODUCT LEVEL)	SEE PAGE
	1	1	**9X-8600**	1	SEAL-O-RING	
	2	1	**190-9775**	1	COVER AS-FILTER	

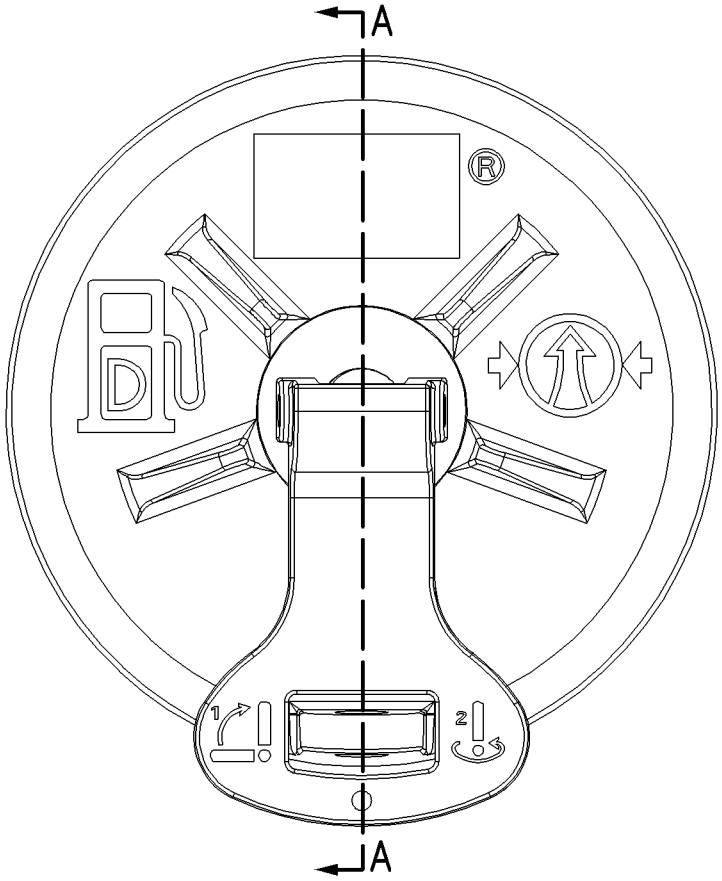

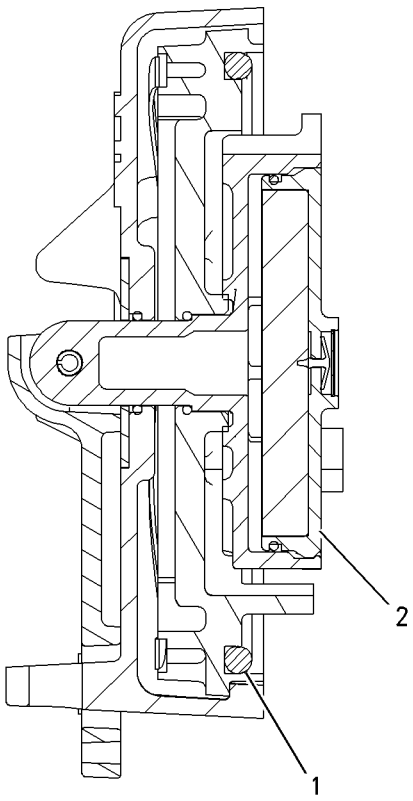

SECTION A-A

GRAPHIC #1 **<END>** g00849812

296-4794 FILTER GP-FUEL

S/N: JKH1-UP
PART OF 279-7805 ENGINE AR
ALSO AN ATTACHMENT

SMCS-1261 **i03013641**

NOTE	REF NO	GRAPHIC REF	PART NUMBER	QTY	PART NAME 1 2 3 4 5 6 (PRODUCT LEVEL)	SEE PAGE
	1	1,2	**099-4437**	19	GASKET	
	2	1,2	**099-5041**	8	BOLT (M14X1.5X27-MM)	
	3	2	**294-1811**	2	WASHER	
	4	1	**296-4749**	1	HOSE	
	5	1	**137-5541**	1	PUMP AS-FUEL PRIMING	
		1	**061-7539**	1	SEAL-O-RING	
		1	**229-3218**	2	VALVE AS	
	6	1	**294-1820**	1	GASKET (FUEL PRIMING PUMP)	
	7	1	**199-2241**	1	BOLT	
	8	1	**294-1821**	1	BOLT (M8X1.25X35.5-MM)	
	9	1	**294-1822**	1	BASE	
	10	1	**296-4750**	4	BOLT	
	11	1	**1R-0751**	2	FILTER (ADVANCED EFFICIENCY) (FUEL)	
	12	1	**305-4886**	1	HOSE	
	13	1	**296-4752**	1	BRACKET	
	14	1	**296-4753**	2	BOLT	
	15	1	**8T-4121**	2	WASHER-HARD (11X21X2.5-MM THK)	
	17	1	**294-1819**	1	HOSE	
	18	1	**296-4754**	1	TUBE	
	19	1	**190-5830**	1	TUBE	
	20	1	**094-9725**	2	PLUG	
	21	1	**310-9529**	1	BRACKET	
	22	1	**310-9530**	1	HOSE	
	23	1	**095-2038**	2	WASHER (7.8X13.5X2-MM THK)	
M	24	1	**213-9433**	2	BOLT (M10X1.5X45-MM)	
	25	2	**294-1838**	1	BRACKET	
	26	1	**294-1831**	3	CLAMP	
	27	1	**310-9531**	1	CLAMP	
	28	1	**297-7706**	2	BOLT (M6X1X64-MM)	
	29	1	**096-2500**	2	LOCKWASHER	
	30	1	**5I-5078**	2	NUT	
	33	2	**294-1809**	1	BOLT	
	34	2	**294-1844**	1	BOLT (M12X1.75X28-MM)	
	35	2	**294-1845**	1	BOLT (M12X1.25X38-MM)	
	37	2	**297-7660**	1	NUT	
	38	2	**5I-8058**	1	CONNECTOR	
	39	2	**297-7661**	1	CONNECTOR	
	40	2	**294-1810**	2	CONNECTOR	
M	41	2	**6V-5215**	2	BOLT (M8X1.25X16-MM)	
	43	2	**294-1837**	1	BRACKET	
	44	2	**305-4901**	1	SEAL-O-RING	
	45	2	**305-4902**	1	CONNECTOR	
	46	2	**305-4900**	1	PIPE	
	48	2	**125-2983**	1	FITTING	
	49	2	**294-1804**	3	SEAL-O-RING	

M-METRIC PART

296-4794 **FILTER GP-FUEL** *(contd.)* **i03013641**

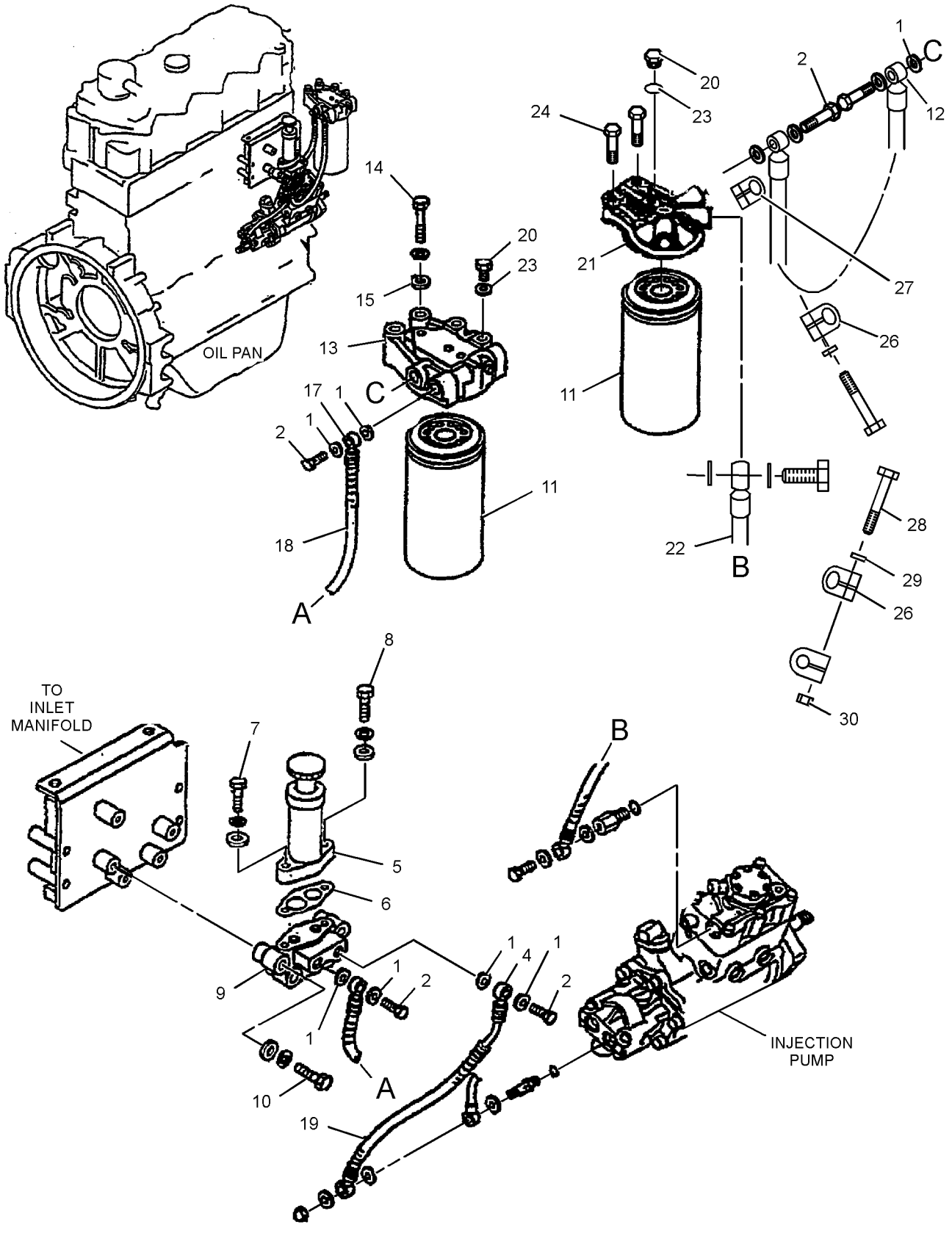

GRAPHIC #1 g01433207

296-4794 **FILTER GP-FUEL** *(contd.)* **i03013641**

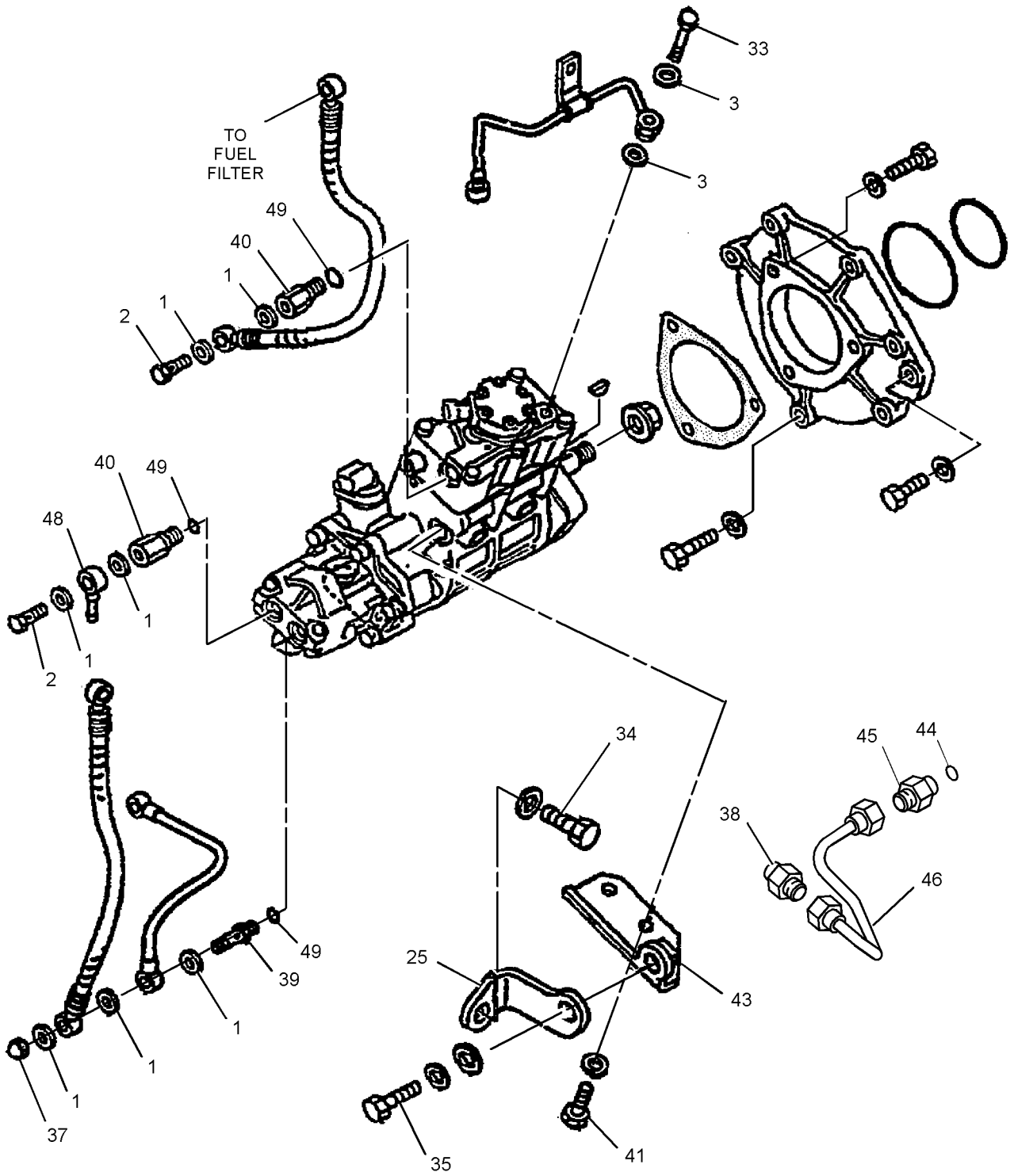

GRAPHIC #2 **<END>** g01433208

174-9570 FILTER GP-WATER SEP & FUEL

S/N: CLA1-UP

PART OF 283-3739 LINES GP-FUEL

SMCS-1261, 1263 **i03181950**

NOTE	REF NO	GRAPHIC REF	PART NUMBER	QTY	PART NAME 1 2 3 4 5 6 (PRODUCT LEVEL)	SEE PAGE
	1	1	**326-1644**	1	FILTER AS-WATER SEP & FUEL (PRIMARY)	
	1A	1	**220-8678**	1	SEAL-RING (FUEL, WATER SEPARATOR)	
	2	1	**270-5320**	1	BOWL AS (FUEL, WATER SEPARATOR)	

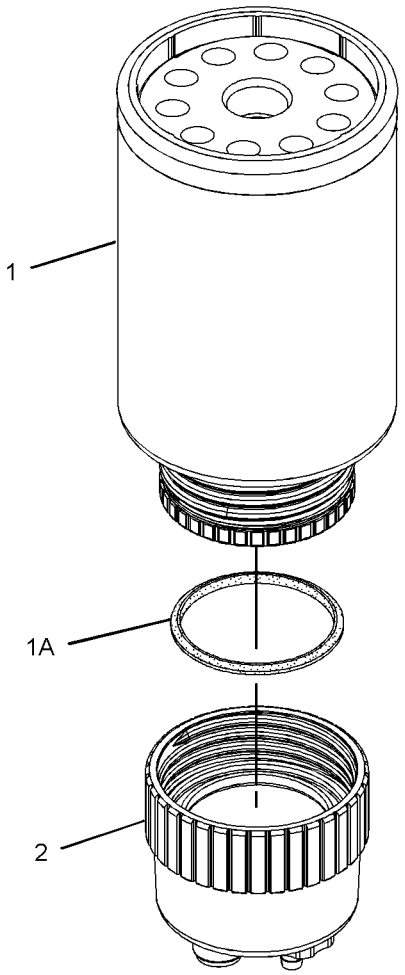

GRAPHIC #1

<END>

g01179858

310-9609 INJECTOR GP-FUEL

S/N: JKH1-UP
PART OF 279-7805 ENGINE AR
ALSO AN ATTACHMENT

SMCS-1251, 1254, 1290, 1713 **i02896386**

NOTE	REF NO	GRAPHIC REF	PART NUMBER	QTY	PART NAME 1 2 3 4 5 6 (PRODUCT LEVEL)	SEE PAGE
	1	1	**260-5656**	4	INJECTOR GP-FUEL	
	2	1	**294-1796**	4	WASHER-SPECIAL	
	3	1	**294-1800**	4	SUPPORT	
	4	1	**294-1803**	4	SEAL-O-RING	
	5	1	**1R-6573**	4	GASKET	
M	6	1	**294-1805**	4	BOLT (M8X1.25X43-MM)	

M-METRIC PART

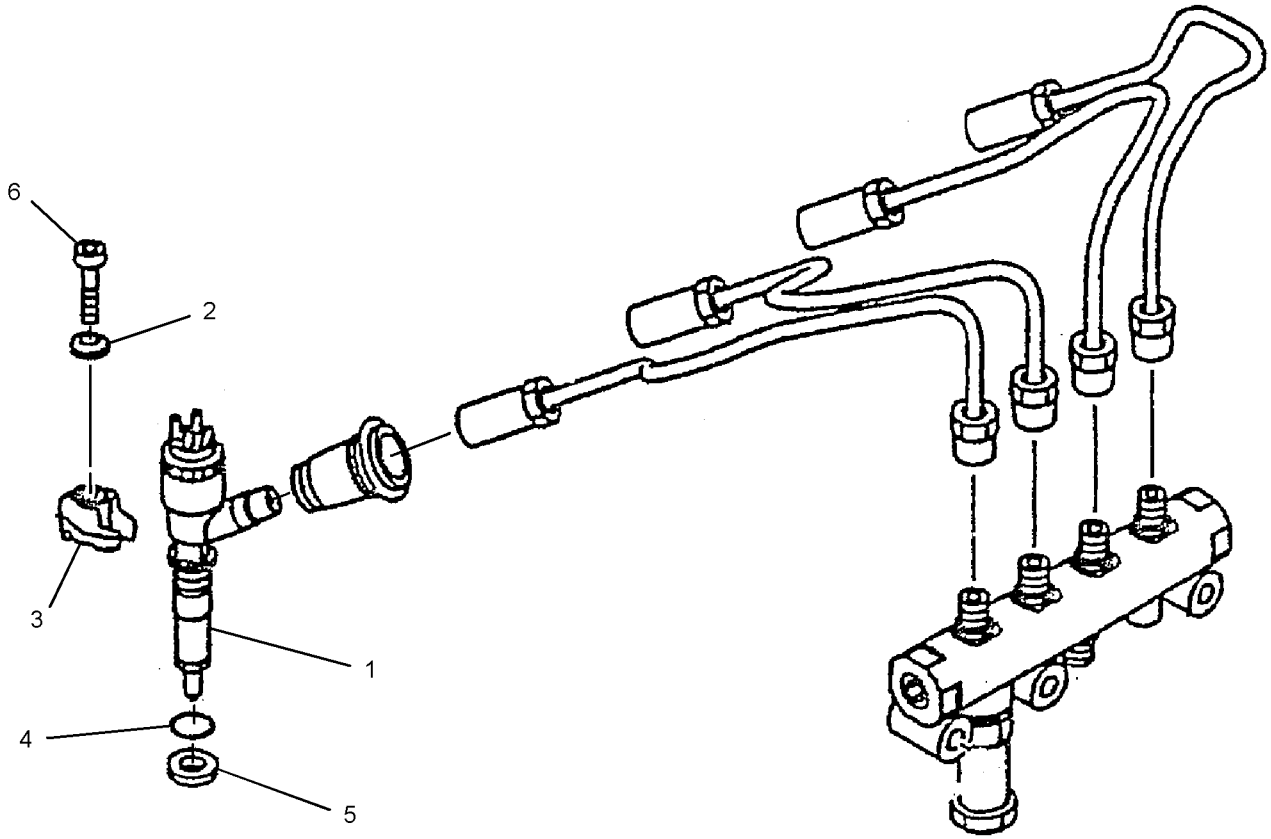

GRAPHIC #1 **<END>** g01442576

FUEL SYSTEM

283-3739 LINES GP-FUEL

S/N: CLA1-UP

PART OF 260-7231 CHASSIS AR

SMCS-1274 **i02794267**

NOTE	REF NO	GRAPHIC REF	PART NUMBER	QTY	PART NAME 1 2 3 4 5 6 (PRODUCT LEVEL)	SEE PAGE
	1	2	**1R-6072**	2	GROMMET	
	2	1	**4I-0379**	1	VALVE-MANUAL (DRAIN, FUEL TANK)	
	3	1	**5P-7175**	1	FITTING-STRAIGHT	
	4	1	**003-7764**	2	END-HOSE	
	5	1,2	**095-1386**	9	CLAMP-HOSE	
	6	2	**096-5863**	1	GROMMET	
M	7	1	**135-8575**	4	BOLT AS-LOCKING (M12X1.75X30-MM)	
	8	1	*150-3024*	1	ELBOW AS	
		1	**3J-1907**	1	SEAL-O-RING	
		1	**5P-4924**	1	ELBOW	
Y	9	1	*174-9570*	1	FILTER GP-WATER SEP & FUEL	80
	10	1	**177-9778**	1	BASE AS	
		1	**9S-4167**	1	STUD-HOLLOW (1-14X1.47-IN)	
	11	1	**283-3817**	1	SUPPORT AS	
	12	1	**283-3821**	1	HOSE	
Y	13	1	**298-3147**	1	VALVE GP-FUEL SHUTOFF	105
	14	2	**304-0041**	1	BRACKET AS	
	15	2	**307-7956**	1	HOSE AS	
	16	2	**307-7957**	1	HOSE AS	
	17	2	**307-7958**	1	HOSE AS	
	18	1	**2R-1498**	1	GROMMET	
	19	1	**3J-1907**	5	SEAL-O-RING	
	20	1,2	**5K-8451**	11	CLIP	
	21	2	**6D-4636**	2	CLIP	
	22	2	**6K-8178**	4	CLIP	
	23	1,2	**8T-4121**	31	WASHER-HARD (11X21X2.5-MM THK)	
M	24	1,2	**8T-4136**	2	BOLT (M10X1.5X25-MM)	
M	25	1,2	**8T-4137**	25	BOLT (M10X1.5X20-MM)	
M	26	1	**8T-4195**	4	BOLT (M10X1.5X30-MM)	
	27	1,2	**9M-8406**	8	CLIP	
	28	1	**9S-8004**	5	PLUG-O-RING	
E	29	1	**5P-1442**		HOSE (141-CM)	
	30	1	**133-5813**	2	BAND-MARKER (GRAY, P)	

E-ORDER BY THE CENTIMETER
M-METRIC PART
Y-SEPARATE ILLUSTRATION

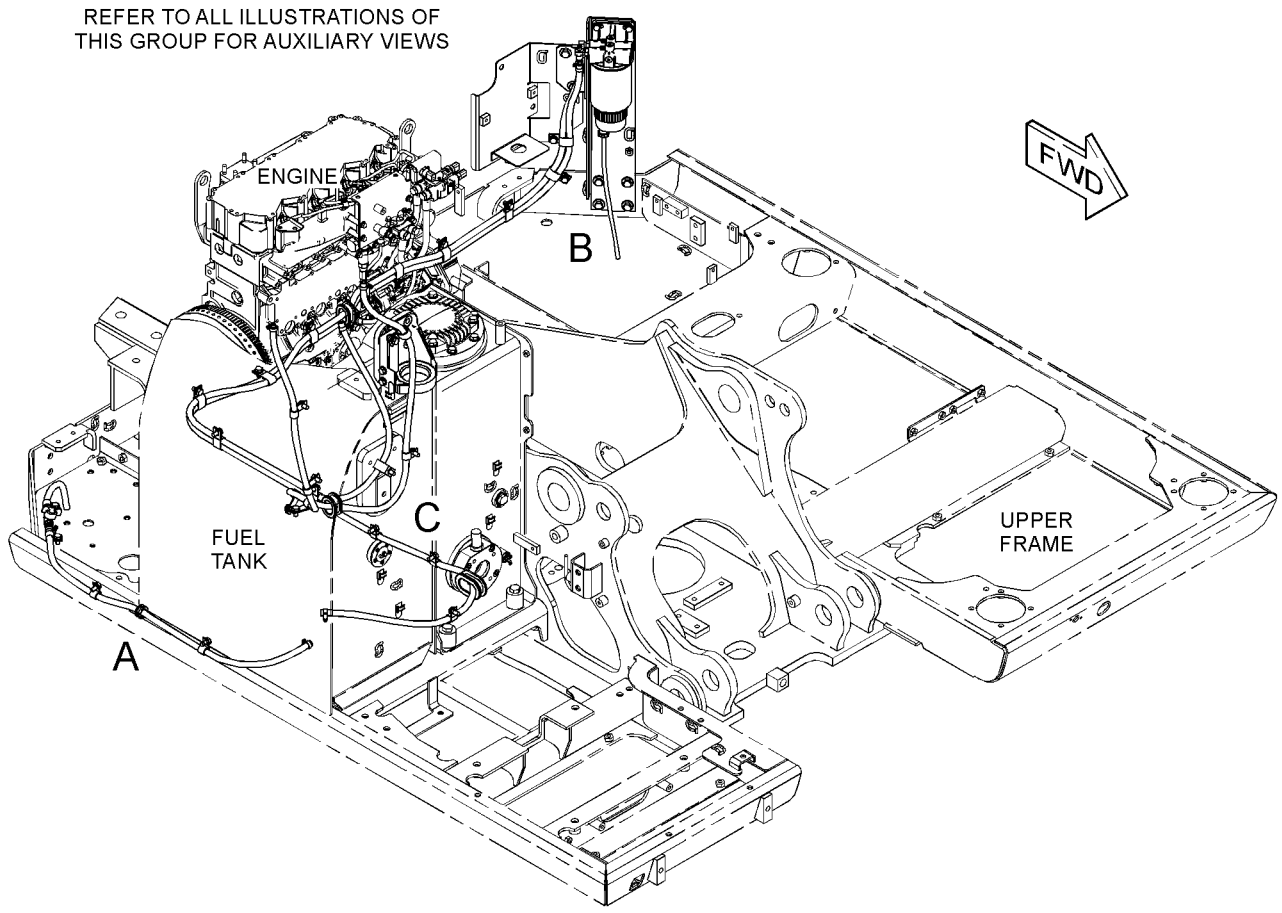

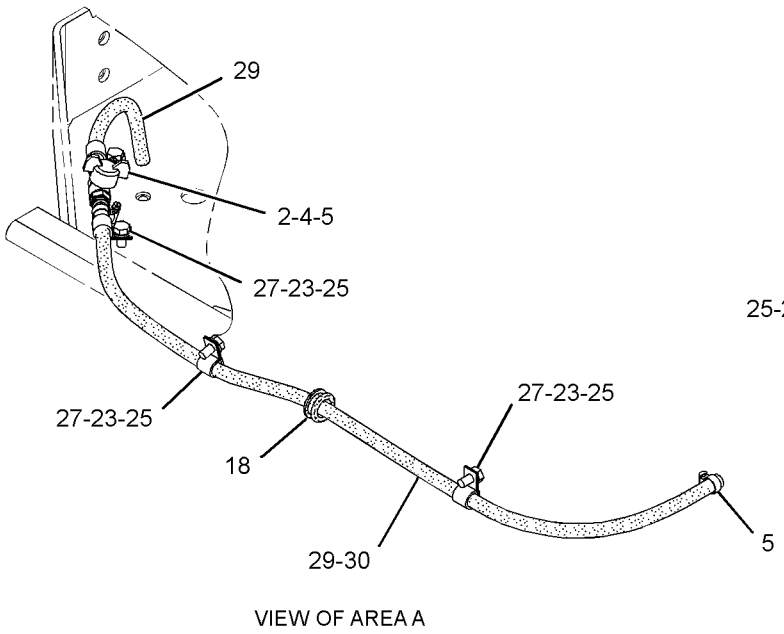

VIEW OF AREA A

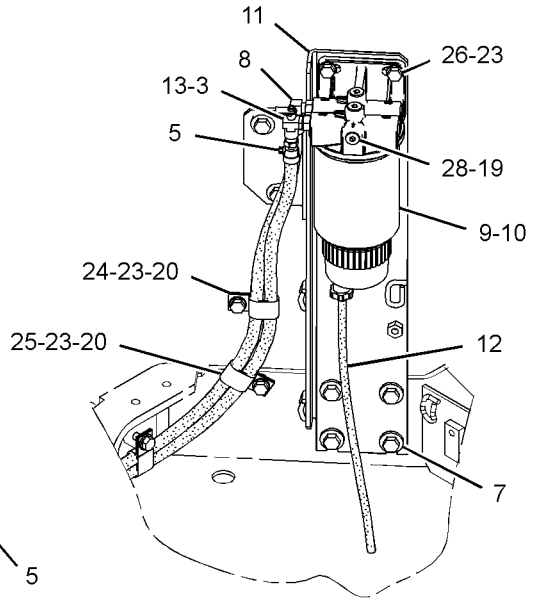

VIEW OF AREA B

GRAPHIC #1

g01424972

283-3739 **LINES GP-FUEL** *(contd.)* **i02794267**

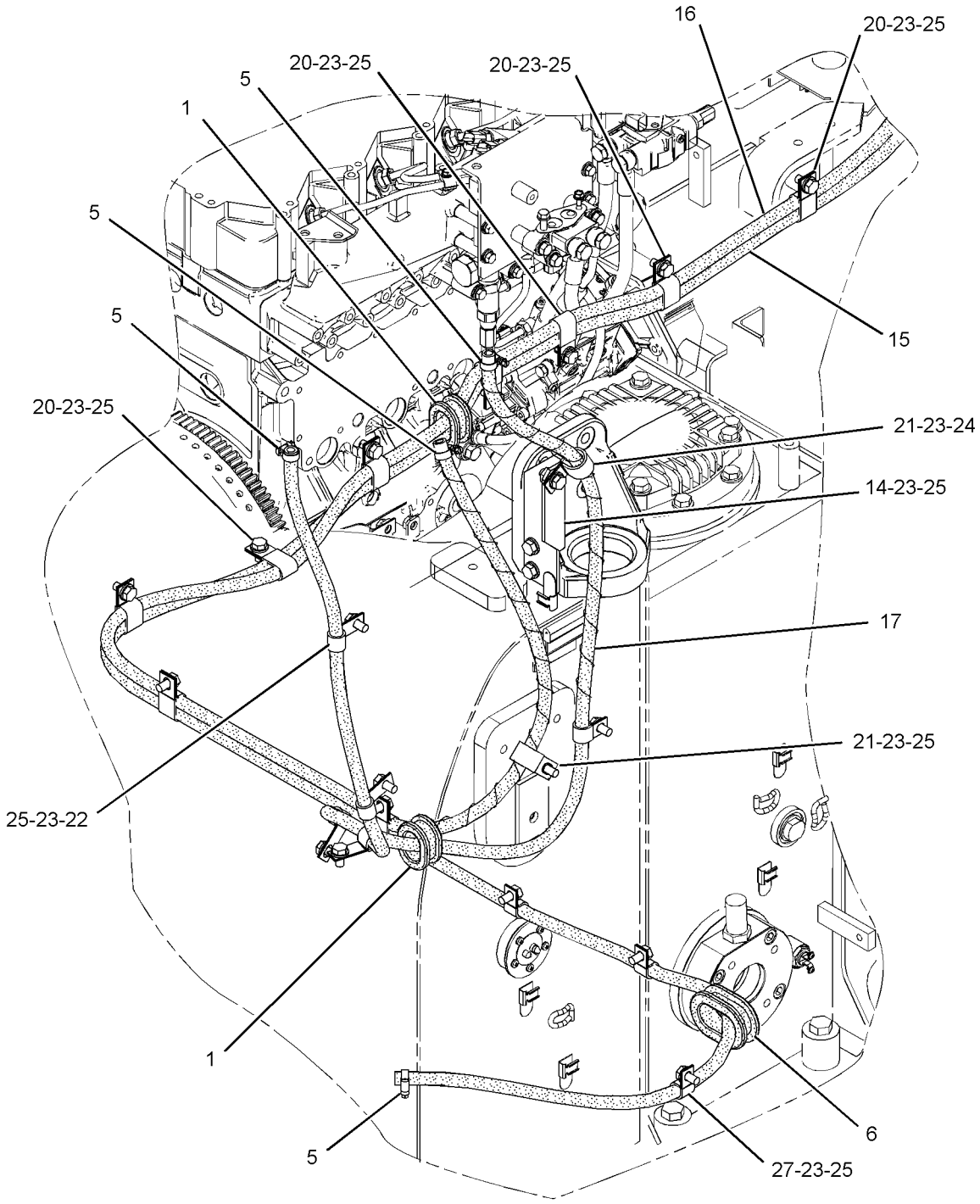

VIEW OF AREA C

GRAPHIC #2 **<END>** g01424970

296-4793 LINES GP-FUEL INJECTION

S/N: JKH1-UP
PART OF 279-7805 ENGINE AR
ALSO AN ATTACHMENT

SMCS-1252, 1254 **i02944413**

NOTE	REF NO	GRAPHIC REF	PART NUMBER	QTY	PART NAME 1 2 3 4 5 6 (PRODUCT LEVEL)	SEE PAGE
	1	1	**294-1788**	4	SEAL	
	2	1	**096-9260**	4	BOLT AS	
	3	1	**296-4740**	1	PIPE	
	4	1	**311-6631**	1	RAIL AS-FUEL	
	5	1	**296-4741**	1	PIPE	
	6	1	**296-4742**	1	PIPE	
	7	1	**296-4743**	1	PIPE	
	8	1	**296-4744**	1	PIPE	
	10	1	**305-4772**	1	PIPE	
	11	1	**297-7657**	1	HOSE	
	12	1	**297-7658**	1	BLOCK	
	14	1	**294-1802**	2	CLAMP	
	16	1	**095-2039**	8	WASHER-SPECIAL	
	18	1	**296-4812**	4	BOLT	
	20	1	**195-8256**	5	BOLT (M8X1.25X45-MM)	
M	21	1	**5C-2890**	2	NUT (M6X1-THD)	
	22	1	**9X-8256**	2	WASHER (6.6X12X2-MM THK)	
	23	1	**099-4437**	4	GASKET	
	24	1	**099-5041**	3	BOLT (M14X1.5X27-MM)	
	25	1	**294-1808**	2	BOLT AS (M6X1X29-MM)	
	26	1	**294-1812**	2	WASHER	
	27	1	**310-9537**	1	VALVE AS	
	28	1	**296-4747**	1	PIPE	
	29	1	**296-4748**	1	BRACKET	

M-METRIC PART

296-4793 **LINES GP-FUEL INJECTION** *(contd.)* **i02944413**

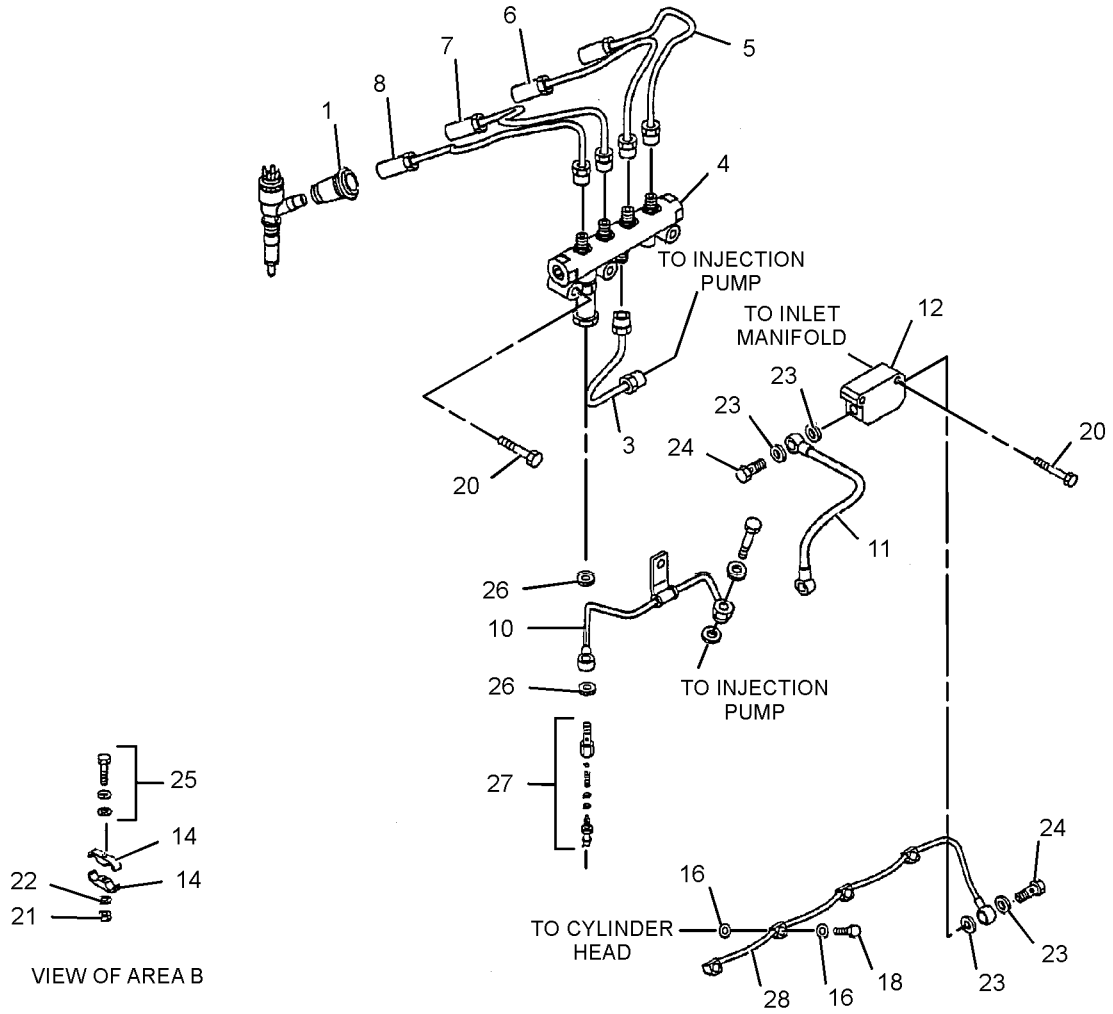

GRAPHIC #1 **<END>** g01414737

305-4680 PUMP & MTG GP-FUEL TRANSFER

S/N: JKH1-UP
PART OF 279-7805 ENGINE AR
ALSO AN ATTACHMENT

SMCS-1256 **i02879720**

NOTE	REF NO	GRAPHIC REF	PART NUMBER	QTY	PART NAME 1 2 3 4 5 6 (PRODUCT LEVEL)	SEE PAGE
R	1	1	**295-9127**	1	PUMP GP-FUEL INJECTION (INCLUDES TRANSFER PUMP)	
	1A	1	**238-0120**	1	SENSOR GP-SPEED (FUEL PUMP)	
	1B	1	**117-1385**	1	SEAL-O-RING	
M	1C	1	**5A-3604**	5	BOLT-SOCKET HEAD (M8X1.25X25-MM)	
	1D	1	**292-3751**	1	PUMP GP-FUEL TRANSFER	
M	1E	1	**8T-4200**	1	BOLT (M8X1.25X16-MM)	
	1F	1	**247-6019**	1	SEAL	
	2	1	**294-1834**	1	NUT	
	3	1	**294-1836**	1	KEY-WOODRUFF	
	4	1	**294-1839**	1	FLANGE	
	5	1	**294-1841**	1	GASKET	
	6	1	**294-1842**	1	SEAL-O-RING	
	7	1	**095-8799**	4	BOLT (M8X1.25X30.5-MM)	
	8	1	**294-1843**	1	BOLT (M10X1.5X47-MM)	
	9	1	**294-1846**	1	SEAL-O-RING	

M-METRIC PART
R-REMFG PART MAY BE AVAILABLE

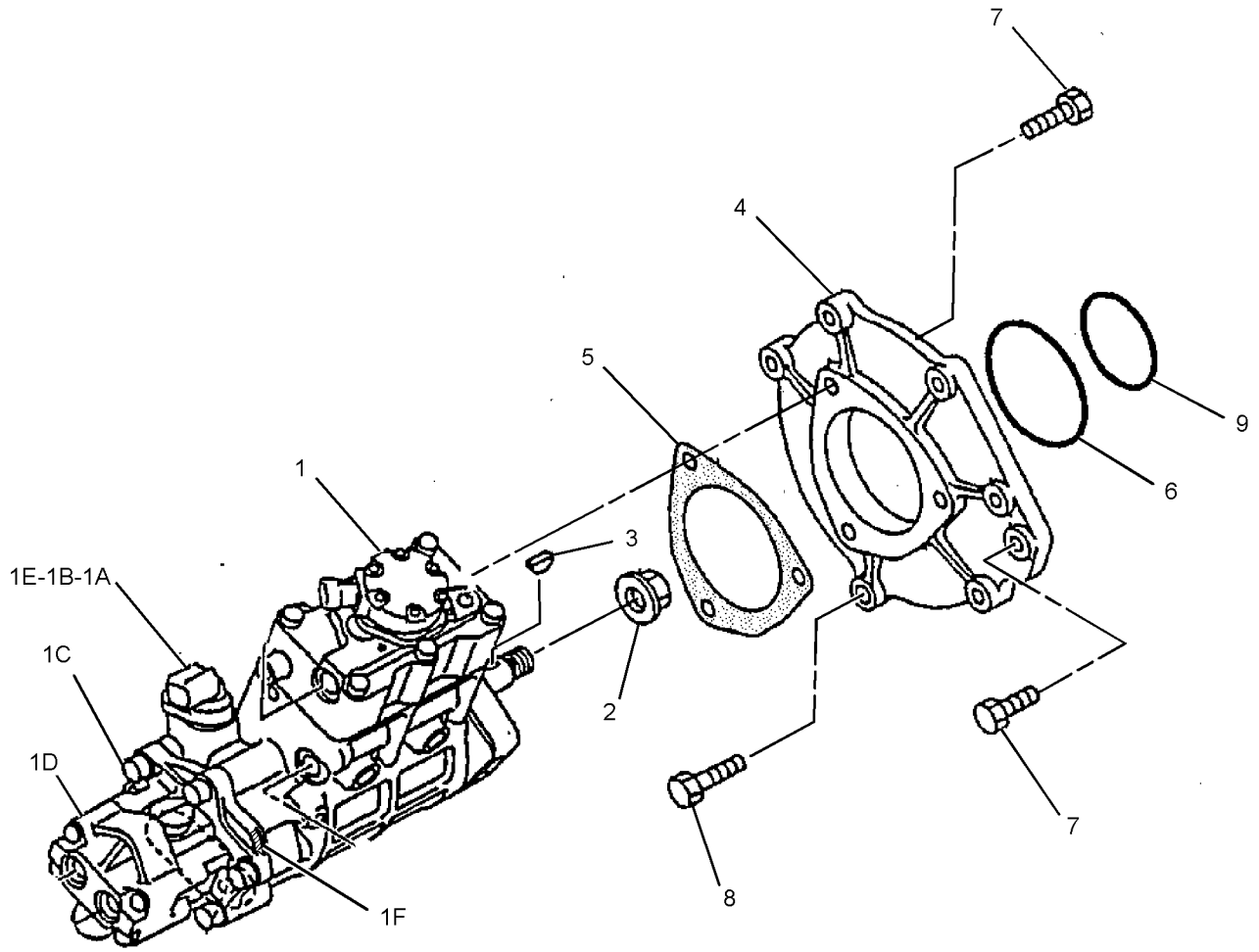

GRAPHIC #1 **<END>** g01433257

FUEL SYSTEM

283-8797 PUMP AR-FUEL TRANSFER

S/N: CLA1-UP

AN ATTACHMENT

SMCS-1256 **i03162060**

NOTE	PART NUMBER	QTY	PART NAME 1 2 3 4 5 6 (PRODUCT LEVEL)	SEE PAGE
Y	*301-2573*	1	FILM GP (FUEL TRANSFER PUMP)	944
Y	*283-8788*	1	PUMP GP-FUEL TRANSFER	90
Y	*283-3696*	1	SUPPORT GP-HOOD	314
Y	*283-3677*	1	TANK & MTG GP-FUEL	95
Y	*283-2620*	1	WIRING GP-FUEL SYSTEM (REFUELING)	225

Y-SEPARATE ILLUSTRATION

<END>

301-2641 PUMP AR-REFUELING

S/N: CLA110-UP

CANNOT BE USED WITH 283-8786—PAGE 817, 283-8837—PAGE 817

AN ATTACHMENT

SMCS-1295 **i03035678**

NOTE	PART NUMBER	QTY	PART NAME 1 2 3 4 5 6 (PRODUCT LEVEL)	SEE PAGE
Y	*301-2573*	1	FILM GP (FUEL TRANSFER PUMP)	944
Y	*301-2642*	1	PUMP GP-REFUELING	92
Y	*283-3696*	1	SUPPORT GP-HOOD	314
Y	*283-3677*	1	TANK & MTG GP-FUEL	95
Y	*283-2620*	1	WIRING GP-FUEL SYSTEM (REFUELING)	225

Y-SEPARATE ILLUSTRATION

<END>

271-2158 PUMP GP-FUEL TRANSFER

S/N: CLA1-UP

PART OF 283-8788 PUMP GP-FUEL TRANSFER

AN ATTACHMENT

SMCS-1256 **i02767955**

NOTE	REF NO	GRAPHIC REF	PART NUMBER	QTY	PART NAME 1 2 3 4 5 6 (PRODUCT LEVEL)	SEE PAGE
	1	1	**9W-0852**	3	PIN-CONNECTOR (14-GA)	
	2	1	**243-4506**	1	RECEPTACLE AS-CONNECTOR (3-PIN)	
	3	1	**272-0709**	1	PUMP GP-FUEL	
	4	1	**272-0710**	1	CONTROL-REFUELING PUMP	
	5	1	**7Y-3963**	2	TERMINAL (RECEPTACLE)	
	6	1	**7Y-3962**	2	TERMINAL (CONNECTOR)	
	7	1	**7Y-3964**	2	TUBE (CONNECTOR TERMINAL)	
	8	1	**7Y-3965**	2	TUBE (RECEPTACLE TERMINAL)	
E	9	1	**125-7876**		TUBE-HEAT SHRINK (17.78-MM DIA) (7-CM)	

E-ORDER BY THE CENTIMETER

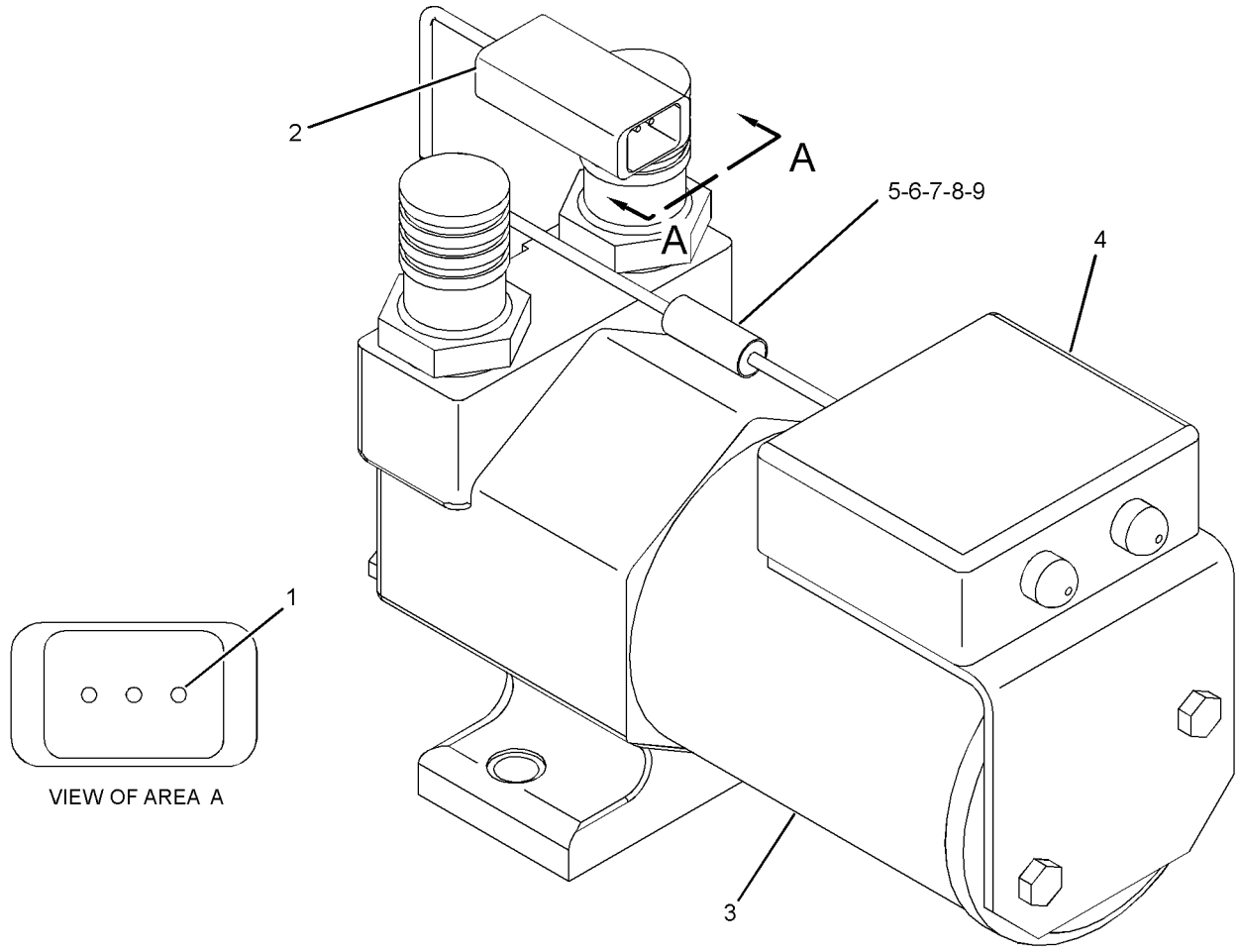

GRAPHIC #1 **<END>** g01364000

FUEL SYSTEM

283-8788 PUMP GP-FUEL TRANSFER

S/N: CLA1-UP

PART OF 283-8797 PUMP AR-FUEL TRANSFER

AN ATTACHMENT

SMCS-1256 **i02795991**

NOTE	REF NO	GRAPHIC REF	PART NUMBER	QTY	PART NAME 1 2 3 4 5 6 (PRODUCT LEVEL)	SEE PAGE
Y	1	1	**5C-6108**	1	SWITCH GP-REFUELING (FUEL TANK SHUTOFF)	180
	2	1	**7W-1890**	1	ELBOW	
	3	1	**9M-7958**	4	CLAMP-HOSE	
	4	1	**122-4021**	1	COVER	
M	5	1	**135-8573**	4	BOLT AS (M12X1.75X25-MM)	
	6	1	**190-5283**	1	VALVE AS (FOOT)	
Y	7	1	**271-2158**	1	PUMP GP-FUEL TRANSFER	89
	8	1	**283-8856**	1	SHEET AS	
	9	1	**283-8860**	1	SUPPORT AS	
	10	1	**283-8862**	1	GUARD	
Y	11	1	*283-8863*	1	BOX GP-FUEL TRANSFER	248
	12	1	**283-8882**	1	SUPPORT AS	
	13	1	**5N-2840**	1	CLIP	
	14	1	**5P-1076**	2	WASHER-HARD (13.5X30X4-MM THK)	
	15	1	**8T-4121**	10	WASHER-HARD (11X21X2.5-MM THK)	
M	16	1	**8T-4137**	4	BOLT (M10X1.5X20-MM)	
M	17	1	**8T-4191**	4	BOLT (M10X1.5X16-MM)	
M	18	1	**8T-4192**	3	BOLT (M12X1.75X25-MM)	
M	19	1	**8T-4196**	2	BOLT (M10X1.5X35-MM)	
	20	1	**8T-4223**	1	WASHER-HARD (13.5X25.5X3-MM THK)	
D	21	1	**234-3344**		HOSE (323-CN)	
D	21A	1	**234-3344**		HOSE (87-CM)	

D-ORDER BY THE METER
M-METRIC PART
Y-SEPARATE ILLUSTRATION

283-8788 **PUMP GP-FUEL TRANSFER** *(contd.)* **i02795991**

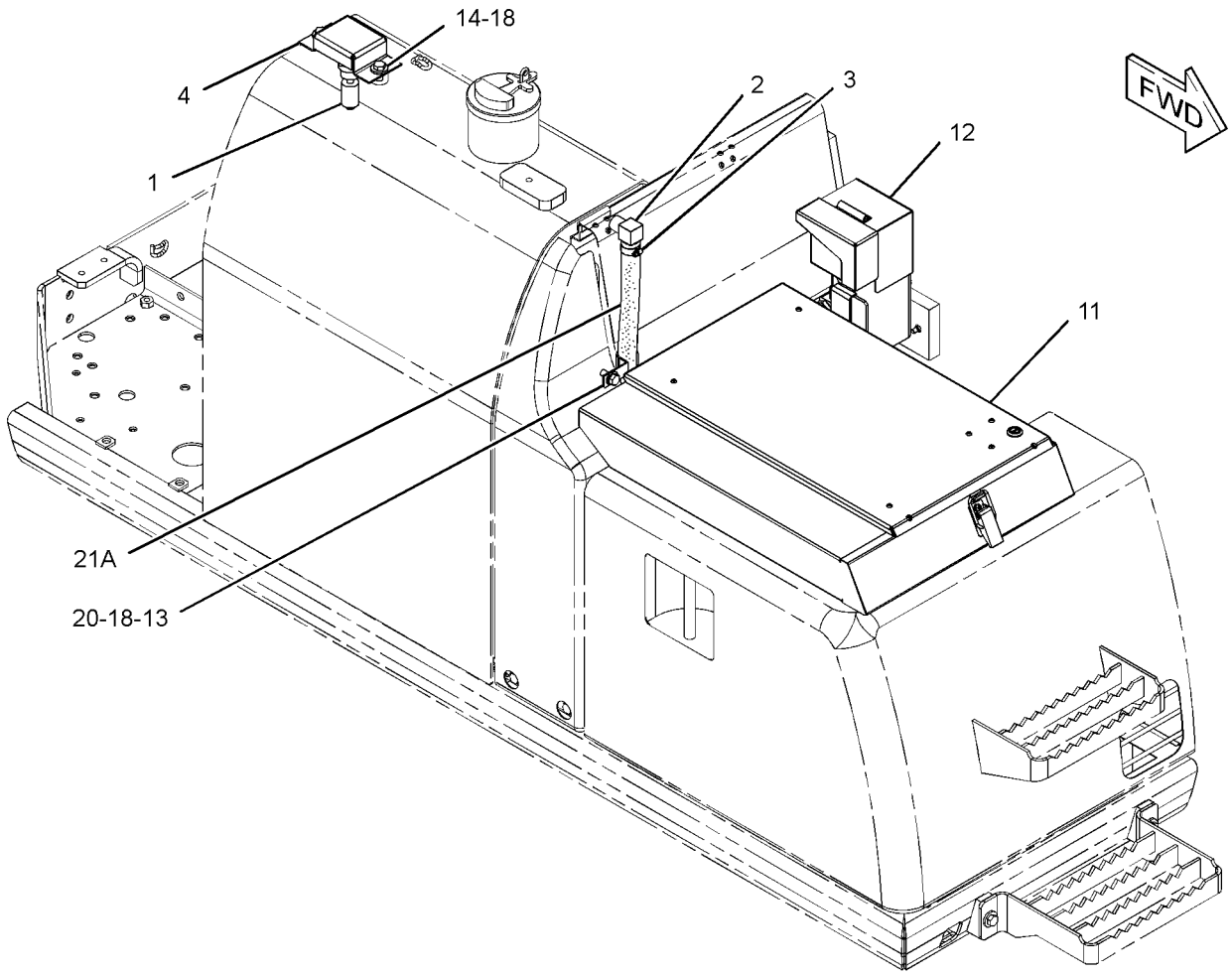

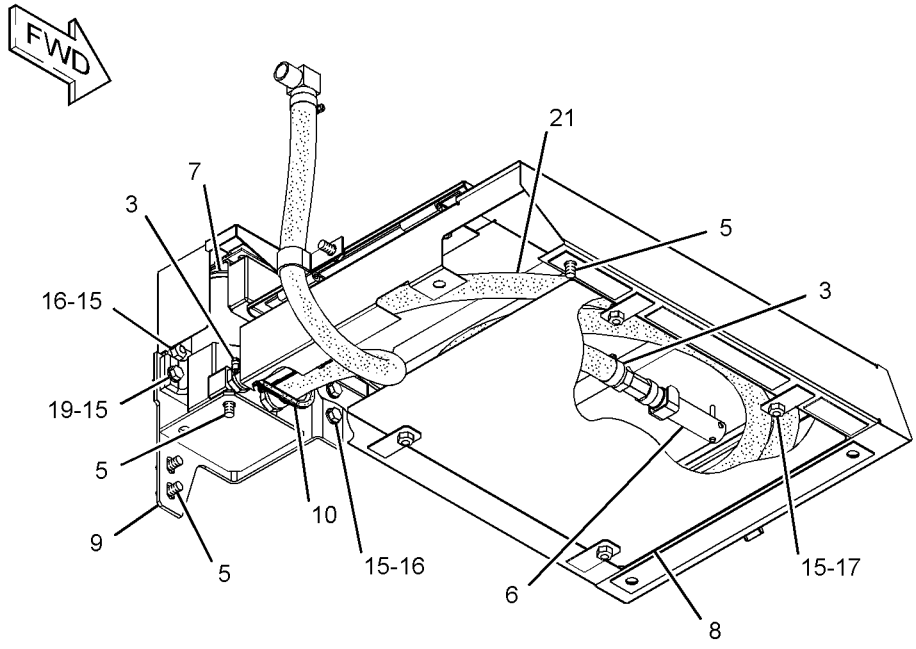

GRAPHIC #1 **<END>** g01400399

FUEL SYSTEM

301-2642 PUMP GP-REFUELING

S/N: CLA110-UP
PART OF 301-2641 PUMP AR-REFUELING
AN ATTACHMENT

SMCS-1295 **i02986528**

NOTE	REF NO	GRAPHIC REF	PART NUMBER	QTY	PART NAME 1 2 3 4 5 6 (PRODUCT LEVEL)	SEE PAGE
Y	1	1	**5C-6108**	1	SWITCH GP-REFUELING (FUEL TANK SHUTOFF)	180
	2	1	**7W-1890**	1	ELBOW	
	3	1	**9M-7958**	4	CLAMP-HOSE	
	4	1	**122-4021**	1	COVER	
M	5	1	*135-8573*	14	BOLT AS (M12X1.75X25-MM)	
		1	**5P-1076**	1	WASHER-HARD (13.5X30X4-MM THK)	
M		1	**8T-4192**	1	BOLT (M12X1.75X25-MM)	
	6	1	**170-3016**	4	SPACER (19X32X2-MM THK)	
	7	1	**190-5283**	1	VALVE AS (FOOT)	
D	8	1	**234-3344**		HOSE (4.4-M)	
D	8A	1	**234-3344**		HOSE (0.3-M)	
	9	1	**301-2477**	1	CONTROL GP-REFUELING PUMP	
		1	**272-0710**	1	CONTROL-REFUELING PUMP	
	10	1	**301-2478**	1	PUMP GP-FUEL TRANSFER	
		1	**272-0709**	1	PUMP GP-FUEL	
	11	1	**301-2524**	2	CONNECTOR-HOSE	
	12	1	**301-2527**	2	SEAL-WASHER	
Y	13	1	*301-2643*	1	COVER GP-PUMP	351
Y	14	1	*301-2646*	1	BOX GP-FUEL TRANSFER	249
	15	1	**304-0078**	1	COVER AS	
		1	**5P-9205**	1	SEAL	
M	16	1	**5C-9553**	2	BOLT (M6X1X16-MM)	
	17	1	**8T-4121**	2	WASHER-HARD (11X21X2.5-MM THK)	
M	18	1	**8T-4195**	2	BOLT (M10X1.5X30-MM)	
	19	1	**9X-8256**	2	WASHER (6.6X12X2-MM THK)	

D-ORDER BY THE METER
M-METRIC PART
Y-SEPARATE ILLUSTRATION

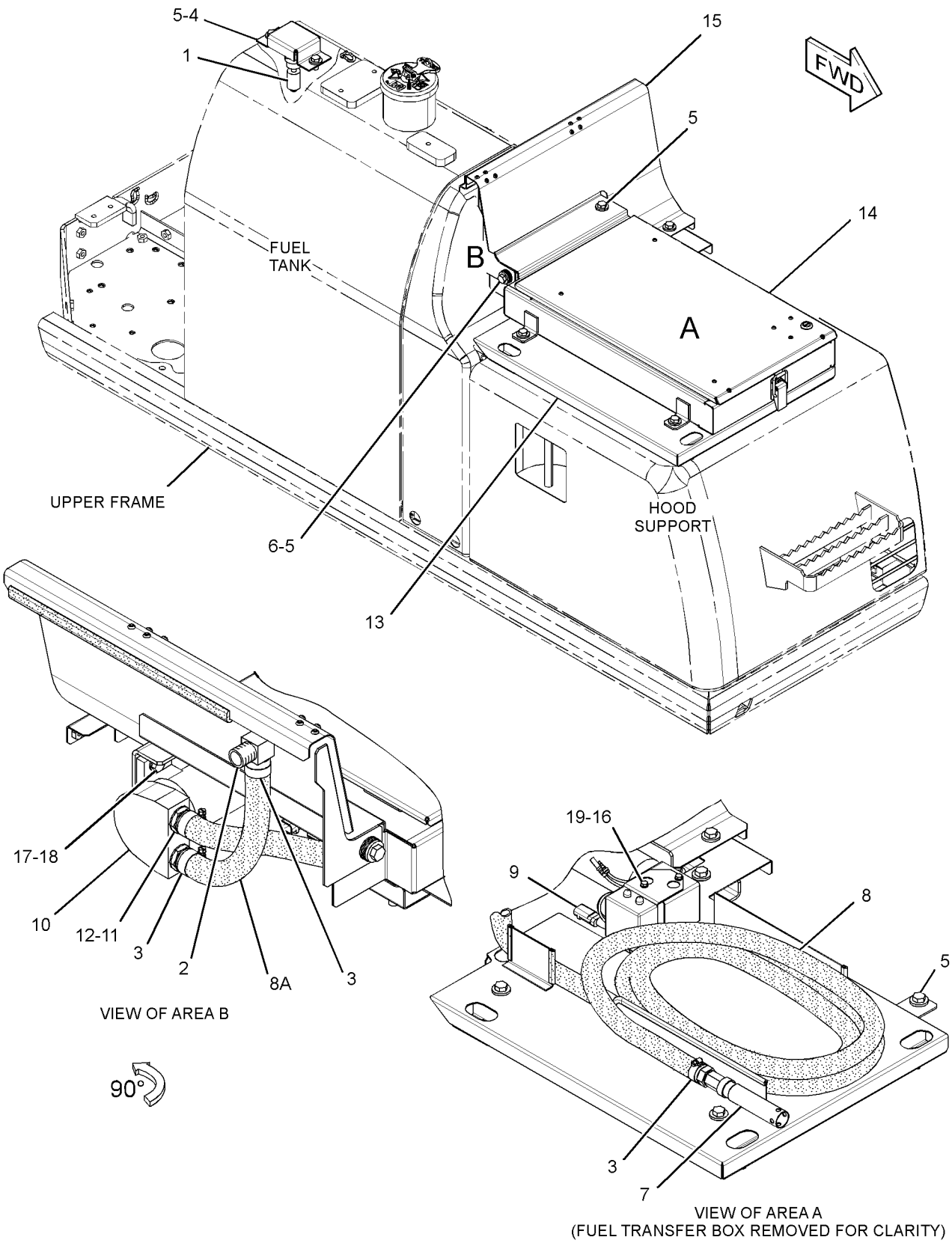

GRAPHIC #1 **<END>** g01575973

FUEL SYSTEM

283-3675 TANK & MTG GP-FUEL

S/N: CLA1-UP

PART OF 260-7231 CHASSIS AR

SMCS-1273 **i02794275**

NOTE	REF NO	GRAPHIC REF	PART NUMBER	QTY	PART NAME 1 2 3 4 5 6 (PRODUCT LEVEL)	SEE PAGE
	1	1	**246-2641**	1	PADLOCK GP	
		1	**5P-8500**	1	KEY	
Y	2	1	**283-3676**	1	TANK GP-FUEL	96
	3	1	**085-9310**	4	SPACER (16.6X32X26-MM THK)	
M	4	1	**8T-4140**	4	BOLT (M16X2X60-MM)	

M-METRIC PART
Y-SEPARATE ILLUSTRATION

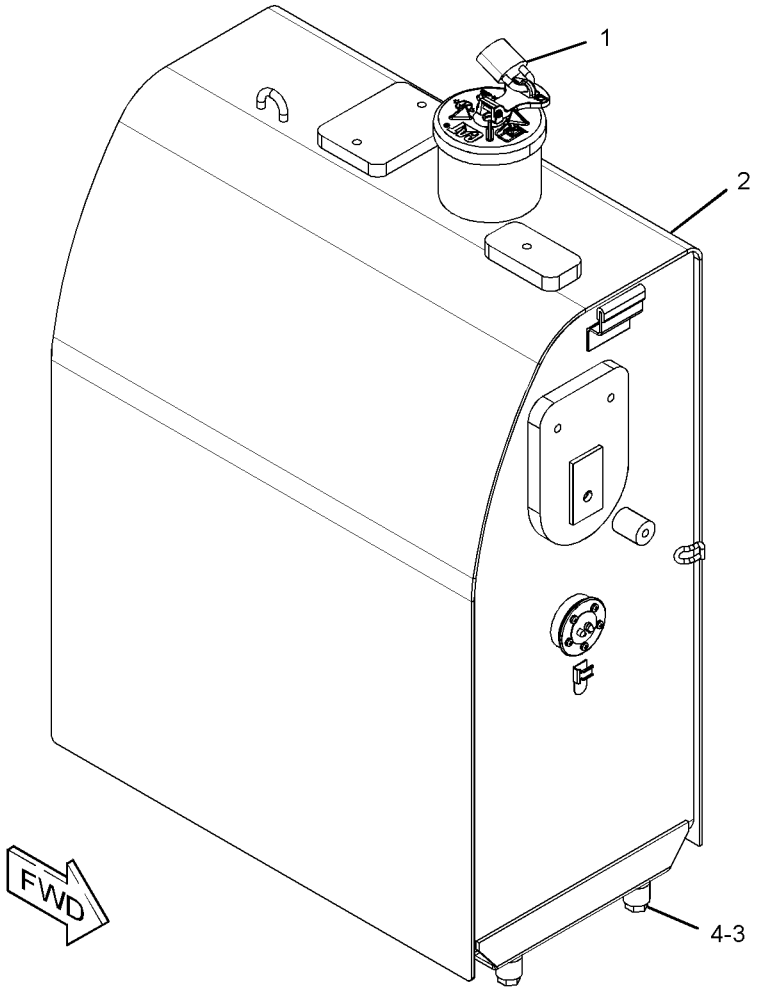

GRAPHIC #1 **<END>** g01415216

283-3677 TANK & MTG GP-FUEL

S/N: CLA1-UP

PART OF 283-8797 PUMP AR-FUEL TRANSFER, 301-2641 PUMP AR-REFUELING AN ATTACHMENT

SMCS-1273 **i02795986**

NOTE	REF NO	GRAPHIC REF	PART NUMBER	QTY	PART NAME 1 2 3 4 5 6 (PRODUCT LEVEL)	SEE PAGE
Y	1	1	**283-3678**	1	TANK GP-FUEL	96

Y-SEPARATE ILLUSTRATION

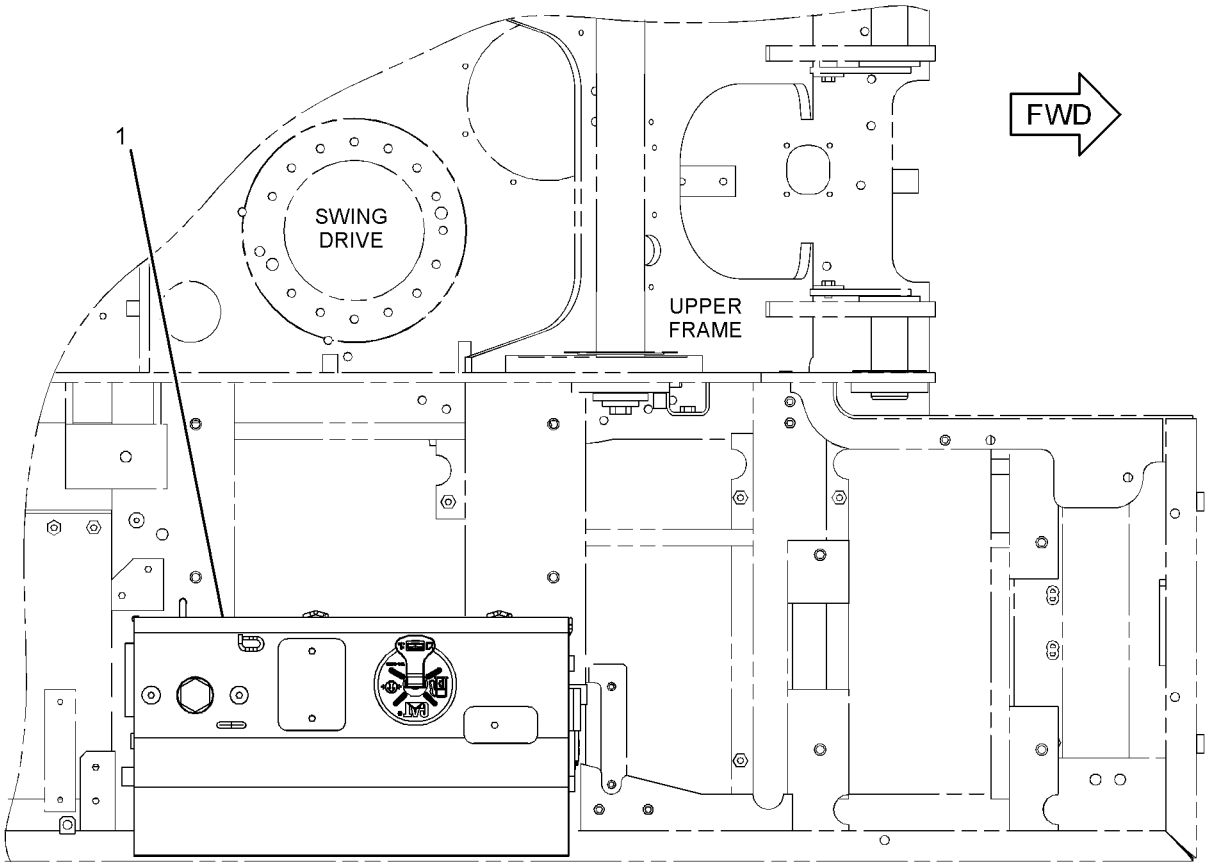

TOP VIEW

GRAPHIC #1 **<END>** g01400181

283-3676 TANK GP-FUEL

S/N: CLA1-UP
210-L (55.5-US GAL)
PART OF 283-3675 TANK & MTG GP-FUEL

SMCS-1273 **i03161586**

NOTE	PART NUMBER	QTY	PART NAME 1 2 3 4 5 6 (PRODUCT LEVEL)	SEE PAGE
Y	*330-1389*	1	TANK GP-FUEL	97
			—OR—	
Y	*330-1390*	1	TANK GP-FUEL	99

Y-SEPARATE ILLUSTRATION

<END>

283-3678 TANK GP-FUEL

S/N: CLA1-UP
210-L (55.47-US GAL)
PART OF 283-3677 TANK & MTG GP-FUEL
AN ATTACHMENT

SMCS-1273 **i03161585**

NOTE	PART NUMBER	QTY	PART NAME 1 2 3 4 5 6 (PRODUCT LEVEL)	SEE PAGE
Y	*330-1393*	1	TANK GP-FUEL	101
			—OR—	
Y	*330-1394*	1	TANK GP-FUEL	103

Y-SEPARATE ILLUSTRATION

<END>

330-1389 TANK GP-FUEL

S/N: CLA1-UP
210-L (55.5-US GAL)
PART OF 283-3676 TANK GP-FUEL

SMCS-1273 **i03159042**

NOTE	REF NO	GRAPHIC REF	PART NUMBER	QTY	PART NAME 1 2 3 4 5 6 (PRODUCT LEVEL)	SEE PAGE
	1	1	**4I-0378**	1	GASKET-RUBBER	
D	2	1	**5P-9205**		SEAL (0.1-M)	
	3	1	**003-7764**	1	END-HOSE	
	4	1	**128-4411**	1	VALVE AS (FUEL SHUTOFF)	
	5	1	*150-3024*	1	ELBOW AS	
		1	**3J-1907**	1	SEAL-O-RING	
		1	**5P-4924**	1	ELBOW	
Y	6	1	**164-4858**	1	CAP GP-FUEL FILLER (EXTREME SERVICE, LOCKABLE)	76
	7	1	**283-2800**	1	SENSOR AS-FUEL LEVEL	
		1	**9X-3401**	2	PIN-CONNECTOR (16-GA TO 18-GA)	
		1	**243-4505**	1	RECEPTACLE AS-CONNECTOR (2-PIN)	
J	9	1	**303-9933**	1	STRAINER AS-FUEL (FLOAT GAUGE)	
M	10	1	**095-0736**	5	SCREW-MACHINE (M5X0.8X10-MM)	
	11	1	**8T-0328**	5	WASHER-HARD (5.5X10X1-MM THK)	
E	12	1	**109-2013**		GUARD (10-CM)	
					AVAILABLE REPAIR KIT(S):	
J			**303-9937**	1	KIT-GAUGE (FUEL STRAINER)	
					(INCLUDES STOPPER & GAUGE FLOAT)	

D-ORDER BY THE METER
E-ORDER BY THE CENTIMETER
J-KIT MARKED J SERVICES PART(S) MARKED J
M-METRIC PART
Y-SEPARATE ILLUSTRATION

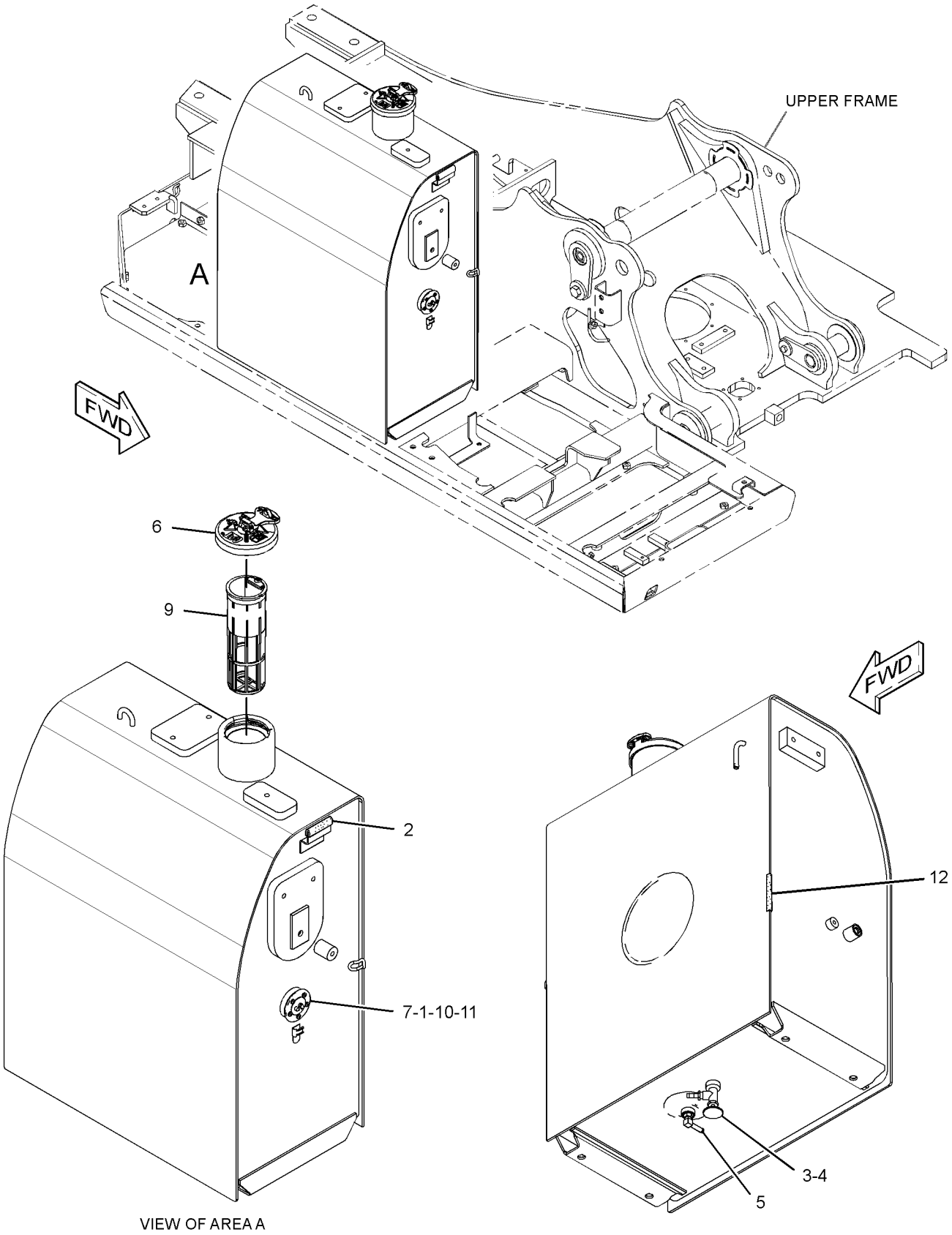

VIEW OF AREA A

GRAPHIC #1 **<END>** g01657695

330-1390 TANK GP-FUEL

S/N: CLA1-UP
210-L (55.5-US GAL)
PART OF 283-3676 TANK GP-FUEL

SMCS-1273 **i03159060**

NOTE	REF NO	GRAPHIC REF	PART NUMBER	QTY	PART NAME 1 2 3 4 5 6 (PRODUCT LEVEL)	SEE PAGE
	1	1	**4I-0378**	1	GASKET-RUBBER	
D	2	1	**5P-9205**		SEAL (0.1-M)	
	3	1	**003-7764**	1	END-HOSE	
	4	1	**128-4411**	1	VALVE AS (FUEL SHUTOFF)	
	5	1	*150-3024*	1	ELBOW AS	
		1	**3J-1907**	1	SEAL-O-RING	
		1	**5P-4924**	1	ELBOW	
Y	6	1	**164-4858**	1	CAP GP-FUEL FILLER (EXTREME SERVICE, LOCKABLE)	76
	7	1	**283-2800**	1	SENSOR AS-FUEL LEVEL	
		1	**9X-3401**	2	PIN-CONNECTOR (16-GA TO 18-GA)	
		1	**243-4505**	1	RECEPTACLE AS-CONNECTOR (2-PIN)	
J	8	1	**303-9933**	1	STRAINER AS-FUEL (FLOAT GAUGE)	
M	10	1	**095-0736**	5	SCREW-MACHINE (M5X0.8X10-MM)	
	11	1	**8T-0328**	5	WASHER-HARD (5.5X10X1-MM THK)	
E	12	1	**109-2013**		GUARD (10-CM)	
					AVAILABLE REPAIR KIT(S):	
J			**303-9937**	1	KIT-GAUGE (FLOAT)	
					(INCLUDES STOPPER & GAUGE FLOAT)	

D-ORDER BY THE METER
E-ORDER BY THE CENTIMETER
J-KIT MARKED J SERVICES PART(S) MARKED J
M-METRIC PART
Y-SEPARATE ILLUSTRATION

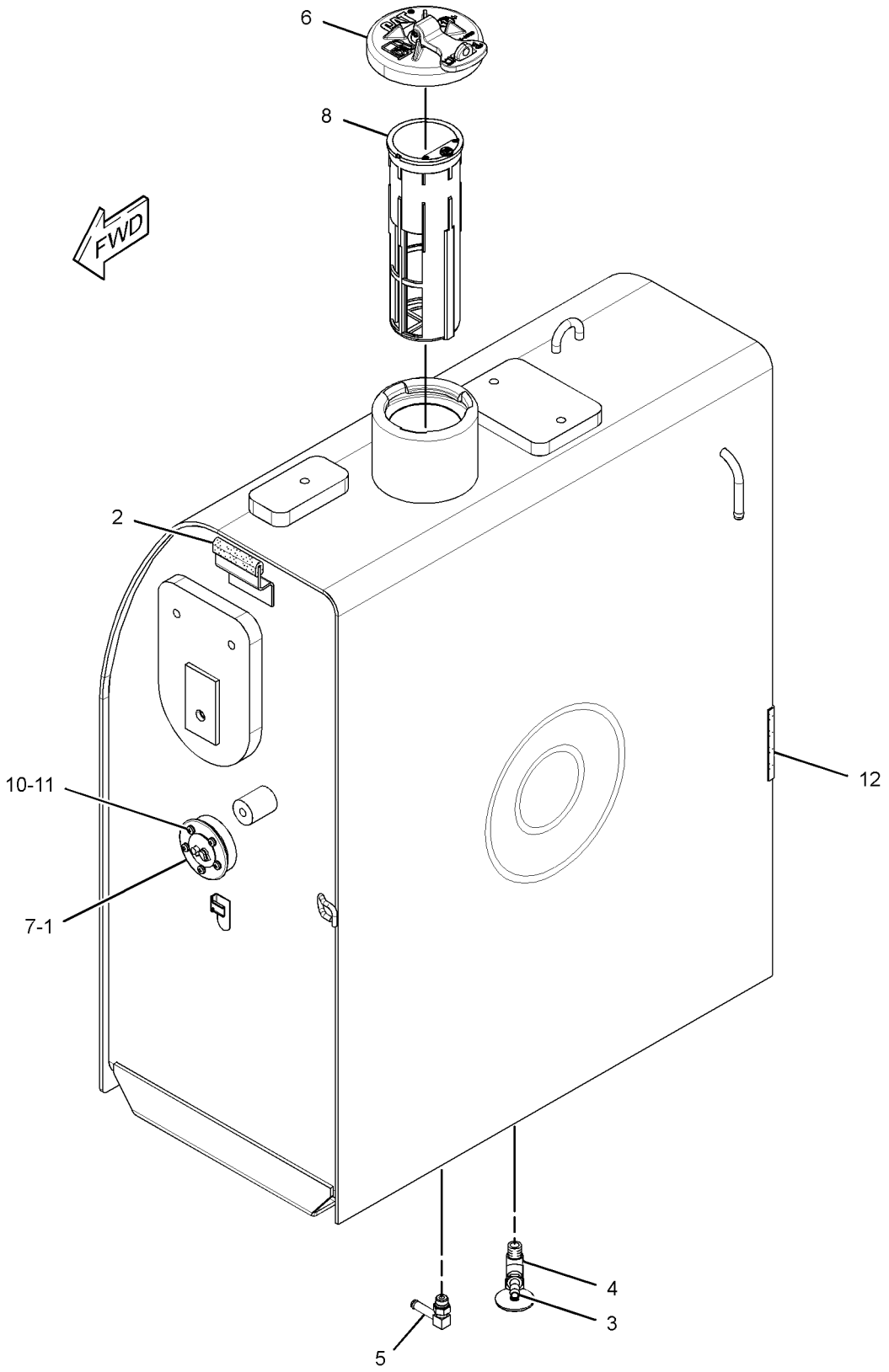

GRAPHIC #1 **<END>** g01642533

330-1393 TANK GP-FUEL

S/N: CLA1-UP
210-L (55.5-US GAL)
PART OF 283-3678 TANK GP-FUEL
AN ATTACHMENT

SMCS-1273 **i03159083**

NOTE	REF NO	GRAPHIC REF	PART NUMBER	QTY	PART NAME 1 2 3 4 5 6 (PRODUCT LEVEL)	SEE PAGE
	1	1	**4I-0378**	1	GASKET-RUBBER	
D	2	1	**5P-9205**		SEAL (0.1-M)	
	3	1	**003-7764**	1	END-HOSE	
	4	1	**128-4411**	1	VALVE AS (FUEL SHUTOFF)	
	5	1	*150-3024*	1	ELBOW AS	
		1	**3J-1907**	1	SEAL-O-RING	
		1	**5P-4924**	1	ELBOW	
Y	6	1	**164-4858**	1	CAP GP-FUEL FILLER (EXTREME SERVICE, LOCKABLE)	76
	7	1	**283-2800**	1	SENSOR AS-FUEL LEVEL	
		1	**9X-3401**	2	PIN-CONNECTOR (16-GA TO 18-GA)	
		1	**243-4505**	1	RECEPTACLE AS-CONNECTOR (2-PIN)	
J	9	1	**303-9933**	1	STRAINER AS-FUEL (FLOAT GAUGE)	
M	10	1	**095-0736**	5	SCREW-MACHINE (M5X0.8X10-MM)	
	11	1	**1B-5174**	1	PLUG-PIPE	
	12	1	**2S-4078**	1	SEAL-O-RING	
	13	1	**8T-0328**	5	WASHER-HARD (5.5X10X1-MM THK)	
	14	1	**9S-6130**	1	PLUG	
E	15	1	**109-2013**		GUARD (10-CM)	
					AVAILABLE REPAIR KIT(S):	
J			**303-9937**	1	KIT-GAUGE (FUEL STRAINER)	
					(INCLUDES STOPPER & GAUGE FLOAT)	

D-ORDER BY THE METER
E-ORDER BY THE CENTIMETER
J-KIT MARKED J SERVICES PART(S) MARKED J
M-METRIC PART
Y-SEPARATE ILLUSTRATION

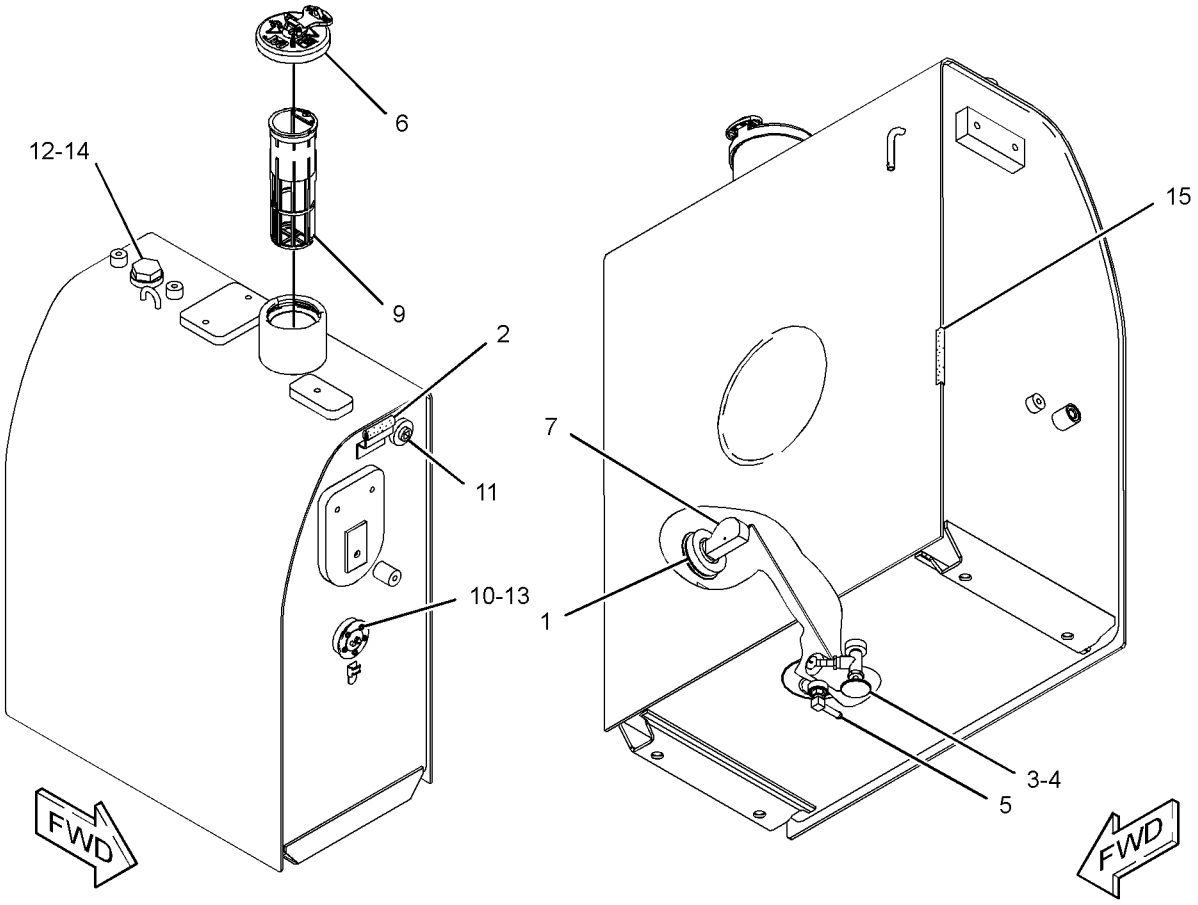

GRAPHIC #1 **<END>** g01642213

FUEL SYSTEM

330-1394 TANK GP-FUEL

S/N: CLA1-UP
210-L (55.5-US GAL)
PART OF 283-3678 TANK GP-FUEL
AN ATTACHMENT

SMCS-1273 **i03159084**

NOTE	REF NO	GRAPHIC REF	PART NUMBER	QTY	PART NAME 1 2 3 4 5 6 (PRODUCT LEVEL)	SEE PAGE
	1	1	**4I-0378**	1	GASKET-RUBBER	
	2	1	**5P-9205**	1	SEAL	
	3	1	**003-7764**	1	END-HOSE	
	4	1	**128-4411**	1	VALVE AS (FUEL SHUTOFF)	
	5	1	*150-3024*	1	ELBOW AS	
		1	**3J-1907**	1	SEAL-O-RING	
		1	**5P-4924**	1	ELBOW	
Y	6	1	**164-4858**	1	CAP GP-FUEL FILLER (EXTREME SERVICE, LOCKABLE)	76
	7	1	**283-2800**	1	SENSOR AS-FUEL LEVEL	
		1	**9X-3401**	2	PIN-CONNECTOR (16-GA TO 18-GA)	
		1	**243-4505**	1	RECEPTACLE AS-CONNECTOR (2-PIN)	
J	8	1	**303-9933**	1	STRAINER AS-FUEL (FLOAT GAUGE)	
E	9	1	**109-2013**		GUARD (10-CM)	
M	10	1	**095-0736**	5	SCREW-MACHINE (M5X0.8X10-MM)	
	11	1	**1B-5174**	1	PLUG-PIPE	
	12	1	**2S-4078**	1	SEAL-O-RING	
	13	1	**8T-0328**	5	WASHER-HARD (5.5X10X1-MM THK)	
	14	1	**9S-6130**	1	PLUG	
					AVAILABLE REPAIR KIT(S):	
J			**303-9937**	1	KIT-GAUGE (FUEL STRAINER)	
					(INCLUDES STOPPER & GAUGE)	

E-ORDER BY THE CENTIMETER
J-KIT MARKED J SERVICES PART(S) MARKED J
M-METRIC PART
Y-SEPARATE ILLUSTRATION

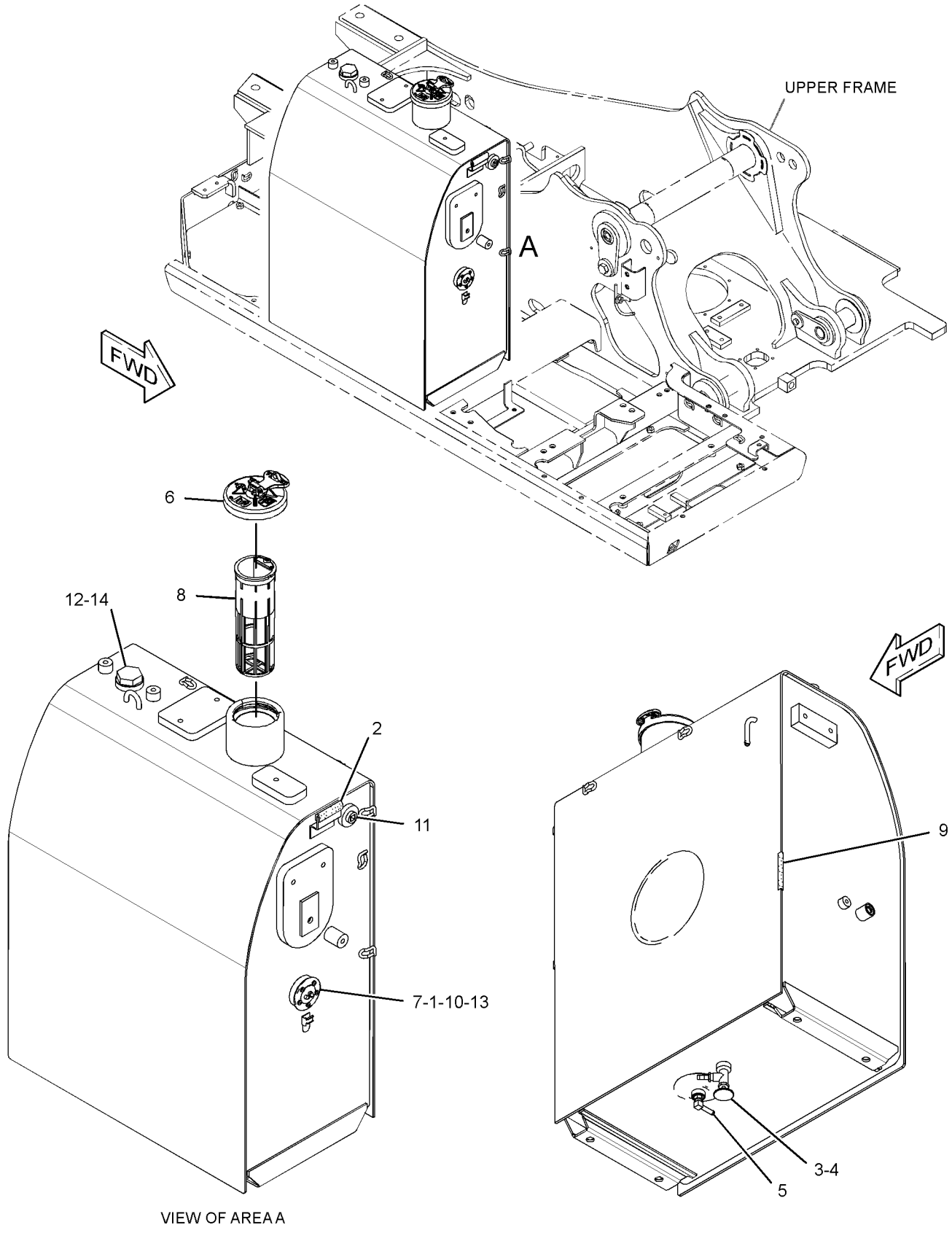

VIEW OF AREA A

GRAPHIC #1 **<END>** g01642778

298-3147 VALVE GP-FUEL SHUTOFF

S/N: CLA1-UP

PART OF 283-3739 LINES GP-FUEL

SMCS-1273 **i02750485**

NOTE	REF NO	GRAPHIC REF	PART NUMBER	QTY	PART NAME 1 2 3 4 5 6 (PRODUCT LEVEL)	SEE PAGE
	1	1	**298-3257**	1	STOP	
	2	1	**298-3258**	1	LEVER	
M	3	1	**260-6692**	1	NUT (M5X0.8-THD)	
	4	1	**3J-1907**	1	SEAL-O-RING	
	5	1	**8T-0328**	1	WASHER-HARD (5.5X10X1-MM THK)	
					PARTS SHOWN IN GRAPHIC(S) WITHOUT A REFERENCE NUMBER ARE NOT SERVICED SEPARATELY	

M-METRIC PART

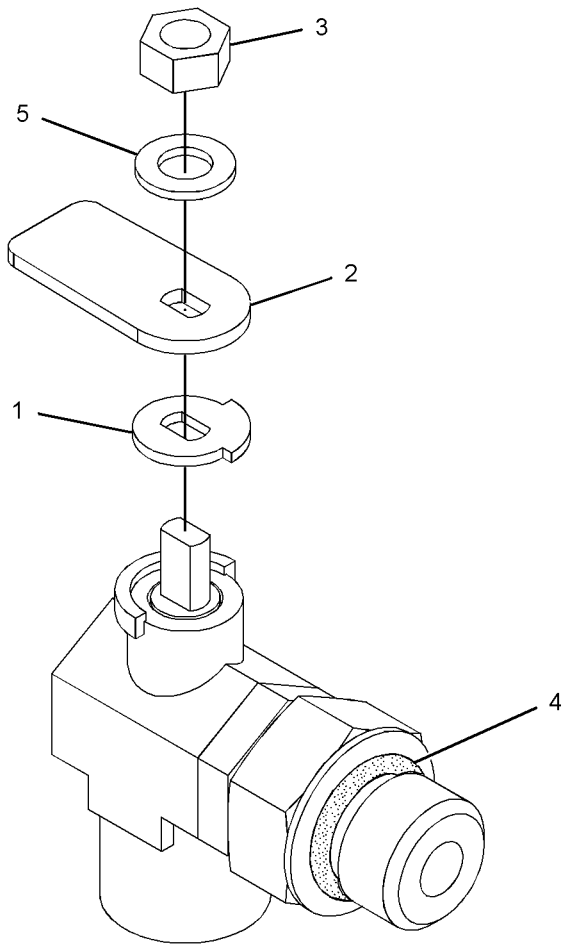

GRAPHIC #1 **<END>** g01377343

132-1829 ALARM GP

S/N: CLA1-UP
24-VOLT
PART OF 259-5161 WIRING GP-CAB

SMCS-7400, 7402, 7407 **i03254766**

NOTE	REF NO	GRAPHIC REF	PART NUMBER	QTY	PART NAME 1 2 3 4 5 6 (PRODUCT LEVEL)	SEE PAGE
	1	1	**102-8802**	1	KIT-RECEPTACLE (2-PIN)	
					(INCLUDES RECEPTACLE AS & WEDGE)	
	2	1	**186-3735**	2	PIN-CONNECTOR (16-GA TO 18-GA)	

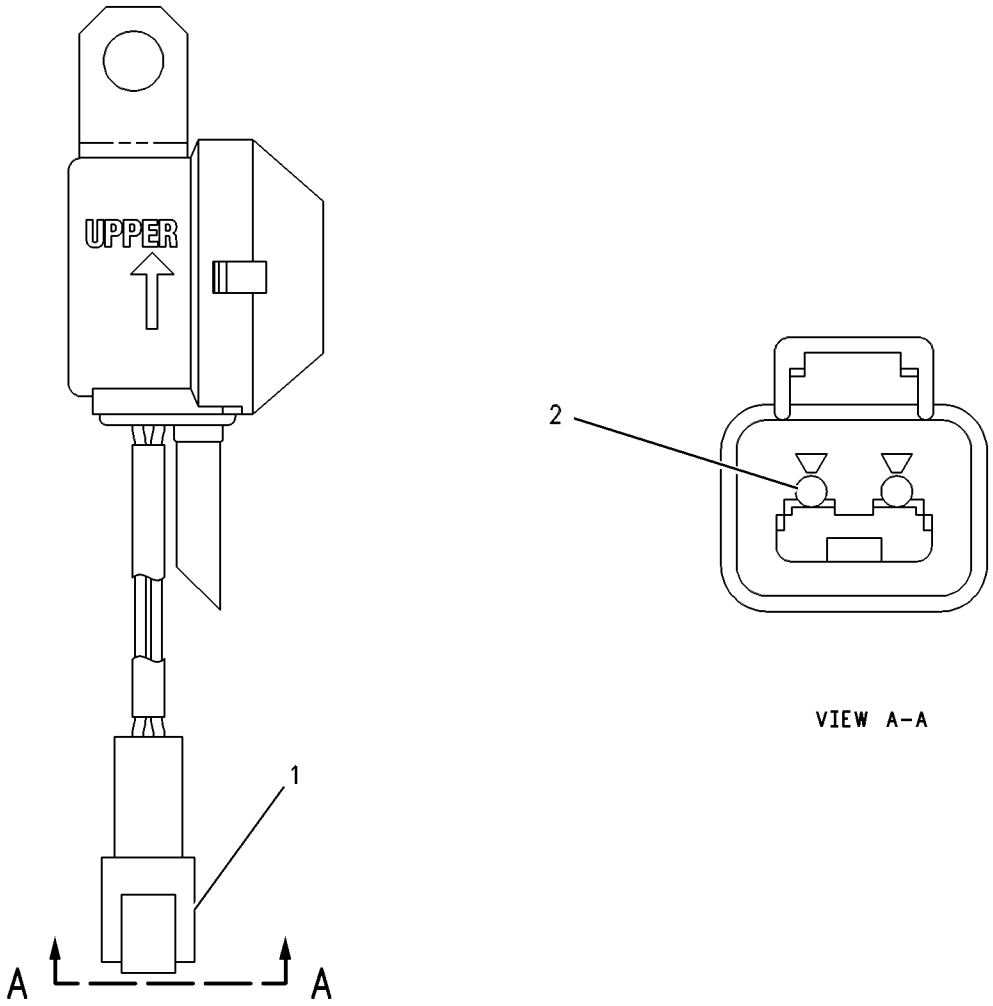

GRAPHIC #1 **<END>** g00272185

231-1771 ALARM GP-TRAVEL

S/N: CLA1-UP
AN ATTACHMENT

SMCS-7429 **i02693231**

NOTE	REF NO	GRAPHIC REF	PART NUMBER	QTY	PART NAME 1 2 3 4 5 6 (PRODUCT LEVEL)	SEE PAGE
	1	1	**213-9100**	1	ALARM GP	
BD		1	**5P-5623**		WIRE-ELECTRICAL (16-GA, BLACK)	
		1	**102-8802**	1	KIT-RECEPTACLE (2-PIN)	
					(INCLUDES RECEPTACLE AS & WEDGE)	
		1	**186-3735**	2	PIN-CONNECTOR (16-GA TO 18-GA)	
BE		1	**9X-1813**		SLEEVE	
M	2	1	**8T-4189**	2	BOLT (M8X1.25X20-MM)	
	3	1	**5P-4116**	2	WASHER-HARD (8.8X20.5X2-MM THK)	

B-USE AS REQUIRED
D-ORDER BY THE METER
E-ORDER BY THE CENTIMETER
M-METRIC PART

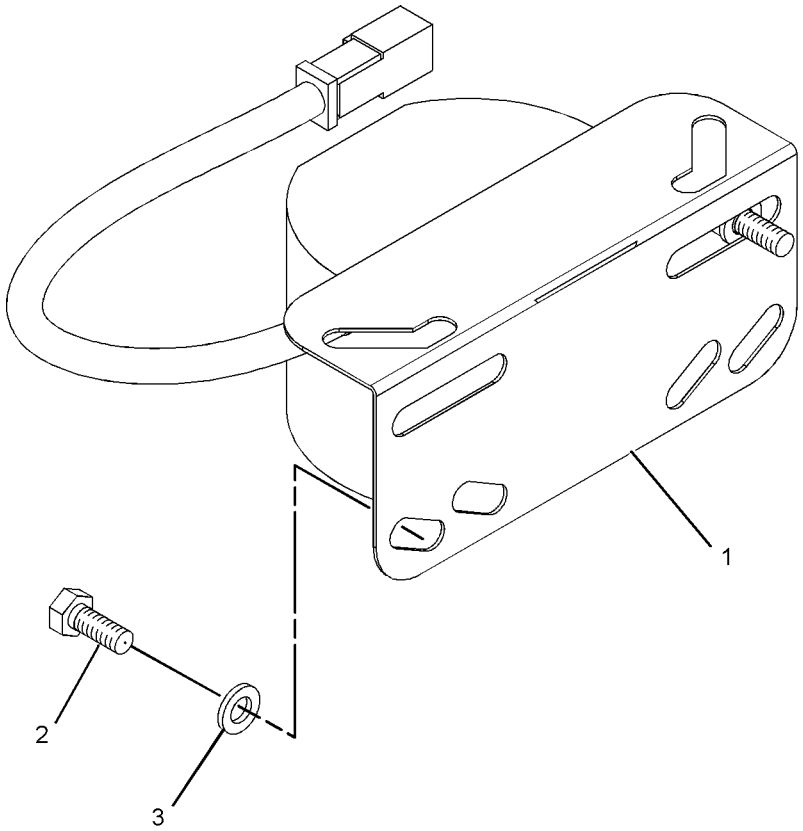

GRAPHIC #1 **<END>** g01071794

125-2994 ALTERNATOR GP-CHARGING

S/N: JKH1-UP

PART OF 296-4798 MOUNTING GP-ALTERNATOR

ALSO AN ATTACHMENT

SMCS-1405 **i02182383**

NOTE	REF NO	GRAPHIC REF	PART NUMBER	QTY	PART NAME 1 2 3 4 5 6 (PRODUCT LEVEL)	SEE PAGE
	1	1	**135-2382**	1	NUT SET	
	2	1	**125-2995**	1	PULLEY AS	
	3	1	**5I-7985**	1	SETSCREW	
	4	1	**5I-8086**	1	BRACKET AS	
	5	1	**5I-7987**	1	SETSCREW	
	6	1	**5I-8087**	1	BEARING	
	7	1	**5I-8097**	1	SETSCREW	
	8	1	**5I-8088**	1	ROTOR AS	
	9	1	**5I-8089**	1	BEARING	
	10	1	**5I-8098**	1	COIL AS	
	11	1	**5I-8090**	1	STATOR	
	12	1	**5I-8091**	1	BRACKET AS	
		1	**212-8521**	1	BRACKET	
	13	1	**239-6681**	1	REGULATOR AS-VOLTAGE	
	14	1	**5I-8095**	1	RECTIFIER AS	
	15	1	**085-9429**	1	NUT SET	
	16	1	**135-2381**	1	PLATE	
	17	1	**5I-8080**	1	CONNECTOR AS	
	18	1	**5I-8094**	1	BOLT	
	19	1	**5I-7997**	1	SETSCREW	

125-2994 ALTERNATOR GP-CHARGING *(contd.)* **i02182383**

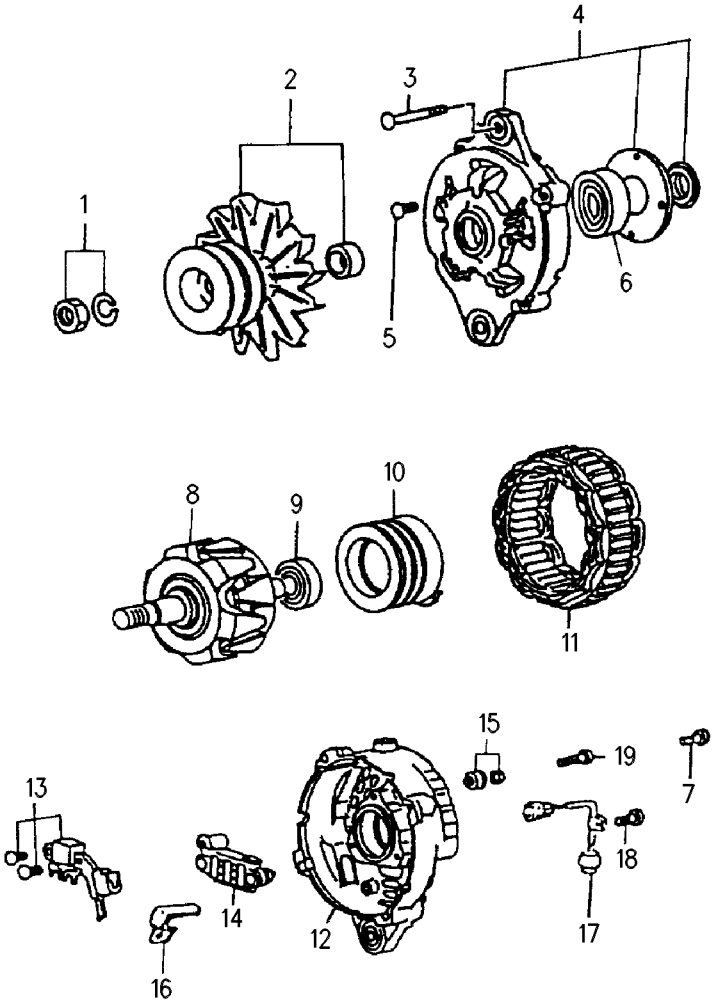

GRAPHIC #1 **<END>** g00287948

ELECTRICAL AND STARTING SYSTEM

283-2600 BATTERY & WIRING GP

S/N: CLA1-UP

PART OF 260-7231 CHASSIS AR

SMCS-1401, 1402, 1408 **i03159362**

NOTE	REF NO	GRAPHIC REF	PART NUMBER	QTY	PART NAME 1 2 3 4 5 6 (PRODUCT LEVEL)	SEE PAGE
	1	1,2,3,4	**3S-2093**	41	STRAP-CABLE	
	2	2	**3T-5760**	2	BATTERY (12-VOLT, MAINTENANCE FREE, WET)	
		2	**123-1373**	6	CAP AS-FILLER (BATTERY)	
	3	2	**4I-5399**	1	GROMMET	
	4	3	**4I-5479**	2	CLAMP	
	5	3	**4I-5480**	3	WASHER (11X72X3-MM THK)	
	6	2	**5I-8270**	1	COVER-BATTERY	
	7	1	**5I-9368**	1	SPACER (9.24X13.72X20.5-MM THK)	
	8	2	**6W-6005**	1	HOLD-DOWN-BATTERY	
	9	2,3,4	**7K-1181**	11	STRAP-CABLE	
	10	1,2	**7Y-5456**	2	GROMMET	
	11	1,4	**111-4836**	6	CLIP	
	12	1,2,3,4	**111-4837**	12	CLIP	
	13	1,2,3,4	**111-4838**	12	CLIP	
	14	1,2,3,4	**111-4839**	12	STRAP	
	15	1,2,4	**116-0118**	6	CLIP	
	16	2	**170-6929**	1	CABLE AS	
E		2	**5P-0761**		CABLE (00-GA, RED) (31-CM)	
		2	**9G-0002**	1	COVER-TERMINAL (RED)	
		2	**9G-0005**	1	COVER-TERMINAL (BLACK)	
		2	**8C-5918**	1	TERMINAL AS (NEGATIVE)	
		2	**8T-9756**	1	TERMINAL AS (POSITIVE)	
	17	1	**204-1611**	1	STRAP-CABLE	
	18	2,3	**204-1635**	2	STRAP AS-GROUND	
	19	2	**238-2501**	1	KNOB	
	20	2	**238-2528**	1	ROD	
	21	2	**267-7683**	1	BRACKET AS	
		2	**7T-1099**	1	LINK	
	22	1	**267-7689**	1	BRACKET AS	
	23	2	**283-2650**	1	CABLE AS	
	24	2	**283-2658**	1	BRACKET AS	
	25	3	**283-2662**	1	BRACKET AS	
	26	4	**283-2664**	1	BRACKET AS	
	27	2	**283-2666**	1	BRACKET AS	
	28	3	**291-7760**	1	BRACKET AS	
	29	2	**291-7841**	1	INSULATION	
	30	2	**306-8769**	1	HARNESS AS-CHASSIS (MAIN)	
	31	2	**319-1036**	1	CABLE AS-BATTERY	
E		2	**5P-0761**		CABLE (00-GA, RED) (214-CM)	
		2	**8N-0869**	1	COVER-TERMINAL (RED)	
		2	**9G-0004**	1	COVER-TERMINAL (RED)	
		2	**1S-7252**	1	TERMINAL-CABLE (00-GA, 3/8-IN BOLT)	
		2	**8C-5917**	1	TERMINAL AS-BATTERY (POSITIVE)	
	32	2	**129-3400**	1	GUARD	
	33	4	**132-5789**	1	CLIP	
	34	1	**1R-6072**	1	GROMMET	
	35	3	**4I-5426**	1	GROMMET	
	37	2	**4K-8864**	1	CLIP	
	38	4	**4P-7429**	1	CLIP	
	39	2	**4P-7581**	1	CLIP	
	40	4	**4P-8134**	1	CLIP	
M	41	2	**5C-7261**	1	NUT (M8X1.25-THD)	
M	42	3	**5C-7883**	4	BOLT-SOCKET HEAD (M6X1X16-MM)	
	43	2,3	**6D-4246**	2	CLIP	
	44	2,3	**6G-2263**	3	SPACER (10.5X19X28.5-MM THK)	
M	45	1	**7X-2619**	1	BOLT (M6X1X10-MM)	

283-2600 **BATTERY & WIRING GP** *(contd.)* **i03159362**

NOTE	REF NO	GRAPHIC REF	PART NUMBER	QTY	PART NAME 1 2 3 4 5 6 (PRODUCT LEVEL)	SEE PAGE
M	46	1	**7Y-5226**	1	NUT (M5X0.8-THD)	
	47	2	**7Y-8169**	1	GROMMET	
M	48	1	**8C-8451**	1	BOLT (M6X1X40-MM)	
	49	1	**8J-1256**	1	CLIP (SLOT)	
	50	1	**8T-0328**	1	WASHER-HARD (5.5X10X1-MM THK)	
	51	1,2,3,4	**8T-4121**	50	WASHER-HARD (11X21X2.5-MM THK)	
M	52	2	**8T-4133**	1	NUT (M10X1.5-THD)	
M	53	2,3,4	**8T-4136**	9	BOLT (M10X1.5X25-MM)	
M	54	1,2,3,4	**8T-4137**	37	BOLT (M10X1.5X20-MM)	
M	55	4	**8T-4179**	1	BOLT (M12X1.75X20-MM)	
M	56	4	**8T-4139**	2	BOLT (M12X1.75X30-MM)	
M	57	2,3	**8T-4185**	3	BOLT (M10X1.5X50-MM)	
M	58	2,3,4	**8T-4191**	3	BOLT (M10X1.5X16-MM)	
	59	4	**8T-4223**	3	WASHER-HARD (13.5X25.5X3-MM THK)	
	60	2	**8T-4226**	1	WASHER-PLATED (10.5X45X3-MM THK)	
	62	1,3	**9X-8256**	6	WASHER (6.6X12X2-MM THK)	

E-ORDER BY THE CENTIMETER
M-METRIC PART

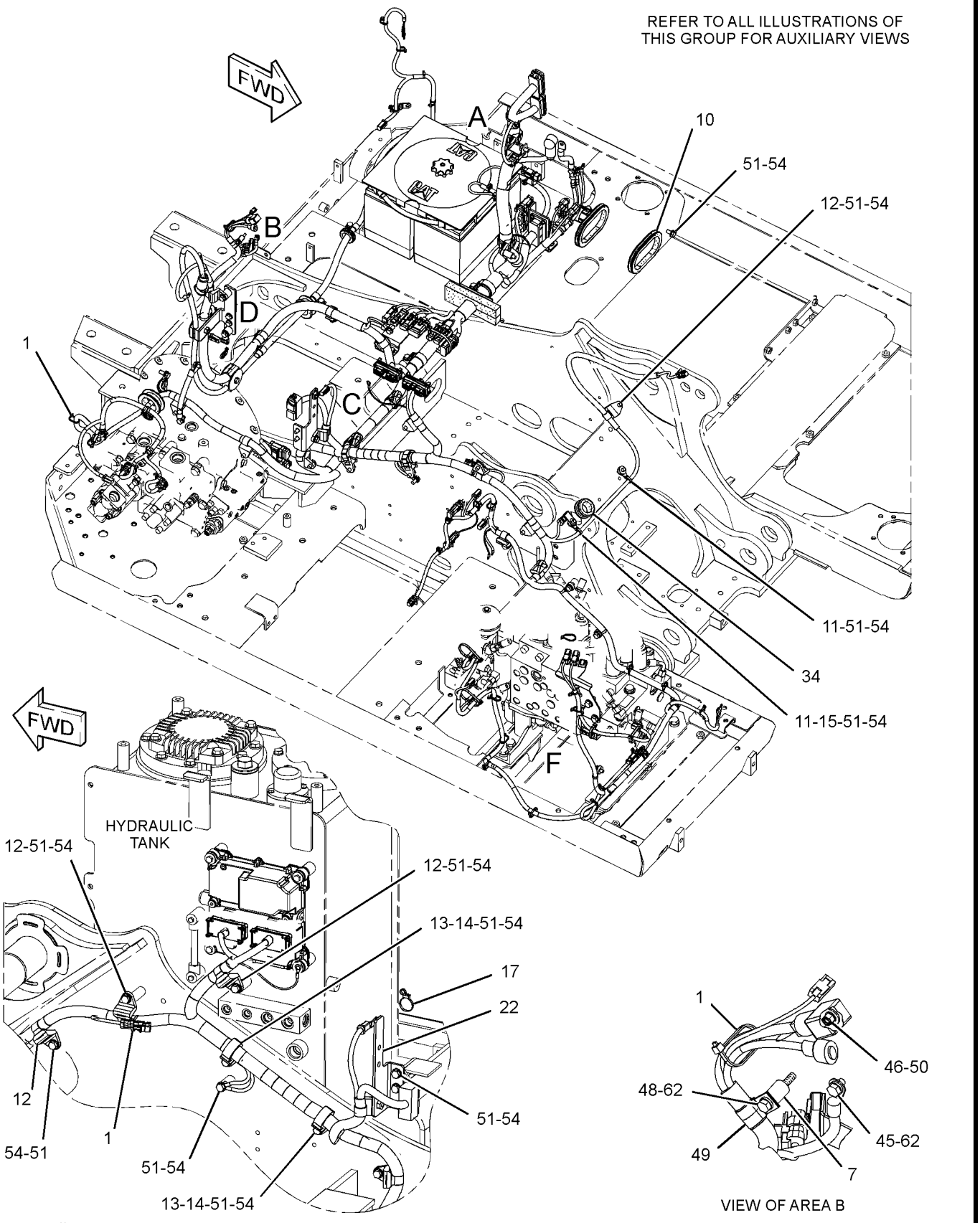

GRAPHIC #1

g01624749

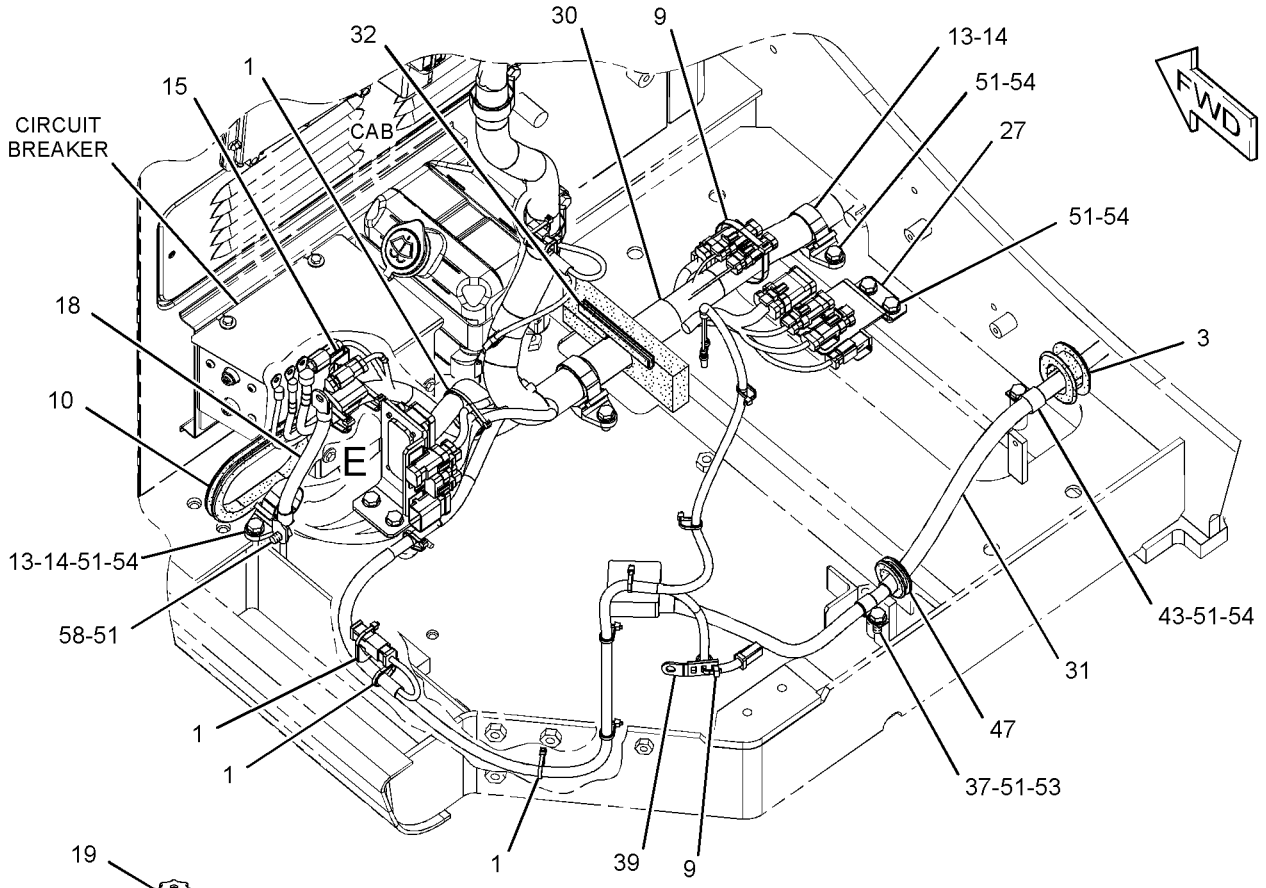

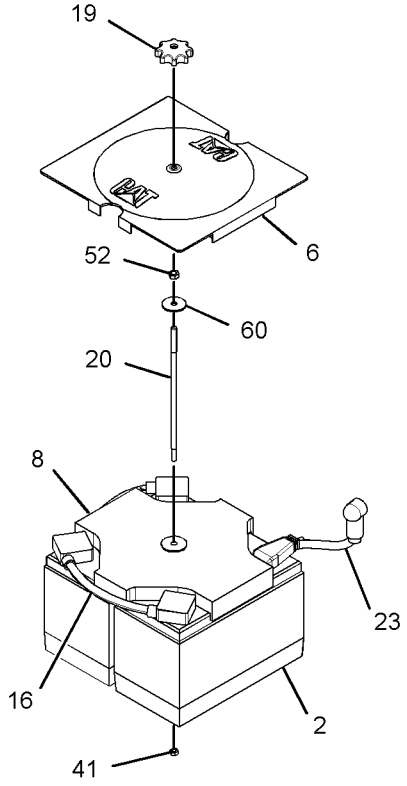

VIEW OF AREA A
(EXPLODED)

REFER TO ALL ILLUSTRATIONS OF
THIS GROUP FOR AUXILIARY VIEWS

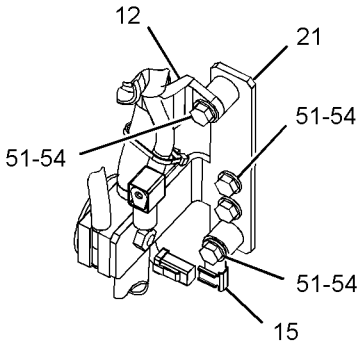

VIEW OF AREA D

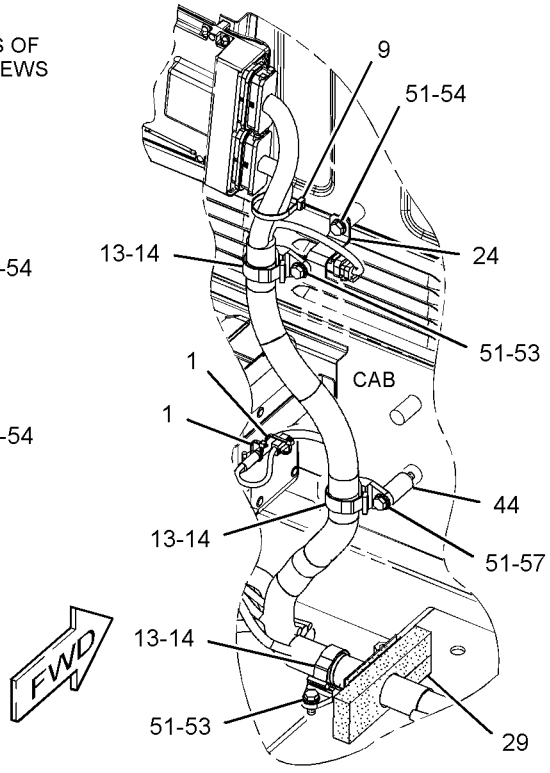

GRAPHIC #2

g01614373

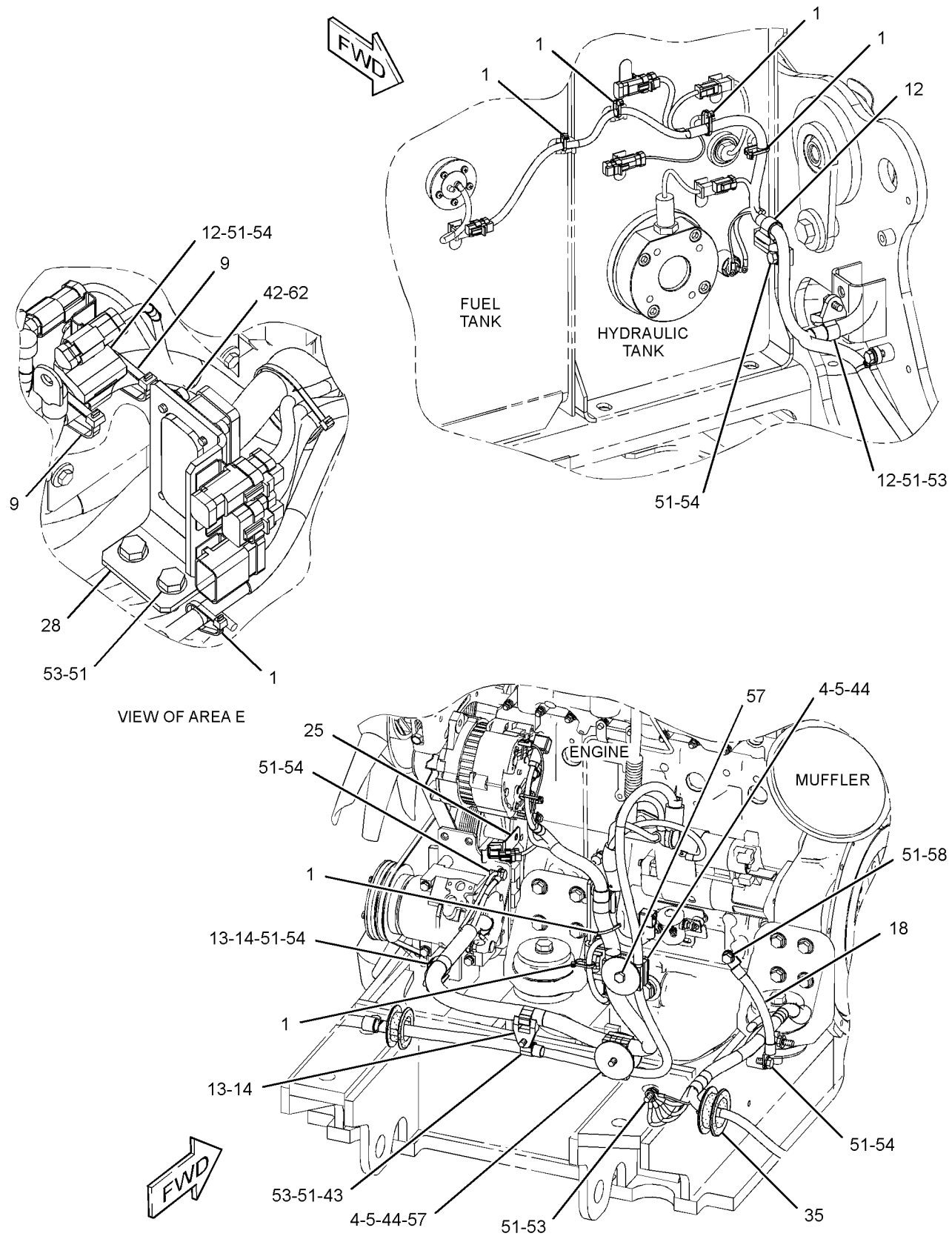

GRAPHIC #3

g01624793

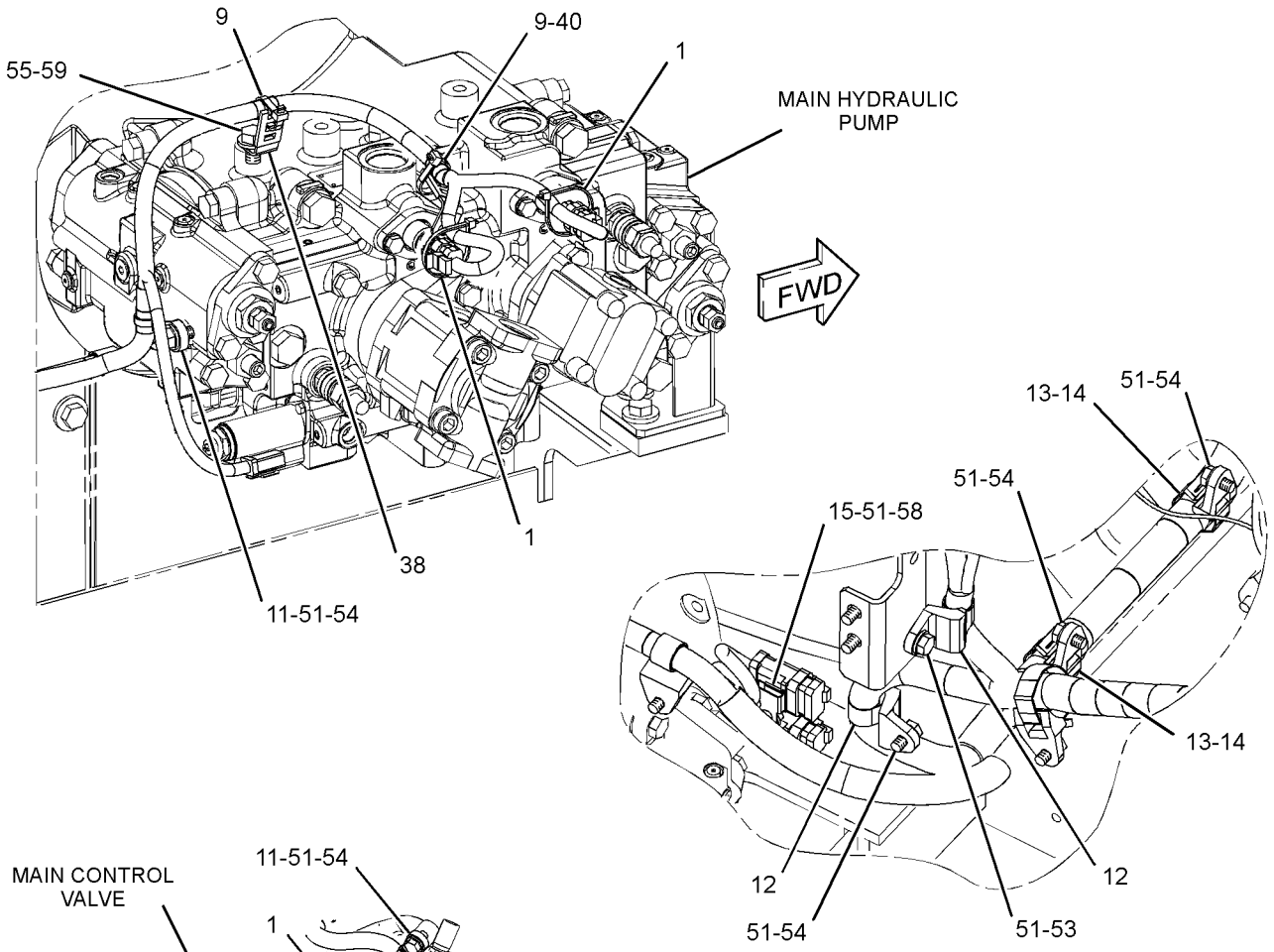

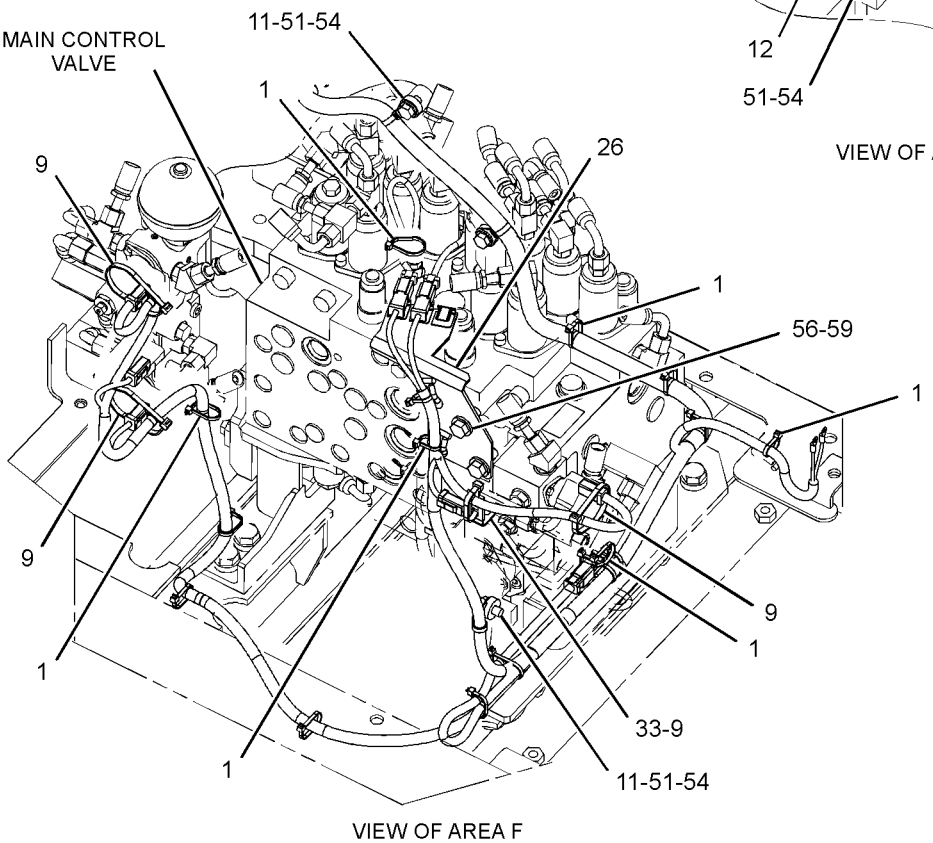

GRAPHIC #4 **<END>** g01624309

259-5050 BATTERY GP–COLD WEATHER

S/N: CLA1-UP

PART OF 298-4105 STARTING AR-COLD WEATHER

AN ATTACHMENT

SMCS-1401 **i02419977**

NOTE	REF NO	GRAPHIC REF	PART NUMBER	QTY	PART NAME 1 2 3 4 5 6 (PRODUCT LEVEL)	SEE PAGE
	1	1	**102-5420**	1	FILM-INSTRUCTION (COLD WEATHER)	
	2	1	**9X-3404**	2	BATTERY (12-VOLT, MAINTENANCE FREE, WET)	

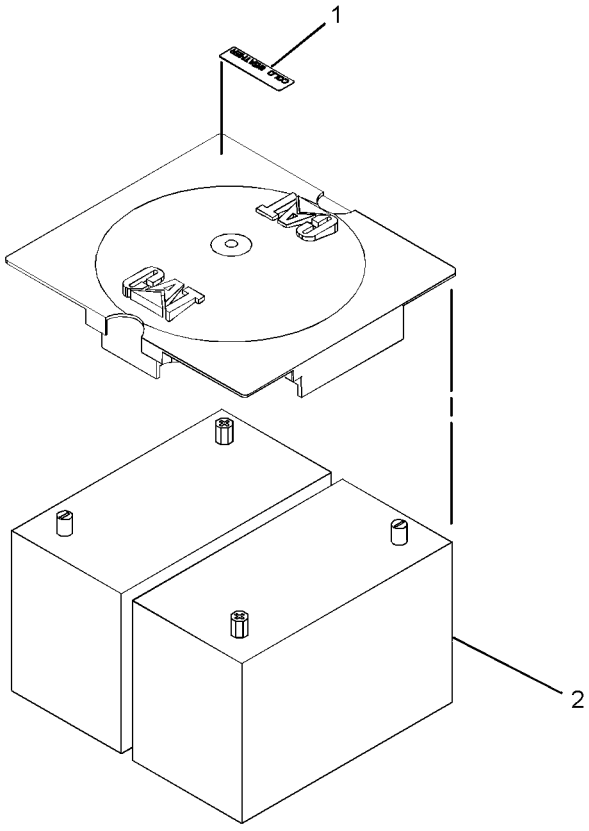

GRAPHIC #1 **<END>** g01226775

9W-0742 BLOCK GP-JUNCTION–BATTERY

S/N: CLA1-UP
PART OF 283-2608 WIRING GP-AUX START RECEPTACLE
AN ATTACHMENT

SMCS-7426 **i02236462**

NOTE	REF NO	GRAPHIC REF	PART NUMBER	QTY	PART NAME 1 2 3 4 5 6 (PRODUCT LEVEL)	SEE PAGE
	1	1	**8C-6358**	1	BLOCK GP-JUNCTION (BATTERY)	
	1A	1	**8T-3519**	3	BOLT-BRONZE (1/2-13X2-IN)	
BD	2	1	**6V-2722**		TUBE-HEAT SHRINK (25.4-MM DIA)	
	3	1	**7F-0560**	6	WASHER (0.516X0.938X0.101-IN THK)	
	4	1	**8T-3518**	6	NUT-FULL (1/2-13-THD)	

B-USE AS REQUIRED
D-ORDER BY THE METER

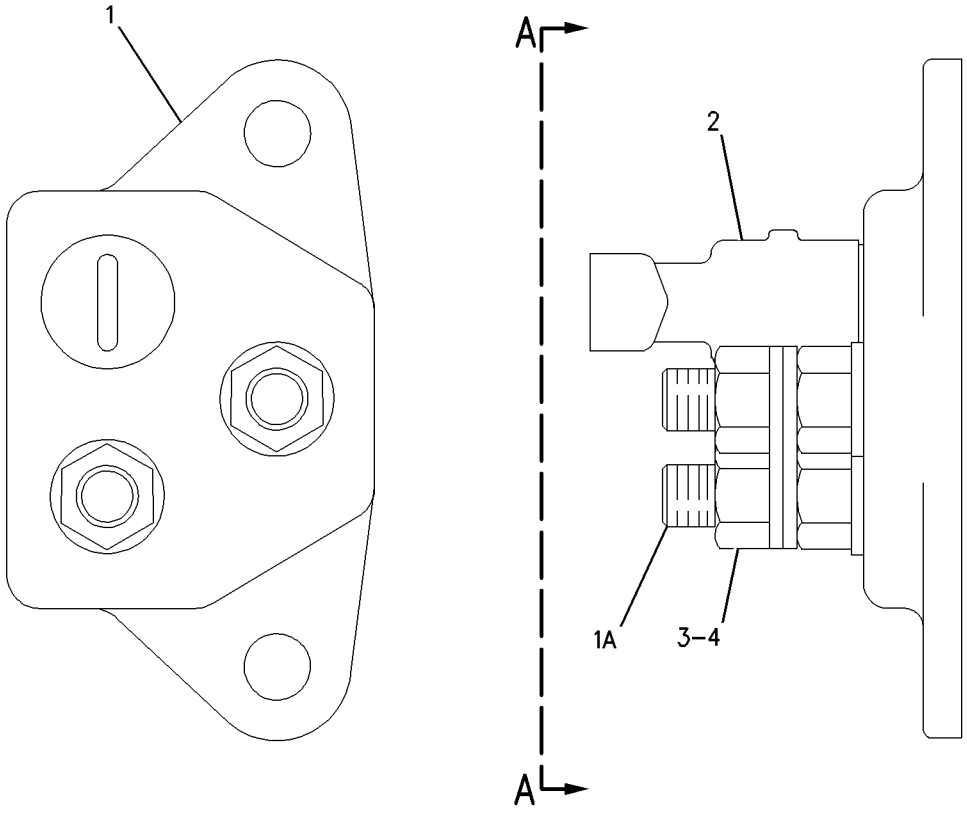

VIEW A-A

GRAPHIC #1 **<END>** g00650721

327-3329 CAMERA & MOUNTING GP

S/N: CLA1-UP
PART OF 330-8747 CAMERA AR
AN ATTACHMENT

SMCS-7348 **i03114041**

NOTE	REF NO	GRAPHIC REF	PART NUMBER	QTY	PART NAME 1 2 3 4 5 6 (PRODUCT LEVEL)	SEE PAGE
Y	1	1	*313-7833*	1	CAMERA GP (WITH MOUNTING)	121
	2	1	**320-5396**	1	COVER	
	3	1	**8T-4121**	4	WASHER-HARD (11X21X2.5-MM THK)	
M	4	1	**8T-4137**	4	BOLT (M10X1.5X20-MM)	

M-METRIC PART
Y-SEPARATE ILLUSTRATION

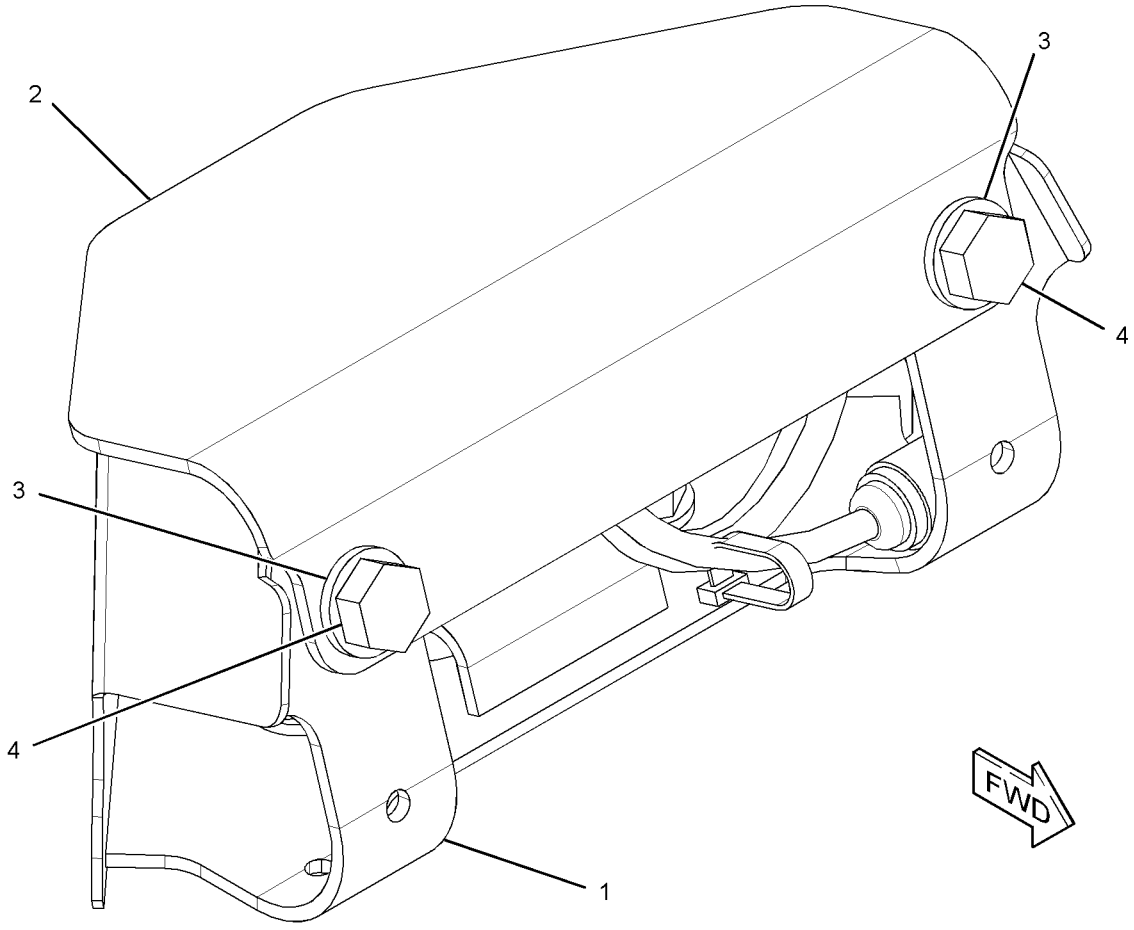

GRAPHIC #1 **<END>** g01609019

330-8747 CAMERA AR–CAMERA

S/N: CLA1-UP

PART OF 330-8746 INSTALLATION AR

AN ATTACHMENT

SMCS-7348 **i03150983**

NOTE	PART NUMBER	QTY	PART NAME 1 2 3 4 5 6 (PRODUCT LEVEL)	SEE PAGE
Y	*327-3329*	1	CAMERA & MOUNTING GP	118
Y	*303-2787*	1	FILM GP	947
Y	*328-0080*	1	WIRING GP-CAMERA (REAR VISION CAMERA)	206
Y	*328-0048*	1	WIRING GP-CAB	205

Y-SEPARATE ILLUSTRATION

<END>

286-4271 CAMERA GP

S/N: CLA1-UP
PART OF 313-7833 CAMERA GP
AN ATTACHMENT

SMCS-7348 **i02957535**

NOTE	REF NO	GRAPHIC REF	PART NUMBER	QTY	PART NAME 1 2 3 4 5 6 (PRODUCT LEVEL)	SEE PAGE
					AVAILABLE REPAIR KIT(S):	
			251-4162	1	KIT-BRACKET (CAMERA)	
					(KIT INCLUDES BRACKET, BOLTS, LOCKNUTS, SOCKET BOLTS, GASKET, & ALLEN KEY)	

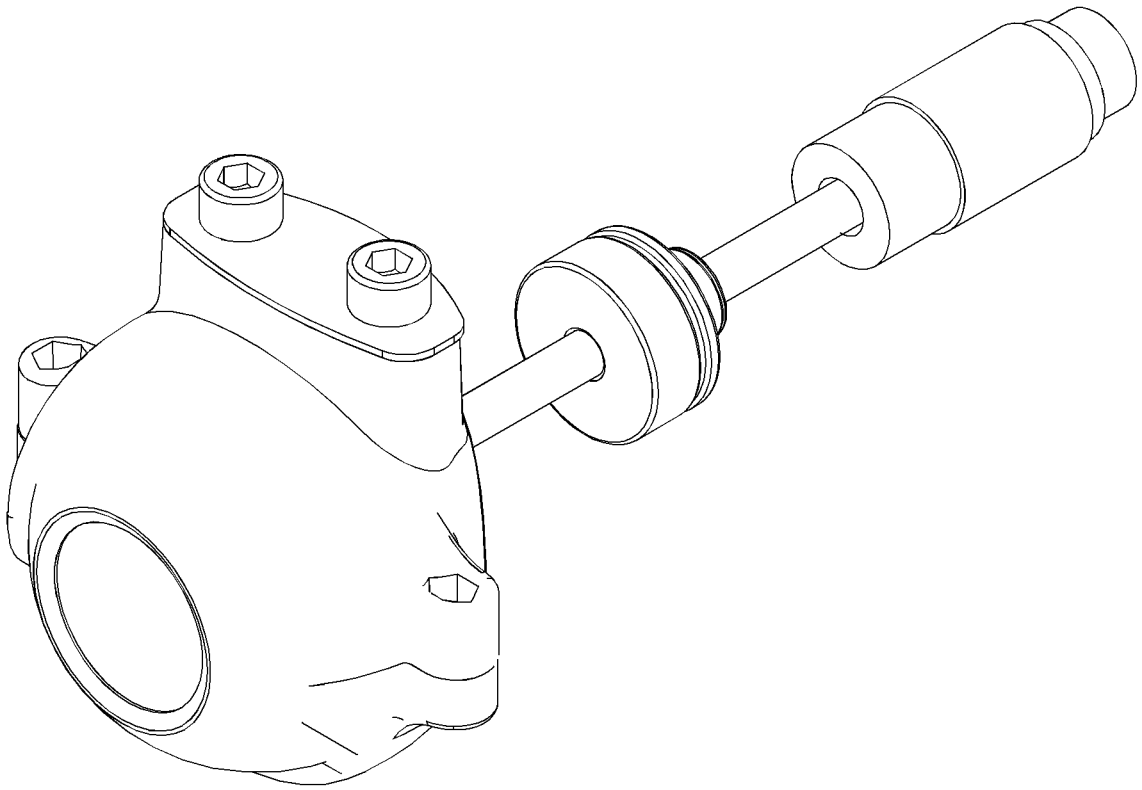

GRAPHIC #1 **<END>** g01356476

313-7833 CAMERA GP

S/N: CLA1-UP

PART OF 327-3329 CAMERA & MOUNTING GP

AN ATTACHMENT

SMCS-7348 **i03045209**

NOTE	REF NO	GRAPHIC REF	PART NUMBER	QTY	PART NAME 1 2 3 4 5 6 (PRODUCT LEVEL)	SEE PAGE
	1	1	**096-0061**	1	STRAP-CABLE	
Y	2	1	**286-4271**	1	CAMERA GP	120
	3	1	**320-5392**	1	BRACKET AS	
M	4	1	**8T-4970**	2	BOLT (M6X1X14-MM)	
	5	1	**9X-8256**	2	WASHER (6.6X12X2-MM THK)	

M-METRIC PART
Y-SEPARATE ILLUSTRATION

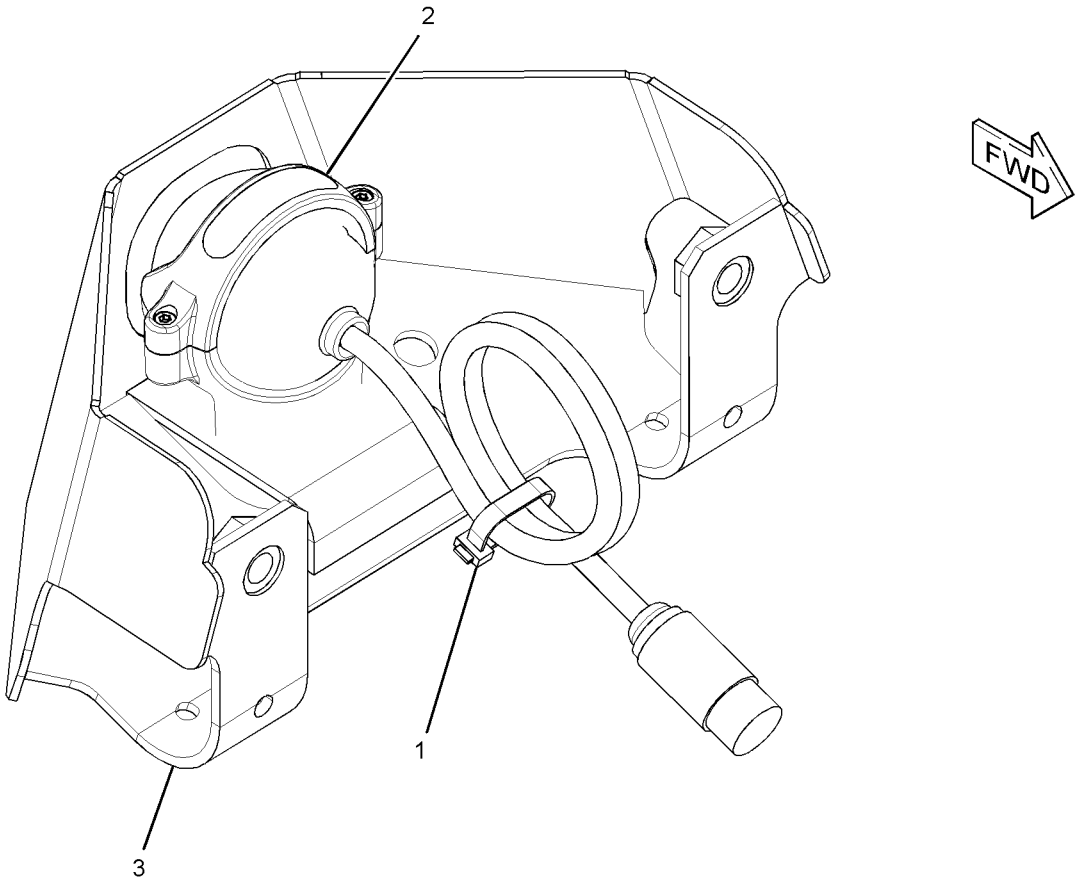

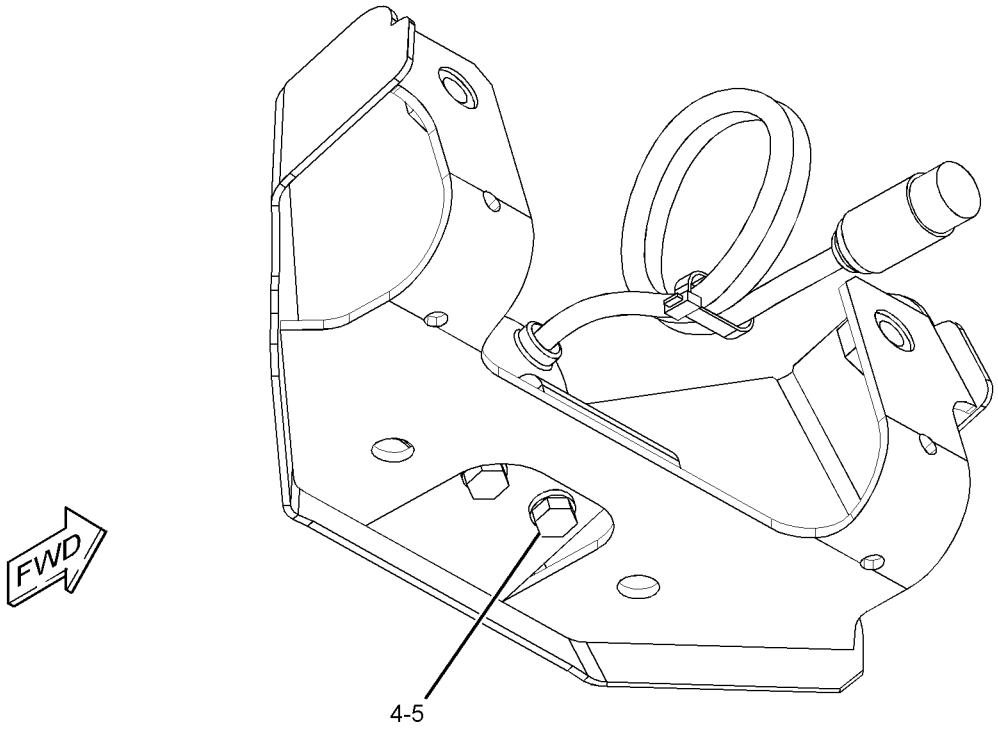

GRAPHIC #1

<END>

g01515863

309-5842 CONTROL & MTG GP-COMMUNICATION–

PRODUCT LINK 321SR

S/N: CLA1-UP

PART OF 301-2584 INSTALLATION AR-COMMUNICATION

AN ATTACHMENT

SMCS-7606 **i02898031**

NOTE	REF NO	GRAPHIC REF	PART NUMBER	QTY	PART NAME 1 2 3 4 5 6 (PRODUCT LEVEL)	SEE PAGE
	1	1	**8C-5608**	4	SPACER (6.5X9.5X25.4-MM THK)	
	2	1	**9X-9896**	8	MOUNT (ISOLATION)	
	3	1	**260-2042**	1	BRACKET AS	
Y	4	1	*262-1421*	1	ELECTRONICS GP-COMMUNICATION (PRODUCT LINK 300)	128
M	5	1	**8C-8451**	4	BOLT (M6X1X40-MM)	
	6	1	**9X-6165**	4	WASHER (6.5X22X2.5-MM THK)	

M-METRIC PART
Y-SEPARATE ILLUSTRATION

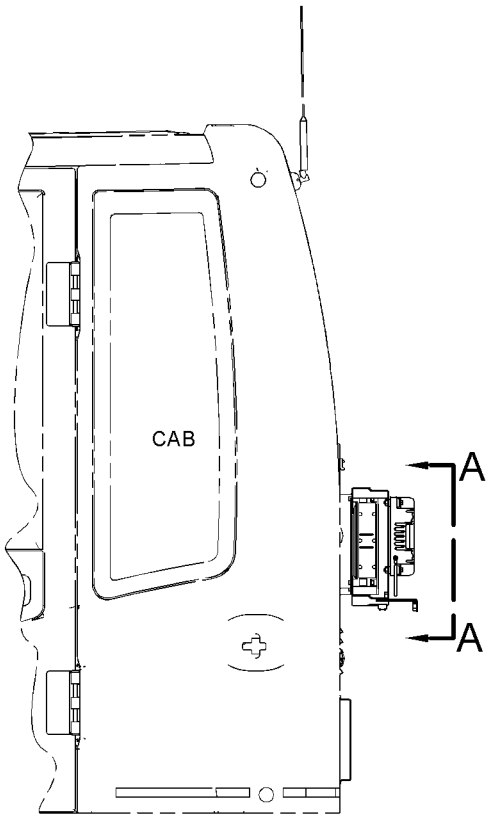

LEFT SIDE VIEW

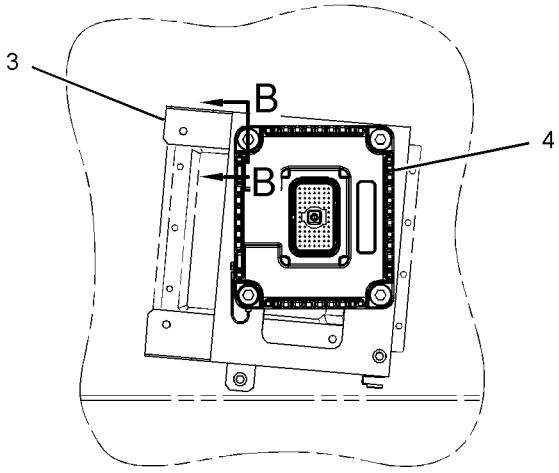

VIEW A-A

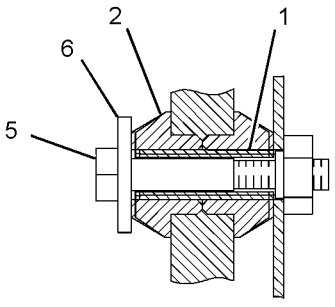

SECTION B-B

GRAPHIC #1 **<END>** g01447041

319-4256 CONTROL & MTG GP-COMMUNICATION–

PRODUCT LINK 121SR

S/N: CLA1-UP

PART OF 301-2583, 301-2584 INSTALLATION AR-COMMUNICATION

AN ATTACHMENT

SMCS-7606 **i02897155**

NOTE	REF NO	GRAPHIC REF	PART NUMBER	QTY	PART NAME 1 2 3 4 5 6 (PRODUCT LEVEL)	SEE PAGE
	1	1	**3S-2093**	2	STRAP-CABLE	
Y	2	1	**263-9088**	1	RADIO GP-COMMUNICATION (PRODUCT LINK 121SR)	867
M	3	1	**8T-4138**	4	BOLT (M6X1X20-MM)	
	4	1	**9X-8256**	4	WASHER (6.6X12X2-MM THK)	
	5	1	**230-1341**	1	FILM-WARNING (PRODUCT LINK RADIO, INTL)	
					–OR–	
			230-1340	1	FILM-WARNING (PRODUCT LINK RADIO, U.S.)	

M-METRIC PART
Y-SEPARATE ILLUSTRATION

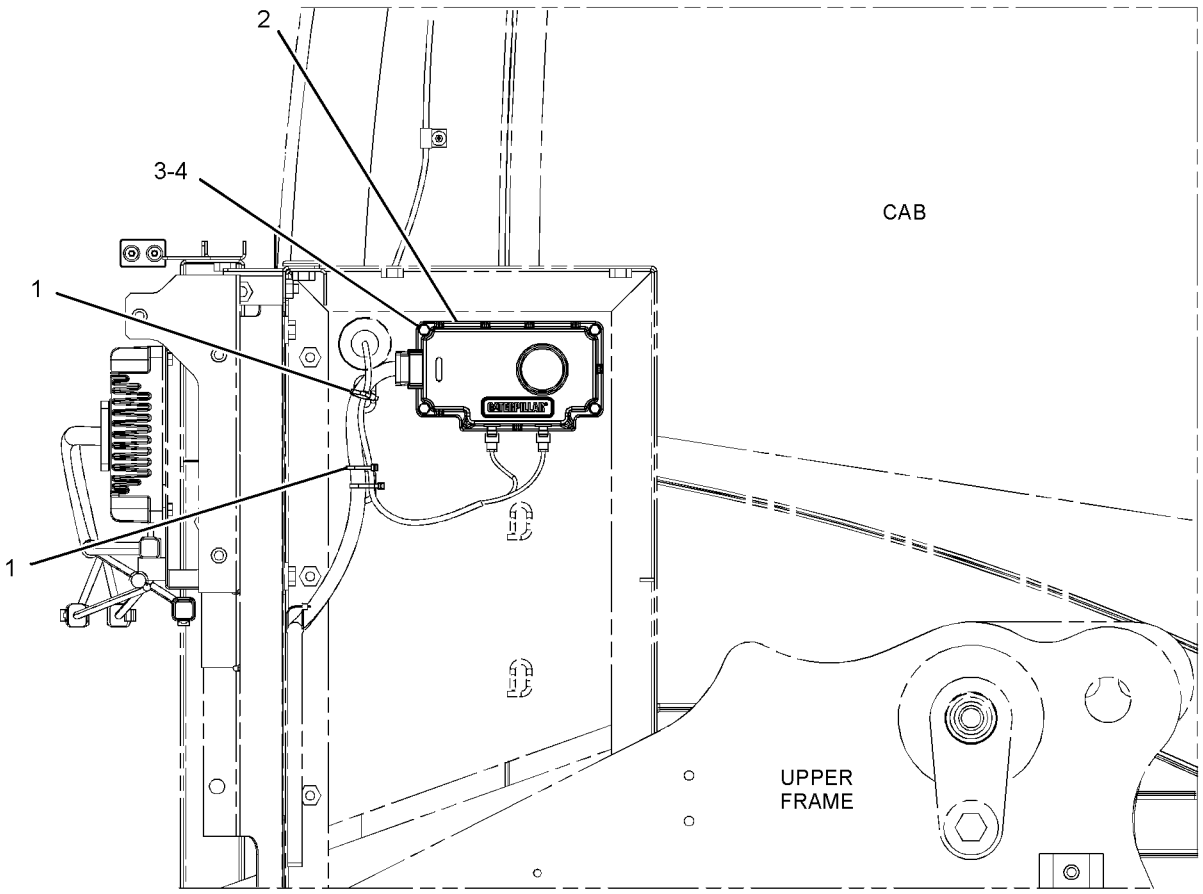

RIGHT SIDE VIEW

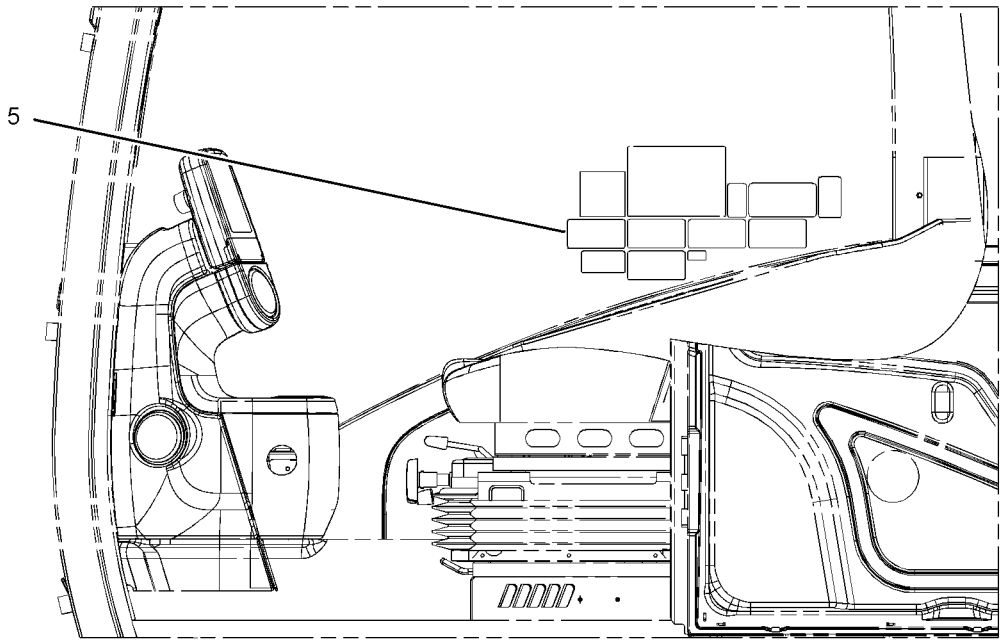

LEFT SIDE VIEW
(CAB)

GRAPHIC #1 **<END>** g01452643

296-4800 CONTROL & MTG GP-ENGINE ELEK

S/N: JKH1-UP
PART OF 279-7805 ENGINE AR
ALSO AN ATTACHMENT

SMCS-1901 **i02710566**

NOTE	REF NO	GRAPHIC REF	PART NUMBER	QTY	PART NAME 1 2 3 4 5 6 (PRODUCT LEVEL)	SEE PAGE
	1	1	**296-4761**	1	BRACKET	
	2	1	**296-4762**	3	BOLT	
	3	1	**294-1775**	2	BOLT (M10X1.5X23-MM)	
	4	1	**286-3683**	1	CONTROL GP-UNPROGRAMMED	
	5	1	**270-6259**	4	BOLT (M8X1.25X40-MM)	
	6	1	**8T-4224**	4	WASHER-HARD (8.8X16X2-MM THK)	
	7	1	**155-0576**	8	MOUNT-ISOLATION	
	8	1	**6I-1418**	4	SPACER (8.2X12.7X28.7-MM THK)	

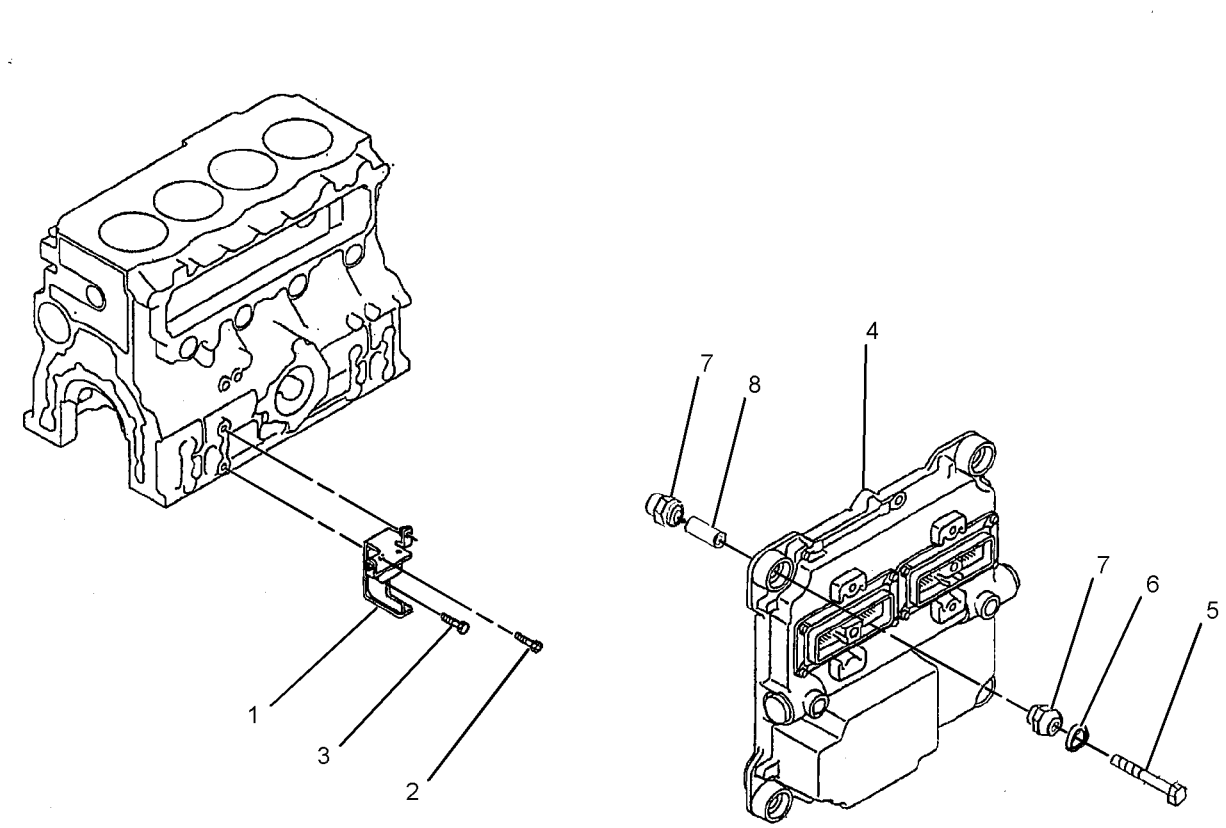

GRAPHIC #1 **<END>** g01402501

221-8872 CONTROL & MTG GP-MACHINE

S/N: CLA1-UP

PART OF 273-5363 OPERATOR AR

SMCS-1931, 7600 **i02348301**

NOTE	REF NO	GRAPHIC REF	PART NUMBER	QTY	PART NAME 1 2 3 4 5 6 (PRODUCT LEVEL)	SEE PAGE
	1	1	**221-8874**	1	CONTROL GP-UNPROGRAMMED	
M	2	1	**9X-2480**	4	BOLT (M6X1X45-MM)	
	3	1	**9X-8256**	4	WASHER (6.6X12X2-MM THK)	

M-METRIC PART

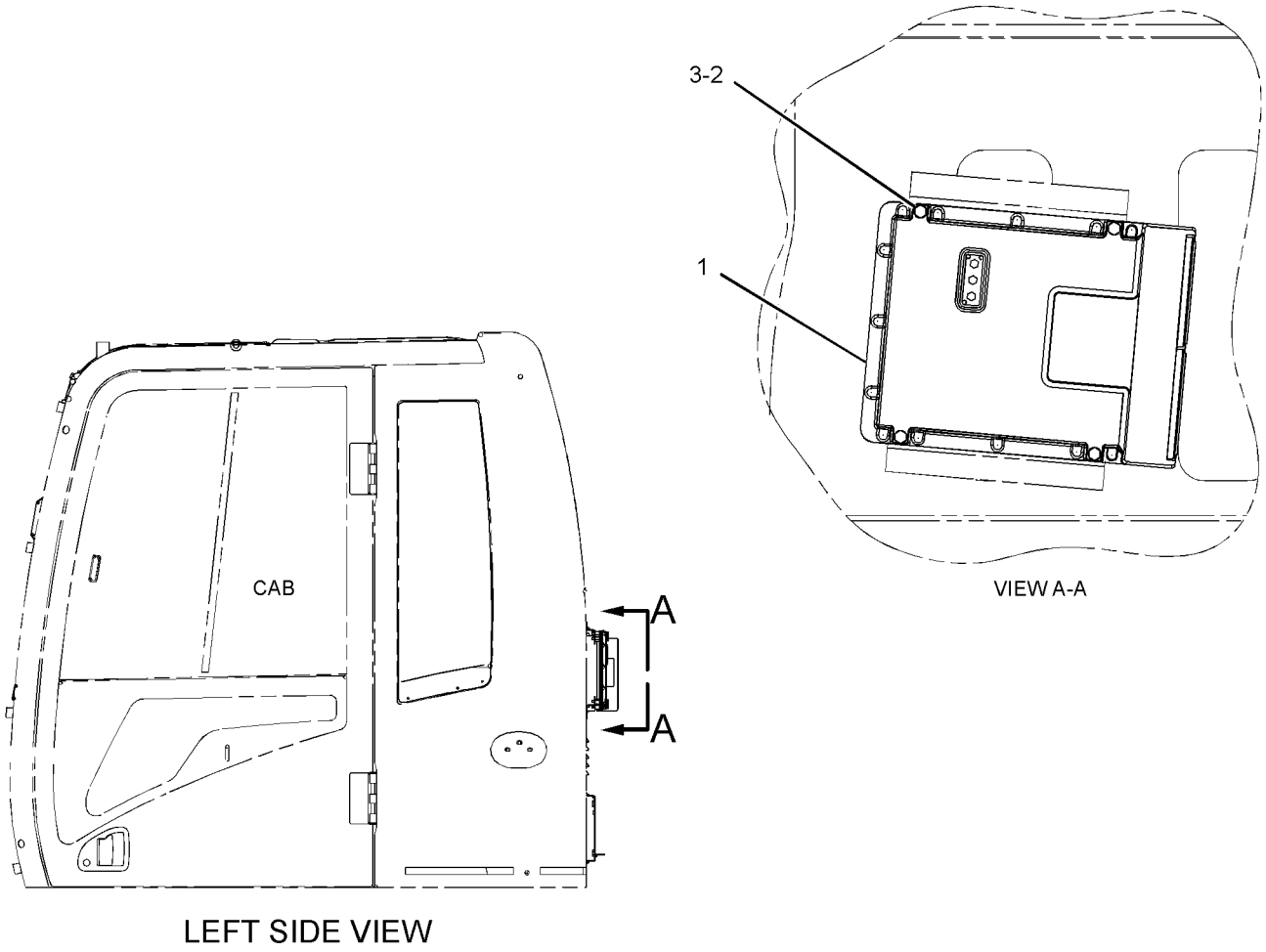

GRAPHIC #1 **<END>** g01150750

262-1421 ELECTRONICS GP-COMMUNICATION–
PRODUCT LINK 300
S/N: CLA1-UP
PART OF 309-5842 CONTROL & MTG GP-COMMUNICATION
AN ATTACHMENT

SMCS-7606, 7610, 7620 **i03136107**

NOTE	PART NUMBER	QTY	PART NAME 1 2 3 4 5 6 (PRODUCT LEVEL)	SEE PAGE
	330-3409	1	SOFTWARE GP-COMMUNICATION (PRODUCT LINK 300)	
			–OR–	
	330-3410	1	SERVICE GP-COMMUNICATION (PRODUCT LINK 300)	
			(OPTIONAL SERVICE REPLACEMENT)(INCLUDES CONTROL GP & SOFTWARE)	
	7X-6315	1	STRAP AS-GROUND	
	126-7574	1	SCREW-PAN HEAD (8-32X9.52-MM)	
	134-4126	1	WASHER (4.52X8.28X0.76-MM THK)	

<END>

279-7576 ELECTRONICS GP-MACHINE
S/N: CLA1-UP
PART OF 260-7228 GENERAL AR

SMCS-7610, 7620 **i03159286**

NOTE	PART NUMBER	QTY	PART NAME 1 2 3 4 5 6 (PRODUCT LEVEL)	SEE PAGE
	327-7391	1	SOFTWARE GP-MACHINE	
			-OR-	
	327-7394	1	SERVICE GP-MACHINE	
			(OPTIONAL SERVICE REPLACEMENT)(INCLUDES CONTROL GP & SOFTWARE)	

<END>

290-9429 ELECTRONICS GP-MACHINE–HIGH AMBIENT
S/N: CLA1-UP
AN ATTACHMENT

SMCS-7610, 7620 **i03001030**

NOTE	PART NUMBER	QTY	PART NAME 1 2 3 4 5 6 (PRODUCT LEVEL)	SEE PAGE
	319-4433	1	SOFTWARE GP-MACHINE	
			–OR–	
	319-4434	1	SERVICE GP-MACHINE	
			(OPTIONAL SERVICE REPLACEMENT) (INCLUDES CONTROL GP & SOFTWARE)	

<END>

221-8861 ELECTRONICS GP-MONITOR

S/N: CLA1-UP

PART OF 260-7228 GENERAL AR

SMCS-7490, 7601, 7610, 7620 **i03250673**

NOTE	PART NUMBER	QTY	PART NAME 1 2 3 4 5 6 (PRODUCT LEVEL)	SEE PAGE
	327-7486	1	SOFTWARE GP-MONITOR	
			—OR—	
	327-7483	1	MONITOR GP-OPERATOR	
			(OPTIONAL SERVICE REPLACEMENT)(PREPROGRAMMED CONTROL GP)	

<END>

259-5293 FASTENER GP-WIRING HARNESS–PEDAL CONTROL

S/N: CLA1-UP

PART OF 255-5845 PEDAL AR-AUXILIARY

AN ATTACHMENT

SMCS-1408, 7553 **i02527277**

NOTE	REF NO	GRAPHIC REF	PART NUMBER	QTY	PART NAME 1 2 3 4 5 6 (PRODUCT LEVEL)	SEE PAGE
	1	1	**116-0118**	1	CLIP	
M	2	1	**7X-2621**	1	BOLT (M10X1.5X12-MM)	
	3	1	**8T-4121**	1	WASHER-HARD (11X21X2.5-MM THK)	

M-METRIC PART

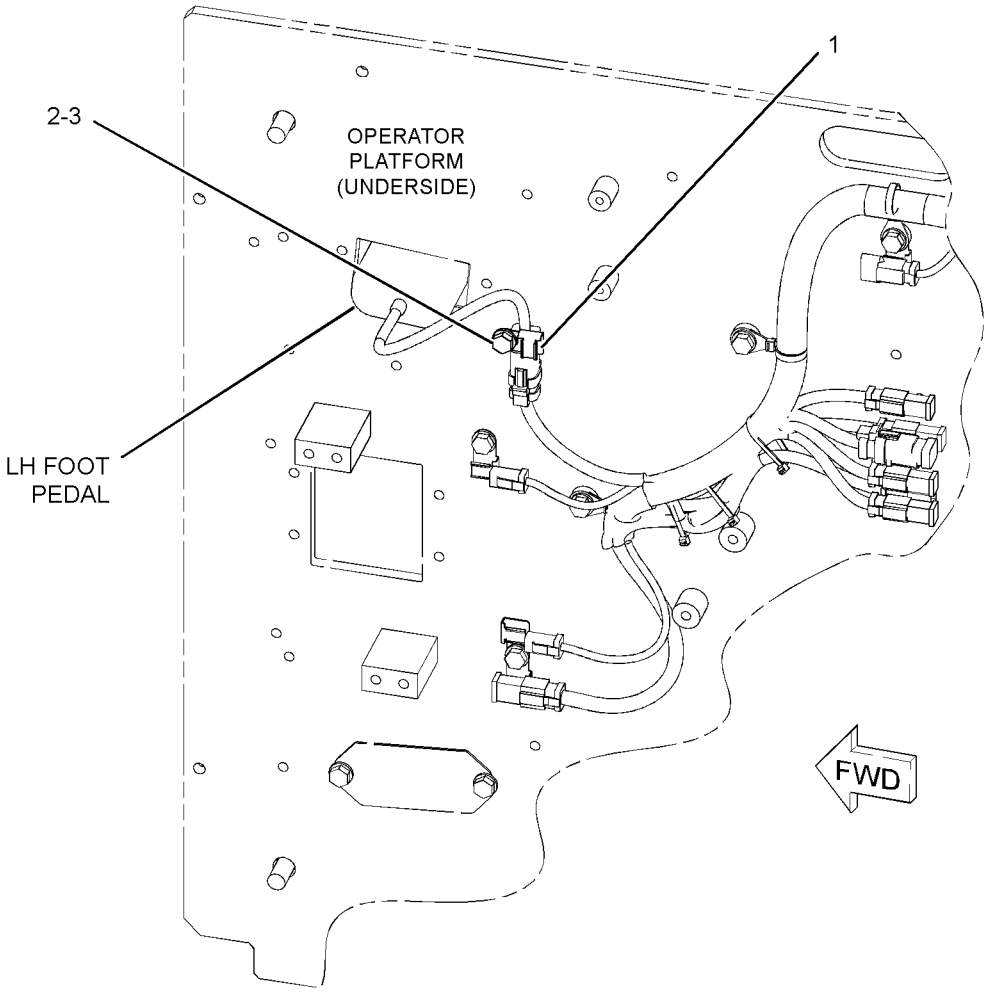

GRAPHIC #1 **<END>** g01264273

259-5294 FASTENER GP-WIRING HARNESS–FOOT SWITCH

S/N: CLA1-UP
PART OF 270-6106 CONTROL AR-AUXILIARY
AN ATTACHMENT

SMCS-1408, 7553 **i02430270**

NOTE	REF NO	GRAPHIC REF	PART NUMBER	QTY	PART NAME 1 2 3 4 5 6 (PRODUCT LEVEL)	SEE PAGE
	1	1	**116-0118**	1	CLIP	
M	2	1	**7X-2621**	1	BOLT (M10X1.5X12-MM)	
	3	1	**8T-4121**	1	WASHER-HARD (11X21X2.5-MM THK)	

M-METRIC PART

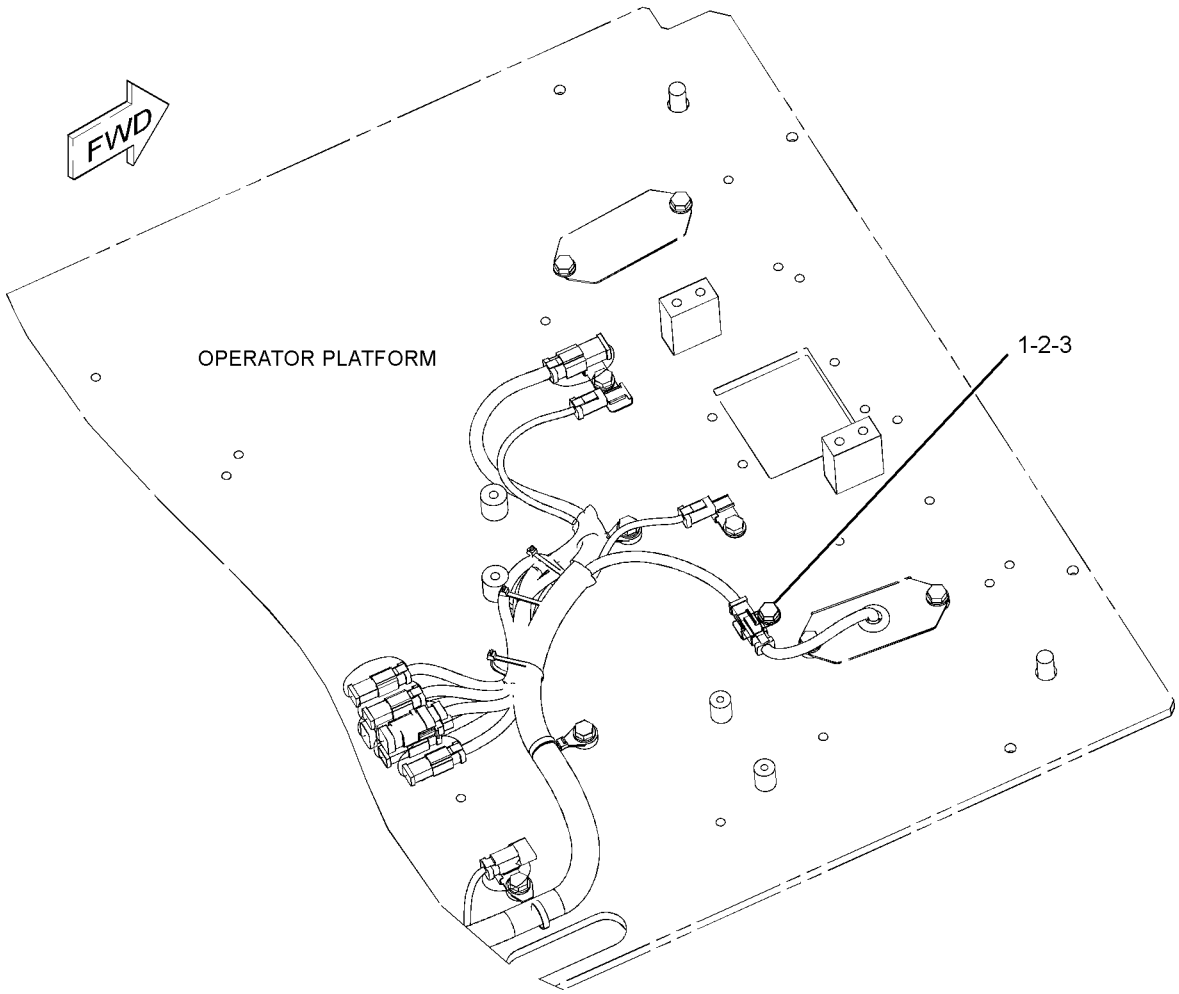

GRAPHIC #1 **<END>** g01156526

259-5295 FASTENER GP-WIRING HARNESS–JOYSTICK

S/N: CLA1-UP

PART OF 255-5843, 255-5844 CONTROL AR-AUXILIARY

AN ATTACHMENT

SMCS-1408, 7553 **i02425705**

NOTE	REF NO	GRAPHIC REF	PART NUMBER	QTY	PART NAME 1 2 3 4 5 6 (PRODUCT LEVEL)	SEE PAGE
	1	1	**3S-2093**	2	STRAP-CABLE	

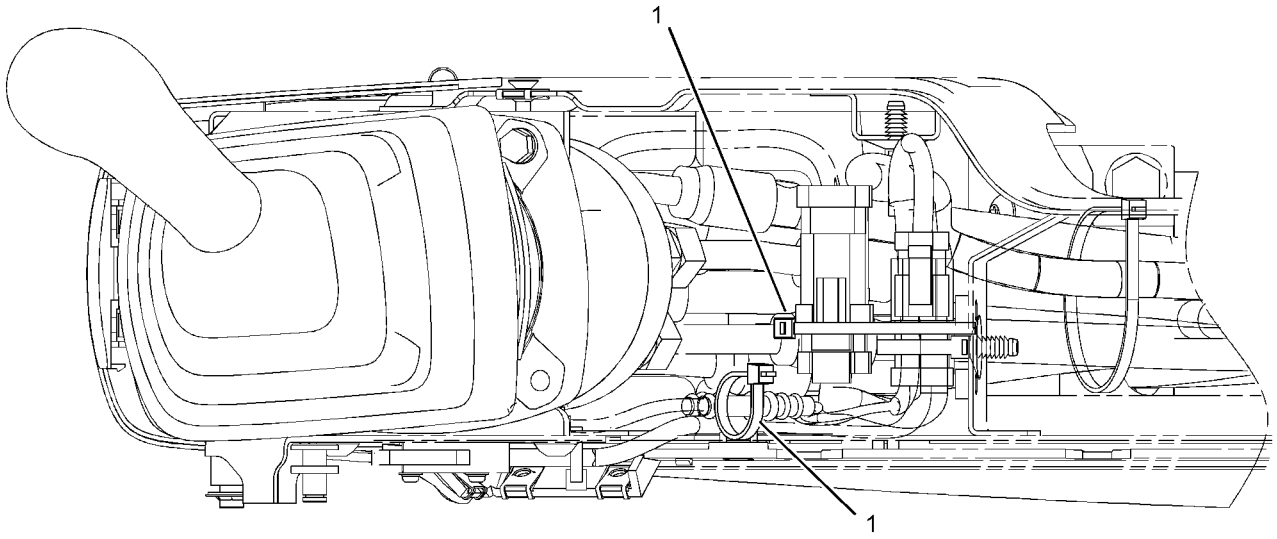

GRAPHIC #1 **<END>** g01160306

275-7063 FASTENER GP-WIRING HARNESS

S/N: CLA1-UP
PART OF 270-5869 VALVE AR-ALT PATTERN CONTROL
AN ATTACHMENT

SMCS-1408, 7553 **i02809113**

NOTE	REF NO	GRAPHIC REF	PART NUMBER	QTY	PART NAME 1 2 3 4 5 6 (PRODUCT LEVEL)	SEE PAGE
	1	1	**3S-2093**	1	STRAP-CABLE	
	2	1	**116-0118**	1	CLIP	
	3	1	**8T-4121**	1	WASHER-HARD (11X21X2.5-MM THK)	
M	4	1	**8T-4191**	1	BOLT (M10X1.5X16-MM)	

M-METRIC PART

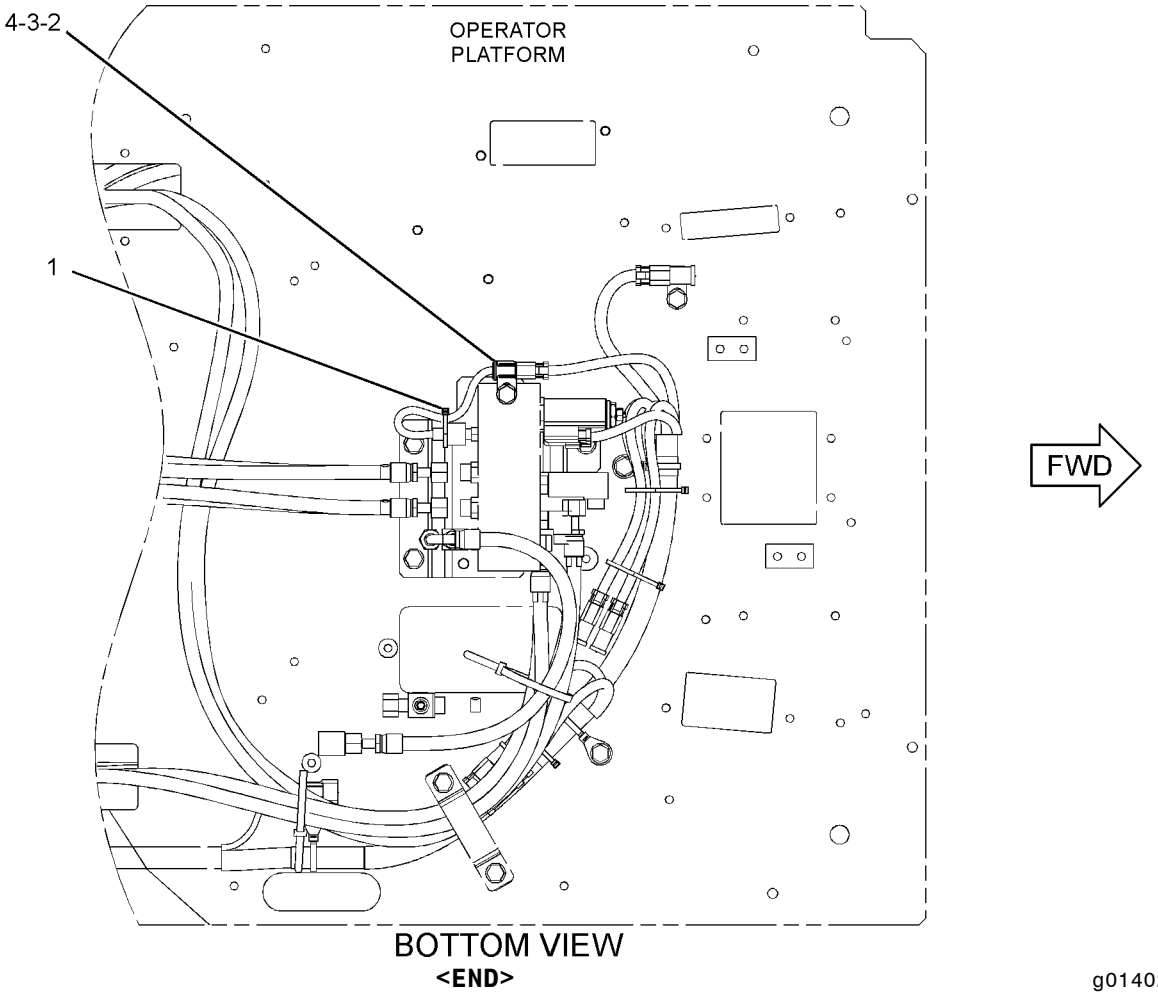

GRAPHIC #1

<END>

g01402066

291-7764 FASTENER GP-WIRING HARNESS–BLADE

S/N: CLA1-UP
PART OF 283-8789 INSTALLATION AR-BLADE
AN ATTACHMENT

SMCS-1408, 7553 **i02910130**

NOTE	REF NO	GRAPHIC REF	PART NUMBER	QTY	PART NAME 1 2 3 4 5 6 (PRODUCT LEVEL)	SEE PAGE
	1	1	**3S-2093**	5	STRAP-CABLE	
	2	1	**116-0118**	1	CLIP	
M	3	1	**7X-2621**	1	BOLT (M10X1.5X12-MM)	
	4	1	**8T-4121**	1	WASHER-HARD (11X21X2.5-MM THK)	

M-METRIC PART

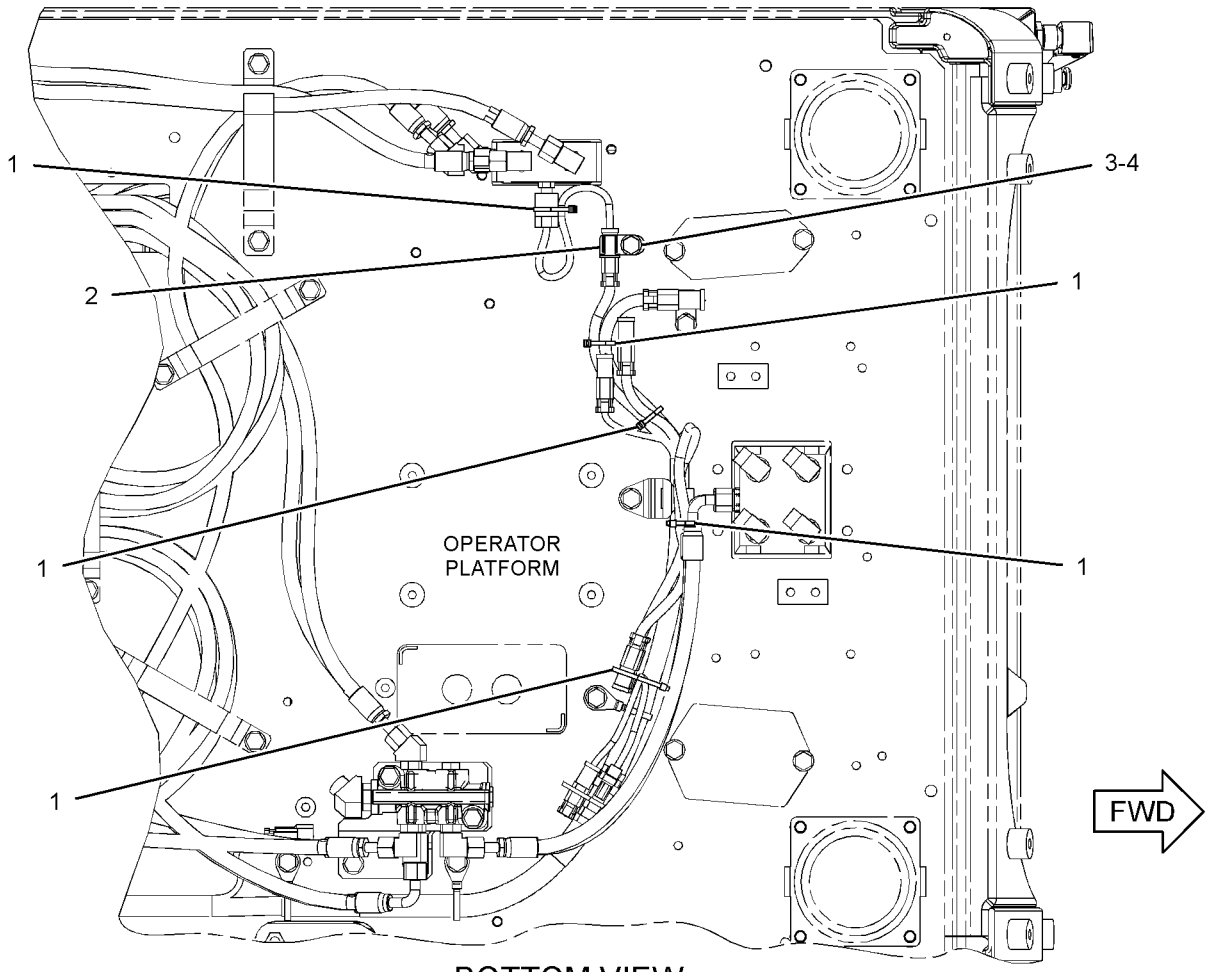

BOTTOM VIEW

GRAPHIC #1

<END>

g01451484

301-2583 INSTALLATION AR-COMMUNICATION–
PRODUCT LINK 121SR
S/N: CLA1-UP
AN ATTACHMENT

SMCS-7606 **i02897926**

NOTE	PART NUMBER	QTY	PART NAME 1 2 3 4 5 6 (PRODUCT LEVEL)	SEE PAGE
Y	*319-4254*	1	ANTENNA & MOUNTING GP (PRODUCT LINK, ANTENNA)	720
Y	*319-4256*	1	CONTROL & MTG GP-COMMUNICATION (PRODUCT LINK 121SR)	124
Y	*283-2605*	1	WIRING GP-COMMUNICATION (PRODUCT LINK 121SR)	212
Y-SEPARATE ILLUSTRATION				

<END>

301-2584 INSTALLATION AR-COMMUNICATION–
PRODUCT LINK 321SR
S/N: CLA1-UP
AN ATTACHMENT

SMCS-7606 **i02897927**

NOTE	PART NUMBER	QTY	PART NAME 1 2 3 4 5 6 (PRODUCT LEVEL)	SEE PAGE
Y	*319-4254*	1	ANTENNA & MOUNTING GP (PRODUCT LINK, ANTENNA)	720
Y	*309-5842*	1	CONTROL & MTG GP-COMMUNICATION (PRODUCT LINK 321SR)	123
Y	*319-4256*	1	CONTROL & MTG GP-COMMUNICATION (PRODUCT LINK 121SR)	124
Y	*283-2604*	1	WIRING GP-COMMUNICATION (PRODUCT LINK 321SR)	210
Y-SEPARATE ILLUSTRATION				

<END>

ELECTRICAL AND STARTING SYSTEM

227-7581 INSTALLATION GP-SECURITY

S/N: CLA1-UP

AN ATTACHMENT

SMCS-7631 **i02397785**

NOTE	REF NO	GRAPHIC REF	PART NUMBER	QTY	PART NAME 1 2 3 4 5 6 (PRODUCT LEVEL)	SEE PAGE
	1	1	**8C-5607**	4	MOUNT-ISOLATION	
	2	1	**8C-5608**	2	SPACER (6.5X9.5X25.4-MM THK)	
	3	1	**206-5162**	2	KEY AS-ELECTRONIC (SECURITY)	
	4	1	**218-0404**	1	MODULE GP-INTERFACE (KEY)	
	5	1	**219-6314**	2	KEY RING (IDENTIFICATION)	
Y	6	1	*251-0544*	1	PANEL GP-SWITCH (ENGINE SPEED, START)	162
M	7	1	**7X-2533**	2	BOLT (M6X1X35-MM)	
	8	1	**9X-6165**	2	WASHER (6.5X22X2.5-MM THK)	

M-METRIC PART
Y-SEPARATE ILLUSTRATION

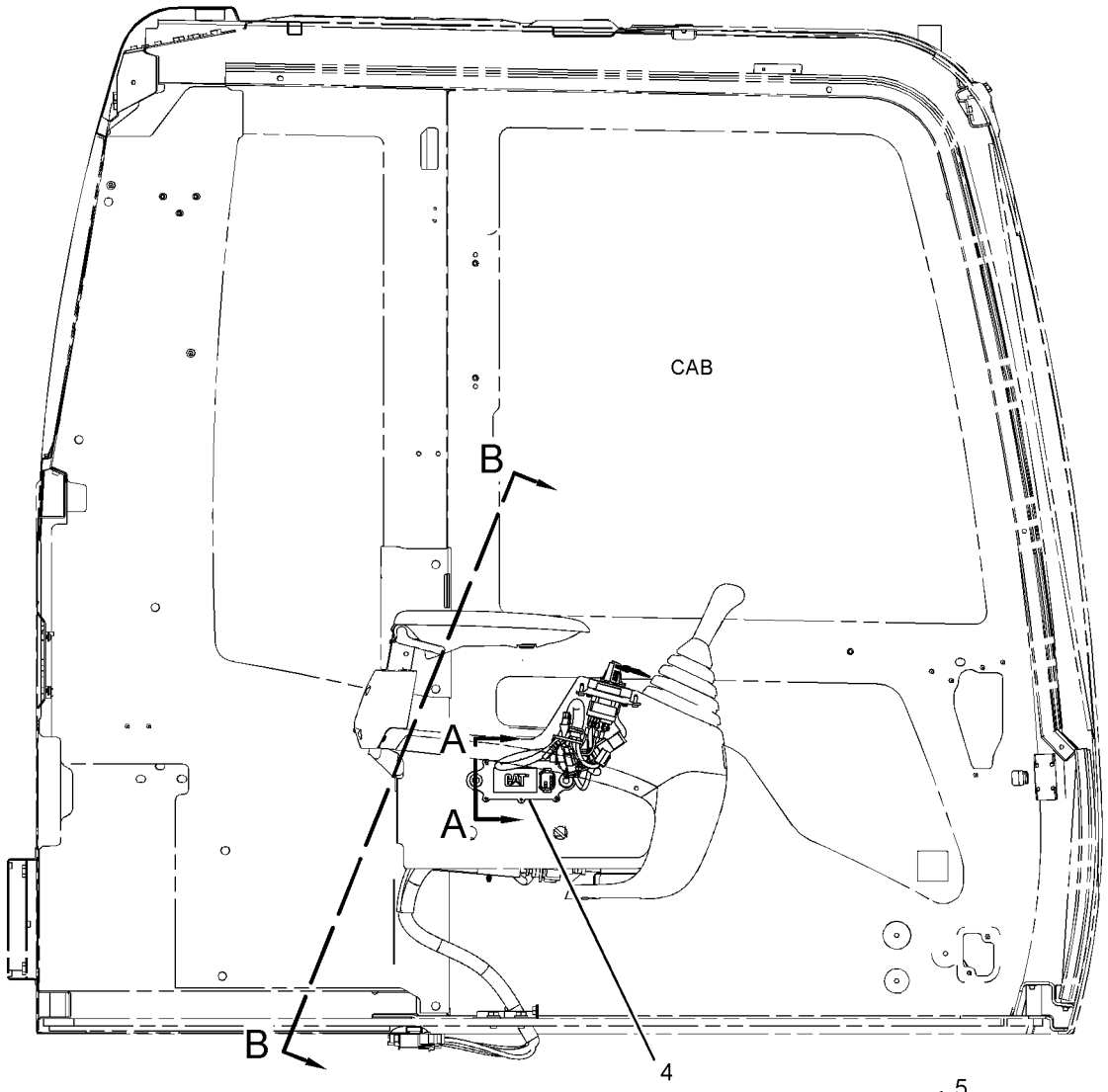

RIGHT SIDE VIEW

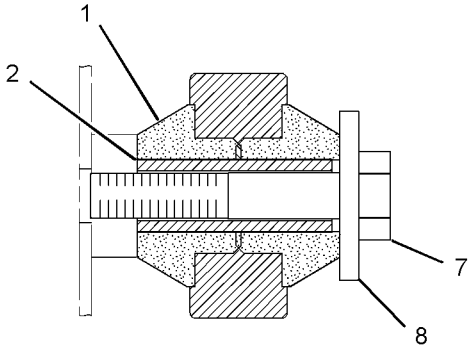

SECTION A-A

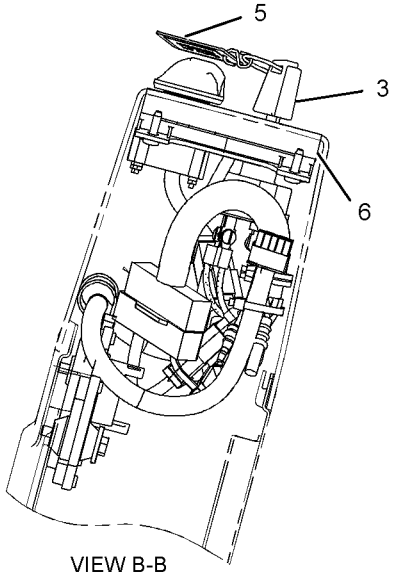

VIEW B-B

GRAPHIC #1 **<END>** g01196691

291-7701 KIT-BRACKET—PRODUCT LINK 121SR, 321SR

S/N: CLA1-UP

PROVIDES MOUNTING PARTS FOR PRODUCT LINK SYSTEM

FIELD INSTALLATION

SMCS-0635, 7606 **i02595811**

NOTE	PART NUMBER	QTY	PART NAME 1 2 3 4 5 6 (PRODUCT LEVEL)	SEE PAGE
M	**8T-4171**	1	BOLT (M6X1X12-MM)	
M	**8T-4190**	1	BOLT (M16X2X25-MM)	
	270-5433	1	BRACKET	
	260-2042	1	BRACKET AS	
	096-3872	1	GROMMET	
	291-7700	1	HARNESS AS-WIRING	
	155-2274	1	KIT-CONNECTING PLUG (6-PIN)	
			(INCLUDES PLUG AS, WEDGE & INTERFACE SEAL)	
	243-4508	1	RECEPTACLE AS-CONNECTOR (6-PIN)	
	9X-8256	1	WASHER (6.6X12X2-MM THK)	
	9X-8257	1	WASHER (17.5X30X3.5-MM THK)	

M-METRIC PART

<END>

153-2521 LAMP GP-FLOOD

S/N: CLA1-UP
24-VOLT
PART OF 275-7014, 283-2602, 283-2603 LIGHTING GP-FLOOD
ALSO AN ATTACHMENT

SMCS-1434 **i02743410**

NOTE	REF NO	GRAPHIC REF	PART NUMBER	QTY	PART NAME 1 2 3 4 5 6 (PRODUCT LEVEL)	SEE PAGE
M	1	1	**6V-5210**	2	SCREW-MACHINE (M4X0.7X10-MM)	
	2	1	**3B-4501**	2	LOCKWASHER	
	3	1	**9X-3463**	1	LAMP-HALOGEN (24-VOLT, 65-WATT)	
	4	1	**8T-4223**	1	WASHER-HARD (13.5X25.5X3-MM THK)	
M	5	1	**8T-4244**	1	NUT (M12X1.75-THD)	
M	6	1	**174-7791**	1	SCREW-TAPPING	
	7	1	**5C-2889**	1	LOCKWASHER	
	8	1	**170-6993**	1	COVER	
M	9	1	**180-3861**	4	SCREW-TAPPING	
	10	1	**170-9417**	1	LENS AS (FLOODLIGHT)	
	11	1	**170-9418**	1	BAND	

M-METRIC PART

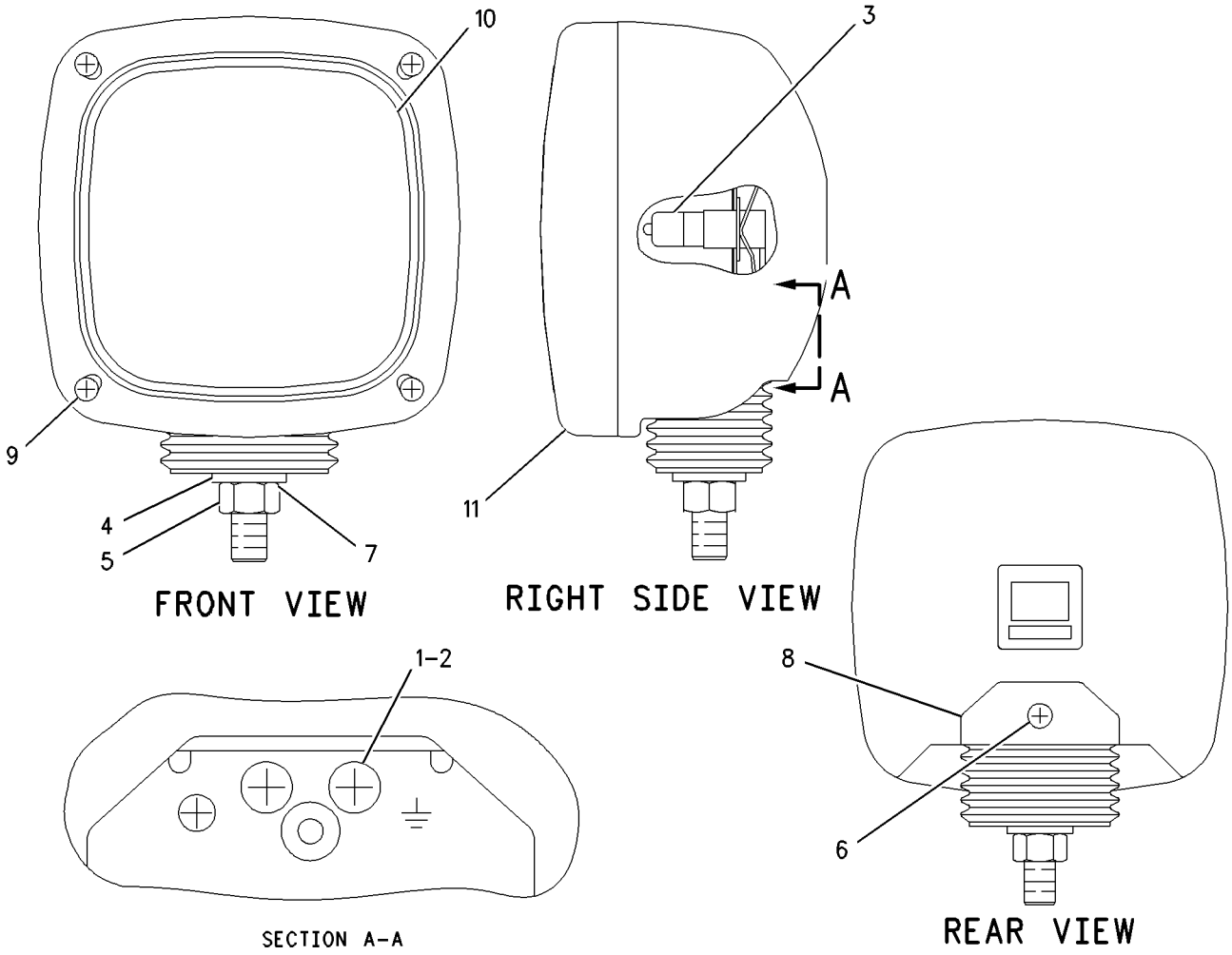

GRAPHIC #1 **<END>** g00645948

170-9294 LIGHTING GP-FLOOD–CAB GUARD

S/N: CLA1-UP
AN ATTACHMENT

SMCS-1434 **i02259861**

NOTE	REF NO	GRAPHIC REF	PART NUMBER	QTY	PART NAME 1 2 3 4 5 6 (PRODUCT LEVEL)	SEE PAGE
	1	1	**183-1035**	2	LAMP GP-FLOOD	
					(EACH INCLUDES)	
		1	**9X-3463**	1	LAMP-HALOGEN (24-VOLT, 65-WATT)	
	2	1	**163-6795**	2	STRAP-CABLE	
M	3	1	**8T-4133**	2	NUT (M10X1.5-THD)	
	4	1	**8T-4121**	4	WASHER-HARD (11X21X2.5-MM THK)	
M	5	1	**8T-4137**	2	BOLT (M10X1.5X20-MM)	
	6	1	**170-9295**	2	HARNESS AS-LIGHTING (CAB FLOODLIGHTS, FRONT)	
					(EACH INCLUDES)	
		1	**7Y-3962**	2	TERMINAL (CONNECTOR)	
		1	**7Y-3964**	2	TUBE (CONNECTOR TERMINAL)	
		1	**7Y-3963**	2	TERMINAL (RECEPTACLE)	
		1	**7Y-3965**	2	TUBE (RECEPTACLE TERMINAL)	

M-METRIC PART

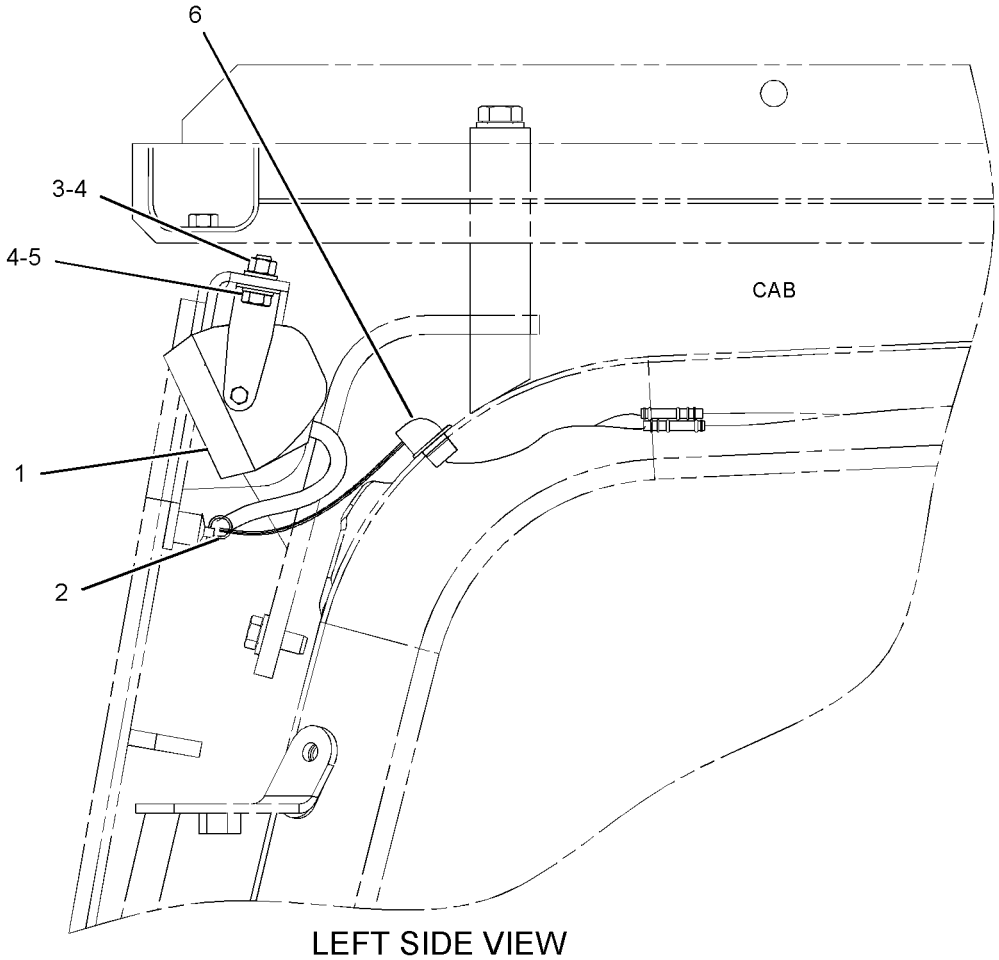

LEFT SIDE VIEW

GRAPHIC #1 **<END>** g01134805

238-1628 LIGHTING GP-FLOOD—CAB GUARD

S/N: CLA1-UP
AN ATTACHMENT

SMCS-1434 **i03130082**

NOTE	REF NO	GRAPHIC REF	PART NUMBER	QTY	PART NAME 1 2 3 4 5 6 (PRODUCT LEVEL)	SEE PAGE
	1	1	**3S-2093**	1	STRAP-CABLE	
	2	1	**163-6704**	1	TIMER AS (TIME DELAY LIGHTING)	
		1	**186-3735**	5	PIN-CONNECTOR (16-GA TO 18-GA)	
		1	**102-8802**	1	KIT-RECEPTACLE (2-PIN)	
		1	**102-8803**	1	KIT-RECEPTACLE (3-PIN)	
					(EACH RECEPTACLE KIT INCLUDES RECEPTACLE AS & WEDGE)	
	3	1	**163-6795**	2	STRAP-CABLE	
	4	1	**170-9295**	2	HARNESS AS-LIGHTING (CAB FLOODLIGHTS, FRONT)	
					(EACH INCLUDES)	
		1	**7Y-3962**	1	TERMINAL (CONNECTOR)	
		1	**7Y-3964**	1	TUBE (CONNECTOR TERMINAL)	
		1	**7Y-3963**	1	TERMINAL (RECEPTACLE)	
		1	**7Y-3965**	1	TUBE (RECEPTACLE TERMINAL)	
	5	1	**183-1035**	2	LAMP GP-FLOOD (CANOPY)	
		1	**9X-3463**	1	LAMP-HALOGEN (24-VOLT, 65-WATT) (CANOPY)	
	6	1	**238-2326**	1	PLATE AS	
	7	1	**8T-4121**	4	WASHER-HARD (11X21X2.5-MM THK)	
M	8	1	**8T-4133**	2	NUT (M10X1.5-THD)	
M	9	1	**8T-4137**	2	BOLT (M10X1.5X20-MM)	
M	10	1	**9X-2042**	2	SCREW-TRUSS HEAD (M6X1X12-MM)	
M	11	1	**9X-2043**	2	SCREW-TRUSS HEAD (M6X1X14-MM)	

M-METRIC PART

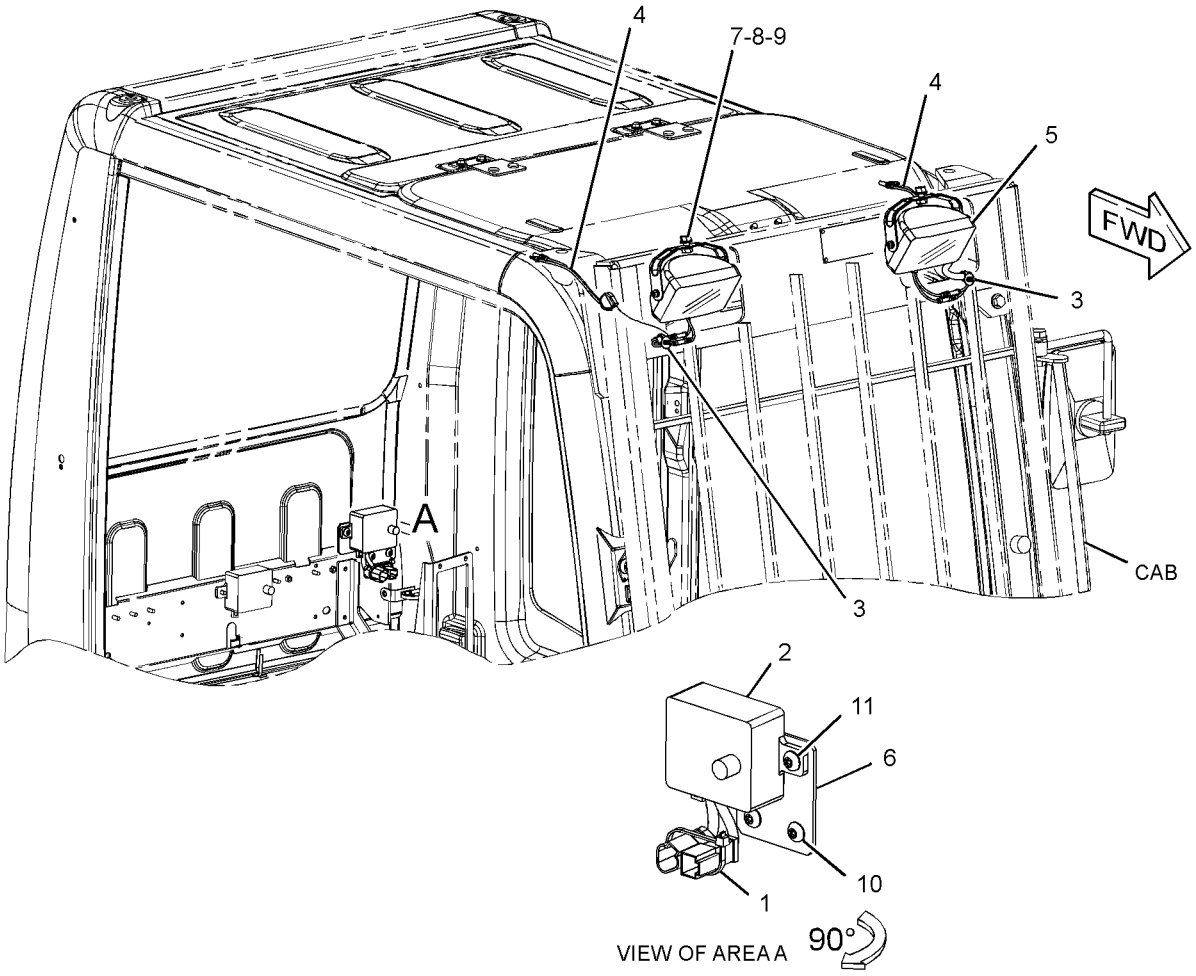

GRAPHIC #1 **<END>** g01620741

275-7014 LIGHTING GP-FLOOD

S/N: CLA1-UP

PART OF 260-7231 CHASSIS AR

SMCS-1434 **i02512251**

NOTE	REF NO	GRAPHIC REF	PART NUMBER	QTY	PART NAME 1 2 3 4 5 6 (PRODUCT LEVEL)	SEE PAGE
Y	1	1	**153-2521**	1	LAMP GP-FLOOD (24-VOLT, VERTICAL MOUNT)	139

Y-SEPARATE ILLUSTRATION

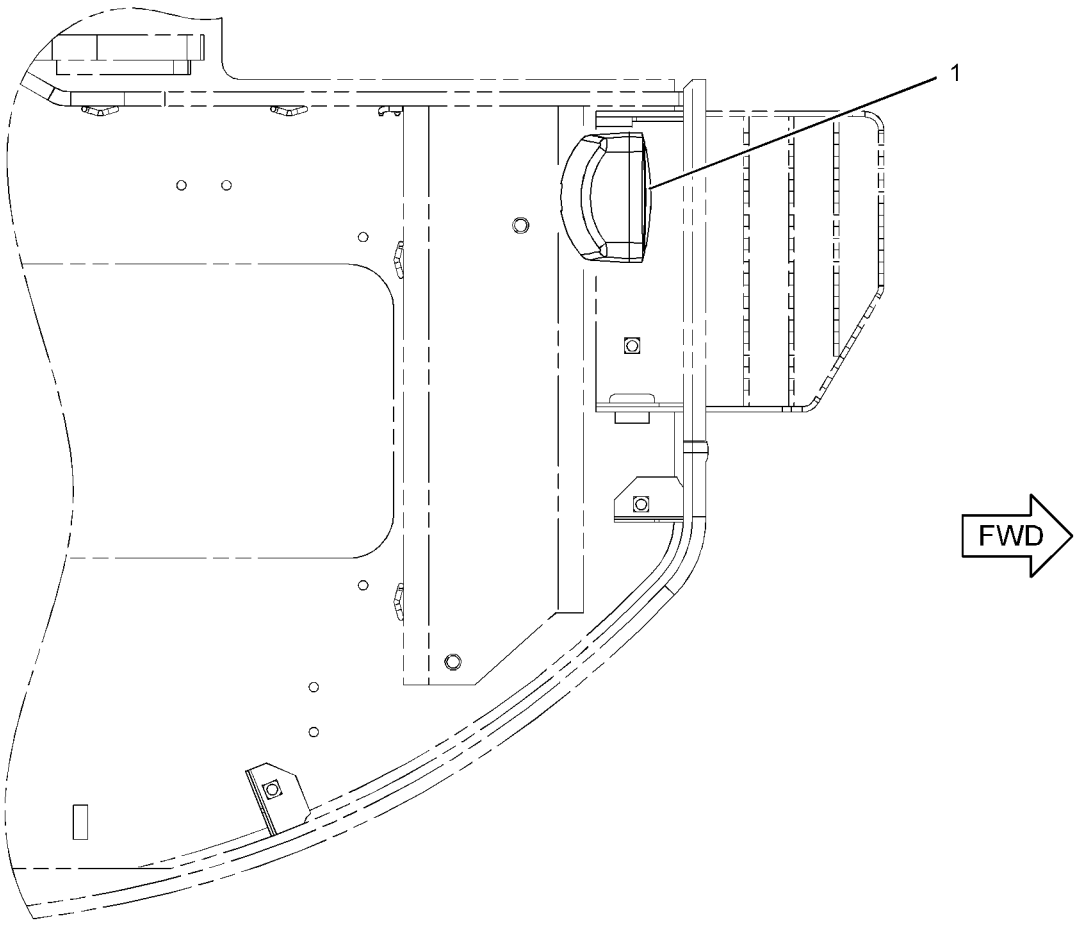

TOP VIEW

GRAPHIC #1

<END>

g01264643

283-2602 LIGHTING GP-FLOOD–BOOM, LH

S/N: CLA1-UP

PART OF 260-7236 BOOM AR, 283-9062 BOOM AR-1 PIECE LONG, 301-2552, 301-2555, 301-2647 SPECIAL AR

AN ATTACHMENT

SMCS-1434 **i02795530**

NOTE	REF NO	GRAPHIC REF	PART NUMBER	QTY	PART NAME 1 2 3 4 5 6 (PRODUCT LEVEL)	SEE PAGE
	1	1	**7I-2673**	1	STRAP-CABLE	
	2	1	**111-4836**	4	CLIP	
	3	1	**116-0118**	1	CLIP	
	4	1	**134-3284**	1	BRACKET	
Y	5	1	**153-2521**	1	LAMP GP-FLOOD (24-VOLT)	139
	6	1	**291-7883**	1	HARNESS AS-LIGHTING	
	7	1	**111-4837**	1	CLIP	
	8	1	**5P-9297**	2	CLIP	
	9	1	**8T-4121**	5	WASHER-HARD (11X21X2.5-MM THK)	
M	10	1	**8T-4133**	5	NUT (M10X1.5-THD)	
M	11	1	**8T-4190**	1	BOLT (M16X2X25-MM)	
	12	1	**9X-8257**	1	WASHER (17.5X30X3.5-MM THK)	

M-METRIC PART
Y-SEPARATE ILLUSTRATION

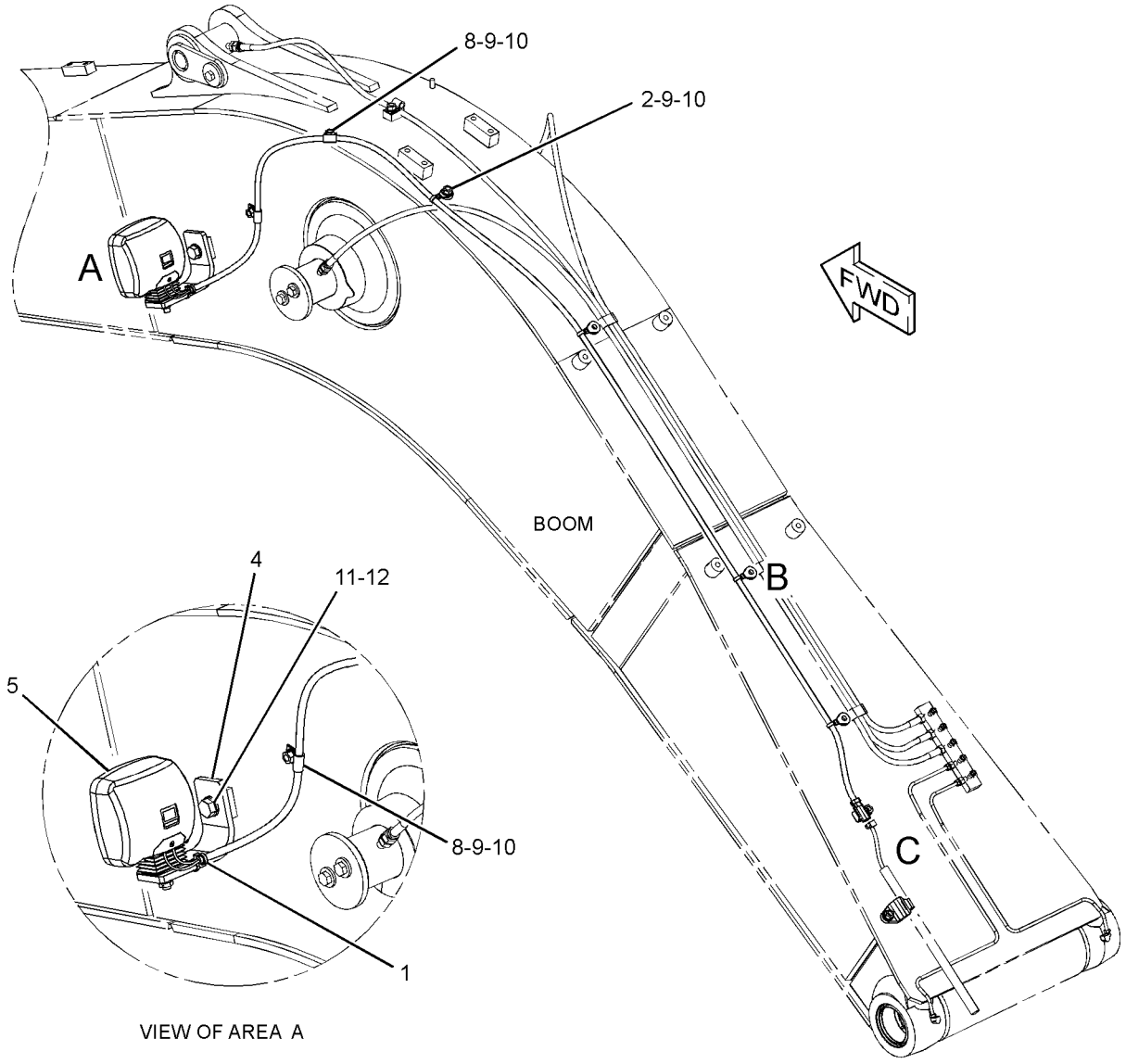

VIEW OF AREA A

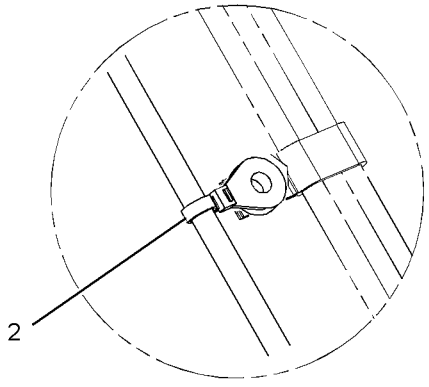

VIEW OF AREA B

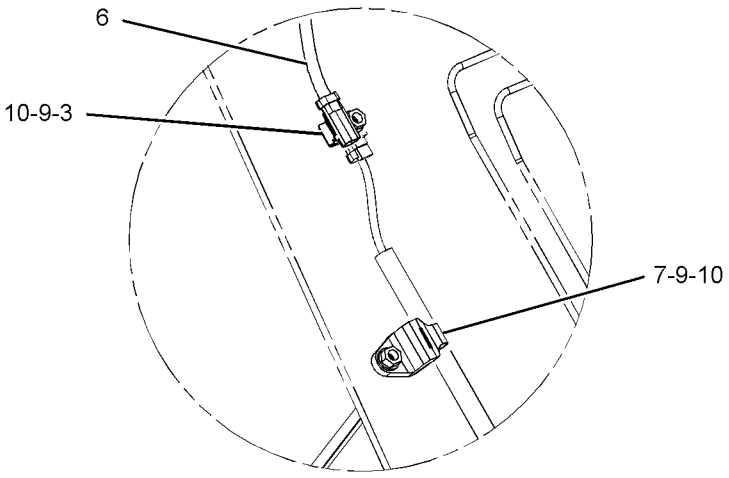

VIEW OF AREA C

GRAPHIC #1 **<END>** g01399352

283-2603 LIGHTING GP-FLOOD–BOOM, RH

S/N: CLA1-UP
AN ATTACHMENT

SMCS-1434 **i02796236**

NOTE	REF NO	GRAPHIC REF	PART NUMBER	QTY	PART NAME 1 2 3 4 5 6 (PRODUCT LEVEL)	SEE PAGE
	1	1	**3S-2093**	1	STRAP-CABLE	
	2	1	**7I-2673**	1	STRAP-CABLE	
	3	1	**134-3284**	1	BRACKET	
Y	4	1	**153-2521**	1	LAMP GP-FLOOD (24-VOLT)	139
	5	1	**283-2594**	1	HARNESS AS-LIGHTING	
	6	1	**5P-9297**	2	CLIP	
	7	1	**7N-3718**	2	CLIP	
	8	1	**8T-4121**	2	WASHER-HARD (11X21X2.5-MM THK)	
M	9	1	**8T-4133**	2	NUT (M10X1.5-THD)	
M	10	1	**8T-4190**	1	BOLT (M16X2X25-MM)	
	11	1	**9X-8257**	1	WASHER (17.5X30X3.5-MM THK)	

M-METRIC PART
Y-SEPARATE ILLUSTRATION

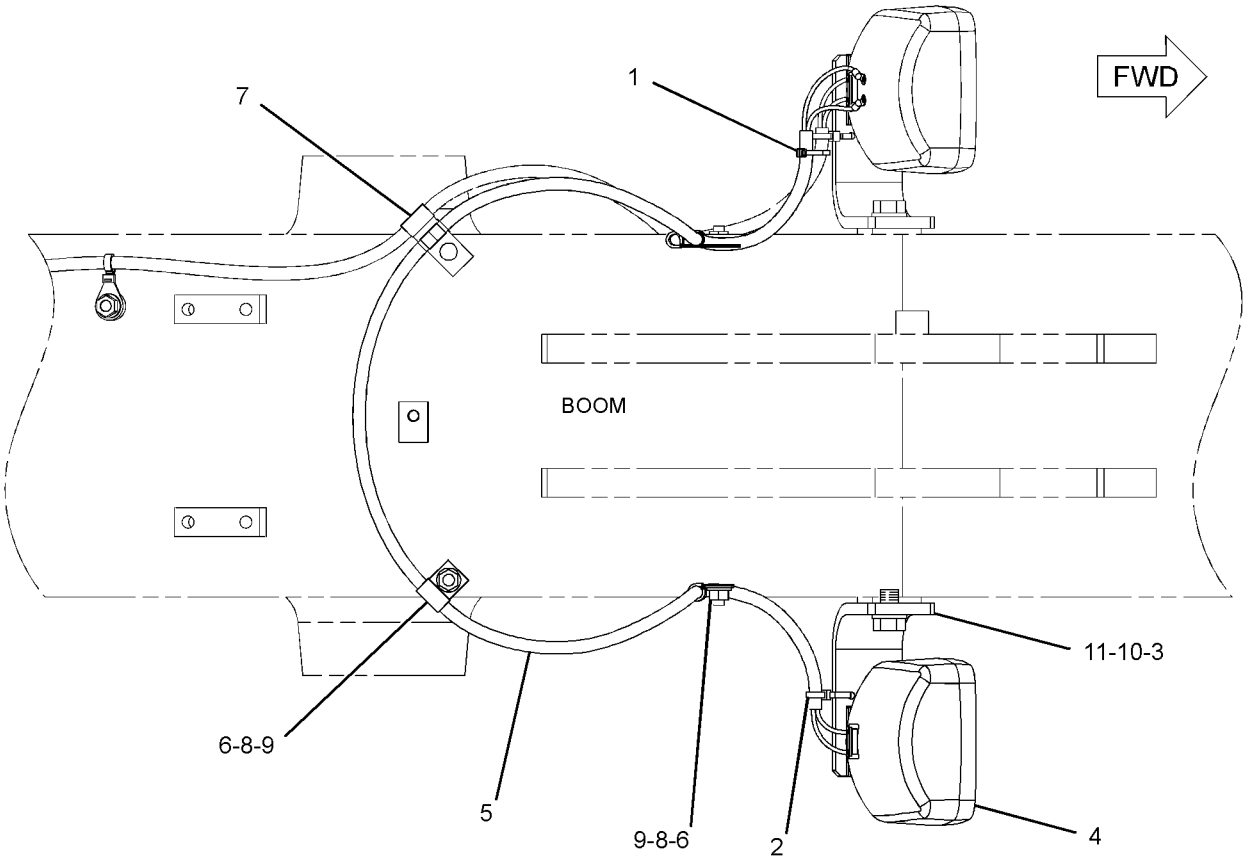

TOP VIEW

GRAPHIC #1 **<END>** g01400655

291-7862 LIGHTING GP-FLOOD—CAB

S/N: CLA1-UP

CANNOT BE USED WITH 291-7863—PAGE 149

AN ATTACHMENT

SMCS-1434 **i02795386**

NOTE	REF NO	GRAPHIC REF	PART NUMBER	QTY	PART NAME 1 2 3 4 5 6 (PRODUCT LEVEL)	SEE PAGE
	1	1	**7I-2673**	2	STRAP-CABLE	
	2	1	**183-1032**	1	BRACKET AS	
	3	1	**183-1035**	2	LAMP GP-FLOOD	
		1	**9X-3463**	1	LAMP-HALOGEN (24-VOLT, 65-WATT)	
	4	1	**291-7864**	1	HARNESS AS-LIGHTING	
	5	1	**8T-4121**	4	WASHER-HARD (11X21X2.5-MM THK)	
M	6	1	**8T-4133**	2	NUT (M10X1.5-THD)	
M	7	1	**8T-4137**	2	BOLT (M10X1.5X20-MM)	
M	8	1	**8T-4189**	3	BOLT (M8X1.25X20-MM)	
M	9	1	**8T-4190**	1	BOLT (M16X2X25-MM)	
	10	1	**8T-4224**	3	WASHER-HARD (8.8X16X2-MM THK)	
	11	1	**9X-8257**	1	WASHER (17.5X30X3.5-MM THK)	

M-METRIC PART

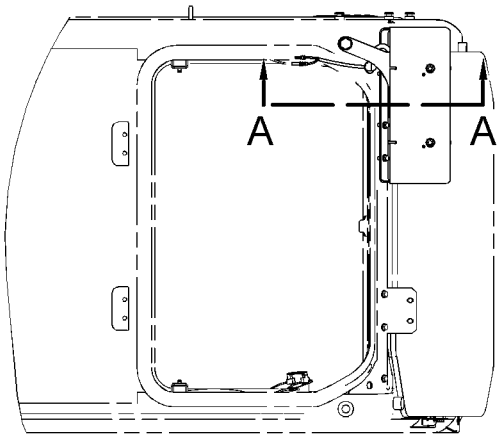

TOP VIEW FWD

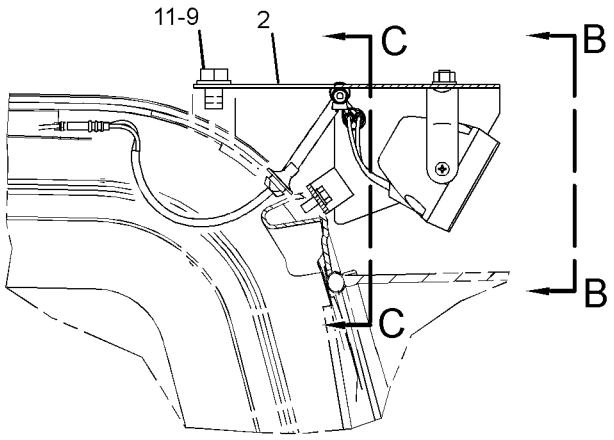

SECTION A-A

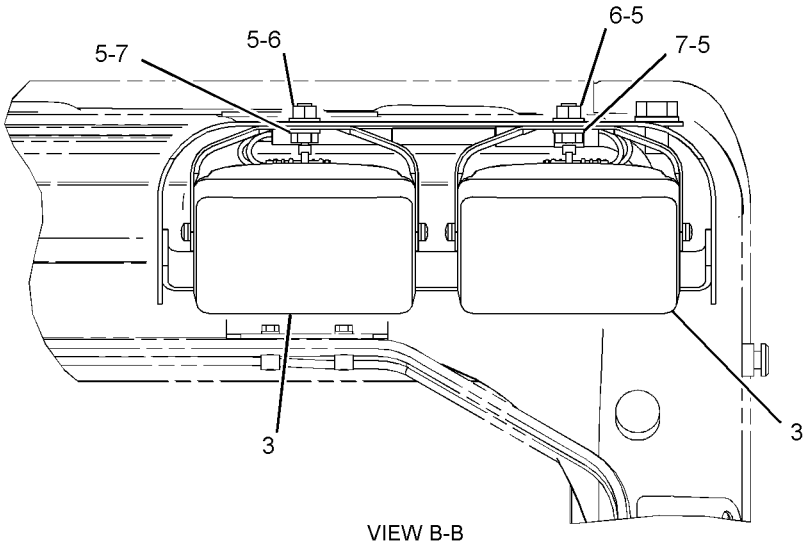

VIEW B-B

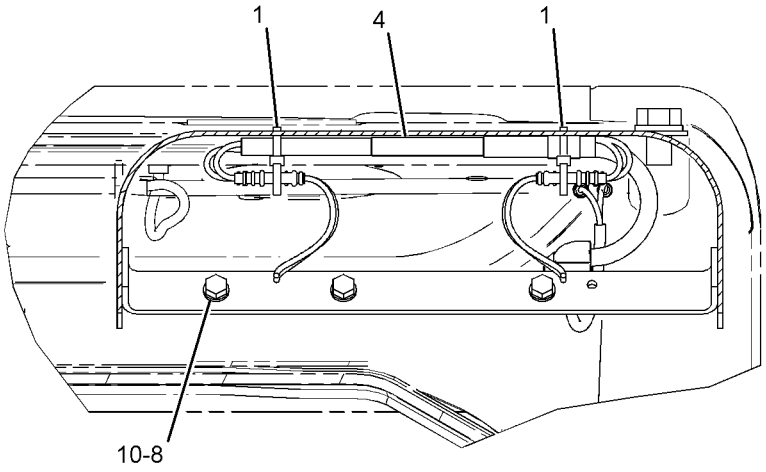

SECTION C-C

GRAPHIC #1 **<END>** g01445499

291-7863 LIGHTING GP-FLOOD—TIMER-ON DELAY

S/N: CLA1-UP

CANNOT BE USED WITH 291-7862—PAGE 147

AN ATTACHMENT

SMCS-1434 **i02795389**

NOTE	REF NO	GRAPHIC REF	PART NUMBER	QTY	PART NAME 1 2 3 4 5 6 (PRODUCT LEVEL)	SEE PAGE
	1	1	**3S-2093**	1	STRAP-CABLE	
	2	1	**7I-2673**	2	STRAP-CABLE	
	3	1	**163-6704**	1	TIMER AS (TIME DELAY LIGHTING)	
		1	**102-8802**	1	KIT-RECEPTACLE (2-PIN)	
		1	**102-8803**	1	KIT-RECEPTACLE (3-PIN)	
					(EACH RECEPTACLE KIT INCLUDES RECEPTACLE AS & WEDGE)	
		1	**186-3735**	5	PIN-CONNECTOR (16-GA TO 18-GA)	
	4	1	**183-1032**	1	BRACKET AS	
	5	1	**183-1035**	2	LAMP GP-FLOOD (CANOPY)	
					(EACH INCLUDES)	
		1	**9X-3463**	1	LAMP-HALOGEN (24-VOLT, 65-WATT)	
	6	1	**238-2326**	1	PLATE AS	
M		1	**6V-9632**	2	NUT-WELD (M6X1-THD)	
	7	1	**291-7864**	1	HARNESS AS-LIGHTING	
	8	1	**8T-4121**	4	WASHER-HARD (11X21X2.5-MM THK)	
M	9	1	**8T-4133**	2	NUT (M10X1.5-THD)	
M	10	1	**8T-4137**	2	BOLT (M10X1.5X20-MM)	
M	11	1	**8T-4189**	3	BOLT (M8X1.25X20-MM)	
M	12	1	**8T-4190**	1	BOLT (M16X2X25-MM)	
	13	1	**8T-4224**	3	WASHER-HARD (8.8X16X2-MM THK)	
M	14	1	**9X-2042**	2	SCREW-TRUSS HEAD (M6X1X12-MM)	
M	15	1	**9X-2043**	2	SCREW-TRUSS HEAD (M6X1X14-MM)	
	16	1	**9X-8257**	1	WASHER (17.5X30X3.5-MM THK)	

M-METRIC PART

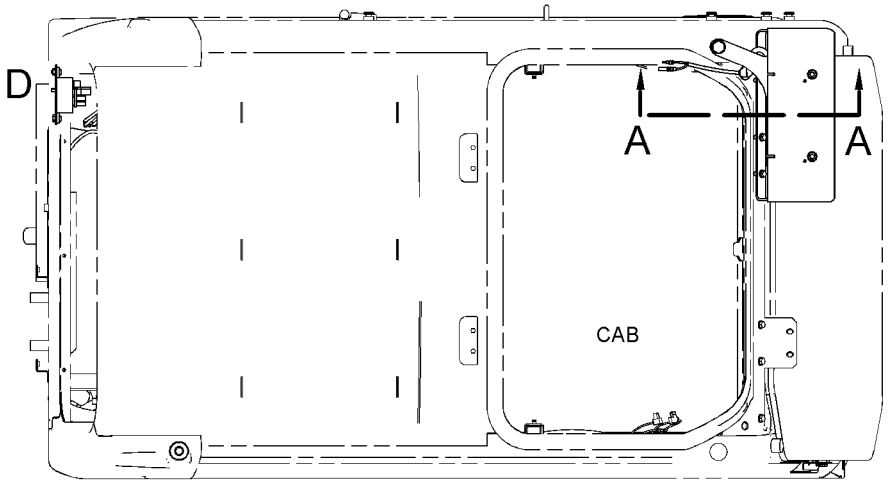

TOP VIEW FWD

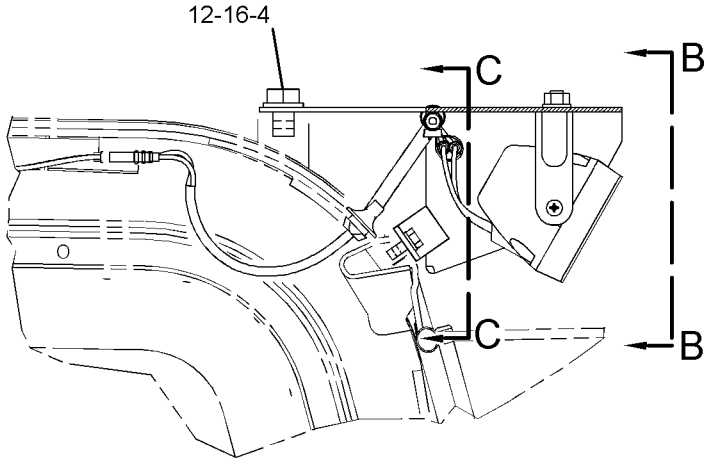

SECTION A-A

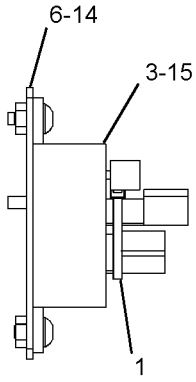

VIEW OF AREA D

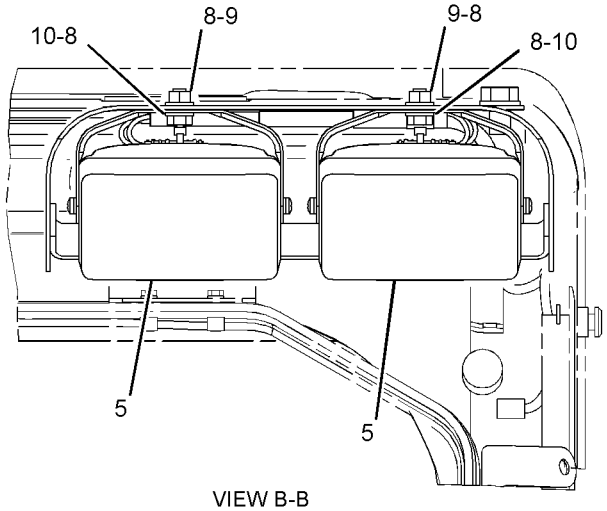

VIEW B-B

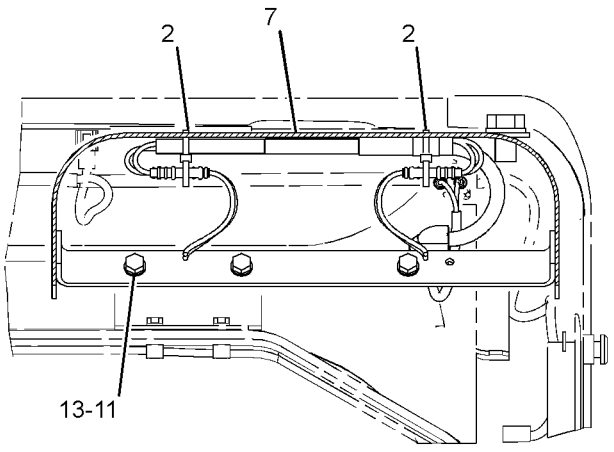

SECTION C-C

GRAPHIC #1 **<END>** g01445590

309-5741 MOUNTING GP-SENSOR–INCLINATION

S/N: CLA1-UP
PART OF 301-2552, 301-2647 SPECIAL AR
AN ATTACHMENT

SMCS-1439, 1923, 1924 **i02852569**

NOTE	REF NO	GRAPHIC REF	PART NUMBER	QTY	PART NAME 1 2 3 4 5 6 (PRODUCT LEVEL)	SEE PAGE
	1	1	**309-5742**	1	BRACKET AS	
M	2	1	**8T-4139**	4	BOLT (M12X1.75X30-MM)	
	3	1	**8T-4223**	4	WASHER-HARD (13.5X25.5X3-MM THK)	

M-METRIC PART

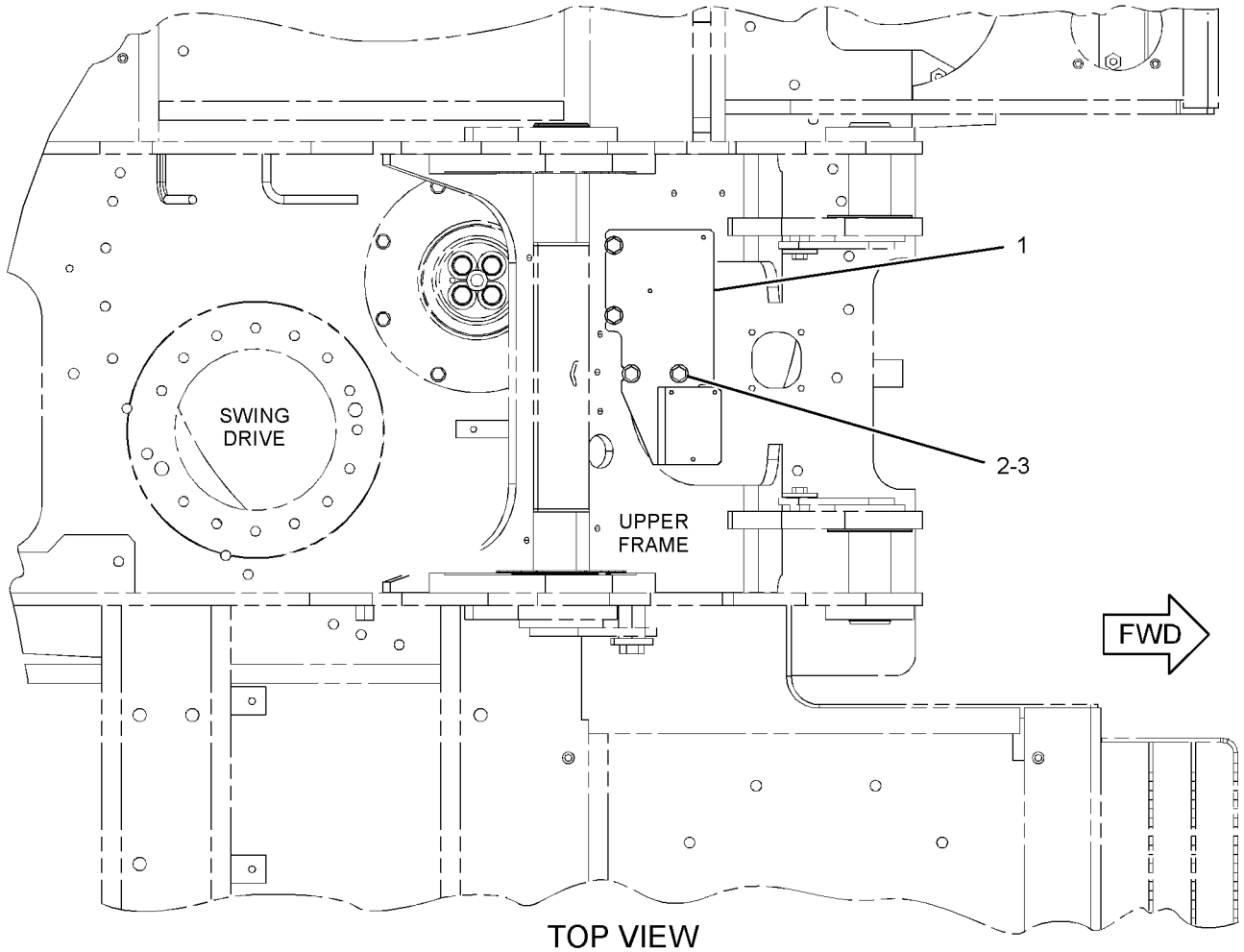

TOP VIEW

GRAPHIC #1 **<END>** g01439909

275-6926 PANEL & MTG GP-CIRCUIT BREAKER

S/N: CLA1-UP
PART OF 273-5363 OPERATOR AR
TYPE 1

SMCS-1417, 1420 **i02599644**

NOTE	REF NO	GRAPHIC REF	PART NUMBER	QTY	PART NAME 1 2 3 4 5 6 (PRODUCT LEVEL)	SEE PAGE
Y	1	1	**275-6927**	1	PANEL GP-CIRCUIT BREAKER	154
	2	1	**8T-4121**	4	WASHER-HARD (11X21X2.5-MM THK)	
M	3	1	**8T-4137**	4	BOLT (M10X1.5X20-MM)	

M-METRIC PART
Y-SEPARATE ILLUSTRATION

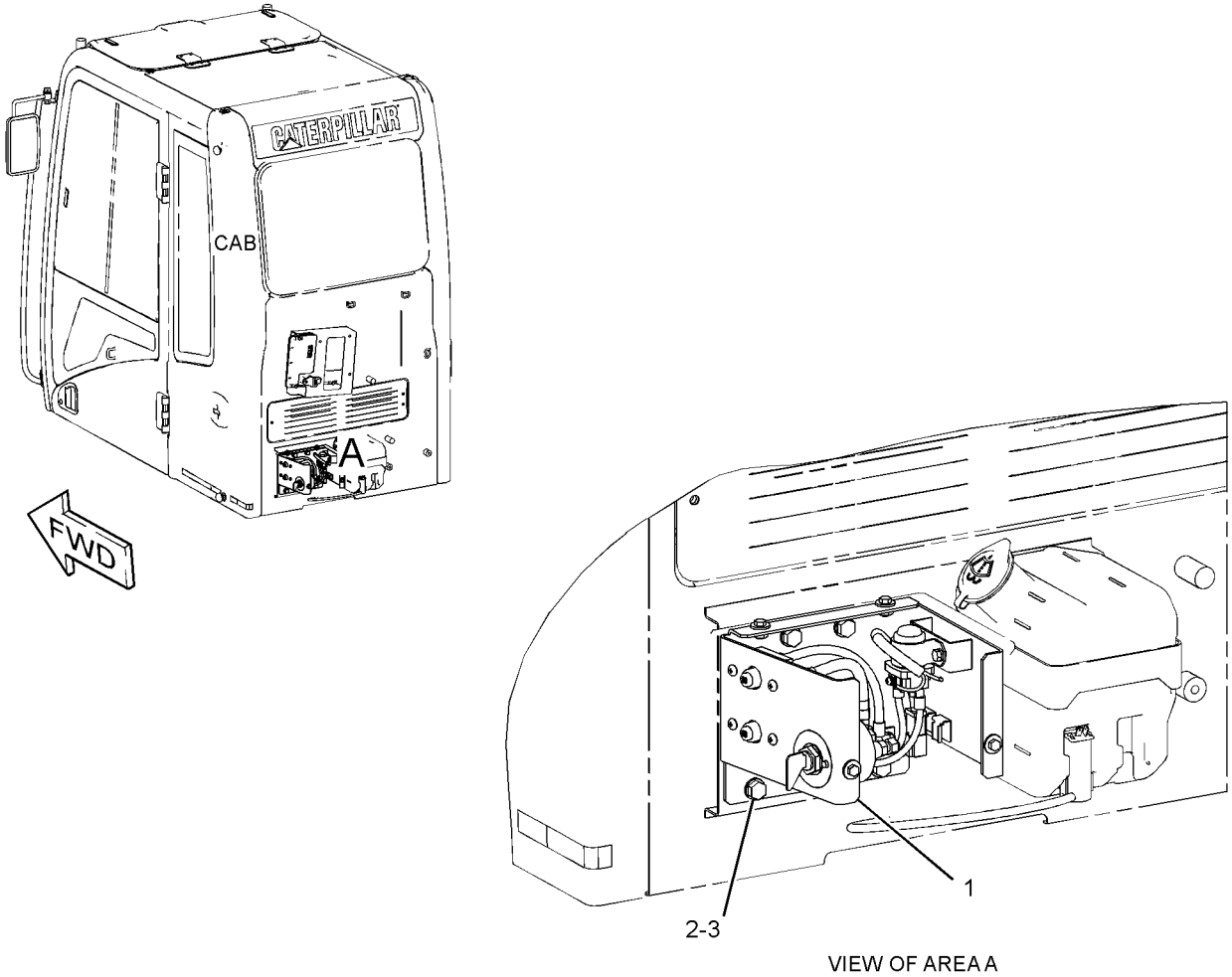

VIEW OF AREA A

GRAPHIC #1 **<END>** g01312382

275-6926 PANEL & MTG GP-CIRCUIT BREAKER

S/N: CLA1-UP
PART OF 273-5363 OPERATOR AR
TYPE 2

SMCS-1417, 1420 **i03016018**

NOTE	REF NO	GRAPHIC REF	PART NUMBER	QTY	PART NAME 1 2 3 4 5 6 (PRODUCT LEVEL)	SEE PAGE
CY	1	1	*319-1170*	1	PANEL GP-CIRCUIT BREAKER	156
	2	1	**8T-4121**	4	WASHER-HARD (11X21X2.5-MM THK)	
M	3	1	**8T-4137**	4	BOLT (M10X1.5X20-MM)	

C-CHANGE FROM PREVIOUS TYPE
M-METRIC PART
Y-SEPARATE ILLUSTRATION

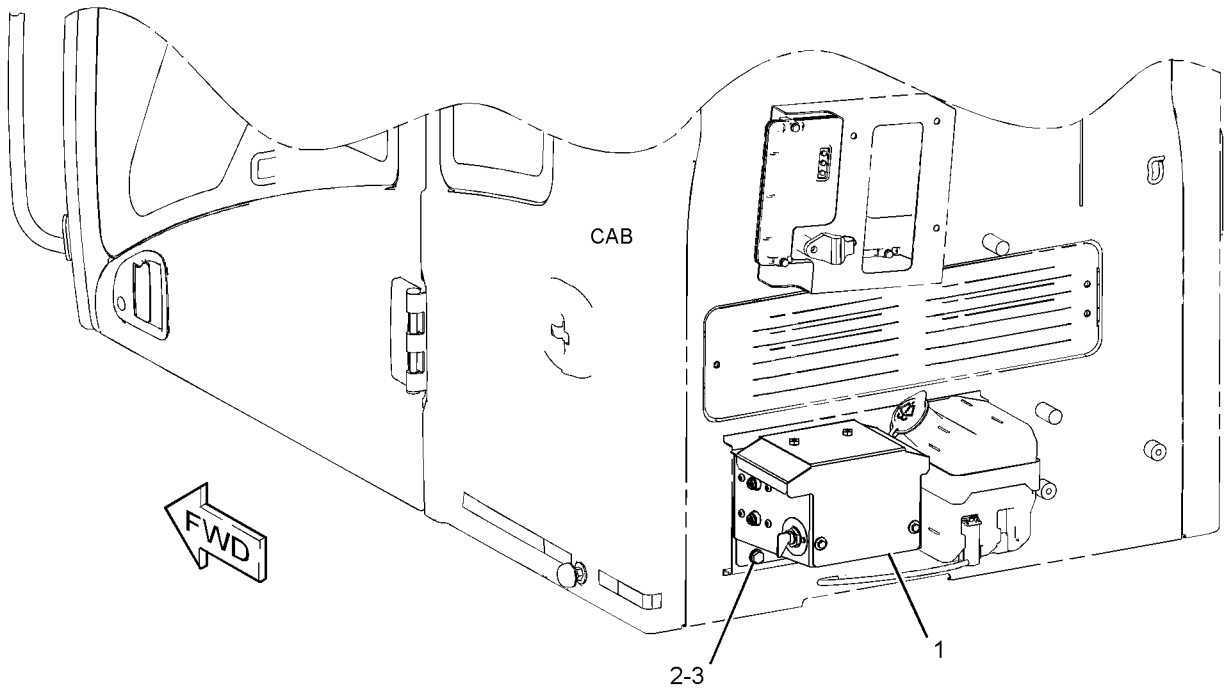

GRAPHIC #1 **<END>** g01526625

275-6927 PANEL GP-CIRCUIT BREAKER

S/N: CLA1-UP

PART OF 275-6926 PANEL & MTG GP-CIRCUIT BREAKER

SMCS-1417 **i02854822**

NOTE	REF NO	GRAPHIC REF	PART NUMBER	QTY	PART NAME 1 2 3 4 5 6 (PRODUCT LEVEL)	SEE PAGE
	1	1	**3E-8320**	1	PLATE-INSTRUCTION (BATTERY)	
Y	2	1	**7N-0718**	1	SWITCH GP-DISCONNECT	176
	3	1	**121-1023**	1	BLOCK-TERMINAL	
	4	1	**171-2208**	1	CIRCUIT BREAKER AS (60-AMPERE) (ALTERNATOR)	
		1	**6V-8187**	2	NUT (1/4-28-THD)	
		1	**8T-4205**	2	WASHER-HARD (7.2X14.5X2-MM THK)	
		1	**253-2111**	2	LOCKWASHER	
	5	1	**224-2908**	1	BRACKET AS	
	6	1	**234-1034**	1	CABLE AS	
		1	**9G-4343**	1	TERMINAL (4-GA)	
E		1	**125-7876**		TUBE-HEAT SHRINK (17.78-MM DIA) (4-CM)	
	7	1	**234-1036**	1	CABLE AS	
		1	**9G-4343**	1	TERMINAL (4-GA)	
E		1	**125-7876**		TUBE-HEAT SHRINK (17.78-MM DIA) (4-CM)	
	8	1	**234-1037**	1	WIRE AS	
	9	1	**234-1038**	1	WIRE AS	
	10	1	**238-1506**	1	COVER	
	11	1	**238-2280**	1	WIRE AS	
	12	1	**238-2392**	1	BAR-BUS	
Y	13	1	**259-5274**	1	SWITCH GP-MAGNETIC (24-VOLT) (START RELAY)	178
	14	1	**171-2210**	1	CIRCUIT BREAKER AS (80-AMPERE) (MAIN)	
		1	**6V-8187**	2	NUT (1/4-28-THD)	
		1	**8T-4205**	2	WASHER-HARD (7.2X14.5X2-MM THK)	
		1	**253-2111**	2	LOCKWASHER	
M	15	1	**5C-9553**	4	BOLT (M6X1X16-MM)	
	16	1	**5P-4115**	4	WASHER-HARD (7.2X19X2-MM THK)	
	17	1	**6V-5645**	4	SCREW-MACHINE (10-32X0.87-IN)	
	18	1	**8T-0328**	4	WASHER-HARD (5.5X10X1-MM THK)	
M	19	1	**8T-4171**	4	BOLT (M6X1X12-MM)	
M	20	1	**8T-4970**	4	BOLT (M6X1X14-MM)	
	21	1	**9X-8256**	8	WASHER (6.6X12X2-MM THK)	

E-ORDER BY THE CENTIMETER
M-METRIC PART
Y-SEPARATE ILLUSTRATION

275-6927 PANEL GP-CIRCUIT BREAKER *(contd.)* i02854822

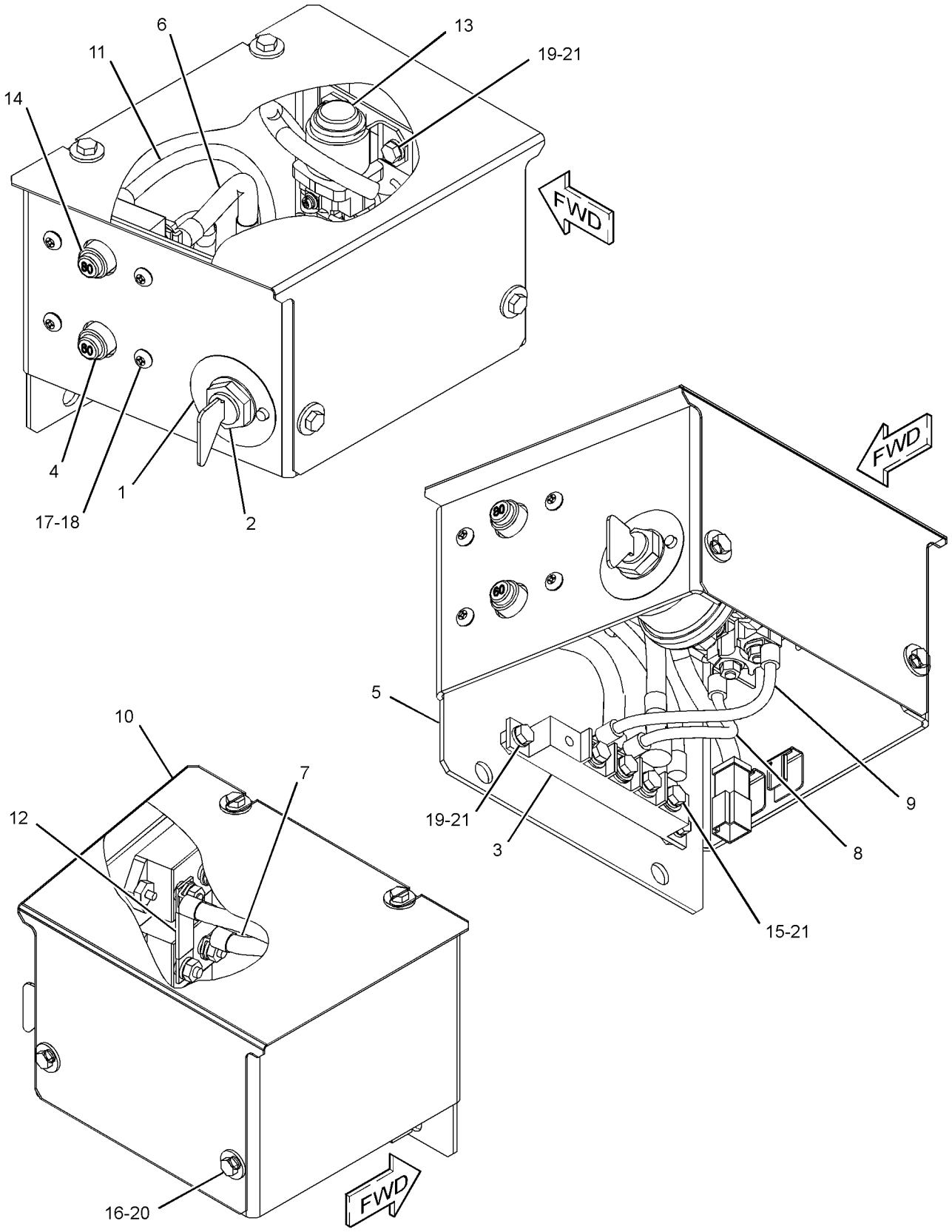

GRAPHIC #1 **<END>** g01312077

319-1170 PANEL GP-CIRCUIT BREAKER

S/N: CLA1-UP

PART OF 275-6926 PANEL & MTG GP-CIRCUIT BREAKER

SMCS-1417 **i03016024**

NOTE	REF NO	GRAPHIC REF	PART NUMBER	QTY	PART NAME 1 2 3 4 5 6 (PRODUCT LEVEL)	SEE PAGE
	1	1	**3E-8320**	1	PLATE-INSTRUCTION (BATTERY)	
Y	2	1	**7N-0718**	1	SWITCH GP-DISCONNECT (BATTERY)	176
	3	1	**116-0114**	1	SWITCH AS-MAGNETIC (24-VOLT) (HEATER RELAY)	
		1	**186-3735**	1	PIN-CONNECTOR (16-GA TO 18-GA)	
		1	**102-8802**	1	KIT-RECEPTACLE (2-PIN)	
					(INCLUDES RECEPTACLE AS & WEDGE)	
	4	1	**121-1023**	1	BLOCK-TERMINAL	
	5	1	**171-2208**	1	CIRCUIT BREAKER AS (60-AMPERE) (ALTERNATOR)	
		1	**6V-8187**	2	NUT (1/4-28-THD)	
		1	**8T-4205**	2	WASHER-HARD (7.2X14.5X2-MM THK)	
		1	**253-2111**	2	LOCKWASHER	
	6	1	**171-2210**	1	CIRCUIT BREAKER AS (80-AMPERE) (MAIN)	
		1	**6V-8187**	2	NUT (1/4-28-THD)	
		1	**8T-4205**	2	WASHER-HARD (7.2X14.5X2-MM THK)	
		1	**253-2111**	2	LOCKWASHER	
	7	1	**197-4330**	1	CONTROLLER-AIR (HEATER)	
	8	1	**224-2908**	1	BRACKET AS	
	9	1	**234-1034**	1	CABLE AS	
D		1	**6V-2369**		WIRE (4-GA, BLACK) (0.2-M)	
		1	**9G-4343**	2	TERMINAL (4-GA)	
E		1	**125-7876**		TUBE-HEAT SHRINK (17.78-MM DIA) (4-CM EACH)	
	10	1	**234-1036**	1	CABLE AS	
D		1	**6V-2369**		WIRE (4-GA, BLACK) (0.2-M)	
		1	**9G-4343**	2	TERMINAL (4-GA)	
E		1	**125-7876**		TUBE-HEAT SHRINK (17.78-MM DIA) (4-CM EACH)	
	11	1	**234-1037**	1	WIRE AS	
	12	1	**234-1038**	1	WIRE AS	
	13	1	**238-2280**	1	WIRE AS	
	14	1	**238-2392**	1	BAR-BUS	
Y	15	1	**259-5274**	1	SWITCH GP-MAGNETIC (24-VOLT) (START RELAY)	178
	16	1	**319-1344**	1	BRACKET AS	
	17	1	**319-1346**	1	COVER AS	
	18	1	**319-1354**	1	CABLE AS	
D		1	**6V-2369**		WIRE (4-GA, BLACK) (0.2-M)	
		1	**9G-4343**	1	TERMINAL (4-GA)	
E		1	**125-7876**		TUBE-HEAT SHRINK (17.78-MM DIA) (4-CM EACH)	
	19	1	**319-1355**	1	CABLE AS	
D		1	**6V-2369**		WIRE (4-GA, BLACK) (0.2-M)	
		1	**9G-4343**	1	TERMINAL (4-GA)	
E		1	**125-7876**		TUBE-HEAT SHRINK (17.78-MM DIA) (4-CM EACH)	
M	20	1	**5C-2890**	2	NUT (M6X1-THD)	
M	21	1	**5C-9553**	5	BOLT (M6X1X16-MM)	
	22	1	**5P-4115**	4	WASHER-HARD (7.2X19X2-MM THK)	
	23	1	**6V-5645**	4	SCREW-MACHINE (10-32X0.87-IN)	
M	24	1	**7X-2619**	2	BOLT (M6X1X10-MM)	
	25	1	**8T-0328**	4	WASHER-HARD (5.5X10X1-MM THK)	
M	26	1	**8T-4171**	4	BOLT (M6X1X12-MM)	
M	27	1	**8T-4970**	6	BOLT (M6X1X14-MM)	
	28	1	**9X-8256**	15	WASHER (6.6X12X2-MM THK)	

D-ORDER BY THE METER
E-ORDER BY THE CENTIMETER
M-METRIC PART
Y-SEPARATE ILLUSTRATION

319-1170 **PANEL GP-CIRCUIT BREAKER** *(contd.)* **i03016024**

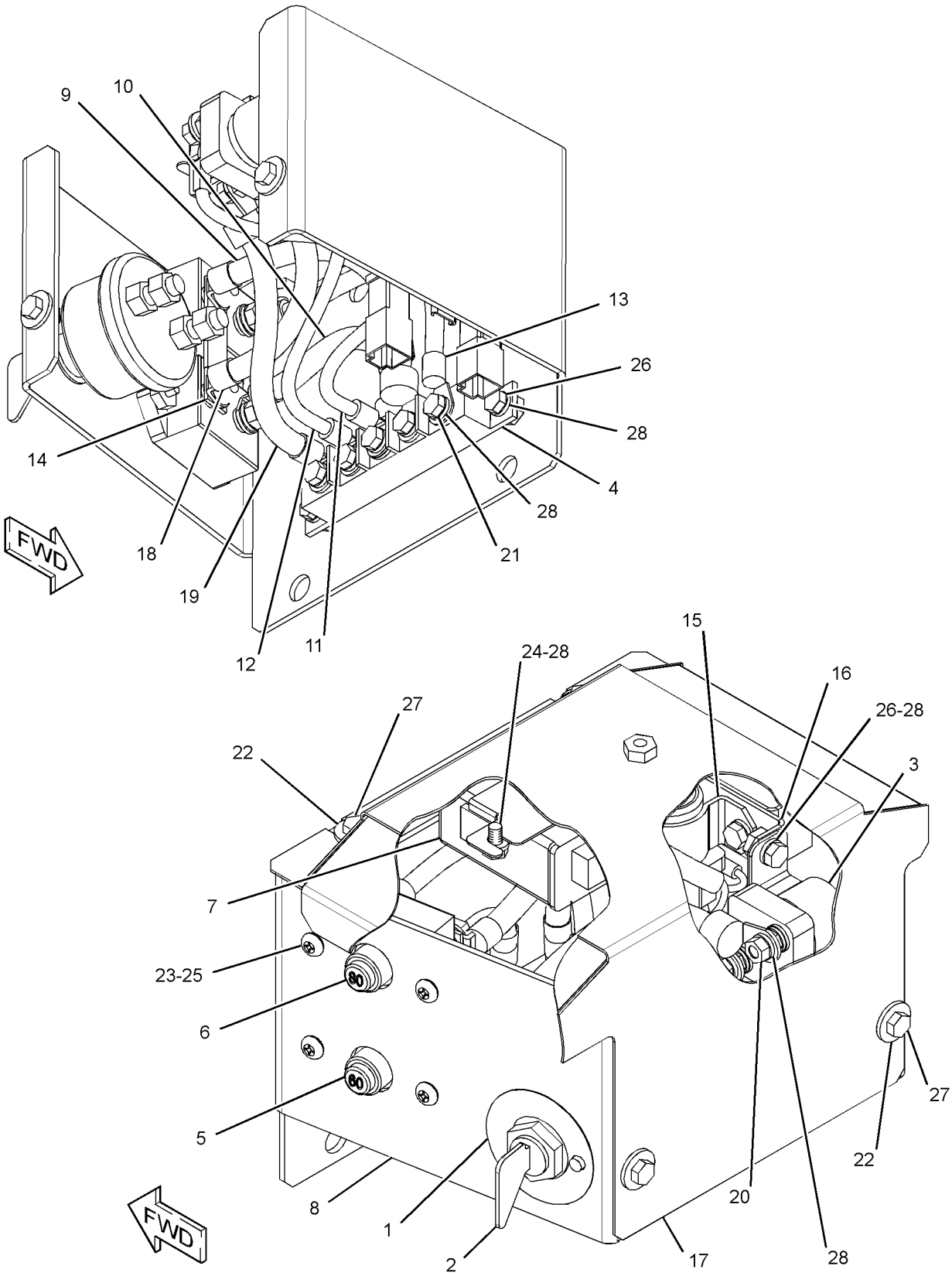

GRAPHIC #1 **<END>** g01526637

251-0542 PANEL GP-SWITCH—ENGINE SPEED, START

S/N: CLA1-UP
CONSOLE
CANNOT BE USED WITH 251-0544—PAGE 162
AN ATTACHMENT
TYPE 1

SMCS-1408, 1429, 7332, 7451 **i02742287**

NOTE	REF NO	GRAPHIC REF	PART NUMBER	QTY	PART NAME 1 2 3 4 5 6 (PRODUCT LEVEL)	SEE PAGE
	1	1	**3S-2093**	4	STRAP-CABLE	
Y	2	1	**9G-7641**	1	SWITCH GP-START (ENGINE, KEY)	183
Y	3	1	**106-0107**	1	SWITCH GP-ROTARY (THROTTLE POSITION)	181
	4	1	**170-9324**	1	LAMP AS (24-VOLT, 3-WATT)	
	5	1	**185-9208**	1	KNOB AS (THROTTLE POSITION)	
	6	1	**234-1156**	1	COVER	
	7	1	**234-1158**	1	COVER	
	8	1	**267-7976**	1	PANEL	
	9	1	**251-0543**	1	HARNESS AS-CONSOLE (RH)	
		1	**102-8802**	1	KIT-RECEPTACLE (2-PIN)	
					(INCLUDES RECEPTACLE AS & WEDGE)	
		1	**155-2270**	1	KIT-CONNECTING PLUG (2-PIN)	
		1	**155-2274**	1	KIT-CONNECTING PLUG (6-PIN)	
					(EACH CONNECTING PLUG KIT INCLUDES PLUG AS, WEDGE & INTERFACE SEAL)	
	10	1	**096-6166**	4	WASHER-HARD (4.5X9X1-MM THK)	
	11	1	**119-5026**	4	SCREW-PAN HEAD (10-16X0.63-IN)	
M	12	1	**6V-9491**	4	SCREW-MACHINE (M4X0.7X20-MM)	

M-METRIC PART
Y-SEPARATE ILLUSTRATION

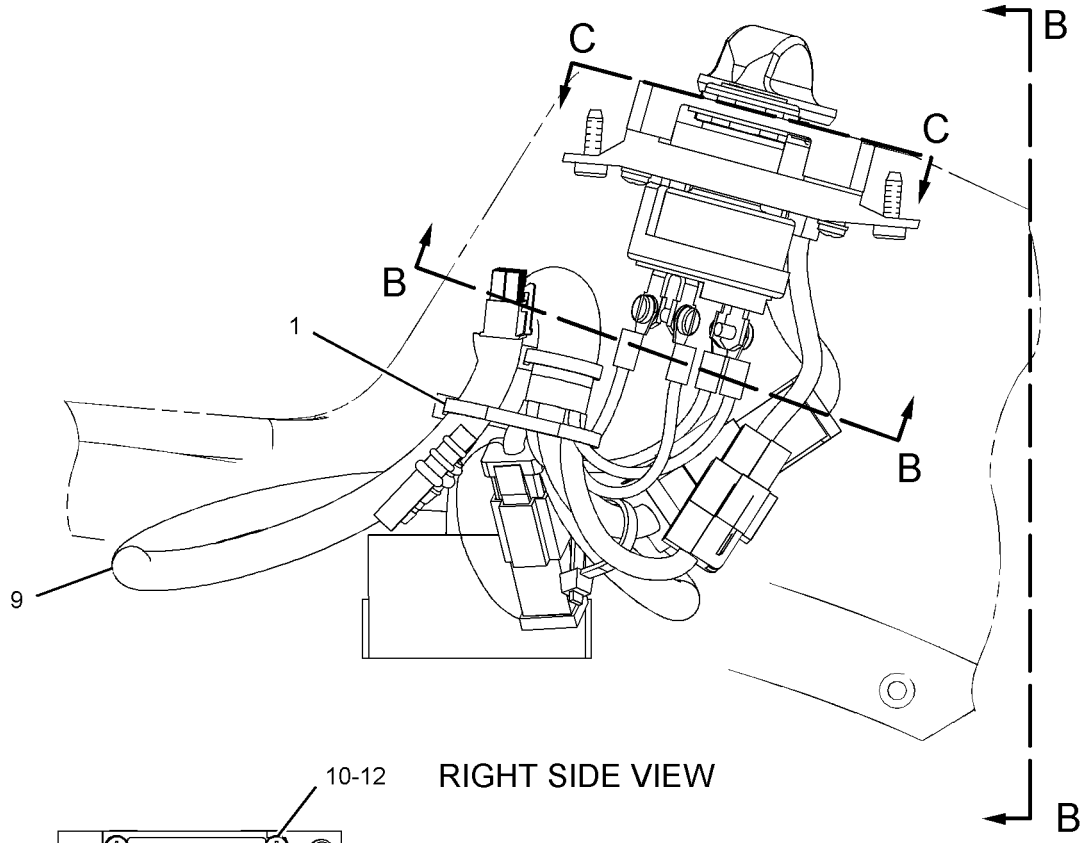

RIGHT SIDE VIEW

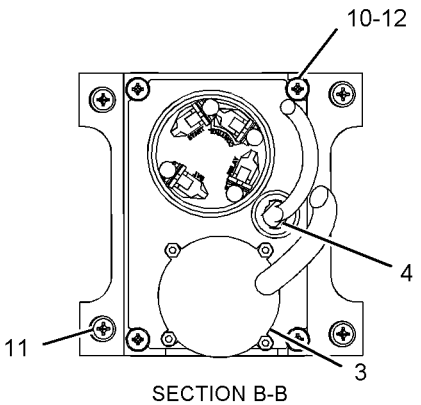

SECTION B-B

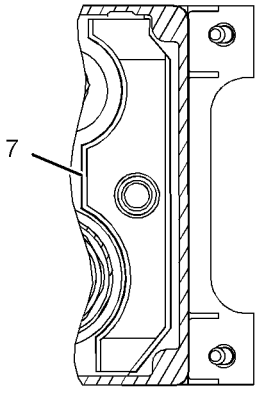

VIEW C-C

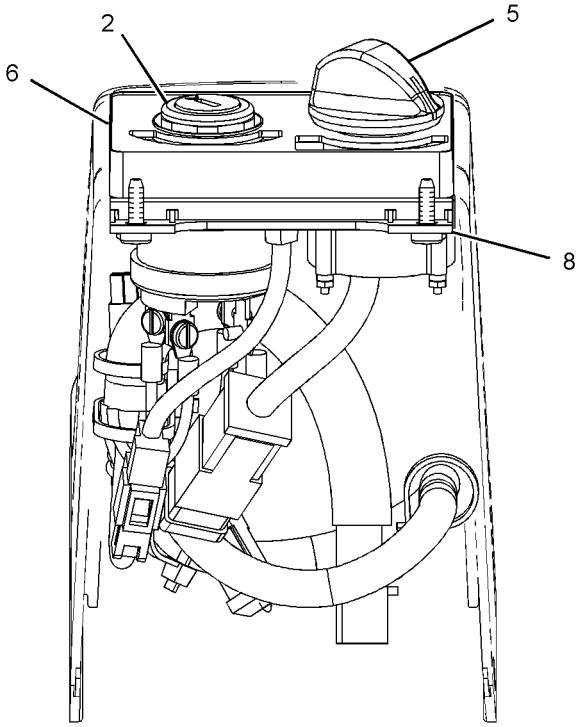

VIEW B-B

GRAPHIC #1 **<END>** g01112022

251-0542 PANEL GP-SWITCH—ENGINE SPEED, START

S/N: CLA1-UP
CONSOLE
CANNOT BE USED WITH 251-0544—PAGE 162
AN ATTACHMENT
TYPE 2

SMCS-1408, 1429, 7332, 7451 **i03098161**

NOTE	REF NO	GRAPHIC REF	PART NUMBER	QTY	PART NAME 1 2 3 4 5 6 (PRODUCT LEVEL)	SEE PAGE
	1	1	**3S-2093**	4	STRAP-CABLE	
Y	2	1	**9G-7641**	1	SWITCH GP-START (ENGINE, KEY)	183
CY	3	1	**319-4420**	1	SWITCH GP-ROTARY (THROTTLE POSITION)	182
	4	1	**170-9324**	1	LAMP AS (24-VOLT, 3-WATT)	
	5	1	**185-9208**	1	KNOB AS (THROTTLE POSITION)	
	6	1	**234-1156**	1	COVER	
	7	1	**234-1158**	1	COVER	
	8	1	**267-7976**	1	PANEL	
C	9	1	**328-0021**	1	HARNESS AS-CONSOLE (RH)	
	10	1	**096-6166**	4	WASHER-HARD (4.5X9X1-MM THK)	
	11	1	**119-5026**	4	SCREW-PAN HEAD (10-16X0.63-IN)	
M	12	1	**6V-9491**	4	SCREW-MACHINE (M4X0.7X20-MM)	

C-CHANGE FROM PREVIOUS TYPE
M-METRIC PART
Y-SEPARATE ILLUSTRATION

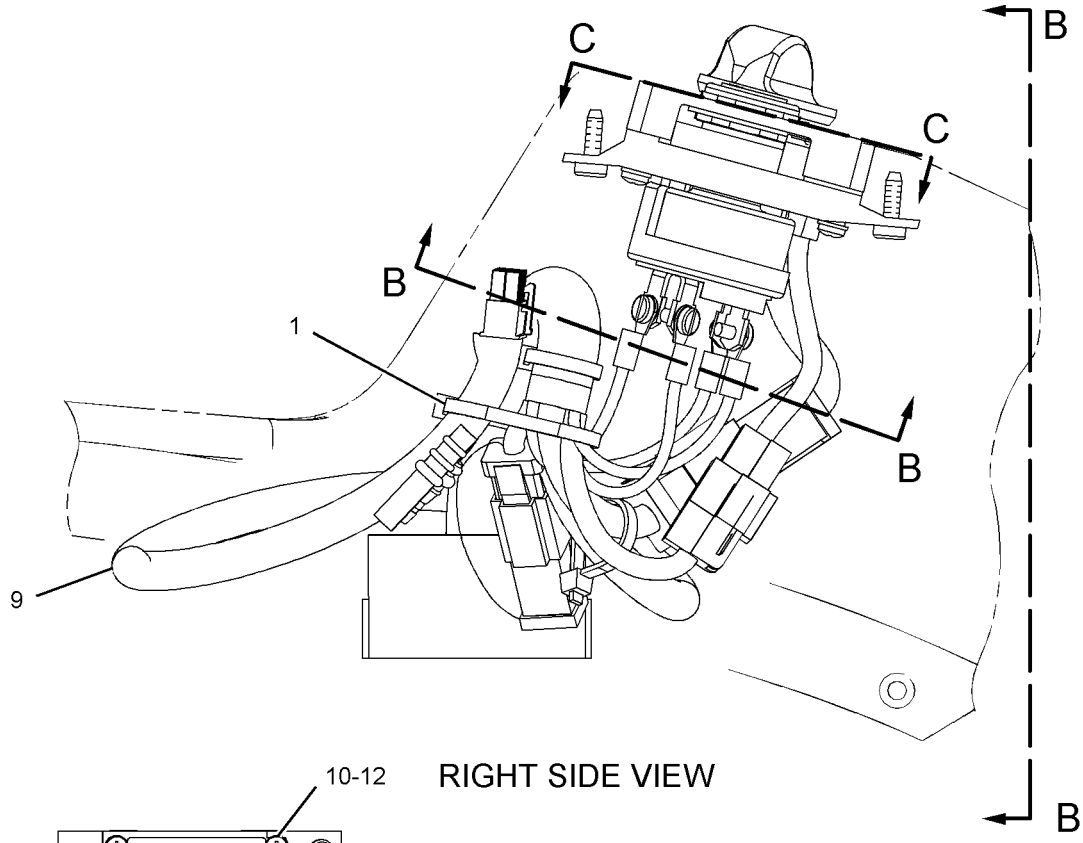

RIGHT SIDE VIEW

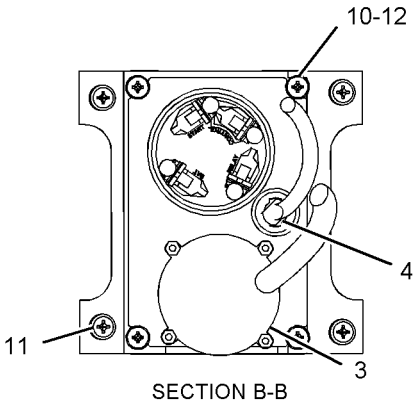

SECTION B-B

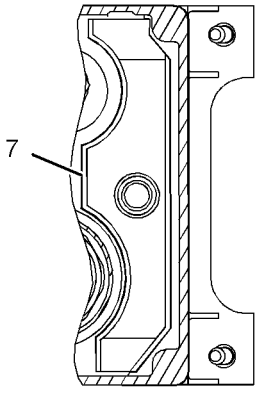

VIEW C-C

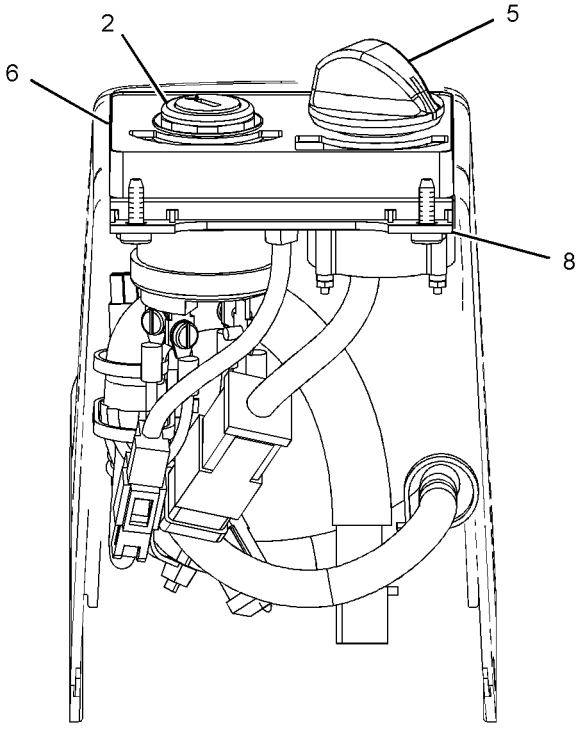

VIEW B-B

GRAPHIC #1 **<END>** g01112022

251-0544 PANEL GP-SWITCH–ENGINE SPEED, START

S/N: CLA1-UP
PART OF 227-7581 INSTALLATION GP-SECURITY
AN ATTACHMENT
TYPE 1

SMCS-1408, 1429, 7332, 7451 **i02742288**

NOTE	REF NO	GRAPHIC REF	PART NUMBER	QTY	PART NAME 1 2 3 4 5 6 (PRODUCT LEVEL)	SEE PAGE
	1	1	**3S-2093**	5	STRAP-CABLE	
Y	2	1	**9G-7641**	1	SWITCH GP-START (ENGINE, KEY)	183
Y	3	1	**106-0107**	1	SWITCH GP-ROTARY (THROTTLE POSITION)	181
	4	1	**185-9208**	1	KNOB AS	
	5	1	**205-0826**	1	FILM-INSTRUCTION (MACHINE SECURITY, CONSOLE)	
	6	1	**205-8257**	1	COIL AS (EXCITER)	
		1	**186-3735**	2	PIN-CONNECTOR (16-GA TO 18-GA)	
	7	1	**234-1156**	1	COVER	
	8	1	**267-7977**	1	PANEL	
	9	1	**251-0543**	1	HARNESS AS-CONSOLE (RH)	
		1	**102-8802**	1	KIT-RECEPTACLE (2-PIN)	
					(INCLUDES RECEPTACLE AS & WEDGE)	
		1	**155-2270**	1	KIT-CONNECTING PLUG (2-PIN)	
		1	**155-2274**	1	KIT-CONNECTING PLUG (6-PIN)	
					(EACH PLUG KIT INCLUDES PLUG AS, WEDGE & INTERFACE SEAL)	
	10	1	**096-6166**	4	WASHER-HARD (4.5X9X1-MM THK)	
	11	1	**119-5026**	4	SCREW-PAN HEAD (10-16X0.63-IN)	
M	12	1	**6V-9491**	4	SCREW-MACHINE (M4X0.7X20-MM)	

M-METRIC PART
Y-SEPARATE ILLUSTRATION

251-0544 **PANEL GP-SWITCH** *(contd.)* **i02742288**

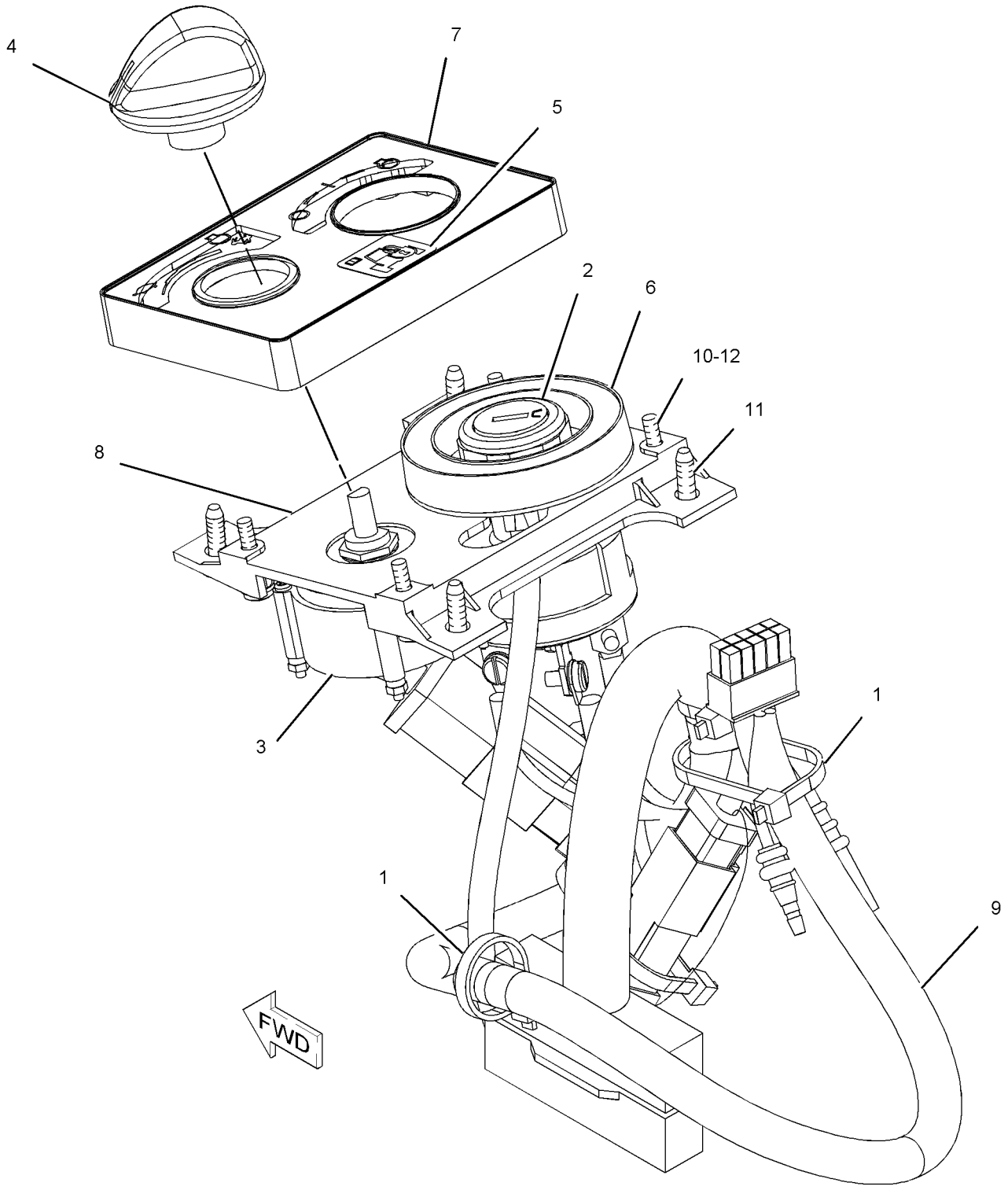

GRAPHIC #1 **<END>** g01123869

251-0544 PANEL GP-SWITCH–ENGINE SPEED, START

S/N: CLA1-UP
PART OF 227-7581 INSTALLATION GP-SECURITY
AN ATTACHMENT
TYPE 2

SMCS-1408, 1429, 7332, 7451 **i03115847**

NOTE	REF NO	GRAPHIC REF	PART NUMBER	QTY	PART NAME 1 2 3 4 5 6 (PRODUCT LEVEL)	SEE PAGE
	1	1	**3S-2093**	5	STRAP-CABLE	
Y	2	1	**9G-7641**	1	SWITCH GP-START (ENGINE, KEY)	183
CY	3	1	**319-4420**	1	SWITCH GP-ROTARY (THROTTLE POSITION)	182
	4	1	**185-9208**	1	KNOB AS	
	5	1	**205-0826**	1	FILM-INSTRUCTION (MACHINE SECURITY, CONSOLE)	
	6	1	**206-5208**	1	COIL AS (EXCITER)	
	7	1	**234-1156**	1	COVER	
	8	1	**267-7977**	1	PANEL	
C	9	1	**328-0021**	1	HARNESS AS-CONSOLE	
	10	1	**096-6166**	4	WASHER-HARD (4.5X9X1-MM THK)	
	11	1	**119-5026**	4	SCREW-PAN HEAD (10-16X0.63-IN)	
M	12	1	**6V-9491**	4	SCREW-MACHINE (M4X0.7X20-MM)	

C-CHANGE FROM PREVIOUS TYPE
M-METRIC PART
Y-SEPARATE ILLUSTRATION

251-0544 **PANEL GP-SWITCH** *(contd.)* **i03115847**

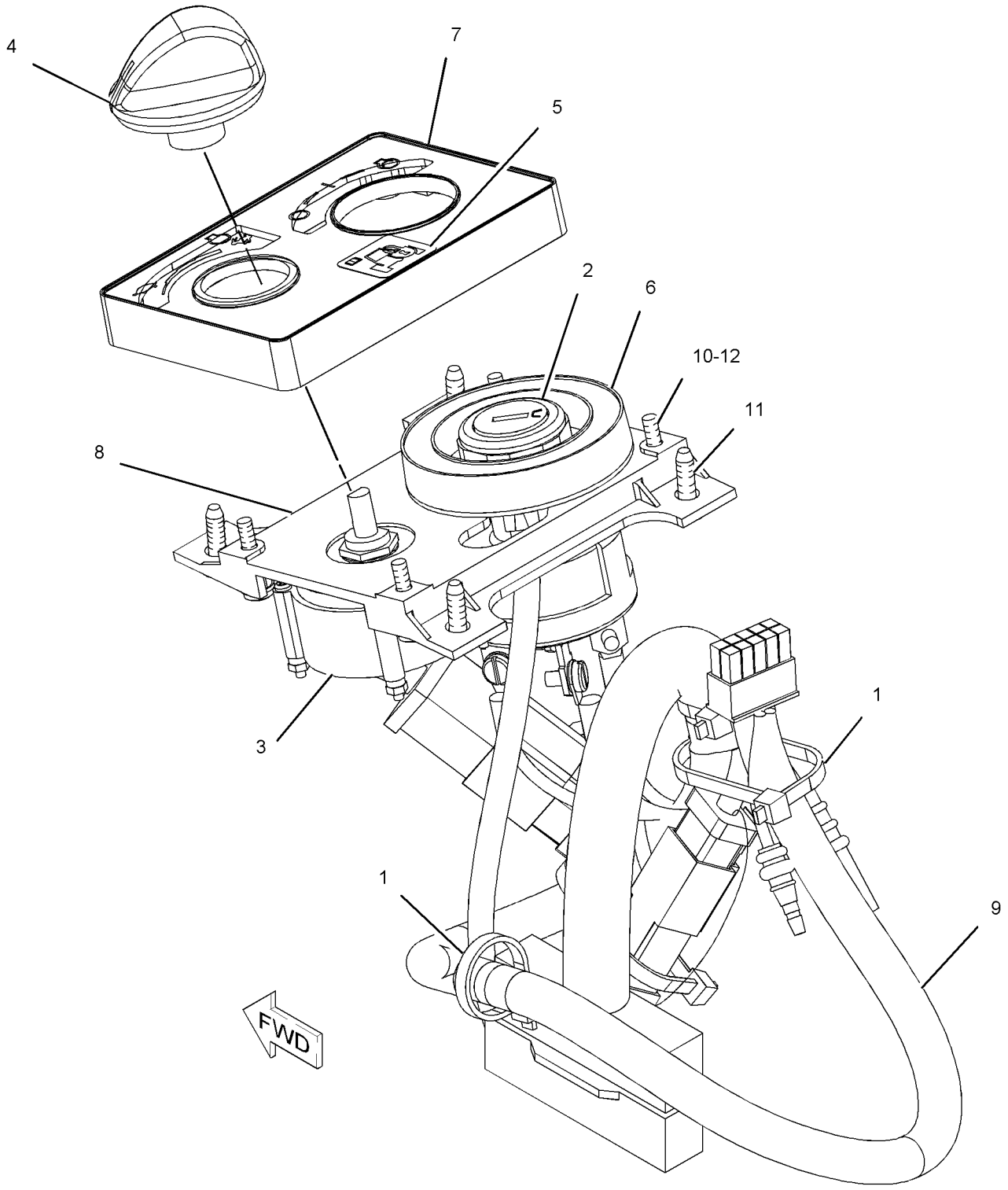

GRAPHIC #1 **<END>** g01123869

309-5745 SENSOR & MTG GP-POSITION–STICK

S/N: CLA1-UP

PART OF 301-2552, 301-2555, 301-2647 SPECIAL AR

AN ATTACHMENT

SMCS-5736 **i02852489**

NOTE	REF NO	GRAPHIC REF	PART NUMBER	QTY	PART NAME 1 2 3 4 5 6 (PRODUCT LEVEL)	SEE PAGE
Y	1	1	**169-0417**	1	SENSOR GP-POSITION (STICK)	171
	2	1	**309-5694**	1	PLATE	
	3	1	**309-5695**	1	ROD AS	
M		1	**8T-4133**	1	NUT (M10X1.5-THD)	
M		1	**9X-2065**	1	NUT (M10X1.15-THD)	
	4	1	**309-5733**	1	ROLLER	
	5	1	**309-5734**	1	SPACER (10.8X17.3X12-MM THK)	
	6	1	**309-5746**	1	LEVER AS	
M	7	1	**131-3983**	4	BOLT-SOCKET HEAD (M8X1.25X35-MM)	
M	8	1	**8T-1160**	1	BOLT-SOCKET HEAD (M10X1.5X50-MM)	
	9	1	**8T-4121**	4	WASHER-HARD (11X21X2.5-MM THK)	
M	10	1	**8T-4195**	1	BOLT (M10X1.5X30-MM)	
	11	1	**8T-4224**	4	WASHER-HARD (8.8X16X2-MM THK)	
M	12	1	**8T-4971**	2	BOLT (M6X1X30-MM)	
	13	1	**9X-8256**	2	WASHER (6.6X12X2-MM THK)	

M-METRIC PART
Y-SEPARATE ILLUSTRATION

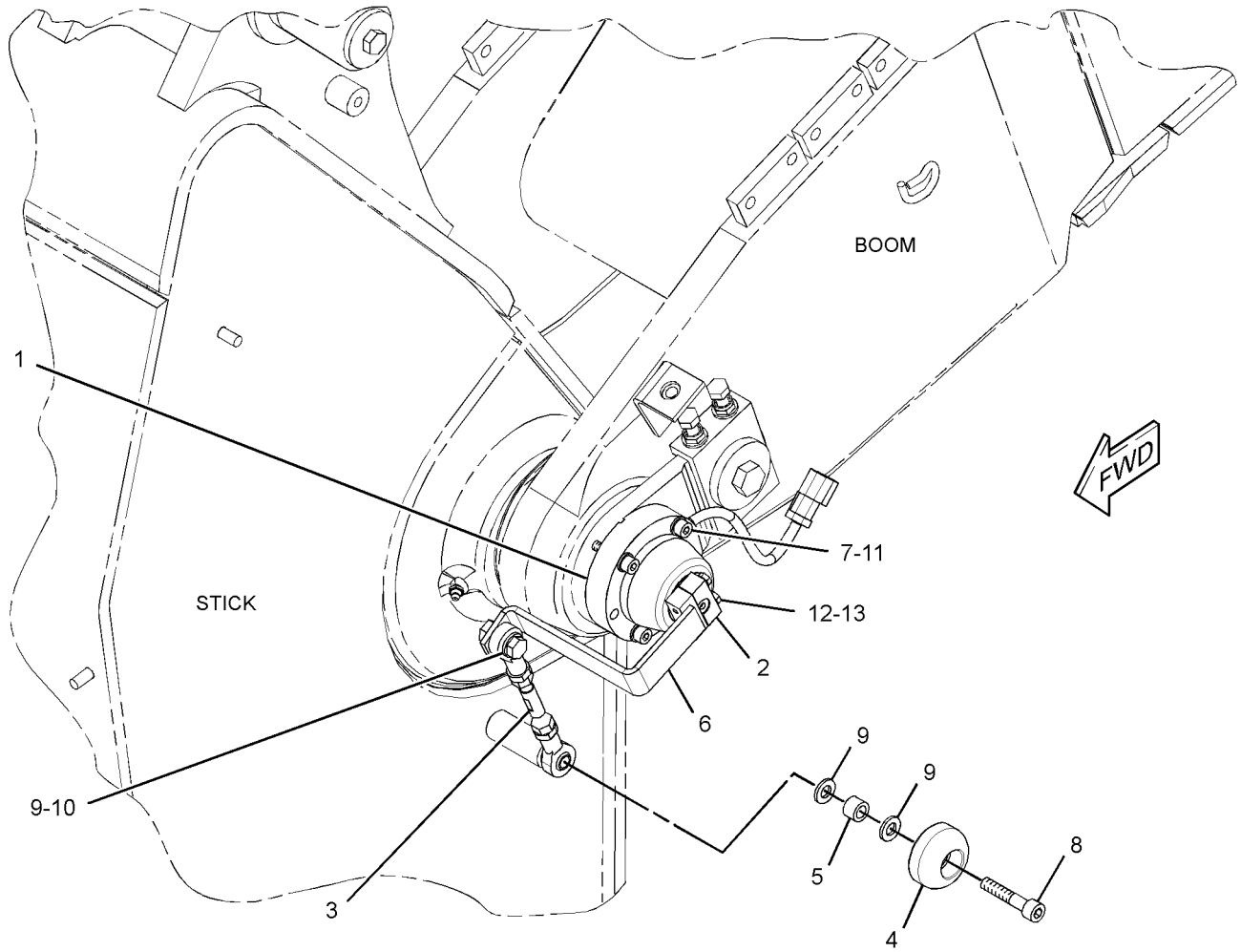

GRAPHIC #1 **<END>** g01439836

309-5773 SENSOR & MTG GP-POSITION–BOOM

S/N: CLA1-UP
PART OF 301-2552, 301-2555, 301-2647 SPECIAL AR
AN ATTACHMENT

SMCS-5736 **i03093820**

NOTE	REF NO	GRAPHIC REF	PART NUMBER	QTY	PART NAME 1 2 3 4 5 6 (PRODUCT LEVEL)	SEE PAGE
Y	1	1	**169-0417**	1	SENSOR GP-POSITION (BOOM)	171
	2	1	**279-2984**	1	SPACER	
	3	1	**309-5694**	1	PLATE	
	4	1	**319-4474**	1	LEVER AS	
M	5	1	**131-3983**	4	BOLT-SOCKET HEAD (M8X1.25X35-MM)	
M	6	1	**7X-2543**	1	BOLT (M10X1.5X120-MM)	
	7	1	**8T-4121**	1	WASHER-HARD (11X21X2.5-MM THK)	
	8	1	**8T-4224**	4	WASHER-HARD (8.8X16X2-MM THK)	
M	9	1	**8T-4971**	2	BOLT (M6X1X30-MM)	
	10	1	**9X-8256**	2	WASHER (6.6X12X2-MM THK)	

M-METRIC PART
Y-SEPARATE ILLUSTRATION

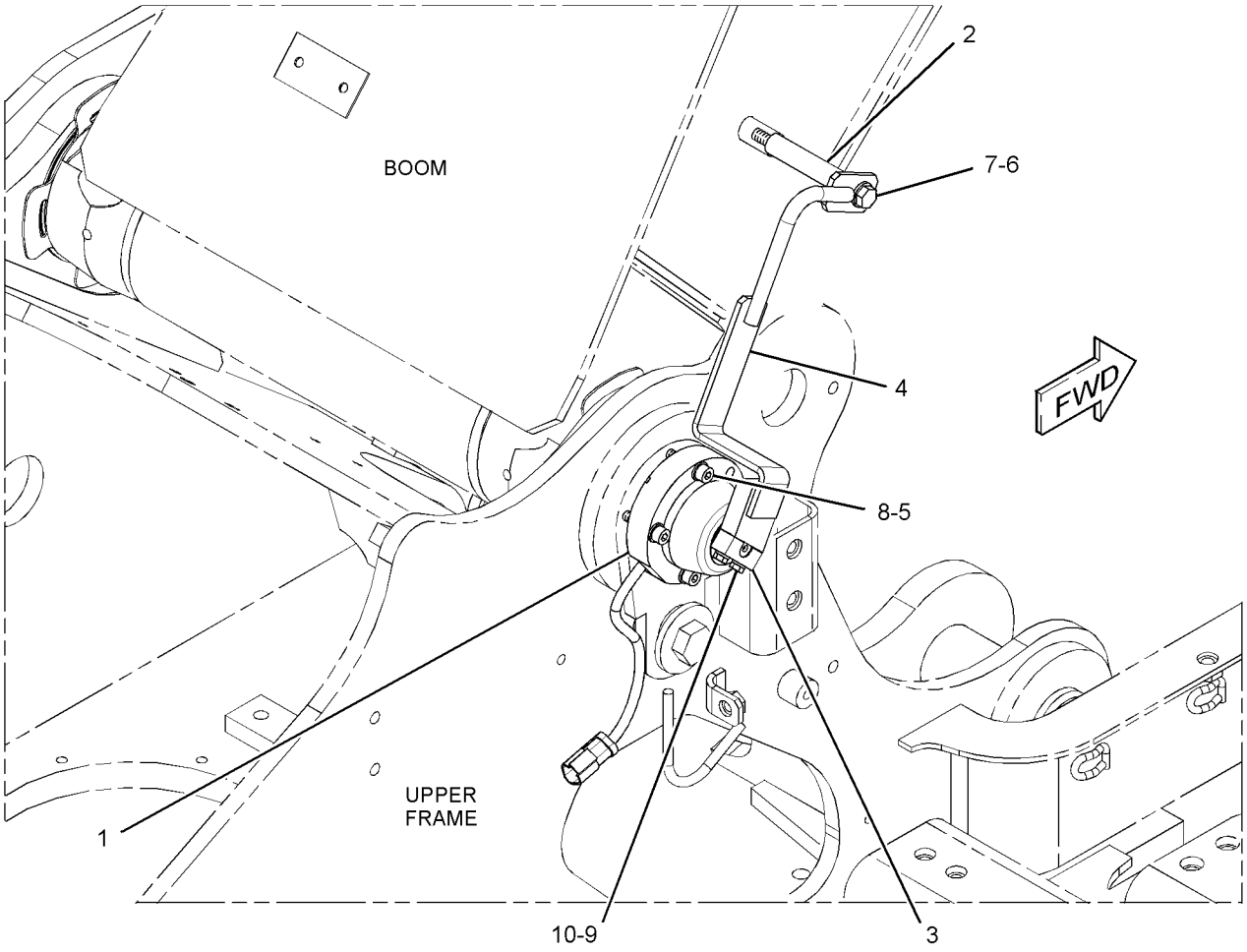

GRAPHIC #1 **<END>** g01622275

296-4802 SENSOR GP-ENGINE

S/N: JKH1-UP
PART OF 279-7805 ENGINE AR
ALSO AN ATTACHMENT

SMCS-1000, 1906, 1907, 1924, 7422 **i02710546**

NOTE	REF NO	GRAPHIC REF	PART NUMBER	QTY	PART NAME 1 2 3 4 5 6 (PRODUCT LEVEL)	SEE PAGE
	1	1	**238-0112**	1	SENSOR GP-TEMPERATURE (AIR INLET)	
	1A	1	**238-0112**	1	SENSOR GP-TEMPERATURE (ENGINE COOLANT)	
	1B	1	**238-0112**	1	SENSOR GP-TEMPERATURE (FUEL)	
	2	1	**238-0118**	1	SENSOR GP-PRESSURE (FUEL MANIFOLD)	
	3	1	**296-4631**	1	WASHER	
	4	1	**274-6720**	1	SENSOR GP-PRESSURE (AIR INLET MANIFOLD)	
	5	1	**274-6721**	1	SENSOR GP-PRESSURE (FUEL)	
	5A	1	**274-6721**	1	SENSOR GP-PRESSURE (ENGINE OIL)	
	6	1	**238-0120**	1	SENSOR GP-SPEED (ENGINE)	
	7	1	**196-7973**	1	SENSOR GP-SPEED (ENGINE)	
	8	1	**294-1804**	5	SEAL-O-RING	
	9	1	**296-4633**	1	SEAL-O-RING	
	10	1	**266-0136**	1	SENSOR GP-PRESSURE (FUEL)	
	11	1	**296-4621**	2	BOLT (M6X1.25X23.5-MM)	

296-4802 **SENSOR GP-ENGINE** *(contd.)* **i02710546**

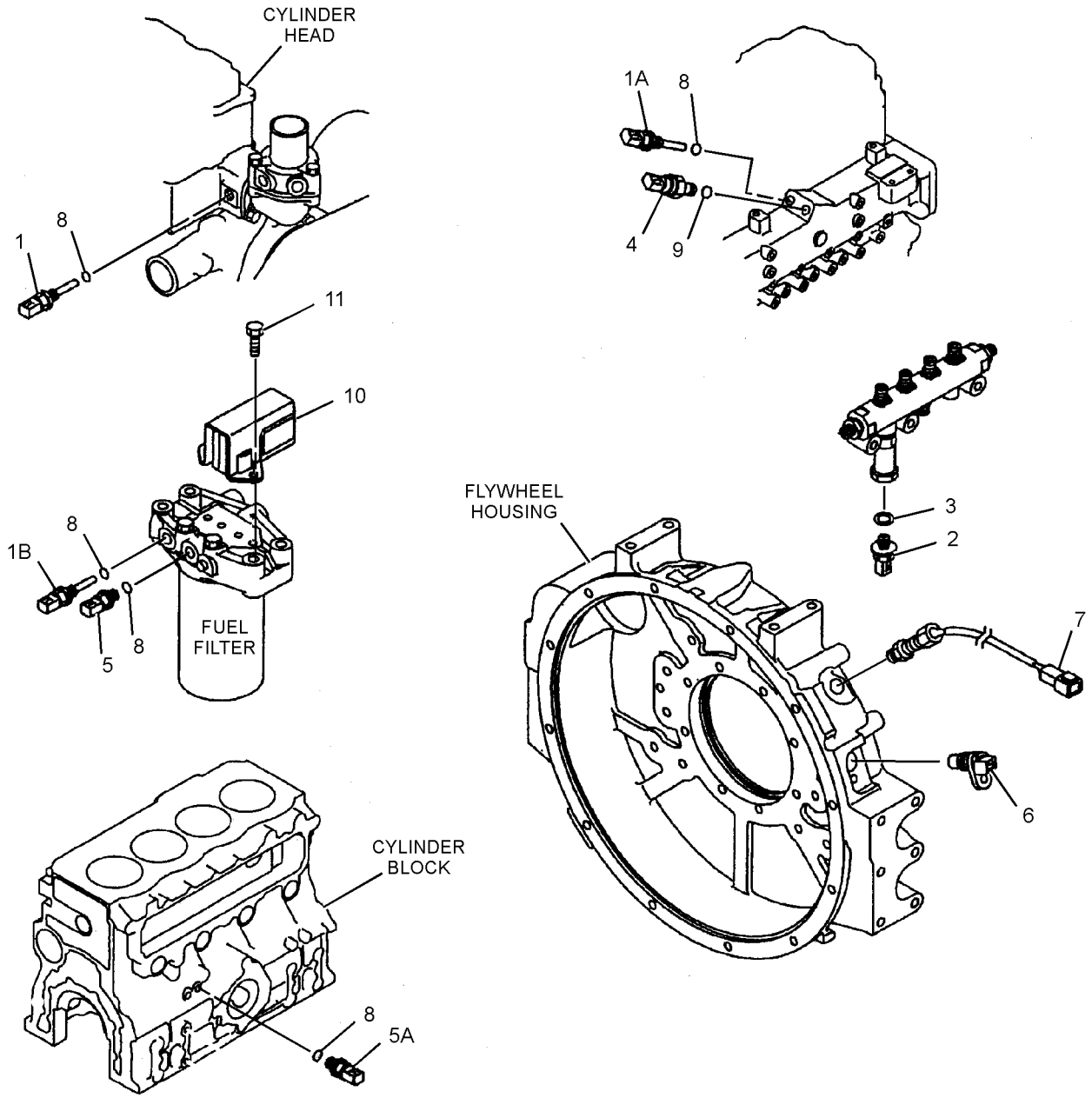

GRAPHIC #1 **<END>** g01403837

178-2345 SENSOR GP-LIQUID LEVEL–WATER IN FUEL

S/N: CLA1-UP
PART OF 279-7833 SENSOR GP-POSITION
AN ATTACHMENT

SMCS-7422 **i03195620**

NOTE	REF NO	GRAPHIC REF	PART NUMBER	QTY	PART NAME 1 2 3 4 5 6 (PRODUCT LEVEL)	SEE PAGE
	1	1	**178-2334**	1	PROBE AS-LIQUID LEVEL (WATER SEPARATOR)	
	2	1	**178-2335**	1	SENSOR AS-LIQUID LEVEL (WATER SEPARATOR)	
		1	**102-8804**	1	KIT-RECEPTACLE (4-PIN)	
					(INCLUDES RECEPTACLE AS & WEDGE)	
		1	**155-2270**	1	KIT-CONNECTING PLUG (2-PIN)	
					(INCLUDES PLUG AS,WEDGE & INTERFACE SEAL)	
		1	**186-3735**	4	PIN-CONNECTOR (16-GA TO 18-GA)	
		1	**186-3736**	2	SOCKET-CONNECTOR (16-GA TO 18-GA)	

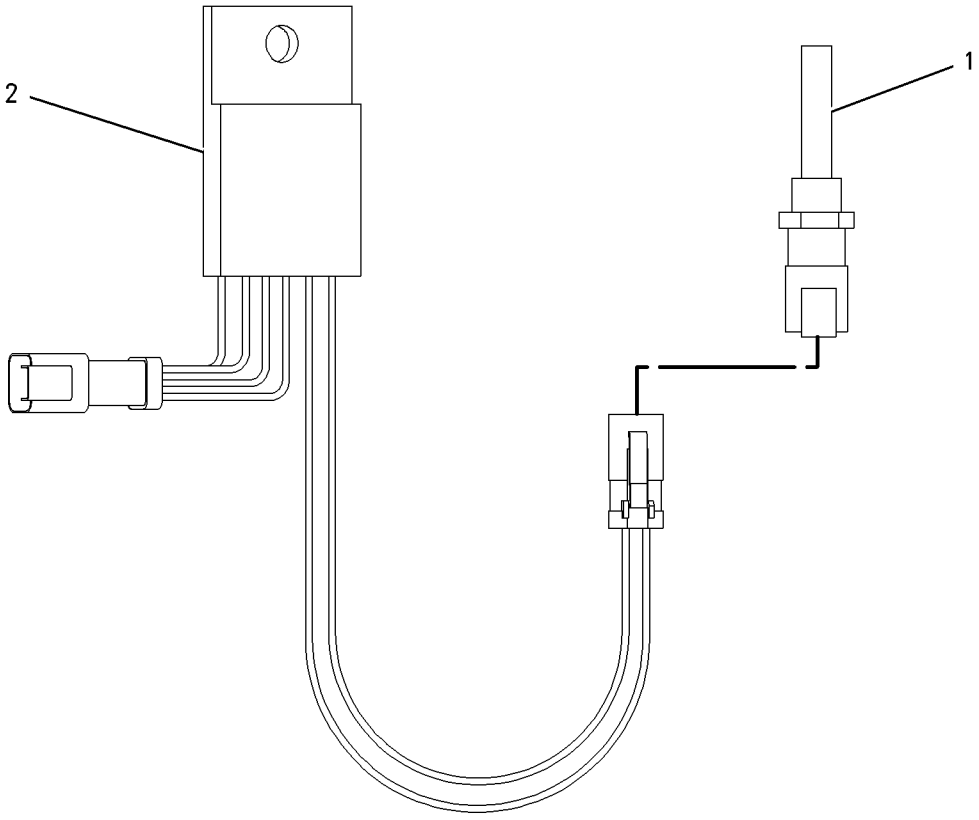

GRAPHIC #1 **<END>** g00816289

169-0417 SENSOR GP-POSITION

S/N: CLA1-UP

PART OF 309-5745, 309-5773 SENSOR & MTG GP-POSITION

AN ATTACHMENT

SMCS-5737 **i02846101**

NOTE	REF NO	GRAPHIC REF	PART NUMBER	QTY	PART NAME 1 2 3 4 5 6 (PRODUCT LEVEL)	SEE PAGE
	2	1	**102-8803**	1	KIT-RECEPTACLE (3-PIN)	
					(INCLUDES RECEPTACLE AS AND WEDGE)	
	3	1	**9X-3401**	3	PIN-CONNECTOR (16-GA TO 18-GA)	
	4	1	**3E-3371**	1	WEDGE-RECEPTACLE LOCK (3-PIN)	
E	5	1	**119-3662**		TUBE-HEAT SHRINK (10.85-MM DIA) (5-CM)	
E	6	1	**9X-1813**		SLEEVE (17-CM)	
	7	1	**172-1482**	1	CLAMP	
M	8	1	**3E-8048**	2	SCREW-MACHINE (M3X0.5X6-MM)	

E-ORDER BY THE CENTIMETER
M-METRIC PART

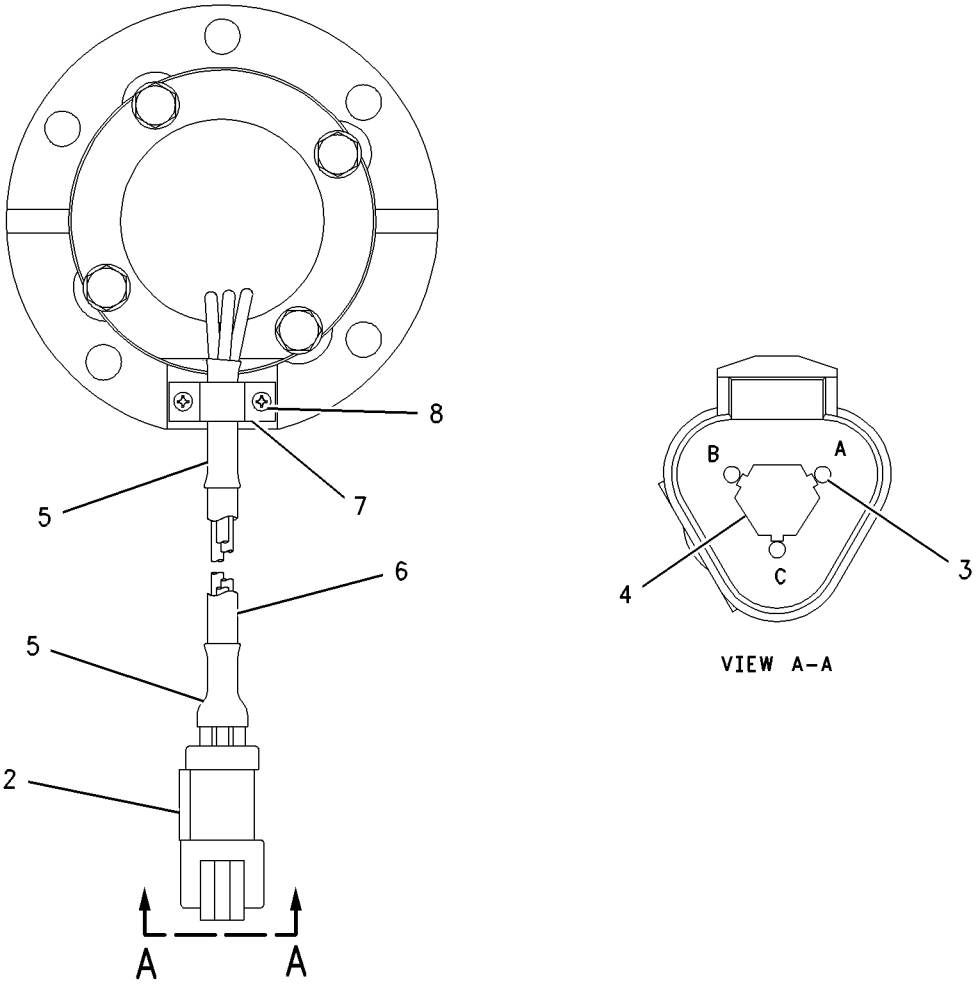

GRAPHIC #1 **<END>** g00934905

279-7833 SENSOR GP-POSITION—WATER SEPARATOR

S/N: CLA1-UP
AN ATTACHMENT

SMCS-5737 **i02974089**

NOTE	REF NO	GRAPHIC REF	PART NUMBER	QTY	PART NAME 1 2 3 4 5 6 (PRODUCT LEVEL)	SEE PAGE
	1	1	**3S-2093**	1	STRAP-CABLE	
	2	1	**116-0118**	1	CLIP	
Y	3	1	**178-2345**	1	SENSOR GP-LIQUID LEVEL (WATER IN FUEL)	170
	4	1	**6V-5049**	1	SEAL-O-RING	
M	5	1	**7X-2621**	1	BOLT (M10X1.5X12-MM)	
	6	1	**8T-4121**	2	WASHER-HARD (11X21X2.5-MM THK)	
M	7	1	**8T-4137**	1	BOLT (M10X1.5X20-MM)	

M-METRIC PART
Y-SEPARATE ILLUSTRATION

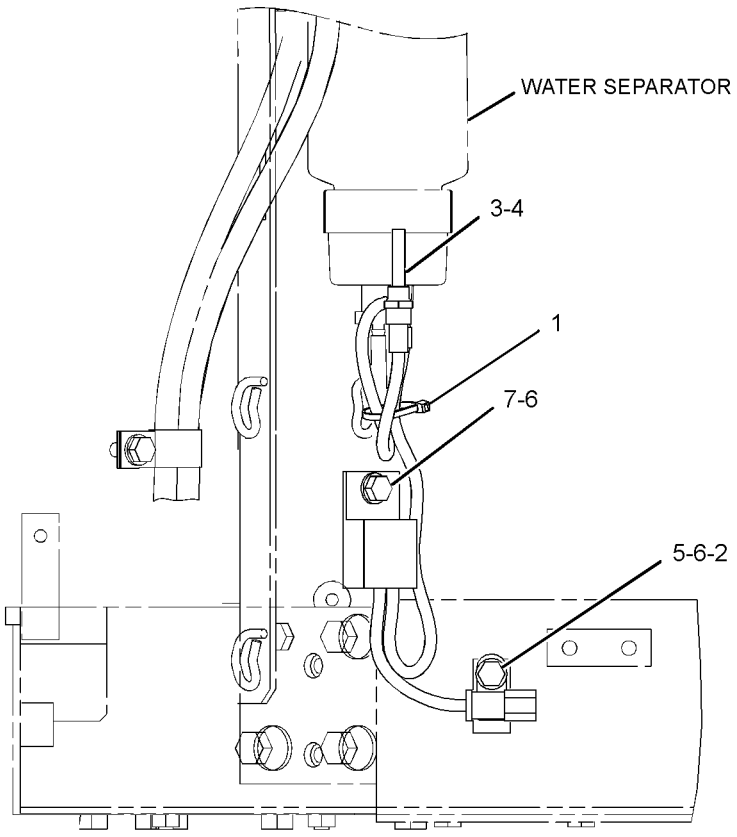

FRONT VIEW

GRAPHIC #1 **<END>** g01554393

ELECTRICAL AND STARTING SYSTEM

298-4105 STARTING AR-COLD WEATHER

S/N: CLA1-UP
AN ATTACHMENT

SMCS-1450 **i02656744**

NOTE	PART NUMBER	QTY	PART NAME 1 2 3 4 5 6 (PRODUCT LEVEL)	SEE PAGE
Y	*259-5050*	1	BATTERY GP (COLD WEATHER)	116
Y	*193-9776*	1	COVER GP-ACCESS (ENGINE OIL DIPSTICK)	264

Y-SEPARATE ILLUSTRATION

<END>

272-4774 STARTING MOTOR GP-ELECTRIC

S/N: JKH1-UP

PART OF 296-4637 MOUNTING GP-STARTING MOTOR

ALSO AN ATTACHMENT

SMCS-1453 **i02646437**

NOTE	REF NO	GRAPHIC REF	PART NUMBER	QTY	PART NAME 1 2 3 4 5 6 (PRODUCT LEVEL)	SEE PAGE
	1	1	**127-5947**	1	SETSCREW	
C	2	1	**294-1855**	1	BRACKET AS	
		1	**127-5937**	1	BEARING AS	
	3	1	**127-5944**	1	LEVER AS	
C	4	1	**294-1857**	1	SOLENOID AS-STARTING MOTOR (STARTING MOTOR)	
	5	1	**127-5948**	1	BALL	
	6	1	**127-5949**	1	PACKING AS	
	7	1	**127-5950**	1	ARMATURE AS	
		1	**095-0410**	1	BEARING	
	8	1	**095-0085**	1	BOLT SET	
	9	1	**279-7750**	1	PINION SET	
		1	**094-9950**	1	STOP SET	
	10	1	**233-1279**	1	SHAFT GP-MOTOR	
		1	**127-5939**	1	SHAFT AS-GEAR	
		1	**127-5940**	1	WASHER AS	
		1	**127-5941**	1	GEAR AS-INTERNAL	
		1	**127-5943**	4	GEAR AS (55/138-TEETH)	
		1	**233-1280**	1	CLUTCH	
	11	1	**094-9980**	2	GASKET	
	12	1	**127-5952**	1	YOKE AS	
		1	**127-5953**	2	BRUSH	
C	13	1	**294-1858**	1	HOLDER AS	
	14	1	**135-2366**	1	BRACKET	

C-CHANGE FROM PREVIOUS TYPE

272-4774 **STARTING MOTOR GP-ELECTRIC** *(contd.)* **i02646437**

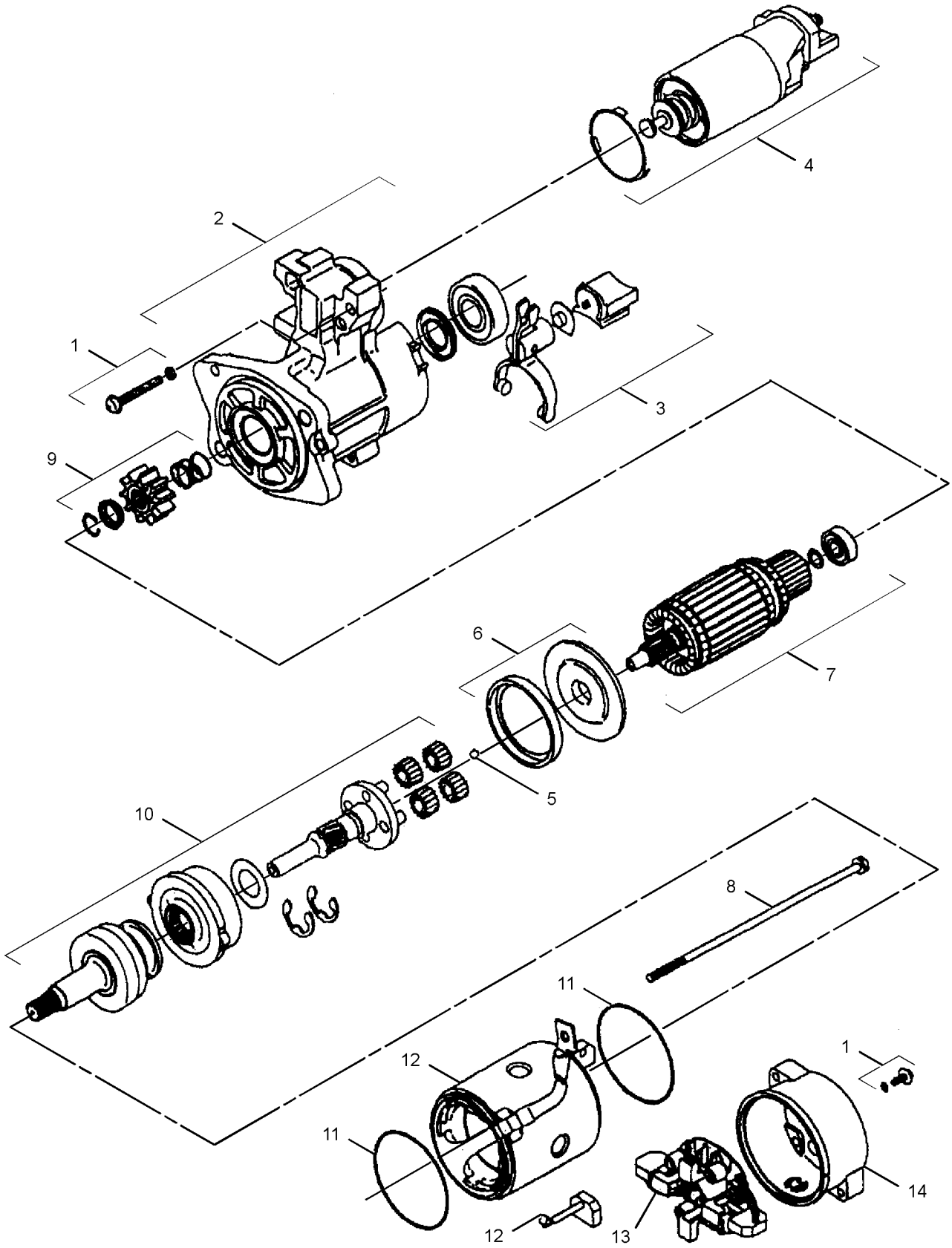

GRAPHIC #1 **<END>** g01219448

7N-0718 SWITCH GP-DISCONNECT–BATTERY

S/N: CLA1-UP

PART OF 275-6927, 319-1170 PANEL GP-CIRCUIT BREAKER

SMCS-1411 **i01213345**

NOTE	REF NO	GRAPHIC REF	PART NUMBER	QTY	PART NAME 1 2 3 4 5 6 (PRODUCT LEVEL)	SEE PAGE
	1	1	**2H-3922**	2	LOCKWASHER	
	2	1	**8H-5303**	1	NUT (3/4-16-THD)	
	3	1	**9F-5644**	2	LOCKWASHER	
	4	1	**6F-7045**	2	NUT-FULL (3/8-24-THD)	
	5	1	**8H-5306**	1	KEY (BATTERY DISCONNECT)	

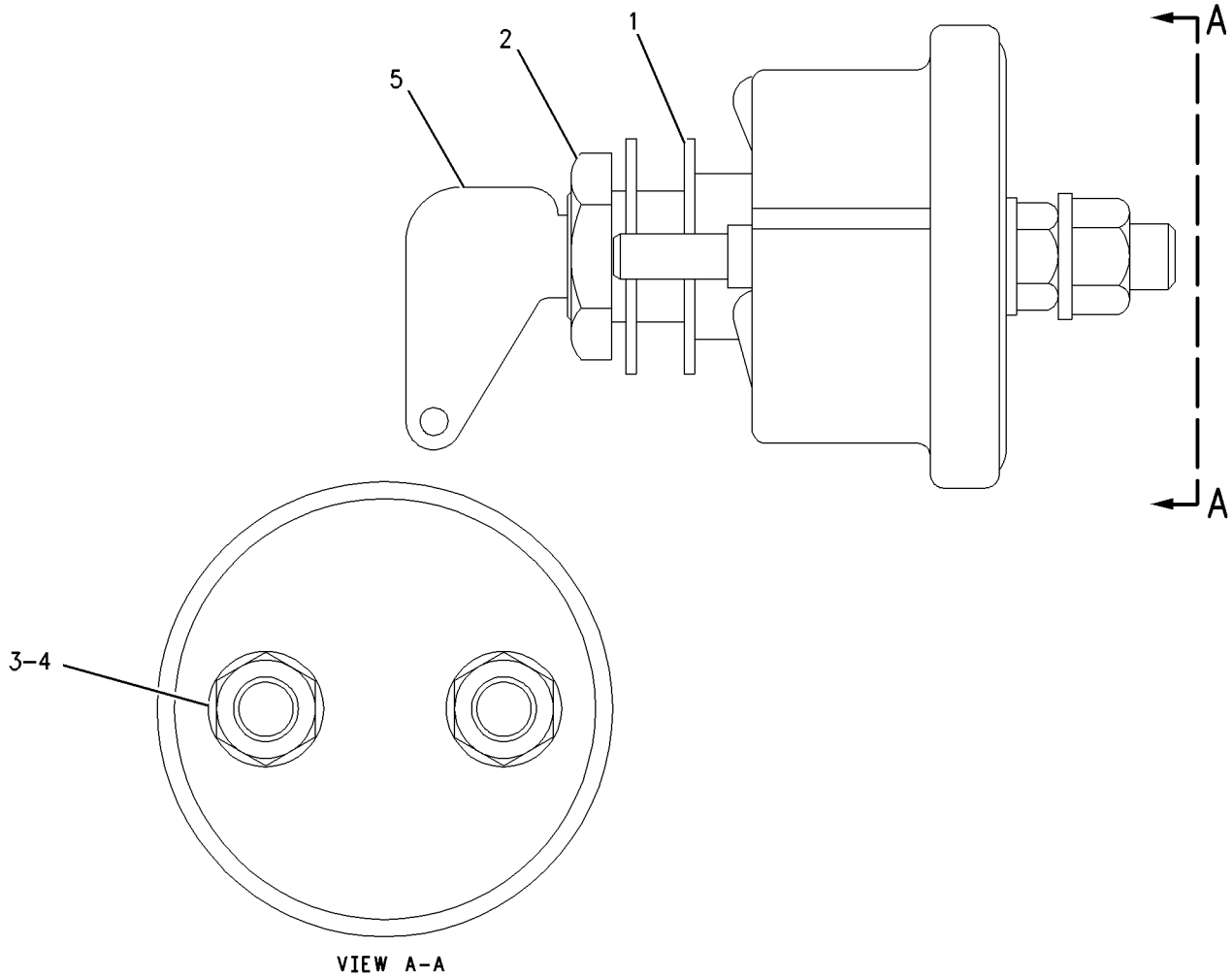

GRAPHIC #1 **<END>** g00664195

223-7577 SWITCH GP-MAGNETIC—AIR INLET HEATER RELAY

S/N: JKH1-UP
24 VOLT
PART OF 296-4801 WIRING GP-ELECTRONIC CONTROL
ALSO AN ATTACHMENT

SMCS-7499 **i02953207**

NOTE	REF NO	GRAPHIC REF	PART NUMBER	QTY	PART NAME 1 2 3 4 5 6 (PRODUCT LEVEL)	SEE PAGE
	1	1	**209-5582**	1	SWITCH GP-MAGNETIC (24-VOLT) (AIR INLET HEATER RELAY)	
	1A	1	**102-8802**	1	KIT-RECEPTACLE (2-PIN)	
					(INCLUDES RECEPTACLE AS & WEDGE)	
	1B	1	**186-3735**	2	PIN-CONNECTOR (16-GA TO 18-GA)	
	1C	1	**3F-9556**	2	LOCKWASHER	
	1D	1	**6V-8186**	2	NUT-FULL (5/16-24-THD)	
	1E	1	**6V-8378**	2	NUT (10-32-THD)	
	1F	1	**8F-1434**	2	LOCKWASHER	
	2	1	**283-1224**	1	BRACKET AS	
	3	1	**208-9277**	2	BOLT-FLANGE HEAD (M8X1X25-MM)	

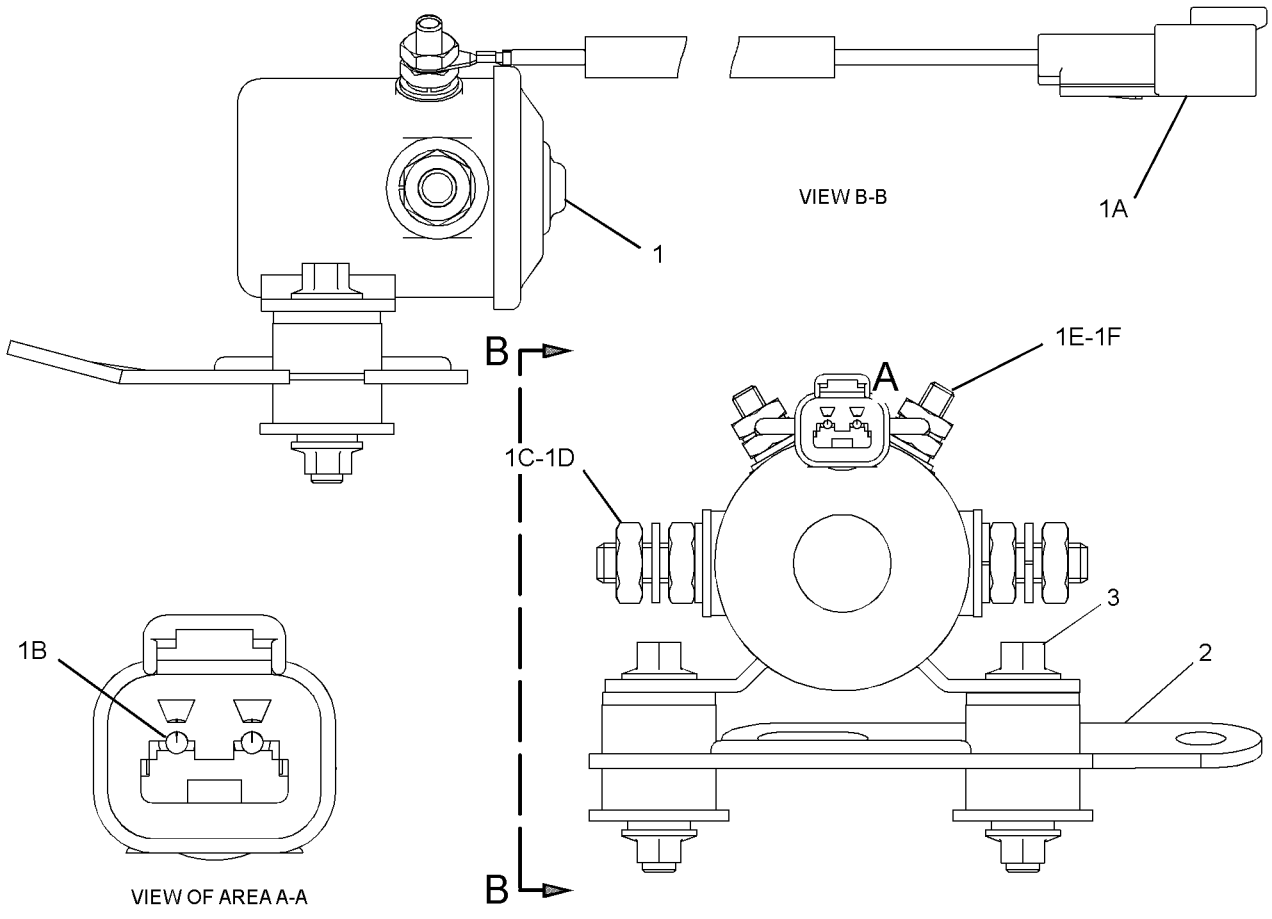

GRAPHIC #1 **<END>** g01269556

259-5274 SWITCH GP-MAGNETIC–START RELAY

S/N: CLA1-UP

PART OF 275-6927, 319-1170 PANEL GP-CIRCUIT BREAKER

SMCS-7499 **i02420131**

NOTE	REF NO	GRAPHIC REF	PART NUMBER	QTY	PART NAME 1 2 3 4 5 6 (PRODUCT LEVEL)	SEE PAGE
	1	1	**102-8802**	1	KIT-RECEPTACLE (2-PIN)	
					(INCLUDES RECEPTACLE AS & WEDGE)	
	2	1	**186-3735**	2	PIN-CONNECTOR (16-GA TO 18-GA)	
	3	1	**1H-3338**	2	LOCKWASHER (TOOTH)	
	4	1	**012-0380**	2	LOCKWASHER (SPLIT)	
M	5	1	**5C-2890**	2	NUT (M6X1-THD)	

M-METRIC PART

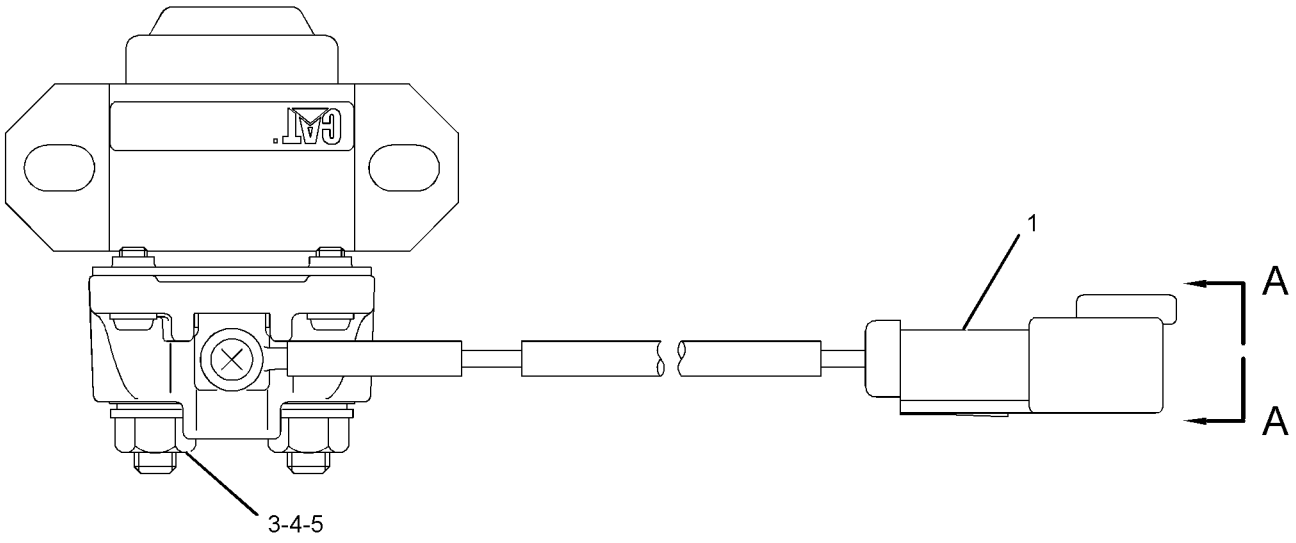

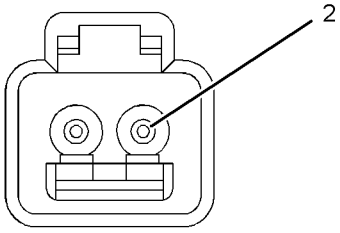

VIEW A-A

GRAPHIC #1 **<END>** g01196733

234-6613 SWITCH GP-POSITION–HYDRAULIC LOCKOUT

S/N: CLA1-UP

PART OF 259-7349 CONSOLE GP-OPERATOR

SMCS-1408, 1435 **i02175053**

NOTE	REF NO	GRAPHIC REF	PART NUMBER	QTY	PART NAME 1 2 3 4 5 6 (PRODUCT LEVEL)	SEE PAGE
	1	1	**3S-2093**	1	STRAP-CABLE	
	2	1	**4I-3038**	2	WASHER (3.3X8X0.5-MM THK)	
	3	1	**111-4799**	1	SWITCH AS-LIMIT (HYDRAULIC LOCKOUT)	
		1	**102-8803**	1	KIT-RECEPTACLE (3-PIN)	
					(INCLUDES RECEPTACLE AS & WEDGE)	
		1	**186-3735**		PIN-CONNECTOR (16-GA TO 18-GA)	
BD		1	**5P-5998**		TUBE	
M	4	1	**185-8286**	2	SCREW-MACHINE (M4X0.7X8-MM)	
	5	1	**234-6615**	1	KNOB	
	6	1	**087-4683**	2	LOCKWASHER	
M	7	1	**120-9027**	2	SCREW-PAN HEAD (M3X0.5X16-MM)	

B-USE AS REQUIRED
D-ORDER BY THE METER
M-METRIC PART

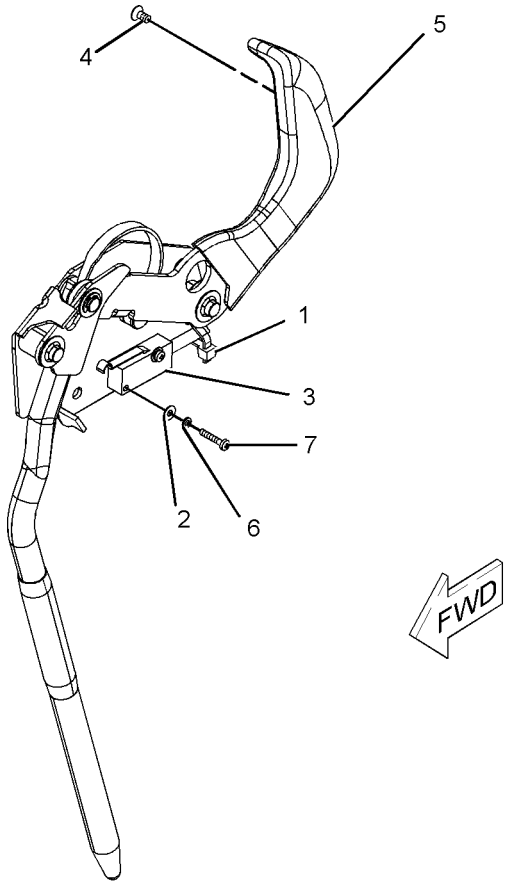

GRAPHIC #1 **<END>** g01096293

5C-6108 SWITCH GP-REFUELING–FUEL TANK SHUTOFF

S/N: CLA1-UP

PART OF 283-8788 PUMP GP-FUEL TRANSFER, 301-2642 PUMP GP-REFUELING AN ATTACHMENT

SMCS-1295 **i02742303**

NOTE	REF NO	GRAPHIC REF	PART NUMBER	QTY	PART NAME 1 2 3 4 5 6 (PRODUCT LEVEL)	SEE PAGE
	1	1	**8J-9236**	1	SWITCH (LIQUID LEVEL) (FUEL)	
	2	1	**5C-6074**	1	FITTING	
	3	1	**2S-4078**	1	SEAL-O-RING	
	4	1	**3D-2824**	1	SEAL-O-RING	
	5	1	**8S-1815**	1	PLUG	
	6	1	**8S-1814**	2	INSULATOR	
	7	1	**4B-2049**	2	NUT (10-32-THD)	
	8	1	**8S-1812**	1	TERMINAL	
	9	1	**9B-4499**	1	SCREW-MACHINE (8-36X0.375-IN)	
	10	1	**2L-8076**	1	TERMINAL (14-GA TO 16-GA, NO. 10 SCREW)	

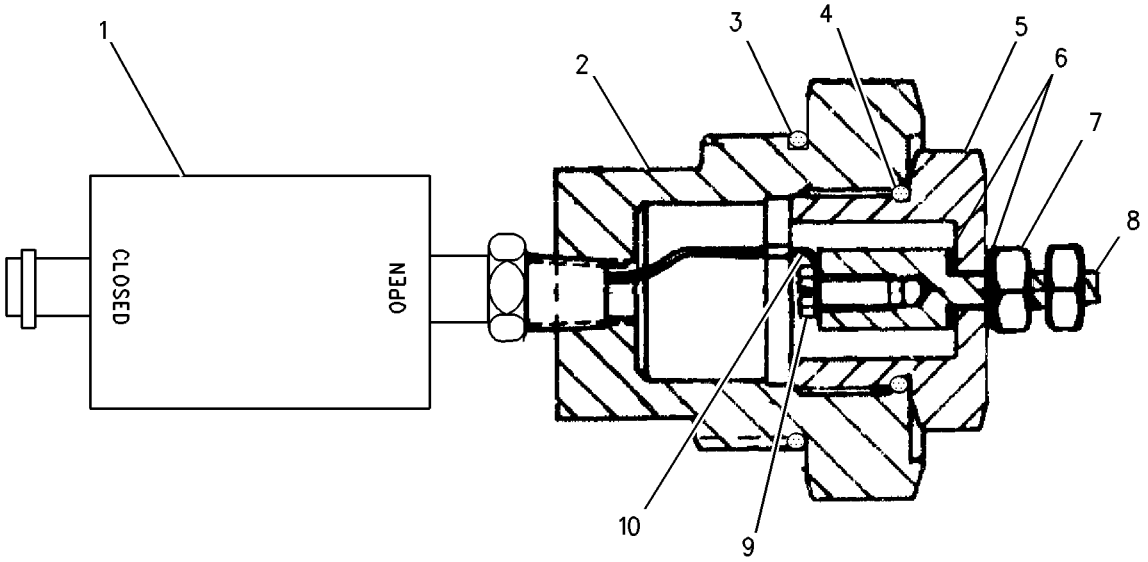

GRAPHIC #1 **<END>** g00687581

106-0107 SWITCH GP-ROTARY–THROTTLE POSITION

S/N: CLA1-UP

PART OF 251-0542, 251-0544 PANEL GP-SWITCH

AN ATTACHMENT

SMCS-7332 **i02164374**

NOTE	REF NO	GRAPHIC REF	PART NUMBER	QTY	PART NAME 1 2 3 4 5 6 (PRODUCT LEVEL)	SEE PAGE
	1	1	**102-8805**	1	KIT-RECEPTACLE (6-PIN)	
					(INCLUDES RECEPTACLE AS & WEDGE)	
	2	1	**3E-3383**	1	WEDGE-RECEPTACLE LOCK (6-PIN)	
	3	1	**8T-8737**	1	PLUG-SEAL	
	4	1	**144-1636**	5	PIN-CONNECTOR (14-GA TO 18-GA)	
M	5	1	**7Y-5458**	1	NUT (M12X1-THD)	
	6	1	**7Y-5464**	1	WASHER (M12.2X15.4X0.5-MM THK)	
	7	1	**106-0210**	1	SEAL	

M-METRIC PART

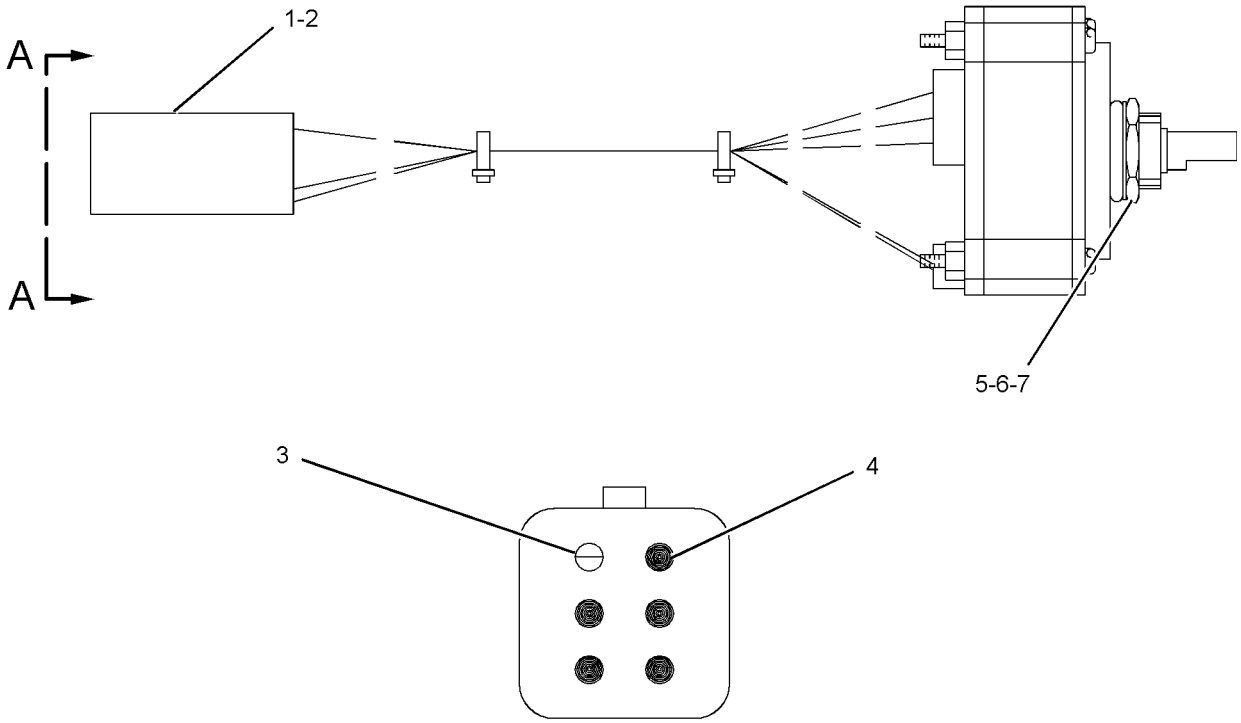

VIEW A-A

GRAPHIC #1 **<END>** g01098706

319-4420 SWITCH GP-ROTARY–THROTTLE POSITION

S/N: CLA1-UP

PART OF 251-0542, 251-0544 PANEL GP-SWITCH

AN ATTACHMENT

SMCS-7332 **i03105700**

NOTE	REF NO	GRAPHIC REF	PART NUMBER	QTY	PART NAME 1 2 3 4 5 6 (PRODUCT LEVEL)	SEE PAGE
	1	1	**243-4508**	1	RECEPTACLE AS-CONNECTOR (6-PIN)	
	2	1	**9X-3401**	5	PIN-CONNECTOR (16-GA TO 18-GA)	
					–OR–	
		1	**126-1767**	5	PIN-CONNECTOR (14-GA)	
	3	1	**8T-8737**	1	PLUG-SEAL	
M	4	1	**7Y-5458**	1	NUT (M12X1-THD)	
	5	1	**7Y-5464**	1	WASHER (M12.2X15.4X0.5-MM THK)	
	6	1	**106-0210**	1	SEAL	

M-METRIC PART

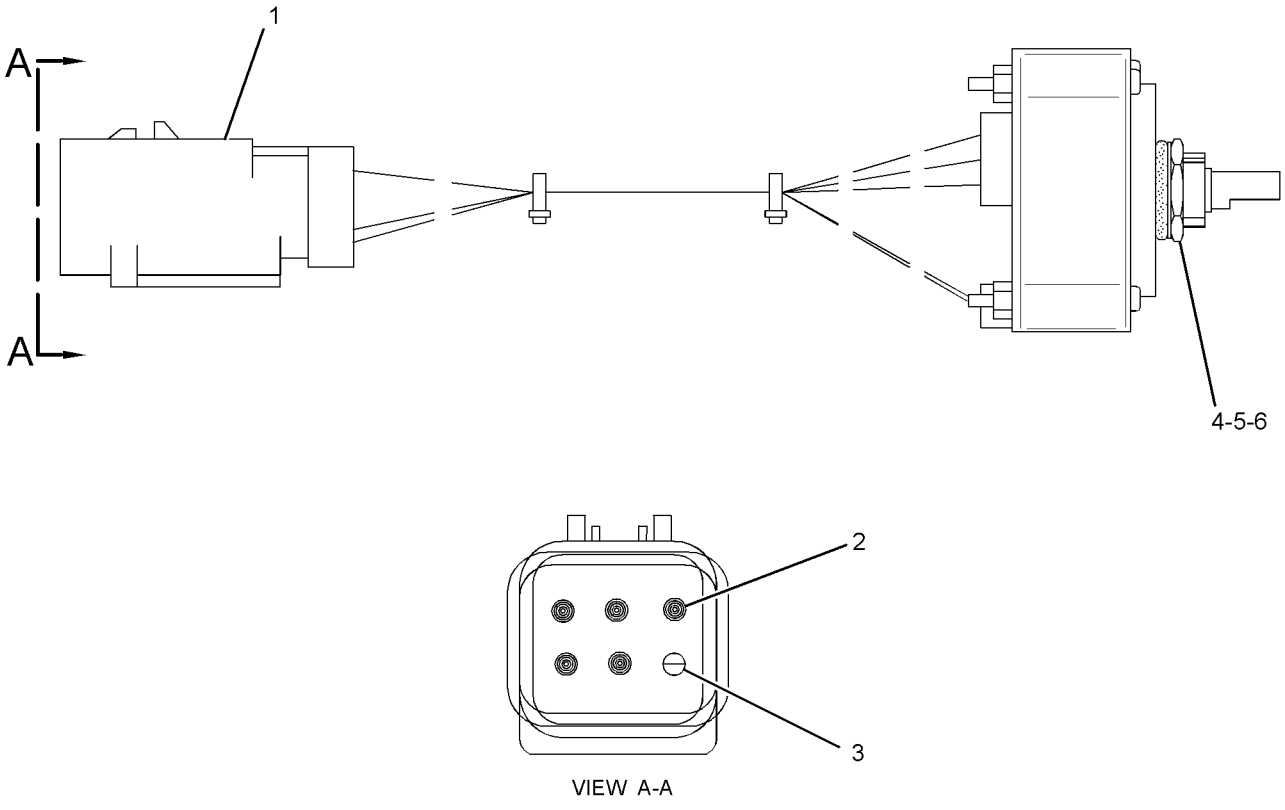

GRAPHIC #1 **<END>** g01588034

9G-7641 SWITCH GP-START–ENGINE, KEY

S/N: CLA1-UP

PART OF 251-0542, 251-0544 PANEL GP-SWITCH

AN ATTACHMENT

SMCS-1416 **i01101254**

NOTE	REF NO	GRAPHIC REF	PART NUMBER	QTY	PART NAME 1 2 3 4 5 6 (PRODUCT LEVEL)	SEE PAGE
	1	1	**6V-8362**	4	SCREW-MACHINE (8-32X0.31-IN)	
	2	1	**9B-7233**	4	LOCKWASHER	
	3	1	**7T-6799**	1	NUT-MOUNTING (1-32-THD)	

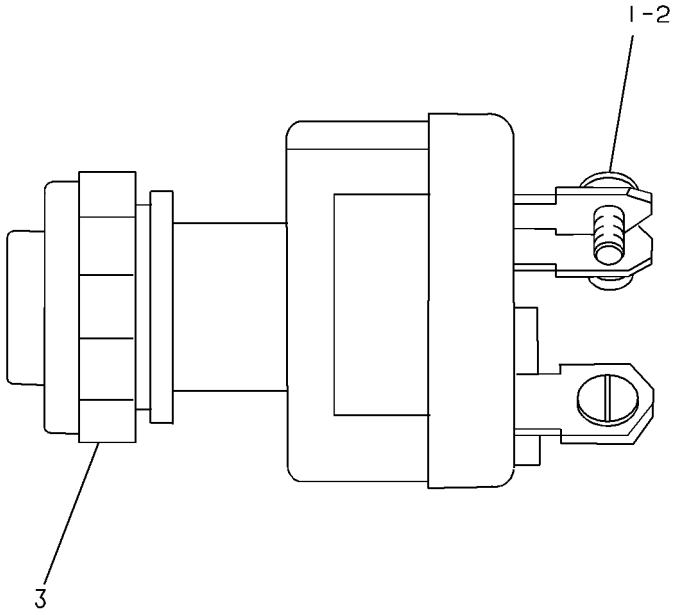

GRAPHIC #1 **<END>** g00081868

238-2478 SWITCH GP-TOGGLE–QUICK COUPLER

S/N: CLA1-UP

PART OF 238-2485 WIRING GP-QUICK COUPLER

AN ATTACHMENT

SMCS-7332 **i02518014**

NOTE	REF NO	GRAPHIC REF	PART NUMBER	QTY	PART NAME 1 2 3 4 5 6 (PRODUCT LEVEL)	SEE PAGE
	1	1	**7N-2353**	1	SWITCH AS-TOGGLE (QUICK COUPLER)	
	2	1	**238-2479**	1	HARNESS AS-WIRING (QUICK COUPLER SWITCH)	
		1	**7Y-3950**	2	TERMINAL (MALE)	
		1	**7Y-3953**	1	CONNECTOR-RECEPTACLE	
		1	**3S-2093**	1	STRAP-CABLE	

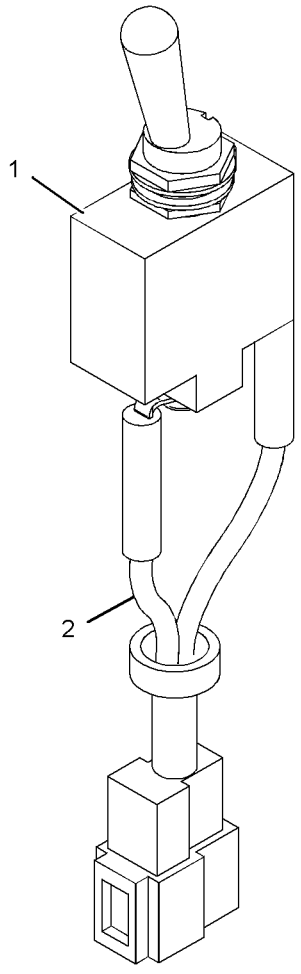

GRAPHIC #1

<END>

g01125914

238-2208 SWITCH GP-WIPER–LOWER

S/N: CLA1-UP

PART OF 273-5388 WIPER AR-WINDOW

AN ATTACHMENT

SMCS-7305 **i02971621**

NOTE	REF NO	GRAPHIC REF	PART NUMBER	QTY	PART NAME 1 2 3 4 5 6 (PRODUCT LEVEL)	SEE PAGE
	1	1	**238-2209**	1	SWITCH AS-ROCKER (WIPER, LOWER)	
		1	**167-3542**	1	CONNECTOR-RECEPTACLE	
		1	**167-3543**	5	TERMINAL (MALE)	
	2	1	**238-2210**	1	SWITCH AS-ROCKER (LOWER WASHER)	
		1	**167-3542**	1	CONNECTOR-RECEPTACLE	
		1	**167-3543**	4	TERMINAL (MALE)	

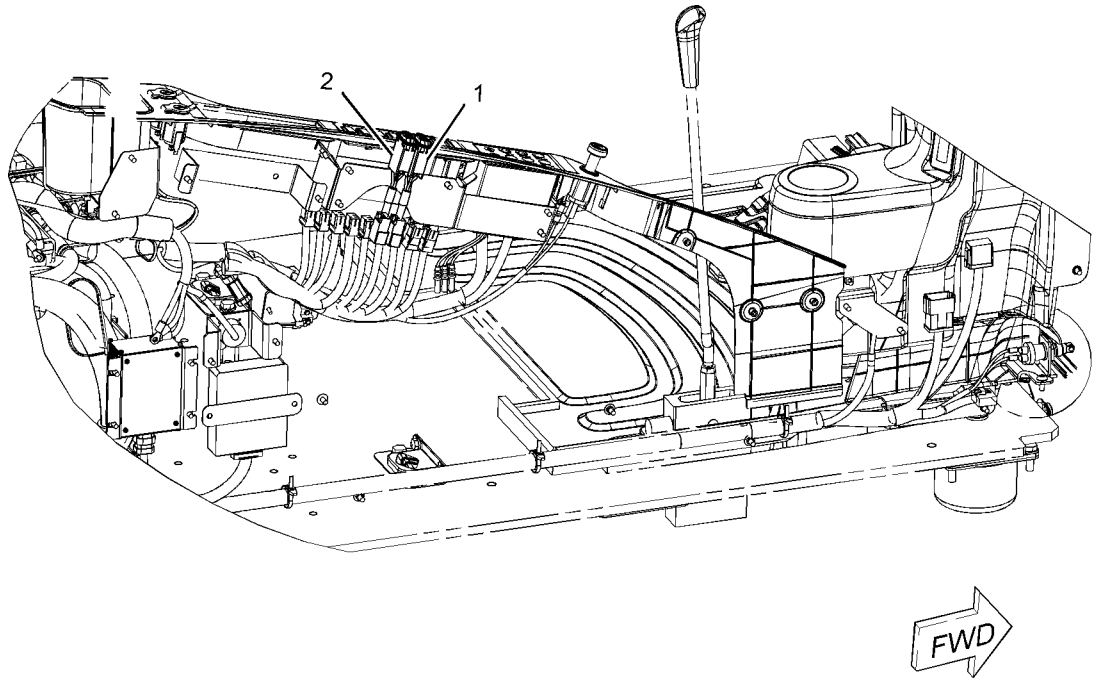

GRAPHIC #1 **<END>** g01098895

283-2608 WIRING GP-AUX START RECEPTACLE–JUMP START

S/N: CLA1-UP
AN ATTACHMENT

SMCS-1408, 1463 **i03001051**

NOTE	REF NO	GRAPHIC REF	PART NUMBER	QTY	PART NAME 1 2 3 4 5 6 (PRODUCT LEVEL)	SEE PAGE
	1	1	**2G-1830**	1	RECEPTACLE AS	
		1	**1S-7251**	2	TERMINAL-CABLE (00-GA, 1/2-IN BOLT)	
E		1	**5P-0747**		CABLE (00-GA, BLACK) (49-CM)	
E		1	**5P-0761**		CABLE (00-GA, RED) (56-CM)	
D		1	**6V-2722**		TUBE-HEAT SHRINK (25.4-MM DIA) (1-M)	
	2	1	**301-0091**	1	COVER-TERMINAL (RED)	
	3	1	**8S-2634**	1	COVER AS	
Y	4	1	**9W-0742**	1	BLOCK GP-JUNCTION (BATTERY)	117
	5	1	**319-1219**	1	CABLE AS	
		1	**1S-7251**	1	TERMINAL-CABLE (00-GA, 1/2-IN BOLT)	
		1	**1S-7252**	1	TERMINAL-CABLE (00-GA, 3/8-IN BOLT)	
E		1	**5P-0761**		CABLE (00-GA, RED) (188-CM)	
		1	**8N-0869**	2	COVER-TERMINAL (RED)	
		1	**301-0091**	1	COVER-TERMINAL (RED)	
	6	1	**283-2657**	1	CABLE AS	
		1	**1S-7251**	1	TERMINAL-CABLE (00-GA, 1/2-IN BOLT)	
E		1	**5P-0761**		CABLE (00-GA, RED) (30-CM)	
		1	**8N-0869**	1	COVER-TERMINAL (RED)	
		1	**9G-0004**	1	COVER-TERMINAL (RED)	
		1	**8L-8413**	1	STRAP-CABLE	
		1	**8C-5917**	1	TERMINAL AS-BATTERY (POSITIVE)	
		1	**1M-6119**	1	BOLT (5/16-18X1.375-IN)	
		1	**1M-6120**	1	NUT (5/16-18-THD)	
	7	1	**283-2668**	1	BRACKET	
	8	1	**283-2669**	1	BRACKET AS	
	9	1	**4K-8864**	2	CLIP	
M	10	1	**5C-9553**	4	BOLT (M6X1X16-MM)	
	11	1	**5P-4115**	4	WASHER-HARD (7.2X19X2-MM THK)	
	12	1	**6G-2263**	2	SPACER (10.5X19X28.5-MM THK)	
	13	1	**8T-4121**	8	WASHER-HARD (11X21X2.5-MM THK)	
M	14	1	**8T-4136**	4	BOLT (M10X1.5X25-MM)	
M	15	1	**8T-4137**	2	BOLT (M10X1.5X20-MM)	
M	16	1	**8T-4185**	2	BOLT (M10X1.5X50-MM)	

D-ORDER BY THE METER
E-ORDER BY THE CENTIMETER
M-METRIC PART
Y-SEPARATE ILLUSTRATION

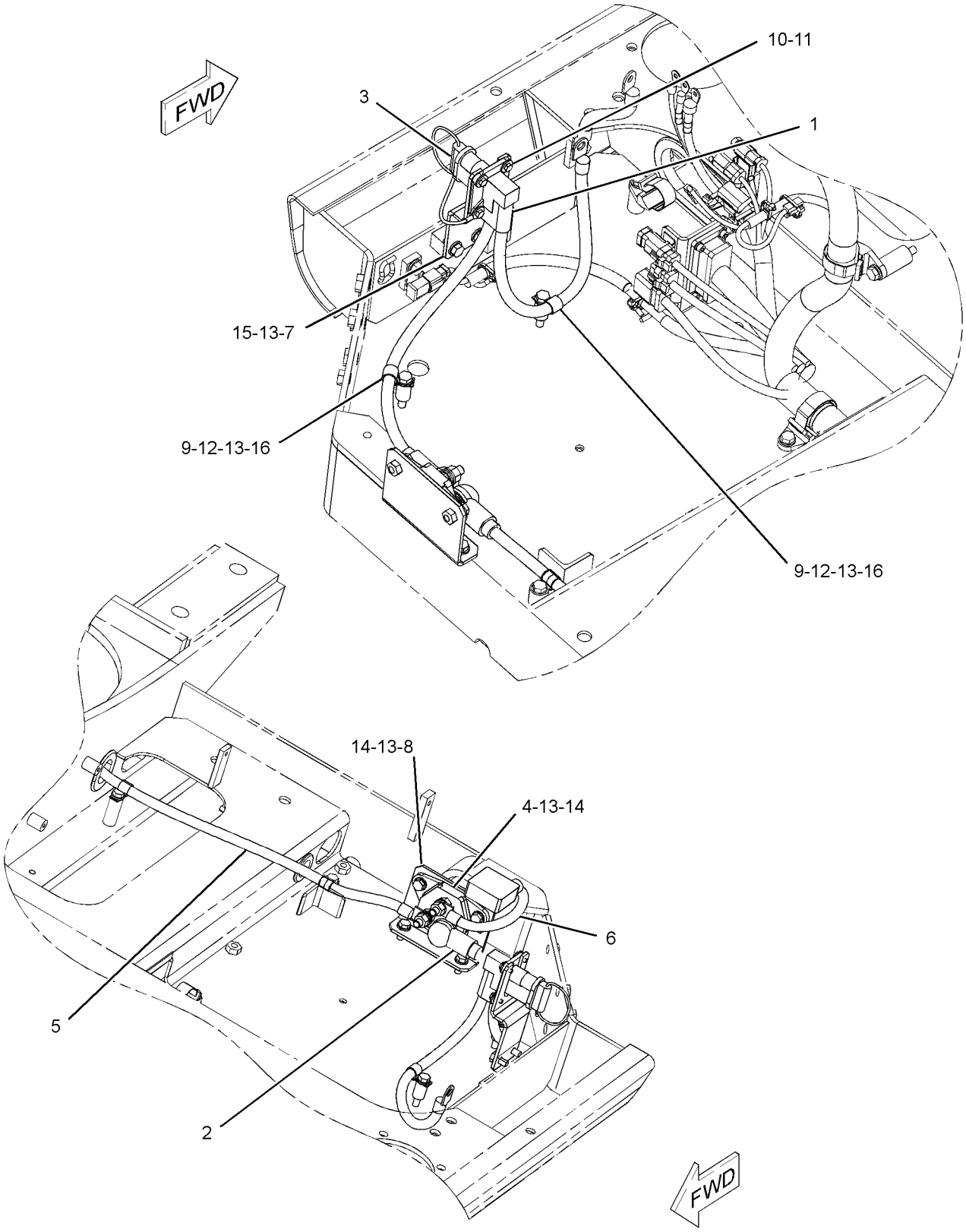

GRAPHIC #1 **<END>** g01401072

283-2614 WIRING GP-AUXILIARY CONTROL–

SYSTEM 20, WORK TOOL PRIORITY

S/N: CLA1-UP

PART OF 270-6025 CONTROL AR-AUXILIARY

AN ATTACHMENT

SMCS-1408 **i02838082**

NOTE	REF NO	GRAPHIC REF	PART NUMBER	QTY	PART NAME 1 2 3 4 5 6 (PRODUCT LEVEL)	SEE PAGE
	1	1,2,3	**3S-2093**	17	STRAP-CABLE	
	2	1	**7I-2673**	1	STRAP-CABLE	
	3	1,2,3	**7K-1181**	19	STRAP-CABLE	
	4	2	**111-4836**	2	CLIP	
	5	3	**283-2654**	1	HARNESS AS-VALVE	
	6	1	**132-5789**	1	CLIP	
	7	2	**8T-4121**	2	WASHER-HARD (11X21X2.5-MM THK)	
M	8	2	**8T-4137**	2	BOLT (M10X1.5X20-MM)	

M-METRIC PART

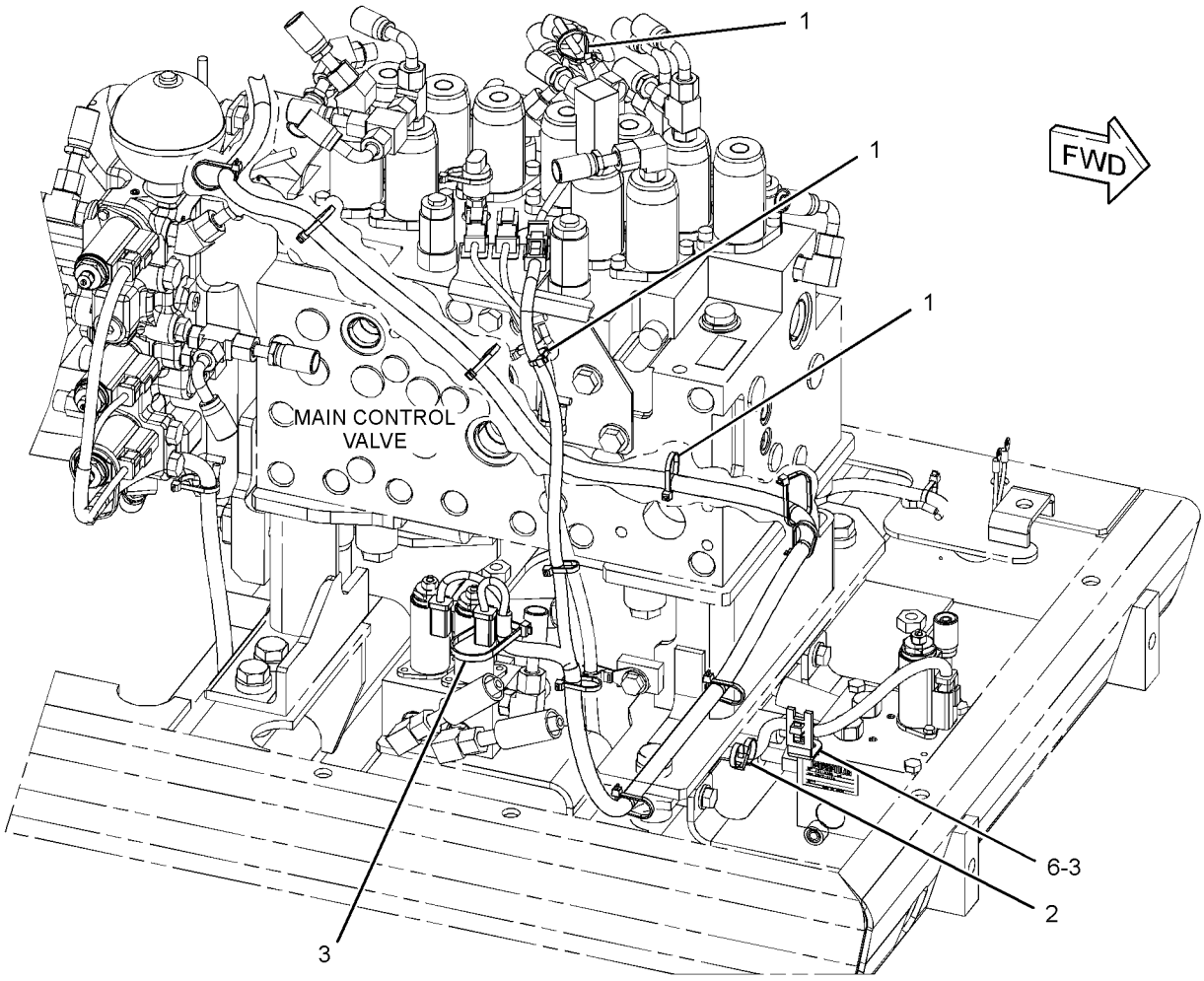

GRAPHIC #1 g01446002

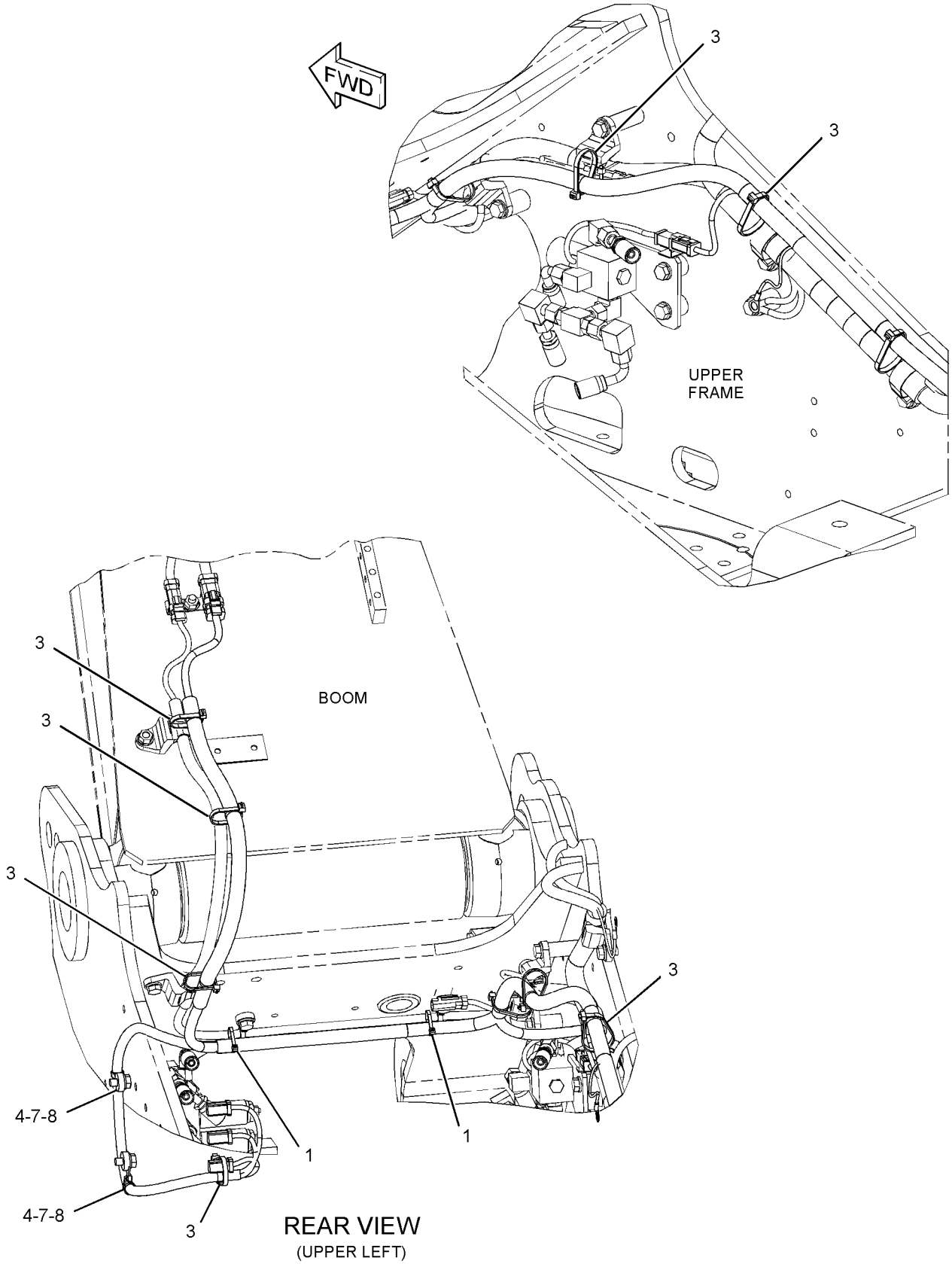

GRAPHIC #2 g01446149

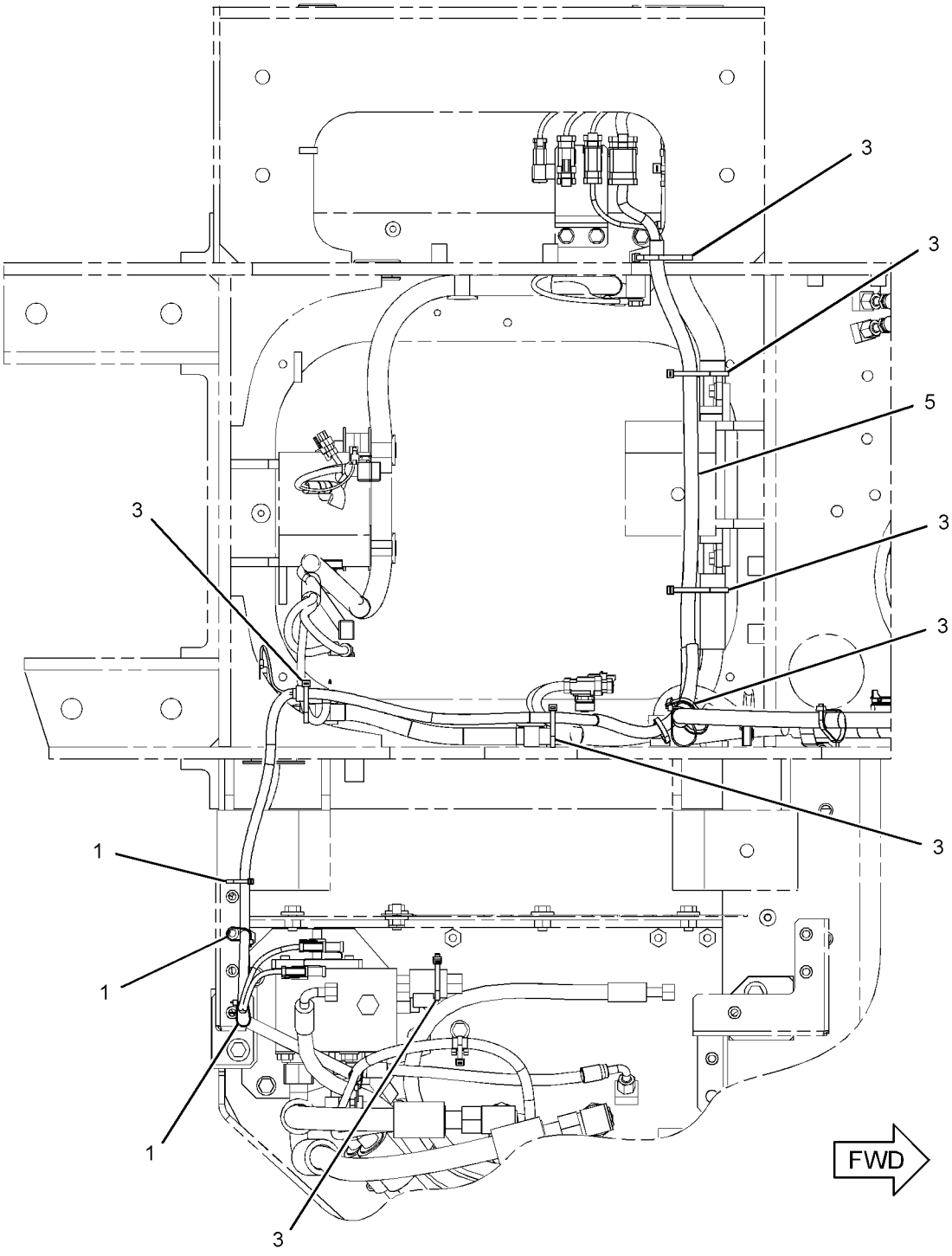

TOP VIEW

GRAPHIC #3 **<END>** g01446205

283-2617 WIRING GP-AUXILIARY CONTROL

S/N: CLA1-UP
PART OF 270-6030 CONTROL AR-AUXILIARY
AN ATTACHMENT

SMCS-1408 **i02877054**

NOTE	REF NO	GRAPHIC REF	PART NUMBER	QTY	PART NAME 1 2 3 4 5 6 (PRODUCT LEVEL)	SEE PAGE
	1	1	**3S-2093**	14	STRAP-CABLE	
	2	1	**7I-2673**	1	STRAP-CABLE	
	3	1	**7K-1181**	17	STRAP-CABLE	
	4	1	**111-4836**	2	CLIP	
	5	1	**291-7917**	1	HARNESS AS-VALVE	
	6	1	**132-5789**	1	CLIP	
	7	1	**8T-4121**	2	WASHER-HARD (11X21X2.5-MM THK)	
M	8	1	**8T-4137**	2	BOLT (M10X1.5X20-MM)	

M-METRIC PART

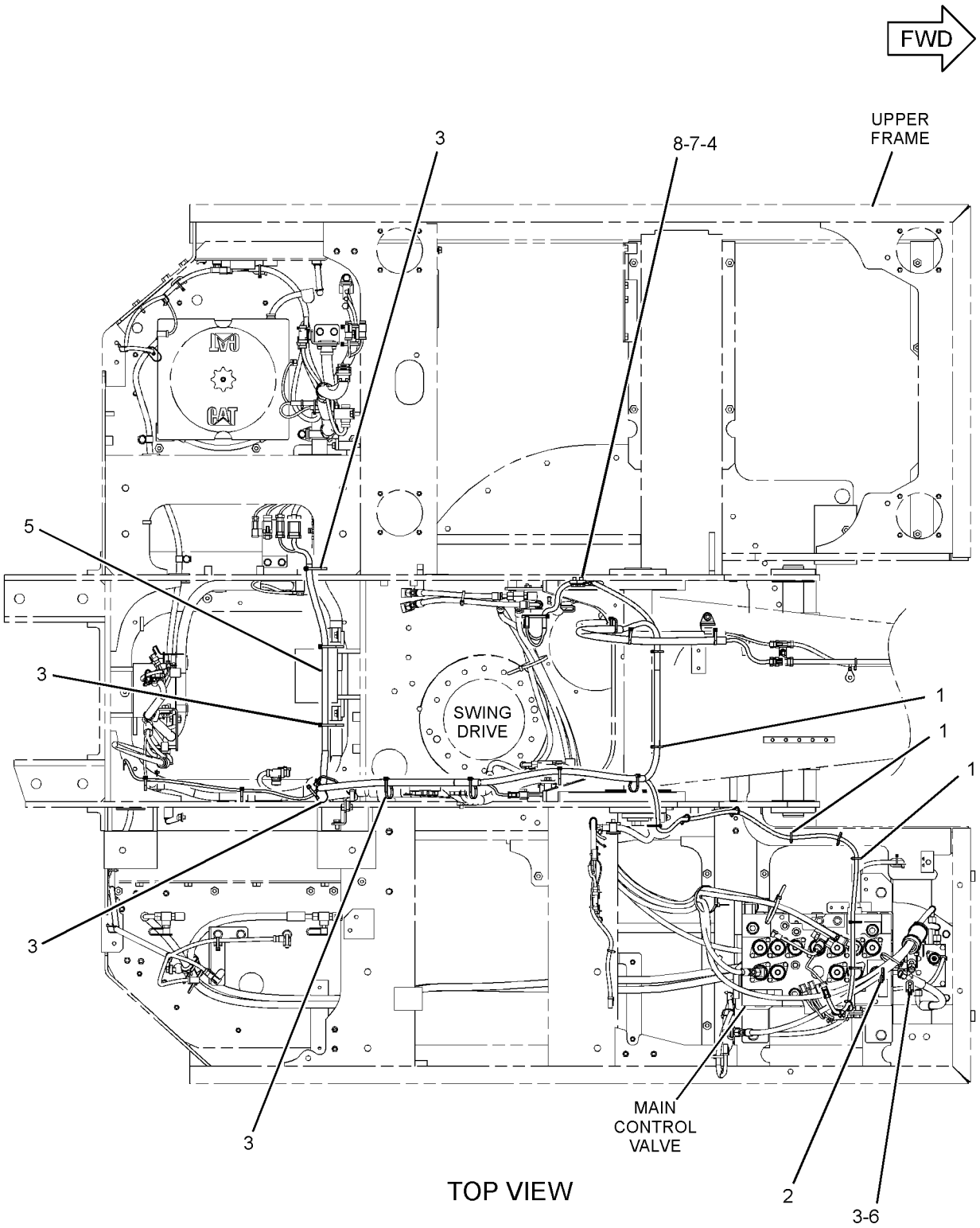

TOP VIEW

GRAPHIC #1 **<END>** g01446291

291-7880 WIRING GP-BOOM

S/N: CLA1-UP

PART OF 294-6428 LINES AR-AUXILIARY HYDRAULIC AN ATTACHMENT

SMCS-1408 **i02795360**

NOTE	REF NO	GRAPHIC REF	PART NUMBER	QTY	PART NAME 1 2 3 4 5 6 (PRODUCT LEVEL)	SEE PAGE
	1	1	**3S-2093**	6	STRAP-CABLE	
	2	1	**116-0118**	1	CLIP	
	3	1	**291-7881**	1	HARNESS AS-VALVE	

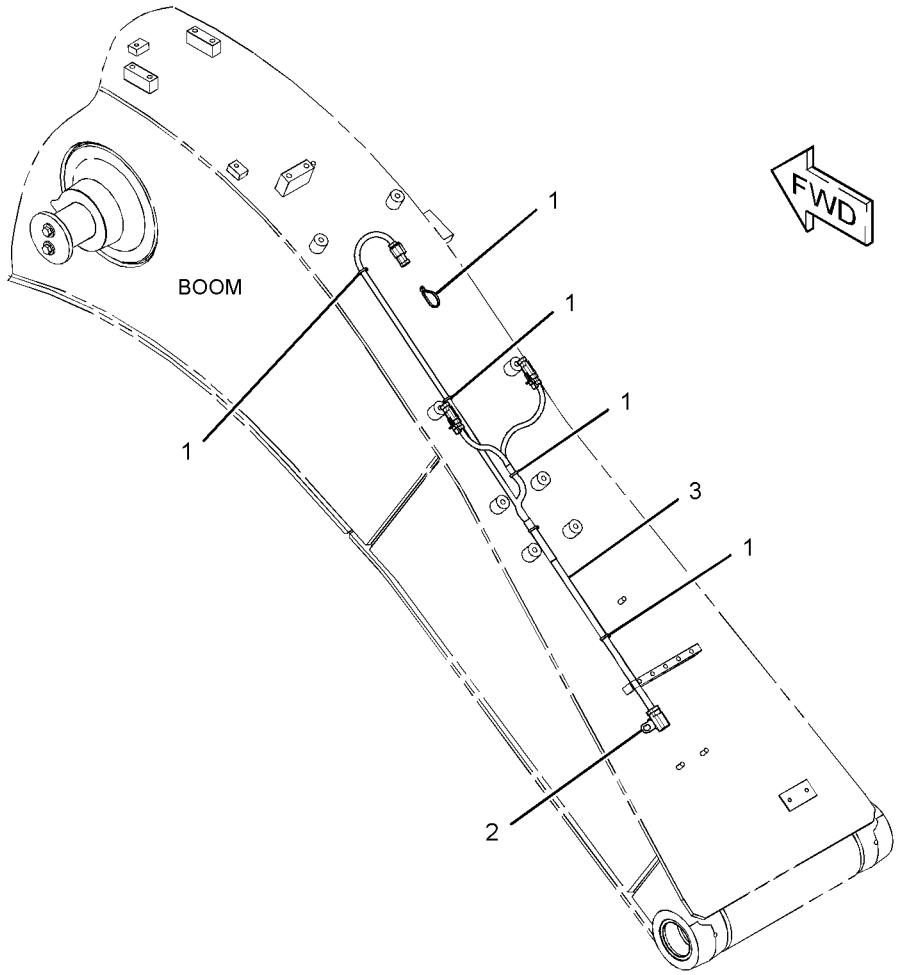

GRAPHIC #1 **<END>** g01411303

306-8536 WIRING GP-BOOM–ACCUGRADE, BOOM

S/N: CLA1-UP

PART OF 301-2552, 301-2555, 301-2647 SPECIAL AR

AN ATTACHMENT

SMCS-1408 **i02869697**

NOTE	REF NO	GRAPHIC REF	PART NUMBER	QTY	PART NAME 1 2 3 4 5 6 (PRODUCT LEVEL)	SEE PAGE
	1	1	**3S-2093**	11	STRAP-CABLE	
	2	1	**095-1390**	2	CLAMP-HOSE	
	3	1	**111-4836**	1	CLIP	
	4	1	**111-4837**	1	CLIP	
	5	1	**111-4838**	2	CLIP	
	6	1	**116-0118**	2	CLIP	
	7	1	**204-1611**	5	STRAP-CABLE	
	8	1	**306-8609**	1	HARNESS AS-CONTROL (GRADE CONTROL)	
	9	1	**4S-1962**	2	CLIP	
	10	1	**8T-4121**	4	WASHER-HARD (11X21X2.5-MM THK)	
M	11	1	**8T-4133**	3	NUT (M10X1.5-THD)	
M	12	1	**8T-4191**	1	BOLT (M10X1.5X16-MM)	
M	13	1	**8T-4195**	2	BOLT (M10X1.5X30-MM)	

M-METRIC PART

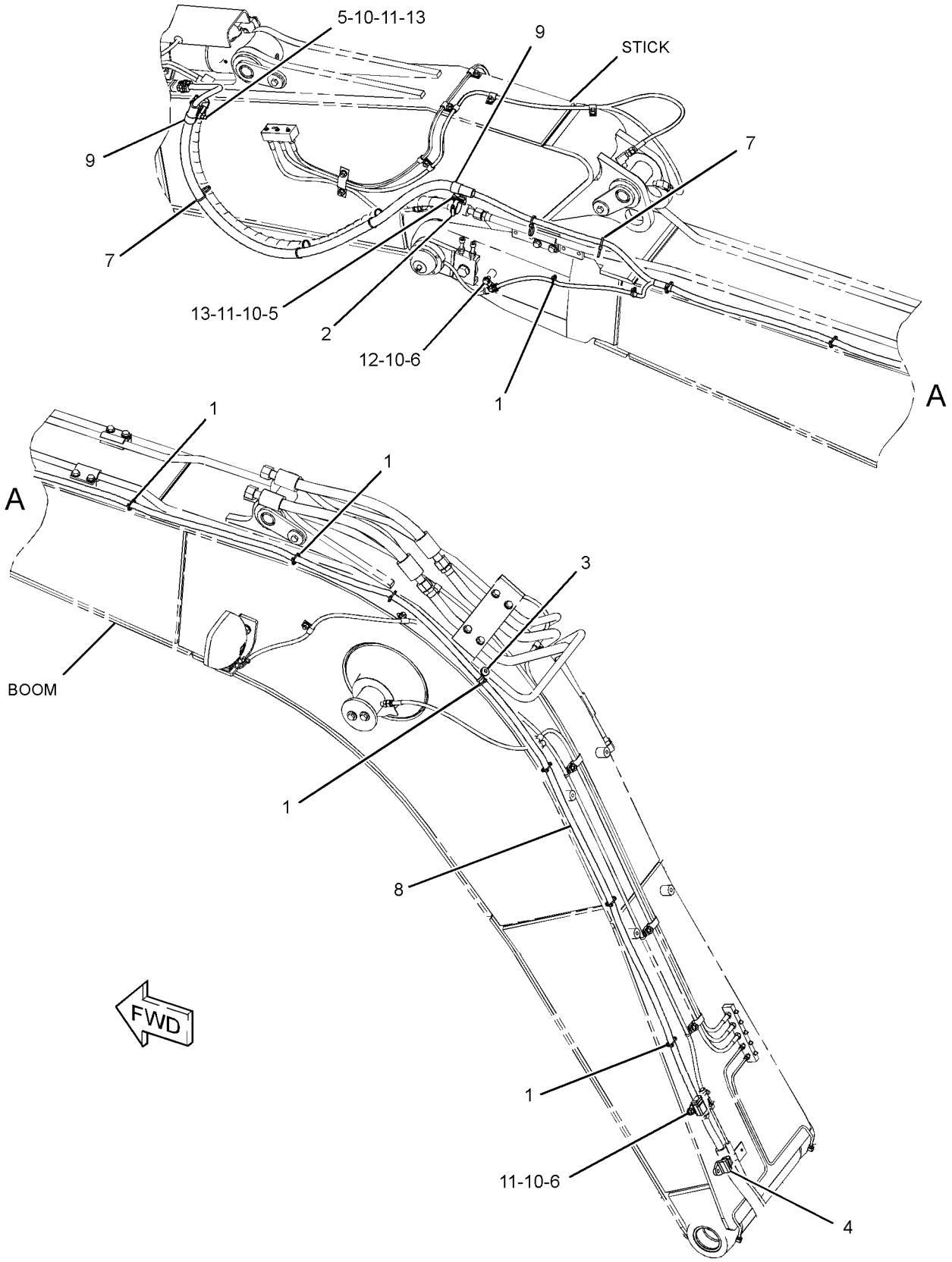

GRAPHIC #1 **<END>** g01446670

ELECTRICAL AND STARTING SYSTEM

259-5161 WIRING GP-CAB

S/N: CLA1-UP

PART OF 273-5363 OPERATOR AR

SMCS-1408, 7301 **i02853579**

NOTE	REF NO	GRAPHIC REF	PART NUMBER	QTY	PART NAME 1 2 3 4 5 6 (PRODUCT LEVEL)	SEE PAGE
	1	3,4	**3S-2093**	10	STRAP-CABLE	
	2	4	**7Y-5505**	2	SPEAKER AS	
					(EACH INCLUDES)	
		4	**7Y-3951**	2	TERMINAL (FEMALE)	
		4	**7Y-3954**	1	CONNECTOR-PLUG	
	3	3	**9W-0335**	1	LIGHTER AS-CIGAR (24-VOLT)	
					—OR—	
F			**238-2318**	1	LIGHTER AS-CIGAR (24-VOLT)	
	4	3	**094-2080**	1	SWITCH-MAGNETIC (24-VOLT) (START RELAY)	
M	5	4	**099-7127**	8	SCREW-MACHINE (M4X0.7X12-MM)	
	6	1	**102-8016**	1	RESISTOR AS	
	7	3	**113-8490**	20	FUSE (10-AMPERE)	
	8	3	**113-8491**	5	FUSE (15-AMPERE)	
	9	3	**113-8492**	3	FUSE (20-AMPERE)	
	10	3	**113-8493**	3	FUSE (25-AMPERE)	
	11	4	**116-0210**	4	BRACKET AS	
	12	3	**124-3548**	2	FUSE (30-AMPERE)	
Y	13	4	**132-1829**	1	ALARM GP (24-VOLT)	106
	14	3	**141-2759**	7	FUSE (5-AMPERE)	
	15	3	**161-3128**	1	RELAY (24-VOLT) (BOOM FLOODLIGHT)	
	15A	3	**161-3128**	1	RELAY (24-VOLT) (CHASSIS LIGHT)	
	15B	3	**161-3128**	1	RELAY (24-VOLT) (CAB FLOODLIGHT)	
	15C	3	**161-3128**	1	RELAY (24-VOLT) (HORN)	
	15D	3	**161-3128**	1	RELAY (24-VOLT) (NEUTRAL START)	
	15E	3	**161-3128**	1	RELAY (24-VOLT) (TRAVEL ALARM)	
	16	4	**268-1964**	1	KIT-SERVICE METER	
					(INCLUDES FILM & METER)	
	17	4	**163-6758**	1	WIRE AS	
	18	2,3,4	**163-6795**	15	STRAP-CABLE	
	19	3	**167-3593**	1	STRAP	
	20	3	**170-6888**	1	PULLER-FUSE	
	21	4	**213-0772**	1	SWITCH AS-MAGNETIC (24-VOLT) (MAIN RELAY)	
	22	3	**227-7575**	1	PANEL-CONTROL (SWITCH)	
	23	3	**234-1097**	1	BRACKET	
	24	3	**238-2212**	1	SWITCH AS-ROCKER (FINE SWING)	
		3	**167-3542**	1	CONNECTOR-RECEPTACLE	
		3	**167-3543**	5	TERMINAL (MALE)	
	26	4	**238-2390**	1	CABLE AS	
		4	**3T-4004**	1	TERMINAL-SOLDER	
E		4	**125-7876**		TUBE-HEAT SHRINK (17.78-MM DIA) (4-CM)	
	27	4	**238-2391**	1	CABLE AS	
		4	**9G-4343**	1	TERMINAL (4-GA)	
E		4	**125-7876**		TUBE-HEAT SHRINK (17.78-MM DIA) (4-CM)	
	28	2	**245-7760**	8	INSULATION	
	29	2	**251-0637**	1	INSULATION	
	30	2	**259-4883**	1	ANTENNA AS	
	31	3	**259-5290**	1	BRACKET AS	
	32	1	**259-5296**	1	HARNESS AS-CAB	
		1	**7Y-3952**	4	CONNECTOR-PLUG	
		1	**7Y-3958**	2	CONNECTOR-PLUG	
		1	**102-7964**	2	CONNECTOR-PLUG	
		1	**111-4816**	1	CONNECTOR-PLUG	
		1	**163-6659**	1	CONNECTOR-PLUG	
		1	**163-6699**	1	CONNECTOR-PLUG	
		1	**163-6803**	9	CONNECTOR-PLUG	
		1	**7Y-3955**	2	CONNECTOR-RECEPTACLE	

259-5161 **WIRING GP-CAB** ***(contd.)*** **i02853579**

NOTE	REF NO	GRAPHIC REF	PART NUMBER	QTY	PART NAME 1 2 3 4 5 6 (PRODUCT LEVEL)	SEE PAGE
		1	**121-1168**	1	CONNECTOR-RECEPTACLE	
		1	**153-2602**	5	CONNECTOR-RECEPTACLE	
		1	**9W-1951**	1	RECEPTACLE-CONNECTOR (9-PIN)	
		1	**8C-6354**	1	CAP-RECEPTACLE	
		1	**5P-6271**	1	CONNECTOR AS	
		1	**134-3296**	1	HOUSING-PLUG	
		1	**134-3297**	1	SEAL	
		1	**3S-2093**	111	STRAP-CABLE	
		1	**121-1022**	3	DIODE	
		1	**238-2319**	1	BASE AS	
		1	**9X-8256**	2	WASHER (6.6X12X2-MM THK)	
M		1	**095-0742**	2	SCREW-MACHINE (M6X1X16-MM)	
		1	**170-9394**	40	TERMINAL	
		1	**102-8803**	3	KIT-RECEPTACLE (3-PIN)	
					(INCLUDES RECEPTACLE AS & WEDGE)	
		1	**155-2260**	1	KIT-CONNECTING PLUG (3-PIN)	
		1	**155-2270**	2	KIT-CONNECTING PLUG (2-PIN)	
					(EACH PLUG KIT INCLUDES PLUG AS, WEDGE & INTERFACE SEAL)	
		1	**230-4011**	1	PLUG AS-CONNECTOR (2-PIN)	
		1	**264-7029**	1	SEAL-CONNECTOR	
		1	**230-4013**	1	PLUG AS-CONNECTOR (3-PIN)	
		1	**264-7030**	1	SEAL-CONNECTOR	
		1	**239-7356**	1	PLUG AS-CONNECTOR (12-PIN)	
		1	**230-4009**	1	PLUG AS-CONNECTOR (12-PIN)	
					(EACH PLUG AS INCLUDES)	
		1	**264-7034**	1	SEAL-CONNECTOR	
		1	**174-3016**	2	PLUG AS-CONNECTOR (3-PIN)	
		1	**243-4505**	2	RECEPTACLE AS-CONNECTOR (2-PIN)	
		1	**243-4506**	1	RECEPTACLE AS-CONNECTOR (3-PIN)	
	33	3	**267-7639**	1	SWITCH AS-ROCKER (LEVELING)	
		3	**167-3542**	1	CONNECTOR-RECEPTACLE	
		3	**167-3543**	5	TERMINAL (MALE)	
M	34	3	**095-0723**	3	SCREW (M3X0.5X10-MM)	
	35	3	**096-5962**	3	WASHER-HARD (3.4X7X0.8-MM THK)	
	36	4	**096-6166**	2	WASHER-HARD (4.5X9X1-MM THK)	
	37	3,4	**132-5789**	7	CLIP	
	38	4	**4P-7581**	1	CLIP	
M	39	3	**5C-2890**	5	NUT (M6X1-THD)	
M	40	4	**6V-5210**	8	SCREW-MACHINE (M4X0.7X10-MM)	
M	41	4	**6V-9672**	2	SCREW-MACHINE (M4X0.7X16-MM)	
	42	4	**8T-0328**	3	WASHER-HARD (5.5X10X1-MM THK)	
M	43	4	**8T-4127**	2	SCREW-MACHINE (M5X0.8X20-MM)	
M	44	4	**8T-6693**	1	SCREW-MACHINE (M5X0.8X16-MM)	
M	45	1,3,4	**9X-2042**	13	SCREW-TRUSS HEAD (M6X1X12-MM)	
M	46	3	**9X-2044**	5	SCREW-TRUSS HEAD (M6X1X16-MM)	
	47	3	**9X-8256**	5	WASHER (6.6X12X2-MM THK)	
E	48	2	**101-2846**		GUARD (9.5-CM)	
E	48A	4	**101-2846**		GUARD (9-CM EACH)	

E-ORDER BY THE CENTIMETER
F-NOT SHOWN
M-METRIC PART
Y-SEPARATE ILLUSTRATION

REFER TO ALL ILLUSTRATIONS OF
THIS GROUP FOR AUXILIARY VIEWS

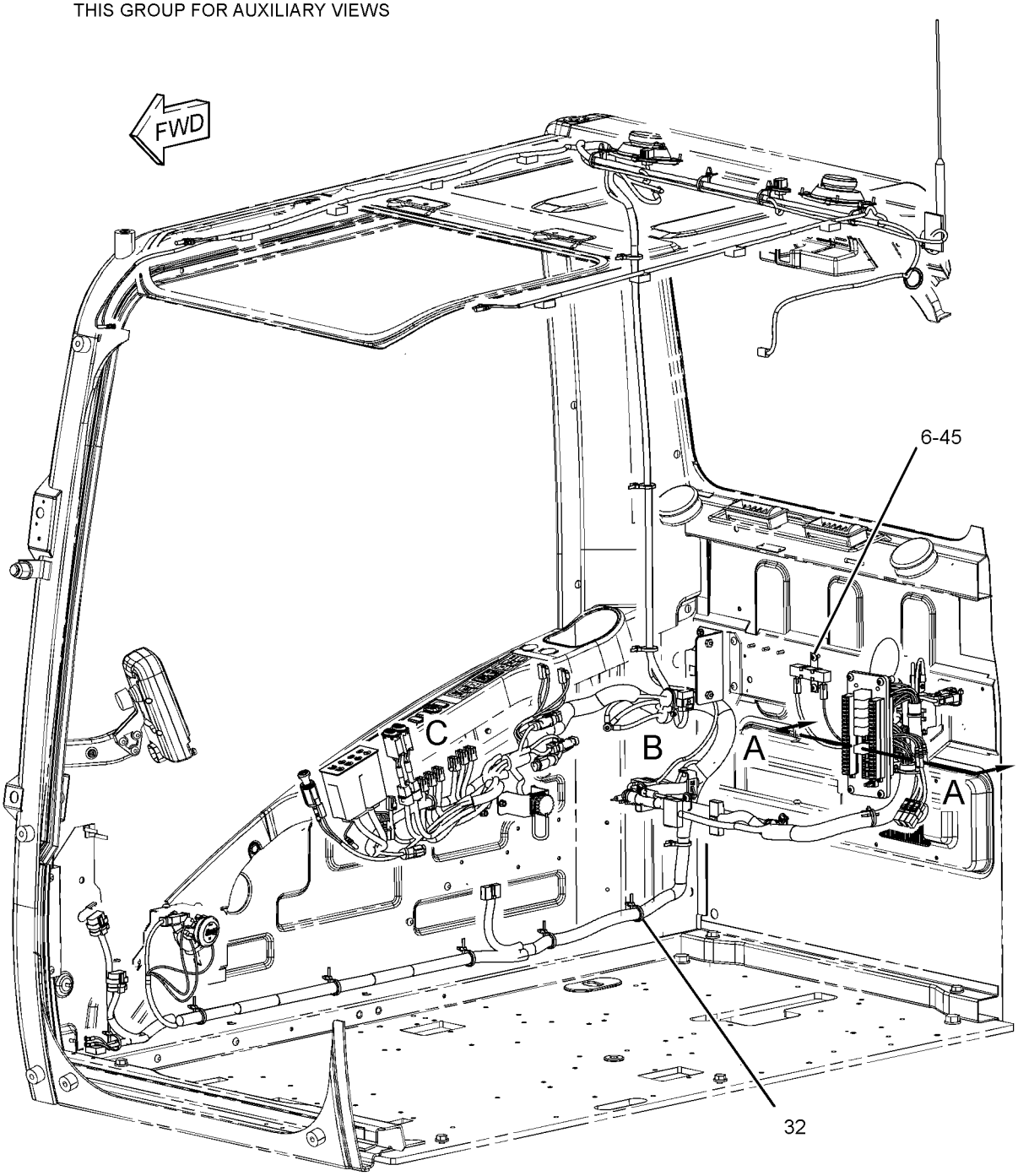

GRAPHIC #1 g01398279

259-5161 **WIRING GP-CAB** *(contd.)* **i02853579**

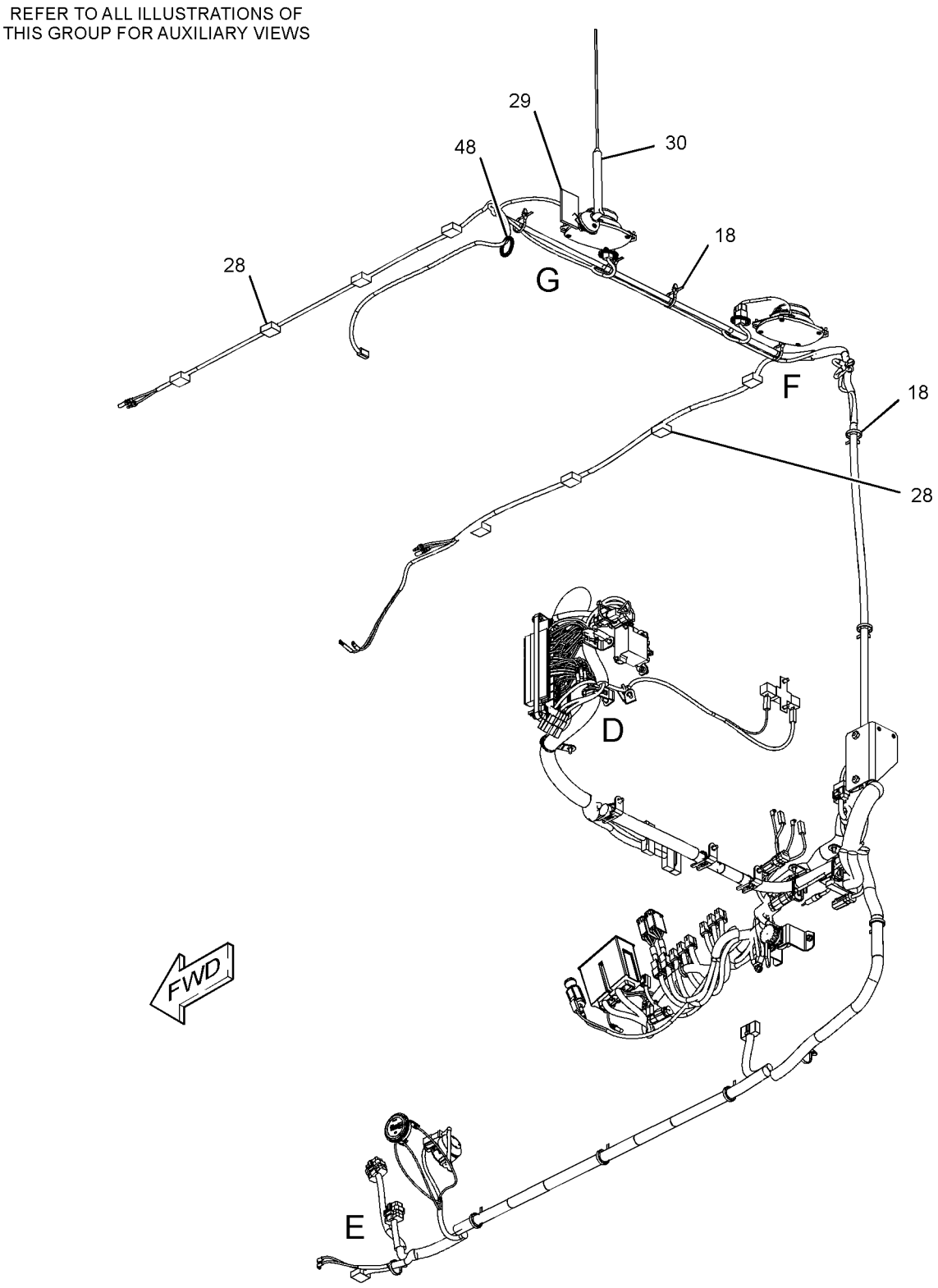

GRAPHIC #2 g01398365

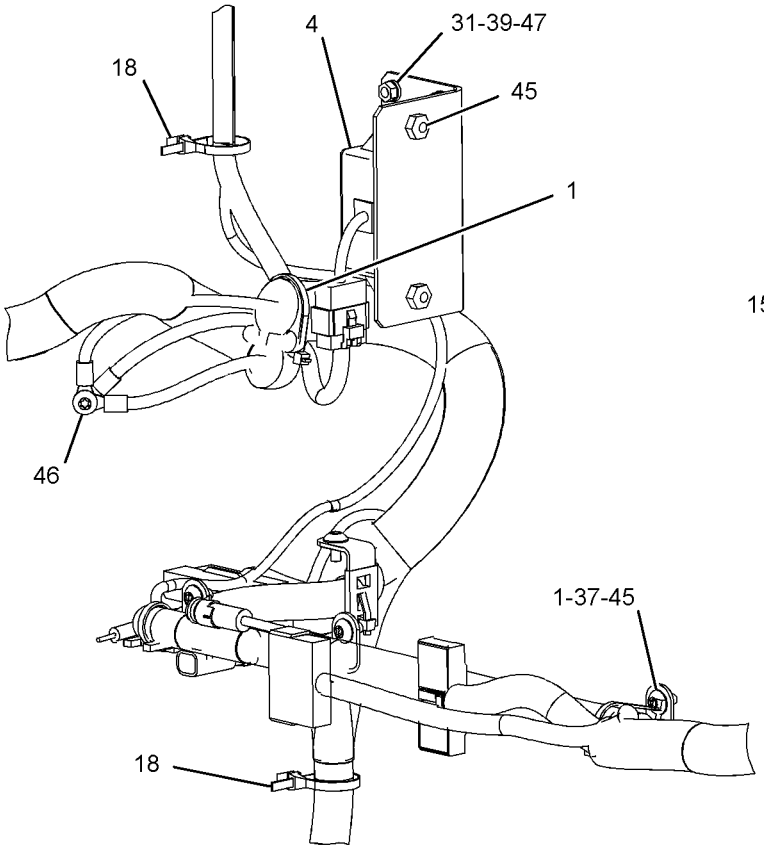

VIEW OF AREA B

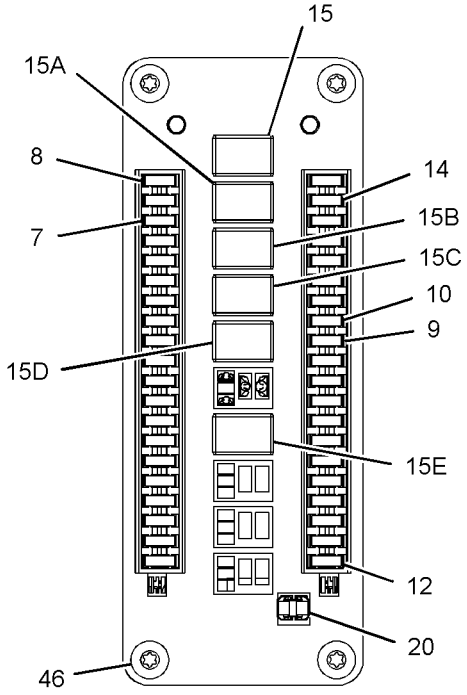

VIEW A-A

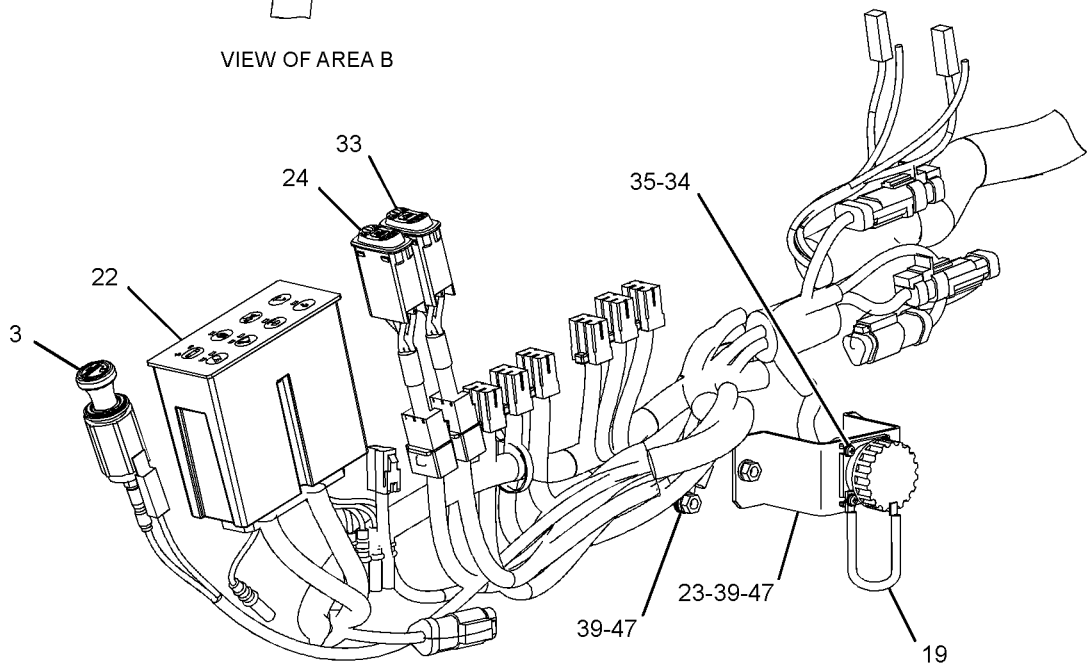

VIEW OF AREA C

GRAPHIC #3 g01398416

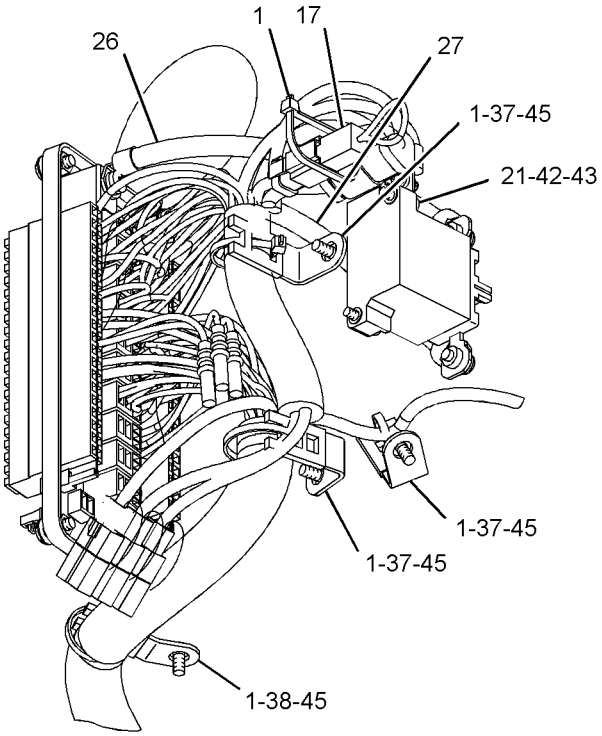

VIEW OF AREA D

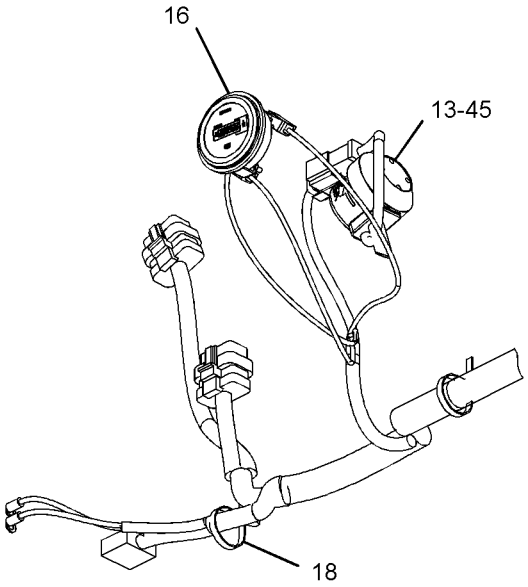

VIEW OF AREA E

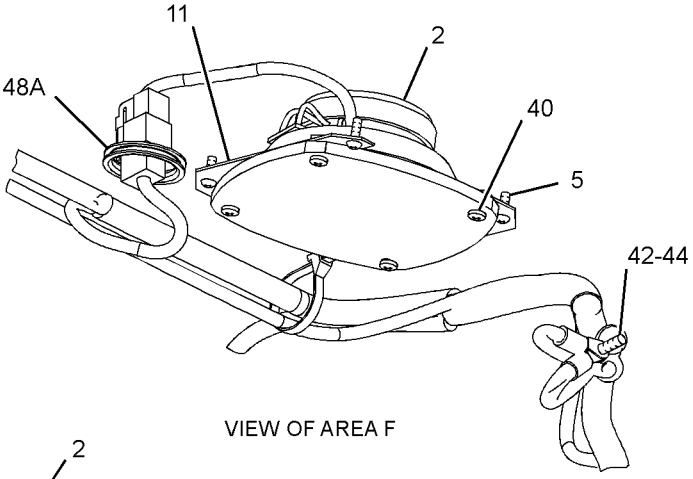

VIEW OF AREA F

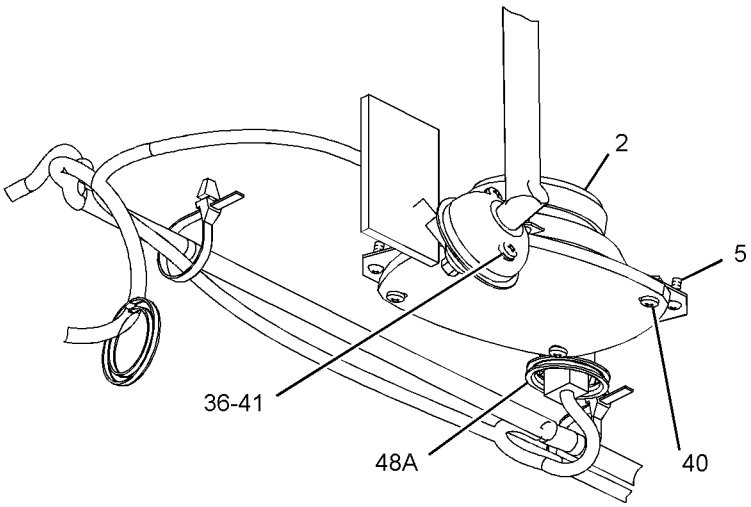

VIEW OF AREA G

GRAPHIC #4 **<END>** g01302137

259-5165 WIRING GP-CAB–SYSTEM 20, WORK TOOL PRIORITY

S/N: CLA1-UP

PART OF 270-6025 CONTROL AR-AUXILIARY

AN ATTACHMENT

SMCS-1408, 7301 **i02747389**

NOTE	REF NO	GRAPHIC REF	PART NUMBER	QTY	PART NAME 1 2 3 4 5 6 (PRODUCT LEVEL)	SEE PAGE
	1	1	**3S-2093**	7	STRAP-CABLE	
	2	1	**7K-1181**	10	STRAP-CABLE	
	3	1	**149-5050**	1	RELAY (24-VOLT) (WORK TOOL)	
	4	1	**259-7219**	1	COVER	
	5	1	**267-7692**	1	HARNESS AS-PUMP	
		1	**3S-2093**	14	STRAP-CABLE	
E		1	**125-7874**		TUBE-HEAT SHRINK (5.72-MM DIA) (5-CM)	
		1	**243-4508**	1	RECEPTACLE AS-CONNECTOR (6-PIN)	
	6	1	*267-7693*	1	SWITCH GP-TOGGLE (WORK TOOL PRIORITY)	
		1	**7N-2353**	1	SWITCH AS-TOGGLE (WORK TOOL PRIORITY)	
		1	**267-7694**	1	HARNESS AS-CONTROL	
		1	**3S-2093**	1	STRAP-CABLE	
	7	1	**267-7695**	1	BRACKET AS	
M	8	1	**5C-2890**	1	NUT (M6X1-THD)	
M	9	1	**9X-2042**	3	SCREW-TRUSS HEAD (M6X1X12-MM)	
	10	1	**9X-8256**	1	WASHER (6.6X12X2-MM THK)	

E-ORDER BY THE CENTIMETER
M-METRIC PART

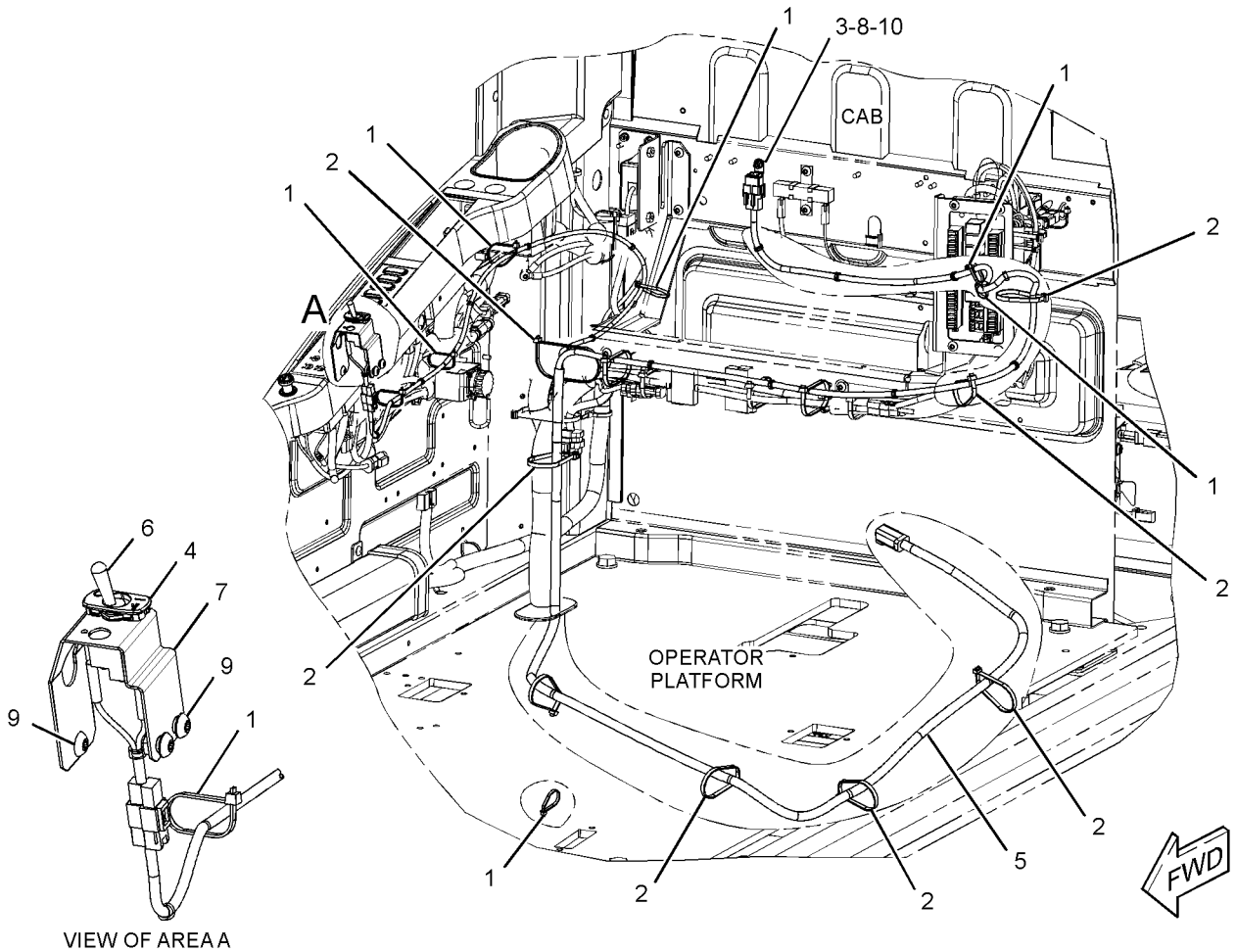

VIEW OF AREA A

GRAPHIC #1 **<END>** g01386511

299-2697 WIRING GP-CAB–ACCUGRADE READY

S/N: CLA1-UP

PART OF 301-2552, 301-2555, 301-2647 SPECIAL AR

AN ATTACHMENT

SMCS-1408, 7301 **i02840817**

NOTE	REF NO	GRAPHIC REF	PART NUMBER	QTY	PART NAME 1 2 3 4 5 6 (PRODUCT LEVEL)	SEE PAGE
	1	2	**3S-2093**	9	STRAP-CABLE	
	2	2	**7K-1181**	22	STRAP-CABLE	
	3	2	**113-8491**	1	FUSE (15-AMPERE) (ACCUGRADE, SOLENOID RESISTOR)	
	4	2	**204-1790**	3	RESISTOR AS	
	5	2	**283-3074**	1	SWITCH AS-TOGGLE (ACCUGRADE BACKUP)	
	6	2	**299-2701**	1	HARNESS AS-CAB	
	7	2	**299-2841**	1	HARNESS AS-SOLENOID	
	8	2	**299-2952**	1	SHEET AS	
M	9	2	**5C-2890**	3	NUT (M6X1-THD)	
M	10	2	**7X-2619**	6	BOLT (M6X1X10-MM)	
	11	2	**9X-8256**	9	WASHER (6.6X12X2-MM THK)	

M-METRIC PART

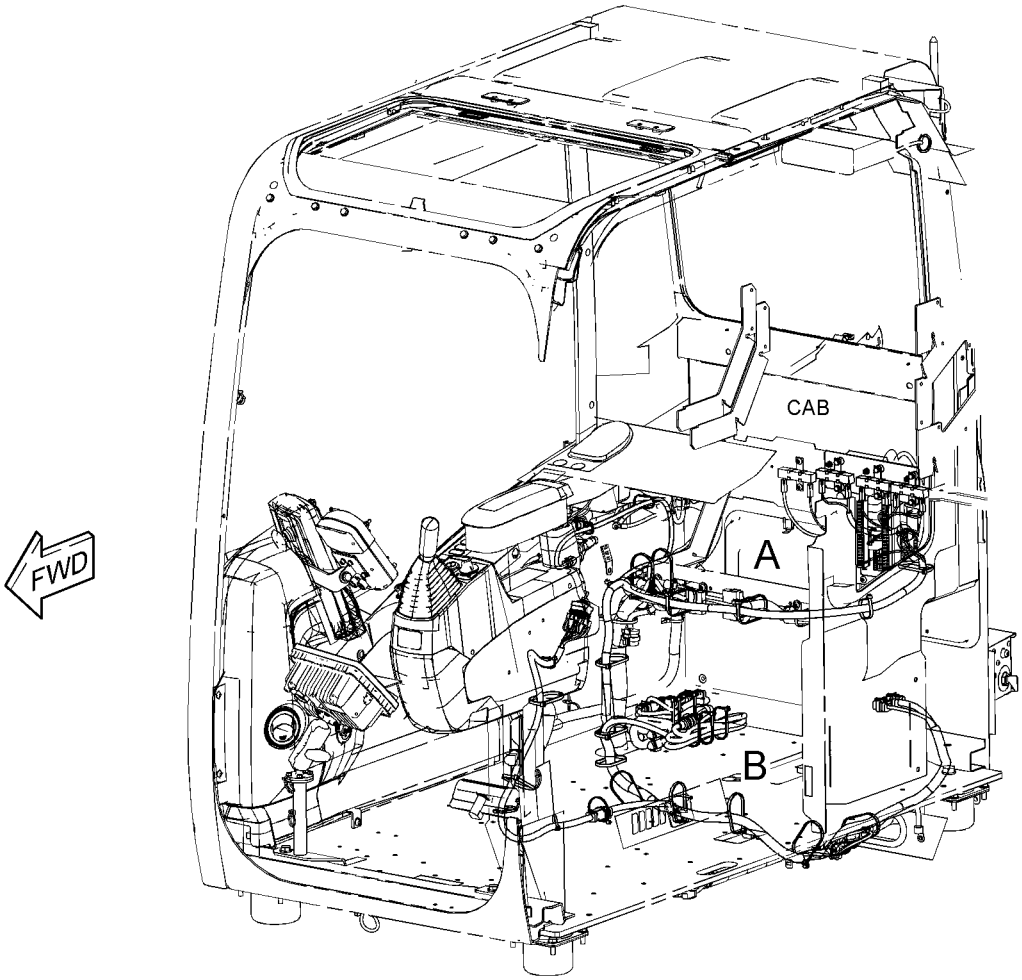

GRAPHIC #1 g01421082

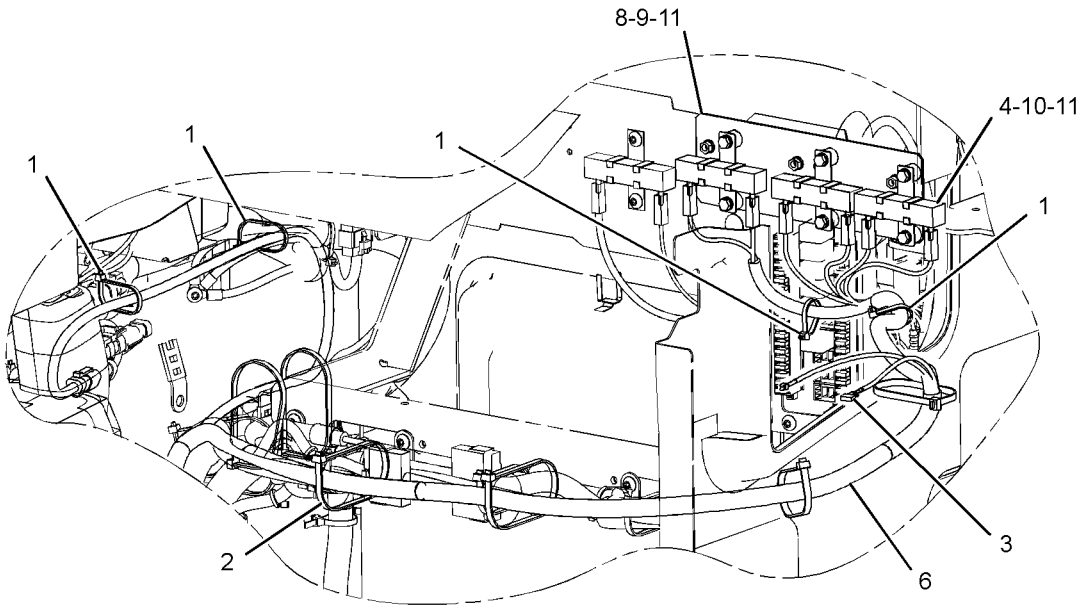

VIEW OF AREA A

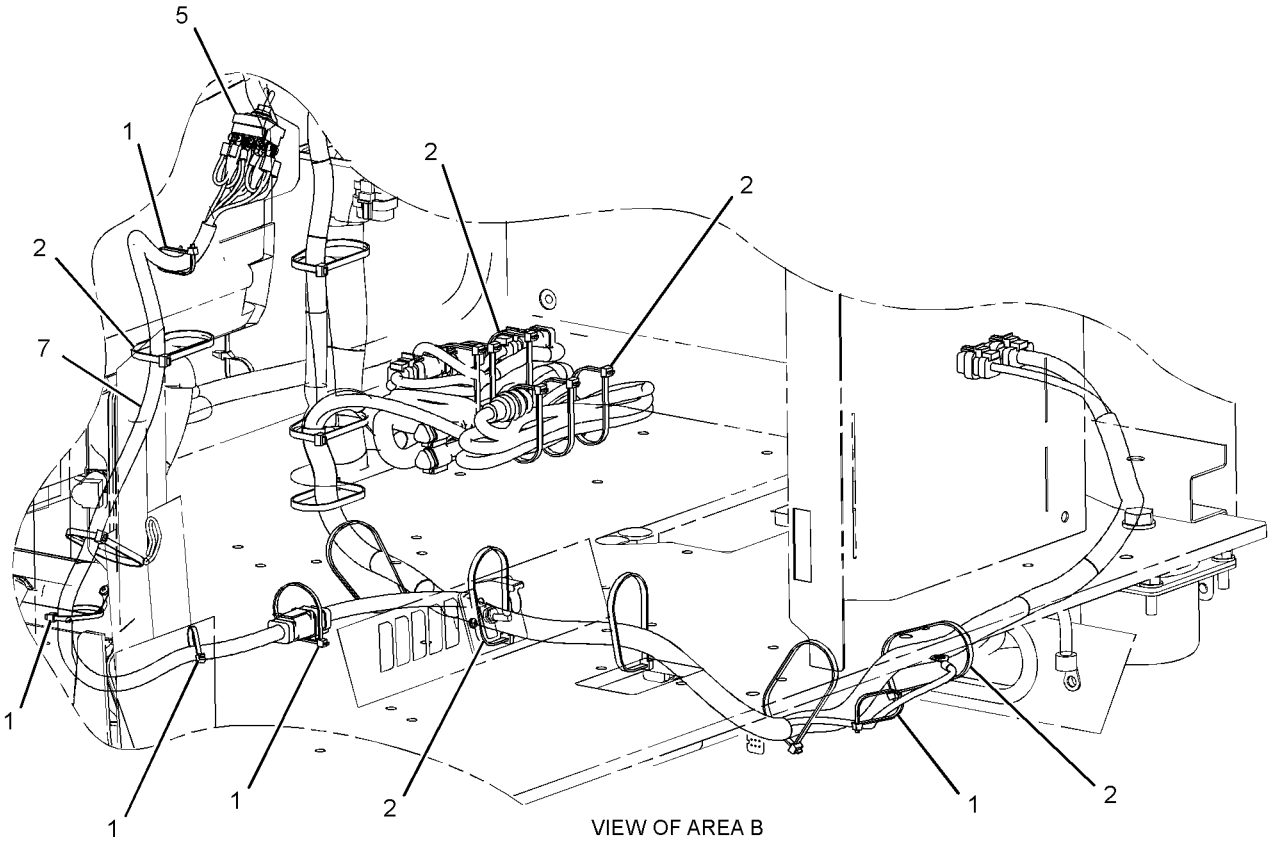

VIEW OF AREA B

GRAPHIC #2 **<END>** g01421083

328-0048 WIRING GP-CAB–REAR VISION CAMERA

S/N: CLA1-UP
PART OF 330-8747 CAMERA AR
AN ATTACHMENT

SMCS-1408, 7301 **i03114038**

NOTE	REF NO	GRAPHIC REF	PART NUMBER	QTY	PART NAME 1 2 3 4 5 6 (PRODUCT LEVEL)	SEE PAGE
	1	1	**3S-2093**	13	STRAP-CABLE	
	2	1	**7K-1181**	16	STRAP-CABLE	
	3	1	**306-8590**	1	HARNESS AS-WIRING	
	4	1	**327-9998**	1	HARNESS AS-AUXILIARY	

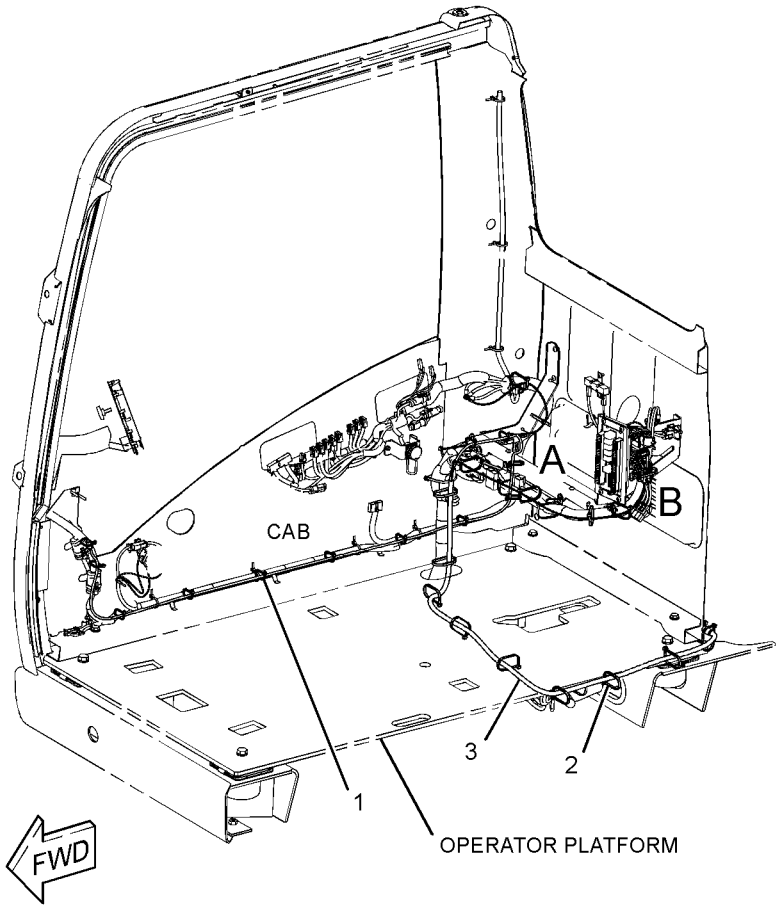

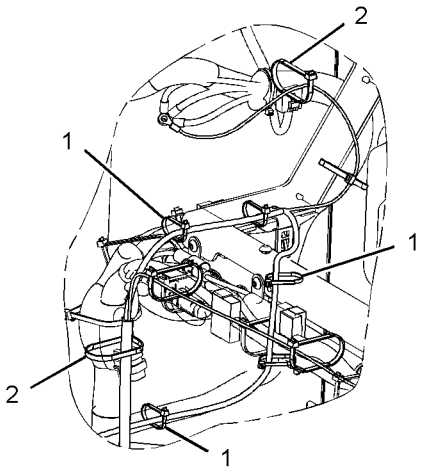

VIEW OF AREA A

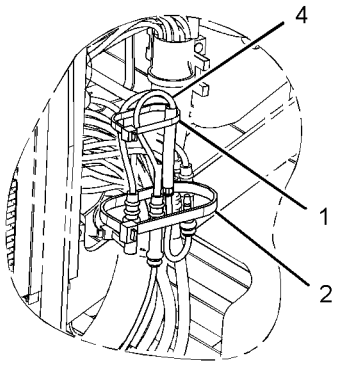

VIEW OF AREA B

GRAPHIC #1 **<END>** g01609106

328-0080 WIRING GP-CAMERA–REAR VISION CAMERA

S/N: CLA1-UP
PART OF 330-8747 CAMERA AR
AN ATTACHMENT

SMCS-1408, 7348 **i03151323**

NOTE	REF NO	GRAPHIC REF	PART NUMBER	QTY	PART NAME 1 2 3 4 5 6 (PRODUCT LEVEL)	SEE PAGE
	1	1	**3S-2093**	15	STRAP-CABLE	
	2	1	**7K-1181**	1	STRAP-CABLE	
	3	1	**251-8248**	1	CABLE AS-COMMUNICATION (CAMERA)	
	4	1	**4P-7581**	1	CLIP	
	5	1	**8D-1470**	1	GROMMET	
	6	1	**8T-4121**	1	WASHER-HARD (11X21X2.5-MM THK)	
M	7	1	**8T-4191**	1	BOLT (M10X1.5X16-MM)	

M-METRIC PART

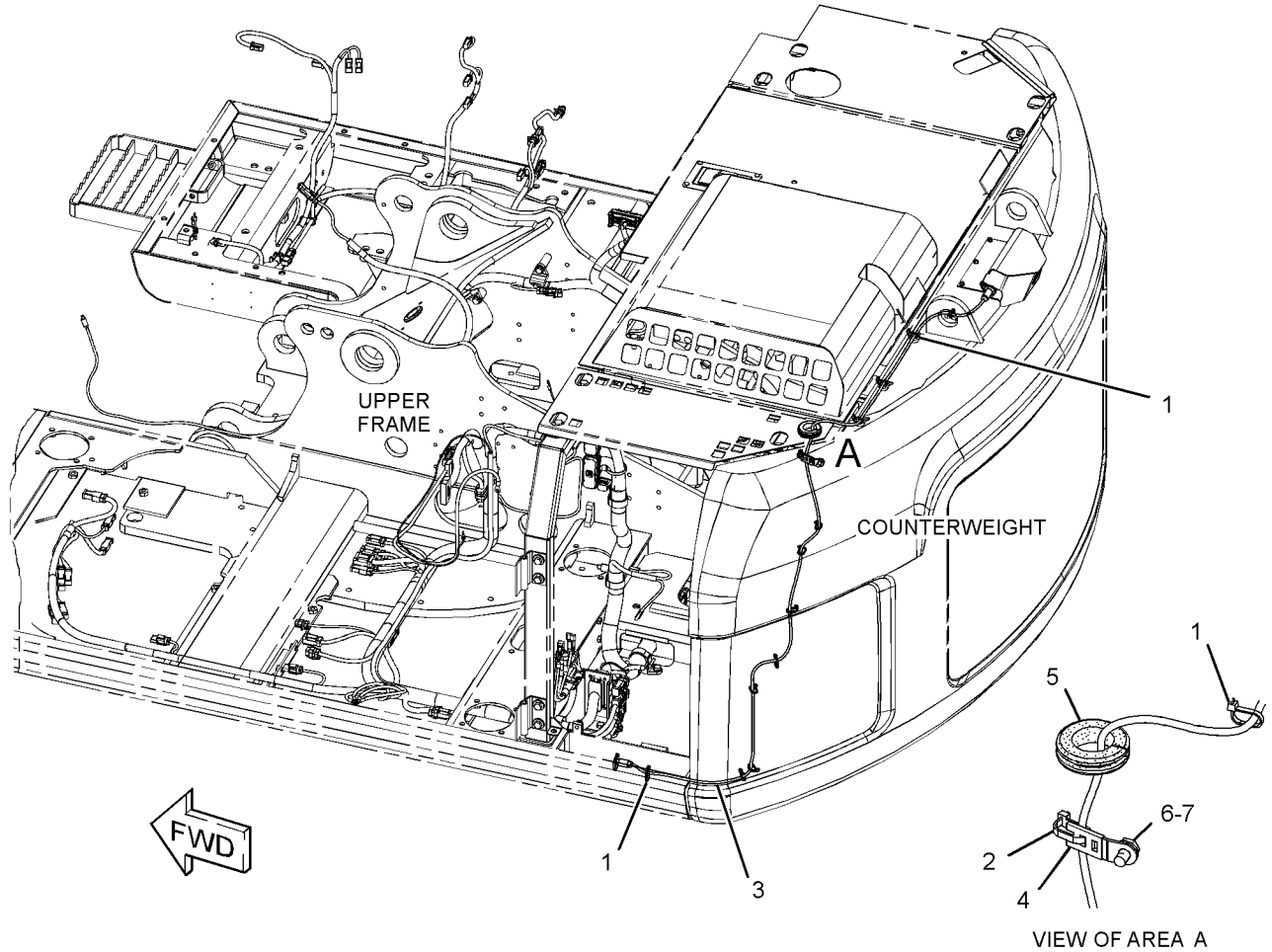

GRAPHIC #1 **<END>** g01621061

306-8535 WIRING GP-CHASSIS–ACCUGRADE

S/N: CLA1-UP

PART OF 301-2552, 301-2555, 301-2647 SPECIAL AR

AN ATTACHMENT

SMCS-1408 **i02897940**

NOTE	REF NO	GRAPHIC REF	PART NUMBER	QTY	PART NAME 1 2 3 4 5 6 (PRODUCT LEVEL)	SEE PAGE
	1	1,2,3	**3S-2093**	36	STRAP-CABLE	
	2	1,2,3	**7K-1181**	21	STRAP-CABLE	
	3	2	**111-4836**	2	CLIP	
	4	2	**111-4837**	1	CLIP	
	5	2	**116-0118**	1	CLIP	
	6	1	**306-8537**	1	HARNESS AS-CHASSIS	
	7	2	**306-8657**	1	SUPPORT AS	
	8	3	**309-5790**	1	BRACKET AS	
	9	2,3	**4P-7581**	3	CLIP	
	10	1,3	**8D-1470**	2	GROMMET	
	11	2,3	**8T-4121**	8	WASHER-HARD (11X21X2.5-MM THK)	
M	12	3	**8T-4136**	4	BOLT (M10X1.5X25-MM)	
M	13	2,3	**8T-4191**	4	BOLT (M10X1.5X16-MM)	

M-METRIC PART

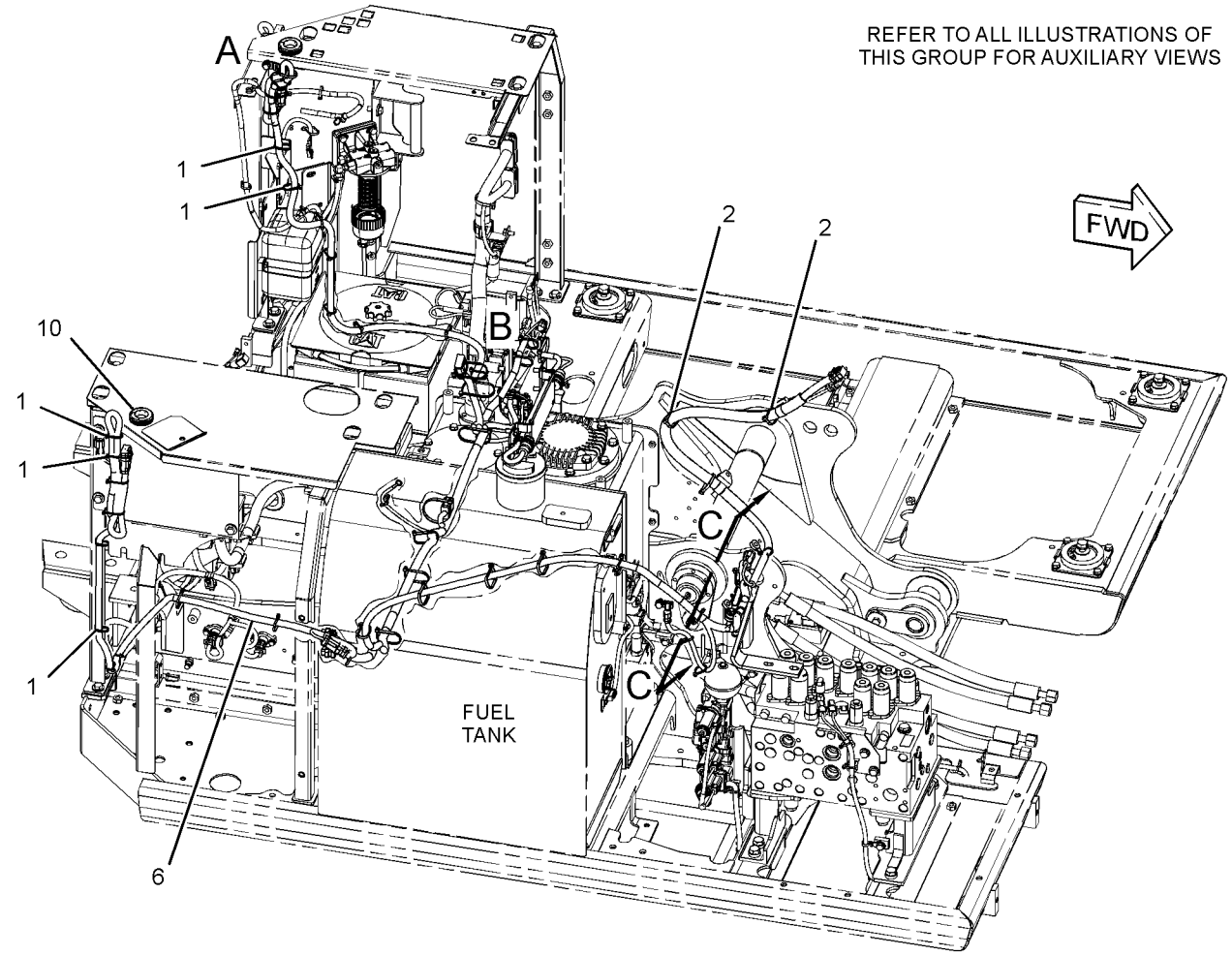

GRAPHIC #1 g01445604

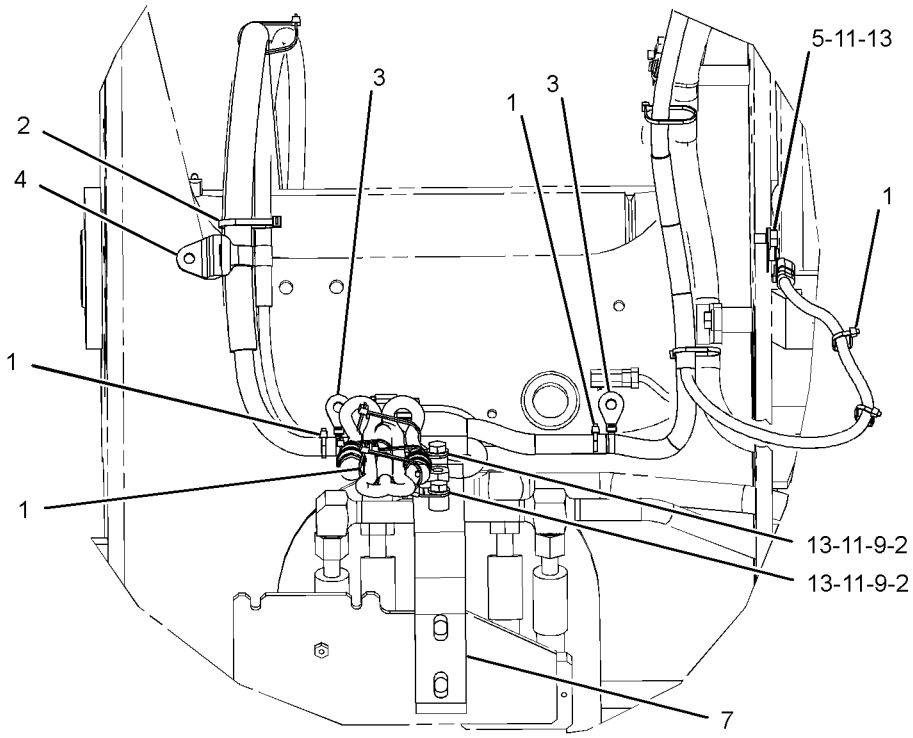

VIEW C-C

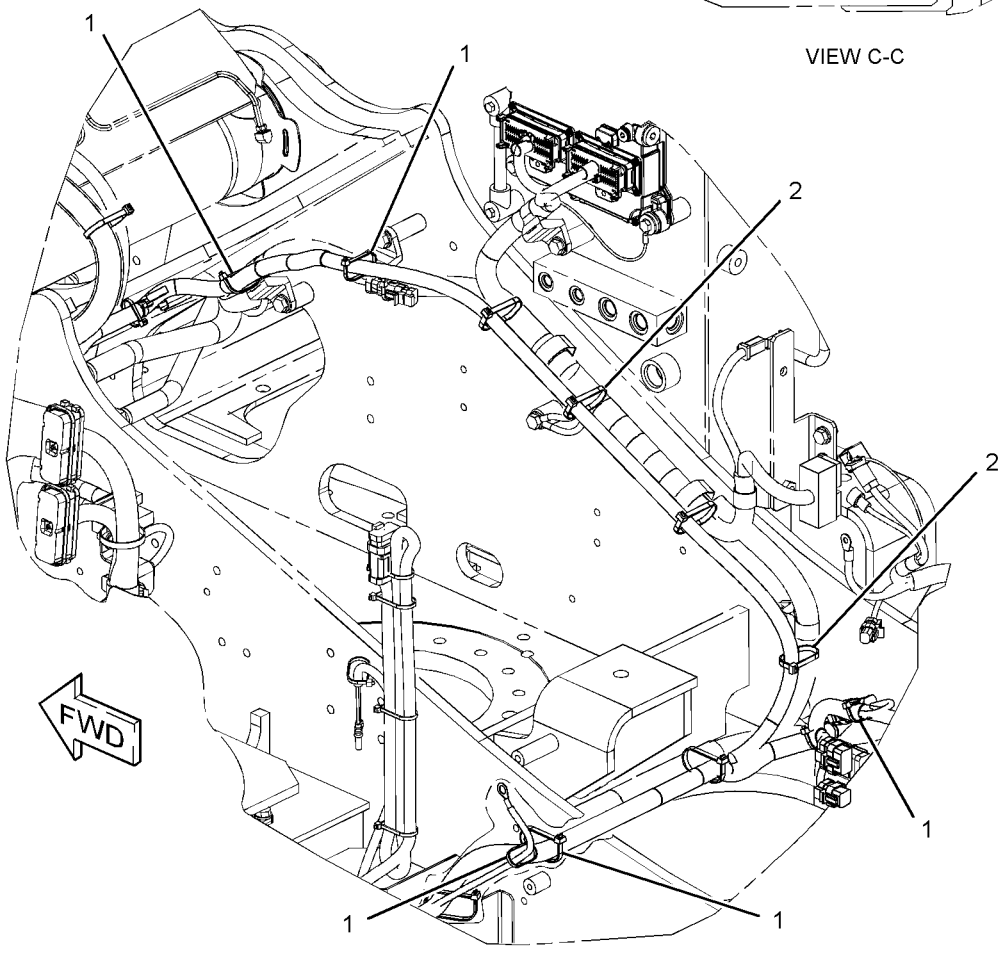

GRAPHIC #2

g01445713

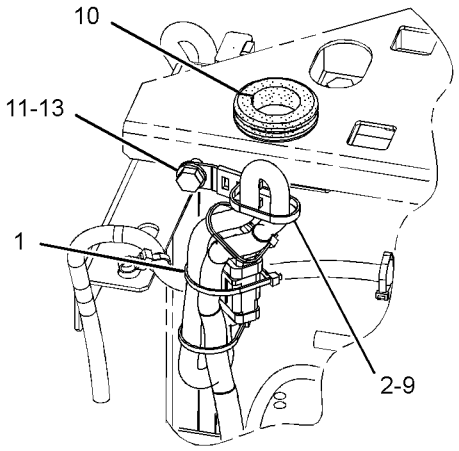

VIEW OF AREA A

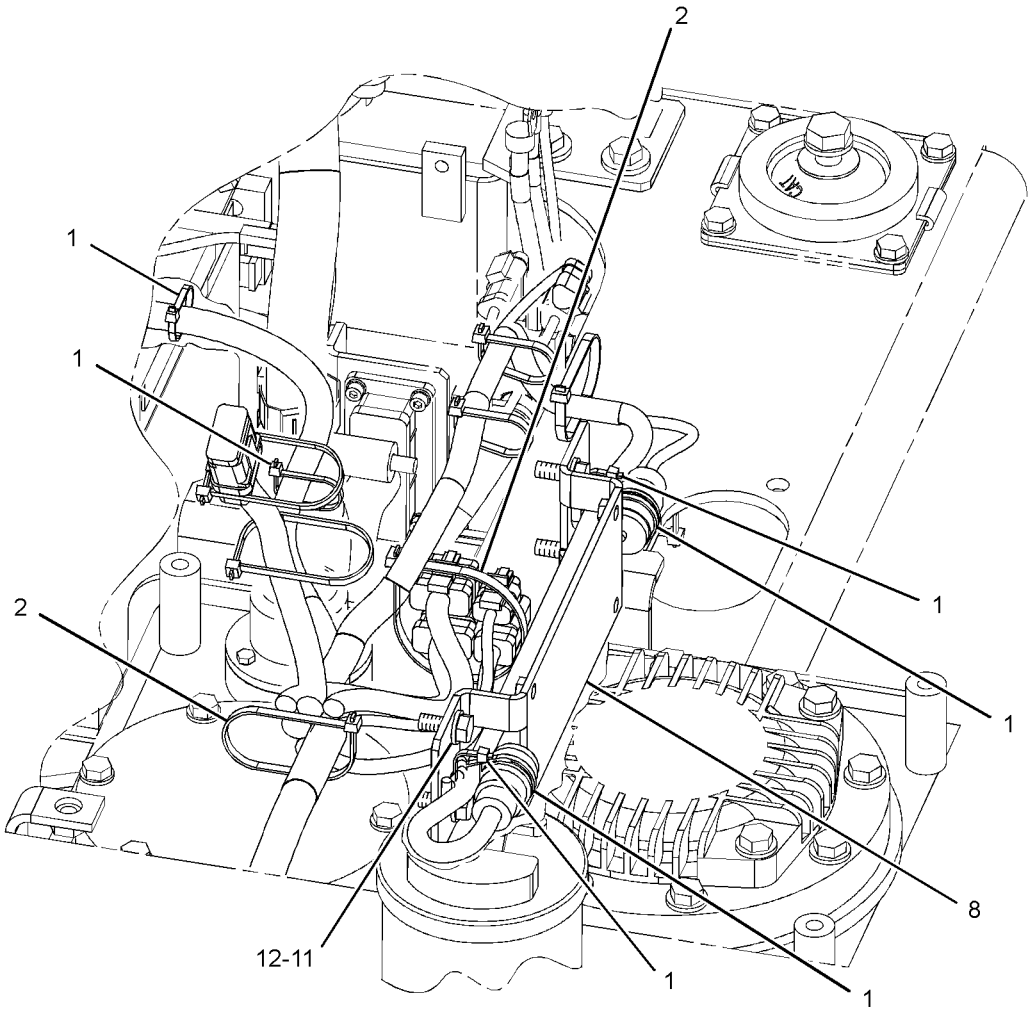

VIEW OF AREA B

GRAPHIC #3 **<END>** g01445832

283-2604 WIRING GP-COMMUNICATION–PRODUCT LINK 321SR

S/N: CLA1-UP

PART OF 301-2584 INSTALLATION AR-COMMUNICATION

AN ATTACHMENT

SMCS-1408 **i02897909**

NOTE	REF NO	GRAPHIC REF	PART NUMBER	QTY	PART NAME 1 2 3 4 5 6 (PRODUCT LEVEL)	SEE PAGE
	1	1	**3S-2093**	6	STRAP-CABLE	
	2	1	**7K-1181**	12	STRAP-CABLE	
	3	1	**111-4837**	1	CLIP	
	4	1	**116-0118**	2	CLIP	
	5	1	**259-4887**	1	HARNESS AS-CONTROL (PRODUCT LINK)	
	6	1	**259-4940**	1	HARNESS AS-WIRING (SERVICE CONNECTOR)	
	7	1	**319-1149**	1	HARNESS AS-CONTROL	
	8	1	**132-5789**	1	CLIP	
	9	1	**8T-4121**	2	WASHER-HARD (11X21X2.5-MM THK)	
M	10	1	**8T-4136**	1	BOLT (M10X1.5X25-MM)	
M	11	1	**8T-4191**	1	BOLT (M10X1.5X16-MM)	

M-METRIC PART

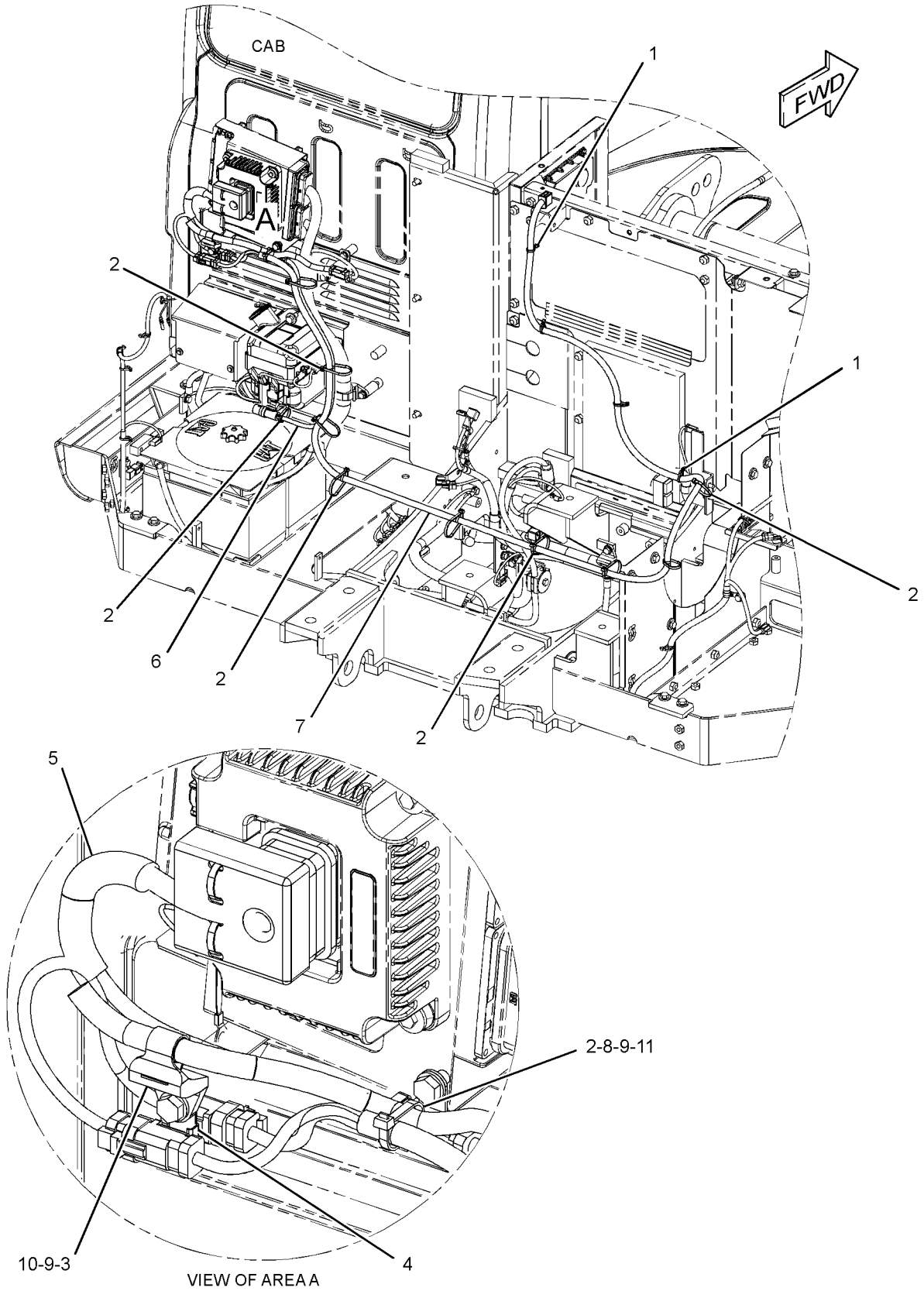

GRAPHIC #1 **<END>** g01400662

283-2605 WIRING GP-COMMUNICATION–PRODUCT LINK 121SR

S/N: CLA1-UP

PART OF 301-2583 INSTALLATION AR-COMMUNICATION

AN ATTACHMENT

SMCS-1408 **i02843543**

NOTE	REF NO	GRAPHIC REF	PART NUMBER	QTY	PART NAME 1 2 3 4 5 6 (PRODUCT LEVEL)	SEE PAGE
	1	1	**3S-2093**	7	STRAP-CABLE	
	2	1	**7K-1181**	11	STRAP-CABLE	
	3	1	**116-0118**	1	CLIP	
	4	1	**259-4940**	1	HARNESS AS-WIRING (SERVICE CONNECTOR)	
	5	1	**319-1149**	1	HARNESS AS-CONTROL	

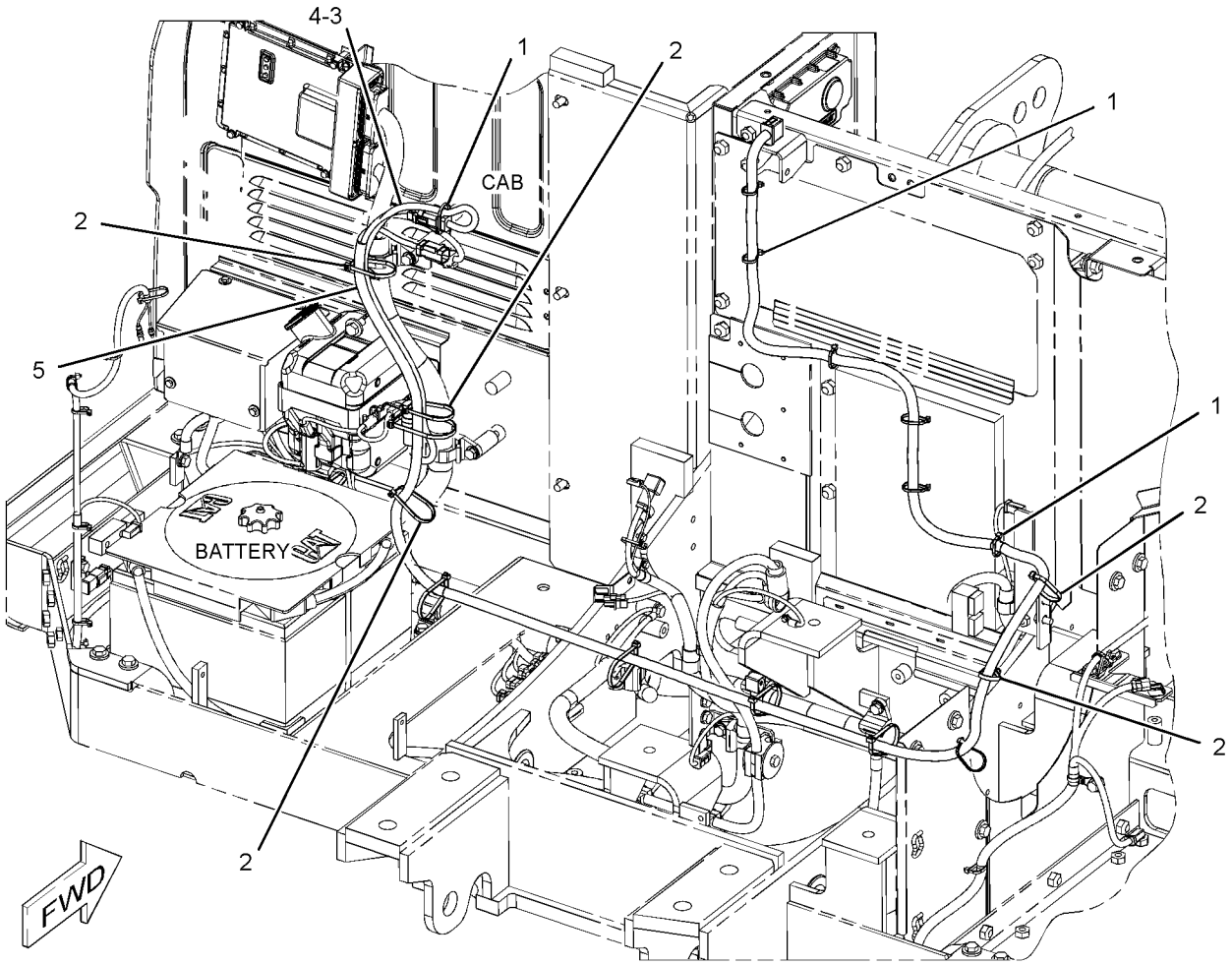

GRAPHIC #1 **<END>** g01449615

231-1836 WIRING GP-CONSOLE–LH

S/N: CLA1-UP

PART OF 251-0433 WIRING GP-CONSOLE

SMCS-1408 **i02348297**

NOTE	REF NO	GRAPHIC REF	PART NUMBER	QTY	PART NAME 1 2 3 4 5 6 (PRODUCT LEVEL)	SEE PAGE
	1	1	**3S-2093**	2	STRAP-CABLE	
	2	1	**7K-1181**	1	STRAP-CABLE	
	3	1	**163-6795**	2	STRAP-CABLE	
	4	1	**251-0580**	1	HARNESS AS-CONSOLE (LH)	
		1	**155-2260**	1	KIT-CONNECTING PLUG (3-PIN)	
					(INCLUDES PLUG AS, WEDGE & INTERFACE SEAL)	
		1	**230-4011**	1	PLUG AS-CONNECTOR (2-PIN)	
		1	**230-5010**	1	PLUG AS-CONNECTOR (6-PIN)	
		1	**239-7352**	1	PLUG AS-CONNECTOR (6-PIN)	
		1	**243-4505**	1	RECEPTACLE AS-CONNECTOR (2-PIN)	
		1	**243-4508**	1	RECEPTACLE AS-CONNECTOR (6-PIN)	
		1	**247-2693**	1	RECEPTACLE AS-CONNECTOR (6-PIN)	

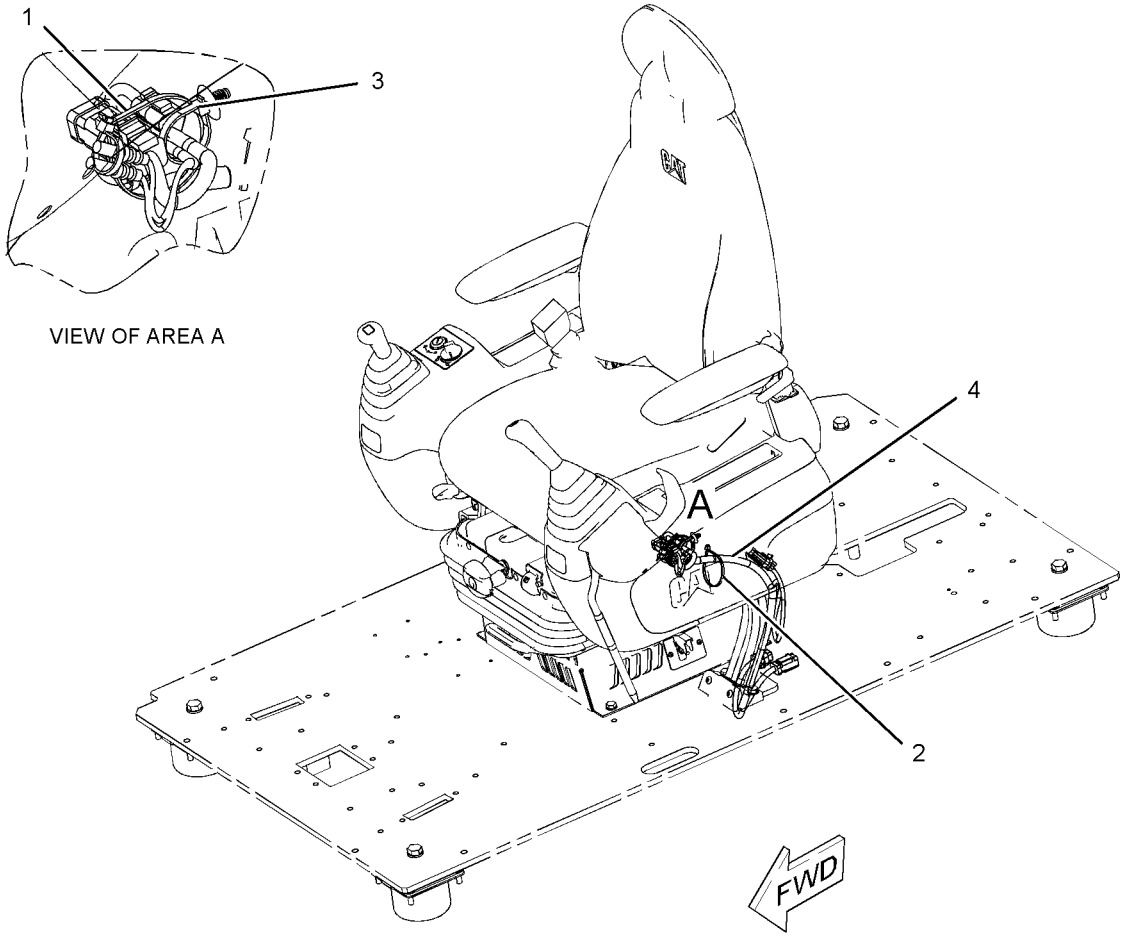

GRAPHIC #1 **<END>** g01150799

ELECTRICAL AND STARTING SYSTEM

251-0433 WIRING GP-CONSOLE

S/N: CLA1-UP

PART OF 273-5363 OPERATOR AR

SMCS-1408 **i02706845**

NOTE	PART NUMBER	QTY	PART NAME 1 2 3 4 5 6 (PRODUCT LEVEL)	SEE PAGE
Y	*231-1836*	1	WIRING GP-CONSOLE (LH)	213
Y	*251-0435*	1	WIRING GP-CONSOLE (RH)	215

Y-SEPARATE ILLUSTRATION

<END>

251-0435 WIRING GP-CONSOLE—RH

S/N: CLA1-UP

PART OF 251-0433 WIRING GP-CONSOLE

SMCS-1408 **i02553916**

NOTE	REF NO	GRAPHIC REF	PART NUMBER	QTY	PART NAME 1 2 3 4 5 6 (PRODUCT LEVEL)	SEE PAGE
	1	1	**3S-2093**	3	STRAP-CABLE	
	2	1	**7K-1181**	1	STRAP-CABLE	
	3	1	**283-3074**	1	SWITCH AS-TOGGLE (AUTO/MANUAL ENG SPEED CONTROL)	
	4	1	**163-6711**	1	SWITCH AS-TOGGLE (MANUAL ENGINE SPEED CONTROL)	
	5	1	**163-6795**	3	STRAP-CABLE	
	6	1	**251-0602**	1	BRACKET	
	7	1	**259-4877**	1	HARNESS AS-CONSOLE (RH)	
		1	**102-8806**	1	KIT-RECEPTACLE (8-PIN)	
					(INCLUDES RECEPTACLE AS & WEDGE)	
		1	**3S-2093**	10	STRAP-CABLE	
		1	**7Y-3967**	2	TERMINAL AS	
		1	**7Y-3963**	1	TERMINAL (RECEPTACLE)	
		1	**7Y-3965**	1	TUBE (RECEPTACLE TERMINAL)	
		1	**102-7964**	1	CONNECTOR-PLUG	
		1	**102-7965**	14	TERMINAL (FEMALE)	
E		1	**125-7874**		TUBE-HEAT SHRINK (5.72-MM DIA) (10-CM)	
E		1	**125-7875**		TUBE-HEAT SHRINK (7.44-MM DIA) (10-CM)	
		1	**155-2265**	1	KIT-CONNECTING PLUG (8-PIN)	
					(INCLUDES PLUG AS, WEDGE & INTERFACE SEAL)	
		1	**9X-3401**	2	PIN-CONNECTOR (16-GA TO 18-GA)	
					—OR—	
		1	**126-1767**	2	PIN-CONNECTOR (14-GA)	
		1	**230-4009**	1	PLUG AS-CONNECTOR (12-PIN)	
		1	**230-4011**	1	PLUG AS-CONNECTOR (2-PIN)	
		1	**230-5008**	1	PLUG AS-CONNECTOR (4-PIN)	
		1	**230-5010**	1	PLUG AS-CONNECTOR (6-PIN)	
		1	**231-2295**	1	PLUG AS-CONNECTOR (8-PIN)	
		1	**239-7352**	1	PLUG AS-CONNECTOR (6-PIN)	
		1	**243-4505**	1	RECEPTACLE AS-CONNECTOR (2-PIN)	
		1	**243-4510**	1	RECEPTACLE AS-CONNECTOR (12-PIN)	
		1	**247-2693**	1	RECEPTACLE AS-CONNECTOR (6-PIN)	
M	8	1	**9X-2042**	3	SCREW-TRUSS HEAD (M6X1X12-MM)	

E-ORDER BY THE CENTIMETER
M-METRIC PART

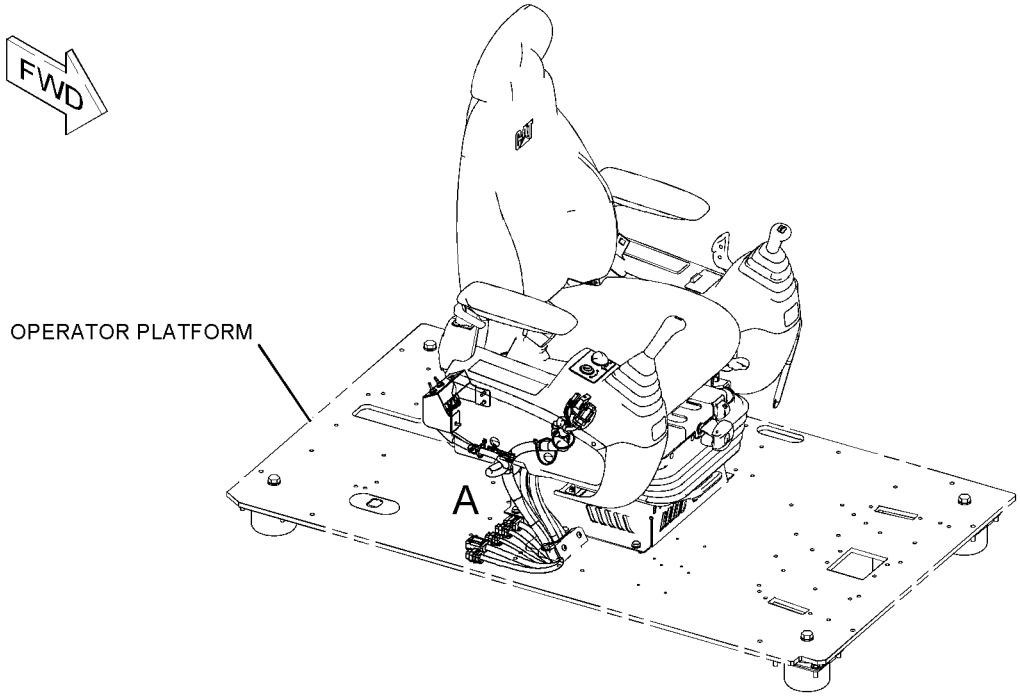

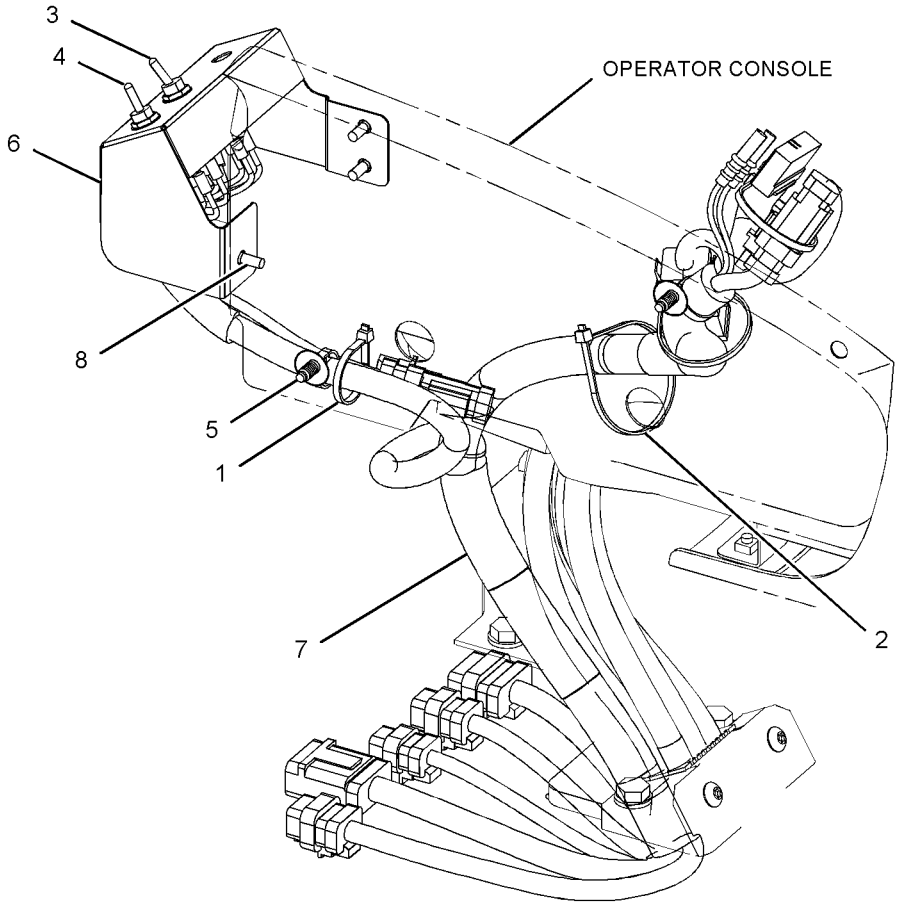

VIEW OF AREA A

GRAPHIC #1 **<END>** g01231684

275-6883 WIRING GP-CONVERTER

S/N: CLA1-UP
12-VOLT, 7-AMPERE
CANNOT BE USED WITH 275-6884—PAGE 219
AN ATTACHMENT

SMCS-1421 **i02636485**

NOTE	REF NO	GRAPHIC REF	PART NUMBER	QTY	PART NAME 1 2 3 4 5 6 (PRODUCT LEVEL)	SEE PAGE
	1	1	**7K-1181**	2	STRAP-CABLE	
	2	1	**121-0987**	1	SOCKET (12-VOLT, 7-AMPERE)	
	3	1	**275-7048**	1	BRACKET	
	4	1	**283-2783**	1	CONVERTER-POWER (24-VOLT TO 12-VOLT)	
	5	1	**8T-4121**	2	WASHER-HARD (11X21X2.5-MM THK)	
M	6	1	**8T-4136**	2	BOLT (M10X1.5X25-MM)	
M	7	1	**8T-4171**	4	BOLT (M6X1X12-MM)	
	8	1	**9X-8256**	4	WASHER (6.6X12X2-MM THK)	

M-METRIC PART

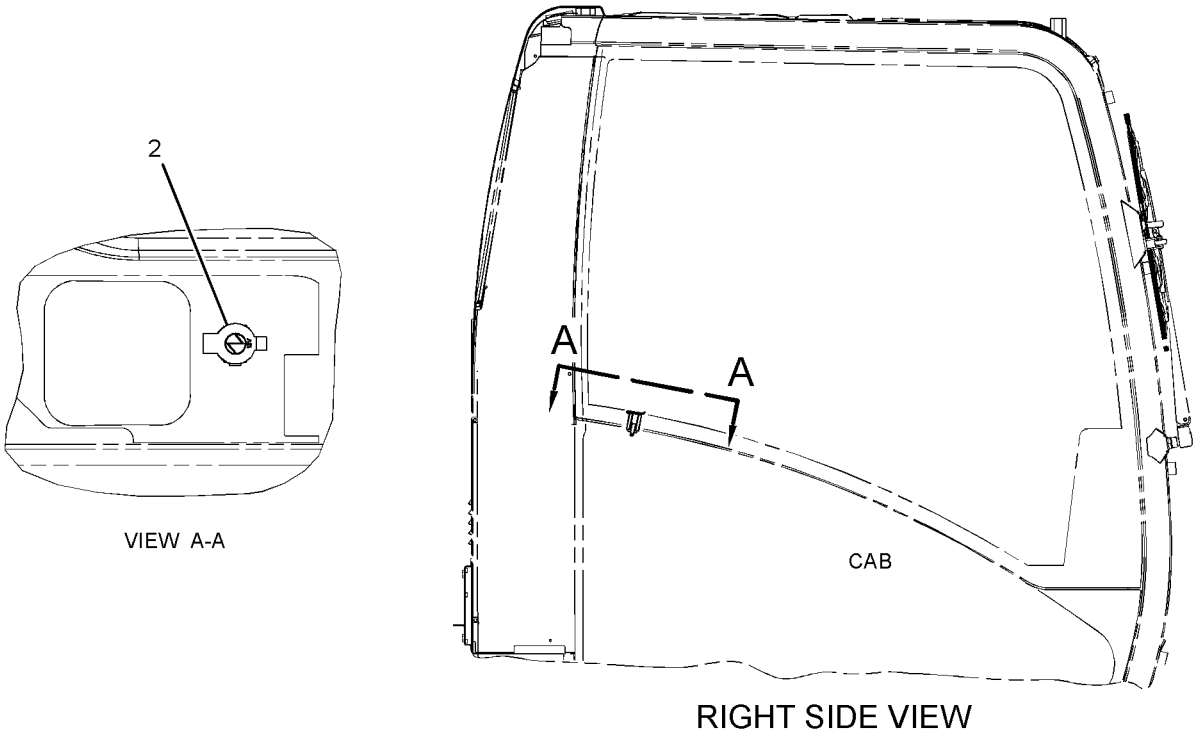

RIGHT SIDE VIEW

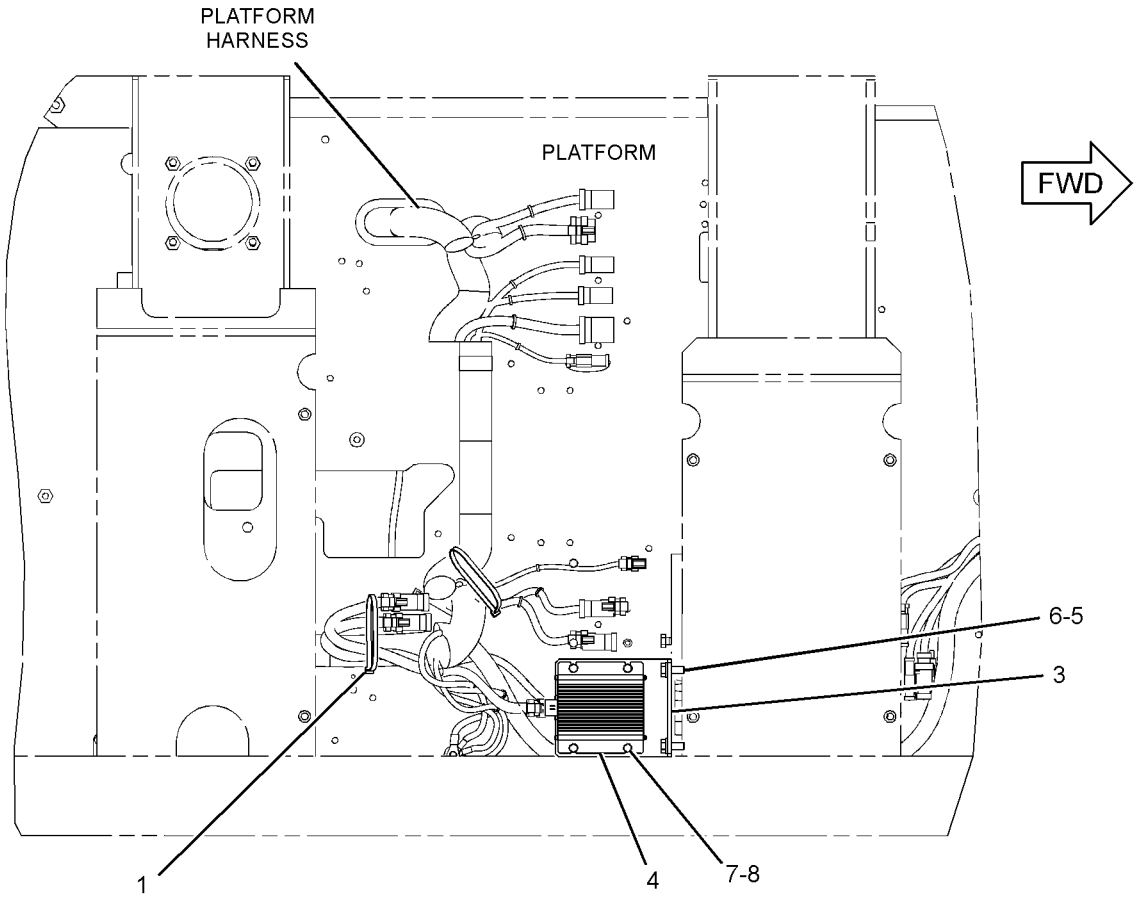

BOTTOM VIEW

GRAPHIC #1

<END>

g01313257

275-6884 WIRING GP-CONVERTER

S/N: CLA1-UP
12-VOLT, 7-AMPERE (2X)
CANNOT BE USED WITH 275-6883–PAGE 217
AN ATTACHMENT

SMCS-1421 **i02598627**

NOTE	REF NO	GRAPHIC REF	PART NUMBER	QTY	PART NAME 1 2 3 4 5 6 (PRODUCT LEVEL)	SEE PAGE
	1	1	**121-0987**	2	SOCKET (12-VOLT, 7-AMPERE)	
	2	1	**275-7048**	2	BRACKET	
	3	1	**283-2783**	2	CONVERTER-POWER (24-VOLT TO 12-VOLT)	
	4	1	**8T-4121**	4	WASHER-HARD (11X21X2.5-MM THK)	
M	5	1	**8T-4136**	4	BOLT (M10X1.5X25-MM)	
M	6	1	**8T-4171**	8	BOLT (M6X1X12-MM)	
	7	1	**9X-8256**	8	WASHER (6.6X12X2-MM THK)	

M-METRIC PART

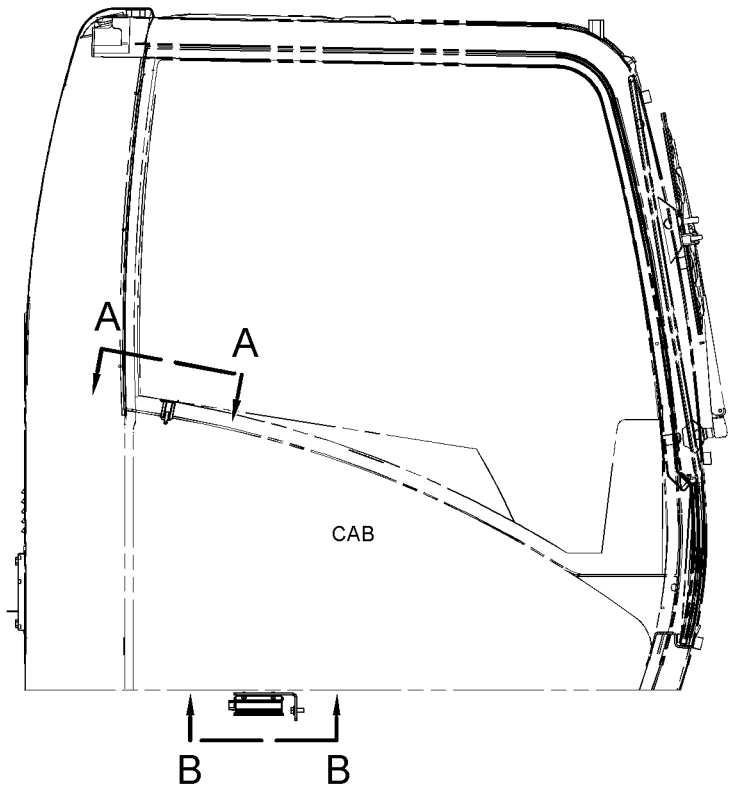

RIGHT SIDE VIEW

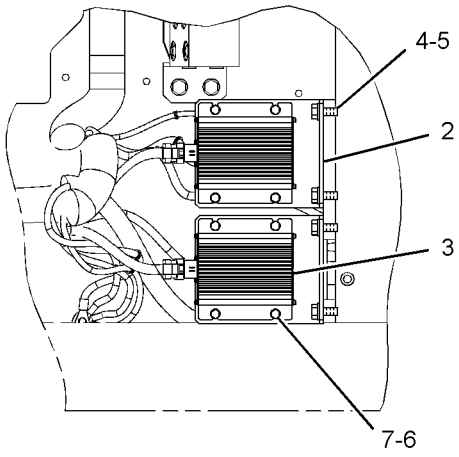

VIEW B-B

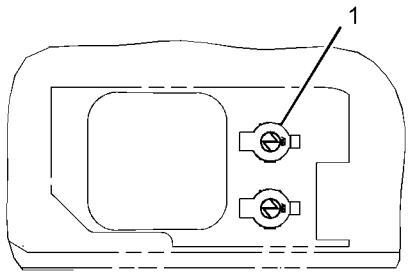

VIEW A-A

GRAPHIC #1 **<END>** g01311851

ELECTRICAL AND STARTING SYSTEM

296-4801 WIRING GP-ELECTRONIC CONTROL

S/N: JKH1-UP
PART OF 279-7805 ENGINE AR
ALSO AN ATTACHMENT

SMCS-1408 **i03021485**

NOTE	REF NO	GRAPHIC REF	PART NUMBER	QTY	PART NAME 1 2 3 4 5 6 (PRODUCT LEVEL)	SEE PAGE
	1	1	**310-9688**	1	HARNESS AS-ENGINE	
	2	1	**296-4618**	1	SPACER	
	3	1	**296-4619**	1	CLIP	
	4	1	**099-4460**	1	BOLT	
	5	1	**096-2501**	1	LOCKWASHER	
	6	1	**8T-4223**	1	WASHER-HARD (13.5X25.5X3-MM THK)	
	7	1	**305-4891**	1	HARNESS AS-ENGINE (FUEL INJECTORS)	
	8	1,2	**305-4895**	15	STRAP-CABLE	
	9	1,2	**282-8567**	2	BOLT	
	10	1	**305-4898**	1	CLIP	
	11	1,2	**305-4896**	11	CLIP	
	12	1	**305-4897**	3	CLIP	
	13	1,2	**294-1768**	6	BOLT	
	14	1	**296-4766**	1	BRACKET	
Y	15	2	**223-7577**	1	SWITCH GP-MAGNETIC (AIR INLET HEATER RELAY)	177
	16	2	**296-4755**	1	CABLE	
	17	2	**296-4621**	2	BOLT (M6X1.25X23.5-MM)	

Y-SEPARATE ILLUSTRATION

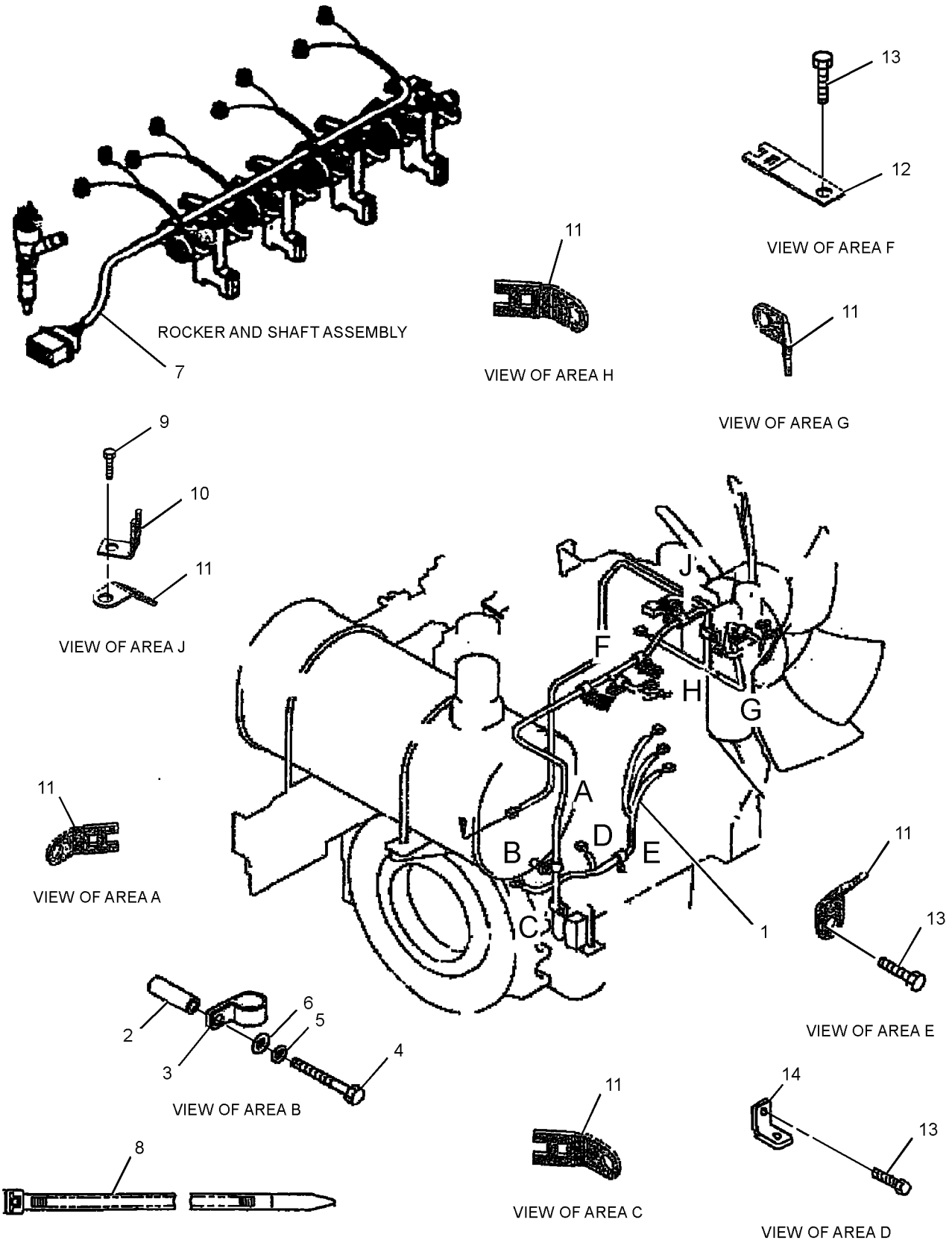

GRAPHIC #1 g01414753

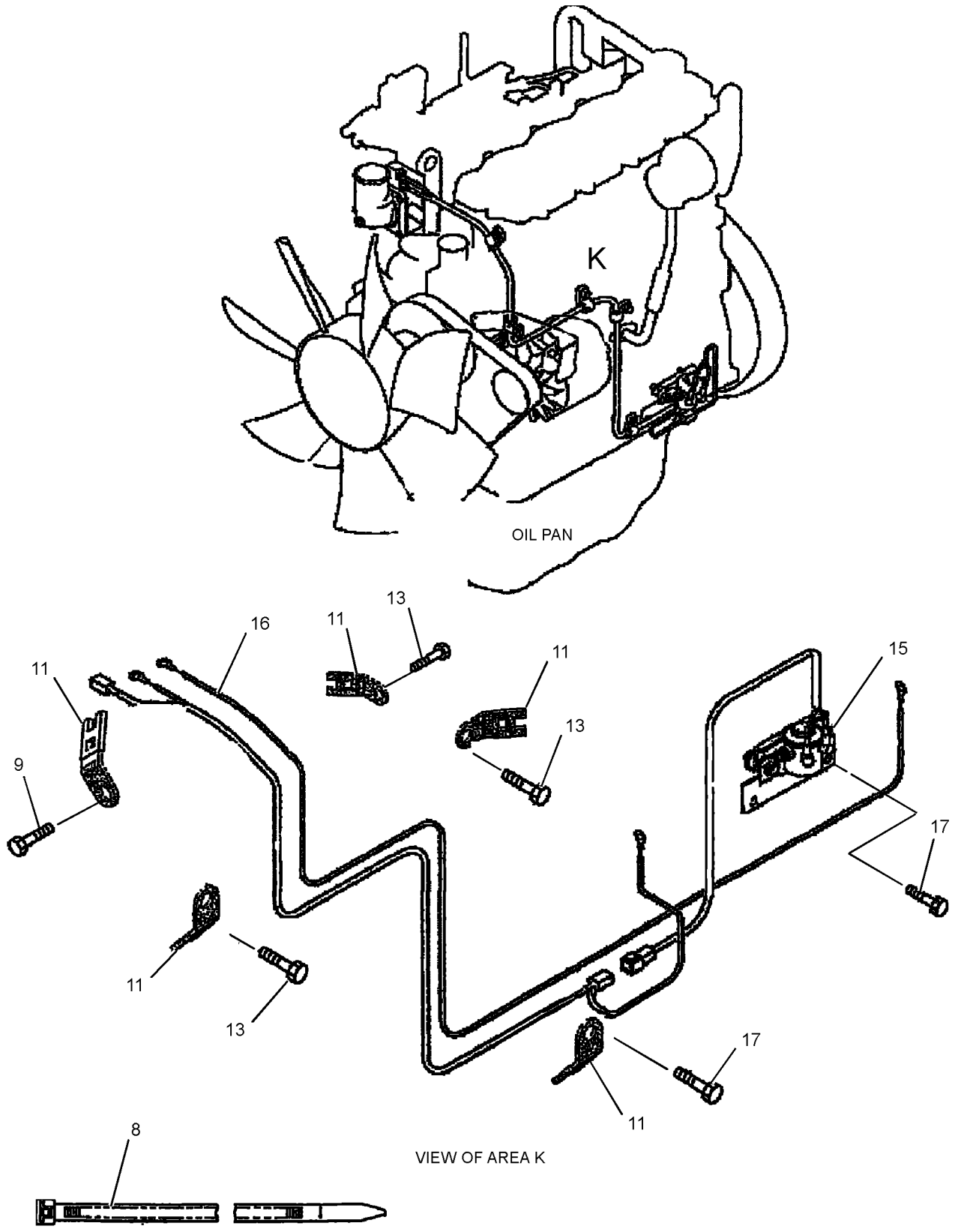

GRAPHIC #2 **<END>** g01414579

283-2607 WIRING GP-FINE SWING

S/N: CLA1-UP

PART OF 283-8792 CONTROL AR-FINE SWING

AN ATTACHMENT

SMCS-1408 **i02795998**

NOTE	REF NO	GRAPHIC REF	PART NUMBER	QTY	PART NAME 1 2 3 4 5 6 (PRODUCT LEVEL)	SEE PAGE
	1	1	**3S-2093**	2	STRAP-CABLE	
	2	1	**116-0118**	1	CLIP	
	3	1	**238-2212**	1	SWITCH AS-ROCKER (FINE SWING)	
		1	**167-3542**	1	CONNECTOR-RECEPTACLE	
		1	**167-3543**	5	TERMINAL (MALE)	
	4	1	**283-2595**	1	HARNESS AS-SOLENOID	
	5	1	**283-2758**	1	BRACKET AS	
	6	1	**8T-4121**	1	WASHER-HARD (11X21X2.5-MM THK)	
M	7	1	**8T-4191**	1	BOLT (M10X1.5X16-MM)	

M-METRIC PART

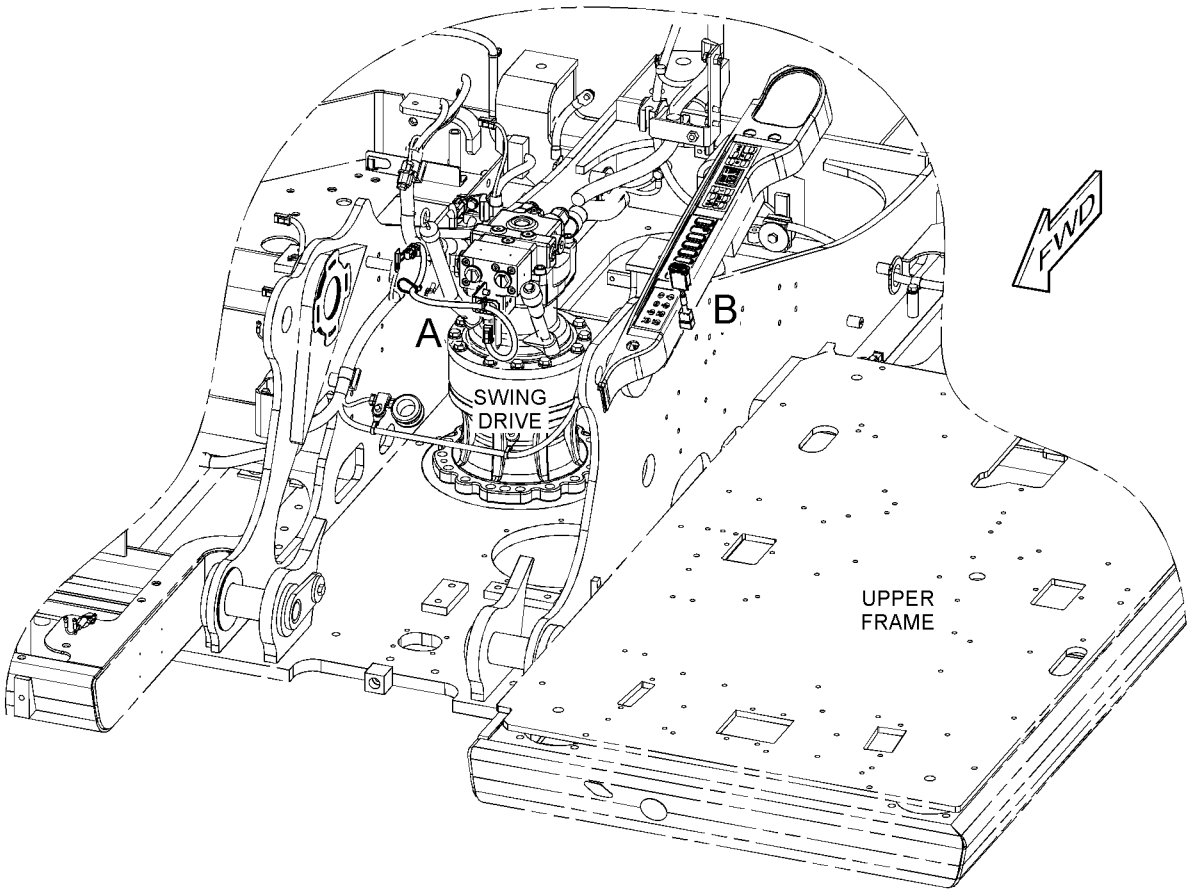

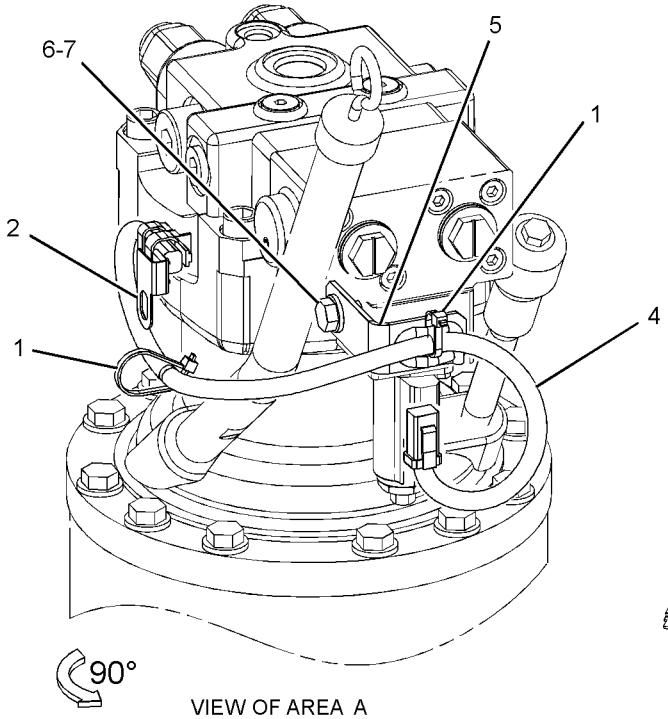

VIEW OF AREA A

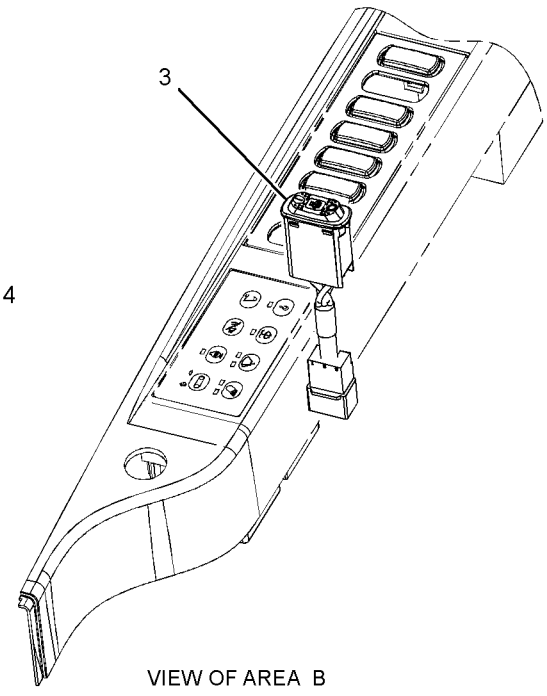

VIEW OF AREA B

GRAPHIC #1 **<END>** g01399447

283-2620 WIRING GP-FUEL SYSTEM–REFUELING

S/N: CLA1-UP

PART OF 283-8797 PUMP AR-FUEL TRANSFER, 301-2641 PUMP AR-REFUELING AN ATTACHMENT

SMCS-1408 **i03001046**

NOTE	REF NO	GRAPHIC REF	PART NUMBER	QTY	PART NAME 1 2 3 4 5 6 (PRODUCT LEVEL)	SEE PAGE
	1	1	**3S-2093**	7	STRAP-CABLE	
	2	1	**116-0118**	1	CLIP	
	3	1	**283-2593**	1	WIRE AS	
	4	1	**324-5664**	1	HARNESS AS-PUMP	
	5	1	**8T-0328**	1	WASHER-HARD (5.5X10X1-MM THK)	
	6	1	**8T-4121**	1	WASHER-HARD (11X21X2.5-MM THK)	
M	7	1	**8T-4137**	1	BOLT (M10X1.5X20-MM)	

M-METRIC PART

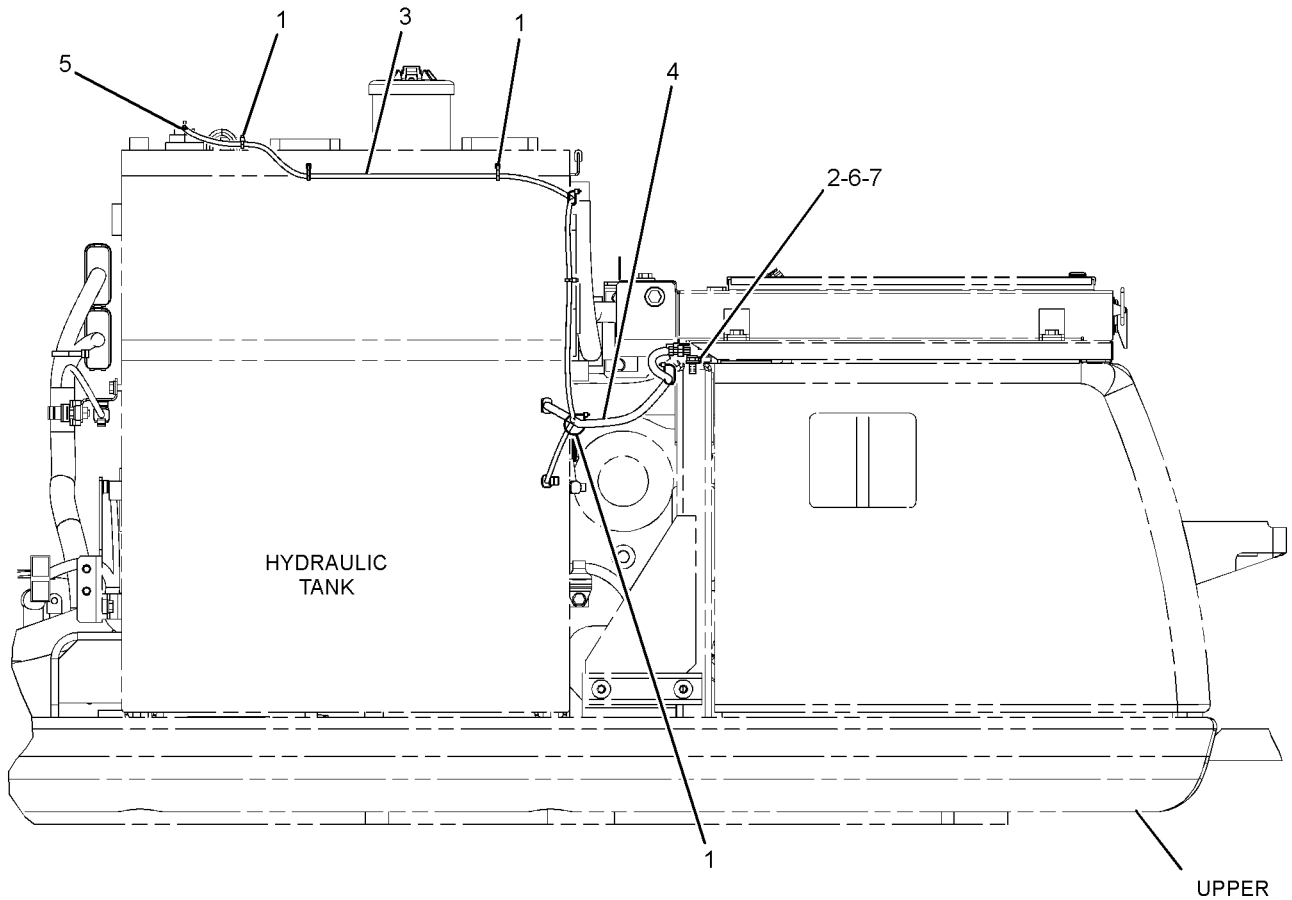

RIGHT SIDE VIEW

GRAPHIC #1 **<END>** g01622969

306-8511 WIRING GP-GRADE CONTROL–ACCUGRADE, STICK

S/N: CLA1-UP

PART OF 301-2552, 301-2555, 301-2647 SPECIAL AR

AN ATTACHMENT

SMCS-1408, 7220 **i02852579**

NOTE	REF NO	GRAPHIC REF	PART NUMBER	QTY	PART NAME 1 2 3 4 5 6 (PRODUCT LEVEL)	SEE PAGE
	1	1	**3S-2093**	7	STRAP-CABLE	
	2	1	**7K-1181**	1	STRAP-CABLE	
	3	1	**204-1611**	1	STRAP-CABLE	
	4	1	**306-8570**	1	HARNESS AS-FRONT	
	5	1	**4P-7428**	1	CLIP	
	6	1	**5P-8522**	1	GROMMET	

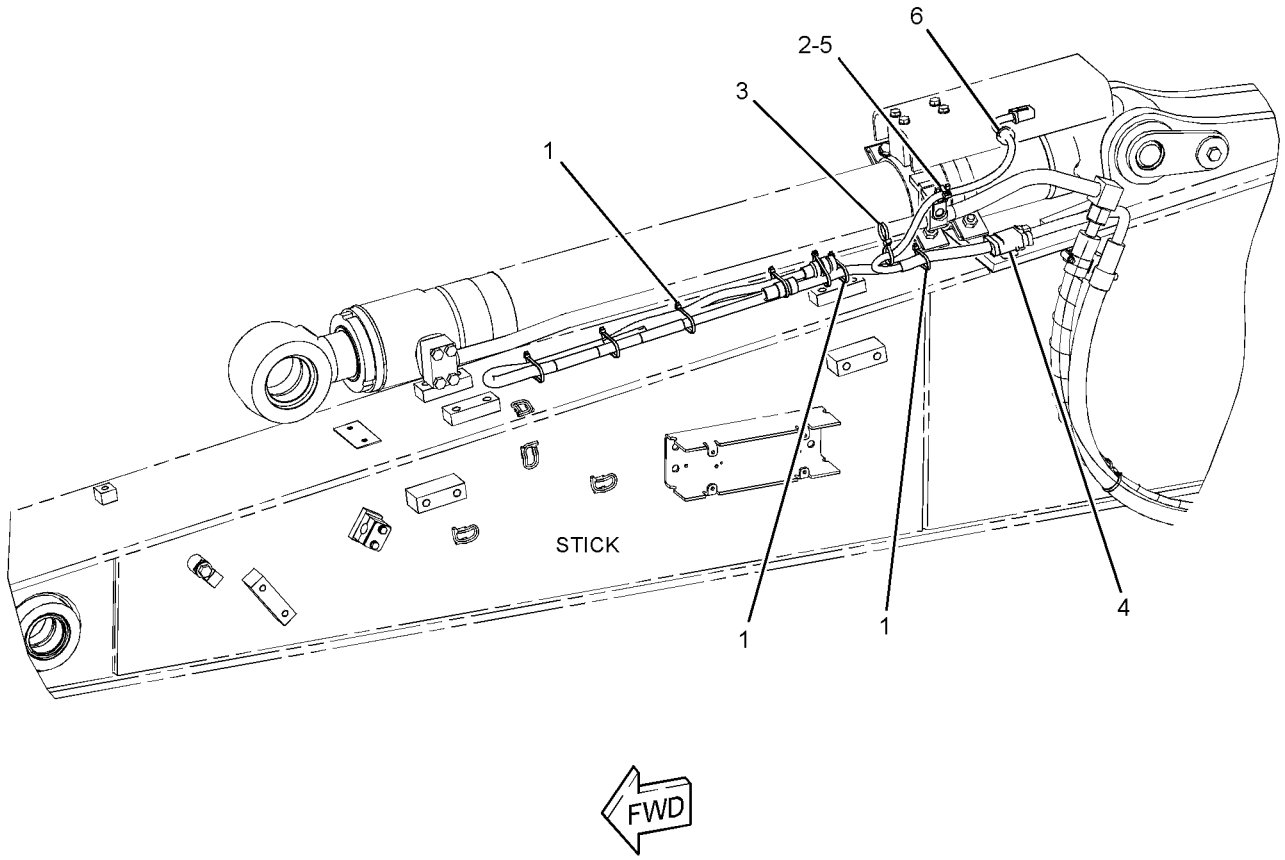

GRAPHIC #1 **<END>** g01423845

283-2609 WIRING GP-HAMMER–RETURN FILTER

S/N: CLA1-UP
PART OF 283-8787 FILTER AR-HYDRAULIC
AN ATTACHMENT

SMCS-1408 **i02896501**

NOTE	REF NO	GRAPHIC REF	PART NUMBER	QTY	PART NAME 1 2 3 4 5 6 (PRODUCT LEVEL)	SEE PAGE
	1	1	**3S-2093**	8	STRAP-CABLE	
	2	1	**7K-1181**	9	STRAP-CABLE	
	3	1	**319-1150**	1	HARNESS AS-PUMP	
	4	1	**7Y-3281**	1	GROMMET	

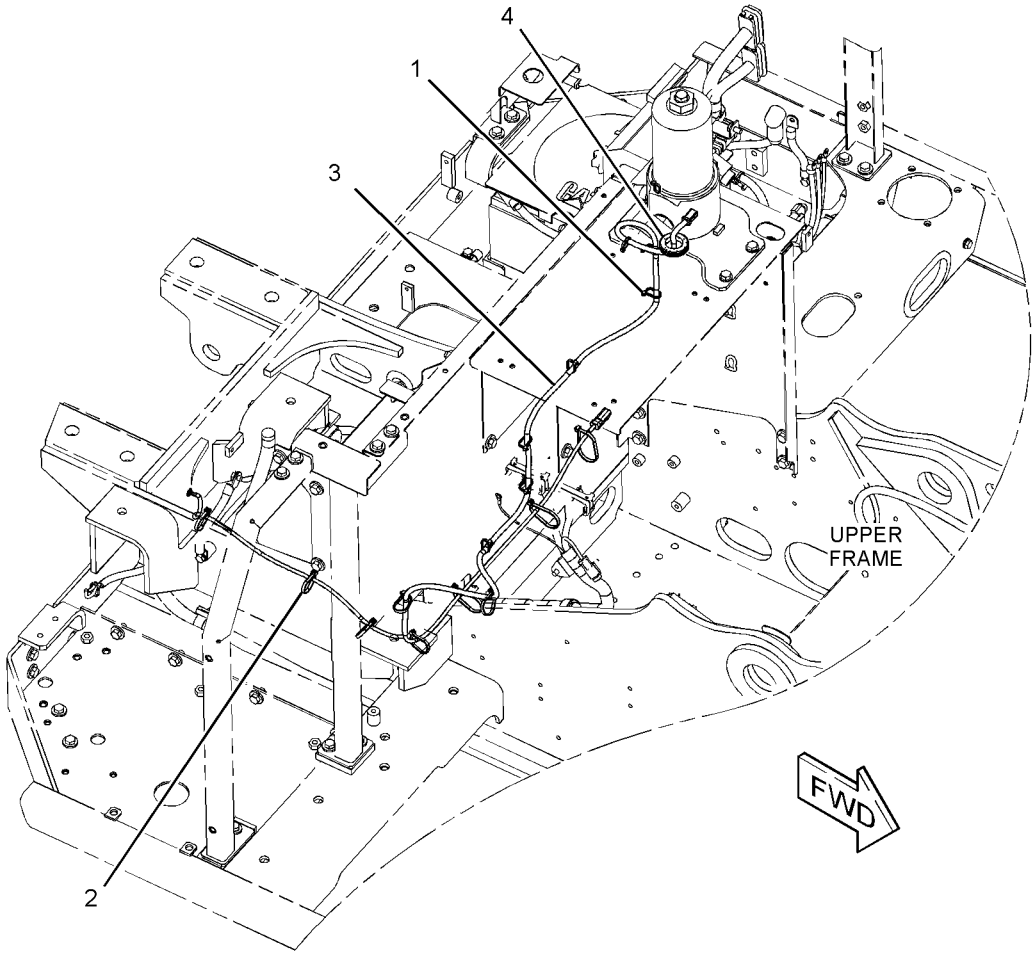

GRAPHIC #1 **<END>** g01445086

319-1399 WIRING GP-HEATER

S/N: CLA1-UP

PART OF 260-7231 CHASSIS AR

SMCS-7304 **i02988375**

NOTE	REF NO	GRAPHIC REF	PART NUMBER	QTY	PART NAME 1 2 3 4 5 6 (PRODUCT LEVEL)	SEE PAGE
	1	1	**3S-2093**	4	STRAP-CABLE	
	2	1	**7K-1181**	16	STRAP-CABLE	
	3	1	**116-0118**	1	CLIP	
	4	1	**319-1367**	1	CABLE AS	
D		1	**6V-2369**		WIRE (4-GA, BLACK) (2.3-M)	
		1	**8T-8799**	1	BOOT	
		1	**9G-4343**	1	TERMINAL (4-GA)	
		1	**5P-3454**	1	TERMINAL (4-GA)	
	5	1	**319-1370**	1	HARNESS AS-CONTROL	

D-ORDER BY THE METER

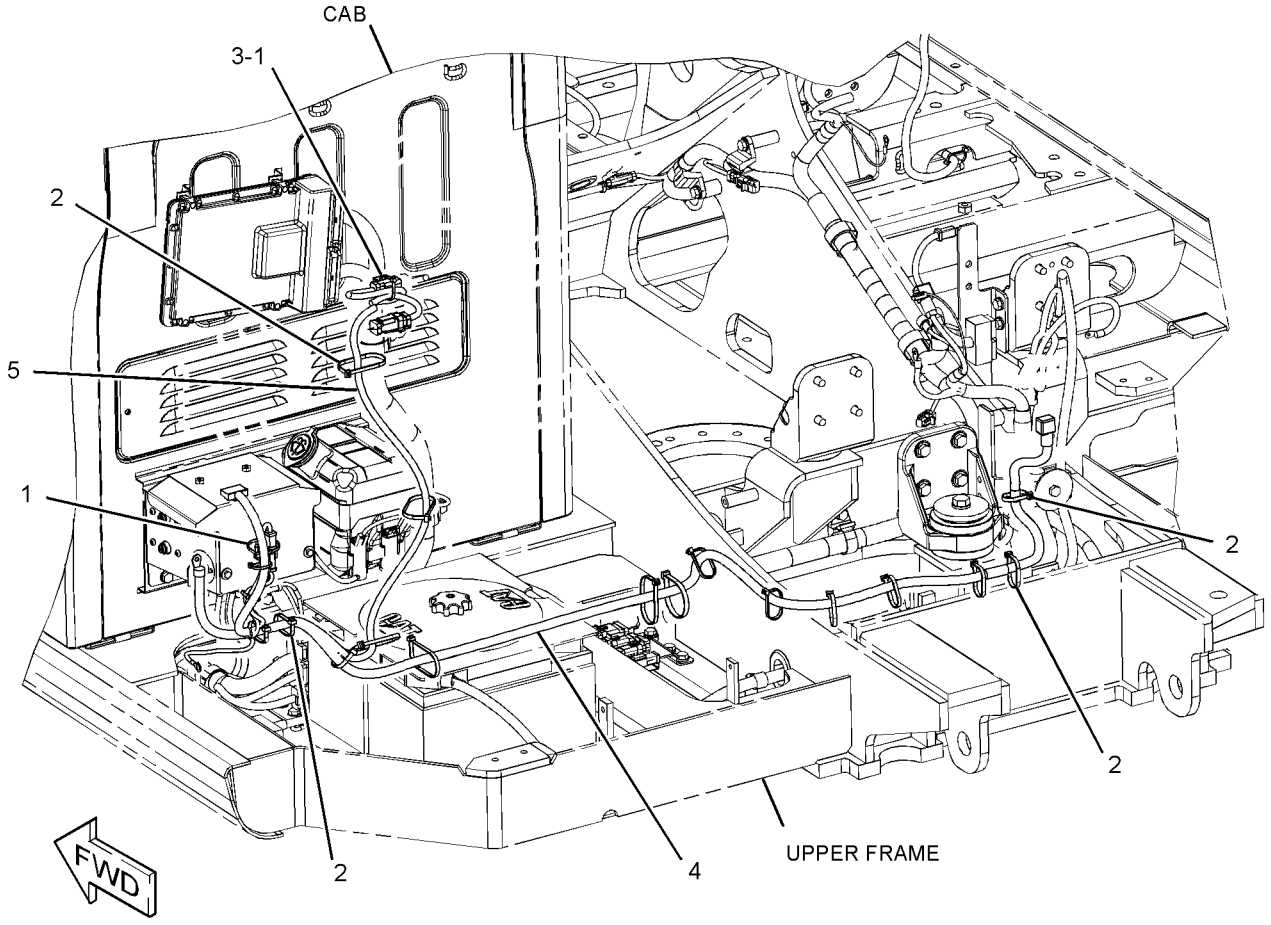

GRAPHIC #1 **<END>** g01560230

283-2618 WIRING GP-MEDIUM PRESSURE

S/N: CLA1-UP

PART OF 270-6037 CONTROL AR-AUXILIARY

AN ATTACHMENT

SMCS-1408 **i02877053**

NOTE	REF NO	GRAPHIC REF	PART NUMBER	QTY	PART NAME 1 2 3 4 5 6 (PRODUCT LEVEL)	SEE PAGE
	1	1	**3S-2093**	6	STRAP-CABLE	
	2	1	**7K-1181**	6	STRAP-CABLE	
	3	1	**116-0118**	2	CLIP	
	4	1	**283-2655**	1	HARNESS AS-VALVE	
	5	1	**8T-4121**	1	WASHER-HARD (11X21X2.5-MM THK)	
M	6	1	**8T-4191**	1	BOLT (M10X1.5X16-MM)	

M-METRIC PART

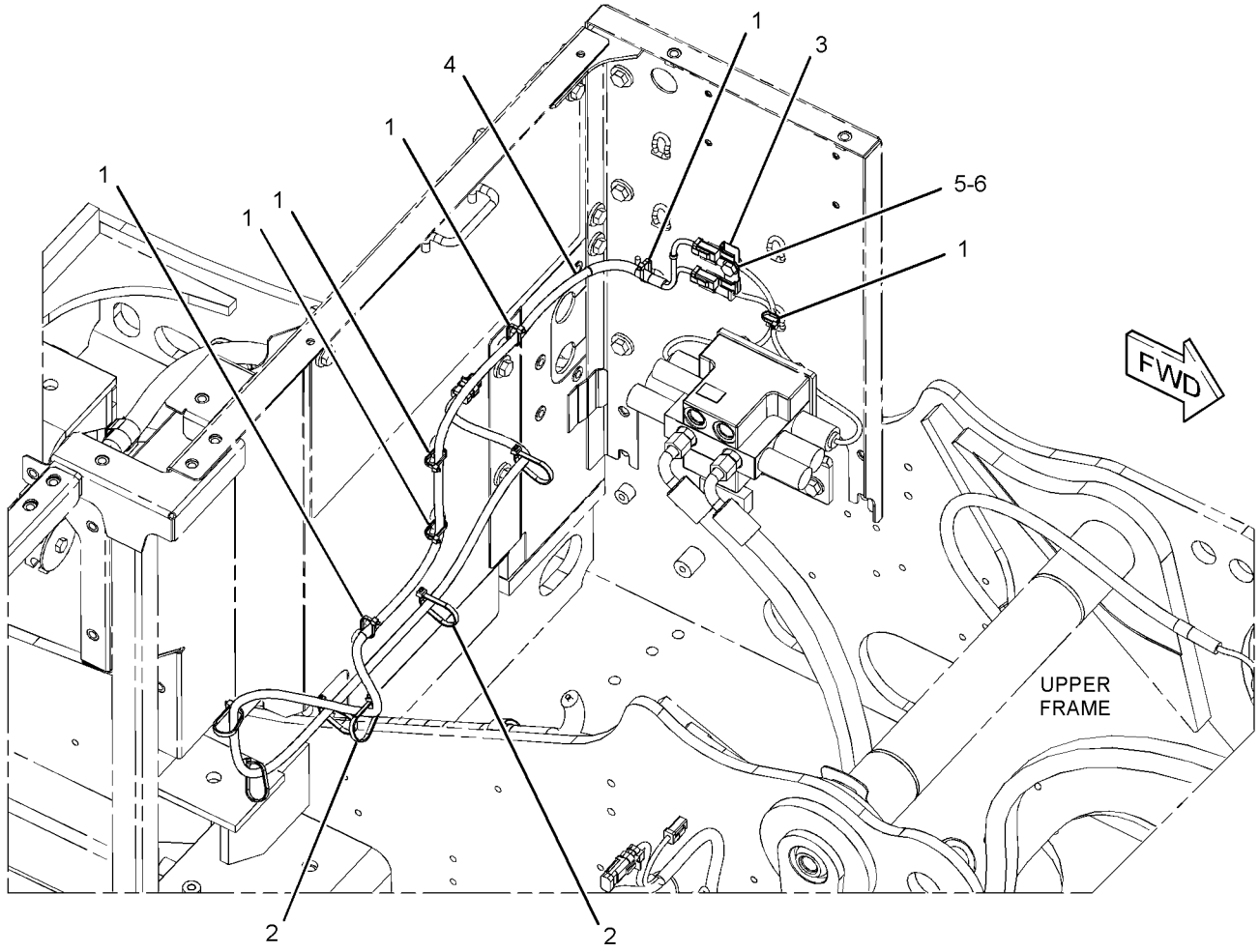

GRAPHIC #1 **<END>** g01446231

283-2619 WIRING GP-MEDIUM PRESSURE

S/N: CLA1-UP
PART OF 270-6043 CONTROL AR-AUXILIARY
AN ATTACHMENT

SMCS-1408 **i02869611**

NOTE	REF NO	GRAPHIC REF	PART NUMBER	QTY	PART NAME 1 2 3 4 5 6 (PRODUCT LEVEL)	SEE PAGE
	1	1	**7K-1181**	7	STRAP-CABLE	
	2	1	**291-7916**	1	HARNESS AS-VALVE	

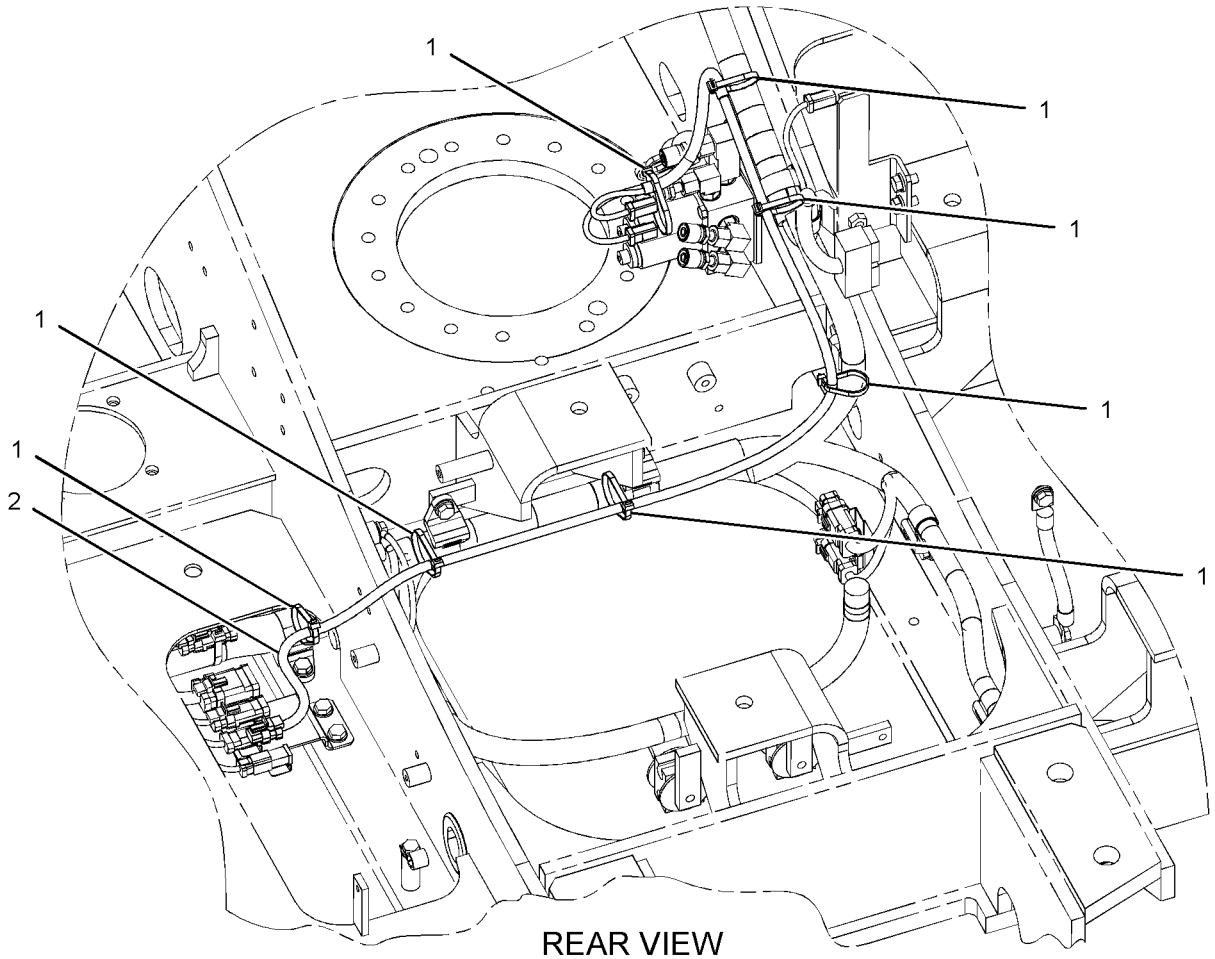

REAR VIEW
(UPPER LEFT)

GRAPHIC #1 **<END>** g01446317

291-7506 WIRING GP-OVERLOAD WARNING

S/N: CLA1-UP
PART OF 297-0195 VALVE AR-LOAD CONTROL
AN ATTACHMENT
TYPE 1

SMCS-1408 **i02819043**

NOTE	REF NO	GRAPHIC REF	PART NUMBER	QTY	PART NAME 1 2 3 4 5 6 (PRODUCT LEVEL)	SEE PAGE
	1	1	**3S-2093**	2	STRAP-CABLE	
	2	1	**7K-1181**	5	STRAP-CABLE	
	3	1	**204-1611**	6	STRAP-CABLE	
	4	1	**238-2215**	1	SWITCH AS-ROCKER (OVERLOAD WARNING)	
		1	**167-3542**	1	CONNECTOR-RECEPTACLE	
		1	**167-3543**	4	TERMINAL (MALE)	
	5	1	**283-3060**	1	BRACKET AS	
	6	1	**299-2662**	1	HARNESS AS-VALVE	

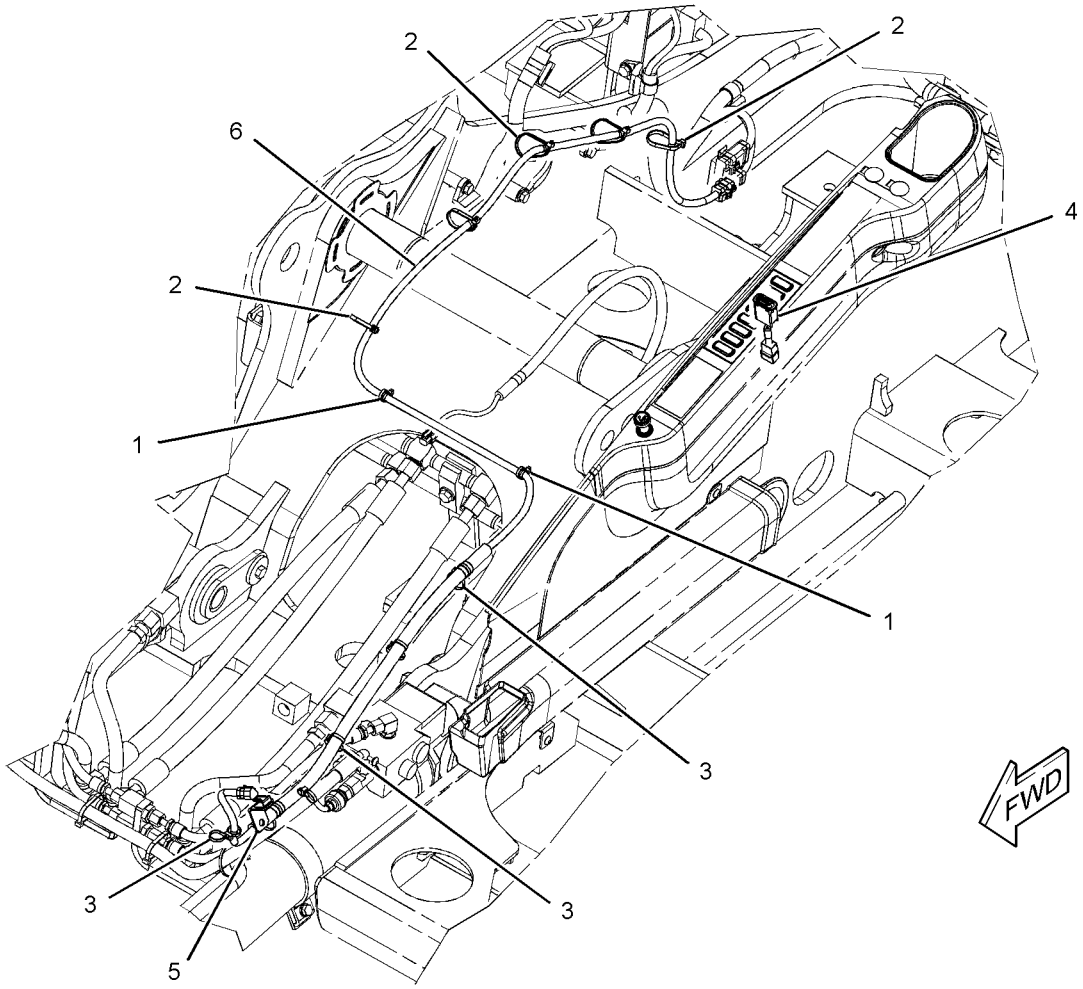

GRAPHIC #1 **<END>** g01445071

291-7506 WIRING GP-OVERLOAD WARNING

S/N: CLA1-UP
PART OF 297-0195 VALVE AR-LOAD CONTROL
AN ATTACHMENT
TYPE 2

SMCS-1408 **i03030968**

NOTE	REF NO	GRAPHIC REF	PART NUMBER	QTY	PART NAME 1 2 3 4 5 6 (PRODUCT LEVEL)	SEE PAGE
	1	1	**3S-2093**	2	STRAP-CABLE	
	2	1	**7K-1181**	5	STRAP-CABLE	
C	3	1	**204-1611**	7	STRAP-CABLE	
	4	1	**238-2215**	1	SWITCH AS-ROCKER (OVERLOAD WARNING)	
		1	**167-3542**	1	CONNECTOR-RECEPTACLE	
		1	**167-3543**	4	TERMINAL (MALE)	
C	5	1	**324-5753**	1	BRACKET AS	
C	6	1	**324-5826**	1	HARNESS AS-VALVE	

C-CHANGE FROM PREVIOUS TYPE

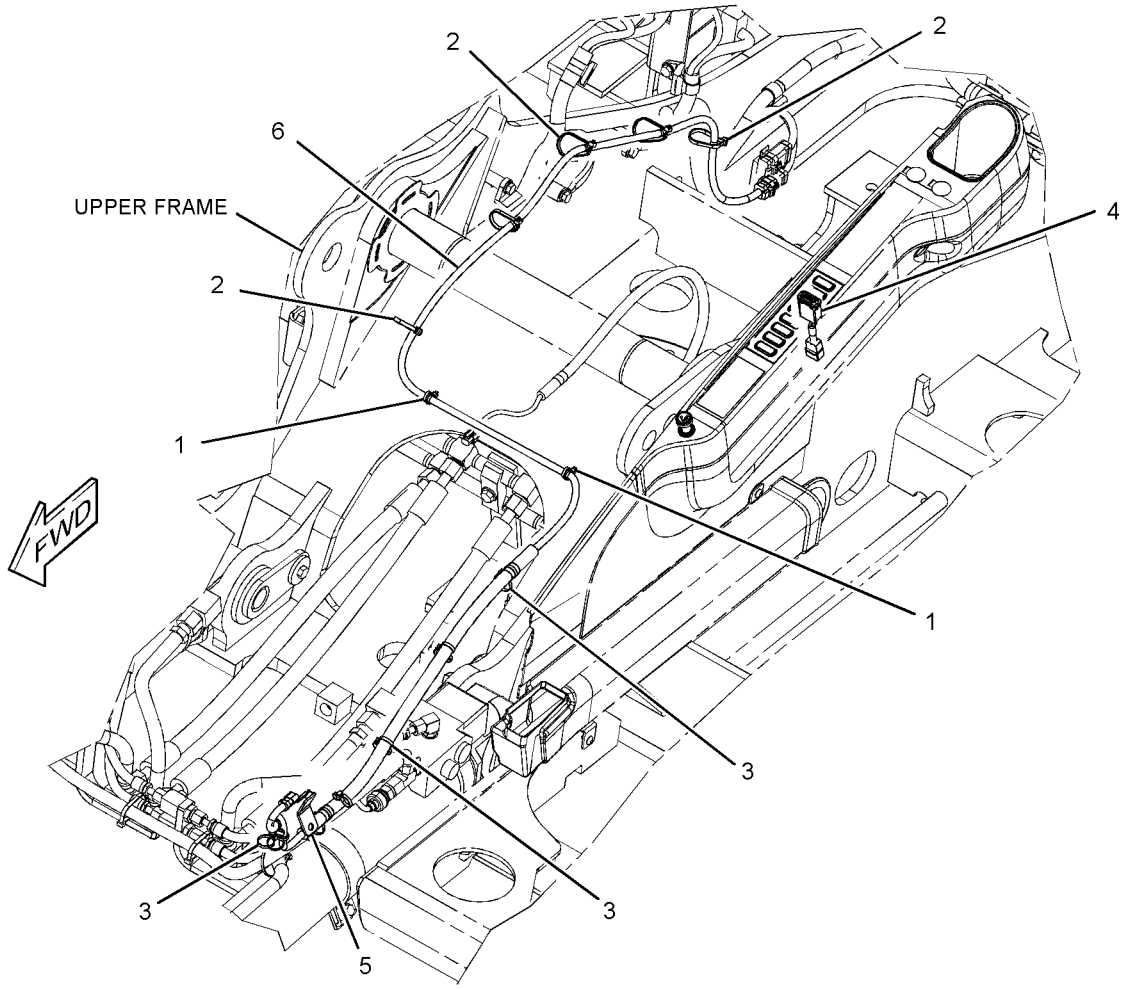

GRAPHIC #1 **<END>** g01622274

328-0089 WIRING GP—OVERLOAD WARNING

S/N: CLA1-UP

PART OF 323-7792 VALVE AR-LOAD CONTROL

AN ATTACHMENT

SMCS-1408 **i03146443**

NOTE	REF NO	GRAPHIC REF	PART NUMBER	QTY	PART NAME 1 2 3 4 5 6 (PRODUCT LEVEL)	SEE PAGE
	1	1	**3S-2093**	2	STRAP-CABLE	
	2	1	**7K-1181**	5	STRAP-CABLE	
	3	1	**204-1611**	7	STRAP-CABLE	
	4	1	**324-5753**	1	BRACKET AS	
	5	1	**324-5826**	1	HARNESS AS-VALVE	
	6	1	**328-0028**	1	SWITCH AS-ROCKER (OVERLOAD WARNING)	
		1	**167-3542**	1	CONNECTOR-RECEPTACLE	
		1	**167-3543**	4	TERMINAL (MALE)	

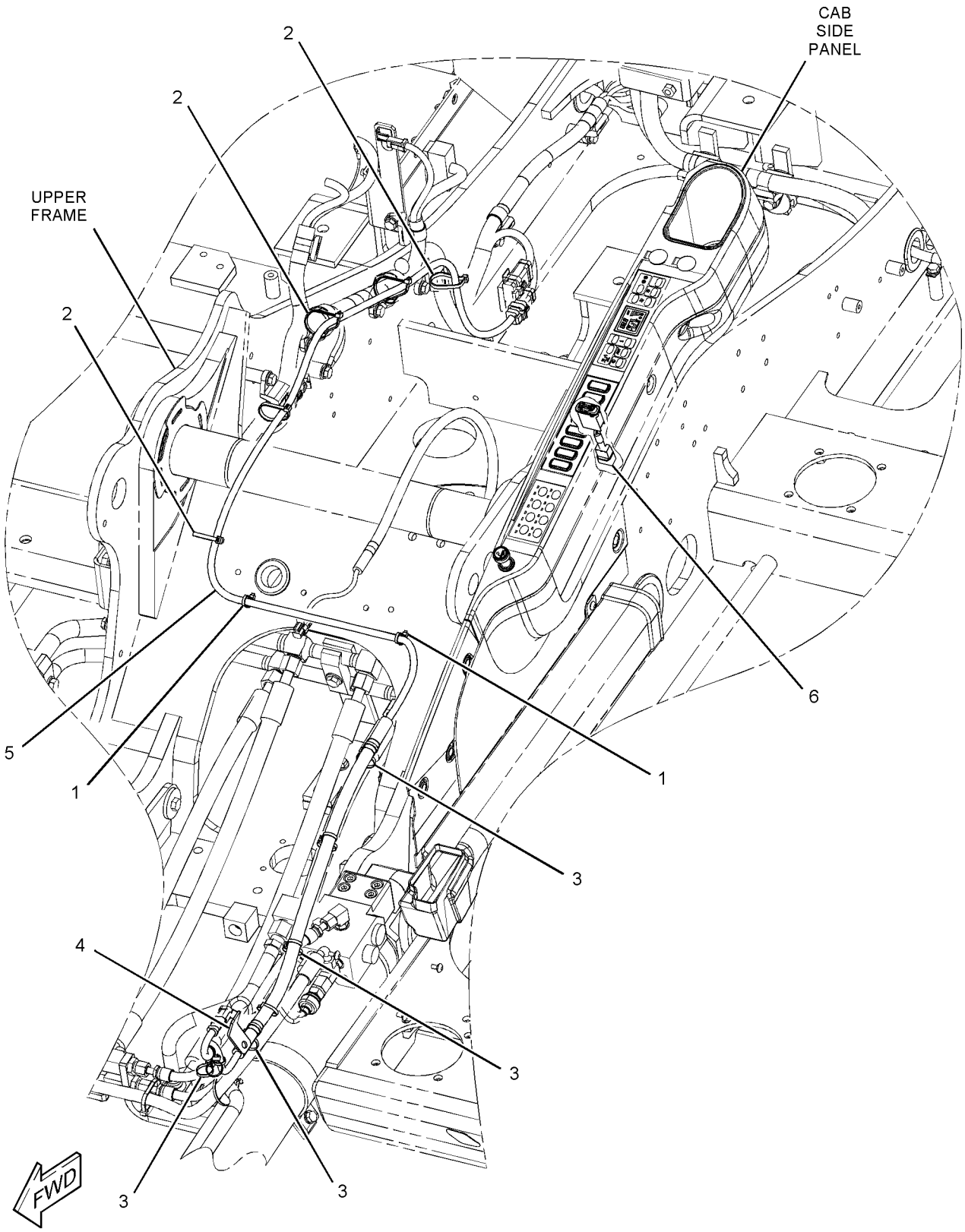

GRAPHIC #1 **<END>** g01646915

275-7051 WIRING GP-PLATFORM

S/N: CLA1-UP

PART OF 273-5363 OPERATOR AR

SMCS-1408 **i02864029**

NOTE	REF NO	GRAPHIC REF	PART NUMBER	QTY	PART NAME 1 2 3 4 5 6 (PRODUCT LEVEL)	SEE PAGE
	1	1	**3E-5169**	1	GUARD-SWITCH	
	2	1	**3S-2093**	3	STRAP-CABLE	
	3	1	**7G-1060**	1	STRAP AS-GROUND	
	4	1,2	**7K-1181**	12	STRAP-CABLE	
	5	1	**111-4836**	4	CLIP	
	6	1	**111-4837**	1	CLIP	
	7	1	**111-4838**	2	CLIP	
	8	1	**111-4839**	2	STRAP	
	9	1	**116-0118**	12	CLIP	
	10	1	**199-7854**	1	SPACER (11.8X20X45-MM THK)	
	11	1	**234-1122**	1	COVER	
	12	1	**251-0299**	1	HARNESS AS-SWITCH (SECONDARY SHUTDOWN)	
	13	2	**275-6810**	1	RECEPTACLE AS	
		2	**134-3297**	1	SEAL	
		2	**163-6773**	1	PLUG-SEAL	
	14	1	**275-7104**	1	HARNESS AS-PLATFORM	
M	15	1	**8T-0337**	2	SCREW-MACHINE (M4X0.7X12-MM)	
	16	1	**096-6166**	2	WASHER-HARD (4.5X9X1-MM THK)	
	17	1	**4D-1836**	1	SWITCH AS-TOGGLE (SECONDARY SHUTDOWN)	
M	18	1	**7X-2621**	4	BOLT (M10X1.5X12-MM)	
	19	1	**8T-4121**	13	WASHER-HARD (11X21X2.5-MM THK)	
M	20	1	**8T-4137**	7	BOLT (M10X1.5X20-MM)	
M	21	1	**8T-4195**	1	BOLT (M10X1.5X30-MM)	
M	22	1	**8T-6466**	1	BOLT (M10X1.5X60-MM)	

M-METRIC PART

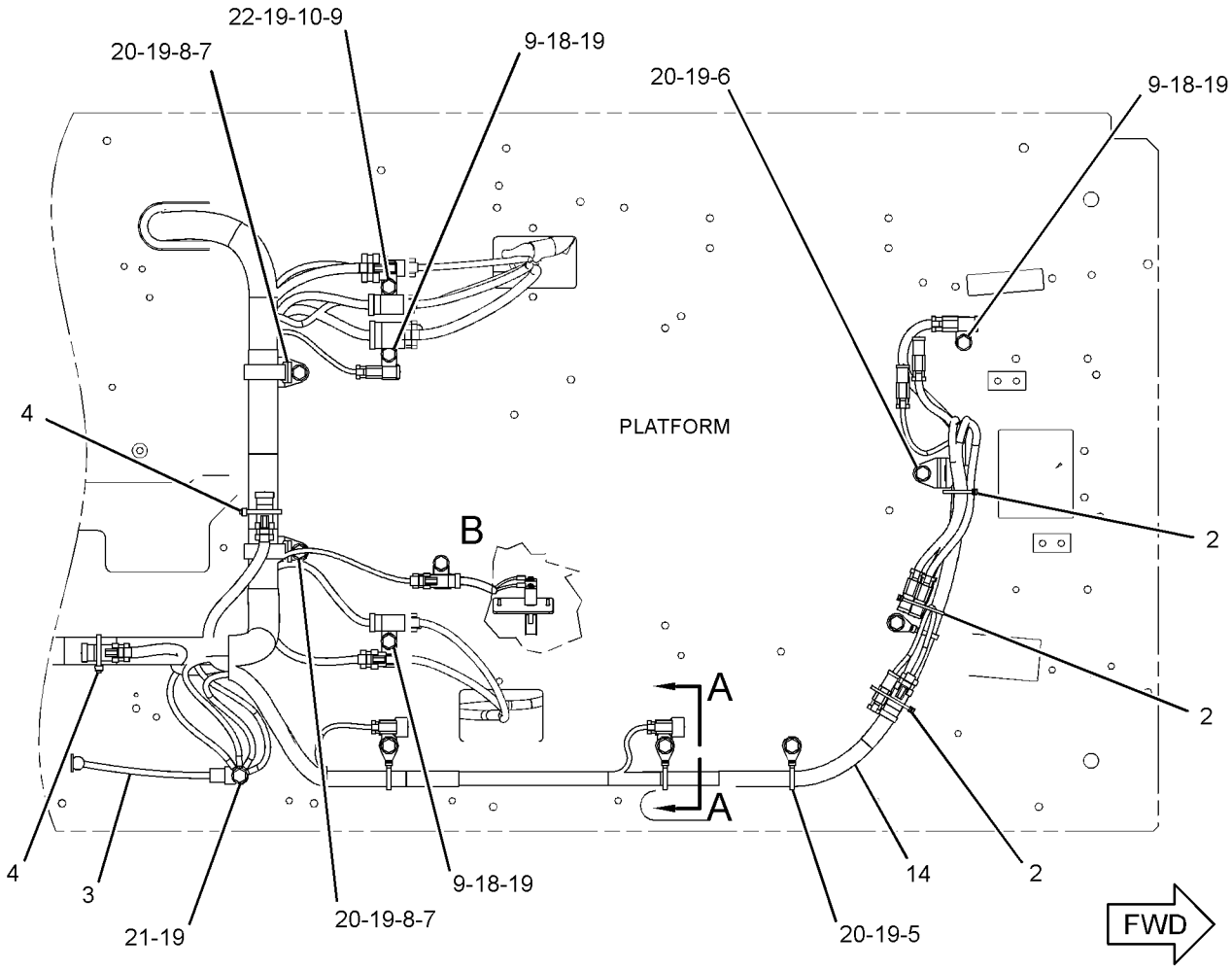

BOTTOM VIEW

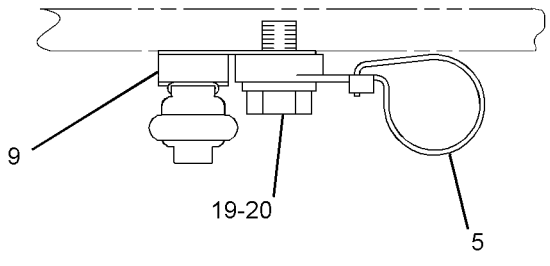

SECTION A-A

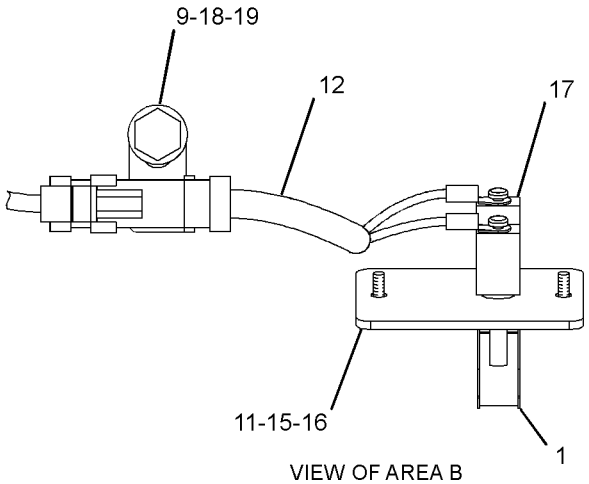

VIEW OF AREA B

GRAPHIC #1

g01427384

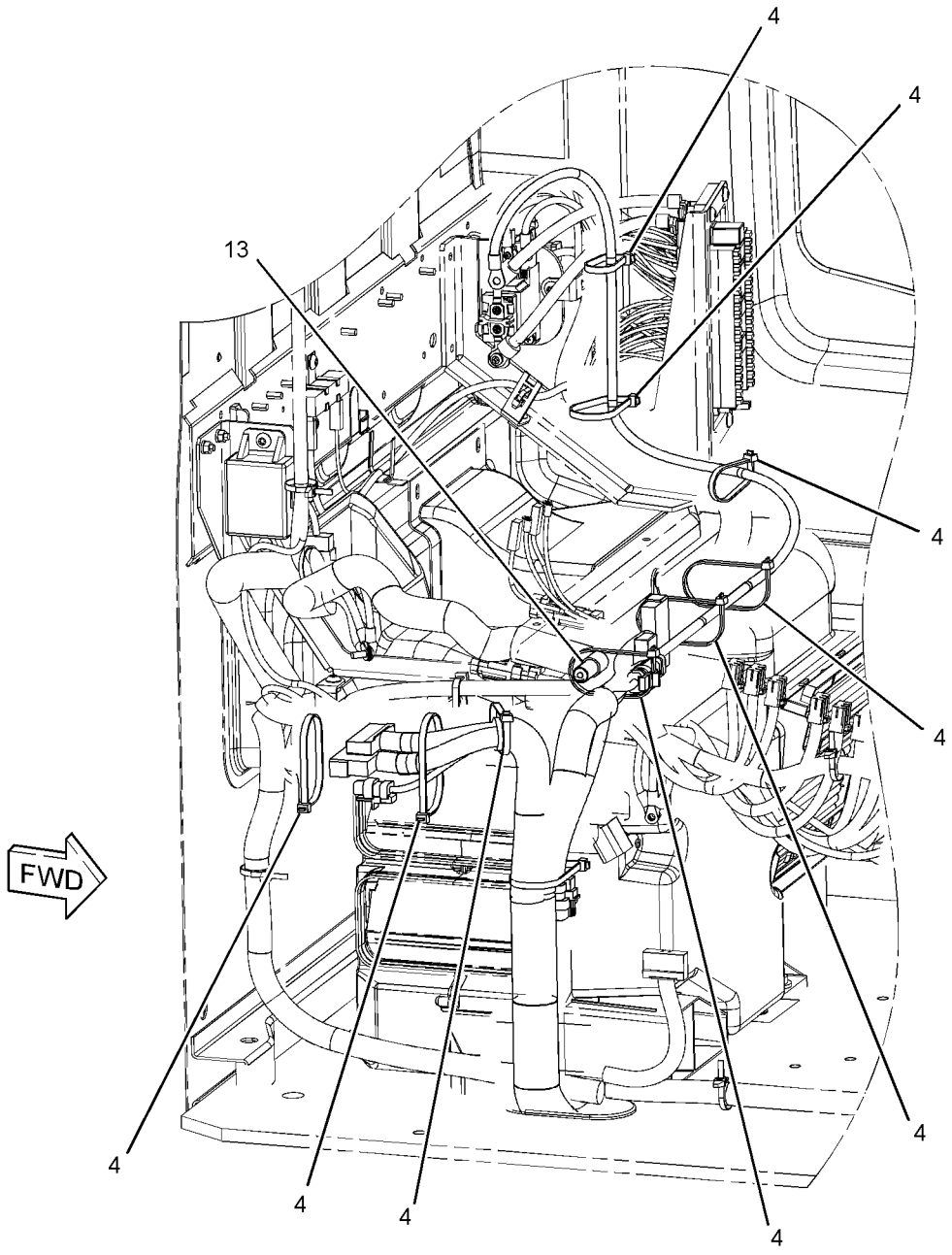

GRAPHIC #2 **<END>** g01427397

306-8509 WIRING GP-PLATFORM–ACCUGRADE

S/N: CLA1-UP

PART OF 301-2552, 301-2555, 301-2647 SPECIAL AR

AN ATTACHMENT

SMCS-1408 **i02852576**

NOTE	REF NO	GRAPHIC REF	PART NUMBER	QTY	PART NAME 1 2 3 4 5 6 (PRODUCT LEVEL)	SEE PAGE
	1	1	**3S-2093**	5	STRAP-CABLE	
	2	1	**7K-1181**	3	STRAP-CABLE	
	3	1	**204-1611**	1	STRAP-CABLE	
	4	1	**306-8513**	1	HARNESS AS-SOLENOID	
	5	1	**132-5789**	1	CLIP	
	6	1	**5P-4116**	1	WASHER-HARD (8.8X20.5X2-MM THK)	

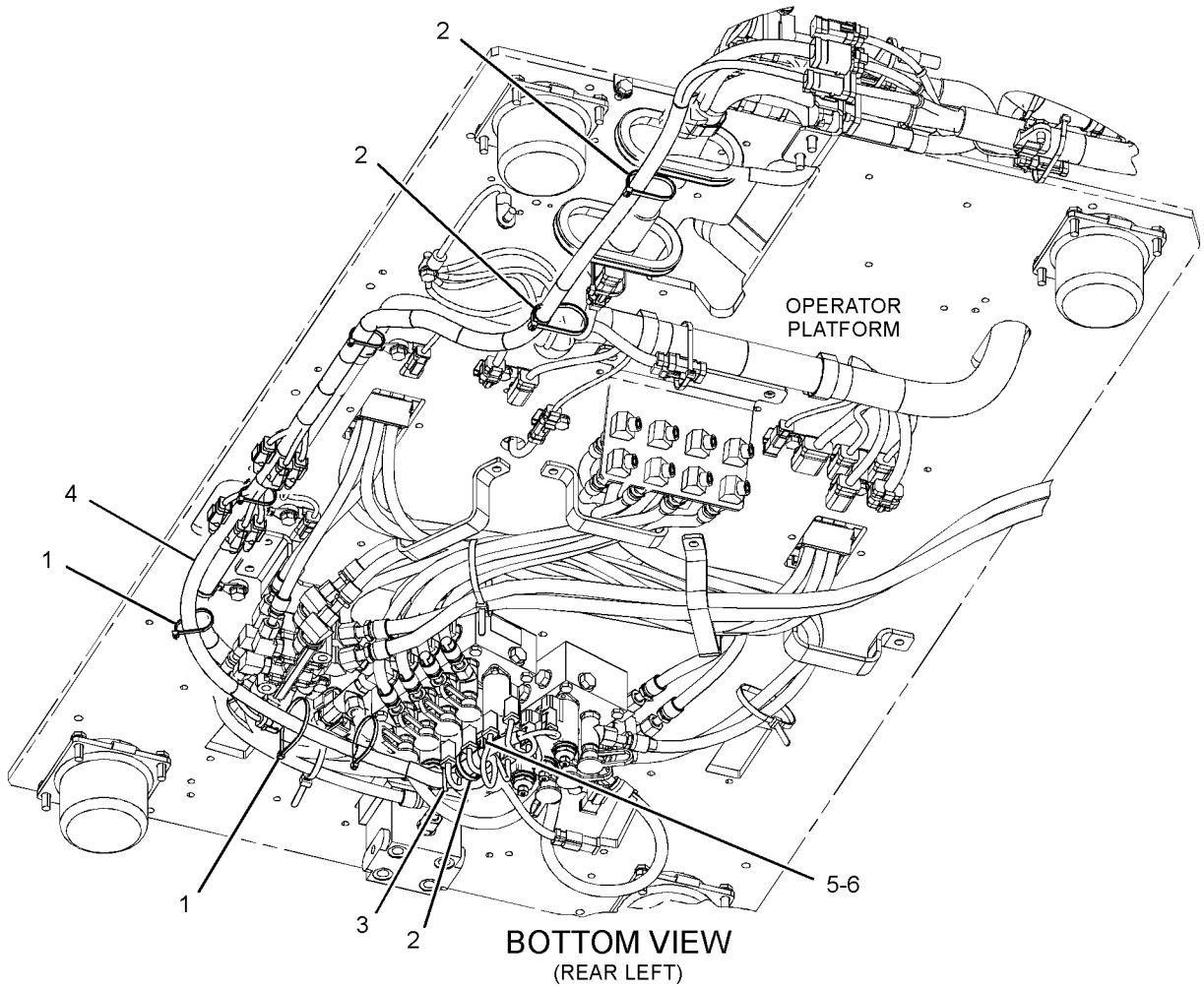

GRAPHIC #1 **<END>** g01438511

238-2485 WIRING GP-COUPLER

S/N: CLA1-UP
PART OF 282-5634 CONTROL AR-COUPLER
AN ATTACHMENT

SMCS-1408, 6129 **i02517794**

NOTE	REF NO	GRAPHIC REF	PART NUMBER	QTY	PART NAME 1 2 3 4 5 6 (PRODUCT LEVEL)	SEE PAGE
Y	1	1	*238-2478*	1	SWITCH GP-TOGGLE (QUICK COUPLER)	184
	2	1	**259-4884**	1	BRACKET AS	
	3	1	**259-7180**	1	COVER	
M	4	1	**9X-2042**	3	SCREW-TRUSS HEAD (M6X1X12-MM)	

M-METRIC PART
Y-SEPARATE ILLUSTRATION

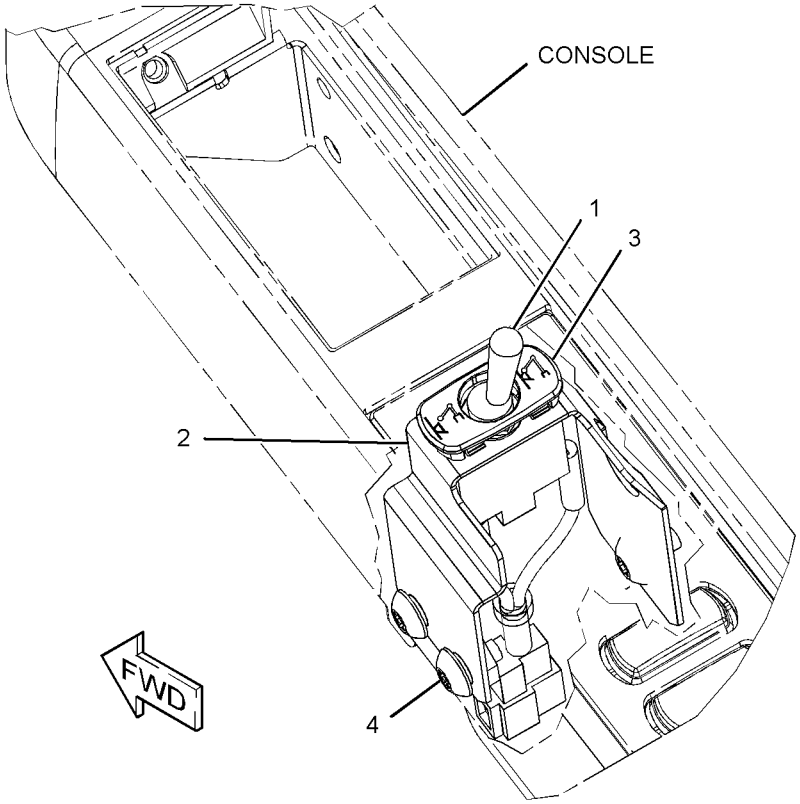

GRAPHIC #1 **<END>** g01259744

283-2610 WIRING GP-QUICK COUPLER—QUICK COUPLER

S/N: CLA1-UP
PART OF 282-5634 CONTROL AR-COUPLER
AN ATTACHMENT

SMCS-1408, 6129 **i02796266**

NOTE	REF NO	GRAPHIC REF	PART NUMBER	QTY	PART NAME 1 2 3 4 5 6 (PRODUCT LEVEL)	SEE PAGE
	1	1	**3S-2093**	3	STRAP-CABLE	
	2	1	**7K-1181**	8	STRAP-CABLE	
	3	1	**116-0118**	1	CLIP	
	4	1	**283-2597**	1	HARNESS AS-SOLENOID	

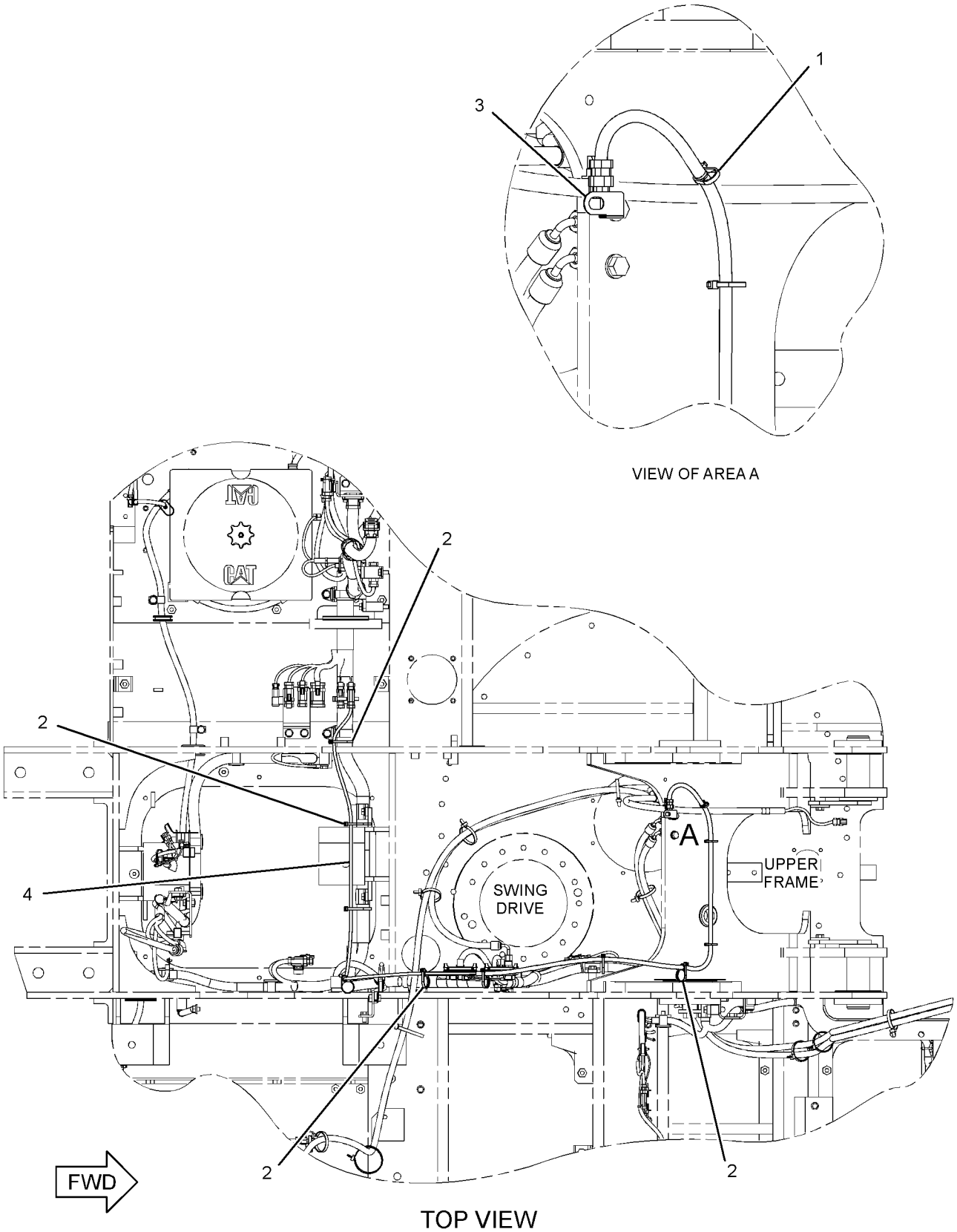

GRAPHIC #1 **<END>** g01399878

277-6695 FINAL DRIVE GP—WITH MOTOR

S/N: CLA1-UP

PART OF 267-6849 POWER TRAIN AR

SMCS-4050 **i02794290**

NOTE	REF NO	GRAPHIC REF	PART NUMBER	QTY	PART NAME 1 2 3 4 5 6 (PRODUCT LEVEL)	SEE PAGE
Y	1	1	*277-6697*	1	MOTOR GP-PISTON	556
Y	2	1	**278-6920**	1	FINAL DRIVE GP	243

Y-SEPARATE ILLUSTRATION

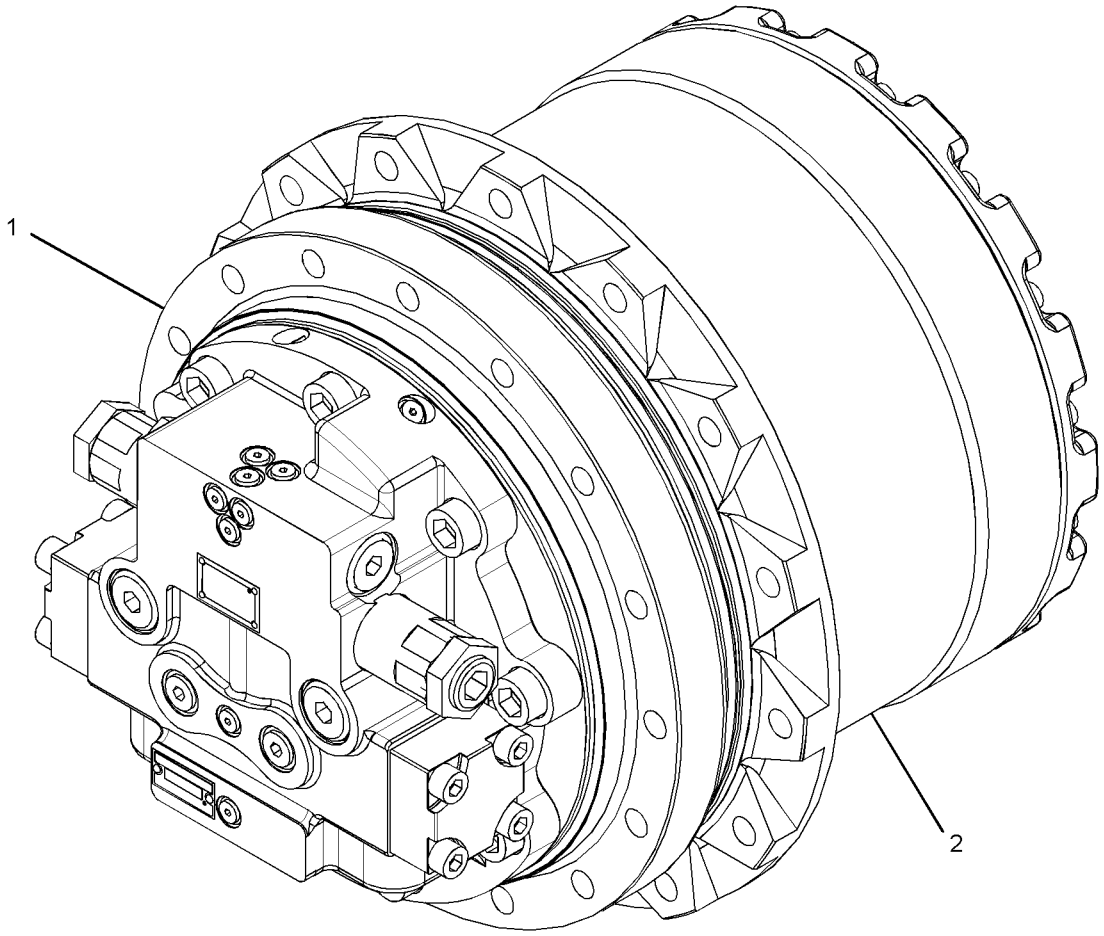

GRAPHIC #1 **<END>** g01417498

278-6920 FINAL DRIVE GP

S/N: CLA1-UP

PART OF 277-6695 DRIVE GP-FINAL

SMCS-4050 **i02902066**

NOTE	REF NO	GRAPHIC REF	PART NUMBER	QTY	PART NAME 1 2 3 4 5 6 (PRODUCT LEVEL)	SEE PAGE
	1	1	**094-0580**	1	PLATE (10-MM THK)	
M	2	1	**165-5854**	1	RING-LOCKING	
	3	1	**165-5855**	4	BEARING	
	4	1	**165-5856**	4	GEAR (37-TEETH)	
	5	1	**165-5857**	4	RACE	
	6	1	**165-5859**	3	RACE	
	7	1	**165-5860**	1	COVER	
	8	1	**307-9371**	1	CARRIER	
	9	1	**165-5864**	1	GEAR-SUN (17-TEETH)	
	10	1	**165-5865**	1	PLATE	
	11	1	**165-5866**	1	RING	
	12	1	**165-5867**	1	GEAR (19-TEETH)	
	13	1	**165-5868**	1	HOUSING	
	14	1	**176-8574**	1	PLATE	
	15	1	**191-0862**	1	PLATE-LOCK	
	16	1	**204-1086**	4	PLATE	
	17	1	**218-4246**	3	GEAR-PLANETARY (40-TEETH)	
	18	1	**218-4247**	2	BEARING	
	19	1	**310-4980**	1	SEAL GP-DUO-CONE	
	20	1	**278-1980**	3	BEARING AS	
	21	1	**3E-2338**	2	PLUG-PIPE	
M	22	1	**6V-7726**	4	SCREW-HEX SOCKET (M10X1.5X25-MM)	
	23	1	**7M-8485**	2	SEAL-O-RING	
M	24	1	**8T-1158**	16	BOLT-SOCKET HEAD (M8X1.25X20-MM)	
M	25	1	**8T-4137**	1	BOLT (M10X1.5X20-MM)	
M	26	1	**8T-4185**	3	BOLT (M10X1.5X50-MM)	
B	27	1	**1U-8846**		SEALANT-GASKET	

B-USE AS REQUIRED
M-METRIC PART

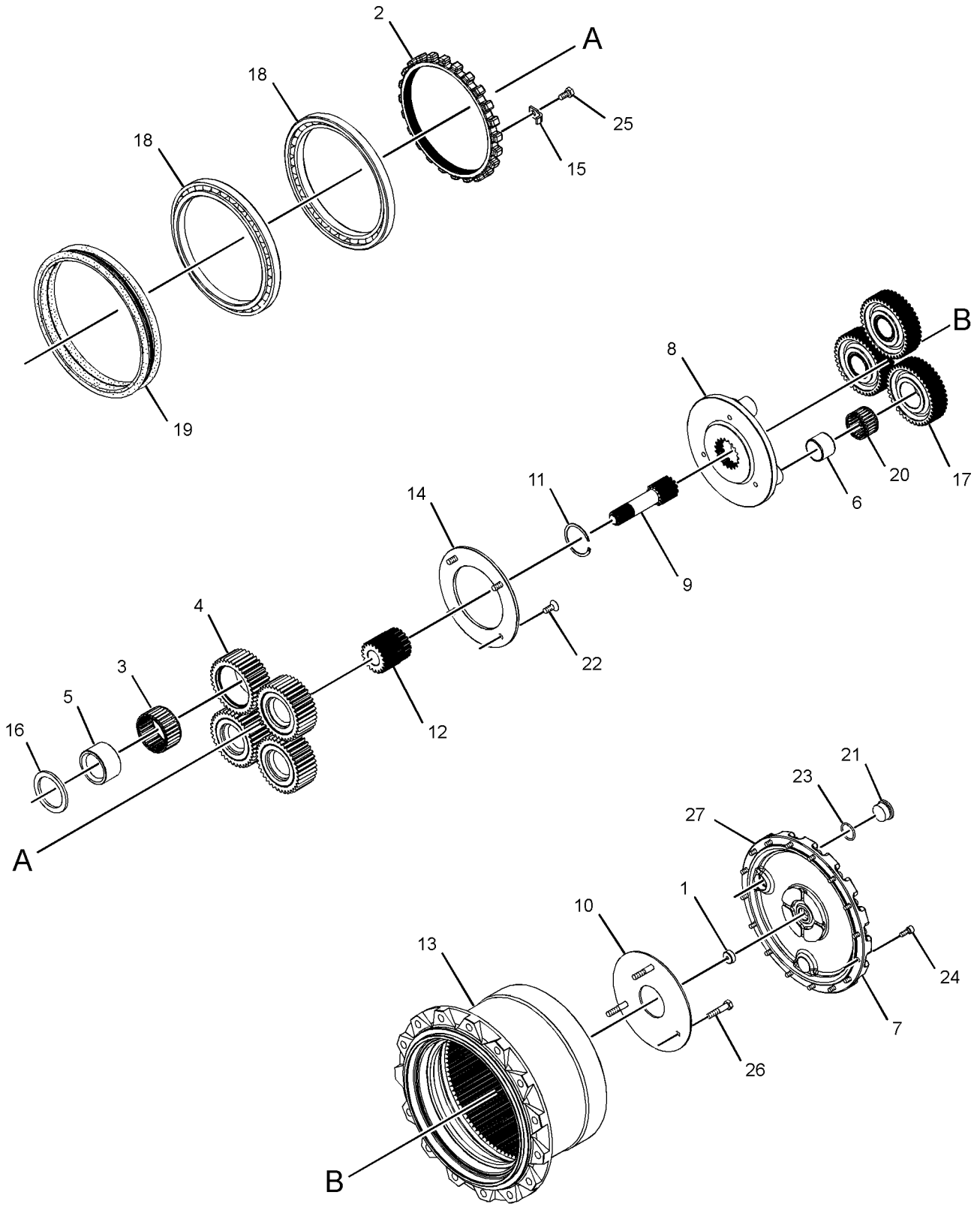

GRAPHIC #1 **<END>** g01428299

267-6849 POWER TRAIN AR

S/N: CLA1-UP

PART OF 260-7228 GENERAL AR

SMCS-3000, 4000 **i02794512**

NOTE	PART NUMBER	QTY	PART NAME 1 2 3 4 5 6 (PRODUCT LEVEL)	SEE PAGE
Y	*267-6846*	1	DRIVE GP-SWING (WITH MOTOR)	381
Y	*171-9406*	1	FASTENER GP-SWING & FINAL DR	383
Y	*277-6695*	2	FINAL DRIVE GP (WITH MOTOR)	242
Y	*168-6728*	2	SPROCKET GP	246

Y-SEPARATE ILLUSTRATION

<END>

POWER TRAIN

168-6728 SPROCKET GP

S/N: CLA1-UP

PART OF 267-6849 POWER TRAIN AR

SMCS-4164 **i01473887**

NOTE	REF NO	GRAPHIC REF	PART NUMBER	QTY	PART NAME 1 2 3 4 5 6 (PRODUCT LEVEL)	SEE PAGE
M	1	1	**8T-7338**	15	BOLT (M16X2.0X45MM)	
	2	1	**4I-7472**	1	SPROCKET-TRACK (21 TEETH)	

M-METRIC PART

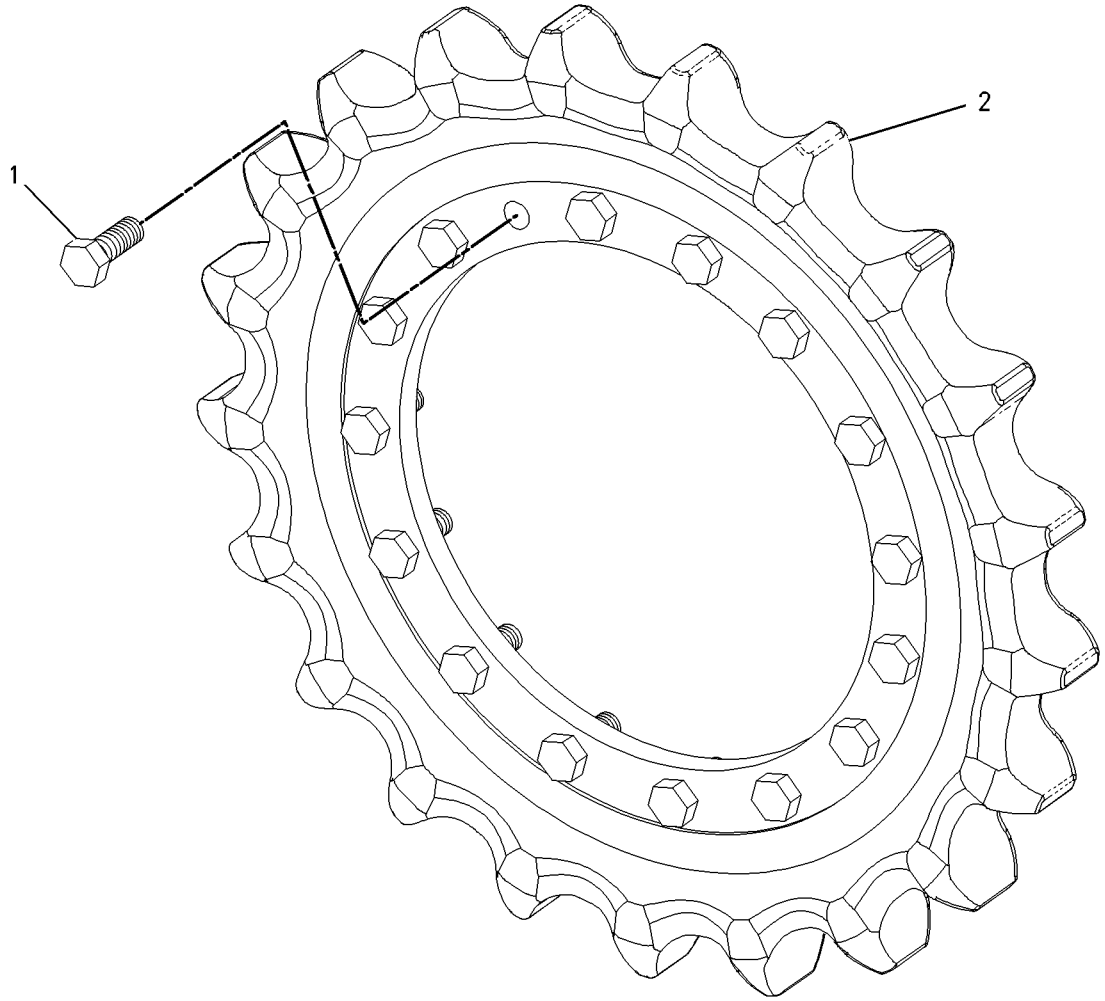

GRAPHIC #1 **<END>** g00735057

293-7050 BOX & MOUNTING GP

S/N: CLA1-UP

PART OF 260-7231 CHASSIS AR

SMCS-7268 **i02794264**

NOTE	REF NO	GRAPHIC REF	PART NUMBER	QTY	PART NAME 1 2 3 4 5 6 (PRODUCT LEVEL)	SEE PAGE
M	1	1	**135-8577**	10	BOLT AS (M12X1.75X35-MM)	
	2	1	**283-4038**	1	SUPPORT AS	
	3	1	**293-7057**	1	BODY AS	

M-METRIC PART

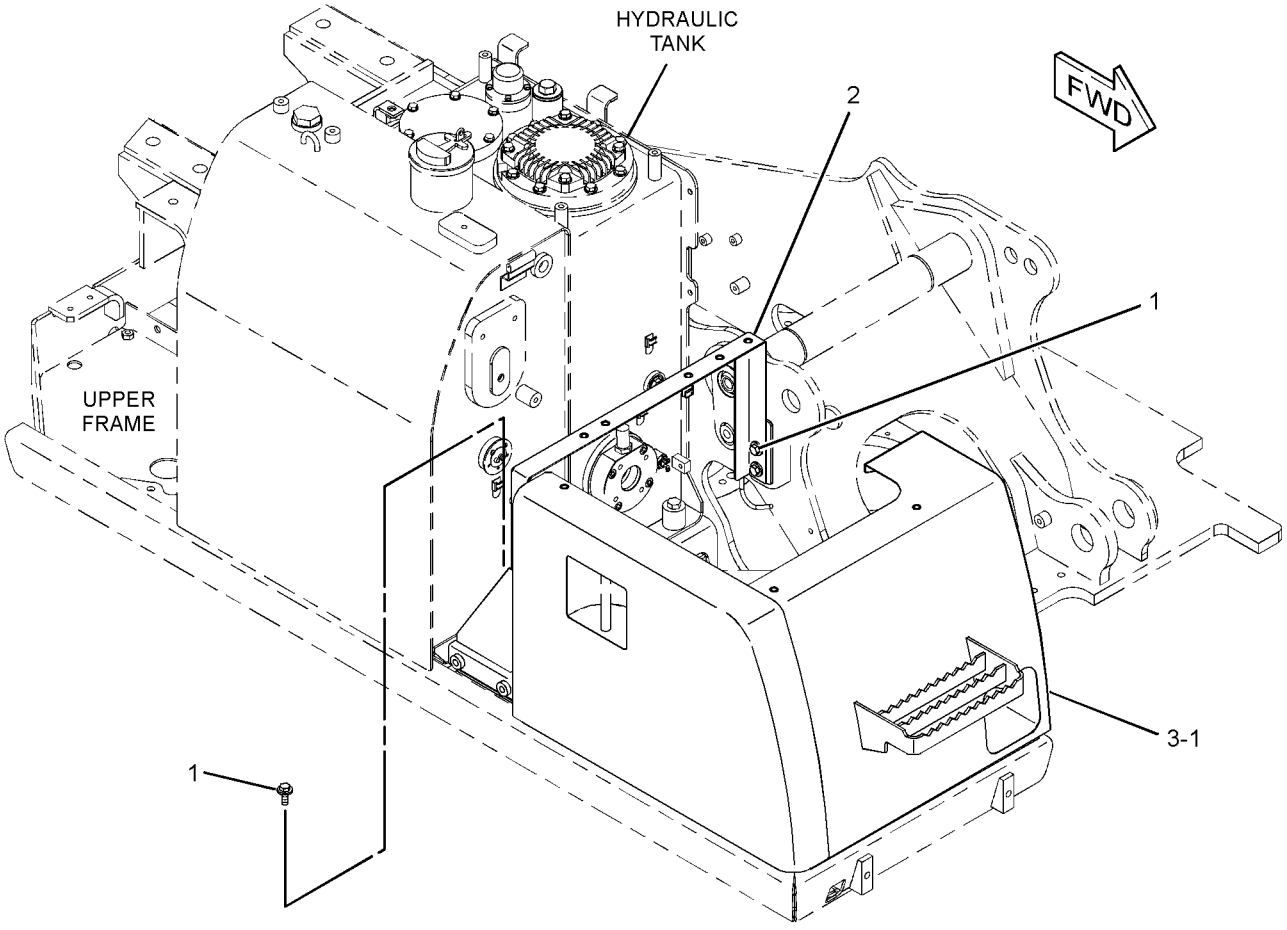

GRAPHIC #1 **<END>** g01414536

283-8863 BOX GP-FUEL TRANSFER

S/N: CLA1-UP
PART OF 283-8788 PUMP GP-FUEL TRANSFER
AN ATTACHMENT

SMCS-1256, 1901, 7268 **i02795992**

NOTE	REF NO	GRAPHIC REF	PART NUMBER	QTY	PART NAME 1 2 3 4 5 6 (PRODUCT LEVEL)	SEE PAGE
	1	1	**4I-7983**	1	CLIP	
J	2	1	**226-0291**	1	LOCK AS	
	3	1	**283-8864**	1	BOX AS	
	4	1	**283-8880**	1	COVER AS	
	5	1	**283-8900**	1	SUPPORT AS	
	6	1	**301-9823**	1	RING	
	7	1	**095-0843**	1	PIN-COTTER	
	8	1	**096-3780**	1	PIN-CLEVIS	
	9	1	**5P-1075**	4	WASHER-HARD (10.2X22.5X3-MM THK)	
	10	1	**5P-4116**	1	WASHER-HARD (8.8X20.5X2-MM THK)	
	11	1	**6V-8823**	2	WASHER-HARD (19.25X27X2-MM THK)	
M	12	1	**8T-4133**	4	NUT (M10X1.5-THD)	
M	13	1	**8T-6411**	2	SCREW-MACHINE (M6X1X12-MM)	
	14	1	**9X-8256**	2	WASHER (6.6X12X2-MM THK)	

J-REQUIRES CORPORATE KEY
M-METRIC PART

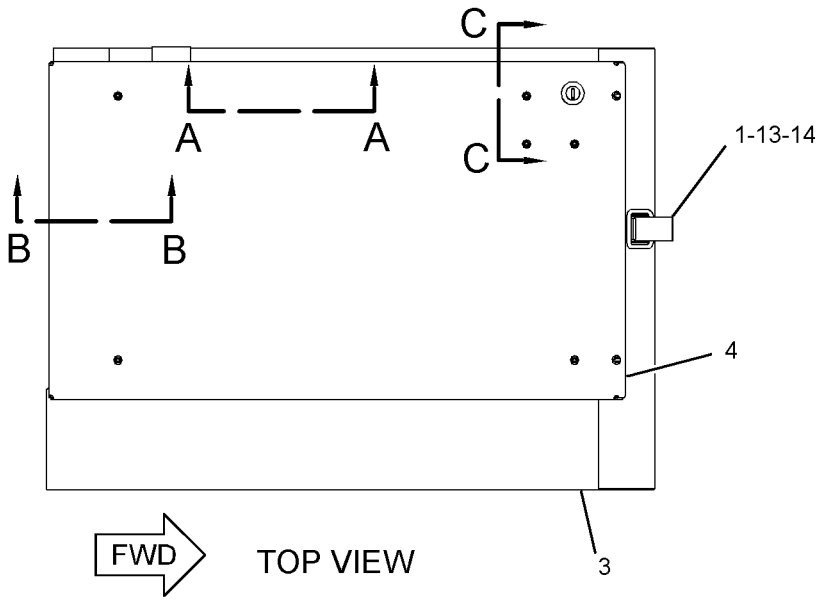

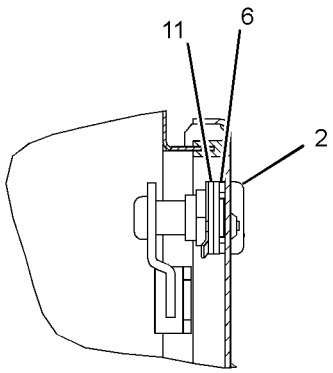

SECTION C-C

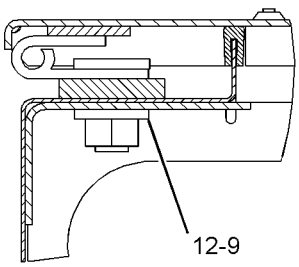

SECTION B-B

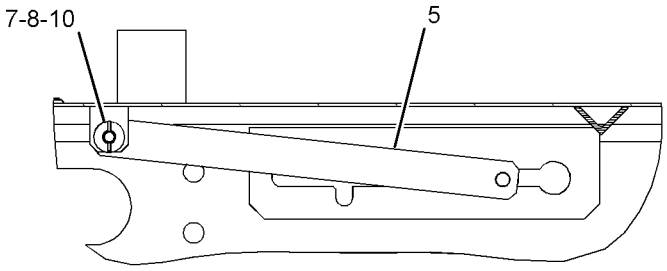

SECTION A-A

GRAPHIC #1 **<END>** g01402068

FRAME AND BODY

301-2646 BOX GP-FUEL TRANSFER

S/N: CLA110-UP
PART OF 301-2642 PUMP GP-REFUELING
AN ATTACHMENT

SMCS-1256, 1901, 7268 **i02986529**

NOTE	REF NO	GRAPHIC REF	PART NUMBER	QTY	PART NAME 1 2 3 4 5 6 (PRODUCT LEVEL)	SEE PAGE
	1	1	**4I-7983**	1	CLIP	
	2	1	*8Y-4804*	1	LOCK AS-CYLINDER	
		1	**226-0291**	1	LOCK AS	
		1	**226-0326**	1	CAM-LOCK	
	3	1	**283-8880**	1	COVER AS	
	4	1	**283-8900**	1	SUPPORT AS	
	5	1	**301-2648**	1	BOX AS	
E		1	**184-8580**		SEAL (189-CM)	
	6	1	**301-9823**	1	RING	
	7	1	**095-0843**	1	PIN-COTTER	
	8	1	**096-3780**	1	PIN-CLEVIS	
	9	1	**5P-1075**	4	WASHER-HARD (10.2X22.5X3-MM THK)	
	10	1	**5P-4116**	1	WASHER-HARD (8.8X20.5X2-MM THK)	
	11	1	**6V-8823**	2	WASHER-HARD (19.25X27X2-MM THK)	
M	12	1	**8T-4133**	4	NUT (M10X1.5-THD)	
M	13	1	**8T-6411**	2	SCREW-MACHINE (M6X1X12-MM)	
	14	1	**9X-8256**	2	WASHER (6.6X12X2-MM THK)	

E-ORDER BY THE CENTIMETER
M-METRIC PART

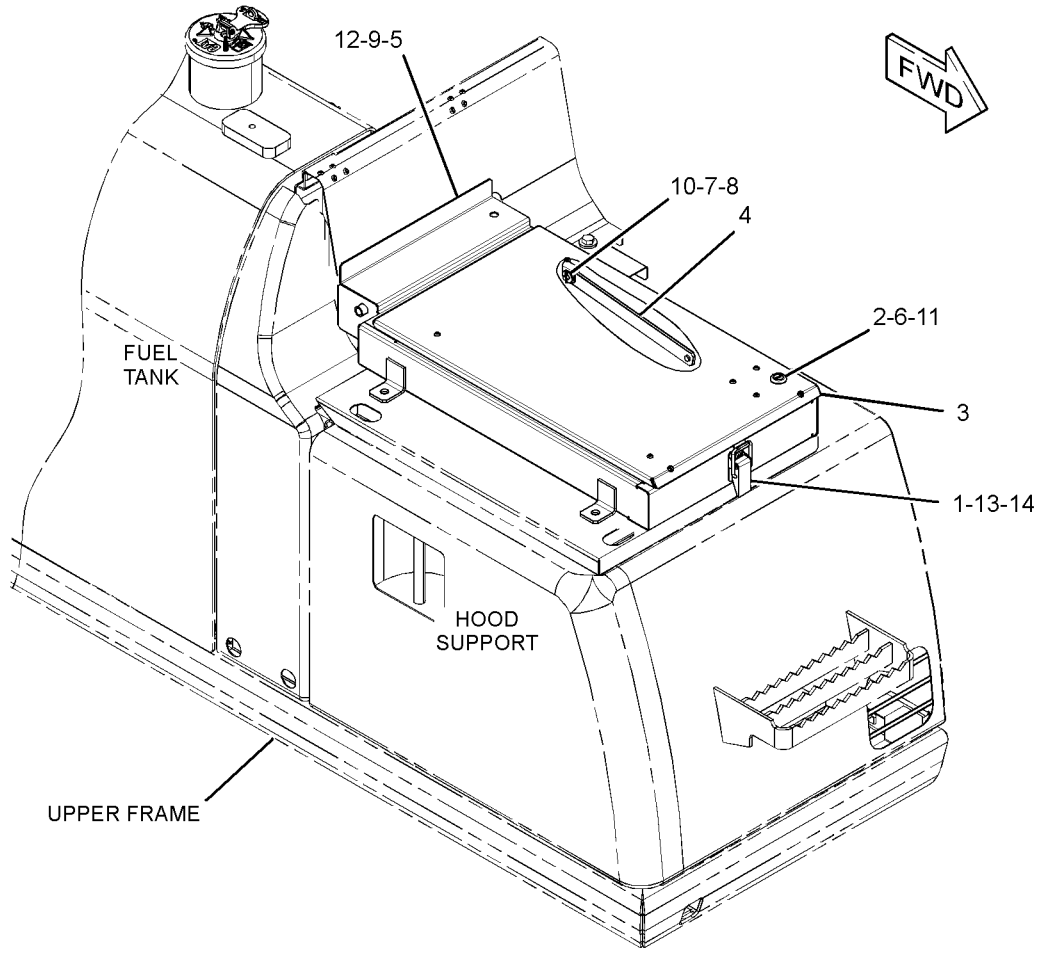

GRAPHIC #1 **<END>** g01560888

FRAME AND BODY

282-4670 BUMPER GP–STEEL

S/N: CLA1-UP

AN ATTACHMENT

SMCS-7156 **i02818909**

NOTE	REF NO	GRAPHIC REF	PART NUMBER	QTY	PART NAME 1 2 3 4 5 6 (PRODUCT LEVEL)	SEE PAGE
	1	1	**294-1582**	1	BUMPER AS (SIDE, LH)	
	2	1	**294-1584**	1	BUMPER AS (SIDE, RH)	

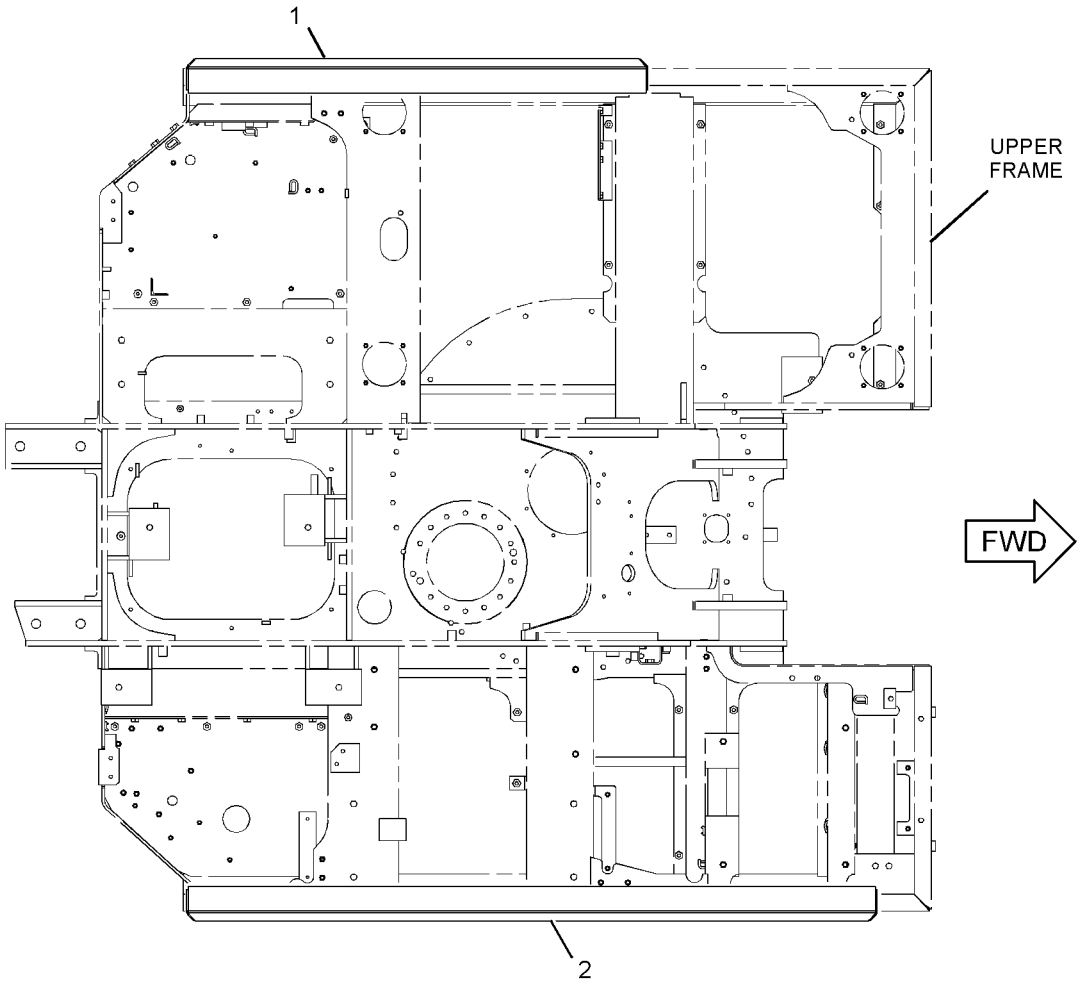

GRAPHIC #1 **<END>** g01444660

301-2654 COUNTERWEIGHT AR

S/N: CLA110-UP
2450-KG (5401.3-LB)
AN ATTACHMENT

SMCS-7056 **i02976345**

NOTE	PART NUMBER	QTY	PART NAME 1 2 3 4 5 6 (PRODUCT LEVEL)	SEE PAGE
Y	*283-3692*	1	COUNTERWEIGHT GP	252
Y	*301-2655*	1	FILM GP	946

Y-SEPARATE ILLUSTRATION

<END>

283-3692 COUNTERWEIGHT GP

S/N: CLA1-UP
PART OF 301-2654 COUNTERWEIGHT AR
AN ATTACHMENT
TYPE 1

SMCS-7056 **i02895976**

NOTE	REF NO	GRAPHIC REF	PART NUMBER	QTY	PART NAME 1 2 3 4 5 6 (PRODUCT LEVEL)	SEE PAGE
B	1	1	**1R-7128**	4	SHIM (1-MM THK)	
B	2	1	**7I-0676**	4	SHIM (1.6-MM THK)	
	3	1	**177-5867**	4	SPACER (25.5X50X75-MM THK)	
Y	4	1	*283-3693*	1	COUNTERWEIGHT GP	254
M	5	1	**8C-3290**	4	BOLT (M24X3X150-MM)	

B-USE AS REQUIRED
M-METRIC PART
Y-SEPARATE ILLUSTRATION

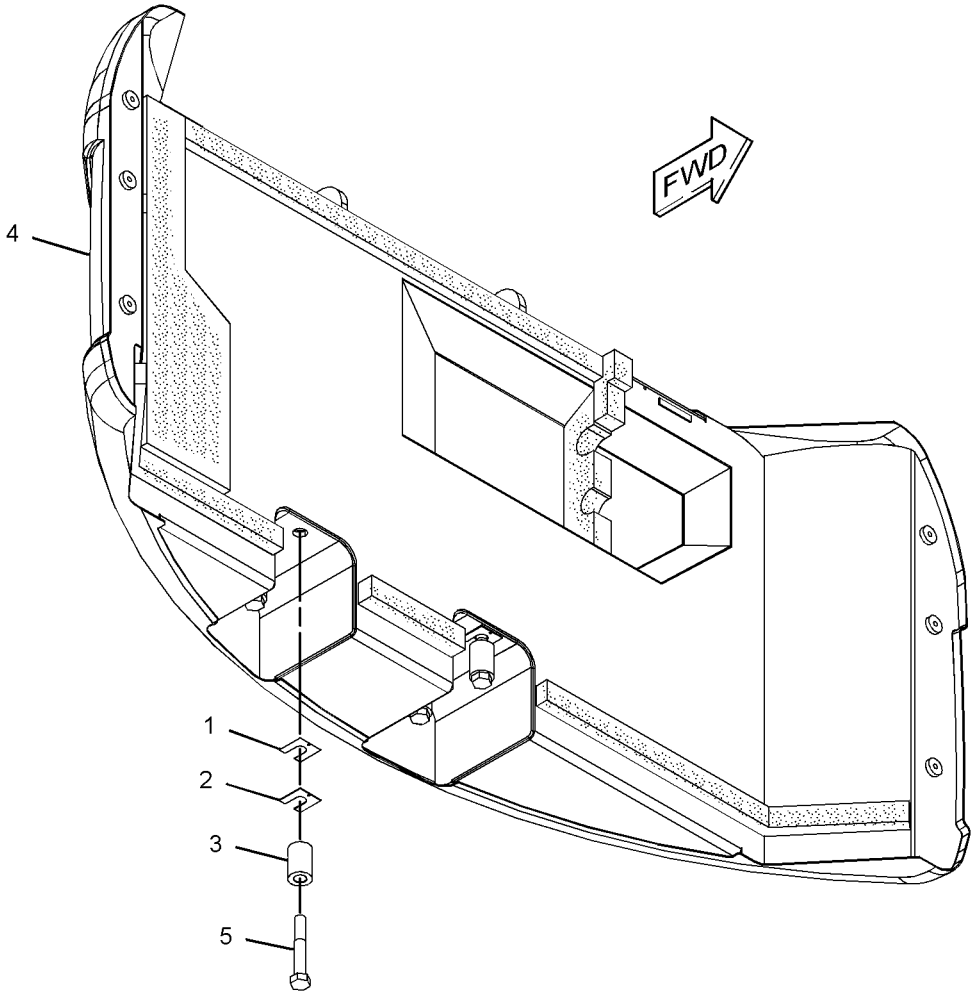

GRAPHIC #1 **<END>** g01422069

283-3692 COUNTERWEIGHT GP

S/N: CLA1-UP
PART OF 301-2654 COUNTERWEIGHT AR
AN ATTACHMENT
TYPE 2

SMCS-7056 **i03154017**

NOTE	REF NO	GRAPHIC REF	PART NUMBER	QTY	PART NAME 1 2 3 4 5 6 (PRODUCT LEVEL)	SEE PAGE
B	1	1	**1R-7128**	4	SHIM (1-MM THK)	
B	2	1	**7I-0676**	4	SHIM (1.6-MM THK)	
	3	1	**177-5867**	4	SPACER (25.5X50X75-MM THK)	
CY	4	1	*330-1201*	1	COUNTERWEIGHT GP	261
M	5	1	**8C-3290**	4	BOLT (M24X3X150-MM)	

B-USE AS REQUIRED
C-CHANGE FROM PREVIOUS TYPE
M-METRIC PART
Y-SEPARATE ILLUSTRATION

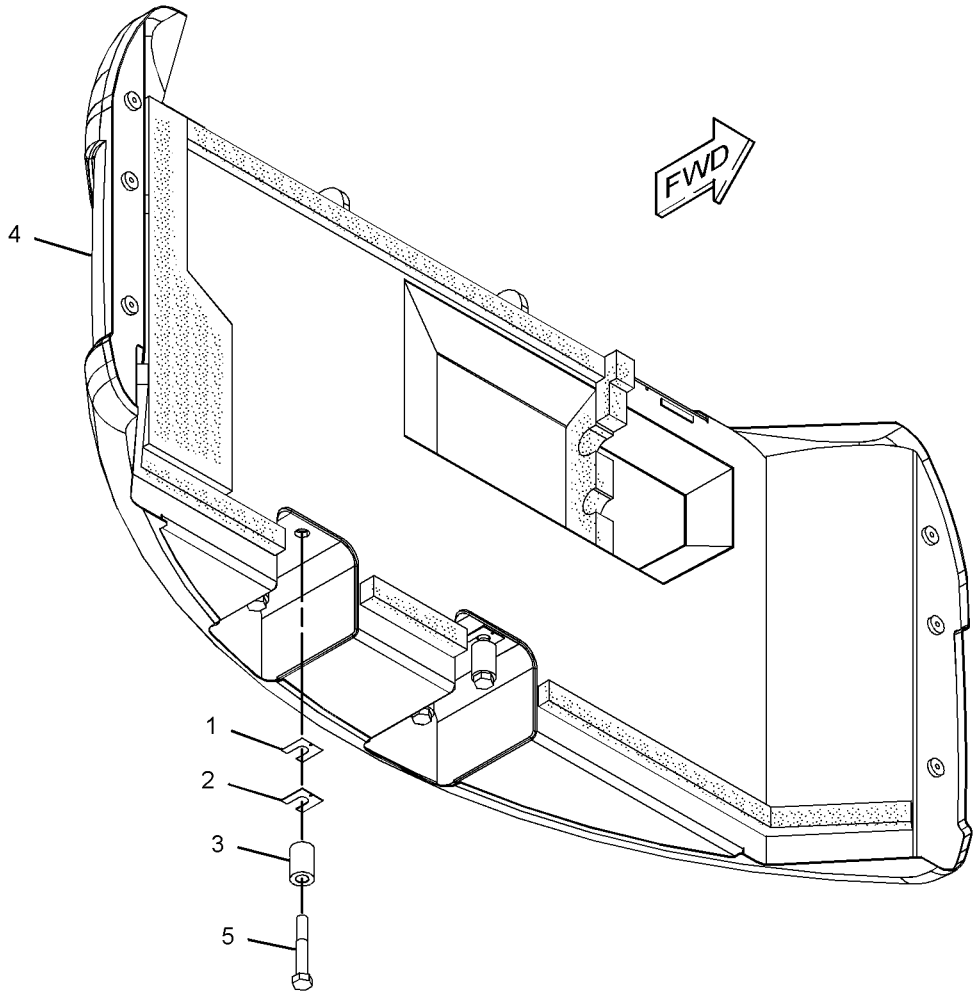

GRAPHIC #1 **<END>** g01422069

FRAME AND BODY

283-3693 COUNTERWEIGHT GP

S/N: CLA1-UP

PART OF 283-3692 COUNTERWEIGHT GP

AN ATTACHMENT

SMCS-7056 **i02895978**

NOTE	REF NO	GRAPHIC REF	PART NUMBER	QTY	PART NAME 1 2 3 4 5 6 (PRODUCT LEVEL)	SEE PAGE
	1	1	**184-8442**	1	LINER	
	2	1	**278-3858**	1	COUNTERWEIGHT AS	
		1	**192-3039**	6	SCREW-HEX FLANGE (6.3X1.8X19-MM)	
	3	1	**278-4013**	1	LINER	
	4	1	**283-3827**	1	LINER	
	5	1	**283-3828**	1	LINER	
	6	1	**283-3829**	1	LINER	
	7	1	**283-3830**	1	LINER	
	8	1	**298-2892**	1	LINER	

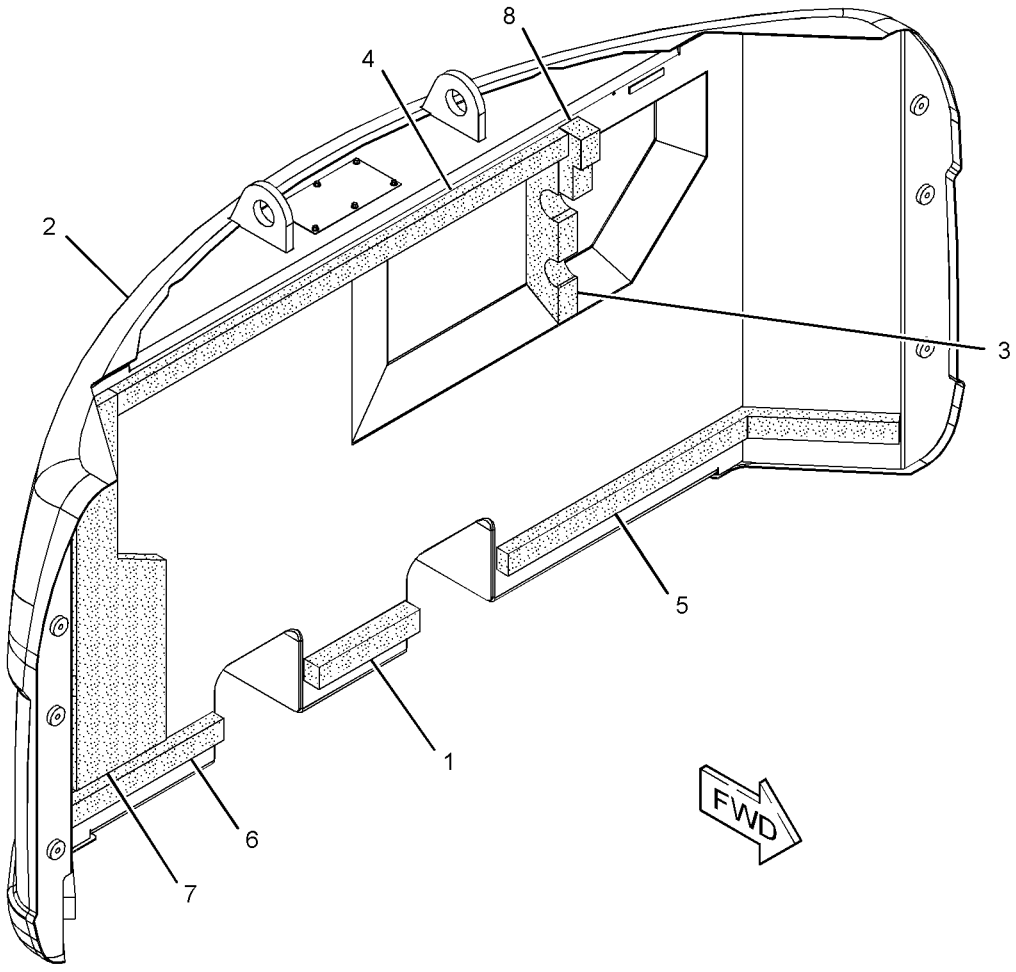

GRAPHIC #1 **<END>** g01422068

307-8071 COUNTERWEIGHT GP

S/N: CLA1-UP
PART OF 301-2552, 301-2647 SPECIAL AR
AN ATTACHMENT
TYPE 1

SMCS-7056 **i02903591**

NOTE	REF NO	GRAPHIC REF	PART NUMBER	QTY	PART NAME 1 2 3 4 5 6 (PRODUCT LEVEL)	SEE PAGE
B	1	1	**1R-7128**	4	SHIM (1-MM THK)	
B	2	1	**7I-0676**	4	SHIM (1.6-MM THK)	
	3	1	**177-5867**	4	SPACER (25.5X50X75-MM THK)	
Y	4	1	*307-8072*	1	COUNTERWEIGHT GP	257
M	5	1	**8C-3290**	4	BOLT (M24X3X150-MM)	
M	6	1	**8T-4190**	8	BOLT (M16X2X25-MM)	

B-USE AS REQUIRED
M-METRIC PART
Y-SEPARATE ILLUSTRATION

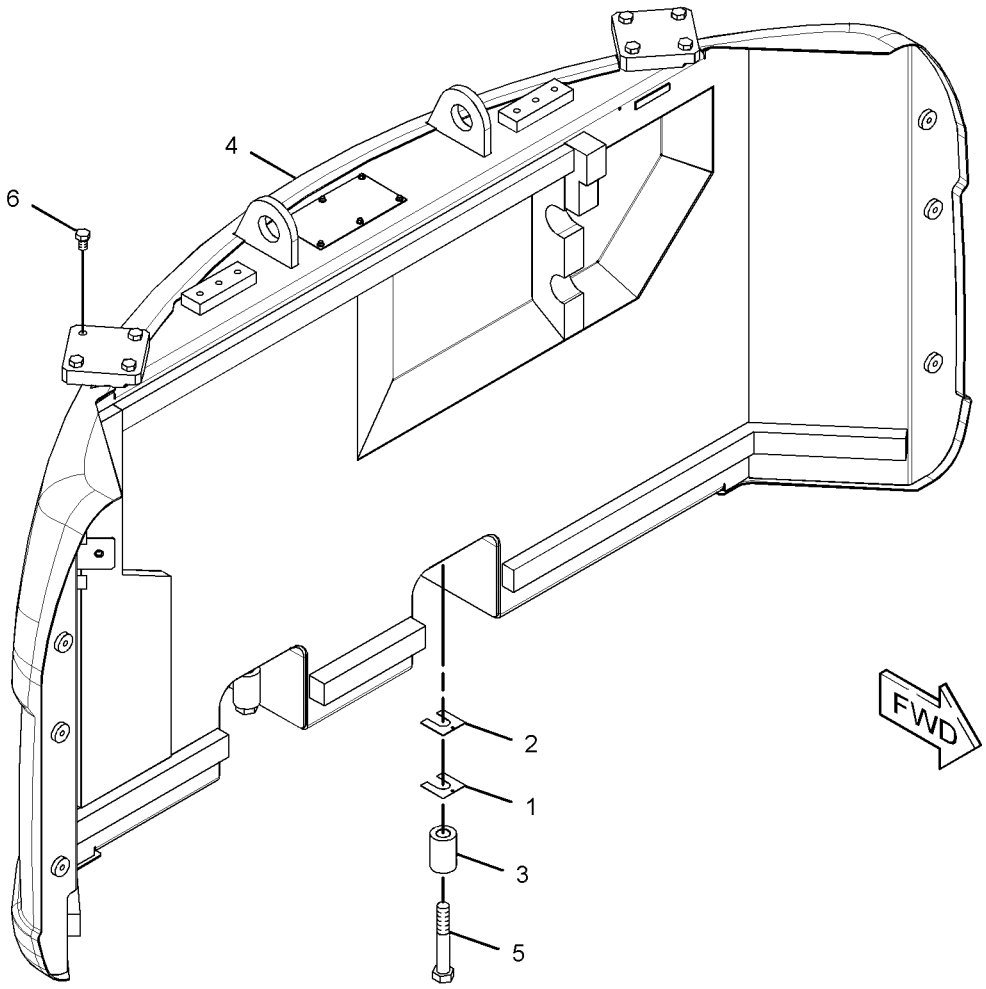

GRAPHIC #1 **<END>** g01447046

307-8071 COUNTERWEIGHT GP

S/N: CLA1-UP
PART OF 301-2552, 301-2647 SPECIAL AR
AN ATTACHMENT
TYPE 2

SMCS-7056 **i03154062**

NOTE	REF NO	GRAPHIC REF	PART NUMBER	QTY	PART NAME 1 2 3 4 5 6 (PRODUCT LEVEL)	SEE PAGE
B	1	1	**1R-7128**	4	SHIM (1-MM THK)	
B	2	1	**7I-0676**	4	SHIM (1.6-MM THK)	
	3	1	**177-5867**	4	SPACER (25.5X50X75-MM THK)	
CY	4	1	*330-1207*	1	COUNTERWEIGHT GP	263
M	5	1	**8C-3290**	4	BOLT (M24X3X150-MM)	
M	6	1	**8T-4190**	8	BOLT (M16X2X25-MM)	

B-USE AS REQUIRED
C-CHANGE FROM PREVIOUS TYPE
M-METRIC PART
Y-SEPARATE ILLUSTRATION

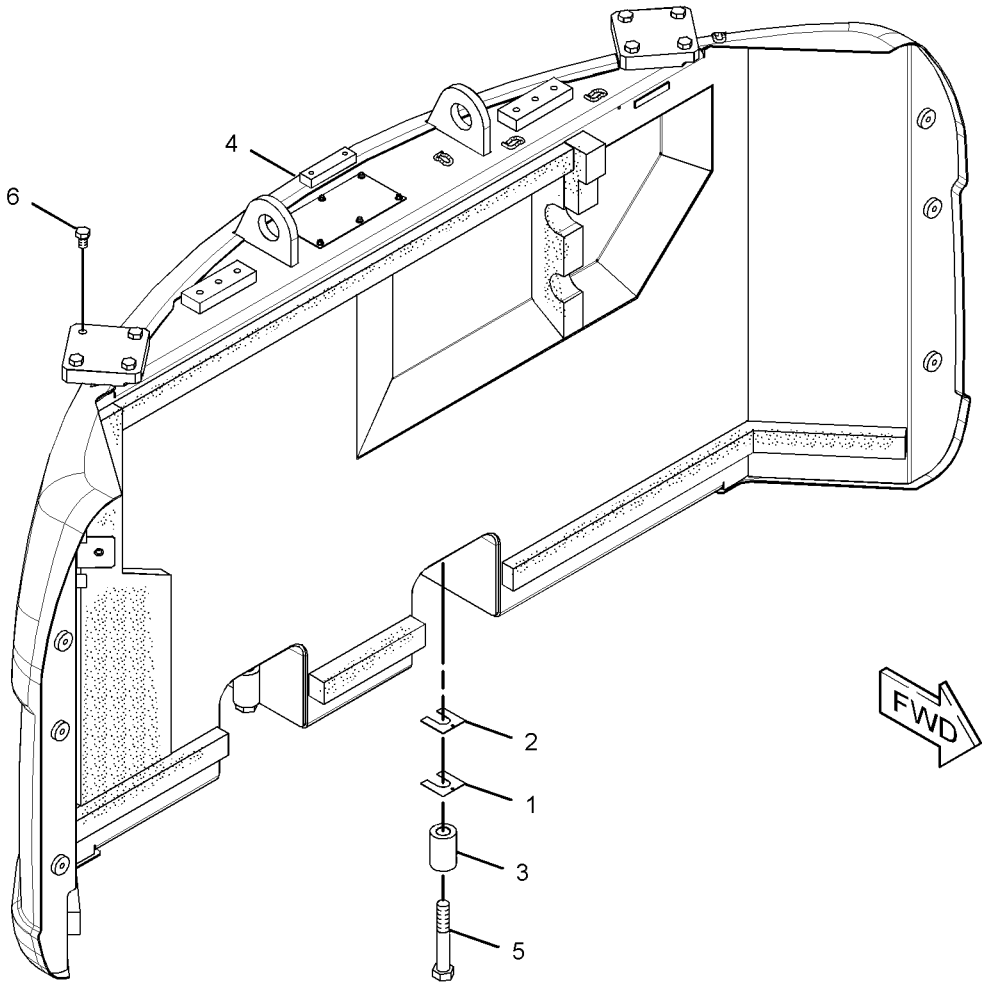

GRAPHIC #1 **<END>** g01621315

307-8072 COUNTERWEIGHT GP

S/N: CLA1-UP
PART OF 307-8071 COUNTERWEIGHT GP
AN ATTACHMENT

SMCS-7056 **i02903592**

NOTE	REF NO	GRAPHIC REF	PART NUMBER	QTY	PART NAME 1 2 3 4 5 6 (PRODUCT LEVEL)	SEE PAGE
	1	1	**184-8442**	1	LINER	
	2	1	**278-4013**	1	LINER	
	3	1	**283-3827**	1	LINER	
	4	1	**283-3828**	1	LINER	
	5	1	**283-3829**	1	LINER	
	6	1	**283-3830**	1	LINER	
	7	1	**298-2892**	1	LINER	
	8	1	**313-8036**	1	COUNTERWEIGHT AS	
		1	**192-3039**	6	SCREW-HEX FLANGE (6.3X1.8X19-MM)	
M		1	**8T-3597**	1	NUT-WELD (M12X1.75-THD)	

M-METRIC PART

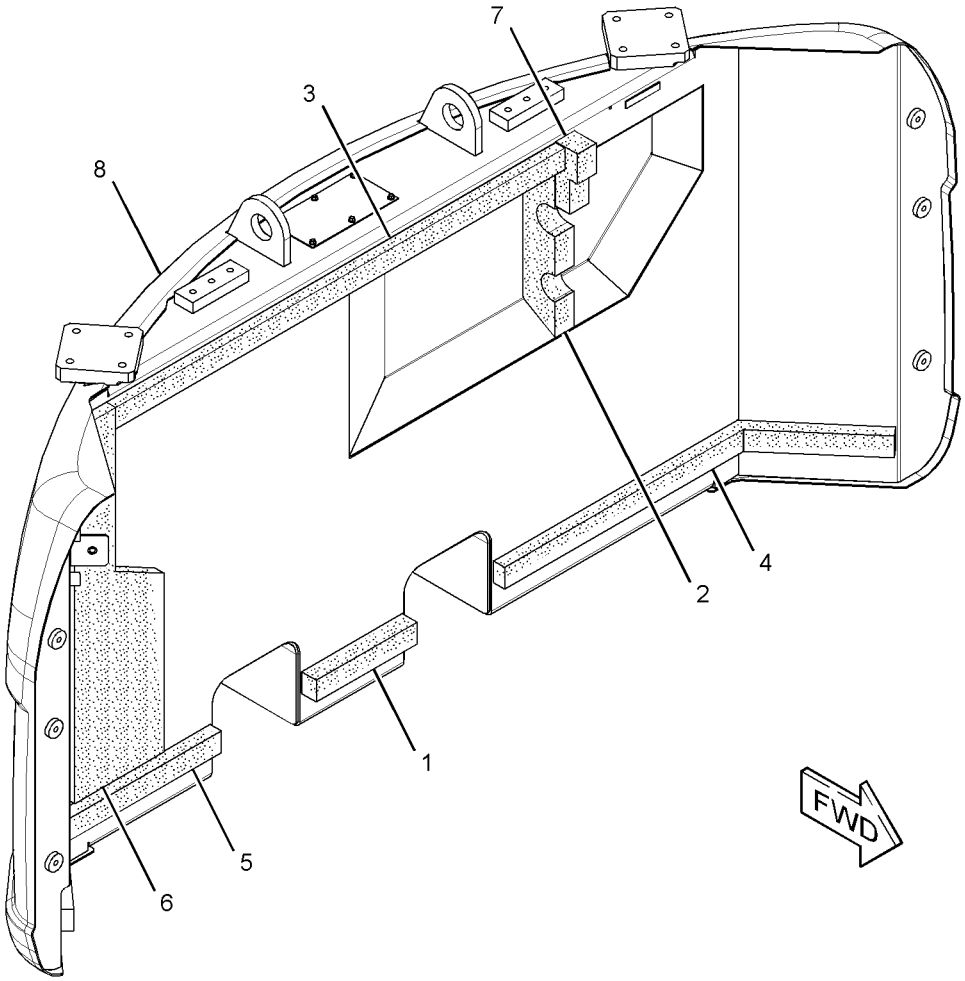

GRAPHIC #1 **<END>** g01447045

320-5457 COUNTERWEIGHT GP

S/N: CLA1-UP
PART OF 260-7231 CHASSIS AR
TYPE 1

SMCS-7056 **i02903525**

NOTE	REF NO	GRAPHIC REF	PART NUMBER	QTY	PART NAME 1 2 3 4 5 6 (PRODUCT LEVEL)	SEE PAGE
B	1	1	**1R-7128**	4	SHIM (1-MM THK)	
	2	1	**4I-0006**	2	CAP	
B	3	1	**7I-0676**	4	SHIM (1.6-MM THK)	
	4	1	**177-5867**	4	SPACER (25.5X50X75-MM THK)	
Y	5	1	*320-5458*	1	COUNTERWEIGHT GP	260
M	6	1	**8C-3290**	4	BOLT (M24X3X150-MM)	

B-USE AS REQUIRED
M-METRIC PART
Y-SEPARATE ILLUSTRATION

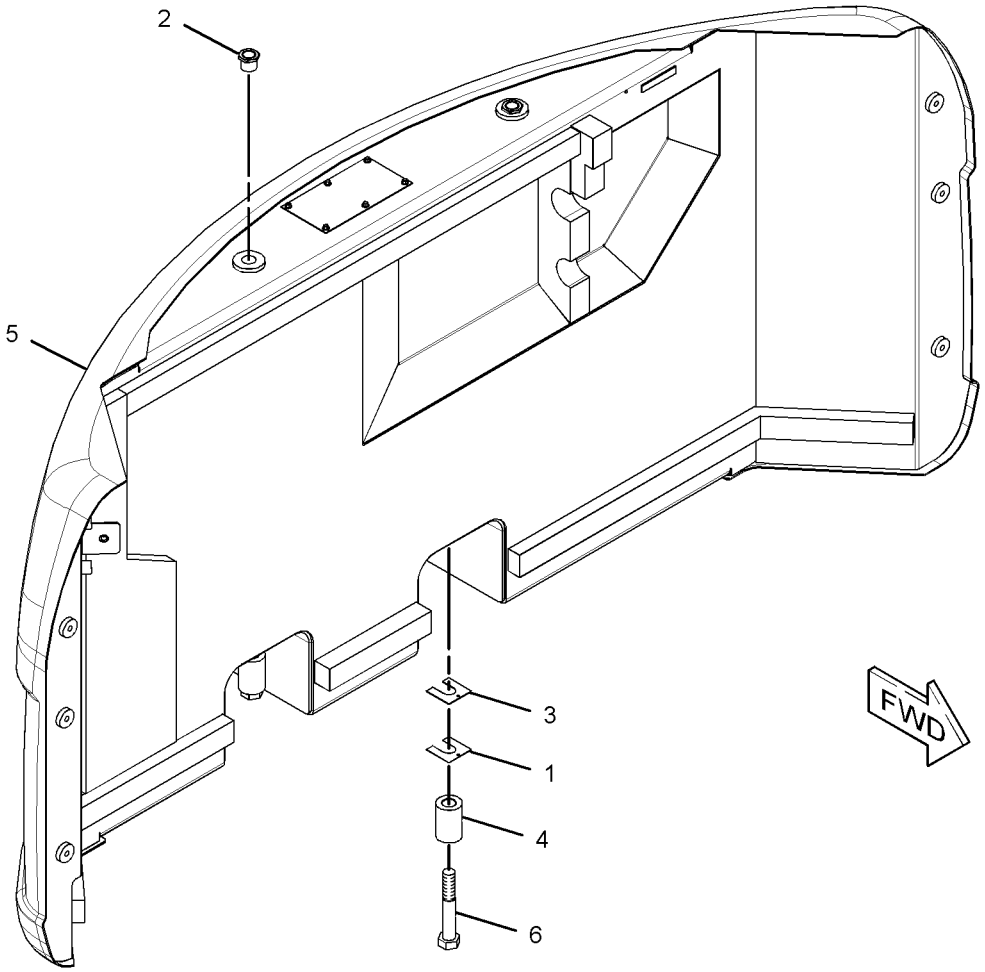

GRAPHIC #1 **<END>** g01447042

320-5457 COUNTERWEIGHT GP

S/N: CLA1-UP
PART OF 260-7231 CHASSIS AR
TYPE 2

SMCS-7056 **i03153981**

NOTE	REF NO	GRAPHIC REF	PART NUMBER	QTY	PART NAME 1 2 3 4 5 6 (PRODUCT LEVEL)	SEE PAGE
B	1	1	**1R-7128**	4	SHIM (1-MM THK)	
	2	1	**4I-0006**	2	CAP	
B	3	1	**7I-0676**	4	SHIM (1.6-MM THK)	
	4	1	**177-5867**	4	SPACER (25.5X50X75-MM THK)	
CY	5	1	*330-1204*	1	COUNTERWEIGHT GP	262
M	6	1	**8C-3290**	4	BOLT (M24X3X150-MM)	

B-USE AS REQUIRED
C-CHANGE FROM PREVIOUS TYPE
M-METRIC PART
Y-SEPARATE ILLUSTRATION

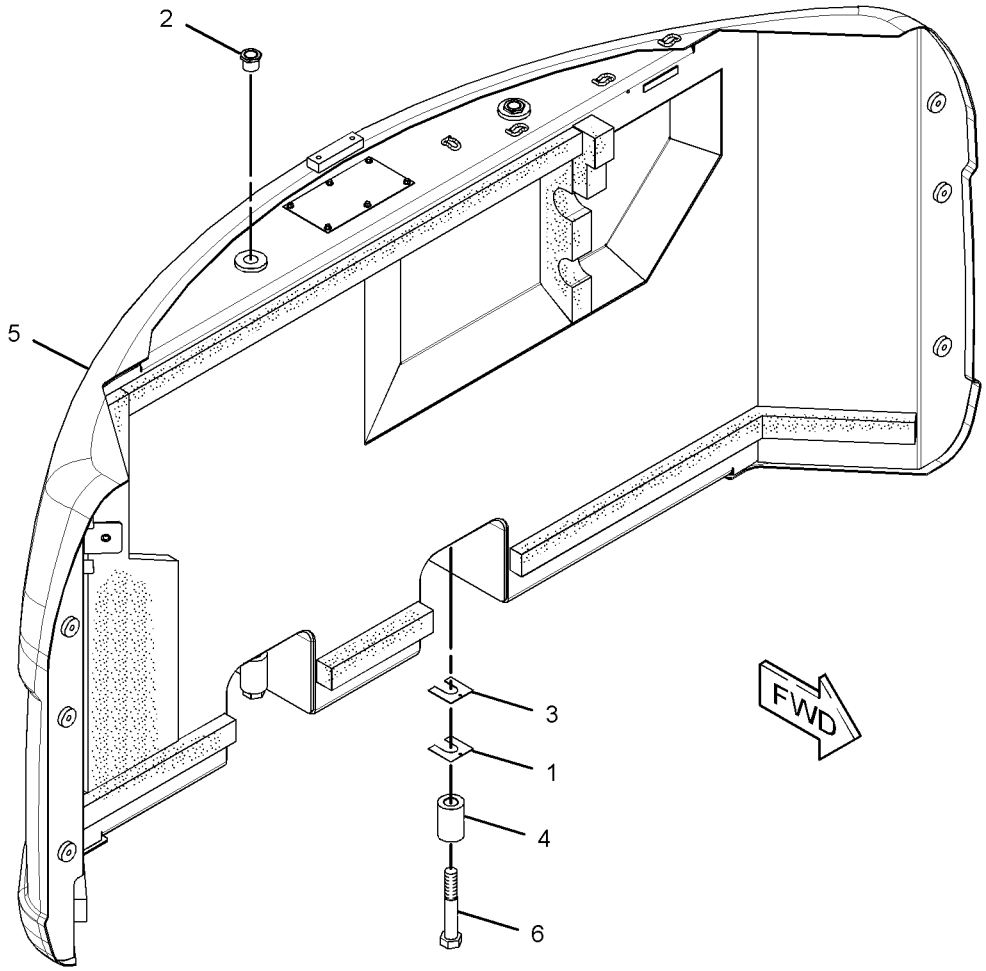

GRAPHIC #1 **<END>** g01621033

320-5458 COUNTERWEIGHT GP

S/N: CLA1-UP

PART OF 320-5457 COUNTERWEIGHT GP

SMCS-7056 **i02903526**

NOTE	REF NO	GRAPHIC REF	PART NUMBER	QTY	PART NAME 1 2 3 4 5 6 (PRODUCT LEVEL)	SEE PAGE
	1	1	**184-8442**	1	LINER	
	2	1	**278-4013**	1	LINER	
	3	1	**283-3827**	1	LINER	
	4	1	**283-3828**	1	LINER	
	5	1	**283-3829**	1	LINER	
	6	1	**283-3830**	1	LINER	
	7	1	**298-2892**	1	LINER	
	8	1	**320-5459**	1	COUNTERWEIGHT AS	
		1	**192-3039**	6	SCREW-HEX FLANGE (6.3X1.8X19-MM)	
M		1	**8T-3597**	1	NUT-WELD (M12X1.75-THD)	

M-METRIC PART

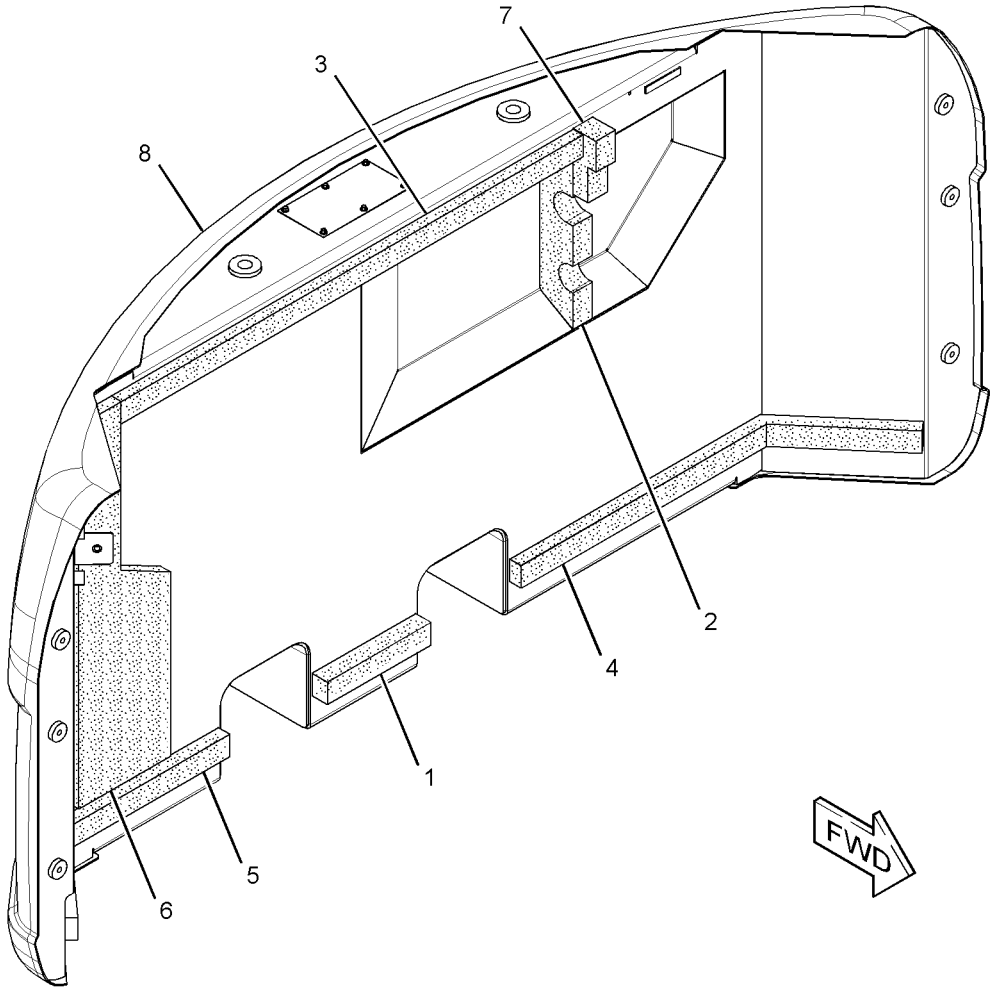

GRAPHIC #1 **<END>** g01447043

330-1201 COUNTERWEIGHT GP

S/N: CLA1-UP
5404-LBS (2541-KG)
PART OF 283-3692 COUNTERWEIGHT GP
AN ATTACHMENT

SMCS-7056 **i03154764**

NOTE	REF NO	GRAPHIC REF	PART NUMBER	QTY	PART NAME 1 2 3 4 5 6 (PRODUCT LEVEL)	SEE PAGE
	1	1	**184-8442**	1	LINER	
	2	1	**278-4013**	1	LINER	
	3	1	**283-3827**	1	LINER	
	4	1	**283-3828**	1	LINER	
	5	1	**283-3829**	1	LINER	
	6	1	**283-3830**	1	LINER	
	7	1	**298-2892**	1	LINER	
	8	1	**330-1202**	1	COUNTERWEIGHT AS	

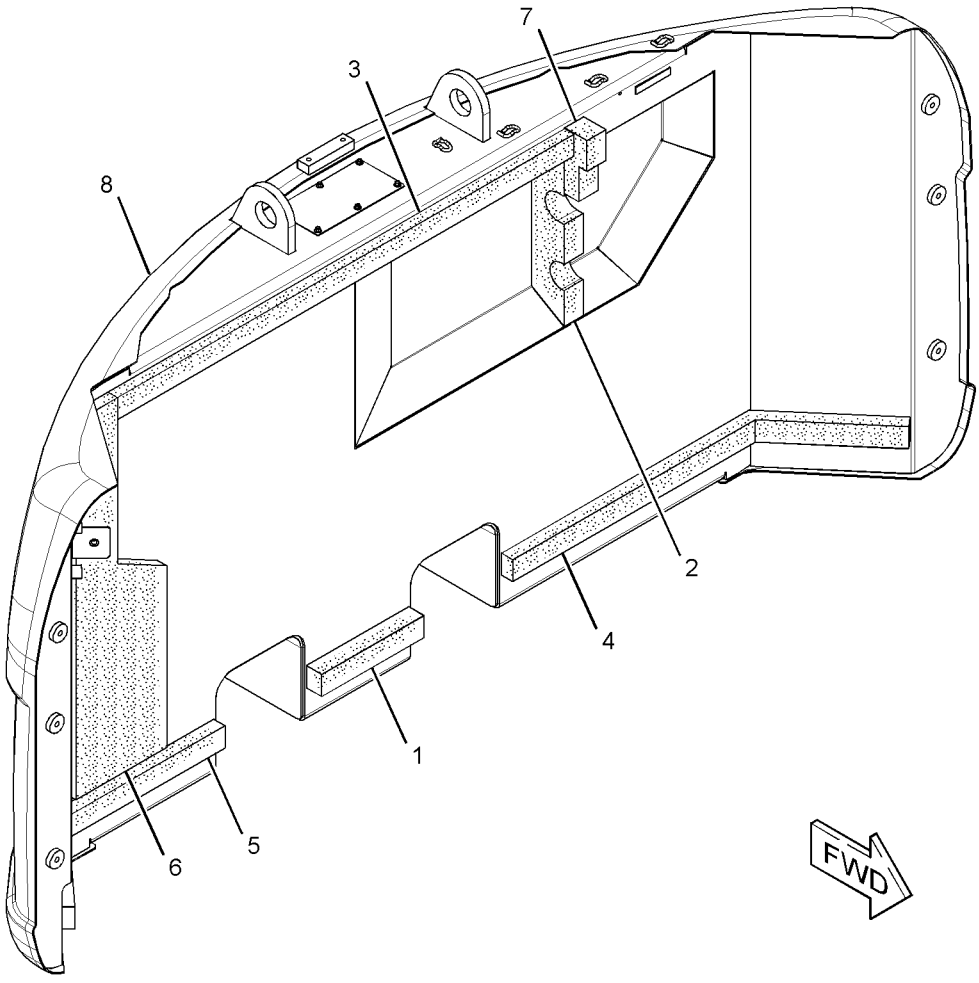

GRAPHIC #1 **<END>** g01621053

330-1204 COUNTERWEIGHT GP—5401-LBS (2450-KG)

S/N: CLA1-UP

PART OF 320-5457 COUNTERWEIGHT GP

SMCS-7056 **i03154781**

NOTE	REF NO	GRAPHIC REF	PART NUMBER	QTY	PART NAME 1 2 3 4 5 6 (PRODUCT LEVEL)	SEE PAGE
	1	1	**184-8442**	1	LINER	
	2	1	**278-4013**	1	LINER	
	3	1	**283-3827**	1	LINER	
	4	1	**283-3828**	1	LINER	
	5	1	**283-3829**	1	LINER	
	6	1	**283-3830**	1	LINER	
	7	1	**298-2892**	1	LINER	
	8	1	**330-1205**	1	COUNTERWEIGHT AS	

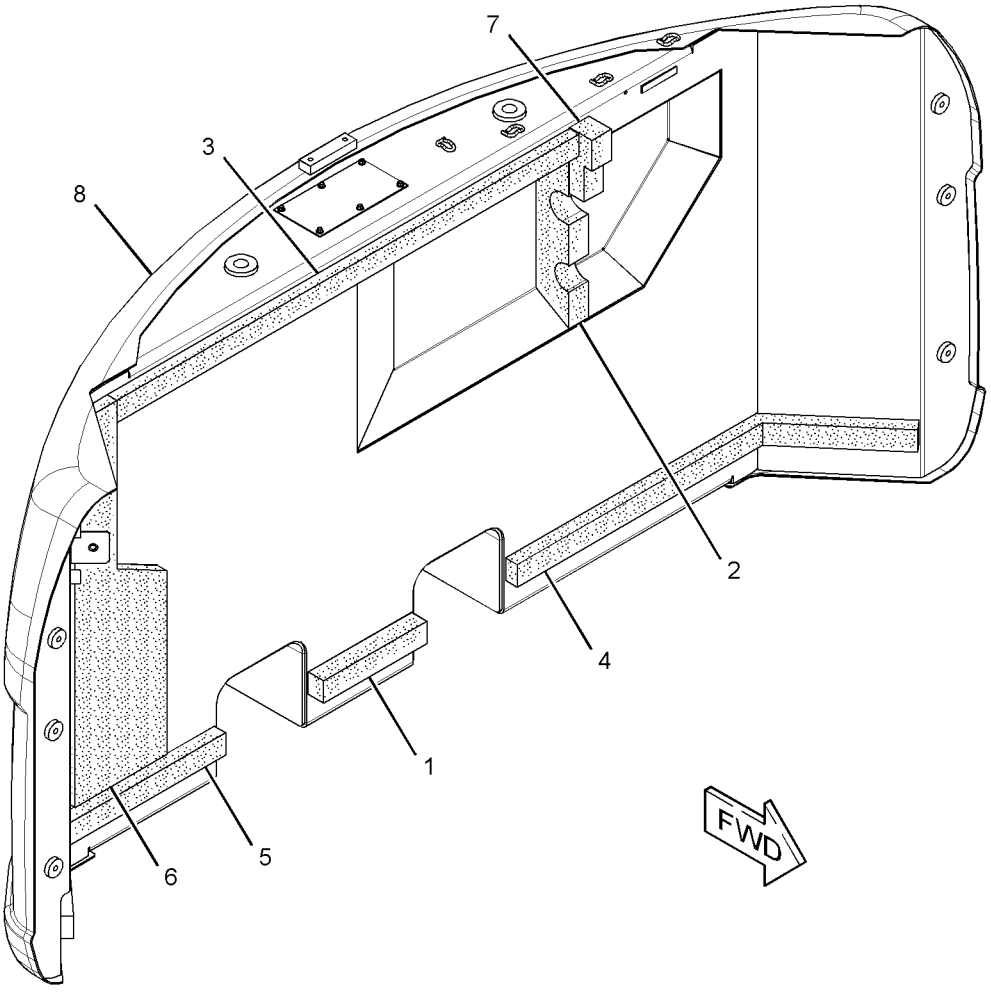

GRAPHIC #1 **<END>** g01621028

330-1207 COUNTERWEIGHT GP

S/N: CLA1-UP
2450-KG (5401-LBS)
PART OF 307-8071 COUNTERWEIGHT GP
AN ATTACHMENT

SMCS-7056 **i03154724**

NOTE	REF NO	GRAPHIC REF	PART NUMBER	QTY	PART NAME 1 2 3 4 5 6 (PRODUCT LEVEL)	SEE PAGE
	1	1	**184-8442**	1	LINER	
	2	1	**278-4013**	1	LINER	
	3	1	**283-3827**	1	LINER	
	4	1	**283-3828**	1	LINER	
	5	1	**283-3829**	1	LINER	
	6	1	**283-3830**	1	LINER	
	7	1	**298-2892**	1	LINER	
	8	1	**330-1208**	1	COUNTERWEIGHT AS	

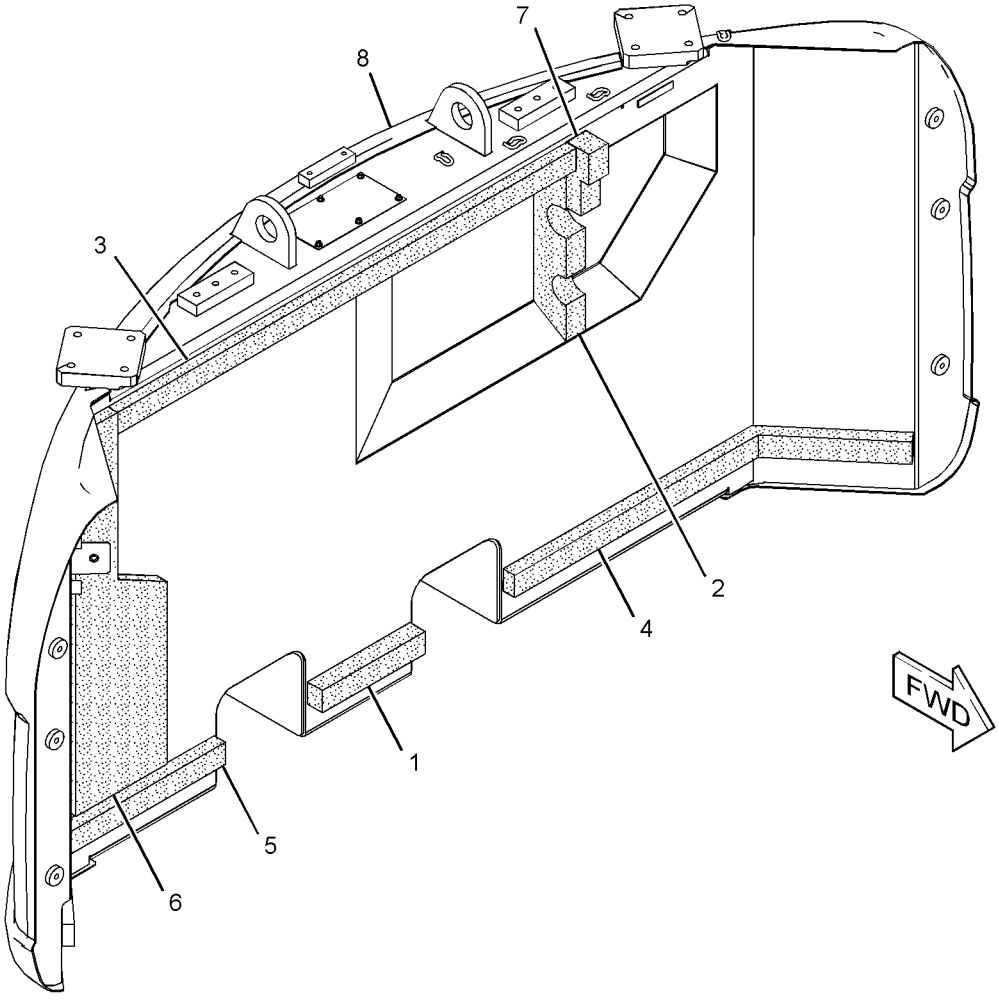

GRAPHIC #1 **<END>** g01621319

193-9776 COVER GP-ACCESS—ENGINE OIL DIPSTICK

S/N: CLA1-UP

PART OF 298-4105 STARTING AR-COLD WEATHER

AN ATTACHMENT

SMCS-726A **i03063893**

NOTE	REF NO	GRAPHIC REF	PART NUMBER	QTY	PART NAME 1 2 3 4 5 6 (PRODUCT LEVEL)	SEE PAGE
	1	1	**1K-8850**	1	SPRING	
	2	1	**193-9793**	1	COVER AS	
	2A	1	**4K-8501**	1	CLIP	
M	2B	1	**8T-5413**	2	STUD-WELD (M10X1.5X25-MM OAL)	
	2C	1	**9V-3659**	1	HINGE	
	3	1	**8T-4121**	2	WASHER-HARD (11X21X2.5-MM THK)	
M	4	1	**8T-4133**	2	NUT (M10X1.5-THD)	

M-METRIC PART

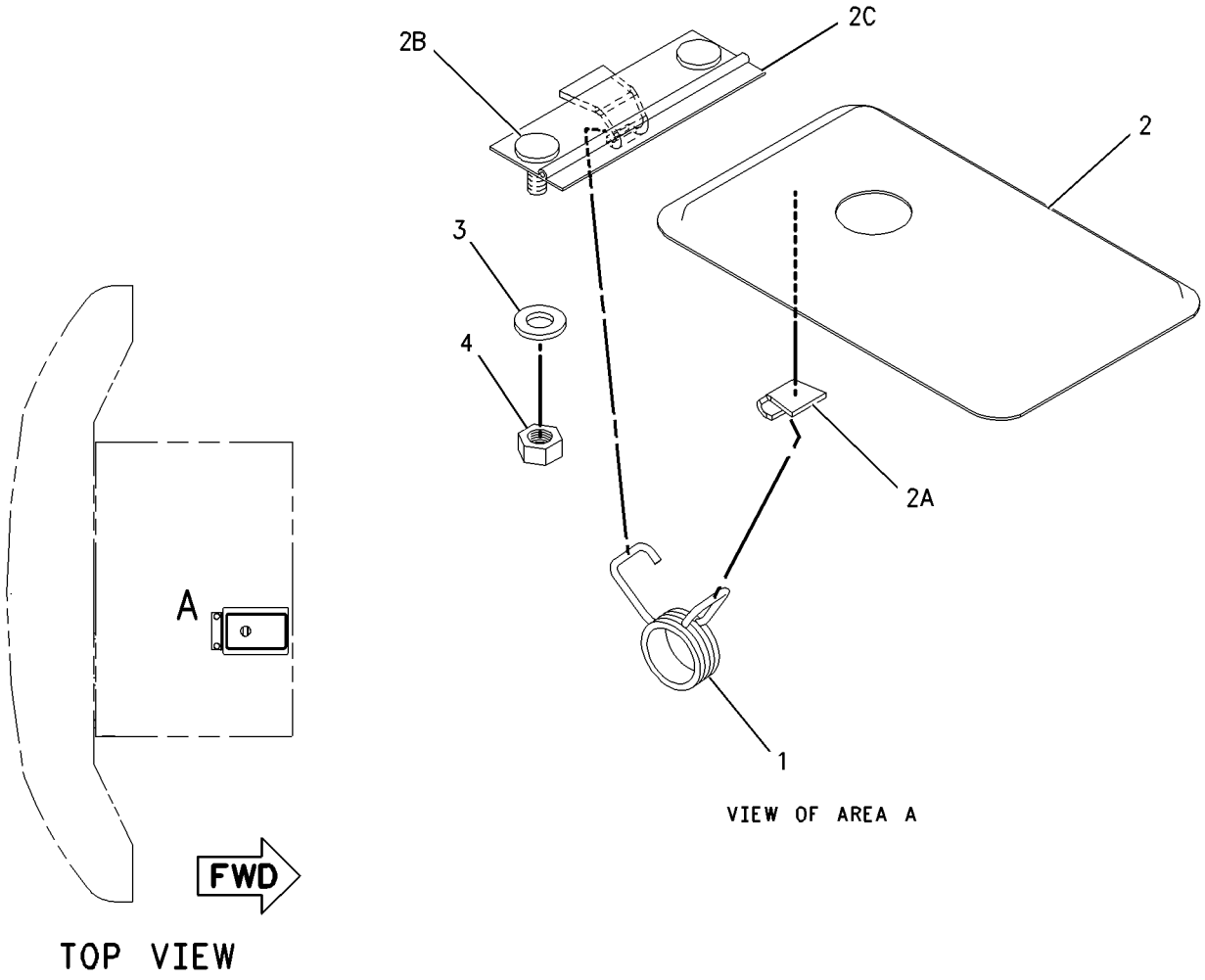

GRAPHIC #1 **<END>** g00791460

283-3772 COVER GP-ACCESS–HAMMER

S/N: CLA1-UP
PART OF 283-8787 FILTER AR-HYDRAULIC
AN ATTACHMENT

SMCS-726A **i02796180**

NOTE	REF NO	GRAPHIC REF	PART NUMBER	QTY	PART NAME 1 2 3 4 5 6 (PRODUCT LEVEL)	SEE PAGE
	1	1	**283-3885**	1	COVER AS	

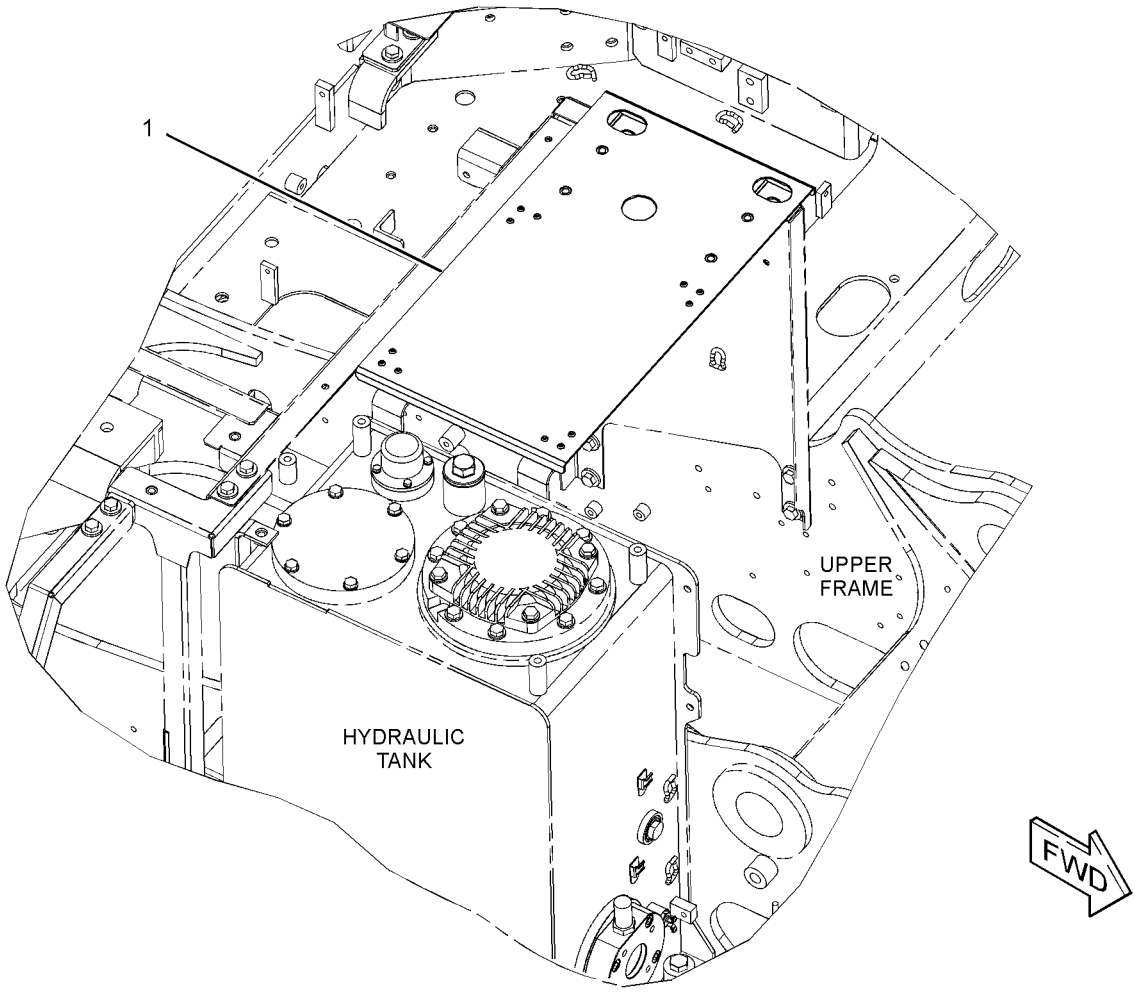

GRAPHIC #1 **<END>** g01400216

283-3865 COVER GP-ACCESS–UPPER

S/N: CLA1-UP

PART OF 283-3664 HOOD & GUARD GP

TYPE 1

SMCS-726A **i02794475**

NOTE	REF NO	GRAPHIC REF	PART NUMBER	QTY	PART NAME 1 2 3 4 5 6 (PRODUCT LEVEL)	SEE PAGE
M	1	1	**135-8575**	15	BOLT AS-LOCKING (M12X1.75X30-MM)	
	2	1	**283-3886**	1	COVER AS	
	3	1	**283-3887**	1	COVER AS	
	4	1	**283-3888**	1	COVER AS	
	5	1	**283-3890**	1	COVER AS	
	6	1	**303-9665**	1	COVER AS	
	7	1	**8T-4121**	1	WASHER-HARD (11X21X2.5-MM THK)	
M	8	1	**8T-4137**	1	BOLT (M10X1.5X20-MM)	

M-METRIC PART

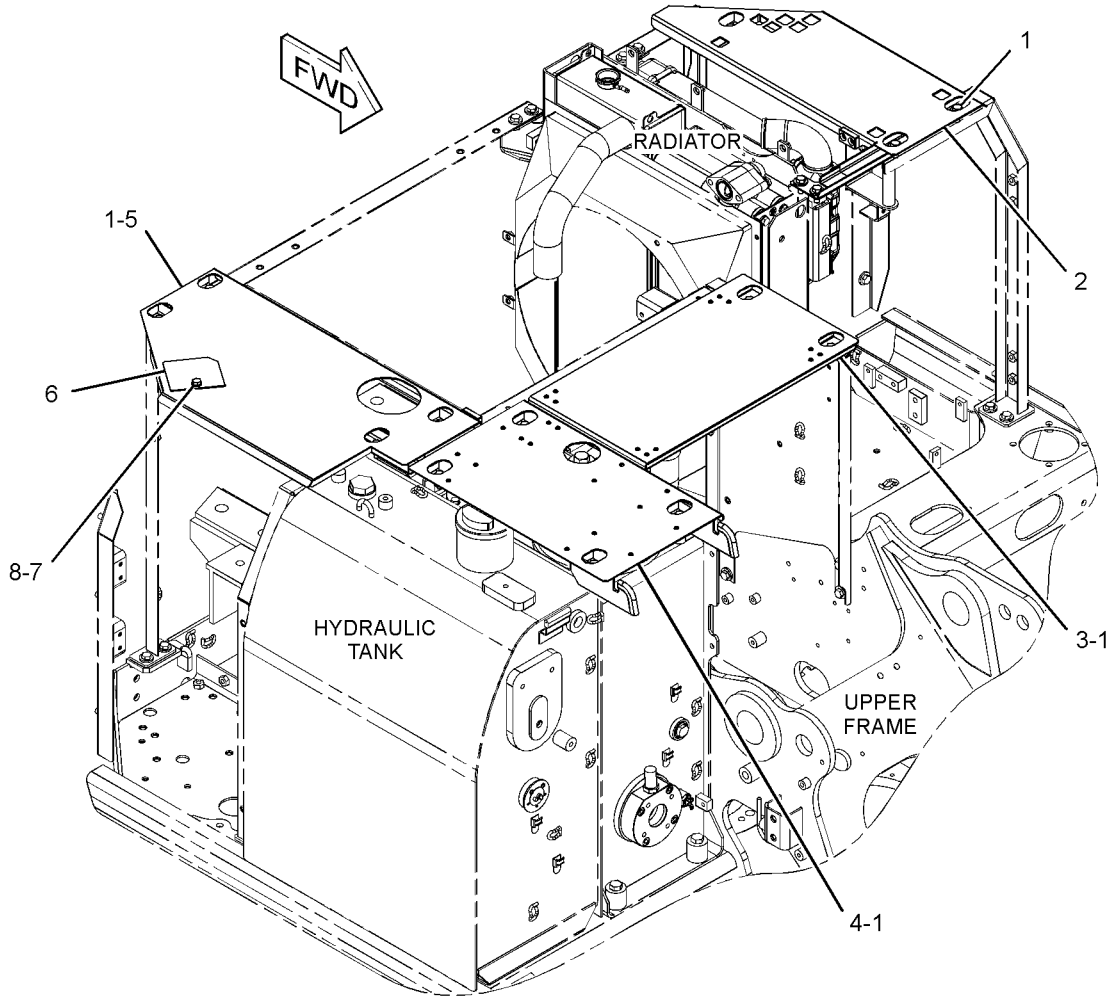

GRAPHIC #1 **<END>** g01409705

283-3865 COVER GP-ACCESS–UPPER

S/N: CLA1-UP
PART OF 283-3664 HOOD & GUARD GP
TYPE 2

SMCS-726A **i03162744**

NOTE	REF NO	GRAPHIC REF	PART NUMBER	QTY	PART NAME 1 2 3 4 5 6 (PRODUCT LEVEL)	SEE PAGE
M	1	1	**135-8575**	15	BOLT AS-LOCKING (M12X1.75X30-MM)	
C	2	1	**313-7992**	1	COVER AS	
		1	**6I-6033**	1	STOP	
M		1	**9X-2045**	2	SCREW-TRUSS HEAD (M6X1X20-MM)	
		1	**313-7974**	1	SHEET-RUBBER	
	3	1	**283-3887**	1	COVER AS	
C	4	1	**330-1620**	1	COVER AS	
		1	**5P-9205**		SEAL (0.2-M)	
	5	1	**283-3890**	1	COVER AS	
	6	1	**303-9665**	1	COVER AS	
	7	1	**8T-4121**	1	WASHER-HARD (11X21X2.5-MM THK)	
M	8	1	**8T-4137**	1	BOLT (M10X1.5X20-MM)	

C-CHANGE FROM PREVIOUS TYPE
M-METRIC PART

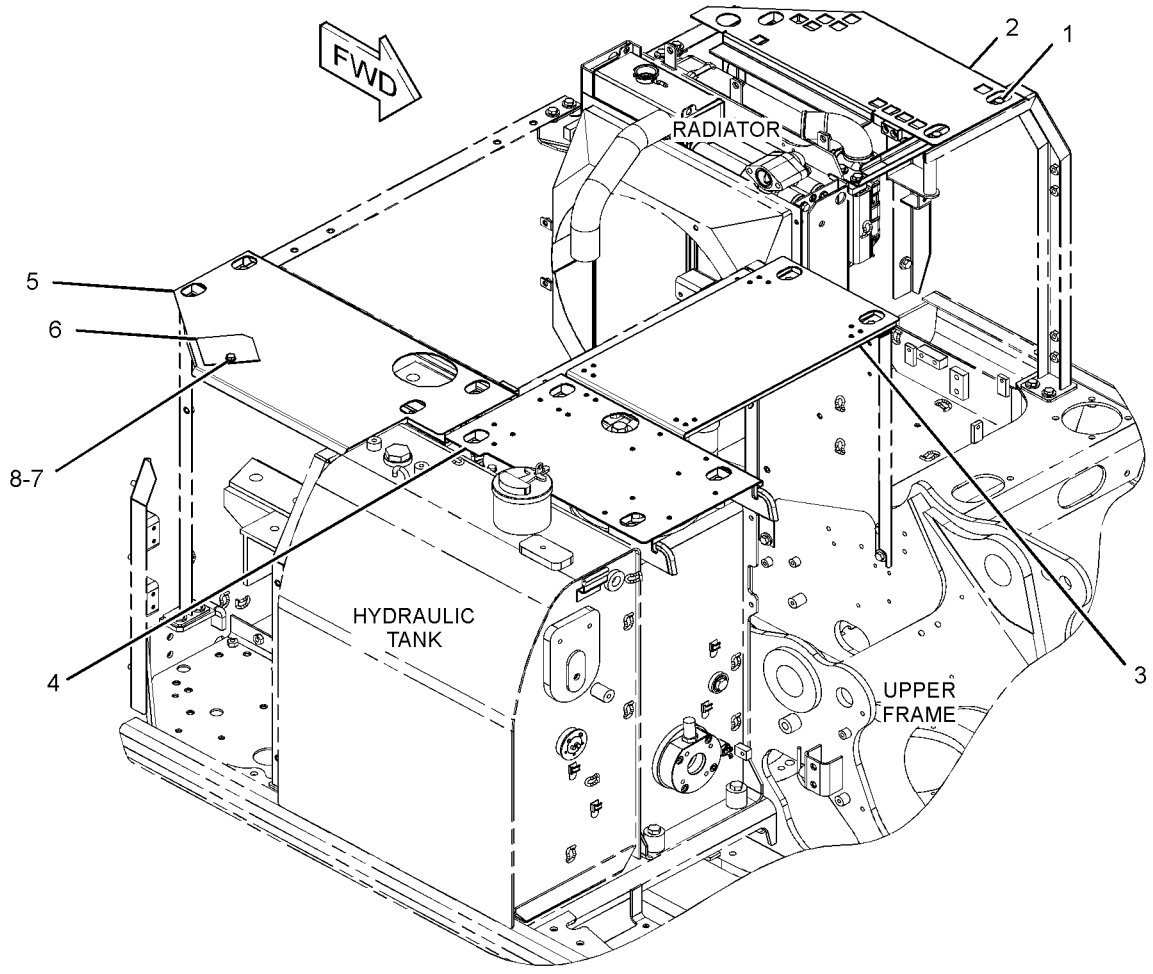

GRAPHIC #1 **<END>** g01650335

304-0076 COVER GP-ACCESS

S/N: CLA1-UP
PART OF 283-8786, 283-8837 GUARD AR-VANDALISM
AN ATTACHMENT

SMCS-726A **i02796182**

NOTE	REF NO	GRAPHIC REF	PART NUMBER	QTY	PART NAME 1 2 3 4 5 6 (PRODUCT LEVEL)	SEE PAGE
M	1	1	**135-8573**	1	BOLT AS (M12X1.75X25-MM)	
	2	1	**298-3166**	1	COVER AS	
	3	1	**304-0077**	1	SUPPORT AS	
	4	1	**304-0078**	1	COVER AS	
	5	1	**307-7912**	1	BODY AS	

M-METRIC PART

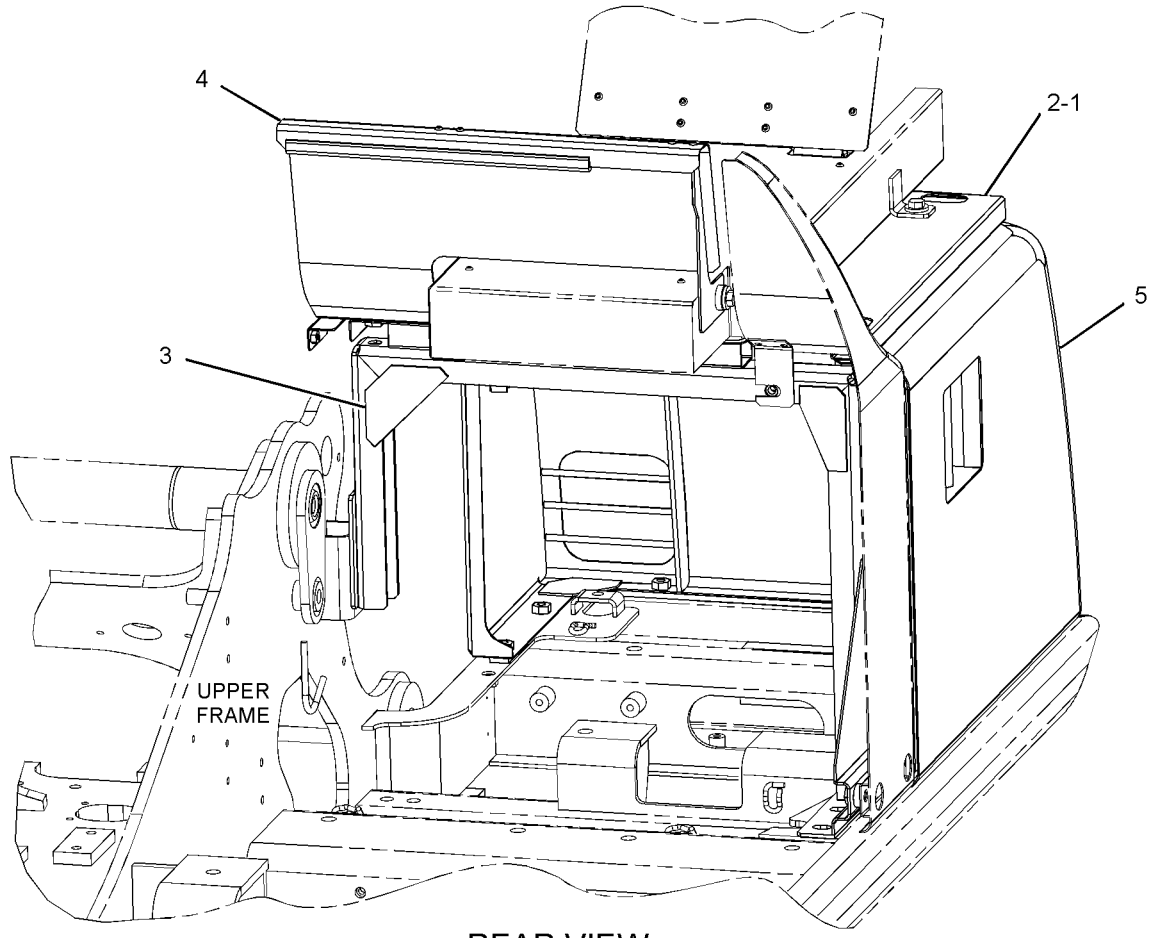

REAR VIEW
(UPPER RIGHT)

GRAPHIC #1 **<END>** g01400202

293-6990 COVER GP-CONTROL VALVE

S/N: CLA1-UP

PART OF 260-7231 CHASSIS AR

SMCS-7150 **i02794265**

NOTE	REF NO	GRAPHIC REF	PART NUMBER	QTY	PART NAME 1 2 3 4 5 6 (PRODUCT LEVEL)	SEE PAGE
M	1	1	**135-8573**	4	BOLT AS (M12X1.75X25-MM)	
	2	1	**293-7061**	1	COVER AS	

M-METRIC PART

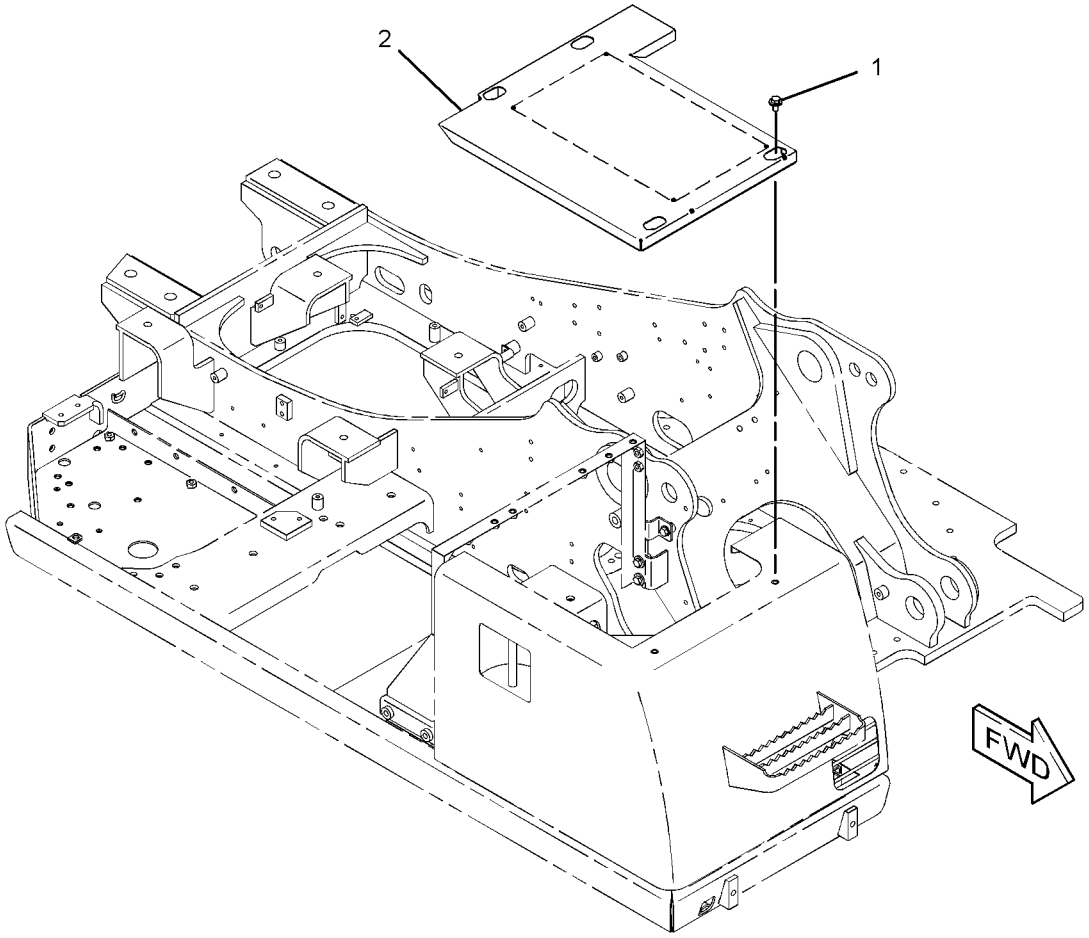

GRAPHIC #1 **<END>** g01414784

283-3672 COVER GP-HOOD–PRECLEANER

S/N: CLA1-UP
PART OF 283-8842 PRECLEANER AR
AN ATTACHMENT

SMCS-7251 **i03212420**

NOTE	REF NO	GRAPHIC REF	PART NUMBER	QTY	PART NAME 1 2 3 4 5 6 (PRODUCT LEVEL)	SEE PAGE
	1	1	**283-3973**	1	COVER AS	

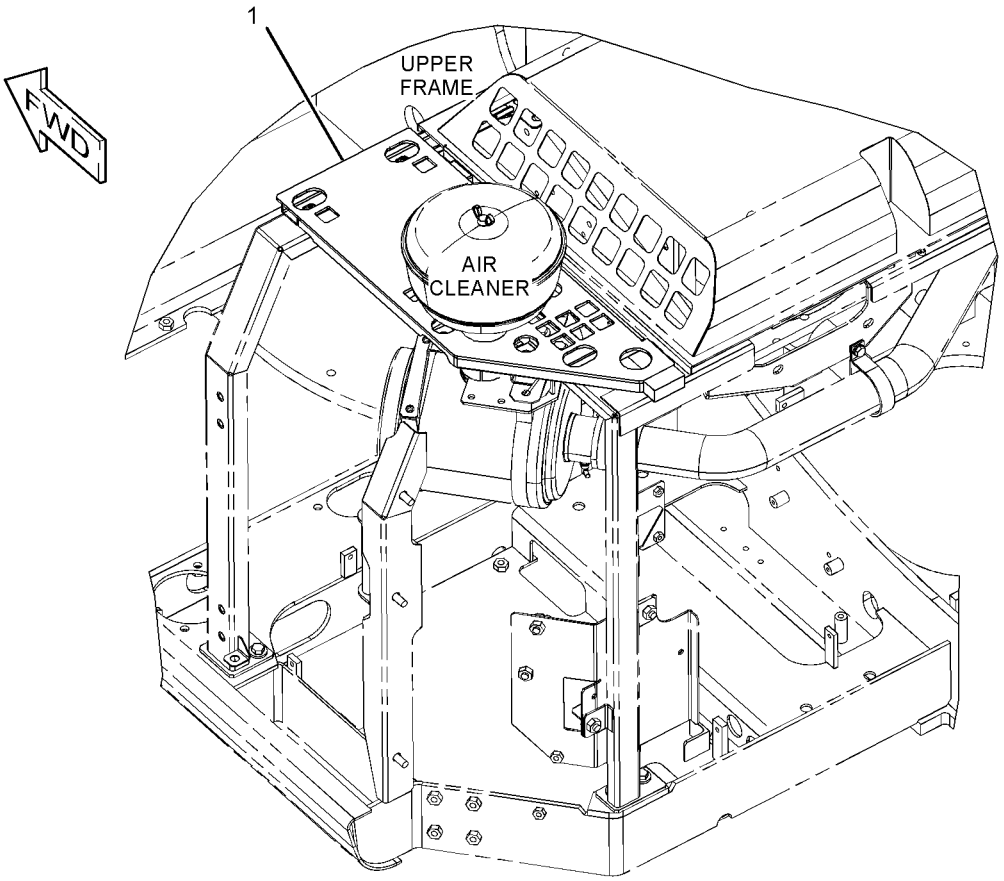

GRAPHIC #1 **<END>** g01640213

283-3864 DOOR GP-ACCESS

S/N: CLA1-UP

PART OF 283-3664 HOOD & GUARD GP

SMCS-7273 **i03088566**

NOTE	REF NO	GRAPHIC REF	PART NUMBER	QTY	PART NAME 1 2 3 4 5 6 (PRODUCT LEVEL)	SEE PAGE
	1	1	**4I-0232**	2	STRIKER	
	2	1	**4I-8019**	1	SUPPORT	
	3	1	**6I-6033**	1	STOP	
	4	1	**7I-1418**	1	SUPPORT AS	
	5	1	**087-3908**	4	SHIM (1-MM THK)	
	6	1	**087-3909**	4	SHIM (2-MM THK)	
M	7	1	**135-8573**	6	BOLT AS (M12X1.75X25-MM)	
Y	8	1	**283-3881**	1	DOOR GP-ACCESS (HYDRAULIC PUMP)	273
Y	9	1	**293-6658**	1	DOOR GP-ACCESS (RADIATOR)	274
	10	1	**293-6757**	1	TUBE AS	
	11	1	**293-6762**	1	TUBE AS	
	12	1	**3B-4618**	1	PIN-COTTER	
M	13	1	**105-3487**	2	BOLT-SOCKET HEAD (M6X1X20-MM)	
	14	1	**5P-4115**	8	WASHER-HARD (7.2X19X2-MM THK)	
M	15	1	**6V-7357**	6	BOLT (M6X1X25-MM)	
M	16	1	**8T-4171**	2	BOLT (M6X1X12-MM)	
	17	1	**8T-4121**	2	WASHER-HARD (11X21X2.5-MM THK)	
	18	1	**9X-8256**	2	WASHER (6.6X12X2-MM THK)	
	19	1	**5P-0372**	1	LOCK PIN	
B	20	1	**087-8894**	4	SHIM (2-MM THK)	
B	21	1	**087-8895**	4	SHIM (1-MM THK)	
B	22	1	**087-8896**	4	SHIM (0.5-MM THK)	

B-USE AS REQUIRED
M-METRIC PART
Y-SEPARATE ILLUSTRATION

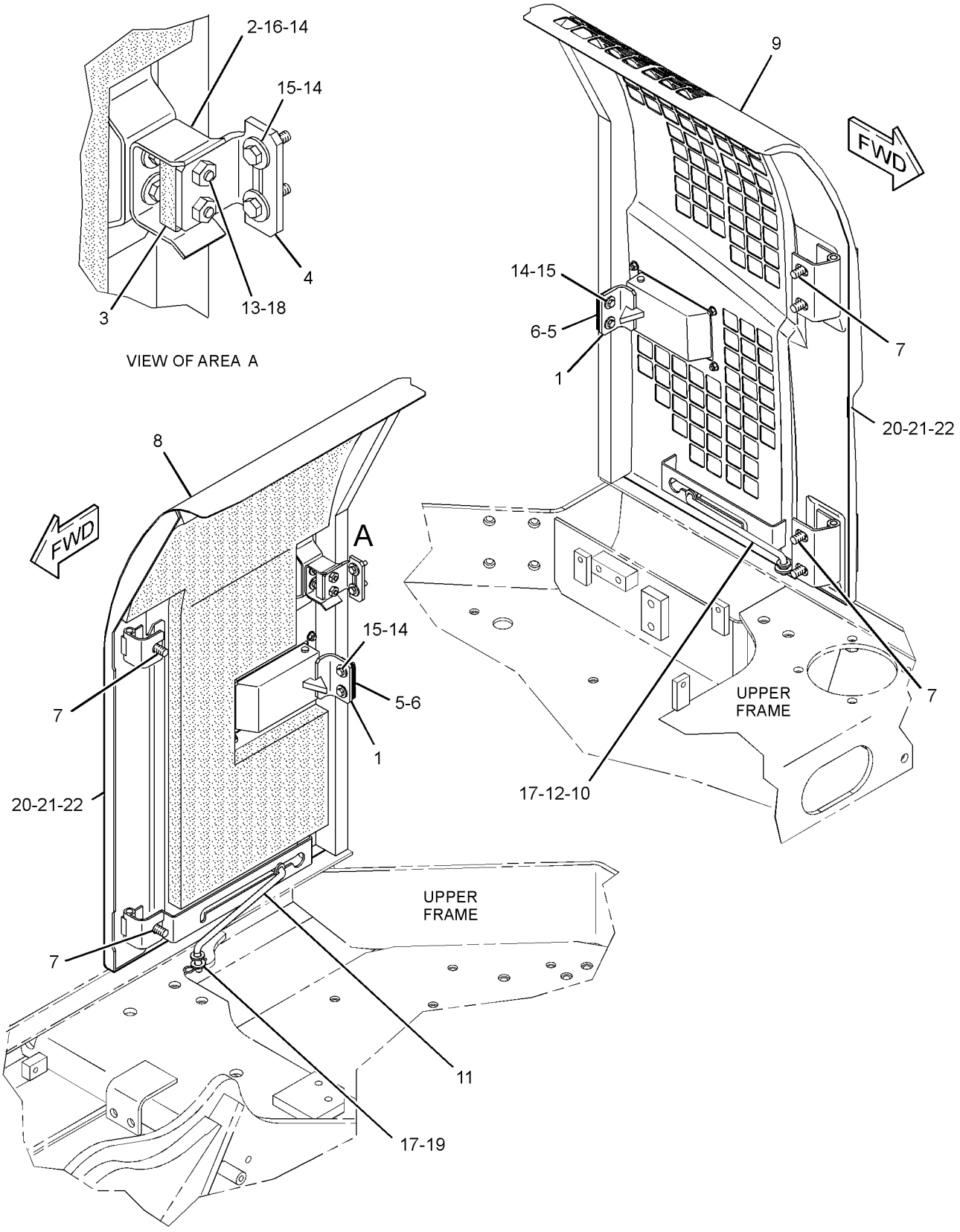

GRAPHIC #1 **<END>** g01573333

283-3881 DOOR GP-ACCESS—HYDRAULIC PUMP

S/N: CLA1-UP

PART OF 283-3864 DOOR GP-ACCESS

SMCS-7273 **i02794480**

NOTE	REF NO	GRAPHIC REF	PART NUMBER	QTY	PART NAME 1 2 3 4 5 6 (PRODUCT LEVEL)	SEE PAGE
M	1	1	**099-6418**	4	NUT (M6X1-THD)	
	2	1	**184-8862**	1	COVER	
	3	1	**283-3882**	1	LINER	
	4	1	**283-3883**	1	LINER	
	5	1	*283-3884*	1	DOOR AS-SIDE	
	5A	1	**142-0963**	2	HINGE	
J	6	1	**298-2942**	1	LOCK AS	

J-REQUIRES CORPORATE KEY
M-METRIC PART

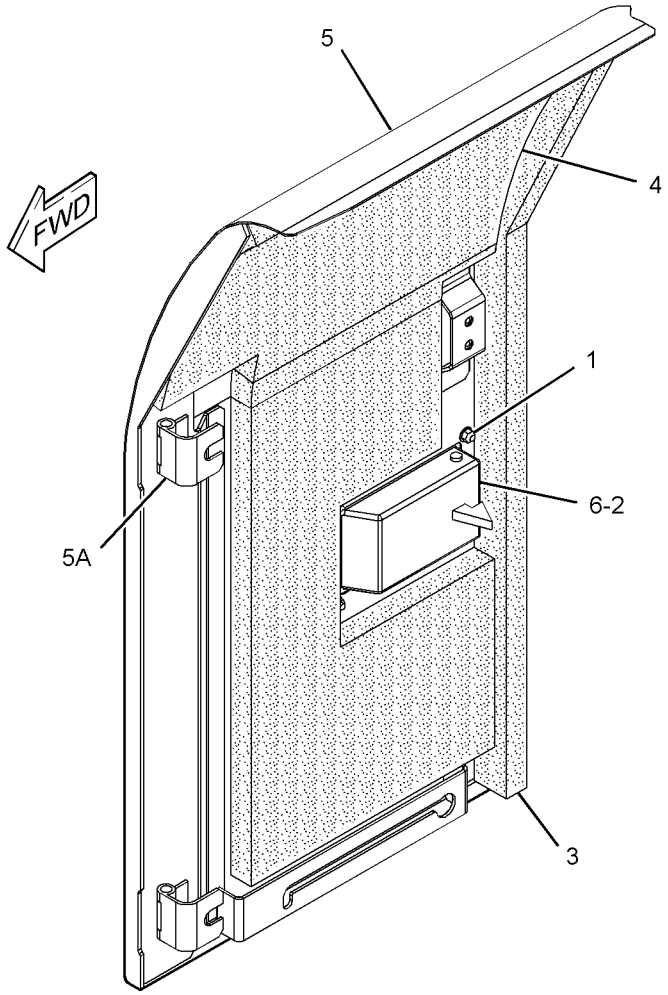

GRAPHIC #1 **<END>** g01409688

293-6658 DOOR GP-ACCESS–RADIATOR

S/N: CLA1-UP

PART OF 283-3864 DOOR GP-ACCESS

SMCS-7273 **i02794481**

NOTE	REF NO	GRAPHIC REF	PART NUMBER	QTY	PART NAME 1 2 3 4 5 6 (PRODUCT LEVEL)	SEE PAGE
M	1	1	**099-6418**	4	NUT (M6X1-THD)	
J	2	1	**298-2942**	1	LOCK AS	
	3	1	**283-3875**	1	LINER	
	4	1	*293-6659*	1	DOOR AS-ACCESS	
	4A	1	**165-2976**	2	HINGE	

J-REQUIRES CORPORATE KEY
M-METRIC PART

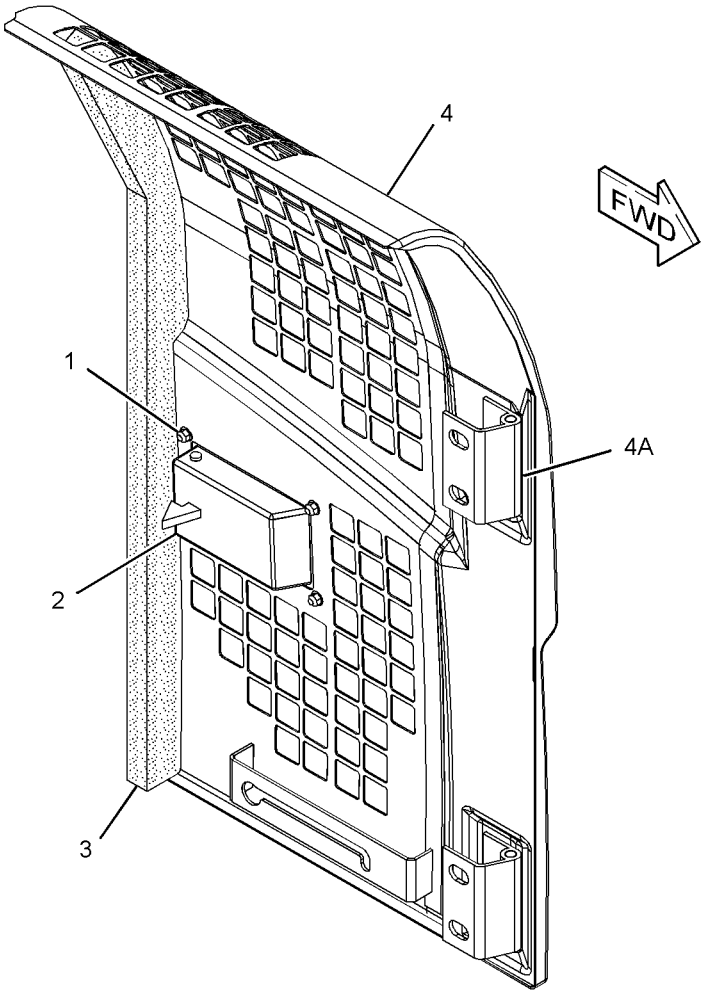

GRAPHIC #1 **<END>** g01409690

293-6989 FENDER GP

S/N: CLA1-UP

PART OF 260-7231 CHASSIS AR

SMCS-7252 **i02896503**

NOTE	REF NO	GRAPHIC REF	PART NUMBER	QTY	PART NAME 1 2 3 4 5 6 (PRODUCT LEVEL)	SEE PAGE
M	1	1	**135-8573**	3	BOLT AS (M12X1.75X25-MM)	
M	2	1	**135-8577**	2	BOLT AS (M12X1.75X35-MM)	
M	3	1	**195-0035**	4	BOLT-SHOULDER (M8X1.25X6.63-MM)	
	4	1	**199-0314**	1	LINER	
	6	1	**293-7060**	1	COVER AS	
D		1	**5P-9205**		SEAL (0.4-M)	
	7	1	**304-0080**	1	COVER AS	
	8	1	**8T-4121**	4	WASHER-HARD (11X21X2.5-MM THK)	

D-ORDER BY THE METER
M-METRIC PART

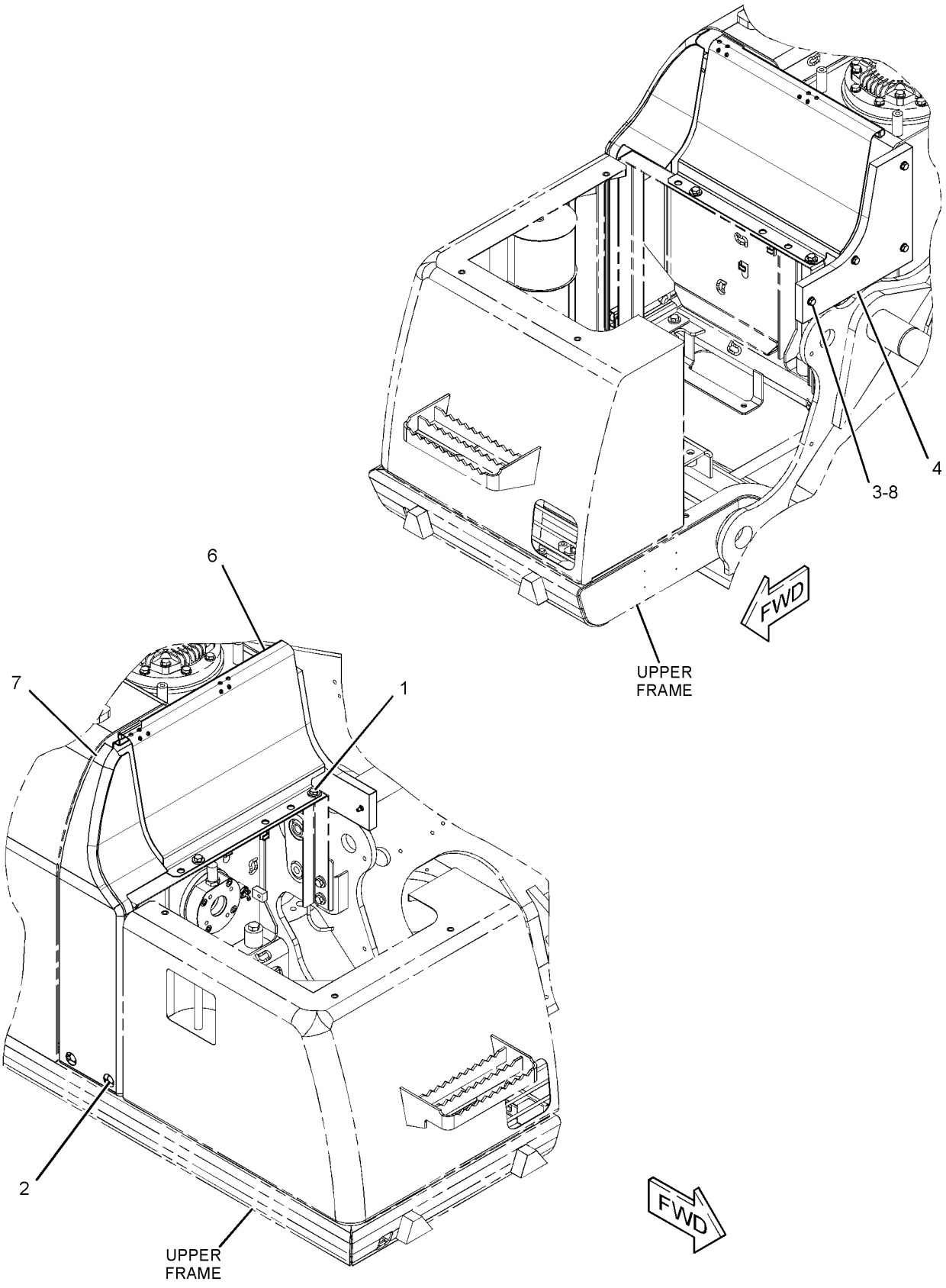

GRAPHIC #1

<END>

g01445596

283-3867 FIREWALL GP

S/N: CLA1-UP

PART OF 283-3664 HOOD & GUARD GP

SMCS-7262 **i02794445**

NOTE	REF NO	GRAPHIC REF	PART NUMBER	QTY	PART NAME 1 2 3 4 5 6 (PRODUCT LEVEL)	SEE PAGE
M	1	1	**135-8572**	13	BOLT AS (M12X1.75X20-MM)	
M	2	1	**135-8573**	22	BOLT AS (M12X1.75X25-MM)	
	3	1	**283-3994**	1	SHEET AS	
	4	1	**283-3996**	1	SHEET AS	
D		1	**101-9848**		SEAL (1-M)	
	5	1	**283-3997**	1	SHEET AS	
D		1	**101-9848**		SEAL (1-M)	
		1	**4I-7924**	3	WASHER (4.5X40X1.2-MM THK)	
		1	**6P-2216**	3	CAP	
		1	**307-7817**	1	INSULATION	
Y	6	1	**283-3999**	1	SHEET AS-SOUND SUPPRESSION	306
Y	7	1	**283-4002**	1	SHEET AS-SOUND SUPPRESSION	307
Y	8	1	**283-4004**	1	SHEET AS-SOUND SUPPRESSION	308
	9	1	**283-4008**	1	SHEET AS	
	10	1	**303-9666**	1	SHEET AS	
		1	**303-9667**	1	LINER	
	11	1	**307-7966**	1	SHEET AS	
		1	**4I-7924**	2	WASHER (4.5X40X1.2-MM THK)	
		1	**6P-2216**	2	CAP	
		1	**307-7968**	1	INSULATION	

D-ORDER BY THE METER
M-METRIC PART
Y-SEPARATE ILLUSTRATION

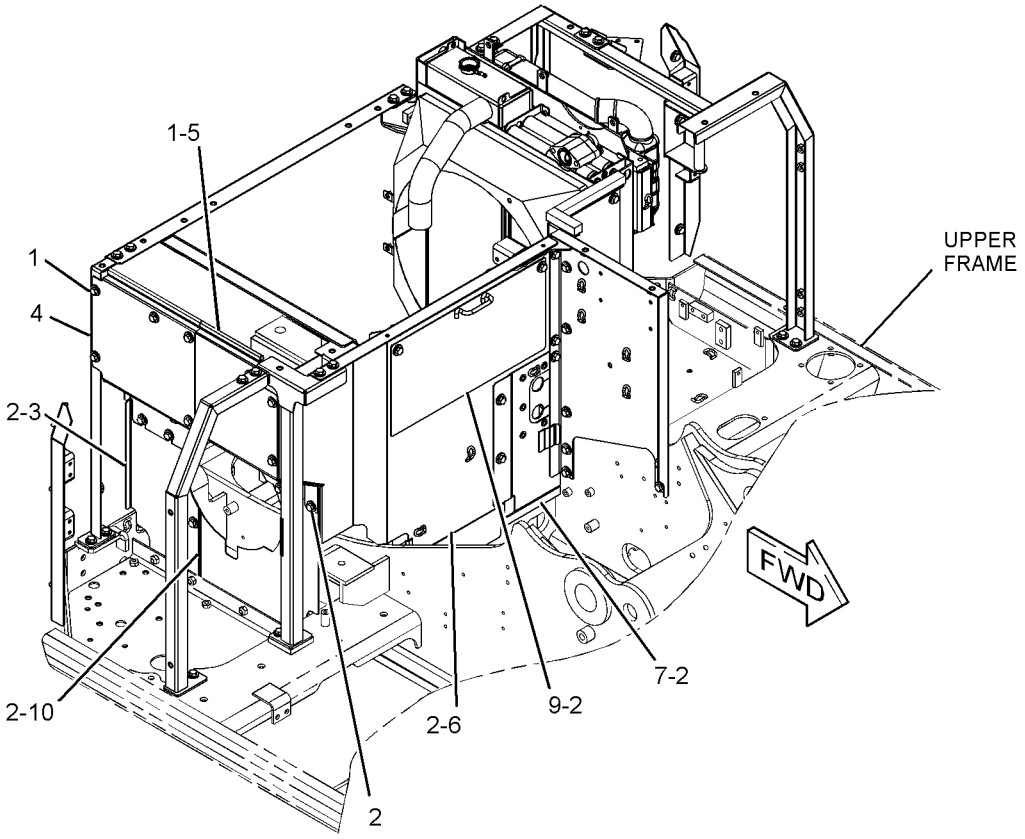

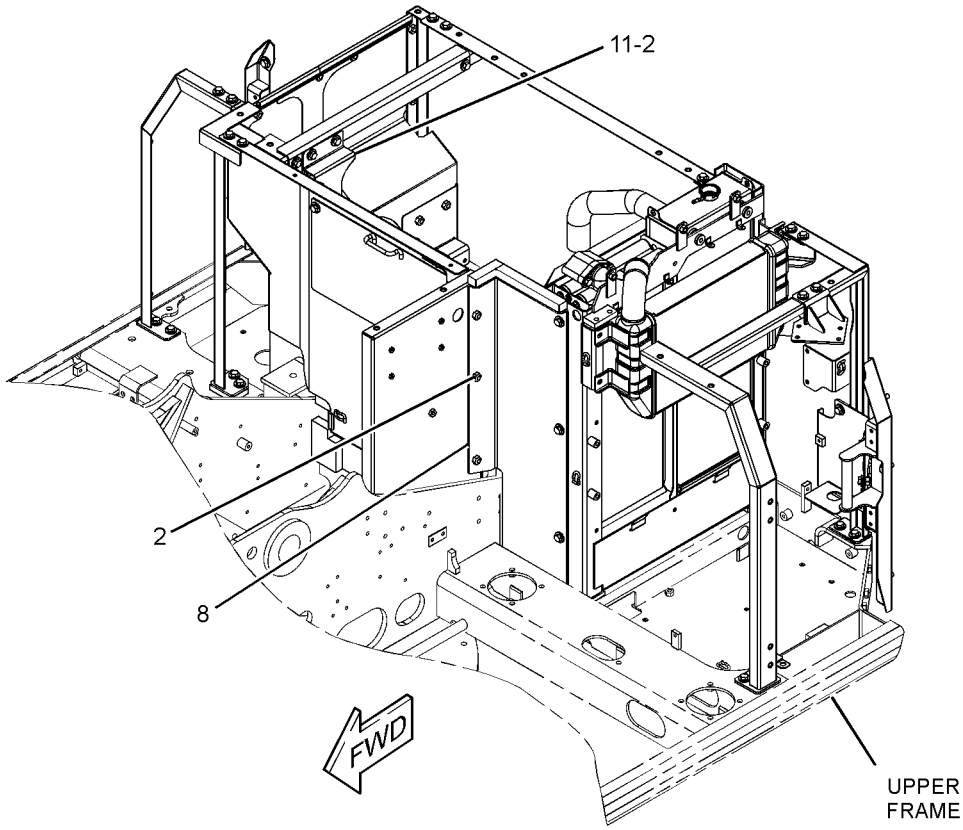

GRAPHIC #1 **<END>** g01421626

278-9264 FRAME GP-UPPER

S/N: CLA1-UP

PART OF 260-7231 CHASSIS AR

SMCS-7051 **i02897070**

NOTE	REF NO	GRAPHIC REF	PART NUMBER	QTY	PART NAME 1 2 3 4 5 6 (PRODUCT LEVEL)	SEE PAGE
	1	1	**1R-6229**	2	PIN AS	
B	2	1	**093-0065**	2	SHIM (1-MM THK)	
B	3	1	**093-0083**	1	SHIM (1-MM THK)	
B	4	1	**093-0097**	2	SHIM (2-MM THK)	
B	5	1	**093-0115**	1	SHIM (2-MM THK)	
	6	1	**093-0357**	2	WASHER (63X100X9-MM THK)	
B	7	1	**133-2425**	2	SHIM (0.5-MM THK)	
B	8	1	**133-2717**	2	SHIM (0.5-MM THK)	
	9	1	**212-2837**	2	SHIM (2-MM THK)	
B	10	1	**245-7900**	1	CAP	
B	11	1	**245-7901**	1	CAP	
	12	1	**278-9265**	1	FRAME AS-UPPER	
	13	1	**282-4502**	1	PIN AS	
	14	1	**086-0297**	2	WASHER (13X50X6-MM THK)	
	15	1	**086-0299**	1	WASHER (22X60X9-MM THK)	
M	16	1	**8T-4179**	2	BOLT (M12X1.75X20-MM)	
M	17	1	**8T-4780**	1	BOLT (M20X2.5X30-MM)	

B-USE AS REQUIRED
M-METRIC PART

278-9264 **FRAME GP-UPPER** *(contd.)* **i02897070**

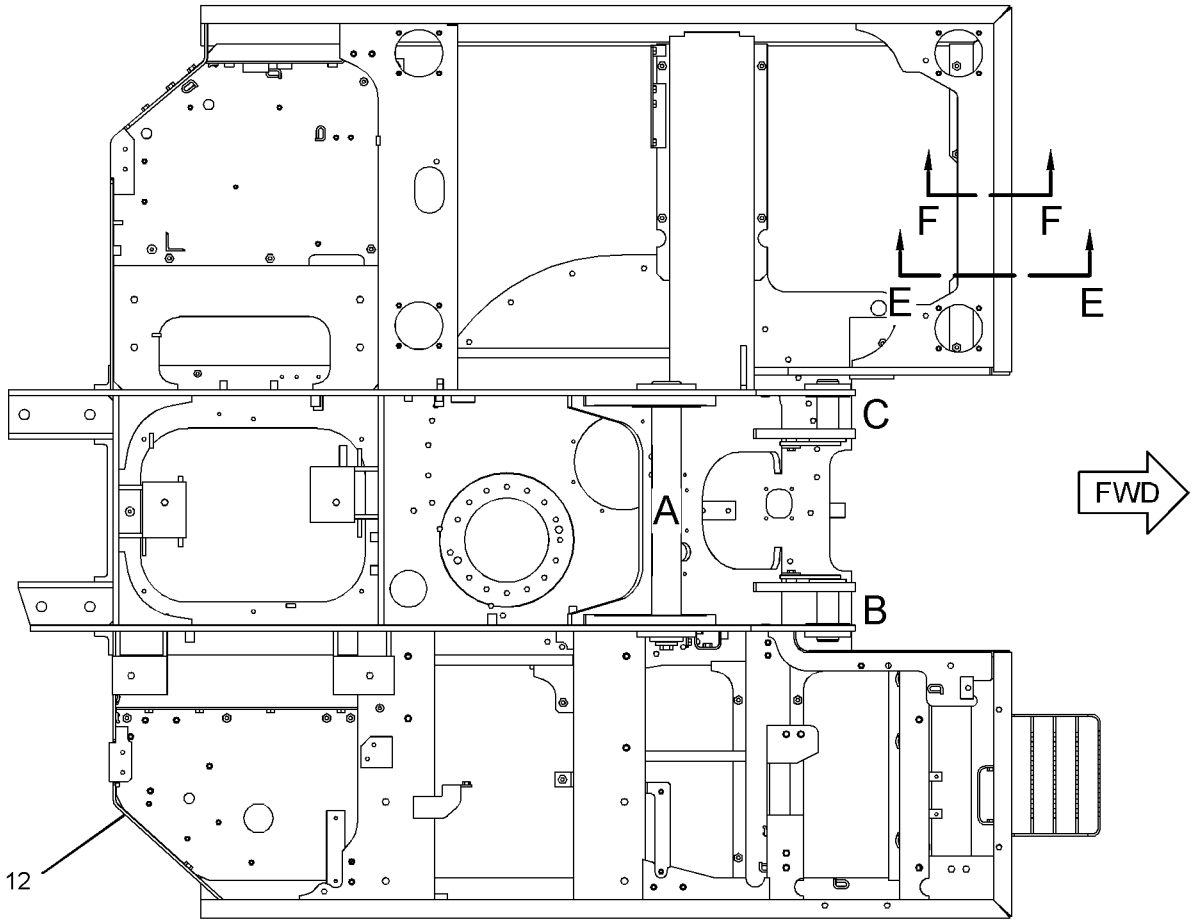

TOP VIEW

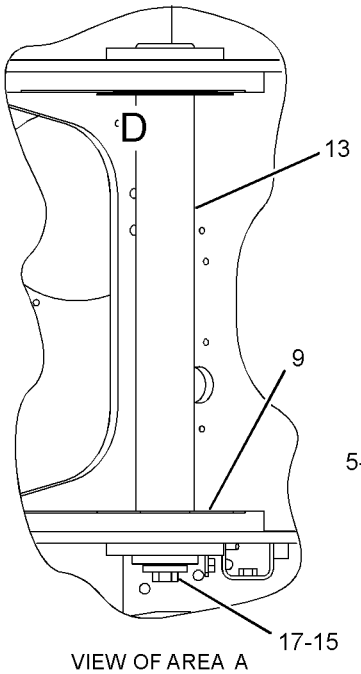

VIEW OF AREA A

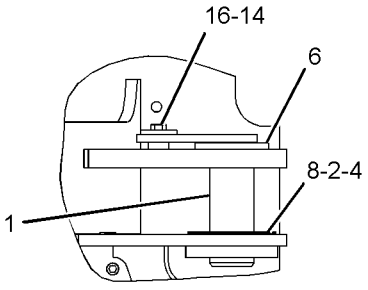

VIEW OF AREA B

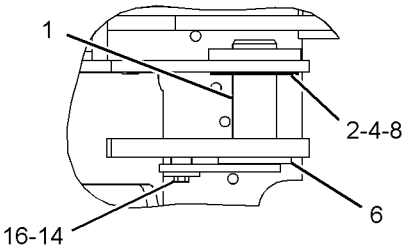

VIEW OF AREA C

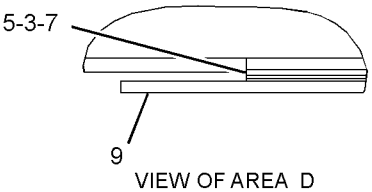

VIEW OF AREA D

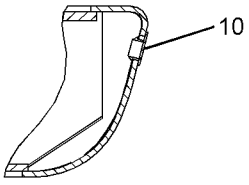

SECTION E-E

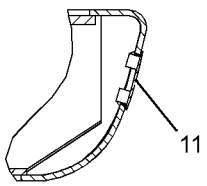

SECTION F-F

GRAPHIC #1 **<END>** g01449248

308-8787 FRAME GP-UPPER–ACCUGRADE READY

S/N: CLA1-UP
PART OF 301-2552, 301-2555, 301-2647 SPECIAL AR
AN ATTACHMENT

SMCS-7051 **i02869703**

NOTE	REF NO	GRAPHIC REF	PART NUMBER	QTY	PART NAME 1 2 3 4 5 6 (PRODUCT LEVEL)	SEE PAGE
	1	1	**1R-6229**	2	PIN AS	
B	2	1	**093-0065**	2	SHIM (1-MM THK)	
B	3	1	**093-0083**	1	SHIM (1-MM THK)	
B	4	1	**093-0097**	2	SHIM (2-MM THK)	
B	5	1	**093-0115**	1	SHIM (2-MM THK)	
	6	1	**093-0349**	1	WASHER (22X60X6-MM THK)	
	7	1	**093-0357**	2	WASHER (63X100X9-MM THK)	
B	8	1	**133-2425**	2	SHIM (0.5-MM THK)	
B	9	1	**133-2717**	2	SHIM (0.5-MM THK)	
	10	1	**212-2837**	2	SHIM (2-MM THK)	
B	11	1	**245-7900**	1	CAP	
B	12	1	**245-7901**	1	CAP	
	13	1	**278-9265**	1	FRAME AS-UPPER	
	14	1	**308-8823**	1	PIN AS	
	15	1	**308-8914**	1	PLATE	
	16	1	**086-0297**	2	WASHER (13X50X6-MM THK)	
M	17	1	**096-4883**	2	LOCKNUT (M10X1.15-THD)	
M	18	1	**7X-2561**	1	BOLT (M20X2.5X35-MM)	
	19	1	**8T-4121**	2	WASHER-HARD (11X21X2.5-MM THK)	
M	20	1	**8T-4179**	2	BOLT (M12X1.75X20-MM)	
M	21	1	**8T-4186**	2	BOLT (M10X1.5X40-MM)	

B-USE AS REQUIRED
M-METRIC PART

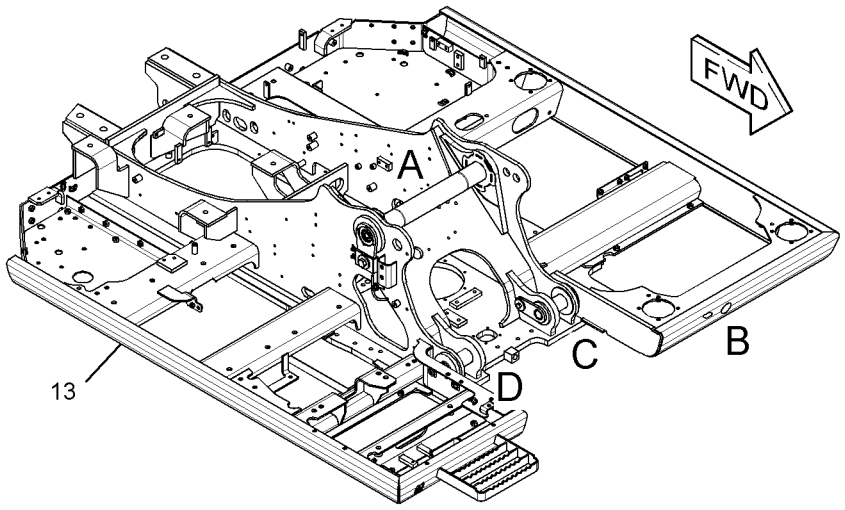

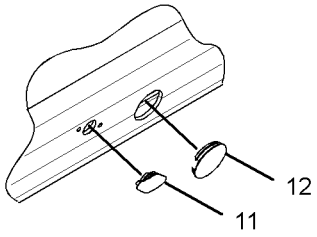

VIEW OF AREA B
(EXPLODED)

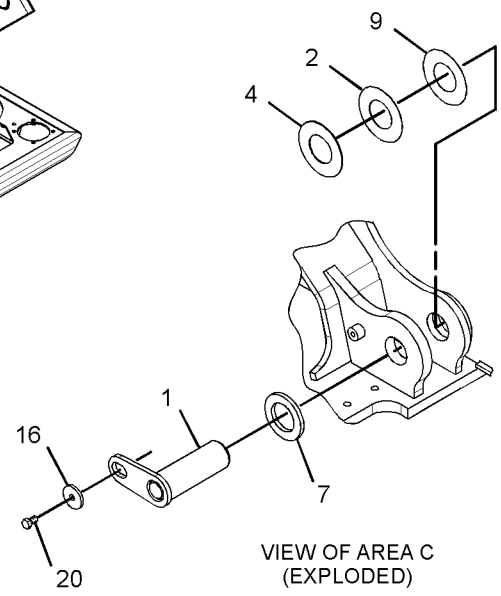

VIEW OF AREA C
(EXPLODED)

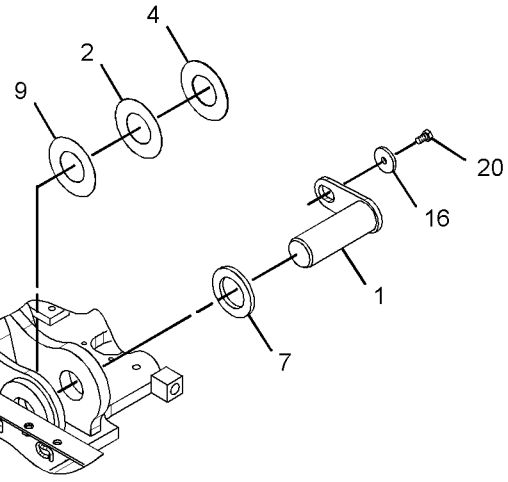

VIEW OF AREA D
(EXPLODED)

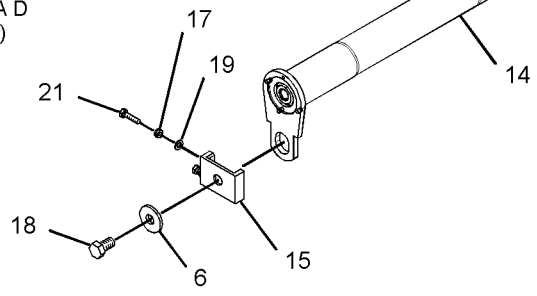

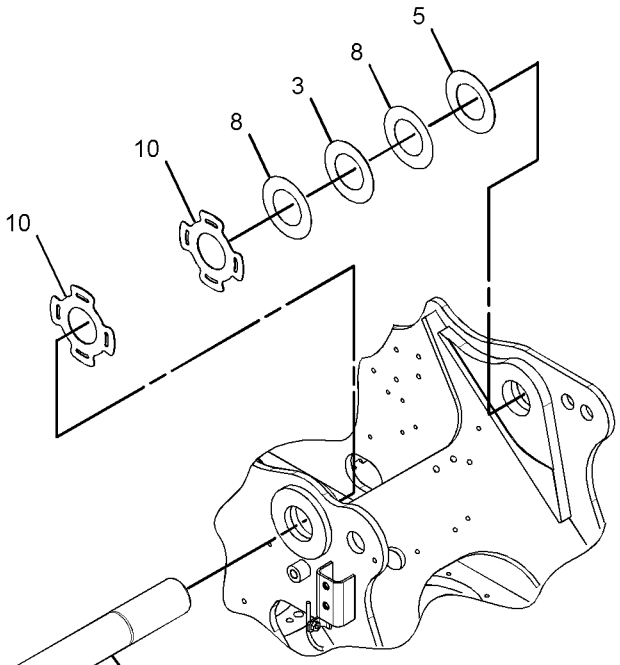

VIEW OF AREA A
(EXPLODED)

GRAPHIC #1 **<END>** g01444678

169-5567 GEAR & BEARING GP-SWING

S/N: CLA1-UP

PART OF 283-8799 FRAME AR-UNDERCARRIAGE

SMCS-7063 **i02902071**

NOTE	REF NO	GRAPHIC REF	PART NUMBER	QTY	PART NAME 1 2 3 4 5 6 (PRODUCT LEVEL)	SEE PAGE
	1	1	**4I-7511**	1	RETAINER	
	2	1	**4I-7512**	1	CLAMP-HOSE	
	3	1	**4I-7444**	1	BOOT	
M	4	1	**8T-4136**	12	BOLT (M10X1.5X25-MM)	
	5	1	**8T-4121**	12	WASHER-HARD (11X21X2.5-MM THK)	
	6	1	**5K-9243**	2	ELBOW-FLARED	
M	7	1	**7X-2555**	34	BOLT (M16X2X80-MM)	
	8	1	**095-1299**	1	DOWEL	
M	9	1	**8T-4199**	2	BOLT (M8X1.25X12-MM)	
	10	1	**4N-9170**	2	CLIP	
	11	1	**3B-8489**	1	FITTING-GREASE	
	12	1	**4I-7446**	1	GASKET	
	13	1	**4I-7326**	1	STRIP	
	14	1	**169-5568**	1	TUBE AS	
	15	1	**229-1077**	1	GEAR & BEARING GP-SWING	
		1	**3B-8489**	1	FITTING-GREASE	
E	15A	1	**148-4685**		SEAL (309-CM)	
	15B	1	**229-1078**	1	SEAL-DUST	
M	16	1	**8T-0357**	38	BOLT (M16X2X70-MM)	
	17	1	**085-9310**	38	SPACER (16.6X32X26-MM THK)	
B	18	1	**1U-8846**		SEALANT-GASKET	
	19	1	**191-2544**	34	WASHER (16.6X32X5-MM THK)	

B-USE AS REQUIRED
E-ORDER BY THE CENTIMETER
M-METRIC PART

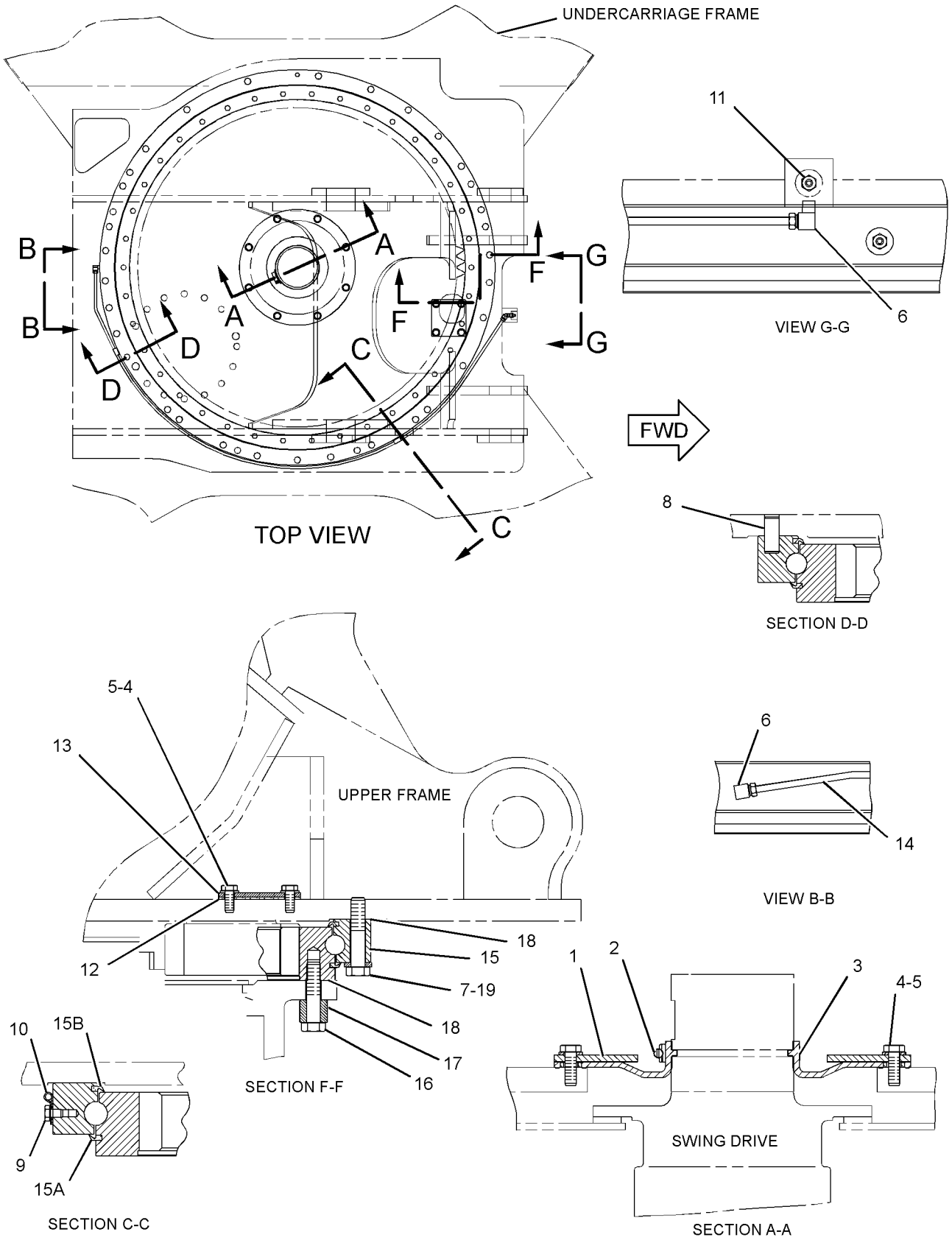

GRAPHIC #1 **<END>** g01165905

199-4573 GEAR & BEARING GP-SWING

S/N: CLA1-UP
PART OF 283-8789 INSTALLATION AR-BLADE
AN ATTACHMENT

SMCS-7063 **i02902072**

NOTE	REF NO	GRAPHIC REF	PART NUMBER	QTY	PART NAME 1 2 3 4 5 6 (PRODUCT LEVEL)	SEE PAGE
	1	1	**121-5204**	1	RETAINER	
	2	1	**099-0913**	1	CLAMP-HOSE	
	3	1	**121-5203**	1	BOOT	
M	4	1	**8T-4136**	12	BOLT (M10X1.5X25-MM)	
	5	1	**8T-4121**	12	WASHER-HARD (11X21X2.5-MM THK)	
	6	1	**5K-9243**	2	ELBOW-FLARED	
M	7	1	**7X-2555**	34	BOLT (M16X2X80-MM)	
	8	1	**095-1299**	1	DOWEL	
M	9	1	**8T-4199**	2	BOLT (M8X1.25X12-MM)	
	10	1	**4N-9170**	2	CLIP	
	11	1	**3B-8489**	1	FITTING-GREASE	
	12	1	**4I-7446**	1	GASKET	
	13	1	**4I-7326**	1	STRIP	
	14	1	**169-5568**	1	TUBE AS	
	15	1	**229-1077**	1	GEAR & BEARING GP-SWING	
		1	**3B-8489**	1	FITTING-GREASE	
E	15A	1	**148-4685**		SEAL (309-CM)	
	15B	1	**229-1078**	1	SEAL-DUST	
M	16	1	**8T-0357**	38	BOLT (M16X2X70-MM)	
	17	1	**085-9310**	38	SPACER (16.6X32X26-MM THK)	
B	18	1	**1U-8846**		SEALANT-GASKET	
	19	1	**191-2544**	34	WASHER (16.6X32X5-MM THK)	

B-USE AS REQUIRED
E-ORDER BY THE CENTIMETER
M-METRIC PART

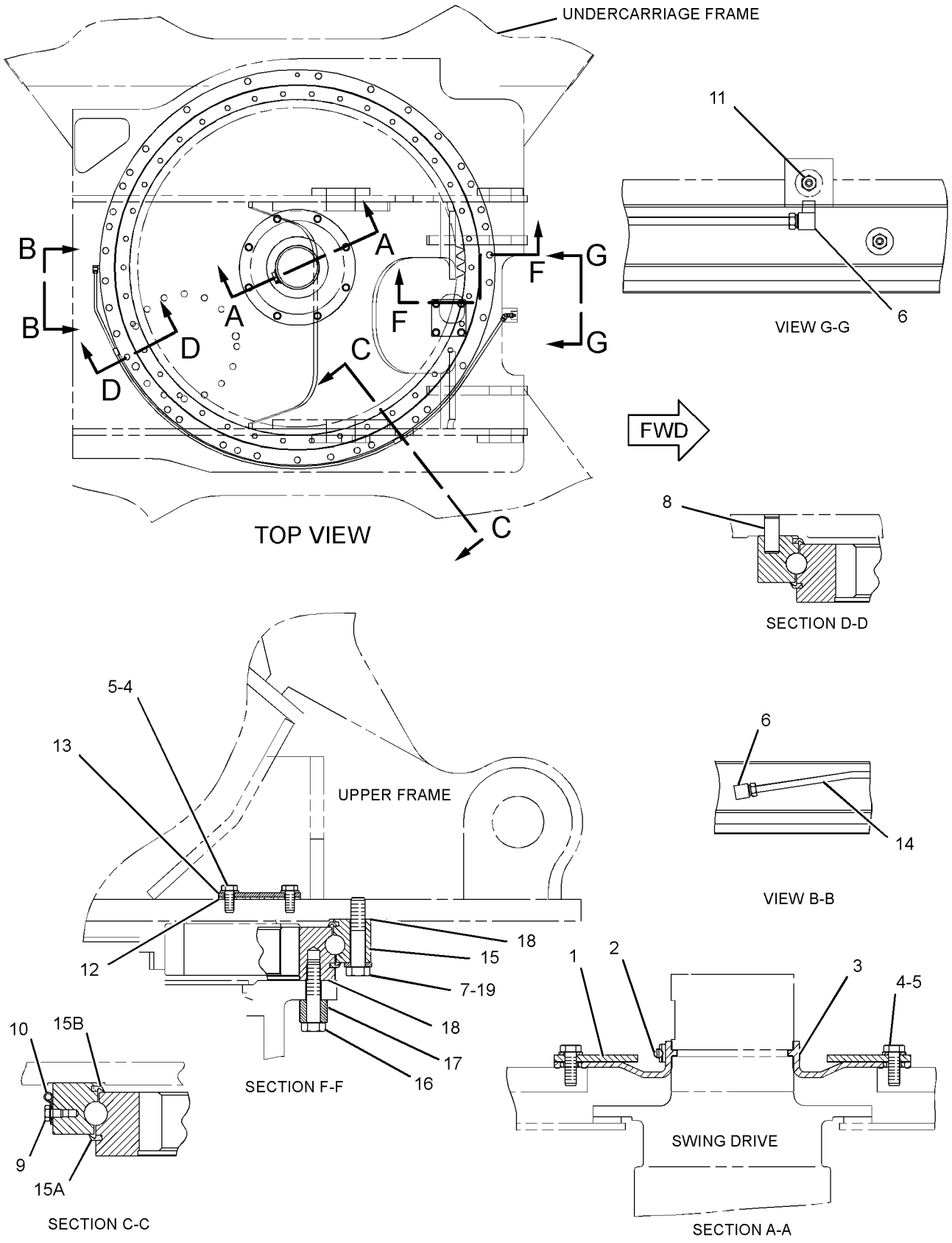

GRAPHIC #1 **<END>** g01165905

283-3659 GUARD GP-BOTTOM

S/N: CLA1-UP

PART OF 260-7231 CHASSIS AR

SMCS-7153 **i02794276**

NOTE	REF NO	GRAPHIC REF	PART NUMBER	QTY	PART NAME 1 2 3 4 5 6 (PRODUCT LEVEL)	SEE PAGE
M	1	1	**135-8576**	35	BOLT AS-LOCKING (M12X1.75X30-MM)	
	2	1	**283-3778**	1	SHEET	
	3	1	**283-3779**	1	SHEET	
	4	1	**283-3780**	1	SHEET	
	5	1	**283-3781**	1	SHEET	
	6	1	**283-3782**	1	SHEET	
	7	1	**283-3783**	1	SHEET	
	8	1	**283-3784**	1	SHEET AS	

M-METRIC PART

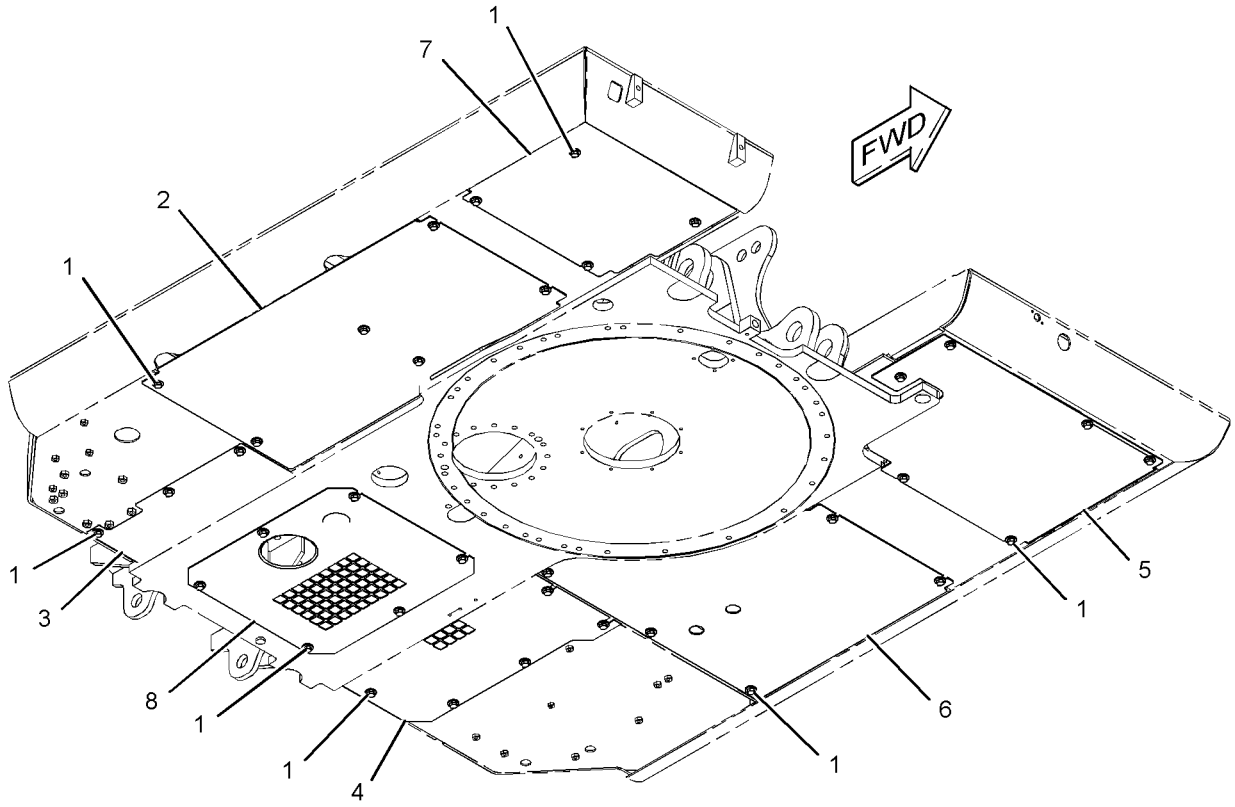

GRAPHIC #1 **<END>** g01414560

FRAME AND BODY

283-3661 GUARD GP-BOTTOM–HEAVY DUTY

S/N: CLA1-UP
AN ATTACHMENT

SMCS-7153 **i02796229**

NOTE	REF NO	GRAPHIC REF	PART NUMBER	QTY	PART NAME 1 2 3 4 5 6 (PRODUCT LEVEL)	SEE PAGE
M	1	1	**135-8576**	2	BOLT AS-LOCKING (M12X1.75X30-MM)	
	2	1	**298-3008**	1	PLATE AS	
	3	1	**298-3010**	1	PLATE AS	
	4	1	**298-3012**	1	PLATE AS	
	5	1	**298-3014**	1	PLATE AS	
	6	1	**298-3016**	1	PLATE AS	
	7	1	**298-3018**	1	PLATE AS	
	8	1	**298-3020**	1	PLATE AS	

M-METRIC PART

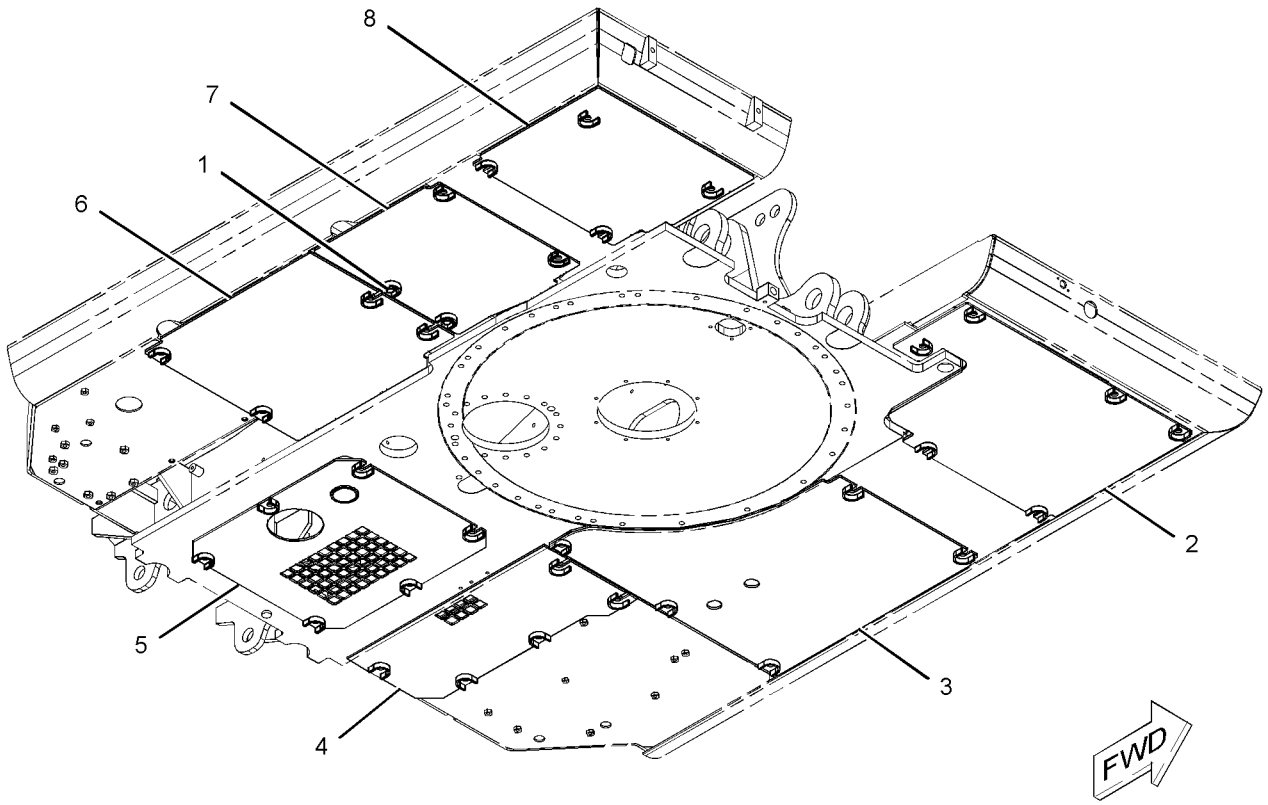

GRAPHIC #1 **<END>** g01400207

309-5747 GUARD GP-FRONT

S/N: CLA1-UP
PART OF 301-2552, 301-2555, 301-2647 SPECIAL AR
AN ATTACHMENT

SMCS-7167, 7182 **i02852239**

NOTE	REF NO	GRAPHIC REF	PART NUMBER	QTY	PART NAME 1 2 3 4 5 6 (PRODUCT LEVEL)	SEE PAGE
	1	1	**309-5748**	1	GUARD AS	
	2	1	**5P-1076**	3	WASHER-HARD (13.5X30X4-MM THK)	
M	3	1	**8T-4179**	3	BOLT (M12X1.75X20-MM)	

M-METRIC PART

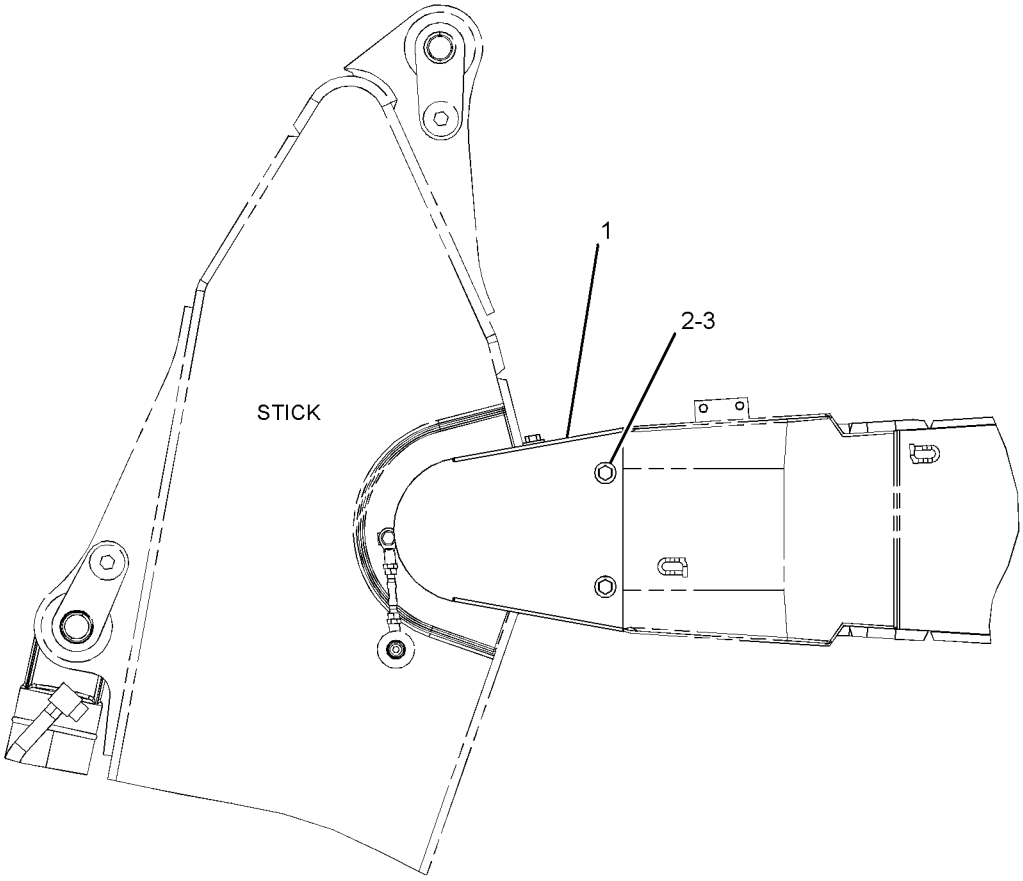

LEFT SIDE VIEW

GRAPHIC #1 **<END>** g01438342

137-2813 GUARD GP-SWIVEL

S/N: CLA1-UP

AN ATTACHMENT

SMCS-7183 **i01764407**

NOTE	REF NO	GRAPHIC REF	PART NUMBER	QTY	PART NAME 1 2 3 4 5 6 (PRODUCT LEVEL)	SEE PAGE
	1	1	**137-2853**	1	PLATE AS	
	2	1	**137-2854**	1	PLATE AS	
M	3	1	**8C-8992**	4	BOLT-LOCKING (M12X1.75X30MM)	
	4	1	**5P-1076**	4	WASHER-HARD (13.5X30X4MM THK)	

M-METRIC PART

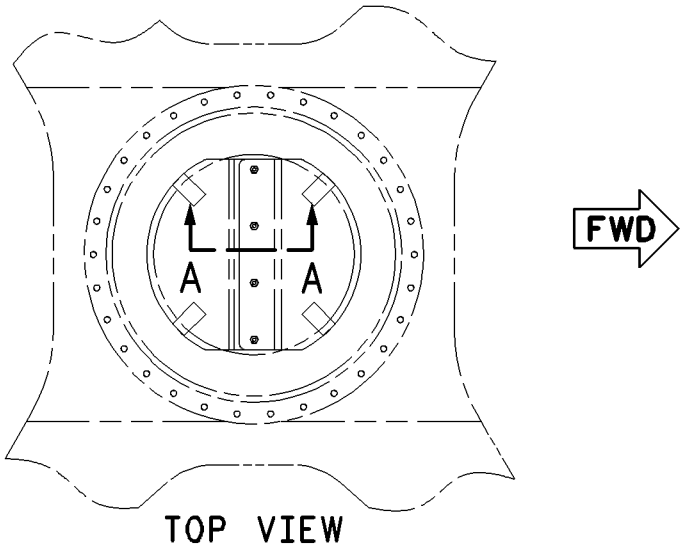

TOP VIEW

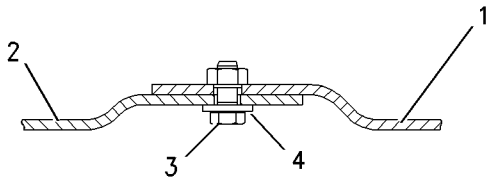

SECTION A-A

GRAPHIC #1 **<END>** g00780828

307-7740 HANDRAIL GP

S/N: CLA1-UP

PART OF 260-7231 CHASSIS AR

SMCS-7256 **i02794259**

NOTE	REF NO	GRAPHIC REF	PART NUMBER	QTY	PART NAME 1 2 3 4 5 6 (PRODUCT LEVEL)	SEE PAGE
M	1	1	**135-8575**	2	BOLT AS-LOCKING (M12X1.75X30-MM)	
M	2	1	**135-8577**	4	BOLT AS (M12X1.75X35-MM)	
M	3	1	**135-8578**	3	BOLT AS (M12X1.75X40-MM)	
	4	1	**177-5879**	1	CLAMP	
	5	1	**177-5880**	2	SLEEVE	
	6	1	**178-5870**	2	CLIP	
	7	1	**178-5871**	2	CLIP	
	8	1	**307-7750**	1	PLATE AS	
	9	1	**307-7840**	1	HANDHOLD AS	
Y	10	1	*307-7842*	1	HANDRAIL GP	293
	11	1	**5P-1076**	4	WASHER-HARD (13.5X30X4-MM THK)	
	12	1	**8T-2920**	2	GROMMET	
M	13	1	**8T-4192**	2	BOLT (M12X1.75X25-MM)	
M	14	1	**8T-4194**	2	BOLT (M12X1.75X50-MM)	
	15	1	**8T-4223**	2	WASHER-HARD (13.5X25.5X3-MM THK)	
M	16	1	**8T-4244**	2	NUT (M12X1.75-THD)	

M-METRIC PART
Y-SEPARATE ILLUSTRATION

307-7740 **HANDRAIL GP** *(contd.)* **i02794259**

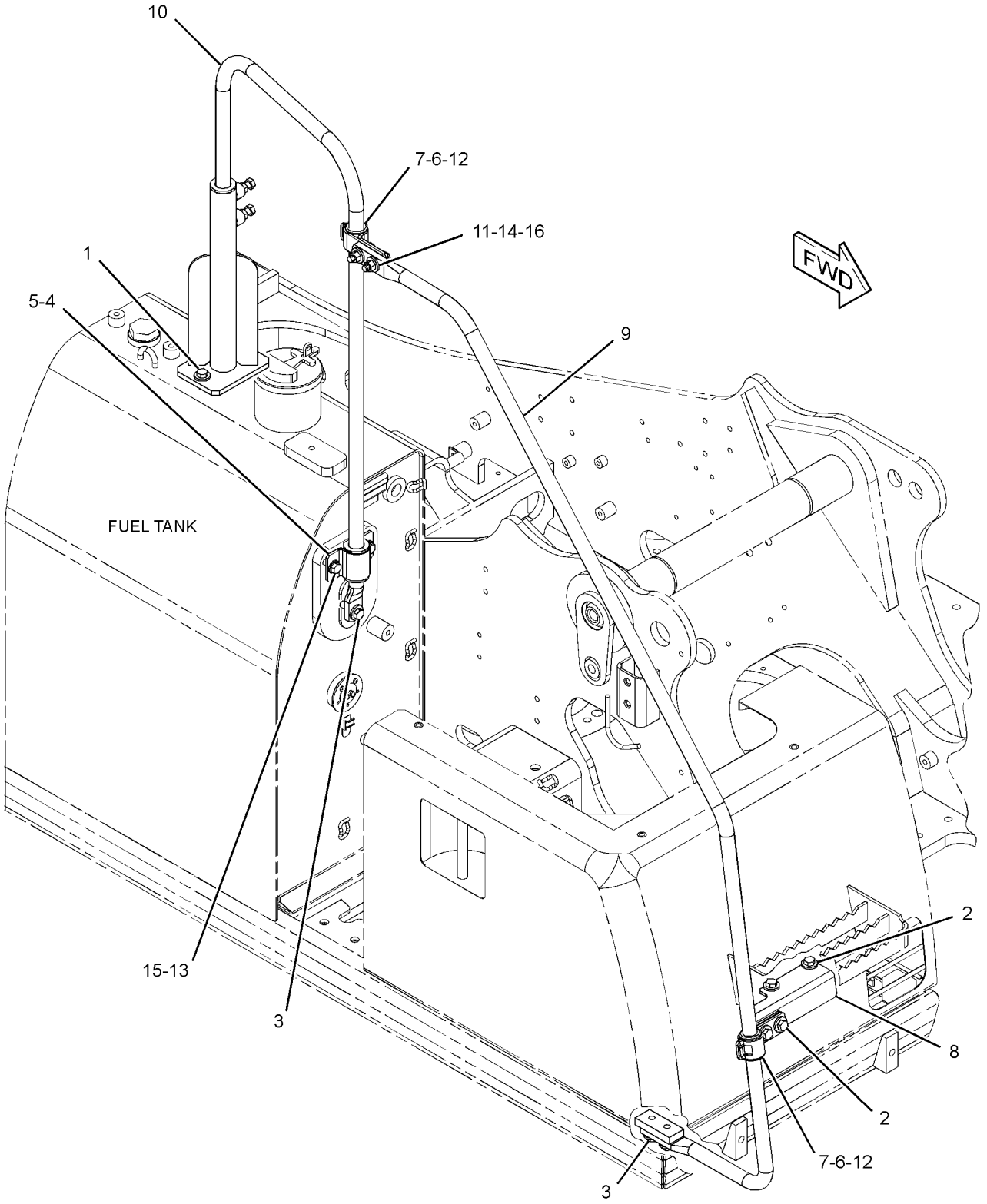

GRAPHIC #1 **<END>** g01417330

FRAME AND BODY

307-7842 HANDRAIL GP

S/N: CLA1-UP

PART OF 307-7740 HANDRAIL GP

SMCS-7256 **i02794260**

NOTE	REF NO	GRAPHIC REF	PART NUMBER	QTY	PART NAME 1 2 3 4 5 6 (PRODUCT LEVEL)	SEE PAGE
	1	1	**137-2292**	1	SLEEVE	
M	2	1	**137-2294**	2	BOLT (M12X1.75X53-MM)	
	3	1	**307-7843**	1	TUBE AS	
	4	1	**307-7845**	1	HANDHOLD AS	
M	5	1	**8T-4244**	2	NUT (M12X1.75-THD)	

M-METRIC PART

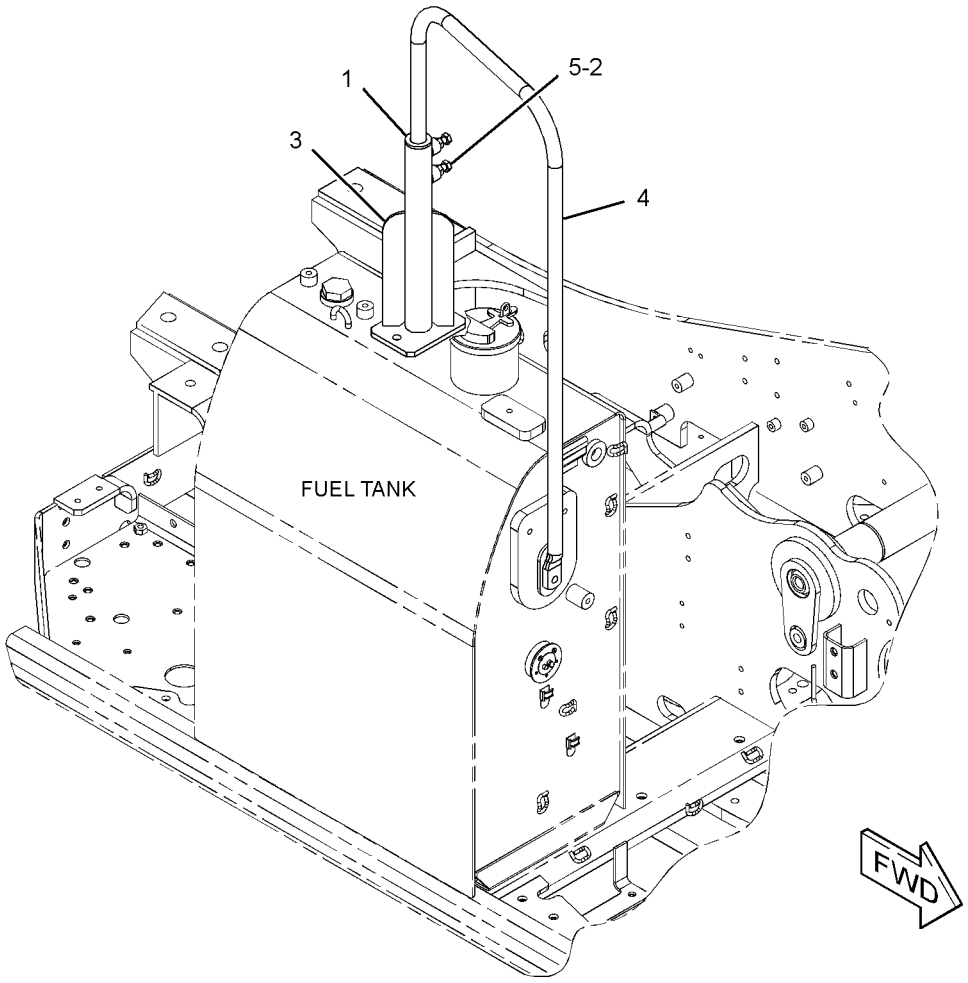

GRAPHIC #1 **<END>** g01417359

FRAME AND BODY

283-3664 HOOD & GUARD GP

S/N: CLA1-UP

PART OF 260-7231 CHASSIS AR

SMCS-7251, 7276 **i03148784**

NOTE	REF NO	GRAPHIC REF	PART NUMBER	QTY	PART NAME 1 2 3 4 5 6 (PRODUCT LEVEL)	SEE PAGE
Y	1	1	*283-3864*	1	DOOR GP-ACCESS	271
Y	2	1	*283-3865*	1	COVER GP-ACCESS (UPPER)	266
Y	3	1	*283-3866*	1	SUPPORT GP-HOOD	315
Y	4	1	*283-3867*	1	FIREWALL GP	277
Y	5	1	*283-3868*	1	HOOD GP-ENGINE	301

Y-SEPARATE ILLUSTRATION

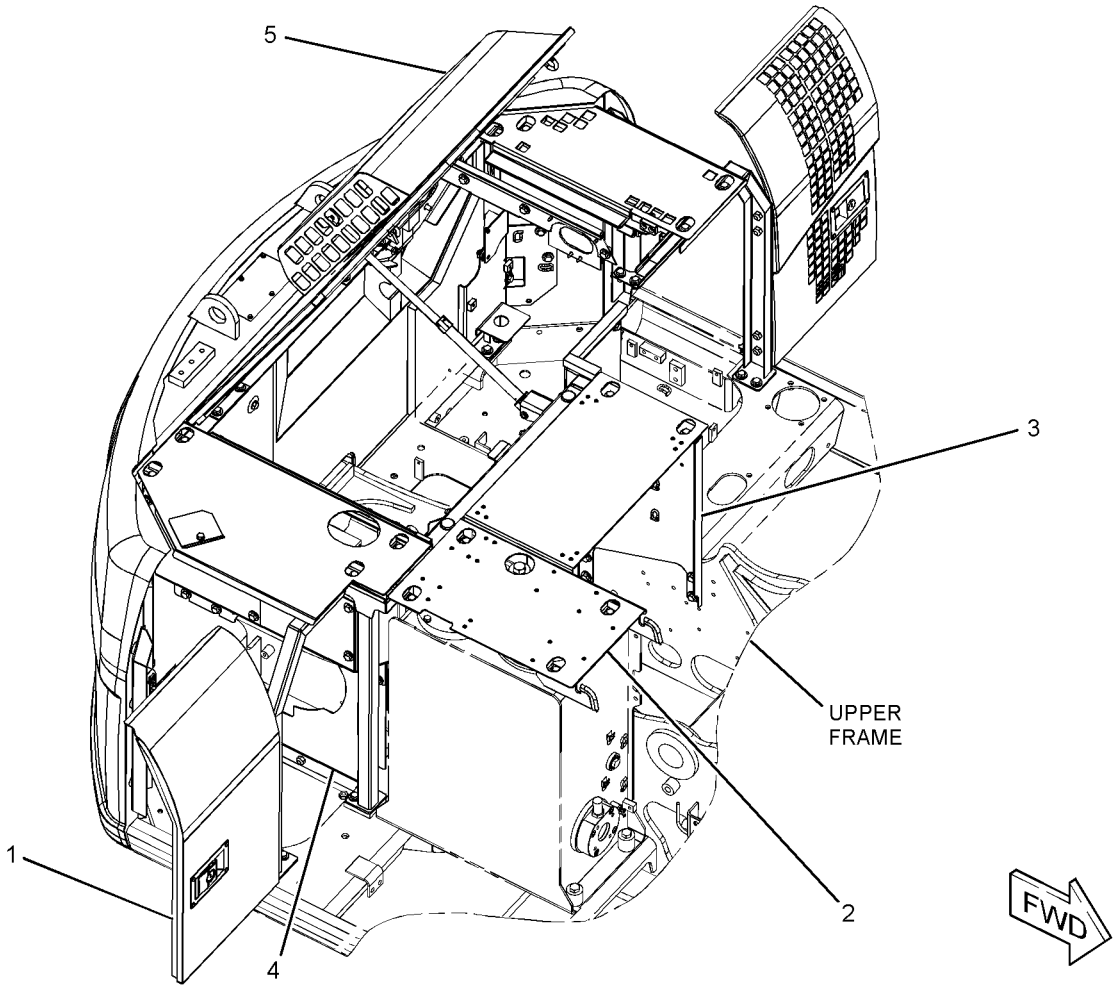

GRAPHIC #1 **<END>** g01622928

FRAME AND BODY

307-8067 HOOD GP

S/N: CLA1-UP
PART OF 301-2552 SPECIAL AR
AN ATTACHMENT
TYPE 1

SMCS-7251 **i02983595**

NOTE	REF NO	GRAPHIC REF	PART NUMBER	QTY	PART NAME 1 2 3 4 5 6 (PRODUCT LEVEL)	SEE PAGE
	1	1	**313-7856**	1	LINER	
	2	1	**313-7857**	1	COVER AS	
	3	1	**313-7976**	1	SUPPORT AS	
		1	**313-7975**	1	GUARD	
	4	1	**313-7992**	1	COVER AS	
		1	**6I-6033**	1	STOP	
M		1	**9X-2045**	2	SCREW-TRUSS HEAD (M6X1X20-MM)	
		1	**313-7974**	1	SHEET-RUBBER	
	5	1	**313-7994**	1	COVER AS	
		1	**6I-6033**	1	STOP	
M		1	**9X-2045**	2	SCREW-TRUSS HEAD (M6X1X20-MM)	
	6	1	**313-7997**	1	SHEET AS	
Y	7	1	**313-8005**	1	HOOD GP-ENGINE	305
	8	1	**325-8982**	1	PLATE AS	

M-METRIC PART
Y-SEPARATE ILLUSTRATION

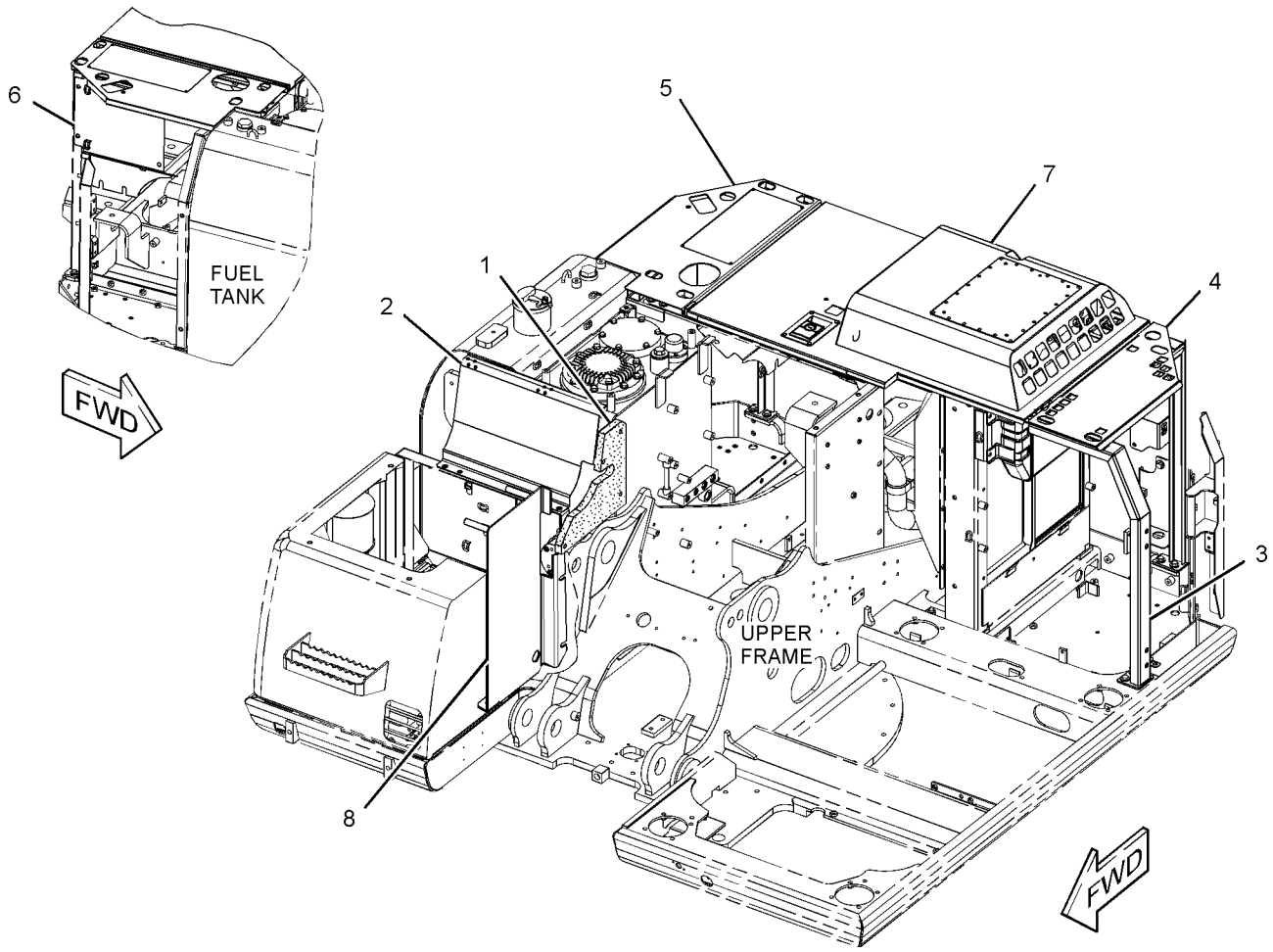

GRAPHIC #1 **<END>** g01559894

307-8067 HOOD GP

S/N: CLA1-UP
PART OF 301-2552 SPECIAL AR
AN ATTACHMENT
TYPE 2

SMCS-7251 **i03212421**

NOTE	REF NO	GRAPHIC REF	PART NUMBER	QTY	PART NAME 1 2 3 4 5 6 (PRODUCT LEVEL)	SEE PAGE
	1	1	**313-7856**	1	LINER	
	2	1	**313-7857**	1	COVER AS	
D		1	**5P-9205**		SEAL (0.4-M)	
	3	1	**313-7994**	1	COVER AS	
		1	**6I-6033**	1	STOP	
M		1	**9X-2045**	2	SCREW-TRUSS HEAD (M6X1X20-MM)	
	4	1	**313-7997**	1	SHEET AS	
D		1	**101-9848**		SEAL (0.4-M)	
Y	5	1	**313-8005**	1	HOOD GP-ENGINE	305
	6	1	**325-8982**	1	PLATE AS	
	7	1	**313-7992**	1	COVER AS	
		1	**6I-6033**	1	STOP	
M		1	**9X-2045**	2	SCREW-TRUSS HEAD (M6X1X20-MM)	
		1	**313-7974**	1	SHEET-RUBBER	

D-ORDER BY THE METER
M-METRIC PART
Y-SEPARATE ILLUSTRATION

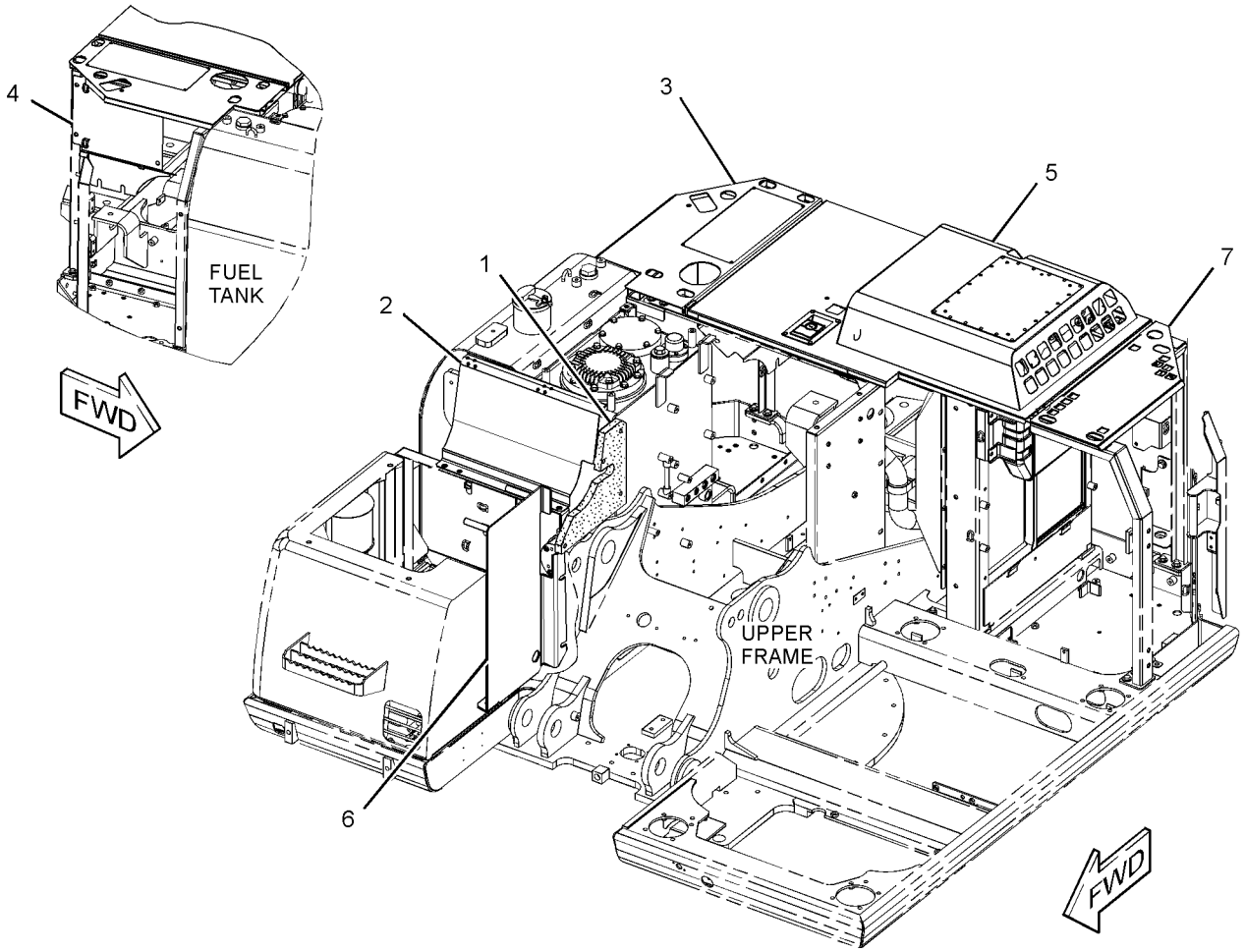

GRAPHIC #1 **<END>** g01639353

307-8069 HOOD GP–GPS

S/N: CLA1-UP
PART OF 301-2647 SPECIAL AR
AN ATTACHMENT

SMCS-7251 **i03236055**

NOTE	REF NO	GRAPHIC REF	PART NUMBER	QTY	PART NAME 1 2 3 4 5 6 (PRODUCT LEVEL)	SEE PAGE
	1	1	**313-7856**	1	LINER	
	2	1	**313-7857**	1	COVER AS	
Y	3	1	**313-7972**	1	HOOD GP-ENGINE	304
	4	1	**313-7976**	1	SUPPORT AS	
		1	**313-7975**	1	GUARD	
	5	1	**313-7992**	1	COVER AS	
		1	**6I-6033**	1	STOP	
M		1	**9X-2045**	2	SCREW-TRUSS HEAD (M6X1X20-MM)	
		1	**313-7974**	1	SHEET-RUBBER	
	6	1	**313-7994**	1	COVER AS	
		1	**6I-6033**	1	STOP	
M		1	**9X-2045**	2	SCREW-TRUSS HEAD (M6X1X20-MM)	
	7	1	**313-7997**	1	SHEET AS	
	8	1	**325-8982**	1	PLATE AS	

M-METRIC PART
Y-SEPARATE ILLUSTRATION

307-8069 **HOOD GP** *(contd.)* **i03236055**

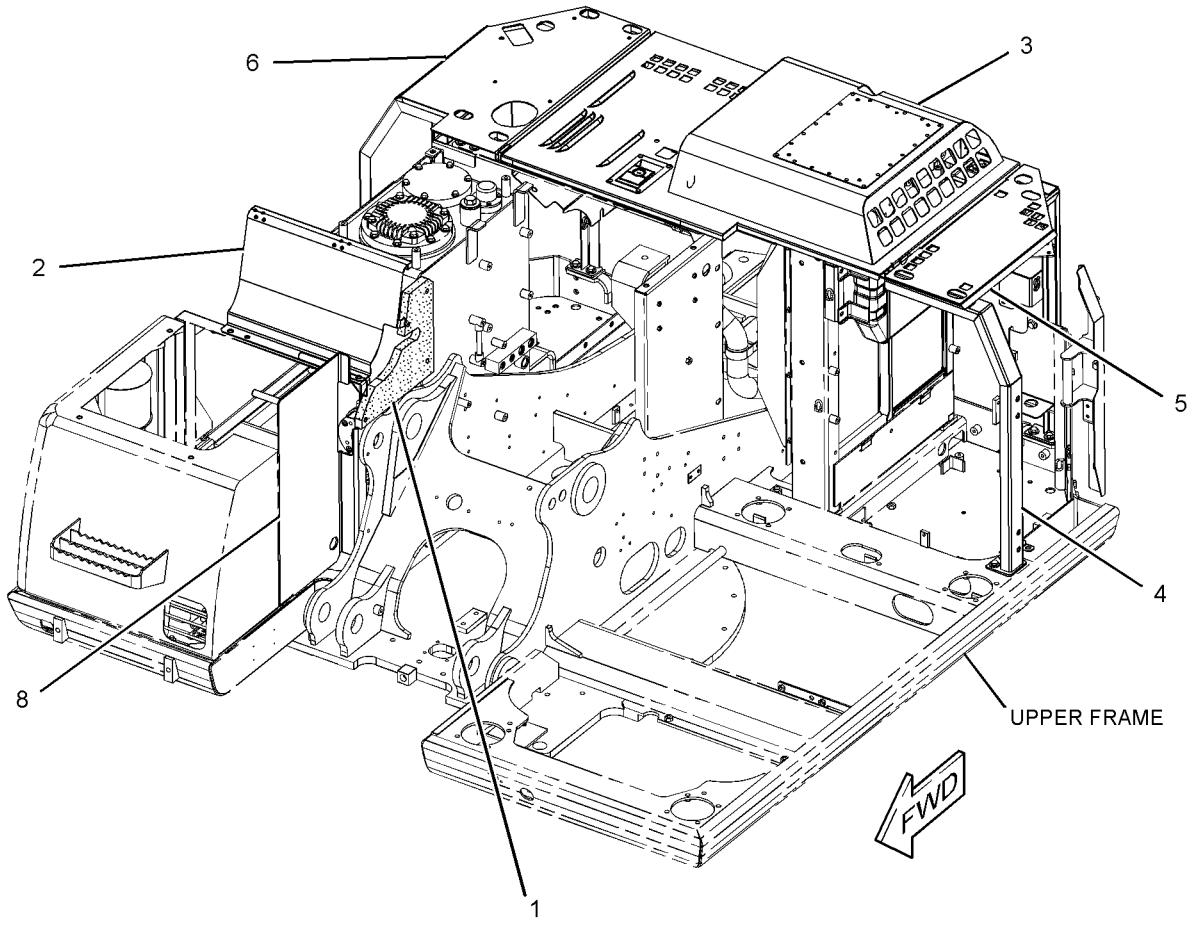

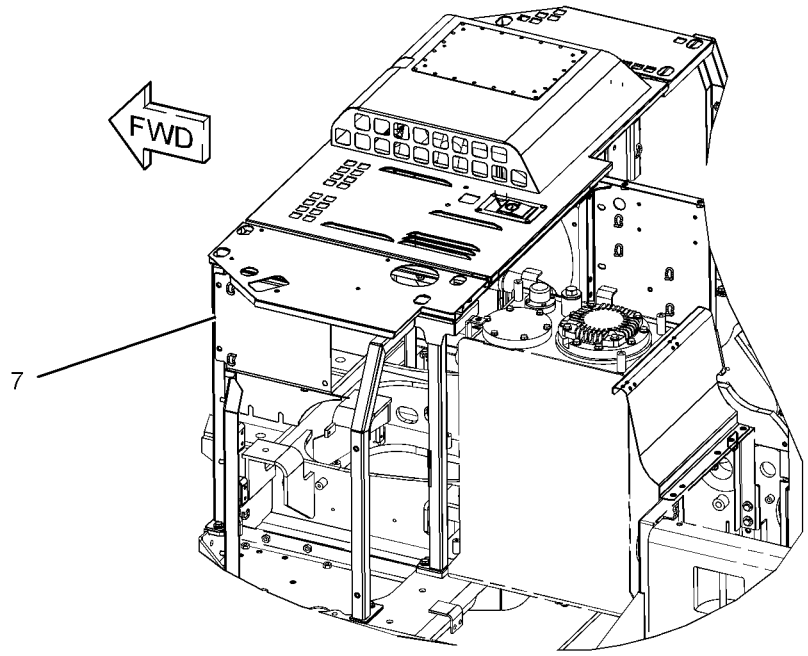

GRAPHIC #1 **<END>** g01622956

FRAME AND BODY

307-8070 HOOD GP

S/N: CLA1-UP
PART OF 301-2555 SPECIAL AR
AN ATTACHMENT

SMCS-7251 **i02988440**

NOTE	REF NO	GRAPHIC REF	PART NUMBER	QTY	PART NAME 1 2 3 4 5 6 (PRODUCT LEVEL)	SEE PAGE
	1	1	**313-7856**	1	LINER	
	2	1	**313-7857**	1	COVER AS	
	3	1	**325-8982**	1	PLATE AS	
M		1	**8T-3612**	1	NUT-WELD (M8X1.25-THD)	

M-METRIC PART

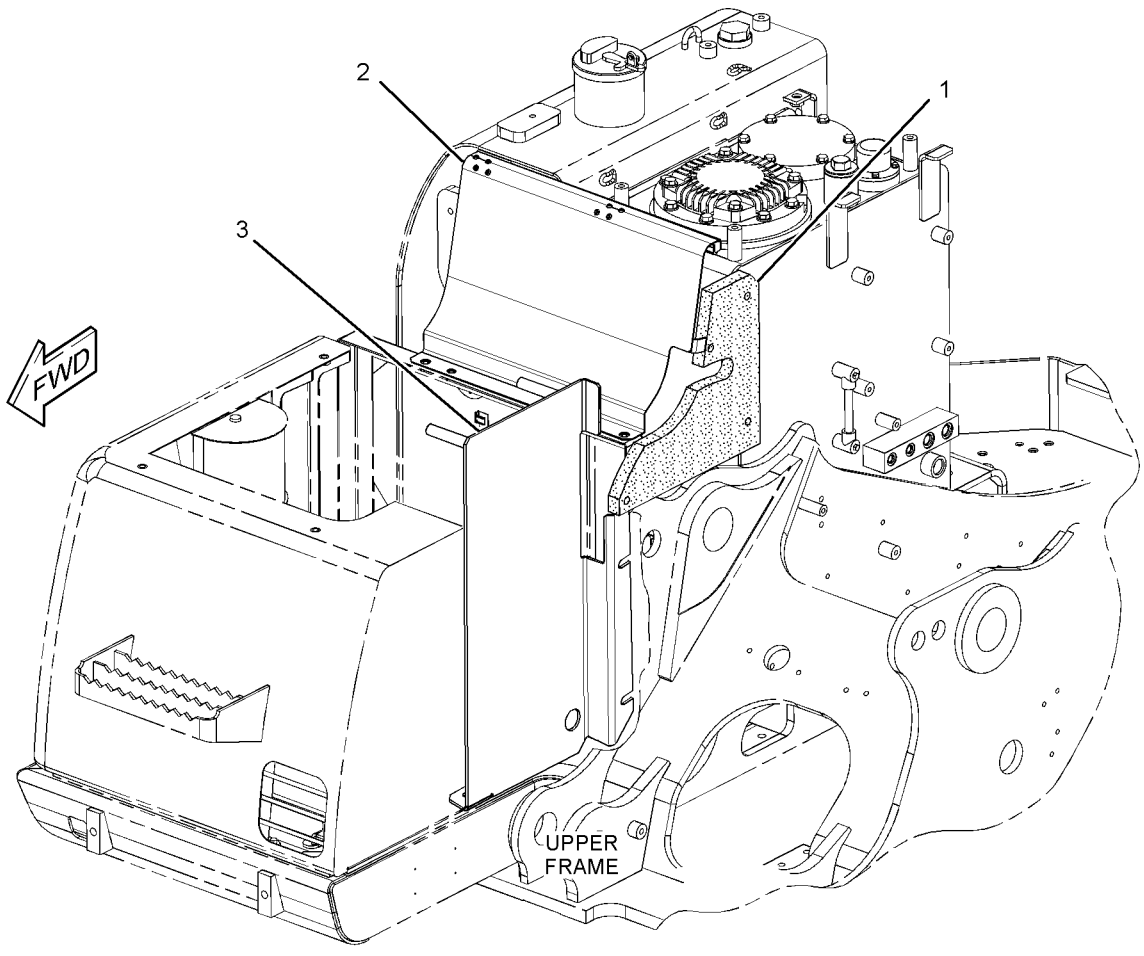

GRAPHIC #1 **<END>** g01559874

283-3671 HOOD GP-ENGINE

S/N: CLA1-UP

PART OF 283-8793, 283-8819, 283-8820 COOLING AR-HIGH AMBIENT TEMP

AN ATTACHMENT

SMCS-7251 **i02838072**

NOTE	REF NO	GRAPHIC REF	PART NUMBER	QTY	PART NAME 1 2 3 4 5 6 (PRODUCT LEVEL)	SEE PAGE
Y	1	1	**293-6752**	1	HOOD GP-ENGINE	303

Y-SEPARATE ILLUSTRATION

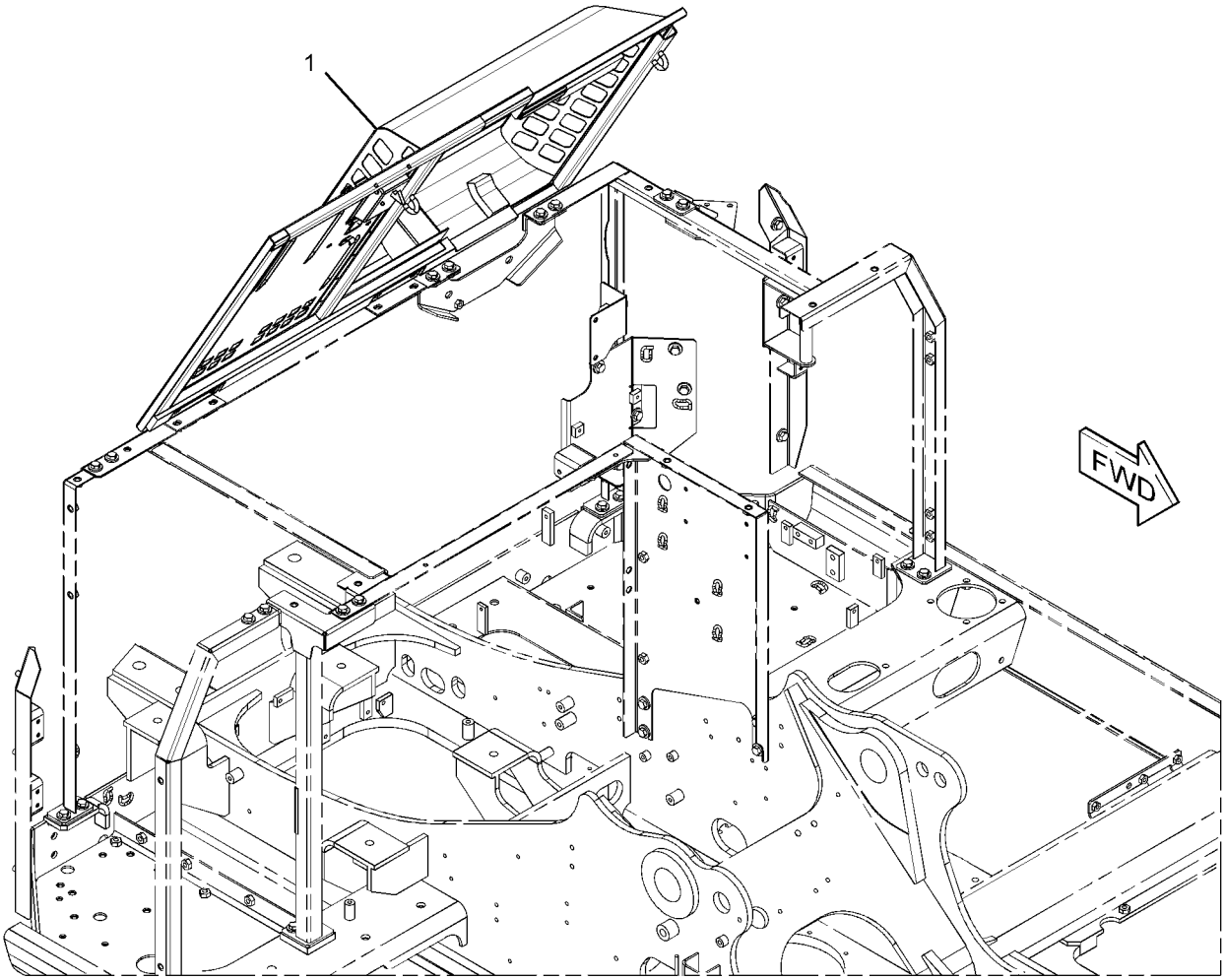

GRAPHIC #1 **<END>** g01444483

283-3868 HOOD GP-ENGINE

S/N: CLA1-UP

PART OF 283-3664 HOOD & GUARD GP

SMCS-7251 **i02903619**

NOTE	REF NO	GRAPHIC REF	PART NUMBER	QTY	PART NAME 1 2 3 4 5 6 (PRODUCT LEVEL)	SEE PAGE
M	1	1	**135-8573**	7	BOLT AS (M12X1.75X25-MM)	
	2	1	**170-3014**	2	BUMPER	
	3	1	**199-0377**	1	PLATE	
	4	1	**236-3404**	4	CLIP	
Y	5	1	**283-3977**	1	HOOD GP-ENGINE	302
	6	1	**293-6936**	1	SHEET-RUBBER	
Y	7	1	**293-6937**	1	SHEET AS-SOUND SUPPRESSION	309
	8	1	**298-2985**	1	SPRING AS-GAS (ENGINE HOOD)	
	9	1	**3B-4618**	1	PIN-COTTER	
M	10	1	**5C-7261**	1	NUT (M8X1.25-THD)	
	11	1	**7F-3708**	1	PIN	
	12	1	**8T-4121**	4	WASHER-HARD (11X21X2.5-MM THK)	
M	13	1	**8T-4136**	2	BOLT (M10X1.5X25-MM)	
	14	1	**8T-4224**	1	WASHER-HARD (8.8X16X2-MM THK)	

M-METRIC PART
Y-SEPARATE ILLUSTRATION

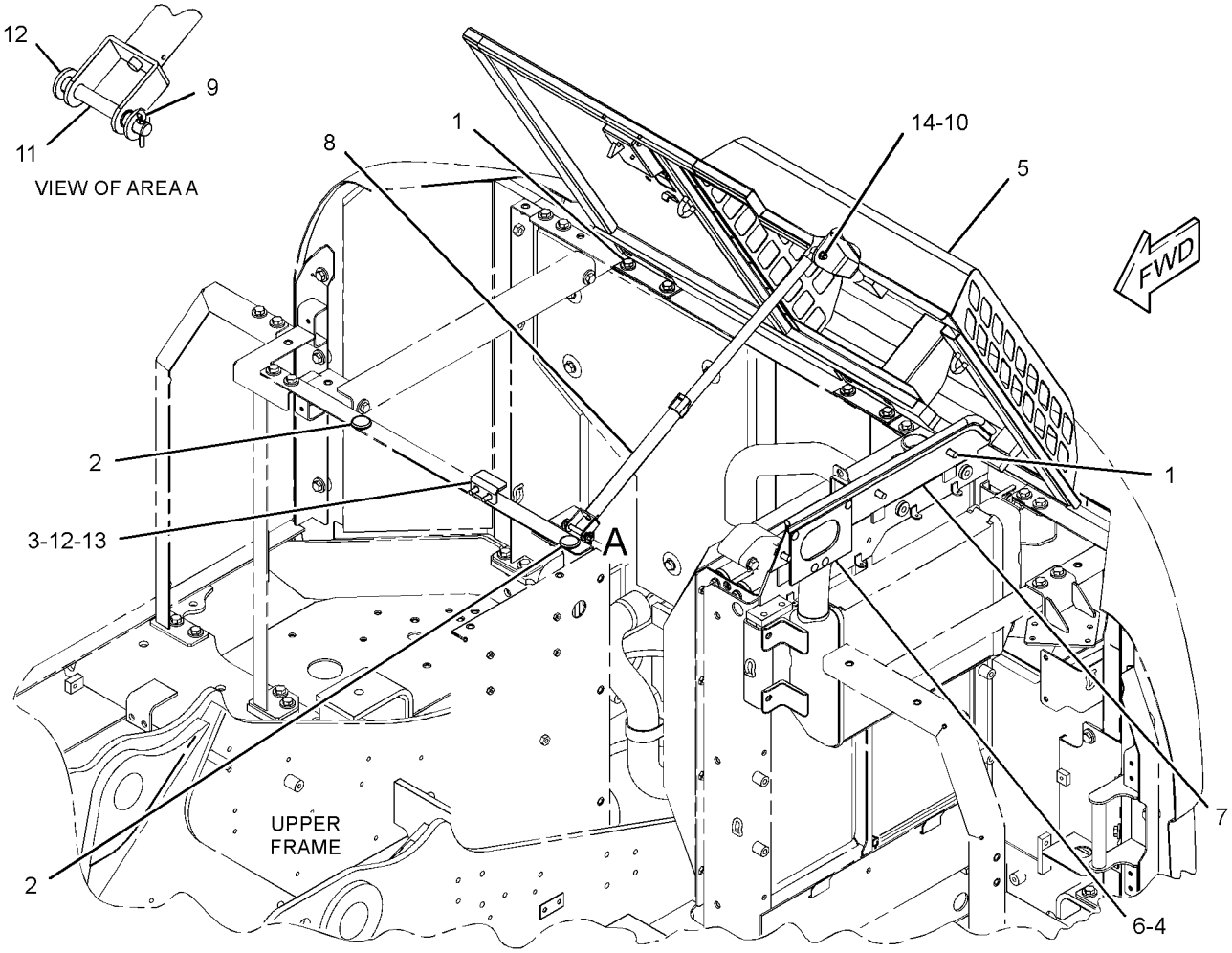

GRAPHIC #1 **<END>** g01418344

FRAME AND BODY

283-3977 HOOD GP-ENGINE

S/N: CLA1-UP

PART OF 283-3868 HOOD GP-ENGINE

SMCS-7251 **i02794353**

NOTE	REF NO	GRAPHIC REF	PART NUMBER	QTY	PART NAME 1 2 3 4 5 6 (PRODUCT LEVEL)	SEE PAGE
M	1	1	**099-6418**	4	NUT (M6X1-THD)	
	2	1	**184-8862**	1	COVER	
	3	1	**199-0159**	1	GUARD	
	4	1	**203-5005**	1	SHEET	
	5	1	*283-3978*	1	HOOD AS	
	5A	1	**203-5001**	2	HINGE	
	6	1	**283-4013**	1	LINER	
	7	1	**286-6130**	1	SHEET-RUBBER	
	8	1	**293-6754**	1	LINER	
	9	1	**293-6755**	1	LINER	
	10	1	**293-6756**	1	LINER	
J	11	1	**298-2942**	1	LOCK AS	

J-REQUIRES CORPORATE KEY
M-METRIC PART

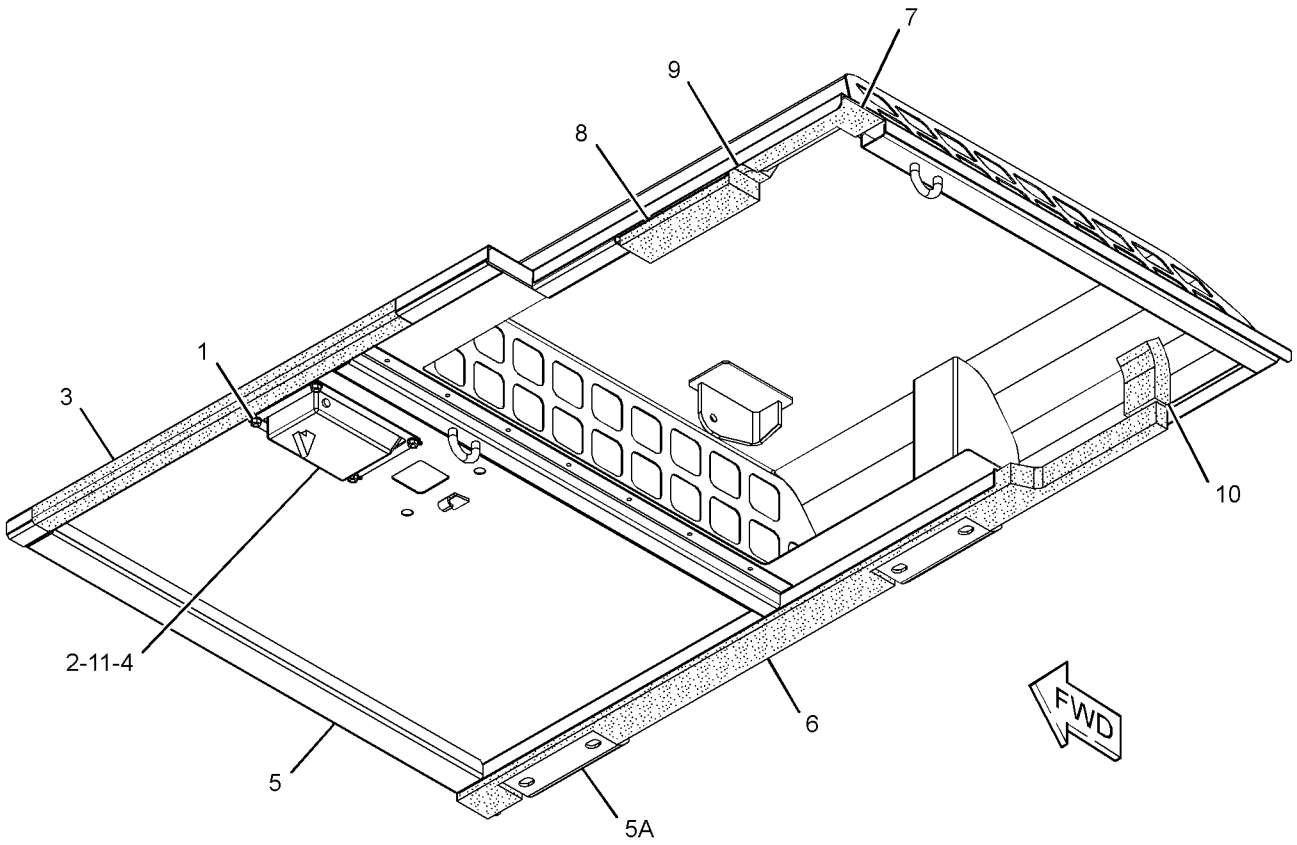

GRAPHIC #1 **<END>** g01417524

FRAME AND BODY

293-6752 HOOD GP-ENGINE

S/N: CLA1-UP
PART OF 283-3671 HOOD GP-ENGINE
AN ATTACHMENT

SMCS-7251 **i02838073**

NOTE	REF NO	GRAPHIC REF	PART NUMBER	QTY	PART NAME 1 2 3 4 5 6 (PRODUCT LEVEL)	SEE PAGE
M	1	1	**099-6418**	4	NUT (M6X1-THD)	
	2	1	**184-8862**	1	COVER	
	3	1	**199-0159**	1	GUARD	
	4	1	**203-5005**	1	SHEET	
J	5	1	**268-0457**	1	LOCK AS	
	6	1	**283-4013**	1	LINER	
	7	1	**286-6130**	1	SHEET-RUBBER	
	8	1	**286-6132**	1	SHEET-RUBBER	
	9	1	*293-6753*	1	HOOD AS	
		1	**4K-8501**	1	CLIP	
		1	**203-5001**	2	HINGE	
	10	1	**293-6754**	1	LINER	
	11	1	**293-6755**	1	LINER	
	12	1	**293-6756**	1	LINER	

J-REQUIRES CORPORATE KEY
M-METRIC PART

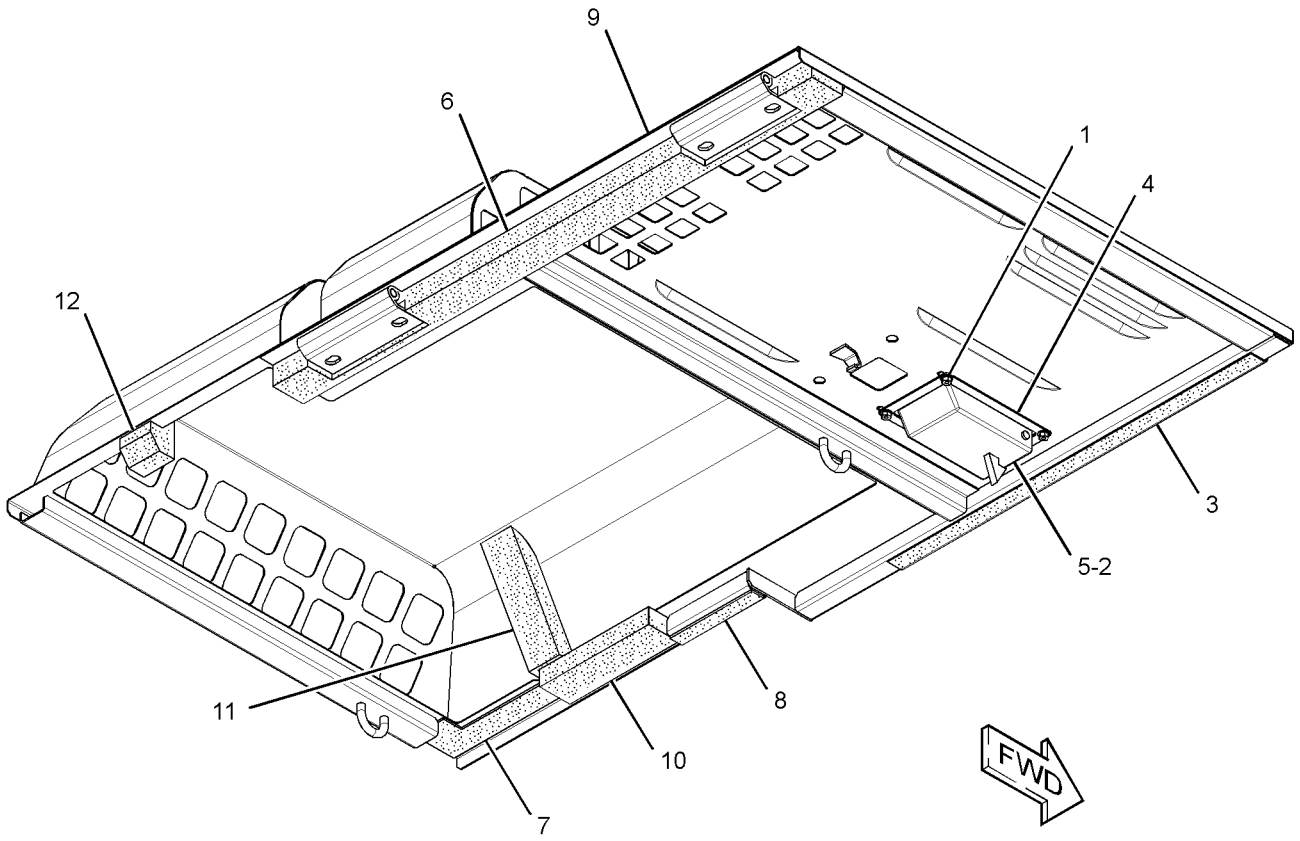

GRAPHIC #1 **<END>** g01447047

FRAME AND BODY

313-7972 HOOD GP-ENGINE

S/N: CLA1-UP
PART OF 307-8069 HOOD GP
AN ATTACHMENT

SMCS-7251 **i02996067**

NOTE	REF NO	GRAPHIC REF	PART NUMBER	QTY	PART NAME 1 2 3 4 5 6 (PRODUCT LEVEL)	SEE PAGE
M	1	1	**099-6418**	4	NUT (M6X1-THD)	
	2	1	**184-8862**	1	COVER	
	3	1	**199-0159**	1	GUARD	
	4	1	**203-5005**	1	SHEET	
J	5	1	**298-2942**	1	LOCK AS	
	6	1	**283-4013**	1	LINER	
	7	1	**286-6130**	1	SHEET-RUBBER	
	8	1	**286-6132**	1	SHEET-RUBBER	
	9	1	**293-6754**	1	LINER	
	10	1	**293-6755**	1	LINER	
	11	1	**293-6756**	1	LINER	
	12	1	*313-7973*	1	HOOD AS	
		1	**4K-8501**	1	CLIP	
		1	**6C-3679**	22	RIVET-POP	
		1	**203-5001**	2	HINGE	

J-REQUIRES CORPORATE KEY
M-METRIC PART

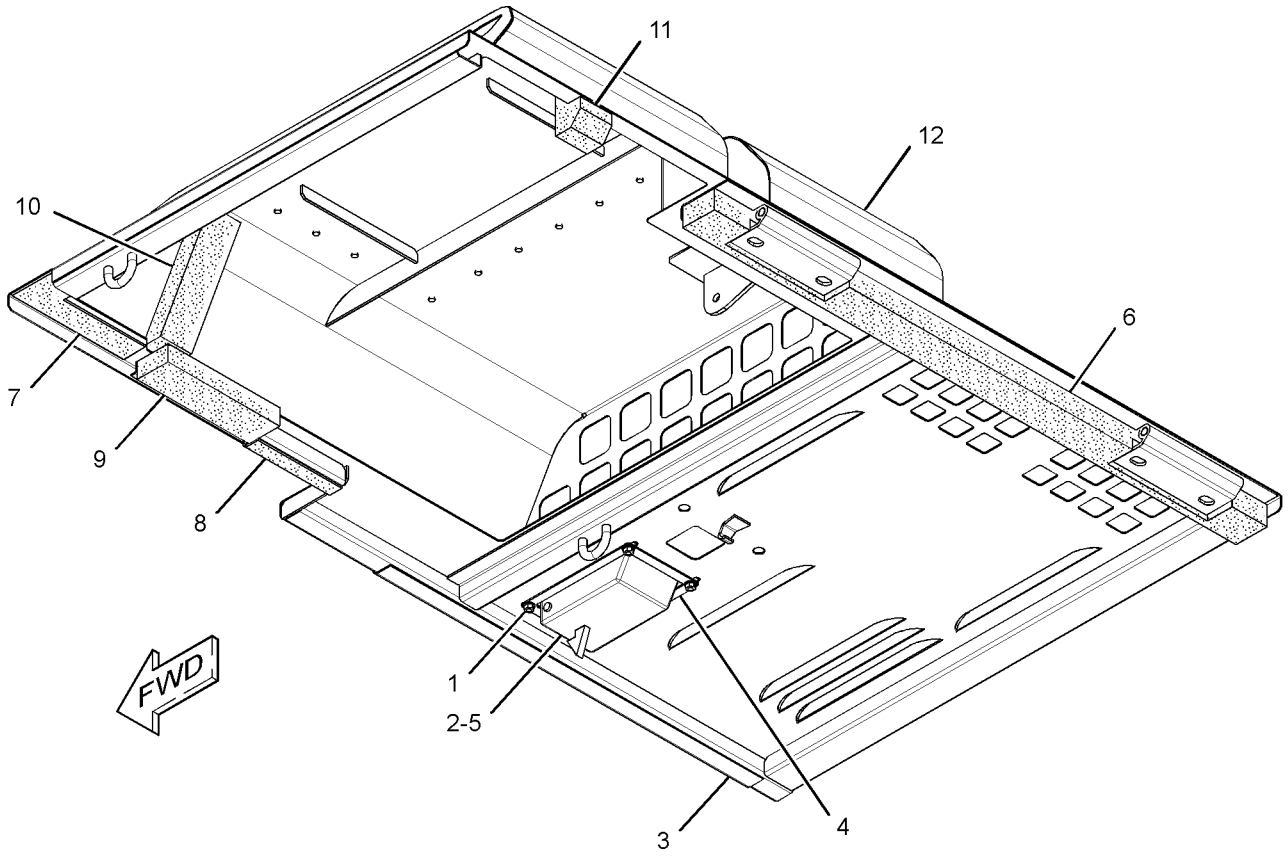

GRAPHIC #1 **<END>** g01623694

313-8005 HOOD GP-ENGINE

S/N: CLA1-UP
PART OF 307-8067 HOOD GP
AN ATTACHMENT

SMCS-7251 **i02983609**

NOTE	REF NO	GRAPHIC REF	PART NUMBER	QTY	PART NAME 1 2 3 4 5 6 (PRODUCT LEVEL)	SEE PAGE
M	1	1	**099-6418**	4	NUT (M6X1-THD)	
	2	1	**184-8862**	1	COVER	
	3	1	**199-0159**	1	GUARD	
	4	1	**203-5005**	1	SHEET	
J	5	1	**298-2942**	1	LOCK AS	
	6	1	**283-4013**	1	LINER	
	7	1	**286-6130**	1	SHEET-RUBBER	
	8	1	**286-6132**	1	SHEET-RUBBER	
	9	1	**293-6754**	1	LINER	
	10	1	**293-6755**	1	LINER	
	11	1	**293-6756**	1	LINER	

J-REQUIRES CORPORATE KEY
M-METRIC PART

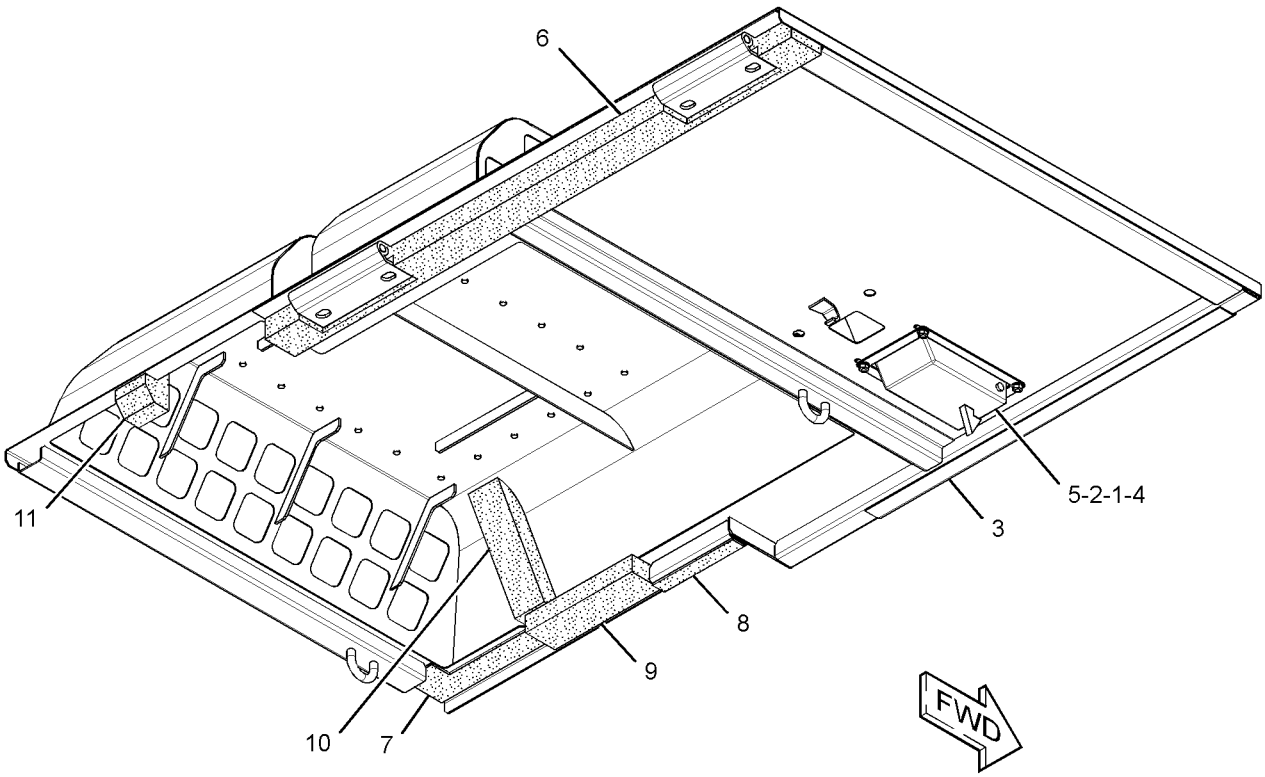

GRAPHIC #1 **<END>** g01559893

FRAME AND BODY

283-3999 SHEET AS-SOUND SUPPRESSION

S/N: CLA1-UP

PART OF 283-3867 FIREWALL GP

SMCS-1801, 7076, 7251, 7267 **i02794380**

NOTE	REF NO	GRAPHIC REF	PART NUMBER	QTY	PART NAME 1 2 3 4 5 6 (PRODUCT LEVEL)	SEE PAGE
D	1	1	**5P-9205**		SEAL (0.05-M)	
	2	1	**283-4012**	1	LINER	
	3	1	**293-6764**	1	LINER	
	4	1	**293-6765**	1	LINER	

D-ORDER BY THE METER

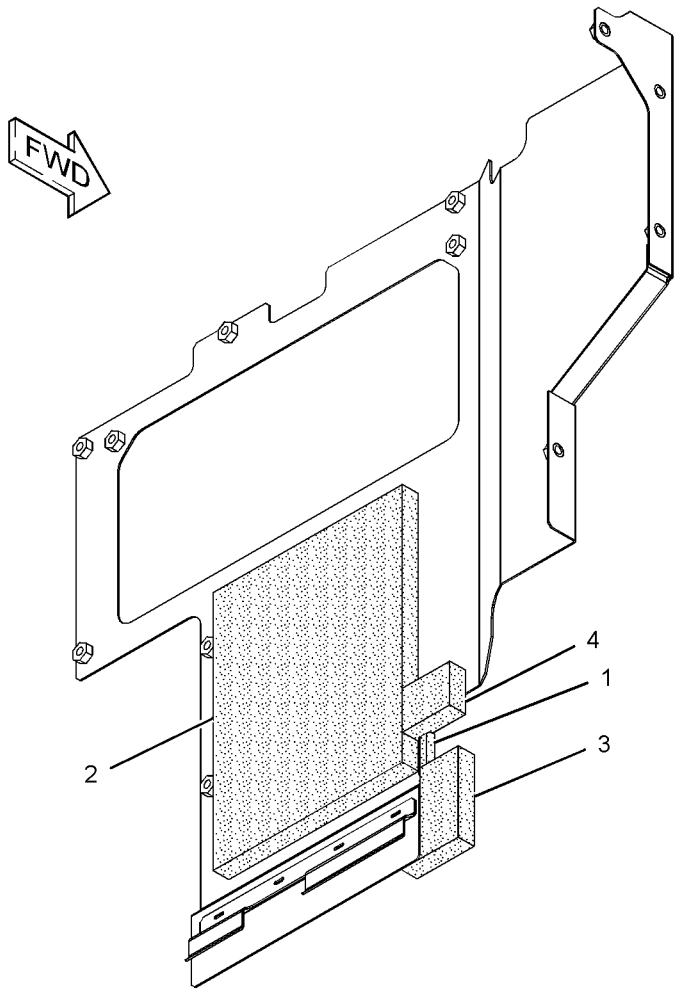

GRAPHIC #1

<END>

g01417587

283-4002 SHEET AS-SOUND SUPPRESSION

S/N: CLA1-UP

PART OF 283-3867 FIREWALL GP

SMCS-1801, 7076, 7251, 7267 **i02794448**

NOTE	REF NO	GRAPHIC REF	PART NUMBER	QTY	PART NAME 1 2 3 4 5 6 (PRODUCT LEVEL)	SEE PAGE
	1	1	**9M-5732**	5	RIVET-POP	
	2	1	**283-4000**	1	SHEET-RUBBER	
	3	1	**9M-2307**	5	WASHER (5.2X19X2-MM THK)	
	4	1	**283-4010**	1	LINER	
	5	1	**293-6765**	1	LINER	

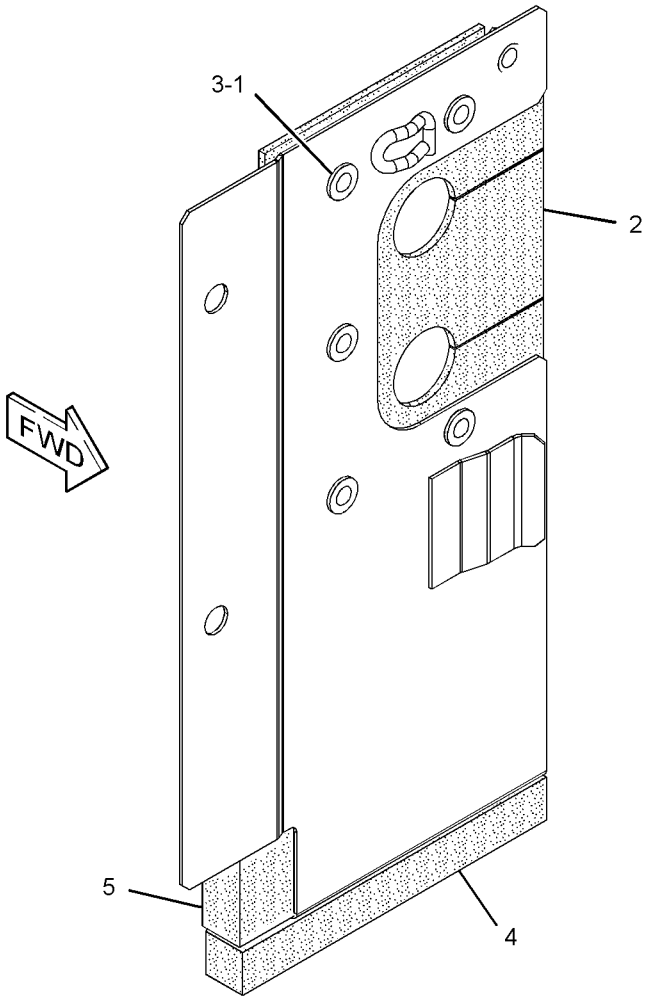

GRAPHIC #1 **<END>** g01417500

283-4004 SHEET AS-SOUND SUPPRESSION

S/N: CLA1-UP

PART OF 283-3867 FIREWALL GP

SMCS-1801, 7076, 7251, 7267 **i02794449**

NOTE	REF NO	GRAPHIC REF	PART NUMBER	QTY	PART NAME 1 2 3 4 5 6 (PRODUCT LEVEL)	SEE PAGE
	1	1	**283-4005**	1	LINER	
	2	1	**283-4006**	1	LINER	
	3	1	**303-9670**	1	LINER	

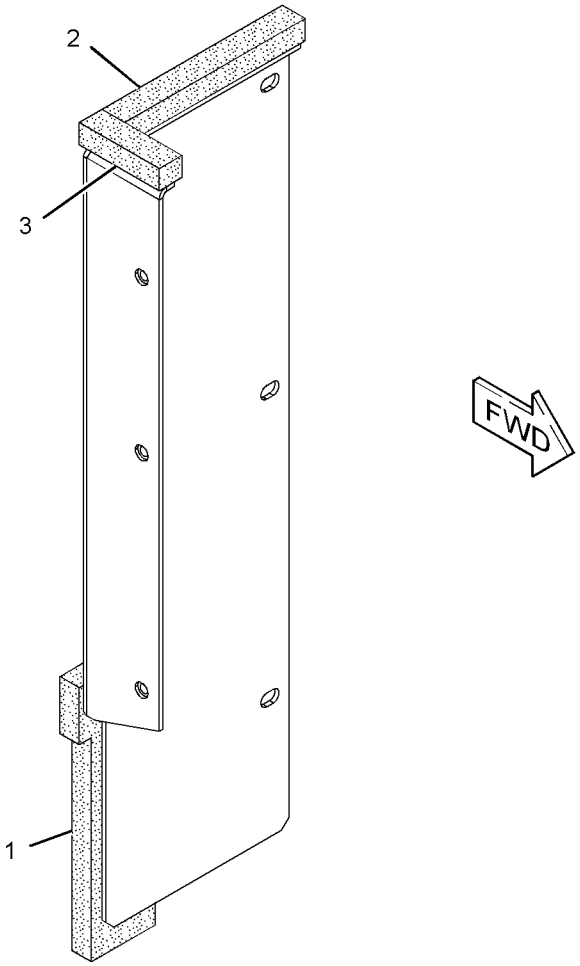

GRAPHIC #1 **<END>** g01417559

293-6937 SHEET AS-SOUND SUPPRESSION

S/N: CLA1-UP

PART OF 283-3868 HOOD GP-ENGINE

SMCS-1801, 7076, 7251, 7267 **i02794493**

NOTE	REF NO	GRAPHIC REF	PART NUMBER	QTY	PART NAME 1 2 3 4 5 6 (PRODUCT LEVEL)	SEE PAGE
	1	1	**283-3930**	2	GUARD	
	2	1	**283-3931**	1	GUARD	
D	3	1	**5P-8309**	1	SEAL (0.6-M)	

D-ORDER BY THE METER

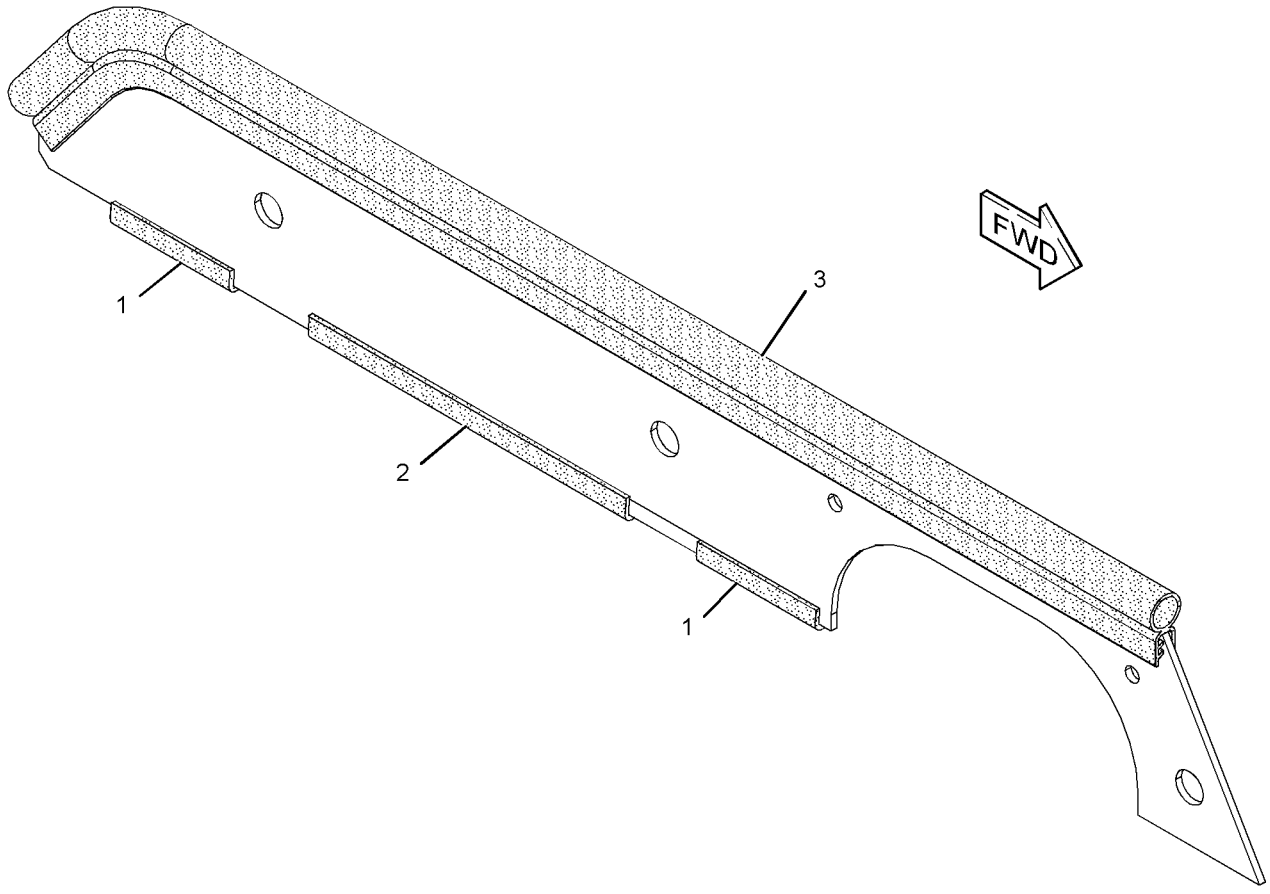

GRAPHIC #1 **<END>** g01417552

235-7764 STEP GP

S/N: CLA1-UP
PART OF 283-8848 TRACK GP
FOR USE WITH TRACK SHOES UP TO 800-MM (31.5-IN) WIDE
AN ATTACHMENT

SMCS-7254 **i03255291**

NOTE	REF NO	GRAPHIC REF	PART NUMBER	QTY	PART NAME 1 2 3 4 5 6 (PRODUCT LEVEL)	SEE PAGE
	1	1	**235-7765**	2	STEP	
M	2	1	**8T-7338**	4	BOLT (M16X2X45-MM)	
	3	1	**9X-8257**	4	WASHER (17.5X30X3.5-MM THK)	

M-METRIC PART

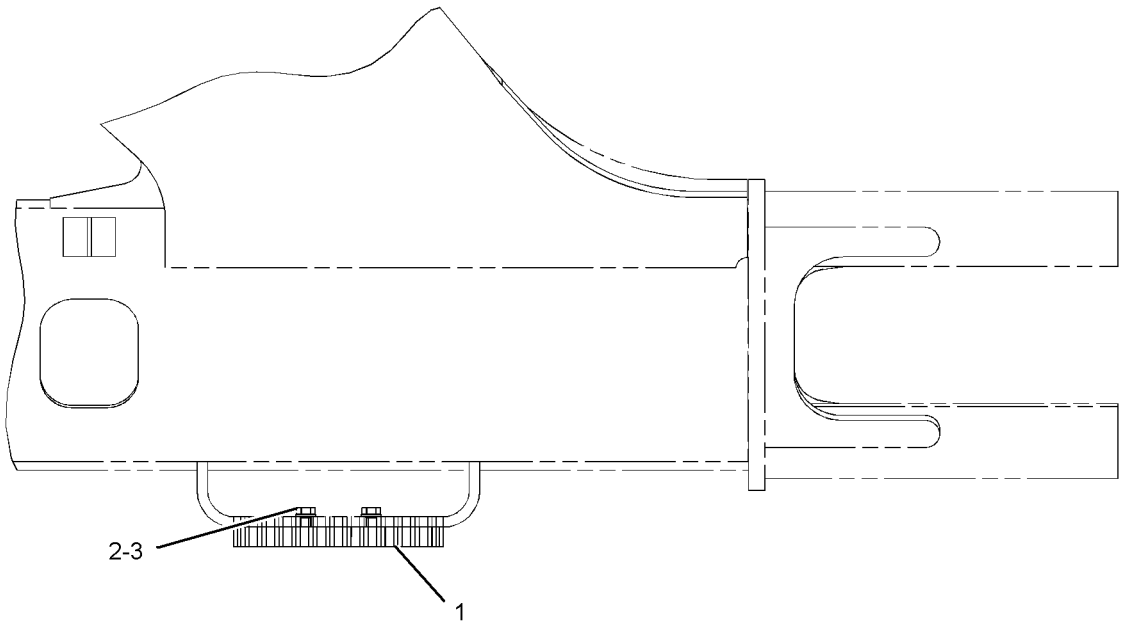

TOP VIEW

GRAPHIC #1 **<END>** g01150668

278-9280 STEP GP

S/N: CLA1-UP
PART OF 283-8934 TRACK GP
AN ATTACHMENT

SMCS-7254 **i02795483**

NOTE	REF NO	GRAPHIC REF	PART NUMBER	QTY	PART NAME 1 2 3 4 5 6 (PRODUCT LEVEL)	SEE PAGE
	1	1	**278-9281**	2	STEP AS	
M	2	1	**7X-2553**	4	BOLT (M16X2X40-MM)	
	3	1	**9X-8257**	4	WASHER (17.5X30X3.5-MM THK)	

M-METRIC PART

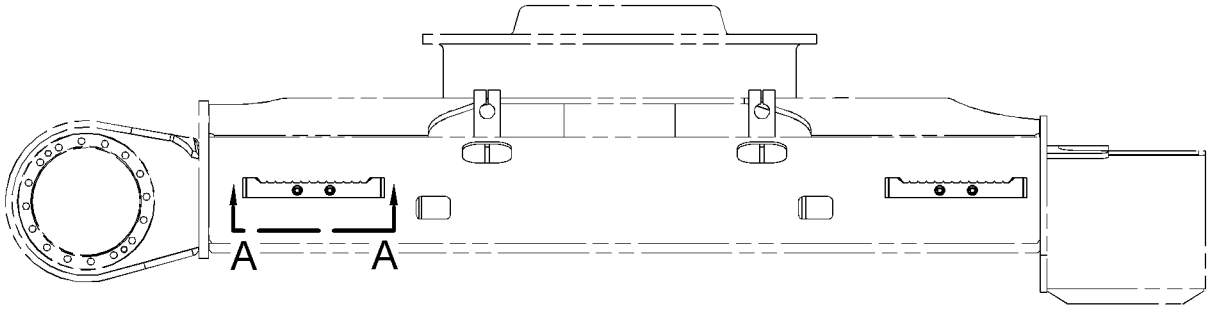

RIGHT SIDE VIEW

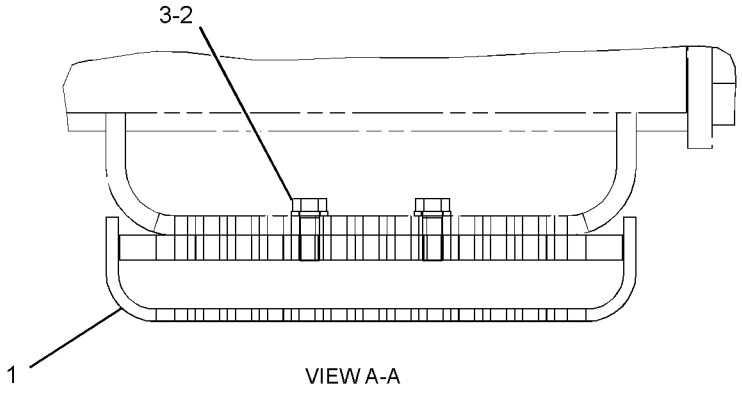

VIEW A-A

GRAPHIC #1 **<END>** g01239750

283-3666 STORAGE GP-VANDALISM GUARD

S/N: CLA1-UP

PART OF 283-8786, 283-8837 GUARD AR-VANDALISM

AN ATTACHMENT

SMCS-7315 **i02795953**

NOTE	REF NO	GRAPHIC REF	PART NUMBER	QTY	PART NAME 1 2 3 4 5 6 (PRODUCT LEVEL)	SEE PAGE
M	1	1	**135-8573**	4	BOLT AS (M12X1.75X25-MM)	
M	2	1	**135-8575**	1	BOLT AS-LOCKING (M12X1.75X30-MM)	
	3	1	**170-3016**	4	SPACER (19X32X2-MM THK)	
	4	1	**203-5292**	1	CABLE	
	5	1	**218-8054**	1	SPRING	
	6	1	**218-8055**	1	HOOK AS	
	7	1	**268-0408**	1	SHEET AS	
Y	8	1	**268-0417**	1	COVER GP-STORAGE (VANDALISM GUARD)	794
	9	1	**268-0727**	1	BOLT AS-SPECIAL	
	10	1	**303-9946**	1	TUBE AS	
M	11	1	**095-7930**	2	SCREW-MACHINE (M4X0.07X6-MM)	
	12	1	**3B-4618**	1	PIN-COTTER	
	13	1	**096-6166**	2	WASHER-HARD (4.5X9X1-MM THK)	
M	14	1	**5C-2890**	2	NUT (M6X1-THD)	
	15	1	**5P-7958**	2	SLEEVE-CABLE SPLICE	
	16	1	**8T-4121**	5	WASHER-HARD (11X21X2.5-MM THK)	
M	17	1	**8T-4133**	4	NUT (M10X1.5-THD)	
M	18	1	**8T-4138**	2	BOLT (M6X1X20-MM)	
	19	1	**9X-8256**	4	WASHER (6.6X12X2-MM THK)	

M-METRIC PART
Y-SEPARATE ILLUSTRATION

283-3666 **STORAGE GP-VANDALISM GUARD** *(contd.)* **i02795953**

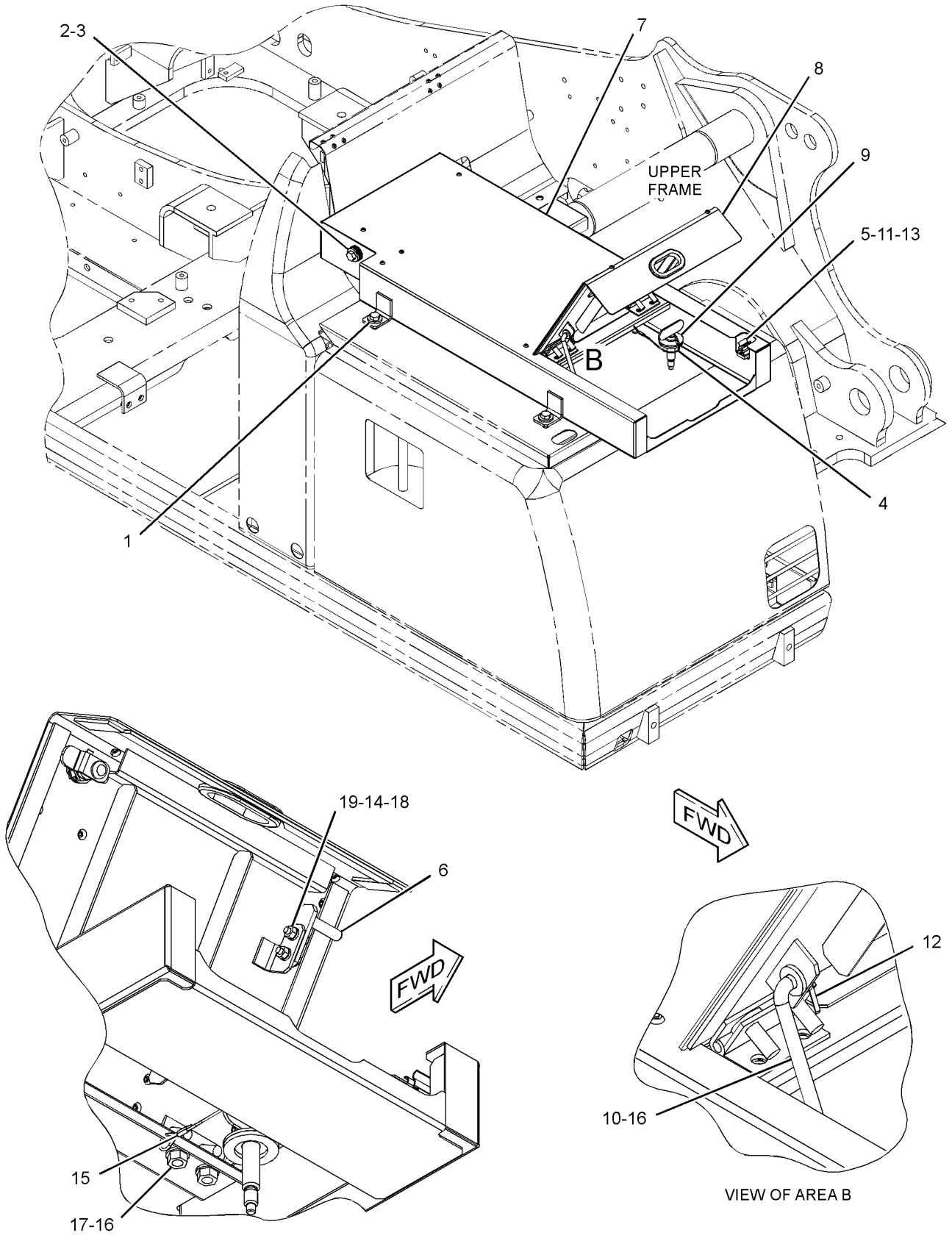

GRAPHIC #1 **<END>** g01400242

FRAME AND BODY

283-3696 SUPPORT GP-HOOD

S/N: CLA1-UP

PART OF 283-8797 PUMP AR-FUEL TRANSFER, 301-2641 PUMP AR-REFUELING AN ATTACHMENT

SMCS-7251 **i02795989**

NOTE	REF NO	GRAPHIC REF	PART NUMBER	QTY	PART NAME 1 2 3 4 5 6 (PRODUCT LEVEL)	SEE PAGE
	1	1	**304-0077**	1	SUPPORT AS	
	2	1	**307-7912**	1	BODY AS	

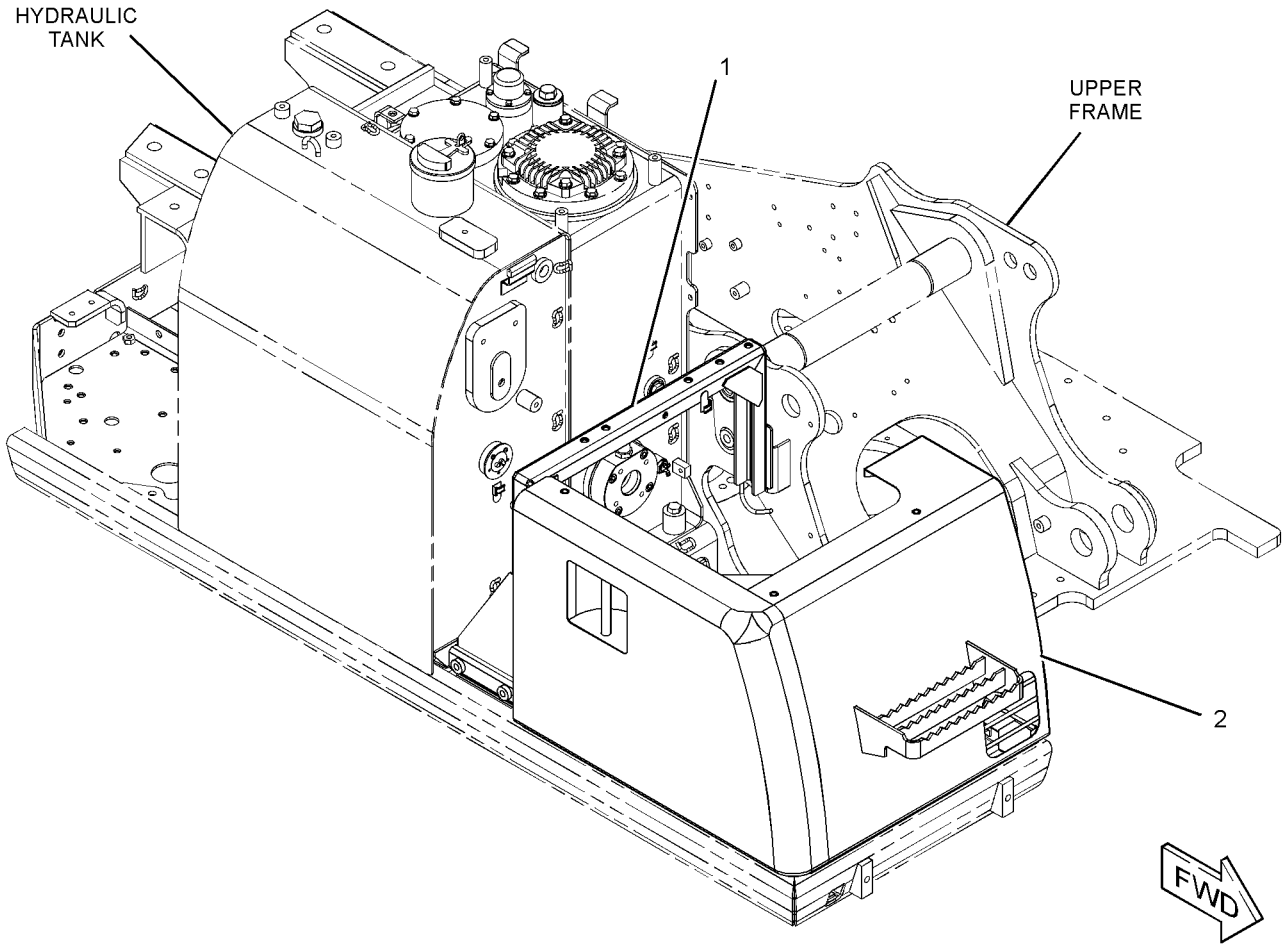

GRAPHIC #1 **<END>** g01404584

283-3866 SUPPORT GP-HOOD

S/N: CLA1-UP

PART OF 283-3664 HOOD & GUARD GP

SMCS-7251 **i03152021**

NOTE	REF NO	GRAPHIC REF	PART NUMBER	QTY	PART NAME 1 2 3 4 5 6 (PRODUCT LEVEL)	SEE PAGE
M	1	1	**135-8573**	38	BOLT AS (M12X1.75X25-MM)	
M	2	1	**135-8575**	4	BOLT AS-LOCKING (M12X1.75X30-MM)	
	3	1	**313-7976**	1	SUPPORT AS	
	4	1	**283-3981**	1	SUPPORT AS	
	5	1	**283-3982**	1	SUPPORT AS	
	6	1	**283-3983**	1	SUPPORT AS	
	7	1	**283-3984**	1	SUPPORT AS	
	8	1	**283-3988**	1	SUPPORT AS	
	9	1	**283-3989**	1	SUPPORT AS	
	10	1	**283-3990**	1	SUPPORT AS	
	11	1	**283-3991**	1	SHEET AS	
	12	1	**293-6747**	1	SUPPORT AS	
	13	1	**293-6748**	1	SUPPORT AS	
	14	1	**293-6760**	1	SUPPORT AS	
	15	1	**307-7969**	1	SHEET AS	

M-METRIC PART

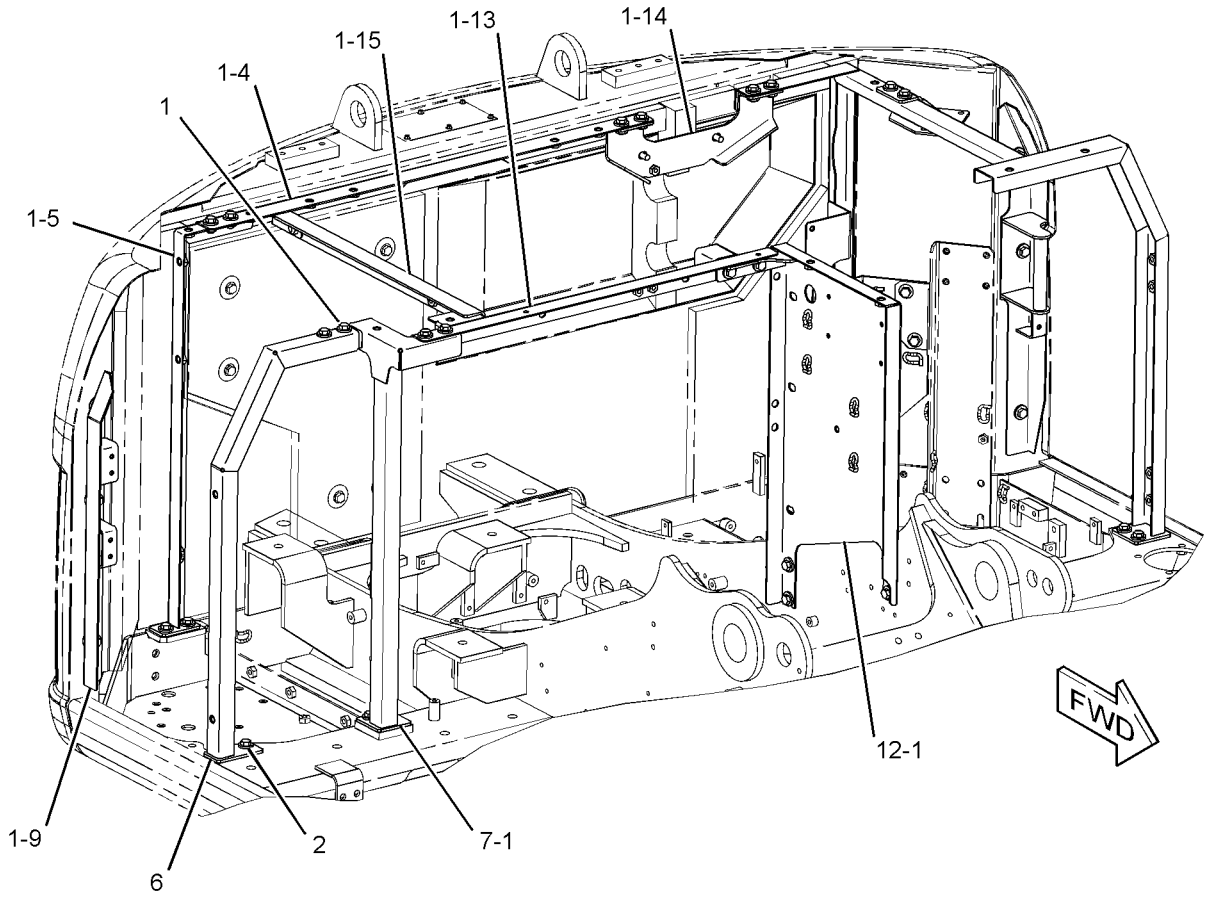

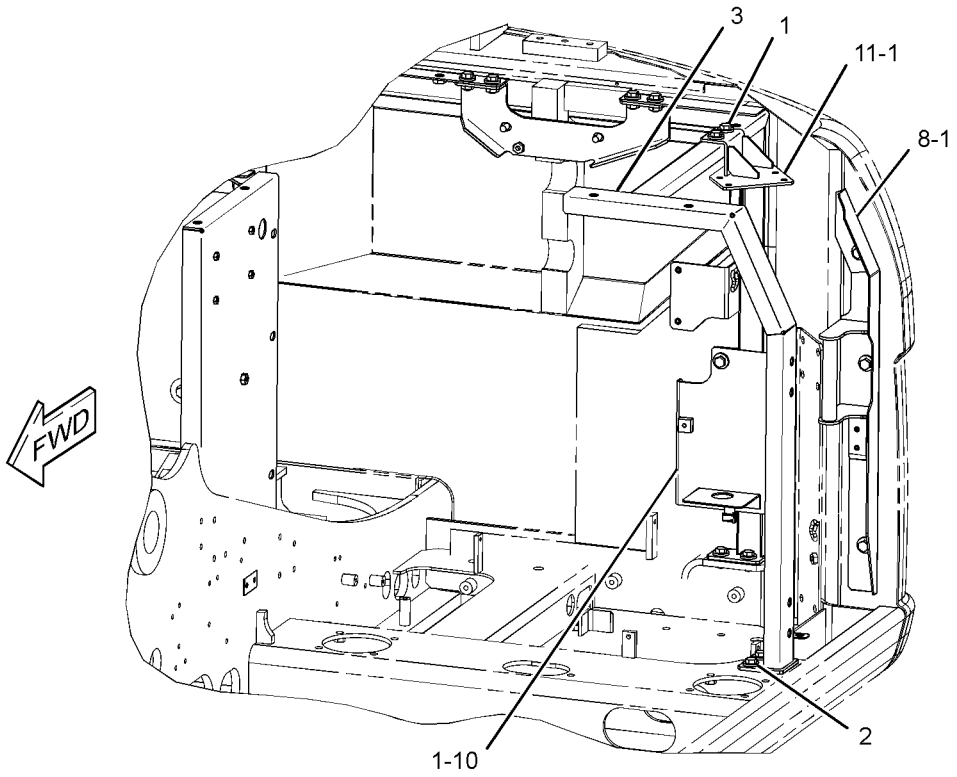

GRAPHIC #1 **<END>** g01444861

283-8799 FRAME AR-UNDERCARRIAGE

S/N: CLA1-UP

PART OF 260-7228 GENERAL AR

SMCS-4151 **i02837184**

NOTE	PART NUMBER	QTY	PART NAME 1 2 3 4 5 6 (PRODUCT LEVEL)	SEE PAGE
Y	**269-1645**	1	FRAME AS-UNDERCARRIAGE	318
Y	*169-5567*	1	GEAR & BEARING GP-SWING	283
Y	*120-7199*	1	GUARD GP-TRACK GUIDE	320
Y	*169-7904*	1	GUARD GP-TRAVEL MOTOR	321
Y	*248-7184*	1	IDLER GP-FRONT	324
Y	*248-7268*	1	ROLLER AR-TRACK & CARRIER	328

Y-SEPARATE ILLUSTRATION

<END>

269-1645 FRAME AS-UNDERCARRIAGE

S/N: CLA1-UP

PART OF 283-8799 FRAME AR-UNDERCARRIAGE, 278-9284 FRAME AS-UNDERCARRIAGE

ALSO AN ATTACHMENT

SMCS-4150, 7062 **i02818878**

NOTE	REF NO	GRAPHIC REF	PART NUMBER	QTY	PART NAME 1 2 3 4 5 6 (PRODUCT LEVEL)	SEE PAGE
	1	1	*269-1647*	1	FRAME AS-TRACK ROLLER	
	1A	1	**151-9751**	1	BRACKET	
	1B	1	**235-7520**	2	STEP	
	2	1	*269-1648*	1	FRAME AS-TRACK ROLLER	
	2A	1	**151-9751**	1	BRACKET	
	2B	1	**235-7520**	2	STEP	

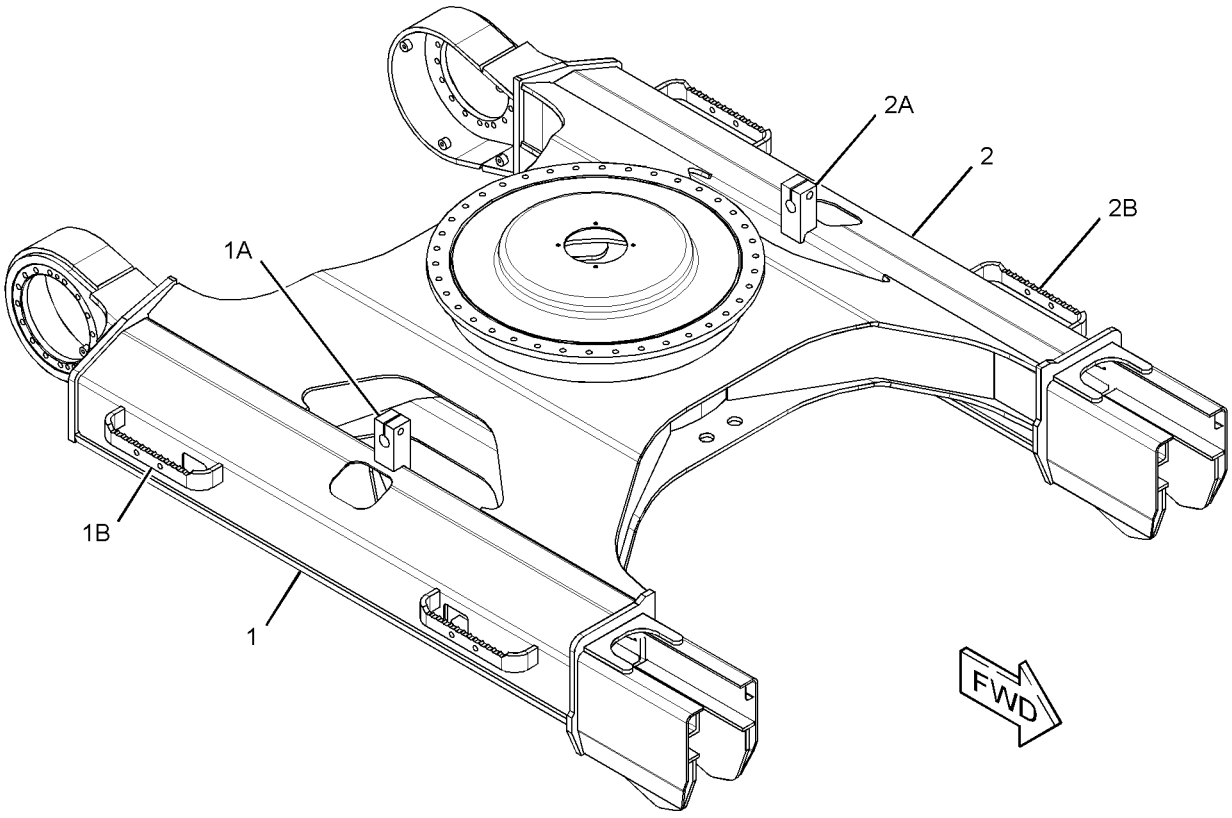

GRAPHIC #1 **<END>** g01410566

278-9284 FRAME AS-UNDERCARRIAGE

S/N: CLA1-UP
PART OF 283-8789 INSTALLATION AR-BLADE
AN ATTACHMENT

SMCS-4150, 7062 **i02877555**

NOTE	REF NO	GRAPHIC REF	PART NUMBER	QTY	PART NAME 1 2 3 4 5 6 (PRODUCT LEVEL)	SEE PAGE
Y	1	1	**269-1645**	1	FRAME AS-UNDERCARRIAGE	318

Y-SEPARATE ILLUSTRATION

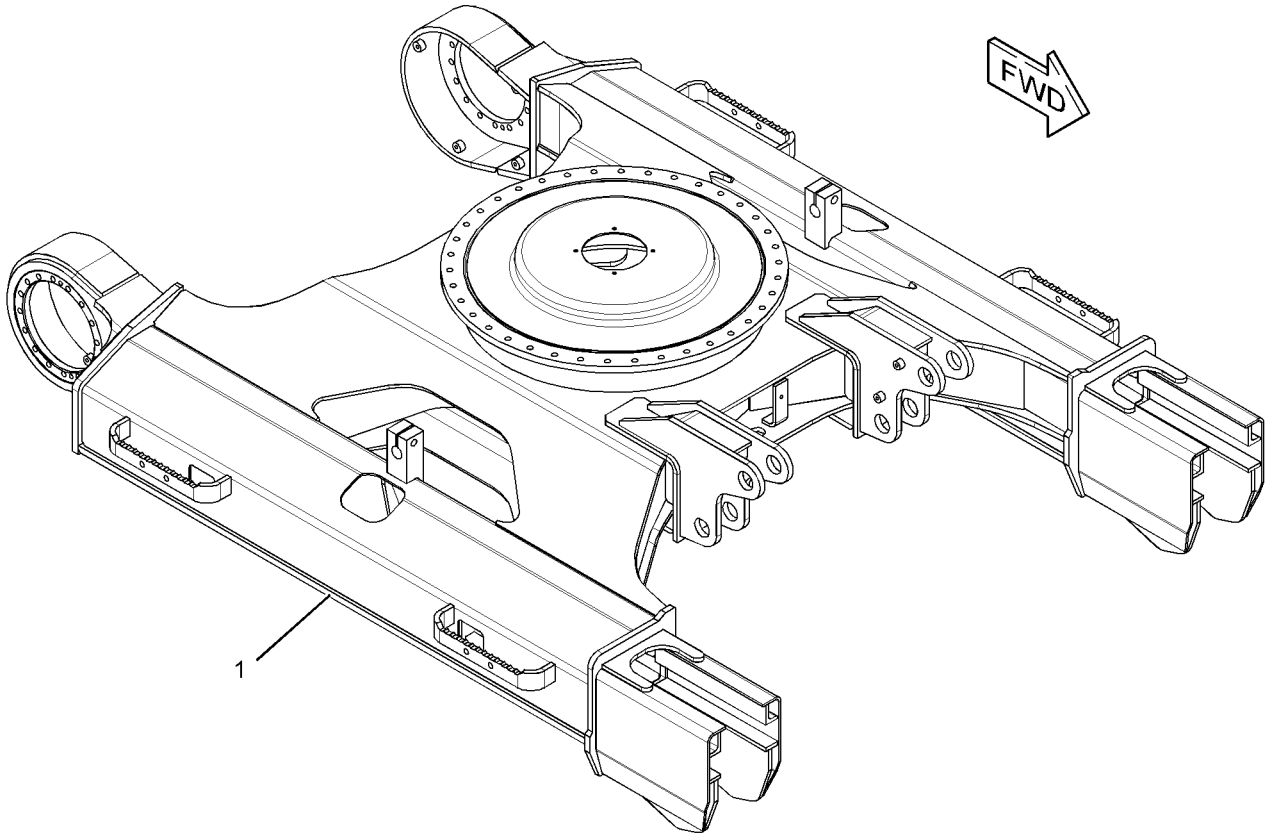

GRAPHIC #1 **<END>** g01432490

UNDERCARRIAGE

120-7199 GUARD GP-TRACK GUIDE

S/N: CLA1-UP

PART OF 283-8799 FRAME AR-UNDERCARRIAGE

SMCS-4177 **i01667851**

NOTE	REF NO	GRAPHIC REF	PART NUMBER	QTY	PART NAME 1 2 3 4 5 6 (PRODUCT LEVEL)	SEE PAGE
	1	1	**133-2554**	2	GUARD AS-TRACK GUIDE	
M	2	1	**8T-4779**	8	BOLT (M16X2X35-MM)	
	3	1	**9X-8257**	8	WASHER (17.5X30X3.5-MM THK)	

QUANTITIES SHOWN ARE THOSE REQUIRED FOR BOTH LH AND RH SIDES
M-METRIC PART

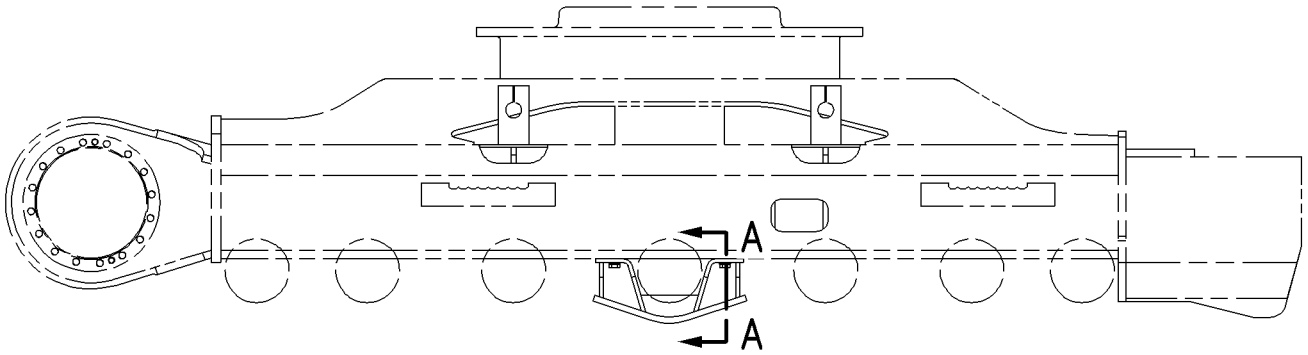

RIGHT SIDE VIEW

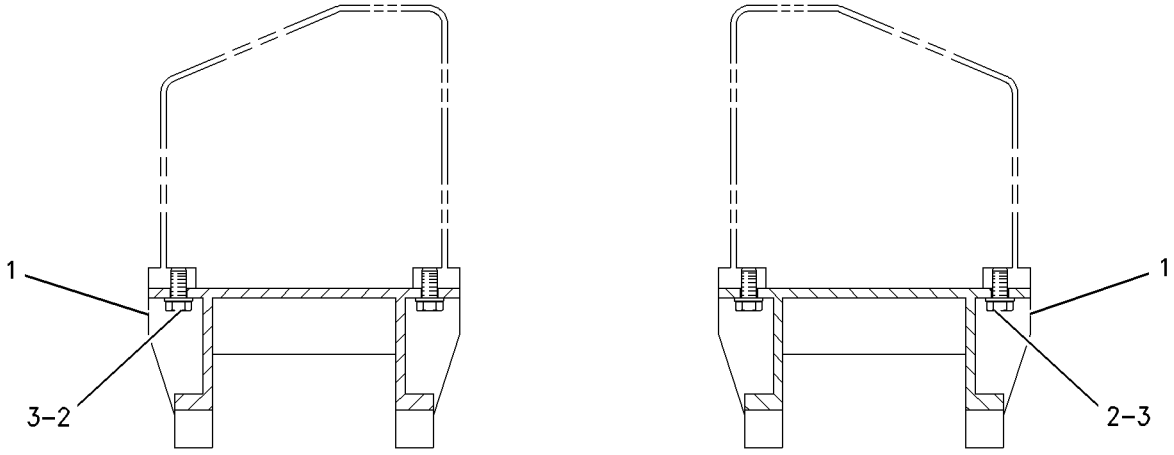

SECTION A-A

GRAPHIC #1 **<END>** g00755978

169-7904 GUARD GP-TRAVEL MOTOR

S/N: CLA1-UP

PART OF 283-8799 FRAME AR-UNDERCARRIAGE

SMCS-7163 **i02906091**

NOTE	REF NO	GRAPHIC REF	PART NUMBER	QTY	PART NAME 1 2 3 4 5 6 (PRODUCT LEVEL)	SEE PAGE
	1	1	**169-7905**	2	PLATE	
M	2	1	**8C-8992**	8	BOLT-LOCKING (M12X1.75X30-MM)	
	3	1	**5P-1076**	8	WASHER-HARD (13.5X30X4-MM THK)	

QUANTITIES SHOWN ARE THOSE REQUIRED FOR BOTH LH AND RH SIDES
M-METRIC PART

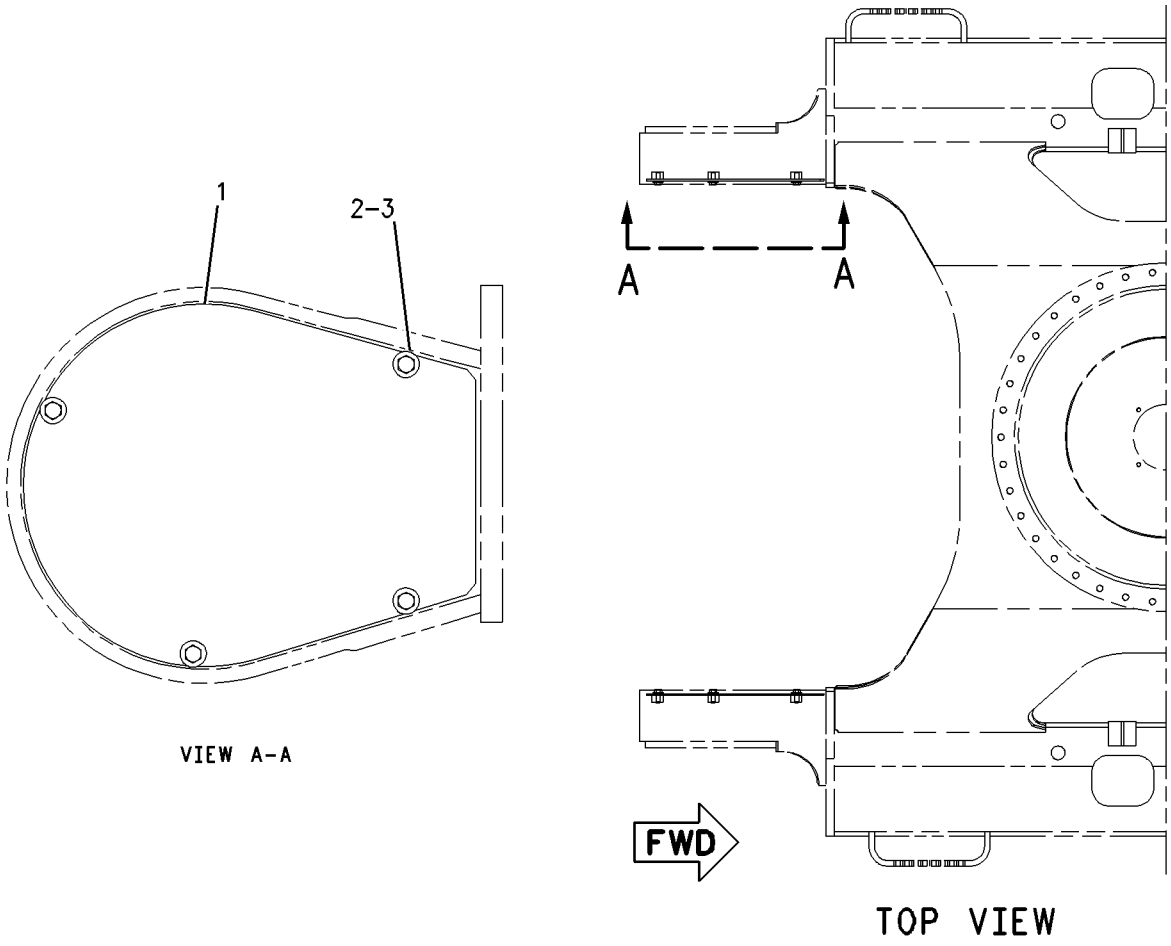

VIEW A-A

TOP VIEW

GRAPHIC #1 **<END>** g00858779

185-9123 GUARD GP-TRAVEL MOTOR

S/N: CLA1-UP
DEMOLITION
AN ATTACHMENT

SMCS-7163 **i01729100**

NOTE	REF NO	GRAPHIC REF	PART NUMBER	QTY	PART NAME 1 2 3 4 5 6 (PRODUCT LEVEL)	SEE PAGE
	1	1	**185-9124**	1	COVER AS-MOTOR (LH)	
	2	1	**185-9125**	1	COVER AS (MOTOR RH)	
M	3	1	**6V-8097**	8	BOLT (M12X1.75X30MM)	
	4	1	**5P-1076**	8	WASHER-HARD (13.5X30X4MM THK)	

M-METRIC PART

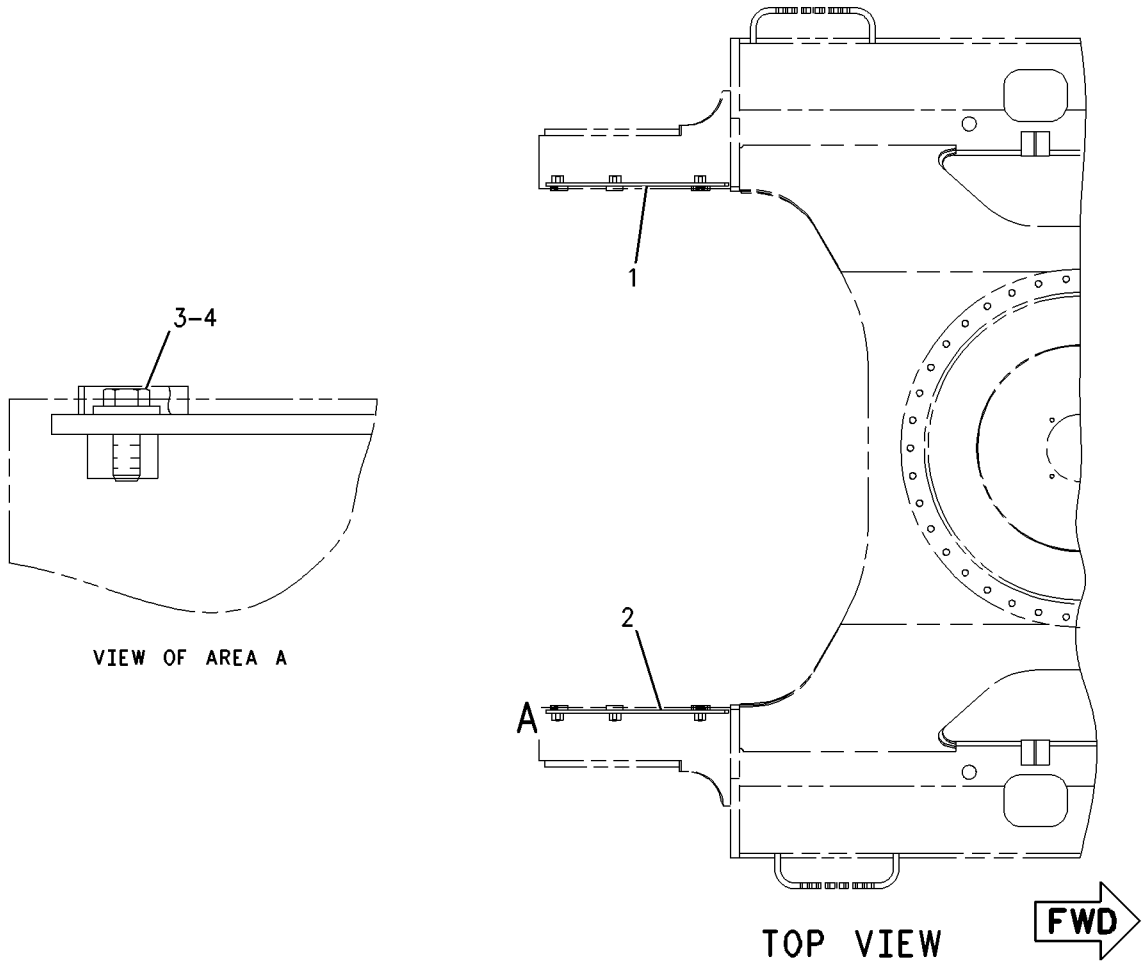

GRAPHIC #1 **<END>** g00900266

4I-7337 IDLER GP-FRONT

S/N: CLA1-UP

PART OF 297-9138, 297-9139 IDLER GP-FRONT

SMCS-4159 **i01667852**

NOTE	REF NO	GRAPHIC REF	PART NUMBER	QTY	PART NAME 1 2 3 4 5 6 (PRODUCT LEVEL)	SEE PAGE
	1	1	**6I-6590**	1	IDLER & BEARING AS	
	2	1	**7H-3171**	1	PLUG-PIPE	
	3	1	**099-0159**	2	SEAL GP	
					(EACH INCLUDES)	
		1	**099-0160**	2	RING-SEALING	
	4	1	**095-1662**	2	SEAL-O-RING	
	5	1	**099-0163**	2	PIN	
	6	1	**6I-6477**	1	SHAFT-IDLER	
	7	1	**4I-7488**	2	BEARING-FRONT IDLER	

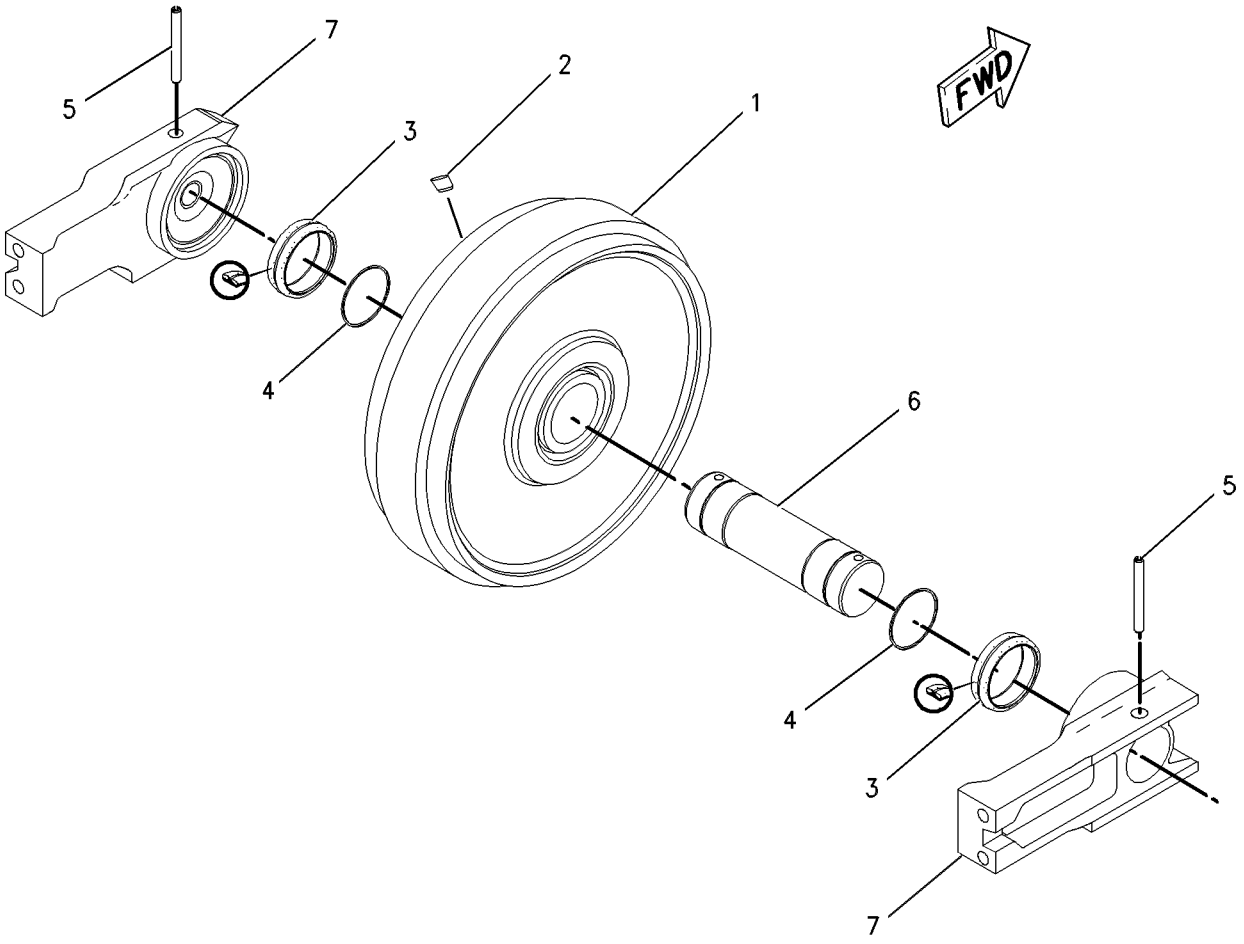

GRAPHIC #1 **<END>** g00662615

UNDERCARRIAGE

248-7184 IDLER GP-FRONT

S/N: CLA1-UP

PART OF 283-8799 FRAME AR-UNDERCARRIAGE

SMCS-4159 **i02845523**

NOTE	REF NO	GRAPHIC REF	PART NUMBER	QTY	PART NAME 1 2 3 4 5 6 (PRODUCT LEVEL)	SEE PAGE
Y	1	1	*297-9138*	1	IDLER GP-FRONT (RH)	325
Y	2	1	*297-9139*	1	IDLER GP-FRONT (LH)	326

Y-SEPARATE ILLUSTRATION

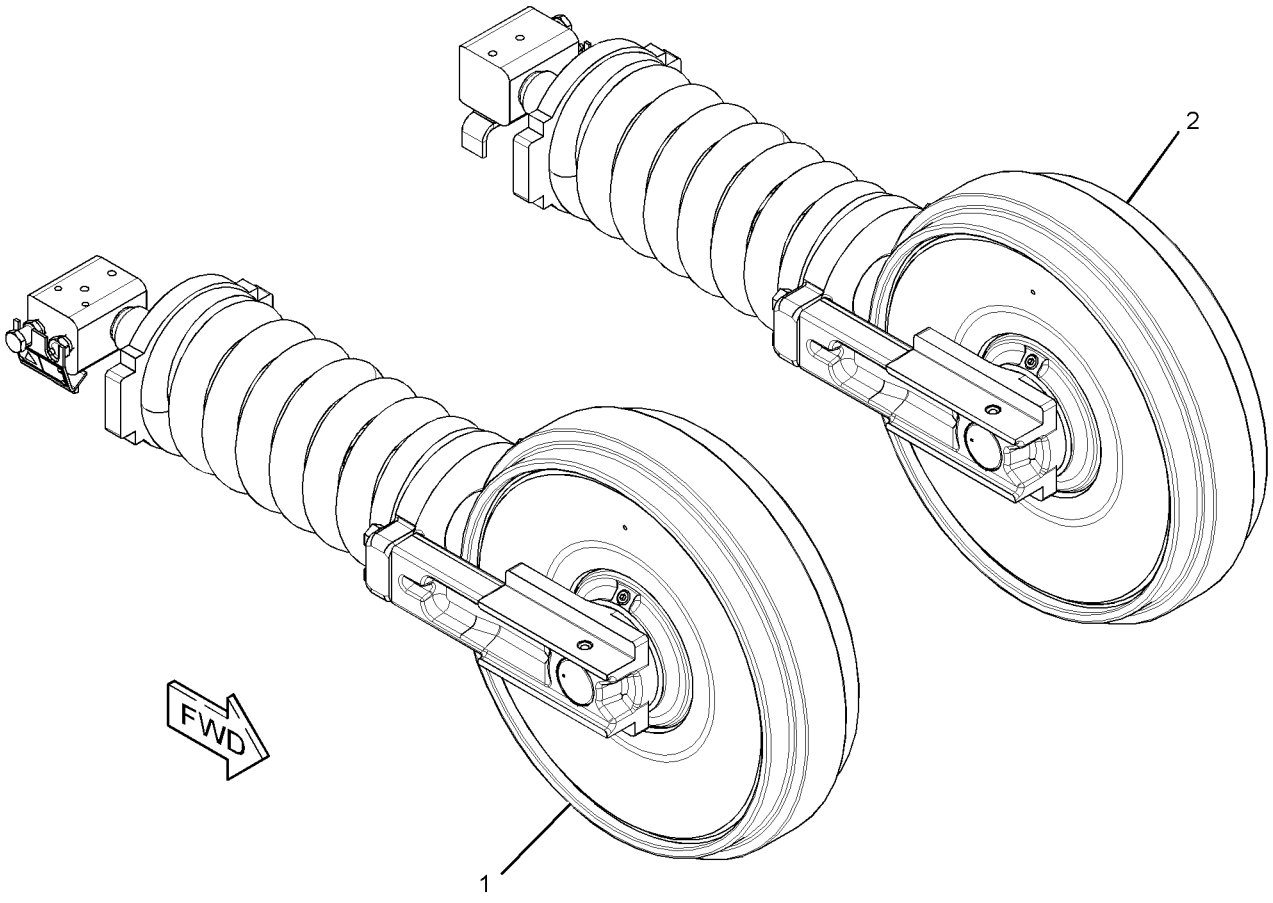

GRAPHIC #1 **<END>** g01410871

297-9138 IDLER GP-FRONT—RH

S/N: CLA1-UP

PART OF 248-7184 IDLER GP-FRONT

SMCS-4159 **i02845517**

NOTE	REF NO	GRAPHIC REF	PART NUMBER	QTY	PART NAME 1 2 3 4 5 6 (PRODUCT LEVEL)	SEE PAGE
Y	1	1	**4I-7337**	1	IDLER GP-FRONT	323
Y	2	1	*297-9140*	1	TRACK ADJUSTER & RECOIL GP	331
M	3	1	**8T-4140**	4	BOLT (M16X2X60-MM)	

M-METRIC PART
Y-SEPARATE ILLUSTRATION

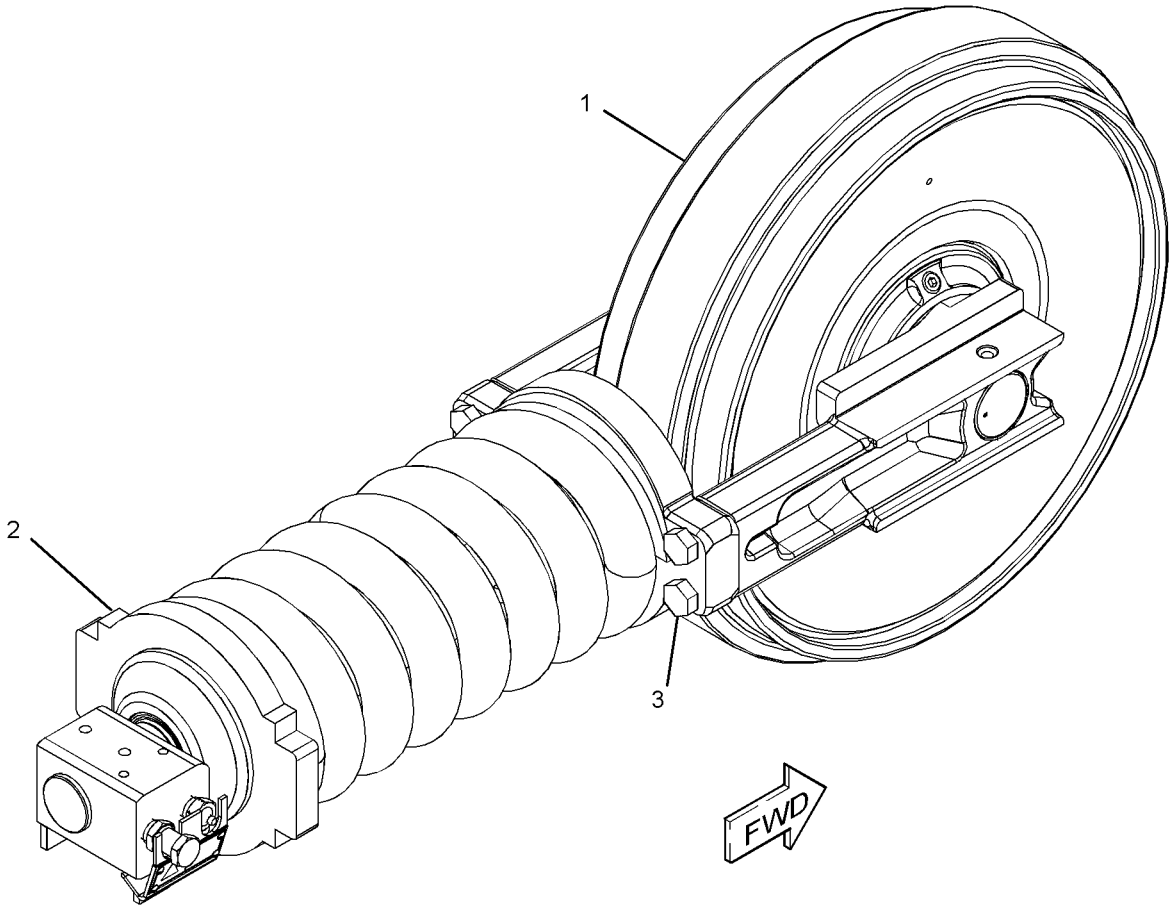

GRAPHIC #1 **<END>** g01424119

297-9139 IDLER GP-FRONT—LH

S/N: CLA1-UP

PART OF 248-7184 IDLER GP-FRONT

SMCS-4159 **i02845519**

NOTE	REF NO	GRAPHIC REF	PART NUMBER	QTY	PART NAME 1 2 3 4 5 6 (PRODUCT LEVEL)	SEE PAGE
Y	1	1	**4I-7337**	1	IDLER GP-FRONT	323
Y	2	1	*297-9141*	1	TRACK ADJUSTER & RECOIL GP	332
M	3	1	**8T-4140**	4	BOLT (M16X2X60-MM)	

M-METRIC PART
Y-SEPARATE ILLUSTRATION

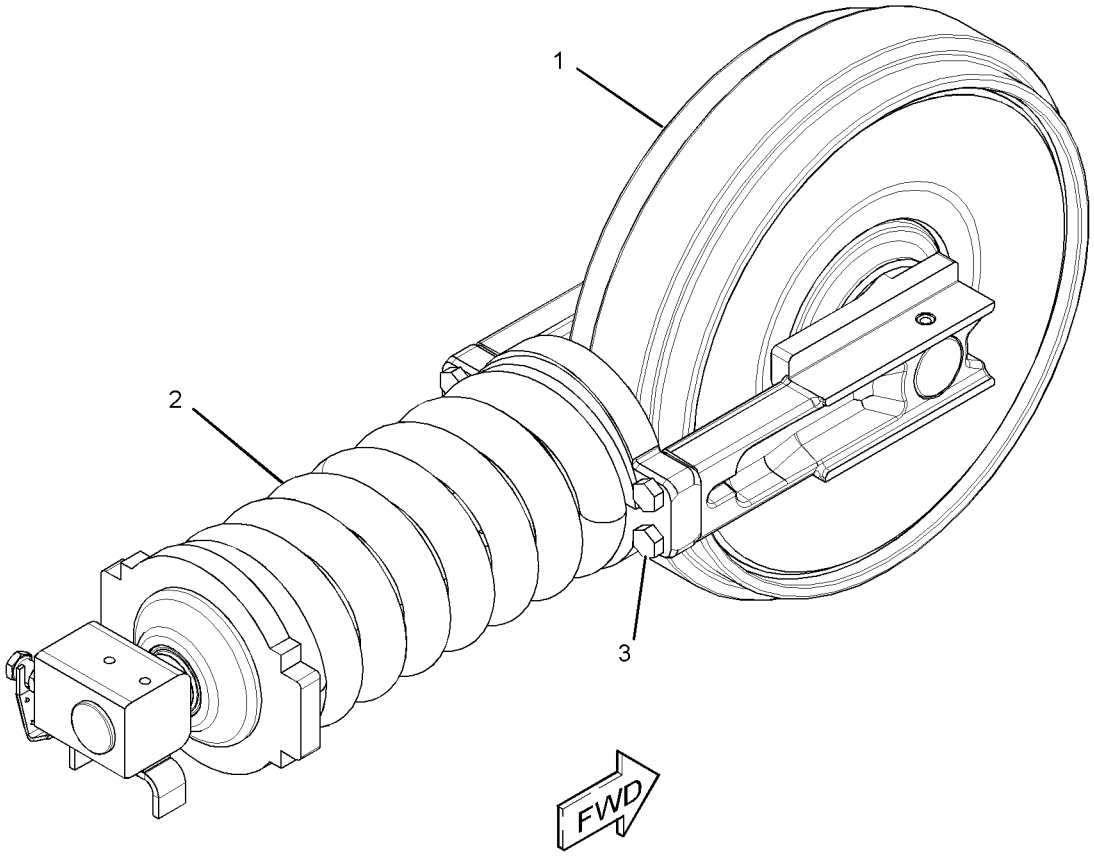

GRAPHIC #1 **<END>** g01424156

176-4870 LINK AS-TRACK

S/N: CLA1-UP

PART OF 176-4863, 176-4864, 176-4865, 176-4869, 179-3030 TRACK GP

AN ATTACHMENT

SMCS-4169, 4171 **i01477527**

NOTE	REF NO	GRAPHIC REF	PART NUMBER	QTY	PART NAME 1 2 3 4 5 6 (PRODUCT LEVEL)	SEE PAGE
	1	1	**4I-7475**	42	LINK-TRACK	
	2	1	**095-0863**	1	COTTER	
	3	1	**4I-7477**	1	LINK-MASTER	
	4	1	**162-4306**	1	BUSHING	
	5	1	**4I-7478**	1	LINK-MASTER	
	6	1	**099-0653**	1	PIN-LINK MASTER	
	7	1	**176-4872**	2	SEAL-TRACK MASTER	
	8	1	**4I-7476**	42	LINK-TRACK	
	9	1	**162-4305**	42	PIN-TRACK	
	10	1	**162-4307**	84	SEAL-TRACK	
	11	1	**162-4304**	42	BUSHING-TRACK	

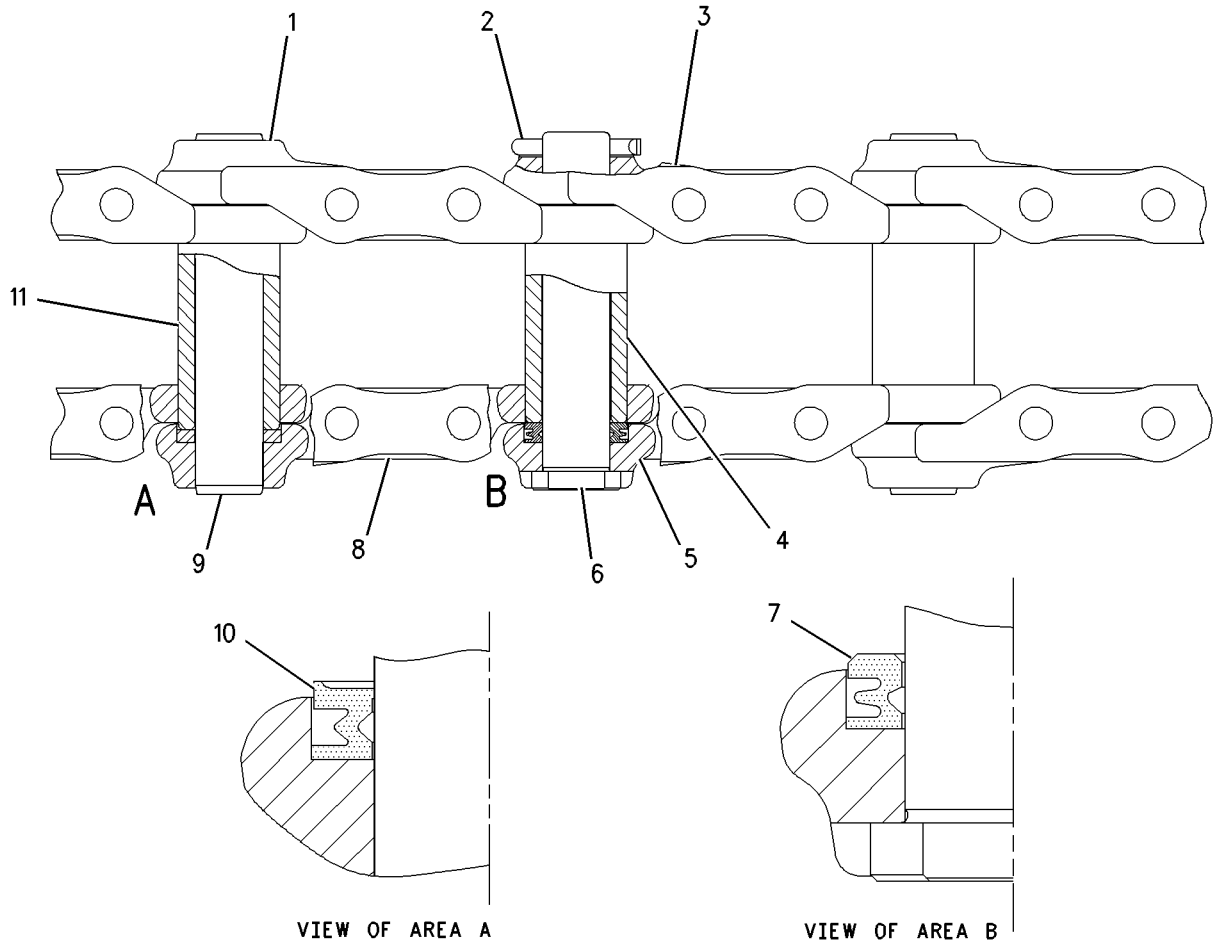

GRAPHIC #1 **<END>** g00770977

248-7268 ROLLER AR-TRACK & CARRIER

S/N: CLA1-UP

PART OF 283-8799 FRAME AR-UNDERCARRIAGE

SMCS-4154, 4180 **i02795031**

NOTE	REF NO	GRAPHIC REF	PART NUMBER	QTY	PART NAME 1 2 3 4 5 6 (PRODUCT LEVEL)	SEE PAGE
Y	1	1	**4I-7345**	2	ROLLER GP-TRACK CARRIER	329
Y	2	1	**248-7259**	12	ROLLER GP-TRACK-SINGLE FLANGE	330
M	3	1	**7X-2555**	48	BOLT (M16X2X80-MM)	
	4	1	**8T-4122**	48	WASHER-HARD (17X32X3.5-MM THK)	
M	5	1	**8T-5878**	2	BOLT (M24X3X80-MM)	

M-METRIC PART
Y-SEPARATE ILLUSTRATION

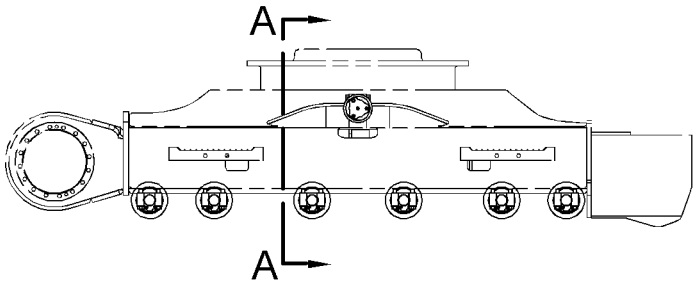

RIGHT SIDE VIEW

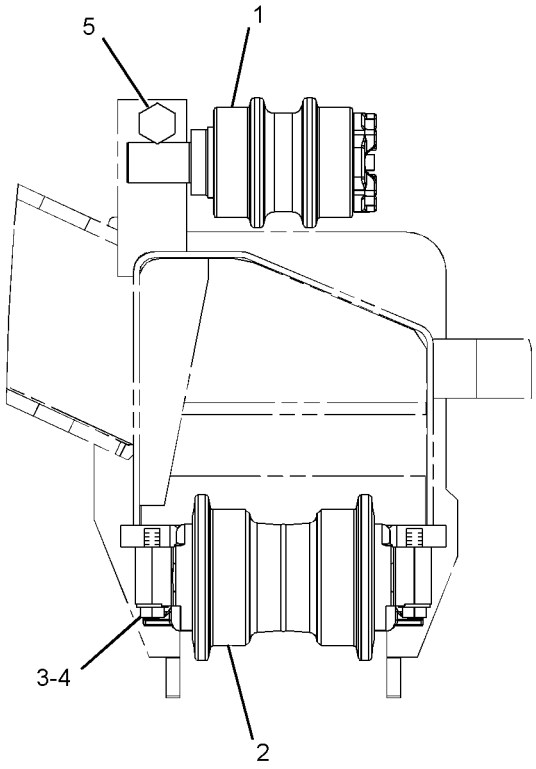

VIEW A-A

GRAPHIC #1 **<END>** g01406170

4I-7345 ROLLER GP-TRACK CARRIER

S/N: CLA1-UP

PART OF 248-7268 ROLLER AR-TRACK & CARRIER

SMCS-4154 **i01667856**

NOTE	REF NO	GRAPHIC REF	PART NUMBER	QTY	PART NAME 1 2 3 4 5 6 (PRODUCT LEVEL)	SEE PAGE
	1	1	**7Y-2159**	1	SHAFT AS-ROLLER	
	2	1	**099-0183**	1	SEAL GP	
		1	**099-4739**	2	RING-SEALING	
	3	1	**7Y-2155**	1	ROLLER & BEARING AS	
	4	1	**7Y-2162**	1	RETAINER	
	5	1	**6V-7658**	1	SEAL-O-RING	
M	6	1	**8T-1159**	5	BOLT-SOCKET HEAD (M10X1.5X25-MM)	
	7	1	**7Y-2158**	1	COVER-CARRIER ROLLER	
	8	1	**7H-3171**	1	PLUG-PIPE	

M-METRIC PART

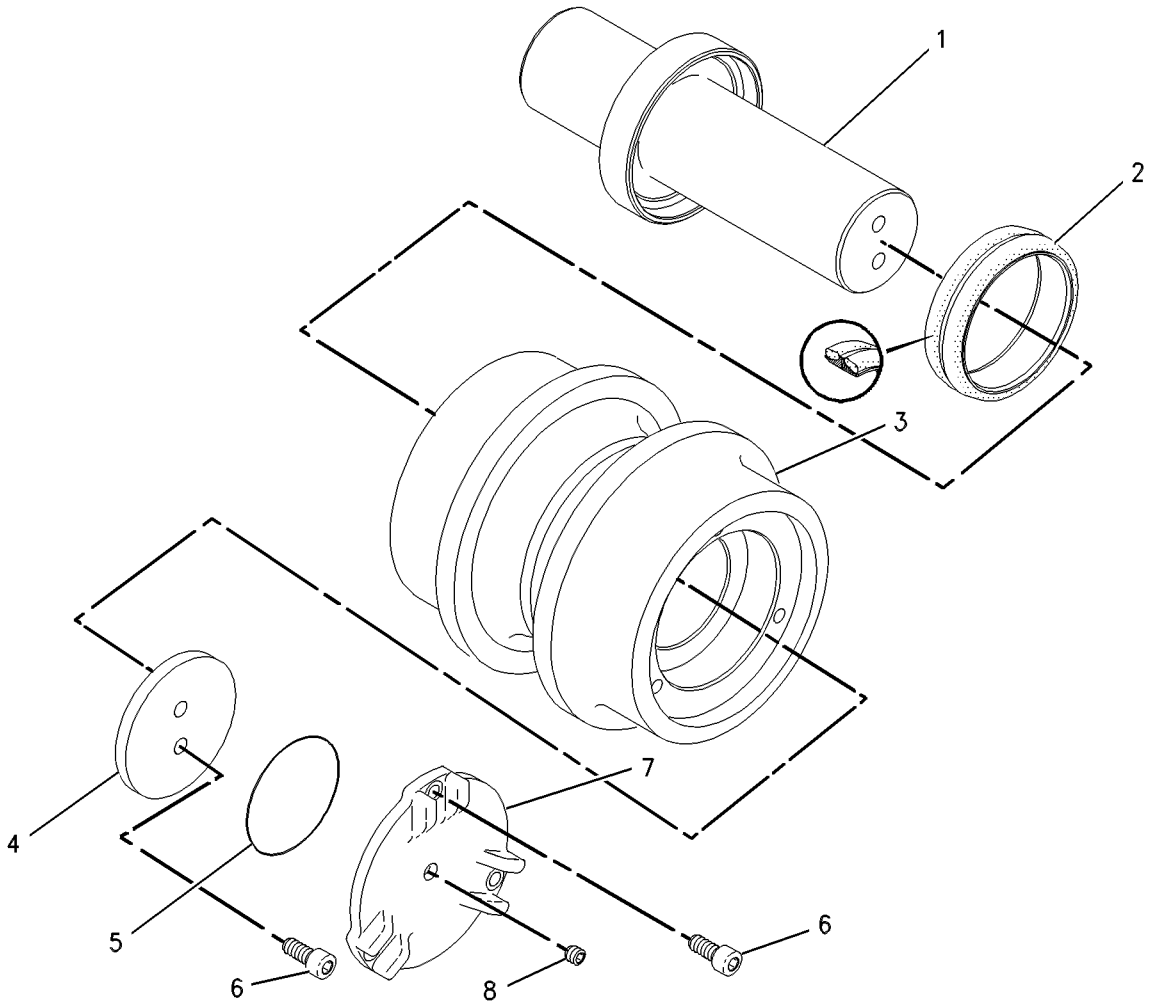

GRAPHIC #1 **<END>** g00661754

248-7259 ROLLER GP-TRACK-SINGLE FLANGE

S/N: CLA1-UP

PART OF 248-7268 ROLLER AR-TRACK & CARRIER

SMCS-4180 **i02876845**

NOTE	REF NO	GRAPHIC REF	PART NUMBER	QTY	PART NAME 1 2 3 4 5 6 (PRODUCT LEVEL)	SEE PAGE
	1	1	**6I-6451**	1	ROLLER & BEARING AS	
	1A	1	**099-0195**	2	BEARING-TRACK ROLLER	
	2	1	**6I-6549**	2	DOWEL	
	3	1	**099-0193**	2	SEAL GP	
					(EACH INCLUDES)	
		1	**6I-6449**	2	SEAL-RING	
		1	**099-0194**	2	RING-SEALING	
	4	1	**248-7260**	1	COLLAR-TRACK	
	5	1	**248-7261**	1	COLLAR-TRACK	
	6	1	**248-7262**	1	SHAFT-TRACK ROLLER	
	7	1	**3D-4603**	1	PLUG-PIPE	
	8	1	**6V-7660**	2	SEAL-O-RING	

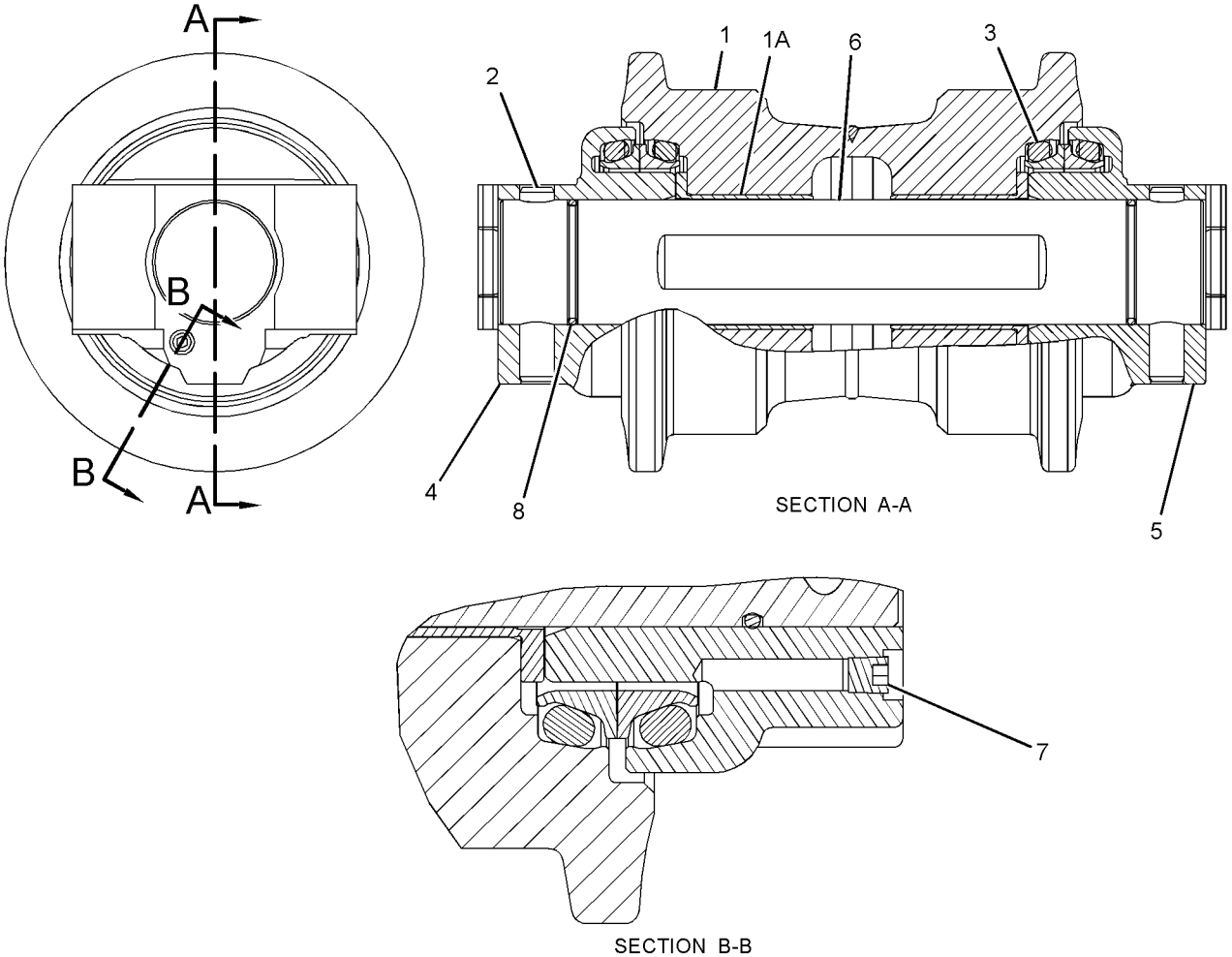

GRAPHIC #1 **<END>** g01400534

297-9140 TRACK ADJUSTER & RECOIL GP–RH

S/N: CLA1-UP

PART OF 297-9138 IDLER GP-FRONT

SMCS-4157, 4158 **i02845518**

NOTE	REF NO	GRAPHIC REF	PART NUMBER	QTY	PART NAME 1 2 3 4 5 6 (PRODUCT LEVEL)	SEE PAGE
	1	1	**248-7200**	1	PLATE AS	
		1	**4B-4158**	4	SCREW-DRIVE (3/16X0.25-IN)	
		1	**253-1346**	1	PLATE-WARNING (HIGH PRESSURE CYLINDER)	
	2	1	**248-7203**	1	PLATE	
Y	3	1	*297-9142*	1	TRACK ADJUSTER & RECOIL GP	333
M	4	1	**8T-4137**	2	BOLT (M10X1.5X20-MM)	

M-METRIC PART
Y-SEPARATE ILLUSTRATION

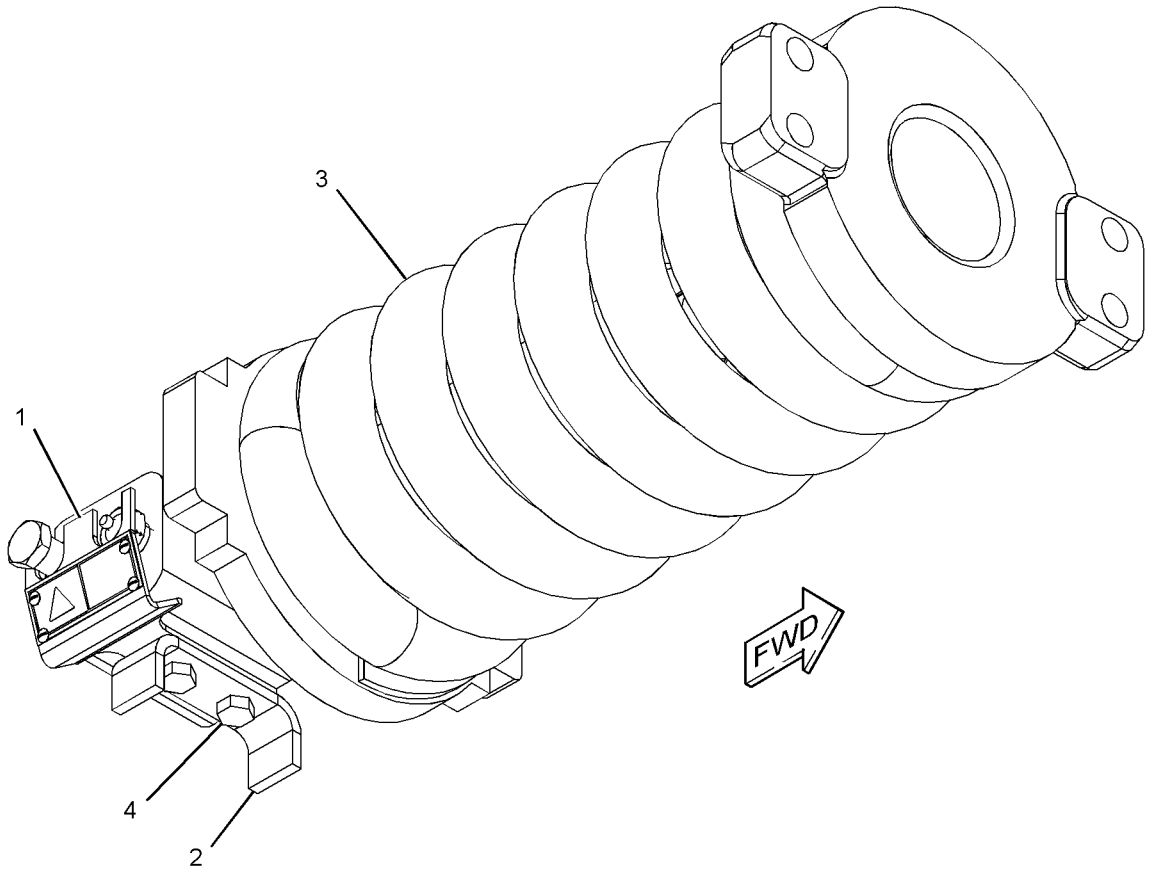

GRAPHIC #1 **<END>** g01424091

297-9141 TRACK ADJUSTER & RECOIL GP–LH

S/N: CLA1-UP

PART OF 297-9139 IDLER GP-FRONT

SMCS-4157, 4158 **i02845520**

NOTE	REF NO	GRAPHIC REF	PART NUMBER	QTY	PART NAME 1 2 3 4 5 6 (PRODUCT LEVEL)	SEE PAGE
	1	1	**248-7200**	1	PLATE AS	
		1	**4B-4158**	4	SCREW-DRIVE (3/16X0.25-IN)	
		1	**253-1346**	1	PLATE-WARNING (HIGH PRESSURE CYLINDER)	
	2	1	**248-7203**	1	PLATE	
Y	3	1	*297-9142*	1	TRACK ADJUSTER & RECOIL GP	333
M	4	1	**8T-4137**	2	BOLT (M10X1.5X20-MM)	

M-METRIC PART
Y-SEPARATE ILLUSTRATION

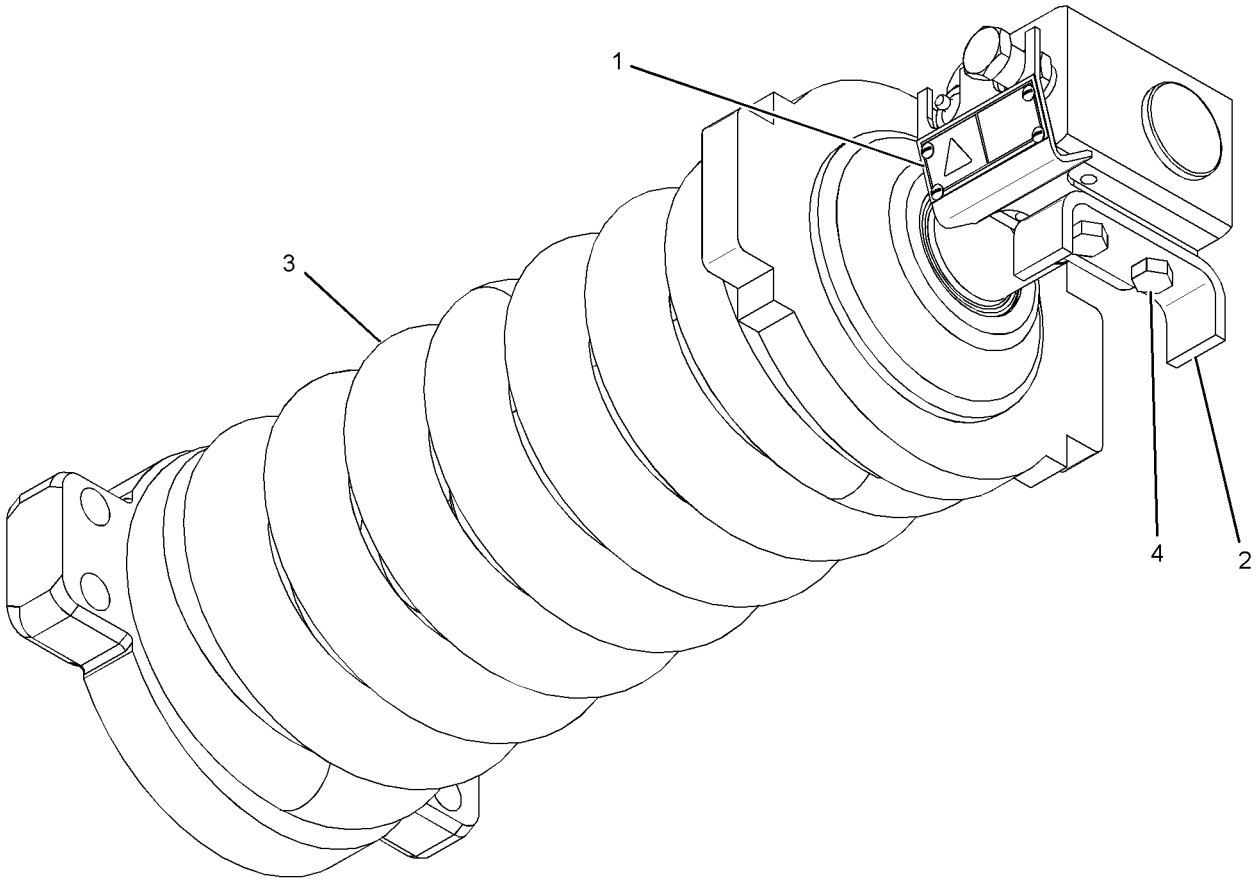

GRAPHIC #1 **<END>** g01424123

297-9142 TRACK ADJUSTER & RECOIL GP

S/N: CLA1-UP

PART OF 297-9140, 297-9141 TRACK ADJUSTER & RECOIL GP

SMCS-4157, 4158 **i02845521**

NOTE	REF NO	GRAPHIC REF	PART NUMBER	QTY	PART NAME 1 2 3 4 5 6 (PRODUCT LEVEL)	SEE PAGE
	1	1	**248-7191**	1	PLATE	
	2	1	**248-7194**	1	SPRING	
	3	1	**297-9137**	1	SUPPORT	
Y	4	1	*297-9143*	1	TRACK ADJUSTER & RECOIL GP	334
	5	1	**297-9161**	1	STRIP	
M	6	1	**096-4879**	1	NUT (M36X4-THD)	
	7	1	**179-5764**	1	WASHER (39X60X6-MM THK)	
M	8	1	**8T-4171**	2	BOLT (M6X1X12-MM)	

M-METRIC PART
Y-SEPARATE ILLUSTRATION

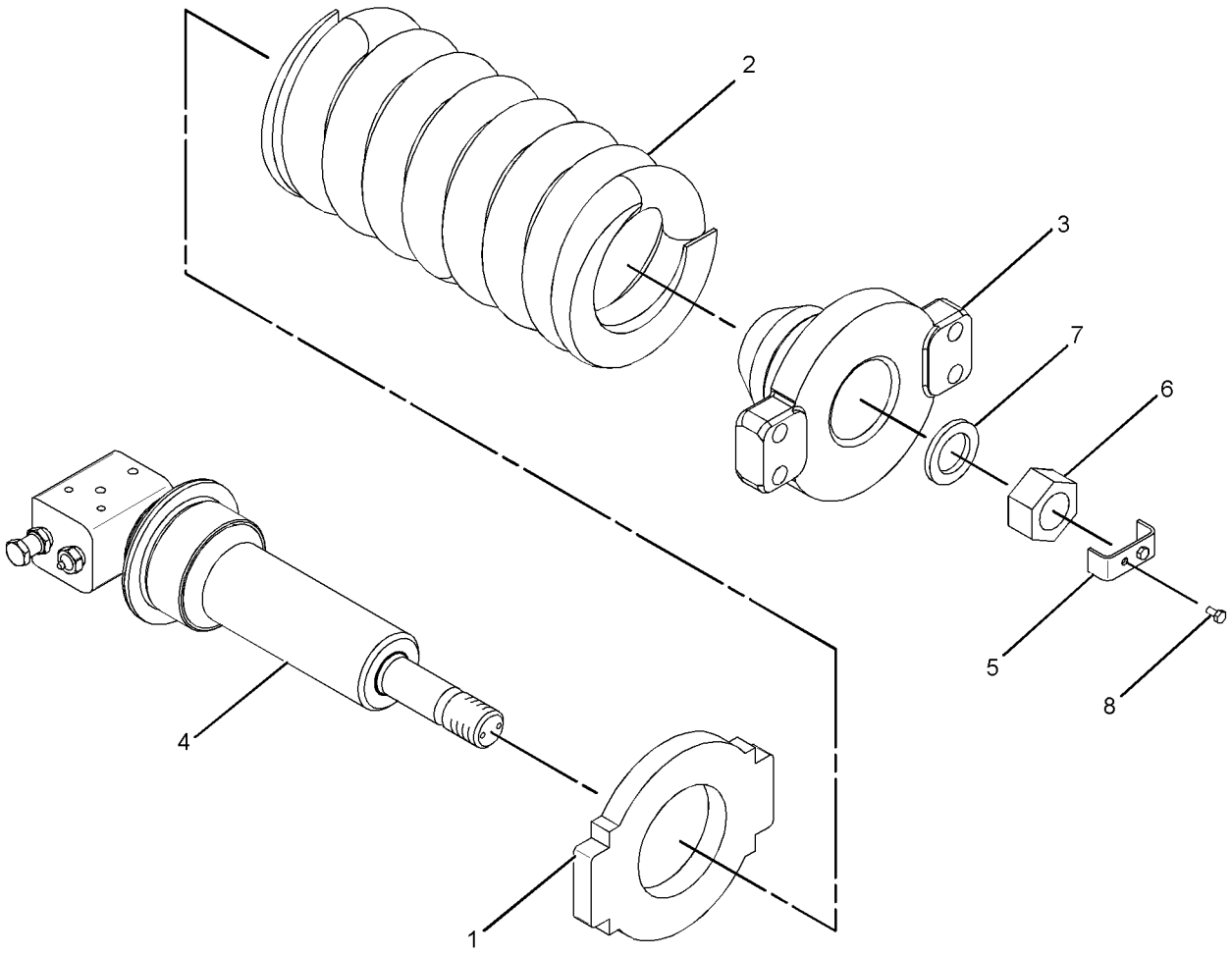

GRAPHIC #1 **<END>** g01424098

297-9143 TRACK ADJUSTER & RECOIL GP

S/N: CLA1-UP

PART OF 297-9142 TRACK ADJUSTER & RECOIL GP

SMCS-4157, 4158 **i02845522**

NOTE	REF NO	GRAPHIC REF	PART NUMBER	QTY	PART NAME 1 2 3 4 5 6 (PRODUCT LEVEL)	SEE PAGE
	1	1	**2S-5926**	1	VALVE-RELIEF	
	2	1	**095-2927**	1	VALVE-FILL	
	3	1	**095-7101**	1	SEAL-LIP TYPE	
	4	1	**248-7172**	2	SEAL-O-RING	
	5	1	**248-7197**	1	PISTON AS	
	6	1	**297-9133**	1	CYLINDER	
	7	1	**297-9134**	1	ROD	
	8	1	**095-1701**	1	SEAL-O-RING	
	9	1	**096-4276**	1	RING	
	10	1	**099-0172**	2	RING-BACKUP	
	11	1	**099-0173**	2	RING-BACKUP	

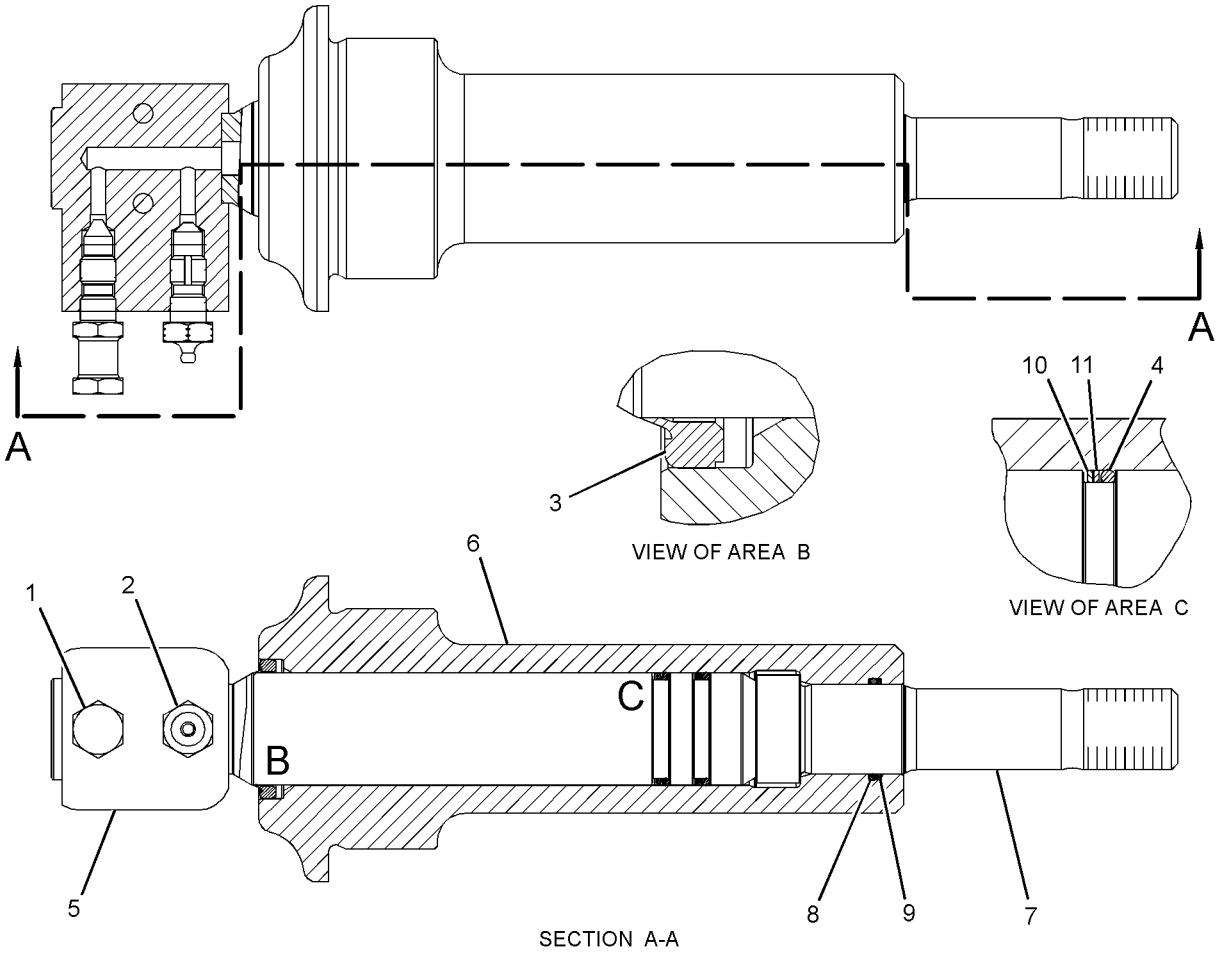

GRAPHIC #1 **<END>** g01424029

176-4863 TRACK GP–2-REQUIRED

S/N: CLA1-UP
500-MM (19-IN) TRIPLE GROUSER SHOE
AN ATTACHMENT

SMCS-4170 **i01477598**

NOTE	REF NO	GRAPHIC REF	PART NUMBER	QTY	PART NAME 1 2 3 4 5 6 (PRODUCT LEVEL)	SEE PAGE
Y	1	1	**176-4870**	1	LINK AS-TRACK	327
	2	1	**137-6114**	43	SHOE-TRACK	
M	3	1	**4I-7538**	172	BOLT-TRACK (M16X1.5X46-MM)	
M	4	1	**5I-6125**	172	NUT-TRACK (M16X1.5-THD)	

M-METRIC PART
Y-SEPARATE ILLUSTRATION

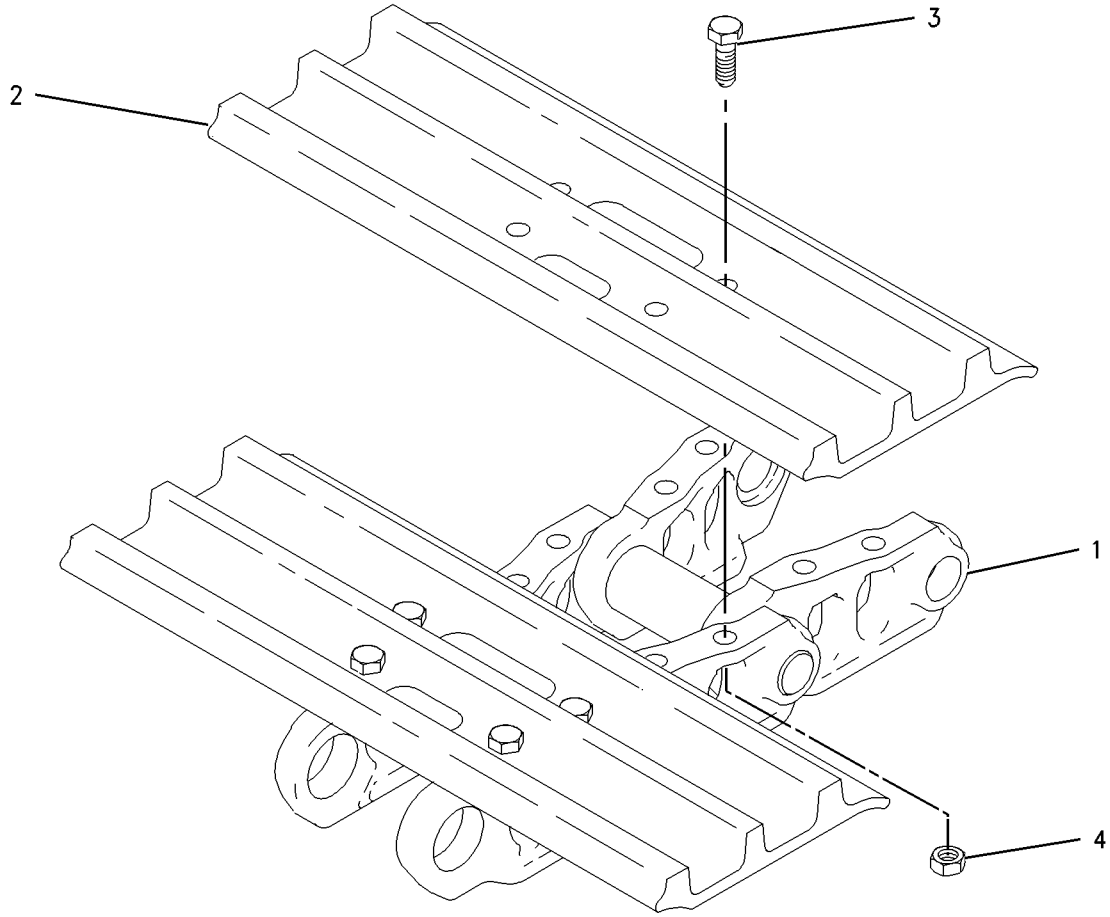

GRAPHIC #1 **<END>** g00731630

176-4864 TRACK GP–2-REQUIRED

S/N: CLA1-UP
600-MM (23.6-IN) TRIPLE GROUSER SHOE
AN ATTACHMENT

SMCS-4170 **i01477596**

NOTE	REF NO	GRAPHIC REF	PART NUMBER	QTY	PART NAME 1 2 3 4 5 6 (PRODUCT LEVEL)	SEE PAGE
Y	1	1	**176-4870**	1	LINK AS-TRACK	327
	2	1	**1R-6009**	43	SHOE-TRACK	
M	3	1	**4I-7538**	172	BOLT-TRACK (M16X1.5X46-MM)	
M	4	1	**5I-6125**	172	NUT-TRACK (M16X1.5-THD)	

M-METRIC PART
Y-SEPARATE ILLUSTRATION

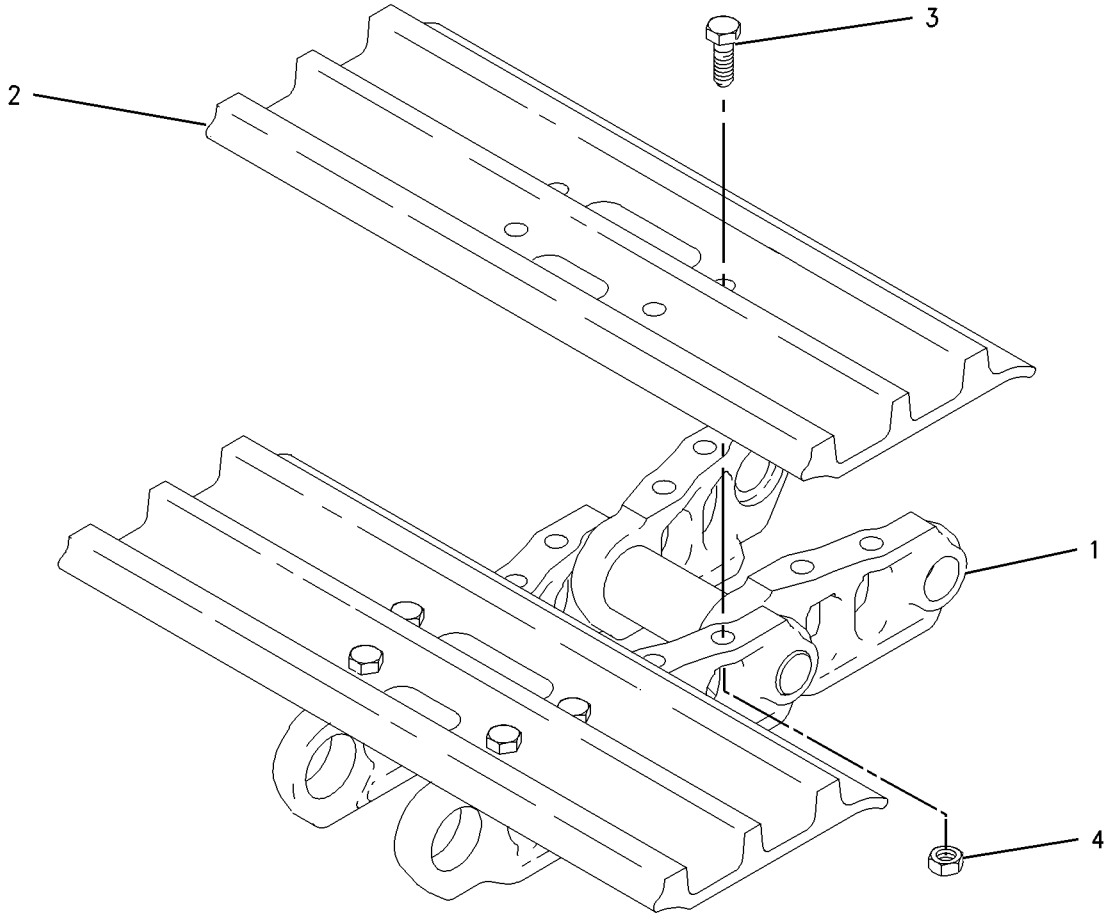

GRAPHIC #1 **<END>** g00731630

176-4865 TRACK GP–2-REQUIRED

S/N: CLA1-UP
700-MM (27.5-IN) TRIPLE GROUSER SHOE
PART OF 283-8848 TRACK GP
AN ATTACHMENT

SMCS-4170 **i01477592**

NOTE	REF NO	GRAPHIC REF	PART NUMBER	QTY	PART NAME 1 2 3 4 5 6 (PRODUCT LEVEL)	SEE PAGE
Y	1	1	**176-4870**	1	LINK AS-TRACK	327
	2	1	**1R-6010**	43	SHOE-TRACK	
M	3	1	**4I-7538**	172	BOLT-TRACK (M16X1.5X46-MM)	
M	4	1	**5I-6125**	172	NUT-TRACK (M16X1.5-THD)	

M-METRIC PART
Y-SEPARATE ILLUSTRATION

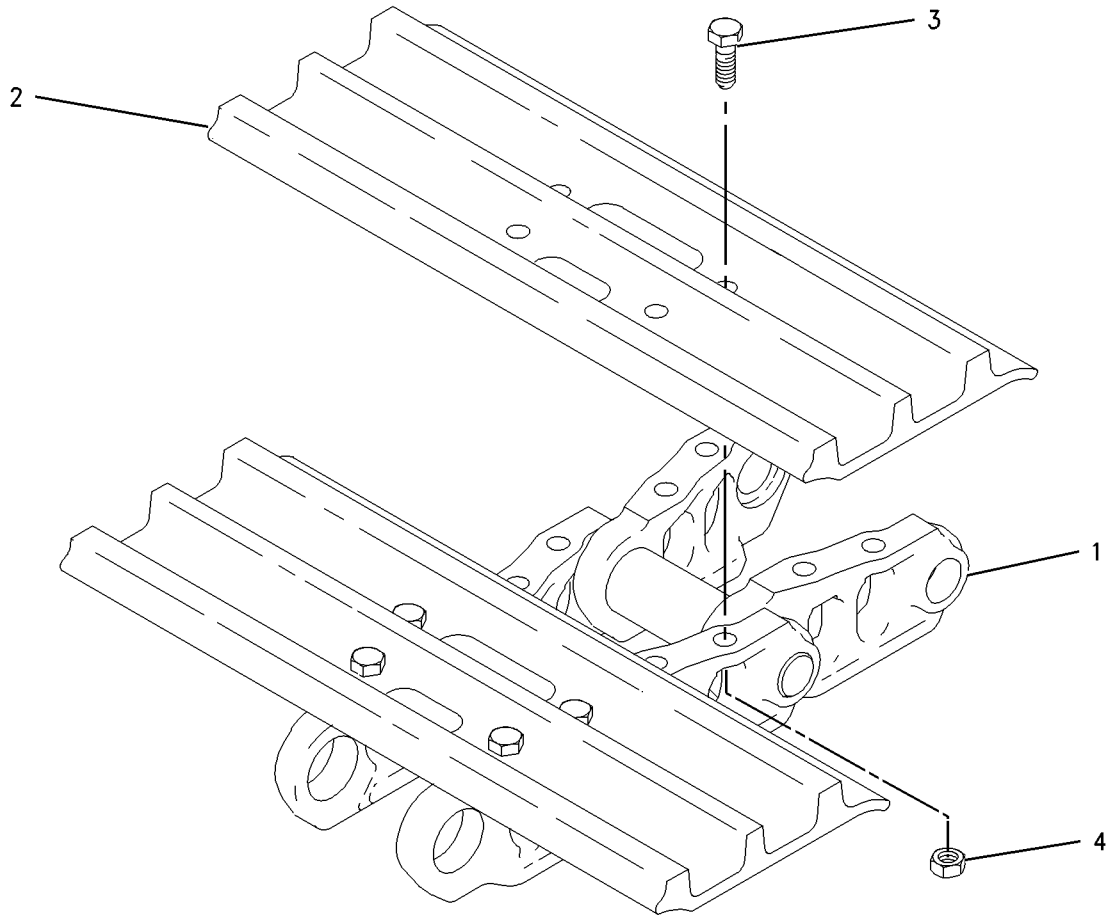

GRAPHIC #1 **<END>** g00731630

176-4869 TRACK GP–2-REQUIRED

S/N: CLA1-UP
SEGMENT RUBBER BELT
AN ATTACHMENT

SMCS-4170 **i01477631**

NOTE	REF NO	GRAPHIC REF	PART NUMBER	QTY	PART NAME 1 2 3 4 5 6 (PRODUCT LEVEL)	SEE PAGE
	1	1	**169-8089**	1	SHOE AS	
	2	1	**169-8091**	1	SHOE AS	
Y	3	1	**176-4870**	1	LINK AS-TRACK	327
	4	1	**096-1043**	172	BOLT-TRACK	
M	5	1	**5I-6125**	172	NUT-TRACK (M16X1.5-THD)	

M-METRIC PART
Y-SEPARATE ILLUSTRATION

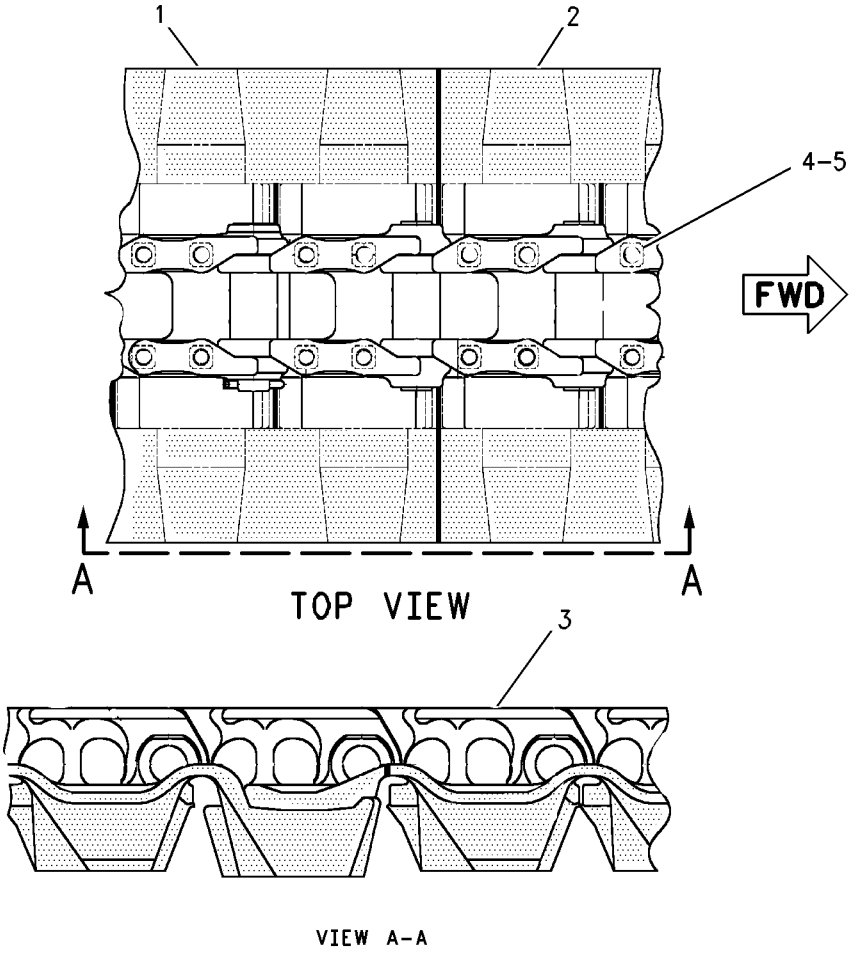

GRAPHIC #1 **<END>** g00770878

UNDERCARRIAGE

179-3030 TRACK GP

S/N: CLA1-UP
770MM (30.3 IN) TRIPLE GROUSER SHOE
PART OF 283-8934 TRACK GP
AN ATTACHMENT

SMCS-4170 **i01477769**

NOTE	PART NUMBER	QTY	PART NAME 1 2 3 4 5 6 (PRODUCT LEVEL)	SEE PAGE
M	**4I-7538**	172	BOLT-TRACK (M16X1.5X46-MM)	
Y	**176-4870**	1	LINK AS-TRACK	327
M	**5I-6125**	172	NUT-TRACK (M16X1.5-THD)	
	1R-6011	43	SHOE-TRACK	

M-METRIC PART
Y-SEPARATE ILLUSTRATION

<END>

283-8848 TRACK GP—2-REQUIRED

S/N: CLA1-UP
700-MM (27.5-IN) TRIPLE GROUSER SHOE
AN ATTACHMENT

SMCS-4170 **i02821854**

NOTE	PART NUMBER	QTY	PART NAME 1 2 3 4 5 6 (PRODUCT LEVEL)	SEE PAGE
Y	*235-7764*	1	STEP GP	310
Y	*176-4865*	1	TRACK GP	337

Y-SEPARATE ILLUSTRATION

<END>

283-8934 TRACK GP—2-REQUIRED

S/N: CLA1-UP
770-MM (30.31-IN) TRIPLE GROUSER SHOE
AN ATTACHMENT

SMCS-4170 **i02843672**

NOTE	PART NUMBER	QTY	PART NAME 1 2 3 4 5 6 (PRODUCT LEVEL)	SEE PAGE
Y	*278-9280*	1	STEP GP	311
Y	*179-3030*	1	TRACK GP	339

Y-SEPARATE ILLUSTRATION

<END>

HYDRAULIC SYSTEM

4I-1536 ACCUMULATOR GP-HYDRAULIC—CHARGED

S/N: CLA1-UP

PART OF 087-4456 ACCUMULATOR GP-HYDRAULIC

SMCS-5077 **i01107876**

NOTE	REF NO	GRAPHIC REF	PART NUMBER	QTY	PART NAME 1 2 3 4 5 6 (PRODUCT LEVEL)	SEE PAGE
	1	1	**4I-5862**	1	CAP	
	2	1	**4I-1539**	1	CORE	
	3	1	**5P-3779**	1	TAG-NOTICE (SHIPPING INSTRUCTIONS)	

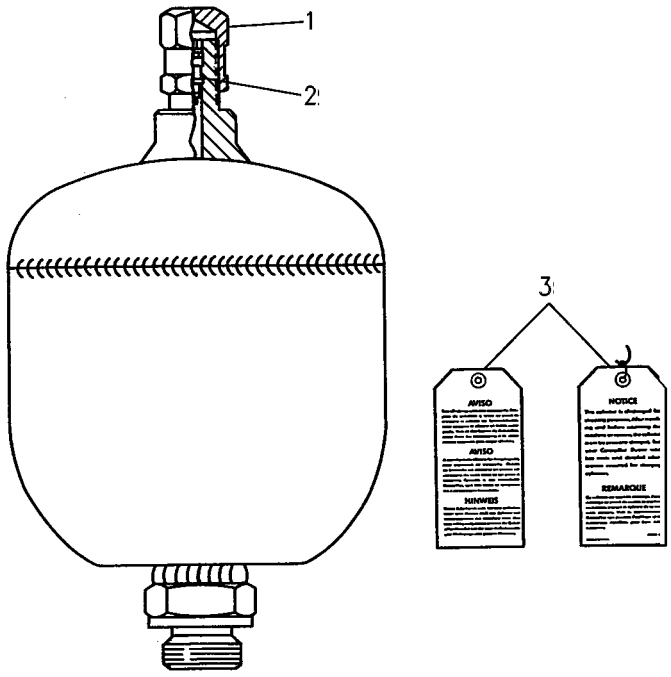

GRAPHIC #1 **<END>** g00237221

5I-8416 ACCUMULATOR GP-HYDRAULIC—CHARGED

S/N: CLA1-UP

PART OF 087-4456 ACCUMULATOR GP-HYDRAULIC

SMCS-5077 **i01548084**

NOTE	REF NO	GRAPHIC REF	PART NUMBER	QTY	PART NAME 1 2 3 4 5 6 (PRODUCT LEVEL)	SEE PAGE
	1	1	**4I-8267**	1	CAP-ACCUMULATOR	
Y	2	1	*087-4454*	1	ACCUMULATOR GP-HYDRAULIC (CHARGED)	342

Y-SEPARATE ILLUSTRATION

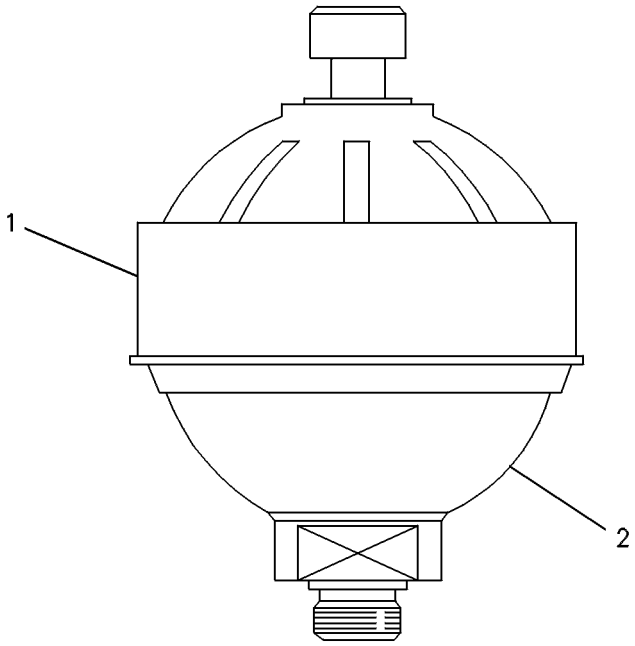

GRAPHIC #1 **<END>** g00237219

087-4454 ACCUMULATOR GP-HYDRAULIC–CHARGED

S/N: CLA1-UP

PART OF 5I-8416 ACCUMULATOR GP-HYDRAULIC

SMCS-5077 **i01611978**

NOTE	REF NO	GRAPHIC REF	PART NUMBER	QTY	PART NAME 1 2 3 4 5 6 (PRODUCT LEVEL)	SEE PAGE
	1	1	**087-4577**	1	SEAL	
	2	1	**087-4576**	1	CAP	
	3	1	**087-4575**	1	CORE	
	4	1	**5P-3779**	1	TAG-NOTICE (SHIPPING INSTRUCTIONS)	

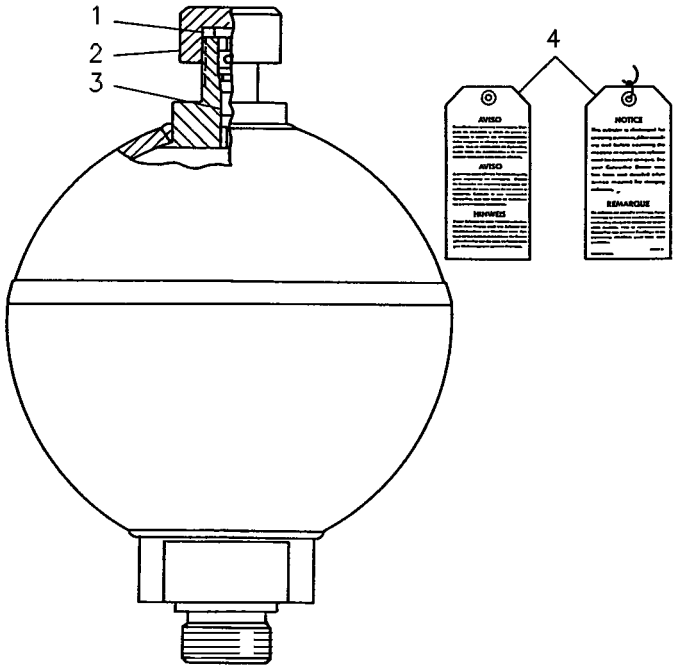

GRAPHIC #1 **<END>** g00237220

087-4456 ACCUMULATOR GP-HYDRAULIC—CHARGED

S/N: CLA1-UP

PART OF 164-6981 ACCUMULATOR GP-HYDRAULIC

SMCS-5077 **i02290967**

NOTE	PART NUMBER	QTY	PART NAME 1 2 3 4 5 6 (PRODUCT LEVEL)	SEE PAGE
Y	*4I-1536*	1	ACCUMULATOR GP-HYDRAULIC (CHARGED)	340
			-OR-	
Y	*5I-8416*	1	ACCUMULATOR GP-HYDRAULIC (CHARGED)	341
			-OR-	
Y	*145-5106*	1	ACCUMULATOR GP-HYDRAULIC (CHARGED)	344

Y-SEPARATE ILLUSTRATION

<END>

HYDRAULIC SYSTEM

145-5106 ACCUMULATOR GP-HYDRAULIC—CHARGED

S/N: CLA1-UP

PART OF 087-4456 ACCUMULATOR GP-HYDRAULIC

SMCS-5077 **i02464714**

NOTE	REF NO	GRAPHIC REF	PART NUMBER	QTY	PART NAME 1 2 3 4 5 6 (PRODUCT LEVEL)	SEE PAGE
	1	1	**159-4700**	1	FILM-WARNING (HIGH PRESSURE CYLINDER)	

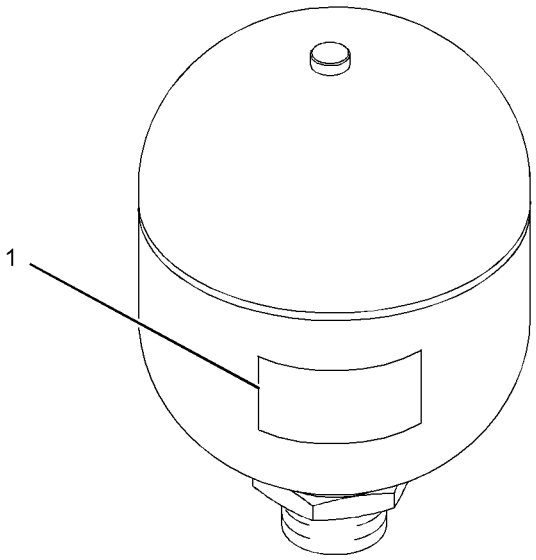

GRAPHIC #1 **<END>** g01229518

164-6981 ACCUMULATOR GP-HYDRAULIC–CHARGED

S/N: CLA1-UP

PART OF 282-7389 LINES GP-PILOT

SMCS-5077 **i01284579**

NOTE	PART NUMBER	QTY	PART NAME 1 2 3 4 5 6 (PRODUCT LEVEL)	SEE PAGE
Y	**087-4456**	1	ACCUMULATOR GP-HYDRAULIC (CHARGED)	343
	3K-0360	1	SEAL-O-RING	

Y-SEPARATE ILLUSTRATION

<END>

255-5843 CONTROL AR-AUXILIARY–JOYSTICK WITH SLIDE CONTROL

S/N: CLA1-UP

AN ATTACHMENT

SMCS-5051 **i02431300**

NOTE	PART NUMBER	QTY	PART NAME 1 2 3 4 5 6 (PRODUCT LEVEL)	SEE PAGE
Y	*259-7598*	1	CONTROL & MTG GP-JOYSTICK (WITH SLIDE CONTROL)	764
Y	*259-5295*	1	FASTENER GP-WIRING HARNESS (JOYSTICK)	132
Y	*247-7410*	1	FILM GP (OPERATOR CONTROLS, NOTICE)	935

Y-SEPARATE ILLUSTRATION

<END>

255-5844 CONTROL AR-AUXILIARY–JOYSTICK, 3-BUTTON, TRIGGER SW

S/N: CLA1-UP

AN ATTACHMENT

SMCS-5051 **i02430669**

NOTE	PART NUMBER	QTY	PART NAME 1 2 3 4 5 6 (PRODUCT LEVEL)	SEE PAGE
Y	*259-7599*	1	CONTROL & MTG GP-JOYSTICK	766
Y	*259-5295*	1	FASTENER GP-WIRING HARNESS (JOYSTICK)	132
Y	*247-7411*	1	FILM GP (OPERATOR CONTROLS, NOTICE)	937

Y-SEPARATE ILLUSTRATION

<END>

270-6025 CONTROL AR-AUXILIARY–
SYSTEM 20, WORK TOOL PRIORITY
S/N: CLA1-UP

FOR USE WITH 255-5843–PAGE 345, 255-5844–PAGE 345, 255-5845–PAGE 865, 270-6106–PAGE 347, 282-7449–PAGE 525, 284-4376–PAGE 808, 284-4377–PAGE 809, 284-4378–PAGE 810, 284-4379–PAGE 811, 293-1222–PAGE 812, 294-6428–PAGE 404

AN ATTACHMENT

SMCS-5051 **i02896490**

NOTE	PART NUMBER	QTY	PART NAME 1 2 3 4 5 6 (PRODUCT LEVEL)	SEE PAGE
Y	*282-7420*	1	LINES GP-FRONT	457
Y	*260-7891*	1	LINES GP-PILOT (PUMP CONTROL, SHUTTLE VALVE)	468
Y	*282-7421*	1	LINES GP-PILOT (SYSTEM 20, WORK TOOL PRIORITY)	498
Y	*282-7423*	1	LINES GP-PUMP	534
Y	**285-1755**	1	VALVE & MTG GP-CONTROL	583
Y	*283-2614*	1	WIRING GP-AUXILIARY CONTROL	188
Y	*259-5165*	1	WIRING GP-CAB (WORK TOOL PRIORITY)	202

Y-SEPARATE ILLUSTRATION

<END>

270-6030 CONTROL AR-AUXILIARY–
AUXILIARY READY, COMB FUNCTION
S/N: CLA1-UP

FOR USE WITH 255-5843–PAGE 345, 255-5844–PAGE 345, 255-5845–PAGE 865, 270-6106–PAGE 347, 282-7449–PAGE 525, 284-4376–PAGE 808, 284-4377–PAGE 809, 284-4378–PAGE 810, 293-1222–PAGE 812

AN ATTACHMENT

SMCS-5051 **i02868596**

NOTE	PART NUMBER	QTY	PART NAME 1 2 3 4 5 6 (PRODUCT LEVEL)	SEE PAGE
Y	*282-5734*	1	LINES GP-BOOM (AUXILIARY READY)	425
Y	*282-7425*	1	LINES GP-FRONT (SYSTEM 23, COMBINED FUNCTION)	459
Y	*260-7891*	1	LINES GP-PILOT (PUMP CONTROL, SHUTTLE VALVE)	468
Y	*282-7426*	1	LINES GP-PILOT (PUMP CONTROL)	508
Y	*283-2617*	1	WIRING GP-AUXILIARY CONTROL	191

Y-SEPARATE ILLUSTRATION

<END>

270-6037 CONTROL AR-AUXILIARY–
AUX PUMP, MED PRESSURE VALVE
S/N: CLA1-UP

AN ATTACHMENT

SMCS-5051 **i02818990**

NOTE	PART NUMBER	QTY	PART NAME 1 2 3 4 5 6 (PRODUCT LEVEL)	SEE PAGE
Y	*282-7435*	1	LINES GP-FRONT (MEDIUM PRESSURE)	461
Y	*282-7436*	1	LINES GP-PILOT (MEDIUM PRESSURE)	521
Y	*282-7437*	1	LINES GP-PUMP (AUXILIARY PUMP)	536
Y	*259-0917*	1	PUMP & MTG GP-AUXILIARY (MEDIUM PRESSURE)	561
Y	*283-2618*	1	WIRING GP-MEDIUM PRESSURE	229

Y-SEPARATE ILLUSTRATION

<END>

270-6043 CONTROL AR-AUXILIARY—MEDIUM PRESSURE

S/N: CLA1-UP

FOR USE WITH 255-5843—PAGE 345, 255-5844—PAGE 345, 255-5845—PAGE 865, 270-6106—PAGE 347, 282-7449—PAGE 525, 284-4376—PAGE 808, 284-4377—PAGE 809, 284-4378—PAGE 810, 284-4379—PAGE 811, 293-1222—PAGE 812

AN ATTACHMENT

SMCS-5051 **i03035927**

NOTE	PART NUMBER	QTY	PART NAME 1 2 3 4 5 6 (PRODUCT LEVEL)	SEE PAGE
Y	*282-7417*	1	LINES GP-FRONT (MEDIUM PRESSURE)	455
Y	*282-7447*	1	LINES GP-PILOT (MEDIUM PRESSURE)	523
Y	**285-1753**	1	VALVE & MTG GP-CONTROL	582
			—OR—	
Y	**310-0156**	1	VALVE & MTG GP-CONTROL	585
Y	*283-2619*	1	WIRING GP-MEDIUM PRESSURE	230
Y-SEPARATE ILLUSTRATION				

<END>

270-6106 CONTROL AR-AUXILIARY—FOOT SWITCH

S/N: CLA1-UP

AN ATTACHMENT

SMCS-5051 **i03245496**

NOTE	PART NUMBER	QTY	PART NAME 1 2 3 4 5 6 (PRODUCT LEVEL)	SEE PAGE
Y	*270-6107*	1	CONTROL GP-FOOT (LEFT ON/OFF SWITCH)	771
Y	*259-5294*	1	FASTENER GP-WIRING HARNESS (FOOT SWITCH)	131
Y	*247-7465*	1	FILM GP (HAMMER CONTROL, FOOT SWITCH)	939
Y-SEPARATE ILLUSTRATION				

<END>

282-5634 CONTROL AR-COUPLER

S/N: CLA1-UP

AN ATTACHMENT

SMCS-6129 **i02796260**

NOTE	PART NUMBER	QTY	PART NAME 1 2 3 4 5 6 (PRODUCT LEVEL)	SEE PAGE
Y	*282-5705*	1	FILM GP (QUICK COUPLER)	943
Y	*282-7408*	1	LINES GP-FRONT (QUICK COUPLER)	447
Y	*283-2610*	1	WIRING GP-QUICK COUPLER	240
Y	*238-2485*	1	WIRING GP-QUICK COUPLER	239
Y-SEPARATE ILLUSTRATION				

<END>

HYDRAULIC SYSTEM

283-8792 CONTROL AR-FINE SWING

S/N: CLA1-UP

AN ATTACHMENT

SMCS-5480 **i02795996**

NOTE	PART NUMBER	QTY	PART NAME 1 2 3 4 5 6 (PRODUCT LEVEL)	SEE PAGE
Y	*267-6841*	1	DRIVE GP-SWING	376
Y	*282-7422*	1	FITTING GP-HYDRAULIC (SWING MOTOR)	398
Y	*283-2607*	1	WIRING GP-FINE SWING	223

Y-SEPARATE ILLUSTRATION

<END>

266-6280 COUPLING GP-FLEXIBLE

S/N: CLA1-UP

PART OF 255-3027 COUPLING GP-PUMP

SMCS-3252 **i02747795**

NOTE	REF NO	GRAPHIC REF	PART NUMBER	QTY	PART NAME 1 2 3 4 5 6 (PRODUCT LEVEL)	SEE PAGE
	1	1	**7Y-1900**	4	INSERT-COUPLING	
	2	1	**7Y-1901**	1	ELEMENT-COUPLING	
	3	1	**7Y-1902**	4	INSERT-COUPLING	
M	4	1	**7Y-1904**	4	BOLT-SOCKET HEAD (M16X2X50-MM)	
	5	1	**248-7284**	1	HUB	
M	6	1	**7Y-0466**	2	SETSCREW-SOCKET (M16X2X22-MM)	
	7	1	**7Y-0468**	12	PIN-SPRING	

M-METRIC PART

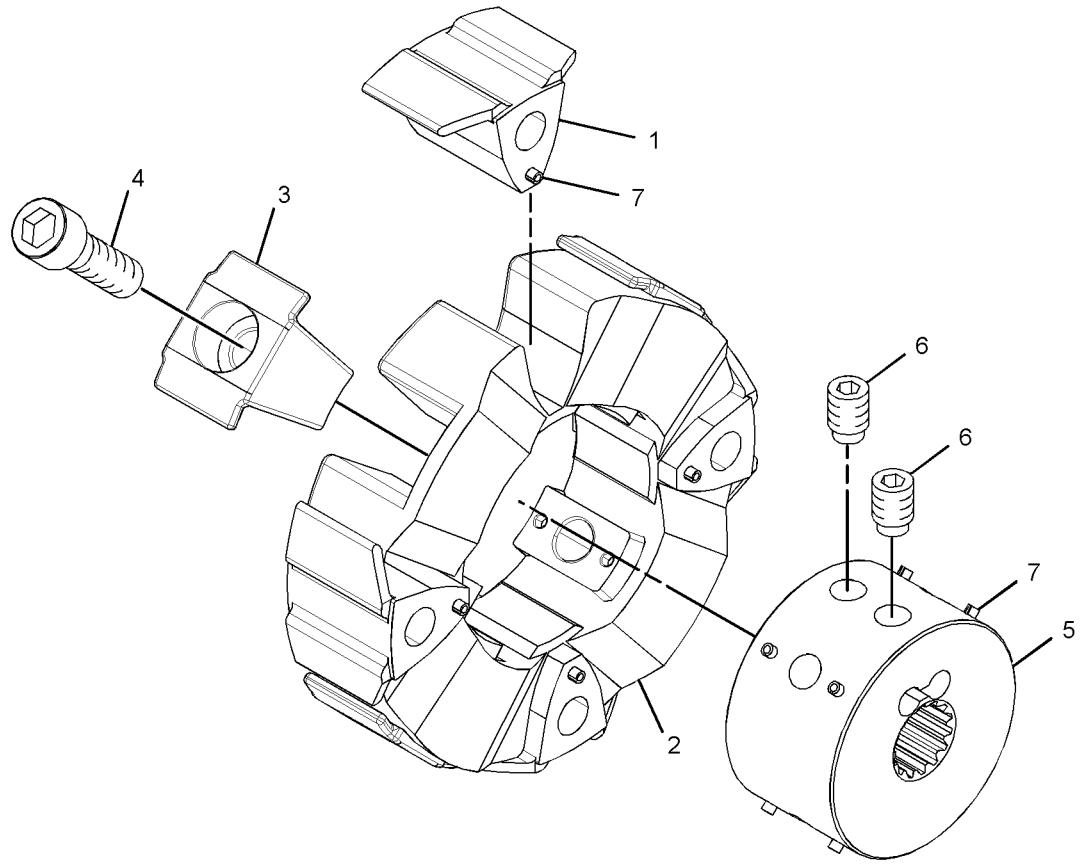

GRAPHIC #1 **<END>** g01379448

HYDRAULIC SYSTEM

255-3027 COUPLING GP-PUMP

S/N: CLA1-UP

PART OF 279-7755 PUMP & MTG GP-MAIN HYDRAULIC

SMCS-5062 **i02724264**

NOTE	REF NO	GRAPHIC REF	PART NUMBER	QTY	PART NAME 1 2 3 4 5 6 (PRODUCT LEVEL)	SEE PAGE
M	1	1	**8T-6429**	4	BOLT-SOCKET HEAD (M16X2X55-MM)	
Y	2	1	**266-6280**	1	COUPLING GP-FLEXIBLE	349
	3	1	**7Y-0468**	4	PIN-SPRING	

M-METRIC PART
Y-SEPARATE ILLUSTRATION

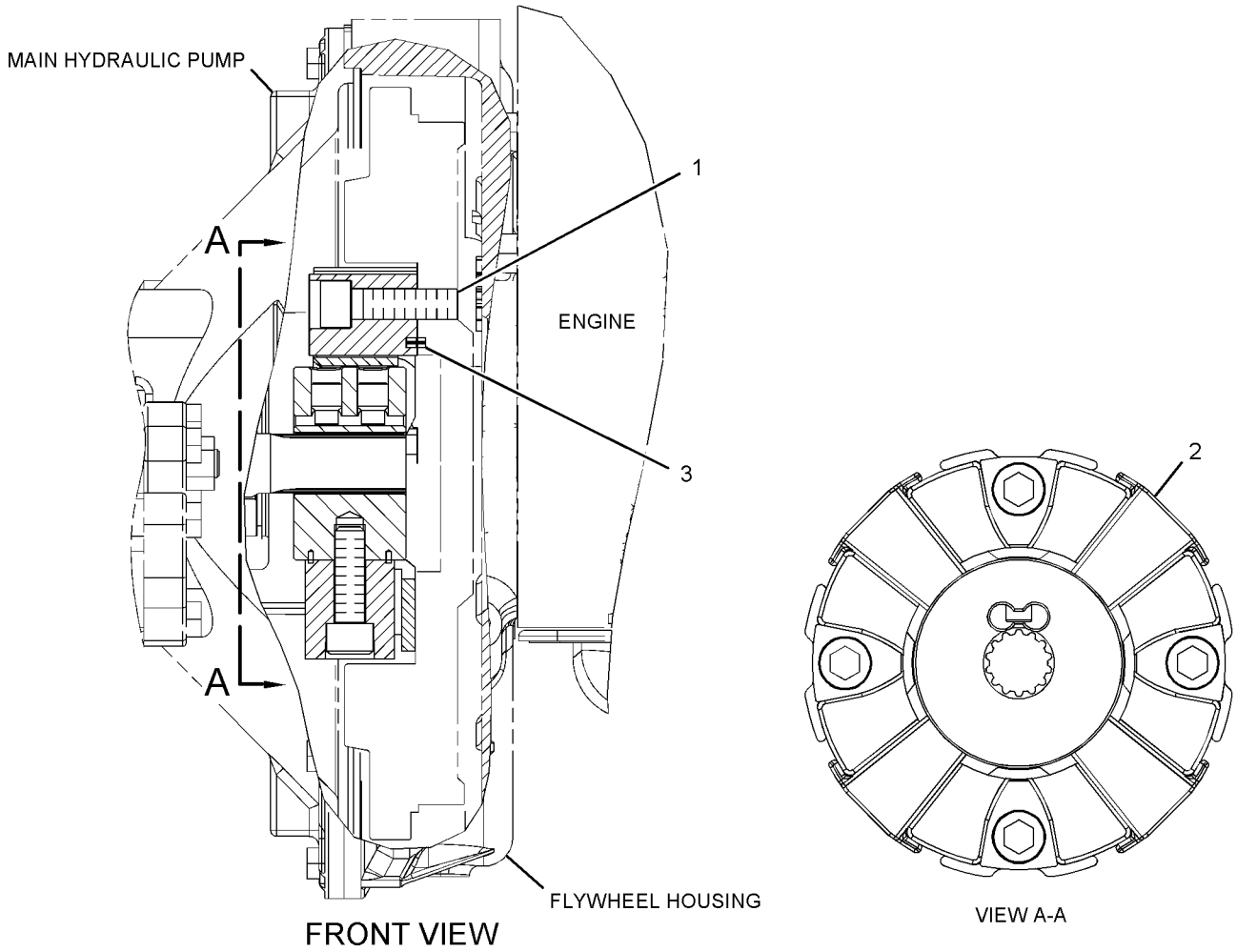

GRAPHIC #1 **<END>** g01325820

301-2643 COVER GP-PUMP

S/N: CLA110-UP
PART OF 301-2642 PUMP GP-REFUELING
AN ATTACHMENT

SMCS-5070 **i02986532**

NOTE	REF NO	GRAPHIC REF	PART NUMBER	QTY	PART NAME 1 2 3 4 5 6 (PRODUCT LEVEL)	SEE PAGE
	1	1	**283-8862**	3	GUARD	
	2	1	**301-2644**	1	COVER AS	
	3	1	**301-2650**	1	GUARD	

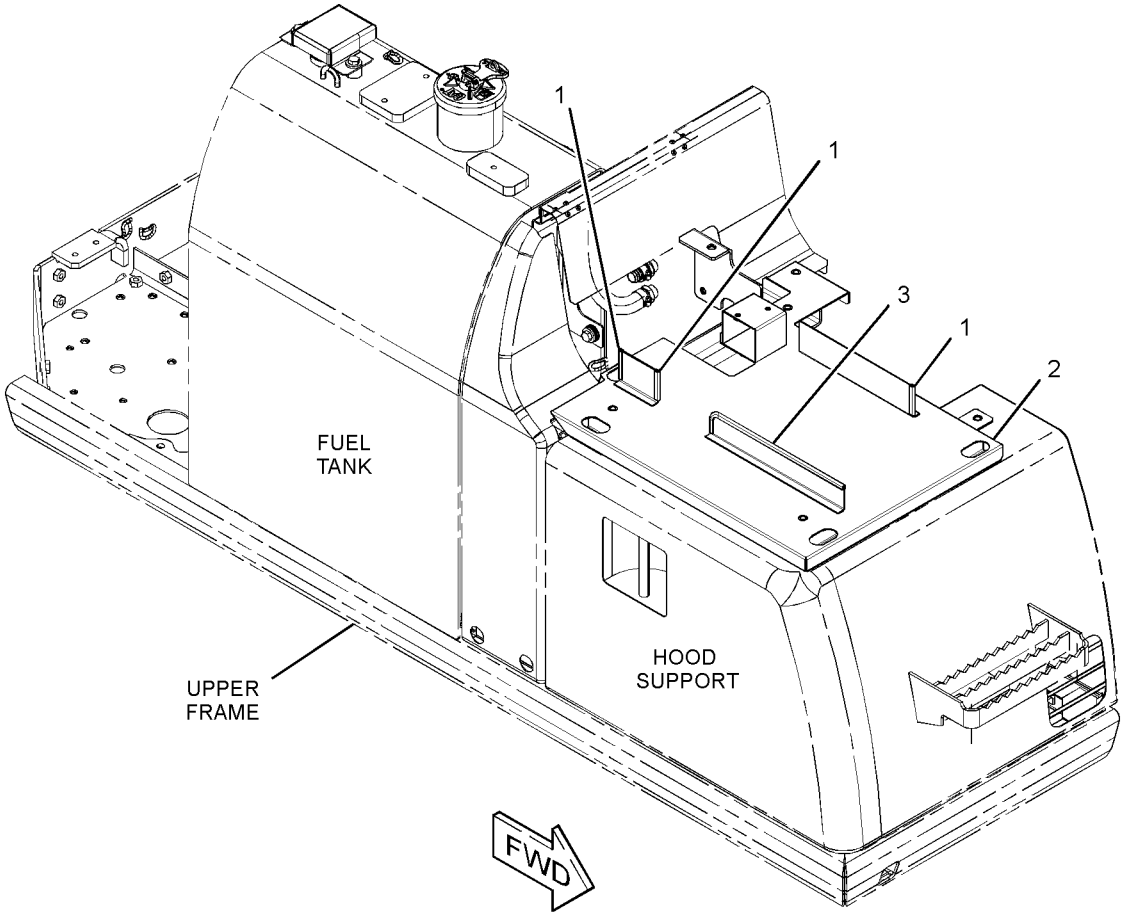

GRAPHIC #1 **<END>** g01554373

274-2678 CYLINDER & LINES GP-BLADE—LH

S/N: CLA1-UP
PART OF 283-8789 INSTALLATION AR-BLADE
AN ATTACHMENT

SMCS-5102 **i03255884**

NOTE	PART NUMBER	QTY	PART NAME 1 2 3 4 5 6 (PRODUCT LEVEL)	SEE PAGE
Y	*274-2680*	1	CYLINDER & SEAL GP-BLADE (LH)	354
Y	*179-7602*	1	LINES GP-BLADE CYLINDER (LH)	419

Y-SEPARATE ILLUSTRATION

<END>

274-2679 CYLINDER & LINES GP-BLADE—RH

S/N: CLA1-UP
PART OF 283-8789 INSTALLATION AR-BLADE
AN ATTACHMENT

SMCS-5102 **i03255885**

NOTE	PART NUMBER	QTY	PART NAME 1 2 3 4 5 6 (PRODUCT LEVEL)	SEE PAGE
Y	*274-2681*	1	CYLINDER & SEAL GP-BLADE (RH)	355
Y	*179-7604*	1	LINES GP-BLADE CYLINDER (RH)	420

Y-SEPARATE ILLUSTRATION

<END>

283-6173 CYLINDER & LINES GP-BOOM—LH

S/N: CLA1-UP
PART OF 260-7236 BOOM AR, 283-9062 BOOM AR-1 PIECE LONG, 301-2552, 301-2555, 301-2647 SPECIAL AR
AN ATTACHMENT

SMCS-5456, 7562 **i02795748**

NOTE	PART NUMBER	QTY	PART NAME 1 2 3 4 5 6 (PRODUCT LEVEL)	SEE PAGE
Y	*283-6175*	1	CYLINDER & SEAL GP-BOOM	356
Y	*296-7325*	1	LINES GP-BOOM CYLINDER (LH)	434

Y-SEPARATE ILLUSTRATION

<END>

283-6174 CYLINDER & LINES GP-BOOM—RH

S/N: CLA1-UP
PART OF 260-7236 BOOM AR, 283-9062 BOOM AR-1 PIECE LONG, 301-2552, 301-2555, 301-2647 SPECIAL AR
AN ATTACHMENT

SMCS-5456, 7562 **i02795759**

NOTE	PART NUMBER	QTY	PART NAME 1 2 3 4 5 6 (PRODUCT LEVEL)	SEE PAGE
Y	*283-6175*	1	CYLINDER & SEAL GP-BOOM	356
Y	*296-7326*	1	LINES GP-BOOM CYLINDER (RH)	435

Y-SEPARATE ILLUSTRATION

<END>

289-7697 CYLINDER & LINES GP-BUCKET

S/N: CLA1-UP
PART OF 282-5536, 282-5537 COUPLER AR-QUICK, 260-7065, 260-7066, 260-7067 LINKAGE AR-BUCKET AN ATTACHMENT

SMCS-5457 **i02796335**

NOTE	PART NUMBER	QTY	PART NAME 1 2 3 4 5 6 (PRODUCT LEVEL)	SEE PAGE
Y	*289-7698*	1	CYLINDER & SEAL GP-BUCKET	357
Y	*179-7598*	1	LINES GP-BUCKET CYLINDER	436
Y-SEPARATE ILLUSTRATION				

<END>

310-1789 CYLINDER & LINES GP-BUCKET

S/N: CLA1-UP
PART OF 301-2552, 301-2555, 301-2647 SPECIAL AR AN ATTACHMENT

SMCS-5457 **i02910729**

NOTE	PART NUMBER	QTY	PART NAME 1 2 3 4 5 6 (PRODUCT LEVEL)	SEE PAGE
Y	*310-1790*	1	CYLINDER & SEAL GP-BUCKET	358
Y	*179-7598*	1	LINES GP-BUCKET CYLINDER	436
Y-SEPARATE ILLUSTRATION				

<END>

289-7724 CYLINDER & LINES GP-STICK

S/N: CLA1-UP
PART OF 260-7236 BOOM AR, 283-9062 BOOM AR-1 PIECE LONG, 301-2552, 301-2555, 301-2647 SPECIAL AR AN ATTACHMENT

SMCS-5458 **i02795541**

NOTE	PART NUMBER	QTY	PART NAME 1 2 3 4 5 6 (PRODUCT LEVEL)	SEE PAGE
Y	*289-7725*	1	CYLINDER & SEAL GP-STICK	359
Y	*282-7393*	1	LINES GP-STICK CYLINDER	545
Y-SEPARATE ILLUSTRATION				

<END>

HYDRAULIC SYSTEM

274-2680 CYLINDER & SEAL GP-BLADE–LH

S/N: CLA1-UP

PART OF 274-2678 CYLINDER & LINES GP-BLADE

AN ATTACHMENT

SMCS-5102 **i02810009**

NOTE	REF NO	GRAPHIC REF	PART NUMBER	QTY	PART NAME 1 2 3 4 5 6 (PRODUCT LEVEL)	SEE PAGE
	1	1	**3B-8489**	2	FITTING-GREASE	
	2	1	**166-1492**	4	SEAL-LIP TYPE	
Y	3	1	**274-2682**	1	CYLINDER GP-BLADE	360

Y-SEPARATE ILLUSTRATION

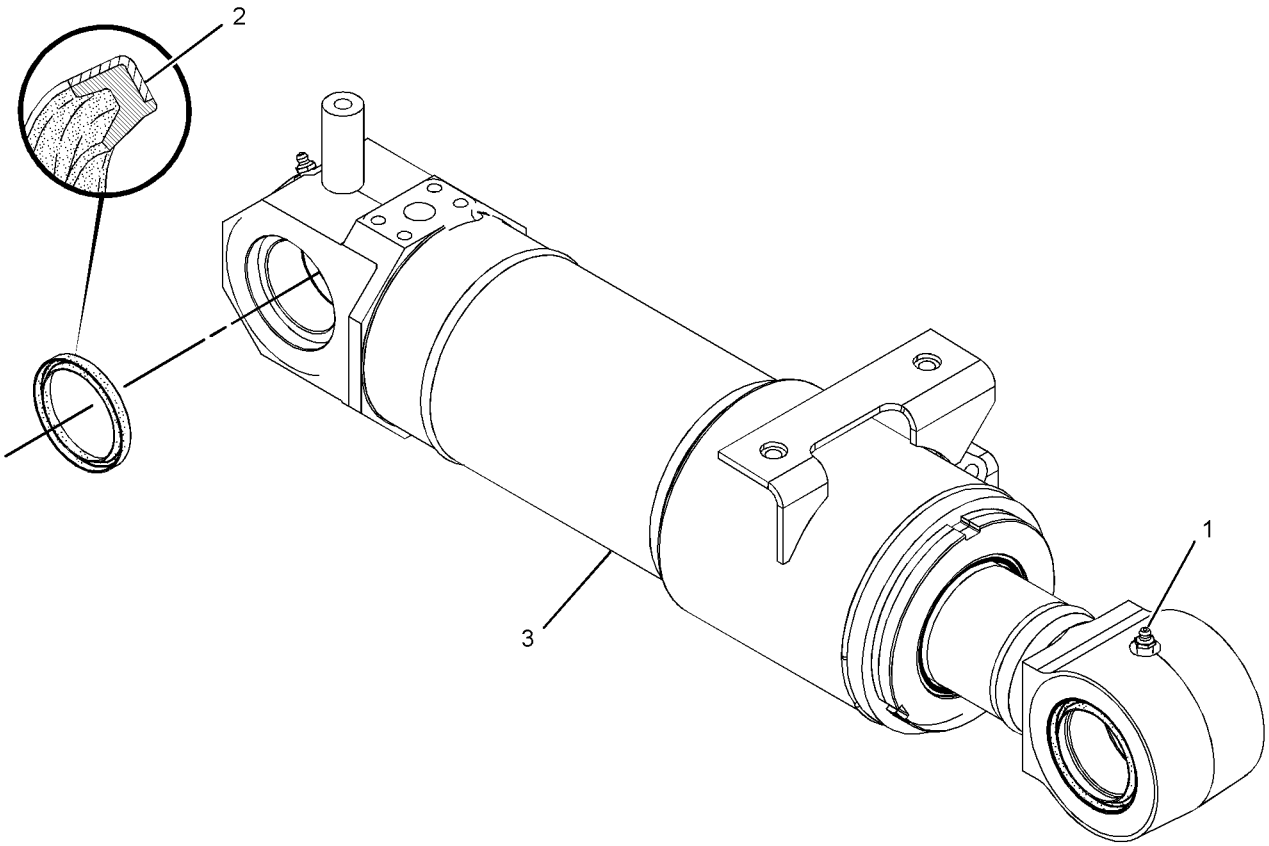

GRAPHIC #1 **<END>** g01406626

274-2681 CYLINDER & SEAL GP-BLADE–RH

S/N: CLA1-UP

PART OF 274-2679 CYLINDER & LINES GP-BLADE

AN ATTACHMENT

SMCS-5102 **i02810002**

NOTE	REF NO	GRAPHIC REF	PART NUMBER	QTY	PART NAME 1 2 3 4 5 6 (PRODUCT LEVEL)	SEE PAGE
	1	1	**3B-8489**	2	FITTING-GREASE	
	2	1	**166-1492**	4	SEAL-LIP TYPE	
Y	3	1	**274-2683**	1	CYLINDER GP-BLADE	362

Y-SEPARATE ILLUSTRATION

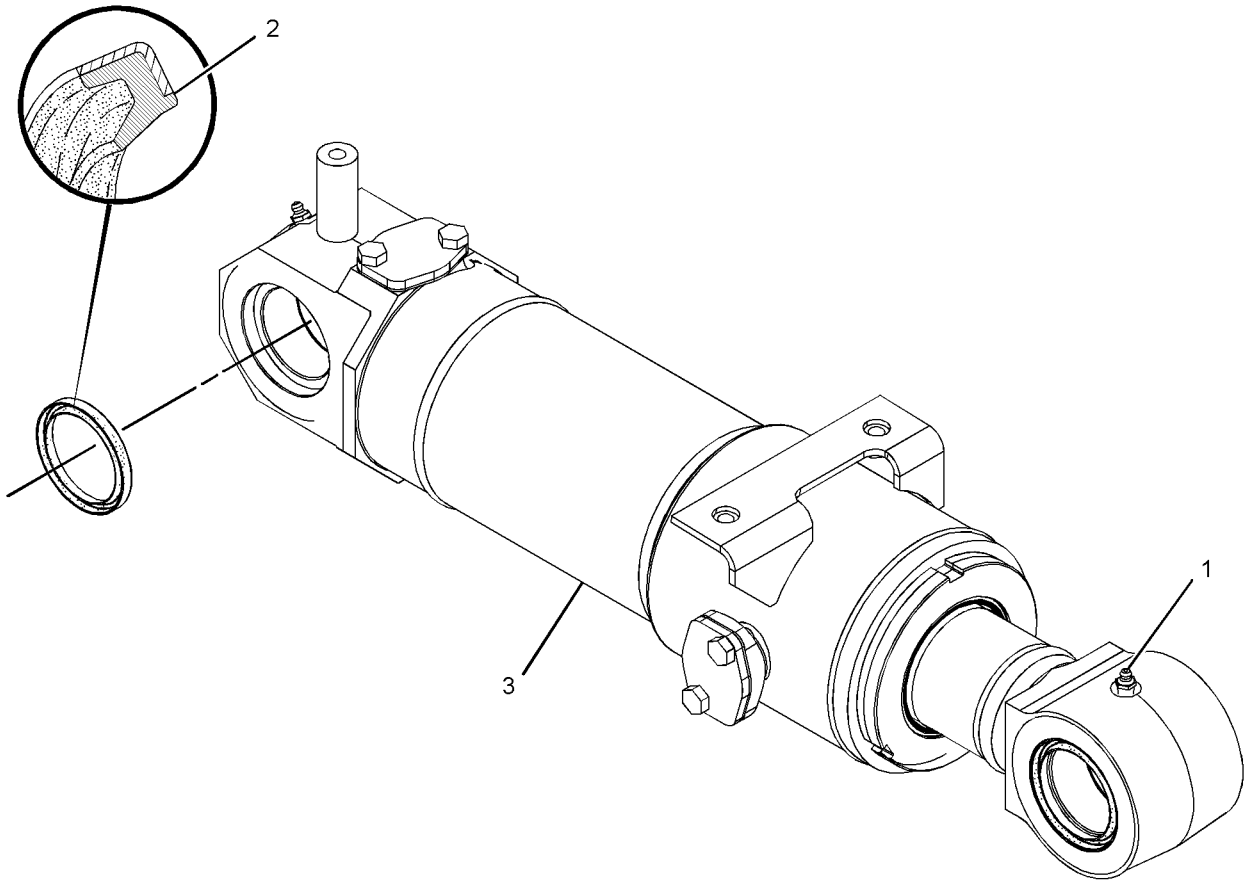

GRAPHIC #1 **<END>** g01406619

HYDRAULIC SYSTEM

283-6175 CYLINDER & SEAL GP-BOOM

S/N: CLA1-UP

PART OF 283-6173, 283-6174 CYLINDER & LINES GP-BOOM

AN ATTACHMENT

SMCS-5456 **i02795749**

NOTE	REF NO	GRAPHIC REF	PART NUMBER	QTY	PART NAME 1 2 3 4 5 6 (PRODUCT LEVEL)	SEE PAGE
	1	1	**3B-8489**	1	FITTING-GREASE	
	2	1	**166-1492**	2	SEAL-LIP TYPE	
Y	3	1	**283-6176**	1	CYLINDER GP-BOOM	364
	4	1	**166-1494**	2	SEAL-LIP TYPE	

Y-SEPARATE ILLUSTRATION

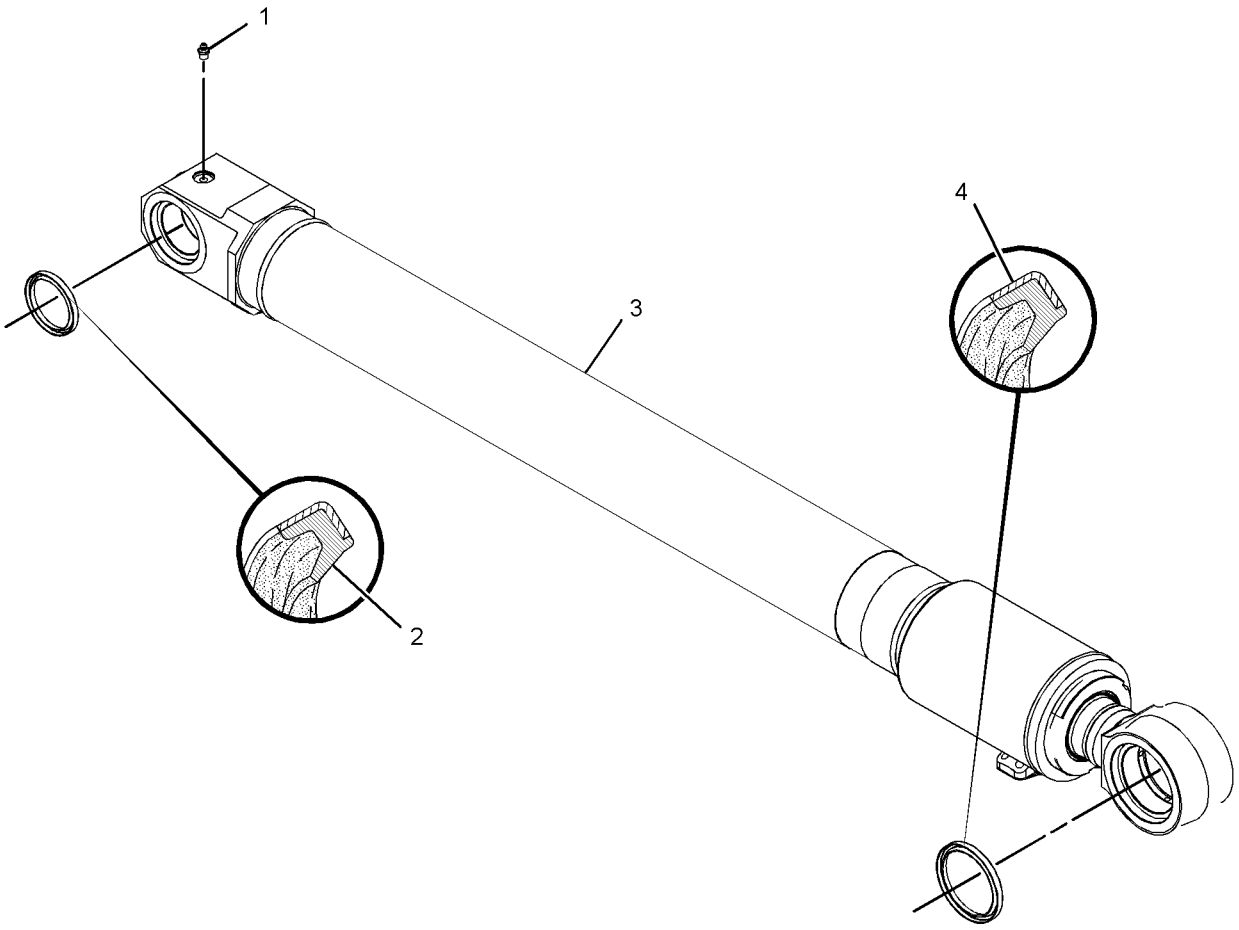

GRAPHIC #1 **<END>** g01399895

289-7698 CYLINDER & SEAL GP-BUCKET

S/N: CLA1-UP

PART OF 289-7697 CYLINDER & LINES GP-BUCKET

AN ATTACHMENT

SMCS-5457 **i02796336**

NOTE	REF NO	GRAPHIC REF	PART NUMBER	QTY	PART NAME 1 2 3 4 5 6 (PRODUCT LEVEL)	SEE PAGE
	1	1	**3B-8489**	2	FITTING-GREASE	
	2	1	**166-1492**	2	SEAL-LIP TYPE	
	3	1	**235-7679**	2	SEAL-LIP TYPE	
Y	4	1	**289-7699**	1	CYLINDER GP-BUCKET	366
Y-SEPARATE ILLUSTRATION						

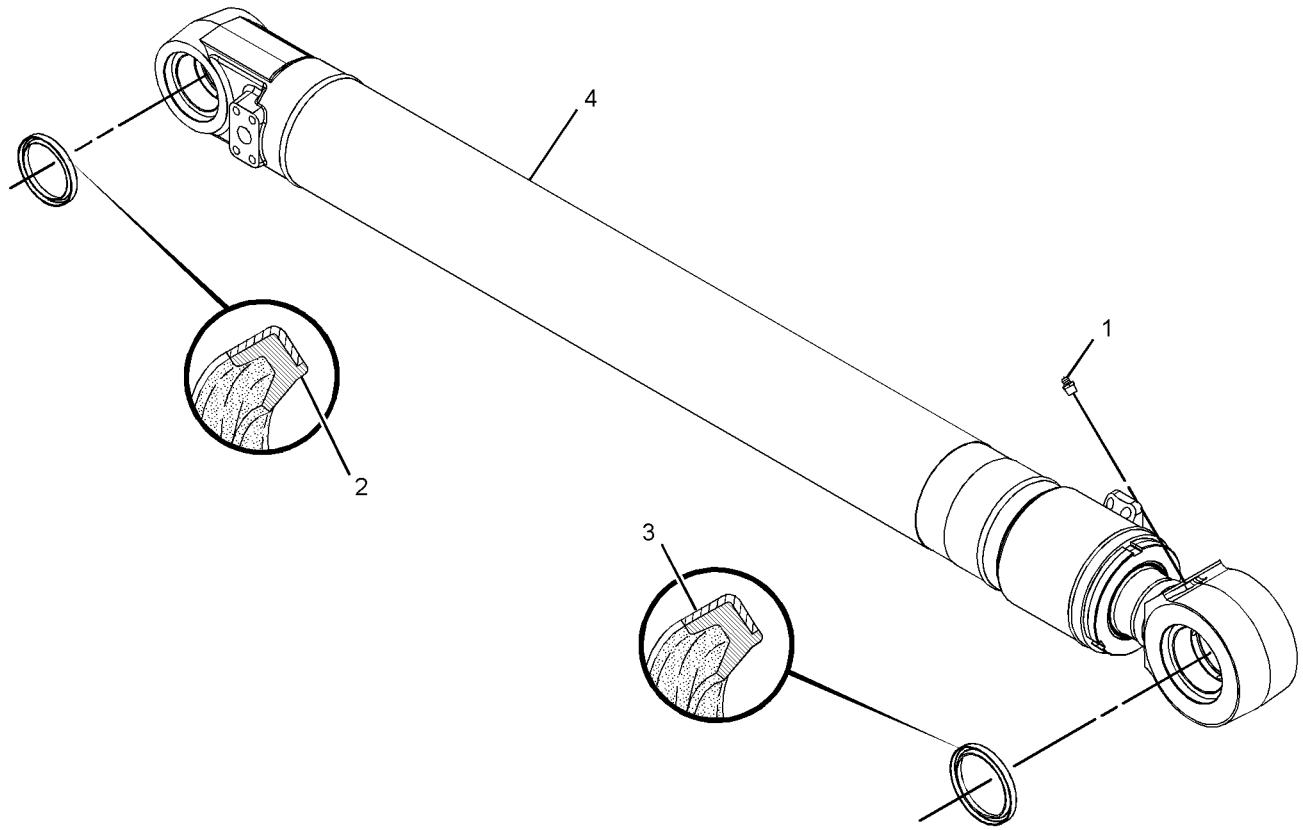

GRAPHIC #1 **<END>** g01400038

310-1790 CYLINDER & SEAL GP-BUCKET

S/N: CLA1-UP

PART OF 310-1789 CYLINDER & LINES GP-BUCKET

AN ATTACHMENT

SMCS-5457 **i02910730**

NOTE	REF NO	GRAPHIC REF	PART NUMBER	QTY	PART NAME 1 2 3 4 5 6 (PRODUCT LEVEL)	SEE PAGE
	1	1	**3B-8489**	2	FITTING-GREASE	
	2	1	**166-1492**	2	SEAL-LIP TYPE	
	3	1	**235-7679**	2	SEAL-LIP TYPE	
Y	4	1	**295-2006**	1	CYLINDER GP-BUCKET	368

Y-SEPARATE ILLUSTRATION

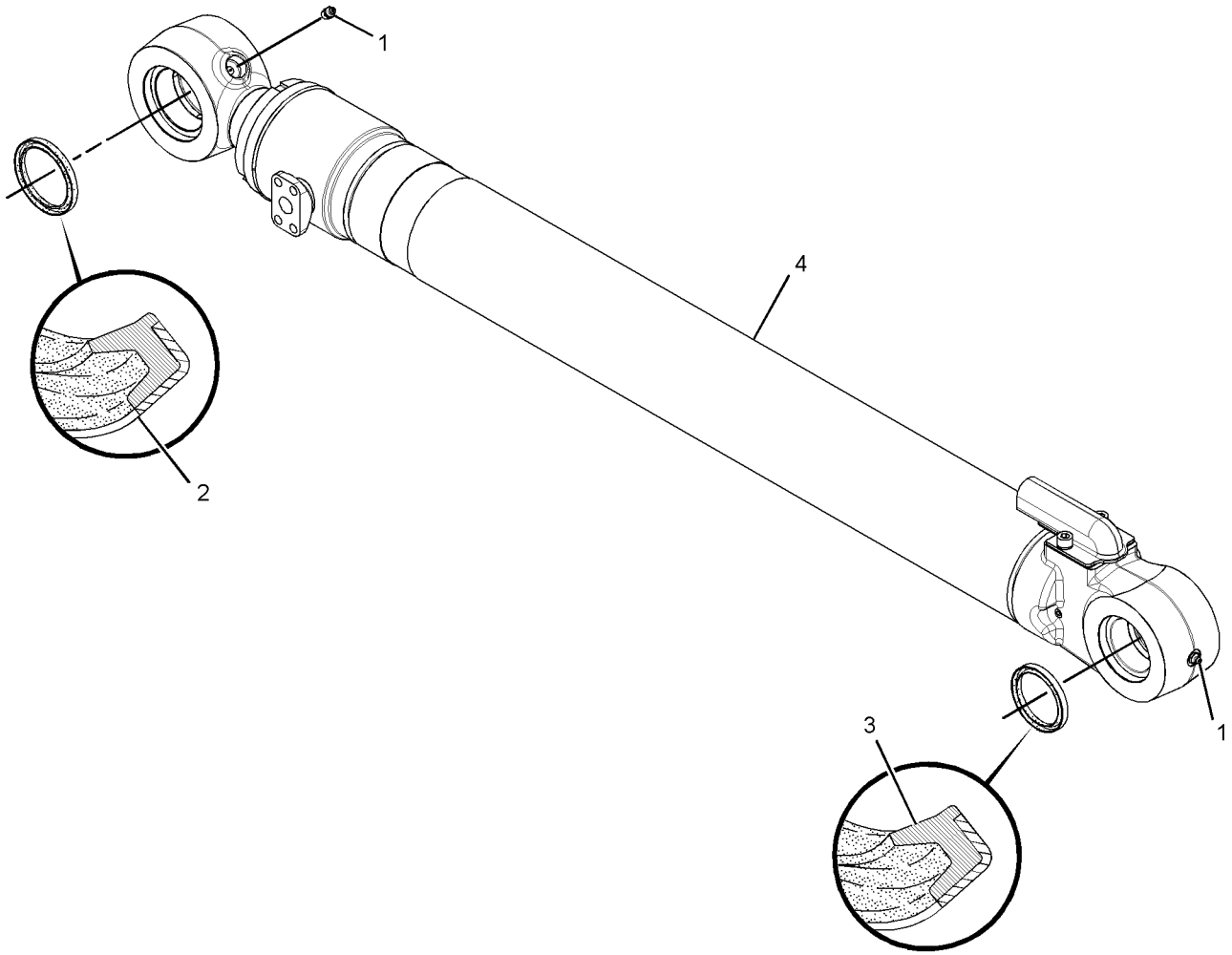

GRAPHIC #1 **<END>** g01457453

289-7725 CYLINDER & SEAL GP-STICK

S/N: CLA1-UP

PART OF 289-7724 CYLINDER & LINES GP-STICK

AN ATTACHMENT

SMCS-5458 **i02795562**

NOTE	REF NO	GRAPHIC REF	PART NUMBER	QTY	PART NAME 1 2 3 4 5 6 (PRODUCT LEVEL)	SEE PAGE
	1	1	**3B-8489**	1	FITTING-GREASE	
	2	1	**166-1492**	4	SEAL-LIP TYPE	
Y	3	1	**289-7726**	1	CYLINDER GP-STICK	371
	4	1	**8T-6763**	1	PLUG-PIPE	

Y-SEPARATE ILLUSTRATION

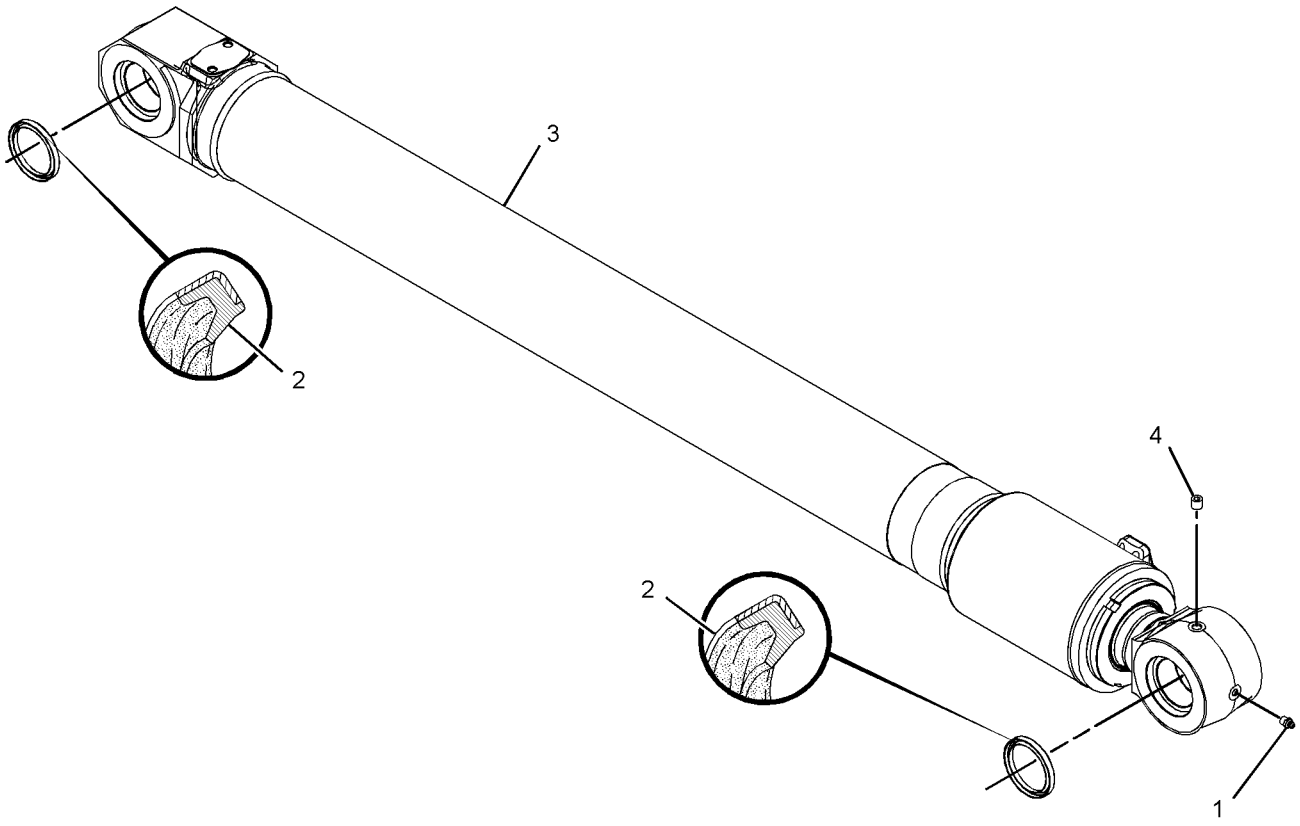

GRAPHIC #1 **<END>** g01399912

274-2682 CYLINDER GP-BLADE–LH

S/N: CLA1-UP
120-MM (4.7-IN) BORE X 202-MM (7.9-IN) STROKE
PART OF 274-2680 CYLINDER & SEAL GP-BLADE
AN ATTACHMENT

SMCS-5102 **i02903872**

NOTE	REF NO	GRAPHIC REF	PART NUMBER	QTY	PART NAME 1 2 3 4 5 6 (PRODUCT LEVEL)	SEE PAGE
J	1	1	**9X-3592**	1	SEAL AS	
	2	1	**099-0695**	1	RING	
J	3	1	**119-5445**	1	RING	
	4	1	**123-9950**	1	HEAD	
	5	1	**125-1551**	1	PISTON	
J	6	1	**143-8027**	1	RING	
M	7	1	**143-8151**	1	LOCKNUT-SPECIAL	
	8	1	**283-6080**	1	CYLINDER AS	
	8A	1	**273-6945**	1	BEARING-SLEEVE	
	9	1	**283-6083**	1	ROD AS	
	9A	1	**273-6945**	1	BEARING-SLEEVE	
J	10	1	**096-1054**	1	RING-BACKUP	
	11	1	**096-8139**	1	RING-RETAINING	
J	12	1	**165-9285**	1	SEAL-LIP TYPE	
J	13	1	**170-9843**	1	SEAL-BUFFER	
J	14	1	**170-9859**	1	SEAL-U-CUP	
J	15	1	**095-1628**	1	SEAL-O-RING	
J	16	1	**095-1676**	1	SEAL-O-RING	
J	17	1	**099-0681**	1	RING-BACKUP	
	18	1	**114-0755**	1	BEARING-SLEEVE	
					AVAILABLE REPAIR KIT(S):	
J			**170-9946**	1	KIT-SEAL (BLADE CYLINDER)	

J-KIT MARKED J SERVICES PART(S) MARKED J
M-METRIC PART

274-2682 CYLINDER GP-BLADE *(contd.)* **i02903872**

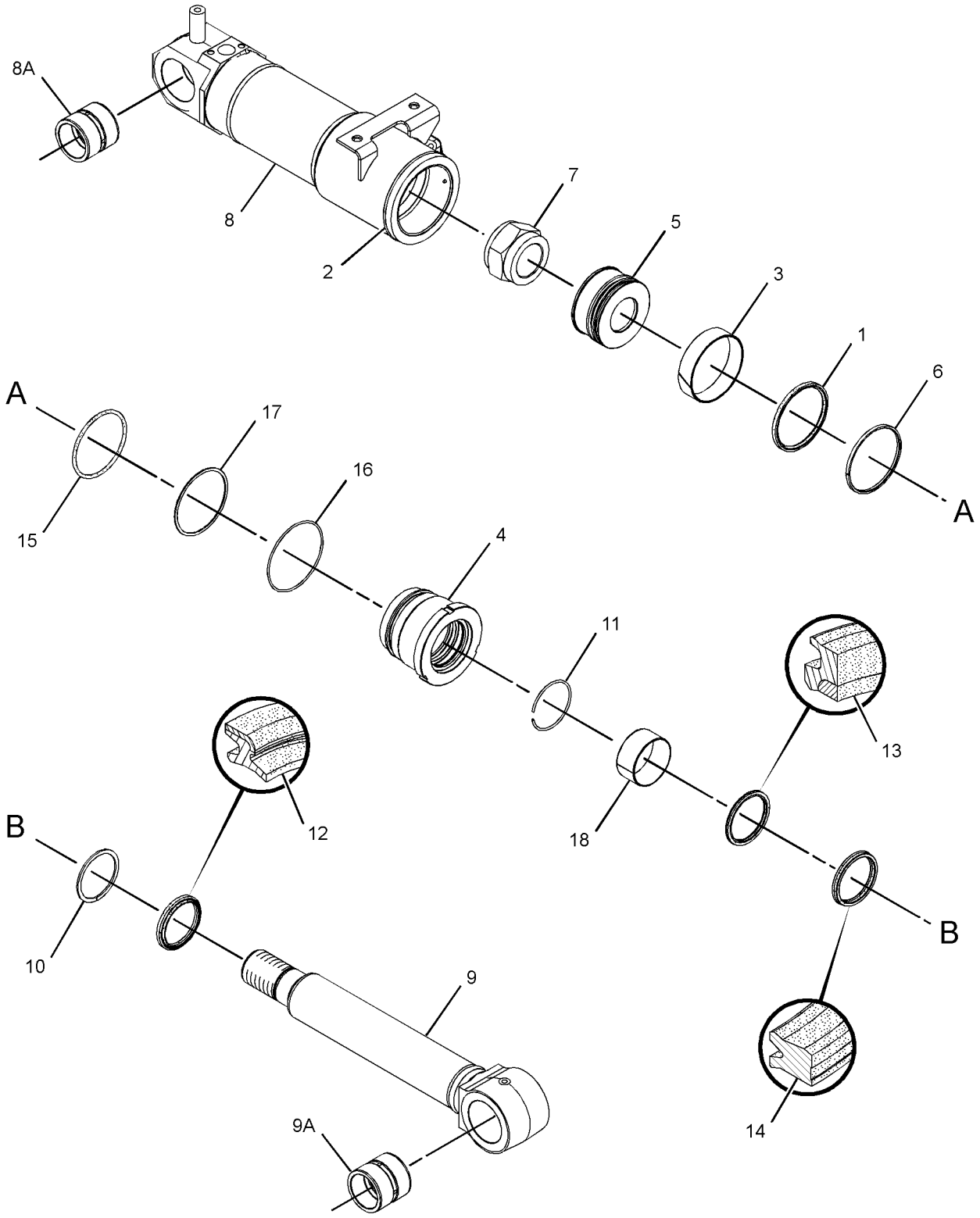

GRAPHIC #1 **<END>** g01453963

274-2683 CYLINDER GP-BLADE–RH

S/N: CLA1-UP
120-MM (4.7-IN) BORE X 202-MM (7.9-IN) STROKE
PART OF 274-2681 CYLINDER & SEAL GP-BLADE
AN ATTACHMENT

SMCS-5102 **i02903863**

NOTE	REF NO	GRAPHIC REF	PART NUMBER	QTY	PART NAME 1 2 3 4 5 6 (PRODUCT LEVEL)	SEE PAGE
J	1	1	**9X-3592**	1	SEAL AS	
	2	1	**099-0695**	1	RING	
J	3	1	**119-5445**	1	RING	
	4	1	**123-9950**	1	HEAD	
	5	1	**125-1551**	1	PISTON	
J	6	1	**143-8027**	1	RING	
M	7	1	**143-8151**	1	LOCKNUT-SPECIAL	
	8	1	**283-6081**	1	CYLINDER AS	
	8A	1	**273-6945**	1	BEARING-SLEEVE	
	9	1	**283-6083**	1	ROD AS	
	9A	1	**273-6945**	1	BEARING-SLEEVE	
J	10	1	**096-1054**	1	RING-BACKUP	
	11	1	**096-8139**	1	RING-RETAINING	
J	12	1	**165-9285**	1	SEAL-LIP TYPE	
J	13	1	**170-9843**	1	SEAL-BUFFER	
J	14	1	**170-9859**	1	SEAL-U-CUP	
J	15	1	**095-1628**	1	SEAL-O-RING	
J	16	1	**095-1676**	1	SEAL-O-RING	
J	17	1	**099-0681**	1	RING-BACKUP	
	18	1	**114-0755**	1	BEARING-SLEEVE	
					AVAILABLE REPAIR KIT(S):	
J			**170-9946**	1	KIT-SEAL (BLADE CYLINDER)	

J-KIT MARKED J SERVICES PART(S) MARKED J
M-METRIC PART

274-2683 CYLINDER GP-BLADE *(contd.)* **i02903863**

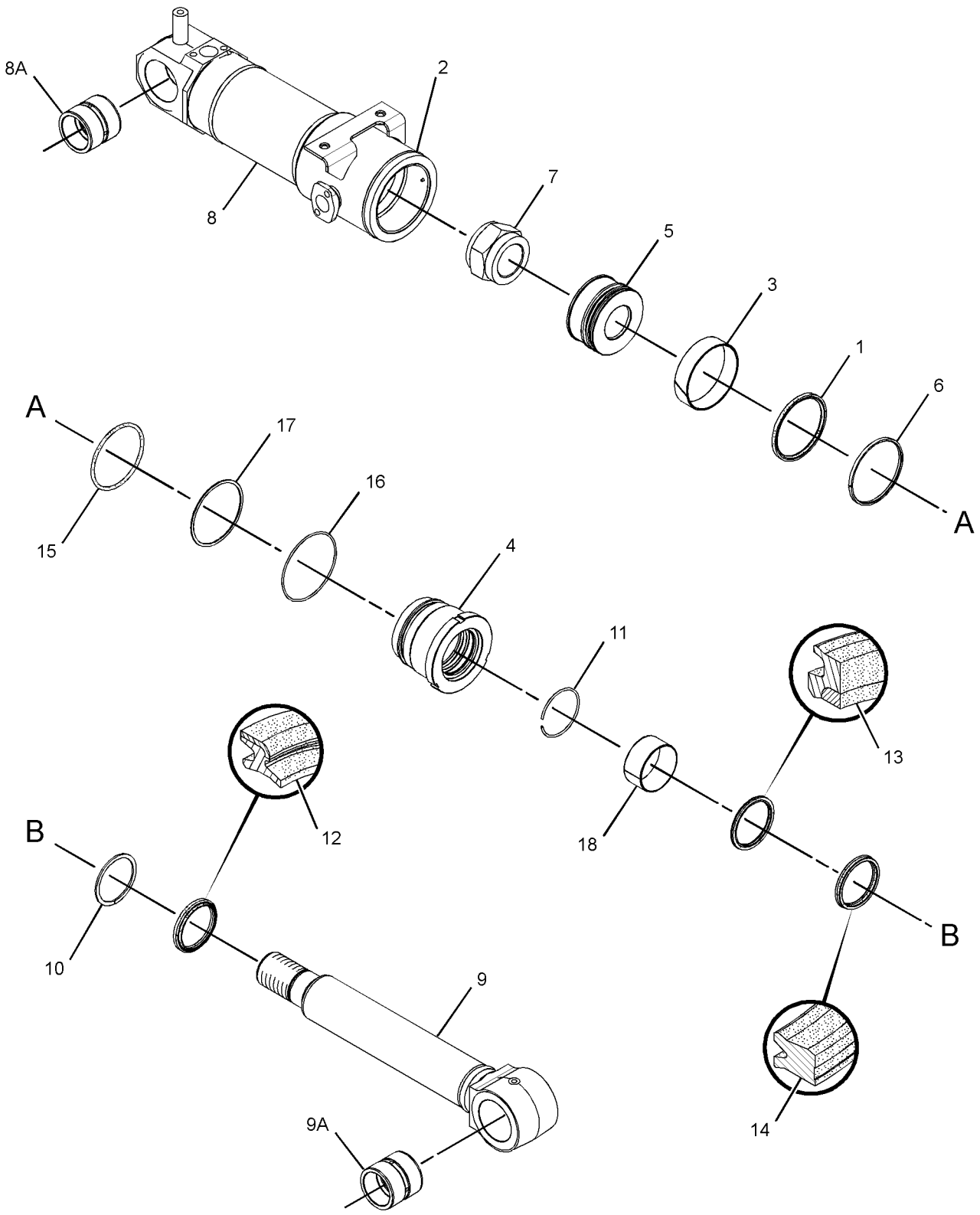

GRAPHIC #1 **<END>** g01453987

HYDRAULIC SYSTEM

283-6176 CYLINDER GP-BOOM

S/N: CLA1-UP
100-MM (3.93-IN) BORE X 1002-MM (31.44-IN) STROKE
PART OF 283-6175 CYLINDER & SEAL GP-BOOM
AN ATTACHMENT

SMCS-5456 **i02795753**

NOTE	REF NO	GRAPHIC REF	PART NUMBER	QTY	PART NAME 1 2 3 4 5 6 (PRODUCT LEVEL)	SEE PAGE
	1	1	**5I-4199**	1	STOP	
J	2	1	**9X-7298**	1	SEAL AS	
J	3	1	**093-1519**	1	RING-BACKUP	
	4	1	**099-5368**	1	RING	
	5	1	**099-5400**	1	RING-RETAINING	
J	6	1	**143-8025**	2	RING	
	7	1	**143-8149**	1	LOCKNUT-SPECIAL	
J	8	1	**165-9283**	1	SEAL-LIP TYPE	
J	9	1	**170-9841**	1	SEAL-BUFFER	
J	10	1	**170-9857**	1	SEAL-U-CUP	
	11	1	**170-9928**	1	HEAD	
J	12	1	**283-5953**	2	RING	
J	13	1	**283-5995**	1	RING-SEAL	
	14	1	**283-6008**	1	ROD AS	
	14A	1	**273-6813**	1	BEARING-SLEEVE	
	15	1	**283-6014**	1	PISTON	
	16	1	**283-6177**	1	CYLINDER AS	
	16A	1	**273-6811**	1	BEARING-SLEEVE	
J	17	1	**095-1713**	2	SEAL-O-RING	
J	18	1	**099-5399**	3	RING-BACKUP	
	19	1	**114-0753**	1	BEARING-SLEEVE	
J	20	1	**6V-8467**	1	SEAL-O-RING	
					AVAILABLE REPAIR KIT(S):	
J			**283-6179**	1	KIT-SEAL (BOOM CYLINDER)	

J-KIT MARKED J SERVICES PART(S) MARKED J

283-6176 CYLINDER GP-BOOM *(contd.)* **i02795753**

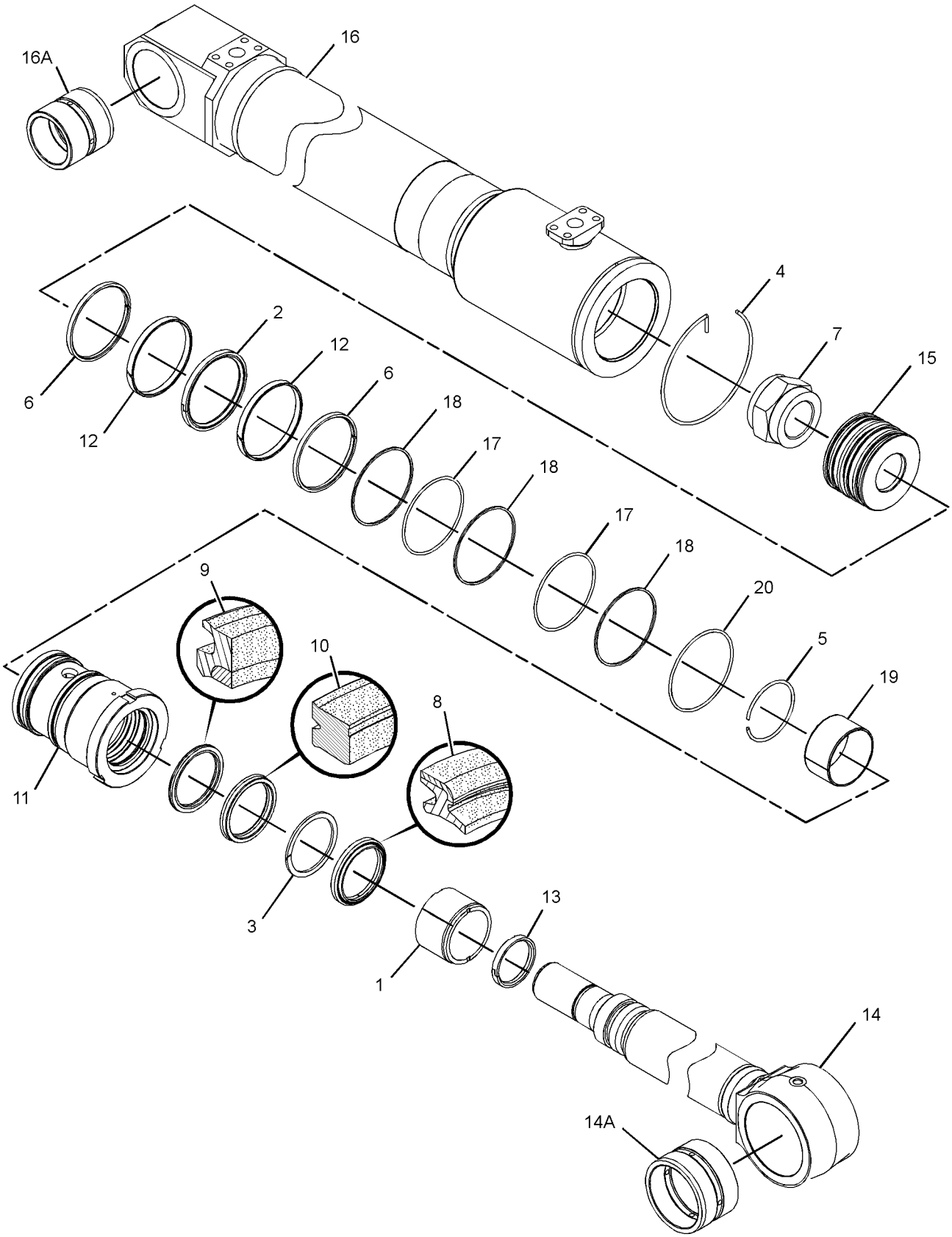

GRAPHIC #1 **<END>** g01401634

HYDRAULIC SYSTEM

289-7699 CYLINDER GP-BUCKET

S/N: CLA1-UP
100-MM (3.9-IN) BORE X 939-MM (37-IN) STROKE
PART OF 289-7698 CYLINDER & SEAL GP-BUCKET
AN ATTACHMENT

SMCS-5457 **i02796337**

NOTE	REF NO	GRAPHIC REF	PART NUMBER	QTY	PART NAME 1 2 3 4 5 6 (PRODUCT LEVEL)	SEE PAGE
J	1	1	**9X-7298**	1	SEAL AS	
J	2	1	**093-1519**	1	RING-BACKUP	
	3	1	**099-0600**	1	RING	
	4	1	**099-5400**	1	RING-RETAINING	
M	5	1	**133-6686**	1	LOCKNUT-SPECIAL	
J	6	1	**143-8025**	2	RING	
J	7	1	**165-9283**	1	SEAL-LIP TYPE	
J	8	1	**170-9841**	1	SEAL-BUFFER	
J	9	1	**170-9857**	1	SEAL-U-CUP	
	10	1	**283-5952**	1	PISTON	
J	11	1	**283-5953**	2	RING	
	12	1	**289-7700**	1	CYLINDER AS	
	12A	1	**273-6810**	1	BEARING-SLEEVE	
	13	1	**289-7702**	1	HEAD	
	14	1	**289-7743**	1	ROD AS	
	14A	1	**248-7857**	1	BEARING-SLEEVE	
J	15	1	**095-1713**	1	SEAL-O-RING	
J	16	1	**099-5399**	1	RING-BACKUP	
	17	1	**114-0753**	1	BEARING-SLEEVE	
J	18	1	**6V-8467**	1	SEAL-O-RING	
					AVAILABLE REPAIR KIT(S):	
			283-6179	1	KIT-SEAL (BUCKET CYLINDER)	
					(ALSO INCLUDES A SEAL RING)	

J-KIT MARKED J SERVICES PART(S) MARKED J
M-METRIC PART

289-7699 CYLINDER GP-BUCKET *(contd.)* **i02796337**

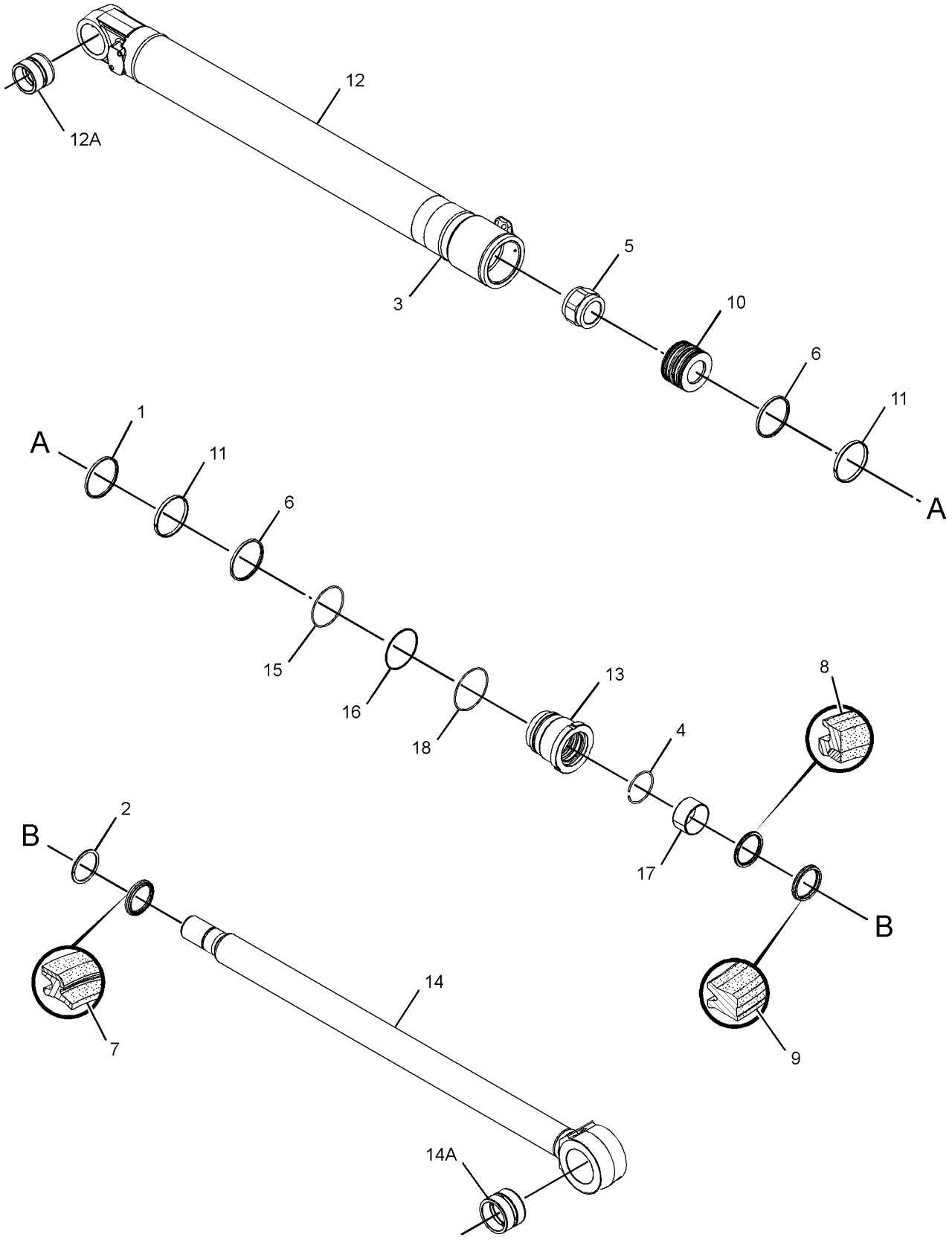

GRAPHIC #1 **<END>** g01400302

HYDRAULIC SYSTEM

295-2006 CYLINDER GP-BUCKET

S/N: CLA1-UP
100-MM (3.9-IN) BORE X 939-MM (36.9-IN) STROKE
PART OF 310-1790 CYLINDER & SEAL GP-BUCKET
AN ATTACHMENT

SMCS-5457 **i02910731**

NOTE	REF NO	GRAPHIC REF	PART NUMBER	QTY	PART NAME 1 2 3 4 5 6 (PRODUCT LEVEL)	SEE PAGE
	1	1	**3E-3377**	1	WEDGE-RECEPTACLE LOCK (4-PIN)	
	2	1	**099-5400**	1	RING-RETAINING	
	3	1	**102-2244**	1	GROMMET	
	4	1	**289-7702**	1	HEAD	
	5	1	**099-5399**	1	RING-BACKUP	
	6	1	**170-9857**	1	SEAL-U-CUP	
	7	1	**212-0907**	1	PLATE-CONNECTOR	
	8	1	**217-3312**	1	MAGNET	
	9	1	**217-8763**	1	COVER-PROTECTION	
	10	1	**246-9113**	1	RETAINER	
	11	1	**295-1407**	1	CYLINDER AS	
	11A	1	**095-0879**	1	PIN-SPRING	
	11B	1	**273-6810**	1	BEARING-SLEEVE	
	12	1	**294-5289**	1	ROD AS	
	12A	1	**248-7857**	1	BEARING-SLEEVE	
	13	1	**281-8986**	1	PISTON	
	14	1	**295-2534**	1	SENSOR AS-POSITION (BUCKET)	
		1	**9X-3401**	3	PIN-CONNECTOR (16-GA TO 18-GA)	
	15	1	**093-1519**	1	RING-BACKUP	
	16	1	**095-1713**	1	SEAL-O-RING	
	17	1	**114-0753**	1	BEARING-SLEEVE	
	18	1	**143-8024**	1	RING	
	19	1	**143-8025**	1	RING	
	20	1	**143-8033**	1	RING	
	21	1	**165-9283**	1	SEAL-LIP TYPE	
	22	1	**170-9841**	1	SEAL-BUFFER	
	23	1	**188-2199**	1	SEAL-O-RING	
	24	1	**215-1942**	1	RING-BACKUP	
	25	1	**102-8804**	1	KIT-RECEPTACLE (4-PIN)	
					(INCLUDES RECEPTACLE AS & WEDGE)	
	26	1	**3V-2431**	2	WASHER (10.2X16X2-MM THK)	
	27	1	**099-0600**	1	RING	
M	28	1	**8T-8894**	2	BOLT-SOCKET HEAD (M10X1.5X20-MM)	
	29	1	**6V-8467**	1	SEAL-O-RING	
M	30	1	**6V-8223**	1	SETSCREW-SOCKET (M10X1.5X16-MM)	
	31	1	**8T-8737**	1	PLUG-SEAL	
	32	1	**9X-7298**	1	SEAL AS	
M	33	1	**095-1267**	2	SETSCREW-SOCKET (M110X1.5-THD)	
	34	1	**9X-1386**		SLEEVE (9-CM)	
	34A	1	**9X-1386**		SLEEVE (7-CM)	

M-METRIC PART

295-2006 CYLINDER GP-BUCKET *(contd.)* i02910731

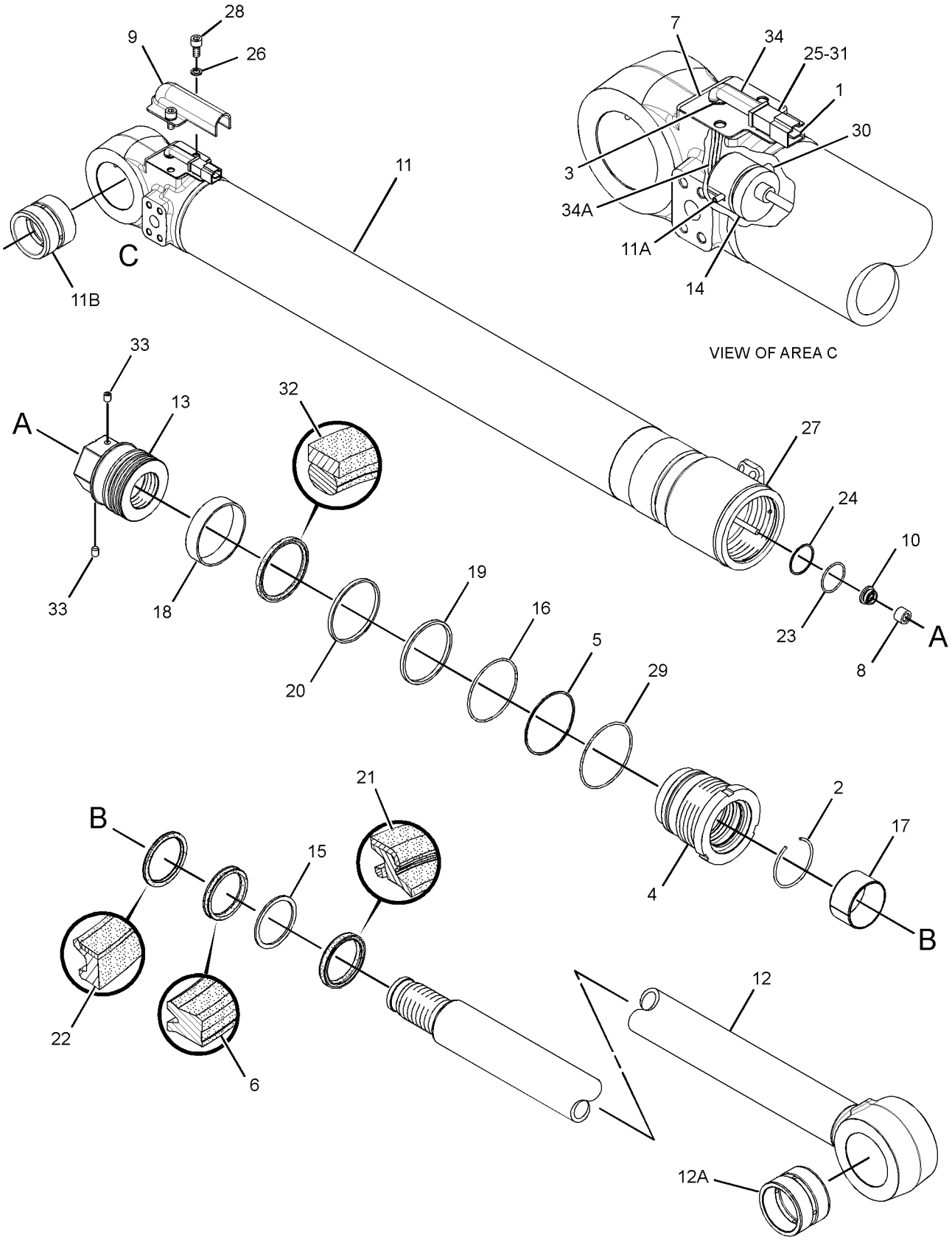

GRAPHIC #1 **<END>** g01457479

HYDRAULIC SYSTEM

273-4147 CYLINDER GP-COUPLER

S/N: CLA1-UP

PART OF 236-4153 COUPLER GP-QUICK

AN ATTACHMENT

SMCS-5133 **i03017532**

NOTE	REF NO	GRAPHIC REF	PART NUMBER	QTY	PART NAME 1 2 3 4 5 6 (PRODUCT LEVEL)	SEE PAGE
	1	1	**091-5928**	2	FITTING-GREASE	
	2	1	**172-8406**	1	VALVE GP-CHECK (HYD CYLINDER, QUICK COUPLER)	
		1	**2U-5338**	1	SEAL-O-RING	
		1	**107-7640**	1	SEAL-O-RING	
		1	**9W-3340**	1	SEAL-O-RING	
					AVAILABLE REPAIR KIT(S):	
			172-8488	1	KIT-SEAL (COUPLER CYLINDER)	

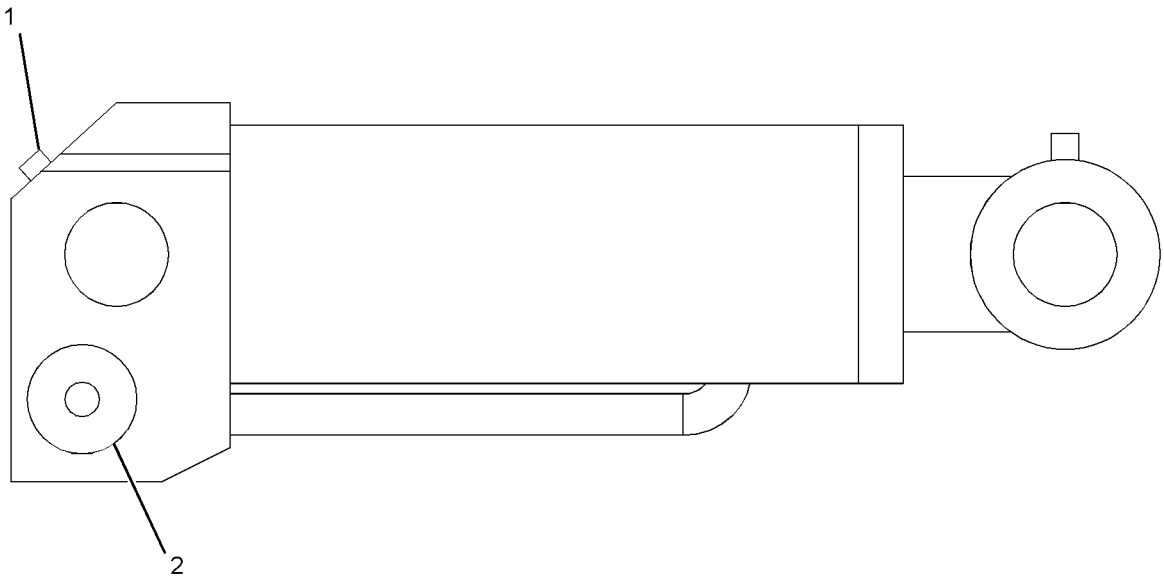

GRAPHIC #1 **<END>** g01203166

HYDRAULIC SYSTEM

289-7726 CYLINDER GP-STICK

S/N: CLA1-UP
110-MM (4.33-IN) BORE X 1194-MM (47.0-IN) STROKE
PART OF 289-7725 CYLINDER & SEAL GP-STICK
AN ATTACHMENT

SMCS-5458 **i02795775**

NOTE	REF NO	GRAPHIC REF	PART NUMBER	QTY	PART NAME 1 2 3 4 5 6 (PRODUCT LEVEL)	SEE PAGE
	1	1	**5I-3030**	1	STOP	
	2	1	**9X-7301**	1	SEAL AS	
	3	2	**099-0661**	1	RING-RETAINING	
	4	1	**099-0674**	1	RING	
	5	1	**103-8441**	1	RING-RETAINING	
	6	1	**103-8442**	1	RING	
	7	1	**105-7398**	1	STOP	
J	8	1	**143-8031**	2	RING	
	9	1	**143-8150**	1	LOCKNUT-SPECIAL	
J	10	2	**165-9284**	1	SEAL-LIP TYPE	
J	11	2	**170-9842**	1	SEAL-BUFFER	
J	12	2	**170-9858**	1	SEAL-U-CUP	
	13	2	**173-3351**	1	HEAD	
	14	1	**283-5926**	1	PISTON	
J	15	1	**283-5927**	2	RING	
J	16	1	**283-5971**	1	RING-SEAL	
	17	1	**289-7727**	1	CYLINDER AS	
	17A	1	**273-6811**	1	BEARING-SLEEVE	
	18	2	**289-7729**	1	ROD AS	
	18A	2	**273-6811**	1	BEARING-SLEEVE	
J	19	1,2	**095-1627**	2	SEAL-O-RING	
J	20	2	**095-1674**	1	SEAL-O-RING	
J	21	2	**096-3467**	1	RING-BACKUP	
J	22	1,2	**099-0660**	3	RING-BACKUP	
	23	2	**114-0750**	1	BEARING-SLEEVE	
	24	1	**8T-4241**	2	RING-RETAINING	
					AVAILABLE REPAIR KIT(S):	
J			**289-7733**	1	KIT-SEAL (STICK CYLINDER)	

J-KIT MARKED J SERVICES PART(S) MARKED J

289-7726 CYLINDER GP-STICK *(contd.)* i02795775

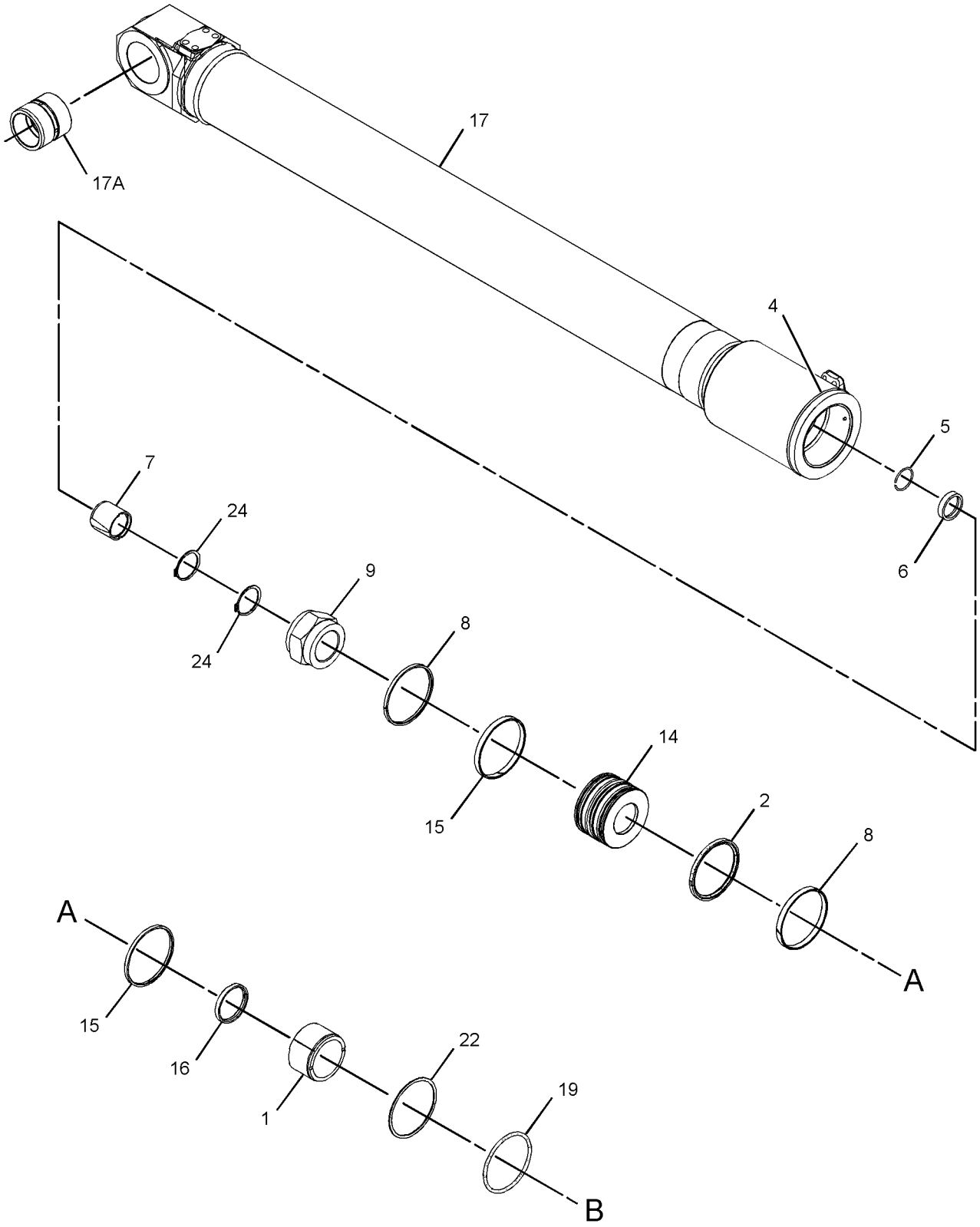

REFER TO ALL ILLUSTRATIONS OF
THIS GROUP FOR AUXILIARY VIEWS

GRAPHIC #1

g01398604

289-7726 CYLINDER GP-STICK *(contd.)* **i02795775**

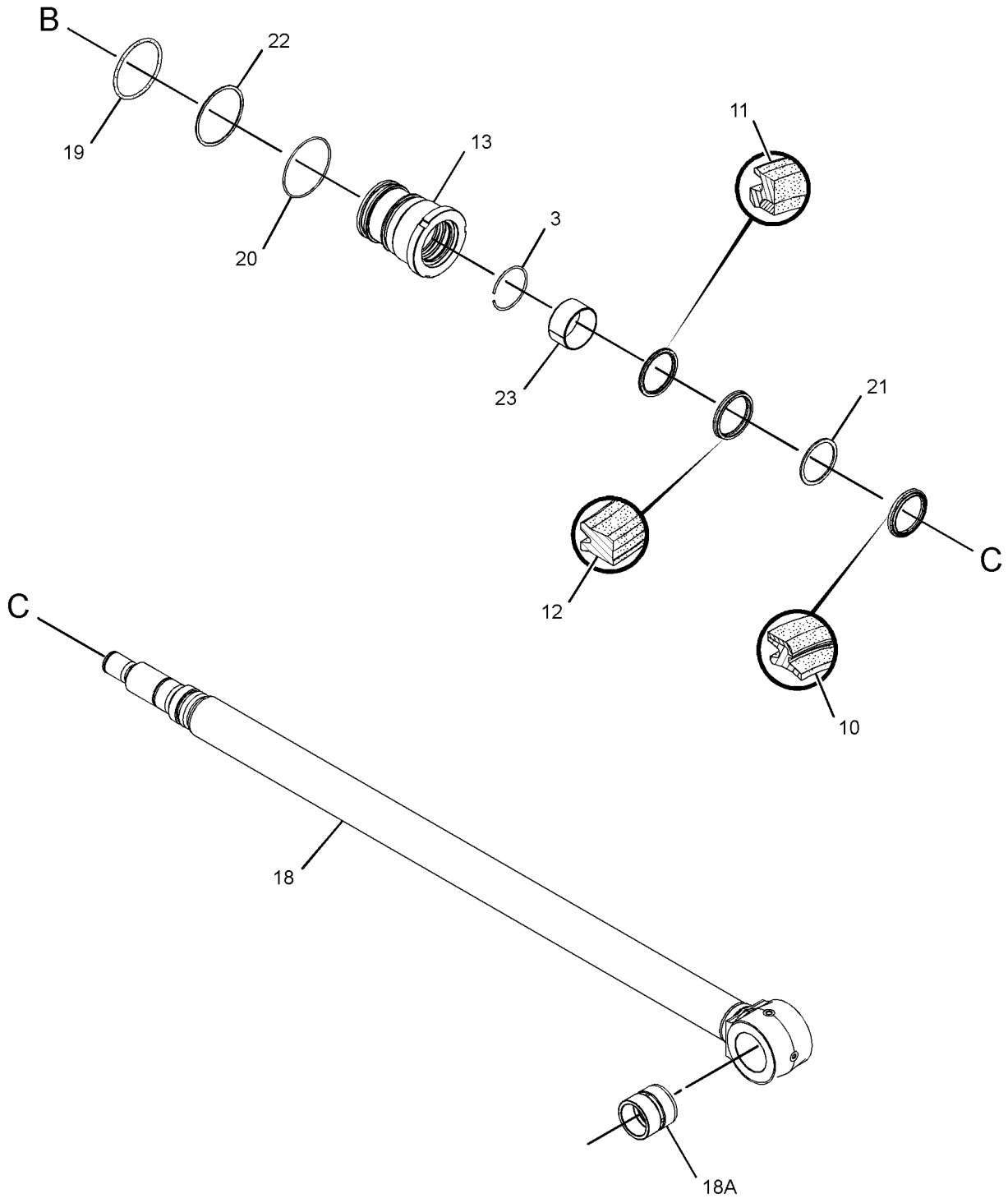

GRAPHIC #2 **<END>** g01398671

HYDRAULIC SYSTEM

169-5549 DRIVE GP-SWING—WITHOUT MOTOR

S/N: CLA1-UP

PART OF 267-6842, 267-6847 DRIVE GP-SWING

ALSO AN ATTACHMENT

SMCS-5459 **i01485213**

NOTE	REF NO	GRAPHIC REF	PART NUMBER	QTY	PART NAME 1 2 3 4 5 6 (PRODUCT LEVEL)	SEE PAGE
	1	1	**191-2600**	3	GEAR-PLANETARY	
	2	1	**191-2599**	1	CARRIER-PLANETARY	
	3	1	**191-2604**	3	PIN-SPRING	
	4	1	**191-2603**	3	SHAFT-PLANETARY	
	5	1	**191-2609**	3	SHAFT-PLANETARY	
	6	1	**191-2605**	1	WASHER (30X75X3-MM THK)	
	7	1	**191-2611**	1	GEAR-SUN	
	8	1	**191-2612**	1	GEAR-SUN	
M	9	1	**114-8224**	1	BOLT (M20X1.5-THD)	
	10	1	**191-2613**	1	GEAR-RING	
	11	1	**093-6089**	2	DOWEL	
	12	1	**095-0893**	1	PIN-SPRING	
	13	1	**7I-7625**	1	BEARING AS-ROLLER	
	14	1	**191-2615**	1	HOUSING	
	15	1	**191-2614**	1	SHAFT-PINION	
B	16	1	**7I-7632**	1	SPACER (69.5-MM THK)	
B		1	**7I-7633**	1	SPACER (69.8-MM THK)	
B		1	**7I-7634**	1	SPACER (70.1-MM THK)	
B		1	**7I-7635**	1	SPACER (70.4-MM THK)	
B		1	**7I-7636**	1	SPACER (70.7-MM THK)	
	21	1	**7I-7626**	1	BEARING AS-ROLLER	
M	22	1	**8T-4195**	8	BOLT (M10X1.5X30-MM)	
	23	1	**8T-4121**	8	WASHER-HARD (11X21X2.5-MM THK)	
	24	1	**099-0233**	1	SEAL-LIP TYPE	
	25	1	**099-0235**	1	CAGE	
B	26	1	**7I-7638**	1	SPACER (10-MM THK)	
B		1	**7I-7639**	1	SPACER (10.03-MM THK)	
B		1	**7I-7640**	1	SPACER (10.05-MM THK)	
B		1	**7I-7641**	1	SPACER (10.08-MM THK)	
B		1	**7I-7642**	1	SPACER (10.1-MM THK)	
B		1	**7I-7643**	1	SPACER (10.12-MM THK)	
B		1	**7I-7644**	1	SPACER (10.15-MM THK)	
B		1	**7I-7645**	1	SPACER (10.18-MM THK)	
B		1	**7I-7646**	1	SPACER (10.2-MM THK)	
B		1	**7I-7647**	1	SPACER (10.23-MM THK)	
B		1	**7I-7648**	1	SPACER (10.25-MM THK)	
B		1	**7I-7649**	1	SPACER (10.28-MM THK)	
	38	1	**191-2607**	1	CARRIER-PLANETARY	
	39	1	**114-8223**	1	RETAINER	
	40	1	**191-2610**	3	PIN-SPRING	
	41	1	**191-2602**	12	WASHER (32X56X1.2-MM THK)	
	42	1	**191-2601**	9	BEARING	
	43	1	**191-2608**	3	GEAR-PLANETARY	
B	44	1	**1U-8846**		SEALANT-GASKET	

B-USE AS REQUIRED
M-METRIC PART

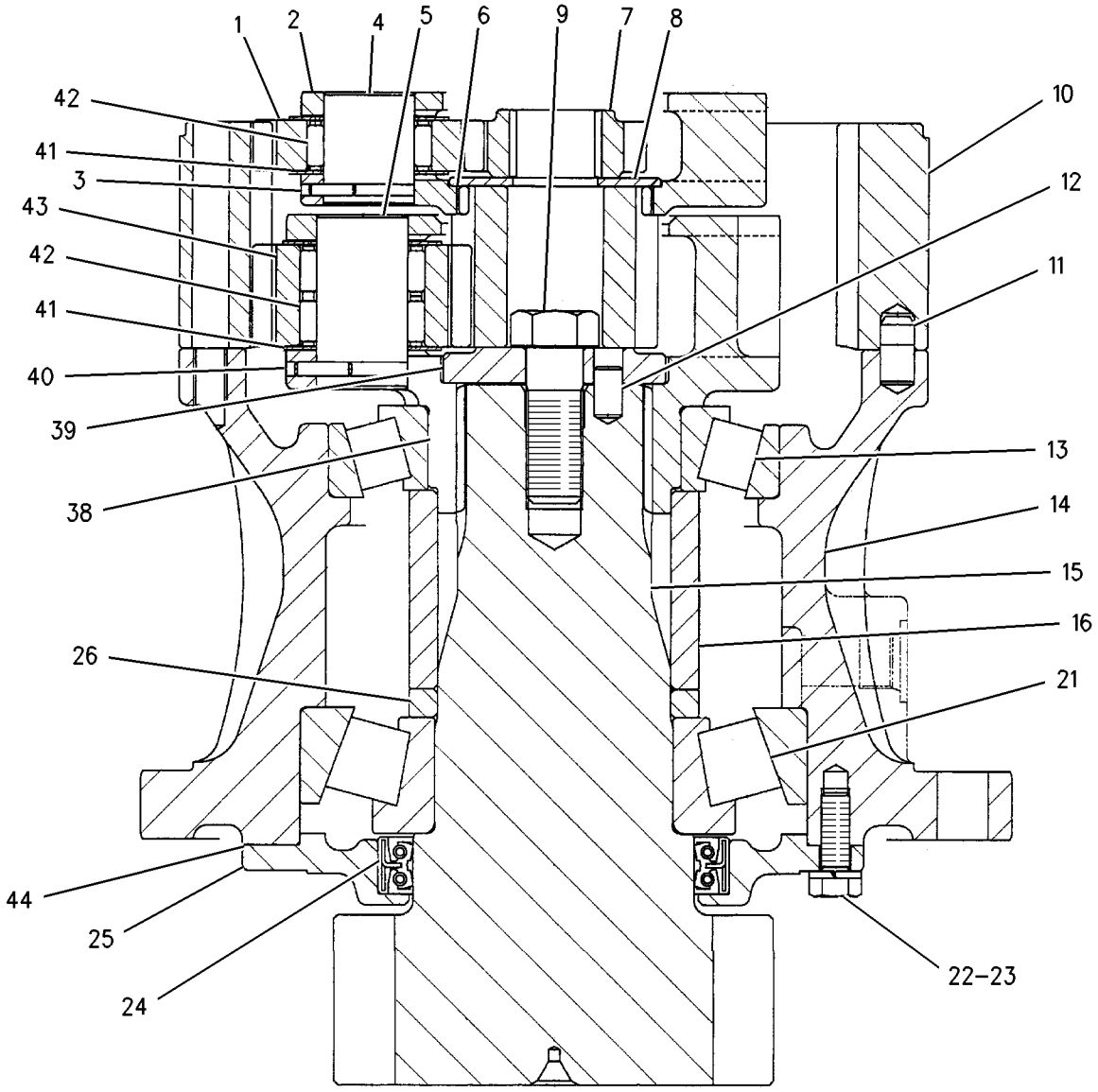

GRAPHIC #1 **<END>** g00772422

267-6841 DRIVE GP-SWING—WITH MOTOR

S/N: CLA1-UP
PART OF 283-8792 CONTROL AR-FINE SWING
AN ATTACHMENT
TYPE 1

SMCS-5459 **i02939257**

NOTE	REF NO	GRAPHIC REF	PART NUMBER	QTY	PART NAME 1 2 3 4 5 6 (PRODUCT LEVEL)	SEE PAGE
	1	1	**171-9420**	1	FITTING-PIPE	
	2	1	**171-9423**	1	PIPE AS	
		1	**3K-0360**	1	SEAL-O-RING	
	3	1	**191-2661**	1	TUBE	
	4	1	**191-2662**	1	GAUGE-OIL LEVEL (SWING DRIVE)	
	5	1	*203-2059*	1	CONNECTOR AS	
		1	**6V-8397**	1	SEAL-O-RING	
		1	**6V-8397**	1	SEAL-O-RING	
		1	**8C-6869**	1	CONNECTOR	
		1	**8C-6869**	1	CONNECTOR	
Y	6	1	**266-7932**	1	VALVE GP-SOLENOID (FINE SWING)	646
Y	7	1	*267-6842*	1	DRIVE GP-SWING	380
	8	1	**267-6856**	1	BREATHER AS (SWING DRIVE)	
	9	1	**095-1581**	1	SEAL-O-RING	
	10	1	**095-1698**	2	SEAL-O-RING	
	11	1	**1B-5174**	1	PLUG-PIPE	
	12	1	**4B-5984**	2	ELBOW	
M	13	1	**6V-8213**	6	BOLT-SOCKET HEAD (M8X1.25X70-MM)	

M-METRIC PART
Y-SEPARATE ILLUSTRATION

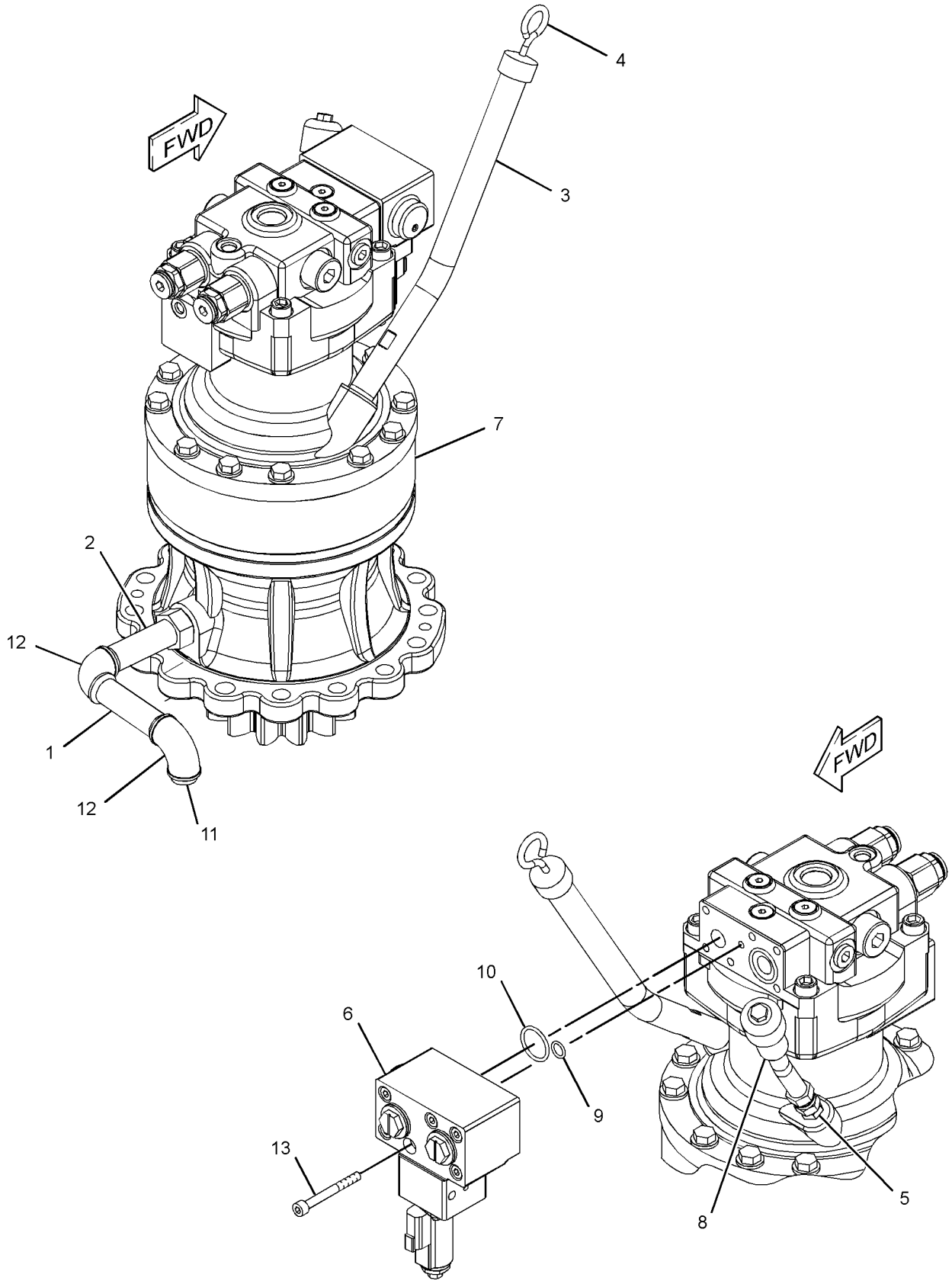

GRAPHIC #1 **<END>** g01407233

267-6841 DRIVE GP-SWING—WITH MOTOR

S/N: CLA1-UP
PART OF 283-8792 CONTROL AR-FINE SWING
AN ATTACHMENT
TYPE 2

SMCS-5459 **i03153991**

NOTE	REF NO	GRAPHIC REF	PART NUMBER	QTY	PART NAME 1 2 3 4 5 6 (PRODUCT LEVEL)	SEE PAGE
	1	1	**171-9420**	1	FITTING-PIPE	
	2	1	**171-9423**	1	PIPE AS	
		1	**3K-0360**	1	SEAL-O-RING	
	3	1	**191-2661**	1	TUBE	
	4	1	**191-2662**	1	GAUGE-OIL LEVEL (SWING DRIVE)	
	5	1	*203-2059*	1	CONNECTOR AS	
		1	**6V-8397**	1	SEAL-O-RING	
		1	**6V-8397**	1	SEAL-O-RING	
		1	**8C-6869**	1	CONNECTOR	
		1	**8C-6869**	1	CONNECTOR	
CY	6	1	**322-8717**	1	VALVE GP-SOLENOID (FINE SWING)	648
Y	7	1	*267-6842*	1	DRIVE GP-SWING	380
	8	1	**267-6856**	1	BREATHER AS (SWING DRIVE)	
	9	1	**095-1581**	1	SEAL-O-RING	
	10	1	**095-1698**	2	SEAL-O-RING	
	11	1	**1B-5174**	1	PLUG-PIPE	
	12	1	**4B-5984**	2	ELBOW	
M	13	1	**6V-8213**	6	BOLT-SOCKET HEAD (M8X1.25X70-MM)	

C-CHANGE FROM PREVIOUS TYPE
M-METRIC PART
Y-SEPARATE ILLUSTRATION

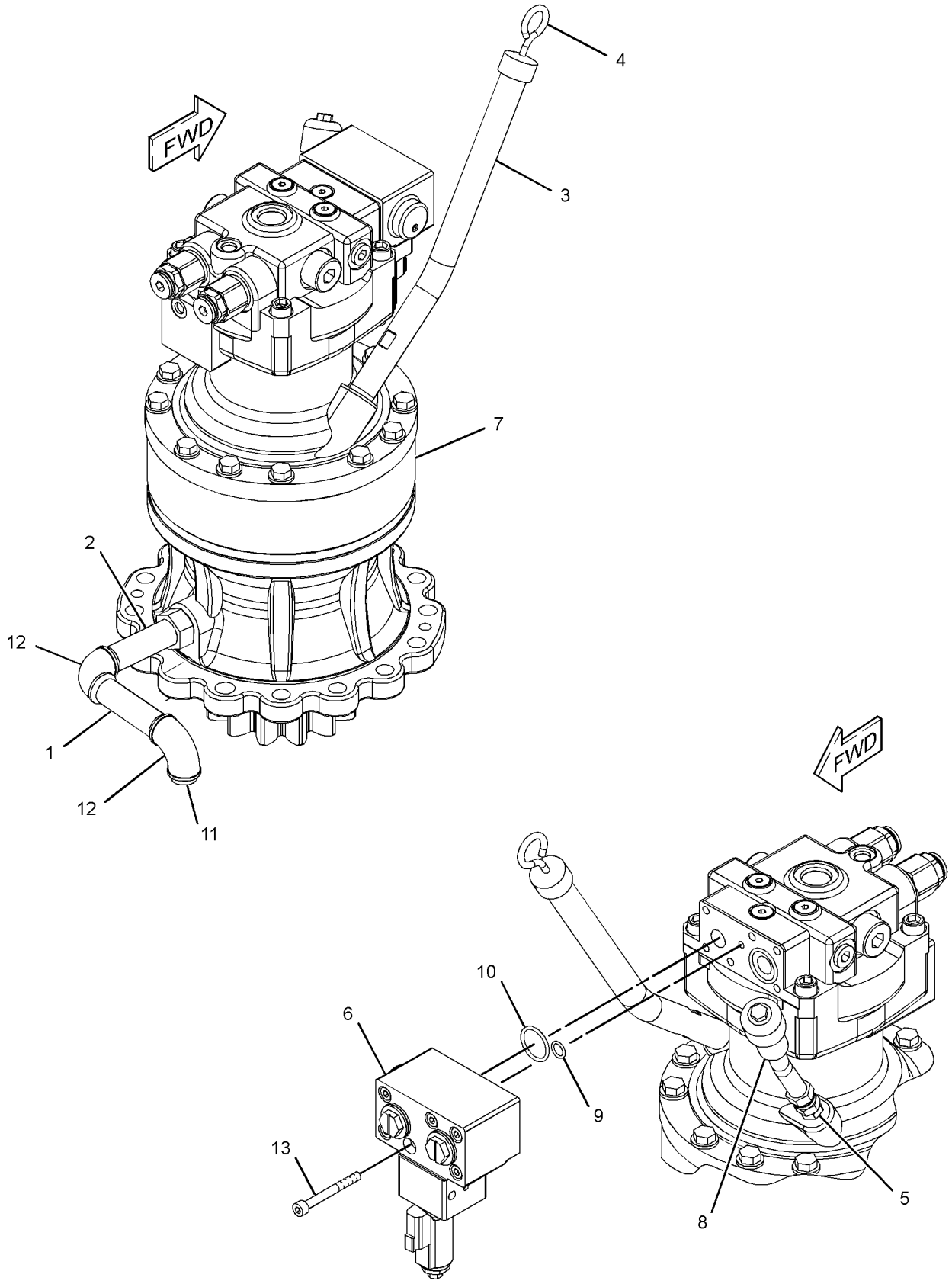

GRAPHIC #1 **<END>** g01407233

267-6842 DRIVE GP-SWING—WITH MOTOR

S/N: CLA1-UP
PART OF 267-6841 DRIVE GP-SWING
AN ATTACHMENT

SMCS-5459 **i02796000**

NOTE	REF NO	GRAPHIC REF	PART NUMBER	QTY	PART NAME 1 2 3 4 5 6 (PRODUCT LEVEL)	SEE PAGE
Y	1	1	**169-5549**	1	DRIVE GP-SWING (WITHOUT MOTOR)	374
Y	2	1	**274-2637**	1	MOTOR GP-PISTON	554
	3	1	**8T-4223**	12	WASHER-HARD (13.5X25.5X3-MM THK)	
M	4	1	**8T-5041**	12	BOLT (M12X1.75X120-MM)	

M-METRIC PART
Y-SEPARATE ILLUSTRATION

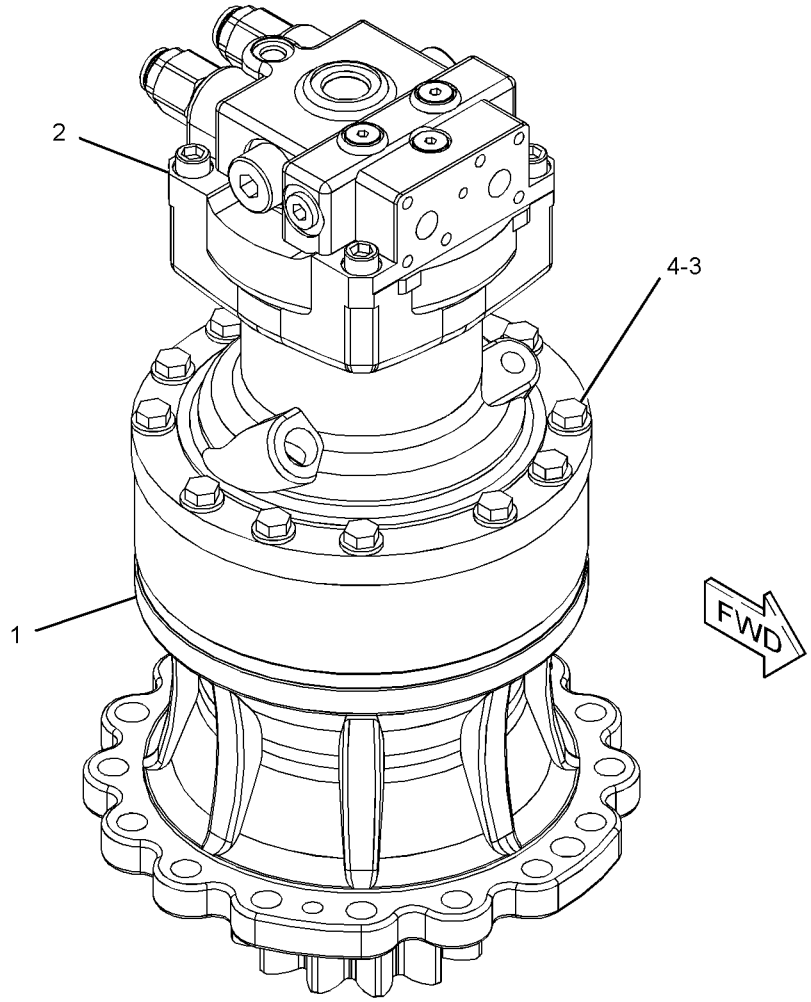

GRAPHIC #1

<END>

g01399051

267-6846 DRIVE GP-SWING—WITH MOTOR

S/N: CLA1-UP

PART OF 267-6849 POWER TRAIN AR

SMCS-5459 **i02794298**

NOTE	REF NO	GRAPHIC REF	PART NUMBER	QTY	PART NAME 1 2 3 4 5 6 (PRODUCT LEVEL)	SEE PAGE
	1	1	**171-9420**	1	FITTING-PIPE	
	2	1	**171-9423**	1	PIPE AS	
		1	**3K-0360**	1	SEAL-O-RING	
	3	1	**191-2661**	1	TUBE	
	4	1	**191-2662**	1	GAUGE-OIL LEVEL (SWING DRIVE)	
	5	1	**267-6744**	1	BREATHER AS (SWING DRIVE)	
		1	**4H-6112**	1	BREATHER (SWING DRIVE)	
		1	**267-6786**	1	FITTING	
Y	6	1	*267-6847*	1	DRIVE GP-SWING	382
	7	1	**1B-5174**	1	PLUG-PIPE	
	8	1	**4B-5984**	2	ELBOW	

Y-SEPARATE ILLUSTRATION

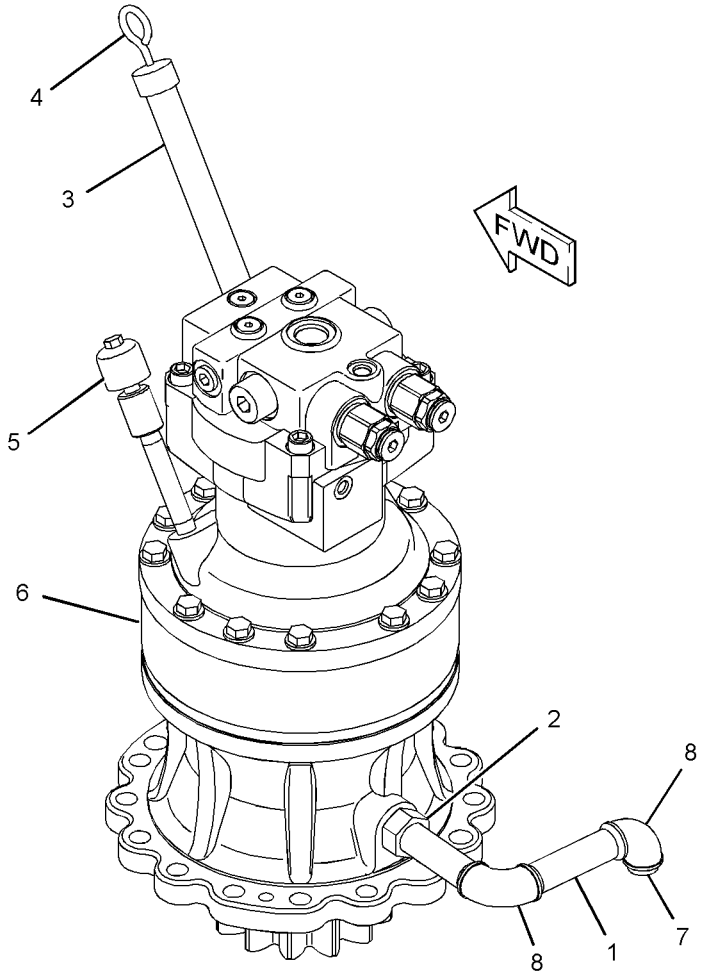

GRAPHIC #1 **<END>** g01414030

267-6847 DRIVE GP-SWING—WITH MOTOR

S/N: CLA1-UP

PART OF 267-6846 DRIVE GP-SWING

SMCS-5459 **i02794296**

NOTE	REF NO	GRAPHIC REF	PART NUMBER	QTY	PART NAME 1 2 3 4 5 6 (PRODUCT LEVEL)	SEE PAGE
Y	1	1	**169-5549**	1	DRIVE GP-SWING (WITHOUT MOTOR)	374
Y	2	1	**274-2635**	1	MOTOR GP-PISTON	551
	3	1	**8T-4223**	12	WASHER-HARD (13.5X25.5X3-MM THK)	
M	4	1	**8T-5041**	12	BOLT (M12X1.75X120-MM)	

M-METRIC PART
Y-SEPARATE ILLUSTRATION

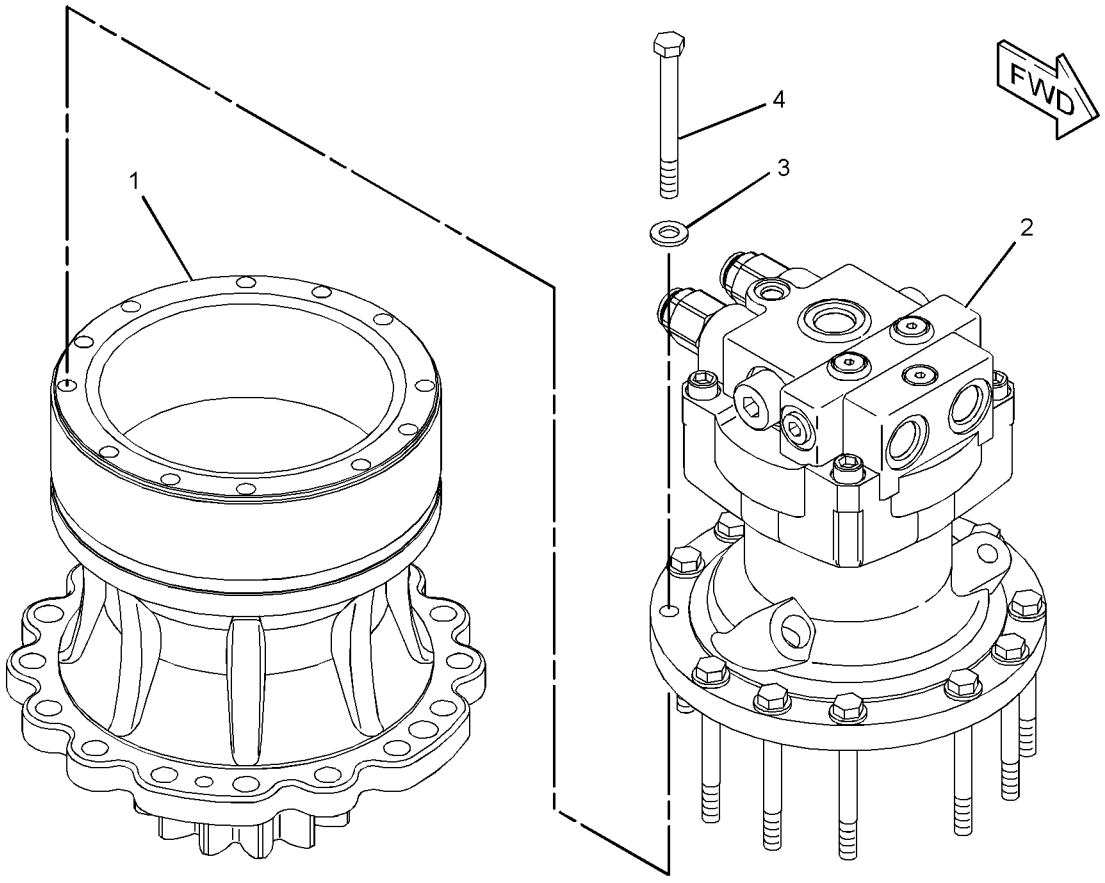

GRAPHIC #1 **<END>** g01414051

171-9406 FASTENER GP-SWING & FINAL DR

S/N: CLA1-UP

PART OF 267-6849 POWER TRAIN AR

SMCS-4050, 5459 **i01502772**

NOTE	REF NO	GRAPHIC REF	PART NUMBER	QTY	PART NAME 1 2 3 4 5 6 (PRODUCT LEVEL)	SEE PAGE
M	1	1	**8T-4193**	32	BOLT (M16X2X50-MM)	
	2	1	**9X-8257**	46	WASHER (17.5X30X3.5-MM THK)	
M	3	1	**8T-7338**	14	BOLT (M16X2X45-MM)	
	4	1	**191-2543**	2	PIN	
B	5	1	**1U-8846**		SEALANT-GASKET	

B-USE AS REQUIRED
M-METRIC PART

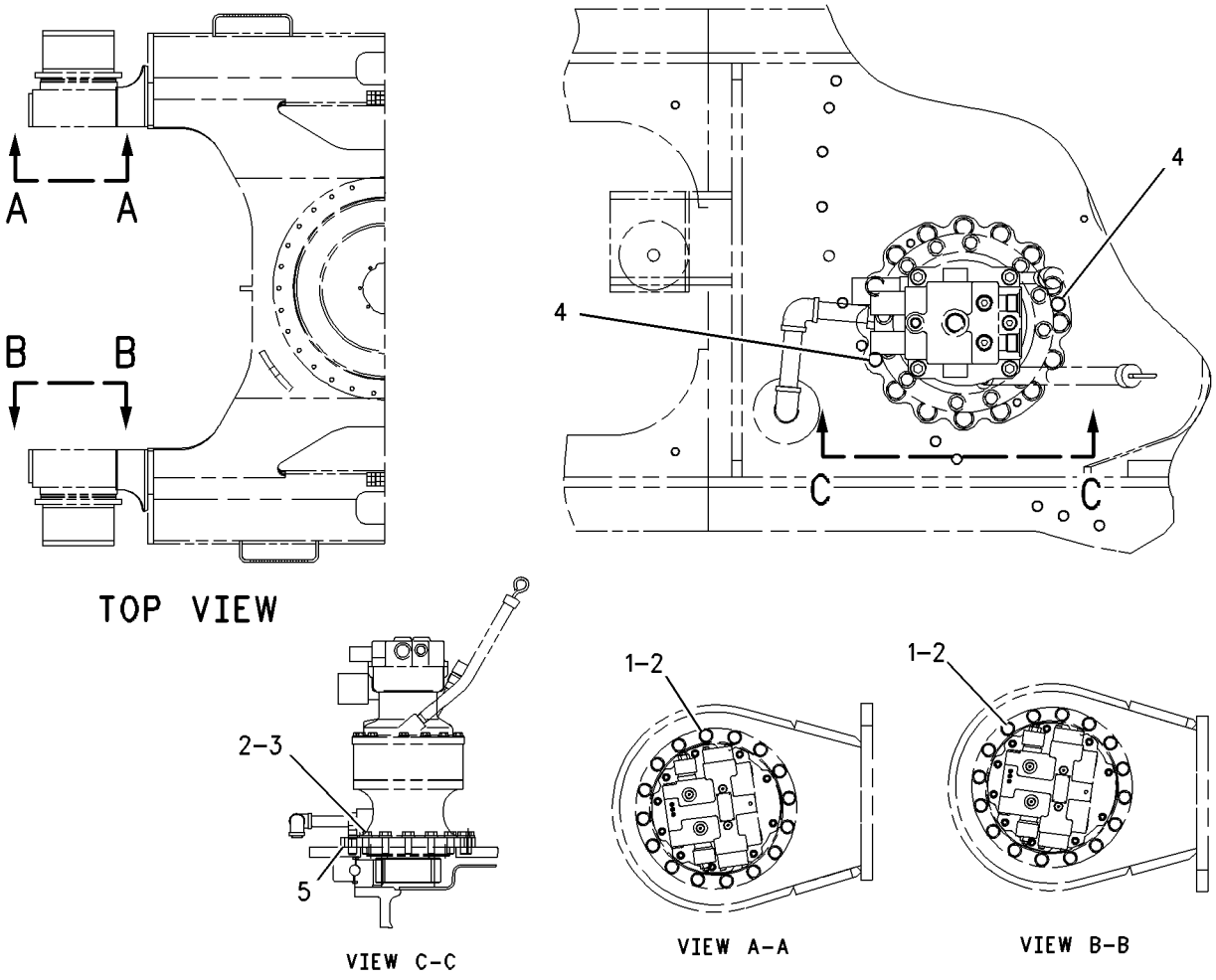

GRAPHIC #1 **<END>** g00788843

HYDRAULIC SYSTEM

282-7378 FILTER & LINES GP-HYDRAULIC

S/N: CLA1-UP

PART OF 282-7377 TANK & MTG GP-HYDRAULIC

SMCS-5057, 5068 **i02922498**

NOTE	REF NO	GRAPHIC REF	PART NUMBER	QTY	PART NAME 1 2 3 4 5 6 (PRODUCT LEVEL)	SEE PAGE
I	1	1	**4I-6121**	1	HOSE AS	
	2	1	**4I-9523**	2	BAND-MARKER (BLUE, L3)	
	3	1	**7K-1181**	8	STRAP-CABLE	
	4	1	**319-9781**	1	HOSE AS	
	5	1	*164-6872*	1	TEE AS	
		1	**2M-9780**	1	SEAL-O-RING	
		1	**6V-8398**	2	SEAL-O-RING	
		1	**115-8634**	1	TEE-O-RING	
I	6	1	**302-9565**	1	HOSE AS	
Y	7	1	**221-5069**	1	FITTING GP-HYDRAULIC (TEE)	397
Y	8	1	**230-2720**	1	VALVE GP-CHECK (RETURN FILTER)	590
	9	1	**248-9428**	1	HOSE AS	
	10	1	**269-9890**	1	HOSE AS	
I	11	1	**319-9782**	1	HOSE AS	
Y	12	1	**289-8194**	1	FILTER GP-OIL (HYDRAULIC, CASE DRAIN)	396
	13	1	**292-7630**	1	SUPPORT AS	
	14	1	*148-8347*	2	ELBOW AS	
					(EACH INCLUDES)	
		1	**3D-2824**	1	SEAL-O-RING	
		1	**6V-9007**	1	ELBOW	
		1	**6V-9746**	1	SEAL-O-RING	
	15	1	*148-8354*	2	ELBOW AS	
					(EACH INCLUDES)	
		1	**3K-0360**	1	SEAL-O-RING	
		1	**6V-8398**	1	SEAL-O-RING	
		1	**6V-9002**	1	ELBOW	
	16	1	*148-8364*	1	ELBOW AS	
		1	**3K-0360**	1	SEAL-O-RING	
		1	**6V-8398**	1	SEAL-O-RING	
		1	**6V-8625**	1	ELBOW	
	17	1	*148-8372*	1	ELBOW AS	
		1	**2M-9780**	1	SEAL-O-RING	
		1	**6V-8398**	1	SEAL-O-RING	
		1	**6V-8721**	1	ELBOW	
	18	1	*148-8407*	2	PLUG AS	
					(EACH INCLUDES)	
		1	**3J-1907**	1	SEAL-O-RING	
		1	**9S-4191**	1	PLUG-O-RING	
Y	19	1	**158-8987**	1	FILTER & VALVE GP-PILOT (HYDRAULIC OIL)	389
	20	1	*164-5567*	1	COUPLER AS-QUICK DISCONNECT	
		1	**3J-1907**	1	SEAL-O-RING	
		1	**6V-3965**	1	FITTING (QUICK DISCONNECT)	
	21	1	*164-5590*	1	VALVE AS-FLUID SAMPLING (PILOT OIL)	
		1	**3J-7354**	1	SEAL-O-RING	
		1	**8C-3446**	1	VALVE-FLUID SAMPLING (PILOT OIL)	
	22	1	*164-5608*	1	CONNECTOR AS	
		1	**3K-0360**	1	SEAL-O-RING	
		1	**6V-8398**	1	SEAL-O-RING	
		1	**8T-1687**	1	CONNECTOR	
	23	1	**4J-0527**	1	SEAL-O-RING	
	25	1	**6V-0852**	1	CAP-DUST	
	26	1	**8C-3451**	1	CAP-DUST	
	27	1	**8T-4121**	3	WASHER-HARD (11X21X2.5-MM THK)	
M	28	1	**8T-4136**	3	BOLT (M10X1.5X25-MM)	
M	30	1	**8T-4910**	2	BOLT (M12X1.75X60-MM)	
	31	1	**8T-4223**	6	WASHER-HARD (13.5X25.5X3-MM THK)	

282-7378 **FILTER & LINES GP-HYDRAULIC** *(contd.)* **i02922498**

NOTE	REF NO	GRAPHIC REF	PART NUMBER	QTY	PART NAME 1 2 3 4 5 6 (PRODUCT LEVEL)	SEE PAGE
	32	1	**8T-4224**	4	WASHER-HARD (8.8X16X2-MM THK)	
M	33	1	**8T-4908**	4	BOLT (M8X1.25X25-MM)	
M	34	1	**8T-5001**	4	BOLT (M12X1.75X130-MM)	
	35	1	*148-8392*	2	ELBOW AS	
					(EACH INCLUDES)	
		1	**6V-9746**	1	SEAL-O-RING	
		1	**6V-9853**	1	ELBOW	

I-REFER TO HYDRAULIC INFORMATION SYSTEM
M-METRIC PART
Y-SEPARATE ILLUSTRATION

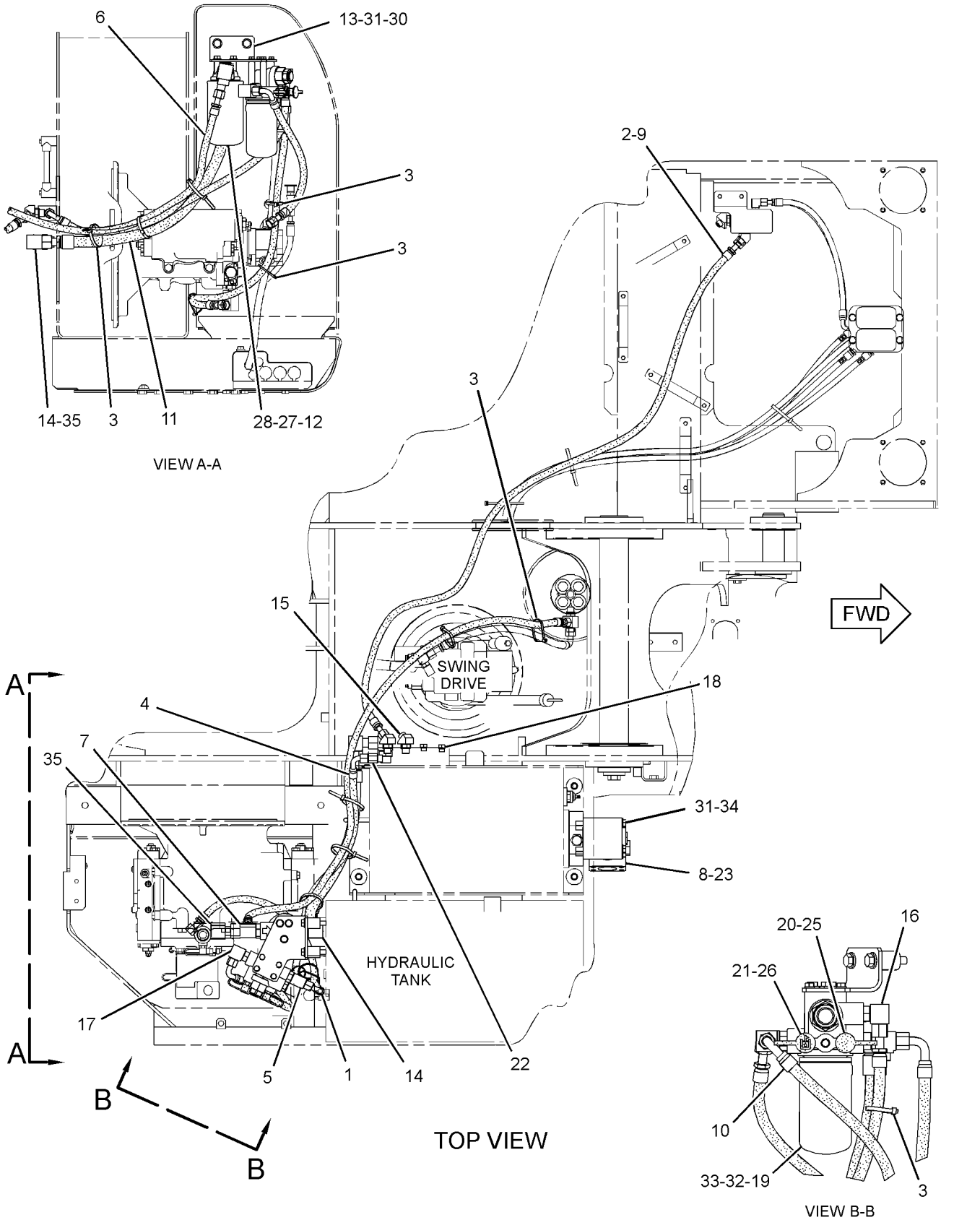

GRAPHIC #1

<END>

g01453470

HYDRAULIC SYSTEM

310-9626 FILTER & MTG GP-OIL

S/N: CLA1-UP

PART OF 279-7830 INSTALLATION AR-ENGINE

SMCS-5068 **i02988520**

NOTE	REF NO	GRAPHIC REF	PART NUMBER	QTY	PART NAME 1 2 3 4 5 6 (PRODUCT LEVEL)	SEE PAGE
	1	1	**7C-1493**	1	VALVE AS-BYPASS	
	2	1	**7W-9028**	1	BASE AS-OIL FILTER	
	3	1	**8C-3445**	1	CAP-DUST	
	4	1	**9L-9188**	1	SPRING-VALVE	
	5	1	**111-4838**	1	CLIP	
	6	1	**111-4839**	1	STRAP	
	7	1	**121-0307**	1	BASE	
M	8	1	**135-8573**	3	BOLT AS (M12X1.75X25-MM)	
	9	1	**152-2938**	4	SEAL-O-RING	
	10	1	**152-2939**	1	SEAL-O-RING	
	11	1	**310-9568**	1	HOSE AS	
	12	1	**310-9569**	1	HOSE AS	
	13	1	**310-9627**	1	PLATE AS	
	14	1	**310-9724**	1	PLATE AS	
	15	1	**033-6038**	2	SEAL-O-RING	
	16	1	**153-4906**	1	SEAL-O-RING	
	17	1	**189-9377**	1	SEAL-O-RING	
	18	1	**1R-0739**	1	FILTER AS-ENGINE OIL (STANDARD EFFICIENCY)	
	19	1	**228-7092**	3	SEAL-O-RING	
	20	1	**2T-2991**	1	CONNECTOR	
M	21	1	**5P-8196**	1	PLUG	
	22	1	**6D-1641**	2	CLIP	
	24	1	**6V-5266**	3	SEAL-O-RING	
	25	1	**6V-8943**	1	REDUCER	
	26	1	**6V-9007**	1	ELBOW	
	27	1	**6V-9852**	1	ELBOW	
	28	1	**6V-9853**	1	ELBOW	
	29	1	**8T-4121**	8	WASHER-HARD (11X21X2.5-MM THK)	
M	30	1	**8T-4136**	3	BOLT (M10X1.5X25-MM)	
M	31	1	**8T-4137**	2	BOLT (M10X1.5X20-MM)	
M	32	1	**8T-4196**	3	BOLT (M10X1.5X35-MM)	
M	33	1	**8T-4197**	3	BOLT (M8X1.25X40-MM)	
	34	1	**8T-4224**	5	WASHER-HARD (8.8X16X2-MM THK)	
M	35	1	**8T-7547**	2	BOLT (M8X1.25X30-MM)	
	36	1	**9S-4188**	1	PLUG	
	37	1	**033-5853**	1	SEAL-O-RING	
	38	1	**5P-9617**	1	ADAPTER	
	39	1	**8C-3446**	1	VALVE-FLUID SAMPLING	

M-METRIC PART

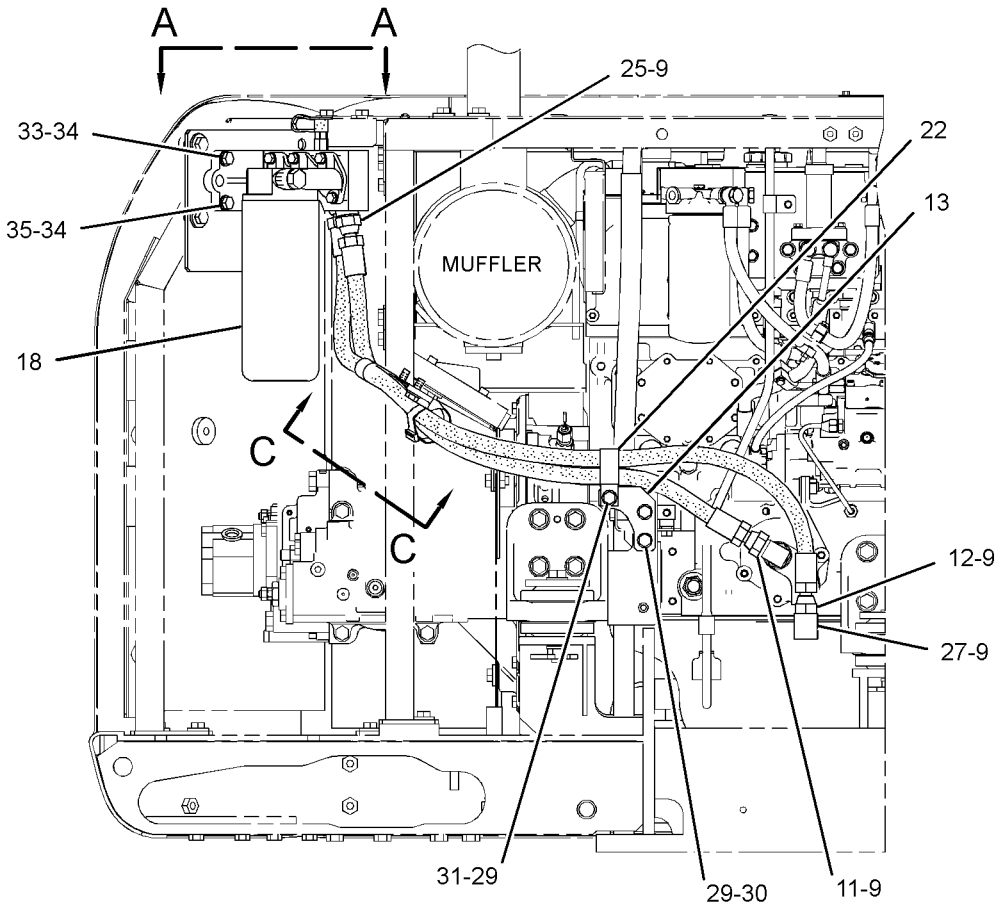

FRONT VIEW

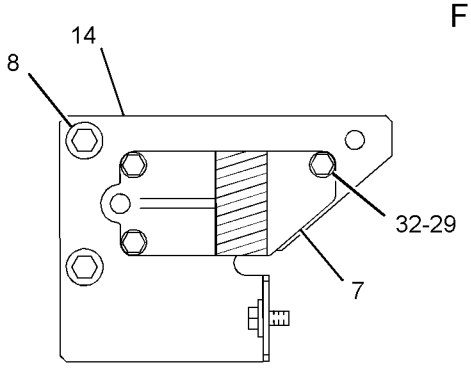

SECTION B-B

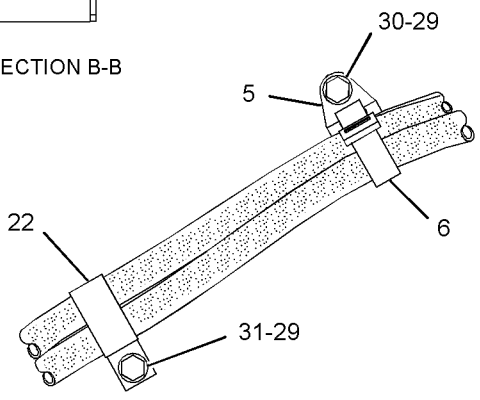

VIEW C-C

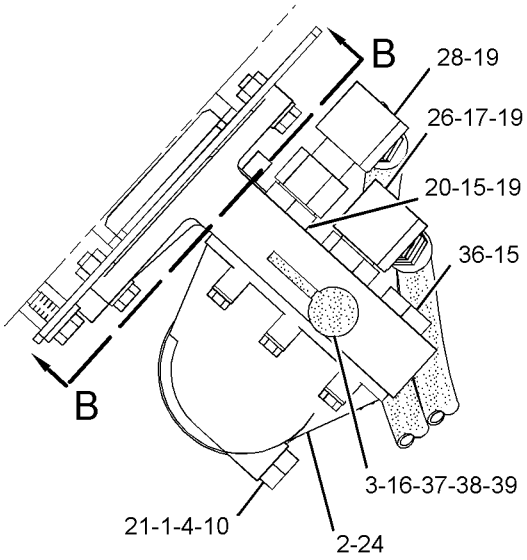

VIEW A-A

GRAPHIC #1 **<END>** g01593115

158-8987 FILTER & VALVE GP-PILOT–HYDRAULIC OIL

S/N: CLA1-UP

PART OF 282-7378 FILTER & LINES GP-HYDRAULIC

SMCS-5072, 5092 **i03215762**

NOTE	REF NO	GRAPHIC REF	PART NUMBER	QTY	PART NAME 1 2 3 4 5 6 (PRODUCT LEVEL)	SEE PAGE
C	1	1	**5I-8670**	1	FILTER-OIL (ADVANCED EFFICIENCY) (HYDRAULIC)	
C	2	1	**215-4909**	1	VALVE GP-PILOT RELIEF (HYDRAULIC FILTER)	
	2A	1	**095-1584**	1	SEAL-O-RING	
	2B	1	**095-1590**	1	SEAL-O-RING	
	2C	1	**095-1596**	1	SEAL-O-RING	

C-CHANGE FROM PREVIOUS TYPE

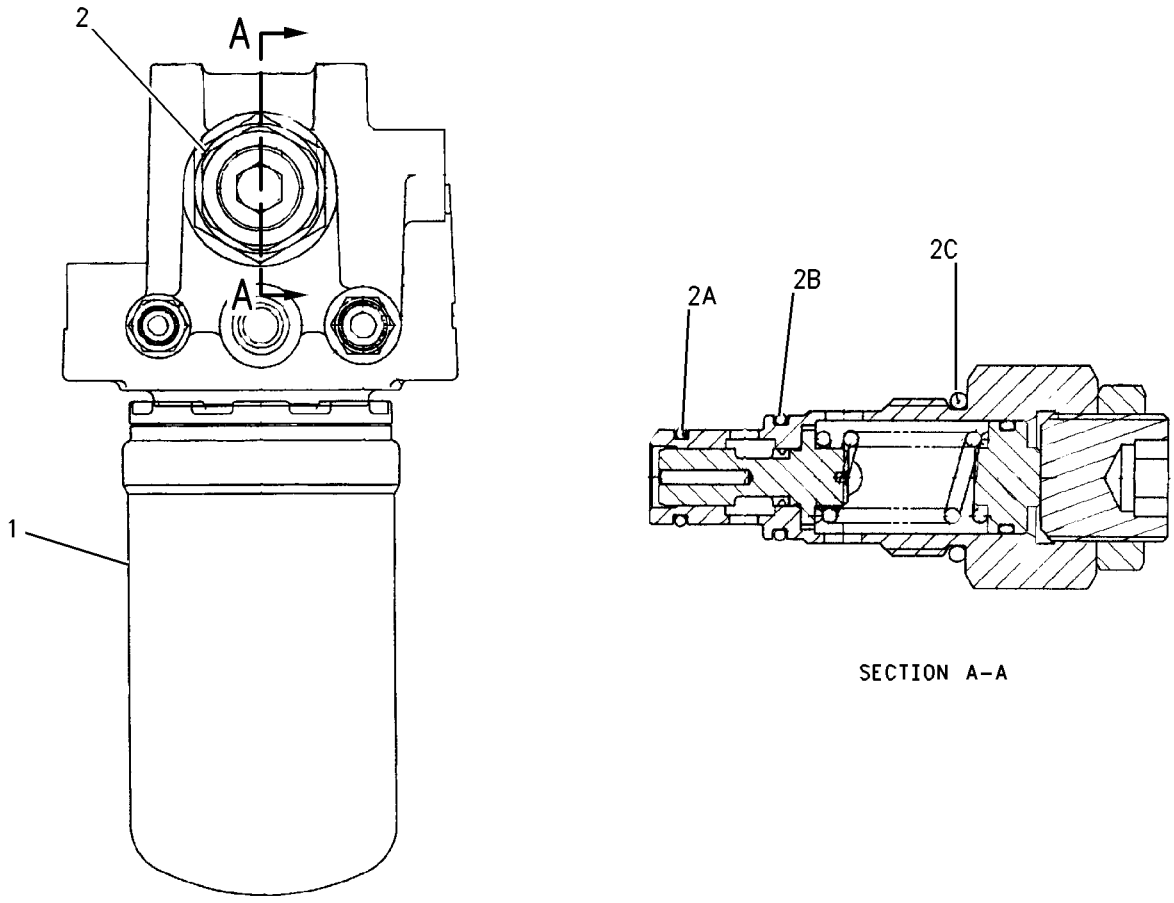

SECTION A–A

GRAPHIC #1 **<END>** g00842119

HYDRAULIC SYSTEM

283-8787 FILTER AR-HYDRAULIC

S/N: CLA1-UP

AN ATTACHMENT

SMCS-5068 **i02796169**

NOTE	PART NUMBER	QTY	PART NAME 1 2 3 4 5 6 (PRODUCT LEVEL)	SEE PAGE
Y	*283-3772*	1	COVER GP-ACCESS (HAMMER)	265
Y	*282-7451*	1	LINES GP-FRONT (HAMMER, RETURN)	463
Y	*283-2609*	1	WIRING GP-HAMMER (RETURN FILTER)	227

Y-SEPARATE ILLUSTRATION

<END>

188-4142 FILTER GP-OIL—HYDRAULIC RETURN

S/N: CLA1-UP

PART OF 188-4145 FILTER GP-OIL

SMCS-3004, 4295, 431F, 5068, 5091, 5092 **i03009976**

NOTE	REF NO	GRAPHIC REF	PART NUMBER	QTY	PART NAME 1 2 3 4 5 6 (PRODUCT LEVEL)	SEE PAGE
	1	1	**204-2762**	1	PLATE	
JM	2	1	**173-3529**	6	BOLT (M6X1X15-MM)	
J	3	1	**3T-7528**	6	SEAL-O-RING	
	4	1	**173-3513**	1	BASE	
J	5	1	**3E-4297**	2	SEAL-O-RING	
M	6	1	**137-3626**	1	BOLT-SHOULDER (M6X1X28.75-MM)	
Z	7	1		1	SHELL AS	
	8	1	**179-9806**	1	FILTER ELEMENT AS-OIL (HYDRAULIC RETURN)	
J	9	1	**137-3623**	4	SEAL-O-RING	
J	10	1	**6V-7658**	2	SEAL-O-RING	
J	11	1	**177-2553**	1	SEAL	
J	12	1	**095-1681**	1	SEAL-O-RING	
	13	1	**173-3515**	1	RING-RETAINING	
	14	1	**173-3516**	1	HANDLE	
J	15	1	**4J-7533**	1	SEAL-O-RING	
J	16	1	**9S-4180**	1	PLUG	
JM	17	1	**137-3624**	8	SCREW (M3X0.5X5-MM)	
J	18	1	**137-3625**	2	PAD	
	19	1	**173-3517**	1	PLATE	
J	20	1	**137-3628**	1	SHIM (0.1-MM THK)	
	21	1	**188-4143**	1	FILM-INSTRUCTION (HYDRAULIC OIL RETURN FILTER)	
					AVAILABLE REPAIR KIT(S):	
J			**201-9299**	1	KIT-SERVICE (HYDRAULIC FILTER) (RETURN)	

J-KIT MARKED J SERVICES PARTS MARKED J
M-METRIC PART
Z-NOT SERVICED SEPARATELY

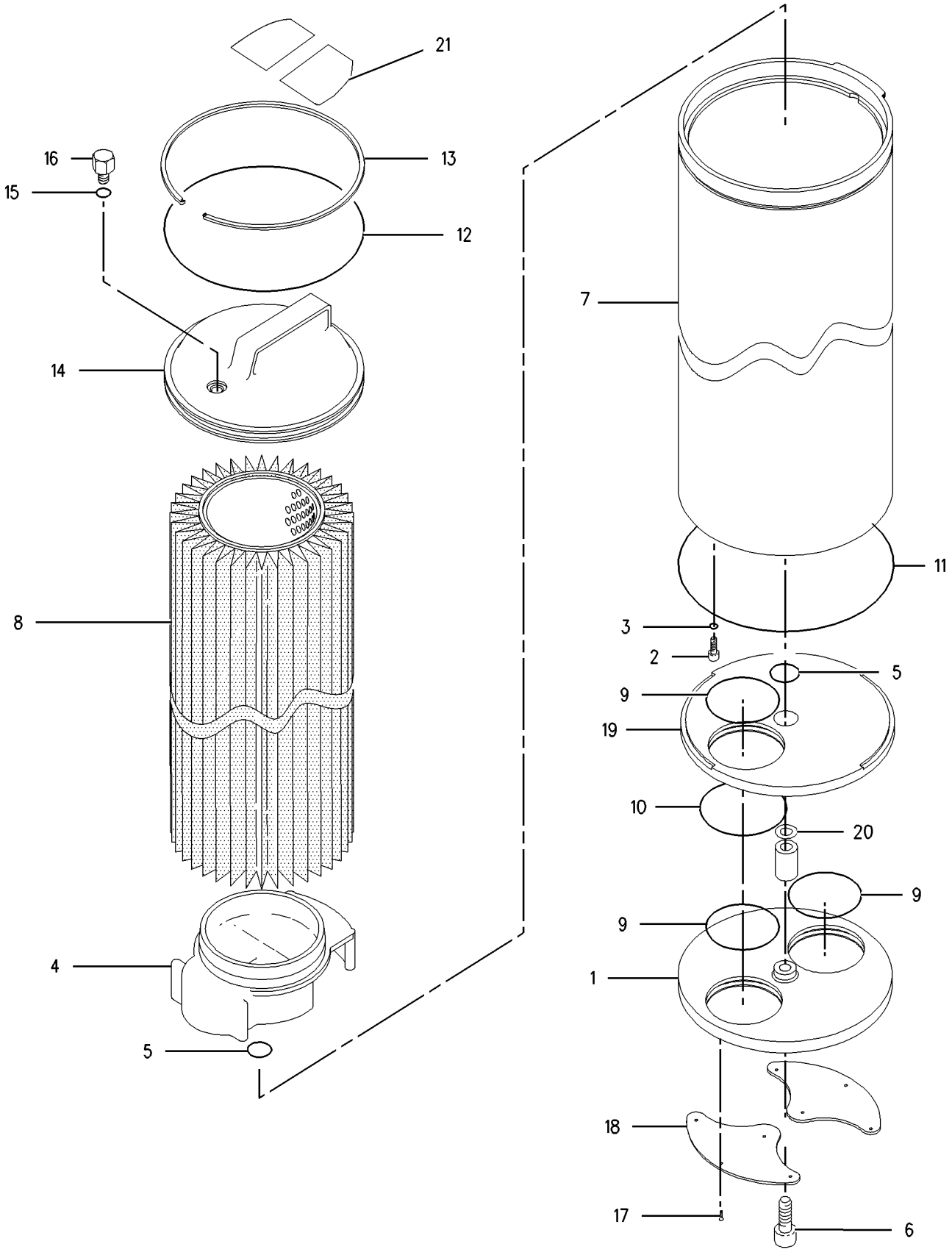

GRAPHIC #1 **<END>** g00923879

188-4145 FILTER GP-OIL—HYDRAULIC RETURN

S/N: CLA1-UP

PART OF 282-7379 TANK & FILTER GP-HYDRAULIC

SMCS-3004, 4295, 431F, 5068, 5091, 5092 **i02215924**

NOTE	REF NO	GRAPHIC REF	PART NUMBER	QTY	PART NAME 1 2 3 4 5 6 (PRODUCT LEVEL)	SEE PAGE
	1	1	**177-2620**	1	HOUSING GP-FILTER	
M		1	**095-0757**	4	SCREW-MACHINE (M6X1X8.6-MM)	
		1	**123-2003**	1	SEAL-O-RING	
		1	**177-2621**	1	FLANGE AS	
	2	1	**177-2617**	1	BLOCK GP-HYDRAULIC	
		1	**5L-4758**	1	SEAL-O-RING	
M		1	**137-3626**	1	BOLT-SHOULDER (M6X1X28.75-MM)	
		1	**137-3628**	1	SHIM (0.1-MM THK)	
		1	**177-2619**	2	PACKING	
		1	**179-9618**	1	PLATE-SLIDE	
	3	1	**177-2625**	1	PACKING	
	4	1	**095-1682**	1	SEAL-O-RING	
M	5	1	**8T-4189**	4	BOLT (M8X1.25X20-MM)	
	6	1	**8T-4224**	4	WASHER-HARD (8.8X16X2-MM THK)	
Y	7	1	**188-4142**	1	FILTER GP-OIL (HYDRAULIC RETURN)	391
	8	1	**173-3510**	1	COVER	
	9	1	**123-2003**	1	SEAL-O-RING	
M	10	1	**8T-4184**	4	BOLT (M12X1.75X45-MM)	
	11	1	**8T-4223**	4	WASHER-HARD (13.5X25.5X3-MM THK)	
	12	1	**175-6178**	1	HOUSING	
	13	1	**177-2623**	1	VALVE AS (BYPASS)	
	14	1	**175-6174**	1	PIPE	
M	15	1	**8T-4970**	2	BOLT (M6X1X14-MM)	
	16	1	**175-6176**	1	SEAL-O-RING	
M	17	1	**6V-8932**	1	SETSCREW-SOCKET (M6X1X10-MM)	
	18	1	**095-1663**	2	SEAL-O-RING	
	19	1	**187-7171**	2	BOLT (M8X1.25X14-MM)	
	20	1	**175-6175**	1	PIPE	

M-METRIC PART
Y-SEPARATE ILLUSTRATION

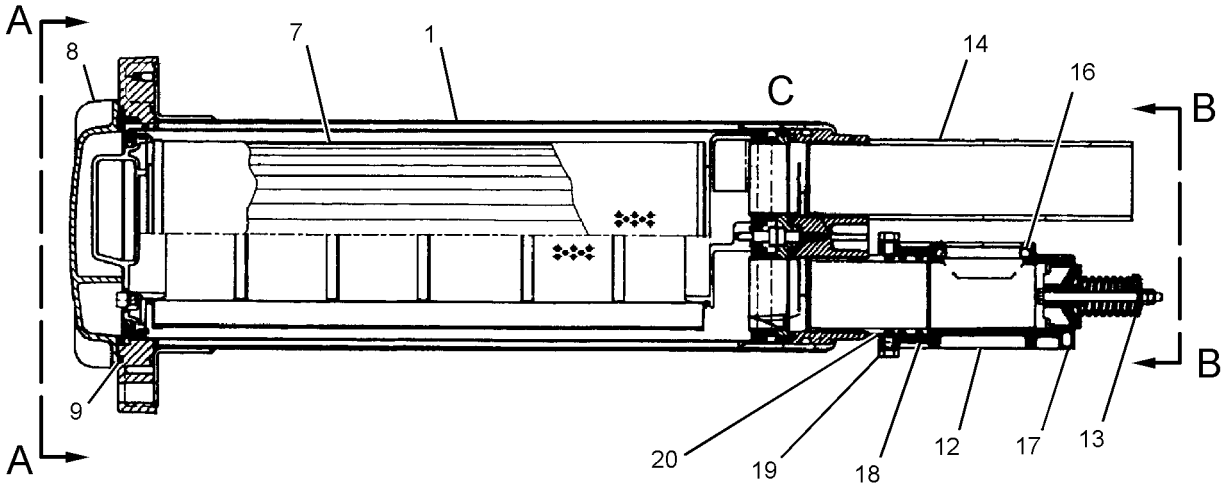

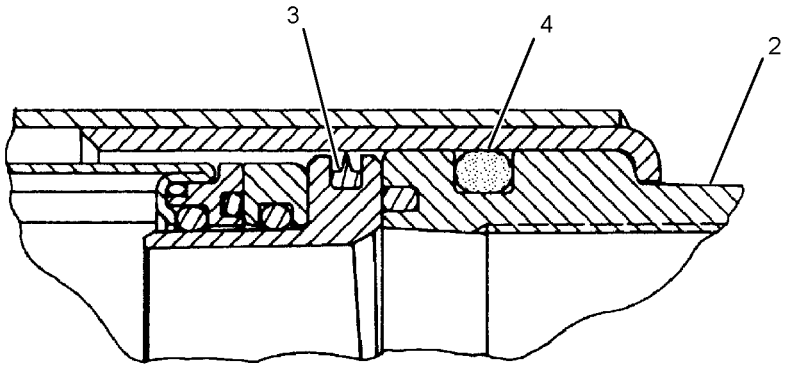

VIEW OF AREA C

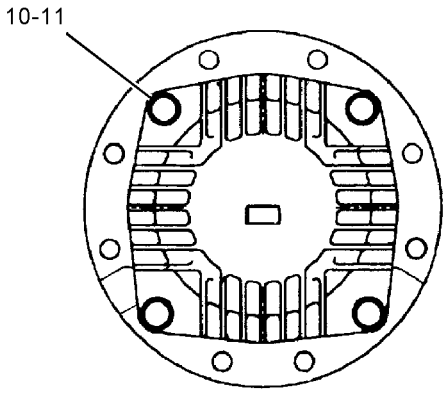

VIEW A-A

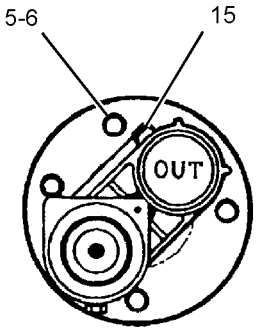

VIEW B-B

GRAPHIC #1 **<END>** g01123506

224-1687 FILTER GP-OIL–HYDRAULIC

S/N: CLA1-UP
PART OF 282-7451 LINES GP-FRONT
AN ATTACHMENT

SMCS-3004, 4295, 431F, 5068, 5091, 5092 **i02855340**

NOTE	REF NO	GRAPHIC REF	PART NUMBER	QTY	PART NAME 1 2 3 4 5 6 (PRODUCT LEVEL)	SEE PAGE
	1	1	**224-1685**	1	SWITCH AS (FILTER BYPASS)	
	2	1	**096-6073**	1	PLUG	
	3	1	**095-1582**	1	SEAL-O-RING	
	4	1	**216-6678**	1	CASE	
	5	1	**216-6676**	1	FILTER ELEMENT AS-OIL (HYDRAULIC)	
	6	1	**216-6677**	1	HEAD AS	
	7	1	**095-1717**	1	SEAL-O-RING	

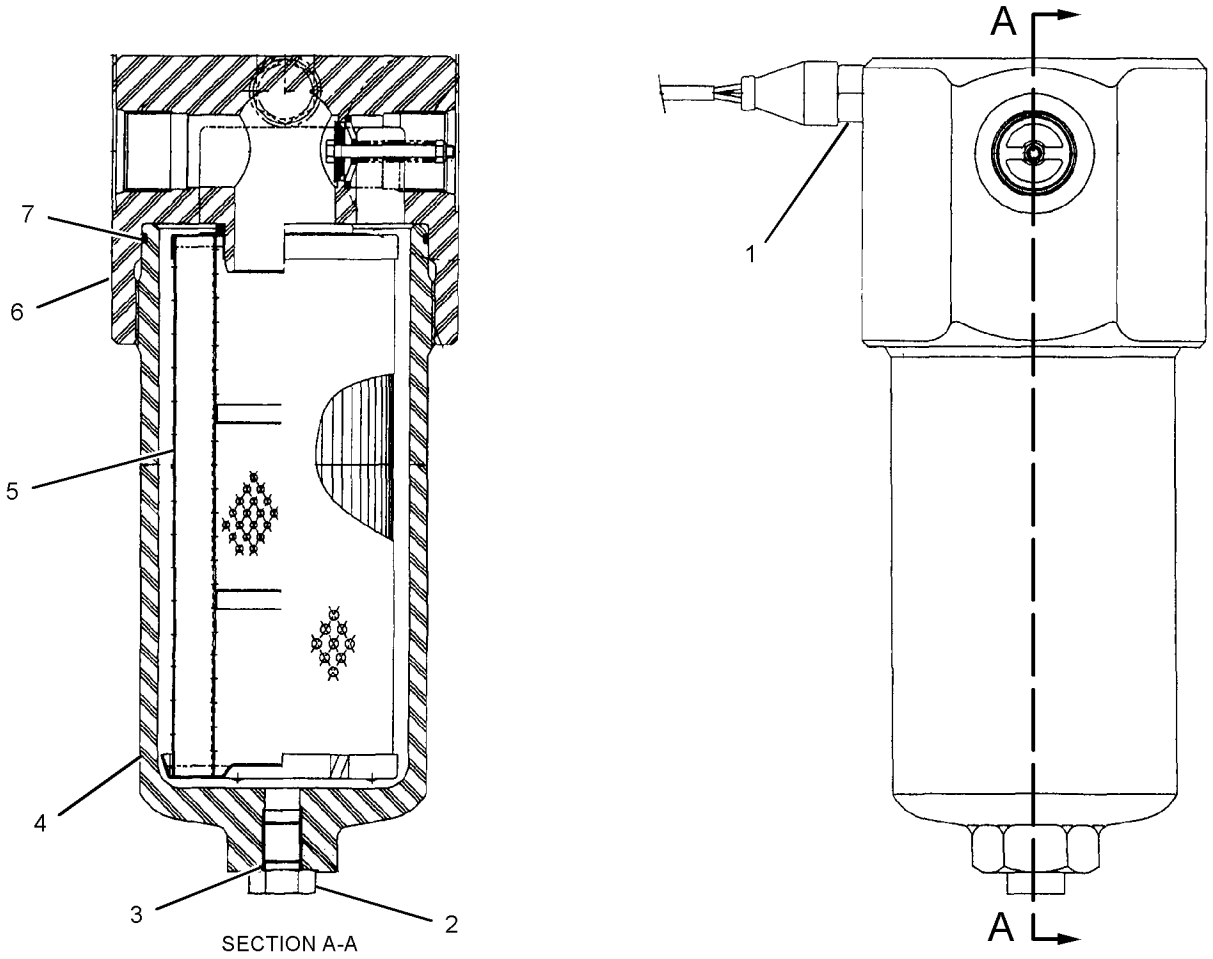

GRAPHIC #1 **<END>** g01029603

289-8194 FILTER GP-OIL–HYDRAULIC, CASE DRAIN

S/N: CLA1-UP

PART OF 282-7378 FILTER & LINES GP-HYDRAULIC

SMCS-3004, 4295, 431F, 5068, 5091, 5092 **i02997232**

NOTE	REF NO	GRAPHIC REF	PART NUMBER	QTY	PART NAME 1 2 3 4 5 6 (PRODUCT LEVEL)	SEE PAGE
	1	1	**093-7521**	1	FILTER-OIL (ADVANCED EFFICIENCY) (HYDRAULIC, CASE DRAIN)	
	2	1	**289-8195**	1	HEAD AS-FILTER	

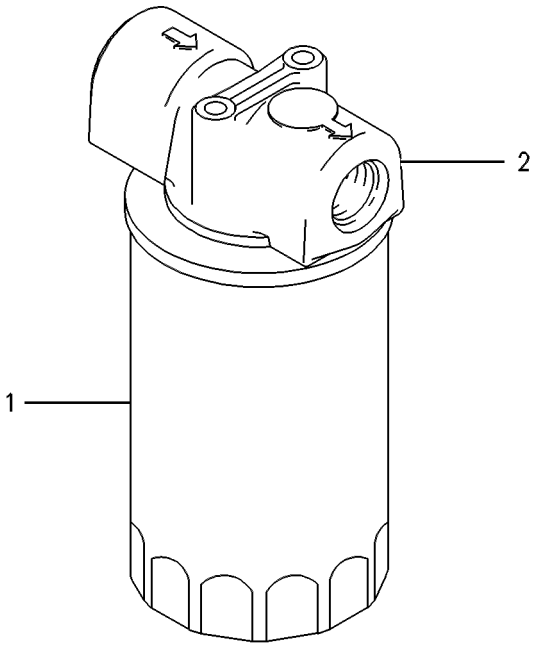

GRAPHIC #1 **<END>** g00258224

221-5069 FITTING GP-HYDRAULIC

S/N: CLA1-UP

PART OF 282-7378 FILTER & LINES GP-HYDRAULIC

SMCS-5057, 7553 **i03016751**

NOTE	PART NUMBER	QTY	PART NAME 1 2 3 4 5 6 (PRODUCT LEVEL)	SEE PAGE
	221-5070	1	TEE AS (TEE,REDUCER & NUT)	
	6V-8556	1	NUT (1-3/16-12-THD)	
	6V-8398	1	SEAL-O-RING	
	6V-8942	1	REDUCER-O-RING	
	3D-2824	1	SEAL-O-RING	
	6V-8784	1	TEE-FACE SEAL	
	6V-9746	2	SEAL-O-RING	
			-OR-	
	221-5071	1	TEE AS (FABRICATED TEE)	
	3D-2824	1	SEAL-O-RING	
	6V-8398	1	SEAL-O-RING	
	6V-9746	1	SEAL-O-RING	

<END>

282-7422 FITTING GP-HYDRAULIC—SWING MOTOR

S/N: CLA1-UP
PART OF 283-8792 CONTROL AR-FINE SWING
AN ATTACHMENT

SMCS-5057, 7553 **i02897088**

NOTE	REF NO	GRAPHIC REF	PART NUMBER	QTY	PART NAME 1 2 3 4 5 6 (PRODUCT LEVEL)	SEE PAGE
	1	1	*153-6232*	2	ELBOW AS	
					(EACH INCLUDES)	
		1	**3D-2824**	1	SEAL-O-RING	
		1	**7J-9108**	1	SEAL-O-RING	
		1	**8T-0120**	1	ELBOW	

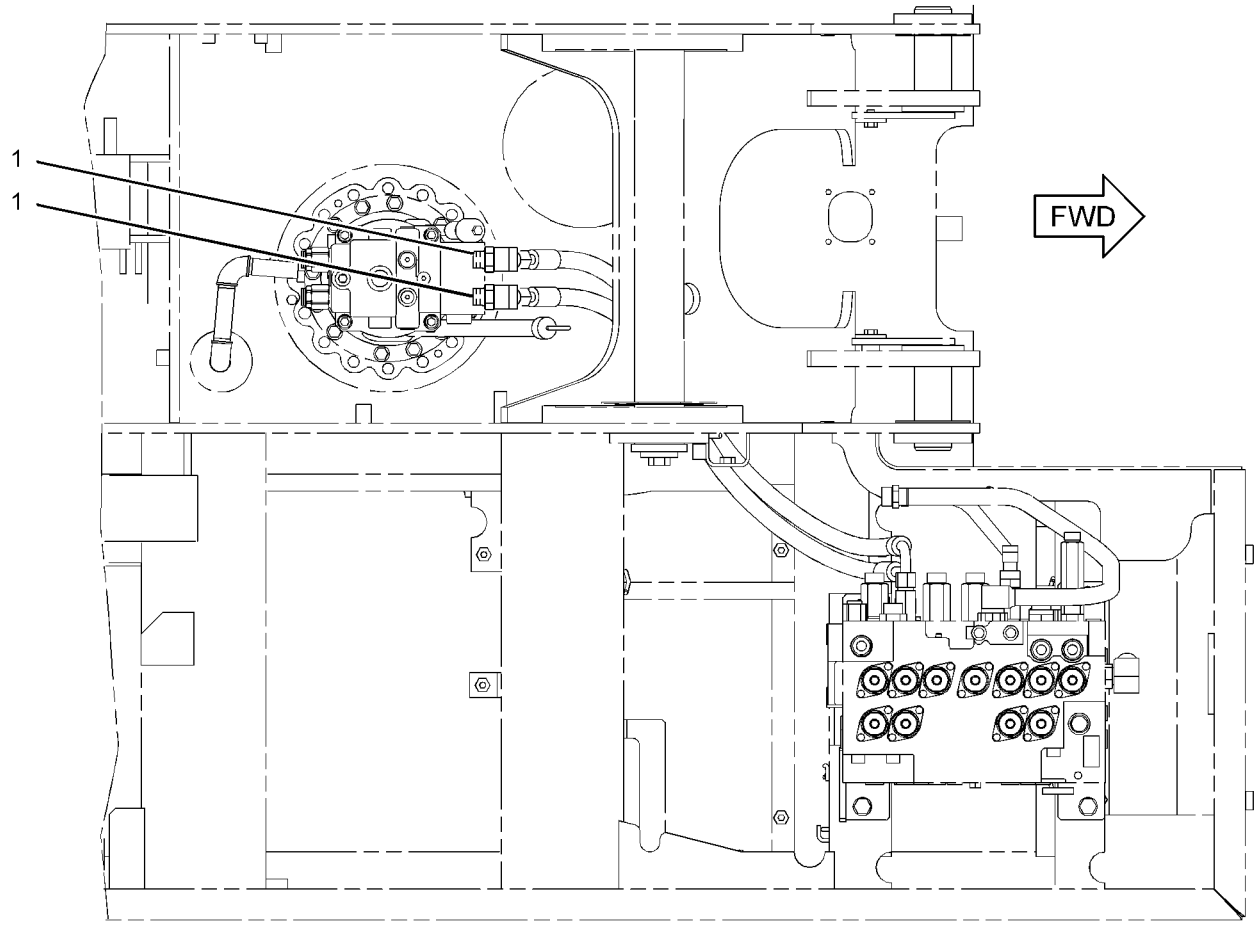

TOP VIEW

GRAPHIC #1 **<END>** g01402803

227-0620 GAUGE GP-SIGHT—HYDRAULIC OIL LEVEL

S/N: CLA1-UP

PART OF 282-7379 TANK & FILTER GP-HYDRAULIC

SMCS-7479 **i02220641**

NOTE	REF NO	GRAPHIC REF	PART NUMBER	QTY	PART NAME 1 2 3 4 5 6 (PRODUCT LEVEL)	SEE PAGE
	1	1	**236-3258**	2	BLOCK	
M	2	1	**236-3259**	2	BOLT-SPECIAL	
	3	1	**236-3257**	1	PIPE	
	4	1	**095-1519**	4	SEAL-O-RING	
	5	1	**6F-4855**	4	SEAL-O-RING	

M-METRIC PART

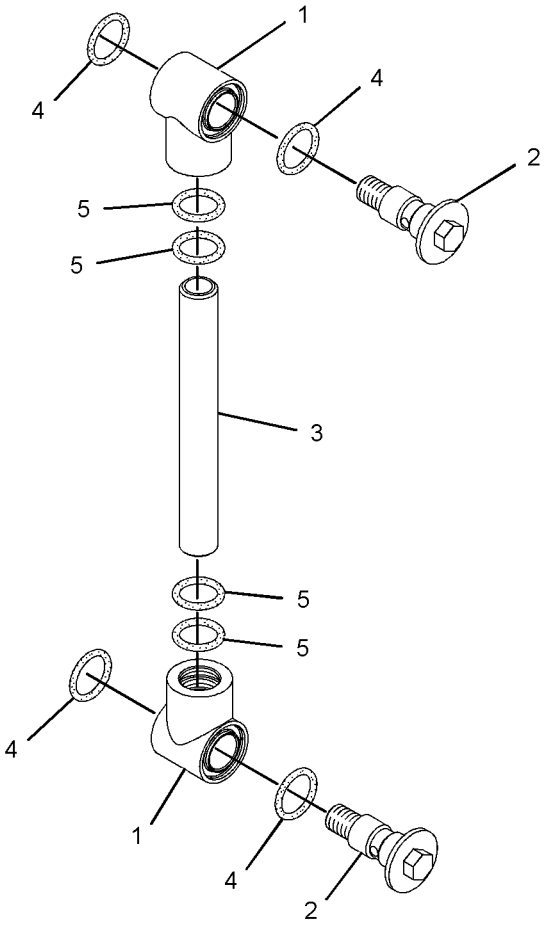

GRAPHIC #1 **<END>** g01091508

HYDRAULIC SYSTEM

289-7814 GUARD GP-CYLINDER–BLADE

S/N: CLA1-UP

PART OF 283-8789 INSTALLATION AR-BLADE

AN ATTACHMENT

SMCS-7164 **i02811450**

NOTE	REF NO	GRAPHIC REF	PART NUMBER	QTY	PART NAME 1 2 3 4 5 6 (PRODUCT LEVEL)	SEE PAGE
	1	1	**289-7815**	1	COVER	
	2	1	**289-7816**	1	COVER	
	3	1	**5P-1076**	6	WASHER-HARD (13.5X30X4-MM THK)	
M	4	1	**8T-4192**	6	BOLT (M12X1.75X25-MM)	

M-METRIC PART

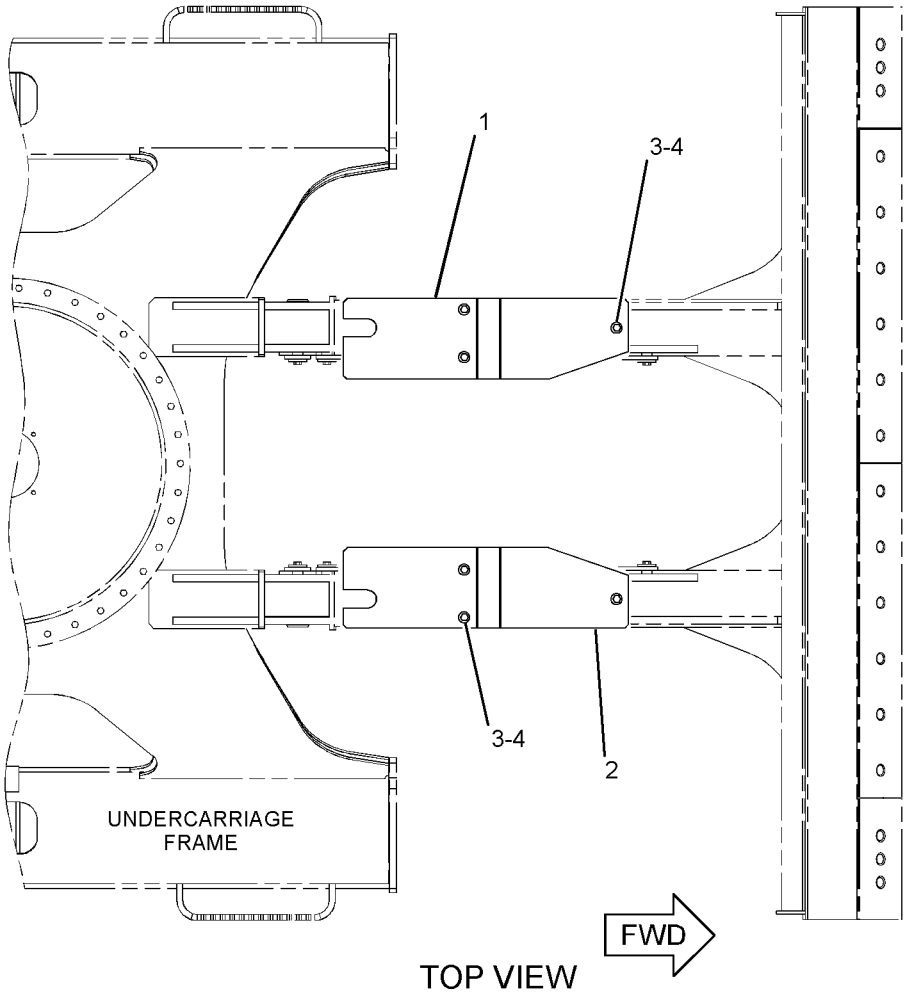

TOP VIEW

GRAPHIC #1 **<END>** g01403234

295-9675 GUARD GP-CYLINDER

S/N: CLA1-UP
PART OF 301-2552, 301-2555, 301-2647 SPECIAL AR
AN ATTACHMENT

SMCS-7164 **i02852717**

NOTE	REF NO	GRAPHIC REF	PART NUMBER	QTY	PART NAME 1 2 3 4 5 6 (PRODUCT LEVEL)	SEE PAGE
	1	1	**121-6223**	2	SUPPORT AS	
	2	1	**295-9563**	1	GUARD AS	
	3	1	**311-9538**	1	SUPPORT AS	
	4	1	**311-9539**	1	SUPPORT AS	
	5	1	**093-1291**	1	CLAMP	
	6	1	**8T-4121**	4	WASHER-HARD (11X21X2.5-MM THK)	
M	7	1	**8T-4189**	4	BOLT (M8X1.25X20-MM)	
M	8	1	**8T-4194**	1	BOLT (M12X1.75X50-MM)	
M	9	1	**8T-4196**	4	BOLT (M10X1.5X35-MM)	
	10	1	**8T-4223**	1	WASHER-HARD (13.5X25.5X3-MM THK)	
	11	1	**8T-4224**	4	WASHER-HARD (8.8X16X2-MM THK)	

M-METRIC PART

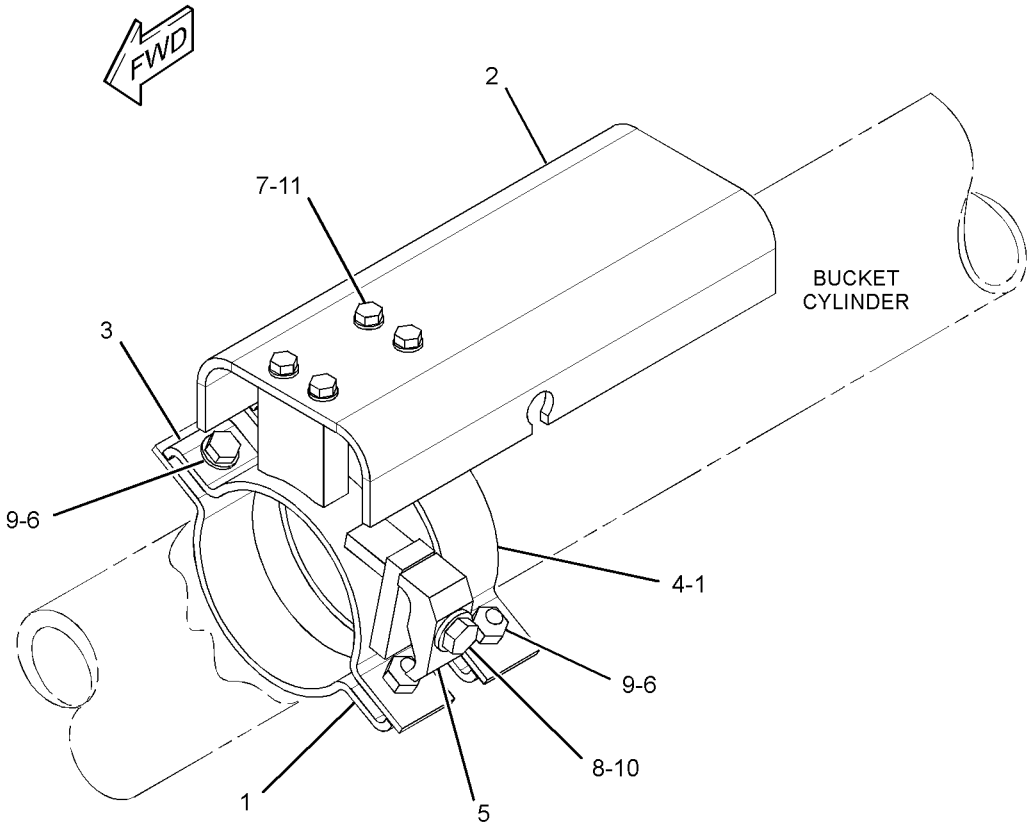

GRAPHIC #1 **<END>** g01439002

HYDRAULIC SYSTEM

282-9153 HEAD GP-PUMP

S/N: CLA1-UP

PART OF 311-7403 PUMP GP-PISTON

SMCS-3222, 5070, 5086 **i02796643**

NOTE	REF NO	GRAPHIC REF	PART NUMBER	QTY	PART NAME 1 2 3 4 5 6 (PRODUCT LEVEL)	SEE PAGE
B	1	1	**099-3669**	2	SHIM (1-MM THK)	
B		1	**099-6109**	2	SHIM (1.05-MM THK)	
B		1	**099-6110**	2	SHIM (1.1-MM THK)	
B		1	**099-6111**	2	SHIM (1.15-MM THK)	
B		1	**099-6112**	2	SHIM (1.2-MM THK)	
B		1	**099-6113**	2	SHIM (1.25-MM THK)	
B		1	**099-6115**	2	SHIM (1.3-MM THK)	
	8	1	**173-1170**	1	SPRING	
	9	1	**173-3389**	2	STOPPER	
	10	1	**174-7220**	2	COVER	
	11	1	**174-7221**	1	COVER	
	12	1	**174-7222**	1	COVER	
	13	1	**192-2376**	1	PIN AS	
	14	1	**200-3244**	1	SPRING	
M	15	1	**225-0224**	1	SETSCREW (M16X2X55-MM)	
M	16	1	**225-0225**	1	SETSCREW (M16X2X45-MM)	
	17	1	**267-1626**	1	SPOOL AS	
	18	1	**268-4201**	1	LEVER AS	
		1	**094-1875**	1	DOWEL	
	19	1	**268-4203**	1	PIN	
	20	1	**273-8316**	1	SEAL-O-RING	
	21	1	**273-8317**	1	SEAL-O-RING	
	22	1	**273-8318**	1	SEAL-O-RING	
	23	1	**281-6847**	1	PISTON	
	24	1	**9S-8001**	9	PLUG-O-RING	
	25	1	**301-6874**	1	RETAINER	
	26	1	**301-8294**	1	ADJUSTER	
	27	1	**094-1881**	1	PLATE-SLIDE	
	28	1	**095-1788**	2	RING-BACKUP	
	29	1	**099-3671**	1	SPRING	
	30	1	**185-0169**	1	GUIDE	
	31	1	**189-9763**	3	SEAL-O-RING	
	32	1	**190-7674**	2	SEAL-O-RING	
M	33	1	**200-3255**	1	NUT (M20X1.5-THD)	
	34	1	**283-4715**	1	SPRING	
	35	1	**2H-9247**	1	SEAL-O-RING	
	36	1	**3D-2891**	1	BALL	
	37	1	**3J-1907**	1	SEAL-O-RING	
	38	1	**4J-7533**	9	SEAL-O-RING	
	39	1	**6V-5391**	1	SEAL-O-RING	
M	40	1	**8T-4132**	2	NUT (M16X2-THD)	
M	41	1	**8T-4133**	1	NUT (M10X1.5-THD)	
M	42	1	**8T-4183**	8	BOLT (M12X1.75X40-MM)	
M	43	1	**8T-4192**	2	BOLT (M12X1.75X25-MM)	

B-USE AS REQUIRED
M-METRIC PART

282-9153 HEAD GP-PUMP *(contd.)* **i02796643**

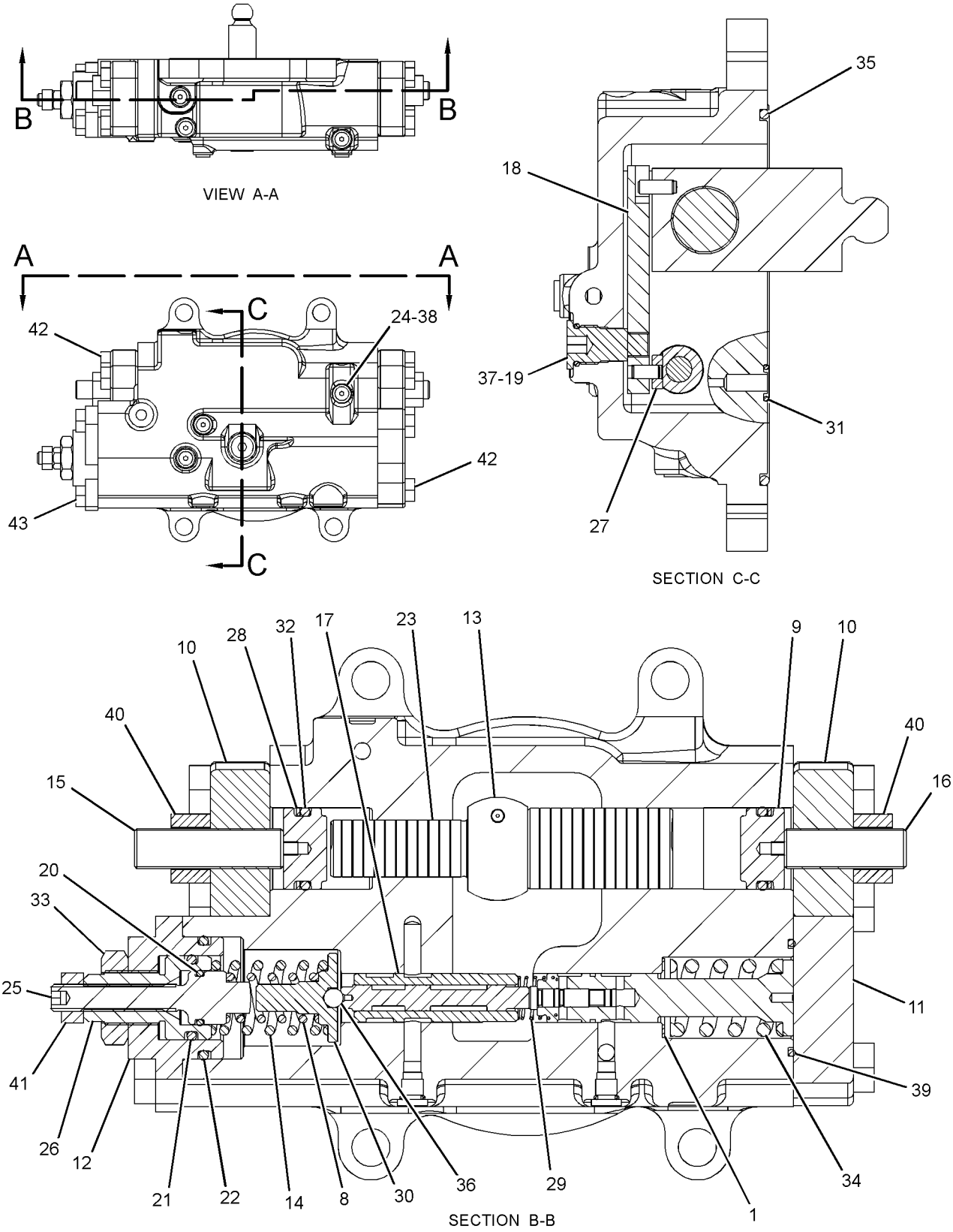

GRAPHIC #1 **<END>** g01400600

HYDRAULIC SYSTEM

270-5992 HYDRAULIC AR

S/N: CLA1-UP

PART OF 260-7228 GENERAL AR

SMCS-5050 **i02939275**

NOTE	PART NUMBER	QTY	PART NAME 1 2 3 4 5 6 (PRODUCT LEVEL)	SEE PAGE
Y	*282-7385*	1	LINES GP-BOOM CYLINDER	429
Y	*282-7384*	1	LINES GP-CONTROL (FRONT)	437
Y	*282-7386*	1	LINES GP-CONTROL (REAR)	439
Y	*282-7387*	1	LINES GP-HYDRAULIC OIL COOLER	465
Y	*278-6672*	1	LINES GP-PILOT (JOYSTICK, PEDALS)	470
Y	*282-7388*	1	LINES GP-PILOT (MAIN CONTROL VALVE)	482
Y	*282-7389*	1	LINES GP-PILOT (MAIN CONTROL VALVE, MANIFOLD)	485
Y	*282-7390*	1	LINES GP-PILOT (PUMP CONTROL)	491
Y	*282-7403*	1	LINES GP-PUMP	530
Y	*278-6511*	1	LINES GP-TRAVEL MOTOR	546
Y	*282-7383*	1	MOUNTING GP-VALVE	559
Y	*279-7755*	1	PUMP & MTG GP-MAIN HYDRAULIC	562
Y	*282-7377*	1	TANK & MTG GP-HYDRAULIC	581
Y	**270-5977**	1	VALVE GP-MAIN CONTROL (2-BANK)	605

Y-SEPARATE ILLUSTRATION

<END>

294-6428 LINES AR-AUXILIARY HYDRAULIC–HIGH PRESSURE, REACH BOOM

S/N: CLA1-UP

SYSTEM 20/23, WORK TOOL PRIORITY/COMBINED FUNCTION

FOR USE WITH 316-3790–PAGE 558. CANNOT BE USED WITH BOOR AR-1 PIECE LONG WITHOUT AUXILIARY AN ATTACHMENT

SMCS-5057 **i02896507**

NOTE	PART NUMBER	QTY	PART NAME 1 2 3 4 5 6 (PRODUCT LEVEL)	SEE PAGE
Y	*282-5624*	1	LINES GP-AUXILIARY HYDRAULIC (HIGH PRESSURE, REACH BOOM)	406
Y	*316-3790*	1	MOUNTING GP-LINES	558
Y	*291-7880*	1	WIRING GP-BOOM	193

Y-SEPARATE ILLUSTRATION

<END>

321-0520 LINES AR-AUXILIARY HYDRAULIC–MEDIUM PRESSURE

S/N: CLA1-UP

CANNOT BE USED WITH BOOM AR-1 PIECE LONG WITHOUT AUXILIARY AN ATTACHMENT

SMCS-5057 **i02897180**

NOTE	PART NUMBER	QTY	PART NAME 1 2 3 4 5 6 (PRODUCT LEVEL)	SEE PAGE
Y	*282-5627*	1	LINES GP-AUXILIARY HYDRAULIC (BOOM, MEDIUM PRESSURE)	408
Y	*316-3790*	1	MOUNTING GP-LINES	558

Y-SEPARATE ILLUSTRATION

<END>

321-0521 LINES AR-QUICK COUPLER–REACH BOOM

S/N: CLA1-UP

AN ATTACHMENT

SMCS-6129 **i02897190**

NOTE	PART NUMBER	QTY	PART NAME 1 2 3 4 5 6 (PRODUCT LEVEL)	SEE PAGE
Y	*282-5629*	1	LINES GP-COUPLER	443
Y	*316-3790*	1	MOUNTING GP-LINES	558

Y-SEPARATE ILLUSTRATION

<END>

HYDRAULIC SYSTEM

282-5624 LINES GP-AUXILIARY HYDRAULIC–

HIGH PRESSURE, REACH BOOM

S/N: CLA1-UP

SYSTEM 20/23, WORK TOOL PRIORITY/COMBINED FUNCTION

PART OF 294-6428 LINES AR-AUXILIARY HYDRAULIC

AN ATTACHMENT

SMCS-5057 **i03063240**

NOTE	REF NO	GRAPHIC REF	PART NUMBER	QTY	PART NAME 1 2 3 4 5 6 (PRODUCT LEVEL)	SEE PAGE
	1	1	**4I-1674**	4	CLIP	
	2	1	**179-5254**	1	PLATE	
	3	1	**202-7000**	1	COUPLING AS	
	4	1	**221-8859**	1	SENSOR AS-PRESSURE (AUXILIARY HYDRAULIC)	
		1	**3E-3371**	1	WEDGE-RECEPTACLE LOCK (3-PIN)	
		1	**3K-0360**	1	SEAL-O-RING	
		1	**9X-3401**	3	PIN-CONNECTOR (16-GA TO 18-GA)	
					–OR–	
		1	**126-1767**	3	PIN-CONNECTOR (14-GA)	
		1	**171-0596**	1	RECEPTACLE AS	
	5	1	**253-6276**	2	PLATE	
	6	1	**270-5672**	1	VALVE GP-SOLENOID & RELIEF (AUXILIARY, COMBINED FN, LH)	
	7	1	**270-5757**	1	VALVE GP-SOLENOID & RELIEF (AUXILIARY, COMBINED FN, RH)	
	8	1	**282-5841**	1	SUPPORT AS	
	9	1	**328-4912**	1	TUBE AS	
	10	1	**328-4917**	1	TUBE AS	
	11	1	**294-6533**	1	TUBE AS	
I	12	1	**294-6534**	1	HOSE AS	
	13	1	**294-6538**	1	HOSE AS	
	14	1	**294-6542**	1	HOSE AS	
	15	1	*148-8347*	1	ELBOW AS	
		1	**3D-2824**	1	SEAL-O-RING	
		1	**6V-9007**	1	ELBOW	
		1	**6V-9746**	1	SEAL-O-RING	
	16	1	*148-8408*	2	PLUG AS	
					(EACH INCLUDES)	
		1	**3D-2824**	1	SEAL-O-RING	
		1	**9S-4183**	1	PLUG-O-RING	
	17	1	*148-8431*	1	TEE AS	
		1	**5K-9090**	2	SEAL-O-RING	
		1	**6V-8785**	1	TEE	
		1	**7M-8485**	1	SEAL-O-RING	
	18	1	**175-6085**	1	FLANGE	
	19	1	**1P-3703**	1	SEAL-RECTANGULAR	
	20	1	**5K-9090**	1	SEAL-O-RING	
	21	1	**6V-9746**	8	SEAL-O-RING	
	22	1	**7M-8485**	1	SEAL-O-RING	
M	23	1	**7X-2549**	4	BOLT (M12X1.75X100-MM)	
	24	1	**7Y-4868**	12	CLIP	
M	25	1	**8T-4139**	4	BOLT (M12X1.75X30-MM)	
M	26	1	**8T-4184**	4	BOLT (M12X1.75X45-MM)	
M	27	1	**8T-4192**	4	BOLT (M12X1.75X25-MM)	
	28	1	**8T-4223**	30	WASHER-HARD (13.5X25.5X3-MM THK)	
M	29	1	**8T-4244**	2	NUT (M12X1.75-THD)	
M	30	1	**8T-4956**	10	BOLT (M12X1.75X35-MM)	
M	31	1	**8T-5412**	2	BOLT (M12X1.75X140-MM)	

I-REFER TO HYDRAULIC INFORMATION SYSTEM
M-METRIC PART

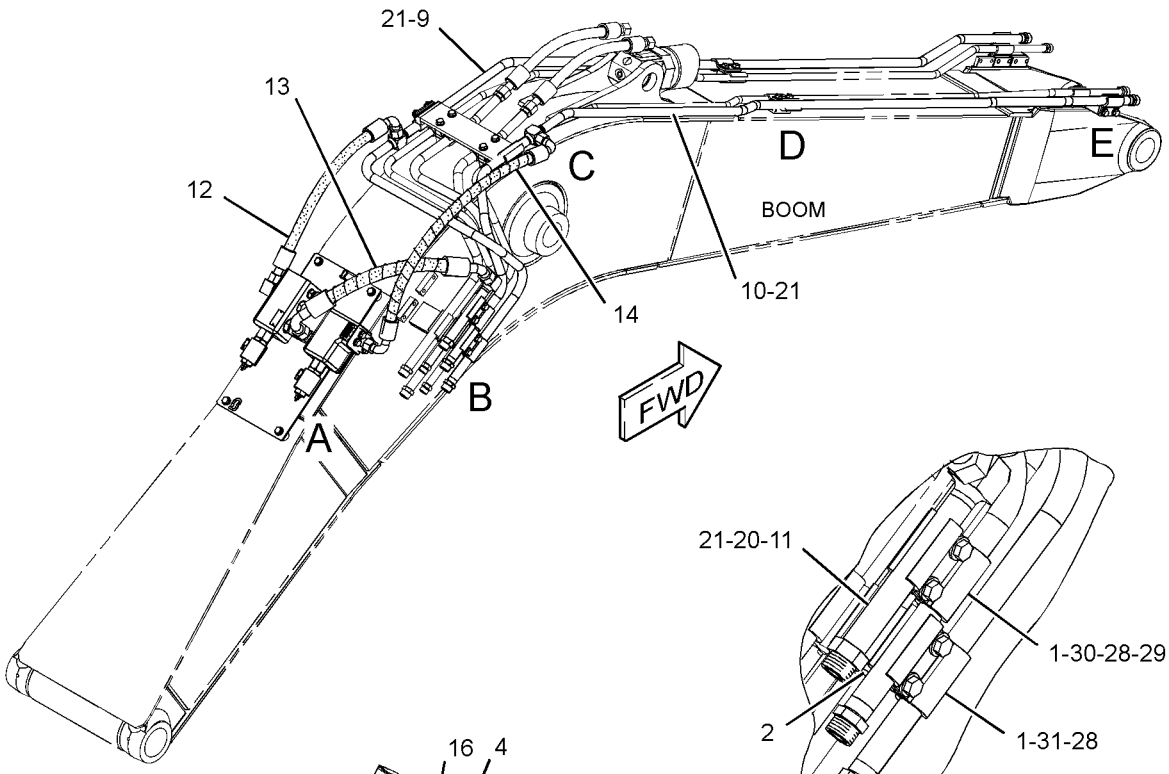

VIEW OF AREA B

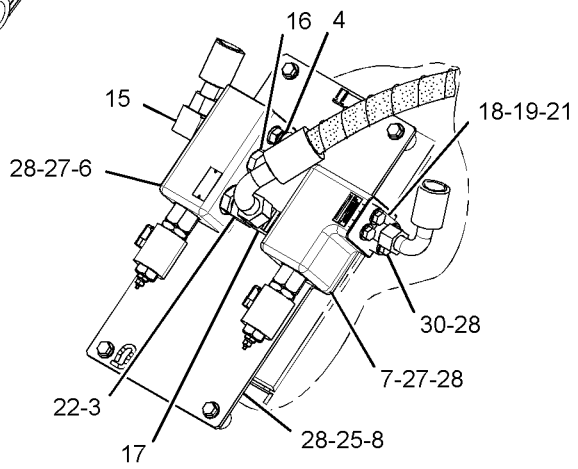

VIEW OF AREA A

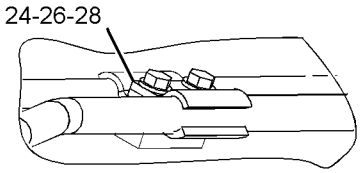

VIEW OF AREA D

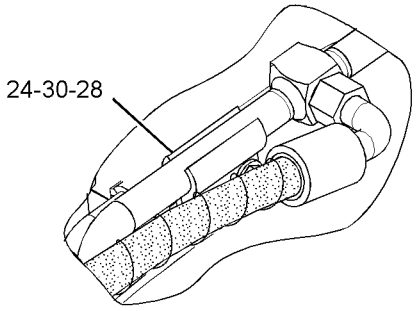

VIEW OF AREA C

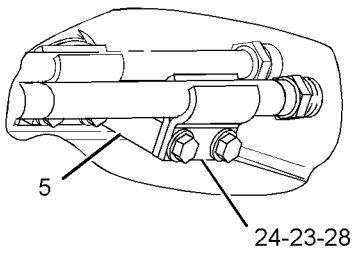

VIEW OF AREA E

GRAPHIC #1 **<END>** g01445908

282-5627 LINES GP-AUXILIARY HYDRAULIC–

BOOM, MEDIUM PRESSURE

S/N: CLA1-UP

PART OF 321-0520 LINES AR-AUXILIARY HYDRAULIC

FOR USE WITH 316-3790–PAGE 558

AN ATTACHMENT

SMCS-5057 **i02868780**

NOTE	REF NO	GRAPHIC REF	PART NUMBER	QTY	PART NAME 1 2 3 4 5 6 (PRODUCT LEVEL)	SEE PAGE
	1	1	**149-1738**	6	CLIP	
	2	1	**153-8867**	4	CLIP	
	3	1	**193-6606**	1	PLATE	
	4	1	**282-5527**	2	SUPPORT AS	
	5	1	**282-5528**	2	CLIP AS	
	6	1	**282-5711**	1	SUPPORT AS	
	7	1	**316-3871**	1	TUBE AS	
	8	1	**282-5779**	1	TUBE AS	
	9	1	**316-3872**	1	TUBE AS	
	10	1	**093-1291**	2	CLAMP	
	11	1	**6V-8398**	4	SEAL-O-RING	
	12	1	**7J-9108**	1	SEAL-O-RING	
M	13	1	**7X-2549**	2	BOLT (M12X1.75X100-MM)	
	14	1	**8T-4121**	2	WASHER-HARD (11X21X2.5-MM THK)	
M	15	1	**8T-4133**	2	NUT (M10X1.5-THD)	
M	16	1	**8T-4139**	10	BOLT (M12X1.75X30-MM)	
M	17	1	**8T-4176**	2	BOLT (M12X1.75X90-MM)	
M	18	1	**8T-4185**	2	BOLT (M10X1.5X50-MM)	
	19	1	**8T-4223**	18	WASHER-HARD (13.5X25.5X3-MM THK)	
M	20	1	**8T-4910**	4	BOLT (M12X1.75X60-MM)	

M-METRIC PART

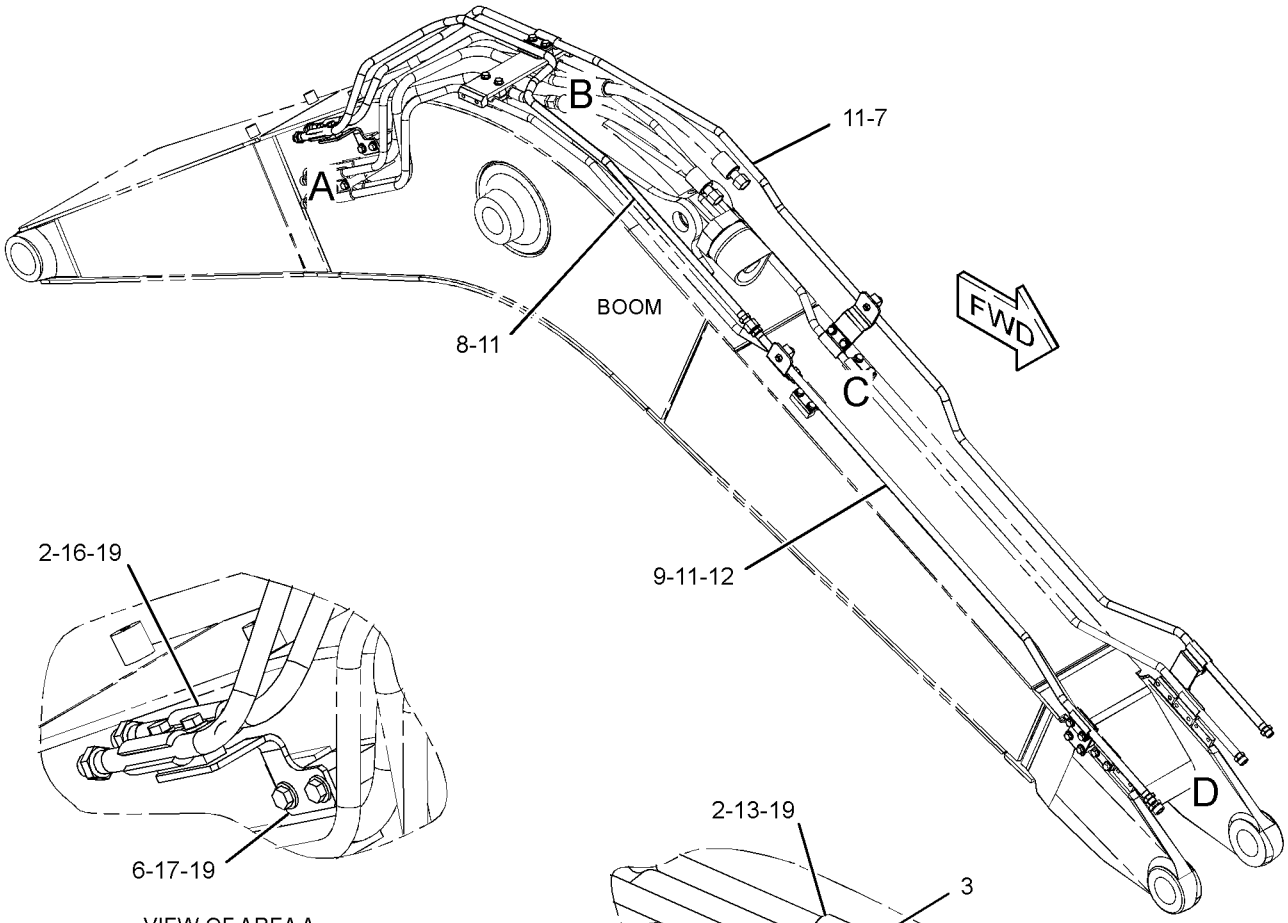

VIEW OF AREA A

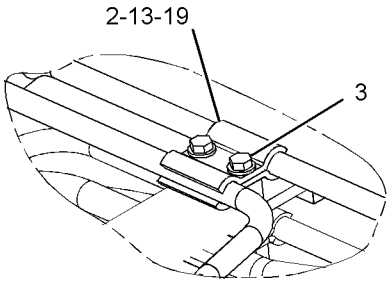

VIEW OF AREA B

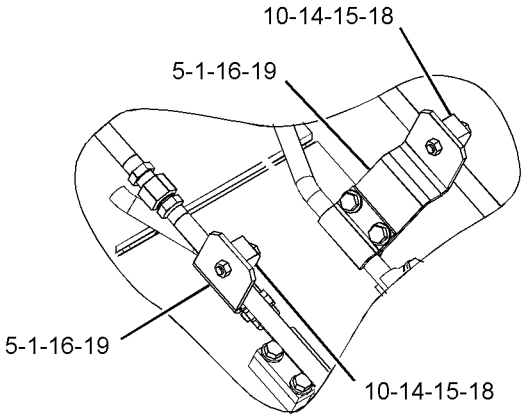

VIEW OF AREA C

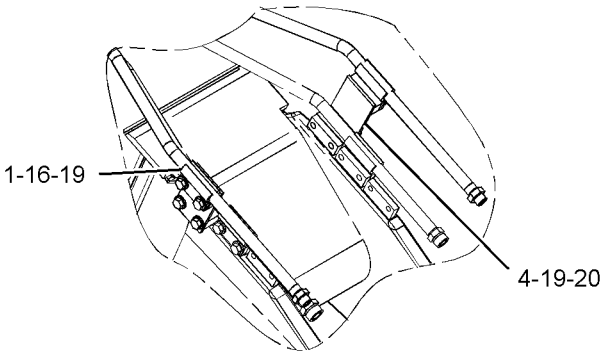

VIEW OF AREA D

GRAPHIC #1 **<END>** g01413456

HYDRAULIC SYSTEM

282-5630 LINES GP-AUXILIARY HYDRAULIC–HIGH PRESSURE

S/N: CLA1-UP
2.6-M (8.5-FT) STICK
AN ATTACHMENT

SMCS-5057 **i02796487**

NOTE	REF NO	GRAPHIC REF	PART NUMBER	QTY	PART NAME 1 2 3 4 5 6 (PRODUCT LEVEL)	SEE PAGE
M	1	1	**101-7403**	4	BOLT-SOCKET HEAD (M10X1.5X80-MM)	
I	2	1	**187-6692**	2	HOSE AS	
Y	3	1	**282-5894**	2	VALVE AS-MANUAL (AUXILIARY, SHUTOFF)	588
	4	1	**288-7690**	4	CLIP AS	
	5	1	**288-7721**	2	TUBE AS	
	6	1	**1P-3703**	2	SEAL-RECTANGULAR	
	7	1	**6V-9746**	2	SEAL-O-RING	
	8	1	**7Y-4868**	4	CLIP	
M	9	1	**8T-4195**	8	BOLT (M10X1.5X30-MM)	
	10	1	**8T-4223**	8	WASHER-HARD (13.5X25.5X3-MM THK)	
	11	1	**8T-4896**	4	WASHER-HARD (10.2X18.5X2.5-MM THK)	
M	12	1	**8T-4910**	8	BOLT (M12X1.75X60-MM)	

I-REFER TO HYDRAULIC INFORMATION SYSTEM
M-METRIC PART
Y-SEPARATE ILLUSTRATION

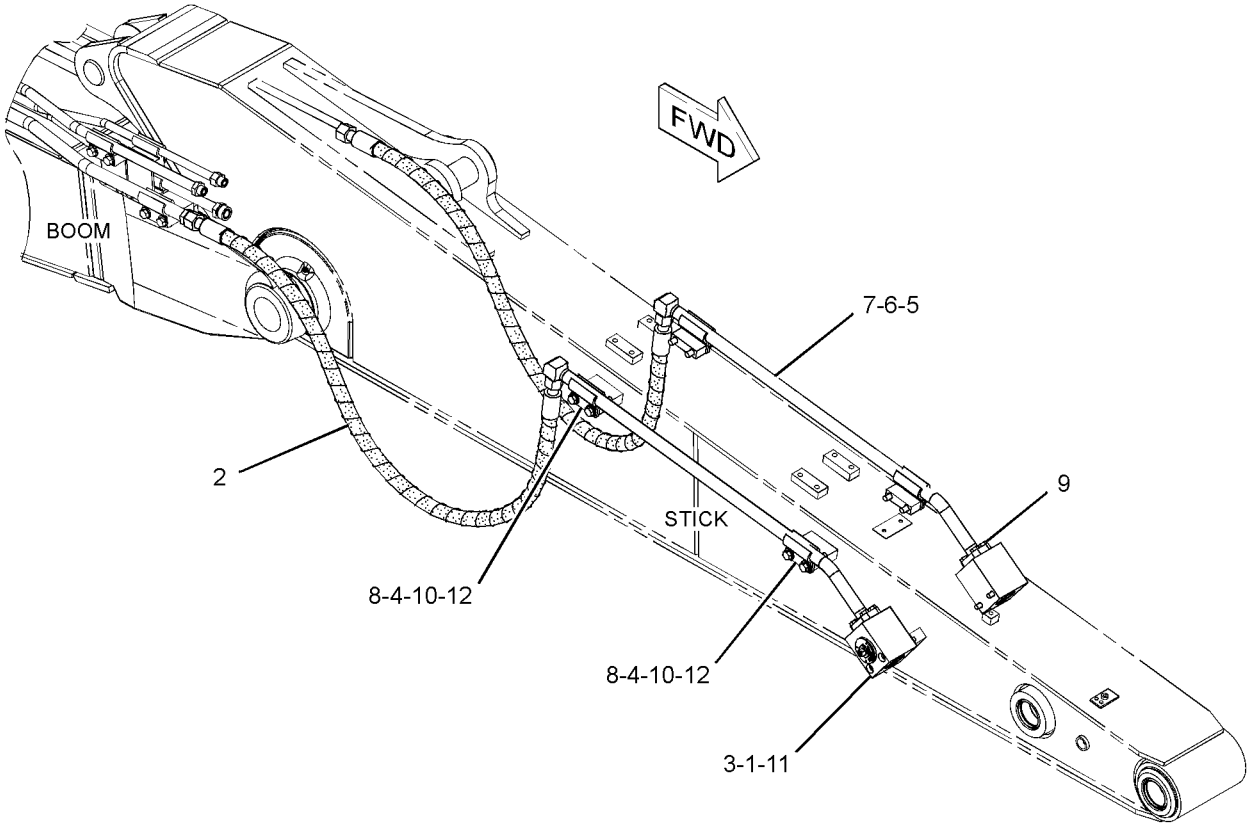

GRAPHIC #1 **<END>** g01400081

282-5631 LINES GP-AUXILIARY HYDRAULIC—MEDIUM PRESSURE

S/N: CLA1-UP
2.6-M (8.5-FT) STICK
AN ATTACHMENT

SMCS-5057 **i02868781**

NOTE	REF NO	GRAPHIC REF	PART NUMBER	QTY	PART NAME 1 2 3 4 5 6 (PRODUCT LEVEL)	SEE PAGE
	1	1	**6C-6760**	2	MANIFOLD	
	2	1	**149-1738**	8	CLIP	
	3	1	*250-1440*	2	ADAPTER AS	
					(EACH INCLUDES)	
		1	**3K-0360**	1	SEAL-O-RING	
		1	**7X-3164**	1	ADAPTER-SWIVEL	
	4	1	**288-7693**	2	PLATE	
	5	1	**288-7694**	4	SUPPORT AS	
	6	1	**288-7722**	2	TUBE AS	
I	7	1	**288-7723**	2	HOSE AS	
	8	1	**6V-8398**	4	SEAL-O-RING	
	9	1	**8T-4121**	4	WASHER-HARD (11X21X2.5-MM THK)	
M	10	1	**8T-4136**	4	BOLT (M10X1.5X25-MM)	
M	11	1	**8T-4139**	8	BOLT (M12X1.75X30-MM)	
M	12	1	**8T-4185**	4	BOLT (M10X1.5X50-MM)	
M	13	1	**8T-4192**	8	BOLT (M12X1.75X25-MM)	
	14	1	**8T-4223**	16	WASHER-HARD (13.5X25.5X3-MM THK)	
JM	15	1	**105-3479**	4	BOLT-SOCKET HEAD (M10X1.5X90-MM)	
JM	16	1	**8T-4648**	8	BOLT (M12X1.75X70-MM)	
J	17	1	**8T-7971**	8	WASHER-HARD (13.5X25.5X5-MM THK)	

I-REFER TO HYDRAULIC INFORMATION SYSTEM
J-USED WITH LINES GP-AUX HYD (HIGH PRESSURE)
M-METRIC PART

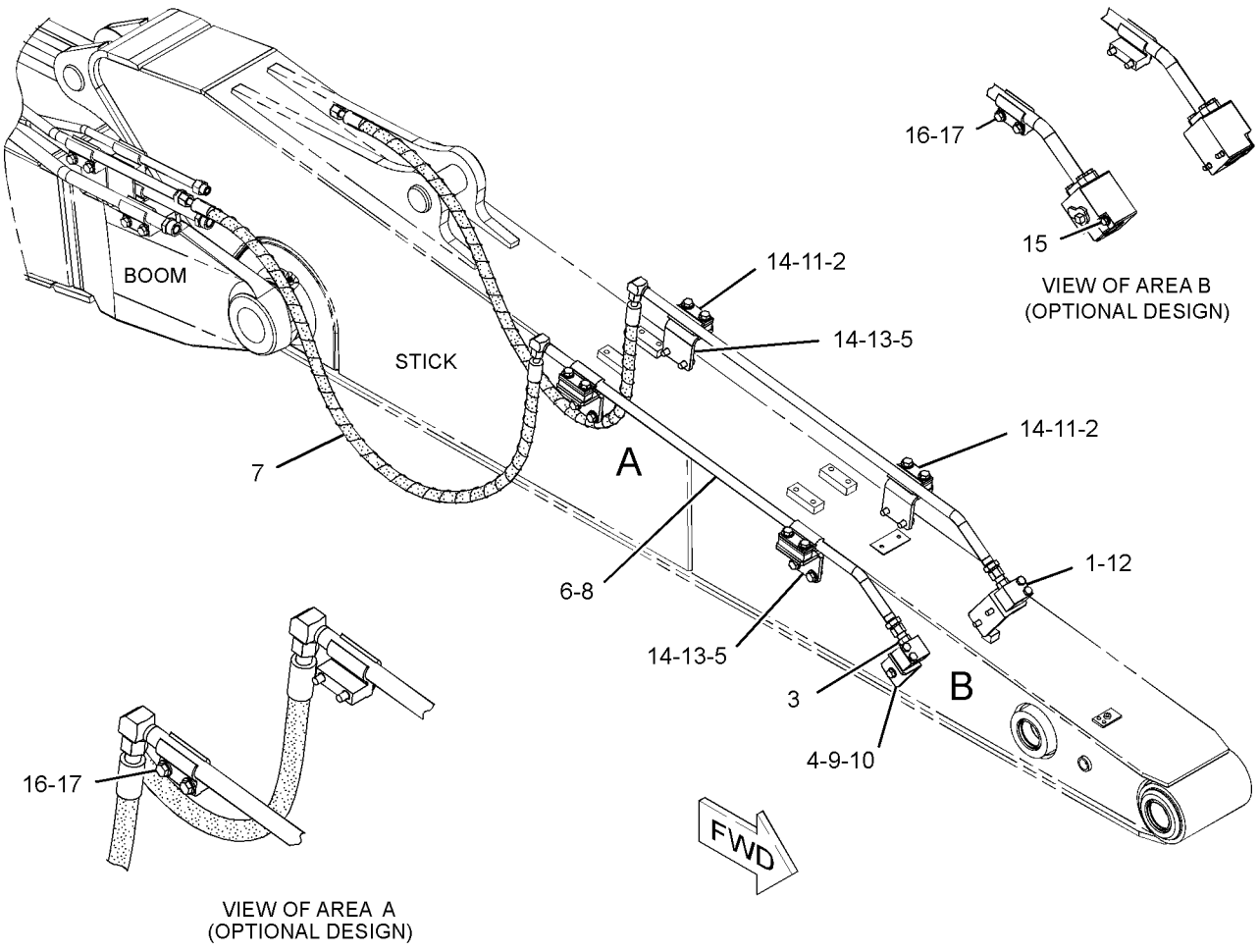

GRAPHIC #1 **<END>** g01453039

HYDRAULIC SYSTEM

288-7396 LINES GP-AUXILIARY HYDRAULIC—HIGH PRESSURE

S/N: CLA1-UP
2.8-M (9.2-FT) STICK
AN ATTACHMENT

SMCS-5057 **i02939277**

NOTE	REF NO	GRAPHIC REF	PART NUMBER	QTY	PART NAME 1 2 3 4 5 6 (PRODUCT LEVEL)	SEE PAGE
M	1	1	**101-7403**	4	BOLT-SOCKET HEAD (M10X1.5X80-MM)	
I	2	1	**102-1279**	2	HOSE AS	
Y	3	1	**282-5894**	2	VALVE AS-MANUAL (AUXILIARY, SHUTOFF)	588
	4	1	**288-7688**	2	TUBE AS	
	5	1	**288-7690**	4	CLIP AS	
	6	1	**1P-3703**	2	SEAL-RECTANGULAR	
	7	1	**6V-9746**	2	SEAL-O-RING	
	8	1	**7Y-4868**	4	CLIP	
M	9	1	**8T-4195**	8	BOLT (M10X1.5X30-MM)	
	10	1	**8T-4223**	8	WASHER-HARD (13.5X25.5X3-MM THK)	
	11	1	**8T-4896**	4	WASHER-HARD (10.2X18.5X2.5-MM THK)	
M	12	1	**8T-4910**	8	BOLT (M12X1.75X60-MM)	

I-REFER TO HYDRAULIC INFORMATION SYSTEM
M-METRIC PART
Y-SEPARATE ILLUSTRATION

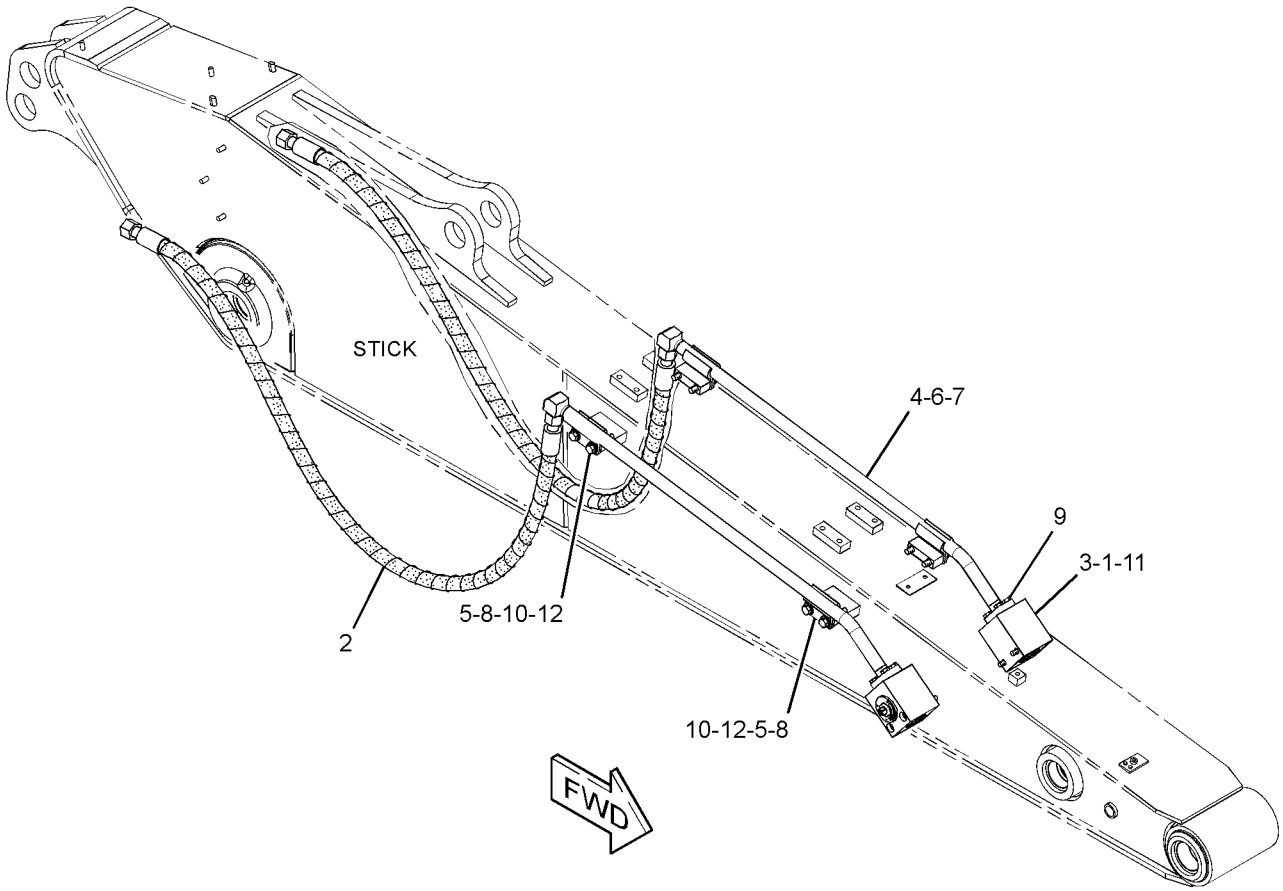

GRAPHIC #1 **<END>** g01410926

HYDRAULIC SYSTEM

288-7397 LINES GP-AUXILIARY HYDRAULIC—MEDIUM PRESSURE

S/N: CLA1-UP
2.8-M (9.2-FT) STICK
AN ATTACHMENT

SMCS-5057 **i02880286**

NOTE	REF NO	GRAPHIC REF	PART NUMBER	QTY	PART NAME 1 2 3 4 5 6 (PRODUCT LEVEL)	SEE PAGE
	1	1	**6C-6760**	2	MANIFOLD	
	2	1	**149-1738**	8	CLIP	
	3	1	*250-1440*	2	ADAPTER AS	
					(EACH INCLUDES)	
		1	**3K-0360**	1	SEAL-O-RING	
		1	**7X-3164**	1	ADAPTER-SWIVEL	
I	4	1	**282-5755**	2	HOSE AS	
	5	1	**288-7692**	2	TUBE AS	
	6	1	**288-7693**	2	PLATE	
	7	1	**288-7694**	4	SUPPORT AS	
	8	1	**6V-8398**	4	SEAL-O-RING	
	9	1	**8T-4121**	4	WASHER-HARD (11X21X2.5-MM THK)	
M	10	1	**8T-4136**	4	BOLT (M10X1.5X25-MM)	
M	11	1	**8T-4139**	8	BOLT (M12X1.75X30-MM)	
M	12	1	**8T-4185**	4	BOLT (M10X1.5X50-MM)	
M	13	1	**8T-4192**	8	BOLT (M12X1.75X25-MM)	
	14	1	**8T-4223**	16	WASHER-HARD (13.5X25.5X3-MM THK)	
JM	15	1	**105-3479**	4	BOLT-SOCKET HEAD (M10X1.5X90-MM)	
JM	16	1	**8T-4648**	8	BOLT (M12X1.75X70-MM)	
J	17	1	**8T-7971**	8	WASHER-HARD (13.5X25.5X5-MM THK)	

I-REFER TO HYDRAULIC INFORMATION SYSTEM
J-WHEN USED WITH AUXILIARY HYDRAULIC LINES GROUP (HIGH PRESSURE)
M-METRIC PART

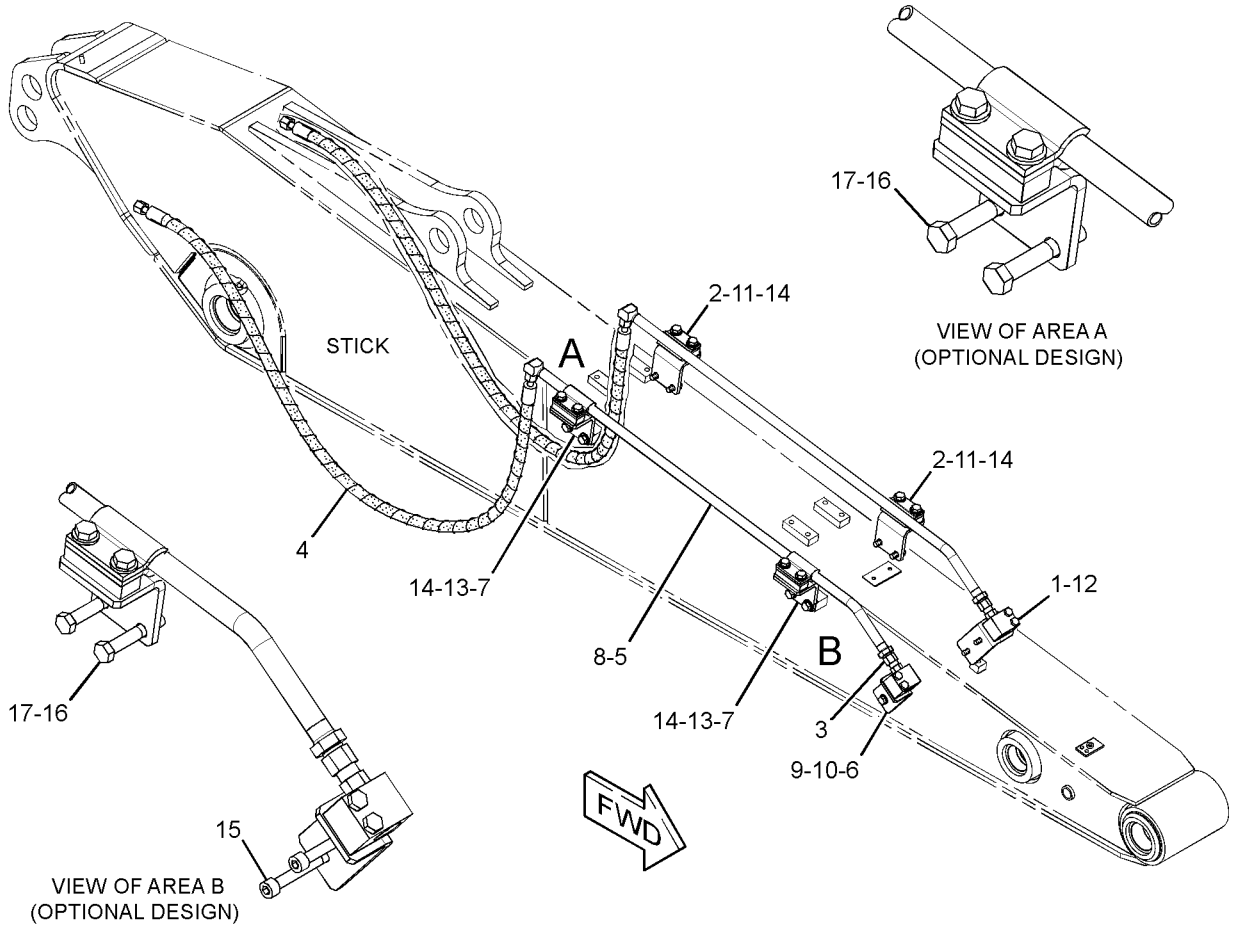

GRAPHIC #1 **<END>** g01438955

HYDRAULIC SYSTEM

288-7400 LINES GP-AUXILIARY HYDRAULIC–HIGH PRESSURE

S/N: CLA1-UP
2.3-M (7.4-FT) STICK
AN ATTACHMENT

SMCS-5057 **i02939280**

NOTE	REF NO	GRAPHIC REF	PART NUMBER	QTY	PART NAME 1 2 3 4 5 6 (PRODUCT LEVEL)	SEE PAGE
M	1	1	**101-7403**	4	BOLT-SOCKET HEAD (M10X1.5X80-MM)	
I	2	1	**237-3227**	2	HOSE AS	
Y	3	1	**282-5894**	2	VALVE AS-MANUAL (AUXILIARY, SHUTOFF)	588
	4	1	**288-7690**	4	CLIP AS	
	5	1	**302-9321**	2	TUBE AS	
	6	1	**1P-3703**	2	SEAL-RECTANGULAR	
	7	1	**6V-9746**	2	SEAL-O-RING	
	8	1	**7Y-4868**	4	CLIP	
M	9	1	**8T-4195**	8	BOLT (M10X1.5X30-MM)	
	10	1	**8T-4223**	8	WASHER-HARD (13.5X25.5X3-MM THK)	
	11	1	**8T-4896**	4	WASHER-HARD (10.2X18.5X2.5-MM THK)	
M	12	1	**8T-4910**	8	BOLT (M12X1.75X60-MM)	

I-REFER TO HYDRAULIC INFORMATION SYSTEM
M-METRIC PART
Y-SEPARATE ILLUSTRATION

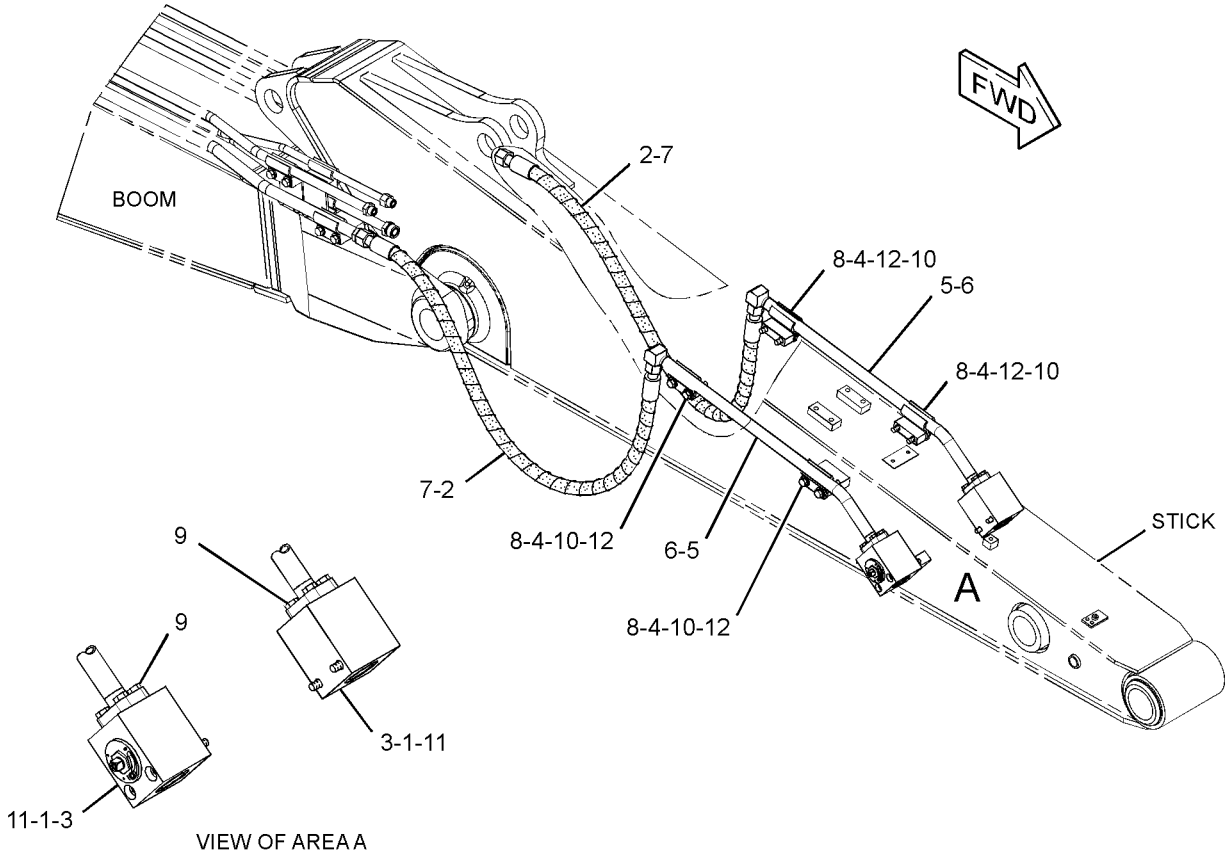

GRAPHIC #1 **<END>** g01410869

HYDRAULIC SYSTEM

288-7401 LINES GP-AUXILIARY HYDRAULIC—MEDIUM PRESSURE

S/N: CLA1-UP
2.3-M (7.4-FT) STICK
AN ATTACHMENT

SMCS-5057 **i02977856**

NOTE	REF NO	GRAPHIC REF	PART NUMBER	QTY	PART NAME 1 2 3 4 5 6 (PRODUCT LEVEL)	SEE PAGE
	1	1	**6C-6760**	2	MANIFOLD	
	2	1	**149-1738**	8	CLIP	
	3	1	*250-1440*	2	ADAPTER AS	
					(EACH INCLUDES)	
		1	**3K-0360**	1	SEAL-O-RING	
		1	**7X-3164**	1	ADAPTER-SWIVEL	
	4	1	**288-7693**	2	PLATE	
	5	1	**288-7694**	4	SUPPORT AS	
	6	1	**302-9356**	2	TUBE AS	
I	7	1	**302-9509**	2	HOSE AS	
	8	1	**6V-8398**	4	SEAL-O-RING	
	9	1	**8T-4121**	4	WASHER-HARD (11X21X2.5-MM THK)	
M	10	1	**8T-4136**	4	BOLT (M10X1.5X25-MM)	
M	11	1	**8T-4139**	8	BOLT (M12X1.75X30-MM)	
M	12	1	**8T-4185**	4	BOLT (M10X1.5X50-MM)	
M	13	1	**8T-4192**	8	BOLT (M12X1.75X25-MM)	
	14	1	**8T-4223**	16	WASHER-HARD (13.5X25.5X3-MM THK)	
JM	15	1	**105-3479**	4	BOLT-SOCKET HEAD (M10X1.5X90-MM)	
JM	16	1	**8T-4648**	8	BOLT (M12X1.75X70-MM)	
J	17	1	**8T-7971**	8	WASHER-HARD (13.5X25.5X5-MM THK)	

I-REFER TO HYDRAULIC INFORMATION SYSTEM
J-WHEN USED WITH AUXILIARY HYDRAULIC LINES GROUP (HIGH PRESSURE)
M-METRIC PART

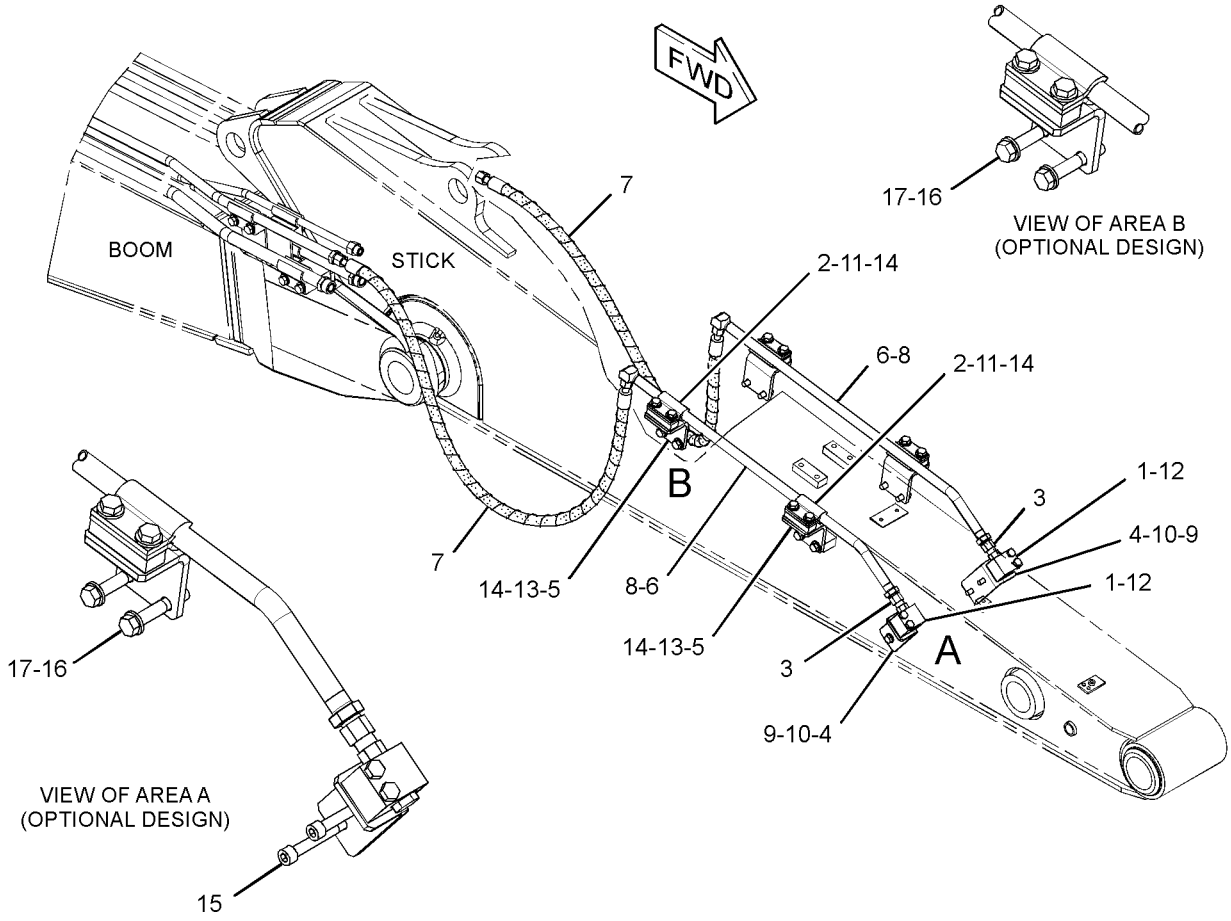

GRAPHIC #1 **<END>** g01514654

179-7602 LINES GP-BLADE CYLINDER–LH

S/N: CLA1-UP

PART OF 274-2678 CYLINDER & LINES GP-BLADE

AN ATTACHMENT

SMCS-5102 **i01779825**

NOTE	REF NO	GRAPHIC REF	PART NUMBER	QTY	PART NAME 1 2 3 4 5 6 (PRODUCT LEVEL)	SEE PAGE
	1	1	**179-7603**	1	PIPE AS	
	2	1	**4J-5267**	2	SEAL-O-RING	
M	3	1	**8T-4182**	4	BOLT (M10X1.5X45-MM)	
M	4	1	**8T-4185**	4	BOLT (M10X1.5X50-MM)	
	5	1	**139-1773**	1	ELBOW	
	6	1	**7J-9108**	2	SEAL-O-RING	
	7	1	**093-1291**	1	CLAMP	
	8	1	**8T-4223**	1	WASHER-HARD (13.5X25.5X3-MM THK)	
M	9	1	**8T-4194**	1	BOLT (M12X1.75X50-MM)	
	10	1	**122-5420**	1	SUPPORT AS	
	11	1	**122-5500**	1	SUPPORT AS	
	12	1	**8T-4121**	2	WASHER-HARD (11X21X2.5-MM THK)	
M	13	1	**8T-4196**	2	BOLT (M10X1.5X35-MM)	

M-METRIC PART

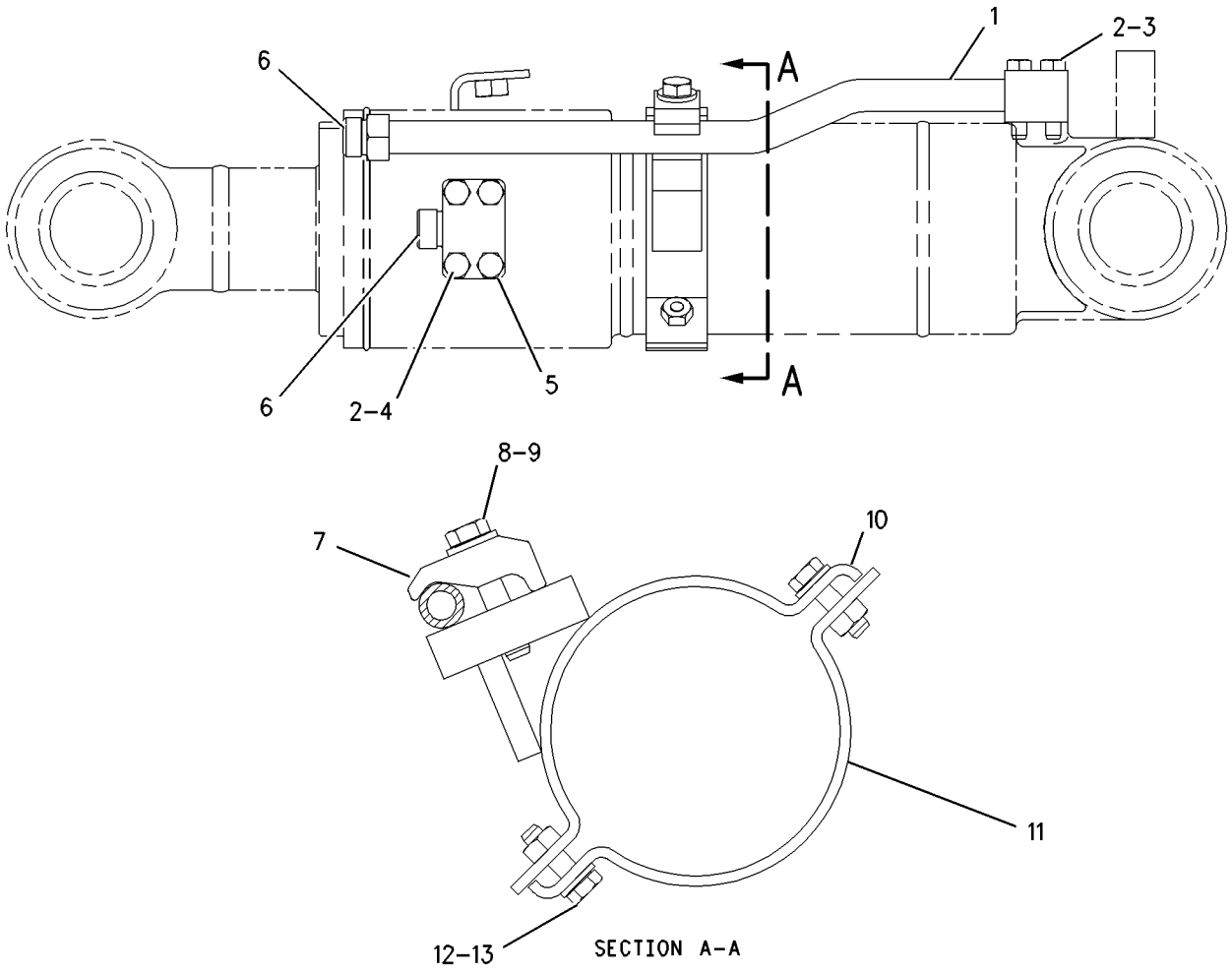

GRAPHIC #1 **<END>** g00748461

179-7604 LINES GP-BLADE CYLINDER–RH

S/N: CLA1-UP
PART OF 274-2679 CYLINDER & LINES GP-BLADE
AN ATTACHMENT

SMCS-5102 **i01777943**

NOTE	REF NO	GRAPHIC REF	PART NUMBER	QTY	PART NAME 1 2 3 4 5 6 (PRODUCT LEVEL)	SEE PAGE
	1	1	**179-7605**	1	PIPE AS	
	2	1	**4J-5267**	2	SEAL-O-RING	
M	3	1	**8T-4182**	4	BOLT (M10X1.5X45-MM)	
M	4	1	**8T-4185**	4	BOLT (M10X1.5X50-MM)	
	5	1	**139-1773**	1	ELBOW	
	6	1	**7J-9108**	2	SEAL-O-RING	
	7	1	**093-1291**	1	CLAMP	
	8	1	**8T-4223**	1	WASHER-HARD (13.5X25.5X3-MM THK)	
M	9	1	**8T-4194**	1	BOLT (M12X1.75X50-MM)	
	10	1	**122-5500**	1	SUPPORT AS	
	11	1	**122-5420**	1	SUPPORT AS	
	12	1	**8T-4121**	2	WASHER-HARD (11X21X2.5-MM THK)	
M	13	1	**8T-4196**	2	BOLT (M10X1.5X35-MM)	

M-METRIC PART

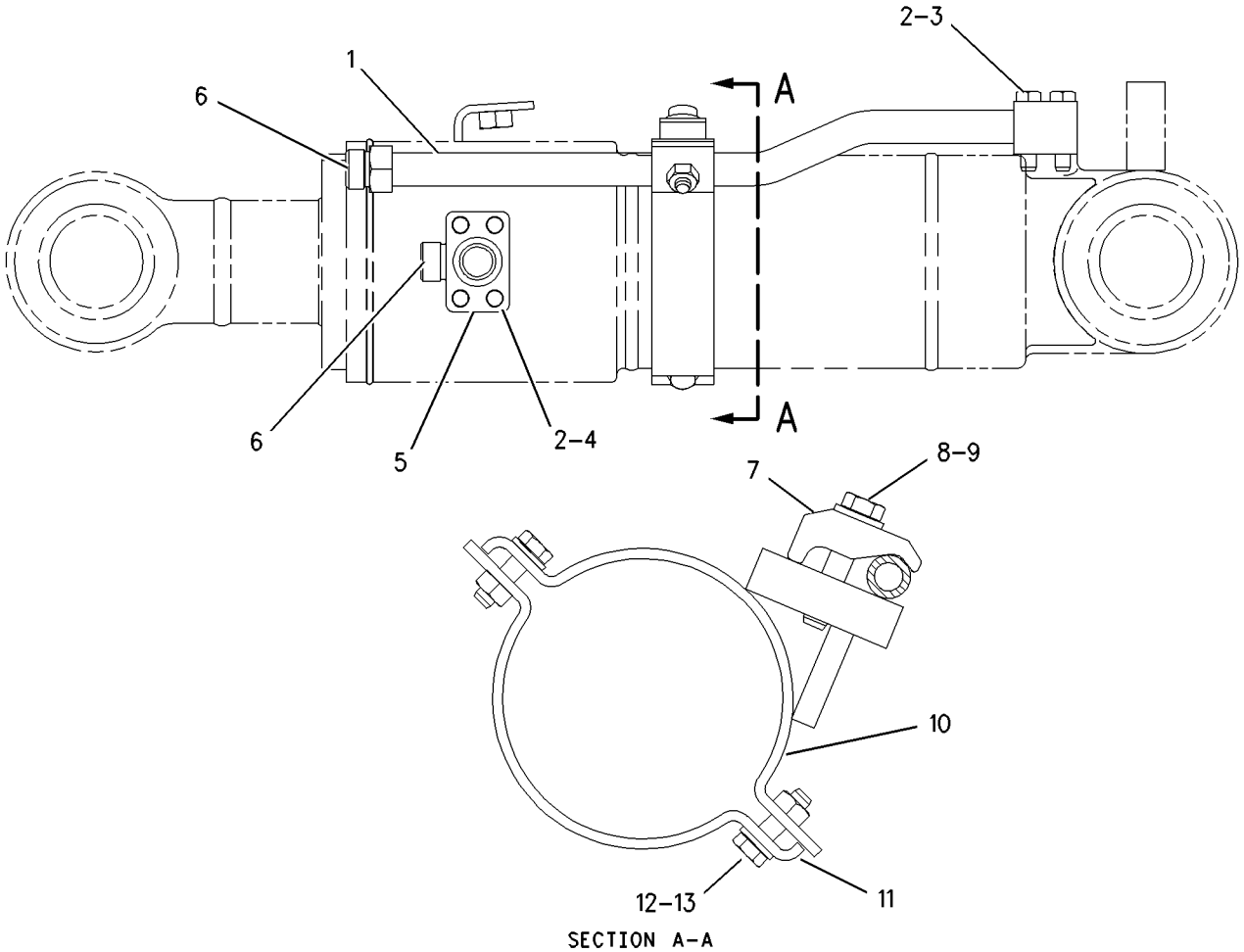

SECTION A-A

GRAPHIC #1 **<END>** g00748452

282-7397 LINES GP-BLADE CYLINDER—BLADE

S/N: CLA1-UP
PART OF 283-8789 INSTALLATION AR-BLADE
AN ATTACHMENT

SMCS-5102 **i02896492**

NOTE	REF NO	GRAPHIC REF	PART NUMBER	QTY	PART NAME 1 2 3 4 5 6 (PRODUCT LEVEL)	SEE PAGE
	1	1	**093-1295**	2	CLAMP	
	2	1	**310-0234**	1	VALVE GP-BANK 2	
I	3	1	**139-1762**	2	HOSE AS	
I	4	1	**139-1765**	2	HOSE AS	
Y	5	1	**162-4695**	1	SWIVEL GP	576
	6	1	**179-7874**	1	TUBE AS	
	7	1	**179-7875**	1	TUBE AS	
	8	1	**286-6482**	1	PLATE	
I	9	1	**302-3098**	1	HOSE AS	
I	10	1	**302-3101**	1	HOSE AS	
	11	1	*148-8341*	2	CONNECTOR AS	
					(EACH INCLUDES)	
		1	**3D-2824**	1	SEAL-O-RING	
		1	**6V-8713**	1	CONNECTOR	
		1	**7J-9108**	1	SEAL-O-RING	
	12	1	*150-3037*	1	ELBOW AS	
		1	**3K-0360**	1	SEAL-O-RING	
		1	**7J-9108**	1	SEAL-O-RING	
		1	**8T-2530**	1	ELBOW	
	13	1	*150-4048*	3	ELBOW AS	
					(EACH INCLUDES)	
		1	**3K-0360**	1	SEAL-O-RING	
		1	**6V-8722**	1	ELBOW	
		1	**7J-9108**	1	SEAL-O-RING	
M	14	1	**5A-3604**	3	BOLT-SOCKET HEAD (M8X1.25X25-MM)	
	15	1	**7J-9108**	4	SEAL-O-RING	
M	16	1	**8T-4192**	2	BOLT (M12X1.75X25-MM)	
M	17	1	**8T-4194**	2	BOLT (M12X1.75X50-MM)	
	18	1	**8T-4223**	4	WASHER-HARD (13.5X25.5X3-MM THK)	

I-REFER TO HYDRAULIC INFORMATION SYSTEM
M-METRIC PART
Y-SEPARATE ILLUSTRATION

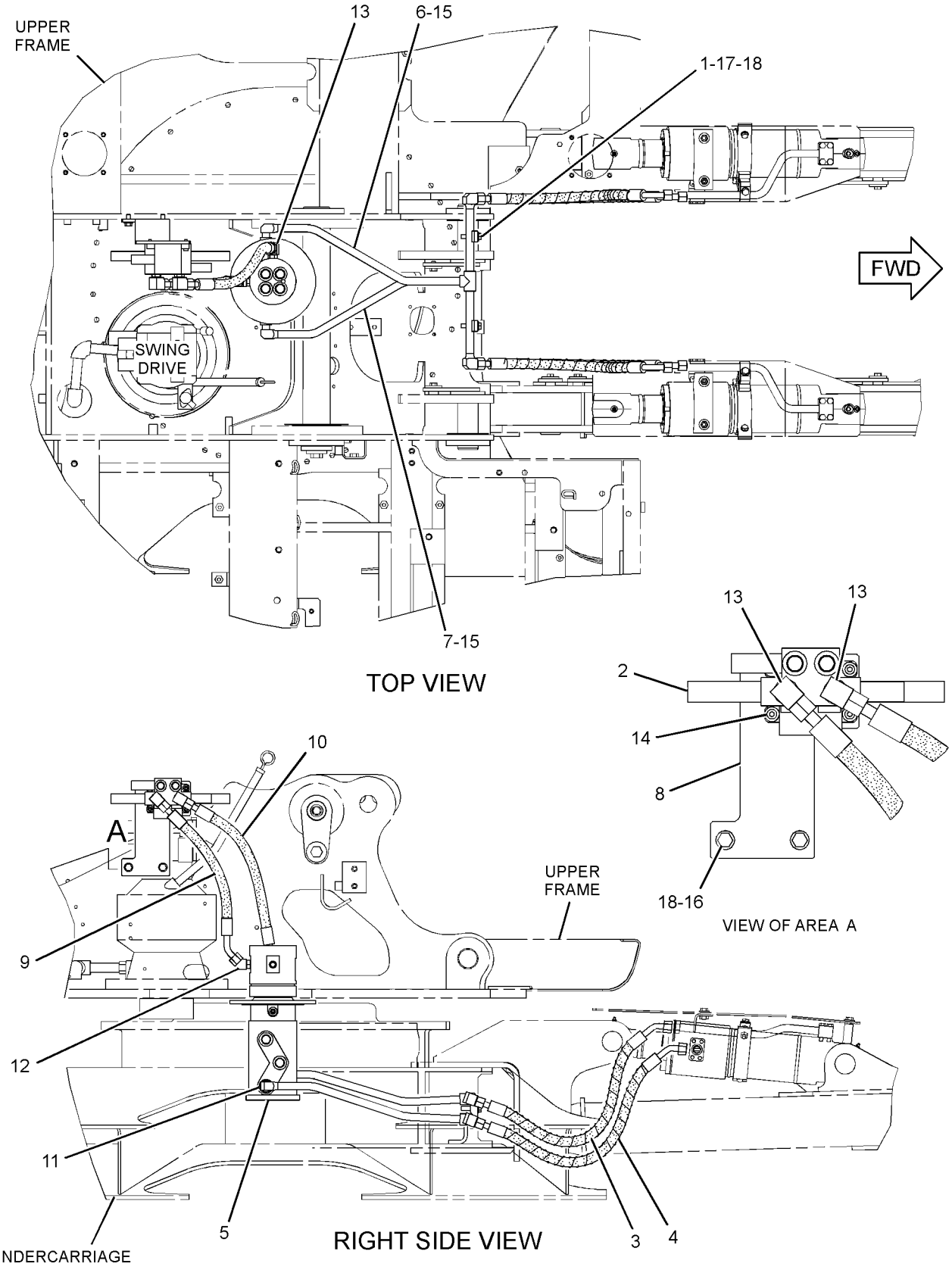

GRAPHIC #1

<END>

g01423581

282-5637 LINES GP-BOOM–REACH BOOM, STICK LOAD CONTROL

S/N: CLA1-UP

PART OF 297-0196 VALVE AR-CHECK & RELIEF

AN ATTACHMENT

SMCS-5057 **i03063815**

NOTE	REF NO	GRAPHIC REF	PART NUMBER	QTY	PART NAME 1 2 3 4 5 6 (PRODUCT LEVEL)	SEE PAGE
	1	1	**7K-1181**	3	STRAP-CABLE	
I	2	1	**184-9156**	2	HOSE AS	
	3	1	**302-9582**	1	SUPPORT AS	
	4	1	*149-5452*	2	UNION AS	
					(EACH INCLUDES)	
		1	**6V-8397**	2	SEAL-O-RING	
		1	**6V-8994**	1	UNION	
	5	1	**6V-9168**	2	NUT (11/16-16-THD)	
	6	1	**8T-4223**	2	WASHER-HARD (13.5X25.5X3-MM THK)	
M	7	1	**8T-5041**	2	BOLT (M12X1.75X120-MM)	
JM	8	1	**8T-7929**	2	BOLT (M12X1.75X180-MM)	

I-REFER TO HYDRAULIC INFORMATION SYSTEM
J-WHEN USED WITH HIGH PRESSURE AUXILIARY HYDRAULIC LINES GROUP
M-METRIC PART

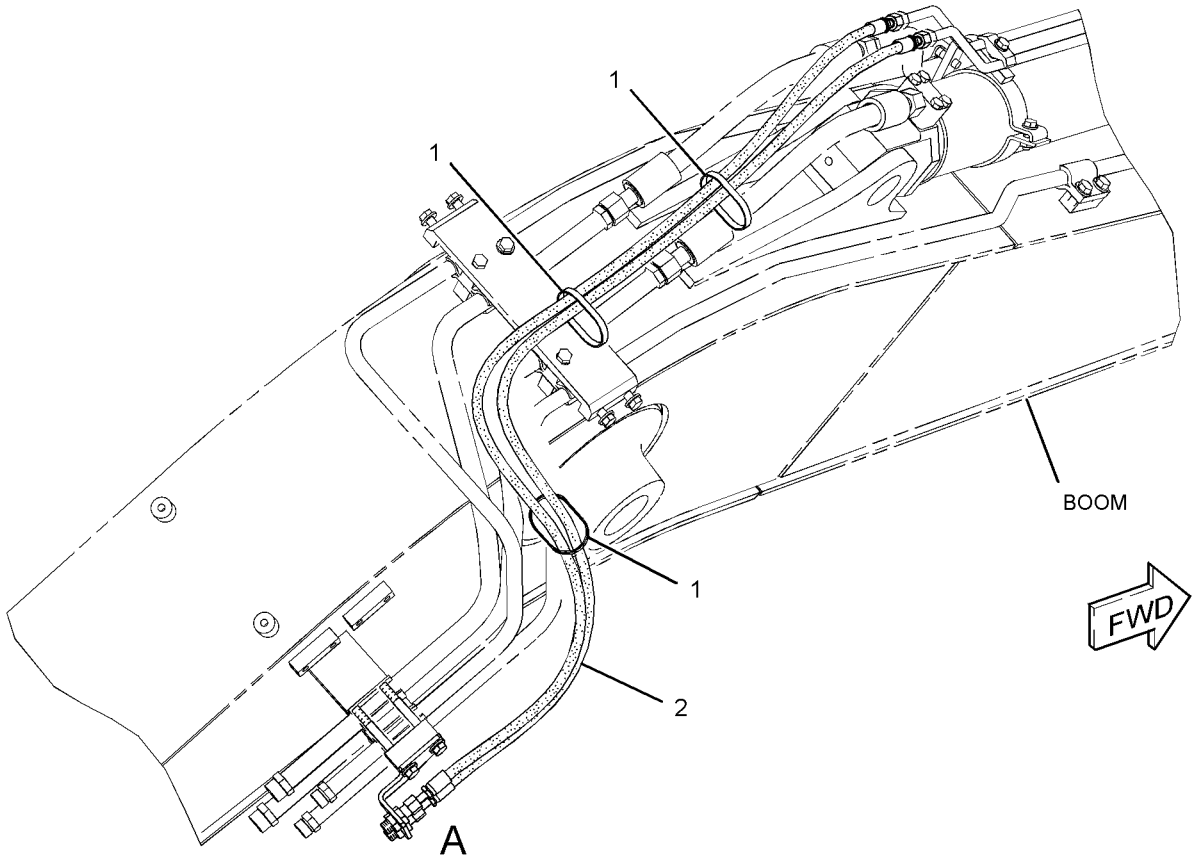

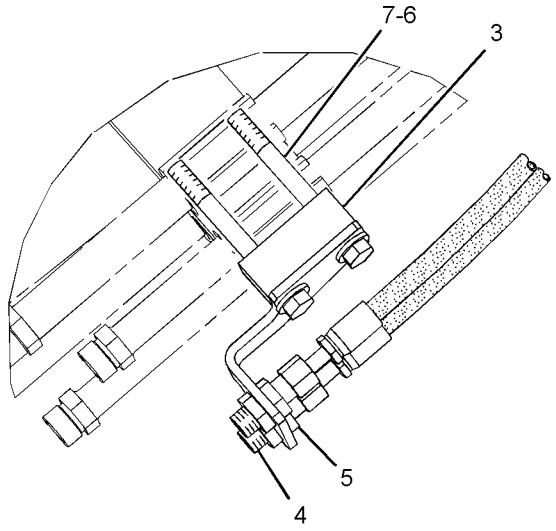

VIEW OF AREA A

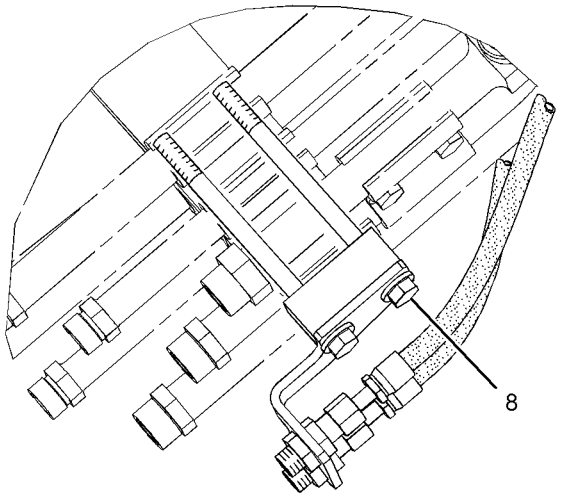

VIEW OF AREA A
(OPTIONAL DESIGN)

GRAPHIC #1 **<END>** g01623297

282-5734 LINES GP-BOOM–AUXILIARY READY

S/N: CLA1-UP

PART OF 270-6030 CONTROL AR-AUXILIARY

AN ATTACHMENT

SMCS-5057 **i02843520**

NOTE	REF NO	GRAPHIC REF	PART NUMBER	QTY	PART NAME 1 2 3 4 5 6 (PRODUCT LEVEL)	SEE PAGE
	1	1	**302-9554**	1	SUPPORT AS	
	2	1	**6V-9746**	3	SEAL-O-RING	
	3	1	**8T-4223**	2	WASHER-HARD (13.5X25.5X3-MM THK)	
M	4	1	**8T-5412**	2	BOLT (M12X1.75X140-MM)	

M-METRIC PART

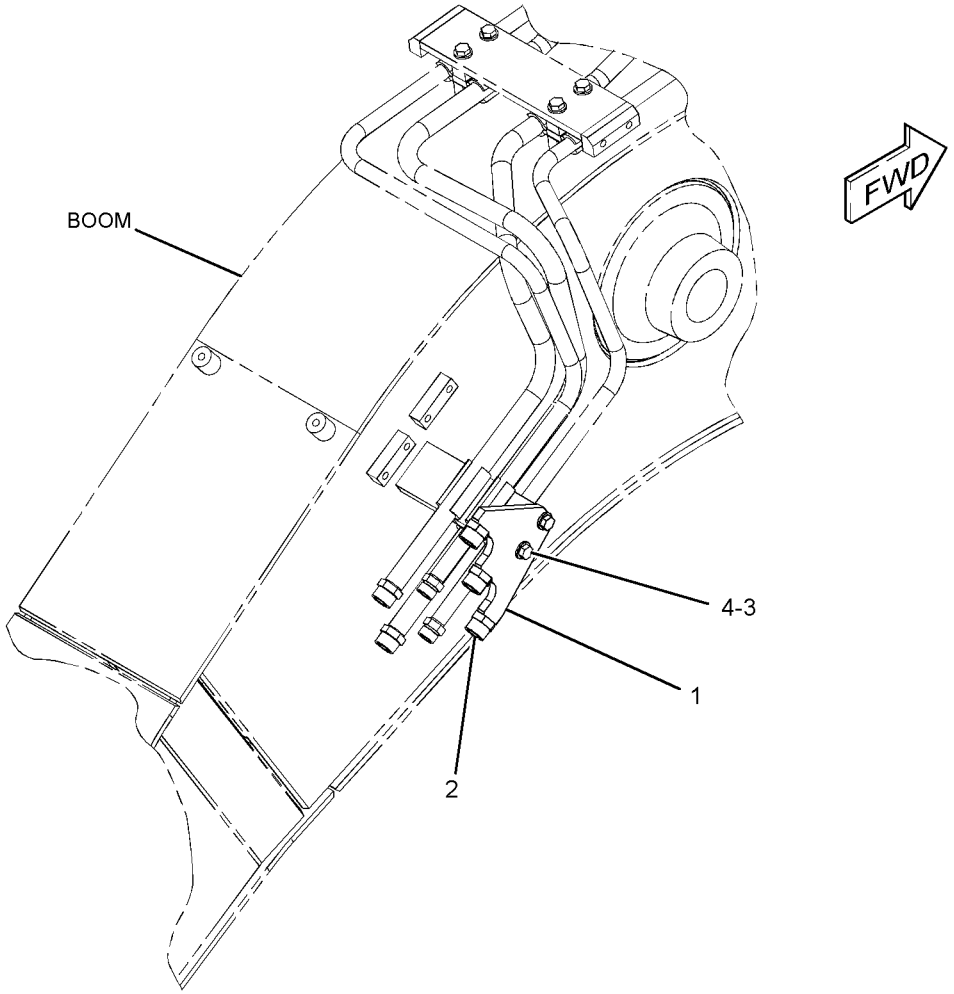

GRAPHIC #1 **<END>** g01445408

HYDRAULIC SYSTEM

282-7394 LINES GP-BOOM

S/N: CLA1-UP

PART OF 260-7236 BOOM AR, 301-2552, 301-2555, 301-2647 SPECIAL AR

AN ATTACHMENT

SMCS-5057 **i02897087**

NOTE	REF NO	GRAPHIC REF	PART NUMBER	QTY	PART NAME 1 2 3 4 5 6 (PRODUCT LEVEL)	SEE PAGE
	1	1	**4I-1674**	2	CLIP	
	2	1	**149-1738**	8	CLIP	
	4	1	**153-8867**	2	CLIP	
	5	1	**173-7895**	4	CLIP	
	6	1	**197-2150**	1	PLATE	
	8	1	**285-2776**	1	TUBE AS	
	9	1	**285-2777**	1	TUBE AS	
	10	1	**285-2778**	1	TUBE AS	
	11	1	**285-2779**	1	TUBE AS	
I	12	1	**286-6410**	2	HOSE AS	
	13	1	**6V-9746**	5	SEAL-O-RING	
	14	1	**7J-9108**	3	SEAL-O-RING	
M	15	1	**8T-4139**	12	BOLT (M12X1.75X30-MM)	
	16	1	**8T-4223**	14	WASHER-HARD (13.5X25.5X3-MM THK)	
M	18	1	**8T-6868**	2	BOLT (M12X1.75X80-MM)	

I-REFER TO HYDRAULIC INFORMATION SYSTEM
M-METRIC PART

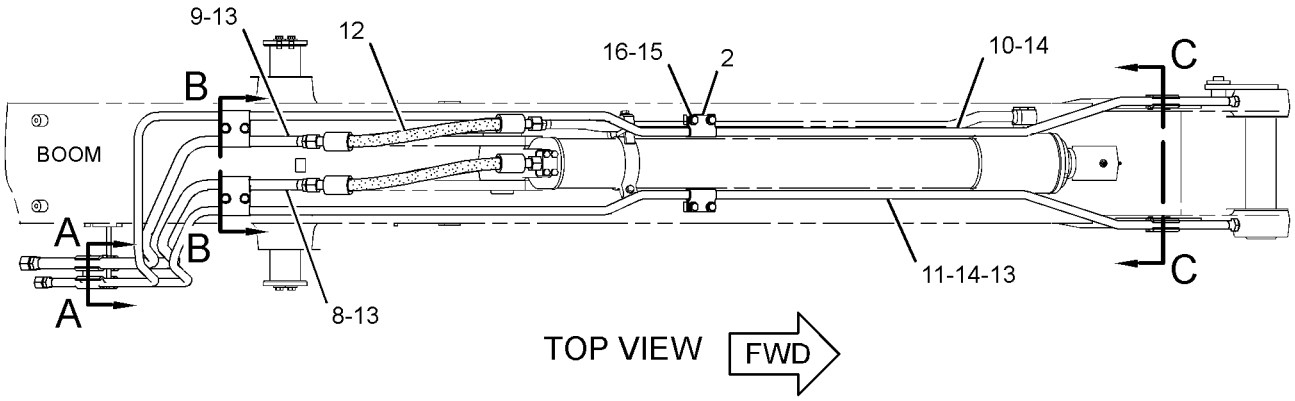

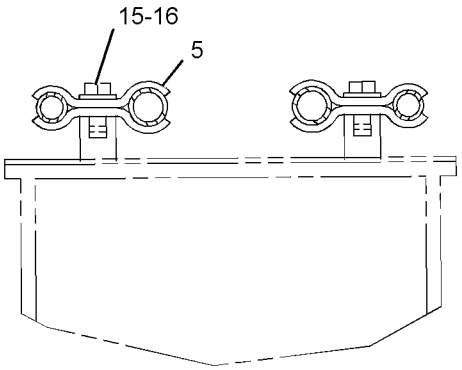

SECTION B-B

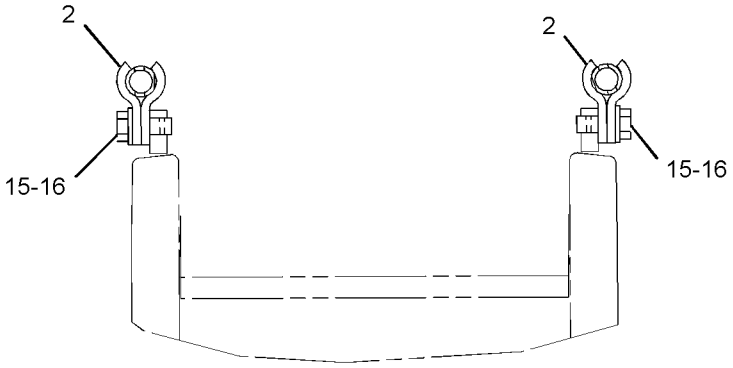

SECTION C-C

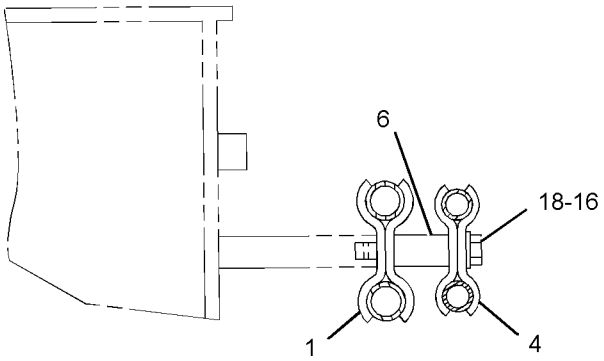

SECTION A-A

GRAPHIC #1 **<END>** g01453628

292-7637 LINES GP-BOOM—WITHOUT AUXILIARY

S/N: CLA1-UP
PART OF 283-9062 BOOM AR-1 PIECE LONG
AN ATTACHMENT

SMCS-5057 **i02795535**

NOTE	REF NO	GRAPHIC REF	PART NUMBER	QTY	PART NAME 1 2 3 4 5 6 (PRODUCT LEVEL)	SEE PAGE
	1	1	**4I-1674**	2	CLIP	
	2	1	**149-1738**	8	CLIP	
	3	1	**153-8867**	2	CLIP	
	4	1	**173-7895**	4	CLIP	
	5	1	**197-2150**	1	PLATE	
	6	1	**285-2776**	1	TUBE AS	
	7	1	**285-2777**	1	TUBE AS	
	8	1	**285-2778**	1	TUBE AS	
	9	1	**285-2779**	1	TUBE AS	
I	10	1	**286-6410**	2	HOSE AS	
	11	1	**6V-9746**	5	SEAL-O-RING	
	12	1	**7J-9108**	3	SEAL-O-RING	
M	13	1	**8T-4139**	12	BOLT (M12X1.75X30-MM)	
	14	1	**8T-4223**	14	WASHER-HARD (13.5X25.5X3-MM THK)	
M	15	1	**8T-6868**	2	BOLT (M12X1.75X80-MM)	

I-REFER TO HYDRAULIC INFORMATION SYSTEM
M-METRIC PART

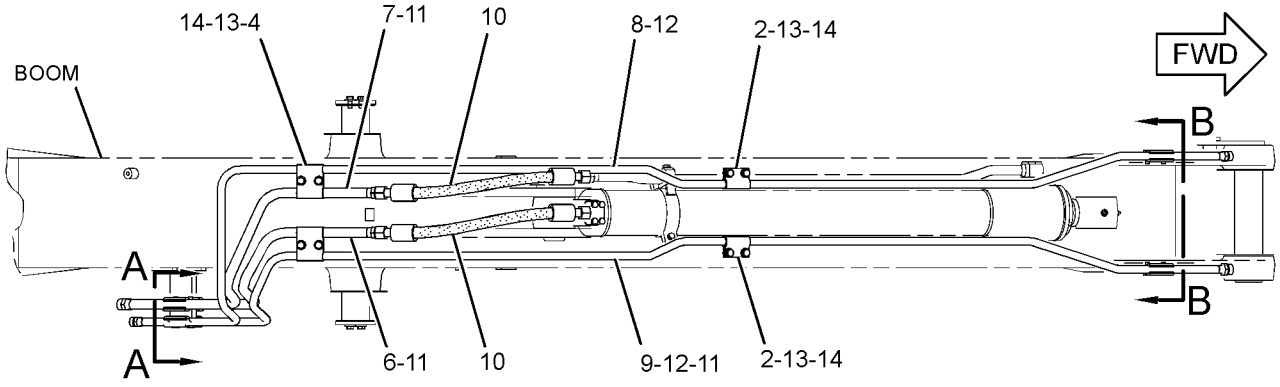

TOP VIEW

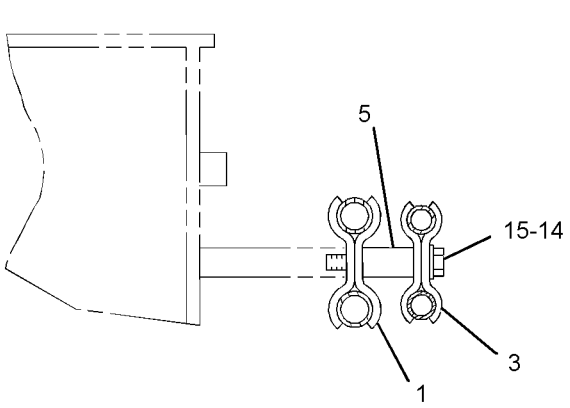

SECTION A-A

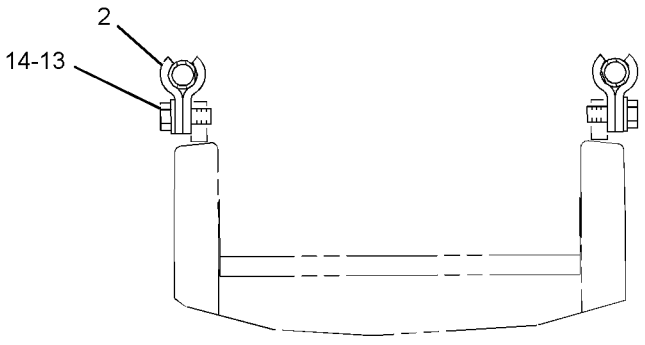

SECTION B-B

GRAPHIC #1 **<END>** g01400395

HYDRAULIC SYSTEM

282-7385 LINES GP-BOOM CYLINDER

S/N: CLA1-UP

PART OF 270-5992 HYDRAULIC AR

SMCS-5057, 5456 **i02988379**

NOTE	REF NO	GRAPHIC REF	PART NUMBER	QTY	PART NAME 1 2 3 4 5 6 (PRODUCT LEVEL)	SEE PAGE
	1	2	**5P-5148**	4	STRAP-TIE	
	2	2	**093-1296**	1	CLAMP	
	3	2	**099-5408**	1	CLAMP	
	4	2	*106-8715*	2	ELBOW AS	
					(EACH INCLUDES)	
		2	**3D-2824**	1	SEAL-O-RING	
		2	**6V-9746**	1	SEAL-O-RING	
		2	**8C-8400**	1	ELBOW	
I	5	2	**123-2636**	4	HOSE AS	
M	6	1,2	**135-8573**	3	BOLT AS (M12X1.75X25-MM)	
	7	1	*164-6874*	1	FITTING AS-ELBOW	
		1	**3J-1907**	1	SEAL-O-RING	
		1	**085-7356**	1	FITTING	
	8	1	**184-9315**	1	TUBE AS	
	9	1	**184-9317**	1	TUBE AS	
	10	1	**184-9592**	1	GROMMET	
	11	2	**199-1986**	2	GUARD	
	12	2	**223-7074**	1	BUSHING-FLANGE	
	13	2	**266-7940**	1	ROD AS	
		2	**225-4539**	1	WASHER-SPECIAL	
	14	2	**266-7941**	1	BRACKET AS	
	15	2	*268-5145*	1	ELBOW AS	
		2	**3D-2824**	1	SEAL-O-RING	
		2	**6V-9746**	1	SEAL-O-RING	
		2	**194-9041**	1	ELBOW	
I	17	2	**282-7525**	1	HOSE AS	
	18	1	**285-2721**	1	GROMMET	
	19	2	**285-2722**	1	GROMMET	
	20	2	**285-2723**	1	CHANNEL AS	
	21	2	**285-2727**	1	SUPPORT AS	
	22	2	**285-2728**	1	SUPPORT AS	
	23	2	**285-2798**	1	SPACER	
	24	2	**285-2799**	1	SPACER	
	25	2	**292-7548**	2	SPACER	
	26	1	*317-4859*	2	ELBOW AS	
					(EACH INCLUDES)	
		1	**3D-2824**	1	SEAL-O-RING	
		1	**7J-9108**	1	SEAL-O-RING	
		1	**195-0037**	1	ELBOW	
	27	1	**319-9751**	1	PLATE AS	
M		1	**8T-3612**	1	NUT-WELD (M8X1.25-THD)	
	28	2	**319-9987**	1	GROMMET	
	29	1,2	*148-8347*	2	ELBOW AS	
					(EACH INCLUDES)	
		1,2	**3D-2824**	1	SEAL-O-RING	
		1,2	**6V-9007**	1	ELBOW	
		1,2	**6V-9746**	1	SEAL-O-RING	
	30	1	*148-8365*	1	ELBOW AS	
		1	**3J-1907**	1	SEAL-O-RING	
		1	**6V-8398**	1	SEAL-O-RING	
		1	**8T-6876**	1	ELBOW (90-DEG)	
	31	2	*148-8378*	1	ELBOW AS	
		2	**3J-1907**	1	SEAL-O-RING	
		2	**6V-8397**	1	SEAL-O-RING	
		2	**6V-8724**	1	ELBOW	
	32	2	*148-8428*	1	TEE AS	

282-7385 **LINES GP-BOOM CYLINDER** *(contd.)* **i02988379**

NOTE	REF NO	GRAPHIC REF	PART NUMBER	QTY	PART NAME 1 2 3 4 5 6 (PRODUCT LEVEL)	SEE PAGE
		2	**3K-0360**	1	SEAL-O-RING	
		2	**6V-8398**	2	SEAL-O-RING	
		2	**6V-8782**	1	TEE	
	33	2	*164-7908*	1	ELBOW AS	
		2	**3J-7354**	1	SEAL-O-RING	
		2	**6V-8397**	1	SEAL-O-RING	
		2	**8T-7546**	1	ELBOW	
	34	1	**7J-9108**	4	SEAL-O-RING	
M	35	2	**8T-4183**	2	BOLT (M12X1.75X40-MM)	
M	36	2	**8T-4192**	4	BOLT (M12X1.75X25-MM)	
	37	2	**8T-4223**	10	WASHER-HARD (13.5X25.5X3-MM THK)	
M	38	2	**8T-4648**	1	BOLT (M12X1.75X70-MM)	
M	39	2	**8T-4910**	1	BOLT (M12X1.75X60-MM)	
M	40	2	**8T-4956**	2	BOLT (M12X1.75X35-MM)	

I-REFER TO HYDRAULIC INFORMATION SYSTEM
M-METRIC PART

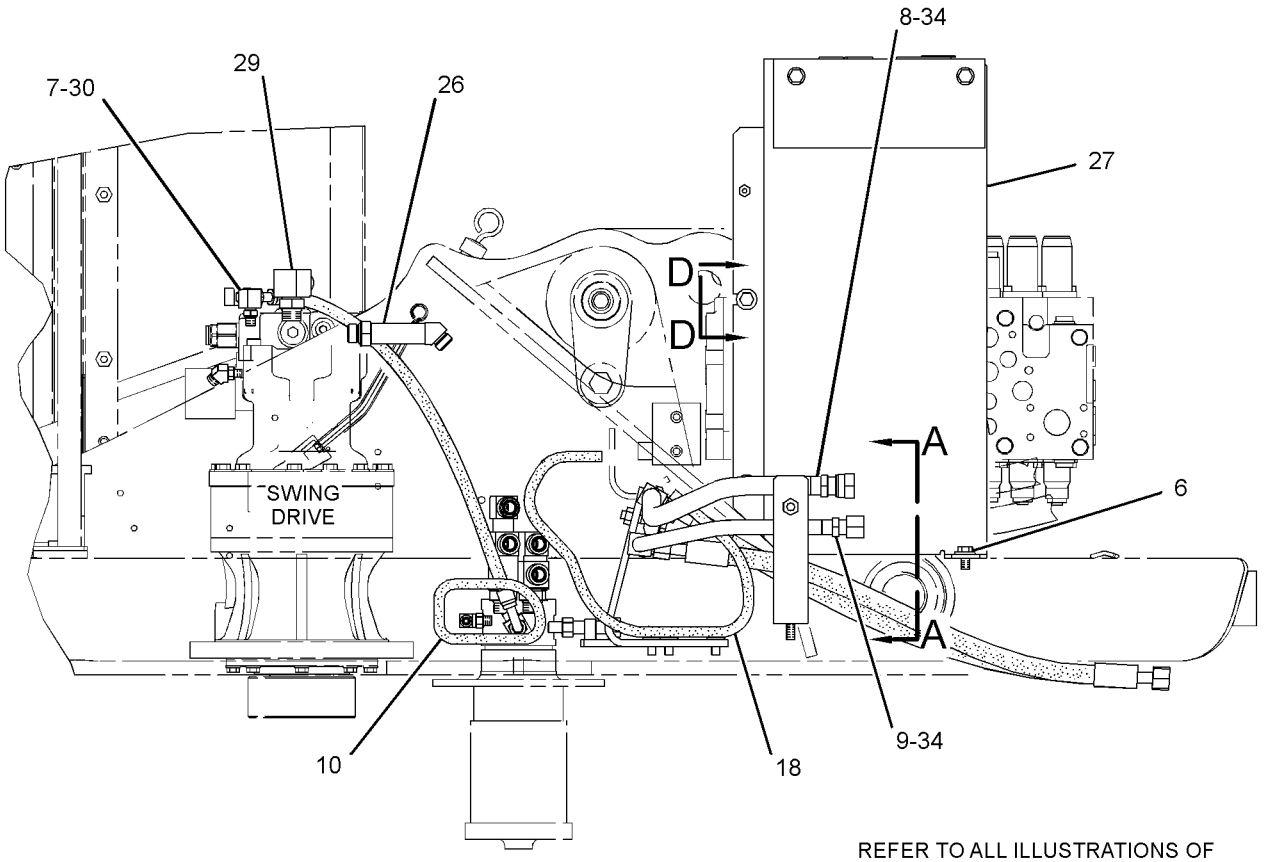

REFER TO ALL ILLUSTRATIONS OF THIS GROUP FOR AUXILIARY VIEWS

RIGHT SIDE VIEW

GRAPHIC #1

g01452669

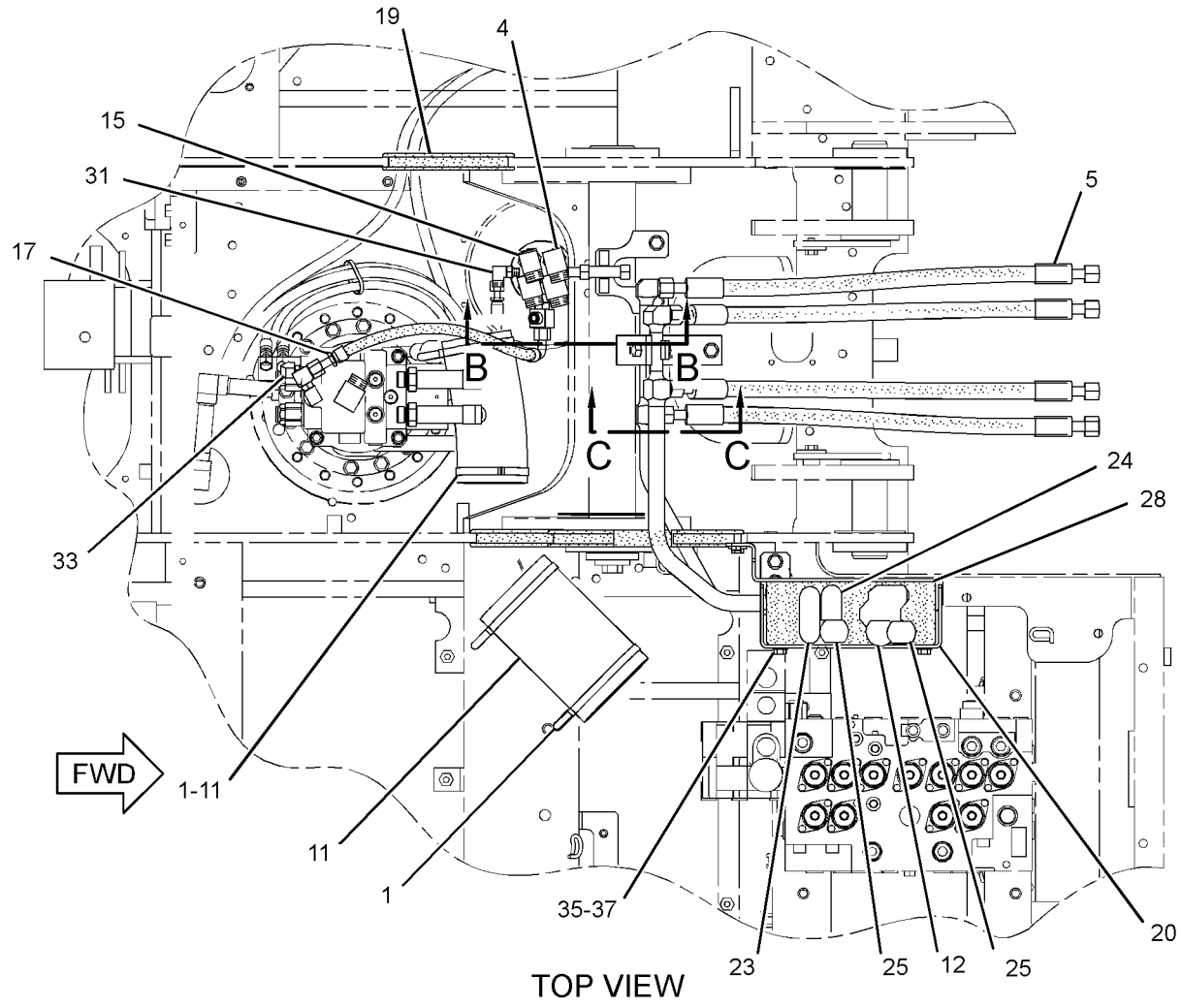

TOP VIEW

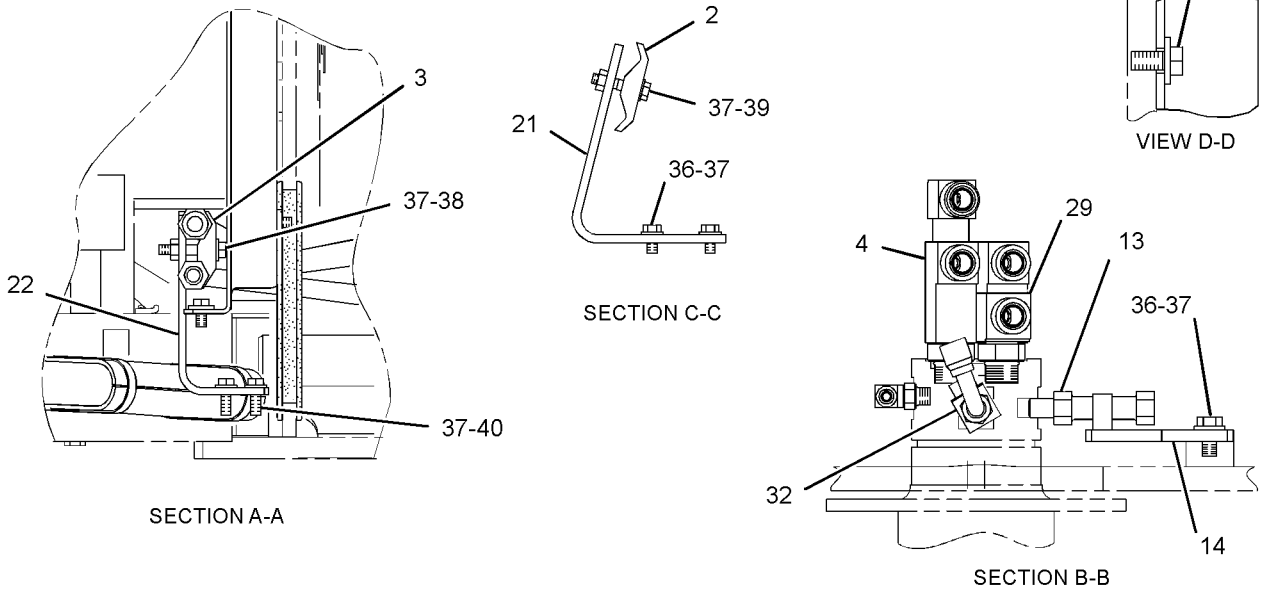

VIEW D-D

SECTION C-C

SECTION A-A

SECTION B-B

GRAPHIC #2 **<END>** g01568494

HYDRAULIC SYSTEM

282-7453 LINES GP-BOOM CYLINDER—BOOM LOWERING CONTROL

S/N: CLA1-UP

PART OF 297-0195, 323-7792 VALVE AR-LOAD CONTROL

AN ATTACHMENT

SMCS-5057, 5456 **i02953932**

NOTE	REF NO	GRAPHIC REF	PART NUMBER	QTY	PART NAME 1 2 3 4 5 6 (PRODUCT LEVEL)	SEE PAGE
	1	1	**7K-1181**	4	STRAP-CABLE	
	2	1	**121-6223**	2	SUPPORT AS	
	3	1	**123-2710**	1	SUPPORT AS	
	4	1	*164-5546*	1	TEE AS	
		1	**3E-7410**	1	TEE-O-RING	
		1	**3J-1907**	1	SEAL-O-RING	
	5	1	**203-5695**	1	TUBE AS	
	6	1	**203-5696**	1	TUBE AS	
	7	1	**207-3852**	1	TUBE AS	
	8	1	**221-8859**	1	SENSOR AS-PRESSURE (1-PUMP/2-PUMP, 1-WAY FLOW)	
		1	**171-0596**	1	RECEPTACLE AS	
		1	**3E-3371**	1	WEDGE-RECEPTACLE LOCK (3-PIN)	
		1	**3K-0360**	1	SEAL-O-RING	
		1	**144-1636**	3	PIN-CONNECTOR (14-GA TO 18-GA)	
Y	9	1	**285-1815**	1	VALVE GP-LOAD CONTROL (BOOM, LH)	599
Y	10	1	**285-1816**	1	VALVE GP-LOAD CONTROL (BOOM, RH)	601
	11	1	**296-7184**	1	SUPPORT AS	
	12	1	**296-7186**	2	HOSE AS	
	13	1	**296-7187**	2	HOSE AS	
I	14	1	**269-9990**	1	HOSE AS	
	15	1	**296-7195**	1	TUBE AS	
	16	1	*148-8307*	1	ADAPTER AS	
		1	**3J-1907**	1	SEAL-O-RING	
		1	**5P-8874**	1	ADAPTER	
	18	1	*148-8353*	2	ELBOW AS	
					(EACH INCLUDES)	
		1	**3J-1907**	1	SEAL-O-RING	
		1	**6V-8397**	1	SEAL-O-RING	
		1	**6V-9001**	1	ELBOW	
	19	1	*148-8378*	4	ELBOW AS	
					(EACH INCLUDES)	
		1	**3J-1907**	1	SEAL-O-RING	
		1	**6V-8397**	1	SEAL-O-RING	
		1	**6V-8724**	1	ELBOW	
	20	1	*148-8382*	2	ELBOW AS	
					(EACH INCLUDES)	
		1	**3D-2824**	1	SEAL-O-RING	
		1	**7J-9108**	1	SEAL-O-RING	
		1	**8T-0404**	1	ELBOW	
	21	1	*148-8407*	2	PLUG AS	
					(EACH INCLUDES)	
		1	**3J-1907**	1	SEAL-O-RING	
		1	**9S-4191**	1	PLUG-O-RING	
	22	1	*153-6246*	2	TEE AS	
					(EACH INCLUDES)	
		1	**6V-8397**	3	SEAL-O-RING	
		1	**7X-0820**	1	TEE-UNION	
M	23	1	**280-2747**	8	BOLT-SOCKET HEAD (M10X1.5X60-MM)	
	24	1	**4J-5267**	4	SEAL-O-RING	
	25	1	**6V-9168**	2	NUT (11/16-16-THD)	
	26	1	**7J-9108**	4	SEAL-O-RING	
	27	1	**8T-4121**	12	WASHER-HARD (11X21X2.5-MM THK)	
M	28	1	**8T-4182**	8	BOLT (M10X1.5X45-MM)	
M	29	1	**8T-4195**	8	BOLT (M10X1.5X30-MM)	
M	30	1	**8T-4196**	4	BOLT (M10X1.5X35-MM)	

282-7453 **LINES GP-BOOM CYLINDER** *(contd.)* **i02953932**

I-REFER TO HYDRAULIC INFORMATION SYSTEM
M-METRIC PART
Y-SEPARATE ILLUSTRATION

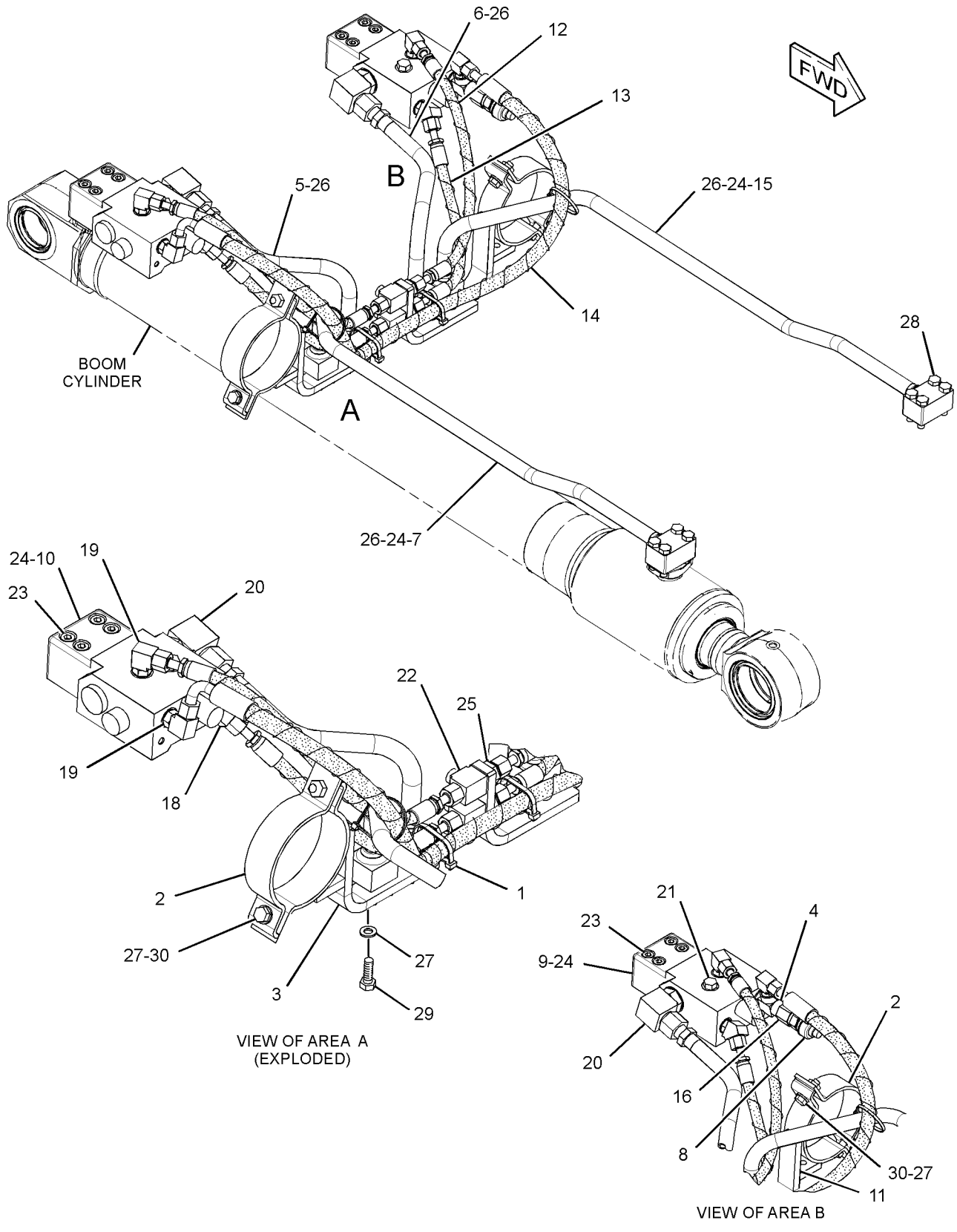

GRAPHIC #1 **<END>** g01603173

HYDRAULIC SYSTEM

296-7325 LINES GP-BOOM CYLINDER–LH

S/N: CLA1-UP

PART OF 283-6173 CYLINDER & LINES GP-BOOM

AN ATTACHMENT

SMCS-5057, 5456 **i02795756**

NOTE	REF NO	GRAPHIC REF	PART NUMBER	QTY	PART NAME 1 2 3 4 5 6 (PRODUCT LEVEL)	SEE PAGE
	1	1	**121-6223**	1	SUPPORT AS	
	2	1	**123-2710**	1	SUPPORT AS	
	3	1	**179-7591**	1	TUBE AS	
	4	1	**296-7195**	1	TUBE AS	
	5	1	**4J-5267**	2	SEAL-O-RING	
	6	1	**7J-9108**	2	SEAL-O-RING	
	7	1	**8T-4121**	6	WASHER-HARD (11X21X2.5-MM THK)	
M	8	1	**8T-4182**	8	BOLT (M10X1.5X45-MM)	
M	9	1	**8T-4195**	4	BOLT (M10X1.5X30-MM)	
M	10	1	**8T-4196**	2	BOLT (M10X1.5X35-MM)	

M-METRIC PART

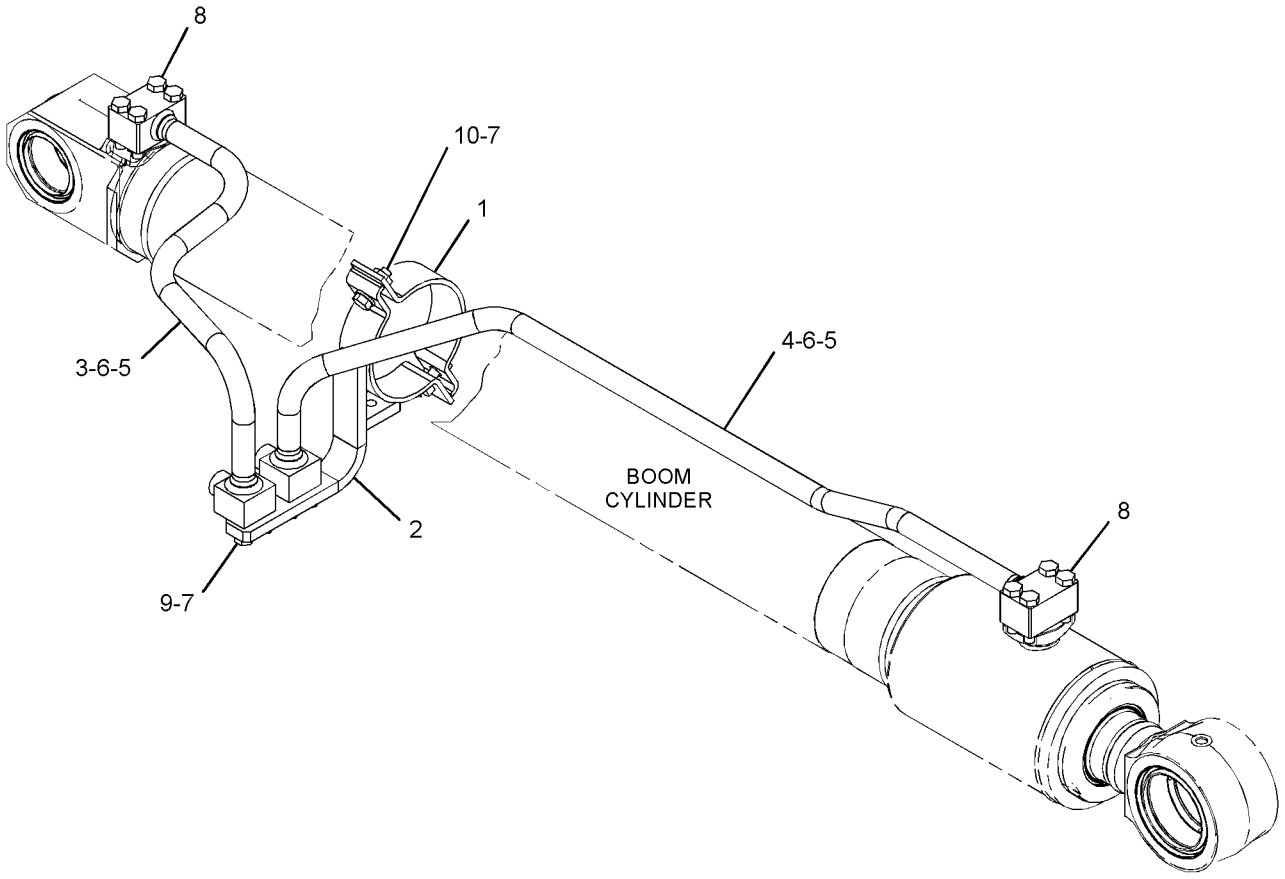

GRAPHIC #1 **<END>** g01399979

296-7326 LINES GP-BOOM CYLINDER–RH

S/N: CLA1-UP

PART OF 283-6174 CYLINDER & LINES GP-BOOM

AN ATTACHMENT

SMCS-5057, 5456 **i02795764**

NOTE	REF NO	GRAPHIC REF	PART NUMBER	QTY	PART NAME 1 2 3 4 5 6 (PRODUCT LEVEL)	SEE PAGE
	1	1	**121-6223**	1	SUPPORT AS	
	2	1	**123-2710**	1	SUPPORT AS	
	3	1	**179-7594**	1	TUBE AS	
	4	1	**207-3852**	1	TUBE AS	
	5	1	**4J-5267**	2	SEAL-O-RING	
	6	1	**7J-9108**	2	SEAL-O-RING	
	7	1	**8T-4121**	6	WASHER-HARD (11X21X2.5-MM THK)	
M	8	1	**8T-4182**	8	BOLT (M10X1.5X45-MM)	
M	9	1	**8T-4195**	4	BOLT (M10X1.5X30-MM)	
M	10	1	**8T-4196**	2	BOLT (M10X1.5X35-MM)	

M-METRIC PART

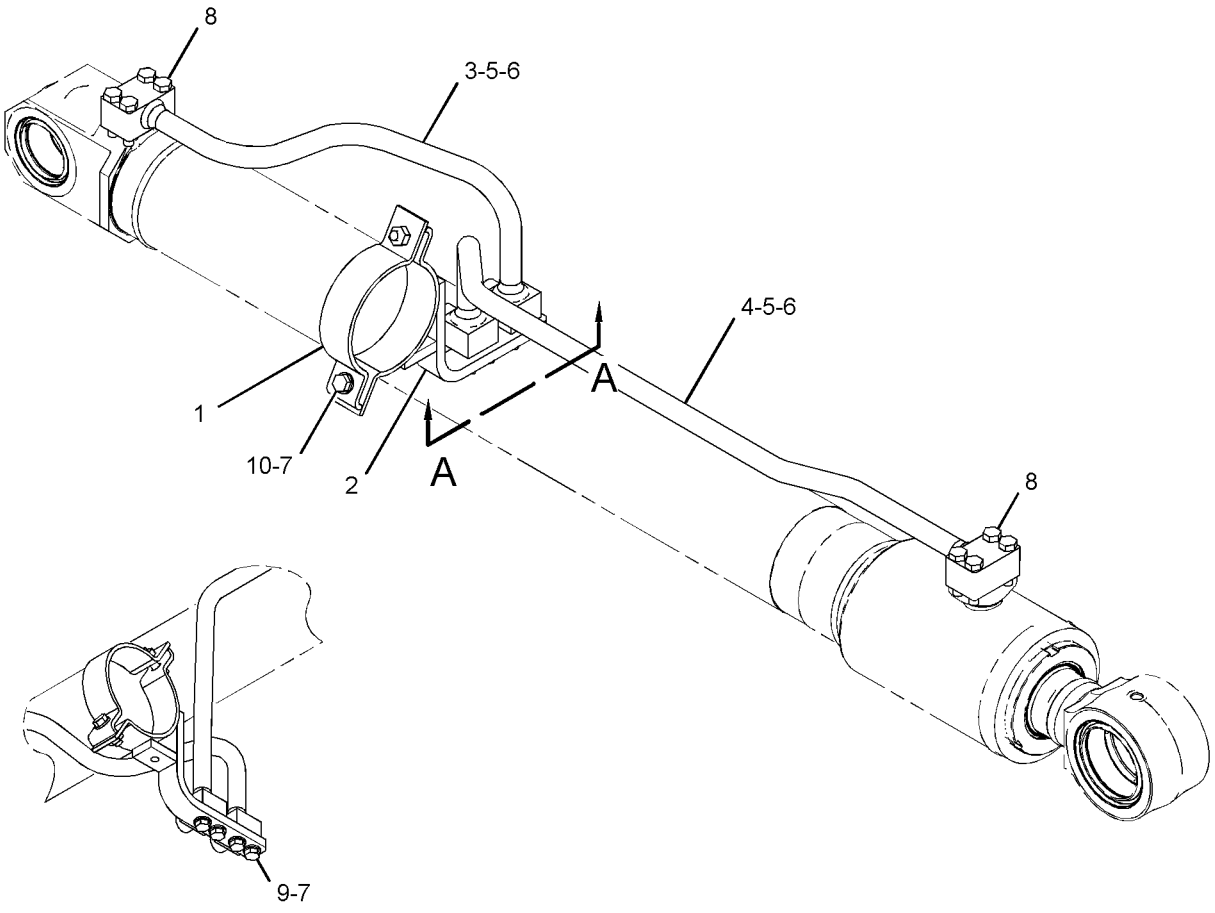

SECTION A-A

GRAPHIC #1 **<END>** g01400093

HYDRAULIC SYSTEM

179-7598 LINES GP-BUCKET CYLINDER

S/N: CLA1-UP

PART OF 289-7697, 310-1789 CYLINDER & LINES GP-BUCKET

AN ATTACHMENT

SMCS-5457 **i01423947**

NOTE	REF NO	GRAPHIC REF	PART NUMBER	QTY	PART NAME 1 2 3 4 5 6 (PRODUCT LEVEL)	SEE PAGE
	1	1	**179-7599**	1	TUBE AS	
	2	1	**4J-5267**	1	SEAL-O-RING	
M	3	1	**8T-4182**	4	BOLT (M10X1.5X45-MM)	
	4	1	**8T-4223**	1	WASHER-HARD (13.5X25.5X3-MM THK)	
M	5	1	**8T-4194**	1	BOLT (M12X1.75X50-MM)	
	6	1	**093-1291**	1	CLAMP	
	7	1	**121-6222**	1	SUPPORT AS	
M		1	**8T-3490**	1	NUT-WELD (M10X1.5-THD)	
	8	1	**8T-4121**	2	WASHER-HARD (11X21X2.5-MM THK)	
M	9	1	**8T-4196**	2	BOLT (M10X1.5X35-MM)	
	10	1	**121-6223**	1	SUPPORT AS	
M		1	**8T-3490**	1	NUT-WELD (M10X1.5-THD)	
	11	1	**7J-9108**	1	SEAL-O-RING	

M-METRIC PART

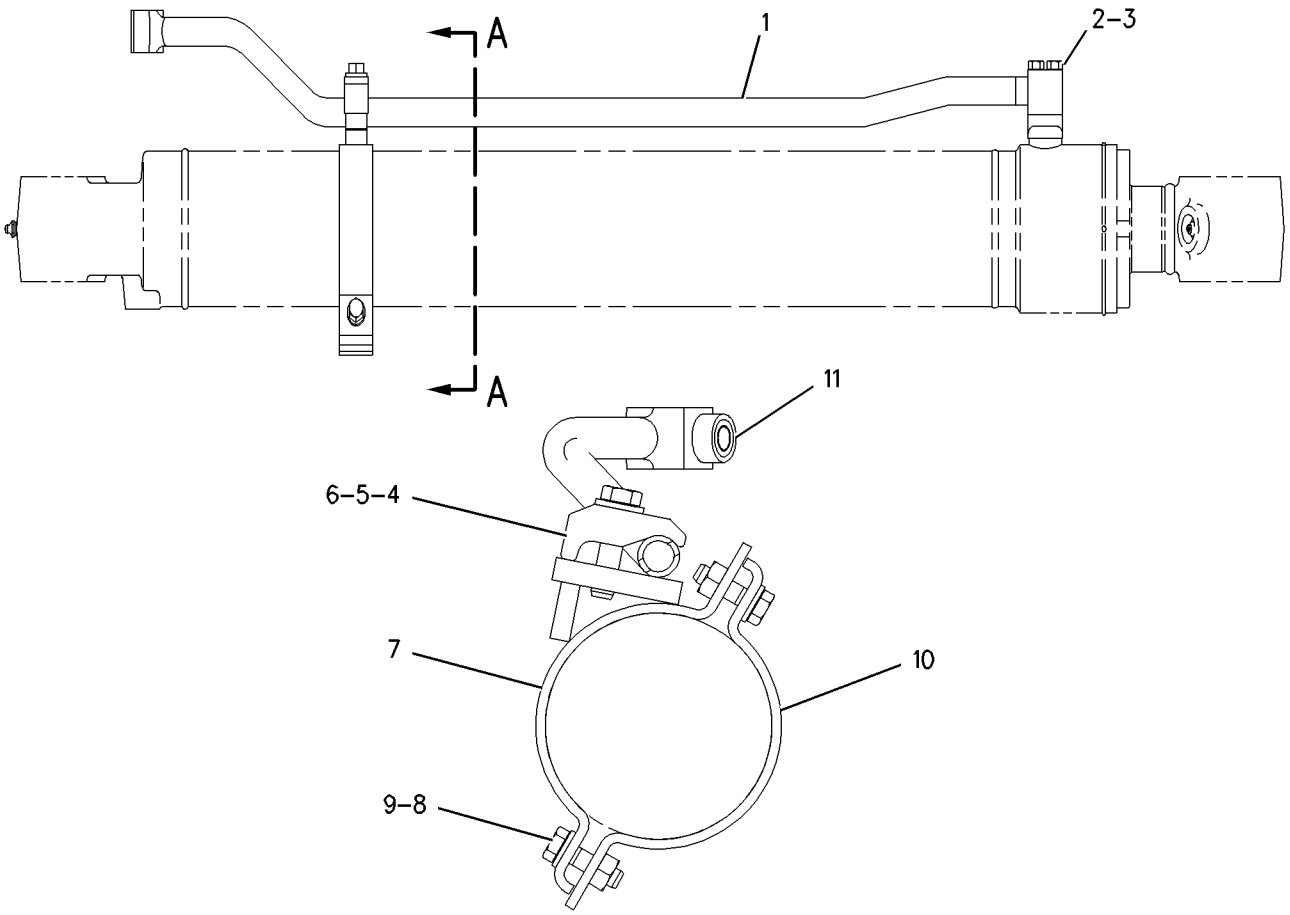

SECTION A-A

GRAPHIC #1 **<END>** g00747069

HYDRAULIC SYSTEM

282-7384 LINES GP-CONTROL—FRONT

S/N: CLA1-UP

PART OF 270-5992 HYDRAULIC AR

SMCS-5057 **i02868790**

NOTE	REF NO	GRAPHIC REF	PART NUMBER	QTY	PART NAME 1 2 3 4 5 6 (PRODUCT LEVEL)	SEE PAGE
	1	1	**7K-1181**	6	STRAP-CABLE	
	2	1	**184-9318**	1	TUBE AS	
I	3	1	**194-9043**	2	HOSE AS	
I	4	1	**202-1699**	1	HOSE AS	
	5	1	*260-9174*	2	CONNECTOR AS	
					(EACH INCLUDES)	
		1	**3D-2824**	1	SEAL-O-RING	
		1	**7J-9108**	1	SEAL-O-RING	
		1	**109-5815**	1	CONNECTOR	
	6	1	**285-2749**	1	TUBE AS	
I	7	1	**285-2751**	1	HOSE AS	
I	8	1	**285-2755**	1	HOSE AS	
I	9	1	**285-2759**	1	HOSE AS	
I	10	1	**285-2762**	1	HOSE AS	
I	11	1	**285-2795**	1	HOSE AS	
	12	1	*286-6499*	3	CONNECTOR AS	
					(EACH INCLUDES)	
		1	**6V-9746**	1	SEAL-O-RING	
		1	**7M-8485**	1	SEAL-O-RING	
		1	**184-9330**	1	CONNECTOR	
	13	1	*286-6568*	1	CONNECTOR AS	
		1	**3D-2824**	1	SEAL-O-RING	
		1	**7J-9108**	1	SEAL-O-RING	
		1	**187-5588**	1	CONNECTOR	
I	14	1	**296-6953**	1	HOSE AS	
I	15	1	**296-6956**	2	HOSE AS	
	16	1	*148-8339*	3	CONNECTOR AS	
					(EACH INCLUDES)	
		1	**6V-8716**	1	CONNECTOR	
		1	**6V-9746**	1	SEAL-O-RING	
		1	**7M-8485**	1	SEAL-O-RING	
	17	1	*148-8341*	2	CONNECTOR AS	
					(EACH INCLUDES)	
		1	**3D-2824**	1	SEAL-O-RING	
		1	**6V-8713**	1	CONNECTOR	
		1	**7J-9108**	1	SEAL-O-RING	
	18	1	*148-8347*	1	ELBOW AS	
		1	**3D-2824**	1	SEAL-O-RING	
		1	**6V-9007**	1	ELBOW	
		1	**6V-9746**	1	SEAL-O-RING	
	19	1	*148-8360*	1	ELBOW AS	
		1	**6V-9182**	1	ELBOW	
		1	**6V-9746**	1	SEAL-O-RING	
		1	**7M-8485**	1	SEAL-O-RING	
	20	1	*164-4180*	2	PLUG AS	
					(EACH INCLUDES)	
		1	**7M-8485**	1	SEAL-O-RING	
		1	**9S-4181**	1	PLUG-O-RING	
	21	1	**6V-9746**	1	SEAL-O-RING	
	22	1	**7J-9108**	1	SEAL-O-RING	
	23	1	**9F-2167**	1	SCREW-PURGE (3/8-24X1.164-IN)	
	24		**289-5700**	1	GROMMET	

I-REFER TO HYDRAULIC INFORMATION SYSTEM

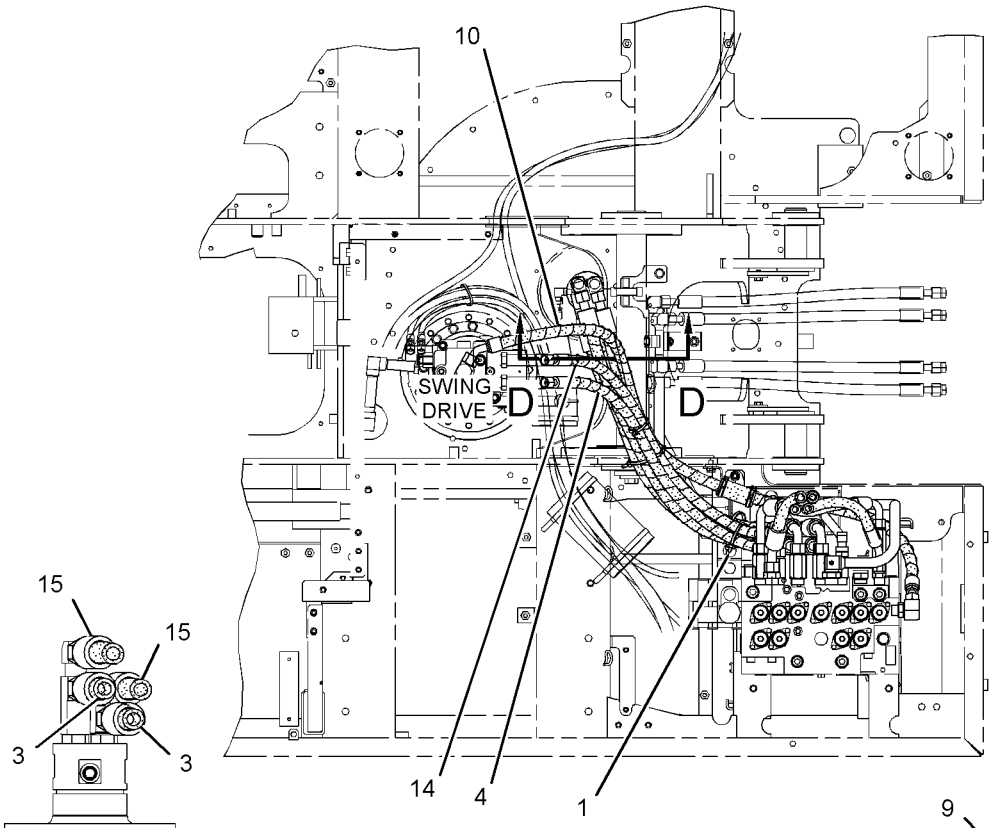

SECTION D-D

TOP VIEW

FWD

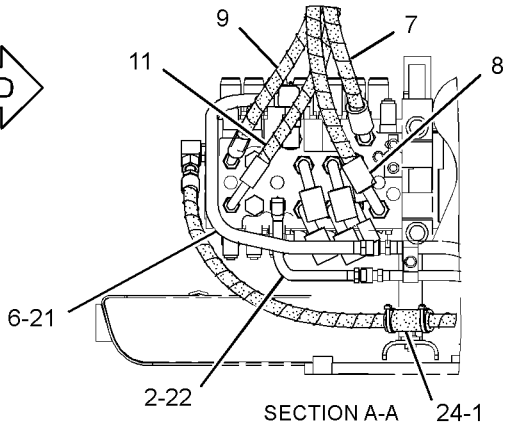

SECTION A-A

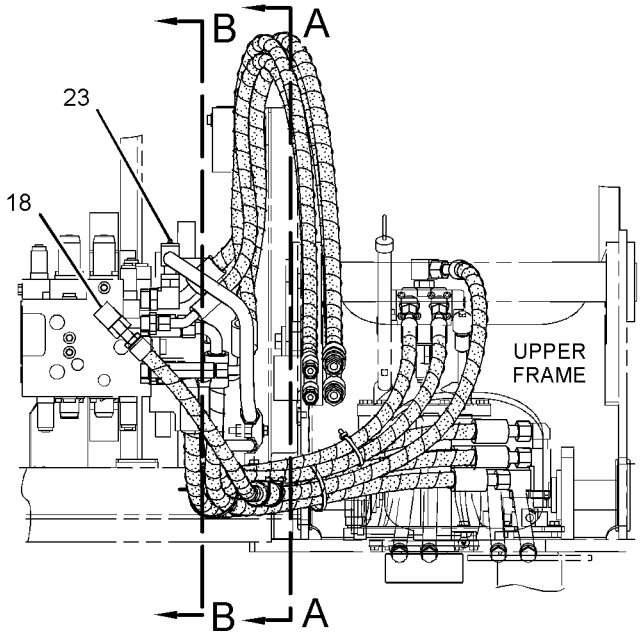

FRONT VIEW

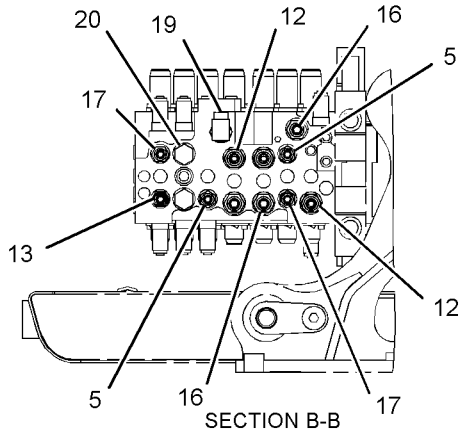

SECTION B-B

GRAPHIC #1

<END>

g01453047

282-7386 LINES GP-CONTROL–REAR

S/N: CLA1-UP

PART OF 270-5992 HYDRAULIC AR

SMCS-5057 **i02796574**

NOTE	REF NO	GRAPHIC REF	PART NUMBER	QTY	PART NAME 1 2 3 4 5 6 (PRODUCT LEVEL)	SEE PAGE
	1	1	**187-5564**	1	FLANGE	
	2	1	**229-0960**	1	HOSE AS	
	3	1	*296-7058*	1	ELBOW AS	
		1	**6V-9746**	1	SEAL-O-RING	
		1	**7M-8485**	1	SEAL-O-RING	
		1	**195-0036**	1	ELBOW	
	4	1	*148-8360*	1	ELBOW AS	
		1	**6V-9182**	1	ELBOW	
		1	**6V-9746**	1	SEAL-O-RING	
		1	**7M-8485**	1	SEAL-O-RING	
	5	1	**1P-4579**	2	FLANGE-HALF	
	6	1	**1P-4582**	2	FLANGE-HALF	
M	7	1	**280-2747**	4	BOLT-SOCKET HEAD (M10X1.5X60-MM)	
	8	1	**4J-0524**	2	SEAL-O-RING	
	9	1	**4J-0527**	1	SEAL-O-RING	
M	10	1	**8T-4183**	8	BOLT (M12X1.75X40-MM)	
	11	1	**8T-4223**	8	WASHER-HARD (13.5X25.5X3-MM THK)	

M-METRIC PART

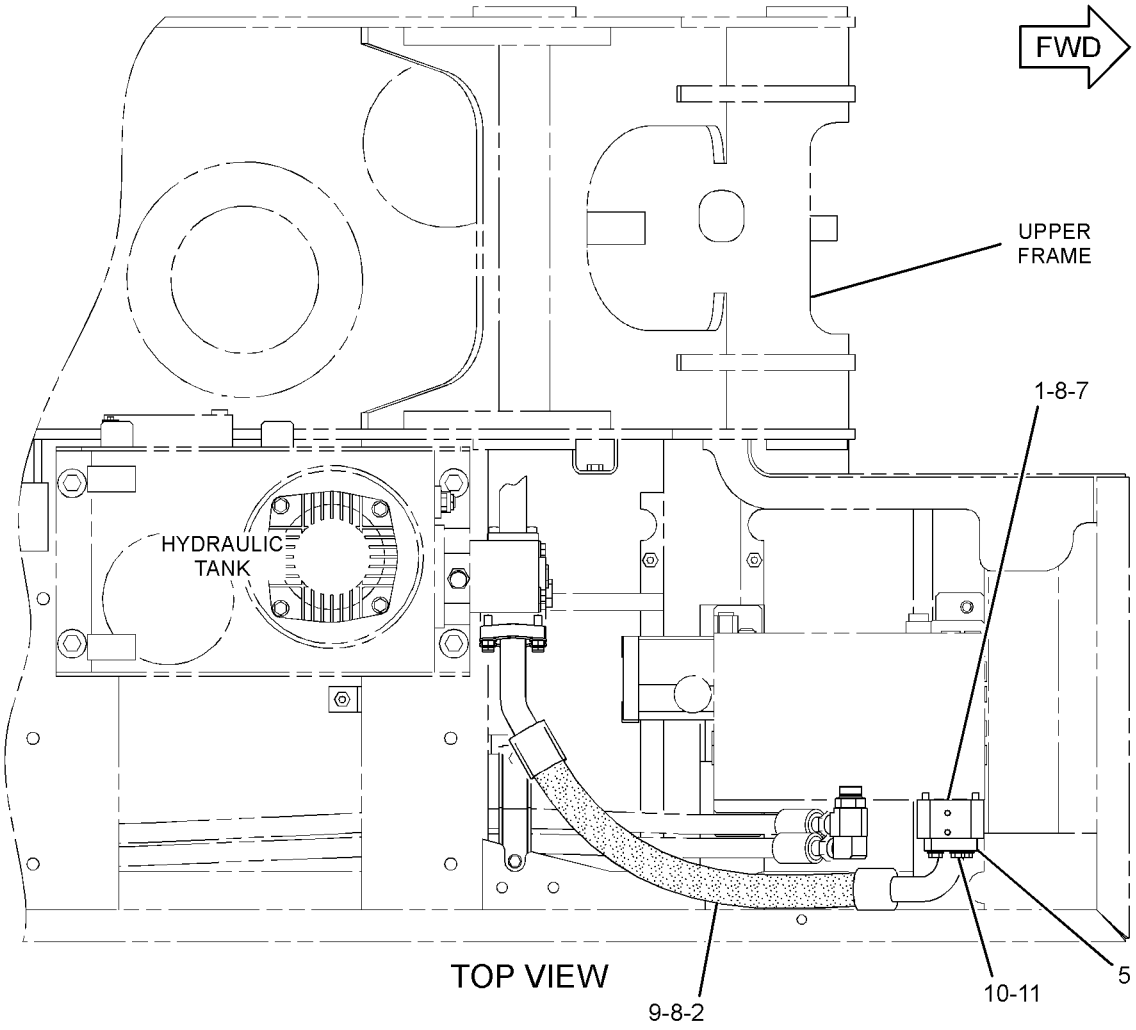

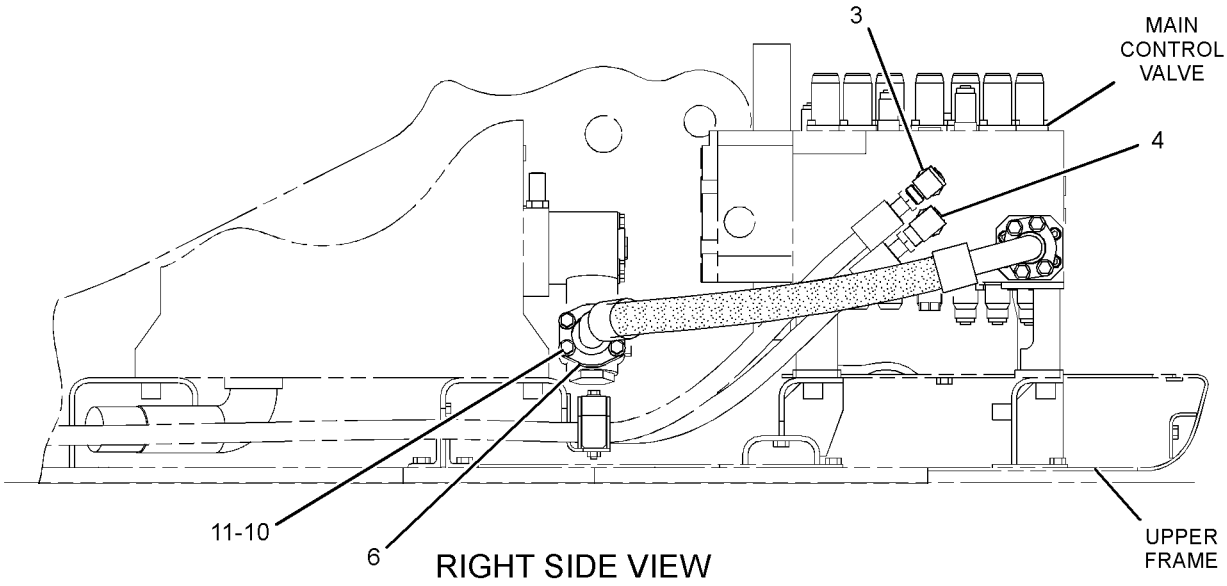

GRAPHIC #1

<END>

g01444737

HYDRAULIC SYSTEM

253-6396 LINES GP-COUPLER

S/N: CLA1-UP

PART OF 282-5536, 282-5537 COUPLER AR-QUICK

AN ATTACHMENT

SMCS-5057, 5133 **i02909661**

NOTE	REF NO	GRAPHIC REF	PART NUMBER	QTY	PART NAME 1 2 3 4 5 6 (PRODUCT LEVEL)	SEE PAGE
	1	1	**8C-6561**	1	BOLT (5/16-18X1.375-IN)	
	2	1	**6W-2464**	2	CLAMP	
Y	3	1	*236-4153*	1	COUPLER GP-QUICK	706
CI	4	1	**316-4076**	1	HOSE AS	
CI	5	1	**316-4077**	1	HOSE AS	
	6	1	**3V-0046**	1	PLATE	
	7	1	**3J-1907**	1	SEAL-O-RING	
	8	1	**3J-7354**	1	SEAL-O-RING	

C-CHANGE FROM PREVIOUS TYPE
I-REFER TO HYDRAULIC INFORMATION SYSTEM
Y-SEPARATE ILLUSTRATION

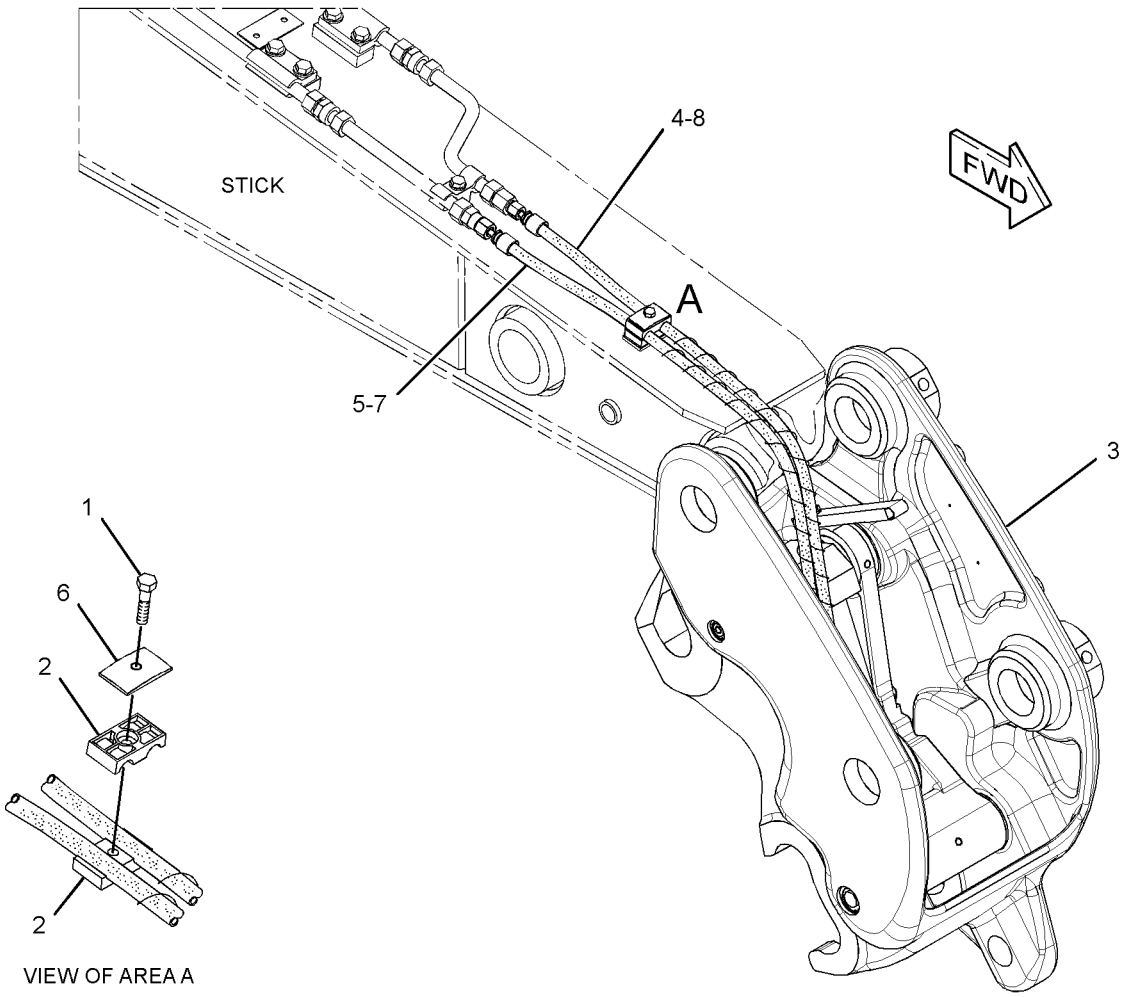

GRAPHIC #1 **<END>** g01447120

HYDRAULIC SYSTEM

277-1172 LINES GP-COUPLER

S/N: CLA1-UP
2.8-M (9.1-FT) STICK
AN ATTACHMENT

SMCS-5057, 5133 **i02820640**

NOTE	REF NO	GRAPHIC REF	PART NUMBER	QTY	PART NAME 1 2 3 4 5 6 (PRODUCT LEVEL)	SEE PAGE
	1	1	**198-0370**	2	CLIP	
I	2	1	**216-6485**	2	HOSE AS	
	3	1	**288-7698**	1	TUBE AS	
	4	1	**288-7699**	1	TUBE AS	
	5	1	*148-8415*	1	REDUCER AS	
		1	**6V-8397**	1	SEAL-O-RING	
		1	**6V-8936**	1	REDUCER	
	6	1	*148-8419*	1	REDUCER AS	
		1	**4J-5477**	1	SEAL-O-RING	
		1	**6V-8935**	1	REDUCER-O-RING	
	7	1	**5Q-4212**	8	CLIP	
	8	1	**6V-8398**	4	SEAL-O-RING	
	9	1	**8T-4121**	1	WASHER-HARD (11X21X2.5-MM THK)	
M	10	1	**8T-4139**	8	BOLT (M12X1.75X30-MM)	
M	11	1	**8T-4195**	1	BOLT (M10X1.5X30-MM)	
	12	1	**8T-4223**	8	WASHER-HARD (13.5X25.5X3-MM THK)	
	13	1	**9X-6582**	1	NUT (13/16-16-THD)	

I-REFER TO HYDRAULIC INFORMATION SYSTEM
M-METRIC PART

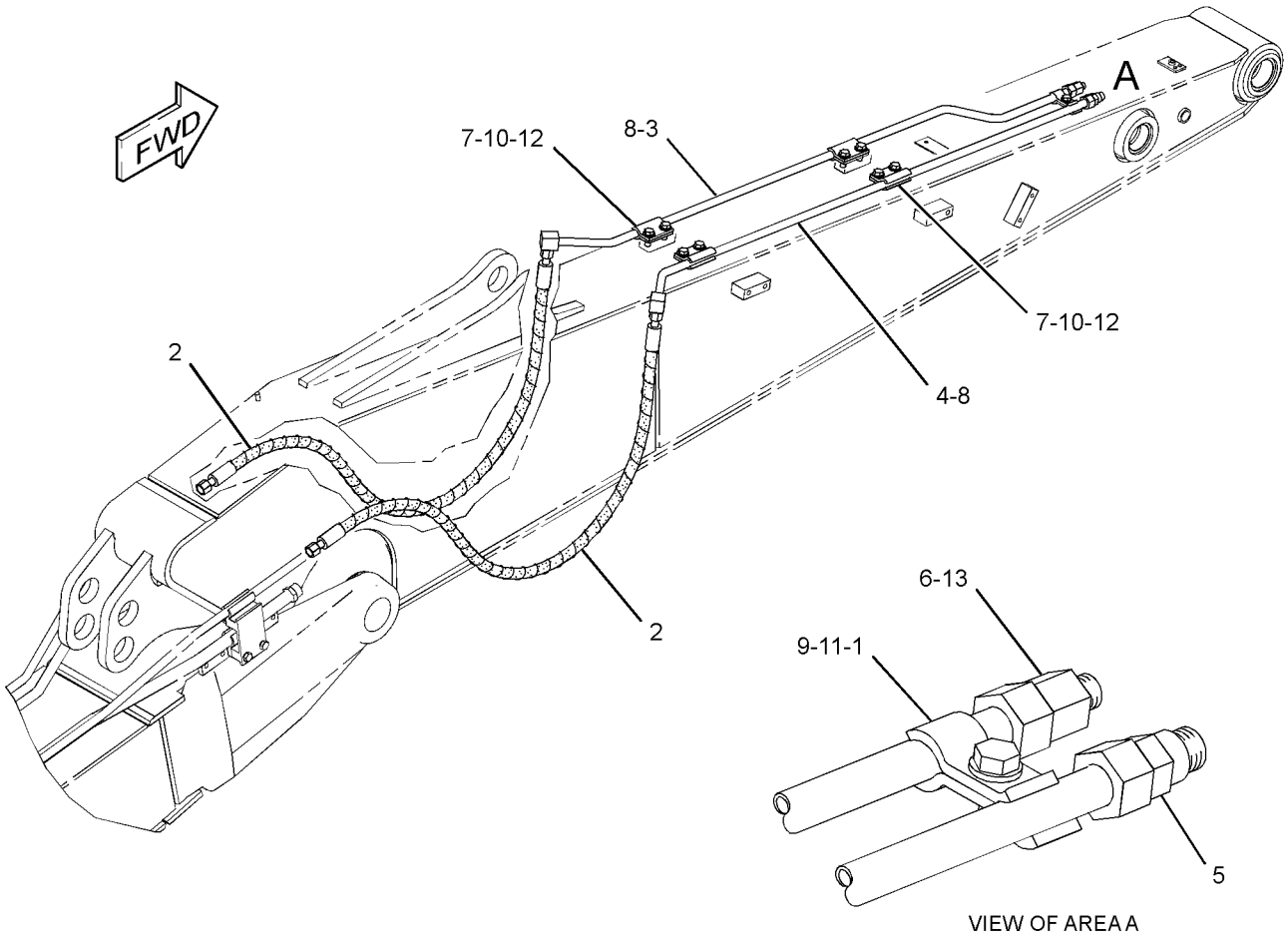

VIEW OF AREA A

GRAPHIC #1 **<END>** g01415079

282-5629 LINES GP-COUPLER—REACH BOOM

S/N: CLA1-UP
PART OF 321-0521 LINES AR-QUICK COUPLER
FOR USE WITH 316-3790—PAGE 558
AN ATTACHMENT

SMCS-5057, 5133 **i02897069**

NOTE	REF NO	GRAPHIC REF	PART NUMBER	QTY	PART NAME 1 2 3 4 5 6 (PRODUCT LEVEL)	SEE PAGE
	1	1	**179-5030**	4	CLIP	
	2	1	**187-9862**	1	PLATE	
	3	1	**193-6606**	1	PLATE	
	4	1	**282-5482**	2	SUPPORT AS	
	5	1	**282-5612**	1	PLATE	
	6	1	**294-6565**	1	TUBE AS	
	7	1	**294-6567**	1	TUBE AS	
	8	1	**135-3980**	2	CLIP	
	9	1	**5Q-4212**	8	CLIP	
	10	1	**6V-8398**	4	SEAL-O-RING	
M	11	1	**7X-2549**	2	BOLT (M12X1.75X100-MM)	
M	12	1	**8T-4139**	8	BOLT (M12X1.75X30-MM)	
	13	1	**8T-4223**	16	WASHER-HARD (13.5X25.5X3-MM THK)	
M	14	1	**8T-4244**	4	NUT (M12X1.75-THD)	
M	15	1	**8T-4910**	4	BOLT (M12X1.75X60-MM)	
M	16	1	**8T-7929**	2	BOLT (M12X1.75X180-MM)	

M-METRIC PART

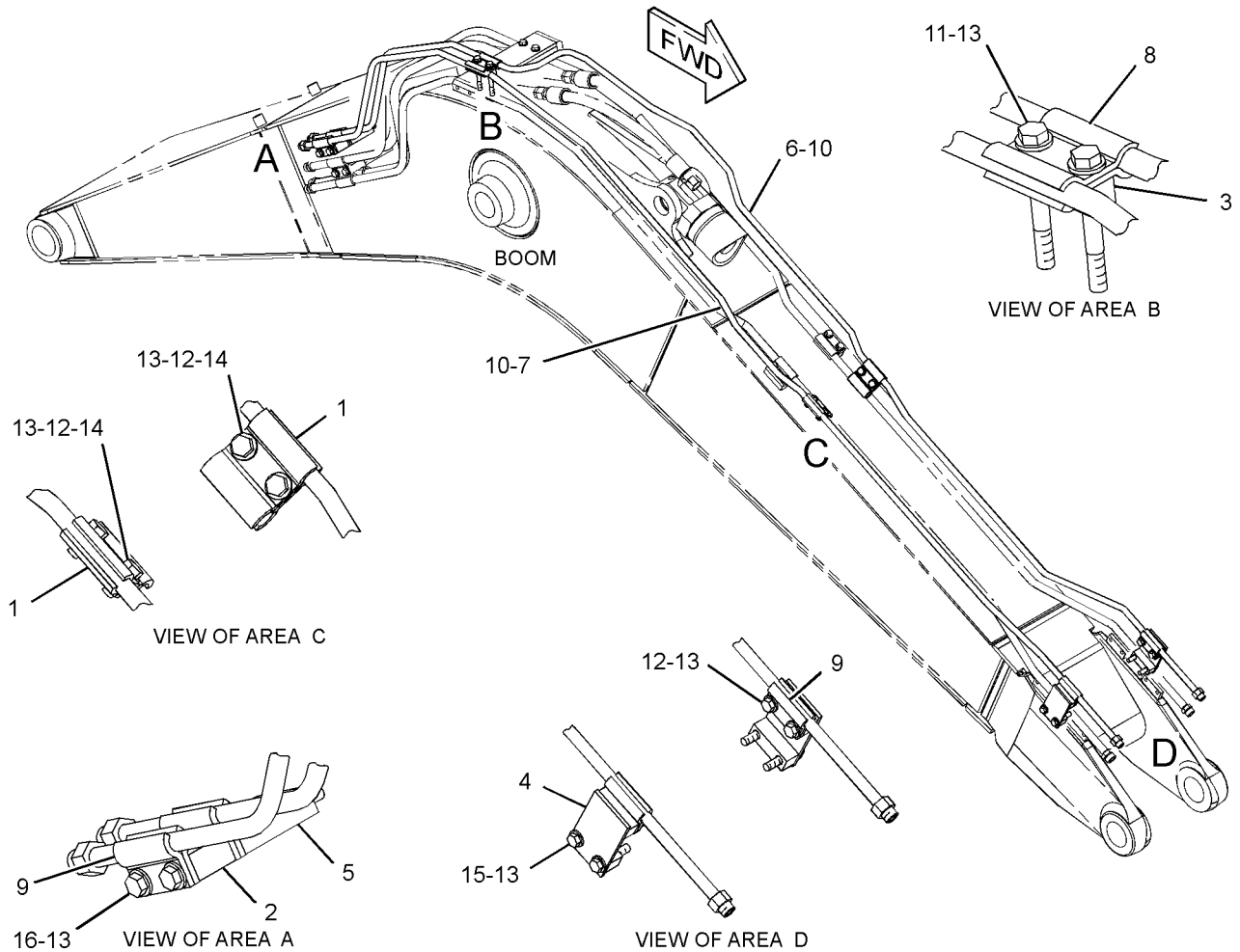

GRAPHIC #1 **<END>** g01402411

HYDRAULIC SYSTEM

282-5633 LINES GP-COUPLER

S/N: CLA1-UP
2.5-M (8.2-FT), 2.6-M (8.5-FT) STICK
AN ATTACHMENT

SMCS-5057, 5133 **i02819022**

NOTE	REF NO	GRAPHIC REF	PART NUMBER	QTY	PART NAME 1 2 3 4 5 6 (PRODUCT LEVEL)	SEE PAGE
	1	1	**198-0370**	2	CLIP	
I	2	1	**277-1251**	2	HOSE AS	
	3	1	**288-7727**	1	TUBE AS	
	4	1	**288-7730**	1	TUBE AS	
	5	1	*148-8415*	1	REDUCER AS	
		1	**6V-8397**	1	SEAL-O-RING	
		1	**6V-8936**	1	REDUCER	
	6	1	*148-8419*	1	REDUCER AS	
		1	**4J-5477**	1	SEAL-O-RING	
		1	**6V-8935**	1	REDUCER-O-RING	
	7	1	**5Q-4212**	8	CLIP	
	8	1	**6V-8398**	4	SEAL-O-RING	
	9	1	**8T-4121**	1	WASHER-HARD (11X21X2.5-MM THK)	
M	10	1	**8T-4139**	8	BOLT (M12X1.75X30-MM)	
M	11	1	**8T-4195**	1	BOLT (M10X1.5X30-MM)	
	12	1	**8T-4223**	8	WASHER-HARD (13.5X25.5X3-MM THK)	
	13	1	**9X-6582**	1	NUT (13/16-16-THD)	

I-REFER TO HYDRAULIC INFORMATION SYSTEM
M-METRIC PART

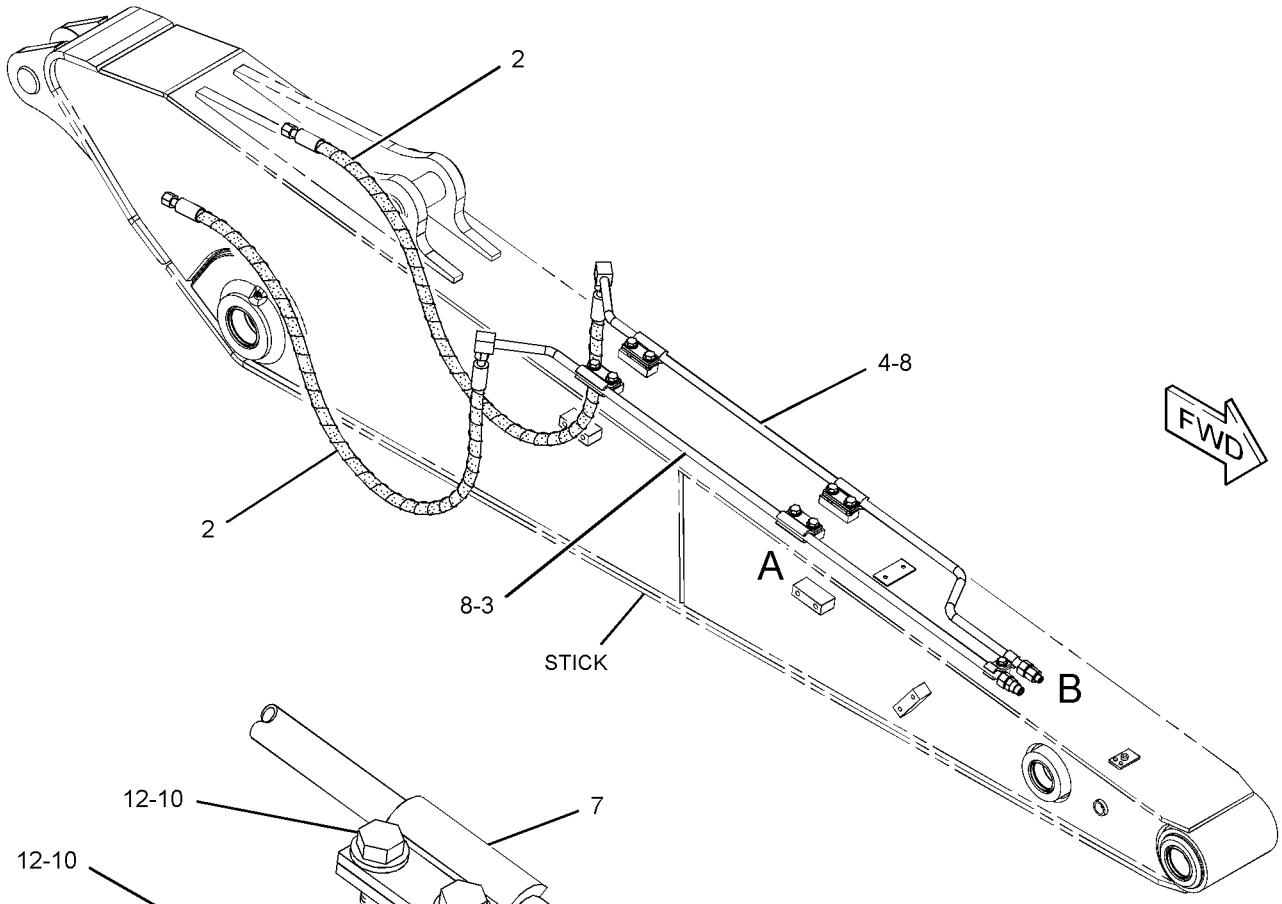

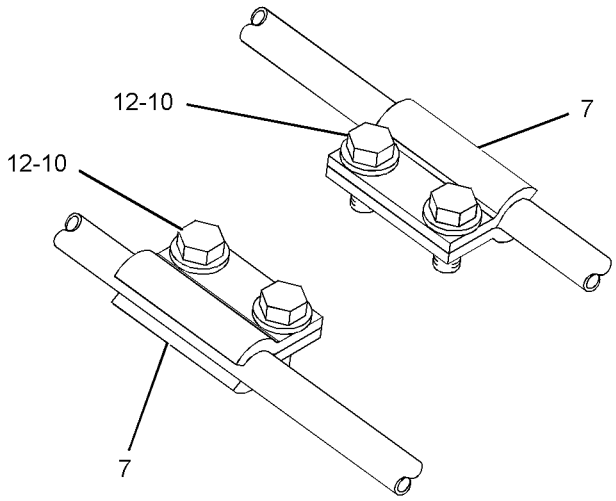

VIEW OF AREA A

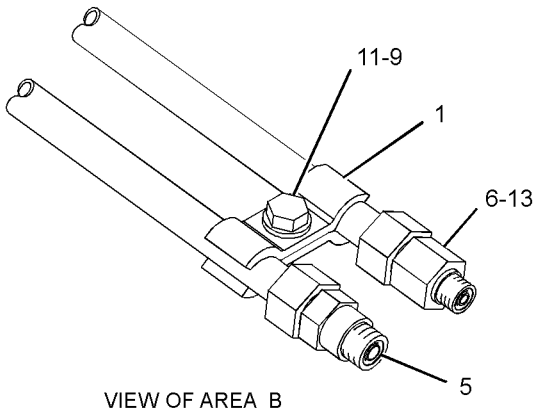

VIEW OF AREA B

GRAPHIC #1 **<END>** g01442604

HYDRAULIC SYSTEM

288-7403 LINES GP-COUPLER

S/N: CLA1-UP
2.3-M (7.4-FT) STICK
AN ATTACHMENT

SMCS-5057, 5133 **i02795429**

NOTE	REF NO	GRAPHIC REF	PART NUMBER	QTY	PART NAME 1 2 3 4 5 6 (PRODUCT LEVEL)	SEE PAGE
	1	1	**198-0370**	2	CLIP	
	2	1	**302-9408**	1	TUBE AS	
	3	1	**302-9411**	1	TUBE AS	
I	4	1	**302-9513**	2	HOSE AS	
	5	1	*148-8415*	1	REDUCER AS	
		1	**6V-8397**	1	SEAL-O-RING	
		1	**6V-8936**	1	REDUCER	
	6	1	*148-8419*	1	REDUCER AS	
		1	**4J-5477**	1	SEAL-O-RING	
		1	**6V-8935**	1	REDUCER-O-RING	
	7	1	**5Q-4212**	8	CLIP	
	8	1	**6V-8398**	4	SEAL-O-RING	
	9	1	**8T-4121**	1	WASHER-HARD (11X21X2.5-MM THK)	
M	10	1	**8T-4139**	8	BOLT (M12X1.75X30-MM)	
M	11	1	**8T-4195**	1	BOLT (M10X1.5X30-MM)	
	12	1	**8T-4223**	8	WASHER-HARD (13.5X25.5X3-MM THK)	
	13	1	**9X-6582**	1	NUT (13/16-16-THD)	

I-REFER TO HYDRAULIC INFORMATION SYSTEM
M-METRIC PART

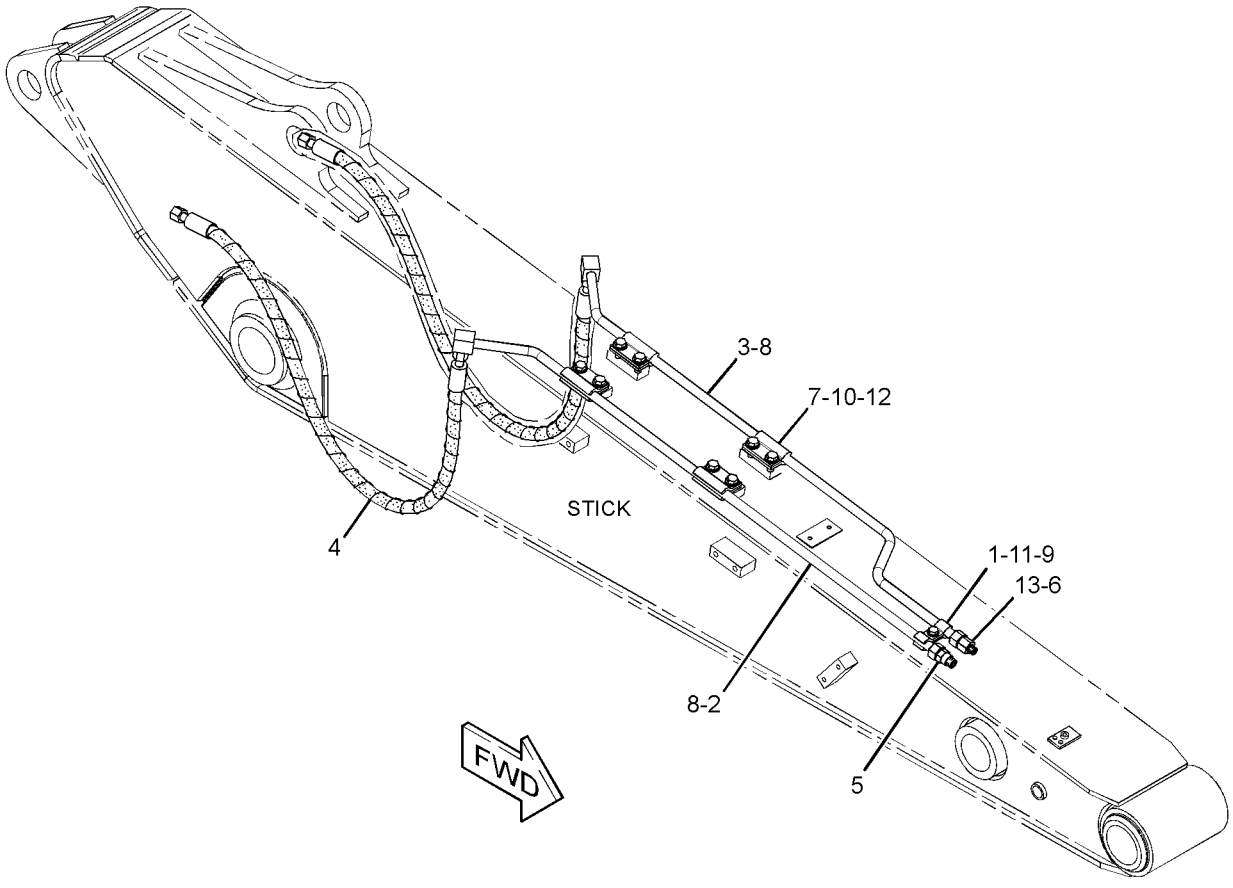

GRAPHIC #1 **<END>** g01411646

HYDRAULIC SYSTEM

282-7408 LINES GP-FRONT—QUICK COUPLER

S/N: CLA1-UP
PART OF 282-5634 CONTROL AR-COUPLER
AN ATTACHMENT
TYPE 1

SMCS-5057 **i02939284**

NOTE	REF NO	GRAPHIC REF	PART NUMBER	QTY	PART NAME 1 2 3 4 5 6 (PRODUCT LEVEL)	SEE PAGE
	1	1	**6V-0852**	1	CAP-DUST	
	2	1	**7K-1181**	11	STRAP-CABLE	
	3	1	**9X-6582**	2	NUT (13/16-16-THD)	
	4	2	*267-4051*	1	CONNECTOR AS	
		1	**3J-1907**	1	SEAL-O-RING	
		1	**4J-5477**	1	SEAL-O-RING	
		1	**156-8845**	1	CONNECTOR	
	5	1	*150-4027*	1	TEE AS	
		1	**3E-2310**	1	TEE	
		1	**6V-8937**	1	REDUCER-O-RING	
		1	**3J-1907**	1	SEAL-O-RING	
Y	6	2	**260-3877**	1	VALVE GP-SOLENOID & MANIFOLD (QUICK COUPLER)	649
	7	2	**268-5109**	1	SUPPORT AS	
	8	2	**296-7235**	2	HOSE AS	
I	9	2	**289-5378**	1	HOSE AS	
I	10	2	**4I-5795**	1	HOSE AS	
	11	2	*148-8325*	2	CONNECTOR AS	
					(EACH INCLUDES)	
		2	**3J-1907**	1	SEAL-O-RING	
		2	**4J-5477**	1	SEAL-O-RING	
		2	**6V-8641**	1	CONNECTOR	
	12	2	*148-8378*	1	ELBOW AS	
		2	**3J-1907**	1	SEAL-O-RING	
		2	**6V-8397**		SEAL-O-RING	
		2	**6V-8724**	1	ELBOW	
	14	1	*148-8419*	2	REDUCER AS	
					(EACH INCLUDES)	
		1	**4J-5477**	1	SEAL-O-RING	
		1	**6V-8935**	1	REDUCER-O-RING	
J	15	2	*148-8435*	1	TEE AS	
		2	**3J-1907**	1	SEAL-O-RING	
		2	**6V-8397**	2	SEAL-O-RING	
		2	**6V-8781**	1	TEE-FACE SEAL	
	16	1	*164-5567*	1	COUPLER AS-QUICK DISCONNECT	
		1	**3J-1907**	1	SEAL-O-RING	
		1	**6V-3965**	1	FITTING (QUICK DISCONNECT)	
	18	2	**4I-9521**	4	BAND-MARKER (RED, L1)	
	19	2	**4I-9522**	4	BAND-MARKER (YELLOW, L2)	
	21	2	**8T-4121**	2	WASHER-HARD (11X21X2.5-MM THK)	
M	22	2	**8T-4196**	2	BOLT (M10X1.5X35-MM)	
	23	2	**8T-4224**	2	WASHER-HARD (8.8X16X2-MM THK)	
M	24	2	**8T-6912**	2	BOLT (M8X1.25X50-MM)	
	25	2	*148-8336*	1	CONNECTOR AS	
		2	**6V-8636**	1	CONNECTOR	
		2	**3J-1907**	1	SEAL-O-RING	
		2	**6V-8397**	1	SEAL-O-RING	
	26	1	**204-1611**	1	STRAP-CABLE	
	27	1	*164-6874*	1	FITTING AS-ELBOW	
		1	**3J-1907**	1	SEAL-O-RING	
		1	**085-7356**	1	FITTING	
	28	1	*148-8371*	1	ELBOW AS	
		1	**6V-8397**	1	SEAL-O-RING	
		1	**8C-8988**	1	ELBOW	

I-REFER TO HYDRAULIC INFORMATION SYSTEM
J-USE ONLY WITH LINES GP-PILOT (SYSTEMS 20,22,& 23/24)
M-METRIC PART
Y-SEPARATE ILLUSTRATION

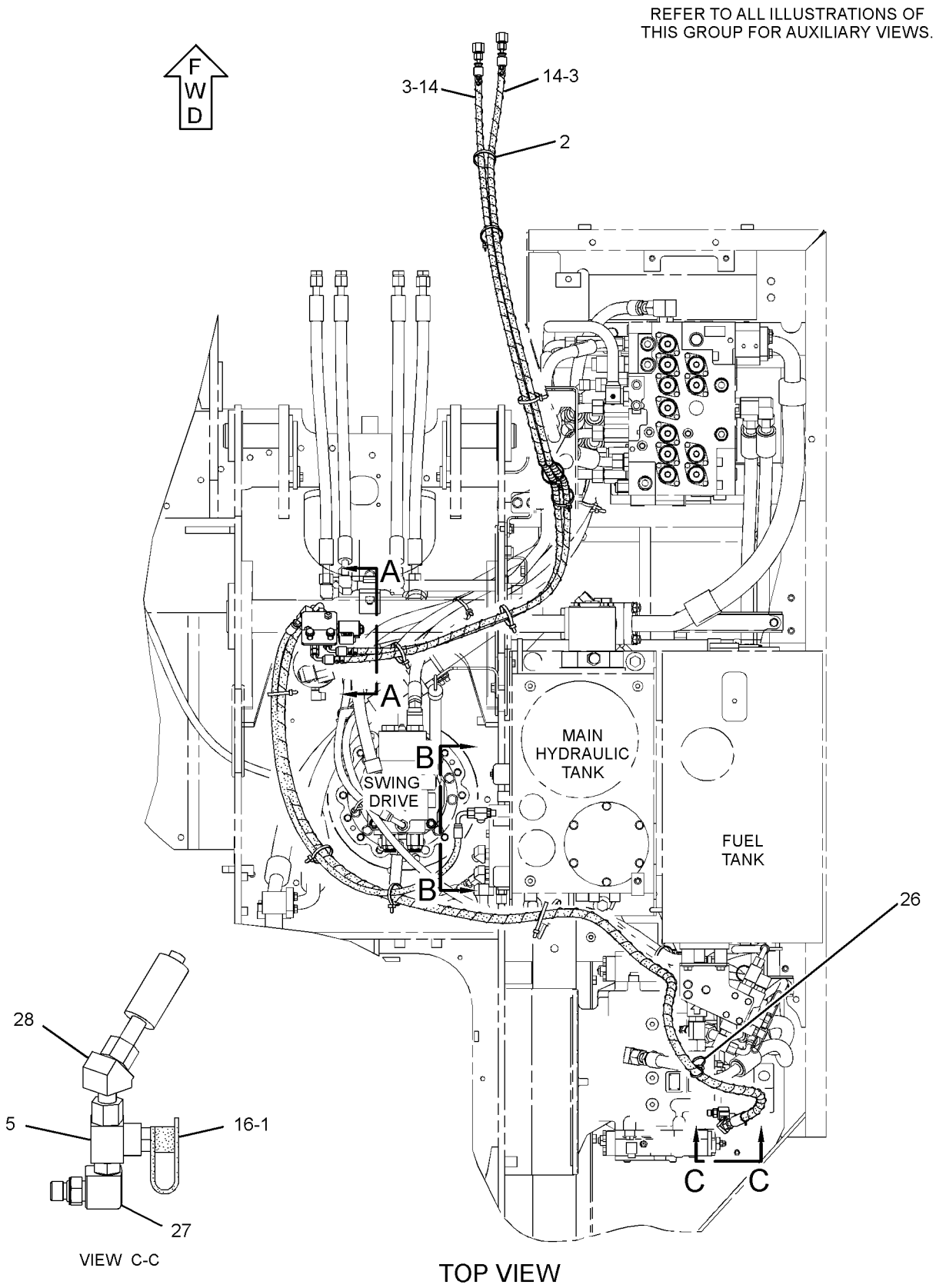

GRAPHIC #1

g01445381

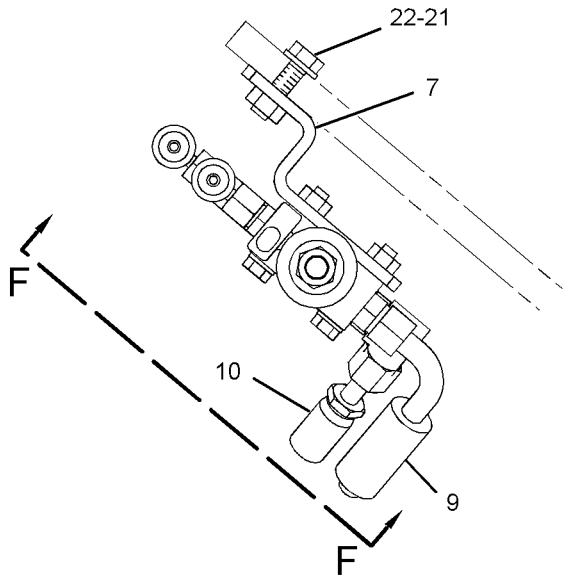

VIEW A-A

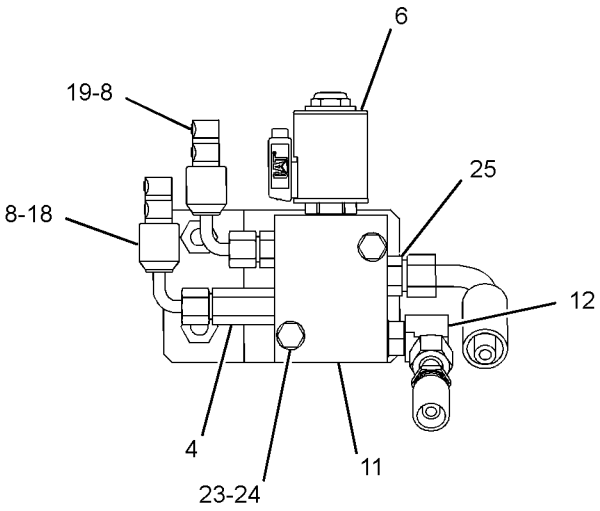

VIEW F-F

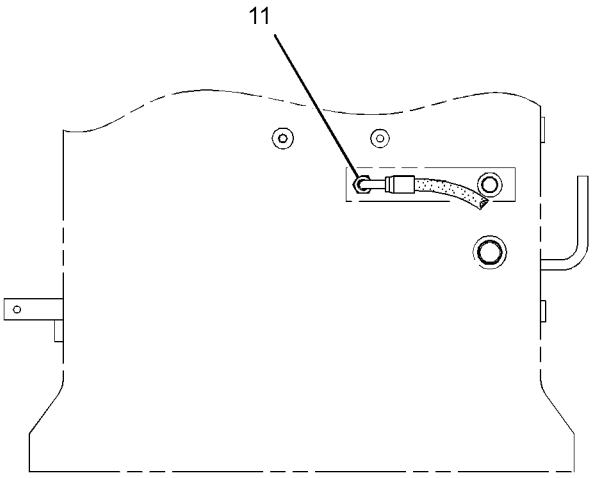

SECTION B-B

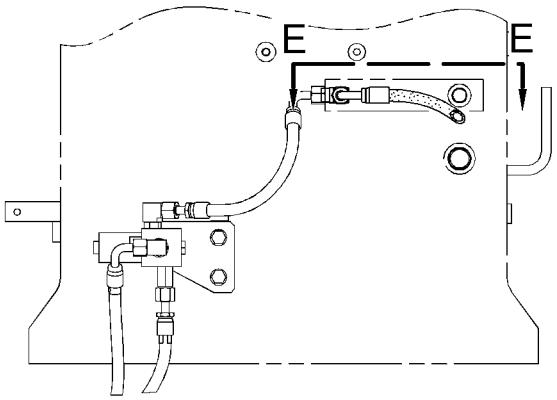

SECTION B-B
(OPTIONAL DESIGN SYSTEM 20, 22, OR 23/24)

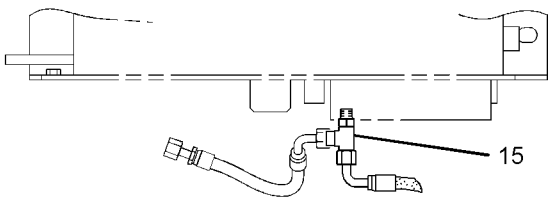

VIEW E-E

GRAPHIC #2 **<END>** g01445416

HYDRAULIC SYSTEM

282-7408 LINES GP-FRONT—QUICK COUPLER

S/N: CLA1-UP
PART OF 282-5634 CONTROL AR-COUPLER
AN ATTACHMENT
TYPE 2

SMCS-5057 **i03026102**

NOTE	REF NO	GRAPHIC REF	PART NUMBER	QTY	PART NAME 1 2 3 4 5 6 (PRODUCT LEVEL)	SEE PAGE
	1	1	**6V-0852**	1	CAP-DUST	
	2	1	**7K-1181**	11	STRAP-CABLE	
	3	1	**9X-6582**	2	NUT (13/16-16-THD)	
	4	2	*267-4051*	1	CONNECTOR AS	
		1	**3J-1907**	1	SEAL-O-RING	
		1	**4J-5477**	1	SEAL-O-RING	
		1	**156-8845**	1	CONNECTOR	
	5	1	*150-4027*	1	TEE AS	
		1	**3E-2310**	1	TEE	
		1	**6V-8937**	1	REDUCER-O-RING	
		1	**3J-1907**	1	SEAL-O-RING	
C	6	2	**328-2035**	1	VALVE GP-SOLENOID & MANIFOLD (QUICK COUPLER)	
	7	2	**268-5109**	1	SUPPORT AS	
	8	2	**296-7235**	2	HOSE AS	
I	9	2	**289-5378**	1	HOSE AS	
I	10	2	**4I-5795**	1	HOSE AS	
	11	2	*148-8325*	2	CONNECTOR AS	
					(EACH INCLUDES)	
		2	**3J-1907**	1	SEAL-O-RING	
		2	**4J-5477**	1	SEAL-O-RING	
		2	**6V-8641**	1	CONNECTOR	
	12	2	*148-8378*	1	ELBOW AS	
		2	**3J-1907**	1	SEAL-O-RING	
		2	**6V-8397**		SEAL-O-RING	
		2	**6V-8724**	1	ELBOW	
	14	1	*148-8419*	2	REDUCER AS	
					(EACH INCLUDES)	
		1	**4J-5477**	1	SEAL-O-RING	
		1	**6V-8935**	1	REDUCER-O-RING	
J	15	2	*148-8435*	1	TEE AS	
		2	**3J-1907**	1	SEAL-O-RING	
		2	**6V-8397**	2	SEAL-O-RING	
		2	**6V-8781**	1	TEE-FACE SEAL	
	16	1	*164-5567*	1	COUPLER AS-QUICK DISCONNECT	
		1	**3J-1907**	1	SEAL-O-RING	
		1	**6V-3965**	1	FITTING (QUICK DISCONNECT)	
	18	2	**4I-9521**	4	BAND-MARKER (RED, L1)	
	19	2	**4I-9522**	4	BAND-MARKER (YELLOW, L2)	
	21	2	**8T-4121**	2	WASHER-HARD (11X21X2.5-MM THK)	
M	22	2	**8T-4196**	2	BOLT (M10X1.5X35-MM)	
	23	2	**8T-4224**	2	WASHER-HARD (8.8X16X2-MM THK)	
M	24	2	**8T-6912**	2	BOLT (M8X1.25X50-MM)	
	25	2	*148-8336*	1	CONNECTOR AS	
		2	**6V-8636**	1	CONNECTOR	
		2	**3J-1907**	1	SEAL-O-RING	
		2	**6V-8397**	1	SEAL-O-RING	
	26	1	**204-1611**	1	STRAP-CABLE	
	27	1	*164-6874*	1	FITTING AS-ELBOW	
		1	**3J-1907**	1	SEAL-O-RING	
		1	**085-7356**	1	FITTING	
	28	1	*148-8371*	1	ELBOW AS	
		1	**6V-8397**	1	SEAL-O-RING	
		1	**8C-8988**	1	ELBOW	

C-CHANGE FROM PREVIOUS TYPE
I-REFER TO HYDRAULIC INFORMATION SYSTEM
J-USE ONLY WITH LINES GP-PILOT (SYSTEMS 20,22,& 23/24)
M-METRIC PART

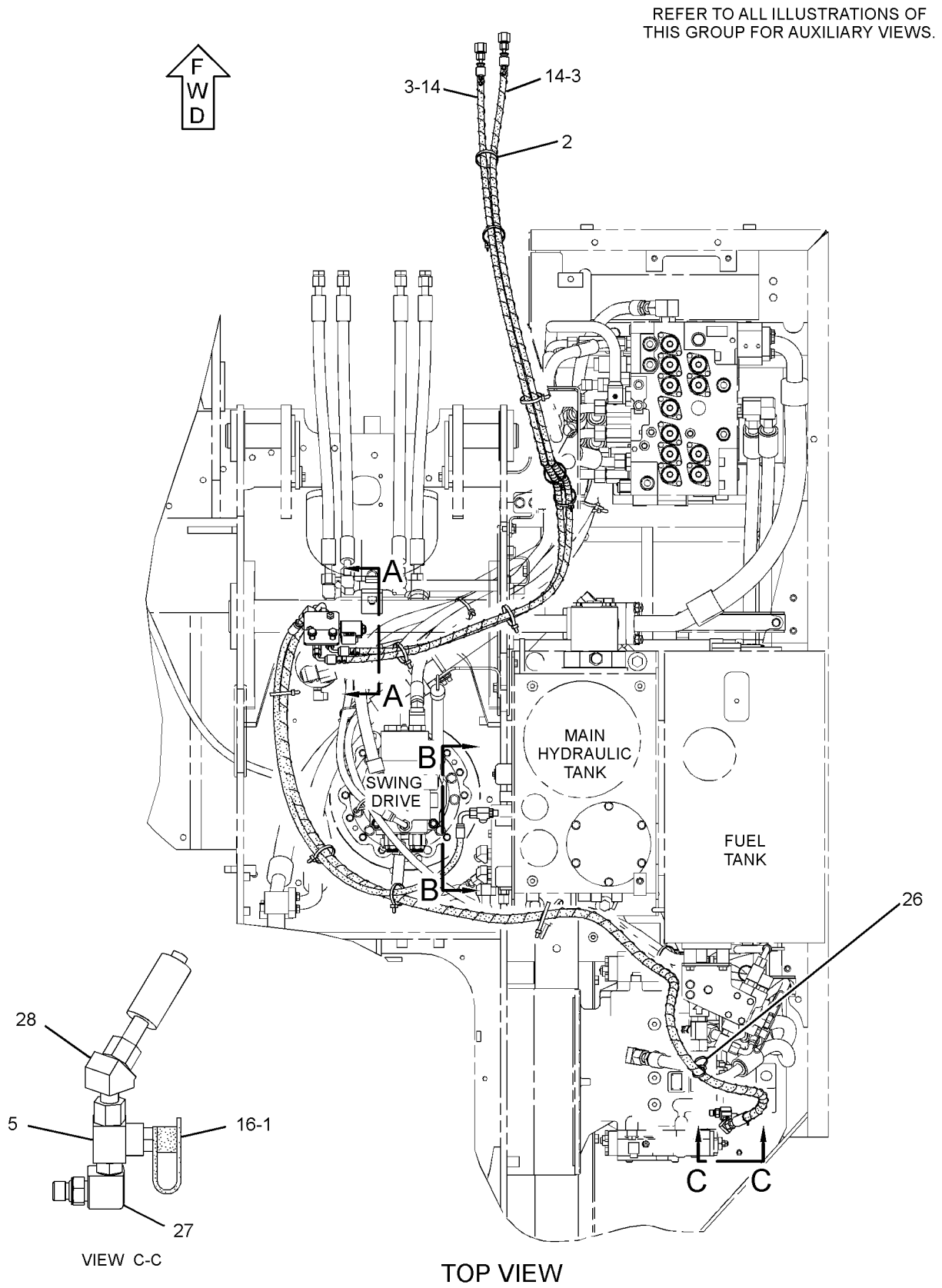

GRAPHIC #1

g01445381

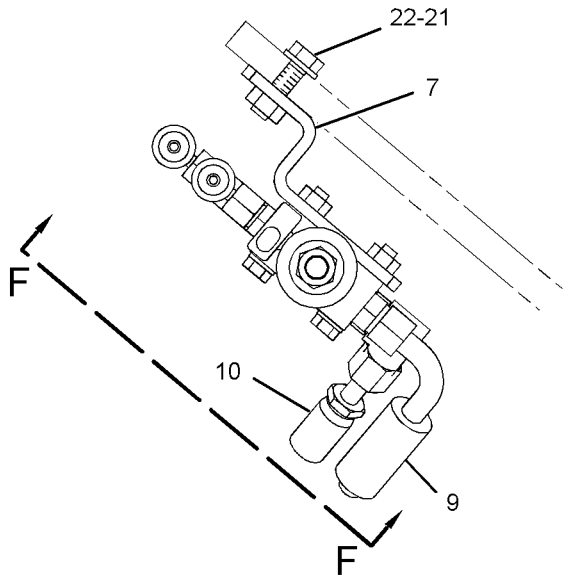

VIEW A-A

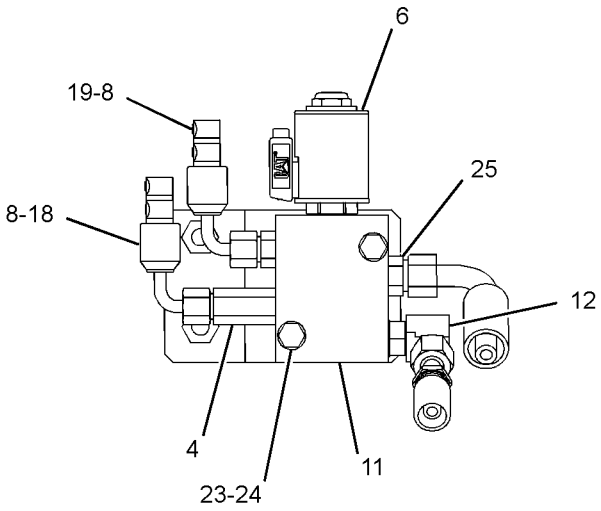

VIEW F-F

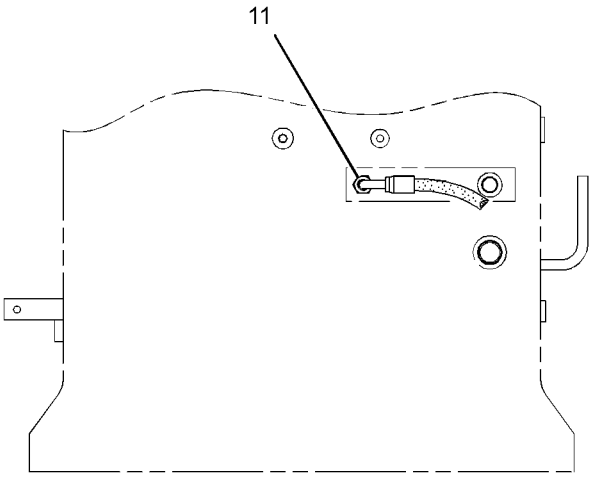

SECTION B-B

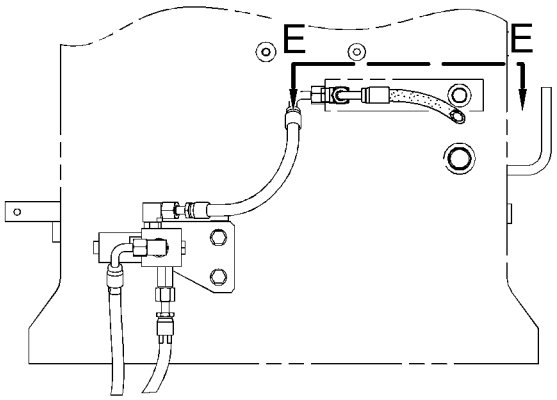

SECTION B-B
(OPTIONAL DESIGN SYSTEM 20, 22, OR 23/24)

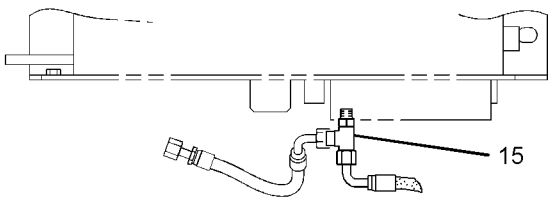

VIEW E-E

GRAPHIC #2 **<END>** g01445416

282-7417 LINES GP-FRONT—MEDIUM PRESSURE

S/N: CLA1-UP

PART OF 270-6043 CONTROL AR-AUXILIARY

AN ATTACHMENT

SMCS-5057 **i02883576**

NOTE	REF NO	GRAPHIC REF	PART NUMBER	QTY	PART NAME 1 2 3 4 5 6 (PRODUCT LEVEL)	SEE PAGE
I	1	1	**5I-4190**	1	HOSE AS	
	2	1	**5P-5148**	2	STRAP-TIE	
I	3	1	**115-3796**	1	HOSE AS	
	4	1	*148-8364*	2	ELBOW AS	
					(EACH INCLUDES)	
		1	**3K-0360**	1	SEAL-O-RING	
		1	**6V-8398**	1	SEAL-O-RING	
		1	**6V-8625**	1	ELBOW	
	5	1	*148-8444*	1	TEE AS-SWIVEL	
		1	**6V-8398**	2	SEAL-O-RING	
		1	**6V-9837**	1	TEE-SWIVEL	
I	6	1	**285-2876**	1	HOSE AS	
I	7	1	**285-2880**	1	HOSE AS	
	8	1	*148-8328*	1	CONNECTOR AS	
		1	**3D-2824**	1	SEAL-O-RING	
		1	**6V-8398**	1	SEAL-O-RING	
		1	**6V-8633**	1	CONNECTOR	
	9	1	*153-6252*	2	CONNECTOR AS	
					(EACH INCLUDES)	
		1	**6V-8398**	1	SEAL-O-RING	
		1	**7M-8485**	1	SEAL-O-RING	
		1	**9X-8408**	1	CONNECTOR	

I-REFER TO HYDRAULIC INFORMATION SYSTEM

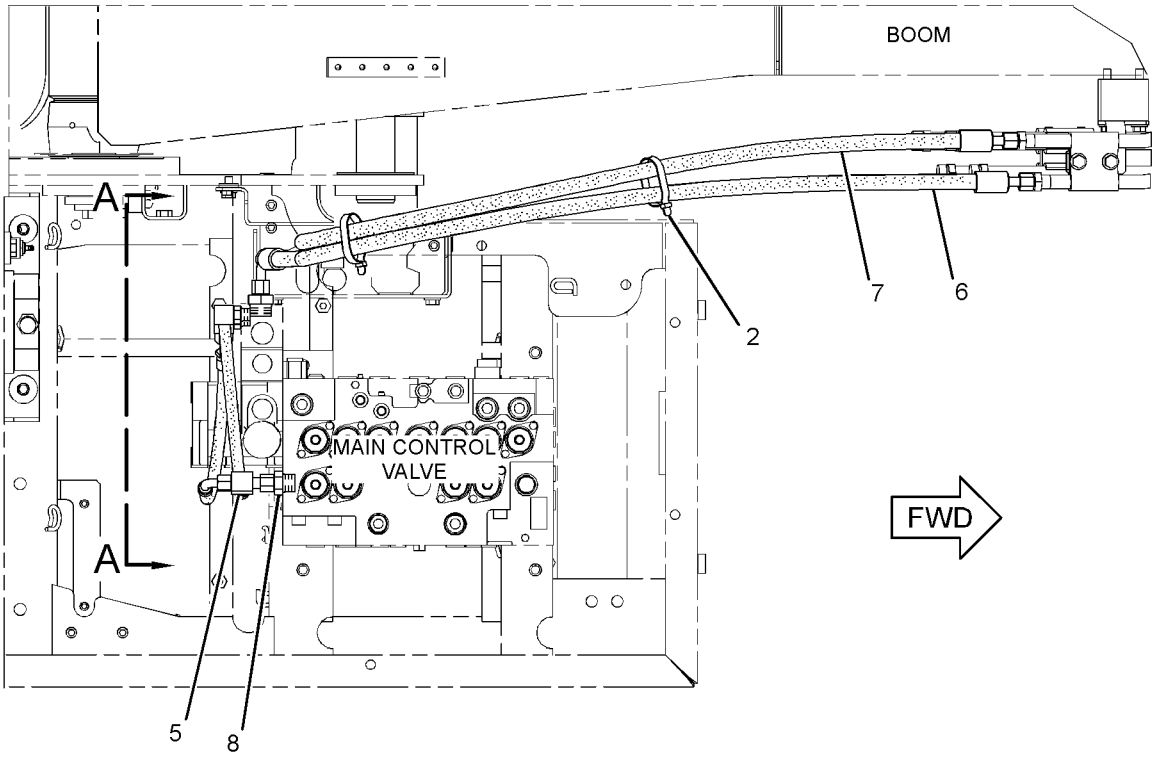

TOP VIEW

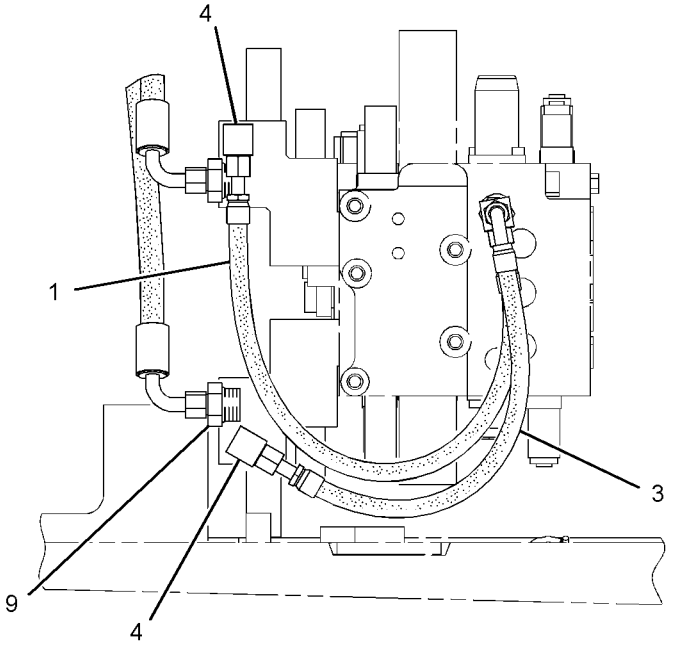

VIEW A-A

GRAPHIC #1 **<END>** g01445443

282-7420 LINES GP-FRONT—SYSTEM 20, WORK TOOL PRIORITY

S/N: CLA1-UP

PART OF 270-6025 CONTROL AR-AUXILIARY

AN ATTACHMENT

SMCS-5057 **i02980583**

NOTE	REF NO	GRAPHIC REF	PART NUMBER	QTY	PART NAME 1 2 3 4 5 6 (PRODUCT LEVEL)	SEE PAGE
	1	1	**5P-5148**	7	STRAP-TIE	
Y	2	1	**309-9973**	2	VALVE GP-RELIEF (LINE, WORK TOOL)	627
	3	1	*286-6468*	1	ELBOW AS	
		1	**6V-9746**	1	SEAL-O-RING	
		1	**7M-8485**	1	SEAL-O-RING	
		1	**286-6469**	1	ELBOW	
	4	1	**270-6110**	1	CONNECTOR AS	
		1	**6V-9746**	1	SEAL-O-RING	
		1	**095-1592**	1	SEAL-O-RING	
I	5	1	**289-5273**	1	HOSE AS	
	6	1	**314-8209**	1	SUPPORT AS	
I	7	1	**199-1676**	1	HOSE AS	
I	8	1	**285-2826**	1	HOSE AS	
I	9	1	**285-2830**	1	HOSE AS	
I	10	1	**307-5232**	1	HOSE AS	
	11	1	*286-6499*	1	CONNECTOR AS	
		1	**6V-9746**	1	SEAL-O-RING	
		1	**7M-8485**	1	SEAL-O-RING	
		1	**184-9330**	1	CONNECTOR	
	12	1	*148-8339*	1	CONNECTOR AS	
		1	**6V-8716**	1	CONNECTOR	
		1	**6V-9746**	1	SEAL-O-RING	
		1	**7M-8485**	1	SEAL-O-RING	
	13	1	*148-8347*	1	ELBOW AS	
		1	**3D-2824**	1	SEAL-O-RING	
		1	**6V-9007**	1	ELBOW	
		1	**6V-9746**	1	SEAL-O-RING	
	14	1	*148-8360*	1	ELBOW AS	
		1	**6V-9182**	1	ELBOW	
		1	**6V-9746**	1	SEAL-O-RING	
		1	**7M-8485**	1	SEAL-O-RING	
	15	1	*148-8392*	1	ELBOW AS	
		1	**6V-9746**	1	SEAL-O-RING	
		1	**6V-9853**	1	ELBOW	
	16	1	*148-8449*	1	TEE AS-SWIVEL	
		1	**6V-9746**	2	SEAL-O-RING	
		1	**6V-9839**	1	TEE-SWIVEL	
	17	1	*164-4180*	1	PLUG AS	
		1	**7M-8485**	1	SEAL-O-RING	
		1	**9S-4181**	1	PLUG-O-RING	
	18	1	**5P-7468**	1	CLIP (SLOT)	
	19	1	**5P-7469**	1	CLIP (TAB)	
	20	1	**6V-1874**	1	GROMMET	
M	21	1	**8T-4139**	2	BOLT (M12X1.75X30-MM)	
	22	1	**8T-4223**	3	WASHER-HARD (13.5X25.5X3-MM THK)	
M	23	1	**8T-4956**	1	BOLT (M12X1.75X35-MM)	

I-REFER TO HYDRAULIC INFORMATION SYSTEM
M-METRIC PART
Y-SEPARATE ILLUSTRATION

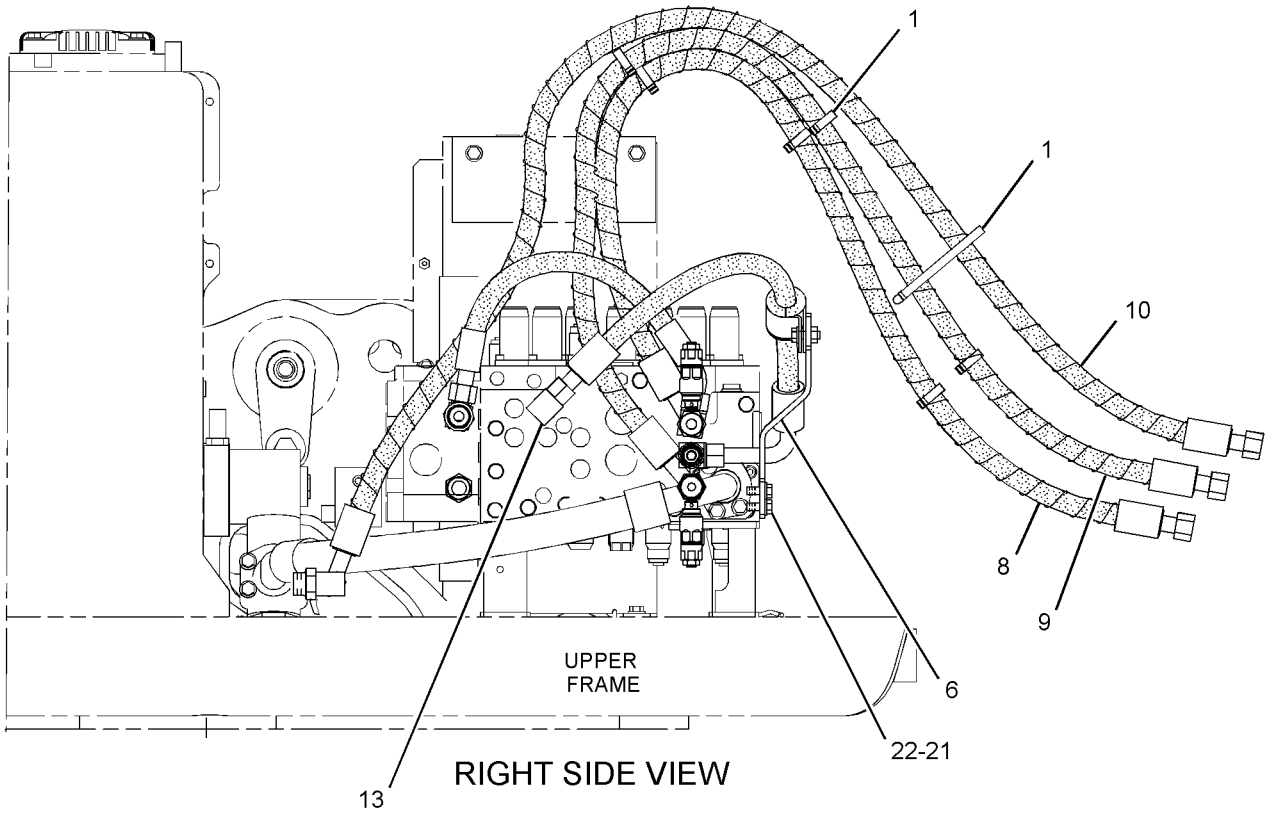

RIGHT SIDE VIEW

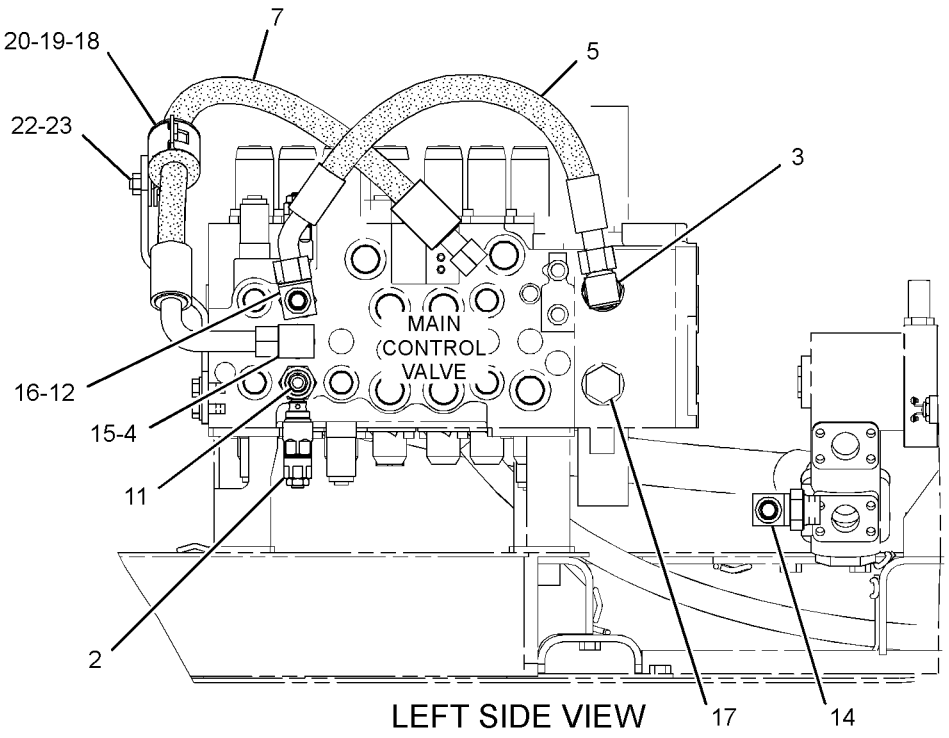

LEFT SIDE VIEW

GRAPHIC #1

<END>

g01568993

282-7425 LINES GP-FRONT—SYSTEM 23, COMBINED FUNCTION

S/N: CLA1-UP

PART OF 270-6030 CONTROL AR-AUXILIARY

AN ATTACHMENT

SMCS-5057 **i02915437**

NOTE	REF NO	GRAPHIC REF	PART NUMBER	QTY	PART NAME 1 2 3 4 5 6 (PRODUCT LEVEL)	SEE PAGE
	1	1	**5P-5148**	7	STRAP-TIE	
I	2	1	**199-1676**	1	HOSE AS	
Y	3	1	**309-9973**	2	VALVE GP-RELIEF (LINE, WORK TOOL)	627
	4	1	**270-6110**	1	CONNECTOR AS	
		1	**6V-9746**	1	SEAL-O-RING	
		1	**095-1592**	1	SEAL-O-RING	
I	5	1	**285-2826**	1	HOSE AS	
I	6	1	**285-2830**	1	HOSE AS	
	7	1	*286-6499*	2	CONNECTOR AS	
					(EACH INCLUDES)	
		1	**6V-9746**	1	SEAL-O-RING	
		1	**7M-8485**	1	SEAL-O-RING	
		1	**184-9330**	1	CONNECTOR	
I	8	1	**307-5232**	1	HOSE AS	
	9	1	**314-8209**	1	SUPPORT AS	
	10	1	*148-8347*	1	ELBOW AS	
		1	**3D-2824**	1	SEAL-O-RING	
		1	**6V-9007**	1	ELBOW	
		1	**6V-9746**	1	SEAL-O-RING	
	11	1	*148-8360*	1	ELBOW AS	
		1	**6V-9182**	1	ELBOW	
		1	**6V-9746**	1	SEAL-O-RING	
		1	**7M-8485**	1	SEAL-O-RING	
	12	1	*148-8392*	1	ELBOW AS	
		1	**6V-9746**	1	SEAL-O-RING	
		1	**6V-9853**	1	ELBOW	
	13	1	**5P-7468**	1	CLIP (SLOT)	
	14	1	**5P-7469**	1	CLIP (TAB)	
	15	1	**6V-1874**	1	GROMMET	
M	16	1	**8T-4139**	2	BOLT (M12X1.75X30-MM)	
	17	1	**8T-4223**	3	WASHER-HARD (13.5X25.5X3-MM THK)	
M	18	1	**8T-4956**	1	BOLT (M12X1.75X35-MM)	

I-REFER TO HYDRAULIC INFORMATION SYSTEM
M-METRIC PART
Y-SEPARATE ILLUSTRATION

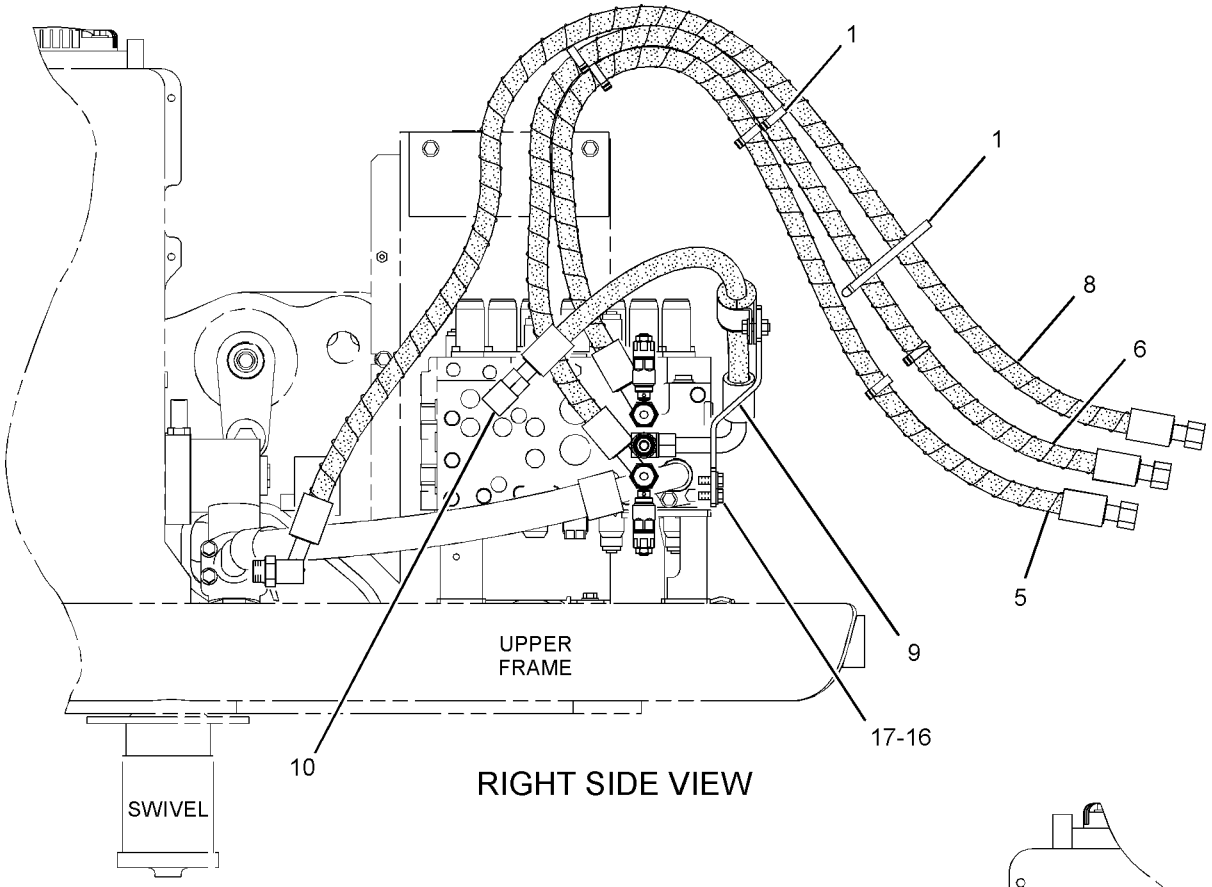

RIGHT SIDE VIEW

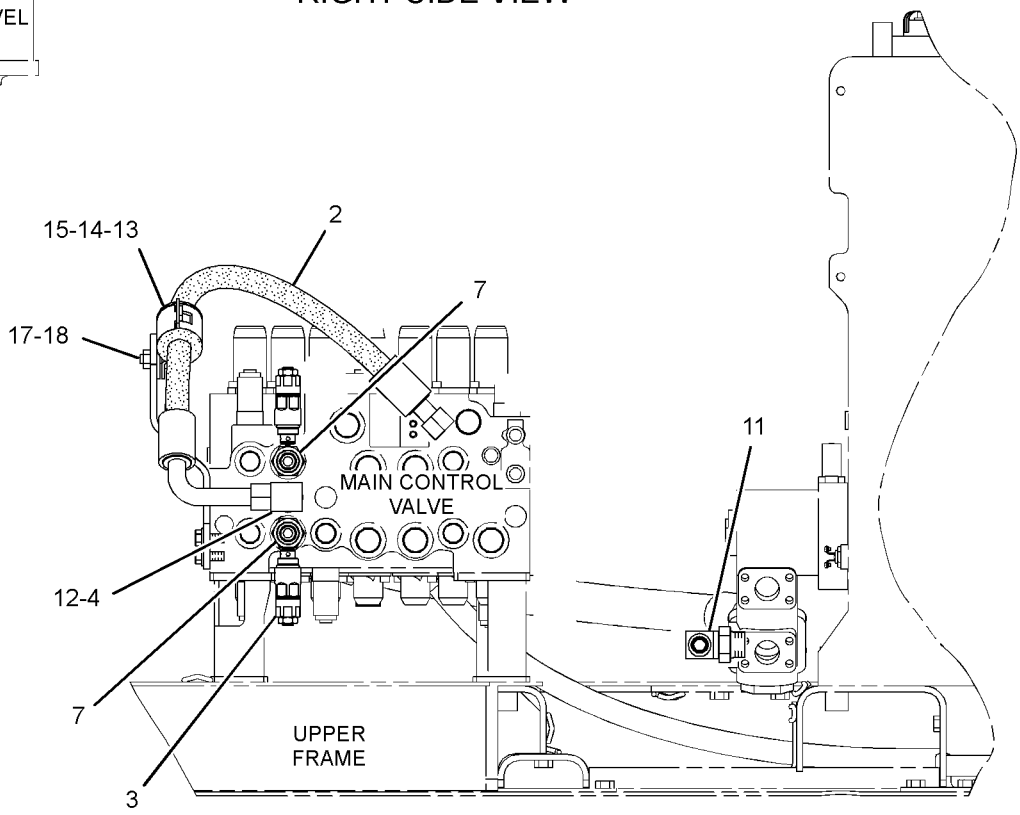

LEFT SIDE VIEW

GRAPHIC #1 **<END>** g01451262

282-7435 LINES GP-FRONT—MEDIUM PRESSURE

S/N: CLA1-UP
PART OF 270-6037 CONTROL AR-AUXILIARY
AN ATTACHMENT

SMCS-5057 **i02877048**

NOTE	REF NO	GRAPHIC REF	PART NUMBER	QTY	PART NAME 1 2 3 4 5 6 (PRODUCT LEVEL)	SEE PAGE
	1	1	**5P-5148**	2	STRAP-TIE	
Y	2	1	**259-7545**	1	VALVE GP-BANK (MEDIUM PRESSURE)	589
	3	1	**286-6397**	1	PLATE	
I	4	1	**286-6402**	1	HOSE AS	
I	5	1	**286-6406**	1	HOSE AS	
	6	1	*148-8340*	2	CONNECTOR AS	
					(EACH INCLUDES)	
		1	**3K-0360**	1	SEAL-O-RING	
		1	**6V-8398**	1	SEAL-O-RING	
		1	**6V-8639**	1	CONNECTOR	
M	7	1	**5I-4936**	4	BOLT (M10X1.25X20-MM)	
	8	1	**7K-1181**	3	STRAP-CABLE	
	9	1	**7X-7729**	4	WASHER (11X25X3-MM THK)	
M	10	1	**8T-4192**	2	BOLT (M12X1.75X25-MM)	
	11	1	**8T-4223**	2	WASHER-HARD (13.5X25.5X3-MM THK)	

I-REFER TO HYDRAULIC INFORMATION SYSTEM
M-METRIC PART
Y-SEPARATE ILLUSTRATION

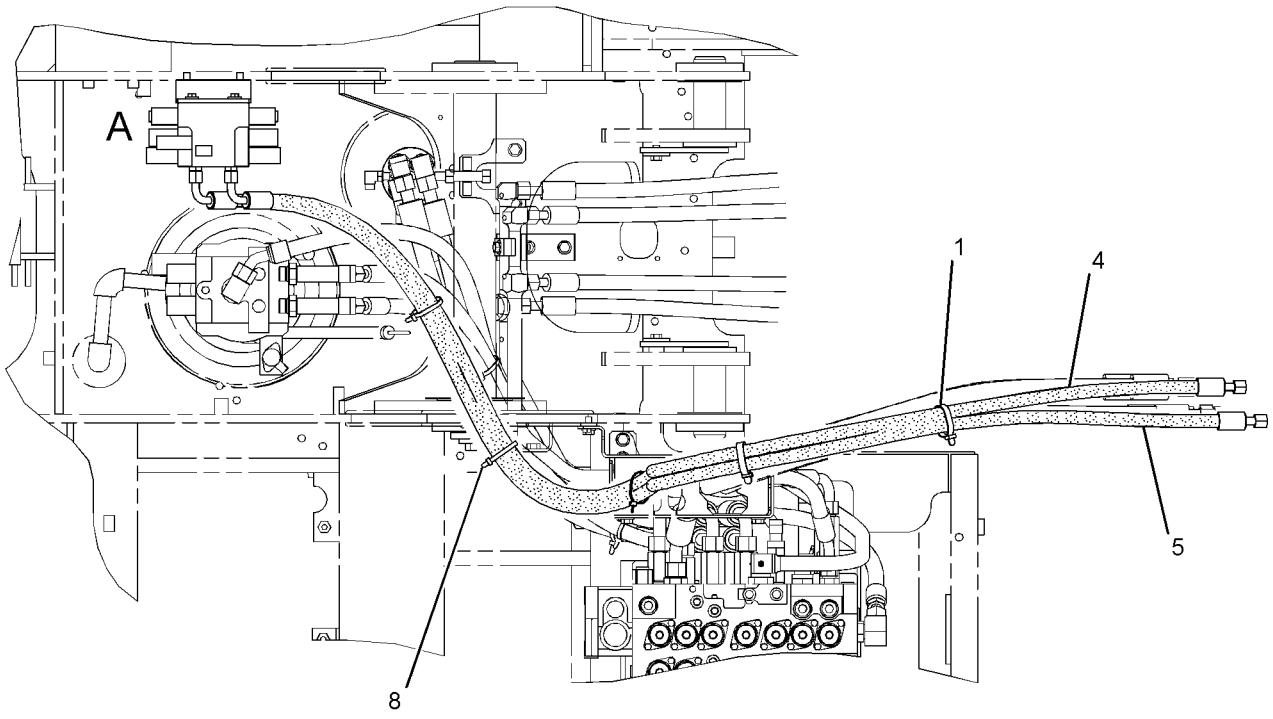

TOP VIEW FWD

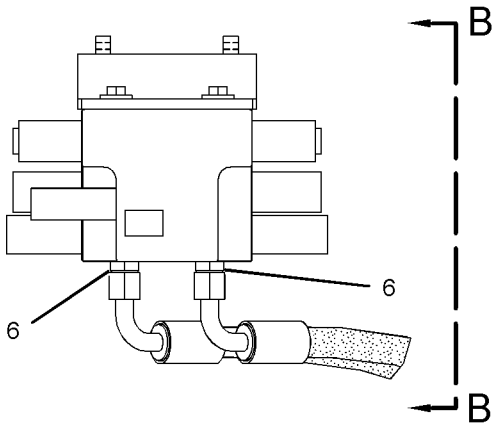

VIEW OF AREA A

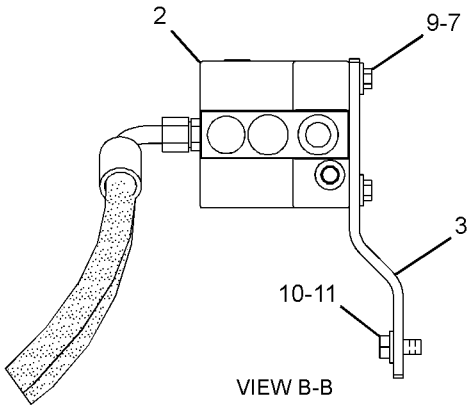

VIEW B-B

GRAPHIC #1 **<END>** g01446215

282-7451 LINES GP-FRONT—HAMMER, RETURN

S/N: CLA1-UP
PART OF 283-8787 FILTER AR-HYDRAULIC
AN ATTACHMENT

SMCS-5057 **i02980589**

NOTE	REF NO	GRAPHIC REF	PART NUMBER	QTY	PART NAME 1 2 3 4 5 6 (PRODUCT LEVEL)	SEE PAGE
	1	1	**5P-5148**	2	STRAP-TIE	
	2	1	**285-2861**	1	SUPPORT AS	
I	3	1	**302-2863**	1	HOSE AS	
I	4	1	**302-2866**	1	HOSE AS	
	5	1	*148-8357*	2	ELBOW AS	
					(EACH INCLUDES)	
		1	**5K-9090**	1	SEAL-O-RING	
		1	**6V-9008**	1	ELBOW	
		1	**7M-8485**	1	SEAL-O-RING	
	6	1	*148-8360*	1	ELBOW AS	
		1	**6V-9182**	1	ELBOW	
		1	**6V-9746**	1	SEAL-O-RING	
		1	**7M-8485**	1	SEAL-O-RING	
Y	7	1	**224-1687**	1	FILTER GP-OIL (HYDRAULIC)	395
	8	1	**7K-1181**	3	STRAP-CABLE	
M	9	1	**8T-4139**	8	BOLT (M12X1.75X30-MM)	
	10	1	**8T-4223**	8	WASHER-HARD (13.5X25.5X3-MM THK)	
	11	1	**289-5700**	2	GROMMET	

I-REFER TO HYDRAULIC INFORMATION SYSTEM
M-METRIC PART
Y-SEPARATE ILLUSTRATION

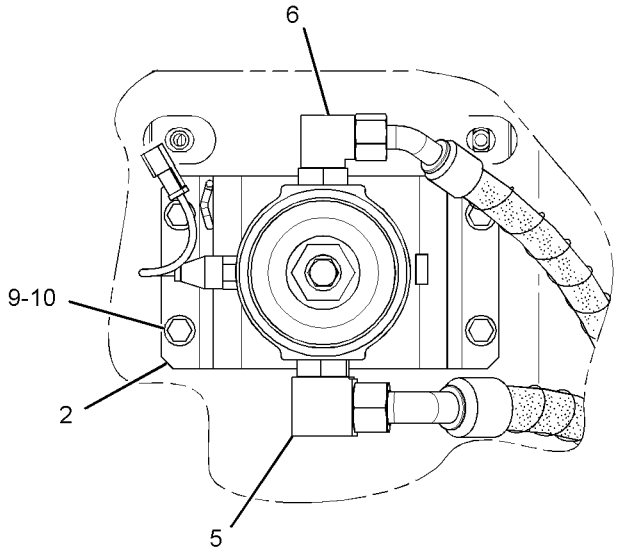

VIEW A-A

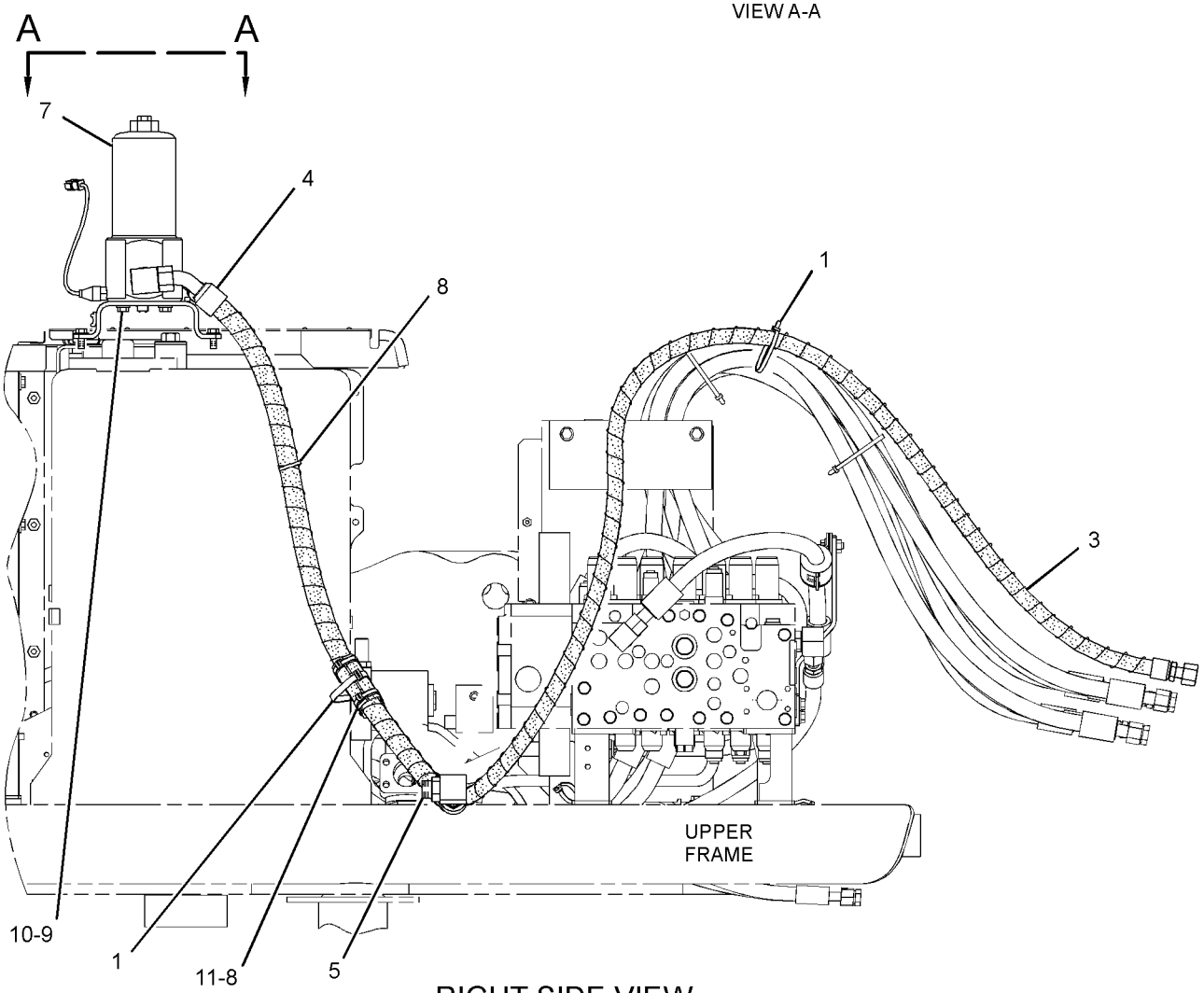

RIGHT SIDE VIEW

GRAPHIC #1 **<END>** g01560890

282-7387 LINES GP-HYDRAULIC OIL COOLER

S/N: CLA1-UP

PART OF 270-5992 HYDRAULIC AR

SMCS-1374 **i02897902**

NOTE	REF NO	GRAPHIC REF	PART NUMBER	QTY	PART NAME 1 2 3 4 5 6 (PRODUCT LEVEL)	SEE PAGE
	1	2	**229-0964**	1	TUBE AS	
I	2	2	**255-1947**	1	HOSE AS	
	3	2	**286-6533**	1	TUBE AS	
	4	2	**286-6536**	1	TUBE AS	
I	6	2	**286-6541**	1	HOSE AS	
	7	2	**296-7064**	1	TUBE AS	
	8	1	**296-7066**	1	SUPPORT	
	9	2	**319-9706**	1	SUPPORT	
M	10	1,2	**096-4883**	8	LOCKNUT (M10X1.15-THD)	
M	11	2	**101-7404**	8	BOLT-SOCKET HEAD (M10X1.5X30-MM)	
	12	1,2	**1P-4578**	8	FLANGE-HALF	
	13	2	**4J-0522**	6	SEAL-O-RING	
	14	2	**4J-0523**	2	SEAL-O-RING	
M	15	1,2	**7Y-5237**	4	U-BOLT	
	16	1,2	**8T-4121**	24	WASHER-HARD (11X21X2.5-MM THK)	
M	18	1,2	**8T-4192**	4	BOLT (M12X1.75X25-MM)	
M	19	1,2	**8T-4196**	16	BOLT (M10X1.5X35-MM)	
	20	1,2	**8T-4223**	8	WASHER-HARD (13.5X25.5X3-MM THK)	
M	21	2	**8T-4956**	4	BOLT (M12X1.75X35-MM)	

I-REFER TO HYDRAULIC INFORMATION SYSTEM
M-METRIC PART

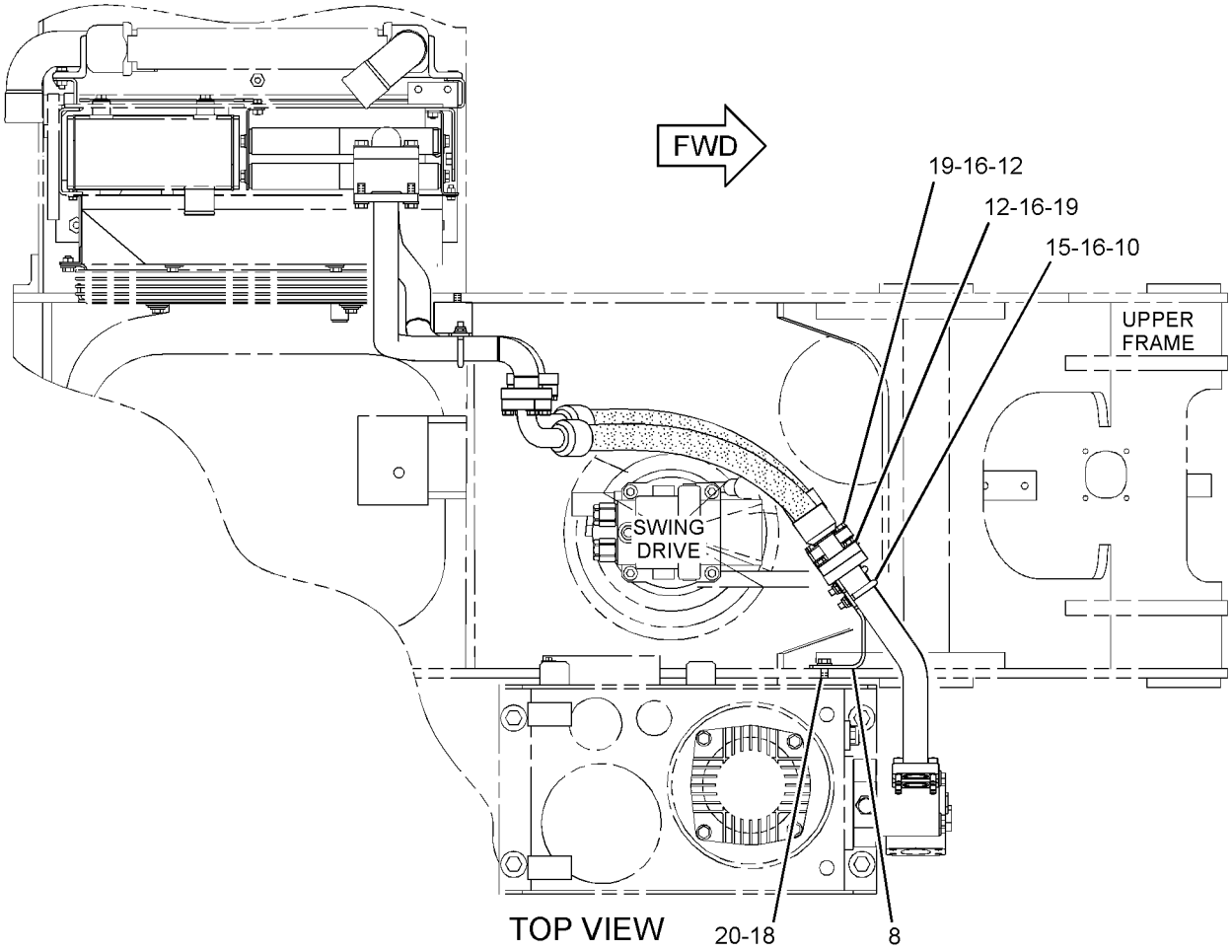

GRAPHIC #1 g01452797

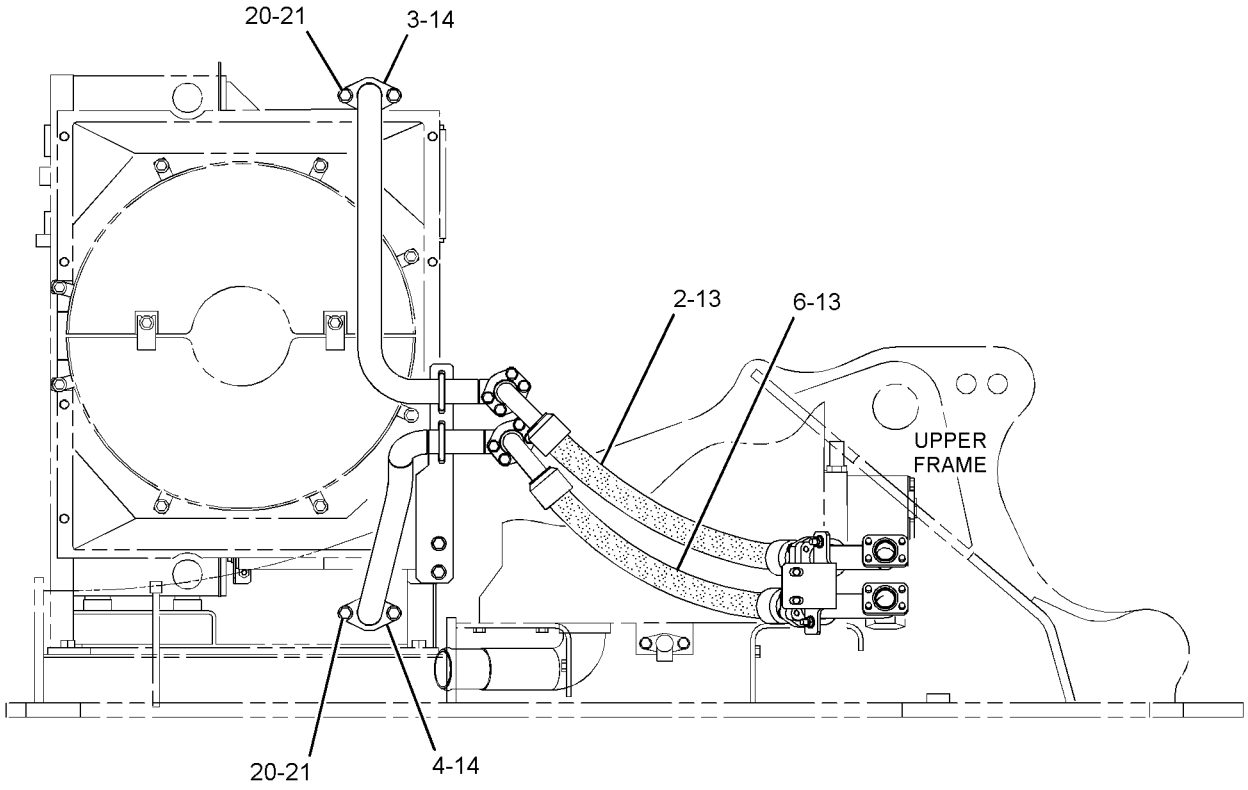

RIGHT SIDE VIEW

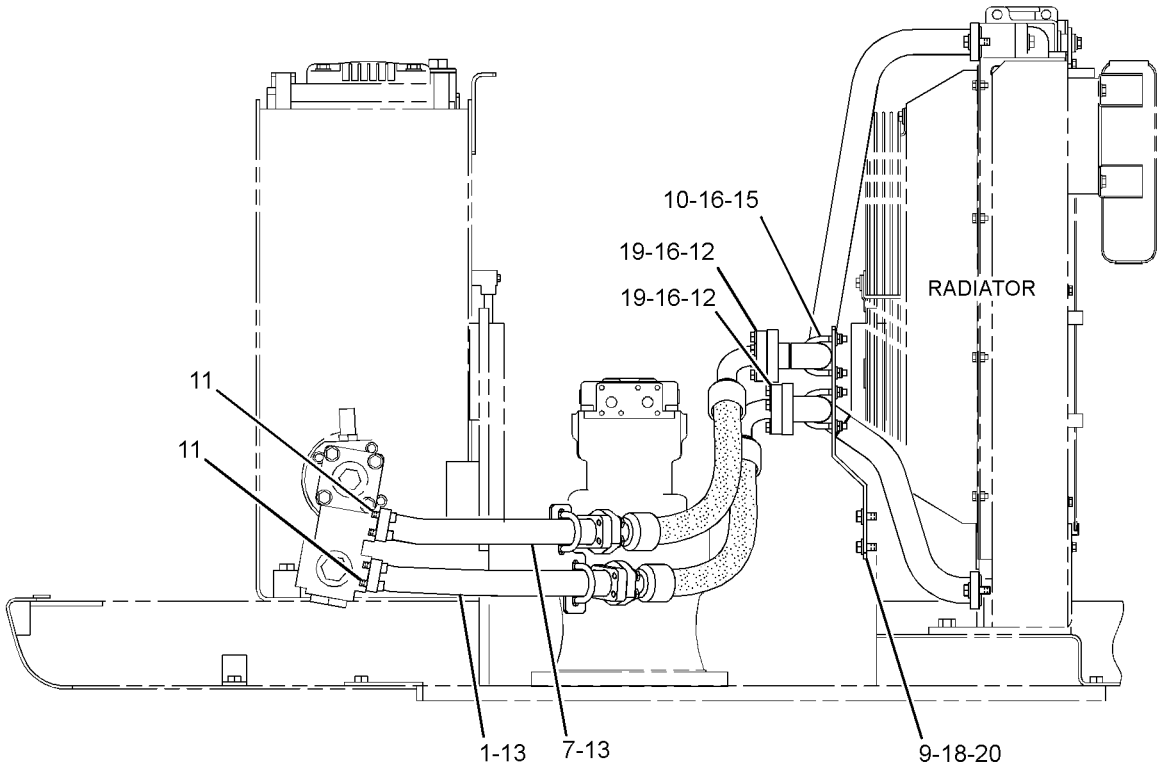

FRONT VIEW

GRAPHIC #2 **<END>** g01452798

HYDRAULIC SYSTEM

260-7891 LINES GP-PILOT—PUMP CONTROL, SHUTTLE VALVE

S/N: CLA1-UP

PART OF 270-6025, 270-6030 CONTROL AR-AUXILIARY

AN ATTACHMENT

SMCS-5057, 5059 **i02855390**

NOTE	REF NO	GRAPHIC REF	PART NUMBER	QTY	PART NAME 1 2 3 4 5 6 (PRODUCT LEVEL)	SEE PAGE
	1	1	**309-5769**	1	SWITCH AS-PRESSURE (IMPLEMENT, SWING)	
		1	**102-8802**	1	KIT-RECEPTACLE (2-PIN)	
					(INCLUDES RECEPTACLE AS & WEDGE)	
		1	**9X-3401**	2	PIN-CONNECTOR (16-GA TO 18-GA)	
					—OR—	
		1	**126-1767**	2	PIN-CONNECTOR (14-GA)	
	2	1	**185-0383**	1	BRACKET	
Y	3	1	**185-0462**	1	VALVE GP-SHUTTLE (PILOT)	637
	4	1	*148-8336*	8	CONNECTOR AS	
					(EACH INCLUDES)	
		1	**3J-1907**	1	SEAL-O-RING	
		1	**6V-8397**	1	SEAL-O-RING	
		1	**6V-8636**	1	CONNECTOR	
	5	1	*148-8353*	8	ELBOW AS	
					(EACH INCLUDES)	
		1	**3J-1907**	1	SEAL-O-RING	
		1	**6V-8397**	1	SEAL-O-RING	
		1	**6V-9001**	1	ELBOW	
	6	1	**8T-4121**	7	WASHER-HARD (11X21X2.5-MM THK)	
M	7	1	**8T-4136**	3	BOLT (M10X1.5X25-MM)	
M	8	1	**8T-4137**	4	BOLT (M10X1.5X20-MM)	

M-METRIC PART
Y-SEPARATE ILLUSTRATION

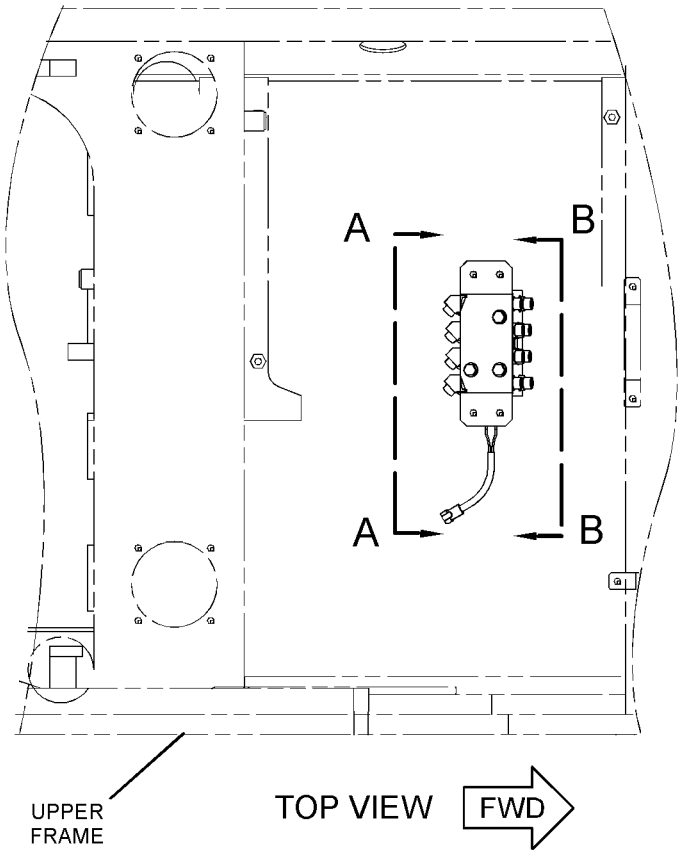

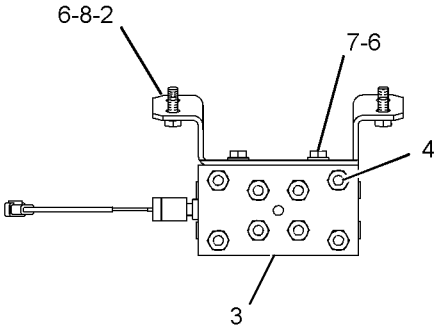

VIEW B-B

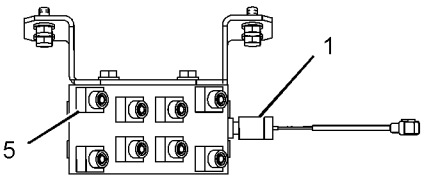

VIEW A-A

GRAPHIC #1 **<END>** g01151832

HYDRAULIC SYSTEM

278-6672 LINES GP-PILOT–JOYSTICK, PEDALS

S/N: CLA1-152

PART OF 270-5992 HYDRAULIC AR

SMCS-5057, 5059 **i02910128**

NOTE	REF NO	GRAPHIC REF	PART NUMBER	QTY	PART NAME 1 2 3 4 5 6 (PRODUCT LEVEL)	SEE PAGE
	1	2	**4I-9521**	2	BAND-MARKER (RED, L1)	
	2	2	**4I-9522**	2	BAND-MARKER (YELLOW, L2)	
	3	2	**4I-9523**	2	BAND-MARKER (BLUE, L3)	
	4	2	**4I-9524**	2	BAND-MARKER (BROWN, L4)	
	5	2	**4I-9525**	2	BAND-MARKER (ORANGE, R1)	
	6	2	**4I-9526**	2	BAND-MARKER (WHITE, R2)	
	7	2	**4I-9527**	2	BAND-MARKER (GREEN, R3)	
	8	2	**4I-9528**	2	BAND-MARKER (PURPLE, R4)	
	9	1	**7K-1181**	2	STRAP-CABLE	
I	10	2	**087-4402**	2	HOSE AS	
	11	1	**133-5813**	4	BAND-MARKER (GRAY, P)	
Y	12	1	**270-5948**	1	VALVE GP-PILOT (TRAVEL)	616
	13	2	**168-9759**	1	BLOCK	
	14	2	**184-9336**	3	SUPPORT	
	15	1	**236-2838**	1	PLATE	
	16	2	**236-2843**	1	HOSE AS	
	17	2	**236-2844**	1	HOSE AS	
	18	1	**307-5248**	1	HOSE AS	
	19	2	**282-7171**	1	HOSE AS	
	20	2	**282-7206**	1	HOSE AS	
I	21	2	**292-7423**	1	HOSE AS	
I	22	2	**292-7424**	1	HOSE AS	
I	23	2	**292-7425**	1	HOSE AS	
I	24	2	**292-7427**	1	HOSE AS	
I	25	2	**292-7428**	1	HOSE AS	
I	26	2	**292-7429**	1	HOSE AS	
	27	2	**292-7431**	1	SUPPORT AS	
	28	2	**292-7513**	1	SUPPORT	
	29	1	*148-8336*	11	CONNECTOR AS	
					(EACH INCLUDES)	
		1	**3J-1907**	1	SEAL-O-RING	
		1	**6V-8397**	1	SEAL-O-RING	
		1	**6V-8636**	1	CONNECTOR	
	30	2	*164-5624*	2	ELBOW AS	
					(EACH INCLUDES)	
		2	**3J-1907**	1	SEAL-O-RING	
		2	**6V-8398**	1	SEAL-O-RING	
		2	**9X-2085**	1	ELBOW	
	31	2	*148-8363*	2	ELBOW AS	
					(EACH INCLUDES)	
		2	**3K-0360**	1	SEAL-O-RING	
		2	**6V-8397**	1	SEAL-O-RING	
		2	**6V-9876**	1	ELBOW	
	32	1	*148-8366*	8	ELBOW AS	
					(EACH INCLUDES)	
		1	**6V-8397**	2	SEAL-O-RING	
		1	**6V-8987**	1	ELBOW	
	33	2	*148-8378*	8	ELBOW AS	
					(EACH INCLUDES)	
		2	**3J-1907**	1	SEAL-O-RING	
		2	**6V-8397**	1	SEAL-O-RING	
		2	**6V-8724**	1	ELBOW	
	34	2	*148-8407*	4	PLUG AS	
					(EACH INCLUDES)	
		2	**3J-1907**	1	SEAL-O-RING	
		2	**9S-4191**	1	PLUG-O-RING	

278-6672 **LINES GP-PILOT** *(contd.)* **i02910128**

NOTE	REF NO	GRAPHIC REF	PART NUMBER	QTY	PART NAME 1 2 3 4 5 6 (PRODUCT LEVEL)	SEE PAGE
	35	1	*164-5628*	3	CONNECTOR AS	
					(EACH INCLUDES)	
		1	**3J-1907**	1	SEAL-O-RING	
		1	**6V-8397**	1	SEAL-O-RING	
		1	**107-6631**	1	CONNECTOR-FILTER	
	36	1	**6V-9168**	8	NUT (11/16-16-THD)	
	37	1,2	**8T-4121**	18	WASHER-HARD (11X21X2.5-MM THK)	
M	38	1	**8T-4136**	4	BOLT (M10X1.5X25-MM)	
M	39	1,2	**8T-4137**	12	BOLT (M10X1.5X20-MM)	
M	40	2	**8T-4178**	2	BOLT (M10X1.5X90-MM)	
	41	1	**9X-8257**	8	WASHER (17.5X30X3.5-MM THK)	
	42	1	**272-4514**	1	HOSE AS	

I-REFER TO HYDRAULIC INFORMATION SYSTEM
M-METRIC PART
Y-SEPARATE ILLUSTRATION

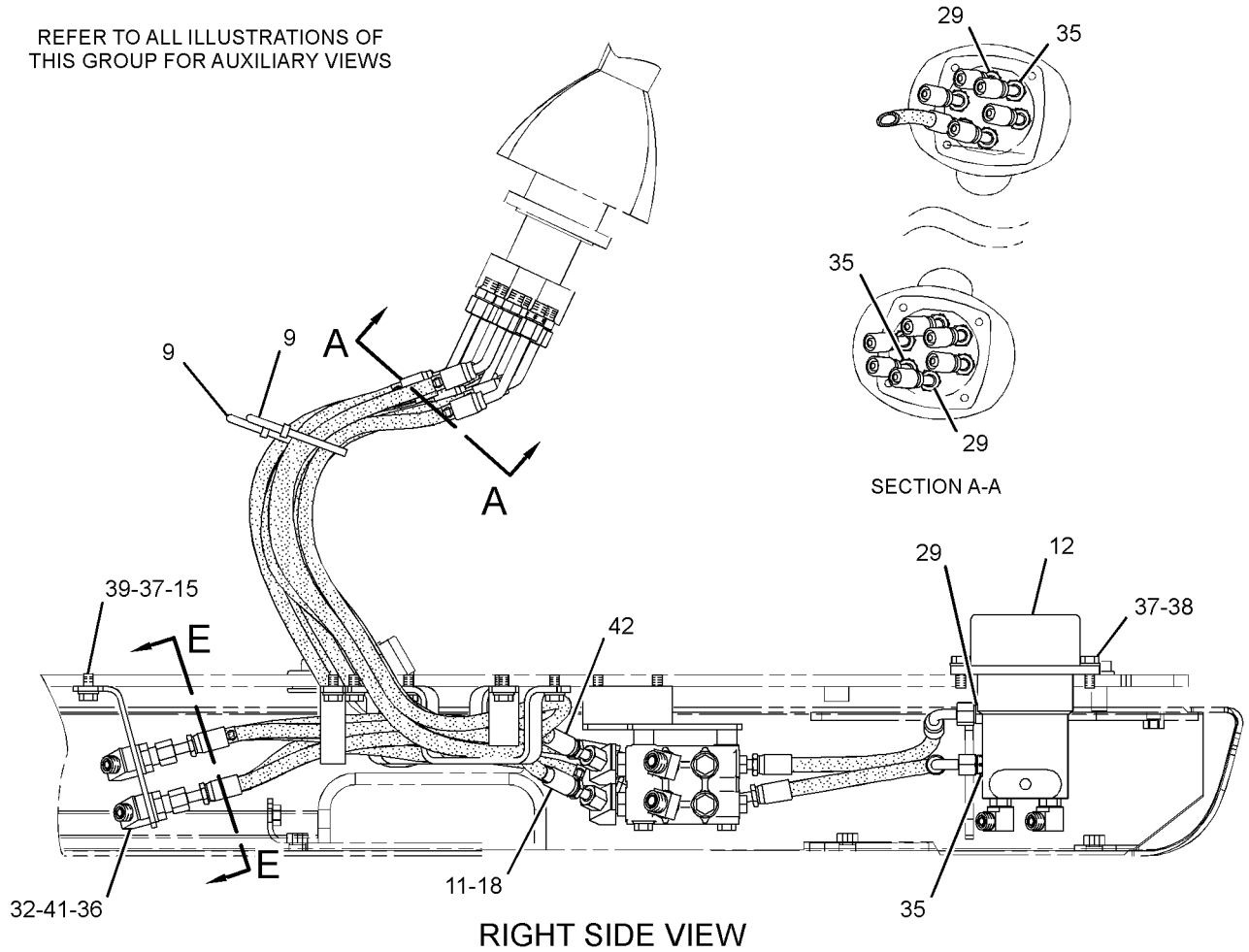

GRAPHIC #1 g01451504

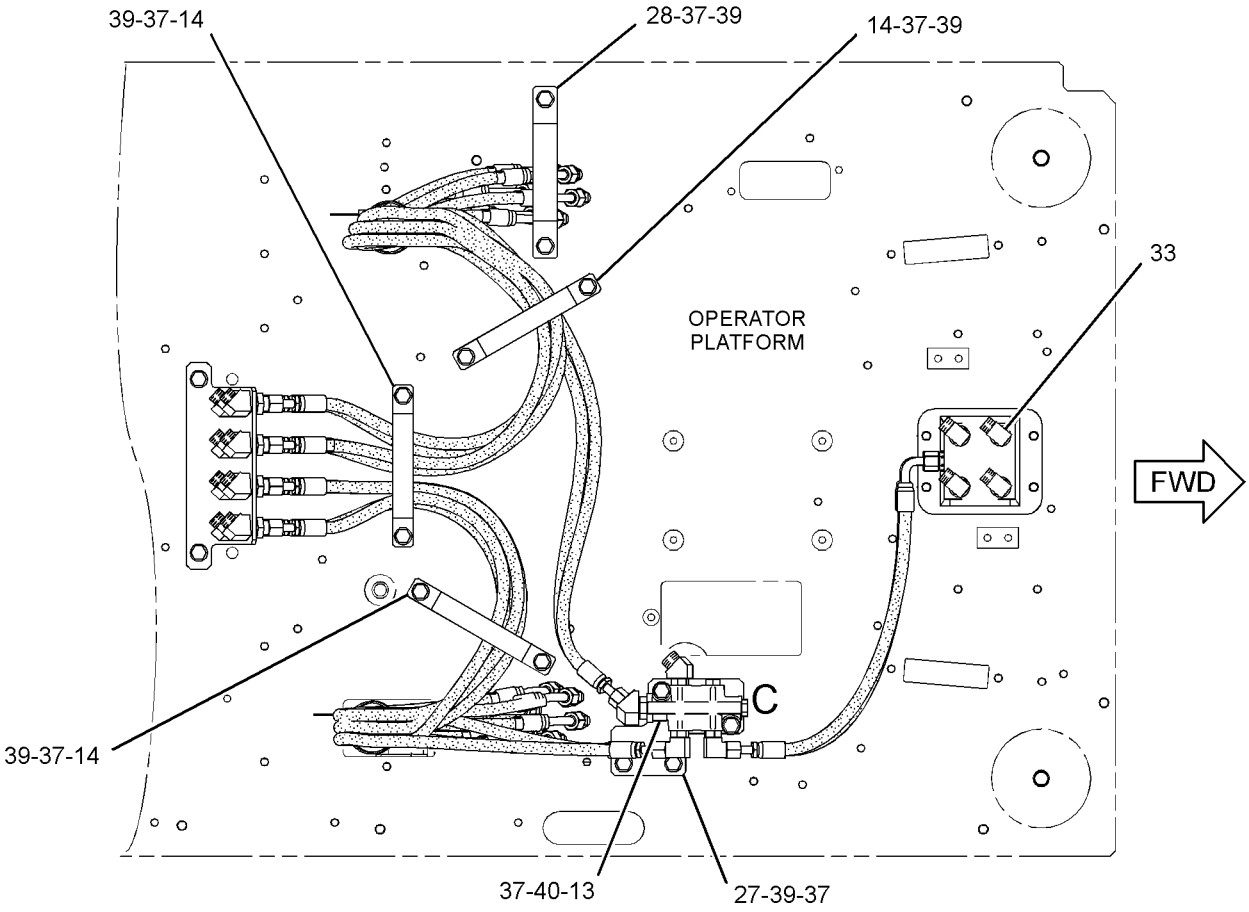

BOTTOM VIEW

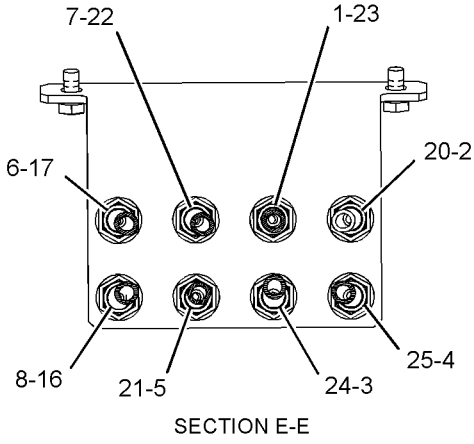

SECTION E-E

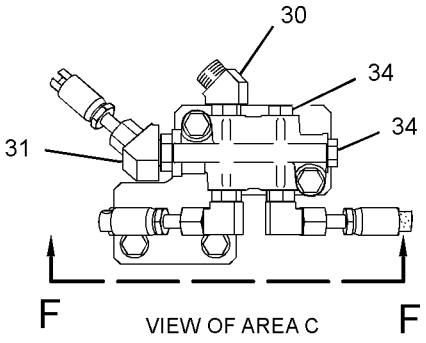

VIEW OF AREA C

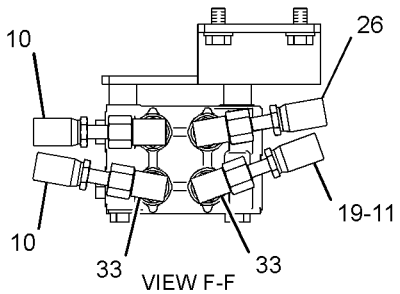

VIEW F-F

GRAPHIC #2 **<END>** g01451505

HYDRAULIC SYSTEM

278-6672 LINES GP-PILOT—JOYSTICK, PEDALS

S/N: CLA153-UP

PART OF 270-5992 HYDRAULIC AR

SMCS-5057, 5059 **i03248921**

NOTE	REF NO	GRAPHIC REF	PART NUMBER	QTY	PART NAME 1 2 3 4 5 6 (PRODUCT LEVEL)	SEE PAGE
	1	2	**4I-9521**	2	BAND-MARKER (RED, L1)	
	2	2	**4I-9522**	2	BAND-MARKER (YELLOW, L2)	
	3	2	**4I-9523**	2	BAND-MARKER (BLUE, L3)	
	4	2	**4I-9524**	2	BAND-MARKER (BROWN, L4)	
	5	2	**4I-9525**	2	BAND-MARKER (ORANGE, R1)	
	6	2	**4I-9526**	2	BAND-MARKER (WHITE, R2)	
	7	2	**4I-9527**	2	BAND-MARKER (GREEN, R3)	
	8	2	**4I-9528**	2	BAND-MARKER (PURPLE, R4)	
	9	1	**7K-1181**	2	STRAP-CABLE	
I	10	2	**087-4402**	2	HOSE AS	
	11	1	**133-5813**	4	BAND-MARKER (GRAY, P)	
CY	12	1	**310-0415**	1	VALVE GP-PILOT (WITHOUT SHUTTLE)	622
	13	2	**168-9759**	1	BLOCK	
	14	2	**184-9336**	3	SUPPORT	
	15	1	**236-2838**	1	PLATE	
	16	2	**236-2843**	1	HOSE AS	
	17	2	**236-2844**	1	HOSE AS	
	18	1	**307-5248**	1	HOSE AS	
	19	2	**282-7171**	1	HOSE AS	
	20	2	**282-7206**	1	HOSE AS	
I	21	2	**292-7423**	1	HOSE AS	
I	22	2	**292-7424**	1	HOSE AS	
I	23	2	**292-7425**	1	HOSE AS	
I	24	2	**292-7427**	1	HOSE AS	
I	25	2	**292-7428**	1	HOSE AS	
I	26	2	**292-7429**	1	HOSE AS	
	27	2	**292-7431**	1	SUPPORT AS	
	28	2	**292-7513**	1	SUPPORT	
	29	1	*148-8336*	11	CONNECTOR AS	
					(EACH INCLUDES)	
		1	**3J-1907**	1	SEAL-O-RING	
		1	**6V-8397**	1	SEAL-O-RING	
		1	**6V-8636**	1	CONNECTOR	
	30	2	*164-5624*	2	ELBOW AS	
					(EACH INCLUDES)	
		2	**3J-1907**	1	SEAL-O-RING	
		2	**6V-8398**	1	SEAL-O-RING	
		2	**9X-2085**	1	ELBOW	
	31	2	*148-8363*	2	ELBOW AS	
					(EACH INCLUDES)	
		2	**3K-0360**	1	SEAL-O-RING	
		2	**6V-8397**	1	SEAL-O-RING	
		2	**6V-9876**	1	ELBOW	
	32	1	*148-8366*	8	ELBOW AS	
					(EACH INCLUDES)	
		1	**6V-8397**	2	SEAL-O-RING	
		1	**6V-8987**	1	ELBOW	
	33	2	*148-8378*	8	ELBOW AS	
					(EACH INCLUDES)	
		2	**3J-1907**	1	SEAL-O-RING	
		2	**6V-8397**	1	SEAL-O-RING	
		2	**6V-8724**	1	ELBOW	
	34	2	*148-8407*	4	PLUG AS	
					(EACH INCLUDES)	
		2	**3J-1907**	1	SEAL-O-RING	
		2	**9S-4191**	1	PLUG-O-RING	

278-6672 **LINES GP-PILOT** *(contd.)* **i03248921**

NOTE	REF NO	GRAPHIC REF	PART NUMBER	QTY	PART NAME 1 2 3 4 5 6 (PRODUCT LEVEL)	SEE PAGE
	35	1	*164-5628*	3	CONNECTOR AS	
					(EACH INCLUDES)	
		1	**3J-1907**	1	SEAL-O-RING	
		1	**6V-8397**	1	SEAL-O-RING	
		1	**107-6631**	1	CONNECTOR-FILTER	
	36	1	**6V-9168**	8	NUT (11/16-16-THD)	
	37	1,2	**8T-4121**	18	WASHER-HARD (11X21X2.5-MM THK)	
M	38	1	**8T-4136**	4	BOLT (M10X1.5X25-MM)	
M	39	1,2	**8T-4137**	12	BOLT (M10X1.5X20-MM)	
M	40	2	**8T-4178**	2	BOLT (M10X1.5X90-MM)	
	41	1	**9X-8257**	8	WASHER (17.5X30X3.5-MM THK)	
	42	1	**272-4514**	1	HOSE AS	

C-CHANGE FROM PREVIOUS TYPE
I-REFER TO HYDRAULIC INFORMATION SYSTEM
M-METRIC PART
Y-SEPARATE ILLUSTRATION

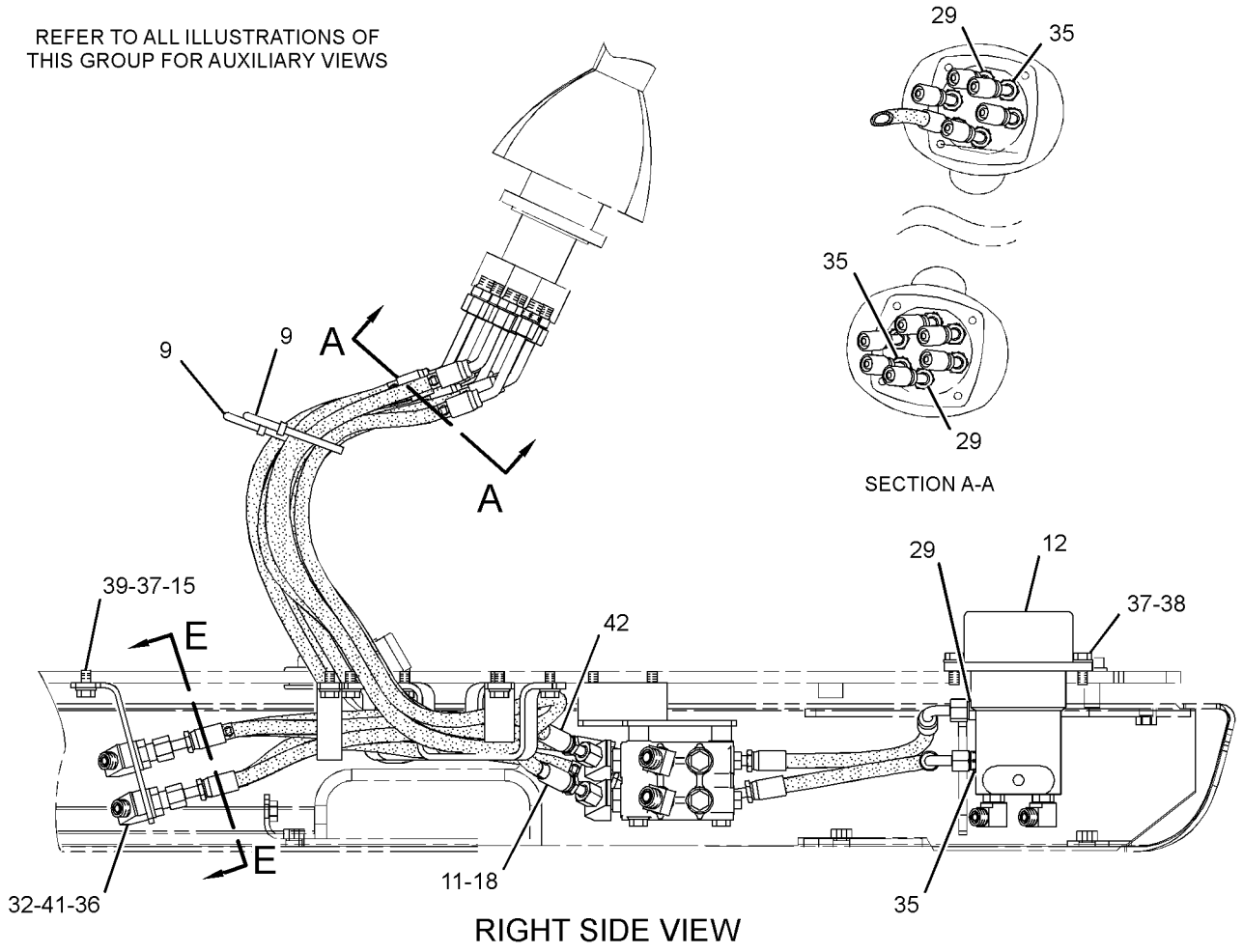

GRAPHIC #1 g01451504

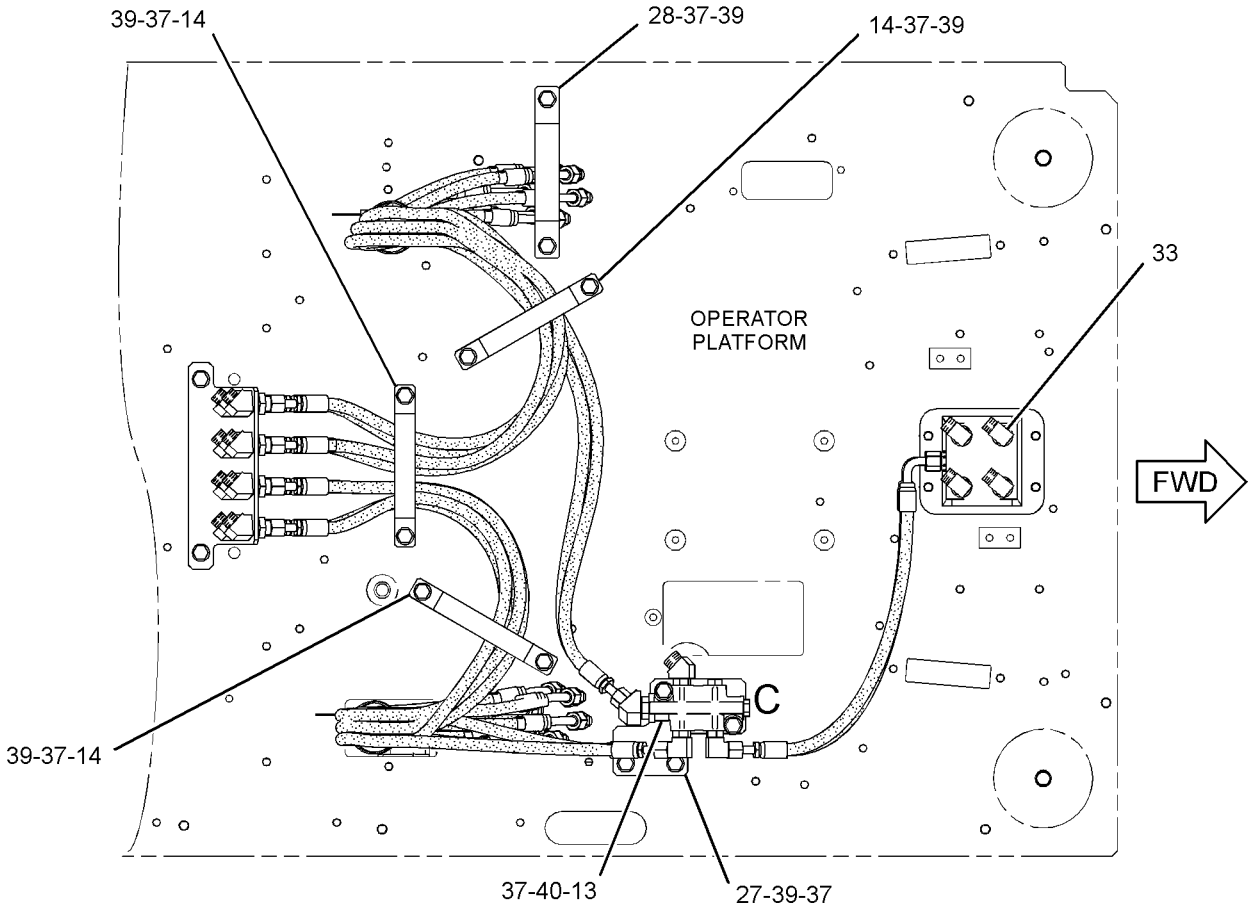

BOTTOM VIEW

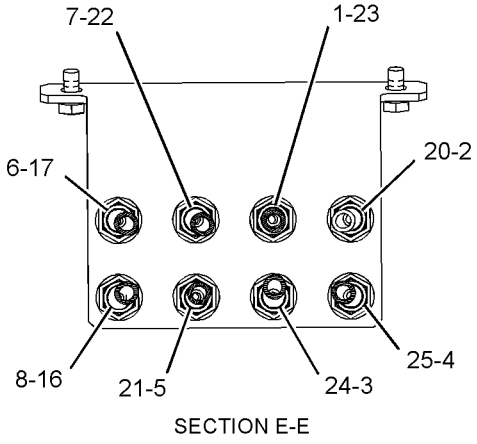

SECTION E-E

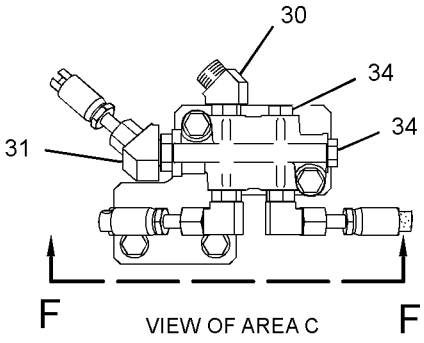

VIEW OF AREA C

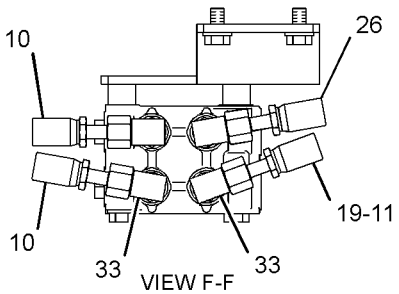

VIEW F-F

GRAPHIC #2 **<END>** g01451505

HYDRAULIC SYSTEM

278-6720 LINES GP-PILOT–2-WAY

S/N: CLA1-UP

PART OF 270-5869 VALVE AR-ALT PATTERN CONTROL

AN ATTACHMENT

SMCS-5057, 5059 **i02867316**

NOTE	REF NO	GRAPHIC REF	PART NUMBER	QTY	PART NAME 1 2 3 4 5 6 (PRODUCT LEVEL)	SEE PAGE
	1	1	**4I-9521**	2	BAND-MARKER (RED, L1)	
	2	1	**4I-9523**	2	BAND-MARKER (BLUE, L3)	
	3	1	**4I-9525**	2	BAND-MARKER (ORANGE, R1)	
	4	1	**4I-9527**	2	BAND-MARKER (GREEN, R3)	
	5	1	**7K-1181**	1	STRAP-CABLE	
	6	1	**133-5813**	2	BAND-MARKER (GRAY, P)	
	7	1	*164-6874*	3	FITTING AS-ELBOW	
					(EACH INCLUDES)	
		1	**3J-1907**	1	SEAL-O-RING	
		1	**085-7356**	1	FITTING	
	8	1	**309-5769**	1	SWITCH AS-PRESSURE (IMPLEMENT, SWING)	
		1	**9X-3401**	2	PIN-CONNECTOR (16-GA TO 18-GA)	
					–OR–	
		1	**126-1767**	2	PIN-CONNECTOR (14-GA)	
		1	**102-8802**	1	KIT-RECEPTACLE (2-PIN)	
					(INCLUDES RECEPTACLE AS & WEDGE)	
I	9	1	**207-6418**	1	HOSE AS	
	10	1	**270-5664**	1	VALVE GP-PILOT (ALT PATTERN CONTROL, 2-WAY)	
I	11	1	**282-7095**	4	HOSE AS	
	12	1	**292-7555**	1	HOSE AS	
	13	1	**282-7317**	1	PLATE	
	14	1	*148-8336*	5	CONNECTOR AS	
					(EACH INCLUDES)	
		1	**3J-1907**	1	SEAL-O-RING	
		1	**6V-8397**	1	SEAL-O-RING	
		1	**6V-8636**	1	CONNECTOR	
	15	1	*148-8378*	2	ELBOW AS	
					(EACH INCLUDES)	
		1	**3J-1907**	1	SEAL-O-RING	
		1	**6V-8397**	1	SEAL-O-RING	
		1	**6V-8724**	1	ELBOW	
	16	1	*150-3036*	5	ELBOW AS	
					(EACH INCLUDES)	
		1	**3J-1907**	1	SEAL-O-RING	
		1	**6V-8397**	1	SEAL-O-RING	
		1	**8T-1905**	1	ELBOW	
	17	1	**5K-8451**	2	CLIP	
	18	1	**8T-4121**	8	WASHER-HARD (11X21X2.5-MM THK)	
M	19	1	**8T-4137**	6	BOLT (M10X1.5X20-MM)	
M	20	1	**8T-4191**	2	BOLT (M10X1.5X16-MM)	

I-REFER TO HYDRAULIC INFORMATION SYSTEM
M-METRIC PART

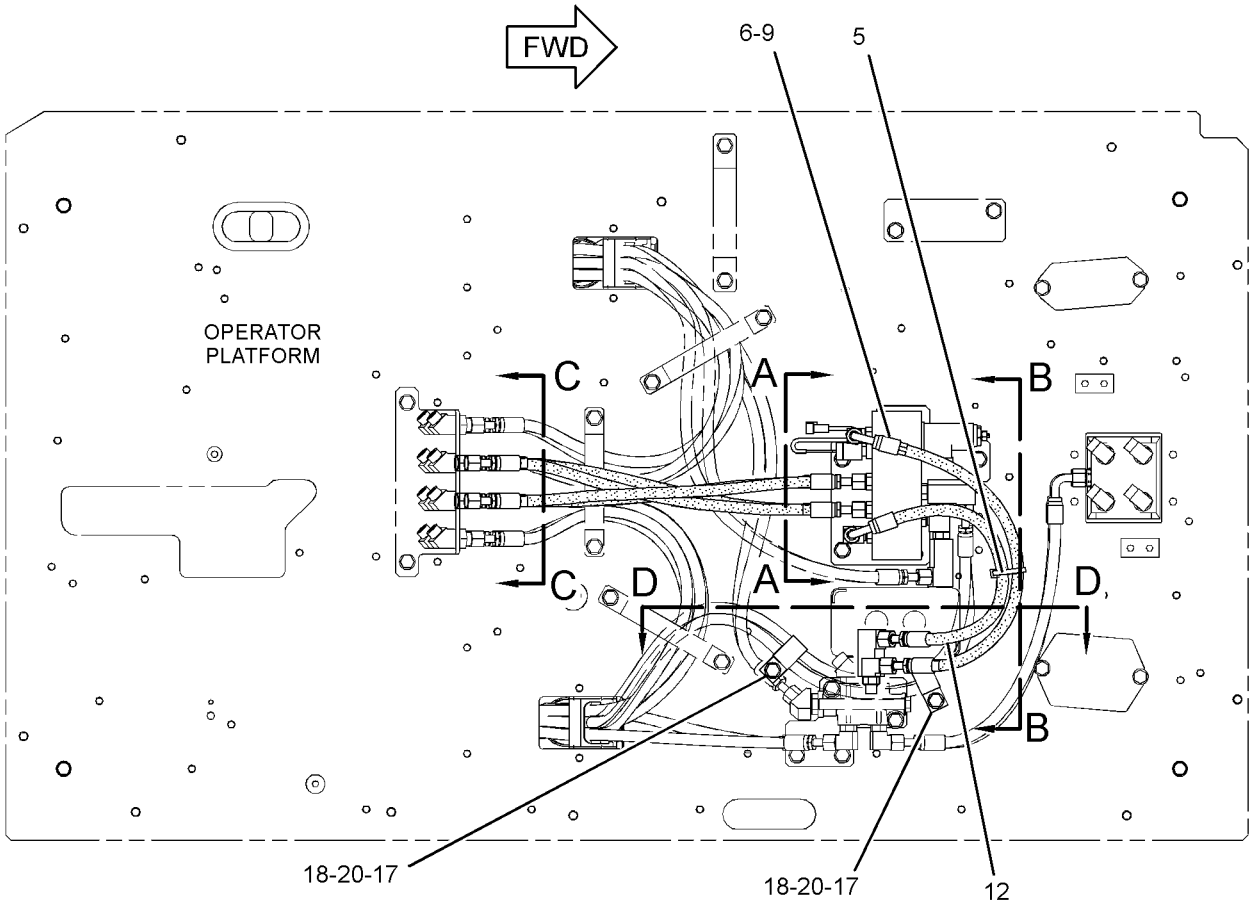

BOTTOM VIEW

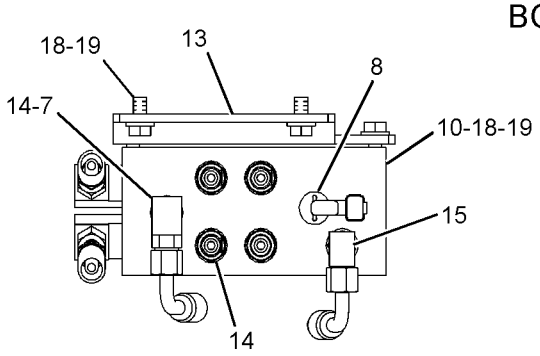

SECTION A-A

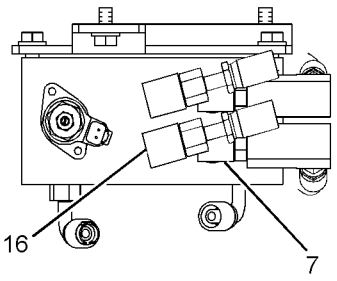

SECTION B-B

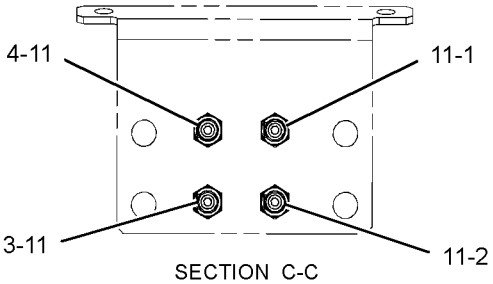

SECTION C-C

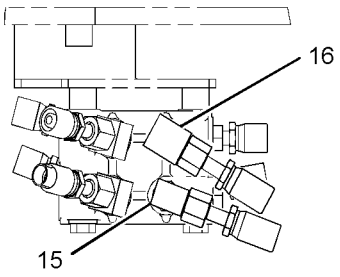

SECTION D-D

GRAPHIC #1 **<END>** g01441576

HYDRAULIC SYSTEM

278-6721 LINES GP-PILOT–4-WAY

S/N: CLA1-UP
PART OF 270-5871 VALVE AR
AN ATTACHMENT

SMCS-5057, 5059 **i03044963**

NOTE	REF NO	GRAPHIC REF	PART NUMBER	QTY	PART NAME 1 2 3 4 5 6 (PRODUCT LEVEL)	SEE PAGE
	1	1	**4I-9521**	2	BAND-MARKER (RED, L1)	
	2	1	**4I-9522**	2	BAND-MARKER (YELLOW, L2)	
	3	1	**4I-9523**	2	BAND-MARKER (BLUE, L3)	
	4	1	**4I-9524**	2	BAND-MARKER (BROWN, L4)	
	5	1	**4I-9525**	2	BAND-MARKER (ORANGE, R1)	
	6	1	**4I-9526**	2	BAND-MARKER (WHITE, R2)	
	7	1	**4I-9527**	2	BAND-MARKER (GREEN, R3)	
	8	1	**4I-9528**	2	BAND-MARKER (PURPLE, R4)	
	9	1	**7K-1181**	1	STRAP-CABLE	
Y	10	1	**171-0024**	1	VALVE GP-SELECTOR (CONTROL PATTERN CHANGE)	632
I	11	1	**275-1538**	8	HOSE AS	
	12	1	**307-5228**	1	SUPPORT AS	
	13	1	*148-8336*	8	CONNECTOR AS	
					(EACH INCLUDES)	
		1	**3J-1907**	1	SEAL-O-RING	
		1	**6V-8397**	1	SEAL-O-RING	
		1	**6V-8636**	1	CONNECTOR	
	14	1	*148-8378*	6	ELBOW AS	
					(EACH INCLUDES)	
		1	**3J-1907**	1	SEAL-O-RING	
		1	**6V-8397**	1	SEAL-O-RING	
		1	**6V-8724**	1	ELBOW	
	15	1	*150-3036*	2	ELBOW AS	
					(EACH INCLUDES)	
		1	**3J-1907**	1	SEAL-O-RING	
		1	**6V-8397**	1	SEAL-O-RING	
		1	**8T-1905**	1	ELBOW	
	16	1	**7D-7233**	2	CLIP	
	17	1	**8T-4121**	6	WASHER-HARD (11X21X2.5-MM THK)	
M	18	1	**8T-4179**	4	BOLT (M12X1.75X20-MM)	
M	19	1	**8T-4191**	2	BOLT (M10X1.5X16-MM)	
M	20	1	**8T-4195**	4	BOLT (M10X1.5X30-MM)	
	21	1	**8T-4223**	4	WASHER-HARD (13.5X25.5X3-MM THK)	

I-REFER TO HYDRAULIC INFORMATION SYSTEM
M-METRIC PART
Y-SEPARATE ILLUSTRATION

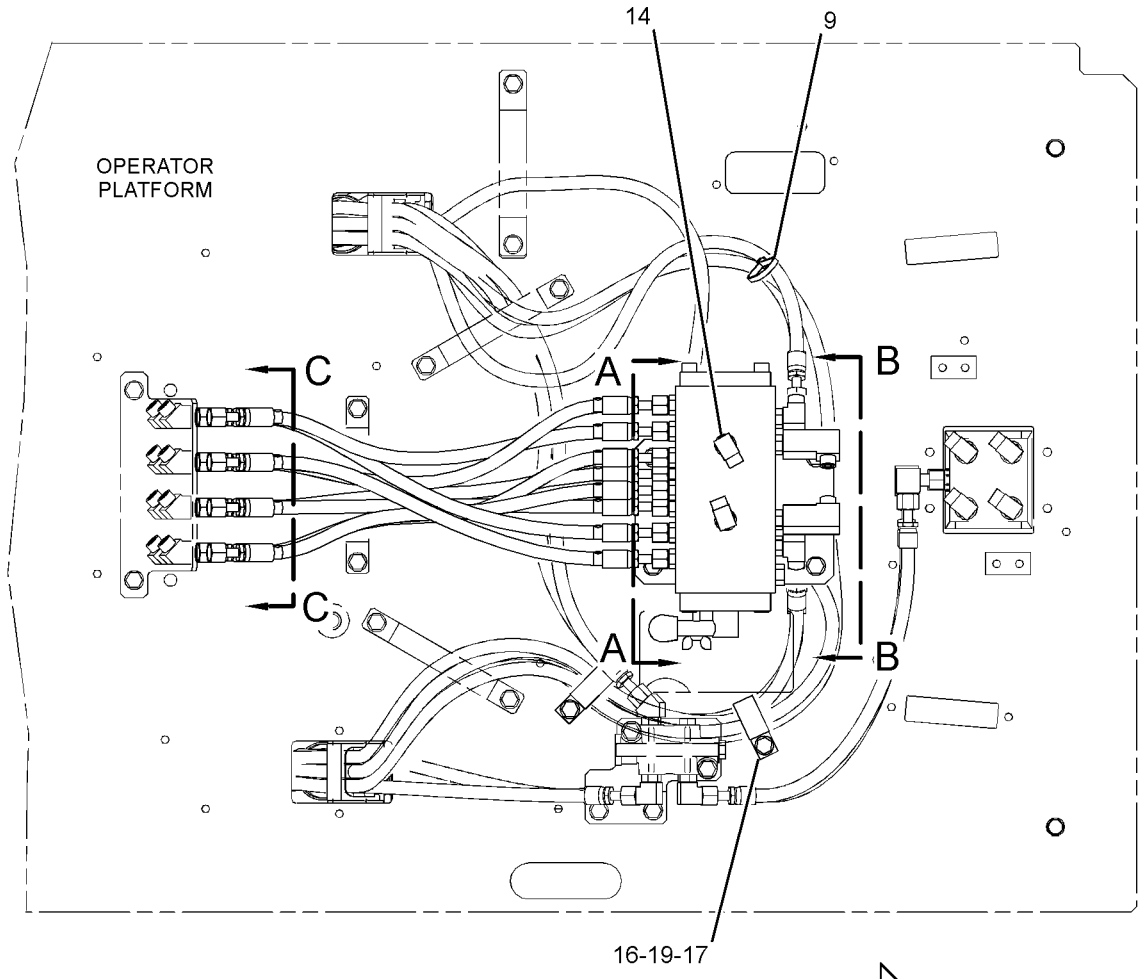

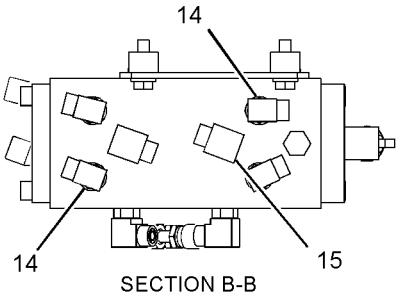

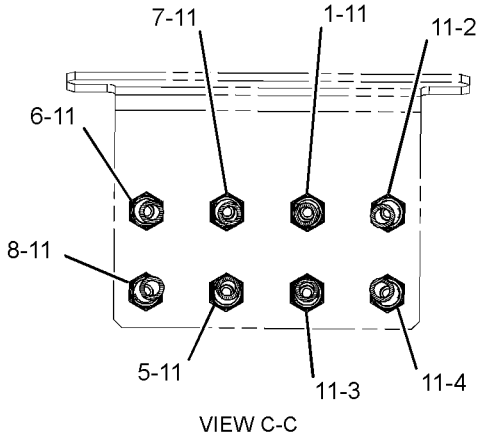

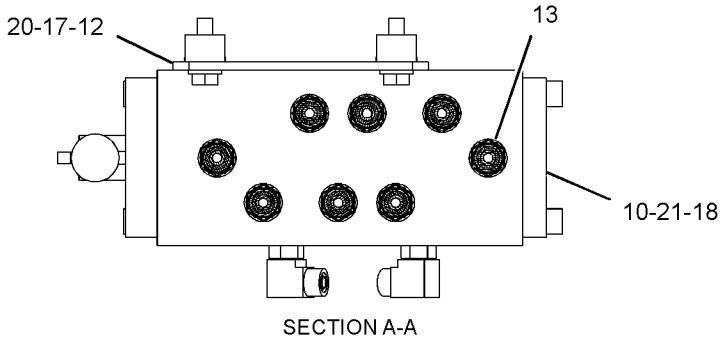

GRAPHIC #1 **<END>** g01402592

HYDRAULIC SYSTEM

278-6726 LINES GP-PILOT—THIRD PEDAL, TRAVEL LEVERS

S/N: CLA1-UP

PART OF 293-1239 PEDAL AR-THIRD

AN ATTACHMENT

SMCS-5057, 5059 **i02910666**

NOTE	REF NO	GRAPHIC REF	PART NUMBER	QTY	PART NAME 1 2 3 4 5 6 (PRODUCT LEVEL)	SEE PAGE
I	1	1	**5I-8825**	1	HOSE AS	
	2	1	**7K-1181**	3	STRAP-CABLE	
I	3	1	**087-4402**	1	HOSE AS	
I	4	1	**087-5766**	1	HOSE AS	
I	5	1	**111-0985**	1	HOSE AS	
Y	6	1	**112-0083**	1	VALVE GP-SHUTTLE	633
	7	1	*164-5628*	1	CONNECTOR AS	
		1	**3J-1907**	1	SEAL-O-RING	
		1	**6V-8397**	1	SEAL-O-RING	
		1	**107-6631**	1	CONNECTOR-FILTER	
	8	1	*164-6874*	3	FITTING AS-ELBOW	
					(EACH INCLUDES)	
		1	**3J-1907**	1	SEAL-O-RING	
		1	**085-7356**	1	FITTING	
I	9	1	**194-0325**	1	HOSE AS	
	10	1	**228-8146**	2	SPACER (11X25X12.5-MM THK)	
	11	1	**238-6189**	2	HOSE AS	
I	12	1	**307-5153**	1	HOSE AS	
	13	1	*148-8336*	5	CONNECTOR AS	
					(EACH INCLUDES)	
		1	**3J-1907**	1	SEAL-O-RING	
		1	**6V-8397**	1	SEAL-O-RING	
		1	**6V-8636**	1	CONNECTOR	
	14	1	*148-8367*	1	ELBOW AS	
		1	**6V-8397**	1	SEAL-O-RING	
		1	**6V-9850**	1	ELBOW	
	15	1	*148-8378*	7	ELBOW AS	
					(EACH INCLUDES)	
		1	**3J-1907**	1	SEAL-O-RING	
		1	**6V-8397**	1	SEAL-O-RING	
		1	**6V-8724**	1	ELBOW	
	16	1	*150-3036*	3	ELBOW AS	
		1	**3J-1907**	1	SEAL-O-RING	
		1	**6V-8397**	1	SEAL-O-RING	
		1	**8T-1905**	1	ELBOW	
	17	1	**8T-4121**	2	WASHER-HARD (11X21X2.5-MM THK)	
M	18	1	**8T-6466**	2	BOLT (M10X1.5X60-MM)	

I-REFER TO HYDRAULIC INFORMATION SYSTEM
M-METRIC PART
Y-SEPARATE ILLUSTRATION

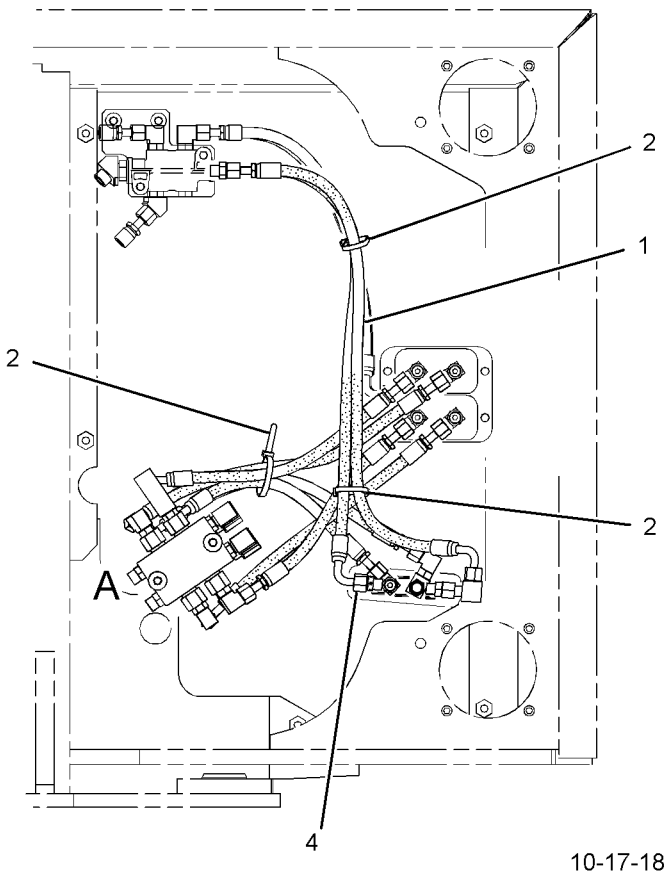

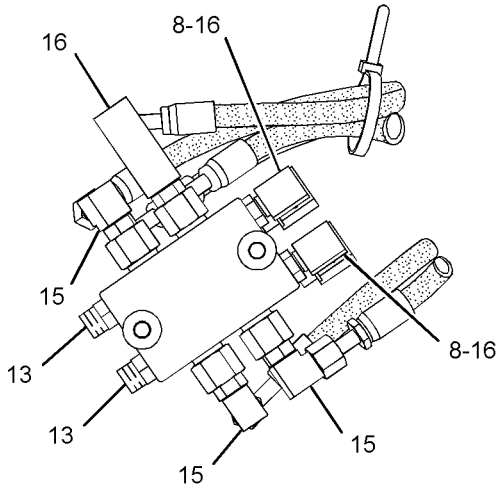

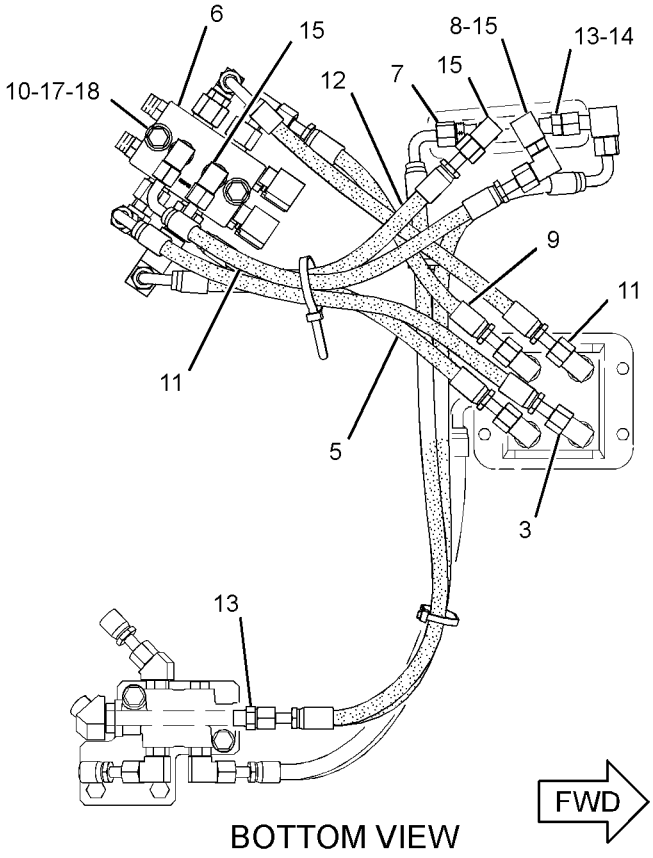

GRAPHIC #1 **<END>** g01450892

HYDRAULIC SYSTEM

282-7388 LINES GP-PILOT—MAIN CONTROL VALVE

S/N: CLA1-UP

PART OF 270-5992 HYDRAULIC AR

SMCS-5057, 5059 **i02825063**

NOTE	REF NO	GRAPHIC REF	PART NUMBER	QTY	PART NAME 1 2 3 4 5 6 (PRODUCT LEVEL)	SEE PAGE
I	1	2	**4I-0812**	1	HOSE AS	
I	2	2	**4I-3988**	1	HOSE AS	
I	3	2	**4I-6136**	1	HOSE AS	
	4	2	**4I-9521**	6	BAND-MARKER (RED, L1)	
	5	2	**4I-9522**	6	BAND-MARKER (YELLOW, L2)	
	6	2	**4I-9523**	2	BAND-MARKER (BLUE, L3)	
	7	2	**4I-9524**	2	BAND-MARKER (BROWN, L4)	
	8	2	**4I-9525**	6	BAND-MARKER (ORANGE, R1)	
	9	2	**4I-9526**	6	BAND-MARKER (WHITE, R2)	
	10	2	**4I-9527**	2	BAND-MARKER (GREEN, R3)	
	11	2	**4I-9528**	2	BAND-MARKER (PURPLE, R4)	
	12	2	**5P-5148**	1	STRAP-TIE	
I	13	2	**7I-8252**	1	HOSE AS	
	14	1	**7K-1181**	6	STRAP-CABLE	
I	15	2	**104-8783**	1	HOSE AS	
I	16	2	**113-6738**	2	HOSE AS	
	17	2	**133-5813**	2	BAND-MARKER (GRAY, P)	
	18	2	*148-8435*	4	TEE AS	
					(EACH INCLUDES)	
		2	**3J-1907**	1	SEAL-O-RING	
		2	**6V-8397**	2	SEAL-O-RING	
		2	**6V-8781**	1	TEE-FACE SEAL	
I	19	2	**179-7616**	1	HOSE AS	
	20	2	**184-9444**	1	BRACKET	
	21	2	**229-1145**	1	HOSE AS	
	22	2	**285-2718**	1	HOSE AS	
	23	2	**285-2719**	2	HOSE AS	
	24	2	**292-7419**	1	HOSE AS	
	25	2	*148-8336*	1	CONNECTOR AS	
		2	**3J-1907**	1	SEAL-O-RING	
		2	**6V-8397**	1	SEAL-O-RING	
		2	**6V-8636**	1	CONNECTOR	
	26	2	*148-8353*	4	ELBOW AS	
					(EACH INCLUDES)	
		2	**3J-1907**	1	SEAL-O-RING	
		2	**6V-8397**	1	SEAL-O-RING	
		2	**6V-9001**	1	ELBOW	
	27	2	*148-8378*	3	ELBOW AS	
					(EACH INCLUDES)	
		2	**3J-1907**	1	SEAL-O-RING	
		2	**6V-8397**	1	SEAL-O-RING	
		2	**6V-8724**	1	ELBOW	
	28	2	*148-8439*	1	TEE AS	
		2	**3J-1907**	1	SEAL-O-RING	
		2	**6V-8397**	2	SEAL-O-RING	
		2	**6V-8774**	1	TEE	
	29	2	*150-4027*	1	TEE AS	
		2	**3E-2310**	1	TEE	
		2	**3J-1907**	1	SEAL-O-RING	
		2	**6V-8397**	1	SEAL-O-RING	
M	30	2	**8T-4192**	2	BOLT (M12X1.75X25-MM)	
	31	2	**8T-4223**	2	WASHER-HARD (13.5X25.5X3-MM THK)	

I-REFER TO HYDRAULIC INFORMATION SYSTEM
M-METRIC PART

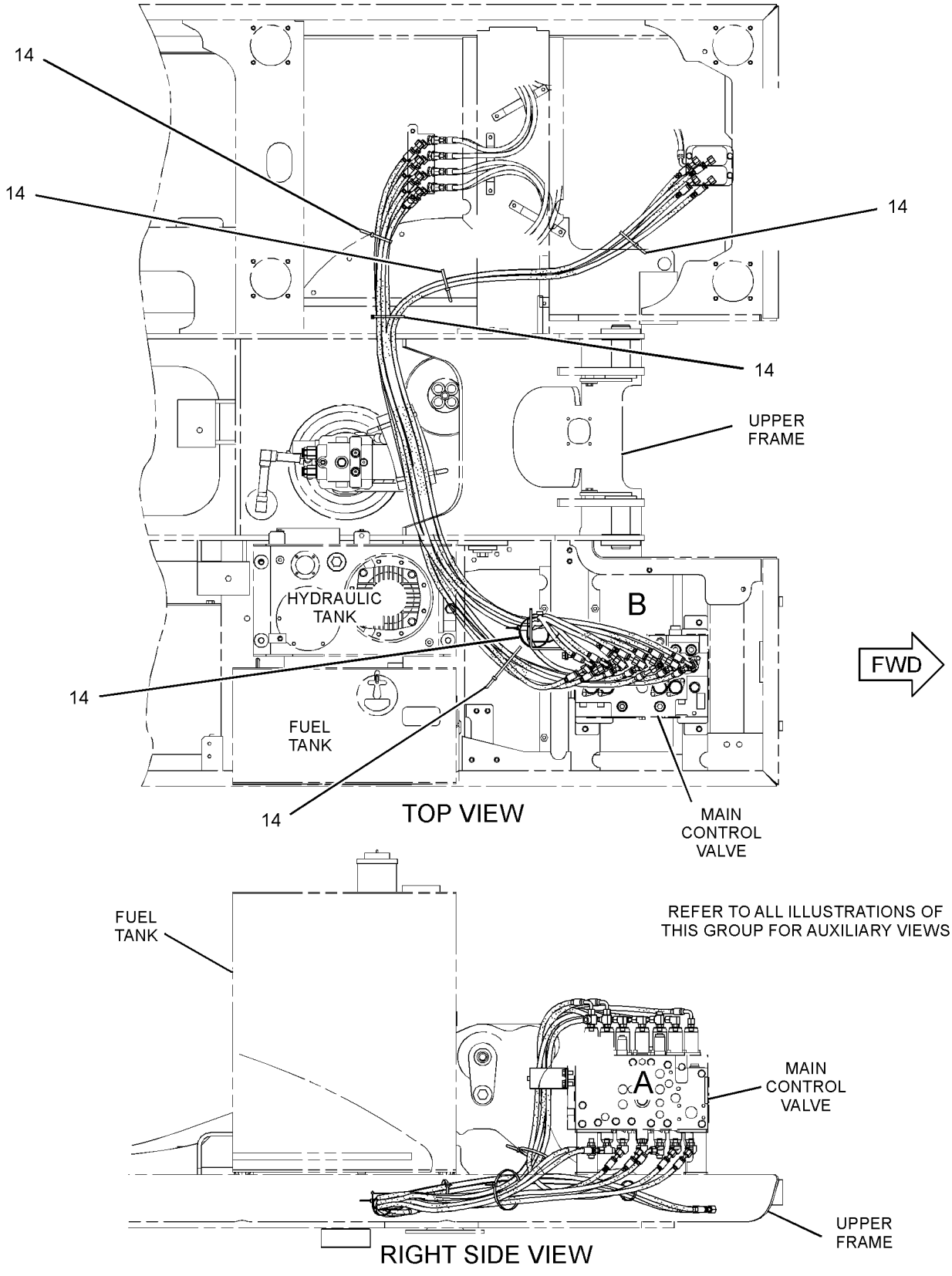

GRAPHIC #1

g01445461

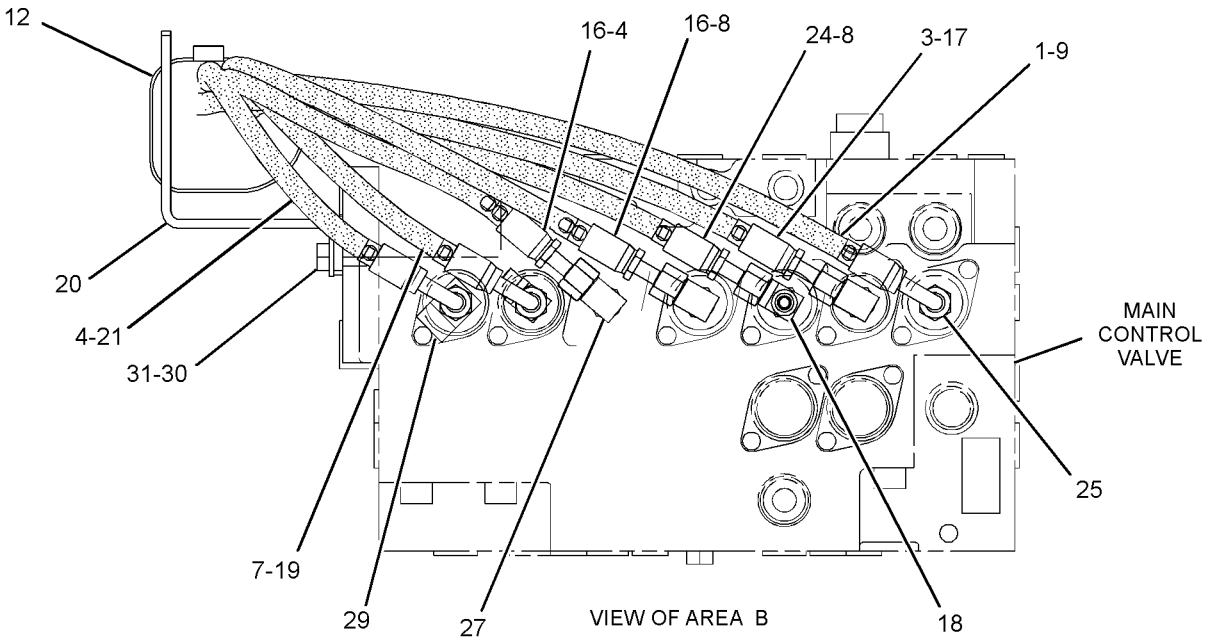

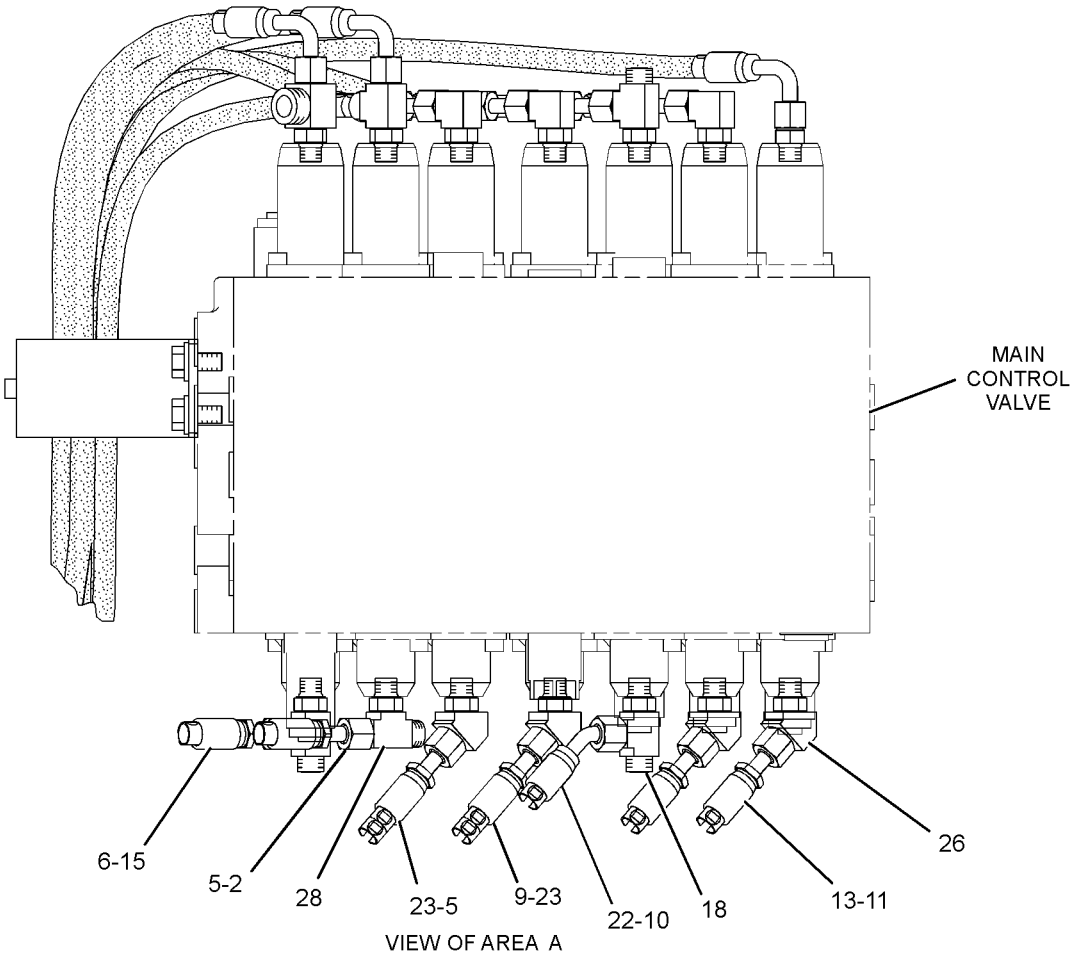

GRAPHIC #2

<END>

g01445462

282-7389 LINES GP-PILOT—MAIN CONTROL VALVE, MANIFOLD

S/N: CLA1-UP

PART OF 270-5992 HYDRAULIC AR

SMCS-5057, 5059 **i02825060**

NOTE	REF NO	GRAPHIC REF	PART NUMBER	QTY	PART NAME 1 2 3 4 5 6 (PRODUCT LEVEL)	SEE PAGE
I	1	1	**4I-0797**	1	HOSE AS	
I	2	1	**4I-0800**	2	HOSE AS	
I	3	1	**4I-0818**	1	HOSE AS	
I	4	1	**4I-0833**	1	HOSE AS	
I	5	1	**4I-0836**	1	HOSE AS	
I	6	1	**4I-1754**	1	HOSE AS	
I	7	1	**4I-1878**	1	HOSE AS	
I	8	1	**4I-5906**	1	HOSE AS	
	9	1	**4I-9521**	6	BAND-MARKER (RED, L1)	
	10	1	**4I-9522**	4	BAND-MARKER (YELLOW, L2)	
	11	1	**4I-9523**	6	BAND-MARKER (BLUE, L3)	
	12	1	**4I-9524**	4	BAND-MARKER (BROWN, L4)	
	13	1	**4I-9525**	2	BAND-MARKER (ORANGE, R1)	
	14	1	**4I-9527**	8	BAND-MARKER (GREEN, R3)	
	15	1	**4I-9528**	2	BAND-MARKER (PURPLE, R4)	
	16	1	**6V-0852**	1	CAP-DUST	
	17	1	**7K-1181**	15	STRAP-CABLE	
I	18	1	**087-4441**	1	HOSE AS	
I	19	1	**087-4531**	1	HOSE AS	
I	20	1	**087-4532**	1	HOSE AS	
I	21	1	**087-5772**	1	HOSE AS	
I	22	1	**109-7556**	1	HOSE AS	
I	23	1	**111-0973**	1	HOSE AS	
Y	24	1	**123-2430**	1	VALVE GP-SHUTTLE	634
	25	1	**133-5813**	2	BAND-MARKER (GRAY, P)	
	26	1	*148-8443*	1	TEE AS	
		1	**6V-8397**	2	SEAL-O-RING	
		1	**6V-9836**	1	TEE-SWIVEL	
	27	1	*164-5567*	1	COUPLER AS-QUICK DISCONNECT	
		1	**3J-1907**	1	SEAL-O-RING	
		1	**6V-3965**	1	FITTING (QUICK DISCONNECT)	
	28	1	*164-5628*	1	CONNECTOR AS	
		1	**3J-1907**	1	SEAL-O-RING	
		1	**6V-8397**	1	SEAL-O-RING	
		1	**107-6631**	1	CONNECTOR-FILTER	
	29	1	*164-5629*	3	FITTING AS	
					(EACH INCLUDES)	
		1	**3J-1907**	1	SEAL-O-RING	
		1	**108-7516**	1	FITTING	
	30	1	*164-6874*	3	FITTING AS-ELBOW	
					(EACH INCLUDES)	
		1	**3J-1907**	1	SEAL-O-RING	
		1	**085-7356**	1	FITTING	
Y	31	1	*164-6981*	1	ACCUMULATOR GP-HYDRAULIC (CHARGED)	345
	32	1	*168-1968*	1	TEE AS	
		1	**3J-1907**	1	SEAL-O-RING	
		1	**6V-8397**	1	SEAL-O-RING	
		1	**126-6872**	1	TEE	
I	33	1	**207-6418**	1	HOSE AS	
Y	34	1	**215-5037**	1	MANIFOLD GP-CONTROL (PILOT OIL SUPPLY)	548
	35	1	**221-4882**	1	HOSE AS	
Y	36	1	**238-0751**	1	VALVE GP-SOLENOID & PRESS REDC	651
	37	1	**248-9470**	1	HOSE AS	
I	38	1	**269-9691**	2	HOSE AS	
	39	1	**275-1442**	2	CLIP (TAB)	
	40	1	**275-1443**	2	CLIP (SLOT)	

282-7389 **LINES GP-PILOT** *(contd.)* **i02825060**

NOTE	REF NO	GRAPHIC REF	PART NUMBER	QTY	PART NAME 1 2 3 4 5 6 (PRODUCT LEVEL)	SEE PAGE
	41	1	**275-1444**	2	GROMMET	
	42	1	**278-6867**	1	HOSE AS	
	43	1	**282-7092**	2	GROMMET	
	44	1	**282-7615**	1	HOSE AS	
Y	45	1	**285-1613**	1	VALVE GP-PRESSURE REDUCING (BOOM PRIORITY)	624
	46	1	**285-2884**	1	SUPPORT AS	
I	47	1	**286-6455**	1	HOSE AS	
I	48	1	**286-6458**	1	HOSE AS	
	49	1	**286-6461**	1	HOSE AS	
	50	1	**286-6497**	1	GUARD	
	51	1	**292-7493**	1	SUPPORT AS	
	52	1	**292-7631**	1	PLATE	
	53	1	**296-7170**	1	HOSE AS	
I	54	1	**307-5071**	1	HOSE AS	
	55	1	**309-5768**	2	SWITCH AS-PRESSURE (HYDRAULIC OIL)	
					(EACH INCLUDES)	
		1	**9X-3402**	2	SOCKET-CONNECTOR (16-GA TO 18-GA)	
		1	**155-2270**	1	KIT-CONNECTING PLUG (2-PIN)	
					(INCLUDES PLUG AS, WEDGE & INTERFACE SEAL)	
	56	1	**309-5769**	1	SWITCH AS-PRESSURE (HYDRAULIC OIL)	
		1	**102-8802**	1	KIT-RECEPTACLE (2-PIN)	
					(INCLUDES RECEPTACLE AS & WEDGE)	
		1	**9X-3401**	2	PIN-CONNECTOR (16-GA TO 18-GA)	
					—OR—	
		1	**126-1767**	2	PIN-CONNECTOR (14-GA)	
	57	1	**314-8083**	1	PLATE	
	58	1	*148-8338*	1	CONNECTOR AS	
		1	**3J-1907**	1	SEAL-O-RING	
		1	**6V-8397**	1	SEAL-O-RING	
		1	**8T-0075**	1	CONNECTOR	
	59	1	*148-8340*	2	CONNECTOR AS	
					(EACH INCLUDES)	
		1	**3K-0360**	1	SEAL-O-RING	
		1	**6V-8398**	1	SEAL-O-RING	
		1	**6V-8639**	1	CONNECTOR	
	60	1	*148-8353*	13	ELBOW AS	
					(EACH INCLUDES)	
		1	**3J-1907**	1	SEAL-O-RING	
		1	**6V-8397**	1	SEAL-O-RING	
		1	**6V-9001**	1	ELBOW	
	61	1	**148-8367**	2	ELBOW AS	
					(EACH INCLUDES)	
		1	**6V-8397**	1	SEAL-O-RING	
		1	**6V-9850**	1	ELBOW	
	62	1	*148-8371*	1	ELBOW AS	
		1	**6V-8397**	1	SEAL-O-RING	
		1	**8C-8988**	1	ELBOW	
	63	1	*148-8378*	6	ELBOW AS	
					(EACH INCLUDES)	
		1	**3J-1907**	1	SEAL-O-RING	
		1	**6V-8397**	1	SEAL-O-RING	
		1	**6V-8724**	1	ELBOW	
	64	1	*148-8407*	5	PLUG AS	
					(EACH INCLUDES)	
		1	**3J-1907**	1	SEAL-O-RING	
		1	**9S-4191**	1	PLUG-O-RING	
	65	1	*148-8411*	1	PLUG AS	
		1	**3K-0360**	1	SEAL-O-RING	
		1	**9S-4185**	1	PLUG-O-RING	

282-7389 **LINES GP-PILOT** ***(contd.)*** **i02825060**

NOTE	REF NO	GRAPHIC REF	PART NUMBER	QTY	PART NAME 1 2 3 4 5 6 (PRODUCT LEVEL)	SEE PAGE
	66	1	*148-8433*	2	TEE AS	
					(EACH INCLUDES)	
		1	**6V-8397**	2	SEAL-O-RING	
		1	**6V-9836**	1	TEE-SWIVEL	
	67	1	*148-8435*	4	TEE AS	
					(EACH INCLUDES)	
		1	**3J-1907**	1	SEAL-O-RING	
		1	**6V-8397**	2	SEAL-O-RING	
		1	**6V-8781**	1	TEE-FACE SEAL	
	68	1	*150-3036*	3	ELBOW AS	
					(EACH INCLUDES)	
		1	**3J-1907**	1	SEAL-O-RING	
		1	**6V-8397**	1	SEAL-O-RING	
		1	**8T-1905**	1	ELBOW	
	69	1	*164-5589*	1	CONNECTOR AS	
		1	**3J-1907**	1	SEAL-O-RING	
		1	**6V-8397**	1	SEAL-O-RING	
		1	**8C-0597**	1	CONNECTOR	
	70	1	*164-8908*	1	CONNECTOR AS	
		1	**3K-0360**	1	SEAL-O-RING	
		1	**6V-8398**	1	SEAL-O-RING	
		1	**8T-0077**	1	CONNECTOR	
	71	1	**4D-7735**	1	CLIP	
	72	1	**6V-8397**	2	SEAL-O-RING	
	73	1	**8T-4121**	9	WASHER-HARD (11X21X2.5-MM THK)	
M	74	1	**8T-4136**	6	BOLT (M10X1.5X25-MM)	
M	75	1	**8T-4137**	1	BOLT (M10X1.5X20-MM)	
M	76	1	**8T-4139**	7	BOLT (M12X1.75X30-MM)	
M	77	1	**8T-4191**	2	BOLT (M10X1.5X16-MM)	
M	78	1	**8T-4197**	2	BOLT (M8X1.25X40-MM)	
M	79	1	**8T-4200**	4	BOLT (M8X1.25X16-MM)	
	80	1	**8T-4223**	7	WASHER-HARD (13.5X25.5X3-MM THK)	
	81	1	**8T-4224**	4	WASHER-HARD (8.8X16X2-MM THK)	

I-REFER TO HYDRAULIC INFORMATION SYSTEM
M-METRIC PART
Y-SEPARATE ILLUSTRATION

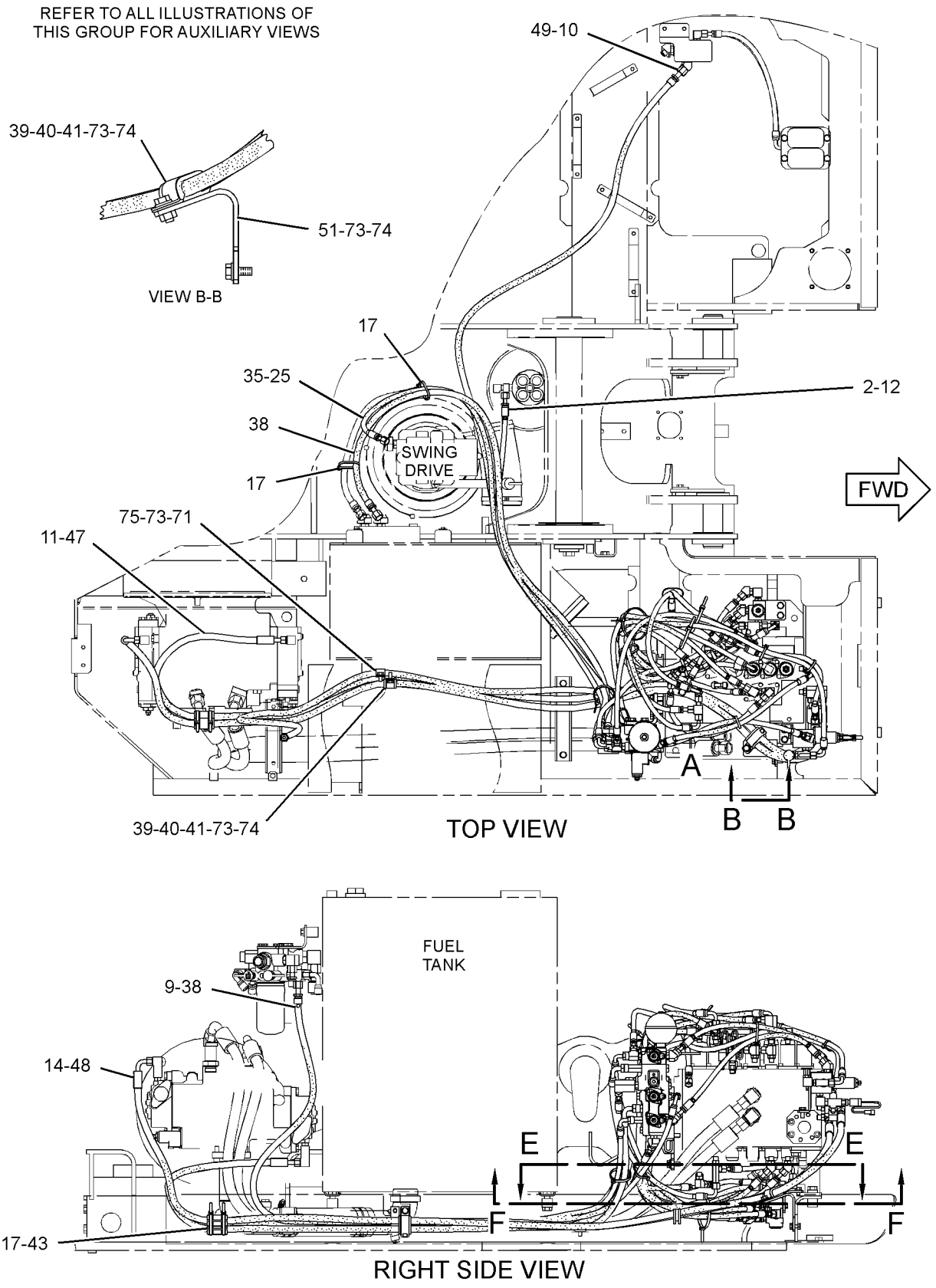

GRAPHIC #1 g01455410

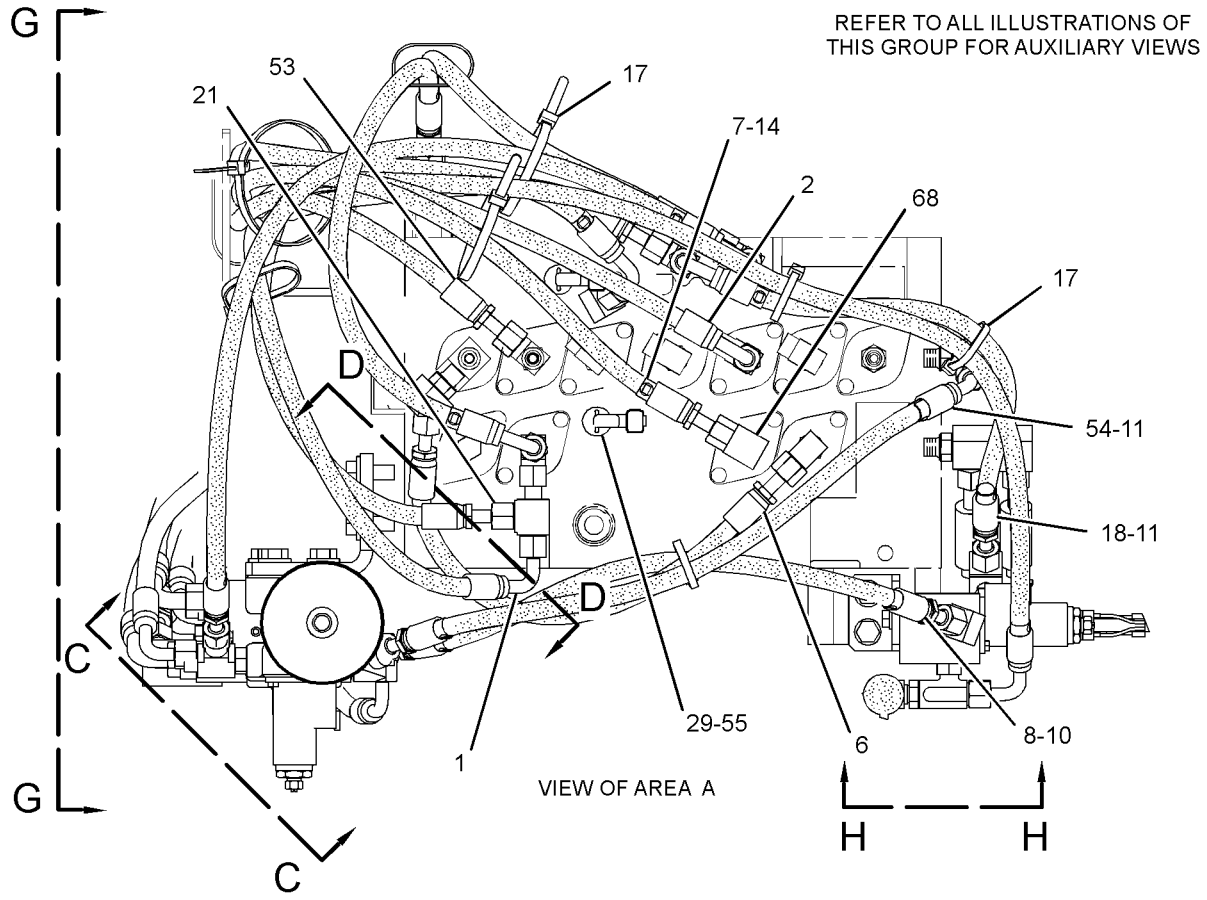

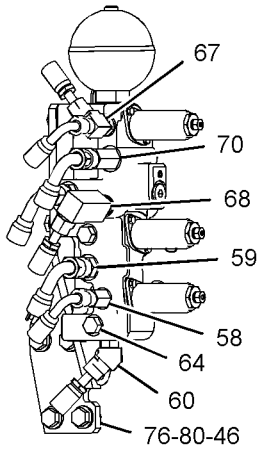

SECTION C-C

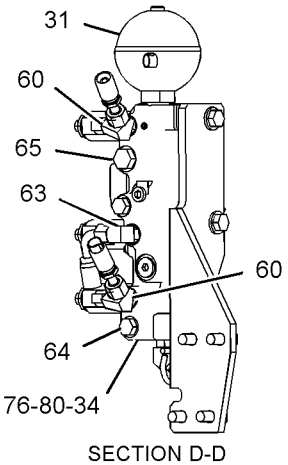

SECTION D-D

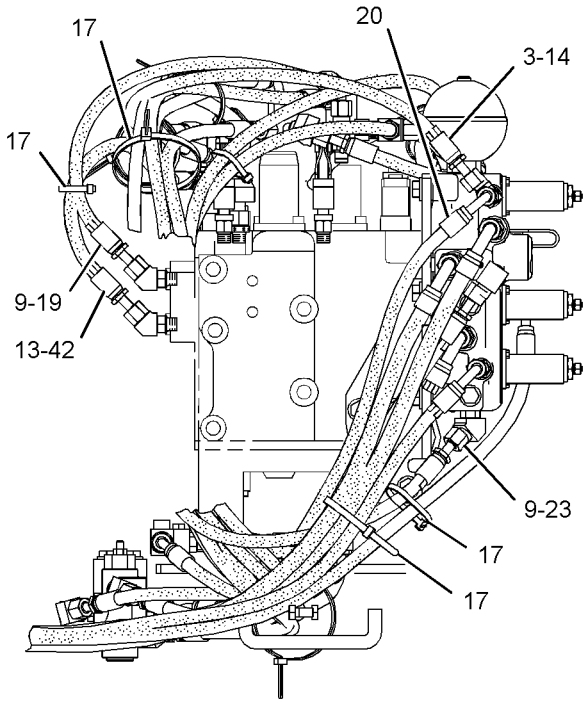

VIEW G-G

GRAPHIC #2

g01455409

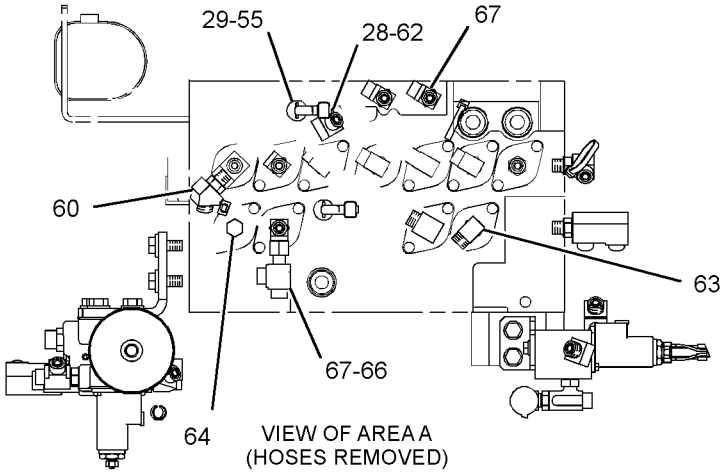

VIEW OF AREA A
(HOSES REMOVED)

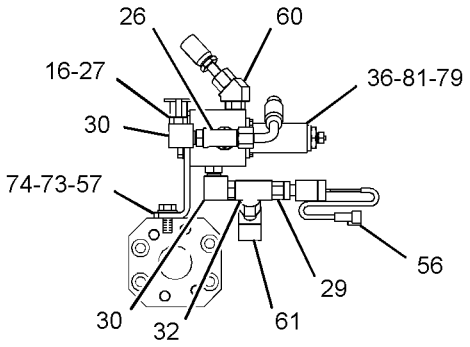

VIEW H-H

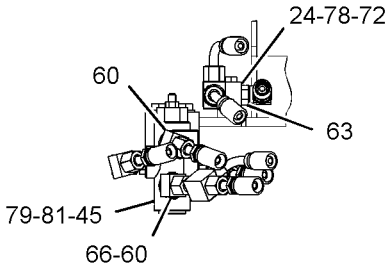

SECTION J-J

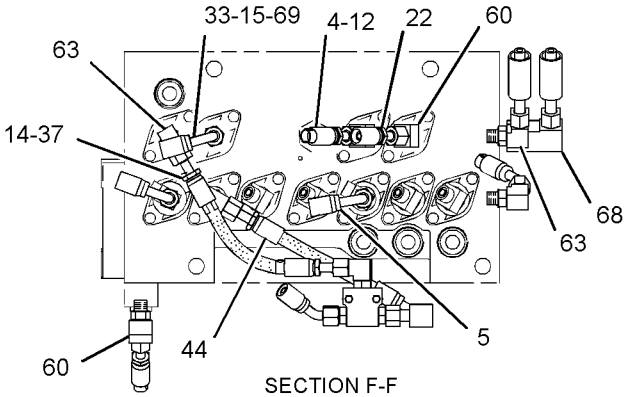

SECTION F-F
(HOSES REMOVED)

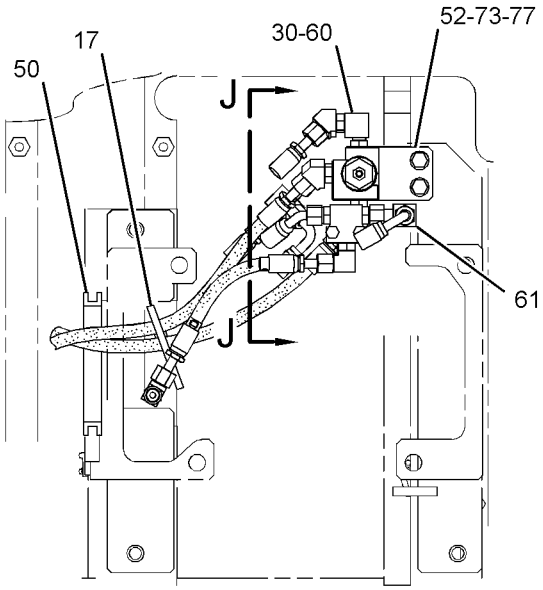

SECTION E-E

GRAPHIC #3 **<END>** g01455407

HYDRAULIC SYSTEM

282-7390 LINES GP-PILOT—PUMP CONTROL

S/N: CLA1-UP

PART OF 270-5992 HYDRAULIC AR

SMCS-5057, 5059 **i03093843**

NOTE	REF NO	GRAPHIC REF	PART NUMBER	QTY	PART NAME 1 2 3 4 5 6 (PRODUCT LEVEL)	SEE PAGE
	1	1	**7K-1181**	2	STRAP-CABLE	
I	2	1	**087-5771**	1	HOSE AS	
	3	1	*148-8443*	1	TEE AS	
		1	**3J-1907**	1	SEAL-O-RING	
		1	**6V-8397**	1	SEAL-O-RING	
		1	**7X-2459**	1	TEE-O-RING	
	4	1	**221-8912**	2	FLANGE	
	5	1	**260-2180**	2	SENSOR AS-PRESSURE (PUMP CONTROL)	
					(EACH INCLUDES)	
		1	**095-1777**	1	RING-BACKUP	
		1	**260-2191**	1	SEAL-O-RING	
I	6	1	**134-7665**	1	HOSE AS	
I	7	1	**296-7220**	1	HOSE AS	
	8	1	*148-8327*	1	CONNECTOR AS	
		1	**3D-2824**	1	SEAL-O-RING	
		1	**6V-8637**	1	CONNECTOR	
		1	**6V-9746**	1	SEAL-O-RING	
	9	1	*106-8715*	1	ELBOW AS	
		1	**3D-2824**	1	SEAL-O-RING	
		1	**6V-9746**	1	SEAL-O-RING	
		1	**8C-8400**	1	ELBOW	
	10	1	*148-8354*	1	ELBOW AS	
		1	**3K-0360**	1	SEAL-O-RING	
		1	**6V-8398**	1	SEAL-O-RING	
		1	**6V-9002**	1	ELBOW	
	11	1	*174-3181*	1	ELBOW AS	
		1	**3J-1907**	1	SEAL-O-RING	
		1	**6V-8398**	1	SEAL-O-RING	
		1	**8T-7521**	1	ELBOW	
	12	1	*148-8336*	1	CONNECTOR AS	
		1	**3J-1907**	1	SEAL-O-RING	
		1	**6V-8397**	1	SEAL-O-RING	
		1	**6V-8636**	1	CONNECTOR	
	13	1	*150-3036*	2	ELBOW AS	
					(EACH INCLUDES)	
		1	**3J-1907**	1	SEAL-O-RING	
		1	**6V-8397**	1	SEAL-O-RING	
		1	**8T-1905**	1	ELBOW	
	14	1	*153-6237*	1	ELBOW AS	
		1	**3D-2824**	1	SEAL-O-RING	
		1	**6V-9004**	1	ELBOW	
		1	**6V-9746**	1	SEAL-O-RING	
	15	1	*164-5567*	4	COUPLER AS-QUICK DISCONNECT	
					(EACH INCLUDES)	
		1	**3J-1907**	1	SEAL-O-RING	
		1	**6V-3965**	1	FITTING (QUICK DISCONNECT)	
	16	1	*165-4931*	1	ELBOW AS	
		1	**3J-1907**	1	SEAL-O-RING	
		1	**6V-8077**	1	ELBOW	
	17	1	**6V-0852**	4	CAP-DUST	
M	18	1	**8T-4189**	4	BOLT (M8X1.25X20-MM)	
	19	1	**8T-4224**	4	WASHER-HARD (8.8X16X2-MM THK)	
	20	1	**285-2663**	1	FITTING AS	
		1	**3J-1907**	1	SEAL-O-RING	

I-REFER TO HYDRAULIC INFORMATION SYSTEM
M-METRIC PART

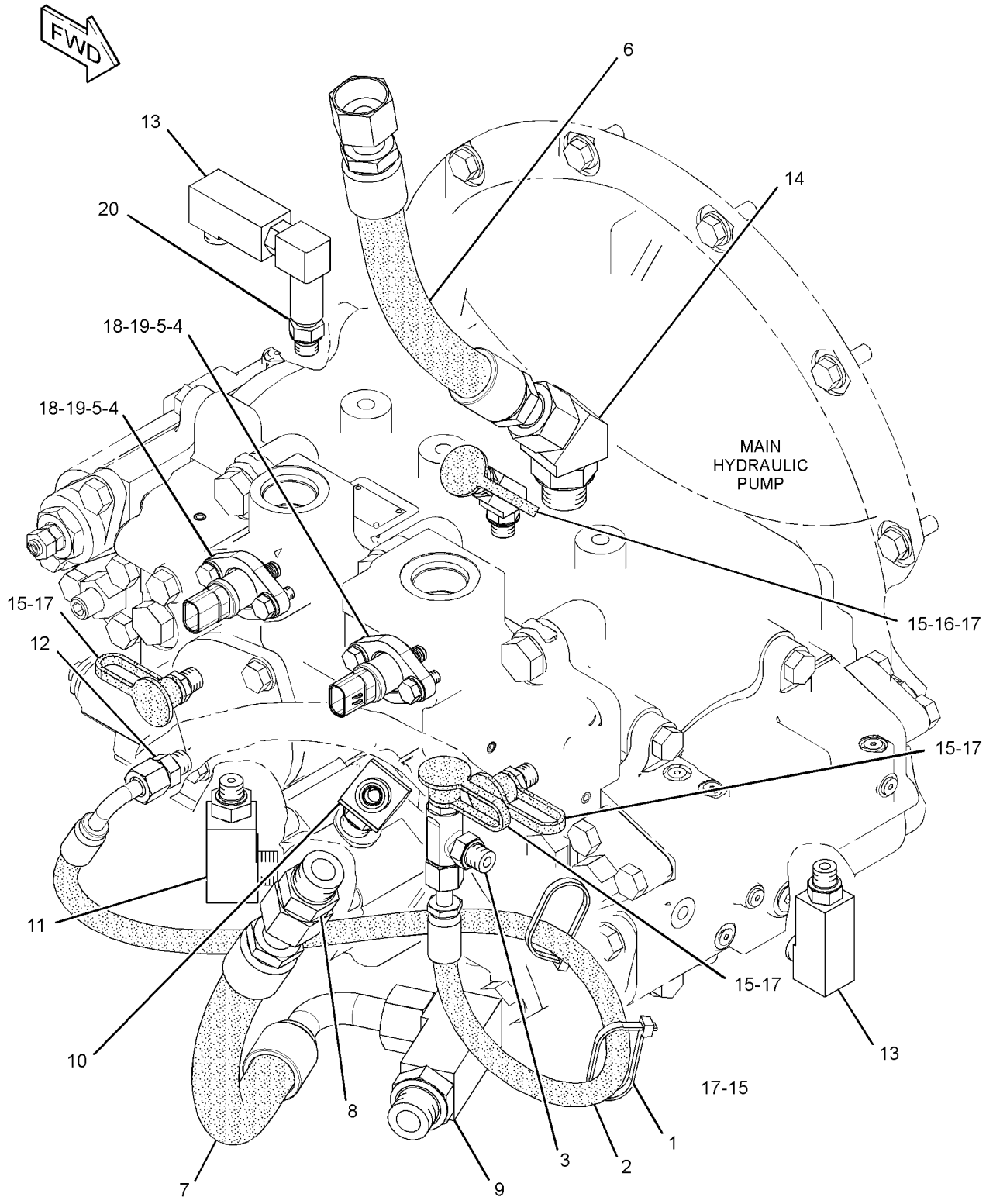

GRAPHIC #1 **<END>** g01622691

282-7395 LINES GP-PILOT–THIRD PEDAL

S/N: CLA1-UP

PART OF 293-1239 PEDAL AR-THIRD

AN ATTACHMENT

SMCS-5057, 5059 **i02795384**

NOTE	REF NO	GRAPHIC REF	PART NUMBER	QTY	PART NAME 1 2 3 4 5 6 (PRODUCT LEVEL)	SEE PAGE
I	1	1	**4I-6003**	2	HOSE AS	
	2	1	**4I-9521**	4	BAND-MARKER (RED, L1)	
	3	1	**4I-9522**	4	BAND-MARKER (YELLOW, L2)	
	4	1	**4I-9525**	4	BAND-MARKER (ORANGE, R1)	
	5	1	**4I-9526**	4	BAND-MARKER (WHITE, R2)	
I	6	1	**7Y-4193**	1	HOSE AS	
I	7	1	**104-8771**	1	HOSE AS	
	8	1	**7K-1181**	1	STRAP-CABLE	

I-REFER TO HYDRAULIC INFORMATION SYSTEM

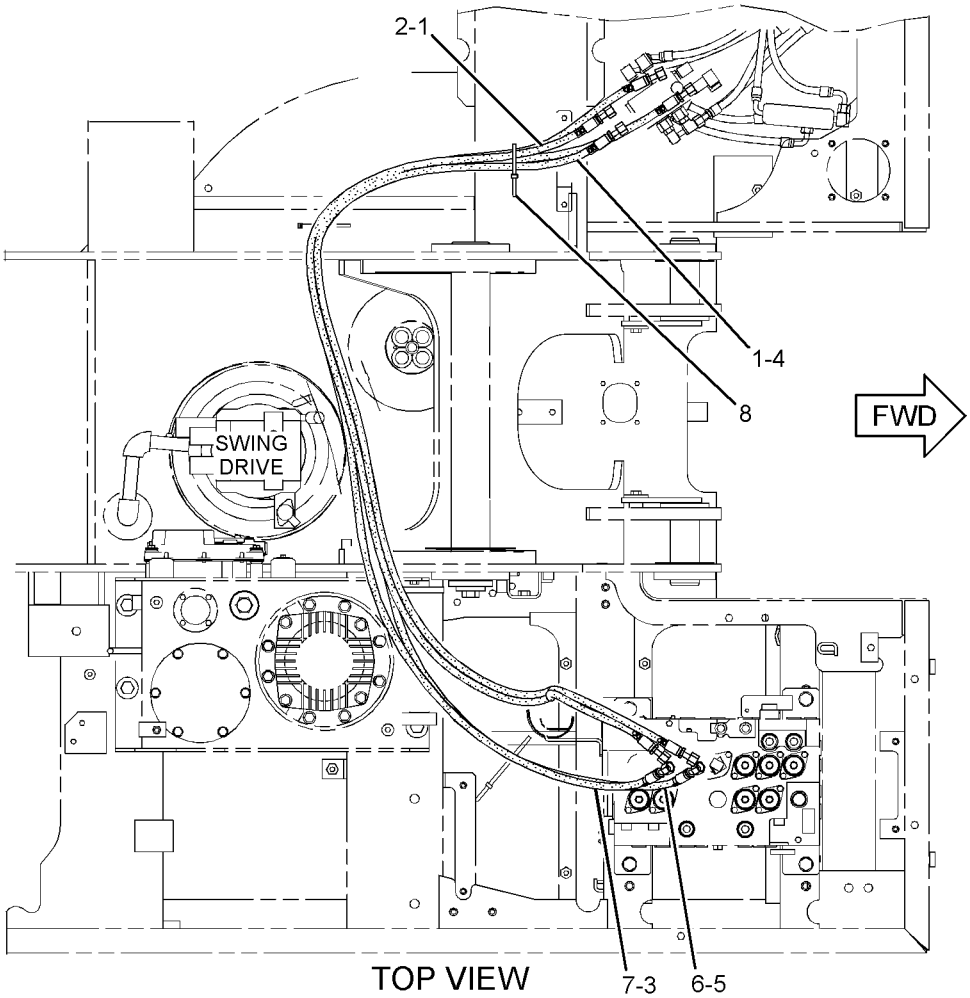

TOP VIEW

GRAPHIC #1 g01410891

<END>

HYDRAULIC SYSTEM

282-7399 LINES GP-PILOT–BLADE

S/N: CLA1-UP

PART OF 283-8789 INSTALLATION AR-BLADE

AN ATTACHMENT

SMCS-5057, 5059 **i02838068**

NOTE	REF NO	GRAPHIC REF	PART NUMBER	QTY	PART NAME 1 2 3 4 5 6 (PRODUCT LEVEL)	SEE PAGE
I	1	1	**4I-0800**	1	HOSE AS	
I	2	1	**4I-5795**	2	HOSE AS	
	3	1	**4I-9522**	2	BAND-MARKER (YELLOW, L2)	
	4	1	**4I-9523**	2	BAND-MARKER (BLUE, L3)	
	5	1	**4I-9524**	2	BAND-MARKER (BROWN, L4)	
	6	1	**4I-9527**	2	BAND-MARKER (GREEN, R3)	
	7	1	**4I-9528**	2	BAND-MARKER (PURPLE, R4)	
I	8	1	**5I-4076**	1	HOSE AS	
	9	1	**7K-1181**	3	STRAP-CABLE	
I	10	1	**7Y-4199**	1	HOSE AS	
	11	1	**130-1433**	1	SPACER (11X25X17-MM THK)	
	12	1	*164-5628*	1	CONNECTOR AS	
		1	**3J-1907**	1	SEAL-O-RING	
		1	**6V-8397**	1	SEAL-O-RING	
		1	**107-6631**	1	CONNECTOR-FILTER	
	13	1	*164-6874*	3	FITTING AS-ELBOW	
					(EACH INCLUDES)	
		1	**3J-1907**	1	SEAL-O-RING	
		1	**085-7356**	1	FITTING	
	14	1	**309-5769**	1	SWITCH AS-PRESSURE (ACTION INPUT, 2-WAY PATTERN)	
		1	**102-8802**	1	KIT-RECEPTACLE (2-PIN)	
					(INCLUDES RECEPTACLE AS & WEDGE)	
		1	**9X-3401**	2	PIN-CONNECTOR (16-GA TO 18-GA)	
					–OR–	
		1	**126-1767**	2	PIN-CONNECTOR (14-GA)	
	15	1	*148-8336*	1	CONNECTOR AS	
		1	**3J-1907**	1	SEAL-O-RING	
		1	**6V-8397**	1	SEAL-O-RING	
		1	**6V-8636**	1	CONNECTOR	
	16	1	*148-8353*	3	ELBOW AS	
					(EACH INCLUDES)	
		1	**3J-1907**	1	SEAL-O-RING	
		1	**6V-8397**	1	SEAL-O-RING	
		1	**6V-9001**	1	ELBOW	
	17	1	*148-8367*	1	ELBOW AS	
		1	**6V-8397**	1	SEAL-O-RING	
		1	**6V-9850**	1	ELBOW	
	18	1	*148-8371*	1	ELBOW AS	
		1	**6V-8397**	1	SEAL-O-RING	
		1	**8C-8988**	1	ELBOW	
	19	1	*148-8378*	1	ELBOW AS	
					(EACH INCLUDES)	
		1	**3J-1907**	1	SEAL-O-RING	
		1	**6V-8397**	1	SEAL-O-RING	
		1	**6V-8724**	1	ELBOW	
	20	1	**148-8407**	2	PLUG AS	
					(EACH INCLUDES)	
		1	**3J-1907**	1	SEAL-O-RING	
		1	**9S-4191**	1	PLUG-O-RING	
	21	1	*148-8435*	2	TEE AS	
					(EACH INCLUDES)	
		1	**3J-1907**	1	SEAL-O-RING	
		1	**6V-8397**	2	SEAL-O-RING	
		1	**6V-8781**	1	TEE-FACE SEAL	

282-7399 **LINES GP-PILOT** ***(contd.)*** **i02838068**

NOTE	REF NO	GRAPHIC REF	PART NUMBER	QTY	PART NAME 1 2 3 4 5 6 (PRODUCT LEVEL)	SEE PAGE
	22	1	*150-3036*	1	ELBOW AS	
		1	**3J-1907**	1	SEAL-O-RING	
		1	**6V-8397**	1	SEAL-O-RING	
		1	**8T-1905**	1	ELBOW	
	23	1	**5K-8451**	1	CLIP	
	24	1	**8T-4121**	1	WASHER-HARD (11X21X2.5-MM THK)	
M	25	1	**8T-4186**	1	BOLT (M10X1.5X40-MM)	

I-REFER TO HYDRAULIC INFORMATION SYSTEM
M-METRIC PART

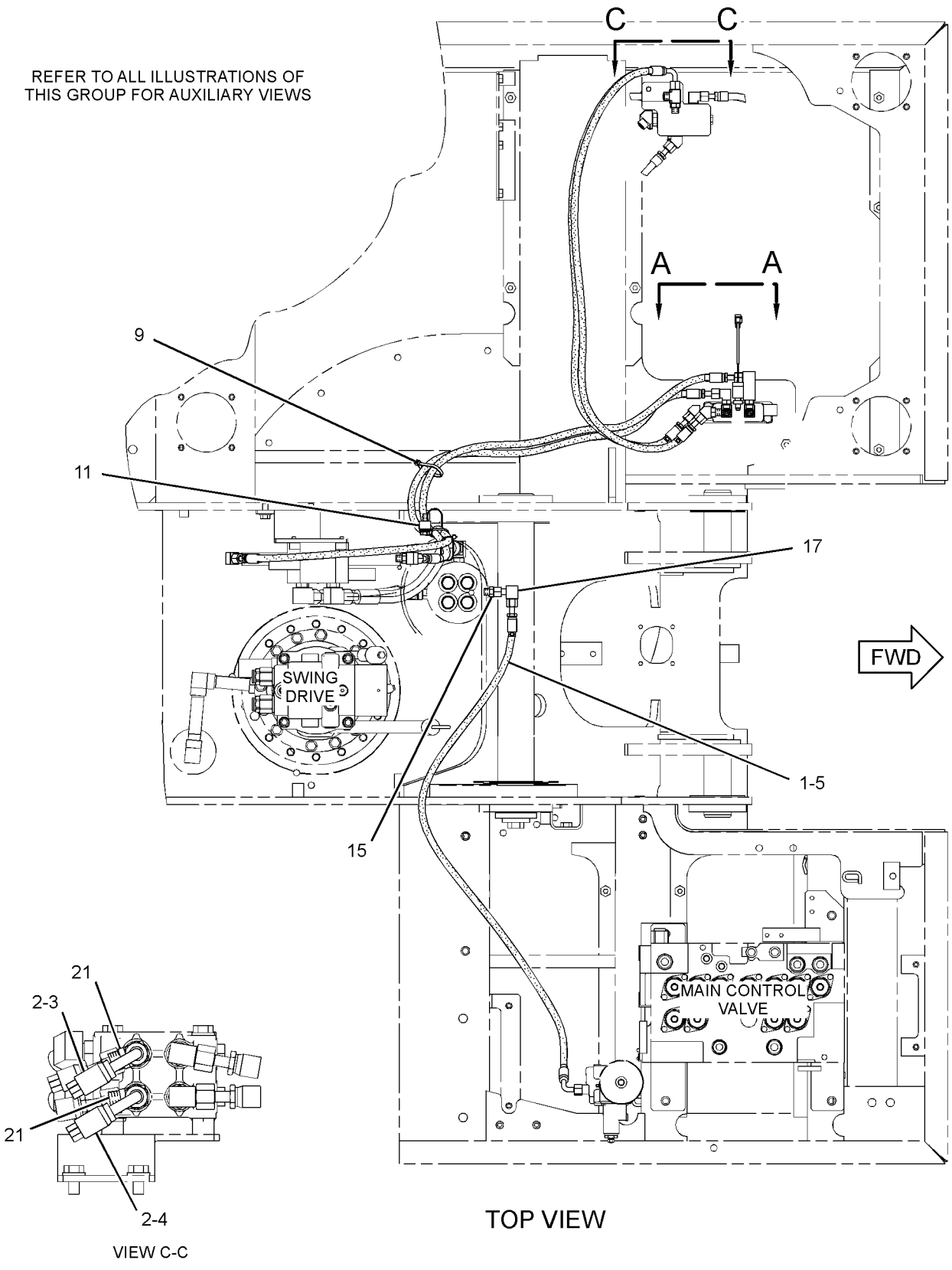

GRAPHIC #1

g01449616

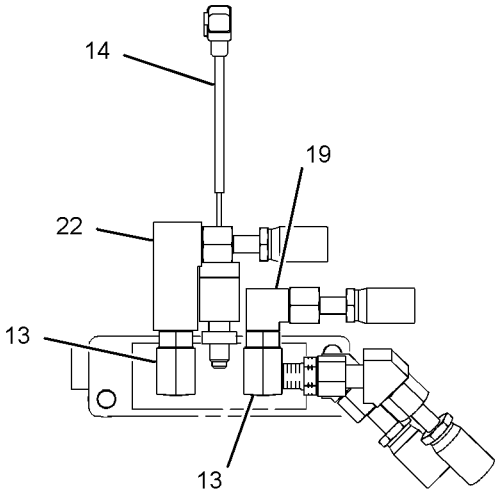

VIEW B-B

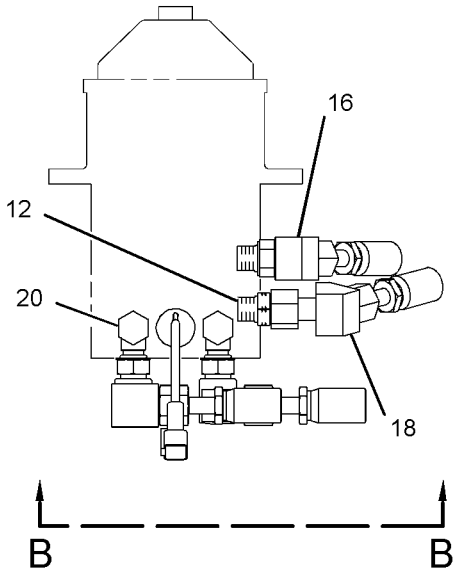

VIEW A-A

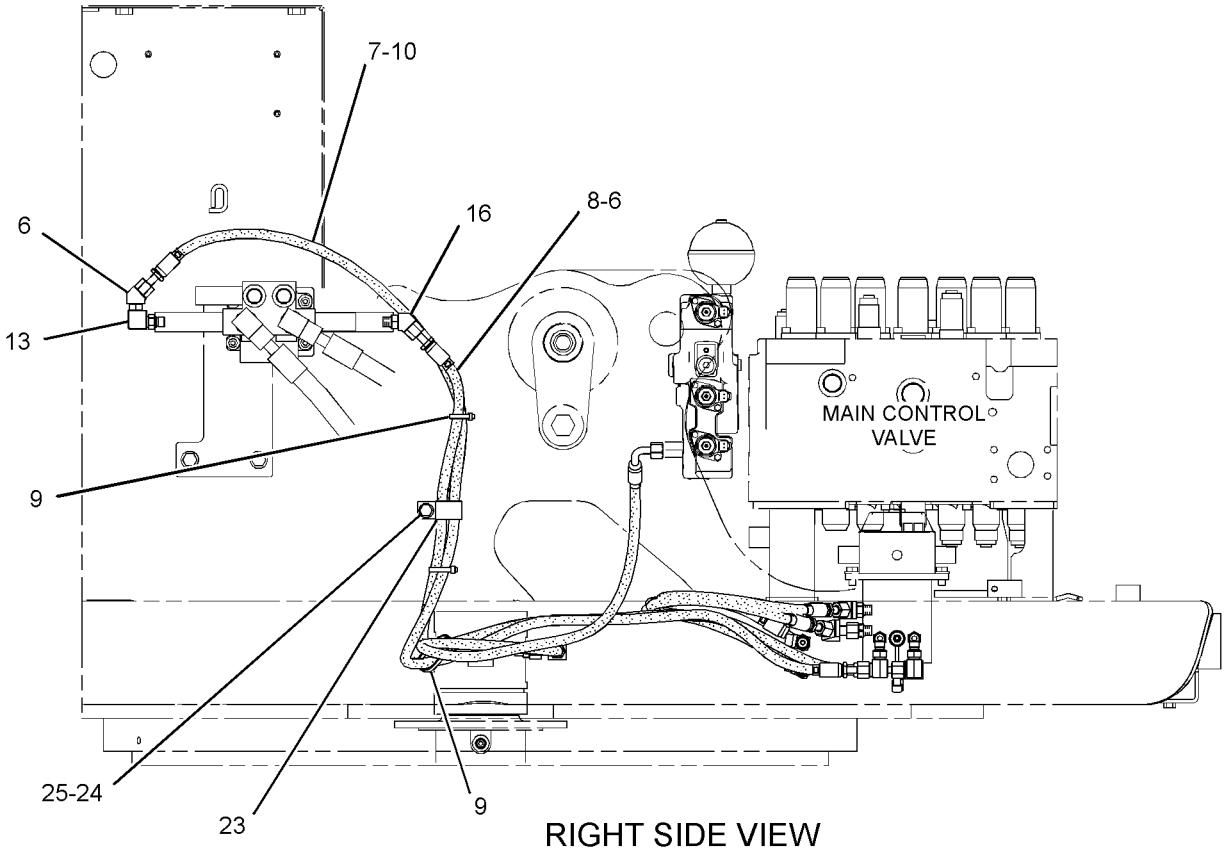

RIGHT SIDE VIEW

GRAPHIC #2

<END>

g01450854

HYDRAULIC SYSTEM

282-7421 LINES GP-PILOT—SYSTEM 20, WORK TOOL PRIORITY

S/N: CLA1-UP
PART OF 270-6025 CONTROL AR-AUXILIARY
AN ATTACHMENT
TYPE 1

SMCS-5057, 5059 **i02838080**

NOTE	REF NO	GRAPHIC REF	PART NUMBER	QTY	PART NAME 1 2 3 4 5 6 (PRODUCT LEVEL)	SEE PAGE
I	1	2	**4I-1783**	1	HOSE AS	
	2	2	**4I-3941**	1	FITTING AS	
		2	**6V-8553**	1	NUT (11/16-16-THD)	
	3	1	**4I-9521**	2	BAND-MARKER (RED, L1)	
	4	1	**4I-9522**	4	BAND-MARKER (YELLOW, L2)	
	5	1,2	**4I-9523**	8	BAND-MARKER (BLUE, L3)	
	6	1	**4I-9524**	2	BAND-MARKER (BROWN, L4)	
	7	1,2	**4I-9527**	8	BAND-MARKER (GREEN, R3)	
	8	1	**4I-9528**	2	BAND-MARKER (PURPLE, R4)	
	9	2	**5P-5148**	1	STRAP-TIE	
	10	1,2	**7K-1181**	16	STRAP-CABLE	
I	11	1	**7Y-4199**	1	HOSE AS	
I	12	2	**7Y-4384**	1	HOSE AS	
I	13	1	**7Y-8379**	1	HOSE AS	
I	14	1	**087-5764**	1	HOSE AS	
I	15	1	**087-5771**	1	HOSE AS	
I	16	1	**104-8777**	1	HOSE AS	
Y	17	2	**121-6303**	1	VALVE GP-SOLENOID	642
Y	18	2	**123-2549**	1	VALVE GP-SHUTTLE	635
	19	2	**133-5813**	2	BAND-MARKER (GRAY, P)	
	20	1	**146-7127**	1	GROMMET	
	21	1	*150-4027*	2	TEE AS	
					(EACH INCLUDES)	
		1	**3E-2310**	1	TEE	
		1	**3J-1907**	1	SEAL-O-RING	
		1	**6V-8397**	1	SEAL-O-RING	
	22	1,2	*164-5567*	5	COUPLER AS-QUICK DISCONNECT	
					(EACH INCLUDES)	
		1,2	**3J-1907**	1	SEAL-O-RING	
		1,2	**6V-3965**	1	FITTING (QUICK DISCONNECT)	
	23	1,2	*164-6874*	4	FITTING AS-ELBOW	
					(EACH INCLUDES)	
		1,2	**3J-1907**	1	SEAL-O-RING	
		1,2	**085-7356**	1	FITTING	
	24	2	*168-1968*	1	TEE AS	
		2	**3J-1907**	1	SEAL-O-RING	
		2	**6V-8397**	1	SEAL-O-RING	
		2	**126-6872**	1	TEE	
Y	25	2	**171-0188**	1	VALVE GP-SOLENOID (NEG FLOW CONT, PROPN RED VALVE)	643
	26	1	**212-5402**	1	HOSE AS	
	27	1,2	**221-4807**	2	HOSE AS	
Y	28	1	**226-3109**	1	VALVE GP-SOLENOID (NEGATIVE FLOW CONTROL)	644
Y	29	2	**270-5766**	1	VALVE GP-SOLENOID & PRESS REDC (WORK TOOL CONTROL)	652
I	30	2	**278-6768**	1	HOSE AS	
	31	1	**282-7092**	4	GROMMET	
	32	2	**282-7106**	1	GROMMET	
I	33	1	**282-7120**	1	HOSE AS	
	34	2	**282-7128**	1	HOSE AS	
	35	1	**285-2663**	2	FITTING AS	
					(EACH INCLUDES)	
		1	**3J-1907**	1	SEAL-O-RING	
I	36	1	**285-2844**	1	HOSE AS	

282-7421 **LINES GP-PILOT** ***(contd.)*** **i02838080**

NOTE	REF NO	GRAPHIC REF	PART NUMBER	QTY	PART NAME 1 2 3 4 5 6 (PRODUCT LEVEL)	SEE PAGE
	37	2	**286-6489**	1	SUPPORT AS	
		2	**091-9035**	3	SPACER (11X25X20-MM THK)	
	38	2	**286-6491**	1	SUPPORT AS	
		2	**091-9035**	2	SPACER (11X25X20-MM THK)	
	39	1	**286-6493**	1	SUPPORT	
	40	2	**286-6494**	1	BRACKET	
I	41	2	**286-6815**	2	HOSE AS	
I	42	1	**296-7229**	1	HOSE AS	
I	43	2	**307-5289**	1	HOSE AS	
	44	2	**309-5769**	1	SWITCH AS-PRESSURE (ACTION INPUT, 2-WAY PATTERN)	
		2	**102-8802**	1	KIT-RECEPTACLE (2-PIN)	
					(INCLUDES RECEPTACLE AS & WEDGE)	
		2	**9X-3401**	2	PIN-CONNECTOR (16-GA TO 18-GA)	
I	45	1	**319-9906**	1	HOSE AS	
	46	2	**319-9910**	1	SUPPORT AS	
	47	2	**104-8903**	1	GUARD	
	48	2	*148-8336*	4	CONNECTOR AS	
					(EACH INCLUDES)	
		2	**3J-1907**	1	SEAL-O-RING	
		2	**6V-8397**	1	SEAL-O-RING	
		2	**6V-8636**	1	CONNECTOR	
	49	2	*148-8338*	1	CONNECTOR AS	
					(EACH INCLUDES)	
		2	**3J-1907**	1	SEAL-O-RING	
		2	**6V-8397**	1	SEAL-O-RING	
		2	**8T-0075**	1	CONNECTOR	
	50	2	*148-8353*	2	ELBOW AS	
					(EACH INCLUDES)	
		2	**3J-1907**	1	SEAL-O-RING	
		2	**6V-8397**	1	SEAL-O-RING	
		2	**6V-9001**	1	ELBOW	
	51	2	*148-8367*	1	ELBOW AS	
					(EACH INCLUDES)	
		2	**6V-8397**	1	SEAL-O-RING	
		2	**6V-9850**	1	ELBOW	
	52	1,2	*148-8378*	15	ELBOW AS	
					(EACH INCLUDES)	
		1,2	**3J-1907**	1	SEAL-O-RING	
		1,2	**6V-8397**	1	SEAL-O-RING	
		1,2	**6V-8724**	1	ELBOW	
	53	2	*148-8407*	2	PLUG AS	
					(EACH INCLUDES)	
		2	**3J-1907**	1	SEAL-O-RING	
		2	**9S-4191**	1	PLUG-O-RING	
	54	2	*148-8435*	3	TEE AS	
					(EACH INCLUDES)	
		2	**3J-1907**	1	SEAL-O-RING	
		2	**6V-8397**	2	SEAL-O-RING	
		2	**6V-8781**	1	TEE-FACE SEAL	
	55	2	*150-3036*	2	ELBOW AS	
					(EACH INCLUDES)	
		2	**3J-1907**	1	SEAL-O-RING	
		2	**6V-8397**	1	SEAL-O-RING	
		2	**8T-1905**	1	ELBOW	
	56	2	*150-4044*	1	CONNECTOR AS	
		2	**3J-1907**	1	SEAL-O-RING	
		2	**6V-8397**	1	SEAL-O-RING	
		2	**8T-1779**	1	CONNECTOR	
	57	2	*153-6249*	1	CONNECTOR AS	

282-7421 **LINES GP-PILOT** *(contd.)* **i02838080**

NOTE	REF NO	GRAPHIC REF	PART NUMBER	QTY	PART NAME 1 2 3 4 5 6 (PRODUCT LEVEL)	SEE PAGE
		2	**3J-1907**	1	SEAL-O-RING	
		2	**6V-8397**	1	SEAL-O-RING	
		2	**8T-8887**	1	CONNECTOR	
M	58	1	**5C-9553**	2	BOLT (M6X1X16-MM)	
	59	1,2	**6V-0852**	5	CAP-DUST	
	60	2	**6V-8397**	2	SEAL-O-RING	
	61	1,2	**8T-4121**	13	WASHER-HARD (11X21X2.5-MM THK)	
M	62	1,2	**8T-4136**	8	BOLT (M10X1.5X25-MM)	
M	63	2	**8T-4139**	2	BOLT (M12X1.75X30-MM)	
M	64	2	**8T-4177**	4	BOLT (M8X1.25X90-MM)	
M	65	2	**8T-4186**	5	BOLT (M10X1.5X40-MM)	
	66	2	**8T-4223**	2	WASHER-HARD (13.5X25.5X3-MM THK)	
M	67	2	**8T-6870**	4	BOLT (M8X1.25X70-MM)	
	68	1	**9X-8256**	2	WASHER (6.6X12X2-MM THK)	

I-REFER TO HYDRAULIC INFORMATION SYSTEM
M-METRIC PART
Y-SEPARATE ILLUSTRATION

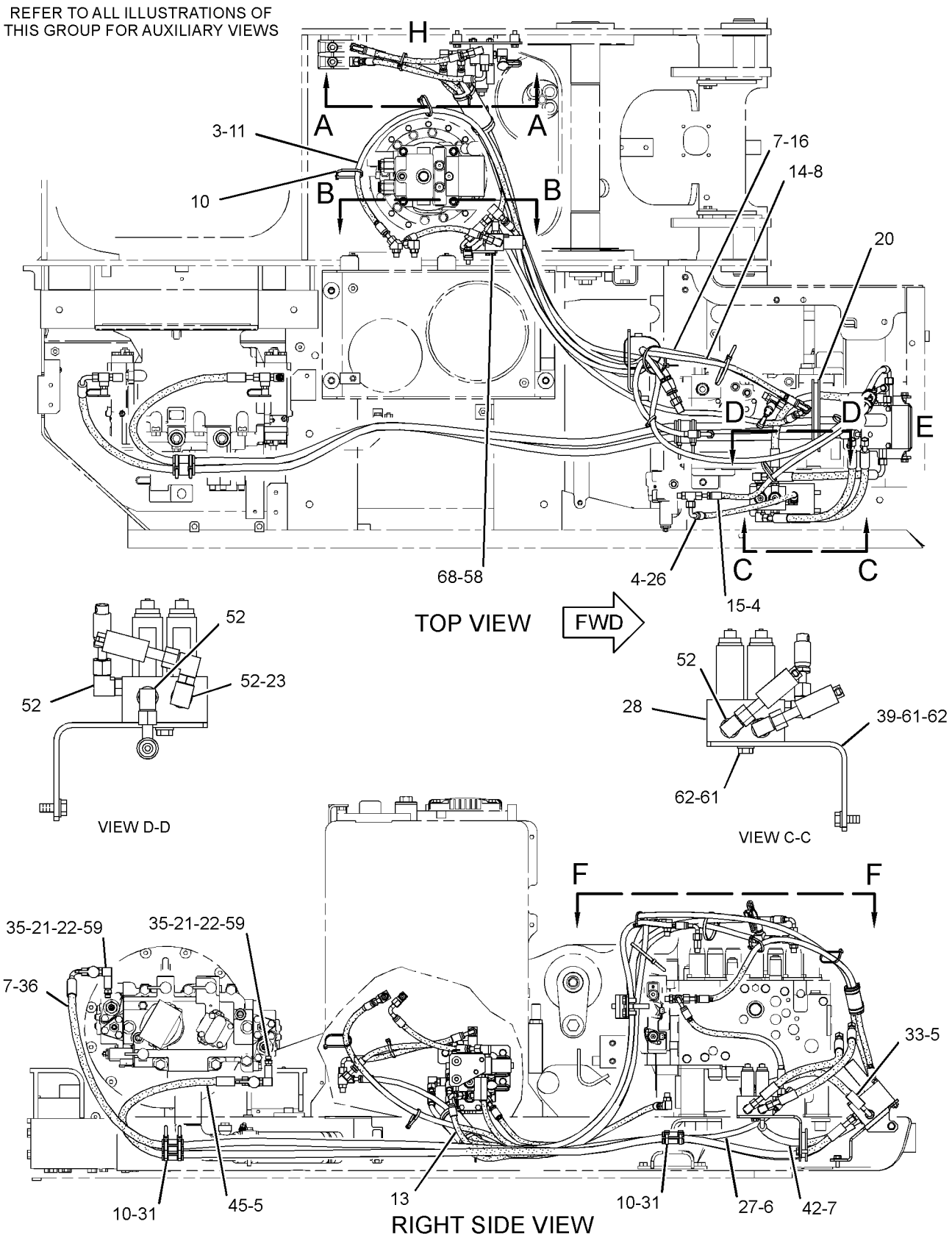

GRAPHIC #1

g01446162

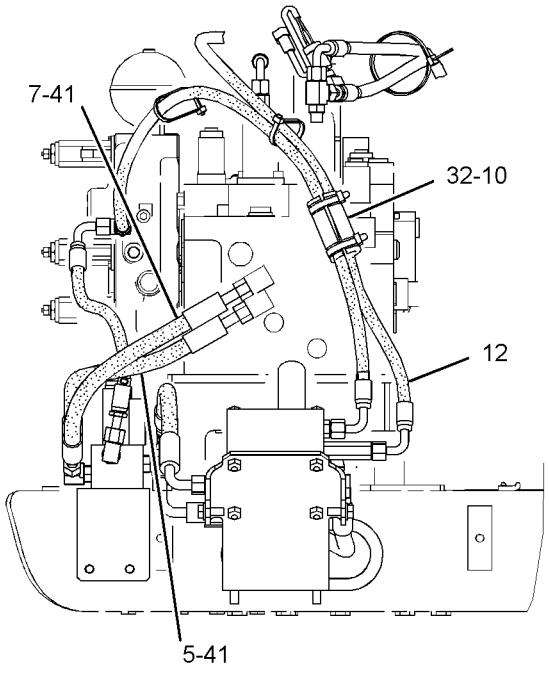

FRONT VIEW

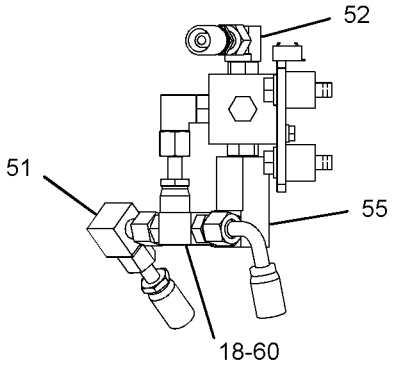

VIEW M-M

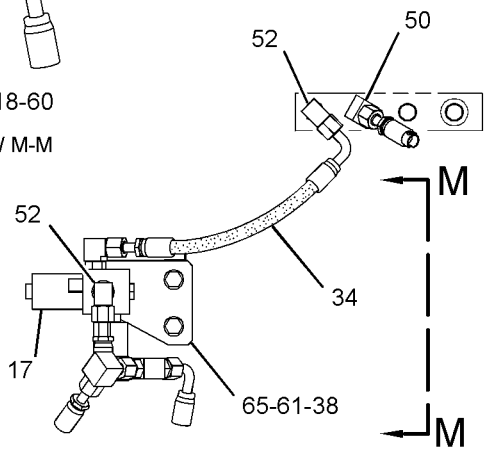

SECTION B-B

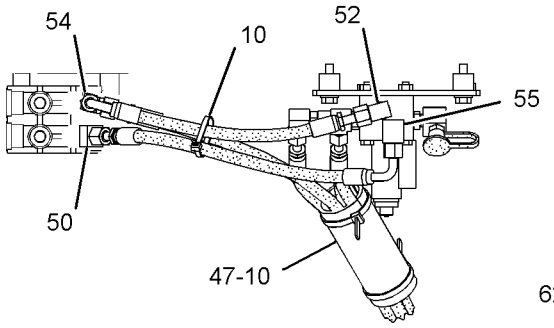

VIEW OF AREA H

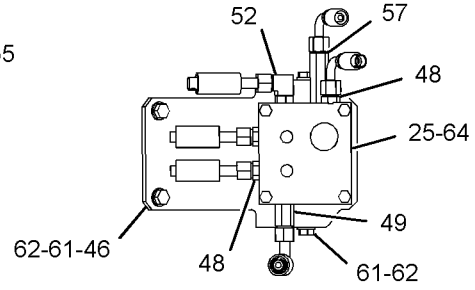

VIEW OF AREA E
(HOSES REMOVED FOR CLARITY)

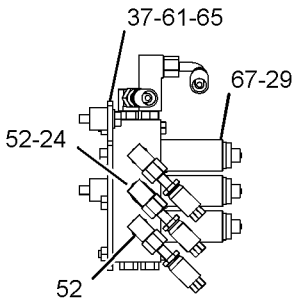

SECTION L-L

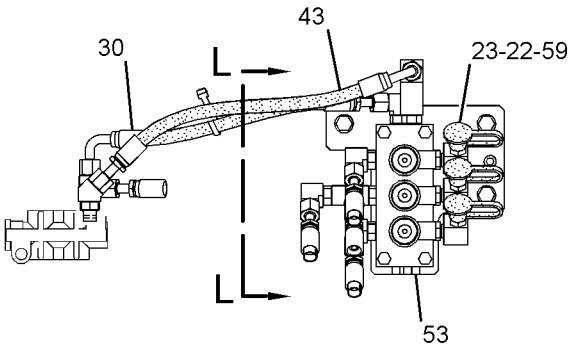

SECTION A-A

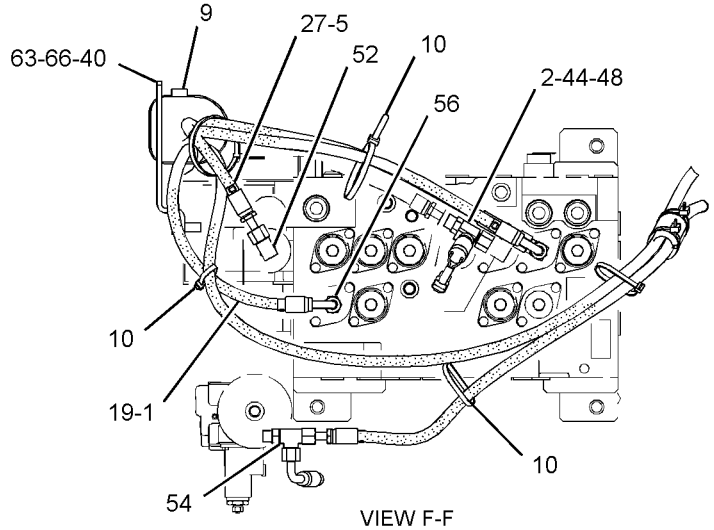

VIEW F-F

GRAPHIC #2 **<END>** g01446163

HYDRAULIC SYSTEM

282-7421 LINES GP-PILOT—SYSTEM 20, WORK TOOL PRIORITY

S/N: CLA1-UP
PART OF 270-6025 CONTROL AR-AUXILIARY
AN ATTACHMENT
TYPE 2

SMCS-5057, 5059 **i03093844**

NOTE	REF NO	GRAPHIC REF	PART NUMBER	QTY	PART NAME 1 2 3 4 5 6 (PRODUCT LEVEL)	SEE PAGE
I	1	2	**4I-1783**	1	HOSE AS	
	2	2	**4I-3941**	1	FITTING AS	
		2	**6V-8553**	1	NUT (11/16-16-THD)	
	3	1	**4I-9521**	2	BAND-MARKER (RED, L1)	
	4	1	**4I-9522**	4	BAND-MARKER (YELLOW, L2)	
	5	1,2	**4I-9523**	8	BAND-MARKER (BLUE, L3)	
	6	1	**4I-9524**	2	BAND-MARKER (BROWN, L4)	
	7	1,2	**4I-9527**	8	BAND-MARKER (GREEN, R3)	
	8	1	**4I-9528**	2	BAND-MARKER (PURPLE, R4)	
	9	2	**5P-5148**	1	STRAP-TIE	
C	10	1,2	**7K-1181**	22	STRAP-CABLE	
I	11	1	**7Y-4199**	1	HOSE AS	
I	12	2	**7Y-4384**	1	HOSE AS	
I	13	1	**7Y-8379**	1	HOSE AS	
I	14	1	**087-5764**	1	HOSE AS	
I	15	1	**087-5771**	1	HOSE AS	
I	16	1	**104-8777**	1	HOSE AS	
Y	17	2	**121-6303**	1	VALVE GP-SOLENOID	642
Y	18	2	**123-2549**	1	VALVE GP-SHUTTLE	635
	19	2	**133-5813**	2	BAND-MARKER (GRAY, P)	
	20	1	**146-7127**	1	GROMMET	
C	21	1	*150-4027*	1	TEE AS	
		1	**3E-2310**	1	TEE	
		1	**3J-1907**	1	SEAL-O-RING	
		1	**6V-8397**	1	SEAL-O-RING	
	22	1,2	*164-5567*	5	COUPLER AS-QUICK DISCONNECT	
					(EACH INCLUDES)	
		1,2	**3J-1907**	1	SEAL-O-RING	
		1,2	**6V-3965**	1	FITTING (QUICK DISCONNECT)	
	23	1,2	*164-6874*	4	FITTING AS-ELBOW	
					(EACH INCLUDES)	
		1,2	**3J-1907**	1	SEAL-O-RING	
		1,2	**085-7356**	1	FITTING	
	24	2	*168-1968*	1	TEE AS	
		2	**3J-1907**	1	SEAL-O-RING	
		2	**6V-8397**	1	SEAL-O-RING	
		2	**126-6872**	1	TEE	
Y	25	2	**171-0188**	1	VALVE GP-SOLENOID (NEG FLOW CONT, PROPN RED VALVE)	643
	26	1	**212-5402**	1	HOSE AS	
	27	1,2	**221-4807**	2	HOSE AS	
Y	28	1	**226-3109**	1	VALVE GP-SOLENOID (NEGATIVE FLOW CONTROL)	644
Y	29	2	**270-5766**	1	VALVE GP-SOLENOID & PRESS REDC (WORK TOOL CONTROL)	652
I	30	2	**278-6768**	1	HOSE AS	
C	31	1	**282-7092**	6	GROMMET	
	32	2	**282-7106**	1	GROMMET	
I	33	1	**282-7120**	1	HOSE AS	
	34	2	**282-7128**	1	HOSE AS	
C	35	1	**285-2663**	1	FITTING AS	
		1	**3J-1907**	1	SEAL-O-RING	
CI	36	1	**320-0195**	1	HOSE AS	
	37	2	**286-6489**	1	SUPPORT AS	
		2	**091-9035**	3	SPACER (11X25X20-MM THK)	

282-7421 **LINES GP-PILOT** ***(contd.)*** **i03093844**

NOTE	REF NO	GRAPHIC REF	PART NUMBER	QTY	PART NAME 1 2 3 4 5 6 (PRODUCT LEVEL)	SEE PAGE
	38	2	**286-6491**	1	SUPPORT AS	
		2	**091-9035**	2	SPACER (11X25X20-MM THK)	
	39	1	**286-6493**	1	SUPPORT	
	40	2	**286-6494**	1	BRACKET	
I	41	2	**286-6815**	2	HOSE AS	
I	42	1	**296-7229**	1	HOSE AS	
I	43	2	**307-5289**	1	HOSE AS	
	44	2	**309-5769**	1	SWITCH AS-PRESSURE (ACTION INPUT, 2-WAY PATTERN)	
		2	**102-8802**	1	KIT-RECEPTACLE (2-PIN)	
					(INCLUDES RECEPTACLE AS & WEDGE)	
		2	**9X-3401**	2	PIN-CONNECTOR (16-GA TO 18-GA)	
I	45	1	**319-9906**	1	HOSE AS	
	46	2	**319-9910**	1	SUPPORT AS	
	47	2	**104-8903**	1	GUARD	
	48	2	*148-8336*	4	CONNECTOR AS	
					(EACH INCLUDES)	
		2	**3J-1907**	1	SEAL-O-RING	
		2	**6V-8397**	1	SEAL-O-RING	
		2	**6V-8636**	1	CONNECTOR	
	49	2	*148-8338*	1	CONNECTOR AS	
					(EACH INCLUDES)	
		2	**3J-1907**	1	SEAL-O-RING	
		2	**6V-8397**	1	SEAL-O-RING	
		2	**8T-0075**	1	CONNECTOR	
	50	2	*148-8353*	2	ELBOW AS	
					(EACH INCLUDES)	
		2	**3J-1907**	1	SEAL-O-RING	
		2	**6V-8397**	1	SEAL-O-RING	
		2	**6V-9001**	1	ELBOW	
	51	2	*148-8367*	1	ELBOW AS	
					(EACH INCLUDES)	
		2	**6V-8397**	1	SEAL-O-RING	
		2	**6V-9850**	1	ELBOW	
C	52	1,2	*148-8378*	16	ELBOW AS	
					(EACH INCLUDES)	
		1,2	**3J-1907**	1	SEAL-O-RING	
		1,2	**6V-8397**	1	SEAL-O-RING	
		1,2	**6V-8724**	1	ELBOW	
	53	2	*148-8407*	2	PLUG AS	
					(EACH INCLUDES)	
		2	**3J-1907**	1	SEAL-O-RING	
		2	**9S-4191**	1	PLUG-O-RING	
	54	2	*148-8435*	3	TEE AS	
					(EACH INCLUDES)	
		2	**3J-1907**	1	SEAL-O-RING	
		2	**6V-8397**	2	SEAL-O-RING	
		2	**6V-8781**	1	TEE-FACE SEAL	
	55	2	*150-3036*	2	ELBOW AS	
					(EACH INCLUDES)	
		2	**3J-1907**	1	SEAL-O-RING	
		2	**6V-8397**	1	SEAL-O-RING	
		2	**8T-1905**	1	ELBOW	
	56	2	*150-4044*	1	CONNECTOR AS	
		2	**3J-1907**	1	SEAL-O-RING	
		2	**6V-8397**	1	SEAL-O-RING	
		2	**8T-1779**	1	CONNECTOR	
	57	2	*153-6249*	1	CONNECTOR AS	
		2	**3J-1907**	1	SEAL-O-RING	
		2	**6V-8397**	1	SEAL-O-RING	

282-7421 **LINES GP-PILOT** *(contd.)* **i03093844**

NOTE	REF NO	GRAPHIC REF	PART NUMBER	QTY	PART NAME 1 2 3 4 5 6 (PRODUCT LEVEL)	SEE PAGE
		2	**8T-8887**	1	CONNECTOR	
M	58	1	**5C-9553**	2	BOLT (M6X1X16-MM)	
	59	1,2	**6V-0852**	5	CAP-DUST	
	60	2	**6V-8397**	2	SEAL-O-RING	
	61	1,2	**8T-4121**	13	WASHER-HARD (11X21X2.5-MM THK)	
M	62	1,2	**8T-4136**	8	BOLT (M10X1.5X25-MM)	
M	63	2	**8T-4139**	2	BOLT (M12X1.75X30-MM)	
M	64	2	**8T-4177**	4	BOLT (M8X1.25X90-MM)	
M	65	2	**8T-4186**	5	BOLT (M10X1.5X40-MM)	
	66	2	**8T-4223**	2	WASHER-HARD (13.5X25.5X3-MM THK)	
M	67	2	**8T-6870**	4	BOLT (M8X1.25X70-MM)	
	68	1	**9X-8256**	2	WASHER (6.6X12X2-MM THK)	
C	69	1	*164-5546*	1	TEE AS	
		1	**3E-7410**	1	TEE-O-RING	
		1	**3J-1907**	1	SEAL-O-RING	

C-CHANGE FROM PREVIOUS TYPE
I-REFER TO HYDRAULIC INFORMATION SYSTEM
M-METRIC PART
Y-SEPARATE ILLUSTRATION

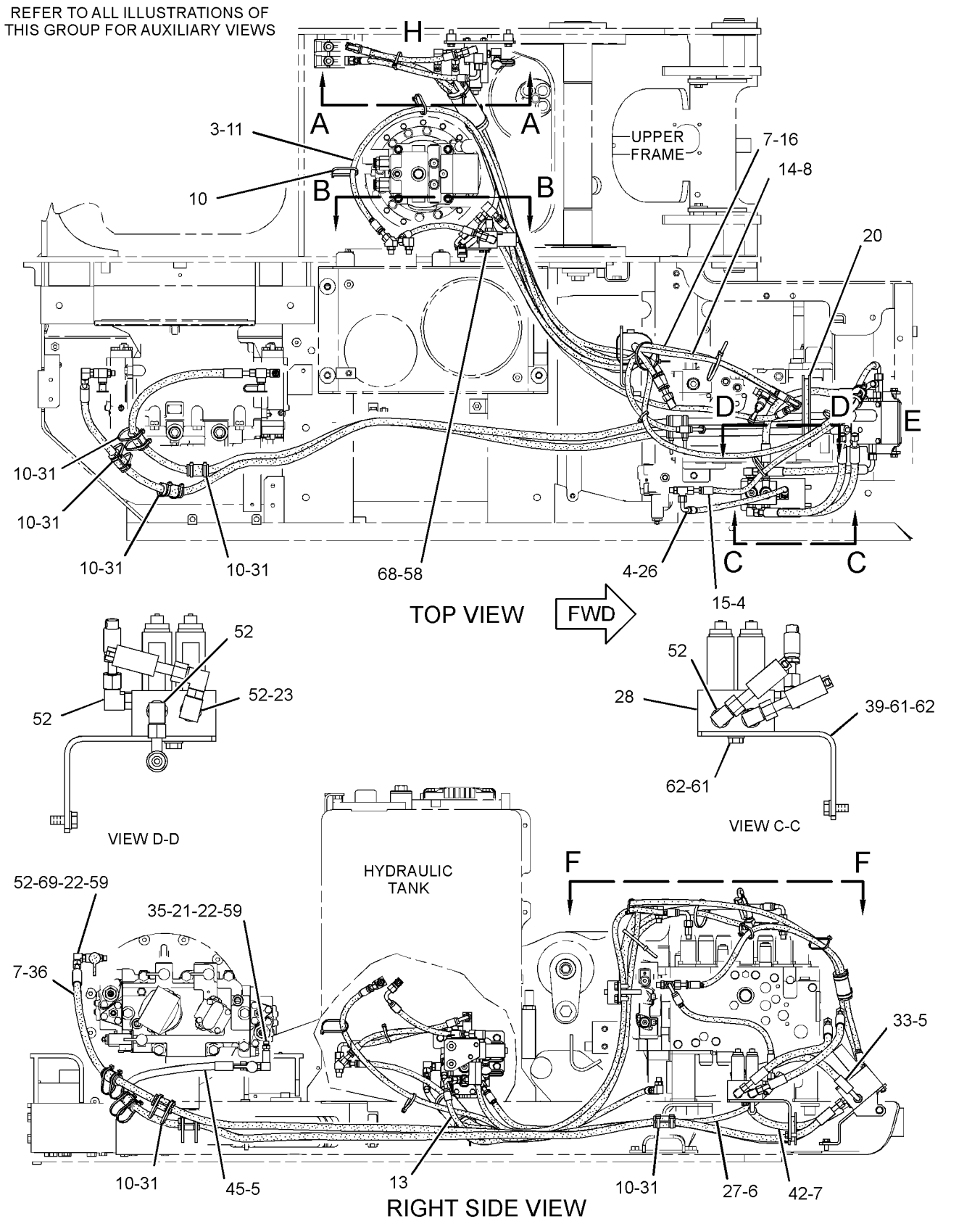

GRAPHIC #1 g01623161

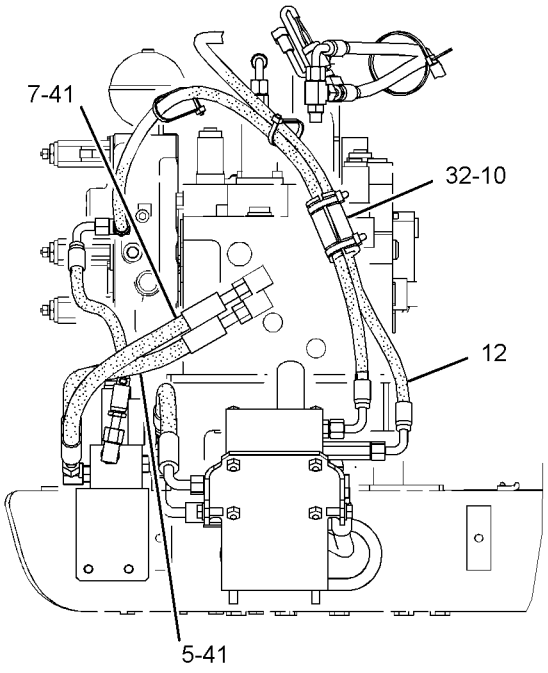

FRONT VIEW

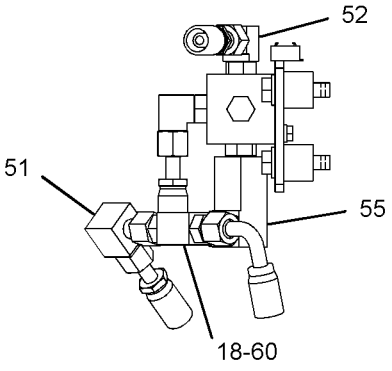

VIEW M-M

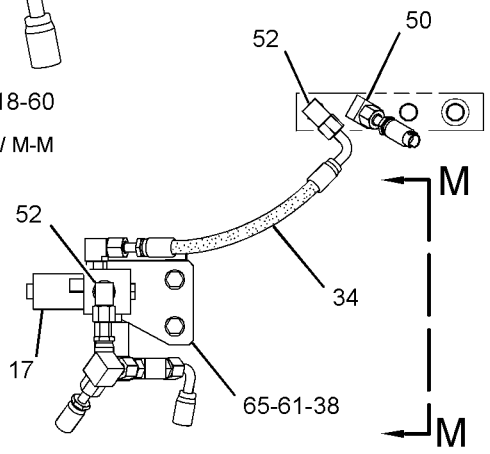

SECTION B-B

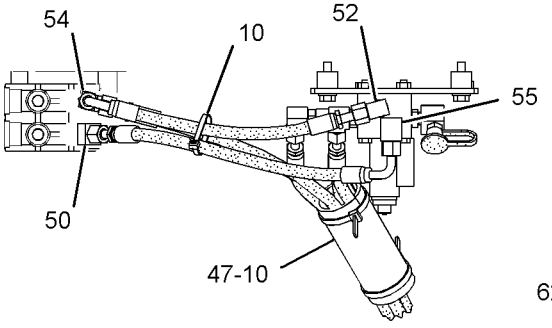

VIEW OF AREA H

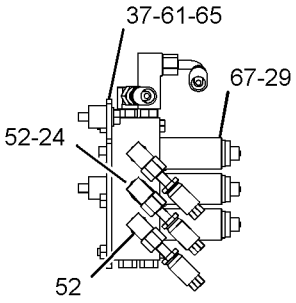

SECTION L-L

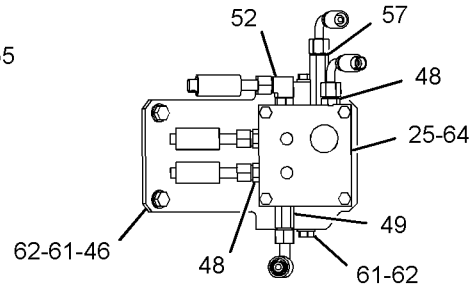

VIEW OF AREA E
(HOSES REMOVED FOR CLARITY)

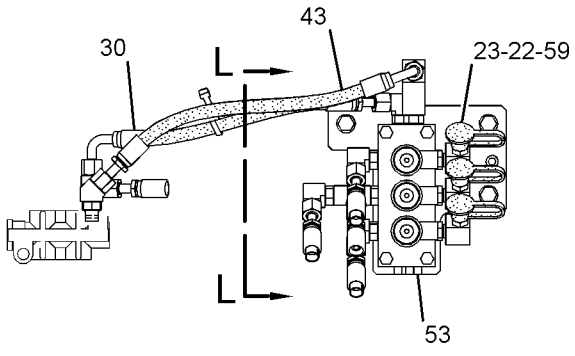

SECTION A-A

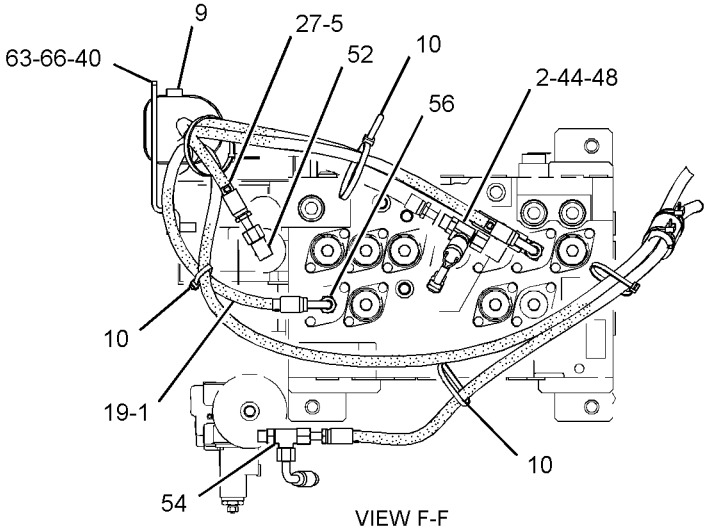

VIEW F-F

GRAPHIC #2 **<END>** g01446163

HYDRAULIC SYSTEM

282-7426 LINES GP-PILOT—PUMP CONTROL

S/N: CLA1-UP
PART OF 270-6030 CONTROL AR-AUXILIARY
AN ATTACHMENT
TYPE 1

SMCS-5057, 5059 **i02877057**

NOTE	REF NO	GRAPHIC REF	PART NUMBER	QTY	PART NAME 1 2 3 4 5 6 (PRODUCT LEVEL)	SEE PAGE
I	1	1	**4I-1783**	1	HOSE AS	
	2	2	**4I-3941**	1	FITTING AS	
		2	**6V-8553**	1	NUT (11/16-16-THD)	
	3	1	**4I-9522**	2	BAND-MARKER (YELLOW, L2)	
	4	1	**4I-9523**	4	BAND-MARKER (BLUE, L3)	
	5	1	**4I-9524**	2	BAND-MARKER (BROWN, L4)	
	6	1,2	**4I-9527**	6	BAND-MARKER (GREEN, R3)	
	7	2	**4I-9528**	2	BAND-MARKER (PURPLE, R4)	
	8	1,2	**7K-1181**	12	STRAP-CABLE	
I	9	1	**7Y-4384**	1	HOSE AS	
I	10	2	**7Y-8379**	1	HOSE AS	
I	11	2	**087-5764**	1	HOSE AS	
I	12	1	**087-5771**	1	HOSE AS	
I	13	2	**104-8777**	1	HOSE AS	
Y	14	2	**121-6303**	1	VALVE GP-SOLENOID (AUXILIARY, 1-PUMP/2-PUMP)	642
Y	15	2	**123-2549**	1	VALVE GP-SHUTTLE (1-PUMP/2-PUMP)	635
	16	1	**133-5813**	2	BAND-MARKER (GRAY, P)	
	17	1	**146-7127**	1	GROMMET	
	18	1	*150-4027*	2	TEE AS	
					(EACH INCLUDES)	
		1	**3E-2310**	1	TEE	
		1	**3J-1907**	1	SEAL-O-RING	
		1	**6V-8397**	1	SEAL-O-RING	
	19	1,2	*164-5567*	4	COUPLER AS-QUICK DISCONNECT	
					(EACH INCLUDES)	
		1,2	**3J-1907**	1	SEAL-O-RING	
		1,2	**6V-3965**	1	FITTING (QUICK DISCONNECT)	
	20	2	*164-6874*	2	FITTING AS-ELBOW	
					(EACH INCLUDES)	
		2	**3J-1907**	1	SEAL-O-RING	
		2	**085-7356**	1	FITTING	
	21	2	*168-1968*	1	TEE AS	
		2	**3J-1907**	1	SEAL-O-RING	
		2	**6V-8397**	1	SEAL-O-RING	
		2	**126-6872**	1	TEE	
	22	1	**221-4807**	1	HOSE AS	
Y	23	2	**259-7430**	1	VALVE GP-SOLENOID (PRESSURE REDUCING)	645
I	24	2	**278-6768**	1	HOSE AS	
	25	1	**282-7092**	2	GROMMET	
	26	1	**282-7106**	1	GROMMET	
	27	2	**282-7128**	1	HOSE AS	
	28	1	**285-2663**	2	FITTING AS	
					(EACH INCLUDES)	
		1	**3J-1907**	1	SEAL-O-RING	
I	29	1	**285-2844**	1	HOSE AS	
	30	2	**286-6489**	1	SUPPORT AS	
M		2	**8T-3490**	1	NUT-WELD (M10X1.5-THD)	
M		2	**8T-3612**	5	NUT-WELD (M8X1.25-THD)	
		2	**091-9035**	3	SPACER (11X25X20-MM THK)	
	31	2	**286-6491**	1	SUPPORT AS	
		2	**091-9035**	2	SPACER (11X25X20-MM THK)	
I	32	2	**307-5289**	1	HOSE AS	
	33	2	**309-5769**	1	SWITCH AS-PRESSURE (PILOT, BOOM UP)	

282-7426 **LINES GP-PILOT** ***(contd.)*** **i02877057**

NOTE	REF NO	GRAPHIC REF	PART NUMBER	QTY	PART NAME 1 2 3 4 5 6 (PRODUCT LEVEL)	SEE PAGE
		2	**102-8802**	1	KIT-RECEPTACLE (2-PIN)	
					(INCLUDES RECEPTACLE AS & WEDGE)	
		2	**9X-3401**	2	PIN-CONNECTOR (16-GA TO 18-GA)	
					—OR—	
		2	**126-1767**	2	PIN-CONNECTOR (14-GA)	
I	34	1	**319-9903**	2	HOSE AS	
I	35	1	**319-9906**	1	HOSE AS	
	36	2	**319-9910**	1	SUPPORT AS	
	37	2	**104-8903**	1	GUARD	
	38	1,2	*148-8336*	5	CONNECTOR AS	
					(EACH INCLUDES)	
		1,2	**3J-1907**	1	SEAL-O-RING	
		1,2	**6V-8397**	1	SEAL-O-RING	
		1,2	**6V-8636**	1	CONNECTOR	
	39	1,2	*148-8353*	3	ELBOW AS	
					(EACH INCLUDES)	
		1,2	**3J-1907**	1	SEAL-O-RING	
		1,2	**6V-8397**	1	SEAL-O-RING	
		1,2	**6V-9001**	1	ELBOW	
	40	2	**148-8367**	1	ELBOW AS	
		2	**6V-8397**	1	SEAL-O-RING	
		2	**6V-9850**	1	ELBOW	
	41	1	*148-8371*	1	ELBOW AS	
		1	**6V-8397**	1	SEAL-O-RING	
		1	**8C-8988**	1	ELBOW	
	42	2	*148-8378*	6	ELBOW AS	
					(EACH INCLUDES)	
		2	**3J-1907**	1	SEAL-O-RING	
		2	**6V-8397**	1	SEAL-O-RING	
		2	**6V-8724**	1	ELBOW	
	43	2	*148-8435*	2	TEE AS	
					(EACH INCLUDES)	
		2	**3J-1907**	1	SEAL-O-RING	
		2	**6V-8397**	2	SEAL-O-RING	
		2	**6V-8781**	1	TEE-FACE SEAL	
	44	2	*150-3036*	3	ELBOW AS	
					(EACH INCLUDES)	
		2	**3J-1907**	1	SEAL-O-RING	
		2	**6V-8397**	1	SEAL-O-RING	
		2	**8T-1905**	1	ELBOW	
	45	2	*150-4044*	1	CONNECTOR AS	
		2	**3J-1907**	1	SEAL-O-RING	
		2	**6V-8397**	1	SEAL-O-RING	
		2	**8T-1779**	1	CONNECTOR	
	46	2	*153-6249*	2	CONNECTOR AS	
					(EACH INCLUDES)	
		2	**3J-1907**	1	SEAL-O-RING	
		2	**6V-8397**	1	SEAL-O-RING	
		2	**8T-8887**	1	CONNECTOR	
Y	47	2	**171-0188**	1	VALVE GP-SOLENOID (NEG FLOW CONT, PROPN RED VALVE)	643
M	48	2	**5C-9553**	2	BOLT (M6X1X16-MM)	
	49	1,2	**6V-0852**	4	CAP-DUST	
	50	2	**6V-8397**	2	SEAL-O-RING	
	51	2	**8T-4121**	9	WASHER-HARD (11X21X2.5-MM THK)	
M	52	2	**8T-4136**	4	BOLT (M10X1.5X25-MM)	
M	53	2	**8T-4177**	4	BOLT (M8X1.25X90-MM)	
M	54	2	**8T-4186**	5	BOLT (M10X1.5X40-MM)	
M	55	2	**8T-6870**	2	BOLT (M8X1.25X70-MM)	
	56	2	**9X-8256**	2	WASHER (6.6X12X2-MM THK)	

I-REFER TO HYDRAULIC INFORMATION SYSTEM
M-METRIC PART
Y-SEPARATE ILLUSTRATION

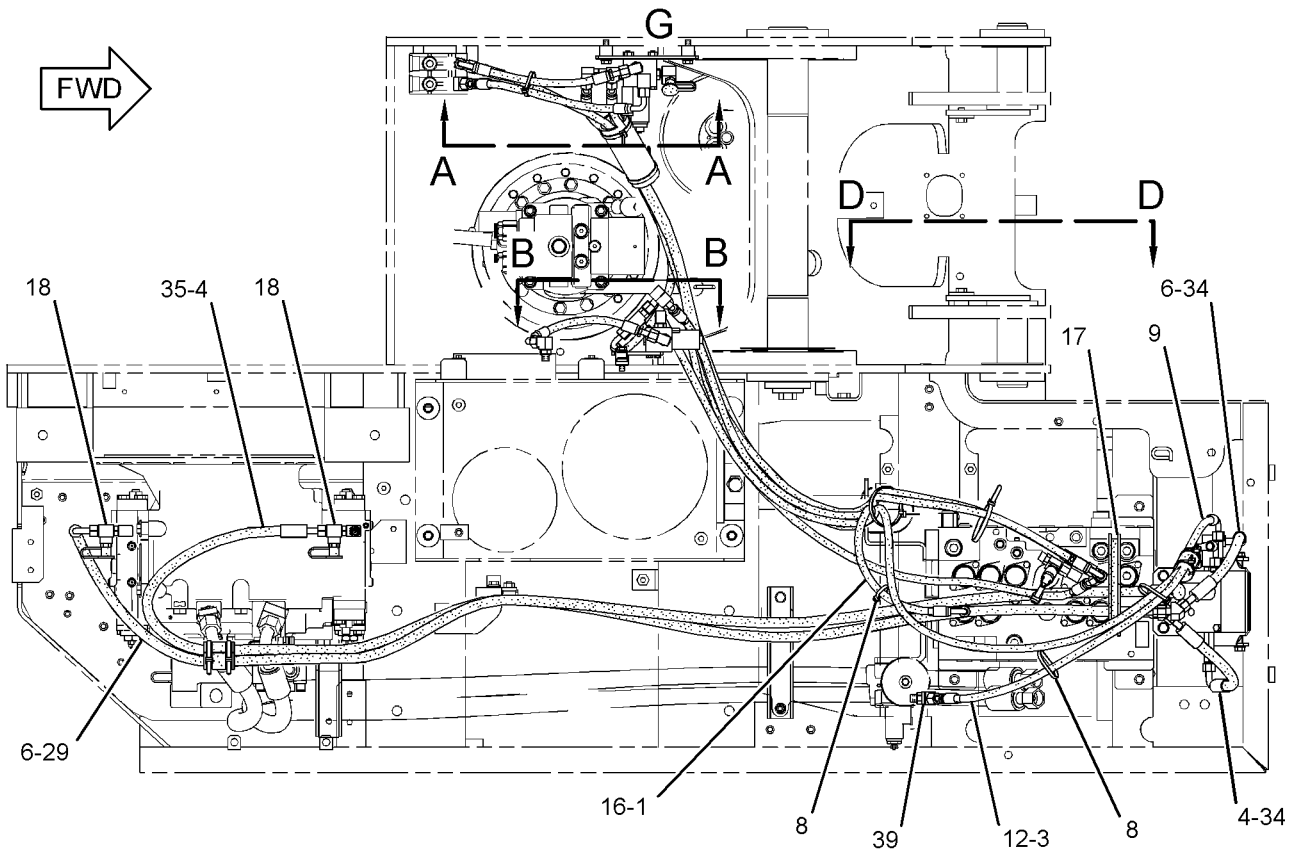

TOP VIEW

REFER TO ALL ILLUSTRATIONS OF
THIS GROUP FOR AUXILIARY VIEWS

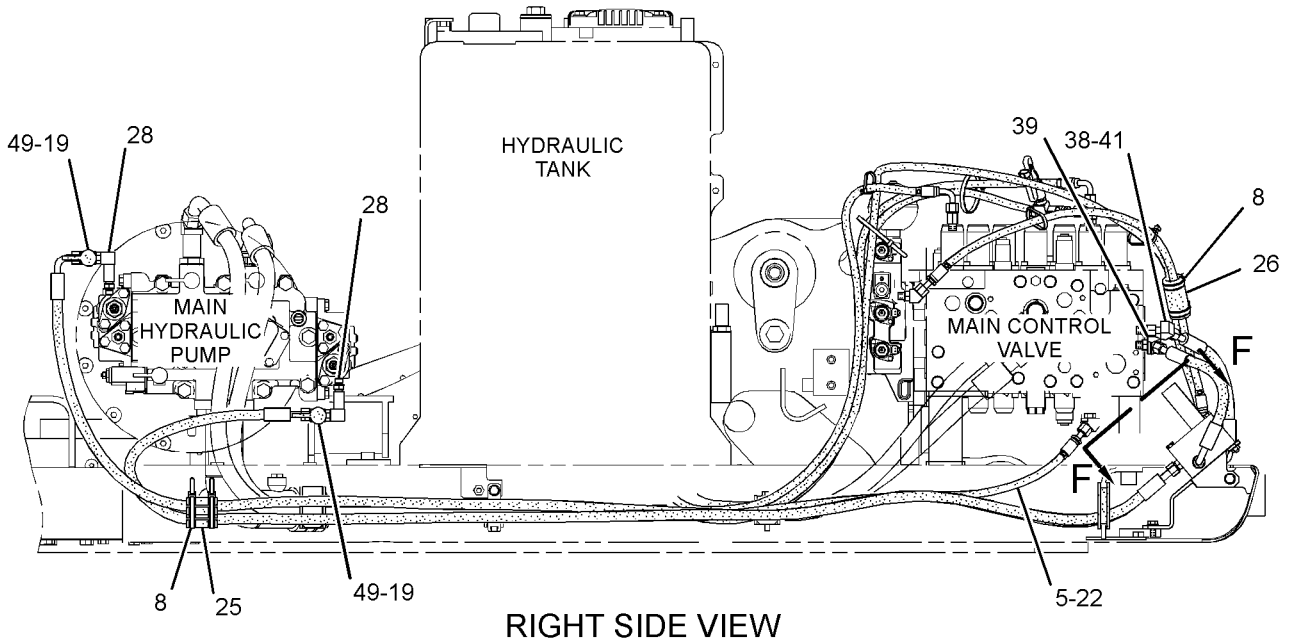

RIGHT SIDE VIEW

GRAPHIC #1

g01449307

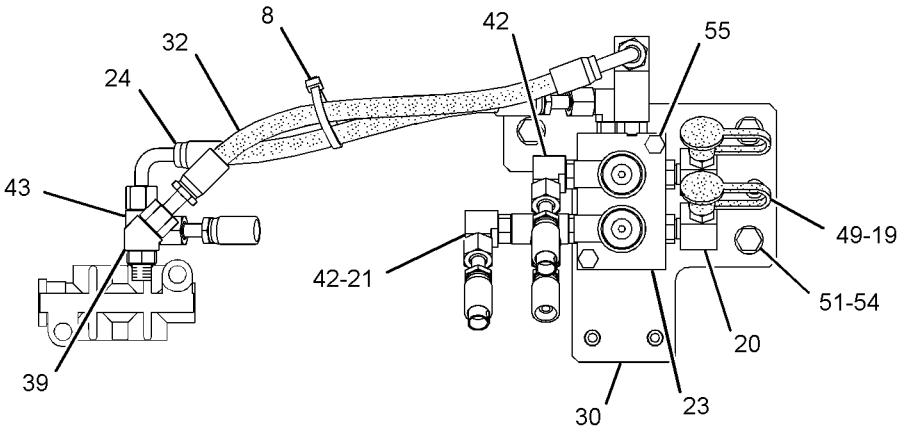

SECTION A-A

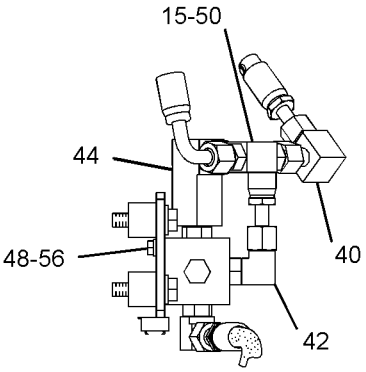

VIEW E-E

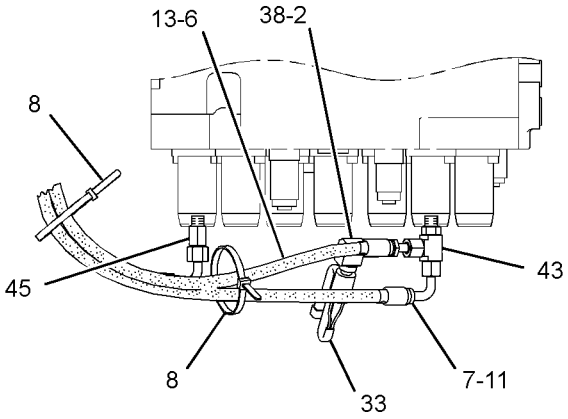

VIEW D-D

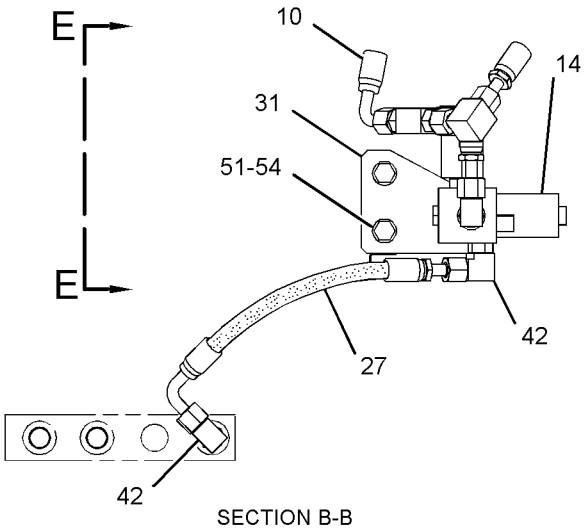

SECTION B-B

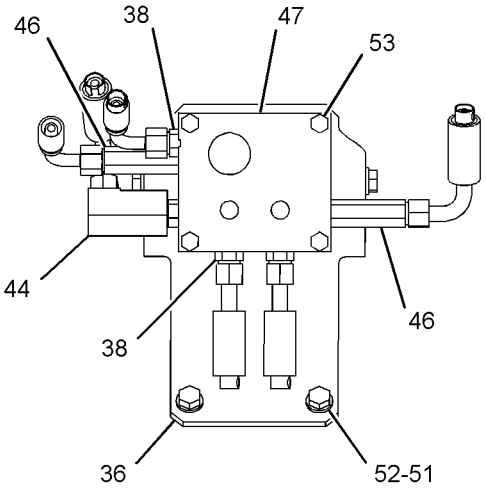

VIEW F-F

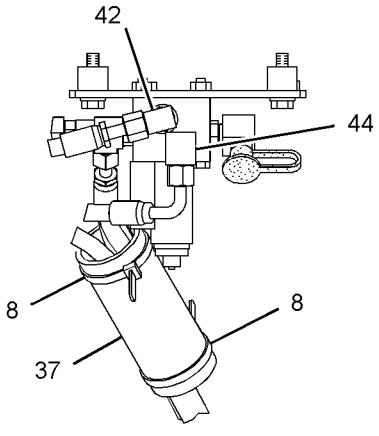

VIEW OF AREA G

GRAPHIC #2 **<END>** g01449447

HYDRAULIC SYSTEM

282-7426 LINES GP-PILOT—PUMP CONTROL

S/N: CLA1-UP
PART OF 270-6030 CONTROL AR-AUXILIARY
AN ATTACHMENT
TYPE 2

SMCS-5057, 5059 **i03001260**

NOTE	REF NO	GRAPHIC REF	PART NUMBER	QTY	PART NAME 1 2 3 4 5 6 (PRODUCT LEVEL)	SEE PAGE
CI	1	1	**4I-6136**	1	HOSE AS	
	2	2	**4I-3941**	1	FITTING AS	
		2	**6V-8553**	1	NUT (11/16-16-THD)	
	3	1	**4I-9522**	2	BAND-MARKER (YELLOW, L2)	
	4	1	**4I-9523**	4	BAND-MARKER (BLUE, L3)	
	5	1	**4I-9524**	2	BAND-MARKER (BROWN, L4)	
	6	1,2	**4I-9527**	6	BAND-MARKER (GREEN, R3)	
	7	2	**4I-9528**	2	BAND-MARKER (PURPLE, R4)	
	8	1,2	**7K-1181**	12	STRAP-CABLE	
I	9	1	**7Y-4384**	1	HOSE AS	
I	10	2	**7Y-8379**	1	HOSE AS	
I	11	2	**087-5764**	1	HOSE AS	
I	12	1	**087-5771**	1	HOSE AS	
I	13	2	**104-8777**	1	HOSE AS	
Y	14	2	**121-6303**	1	VALVE GP-SOLENOID (AUXILIARY, 1-PUMP/2-PUMP)	642
Y	15	2	**123-2549**	1	VALVE GP-SHUTTLE (1-PUMP/2-PUMP)	635
	16	1	**133-5813**	2	BAND-MARKER (GRAY, P)	
	17	1	**146-7127**	1	GROMMET	
C	18	1	*150-4027*	1	TEE AS	
		1	**3E-2310**	1	TEE	
		1	**3J-1907**	1	SEAL-O-RING	
		1	**6V-8397**	1	SEAL-O-RING	
	19	1,2	*164-5567*	4	COUPLER AS-QUICK DISCONNECT	
					(EACH INCLUDES)	
		1,2	**214-7568**	1	SEAL-O-RING	
		1,2	**6V-3965**	1	FITTING (QUICK DISCONNECT)	
	20	2	*164-6874*	2	FITTING AS-ELBOW	
					(EACH INCLUDES)	
		2	**3J-1907**	1	SEAL-O-RING	
		2	**085-7356**	1	FITTING	
	21	2	*168-1968*	1	TEE AS	
		2	**3J-1907**	1	SEAL-O-RING	
		2	**6V-8397**	1	SEAL-O-RING	
		2	**126-6872**	1	TEE	
	22	1	**221-4807**	1	HOSE AS	
Y	23	2	**259-7430**	1	VALVE GP-SOLENOID (PRESSURE REDUCING)	645
I	24	2	**278-6768**	1	HOSE AS	
	25	1	**282-7092**	2	GROMMET	
	26	1	**282-7106**	1	GROMMET	
	27	2	**282-7128**	1	HOSE AS	
C	28	1	**285-2663**	1	FITTING AS	
		1	**3J-1907**	1	SEAL-O-RING	
CI	29	1	**320-0195**	1	HOSE AS	
	30	2	**286-6489**	1	SUPPORT AS	
		2	**091-9035**	3	SPACER (11X25X20-MM THK)	
	31	2	**286-6491**	1	SUPPORT AS	
		2	**091-9035**	2	SPACER (11X25X20-MM THK)	
I	32	2	**307-5289**	1	HOSE AS	
	33	2	**309-5769**	1	SWITCH AS-PRESSURE (PILOT, BOOM UP)	
		2	**102-8802**	1	KIT-RECEPTACLE (2-PIN)	
					(INCLUDES RECEPTACLE AS & WEDGE)	
		2	**9X-3401**	2	PIN-CONNECTOR (16-GA TO 18-GA)	
					—OR—	
		2	**126-1767**	2	PIN-CONNECTOR (14-GA)	

282-7426 **LINES GP-PILOT** *(contd.)* **i03001260**

NOTE	REF NO	GRAPHIC REF	PART NUMBER	QTY	PART NAME 1 2 3 4 5 6 (PRODUCT LEVEL)	SEE PAGE
I	34	1	**319-9903**	2	HOSE AS	
I	35	1	**319-9906**	1	HOSE AS	
	36	2	**319-9910**	1	SUPPORT AS	
	37	2	**104-8903**	1	GUARD	
	38	1,2	*148-8336*	5	CONNECTOR AS	
					(EACH INCLUDES)	
		1,2	**3J-1907**	1	SEAL-O-RING	
		1,2	**6V-8397**	1	SEAL-O-RING	
		1,2	**6V-8636**	1	CONNECTOR	
	39	1,2	*148-8353*	3	ELBOW AS	
					(EACH INCLUDES)	
		1,2	**3J-1907**	1	SEAL-O-RING	
		1,2	**6V-8397**	1	SEAL-O-RING	
		1,2	**6V-9001**	1	ELBOW	
	40	2	*148-8367*	1	ELBOW AS	
		2	**6V-8397**	1	SEAL-O-RING	
		2	**6V-9850**	1	ELBOW	
	41	1	*148-8371*	1	ELBOW AS	
		1	**6V-8397**	1	SEAL-O-RING	
		1	**8C-8988**	1	ELBOW	
C	42	1,2	*148-8378*	7	ELBOW AS	
					(EACH INCLUDES)	
		1,2	**3J-1907**	1	SEAL-O-RING	
		1,2	**6V-8397**	1	SEAL-O-RING	
		1,2	**6V-8724**	1	ELBOW	
	43	2	*148-8435*	2	TEE AS	
					(EACH INCLUDES)	
		2	**3J-1907**	1	SEAL-O-RING	
		2	**6V-8397**	2	SEAL-O-RING	
		2	**6V-8781**	1	TEE-FACE SEAL	
C	44	2	*150-3036*	4	ELBOW AS	
					(EACH INCLUDES)	
		2	**3J-1907**	1	SEAL-O-RING	
		2	**6V-8397**	1	SEAL-O-RING	
		2	**8T-1905**	1	ELBOW	
C	45	1	*164-5546*	2	TEE AS	
		1	**3E-7410**	1	TEE-O-RING	
		1	**3J-1907**	1	SEAL-O-RING	
	46	2	*153-6249*	2	CONNECTOR AS	
					(EACH INCLUDES)	
		2	**3J-1907**	1	SEAL-O-RING	
		2	**6V-8397**	1	SEAL-O-RING	
		2	**8T-8887**	1	CONNECTOR	
Y	47	2	**171-0188**	1	VALVE GP-SOLENOID (NEG FLOW CONT, PROPN RED VALVE)	643
M	48	2	**5C-9553**	2	BOLT (M6X1X16-MM)	
	49	1,2	**6V-0852**	4	CAP-DUST	
	50	2	**6V-8397**	2	SEAL-O-RING	
	51	2	**8T-4121**	9	WASHER-HARD (11X21X2.5-MM THK)	
M	52	2	**8T-4136**	4	BOLT (M10X1.5X25-MM)	
M	53	2	**8T-4177**	4	BOLT (M8X1.25X90-MM)	
M	54	2	**8T-4186**	5	BOLT (M10X1.5X40-MM)	
M	55	2	**8T-6870**	2	BOLT (M8X1.25X70-MM)	
	56	2	**9X-8256**	2	WASHER (6.6X12X2-MM THK)	

C-CHANGE FROM PREVIOUS TYPE
I-REFER TO HYDRAULIC INFORMATION SYSTEM
M-METRIC PART
Y-SEPARATE ILLUSTRATION

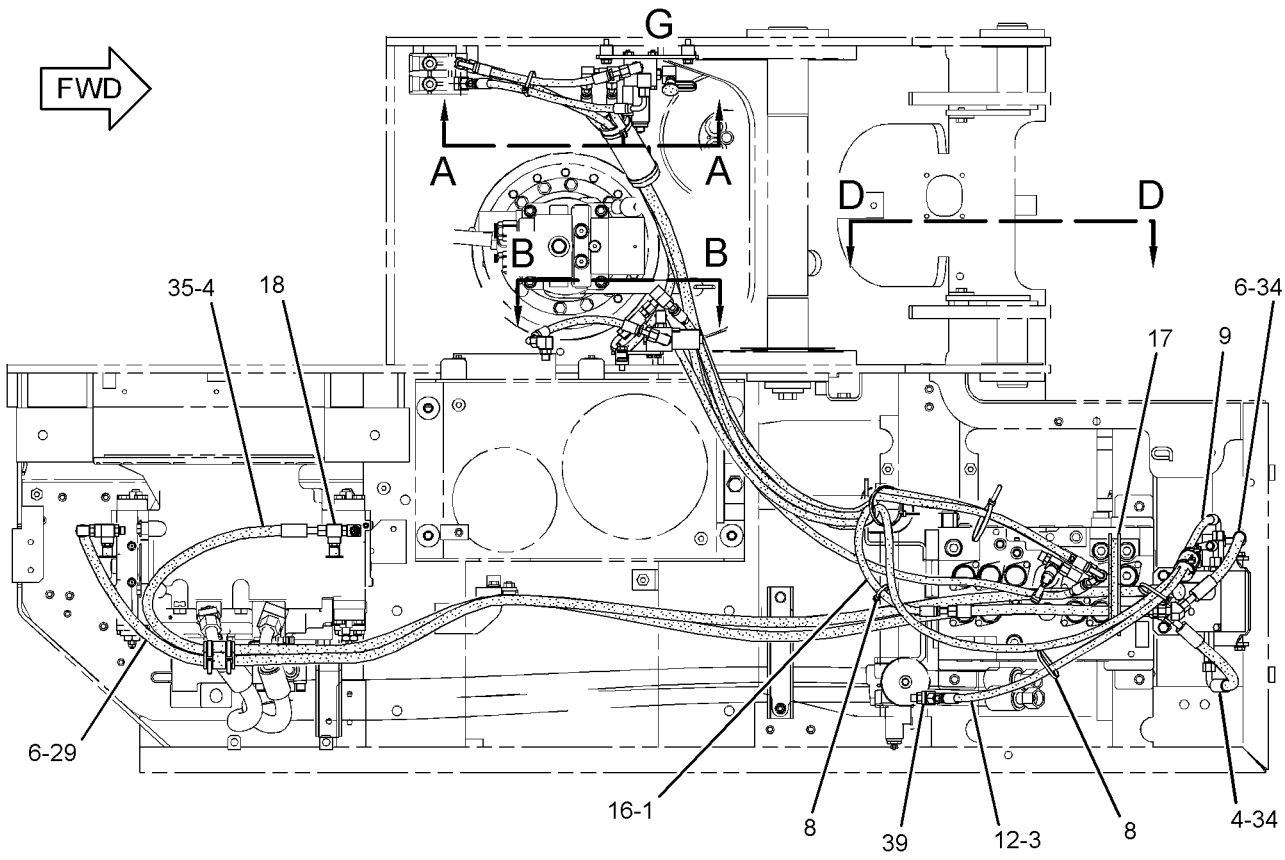

TOP VIEW

REFER TO ALL ILLUSTRATIONS OF
THIS GROUP FOR AUXILIARY VIEWS

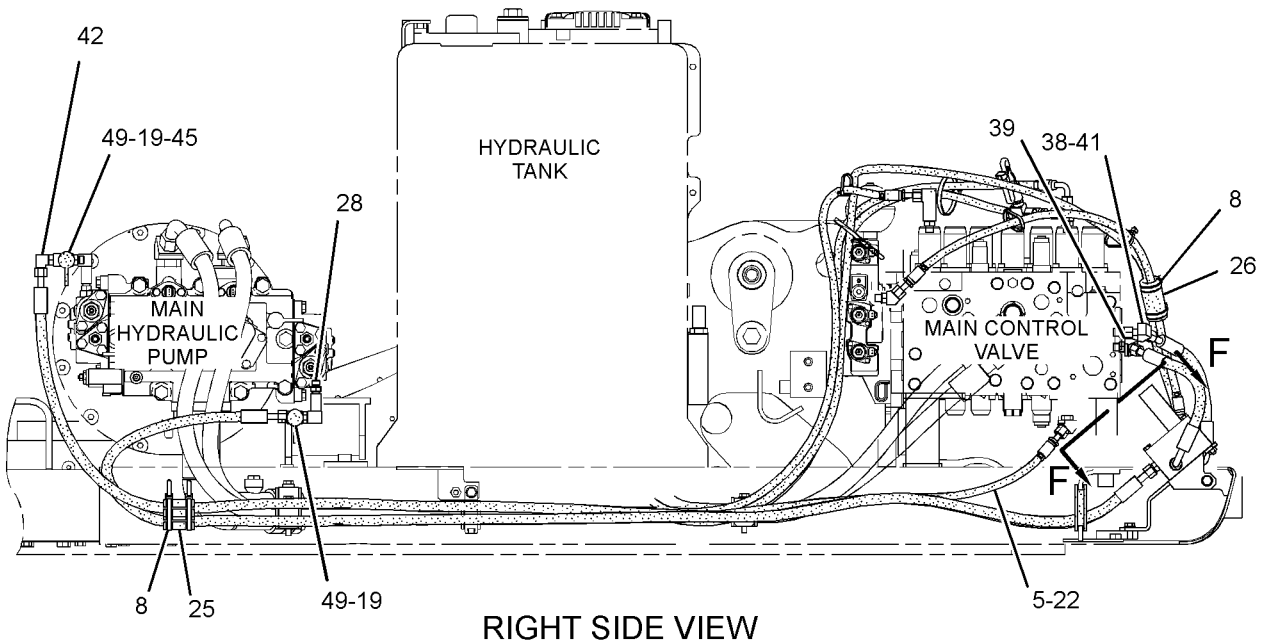

RIGHT SIDE VIEW

GRAPHIC #1

g01624096

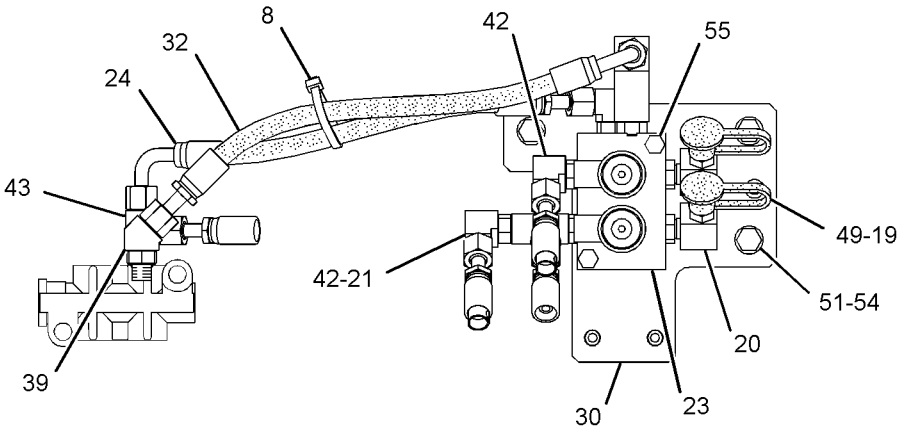

SECTION A-A

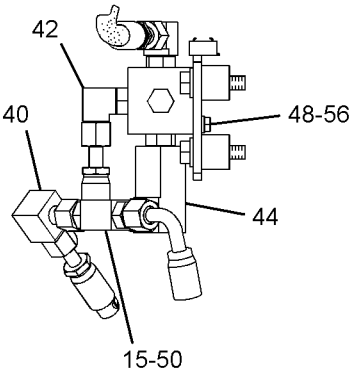

VIEW E-E

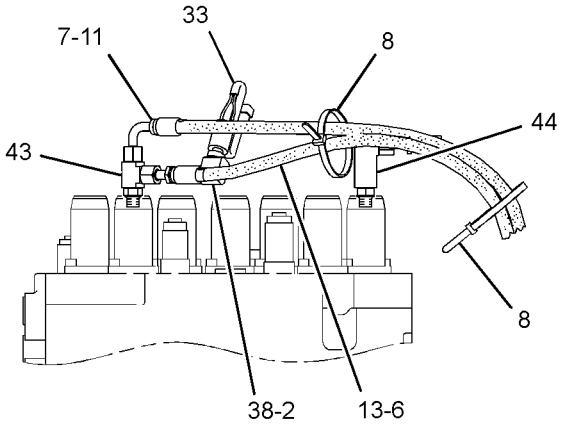

VIEW D-D

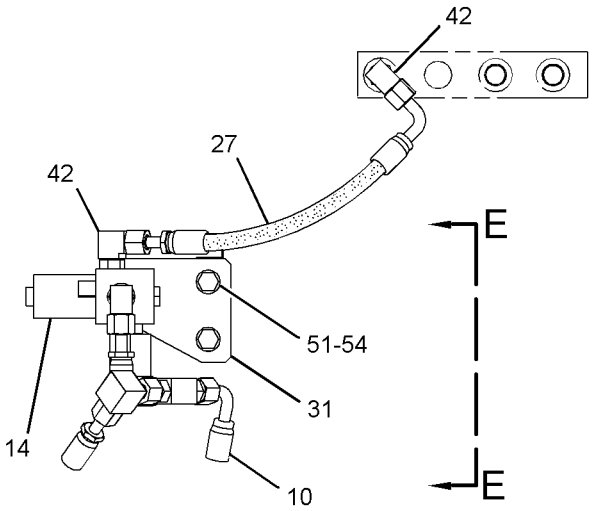

SECTION B-B

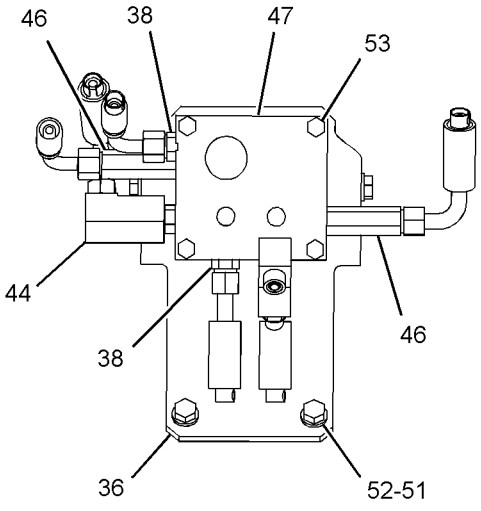

VIEW F-F

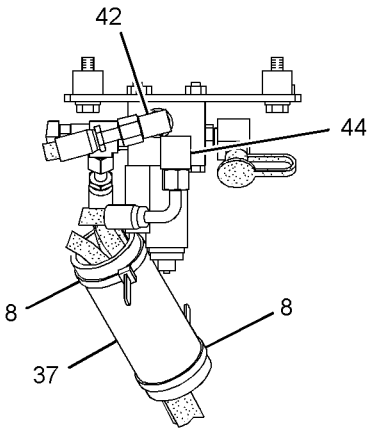

VIEW OF AREA G

GRAPHIC #2 **<END>** g01624097

282-7427 LINES GP-PILOT—STICK LOWERING CONTROL

S/N: CLA1-UP

PART OF 297-0196 VALVE AR-CHECK & RELIEF

AN ATTACHMENT

TYPE 1

SMCS-5057, 5059 **i03063834**

NOTE	REF NO	GRAPHIC REF	PART NUMBER	QTY	PART NAME 1 2 3 4 5 6 (PRODUCT LEVEL)	SEE PAGE
	1	1	**7K-1181**	2	STRAP-CABLE	
I	2	1	**207-6204**	1	HOSE AS	
	3	1	**223-8666**	1	HOSE AS	
	4	1	**238-6189**	1	HOSE AS	
	5	1	*148-8378*	1	ELBOW AS	
		1	**3J-1907**	1	SEAL-O-RING	
		1	**6V-8397**	1	SEAL-O-RING	
		1	**6V-8724**	1	ELBOW	
	6	1	*148-8433*	2	TEE AS	
					(EACH INCLUDES)	
		1	**6V-8397**	2	SEAL-O-RING	
		1	**6V-9836**	1	TEE-SWIVEL	
	7	1	*150-4044*	1	CONNECTOR AS	
		1	**3J-1907**	1	SEAL-O-RING	
		1	**6V-8397**	1	SEAL-O-RING	
		1	**8T-1779**	1	CONNECTOR	
	8	1	**4I-9525**	2	BAND-MARKER (ORANGE, R1)	
	9	1	**4I-9523**	2	BAND-MARKER (BLUE, L3)	
	10	1	**133-5813**	2	BAND-MARKER (GRAY, P)	

I-REFER TO HYDRAULIC INFORMATION SYSTEM

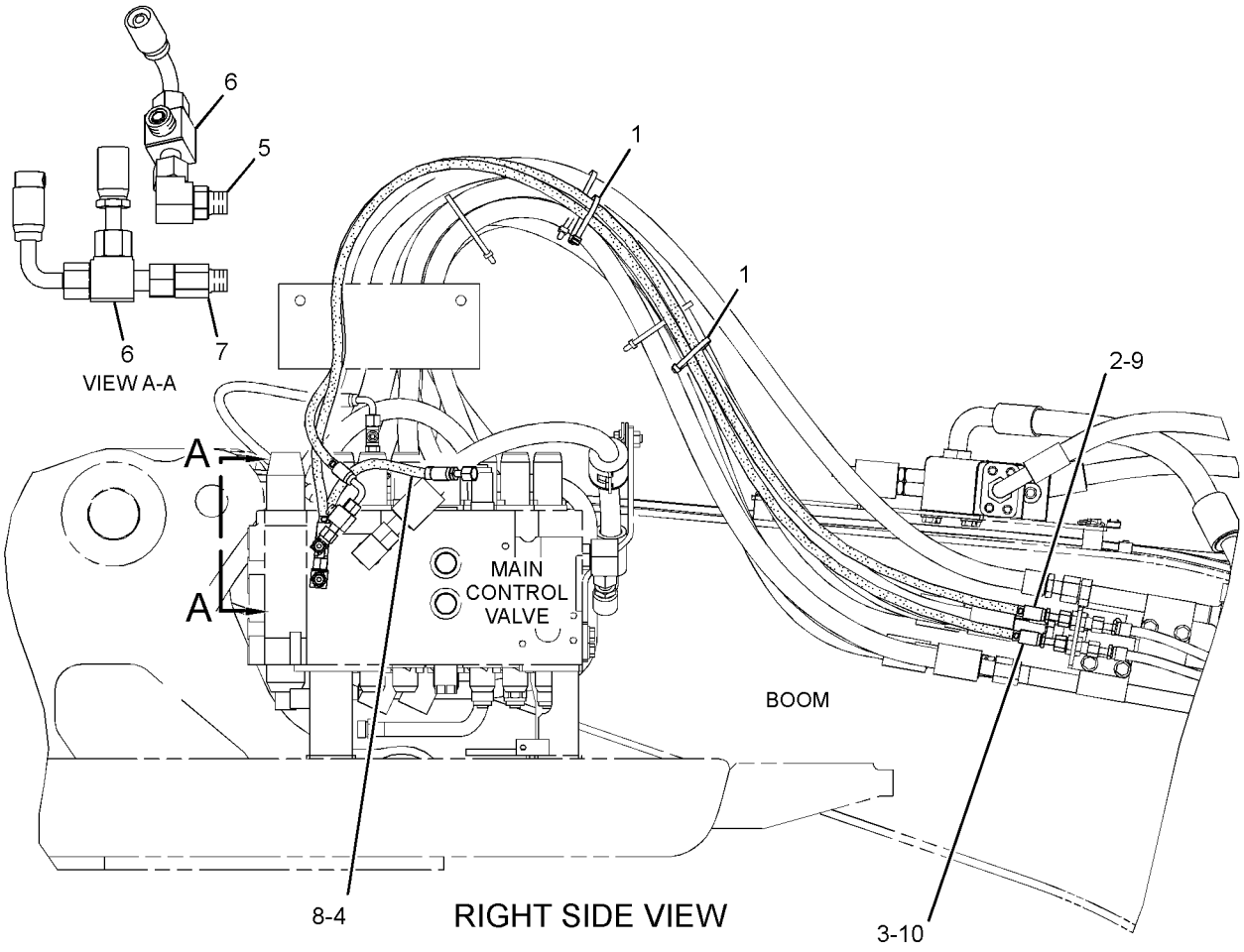

GRAPHIC #1 **<END>** g01623634

282-7427 LINES GP-PILOT—STICK LOWERING CONTROL

S/N: CLA1-UP
PART OF 297-0196 VALVE AR-CHECK & RELIEF
AN ATTACHMENT
TYPE 2

SMCS-5057, 5059 **i03166300**

NOTE	REF NO	GRAPHIC REF	PART NUMBER	QTY	PART NAME 1 2 3 4 5 6 (PRODUCT LEVEL)	SEE PAGE
	1	1	**7K-1181**	2	STRAP-CABLE	
I	2	1	**207-6204**	1	HOSE AS	
	3	1	**223-8666**	1	HOSE AS	
	4	1	**238-6189**	1	HOSE AS	
C	5	1	*164-6874*	1	FITTING AS-ELBOW	
		1	**3J-1907**	1	SEAL-O-RING	
		1	**085-7356**	1	FITTING	
C	6	1	*148-8433*	1	TEE AS	
		1	**6V-8397**	2	SEAL-O-RING	
		1	**6V-9836**	1	TEE-SWIVEL	
	7	1	*150-4044*	1	CONNECTOR AS	
		1	**3J-1907**	1	SEAL-O-RING	
		1	**6V-8397**	1	SEAL-O-RING	
		1	**8T-1779**	1	CONNECTOR	
	8	1	**4I-9525**	2	BAND-MARKER (ORANGE, R1)	
	9	1	**4I-9523**	2	BAND-MARKER (BLUE, L3)	
	10	1	**133-5813**	2	BAND-MARKER (GRAY, P)	
C	11	1	*148-8435*	1	TEE AS	
		1	**3J-1907**	1	SEAL-O-RING	
		1	**6V-8397**	2	SEAL-O-RING	
		1	**6V-8781**	1	TEE-FACE SEAL	

C-CHANGE FROM PREVIOUS TYPE
I-REFER TO HYDRAULIC INFORMATION SYSTEM

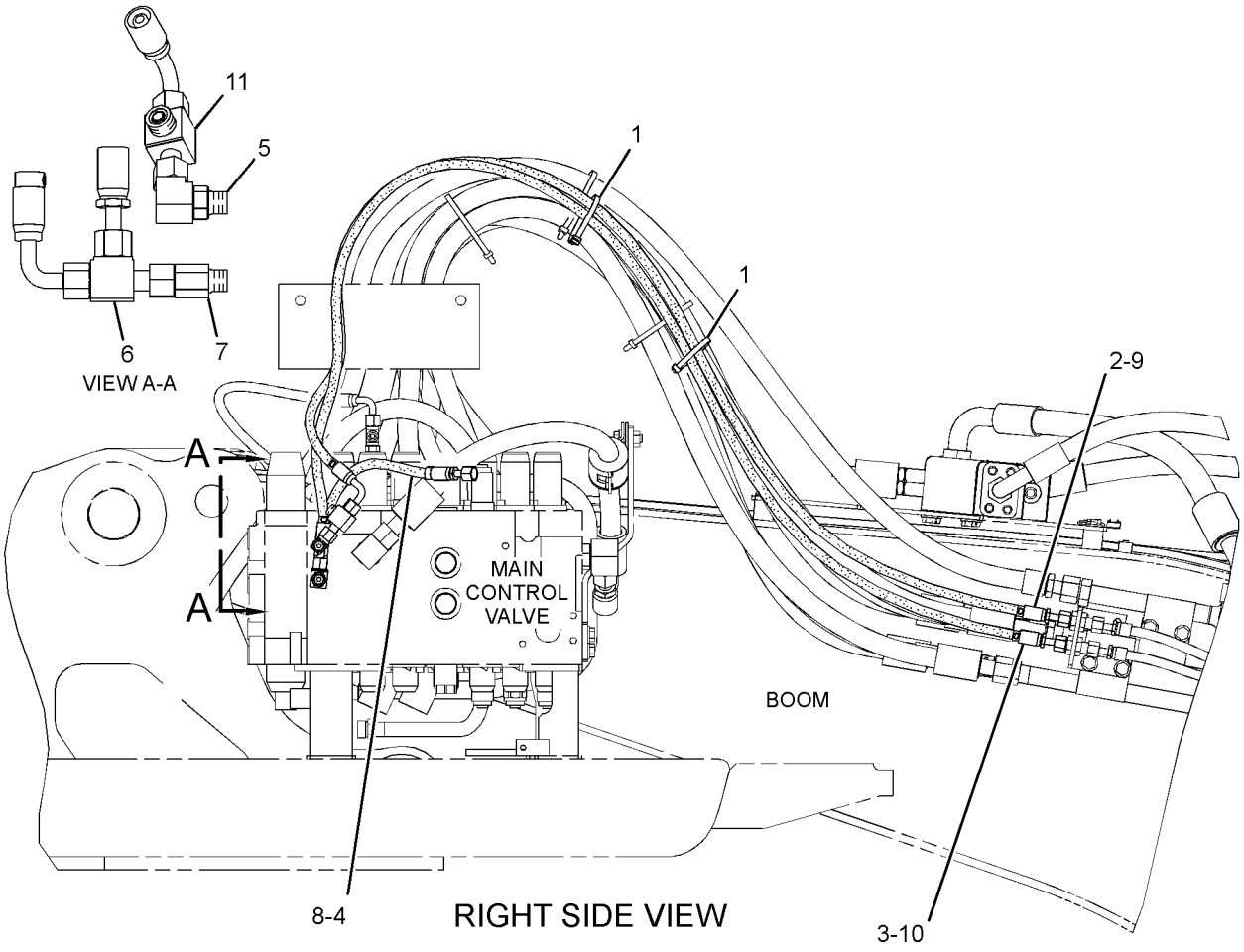

GRAPHIC #1 **<END>** g01633556

282-7436 LINES GP-PILOT–MEDIUM PRESSURE

S/N: CLA1-UP
PART OF 270-6037 CONTROL AR-AUXILIARY
AN ATTACHMENT

SMCS-5057, 5059 **i02877051**

NOTE	REF NO	GRAPHIC REF	PART NUMBER	QTY	PART NAME 1 2 3 4 5 6 (PRODUCT LEVEL)	SEE PAGE
I	1	1	**087-5762**	1	HOSE AS	
	2	1	**307-4966**	1	HOSE AS	
	3	1	*148-8336*	2	CONNECTOR AS	
					(EACH INCLUDES)	
		1	**3J-1907**	1	SEAL-O-RING	
		1	**6V-8397**	1	SEAL-O-RING	
		1	**6V-8636**	1	CONNECTOR	
	4	1	*148-8353*	1	ELBOW AS	
		1	**3J-1907**	1	SEAL-O-RING	
		1	**6V-8397**	1	SEAL-O-RING	
		1	**6V-9001**	1	ELBOW	
	5	1	*148-8378*	1	ELBOW AS	
		1	**3J-1907**	1	SEAL-O-RING	
		1	**6V-8397**	1	SEAL-O-RING	
		1	**6V-8724**	1	ELBOW	

I-REFER TO HYDRAULIC INFORMATION SYSTEM

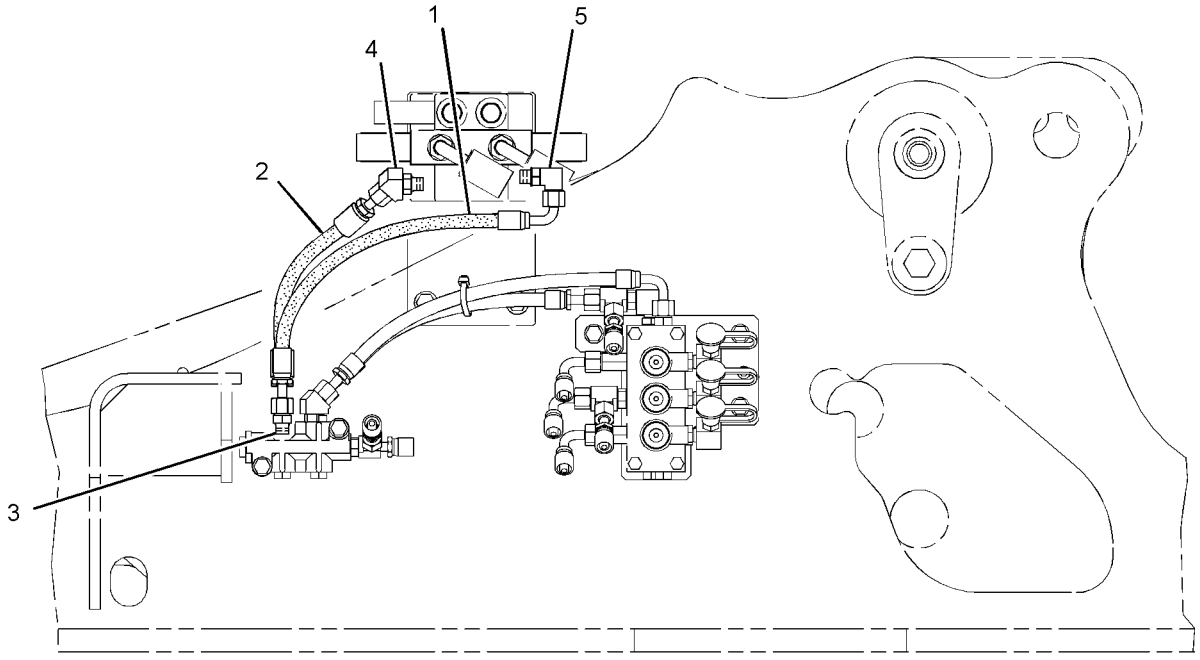

RIGHT SIDE VIEW

GRAPHIC #1 **<END>** g01446267

282-7446 LINES GP-PILOT–BOOM LOWERING CONTROL

S/N: CLA1-UP

PART OF 297-0195, 323-7792 VALVE AR-LOAD CONTROL

AN ATTACHMENT

SMCS-5057, 5059 **i02988378**

NOTE	REF NO	GRAPHIC REF	PART NUMBER	QTY	PART NAME 1 2 3 4 5 6 (PRODUCT LEVEL)	SEE PAGE
	1	1	**4I-9525**	4	BAND-MARKER (ORANGE, R1)	
	2	1	**7K-1181**	9	STRAP-CABLE	
B	3	1	*168-1968*	1	TEE AS	
		1	**3J-1907**	1	SEAL-O-RING	
		1	**6V-8397**	1	SEAL-O-RING	
		1	**126-6872**	1	TEE	
	4	1	**223-8666**	1	HOSE AS	
	5	1	**292-7628**	1	HOSE AS	
	6	1	*148-8378*	1	ELBOW AS	
		1	**3J-1907**	1	SEAL-O-RING	
		1	**6V-8397**	1	SEAL-O-RING	
		1	**6V-8724**	1	ELBOW	
	7	1	*148-8433*	1	TEE AS	
		1	**6V-8397**	2	SEAL-O-RING	
		1	**6V-9836**	1	TEE-SWIVEL	

B-USE AS REQUIRED

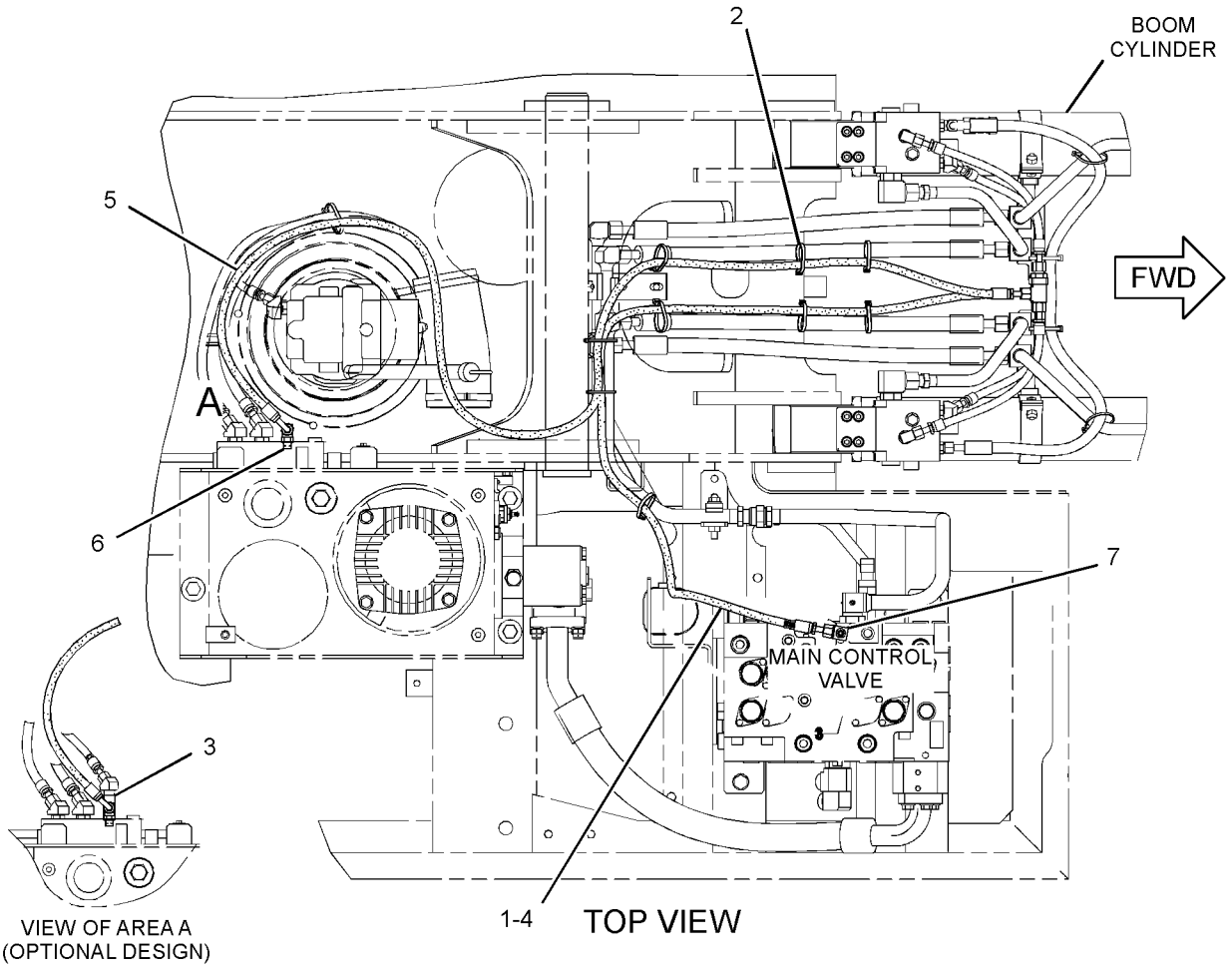

GRAPHIC #1 **<END>** g01589553

282-7447 LINES GP-PILOT—MEDIUM PRESSURE

S/N: CLA1-UP
PART OF 270-6043 CONTROL AR-AUXILIARY
AN ATTACHMENT

SMCS-5057, 5059 **i02883575**

NOTE	REF NO	GRAPHIC REF	PART NUMBER	QTY	PART NAME 1 2 3 4 5 6 (PRODUCT LEVEL)	SEE PAGE
	1	1	**4I-9523**	2	BAND-MARKER (BLUE, L3)	
	2	1	**4I-9526**	2	BAND-MARKER (WHITE, R2)	
	3	1	**6V-0852**	2	CAP-DUST	
I	4	1	**7Y-4199**	1	HOSE AS	
I	5	1	**102-8274**	1	HOSE AS	
I	6	1	**104-8774**	1	HOSE AS	
	7	1	*164-6874*	1	FITTING AS-ELBOW	
		1	**3J-1907**	1	SEAL-O-RING	
		1	**085-7356**	1	FITTING	
I	8	1	**248-9443**	1	HOSE AS	
Y	9	1	**259-7430**	1	VALVE GP-SOLENOID (PRESSURE REDUCING)	645
	10	1	*285-2663*	1	FITTING AS	
		1	**3J-1907**	1	SEAL-O-RING	
	11	1	**296-7268**	1	SUPPORT AS	
	12	1	*148-8378*	6	ELBOW AS	
					(EACH INCLUDES)	
		1	**3J-1907**	1	SEAL-O-RING	
		1	**6V-8397**	1	SEAL-O-RING	
		1	**6V-8724**	1	ELBOW	
	13	1	*150-3036*	2	ELBOW AS	
					(EACH INCLUDES)	
		1	**3J-1907**	1	SEAL-O-RING	
		1	**6V-8397**	1	SEAL-O-RING	
		1	**8T-1905**	1	ELBOW	
	14	1	*164-5567*	2	COUPLER AS-QUICK DISCONNECT	
					(EACH INCLUDES)	
		1	**3J-1907**	1	SEAL-O-RING	
		1	**6V-3965**	1	FITTING (QUICK DISCONNECT)	
	15	1	**7K-1181**	1	STRAP-CABLE	
	16	1	**8T-4121**	2	WASHER-HARD (11X21X2.5-MM THK)	
M	17	1	**8T-4136**	2	BOLT (M10X1.5X25-MM)	
M	18	1	**8T-6870**	2	BOLT (M8X1.25X70-MM)	

I-REFER TO HYDRAULIC INFORMATION SYSTEM
M-METRIC PART
Y-SEPARATE ILLUSTRATION

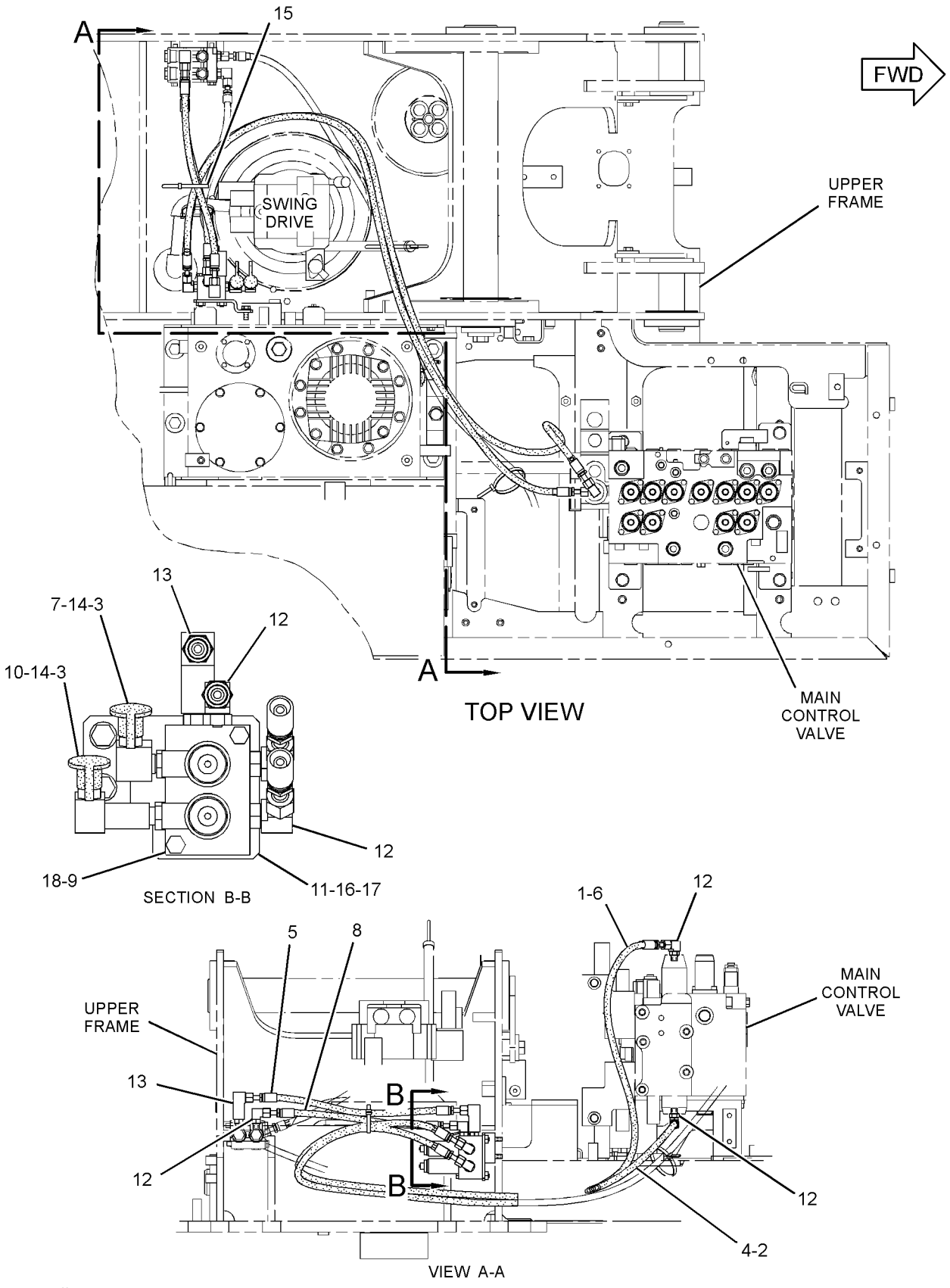

GRAPHIC #1

<END>

g01446197

282-7449 LINES GP-PILOT—INITIAL SERVICE

S/N: CLA1-UP
AN ATTACHMENT

SMCS-5057, 5059 **i02796243**

NOTE	REF NO	GRAPHIC REF	PART NUMBER	QTY	PART NAME 1 2 3 4 5 6 (PRODUCT LEVEL)	SEE PAGE
I	1	1	**4I-5906**	1	HOSE AS	
	2	1	**4I-9526**	2	BAND-MARKER (WHITE, R2)	
	3	1	**4I-9527**	2	BAND-MARKER (GREEN, R3)	
	4	1	**7K-1181**	3	STRAP-CABLE	
I	5	1	**087-5778**	1	HOSE AS	
	6	1	**168-9759**	1	BLOCK	
	7	1	*148-8336*	2	CONNECTOR AS	
					(EACH INCLUDES)	
		1	**3J-1907**	1	SEAL-O-RING	
		1	**6V-8397**	1	SEAL-O-RING	
		1	**6V-8636**	1	CONNECTOR	
	8	1	*148-8353*	1	ELBOW AS	
		1	**3J-1907**	1	SEAL-O-RING	
		1	**6V-8397**	1	SEAL-O-RING	
		1	**6V-9001**	1	ELBOW	
	9	1	*148-8378*	1	ELBOW AS	
		1	**3J-1907**	1	SEAL-O-RING	
		1	**6V-8397**	1	SEAL-O-RING	
		1	**6V-8724**	1	ELBOW	
B	10	1	*148-8407*	8	PLUG AS	
					(EACH INCLUDES)	
		1	**3J-1907**	1	SEAL-O-RING	
		1	**9S-4191**	1	PLUG-O-RING	
	11	1	*148-8411*	2	PLUG AS	
					(EACH INCLUDES)	
		1	**3K-0360**	1	SEAL-O-RING	
		1	**9S-4185**	1	PLUG-O-RING	
	12	1	**8T-4121**	2	WASHER-HARD (11X21X2.5-MM THK)	
M	13	1	**8T-4178**	2	BOLT (M10X1.5X90-MM)	

B-USE AS REQUIRED
I-REFER TO HYDRAULIC INFORMATION SYSTEM
M-METRIC PART

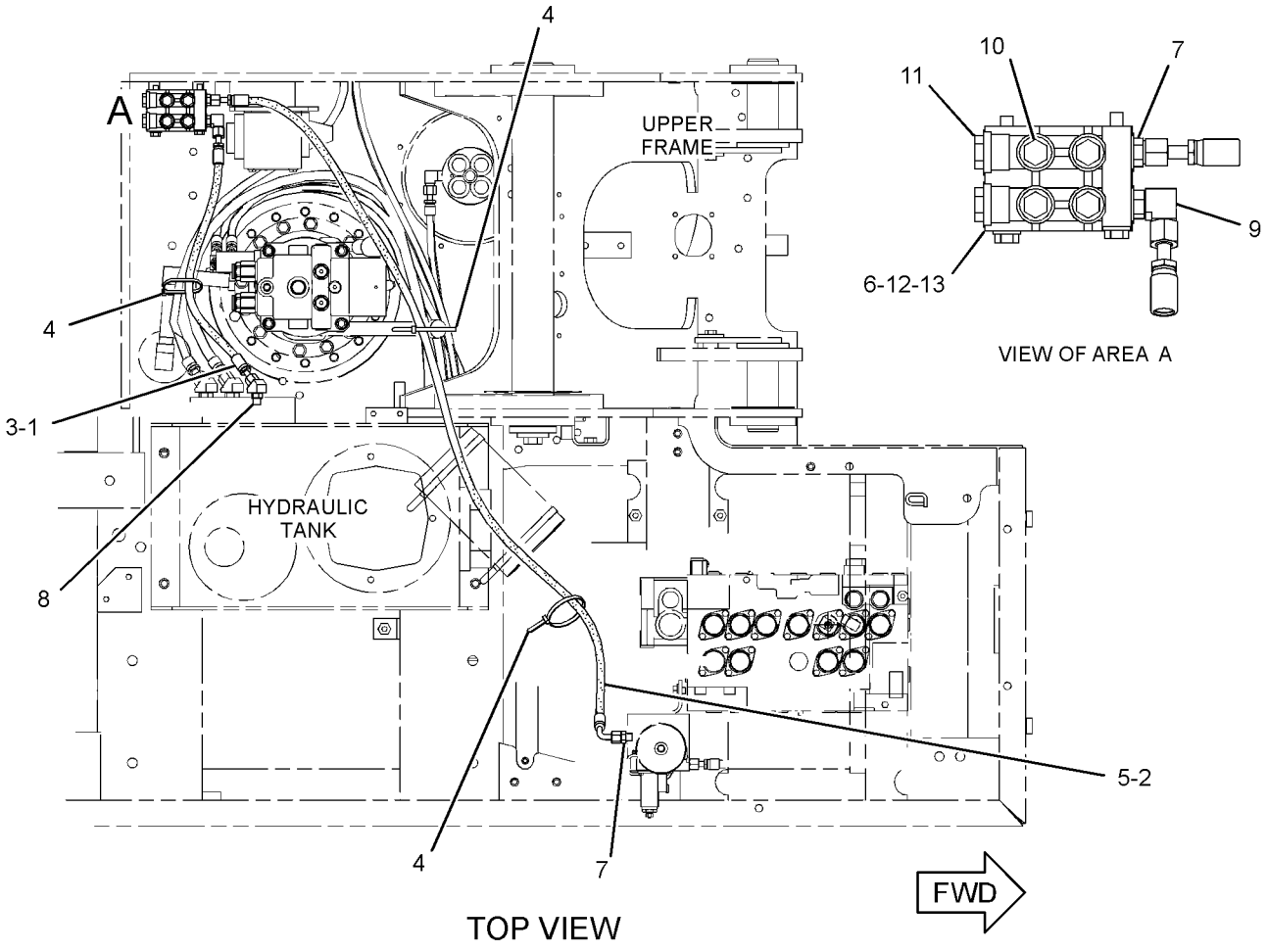

TOP VIEW

GRAPHIC #1 **<END>** g01400276

HYDRAULIC SYSTEM

307-5147 LINES GP-PILOT–ACCUGRADE

S/N: CLA1-UP

PART OF 301-2552, 301-2555, 301-2647 SPECIAL AR

AN ATTACHMENT

SMCS-5057, 5059 **i02852575**

NOTE	REF NO	GRAPHIC REF	PART NUMBER	QTY	PART NAME 1 2 3 4 5 6 (PRODUCT LEVEL)	SEE PAGE
	1	1	**4I-9521**	2	BAND-MARKER (RED, L1)	
	2	1	**4I-9523**	2	BAND-MARKER (BLUE, L3)	
	3	1	**4I-9525**	6	BAND-MARKER (ORANGE, R1)	
	4	1	**4I-9526**	2	BAND-MARKER (WHITE, R2)	
	5	1	**4I-9527**	2	BAND-MARKER (GREEN, R3)	
	6	1	**4I-9528**	2	BAND-MARKER (PURPLE, R4)	
	7	1	**6V-0852**	7	CAP-DUST	
	8	1	**7K-1181**	5	STRAP-CABLE	
I	9	1	**087-4531**	1	HOSE AS	
I	10	1	**087-5766**	1	HOSE AS	
Y	11	1	**123-2430**	1	VALVE GP-SHUTTLE	634
	12	1	**157-3180**	1	SENSOR AS-PRESSURE (ACTION INPUT, BOOM UP)	
		1	**3E-3371**	1	WEDGE-RECEPTACLE LOCK (3-PIN)	
		1	**9X-3401**	3	PIN-CONNECTOR (16-GA TO 18-GA)	
					–OR–	
		1	**126-1767**	3	PIN-CONNECTOR (14-GA)	
		1	**171-0596**	1	RECEPTACLE AS	
		1	**185-2478**	1	SEAL	
	13	1	*164-5546*	3	TEE AS	
					(EACH INCLUDES)	
		1	**3E-7410**	1	TEE-O-RING	
		1	**3J-1907**	1	SEAL-O-RING	
	14	1	*168-1968*	6	TEE AS	
					(EACH INCLUDES)	
		1	**3J-1907**	1	SEAL-O-RING	
		1	**6V-8397**	1	SEAL-O-RING	
		1	**126-6872**	1	TEE	
I	15	1	**176-4768**	1	HOSE AS	
	16	1	**202-1771**	1	CONNECTOR	
I	17	1	**289-5474**	1	HOSE AS	
	18	1	**292-7176**	2	HOSE AS	
	19	1	**296-6928**	1	HOSE AS	
Y	20	1	**297-0684**	1	VALVE GP-SOLENOID & PRESS REDC	653
Y	21	1	*297-0685*	1	VALVE GP-SOLENOID & PRESS REDC	654
I	22	1	**307-5289**	1	HOSE AS	
I	23	1	**314-8198**	1	HOSE AS	
I	24	1	**314-8199**	1	HOSE AS	
	25	1	*148-8336*	2	CONNECTOR AS	
					(EACH INCLUDES)	
		1	**3J-1907**	1	SEAL-O-RING	
		1	**6V-8397**	1	SEAL-O-RING	
		1	**6V-8636**	1	CONNECTOR	
	26	1	*148-8353*	4	ELBOW AS	
					(EACH INCLUDES)	
		1	**3J-1907**	1	SEAL-O-RING	
		1	**6V-8397**	1	SEAL-O-RING	
		1	**6V-9001**	1	ELBOW	
	27	1	*148-8378*	6	ELBOW AS	
					(EACH INCLUDES)	
		1	**3J-1907**	1	SEAL-O-RING	
		1	**6V-8397**	1	SEAL-O-RING	
		1	**6V-8724**	1	ELBOW	
	28	1	*148-8407*	9	PLUG AS	
					(EACH INCLUDES)	
		1	**3J-1907**	1	SEAL-O-RING	

307-5147 **LINES GP-PILOT** ***(contd.)*** **i02852575**

NOTE	REF NO	GRAPHIC REF	PART NUMBER	QTY	PART NAME 1 2 3 4 5 6 (PRODUCT LEVEL)	SEE PAGE
		1	**9S-4191**	1	PLUG-O-RING	
	29	1	*150-3036*	1	ELBOW AS	
		1	**3J-1907**	1	SEAL-O-RING	
		1	**6V-8397**	1	SEAL-O-RING	
		1	**8T-1905**	1	ELBOW	
	30	1	*164-5549*	1	COUPLING AS	
		1	**3J-1907**	1	SEAL-O-RING	
		1	**4I-6287**	1	COUPLING	
	31	1	*164-5567*	7	COUPLER AS-QUICK DISCONNECT	
					(EACH INCLUDES)	
		1	**3J-1907**	1	SEAL-O-RING	
		1	**6V-3965**	1	FITTING (QUICK DISCONNECT)	
	32	1	**3J-1907**	1	SEAL-O-RING	
	33	1	**6V-8397**	2	SEAL-O-RING	
M	34	1	**8T-6870**	8	BOLT (M8X1.25X70-MM)	

I-REFER TO HYDRAULIC INFORMATION SYSTEM
M-METRIC PART
Y-SEPARATE ILLUSTRATION

307-5147 **LINES GP-PILOT** *(contd.)* **i02852575**

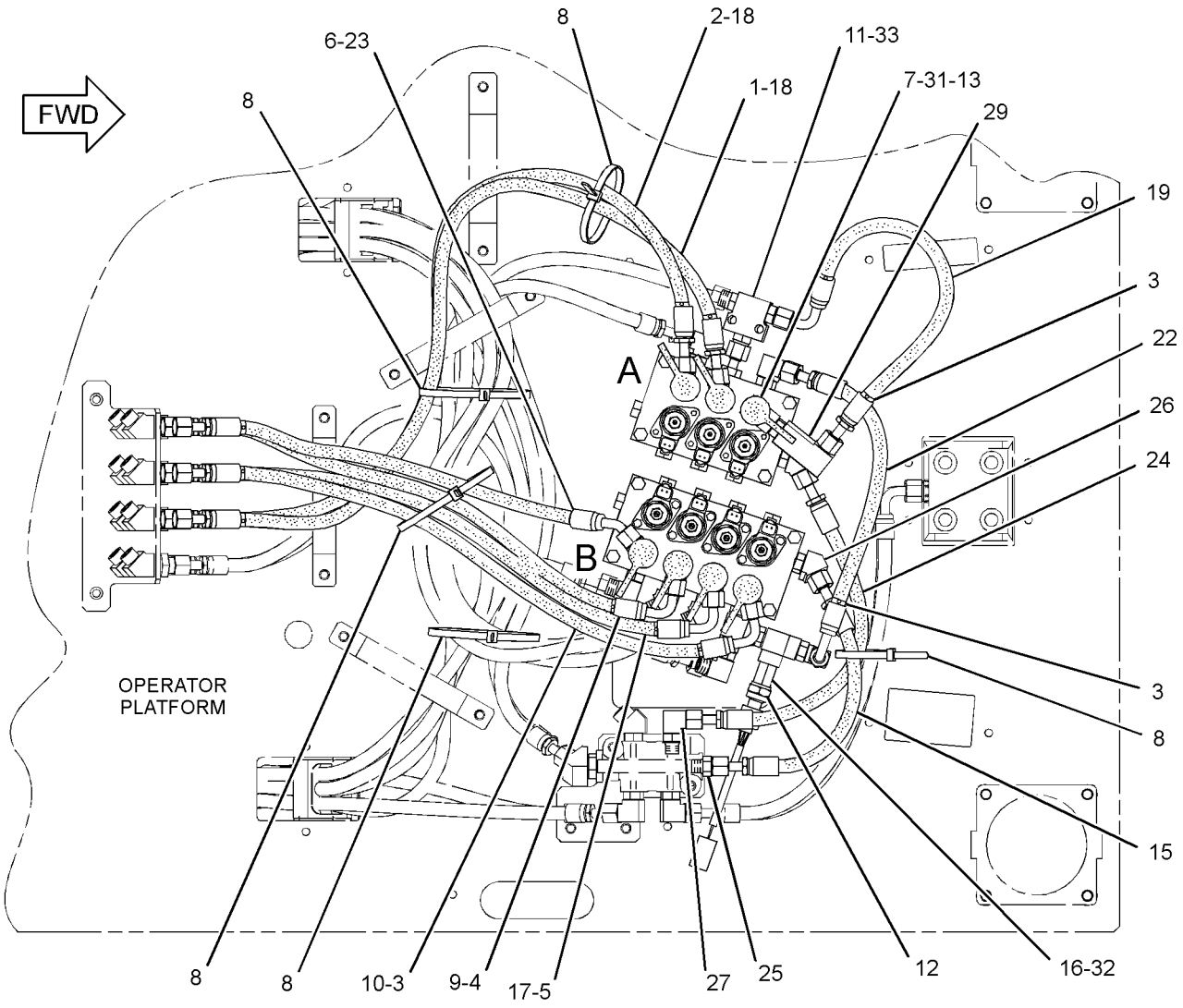

BOTTOM VIEW

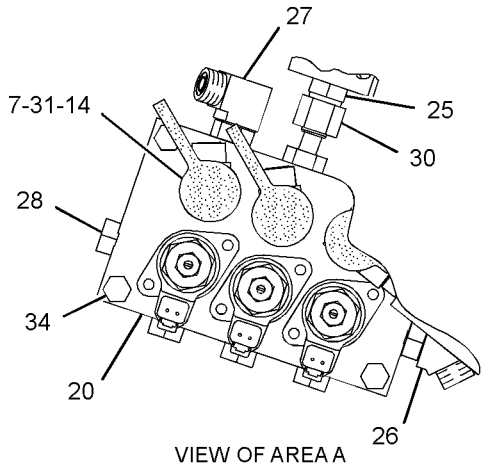

VIEW OF AREA A

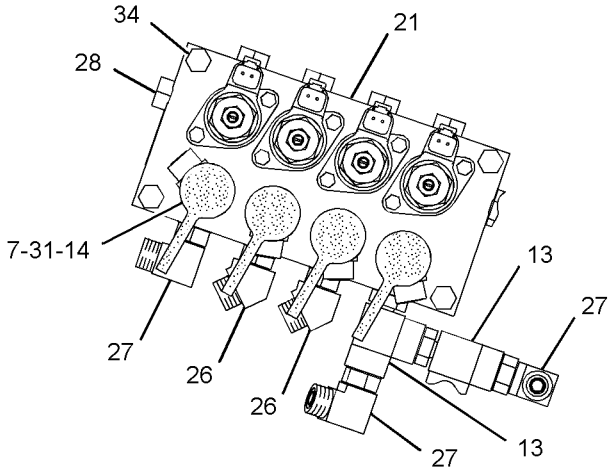

VIEW OF AREA B

GRAPHIC #1 **<END>** g01438291

HYDRAULIC SYSTEM

282-7403 LINES GP-PUMP

S/N: CLA1-108

PART OF 270-5992 HYDRAULIC AR

SMCS-5057 **i02897908**

NOTE	REF NO	GRAPHIC REF	PART NUMBER	QTY	PART NAME 1 2 3 4 5 6 (PRODUCT LEVEL)	SEE PAGE
	1	1	**8T-4985**	4	CLAMP-HOSE	
	2	1	**286-6504**	1	SUPPORT	
	3	1	**286-6505**	1	GROMMET	
	4	1	**314-8139**	1	TUBE AS	
I	5	1	**286-6508**	1	HOSE AS	
I	6	1	**286-6512**	1	HOSE AS	
	7	1	**289-5448**	1	HOSE	
	8	1	**296-7083**	1	SUPPORT	
	9	1	**296-7084**	1	GROMMET	
	10	1	**296-7085**	1	GROMMET	
	11	1	*296-7086*	1	ELBOW AS	
		1	**6V-9746**	1	SEAL-O-RING	
		1	**7M-8485**	1	SEAL-O-RING	
		1	**195-0106**	1	ELBOW	
M	12	1	**108-1781**	4	BOLT-SOCKET HEAD (M12X1.75X35-MM)	
	13	1	*148-8407*	1	PLUG AS	
		1	**3J-1907**	1	SEAL-O-RING	
		1	**9S-4191**	1	PLUG-O-RING	
	14	1	*148-8411*	1	PLUG AS	
		1	**3K-0360**	1	SEAL-O-RING	
		1	**9S-4185**	1	PLUG-O-RING	
	15	1	*150-4049*	1	ELBOW AS	
		1	**6V-9746**	1	SEAL-O-RING	
		1	**7M-8485**	1	SEAL-O-RING	
		1	**8T-4149**	1	ELBOW	
	16	1	*164-4180*	1	PLUG AS	
		1	**7M-8485**	1	SEAL-O-RING	
		1	**9S-4181**	1	PLUG-O-RING	
	17	1	**6J-2680**	1	SEAL-O-RING	
	18	1	**8T-4121**	2	WASHER-HARD (11X21X2.5-MM THK)	
M	19	1	**8T-4198**	1	BOLT (M10X1.5X100-MM)	
M	20	1	**8T-5005**	3	BOLT (M10X1.5X70-MM)	
	21	1	**4H-1225**	2	WASHER (11X22X6-MM THK)	

I-REFER TO HYDRAULIC INFORMATION SYSTEM
M-METRIC PART

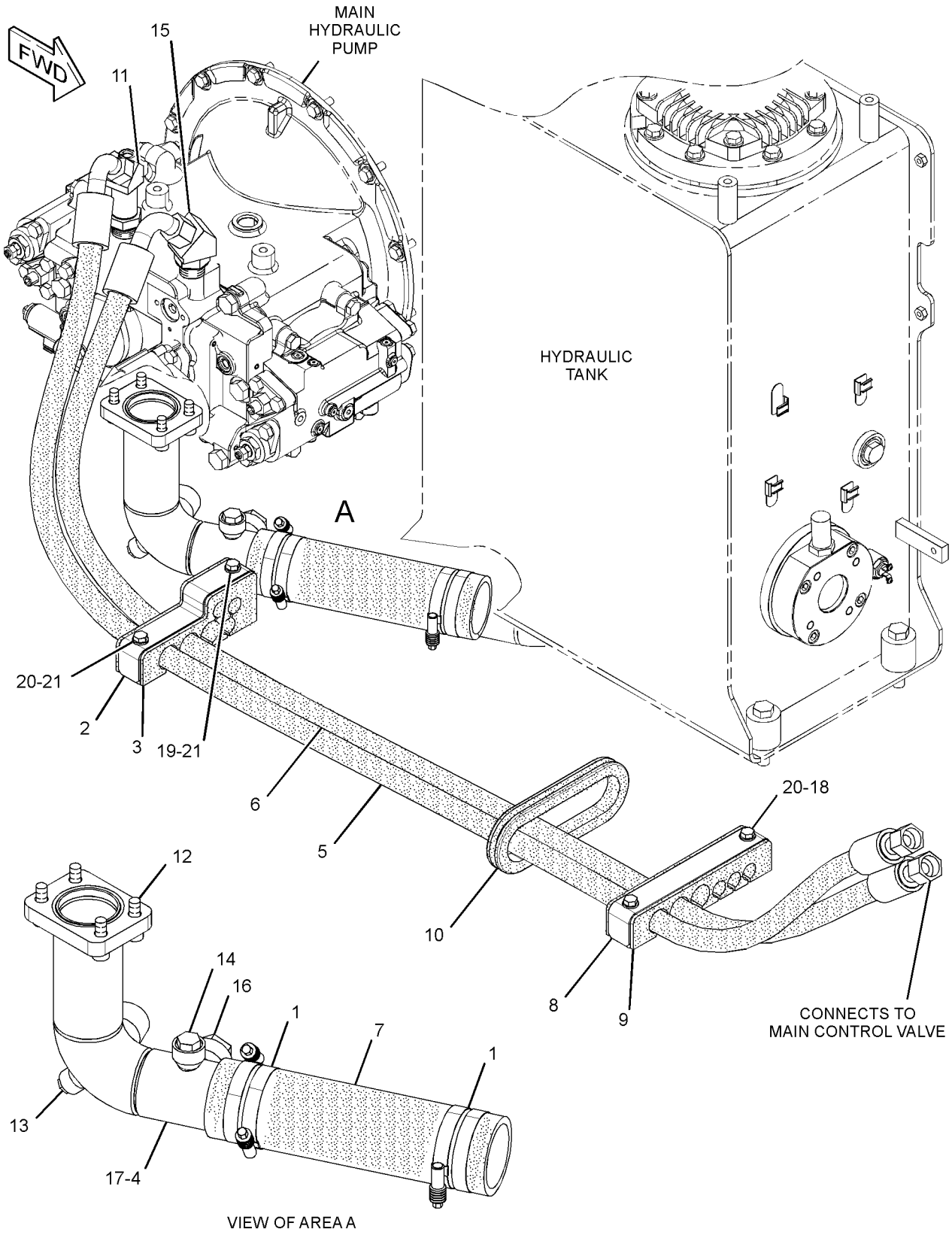

GRAPHIC #1 **<END>** g01445070

HYDRAULIC SYSTEM

282-7403 LINES GP-PUMP

S/N: CLA109-UP

PART OF 270-5992 HYDRAULIC AR

SMCS-5057 **i03018222**

NOTE	REF NO	GRAPHIC REF	PART NUMBER	QTY	PART NAME 1 2 3 4 5 6 (PRODUCT LEVEL)	SEE PAGE
	1	1	**8T-4985**	4	CLAMP-HOSE	
	2	1	**286-6504**	1	SUPPORT	
	3	1	**286-6505**	1	GROMMET	
	4	1	**314-8139**	1	TUBE AS	
I	5	1	**286-6508**	1	HOSE AS	
I	6	1	**286-6512**	1	HOSE AS	
	7	1	**289-5448**	1	HOSE	
	8	1	**296-7083**	1	SUPPORT	
	9	1	**296-7084**	1	GROMMET	
	10	1	**296-7085**	1	GROMMET	
M	12	1	**108-1781**	4	BOLT-SOCKET HEAD (M12X1.75X35-MM)	
	13	1	*148-8407*	1	PLUG AS	
		1	**3J-1907**	1	SEAL-O-RING	
		1	**9S-4191**	1	PLUG-O-RING	
	14	1	*148-8411*	1	PLUG AS	
		1	**3K-0360**	1	SEAL-O-RING	
		1	**9S-4185**	1	PLUG-O-RING	
C	15	1	*150-4049*	2	ELBOW AS	
					(EACH INCLUDES)	
		1	**6V-9746**	1	SEAL-O-RING	
		1	**7M-8485**	1	SEAL-O-RING	
		1	**8T-4149**	1	ELBOW	
	16	1	*164-4180*	1	PLUG AS	
		1	**7M-8485**	1	SEAL-O-RING	
		1	**9S-4181**	1	PLUG-O-RING	
	17	1	**6J-2680**	1	SEAL-O-RING	
	18	1	**8T-4121**	2	WASHER-HARD (11X21X2.5-MM THK)	
M	19	1	**8T-4198**	1	BOLT (M10X1.5X100-MM)	
M	20	1	**8T-5005**	3	BOLT (M10X1.5X70-MM)	
	21	1	**4H-1225**	2	WASHER (11X22X6-MM THK)	
C	22	1	**289-5700**	1	GROMMET	
C	23	1	**7K-1181**	2	STRAP-CABLE	

C-CHANGE FROM PREVIOUS TYPE
I-REFER TO HYDRAULIC INFORMATION SYSTEM
M-METRIC PART

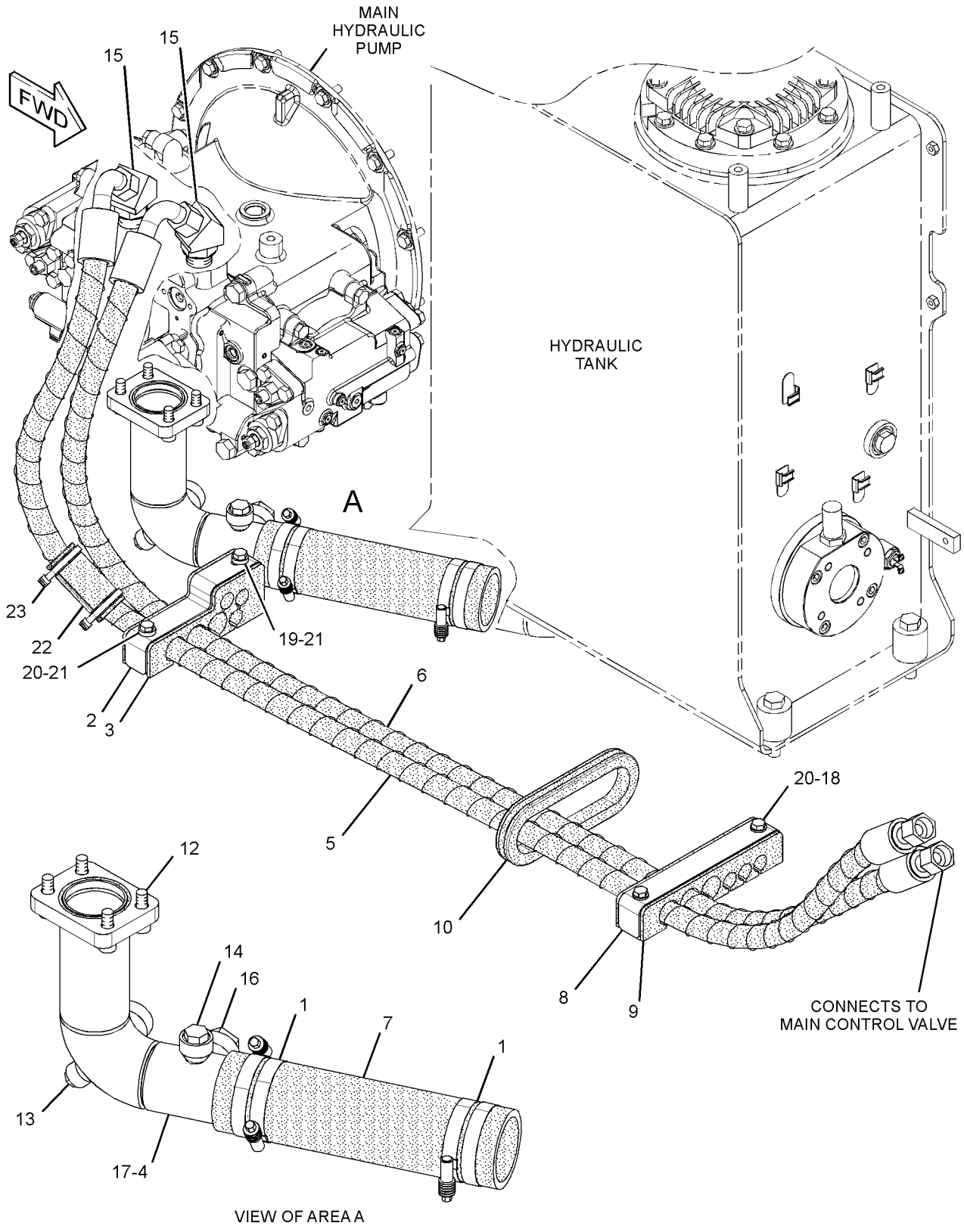

GRAPHIC #1 **<END>** g01622279

HYDRAULIC SYSTEM

282-7423 LINES GP-PUMP—SYSTEM 20, WORK TOOL PRIORITY

S/N: CLA1-UP
PART OF 270-6025 CONTROL AR-AUXILIARY
AN ATTACHMENT

SMCS-5057 **i02896488**

NOTE	REF NO	GRAPHIC REF	PART NUMBER	QTY	PART NAME 1 2 3 4 5 6 (PRODUCT LEVEL)	SEE PAGE
I	1	1	**111-0985**	1	HOSE AS	
	2	1	*286-6468*	1	ELBOW AS	
		1	**6V-9746**	1	SEAL-O-RING	
		1	**7M-8485**	1	SEAL-O-RING	
		1	**286-6469**	1	ELBOW	
I	3	1	**286-6694**	1	HOSE AS	
I	4	1	**286-6698**	1	HOSE AS	
I	5	1	**286-6702**	1	HOSE AS	
I	6	1	**286-6706**	1	HOSE AS	
	7	1	**286-6710**	1	SUPPORT AS	
		1	**121-1029**	2	CLIP	
	8	1	*296-7086*	1	ELBOW AS	
		1	**6V-9746**	1	SEAL-O-RING	
		1	**7M-8485**	1	SEAL-O-RING	
		1	**195-0106**	1	ELBOW	
I	9	1	**307-5277**	1	HOSE AS	
	10	1	**310-0037**	1	VALVE GP-PRIORITY (FLOW DIVIDER VALVE)	
	11	1	*148-8339*	3	CONNECTOR AS	
					(EACH INCLUDES)	
		1	**6V-8716**	1	CONNECTOR	
		1	**6V-9746**	1	SEAL-O-RING	
		1	**7M-8485**	1	SEAL-O-RING	
	12	1	*148-8360*	1	ELBOW AS	
		1	**6V-9182**	1	ELBOW	
		1	**6V-9746**	1	SEAL-O-RING	
		1	**7M-8485**	1	SEAL-O-RING	
	13	1	*148-8363*	1	ELBOW AS	
		1	**3K-0360**	1	SEAL-O-RING	
		1	**6V-8397**	1	SEAL-O-RING	
		1	**6V-9876**	1	ELBOW	
	14	1	*148-8378*	1	ELBOW AS	
		1	**3J-1907**	1	SEAL-O-RING	
		1	**6V-8397**	1	SEAL-O-RING	
		1	**6V-8724**	1	ELBOW	
	15	1	*150-4049*	1	ELBOW AS	
		1	**6V-9746**	1	SEAL-O-RING	
		1	**7M-8485**	1	SEAL-O-RING	
		1	**8T-4149**	1	ELBOW	
	16	1	*153-6242*	1	CONNECTOR AS	
		1	**6V-9746**	1	SEAL-O-RING	
		1	**7M-8485**	1	SEAL-O-RING	
		1	**8T-0197**	1	CONNECTOR	
	17	1	**8T-4223**	7	WASHER-HARD (13.5X25.5X3-MM THK)	
M	18	1	**8T-4956**	3	BOLT (M12X1.75X35-MM)	
M	19	1	**8T-5001**	4	BOLT (M12X1.75X130-MM)	

I-REFER TO HYDRAULIC INFORMATION SYSTEM
M-METRIC PART

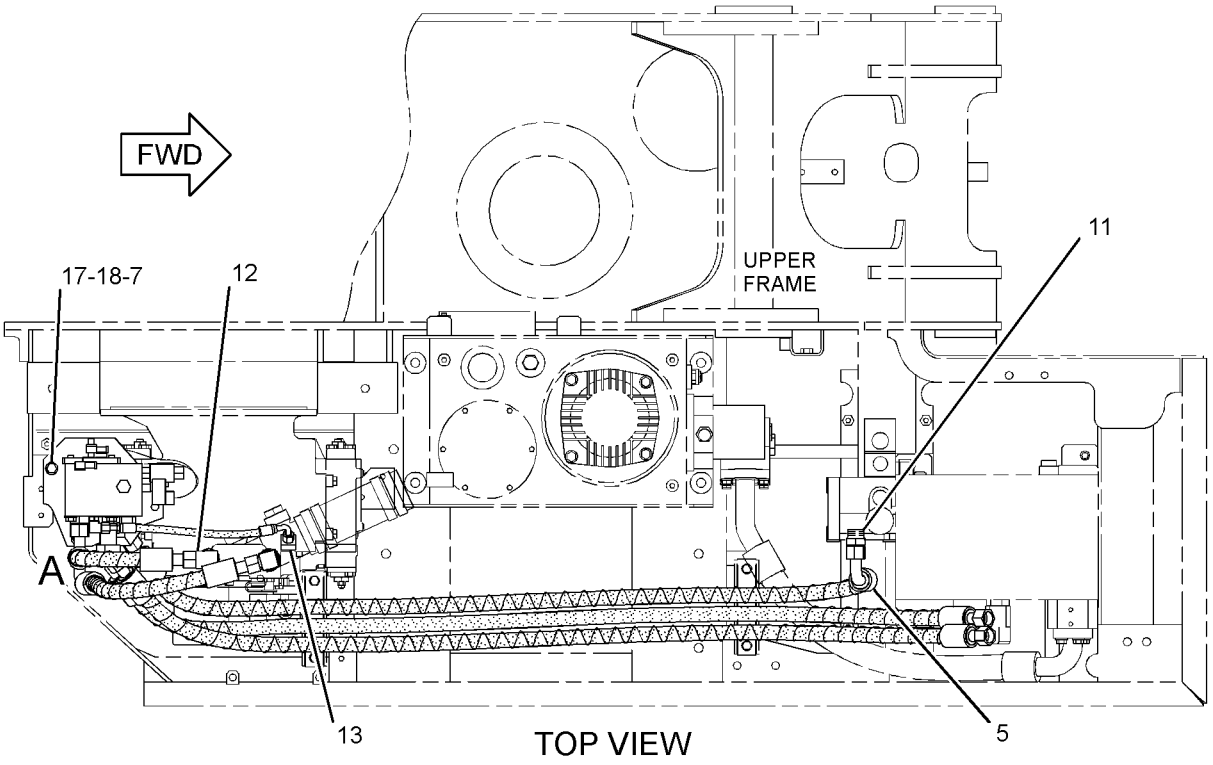

TOP VIEW

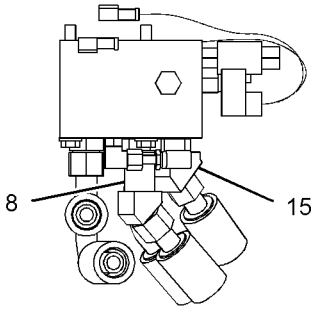

VIEW OF AREA A

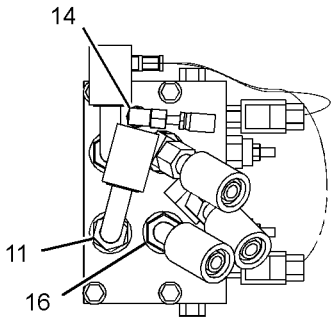

VIEW OF AREA B

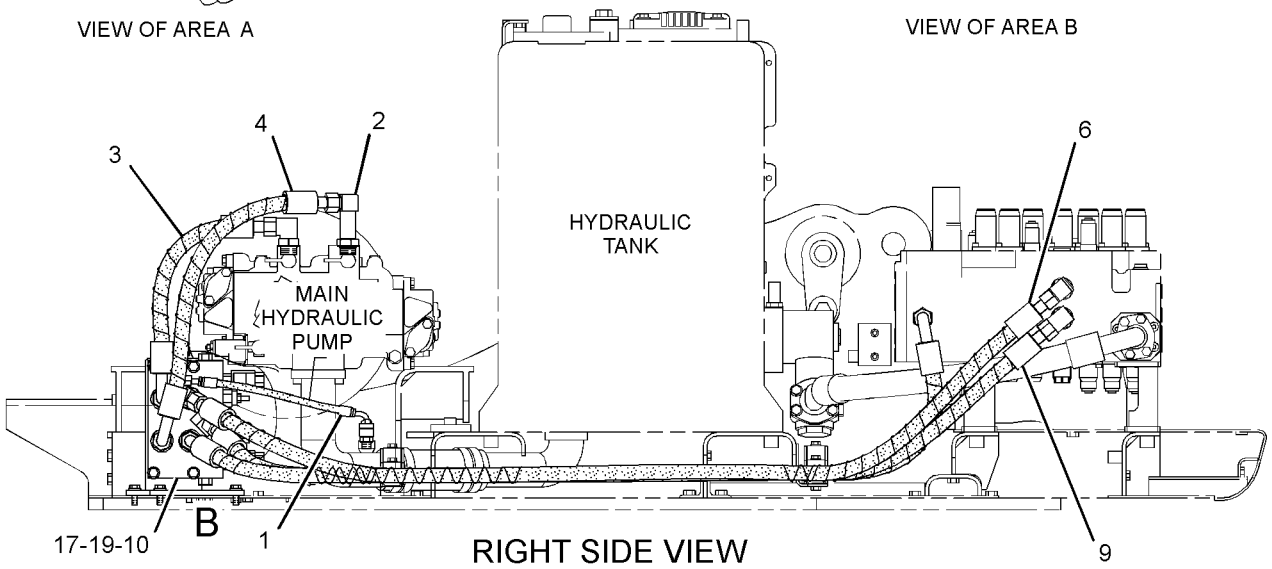

RIGHT SIDE VIEW

GRAPHIC #1 **<END>** g01445773

HYDRAULIC SYSTEM

282-7437 LINES GP-PUMP—AUXILIARY PUMP

S/N: CLA1-UP
PART OF 270-6037 CONTROL AR-AUXILIARY
AN ATTACHMENT

SMCS-5057 **i02980590**

NOTE	REF NO	GRAPHIC REF	PART NUMBER	QTY	PART NAME 1 2 3 4 5 6 (PRODUCT LEVEL)	SEE PAGE
	1	1	**6V-0852**	1	CAP-DUST	
	2	1	*148-8447*	1	TEE AS-SWIVEL	
		1	**7J-9108**	1	SEAL-O-RING	
		1	**7X-0872**	1	TEE-SWIVEL	
	3	1	**237-1040**	1	GUARD	
I	4	1	**286-6633**	1	HOSE AS	
	5	1	*296-7086*	2	ELBOW AS	
					(EACH INCLUDES)	
		1	**6V-9746**	1	SEAL-O-RING	
		1	**7M-8485**	1	SEAL-O-RING	
		1	**195-0106**	1	ELBOW	
I	6	1	**307-5162**	1	HOSE AS	
I	7	1	**307-5168**	1	HOSE AS	
	8	1	*148-8315*	1	CONNECTOR AS	
		1	**2M-9780**	1	SEAL-O-RING	
		1	**6V-8642**	1	CONNECTOR	
		1	**7J-9108**	1	SEAL-O-RING	
	9	1	*148-8355*	1	ELBOW AS	
		1	**5K-9090**	1	SEAL-O-RING	
		1	**6V-9005**	1	ELBOW	
		1	**7M-8485**	1	SEAL-O-RING	
	10	1	*148-8357*	1	ELBOW AS	
		1	**5K-9090**	1	SEAL-O-RING	
		1	**6V-9008**	1	ELBOW	
		1	**7M-8485**	1	SEAL-O-RING	
	11	1	*148-8388*	1	ELBOW AS	
		1	**2M-9780**	1	SEAL-O-RING	
		1	**6V-8629**	1	ELBOW	
		1	**6V-9746**	1	SEAL-O-RING	
	12	1	*153-6232*	1	ELBOW AS	
		1	**3D-2824**	1	SEAL-O-RING	
		1	**7J-9108**	1	SEAL-O-RING	
		1	**8T-0120**	1	ELBOW	
	13	1	*153-6259*	1	TEE AS	
		1	**3D-2824**	1	SEAL-O-RING	
		1	**6V-8777**	1	TEE-FACE SEAL	
		1	**6V-9746**	2	SEAL-O-RING	
	14	1	*164-5567*	1	COUPLER AS-QUICK DISCONNECT	
		1	**3J-1907**	1	SEAL-O-RING	
		1	**6V-3965**	1	FITTING (QUICK DISCONNECT)	
	15	1	**5P-7466**	1	CLIP (SLOT)	
	16	1	**5P-7467**	1	CLIP (TAB)	
	17	1	**5P-8112**	1	GROMMET	
M	18	1	**8T-4192**	1	BOLT (M12X1.75X25-MM)	
	19	1	**8T-4223**	1	WASHER-HARD (13.5X25.5X3-MM THK)	

I-REFER TO HYDRAULIC INFORMATION SYSTEM
M-METRIC PART

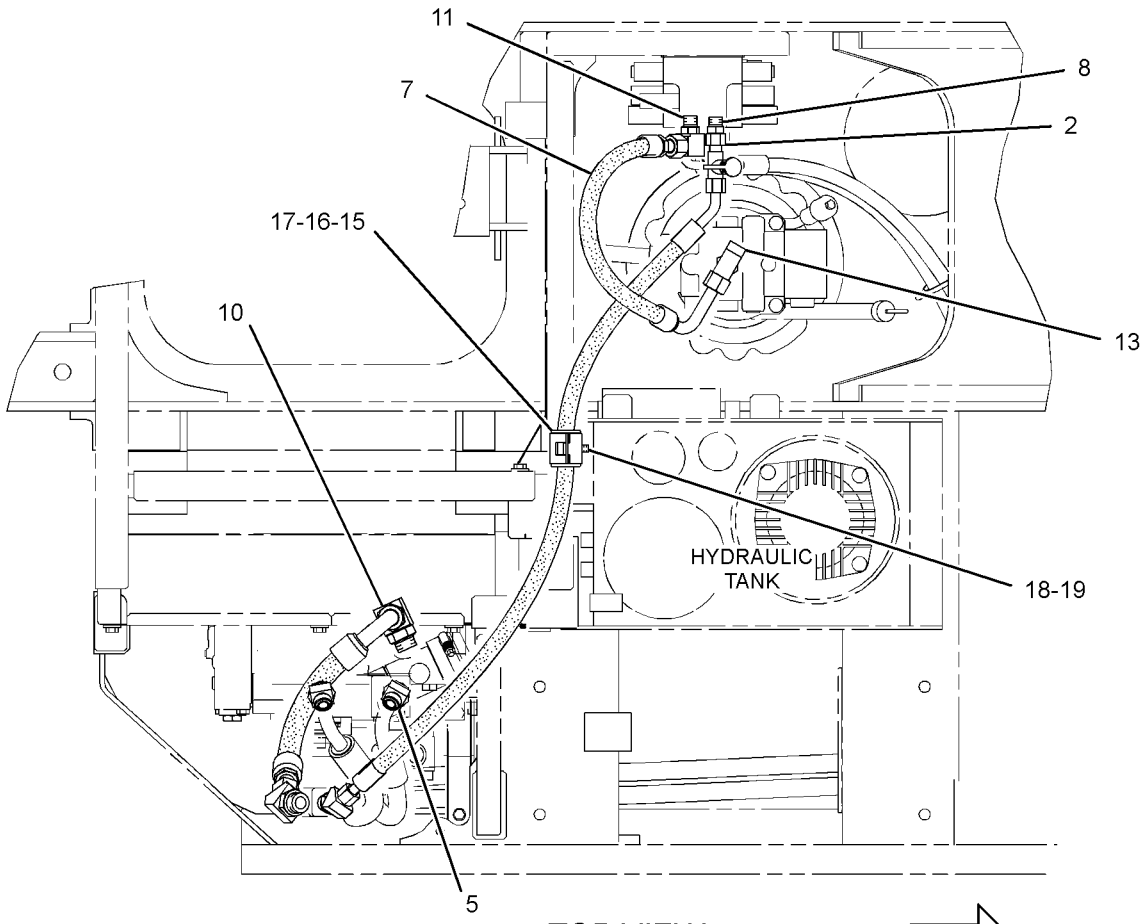

TOP VIEW

FWD

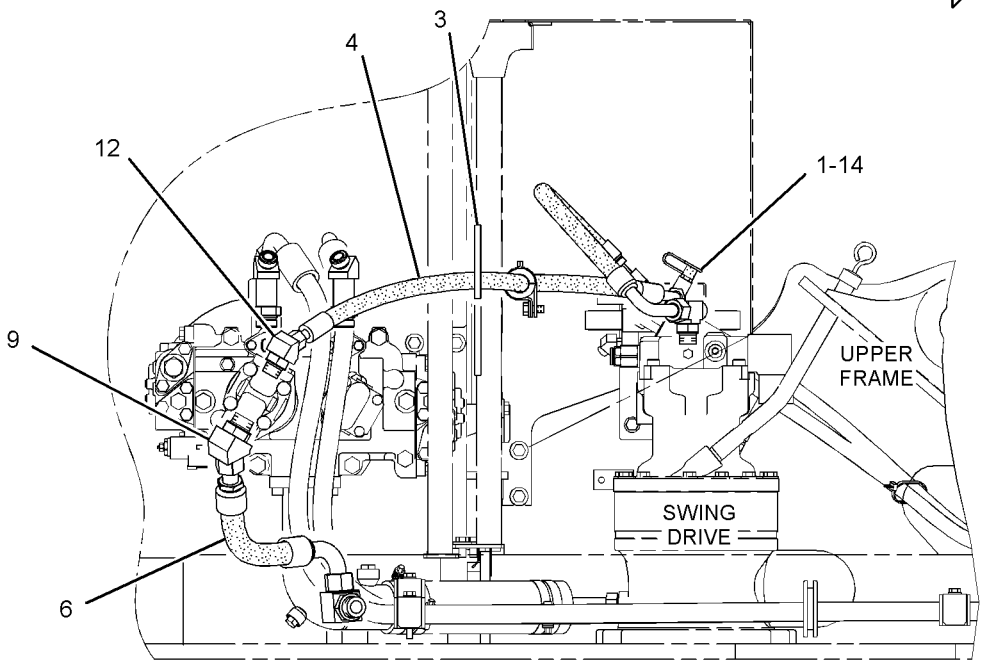

RIGHT SIDE VIEW

GRAPHIC #1 **<END>** g01611215

HYDRAULIC SYSTEM

286-6396 LINES GP-PUMP–BLADE

S/N: CLA1-UP
PART OF 283-8789 INSTALLATION AR-BLADE
AN ATTACHMENT

SMCS-5057 **i02980588**

NOTE	REF NO	GRAPHIC REF	PART NUMBER	QTY	PART NAME 1 2 3 4 5 6 (PRODUCT LEVEL)	SEE PAGE
	1	1	**6V-0852**	1	CAP-DUST	
	2	1	*148-8447*	1	TEE AS-SWIVEL	
		1	**7J-9108**	1	SEAL-O-RING	
		1	**7X-0872**	1	TEE-SWIVEL	
	3	1	**237-1040**	1	GUARD	
	4	1	*296-7086*	2	ELBOW AS	
					(EACH INCLUDES)	
		1	**6V-9746**	1	SEAL-O-RING	
		1	**7M-8485**	1	SEAL-O-RING	
		1	**195-0106**	1	ELBOW	
I	5	1	**307-5162**	1	HOSE AS	
I	6	1	**307-5165**	1	HOSE AS	
I	7	1	**307-5168**	1	HOSE AS	
	8	1	*148-8315*	2	CONNECTOR AS	
					(EACH INCLUDES)	
		1	**2M-9780**	1	SEAL-O-RING	
		1	**6V-8642**	1	CONNECTOR	
		1	**7J-9108**	1	SEAL-O-RING	
	9	1	*148-8355*	1	ELBOW AS	
		1	**5K-9090**	1	SEAL-O-RING	
		1	**6V-9005**	1	ELBOW	
		1	**7M-8485**	1	SEAL-O-RING	
	10	1	*148-8357*	1	ELBOW AS	
		1	**5K-9090**	1	SEAL-O-RING	
		1	**6V-9008**	1	ELBOW	
		1	**7M-8485**	1	SEAL-O-RING	
	11	1	*150-3035*	1	ELBOW AS	
		1	**6V-9746**	1	SEAL-O-RING	
		1	**8T-1718**	1	ELBOW	
	12	1	*153-6232*	1	ELBOW AS	
		1	**3D-2824**	1	SEAL-O-RING	
		1	**7J-9108**	1	SEAL-O-RING	
		1	**8T-0120**	1	ELBOW	
	13	1	*153-6259*	1	TEE AS	
		1	**3D-2824**	1	SEAL-O-RING	
		1	**6V-8777**	1	TEE-FACE SEAL	
		1	**6V-9746**	2	SEAL-O-RING	
	14	1	*164-5567*	1	COUPLER AS-QUICK DISCONNECT	
		1	**3J-1907**	1	SEAL-O-RING	
		1	**6V-3965**	1	FITTING (QUICK DISCONNECT)	
	15	1	**5P-7466**	1	CLIP (SLOT)	
	16	1	**5P-7467**	1	CLIP (TAB)	
	17	1	**5P-8112**	1	GROMMET	
M	18	1	**8T-4192**	1	BOLT (M12X1.75X25-MM)	
	19	1	**8T-4223**	1	WASHER-HARD (13.5X25.5X3-MM THK)	

I-REFER TO HYDRAULIC INFORMATION SYSTEM
M-METRIC PART

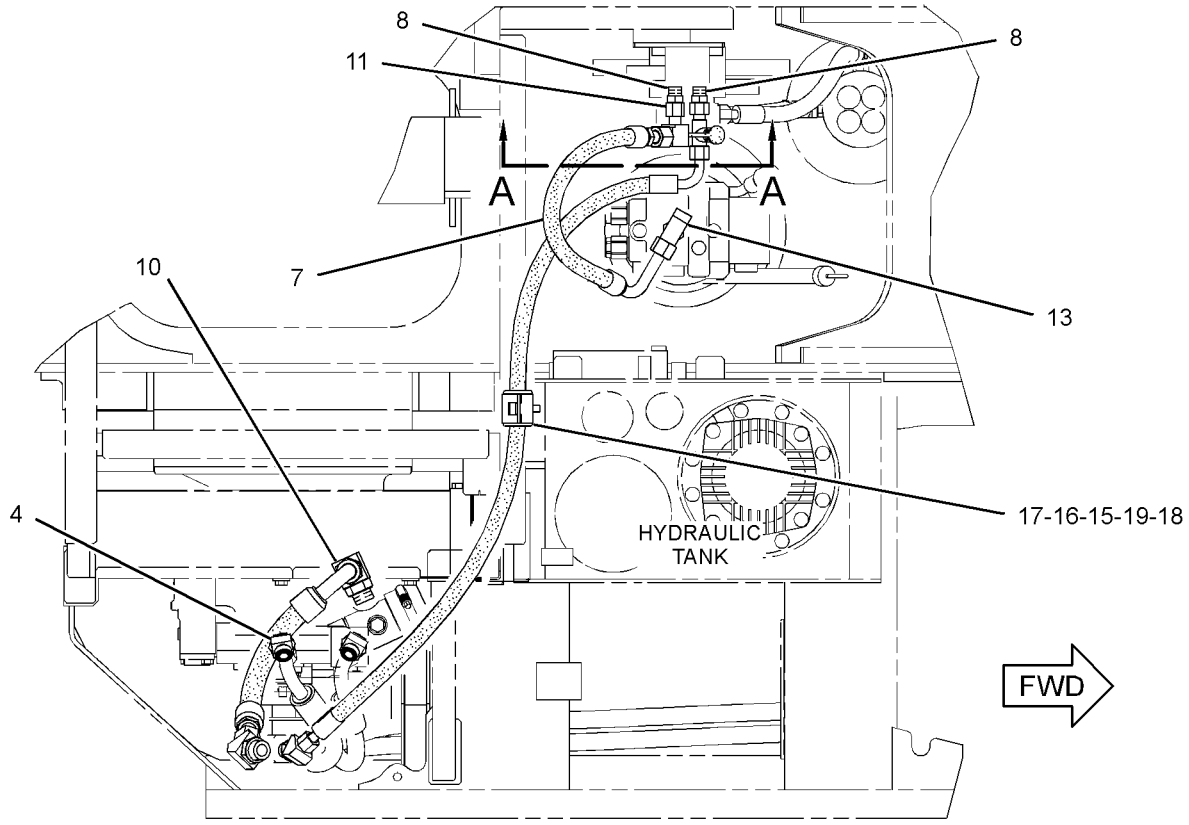

TOP VIEW

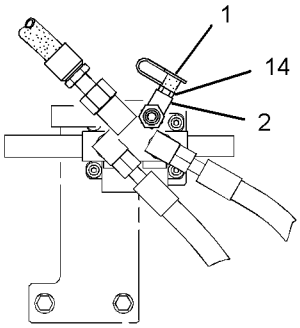

SECTION A-A

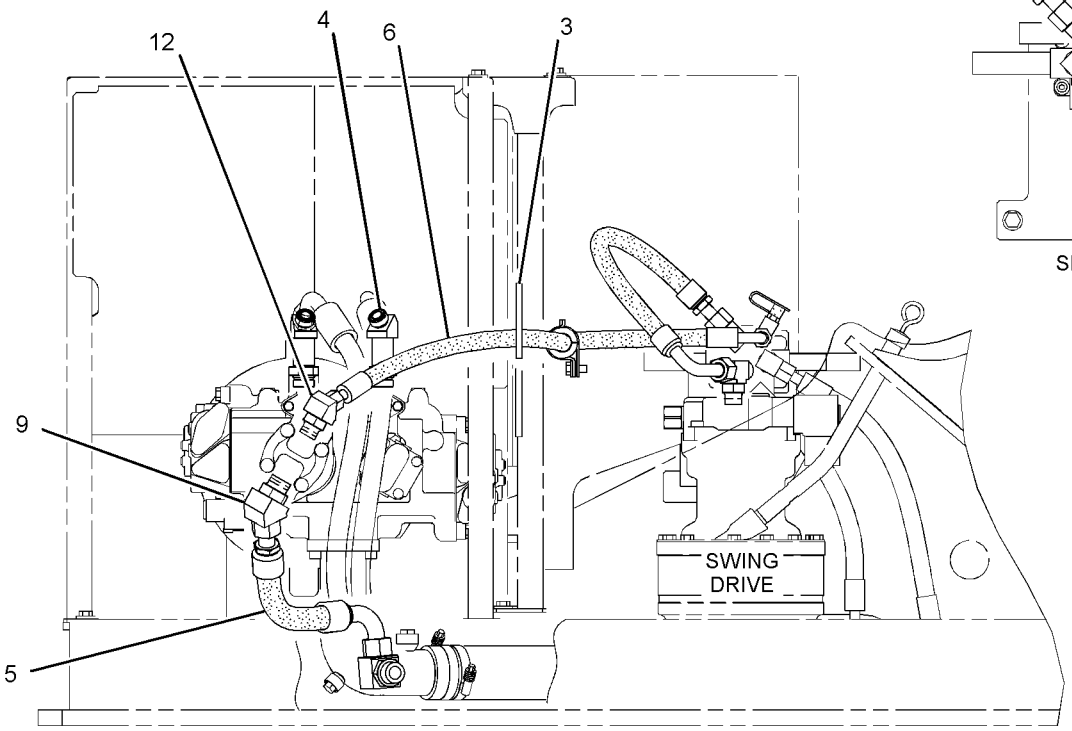

RIGHT SIDE VIEW

GRAPHIC #1 **<END>** g01568959

HYDRAULIC SYSTEM

179-7601 LINES GP-STICK

S/N: CLA1-UP
2.5-M (8.2-FT)
PART OF 260-7239 STICK AR
AN ATTACHMENT

SMCS-5057, 5458 **i02781247**

NOTE	REF NO	GRAPHIC REF	PART NUMBER	QTY	PART NAME 1 2 3 4 5 6 (PRODUCT LEVEL)	SEE PAGE
I	1	1	**104-8999**	1	HOSE AS	
I	2	1	**124-0838**	1	HOSE AS	
	3	1	**8C-3205**	2	FLANGE-HALF	
	4	1	**4J-5267**	2	SEAL-O-RING	
	5	1	**131-9850**	1	BLOCK	
M	6	1	**8T-5005**	4	BOLT (M10X1.5X70-MM)	
	7	1	**8T-4121**	4	WASHER-HARD (11X21X2.5-MM THK)	

I-REFER TO HYDRAULIC INFORMATION SYSTEM
M-METRIC PART

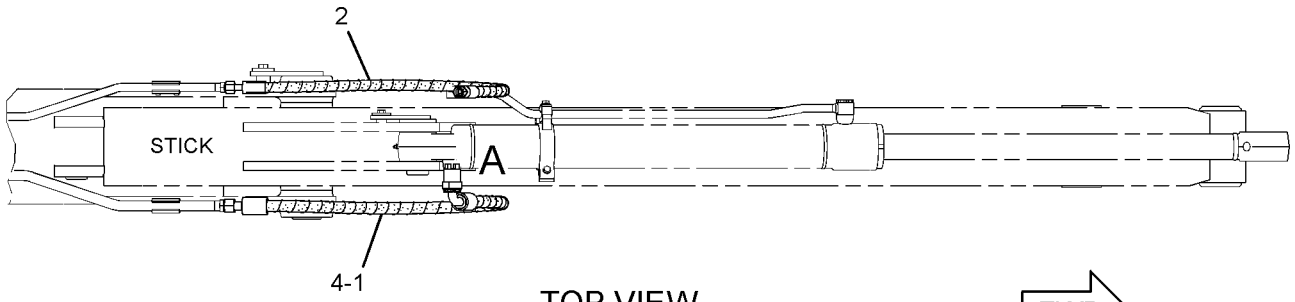

TOP VIEW

FWD

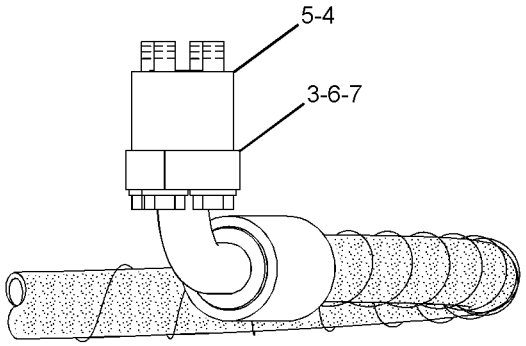

VIEW OF AREA A

GRAPHIC #1 **<END>** g01408915

HYDRAULIC SYSTEM

194-0334 LINES GP-STICK

S/N: CLA1-UP
PART OF 260-7237, 260-7238 STICK AR
AN ATTACHMENT

SMCS-5057, 5458 **i02961282**

NOTE	REF NO	GRAPHIC REF	PART NUMBER	QTY	PART NAME 1 2 3 4 5 6 (PRODUCT LEVEL)	SEE PAGE
I	1	1	**121-6453**	1	HOSE AS	
I	2	1	**121-6447**	1	HOSE AS	
	3	1	**8C-3205**	2	FLANGE-HALF	
	4	1	**4J-5267**	2	SEAL-O-RING	
	5	1	**131-9850**	1	BLOCK	
M	6	1	**8T-5005**	4	BOLT (M10X1.5X70-MM)	
	7	1	**8T-4121**	4	WASHER-HARD (11X21X2.5-MM THK)	

I-REFER TO HYDRAULIC INFORMATION SYSTEM
M-METRIC PART

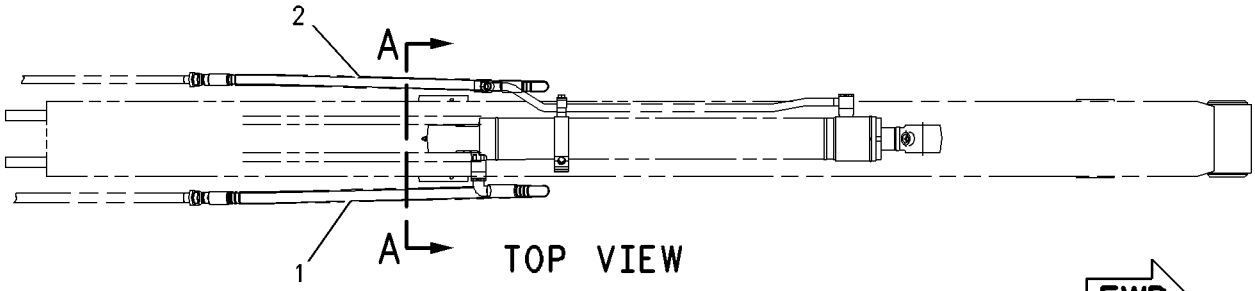

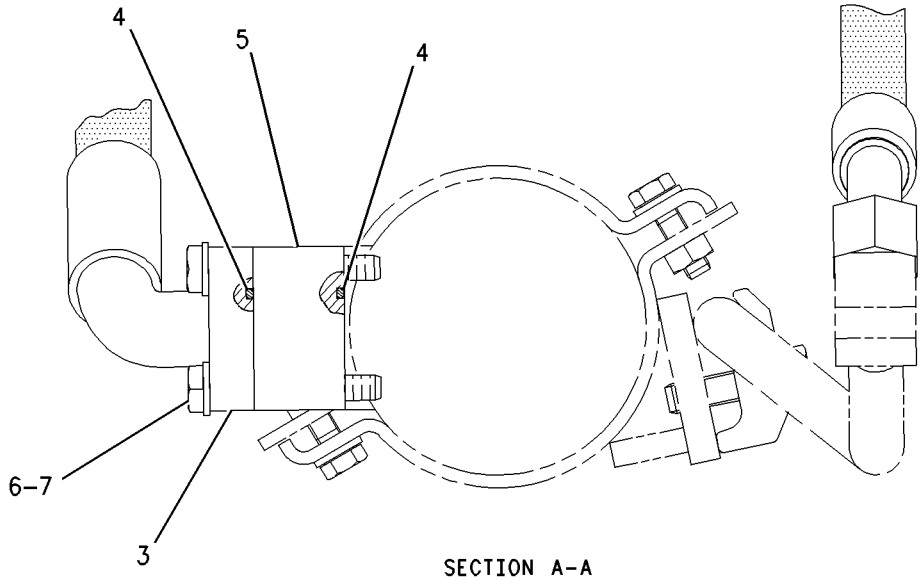

SECTION A-A

GRAPHIC #1 **<END>** g00790422

HYDRAULIC SYSTEM

194-0335 LINES GP-STICK

S/N: CLA1-UP

PART OF 301-2552, 301-2555, 301-2647 SPECIAL AR, 260-7240 STICK AR

AN ATTACHMENT

SMCS-5057, 5458 **i01500730**

NOTE	REF NO	GRAPHIC REF	PART NUMBER	QTY	PART NAME 1 2 3 4 5 6 (PRODUCT LEVEL)	SEE PAGE
I	1	1	**115-8620**	1	HOSE AS	
I	2	1	**124-0841**	1	HOSE AS	
	3	1	**1P-4576**	2	FLANGE-HALF	
	4	1	**4J-5267**	2	SEAL-O-RING	
	5	1	**131-9850**	1	BLOCK	
M	6	1	**8T-5005**	4	BOLT (M10X1.5X70-MM)	
	7	1	**8T-4121**	4	WASHER-HARD (11X21X2.5-MM THK)	

I-REFER TO HYDRAULIC INFORMATION SYSTEM
M-METRIC PART

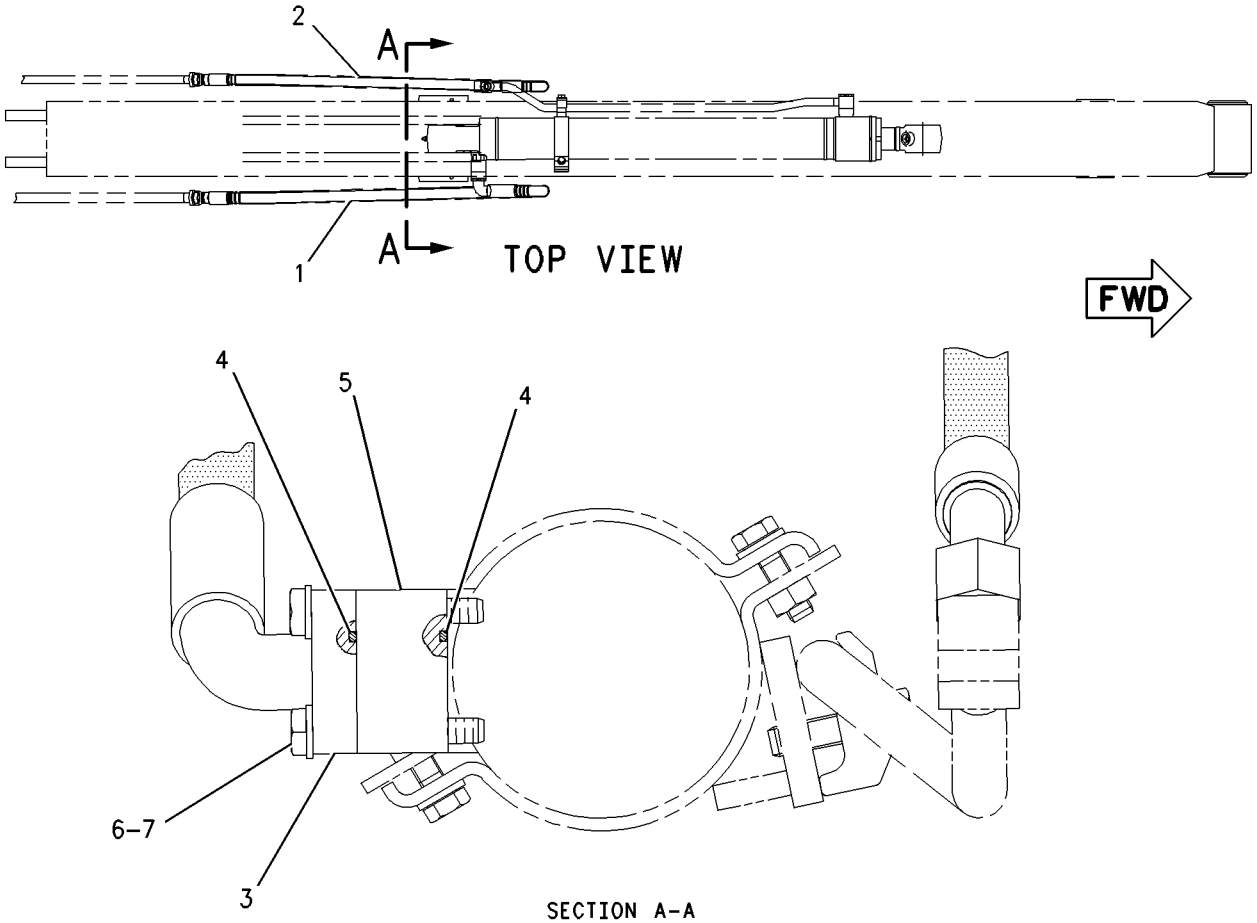

GRAPHIC #1 **<END>** g00790422

282-5636 LINES GP-STICK CYLINDER—STICK LOWERING CONTROL

S/N: CLA1-UP

PART OF 297-0196 VALVE AR-CHECK & RELIEF

AN ATTACHMENT

SMCS-5458 **i03001042**

NOTE	REF NO	GRAPHIC REF	PART NUMBER	QTY	PART NAME 1 2 3 4 5 6 (PRODUCT LEVEL)	SEE PAGE
M	1	1	**8T-4186**	1	BOLT (M10X1.5X40-MM)	
M	2	1	**8T-4189**	2	BOLT (M8X1.25X20-MM)	
M	3	1	**8T-4196**	6	BOLT (M10X1.5X35-MM)	
M	4	1	**8T-4910**	1	BOLT (M12X1.75X60-MM)	
M	5	1	**280-2747**	4	BOLT-SOCKET HEAD (M10X1.5X60-MM)	
	6	1	**093-1294**	1	CLAMP	
	7	1	**093-1292**	1	CLAMP	
	8	1	*148-8325*	1	CONNECTOR AS	
		1	**3J-1907**	1	SEAL-O-RING	
		1	**4J-5477**	1	SEAL-O-RING	
		1	**6V-8641**	1	CONNECTOR	
	9	1	*148-8347*	1	ELBOW AS	
		1	**3D-2824**	1	SEAL-O-RING	
		1	**6V-9007**	1	ELBOW	
		1	**6V-9746**	1	SEAL-O-RING	
	10	1	*148-8368*	1	ELBOW AS	
		1	**3J-1907**	1	SEAL-O-RING	
		1	**4J-5477**	1	SEAL-O-RING	
		1	**6V-8627**	1	ELBOW	
	11	1	**302-9657**	1	TUBE AS	
	12	1	**302-9659**	1	TUBE AS	
	13	1	*148-8407*	2	PLUG AS	
					(EACH INCLUDES)	
		1	**3J-1907**	1	SEAL-O-RING	
		1	**9S-4191**	1	PLUG-O-RING	
	14	1	**6V-8397**	2	SEAL-O-RING	
	15	1	**6V-9746**	1	SEAL-O-RING	
	16	1	**4J-5267**	1	SEAL-O-RING	
	17	1	**134-7810**	1	SUPPORT AS	
	18	1	**302-9532**	1	SUPPORT AS	
	19	1	**302-9646**	1	SUPPORT AS	
	20	1	**302-9654**	1	SUPPORT AS	
	21	1	**302-9656**	1	TUBE AS	
Y	22	1	**297-0189**	1	VALVE GP-LOAD CONTROL (STICK)	603
	23	1	**5P-4116**	2	WASHER-HARD (8.8X20.5X2-MM THK)	
	24	1	**8T-4121**	7	WASHER-HARD (11X21X2.5-MM THK)	
	25	1	**8T-4223**	1	WASHER-HARD (13.5X25.5X3-MM THK)	

M-METRIC PART
Y-SEPARATE ILLUSTRATION

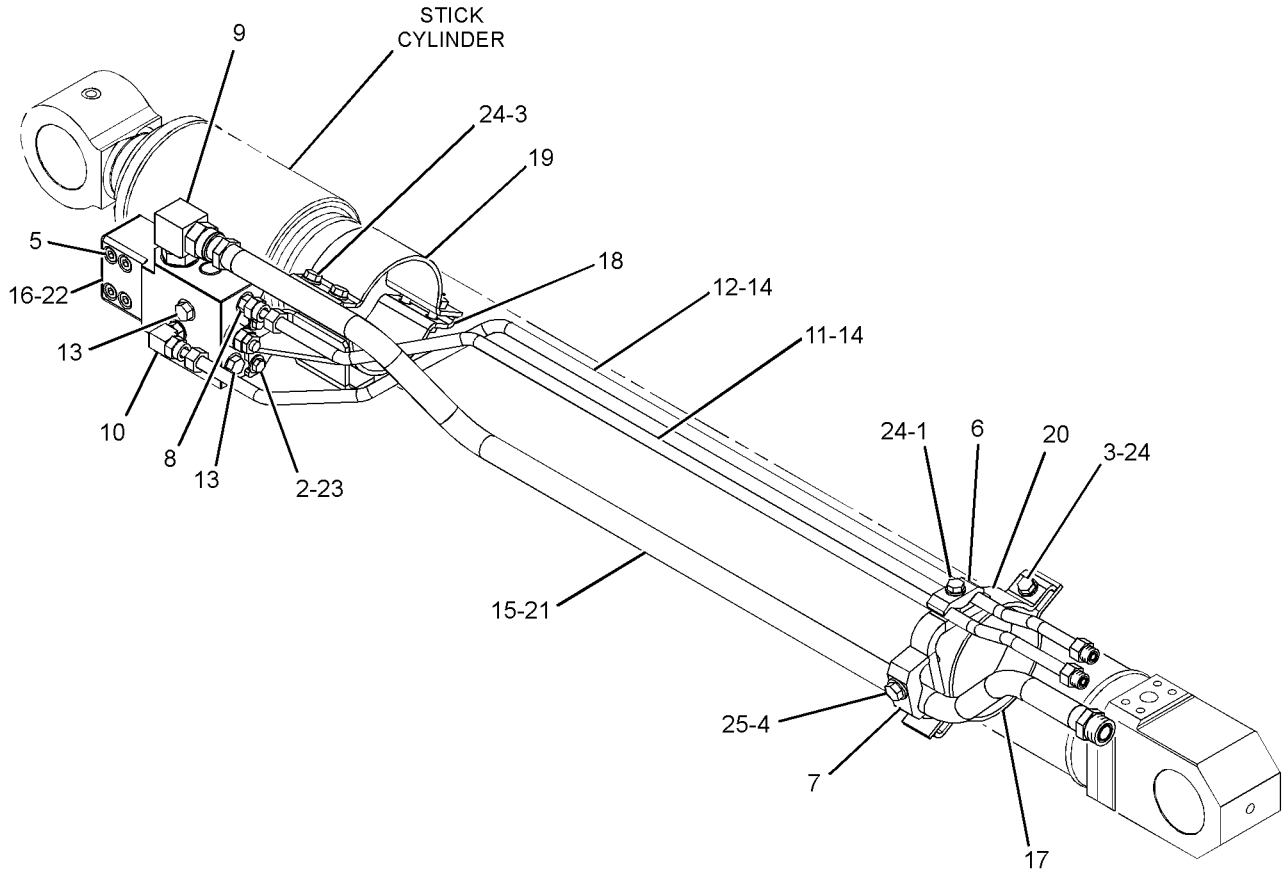

GRAPHIC #1 **<END>** g01444712

282-7393 LINES GP-STICK CYLINDER

S/N: CLA1-UP

PART OF 289-7724 CYLINDER & LINES GP-STICK

AN ATTACHMENT

SMCS-5458 **i02795555**

NOTE	REF NO	GRAPHIC REF	PART NUMBER	QTY	PART NAME 1 2 3 4 5 6 (PRODUCT LEVEL)	SEE PAGE
	1	1	**109-5816**	1	ELBOW	
	2	1	**134-7810**	1	SUPPORT AS	
	3	1	**212-5230**	1	SUPPORT AS	
	4	1	**286-6474**	1	TUBE AS	
	5	1	**093-1292**	1	CLAMP	
	6	1	**4J-5267**	2	SEAL-O-RING	
	7	1	**6V-9746**	2	SEAL-O-RING	
	8	1	**8T-4121**	2	WASHER-HARD (11X21X2.5-MM THK)	
M	9	1	**8T-4185**	8	BOLT (M10X1.5X50-MM)	
M	10	1	**8T-4196**	2	BOLT (M10X1.5X35-MM)	
	11	1	**8T-4223**	1	WASHER-HARD (13.5X25.5X3-MM THK)	
M	12	1	**8T-4910**	1	BOLT (M12X1.75X60-MM)	

M-METRIC PART

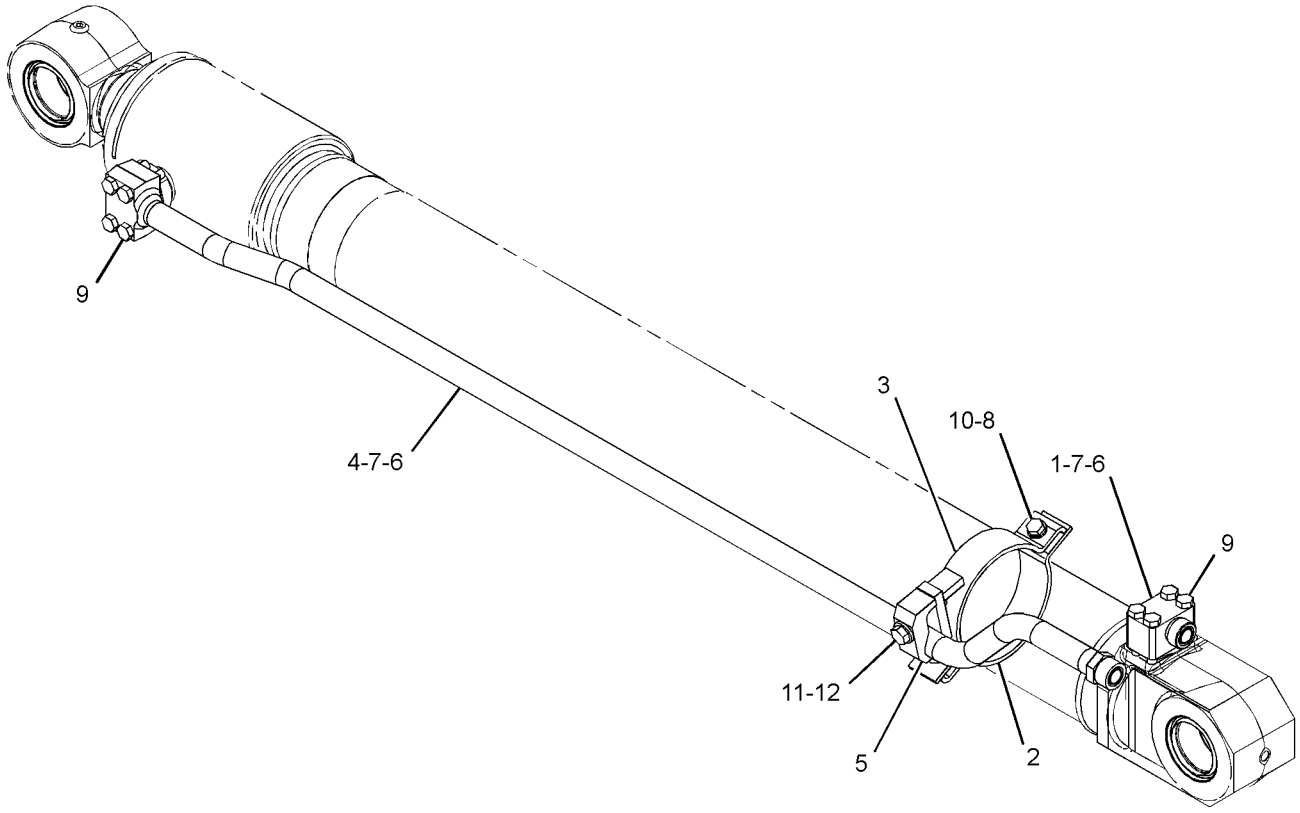

GRAPHIC #1 **<END>** g01399993

HYDRAULIC SYSTEM

278-6511 LINES GP-TRAVEL MOTOR

S/N: CLA1-UP

PART OF 270-5992 HYDRAULIC AR

SMCS-5057, 5058 **i02796644**

NOTE	REF NO	GRAPHIC REF	PART NUMBER	QTY	PART NAME 1 2 3 4 5 6 (PRODUCT LEVEL)	SEE PAGE
	1	1	**5I-4365**	2	GROMMET	
	2	1	**5I-4366**	2	GROMMET	
I	3	1	**7I-1303**	4	HOSE AS	
Y	4	1	**162-4696**	1	SWIVEL GP	577
I	5	1	**179-7770**	2	HOSE AS	
I	6	1	**179-7771**	2	HOSE AS	
	7	1	*267-4063*	2	CONNECTOR AS	
					(EACH INCLUDES)	
		1	**3J-1907**	1	SEAL-O-RING	
		1	**4J-5477**	1	SEAL-O-RING	
		1	**156-8801**	1	CONNECTOR	
	8	1	*148-8325*	2	CONNECTOR AS	
					(EACH INCLUDES)	
		1	**3J-1907**	1	SEAL-O-RING	
		1	**4J-5477**	1	SEAL-O-RING	
		1	**6V-8641**	1	CONNECTOR	
	9	1	*148-8327*	8	CONNECTOR AS	
					(EACH INCLUDES)	
		1	**3D-2824**	1	SEAL-O-RING	
		1	**6V-8637**	1	CONNECTOR	
		1	**6V-9746**	1	SEAL-O-RING	
	10	1	*148-8340*	2	CONNECTOR AS	
					(EACH INCLUDES)	
		1	**3K-0360**	1	SEAL-O-RING	
		1	**6V-8398**	1	SEAL-O-RING	
		1	**6V-8639**	1	CONNECTOR	
	11	1	*148-8436*	1	TEE AS	
		1	**3K-0360**	1	SEAL-O-RING	
		1	**6V-8398**	2	SEAL-O-RING	
		1	**6V-8775**	1	TEE-FACE SEAL	
	12	1	**7K-1181**	4	STRAP-CABLE	
	13	1	**8T-4121**	4	WASHER-HARD (11X21X2.5-MM THK)	
M	14	1	**8T-4137**	4	BOLT (M10X1.5X20-MM)	
B	15	1	**1U-8846**		SEALANT-GASKET	

B-USE AS REQUIRED
I-REFER TO HYDRAULIC INFORMATION SYSTEM
M-METRIC PART
Y-SEPARATE ILLUSTRATION

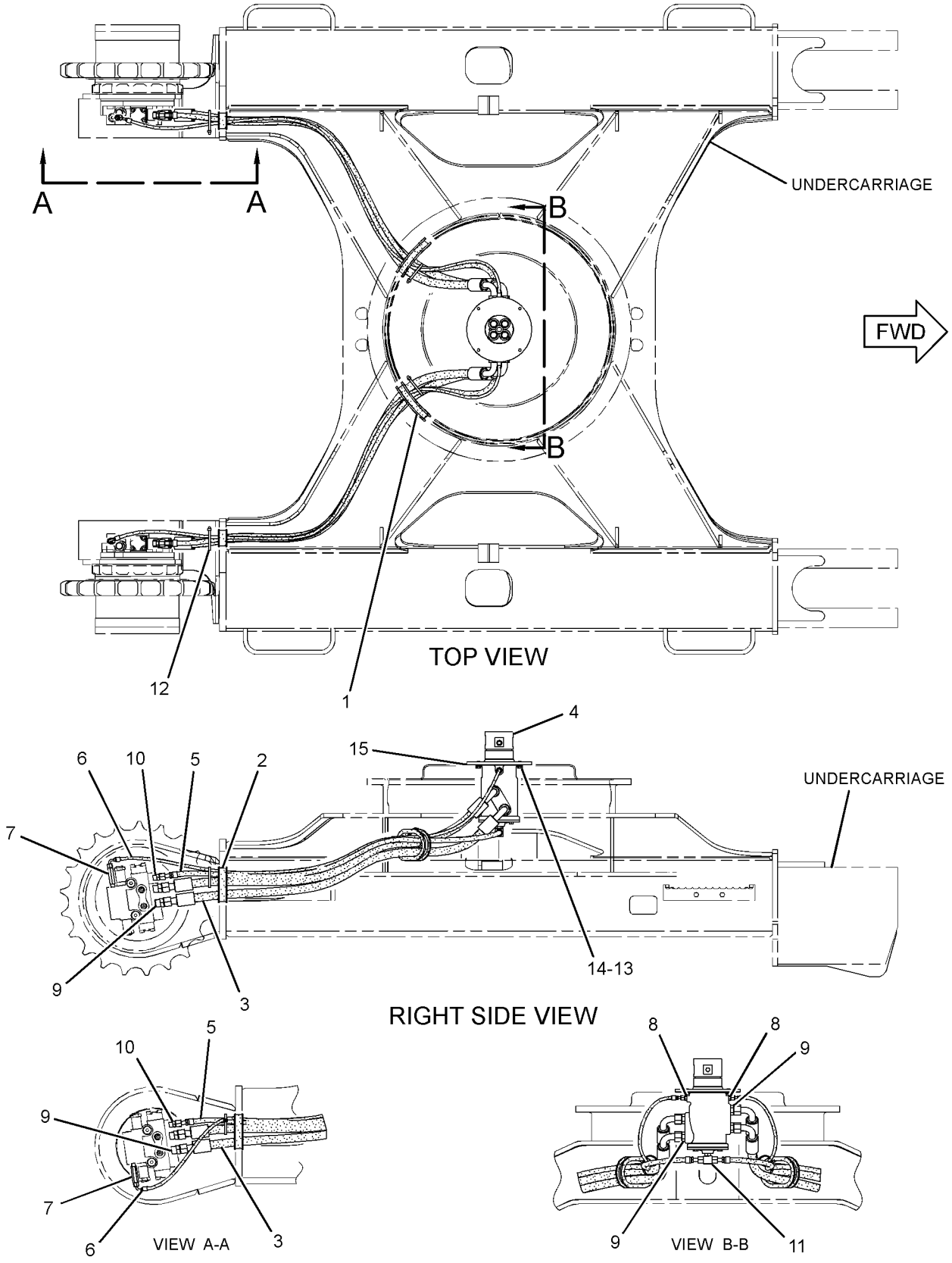

GRAPHIC #1 **<END>** g01400455

215-5037 MANIFOLD GP-CONTROL—PILOT OIL SUPPLY

S/N: CLA1-UP

PART OF 282-7389 LINES GP-PILOT

SMCS-5264 **i02092079**

NOTE	PART NUMBER	QTY	PART NAME 1 2 3 4 5 6 (PRODUCT LEVEL)	SEE PAGE
Y	*239-8998*	1	MANIFOLD GP-CONTROL (PILOT OIL SUPPLY) (STEEL BODY)	550
			-OR-	
Y	*239-8697*	1	MANIFOLD GP-CONTROL (PILOT OIL SUPPLY) (ALUMINUM BODY)	549

Y-SEPARATE ILLUSTRATION

<END>

239-8697 MANIFOLD GP-CONTROL—PILOT OIL SUPPLY

S/N: CLA1-UP
ALUMINUM BODY
PART OF 215-5037 MANIFOLD GP-CONTROL

SMCS-5264 **i02092727**

NOTE	REF NO	GRAPHIC REF	PART NUMBER	QTY	PART NAME 1 2 3 4 5 6 (PRODUCT LEVEL)	SEE PAGE
Y	1	1	**121-1491**	1	VALVE GP-SOLENOID (SWING BRAKE RELEASE)	641
Y	2	1	**121-1491**	1	VALVE GP-SOLENOID (HYDRAULIC LOCKOUT)	641
Y	3	1	**121-1491**	1	VALVE GP-SOLENOID (TRAVEL SPEED)	641
	4	1	**197-0196**	1	VALVE-CHECK	
	5	1	**197-0199**	1	SPRING	
	6	1	**197-0273**	1	SPRING	
Z	7	1		1	MANIFOLD GP-CONTROL	
	8	1	**3J-1907**	1	SEAL-O-RING	
	9	1	**3K-0360**	4	SEAL-O-RING	
	10	1	**4J-7533**	6	SEAL-O-RING	
M	11	1	**7I-2272**	6	BOLT (M5X0.8X12-MM)	
	12	1	**9S-8001**	6	PLUG-O-RING	
	13	1	**9S-8004**	1	PLUG-O-RING	
	14	1	**9S-8005**	4	PLUG-O-RING	

M-METRIC PART
Y-SEPARATE ILLUSTRATION
Z-NOT SERVICED SEPARATELY

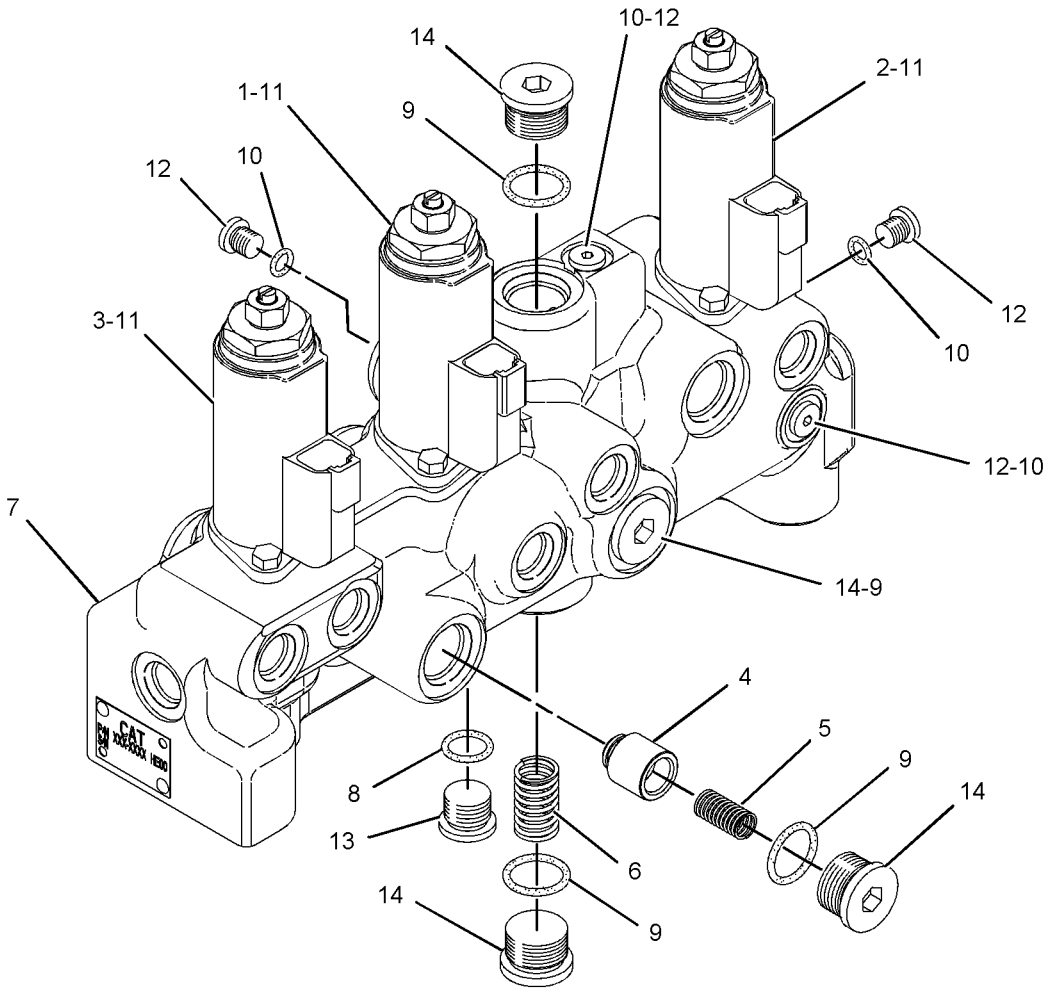

GRAPHIC #1 **<END>** g01084474

239-8998 MANIFOLD GP-CONTROL—PILOT OIL SUPPLY

S/N: CLA1-UP
STEEL BODY
PART OF 215-5037 MANIFOLD GP-CONTROL

SMCS-5264 **i02092174**

NOTE	REF NO	GRAPHIC REF	PART NUMBER	QTY	PART NAME 1 2 3 4 5 6 (PRODUCT LEVEL)	SEE PAGE
Y	1	1	**121-1491**	1	VALVE GP-SOLENOID (SWING BRAKE RELEASE)	641
Y	2	1	**121-1491**	1	VALVE GP-SOLENOID (HYDRAULIC LOCKOUT)	641
Y	3	1	**121-1491**	1	VALVE GP-SOLENOID (TRAVEL SPEED)	641
	4	1	**197-0196**	1	VALVE-CHECK	
Z	5	1		1	MANIFOLD GP-CONTROL	
	6	1	**197-0199**	1	SPRING	
	7	1	**197-0273**	1	SPRING	
	8	1	**3K-0360**	3	SEAL-O-RING	
M	9	1	**7I-2272**	6	BOLT (M5X0.8X12-MM)	
	10	1	**7M-7410**	2	PLUG-PIPE	
	11	1	**8T-6759**	6	PLUG-PIPE	
	12	1	**9S-8005**	3	PLUG-O-RING	

M-METRIC PART
Y-SEPARATE ILLUSTRATION
Z-NOT SERVICED SEPARATELY

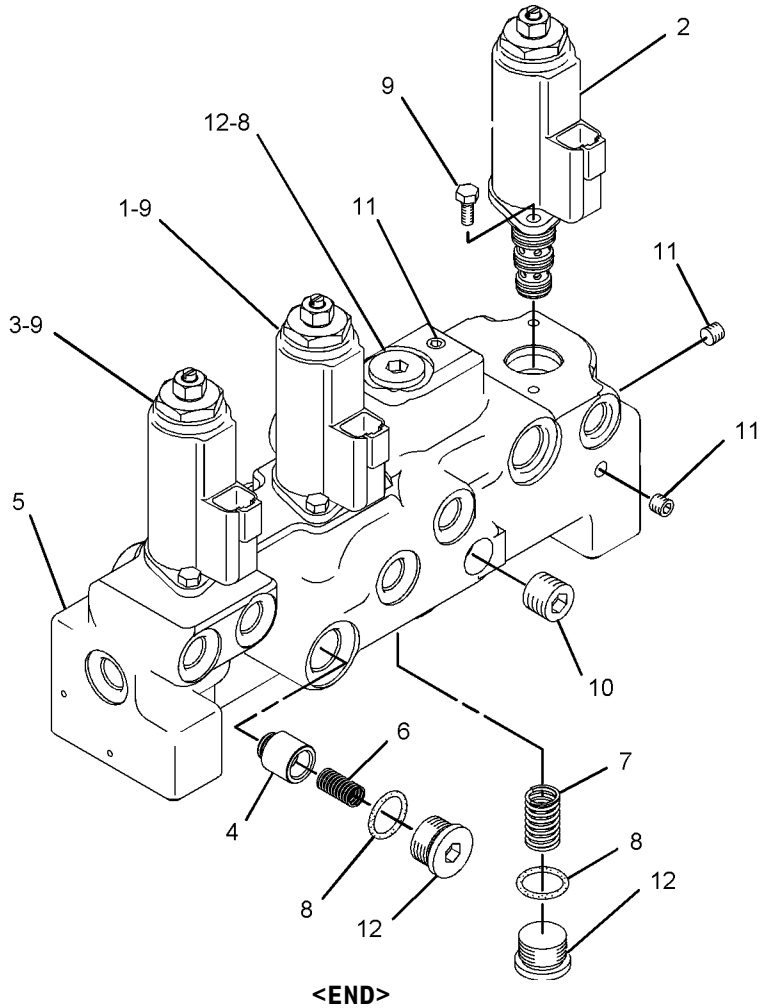

GRAPHIC #1 **<END>** g01083316

274-2635 MOTOR GP-PISTON

S/N: CLA1-UP

PART OF 267-6847 DRIVE GP-SWING

SMCS-5058 **i02794294**

NOTE	REF NO	GRAPHIC REF	PART NUMBER	QTY	PART NAME 1 2 3 4 5 6 (PRODUCT LEVEL)	SEE PAGE
	1	1	**7I-0168**	1	PLATE-IDENTIFICATION	
	2	2	**099-0320**	1	BUSHING	
J	3	2	**099-0321**	1	SEAL-LIP TYPE	
	4	2	**099-0322**	1	BEARING-ROLLER	
	5	2	**7I-0057**	1	SPRING	
	6	2	**099-4749**	1	PLATE-CAM	
	7	2	**7I-0058**	1	PLATE-RETAINER	
	8	2	**200-3335**	1	PISTON AS	
	9	2	**099-6530**	3	PLATE-FRICTION	
	10	2	**099-6531**	3	PLATE-SEPARATOR	
J	11	2	**099-6532**	1	SEAL-O-RING	
	12	2	**099-6535**	1	PISTON-BRAKE	
J	13	2	**6F-4718**	2	SEAL-O-RING	
	14	2	**099-0328**	16	SPRING	
	15	2	**099-0329**	2	PIN	
	16	2	**9S-4191**	3	PLUG-O-RING	
J	17	2	**3J-1907**	3	SEAL-O-RING	
	18	2	**099-0330**	4	SPRING	
	19	2	**099-0331**	4	RING	
	20	2	**099-0332**	4	BUSHING	
	21	2	**099-0333**	1	PLATE-VALVE	
	22	2	**099-0334**	1	BEARING AS-NEEDLE	
	23	2	**099-0335**	1	RING-RETAINING	
	24	2	**123-2143**	1	BARREL AS	
	25	2	**194-8401**	1	HOUSING	
J	26	1	**095-1594**	4	SEAL-O-RING	
	27	1	**229-0992**	2	VALVE GP-RELIEF	
		1	**095-1594**	1	SEAL-O-RING	
	28	1	**096-5933**	2	VALVE-CHECK (MAKEUP)	
J	29	1	**095-1789**	2	RING	
	30	1	**096-5934**	2	SPRING	
	31	1	**096-5932**	2	PLUG	
	32	1	**283-6098**	2	VALVE AS	
	33	1	**095-1784**	2	RING-BACKUP	
J	34	1	**095-1585**	2	SEAL-O-RING	
J	35	1	**095-1580**	2	SEAL-O-RING	
	36	1	**194-8400**	1	HEAD	
M	37	1	**8T-0347**	4	BOLT-SOCKET HEAD (M14X1.5X45-MM)	
					AVAILABLE REPAIR KIT(S):	
			123-2145	1	KIT-SEAL (PISTON MOTOR)	
					(ALSO INCLUDES 7 O-RING SEALS)	

J-KIT MARKED J SERVICES PART(S) MARKED J
M-METRIC PART

274-2635 MOTOR GP-PISTON *(contd.)* i02794294

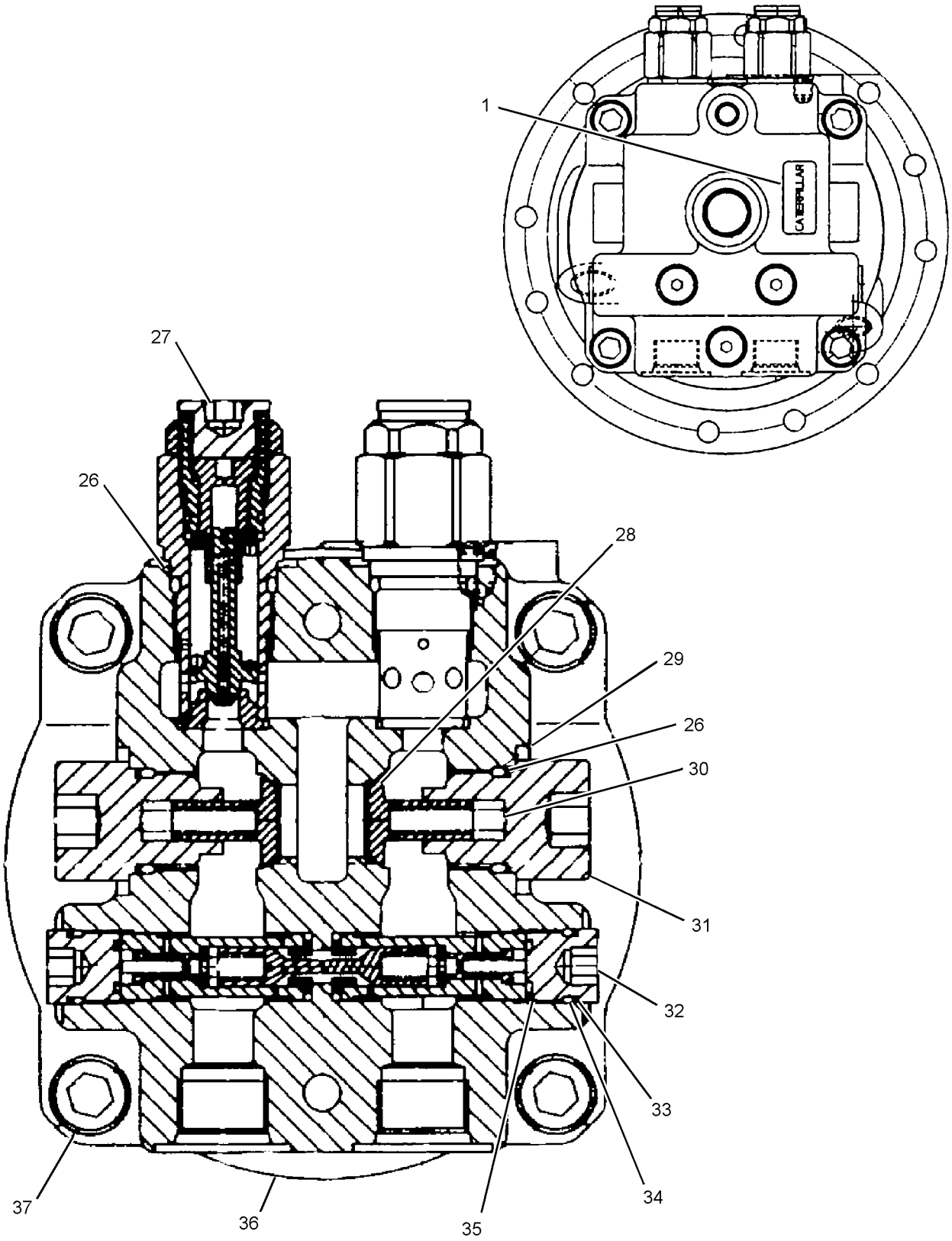

GRAPHIC #1 g01412251

274-2635 MOTOR GP-PISTON *(contd.)* **i02794294**

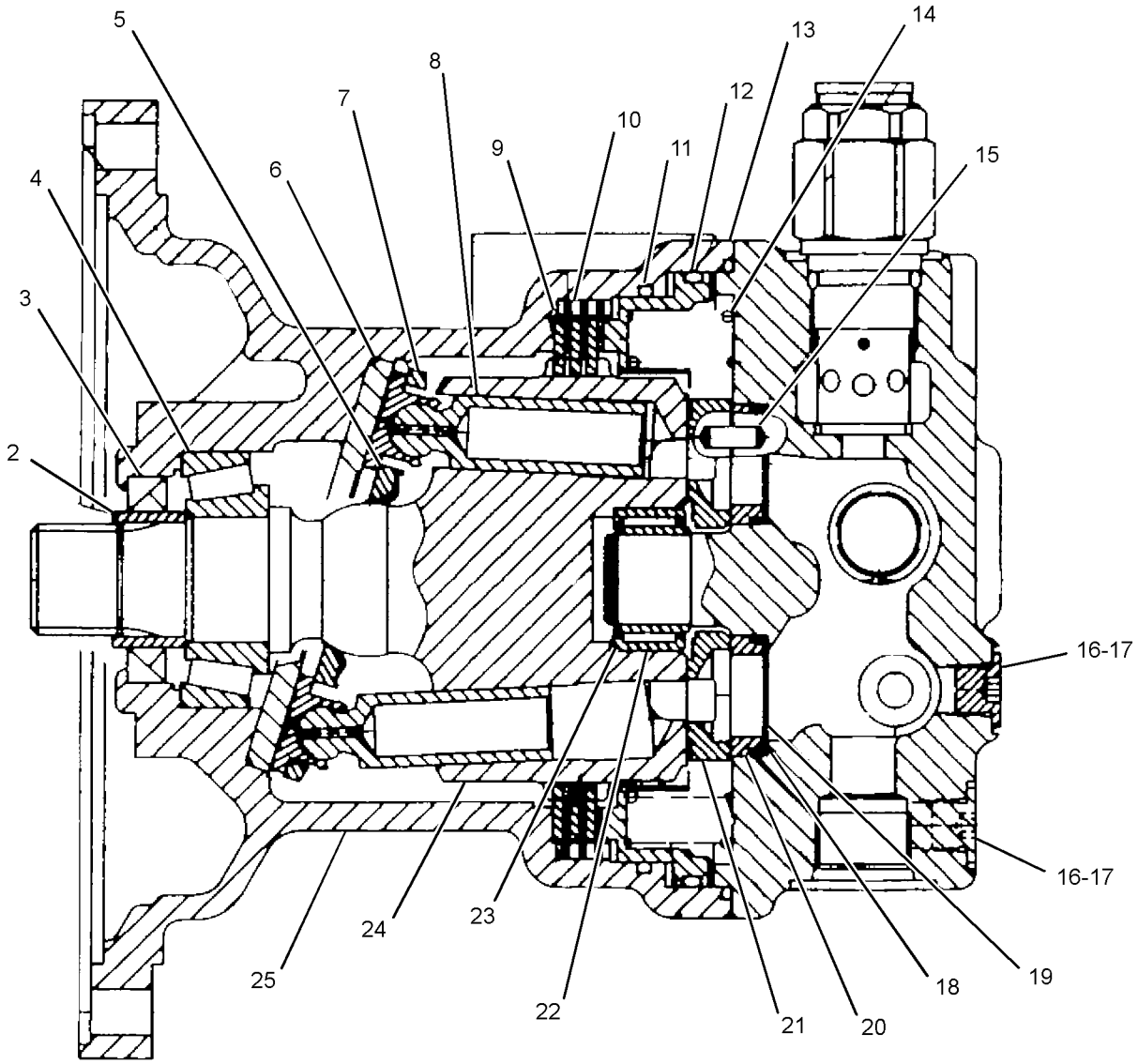

GRAPHIC #2 **<END>** g01412338

HYDRAULIC SYSTEM

274-2637 MOTOR GP-PISTON—SWING DRIVE

S/N: CLA1-UP
PART OF 267-6842 DRIVE GP-SWING
AN ATTACHMENT

SMCS-5058 **i02845647**

NOTE	REF NO	GRAPHIC REF	PART NUMBER	QTY	PART NAME 1 2 3 4 5 6 (PRODUCT LEVEL)	SEE PAGE
M	1	1	**8T-0347**	4	BOLT-SOCKET HEAD (M14X1.5X45-MM)	
	2	1	**099-0320**	1	BUSHING	
J	3	1	**099-0321**	1	SEAL-LIP TYPE	
	4	1	**099-0322**	1	BEARING-ROLLER	
	5	1	**7I-0057**	1	SPRING	
	6	1	**099-4749**	1	PLATE-CAM	
	7	1	**7I-0058**	1	PLATE-RETAINER	
	8	1	**200-3335**	1	PISTON AS	
	9	1	**099-6530**	3	PLATE-FRICTION	
	10	1	**099-6531**	3	PLATE-SEPARATOR	
J	11	1	**099-6532**	1	SEAL-O-RING	
	12	1	**099-6535**	1	PISTON-BRAKE	
J	13	1	**6F-4718**	2	SEAL-O-RING	
	14	1	**099-0328**	16	SPRING	
	15	1	**099-0329**	2	PIN	
	16	1	**9S-4191**	3	PLUG-O-RING	
J	17	1	**3J-1907**	3	SEAL-O-RING	
	18	1	**099-0330**	4	SPRING	
	19	1	**099-0331**	4	RING	
	20	1	**099-0332**	4	BUSHING	
	21	1	**099-0333**	1	PLATE-VALVE	
	22	1	**099-0334**	1	BEARING AS-NEEDLE	
	23	1	**099-0335**	1	RING-RETAINING	
	24	1	**123-2143**	1	BARREL AS	
	25	1	**194-8401**	1	HOUSING	
J	26	1	**095-1594**	4	SEAL-O-RING	
	27	1	**229-0992**	2	VALVE GP-RELIEF	
	28	1	**096-5933**	2	VALVE-CHECK (MAKEUP)	
J	29	1	**095-1789**	2	RING	
	30	1	**096-5934**	2	SPRING	
	31	1	**096-5932**	2	PLUG	
	32	1	**283-6098**	2	VALVE AS	
J	33	1	**095-1784**	2	RING-BACKUP	
J	34	1	**095-1585**	2	SEAL-O-RING	
J	35	1	**095-1580**	2	SEAL-O-RING	
	36	1	**274-2565**	1	HEAD	
					AVAILABLE REPAIR KIT(S):	
J			**123-2145**	1	KIT-SEAL (PISTON MOTOR)	
					(ALSO INCLUDES 7 SEALS)	

J-KIT MARKED J SERVICES PART(S) MARKED J
M-METRIC PART

274-2637 MOTOR GP-PISTON *(contd.)* **i02845647**

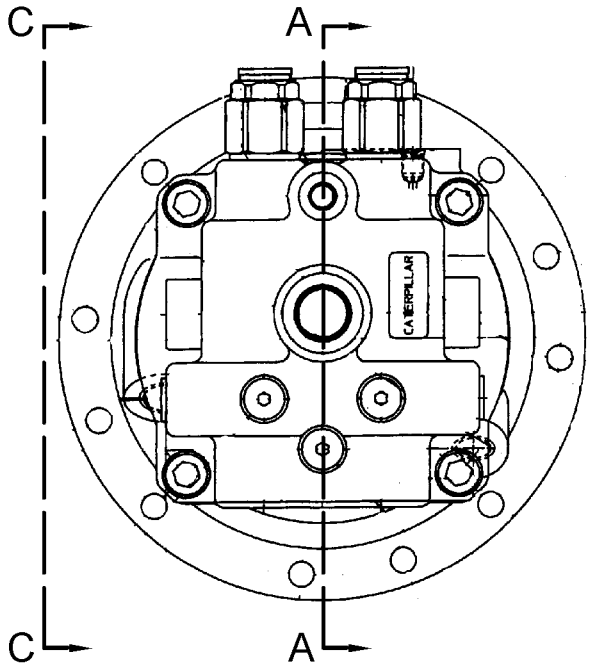

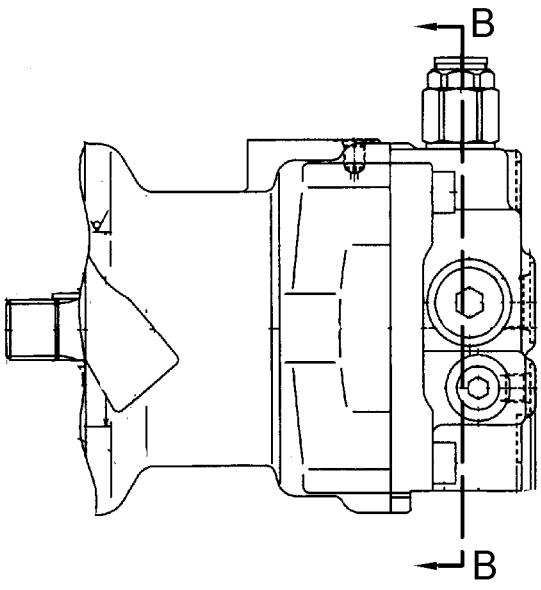

VIEW C-C

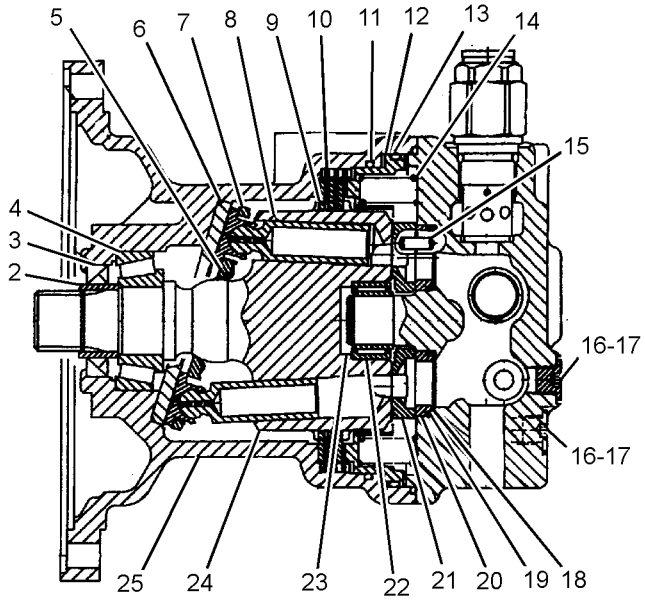

SECTION A-A

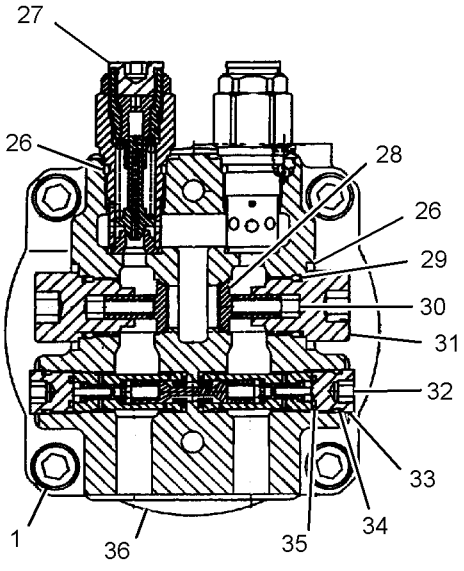

SECTION B-B

GRAPHIC #1 **<END>** g01418963

HYDRAULIC SYSTEM

277-6697 MOTOR GP-PISTON

S/N: CLA1-UP

PART OF 277-6695 DRIVE GP-FINAL

SMCS-5058 **i02939289**

NOTE	REF NO	GRAPHIC REF	PART NUMBER	QTY	PART NAME 1 2 3 4 5 6 (PRODUCT LEVEL)	SEE PAGE
	1	1	**1H-8278**	1	SEAL-O-RING	
	2	1	**7Y-4224**	1	ORIFICE	
	3	1	**085-9769**	4	PIN	
	4	1	**087-4742**	1	VALVE	
	5	1	**095-1585**	1	SEAL-O-RING	
	6	1	**095-7380**	1	SPRING	
	7	1	**095-7382**	1	RETAINER	
	8	1	**096-1519**	1	SEAT	
	9	1	**165-2793**	1	RETAINER	
	10	1	**165-2799**	9	SPRING	
	11	1	**165-5803**	1	SHAFT	
	12	1	**165-5804**	1	BEARING-ROLLER	
	13	1	**165-5806**	2	PISTON	
	14	1	**165-5809**	9	PISTON AS	
	15	1	**165-5811**	1	BARREL AS	
	16	1	**165-5814**	4	PLATE-SEPARATOR	
	17	1	**165-5816**	1	GUIDE-PISTON	
	18	1	**165-5817**	1	PISTON-BRAKE	
	19	1	**165-5818**	8	SPRING	
	20	1	**165-5826**	1	SEAL-LIP TYPE	
	21	1	**165-5828**	2	KEY	
	22	1	**165-5831**	2	SPRING	
	23	1	**176-8131**	1	SPACER-SPECIAL	
	24	1	**176-8571**	1	BODY	
	25	1	**176-8573**	4	PLATE-FRICTION	
	26	1	**176-8579**	1	PLATE-CAM	
	27	1	**267-8084**	1	BEARING-NEEDLE	
	28	1	**9S-8005**	1	PLUG-O-RING	
	29	1	**298-5732**	1	RETAINER-BALL	
Y	30	1	**303-4484**	1	VALVE GP-TRAVEL COUNTERBALANCE	655
	31	1	**094-1875**	1	DOWEL	
	32	1	**094-1882**	7	PLUG	
M	33	1	**8T-4944**	9	BOLT-SOCKET HEAD (M16X2X40-MM)	
	34	1	**165-5819**	1	SEAL-O-RING	
	35	1	**165-5820**	1	RING-BACKUP	
	36	1	**165-5821**	1	SEAL-O-RING	
	37	1	**165-5822**	1	RING-BACKUP	
	38	1	**165-5823**	1	SEAL-O-RING	
	39	1	**165-5824**	1	RING-BACKUP	
	40	1	**3K-0360**	1	SEAL-O-RING	
	41	1	**8T-4240**	1	RING-RETAINING	

M-METRIC PART
Y-SEPARATE ILLUSTRATION

277-6697 MOTOR GP-PISTON *(contd.)* **i02939289**

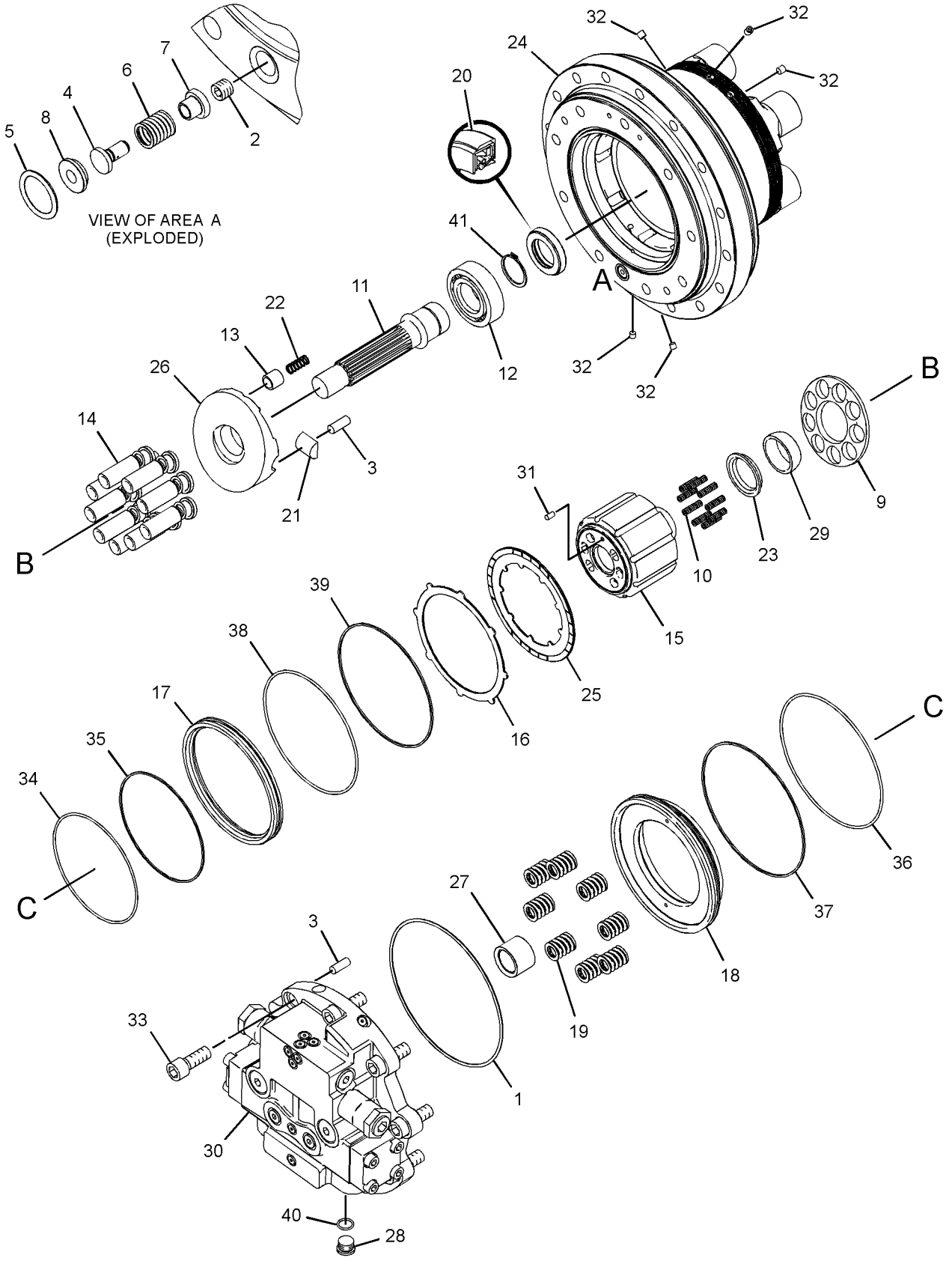

GRAPHIC #1 **<END>** g01444444

HYDRAULIC SYSTEM

316-3790 MOUNTING GP-LINES

S/N: CLA1-UP

PART OF 294-6428, 321-0520 LINES AR-AUXILIARY HYDRAULIC, 321-0521 LINES AR-QUICK COUPLER

FOR USE WITH 4.3-M TO 4.6-M (14.1-FT TO 15.2-FT) AUXILIARY LINES AN ATTACHMENT

SMCS-5057 **i02869737**

NOTE	REF NO	GRAPHIC REF	PART NUMBER	QTY	PART NAME 1 2 3 4 5 6 (PRODUCT LEVEL)	SEE PAGE
	1	1	**153-8800**	2	PLATE	
	2	1	**282-5691**	1	SUPPORT AS	
	3	1	**8T-4223**	4	WASHER-HARD (13.5X25.5X3-MM THK)	
M	4	1	**8T-4648**	4	BOLT (M12X1.75X70-MM)	

M-METRIC PART

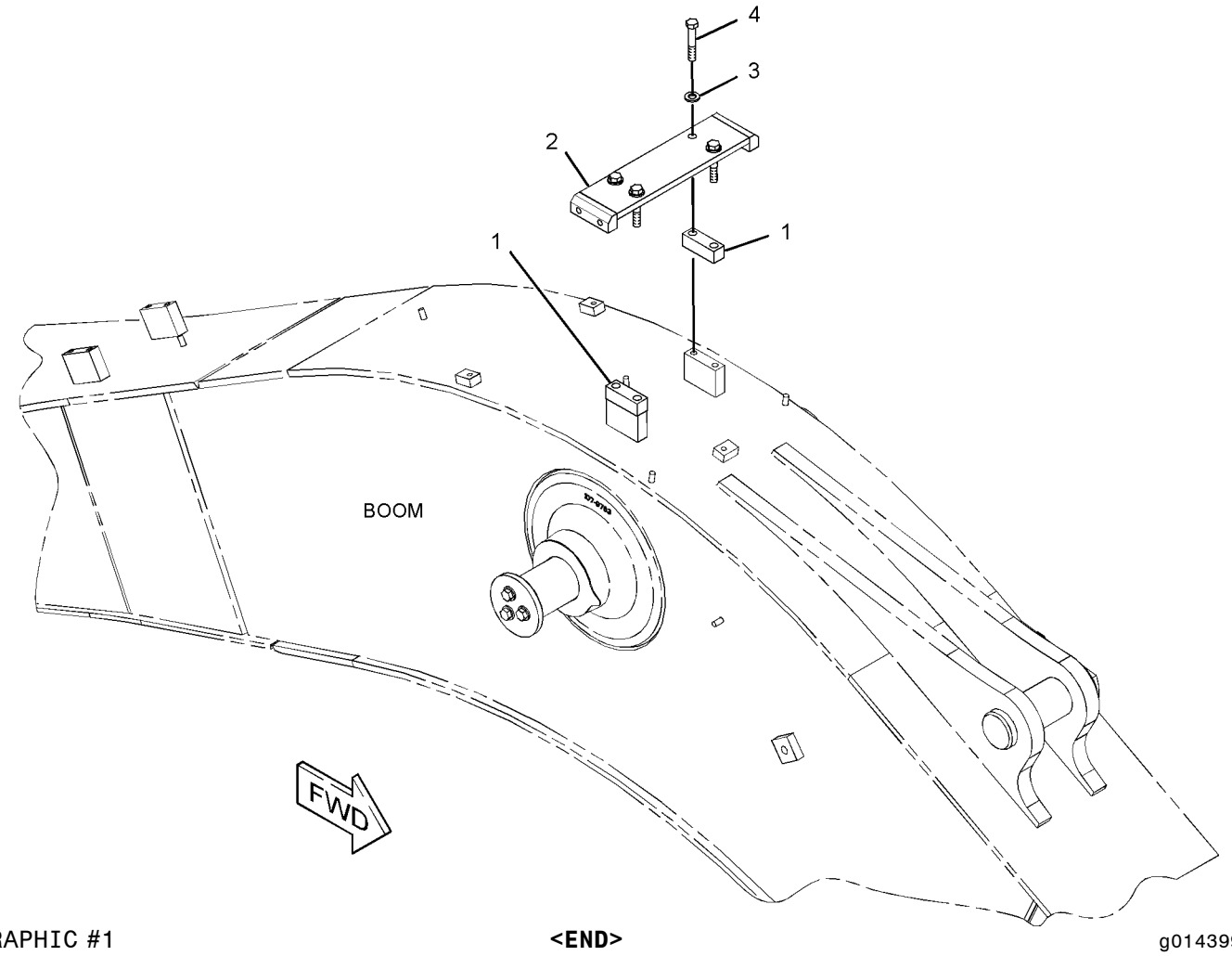

GRAPHIC #1 **<END>** g01439999

282-7383 MOUNTING GP-VALVE

S/N: CLA1-UP

PART OF 270-5992 HYDRAULIC AR

SMCS-5051 **i03033602**

NOTE	REF NO	GRAPHIC REF	PART NUMBER	QTY	PART NAME 1 2 3 4 5 6 (PRODUCT LEVEL)	SEE PAGE
	1	1	**178-6450**	4	SPACER (17X35X30-MM THK)	
M	2	1	**296-7283**	6	BOLT (M16X2X50-MM)	
	3	1	**325-9217**	1	SUPPORT AS	
	4	1	**325-9140**	1	SUPPORT AS	
	5	1	**176-4703**	6	WASHER (17X30X8-MM THK)	
M	6	1	**8T-4140**	4	BOLT (M16X2X60-MM)	

M-METRIC PART

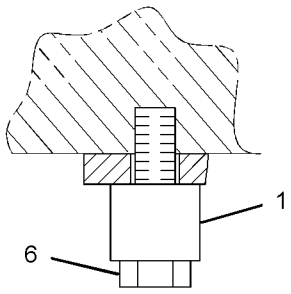

SECTION A-A

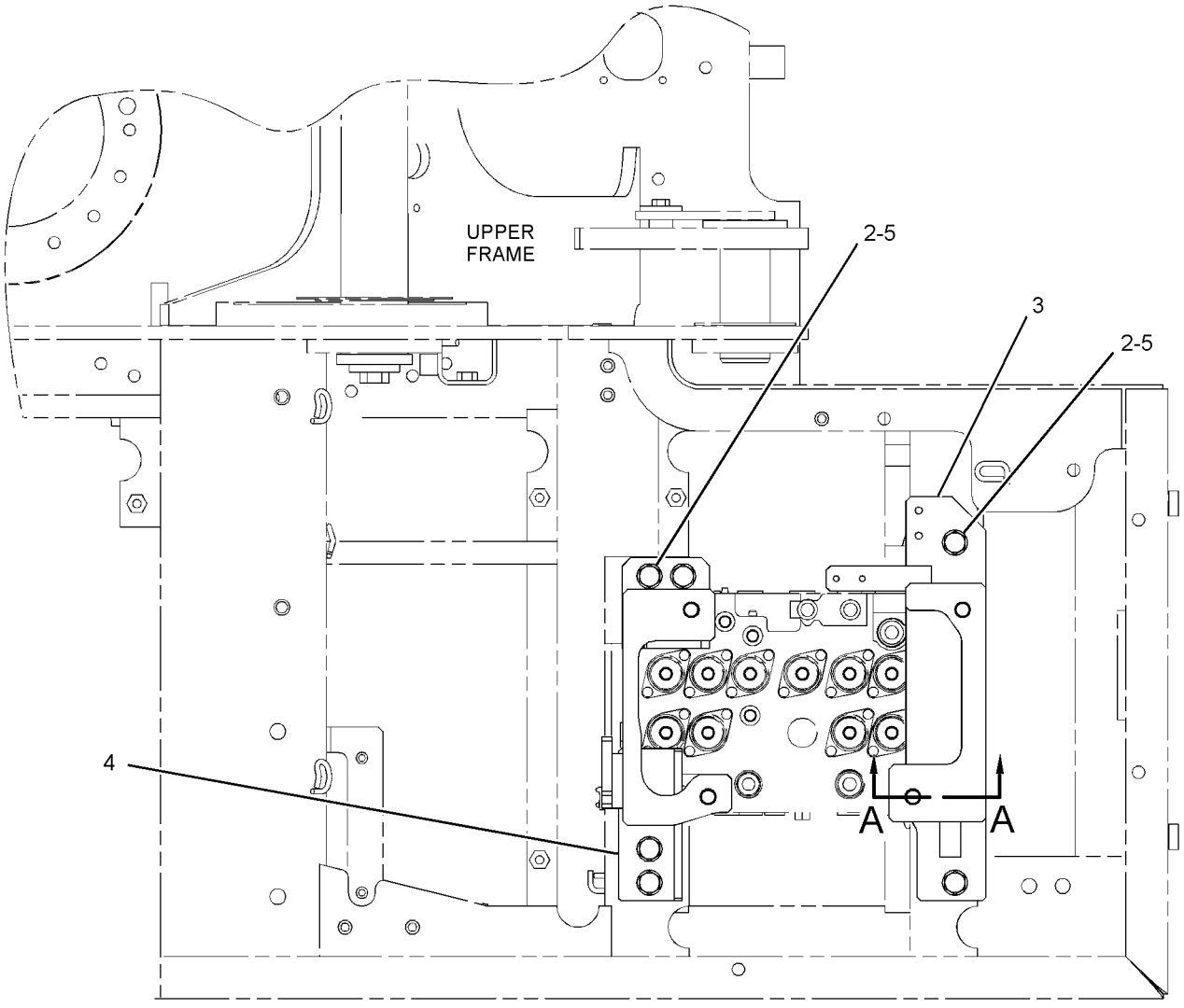

FWD

TOP VIEW

GRAPHIC #1 **<END>** g01400813

259-0917 PUMP & MTG GP-AUXILIARY—MEDIUM PRESSURE

S/N: CLA1-UP

PART OF 270-6037 CONTROL AR-AUXILIARY, 283-8789 INSTALLATION AR-BLADE AN ATTACHMENT

SMCS-5070, 5073 **i02749965**

NOTE	REF NO	GRAPHIC REF	PART NUMBER	QTY	PART NAME 1 2 3 4 5 6 (PRODUCT LEVEL)	SEE PAGE
	1	1	**170-6738**	1	SPACER	
	2	1	**218-0557**	1	PUMP GP-GEAR	
	3	1	**222-2062**	1	COUPLING	
	4	1	**273-8315**	2	SEAL-O-RING	
	5	1	**8T-4121**	2	WASHER-HARD (11X21X2.5-MM THK)	
M	6	1	**8T-6466**	2	BOLT (M10X1.5X60-MM)	

M-METRIC PART

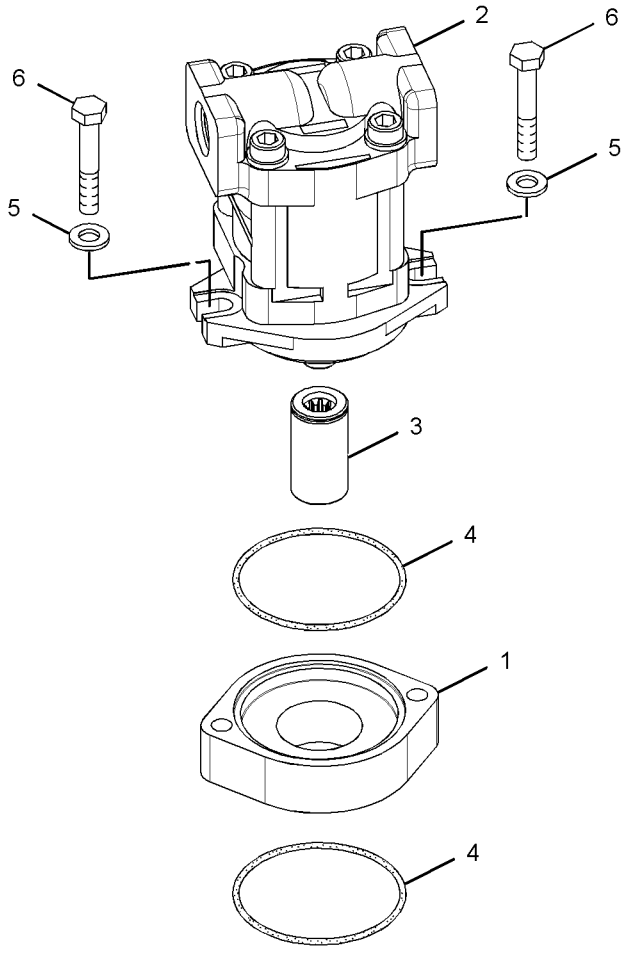

GRAPHIC #1 **<END>** g01379452

HYDRAULIC SYSTEM

279-7755 PUMP & MTG GP-MAIN HYDRAULIC

S/N: CLA1-UP

PART OF 270-5992 HYDRAULIC AR

SMCS-5070 **i02796641**

NOTE	REF NO	GRAPHIC REF	PART NUMBER	QTY	PART NAME 1 2 3 4 5 6 (PRODUCT LEVEL)	SEE PAGE
Y	1	1	*255-3027*	1	COUPLING GP-PUMP	350
Y	2	1	*311-7403*	1	PUMP GP-PISTON	563
	3	1	**8T-4121**	12	WASHER-HARD (11X21X2.5-MM THK)	
M	4	1	**8T-4195**	12	BOLT (M10X1.5X30-MM)	

M-METRIC PART
Y-SEPARATE ILLUSTRATION

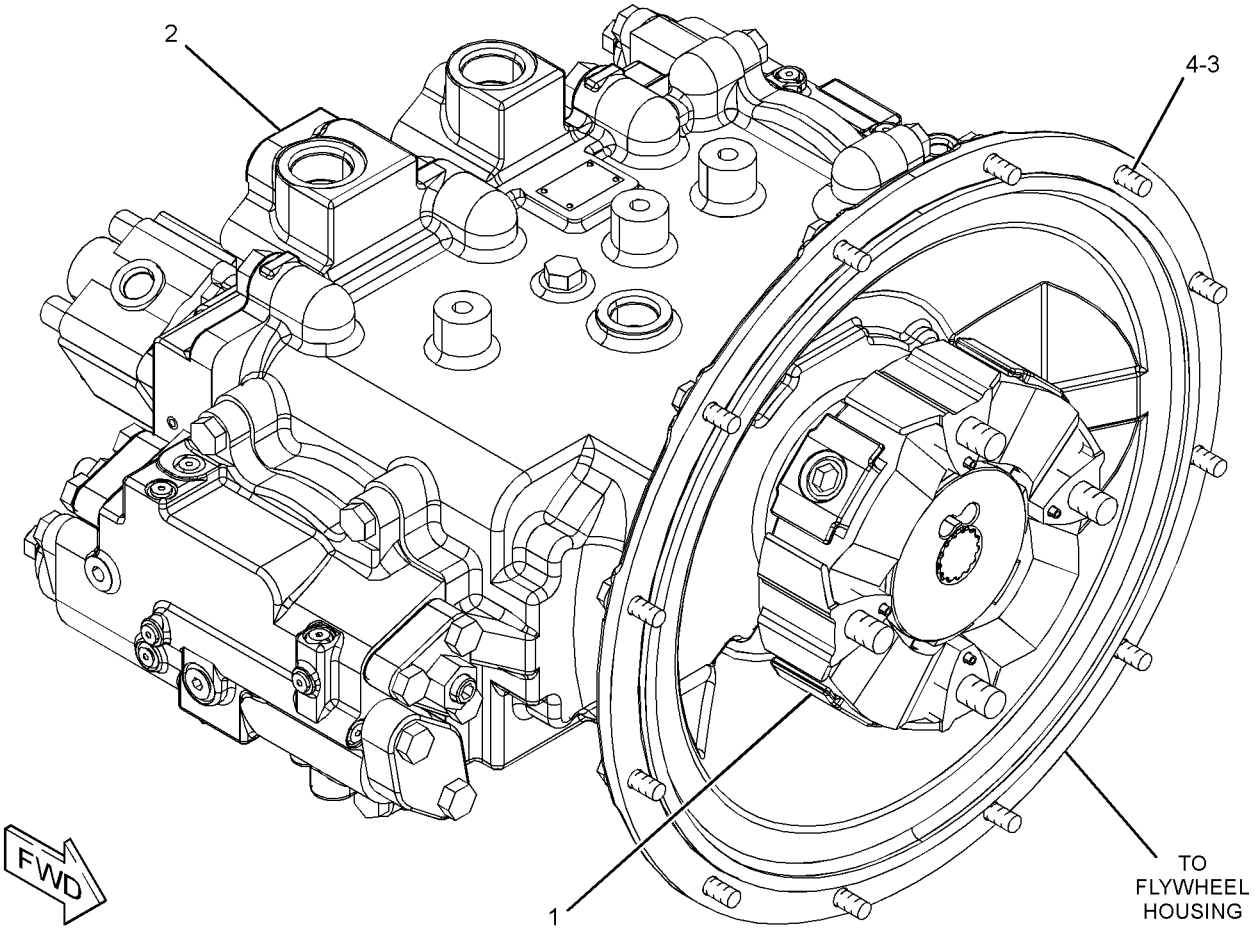

GRAPHIC #1 **<END>** g01400619

HYDRAULIC SYSTEM

311-7403 PUMP GP-PISTON

S/N: CLA1-UP

PART OF 279-7755 PUMP & MTG GP-MAIN HYDRAULIC

SMCS-5070 **i02796642**

NOTE	REF NO	GRAPHIC REF	PART NUMBER	QTY	PART NAME 1 2 3 4 5 6 (PRODUCT LEVEL)	SEE PAGE
Y	1	1	**111-9916**	1	VALVE GP-SOLENOID	638
	2	2	**165-2793**	2	RETAINER	
	3	2	**165-2801**	2	BEARING-ROLLER	
	4	2	**165-2802**	1	SEAL-LIP TYPE	
	5	1	**165-2804**	1	FLANGE	
	6	2	**165-2805**	2	BLOCK	
	7	2	**165-3838**	1	BARREL AS	
	8	2	**165-3839**	1	BARREL AS	
	9	2	**165-3847**	18	PISTON AS	
	10	2	**165-3853**	1	COVER	
	11	1	**173-1203**	1	PUMP GP-GEAR	
	12	2	**176-8131**	2	SPACER-SPECIAL	
	13	2	**176-8132**	2	BEARING	
	14	2	**190-4896**	2	PLUG	
	15	2	**192-0573**	4	PIN-DOWEL	
	16	2	**199-0518**	2	SEAL-O-RING	
	17	2	**207-2985**	2	ORIFICE	
	18	1	**225-6216**	1	GASKET	
	19	2	**267-1628**	1	SHAFT-DRIVE	
	20	2	**267-1629**	1	SHAFT-DRIVEN	
	21	2	**267-8084**	2	BEARING-NEEDLE	
	22	2	**268-6263**	2	CAM	
	23	2	**268-6265**	1	PLATE	
	24	2	**269-2433**	4	BEARING-CRADLE	
Y	25	1	**282-9153**	2	HEAD GP-PUMP	402
	26	1	**282-9192**	1	CASE-FLANGE	
	27	2	**298-5732**	2	RETAINER-BALL	
	28	1	**311-7407**	1	BLOCK-PORT	
	29	1,2	**9S-4191**	3	PLUG-O-RING	
	30	1,2	**094-1875**	6	DOWEL	
	31	1	**094-1882**	12	PLUG	
	32	2	**095-1663**	1	SEAL-O-RING	
	34	2	**165-2799**	12	SPRING	
	35	2	**189-9763**	4	SEAL-O-RING	
	36	2	**1H-7339**	1	SEAL-O-RING	
	37	2	**1J-6472**	2	RING-RETAINING	
	38	2	**273-8320**	1	SEAL-O-RING	
	39	1,2	**3J-1907**	3	SEAL-O-RING	
	40	2	**6V-8144**	2	RING-RETAINING	
M	41	1	**7I-2272**	2	BOLT (M5X0.8X12-MM)	
M	42	1	**7X-2553**	5	BOLT (M16X2X40-MM)	
M	43	1	**7X-2556**	1	BOLT (M16X2X100-MM)	
	44	2	**8C-3338**	4	DOWEL	
	45	1	**8T-4121**	2	WASHER-HARD (11X21X2.5-MM THK)	
M	46	1	**8T-4136**	2	BOLT (M10X1.5X25-MM)	
M	47	2	**8T-4137**	2	BOLT (M10X1.5X20-MM)	
M	48	1	**8T-4139**	8	BOLT (M12X1.75X30-MM)	
M	49	1	**8T-4140**	2	BOLT (M16X2X60-MM)	
M	50	2	**8T-4185**	4	BOLT (M10X1.5X50-MM)	
M	51	2	**8T-7547**	4	BOLT (M8X1.25X30-MM)	
	52	2	**8T-9599**	1	RING-RETAINING	

M-METRIC PART
Y-SEPARATE ILLUSTRATION

REFER TO ALL ILLUSTRATIONS OF
THIS GROUP FOR AUXILIARY VIEWS

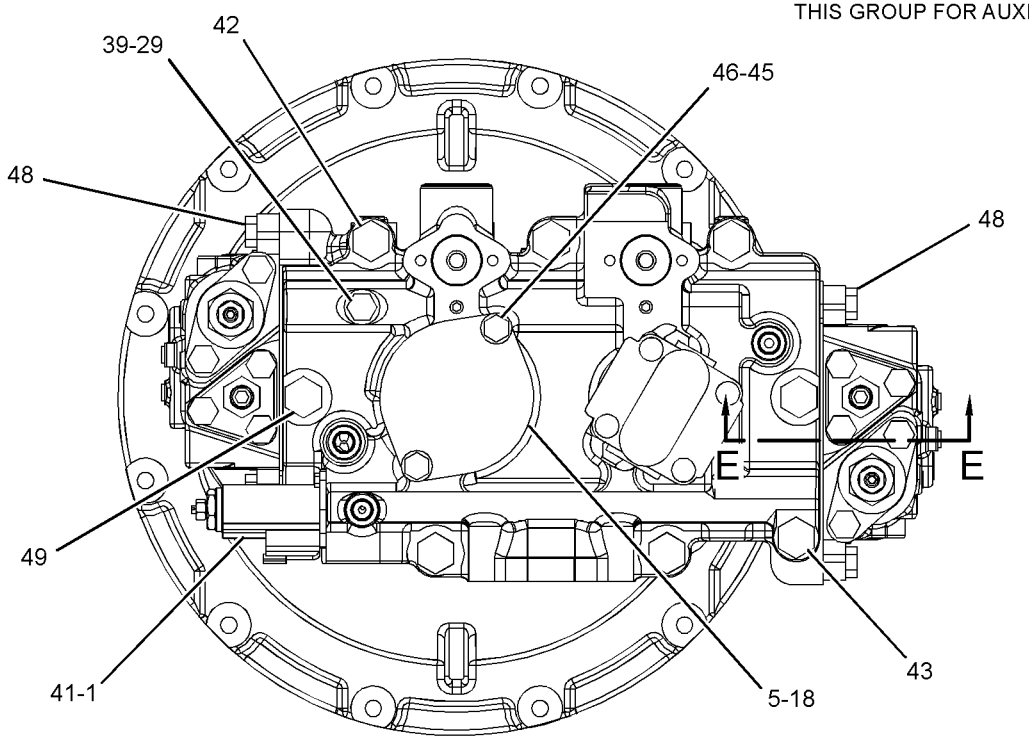

VIEW A-A

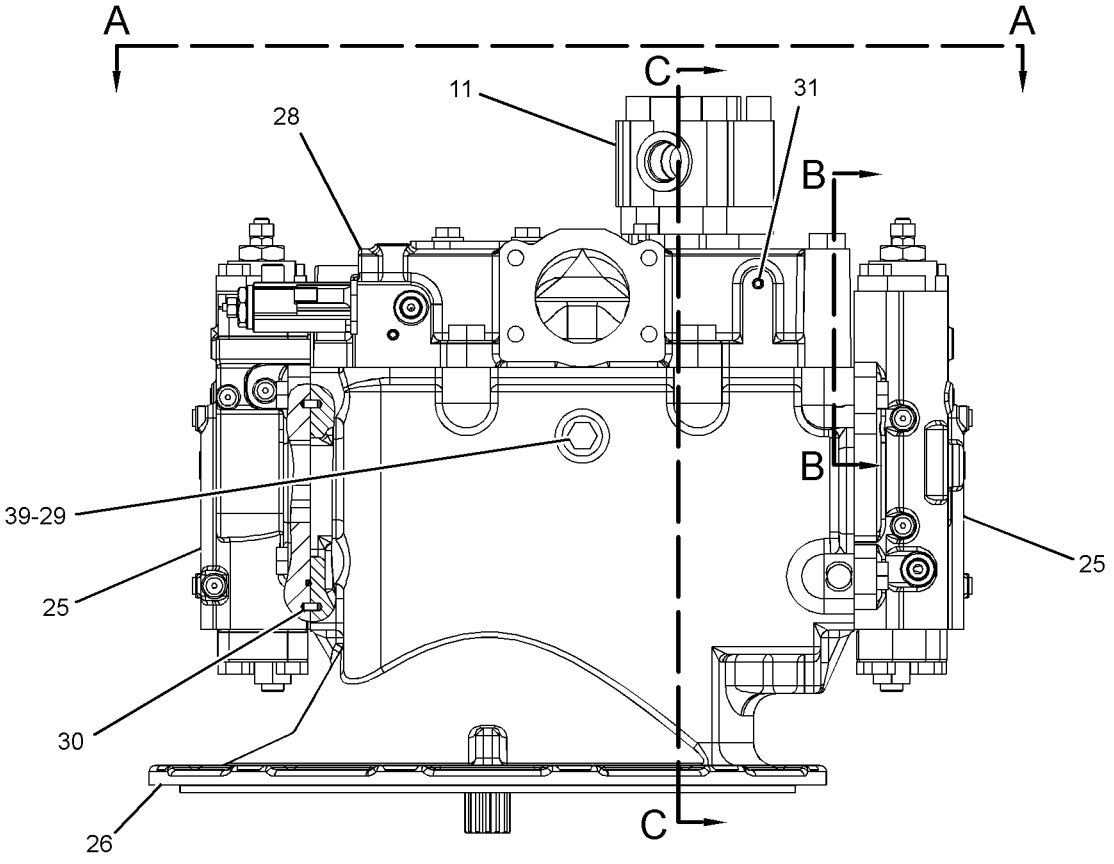

GRAPHIC #1

g01401017

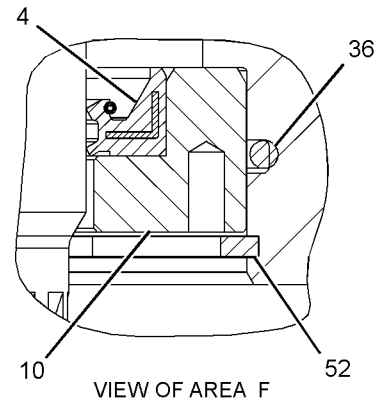

VIEW OF AREA F

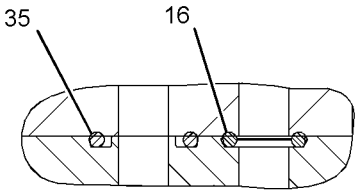

SECTION B-B

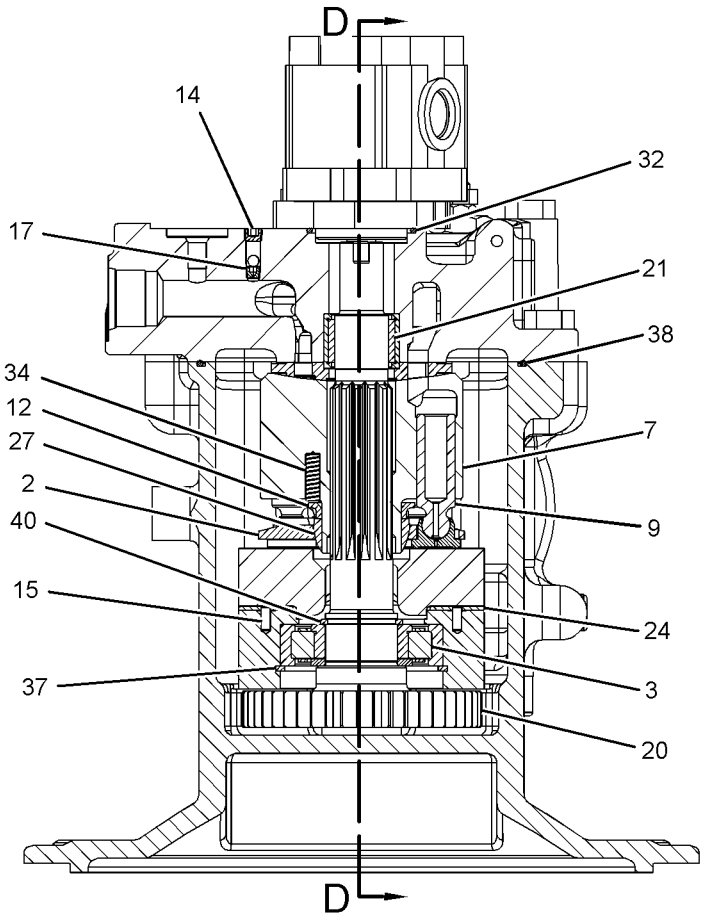

SECTION C-C

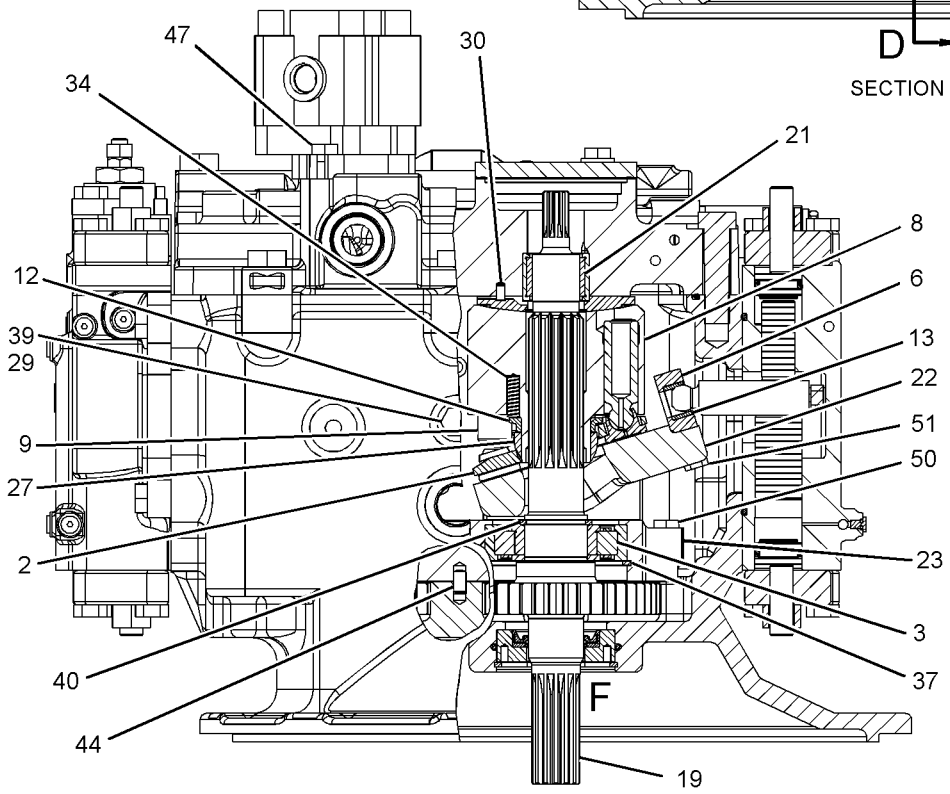

SECTION D-D

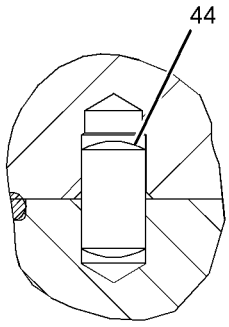

SECTION E-E

GRAPHIC #2 **<END>** g01401018

283-6102 SCREEN GP-HYDRAULIC

S/N: CLA1-UP

PART OF 282-7379 TANK & FILTER GP-HYDRAULIC

SMCS-5068 **i02796637**

NOTE	REF NO	GRAPHIC REF	PART NUMBER	QTY	PART NAME 1 2 3 4 5 6 (PRODUCT LEVEL)	SEE PAGE
	1	1	**129-7784**	1	ROD	
	2	1	**209-6002**	1	SCREEN AS (HYDRAULIC TANK)	
	3	1	**259-0918**	1	GUIDE	
	4	1	**095-1552**	1	SEAL-O-RING	
	5	1	**095-6639**	1	SPRING	
M	6	1	**8T-4133**	2	NUT (M10X1.5-THD)	

M-METRIC PART

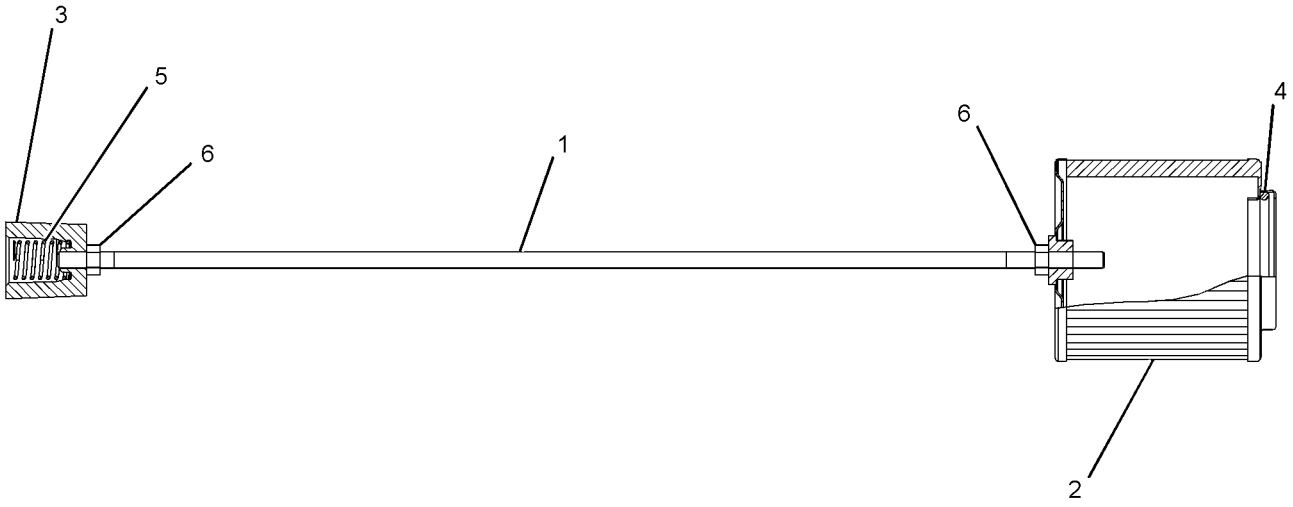

GRAPHIC #1 **<END>** g01400707

197-0173 SPOOL GP-CONTROL VALVE–WORK TOOL

S/N: CLA1-UP

PART OF 259-7804, 285-1600, 297-0374, 310-0157 VALVE GP-CONTROL, 270-5977 VALVE GP-MAIN CONTROL

ALSO AN ATTACHMENT

SMCS-5051, 5464 **i01463920**

NOTE	REF NO	GRAPHIC REF	PART NUMBER	QTY	PART NAME 1 2 3 4 5 6 (PRODUCT LEVEL)	SEE PAGE
M	1	1	**197-0148**	1	BOLT-SHOULDER (M8X1.25X56.1-MM)	
	2	1	**7I-7203**	2	SEAT	
	3	1	**197-0151**	1	SPRING	
	4	1	**197-0150**	1	SPRING	
	5	1	**197-0149**	1	STOP	
	6	1	**197-0156**	1	SPOOL	

M-METRIC PART

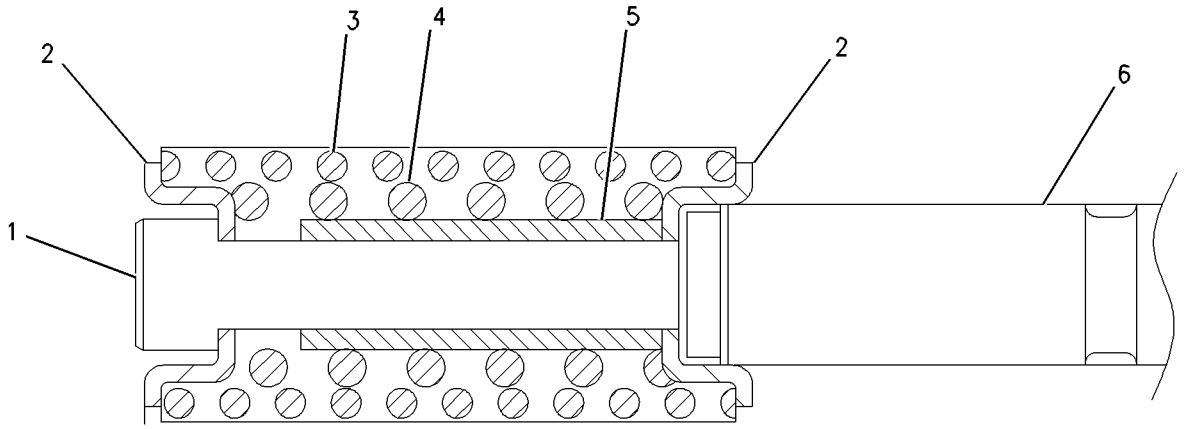

GRAPHIC #1 **<END>** g00766597

197-0175 SPOOL GP-CONTROL VALVE–STICK II

S/N: CLA1-UP

PART OF 270-5977 VALVE GP-MAIN CONTROL

ALSO AN ATTACHMENT

SMCS-5051, 5464 **i01463924**

NOTE	REF NO	GRAPHIC REF	PART NUMBER	QTY	PART NAME 1 2 3 4 5 6 (PRODUCT LEVEL)	SEE PAGE
M	1	1	**197-0148**	1	BOLT-SHOULDER (M8X1.25X56.1-MM)	
	2	1	**7I-7203**	2	SEAT	
	3	1	**197-0153**	1	SPRING	
	4	1	**197-0150**	1	SPRING	
	5	1	**197-0149**	1	STOP	
	6	1	**197-0158**	1	SPOOL	

M-METRIC PART

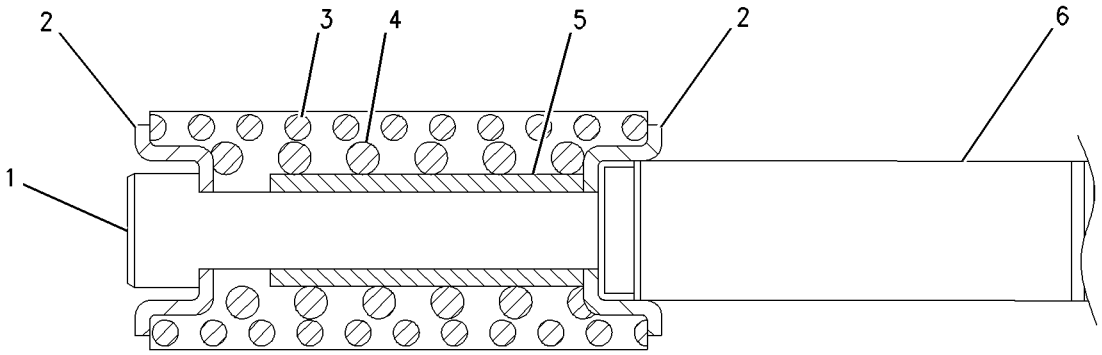

GRAPHIC #1 **<END>** g00766571

197-0211 SPOOL GP-CONTROL VALVE–STICK I

S/N: CLA1-UP

PART OF 270-5977 VALVE GP-MAIN CONTROL

ALSO AN ATTACHMENT

SMCS-5051, 5464 **i01463949**

NOTE	REF NO	GRAPHIC REF	PART NUMBER	QTY	PART NAME 1 2 3 4 5 6 (PRODUCT LEVEL)	SEE PAGE
M	1	1	**197-0148**	1	BOLT-SHOULDER (M8X1.25X56.1-MM)	
	2	1	**7I-7203**	2	SEAT	
	3	1	**197-0151**	1	SPRING	
	4	1	**197-0150**	1	SPRING	
	5	1	**197-0149**	1	STOP	
	6	1	**197-0212**	1	SPOOL	

M-METRIC PART

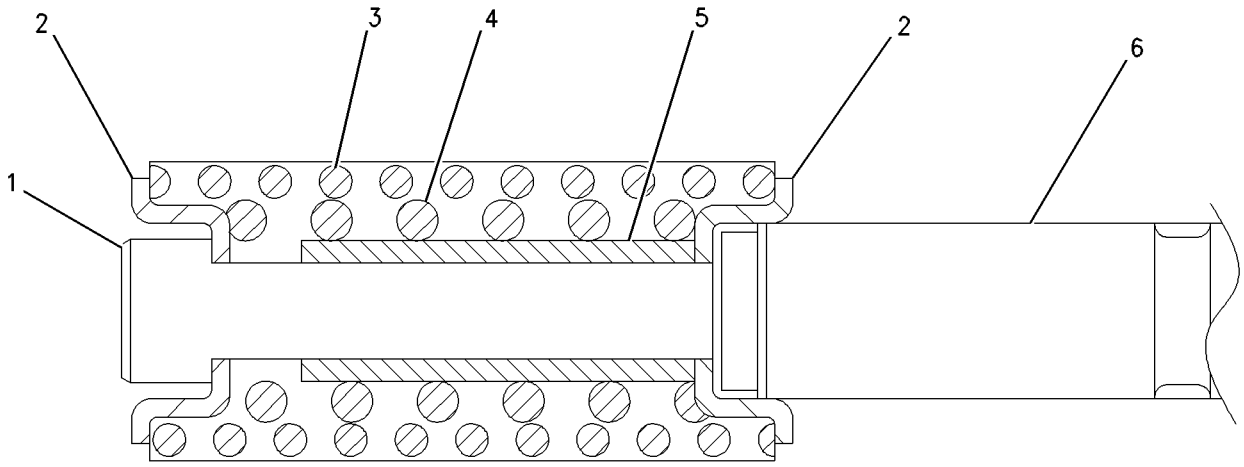

GRAPHIC #1 **<END>** g00766559

197-0217 SPOOL GP-CONTROL VALVE–STICK

S/N: CLA1-UP

PART OF 270-5977 VALVE GP-MAIN CONTROL

ALSO AN ATTACHMENT

SMCS-5051, 5464 **i01481681**

NOTE	REF NO	GRAPHIC REF	PART NUMBER	QTY	PART NAME 1 2 3 4 5 6 (PRODUCT LEVEL)	SEE PAGE
M	1	1	**197-0148**	1	BOLT-SHOULDER (M8X1.25X56.1-MM)	
	2	1	**7I-7203**	2	SEAT	
	3	1	**197-0151**	1	SPRING	
	4	1	**197-0150**	1	SPRING	
	5	1	**197-0149**	1	STOP	
	6	1	**197-0218**	1	SPOOL AS	

M-METRIC PART

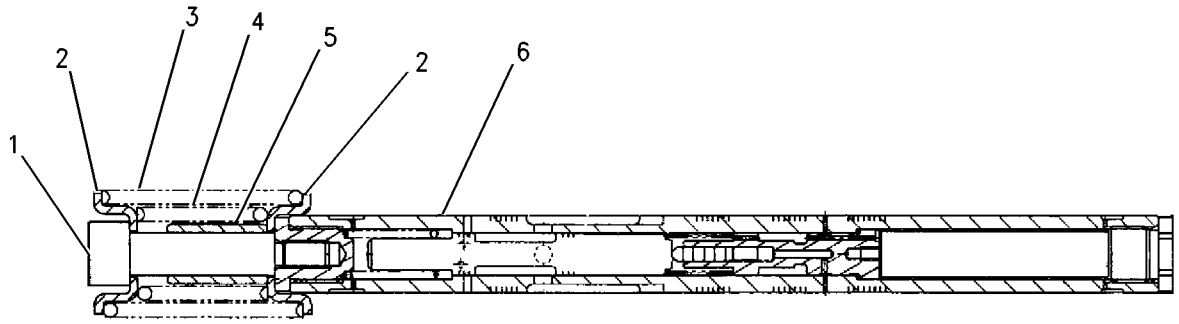

GRAPHIC #1 **<END>** g00790767

285-1504 SPOOL GP-CONTROL VALVE—COMBINED FLOW

S/N: CLA1-UP

PART OF 270-5977 VALVE GP-MAIN CONTROL

ALSO AN ATTACHMENT

SMCS-5051, 5464 **i03016739**

NOTE	REF NO	GRAPHIC REF	PART NUMBER	QTY	PART NAME 1 2 3 4 5 6 (PRODUCT LEVEL)	SEE PAGE
	1	1	**297-0366**	1	STOP	
M	2	1	**197-0148**	1	BOLT-SHOULDER (M8X1.25X56.1-MM)	
	3	1	**7I-7203**	2	SEAT	
	4	1	**197-0151**	1	SPRING	
	5	1	**197-0150**	1	SPRING	

M-METRIC PART

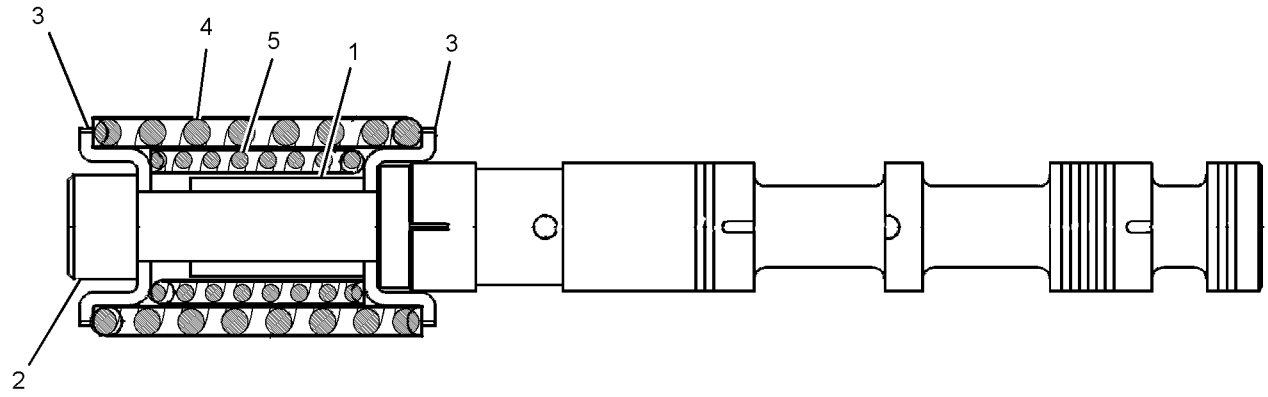

GRAPHIC #1 **<END>** g01424755

285-1505 SPOOL GP-CONTROL VALVE—SWING PRIORITY

S/N: CLA1-UP

PART OF 270-5977 VALVE GP-MAIN CONTROL

ALSO AN ATTACHMENT

SMCS-5051, 5464 **i02776159**

NOTE	REF NO	GRAPHIC REF	PART NUMBER	QTY	PART NAME 1 2 3 4 5 6 (PRODUCT LEVEL)	SEE PAGE
	1	1	**285-1641**	1	SPOOL	
M	2	1	**197-0148**	1	BOLT-SHOULDER (M8X1.25X56.1-MM)	
	3	1	**7I-7203**	2	SEAT	
	4	1	**197-0151**	1	SPRING	
	5	1	**197-0150**	1	SPRING	
	6	1	**197-0149**	1	STOP	

M-METRIC PART

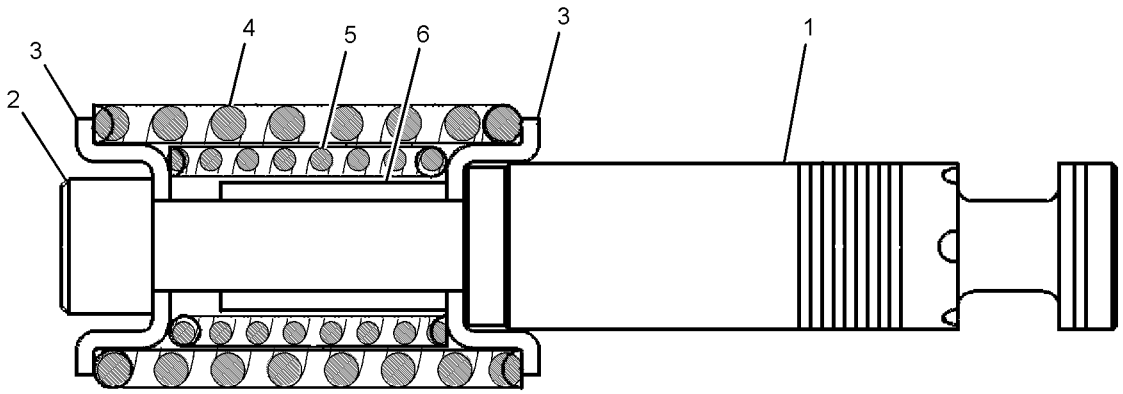

GRAPHIC #1 **<END>** g01390001

297-0235 SPOOL GP-CONTROL VALVE–TRAVEL, RH, LH

S/N: CLA1-UP

PART OF 270-5977 VALVE GP-MAIN CONTROL

ALSO AN ATTACHMENT

SMCS-5051, 5464 **i02857728**

NOTE	REF NO	GRAPHIC REF	PART NUMBER	QTY	PART NAME 1 2 3 4 5 6 (PRODUCT LEVEL)	SEE PAGE
	1	1	**197-0149**	1	STOP	
M	2	1	**197-0148**	1	BOLT-SHOULDER (M8X1.25X56.1-MM)	
	3	1	**7I-7203**	2	SEAT	
	4	1	**197-0151**	1	SPRING	
	5	1	**197-0150**	1	SPRING	

M-METRIC PART

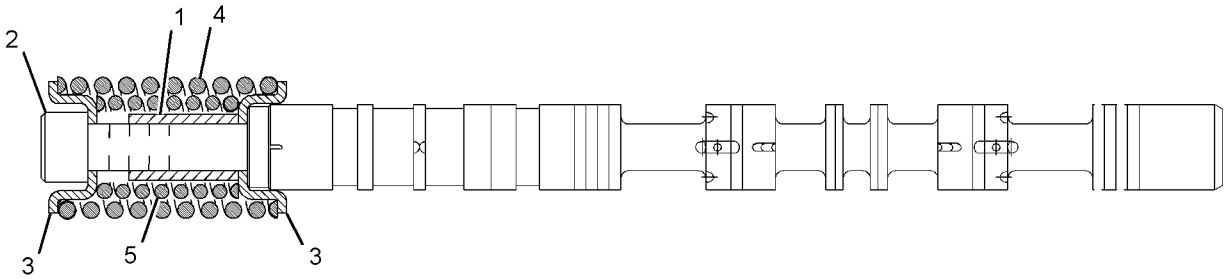

GRAPHIC #1 **<END>** g01424334

310-0056 SPOOL GP-CONTROL VALVE–BUCKET

S/N: CLA1-UP

PART OF 270-5977 VALVE GP-MAIN CONTROL

ALSO AN ATTACHMENT

SMCS-5051, 5464 **i02868534**

NOTE	REF NO	GRAPHIC REF	PART NUMBER	QTY	PART NAME 1 2 3 4 5 6 (PRODUCT LEVEL)	SEE PAGE
	1	1	**197-0149**	1	STOP	
M	2	1	**197-0148**	1	BOLT-SHOULDER (M8X1.25X56.1-MM)	
	3	1	**7I-7203**	2	SEAT	
	4	1	**197-0152**	1	SPRING	
	5	1	**197-0150**	1	SPRING	

M-METRIC PART

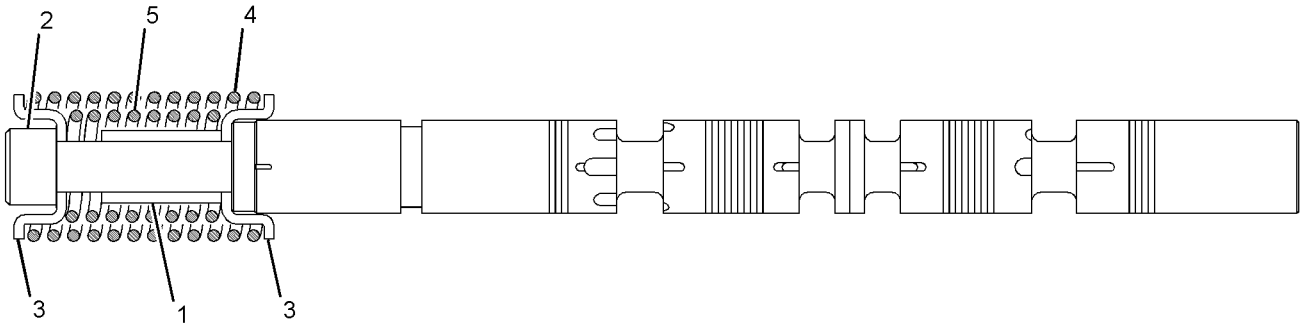

GRAPHIC #1 **<END>** g01445073

310-0417 SPOOL GP-CONTROL VALVE–BOOM II

S/N: CLA1-UP

PART OF 270-5977 VALVE GP-MAIN CONTROL

ALSO AN ATTACHMENT

SMCS-5051, 5464 **i03034983**

NOTE	REF NO	GRAPHIC REF	PART NUMBER	QTY	PART NAME 1 2 3 4 5 6 (PRODUCT LEVEL)	SEE PAGE
	1	1	**7I-7203**	2	SEAT	
M	3	1	**197-0148**	1	BOLT-SHOULDER (M8X1.25X56.1-MM)	
	4	1	**197-0149**	1	STOP	
	5	1	**197-0150**	1	SPRING	
	6	1	**197-0153**	1	SPRING	

M-METRIC PART

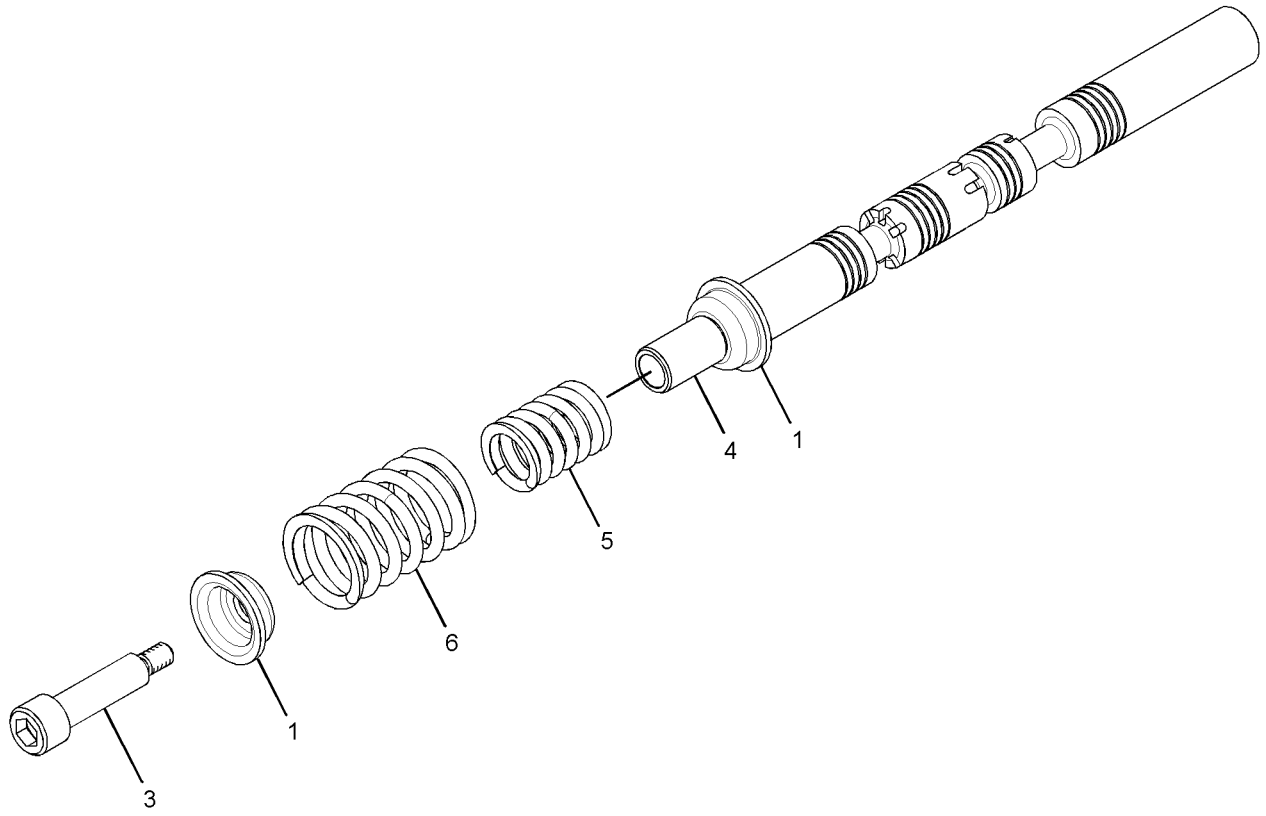

GRAPHIC #1 **<END>** g01622719

HYDRAULIC SYSTEM

162-4695 SWIVEL GP

S/N: CLA1-UP
PART OF 282-7397 LINES GP-BLADE CYLINDER
AN ATTACHMENT

SMCS-5060 **i01460757**

NOTE	REF NO	GRAPHIC REF	PART NUMBER	QTY	PART NAME 1 2 3 4 5 6 (PRODUCT LEVEL)	SEE PAGE
M	1	1	**8T-4136**	6	BOLT (M10X1.5X25-MM)	
	2	1	**8T-4121**	2	WASHER-HARD (11X21X2.5-MM THK)	
	3	1	**5I-4363**	1	COVER	
	4	1	**095-1716**	1	SEAL-O-RING	
	5	1	**7I-7321**	1	RETAINER	
	6	1	**114-8249**	1	HOUSING	
	7	1	**159-7782**	7	SEAL	
	8	1	**095-1625**	3	SEAL-O-RING	
	9	1	**114-8250**	1	ROTOR	
	10	1	**8T-6759**	1	PLUG-PIPE	
	11	1	**3J-1907**	2	SEAL-O-RING	
	12	1	**9S-8004**	2	PLUG-O-RING	

M-METRIC PART

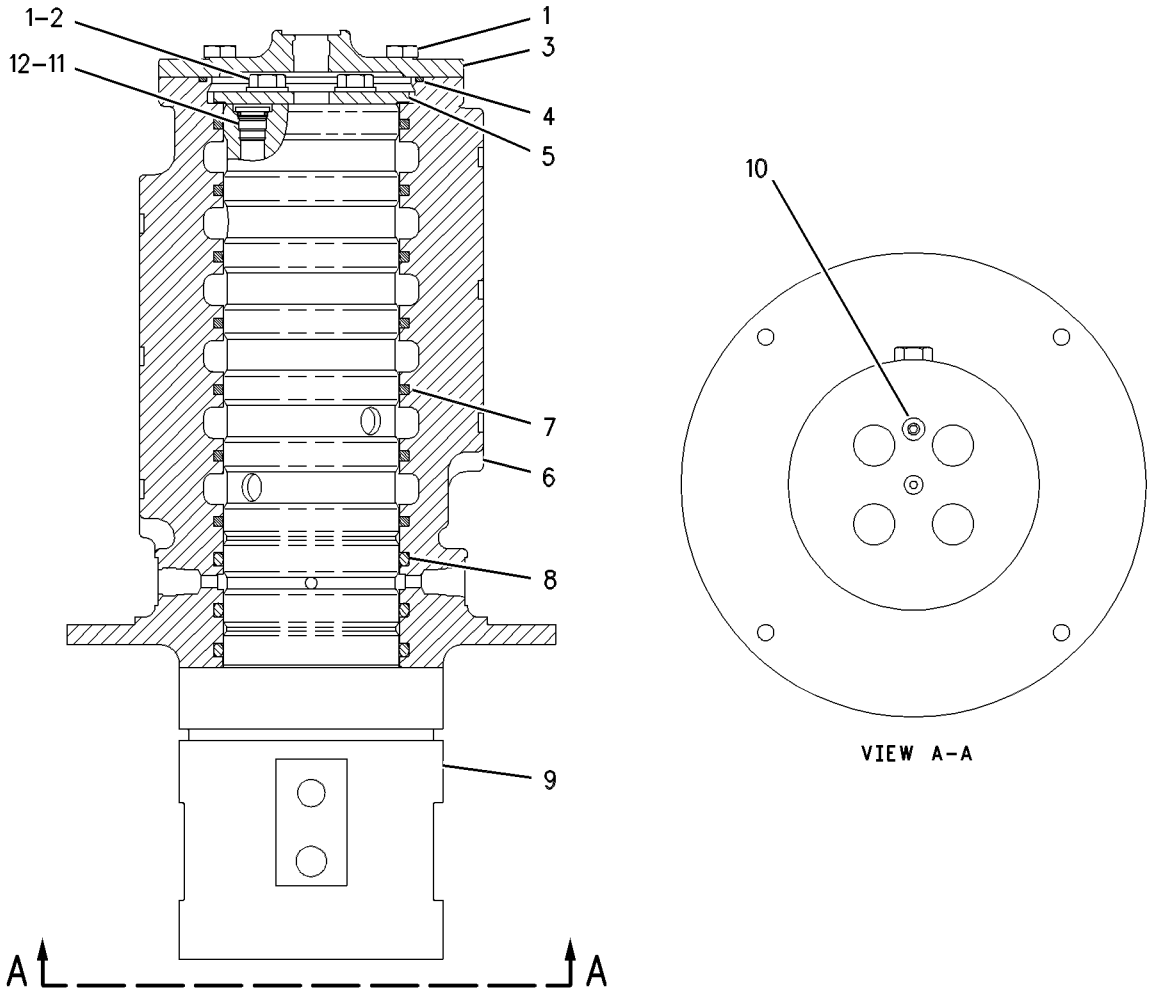

GRAPHIC #1 **<END>** g00548364

HYDRAULIC SYSTEM

162-4696 SWIVEL GP

S/N: CLA1-UP

PART OF 278-6511 LINES GP-TRAVEL MOTOR

SMCS-5060 **i01108789**

NOTE	REF NO	GRAPHIC REF	PART NUMBER	QTY	PART NAME 1 2 3 4 5 6 (PRODUCT LEVEL)	SEE PAGE
M	1	1	**8T-4136**	6	BOLT (M10X1.5X25-MM)	
	2	1	**8T-4121**	2	WASHER-HARD (11X21X2.5-MM THK)	
	3	1	**5I-4363**	1	COVER	
	4	1	**095-1716**	1	SEAL-O-RING	
	5	1	**7I-7321**	1	RETAINER	
	6	1	**4I-7604**	1	HOUSING	
	7	1	**159-7782**	5	SEAL	
	8	1	**095-1625**	3	SEAL-O-RING	
	9	1	**4I-7605**	1	ROTOR	
	10	1	**8T-6759**	1	PLUG-PIPE	
	11	1	**3K-0360**	1	SEAL-O-RING	
	12	1	**9S-8005**	1	PLUG-O RING	

M-METRIC PART

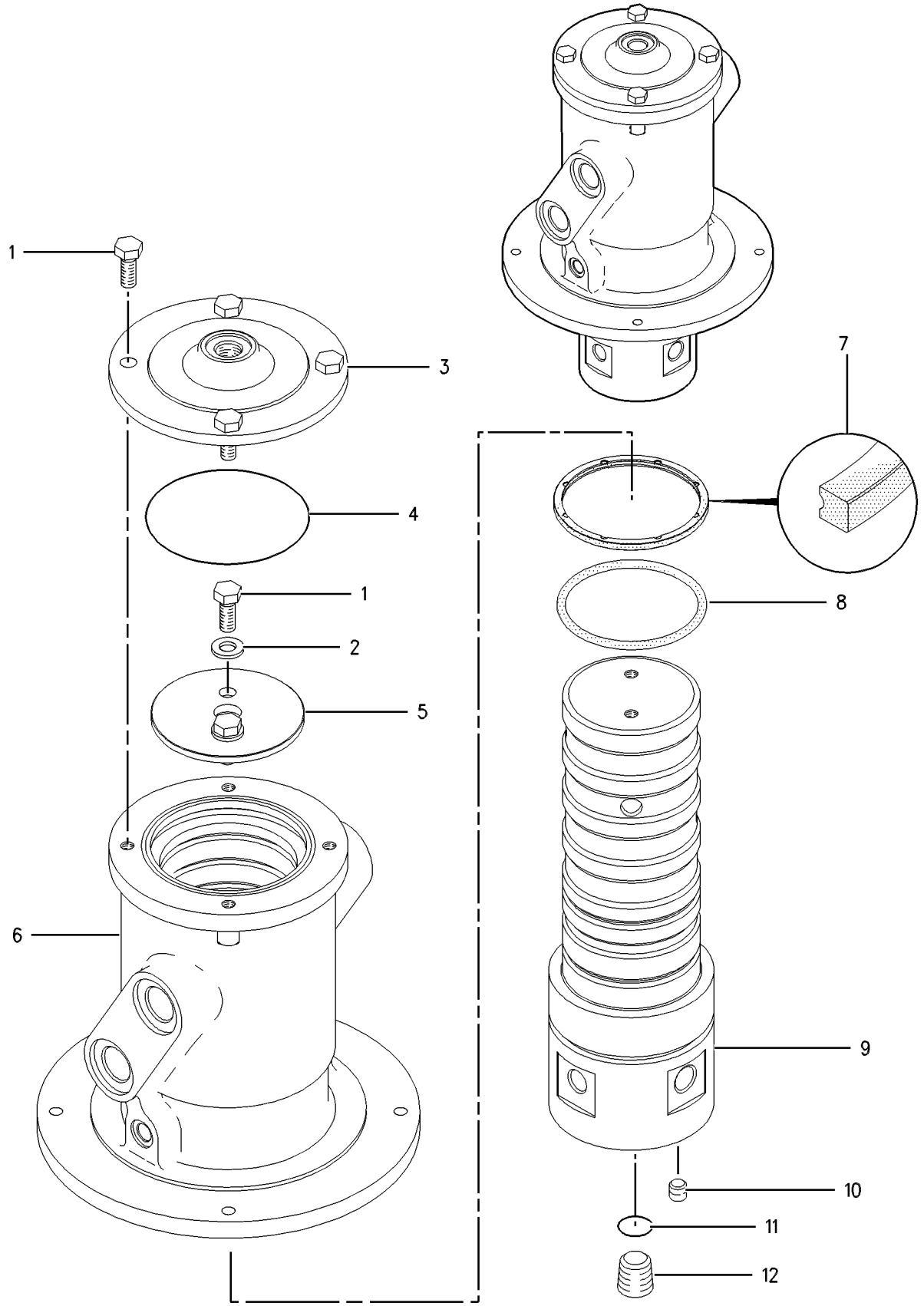

GRAPHIC #1 **<END>** g00590219

HYDRAULIC SYSTEM

282-7379 TANK & FILTER GP-HYDRAULIC

S/N: CLA1-UP
150-L (39.6-US GAL)
PART OF 282-7377 TANK & MTG GP-HYDRAULIC

SMCS-5056, 5068 **i02939296**

NOTE	REF NO	GRAPHIC REF	PART NUMBER	QTY	PART NAME 1 2 3 4 5 6 (PRODUCT LEVEL)	SEE PAGE
	1	1	**4B-7739**	1	PLUG-DRAIN (HYDRAULIC TANK)	
	2	1	**4I-5394**	1	SENDER AS-TEMPERATURE (HYDRAULIC OIL)	
M		1	**4I-5490**	2	SCREW-MACHINE (M4X0.7X6-MM)	
		1	**095-0826**	2	LOCKWASHER	
	3	1	**8H-9819**	1	ADAPTER-PLUG	
	4	1	**170-9419**	1	SWITCH AS-PRESSURE (HYDRAULIC OIL)	
		1	**2M-9780**	1	SEAL-O-RING	
		1	**4I-0754**	1	SEAL-O-RING	
		1	**186-3735**	2	PIN-CONNECTOR (16-GA TO 18-GA)	
		1	**102-8802**	1	KIT-RECEPTACLE (2-PIN)	
					(INCLUDES RECEPTACLE AS & WEDGE)	
	5	1	**175-6177**	1	FLANGE AS	
		1	**175-6176**	1	SEAL-O-RING	
	6	1	**179-7468**	1	PIPE	
Y	7	1	*188-4145*	1	FILTER GP-OIL (HYDRAULIC RETURN)	393
	8	1	**213-0677**	1	SWITCH AS-LIQUID LEVEL (HYDRAULIC OIL)	
		1	**102-8802**	1	KIT-RECEPTACLE (2-PIN)	
					(INCLUDES RECEPTACLE AS & WEDGE)	
		1	**9X-3401**	2	PIN-CONNECTOR (16-GA TO 18-GA)	
	9	1	**227-0590**	1	BREATHER GP (HYDRAULIC TANK)	
Y	10	1	**227-0620**	1	GAUGE GP-SIGHT (HYDRAULIC OIL LEVEL)	399
	11	1	**269-9853**	1	COVER AS	
	12	1	**9X-8256**	4	WASHER (6.6X12X2-MM THK)	
Y	13	1	*283-6102*	1	SCREEN GP-HYDRAULIC (TANK)	566
	14	1	**207-6403**	1	PLUG	
	15	1	**207-6404**	1	WASHER (49.5X60.5X1.5-MM THK)	
	16	1	**095-1608**	1	SEAL-O-RING	
	17	1	**095-1725**	1	SEAL-O-RING	
	18	1	*155-3624*	1	PLUG AS	
		1	**3J-7354**	1	SEAL-O-RING	
		1	**9S-4182**	1	PLUG-O-RING	
	19	1	**1H-8278**	1	SEAL-O-RING	
	20	1	**2B-0858**	1	PLUG-PIPE	
	21	1	**2H-3934**	1	SEAL-O-RING	
	22	1	**3D-2824**	1	SEAL-O-RING	
	23	1	**3K-0360**	1	SEAL-O-RING	
	24	1	**4J-0527**	1	SEAL-O-RING	
	25	1	**4J-5267**	1	SEAL-O-RING	
M	26	1	**5C-9553**	4	BOLT (M6X1X16-MM)	
M	27	1	**8T-0273**	4	BOLT-SOCKET HEAD (M12X1.75X40-MM)	
	28	1	**8T-4121**	8	WASHER-HARD (11X21X2.5-MM THK)	
M	29	1	**8T-4136**	2	BOLT (M10X1.5X25-MM)	
M	30	1	**8T-4137**	6	BOLT (M10X1.5X20-MM)	
M	31	1	**8T-4194**	8	BOLT (M12X1.75X50-MM)	
	32	1	**8T-4223**	8	WASHER-HARD (13.5X25.5X3-MM THK)	
	33	1	**129-3400**	1	GUARD	

M-METRIC PART
Y-SEPARATE ILLUSTRATION

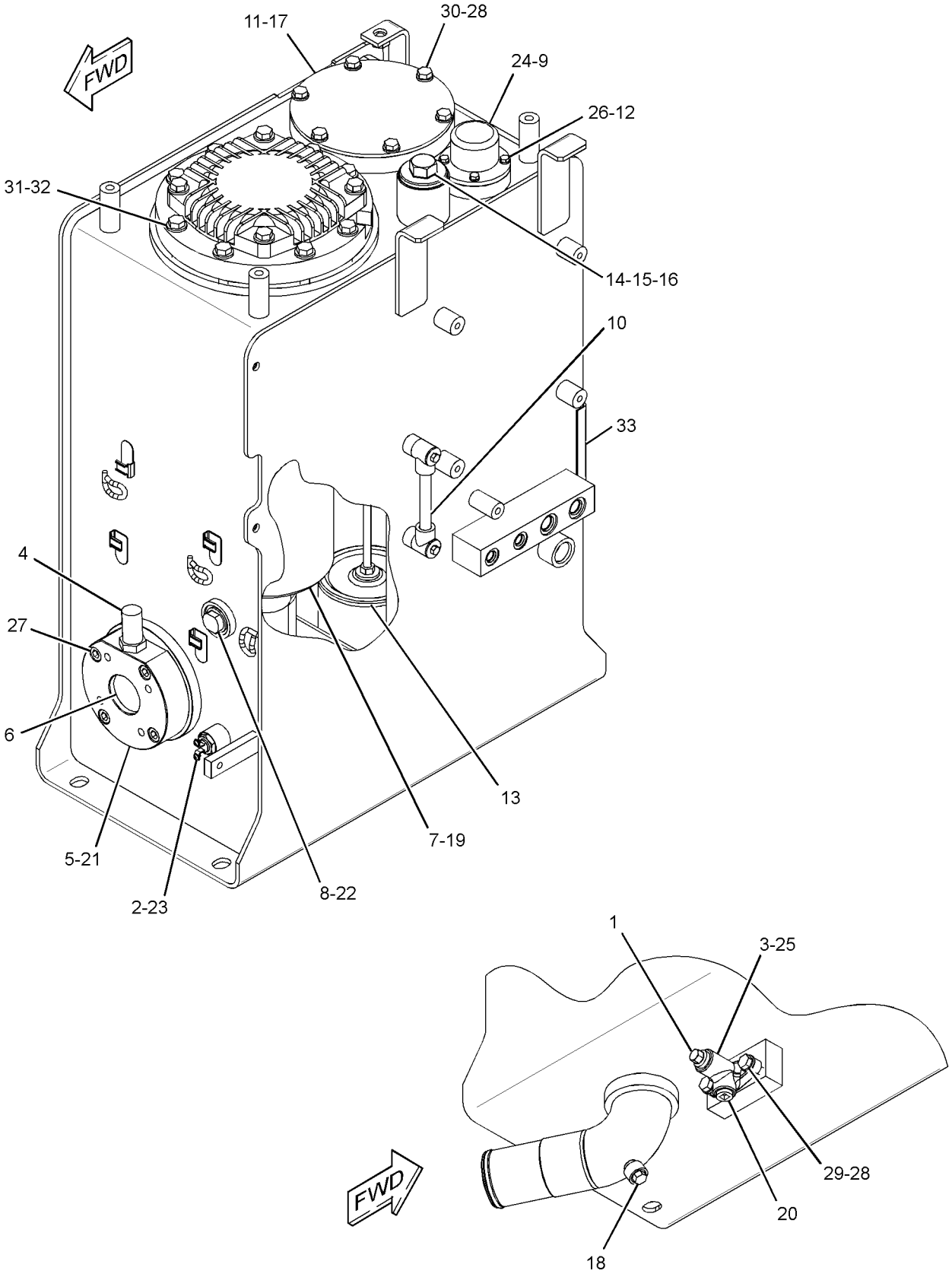

GRAPHIC #1 **<END>** g01453598

282-7377 TANK & MTG GP-HYDRAULIC

S/N: CLA1-UP

PART OF 270-5992 HYDRAULIC AR

SMCS-5056 **i02796640**

NOTE	REF NO	GRAPHIC REF	PART NUMBER	QTY	PART NAME 1 2 3 4 5 6 (PRODUCT LEVEL)	SEE PAGE
	1	1	**187-5718**	4	SPACER (17X45X25-MM THK)	
Y	2	1	*282-7378*	1	FILTER & LINES GP-HYDRAULIC	384
Y	3	1	**282-7379**	1	TANK & FILTER GP-HYDRAULIC	579
M	4	1	**7X-2555**	4	BOLT (M16X2X80-MM)	

M-METRIC PART
Y-SEPARATE ILLUSTRATION

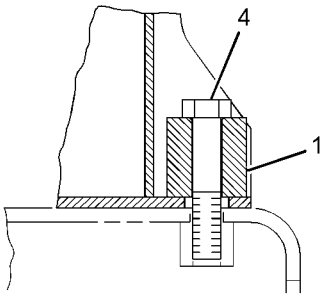

VIEW OF AREA A

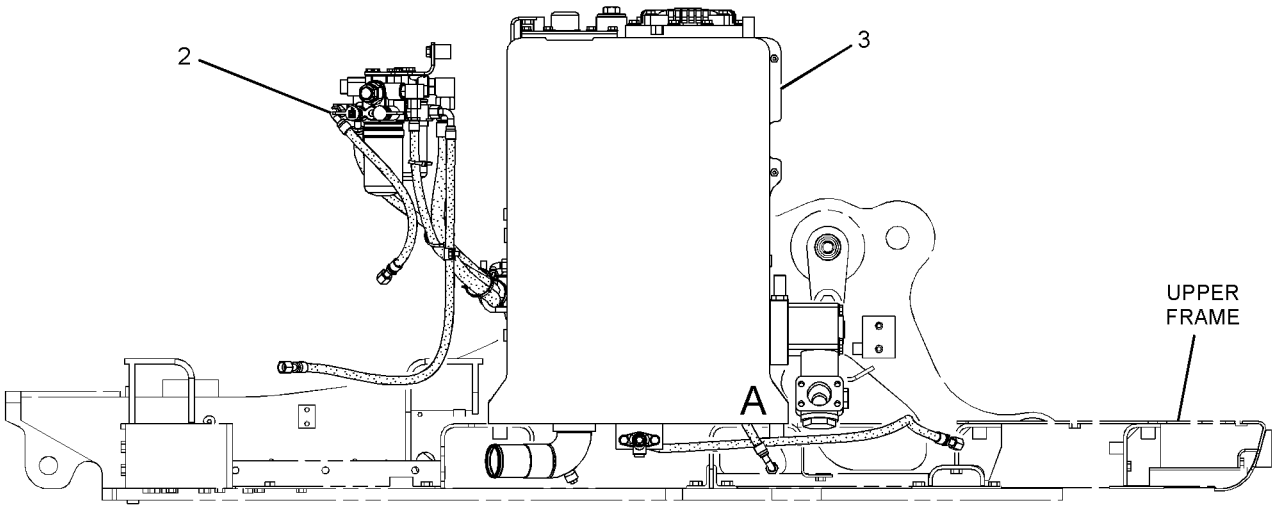

RIGHT SIDE VIEW

GRAPHIC #1 **<END>** g01400693

HYDRAULIC SYSTEM

285-1753 VALVE & MTG GP-CONTROL

S/N: CLA1-UP
PART OF 270-6043 CONTROL AR-AUXILIARY
AN ATTACHMENT

SMCS-5051 **i02870129**

NOTE	REF NO	GRAPHIC REF	PART NUMBER	QTY	PART NAME 1 2 3 4 5 6 (PRODUCT LEVEL)	SEE PAGE
Y	1	1	**270-5977**	1	VALVE GP-MAIN CONTROL (2-BANK)	605
Y	2	1	**297-0374**	1	VALVE GP-CONTROL	596
M	3	1	**177-2768**	5	BOLT (M14X2X105-MM)	

M-METRIC PART
Y-SEPARATE ILLUSTRATION

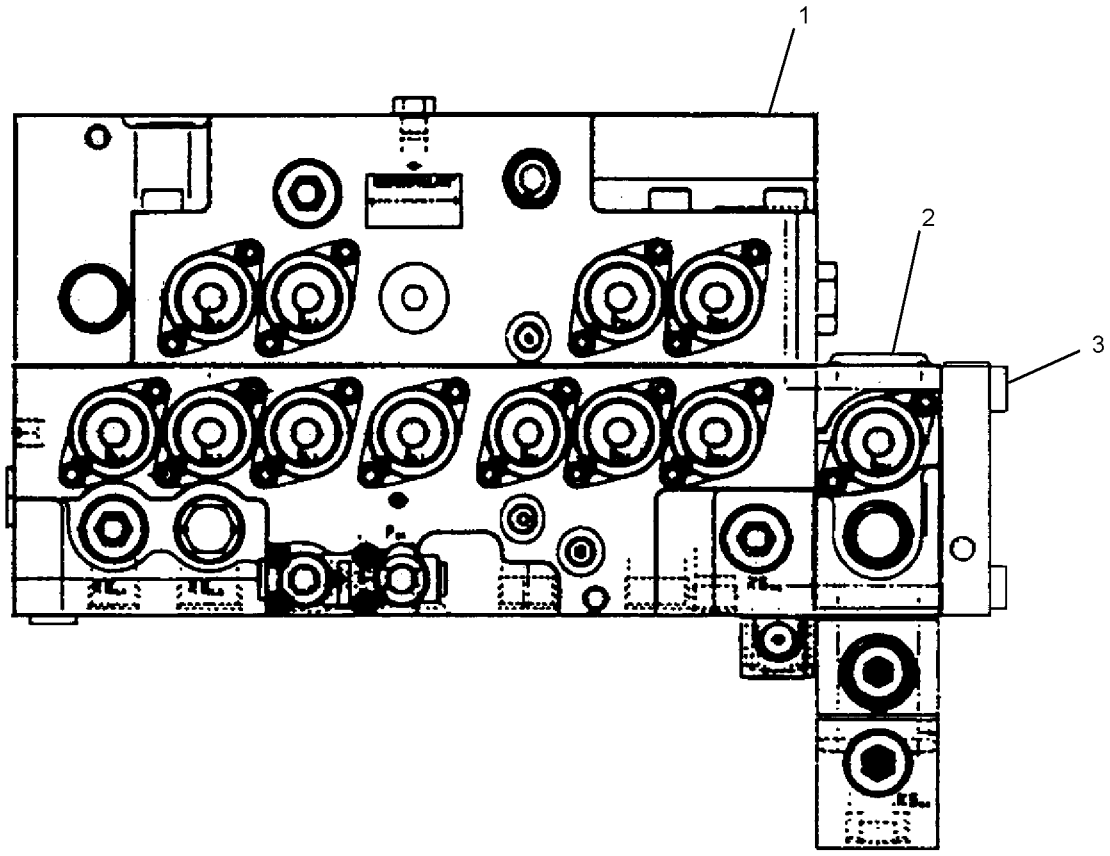

GRAPHIC #1 **<END>** g01444622

285-1755 VALVE & MTG GP-CONTROL

S/N: CLA1-UP
PART OF 270-6025 CONTROL AR-AUXILIARY
AN ATTACHMENT
TYPE 1

SMCS-5051 **i02870148**

NOTE	REF NO	GRAPHIC REF	PART NUMBER	QTY	PART NAME 1 2 3 4 5 6 (PRODUCT LEVEL)	SEE PAGE
Y	1	1	**270-5977**	1	VALVE GP-MAIN CONTROL (2-BANK)	605
Y	2	1	**259-7804**	1	VALVE GP-CONTROL (2-PUMP, 1-WAY)	592
	3	1	**185-0508**	5	BOLT (M14X2X155-MM)	

Y-SEPARATE ILLUSTRATION

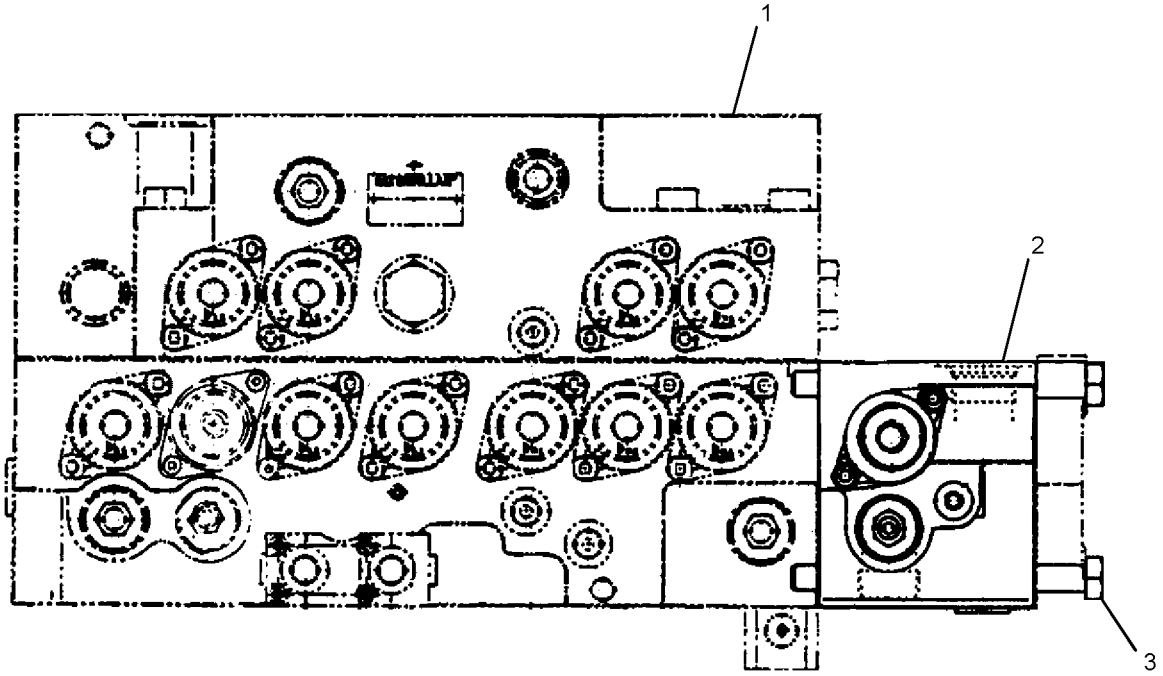

GRAPHIC #1 **<END>** g01444647

HYDRAULIC SYSTEM

285-1755 VALVE & MTG GP-CONTROL

S/N: CLA1-UP
PART OF 270-6025 CONTROL AR-AUXILIARY
AN ATTACHMENT
TYPE 2

SMCS-5051 **i03022388**

NOTE	REF NO	GRAPHIC REF	PART NUMBER	QTY	PART NAME 1 2 3 4 5 6 (PRODUCT LEVEL)	SEE PAGE
	1	1	**185-0508**	5	BOLT (M14X2X155-MM)	
Y	2	1	**270-5977**	1	VALVE GP-MAIN CONTROL (2-BANK)	605
CY	3	1	**310-0157**	1	VALVE GP-CONTROL	598

C-CHANGE FROM PREVIOUS TYPE
Y-SEPARATE ILLUSTRATION

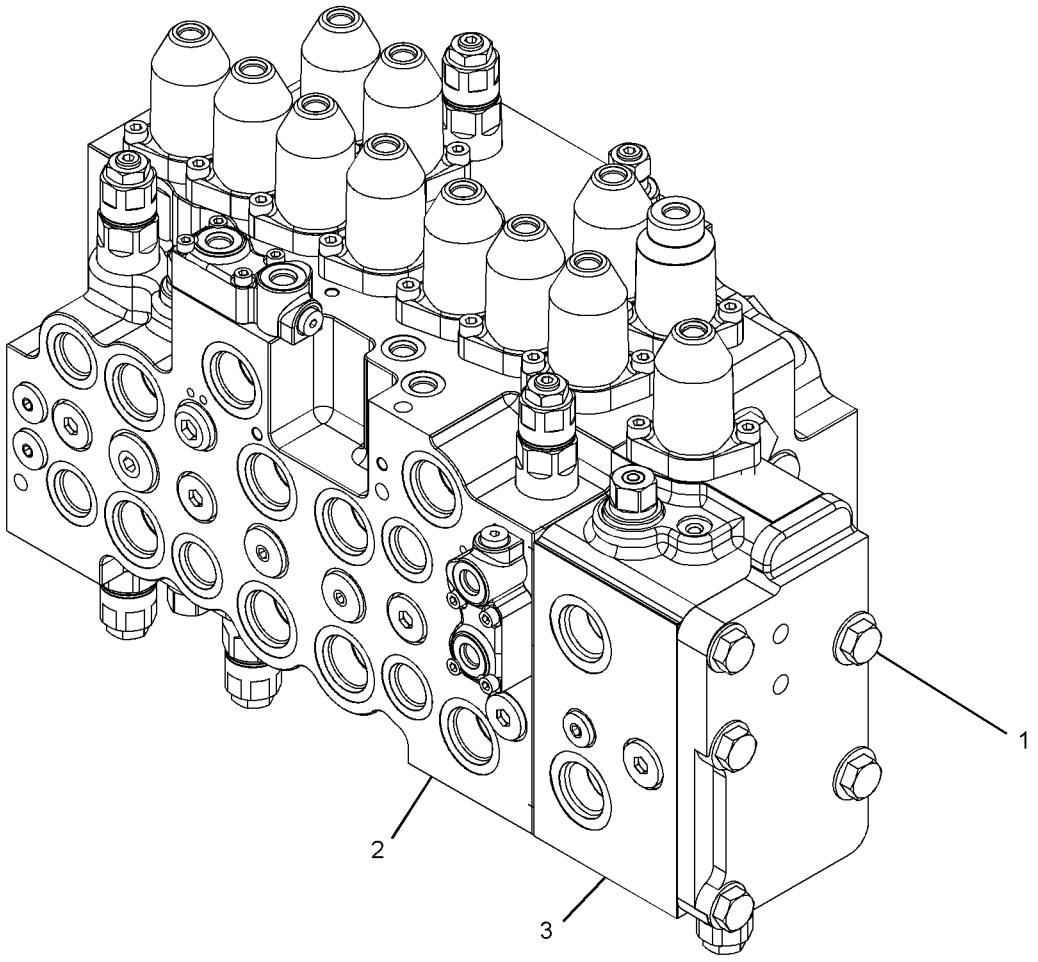

GRAPHIC #1 **<END>** g01622522

310-0156 VALVE & MTG GP-CONTROL

S/N: CLA1-UP
PART OF 270-6043 CONTROL AR-AUXILIARY
AN ATTACHMENT

SMCS-5051 **i03035928**

NOTE	REF NO	GRAPHIC REF	PART NUMBER	QTY	PART NAME 1 2 3 4 5 6 (PRODUCT LEVEL)	SEE PAGE
M	1	1	**177-2768**	5	BOLT (M14X2X105-MM)	
Y	2	1	**270-5977**	1	VALVE GP-MAIN CONTROL (2-BANK)	605
Y	3	1	**285-1600**	1	VALVE GP-CONTROL (MEDIUM PRESSURE)	594

M-METRIC PART
Y-SEPARATE ILLUSTRATION

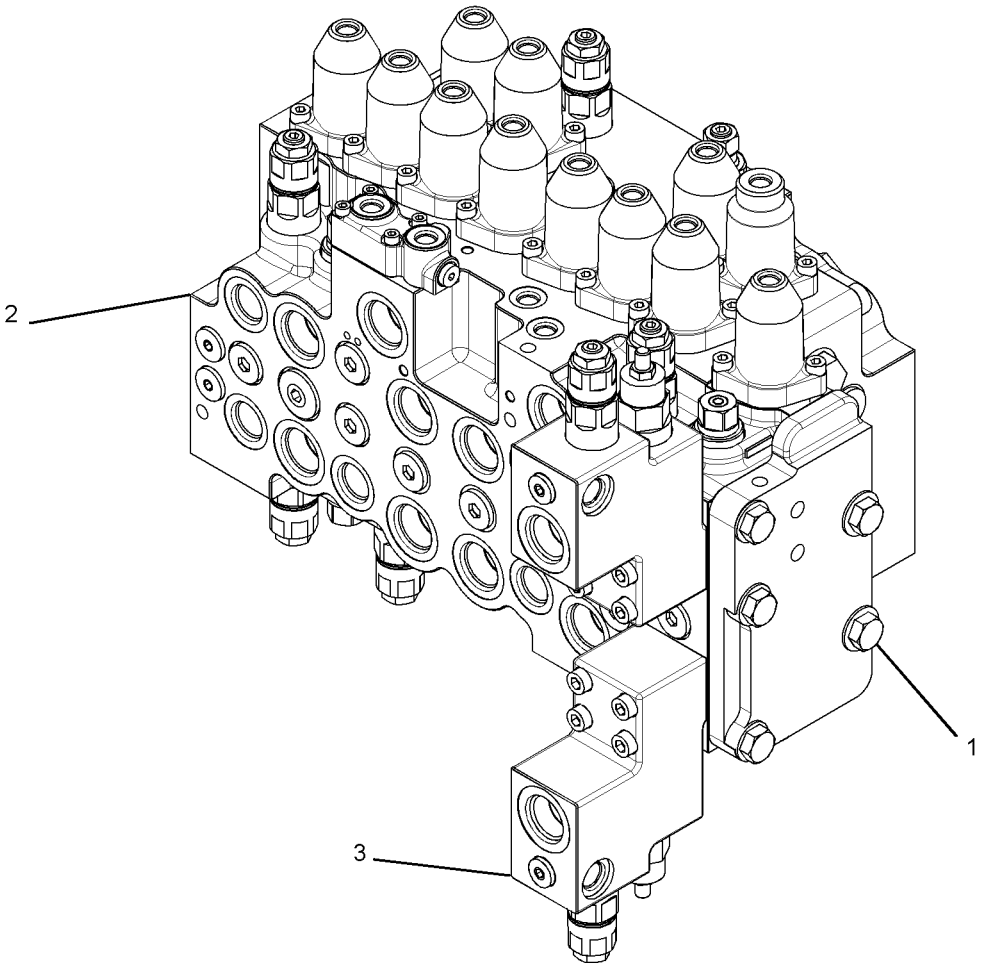

GRAPHIC #1 **<END>** g01622420

HYDRAULIC SYSTEM

270-5871 VALVE AR—4-WAY PATTERN

S/N: CLA1-UP
AN ATTACHMENT

SMCS-5051 **i02884835**

NOTE	PART NUMBER	QTY	PART NAME 1 2 3 4 5 6 (PRODUCT LEVEL)	SEE PAGE
Y	*247-7494*	1	FILM GP (CONTROL PATTERN, QUICK CHANGE)	940
Y	*278-6721*	1	LINES GP-PILOT (4-WAY)	478

Y-SEPARATE ILLUSTRATION

<END>

270-5869 VALVE AR-ALT PATTERN CONTROL—2-WAY

S/N: CLA1-UP
AN ATTACHMENT

SMCS-5065 **i02938718**

NOTE	PART NUMBER	QTY	PART NAME 1 2 3 4 5 6 (PRODUCT LEVEL)	SEE PAGE
Y	*275-7063*	1	FASTENER GP-WIRING HARNESS	133
Y	*260-7006*	1	FILM GP (CONTROL PATTERN CHANGE, 2-WAY)	942
Y	*278-6720*	1	LINES GP-PILOT (2-WAY)	476

Y-SEPARATE ILLUSTRATION

<END>

297-0196 VALVE AR-CHECK & RELIEF—STICK LOWERING CONTROL

S/N: CLA1-UP
FOR USE WITH 297-0195—PAGE 586
AN ATTACHMENT

SMCS-5117, 5453 **i02819057**

NOTE	PART NUMBER	QTY	PART NAME 1 2 3 4 5 6 (PRODUCT LEVEL)	SEE PAGE
Y	*282-5637*	1	LINES GP-BOOM (REACH BOOM, STICK LOAD CONTROL)	423
Y	*282-7427*	1	LINES GP-PILOT (STICK LOWERING CONTROL)	517
Y	*282-5636*	1	LINES GP-STICK CYLINDER (STICK LOWERING CONTROL)	543

Y-SEPARATE ILLUSTRATION

<END>

297-0195 VALVE AR-LOAD CONTROL—BOOM LOWERING CONTROL

S/N: CLA1-UP
FOR USE WITH 260-7236—PAGE 657, 283-9062—PAGE 657
AN ATTACHMENT

SMCS-5067, 5117, 5147, 5811 **i02819054**

NOTE	PART NUMBER	QTY	PART NAME 1 2 3 4 5 6 (PRODUCT LEVEL)	SEE PAGE
Y	*282-7453*	1	LINES GP-BOOM CYLINDER	432
Y	*282-7446*	1	LINES GP-PILOT (BOOM LOWERING CONTROL)	522
Y	*291-7506*	1	WIRING GP-OVERLOAD WARNING	231

Y-SEPARATE ILLUSTRATION

<END>

323-7792 VALVE AR-LOAD CONTROL–
BOOM LOWERING, OVERLOAD WARNING
S/N: CLA1-UP
AN ATTACHMENT

SMCS-5067, 5117, 5147, 5811 **i03149685**

NOTE	PART NUMBER	QTY	PART NAME 1 2 3 4 5 6 (PRODUCT LEVEL)	SEE PAGE
Y	*314-3768*	1	FILM GP	948
Y	*282-7453*	1	LINES GP-BOOM CYLINDER	432
Y	*282-7446*	1	LINES GP-PILOT (BOOM LOWERING CONTROL)	522
Y	*328-0089*	1	WIRING GP	233

Y-SEPARATE ILLUSTRATION

<END>

282-5894 VALVE AS-MANUAL–AUXILIARY, SHUTOFF

S/N: CLA1-UP

PART OF 282-5630, 288-7396, 288-7400 LINES GP-AUXILIARY HYDRAULIC AN ATTACHMENT

SMCS-1329 **i03079367**

NOTE	REF NO	GRAPHIC REF	PART NUMBER	QTY	PART NAME 1 2 3 4 5 6 (PRODUCT LEVEL)	SEE PAGE
	1	1	**302-9466**	1	HANDLE	

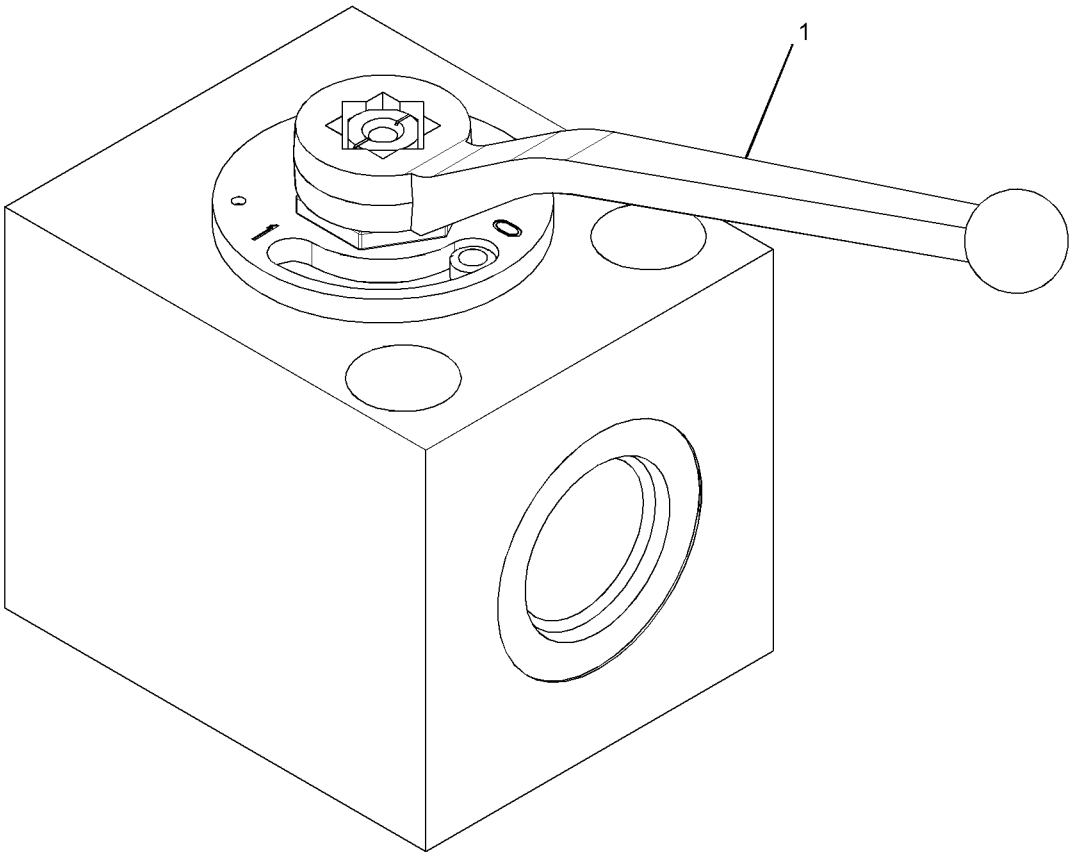

GRAPHIC #1 **<END>** g01562673

259-7545 VALVE GP-BANK–MEDIUM PRESSURE

S/N: CLA1-UP
PART OF 282-7435 LINES GP-FRONT
AN ATTACHMENT

SMCS-5051 **i02749998**

NOTE	REF NO	GRAPHIC REF	PART NUMBER	QTY	PART NAME 1 2 3 4 5 6 (PRODUCT LEVEL)	SEE PAGE
	1	1	**102-8802**	2	KIT-RECEPTACLE (2-PIN)	
					(EACH INCLUDES RECEPTACLE AS & WEDGE)	
	2	1	**186-3735**	4	PIN-CONNECTOR (16-GA TO 18-GA)	
	3	1	**252-6601**	1	BLOCK AS	
	4	1	**252-6602**	1	BLOCK AS	
	5	1	**252-6603**	1	BLOCK AS	
	6	1	**102-7024**	1	VALVE GP-RELIEF (AUXILIARY PUMP)	
	7	1	**150-6351**	2	VALVE AS-RELIEF (LINE, MEDIUM PRESSURE)	
	8	1	**200-4856**	4	NUT	
	9	1	**093-3094**	2	ROD	
	10	1	**150-6348**	2	NUT	
	11	1	**093-3093**	1	ROD	

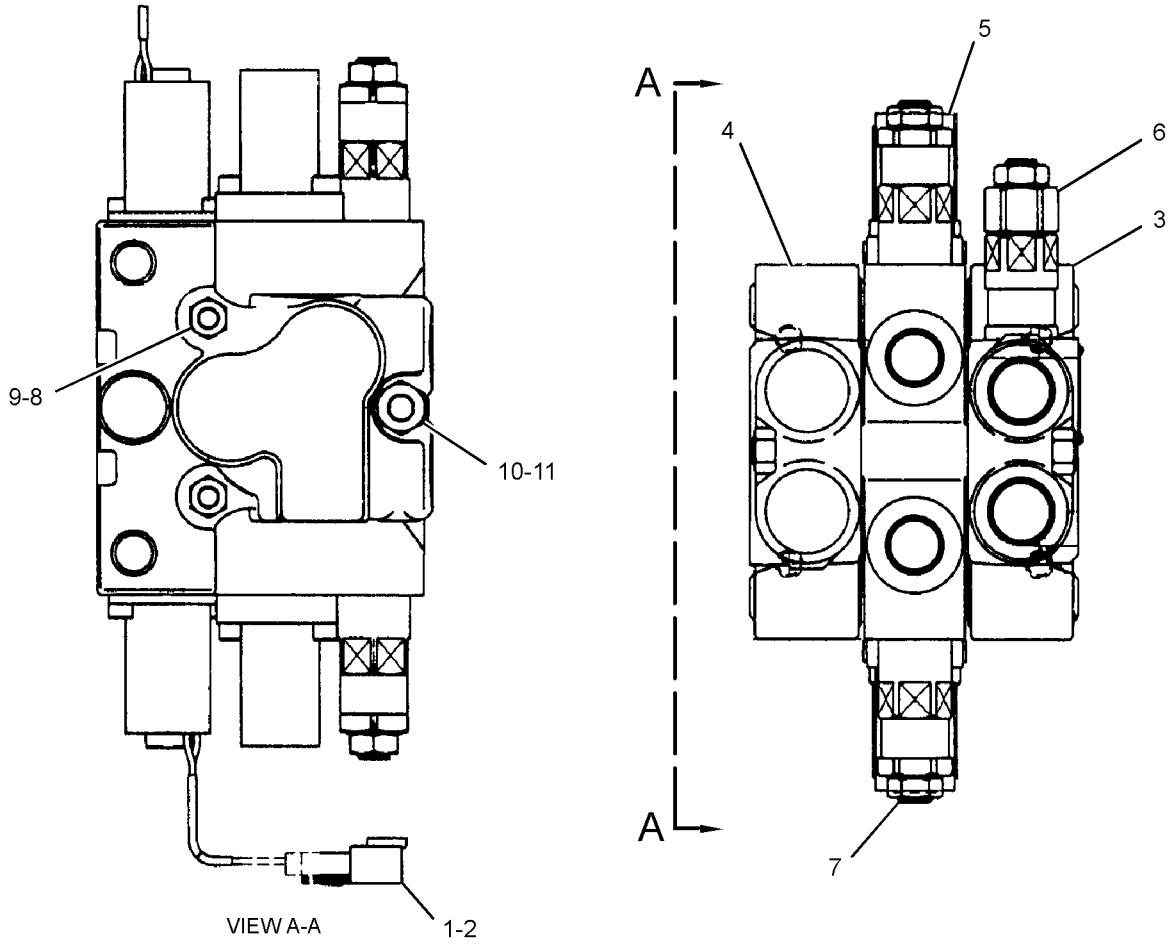

GRAPHIC #1 **<END>** g01381960

HYDRAULIC SYSTEM

230-2720 VALVE GP-CHECK–RETURN FILTER

S/N: CLA1-UP

PART OF 282-7378 FILTER & LINES GP-HYDRAULIC

SMCS-5067 **i02408069**

NOTE	REF NO	GRAPHIC REF	PART NUMBER	QTY	PART NAME 1 2 3 4 5 6 (PRODUCT LEVEL)	SEE PAGE
	1	1	**094-6526**	2	VALVE AS-CHECK	
	2	1	**190-7826**	1	PLUG	
	3	1	**095-1547**	1	SEAL-O-RING	
	4	1	**9S-4183**	1	PLUG-O-RING	
	5	1	**3D-2824**	1	SEAL-O-RING	
	6	1	**9S-4181**	1	PLUG-O-RING	
	7	1	**7M-8485**	1	SEAL-O-RING	

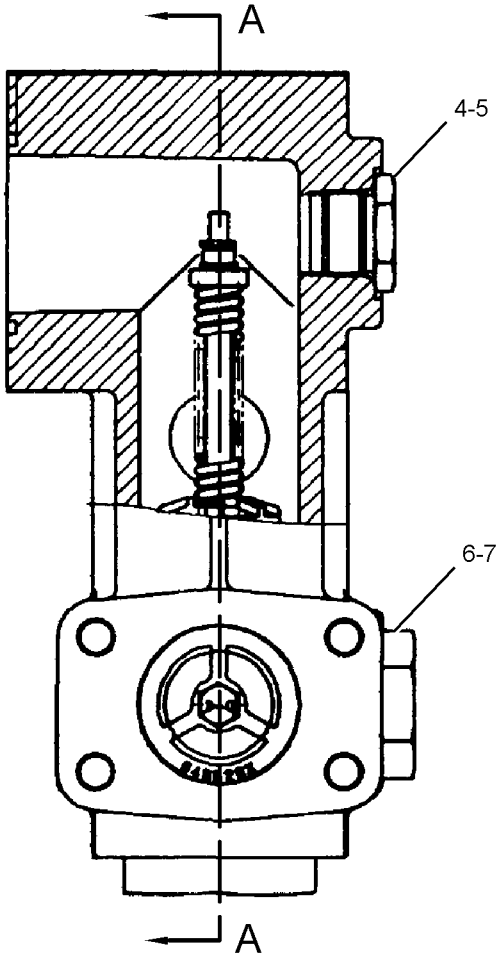

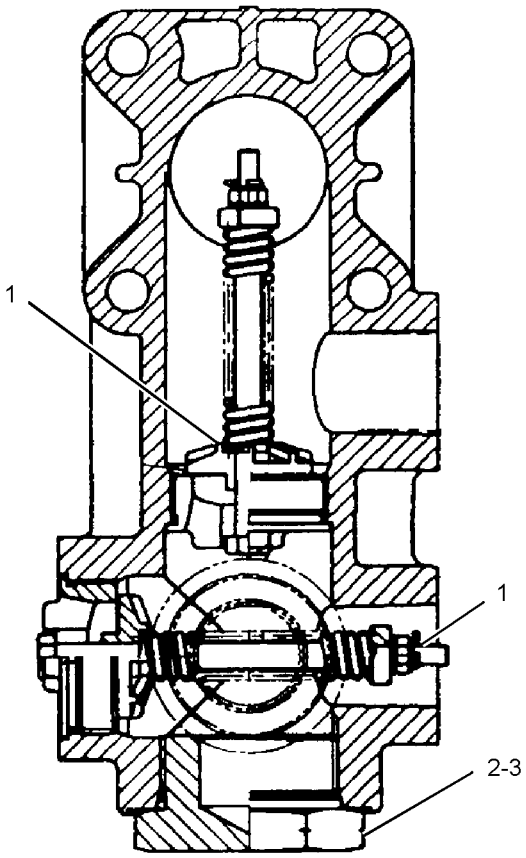

SECTION A-A

GRAPHIC #1 **<END>** g01208559

197-0256 VALVE GP-CONTROL

S/N: CLA1-UP

PART OF 270-5977 VALVE GP-MAIN CONTROL

ALSO AN ATTACHMENT

SMCS-5051 **i01481675**

NOTE	REF NO	GRAPHIC REF	PART NUMBER	QTY	PART NAME 1 2 3 4 5 6 (PRODUCT LEVEL)	SEE PAGE
M	1	1	**197-0148**	1	BOLT-SHOULDER (M8X1.25X56.1-MM)	
	2	1	**7I-7203**	2	SEAT	
	3	1	**197-0151**	1	SPRING	
	4	1	**197-0150**	1	SPRING	
	5	1	**197-0149**	1	STOP	
	6	1	**197-0254**	1	SPOOL	

M-METRIC PART

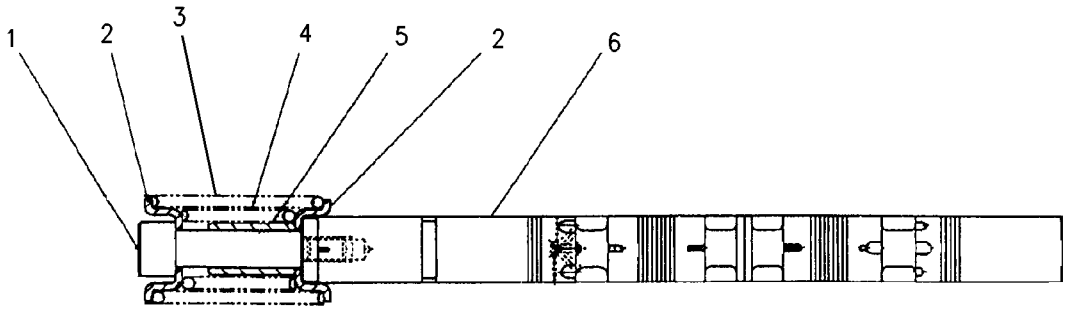

GRAPHIC #1 **<END>** g00789836

HYDRAULIC SYSTEM

259-7804 VALVE GP-CONTROL–2-PUMP, 1-WAY

S/N: CLA1-UP

PART OF 285-1755 VALVE & MTG GP-CONTROL

AN ATTACHMENT

SMCS-5051 **i02747405**

NOTE	REF NO	GRAPHIC REF	PART NUMBER	QTY	PART NAME 1 2 3 4 5 6 (PRODUCT LEVEL)	SEE PAGE
M	1	1	**5A-3604**	2	BOLT-SOCKET HEAD (M8X1.25X25-MM)	
	2	1	**7I-7204**	1	SEAL	
	3	1	**7I-7206**	1	PLUG	
	4	1	**7I-7207**	1	SPRING	
	5	1	**7I-7208**	1	VALVE-LOAD CHECK	
	6	1	**170-9997**	1	PLUG	
M	7	1	**197-0165**	2	BOLT (M8X1.25X20-MM)	
	8	1	**197-0168**	1	COVER	
	9	1	**197-0170**	1	COVER	
Y	10	1	**197-0173**	1	SPOOL GP-CONTROL VALVE (WORK TOOL)	567
Y	11	1	**309-9976**	2	VALVE GP-RELIEF	629
Y	12	1	**310-0062**	1	VALVE GP-RELIEF	630
	13	1	**095-1578**	3	SEAL-O-RING	
	14	1	**095-1579**	1	SEAL-O-RING	
	15	1	**095-1586**	1	SEAL-O-RING	
	16	1	**095-1698**	2	SEAL-O-RING	
	17	1	**095-1700**	1	SEAL-O-RING	

M-METRIC PART
Y-SEPARATE ILLUSTRATION

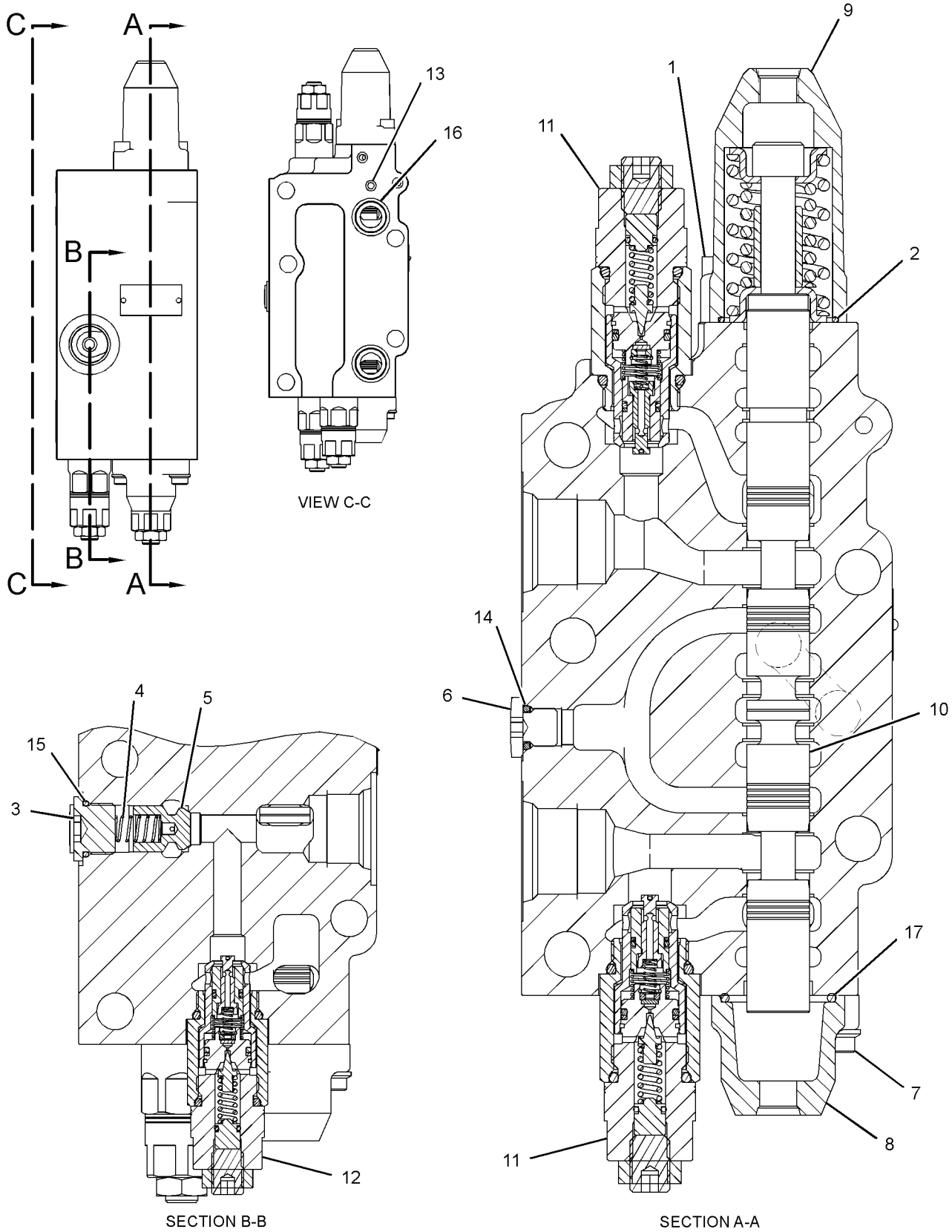

GRAPHIC #1

<END>

g01419189

HYDRAULIC SYSTEM

285-1600 VALVE GP-CONTROL

S/N: CLA1-UP
PART OF 310-0156 VALVE & MTG GP-CONTROL
AN ATTACHMENT

SMCS-5051 **i03254260**

NOTE	REF NO	GRAPHIC REF	PART NUMBER	QTY	PART NAME 1 2 3 4 5 6 (PRODUCT LEVEL)	SEE PAGE
	1	1	**9S-4185**	2	PLUG-O-RING	
	2	1	**7I-7204**	1	SEAL	
	3	1	**7I-7206**	1	PLUG	
	4	1	**7I-7207**	1	SPRING	
	5	1	**7I-7208**	1	VALVE-LOAD CHECK	
J	6	1	**165-9497**	2	VALVE GP-FLOW CONTROL (MEDIUM PRESSURE)	
	7	1	**170-9997**	2	PLUG	
M	8	1	**197-0165**	2	BOLT (M8X1.25X20-MM)	
	9	1	**197-0168**	1	COVER	
	10	1	**197-0170**	1	COVER	
Y	11	1	**197-0173**	1	SPOOL GP-CONTROL VALVE (WORK TOOL)	567
	12	1	**197-0225**	2	PLUG AS	
Y	13	1	**310-0063**	2	VALVE GP-RELIEF (LINE) (MEDIUM PRESSURE)	631
	14	1	**095-1578**	3	SEAL-O-RING	
	15	1	**095-1579**	2	SEAL-O-RING	
	16	1	**095-1586**	1	SEAL-O-RING	
	17	1	**095-1696**	2	SEAL-O-RING	
	18	1	**095-1698**	5	SEAL-O-RING	
	19	1	**095-1700**	1	SEAL-O-RING	
M	20	1	**197-0226**	8	BOLT-SOCKET HEAD (M10X1.5X75-MM)	
	21	1	**3K-0360**	2	SEAL-O-RING	
M	22	1	**5A-3604**	2	BOLT-SOCKET HEAD (M8X1.25X25-MM)	
					AVAILABLE REPAIR KIT(S):	
J			**185-0400**	1	KIT-SEAL (CONTROL VALVE)	
					(INCLUDES SEAL-O-RINGS & RING BACKUPS)	

J-KITS MARKED J SERVICES PARTS MARKED J
M-METRIC PART
Y-SEPARATE ILLUSTRATION

285-1600 VALVE GP-CONTROL *(contd.)* **i03254260**

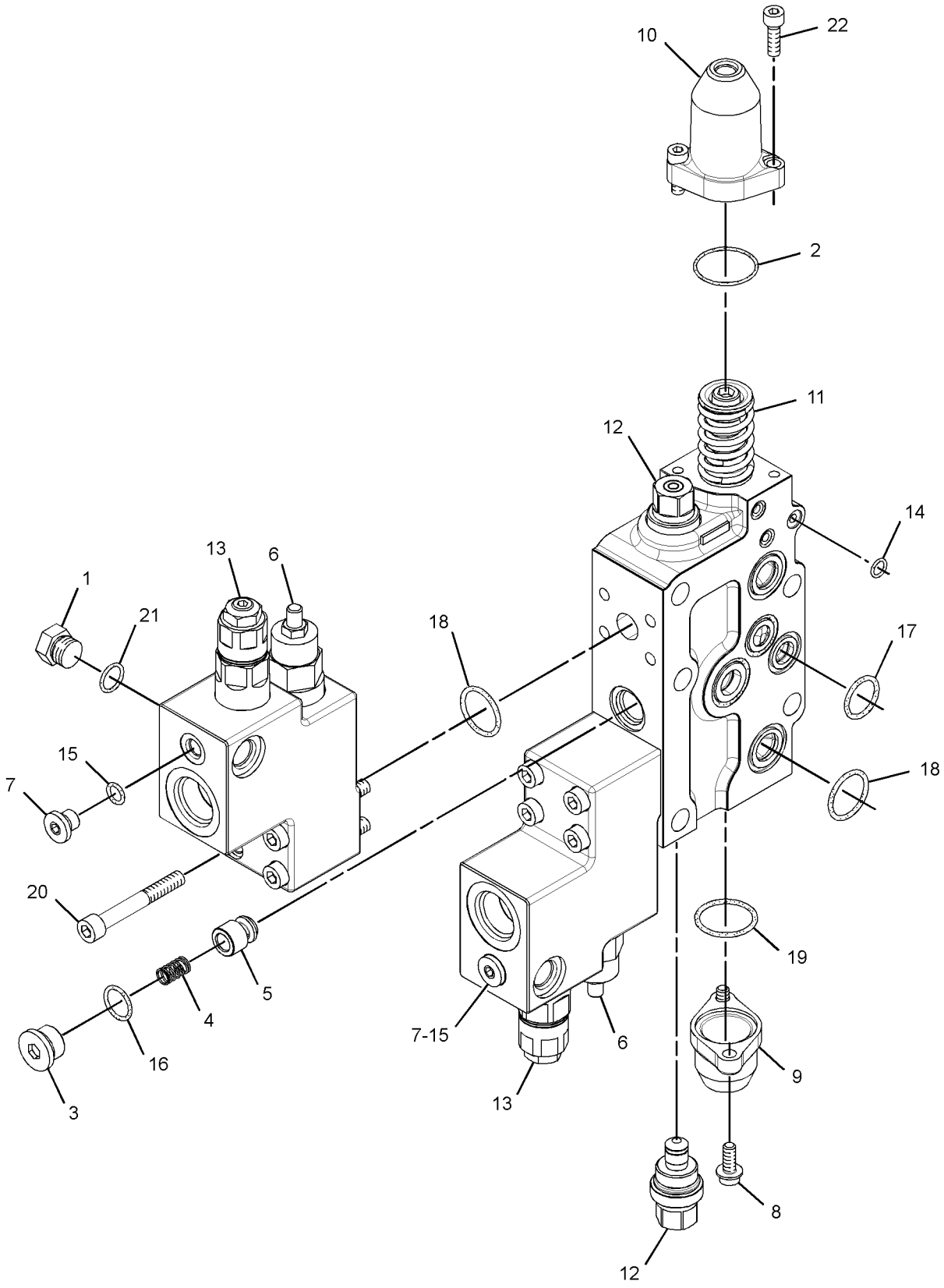

GRAPHIC #1 **<END>** g01502205

HYDRAULIC SYSTEM

297-0374 VALVE GP-CONTROL

S/N: CLA1-UP
PART OF 285-1753 VALVE & MTG GP-CONTROL
AN ATTACHMENT

SMCS-5051 **i03246024**

NOTE	REF NO	GRAPHIC REF	PART NUMBER	QTY	PART NAME 1 2 3 4 5 6 (PRODUCT LEVEL)	SEE PAGE
M	1	1	**5A-3604**	2	BOLT-SOCKET HEAD (M8X1.25X25-MM)	
	2	1	**7I-7204**	1	SEAL	
	3	1	**7I-7206**	1	PLUG	
	4	1	**7I-7207**	1	SPRING	
	5	1	**7I-7208**	1	VALVE-LOAD CHECK	
J	6	1	**165-9497**	2	VALVE GP-FLOW CONTROL (MEDIUM PRESSURE)	
M	7	1	**197-0165**	2	BOLT (M8X1.25X20-MM)	
	8	1	**197-0168**	1	COVER	
	9	1	**197-0170**	1	COVER	
Y	10	1	**197-0173**	1	SPOOL GP-CONTROL VALVE (WORK TOOL)	567
	11	1	**197-0225**	2	PLUG AS	
Y	12	1	**310-0063**	2	VALVE GP-RELIEF (LINE)	631
	13	1	**095-1578**	3	SEAL-O-RING	
	14	1	**095-1586**	1	SEAL-O-RING	
	15	1	**095-1696**	2	SEAL-O-RING	
	16	1	**095-1698**	5	SEAL-O-RING	
	17	1	**095-1700**	1	SEAL-O-RING	
M	18	1	**197-0226**	8	BOLT-SOCKET HEAD (M10X1.5X75-MM)	
					AVAILABLE REPAIR KIT(S):	
J			**185-0400**	1	KIT-SEAL (CONTROL VALVE)	
					(INCLUDES O-RING SEALS & BACKUP RINGS)	

J-KIT MARKED J SERVICES PART MARKED J
M-METRIC PART
Y-SEPARATE ILLUSTRATION

297-0374 VALVE GP-CONTROL *(contd.)* **i03246024**

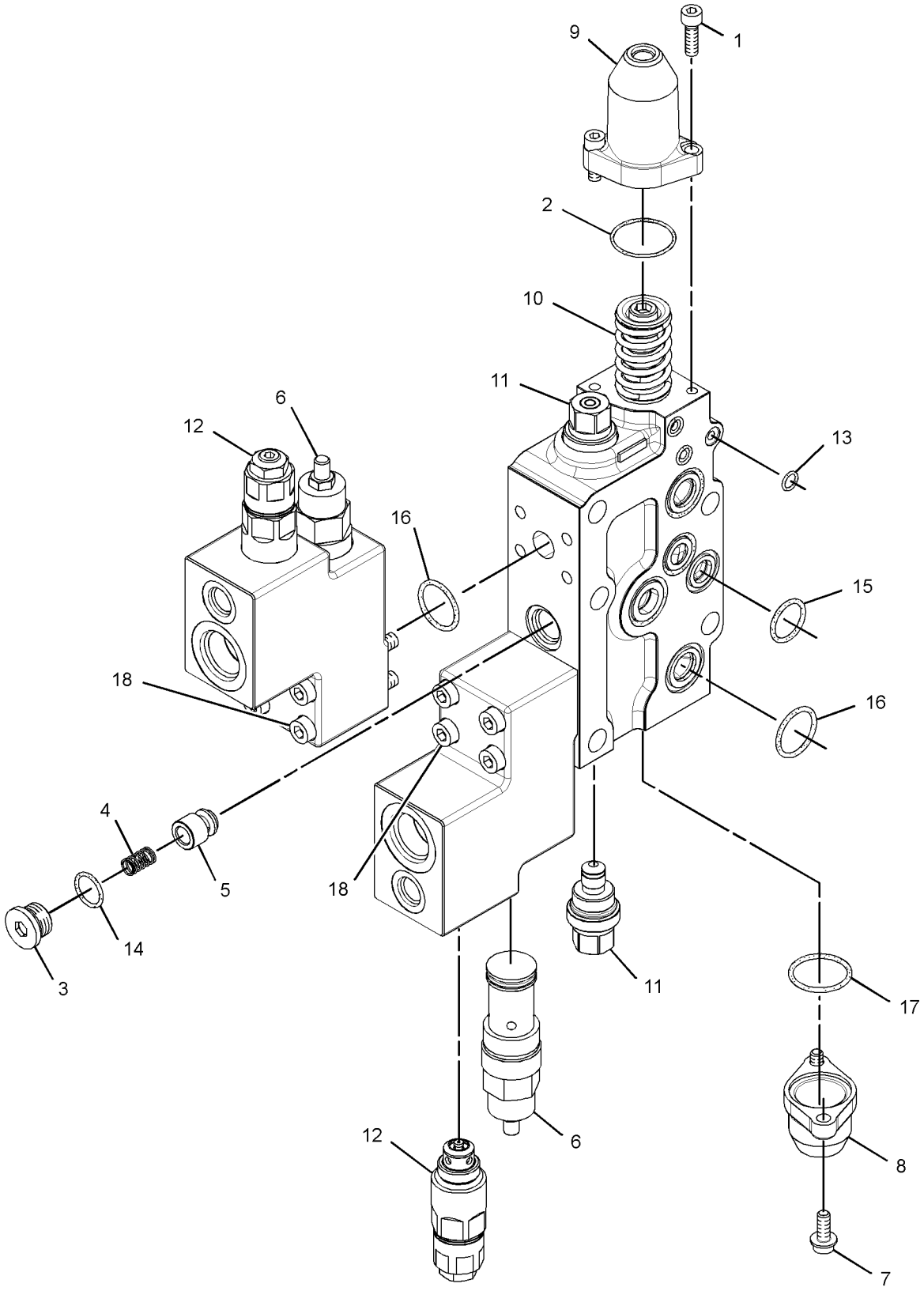

GRAPHIC #1 **<END>** g01439086

HYDRAULIC SYSTEM

310-0157 VALVE GP-CONTROL–2-PUMP, 1-WAY

S/N: CLA1-UP

PART OF 285-1755 VALVE & MTG GP-CONTROL

AN ATTACHMENT

SMCS-5051 **i03022387**

NOTE	REF NO	GRAPHIC REF	PART NUMBER	QTY	PART NAME 1 2 3 4 5 6 (PRODUCT LEVEL)	SEE PAGE
M	1	1	**5A-3604**	2	BOLT-SOCKET HEAD (M8X1.25X25-MM)	
	2	1	**7I-7204**	1	SEAL	
	3	1	**7I-7206**	1	PLUG	
	4	1	**7I-7207**	1	SPRING	
	5	1	**7I-7208**	1	VALVE-LOAD CHECK	
	6	1	**170-9997**	1	PLUG	
M	7	1	**197-0165**	2	BOLT (M8X1.25X20-MM)	
	8	1	**197-0168**	1	COVER	
	9	1	**197-0170**	1	COVER	
Y	10	1	**197-0173**	1	SPOOL GP-CONTROL VALVE (WORK TOOL)	567
	11	1	**197-0225**	2	PLUG AS	
Y	12	1	**310-0062**	1	VALVE GP-RELIEF	630
	13	1	**095-1578**	3	SEAL-O-RING	
	14	1	**095-1579**	1	SEAL-O-RING	
	15	1	**095-1586**	1	SEAL-O-RING	
	16	1	**095-1698**	2	SEAL-O-RING	
	17	1	**095-1700**	1	SEAL-O-RING	

M-METRIC PART
Y-SEPARATE ILLUSTRATION

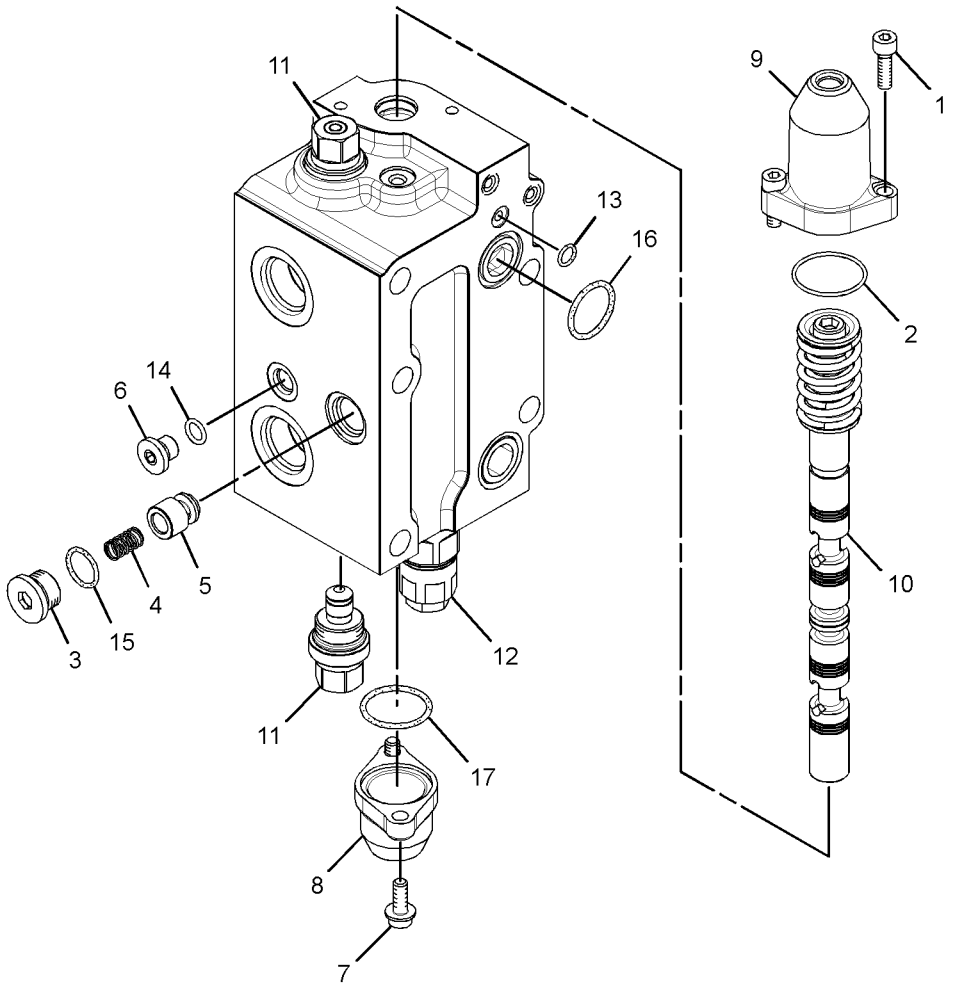

GRAPHIC #1 **<END>** g01622720

285-1815 VALVE GP-LOAD CONTROL–BOOM, LH

S/N: CLA1-UP

PART OF 282-7453 LINES GP-BOOM CYLINDER

AN ATTACHMENT

SMCS-5067, 5117, 5147, 5811 **i02910667**

NOTE	REF NO	GRAPHIC REF	PART NUMBER	QTY	PART NAME 1 2 3 4 5 6 (PRODUCT LEVEL)	SEE PAGE
	1	1	**7J-9108**	1	SEAL-O-RING	
	7	1	**7I-8084**	3	PLUG	
	8	1	**215-5023**	1	PISTON	
	9	1	**095-1584**	1	SEAL-O-RING	
	10	1	**197-0145**	1	PLUG	
	11	1	**201-9283**	1	SEAT AS	
	12	1	**095-1590**	1	SEAL-O-RING	
	13	1	**201-9291**	1	VALVE	
	14	1	**201-9287**	1	SPRING	
	15	1	**095-1573**	1	SEAL-O-RING	
	16	1	**201-9285**	1	SEAT	
M	17	1	**201-9331**	1	SETSCREW (M12X1.75X19.5-MM)	
M	18	1	**201-9330**	1	NUT (M12X1.75-THD)	
	19	1	**201-9295**	1	PLUG	
	20	1	**310-0406**	1	SPOOL AS	
	21	1	**095-1589**	1	SEAL-O-RING	
	22	1	**201-9289**	1	SPRING	
M	23	1	**201-9296**	1	PLUG	
M	24	1	**201-9294**	1	PLUG	
	25	1	**095-1592**	1	SEAL-O-RING	
	26	1	**201-9288**	1	SPRING	
	27	1	**310-0356**	1	VALVE AS	
	28	1	**095-1582**	1	SEAL-O-RING	

M-METRIC PART

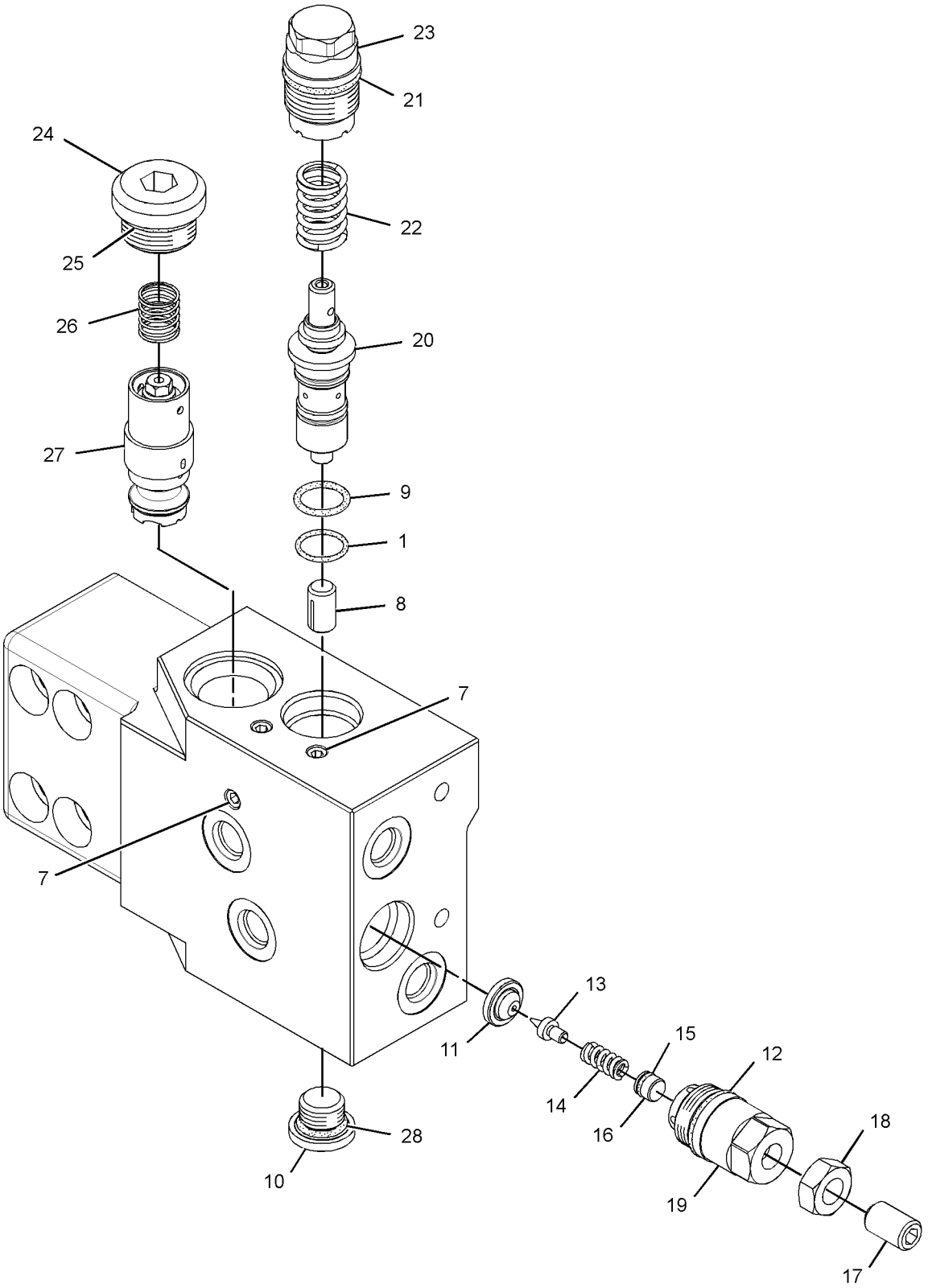

GRAPHIC #1 **<END>** g01451910

285-1816 VALVE GP-LOAD CONTROL–BOOM, RH

S/N: CLA1-UP

PART OF 282-7453 LINES GP-BOOM CYLINDER

AN ATTACHMENT

SMCS-5067, 5117, 5147, 5811 **i02910669**

NOTE	REF NO	GRAPHIC REF	PART NUMBER	QTY	PART NAME 1 2 3 4 5 6 (PRODUCT LEVEL)	SEE PAGE
	1	1	**7J-9108**	1	SEAL-O-RING	
	7	1	**7I-8084**	3	PLUG	
	8	1	**215-5023**	1	PISTON	
	9	1	**095-1584**	1	SEAL-O-RING	
	10	1	**197-0145**	1	PLUG	
	11	1	**201-9283**	1	SEAT AS	
	12	1	**095-1590**	1	SEAL-O-RING	
	13	1	**201-9291**	1	VALVE	
	14	1	**201-9287**	1	SPRING	
	15	1	**095-1573**	1	SEAL-O-RING	
	16	1	**201-9285**	1	SEAT	
M	17	1	**201-9331**	1	SETSCREW (M12X1.75X19.5-MM)	
M	18	1	**201-9330**	1	NUT (M12X1.75-THD)	
	19	1	**201-9295**	1	PLUG	
	20	1	**310-0406**	1	SPOOL AS	
	21	1	**095-1589**	1	SEAL-O-RING	
	22	1	**201-9289**	1	SPRING	
M	23	1	**201-9296**	1	PLUG	
M	24	1	**201-9294**	1	PLUG	
	25	1	**095-1592**	1	SEAL-O-RING	
	26	1	**201-9288**	1	SPRING	
	27	1	**310-0356**	1	VALVE AS	
	28	1	**095-1582**	1	SEAL-O-RING	

M-METRIC PART

285-1816 VALVE GP-LOAD CONTROL *(contd.)* i02910669

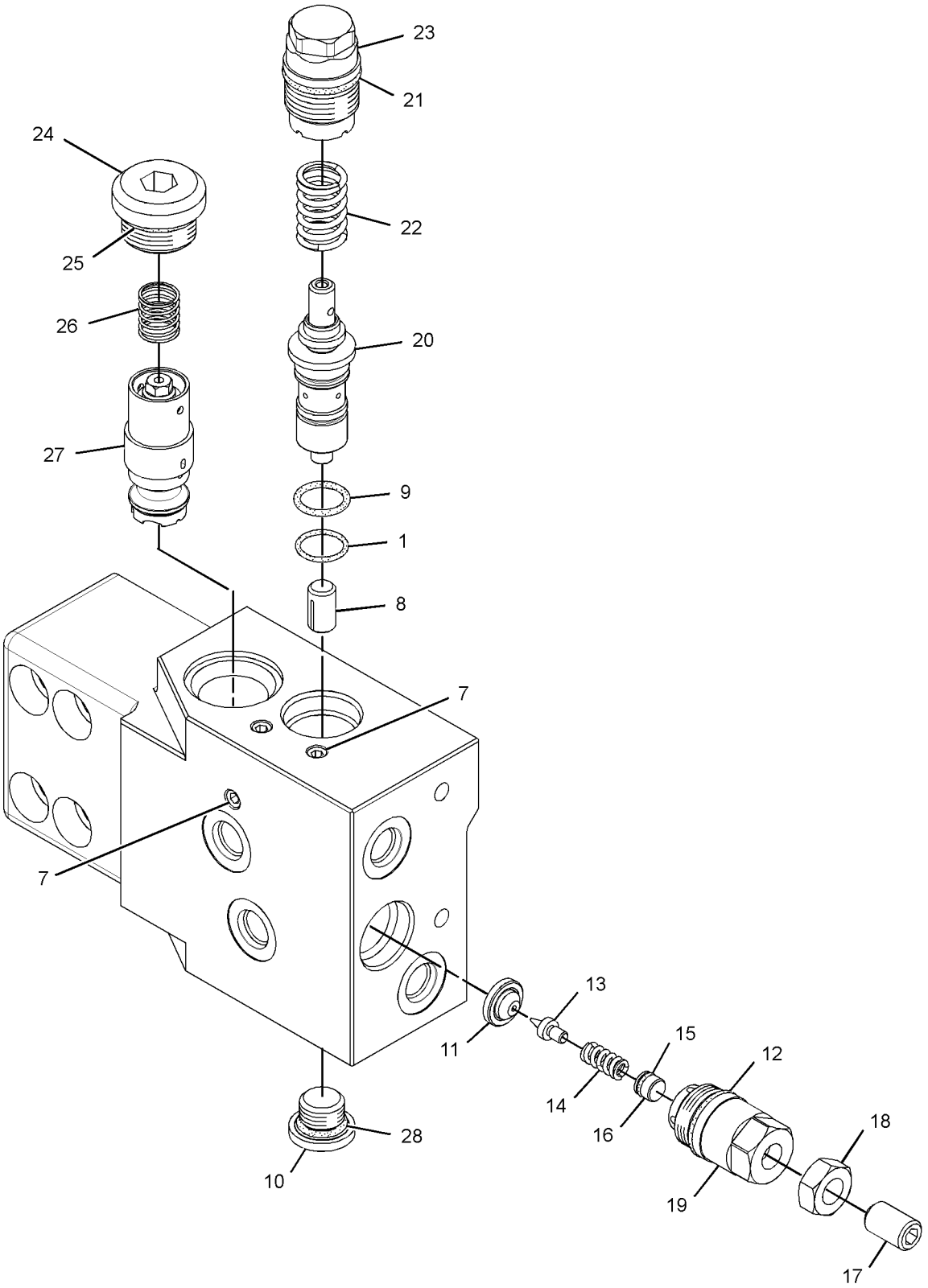

GRAPHIC #1 **<END>** g01451927

297-0189 VALVE GP-LOAD CONTROL–STICK

S/N: CLA1-UP

PART OF 282-5636 LINES GP-STICK CYLINDER

AN ATTACHMENT

SMCS-5067, 5117, 5147, 5811 **i02812735**

NOTE	REF NO	GRAPHIC REF	PART NUMBER	QTY	PART NAME 1 2 3 4 5 6 (PRODUCT LEVEL)	SEE PAGE
	1	1	**7I-8084**	3	PLUG	
	2	1	**215-5023**	1	PISTON	
	3	1	**095-1584**	1	SEAL-O-RING	
	4	1	**197-0145**	1	PLUG	
	5	1	**201-9283**	1	SEAT AS	
	6	1	**095-1590**	1	SEAL-O-RING	
	7	1	**201-9291**	1	VALVE	
	8	1	**201-9287**	1	SPRING	
	9	1	**095-1573**	1	SEAL-O-RING	
	10	1	**201-9285**	1	SEAT	
M	11	1	**201-9331**	1	SETSCREW (M12X1.75X19.5-MM)	
M	12	1	**201-9330**	1	NUT (M12X1.75-THD)	
	13	1	**201-9295**	1	PLUG	
	14	1	**297-0687**	1	SPOOL AS	
	15	1	**095-1589**	1	SEAL-O-RING	
	16	1	**201-9290**	1	SPRING	
M	17	1	**201-9296**	1	PLUG	
M	18	1	**201-9294**	1	PLUG	
	19	1	**095-1592**	1	SEAL-O-RING	
	20	1	**201-9288**	1	SPRING	
	21	1	**209-5931**	1	VALVE AS	
	22	1	**095-1582**	1	SEAL-O-RING	
	23	1	**7J-9108**	1	SEAL-O-RING	

M-METRIC PART

297-0189 VALVE GP-LOAD CONTROL *(contd.)* i02812735

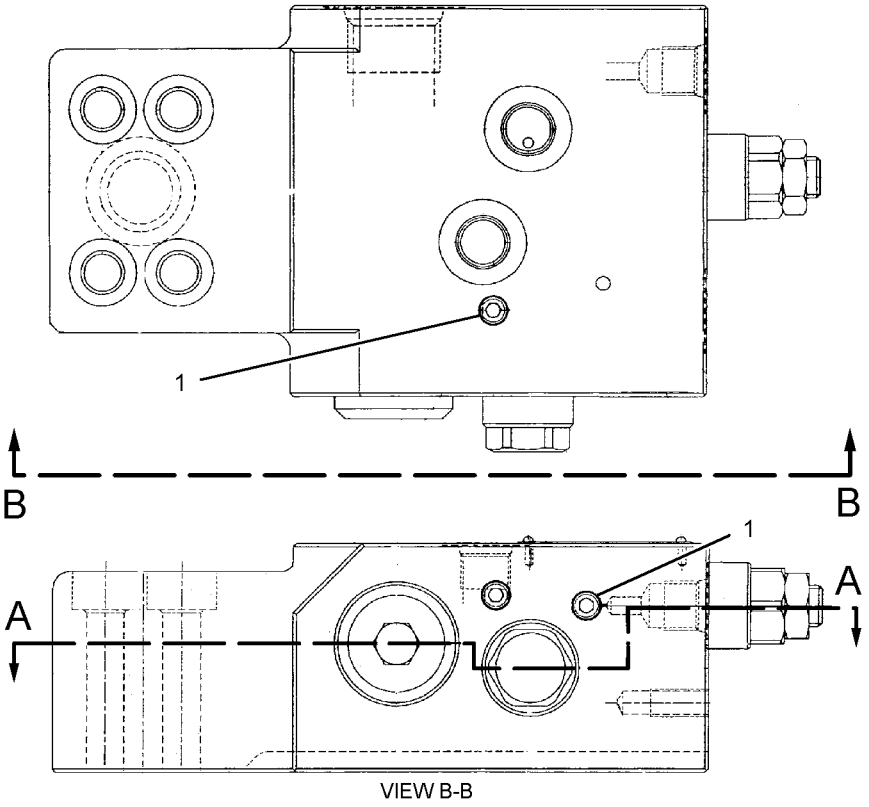

VIEW B-B

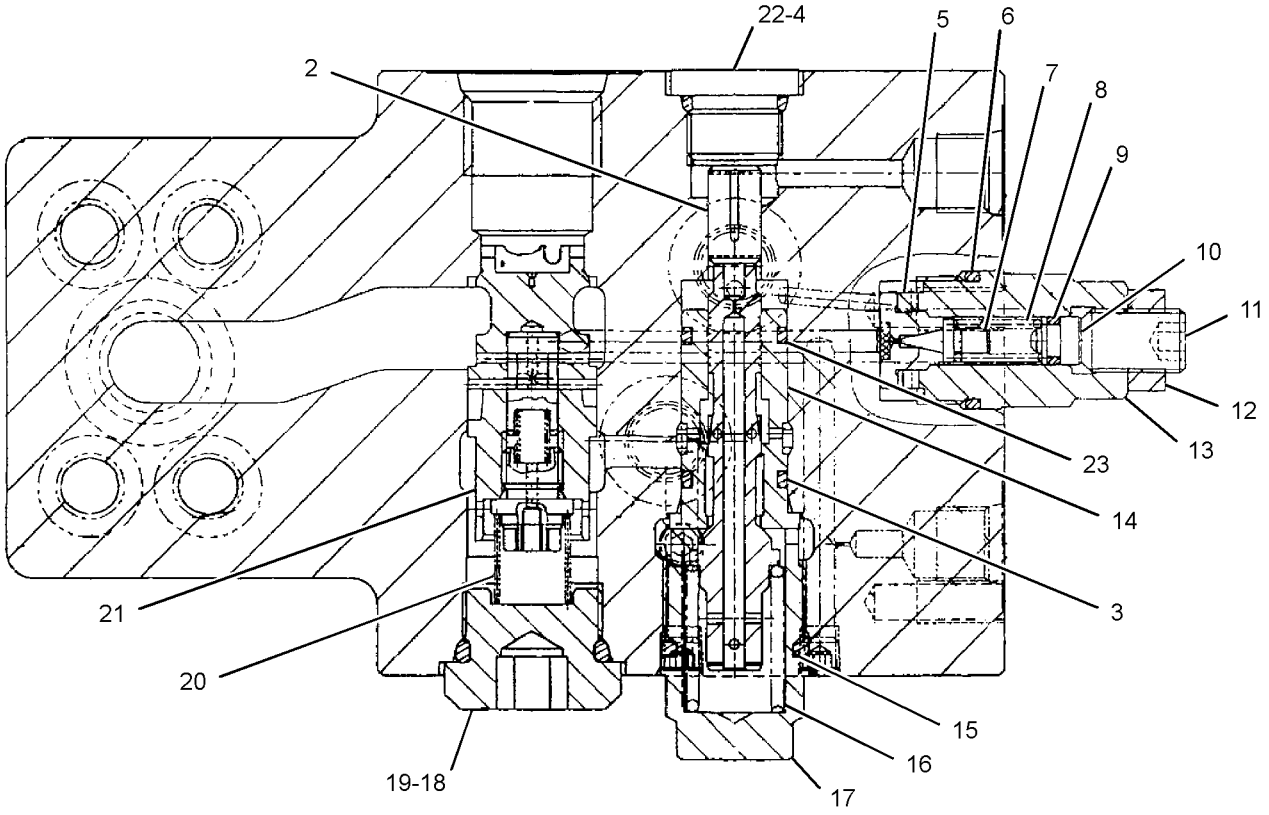

SECTION A-A

GRAPHIC #1 **<END>** g01402620

HYDRAULIC SYSTEM

270-5977 VALVE GP-MAIN CONTROL–2-BANK

S/N: CLA1-UP

PART OF 270-5992 HYDRAULIC AR, 285-1753, 285-1755, 310-0156 VALVE & MTG GP-CONTROL

ALSO AN ATTACHMENT

SMCS-5051 **i03036020**

NOTE	REF NO	GRAPHIC REF	PART NUMBER	QTY	PART NAME 1 2 3 4 5 6 (PRODUCT LEVEL)	SEE PAGE
	1	4	**285-1503**	2	COVER	
Y	2	4	**285-1504**	1	SPOOL GP-CONTROL VALVE (COMBINED FLOW)	571
	3	3	**285-1506**	1	VALVE	
	4	3	**285-1507**	1	SPRING	
Y	5	2	**309-9974**	1	VALVE GP-RELIEF	628
M	6	1,4	**5A-3604**	24	BOLT-SOCKET HEAD (M8X1.25X25-MM)	
M	7	1	**197-0165**	20	BOLT (M8X1.25X20-MM)	
	8	2	**197-0167**	1	PLATE	
	9	2,3,4	**095-1578**	12	SEAL-O-RING	
	10	2,3,4	**095-1696**	8	SEAL-O-RING	
M	11	2	**085-9768**	5	BOLT (M14X2X40-MM)	
	12	2,3,4	**095-1698**	18	SEAL-O-RING	
	13	2,3,4	**197-0145**	13	PLUG	
	14	2,3,4	**095-1582**	13	SEAL-O-RING	
	15	2,4	**095-1585**	11	SEAL-O-RING	
	16	2,4	**197-0272**	8	PLUG	
M	17	2	**197-0143**	3	BOLT (M14X2X95-MM)	
	18	1,2	**3D-2824**	2	SEAL-O-RING	
	19	1,2	**9S-4183**	2	PLUG-O-RING	
M	20	2	**197-0144**	13	BOLT (M14X2X130-MM)	
	21	2	**7I-7192**	2	PLUG	
	22	2	**215-4855**	2	VALVE AS-CHECK (MAKEUP)	
	23	2,3,4	**095-1700**	10	SEAL-O-RING	
	24	2,3,4	**197-0168**	10	COVER	
Y	25	1,2,3,4	**309-9973**	5	VALVE GP-RELIEF	627
	26	1,2,3,4	**7I-7208**	10	VALVE-LOAD CHECK	
	27	1,2,3,4	**7I-7207**	13	SPRING	
	28	1,2,3,4	**095-1586**	15	SEAL-O-RING	
	29	1,2,3,4	**7I-7206**	13	PLUG	
Y	30	2	**310-0056**	1	SPOOL GP-CONTROL VALVE (BUCKET)	574
	31	2,3,4	**7I-7204**	12	SEAL	
	32	2,3,4	**197-0170**	10	COVER	
Y	33	3	**197-0175**	1	SPOOL GP-CONTROL VALVE (STICK II)	568
	34	3	**197-0225**	2	PLUG AS	
Y	35	3	**197-0173**	1	SPOOL GP-CONTROL VALVE (WORK TOOL)	567
Y	36	3	**310-0417**	1	SPOOL GP-CONTROL VALVE	575
	37	3,4	**131-5767**	2	PLUG	
	38	3,4	**105-7405**	2	SPRING	
	39	3,4	**131-5768**	2	VALVE-LOAD CHECK	
	40	1,3	**197-0169**	2	VALVE AS	
Y	41	3	**197-0256**	1	VALVE GP-CONTROL	591
	42	3,4	**7I-7235**	2	PLUG	
	43	4	**3J-1907**	1	SEAL-O-RING	
	44	4	**9S-4191**	1	PLUG-O-RING	
	45	4	**201-9271**	1	SPOOL AS	
	46	4	**103-8413**	1	ROD	
	47	4	**103-8412**	1	SPRING	
	48	4	**103-8411**	1	SPRING	
	49	4	**197-0166**	1	PLUG	
	50	3,4	**7I-8084**	6	PLUG	
Y	51	4	**297-0235**	2	SPOOL GP-CONTROL VALVE (TRAVEL, RH, LH)	573
Y	52	4	**270-5978**	1	VALVE GP-RELIEF (MAIN)	625
	53	4	**095-0965**	2	PLUG	
	54	4	**7I-7241**	2	ORIFICE	

270-5977 VALVE GP-MAIN CONTROL *(contd.)* i03036020

NOTE	REF NO	GRAPHIC REF	PART NUMBER	QTY	PART NAME 1 2 3 4 5 6 (PRODUCT LEVEL)	SEE PAGE
Y	55	4	**197-0217**	1	SPOOL GP-CONTROL VALVE (STICK)	570
Y	57	4	**285-1505**	1	SPOOL GP-CONTROL VALVE (SWING PRIORITY)	572
	58	4	**7I-7250**	1	VALVE-LOAD CHECK	
Y	59	4	**197-0211**	1	SPOOL GP-CONTROL VALVE (STICK I)	569
	60	3	**197-0146**	1	SPRING	
	61	3	**197-0147**	1	VALVE	
	62	3	**095-1579**	1	SEAL-O-RING	
	63	3,4	**095-1592**	2	SEAL-O-RING	
	64	4	**215-4872**	2	VALVE	
	65	3	**170-9997**	1	PLUG	

M-METRIC PART
Y-SEPARATE ILLUSTRATION

270-5977 VALVE GP-MAIN CONTROL *(contd.)* i03036020

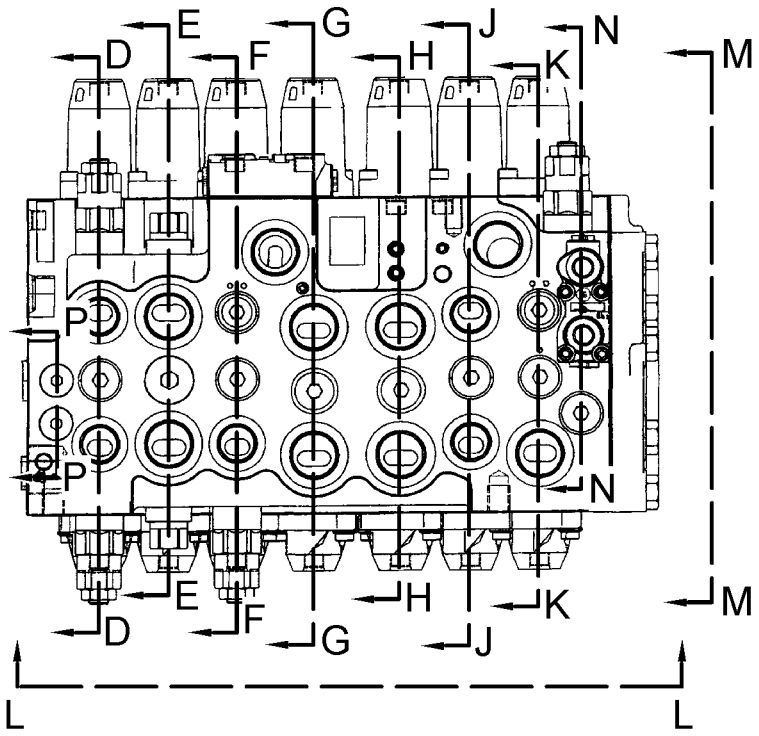

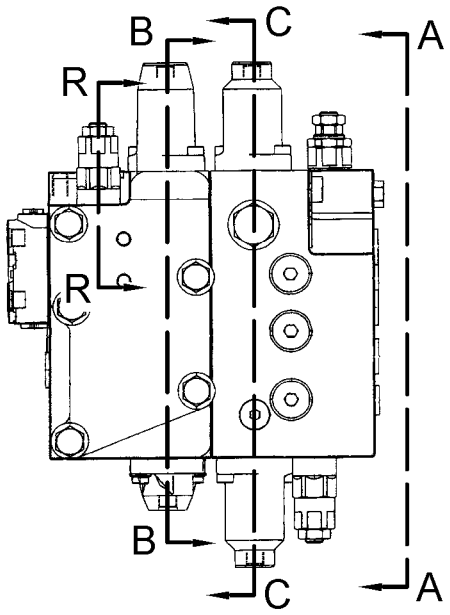

VIEW M-M

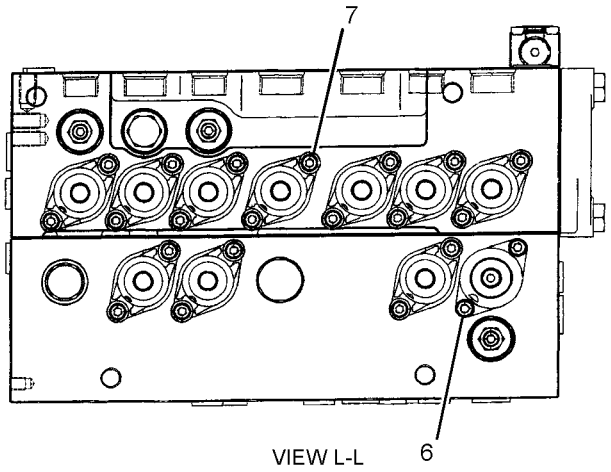

VIEW L-L

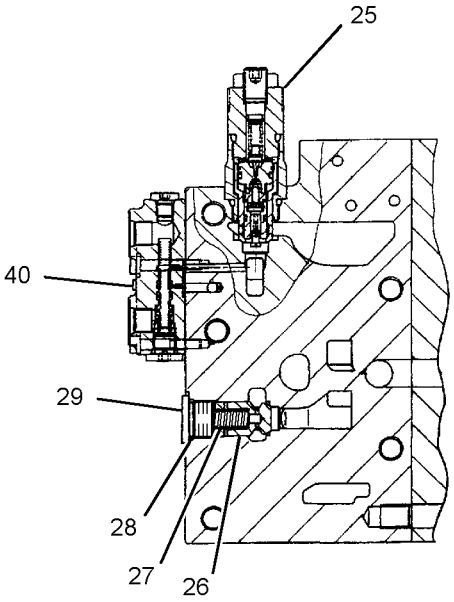

SECTION N-N

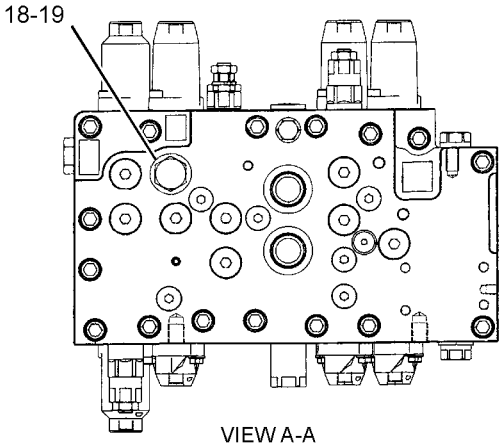

VIEW A-A

REFER TO ALL ILLUSTRATIONS OF THIS GROUP FOR AUXILIARY VIEWS

GRAPHIC #1 g01449466

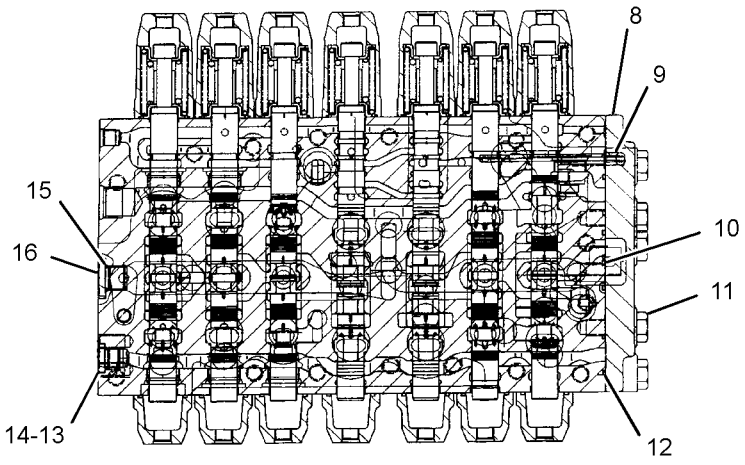

SECTION B-B

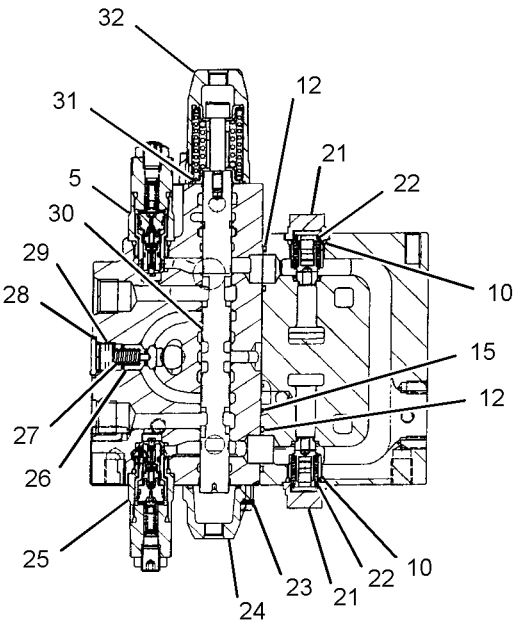

SECTION D-D

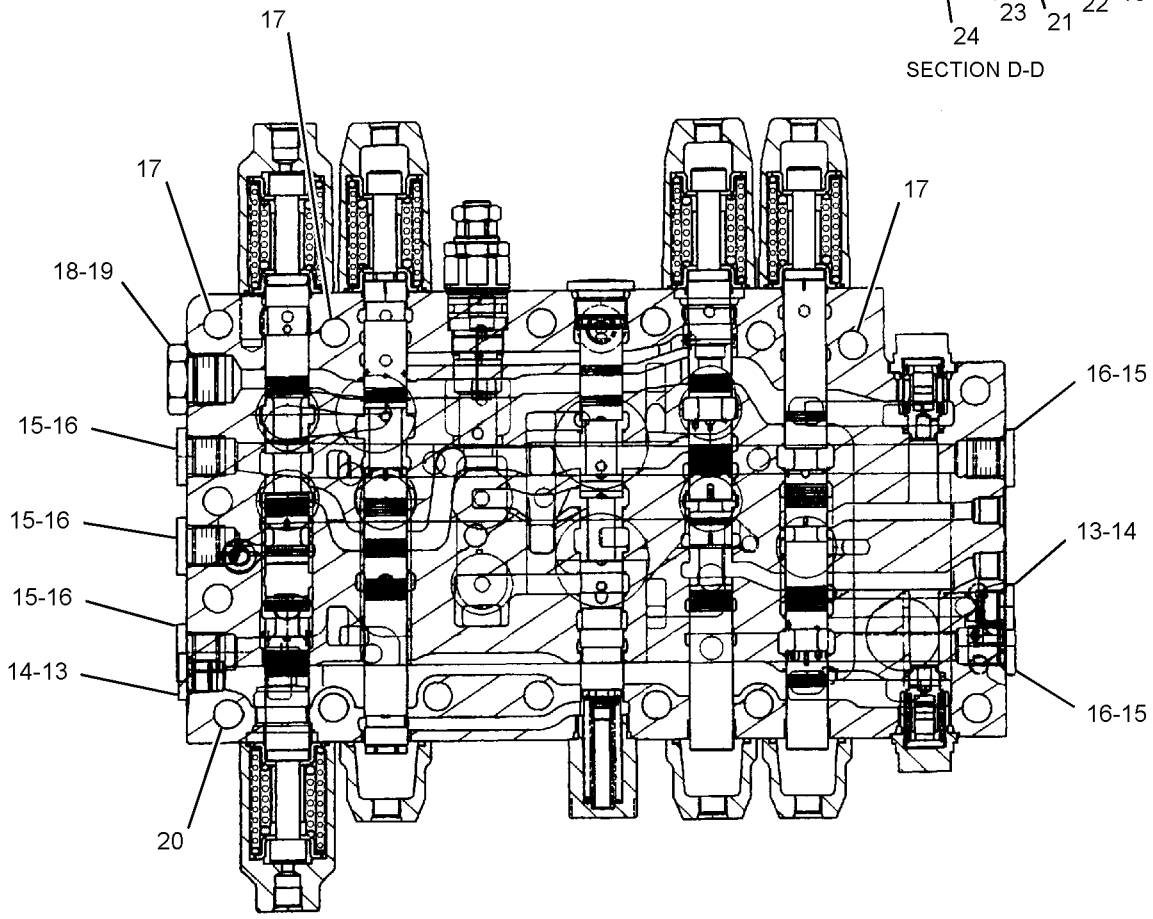

SECTION C-C

GRAPHIC #2

g01449467

270-5977 VALVE GP-MAIN CONTROL *(contd.)* i03036020

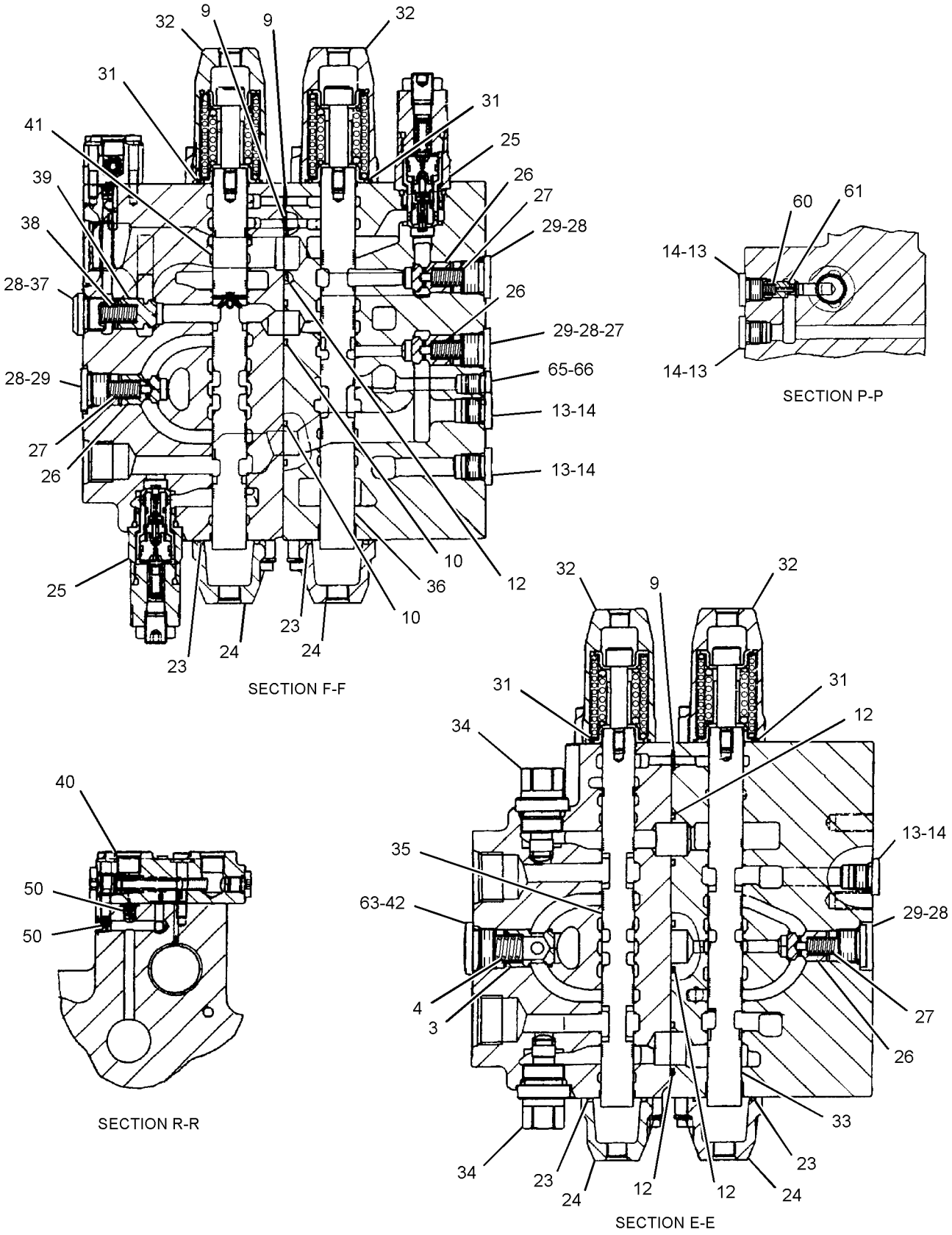

GRAPHIC #3 g01449468

270-5977 VALVE GP-MAIN CONTROL *(contd.)* i03036020

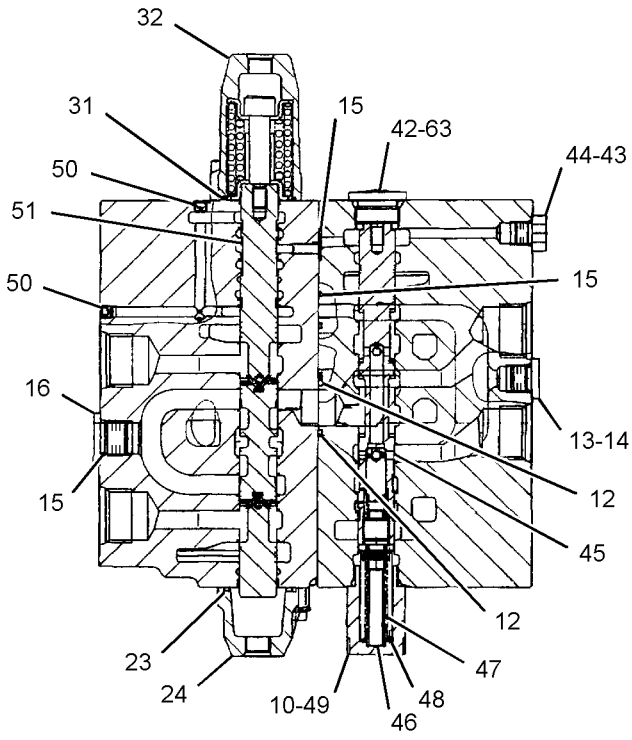

SECTION G-G

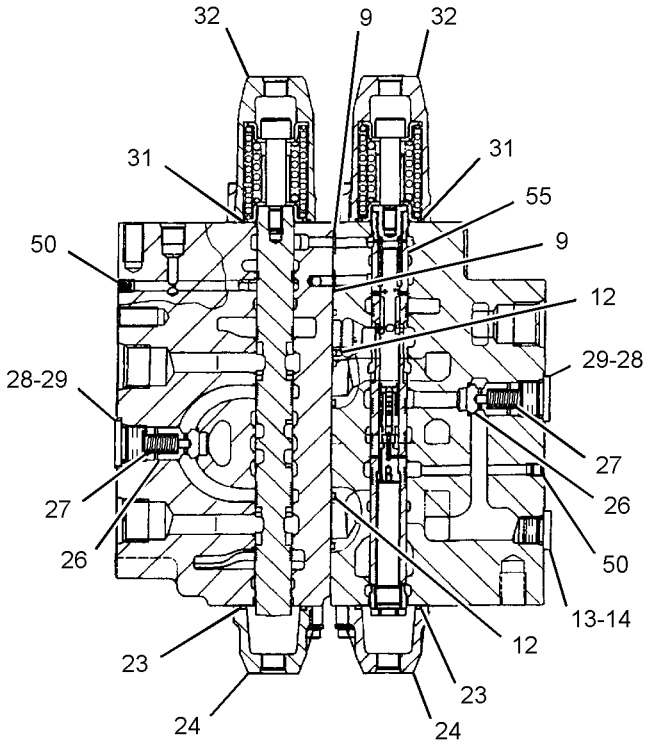

SECTION J-J

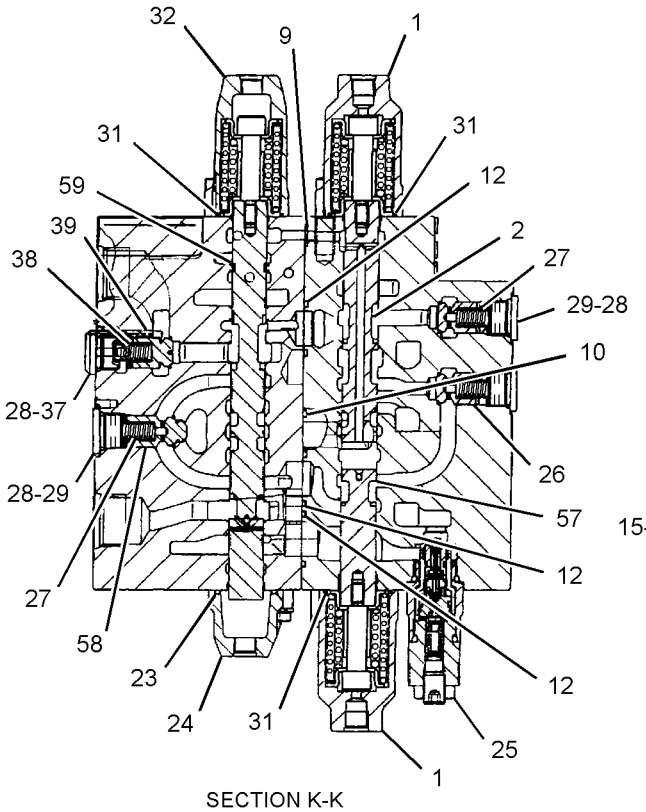

SECTION K-K

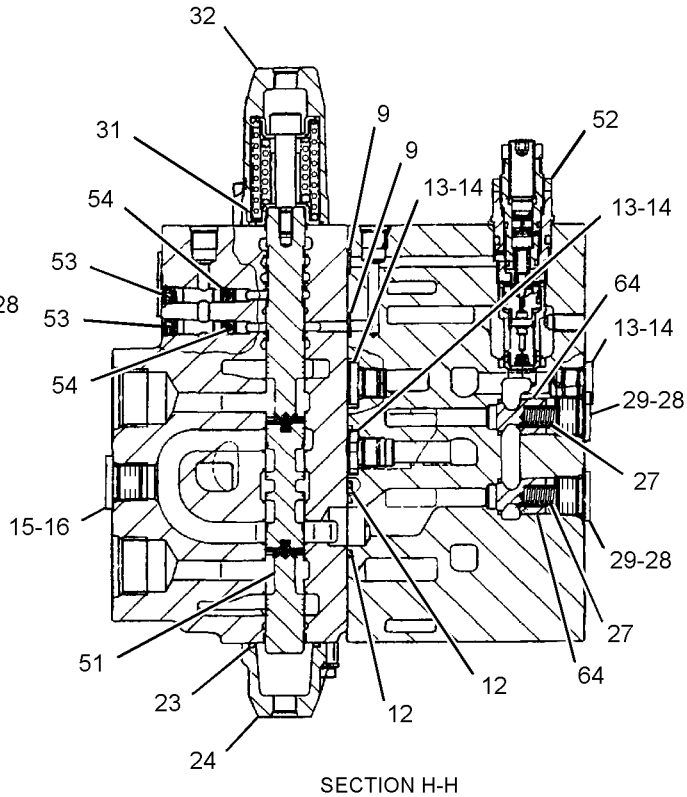

SECTION H-H

GRAPHIC #4 **<END>** g01449469

HYDRAULIC SYSTEM

190-7695 VALVE GP-PILOT

S/N: CLA1-UP

PART OF 316-8851 CONTROL GP-BLADE

AN ATTACHMENT

SMCS-5059 **i02070449**

NOTE	REF NO	GRAPHIC REF	PART NUMBER	QTY	PART NAME 1 2 3 4 5 6 (PRODUCT LEVEL)	SEE PAGE
	1	1	**197-0758**	2	SCREW	
M	2	1	**9X-2537**	2	BOLT-SOCKET HEAD (M6X1X70-MM)	
	3	1	**198-8160**	1	COLLAR	
	4	1	**198-8165**	1	BOLT	
	5	1	**206-3290**	1	COVER AS	
	6	1	**198-8162**	2	HOLDER	
	7	1	**198-8168**	2	BALL	
	8	1	**206-3288**	1	PLATE	
M	9	1	**8T-1158**	2	BOLT-SOCKET HEAD (M8X1.25X20-MM)	
	10	1	**204-1974**	1	PIN	
	11	1	**204-1976**	1	LEVER AS	
M	12	1	**095-1260**	1	SETSCREW-SOCKET (M6X1X6-MM)	
	13	1	**198-8156**	1	BOOT	
	14	1	**198-7543**	2	GUIDE	
	15	1	**198-8167**	2	NUT	
	16	1	**198-8154**	2	SPRING	
	17	1	**198-8153**	2	SCREW	
	18	1	**198-8176**	2	ROD AS	
	19	1	**095-1578**	2	SEAL-O-RING	
	20	1	**198-8159**	2	SLEEVE	
	21	1	**095-1585**	2	SEAL-O-RING	
	22	1	**096-4535**	2	SLEEVE	
	23	1	**6I-6911**	2	SHIM	
	24	1	**6I-6912**	2	SHIM	
	25	1	**096-4543**	1	BOLT	
	26	1	**201-9394**	2	SPRING	
	27	1	**099-0361**	2	SHIM	
	28	1	**132-9046**	2	SHIM (0.1-MM THK)	
	29	1	**215-4893**	1	BODY AS	
	30	1	**198-8178**	1	BALL	
	31	1	**7I-2753**	1	SEAT	
	32	1	**102-0818**	3	PLUG	
	33	1	**3J-1907**	3	SEAL-O-RING	
	34	1	**198-8166**	2	WASHER	
	35	1	**198-8161**	2	SPRING	

M-METRIC PART

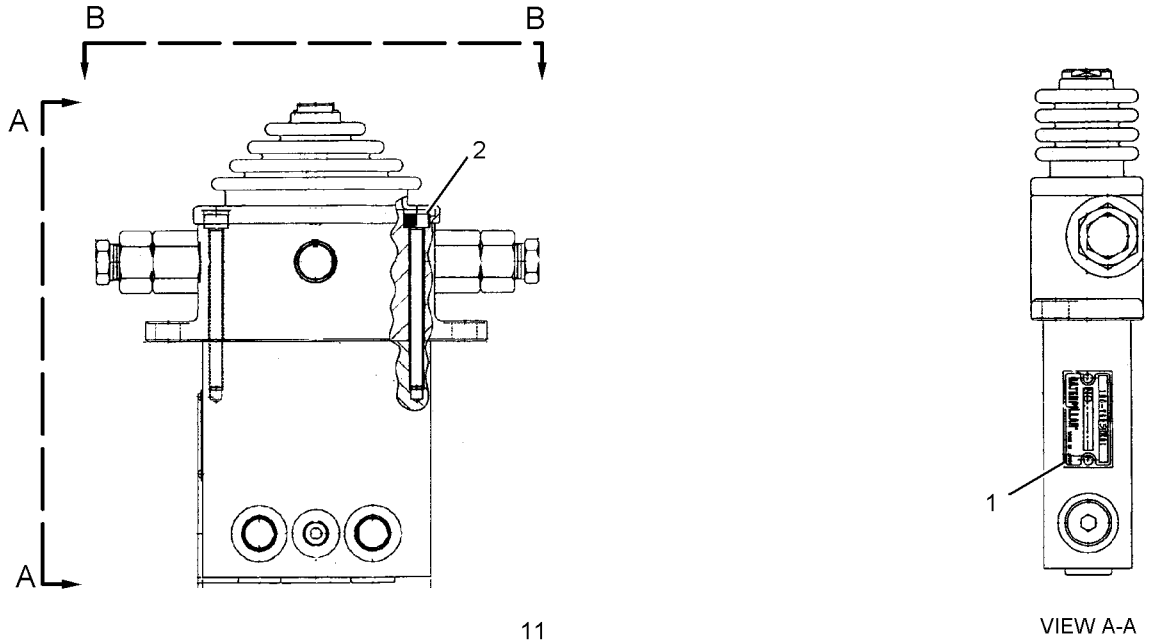

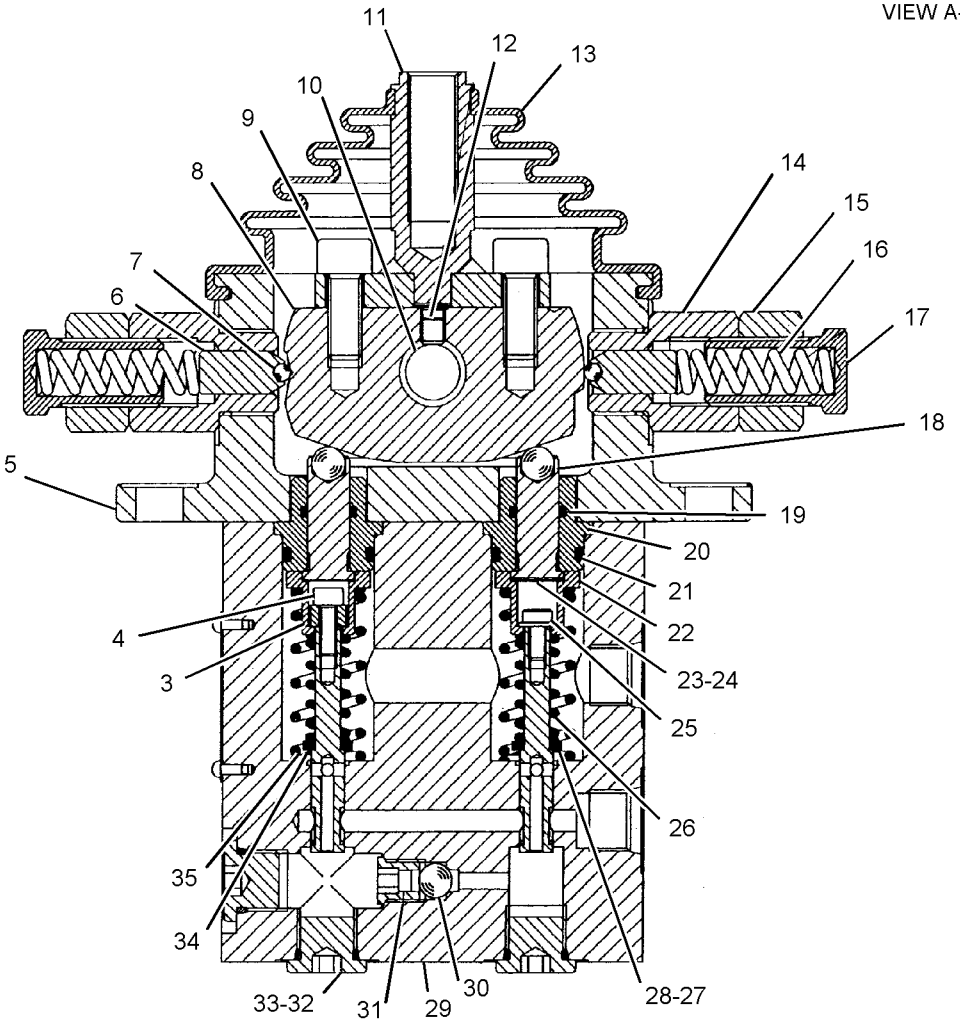

SECTION B-B

GRAPHIC #1 **<END>** g01079515

206-3305 VALVE GP-PILOT—JOYSTICK

S/N: CLA1-UP

PART OF 259-7762, 259-7763, 259-7764, 259-7765 CONTROL GP-JOYSTICK

FIELD REPLACEMENT ORDER 297-0589—PAGE 620

AN ATTACHMENT

SMCS-5059 **i02174618**

NOTE	REF NO	GRAPHIC REF	PART NUMBER	QTY	PART NAME 1 2 3 4 5 6 (PRODUCT LEVEL)	SEE PAGE
	1	1	**165-9431**	1	PLATE	
	2	1	**4I-6365**	1	JOINT	
	3	1	**118-4087**	4	SPRING	
	4	1	**165-9444**	2	SEAT-SPRING	
					(USED WITH REF NO 7 OR 7A SPRINGS)	
					—OR—	
J		1	**244-8496**	2	SEAT-SPRING	
					(USED WITH REF NO 7B SPRINGS)	
					—OR—	
L		1	**244-8500**	2	SEAT-SPRING	
					(USED WITH REF NO 7C SPRINGS)	
	5	1	**096-1628**	4	PLUG	
	6	1	**165-9436**	2	SEAT	
	7	1	**165-9460**	2	SPRING (STANDARD)	
					—OR—	
	7A	1	**225-4815**	2	SPRING (OPTIONAL)	
					(REDUCES OPERATING FORCE FOR IMPROVED INCHING CONTROL)	
					—OR—	
J	7B	1	**244-8494**	2	SPRING (OPTIONAL)	
					(PROVIDES CONTROLLABILITY EQUAL TO A-SERIES MACHINES)	
					—OR—	
L	7C	1	**244-8498**	2	SPRING (OPTIONAL)	
					(PROVIDES CONTROLLABILITY COMPARABLE TO A AND B-SERIES MACHINES)	
	8	1	**165-9461**	4	SPRING (STANDARD)	
					—OR—	
		1	**190-7750**	4	SPRING (OPTIONAL)	
					(REDUCES OPERATING FORCE BY 30%)	
					—OR—	
		1	**190-7751**	4	SPRING (OPTIONAL)	
					(REDUCES OPERATING FORCE BY 20%)	
	9	1	**165-9439**	1	BUSHING	
	10	1	**165-9448**	1	SEAL-O-RING	
	11	1	**168-0794**	1	PLATE	
	12	1	**096-4498**	2	WASHER	
M	13	1	**6V-8337**	2	BOLT-SOCKET HEAD (M8X1.25X35-MM)	
	14	1	**171-0087**	1	BELLOWS	
M	15	1	**131-5915**	1	NUT-SPECIAL	
	16	1	**7Y-0468**	1	PIN-SPRING	
	17	1	**094-0876**	4	SEAL	
B	18	1	**099-6137**	4	WASHER (6.1X9X0.2-MM THK)	
	19	1	**165-9442**	2	SPRING (STANDARD)	
					—OR—	
	19A	1	**225-4816**	2	SPRING (OPTIONAL)	
					(REDUCES OPERATING FORCE FOR IMPROVED INCHING CONTROL)	
					—OR—	
J	19B	1	**244-8495**	2	SPRING (OPTIONAL)	
					(PROVIDES CONTROLLABILITY EQUAL TO A-SERIES MACHINES)	
					—OR—	

206-3305 VALVE GP-PILOT *(contd.)* i02174618

NOTE	REF NO	GRAPHIC REF	PART NUMBER	QTY	PART NAME 1 2 3 4 5 6 (PRODUCT LEVEL)	SEE PAGE
L	19C	1	**244-8499**	2	SPRING (OPTIONAL)	
					(PROVIDES CONTROLLABILITY COMPARABLE TO A AND B-SERIES MACHINES)	
	20	1	**165-9435**	2	SEAT	
	21	1	**095-1586**	4	SEAL-O-RING	
	22	1	**165-9443**	2	SEAT-SPRING	
					(USED WITH REF NO 19 OR 19A SPRINGS)	
					—OR—	
J		1	**244-8497**	2	SEAT-SPRING	
					(USED WITH REF NO 19B SPRINGS)	
					—OR—	
L		1	**244-8501**	2	SEAT-SPRING	
					(USED WITH REF NO 19C SPRINGS)	
	23	1	**165-9438**	1	PLATE	
	24	1	**118-4086**	4	ROD	

B-USE AS REQUIRED
J-PARTS MARKED J MUST BE USED TOGETHER AS A SET
L-PARTS MARKED L MUST BE USED TOGETHER AS A SET
M-METRIC PART

206-3305 VALVE GP-PILOT *(contd.)* **i02174618**

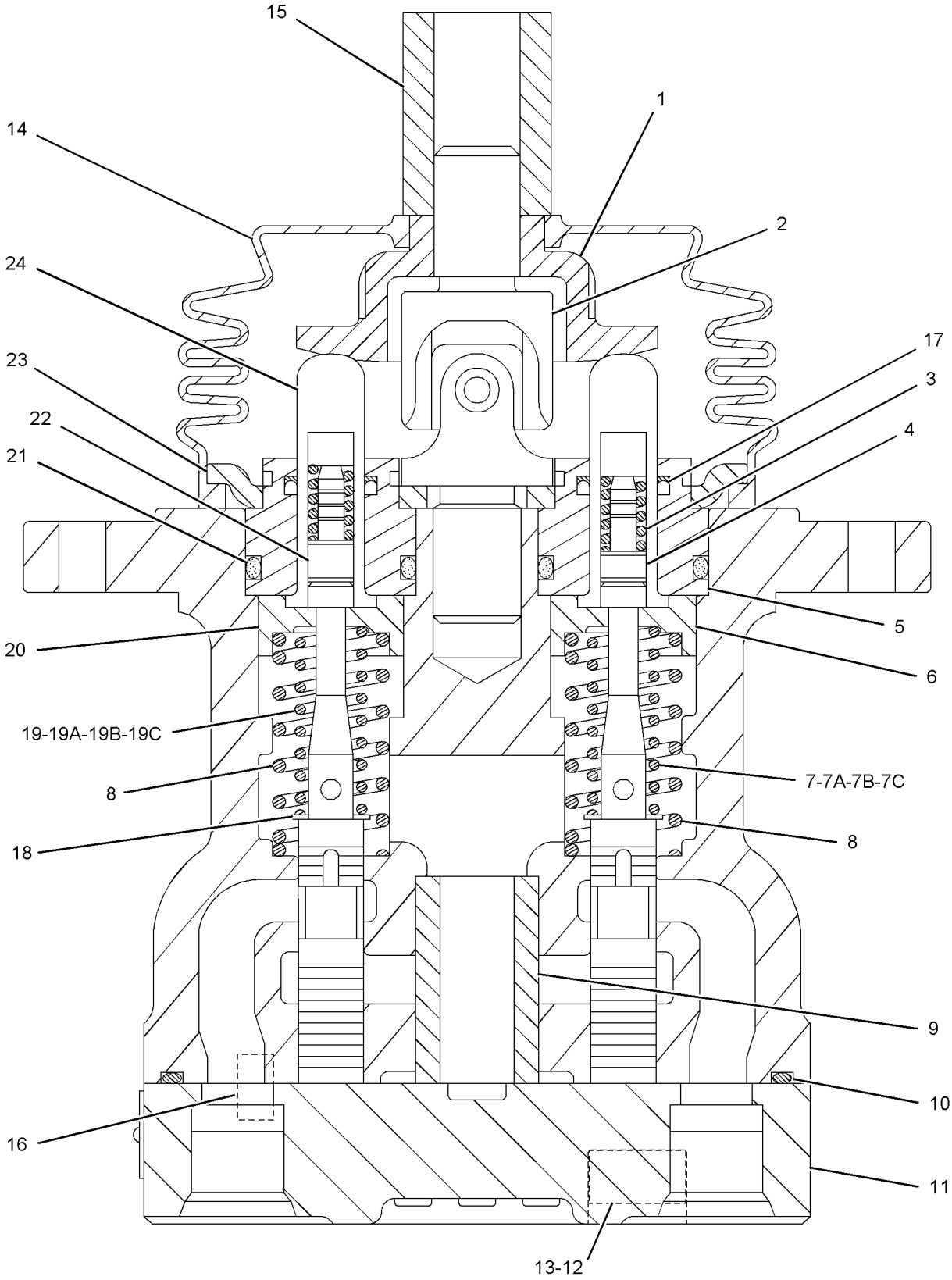

GRAPHIC #1 **<END>** g01102305

HYDRAULIC SYSTEM

270-5948 VALVE GP-PILOT–TRAVEL

S/N: CLA1-152

PART OF 278-6672 LINES GP-PILOT

SMCS-5059 **i02696671**

NOTE	REF NO	GRAPHIC REF	PART NUMBER	QTY	PART NAME 1 2 3 4 5 6 (PRODUCT LEVEL)	SEE PAGE
	1	1	**270-5950**	4	SPRING	
	2	1	**131-5818**	4	SPRING	
	3	1	**095-0936**	4	RING-RETAINING	
	4	1	**126-1865**	4	SPRING	
	5	1	**126-1866**	4	SPRING	
	6	1	**270-5949**	4	PISTON	
	7	1	**6V-8400**	4	SEAL-O-RING	
	8	1	**165-9463**	2	COVER	
	9	1	**165-9554**	4	PLUG	
	10	1	**119-5389**	4	PACKING	
	11	1	**165-9552**	4	PUSHROD	
M	12	1	**8T-4133**	4	NUT (M10X1.5-THD)	
M	13	1	**087-4710**	4	SETSCREW	
	14	1	**147-4131**	2	BOOT-PROTECTION	
	15	1	**087-5708**	2	PEDAL	
M	16	1	**8T-0343**	2	BOLT-SOCKET HEAD (M12X1.75X55-MM)	
	17	1	**119-5388**	4	CAP	
	18	1	**165-9553**	1	COVER	
	19	1	**119-5391**	4	SEAT	
	20	1	**153-5223**	12	BALL	
	21	1	**119-5392**	4	BUSHING	
	22	1	**165-9551**	4	SEAT	
	24	1	**099-6137**	4	WASHER	
	25	1	**099-6141**	4	WASHER (6.1X11X1.5-MM THK)	
	26	1	**099-6145**	2	CAMSHAFT	
	27	1	**099-6144**	4	BUSHING-TERMINAL	
M	28	1	**095-1260**	2	SETSCREW-SOCKET (M6X1X6-MM)	
M	29	1	**8T-1158**	2	BOLT-SOCKET HEAD (M8X1.25X20-MM)	
	30	1	**8T-6759**	2	PLUG-PIPE	

M-METRIC PART

270-5948 VALVE GP-PILOT *(contd.)* **i02696671**

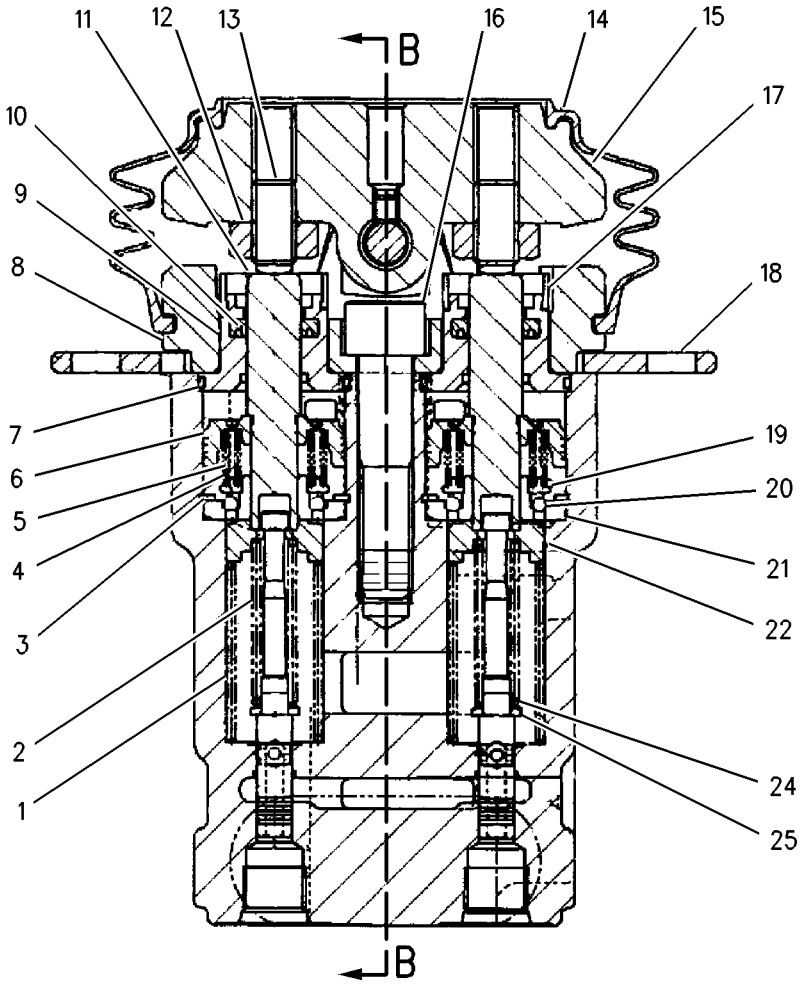

SECTION A-A

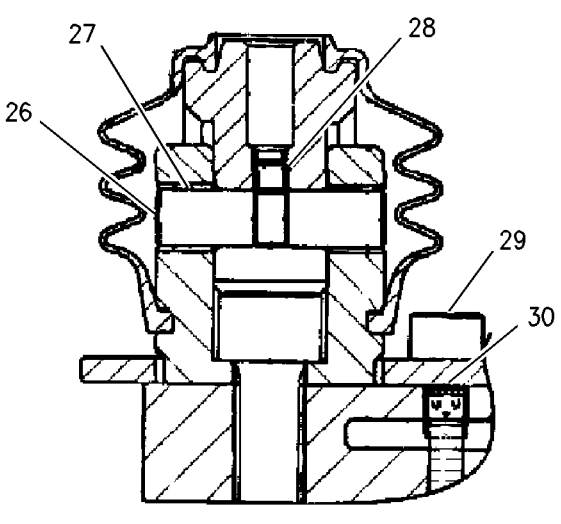

SECTION B-B

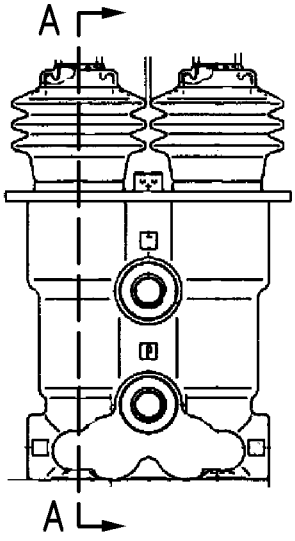

GRAPHIC #1 **<END>** g00857024

HYDRAULIC SYSTEM

297-0529 VALVE GP-PILOT–JOYSTICK

S/N: CLA1-UP

PART OF 297-0532, 297-0533 CONTROL GP-JOYSTICK

AN ATTACHMENT

SMCS-5059 **i03017531**

NOTE	REF NO	GRAPHIC REF	PART NUMBER	QTY	PART NAME 1 2 3 4 5 6 (PRODUCT LEVEL)	SEE PAGE
	1	1	**270-5953**	4	SPRING	
	2	1	**095-1586**	4	SEAL-O-RING	
	3	1	**4I-6365**	1	JOINT	
	4	1	**094-0876**	4	SEAL	
	5	1	**096-1628**	4	PLUG	
B	6	1	**099-6137**	4	WASHER (6.1X9X0.2-MM THK)	
	7	1	**118-4086**	4	ROD	
	8	1	**118-4087**	4	SPRING	
M	9	1	**131-5915**	1	NUT-SPECIAL	
	10	1	**165-9431**	1	PLATE	
	11	1	**165-9435**	2	SEAT	
	12	1	**165-9436**	2	SEAT	
	13	1	**165-9438**	1	PLATE	
	14	1	**165-9442**	2	SPRING	
	15	1	**165-9443**	2	SEAT-SPRING	
	16	1	**165-9444**	2	SEAT-SPRING	
	17	1	**165-9460**	2	SPRING	
	18	1	**171-0087**	1	BELLOWS	

PARTS SHOWN IN GRAPHIC(S) WITHOUT A REFERENCE NUMBER ARE NOT SERVICED SEPARATELY

B-USE AS REQUIRED
M-METRIC PART

297-0529 VALVE GP-PILOT *(contd.)* **i03017531**

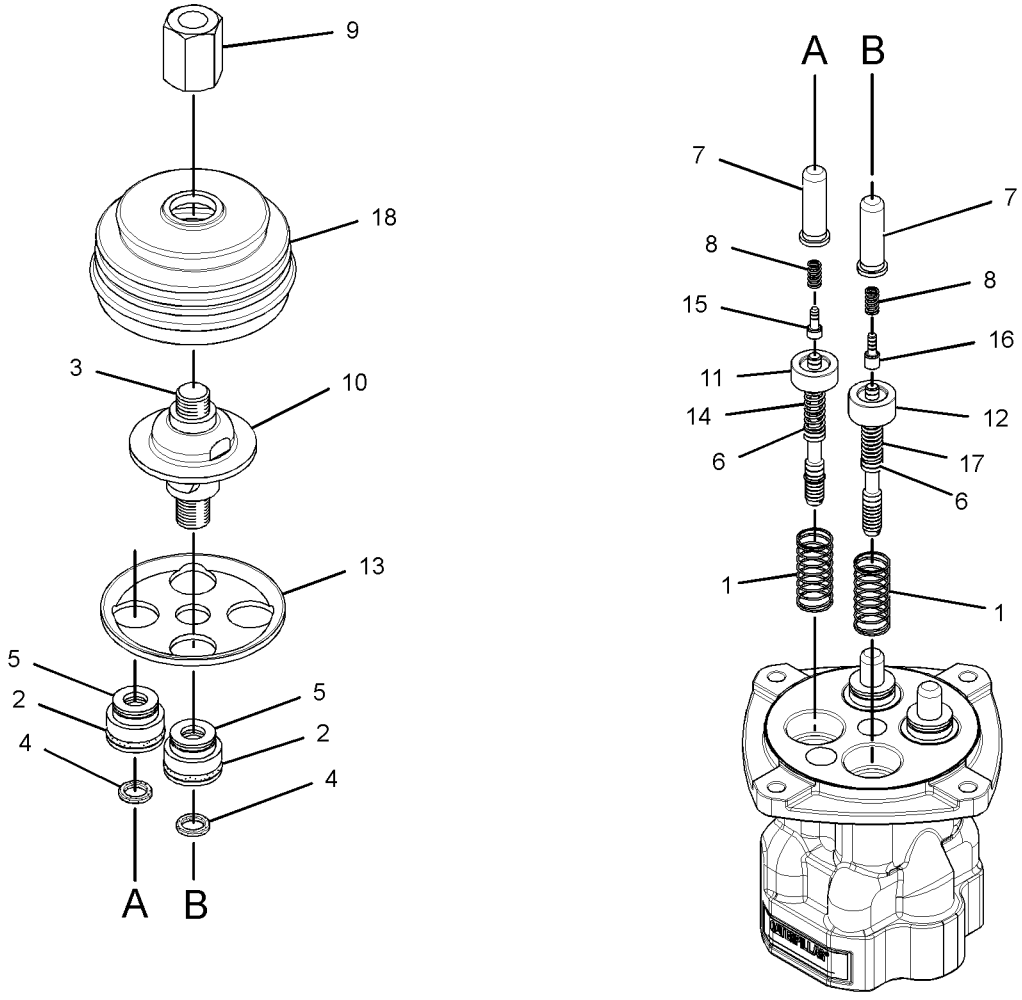

GRAPHIC #1 **<END>** g01528724

HYDRAULIC SYSTEM

297-0589 VALVE GP-PILOT–JOYSTICK

S/N: CLA1-UP

PART OF 297-0534, 297-0535, 297-0536, 297-0537 CONTROL GP-JOYSTICK

FIELD REPLACEMENT FOR 206-3305–PAGE 613

AN ATTACHMENT

SMCS-5059 **i03135570**

NOTE	REF NO	GRAPHIC REF	PART NUMBER	QTY	PART NAME 1 2 3 4 5 6 (PRODUCT LEVEL)	SEE PAGE
	1	1	**095-1586**	4	SEAL-O-RING	
	2	1	**4I-6365**	1	JOINT	
	3	1	**094-0876**	4	SEAL	
	4	1	**096-1628**	4	PLUG	
B	5	1	**099-6137**	4	WASHER (6.1X9X0.2-MM THK)	
	6	1	**118-4086**	4	ROD	
	7	1	**118-4087**	4	SPRING	
M	8	1	**131-5915**	1	NUT-SPECIAL	
	9	1	**165-9431**	1	PLATE	
	10	1	**165-9435**	2	SEAT	
	11	1	**165-9436**	2	SEAT	
	12	1	**165-9438**	1	PLATE	
	13	1	**165-9442**	2	SPRING	
	14	1	**165-9443**	2	SEAT-SPRING	
	15	1	**165-9444**	2	SEAT-SPRING	
	16	1	**165-9460**	2	SPRING	
	17	1	**165-9461**	4	SPRING	
	18	1	**171-0087**	1	BELLOWS	

B-USE AS REQUIRED
M-METRIC PART

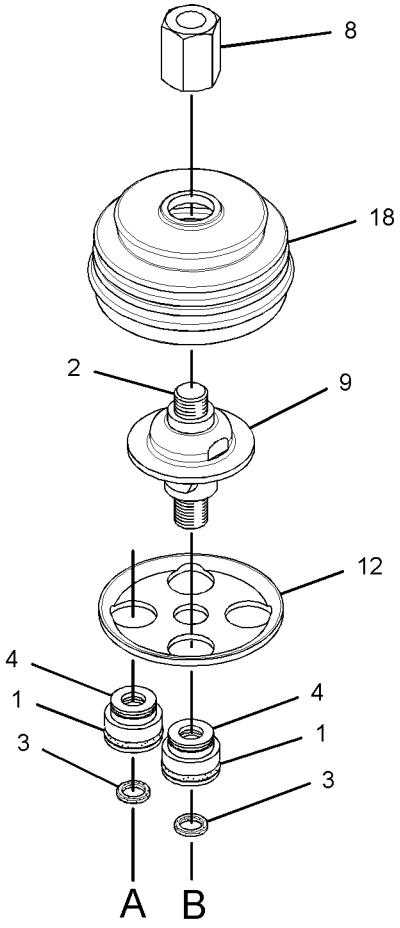

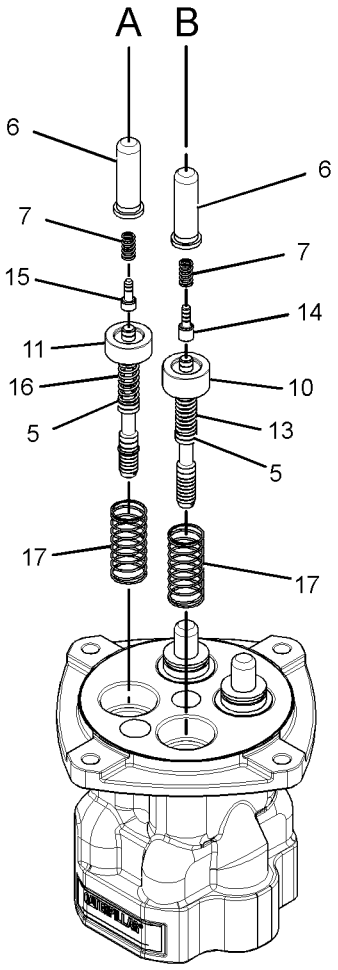

GRAPHIC #1 **<END>** g01528741

HYDRAULIC SYSTEM

310-0415 VALVE GP-PILOT—WITHOUT SHUTTLE

S/N: CLA153-UP

PART OF 278-6672 LINES GP-PILOT

SMCS-5059 **i03127888**

NOTE	REF NO	GRAPHIC REF	PART NUMBER	QTY	PART NAME 1 2 3 4 5 6 (PRODUCT LEVEL)	SEE PAGE
	1	1	**087-5708**	2	PEDAL	
M	2	1	**095-0673**	2	BOLT-SOCKET HEAD (M12X1.75X60-MM)	
	3	1	**099-6137**	4	WASHER (6.1X9X0.2-MM THK)	
	4	1	**099-6141**	4	WASHER (6.1X11X1.5-MM THK)	
	5	1	**099-6144**	4	BUSHING-TERMINAL	
	6	1	**099-6145**	2	CAMSHAFT	
	7	1	**119-5388**	4	CAP	
	8	1	**119-5389**	4	PACKING	
	9	1	**119-5391**	4	SEAT	
	10	1	**126-1865**	4	SPRING	
	11	1	**126-1866**	4	SPRING	
	12	1	**131-5818**	4	SPRING	
	13	1	**147-4131**	2	BOOT-PROTECTION	
	14	1	**153-5223**	12	BALL	
	15	1	**165-9463**	2	COVER	
	16	1	**165-9552**	4	PUSHROD	
	17	1	**165-9553**	1	COVER	
	18	1	**165-9554**	4	PLUG	
	19	1	**270-5949**	4	PISTON	
	20	1	**270-5950**	4	SPRING	
	21	1	**310-0419**	4	SEAT	
	22	1	**310-0420**	4	SEAL-O-RING	
M	23	1	**087-4710**	4	SETSCREW	
M	24	1	**095-1260**	2	SETSCREW-SOCKET (M6X1X6-MM)	
	25	1	**095-1575**	2	SEAL-O-RING	
	26	1	**6V-8400**	4	SEAL-O-RING	
M	27	1	**8C-6965**	2	BOLT-SOCKET HEAD (M6X1X45-MM)	
M	28	1	**8T-1158**	2	BOLT-SOCKET HEAD (M8X1.25X20-MM)	
M	29	1	**8T-4133**	4	NUT (M10X1.5-THD)	

M-METRIC PART

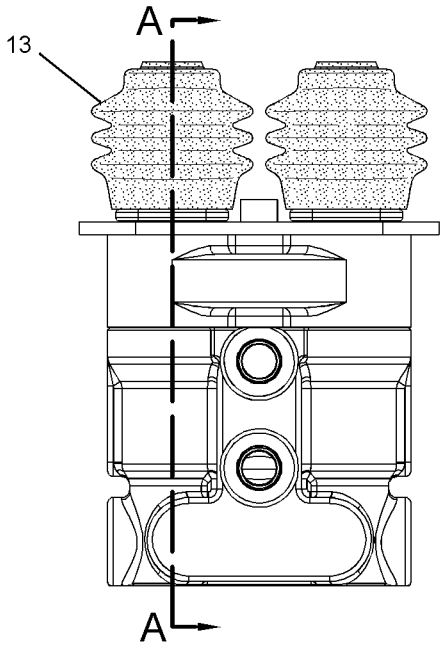

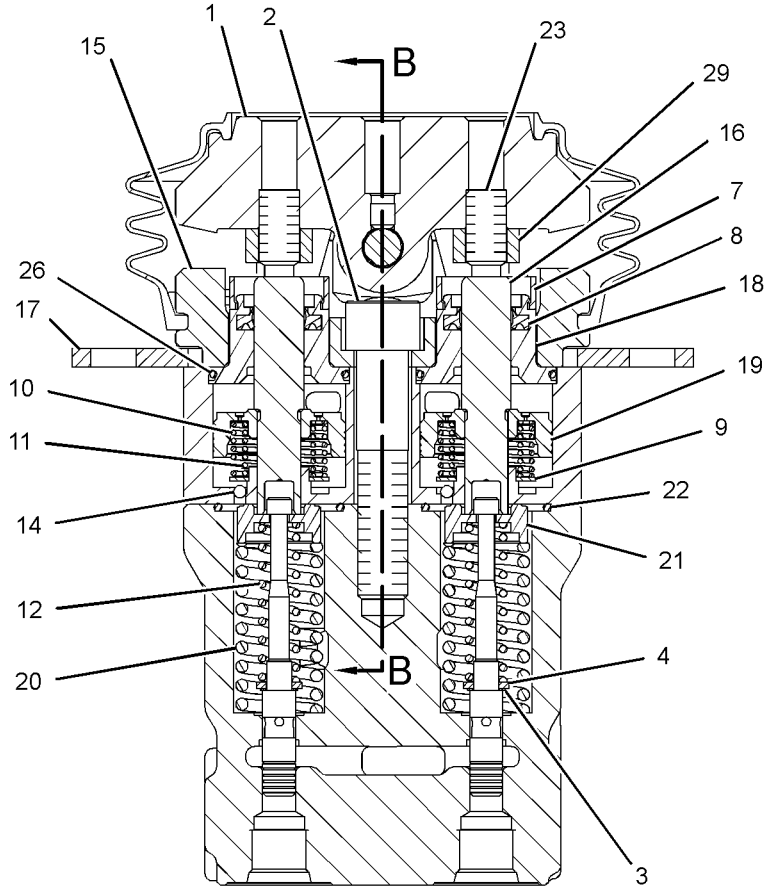

SECTION A-A

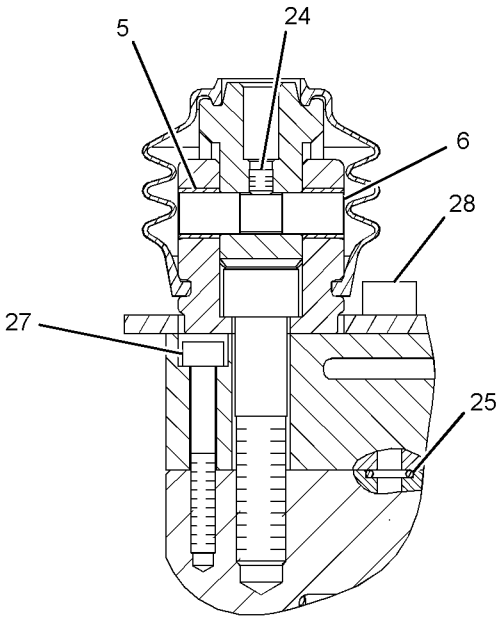

SECTION B-B

GRAPHIC #1 **<END>** g01620929

285-1613 VALVE GP-PRESSURE REDUCING–BOOM PRIORITY

S/N: CLA1-UP

PART OF 282-7389 LINES GP-PILOT

SMCS-5117 **i02711164**

NOTE	REF NO	GRAPHIC REF	PART NUMBER	QTY	PART NAME 1 2 3 4 5 6 (PRODUCT LEVEL)	SEE PAGE
	1	1	**171-0123**	1	PLUG	
M	2	1	**171-0124**	1	SETSCREW (M8X1.25X18-MM)	
	3	1	**185-0423**	1	STOP	
	4	1	**095-1582**	1	SEAL-O-RING	
	5	1	**111-9998**	1	PLUG	
	6	1	**171-0127**	1	SEAT-SPRING	
	7	1	**171-0128**	1	SPRING	
	8	1	**171-0126**	1	SEAT-SPRING	
	9	1	**095-1590**	1	SEAL-O-RING	
	10	1	**095-1580**	1	SEAL-O-RING	
M	11	1	**5C-7261**	1	NUT (M8X1.25-THD)	

M-METRIC PART

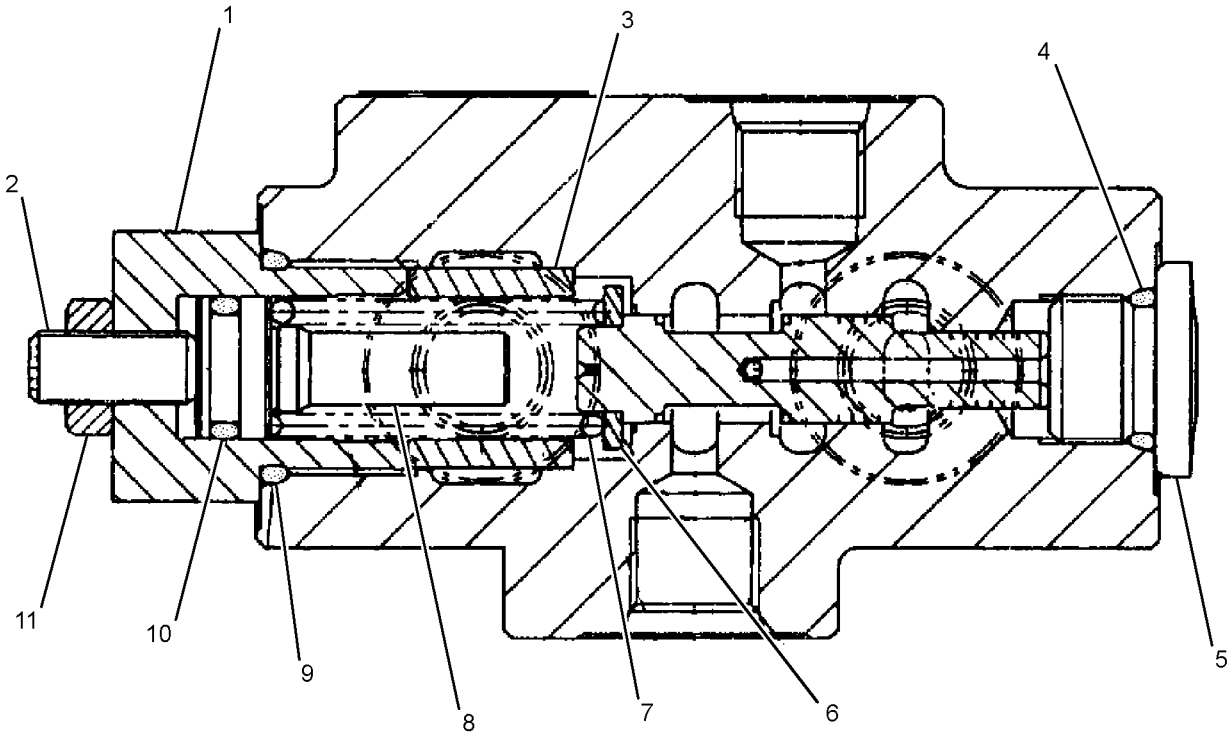

GRAPHIC #1 **<END>** g01363363

270-5978 VALVE GP-RELIEF–MAIN

S/N: CLA1-UP
PART OF 270-5977 VALVE GP-MAIN CONTROL
ALSO AN ATTACHMENT

SMCS-5069, 5117 **i02852735**

NOTE	REF NO	GRAPHIC REF	PART NUMBER	QTY	PART NAME 1 2 3 4 5 6 (PRODUCT LEVEL)	SEE PAGE
	1	1	**095-1575**	1	SEAL-O-RING	
	2	1	**7I-8096**	1	STOP	
M	3	1	**7I-8098**	1	SETSCREW (M14X1.5X34-MM)	
M	4	1	**6V-8821**	1	NUT (M14X1.5-THD)	
M	5	1	**7I-8100**	1	NUT (M24X1.3-THD)	
	6	1	**095-1584**	1	SEAL-O-RING	
	7	1	**7I-8087**	1	SPRING	
	8	1	**7I-8095**	1	RING	
	9	1	**7I-8081**	1	SPRING	
	10	1	**095-1593**	1	SEAL-O-RING	
	11	1	**095-1519**	1	SEAL-O-RING	
	12	1	**095-1783**	1	RING-BACKUP	
	13	1	**095-1582**	1	SEAL-O-RING	

M-METRIC PART

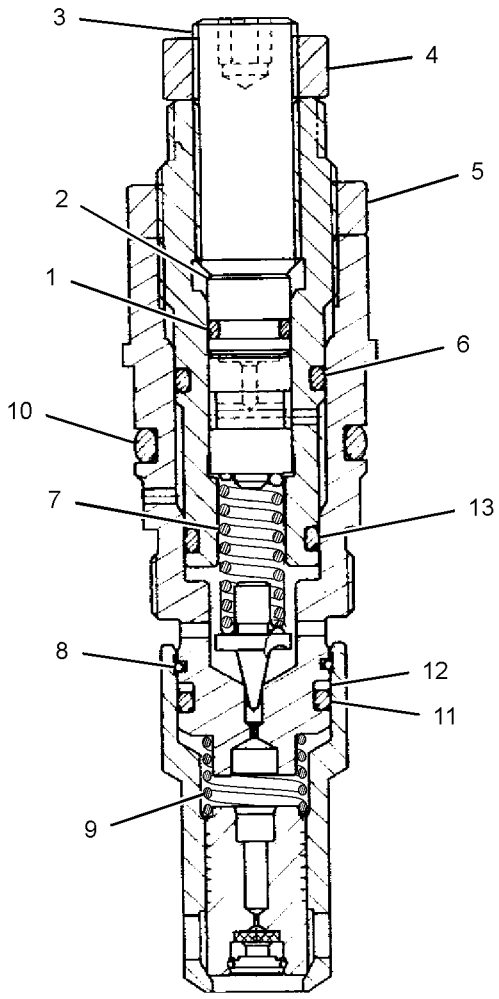

GRAPHIC #1 **<END>** g01426630

HYDRAULIC SYSTEM

304-3961 VALVE GP-RELIEF–TRACTION CONTROL

S/N: CLA1-UP

PART OF 303-4484 VALVE GP-TRAVEL COUNTERBALANCE

SMCS-5069, 5117 **i02827540**

NOTE	REF NO	GRAPHIC REF	PART NUMBER	QTY	PART NAME 1 2 3 4 5 6 (PRODUCT LEVEL)	SEE PAGE
M	1	1	**7Y-8436**	1	SETSCREW (M27X2X27-MM)	
	2	1	**114-0515**	1	SEAT	
	3	1	**114-0517**	1	PISTON	
	4	1	**165-5840**	1	STOP	
	6	1	**176-8590**	1	VALVE GP-RELIEF	
	7	1	**095-1586**	3	SEAL-O-RING	
	8	1	**095-1785**	3	RING-BACKUP	
	9	1	**121-1459**	2	RING-BACKUP	
	10	1	**165-5839**	1	SPRING	
	11	1	**4K-1388**	1	SEAL-O-RING	
M	12	1	**7Y-8437**	1	NUT (M27X2-THD)	

M-METRIC PART

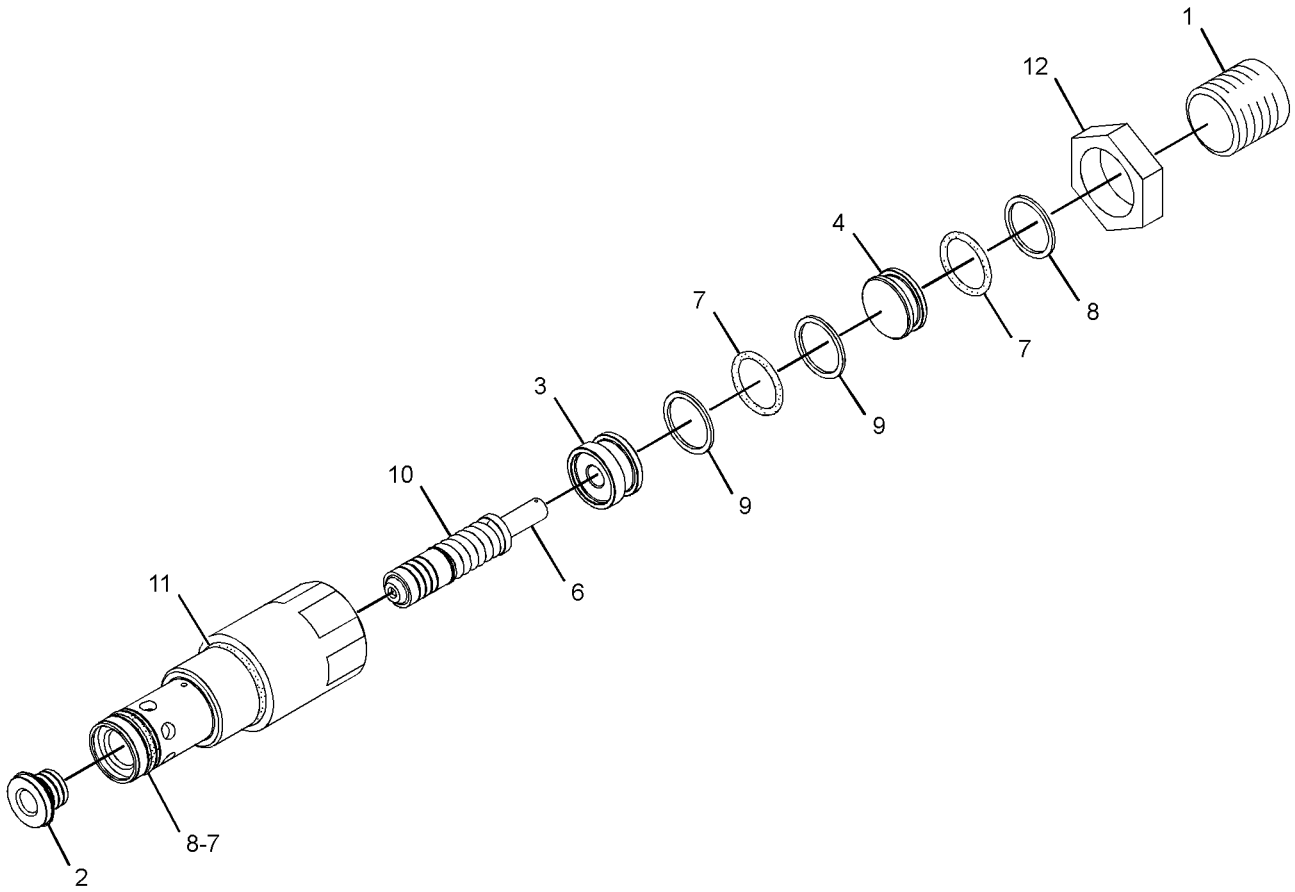

GRAPHIC #1 **<END>** g01413822

309-9973 VALVE GP-RELIEF–LINE

S/N: CLA1-UP

PART OF 282-7420, 282-7425 LINES GP-FRONT, 270-5977 VALVE GP-MAIN CONTROL

ALSO AN ATTACHMENT

SMCS-5069, 5117 **i02852740**

NOTE	REF NO	GRAPHIC REF	PART NUMBER	QTY	PART NAME 1 2 3 4 5 6 (PRODUCT LEVEL)	SEE PAGE
	1	1	**095-1514**	1	SEAL-O-RING	
	2	1	**095-1519**	1	SEAL-O-RING	
	3	1	**095-1575**	1	SEAL-O-RING	
	4	1	**095-1591**	1	SEAL-O-RING	
	5	1	**095-1592**	1	SEAL-O-RING	
	6	1	**095-1783**	1	RING-BACKUP	
	7	1	**095-8024**	1	RING-BACKUP	

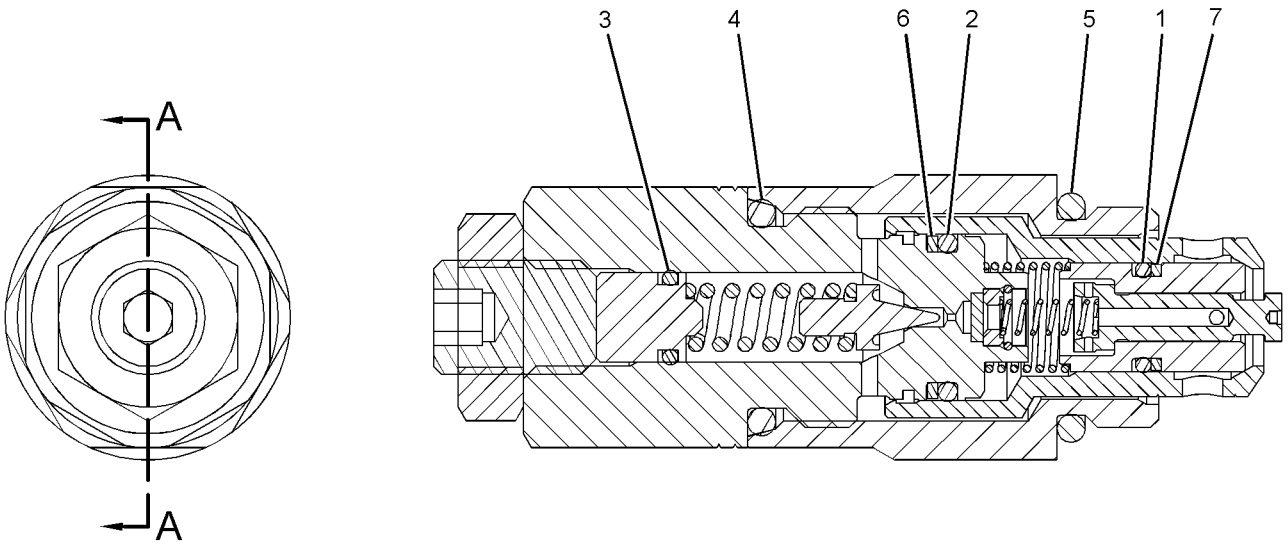

SECTION A-A

GRAPHIC #1 **<END>** g01425186

HYDRAULIC SYSTEM

309-9974 VALVE GP-RELIEF

S/N: CLA1-UP
PART OF 270-5977 VALVE GP-MAIN CONTROL
ALSO AN ATTACHMENT

SMCS-5069, 5117 **i02868535**

NOTE	REF NO	GRAPHIC REF	PART NUMBER	QTY	PART NAME 1 2 3 4 5 6 (PRODUCT LEVEL)	SEE PAGE
	1	1	**095-1514**	1	SEAL-O-RING	
	2	1	**095-1519**	1	SEAL-O-RING	
	3	1	**095-1575**	1	SEAL-O-RING	
	4	1	**095-1591**	1	SEAL-O-RING	
	5	1	**095-1592**	1	SEAL-O-RING	
	6	1	**095-1783**	1	RING-BACKUP	
	7	1	**095-8024**	1	RING-BACKUP	

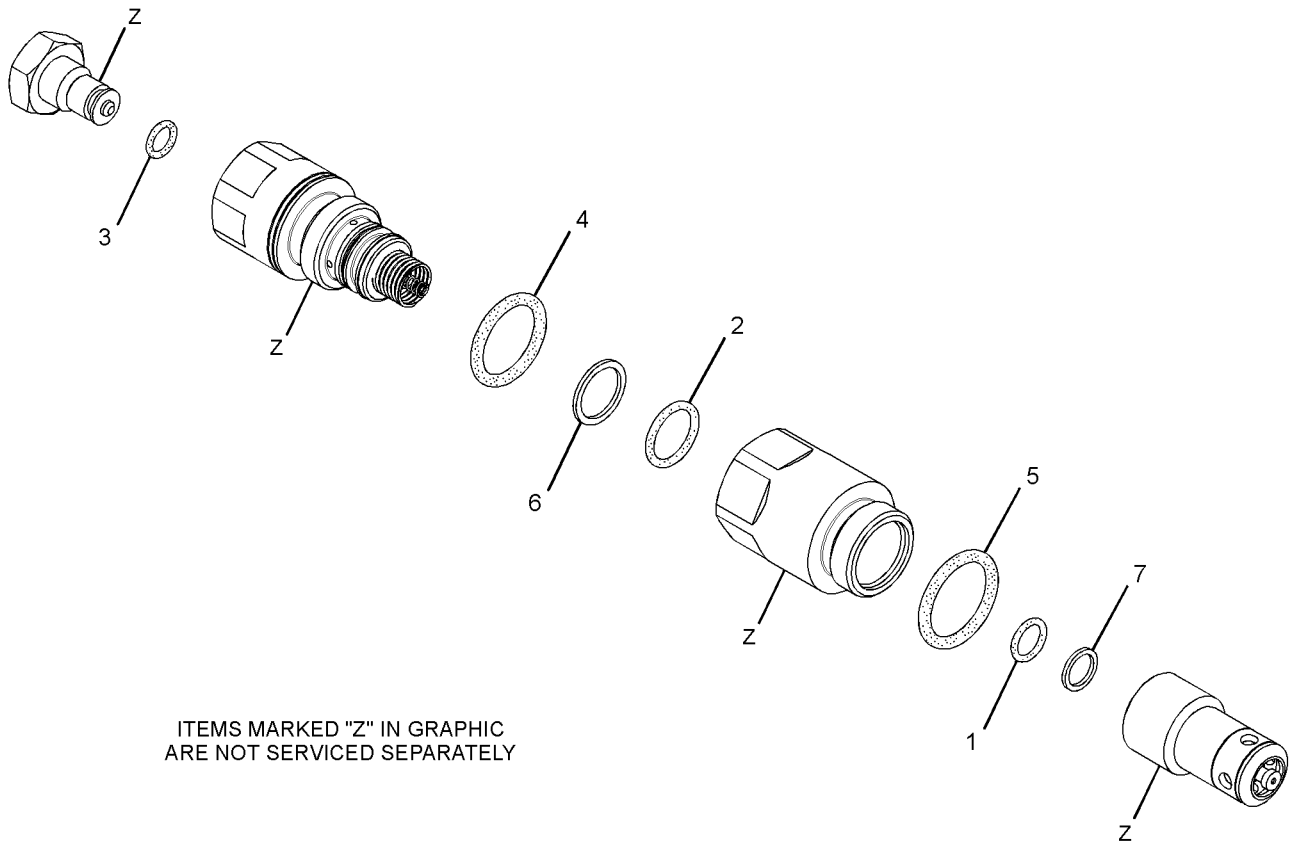

ITEMS MARKED "Z" IN GRAPHIC
ARE NOT SERVICED SEPARATELY

GRAPHIC #1 **<END>** g01445060

309-9976 VALVE GP-RELIEF

S/N: CLA1-UP
PART OF 259-7804 VALVE GP-CONTROL
AN ATTACHMENT

SMCS-5069, 5117 **i02845984**

NOTE	REF NO	GRAPHIC REF	PART NUMBER	QTY	PART NAME 1 2 3 4 5 6 (PRODUCT LEVEL)	SEE PAGE
	1	1	**095-1514**	1	SEAL-O-RING	
	2	1	**095-1519**	1	SEAL-O-RING	
	3	1	**095-1575**	1	SEAL-O-RING	
	4	1	**095-1591**	1	SEAL-O-RING	
	5	1	**095-1592**	1	SEAL-O-RING	
	6	1	**095-1783**	1	RING-BACKUP	
	7	1	**095-8024**	1	RING-BACKUP	

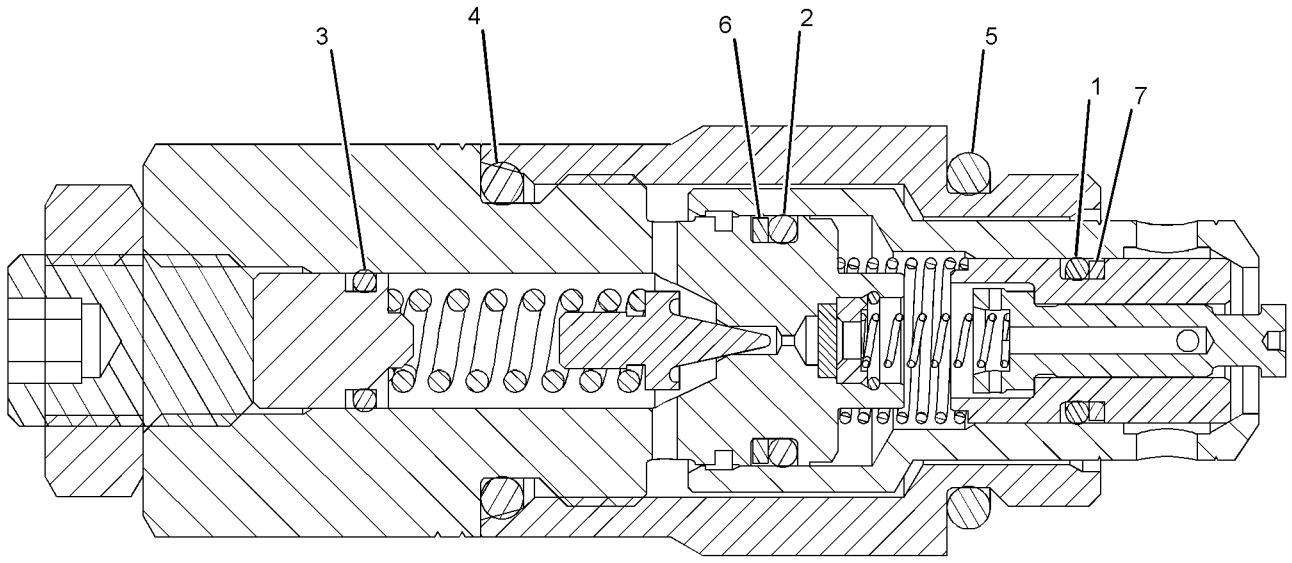

GRAPHIC #1 **<END>** g01419177

HYDRAULIC SYSTEM

310-0062 VALVE GP-RELIEF

S/N: CLA1-UP

PART OF 259-7804, 310-0157 VALVE GP-CONTROL

AN ATTACHMENT

SMCS-5069, 5117 **i02845986**

NOTE	REF NO	GRAPHIC REF	PART NUMBER	QTY	PART NAME 1 2 3 4 5 6 (PRODUCT LEVEL)	SEE PAGE
	1	1	**095-1514**	1	SEAL-O-RING	
	2	1	**095-1519**	1	SEAL-O-RING	
	3	1	**095-1575**	1	SEAL-O-RING	
	4	1	**095-1591**	1	SEAL-O-RING	
	5	1	**095-1592**	1	SEAL-O-RING	
	6	1	**095-1783**	1	RING-BACKUP	
	7	1	**095-8024**	1	RING-BACKUP	

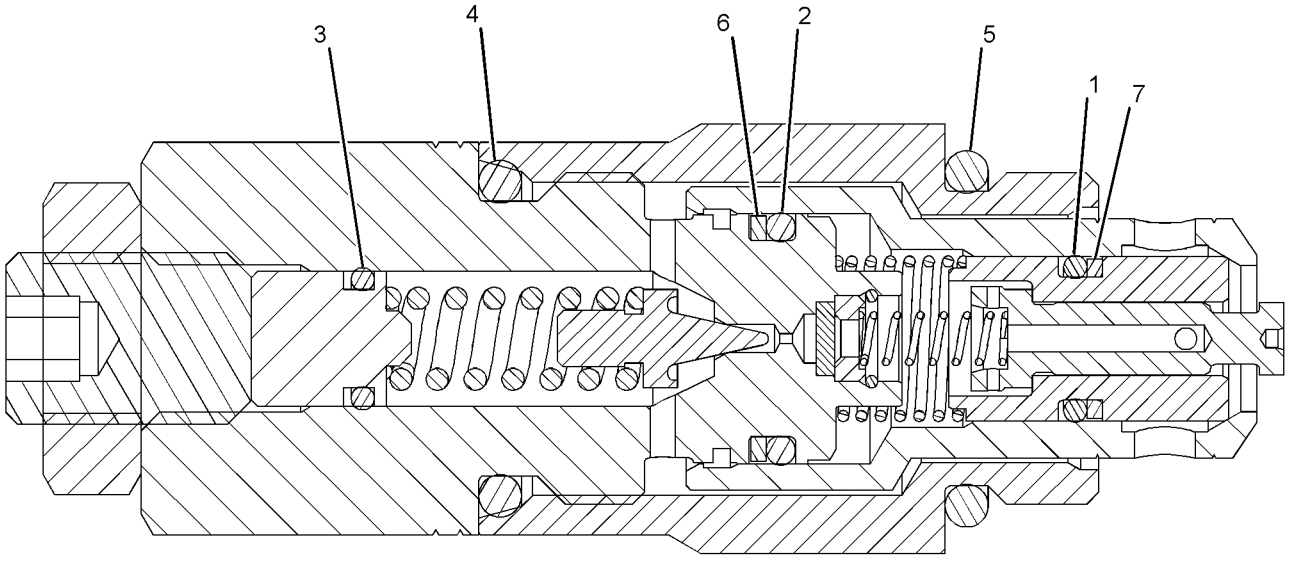

GRAPHIC #1 **<END>** g01419177

310-0063 VALVE GP-RELIEF

S/N: CLA1-UP

PART OF 285-1600, 297-0374 VALVE GP-CONTROL

AN ATTACHMENT

SMCS-5069, 5117 **i02862897**

NOTE	REF NO	GRAPHIC REF	PART NUMBER	QTY	PART NAME 1 2 3 4 5 6 (PRODUCT LEVEL)	SEE PAGE
	1	1	**095-1514**	1	SEAL-O-RING	
	2	1	**095-1519**	1	SEAL-O-RING	
	3	1	**095-1575**	1	SEAL-O-RING	
	4	1	**095-1591**	1	SEAL-O-RING	
	5	1	**095-1592**	1	SEAL-O-RING	
	6	1	**095-1783**	1	RING-BACKUP	
	7	1	**095-8024**	1	RING-BACKUP	

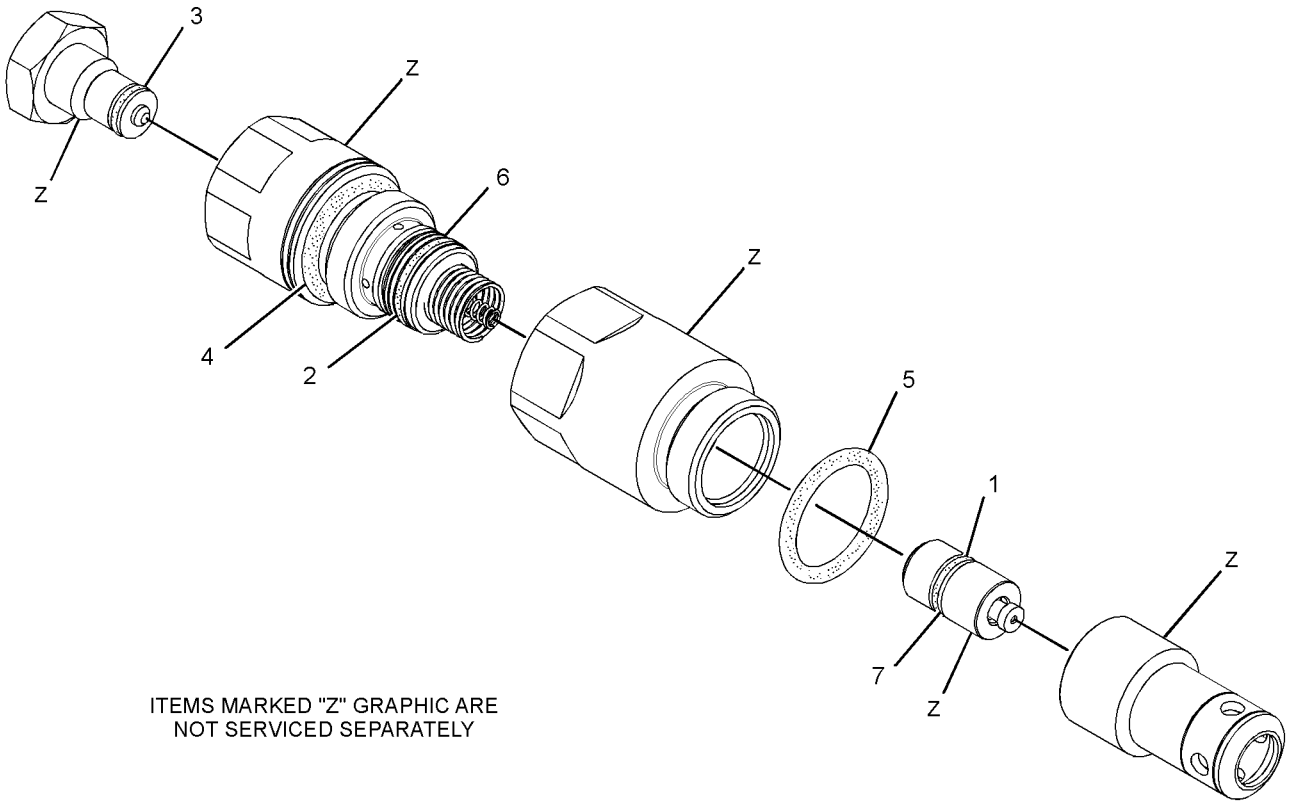

ITEMS MARKED "Z" GRAPHIC ARE
NOT SERVICED SEPARATELY

GRAPHIC #1 **<END>** g01439985

HYDRAULIC SYSTEM

171-0024 VALVE GP-SELECTOR

S/N: CLA1-UP
PART OF 278-6721 LINES GP-PILOT
AN ATTACHMENT

SMCS-5065 **i02811435**

NOTE	REF NO	GRAPHIC REF	PART NUMBER	QTY	PART NAME 1 2 3 4 5 6 (PRODUCT LEVEL)	SEE PAGE
M	1	1	**8T-1159**	8	BOLT-SOCKET HEAD (M10X1.5X25-MM)	
	2	1	**085-7076**	1	COVER	
	3	1	**085-7079**	1	GRIP	
	4	1	**085-7080**	1	LEVER	
	5	1	**085-7084**	1	BOLT (M8X1.25X35-MM)	
	6	1	**095-1710**	2	SEAL-O-RING	
	7	1	**085-7075**	1	COVER	
	8	1	**095-1590**	1	SEAL-O-RING	
	9	1	**095-1787**	1	RING-BACKUP	
	10	1	**085-7083**	1	PIN-SPRING	
	11	1	**6I-6923**	1	SEAL	
	12	1	**085-7085**	1	BALL	
	13	1	**095-1582**	1	SEAL-O-RING	
	14	1	**085-7078**	1	SPRING	
	15	1	**085-7077**	1	PLUG	
	16	1	**085-7081**	4	NEEDLE	
	17	1	**085-7082**	14	PLUG	
	18	1	**169-1165**	1	PIN	
	19	1	**197-0758**	2	SCREW	

M-METRIC PART

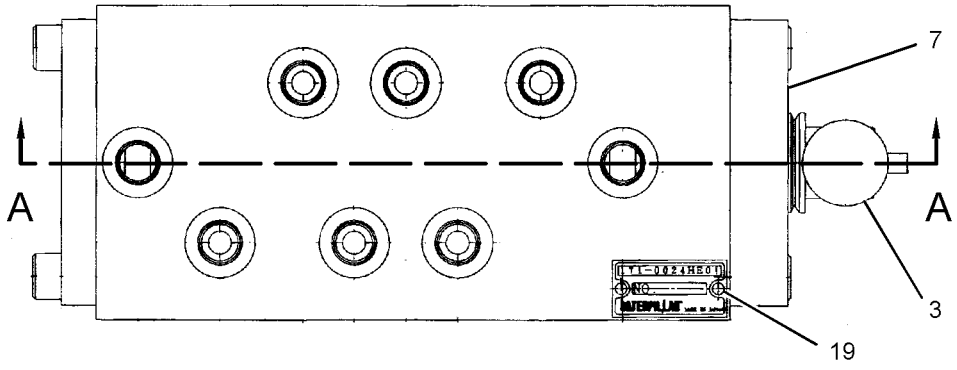

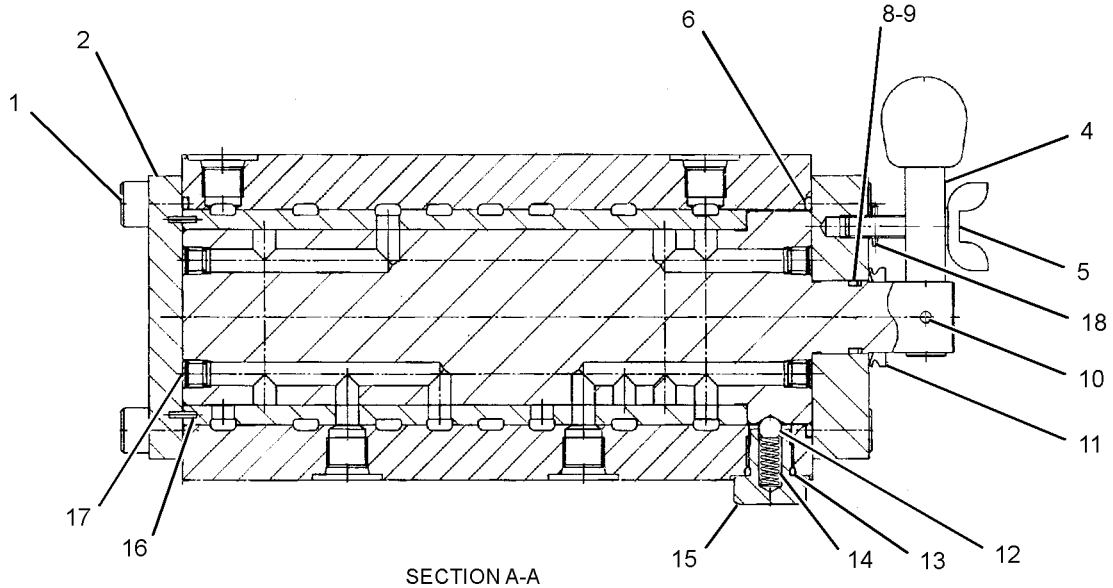

SECTION A-A

GRAPHIC #1 **<END>** g01411403

112-0083 VALVE GP-SHUTTLE

S/N: CLA1-UP
PART OF 278-6726 LINES GP-PILOT
AN ATTACHMENT

SMCS-5079 **i03093680**

NOTE	REF NO	GRAPHIC REF	PART NUMBER	QTY	PART NAME 1 2 3 4 5 6 (PRODUCT LEVEL)	SEE PAGE
Z	1	1		1	BODY	
	2	1	**2D-6642**	4	BALL	
	3	1	**112-0085**	4	PLUG	
	4	1	**3J-1907**	4	SEAL-O-RING	

Z-NOT SERVICED SEPARATELY

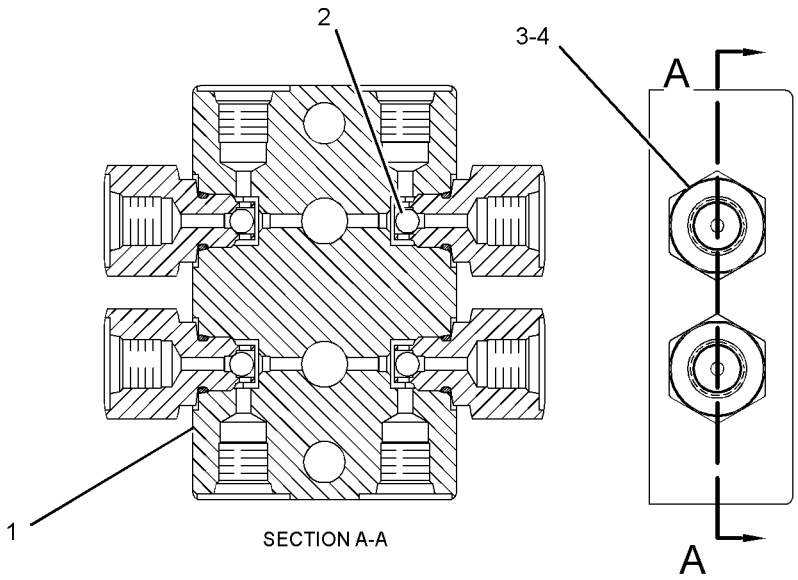

GRAPHIC #1 **<END>** g01206121

HYDRAULIC SYSTEM

123-2430 VALVE GP-SHUTTLE

S/N: CLA1-UP
PART OF 282-7389, 307-5147 LINES GP-PILOT
ALSO AN ATTACHMENT

SMCS-5079 **i01884911**

NOTE	REF NO	GRAPHIC REF	PART NUMBER	QTY	PART NAME 1 2 3 4 5 6 (PRODUCT LEVEL)	SEE PAGE
Z	1	1		1	BODY-VALVE	
	2	1	**4B-9783**	1	BALL	
	3	1	**3J-1907**	2	SEAL-O-RING	
	4	1	**123-2552**	2	CONNECTOR	

Z-NOT SERVICED SEPARATELY

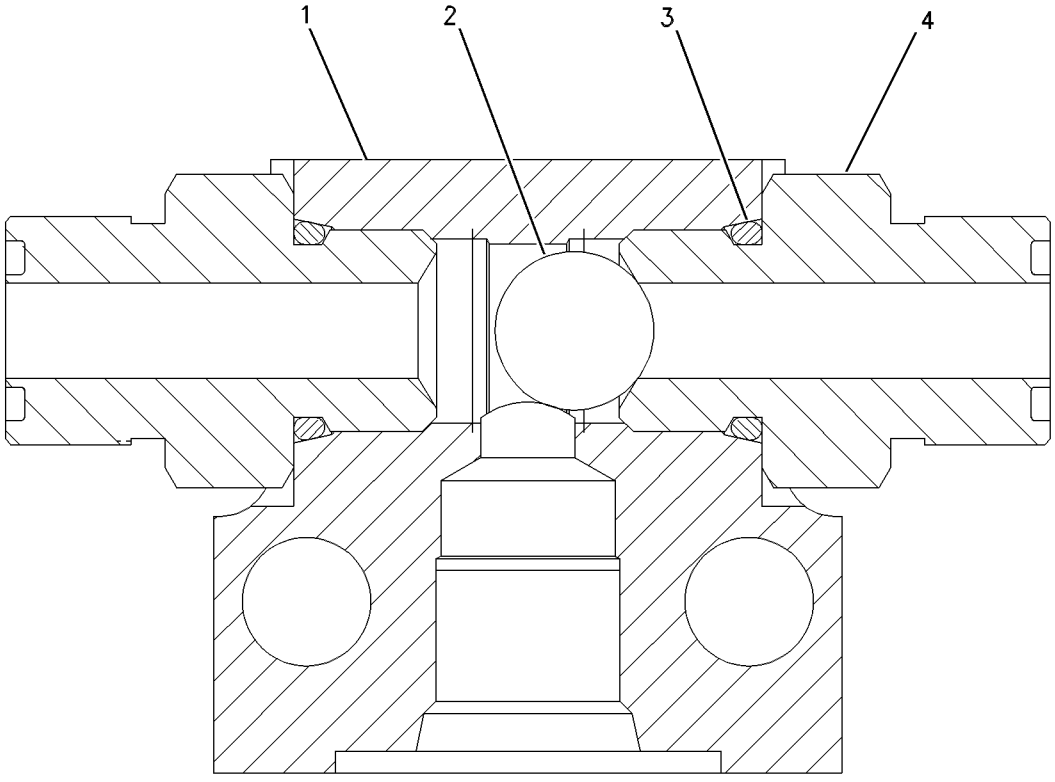

GRAPHIC #1 **<END>** g00652899

123-2549 VALVE GP-SHUTTLE–1-PUMP/2-PUMP

S/N: CLA1-UP

PART OF 282-7421, 282-7426 LINES GP-PILOT

AN ATTACHMENT

SMCS-5079 **i02210148**

NOTE	REF NO	GRAPHIC REF	PART NUMBER	QTY	PART NAME 1 2 3 4 5 6 (PRODUCT LEVEL)	SEE PAGE
	1	1	**123-2511**	1	TEE	
	2	1	**4B-9783**	1	BALL	
	3	1	**123-2552**	2	CONNECTOR	
	4	1	**3J-1907**	2	SEAL-O-RING	

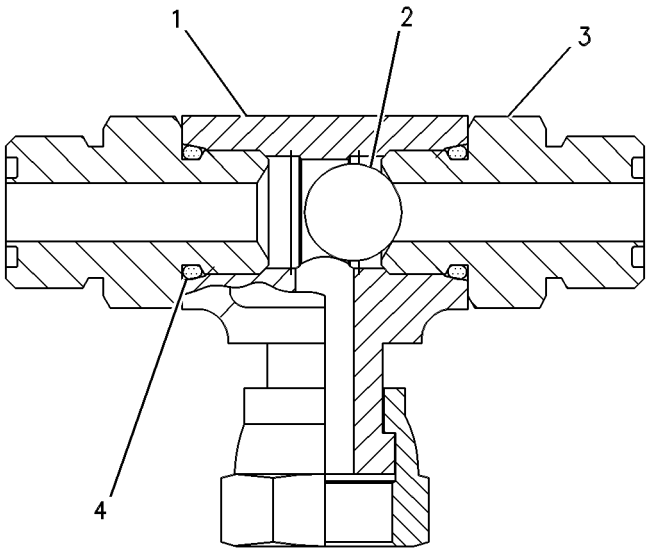

GRAPHIC #1 **<END>** g00274258

HYDRAULIC SYSTEM

171-0198 VALVE GP-SHUTTLE

S/N: CLA1-UP

PART OF 171-0188 VALVE GP-SOLENOID

AN ATTACHMENT

SMCS-5079 **i01269960**

NOTE	PART NUMBER	QTY	PART NAME 1 2 3 4 5 6 (PRODUCT LEVEL)	SEE PAGE
	185-0407	1	KIT-SEAL (SHUTTLE VALVE)	

<END>

185-0462 VALVE GP-SHUTTLE–PILOT

S/N: CLA1-UP
PART OF 260-7891 LINES GP-PILOT
AN ATTACHMENT

SMCS-5079 **i01612080**

NOTE	REF NO	GRAPHIC REF	PART NUMBER	QTY	PART NAME 1 2 3 4 5 6 (PRODUCT LEVEL)	SEE PAGE
	1	1	**7I-8084**	4	PLUG	
	2	1	**185-0463**	1	SEAT	
	3	1	**4B-9880**	7	BALL	
	4	1	**165-9464**	6	SEAT	
	5	1	**095-1578**	7	SEAL-O-RING	
	6	1	**107-6479**	7	PLUG	

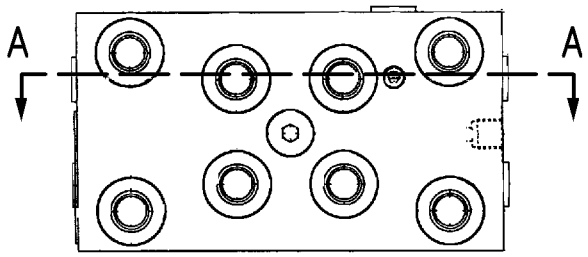

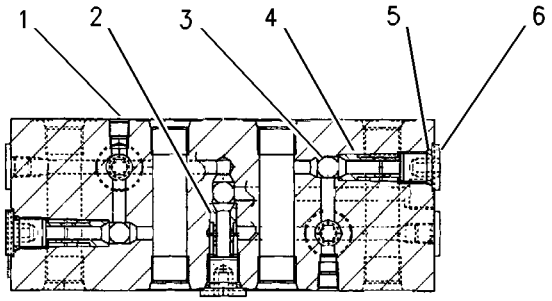

SECTION A-A

GRAPHIC #1 **<END>** g00699270

111-9916 VALVE GP-SOLENOID–PRESSURE REDUCING

S/N: CLA1-UP

PART OF 311-7403 PUMP GP-PISTON, 171-0188, 259-7430 VALVE GP-SOLENOID, 238-0751, 270-5766, 297-0684, 297-0685 VALVE GP-SOLENOID & PRESS REDC

ALSO AN ATTACHMENT

SMCS-5479 **i02649387**

NOTE	REF NO	GRAPHIC REF	PART NUMBER	QTY	PART NAME 1 2 3 4 5 6 (PRODUCT LEVEL)	SEE PAGE
	1	1	**095-1750**	1	SEAL-O-RING	
	2	1	**6V-8398**	1	SEAL-O-RING	
	3	1	**095-1751**	1	SEAL-O-RING	
	4	1	**095-1586**	1	SEAL-O-RING	
M	5	1	**114-0623**	1	NUT AS (M6X1-THD)	

M-METRIC PART

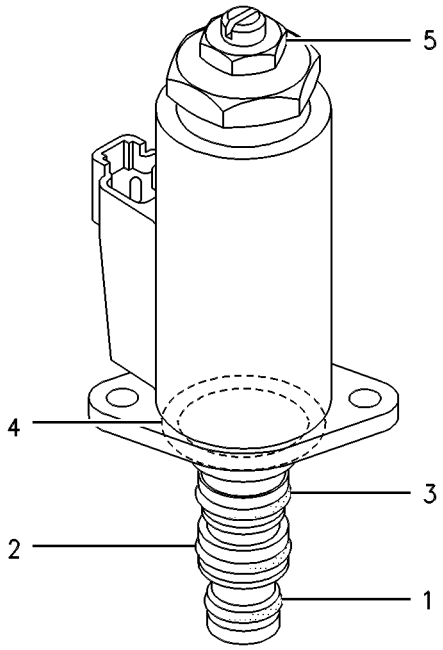

GRAPHIC #1 **<END>** g00258219

116-3526 VALVE GP-SOLENOID

S/N: CLA1-UP
24-VOLT
PART OF 266-7932 VALVE GP-SOLENOID
AN ATTACHMENT

SMCS-5479 **i01229341**

NOTE	REF NO	GRAPHIC REF	PART NUMBER	QTY	PART NAME 1 2 3 4 5 6 (PRODUCT LEVEL)	SEE PAGE
	1	1	**126-6514**	1	SEAL-O-RING	
	2	1	**126-6515**	1	SEAL-O-RING	
	3	1	**126-6516**	1	SEAL-O-RING	
	4	1	**095-1586**	1	SEAL-O-RING	

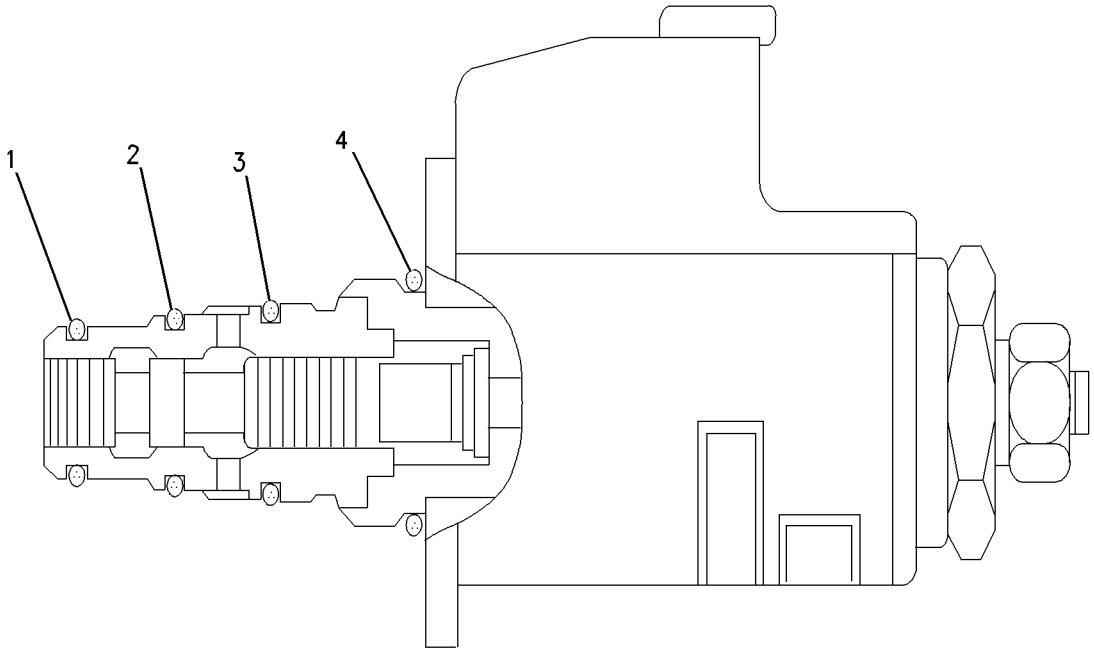

GRAPHIC #1 **<END>** g00669557

HYDRAULIC SYSTEM

121-1490 VALVE GP-SOLENOID

S/N: CLA1-UP
PART OF 226-3109 VALVE GP-SOLENOID
AN ATTACHMENT

SMCS-5479 **i01897979**

NOTE	REF NO	GRAPHIC REF	PART NUMBER	QTY	PART NAME 1 2 3 4 5 6 (PRODUCT LEVEL)	SEE PAGE
	1	1	**095-1750**	1	SEAL-O-RING	
	2	1	**6V-8398**	1	SEAL-O-RING	
	3	1	**095-1751**	1	SEAL-O-RING	
	4	1	**095-1586**	1	SEAL-O-RING	
M	5	1	**114-0623**	1	NUT AS (M6X1-THD)	

M-METRIC PART

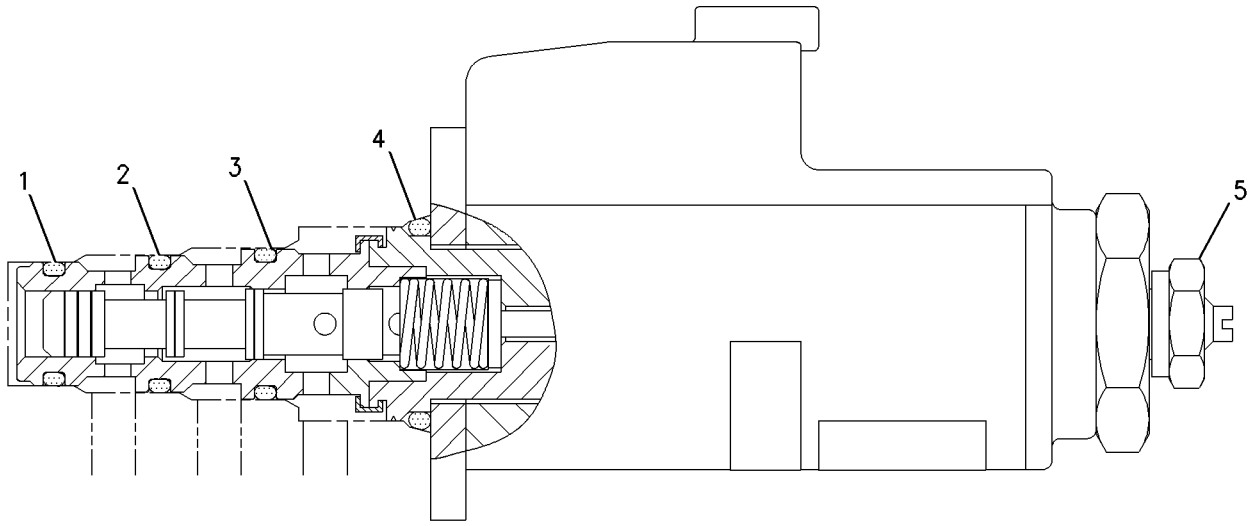

GRAPHIC #1 **<END>** g00989646

HYDRAULIC SYSTEM

121-1491 VALVE GP-SOLENOID

S/N: CLA1-UP

PART OF 239-8697, 239-8998 MANIFOLD GP-CONTROL

SMCS-5479 **i02196717**

NOTE	REF NO	GRAPHIC REF	PART NUMBER	QTY	PART NAME 1 2 3 4 5 6 (PRODUCT LEVEL)	SEE PAGE
	1	1	**095-1750**	1	SEAL-O-RING	
	2	1	**6V-8398**	1	SEAL-O-RING	
	3	1	**095-1751**	1	SEAL-O-RING	
	4	1	**095-1586**	1	SEAL-O-RING	
M	5	1	**114-0623**	1	NUT AS (M6X1-THD)	

M-METRIC PART

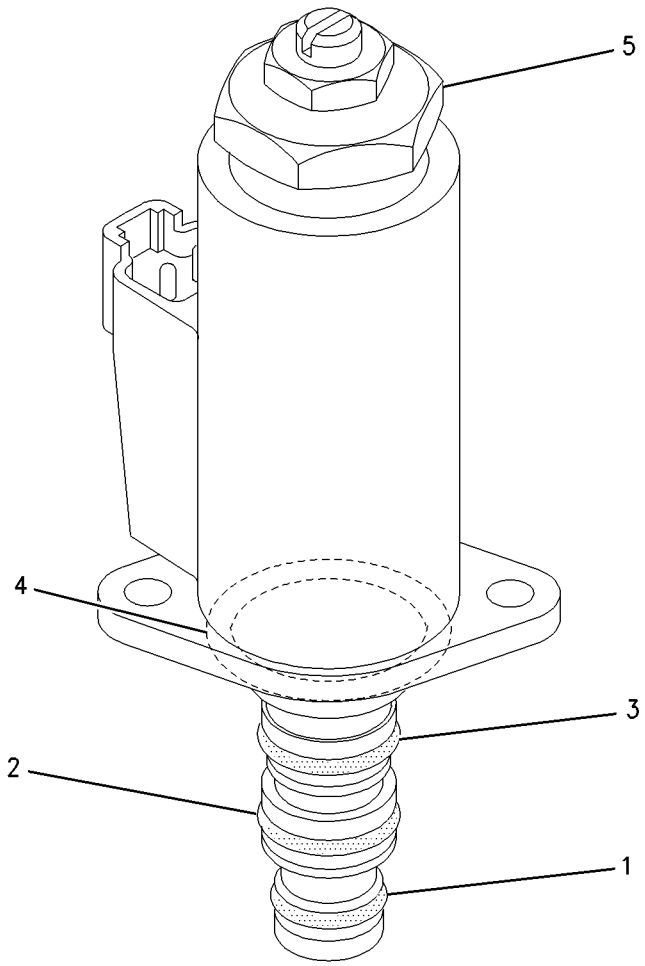

GRAPHIC #1 **<END>** g00928680

HYDRAULIC SYSTEM

121-6303 VALVE GP-SOLENOID

S/N: CLA1-UP

PART OF 282-7421, 282-7426 LINES GP-PILOT

AN ATTACHMENT

SMCS-5479 **i01272110**

NOTE	REF NO	GRAPHIC REF	PART NUMBER	QTY	PART NAME 1 2 3 4 5 6 (PRODUCT LEVEL)	SEE PAGE
	1	1	**7I-8102**	1	VALVE AS	
	2	1	**121-6304**	1	COIL GP	
M	3	1	**099-0822**	2	BOLT-SOCKET HEAD (M5X0.8X10-MM)	
	4	1	**095-1519**	1	SEAL-O-RING	
	5	1	**7I-0986**	1	PLUG	
	6	1	**7I-7403**	1	SPRING	
	7	1	**095-1578**	1	SEAL-O-RING	

M-METRIC PART

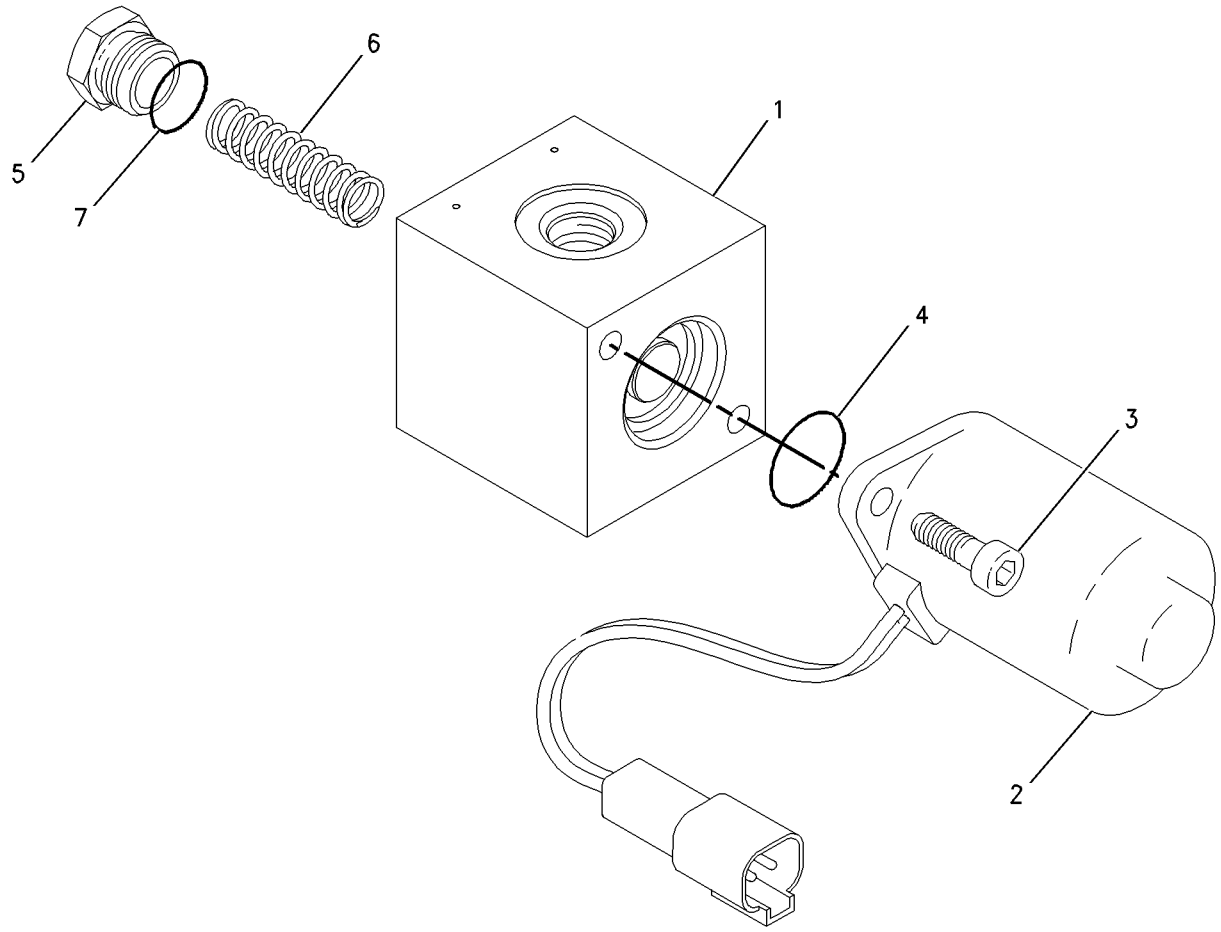

GRAPHIC #1 **<END>** g00685554

171-0188 VALVE GP-SOLENOID–NEG FLOW CONT, PROPN RED VALVE

S/N: CLA1-UP

PART OF 282-7421, 282-7426 LINES GP-PILOT

AN ATTACHMENT

SMCS-5479 **i03255367**

NOTE	REF NO	GRAPHIC REF	PART NUMBER	QTY	PART NAME 1 2 3 4 5 6 (PRODUCT LEVEL)	SEE PAGE
Y	1	1	**111-9916**	1	VALVE GP-SOLENOID (PRESSURE REDUCING)	638
M	2	1	**8T-0288**	2	BOLT (M5X0.8X12-MM)	
Y	3	1	**171-0198**	2	VALVE GP-SHUTTLE	636
	4	1	**7I-8084**	6	PLUG	

M-METRIC PART
Y-SEPARATE ILLUSTRATION

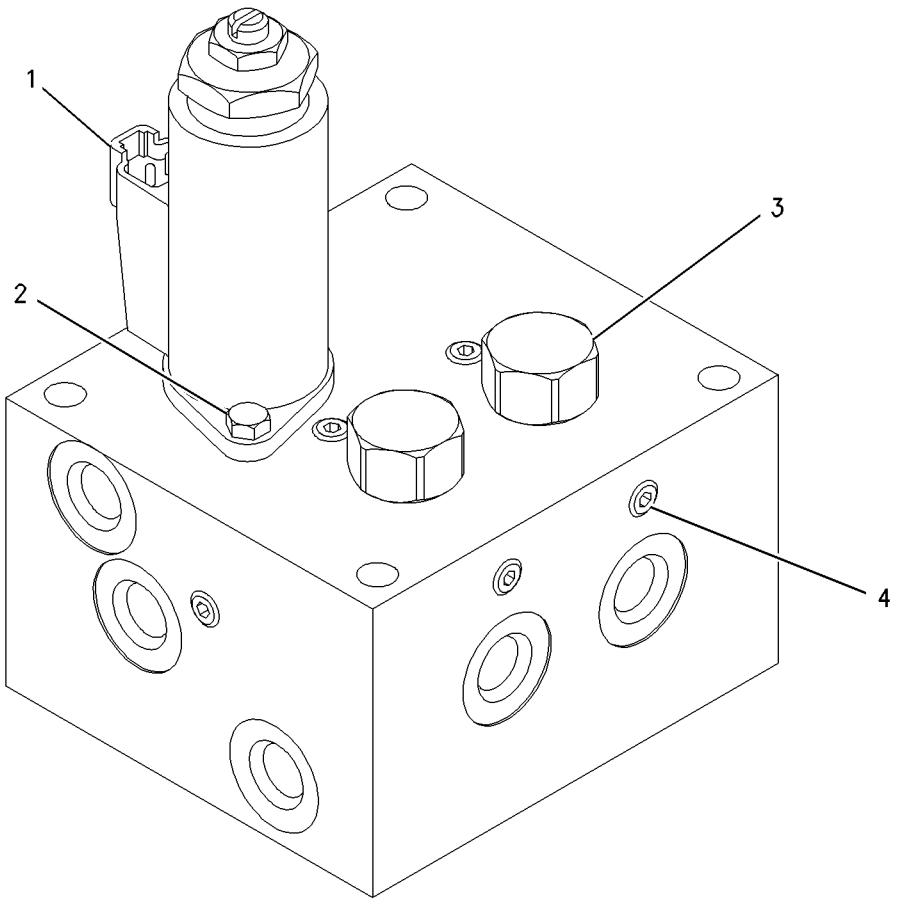

GRAPHIC #1 **<END>** g00681111

226-3109 VALVE GP-SOLENOID—NEGATIVE FLOW CONTROL

S/N: CLA1-UP

PART OF 282-7421 LINES GP-PILOT

AN ATTACHMENT

SMCS-5479 **i02747443**

NOTE	REF NO	GRAPHIC REF	PART NUMBER	QTY	PART NAME 1 2 3 4 5 6 (PRODUCT LEVEL)	SEE PAGE
Y	1	1	**121-1490**	2	VALVE GP-SOLENOID (NEGATIVE FLOW CONTROL)	640
M	2	1	**8T-0288**	4	BOLT (M5X0.8X12-MM)	

M-METRIC PART
Y-SEPARATE ILLUSTRATION

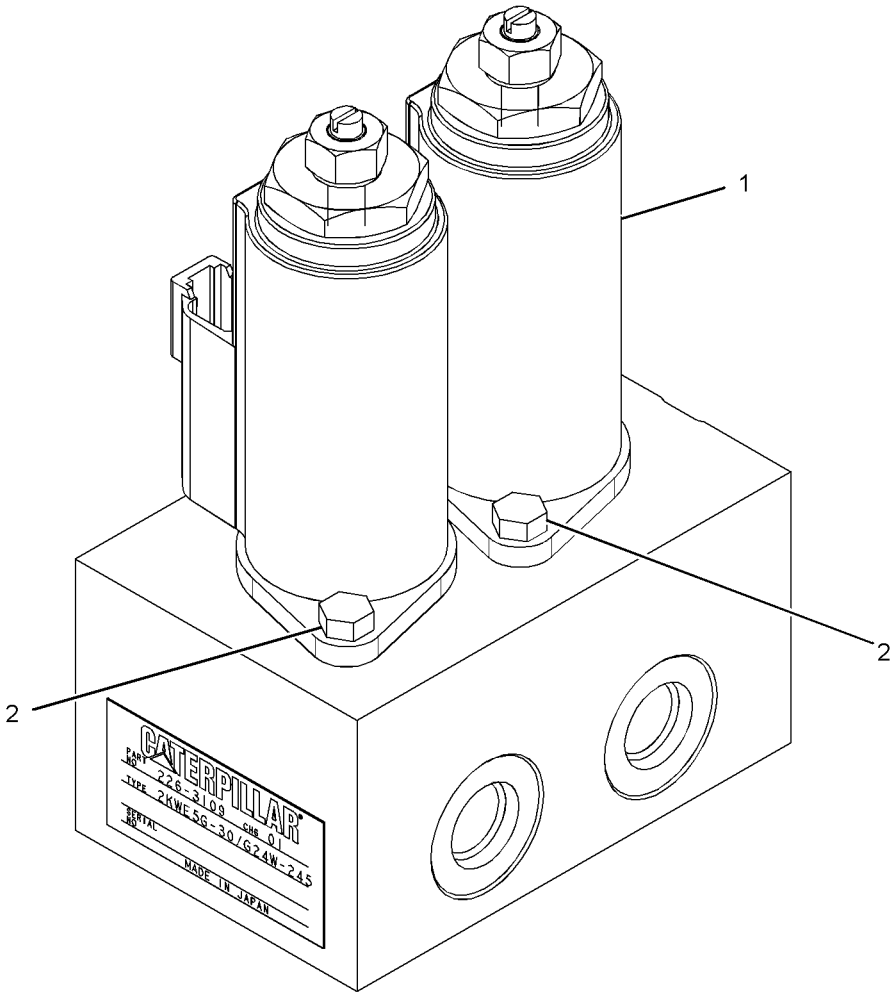

GRAPHIC #1 **<END>** g01381829

259-7430 VALVE GP-SOLENOID—PRESSURE REDUCING

S/N: CLA1-UP
PART OF 282-7426, 282-7447 LINES GP-PILOT
AN ATTACHMENT

SMCS-5479 **i03196381**

NOTE	REF NO	GRAPHIC REF	PART NUMBER	QTY	PART NAME 1 2 3 4 5 6 (PRODUCT LEVEL)	SEE PAGE
M	1	1	**8T-0288**	4	BOLT (M5X0.8X12-MM)	
Y	2	1	**111-9916**	2	VALVE GP-SOLENOID (PRESSURE REDUCING)	638

M-METRIC PART
Y-SEPARATE ILLUSTRATION

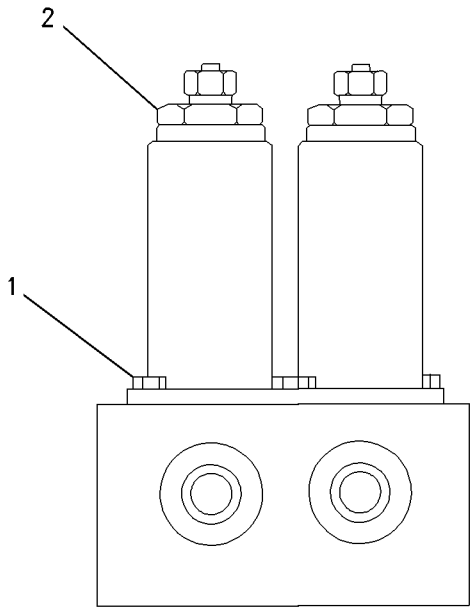

GRAPHIC #1 **<END>** g00785417

266-7932 VALVE GP-SOLENOID—FINE SWING

S/N: CLA1-UP
PART OF 267-6841 DRIVE GP-SWING
AN ATTACHMENT

SMCS-5479 **i02752937**

NOTE	REF NO	GRAPHIC REF	PART NUMBER	QTY	PART NAME 1 2 3 4 5 6 (PRODUCT LEVEL)	SEE PAGE
	1	1	**8T-6759**	3	PLUG-PIPE	
Y	2	1	**116-3526**	1	VALVE GP-SOLENOID (24-VOLT) (FINE SWING)	639
	3	1	**190-4896**	2	PLUG	
	4	1	**266-8070**	1	BLOCK	
	5	1	**283-6099**	2	ORIFICE	
M	6	1	**7I-2272**	2	BOLT (M5X0.8X12-MM)	

M-METRIC PART
Y-SEPARATE ILLUSTRATION

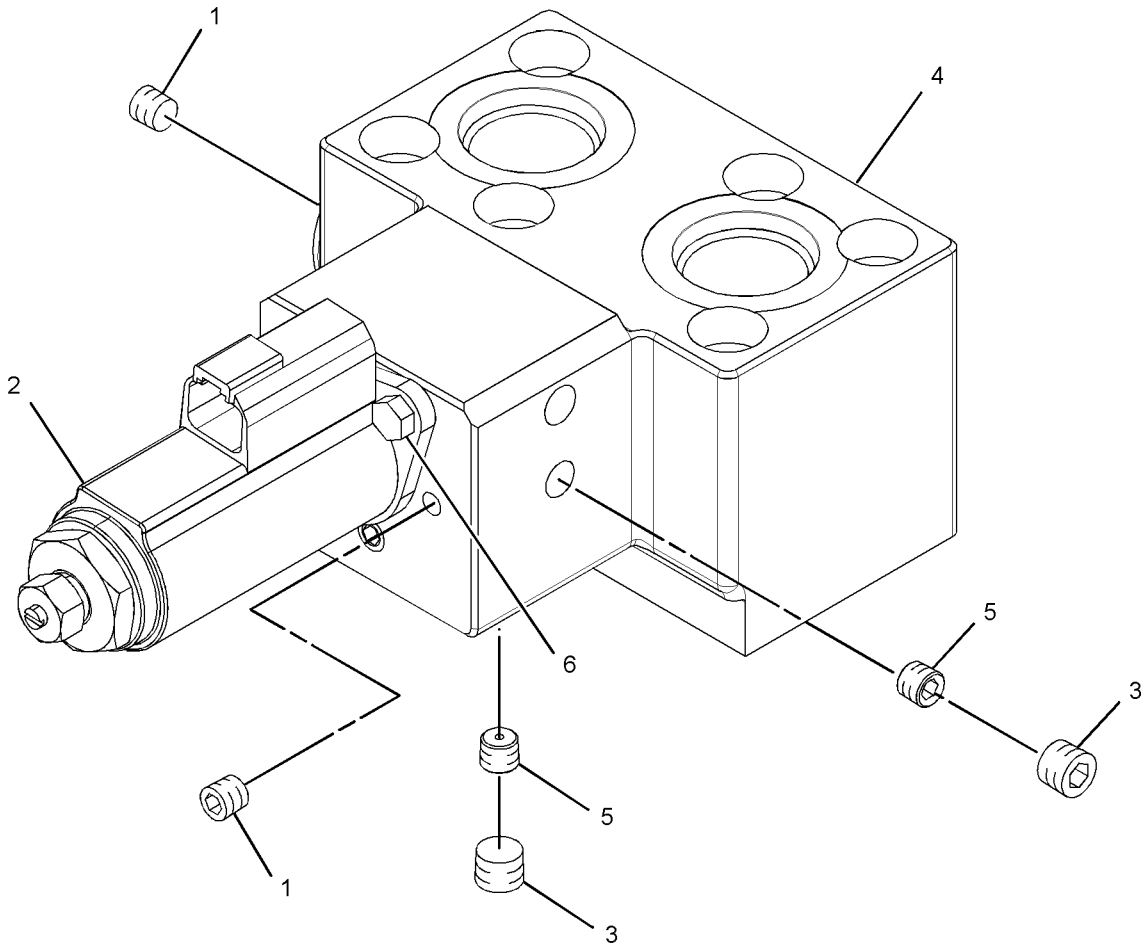

GRAPHIC #1 **<END>** g01382010

315-4412 VALVE GP-SOLENOID

S/N: CLA1-UP

PART OF 322-8717 VALVE GP-SOLENOID

AN ATTACHMENT

SMCS-5479 **i02954227**

NOTE	REF NO	GRAPHIC REF	PART NUMBER	QTY	PART NAME 1 2 3 4 5 6 (PRODUCT LEVEL)	SEE PAGE
	1	1	**126-6514**	1	SEAL-O-RING	
	2	1	**126-6515**	1	SEAL-O-RING	
	3	1	**126-6516**	1	SEAL-O-RING	
	4	1	**095-1586**	1	SEAL-O-RING	

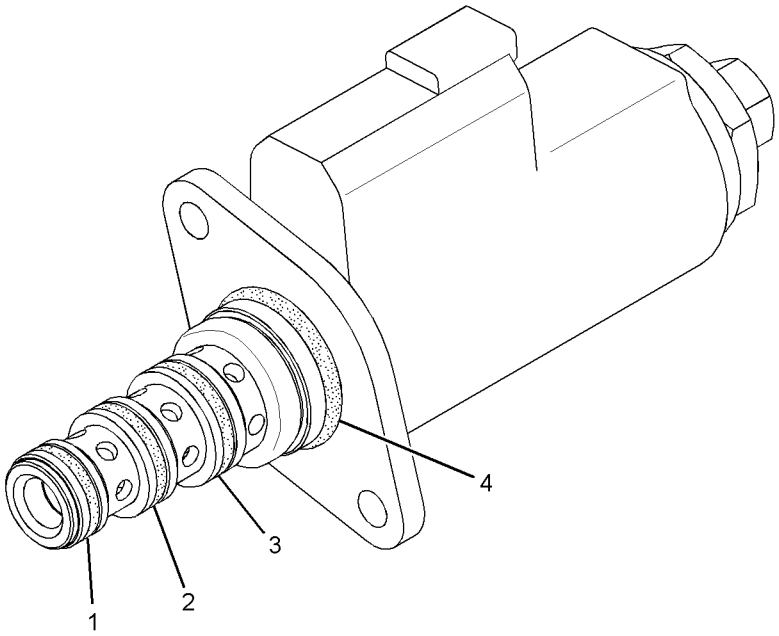

GRAPHIC #1 **<END>** g01456627

HYDRAULIC SYSTEM

322-8717 VALVE GP-SOLENOID—FINE SWING

S/N: CLA1-UP
PART OF 267-6841 DRIVE GP-SWING
AN ATTACHMENT

SMCS-5479 **i03153990**

NOTE	REF NO	GRAPHIC REF	PART NUMBER	QTY	PART NAME 1 2 3 4 5 6 (PRODUCT LEVEL)	SEE PAGE
	1	1	**8T-6759**	3	PLUG-PIPE	
	2	1	**190-4896**	2	PLUG	
	3	1	**266-8070**	1	BLOCK	
	4	1	**283-6099**	2	ORIFICE	
Y	5	1	**315-4412**	1	VALVE GP-SOLENOID (24-VOLT) (FINE SWING)	647
M	6	1	**7I-2272**	2	BOLT (M5X0.8X12-MM)	

M-METRIC PART
Y-SEPARATE ILLUSTRATION

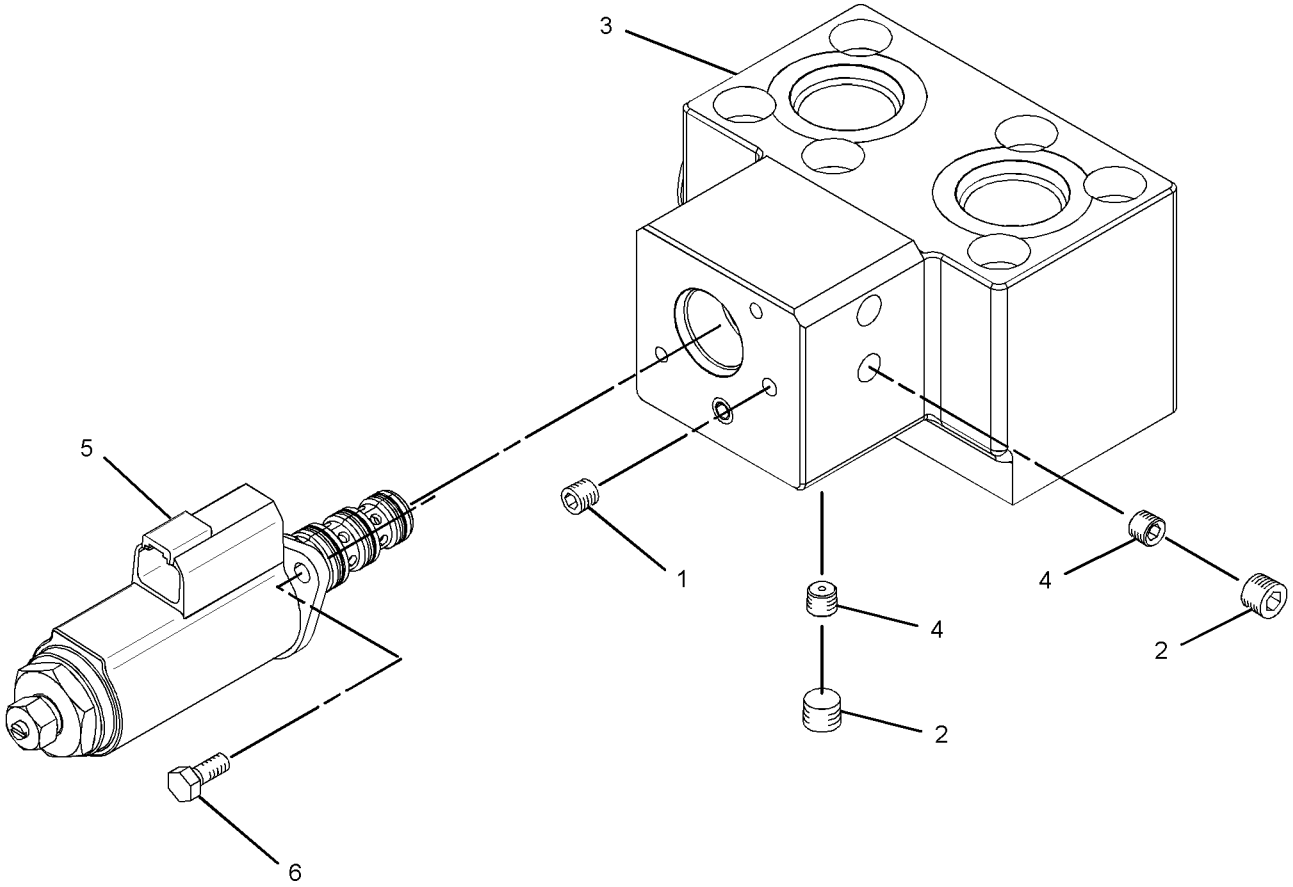

GRAPHIC #1 **<END>** g01622516

260-3877 VALVE GP-SOLENOID & MANIFOLD—QUICK COUPLER

S/N: CLA1-UP
24-VOLT
PART OF 282-7408 LINES GP-FRONT
FIELD REPLACEMENT ORDER 328-2035—PAGE 650
AN ATTACHMENT

SMCS-5264, 5479 **i03091731**

NOTE	REF NO	GRAPHIC REF	PART NUMBER	QTY	PART NAME 1 2 3 4 5 6 (PRODUCT LEVEL)	SEE PAGE
	1	1	**156-5970**	1	NUT (1/2-20-THD)	
	2	1	**260-3883**	1	COIL AS-SOLENOID	
		1	**1S-9593**	2	STRAP-CABLE	
		1	**186-3735**	2	PIN-CONNECTOR (16-GA TO 18-GA)	
		1	**230-4012**	1	RECEPTACLE AS-CONNECTOR (2-PIN)	

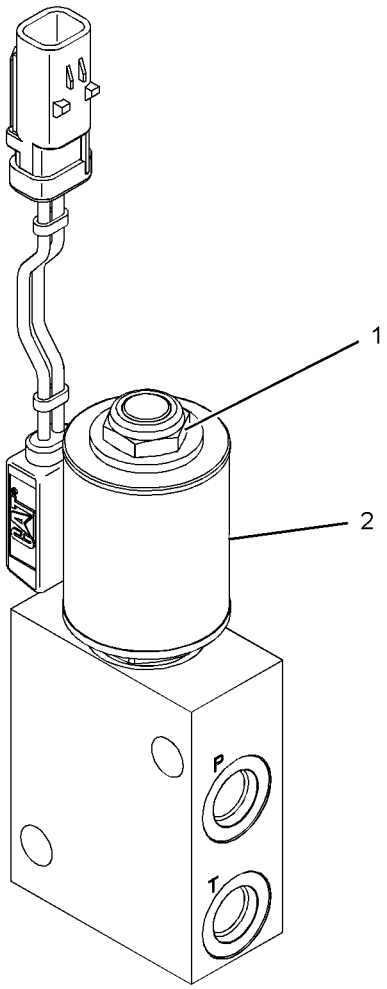

GRAPHIC #1 **<END>** g01573003

328-2035 VALVE GP-SOLENOID & MANIFOLD—QUICK COUPLER

S/N: CLA1-UP

FIELD REPLACEMENT FOR 260-3877—PAGE 649

SMCS-5264, 5479 **i03091800**

NOTE	REF NO	GRAPHIC REF	PART NUMBER	QTY	PART NAME 1 2 3 4 5 6 (PRODUCT LEVEL)	SEE PAGE
	1	1	**156-5970**	1	NUT (1/2-20-THD)	
	2	1	**260-3883**	1	COIL AS-SOLENOID	
		1	**1S-9593**	2	STRAP-CABLE	
		1	**186-3735**	2	PIN-CONNECTOR (16-GA TO 18-GA)	
		1	**230-4012**	1	RECEPTACLE AS-CONNECTOR (2-PIN)	

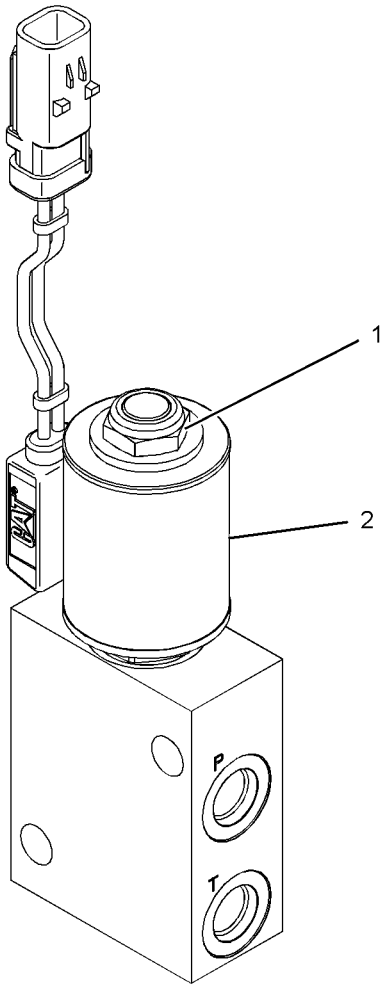

GRAPHIC #1 **<END>** g01573003

HYDRAULIC SYSTEM

238-0751 VALVE GP-SOLENOID & PRESS REDC

S/N: CLA1-UP

PART OF 282-7389 LINES GP-PILOT

SMCS-5467, 5479 **i02753368**

NOTE	REF NO	GRAPHIC REF	PART NUMBER	QTY	PART NAME 1 2 3 4 5 6 (PRODUCT LEVEL)	SEE PAGE
Y	1	1	**111-9916**	1	VALVE GP-SOLENOID (AUXILIARY, 1-WAY/2-WAY FLOW)	638
M	2	1	**8T-0288**	2	BOLT (M5X0.8X12-MM)	

M-METRIC PART
Y-SEPARATE ILLUSTRATION

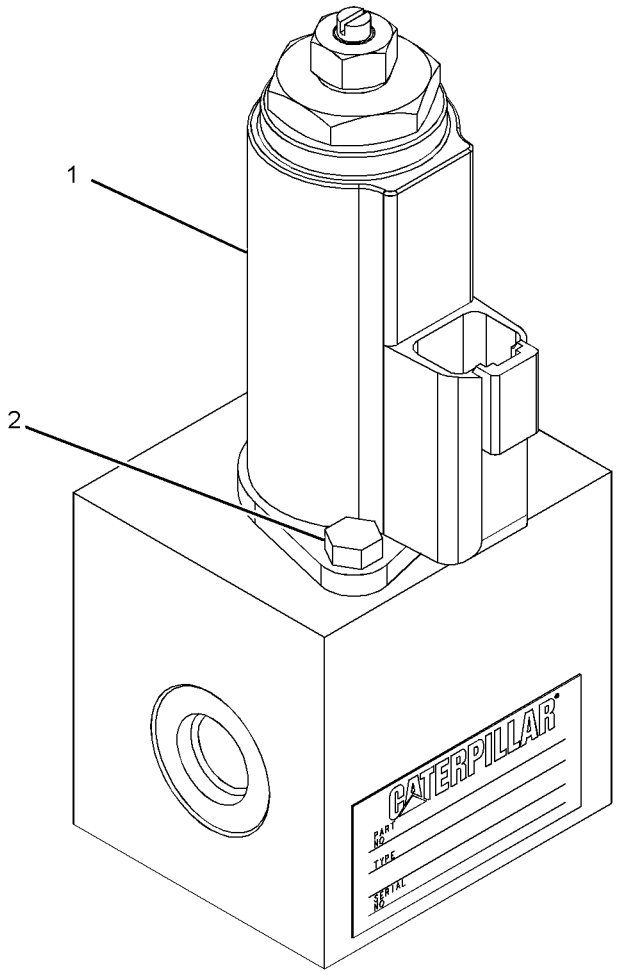

GRAPHIC #1 **<END>** g01380974

270-5766 VALVE GP-SOLENOID & PRESS REDC–

WORK TOOL CONTROL

S/N: CLA1-UP

PART OF 282-7421 LINES GP-PILOT

AN ATTACHMENT

SMCS-5467, 5479 **i02747429**

NOTE	REF NO	GRAPHIC REF	PART NUMBER	QTY	PART NAME 1 2 3 4 5 6 (PRODUCT LEVEL)	SEE PAGE
M	1	1	**8T-0288**	6	BOLT (M5X0.8X12-MM)	
Y	2	1	**111-9916**	3	VALVE GP-SOLENOID (AUXILIARY, COMBINED FUNCTION)	638

M-METRIC PART
Y-SEPARATE ILLUSTRATION

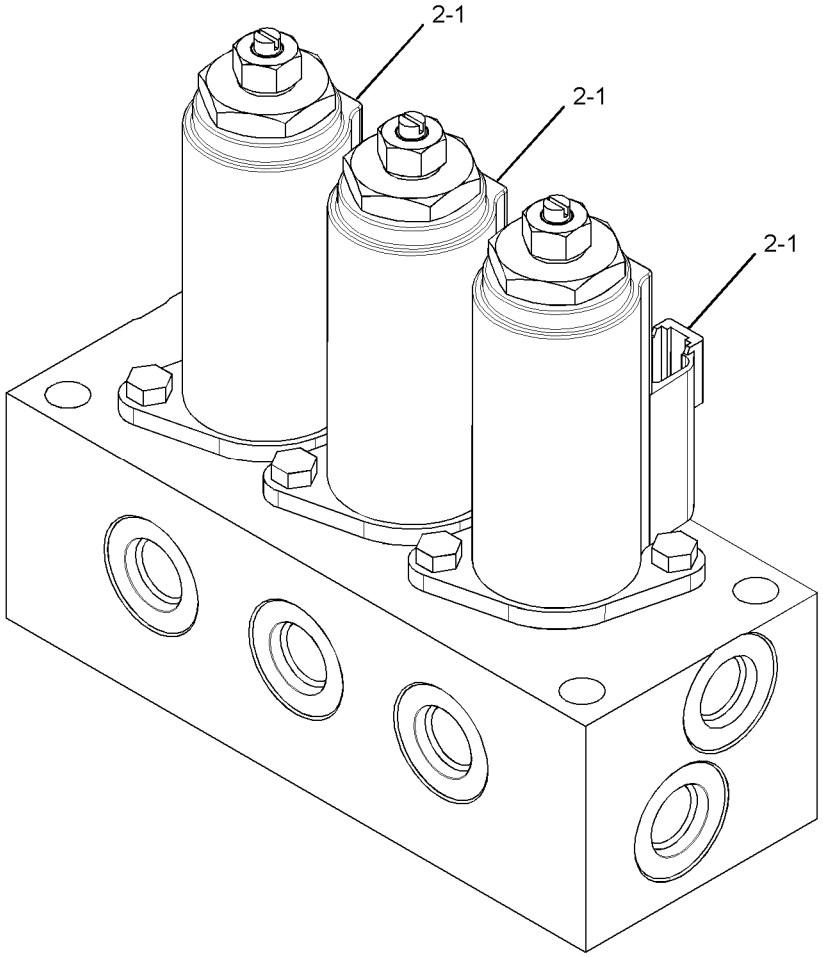

GRAPHIC #1 **<END>** g01382803

297-0684 VALVE GP-SOLENOID & PRESS REDC

S/N: CLA1-UP
PART OF 307-5147 LINES GP-PILOT
AN ATTACHMENT

SMCS-5467, 5479 **i02843761**

NOTE	REF NO	GRAPHIC REF	PART NUMBER	QTY	PART NAME 1 2 3 4 5 6 (PRODUCT LEVEL)	SEE PAGE
M	1	1	**8T-0288**	6	BOLT (M5X0.8X12-MM)	
Y	2	1	**111-9916**	3	VALVE GP-SOLENOID	638
	3	1	**215-5032**	3	PLUG	
	4	1	**215-5033**	3	SPRING	
	5	1	**215-5034**	3	SEAT	
	6	1	**215-5035**	3	VALVE	
	7	1	**095-1579**	3	SEAL-O-RING	
	8	1	**4J-5477**	3	SEAL-O-RING	

M-METRIC PART
Y-SEPARATE ILLUSTRATION

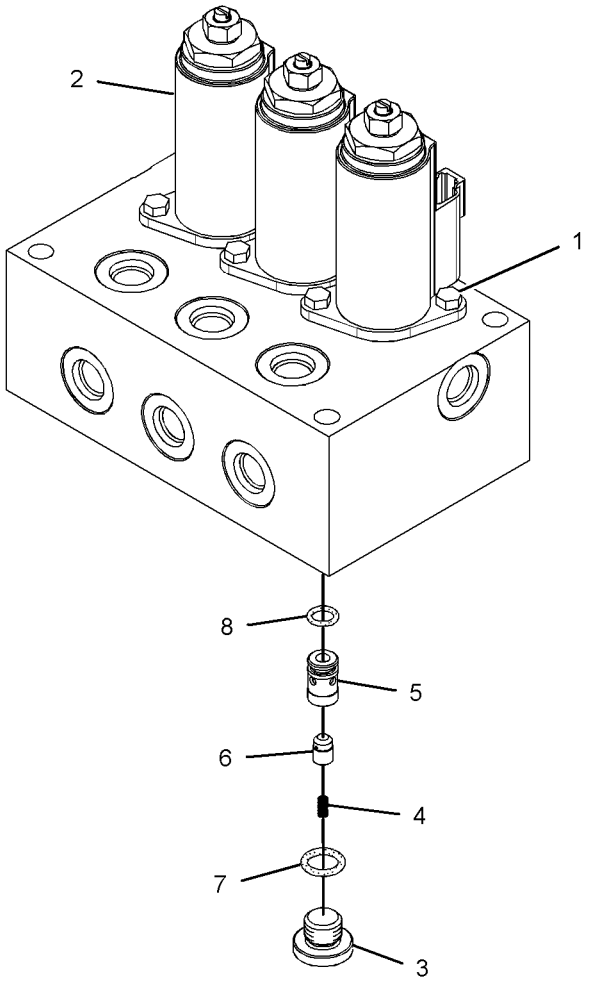

GRAPHIC #1 **<END>** g01418539

297-0685 VALVE GP-SOLENOID & PRESS REDC

S/N: CLA1-UP
PART OF 307-5147 LINES GP-PILOT
AN ATTACHMENT

SMCS-5467, 5479 **i02843757**

NOTE	REF NO	GRAPHIC REF	PART NUMBER	QTY	PART NAME 1 2 3 4 5 6 (PRODUCT LEVEL)	SEE PAGE
M	1	1	**8T-0288**	8	BOLT (M5X0.8X12-MM)	
Y	2	1	**111-9916**	4	VALVE GP-SOLENOID	638
	3	1	**215-5032**	4	PLUG	
	4	1	**215-5033**	4	SPRING	
	5	1	**215-5034**	4	SEAT	
	6	1	**215-5035**	4	VALVE	
	7	1	**095-1579**	4	SEAL-O-RING	
	8	1	**4J-5477**	4	SEAL-O-RING	

M-METRIC PART
Y-SEPARATE ILLUSTRATION

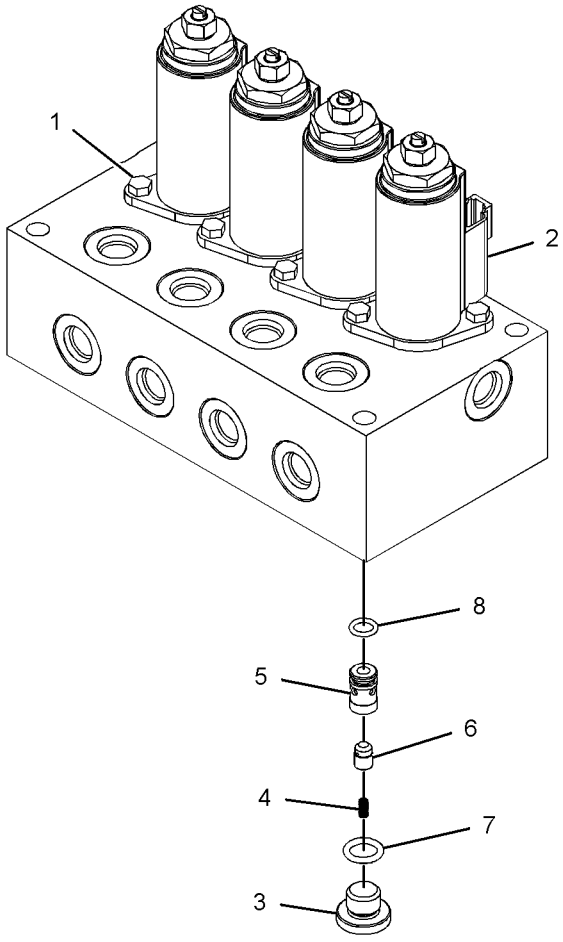

GRAPHIC #1 **<END>** g01418520

303-4484 VALVE GP-TRAVEL COUNTERBALANCE

S/N: CLA1-UP

PART OF 277-6697 MOTOR GP-PISTON

SMCS-5811 **i02827539**

NOTE	REF NO	GRAPHIC REF	PART NUMBER	QTY	PART NAME 1 2 3 4 5 6 (PRODUCT LEVEL)	SEE PAGE
	1	1	**7Y-4224**	2	ORIFICE	
	2	1	**087-5631**	1	ORIFICE	
	3	1	**095-1585**	2	SEAL-O-RING	
	4	1	**119-5362**	2	SPRING	
	5	1	**119-5364**	2	PLUG	
	6	1	**129-7932**	2	GUIDE	
	7	1	**165-5837**	2	COVER	
	8	1	**165-5846**	2	VALVE	
	9	1	**165-5850**	1	SPRING	
	10	1	**176-8585**	1	SPOOL	
	11	1	**199-5152**	2	SPRING	
	12	1	*199-6408*	1	VALVE GP-COUNTERBALANCE	
		1	**199-6921**	1	SPOOL AS	
		1	**5H-1472**	2	BALL	
	13	1	**4T-9905**	1	ADAPTER	
Y	15	1	**304-3961**	2	VALVE GP-RELIEF (TRACTION CONTROL)	626
	16	1	**095-1701**	2	SEAL-O-RING	
	17	1	**2M-9780**	4	SEAL-O-RING	
	18	1	**3J-1907**	2	SEAL-O-RING	
	19	1	**3K-0360**	1	SEAL-O-RING	
	20	1	**4J-7533**	12	SEAL-O-RING	
M	22	1	**8T-9515**	8	BOLT-SOCKET HEAD (M10X1.5X40-MM)	
	23	1	**9S-8001**	12	PLUG-O-RING	
	24	1	**9S-8004**	2	PLUG-O-RING	
	25	1	**9S-8005**	1	PLUG-O-RING	
	26	1	**9S-8006**	1	PLUG-O-RING	

M-METRIC PART
Y-SEPARATE ILLUSTRATION

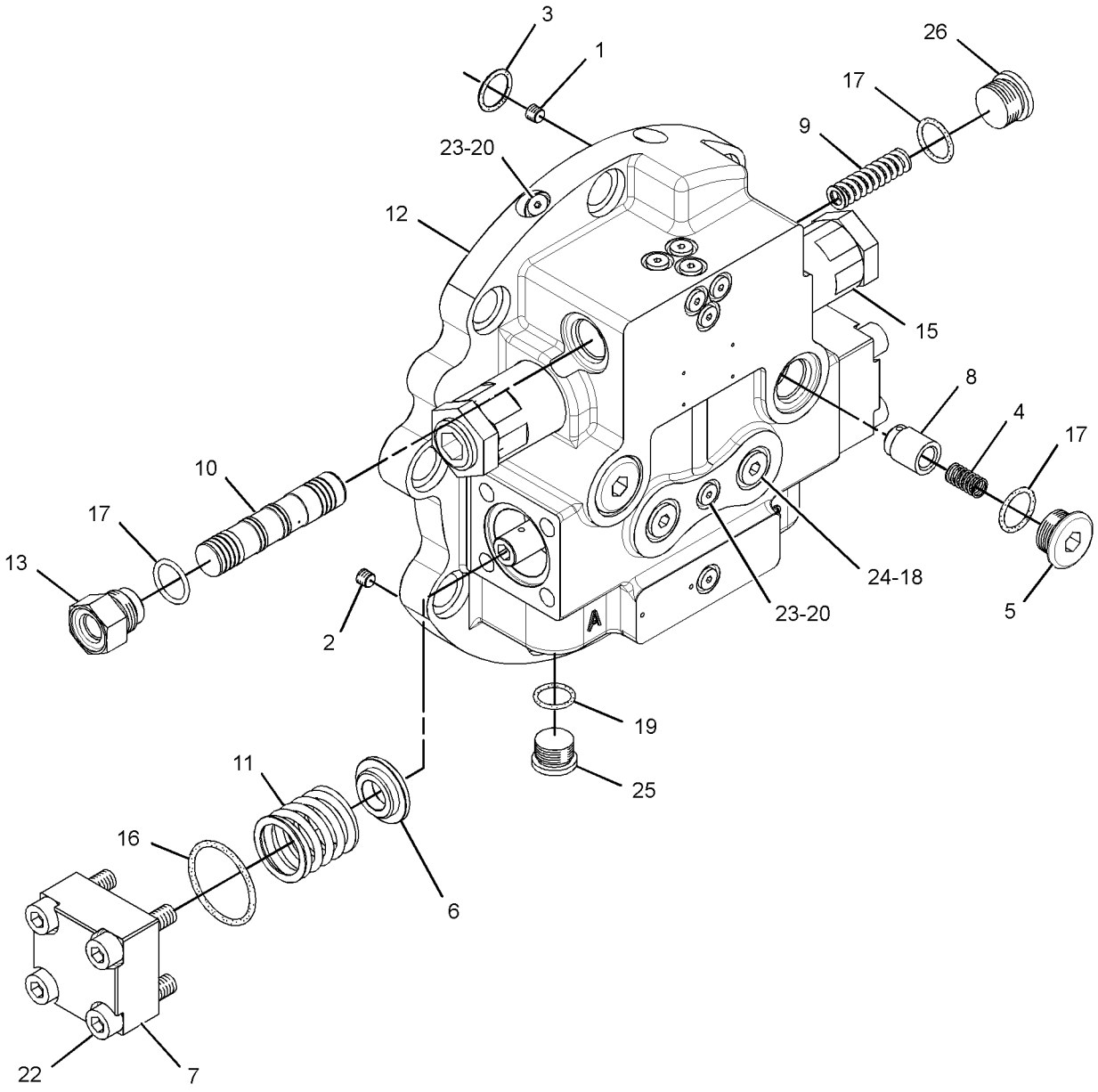

GRAPHIC #1 **<END>** g01442879

260-7236 BOOM AR

S/N: CLA1-UP
AN ATTACHMENT

SMCS-6000 **i02796542**

NOTE	PART NUMBER	QTY	PART NAME 1 2 3 4 5 6 (PRODUCT LEVEL)	SEE PAGE
Y	*282-4476*	1	BOOM GP	658
Y	*283-6173*	1	CYLINDER & LINES GP-BOOM (LH)	352
Y	*283-6174*	1	CYLINDER & LINES GP-BOOM (RH)	352
Y	*289-7724*	1	CYLINDER & LINES GP-STICK	353
Y	*283-2602*	1	LIGHTING GP-FLOOD (BOOM, LH)	144
Y	*282-7394*	1	LINES GP-BOOM	426
Y	*284-7070*	1	LINES GP-GREASE	666

Y-SEPARATE ILLUSTRATION

<END>

283-9062 BOOM AR-1 PIECE LONG

S/N: CLA1-UP
AN ATTACHMENT

SMCS-6501 **i02795766**

NOTE	PART NUMBER	QTY	PART NAME 1 2 3 4 5 6 (PRODUCT LEVEL)	SEE PAGE
Y	*294-1414*	1	BOOM GP	660
Y	*283-6173*	1	CYLINDER & LINES GP-BOOM (LH)	352
Y	*283-6174*	1	CYLINDER & LINES GP-BOOM (RH)	352
Y	*289-7724*	1	CYLINDER & LINES GP-STICK	353
Y	*283-2602*	1	LIGHTING GP-FLOOD (BOOM, LH)	144
Y	*292-7637*	1	LINES GP-BOOM	428
Y	*284-7070*	1	LINES GP-GREASE	666

Y-SEPARATE ILLUSTRATION

<END>

IMPLEMENTS

282-4476 BOOM GP

S/N: CLA1-UP
PART OF 260-7236 BOOM AR
AN ATTACHMENT

SMCS-6301, 6302, 6460, 6501, 6516, 6521, 6535, 6536 **i02796361**

NOTE	REF NO	GRAPHIC REF	PART NUMBER	QTY	PART NAME 1 2 3 4 5 6 (PRODUCT LEVEL)	SEE PAGE
	1	1	**1R-6224**	1	PIN AS	
	2	1	**1R-6226**	1	PIN AS	
	3	1	**4I-3309**	2	SPACER (82X110X3-MM THK)	
B	4	1	**093-0115**	1	SHIM (2-MM THK)	
	5	1	**093-0357**	1	WASHER (63X100X9-MM THK)	
B	6	1	**133-2425**	1	SHIM (0.5-MM THK)	
	7	1	**166-1486**	4	SHIM (2-MM THK)	
	8	1	**172-3080**	1	PIN	
	9	1	**282-4477**	1	BOOM & BEARING AS	
	9A	1	**273-6814**	2	BEARING-SLEEVE	
	10	1	**086-0297**	1	WASHER (13X50X6-MM THK)	
	11	1	**086-0298**	1	WASHER (19X60X9-MM THK)	
	12	1	**095-6824**	2	PLATE	
	13	1	**099-3600**	4	WASHER (12.7X30X4-MM THK)	
	14	1	**166-1494**	2	SEAL-LIP TYPE	
M	15	1	**7X-2552**	1	BOLT (M16X2X30-MM)	
M	16	1	**8T-4179**	1	BOLT (M12X1.75X20-MM)	
M	17	1	**8T-4192**	4	BOLT (M12X1.75X25-MM)	

B-USE AS REQUIRED
M-METRIC PART

282-4476 **BOOM GP** *(contd.)* **i02796361**

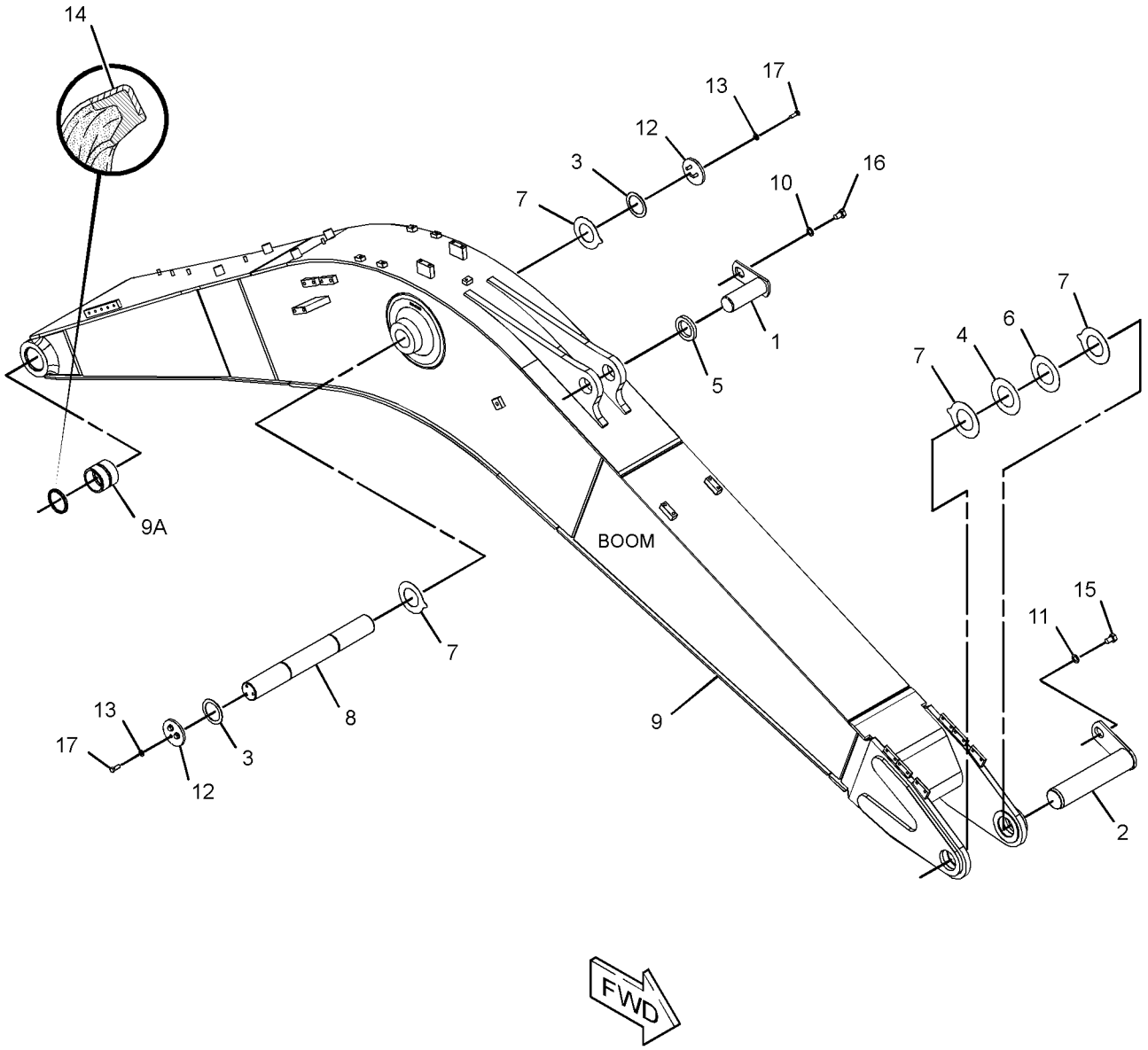

GRAPHIC #1 **<END>** g01400154

IMPLEMENTS

294-1414 BOOM GP

S/N: CLA1-UP
PART OF 283-9062 BOOM AR-1 PIECE LONG
AN ATTACHMENT

SMCS-6301, 6302, 6460, 6501, 6516, 6521, 6535, 6536 **i02795539**

NOTE	REF NO	GRAPHIC REF	PART NUMBER	QTY	PART NAME 1 2 3 4 5 6 (PRODUCT LEVEL)	SEE PAGE
	1	1	**1R-6224**	1	PIN AS	
	2	1	**1R-6226**	1	PIN AS	
	3	1	**4I-3309**	2	SPACER (82X110X3-MM THK)	
B	4	1	**093-0115**	1	SHIM (2-MM THK)	
	5	1	**093-0357**	1	WASHER (63X100X9-MM THK)	
B	6	1	**133-2425**	1	SHIM (0.5-MM THK)	
	7	1	**166-1486**	4	SHIM (2-MM THK)	
	8	1	**172-3080**	1	PIN	
	9	1	**294-1415**	1	BOOM & BEARING AS	
	9A	1	**273-6814**	2	BEARING-SLEEVE	
	10	1	**086-0297**	1	WASHER (13X50X6-MM THK)	
	11	1	**086-0298**	1	WASHER (19X60X9-MM THK)	
	12	1	**095-6824**	2	PLATE	
	13	1	**099-3600**	4	WASHER (12.7X30X4-MM THK)	
	14	1	**166-1494**	2	SEAL-LIP TYPE	
M	15	1	**7X-2552**	1	BOLT (M16X2X30-MM)	
M	16	1	**8T-4179**	1	BOLT (M12X1.75X20-MM)	
M	17	1	**8T-4192**	4	BOLT (M12X1.75X25-MM)	

B-USE AS REQUIRED
M-METRIC PART

294-1414 **BOOM GP** *(contd.)* **i02795539**

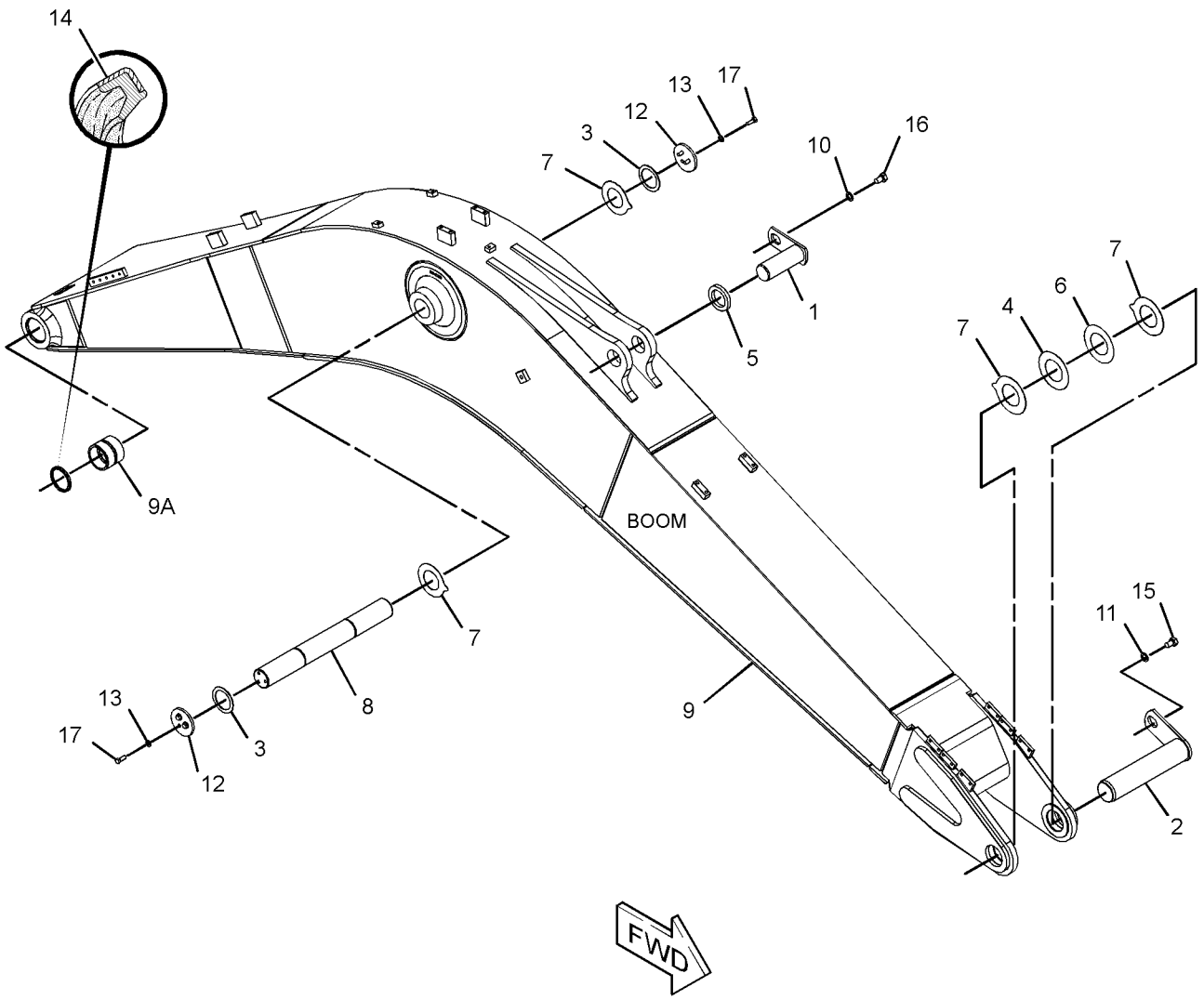

GRAPHIC #1 **<END>** g01399874

308-8811 BOOM GP–ACCUGRADE READY

S/N: CLA1-UP
4.3-M (14.1-FT)
PART OF 301-2552, 301-2555, 301-2647 SPECIAL AR
AN ATTACHMENT

SMCS-6301, 6302, 6460, 6501, 6516, 6521, 6535, 6536 **i02869733**

NOTE	REF NO	GRAPHIC REF	PART NUMBER	QTY	PART NAME 1 2 3 4 5 6 (PRODUCT LEVEL)	SEE PAGE
	1	1	**1R-6224**	1	PIN AS	
	2	1	**4I-3309**	2	SPACER (82X110X3-MM THK)	
B	3	1	**093-0115**	1	SHIM (2-MM THK)	
	4	1	**093-0357**	1	WASHER (63X100X9-MM THK)	
B	5	1	**133-2425**	1	SHIM (0.5-MM THK)	
	6	1	**166-1486**	4	SHIM (2-MM THK)	
	7	1	**172-3080**	1	PIN	
	8	1	**308-8809**	1	PIN AS	
	9	1	**308-8812**	1	BOOM & BEARING AS	
	9A	1	**273-6814**	2	BEARING-SLEEVE	
	10	1	**308-8914**	1	PLATE	
	11	1	**086-0297**	1	WASHER (13X50X6-MM THK)	
	12	1	**086-0298**	1	WASHER (19X60X9-MM THK)	
	13	1	**095-6824**	2	PLATE	
M	14	1	**096-4883**	2	LOCKNUT (M10X1.15-THD)	
	15	1	**099-3600**	4	WASHER (12.7X30X4-MM THK)	
	16	1	**166-1494**	2	SEAL-LIP TYPE	
M	17	1	**7X-2553**	1	BOLT (M16X2X40-MM)	
	18	1	**8T-4121**	2	WASHER-HARD (11X21X2.5-MM THK)	
M	19	1	**8T-4179**	1	BOLT (M12X1.75X20-MM)	
M	20	1	**8T-4186**	2	BOLT (M10X1.5X40-MM)	
M	21	1	**8T-4192**	4	BOLT (M12X1.75X25-MM)	

B-USE AS REQUIRED
M-METRIC PART

308-8811 **BOOM GP** *(contd.)* **i02869733**

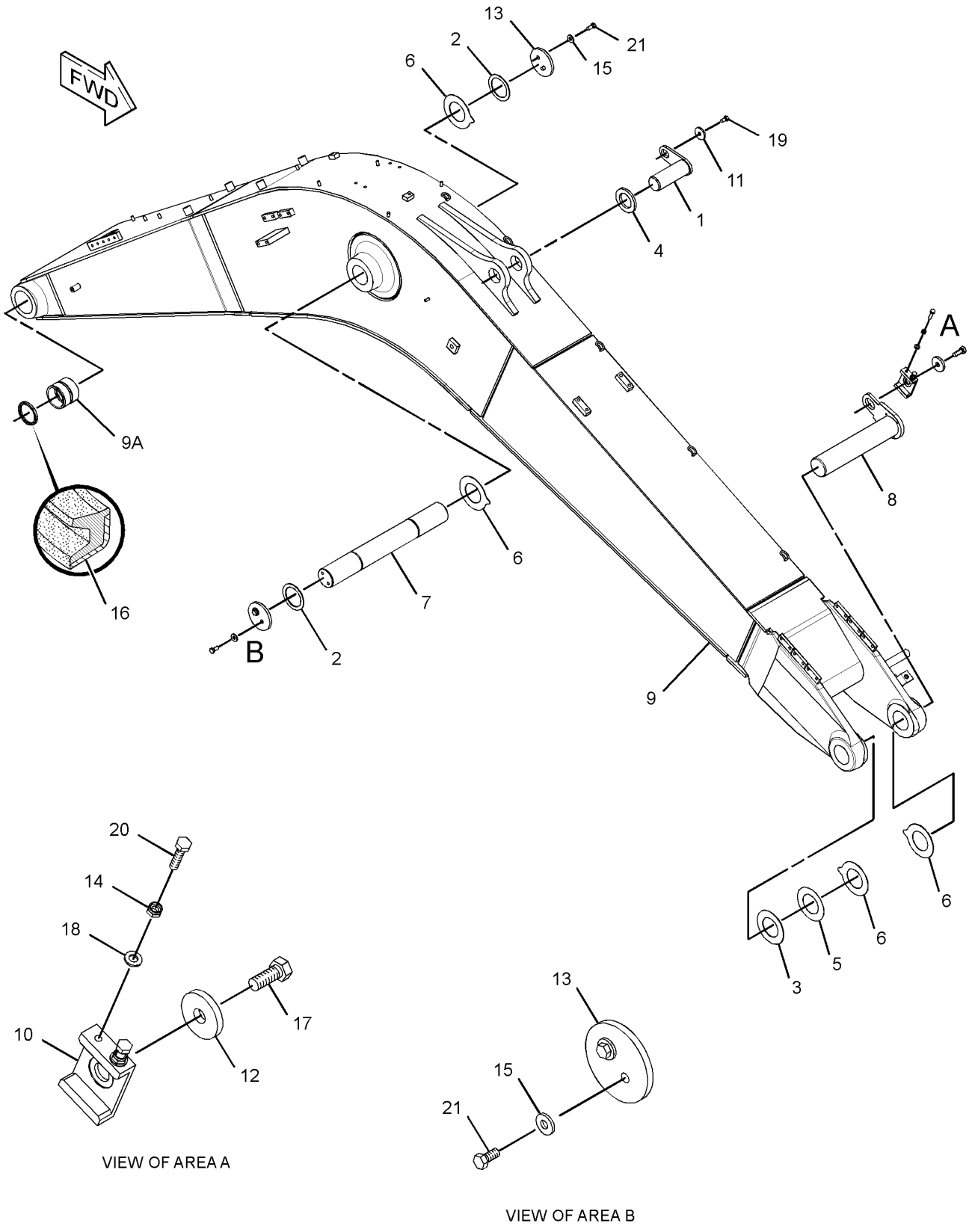

GRAPHIC #1 **<END>** g01445947

IMPLEMENTS

282-4483 LINES GP-GREASE

S/N: CLA1-UP

PART OF 301-2552, 301-2555, 301-2647 SPECIAL AR, 260-7240 STICK AR AN ATTACHMENT

SMCS-7510 **i02796425**

NOTE	REF NO	GRAPHIC REF	PART NUMBER	QTY	PART NAME 1 2 3 4 5 6 (PRODUCT LEVEL)	SEE PAGE
	1	1	**6V-3342**	2	ELBOW-PIPE	
	2	1	**7J-8611**	1	ELBOW-PIPE	
	3	1	**087-5840**	1	PLATE	
I	4	1	**087-5899**	1	HOSE AS	
I	5	1	**290-9044**	1	HOSE AS	
I	6	1	**290-9045**	1	HOSE AS	
	7	1	**033-8248**	8	CLIP	
	8	1	**3B-8489**	3	FITTING-GREASE	
	9	1	**6K-6967**	2	ADAPTER-PIPE	
	10	1	**8T-4121**	8	WASHER-HARD (11X21X2.5-MM THK)	
M	11	1	**8T-4133**	8	NUT (M10X1.5-THD)	

I-REFER TO HYDRAULIC INFORMATION SYSTEM
M-METRIC PART

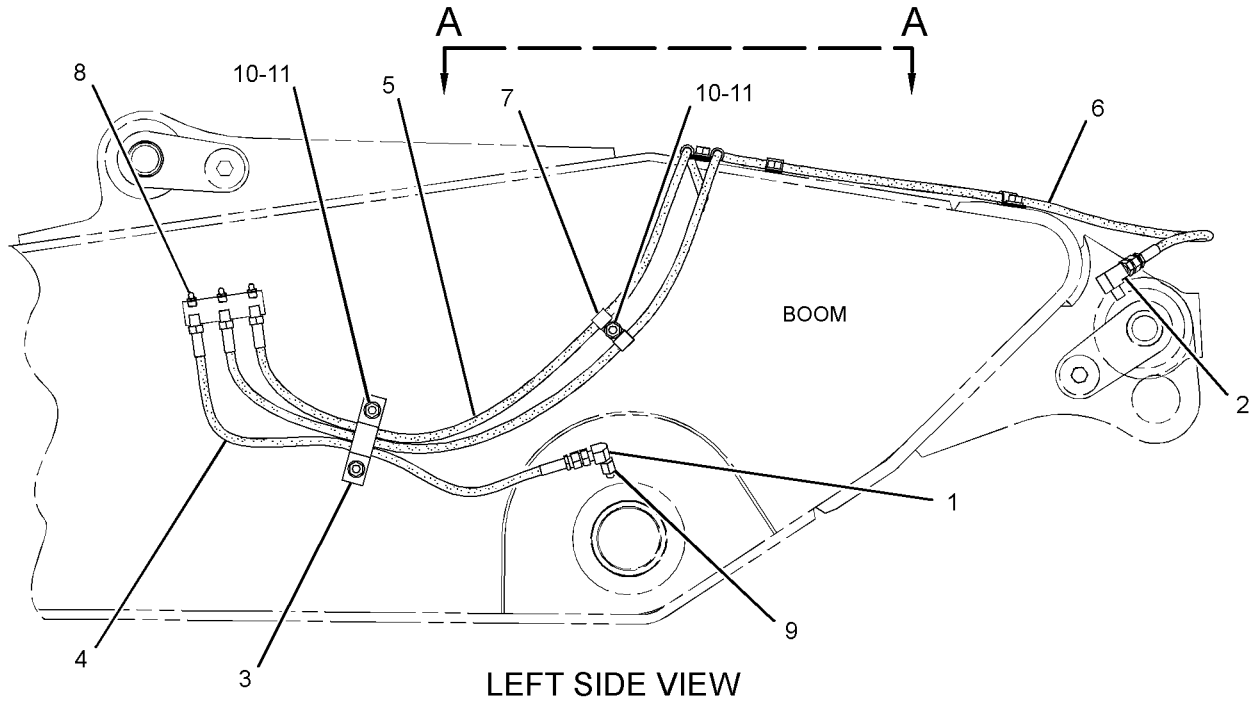

LEFT SIDE VIEW

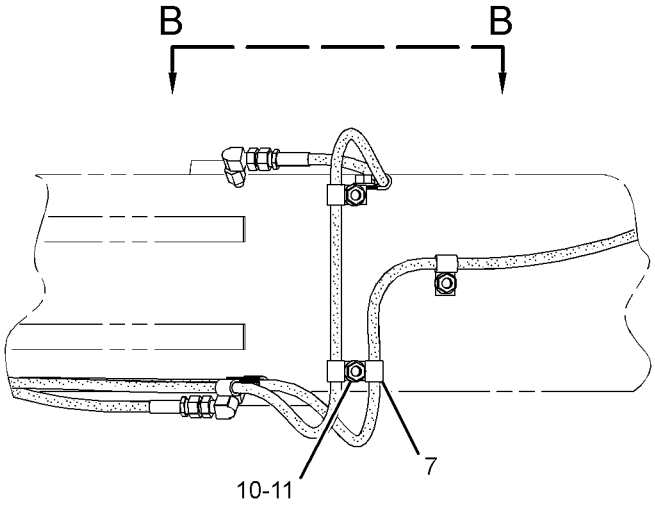

VIEW A-A

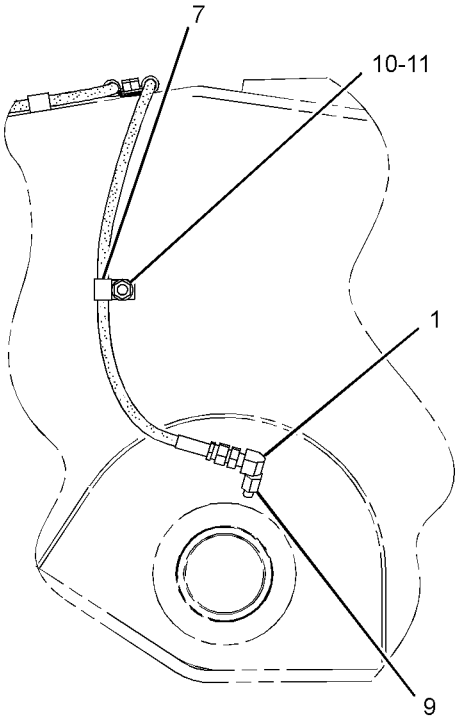

VIEW B-B

GRAPHIC #1 **<END>** g01399939

284-7070 LINES GP-GREASE

S/N: CLA1-UP
PART OF 260-7236 BOOM AR, 283-9062 BOOM AR-1 PIECE LONG, 301-2552, 301-2555, 301-2647 SPECIAL AR
AN ATTACHMENT

SMCS-7510 **i02795532**

NOTE	REF NO	GRAPHIC REF	PART NUMBER	QTY	PART NAME 1 2 3 4 5 6 (PRODUCT LEVEL)	SEE PAGE
	1	1	**5K-9243**	2	ELBOW-FLARED	
	2	1	**7I-6896**	1	TUBE AS	
I	3	1	**121-8659**	2	HOSE AS	
	4	1	**123-5349**	1	HOSE AS	
	5	1	**166-1579**	3	CLIP	
	6	1	**180-7758**	1	TUBE AS	
	7	1	**033-8248**	3	CLIP	
	8	1	**3B-8489**	5	FITTING-GREASE	
	9	1	**6L-3616**	2	CONNECTOR	
	10	1	**8T-4121**	6	WASHER-HARD (11X21X2.5-MM THK)	
M	11	1	**8T-4133**	4	NUT (M10X1.5-THD)	
M	12	1	**8T-4191**	2	BOLT (M10X1.5X16-MM)	
	13	1	**8T-6757**	5	PLUG-PIPE	

I-REFER TO HYDRAULIC INFORMATION SYSTEM
M-METRIC PART

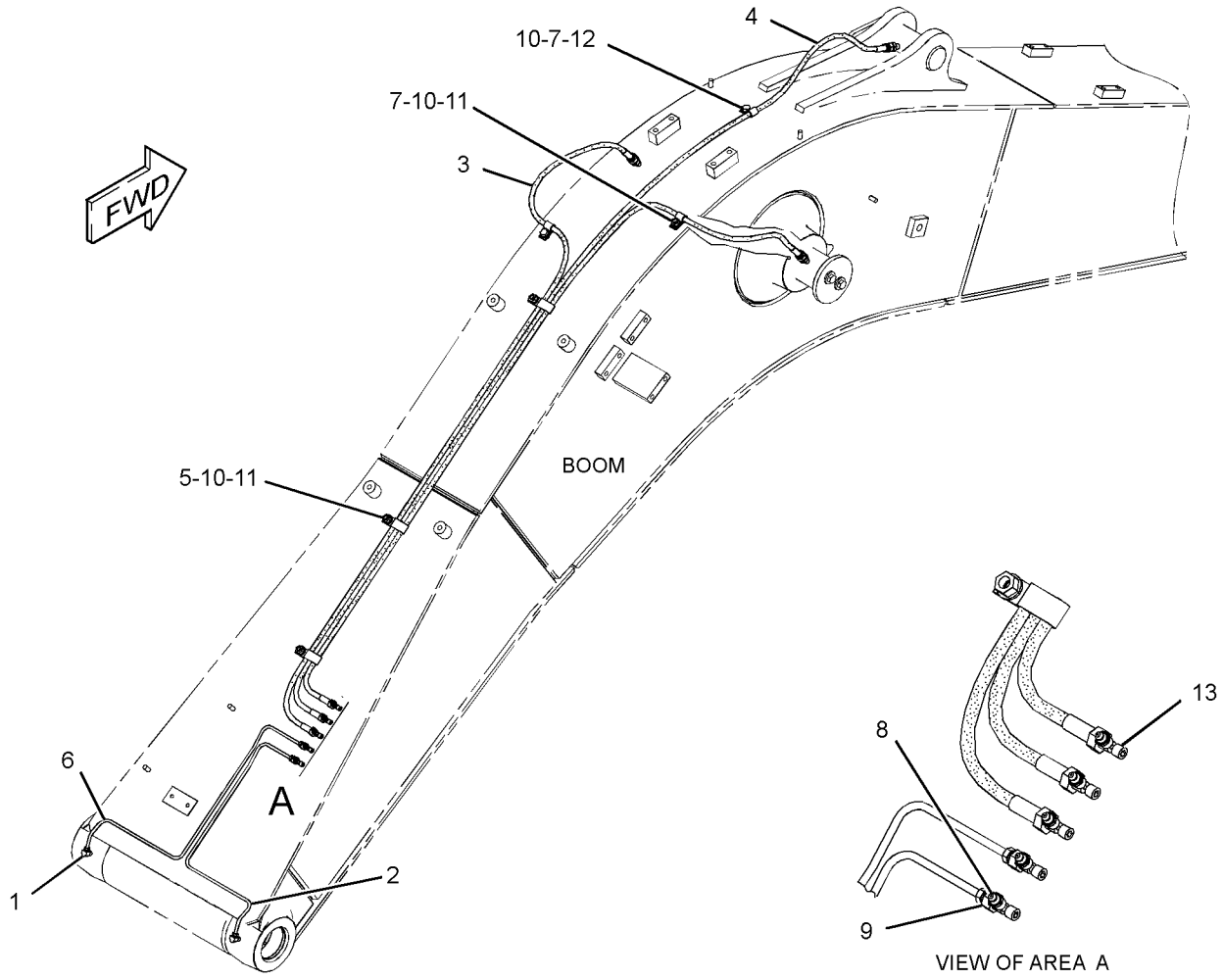

GRAPHIC #1 **<END>** g01399952

294-1385 LINES GP-GREASE

S/N: CLA1-UP
PART OF 260-7239 STICK AR
AN ATTACHMENT

SMCS-7510 **i02796417**

NOTE	REF NO	GRAPHIC REF	PART NUMBER	QTY	PART NAME 1 2 3 4 5 6 (PRODUCT LEVEL)	SEE PAGE
	1	1	**6V-3342**	2	ELBOW-PIPE	
	2	1	**7J-8611**	1	ELBOW-PIPE	
	3	1	**087-5840**	1	PLATE	
I	4	1	**087-5891**	1	HOSE AS	
I	5	1	**101-2169**	1	HOSE AS	
I	6	1	**294-1389**	1	HOSE AS	
	7	1	**033-8248**	7	CLIP	
	8	1	**3B-8489**	3	FITTING-GREASE	
	9	1	**6K-6967**	2	ADAPTER-PIPE	
	10	1	**8T-4121**	7	WASHER-HARD (11X21X2.5-MM THK)	
M	11	1	**8T-4133**	7	NUT (M10X1.5-THD)	

I-REFER TO HYDRAULIC INFORMATION SYSTEM
M-METRIC PART

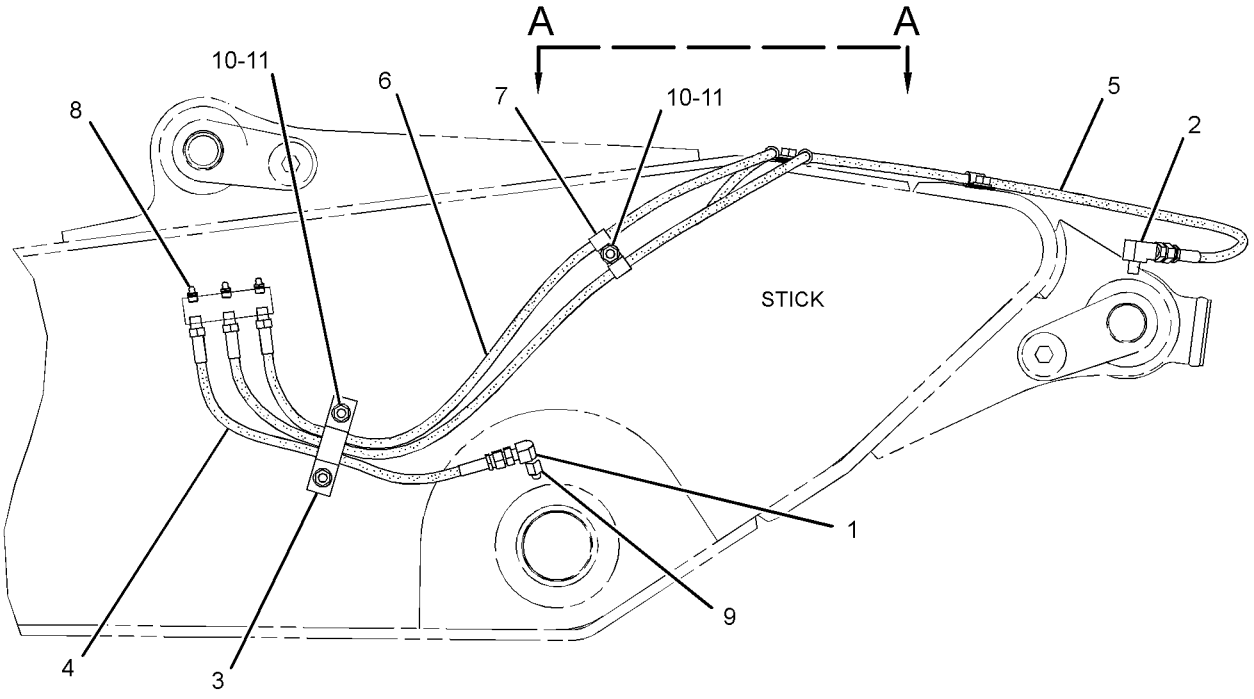

LEFT SIDE VIEW

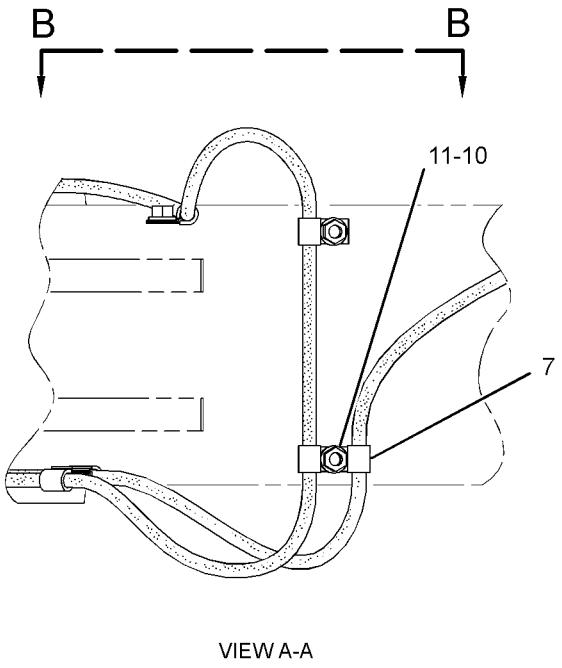

VIEW A-A

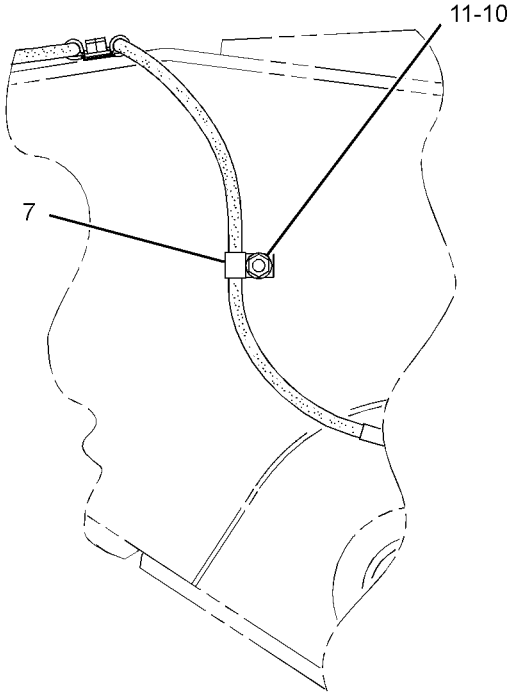

VIEW B-B

GRAPHIC #1 **<END>** g01400039

260-7065 LINKAGE AR-BUCKET—WITHOUT LIFTING EYE

S/N: CLA1-UP
AN ATTACHMENT

SMCS-6513 **i02997474**

NOTE	PART NUMBER	QTY	PART NAME 1 2 3 4 5 6 (PRODUCT LEVEL)	SEE PAGE
Y	*289-7697*	1	CYLINDER & LINES GP-BUCKET	353
Y	*248-7837*	1	LINKAGE GP-BUCKET	672
Y-SEPARATE ILLUSTRATION				

<END>

260-7066 LINKAGE AR-BUCKET—WITHOUT LIFTING EYE

S/N: CLA1-UP
AN ATTACHMENT

SMCS-6513 **i02997475**

NOTE	PART NUMBER	QTY	PART NAME 1 2 3 4 5 6 (PRODUCT LEVEL)	SEE PAGE
Y	*289-7697*	1	CYLINDER & LINES GP-BUCKET	353
Y	*248-7821*	1	LINKAGE GP-BUCKET	670
Y-SEPARATE ILLUSTRATION				

<END>

260-7067 LINKAGE AR-BUCKET—WITH LIFTING EYE

S/N: CLA1-UP
AN ATTACHMENT

SMCS-6513 **i02796543**

NOTE	PART NUMBER	QTY	PART NAME 1 2 3 4 5 6 (PRODUCT LEVEL)	SEE PAGE
Y	*289-7697*	1	CYLINDER & LINES GP-BUCKET	353
Y	*278-9293*	1	LINKAGE GP-BUCKET	674
Y-SEPARATE ILLUSTRATION				

<END>

IMPLEMENTS

248-7821 LINKAGE GP-BUCKET

S/N: CLA1-UP
PART OF 260-7066 LINKAGE AR-BUCKET
AN ATTACHMENT

SMCS-6513 **i02997357**

NOTE	REF NO	GRAPHIC REF	PART NUMBER	QTY	PART NAME 1 2 3 4 5 6 (PRODUCT LEVEL)	SEE PAGE
	1	1	**248-7822**	1	LINK	
	2	1	**248-7820**	1	PIN	
	3	1	**248-7824**	1	LINK & BEARING AS	
	3A	1	**248-7835**	2	BEARING-SLEEVE	
	3B	1	**229-1092**	2	BEARING-SLEEVE	
	4	1	**3B-8489**	5	FITTING-GREASE	
M	5	1	**096-4876**	2	NUT (M14X2-THD)	
M	6	1	**099-0707**	1	BOLT (M14X2X115-MM)	
	7	1	**248-7823**	1	LINK AS	
	8	1	**134-7178**	2	PIN	
	9	1	**086-0523**	2	PIN	
	10	1	**093-1342**	4	SEAL-O-RING	
	11	1	**235-7679**	4	SEAL-LIP TYPE	
	12	1	**248-7836**	2	SEAL-LIP TYPE	
	13	1	**166-1482**	2	SHIM (2-MM THK)	
	14	1	**134-7179**	2	RING	
	15	1	**7I-6843**	1	PIN	
M	16	1	**186-5644**	1	BOLT (M16X2X150-MM)	
M	17	1	**8T-4132**	2	NUT (M16X2-THD)	

M-METRIC PART

248-7821 **LINKAGE GP-BUCKET** *(contd.)* **i02997357**

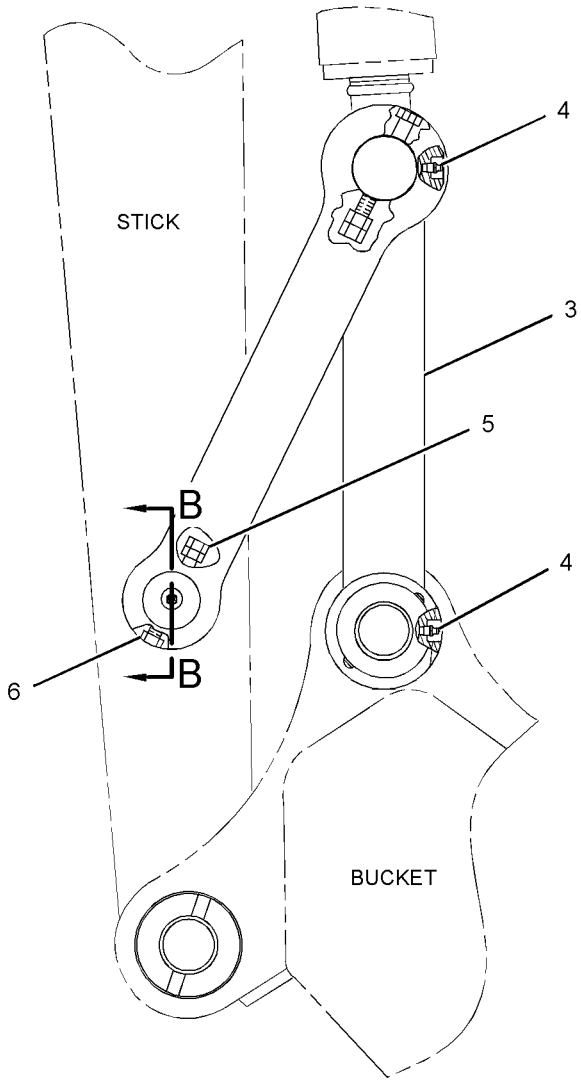

RIGHT SIDE VIEW

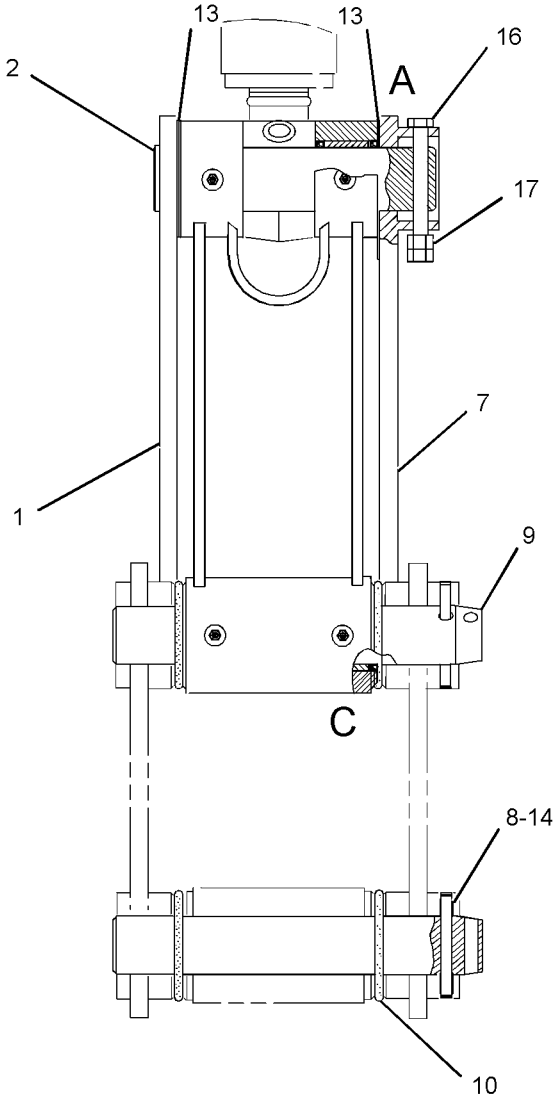

FRONT VIEW

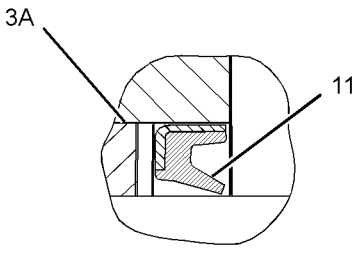

VIEW OF AREA A

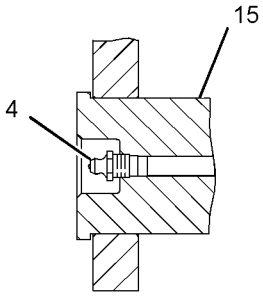

SECTION B-B

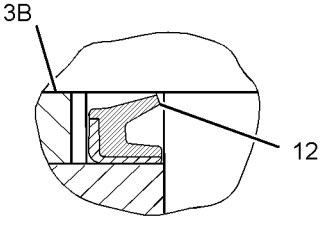

VIEW OF AREA C

GRAPHIC #1 **<END>** g01523536

IMPLEMENTS

248-7837 LINKAGE GP-BUCKET

S/N: CLA1-UP
PART OF 260-7065 LINKAGE AR-BUCKET
AN ATTACHMENT

SMCS-6513 **i02997360**

NOTE	REF NO	GRAPHIC REF	PART NUMBER	QTY	PART NAME 1 2 3 4 5 6 (PRODUCT LEVEL)	SEE PAGE
	1	1	**248-7822**	1	LINK	
	2	1	**248-7820**	1	PIN	
	3	1	**248-7838**	1	LINK & BEARING AS	
	3A	1	**229-1092**	2	BEARING-SLEEVE	
	3B	1	**248-7835**	2	BEARING-SLEEVE	
	4	1	**3B-8489**	5	FITTING-GREASE	
M	5	1	**096-4876**	2	NUT (M14X2-THD)	
M	6	1	**099-0707**	1	BOLT (M14X2X115-MM)	
	7	1	**248-7823**	1	LINK AS	
	8	1	**134-7178**	2	PIN	
	9	1	**086-0523**	2	PIN	
	10	1	**093-1342**	4	SEAL-O-RING	
	11	1	**235-7679**	4	SEAL-LIP TYPE	
	12	1	**248-7836**	2	SEAL-LIP TYPE	
	13	1	**166-1482**	2	SHIM (2-MM THK)	
	14	1	**134-7179**	2	RING	
	15	1	**7I-6843**	1	PIN	
M	16	1	**186-5644**	1	BOLT (M16X2X150-MM)	
M	17	1	**8T-4132**	2	NUT (M16X2-THD)	

M-METRIC PART

248-7837 **LINKAGE GP-BUCKET** *(contd.)* **i02997360**

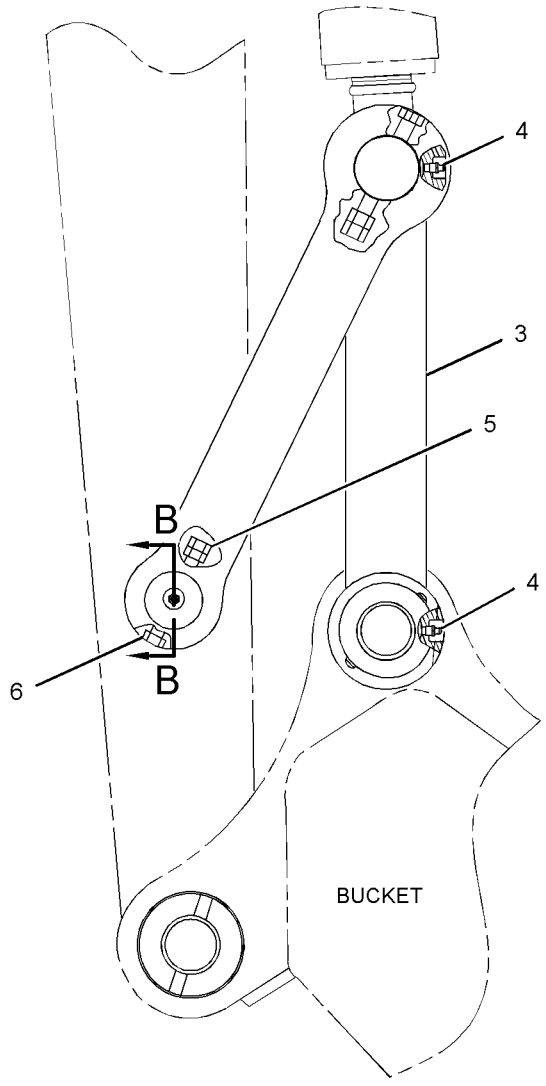

RIGHT SIDE VIEW

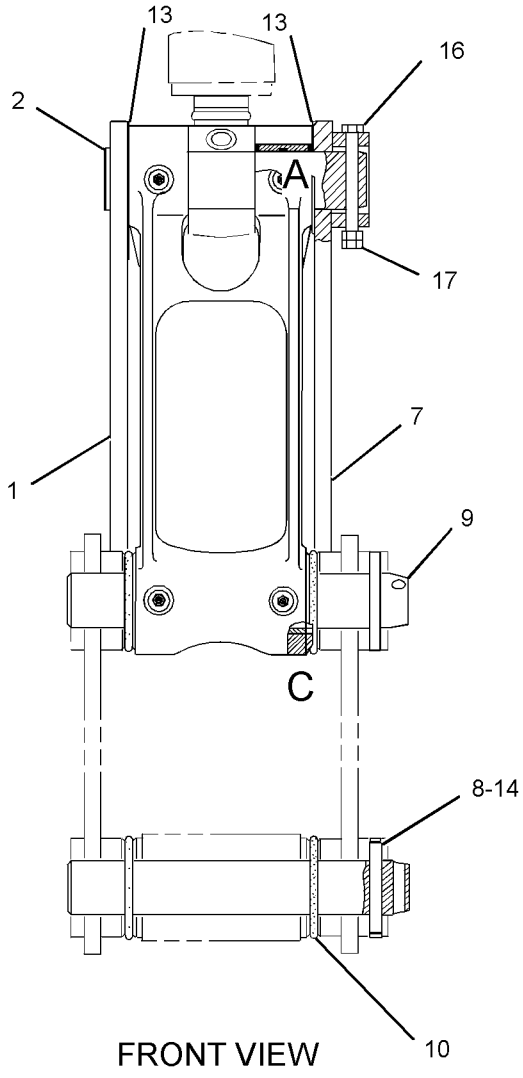

FRONT VIEW

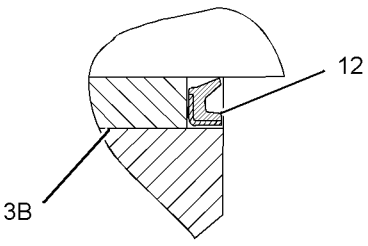

VIEW OF AREA C

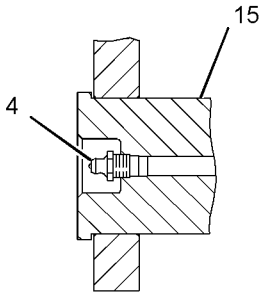

SECTION B-B

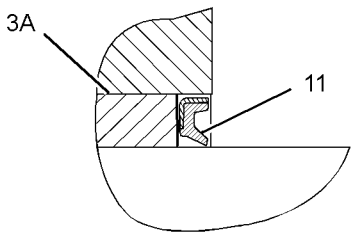

VIEW OF AREA A

GRAPHIC #1 **<END>** g01521489

278-9293 LINKAGE GP-BUCKET—WITH LIFTING EYE

S/N: CLA1-UP

PART OF 260-7067 LINKAGE AR-BUCKET, 301-2552, 301-2555, 301-2647 SPECIAL AR AN ATTACHMENT

SMCS-6513 **i02796349**

NOTE	REF NO	GRAPHIC REF	PART NUMBER	QTY	PART NAME 1 2 3 4 5 6 (PRODUCT LEVEL)	SEE PAGE
	1	1	**3B-8489**	5	FITTING-GREASE	
	2	1	**7I-6843**	1	PIN	
	3	1	**086-0523**	2	PIN	
M	4	1	**096-4876**	6	NUT (M14X2-THD)	
	5	1	**166-1482**	2	SHIM (2-MM THK)	
M	6	1	**236-6365**	1	BOLT (M16X2X150-MM)	
	7	1	**235-7679**	4	SEAL-LIP TYPE	
	8	1	**248-7820**	1	PIN	
	9	1	**248-7822**	1	LINK	
	10	1	**248-7823**	1	LINK AS	
	11	1	**248-7836**	2	SEAL-LIP TYPE	
	12	1	**282-4503**	1	LINK & BEARING AS	
	12A	1	**248-7835**	2	BEARING-SLEEVE	
	12B	1	**229-1092**	2	BEARING-SLEEVE	
	13	1	**093-1342**	4	SEAL-O-RING	
M	14	1	**099-0707**	1	BOLT (M14X2X115-MM)	
M	15	1	**099-0724**	2	BOLT (M14X2X145-MM)	
M	16	1	**8T-4132**	2	NUT (M16X2-THD)	

M-METRIC PART

278-9293 **LINKAGE GP-BUCKET** *(contd.)* **i02796349**

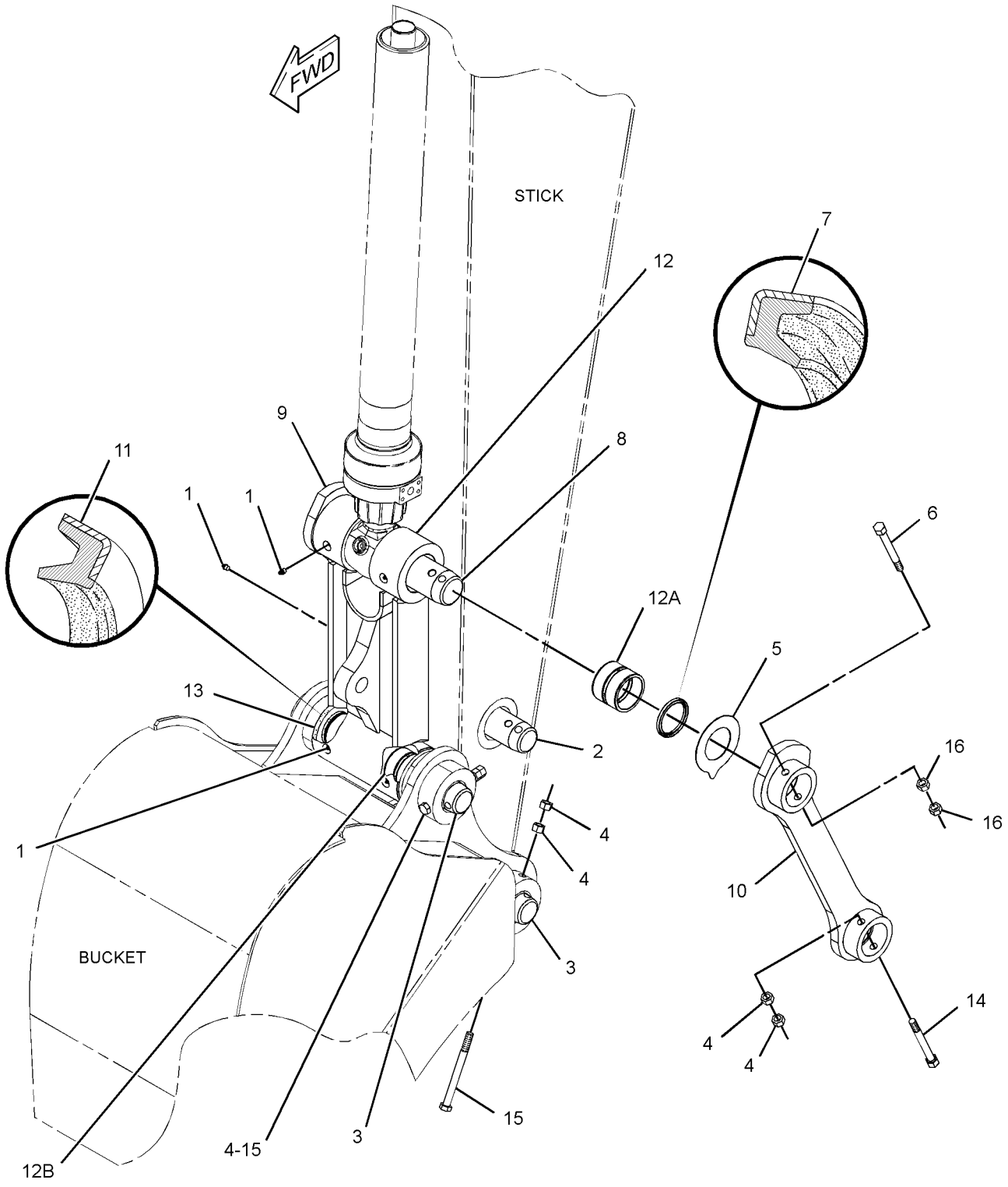

GRAPHIC #1 **<END>** g01400008

282-5540 LINKAGE GP-BUCKET—COUPLER

S/N: CLA1-UP

PART OF 282-5536, 282-5537 COUPLER AR-QUICK

AN ATTACHMENT

SMCS-6513 **i02906298**

NOTE	REF NO	GRAPHIC REF	PART NUMBER	QTY	PART NAME 1 2 3 4 5 6 (PRODUCT LEVEL)	SEE PAGE
	1	1	**3B-8489**	5	FITTING-GREASE	
	2	1	**7I-6843**	1	PIN	
	3	1	**086-0523**	2	PIN	
M	4	1	**096-4876**	6	NUT (M14X2-THD)	
	5	1	**166-1482**	2	SHIM (2-MM THK)	
M	6	1	**236-6365**	1	BOLT (M16X2X150-MM)	
	7	1	**235-7679**	4	SEAL-LIP TYPE	
	8	1	**248-7820**	1	PIN	
	9	1	**248-7822**	1	LINK	
	10	1	**248-7823**	1	LINK AS	
	11	1	**248-7836**	2	SEAL-LIP TYPE	
	12	1	**282-4503**	1	LINK & BEARING AS	
	12A	1	**248-7835**	2	BEARING-SLEEVE	
	12B	1	**229-1092**	2	BEARING-SLEEVE	
	13	1	**093-1342**	4	SEAL-O-RING	
M	14	1	**099-0707**	1	BOLT (M14X2X115-MM)	
	15	1	**248-5474**	2	BOLT (M14X2X160-MM)	
M	16	1	**8T-4132**	2	NUT (M16X2-THD)	

M-METRIC PART

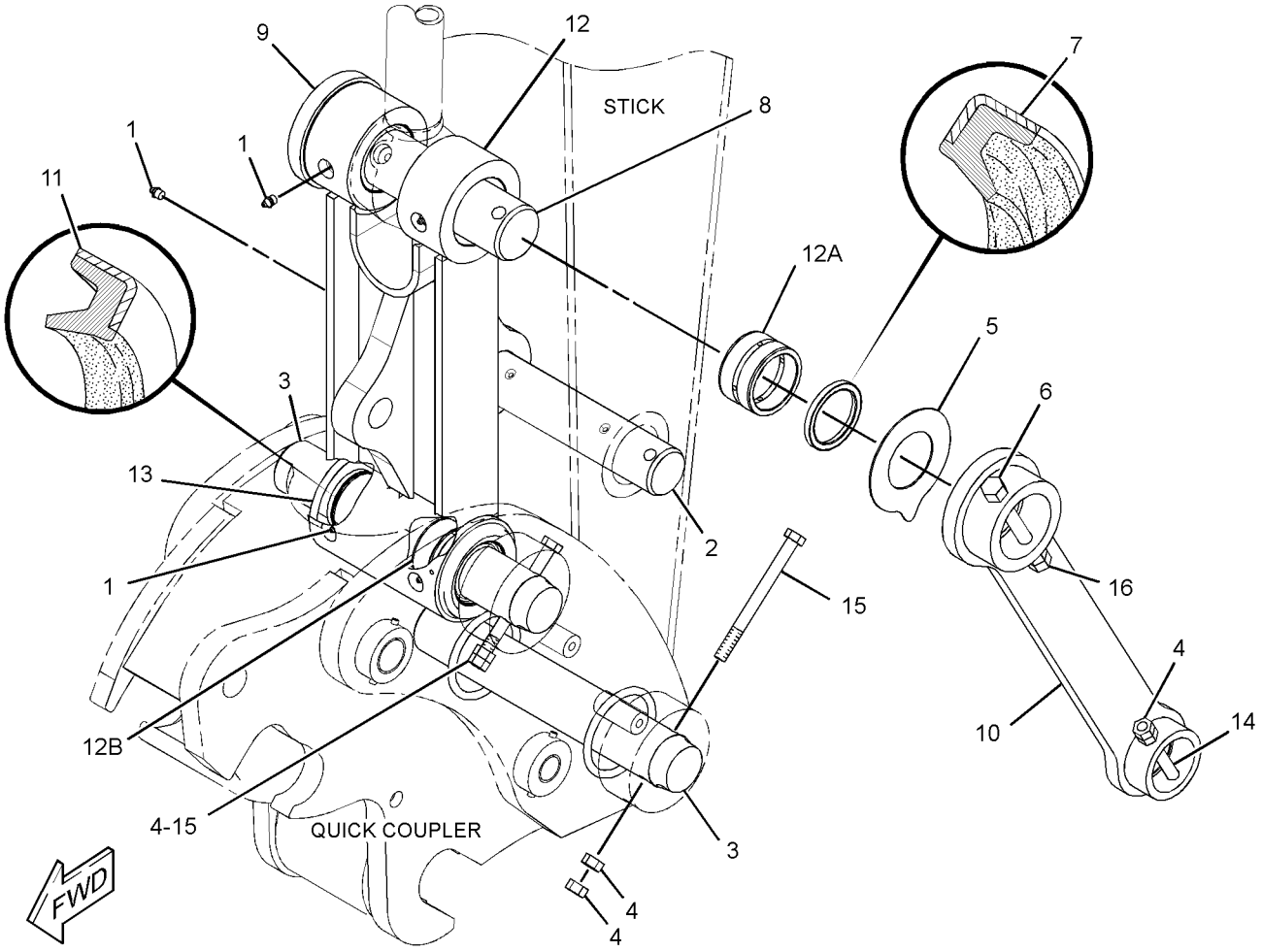

GRAPHIC #1 **<END>** g01446716

260-7237 STICK AR

S/N: CLA1-UP
2.25-M (7.38-FT) REACH
AN ATTACHMENT

SMCS-6502 **i02796544**

NOTE	PART NUMBER	QTY	PART NAME 1 2 3 4 5 6 (PRODUCT LEVEL)	SEE PAGE
Y	*194-0334*	1	LINES GP-STICK	541
Y	*282-4484*	1	STICK GP-HOE	679
Y-SEPARATE ILLUSTRATION				

<END>

260-7238 STICK AR

S/N: CLA1-UP
2.25-M (7.38-FT) REACH
AN ATTACHMENT

SMCS-6502 **i02796538**

NOTE	PART NUMBER	QTY	PART NAME 1 2 3 4 5 6 (PRODUCT LEVEL)	SEE PAGE
Y	*194-0334*	1	LINES GP-STICK	541
Y	*282-4488*	1	STICK GP-HOE	680
Y-SEPARATE ILLUSTRATION				

<END>

260-7239 STICK AR

S/N: CLA1-UP
2.6-M (8.5-FT) REACH
AN ATTACHMENT

SMCS-6502 **i02796536**

NOTE	PART NUMBER	QTY	PART NAME 1 2 3 4 5 6 (PRODUCT LEVEL)	SEE PAGE
Y	*294-1385*	1	LINES GP-GREASE	667
Y	*179-7601*	1	LINES GP-STICK	540
Y	*282-4494*	1	STICK GP-HOE	681
Y-SEPARATE ILLUSTRATION				

<END>

260-7240 STICK AR

S/N: CLA1-UP
2.8-M (9.1-FT) REACH
AN ATTACHMENT

SMCS-6502 **i02796531**

NOTE	PART NUMBER	QTY	PART NAME 1 2 3 4 5 6 (PRODUCT LEVEL)	SEE PAGE
Y	*282-4483*	1	LINES GP-GREASE	664
Y	*194-0335*	1	LINES GP-STICK	542
Y	*282-4480*	1	STICK GP-HOE	678
Y-SEPARATE ILLUSTRATION				

<END>

IMPLEMENTS

282-4480 STICK GP-HOE

S/N: CLA1-UP
2.8-M (9.18-FT) REACH
PART OF 260-7240 STICK AR
AN ATTACHMENT

SMCS-6502 **i02796432**

NOTE	REF NO	GRAPHIC REF	PART NUMBER	QTY	PART NAME 1 2 3 4 5 6 (PRODUCT LEVEL)	SEE PAGE
	1	1	**1R-6224**	1	PIN AS	
	2	1	**093-0357**	2	WASHER (63X100X9-MM THK)	
	3	1	**127-3913**	1	PIN AS	
	4	1	**166-1481**	2	SHIM (2-MM THK)	
	5	1	**166-1492**	2	SEAL-LIP TYPE	
	6	1	**248-7836**	2	SEAL-LIP TYPE	
	7	1	**282-4481**	1	STICK & BEARING AS	
	7A	1	**229-1091**	2	BEARING-SLEEVE	
	7B	1	**229-1095**	2	BEARING-SLEEVE	
	7C	1	**273-6814**	2	BEARING-SLEEVE	
	8	1	**086-0297**	2	WASHER (13X50X6-MM THK)	
	9	1	**166-1494**	2	SEAL-LIP TYPE	
	10	1	**3B-8489**	3	FITTING-GREASE	
M	11	1	**8T-4179**	2	BOLT (M12X1.75X20-MM)	

M-METRIC PART

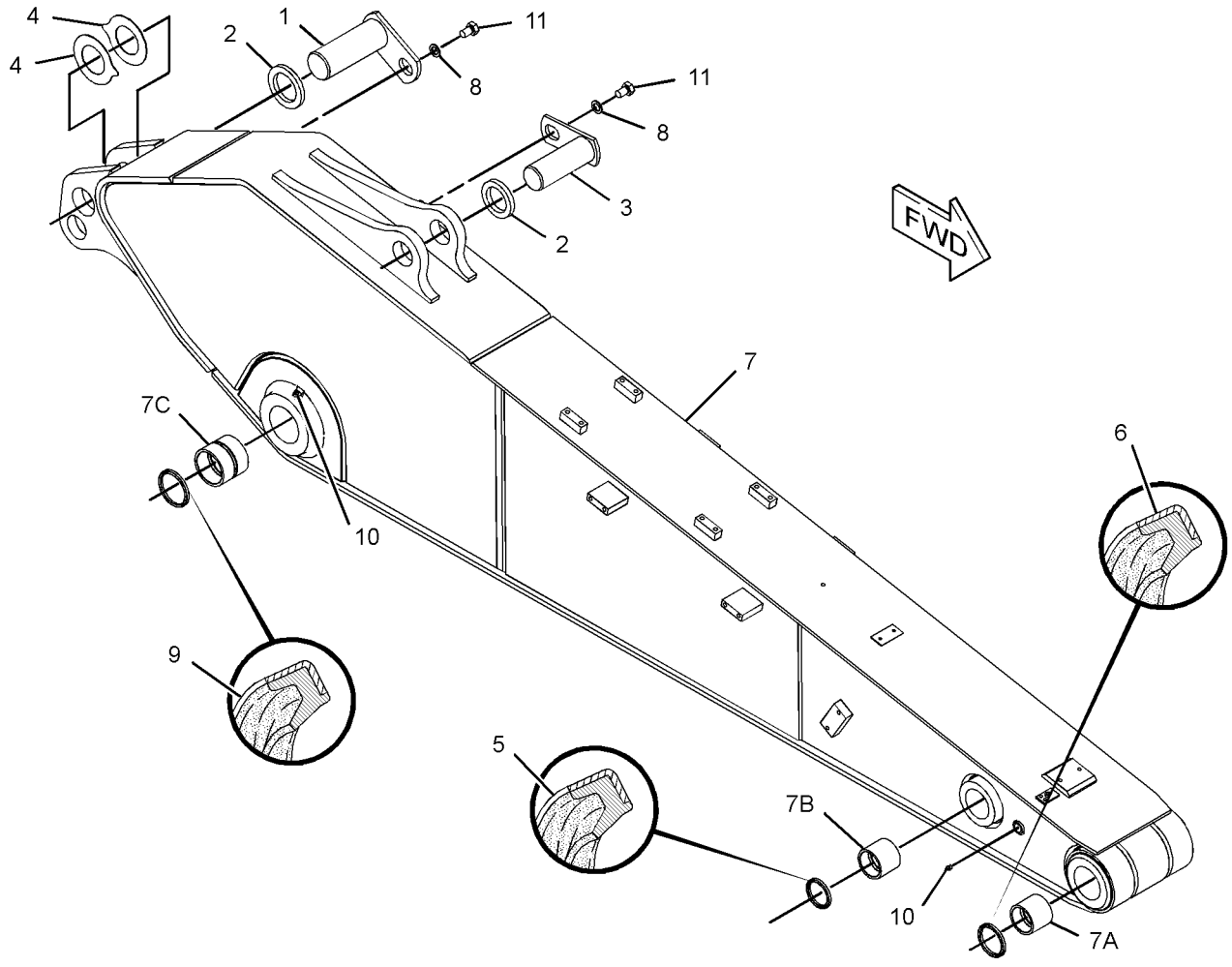

GRAPHIC #1 **<END>** g01399930

282-4484 STICK GP-HOE

S/N: CLA1-UP
2.25-M (7.38-FT) REACH
PART OF 260-7237 STICK AR
AN ATTACHMENT

SMCS-6502 **i02796382**

NOTE	REF NO	GRAPHIC REF	PART NUMBER	QTY	PART NAME 1 2 3 4 5 6 (PRODUCT LEVEL)	SEE PAGE
	1	1	**1R-6224**	1	PIN AS	
	2	1	**093-0357**	2	WASHER (63X100X9-MM THK)	
	3	1	**127-3913**	1	PIN AS	
	4	1	**166-1481**	2	SHIM (2-MM THK)	
	5	1	**166-1492**	2	SEAL-LIP TYPE	
	6	1	**248-7836**	2	SEAL-LIP TYPE	
	7	1	**282-4485**	1	STICK & BEARING AS	
	7A	1	**229-1091**	2	BEARING-SLEEVE	
	7B	1	**229-1095**	2	BEARING-SLEEVE	
	7C	1	**273-6814**	2	BEARING-SLEEVE	
	8	1	**086-0297**	2	WASHER (13X50X6-MM THK)	
	9	1	**166-1494**	2	SEAL-LIP TYPE	
	10	1	**3B-8489**	3	FITTING-GREASE	
M	11	1	**8T-4179**	2	BOLT (M12X1.75X20-MM)	

M-METRIC PART

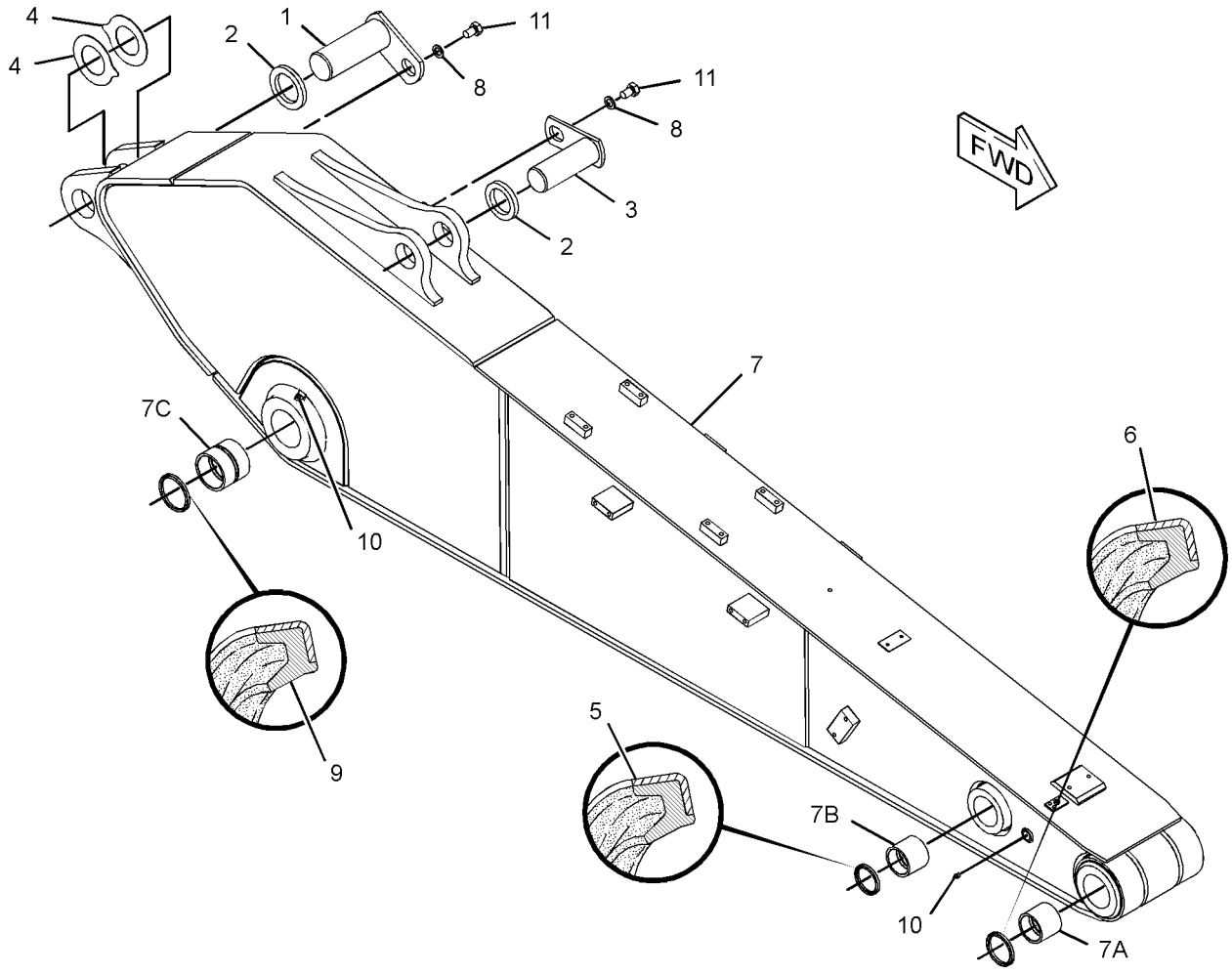

GRAPHIC #1 **<END>** g01400090

IMPLEMENTS

282-4488 STICK GP-HOE

S/N: CLA1-UP
2.25-M (7.38-FT) REACH
PART OF 260-7238 STICK AR
AN ATTACHMENT

SMCS-6502 **i02796394**

NOTE	REF NO	GRAPHIC REF	PART NUMBER	QTY	PART NAME 1 2 3 4 5 6 (PRODUCT LEVEL)	SEE PAGE
	1	1	**1R-6224**	1	PIN AS	
	2	1	**093-0357**	2	WASHER (63X100X9-MM THK)	
	3	1	**127-3913**	1	PIN AS	
	4	1	**166-1481**	2	SHIM (2-MM THK)	
	5	1	**166-1492**	2	SEAL-LIP TYPE	
	6	1	**248-7836**	2	SEAL-LIP TYPE	
	7	1	**282-4489**	1	STICK & BEARING AS	
	7A	1	**229-1091**	2	BEARING-SLEEVE	
	7B	1	**229-1095**	2	BEARING-SLEEVE	
	7C	1	**273-6814**	2	BEARING-SLEEVE	
	8	1	**086-0297**	2	WASHER (13X50X6-MM THK)	
	9	1	**166-1494**	2	SEAL-LIP TYPE	
	10	1	**3B-8489**	3	FITTING-GREASE	
M	11	1	**8T-4179**	2	BOLT (M12X1.75X20-MM)	

M-METRIC PART

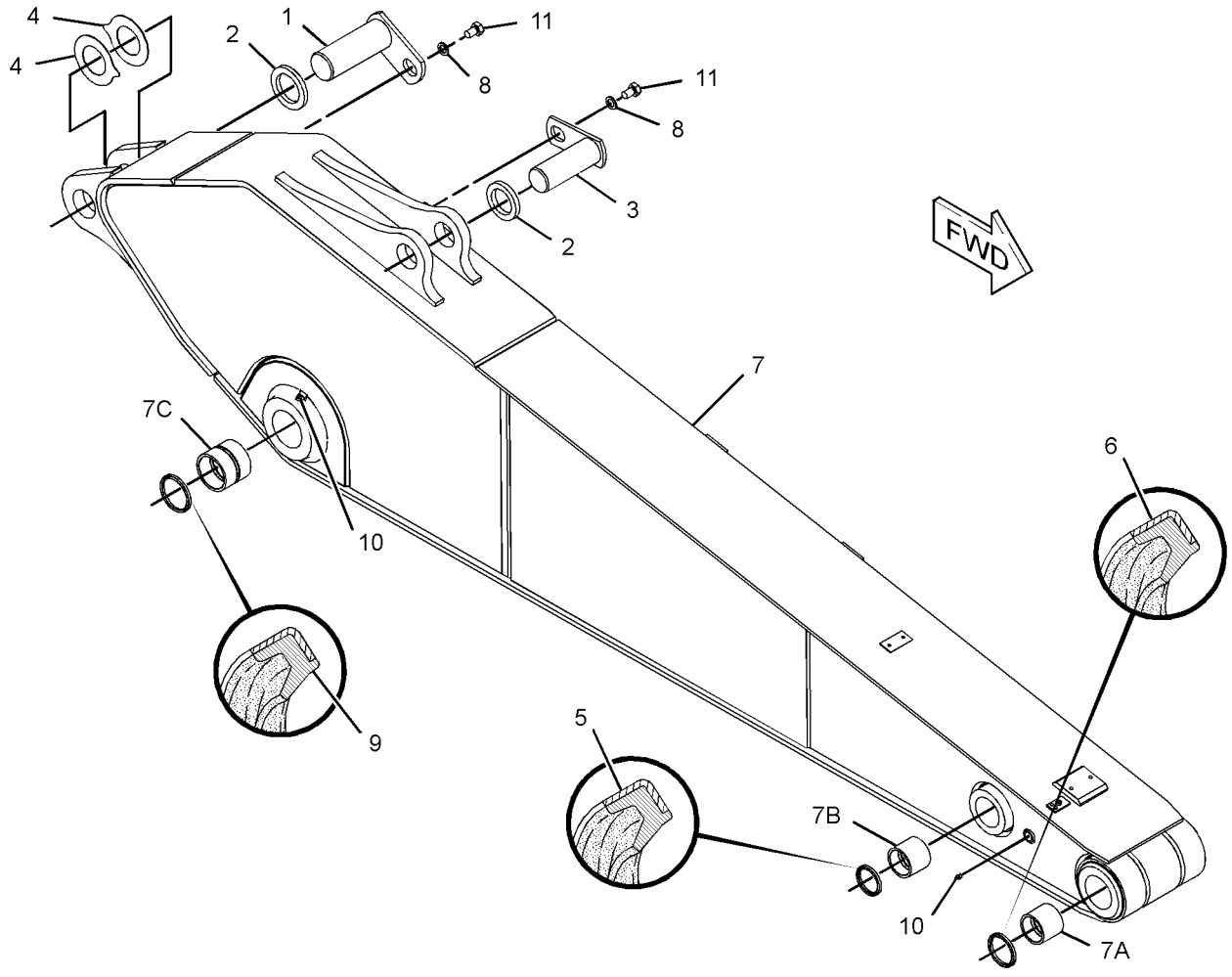

GRAPHIC #1 **<END>** g01400084

282-4494 STICK GP-HOE

S/N: CLA1-UP
2.6-M (8.5-FT) REACH
PART OF 260-7239 STICK AR
AN ATTACHMENT

SMCS-6502 **i02796449**

NOTE	REF NO	GRAPHIC REF	PART NUMBER	QTY	PART NAME 1 2 3 4 5 6 (PRODUCT LEVEL)	SEE PAGE
	1	1	**1R-6224**	1	PIN AS	
	2	1	**093-0357**	2	WASHER (63X100X9-MM THK)	
	3	1	**127-3913**	1	PIN AS	
	4	1	**166-1481**	2	SHIM (2-MM THK)	
	5	1	**166-1492**	2	SEAL-LIP TYPE	
	6	1	**248-7836**	2	SEAL-LIP TYPE	
	7	1	**282-4495**	1	STICK & BEARING AS	
	7A	1	**229-1091**	2	BEARING-SLEEVE	
	7B	1	**229-1095**	2	BEARING-SLEEVE	
	7C	1	**273-6814**	2	BEARING-SLEEVE	
	8	1	**086-0297**	2	WASHER (13X50X6-MM THK)	
	9	1	**166-1494**	2	SEAL-LIP TYPE	
	10	1	**3B-8489**	3	FITTING-GREASE	
M	11	1	**8T-4179**	2	BOLT (M12X1.75X20-MM)	

M-METRIC PART

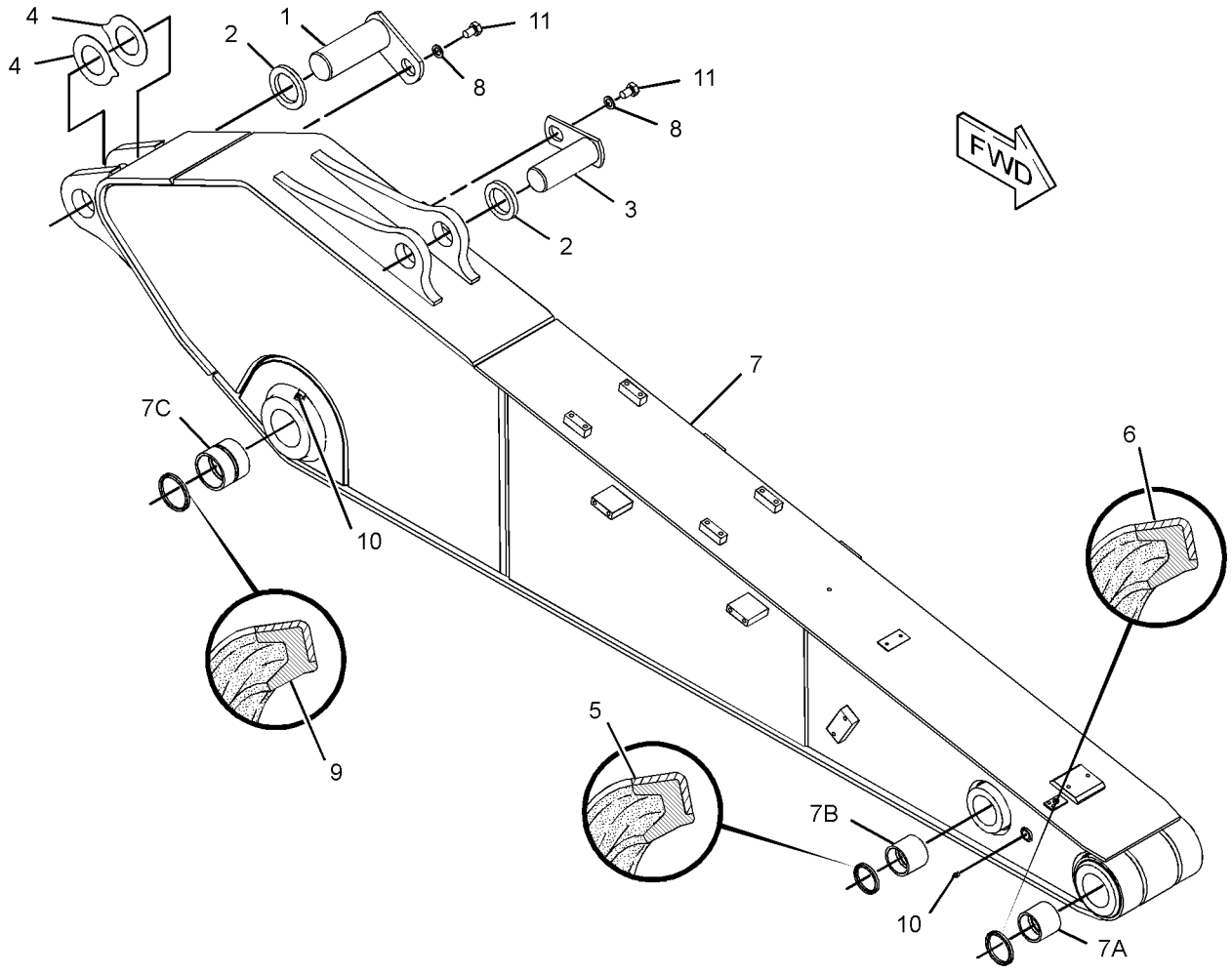

GRAPHIC #1 **<END>** g01400101

308-8814 STICK GP-HOE–ACCUGRADE READY

S/N: CLA1-UP
2.8-M (9.1-FT)
PART OF 301-2552, 301-2555, 301-2647 SPECIAL AR
AN ATTACHMENT

SMCS-6502 **i02869734**

NOTE	REF NO	GRAPHIC REF	PART NUMBER	QTY	PART NAME 1 2 3 4 5 6 (PRODUCT LEVEL)	SEE PAGE
	1	1	**1R-6224**	1	PIN AS	
	2	1	**093-0357**	2	WASHER (63X100X9-MM THK)	
	3	1	**127-3913**	1	PIN AS	
	4	1	**166-1481**	2	SHIM (2-MM THK)	
	5	1	**166-1492**	2	SEAL-LIP TYPE	
	6	1	**248-7836**	2	SEAL-LIP TYPE	
	7	1	**308-8815**	1	STICK & BEARING AS	
	7A	1	**229-1091**	2	BEARING-SLEEVE	
	7B	1	**229-1095**	2	BEARING-SLEEVE	
	7C	1	**273-6814**	2	BEARING-SLEEVE	
	8	1	**086-0297**	2	WASHER (13X50X6-MM THK)	
	9	1	**166-1494**	2	SEAL-LIP TYPE	
	10	1	**3B-8489**	3	FITTING-GREASE	
M	11	1	**8T-4179**	2	BOLT (M12X1.75X20-MM)	

M-METRIC PART

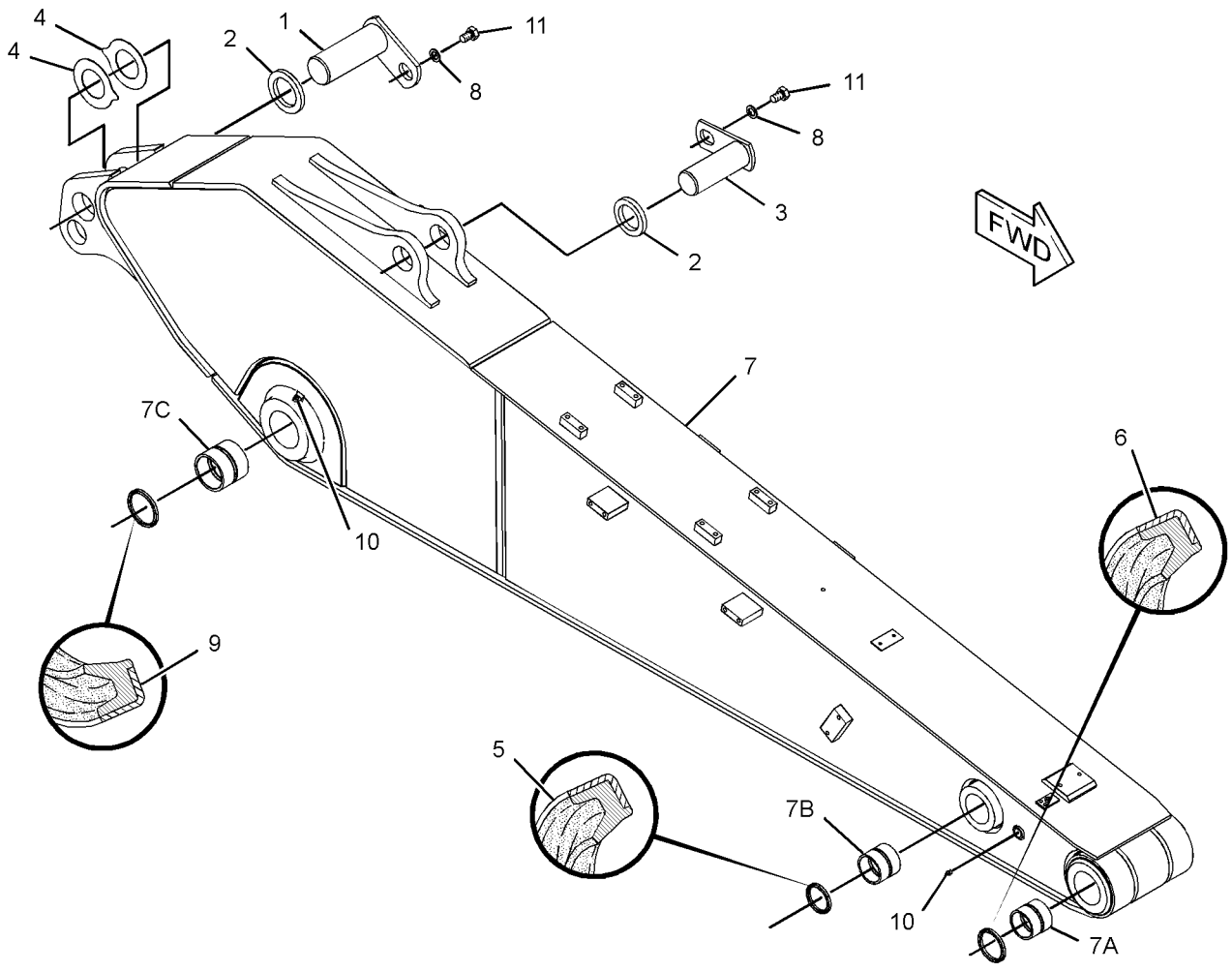

GRAPHIC #1 **<END>** g01445364

4I-6914 ADJUSTER GP-BUCKET

S/N: CLA1-UP
PART OF 229-7685, 305-1607, 305-1630 BUCKET & ADJUSTER GP
AN ATTACHMENT

SMCS-6513, 6700 **i01225392**

NOTE	REF NO	GRAPHIC REF	PART NUMBER	QTY	PART NAME 1 2 3 4 5 6 (PRODUCT LEVEL)	SEE PAGE
B	1	1	**086-0416**	6	SHIM (1-MM THK)	
B	2	1	**086-0415**	4	SHIM (0.5-MM THK)	
	3	1	**085-9769**	1	PIN	
	4	1	**085-8828**	1	PLATE	
M	5	1	**8T-4183**	4	BOLT (M12X1.75X40-MM)	
	6	1	**8T-4223**	4	WASHER-HARD (13.5X25.5X3-MM THK)	
	7	1	**086-0414**	1	FLANGE	

B-USE AS REQUIRED
M-METRIC PART

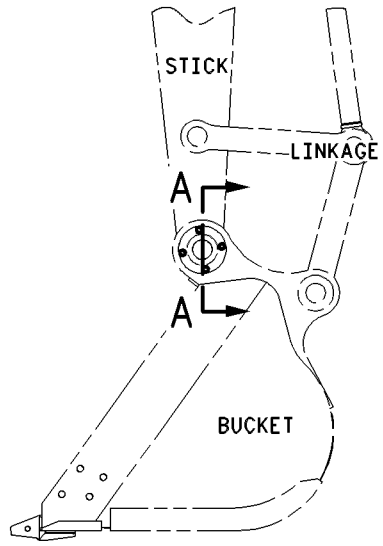

RIGHT SIDE VIEW

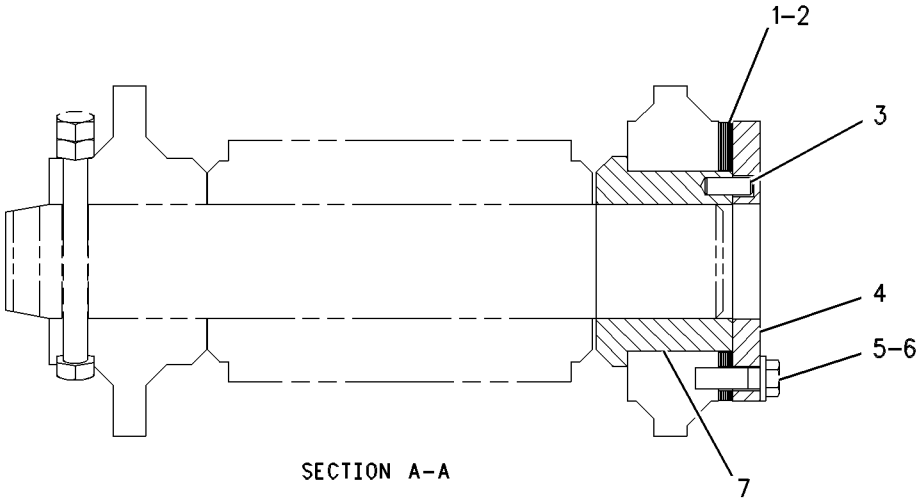

SECTION A–A

GRAPHIC #1 **<END>** g00658085

WORK TOOLS

282-4576 BLADE & MOUNTING GP

S/N: CLA1-UP
2490-MM (98-IN) WIDE
AN ATTACHMENT

SMCS-6060 **i02818884**

NOTE	REF NO	GRAPHIC REF	PART NUMBER	QTY	PART NAME 1 2 3 4 5 6 (PRODUCT LEVEL)	SEE PAGE
	1	1	**3J-7283**	2	FITTING-GREASE	
B	2	1	**093-0065**	12	SHIM (1-MM THK)	
B	3	1	**093-0097**	6	SHIM (2-MM THK)	
	4	1	**093-0357**	6	WASHER (63X100X9-MM THK)	
B	5	1	**099-7091**	6	SHIM (1.5-MM THK)	
	6	1	**127-3913**	6	PIN AS	
	7	1	**166-1492**	4	SEAL-LIP TYPE	
Y	8	1	**282-4577**	1	BLADE GP-STRAIGHT	689
	9	1	**086-0297**	6	WASHER (13X50X6-MM THK)	
M	10	1	**8T-4179**	6	BOLT (M12X1.75X20-MM)	

B-USE AS REQUIRED
M-METRIC PART
Y-SEPARATE ILLUSTRATION

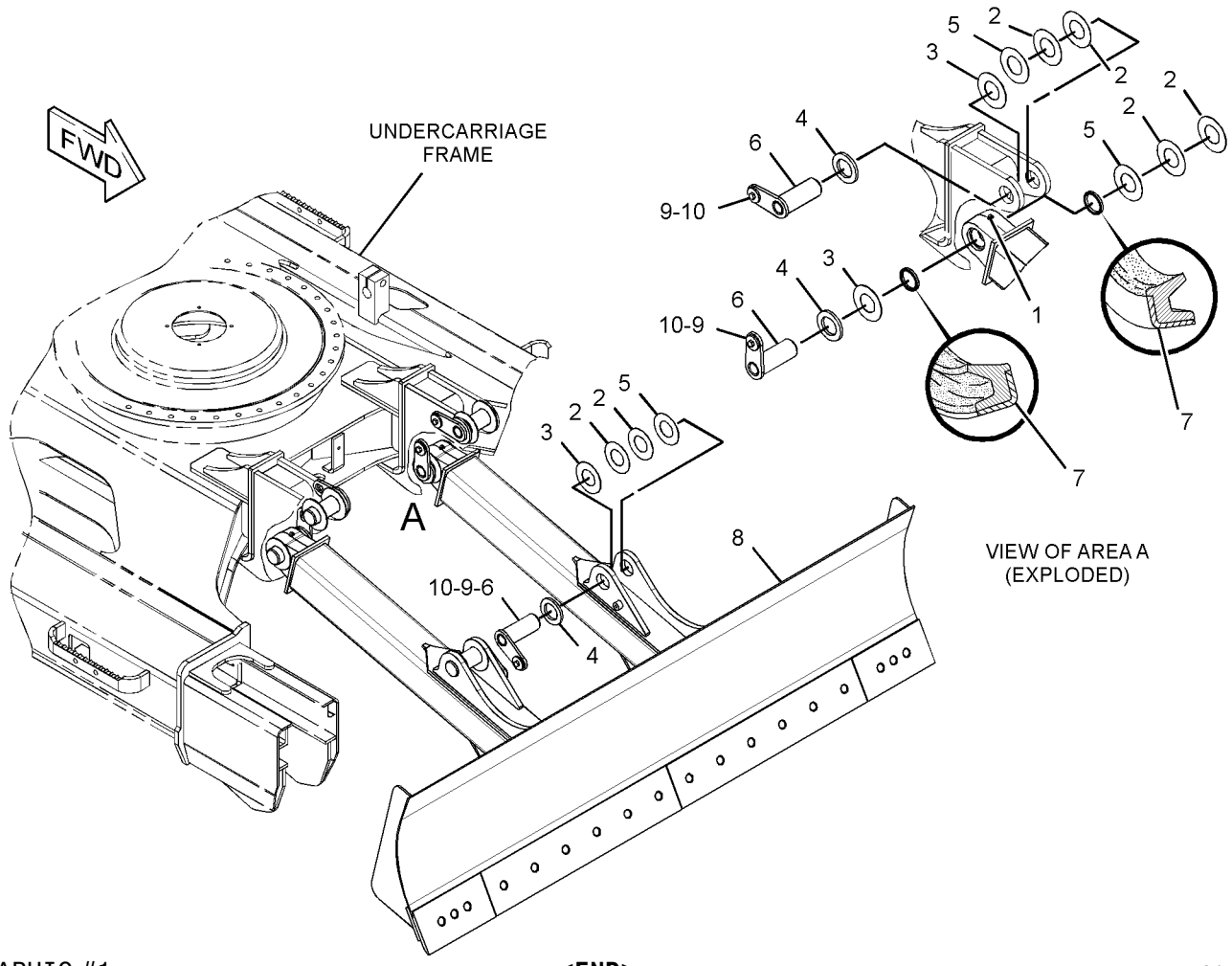

GRAPHIC #1 **<END>** g01411278

282-4579 BLADE & MOUNTING GP

S/N: CLA1-UP
2590-MM (101.9-IN) WIDE
AN ATTACHMENT

SMCS-6060 **i02818886**

NOTE	REF NO	GRAPHIC REF	PART NUMBER	QTY	PART NAME 1 2 3 4 5 6 (PRODUCT LEVEL)	SEE PAGE
	1	1	**3J-7283**	2	FITTING-GREASE	
B	2	1	**093-0065**	12	SHIM (1-MM THK)	
B	3	1	**093-0097**	6	SHIM (2-MM THK)	
	4	1	**093-0357**	6	WASHER (63X100X9-MM THK)	
B	5	1	**099-7091**	6	SHIM (1.5-MM THK)	
	6	1	**127-3913**	1	PIN AS	
	7	1	**166-1492**	4	SEAL-LIP TYPE	
Y	8	1	*282-4580*	1	BLADE GP-STRAIGHT	690
	9	1	**086-0297**	6	WASHER (13X50X6-MM THK)	
M	10	1	**8T-4179**	6	BOLT (M12X1.75X20-MM)	

B-USE AS REQUIRED
M-METRIC PART
Y-SEPARATE ILLUSTRATION

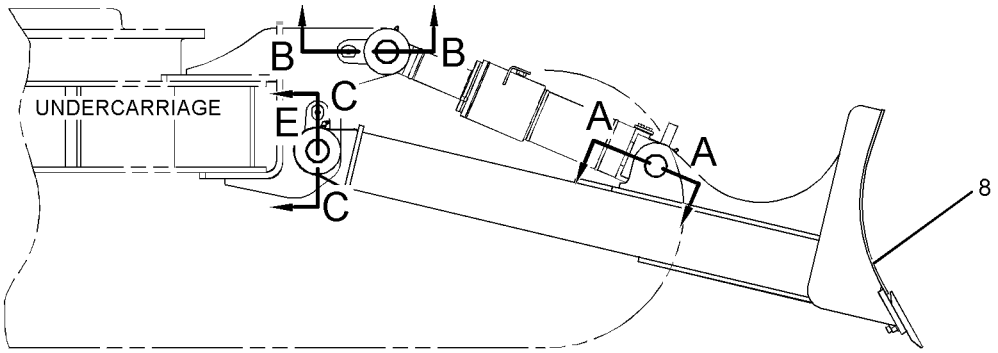

RIGHT SIDE VIEW

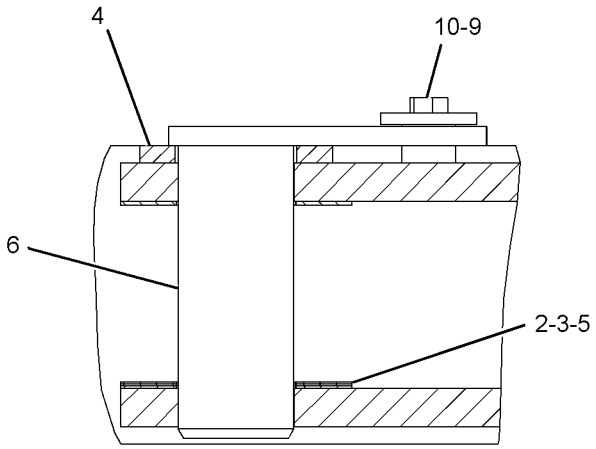

SECTION A-A

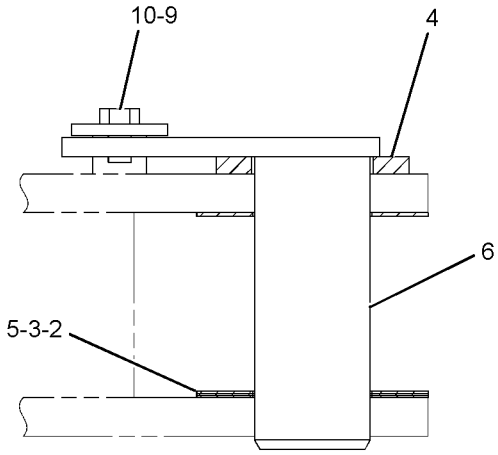

SECTION B-B

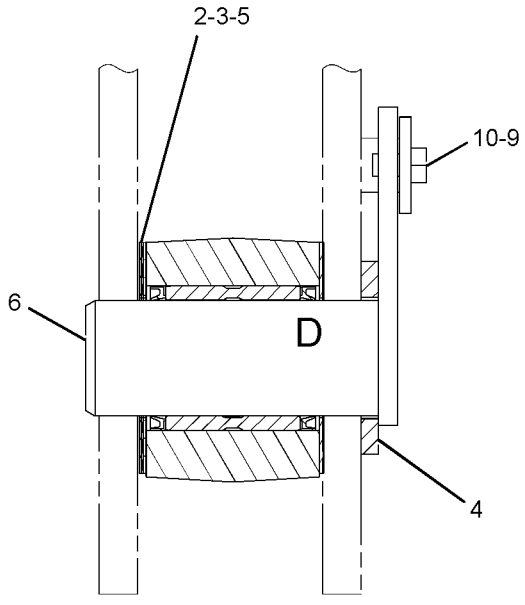

SECTION C-C

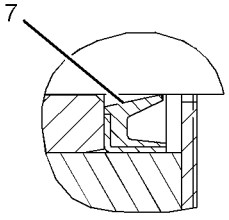

VIEW OF AREA D

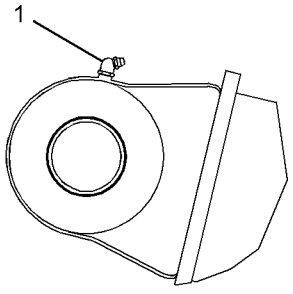

VIEW OF AREA E

GRAPHIC #1 **<END>** g01423523

282-4582 BLADE & MOUNTING GP

S/N: CLA1-UP
2690-MM (105.9-IN) WIDE
AN ATTACHMENT

SMCS-6060 **i02818907**

NOTE	REF NO	GRAPHIC REF	PART NUMBER	QTY	PART NAME 1 2 3 4 5 6 (PRODUCT LEVEL)	SEE PAGE
	1	1	**3J-7283**	2	FITTING-GREASE	
B	2	1	**093-0065**	12	SHIM (1-MM THK)	
B	3	1	**093-0097**	6	SHIM (2-MM THK)	
	4	1	**093-0357**	6	WASHER (63X100X9-MM THK)	
B	5	1	**099-7091**	6	SHIM (1.5-MM THK)	
	6	1	**127-3913**	6	PIN AS	
	7	1	**166-1492**	4	SEAL-LIP TYPE	
Y	8	1	*282-4583*	1	BLADE GP-STRAIGHT	691
	9	1	**086-0297**	6	WASHER (13X50X6-MM THK)	
M	10	1	**8T-4179**	6	BOLT (M12X1.75X20-MM)	

B-USE AS REQUIRED
M-METRIC PART
Y-SEPARATE ILLUSTRATION

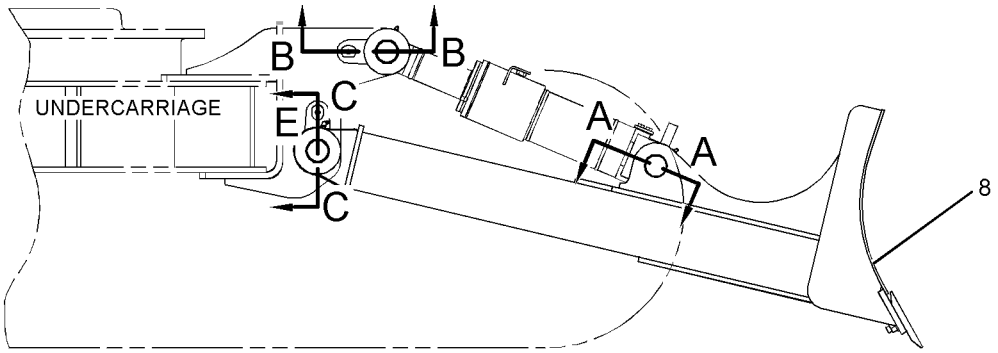

RIGHT SIDE VIEW

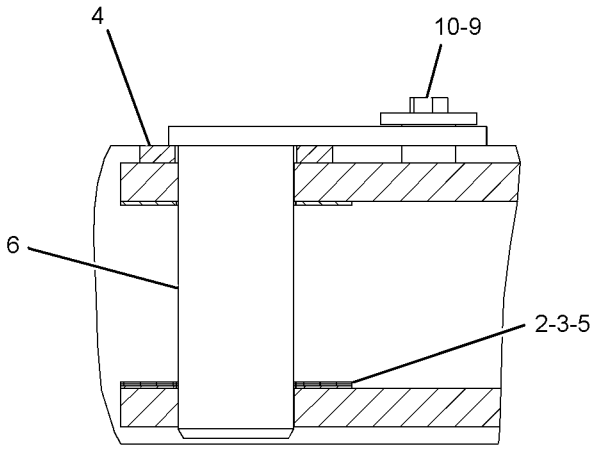

SECTION A-A

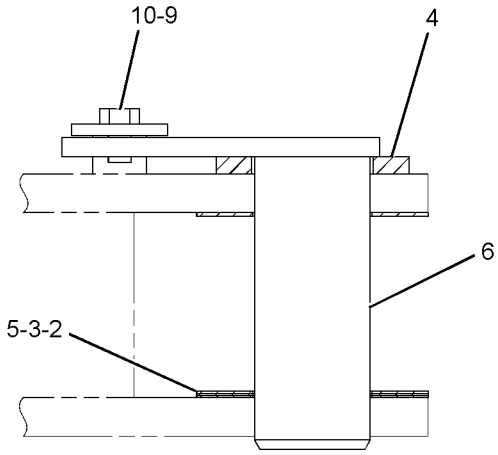

SECTION B-B

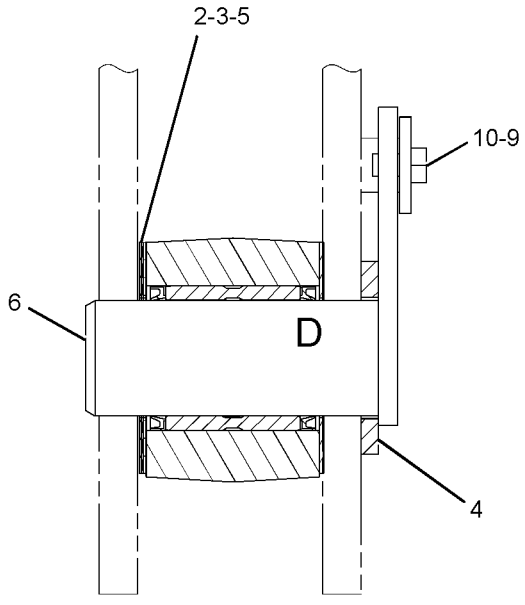

SECTION C-C

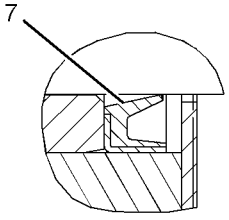

VIEW OF AREA D

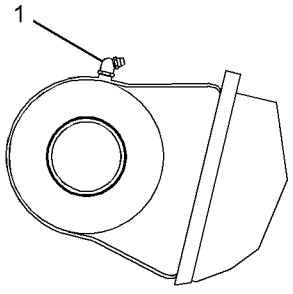

VIEW OF AREA E

GRAPHIC #1 **<END>** g01423523

282-4577 BLADE GP-STRAIGHT

S/N: CLA1-UP
2490-MM (98-IN) WIDE
PART OF 282-4576 BLADE & MOUNTING GP
AN ATTACHMENT

SMCS-6060 **i02818885**

NOTE	REF NO	GRAPHIC REF	PART NUMBER	QTY	PART NAME 1 2 3 4 5 6 (PRODUCT LEVEL)	SEE PAGE
	1	1	**4T-6229**	2	BIT-END	
	2	1	**3Q-2034**	2	EDGE-CUTTING	
	3	1	**282-4578**	1	BLADE & BEARING AS	
	3A	1	**273-6945**	2	BEARING-SLEEVE	
	4	1	**3F-5108**	18	BOLT-PLOW (5/8-11X2.25-IN)	
	5	1	**4K-0367**	18	NUT-FULL (5/8-11-THD)	
	6	1	**5P-8247**	18	WASHER-HARD (17X32X3.5-MM THK)	

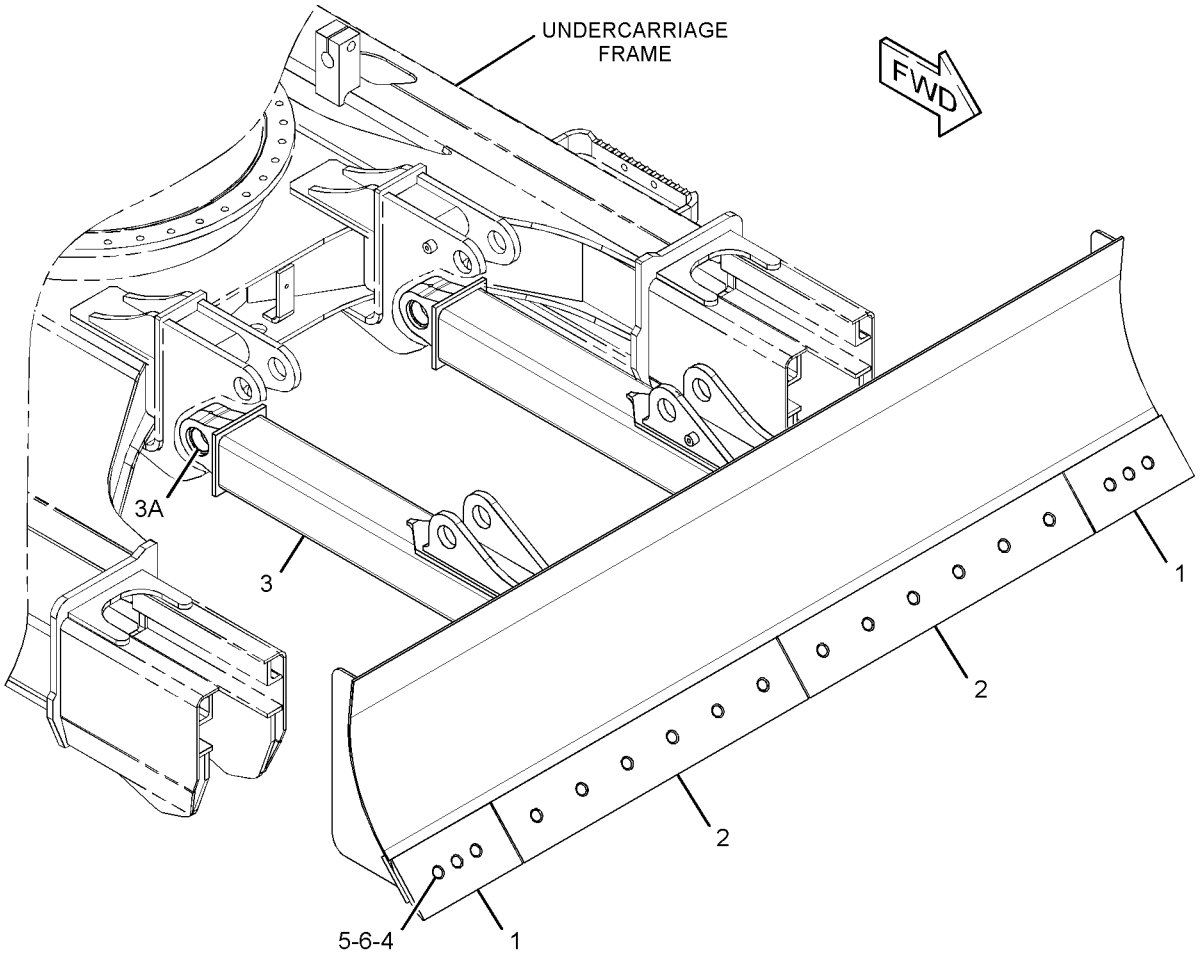

GRAPHIC #1 **<END>** g01411671

WORK TOOLS

282-4580 BLADE GP-STRAIGHT

S/N: CLA1-UP
2590-MM (101.9-IN) WIDE
PART OF 282-4579 BLADE & MOUNTING GP
AN ATTACHMENT

SMCS-6060 **i02818887**

NOTE	REF NO	GRAPHIC REF	PART NUMBER	QTY	PART NAME 1 2 3 4 5 6 (PRODUCT LEVEL)	SEE PAGE
	1	1	**4T-6229**	2	BIT-END	
	2	1	**140-6836**	2	EDGE-CUTTING	
	3	1	**282-4581**	1	BLADE & BEARING AS	
	3A	1	**273-6945**	2	BEARING-SLEEVE	
	4	1	**3F-5108**	18	BOLT-PLOW (5/8-11X2.25-IN)	
	5	1	**4K-0367**	18	NUT-FULL (5/8-11-THD)	
	6	1	**5P-8247**	18	WASHER-HARD (17X32X3.5-MM THK)	

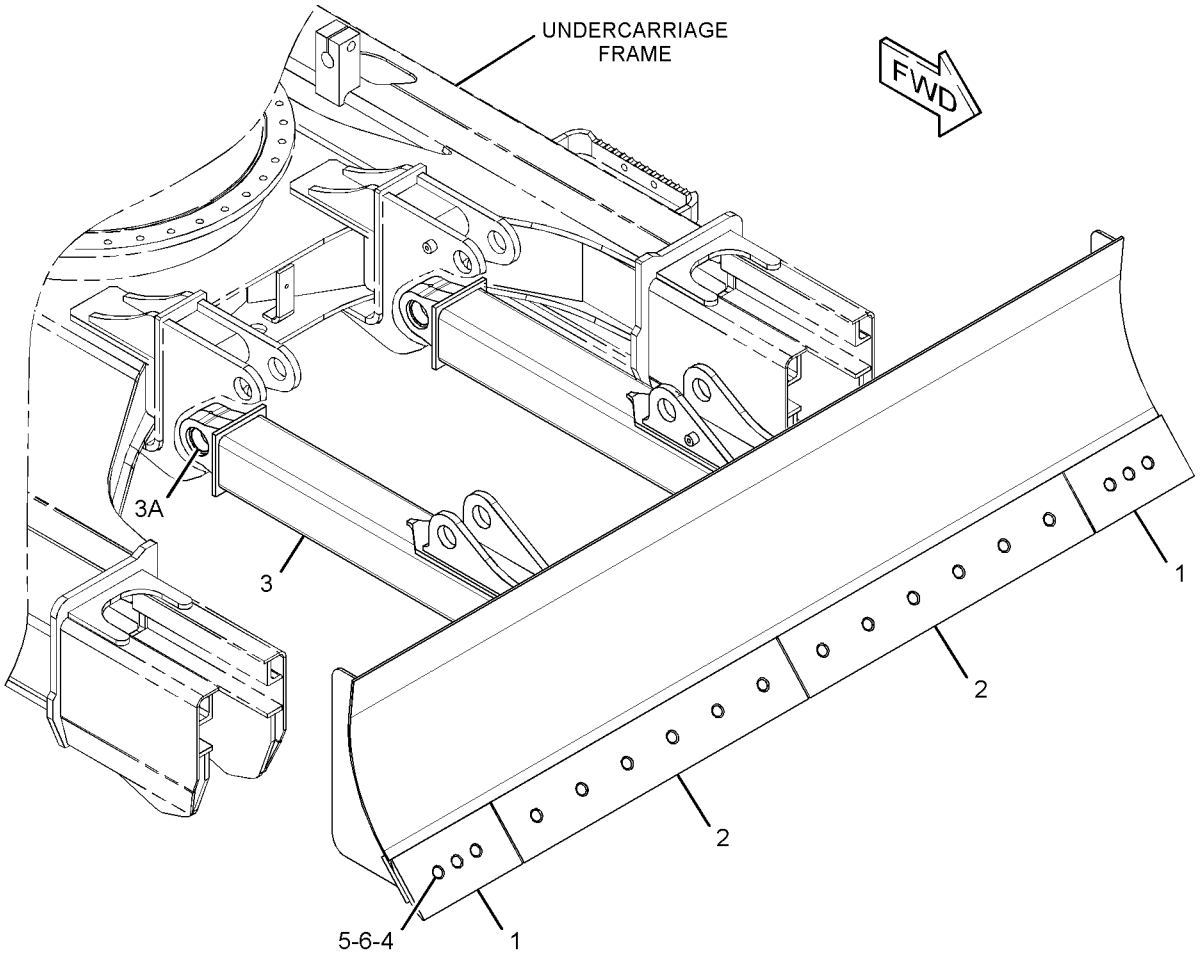

GRAPHIC #1 **<END>** g01411671

WORK TOOLS

282-4583 BLADE GP-STRAIGHT

S/N: CLA1-UP
2690-MM (105.9-IN) WIDE
PART OF 282-4582 BLADE & MOUNTING GP
AN ATTACHMENT

SMCS-6060 **i02818908**

NOTE	REF NO	GRAPHIC REF	PART NUMBER	QTY	PART NAME 1 2 3 4 5 6 (PRODUCT LEVEL)	SEE PAGE
	1	1	**4T-6229**	2	BIT-END	
	2	1	**140-2187**	2	EDGE-CUTTING	
	3	1	**282-4584**	1	BLADE & BEARING AS	
	3A	1	**273-6945**	2	BEARING-SLEEVE	
	4	1	**3F-5108**	18	BOLT-PLOW (5/8-11X2.25-IN)	
	5	1	**4K-0367**	18	NUT-FULL (5/8-11-THD)	
	6	1	**5P-8247**	18	WASHER-HARD (17X32X3.5-MM THK)	

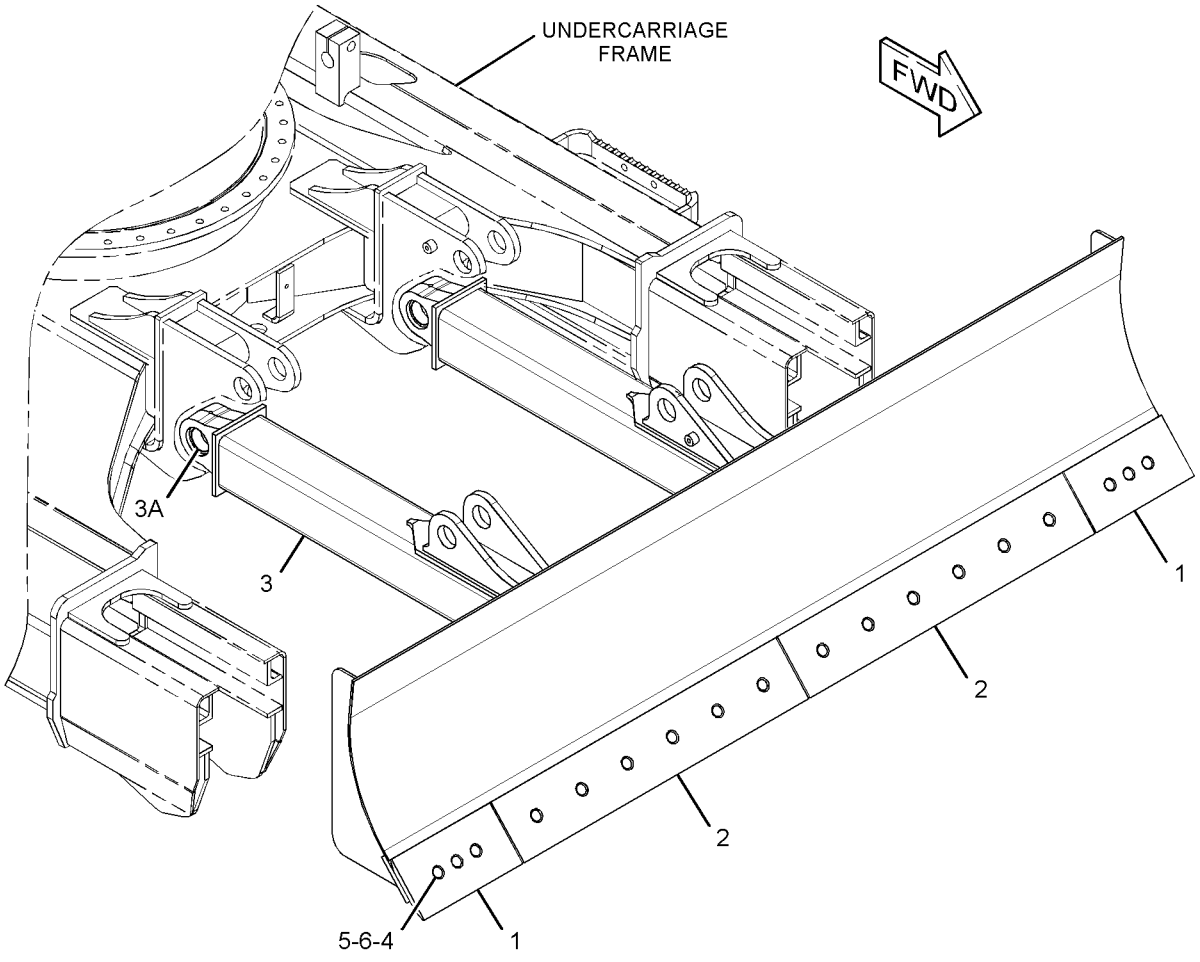

GRAPHIC #1 **<END>** g01411671

WORK TOOLS

229-7685 BUCKET & ADJUSTER GP—HEAVY DUTY ROCK

S/N: CLA1-UP
775-MM (30-IN) WIDE X .4-CU M (.5-CU YD) CAPACITY. J-300 ADAPTERS, (4X)
AN ATTACHMENT

SMCS-6503, 6513 **i02880708**

NOTE	PART NUMBER	QTY	PART NAME 1 2 3 4 5 6 (PRODUCT LEVEL)	SEE PAGE
Y	**4I-6914**	1	ADJUSTER GP-BUCKET	683
Y	**305-1592**	1	BUCKET AS-HEAVY DUTY ROCK	702
Y-SEPARATE ILLUSTRATION				

<END>

305-1607 BUCKET & ADJUSTER GP—EXCAVATION

S/N: CLA1-UP
787-MM (31-IN) WIDE X 0.45-CU M (0.59-CU YD) CAPACITY. J-300 ADAPTERS, (4X)
PART OF 305-1624 BUCKET AR-EXCAVATION
AN ATTACHMENT

SMCS-6503, 6513 **i02898762**

NOTE	PART NUMBER	QTY	PART NAME 1 2 3 4 5 6 (PRODUCT LEVEL)	SEE PAGE
Y	**4I-6914**	1	ADJUSTER GP-BUCKET	683
Y	**305-1608**	1	BUCKET AS-EXCAVATION (HEAVY-DUTY ROCK)	700
Y-SEPARATE ILLUSTRATION				

<END>

305-1630 BUCKET & ADJUSTER GP—EXCAVATION

S/N: CLA1-UP
882-MM (35-IN) WIDE X 0.52-CU M (0.68-CU YD) CAPACITY. J-300 ADAPTERS, (4X)
PART OF 305-1629 BUCKET AR-EXCAVATION
AN ATTACHMENT

SMCS-6503, 6513 **i02899782**

NOTE	PART NUMBER	QTY	PART NAME 1 2 3 4 5 6 (PRODUCT LEVEL)	SEE PAGE
Y	**4I-6914**	1	ADJUSTER GP-BUCKET	683
Y	**305-1631**	1	BUCKET AS-EXCAVATION	701
Y-SEPARATE ILLUSTRATION				

<END>

305-1624 BUCKET AR-EXCAVATION

S/N: CLA1-UP
787-MM (31-IN) WIDE X 0.45-CU M (0.59-CU YD) CAPACITY. J-300 ADAPTERS, (4X)
AN ATTACHMENT

SMCS-6523 **i02898760**

NOTE	PART NUMBER	QTY	PART NAME 1 2 3 4 5 6 (PRODUCT LEVEL)	SEE PAGE
Y	*305-1607*	1	BUCKET & ADJUSTER GP (EXCAVATION)	692
Y	*4I-7343*	1	SIDECUTTER GP	709
Y	*9J-3167*	4	TIP GP-LONG	710
Y-SEPARATE ILLUSTRATION				

<END>

WORK TOOLS

305-1629 BUCKET AR-EXCAVATION

S/N: CLA1-UP

882-MM (35-IN) WIDE X 0.52-CU M (0.68-CU YD) CAPACITY. J-300 ADAPTERS, (4X)

AN ATTACHMENT

SMCS-6523 **i02899774**

NOTE	PART NUMBER	QTY	PART NAME 1 2 3 4 5 6 (PRODUCT LEVEL)	SEE PAGE
Y	*305-1630*	1	BUCKET & ADJUSTER GP (EXCAVATION)	692
Y	*4I-7343*	1	SIDECUTTER GP	709
Y	*9J-3167*	4	TIP GP-LONG	710

Y-SEPARATE ILLUSTRATION

<END>

WORK TOOLS

327-3600 BUCKET AS

S/N: CLA1-UP
458-MM (18-IN) WIDE X 0.3-CU M (0.3-CU YD) CAPACITY. K-250 ADAPTERS, (3X)
PART OF 327-3599 BUCKET GP
AN ATTACHMENT

SMCS-6001, 6101 **i03144442**

NOTE	REF NO	GRAPHIC REF	PART NUMBER	QTY	PART NAME 1 2 3 4 5 6 (PRODUCT LEVEL)	SEE PAGE
	1	1	**226-1311**	1	EDGE AS	
	1A	1	**8P-9770**	1	PLATE	
	1B	1	**119-3253**	3	ADAPTER-TIP (J-250, 2-STRAP, CENTER)	
	2	1	**2C-9259**	1	PLATE-IDENTIFICATION (CAT)	
	3	1	**216-5841**	2	PLATE-WEAR	
	4	1	**226-1320**	3	PLATE	
	5	1	**226-1319**	1	PLATE	
	6	1	**327-3601**	1	PLATE AS-HINGE	

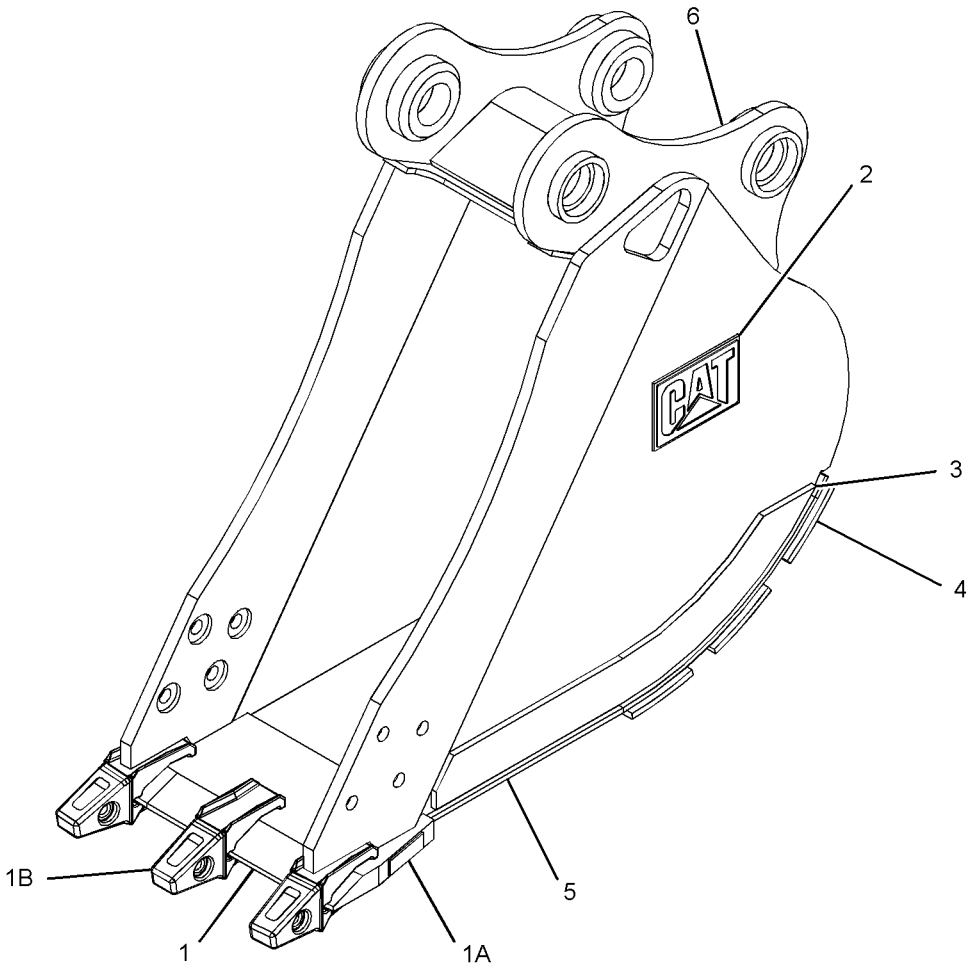

GRAPHIC #1 **<END>** g01623016

327-3603 BUCKET AS

S/N: CLA1-UP
610-MM (24-IN) WIDE X 0.3-CU M (0.4-CU YD) CAPACITY. K-250 ADAPTERS, (4X)
PART OF 327-3602 BUCKET GP
AN ATTACHMENT

SMCS-6001, 6101 **i03144475**

NOTE	REF NO	GRAPHIC REF	PART NUMBER	QTY	PART NAME 1 2 3 4 5 6 (PRODUCT LEVEL)	SEE PAGE
	1	1	**229-7650**	1	EDGE AS	
	1A	1	**8P-9770**	1	PLATE	
	1B	1	**119-3253**	4	ADAPTER-TIP (J-250, 2-STRAP, CENTER)	
	2	1	**2C-9259**	1	PLATE-IDENTIFICATION (CAT)	
	3	1	**216-5841**	2	PLATE-WEAR	
	4	1	**216-5838**	3	PLATE-WEAR	
	5	1	**216-5837**	1	PLATE-WEAR	
	6	1	**327-3604**	1	PLATE AS-BOX	

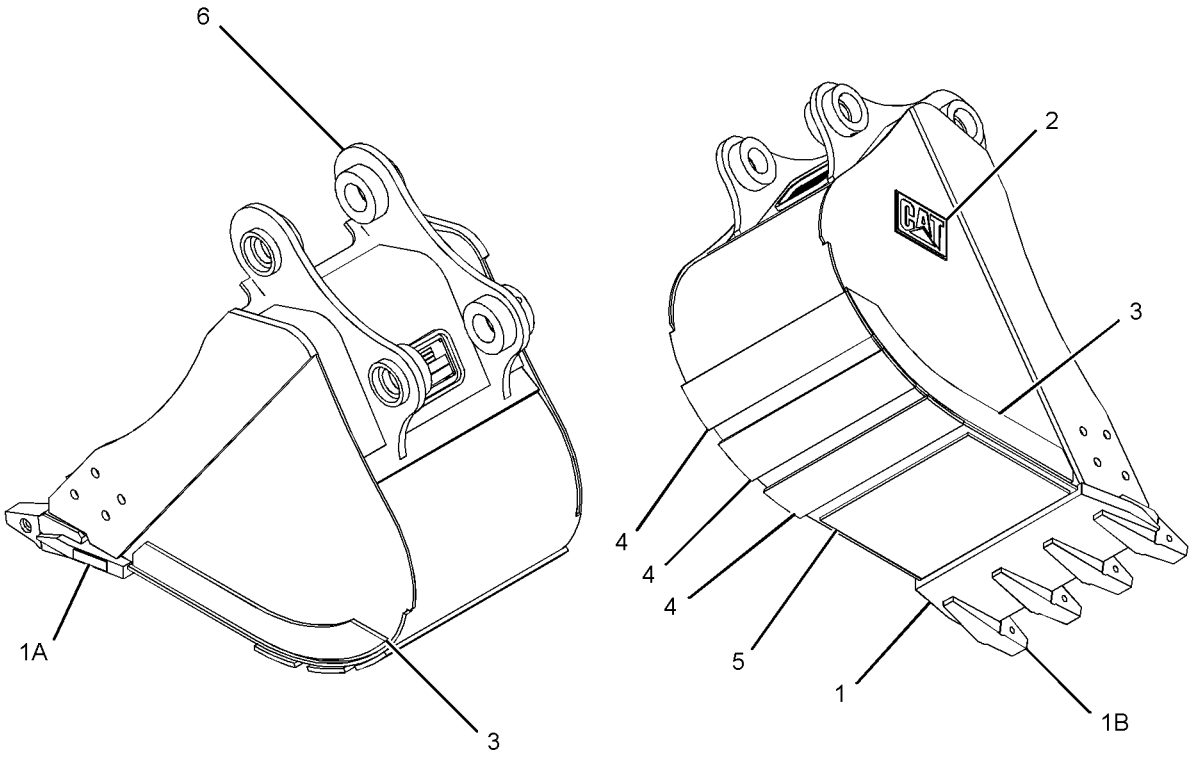

GRAPHIC #1 **<END>** g01624127

327-3606 BUCKET AS

S/N: CLA1-UP
760-MM (30-IN) WIDE X 0.4-CU M (0.5-CU YD) CAPACITY. J-250 ADAPTERS, (5X)
PART OF 327-3605 BUCKET GP
AN ATTACHMENT

SMCS-6001, 6101 **i03144502**

NOTE	REF NO	GRAPHIC REF	PART NUMBER	QTY	PART NAME 1 2 3 4 5 6 (PRODUCT LEVEL)	SEE PAGE
	1	1	**229-7653**	1	EDGE AS	
	1A	1	**8P-9770**	1	PLATE	
	1B	1	**119-3253**	5	ADAPTER-TIP (J-250, 2-STRAP, CENTER)	
	2	1	**2C-9259**	1	PLATE-IDENTIFICATION (CAT)	
	3	1	**216-5841**	2	PLATE-WEAR	
	4	1	**216-5848**	3	PLATE-WEAR	
	5	1	**216-5847**	1	PLATE-WEAR	
	6	1	**327-3607**	1	PLATE AS-BOX	

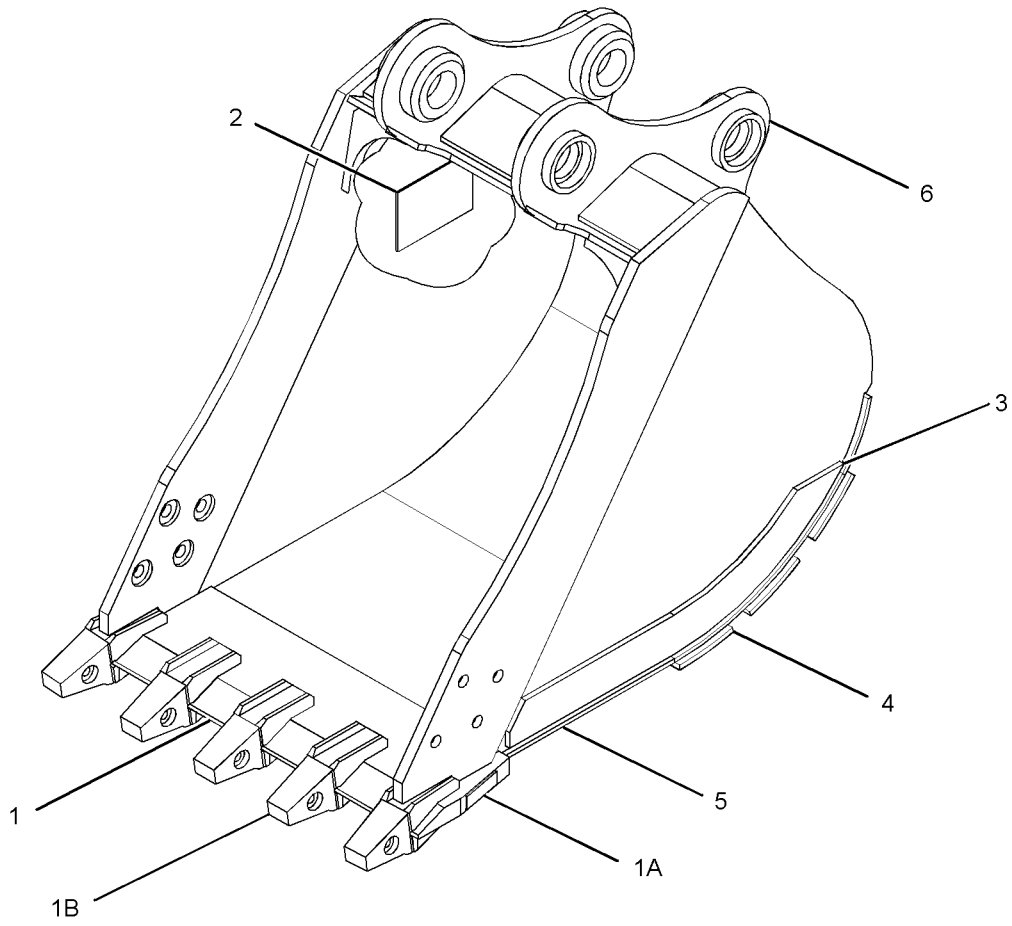

GRAPHIC #1 **<END>** g01627301

327-3609 BUCKET AS

S/N: CLA1-UP
915-MM (36-IN) WIDE X 0.5-CU M (0.7-CU YD) CAPACITY. J-250 ADAPTERS, (6X)
PART OF 327-3608 BUCKET GP
AN ATTACHMENT

SMCS-6001, 6101 **i03144561**

NOTE	REF NO	GRAPHIC REF	PART NUMBER	QTY	PART NAME 1 2 3 4 5 6 (PRODUCT LEVEL)	SEE PAGE
	1	1	**229-7656**	1	EDGE AS	
	1A	1	**8P-9770**	1	PLATE	
	1B	1	**119-3253**	6	ADAPTER-TIP (J-250, 2-STRAP, CENTER)	
	2	1	**2C-9259**	1	PLATE-IDENTIFICATION (CAT)	
	3	1	**216-5841**	2	PLATE-WEAR	
	4	1	**216-5884**	3	PLATE-WEAR	
	5	1	**216-5883**	1	PLATE-WEAR	
	6	1	**327-3610**	1	PLATE AS-BOX	

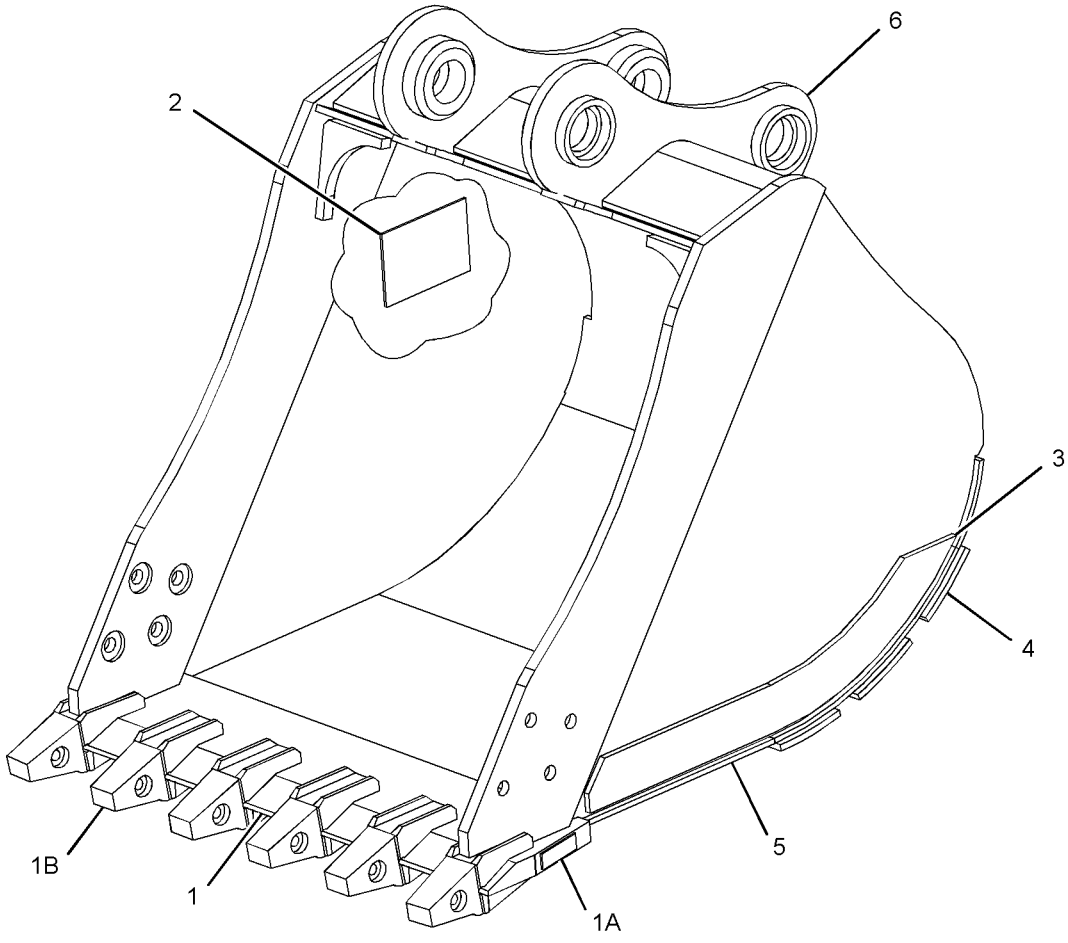

GRAPHIC #1 **<END>** g01627469

WORK TOOLS

327-3612 BUCKET AS

S/N: CLA1-UP
1067-MM (42-IN) WIDE X 0.6-CU M (0.8-CU YD) CAPACITY. J-250 ADAPTERS, (7X)
PART OF 327-3611 BUCKET GP
AN ATTACHMENT

SMCS-6001, 6101 **i03144569**

NOTE	REF NO	GRAPHIC REF	PART NUMBER	QTY	PART NAME 1 2 3 4 5 6 (PRODUCT LEVEL)	SEE PAGE
	1	1	**229-7659**	1	EDGE AS	
	1A	1	**8P-9770**	1	PLATE	
	1B	1	**119-3253**	7	ADAPTER-TIP (J-250, 2-STRAP, CENTER)	
	2	1	**327-3613**	1	PLATE AS-BOX	
	3	1	**216-5841**	2	PLATE-WEAR	
	4	1	**216-5886**	1	PLATE-WEAR	
	5	1	**216-5887**	3	PLATE-WEAR	
	6	1	**2C-9259**	1	PLATE-IDENTIFICATION (CAT)	

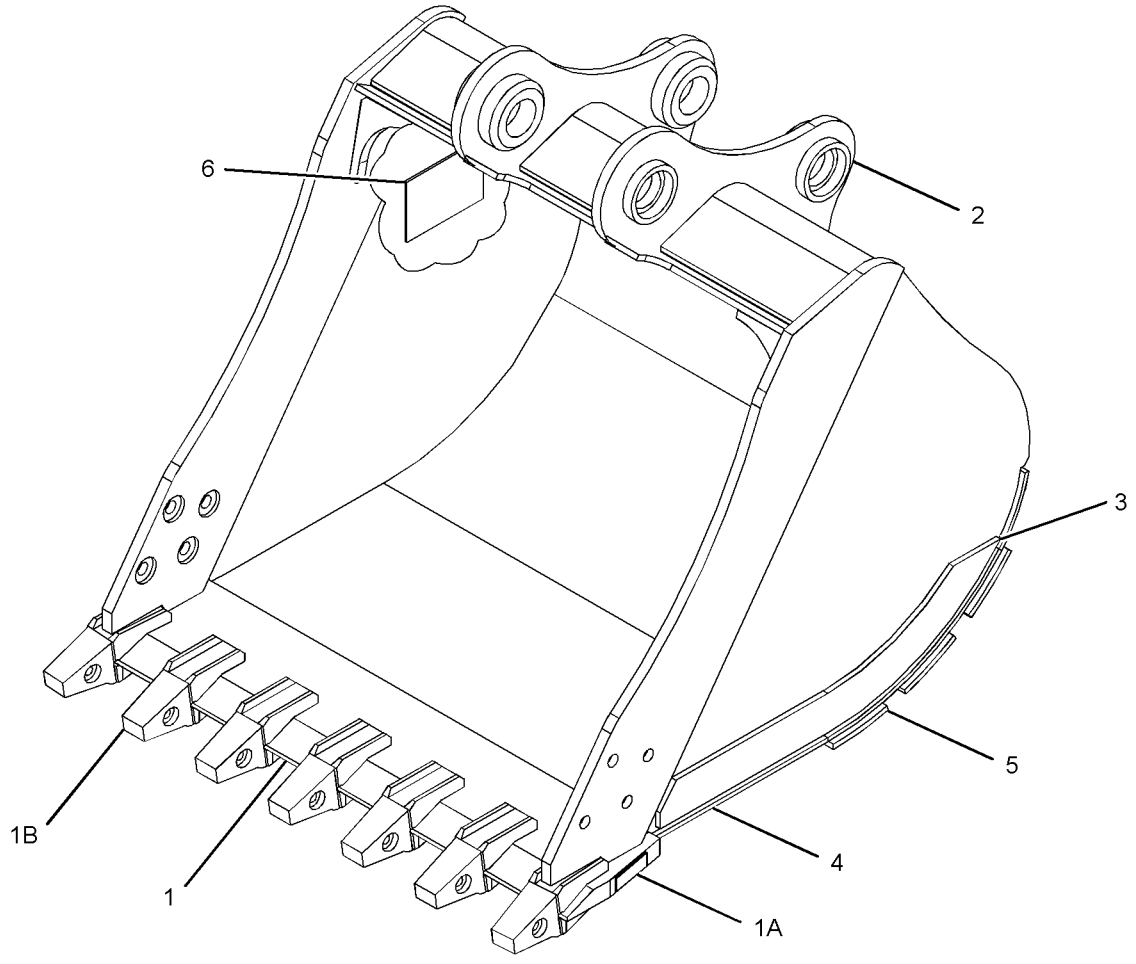

GRAPHIC #1 **<END>** g01627852

167-0279 BUCKET AS-DITCH CLEANING

S/N: CLA1-UP
1500-MM (59-IN) WIDE X 1-CU M (1.3-CU YD) CAPACITY
PART OF 327-3649 BUCKET GP-DITCH CLEANING
AN ATTACHMENT

SMCS-6526 **i03100248**

NOTE	REF NO	GRAPHIC REF	PART NUMBER	QTY	PART NAME 1 2 3 4 5 6 (PRODUCT LEVEL)	SEE PAGE
	1	1	**167-0261**	1	EDGE	
	2	1	**2C-9259**	2	PLATE-IDENTIFICATION (CAT)	

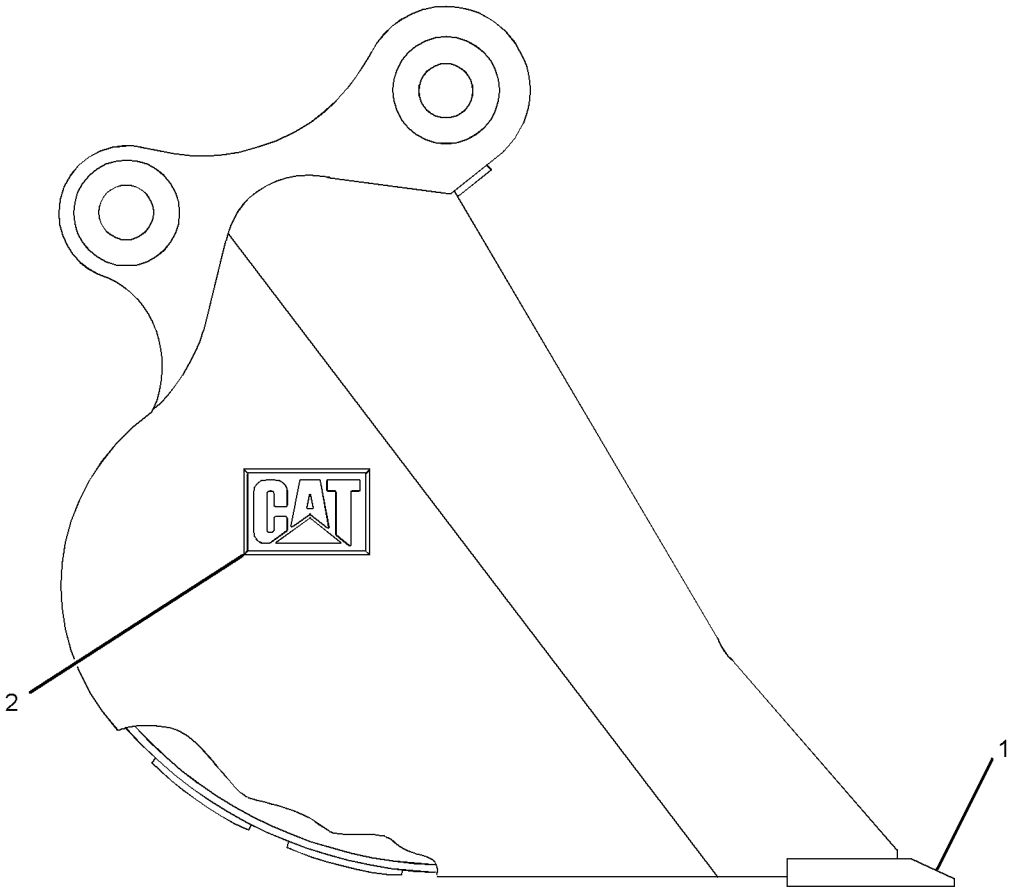

GRAPHIC #1 **<END>** g01627513

305-1608 BUCKET AS-EXCAVATION–HEAVY-DUTY ROCK

S/N: CLA1-UP
787-MM (31-IN) WIDE X 0.45-CU M (0.59-CU YD) CAPACITY. J-300 ADAPTERS, (4X)
PART OF 305-1607 BUCKET & ADJUSTER GP
AN ATTACHMENT

SMCS-6523 **i02898764**

NOTE	REF NO	GRAPHIC REF	PART NUMBER	QTY	PART NAME 1 2 3 4 5 6 (PRODUCT LEVEL)	SEE PAGE
	1	1	**305-1609**	1	EDGE AS	
	1A	1	**8E-9490**	4	ADAPTER-TIP (J-300, 2-STRAP, CENTER)	
	1B	1	**8P-9770**	1	PLATE	
	2	1	**250-6450**	2	PLATE-WEAR	
	3	1	**305-1623**	3	PLATE	

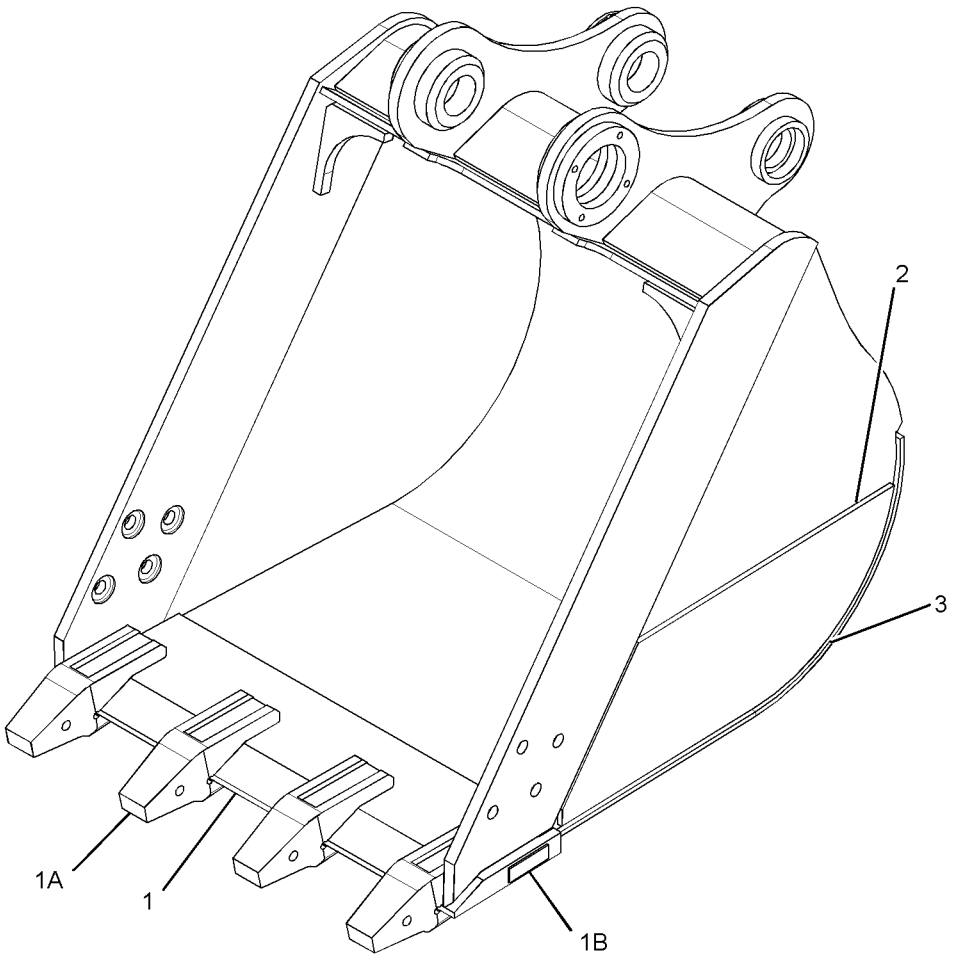

GRAPHIC #1 **<END>** g01455608

WORK TOOLS

305-1631 BUCKET AS-EXCAVATION

S/N: CLA1-UP
882-MM (35-IN) WIDE X 0.52-CU M (0.68-CU YD) CAPACITY. J-300 ADAPTERS, (4X)
PART OF 305-1630 BUCKET & ADJUSTER GP
AN ATTACHMENT

SMCS-6523 **i02899790**

NOTE	REF NO	GRAPHIC REF	PART NUMBER	QTY	PART NAME 1 2 3 4 5 6 (PRODUCT LEVEL)	SEE PAGE
	1	1	**305-1632**	1	EDGE AS	
	1A	1	**8E-9490**	4	ADAPTER-TIP (J-300, 2-STRAP, CENTER)	
	1B	1	**8P-9770**	1	PLATE	
	2	1	**250-6450**	2	PLATE-WEAR	

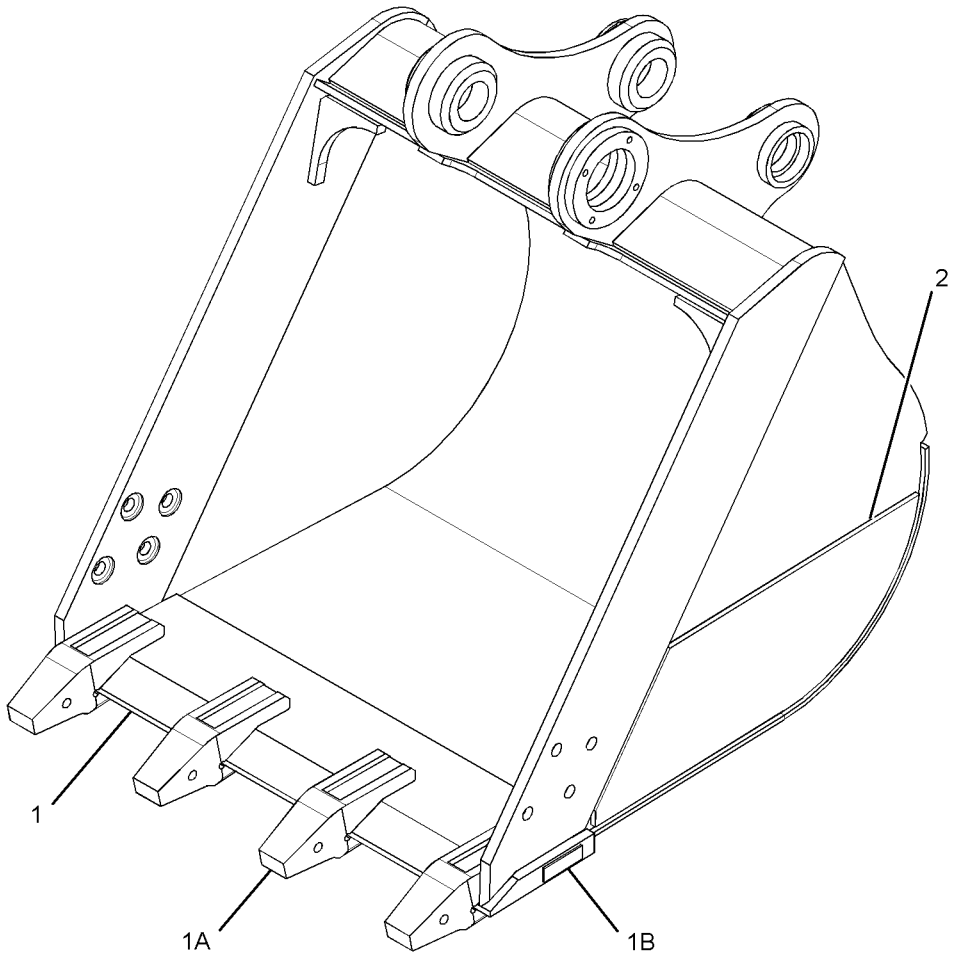

GRAPHIC #1 **<END>** g01447107

WORK TOOLS

305-1592 BUCKET AS-HEAVY DUTY ROCK

S/N: CLA1-UP
775-MM (30-IN) WIDE X 0.4-CU M (0.5-CU YD) CAPACITY. J-300 ADAPTERS, (4X)
PART OF 229-7685 BUCKET & ADJUSTER GP
AN ATTACHMENT

SMCS-6102 **i02880703**

NOTE	REF NO	GRAPHIC REF	PART NUMBER	QTY	PART NAME 1 2 3 4 5 6 (PRODUCT LEVEL)	SEE PAGE
	1	1	**229-7690**	1	EDGE AS	
	1A	1	**8E-9490**	4	ADAPTER-TIP (J-300, 2-STRAP, CENTER)	
	1B	1	**8P-9770**	1	PLATE	
	2	1	**229-7687**	1	PLATE-WEAR	
	3	1	**229-7688**	3	PLATE-WEAR	
	4	1	**229-7689**	1	PLATE-WEAR	
	5	1	**2C-9259**	1	PLATE-IDENTIFICATION (CAT)	

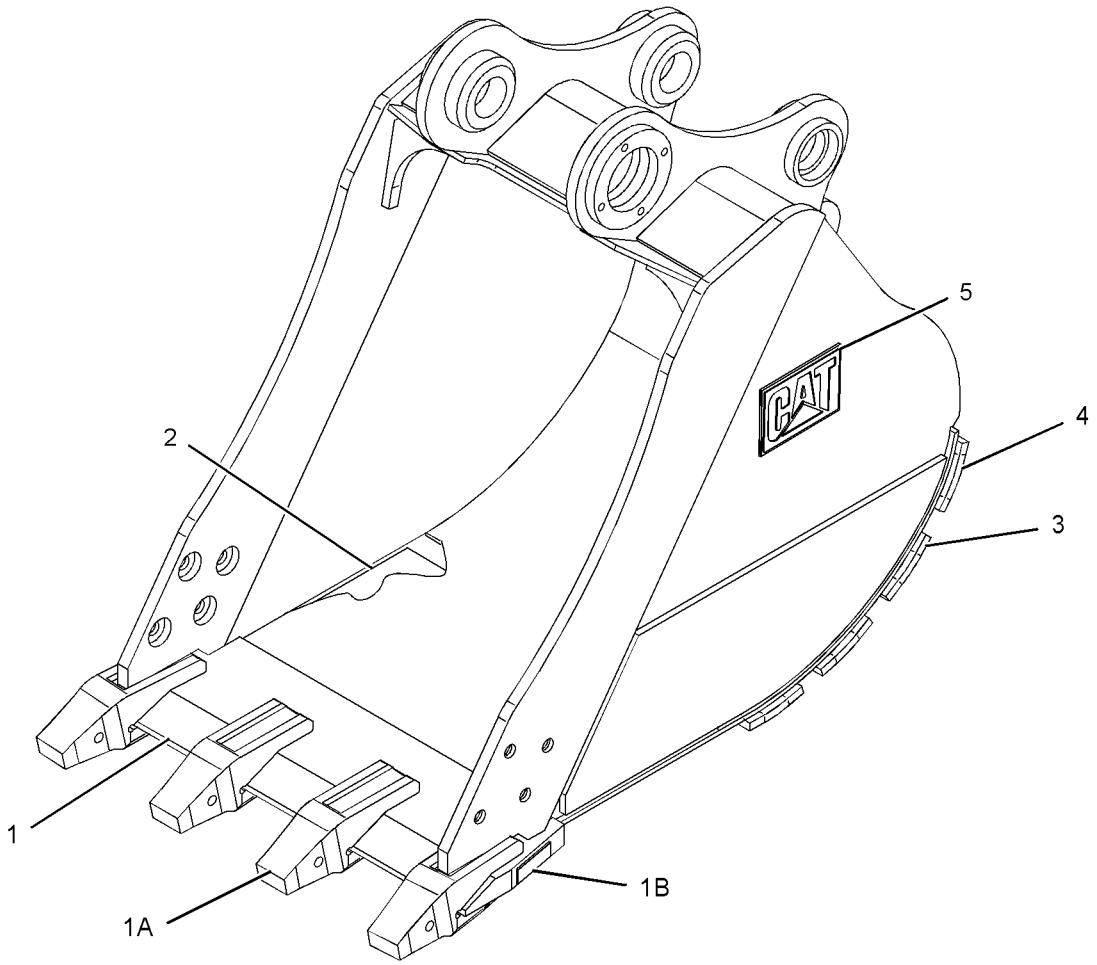

GRAPHIC #1 **<END>** g01435457

327-3599 BUCKET GP

S/N: CLA1-UP

458-MM (18-IN) WIDE X 0.3-CU M (0.3-CU YD) CAPACITY). K-250 ADAPTERS, (3X)

AN ATTACHMENT

SMCS-6101, 6102, 6103, 6104, 6110, 6503, 6515, 6803, 6805, 6822 **i03144429**

NOTE	PART NUMBER	QTY	PART NAME 1 2 3 4 5 6 (PRODUCT LEVEL)	SEE PAGE
Y	**327-3600**	1	BUCKET AS	694
Y	*2C-9548*	1	PIN GP-BUCKET	707
Y	*4I-7343*	1	SIDECUTTER GP	709
Y	*9J-3169*	3	TIP GP-LONG	711

Y-SEPARATE ILLUSTRATION

<END>

327-3602 BUCKET GP

S/N: CLA1-UP

610-MM (24-IN) WIDE X 0.3-CU M (0.4-CU YD) CAPACITY. K-250 ADAPTERS, (4X)

AN ATTACHMENT

SMCS-6101, 6102, 6103, 6104, 6110, 6503, 6515, 6803, 6805, 6822 **i03144466**

NOTE	PART NUMBER	QTY	PART NAME 1 2 3 4 5 6 (PRODUCT LEVEL)	SEE PAGE
Y	**327-3603**	1	BUCKET AS	695
Y	*2C-9548*	1	PIN GP-BUCKET	707
Y	*4I-7343*	1	SIDECUTTER GP	709
Y	*9J-3169*	4	TIP GP-LONG	711

Y-SEPARATE ILLUSTRATION

<END>

327-3605 BUCKET GP

S/N: CLA1-UP

760-MM (30-IN) WIDE X 0.4-CU M (0.5-CU YD) CAPACITY. J-250 ADAPTERS, (5X)

AN ATTACHMENT

SMCS-6101, 6102, 6103, 6104, 6110, 6503, 6515, 6803, 6805, 6822 **i03144483**

NOTE	PART NUMBER	QTY	PART NAME 1 2 3 4 5 6 (PRODUCT LEVEL)	SEE PAGE
Y	**327-3606**	1	BUCKET AS	696
Y	*2C-9548*	1	PIN GP-BUCKET	707
Y	*4I-7343*	1	SIDECUTTER GP	709
Y	*9J-3169*	5	TIP GP-LONG	711

Y-SEPARATE ILLUSTRATION

<END>

327-3608 BUCKET GP

S/N: CLA1-UP
915-MM (36-IN) WIDE X 0.5-CU M (0.7-CU YD) CAPACITY. J-250 ADAPTERS, (6X)
AN ATTACHMENT

SMCS-6101, 6102, 6103, 6104, 6110, 6503, 6515, 6803, 6805, 6822 **i03144525**

NOTE	PART NUMBER	QTY	PART NAME 1 2 3 4 5 6 (PRODUCT LEVEL)	SEE PAGE
Y	**327-3609**	1	BUCKET AS	697
Y	*2C-9548*	1	PIN GP-BUCKET	707
Y	*4I-7343*	1	SIDECUTTER GP	709
Y	*9J-3169*	6	TIP GP-LONG	711

Y-SEPARATE ILLUSTRATION

<END>

327-3611 BUCKET GP

S/N: CLA1-UP
1067-MM (42-IN) WIDE X 0.6-CU M (0.8-CU YD) CAPACITY. J-250 ADAPTERS, (7X)
AN ATTACHMENT

SMCS-6101, 6102, 6103, 6104, 6110, 6503, 6515, 6803, 6805, 6822 **i03144567**

NOTE	PART NUMBER	QTY	PART NAME 1 2 3 4 5 6 (PRODUCT LEVEL)	SEE PAGE
Y	**327-3612**	1	BUCKET AS	698
Y	*2C-9548*	1	PIN GP-BUCKET	707
Y	*4I-7343*	1	SIDECUTTER GP	709
Y	*9J-3169*	7	TIP GP-LONG	711

Y-SEPARATE ILLUSTRATION

<END>

327-3649 BUCKET GP-DITCH CLEANING

S/N: CLA1-UP
1500-MM (59-IN) WIDE X 1-CU M (1.3-CU YD) CAPACITY
AN ATTACHMENT

SMCS-6526 **i03100252**

NOTE	PART NUMBER	QTY	PART NAME 1 2 3 4 5 6 (PRODUCT LEVEL)	SEE PAGE
Y	**167-0279**	1	BUCKET AS-DITCH CLEANING	699
Y	*167-0316*	1	EDGE GP-CUTTING	707
Y	*2C-9548*	1	PIN GP-BUCKET	707

Y-SEPARATE ILLUSTRATION

<END>

282-5536 COUPLER AR-QUICK

S/N: CLA1-UP
AN ATTACHMENT

SMCS-1408, 5057, 6129 **i02864051**

NOTE	PART NUMBER	QTY	PART NAME 1 2 3 4 5 6 (PRODUCT LEVEL)	SEE PAGE
Y	*289-7697*	1	CYLINDER & LINES GP-BUCKET	353
Y	*253-6396*	1	LINES GP-COUPLER	441
Y	*282-5540*	1	LINKAGE GP-BUCKET	676
Y	*253-6406*	1	PIN GP-COUPLER	708

Y-SEPARATE ILLUSTRATION

<END>

282-5537 COUPLER AR-QUICK

S/N: CLA1-UP
AN ATTACHMENT

SMCS-1408, 5057, 6129 **i02864054**

NOTE	PART NUMBER	QTY	PART NAME 1 2 3 4 5 6 (PRODUCT LEVEL)	SEE PAGE
Y	*289-7697*	1	CYLINDER & LINES GP-BUCKET	353
Y	*253-6396*	1	LINES GP-COUPLER	441
Y	*282-5540*	1	LINKAGE GP-BUCKET	676

Y-SEPARATE ILLUSTRATION

<END>

WORK TOOLS

236-4153 COUPLER GP-QUICK

S/N: CLA1-UP
PART OF 253-6396 LINES GP-COUPLER
AN ATTACHMENT

SMCS-1408, 5057, 6129 **i02785034**

NOTE	REF NO	GRAPHIC REF	PART NUMBER	QTY	PART NAME 1 2 3 4 5 6 (PRODUCT LEVEL)	SEE PAGE
Y	1	1	**273-4147**	1	CYLINDER GP-COUPLER	370
	2	1	**256-9793**	1	HOOK	
	3	1	**256-9792**	1	PIN	
	4	1	**256-9790**	1	PIN	
	5	1	**256-9791**	1	PIN	
	6	1	**3B-8489**	4	FITTING-GREASE	
	7	1	**201-3663**	1	SPRING	
	8	1	**184-7495**	1	BEARING	
	9	1	**256-9788**	1	BAR	
	10	1	**273-4148**	1	BAR	
	11	1	**256-9786**	2	CLIP	
	12	1	**256-9787**	4	CLIP	
	13	1	**273-4149**	1	PLATE-RETAINING	
M	14	1	**8C-6364**	2	BOLT-SOCKET HEAD (M5X0.8X14-MM)	
Z	15	1		1	COUPLER AS-QUICK	

M-METRIC PART
Y-SEPARATE ILLUSTRATION
Z-NOT SERVICED SEPARATELY

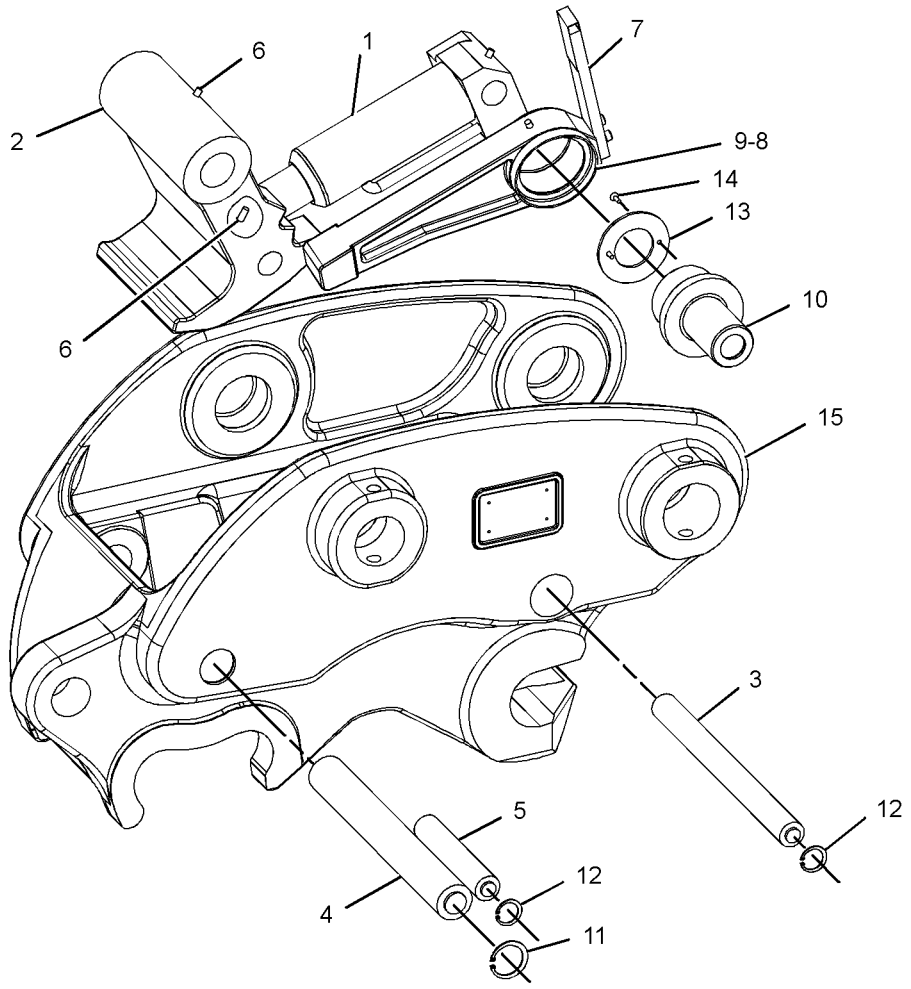

GRAPHIC #1 **<END>** g01203214

WORK TOOLS

167-0316 EDGE GP-CUTTING

S/N: CLA1-UP
PART OF 327-3649 BUCKET GP-DITCH CLEANING
AN ATTACHMENT

SMCS-6801 **i03095383**

NOTE	PART NUMBER	QTY	PART NAME 1 2 3 4 5 6 (PRODUCT LEVEL)	SEE PAGE
	5J-4771	6	BOLT-PLOW (3/4-10X2.75-IN)	
	4T-3009	1	EDGE-CUTTING	
	2J-3506	6	NUT-FULL (3/4-10-THD)	

<END>

2C-9548 PIN GP-BUCKET

S/N: CLA1-UP
PART OF 327-3599, 327-3602, 327-3605, 327-3608, 327-3611 BUCKET GP, 327-3649 BUCKET GP-DITCH CLEANING
AN ATTACHMENT

SMCS-6108 **i03100240**

NOTE	PART NUMBER	QTY	PART NAME 1 2 3 4 5 6 (PRODUCT LEVEL)	SEE PAGE
M	**099-0724**	2	BOLT (M14X2X145-MM)	
M	**096-4876**	4	NUT (M14X2-THD)	
	2C-9460	2	PIN	

M-METRIC PART

<END>

WORK TOOLS

253-6406 PIN GP-COUPLER

S/N: CLA1-UP
PART OF 282-5536 COUPLER AR-QUICK
AN ATTACHMENT

SMCS-6129 **i02210463**

NOTE	REF NO	GRAPHIC REF	PART NUMBER	QTY	PART NAME 1 2 3 4 5 6 (PRODUCT LEVEL)	SEE PAGE
	1	1	**086-0523**	2	PIN	
M	2	1	**096-4876**	4	NUT (M14X2-THD)	
M	3	1	**099-0724**	2	BOLT (M14X2X145-MM)	

M-METRIC PART

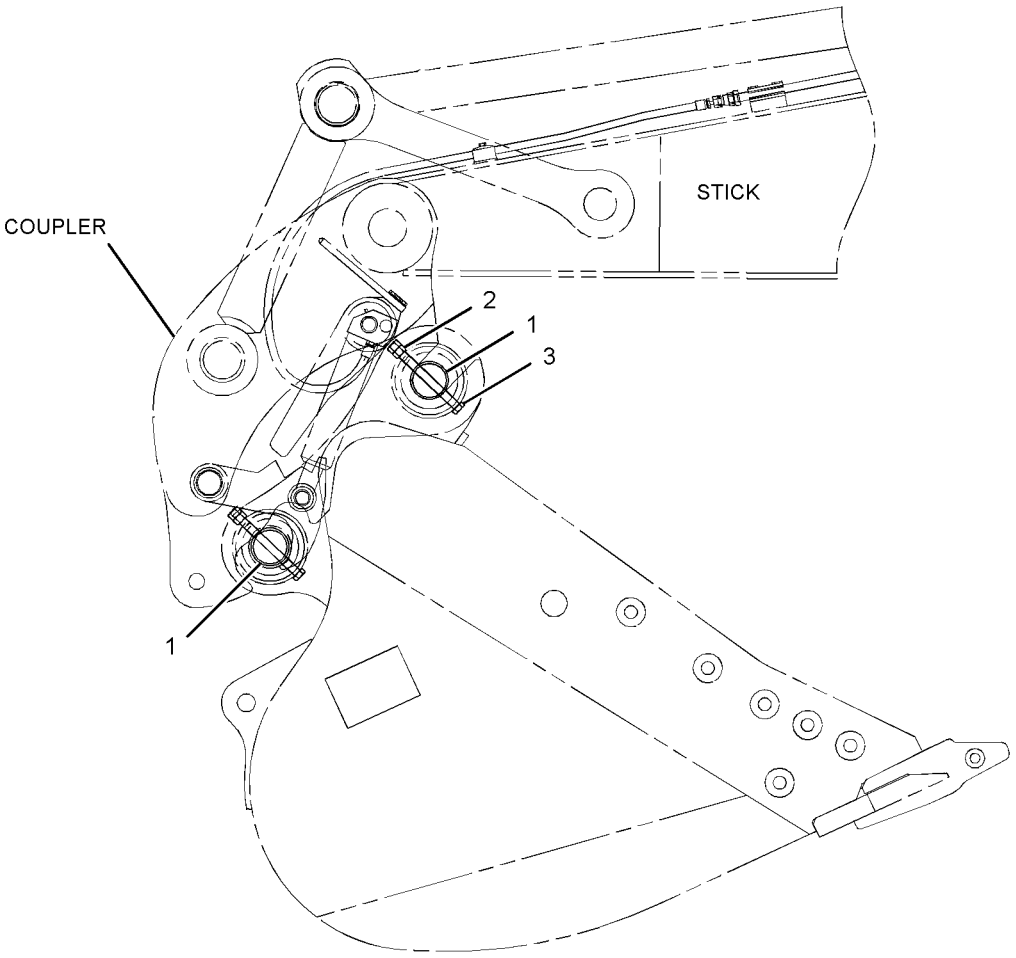

LEFT SIDE VIEW

GRAPHIC #1 **<END>** g01118540

WORK TOOLS

4I-7343 SIDECUTTER GP

S/N: CLA1-UP

PART OF 305-1624, 305-1629 BUCKET AR-EXCAVATION, 327-3599, 327-3602, 327-3605, 327-3608, 327-3611 BUCKET GP

AN ATTACHMENT

SMCS-6813 **i01662690**

NOTE	REF NO	GRAPHIC REF	PART NUMBER	QTY	PART NAME 1 2 3 4 5 6 (PRODUCT LEVEL)	SEE PAGE
	1	1	**7Y-0204**	1	SIDECUTTER-RH	
	2	1	**7Y-0203**	1	SIDECUTTER-LH	
M	3	1	**096-7074**	8	BOLT	
M	4	1	**093-7676**	8	NUT	

M-METRIC PART

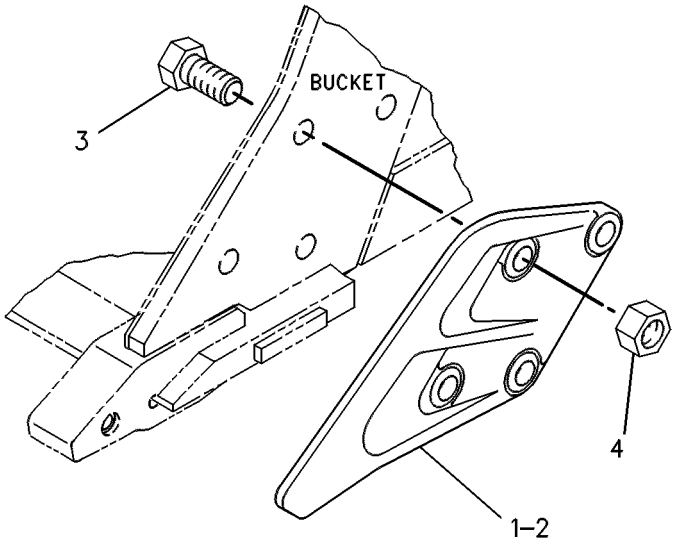

GRAPHIC #1 **<END>** g00245085

WORK TOOLS

9J-3167 TIP GP-LONG

S/N: CLA1-UP

PART OF 305-1624, 305-1629 BUCKET AR-EXCAVATION

AN ATTACHMENT

SMCS-6805 **i01848822**

NOTE	REF NO	GRAPHIC REF	PART NUMBER	QTY	PART NAME 1 2 3 4 5 6 (PRODUCT LEVEL)	SEE PAGE
	1	1	**107-3308**	1	PIN	
C	2	1	**8E-6259**	1	RETAINER AS	
C	3	1	**1U-3302**	1	TIP-LONG	

C-CHANGE FROM PREVIOUS TYPE

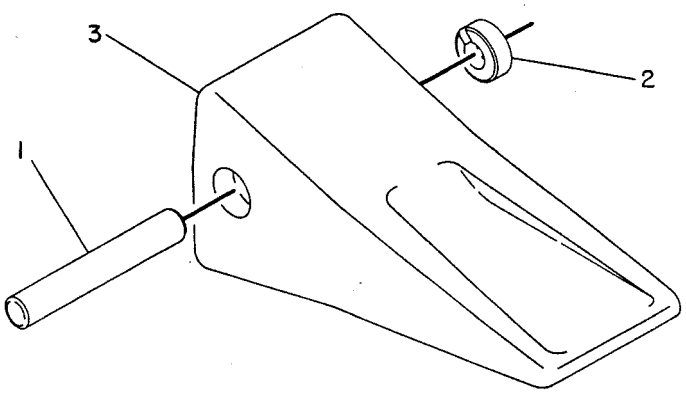

GRAPHIC #1 **<END>** g00115577

9J-3169 TIP GP-LONG

S/N: CLA1-UP

PART OF 327-3599, 327-3602, 327-3605, 327-3608, 327-3611 BUCKET GP

AN ATTACHMENT

SMCS-6805 **i01668173**

NOTE	REF NO	GRAPHIC REF	PART NUMBER	QTY	PART NAME 1 2 3 4 5 6 (PRODUCT LEVEL)	SEE PAGE
	1	1	**8E-6258**	1	PIN	
	2	1	**8E-6259**	1	RETAINER AS	
	3	1	**1U-3252**	1	TIP-LONG	

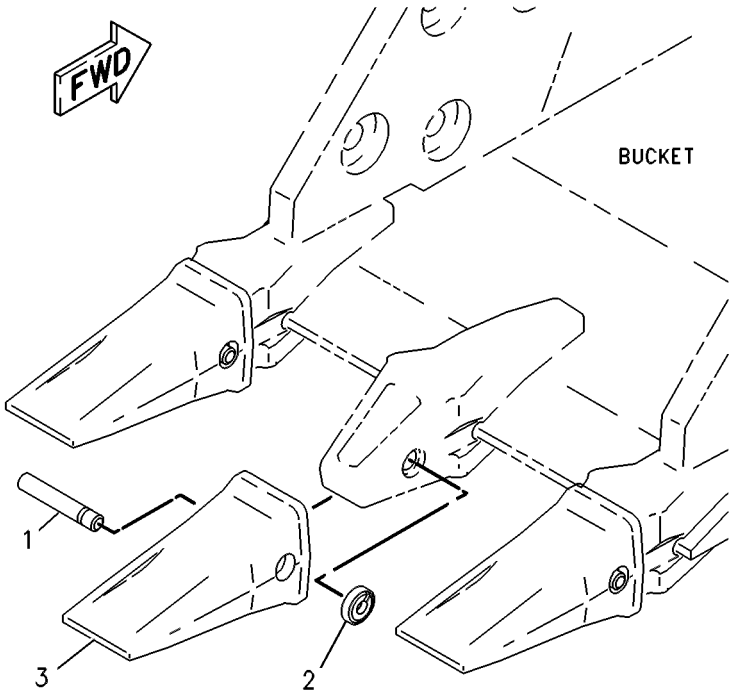

GRAPHIC #1 **<END>** g00117668

OPERATOR STATION

245-7889 ADJUSTER GP-SEAT—UPPER SLIDE

S/N: CLA1-UP

PART OF 229-9095, 240-5063 SUSPENSION GP-SEAT

AN ATTACHMENT

SMCS-7321 **i02407038**

NOTE	REF NO	GRAPHIC REF	PART NUMBER	QTY	PART NAME 1 2 3 4 5 6 (PRODUCT LEVEL)	SEE PAGE
	1	1	**245-7897**	4	PLATE	
M	2	1	**245-7899**	4	SCREW-BUTTON HEAD (M8X1.25X30-MM)	
M	3	1	**5C-7261**	8	NUT (M8X1.25-THD)	
	4	1	**8T-4224**	8	WASHER-HARD (8.8X16X2-MM THK)	

M-METRIC PART

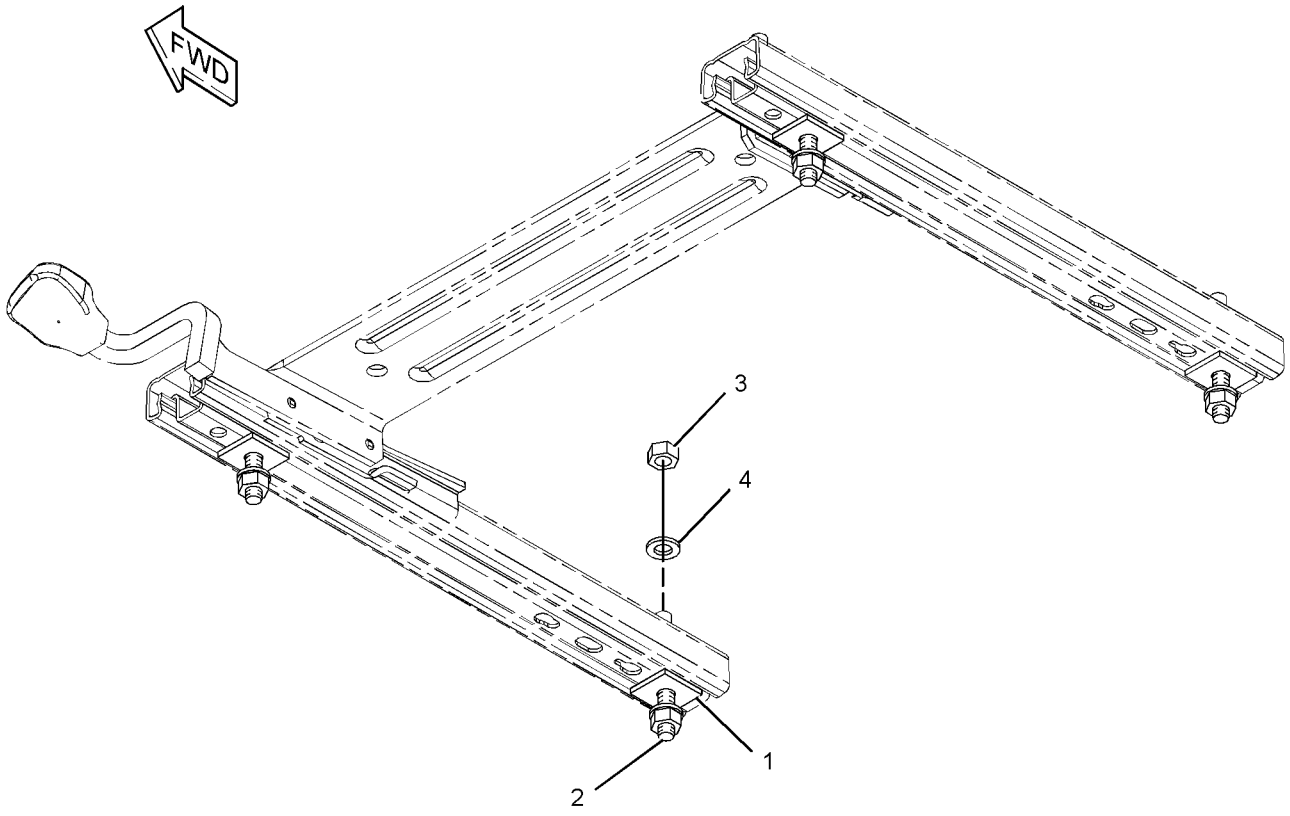

GRAPHIC #1 **<END>** g01203316

245-7896 ADJUSTER GP-SEAT—LOWER SLIDE

S/N: CLA1-UP

PART OF 229-9077, 229-9095, 240-5063 SUSPENSION GP-SEAT

AN ATTACHMENT

SMCS-7321 **i02178063**

NOTE	REF NO	GRAPHIC REF	PART NUMBER	QTY	PART NAME 1 2 3 4 5 6 (PRODUCT LEVEL)	SEE PAGE
M	1	1	**198-3899**	2	SCREW-BUTTON HEAD (M8X1.25X20-MM)	
	2	1	**245-7886**	2	PLATE	
	3	1	**245-7897**	4	PLATE	
M	4	1	**245-7898**	2	SCREW-BUTTON HEAD (M8X1.25X25-MM)	
M	5	1	**5C-7261**	4	NUT (M8X1.25-THD)	
	6	1	**8T-4224**	4	WASHER-HARD (8.8X16X2-MM THK)	

M-METRIC PART

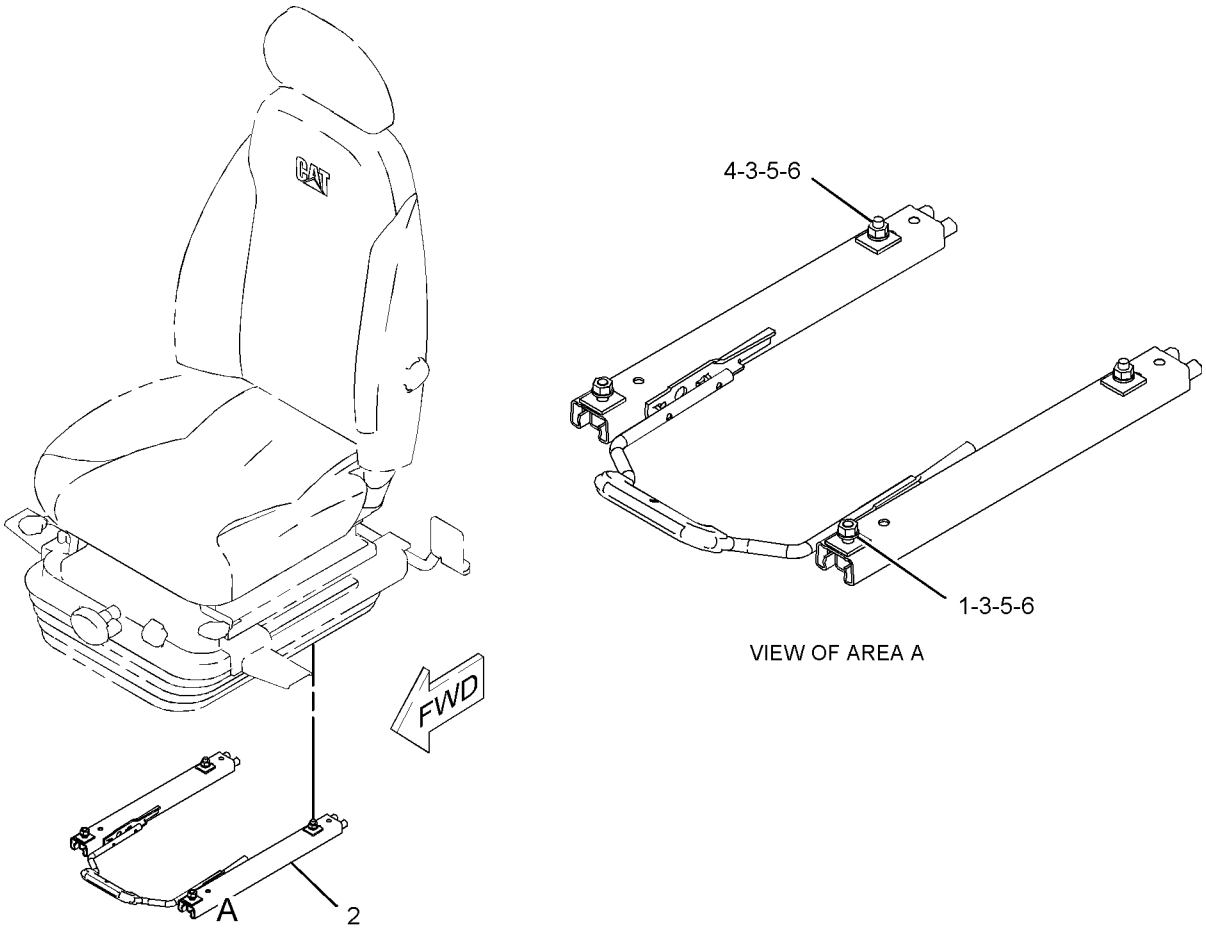

GRAPHIC #1 **<END>** g01103189

OPERATOR STATION

235-9004 AIR CONDITIONER & MOUNTING GP

S/N: CLA1-UP

PART OF 235-9003 AIR CONDITIONER AR

AN ATTACHMENT

SMCS-7320 **i03033088**

NOTE	REF NO	GRAPHIC REF	PART NUMBER	QTY	PART NAME 1 2 3 4 5 6 (PRODUCT LEVEL)	SEE PAGE
	1	1	**293-1136**	1	PANEL AS-CONTROL	
	2	1	**235-8873**	1	HARNESS AS-HEATER & AIR COND (CONTROL PANEL SWITCHES)	
	3	1	**235-8874**	1	SENSOR-TEMPERATURE (AMBIENT AIR)	
	4	1	**235-8875**	1	BRACKET	
	5	1	**235-9005**	1	HARNESS AS-HEATER & AIR COND (AIR CONDITIONER, LOW SIDE)	
CY	6	1	**316-8811**	1	AIR CONDITIONER GP	717
	7	1	**9X-8256**	1	WASHER (6.6X12X2-MM THK)	
M	8	1	**099-2374**	2	BOLT-SOCKET HEAD (M5X0.8X12-MM)	
	9	1	**111-4836**	3	CLIP	
	10	1	**3S-2093**	2	STRAP-CABLE	
M	11	1	**5C-9553**	1	BOLT (M6X1X16-MM)	
	12	1	**7X-7729**	7	WASHER (11X25X3-MM THK)	
	13	1	**8T-0328**	2	WASHER-HARD (5.5X10X1-MM THK)	
	14	1	**8T-4121**	3	WASHER-HARD (11X21X2.5-MM THK)	
M	15	1	**8T-4136**	7	BOLT (M10X1.5X25-MM)	
M	16	1	**8T-4137**	3	BOLT (M10X1.5X20-MM)	

C-CHANGE FROM PREVIOUS TYPE
M-METRIC PART
Y-SEPARATE ILLUSTRATION

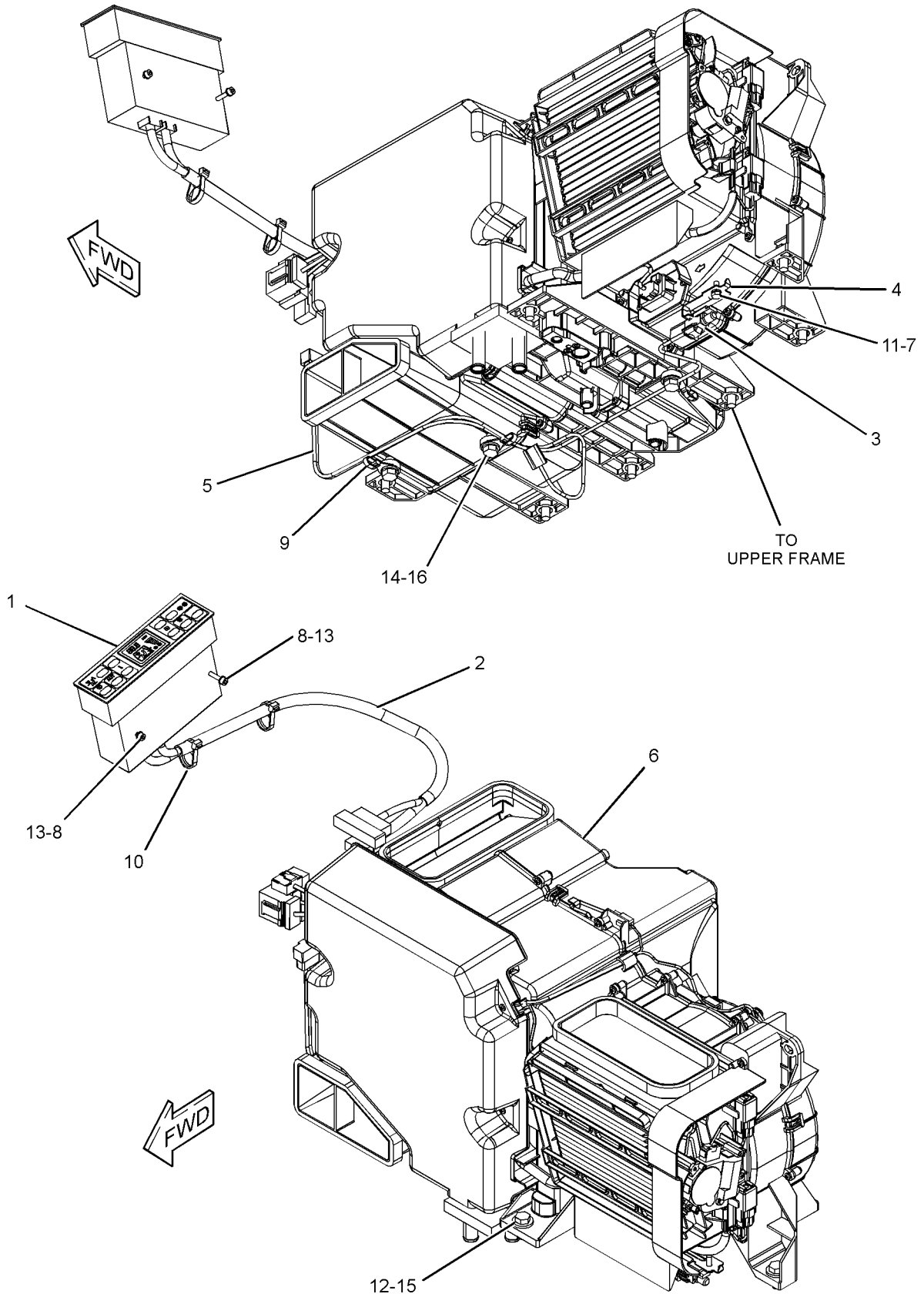

GRAPHIC #1 **<END>** g01397723

OPERATOR STATION

235-9003 AIR CONDITIONER AR

S/N: CLA1-UP

AN ATTACHMENT

SMCS-7320 **i02420514**

NOTE	PART NUMBER	QTY	PART NAME 1 2 3 4 5 6 (PRODUCT LEVEL)	SEE PAGE
Y	*235-9004*	1	AIR CONDITIONER & MOUNTING GP	714
Y	*229-9082*	1	DUCT GP-CAB AIR	807

Y-SEPARATE ILLUSTRATION

<END>

OPERATOR STATION

316-8811 AIR CONDITIONER GP

S/N: CLA1-UP

PART OF 235-9004 AIR CONDITIONER & MOUNTING GP, 229-9084 HEATER & MTG GP-CAB

AN ATTACHMENT

SMCS-7320 **i03012140**

NOTE	REF NO	GRAPHIC REF	PART NUMBER	QTY	PART NAME 1 2 3 4 5 6 (PRODUCT LEVEL)	SEE PAGE
	1	1	**185-8300**	35	SCREW-TAPPING	
	2	2	**185-8302**	3	SCREW AS-TAPPING	
	3	1	**245-7817**	2	MOTOR AS	
	4	1	**245-7818**	3	CLIP	
	5	2	**245-7819**	2	CLIP	
	6	1	**245-7820**	1	COVER-FRONT	
	7	1	**245-7825**	1	INSULATOR	
	8	2	**245-7826**	1	INSULATOR	
	9	2	**245-7827**	1	INSULATOR	
	10	2	**245-7828**	1	INSULATOR	
	11	1	**245-7829**	1	PACKING	
	12	1	**245-7830**	1	CLIP	
	13	1	**245-7831**	1	SENSOR AS-TEMPERATURE (COOLANT)	
	14	1	**245-7832**	1	CONTROL AS	
	15	1	**245-7833**	1	CORE AS-HEATER	
	16	1	**245-7834**	1	DAMPER AS	
	17	2	**245-7835**	1	SENSOR AS (AMBIENT AIR TEMP)	
Y	18	2	**245-7836**	1	COIL GP-EVAPORATOR	750
	19	2	**245-7838**	1	PACKING	
	20	2	**245-7839**	1	MOTOR AS (WITH FAN)	
Y	21	1	**245-7846**	1	CONTROL GP-HEAT & AIR COND (AIR INLET)	778
	22	1	**245-7847**	1	HARNESS AS-HEATER & AIR COND	
	23	2	**245-7856**	3	SCREW AS-TAPPING	
	24	1	**293-1137**	1	FILTER GP-AIR (AIR CONDITIONER)	
		1	**245-7823**	1	FILTER ELEMENT-CAB AIR (AIR CONDITIONER)	
		1	**245-7824**	1	PACKING	
	25	2	**316-8845**	1	PLATE	
	26	2	**316-8846**	1	PLATE	
	27	2	**316-8847**	2	ROD	
	28	2	**316-8848**	1	ROD	
	29	1	**316-8849**	1	ROD	
	30	2	**316-8850**	1	ROD	

Y-SEPARATE ILLUSTRATION

REFER TO ALL ILLUSTRATIONS OF
THIS GROUP FOR AUXILIARY VIEWS

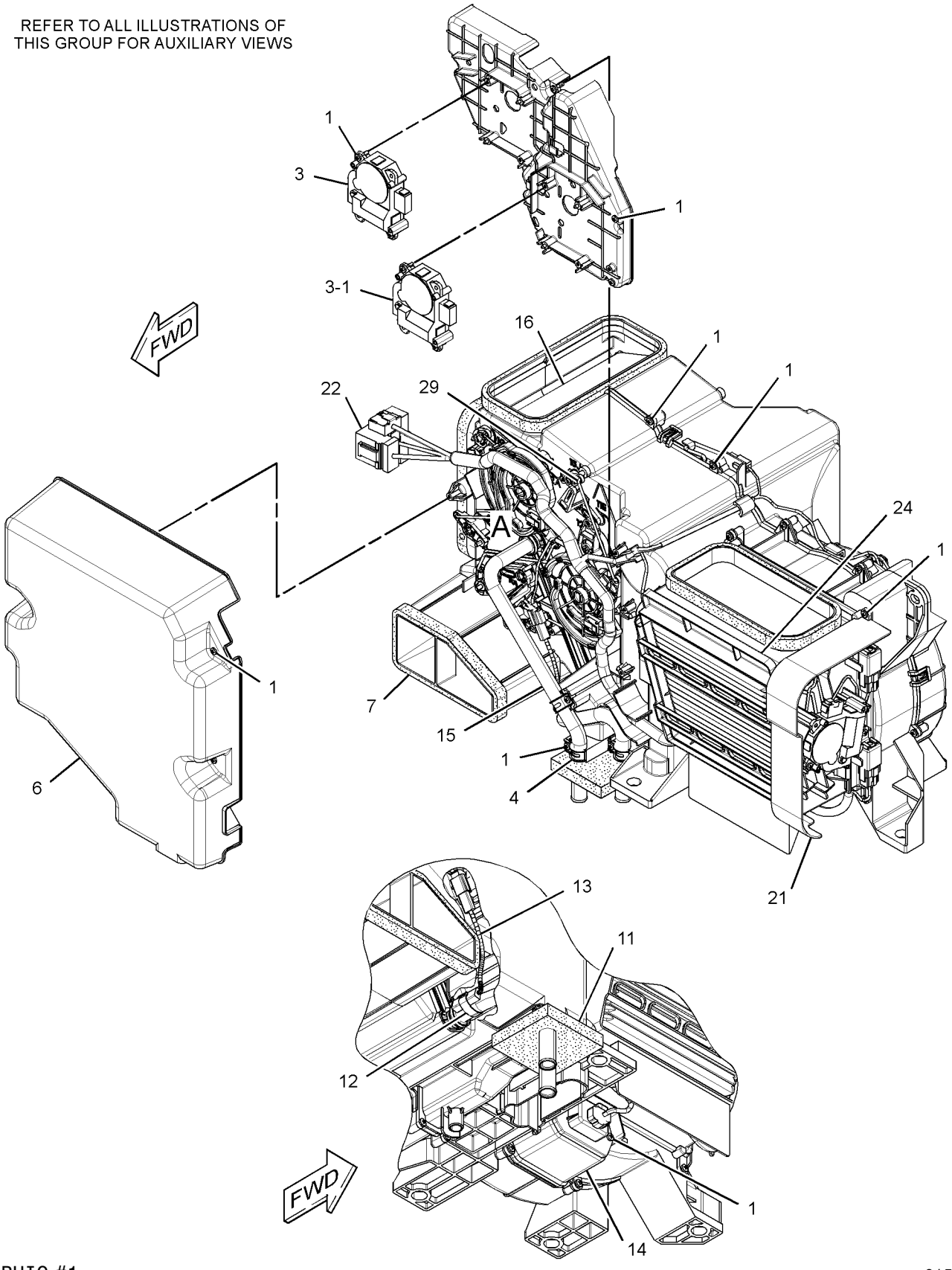

GRAPHIC #1

g01525866

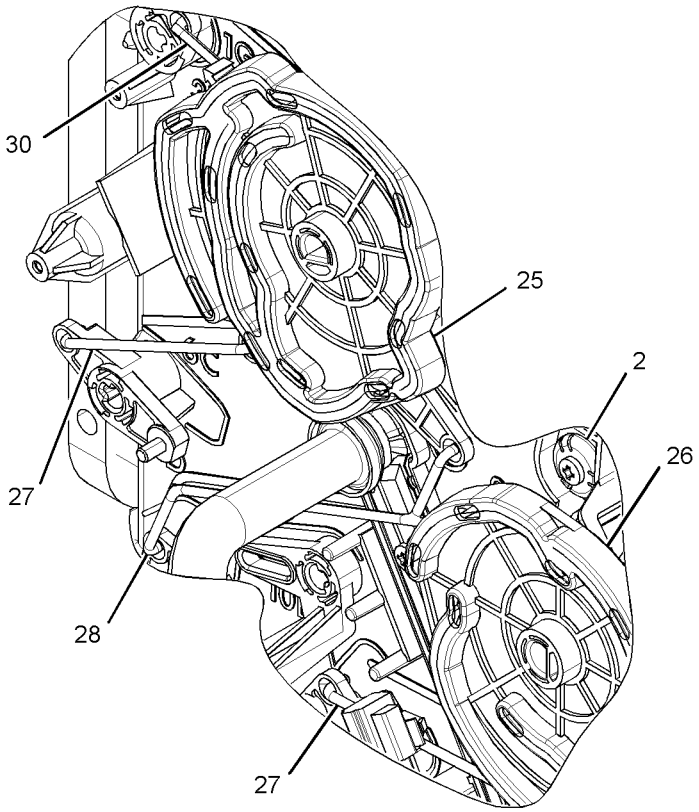

VIEW OF AREA A

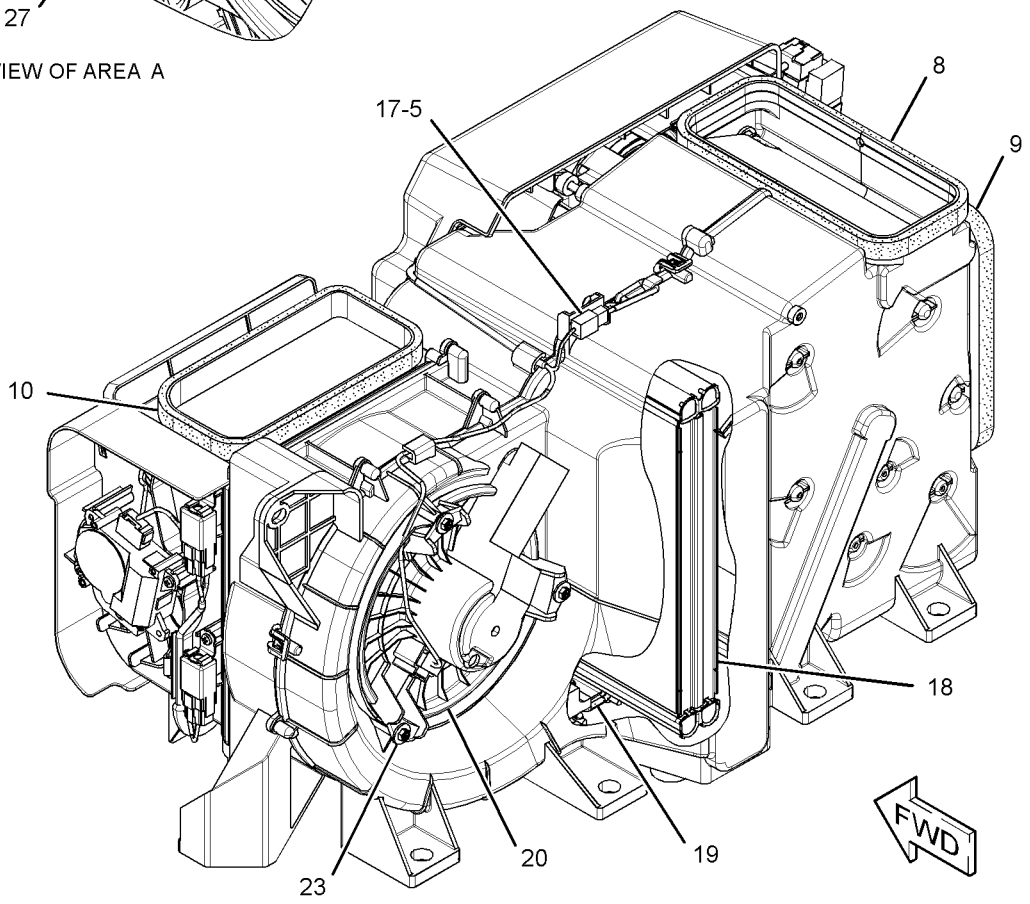

GRAPHIC #2 **<END>** g01526086

OPERATOR STATION

319-4254 ANTENNA & MOUNTING GP—PRODUCT LINK, ANTENNA

S/N: CLA1-UP

PART OF 301-2583, 301-2584 INSTALLATION AR-COMMUNICATION

AN ATTACHMENT

SMCS-7606 **i03036106**

NOTE	REF NO	GRAPHIC REF	PART NUMBER	QTY	PART NAME 1 2 3 4 5 6 (PRODUCT LEVEL)	SEE PAGE
M	1	1	**143-9397**	2	SCREW-PAN HEAD (M4X0.7X12-MM)	
	2	1	**309-5751**	1	BRACKET	
	3	1	**310-2391**	1	ANTENNA AS	
		1	**301-0589**	1	ANTENNA (WHIP)	
	4	1	**095-0910**	3	CLIP	
	5	1	**161-6987**	2	WASHER-HARD (5.2X16X1.5-MM THK)	
M	6	1	**8T-4190**	1	BOLT (M16X2X25-MM)	
M	7	1	**8T-4138**	1	BOLT (M6X1X20-MM)	
	8	1	**9X-2026**	1	WASHER (6.5X17X1-MM THK)	
	9	1	**9X-6165**	1	WASHER (6.5X22X2.5-MM THK)	
	10	1	**9X-8257**	1	WASHER (17.5X30X3.5-MM THK)	

M-METRIC PART

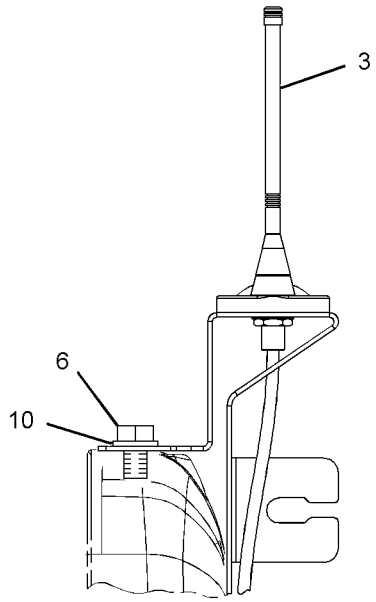

VIEW A-A

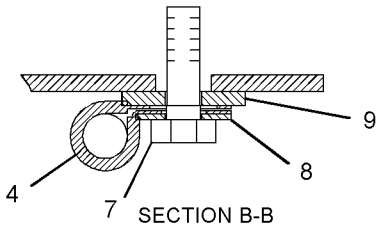

SECTION B-B

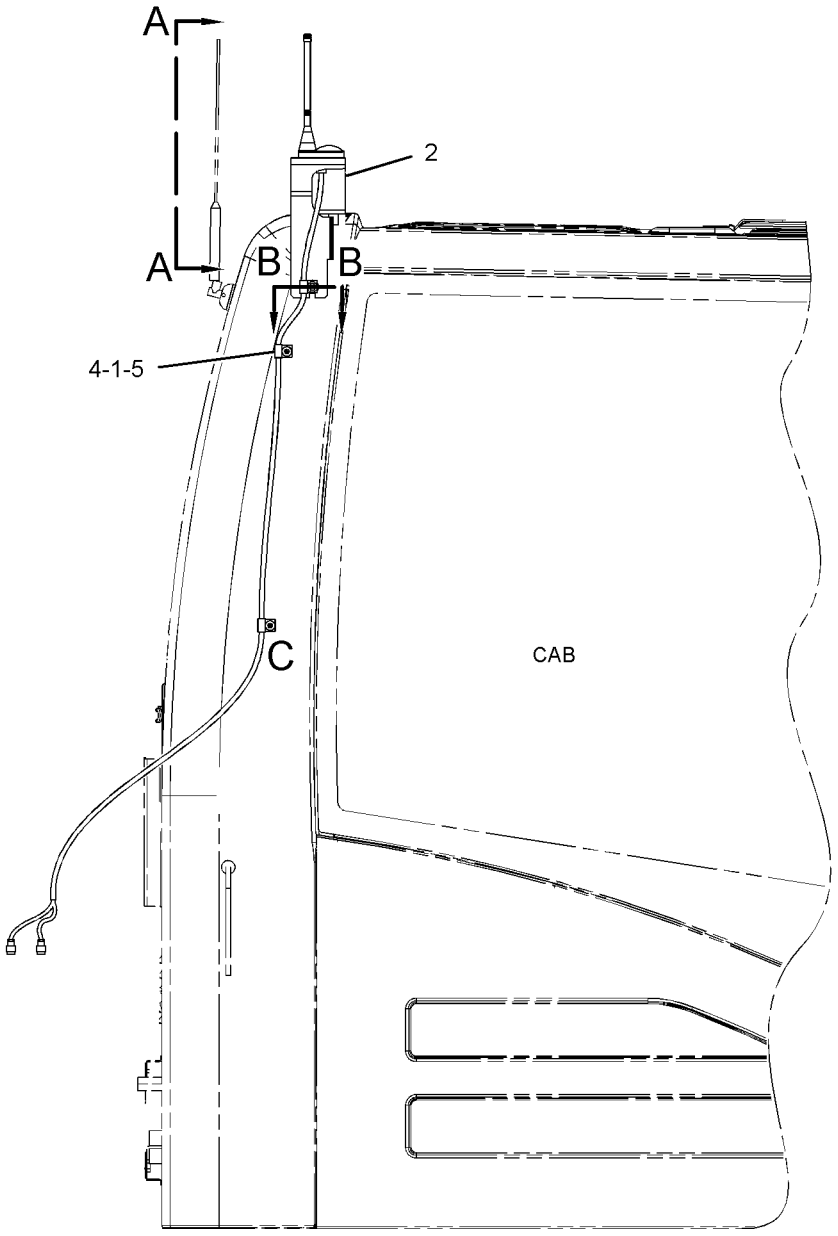

RIGHT SIDE VIEW

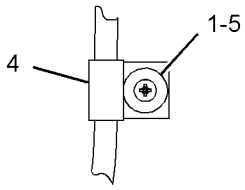

VIEW OF AREA C

GRAPHIC #1 **<END>** g01623535

OPERATOR STATION

259-7346 ARMREST GP–RH

S/N: CLA1-UP

PART OF 259-7348 CONSOLE GP-OPERATOR

SMCS-7307 **i02488350**

NOTE	REF NO	GRAPHIC REF	PART NUMBER	QTY	PART NAME 1 2 3 4 5 6 (PRODUCT LEVEL)	SEE PAGE
	1	1	**171-7325**	3	SCREW-TAPPING	
M	2	1	**185-8286**	2	SCREW-MACHINE (M4X0.7X8-MM)	
	3	1	**235-8951**	1	SUPPORT AS	
	4	1	**235-8996**	1	COVER	
	5	1	**235-8997**	1	KNOB	
	6	1	**279-3161**	1	CUSHION	

M-METRIC PART

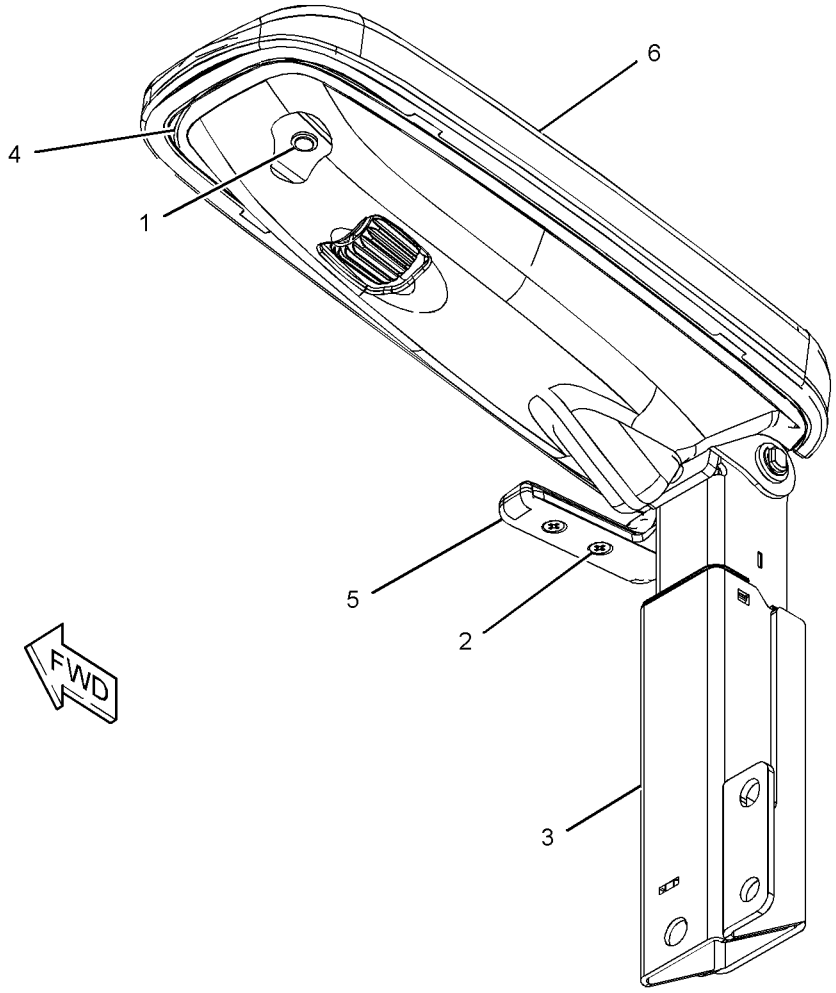

GRAPHIC #1 **<END>** g01217218

OPERATOR STATION

259-7347 ARMREST GP–LH

S/N: CLA1-UP

PART OF 259-7349 CONSOLE GP-OPERATOR

SMCS-7307 **i02488397**

NOTE	REF NO	GRAPHIC REF	PART NUMBER	QTY	PART NAME 1 2 3 4 5 6 (PRODUCT LEVEL)	SEE PAGE
	1	1	**171-7325**	3	SCREW-TAPPING	
M	2	1	**185-8286**	2	SCREW-MACHINE (M4X0.7X8-MM)	
	3	1	**235-8952**	1	SUPPORT AS	
	4	1	**235-8996**	1	COVER	
	5	1	**235-8998**	1	KNOB	
	6	1	**259-7345**	1	CUSHION	

M-METRIC PART

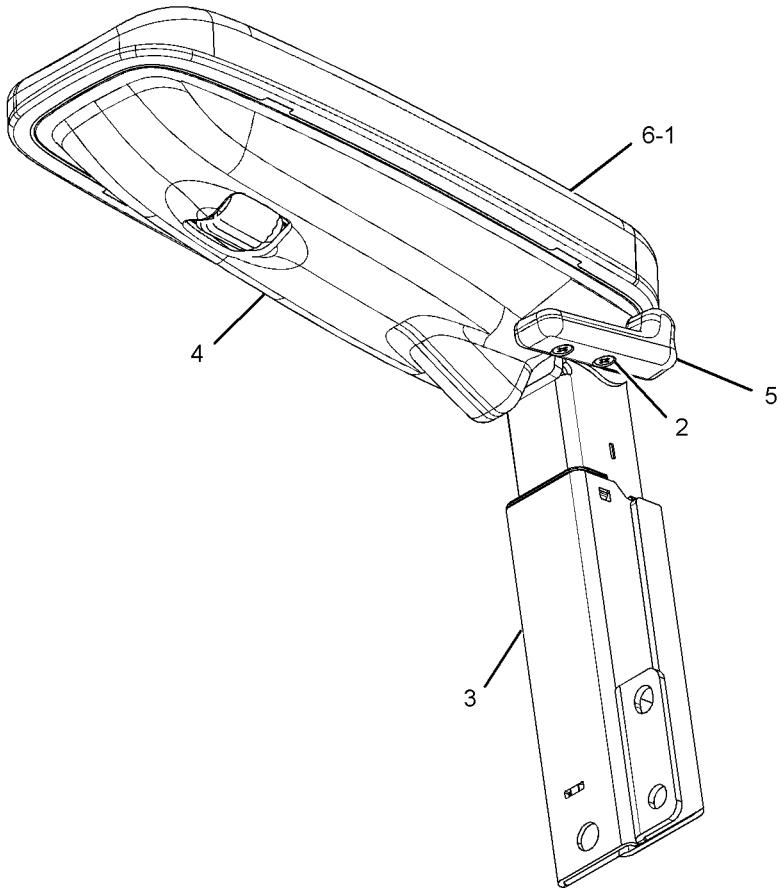

GRAPHIC #1 **<END>** g01210886

OPERATOR STATION

259-7295 BRACKET GP-MIRROR

S/N: CLA1-UP
PART OF 235-8910 CAB GP
AN ATTACHMENT

SMCS-7319 **i02612533**

NOTE	REF NO	GRAPHIC REF	PART NUMBER	QTY	PART NAME 1 2 3 4 5 6 (PRODUCT LEVEL)	SEE PAGE
	1	1	**2U-2552**	5	LOCKWASHER	
M	2	1	**6V-5683**	3	BOLT (M6X1X16-MM)	
M	3	1	**9X-6153**	2	BOLT (M6X1X10-MM)	
Z	4	1		1	BRACKET-MIRROR	

M-METRIC PART
Z-NOT SERVICED SEPARATELY

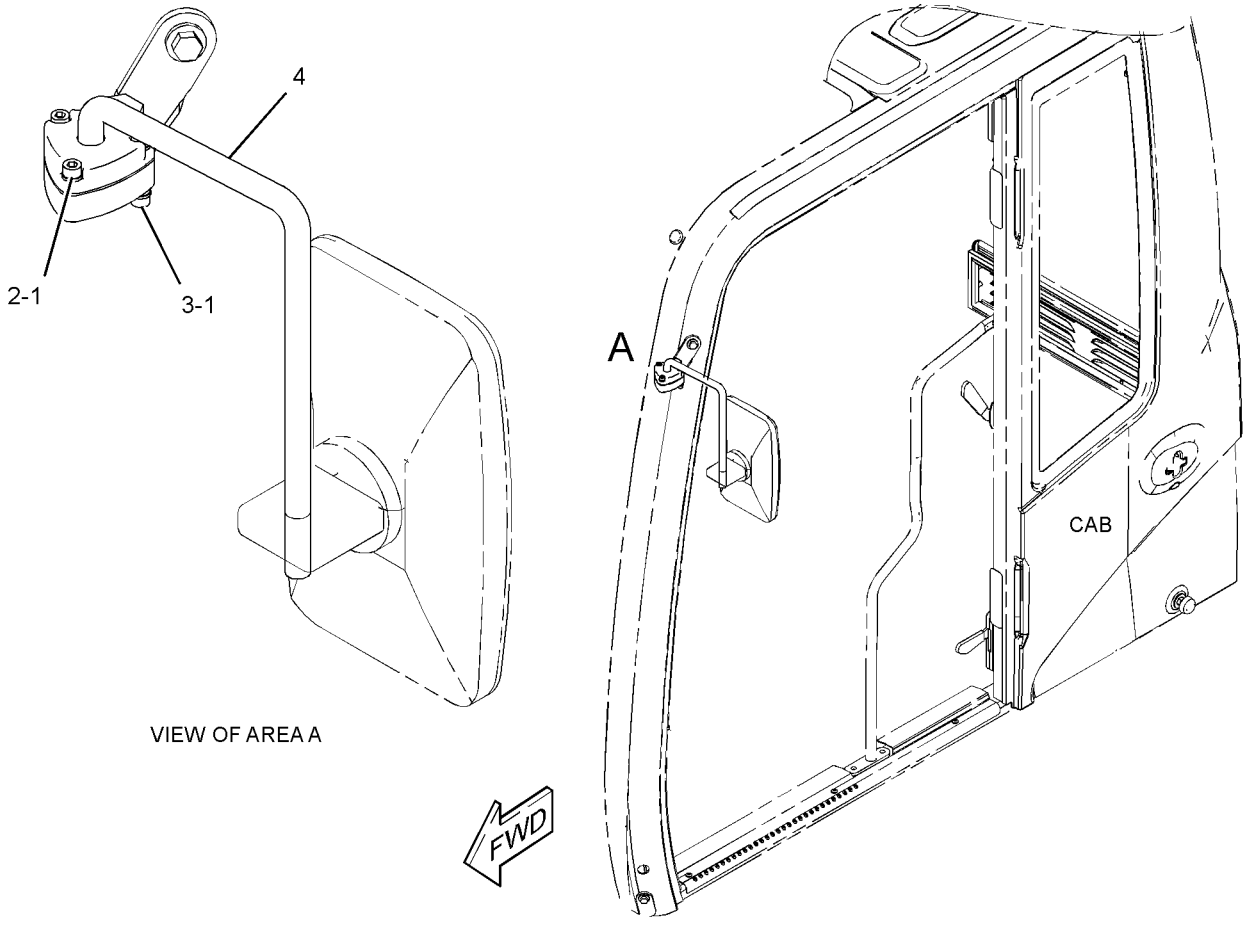

VIEW OF AREA A

GRAPHIC #1 **<END>** g01307553

OPERATOR STATION

245-7890 BRACKET GP-MOUNTING—SUSPENSION SEAT

S/N: CLA1-UP

PART OF 229-9095, 240-5063 SUSPENSION GP-SEAT

AN ATTACHMENT

SMCS-0635 **i02407041**

NOTE	REF NO	GRAPHIC REF	PART NUMBER	QTY	PART NAME 1 2 3 4 5 6 (PRODUCT LEVEL)	SEE PAGE
	1	1	**245-7897**	4	PLATE	
M	2	1	**245-7899**	4	SCREW-BUTTON HEAD (M8X1.25X30-MM)	
M	3	1	**5C-7261**	4	NUT (M8X1.25-THD)	
	4	1	**8T-4224**	4	WASHER-HARD (8.8X16X2-MM THK)	

M-METRIC PART

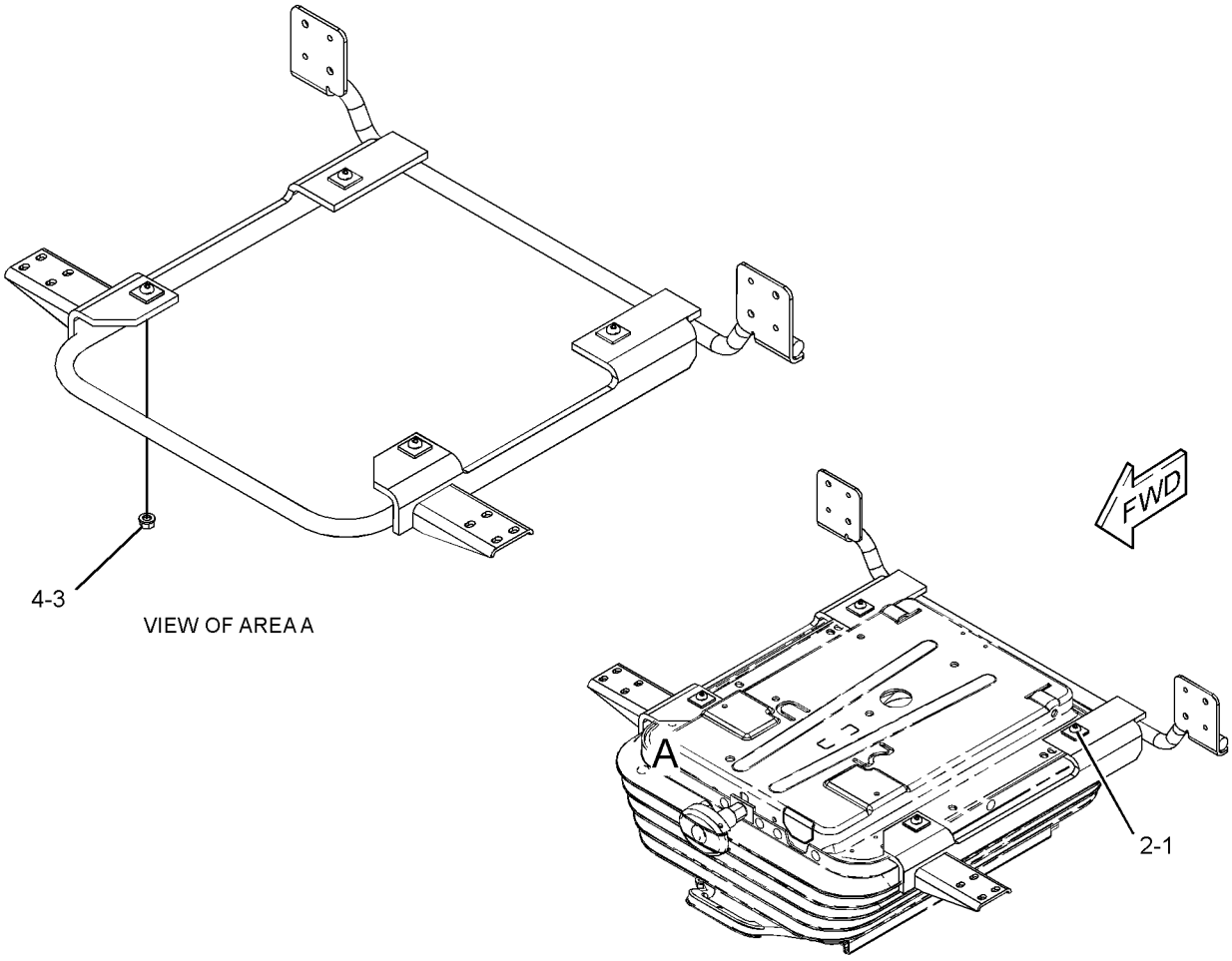

GRAPHIC #1 **<END>** g01231528

OPERATOR STATION

229-9098 CAB GP

S/N: CLA1-UP

AN ATTACHMENT

SMCS-7301, 7325 **i02401091**

NOTE	REF NO	GRAPHIC REF	PART NUMBER	QTY	PART NAME 1 2 3 4 5 6 (PRODUCT LEVEL)	SEE PAGE
M	1	1	**128-2135**	5	SCREW-TRUSS HEAD (M6X1X13-MM)	
	2	1	**164-8474**	2	LOUVER AS-VENT	
Y	3	1	**229-9099**	1	CAB GP	728
Y	4	1	*234-6501*	1	COVER GP-CAB (REAR)	792
	5	1	**235-9001**	1	SUPPORT	
M	6	1	**8T-4179**	5	BOLT (M12X1.75X20-MM)	
M	7	1	**8T-4190**	4	BOLT (M16X2X25-MM)	
	8	1	**8T-4223**	13	WASHER-HARD (13.5X25.5X3-MM THK)	
M	9	1	**8T-4910**	6	BOLT (M12X1.75X60-MM)	
M	10	1	**8T-6868**	2	BOLT (M12X1.75X80-MM)	
	11	1	**8Y-6967**	2	LOUVER AS	
	12	1	**9X-8257**	6	WASHER (17.5X30X3.5-MM THK)	

M-METRIC PART
Y-SEPARATE ILLUSTRATION

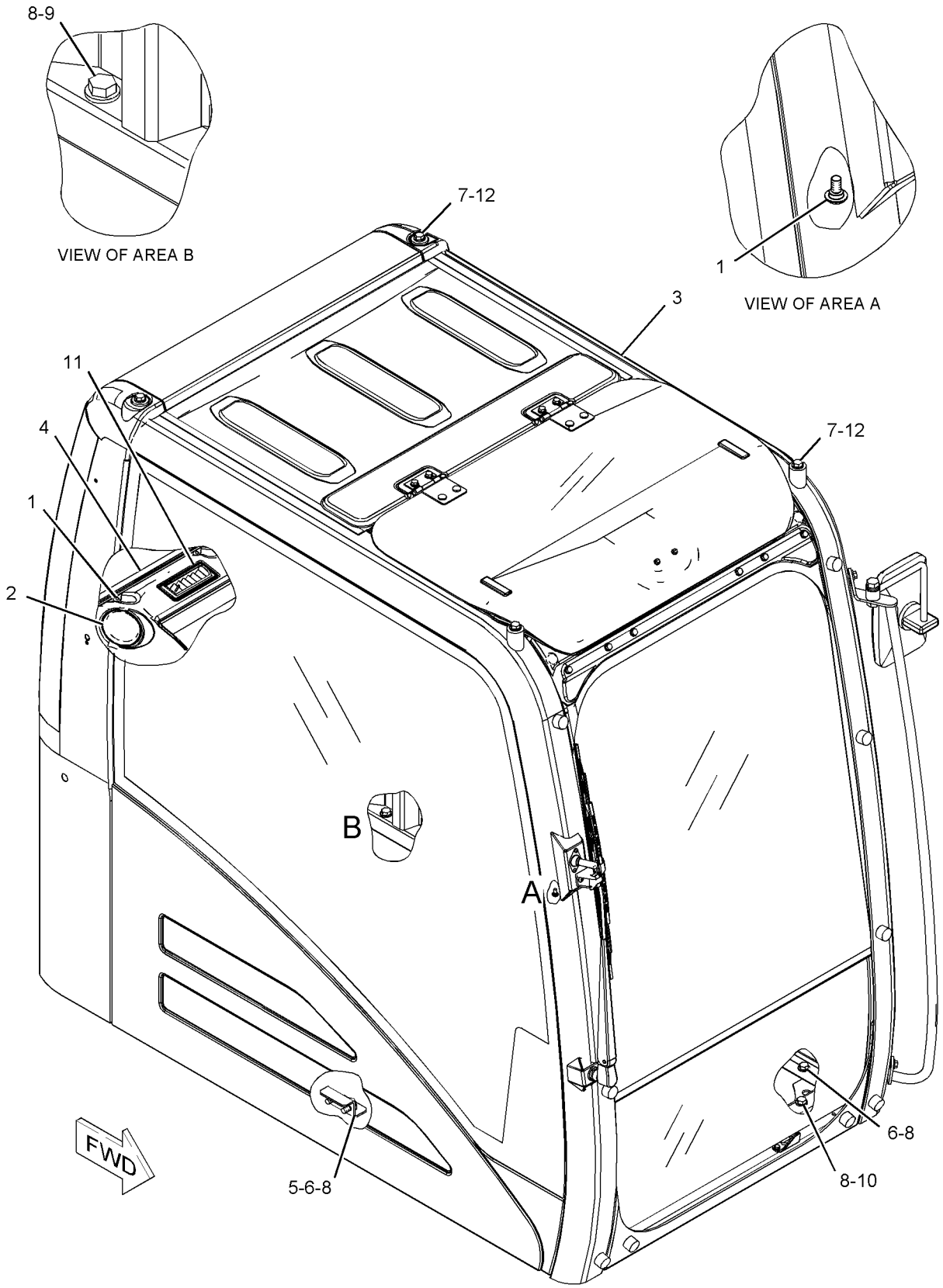

GRAPHIC #1 **<END>** g01119695

OPERATOR STATION

229-9099 CAB GP

S/N: CLA1-UP
PART OF 229-9098 CAB GP
AN ATTACHMENT

SMCS-7301, 7325 **i02888830**

NOTE	REF NO	GRAPHIC REF	PART NUMBER	QTY	PART NAME 1 2 3 4 5 6 (PRODUCT LEVEL)	SEE PAGE
	1	1	*235-8916*	1	CAB AS	
Y	2	1	*235-8910*	1	CAB GP (EXTERIOR)	736
Y	3	1	*235-8908*	1	CAB GP (INTERIOR)	734
Y	4	1	*235-8909*	1	WINDOW GP-CAB (SIDE, REAR)	922
Y	5	1	*234-6594*	1	WIPER GP-WINDOW (FRONT, UPPER)	932
Y	6	1	**189-2768**	1	DOOR & MTG GP-CAB	795
JY	7	1	*139-7101*	1	WINDOW GP-CAB (FRONT, UPPER)	915
Y	8	1	*176-1958*	1	WINDOW GP-CAB (LOWER)	919
Y	9	1	*139-7099*	1	HATCH GP-ROOF	829
FJY		1	*171-7503*	1	FRAME GP-UPPER FRONT WINDOW	815
FJY		1	*207-0144*	1	WINDOW AS-FRONT (UPPER)	914

F-NOT SHOWN
J-ITEMS MARKED J AVAILABLE FOR SERVICE REPAIR OF WINDOW GP MARKED J
Y-SEPARATE ILLUSTRATION

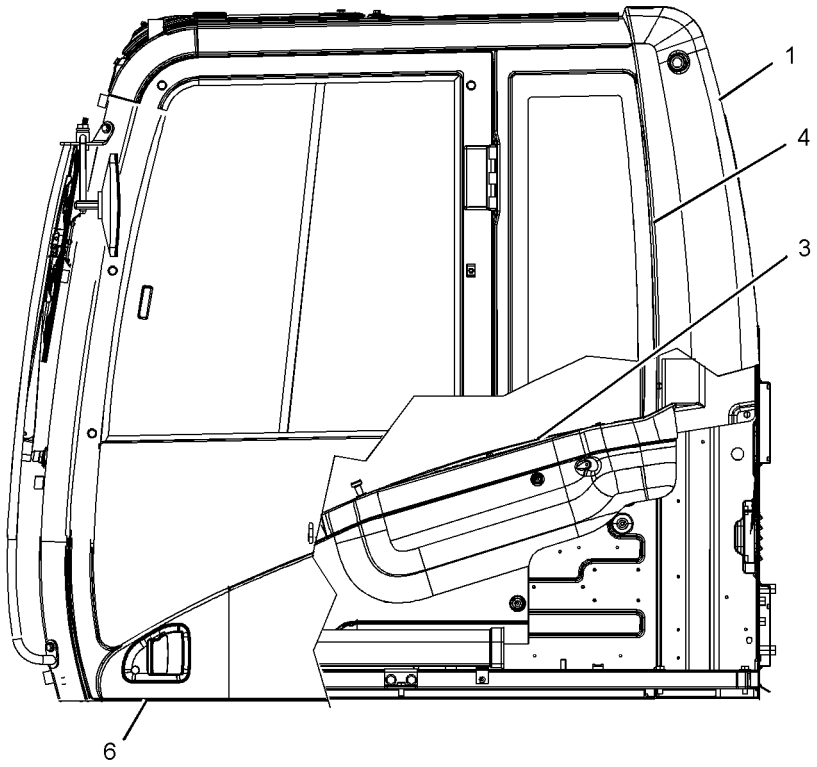

LEFT SIDE VIEW

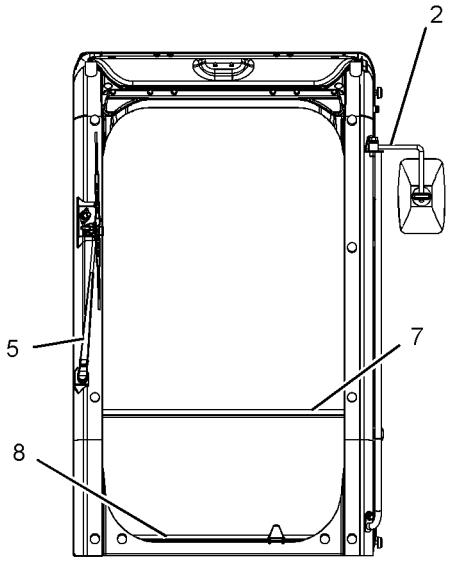

FRONT VIEW

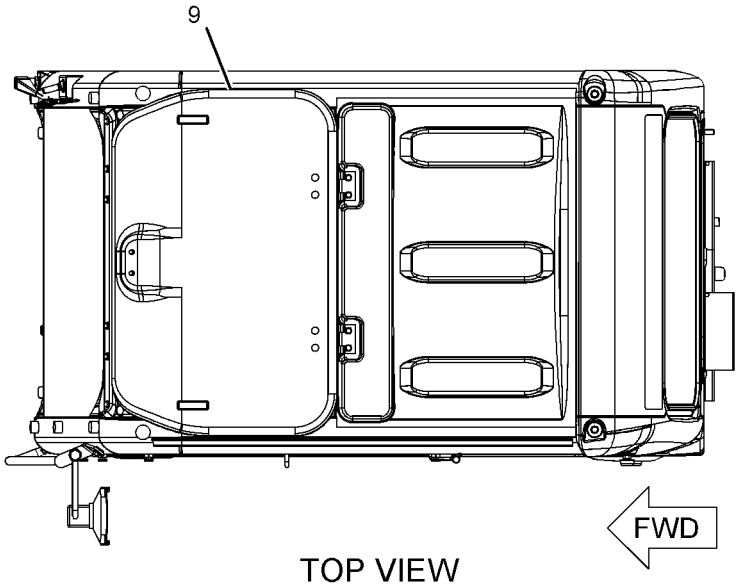

TOP VIEW

GRAPHIC #1 **<END>** g01125083

OPERATOR STATION

229-9100 CAB GP

S/N: CLA1-UP

AN ATTACHMENT

SMCS-7301, 7325 **i02401123**

NOTE	REF NO	GRAPHIC REF	PART NUMBER	QTY	PART NAME 1 2 3 4 5 6 (PRODUCT LEVEL)	SEE PAGE
M	1	1	**128-2135**	5	SCREW-TRUSS HEAD (M6X1X13-MM)	
	2	1	**164-8474**	2	LOUVER AS-VENT	
Y	3	1	**229-9101**	1	CAB GP	732
Y	4	1	*234-6501*	1	COVER GP-CAB (REAR)	792
	5	1	**235-9001**	1	SUPPORT	
M	6	1	**8T-4179**	5	BOLT (M12X1.75X20-MM)	
M	7	1	**8T-4190**	4	BOLT (M16X2X25-MM)	
	8	1	**8T-4223**	13	WASHER-HARD (13.5X25.5X3-MM THK)	
M	9	1	**8T-4910**	6	BOLT (M12X1.75X60-MM)	
M	10	1	**8T-6868**	2	BOLT (M12X1.75X80-MM)	
	11	1	**8Y-6967**	2	LOUVER AS	
	12	1	**9X-8257**	6	WASHER (17.5X30X3.5-MM THK)	

M-METRIC PART
Y-SEPARATE ILLUSTRATION

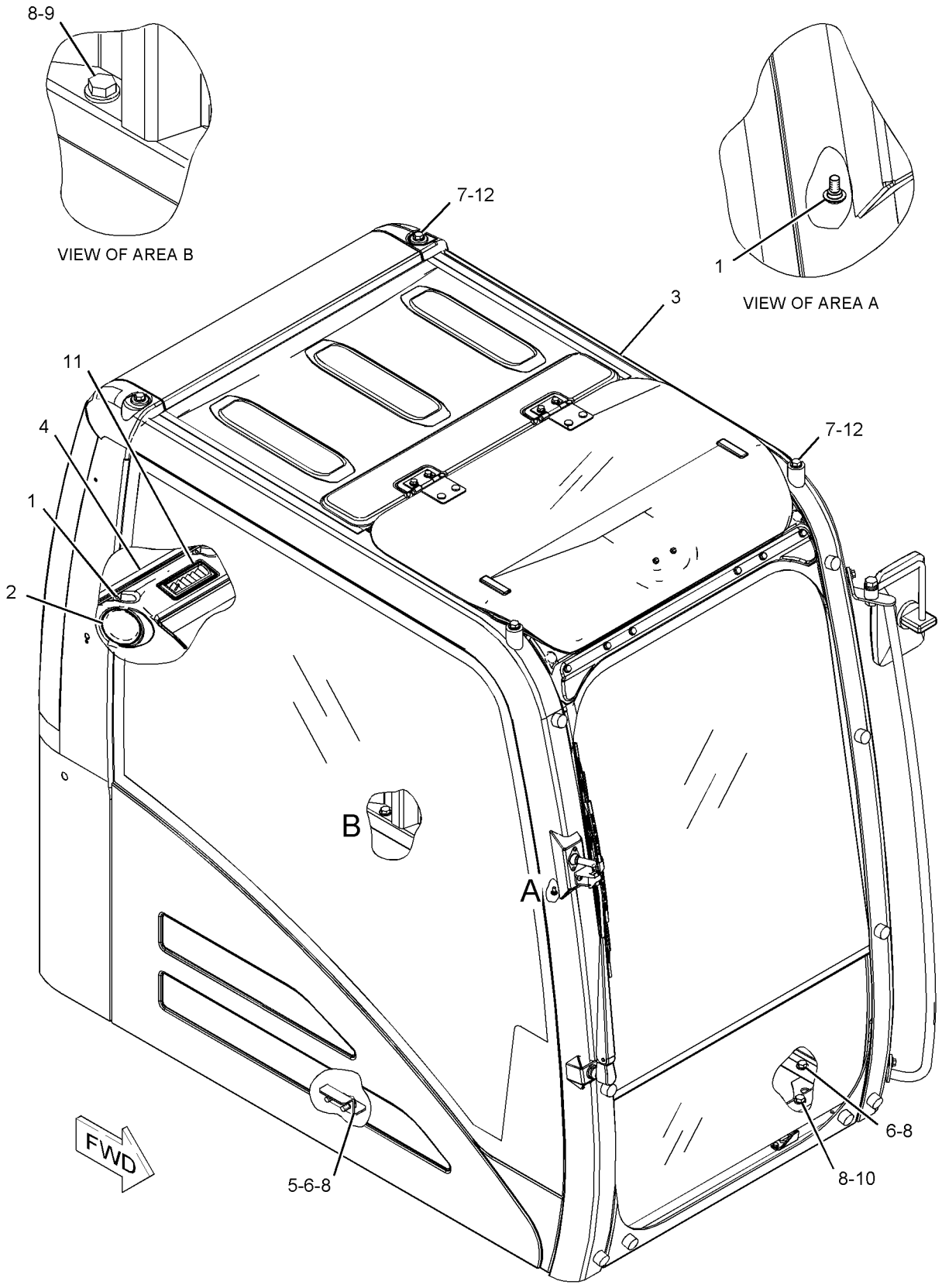

GRAPHIC #1 **<END>** g01119695

OPERATOR STATION

229-9101 CAB GP

S/N: CLA1-UP
PART OF 229-9100 CAB GP
AN ATTACHMENT

SMCS-7301, 7325 **i02857421**

NOTE	REF NO	GRAPHIC REF	PART NUMBER	QTY	PART NAME 1 2 3 4 5 6 (PRODUCT LEVEL)	SEE PAGE
	1		**234-6493**	1	CAB AS	
Y	2	1	*235-8910*	1	CAB GP (EXTERIOR)	736
Y	3	1	*235-8908*	1	CAB GP (INTERIOR)	734
Y	4	1	*235-8915*	1	WINDOW GP-CAB (SIDE, REAR)	923
Y	5	1	*234-6594*	1	WIPER GP-WINDOW (FRONT, UPPER)	932
Y	6	1	*176-1964*	1	DOOR GP-CAB	800
JY	7	1	*139-7101*	1	WINDOW GP-CAB (FRONT, UPPER)	915
Y	8	1	*176-1958*	1	WINDOW GP-CAB (LOWER)	919
Y	9	1	*139-7099*	1	HATCH GP-ROOF	829
FJY		1	*189-2793*	1	DOOR GP-CAB	806
FJY		1	*171-7503*	1	FRAME GP-UPPER FRONT WINDOW	815
FJY		1	*207-0144*	1	WINDOW AS-FRONT (UPPER)	914

F-NOT SHOWN
J-ITEMS MARKED J AVAILABLE FOR SERVICE REPAIR OF WINDOW GP MARKED J
Y-SEPARATE ILLUSTRATION

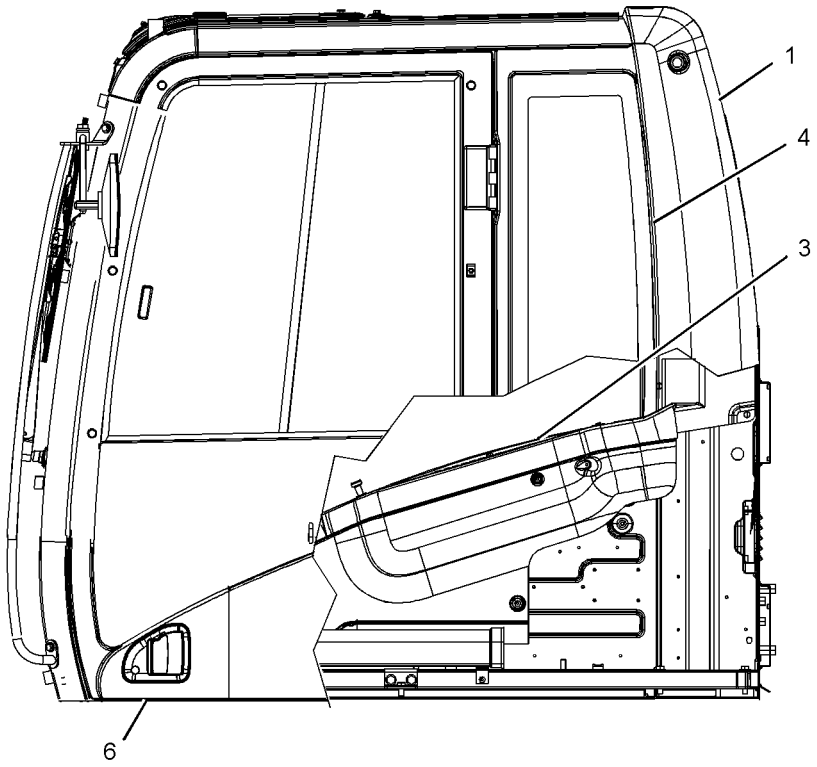

LEFT SIDE VIEW

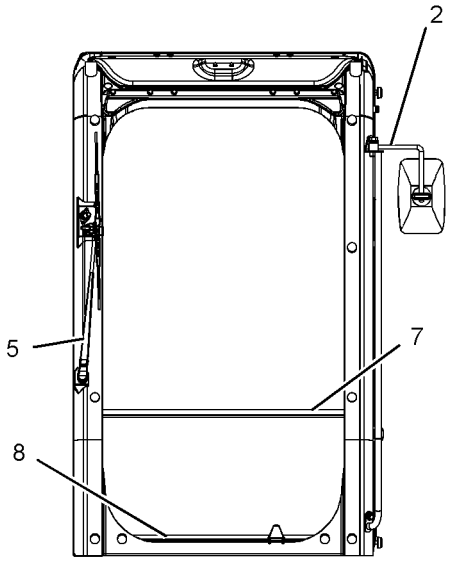

FRONT VIEW

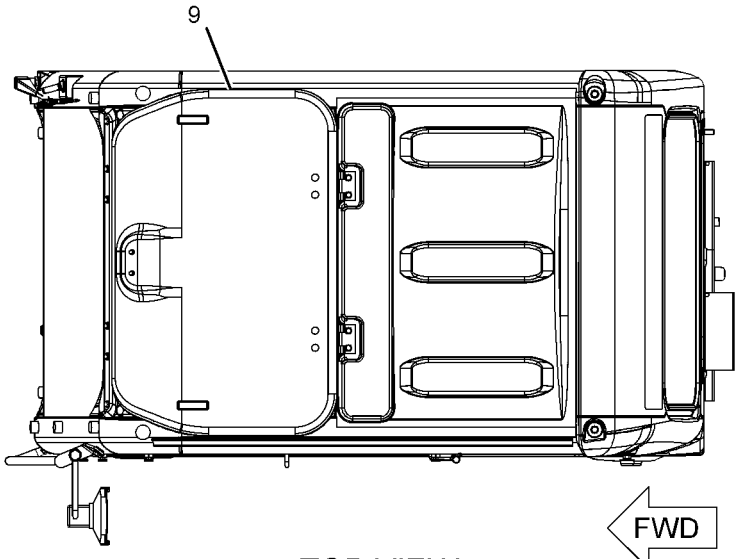

TOP VIEW

GRAPHIC #1 **<END>** g01125083

OPERATOR STATION

235-8908 CAB GP–INTERIOR

S/N: CLA1-UP

PART OF 229-9099, 229-9101 CAB GP

AN ATTACHMENT

SMCS-7301, 7325 **i03087701**

NOTE	REF NO	GRAPHIC REF	PART NUMBER	QTY	PART NAME 1 2 3 4 5 6 (PRODUCT LEVEL)	SEE PAGE
	1	1	**8Y-6352**	1	LOUVER AS	
	2	1	**156-6656**	1	RAIL	
	3	1	**156-6657**	1	RAIL	
	4	1	**164-0646**	1	CUP	
	5	1	**164-0655**	1	PANEL-SWITCH (OPERATOR CONSOLE)	
	6	1	**164-8474**	2	LOUVER AS-VENT	
	7	1	**170-9724**	5	CLIP	
	8	1	**171-7420**	6	CLIP	
	9	1	**176-1946**	1	PLATE	
	10	1	**176-1947**	1	PLATE	
	11	1	**176-1972**	1	COVER	
	12	1	**185-8214**	1	BRACKET AS	
	13	1	**189-2678**	3	SPACER	
	14	1	**234-6468**	1	COVER AS	
	15	1	**234-6470**	1	COVER-MONITOR	
	16	1	**234-6471**	1	COVER-DUCT	
	17	1	**234-6472**	1	COVER	
	18	1	**234-6473**	1	COVER-FRONT (UPPER, RH)	
	19	1	**234-6474**	1	COVER (UPPER, RH)	
	20	1	**305-0330**	1	COVER	
	21	1	**234-6476**	1	DUCT	
	22	1	**234-6477**	1	BRACKET AS	
	23	1	**305-0333**	1	BRACKET	
	24	1	**234-6480**	1	BRACKET AS	
	25	1	**234-6483**	1	BRACKET AS	
	26	1	**234-6485**	1	BRACKET AS	
	27	1	**234-6490**	1	CUP	
	28	1	**234-6491**	1	COVER	
	29	1	**234-6497**	1	COVER	
	30	1	**234-6498**	3	RIVET	
	31	1	**234-6521**	1	COVER	
	32	1	**234-6547**	1	COVER	
	33	1	**234-6548**	1	COVER	
	34	1	**234-6549**	1	COVER	
	35	1	**234-6550**	1	COVER	
	36	1	**234-6579**	2	NUT-SPEED	
	37	1	**235-8922**	1	COVER	
	38	1	**235-8923**	2	CAP	
	39	1	**235-8926**	1	VISOR	
	40	1	**235-8928**	1	LINER	
	41	1	**235-8929**	2	HANDLE	
	42	1	**185-8205**	5	CLIP	
	43	1	**235-8950**	10	CLIP	
	44	1	**245-7790**	2	SCREW-TAPPING	
M	45	1	**128-2135**	13	SCREW-TRUSS HEAD (M6X1X13-MM)	
M	46	1	**128-2136**	1	SCREW-TRUSS HEAD (M6X1X16-MM)	
	47	1	**189-2855**	1	COVER	
	48	1	**234-6469**	1	COVER	
M	49	1	**9X-2042**	23	SCREW-TRUSS HEAD (M6X1X12-MM)	
M	50	1	**9X-2044**	6	SCREW-TRUSS HEAD (M6X1X16-MM)	

M-METRIC PART

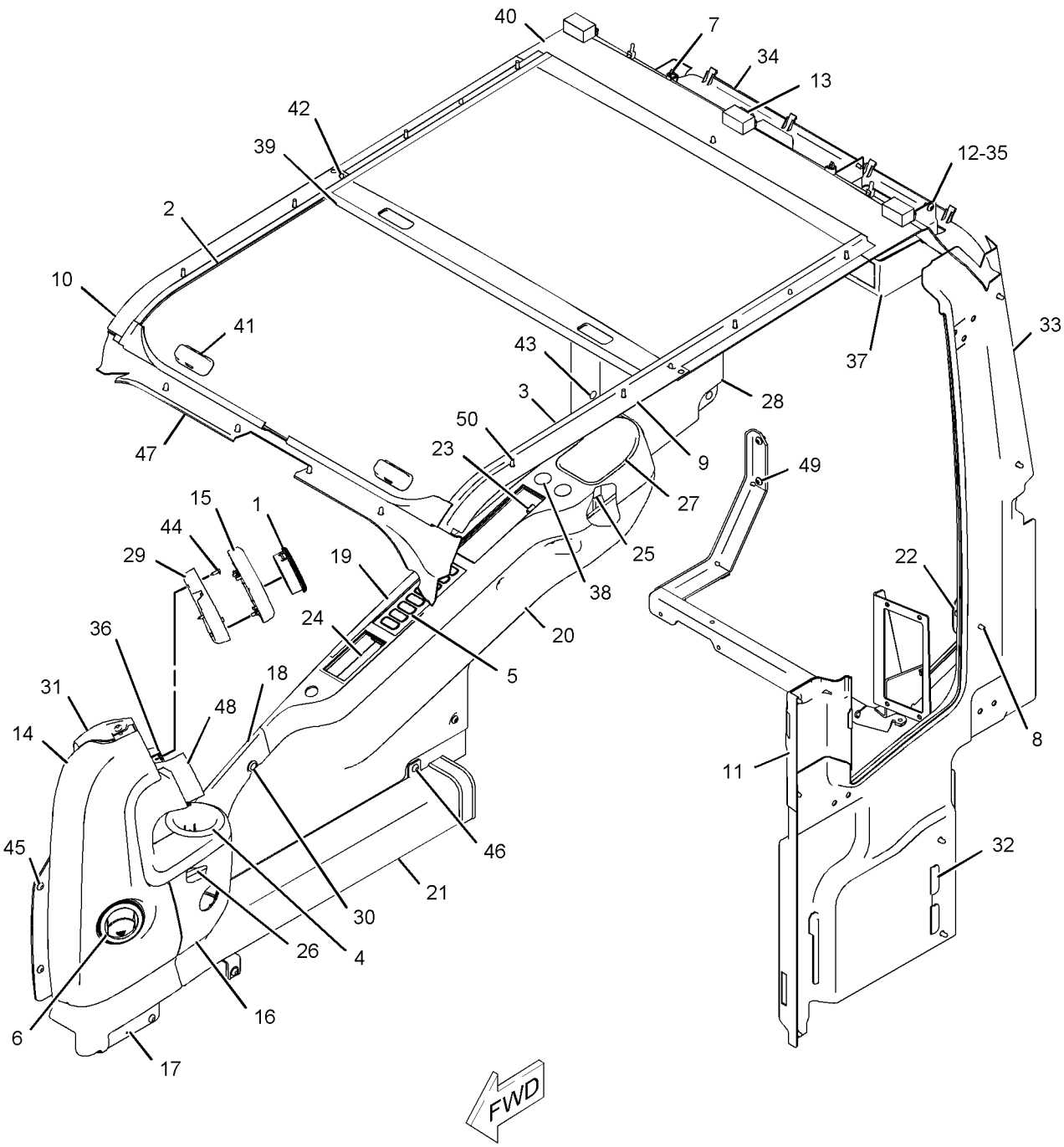

GRAPHIC #1 **<END>** g01097914

OPERATOR STATION

235-8910 CAB GP–EXTERIOR

S/N: CLA1-UP
PART OF 229-9099, 229-9101, 316-8815 CAB GP
AN ATTACHMENT
TYPE 1

SMCS-7301, 7325 **i02909131**

NOTE	REF NO	GRAPHIC REF	PART NUMBER	QTY	PART NAME 1 2 3 4 5 6 (PRODUCT LEVEL)	SEE PAGE
	1	2	**139-7126**	1	HOLDER	
	2	2	**139-7127**	1	HOLDER	
	3	1	**156-6599**	1	STRIKER	
	4	2	**161-3685**	1	ROD	
	5	1	**235-8933**	1	HANDLE AS	
	6	1	**161-3697**	1	GUARD	
	7	2	**164-0523**	1	LEVER AS	
	8	2	**164-0527**	1	ROD	
Y	9	2	*164-0528*	1	LEVER GP-AIR & TEMP CONTROL	847
	10	1	**167-7018**	1	COVER AS	
	11	2	**167-7042**	2	SEAL	
	12	2	**171-7426**	1	CABLE AS	
	13	2	*176-1939*	1	LEVER AS	
M		2	**9X-2044**	1	SCREW-TRUSS HEAD (M6X1X16-MM)	
		2	**176-1937**	1	BRACKET AS	
		2	**176-1938**	1	LEVER	
	14	2	**176-1942**	1	COVER	
	15	1	**178-5570**	2	GROMMET	
	16	2	**185-8196**	1	GROMMET	
	17	2	**189-2704**	1	SEAL	
M	18	1,2	**189-3396**	5	NUT (M10X1.15-THD)	
	19	2	**189-3409**	3	WASHER	
	20	2	**201-4530**	1	BRACKET AS	
	21	2	**205-6295**	1	LATCH AS	
	22	1	**210-5808**	1	SEAL	
	23	1	**235-8912**	1	HANDLE AS	
M	24	1	**099-0823**	3	SCREW-MACHINE (M6X1X6-MM)	
M	25	1	**127-0580**	2	SCREW-FLAT HEAD (M8X1.25X20-MM)	
	26	2	**133-8016**	1	PACKING	
	27	1	**156-6617**	1	MIRROR	
CY	28	1	**259-7295**	1	BRACKET GP-MIRROR	724
	29	2	**176-1986**	1	LAMP AS-DOME	
		2	**201-4417**	1	LAMP (24-VOLT, 10-WATT) (DOME)	
	30	1	**1R-5998**	2	LOCKWASHER	
M	31	1	**284-4426**	1	BOLT-WING (M8X1.25X15-MM)	
M	32	2	**3E-8020**	6	SCREW-TRUSS HEAD (M6X1X25-MM)	
M	33	2	**3E-9874**	2	SCREW-OVAL HEAD	
	34	1	**4I-1205**	2	BUMPER	
	35	2	**4I-1206**	2	GUIDE	
	36	2	**4I-3063**	1	SPRING	
M	37	1	**4I-3123**	2	BOLT (M10X1.5X20-MM)	
	38	1	**4I-3144**	2	WASHER-HARD (10.2X22X3.2-MM THK)	
	39	2	**4I-4270**	1	HOLDER-GLASS	
	40	2	**4I-4392**	3	CLIP	
	41	2	**5C-7793**	1	HOOK-COAT	
	42	2	**6V-7636**	4	PIN AS-SPRING	
	43	1	**7X-0578**	2	WASHER-HARD (10.2X32X2.5-MM THK)	
					–OR–	
		1	**099-3607**	2	WASHER-HARD (10.2X30X3.2-MM THK)	
CM	44	1	**8T-4779**	1	BOLT (M16X2X35-MM)	
M	45	2	**9X-2041**	1	SCREW-TRUSS HEAD (M10X1.5X20-MM)	
M	46	2	**9X-2042**	5	SCREW-TRUSS HEAD (M6X1X12-MM)	
M	47	2	**9X-2044**	5	SCREW-TRUSS HEAD (M6X1X16-MM)	
M	48	2	**9X-2045**	2	SCREW-TRUSS HEAD (M6X1X20-MM)	

235-8910 **CAB GP** ***(contd.)*** **i02909131**

NOTE	REF NO	GRAPHIC REF	PART NUMBER	QTY	PART NAME 1 2 3 4 5 6 (PRODUCT LEVEL)	SEE PAGE
	49	1	**9X-8257**	1	WASHER (17.5X30X3.5-MM THK)	
E	50	2	**6I-5470**		SEAL (150-CM)	
	51	1	**085-6452**	2	WASHER	
M	52	1	**105-2169**	2	BOLT AS (M8X1.25X16-MM)	
M	53	1	**189-2864**	2	SCREW-FLAT HEAD (M8X1.25X30-MM)	
	54	1	**4I-3090**	4	SEAL	

C-CHANGE FROM PREVIOUS TYPE
E-ORDER BY THE CENTIMETER
M-METRIC PART
Y-SEPARATE ILLUSTRATION

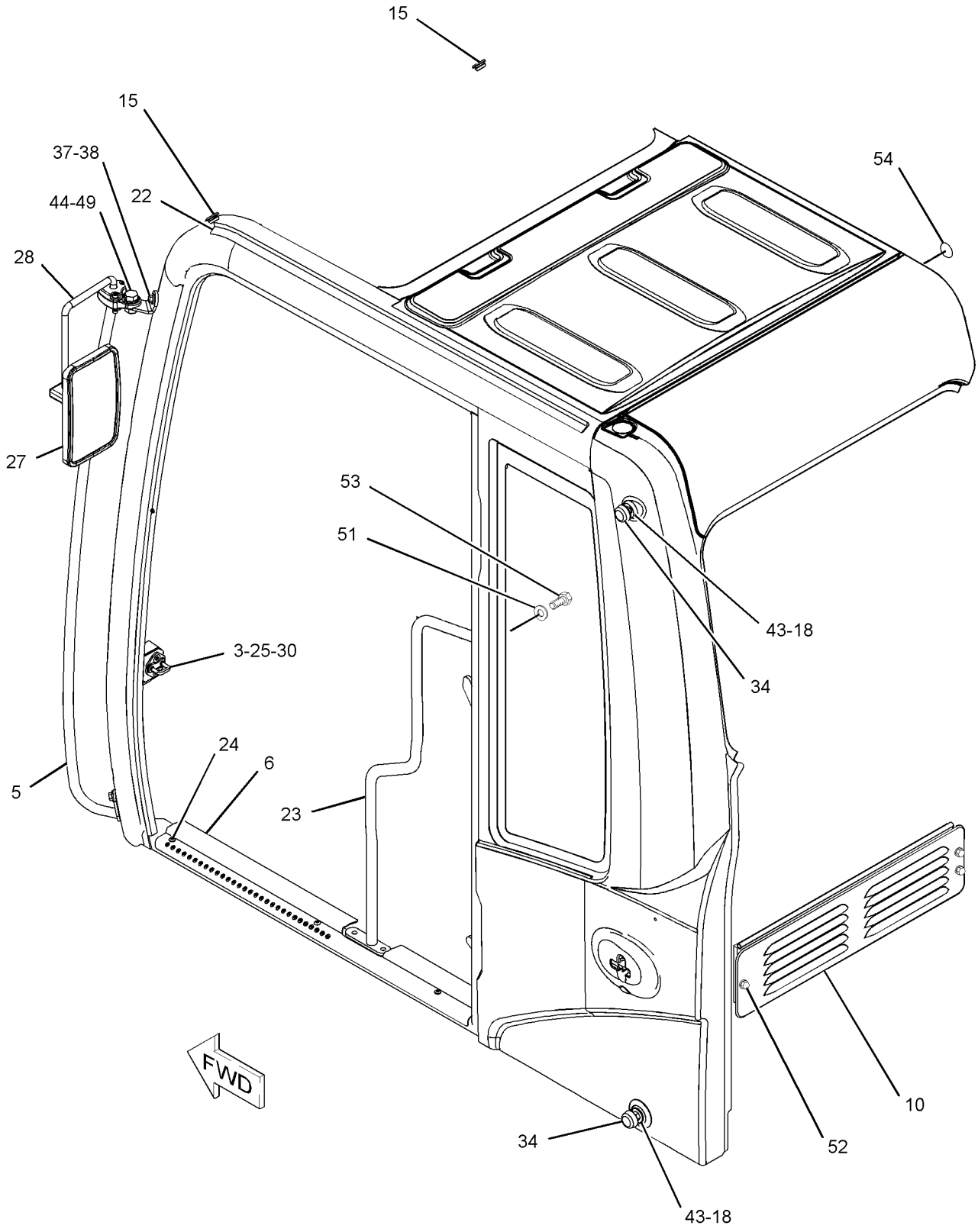

GRAPHIC #1 g01253581

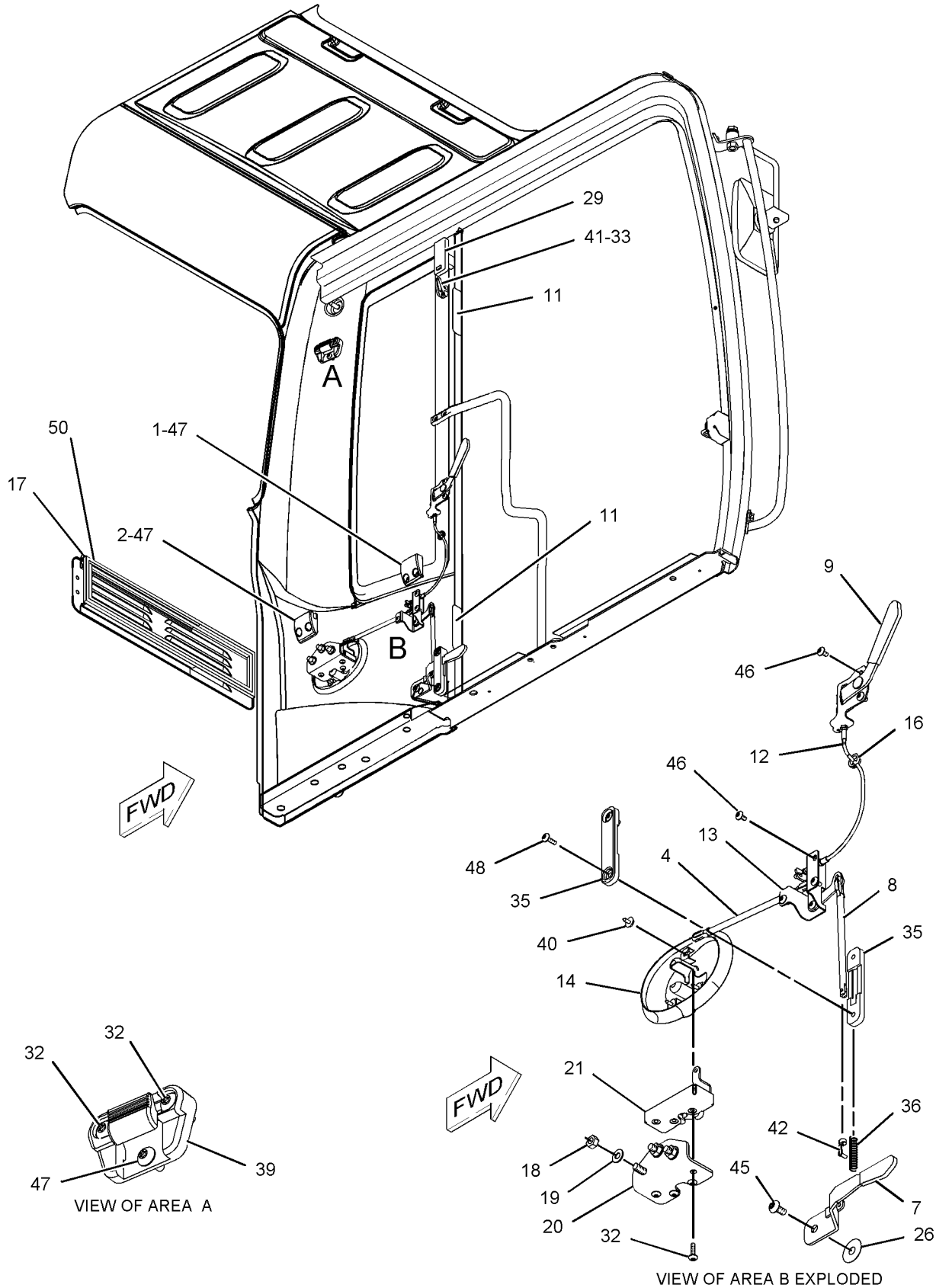

GRAPHIC #2 **<END>** g01098017

OPERATOR STATION

235-8910 CAB GP–EXTERIOR

S/N: CLA1-UP
PART OF 229-9099, 229-9101, 316-8815 CAB GP
AN ATTACHMENT
TYPE 2

SMCS-7301, 7325 **i03087760**

NOTE	REF NO	GRAPHIC REF	PART NUMBER	QTY	PART NAME 1 2 3 4 5 6 (PRODUCT LEVEL)	SEE PAGE
	1	2	**139-7126**	1	HOLDER	
	2	2	**139-7127**	1	HOLDER	
	3	1	**156-6599**	1	STRIKER	
	4	2	**161-3685**	1	ROD	
	5	1	**235-8933**	1	HANDLE AS	
	6	1	**161-3697**	1	GUARD	
	7	2	**164-0523**	1	LEVER AS	
	8	2	**164-0527**	1	ROD	
Y	9	2	*164-0528*	1	LEVER GP-AIR & TEMP CONTROL	847
	10	1	**167-7018**	1	COVER AS	
	11	2	**167-7042**	2	SEAL	
	12	2	**171-7426**	1	CABLE AS	
	13	2	*176-1939*	1	LEVER AS	
M		2	**9X-2044**	1	SCREW-TRUSS HEAD (M6X1X16-MM)	
		2	**176-1937**	1	BRACKET AS	
		2	**176-1938**	1	LEVER	
	14	2	**176-1942**	1	COVER	
	15	1	**178-5570**	2	GROMMET	
	16	2	**185-8196**	1	GROMMET	
	17	2	**189-2704**	1	SEAL	
M	18	1,2	**189-3396**	5	NUT (M10X1.15-THD)	
	19	2	**189-3409**	3	WASHER	
	20	2	**201-4530**	1	BRACKET AS	
	21	2	**205-6295**	1	LATCH AS	
	22	1	**210-5808**	1	SEAL	
	23	1	**235-8912**	1	HANDLE AS	
M	24	1	**099-0823**	3	SCREW-MACHINE (M6X1X6-MM)	
M	25	1	**127-0580**	2	SCREW-FLAT HEAD (M8X1.25X20-MM)	
	26	2	**133-8016**	1	PACKING	
CY	27	1	**327-6550**	1	MIRROR GP-REAR VIEW	855
Y	28	1	**259-7295**	1	BRACKET GP-MIRROR	724
	29	2	**176-1986**	1	LAMP AS-DOME	
		2	**201-4417**	1	LAMP (24-VOLT, 10-WATT) (DOME)	
	30	1	**1R-5998**	2	LOCKWASHER	
M	31	1	**284-4426**	1	BOLT-WING (M8X1.25X15-MM)	
M	32	2	**3E-8020**	6	SCREW-TRUSS HEAD (M6X1X25-MM)	
M	33	2	**3E-9874**	2	SCREW-OVAL HEAD	
	34	1	**4I-1205**	2	BUMPER	
	35	2	**4I-1206**	2	GUIDE	
	36	2	**4I-3063**	1	SPRING	
M	37	1	**4I-3123**	2	BOLT (M10X1.5X20-MM)	
	38	1	**4I-3144**	2	WASHER-HARD (10.2X22X3.2-MM THK)	
	39	2	**4I-4270**	1	HOLDER-GLASS	
	40	2	**4I-4392**	3	CLIP	
	41	2	**5C-7793**	1	HOOK-COAT	
	42	2	**6V-7636**	4	PIN AS-SPRING	
	43	1	**7X-0578**	2	WASHER-HARD (10.2X32X2.5-MM THK)	
					–OR–	
		1	**099-3607**	2	WASHER-HARD (10.2X30X3.2-MM THK)	
M	44	1	**8T-4779**	1	BOLT (M16X2X35-MM)	
M	45	2	**9X-2041**	1	SCREW-TRUSS HEAD (M10X1.5X20-MM)	
M	46	2	**9X-2042**	5	SCREW-TRUSS HEAD (M6X1X12-MM)	
M	47	2	**9X-2044**	5	SCREW-TRUSS HEAD (M6X1X16-MM)	
M	48	2	**9X-2045**	2	SCREW-TRUSS HEAD (M6X1X20-MM)	

235-8910 **CAB GP** ***(contd.)*** **i03087760**

NOTE	REF NO	GRAPHIC REF	PART NUMBER	QTY	PART NAME 1 2 3 4 5 6 (PRODUCT LEVEL)	SEE PAGE
	49	1	**9X-8257**	1	WASHER (17.5X30X3.5-MM THK)	
E	50	2	**6I-5470**		SEAL (150-CM)	
	51	1	**085-6452**	2	WASHER	
M	52	1	**105-2169**	2	BOLT AS (M8X1.25X16-MM)	
M	53	1	**189-2864**	2	SCREW-FLAT HEAD (M8X1.25X30-MM)	
	54	1	**4I-3090**	4	SEAL	

C-CHANGE FROM PREVIOUS TYPE
E-ORDER BY THE CENTIMETER
M-METRIC PART
Y-SEPARATE ILLUSTRATION

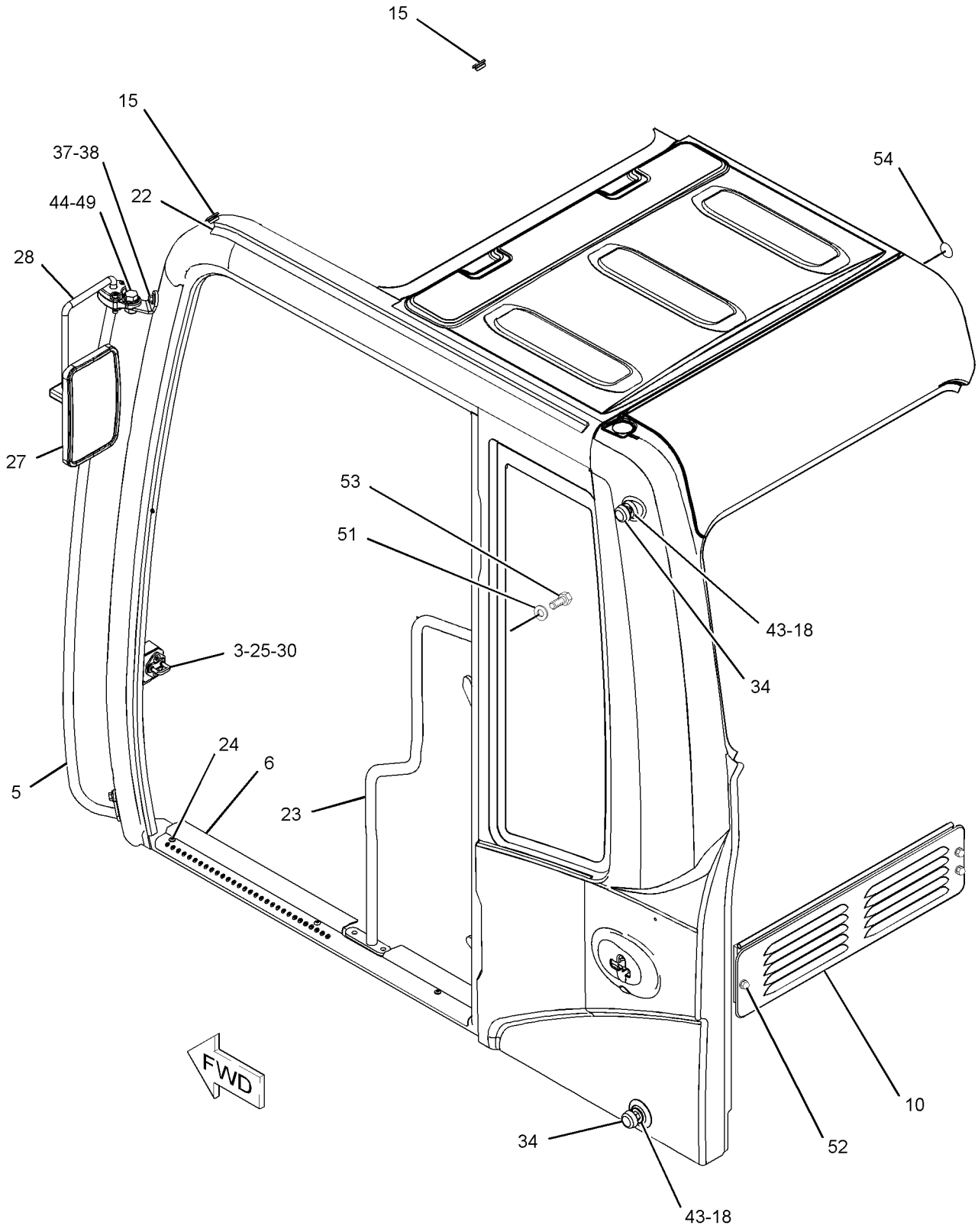

GRAPHIC #1

g01253581

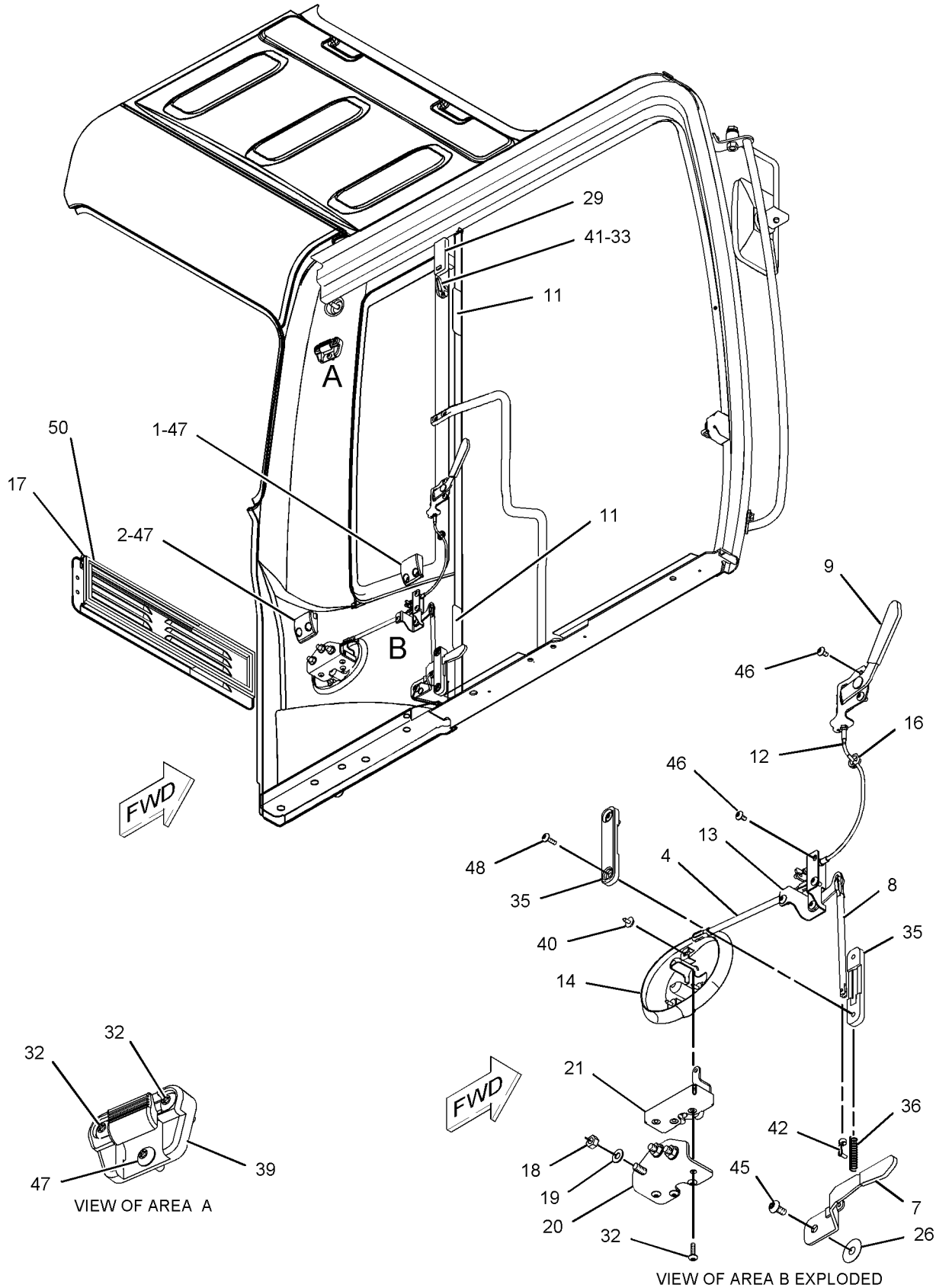

GRAPHIC #2 **<END>** g01098017

OPERATOR STATION

235-8917 CAB GP–INTERIOR

S/N: CLA1-UP
PART OF 316-8815 CAB GP
AN ATTACHMENT

SMCS-7301, 7325 **i02783571**

NOTE	REF NO	GRAPHIC REF	PART NUMBER	QTY	PART NAME 1 2 3 4 5 6 (PRODUCT LEVEL)	SEE PAGE
	1	1	**8Y-6352**	1	LOUVER AS	
	2	1	**164-0646**	1	CUP	
	3	1	**164-0655**	1	PANEL-SWITCH (OPERATOR CONSOLE)	
	4	1	**164-8474**	2	LOUVER AS-VENT	
	5	1	**170-9724**	5	CLIP	
	6	1	**171-7420**	10	CLIP	
	7	1	**176-1972**	1	COVER	
	8	1	**185-8205**	7	CLIP	
	9	1	**185-8214**	1	BRACKET AS	
	10	1	**189-2678**	3	SPACER	
	11	1	**189-2853**	1	COVER	
	12	1	**189-2854**	1	COVER	
	13	1	**234-6468**	1	COVER AS	
		1	**259-7353**	4	CLIP	
	14	1	**234-6470**	1	COVER-MONITOR	
	15	1	**234-6471**	1	COVER-DUCT	
	16	1	**234-6472**	1	COVER	
	17	1	**234-6473**	1	COVER-FRONT (UPPER, RH)	
	18	1	**234-6474**	1	COVER (UPPER, RH)	
	20	1	**234-6476**	1	DUCT	
	21	1	**234-6477**	1	BRACKET AS	
	23	1	**234-6480**	1	BRACKET AS	
	24	1	**234-6483**	1	BRACKET AS	
	25	1	**234-6485**	1	BRACKET AS	
	26	1	**234-6490**	1	CUP	
	27	1	**234-6491**	1	COVER	
	28	1	**234-6497**	1	COVER	
	29	1	**234-6498**	3	RIVET	
	30	1	**234-6521**	1	COVER	
	31	1	**234-6547**	1	COVER	
	32	1	**234-6548**	1	COVER	
	33	1	**234-6549**	1	COVER	
	34	1	**234-6550**	1	COVER	
	35	1	**234-6579**	2	NUT-SPEED	
	36	1	**235-8922**	1	COVER	
	37	1	**235-8923**	2	CAP	
	38	1	**235-8930**	1	LINER	
C	39	1	**235-8950**	10	CLIP	
	40	1	**245-7790**	2	SCREW-TAPPING	
M	41	1	**128-2135**	13	SCREW-TRUSS HEAD (M6X1X13-MM)	
M	42	1	**128-2136**	1	SCREW-TRUSS HEAD (M6X1X16-MM)	
	43	1	**189-2855**	1	COVER	
	44	1	**234-6469**	1	COVER	
M	45	1	**9X-2042**	23	SCREW-TRUSS HEAD (M6X1X12-MM)	
C	46	1	**305-0333**	1	BRACKET	
C	47	1	**305-0330**	1	COVER	

C-CHANGE FROM PREVIOUS TYPE
M-METRIC PART

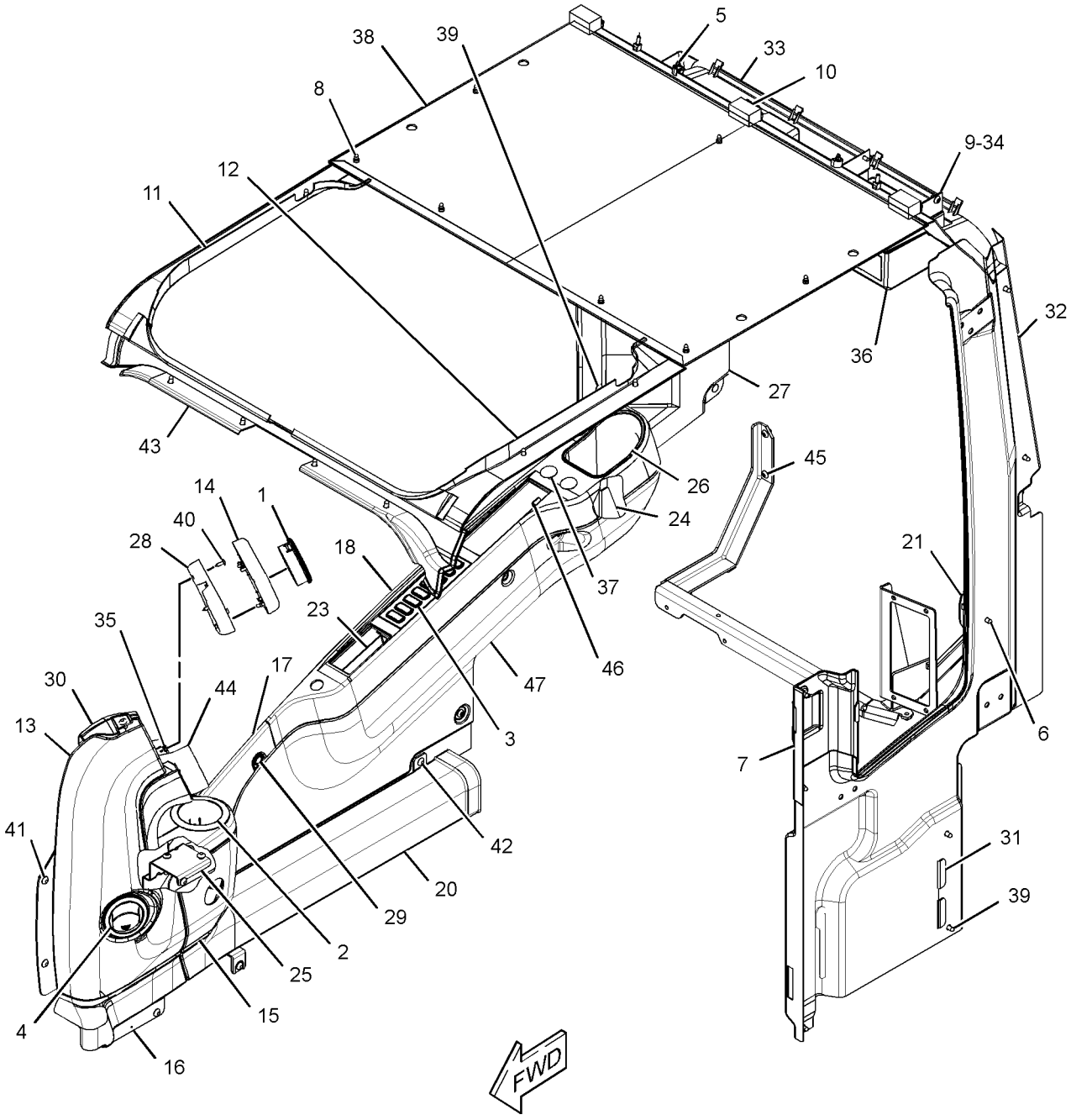

GRAPHIC #1 **<END>** g01421499

OPERATOR STATION

316-8814 CAB GP

S/N: CLA1-UP

AN ATTACHMENT

SMCS-7301, 7325 **i02884426**

NOTE	REF NO	GRAPHIC REF	PART NUMBER	QTY	PART NAME 1 2 3 4 5 6 (PRODUCT LEVEL)	SEE PAGE
M	1	1	**128-2135**	5	SCREW-TRUSS HEAD (M6X1X13-MM)	
	2	1	**164-8474**	2	LOUVER AS-VENT	
Y	3	1	**316-8815**	1	CAB GP	748
Y	4	1	*234-6501*	1	COVER GP-CAB (REAR)	792
	5	1	**235-9001**	1	SUPPORT	
M	6	1	**8T-4179**	5	BOLT (M12X1.75X20-MM)	
M	7	1	**8T-4190**	4	BOLT (M16X2X25-MM)	
	8	1	**8T-4223**	13	WASHER-HARD (13.5X25.5X3-MM THK)	
M	9	1	**8T-4910**	6	BOLT (M12X1.75X60-MM)	
M	10	1	**8T-6868**	2	BOLT (M12X1.75X80-MM)	
	11	1	**8Y-6967**	2	LOUVER AS	
	12	1	**9X-8257**	6	WASHER (17.5X30X3.5-MM THK)	

M-METRIC PART
Y-SEPARATE ILLUSTRATION

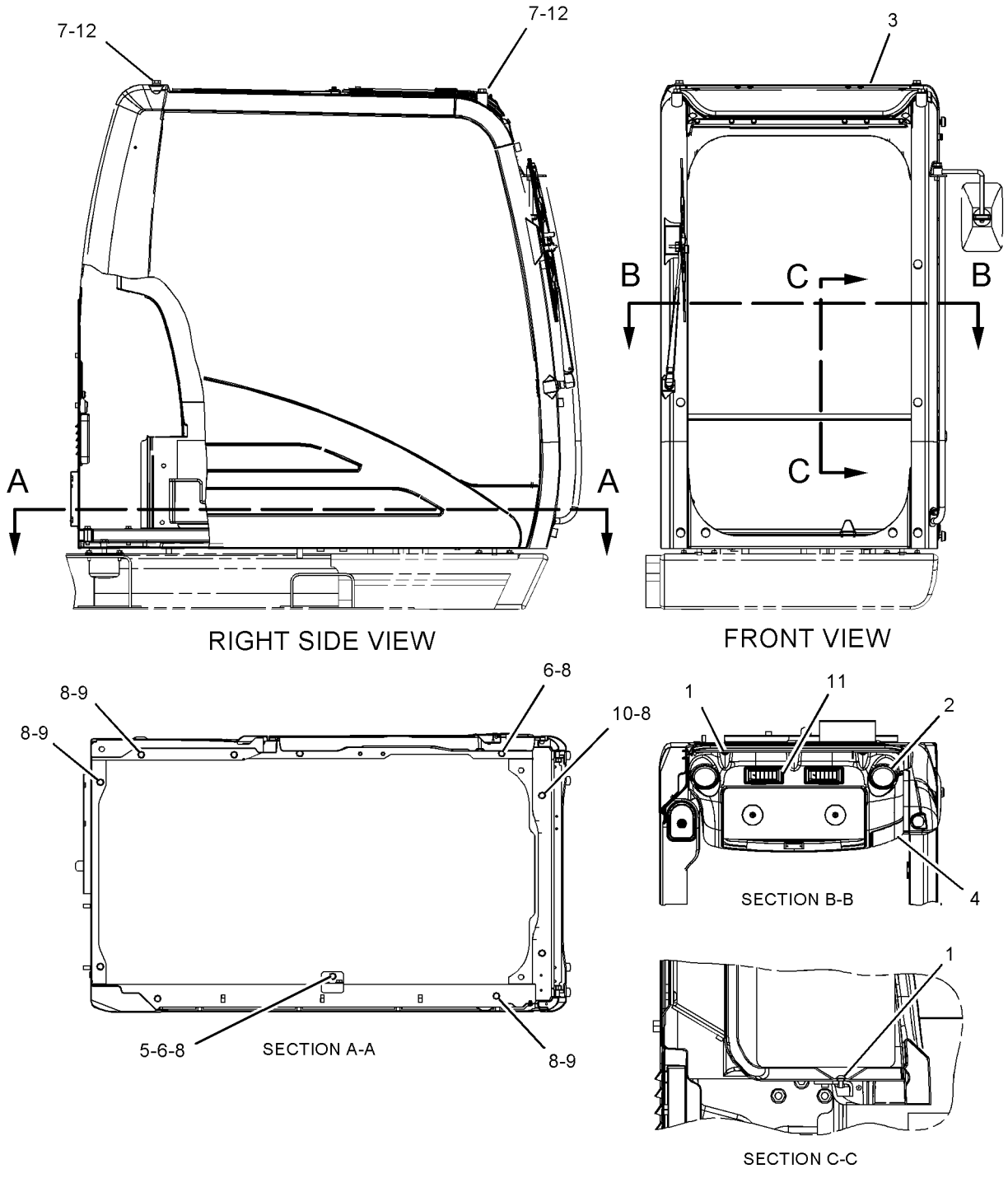

GRAPHIC #1 **<END>** g01125071

OPERATOR STATION

316-8815 CAB GP

S/N: CLA1-UP
PART OF 316-8814 CAB GP
AN ATTACHMENT

SMCS-7301, 7325 **i02884427**

NOTE	REF NO	GRAPHIC REF	PART NUMBER	QTY	PART NAME 1 2 3 4 5 6 (PRODUCT LEVEL)	SEE PAGE
	1	1	*235-8916*	1	CAB AS	
Y	2	1	*235-8910*	1	CAB GP (EXTERIOR)	736
Y	3	1	*235-8917*	1	CAB GP (INTERIOR)	744
Y	4	1	*235-8909*	1	WINDOW GP-CAB (SIDE, REAR)	922
Y	5	1	*234-6594*	1	WIPER GP-WINDOW (FRONT, UPPER)	932
Y	6	1	**189-2768**	1	DOOR & MTG GP-CAB	795
JY	7	1	*139-7101*	1	WINDOW GP-CAB (FRONT, UPPER)	915
Y	8	1	*176-1958*	1	WINDOW GP-CAB (LOWER)	919
Y	9	1	*139-7099*	1	HATCH GP-ROOF	829
FJY		1	*171-7503*	1	FRAME GP-UPPER FRONT WINDOW	815
FJY		1	*207-0144*	1	WINDOW AS-FRONT (UPPER)	914

F-NOT SHOWN
J-ITEMS MARKED J AVAILABLE FOR SERVICE REPAIR OF WINDOW GP MARKED J
Y-SEPARATE ILLUSTRATION

316-8815 CAB GP *(contd.)* **i02884427**

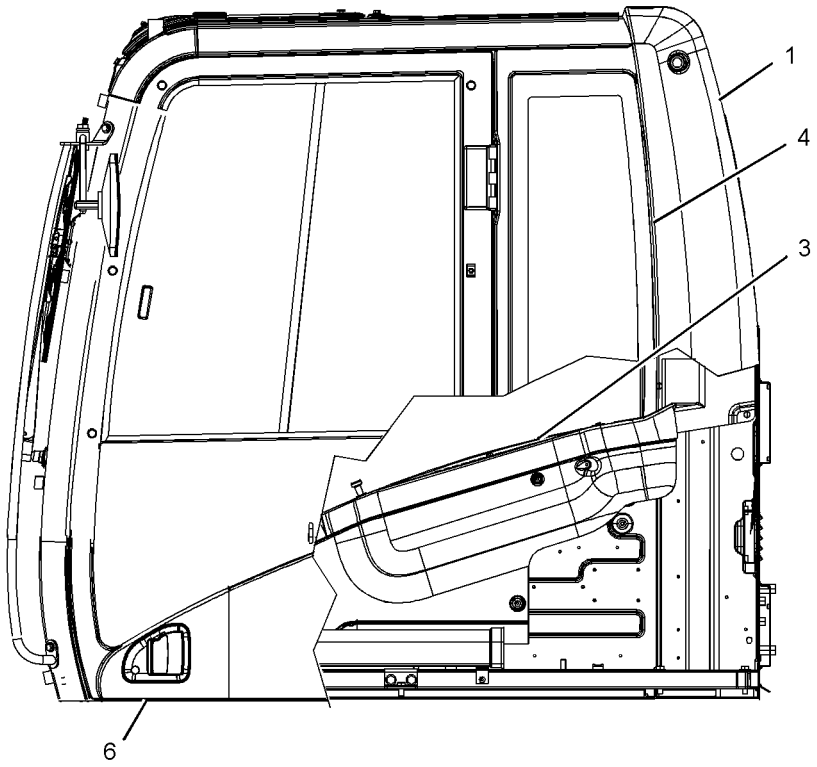

LEFT SIDE VIEW

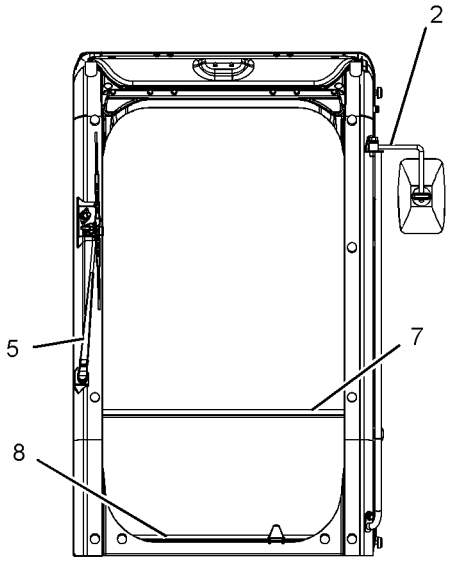

FRONT VIEW

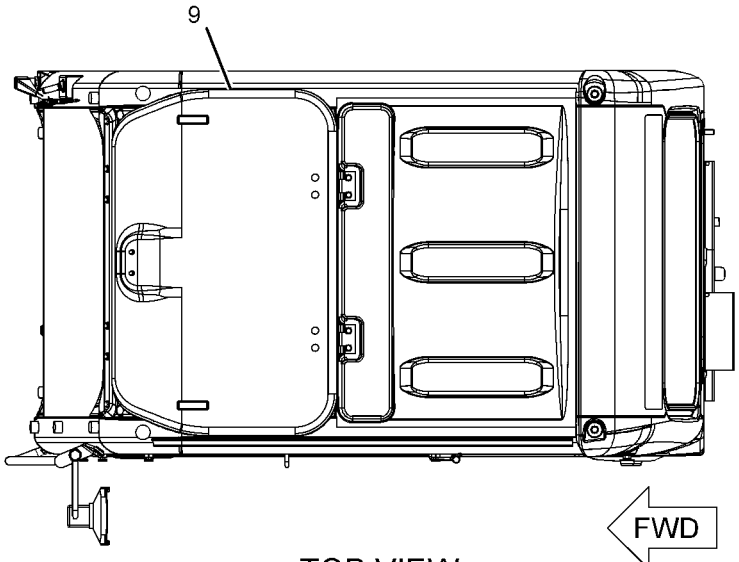

TOP VIEW

GRAPHIC #1 **<END>** g01125083

OPERATOR STATION

245-7836 COIL GP-EVAPORATOR

S/N: CLA1-UP

PART OF 316-8811 AIR CONDITIONER GP

AN ATTACHMENT

SMCS-7343 **i02218138**

NOTE	REF NO	GRAPHIC REF	PART NUMBER	QTY	PART NAME 1 2 3 4 5 6 (PRODUCT LEVEL)	SEE PAGE
	1	1	**245-7837**	1	VALVE AS-EXPANSION	
	2	1	**245-7905**	1	INSULATOR	
M	3	1	**8T-0266**	2	BOLT-SOCKET HEAD (M5X0.8X40-MM)	
	4	1	**121-7136**	1	SEAL-O-RING	
	5	1	**121-7138**	1	SEAL-O-RING	

M-METRIC PART

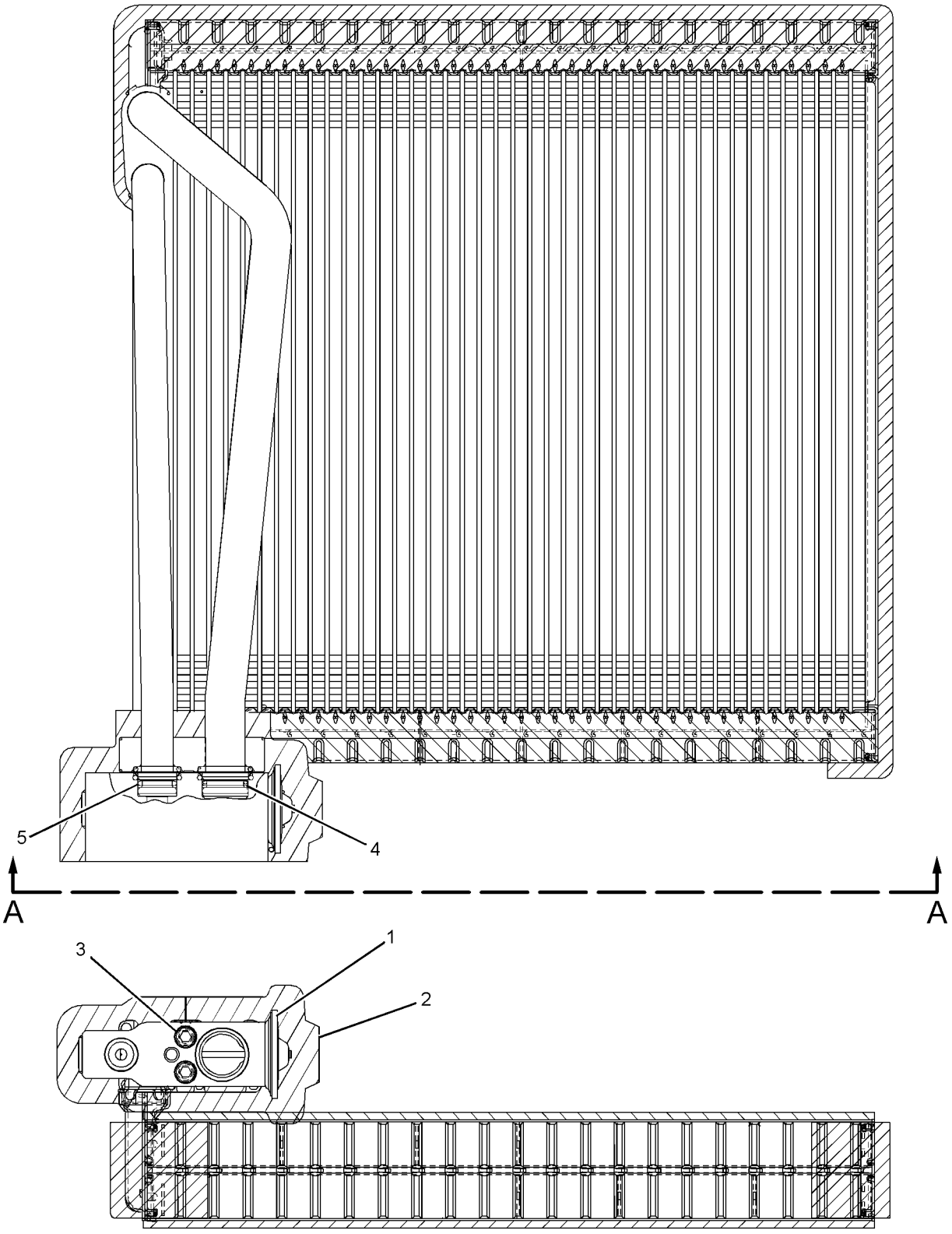

VIEW A-A

GRAPHIC #1 **<END>** g01134658

OPERATOR STATION

259-7244 COMPRESSOR GP-REFRIGERANT

S/N: CLA1-UP

PART OF 310-9499 COMPRESSOR GP-REFRIGERANT

SMCS-1802 **i02974093**

NOTE	REF NO	GRAPHIC REF	PART NUMBER	QTY	PART NAME 1 2 3 4 5 6 (PRODUCT LEVEL)	SEE PAGE
	1	1	**259-7286**	1	COIL AS (24-VOLT)	
		1	**8T-8729**	2	PIN-CONNECTOR	
		1	**243-4505**	1	RECEPTACLE AS-CONNECTOR (2-PIN)	
B	2	1	**264-9982**	1	WASHER (6.2X12.2X0.1-MM THK)	
B	3	1	**264-9983**	1	WASHER (6.2X12.2X0.3-MM THK)	
B	4	1	**264-9984**	1	WASHER (6.2X12.2X0.5-MM THK)	

B-USE AS REQUIRED

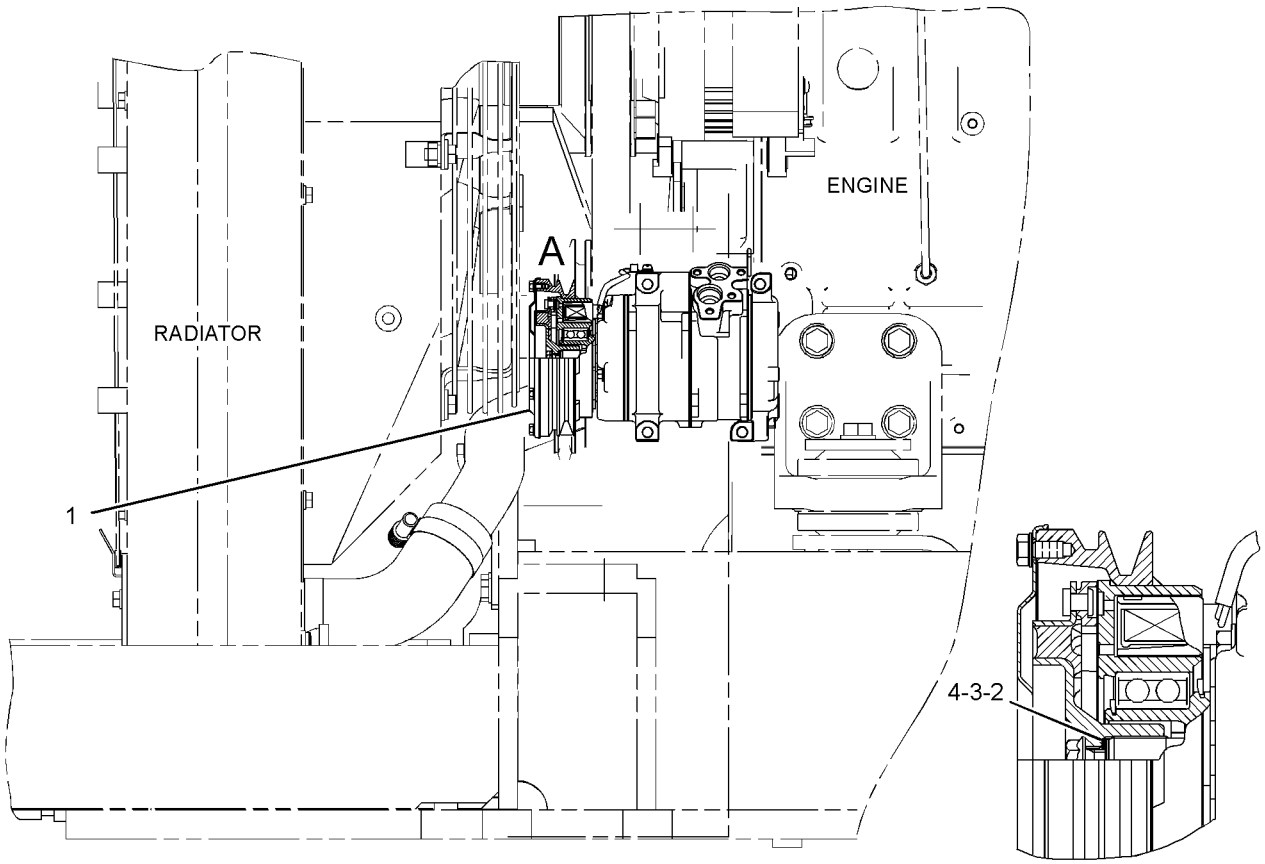

REAR VIEW

VIEW OF AREA A

GRAPHIC #1 **<END>** g01505958

310-9499 COMPRESSOR GP-REFRIGERANT

S/N: CLA1-UP

PART OF 279-7830 INSTALLATION AR-ENGINE

SMCS-1802 **i02794494**

NOTE	REF NO	GRAPHIC REF	PART NUMBER	QTY	PART NAME 1 2 3 4 5 6 (PRODUCT LEVEL)	SEE PAGE
	1	1	**118-9863**	1	PULLEY	
	2	1	**255-3016**	1	V-BELT (REFRIGERANT COMPRESSOR)	
Y	3	1	**255-3018**	1	PULLEY GP-IDLER	40
Y	4	1	**259-7244**	1	COMPRESSOR GP-REFRIGERANT	752
	5	1	**297-7667**	1	BRACKET AS	
	6	1	**5P-4116**	1	WASHER-HARD (8.8X20.5X2-MM THK)	
M	7	1	**8T-3647**	4	BOLT (M8X1.25X80-MM)	
	8	1	**8T-4121**	7	WASHER-HARD (11X21X2.5-MM THK)	
M	9	1	**8T-4172**	3	BOLT (M10X1.5X80-MM)	
M	10	1	**8T-4182**	4	BOLT (M10X1.5X45-MM)	
	11	1	**8T-4223**	2	WASHER-HARD (13.5X25.5X3-MM THK)	
	12	1	**8T-4224**	4	WASHER-HARD (8.8X16X2-MM THK)	
M	13	1	**8T-4910**	2	BOLT (M12X1.75X60-MM)	

M-METRIC PART
Y-SEPARATE ILLUSTRATION

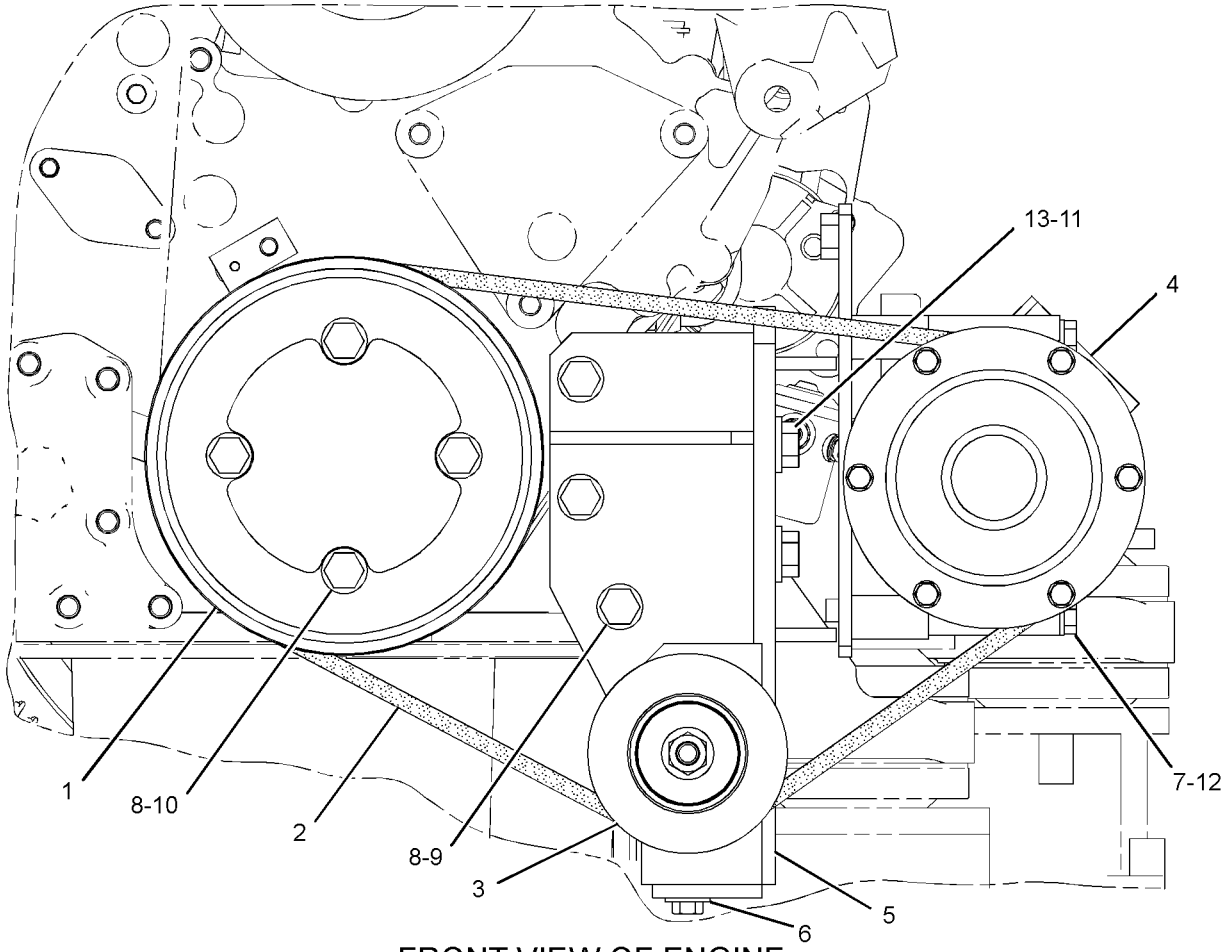

FRONT VIEW OF ENGINE

GRAPHIC #1

<END>

g01410602

OPERATOR STATION

273-5347 CONDENSER & MTG GP-REFRIGERANT

S/N: CLA1-UP

PART OF 279-7830 INSTALLATION AR-ENGINE

SMCS-1805 **i02794501**

NOTE	REF NO	GRAPHIC REF	PART NUMBER	QTY	PART NAME 1 2 3 4 5 6 (PRODUCT LEVEL)	SEE PAGE
Y	1	1	**245-7749**	1	CONDENSER GP-REFRIGERANT	755
	2	1	**284-4404**	1	BRACKET AS	
	3	1	**284-4406**	1	BRACKET AS	
	4	1	**8T-4121**	4	WASHER-HARD (11X21X2.5-MM THK)	
M	5	1	**8T-4137**	4	BOLT (M10X1.5X20-MM)	
M	6	1	**8T-4971**	4	BOLT (M6X1X30-MM)	
	7	1	**9X-8256**	4	WASHER (6.6X12X2-MM THK)	

M-METRIC PART
Y-SEPARATE ILLUSTRATION

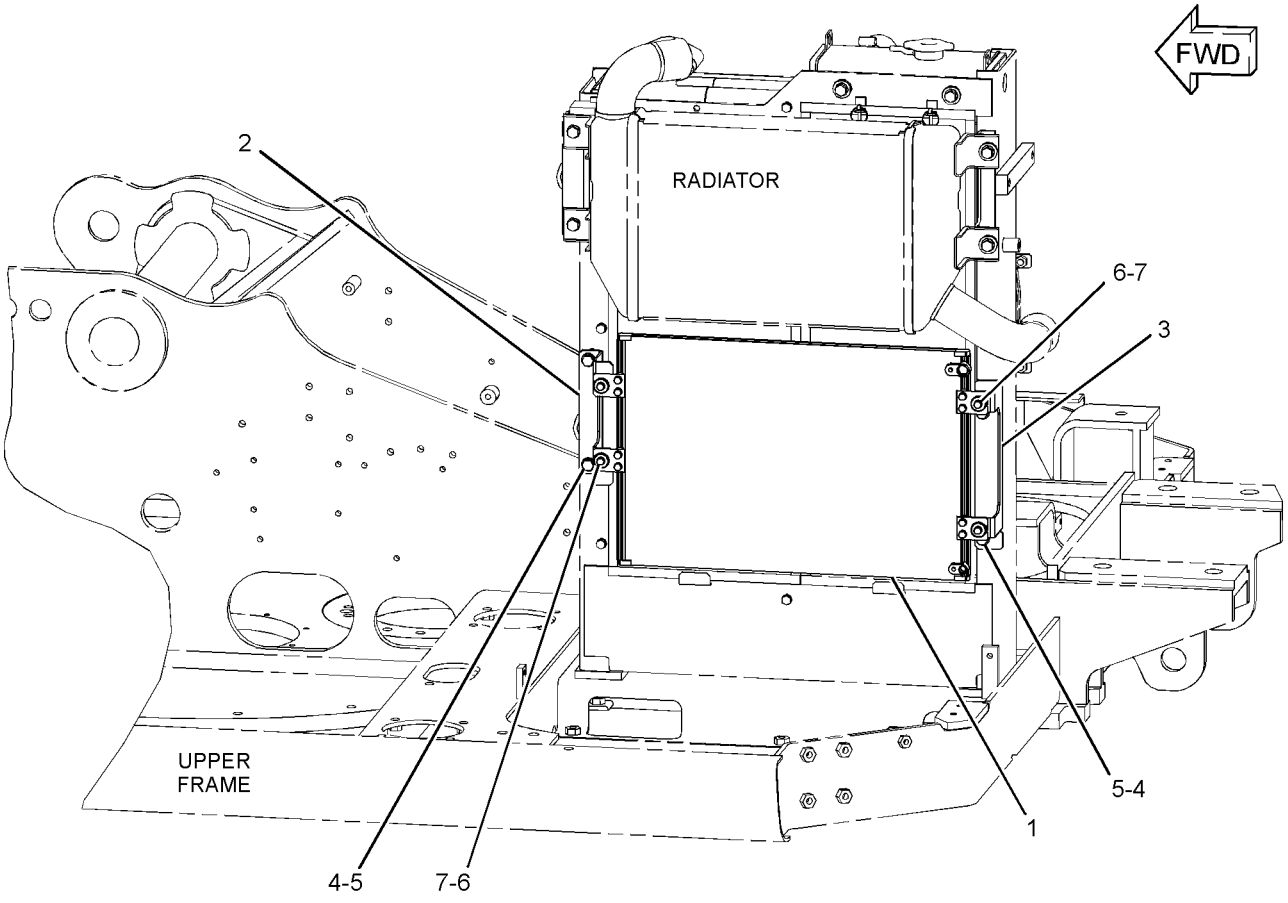

GRAPHIC #1 **<END>** g01400711

OPERATOR STATION

245-7749 CONDENSER GP-REFRIGERANT

S/N: CLA1-UP

PART OF 273-5347 CONDENSER & MTG GP-REFRIGERANT

SMCS-1805 **i02416857**

NOTE	REF NO	GRAPHIC REF	PART NUMBER	QTY	PART NAME 1 2 3 4 5 6 (PRODUCT LEVEL)	SEE PAGE
	1	1	**235-8880**	1	CONDENSER AS	
	2	1	**245-7750**	4	BUSHING-RUBBER	
	3	1	**245-7751**	4	BRACKET	
	4	1	**095-0827**	8	LOCKWASHER	
M	5	1	**8T-4171**	8	BOLT (M6X1X12-MM)	
	6	1	**9X-8256**	8	WASHER (6.6X12X2-MM THK)	

M-METRIC PART

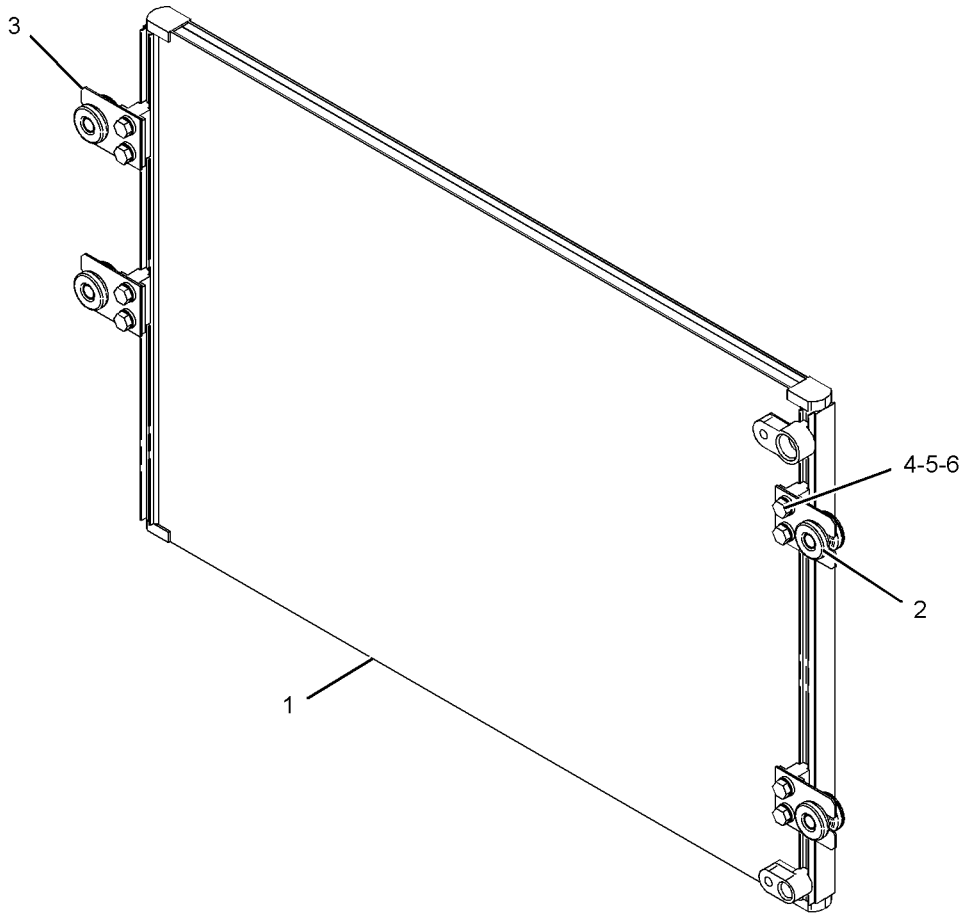

GRAPHIC #1 **<END>** g01086695

OPERATOR STATION

245-7922 CONSOLE GP-OPERATOR

S/N: CLA1-UP
PART OF 273-5363 OPERATOR AR
TYPE 1

SMCS-5258 **i03088621**

NOTE	REF NO	GRAPHIC REF	PART NUMBER	QTY	PART NAME 1 2 3 4 5 6 (PRODUCT LEVEL)	SEE PAGE
	1	1	**176-1916**	2	GROMMET	
	2	1	**178-5422**	2	GROMMET	
	3	1	**178-5423**	2	GROMMET	
	4	1	**185-8161**	2	INSULATOR	
	5	1	**235-8893**	2	SUPPORT	
	6	1	**235-8894**	2	SUPPORT	
CY	7	1	*259-7349*	1	CONSOLE GP-OPERATOR (LH)	762
CY	8	1	*259-7348*	1	CONSOLE GP-OPERATOR (RH)	760
	9	1	**8T-4121**	4	WASHER-HARD (11X21X2.5-MM THK)	
M	10	1	**8T-4195**	4	BOLT (M10X1.5X30-MM)	
M	11	1	**9X-2046**	8	SCREW-TRUSS HEAD (M6X1X35-MM)	
M	12	1	**9X-2045**	12	SCREW-TRUSS HEAD (M6X1X20-MM)	
	13	1	**7K-1181**	4	STRAP-CABLE	
	14	1	**122-9617**	2	GUARD	
	15	1	**105-1766**	8	SPACER (6.6X11X6-MM THK)	

C-CHANGE FROM PREVIOUS TYPE
M-METRIC PART
Y-SEPARATE ILLUSTRATION

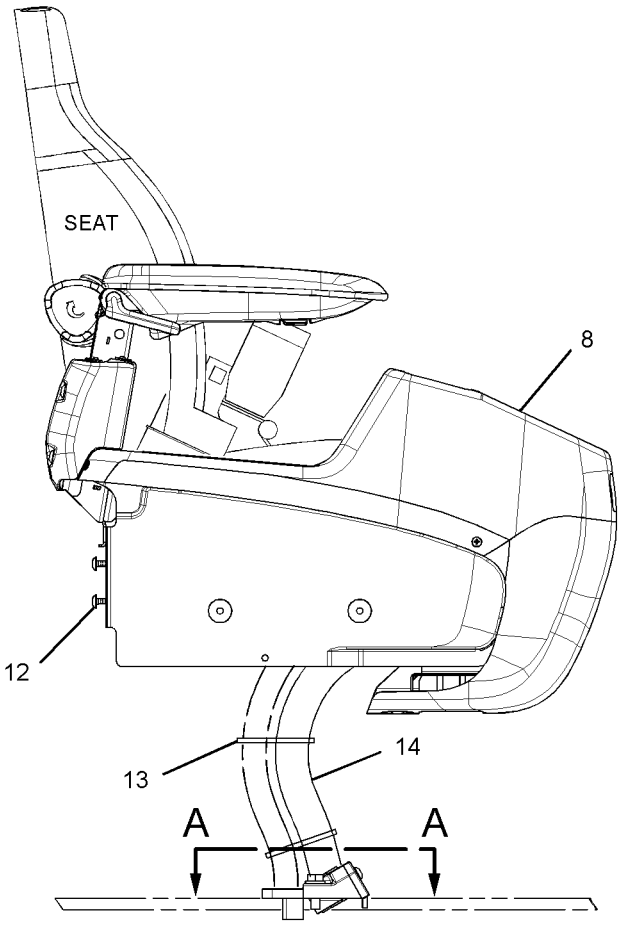

RIGHT SIDE VIEW

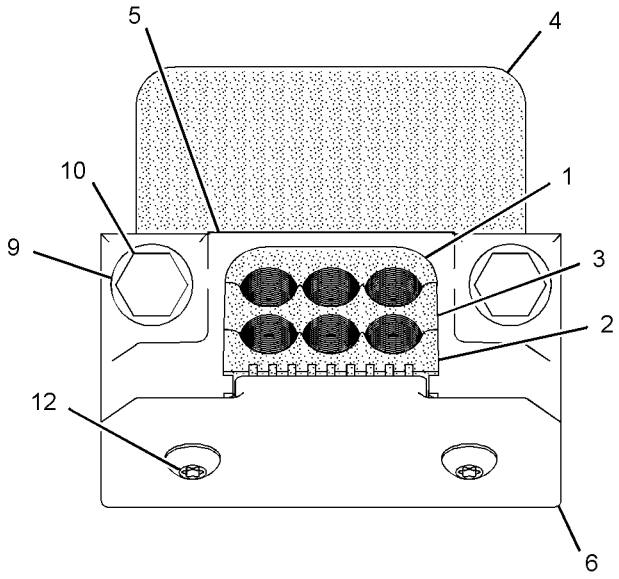

SECTION A-A

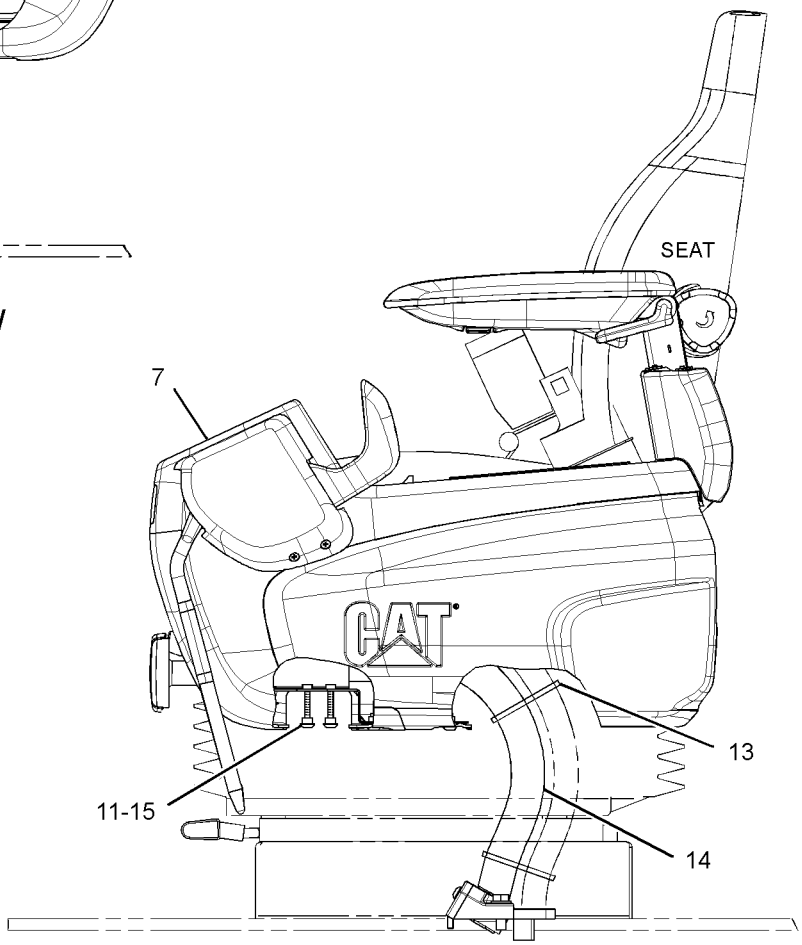

LEFT SIDE VIEW

GRAPHIC #1 **<END>** g01592535

OPERATOR STATION

245-7922 CONSOLE GP-OPERATOR

S/N: CLA1-UP
PART OF 273-5363 OPERATOR AR
TYPE 2

SMCS-5258 **i03158925**

NOTE	REF NO	GRAPHIC REF	PART NUMBER	QTY	PART NAME 1 2 3 4 5 6 (PRODUCT LEVEL)	SEE PAGE
	1	1	**176-1916**	2	GROMMET	
	2	1	**178-5422**	2	GROMMET	
	3	1	**178-5423**	2	GROMMET	
	4	1	**185-8161**	2	INSULATOR	
	5	1	**235-8893**	2	SUPPORT	
	6	1	**235-8894**	2	SUPPORT	
Y	7	1	*259-7349*	1	CONSOLE GP-OPERATOR (LH)	762
Y	8	1	*259-7348*	1	CONSOLE GP-OPERATOR (RH)	760
	9	1	**8T-4121**	4	WASHER-HARD (11X21X2.5-MM THK)	
M	10	1	**8T-4195**	4	BOLT (M10X1.5X30-MM)	
CM	11	1	**9X-2046**	8	SCREW-TRUSS HEAD (M6X1X35-MM)	
CM	12	1	**9X-2045**	12	SCREW-TRUSS HEAD (M6X1X20-MM)	
	13	1	**7K-1181**	4	STRAP-CABLE	
	14	1	**122-9617**	2	GUARD	
C	15	1	**105-1766**	8	SPACER (6.6X11X6-MM THK)	

C-CHANGE FROM PREVIOUS TYPE
M-METRIC PART
Y-SEPARATE ILLUSTRATION

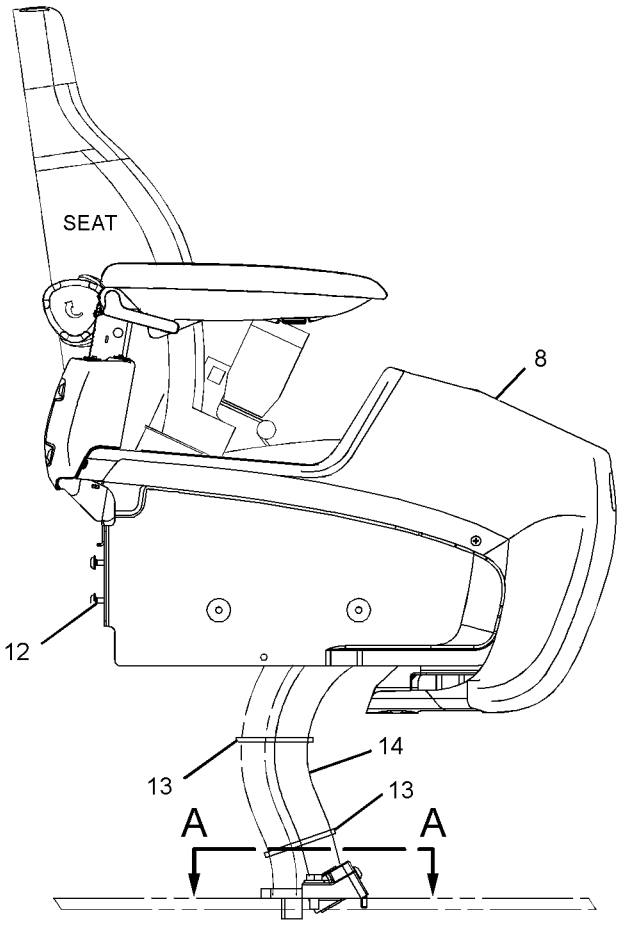

RIGHT SIDE VIEW

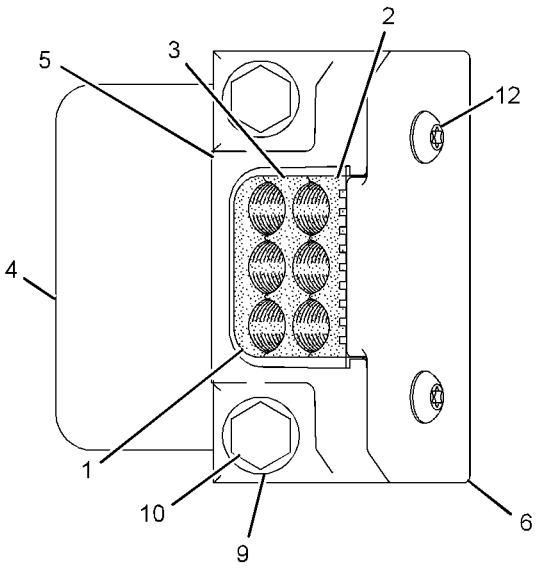

SECTION A-A

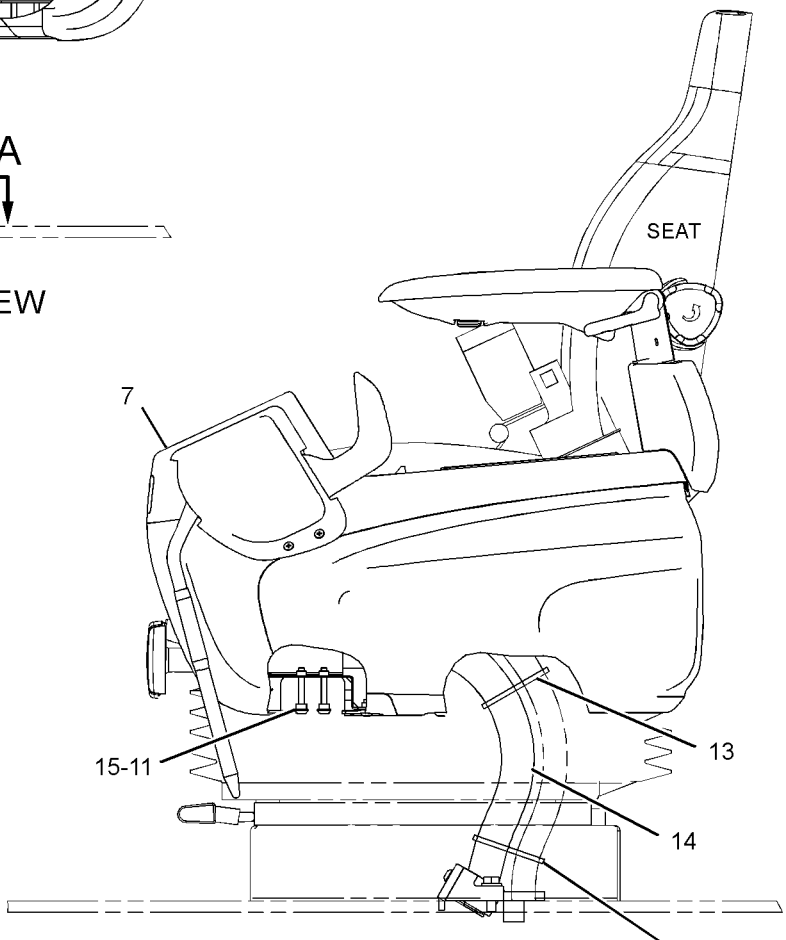

LEFT SIDE VIEW

GRAPHIC #1 **<END>** g01620582

OPERATOR STATION

259-7348 CONSOLE GP-OPERATOR—RH

S/N: CLA1-UP

PART OF 245-7922 CONSOLE GP-OPERATOR

SMCS-5258 **i02488237**

NOTE	REF NO	GRAPHIC REF	PART NUMBER	QTY	PART NAME 1 2 3 4 5 6 (PRODUCT LEVEL)	SEE PAGE
M	1	1	**128-2135**	4	SCREW-TRUSS HEAD (M6X1X13-MM)	
	2	1	**185-8284**	1	COVER	
	3	1	**234-6579**	2	NUT-SPEED	
	4	1	**234-6580**	2	CAP	
	5	1	**234-6602**	1	COVER	
	6	1	**234-6604**	1	COVER	
	7	1	**234-6608**	1	COVER	
	8	1	**234-6609**	1	COVER	
	9	1	**234-6610**	1	COVER	
	10	1	**235-8914**	4	NUT-SPEED	
	11	1	**235-8966**	2	BASE-MOUNTING	
	12	1	**245-7790**	2	SCREW-TAPPING	
	13	1	**245-7926**	1	SUPPORT AS	
	14	1	**245-7948**	4	SCREW-TAPPING	
Y	15	1	**259-7346**	1	ARMREST GP (RH)	722
M	16	1	**9X-2041**	3	SCREW-TRUSS HEAD (M10X1.5X20-MM)	

M-METRIC PART
Y-SEPARATE ILLUSTRATION

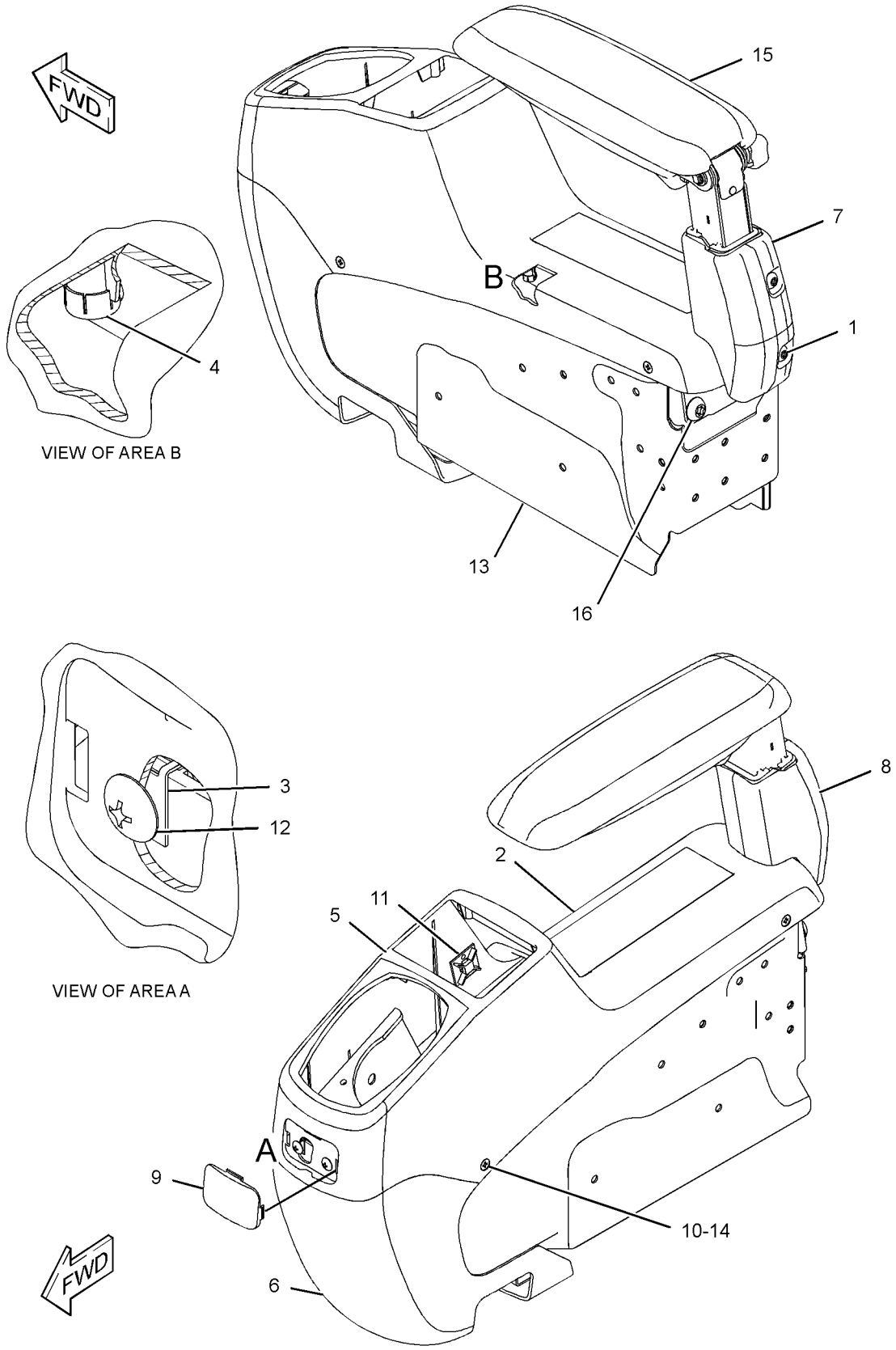

GRAPHIC #1 **<END>** g01217107

OPERATOR STATION

259-7349 CONSOLE GP-OPERATOR–LH

S/N: CLA1-UP

PART OF 245-7922 CONSOLE GP-OPERATOR

SMCS-5258 **i02488329**

NOTE	REF NO	GRAPHIC REF	PART NUMBER	QTY	PART NAME 1 2 3 4 5 6 (PRODUCT LEVEL)	SEE PAGE
M	1	1	**128-2135**	5	SCREW-TRUSS HEAD (M6X1X13-MM)	
	2	1	**171-7325**	3	SCREW-TAPPING	
	3	1	**234-6579**	6	NUT-SPEED	
	4	1	**234-6580**	4	CAP	
	5	1	**234-6603**	1	COVER	
	6	1	**234-6605**	1	COVER	
	7	1	**234-6608**	1	COVER	
	8	1	**234-6609**	1	COVER	
	9	1	**234-6610**	1	COVER	
	10	1	**234-6611**	1	CASE	
	11	1	**234-6612**	1	COVER	
Y	12	1	**234-6613**	1	SWITCH GP-POSITION (HYDRAULIC LOCKOUT)	179
	13	1	**234-6614**	1	COVER	
	14	1	**235-8914**	4	NUT-SPEED	
	15	1	**235-8965**	1	GUARD	
	16	1	**245-7790**	3	SCREW-TAPPING	
	17	1	**245-7925**	1	SUPPORT AS	
	18	1	**245-7948**	7	SCREW-TAPPING	
	19	1	**259-7202**	1	ASHTRAY	
Y	20	1	**259-7347**	1	ARMREST GP (LH)	723
M	21	1	**9X-2041**	3	SCREW-TRUSS HEAD (M10X1.5X20-MM)	
M	22	1	**9X-2042**	2	SCREW-TRUSS HEAD (M6X1X12-MM)	

M-METRIC PART
Y-SEPARATE ILLUSTRATION

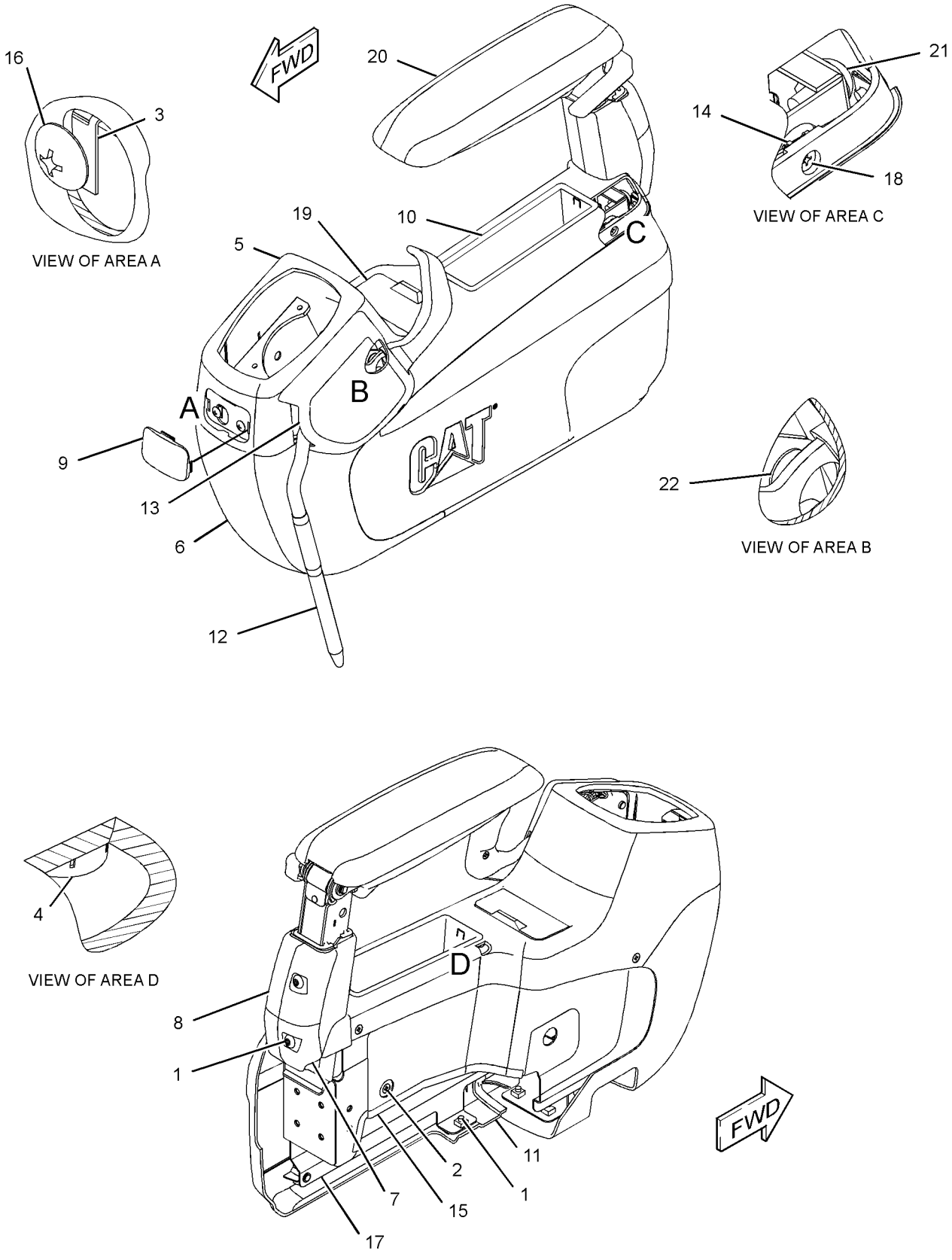

GRAPHIC #1 **<END>** g01217096

OPERATOR STATION

259-7598 CONTROL & MTG GP-JOYSTICK—WITH SLIDE CONTROL

S/N: CLA1-UP
PART OF 255-5843 CONTROL AR-AUXILIARY
AN ATTACHMENT
TYPE 1

SMCS-5063, 5705 **i02431334**

NOTE	REF NO	GRAPHIC REF	PART NUMBER	QTY	PART NAME 1 2 3 4 5 6 (PRODUCT LEVEL)	SEE PAGE
Y	1	1	**259-7763**	1	CONTROL GP-JOYSTICK (LH)	782
Y	2	1	**259-7762**	1	CONTROL GP-JOYSTICK (RH)	781
M	3	1	**6V-7357**	6	BOLT (M6X1X25-MM)	
	4	1	**9X-8256**	6	WASHER (6.6X12X2-MM THK)	

M-METRIC PART
Y-SEPARATE ILLUSTRATION

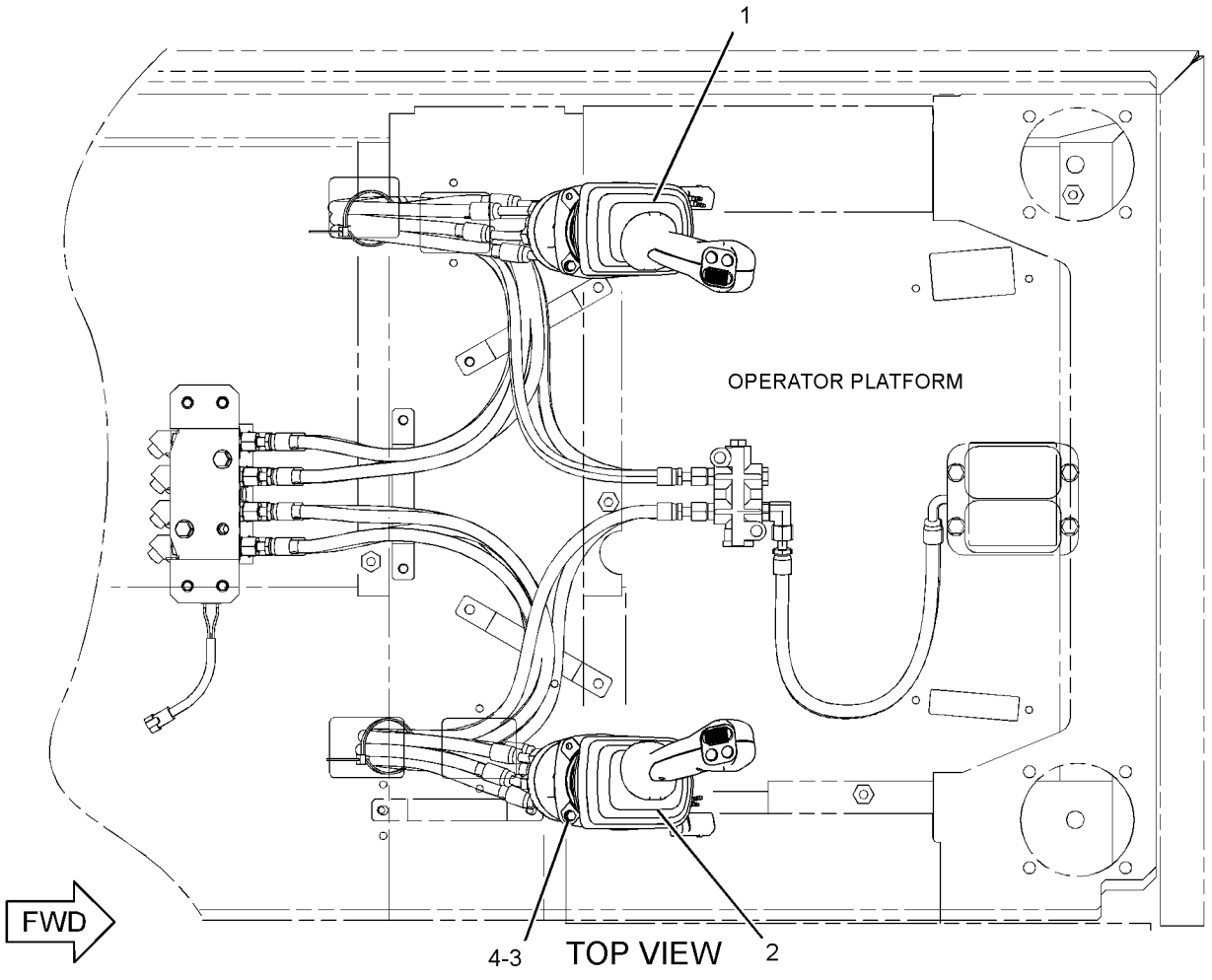

GRAPHIC #1

<END>

g01236540

OPERATOR STATION

259-7598 CONTROL & MTG GP-JOYSTICK—WITH SLIDE CONTROL

S/N: CLA1-UP
PART OF 255-5843 CONTROL AR-AUXILIARY
AN ATTACHMENT
TYPE 2

SMCS-5063, 5705 **i03105561**

NOTE	REF NO	GRAPHIC REF	PART NUMBER	QTY	PART NAME 1 2 3 4 5 6 (PRODUCT LEVEL)	SEE PAGE
CY	1	1	**297-0535**	1	CONTROL GP-JOYSTICK (LH)	788
CY	2	1	**297-0534**	1	CONTROL GP-JOYSTICK (RH)	787
M	3	1	**6V-7357**	6	BOLT (M6X1X25-MM)	
	4	1	**9X-8256**	6	WASHER (6.6X12X2-MM THK)	

C-CHANGE FROM PREVIOUS TYPE
M-METRIC PART
Y-SEPARATE ILLUSTRATION

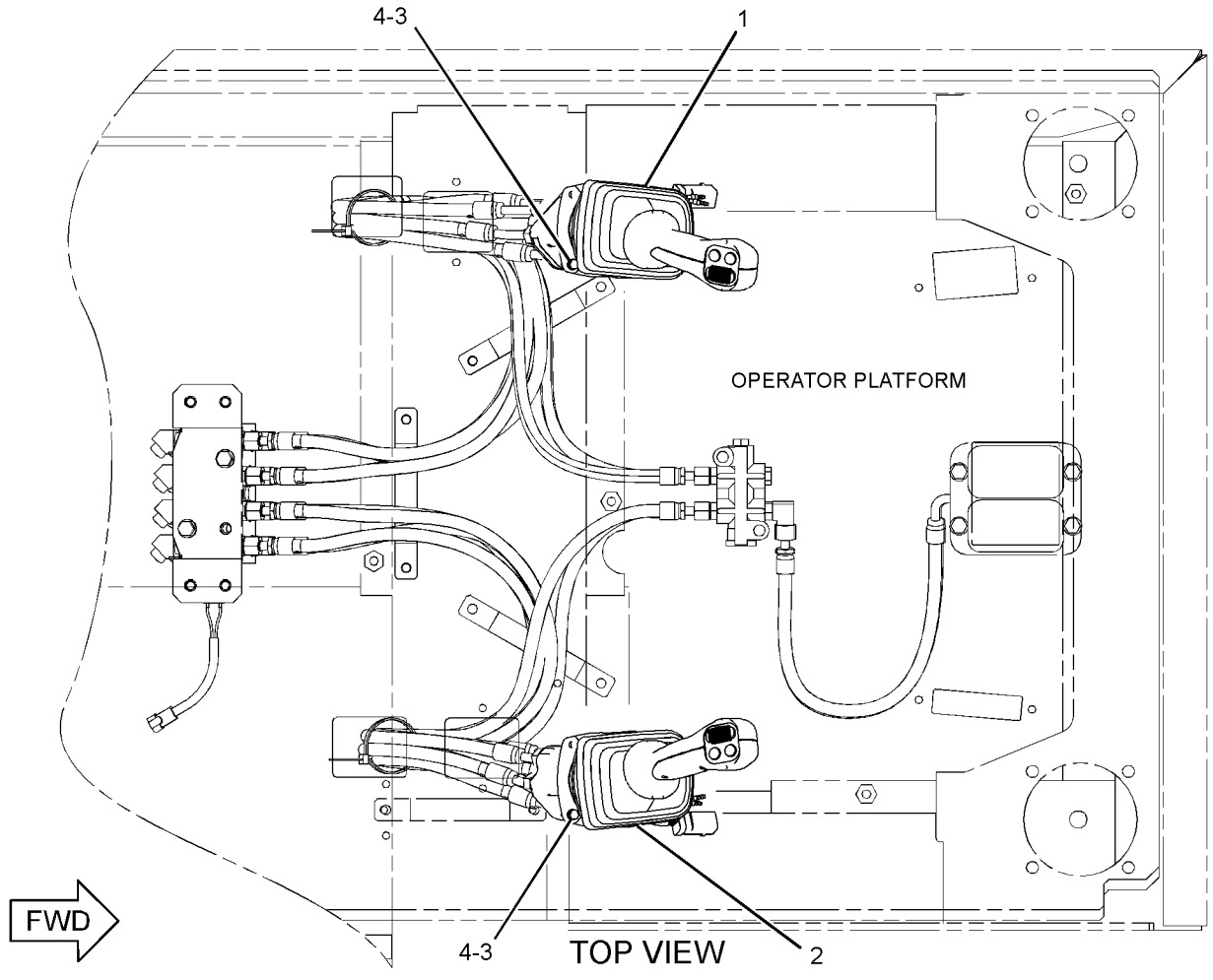

GRAPHIC #1

<END>

g01541355

259-7599 CONTROL & MTG GP-JOYSTICK–
3-BUTTON, TRIGGER SWITCH
S/N: CLA1-UP
PART OF 255-5844 CONTROL AR-AUXILIARY
AN ATTACHMENT
TYPE 1

SMCS-5063, 5705 **i03040444**

NOTE	REF NO	GRAPHIC REF	PART NUMBER	QTY	PART NAME 1 2 3 4 5 6 (PRODUCT LEVEL)	SEE PAGE
Y	1	1	**259-7765**	1	CONTROL GP-JOYSTICK (LH)	784
Y	2	1	**259-7764**	1	CONTROL GP-JOYSTICK (RH)	783
M	3	1	**6V-7357**	6	BOLT (M6X1X25-MM)	
	4	1	**9X-8256**	6	WASHER (6.6X12X2-MM THK)	

M-METRIC PART
Y-SEPARATE ILLUSTRATION

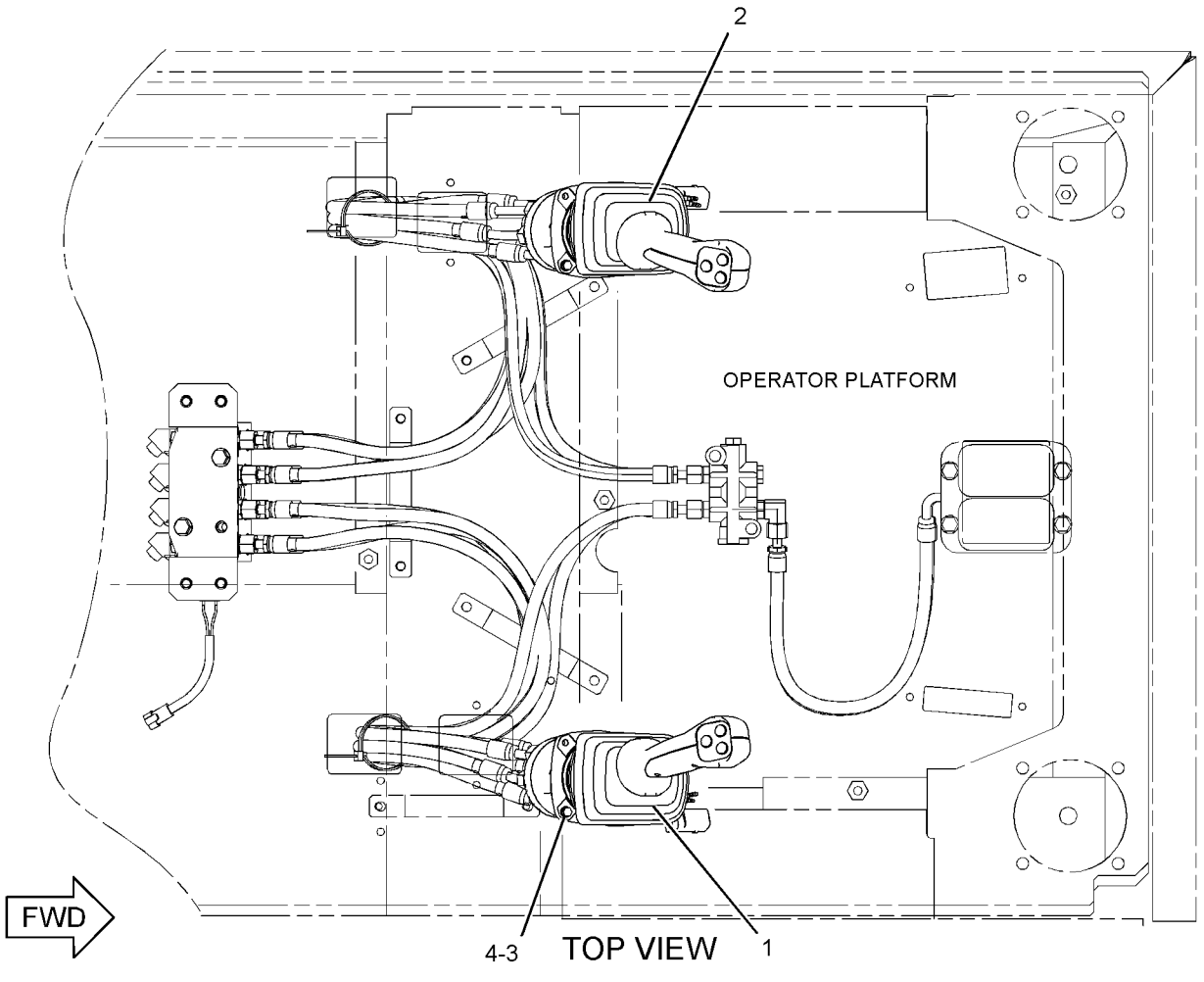

GRAPHIC #1 **<END>** g01263586

259-7599 CONTROL & MTG GP-JOYSTICK–
3-BUTTON, TRIGGER SWITCH
S/N: CLA1-UP
PART OF 255-5844 CONTROL AR-AUXILIARY
AN ATTACHMENT
TYPE 2

SMCS-5063, 5705 **i03017480**

NOTE	REF NO	GRAPHIC REF	PART NUMBER	QTY	PART NAME 1 2 3 4 5 6 (PRODUCT LEVEL)	SEE PAGE
CY	1	1	**297-0537**	1	CONTROL GP-JOYSTICK (LH)	790
CY	2	1	**297-0536**	1	CONTROL GP-JOYSTICK (RH)	789
M	3	1	**6V-7357**	6	BOLT (M6X1X25-MM)	
	4	1	**9X-8256**	6	WASHER (6.6X12X2-MM THK)	

C-CHANGE FROM PREVIOUS TYPE
M-METRIC PART
Y-SEPARATE ILLUSTRATION

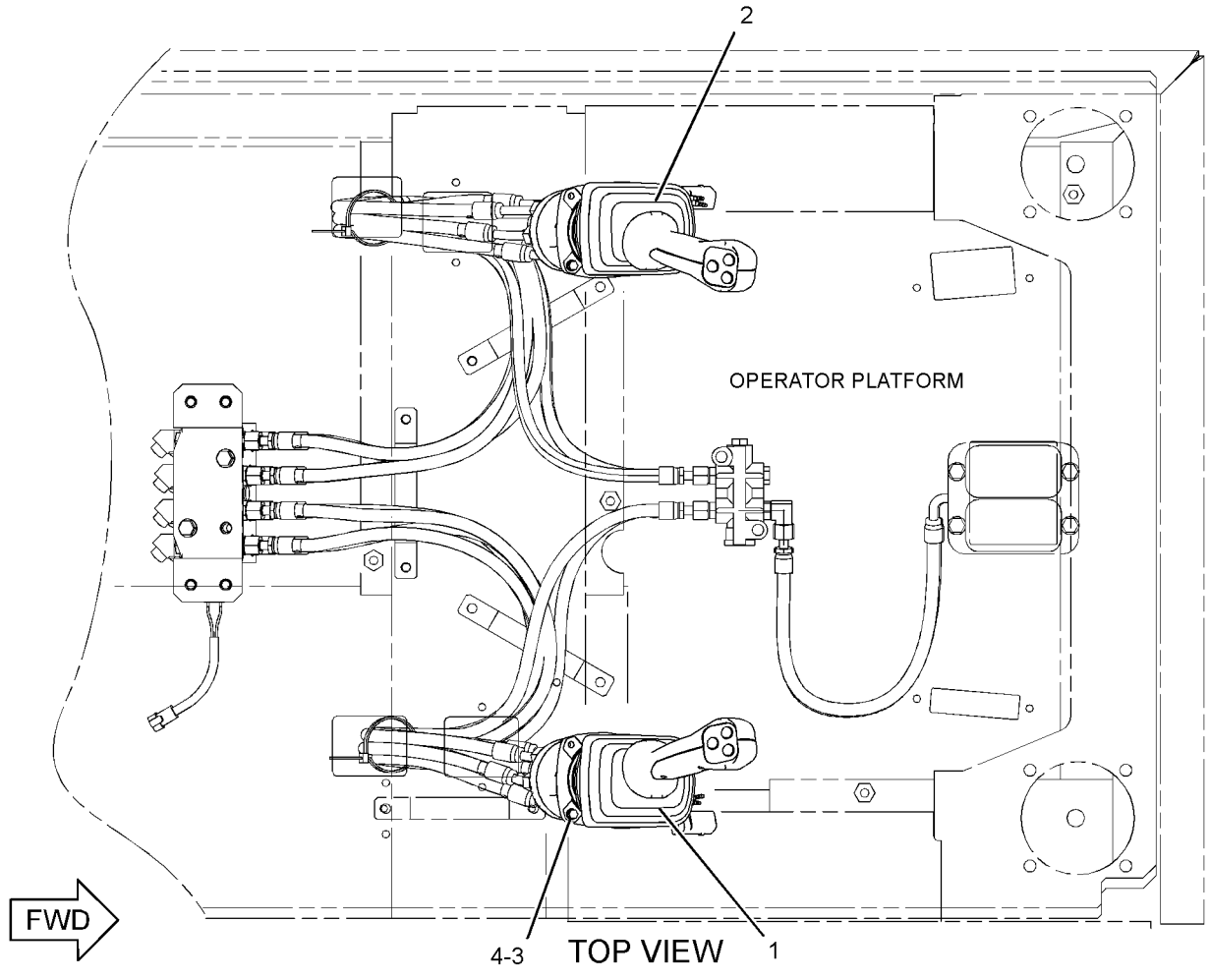

GRAPHIC #1 **<END>** g01263586

OPERATOR STATION

310-0078 CONTROL & MTG GP-JOYSTICK

S/N: CLA1-UP
AN ATTACHMENT

SMCS-5063, 5705 **i03031921**

NOTE	REF NO	GRAPHIC REF	PART NUMBER	QTY	PART NAME 1 2 3 4 5 6 (PRODUCT LEVEL)	SEE PAGE
Y	1	1	**297-0532**	1	CONTROL GP-JOYSTICK (RH)	785
Y	2	1	**297-0533**	1	CONTROL GP-JOYSTICK (LH)	786
M	3	1	**6V-7357**	6	BOLT (M6X1X25-MM)	
	4	1	**9X-8256**	6	WASHER (6.6X12X2-MM THK)	

M-METRIC PART
Y-SEPARATE ILLUSTRATION

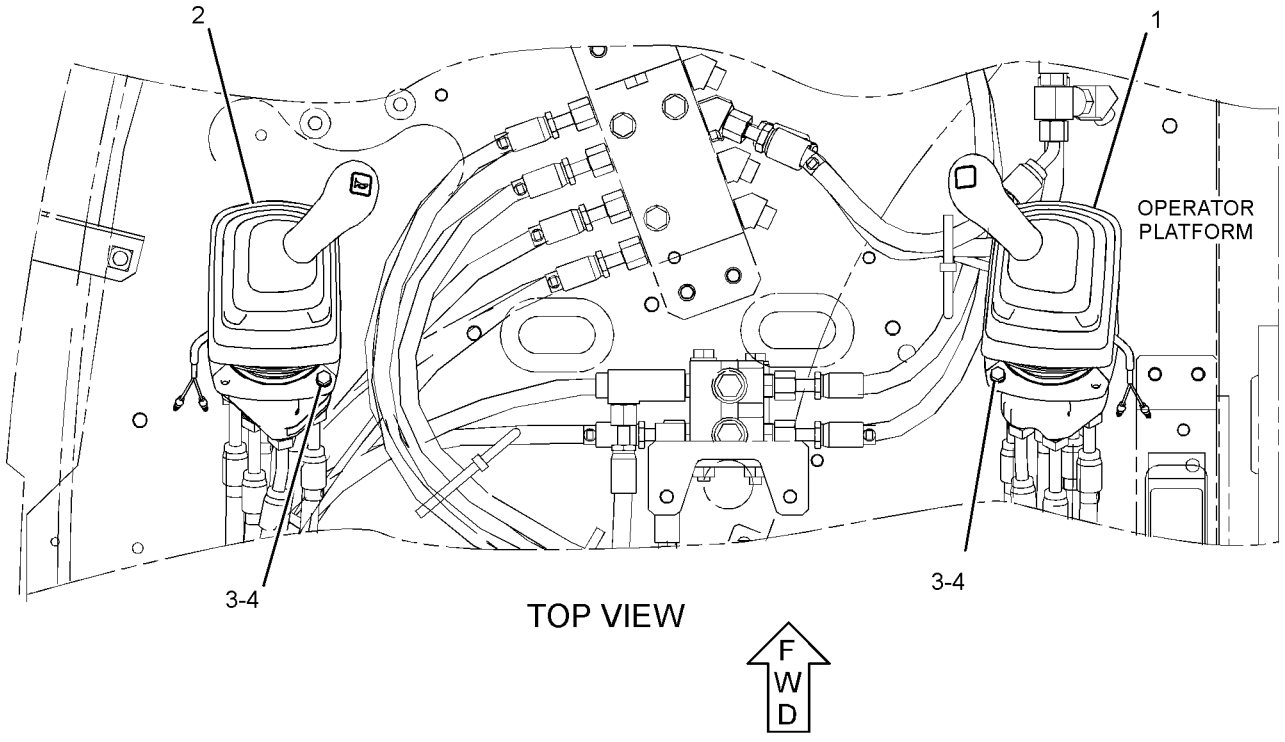

GRAPHIC #1 **<END>** g01442248

221-8884 CONTROL & MTG GP-PEDAL–LH

S/N: CLA1-UP

PART OF 255-5845 PEDAL AR-AUXILIARY

AN ATTACHMENT

SMCS-5462 **i02889901**

NOTE	REF NO	GRAPHIC REF	PART NUMBER	QTY	PART NAME 1 2 3 4 5 6 (PRODUCT LEVEL)	SEE PAGE
	1	1	**5I-7090**	1	CHAIN AS	
	2	1	**121-1865**	1	PEDAL-RUBBER (LH)	
	3	1	**128-2173**	1	PIN	
	4	1	**153-8723**	1	PEDAL AS	
CY	5	1	**309-5808**	1	CONTROL GP-PEDAL (ELECTRIC)	791
	6	1	**227-7625**	1	SUPPORT AS	
M	7	1	**095-0735**	2	SCREW-MACHINE (M5X0.8X8-MM)	
M	8	1	**7X-2536**	2	BOLT (M8X1.25X14-MM)	
	9	1	**8T-0114**	1	PIN-SPRING	
	10	1	**8T-4121**	3	WASHER-HARD (11X21X2.5-MM THK)	
M	11	1	**8T-4136**	2	BOLT (M10X1.5X25-MM)	
M	12	1	**8T-4191**	1	BOLT (M10X1.5X16-MM)	
	13	1	**8T-4224**	2	WASHER-HARD (8.8X16X2-MM THK)	

C-CHANGE FROM PREVIOUS TYPE
M-METRIC PART
Y-SEPARATE ILLUSTRATION

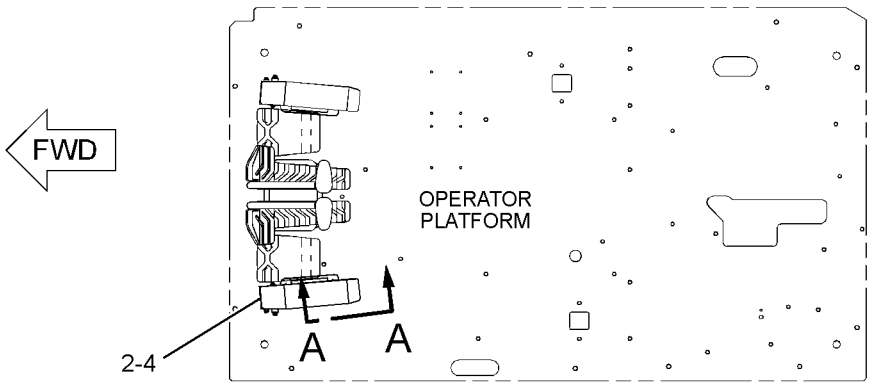

TOP VIEW

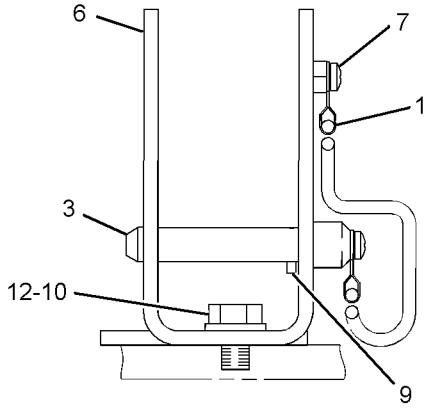

VIEW B-B

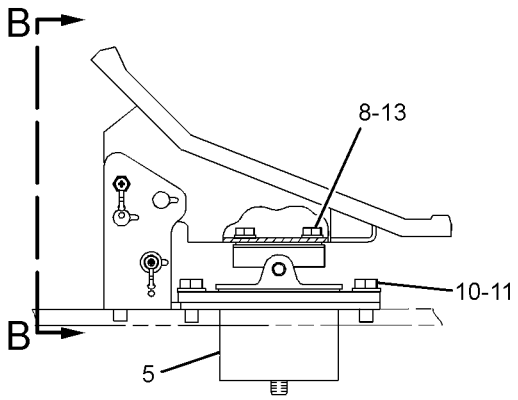

VIEW A-A

GRAPHIC #1 **<END>** g01439827

OPERATOR STATION

316-8851 CONTROL GP-BLADE

S/N: CLA1-UP
PART OF 283-8789 INSTALLATION AR-BLADE
AN ATTACHMENT

SMCS-5063 **i02910623**

NOTE	REF NO	GRAPHIC REF	PART NUMBER	QTY	PART NAME 1 2 3 4 5 6 (PRODUCT LEVEL)	SEE PAGE
	1	1	**178-5528**	1	KNOB	
Y	2	1	**190-7695**	1	VALVE GP-PILOT	611
	3	1	**273-5395**	1	LEVER AS	
	4	1	**8T-4121**	2	WASHER-HARD (11X21X2.5-MM THK)	
M	5	1	**8T-4137**	2	BOLT (M10X1.5X20-MM)	
M	6	1	**8T-4139**	1	BOLT (M12X1.75X30-MM)	
	7	1	**8T-4223**	1	WASHER-HARD (13.5X25.5X3-MM THK)	

M-METRIC PART
Y-SEPARATE ILLUSTRATION

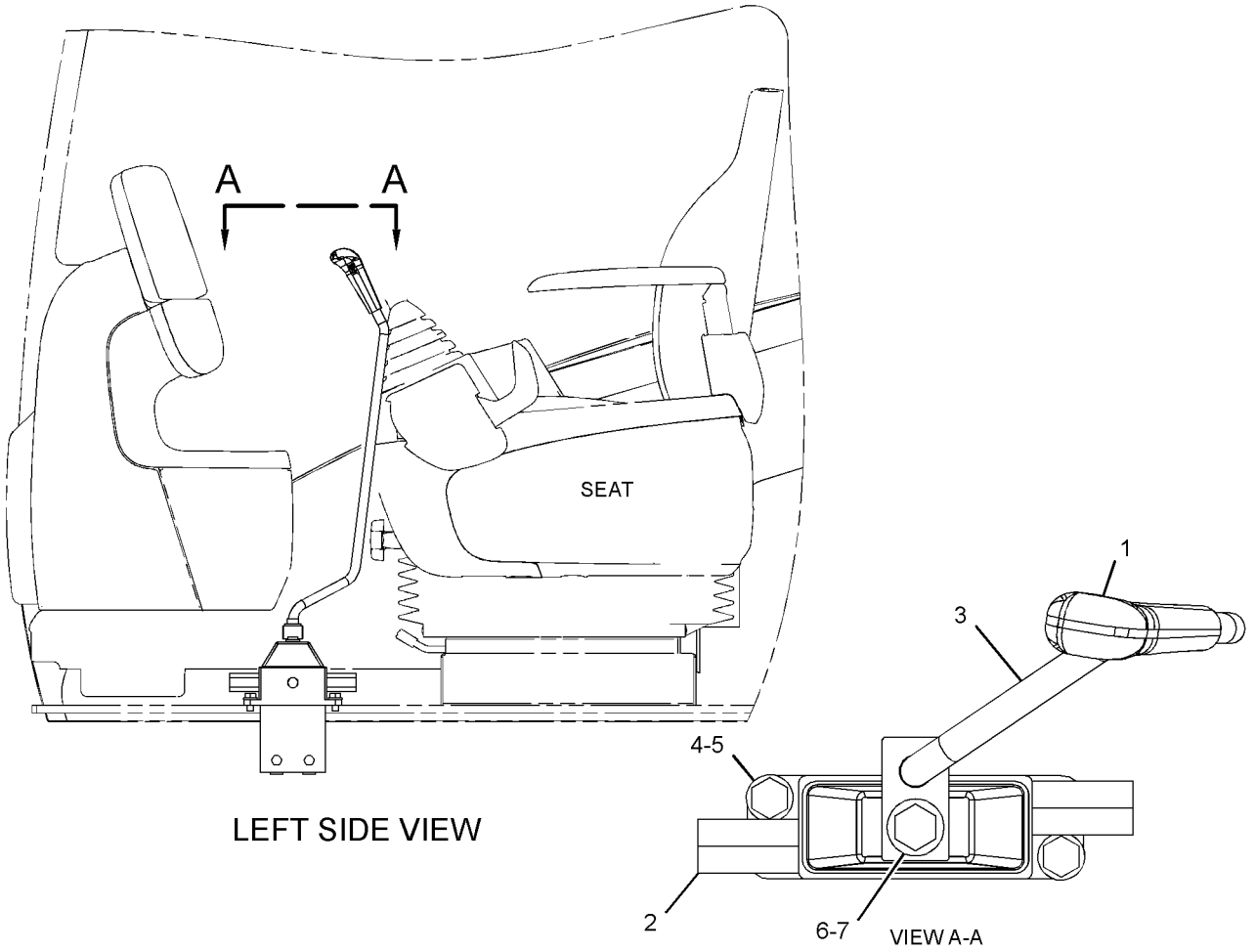

GRAPHIC #1 **<END>** g01504394

OPERATOR STATION

270-6107 CONTROL GP-FOOT–LH

S/N: CLA1-UP
PART OF 270-6106 CONTROL AR-AUXILIARY
AN ATTACHMENT

SMCS-1435 **i02490892**

NOTE	REF NO	GRAPHIC REF	PART NUMBER	QTY	PART NAME 1 2 3 4 5 6 (PRODUCT LEVEL)	SEE PAGE
	1	1	**093-2069**	1	GROMMET	
	2	1	**2Q-4703**	1	SWITCH AS-FOOT (WORK TOOL)	
		1	**205-1340**	1	HARNESS AS-OPERATOR CONTROLS	
		1	**155-2270**	1	KIT-CONNECTING PLUG (2-PIN)	
					(INCLUDES PLUG AS, WEDGE & INTERFACE SEAL)	
	3	1	**285-1332**	1	SUPPORT AS	
	4	1	**285-1333**	1	SUPPORT AS	
	5	1	**285-1337**	1	PLATE-STOP	
	6	1	**6V-7646**	1	WASHER-HARD (7.2X25X2-MM THK)	
M	7	1	**8C-8580**	2	BOLT-SOCKET HEAD (M5X0.8X16-MM)	
M	8	1	**8T-0269**	2	BOLT-SOCKET HEAD (M6X1X20-MM)	
	9	1	**8T-4121**	4	WASHER-HARD (11X21X2.5-MM THK)	
M	10	1	**8T-4137**	4	BOLT (M10X1.5X20-MM)	
	11	1	**9X-8256**	1	WASHER (6.6X12X2-MM THK)	

M-METRIC PART

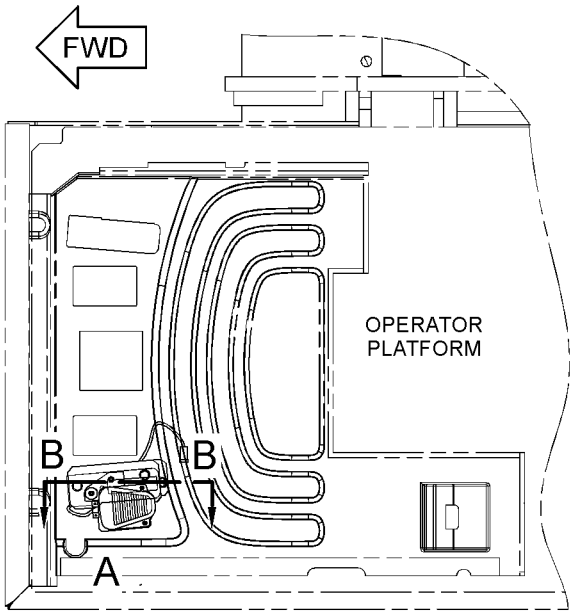

TOP VIEW

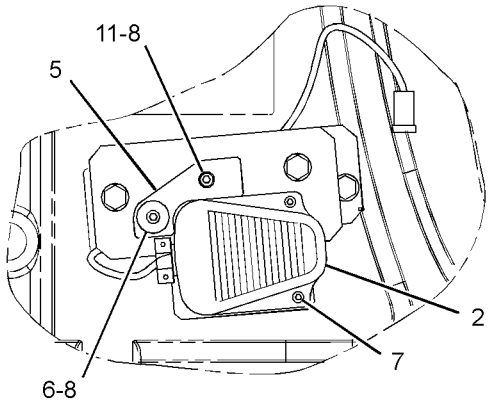

VIEW OF AREA A

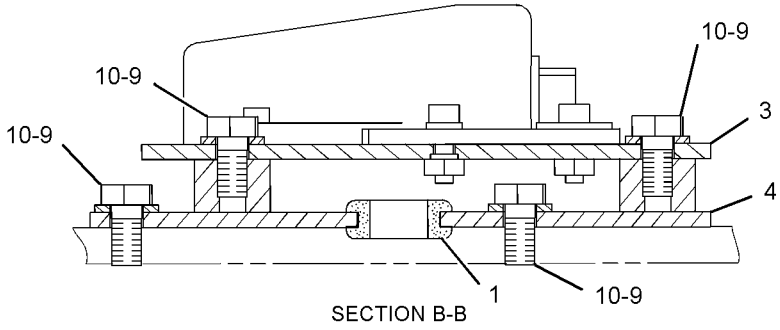

SECTION B-B

GRAPHIC #1 **<END>** g01252474

OPERATOR STATION

235-8969 CONTROL GP-HANDLE—JOYSTICK, LH

S/N: CLA1-UP

PART OF 297-0533 CONTROL GP-JOYSTICK

AN ATTACHMENT

SMCS-5705 **i02923993**

NOTE	REF NO	GRAPHIC REF	PART NUMBER	QTY	PART NAME 1 2 3 4 5 6 (PRODUCT LEVEL)	SEE PAGE
	1	1	**124-4010**	1	LEVER	
	2	1	**235-8971**	1	BOOT	
	3	1	**245-7842**	1	KNOB AS	
M		1	**6I-5298**	1	SCREW-TAPPING	
		1	**124-4009**	1	SHAFT	
		1	**222-0225**	1	SWITCH AS-PUSH BUTTON (HORN)	
M	4	1	**096-2617**	2	SCREW-MACHINE (M5X0.8X6-MM)	

M-METRIC PART

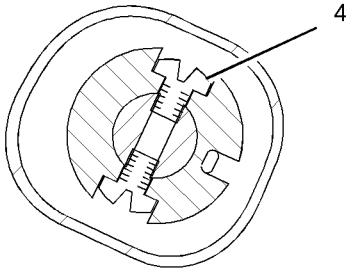

SECTION B-B

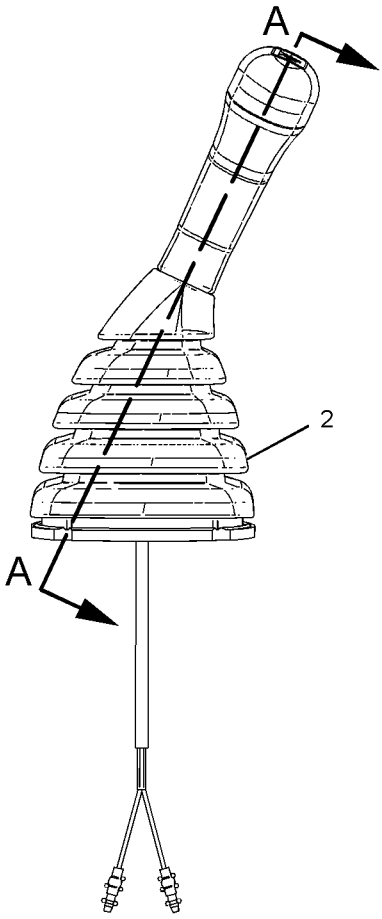

LEFT SIDE VIEW

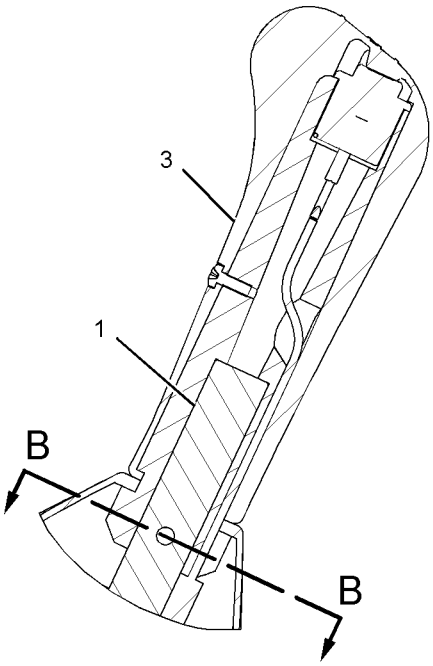

SECTION A-A

GRAPHIC #1 **<END>** g01082395

OPERATOR STATION

235-8970 CONTROL GP-HANDLE–JOYSTICK, RH

S/N: CLA1-UP

PART OF 297-0532 CONTROL GP-JOYSTICK

AN ATTACHMENT

SMCS-5705 **i02924011**

NOTE	REF NO	GRAPHIC REF	PART NUMBER	QTY	PART NAME 1 2 3 4 5 6 (PRODUCT LEVEL)	SEE PAGE
	1	1	**124-4010**	1	LEVER	
	2	1	**235-8972**	1	BOOT	
	3	1	**245-7844**	1	KNOB AS	
M		1	**6I-5298**	1	SCREW-TAPPING	
		1	**124-4009**	1	SHAFT	
		1	**222-0225**	1	SWITCH AS-PUSH BUTTON (MANUAL LOW IDLE)	
M	4	1	**096-2617**	2	SCREW-MACHINE (M5X0.8X6-MM)	

M-METRIC PART

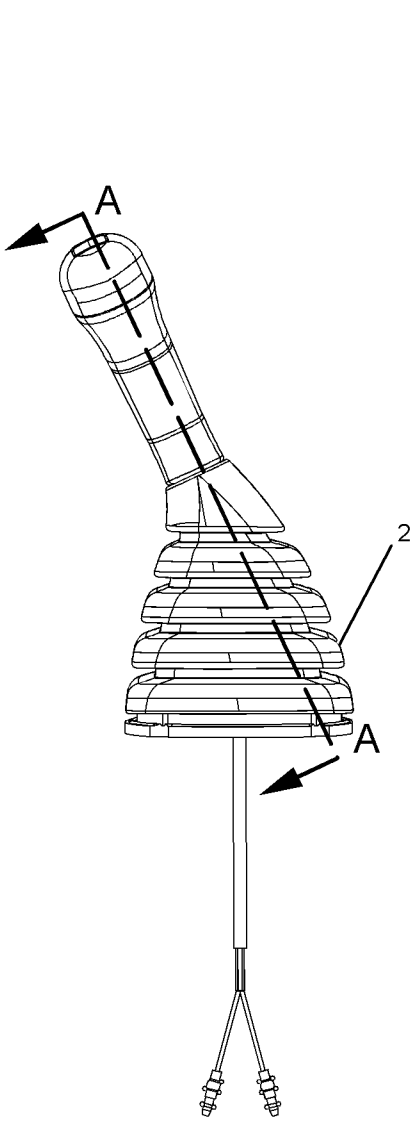

RIGHT SIDE VIEW

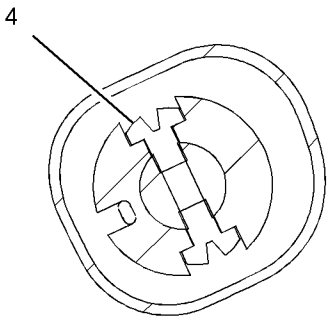

SECTION B-B

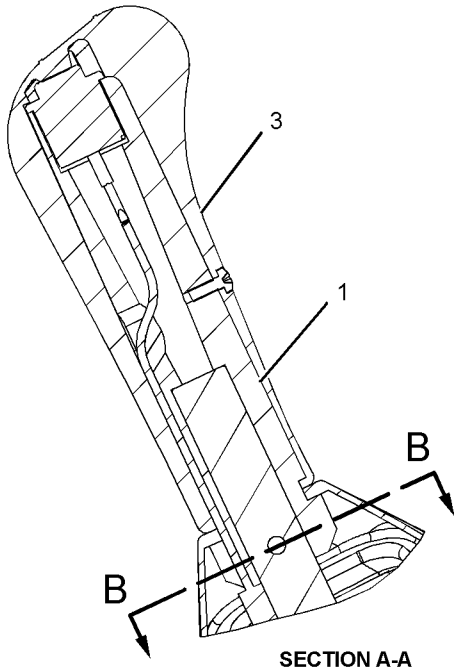

SECTION A-A

GRAPHIC #1 **<END>** g01082427

OPERATOR STATION

260-2109 CONTROL GP-HANDLE—JOYSTICK, RH

S/N: CLA1-UP
2-BUTTON, SLIDE, TRIGGER SW
PART OF 259-7762, 297-0534 CONTROL GP-JOYSTICK
AN ATTACHMENT

SMCS-5705 **i02865889**

NOTE	REF NO	GRAPHIC REF	PART NUMBER	QTY	PART NAME 1 2 3 4 5 6 (PRODUCT LEVEL)	SEE PAGE
M	1	1	**7Y-8463**	1	NUT (M14X2-THD)	
	2	1	**117-8683**	1	PIN-SPRING	
	3	1	**260-2111**	1	LEVER	
	4	1	**297-4589**	1	CONTROL GP-HANDLE (RH)	
		1	**247-2693**	1	RECEPTACLE AS-CONNECTOR (6-PIN)	
		1	**9X-3401**	6	PIN-CONNECTOR (16-GA TO 18-GA)	
					—OR—	
		1	**126-1767**	6	PIN-CONNECTOR (14-GA)	
	5	1	**305-0332**	1	BOOT	

M-METRIC PART

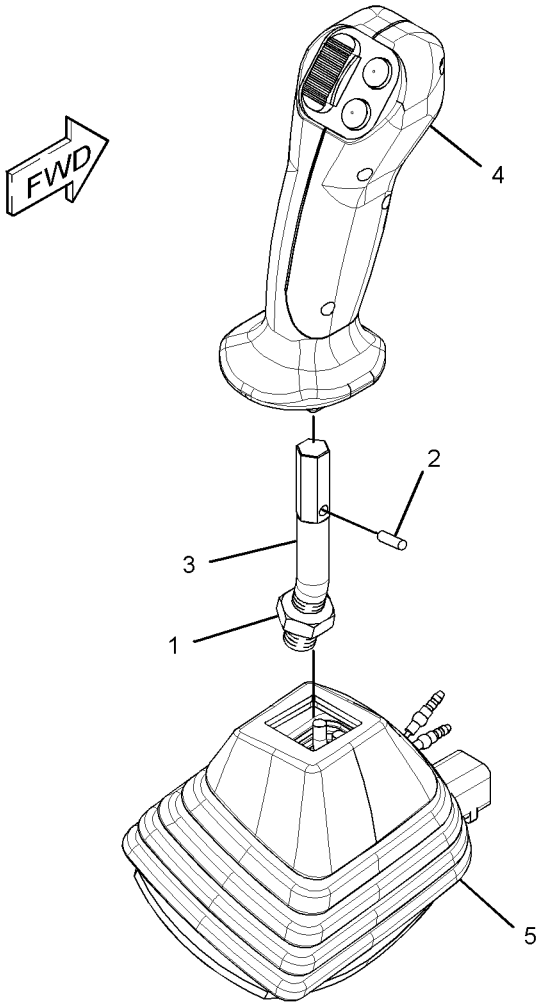

GRAPHIC #1

<END>

g01436256

OPERATOR STATION

260-2110 CONTROL GP-HANDLE–JOYSTICK, LH

S/N: CLA1-UP

PART OF 259-7763, 297-0535 CONTROL GP-JOYSTICK

AN ATTACHMENT

SMCS-5705 **i02865875**

NOTE	REF NO	GRAPHIC REF	PART NUMBER	QTY	PART NAME 1 2 3 4 5 6 (PRODUCT LEVEL)	SEE PAGE
M	1	1	**7Y-8463**	1	NUT (M14X2-THD)	
	2	1	**117-8683**	1	PIN-SPRING	
	3	1	**260-2111**	1	LEVER	
C	4	1	**297-4590**	1	CONTROL GP-HANDLE (LH)	
		1	**9X-3401**	6	PIN-CONNECTOR (16-GA TO 18-GA)	
					–OR–	
		1	**126-1767**	6	PIN-CONNECTOR (14-GA)	
		1	**247-2693**	1	RECEPTACLE AS-CONNECTOR (6-PIN)	
	5	1	**305-0331**	1	BOOT	

C-CHANGE FROM PREVIOUS TYPE
M-METRIC PART

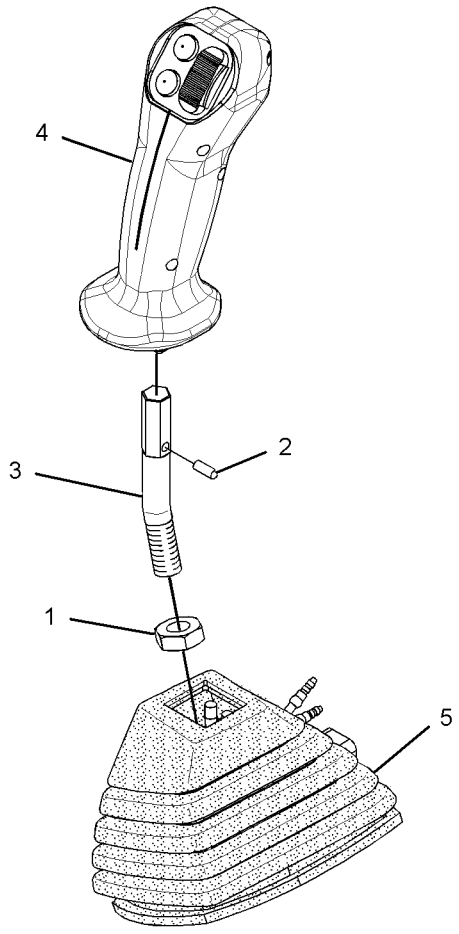

GRAPHIC #1 **<END>** g01428094

OPERATOR STATION

260-2127 CONTROL GP-HANDLE—JOYSTICK, RH

S/N: CLA1-UP

PART OF 259-7764, 297-0536 CONTROL GP-JOYSTICK

AN ATTACHMENT

SMCS-5705 **i02865870**

NOTE	REF NO	GRAPHIC REF	PART NUMBER	QTY	PART NAME 1 2 3 4 5 6 (PRODUCT LEVEL)	SEE PAGE
M	1	1	**7Y-8463**	1	NUT (M14X2-THD)	
	2	1	**117-8683**	1	PIN-SPRING	
	3	1	**260-2111**	1	LEVER	
	4	1	**297-4595**	1	CONTROL GP-HANDLE (RH)	
		1	**8T-8737**	2	PLUG-SEAL	
		1	**9X-3401**	4	PIN-CONNECTOR (16-GA TO 18-GA)	
					—OR—	
		1	**126-1767**	4	PIN-CONNECTOR (14-GA)	
		1	**247-2693**	1	RECEPTACLE AS-CONNECTOR (6-PIN)	
	5	1	**305-0332**	1	BOOT	

M-METRIC PART

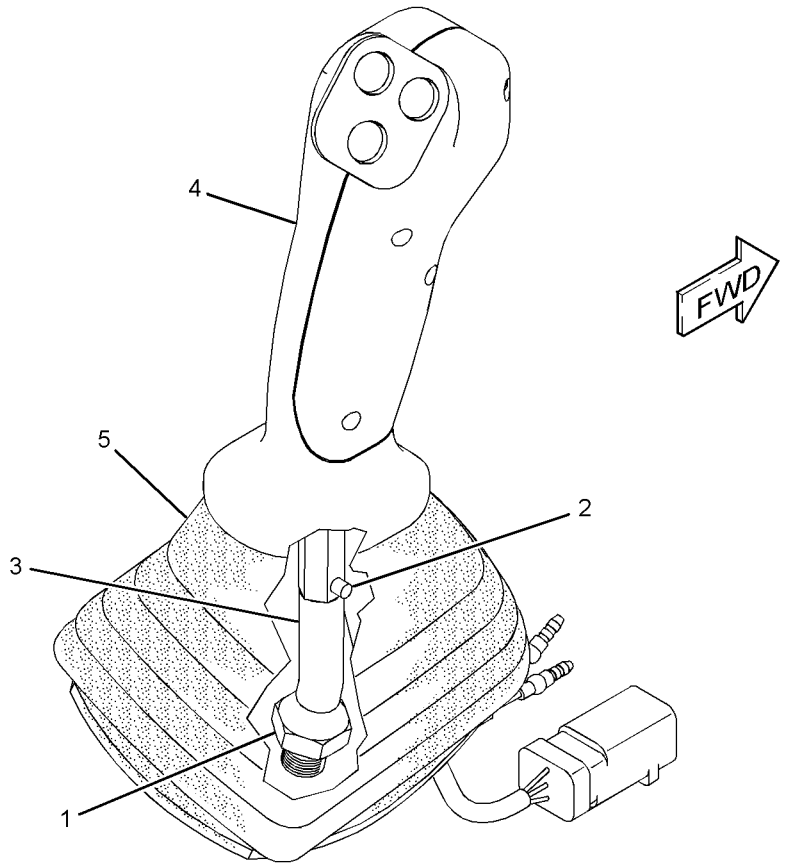

GRAPHIC #1 **<END>** g01430928

OPERATOR STATION

260-2128 CONTROL GP-HANDLE–JOYSTICK, LH

S/N: CLA1-UP

PART OF 259-7765, 297-0537 CONTROL GP-JOYSTICK

AN ATTACHMENT

SMCS-5705 **i02865871**

NOTE	REF NO	GRAPHIC REF	PART NUMBER	QTY	PART NAME 1 2 3 4 5 6 (PRODUCT LEVEL)	SEE PAGE
M	1	1	**7Y-8463**	1	NUT (M14X2-THD)	
	2	1	**117-8683**	1	PIN-SPRING	
	3	1	**305-0331**	1	BOOT	
	4	1	**297-4595**	1	CONTROL GP-HANDLE (LH)	
		1	**8T-8737**	2	PLUG-SEAL	
		1	**9X-3401**	4	PIN-CONNECTOR (16-GA TO 18-GA)	
					–OR–	
		1	**126-1767**	4	PIN-CONNECTOR (14-GA)	
		1	**247-2693**	1	RECEPTACLE AS-CONNECTOR (6-PIN)	
	5	1	**260-2111**	1	LEVER	

M-METRIC PART

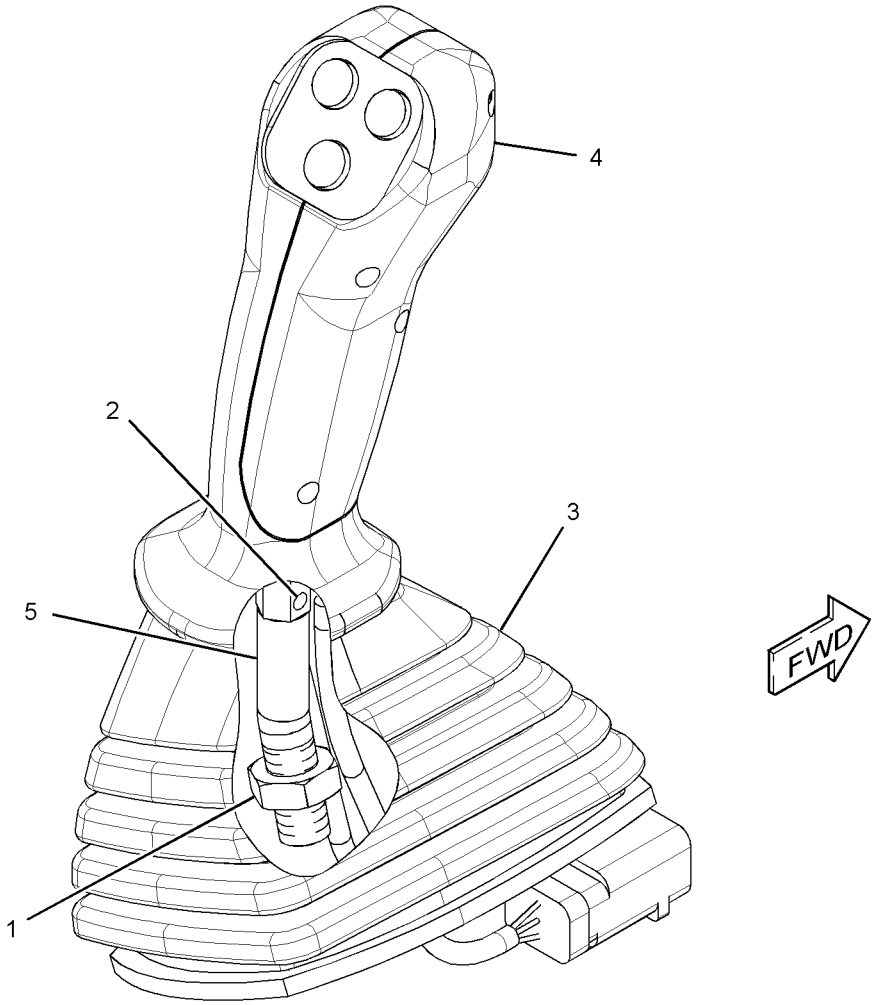

GRAPHIC #1 **<END>** g01436267

OPERATOR STATION

245-7846 CONTROL GP-HEAT & AIR COND—AIR INLET

S/N: CLA1-UP

PART OF 316-8811 AIR CONDITIONER GP

AN ATTACHMENT

SMCS-7309 **i02547472**

NOTE	REF NO	GRAPHIC REF	PART NUMBER	QTY	PART NAME 1 2 3 4 5 6 (PRODUCT LEVEL)	SEE PAGE
	1	1	**185-8300**	4	SCREW-TAPPING	
	2	1	**196-1666**	1	RELAY (COMPRESSOR CLUTCH)	
	2A	1	**196-1666**	1	RELAY (BLOWER)	
	3	1	**245-7813**	1	MOTOR AS	
	4	1	**245-7814**	1	BRACKET	
	5	1	**245-7815**	1	SENSOR AS-TEMPERATURE (AIR)	
	6	1	**245-7816**	1	DAMPER AS	

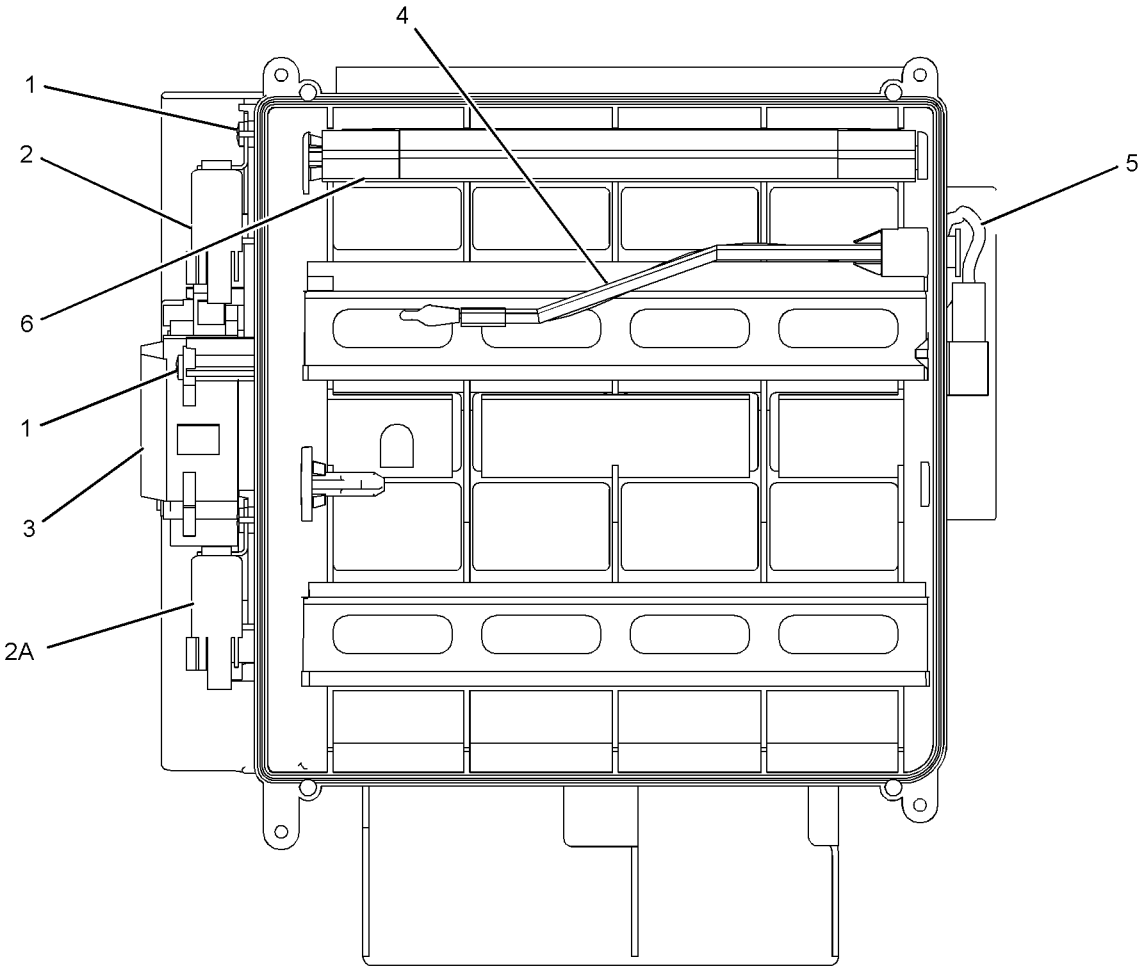

GRAPHIC #1 **<END>** g01245591

OPERATOR STATION

170-9497 CONTROL GP-HYDRAULIC PEDAL–TRAVEL

S/N: CLA1-UP

PART OF 273-5363 OPERATOR AR

SMCS-5059, 5063 **i02997569**

NOTE	REF NO	GRAPHIC REF	PART NUMBER	QTY	PART NAME 1 2 3 4 5 6 (PRODUCT LEVEL)	SEE PAGE
	1	1	**096-6166**	2	WASHER-HARD (4.5X9X1-MM THK)	
M	2	1	**095-0728**	2	SCREW-MACHINE (M4X0.7X12-MM)	
	3	1	**8T-4121**	12	WASHER-HARD (11X21X2.5-MM THK)	
M	4	1	**8T-4136**	4	BOLT (M10X1.5X25-MM)	
M	5	1	**8T-4191**	8	BOLT (M10X1.5X16-MM)	
	6	1	**142-5546**	2	KNOB	
	7	1	**117-6356**	2	STEP AS	
	8	1	**122-9610**	2	STEP	
	9	1	**170-9499**	1	LEVER AS (LH)	
	10	1	**170-9498**	1	LEVER AS (RH)	
	11	1	**122-9608**	1	PEDAL-RUBBER (RH)	
	12	1	**117-6350**	1	PEDAL AS (RH)	
	13	1	**122-9609**	1	PEDAL-RUBBER (LH)	
	14	1	**117-6349**	1	PEDAL AS (LH)	

M-METRIC PART

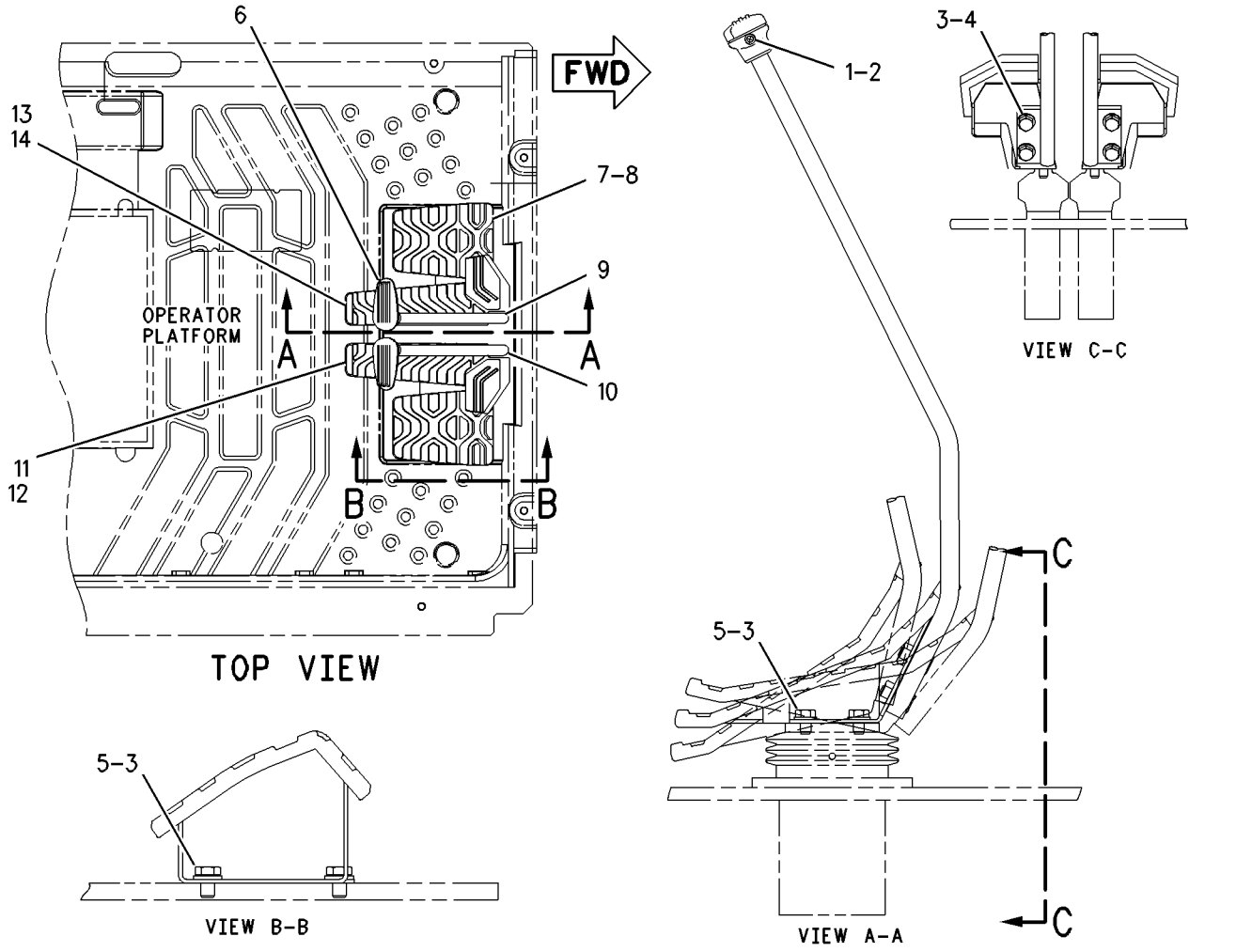

GRAPHIC #1 **<END>** g00672963

OPERATOR STATION

225-5730 CONTROL GP-HYDRAULIC PEDAL–

THIRD PEDAL, STRAIGHT TRAVEL

S/N: CLA1-UP

PART OF 293-1239 PEDAL AR-THIRD

AN ATTACHMENT

SMCS-5059, 5063 **i02214468**

NOTE	REF NO	GRAPHIC REF	PART NUMBER	QTY	PART NAME 1 2 3 4 5 6 (PRODUCT LEVEL)	SEE PAGE
	1	1	**5I-7090**	1	CHAIN AS	
	2	1	**128-2173**	1	PIN	
	3	1	**135-2274**	1	PEDAL-RUBBER	
	4	1	**164-0614**	1	PEDAL AS	
	5	1	**164-0617**	1	SUPPORT AS	
	6	1	**165-9523**	1	VALVE GP-PILOT (THIRD PEDAL, STRAIGHT TRAVEL)	
	7	1	**8T-4224**	2	WASHER-HARD (8.8X16X2-MM THK)	
M	8	1	**095-0735**	2	SCREW-MACHINE (M5X0.8X8-MM)	
M	9	1	**7X-2536**	2	BOLT (M8X1.25X14-MM)	
	10	1	**8T-0114**	1	PIN-SPRING	
	11	1	**8T-4121**	3	WASHER-HARD (11X21X2.5-MM THK)	
M	12	1	**8T-4136**	2	BOLT (M10X1.5X25-MM)	
M	13	1	**8T-4191**	1	BOLT (M10X1.5X16-MM)	

M-METRIC PART

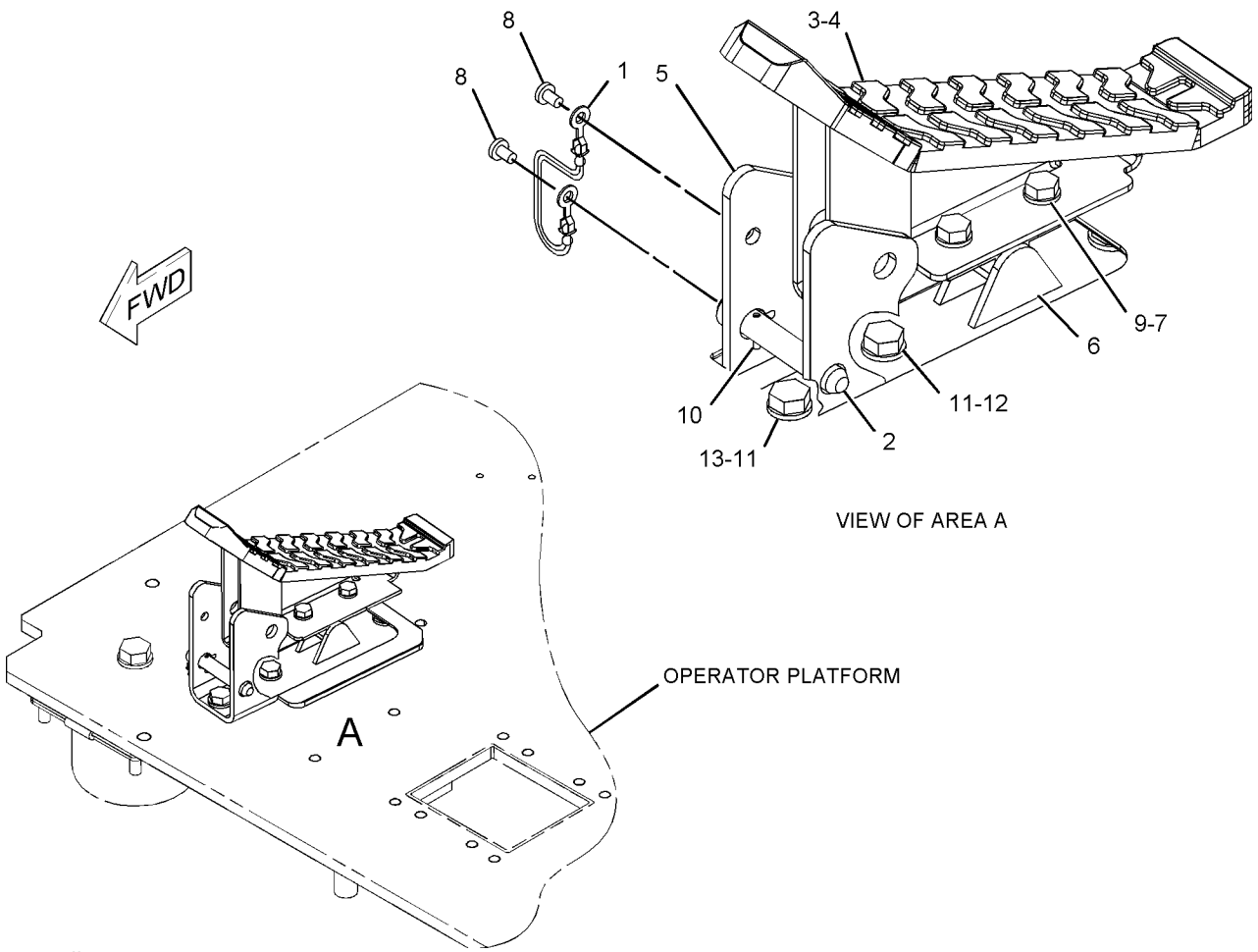

GRAPHIC #1 **<END>** g01130744

259-7762 CONTROL GP-JOYSTICK–RH

S/N: CLA1-UP

PART OF 259-7598 CONTROL & MTG GP-JOYSTICK

AN ATTACHMENT

SMCS-5705 **i02922535**

NOTE	REF NO	GRAPHIC REF	PART NUMBER	QTY	PART NAME 1 2 3 4 5 6 (PRODUCT LEVEL)	SEE PAGE
	1	1	**6K-0806**	1	STRAP-CABLE	
Y	2	1	**206-3305**	1	VALVE GP-PILOT (JOYSTICK)	613
Y	3	1	**260-2109**	1	CONTROL GP-HANDLE (JOYSTICK, RH)	774

Y-SEPARATE ILLUSTRATION

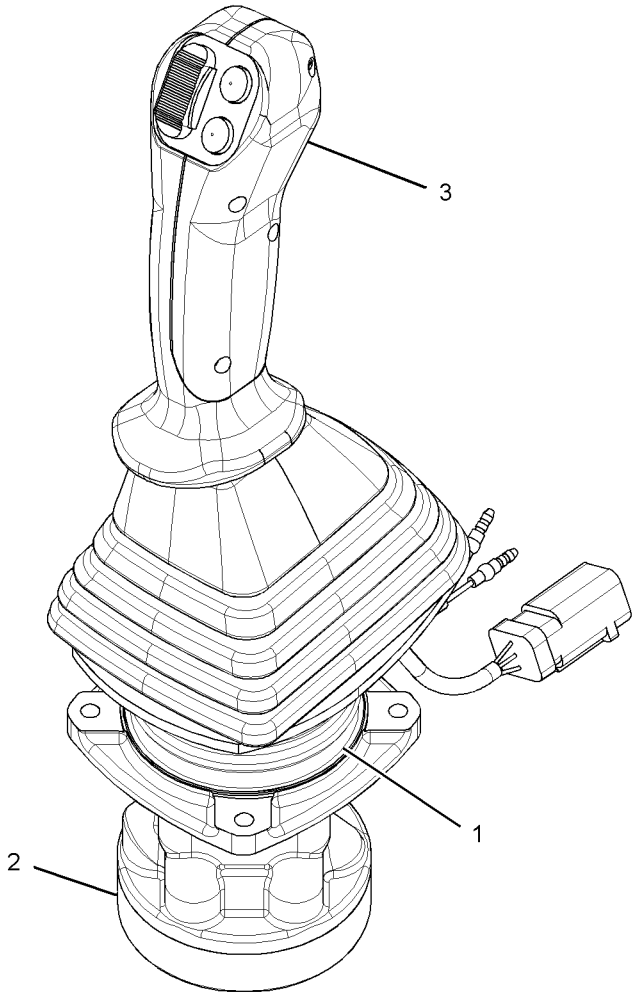

GRAPHIC #1

<END>

g01453642

OPERATOR STATION

259-7763 CONTROL GP-JOYSTICK–LH

S/N: CLA1-UP
PART OF 259-7598 CONTROL & MTG GP-JOYSTICK
AN ATTACHMENT

SMCS-5705 **i02922536**

NOTE	REF NO	GRAPHIC REF	PART NUMBER	QTY	PART NAME 1 2 3 4 5 6 (PRODUCT LEVEL)	SEE PAGE
	1	1	**6K-0806**	1	STRAP-CABLE	
Y	2	1	**206-3305**	1	VALVE GP-PILOT (JOYSTICK)	613
Y	3	1	**260-2110**	1	CONTROL GP-HANDLE (JOYSTICK, LH)	775

Y-SEPARATE ILLUSTRATION

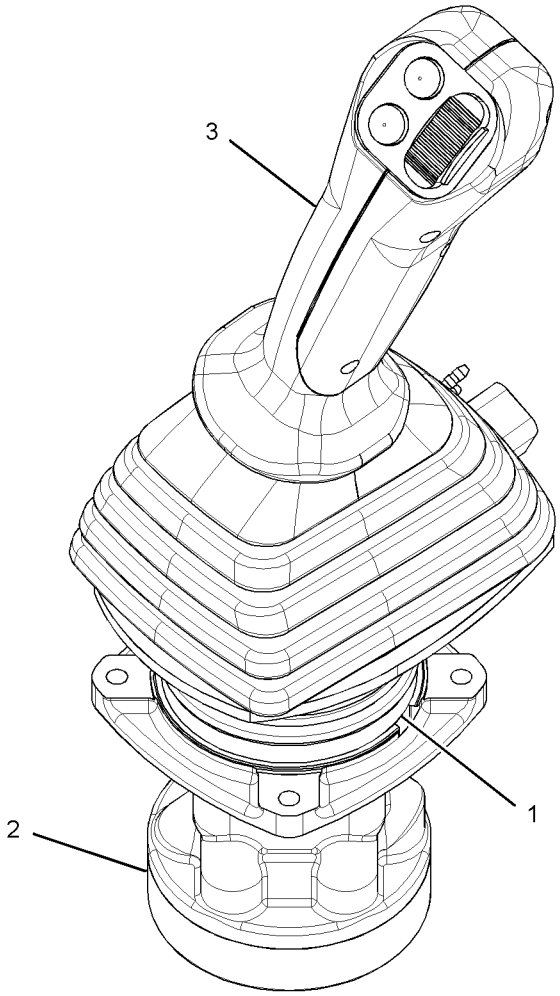

GRAPHIC #1 **<END>** g01453715

OPERATOR STATION

259-7764 CONTROL GP-JOYSTICK–RH

S/N: CLA1-UP

PART OF 259-7599 CONTROL & MTG GP-JOYSTICK

AN ATTACHMENT

SMCS-5705 **i03016372**

NOTE	REF NO	GRAPHIC REF	PART NUMBER	QTY	PART NAME 1 2 3 4 5 6 (PRODUCT LEVEL)	SEE PAGE
Y	1	1	**206-3305**	1	VALVE GP-PILOT (JOYSTICK)	613
Y	2	1	**260-2127**	1	CONTROL GP-HANDLE (JOYSTICK, RH)	776
	3	1	**6K-0806**	1	STRAP-CABLE	

Y-SEPARATE ILLUSTRATION

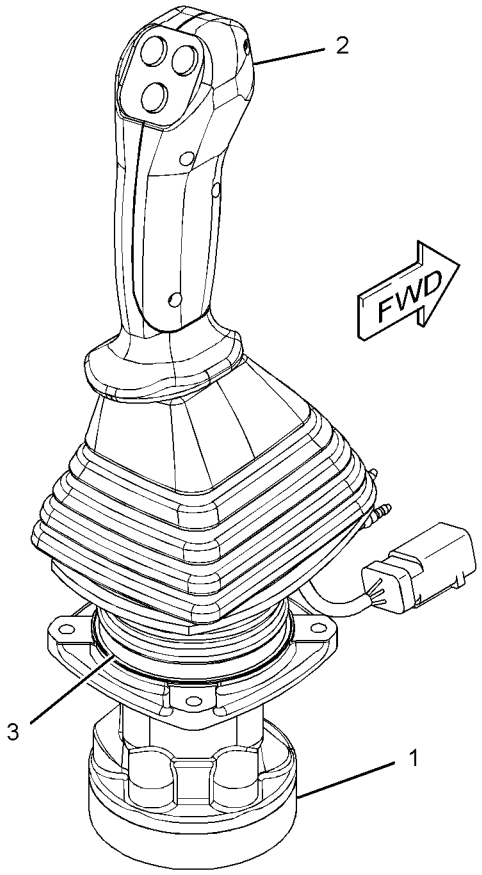

GRAPHIC #1 **<END>** g01525041

OPERATOR STATION

259-7765 CONTROL GP-JOYSTICK–LH

S/N: CLA1-UP

PART OF 259-7599 CONTROL & MTG GP-JOYSTICK

AN ATTACHMENT

SMCS-5705 **i03016371**

NOTE	REF NO	GRAPHIC REF	PART NUMBER	QTY	PART NAME 1 2 3 4 5 6 (PRODUCT LEVEL)	SEE PAGE
Y	1	1	**206-3305**	1	VALVE GP-PILOT (JOYSTICK)	613
Y	2	1	**260-2128**	1	CONTROL GP-HANDLE (JOYSTICK, LH)	777
	3	1	**6K-0806**	1	STRAP-CABLE	

Y-SEPARATE ILLUSTRATION

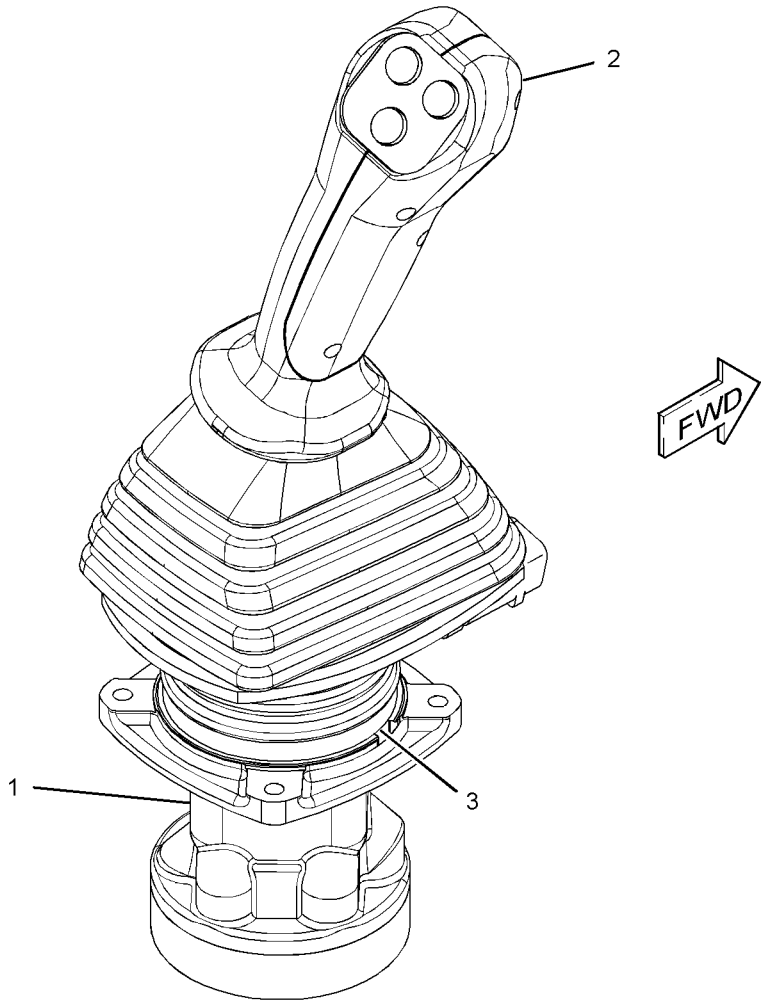

GRAPHIC #1

<END>

g01525010

OPERATOR STATION

297-0532 CONTROL GP-JOYSTICK–RH

S/N: CLA1-UP
PART OF 310-0078 CONTROL & MTG GP-JOYSTICK
AN ATTACHMENT

SMCS-5705 **i03010035**

NOTE	REF NO	GRAPHIC REF	PART NUMBER	QTY	PART NAME 1 2 3 4 5 6 (PRODUCT LEVEL)	SEE PAGE
M	1	1	**7Y-8463**	1	NUT (M14X2-THD)	
Y	2	1	**235-8970**	1	CONTROL GP-HANDLE (JOYSTICK, RH)	773
Y	3	1	**297-0529**	1	VALVE GP-PILOT (JOYSTICK)	618
	4	1	**6K-0806**	1	STRAP-CABLE	

M-METRIC PART
Y-SEPARATE ILLUSTRATION

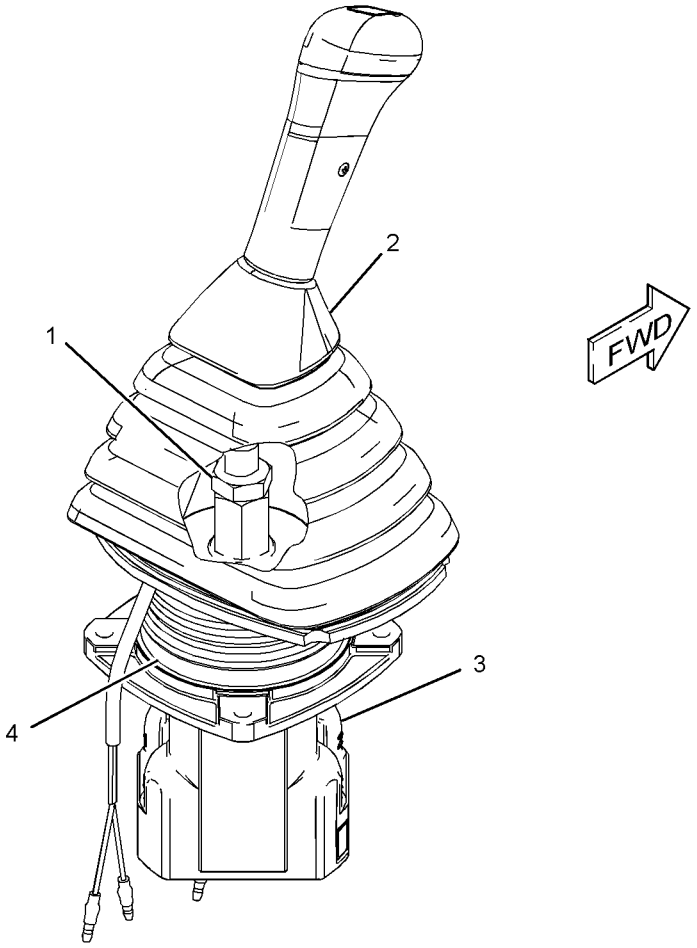

GRAPHIC #1 **<END>** g01452407

297-0533 CONTROL GP-JOYSTICK–LH

S/N: CLA1-UP

PART OF 310-0078 CONTROL & MTG GP-JOYSTICK

AN ATTACHMENT

SMCS-5705 **i03010036**

NOTE	REF NO	GRAPHIC REF	PART NUMBER	QTY	PART NAME 1 2 3 4 5 6 (PRODUCT LEVEL)	SEE PAGE
M	1	1	**7Y-8463**	1	NUT (M14X2-THD)	
Y	2	1	**235-8969**	1	CONTROL GP-HANDLE (JOYSTICK, LH)	772
Y	3	1	**297-0529**	1	VALVE GP-PILOT (JOYSTICK)	618
	4	1	**6K-0806**	1	STRAP-CABLE	

M-METRIC PART
Y-SEPARATE ILLUSTRATION

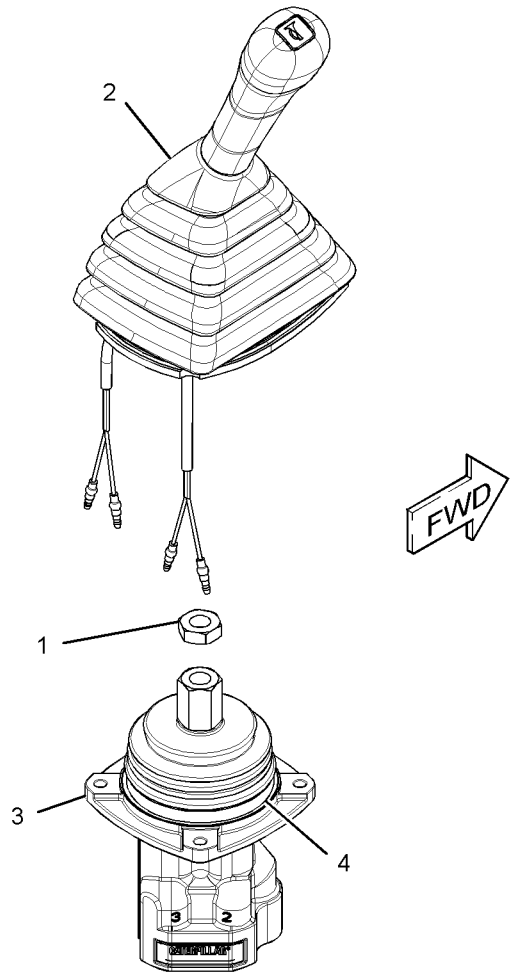

GRAPHIC #1 **<END>** g01452496

297-0534 CONTROL GP-JOYSTICK–RH

S/N: CLA1-UP

PART OF 259-7598 CONTROL & MTG GP-JOYSTICK

AN ATTACHMENT

SMCS-5705 **i03108272**

NOTE	REF NO	GRAPHIC REF	PART NUMBER	QTY	PART NAME 1 2 3 4 5 6 (PRODUCT LEVEL)	SEE PAGE
	1	1	**6K-0806**	1	STRAP-CABLE	
Y	2	1	**260-2109**	1	CONTROL GP-HANDLE (JOYSTICK, RH)	774
Y	3	1	**297-0589**	1	VALVE GP-PILOT	620

Y-SEPARATE ILLUSTRATION

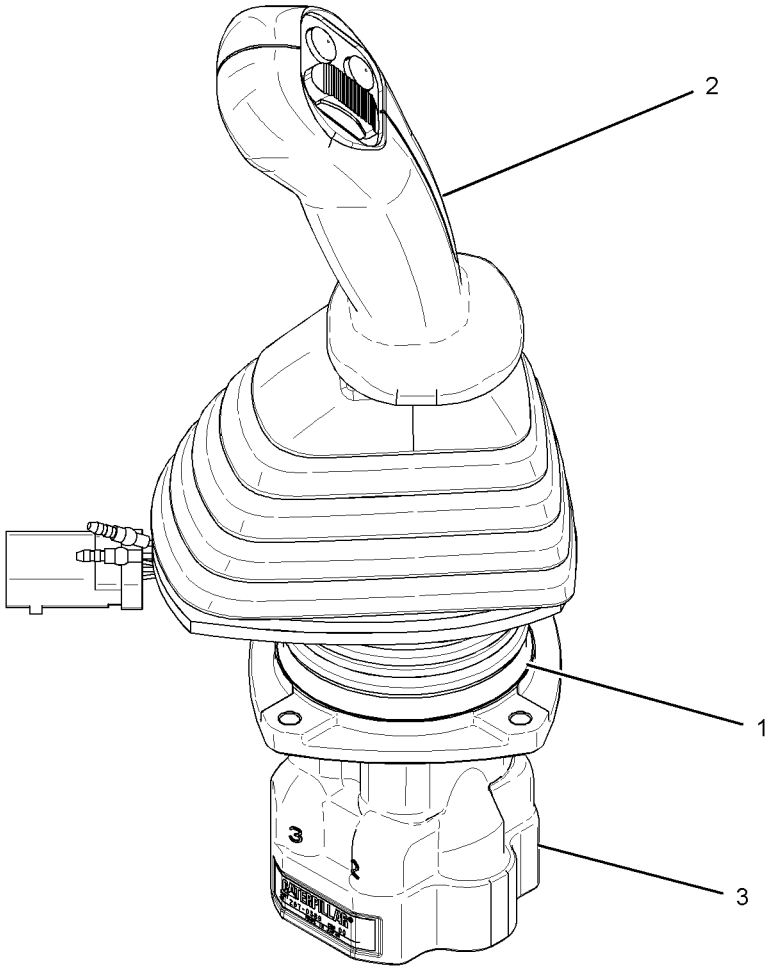

GRAPHIC #1 **<END>** g01539394

OPERATOR STATION

297-0535 CONTROL GP-JOYSTICK–LH

S/N: CLA1-UP

PART OF 259-7598 CONTROL & MTG GP-JOYSTICK

AN ATTACHMENT

SMCS-5705 **i03108292**

NOTE	REF NO	GRAPHIC REF	PART NUMBER	QTY	PART NAME 1 2 3 4 5 6 (PRODUCT LEVEL)	SEE PAGE
	1	1	**6K-0806**	1	STRAP-CABLE	
Y	2	1	**260-2110**	1	CONTROL GP-HANDLE (JOYSTICK, LH)	775
Y	3	1	**297-0589**	1	VALVE GP-PILOT	620

Y-SEPARATE ILLUSTRATION

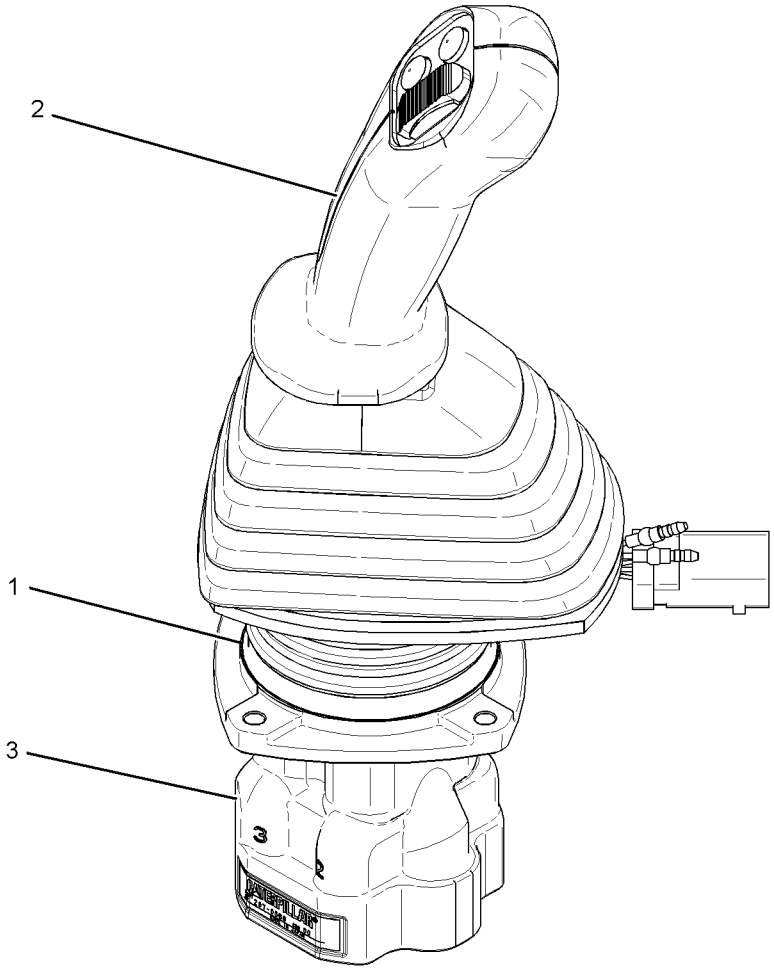

GRAPHIC #1 **<END>** g01541298

OPERATOR STATION

297-0536 CONTROL GP-JOYSTICK–RH

S/N: CLA1-UP
PART OF 259-7599 CONTROL & MTG GP-JOYSTICK
AN ATTACHMENT

SMCS-5705 **i03045060**

NOTE	REF NO	GRAPHIC REF	PART NUMBER	QTY	PART NAME 1 2 3 4 5 6 (PRODUCT LEVEL)	SEE PAGE
	1	1	**6K-0806**	1	STRAP-CABLE	
Y	2	1	**260-2127**	1	CONTROL GP-HANDLE (JOYSTICK, RH)	776
Y	3	1	**297-0589**	1	VALVE GP-PILOT (JOYSTICK)	620

Y-SEPARATE ILLUSTRATION

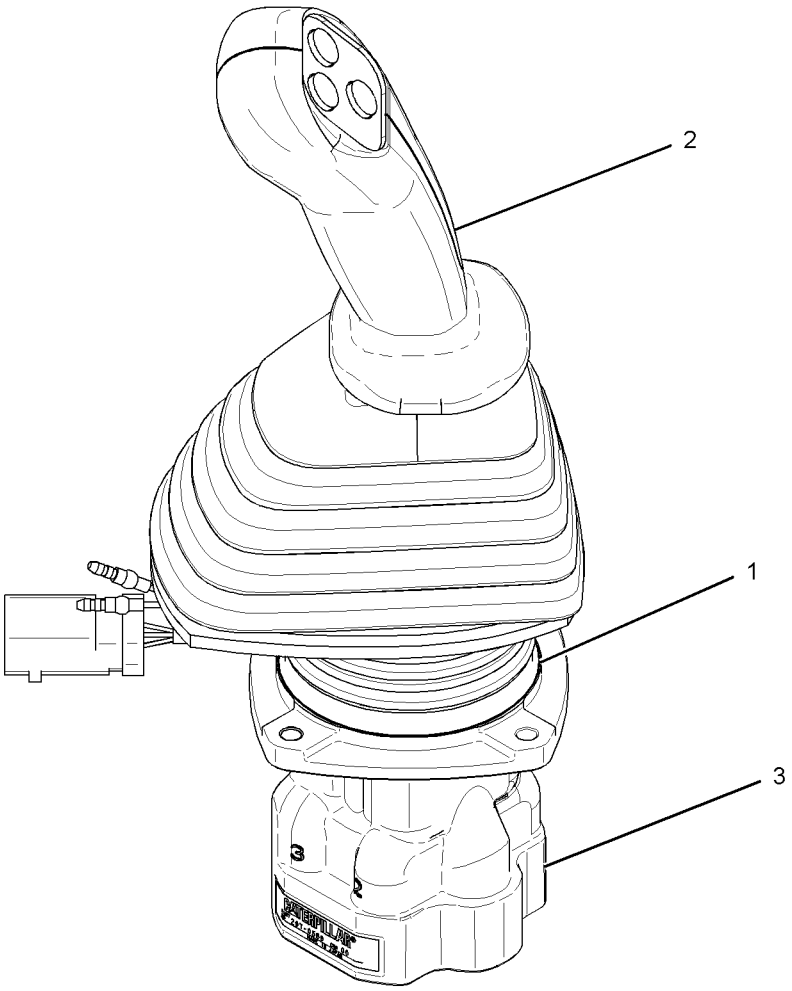

GRAPHIC #1 **<END>** g01529333

OPERATOR STATION

297-0537 CONTROL GP-JOYSTICK–LH

S/N: CLA1-UP

PART OF 259-7599 CONTROL & MTG GP-JOYSTICK

AN ATTACHMENT

SMCS-5705 **i03040580**

NOTE	REF NO	GRAPHIC REF	PART NUMBER	QTY	PART NAME 1 2 3 4 5 6 (PRODUCT LEVEL)	SEE PAGE
	1	1	**6K-0806**	1	STRAP-CABLE	
Y	2	1	**260-2128**	1	CONTROL GP-HANDLE (JOYSTICK, LH)	777
Y	3	1	**297-0589**	1	VALVE GP-PILOT	620

Y-SEPARATE ILLUSTRATION

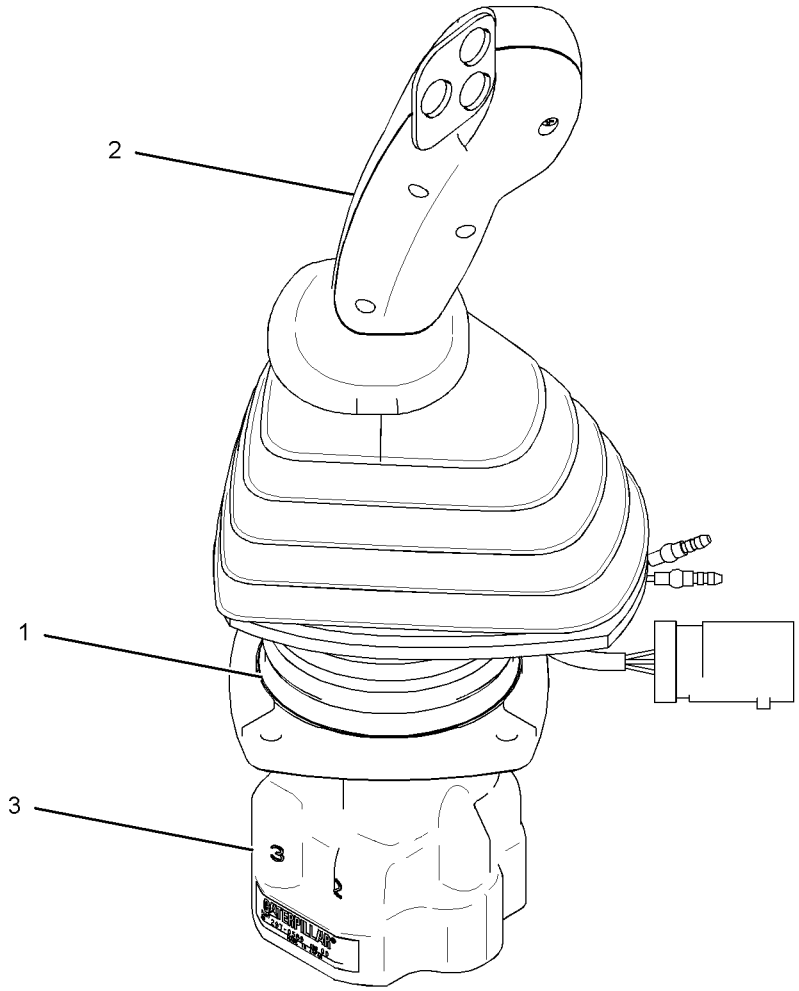

GRAPHIC #1 **<END>** g01528713

309-5808 CONTROL GP-PEDAL–ELECTRIC

S/N: CLA1-UP

PART OF 221-8884 CONTROL & MTG GP-PEDAL

AN ATTACHMENT

SMCS-1435, 5702 **i02840265**

NOTE	REF NO	GRAPHIC REF	PART NUMBER	QTY	PART NAME 1 2 3 4 5 6 (PRODUCT LEVEL)	SEE PAGE
	1	1	**8T-8737**	1	PLUG-SEAL	
	2	1	**9X-3401**	5	PIN-CONNECTOR (16-GA TO 18-GA)	
					–OR–	
		1	**126-1767**	5	PIN-CONNECTOR (14-GA)	
	3	1	**247-2693**	1	RECEPTACLE AS-CONNECTOR (6-PIN)	
	4	1	**247-5112**	1	BOOT	

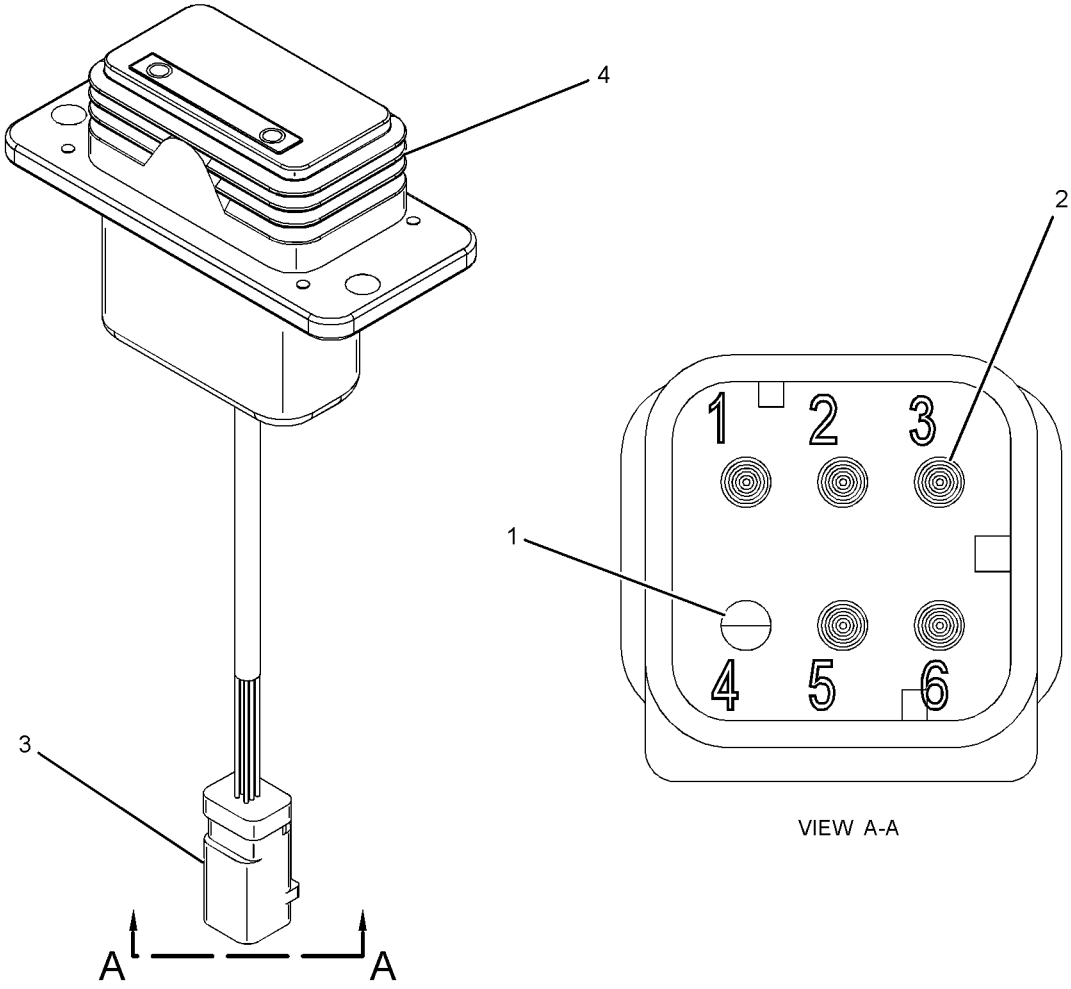

VIEW A-A

GRAPHIC #1 **<END>** g01219365

OPERATOR STATION

234-6501 COVER GP-CAB–REAR

S/N: CLA1-UP

PART OF 229-9098, 229-9100, 316-8814 CAB GP

AN ATTACHMENT

SMCS-7301, 7308 **i03159185**

NOTE	REF NO	GRAPHIC REF	PART NUMBER	QTY	PART NAME 1 2 3 4 5 6 (PRODUCT LEVEL)	SEE PAGE
	1	1	**234-6499**	1	COVER AS	
	2	1	**234-6502**	1	COVER-ACCESS (FUSE-REAR PANEL)	
	3	1	**234-6593**	2	FASTENER	
					USE WITH COVER WITH A 9-MM DIAMETER UPPER MOUNTING HOLE	
					–OR–	
		1	**245-7929**	2	CLIP	
					USE WITH COVER WITH A 7.6-MM DIAMETER UPPER MOUNTING HOLE	

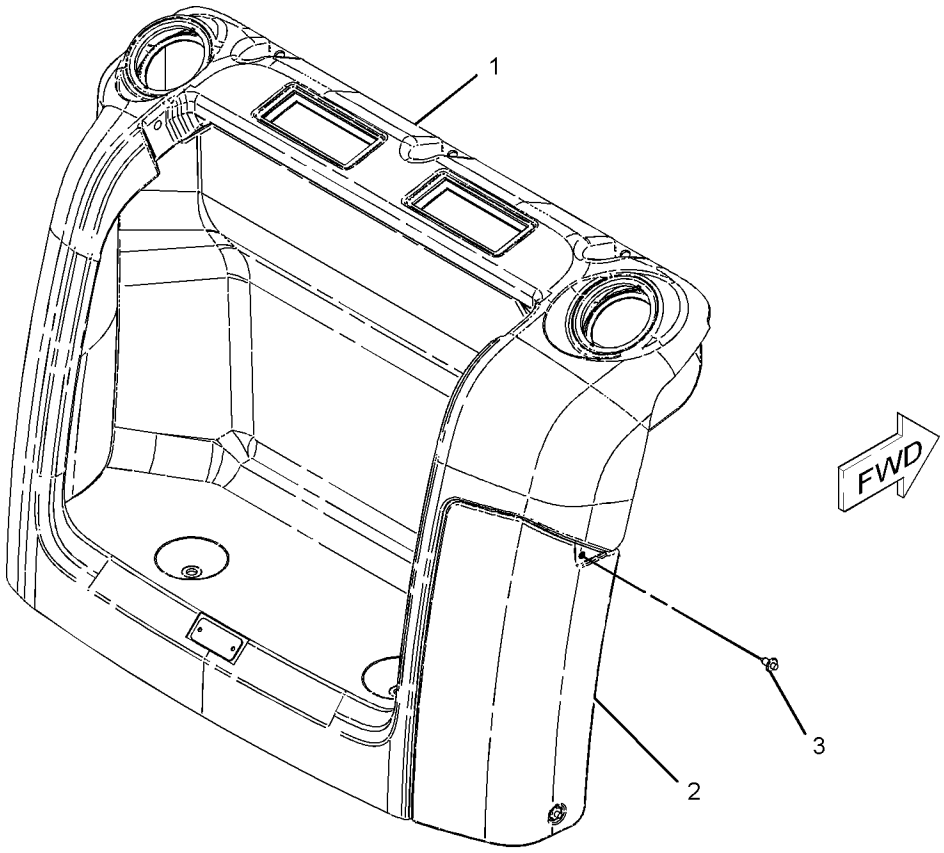

GRAPHIC #1

<END>

g01101423

OPERATOR STATION

234-6500 COVER GP-STORAGE

S/N: CLA1-UP

USED ON STORAGE COMPARTMENT INSIDE CAB

AN ATTACHMENT

SMCS-7268 **i02232841**

NOTE	REF NO	GRAPHIC REF	PART NUMBER	QTY	PART NAME 1 2 3 4 5 6 (PRODUCT LEVEL)	SEE PAGE
					(NO SERVICED PARTS)	

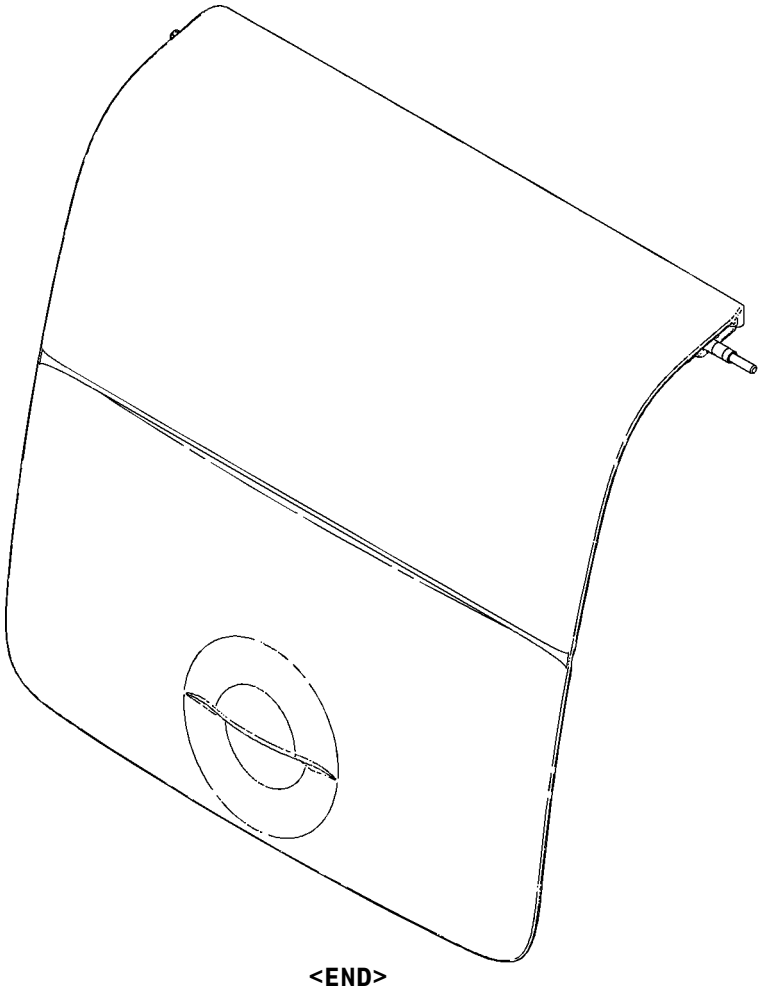

GRAPHIC #1

<END>

g01092876

OPERATOR STATION

268-0417 COVER GP-STORAGE

S/N: CLA1-UP

PART OF 283-3666 STORAGE GP-VANDALISM GUARD

AN ATTACHMENT

SMCS-7268 **i02897067**

NOTE	REF NO	GRAPHIC REF	PART NUMBER	QTY	PART NAME 1 2 3 4 5 6 (PRODUCT LEVEL)	SEE PAGE
	1	1	**313-7861**	1	HANDLE	
J	2	1	**226-0291**	1	LOCK AS	
			226-0326	1	CAM-LOCK	
	3	1	**268-0418**	2	SHEET-RUBBER	
	4	1	**268-0419**	2	SHEET-RUBBER	
	5	1	**320-5461**	1	SHEET-RUBBER	
	6	1	**6V-8823**	2	WASHER-HARD (19.25X27X2-MM THK)	
	7	1	**301-9823**	1	RING	

J-REQUIRES CORPORATE KEY

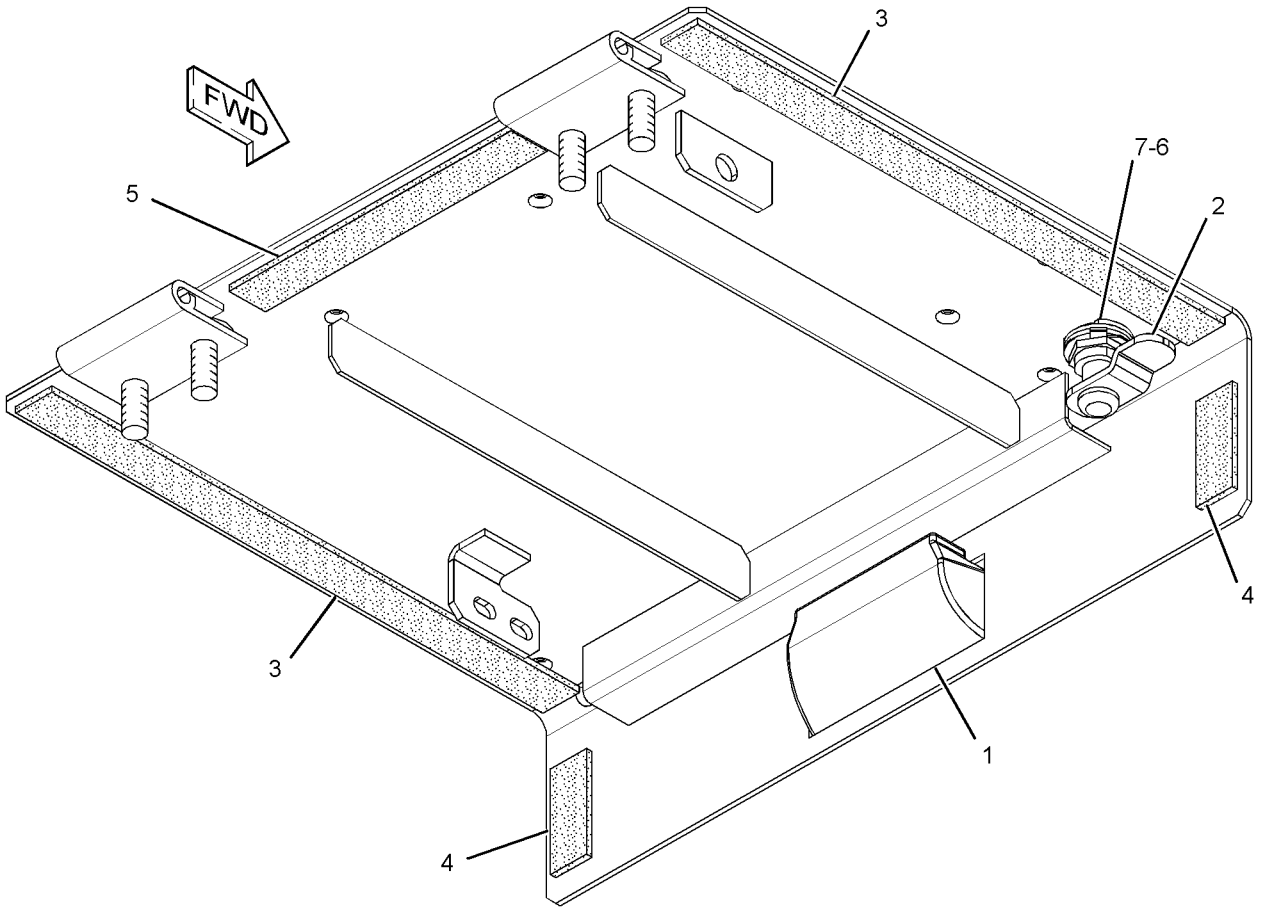

GRAPHIC #1 **<END>** g01446747

OPERATOR STATION

189-2768 DOOR & MTG GP-CAB

S/N: CLA1-UP
PART OF 229-9099, 316-8815 CAB GP
AN ATTACHMENT

SMCS-7308 **i03013736**

NOTE	REF NO	GRAPHIC REF	PART NUMBER	QTY	PART NAME 1 2 3 4 5 6 (PRODUCT LEVEL)	SEE PAGE
Y	1	1	*139-7100*	1	DOOR GP-CAB	796
	2	1	*151-6767*	1	DOOR AS	
M		1	**9X-2041**	6	SCREW-TRUSS HEAD (M10X1.5X20-MM)	
		1	**151-6777**	2	HINGE	

M-METRIC PART
Y-SEPARATE ILLUSTRATION

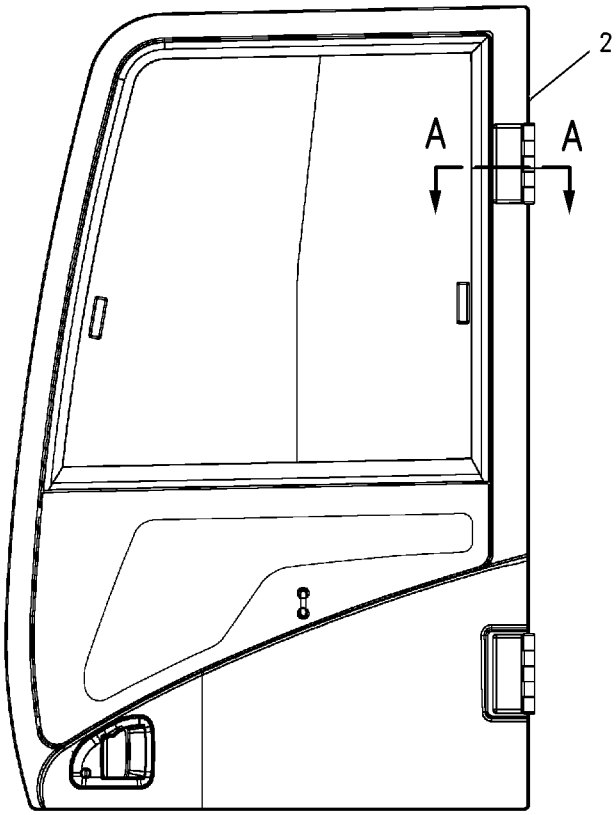

LEFT SIDE VIEW

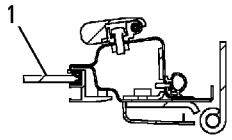

SECTION A-A

GRAPHIC #1 **<END>** g00840880

OPERATOR STATION

139-7100 DOOR GP-CAB

S/N: CLA1-UP
PART OF 189-2768 DOOR & MTG GP-CAB
AN ATTACHMENT
TYPE 1

SMCS-7308 **i02583462**

NOTE	REF NO	GRAPHIC REF	PART NUMBER	QTY	PART NAME 1 2 3 4 5 6 (PRODUCT LEVEL)	SEE PAGE
	1	1	**151-6703**	1	HANDLE-PULL	
	2	1	**151-6704**	2	CAP (HANDLE)	
Y	3	1	**151-6792**	1	WINDOW GP-DOOR	924
	4	1	**156-6471**	1	GLASS	
	5	1	**156-6598**	1	HOOK	
	6	1	**156-6600**	1	LOCK AS	
	7	1	**156-6643**	1	COVER	
	8	1	**156-6645**	1	HANDLE AS	
	9	1	**161-3639**	1	HANDLE AS	
	10	1	**161-3650**	1	COVER AS	
	11	1	**161-3663**	1	SEAL AS	
		1	**151-9497**	45	CLIP	
	12	1	**161-3665**	1	SEAL	
	13	1	**259-7354**	1	COVER	
	14	1	**164-0515**	1	JOINT	
	15	1	**167-7039**	1	GROMMET	
M	16	1	**185-8180**	3	SCREW (M6X1X16-MM)	
	17	1	**189-2711**	2	WASHER (8.5X16X2.3-MM THK)	
M	18	1	**096-2622**	2	SCREW-MACHINE (M4X0.7X8-MM)	
	19	1	**3B-4505**	1	LOCKWASHER	
M	20	1	**101-8899**	2	SCREW AS (M6X1X16-MM)	
M	21	1	**101-8900**	2	SCREW AS (M6X1X20-MM)	
	22	1	**151-9461**	4	SPACER	
	23	1	**156-6644**	1	COVER	
	24	1	**178-5573**	4	SPACER	
	25	1	**178-5574**	2	SPACER	
	26	1	**189-2690**	1	HANDLE AS	
	27	1	**4I-4286**	1	KNOB	
M	28	1	**9X-2042**	8	SCREW-TRUSS HEAD (M6X1X12-MM)	

M-METRIC PART
Y-SEPARATE ILLUSTRATION

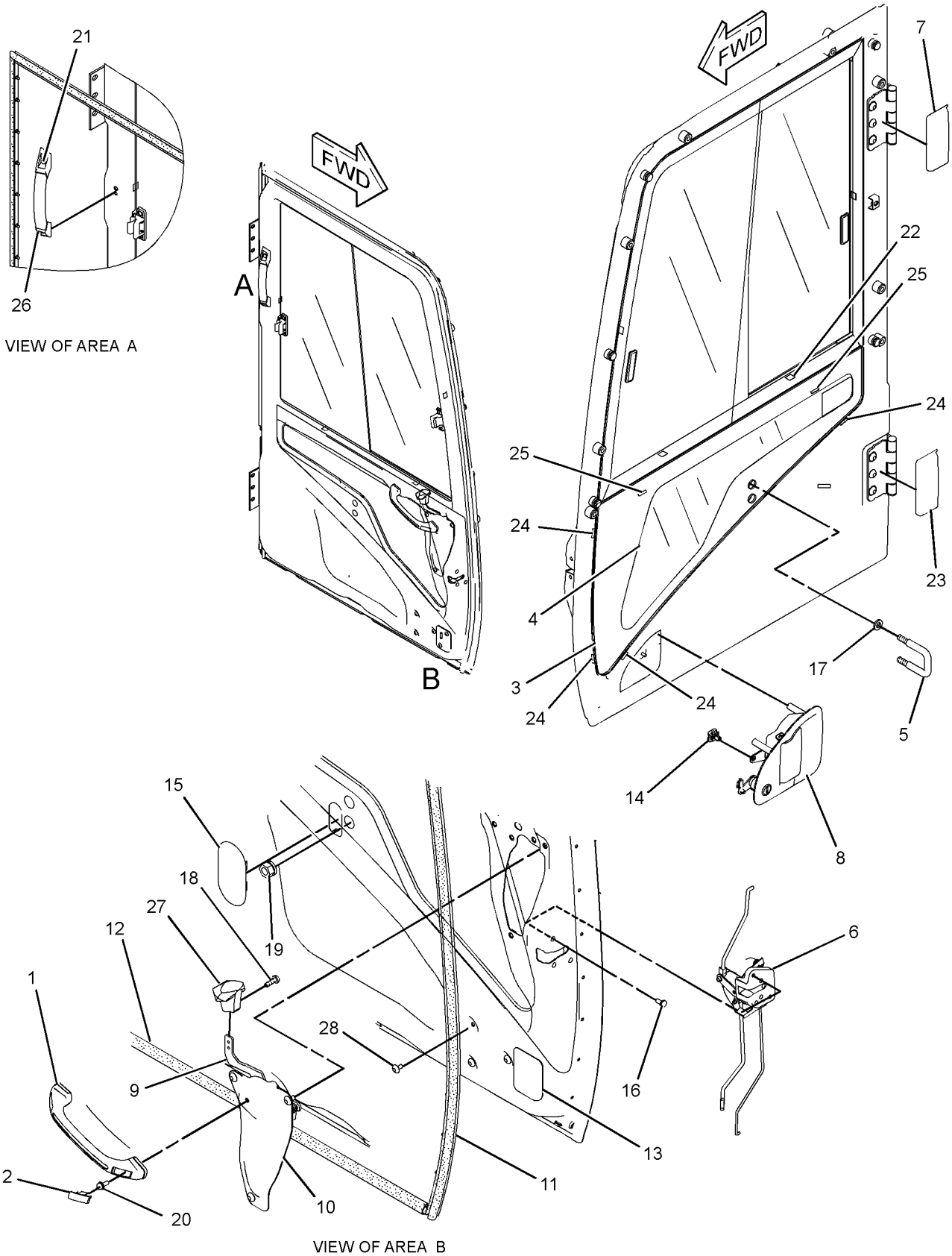

GRAPHIC #1 **<END>** g01304731

OPERATOR STATION

139-7100 DOOR GP-CAB

S/N: CLA1-UP
PART OF 189-2768 DOOR & MTG GP-CAB
AN ATTACHMENT
TYPE 2

SMCS-7308 **i03258887**

NOTE	REF NO	GRAPHIC REF	PART NUMBER	QTY	PART NAME 1 2 3 4 5 6 (PRODUCT LEVEL)	SEE PAGE
C	1	1	**327-6579**	1	HANDLE-PULL	
Y	3	1	**151-6792**	1	WINDOW GP-DOOR	924
	4	1	**156-6471**	1	GLASS	
	5	1	**156-6598**	1	HOOK	
	6	1	**156-6600**	1	LOCK AS	
		1	**164-0514**	1	CLIP	
		1	**164-0519**	1	CLIP	
	7	1	**156-6643**	1	COVER	
	8	1	**156-6645**	1	HANDLE AS	
		1	**201-4391**	1	CLIP	
	9	1	**161-3639**	1	HANDLE AS	
	10	1	**161-3650**	1	COVER AS	
	11	1	**161-3663**	1	SEAL AS	
		1	**151-9497**	45	CLIP	
	12	1	**161-3665**	1	SEAL	
	13	1	**259-7354**	1	COVER	
	14	1	**164-0515**	1	JOINT	
	15	1	**167-7039**	1	GROMMET	
M	16	1	**185-8180**	3	SCREW (M6X1X16-MM)	
	17	1	**189-2711**	2	WASHER (8.5X16X2.3-MM THK)	
M	18	1	**096-2622**	2	SCREW-MACHINE (M4X0.7X8-MM)	
M	19	1	**096-3884**	2	NUT-SPRING	
M	20	1	**101-8899**	2	SCREW AS (M6X1X16-MM)	
M	21	1	**101-8900**	2	SCREW AS (M6X1X20-MM)	
	22	1	**151-9461**	4	SPACER	
	23	1	**156-6644**	1	COVER	
	24	1	**178-5573**	4	SPACER	
	25	1	**178-5574**	2	SPACER	
	26	1	**189-2690**	1	HANDLE AS	
	27	1	**4I-4286**	1	KNOB	
M	28	1	**9X-2042**	8	SCREW-TRUSS HEAD (M6X1X12-MM)	

C-CHANGE FROM PREVIOUS TYPE
M-METRIC PART
Y-SEPARATE ILLUSTRATION

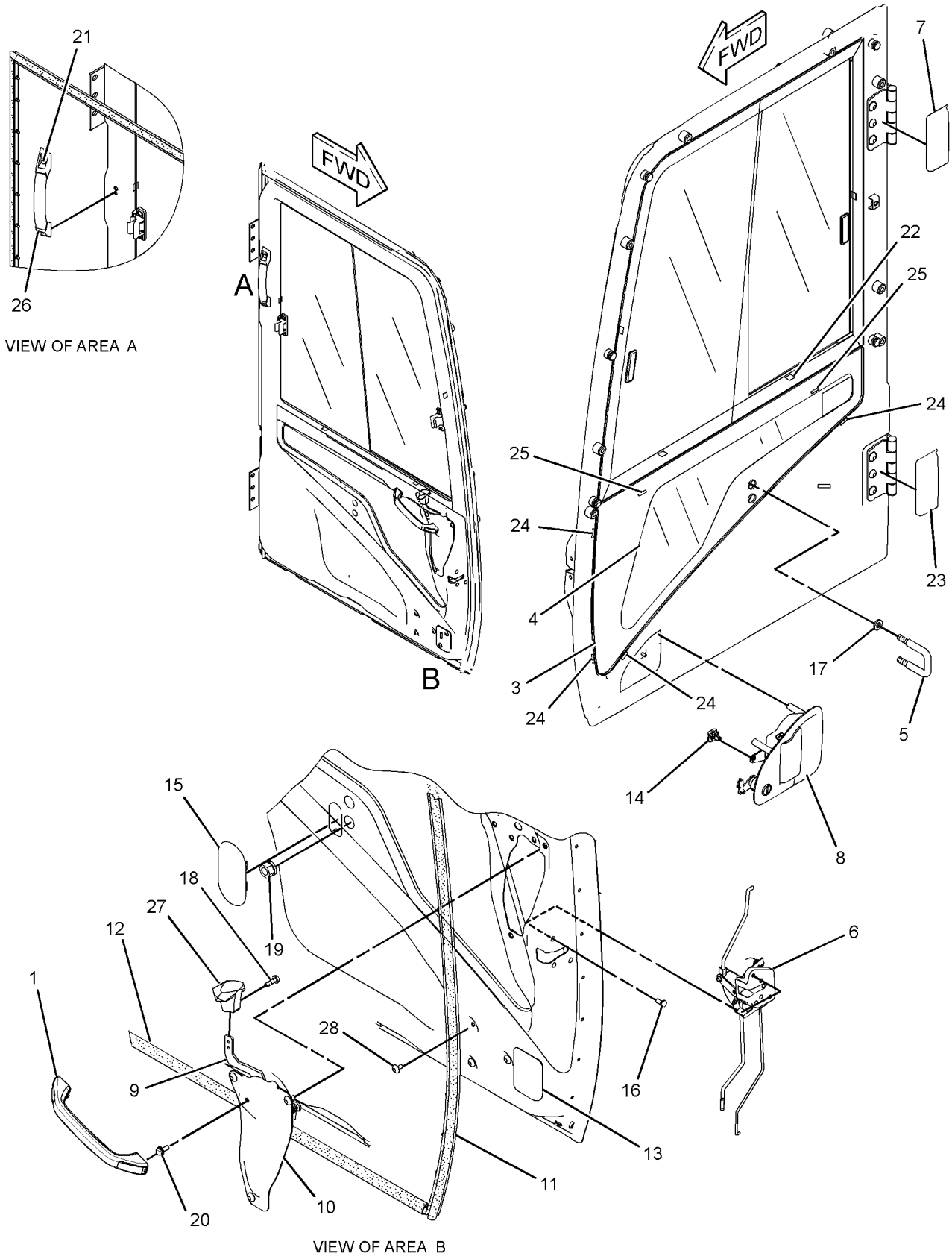

GRAPHIC #1 **<END>** g01625586

OPERATOR STATION

176-1964 D0OR GP-CAB

S/N: CLA1-UP
PART OF 229-9101 CAB GP, 189-2793 D0OR GP-CAB
AN ATTACHMENT
TYPE 1

SMCS-7308 **i02583463**

NOTE	REF NO	GRAPHIC REF	PART NUMBER	QTY	PART NAME 1 2 3 4 5 6 (PRODUCT LEVEL)	SEE PAGE
	1	1	**151-6703**	1	HANDLE-PULL	
	2	1	**151-6704**	2	CAP (HANDLE)	
Y	3	2	**151-6792**	1	WINDOW GP-DOOR	924
	4	2	**156-6598**	1	HOOK	
	5	1	**156-6600**	1	LOCK AS	
		1	**164-0514**	1	CLIP	
	5A	1	**164-0519**	1	CLIP	
	6	2	**156-6643**	1	COVER	
	7	2	**156-6645**	1	HANDLE AS	
	7A	2	**201-4391**	1	CLIP	
	8	1	**161-3639**	1	HANDLE AS	
	9	1	**161-3650**	1	COVER AS	
	10	1	**161-3663**	1	SEAL AS	
		1	**151-9497**	45	CLIP	
	11	1	**161-3665**	1	SEAL	
	12	1	**259-7354**	1	COVER	
	13	2	**164-0515**	1	JOINT	
	14	2	**167-7038**	1	GLASS	
	15	1	**167-7039**	1	GROMMET	
M	16	1	**185-8180**	3	SCREW (M6X1X16-MM)	
	17	2	**8T-4224**	2	WASHER-HARD (8.8X16X2-MM THK)	
M	18	1	**096-2622**	2	SCREW-MACHINE (M4X0.7X8-MM)	
M	19	1	**095-0772**	2	NUT	
		1	**3B-4505**	2	LOCKWASHER	
M	20	1	**101-8899**	1	SCREW AS (M6X1X16-MM)	
M	21	1	**101-8900**	2	SCREW AS (M6X1X20-MM)	
	22	2	**151-9461**	4	SPACER	
	23	2	**156-6644**	1	COVER	
	24	2	**178-5573**	4	SPACER	
	25	2	**178-5574**	2	SPACER	
	26	1	**189-2690**	1	HANDLE AS	
	27	1	**4I-4286**	1	KNOB	
M	28	1	**9X-2042**	8	SCREW-TRUSS HEAD (M6X1X12-MM)	

M-METRIC PART
Y-SEPARATE ILLUSTRATION

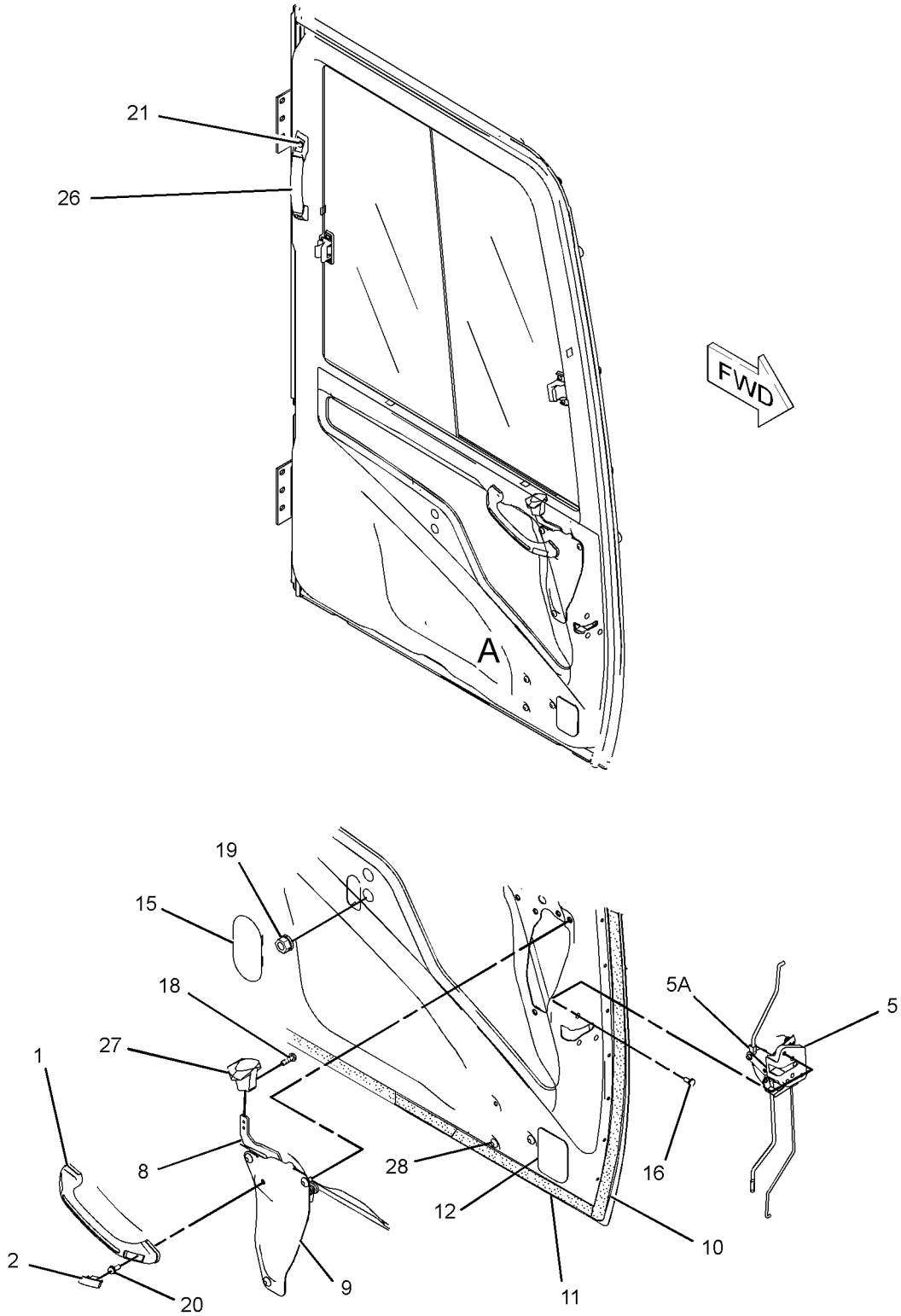

VIEW OF AREA A

GRAPHIC #1 g01294172

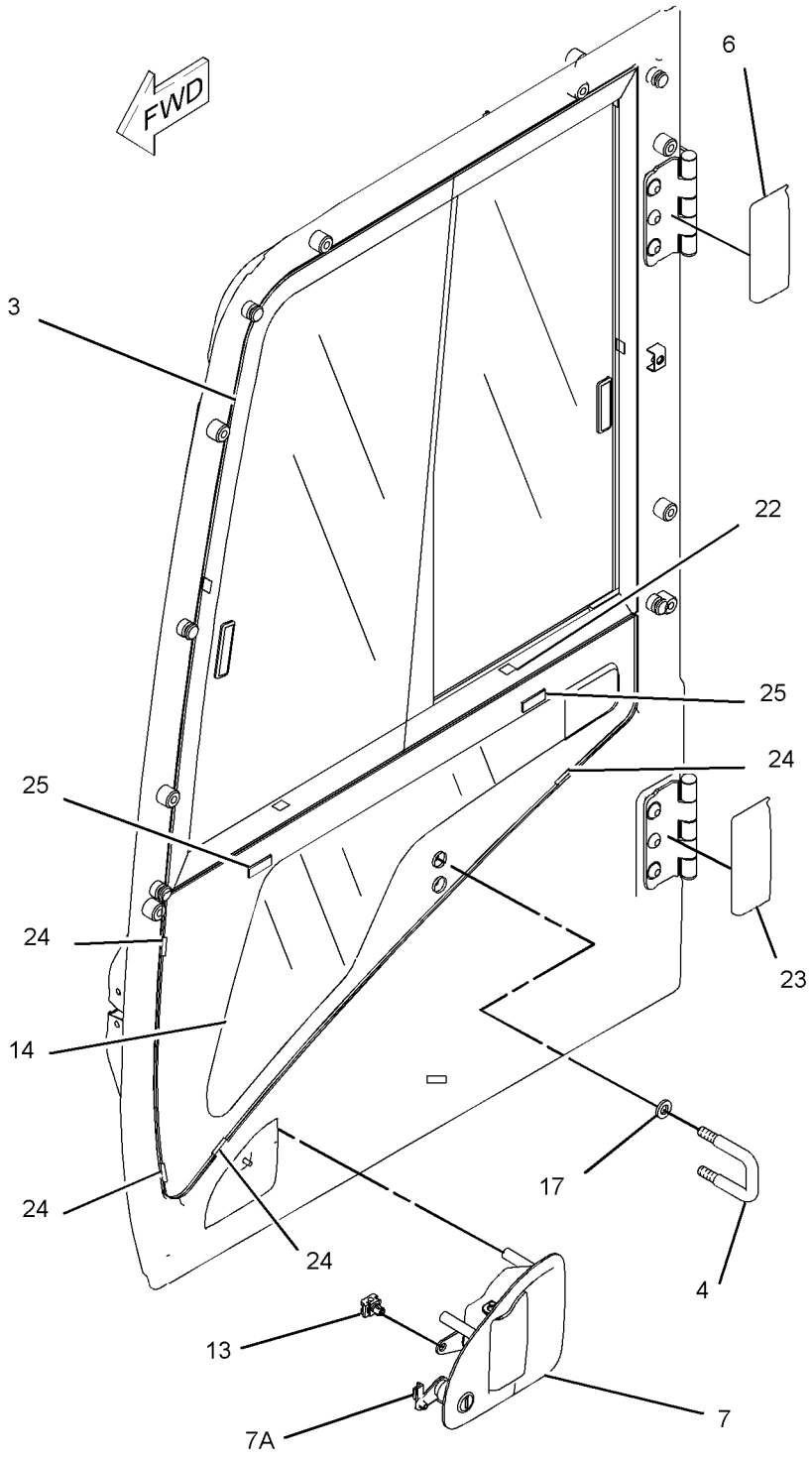

GRAPHIC #2 **<END>** g01120659

OPERATOR STATION

176-1964 DOOR GP-CAB

S/N: CLA1-UP
PART OF 229-9101 CAB GP, 189-2793 DOOR GP-CAB
AN ATTACHMENT
TYPE 2

SMCS-7308 **i03258888**

NOTE	REF NO	GRAPHIC REF	PART NUMBER	QTY	PART NAME 1 2 3 4 5 6 (PRODUCT LEVEL)	SEE PAGE
C	1	2	**327-6579**	1	HANDLE-PULL	
Y	3	1	**151-6792**	1	WINDOW GP-DOOR	924
	4	1	**156-6598**	1	HOOK	
	5	2	**156-6600**	1	LOCK AS	
		2	**164-0514**	1	CLIP	
	5A	2	**164-0519**	1	CLIP	
	6	1	**156-6643**	1	COVER	
	7	1	**156-6645**	1	HANDLE AS	
	7A	1	**201-4391**	1	CLIP	
	8	2	**161-3639**	1	HANDLE AS	
	9	2	**161-3650**	1	COVER AS	
	10	2	**161-3663**	1	SEAL AS	
		2	**151-9497**	45	CLIP	
	11	2	**161-3665**	1	SEAL	
	12	2	**259-7354**	1	COVER	
	13	1	**164-0515**	1	JOINT	
	14	1	**167-7038**	1	GLASS	
	15	2	**167-7039**	1	GROMMET	
M	16	2	**185-8180**	3	SCREW (M6X1X16-MM)	
	17	1	**8T-4224**	2	WASHER-HARD (8.8X16X2-MM THK)	
M	18	2	**096-2622**	2	SCREW-MACHINE (M4X0.7X8-MM)	
M	19	2	**096-3884**	2	NUT-SPRING	
M	20	2	**101-8899**	1	SCREW AS (M6X1X16-MM)	
M	21	2	**101-8900**	2	SCREW AS (M6X1X20-MM)	
	22	1	**151-9461**	4	SPACER	
	23	1	**156-6644**	1	COVER	
	24	1	**178-5573**	4	SPACER	
	25	1	**178-5574**	2	SPACER	
	26	2	**189-2690**	1	HANDLE AS	
	27	2	**4I-4286**	1	KNOB	
M	28	2	**9X-2042**	8	SCREW-TRUSS HEAD (M6X1X12-MM)	

C-CHANGE FROM PREVIOUS TYPE
M-METRIC PART
Y-SEPARATE ILLUSTRATION

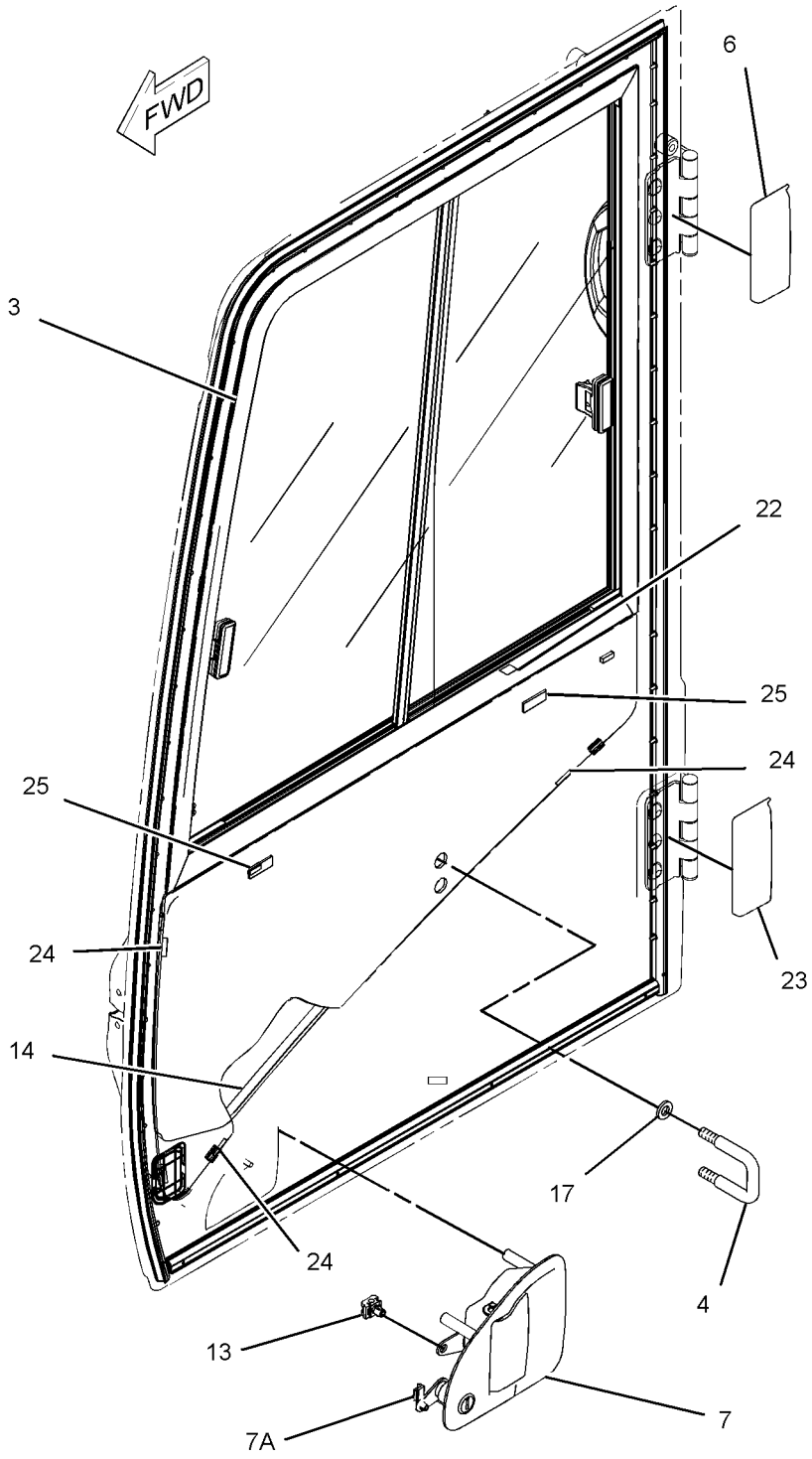

GRAPHIC #1 g01625289

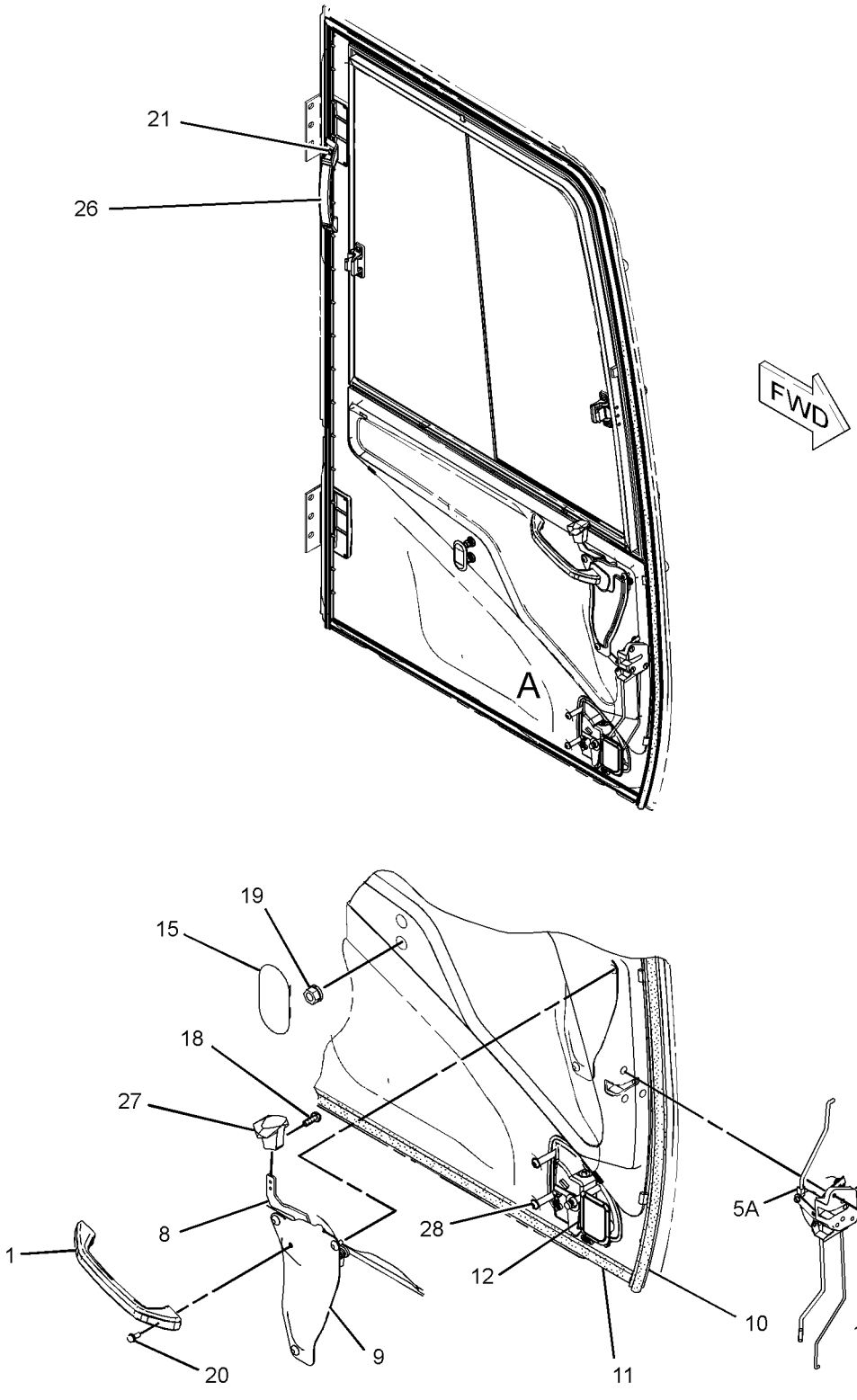

VIEW OF AREA A

GRAPHIC #2 **<END>** g01625166

OPERATOR STATION

189-2793 D00R GP-CAB

S/N: CLA1-UP
PART OF 229-9101 CAB GP
AN ATTACHMENT

SMCS-7308 **i02841129**

NOTE	REF NO	GRAPHIC REF	PART NUMBER	QTY	PART NAME 1 2 3 4 5 6 (PRODUCT LEVEL)	SEE PAGE
Y	1	1	**176-1964**	1	DOOR GP-CAB	800
	2	1	**189-2796**	1	DOOR AS	
	2A	1	**151-6777**	2	HINGE	
M	2B	1	**9X-2041**	6	SCREW-TRUSS HEAD (M10X1.5X20-MM)	

M-METRIC PART
Y-SEPARATE ILLUSTRATION

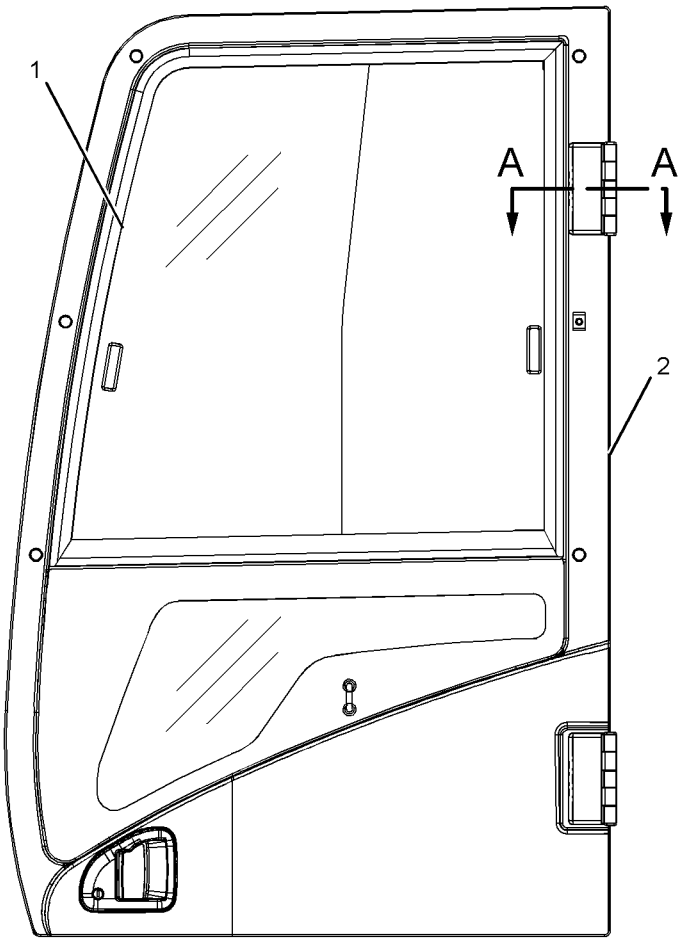

LEFT SIDE VIEW

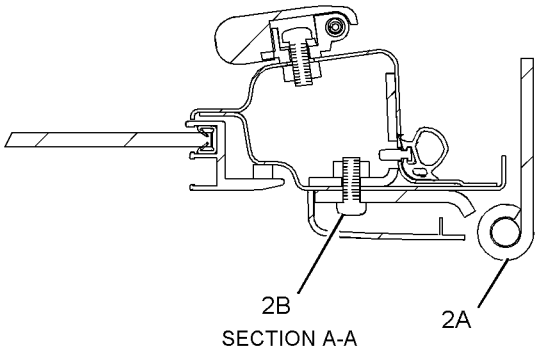

SECTION A-A

GRAPHIC #1 **<END>** g01121662

OPERATOR STATION

229-9082 DUCT GP-CAB AIR

S/N: CLA1-UP

PART OF 235-9003 AIR CONDITIONER AR, 273-5440 HEATER AR-CAB

AN ATTACHMENT

SMCS-734D **i03040445**

NOTE	REF NO	GRAPHIC REF	PART NUMBER	QTY	PART NAME 1 2 3 4 5 6 (PRODUCT LEVEL)	SEE PAGE
	1	1	**305-0329**	1	FILTER ELEMENT AS-CAB AIR	
		1	**293-1184**	1	FILTER ELEMENT-CAB AIR	
	2	1	**235-8876**	1	DUCT AS (FRESH AIR, UPPER)	
		1	**245-7872**	1	INSULATOR	
	3	1	**235-8877**	1	DUCT AS (VENT, REAR)	
		1	**245-7792**	1	INSULATOR	
	4	1	**235-8878**	1	DUCT AS (VENT, FRONT)	
		1	**245-7793**	1	INSULATOR	
	5	1	**235-8879**	1	DUCT AS (FLOOR)	
		1	**245-7873**	1	INSULATOR	
	6	1	**240-5074**	1	DUCT AS (FRESH AIR, LOWER)	
		1	**245-7791**	1	INSULATOR	
M	7	1	**101-8899**	2	SCREW AS (M6X1X16-MM)	
	8	1	**176-1996**	5	CLIP	

M-METRIC PART

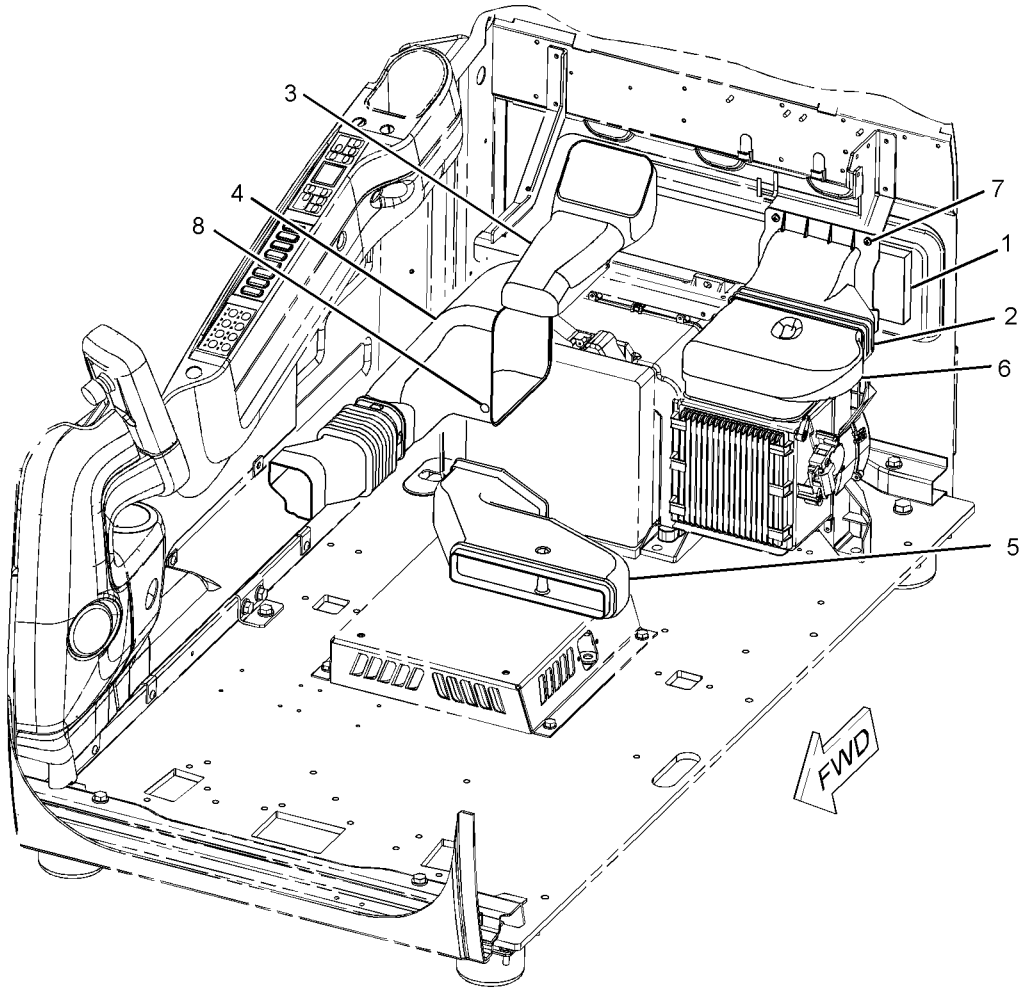

GRAPHIC #1 **<END>** g01126665

OPERATOR STATION

284-4376 FLOOR MAT

S/N: CLA1-UP

FIELD REPLACEMENT FOR 284-4379—PAGE 811: FOR 284-4378—PAGE 810: FOR 284-4377—PAGE 809: FOR 293-1222—PAGE 812: FOR 305-0327—PAGE 813 AN ATTACHMENT

SMCS-726M **i02849540**

NOTE	REF NO	GRAPHIC REF	PART NUMBER	QTY	PART NAME 1 2 3 4 5 6 (PRODUCT LEVEL)	SEE PAGE
					(NO SERVICED PARTS)	

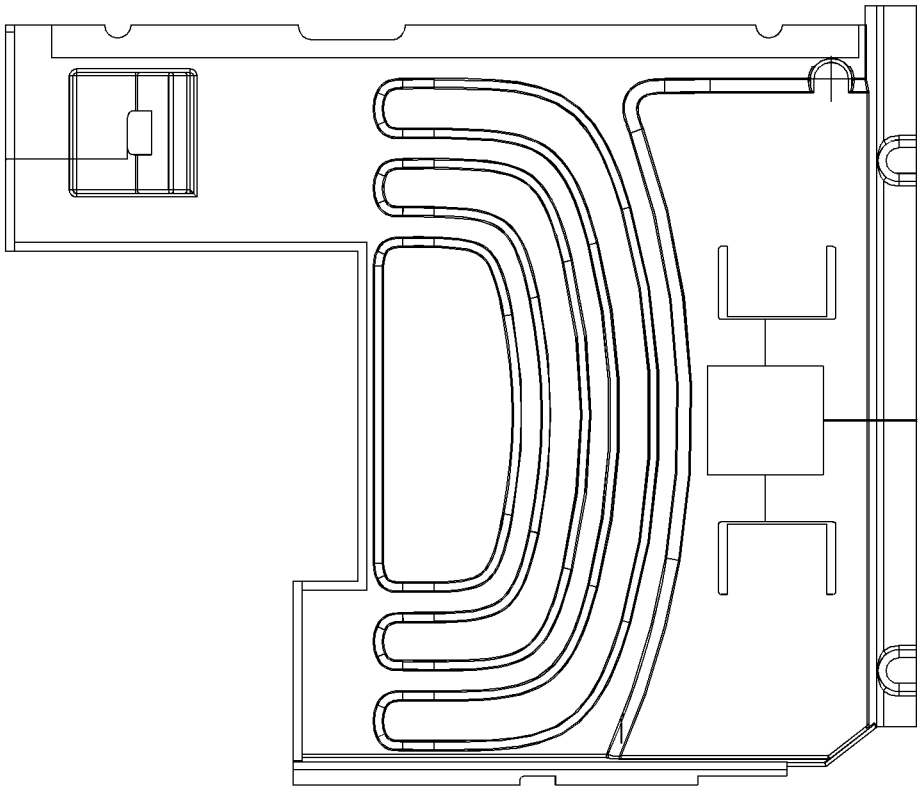

GRAPHIC #1 **<END>** g01420854

OPERATOR STATION

284-4377 FLOOR MAT

S/N: CLA1-UP

FIELD REPLACEMENT ORDER 284-4376—PAGE 808

AN ATTACHMENT

SMCS-726M **i02849538**

NOTE	REF NO	GRAPHIC REF	PART NUMBER	QTY	PART NAME 1 2 3 4 5 6 (PRODUCT LEVEL)	SEE PAGE
					(NO SERVICED PARTS)	

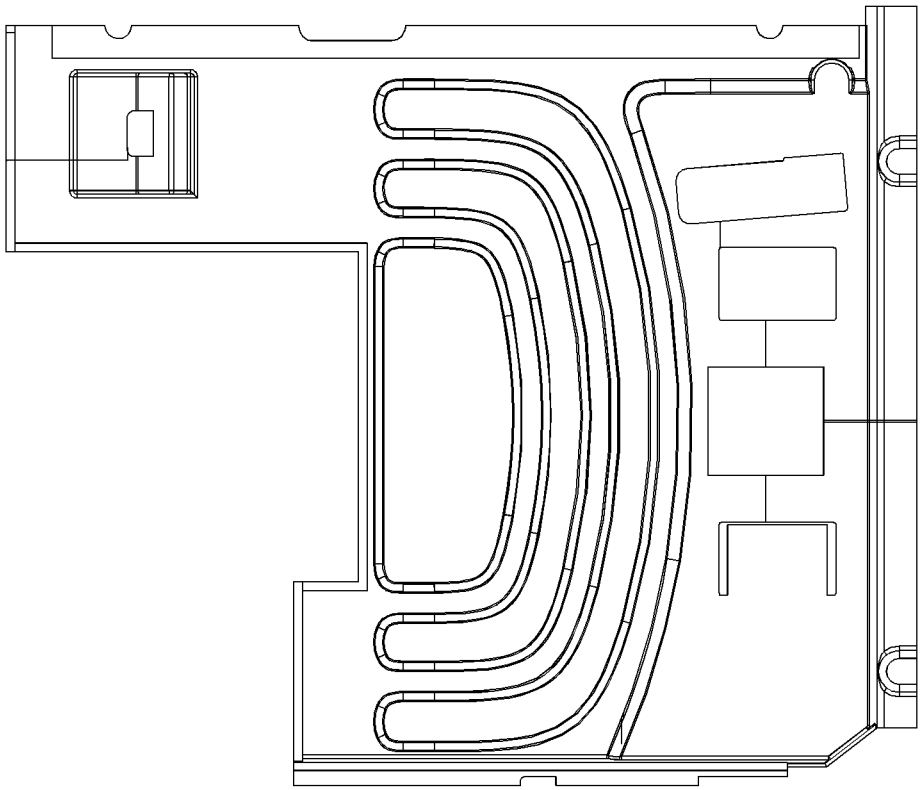

GRAPHIC #1

<END>

g01420840

OPERATOR STATION

284-4378 FLOOR MAT

S/N: CLA1-UP

FIELD REPLACEMENT ORDER 284-4376—PAGE 808

AN ATTACHMENT

SMCS-726M **i02849239**

NOTE	REF NO	GRAPHIC REF	PART NUMBER	QTY	PART NAME 1 2 3 4 5 6 (PRODUCT LEVEL)	SEE PAGE
					(NO SERVICED PARTS)	

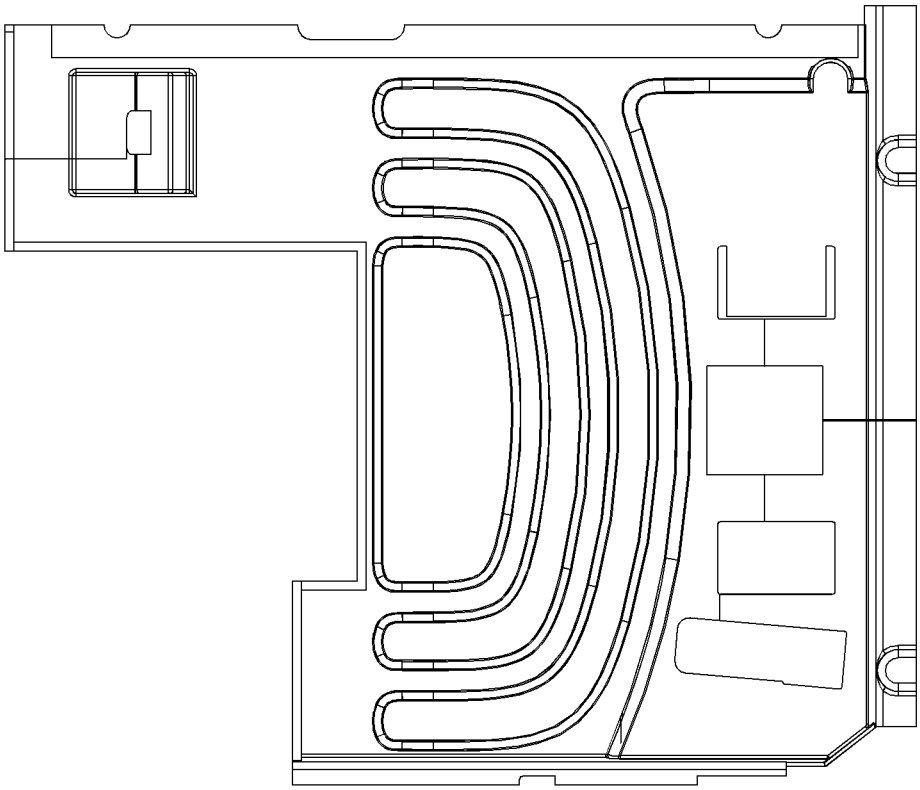

GRAPHIC #1 **<END>** g01420875

OPERATOR STATION

284-4379 FLOOR MAT

S/N: CLA1-UP

FIELD REPLACEMENT ORDER 284-4376—PAGE 808

AN ATTACHMENT

SMCS-726M **i02849223**

NOTE	REF NO	GRAPHIC REF	PART NUMBER	QTY	PART NAME 1 2 3 4 5 6 (PRODUCT LEVEL)	SEE PAGE
					(NO SERVICED PARTS)	

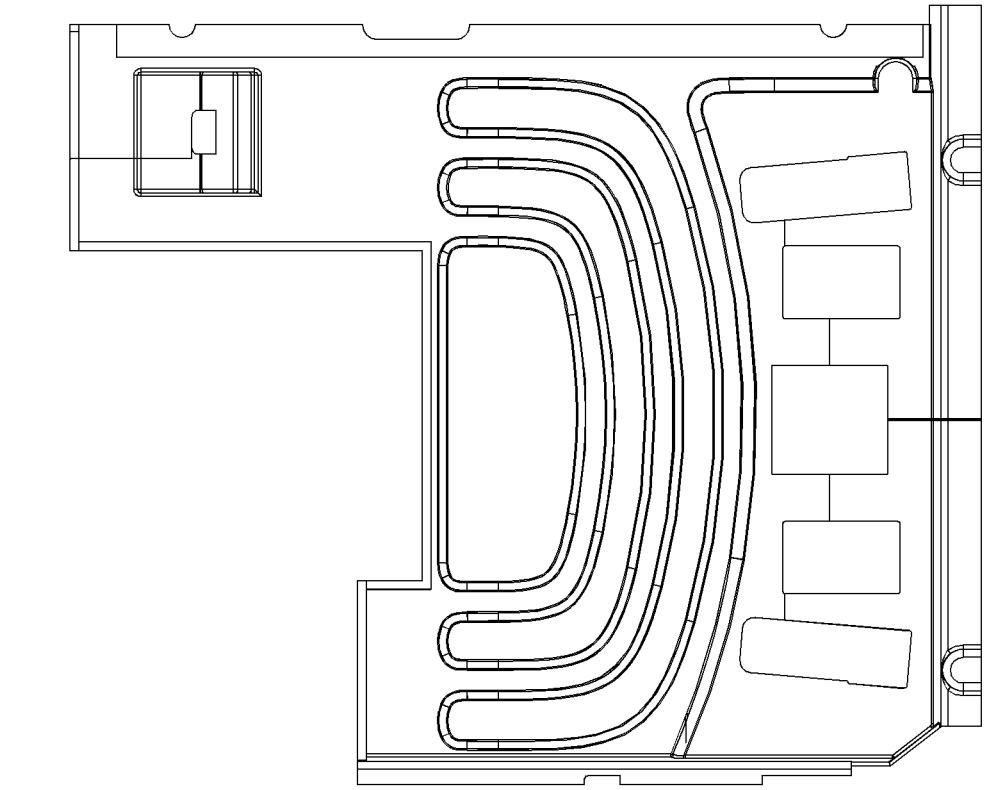

TOP VIEW

GRAPHIC #1

<END>

g01421222

OPERATOR STATION

293-1222 FL00R MAT

S/N: CLA1-UP

FIELD REPLACEMENT ORDER 284-4376—PAGE 808

AN ATTACHMENT

SMCS-726M **i02849545**

NOTE	REF NO	GRAPHIC REF	PART NUMBER	QTY	PART NAME 1 2 3 4 5 6 (PRODUCT LEVEL)	SEE PAGE
					(NO SERVICED PARTS)	

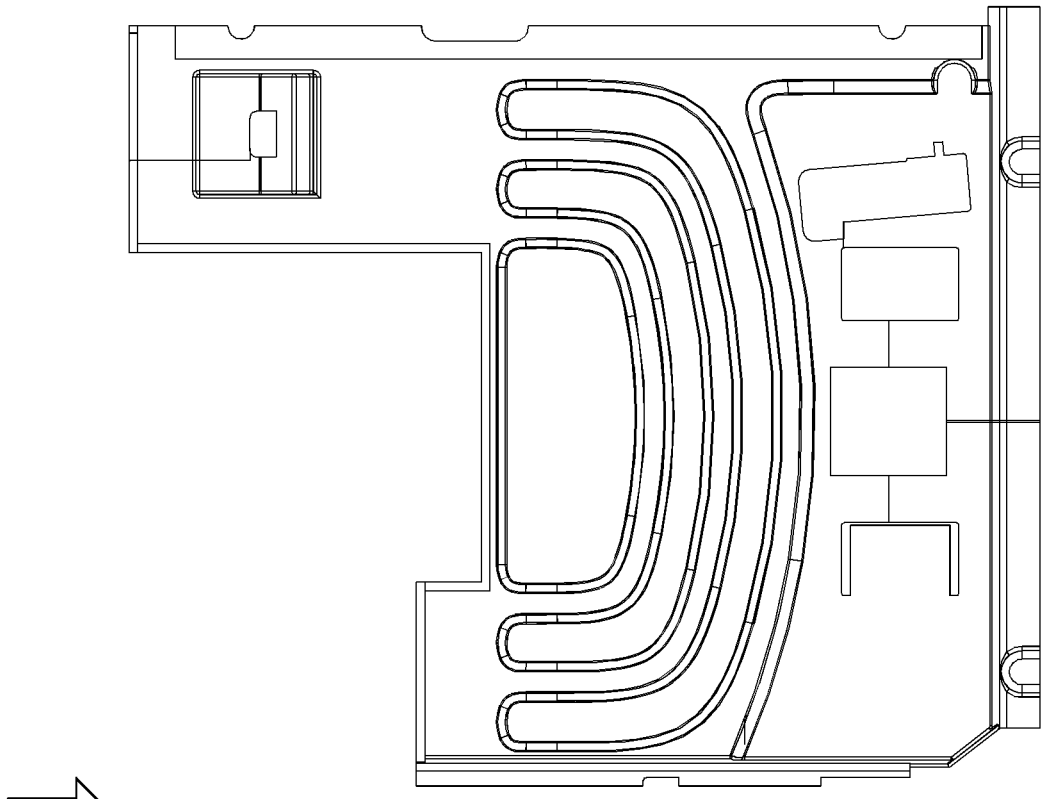

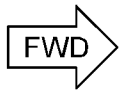

TOP VIEW

GRAPHIC #1

<END>

g01421278

305-0327 FL00R MAT

S/N: CLA1-UP

FIELD REPLACEMENT ORDER 284-4376—PAGE 808. FOR USE WITH CONTROL AR-AUXILIARY-SYSTEM 3 ONE WAY/TWO PUMP FLOW/FOOT SWITCH, CONTROL AR-AUXILIARY-SYSTEM 1 ONE WAY/ONE PUMP FLOW RH PEDAL AN ATTACHMENT

SMCS-726M **i02868623**

NOTE	REF NO	GRAPHIC REF	PART NUMBER	QTY	PART NAME 1 2 3 4 5 6 (PRODUCT LEVEL)	SEE PAGE
					(NO SERVICED PARTS)	

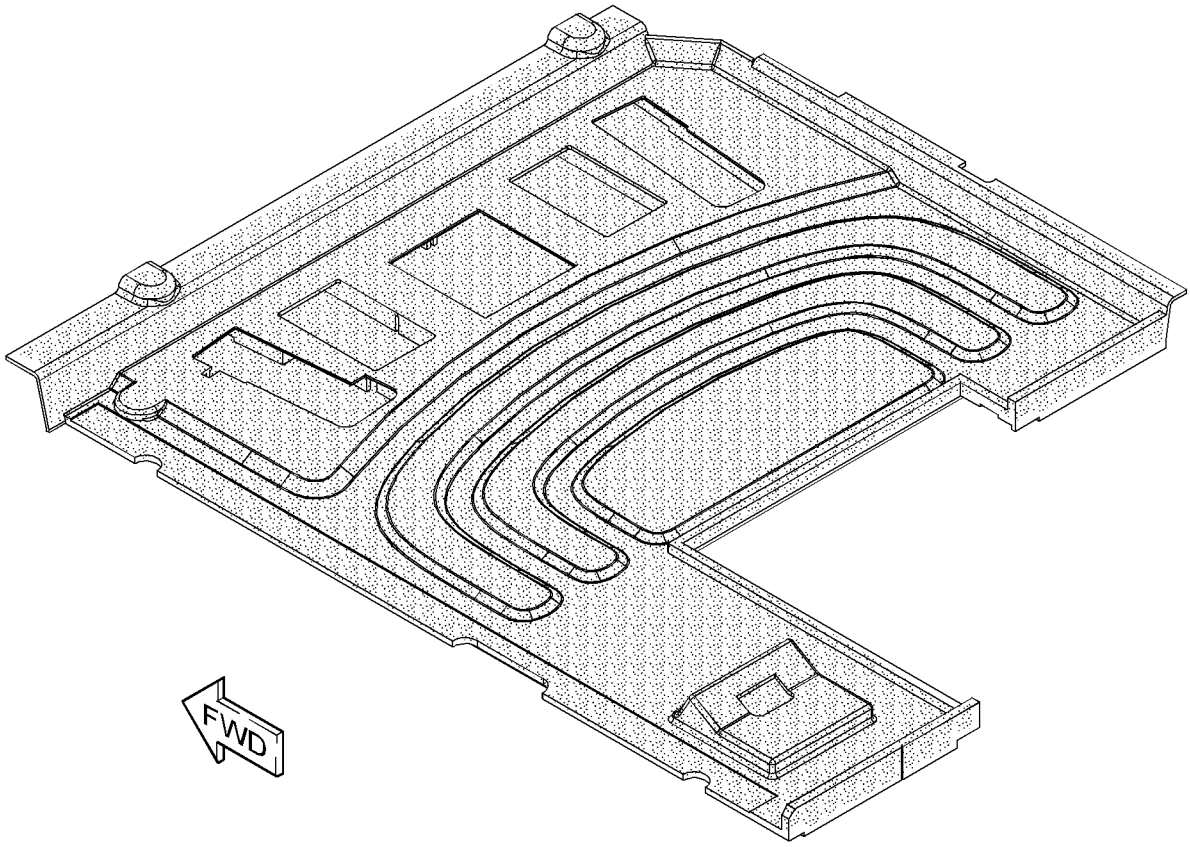

GRAPHIC #1 **<END>** g01437183

OPERATOR STATION

305-0399 FLOOR MAT GP–ACCUGRADE

S/N: CLA1-UP

PART OF 301-2552, 301-2555, 301-2647 SPECIAL AR

AN ATTACHMENT

SMCS-7265, 726M **i02852716**

NOTE	REF NO	GRAPHIC REF	PART NUMBER	QTY	PART NAME 1 2 3 4 5 6 (PRODUCT LEVEL)	SEE PAGE
	1	1	**305-0430**	1	FLOOR MAT	
	2	1	**305-0431**	3	PLATE-RUBBER	

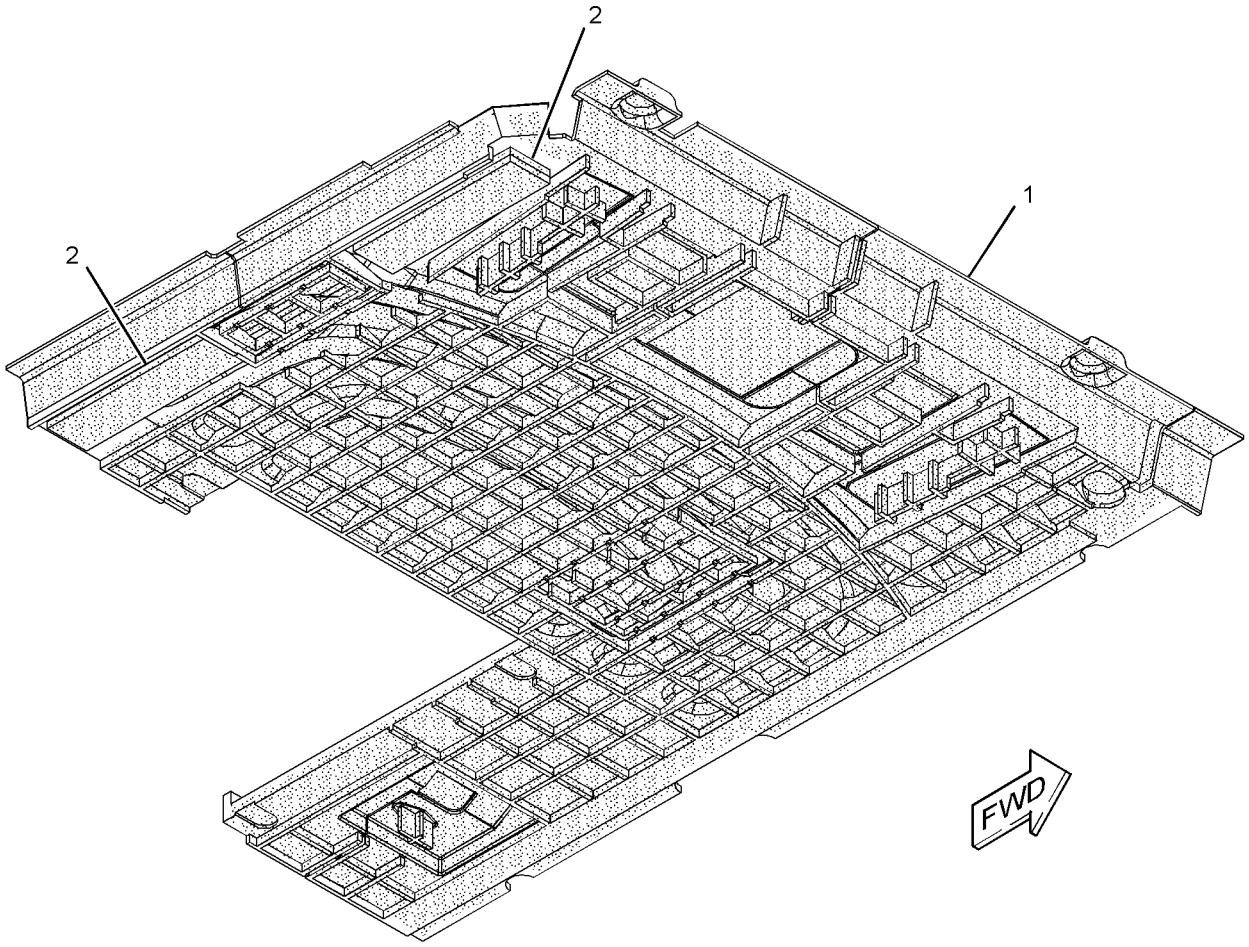

GRAPHIC #1 **<END>** g01437768

OPERATOR STATION

171-7503 FRAME GP-UPPER FRONT WINDOW

S/N: CLA1-UP
PART OF 229-9099, 229-9101, 316-8815 CAB GP
FIELD REPLACEMENT FOR 139-7101 WINDOW GP-CAB
AN ATTACHMENT

SMCS-7340 **i03013743**

NOTE	REF NO	GRAPHIC REF	PART NUMBER	QTY	PART NAME 1 2 3 4 5 6 (PRODUCT LEVEL)	SEE PAGE
	1	1	**161-3698**	1	SEAL	
M	2	1	**101-8900**	2	SCREW AS (M6X1X20-MM)	
	3	1	**151-6703**	1	HANDLE-PULL	
	4	1	**151-6704**	2	CAP (HANDLE)	
	5	1	**151-6778**	1	FRAME AS	
	6	1	**151-6813**	1	BRACKET AS	
	7	1	**151-6815**	1	BRACKET AS	
	8	1	**273-5345**	1	LINK AS	
	9	1	**273-5346**	1	LINK AS	
	10	1	**151-6831**	1	LOCK AS	
	11	1	**151-6832**	1	LEVER AS	
	12	1	**156-6472**	1	GLASS	
	13	1	**170-9722**	1	CUSHION	
	14	1	**151-9576**	4	ROLLER	
M	15	1	**9X-2042**	15	SCREW-TRUSS HEAD (M6X1X12-MM)	

M-METRIC PART

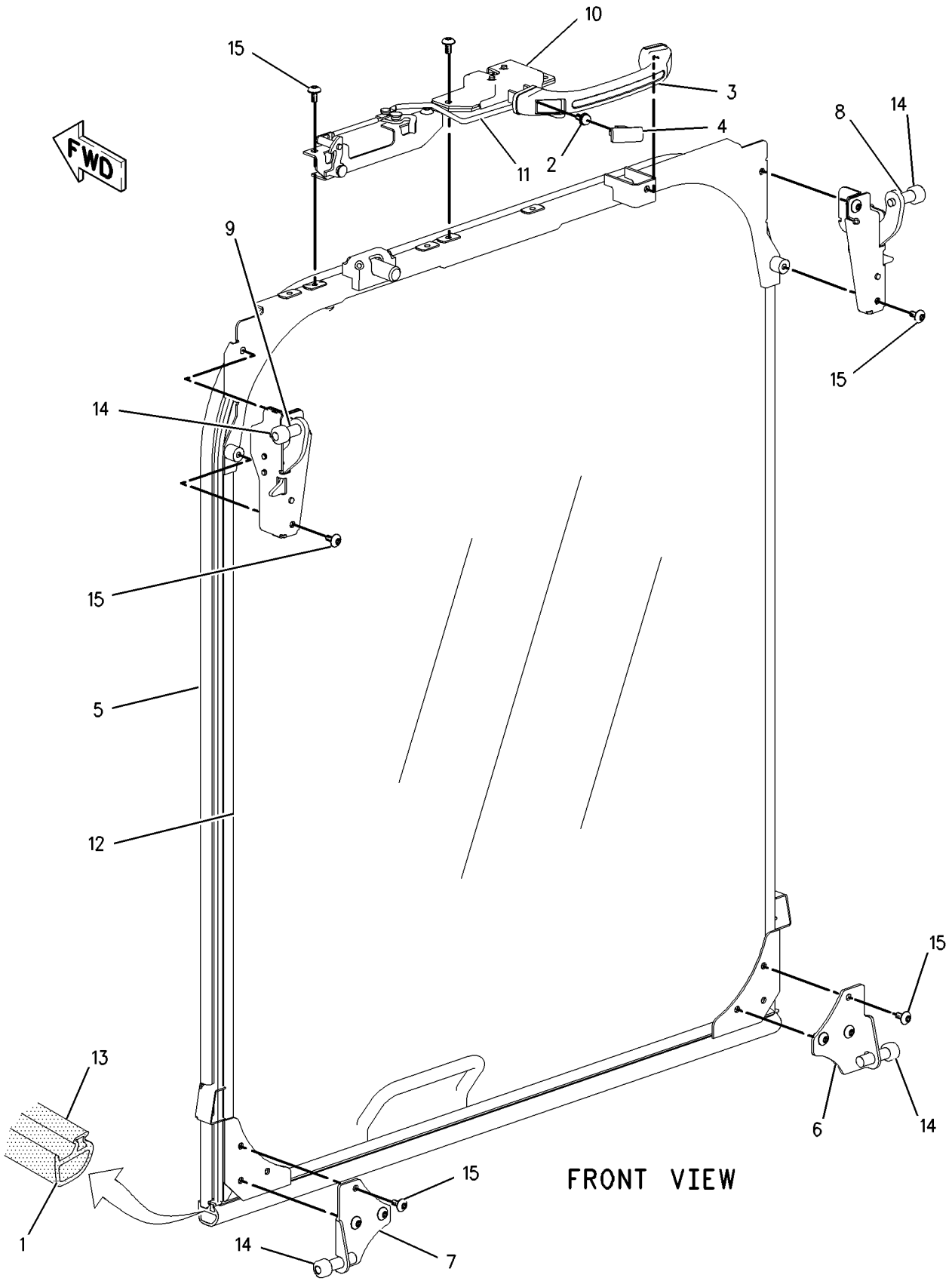

GRAPHIC #1 **<END>** g00852375

178-5549 GUARD AR-OVERHEAD—FOG

S/N: CLA1-UP
CANNOT BE USED WITH VANDALISM GUARD, WINDOW GUARD
AN ATTACHMENT

SMCS-7159 **i01485889**

NOTE	PART NUMBER	QTY	PART NAME 1 2 3 4 5 6 (PRODUCT LEVEL)	SEE PAGE
Y	*171-7485*	1	GUARD GP-FRONT WINDOW	823
Y	*164-0497*	1	GUARD GP-OVERHEAD	825
Y-SEPARATE ILLUSTRATION				

<END>

283-8786 GUARD AR-VANDALISM

S/N: CLA1-UP
CANNOT BE USED WITH 161-3750—PAGE 910
AN ATTACHMENT

SMCS-7315 **i02796205**

NOTE	PART NUMBER	QTY	PART NAME 1 2 3 4 5 6 (PRODUCT LEVEL)	SEE PAGE
Y	*283-3666*	1	STORAGE GP-VANDALISM GUARD	312
Y	*304-0076*	1	COVER GP-ACCESS	268
Y	*207-0159*	1	GUARD GP-VANDALISM (CAB)	827
Y-SEPARATE ILLUSTRATION				

<END>

283-8837 GUARD AR-VANDALISM

S/N: CLA1-UP
AN ATTACHMENT

SMCS-7315 **i02795951**

NOTE	PART NUMBER	QTY	PART NAME 1 2 3 4 5 6 (PRODUCT LEVEL)	SEE PAGE
Y	*283-3666*	1	STORAGE GP-VANDALISM GUARD	312
Y	*304-0076*	1	COVER GP-ACCESS	268
Y	*207-0160*	1	GUARD GP-VANDALISM	828
Y-SEPARATE ILLUSTRATION				

<END>

OPERATOR STATION

164-0534 GUARD GP-FRONT WINDOW—FULL

S/N: CLA1-UP

CANNOT BE USED WITH 164-0535—PAGE 822, 171-7485—PAGE 823

AN ATTACHMENT

TYPE 1

SMCS-7182, 7315 **i02247106**

NOTE	REF NO	GRAPHIC REF	PART NUMBER	QTY	PART NAME 1 2 3 4 5 6 (PRODUCT LEVEL)	SEE PAGE
	1	1	**2Y-5685**	4	RING-RETAINING	
	2	1	**6C-8382**	2	SPRING-LATCH	
	3	1	**176-1928**	2	BRACKET AS	
	4	1	**196-1569**	1	SUPPORT AS	
	5	1	**196-1571**	1	SUPPORT AS	
	6	1	**196-1572**	2	LATCH AS	
	7	1	**258-0330**	2	BRACKET AS	
	8	1	**196-1599**	1	FRAME AS	
	9	1	**201-4534**	2	PIN	
	10	1	**201-4535**	2	PIN	
	11	1	**207-0216**	2	SPRING AS-GAS	
M	12	1	**096-4882**	2	LOCKNUT (M8X1.25-THD)	
M	13	1	**7X-2553**	2	BOLT (M16X2X40-MM)	
M	14	1	**7Y-0623**	2	LOCKNUT (M16X2-THD)	
M	15	1	**8T-4139**	6	BOLT (M12X1.75X30-MM)	
M	16	1	**8T-4192**	2	BOLT (M12X1.75X25-MM)	
	17	1	**8T-4223**	8	WASHER-HARD (13.5X25.5X3-MM THK)	
	18	1	**8T-4224**	4	WASHER-HARD (8.8X16X2-MM THK)	
	19	1	**9X-8257**	4	WASHER (17.5X30X3.5-MM THK)	
	20	1	**4I-6602**	8	BOSS (M12X1.75X20-MM)	

M-METRIC PART

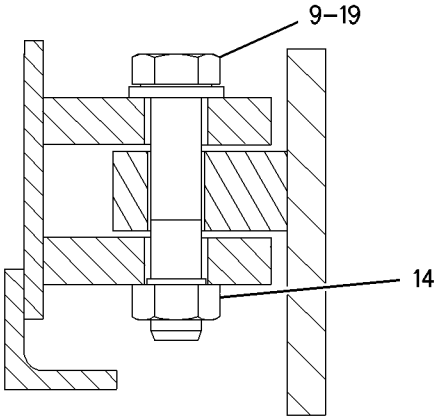

SECTION B-B

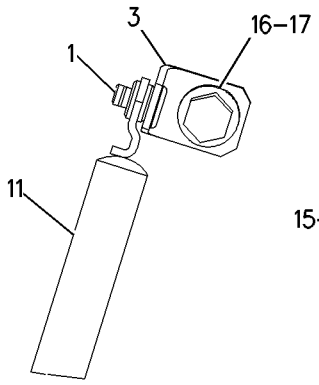

VIEW C-C

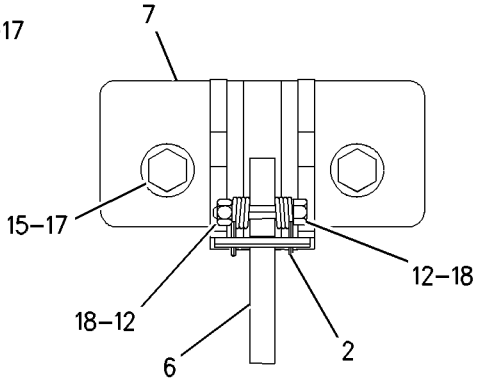

VIEW A-A

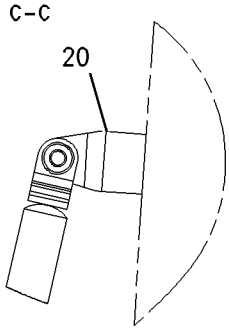

VIEW OF AREA D

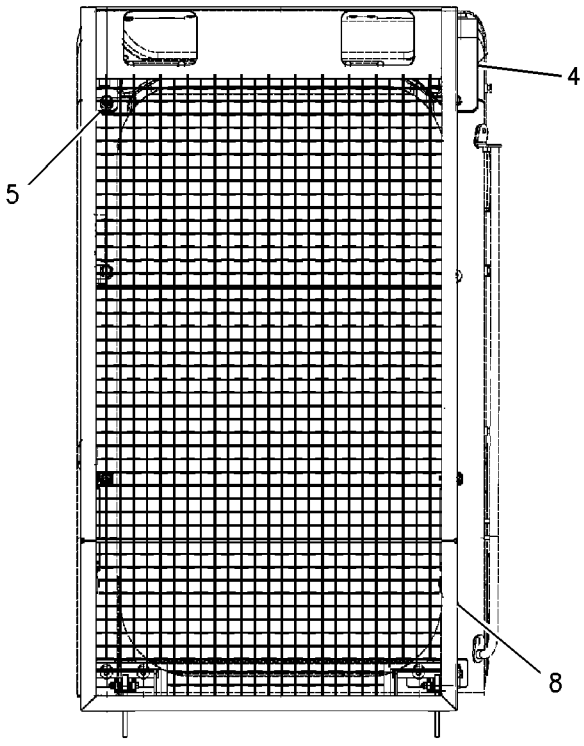

FRONT VIEW

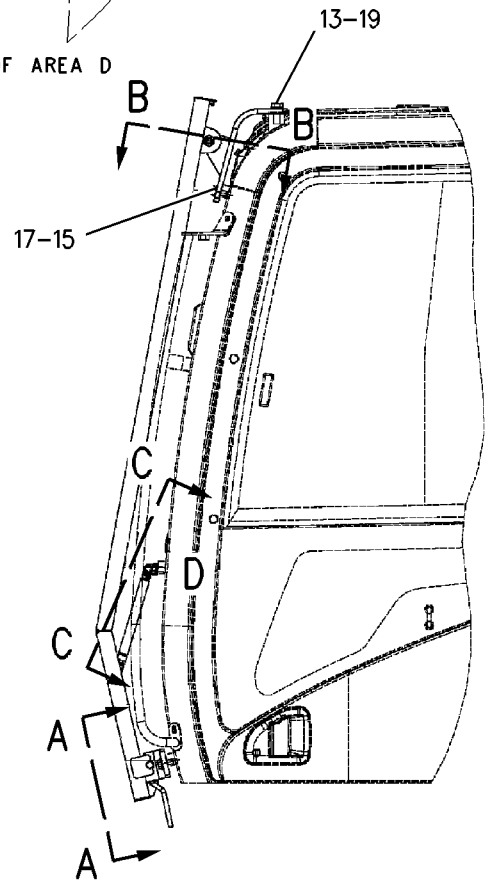

LEFT SIDE VIEW

GRAPHIC #1 **<END>** g00909397

OPERATOR STATION

164-0534 GUARD GP-FRONT WINDOW—FULL

S/N: CLA1-UP
CANNOT BE USED WITH 164-0535—PAGE 822, 171-7485—PAGE 823
AN ATTACHMENT
TYPE 2

SMCS-7182, 7315 **i03142180**

NOTE	REF NO	GRAPHIC REF	PART NUMBER	QTY	PART NAME 1 2 3 4 5 6 (PRODUCT LEVEL)	SEE PAGE
	1	1	**2Y-5685**	4	RING-RETAINING	
	2	1	**6C-8382**	2	SPRING-LATCH	
	3	1	**176-1928**	2	BRACKET AS	
	4	1	**196-1569**	1	SUPPORT AS	
	5	1	**196-1571**	1	SUPPORT AS	
	6	1	**196-1572**	2	LATCH AS	
	7	1	**201-4534**	2	PIN	
	8	1	**201-4535**	2	PIN	
	9	1	**207-0216**	2	SPRING AS-GAS	
	10	1	**258-0330**	2	BRACKET AS	
C	11	1	**327-6601**	1	FRAME AS	
M	12	1	**096-4882**	2	LOCKNUT (M8X1.25-THD)	
	13	1	**4I-6602**	8	BOSS (M12X1.75X20-MM)	
M	14	1	**7X-2553**	2	BOLT (M16X2X40-MM)	
M	15	1	**7Y-0623**	2	LOCKNUT (M16X2-THD)	
M	16	1	**8T-4139**	6	BOLT (M12X1.75X30-MM)	
M	17	1	**8T-4192**	2	BOLT (M12X1.75X25-MM)	
	18	1	**8T-4223**	8	WASHER-HARD (13.5X25.5X3-MM THK)	
	19	1	**8T-4224**	4	WASHER-HARD (8.8X16X2-MM THK)	
	20	1	**9X-8257**	4	WASHER (17.5X30X3.5-MM THK)	

C-CHANGE FROM PREVIOUS TYPE
M-METRIC PART

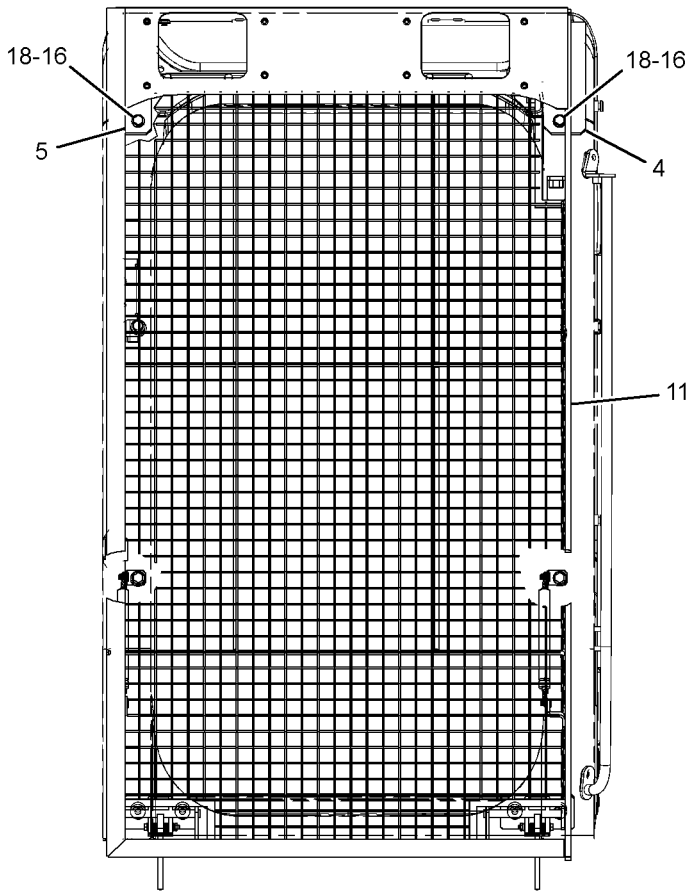

FRONT VIEW

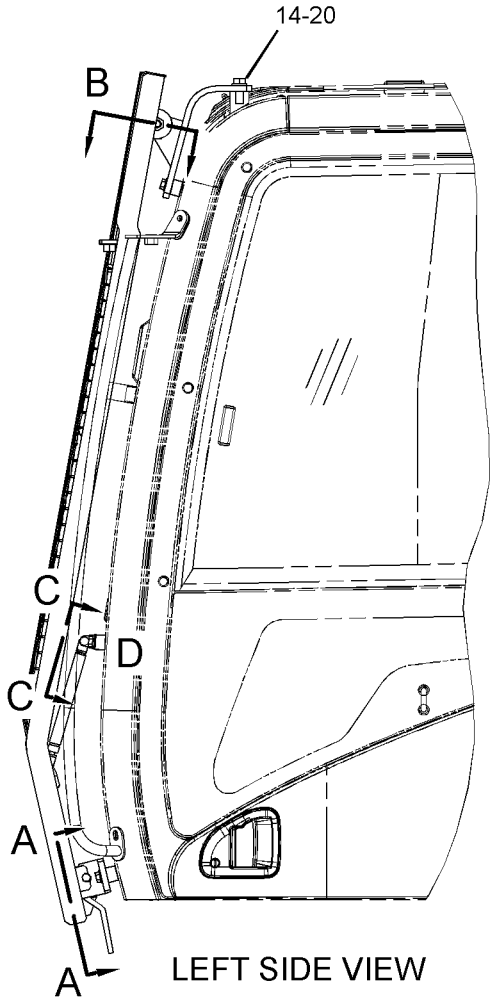

LEFT SIDE VIEW

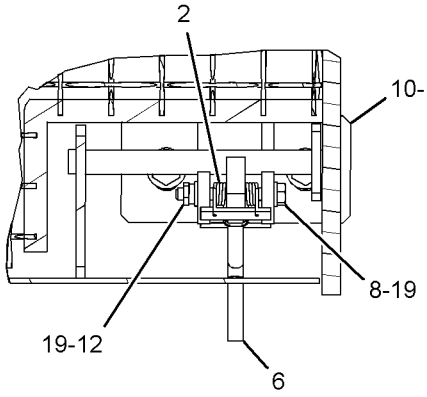

SECTION A-A

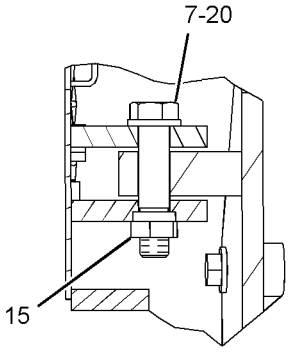

SECTION B

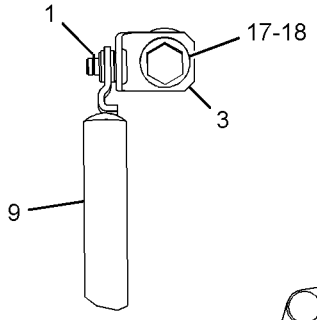

VIEW C-C

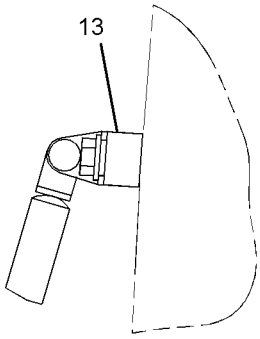

VIEW OF AREA D

GRAPHIC #1

<END>

g01619617

OPERATOR STATION

164-0535 GUARD GP-FRONT WINDOW–LOWER

S/N: CLA1-UP
AN ATTACHMENT

SMCS-7182, 7315 **i02909135**

NOTE	REF NO	GRAPHIC REF	PART NUMBER	QTY	PART NAME 1 2 3 4 5 6 (PRODUCT LEVEL)	SEE PAGE
M	1	1	**8T-4192**	4	BOLT (M12X1.75X25-MM)	
	2	1	**8T-4223**	4	WASHER-HARD (13.5X25.5X3-MM THK)	
	3	1	**167-7055**	1	FRAME AS	
	4	1	**4I-6602**	4	BOSS (M12X1.75X20-MM)	

M-METRIC PART

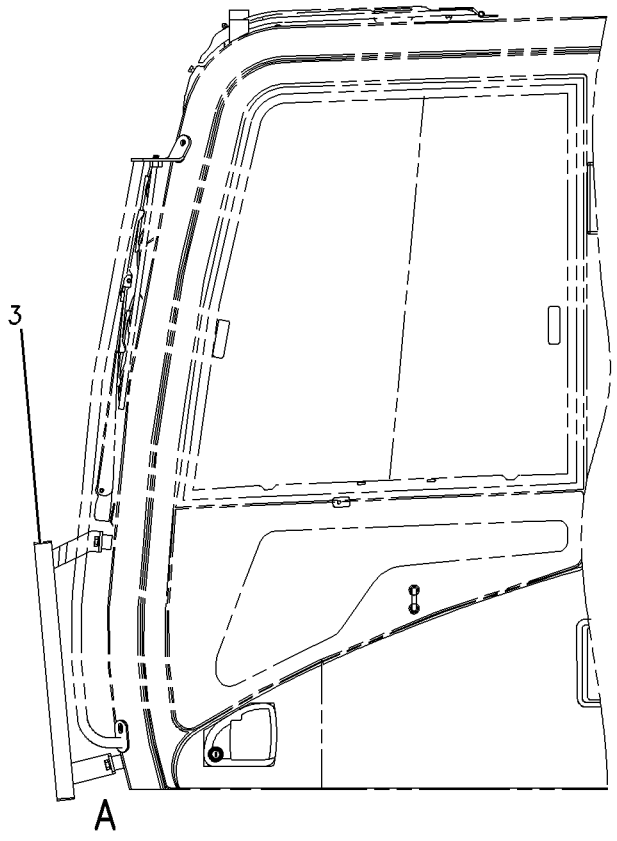

LEFT SIDE VIEW

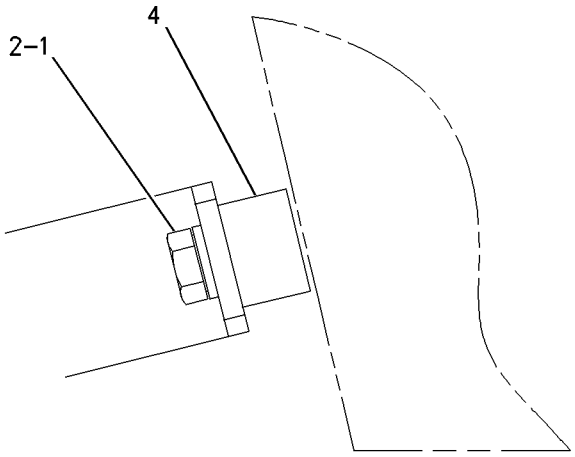

VIEW OF AREA A

GRAPHIC #1 **<END>** g00689592

OPERATOR STATION

171-7485 GUARD GP-FRONT WINDOW

S/N: CLA1-UP

PART OF 178-5549 GUARD AR-OVERHEAD

CANNOT BE USED WITH 164-0534—PAGE 818, 164-0535—PAGE 822, 161-3750—PAGE 910

AN ATTACHMENT

SMCS-7182, 7315 **i03139021**

NOTE	REF NO	GRAPHIC REF	PART NUMBER	QTY	PART NAME 1 2 3 4 5 6 (PRODUCT LEVEL)	SEE PAGE
	1	1	**5D-4822**	4	RING-RETAINING	
	2	1	**6C-8382**	2	SPRING-LATCH	
	4	1	**316-8908**	1	GUARD AS-WINDOW	
	5	1	**176-1925**	2	SPRING AS-GAS	
	6	1	**176-1928**	2	BRACKET AS	
	7	1	**196-1569**	1	SUPPORT AS	
	8	1	**196-1571**	1	SUPPORT AS	
	9	1	**196-1572**	2	LATCH AS	
	10	1	**258-0330**	2	BRACKET AS	
	11	1	**201-4534**	2	PIN	
	12	1	**201-4535**	2	PIN	
M	13	1	**096-4882**	2	LOCKNUT (M8X1.25-THD)	
B	15	1	**4I-6602**	8	BOSS (M12X1.75X20-MM)	
M	16	1	**7X-2553**	2	BOLT (M16X2X40-MM)	
M	17	1	**7Y-0623**	2	LOCKNUT (M16X2-THD)	
M	18	1	**8T-4139**	6	BOLT (M12X1.75X30-MM)	
M	19	1	**8T-4192**	2	BOLT (M12X1.75X25-MM)	
	20	1	**8T-4223**	8	WASHER-HARD (13.5X25.5X3-MM THK)	
	21	1	**8T-4224**	4	WASHER-HARD (8.8X16X2-MM THK)	
	22	1	**9X-8257**	4	WASHER (17.5X30X3.5-MM THK)	
	23	1	**298-4195**	1	FILM-CERTIFICATION (OPS GUARD, READ OMM, ENGLISH)	
	25	1	**219-0305**	1	FILM-WARNING (NO WELD, NO DRILL, READ OMM)	

B-USE AS REQUIRED
M-METRIC PART

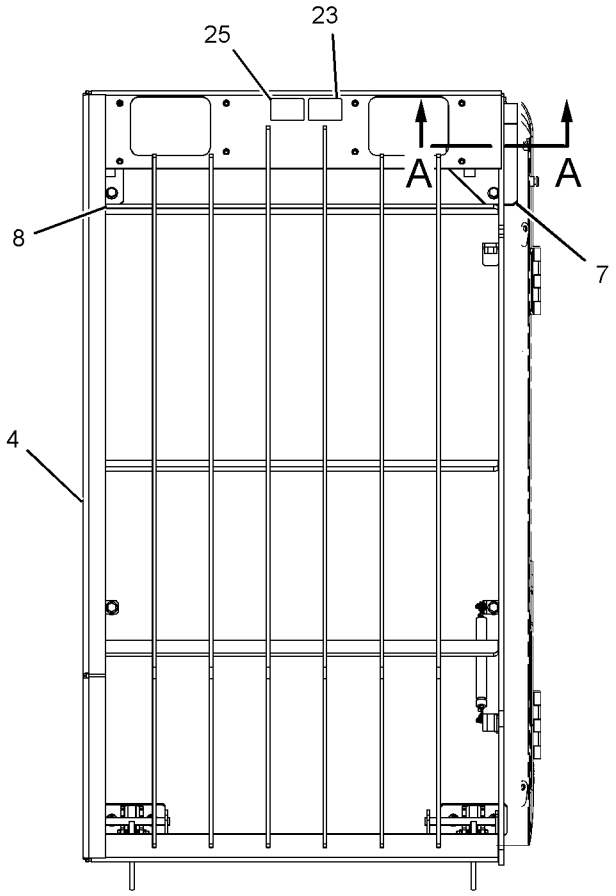

FRONT VIEW

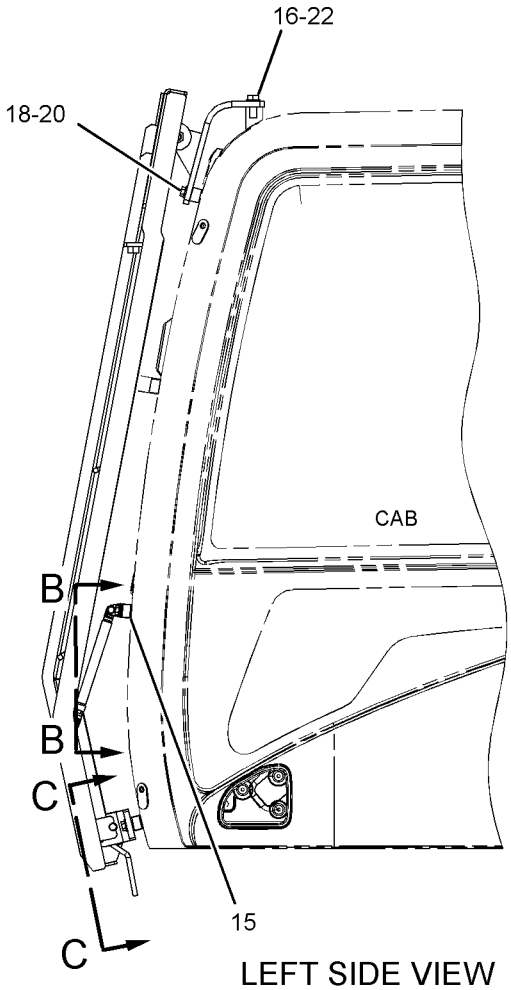

LEFT SIDE VIEW

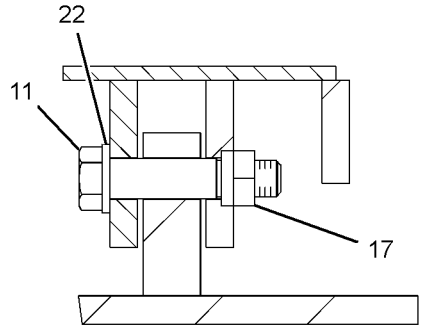

SECTION A-A

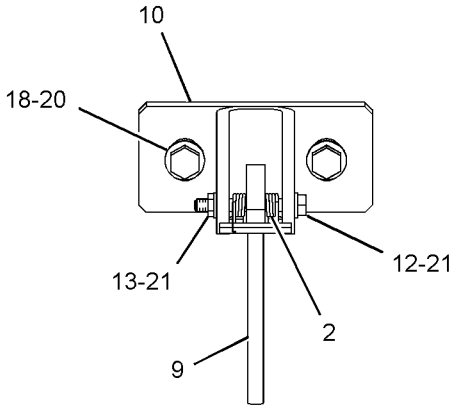

SECTION C-C

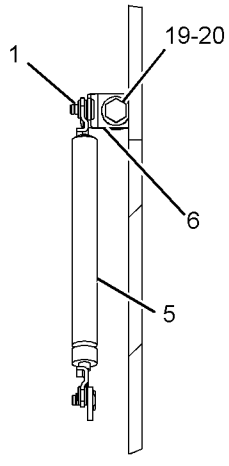

SECTION B-B

GRAPHIC #1 **<END>** g01620958

OPERATOR STATION

164-0497 GUARD GP-OVERHEAD

S/N: CLA1-UP
PART OF 178-5549 GUARD AR-OVERHEAD
AN ATTACHMENT

SMCS-7159 **i03253683**

NOTE	REF NO	GRAPHIC REF	PART NUMBER	QTY	PART NAME 1 2 3 4 5 6 (PRODUCT LEVEL)	SEE PAGE
	1	1	**8V-1715**	2	SPACER (20.5X35X12-MM THK)	
	2	1	**167-7141**	1	GUARD AS	
	3	1	**219-0305**	1	FILM-WARNING (NO WELD, NO DRILL, READ OMM)	
	4	1	**298-4196**	1	FILM-CERTIFICATION (OPS GUARD, READ OMM)	
	6	1	**090-8865**	2	SPACER (17X40X3-MM THK)	
					(WHEN EQUIPPED WITH CAB LIGHTS)	
					-OR-	
		1	**090-8865**	3	SPACER (17X40X3-MM THK)	
					(WHEN EQUIPPED WITH PRODUCT LINK)	
					-OR-	
		1	**090-8865**	1	SPACER (17X40X3-MM THK)	
					(WHEN EQUIPPED WITH CAB LIGHTS AND PRODUCT LINK)	
M	7	1	**7X-2559**	2	BOLT (M16X2X160-MM)	
M	8	1	**8T-4174**	2	BOLT (M16X2X120-MM)	
	9	1	**9X-8257**	4	WASHER (17.5X30X3.5-MM THK)	

M-METRIC PART

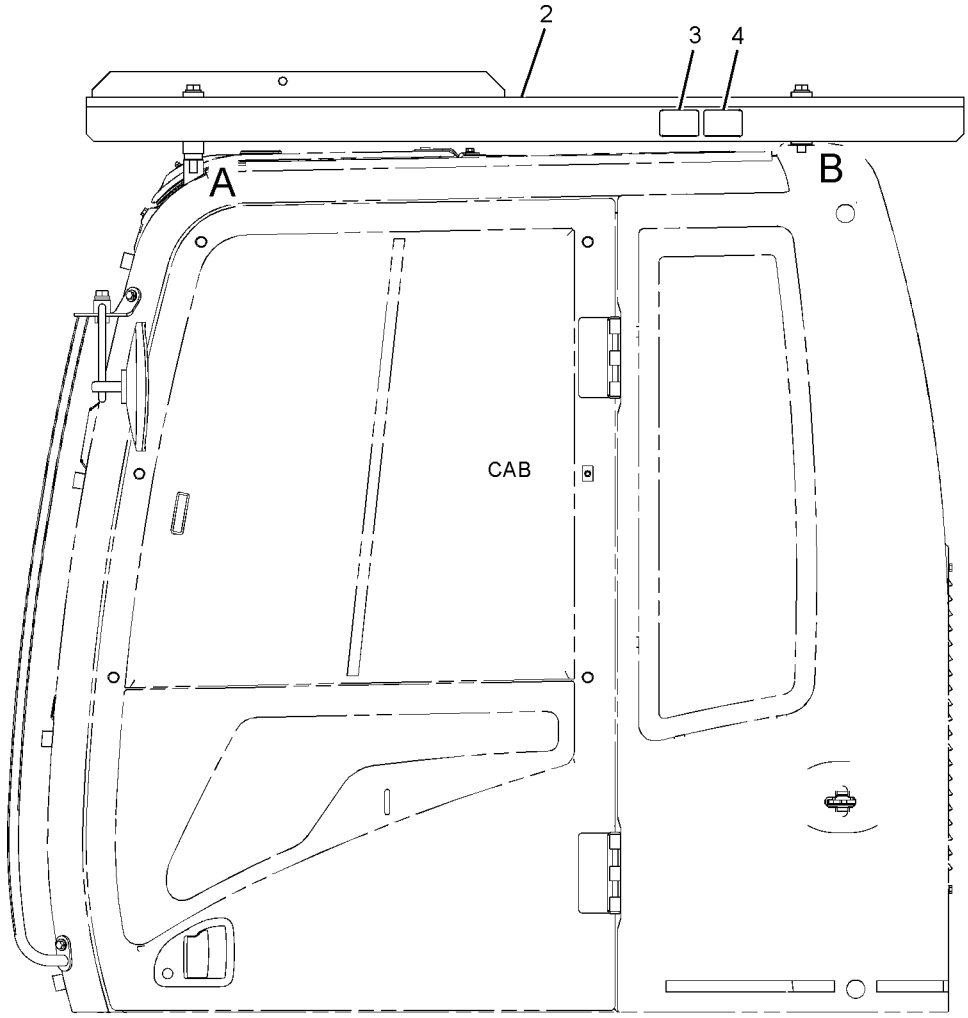

LEFT SIDE VIEW

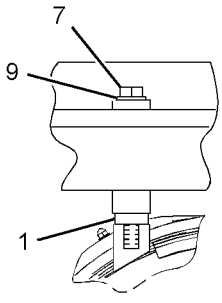

VIEW OF AREA A

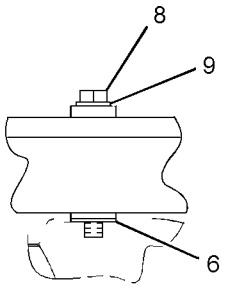

VIEW OF AREA B

GRAPHIC #1 **<END>** g01654213

OPERATOR STATION

207-0159 GUARD GP-VANDALISM—CAB

S/N: CLA1-UP

PART OF 283-8786 GUARD AR-VANDALISM

AN ATTACHMENT

SMCS-7315 **i02110739**

NOTE	REF NO	GRAPHIC REF	PART NUMBER	QTY	PART NAME 1 2 3 4 5 6 (PRODUCT LEVEL)	SEE PAGE
	1	1	**7Y-8621**	6	PIN	
	2	1	**7Y-8622**	1	PIN	
	3	1	**207-0161**	1	GUARD AS	
		1	**8H-2282**	2	HINGE	
	4	1	**207-0164**	1	GUARD AS	
		1	**8H-2282**	2	HINGE	
	5	1	**207-0167**	1	GUARD AS	
		1	**8H-2282**	2	HINGE	
	6	1	**207-0170**	1	GUARD AS	
		1	**8H-2282**	2	HINGE	
	7	1	**207-0173**	1	GUARD AS	
		1	**8H-2282**	2	HINGE	
M	8	1	**8T-4200**	2	BOLT (M8X1.25X16-MM)	
	9	1	**8T-4224**	2	WASHER-HARD (8.8X16X2-MM THK)	

M-METRIC PART

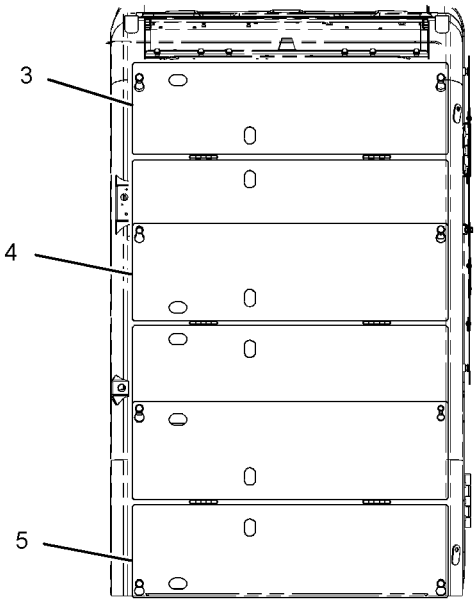

FRONT VIEW

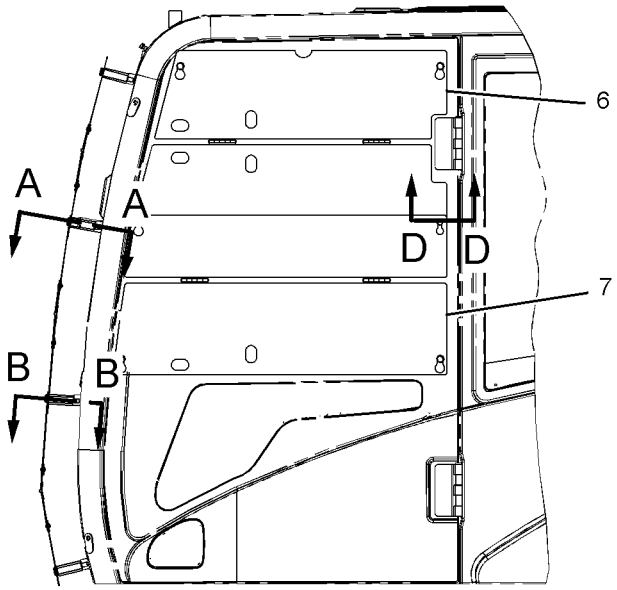

LEFT SIDE VIEW

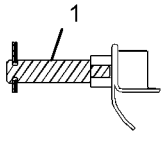

SECTION A-A

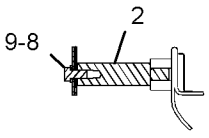

SECTION B-B

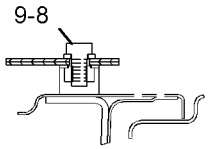

SECTION D-D

GRAPHIC #1

<END>

g01079377

OPERATOR STATION

207-0160 GUARD GP-VANDALISM–CAB

S/N: CLA1-UP
PART OF 283-8837 GUARD AR-VANDALISM
AN ATTACHMENT

SMCS-7315 **i01707116**

NOTE	REF NO	GRAPHIC REF	PART NUMBER	QTY	PART NAME 1 2 3 4 5 6 (PRODUCT LEVEL)	SEE PAGE
	1	1	**7Y-8621**	4	PIN	
	2	1	**7Y-8622**	1	PIN	
	3	1	**164-0643**	1	BRACKET AS	
	4	1	**207-0164**	1	GUARD AS	
		1	**8H-2282**	2	HINGE	
	5	1	**207-0167**	1	GUARD AS	
		1	**8H-2282**	2	HINGE	
	6	1	**207-0170**	1	GUARD AS	
		1	**8H-2282**	2	HINGE	
	7	1	**207-0173**	1	GUARD AS	
		1	**8H-2282**	2	HINGE	
	8	1	**207-0176**	1	GUARD AS	
		1	**8H-2282**	2	HINGE	
M	9	1	**8T-4138**	4	BOLT (M6X1X20MM)	
M	10	1	**8T-4200**	2	BOLT (M8X1.25X16MM)	
	11	1	**8T-4224**	2	WASHER-HARD (8.8X16X2MM THK)	

M-METRIC PART

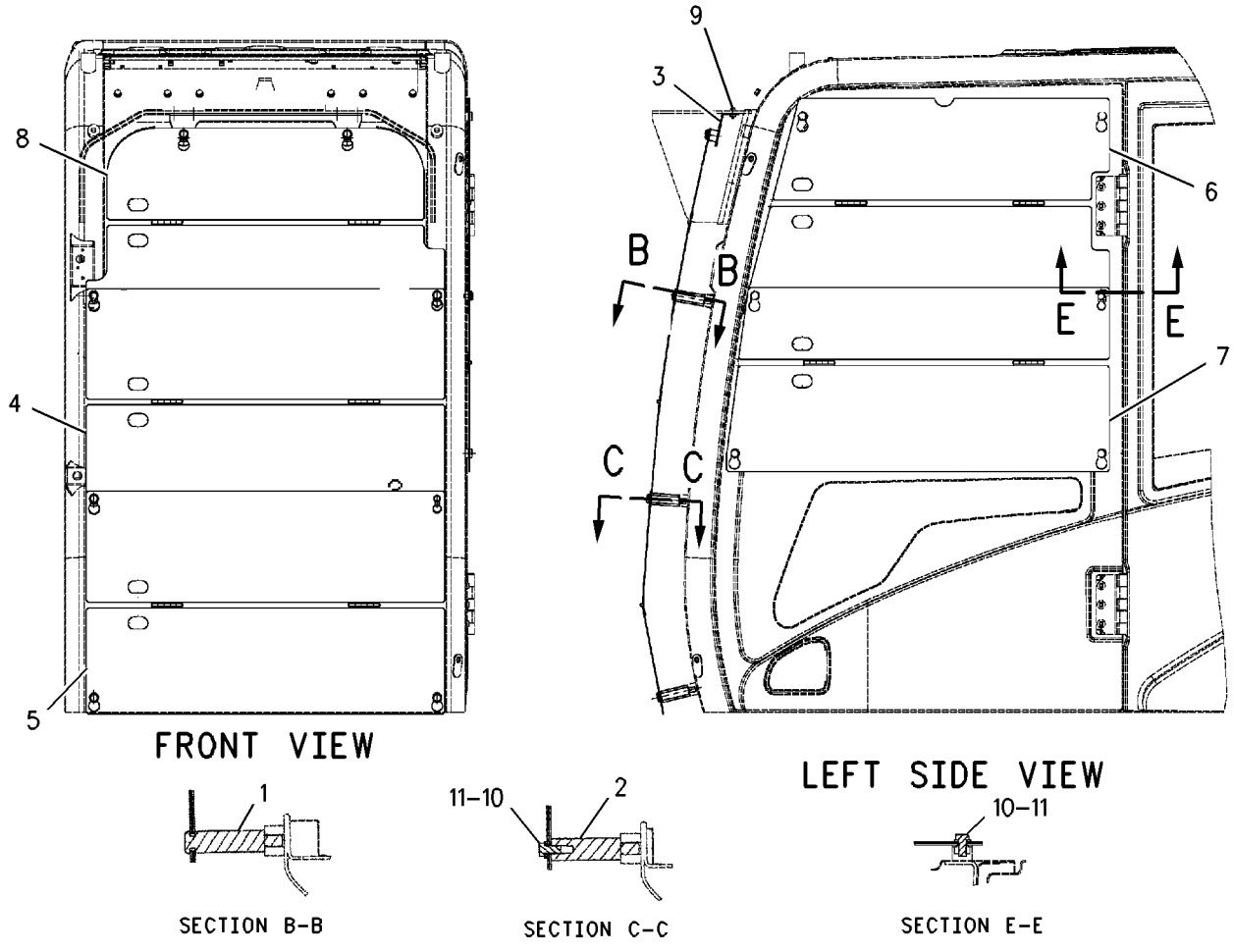

GRAPHIC #1 **<END>** g00880379

OPERATOR STATION

139-7099 HATCH GP-ROOF

S/N: CLA1-UP
PART OF 229-9099, 229-9101, 316-8815 CAB GP
AN ATTACHMENT

SMCS-7303 **i02757434**

NOTE	REF NO	GRAPHIC REF	PART NUMBER	QTY	PART NAME 1 2 3 4 5 6 (PRODUCT LEVEL)	SEE PAGE
	1	1	**2Y-5685**	4	RING-RETAINING	
	2	1	**099-3506**	2	SPRING AS-GAS	
M	3	1	**105-2169**	4	BOLT AS (M8X1.25X16-MM)	
Y	4	1	**189-2849**	1	HATCH GP-ROOF	830
	5	1	**189-2847**	1	SEAL	

M-METRIC PART
Y-SEPARATE ILLUSTRATION

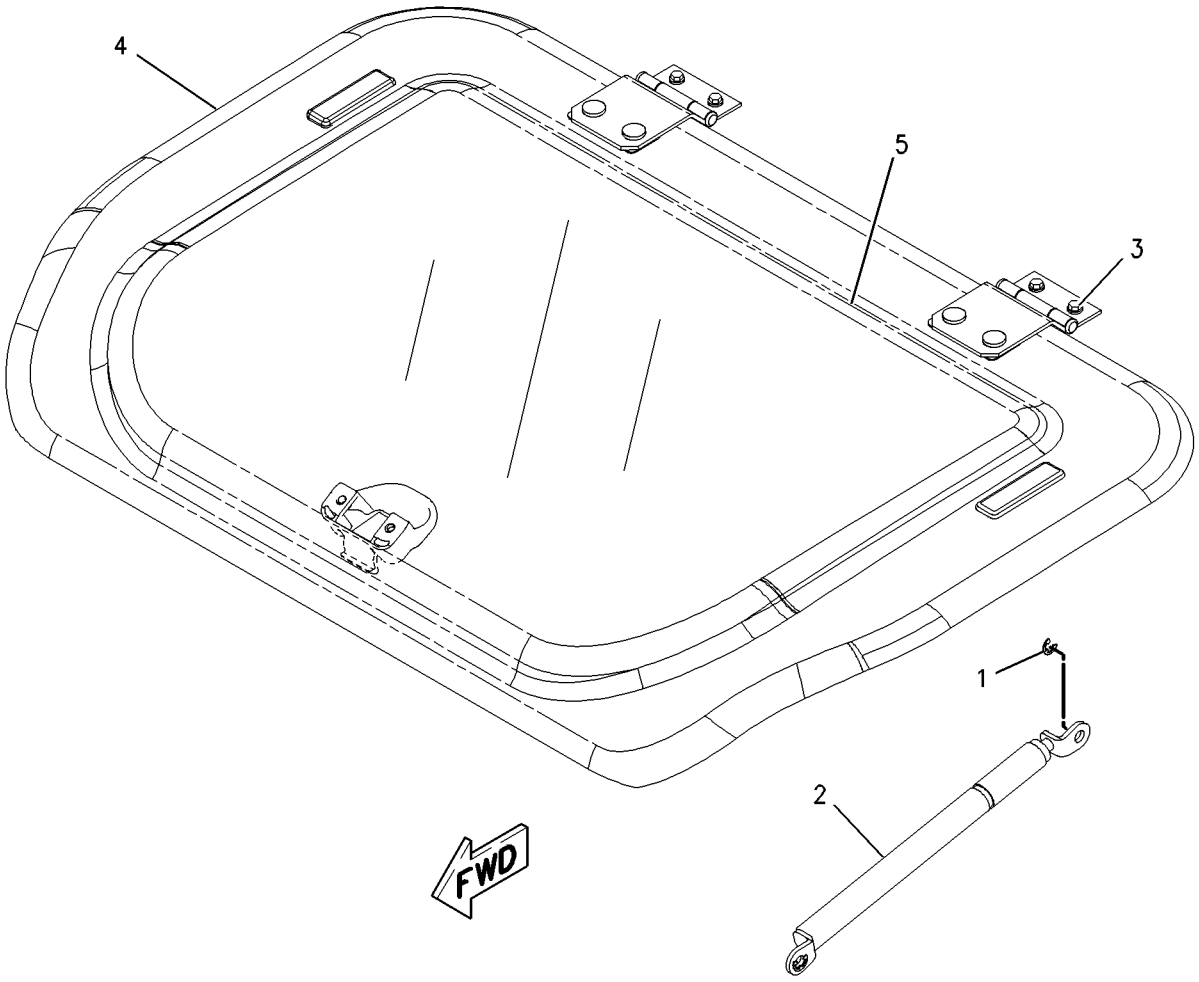

GRAPHIC #1 **<END>** g00737364

OPERATOR STATION

189-2849 HATCH GP-ROOF

S/N: CLA1-UP
PART OF 139-7099 HATCH GP-ROOF
AN ATTACHMENT

SMCS-7303 **i01895765**

NOTE	REF NO	GRAPHIC REF	PART NUMBER	QTY	PART NAME 1 2 3 4 5 6 (PRODUCT LEVEL)	SEE PAGE
	1	1	**161-3694**	1	CATCH	
	2	1	**189-2693**	1	BRACKET AS (RH)	
	3	1	**189-2694**	1	BRACKET AS (LH)	
	4	1	**189-2716**	2	HINGE AS	
Z	5	1		1	COVER	
	6	1	**085-6449**	2	PACKING	
M	7	1	**100-2881**	4	SCREW-TRUSS HEAD	
	8	1	**171-7477**	2	NUT	
	9	1	**4I-1260**	2	PACKING	
	10	1	**4I-4361**	2	RETAINER	
M	11	1	**6I-5342**	4	NUT (M8X1.25-THD)	
M	12	1	**9X-2045**	2	SCREW-TRUSS HEAD (M6X1X20-MM)	

M-METRIC PART
Z-NOT SERVICED SEPARATELY

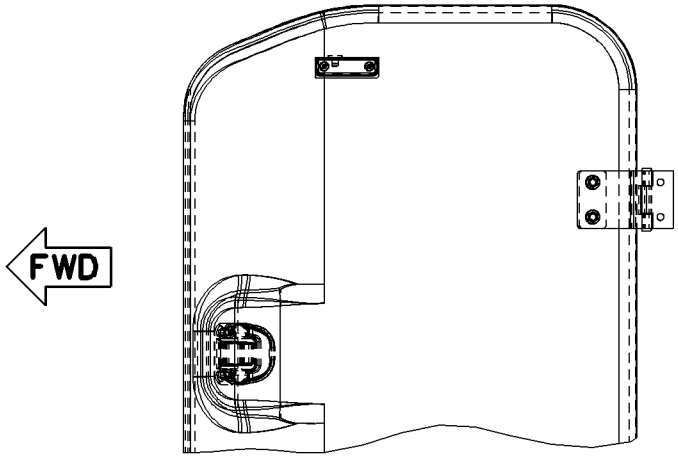

TOP VIEW

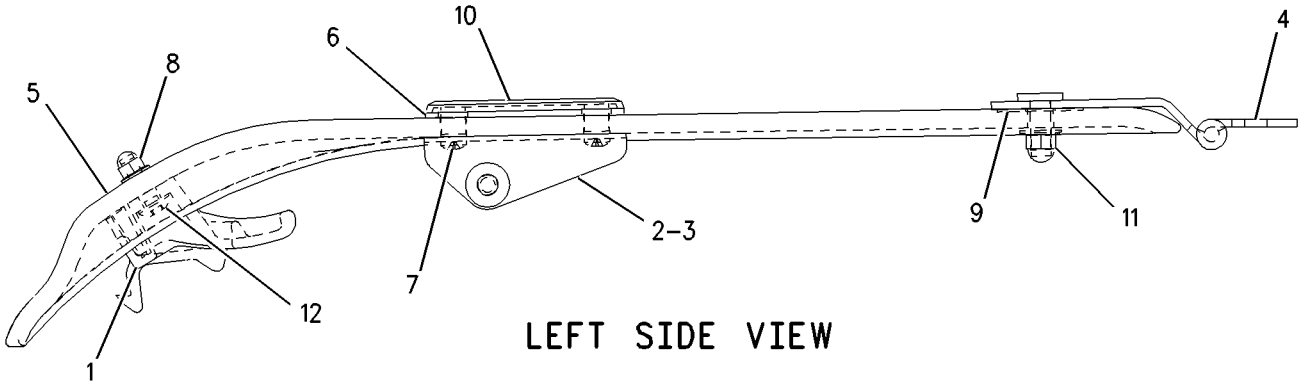

LEFT SIDE VIEW

GRAPHIC #1 **<END>** g00986370

OPERATOR STATION

229-9094 HEADREST AS-SEAT—CLOTH

S/N: CLA1-UP

AN ATTACHMENT

SMCS-7312 **i02232852**

NOTE	REF NO	GRAPHIC REF	PART NUMBER	QTY	PART NAME 1 2 3 4 5 6 (PRODUCT LEVEL)	SEE PAGE
					(NO SERVICED PARTS)	

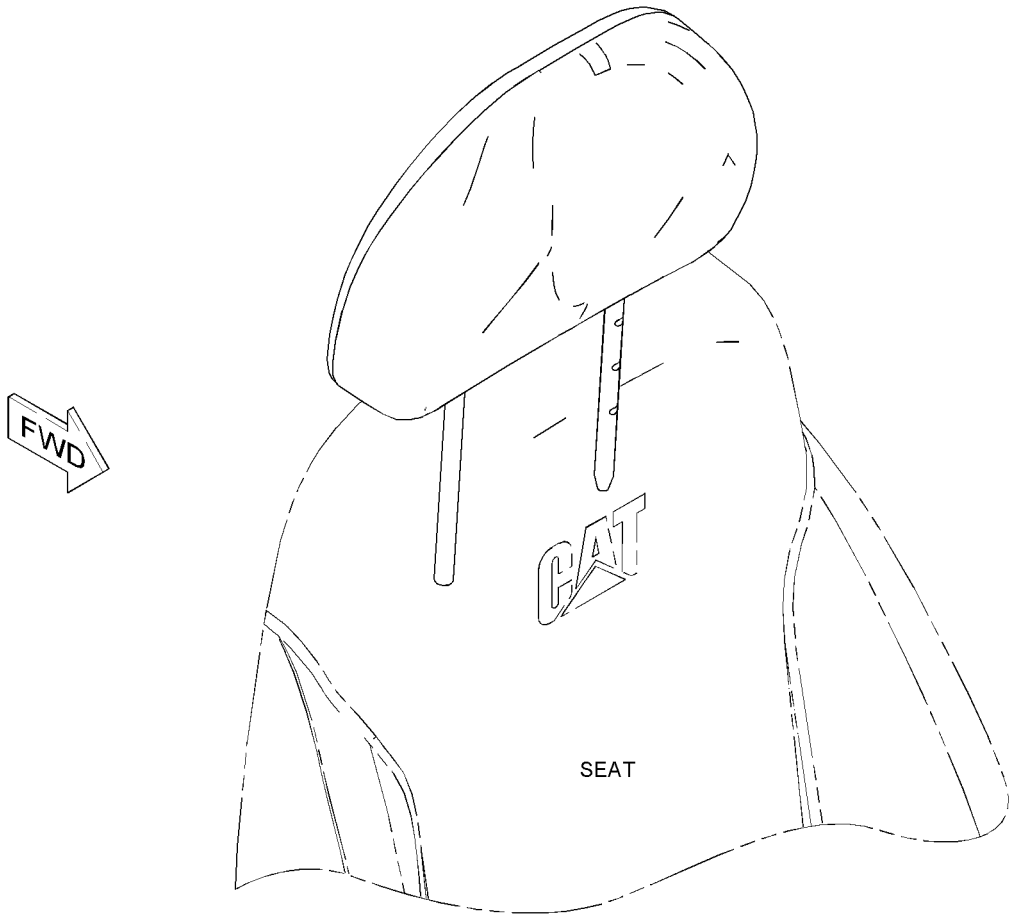

GRAPHIC #1 **<END>** g01126613

OPERATOR STATION

327-6514 HEADREST AS-SEAT

S/N: CLA1-UP

AN ATTACHMENT

SMCS-7312 **i03213631**

NOTE	REF NO	GRAPHIC REF	PART NUMBER	QTY	PART NAME 1 2 3 4 5 6 (PRODUCT LEVEL)	SEE PAGE
					(NO SERVICED PARTS)	

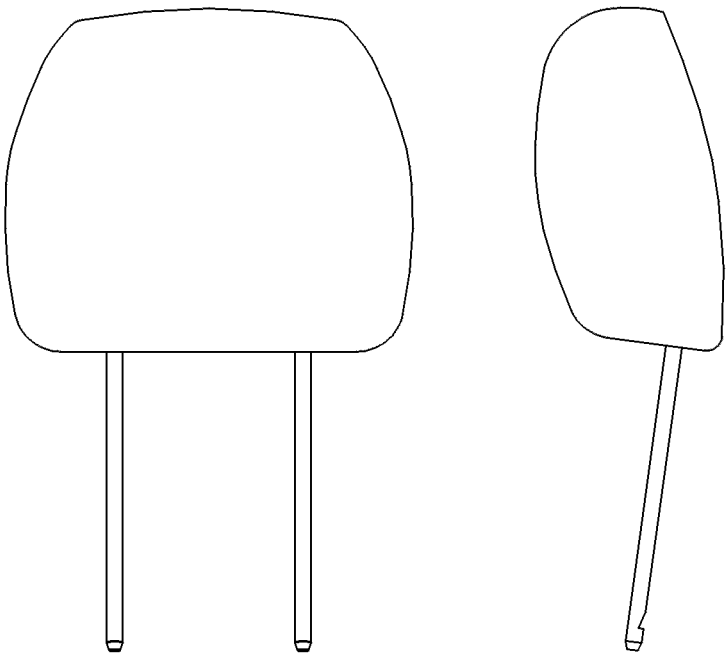

GRAPHIC #1 **<END>** g00242379

OPERATOR STATION

327-6515 HEADREST AS-SEAT

S/N: CLA1-UP
PART OF 327-6512 SEAT GP
AN ATTACHMENT

SMCS-7312 **i03090223**

NOTE	REF NO	GRAPHIC REF	PART NUMBER	QTY	PART NAME 1 2 3 4 5 6 (PRODUCT LEVEL)	SEE PAGE
					(NO SERVICED PARTS)	

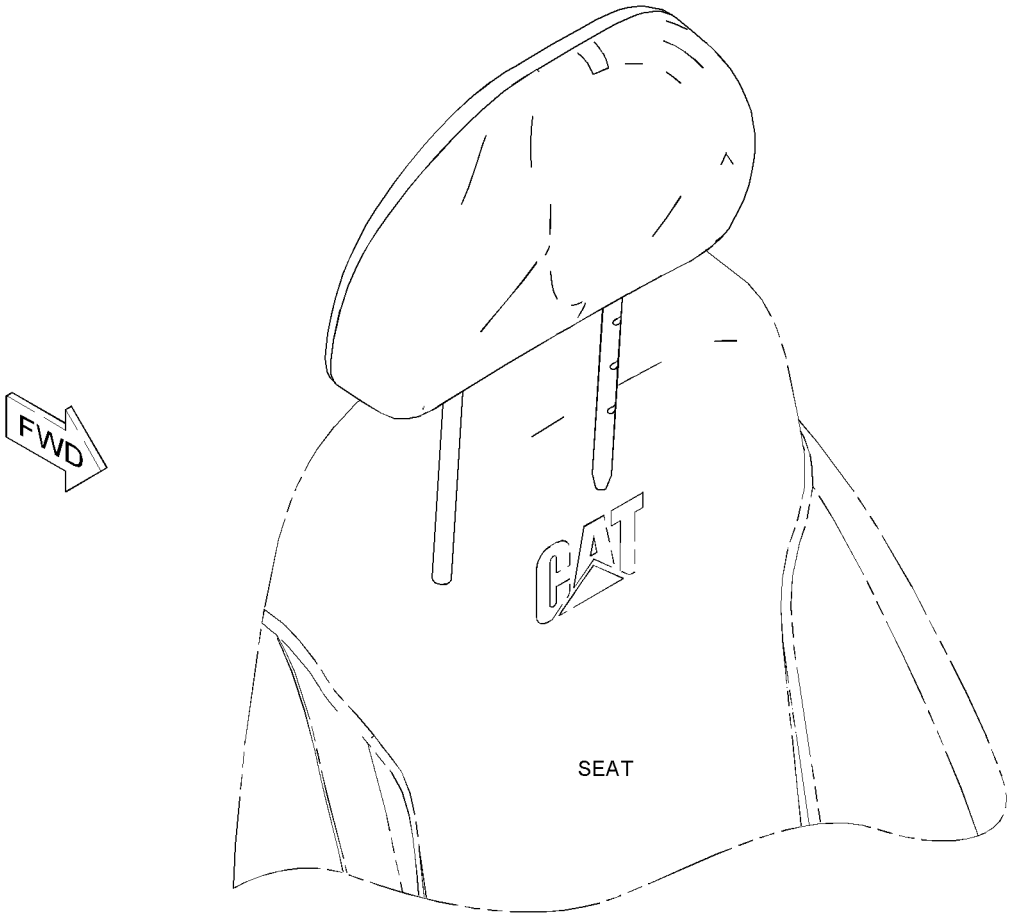

GRAPHIC #1 **<END>** g01126613

OPERATOR STATION

229-9084 HEATER & MTG GP-CAB

S/N: CLA1-UP

PART OF 273-5440 HEATER AR-CAB

AN ATTACHMENT

SMCS-7304 **i02911100**

NOTE	REF NO	GRAPHIC REF	PART NUMBER	QTY	PART NAME 1 2 3 4 5 6 (PRODUCT LEVEL)	SEE PAGE
	1	1	**235-8873**	1	HARNESS AS-HEATER & AIR COND (CONTROL PANEL SWITCHES)	
	2	1	**235-8874**	1	SENSOR-TEMPERATURE (AMBIENT AIR)	
	3	1	**235-8875**	1	BRACKET	
CY	4	1	**316-8811**	1	AIR CONDITIONER GP	717
	5	1	**293-1138**	1	PANEL AS-CONTROL	
	6	1	**245-7858**	1	HARNESS AS-HEATER	
M	8	1	**099-2374**	2	BOLT-SOCKET HEAD (M5X0.8X12-MM)	
	9	1	**111-4836**	3	CLIP	
	10	1	**3S-2093**	2	STRAP-CABLE	
M	11	1	**5C-9553**	1	BOLT (M6X1X16-MM)	
	12	1	**7X-7729**	7	WASHER (11X25X3-MM THK)	
	13	1	**8T-0328**	2	WASHER-HARD (5.5X10X1-MM THK)	
	14	1	**8T-4121**	3	WASHER-HARD (11X21X2.5-MM THK)	
M	15	1	**8T-4136**	7	BOLT (M10X1.5X25-MM)	
M	16	1	**8T-4137**	3	BOLT (M10X1.5X20-MM)	
	17	1	**9X-8256**	1	WASHER (6.6X12X2-MM THK)	

C-CHANGE FROM PREVIOUS TYPE
M-METRIC PART
Y-SEPARATE ILLUSTRATION

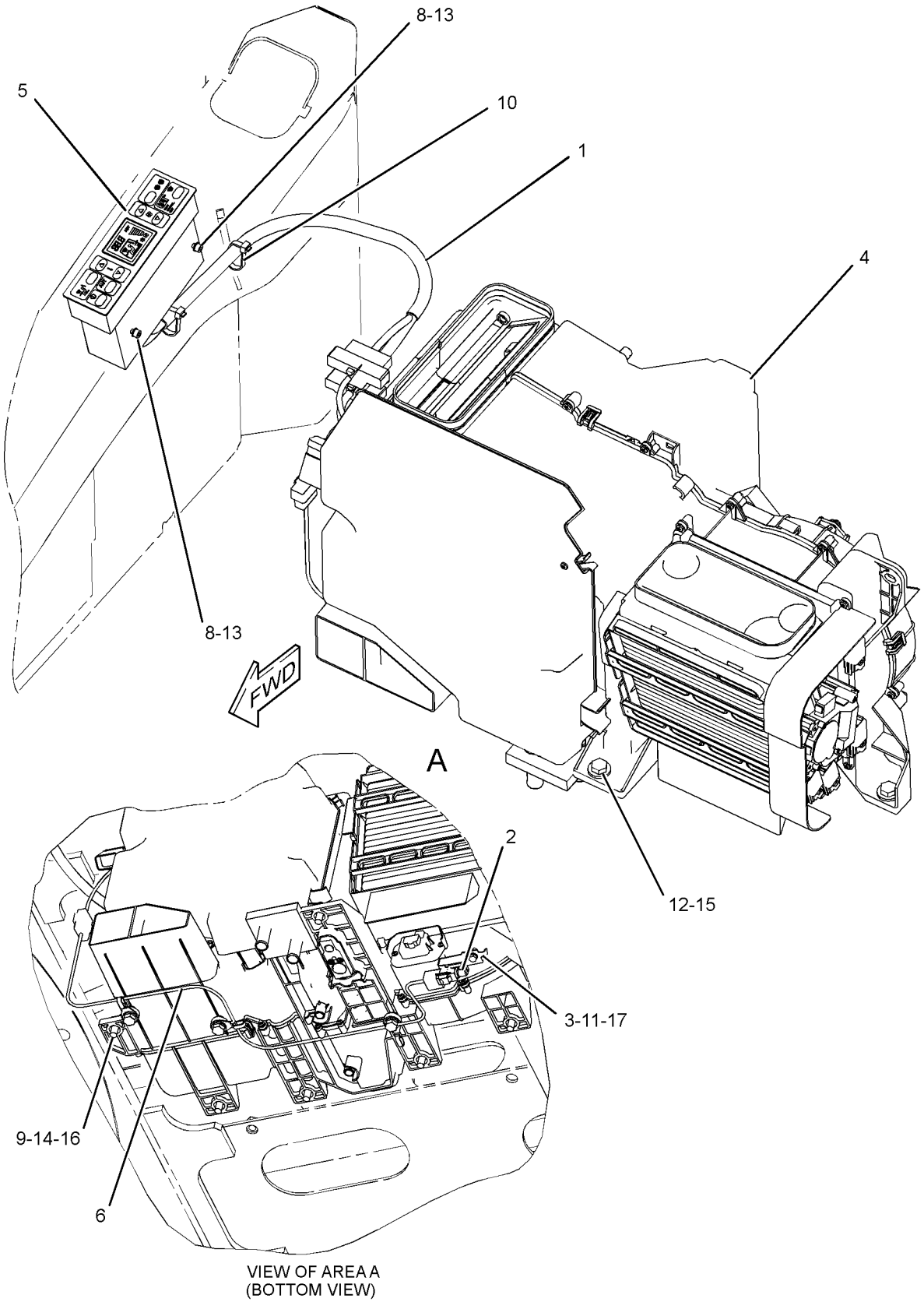

VIEW OF AREA A
(BOTTOM VIEW)

GRAPHIC #1 **<END>** g01405002

OPERATOR STATION

273-5440 HEATER AR

S/N: CLA1-UP

AN ATTACHMENT

SMCS-7304 **i02838075**

NOTE	PART NUMBER	QTY	PART NAME 1 2 3 4 5 6 (PRODUCT LEVEL)	SEE PAGE
Y	*229-9082*	1	DUCT GP-CAB AIR	807
Y	*229-9084*	1	HEATER & MTG GP-CAB	834
Y	*273-5441*	1	LINES GP-HEATER	851

Y-SEPARATE ILLUSTRATION

<END>

OPERATOR STATION

275-6874 HORN GP-ELECTRIC

S/N: CLA1-UP

PART OF 260-7231 CHASSIS AR

SMCS-7402 **i02599628**

NOTE	REF NO	GRAPHIC REF	PART NUMBER	QTY	PART NAME 1 2 3 4 5 6 (PRODUCT LEVEL)	SEE PAGE
Y	1	1	*275-6875*	1	HORN GP-ELECTRIC	838
	2	1	**8T-4121**	2	WASHER-HARD (11X21X2.5-MM THK)	
M	3	1	**8T-4137**	2	BOLT (M10X1.5X20-MM)	

M-METRIC PART
Y-SEPARATE ILLUSTRATION

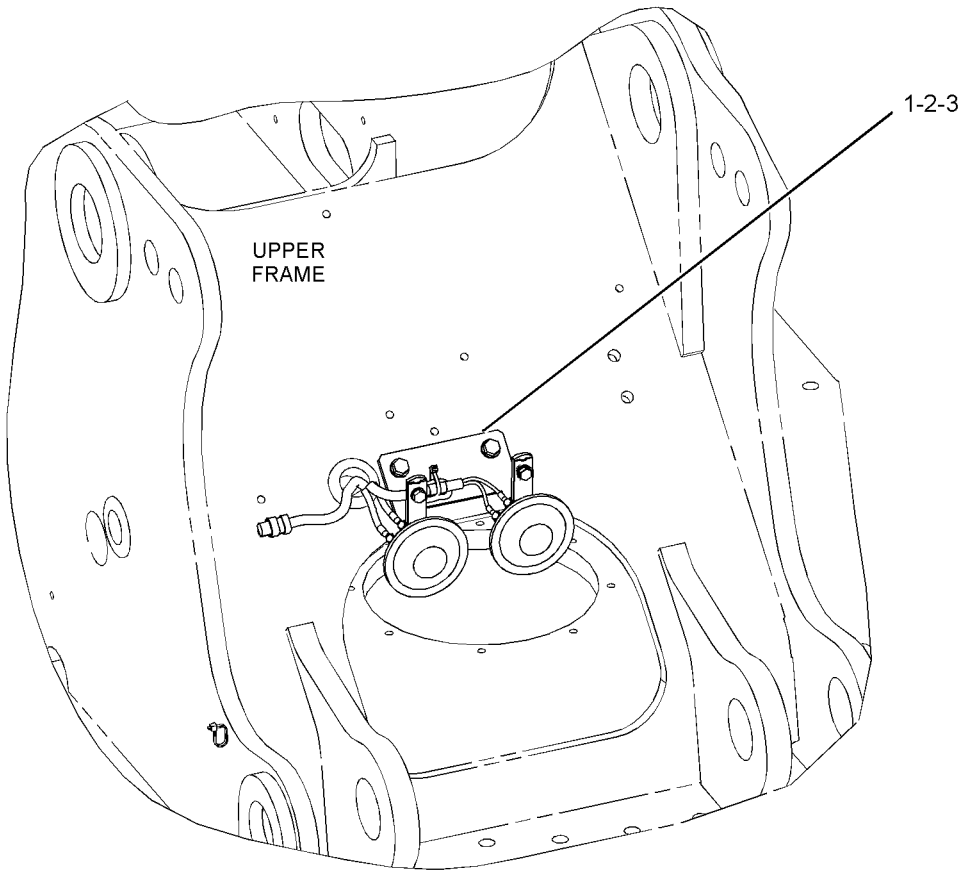

FRONT VIEW
(UPPER RIGHT)

GRAPHIC #1 **<END>** g01304388

OPERATOR STATION

275-6875 HORN GP-ELECTRIC

S/N: CLA1-UP

PART OF 275-6874 HORN GP-ELECTRIC

SMCS-7402 **i02856005**

NOTE	REF NO	GRAPHIC REF	PART NUMBER	QTY	PART NAME 1 2 3 4 5 6 (PRODUCT LEVEL)	SEE PAGE
	1	1	**3S-2093**	1	STRAP-CABLE	
	2	1	**7Y-3919**	1	HORN AS (24-VOLT)	
		1	**095-0826**	2	LOCKWASHER	
M		1	**095-7930**	2	SCREW-MACHINE (M4X0.07X6-MM)	
	3	1	**7Y-3920**	1	HORN AS (24-VOLT)	
		1	**095-0826**	2	LOCKWASHER	
M		1	**095-7930**	2	SCREW-MACHINE (M4X0.07X6-MM)	
	4	1	**170-6941**	1	BRACKET AS	
	5	1	**275-6876**	1	HARNESS AS-WIRING (HORN)	
		1	**3S-2093**	2	STRAP-CABLE	
		1	**230-4011**	1	PLUG AS-CONNECTOR (2-PIN)	
M	6	1	**8T-4200**	2	BOLT (M8X1.25X16-MM)	
	7	1	**8T-4224**	2	WASHER-HARD (8.8X16X2-MM THK)	

M-METRIC PART

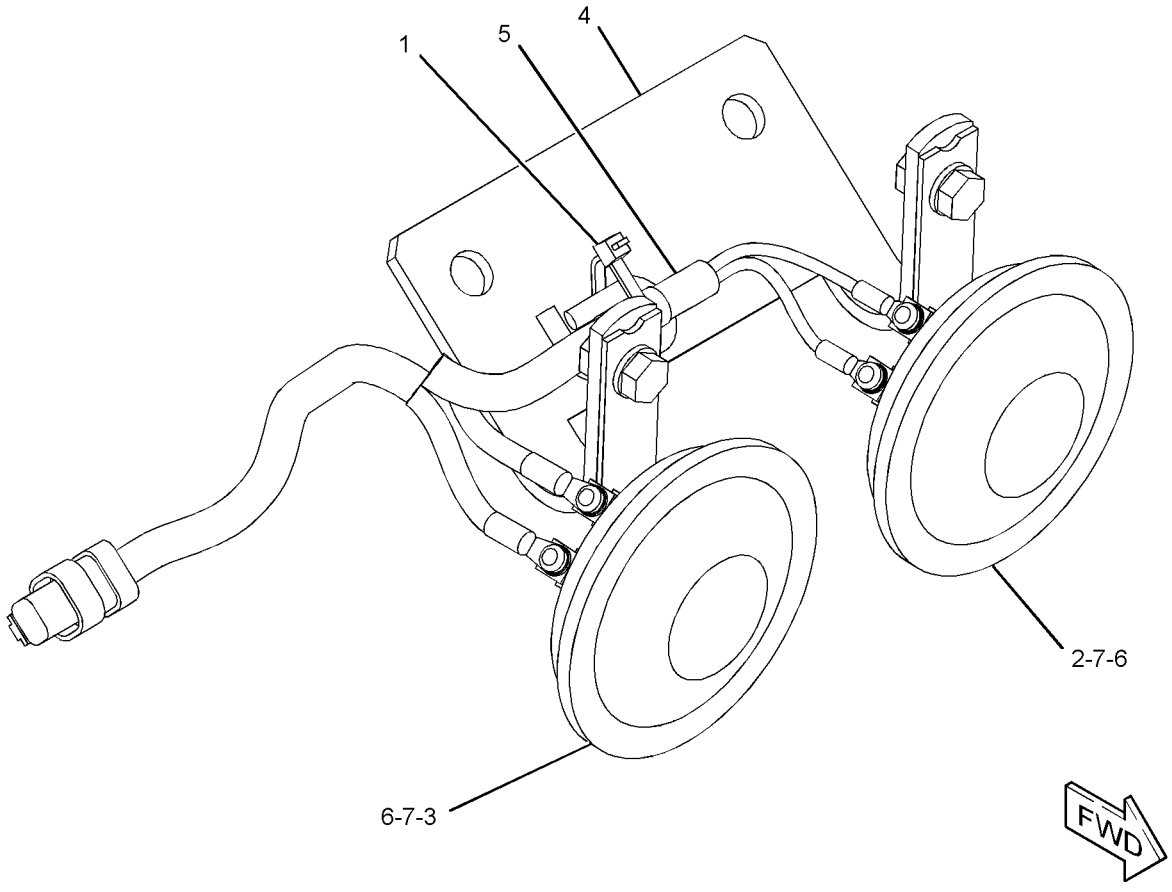

GRAPHIC #1 **<END>** g01304939

OPERATOR STATION

330-8746 INSTALLATION AR

S/N: CLA1-UP

FOR USE WITH 327-6552–PAGE 856, 327-6553–PAGE 857

AN ATTACHMENT

SMCS-1405, 1802, 1805, 1808, 7174, 7304, 7319, 7320, 7348, 734D

i03150950

NOTE	PART NUMBER	QTY	PART NAME 1 2 3 4 5 6 (PRODUCT LEVEL)	SEE PAGE
Y	*330-8747*	1	CAMERA AR	119
Y	*330-1320*	1	MIRROR GP-REAR VIEW	858

Y-SEPARATE ILLUSTRATION

<END>

OPERATOR STATION

251-0538 INSTALLATION GP-RADIO

S/N: CLA1-UP

PART OF 273-5363 OPERATOR AR

SMCS-7338 **i02996046**

NOTE	REF NO	GRAPHIC REF	PART NUMBER	QTY	PART NAME 1 2 3 4 5 6 (PRODUCT LEVEL)	SEE PAGE
	1	1	**3S-2093**	2	STRAP-CABLE	
	2	1	**7K-1181**	2	STRAP-CABLE	
M	3	1	**095-0736**	2	SCREW-MACHINE (M5X0.8X10-MM)	
	4	1	**238-2260**	1	CABLE	
	5	1	**306-8802**	1	RADIO-AM/FM	
	6	1	**259-4914**	1	BRACKET AS	
	7	1	**119-5026**	2	SCREW-PAN HEAD (10-16X0.63-IN)	

M-METRIC PART

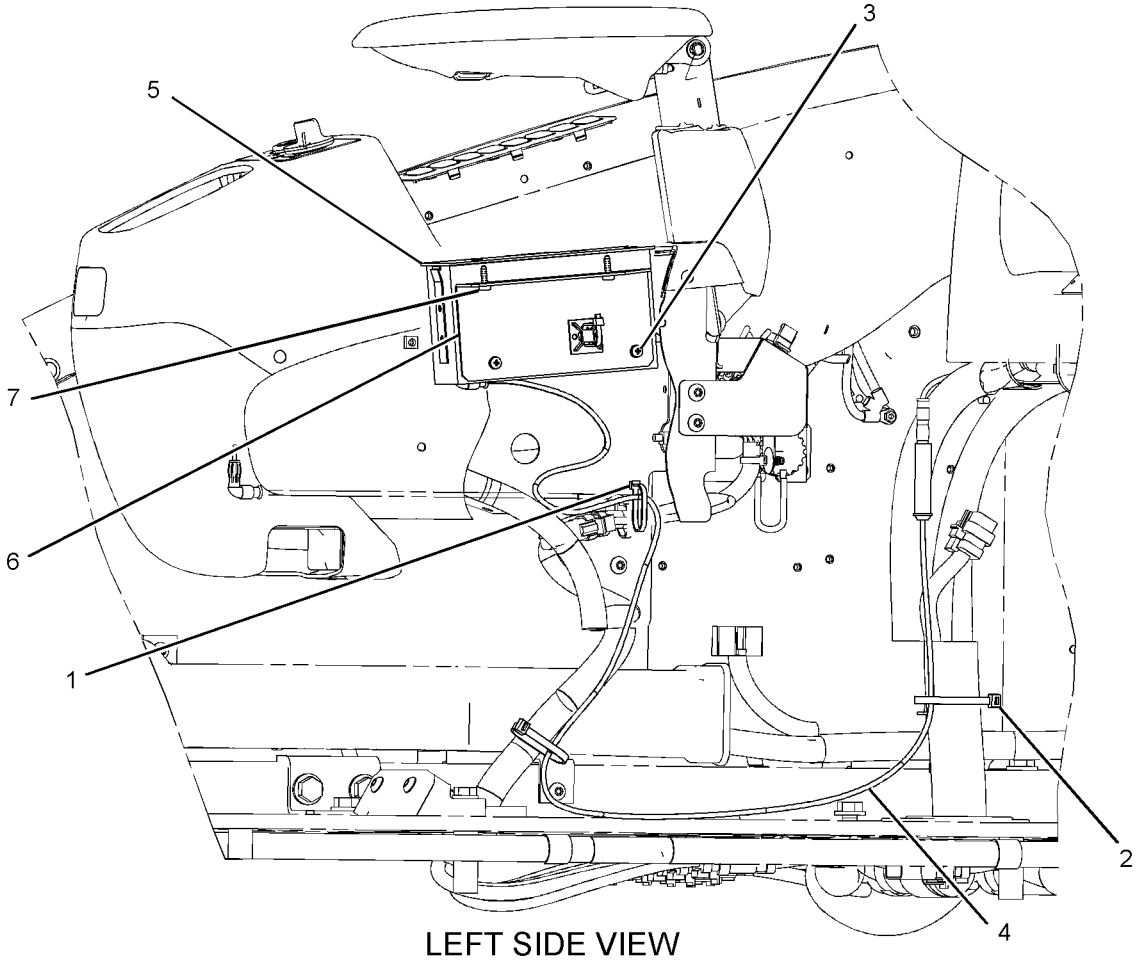

LEFT SIDE VIEW

GRAPHIC #1 **<END>** g01520813

OPERATOR STATION

259-5253 INSTALLATION GP-RADIO

S/N: CLA1-UP
AN ATTACHMENT

SMCS-7338 **i02742923**

NOTE	REF NO	GRAPHIC REF	PART NUMBER	QTY	PART NAME 1 2 3 4 5 6 (PRODUCT LEVEL)	SEE PAGE
	1	1	**3S-2093**	14	STRAP-CABLE	
	2	1	**7K-1181**	5	STRAP-CABLE	
	3	1	**141-2759**	1	FUSE (5-AMPERE) (RADIO)	
	4	1	**283-2783**	1	CONVERTER-POWER (24-VOLT TO 12-VOLT)	
	5	1	**238-2216**	1	SWITCH AS-ROCKER (RADIO MUTE)	
		1	**167-3542**	1	CONNECTOR-RECEPTACLE	
		1	**167-3543**	5	TERMINAL (MALE)	
	6	1	**259-5254**	1	HARNESS AS-POWER (RADIO)	
		1	**230-4013**	1	PLUG AS-CONNECTOR (3-PIN)	
		1	**230-5010**	1	PLUG AS-CONNECTOR (6-PIN)	
		1	**243-4505**	1	RECEPTACLE AS-CONNECTOR (2-PIN)	
		1	**243-4506**	1	RECEPTACLE AS-CONNECTOR (3-PIN)	
		1	**3S-2093**	20	STRAP-CABLE	
M	7	1	**8T-4171**	4	BOLT (M6X1X12-MM)	
	8	1	**9X-8256**	4	WASHER (6.6X12X2-MM THK)	

M-METRIC PART

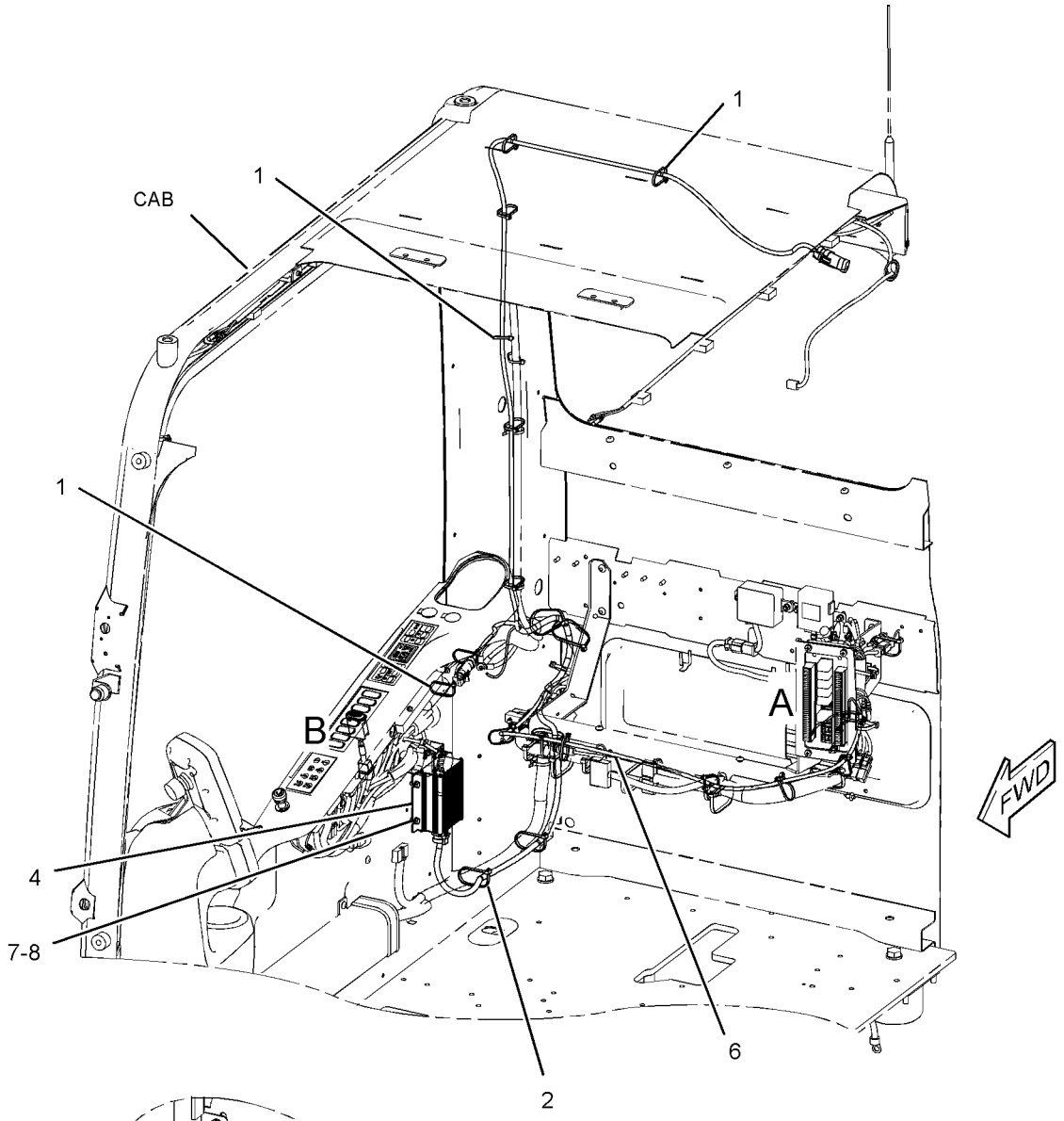

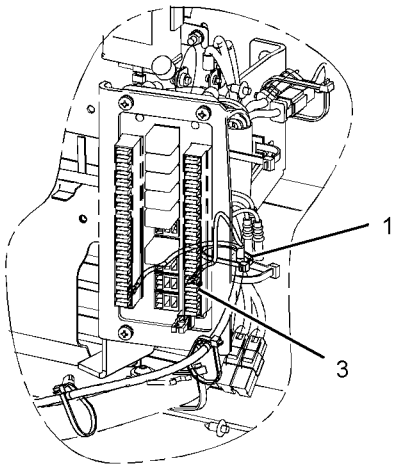

VIEW OF AREA A

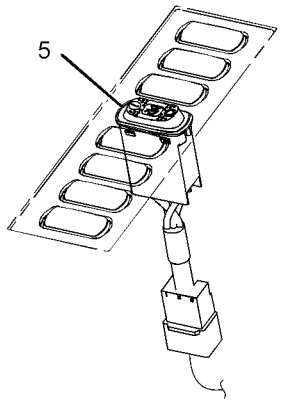

VIEW OF AREA B

GRAPHIC #1 **<END>** g01235540

OPERATOR STATION

275-6879 INSTALLATION GP-RADIO

S/N: CLA1-UP
FOR USE WITH CAB OUTSIDE JAPAN
AN ATTACHMENT

SMCS-7338 **i02598635**

NOTE	REF NO	GRAPHIC REF	PART NUMBER	QTY	PART NAME 1 2 3 4 5 6 (PRODUCT LEVEL)	SEE PAGE
	1	1	**3S-2093**	9	STRAP-CABLE	
	2	1	**7K-1181**	8	STRAP-CABLE	
	3	1	**185-8284**	1	COVER	
	4	1	**234-1124**	1	HARNESS AS-RADIO	
		1	**3S-2093**	15	STRAP-CABLE	
		1	**8T-8737**	10	PLUG-SEAL	
		1	**230-5010**	1	PLUG AS-CONNECTOR (6-PIN)	
		1	**231-2295**	2	PLUG AS-CONNECTOR (8-PIN)	
		1	**243-4505**	1	RECEPTACLE AS-CONNECTOR (2-PIN)	
		1	**243-4509**	1	RECEPTACLE AS-CONNECTOR (8-PIN)	
	5	1	**238-1463**	1	RECEPTACLE AS	
		1	**8T-8737**	8	PLUG-SEAL	
		1	**243-4509**	1	RECEPTACLE AS-CONNECTOR (8-PIN)	
	6	1	**238-2216**	1	SWITCH AS-ROCKER (RADIO MUTE)	
		1	**167-3542**	1	CONNECTOR-RECEPTACLE	
		1	**167-3543**	5	TERMINAL (MALE)	
	7	1	**283-2783**	1	CONVERTER-POWER (24-VOLT TO 12-VOLT)	
M	8	1	**8T-4171**	4	BOLT (M6X1X12-MM)	
	9	1	**9X-8256**	4	WASHER (6.6X12X2-MM THK)	

M-METRIC PART

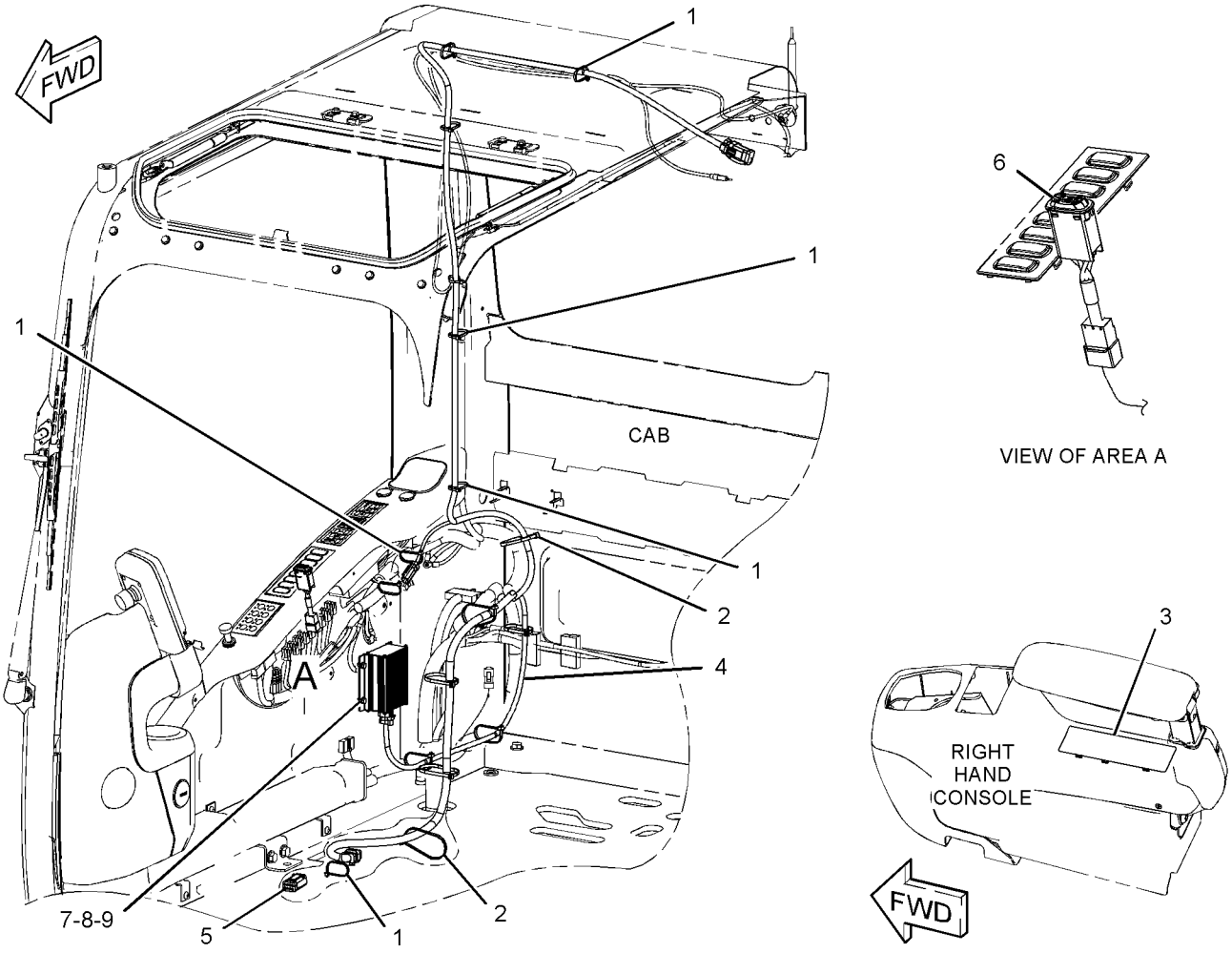

GRAPHIC #1 **<END>** g01325160

OPERATOR STATION

316-8872 KIT-CONSOLE ADJUSTMENT

S/N: CLA1-UP

FIELD INSTALLATION

SMCS-5258 **i02911066**

NOTE	REF NO	GRAPHIC REF	PART NUMBER	QTY	PART NAME 1 2 3 4 5 6 (PRODUCT LEVEL)	SEE PAGE
					INDIVIDUAL PARTS NOT SERVICED SEPARATELY	

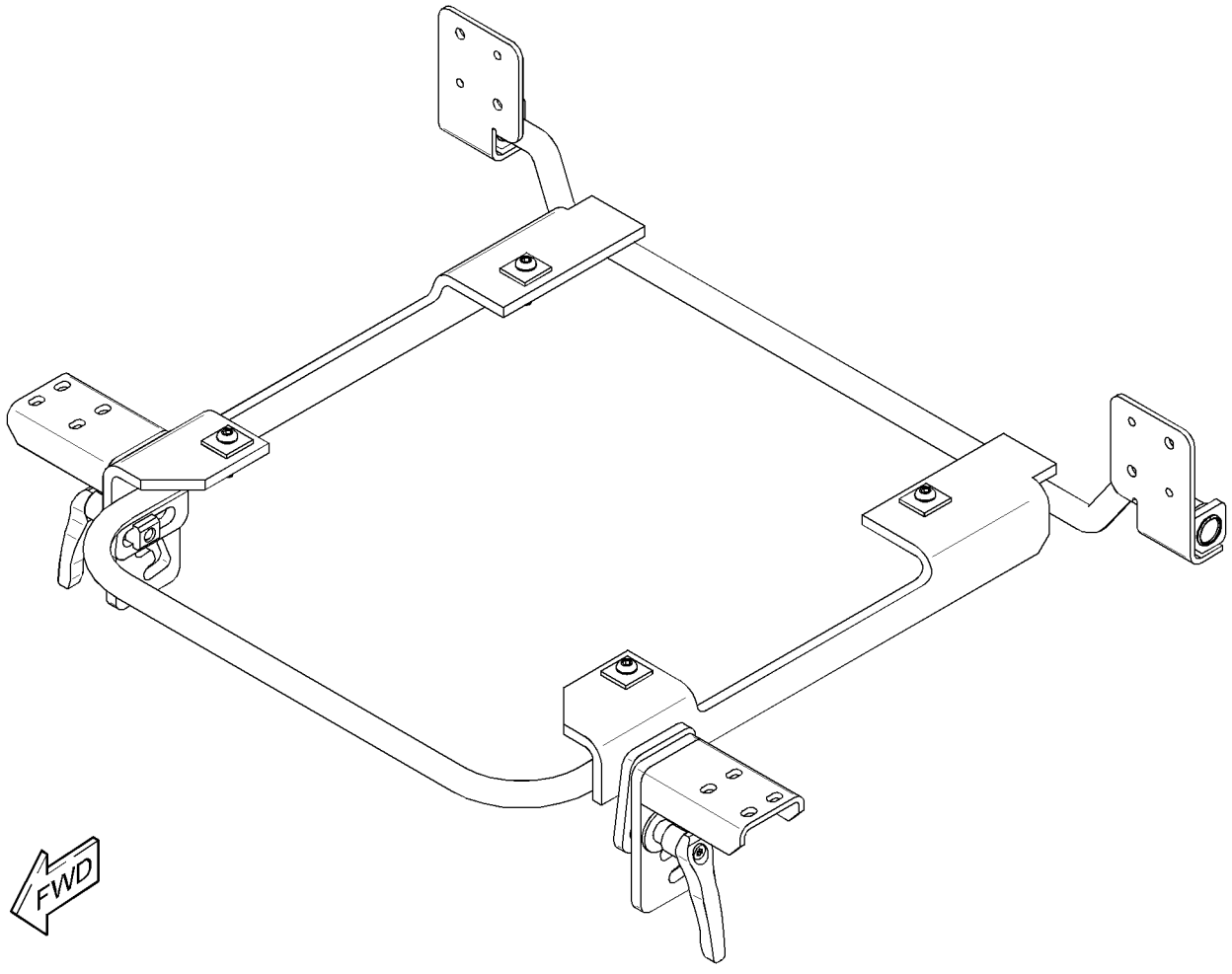

GRAPHIC #1 **<END>** g01451227

OPERATOR STATION

327-6645 KIT-SEAT SUSPENSION—SEAT HEIGHT

S/N: CLA1-UP

PART OF 327-6520 SUSPENSION GP-SEAT

AN ATTACHMENT

SMCS-7312 **i03207841**

NOTE	REF NO	GRAPHIC REF	PART NUMBER	QTY	PART NAME 1 2 3 4 5 6 (PRODUCT LEVEL)	SEE PAGE
	1	1	**327-6646**	1	KIT-CYLINDER (DAMPENER)	
J	2	1	**327-6647**	1	KIT-COVER (SUSPENSION SEAT)	
					(INCLUDES COVER & CLIP KIT)	
	3	1	**333-4180**	6	SCREW-BUTTON HEAD	
	4	1	**333-4181**	1	KIT-HANDLE (SEAT HEIGHT)	
M	5	1	**7Y-7394**	4	SCREW-BUTTON HEAD (M8X1.25X25-MM)	
					AVAILABLE REPAIR KIT(S):	
J			**245-7895**	1	KIT-CLIP (SUSPENSION SEAT)	
					(INCLUDES 28 CLIPS)	

J-KIT MARKED J SERVICES PART(S) MARKED J
M-METRIC PART

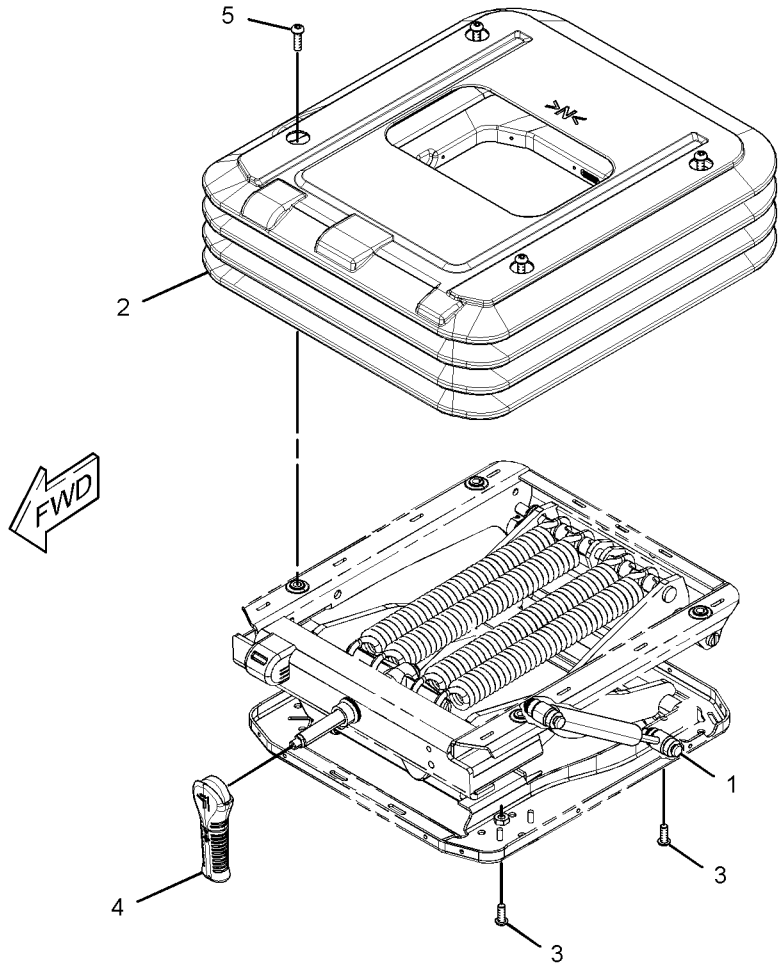

GRAPHIC #1 **<END>** g01637858

OPERATOR STATION

333-4173 KIT-SEAT SUSPENSION

S/N: CLA1-UP

PART OF 327-6517 SUSPENSION GP-SEAT

AN ATTACHMENT

SMCS-7312 **i03213417**

NOTE	REF NO	GRAPHIC REF	PART NUMBER	QTY	PART NAME 1 2 3 4 5 6 (PRODUCT LEVEL)	SEE PAGE
J	1	1	**333-4174**	1	KIT-COVER (SUSPENSION SEAT)	
	2	1	**333-4180**	6	SCREW-BUTTON HEAD	
	3	1	**333-4181**	1	KIT-HANDLE (SEAT HEIGHT)	
M	4	1	**7Y-7394**	4	SCREW-BUTTON HEAD (M8X1.25X25-MM)	
					AVAILABLE REPAIR KIT(S):	
J			**245-7895**	1	KIT-CLIP (SUSPENSION SEAT)	
					(KIT INCLUDES 28 CLIPS)	

J-KIT MARKED J SERVICES PART(S) MARKED J
M-METRIC PART

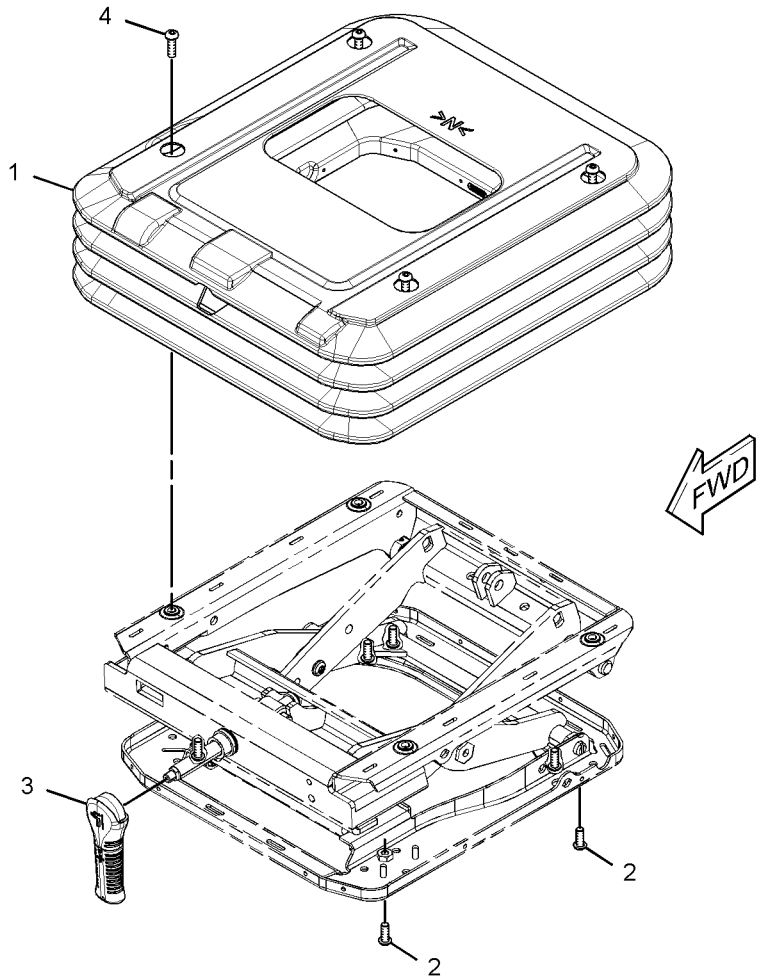

GRAPHIC #1 **<END>** g01641134

164-0528 LEVER GP-AIR & TEMP CONTROL

S/N: CLA1-UP
PART OF 235-8910 CAB GP
AN ATTACHMENT

SMCS-7309, 7337 **i02504626**

NOTE	REF NO	GRAPHIC REF	PART NUMBER	QTY	PART NAME 1 2 3 4 5 6 (PRODUCT LEVEL)	SEE PAGE
	1	1	**156-6642**	1	LEVER AS	
	2	1	**164-0664**	1	BRACKET	
	3	1	**176-1941**	1	PIN	
	4	1	**185-8280**	1	WASHER-WAVE (10.5X15X0.3-MM THK)	
	5	1	**185-8281**	1	SPRING	

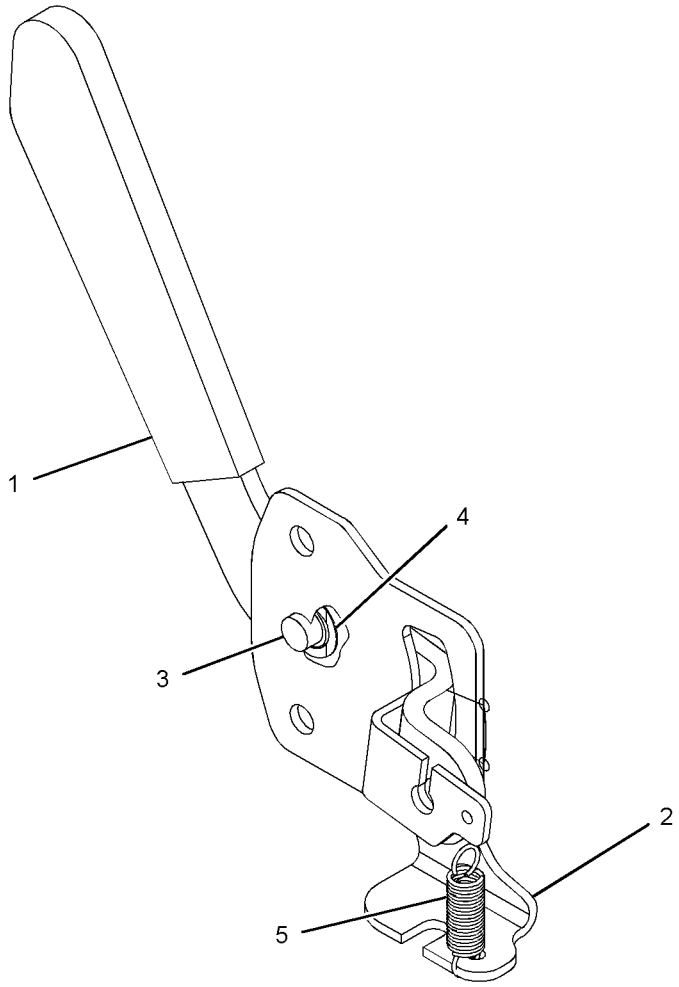

GRAPHIC #1 **<END>** g01217036

OPERATOR STATION

273-5348 LINES GP-AIR CONDITIONER

S/N: CLA1-UP

PART OF 260-7231 CHASSIS AR

SMCS-1808 **i02974086**

NOTE	REF NO	GRAPHIC REF	PART NUMBER	QTY	PART NAME 1 2 3 4 5 6 (PRODUCT LEVEL)	SEE PAGE
	1	2	**4I-4580**	1	FITTING	
	2	1	**5I-3875**	1	GROMMET	
E	3	2	**293-1135**		GUARD (15-CM EACH)	
	4	1	**7I-0375**	1	ELBOW	
	5	2	**7I-2673**	1	STRAP-CABLE	
	6	2	**7K-1181**	2	STRAP-CABLE	
	7	2	**099-1319**	1	GROMMET	
	8	1	**108-7553**	1	GROMMET	
	9	2	**122-9605**	2	TUBE	
					—OR—	
			6P-8855	2	TUBE	
	10	2	**122-9657**	2	CLAMP	
	11	1	**132-4233**	1	SPACER (8.7X16X18-MM)	
	12	2	**133-8011**	1	FITTING AS	
		2	**121-7138**	1	SEAL-O-RING	
	13	1,2	**155-7024**	2	SPACER-SPECIAL	
	14	2	**176-1902**	1	RECEIVER DRYER AS (REFRIGERANT)	
	15	2	**235-8891**	1	PLATE	
	16	1,2	**235-9014**	8	CLAMP-HOSE	
					—OR—	
			5D-1026	8	CLAMP-HOSE	
	17	2	**235-9015**	2	HOSE	
	18	1	**273-5442**	1	HOSE AS	
		1	**121-7137**	1	SEAL-O-RING	
		1	**245-7850**	1	PLUG	
	19	2	**273-5443**	1	HOSE AS	
		2	**121-7138**	2	SEAL-O-RING	
	20	1	**273-5444**	1	HOSE AS	
		1	**121-7138**	2	SEAL-O-RING	
		1	**130-0270**	1	SWITCH AS-PRESSURE (REFRIGERANT)	
		1	**185-8293**	1	SEAL-O-RING	
	21	1	**273-5445**	1	HOSE AS	
		1	**121-7136**	1	SEAL-O-RING	
		1	**245-7851**	1	PLUG	
	22	1	**284-4424**	1	HOSE AS	
		1	**121-7137**	2	SEAL-O-RING	
	23	1	**284-4425**	1	HOSE AS	
		1	**121-7136**	2	SEAL-O-RING	
	24	2	**293-1238**	2	HOSE-DRAIN	
	25	1,2	**095-0913**	2	CLIP	
	26	1,2	**100-4336**	2	CLIP	
	27		**104-3173**	1	CLIP	
	28	2	**121-7098**	1	BRACKET AS	
M		2	**8T-4138**	2	BOLT (M6X1X20-MM)	
		2	**9X-8256**	2	WASHER (6.6X12X2-MM THK)	
	29	2	**132-5789**	1	CLIP	
	30	1,2	**4S-1962**	3	CLIP	
E	31	1	**5P-0767**		HOSE (170-CM)	
E	31A	2	**5P-0767**		HOSE (240-CM)	
	32	2	**5K-3294**	1	CLIP	
	33	2	**6D-1641**	1	CLIP	
	34	2	**6D-3479**	2	CLIP	
	35	1	**6V-2235**	2	CLIP	
	36	2	**6V-3265**	1	CLIP	
M	37	1,2	**6V-7357**	5	BOLT (M6X1X25-MM)	
M	38	1	**7X-2538**	1	BOLT (M8X1.25X100-MM)	

273-5348 **LINES GP-AIR CONDITIONER** *(contd.)* **i02974086**

NOTE	REF NO	GRAPHIC REF	PART NUMBER	QTY	PART NAME 1 2 3 4 5 6 (PRODUCT LEVEL)	SEE PAGE
	39	1,2	**8T-4121**	11	WASHER-HARD (11X21X2.5-MM THK)	
M	40	2	**8T-4136**	2	BOLT (M10X1.5X25-MM)	
M	41	1,2	**8T-4137**	7	BOLT (M10X1.5X20-MM)	
M	42	2	**8T-4191**	2	BOLT (M10X1.5X16-MM)	
M	43	2	**8T-4200**	3	BOLT (M8X1.25X16-MM)	
	44	1,2	**8T-4224**	4	WASHER-HARD (8.8X16X2-MM THK)	
M	45	2	**8T-4971**	2	BOLT (M6X1X30-MM)	
	46	1,2	**9X-8256**	7	WASHER (6.6X12X2-MM THK)	
E	47	2	**293-1243**		GUARD (8-CM)	
	48	2	**305-0441**	2	BAND-MARKER (HS)	
	49	1,2	**305-0442**	2	BAND-MARKER (HR)	
E	52	1,2	**225-5707**		GUARD (15-CM EACH)	
E	52A	1	**225-5707**		GUARD (30-CM EACH)	
E	53	1,2	**225-5714**		GUARD (30-CM EACH)	
	54	2	**316-8906**	1	GUARD	

E-ORDER BY THE CENTIMETER
M-METRIC PART

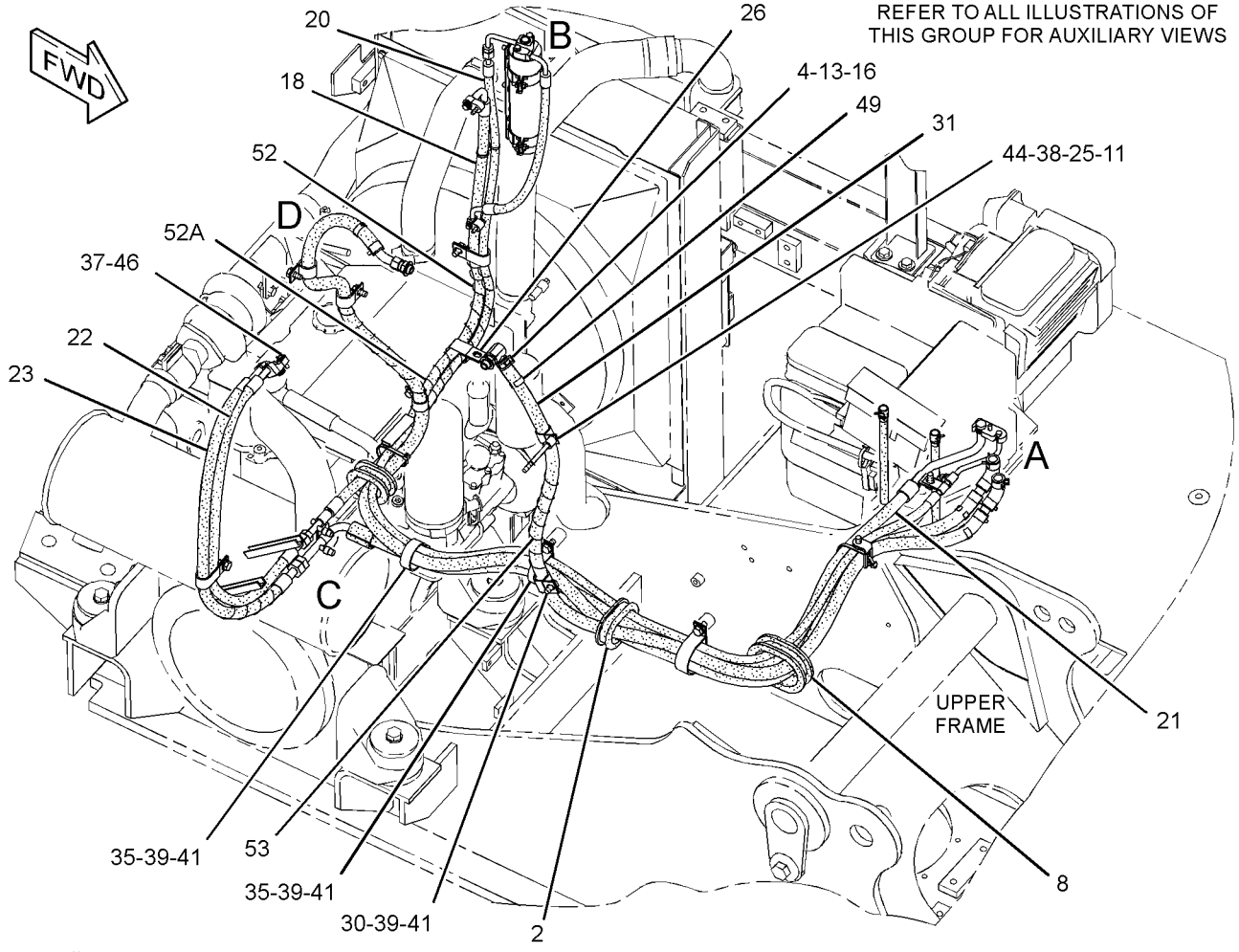

GRAPHIC #1 g01591313

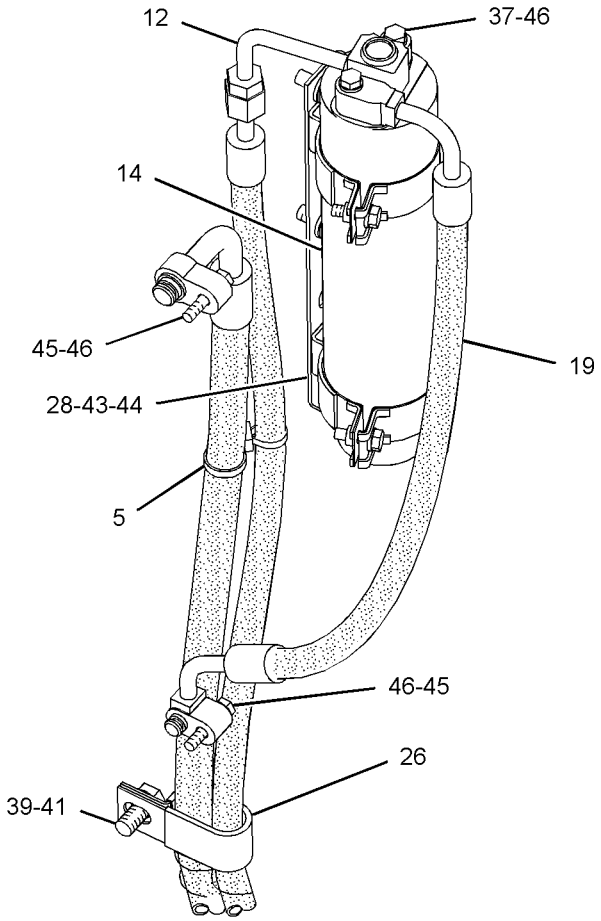

VIEW OF AREA B

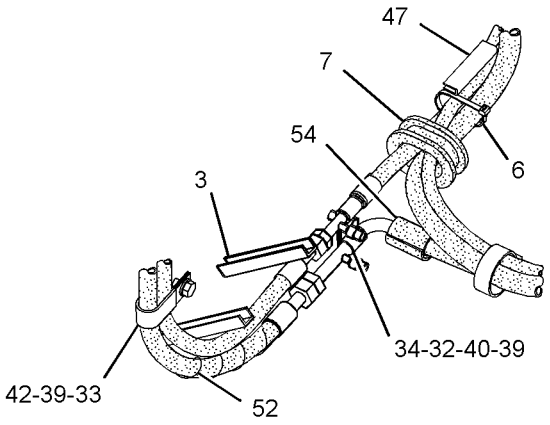

VIEW OF AREA C

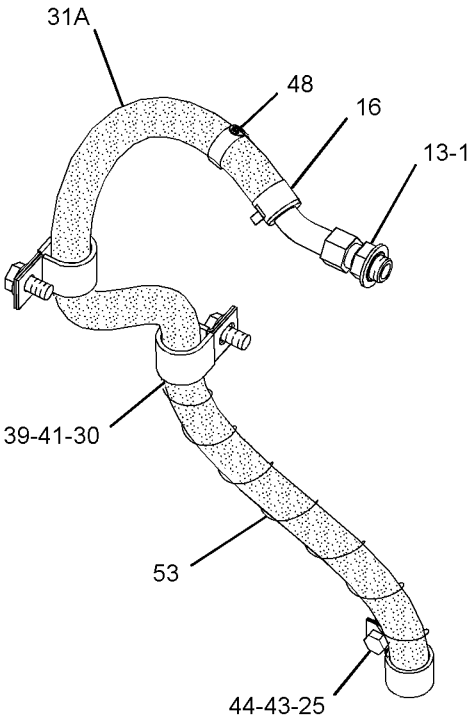

VIEW OF AREA D

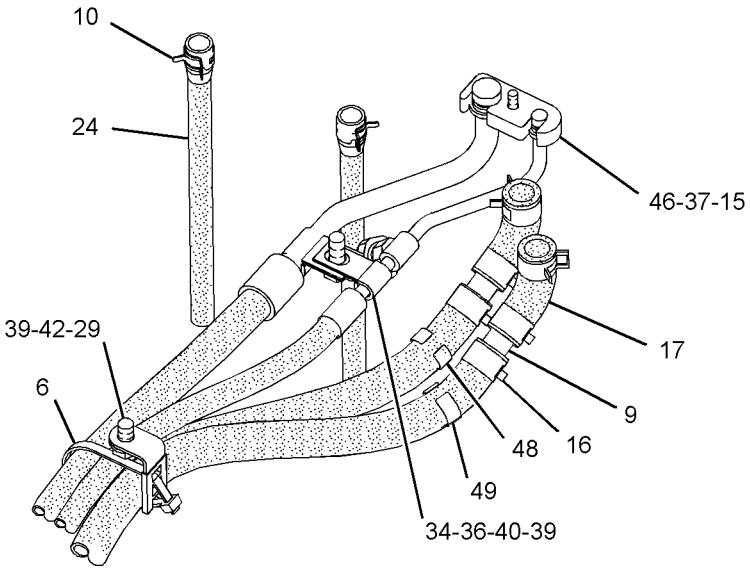

VIEW OF AREA A

GRAPHIC #2 **<END>** g01591314

OPERATOR STATION

273-5441 LINES GP-HEATER

S/N: CLA1-UP
PART OF 273-5440 HEATER AR-CAB
AN ATTACHMENT

SMCS-1812, 7304 **i02838076**

NOTE	REF NO	GRAPHIC REF	PART NUMBER	QTY	PART NAME 1 2 3 4 5 6 (PRODUCT LEVEL)	SEE PAGE
	1	1	**4I-4580**	1	FITTING	
	2	1	**5I-3875**	1	GROMMET	
	3	1	**6P-8855**	2	TUBE	
	4	1	**7I-0375**	1	ELBOW	
	5	1	**7K-1181**	1	STRAP-CABLE	
	6	1	**099-1319**	1	GROMMET	
	7	1	**108-7553**	1	GROMMET	
	8	1	**122-9605**	2	TUBE	
	9	1	**132-4233**	1	SPACER (8.7X16X18-MM)	
	10	1	**155-7024**	2	SPACER-SPECIAL	
	11	1	**235-9014**	8	CLAMP-HOSE	
	12	1	**235-9015**	2	HOSE	
	13	1	**283-2893**	1	RECEPTACLE AS	
		1	**8T-8737**	2	PLUG-SEAL	
		1	**243-4505**	1	RECEPTACLE AS-CONNECTOR (2-PIN)	
	14	1	**297-7667**	1	BRACKET AS	
	15	1	**095-0913**	2	CLIP	
	16	1	**132-5789**	1	CLIP	
	17	1	**4S-1962**	5	CLIP	
	18	1	**5D-1026**	8	CLAMP-HOSE	
	19	1	**6D-1641**	1	CLIP	
M	20	1	**7X-2538**	1	BOLT (M8X1.25X100-MM)	
	21	1	**8T-4121**	10	WASHER-HARD (11X21X2.5-MM THK)	
M	22	1	**8T-4137**	7	BOLT (M10X1.5X20-MM)	
M	23	1	**8T-4172**	3	BOLT (M10X1.5X80-MM)	
M	24	1	**8T-4191**	1	BOLT (M10X1.5X16-MM)	
M	25	1	**8T-4200**	1	BOLT (M8X1.25X16-MM)	
	26	1	**8T-4223**	2	WASHER-HARD (13.5X25.5X3-MM THK)	
	27	1	**8T-4224**	2	WASHER-HARD (8.8X16X2-MM THK)	
M	28	1	**8T-4910**	2	BOLT (M12X1.75X60-MM)	
E	29	1	**293-1243**		GUARD (8-CM)	
E	30	1	**5P-0767**		HOSE (270-CM)	
E	30A	1	**5P-0767**		HOSE (170-CM)	
	31	1	**305-0441**	2	BAND-MARKER (HS)	
	32	1	**305-0442**	2	BAND-MARKER (HR)	
E	33	1	**225-5714**		GUARD (30-CM EACH)	

E-ORDER BY THE CENTIMETER
M-METRIC PART

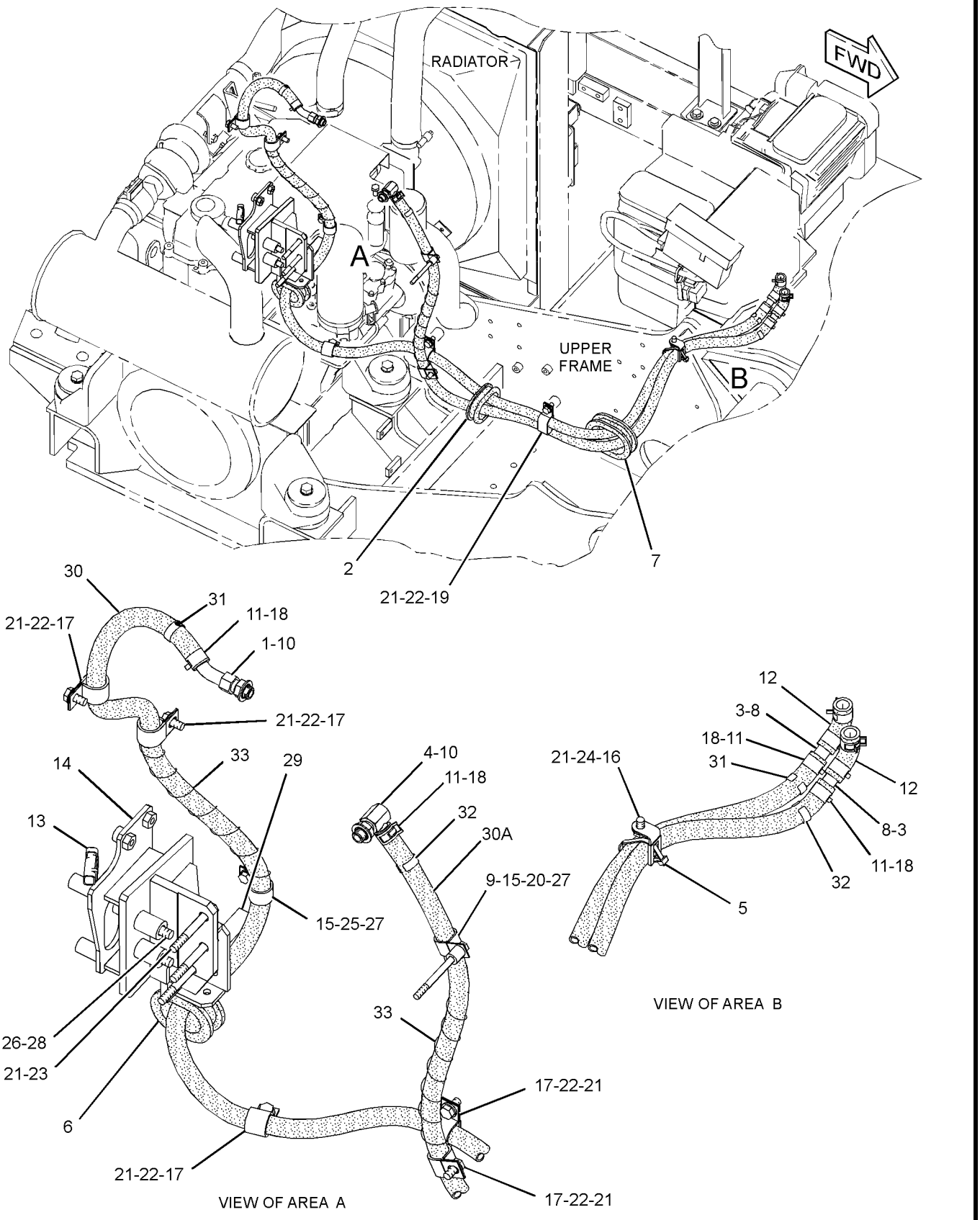

GRAPHIC #1 **<END>** g01447319

OPERATOR STATION

275-3667 LITERATURE GP

S/N: CLA1-UP

PART OF 260-7231 CHASSIS AR

SMCS-7300 **i02794529**

NOTE	PART NUMBER	QTY	PART NAME 1 2 3 4 5 6 (PRODUCT LEVEL)	SEE PAGE
	099-3645	1	CABLE-LANYARD	
	278-1585	2	KEY (CORPORATE)	
	5P-7958	2	SLEEVE-CABLE SPLICE	

<END>

OPERATOR STATION

184-8807 MIRROR GP-REAR VIEW

S/N: CLA1-UP

PART OF 260-7231 CHASSIS AR

SMCS-7319 **i01501674**

NOTE	REF NO	GRAPHIC REF	PART NUMBER	QTY	PART NAME 1 2 3 4 5 6 (PRODUCT LEVEL)	SEE PAGE
	1	1	**122-5311**	1	MIRROR	
	2	1	**170-2570**	1	SUPPORT AS	
	3	1	**5P-1076**	1	WASHER-HARD (13.5X30X4MM THK)	
M	4	1	**7X-2550**	1	BOLT (M12X1.75X110MM)	

M-METRIC PART

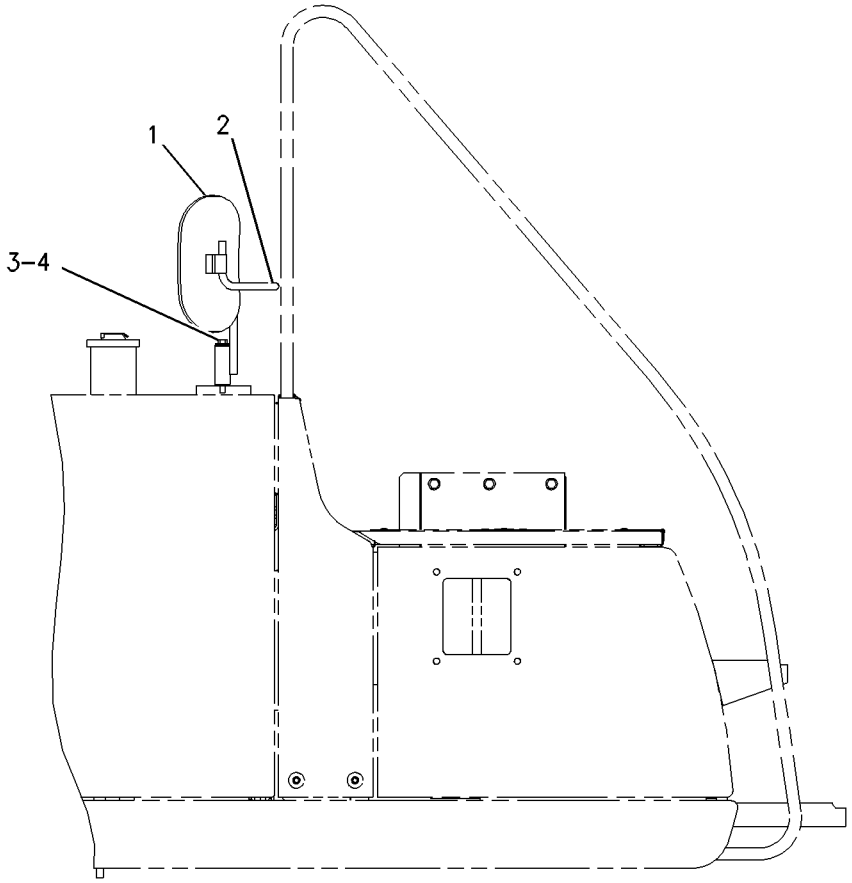

RIGHT SIDE VIEW

GRAPHIC #1 **<END>** g00788961

OPERATOR STATION

327-6550 MIRROR GP-REAR VIEW

S/N: CLA1-UP

PART OF 235-8910 CAB GP, 327-6552, 327-6553 MIRROR GP-REAR VIEW

AN ATTACHMENT

SMCS-7319 **i03185260**

NOTE	REF NO	GRAPHIC REF	PART NUMBER	QTY	PART NAME 1 2 3 4 5 6 (PRODUCT LEVEL)	SEE PAGE
M	1	1	**8T-0269**	2	BOLT-SOCKET HEAD (M6X1X20-MM)	
	2	1	**9X-8256**	2	WASHER (6.6X12X2-MM THK)	

M-METRIC PART

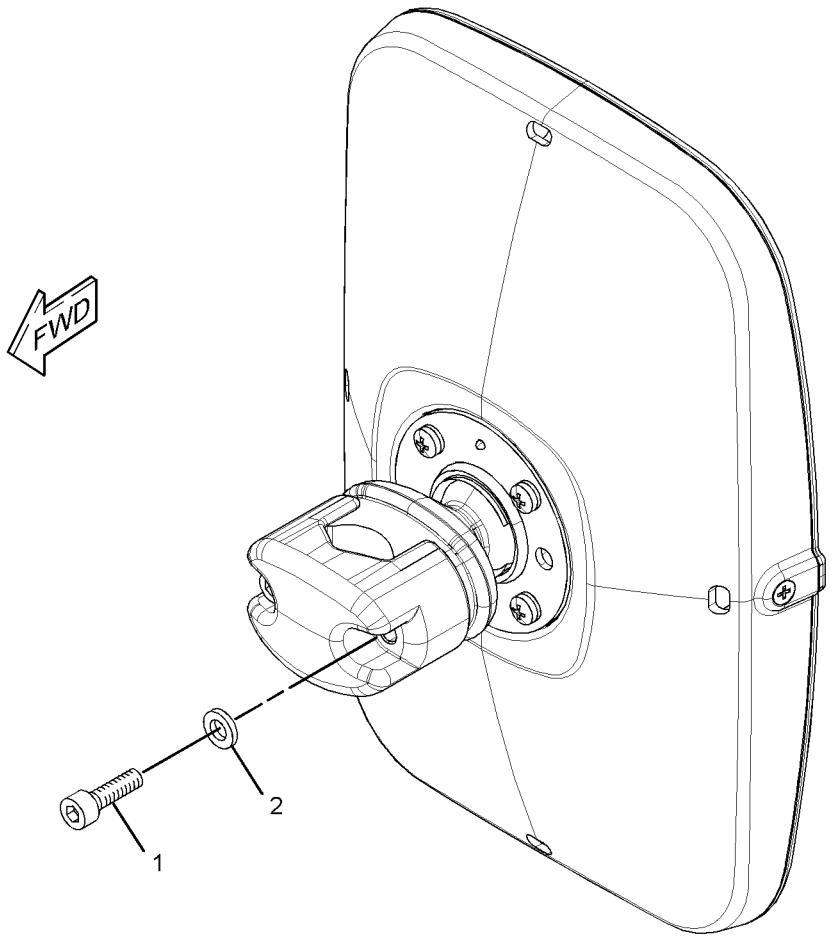

GRAPHIC #1 **<END>** g01615528

OPERATOR STATION

327-6552 MIRROR GP-REAR VIEW

S/N: CLA1-UP
CANNOT BE USED WITH GAURD
AN ATTACHMENT

SMCS-7319 **i03250686**

NOTE	REF NO	GRAPHIC REF	PART NUMBER	QTY	PART NAME 1 2 3 4 5 6 (PRODUCT LEVEL)	SEE PAGE
Y	1	1	**327-6550**	1	MIRROR GP-REAR VIEW	855
	2	1	**327-6576**	1	SUPPORT AS	
M	3	1	**8T-4175**	1	BOLT (M16X2X90-MM)	
	4	1	**9X-8257**	1	WASHER (17.5X30X3.5-MM THK)	

M-METRIC PART
Y-SEPARATE ILLUSTRATION

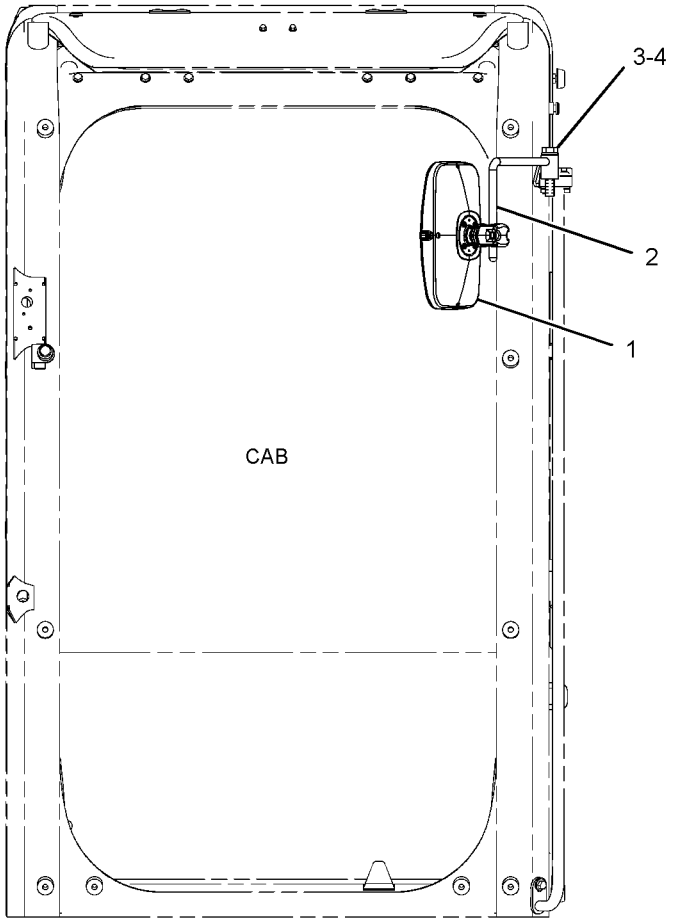

FRONT VIEW

GRAPHIC #1 **<END>** g01615557

OPERATOR STATION

327-6553 MIRROR GP-REAR VIEW

S/N: CLA1-UP
FOR USE WITH GUARD
AN ATTACHMENT

SMCS-7319 **i03082146**

NOTE	REF NO	GRAPHIC REF	PART NUMBER	QTY	PART NAME 1 2 3 4 5 6 (PRODUCT LEVEL)	SEE PAGE
	1	1	**316-8989**	1	SUPPORT AS	
Y	2	1	**327-6550**	1	MIRROR GP-REAR VIEW	855
M	3	1	**8T-4193**	1	BOLT (M16X2X50-MM)	
	4	1	**9X-8257**	1	WASHER (17.5X30X3.5-MM THK)	

M-METRIC PART
Y-SEPARATE ILLUSTRATION

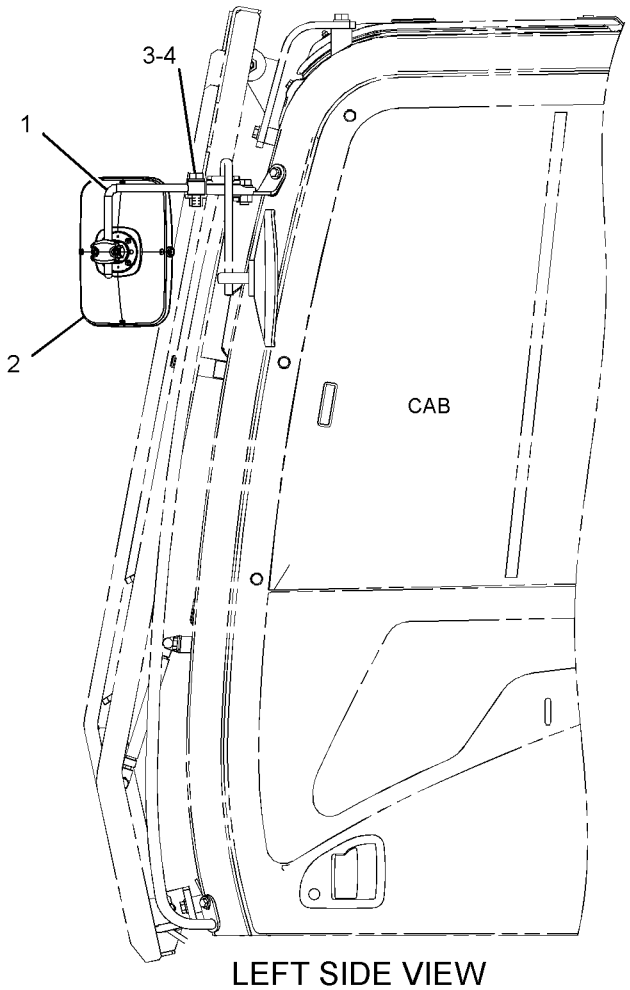

LEFT SIDE VIEW

GRAPHIC #1

<END>

g01615542

OPERATOR STATION

330-1320 MIRROR GP-REAR VIEW

S/N: CLA1-UP
PART OF 330-8746 INSTALLATION AR
AN ATTACHMENT

SMCS-7319 **i03150962**

NOTE	REF NO	GRAPHIC REF	PART NUMBER	QTY	PART NAME 1 2 3 4 5 6 (PRODUCT LEVEL)	SEE PAGE
	1	1	**320-5593**	1	TUBE AS	
	2	1	**327-3062**	1	MIRROR GP-REAR VIEW	
M		1	**8T-0269**	2	BOLT-SOCKET HEAD (M6X1X20-MM)	
		1	**9X-8256**	2	WASHER (6.6X12X2-MM THK)	
	3	1	**327-3063**	1	MIRROR GP-REAR VIEW	
M		1	**8T-0269**	2	BOLT-SOCKET HEAD (M6X1X20-MM)	
		1	**9X-8256**	2	WASHER (6.6X12X2-MM THK)	

M-METRIC PART

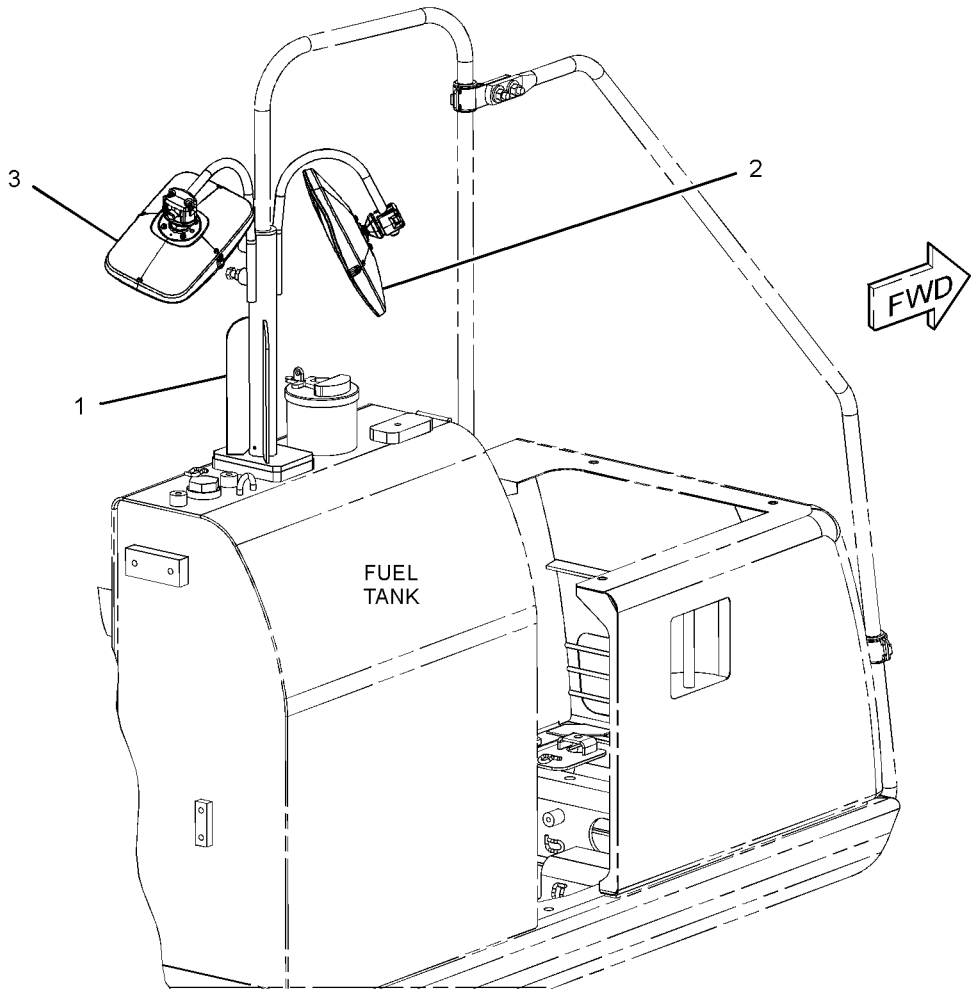

GRAPHIC #1 **<END>** g01621066

OPERATOR STATION

221-8813 MONITOR & MTG GP-OPERATOR

S/N: CLA1-UP

PART OF 273-5363 OPERATOR AR

SMCS-7490 **i03017455**

NOTE	REF NO	GRAPHIC REF	PART NUMBER	QTY	PART NAME 1 2 3 4 5 6 (PRODUCT LEVEL)	SEE PAGE
Y	1	1	**319-4353**	1	MONITOR GP-OPERATOR	860
M	2	1	**9X-2046**	3	SCREW-TRUSS HEAD (M6X1X35-MM)	

M-METRIC PART
Y-SEPARATE ILLUSTRATION

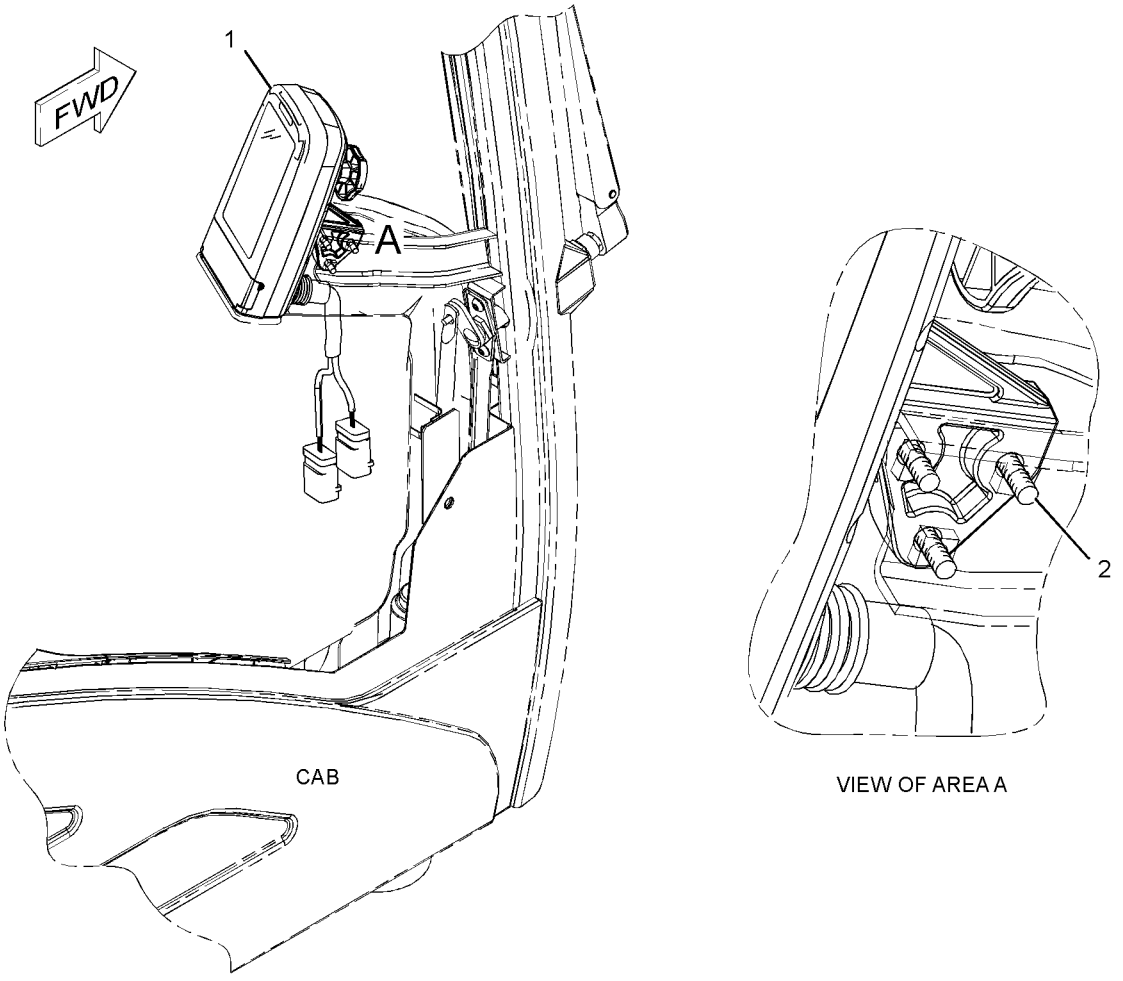

GRAPHIC #1 **<END>** g01231835

OPERATOR STATION

319-4353 MONITOR GP-OPERATOR

S/N: CLA1-UP

PART OF 221-8813 MONITOR & MTG GP-OPERATOR

SMCS-7490 **i03022205**

NOTE	REF NO	GRAPHIC REF	PART NUMBER	QTY	PART NAME 1 2 3 4 5 6 (PRODUCT LEVEL)	SEE PAGE
	1	1	**247-2694**	1	RECEPTACLE AS-CONNECTOR (12-PIN)	
	2	1	**247-2695**	1	RECEPTACLE AS-CONNECTOR (12-PIN)	
	3	1	**9X-3401**	17	PIN-CONNECTOR (16-GA TO 18-GA)	
					—OR—	
		1	**126-1767**	17	PIN-CONNECTOR (14-GA)	
	4	1	**8T-8737**	7	PLUG-SEAL	

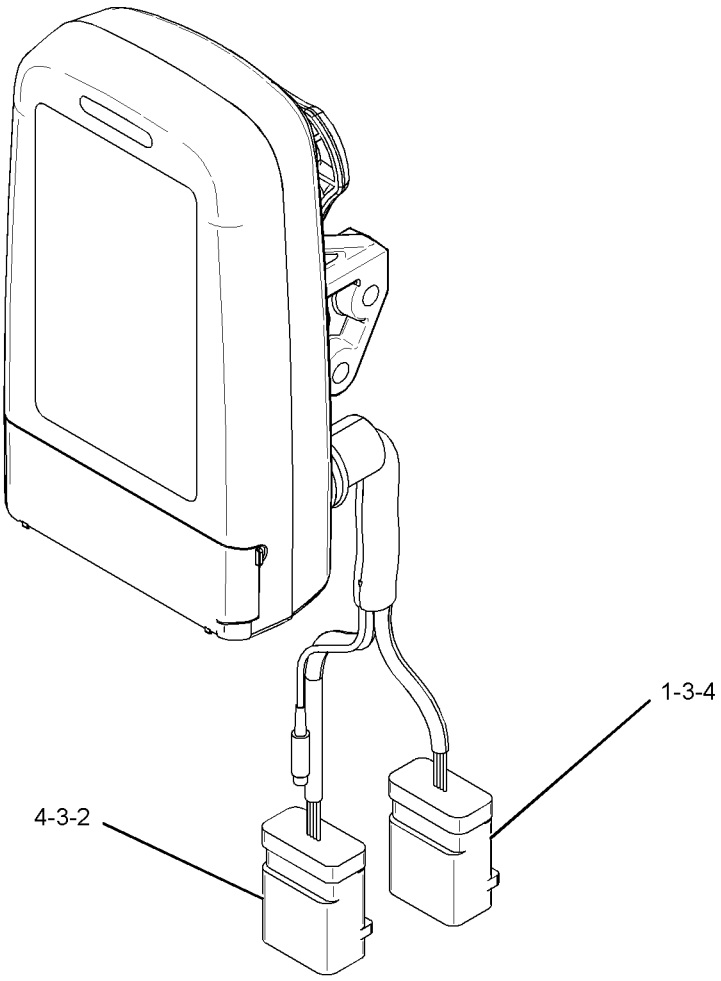

GRAPHIC #1 **<END>** g01528758

OPERATOR STATION

270-5603 MOUNTING GP-ANTENNA

S/N: CLA1-UP

PART OF 301-2552, 301-2647 SPECIAL AR

AN ATTACHMENT

SMCS-7338, 7606 **i02862871**

NOTE	REF NO	GRAPHIC REF	PART NUMBER	QTY	PART NAME 1 2 3 4 5 6 (PRODUCT LEVEL)	SEE PAGE
	1	1	**309-5849**	1	BRACKET AS	
M	2	1	**7X-2552**	2	BOLT (M16X2X30-MM)	
	3	1	**9X-8257**	2	WASHER (17.5X30X3.5-MM THK)	

M-METRIC PART

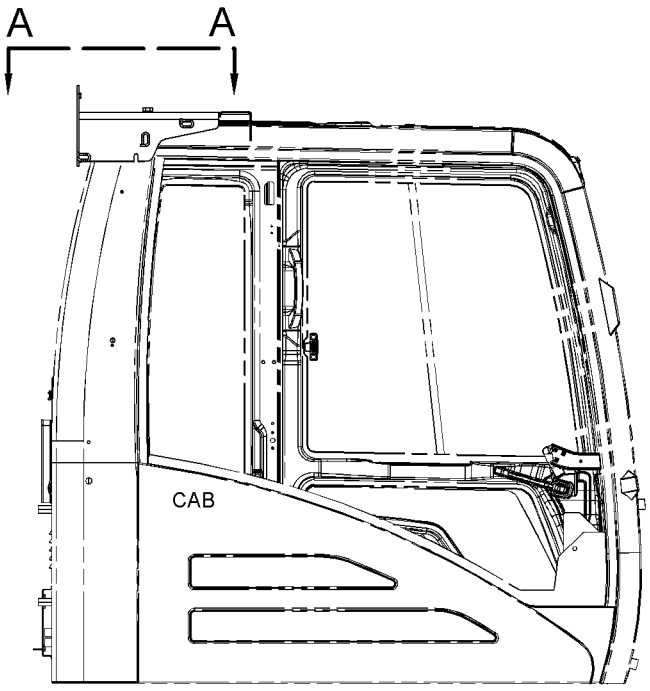

RIGHT SIDE VIEW
(WITHOUT CAB GUARD)

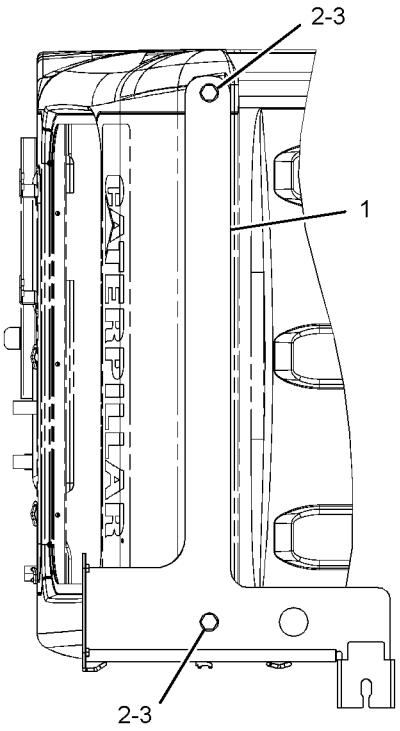

VIEW A-A

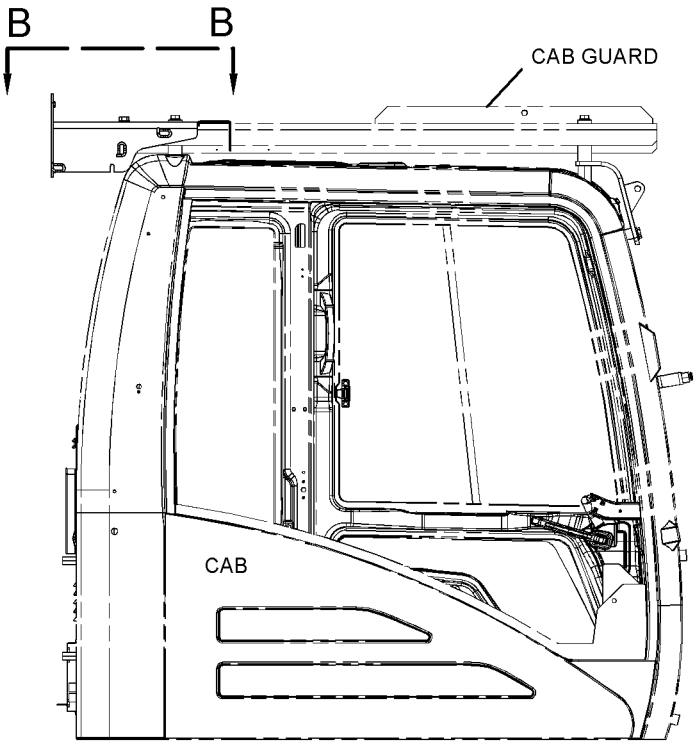

RIGHT SIDE VIEW
(WITH CAB GUARD)

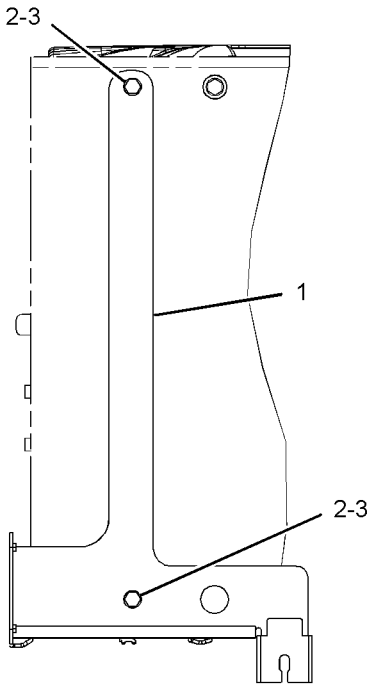

VIEW B-B

GRAPHIC #1 **<END>** g01435822

OPERATOR STATION

245-7811 MOUNTING GP-PLATFORM

S/N: CLA1-UP

PART OF 260-7231 CHASSIS AR

SMCS-7253 **i02217210**

NOTE	REF NO	GRAPHIC REF	PART NUMBER	QTY	PART NAME 1 2 3 4 5 6 (PRODUCT LEVEL)	SEE PAGE
	1	1	**235-8862**	4	MOUNT AS	
	2	1	**8T-4121**	16	WASHER-HARD (11X21X2.5-MM THK)	
M	3	1	**8T-4195**	16	BOLT (M10X1.5X30-MM)	

M-METRIC PART

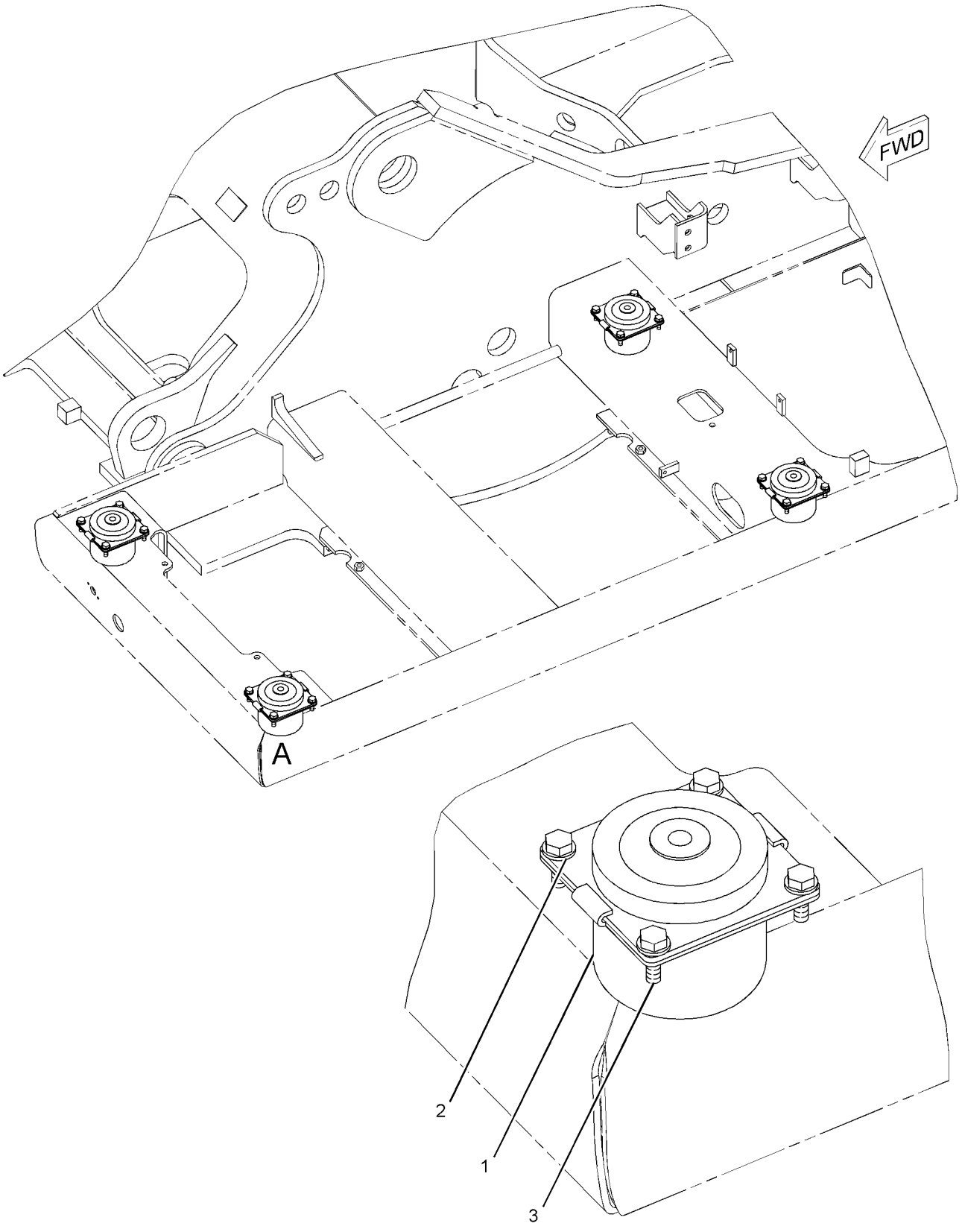

VIEW OF AREA A

GRAPHIC #1 **<END>** g01101486

OPERATOR STATION

273-5363 OPERATOR AR

S/N: CLA1-UP

PART OF 260-7231 CHASSIS AR

SMCS-7301 **i03017385**

NOTE	PART NUMBER	QTY	PART NAME 1 2 3 4 5 6 (PRODUCT LEVEL)	SEE PAGE
Y	*245-7922*	1	CONSOLE GP-OPERATOR	756
Y	*221-8872*	1	CONTROL & MTG GP-MACHINE	127
Y	*170-9497*	1	CONTROL GP-HYDRAULIC PEDAL (TRAVEL)	779
Y	*251-0538*	1	INSTALLATION GP-RADIO (AM, FM)	840
Y	*221-8813*	1	MONITOR & MTG GP-OPERATOR	859
Y	*273-5433*	1	PLATFORM GP-OPERATOR	866
Y	*235-8856*	1	SUPPORT GP-SEAT	899
			—OR—	
Y	*327-6523*	1	SUPPORT GP-SEAT	901
Y	*259-5161*	1	WIRING GP-CAB	196
Y	*251-0433*	1	WIRING GP-CONSOLE	214
Y	*275-6926*	1	PANEL & MTG GP-CIRCUIT BREAKER	152
Y	*275-7051*	1	WIRING GP-PLATFORM	235

Y-SEPARATE ILLUSTRATION

<END>

255-5845 PEDAL AR-AUXILIARY—LH

S/N: CLA1-UP

AN ATTACHMENT

SMCS-5059 **i03196539**

NOTE	PART NUMBER	QTY	PART NAME 1 2 3 4 5 6 (PRODUCT LEVEL)	SEE PAGE
Y	*221-8884*	1	CONTROL & MTG GP-PEDAL (LH)	769
Y	*259-5293*	1	FASTENER GP-WIRING HARNESS (PEDAL CONTROL)	130
Y	*247-7418*	1	FILM GP (OPERATOR CONTROLS, NOTICE)	938

Y-SEPARATE ILLUSTRATION

<END>

293-1239 PEDAL AR-THIRD

S/N: CLA1-UP

AN ATTACHMENT

SMCS-5059, 5462 **i02831544**

NOTE	PART NUMBER	QTY	PART NAME 1 2 3 4 5 6 (PRODUCT LEVEL)	SEE PAGE
Y	*225-5730*	1	CONTROL GP-HYDRAULIC PEDAL	780
Y	*278-6726*	1	LINES GP-PILOT (THIRD PEDAL, TRAVEL LEVERS)	480
Y	*282-7395*	1	LINES GP-PILOT (CONTROL VALVE, TRAVEL)	493
	260-6948	1	FILM-INSTRUCTION (OPERATOR CONTROLS, READ OMM)	

Y-SEPARATE ILLUSTRATION

<END>

OPERATOR STATION

273-5433 PLATFORM GP-OPERATOR

S/N: CLA1-UP

PART OF 273-5363 OPERATOR AR

SMCS-7253 **i02794261**

NOTE	REF NO	GRAPHIC REF	PART NUMBER	QTY	PART NAME 1 2 3 4 5 6 (PRODUCT LEVEL)	SEE PAGE
	1	1	**4I-3266**	1	STRIP	
	2	1	**135-8965**	1	GROMMET	
	3	1	**135-8966**	1	GROMMET	
	4	1	**161-3717**	1	STRIP	
	5	1	**167-7135**	1	PLATE AS	
	6	1	**171-7370**	1	PLATE	
	7	1	**273-5434**	1	PLATFORM AS	
M	8	1	**7X-2553**	4	BOLT (M16X2X40-MM)	
	9	1	**8T-4121**	6	WASHER-HARD (11X21X2.5-MM THK)	
M	10	1	**8T-4191**	6	BOLT (M10X1.5X16-MM)	
	11	1	**9X-8257**	4	WASHER (17.5X30X3.5-MM THK)	

M-METRIC PART

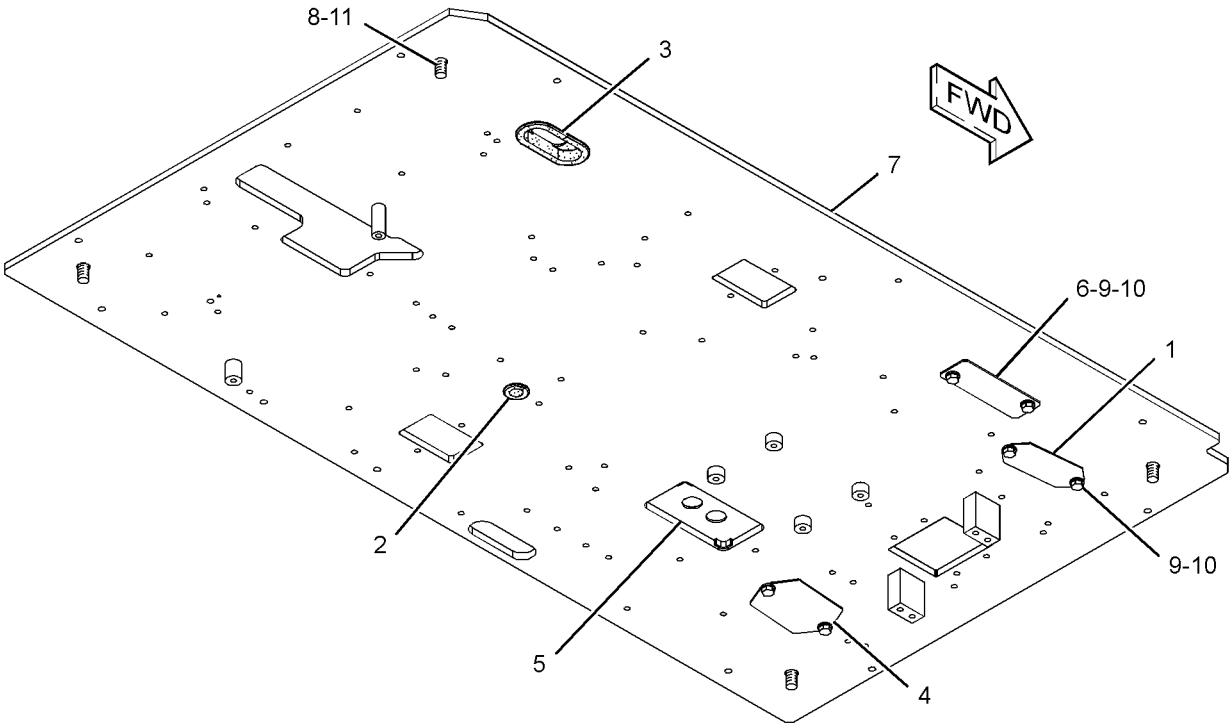

GRAPHIC #1 **<END>** g01414332

OPERATOR STATION

263-9088 RADIO GP-COMMUNICATION—PRODUCT LINK 121SR

S/N: CLA1-UP

PART OF 319-4256 CONTROL & MTG GP-COMMUNICATION

AN ATTACHMENT

SMCS-733T **i03135906**

NOTE	PART NUMBER	QTY	PART NAME 1 2 3 4 5 6 (PRODUCT LEVEL)	SEE PAGE
	330-3408	1	SOFTWARE GP-COMMUNICATION (PRODUCT LINK 121SR)	

<END>

OPERATOR STATION

245-7881 SCREEN GP-SUN

S/N: CLA1-UP

AN ATTACHMENT

SMCS-7165 **i02440979**

NOTE	REF NO	GRAPHIC REF	PART NUMBER	QTY	PART NAME 1 2 3 4 5 6 (PRODUCT LEVEL)	SEE PAGE
	1	1	**255-4410**	1	SCREEN AS (CAB)	
	2	1	**259-7214**	3	HOOK-RETAINER	
	3	1	**259-7215**	3	HOOK-RETAINER	
M	4	1	**099-0822**	6	BOLT-SOCKET HEAD (M5X0.8X10-MM)	

M-METRIC PART

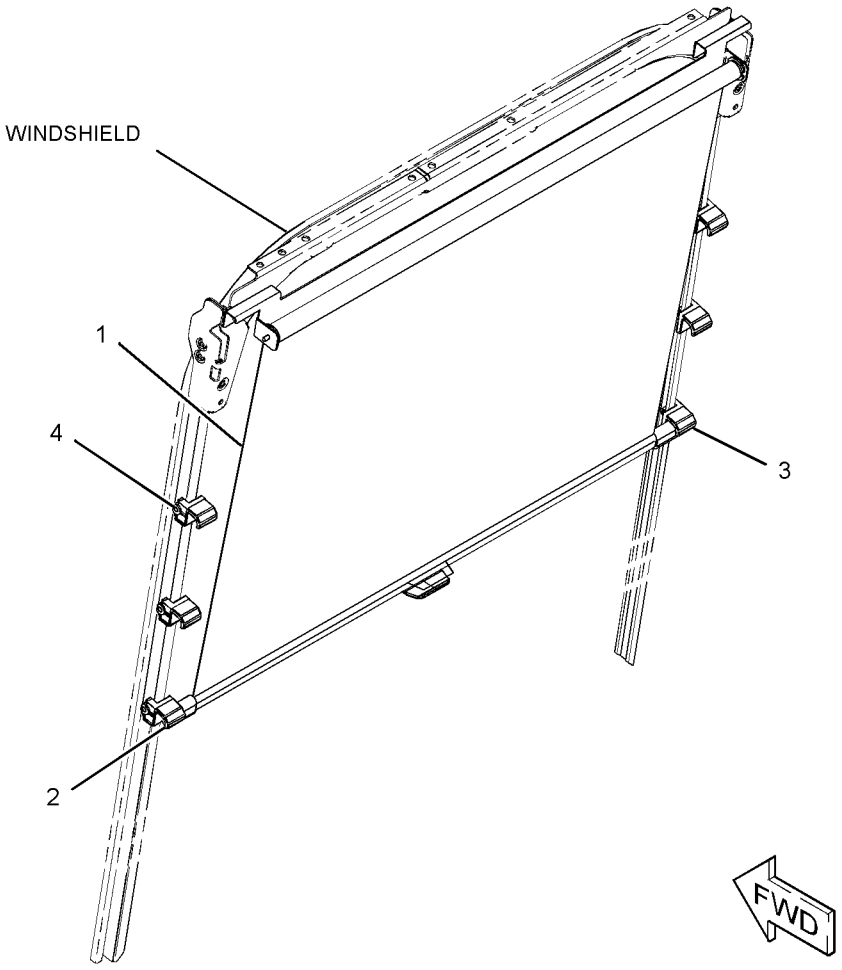

GRAPHIC #1 **<END>** g01177458

OPERATOR STATION

240-4999 SEAT & MOUNTING GP—LOW BACK WITH TILT

S/N: CLA1-UP
AN ATTACHMENT

SMCS-7312 **i02212239**

NOTE	REF NO	GRAPHIC REF	PART NUMBER	QTY	PART NAME 1 2 3 4 5 6 (PRODUCT LEVEL)	SEE PAGE
Y	1	1	*229-9075*	1	SEAT GP-SUSPENSION (LOW BACK, TILT)	893
M	2	1	**6V-8202**	4	BOLT-SOCKET HEAD (M8X1.25X16-MM)	

M-METRIC PART
Y-SEPARATE ILLUSTRATION

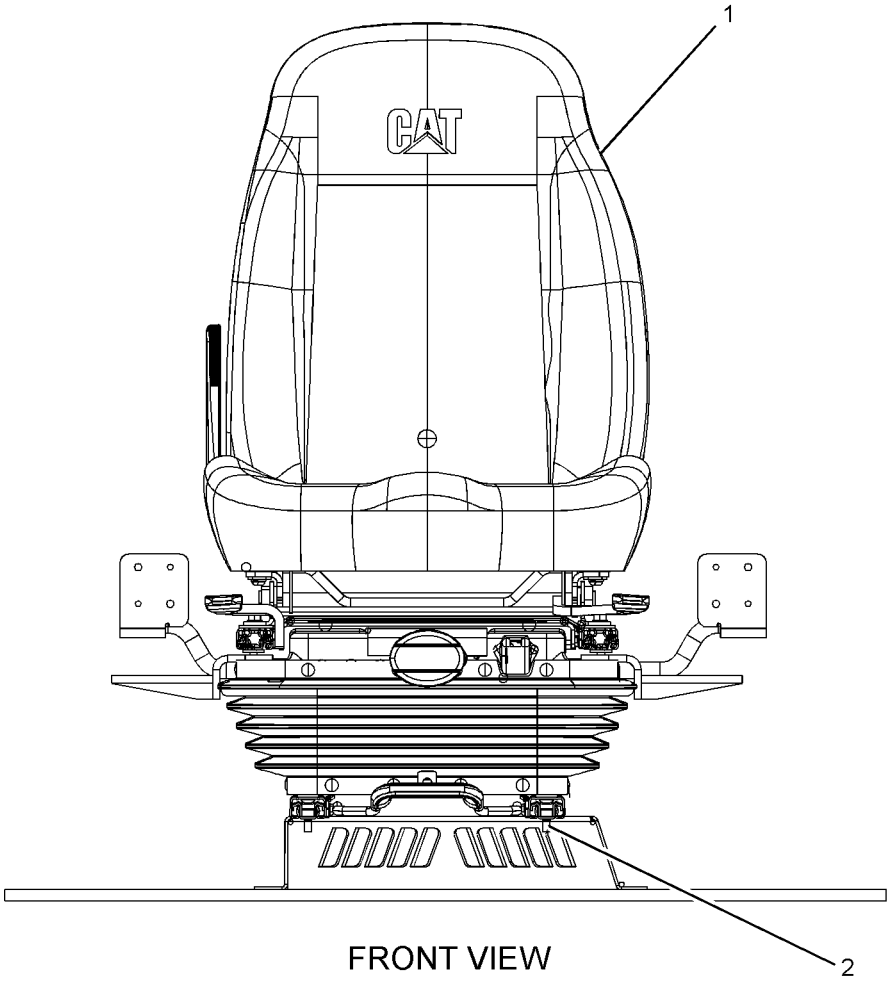

FRONT VIEW

GRAPHIC #1

<END>

g01089524

OPERATOR STATION

240-5003 SEAT & MOUNTING GP—HIGH BACK, TILT

S/N: CLA1-UP

AN ATTACHMENT

SMCS-7312 **i02707796**

NOTE	REF NO	GRAPHIC REF	PART NUMBER	QTY	PART NAME 1 2 3 4 5 6 (PRODUCT LEVEL)	SEE PAGE
Y	1	1	*229-9089*	1	SEAT GP-SUSPENSION (HIGH BACK, TILT)	894
M	2	1	**6V-8202**	4	BOLT-SOCKET HEAD (M8X1.25X16-MM)	

M-METRIC PART
Y-SEPARATE ILLUSTRATION

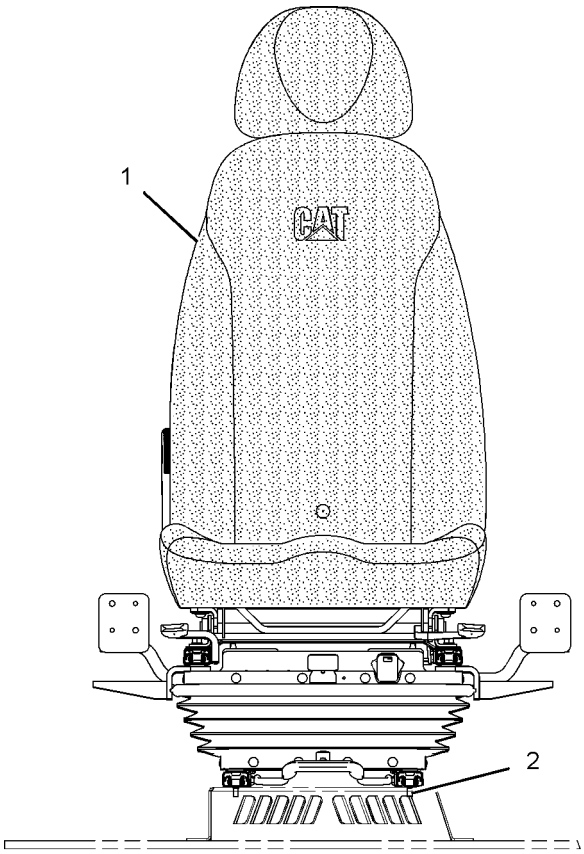

FRONT VIEW

GRAPHIC #1 **<END>** g01103598

327-6501 SEAT & MOUNTING GP—HIGH BACK, TILT

S/N: CLA1-UP
AN ATTACHMENT

SMCS-7312 **i03196559**

NOTE	REF NO	GRAPHIC REF	PART NUMBER	QTY	PART NAME 1 2 3 4 5 6 (PRODUCT LEVEL)	SEE PAGE
	1	1	**316-8987**	2	BRACKET	
Y	2	1	*327-6507*	1	SEAT GP-SUSPENSION (HIGH BACK, TILT)	898
M	3	1	**5A-3604**	2	BOLT-SOCKET HEAD (M8X1.25X25-MM)	
M	4	1	**6V-8202**	2	BOLT-SOCKET HEAD (M8X1.25X16-MM)	

M-METRIC PART
Y-SEPARATE ILLUSTRATION

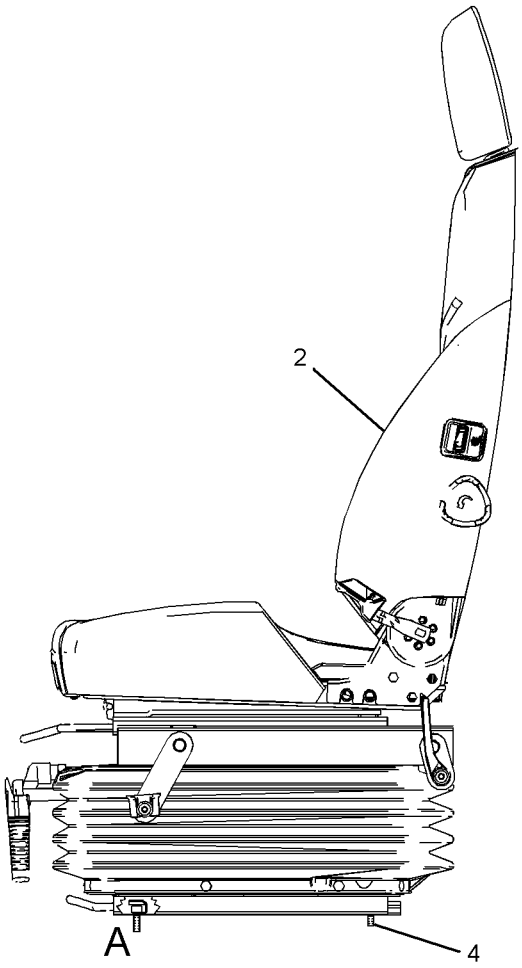

LEFT SIDE VIEW

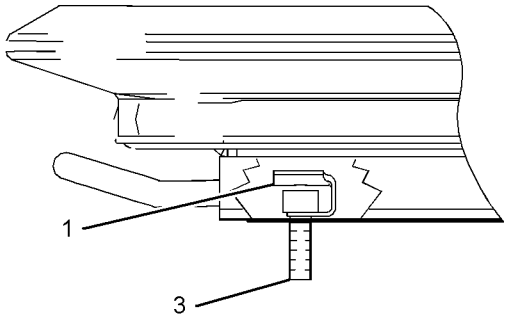

VIEW OF AREA A

GRAPHIC #1 **<END>** g01619849

OPERATOR STATION

235-9020 SEAT BELT GP–RETRACTABLE

S/N: CLA1-UP
PART OF 240-5039 SEAT BELT GP
AN ATTACHMENT

SMCS-7327 **i02212218**

NOTE	REF NO	GRAPHIC REF	PART NUMBER	QTY	PART NAME 1 2 3 4 5 6 (PRODUCT LEVEL)	SEE PAGE
	1	1	**8S-4724**	1	BOLT (7/16-20X2.25-IN)	
	2	1	**8S-4723**	1	BOLT (7/16-20X1.5-IN)	
	3	1	**8S-0934**	1	LOCKNUT-FLANGE (7/16-20-THD)	

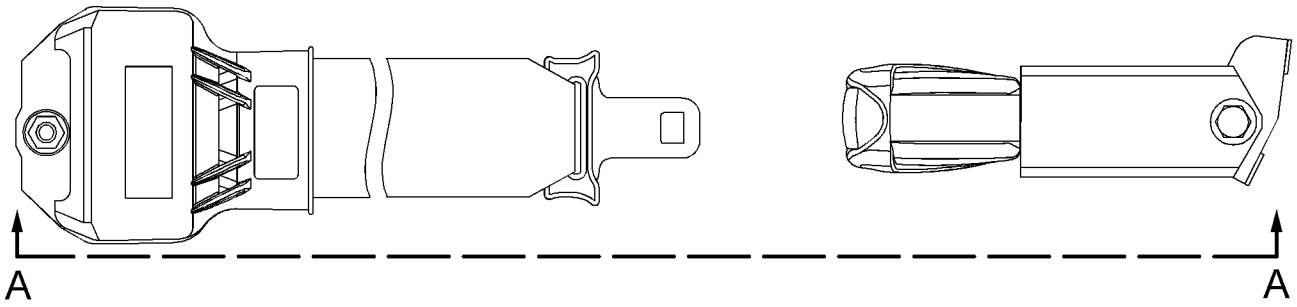

TOP VIEW

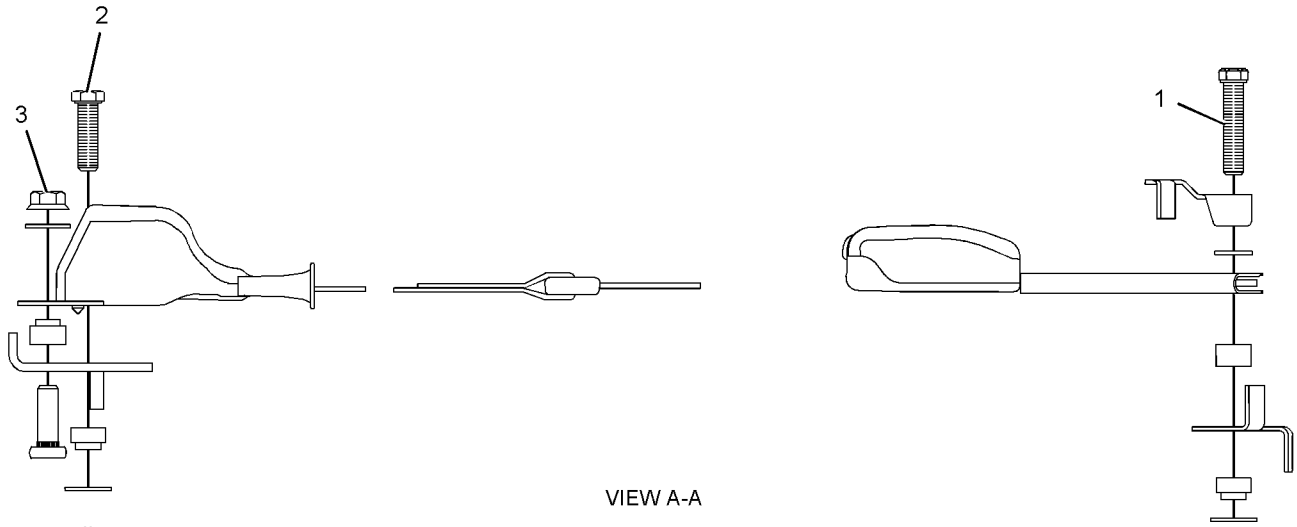

VIEW A-A

GRAPHIC #1 **<END>** g01131817

OPERATOR STATION

240-5037 SEAT BELT GP–RETRACTABLE, 46-MM

S/N: CLA1-UP

AN ATTACHMENT

SMCS-7327 **i02578051**

NOTE	REF NO	GRAPHIC REF	PART NUMBER	QTY	PART NAME 1 2 3 4 5 6 (PRODUCT LEVEL)	SEE PAGE
Y	1	1	**273-5446**	1	SEAT BELT GP (RETRACTABLE, 46-MM)	875

Y-SEPARATE ILLUSTRATION

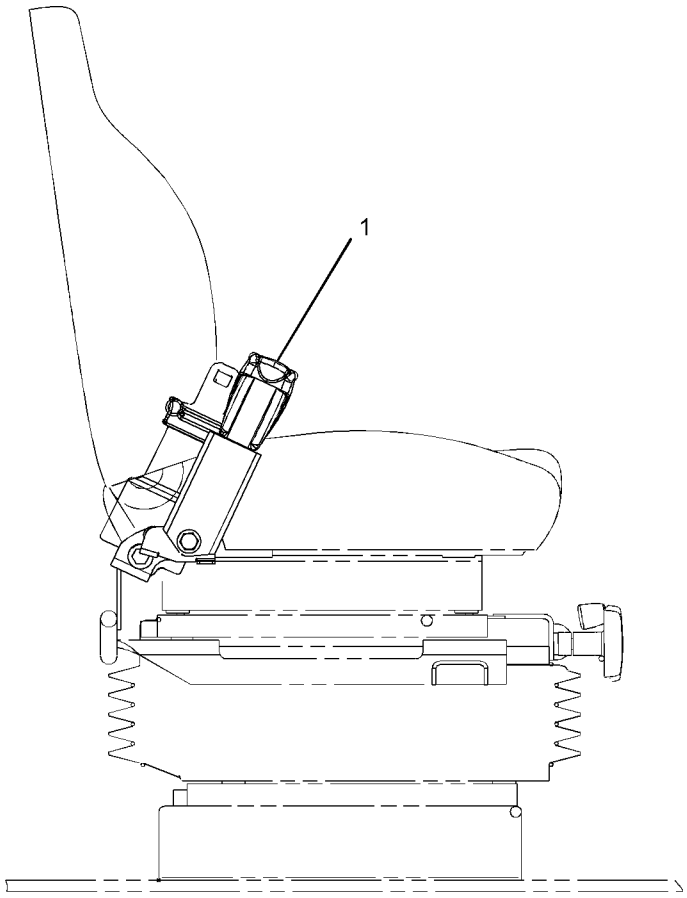

RIGHT SIDE VIEW

GRAPHIC #1

<END>

g01071615

OPERATOR STATION

240-5039 SEAT BELT GP–RETRACTABLE, 3-IN

S/N: CLA1-UP

AN ATTACHMENT

SMCS-7327 **i02497564**

NOTE	REF NO	GRAPHIC REF	PART NUMBER	QTY	PART NAME 1 2 3 4 5 6 (PRODUCT LEVEL)	SEE PAGE
Y	1	1	**235-9020**	1	SEAT BELT GP (RETRACTABLE, 3-IN)	872

Y-SEPARATE ILLUSTRATION

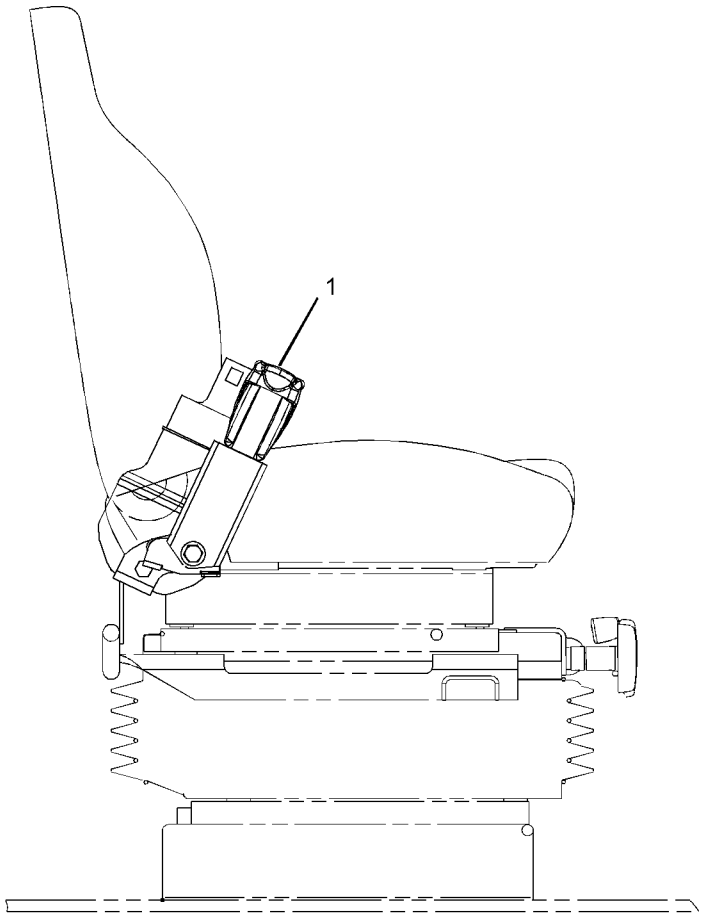

RIGHT SIDE VIEW

GRAPHIC #1

<END>

g01071676

OPERATOR STATION

273-5446 SEAT BELT GP–RETRACTABLE, 46-MM

S/N: CLA1-UP
PART OF 240-5037 SEAT BELT GP
AN ATTACHMENT

SMCS-7327 **i02578052**

NOTE	REF NO	GRAPHIC REF	PART NUMBER	QTY	PART NAME 1 2 3 4 5 6 (PRODUCT LEVEL)	SEE PAGE
	1	1	**8S-4724**	1	BOLT (7/16-20X2.25-IN)	
	2	1	**8S-4723**	1	BOLT (7/16-20X1.5-IN)	
	3	1	**8S-0934**	1	LOCKNUT-FLANGE (7/16-20-THD)	

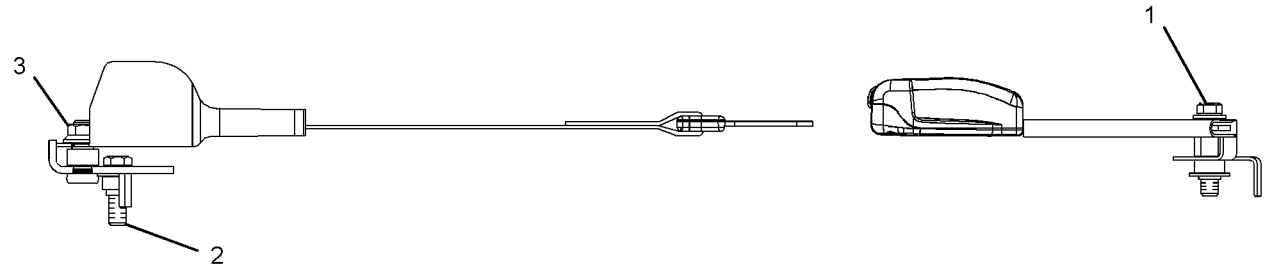

GRAPHIC #1 **<END>** g01253938

OPERATOR STATION

305-0466 SEAT BELT GP–RETRACTABLE

S/N: CLA1-UP

AN ATTACHMENT

SMCS-7327 **i03090282**

NOTE	REF NO	GRAPHIC REF	PART NUMBER	QTY	PART NAME 1 2 3 4 5 6 (PRODUCT LEVEL)	SEE PAGE
	1	1	**327-6540**	1	SEAT BELT GP	

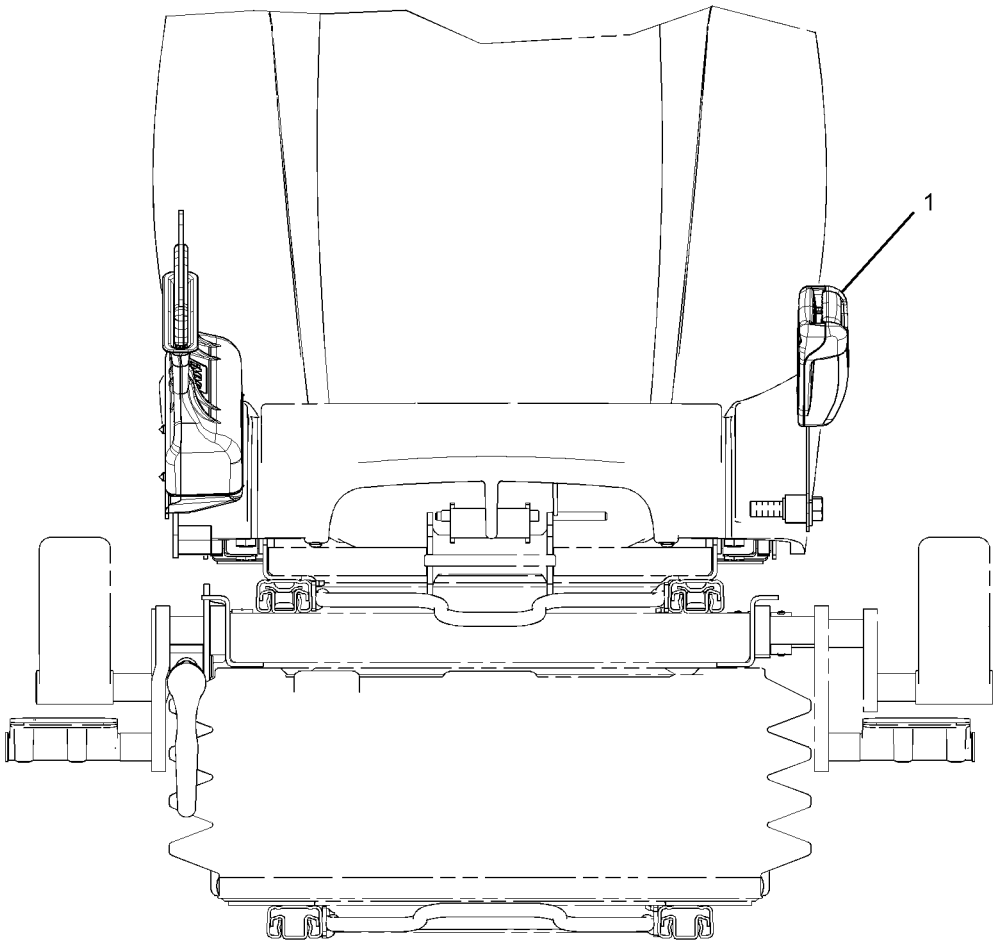

FRONT VIEW

GRAPHIC #1

<END>

g01576875

OPERATOR STATION

305-0467 SEAT BELT GP–RETRACTABLE

S/N: CLA1-UP

AN ATTACHMENT

SMCS-7327 **i03090307**

NOTE	REF NO	GRAPHIC REF	PART NUMBER	QTY	PART NAME 1 2 3 4 5 6 (PRODUCT LEVEL)	SEE PAGE
	1	1	**327-6541**	1	SEAT BELT GP	

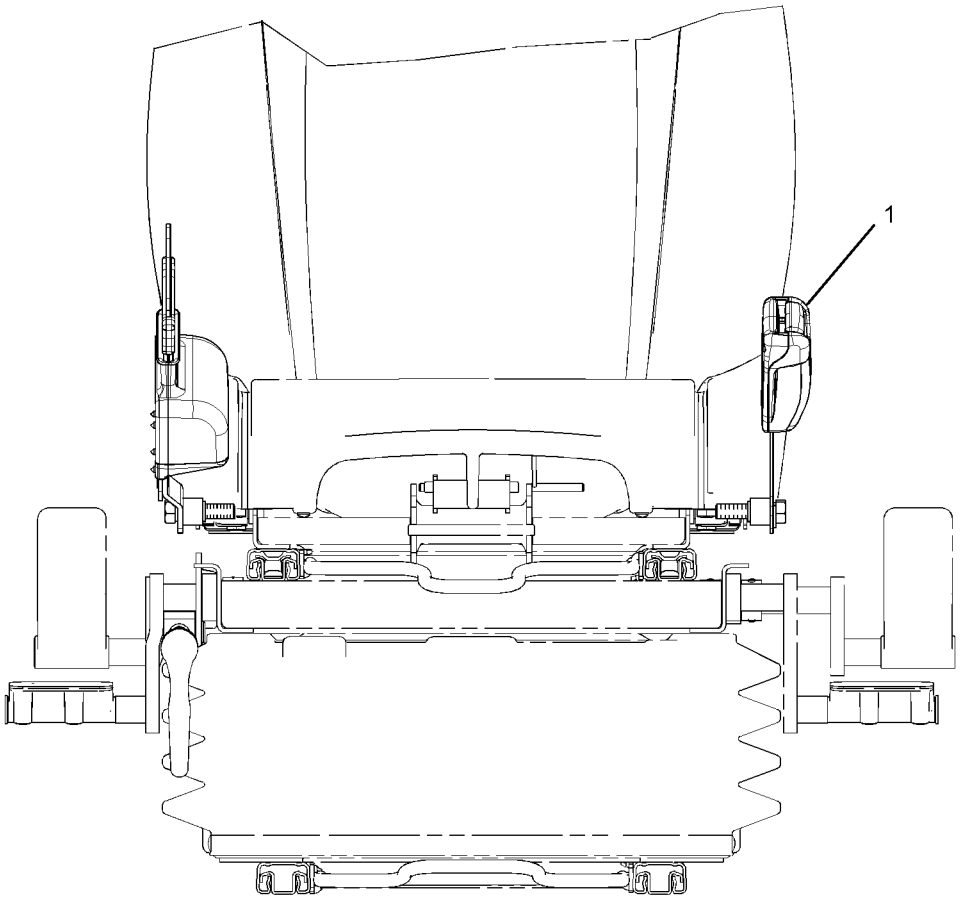

FRONT VIEW

GRAPHIC #1 **<END>** g01576478

OPERATOR STATION

229-9076 SEAT GP—LOW BACK WITH TILT

S/N: CLA1-UP

PART OF 235-9028 SEAT GP, 229-9075 SEAT GP-SUSPENSION

AN ATTACHMENT

SMCS-7312 **i02526961**

NOTE	REF NO	GRAPHIC REF	PART NUMBER	QTY	PART NAME 1 2 3 4 5 6 (PRODUCT LEVEL)	SEE PAGE
	1	1	**245-7883**	1	KIT-SEAT (CONTROL HANDLE)	
	1A	1	**8T-4224**	4	WASHER-HARD (8.8X16X2-MM THK)	
	1B	1	**245-7887**	1	LEVER-CONTROL	
M	1C	1	**245-7898**	4	SCREW-BUTTON HEAD (M8X1.25X25-MM)	
	2	1	**245-7888**	1	KIT-SEAT SUPPORT	
M	2A	1	**5C-7261**	4	NUT (M8X1.25-THD)	
	2B	1	**8T-4224**	8	WASHER-HARD (8.8X16X2-MM THK)	
M	2C	1	**245-7898**	4	SCREW-BUTTON HEAD (M8X1.25X25-MM)	
					J-PARTS INCLUDED IN BOTH SEAT KIT AND SEAT SUPPORT KIT	

M-METRIC PART

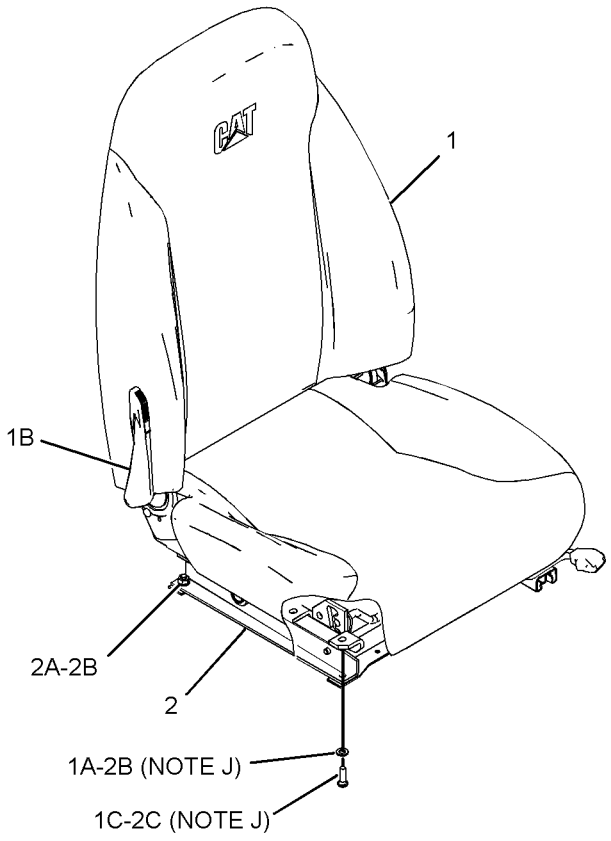

GRAPHIC #1 **<END>** g01263931

OPERATOR STATION

229-9090 SEAT GP—HIGH BACK, TILT

S/N: CLA1-UP

PART OF 229-9089 SEAT GP-SUSPENSION

AN ATTACHMENT

SMCS-7312 **i02212463**

NOTE	REF NO	GRAPHIC REF	PART NUMBER	QTY	PART NAME 1 2 3 4 5 6 (PRODUCT LEVEL)	SEE PAGE
	1	1	**245-7884**	1	KIT-SEAT	
M	1A	1	**245-7898**	4	SCREW-BUTTON HEAD (M8X1.25X25-MM)	
	1B	1	**8T-4224**	4	WASHER-HARD (8.8X16X2-MM THK)	
	1C	1	**178-5659**	1	HANDLE (LUMBAR SUPPORT ADJUSTER)	
	1D	1	**229-9094**	1	HEADREST AS-SEAT	
	1E	1	**245-7887**	1	LEVER-CONTROL	
	2	1	**245-7888**	1	KIT-SEAT SUPPORT	
M	2A	1	**245-7898**	4	SCREW-BUTTON HEAD (M8X1.25X25-MM)	
	2B	1	**8T-4224**	8	WASHER-HARD (8.8X16X2-MM THK)	
M	2C	1	**5C-7261**	4	NUT (M8X1.25-THD)	
					J-PARTS INCLUDED IN BOTH SEAT KIT AND SEAT SUPPORT KIT	

M-METRIC PART

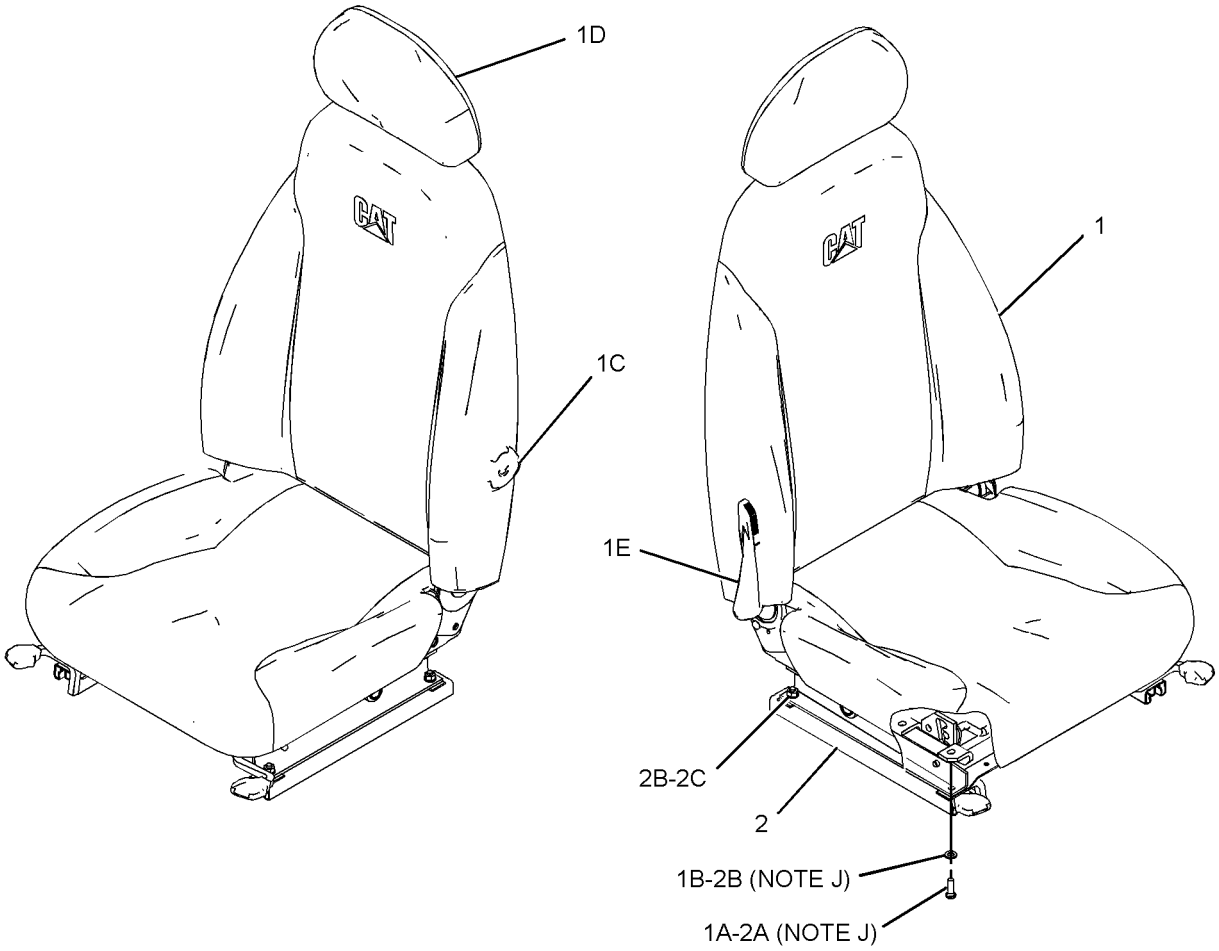

GRAPHIC #1 **<END>** g01118558

OPERATOR STATION

229-9093 SEAT GP—HIGH BACK, WITH HEATER

S/N: CLA1-UP

PART OF 240-5065 SEAT GP-SUSPENSION

AN ATTACHMENT

SMCS-7312 **i02212370**

NOTE	REF NO	GRAPHIC REF	PART NUMBER	QTY	PART NAME 1 2 3 4 5 6 (PRODUCT LEVEL)	SEE PAGE
	1	1	**245-7885**	1	SEAT GP	
		1	**8T-4224**	4	WASHER-HARD (8.8X16X2-MM THK)	
		1	**178-5659**	1	HANDLE (LUMBAR SUPPORT ADJUSTER)	
		1	**229-9094**	1	HEADREST AS-SEAT	
		1	**245-7887**	1	LEVER-CONTROL	
M		1	**245-7898**	4	SCREW-BUTTON HEAD (M8X1.25X25-MM)	
	2	1	**245-7888**	1	KIT-SEAT SUPPORT	
M		1	**5C-7261**	4	NUT (M8X1.25-THD)	
		1	**8T-4224**	8	WASHER-HARD (8.8X16X2-MM THK)	
M		1	**245-7898**	4	SCREW-BUTTON HEAD (M8X1.25X25-MM)	

M-METRIC PART

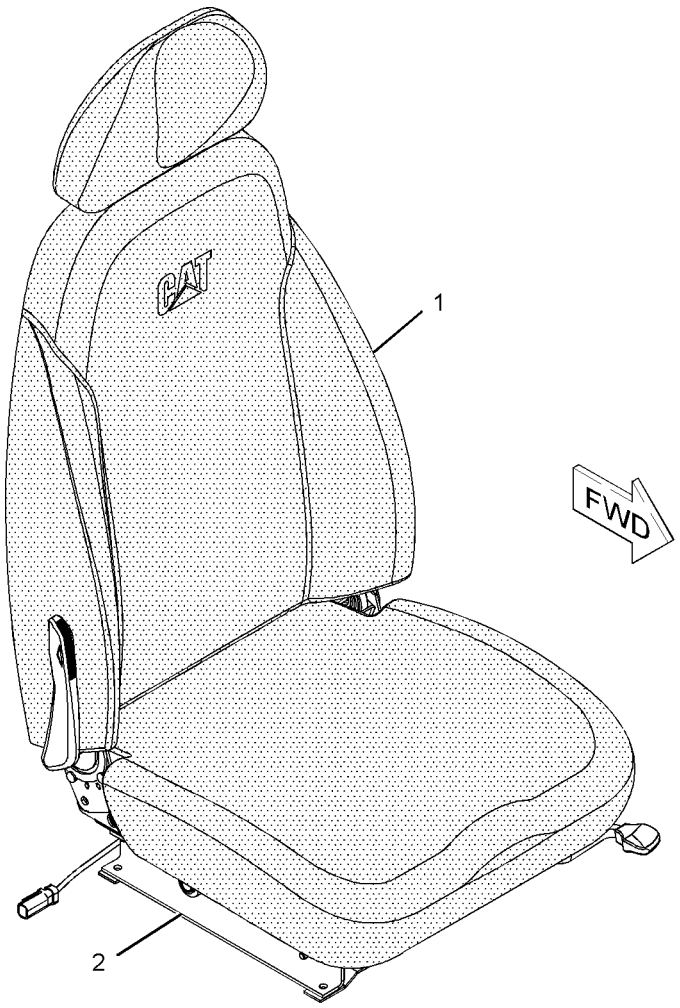

GRAPHIC #1

<END>

g01086049

OPERATOR STATION

235-9028 SEAT GP—LOW BACK, TILT

S/N: CLA1-UP
PART OF 240-5001 SEAT GP
AN ATTACHMENT

SMCS-7312 **i02489602**

NOTE	REF NO	GRAPHIC REF	PART NUMBER	QTY	PART NAME 1 2 3 4 5 6 (PRODUCT LEVEL)	SEE PAGE
Y	1	1	**229-9076**	1	SEAT GP (LOW BACK, TILT)	878
Y	2	1	*229-9095*	1	SUSPENSION GP-SEAT	903
M	3	1	**5C-7261**	4	NUT (M8X1.25-THD)	
	4	1	**8T-4224**	4	WASHER-HARD (8.8X16X2-MM THK)	

M-METRIC PART
Y-SEPARATE ILLUSTRATION

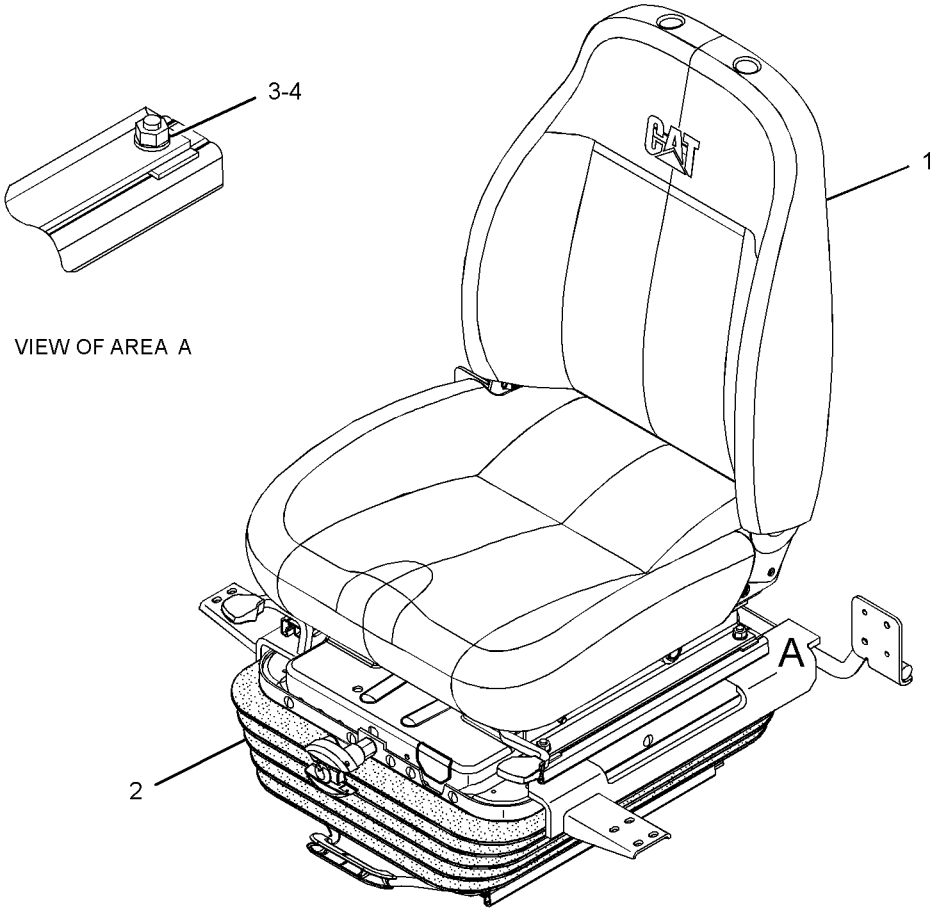

GRAPHIC #1 **<END>** g01251410

OPERATOR STATION

240-5001 SEAT GP—LOW BACK, TILT

S/N: CLA1-UP

AN ATTACHMENT

SMCS-7312 **i02526931**

NOTE	REF NO	GRAPHIC REF	PART NUMBER	QTY	PART NAME 1 2 3 4 5 6 (PRODUCT LEVEL)	SEE PAGE
Y	1	1	*235-9028*	1	SEAT GP (LOW BACK, TILT)	881
M	2	1	**6V-8202**	4	BOLT-SOCKET HEAD (M8X1.25X16-MM)	

M-METRIC PART
Y-SEPARATE ILLUSTRATION

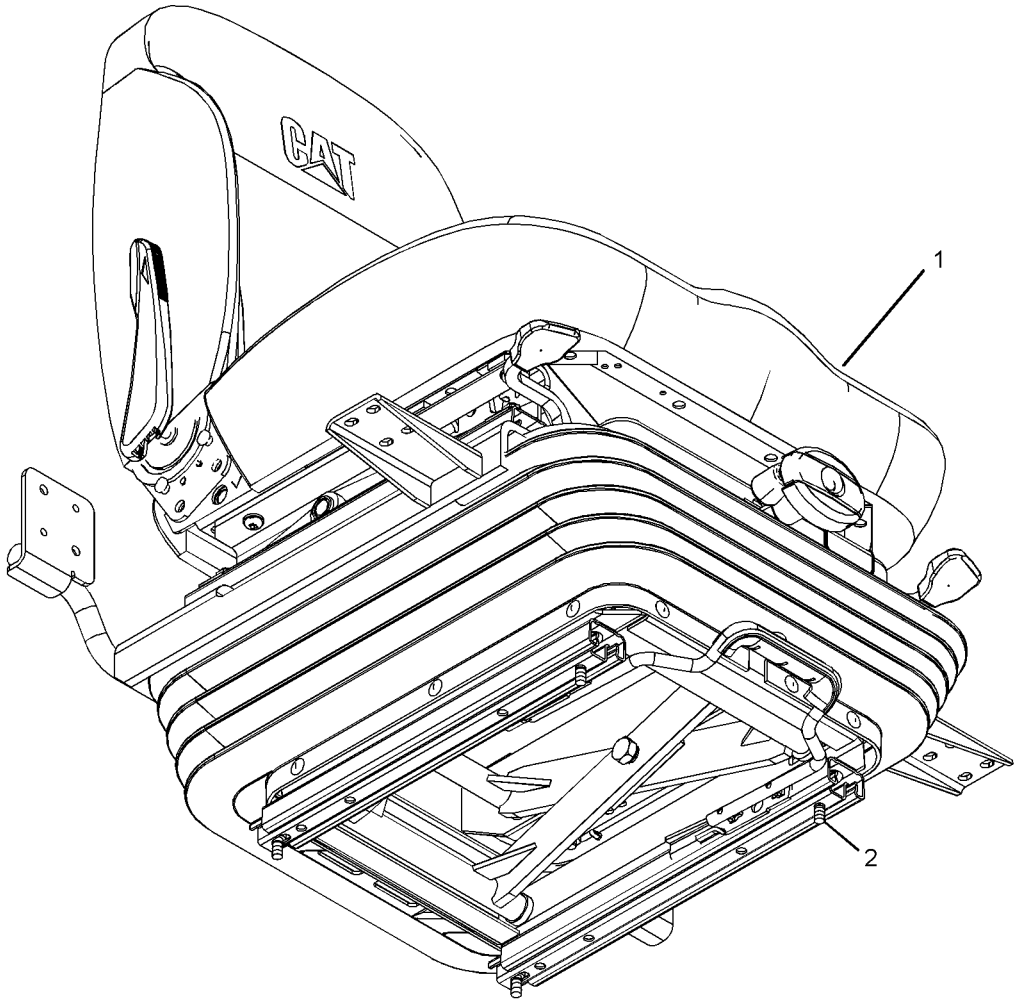

GRAPHIC #1 **<END>** g01236378

OPERATOR STATION

240-5056 SEAT GP–LOW BACK, TILT

S/N: CLA1-UP
AN ATTACHMENT

SMCS-7312 **i03258806**

NOTE	REF NO	GRAPHIC REF	PART NUMBER	QTY	PART NAME 1 2 3 4 5 6 (PRODUCT LEVEL)	SEE PAGE
Y	1	1	*240-5057*	1	SEAT GP (LOW BACK, TILT)	884
M	2	1	**6V-8202**	4	BOLT-SOCKET HEAD (M8X1.25X16-MM)	

M-METRIC PART
Y-SEPARATE ILLUSTRATION

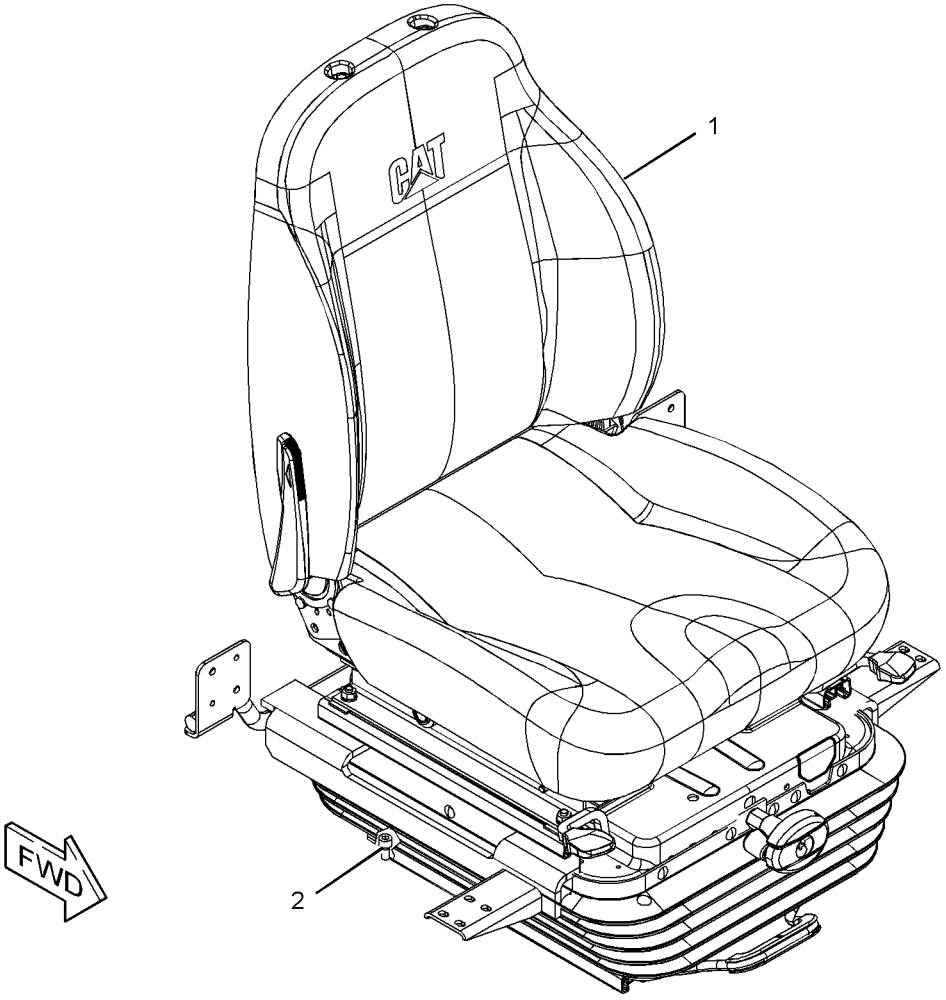

GRAPHIC #1 **<END>** g01232409

OPERATOR STATION

240-5057 SEAT GP—LOW BACK, TILT

S/N: CLA1-UP
PART OF 240-5056 SEAT GP
AN ATTACHMENT

SMCS-7312 **i02489607**

NOTE	REF NO	GRAPHIC REF	PART NUMBER	QTY	PART NAME 1 2 3 4 5 6 (PRODUCT LEVEL)	SEE PAGE
Y	1	1	*229-9095*	1	SUSPENSION GP-SEAT	903
Y	2	1	**240-5058**	1	SEAT GP (LOW BACK, TILT)	885
M	3	1	**5C-7261**	4	NUT (M8X1.25-THD)	
	4	1	**8T-4224**	4	WASHER-HARD (8.8X16X2-MM THK)	

M-METRIC PART
Y-SEPARATE ILLUSTRATION

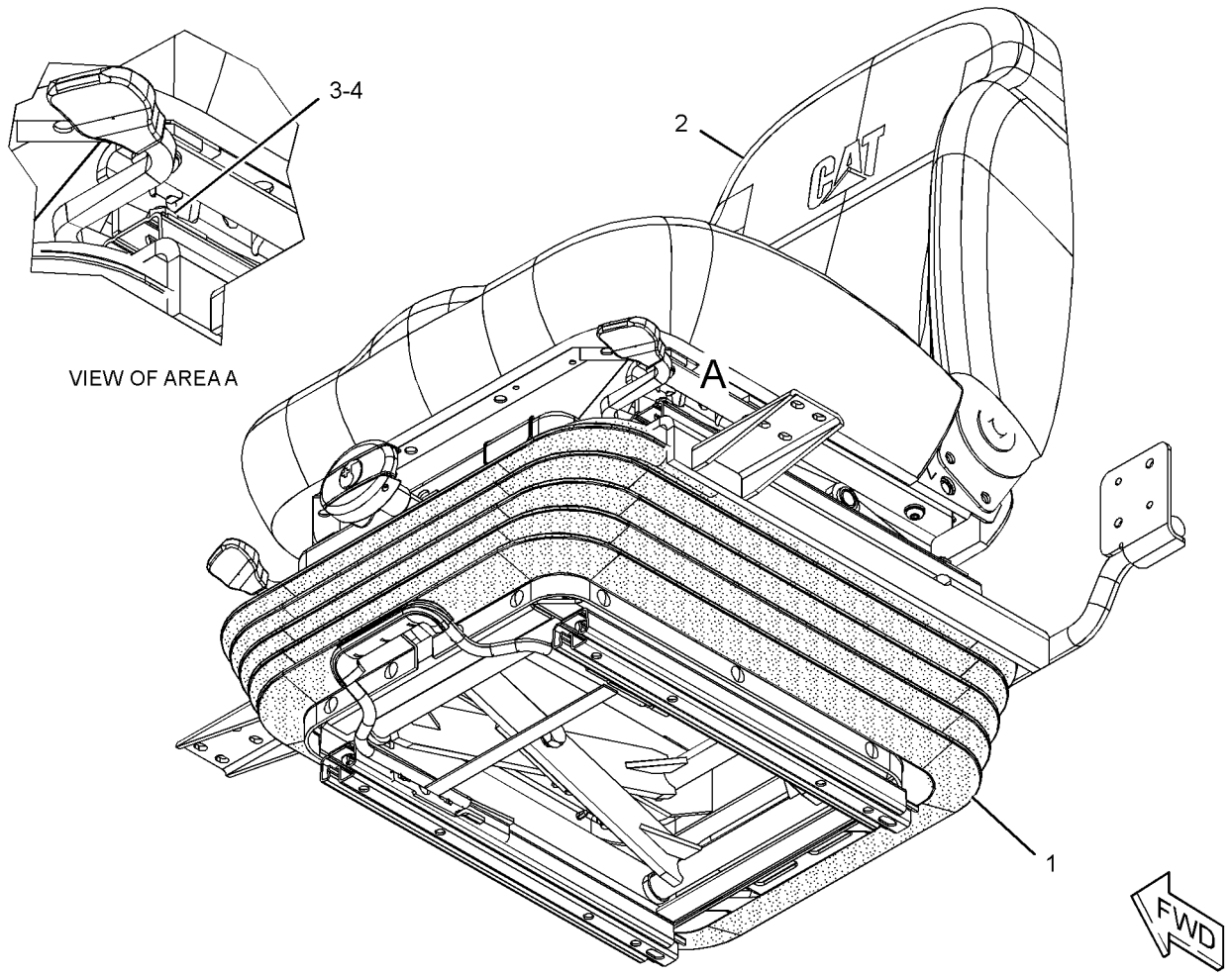

GRAPHIC #1 **<END>** g01251481

OPERATOR STATION

240-5058 SEAT GP–LOW BACK, TILT

S/N: CLA1-UP
PART OF 240-5057 SEAT GP
AN ATTACHMENT

SMCS-7312 **i02476490**

NOTE	REF NO	GRAPHIC REF	PART NUMBER	QTY	PART NAME 1 2 3 4 5 6 (PRODUCT LEVEL)	SEE PAGE
	1	1	**245-7882**	1	KIT-SEAT	
M	1A	1	**245-7898**	4	SCREW-BUTTON HEAD (M8X1.25X25-MM)	
	1B	1	**8T-4224**	4	WASHER-HARD (8.8X16X2-MM THK)	
	1C	1	**245-7887**	1	LEVER-CONTROL	
	2	1	**245-7888**	1	KIT-SEAT SUPPORT	
M	2A	1	**245-7898**	4	SCREW-BUTTON HEAD (M8X1.25X25-MM)	
	2B	1	**8T-4224**	8	WASHER-HARD (8.8X16X2-MM THK)	
M	2C	1	**5C-7261**	4	NUT (M8X1.25-THD)	
					J-PARTS INCLUDED IN BOTH SEAT KIT AND SEAT SUPPORT KIT	

M-METRIC PART

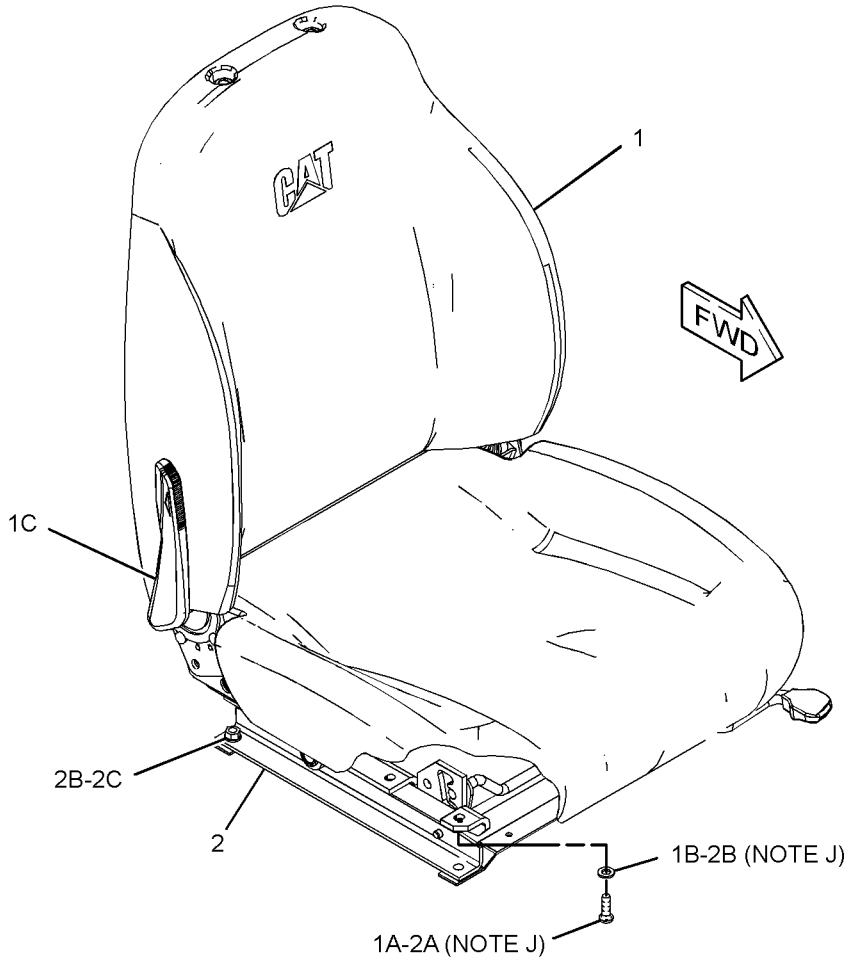

GRAPHIC #1 **<END>** g01242921

OPERATOR STATION

327-6498 SEAT GP—LOW BACK, VINYL

S/N: CLA1-UP

AN ATTACHMENT

SMCS-7312 **i03213397**

NOTE	REF NO	GRAPHIC REF	PART NUMBER	QTY	PART NAME 1 2 3 4 5 6 (PRODUCT LEVEL)	SEE PAGE
	1	1	**316-8987**	2	BRACKET	
Y	2	1	*327-6504*	1	SEAT GP	888
M	3	1	**5A-3604**	2	BOLT-SOCKET HEAD (M8X1.25X25-MM)	
M	4	1	**6V-8202**	2	BOLT-SOCKET HEAD (M8X1.25X16-MM)	

M-METRIC PART
Y-SEPARATE ILLUSTRATION

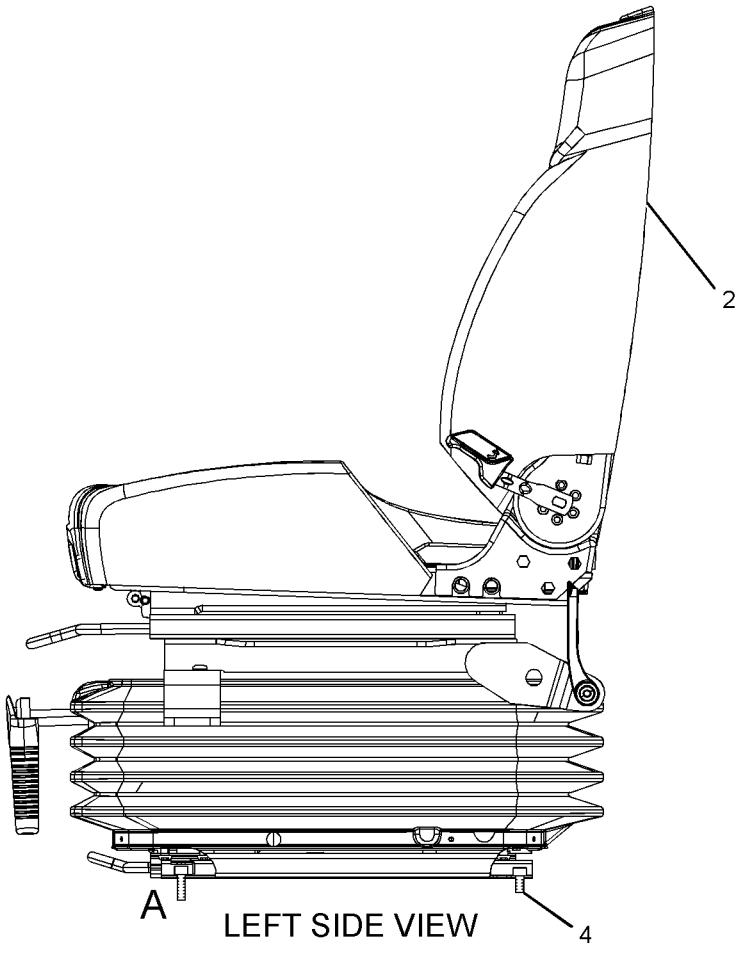

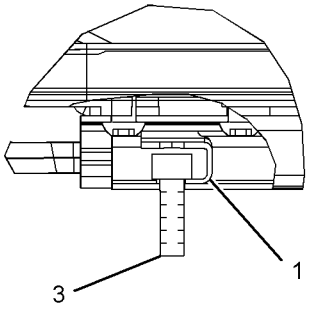

VIEW OF AREA A

GRAPHIC #1 **<END>** g01642053

OPERATOR STATION

327-6499 SEAT GP—LOW BACK, TILT

S/N: CLA1-UP
AN ATTACHMENT

SMCS-7312 **i03213460**

NOTE	REF NO	GRAPHIC REF	PART NUMBER	QTY	PART NAME 1 2 3 4 5 6 (PRODUCT LEVEL)	SEE PAGE
	1	1	**316-8987**	2	BRACKET	
Y	2	1	*327-6505*	1	SEAT GP	889
M	3	1	**5A-3604**	2	BOLT-SOCKET HEAD (M8X1.25X25-MM)	
M	4	1	**6V-8202**	2	BOLT-SOCKET HEAD (M8X1.25X16-MM)	

M-METRIC PART
Y-SEPARATE ILLUSTRATION

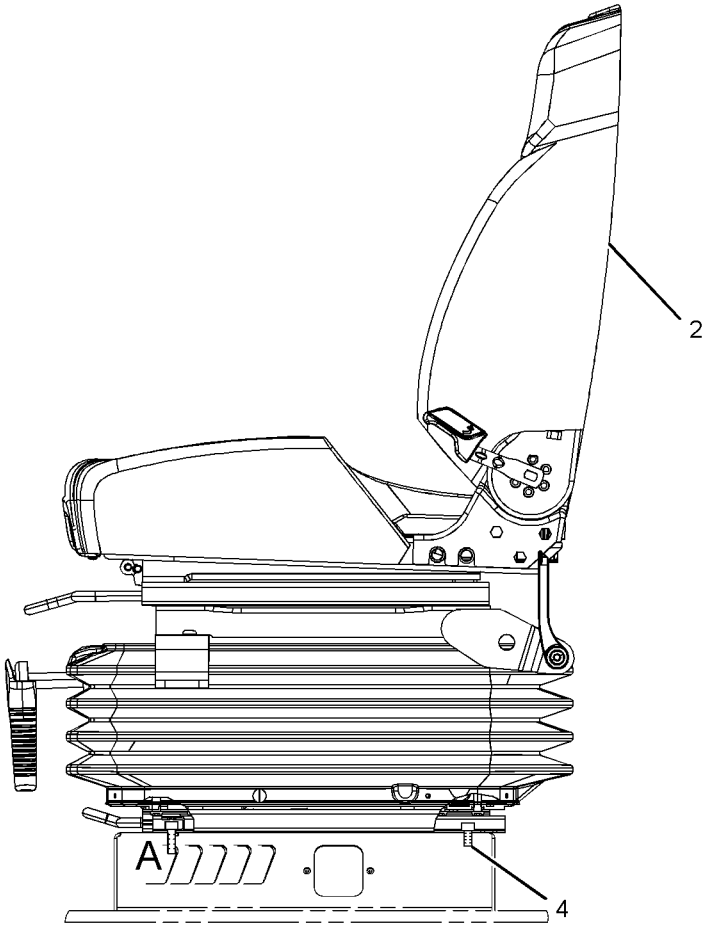

LEFT SIDE VIEW

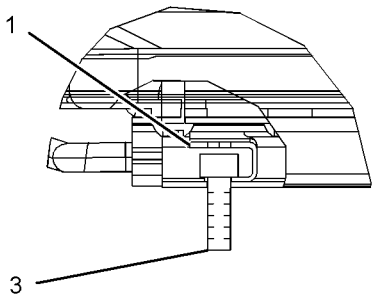

VIEW OF AREA A

GRAPHIC #1 **<END>** g01642156

OPERATOR STATION

327-6504 SEAT GP—LOW BACK, VINYL

S/N: CLA1-UP
PART OF 327-6498 SEAT GP
AN ATTACHMENT

SMCS-7312 **i03213408**

NOTE	REF NO	GRAPHIC REF	PART NUMBER	QTY	PART NAME 1 2 3 4 5 6 (PRODUCT LEVEL)	SEE PAGE
	1	1	**316-8987**	2	BRACKET	
Y	2	1	**327-6510**	1	SEAT GP	890
Y	3	1	**327-6517**	1	SUSPENSION GP-SEAT	907
M	4	1	**5A-3604**	4	BOLT-SOCKET HEAD (M8X1.25X25-MM)	

M-METRIC PART
Y-SEPARATE ILLUSTRATION

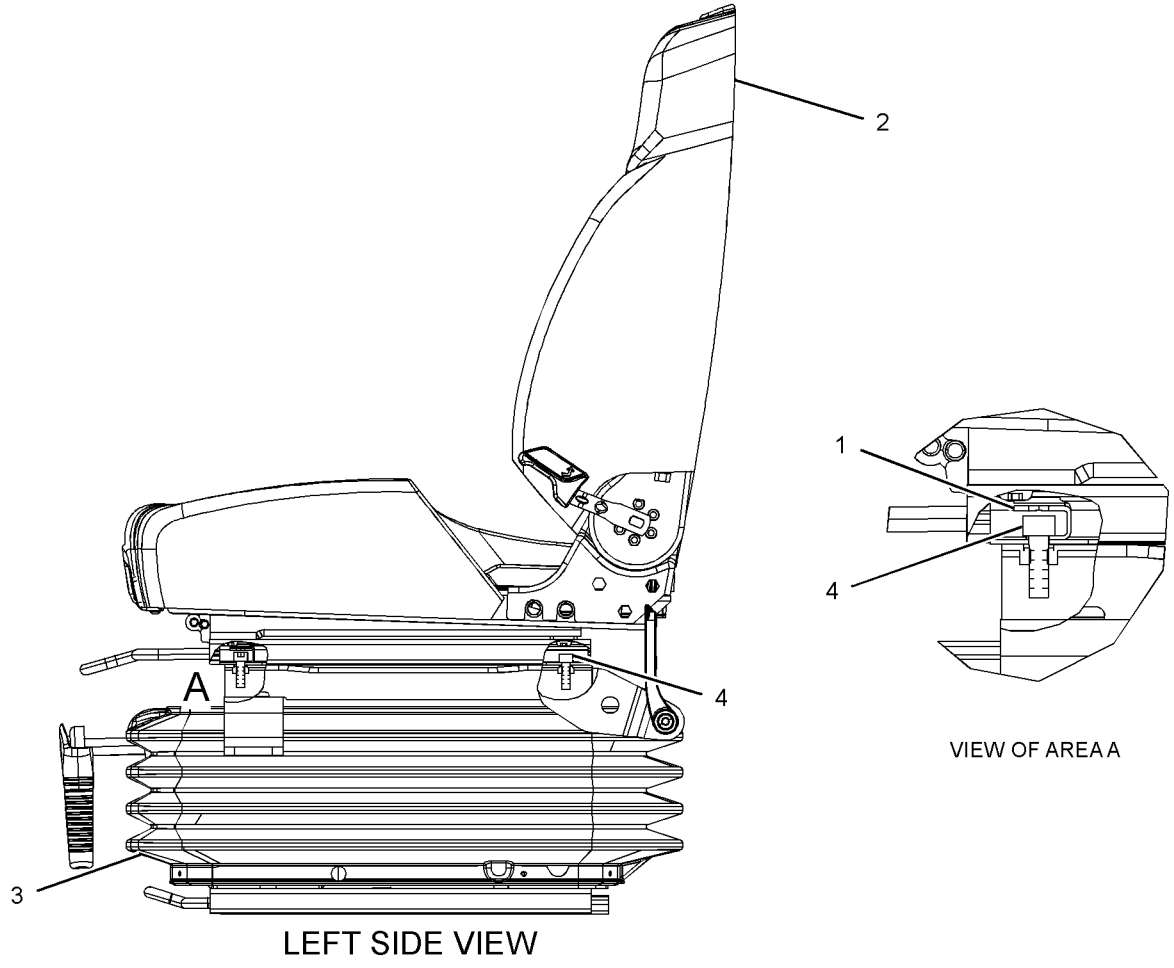

LEFT SIDE VIEW

GRAPHIC #1 **<END>** g01641812

327-6505 SEAT GP–LOW BACK, TILT

S/N: CLA1-UP
PART OF 327-6499 SEAT GP
AN ATTACHMENT

SMCS-7312 **i03213463**

NOTE	REF NO	GRAPHIC REF	PART NUMBER	QTY	PART NAME 1 2 3 4 5 6 (PRODUCT LEVEL)	SEE PAGE
	1	1	**316-8987**	2	BRACKET	
Y	2	1	**327-6511**	1	SEAT GP	891
Y	3	1	**327-6517**	1	SUSPENSION GP-SEAT	907
M	4	1	**5A-3604**	4	BOLT-SOCKET HEAD (M8X1.25X25-MM)	

M-METRIC PART
Y-SEPARATE ILLUSTRATION

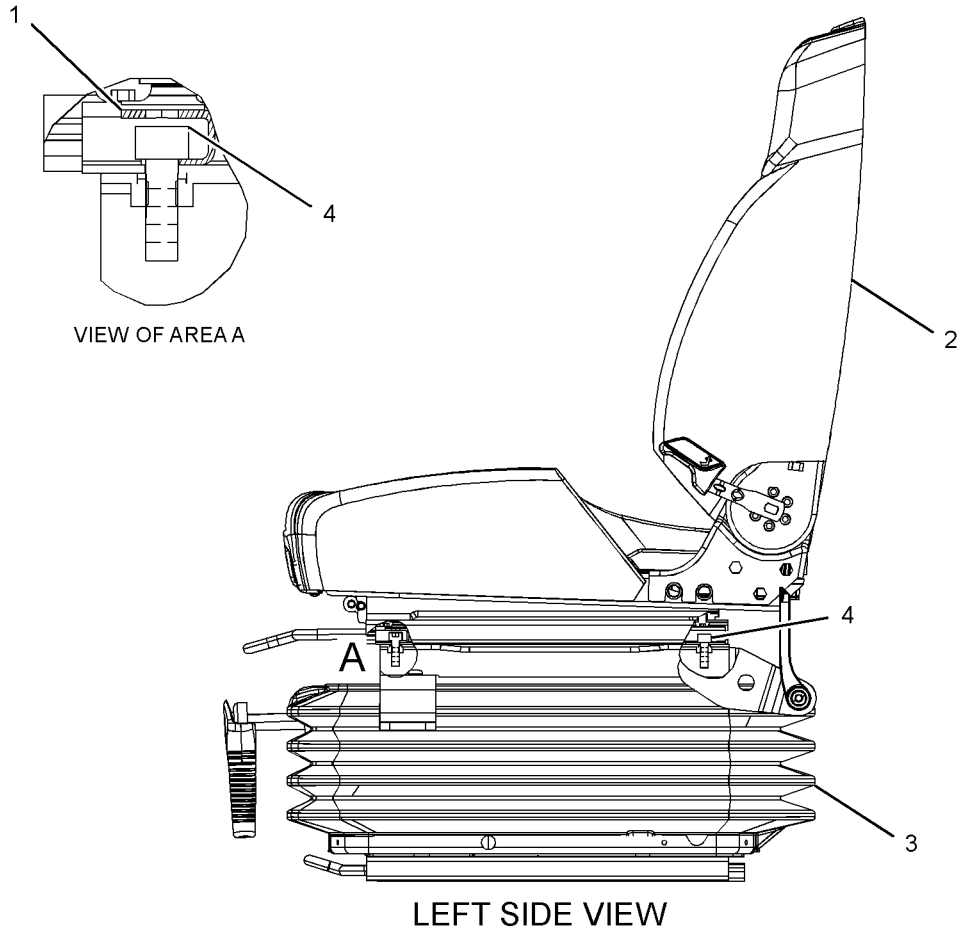

LEFT SIDE VIEW

GRAPHIC #1 **<END>** g01641267

OPERATOR STATION

327-6510 SEAT GP—LOW BACK, VINYL

S/N: CLA1-UP
PART OF 327-6504 SEAT GP
AN ATTACHMENT

SMCS-7312 **i03213421**

NOTE	REF NO	GRAPHIC REF	PART NUMBER	QTY	PART NAME 1 2 3 4 5 6 (PRODUCT LEVEL)	SEE PAGE
	1	1	**327-6642**	1	KIT-ADJUSTER (SEAT TILT)	
M		1	**9X-2616**	4	SCREW-SOCKET (M8X1.25X16-MM)	
		1	**333-4179**	2	BOLT	
	2	1	**327-6643**	1	KIT-ADJUSTER (CUSHION POSITIONING)	
M		1	**9X-2616**	4	SCREW-SOCKET (M8X1.25X16-MM)	
		1	**316-8987**	2	BRACKET	
J	3	1	**333-4172**	1	KIT-SEAT (LOW BACK, VINYL)	
		1	**333-4179**	2	BOLT	
					AVAILABLE REPAIR KIT(S):	
J			**327-6640**	1	KIT-HANDLE (RECLINER)	

J-KIT MARKED J SERVICES PART(S) MARKED J
M-METRIC PART

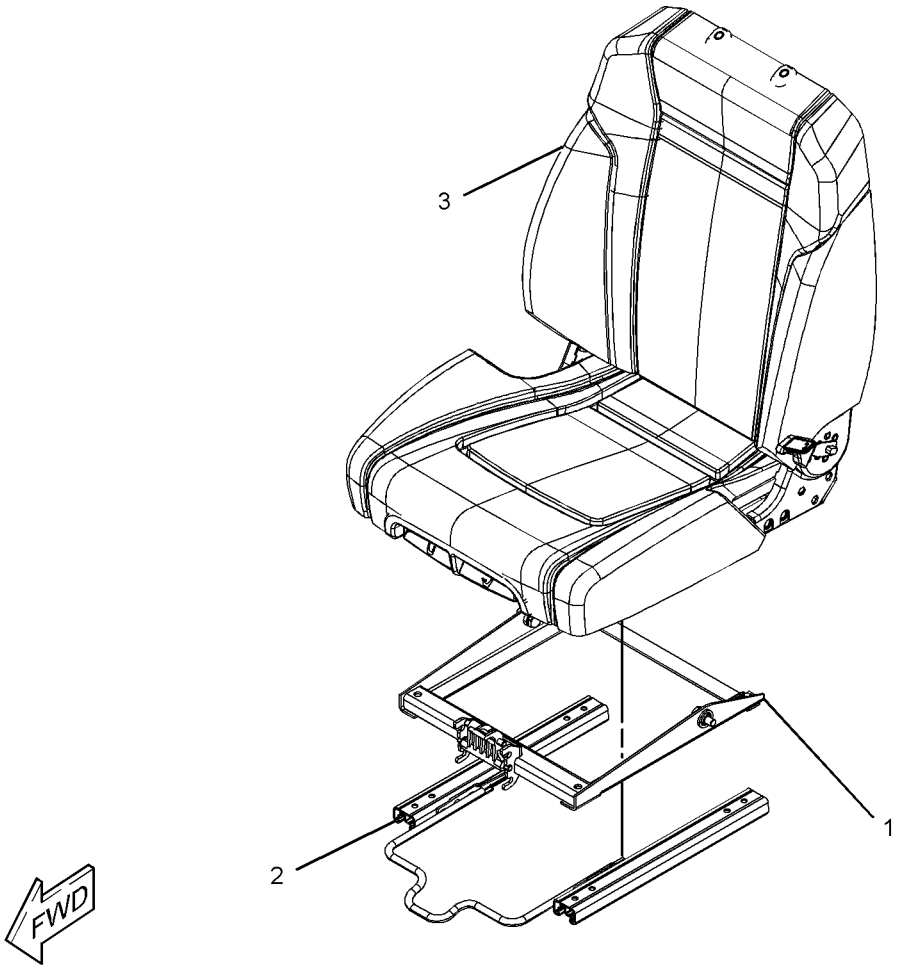

GRAPHIC #1 **<END>** g01641780

OPERATOR STATION

327-6511 SEAT GP–LOW BACK, TILT

S/N: CLA1-UP
PART OF 327-6505 SEAT GP
AN ATTACHMENT

SMCS-7312 **i03207831**

NOTE	REF NO	GRAPHIC REF	PART NUMBER	QTY	PART NAME 1 2 3 4 5 6 (PRODUCT LEVEL)	SEE PAGE
J	1	1	**327-6639**	1	KIT-SEAT (CLOTH, LOW BACK)	
		1	**333-4179**	2	BOLT	
	2	1	**327-6642**	1	KIT-ADJUSTER (SEAT TILT)	
M		1	**9X-2616**	4	SCREW-SOCKET (M8X1.25X16-MM)	
		1	**333-4179**	2	BOLT	
	3	1	**327-6643**	1	KIT-ADJUSTER (CUSHION POSITIONING)	
M		1	**9X-2616**	4	SCREW-SOCKET (M8X1.25X16-MM)	
		1	**316-8987**	2	BRACKET	
					AVAILABLE REPAIR KIT(S):	
J			**327-6640**	1	KIT-HANDLE (RECLINER)	

J-KIT MARKED J SERVICES PART(S) MARKED J
M-METRIC PART

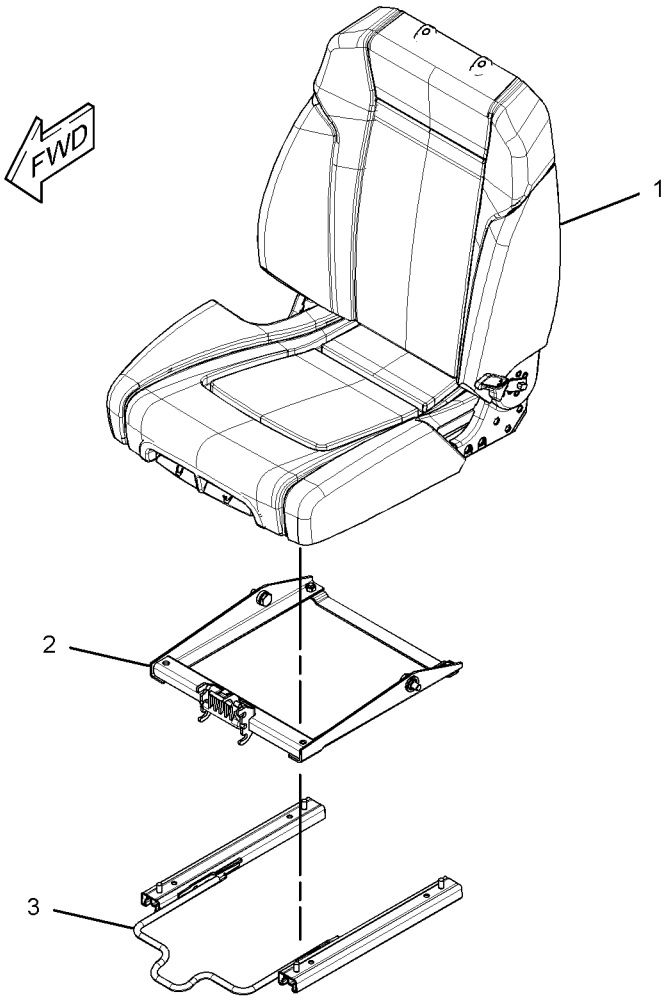

GRAPHIC #1

<END>

g01637855

OPERATOR STATION

327-6512 SEAT GP—HIGH BACK, TILT

S/N: CLA1-UP
PART OF 327-6507 SEAT GP-SUSPENSION
AN ATTACHMENT

SMCS-7312 **i03213644**

NOTE	REF NO	GRAPHIC REF	PART NUMBER	QTY	PART NAME 1 2 3 4 5 6 (PRODUCT LEVEL)	SEE PAGE
Y	1	1	**327-6515**	1	HEADREST AS-SEAT	833
	2	1	**327-6642**	1	KIT-ADJUSTER (SEAT TILT)	
M		1	**9X-2616**	4	SCREW-SOCKET (M8X1.25X16-MM)	
		1	**333-4179**	2	BOLT	
	3	1	**327-6643**	1	KIT-ADJUSTER (CUSHION POSITIONING)	
M		1	**9X-2616**	4	SCREW-SOCKET (M8X1.25X16-MM)	
		1	**316-8987**	2	BRACKET	
J	4	1	**333-4160**	1	KIT-SEAT (CLOTH, HIGH BACK)	
		1	**178-5659**	1	HANDLE (LUMBAR SUPPORT ADJUSTER)	
		1	**333-4179**	2	BOLT	
					AVAILABLE REPAIR KIT(S):	
J			**327-6640**	1	KIT-HANDLE (RECLINER)	

J-KIT MARKED J SERVICES PART(S) MARKED J
M-METRIC PART
Y-SEPARATE ILLUSTRATION

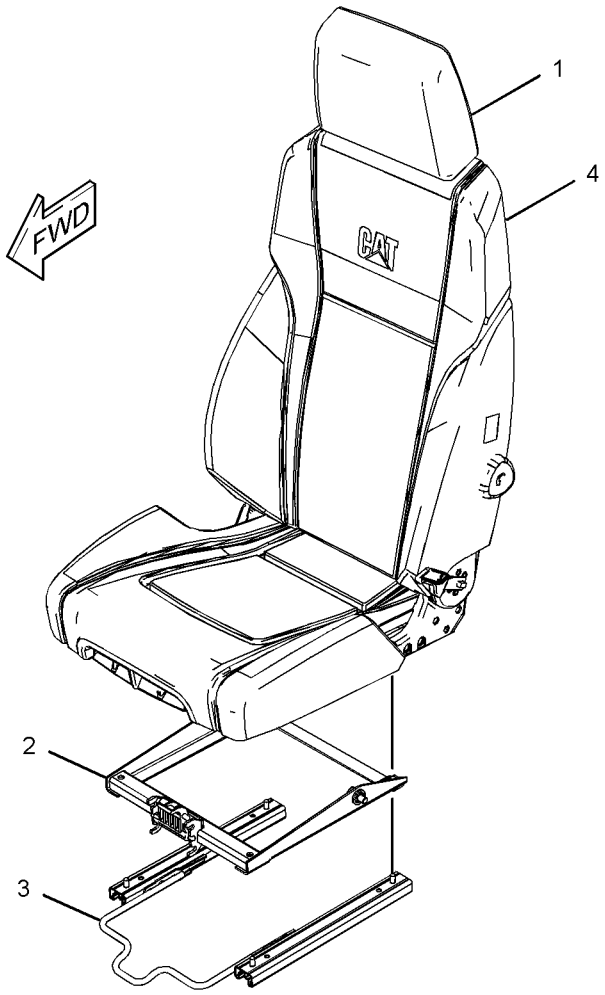

GRAPHIC #1

<END>

g01641173

OPERATOR STATION

229-9075 SEAT GP-SUSPENSION—LOW BACK, TILT

S/N: CLA1-UP

PART OF 240-4999 SEAT & MOUNTING GP

AN ATTACHMENT

SMCS-7324, 7336 **i02212271**

NOTE	REF NO	GRAPHIC REF	PART NUMBER	QTY	PART NAME 1 2 3 4 5 6 (PRODUCT LEVEL)	SEE PAGE
Y	1	1	**229-9076**	1	SEAT GP (LOW BACK, TILT)	878
Y	2	1	**229-9077**	1	SUSPENSION GP-SEAT	902
M	3	1	**5C-7261**	4	NUT (M8X1.25-THD)	
	4	1	**8T-4224**	4	WASHER-HARD (8.8X16X2-MM THK)	

M-METRIC PART
Y-SEPARATE ILLUSTRATION

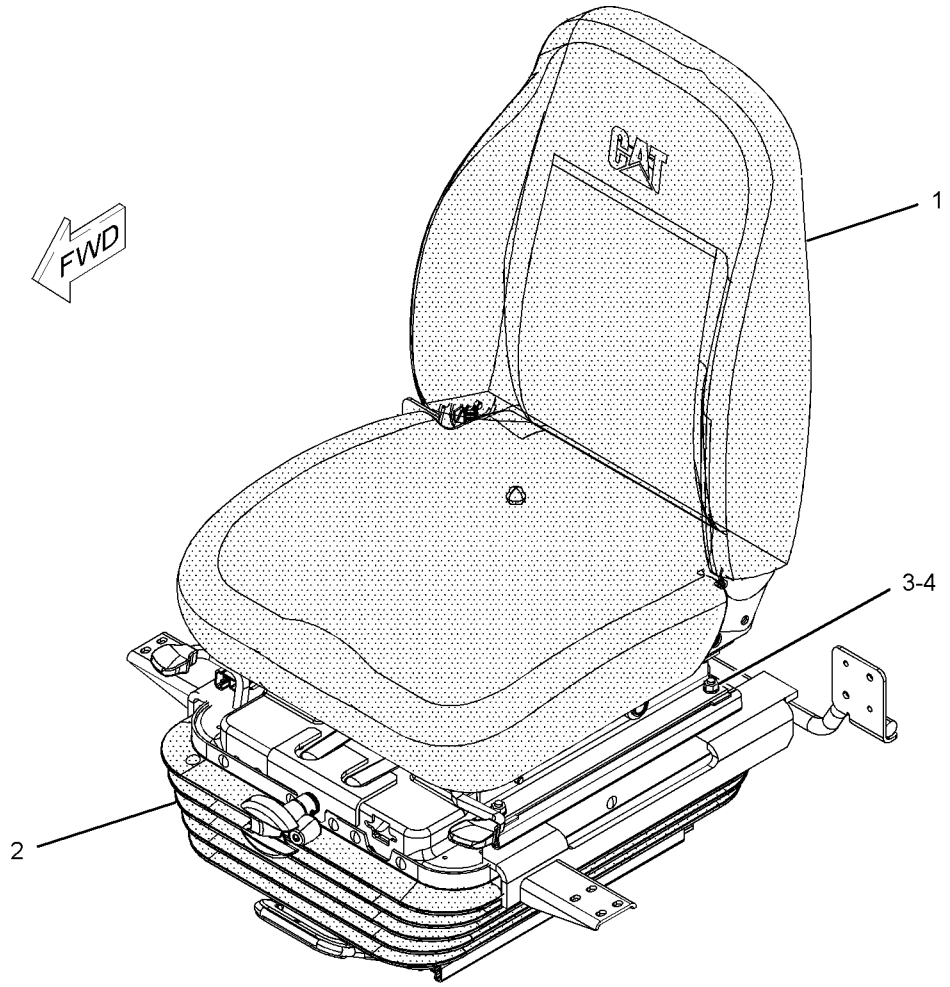

GRAPHIC #1 **<END>** g01092314

OPERATOR STATION

229-9089 SEAT GP-SUSPENSION—HIGH BACK, TILT

S/N: CLA1-UP

PART OF 240-5003 SEAT & MOUNTING GP

AN ATTACHMENT

SMCS-7324, 7336 **i03016833**

NOTE	REF NO	GRAPHIC REF	PART NUMBER	QTY	PART NAME 1 2 3 4 5 6 (PRODUCT LEVEL)	SEE PAGE
Y	1	1	**229-9077**	1	SUSPENSION GP-SEAT	902
Y	2	1	**229-9090**	1	SEAT GP (HIGH BACK, TILT)	879
M	3	1	**5C-7261**	4	NUT (M8X1.25-THD)	
	4	1	**8T-4224**	4	WASHER-HARD (8.8X16X2-MM THK)	

M-METRIC PART
Y-SEPARATE ILLUSTRATION

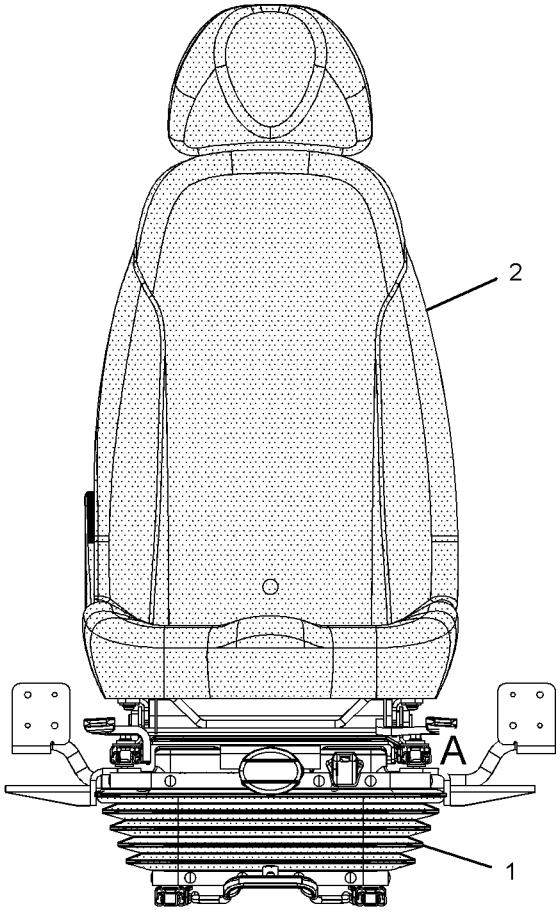

FRONT VIEW

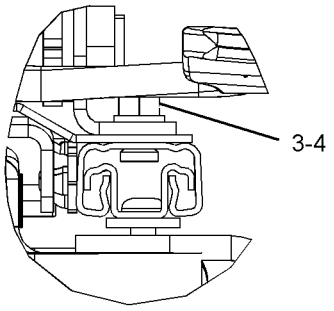

VIEW OF AREA A

GRAPHIC #1 **<END>** g01172597

240-5064 SEAT GP-SUSPENSION—AIR SUSP, HIGH BACK, WITH HTR

S/N: CLA1-UP

AN ATTACHMENT

SMCS-7324, 7336 **i02476000**

NOTE	REF NO	GRAPHIC REF	PART NUMBER	QTY	PART NAME 1 2 3 4 5 6 (PRODUCT LEVEL)	SEE PAGE
	1	1	**3S-2093**	2	STRAP-CABLE	
	2	1	**238-2211**	1	SWITCH AS-ROCKER (HEATED SEAT)	
		1	**167-3542**	1	CONNECTOR-RECEPTACLE	
		1	**167-3543**	4	TERMINAL (MALE)	
Y	3	1	*240-5065*	1	SEAT GP-SUSPENSION (AIR SUSP, HIGH BACK, WITH HTR)	897
M	4	1	**6V-8202**	4	BOLT-SOCKET HEAD (M8X1.25X16-MM)	
	5	1	**7I-2673**	1	STRAP-CABLE	

M-METRIC PART
Y-SEPARATE ILLUSTRATION

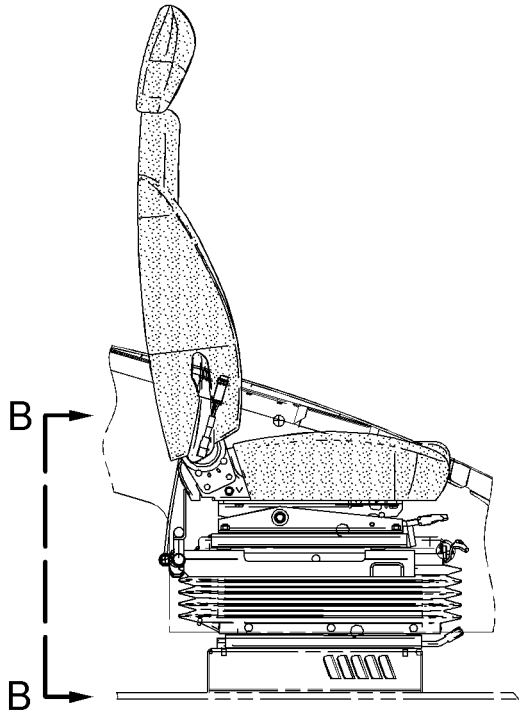

RIGHT SIDE VIEW

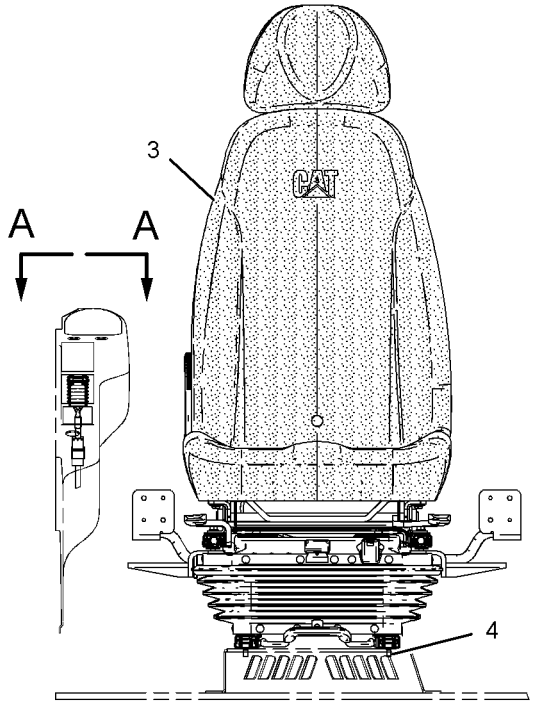

FRONT VIEW

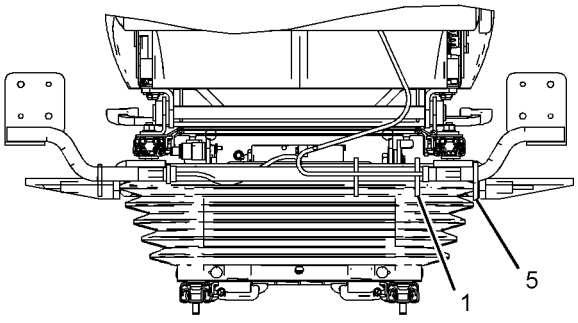

VIEW B-B

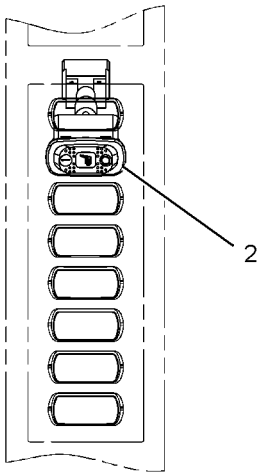

VIEW A-A

GRAPHIC #1 **<END>** g01122377

240-5065 SEAT GP-SUSPENSION—AIR SUSP, HIGH BACK, WITH HTR

S/N: CLA1-UP

PART OF 240-5064 SEAT GP-SUSPENSION

AN ATTACHMENT

SMCS-7324, 7336 **i02510753**

NOTE	REF NO	GRAPHIC REF	PART NUMBER	QTY	PART NAME 1 2 3 4 5 6 (PRODUCT LEVEL)	SEE PAGE
Y	1	1	**229-9093**	1	SEAT GP (HIGH BACK, WITH HEATER)	880
Y	2	1	**240-5063**	1	SUSPENSION GP-SEAT (AIR)	904
M	3	1	**5C-7261**	4	NUT (M8X1.25-THD)	
	4	1	**8T-4224**	4	WASHER-HARD (8.8X16X2-MM THK)	

M-METRIC PART
Y-SEPARATE ILLUSTRATION

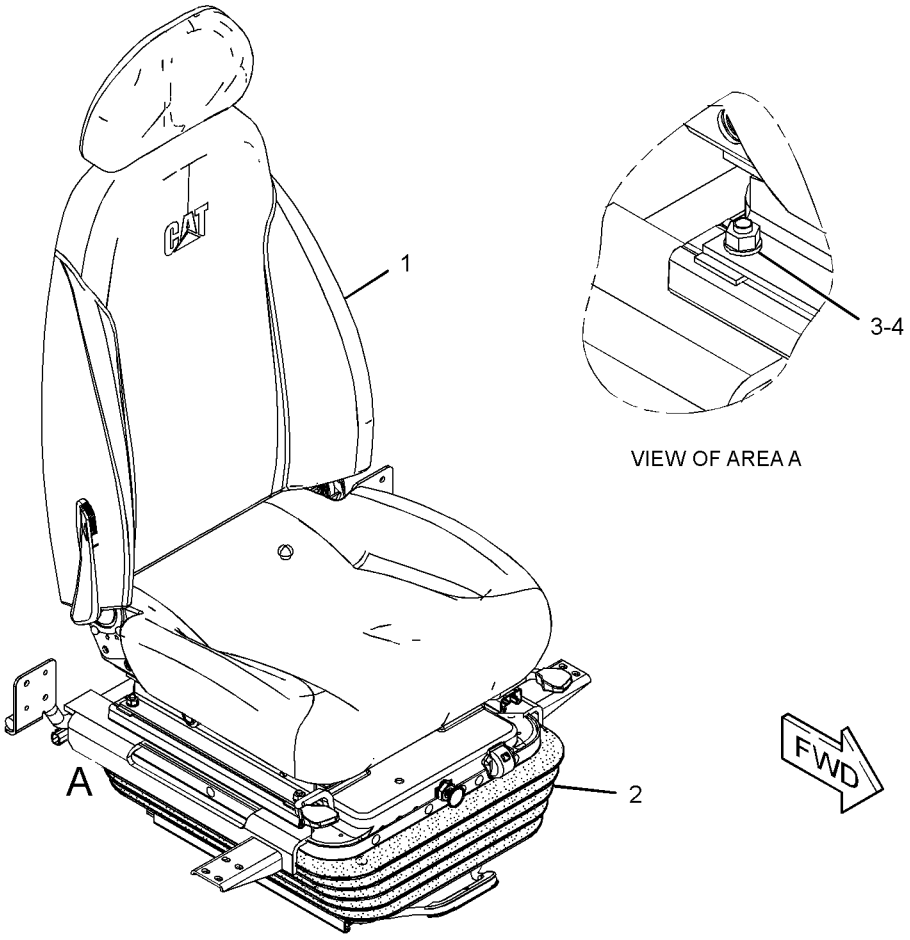

GRAPHIC #1 **<END>** g01235077

OPERATOR STATION

327-6507 SEAT GP-SUSPENSION—HIGH BACK, TILT

S/N: CLA1-UP

PART OF 327-6501 SEAT & MOUNTING GP

AN ATTACHMENT

SMCS-7324, 7336 **i03213641**

NOTE	REF NO	GRAPHIC REF	PART NUMBER	QTY	PART NAME 1 2 3 4 5 6 (PRODUCT LEVEL)	SEE PAGE
	1	1	**316-8987**	2	BRACKET	
Y	2	1	**327-6512**	1	SEAT GP	892
Y	3	1	**327-6520**	1	SUSPENSION GP-SEAT	908
M	4	1	**5A-3604**	4	BOLT-SOCKET HEAD (M8X1.25X25-MM)	

M-METRIC PART
Y-SEPARATE ILLUSTRATION

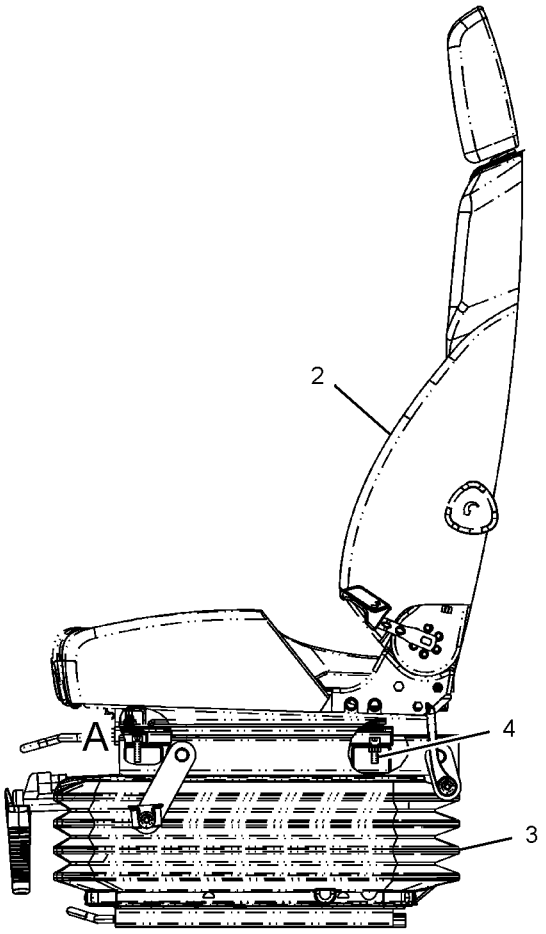

LEFT SIDE VIEW

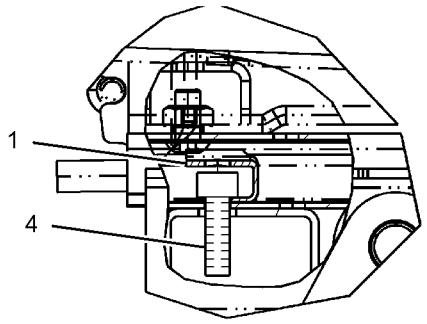

VIEW OF AREA A

GRAPHIC #1 **<END>** g01592076

OPERATOR STATION

235-8856 SUPPORT GP-SEAT

S/N: CLA1-UP

PART OF 273-5363 OPERATOR AR

SMCS-7321 **i02160706**

NOTE	REF NO	GRAPHIC REF	PART NUMBER	QTY	PART NAME 1 2 3 4 5 6 (PRODUCT LEVEL)	SEE PAGE
	1	1	**235-8857**	1	SUPPORT AS	
	2	1	**8T-4121**	4	WASHER-HARD (11X21X2.5-MM THK)	
M	3	1	**8T-4191**	4	BOLT (M10X1.5X16-MM)	

M-METRIC PART

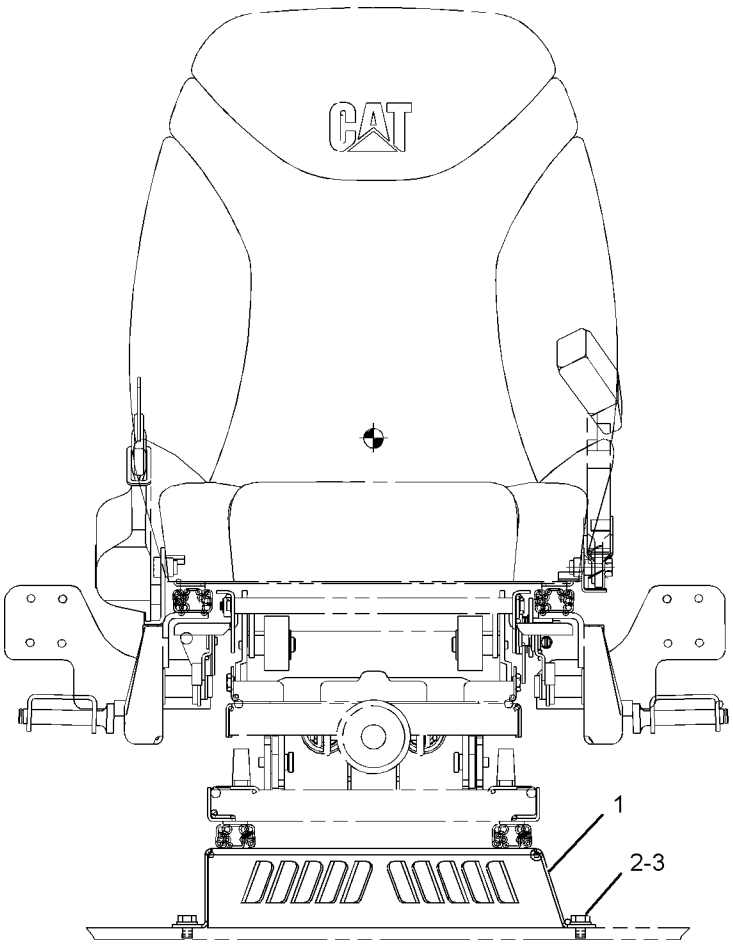

FRONT VIEW

GRAPHIC #1

<END>

g01097240

OPERATOR STATION

245-7891 SUPPORT GP-SEAT

S/N: CLA1-UP
PART OF 229-9095 SUSPENSION GP-SEAT
AN ATTACHMENT

SMCS-7321 **i02407043**

NOTE	REF NO	GRAPHIC REF	PART NUMBER	QTY	PART NAME 1 2 3 4 5 6 (PRODUCT LEVEL)	SEE PAGE
M	1	1	**198-3899**	2	SCREW-BUTTON HEAD (M8X1.25X20-MM)	
	2	1	**245-7897**	8	PLATE	
M	3	1	**245-7898**	2	SCREW-BUTTON HEAD (M8X1.25X25-MM)	
M	4	1	**245-7899**	4	SCREW-BUTTON HEAD (M8X1.25X30-MM)	
M	5	1	**5C-7261**	8	NUT (M8X1.25-THD)	
	6	1	**8T-4224**	8	WASHER-HARD (8.8X16X2-MM THK)	

M-METRIC PART

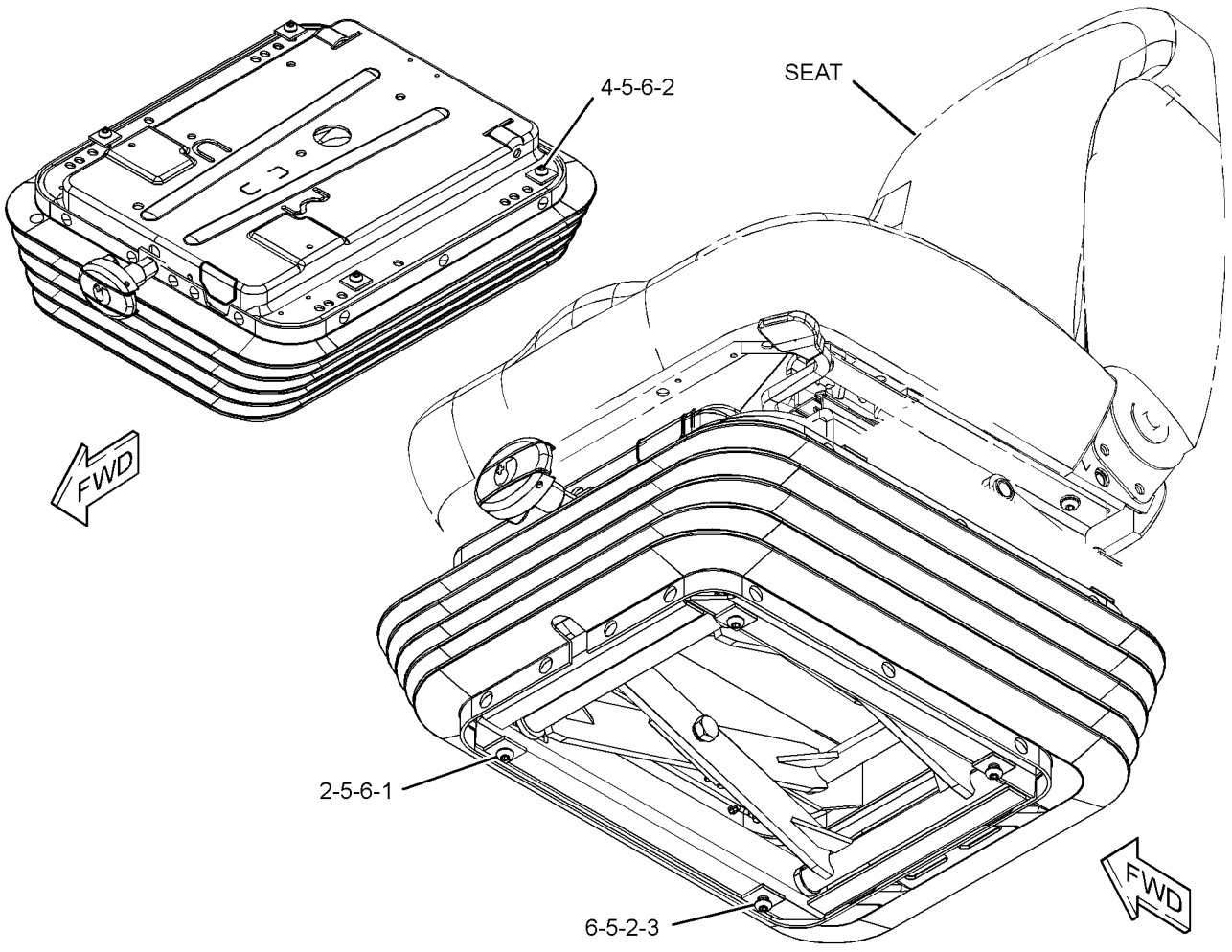

GRAPHIC #1 **<END>** g01231529

OPERATOR STATION

327-6523 SUPPORT GP-SEAT

S/N: CLA112-UP

PART OF 273-5363 OPERATOR AR

SMCS-7321 **i03256781**

NOTE	REF NO	GRAPHIC REF	PART NUMBER	QTY	PART NAME 1 2 3 4 5 6 (PRODUCT LEVEL)	SEE PAGE
	1	1	**327-6538**	1	SUPPORT AS-SEAT	
	2	1	**8T-4121**	4	WASHER-HARD (11X21X2.5-MM THK)	
M	3	1	**8T-4191**	4	BOLT (M10X1.5X16-MM)	

M-METRIC PART

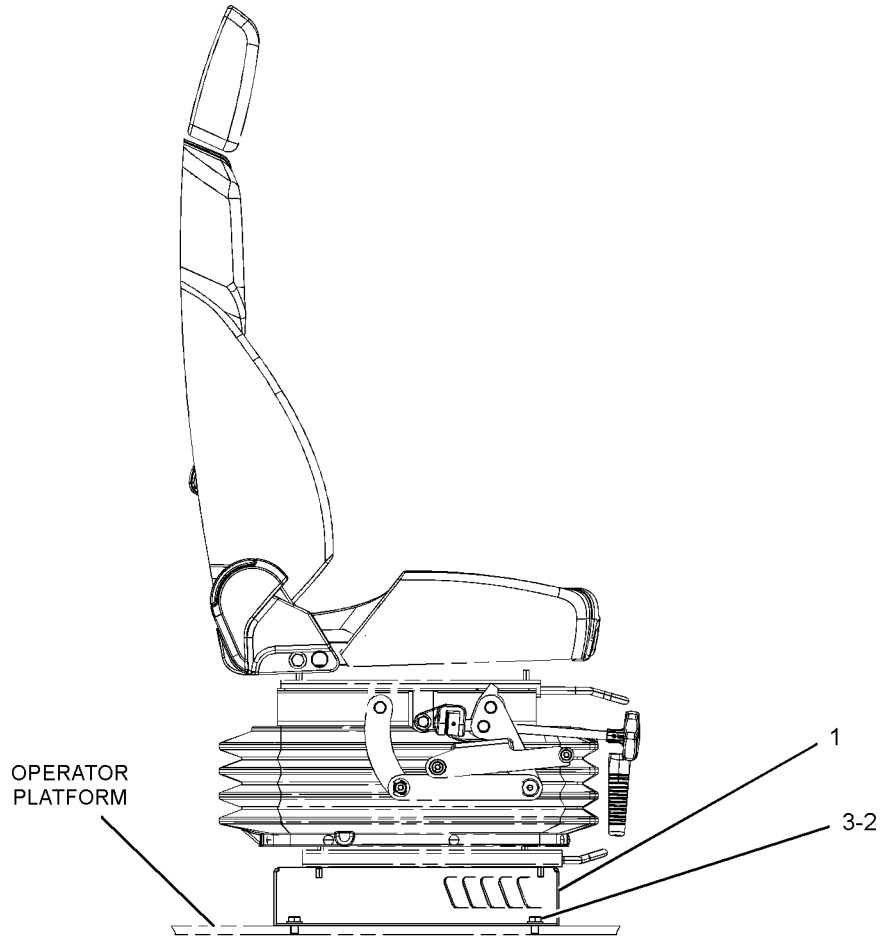

RIGHT SIDE VIEW

GRAPHIC #1 **<END>** g01528767

OPERATOR STATION

229-9077 SUSPENSION GP-SEAT

S/N: CLA1-UP

PART OF 229-9075, 229-9089 SEAT GP-SUSPENSION

AN ATTACHMENT

SMCS-7324 **i02177429**

NOTE	REF NO	GRAPHIC REF	PART NUMBER	QTY	PART NAME 1 2 3 4 5 6 (PRODUCT LEVEL)	SEE PAGE
	1	1	**242-8768**	1	COVER AS	
		1	**147-4921**	1	KIT-CLIP (SEAT)	
	2	1	**245-7889**	1	ADJUSTER GP-SEAT (UPPER SLIDE)	
M		1	**5C-7261**	8	NUT (M8X1.25-THD)	
		1	**8T-4224**	8	WASHER-HARD (8.8X16X2-MM THK)	
		1	**245-7897**	4	PLATE	
M		1	**245-7899**	4	SCREW-BUTTON HEAD (M8X1.25X30-MM)	
	3	1	**245-7890**	1	BRACKET GP-MOUNTING	
M		1	**5C-7261**	4	NUT (M8X1.25-THD)	
		1	**8T-4224**	4	WASHER-HARD (8.8X16X2-MM THK)	
		1	**245-7897**	4	PLATE	
M		1	**245-7899**	4	SCREW-BUTTON HEAD (M8X1.25X30-MM)	
Y	4	1	**245-7892**	1	SUSPENSION GP-SEAT	905
	5	1	**245-7895**	1	KIT-CLIP (SUSPENSION SEAT)	
Y	6	1	**245-7896**	1	ADJUSTER GP-SEAT (LOWER SLIDE)	713

M-METRIC PART
Y-SEPARATE ILLUSTRATION

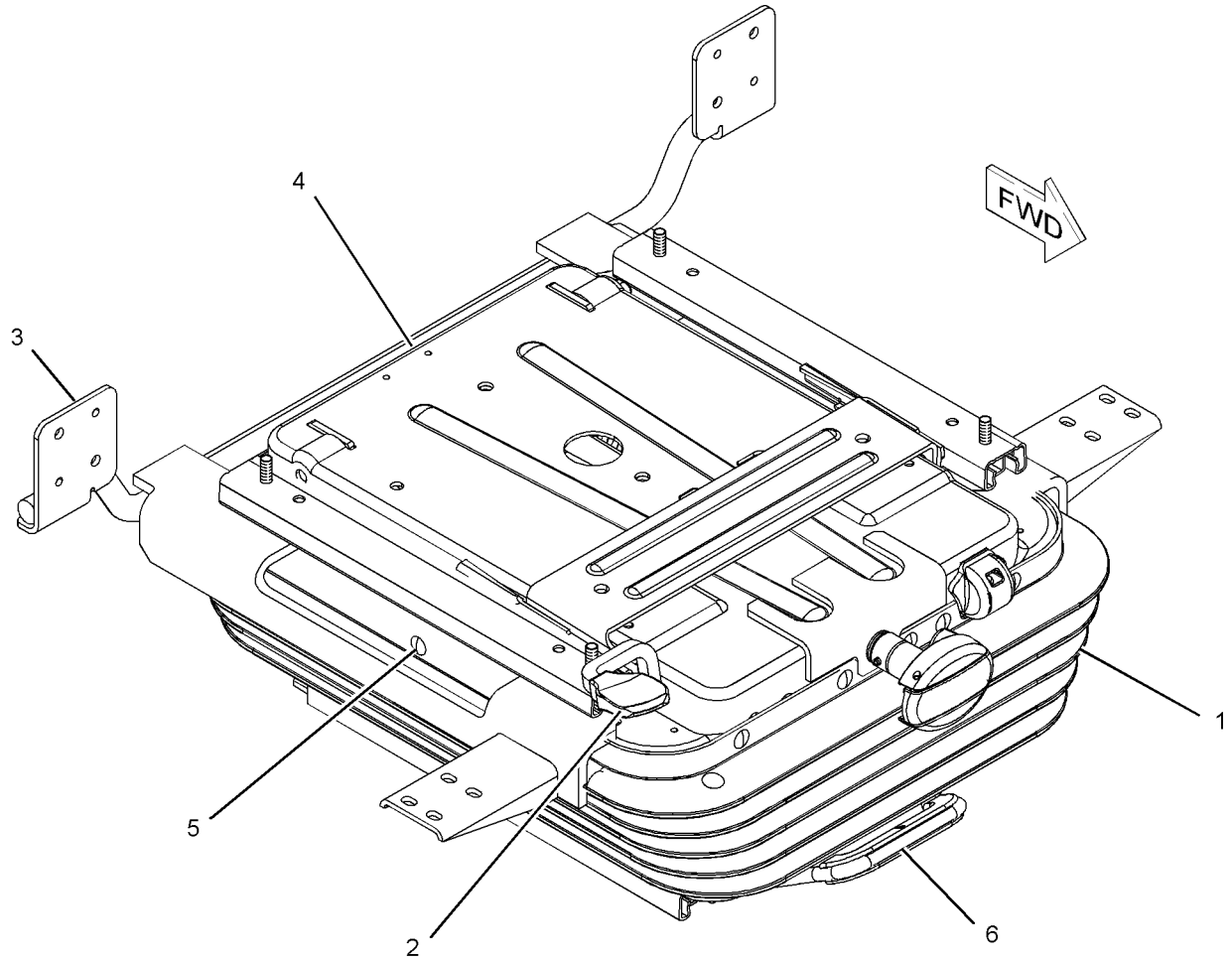

GRAPHIC #1 **<END>** g01087842

OPERATOR STATION

229-9095 SUSPENSION GP-SEAT

S/N: CLA1-UP
PART OF 235-9028, 240-5057 SEAT GP
AN ATTACHMENT

SMCS-7324 **i02752800**

NOTE	REF NO	GRAPHIC REF	PART NUMBER	QTY	PART NAME 1 2 3 4 5 6 (PRODUCT LEVEL)	SEE PAGE
J	1	1	**242-8768**	1	COVER AS	
Y	2	1	**245-7889**	1	ADJUSTER GP-SEAT (UPPER SLIDE)	712
Y	3	1	**245-7890**	1	BRACKET GP-MOUNTING	725
Y	4	1	**245-7891**	1	SUPPORT GP-SEAT	900
Y	5	1	**245-7896**	1	ADJUSTER GP-SEAT (LOWER SLIDE)	713
					AVAILABLE REPAIR KIT(S):	
			245-7895	1	KIT-CLIP (SUSPENSION SEAT)	
					(INCLUDES 28 CLIPS)	

J-KIT MARKED J AVAILABLE FOR PART MARKED J
Y-SEPARATE ILLUSTRATION

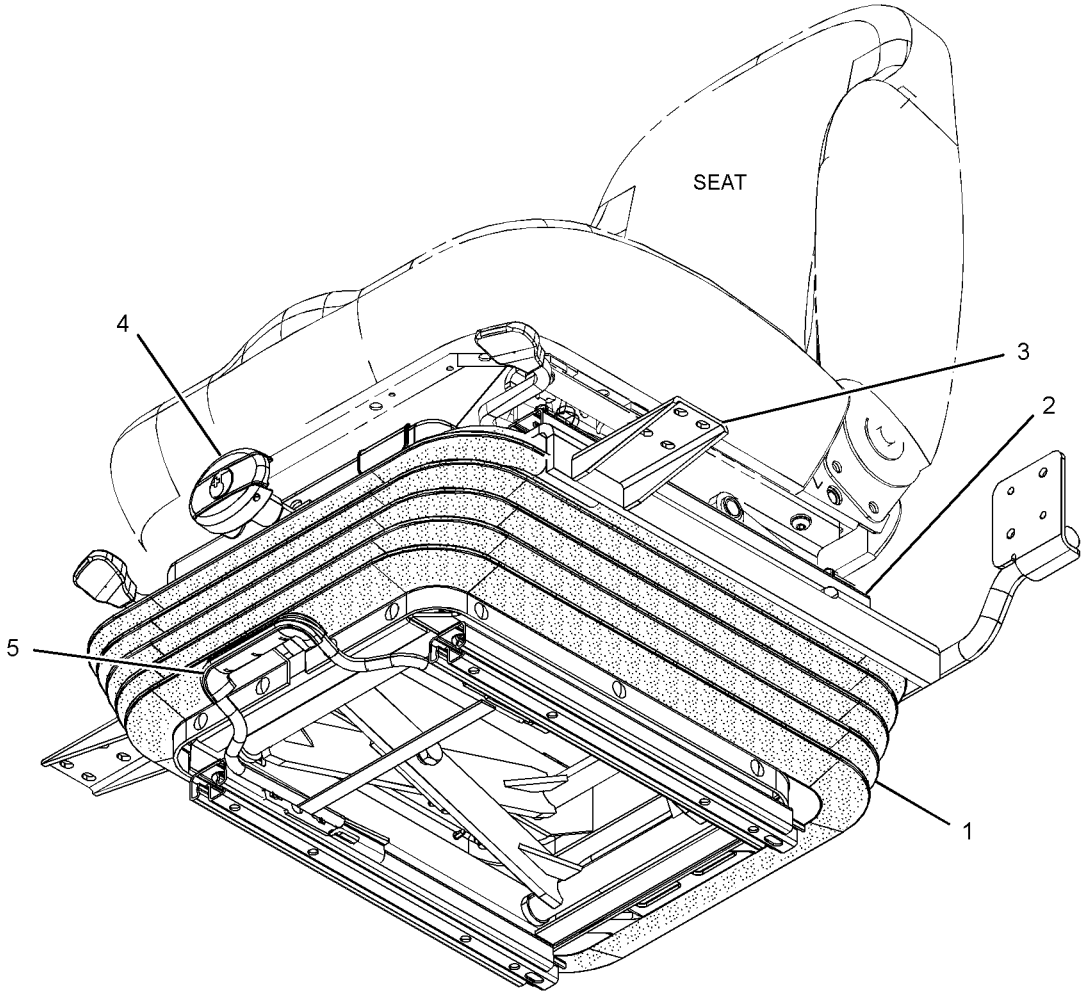

GRAPHIC #1 **<END>** g01253953

OPERATOR STATION

240-5063 SUSPENSION GP-SEAT—AIR

S/N: CLA1-UP
PART OF 240-5065 SEAT GP-SUSPENSION
AN ATTACHMENT

SMCS-7324 **i03130945**

NOTE	REF NO	GRAPHIC REF	PART NUMBER	QTY	PART NAME 1 2 3 4 5 6 (PRODUCT LEVEL)	SEE PAGE
	1	1	**7I-2673**	1	STRAP-CABLE	
	2	1	**242-8768**	1	COVER AS	
		1	**147-4921**	1	KIT-CLIP (SEAT)	
Y	3	1	**245-7889**	1	ADJUSTER GP-SEAT (UPPER SLIDE)	712
Y	4	1	**245-7890**	1	BRACKET GP-MOUNTING (SUSPENSION SEAT)	725
Y	5	1	**273-5384**	1	SUSPENSION GP-SEAT	906
	6	1	**245-7895**	1	KIT-CLIP (SUSPENSION SEAT)	
Y	7	1	**245-7896**	1	ADJUSTER GP-SEAT (LOWER SLIDE)	713

Y-SEPARATE ILLUSTRATION

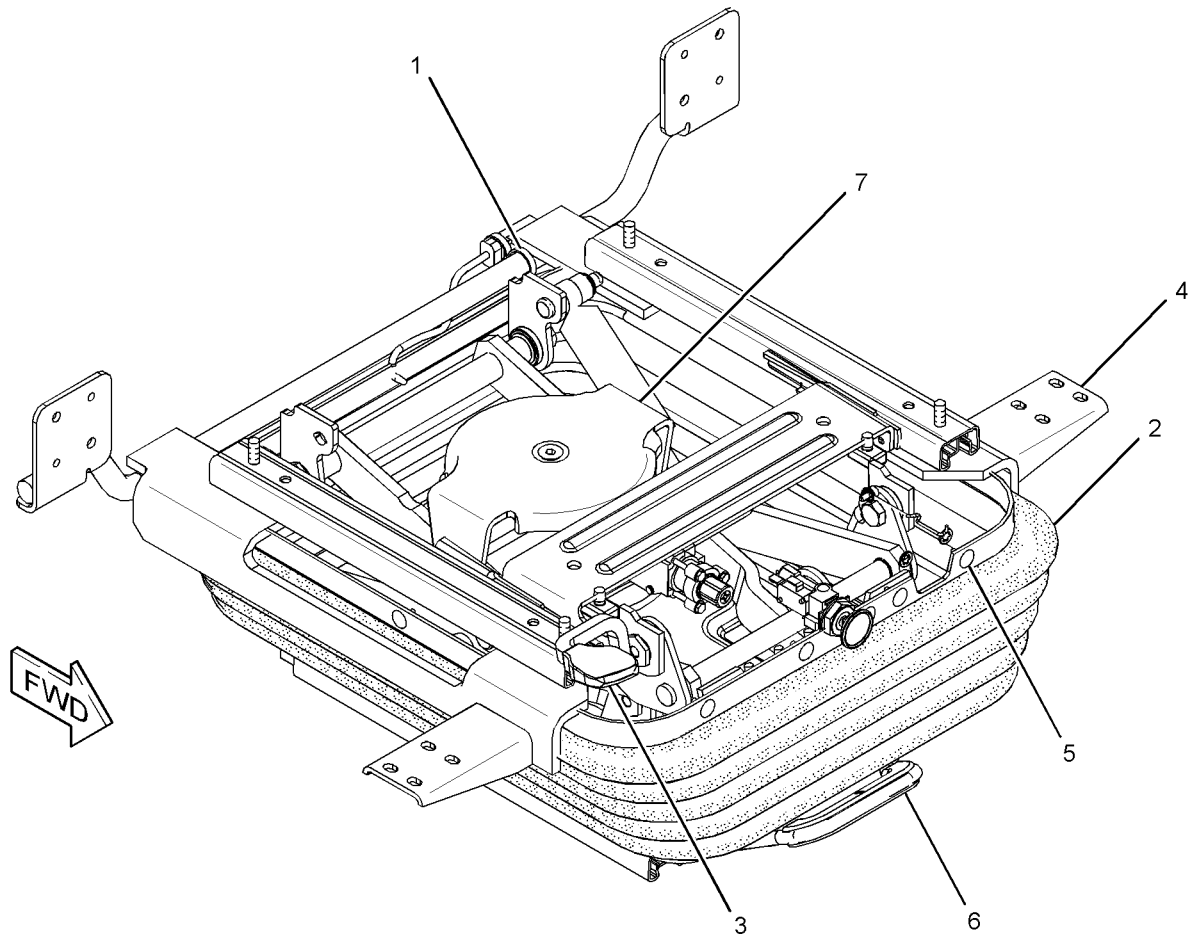

GRAPHIC #1 **<END>** g01307533

OPERATOR STATION

245-7892 SUSPENSION GP-SEAT

S/N: CLA1-UP

PART OF 229-9077 SUSPENSION GP-SEAT

AN ATTACHMENT

SMCS-7324 **i02178065**

NOTE	REF NO	GRAPHIC REF	PART NUMBER	QTY	PART NAME 1 2 3 4 5 6 (PRODUCT LEVEL)	SEE PAGE
M	1	1	**198-3899**	2	SCREW-BUTTON HEAD (M8X1.25X20-MM)	
	2	1	**209-4280**	1	CYLINDER-DAMPER	
	3	1	**245-7897**	8	PLATE	
M	4	1	**245-7898**	2	SCREW-BUTTON HEAD (M8X1.25X25-MM)	
M	5	1	**245-7899**	4	SCREW-BUTTON HEAD (M8X1.25X30-MM)	
M	6	1	**5C-7261**	8	NUT (M8X1.25-THD)	
	7	1	**8T-4224**	8	WASHER-HARD (8.8X16X2-MM THK)	

M-METRIC PART

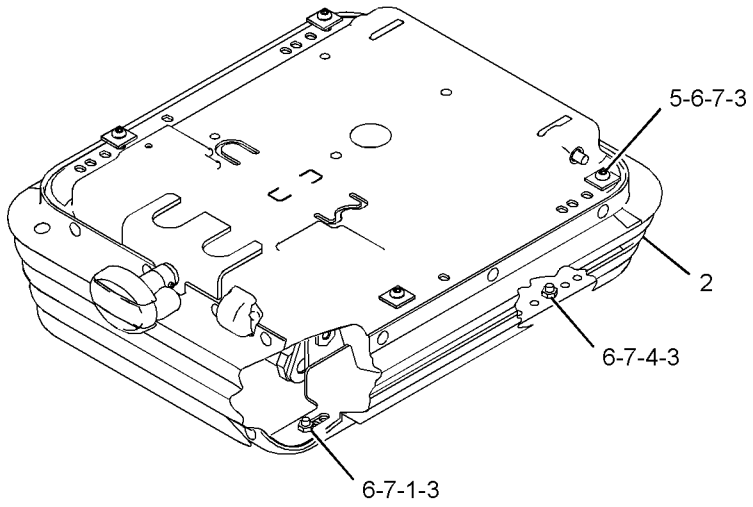

VIEW OF AREA A

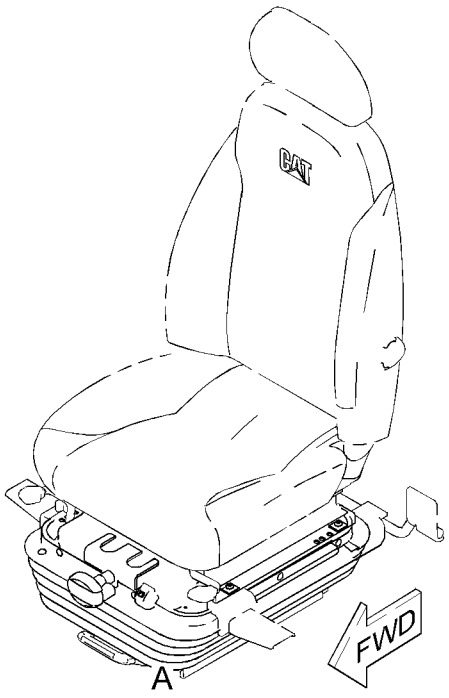

GRAPHIC #1 **<END>** g01103188

OPERATOR STATION

273-5384 SUSPENSION GP-SEAT

S/N: CLA1-UP
PART OF 240-5063 SUSPENSION GP-SEAT
AN ATTACHMENT

SMCS-7324 **i02795410**

NOTE	REF NO	GRAPHIC REF	PART NUMBER	QTY	PART NAME 1 2 3 4 5 6 (PRODUCT LEVEL)	SEE PAGE
M	1	1	**198-3899**	2	SCREW-BUTTON HEAD (M8X1.25X20-MM)	
	2	1	**209-0348**	1	DAMPER (SUSPENSION)	
	3	1	**245-7897**	8	PLATE	
M	4	1	**245-7898**	2	SCREW-BUTTON HEAD (M8X1.25X25-MM)	
M	5	1	**245-7899**	4	SCREW-BUTTON HEAD (M8X1.25X30-MM)	
M	6	1	**5C-7261**	8	NUT (M8X1.25-THD)	
	7	1	**8T-4224**	8	WASHER-HARD (8.8X16X2-MM THK)	
	8	1	**273-5386**	1	VALVE AS-AIR (SEAT)	

M-METRIC PART

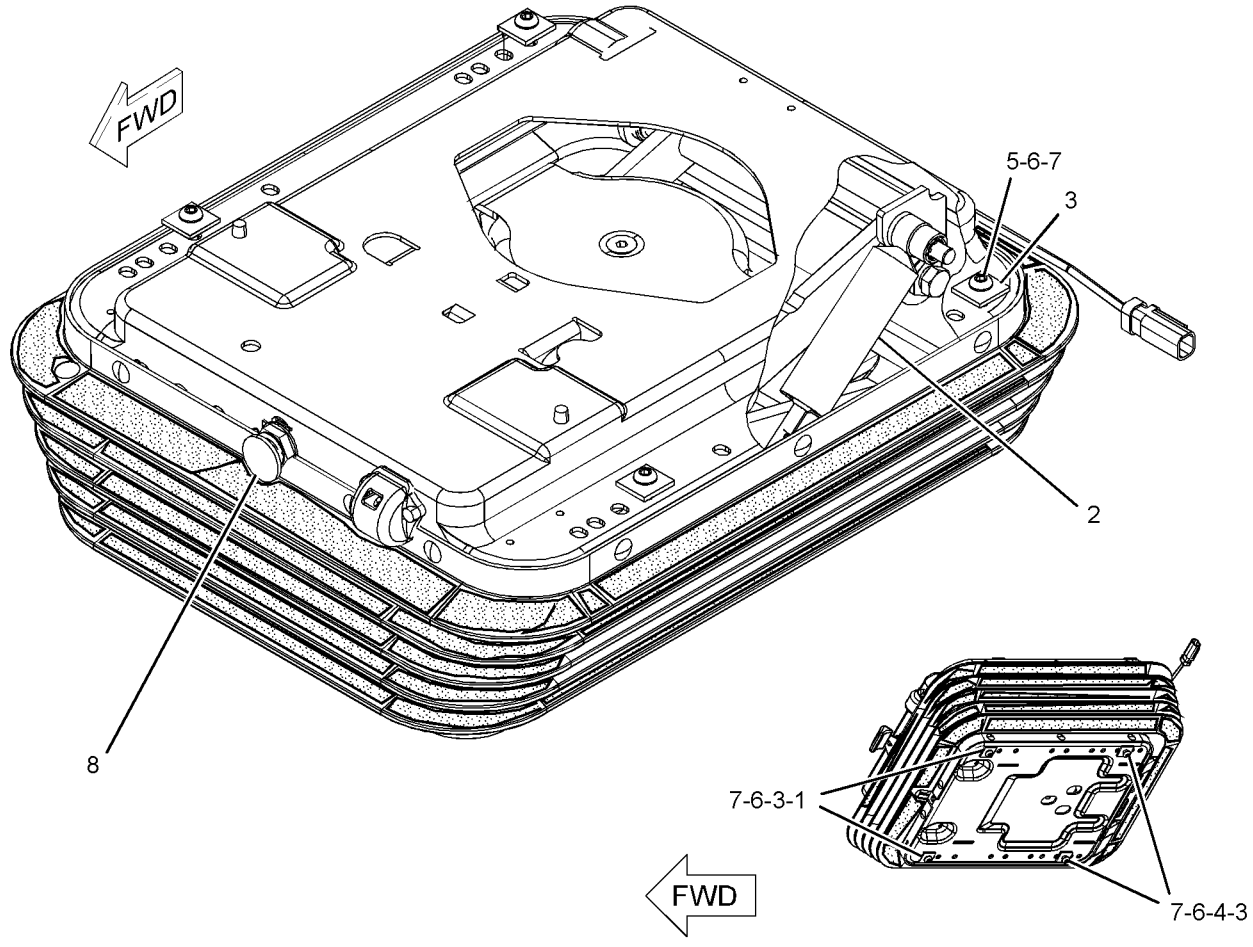

GRAPHIC #1 **<END>** g01254074

OPERATOR STATION

327-6517 SUSPENSION GP-SEAT

S/N: CLA1-UP
PART OF 327-6504, 327-6505 SEAT GP
AN ATTACHMENT

SMCS-7324 **i03213412**

NOTE	REF NO	GRAPHIC REF	PART NUMBER	QTY	PART NAME 1 2 3 4 5 6 (PRODUCT LEVEL)	SEE PAGE
	1	1	**327-6648**	1	KIT-ADJUSTER (SEAT POSITION)	
		1	**316-8987**	2	BRACKET	
		1	**333-4180**	6	SCREW-BUTTON HEAD	
Y	2	1	**333-4173**	1	KIT-SEAT SUSPENSION (MECHANICAL)	846
	3	1	**333-4175**	1	KIT-BRACKET (CONSOLE)	
M		1	**7Y-7394**	4	SCREW-BUTTON HEAD (M8X1.25X25-MM)	

M-METRIC PART
Y-SEPARATE ILLUSTRATION

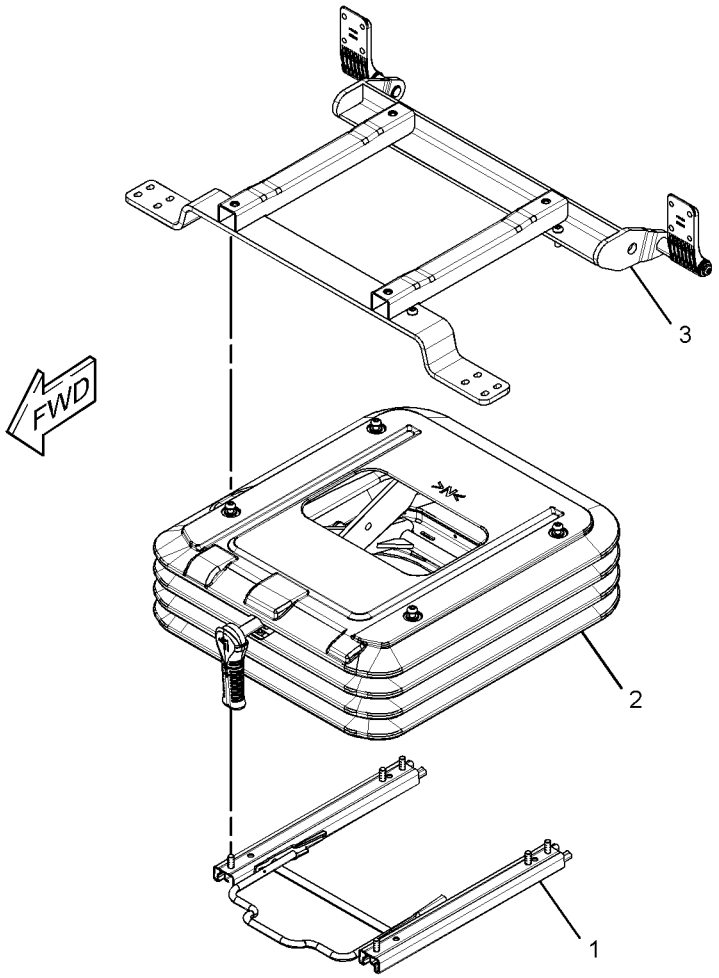

GRAPHIC #1 **<END>** g01644135

OPERATOR STATION

327-6520 SUSPENSION GP-SEAT

S/N: CLA1-UP

PART OF 327-6507 SEAT GP-SUSPENSION

AN ATTACHMENT

SMCS-7324 **i03207836**

NOTE	REF NO	GRAPHIC REF	PART NUMBER	QTY	PART NAME 1 2 3 4 5 6 (PRODUCT LEVEL)	SEE PAGE
	1	1	**327-6644**	1	KIT-BRACKET (CONSOLE RAISE, LOWER)	
		1	**327-6648**	4	KIT-ADJUSTER	
Y	2	1	**327-6645**	1	KIT-SEAT SUSPENSION (MECHANICAL) (SEAT HEIGHT)	845
	3	1	**327-6648**	1	KIT-ADJUSTER (SEAT POSITION)	
		1	**316-8987**	2	BRACKET	
		1	**333-4180**	6	SCREW-BUTTON HEAD	

Y-SEPARATE ILLUSTRATION

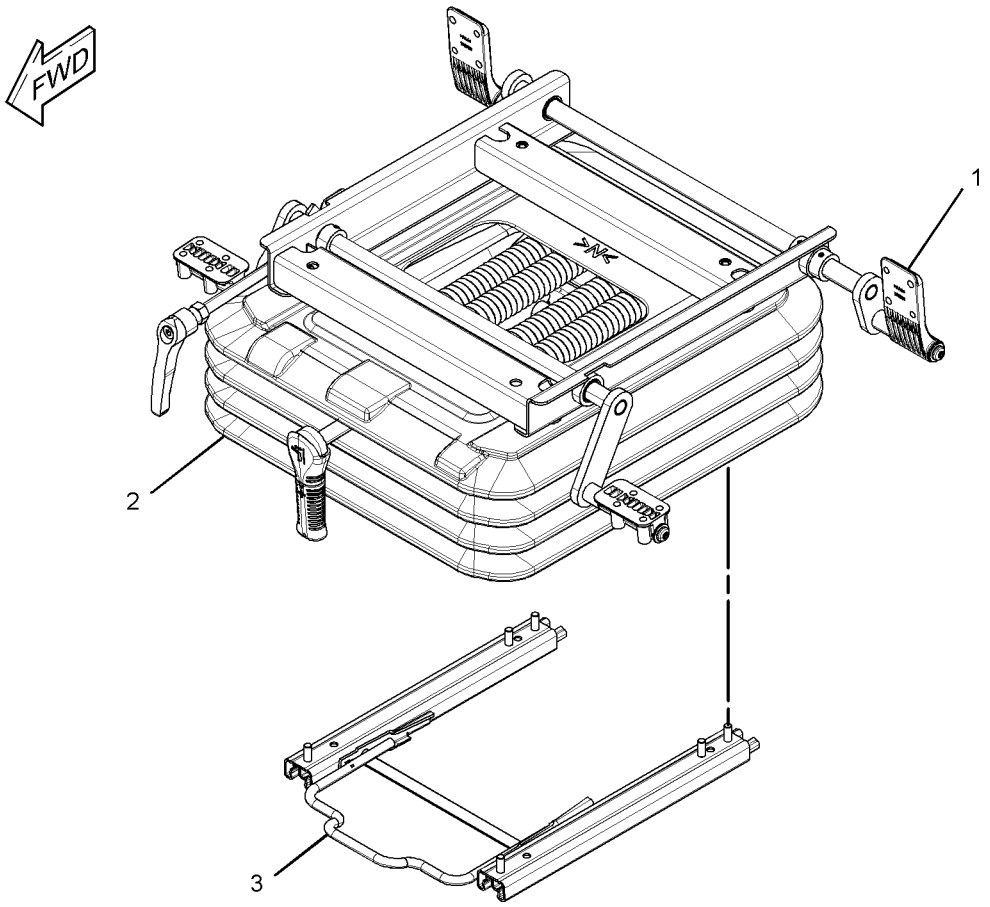

GRAPHIC #1 **<END>** g01637856

OPERATOR STATION

161-3751 VISOR GP-CAB

S/N: CLA1-UP
AN ATTACHMENT

SMCS-7301 **i02906060**

NOTE	REF NO	GRAPHIC REF	PART NUMBER	QTY	PART NAME 1 2 3 4 5 6 (PRODUCT LEVEL)	SEE PAGE
	1	1	**164-0639**	1	BRACKET AS	
	2	1	**210-5827**	1	PLATE	
	3	1	**210-5828**	1	PLATE	
	4	1	**210-5829**	2	BOLT	
	5	1	**210-5834**	1	BRACKET AS	
	6	1	**210-5836**	1	VISOR	
	7	1	**210-5837**	2	STRIP	
	8	1	**210-5838**	4	PACKING	
	9	1	**8H-3481**	2	LOCKWASHER	
M	10	1	**9X-2044**	8	SCREW-TRUSS HEAD (M6X1X16-MM)	
M	11	1	**9X-2046**	2	SCREW-TRUSS HEAD (M6X1X35-MM)	
	12	1	**9X-8256**	2	WASHER (6.6X12X2-MM THK)	

M-METRIC PART

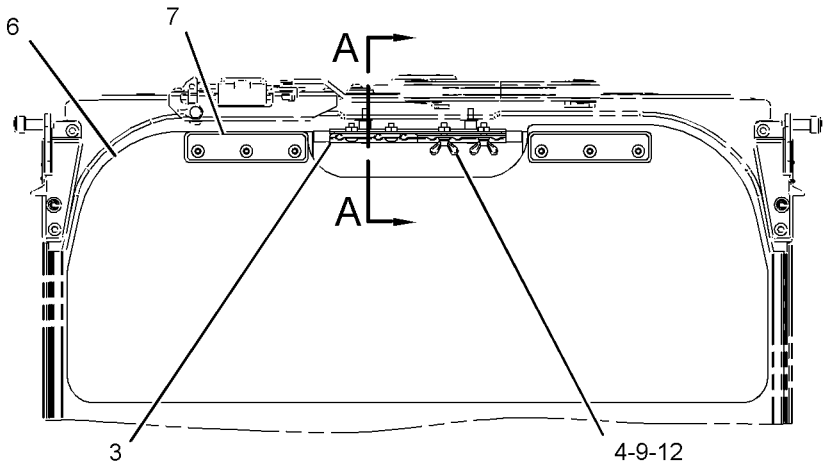

FRONT VIEW

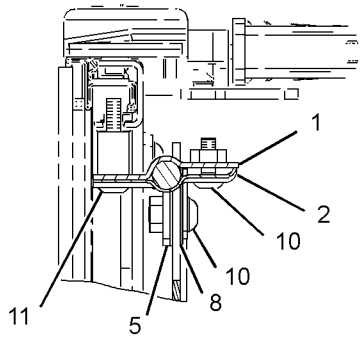

SECTION A-A

GRAPHIC #1 **<END>** g01447299

OPERATOR STATION

161-3750 VISOR GP-PROTECTION—RAIN

S/N: CLA1-UP
AN ATTACHMENT

SMCS-7340 **i03087900**

NOTE	REF NO	GRAPHIC REF	PART NUMBER	QTY	PART NAME 1 2 3 4 5 6 (PRODUCT LEVEL)	SEE PAGE
M	1	1	**4I-5049**	8	NUT-SPACER (M6X1-THD)	
	2	1	**164-0618**	2	BRACKET	
	3	1	**164-0619**	1	BRACKET	
	4	1	**164-0620**	1	BRACKET	
	5	1	**327-6581**	1	VISOR	
M	6	1	**6V-7357**	8	BOLT (M6X1X25-MM)	
M	7	1	**8T-4189**	4	BOLT (M8X1.25X20-MM)	
	8	1	**8T-4224**	4	WASHER-HARD (8.8X16X2-MM THK)	
	9	1	**9X-8256**	8	WASHER (6.6X12X2-MM THK)	
D	10	1	**5P-8292**		SEAL (1.4-M)	

D-ORDER BY THE METER
M-METRIC PART

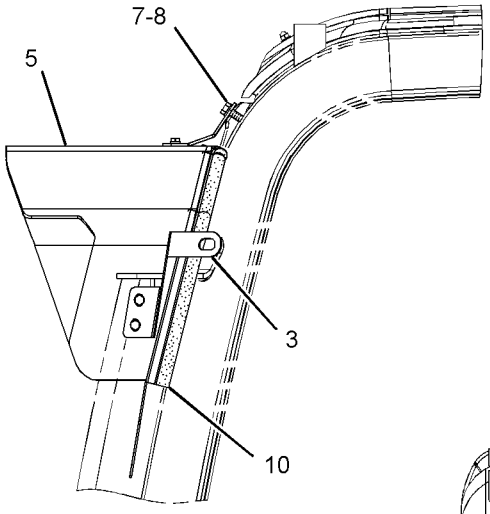

LEFT SIDE VIEW

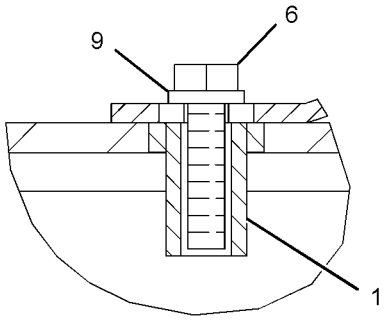

SECTION A-A

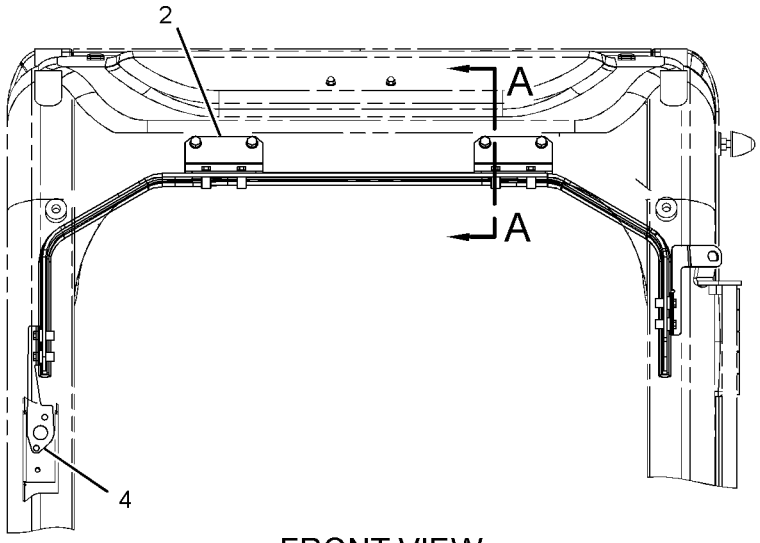

FRONT VIEW

GRAPHIC #1 **<END>** g01592616

OPERATOR STATION

229-9070 WASHER GP-WINDOW

S/N: CLA1-UP
AN ATTACHMENT

SMCS-7306 **i02593848**

NOTE	REF NO	GRAPHIC REF	PART NUMBER	QTY	PART NAME 1 2 3 4 5 6 (PRODUCT LEVEL)	SEE PAGE
	1	1	**7Y-3474**	1	VALVE AS-CHECK (WINDOW WASHER)	
	2	1	**163-6795**	2	STRAP-CABLE	
	3	1	**176-1931**	1	TANK AS-WINDOW WASHER	
		1	**5C-8138**	1	GROMMET	
		1	**7T-8890**	1	PUMP AS-WASHER	
		1	**178-5431**	1	CAP AS (WINDOW WASHER)	
		1	**3W-6399**		PACKING	
	4	1	**235-9012**	1	SUPPORT AS	
M	5	1	**8T-4970**	2	BOLT (M6X1X14-MM)	
	6	1	**9X-8256**	2	WASHER (6.6X12X2-MM THK)	
CE	7	1	**144-0195**		HOSE (13-CM)	
	8	1	**3S-2093**	1	STRAP-CABLE	

C-CHANGE FROM PREVIOUS TYPE
E-ORDER BY THE CENTIMETER
M-METRIC PART

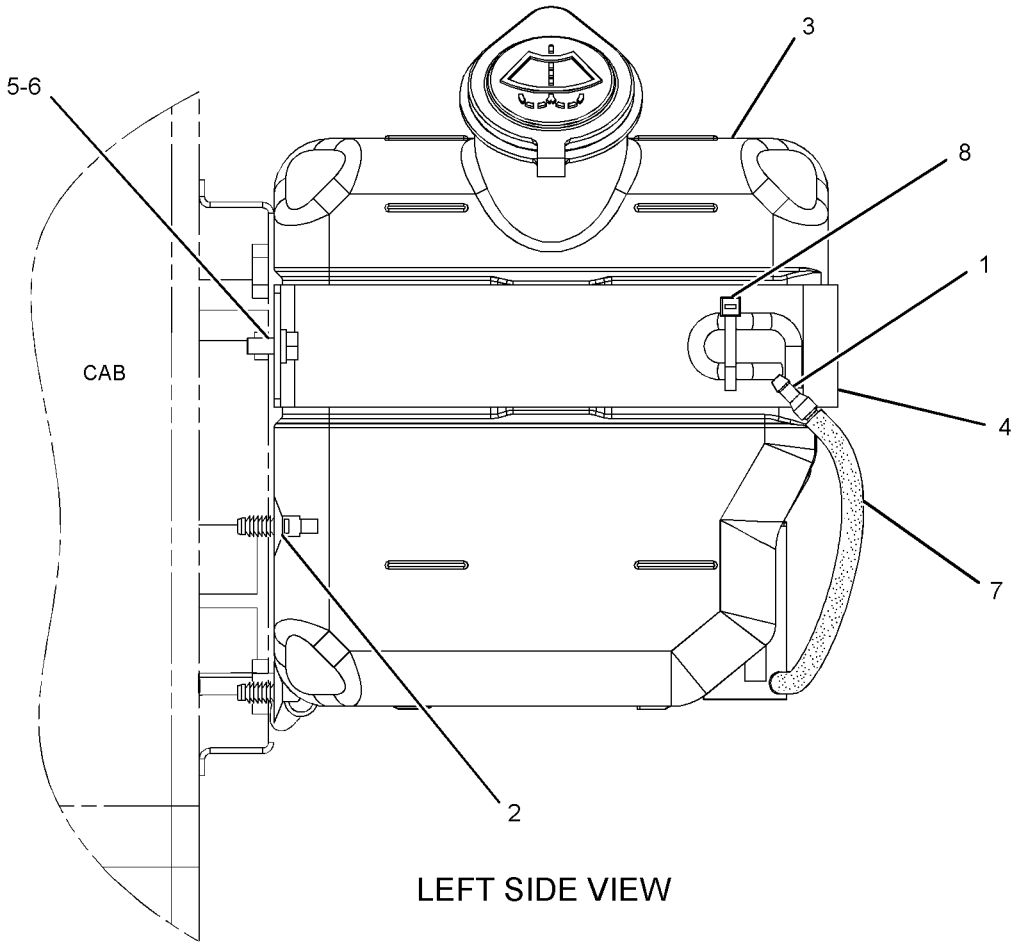

LEFT SIDE VIEW

GRAPHIC #1 **<END>** g01307642

OPERATOR STATION

229-9088 WASHER GP-WINDOW—LOWER

S/N: CLA1-UP

PART OF 273-5388 WIPER AR-WINDOW

AN ATTACHMENT

SMCS-7306 **i02703029**

NOTE	REF NO	GRAPHIC REF	PART NUMBER	QTY	PART NAME 1 2 3 4 5 6 (PRODUCT LEVEL)	SEE PAGE
	1	1	**3S-2093**	2	STRAP-CABLE	
	2	1	**293-1256**	2	VALVE AS-CHECK	
	3	1	**163-6795**	2	STRAP-CABLE	
	4	1	**170-9492**	1	PLATE	
E	5	1	**144-0195**		HOSE (290-CM)	
E	5A	1	**144-0195**		HOSE (30-CM)	
E	5B	1	**144-0195**		HOSE (13-CM)	
	6	1	**235-9012**	1	SUPPORT AS	
	7	1	**176-1932**	1	TANK AS-WINDOW WASHER	
	8	1	**178-5500**	1	NOZZLE AS	
		1	**085-8037**	1	NOZZLE	
		1	**105-9526**	1	ADAPTER	
		1	**105-9527**	1	GASKET	
M	9	1	**3E-9872**	2	SCREW AS (M4X0.7X12-MM)	
	10	1	**6V-3265**	10	CLIP	
	11	1	**8T-4121**	10	WASHER-HARD (11X21X2.5-MM THK)	
M	12	1	**8T-4191**	10	BOLT (M10X1.5X16-MM)	
M	13	1	**8T-4970**	2	BOLT (M6X1X14-MM)	
	14	1	**9X-8256**	2	WASHER (6.6X12X2-MM THK)	

E-ORDER BY THE CENTIMETER
M-METRIC PART

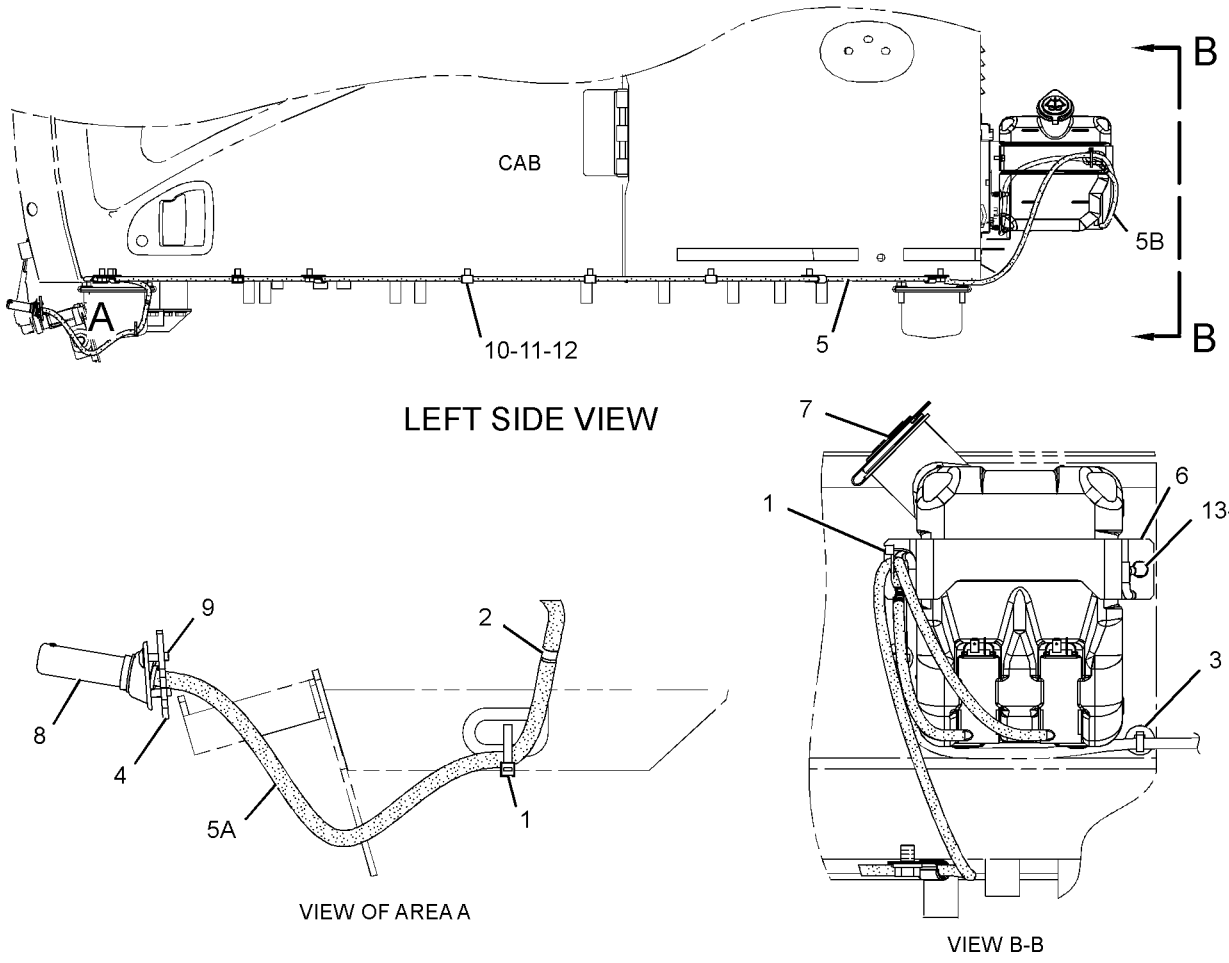

GRAPHIC #1 **<END>** g01292034

OPERATOR STATION

207-0144 WINDOW AS-FRONT–UPPER

S/N: CLA1-UP
PART OF 229-9099, 229-9101, 316-8815 CAB GP
AN ATTACHMENT

SMCS-7340 **i02857428**

NOTE	REF NO	GRAPHIC REF	PART NUMBER	QTY	PART NAME 1 2 3 4 5 6 (PRODUCT LEVEL)	SEE PAGE
	1	1	**170-9722**	1	CUSHION	
	2	1	**156-6472**	1	GLASS	
	3	1	**161-3698**	1	SEAL	
	4	1	**4I-0420**	1	STRIP	

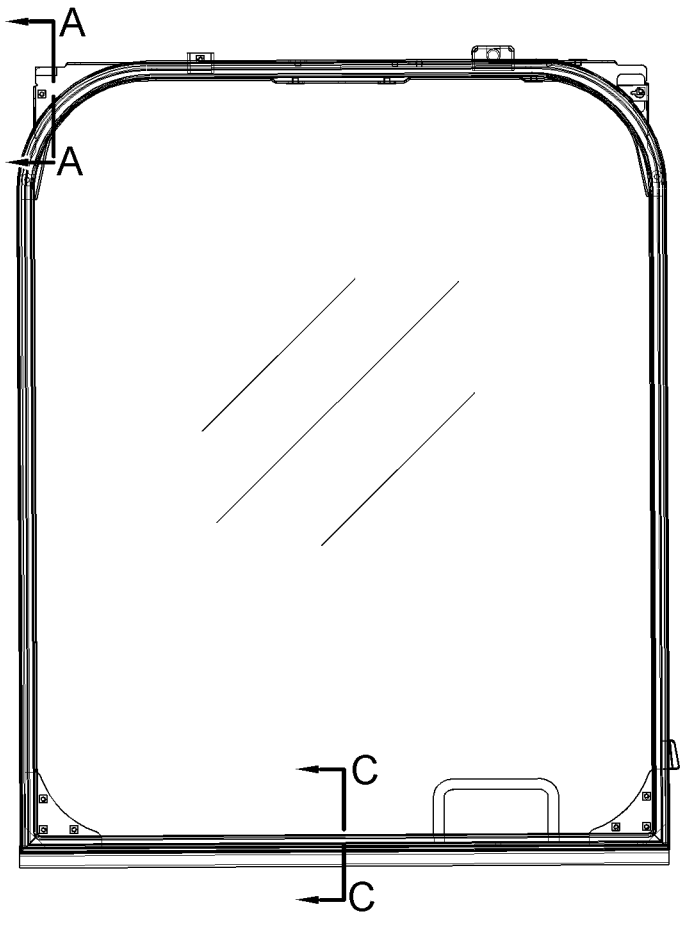

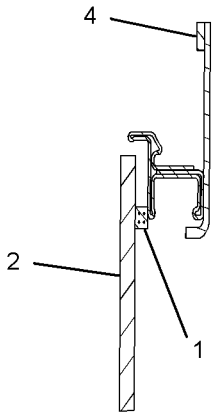

SECTION A-A

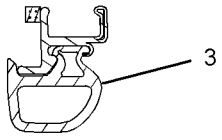

SECTION C-C

GRAPHIC #1 **<END>** g01439108

OPERATOR STATION

139-7101 WINDOW GP-CAB—FRONT, UPPER

S/N: CLA1-UP

PART OF 229-9099, 229-9101, 316-8815 CAB GP

AN ATTACHMENT

SMCS-7310 **i02836457**

NOTE	REF NO	GRAPHIC REF	PART NUMBER	QTY	PART NAME 1 2 3 4 5 6 (PRODUCT LEVEL)	SEE PAGE
	1	2	**170-9722**	1	CUSHION	
	2	1	**151-6703**	1	HANDLE-PULL	
	3	1	**151-6704**	2	CAP (HANDLE)	
	4	2	**151-6778**	1	FRAME AS	
	5	1	**151-6785**	1	BRACKET AS	
	6	1	**151-6813**	1	BRACKET AS	
	7	1	**151-6815**	1	BRACKET AS	
	8	1	**273-5345**	1	LINK AS	
	9	1	**273-5346**	1	LINK AS	
	10	1	**151-6831**	1	LOCK AS	
	11	1	**151-6832**	1	LEVER AS	
	12	2	**151-6844**	1	COVER	
	13	1	**151-9557**	2	STOP-RUBBER	
	14	2	**156-6472**	1	GLASS	
	15	2	**156-6554**	1	CABLE AS	
	16	1	**156-6555**	1	STRIKER AS	
	17	2	**156-6562**	1	BRACKET	
	18	2	**273-5274**	1	CATCH AS	
	19	2	**156-6579**	1	STOP	
	20	2	**156-6601**	1	SEAL AS	
	21	2	**156-6627**	1	STOP AS	
	22	1	**161-3684**	2	STOP	
	23	1	**161-3698**	1	SEAL	
	24	2	**164-0648**	1	BRACKET AS	
	25	1	**178-5576**	1	STOP	
M	26	2	**185-8181**	2	SCREW (M4X0.7X10-MM)	
M	27	2	**185-8182**	4	BOLT (M10X1.5X20-MM)	
M	28	2	**5C-8312**	1	NUT (M4X0.7-THD)	
	29	2	**185-8187**	4	WASHER (10.2X22X3.2-MM THK)	
M	30	1	**185-8197**	1	NUT (M10X1.15-THD)	
	31	1	**185-8221**	1	STOP	
M	32	1	**099-0823**	2	SCREW-MACHINE (M6X1X6-MM)	
M	33	1	**101-8900**	2	SCREW AS (M6X1X20-MM)	
	34	1	**117-6306**	1	SWITCH (WINDOW LOWER LIMIT)	
	35	1	**151-9576**	4	ROLLER	
	36	1	**4I-0420**	1	STRIP	
	37	1	**7X-0578**	1	WASHER-HARD (10.2X32X2.5-MM THK)	
M	38	2	**9X-2042**	20	SCREW-TRUSS HEAD (M6X1X12-MM)	
M	39	1,2	**9X-2044**	5	SCREW-TRUSS HEAD (M6X1X16-MM)	
M	40	2	**9X-2045**	3	SCREW-TRUSS HEAD (M6X1X20-MM)	
	41	2	**9X-8256**	2	WASHER (6.6X12X2-MM THK)	

M-METRIC PART

REFER TO ALL ILLUSTRATIONS OF
THIS GROUP FOR AUXILIARY VIEWS

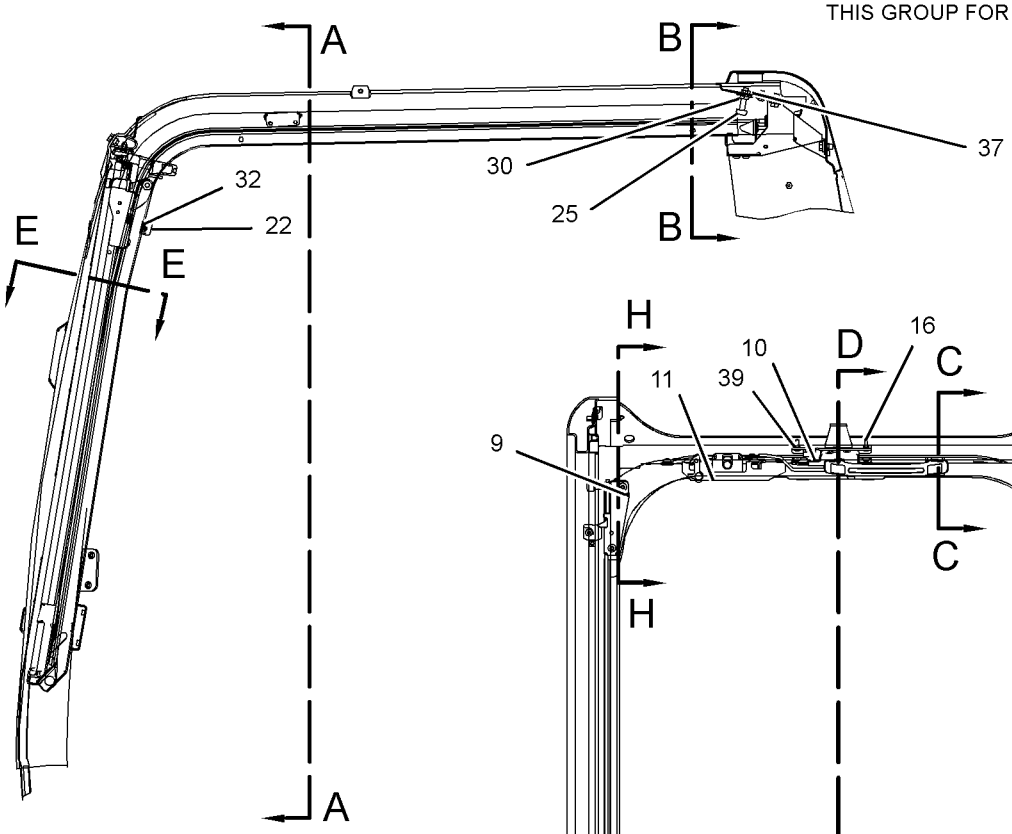

LEFT SIDE VIEW

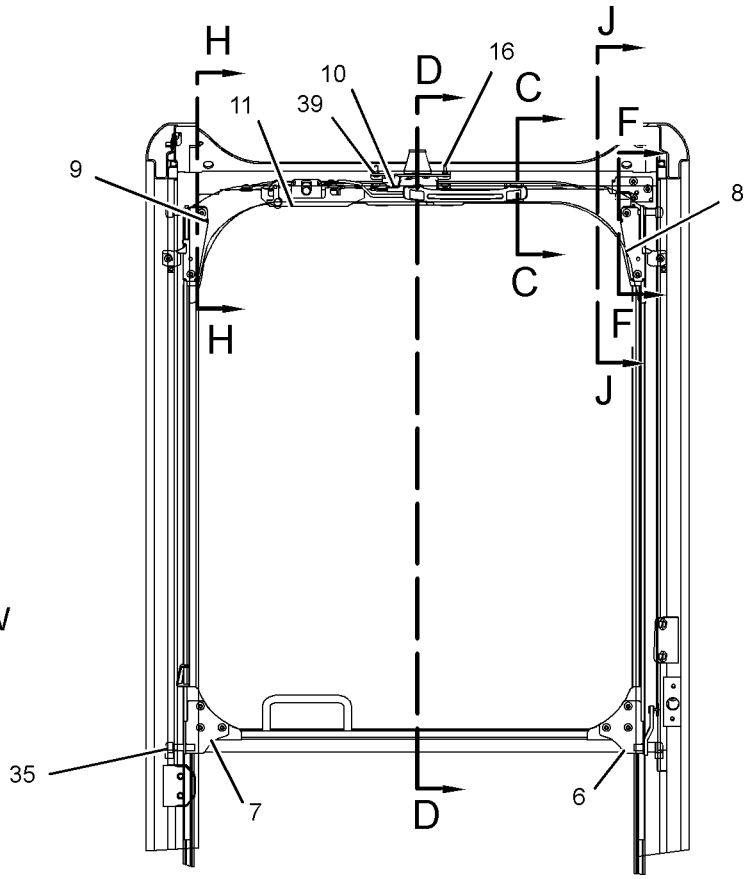

SECTION A-A

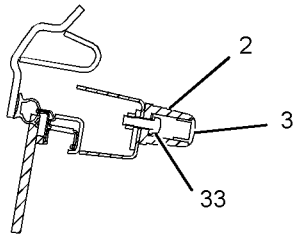

SECTION C-C

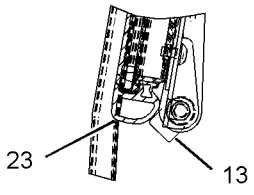

SECTION D-D

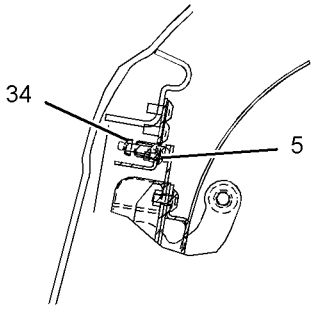

SECTION F-F

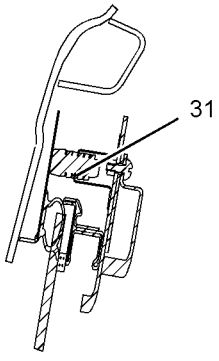

SECTION H-H

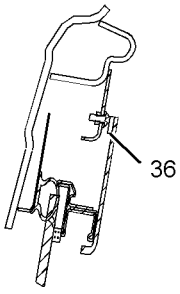

SECTION J-J

GRAPHIC #1 g01231378

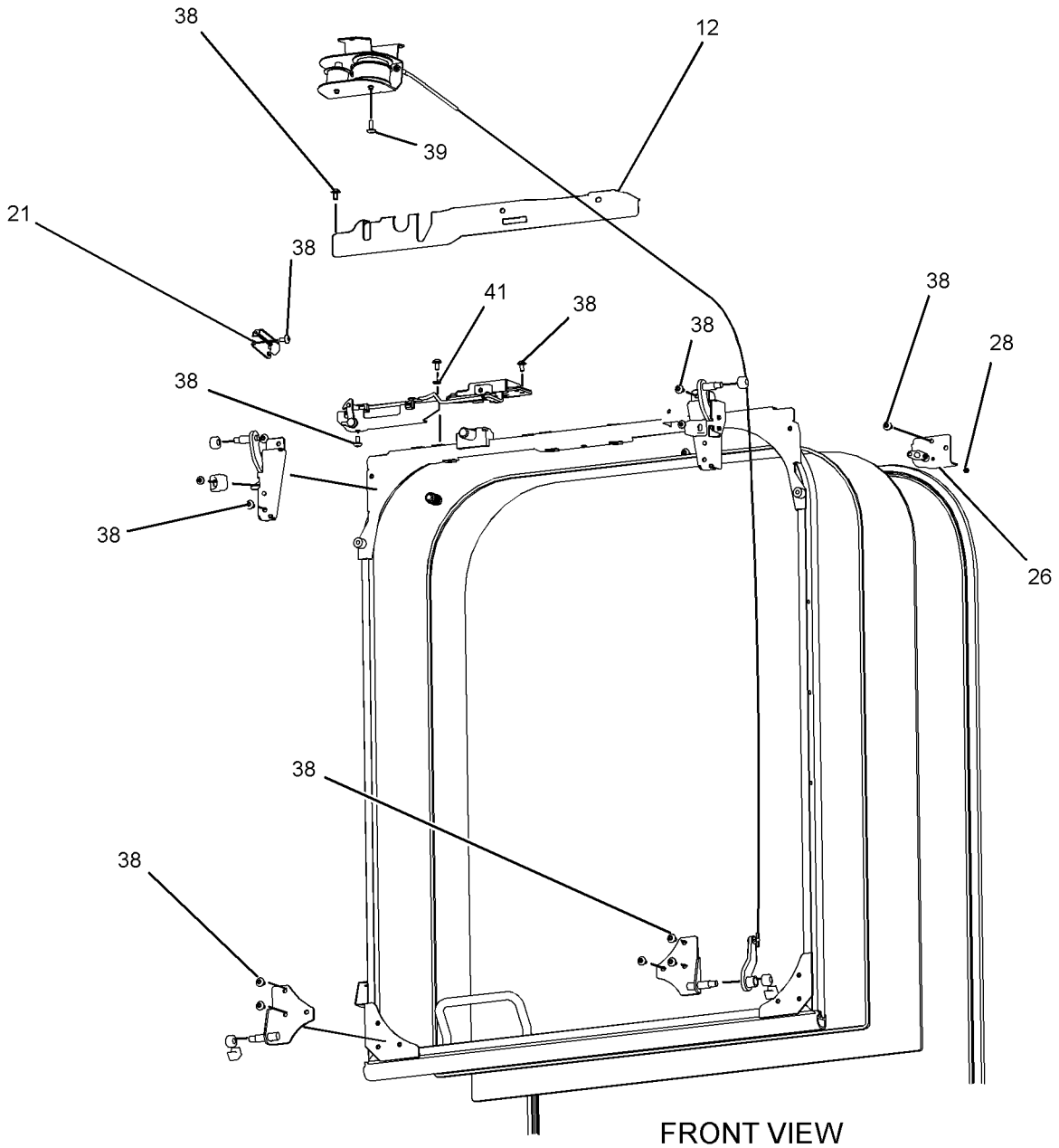

FRONT VIEW

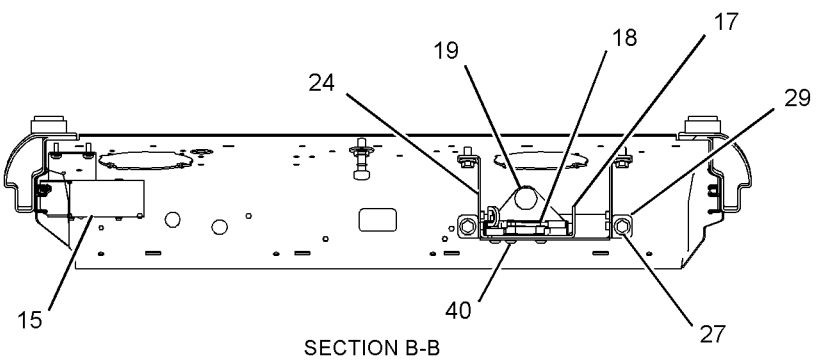

SECTION B-B

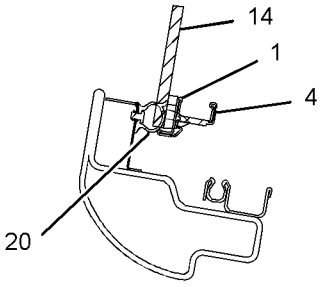

SECTION E-E

GRAPHIC #2 **<END>** g01231379

OPERATOR STATION

156-6647 WINDOW GP-CAB–FRONT, LOWER

S/N: CLA1-UP

PART OF 273-5389 WIPER & WASHER GP-WINDOW

AN ATTACHMENT

SMCS-7310 **i02243909**

NOTE	REF NO	GRAPHIC REF	PART NUMBER	QTY	PART NAME 1 2 3 4 5 6 (PRODUCT LEVEL)	SEE PAGE
	1	1	*156-6648*	1	GLASS	
M	2	1	**9X-2042**	2	SCREW-TRUSS HEAD (M6X1X12-MM)	
	3	1	**151-6705**	1	PACKING	
	4	1	**124-3966**	1	STOP	
	5	1	**144-9692**	2	RETAINER	
	6	1	**144-9691**	2	PACKING	

M-METRIC PART

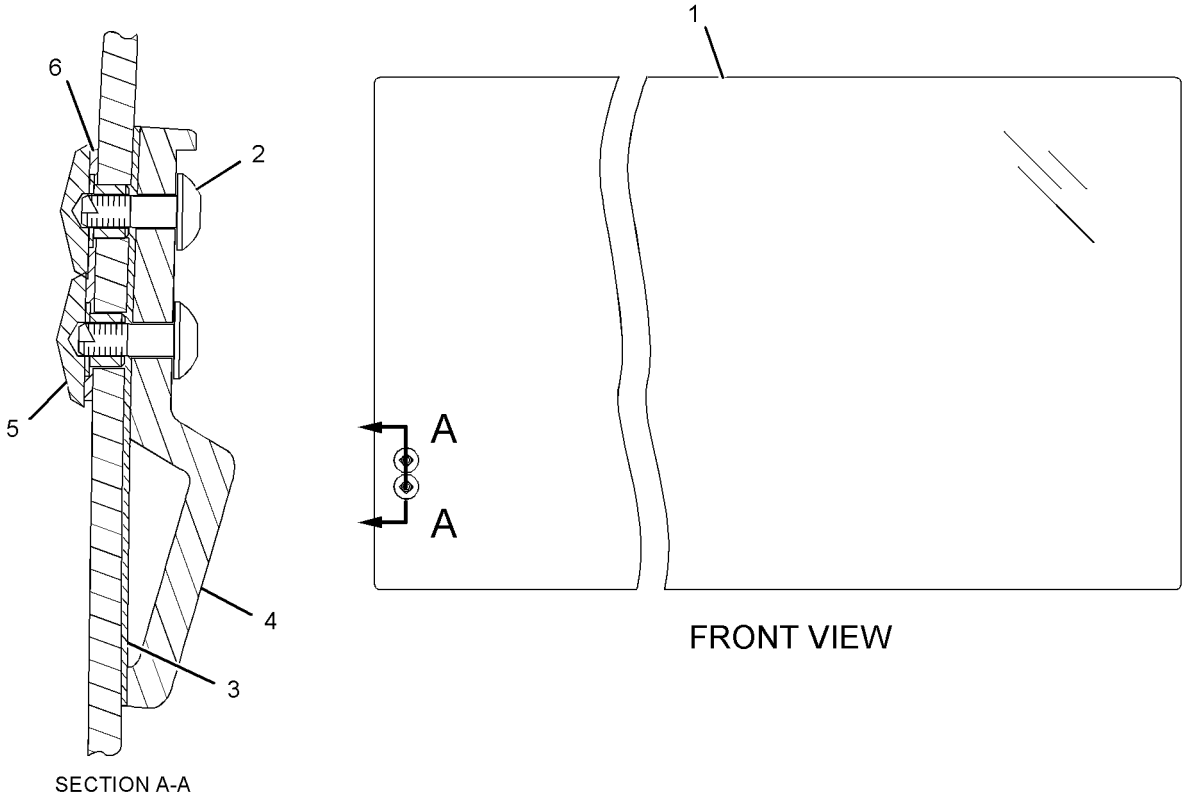

SECTION A-A

FRONT VIEW

GRAPHIC #1 **<END>** g01131367

OPERATOR STATION

176-1958 WINDOW GP-CAB—LOWER

S/N: CLA1-UP

PART OF 229-9099, 229-9101, 316-8815 CAB GP

AN ATTACHMENT

SMCS-7310 **i02793691**

NOTE	REF NO	GRAPHIC REF	PART NUMBER	QTY	PART NAME 1 2 3 4 5 6 (PRODUCT LEVEL)	SEE PAGE
	1	1	**156-6473**	1	GLASS (LOWER FRONT)	
	2	1	**156-6631**	2	STOP	
	3	1	**305-0361**	1	SEAL	
	4	1	**178-5569**	2	SEAL	
	5	1	**189-2702**	2	SEAL	
	6	1	**139-7119**	2	PLUG	

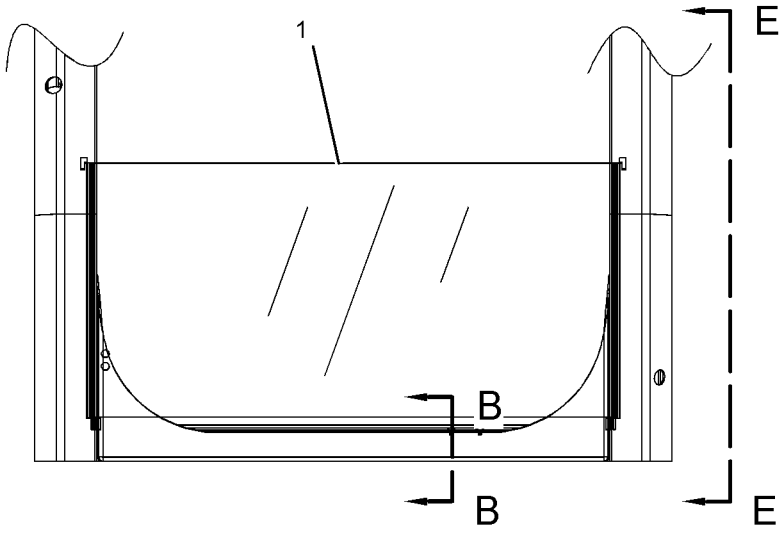

FRONT VIEW

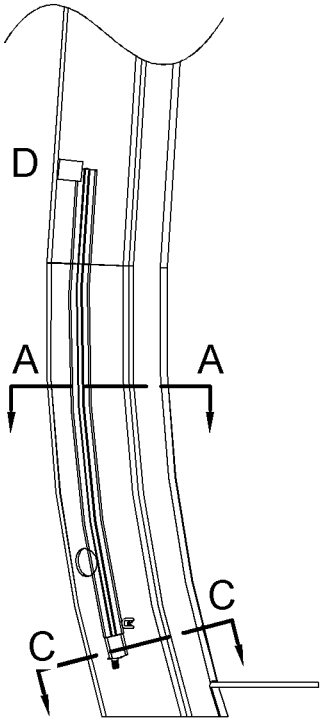

VIEW E-E

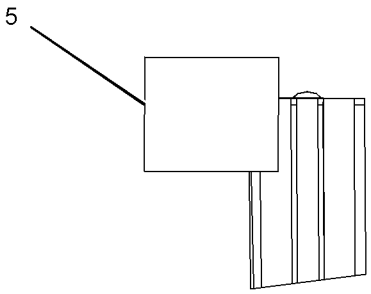

VIEW OF AREA D

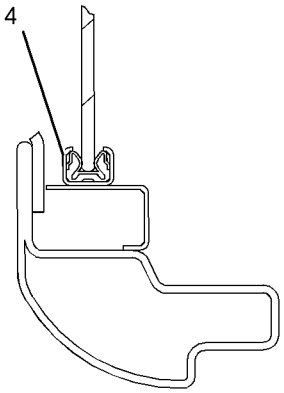

SECTION A-A

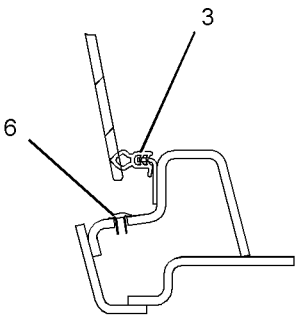

SECTION B-B

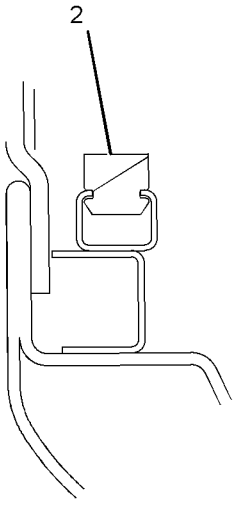

SECTION C-C

GRAPHIC #1 **<END>** g01398601

OPERATOR STATION

189-2778 WINDOW GP-CAB—REAR

S/N: CLA1-UP

AN ATTACHMENT

SMCS-7310 **i02742929**

NOTE	PART NUMBER	QTY	PART NAME 1 2 3 4 5 6 (PRODUCT LEVEL)	SEE PAGE
Y	*186-1305*	1	FILM GP (SECONDARY EXIT)	934
Y	*189-2759*	1	WINDOW GP-REAR	928

Y-SEPARATE ILLUSTRATION

<END>

OPERATOR STATION

235-8909 WINDOW GP-CAB—SIDE, REAR

S/N: CLA1-UP
PART OF 229-9099, 316-8815 CAB GP
AN ATTACHMENT

SMCS-7310 **i02877557**

NOTE	REF NO	GRAPHIC REF	PART NUMBER	QTY	PART NAME 1 2 3 4 5 6 (PRODUCT LEVEL)	SEE PAGE
	1	1	**151-6790**	1	GLASS	
	2	1	**156-6469**	1	GLASS	
	3	1	**164-0666**	1	SEAL	
	4	1	**178-5572**	4	SPACER	
	5	1	**234-6489**	1	GLASS	
	6	1	**099-3629**	1	RING-KEY	
	7	1	**178-5573**	4	SPACER	
	8	1	**178-5574**	9	SPACER	

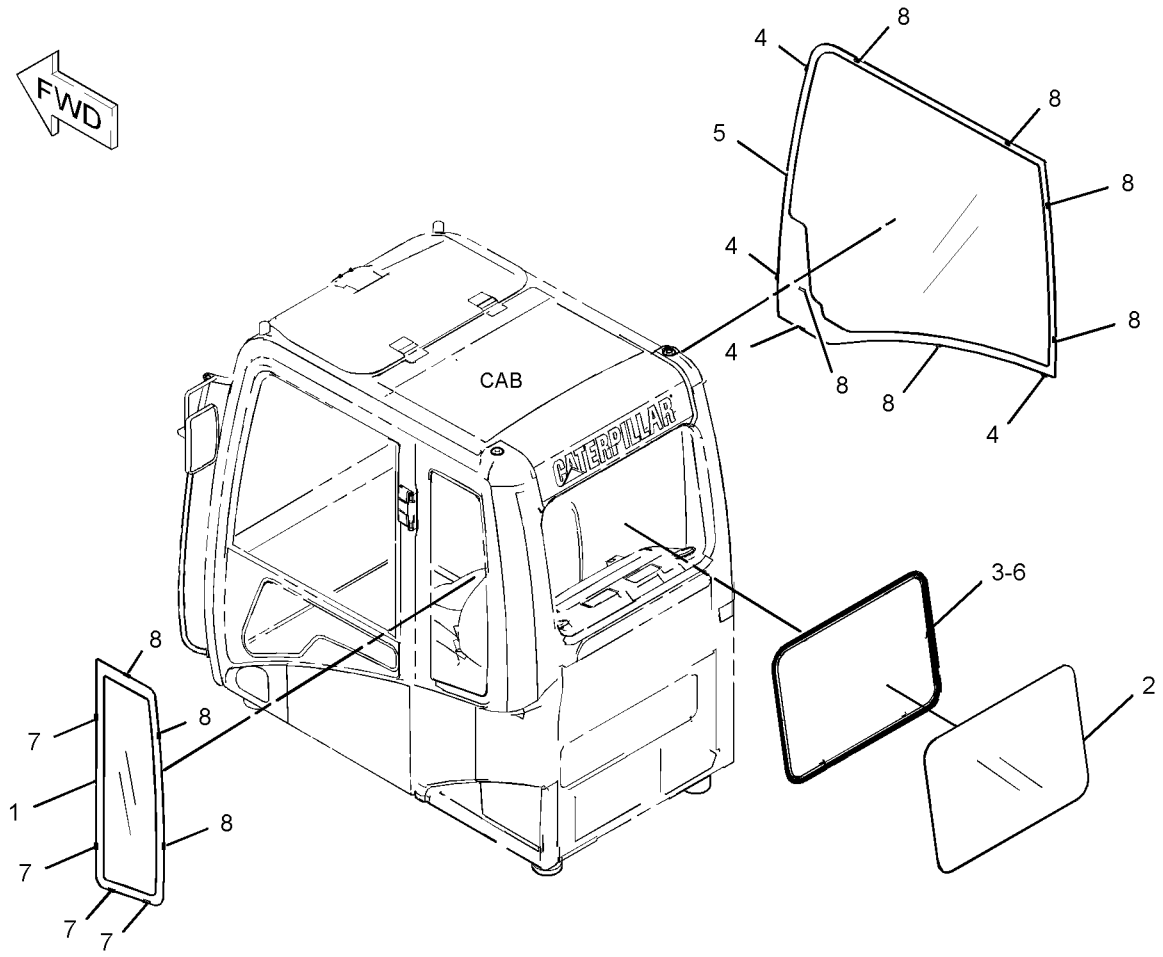

GRAPHIC #1 **<END>** g01432743

OPERATOR STATION

235-8915 WINDOW GP-CAB

S/N: CLA1-UP
PART OF 229-9101 CAB GP
AN ATTACHMENT

SMCS-7310 **i02862883**

NOTE	REF NO	GRAPHIC REF	PART NUMBER	QTY	PART NAME 1 2 3 4 5 6 (PRODUCT LEVEL)	SEE PAGE
	1	1	**164-0666**	1	SEAL	
	2	1	**167-7037**	1	GLASS (REAR)	
	3	1	**178-5572**	4	SPACER	
	4	1	**235-8911**	1	GLASS (RH)	
	5	1	**099-3629**	1	RING-KEY	
	6	1	**167-7036**	1	GLASS (LH)	
	7	1	**178-5573**	4	SPACER	
	8	1	**178-5574**	9	SPACER	

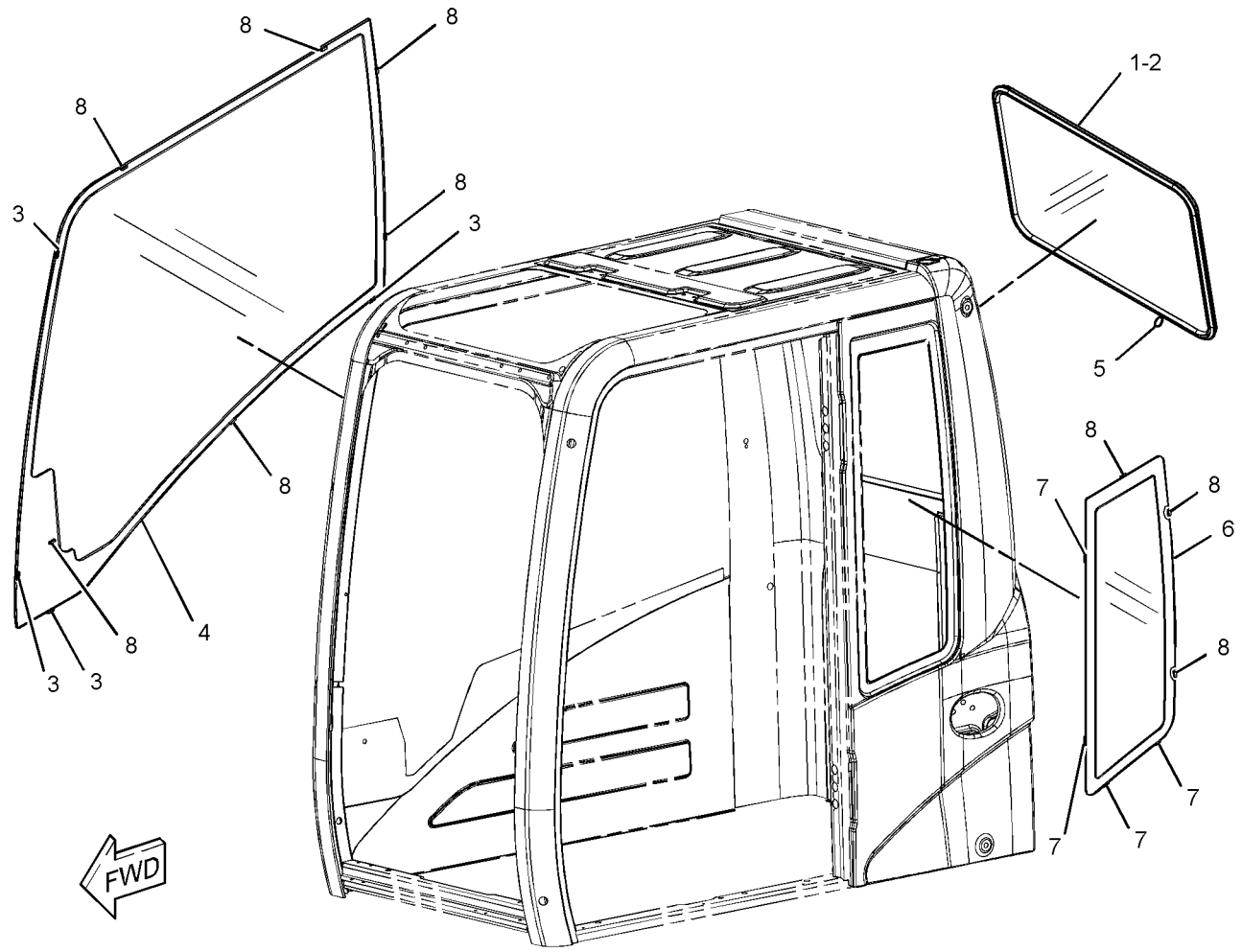

GRAPHIC #1 **<END>** g01427383

OPERATOR STATION

151-6792 WINDOW GP-DOOR

S/N: CLA1-UP

PART OF 139-7100, 176-1964 DOOR GP-CAB

AN ATTACHMENT

SMCS-7308, 7310 **i03214888**

NOTE	REF NO	GRAPHIC REF	PART NUMBER	QTY	PART NAME 1 2 3 4 5 6 (PRODUCT LEVEL)	SEE PAGE
	1	1	**085-6444**	2	LATCH GP-FRONT WINDOW	
					(EACH INCLUDES)	
		1	**085-6447**	1	RETAINER	
M		1	**085-6448**	2	SCREW-TAPPING	
		1	**085-6449**	1	PACKING	
	2	1	**151-6793**	1	FRAME AS	
		1	**4I-4298**	1	STOPPER	
		1	**4I-4300**	1	CATCH	
		1	**099-0139**	3	RIVET	
	3	1	**151-6841**	1	SEAL	
	4	1	**156-6474**	1	GLASS	
	5	1	**156-6475**	1	GLASS	
	6	1	**161-3695**	1	SEAL	
	7	1	**161-3705**	1	SEAL	
	8	1	**164-0516**	1	RUBBER	
	9	1	**164-0517**	1	RUBBER	
	10	1	**164-0518**	1	RUBBER	
	11	1	**171-7413**	1	SPACER	
	12	1	**171-7414**	1	SPACER	
	13	1	**176-1951**	1	SPACER	
	14	1	**176-1952**	1	SPACER	
	15	1	**176-1953**	1	STOP	
	16	1	**176-1954**	1	SEAL	
	17	1	**176-1955**	1	SEAL	
	18	1	**176-1956**	1	SEAL	
	19	1	**176-1957**	1	SEAL	

M-METRIC PART

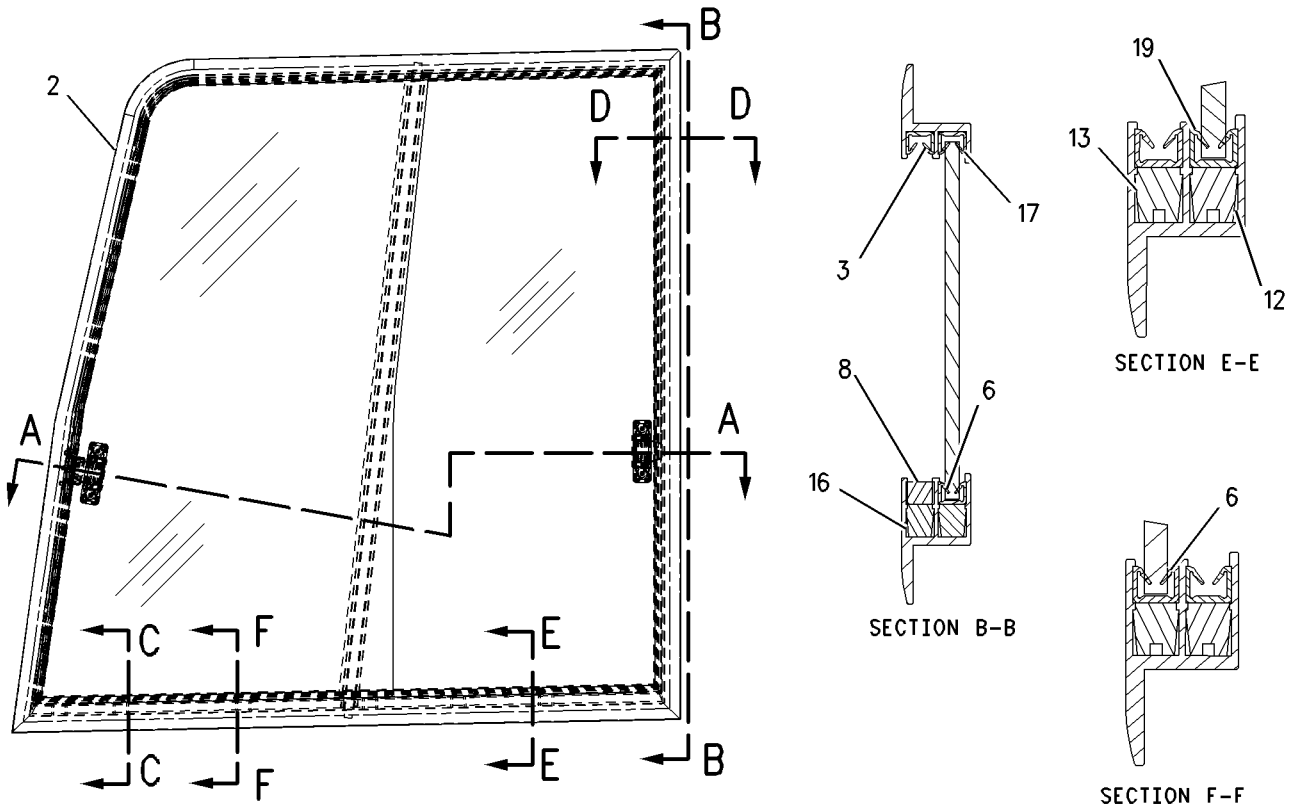

GRAPHIC #1 **<END>** g00722948

OPERATOR STATION

185-8203 WINDOW GP-REAR

S/N: CLA1-UP
PART OF 189-2759 WINDOW GP-REAR
AN ATTACHMENT

SMCS-7310, 7340 **i01818870**

NOTE	REF NO	GRAPHIC REF	PART NUMBER	QTY	PART NAME 1 2 3 4 5 6 (PRODUCT LEVEL)	SEE PAGE
	1	1	**178-5574**	6	SPACER	
	2	1	**184-3971**	1	HANDLE	
	3	1	**184-3979**	1	PIN	
	4	1	**185-8200**	1	GLASS	
	5	1	**185-8201**	1	FRAME AS	
	6	1	**185-8204**	1	BRACKET	
	7	1	**185-8209**	1	LEVER	
	8	1	**189-2712**	1	COVER	
	9	1	**184-3978**	1	SPRING	
	10	1	**184-3980**	1	LEVER	
M	11	1	**9X-2044**	3	SCREW-TRUSS HEAD	

M-METRIC PART

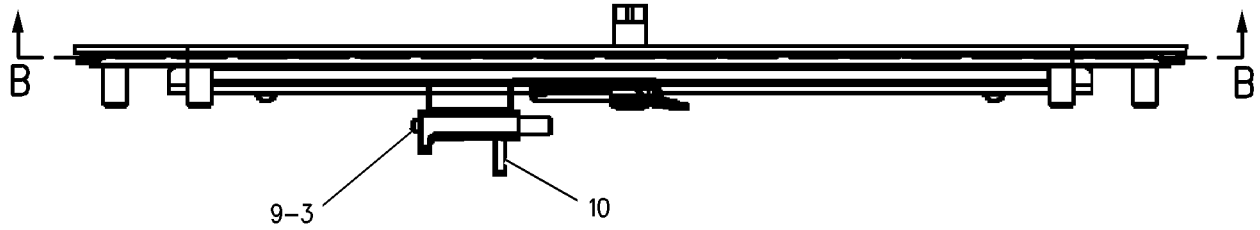

SECTION C-C

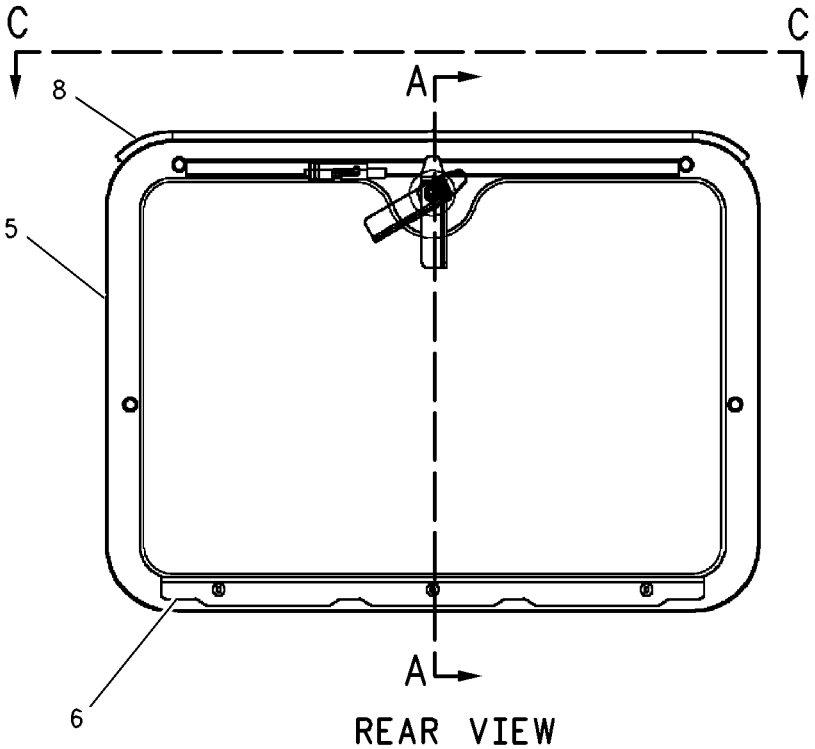

REAR VIEW

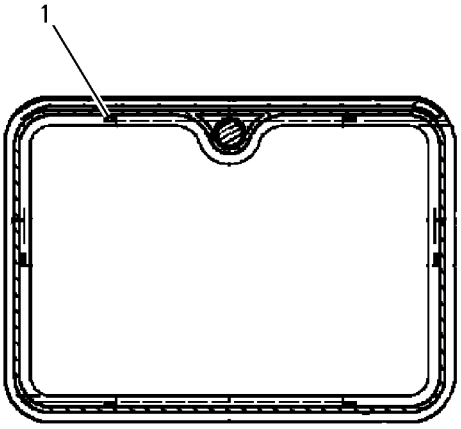

SECTION B-B

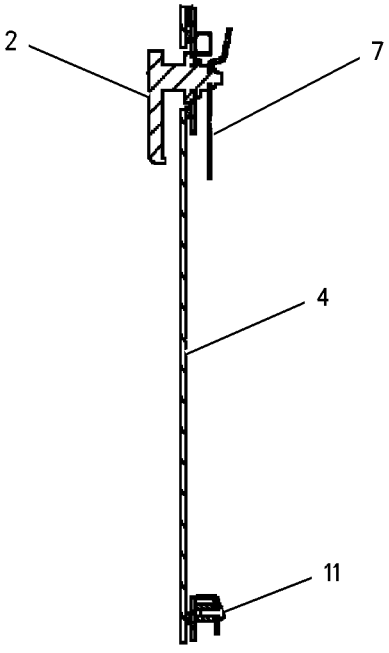

SECTION A-A

GRAPHIC #1 **<END>** g00852376

OPERATOR STATION

189-2759 WINDOW GP-REAR

S/N: CLA1-UP
PART OF 189-2778 WINDOW GP-CAB
AN ATTACHMENT

SMCS-7310, 7340 **i01426307**

NOTE	REF NO	GRAPHIC REF	PART NUMBER	QTY	PART NAME 1 2 3 4 5 6 (PRODUCT LEVEL)	SEE PAGE
Y	1	1	**185-8203**	1	WINDOW GP-REAR	926
	2	1	**166-3215**	1	SEAL	
	3	1	**189-2705**	1	BRACKET AS	
	4	1	**185-8206**	1	BRACKET	
M	5	1	**9X-2044**	4	SCREW-TRUSS HEAD	

M-METRIC PART
Y-SEPARATE ILLUSTRATION

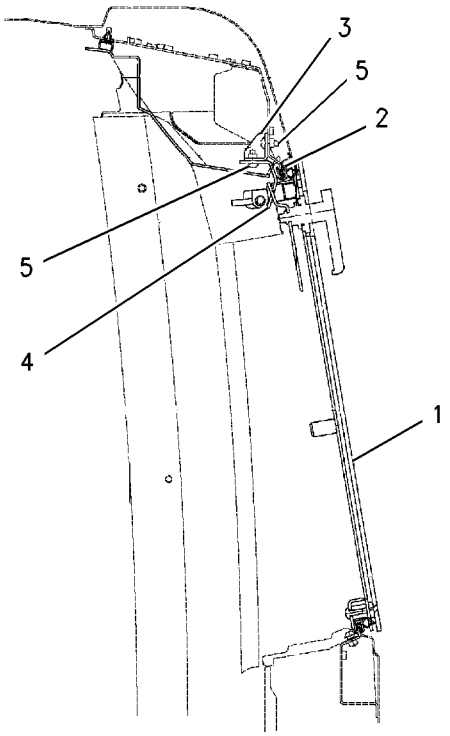

SECTION A-A

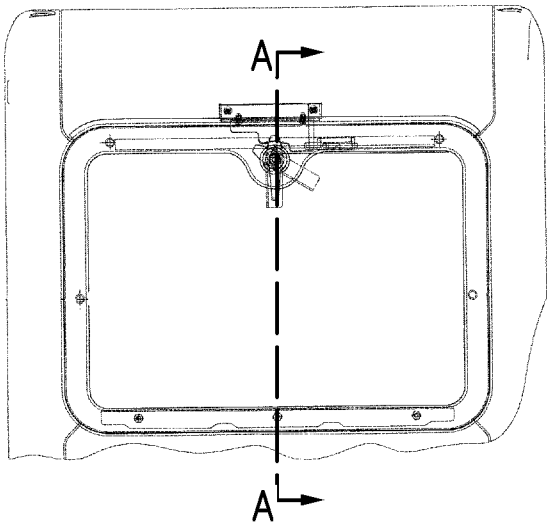

REAR VIEW

GRAPHIC #1 **<END>** g00748799

273-5389 WIPER & WASHER GP-WINDOW—LOWER

S/N: CLA1-UP
PART OF 273-5388 WIPER AR-WINDOW
AN ATTACHMENT

SMCS-7305, 7306 **i02736326**

NOTE	REF NO	GRAPHIC REF	PART NUMBER	QTY	PART NAME 1 2 3 4 5 6 (PRODUCT LEVEL)	SEE PAGE
	1	1	**3S-2093**	1	STRAP-CABLE	
	2	1	**4I-1163**	1	BRACKET	
	3	1	**129-6466**	1	SWITCH AS-ROLLER (LOWER WASHER/WIPER, DISABLE)	
		1	**2H-3922**	1	LOCKWASHER	
		1	**6V-8363**	2	SCREW (10-32X0.312-IN)	
		1	**6V-8370**	1	NUT-HEX (3/4-32-THD)	
		1	**8F-1434**	2	LOCKWASHER	
		1	**9X-0199**	1	BOOT-SWITCH	
	4	1	**156-6646**	1	BRACKET	
Y	5	1	**156-6647**	1	WINDOW GP-CAB (FRONT, LOWER)	918
	6	1	**273-5390**	1	BRACKET AS	
	7	1	**167-7079**	1	MOTOR AS-WINDOW WIPER (LOWER)	
	8	1	**4I-5020**	1	ARM AS-WIPER	
	9	1	**4I-5021**	1	BLADE AS-WIPER (275-MM) (LOWER)	
M	10	1	**5C-2890**	3	NUT (M6X1-THD)	
M	11	1	**5C-9553**	2	BOLT (M6X1X16-MM)	
	12	1	**8T-4121**	4	WASHER-HARD (11X21X2.5-MM THK)	
M	13	1	**8T-4191**	4	BOLT (M10X1.5X16-MM)	
M	14	1	**9X-2044**	2	SCREW-TRUSS HEAD (M6X1X16-MM)	
	15	1	**9X-8256**	5	WASHER (6.6X12X2-MM THK)	

M-METRIC PART
Y-SEPARATE ILLUSTRATION

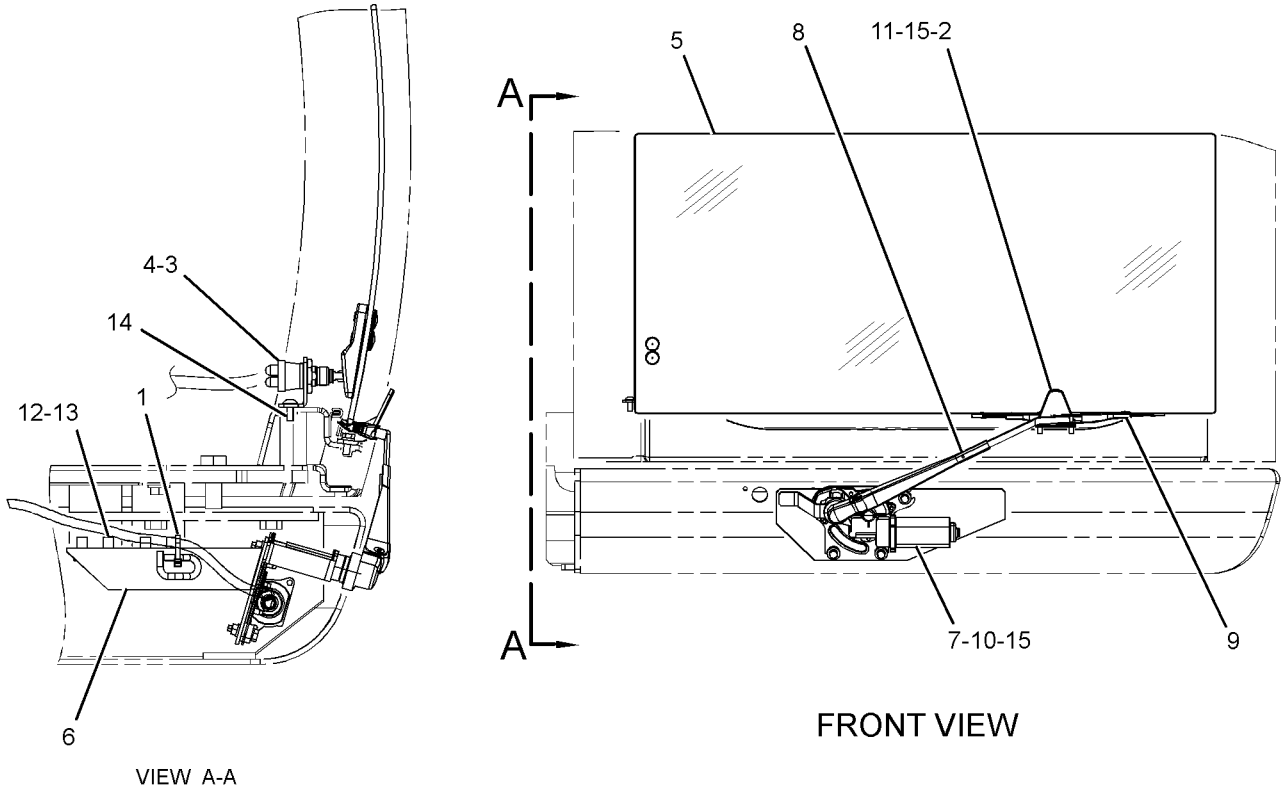

GRAPHIC #1 **<END>** g01374433

OPERATOR STATION

273-5388 WIPER AR-WINDOW

S/N: CLA1-UP

CANNOT BE USED WITH 229-9070—PAGE 911

AN ATTACHMENT

SMCS-7305 **i03196576**

NOTE	PART NUMBER	QTY	PART NAME 1 2 3 4 5 6 (PRODUCT LEVEL)	SEE PAGE
Y	*238-2208*	1	SWITCH GP-WIPER (LOWER)	185
Y	*229-9088*	1	WASHER GP-WINDOW (LOWER)	912
Y	*273-5389*	1	WIPER & WASHER GP-WINDOW (LOWER)	929

Y-SEPARATE ILLUSTRATION

<END>

OPERATOR STATION

234-6594 WIPER GP-WINDOW—FRONT, UPPER

S/N: CLA1-UP

PART OF 229-9099, 229-9101, 316-8815 CAB GP

AN ATTACHMENT

SMCS-7305 **i02725441**

NOTE	REF NO	GRAPHIC REF	PART NUMBER	QTY	PART NAME 1 2 3 4 5 6 (PRODUCT LEVEL)	SEE PAGE
	1	1	**161-3677**	1	HOLDER	
	2	1	**245-7931**	1	MOTOR AS (WIPER)	
M		1	**6V-8231**	1	NUT (M10X1.25-THD)	
M		1	**7Y-3470**	1	NUT (M20X1-THD)	
		1	**7Y-3472**	1	CAP	
		1	**124-3953**	1	WASHER (20.5X30X2-MM THK)	
	3	1	**235-8932**	1	NOZZLE AS	
	4	1	**155-7042**	1	RELAY AS (WIPER)	
	5	1	**161-3668**	1	ARM AS	
		1	**161-3669**	1	GUIDE	
		1	**161-3670**	1	BLADE AS-WIPER (600-MM) (UPPER)	
		1	**185-8290**	1	SCREW AS (M35X0.06X9-MM)	
	6	1	**163-6795**	1	STRAP-CABLE	
M	7	1	**3E-9872**	2	SCREW AS (M4X0.7X12-MM)	
	8	1	**4I-3090**	1	SEAL	
	9	1	**7Y-7364**	1	GROMMET	
M	10	1	**8T-4134**	4	NUT (M6X1-THD)	
M	11	1	**9X-2042**	2	SCREW-TRUSS HEAD (M6X1X12-MM)	
M	12	1	**9X-2044**	3	SCREW-TRUSS HEAD (M6X1X16-MM)	

M-METRIC PART

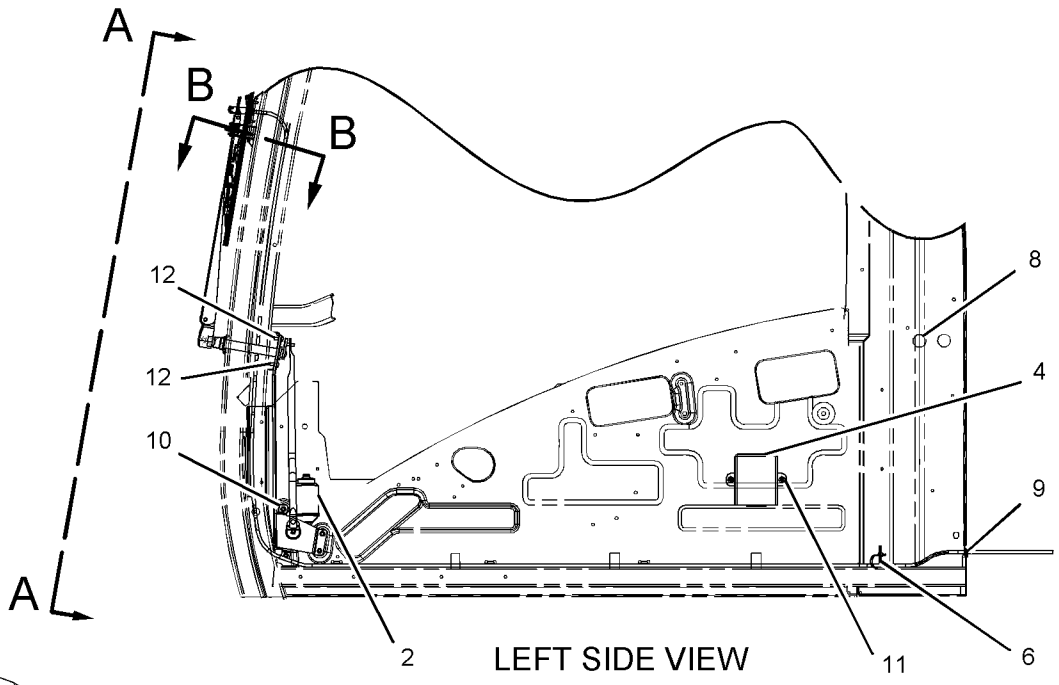

LEFT SIDE VIEW

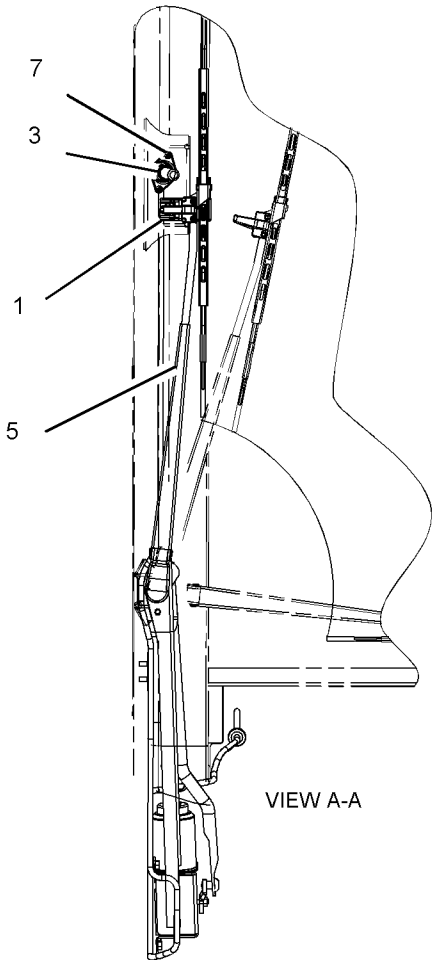

VIEW A-A

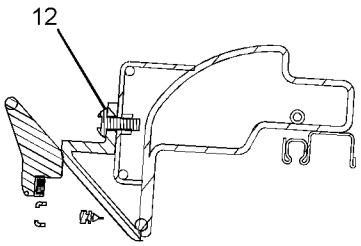

SECTION B-B

GRAPHIC #1 **<END>** g01098021

186-1305 FILM GP—SECONDARY EXIT

S/N: CLA1-UP
PART OF 189-2778 WINDOW GP-CAB
AN ATTACHMENT

SMCS-7405, 7557 **i02514314**

NOTE	REF NO	GRAPHIC REF	PART NUMBER	QTY	PART NAME 1 2 3 4 5 6 (PRODUCT LEVEL)	SEE PAGE
	1	1	**224-1943**	1	FILM-INSTRUCTION (ALTERNATE EXIT, REMOVE WINDOW)	

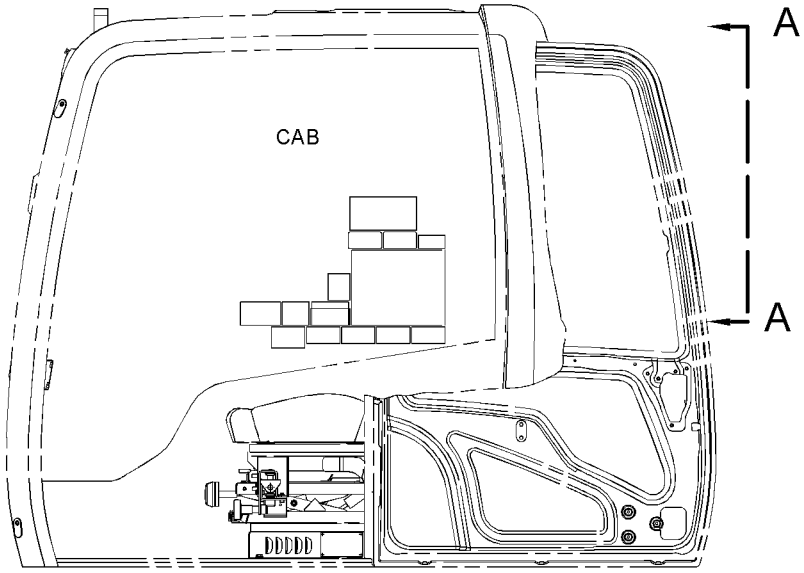

LEFT SIDE VIEW

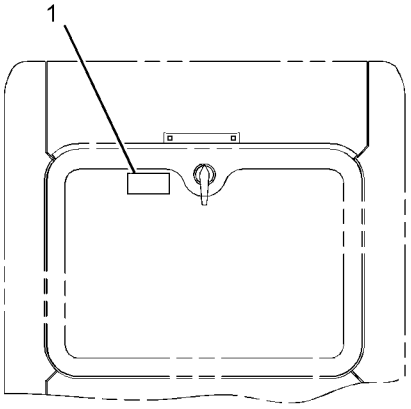

VIEW A-A

GRAPHIC #1 **<END>** g01274365

247-7410 FILM GP–OPERATOR CONTROLS, NOTICE

S/N: CLA1-UP

PART OF 255-5843 CONTROL AR-AUXILIARY

AN ATTACHMENT

SMCS-7405, 7557 **i02426165**

NOTE	REF NO	GRAPHIC REF	PART NUMBER	QTY	PART NAME 1 2 3 4 5 6 (PRODUCT LEVEL)	SEE PAGE
	1	1	**250-8054**	1	FILM-NOTICE (HAMMER, READ OMM)	
	2	1	**260-6941**	1	FILM-INFORMATION (OPERATOR CONTROLS, READ OMM)	

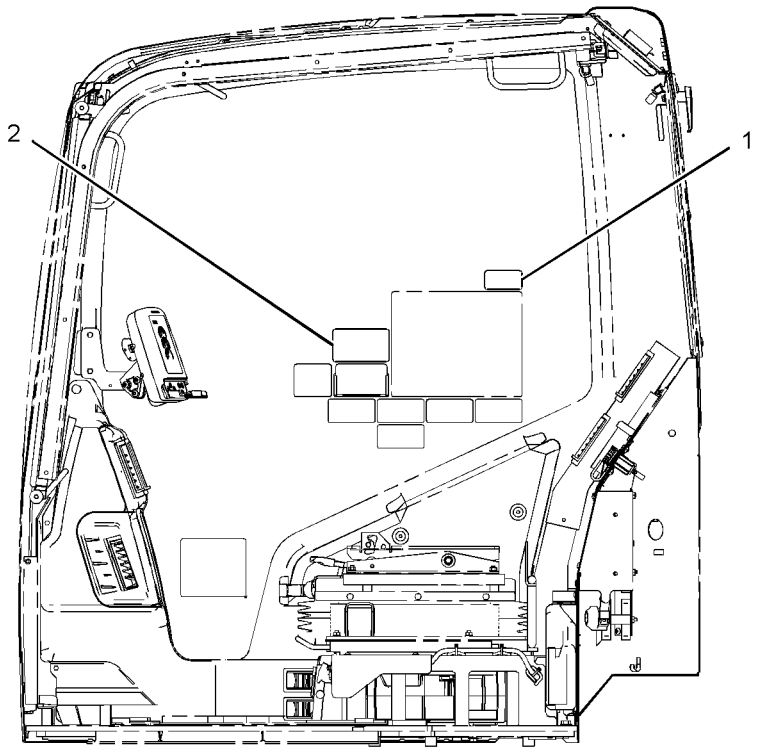

LEFT SIDE VIEW
(328D MODELS)

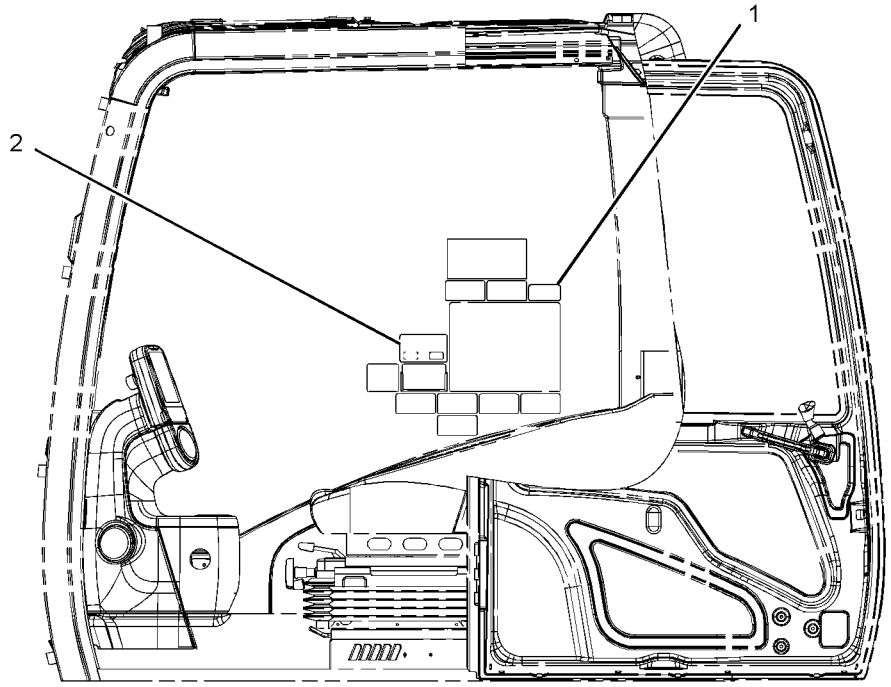

LEFT SIDE VIEW
(ALL OTHER MODELS)

GRAPHIC #1 **<END>** g01246655

SERVICE EQUIPMENT AND SUPPLIES

247-7411 FILM GP—OPERATOR CONTROLS, NOTICE

S/N: CLA1-UP

PART OF 255-5844 CONTROL AR-AUXILIARY

AN ATTACHMENT

SMCS-7405, 7557 **i02433607**

NOTE	REF NO	GRAPHIC REF	PART NUMBER	QTY	PART NAME 1 2 3 4 5 6 (PRODUCT LEVEL)	SEE PAGE
	1	1	**260-6942**	1	FILM-INFORMATION (OPERATOR CONTROLS, READ OMM)	
	2	1	**250-8054**	1	FILM-NOTICE (HAMMER, READ OMM)	

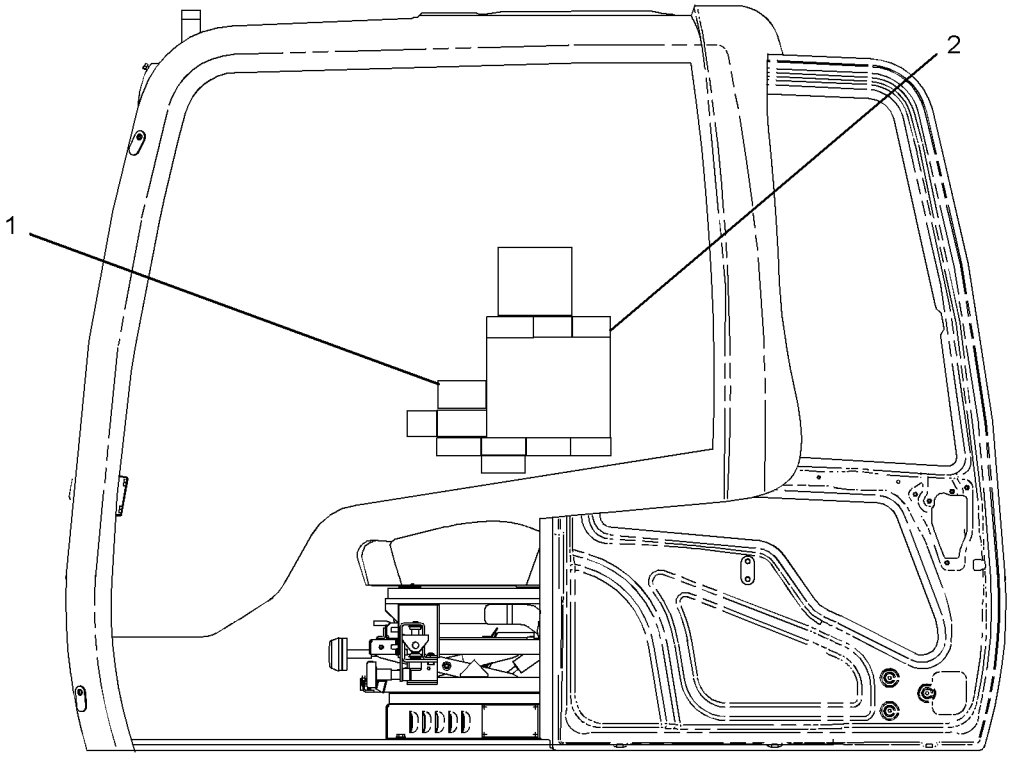

LEFT SIDE VIEW

GRAPHIC #1 **<END>** g01212938

SERVICE EQUIPMENT AND SUPPLIES

247-7418 FILM GP–PEDAL, LH

S/N: CLA1-UP

PART OF 255-5845 PEDAL AR-AUXILIARY

AN ATTACHMENT

SMCS-7405, 7557 **i02430392**

NOTE	REF NO	GRAPHIC REF	PART NUMBER	QTY	PART NAME 1 2 3 4 5 6 (PRODUCT LEVEL)	SEE PAGE
	1	1	**250-8054**	1	FILM-NOTICE (HAMMER, READ OMM)	
	2	1	**260-6948**	1	FILM-INSTRUCTION (OPERATOR CONTROLS, READ OMM)	

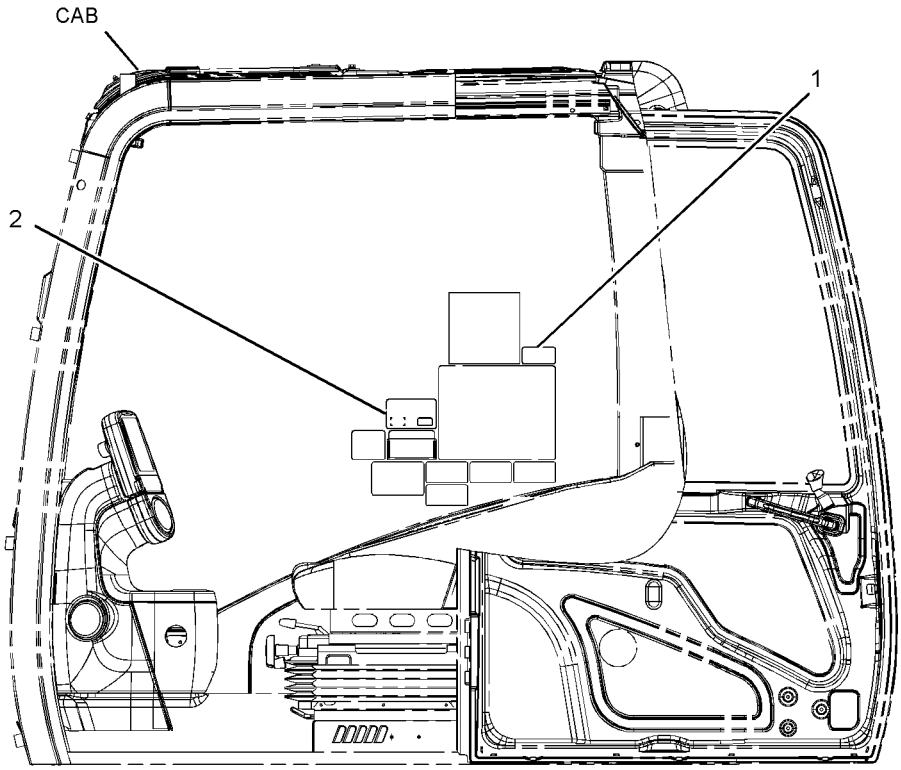

LEFT SIDE VIEW

GRAPHIC #1 **<END>** g01203264

SERVICE EQUIPMENT AND SUPPLIES

247-7465 FILM GP—HAMMER CONTROL, FOOT SWITCH

S/N: CLA1-UP

PART OF 270-6106 CONTROL AR-AUXILIARY

AN ATTACHMENT

SMCS-7405, 7557 **i02424961**

NOTE	REF NO	GRAPHIC REF	PART NUMBER	QTY	PART NAME 1 2 3 4 5 6 (PRODUCT LEVEL)	SEE PAGE
	1	1	**176-2815**	1	FILM-INSTRUCTION (HAMMER CONTROL)	
	2	1	**250-8054**	1	FILM-NOTICE (HAMMER, READ OMM)	

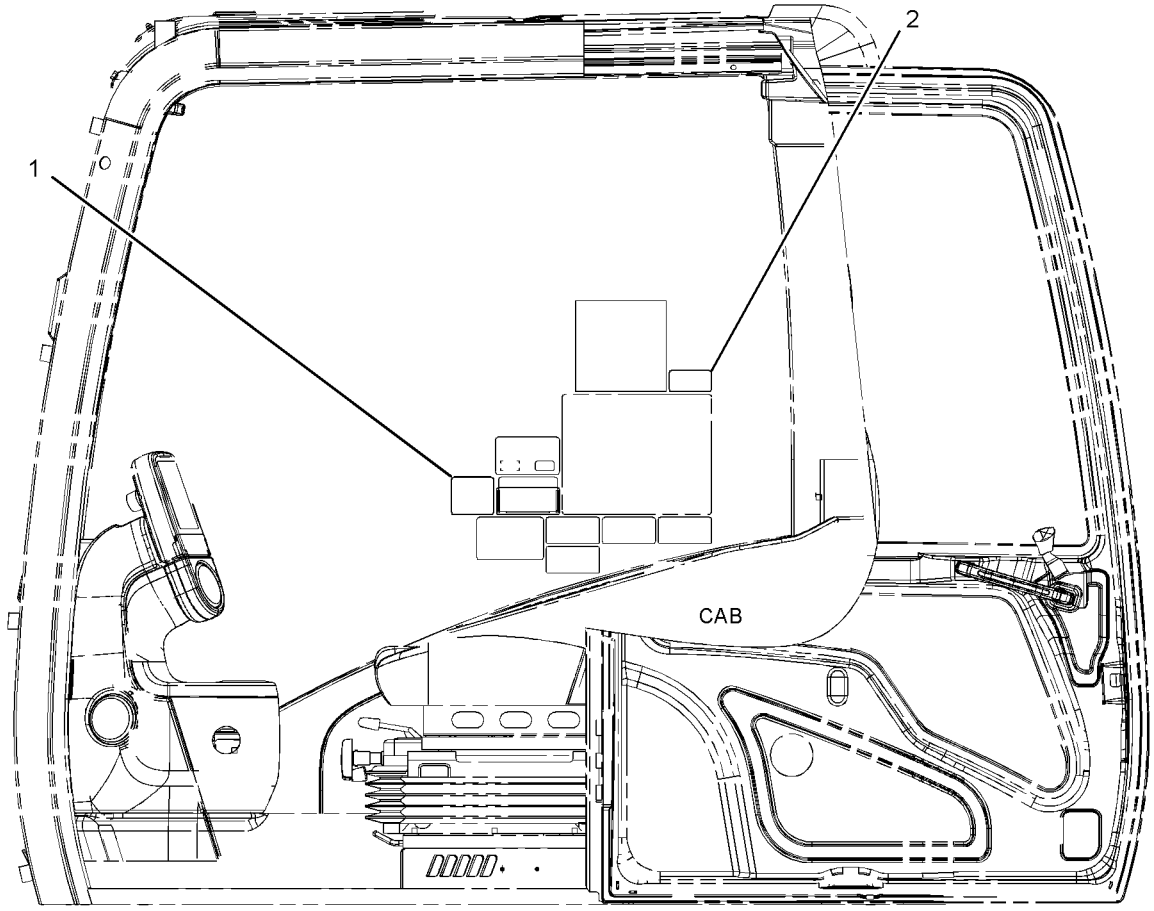

LEFT SIDE VIEW

GRAPHIC #1

<END>

g01157047

247-7494 FILM GP—CONTROL PATTERN, QUICK CHANGE

S/N: CLA1-UP
4-WAY
PART OF 270-5871 VALVE AR
AN ATTACHMENT

SMCS-7405, 7557 **i02414960**

NOTE	REF NO	GRAPHIC REF	PART NUMBER	QTY	PART NAME 1 2 3 4 5 6 (PRODUCT LEVEL)	SEE PAGE
	1	1	**4I-2885**	1	CASE	
	2	1	**109-1839**	1	FILM-INSTRUCTION (OPERATOR CONTROLS, READ OMM)	
	3	1	**214-4531**	1	PLATE-INSTRUCTION (OPERATOR CONTROLS, READ OMM) (MHI, SCM PATTERNS)	
	4	1	**214-4532**	1	PLATE-INSTRUCTION (OPERATOR CONTROLS, READ OMM) (KOBELCO, SAE PATTERNS)	
	5	1	**257-4547**	1	FILM-WARNING (CRUSH HAZARD, READ OMM, INTL)	

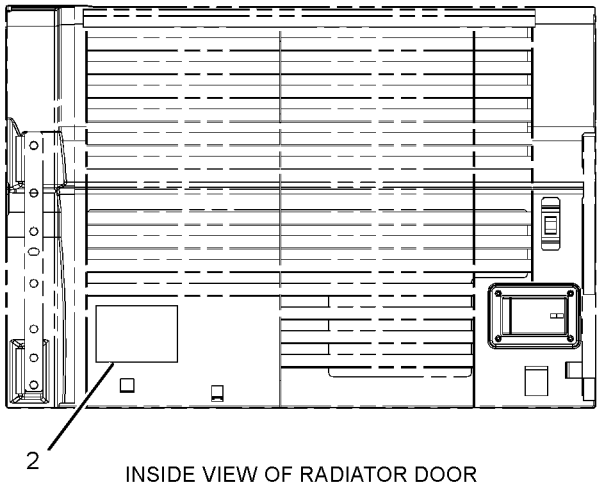

INSIDE VIEW OF RADIATOR DOOR

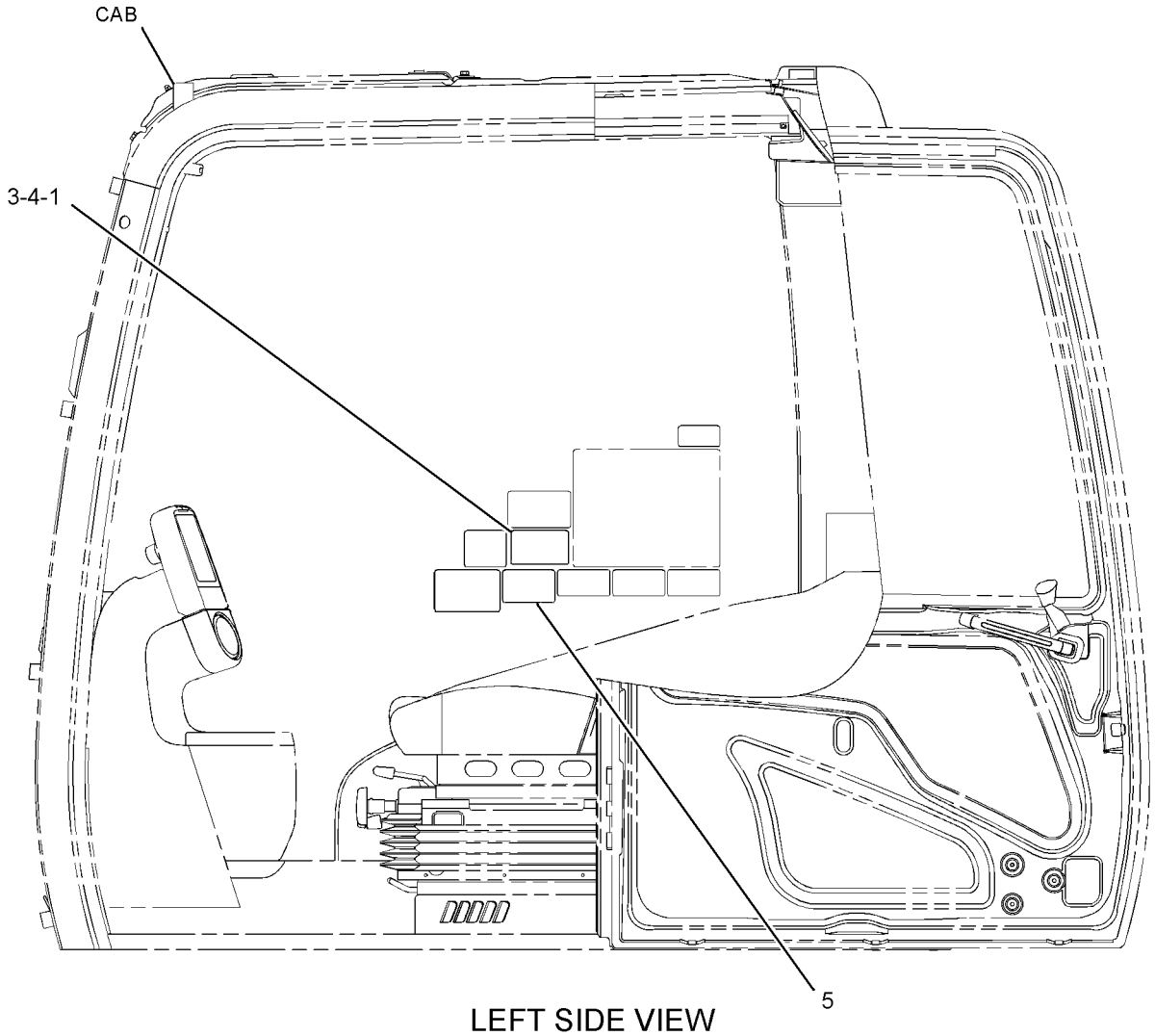

LEFT SIDE VIEW

GRAPHIC #1 **<END>** g01238061

260-7006 FILM GP—CONTROL PATTERN CHANGE, 2-WAY

S/N: CLA1-UP

PART OF 270-5869 VALVE AR-ALT PATTERN CONTROL

AN ATTACHMENT

SMCS-7405, 7557 **i02724704**

NOTE	REF NO	GRAPHIC REF	PART NUMBER	QTY	PART NAME 1 2 3 4 5 6 (PRODUCT LEVEL)	SEE PAGE
	1	1	**4I-2885**	1	CASE	
	2	1	**255-3171**	1	PLATE-INSTRUCTION (CONTROL PATTERN CHANGE)	
	3	1	**255-3173**	1	FILM-WARNING (CRUSH HAZARD, READ OMM, INTL)	
					—OR—	
		1	**257-5015**	1	FILM-WARNING (CRUSH HAZARD, READ OMM, U.S.)	

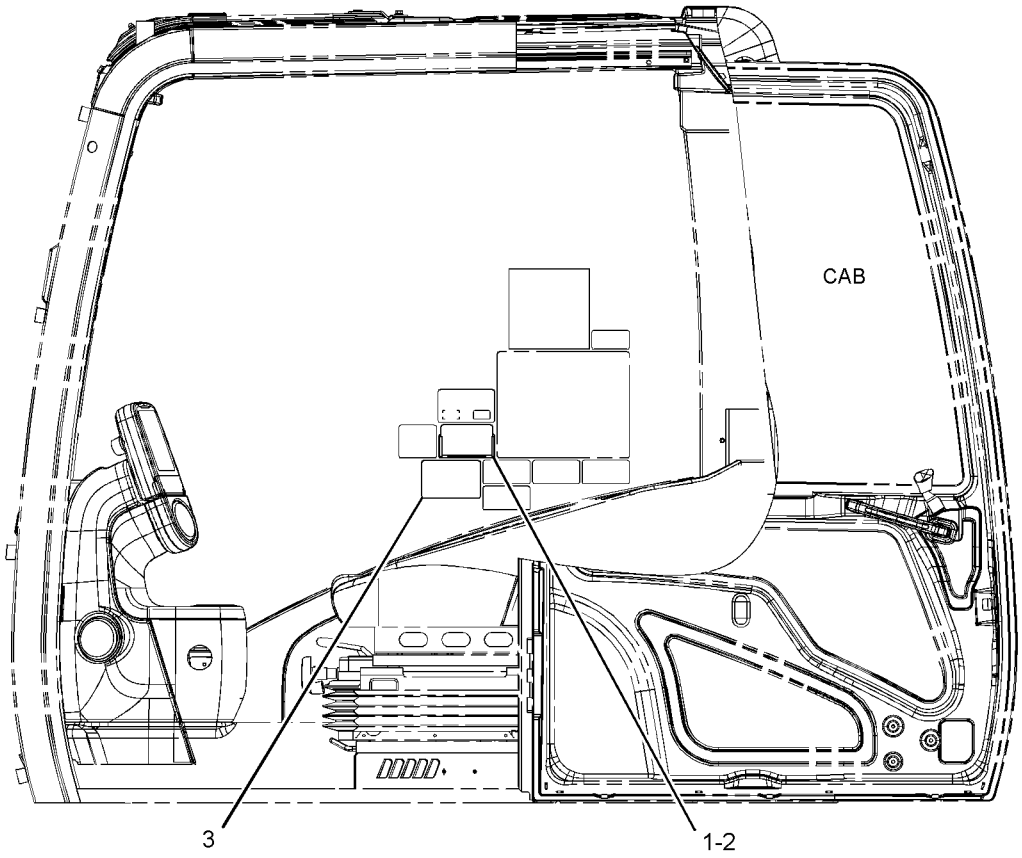

LEFT SIDE VIEW

GRAPHIC #1 **<END>** g01367678

SERVICE EQUIPMENT AND SUPPLIES

282-5705 FILM GP—QUICK COUPLER

S/N: CLA1-UP

PART OF 282-5634 CONTROL AR-COUPLER

AN ATTACHMENT

SMCS-7405, 7557 **i02817497**

NOTE	REF NO	GRAPHIC REF	PART NUMBER	QTY	PART NAME 1 2 3 4 5 6 (PRODUCT LEVEL)	SEE PAGE
	1	1	**268-4530**	1	FILM-WARNING (CRUSH HAZARD, READ OMM, U.S.)	
					—OR—	
		1	**269-0120**	1	FILM-WARNING (CRUSH HAZARD, READ OMM, INTL)	
	2	1	**268-4531**	1	FILM-INSTRUCTION (COUPLER OPERATION)	
	3	1	**268-8872**	1	FILM-WARNING (CRUSH HAZARD, READ OMM, U.S.)	
					—OR—	
		1	**269-0121**	1	FILM-WARNING (CRUSH HAZARD, READ OMM, INTL)	

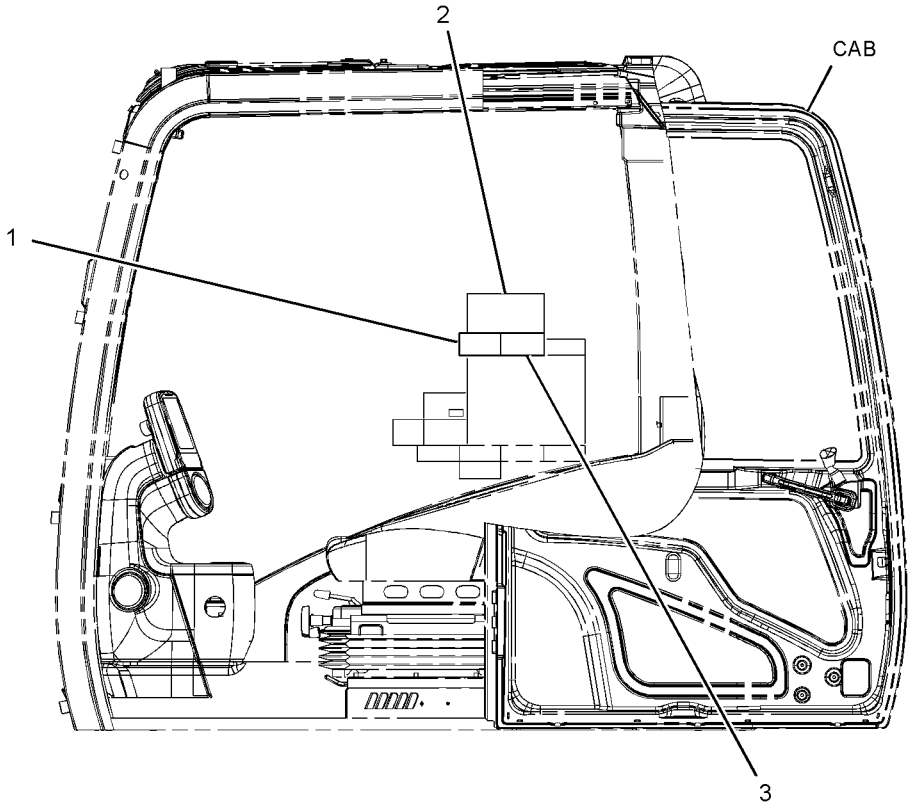

LEFT SIDE VIEW

GRAPHIC #1 **<END>** g01238116

SERVICE EQUIPMENT AND SUPPLIES

301-2573 FILM GP–FUEL TRANSFER PUMP

S/N: CLA1-UP

PART OF 283-8797 PUMP AR-FUEL TRANSFER, 301-2641 PUMP AR-REFUELING AN ATTACHMENT

SMCS-7405, 7557 **i02883995**

NOTE	REF NO	GRAPHIC REF	PART NUMBER	QTY	PART NAME 1 2 3 4 5 6 (PRODUCT LEVEL)	SEE PAGE
B	1	1,2	**309-3872**	1	FILM-WARNING (EXPLOSION HAZARD, READ OMM)	

B-USE AS REQUIRED

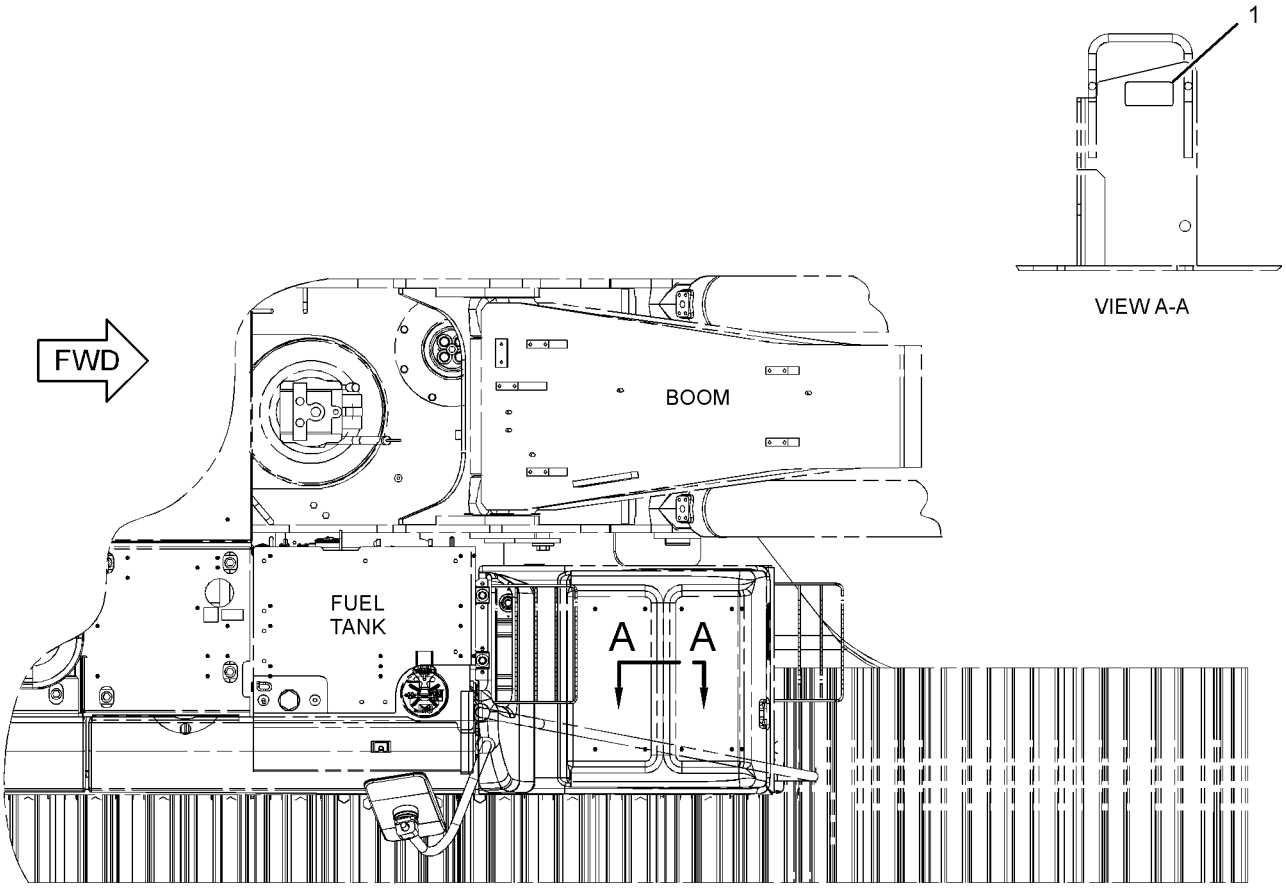

TOP VIEW
(315D & 319D)

GRAPHIC #1 g01441356

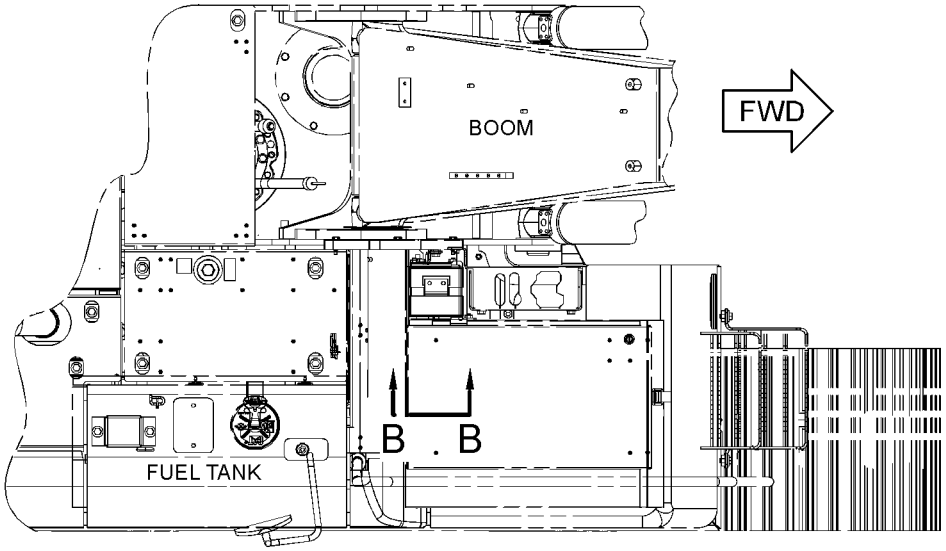

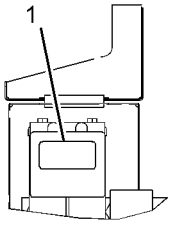

TOP VIEW
(311D)

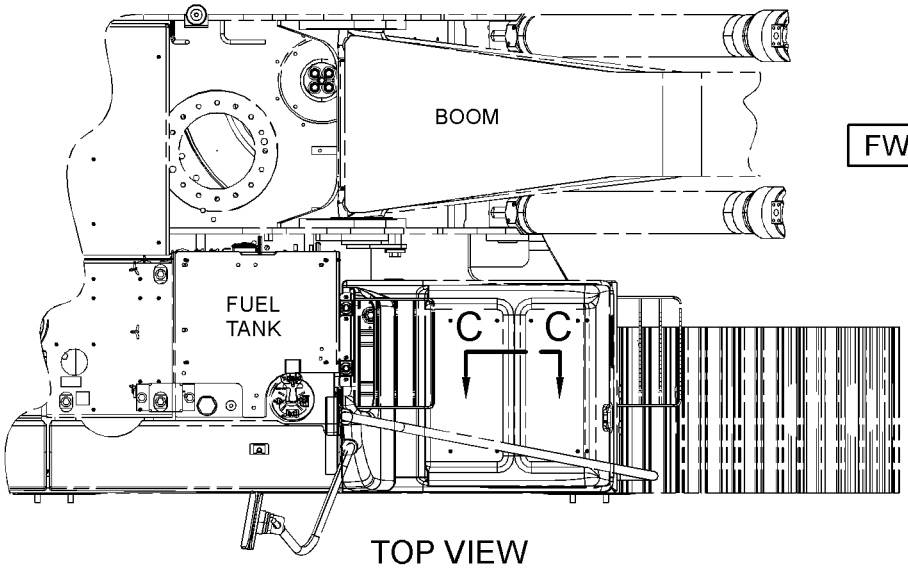

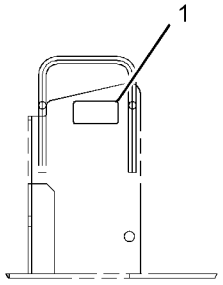

TOP VIEW
(312D)

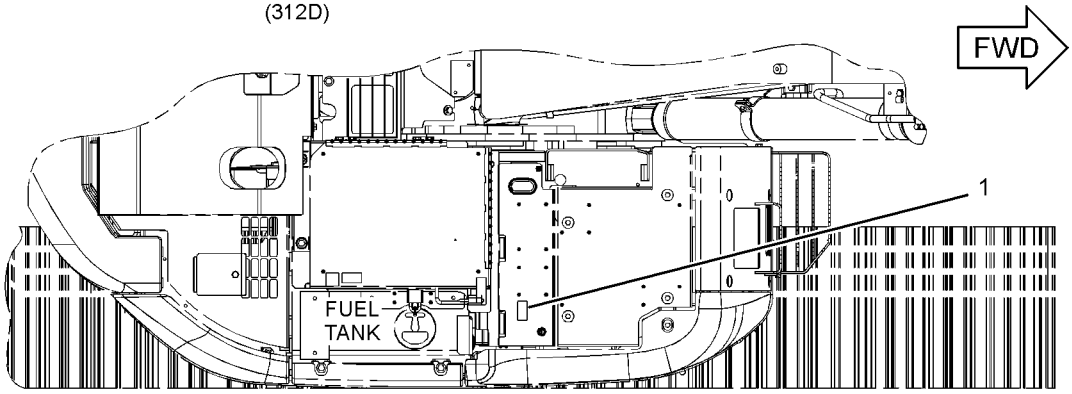

TOP VIEW
(314D)

GRAPHIC #2 **<END>** g01441201

SERVICE EQUIPMENT AND SUPPLIES

301-2655 FILM GP

S/N: CLA110-UP
PART OF 301-2654 COUNTERWEIGHT AR
AN ATTACHMENT

SMCS-7405, 7557 **i02976513**

NOTE	REF NO	GRAPHIC REF	PART NUMBER	QTY	PART NAME 1 2 3 4 5 6 (PRODUCT LEVEL)	SEE PAGE
	1	1	**1P-2807**	4	FILM-INFORMATION (LIFT EYE LOCATION)	

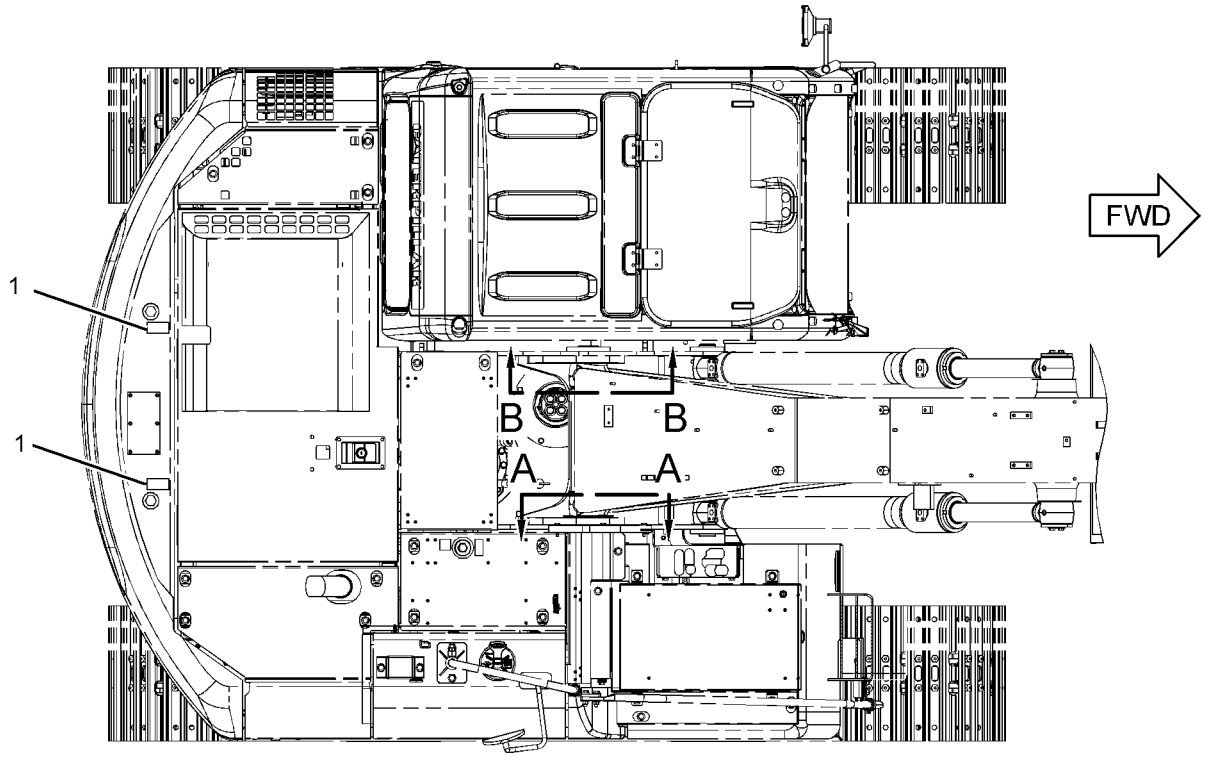

TOP VIEW

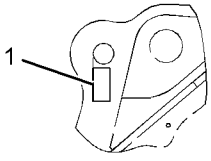

VIEW A-A

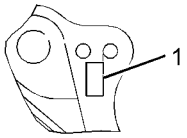

VIEW B-B

GRAPHIC #1 **<END>** g01513250

SERVICE EQUIPMENT AND SUPPLIES

303-2787 FILM GP—WORK AREA VISUAL SYSTEM, REAR

S/N: CLA1-UP
PART OF 330-8747 CAMERA AR
AN ATTACHMENT

SMCS-7405, 7557 **i03128324**

NOTE	REF NO	GRAPHIC REF	PART NUMBER	QTY	PART NAME 1 2 3 4 5 6 (PRODUCT LEVEL)	SEE PAGE
	1	1	**319-9152**	1	FILM-INSTRUCTION (BATTERY LIFE, CAMERA)	

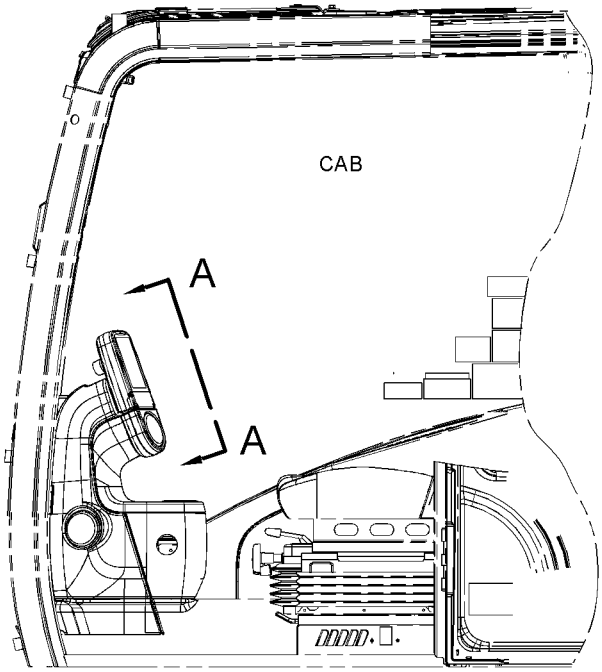

LEFT SIDE VIEW

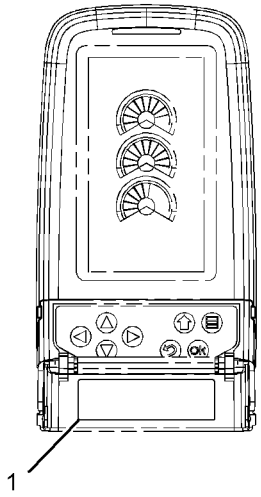

VIEW A-A

GRAPHIC #1 **<END>** g01620358

SERVICE EQUIPMENT AND SUPPLIES

314-3768 FILM GP—OVERLOAD WARNING DEVICE

S/N: CLA1-UP

PART OF 323-7792 VALVE AR-LOAD CONTROL

AN ATTACHMENT

SMCS-7405, 7557 **i03113101**

NOTE	REF NO	GRAPHIC REF	PART NUMBER	QTY	PART NAME 1 2 3 4 5 6 (PRODUCT LEVEL)	SEE PAGE
	1	1	**322-4582**	1	FILM-WARNING (TIPPING HAZARD, READ OMM)	
					(LOCATE ON RIGHT SIDE CAB WINDOW)	

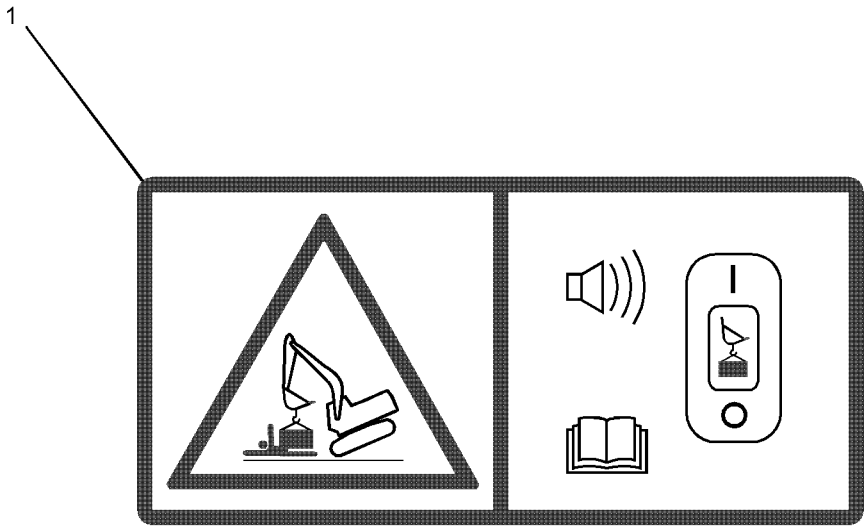

GRAPHIC #1 **<END>** g01622349

SERVICE EQUIPMENT AND SUPPLIES

194-8936 PLATE & FILM GP

S/N: CLA1-UP
BLADE AR
PART OF 283-8789 INSTALLATION AR-BLADE
AN ATTACHMENT

SMCS-7405, 7557 **i01478327**

NOTE	REF NO	GRAPHIC REF	PART NUMBER	QTY	PART NAME 1 2 3 4 5 6 (PRODUCT LEVEL)	SEE PAGE
	1	1	**102-5474**	1	FILM-INSTRUCTION (BLADE)	

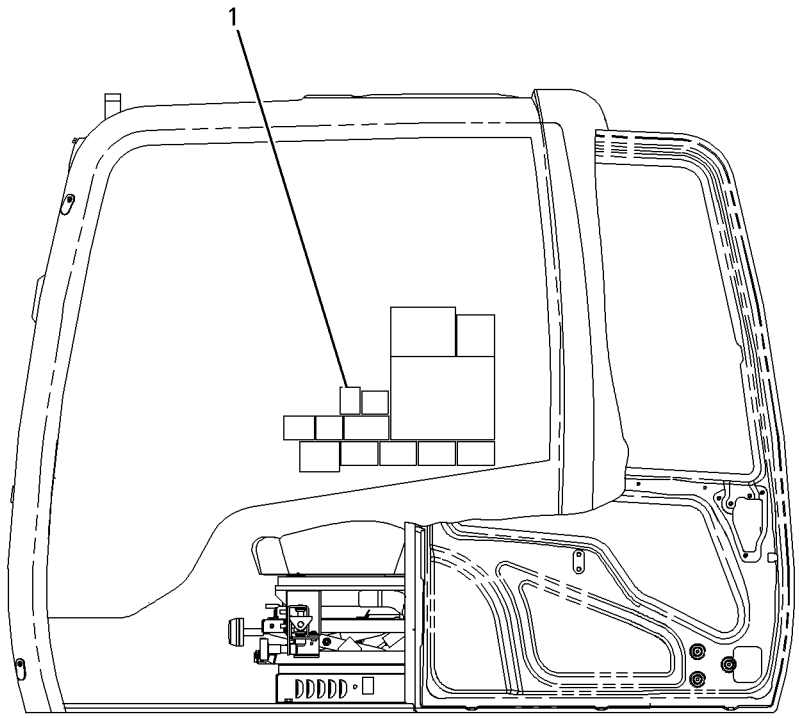

LEFT SIDE VIEW

GRAPHIC #1 **<END>** g00987247

SERVICE EQUIPMENT AND SUPPLIES

260-7234 PLATE & FILM GP

S/N: CLA1-UP

PART OF 260-7231 CHASSIS AR

TYPE 1

SMCS-7405, 7557 **i03093860**

NOTE	REF NO	GRAPHIC REF	PART NUMBER	QTY	PART NAME 1 2 3 4 5 6 (PRODUCT LEVEL)	SEE PAGE
	1	1,2	**1P-2807**	4	FILM-INFORMATION (LIFT EYE LOCATION)	
	2	4	**4I-8472**	1	FILM-INSTRUCTION (OPERATOR CONTROLS, READ OMM)	
	3	2	**7X-7644**	4	FILM-INFORMATION (TIE-DOWN)	
	4	4	**8T-6842**	1	FILM-INSTRUCTION (PULL RING, ALTERNATE EXIT)	
	6	2	**134-7258**	1	FILM-INFORMATION (EXTENDED LIFE COOLANT,READ OMM)	
	7	3	**144-9126**	1	FILM-INSTRUCTION (OIL)	
	8	3	**146-6747**	1	FILM-INFORMATION (24-VOLT)	
	9	1,3	**167-7270**	2	FILM-INSTRUCTION (NO STEP)	
	10	4	**187-0661**	1	FILM-INSTRUCTION (ALTERNATE EXIT)	
	11	2	**190-5386**	2	FILM-STRIPE (ROUND RED REFLECTIVE)	
	12	4	**214-7915**	1	FILM-INSTRUCTION (ENGINE SHUTOFF)	
	13	4	**221-8045**	1	FILM-WARNING (SEAT BELT, INTERNATIONAL)	
	14	4	**223-9818**	1	FILM-INSTRUCTION (WINDOW CLEANING, READ OMM)	
	15	4	**224-0554**	1	FILM-WARNING (UNIVERSAL, READ OMM, INTL)	
	16	3	**224-8946**	1	FILM-WARNING (NO ETHER SPRAY/AIR INTK, INTL)	
	17	3	**225-0312**	1	FILM-WARNING (JUMP START, READ OMM)	
	18	1,3	**225-4257**	2	FILM-WARNING (HOT FLUID UNDER PRESS, INTL)	
	19	2	**228-2781**	2	FILM-WARNING (MACHINE SWING, CRUSHING, INTL)	
	20	4	**228-9254**	1	FILM-WARNING (ELEC HAZARD, READ OMM, INTL)	
	21	3	**229-0887**	1	FILM-INFORMATION (AIR CLEANER)	
	22	1	**239-6986**	1	PLATE-IDENTIFICATION (MACHINE)	
	23	2	**242-1510**	1	FILM-INSTRUCTION (HYDRAULIC OIL CHECK)	
	24	4	**242-1588**	1	FILM-WARNING (FRONT WINDOW, READ OMM, INTL)	
	25	1	**242-6092**	1	FILM-WARNING (ACCUMULATOR PRESSURE)	
	26	4	**245-5457**	1	FILM-INSTRUCTION (BACKUP CONTROL)	
	27	2	**247-7436**	1	FILM-IDENTIFICATION (CAT)	
	28	3	**247-7437**	1	FILM-IDENTIFICATION (BATTERY CIRCUIT BREAKER)	
	29	3	**247-7438**	1	FILM-IDENTIFICATION (ELECTRICAL CIRCUIT BREAKER)	
	30	1,2	**253-0861**	2	FILM-INFORMATION (CAT POWER, ACERT TECHNOLOGY)	
	31	2	**257-4502**	1	FILM-IDENTIFICATION (CATERPILLAR)	
	32	4	**260-7135**	1	FILM-IDENTIFICATION (FUSE PANEL)	
	33	4	**266-5431**	1	FILM-WARNING (CRUSH HAZARD, READ OMM, INTL)	
	34	1	**283-9074**	1	FILM-IDENTIFICATION (CAT, RH)	
	35	2	**283-9075**	1	FILM-IDENTIFICATION (CAT, LH)	
E	36	1	**290-1908**		FILM-STRIPE (40-CM EACH)	
	37	1,2	**301-2399**	2	FILM-IDENTIFICATION (311D)	
	38	4	**301-2403**	1	FILM-INFORMATION (LIFTING CAPACITIES, READ OMM)	
	39	1,2	**301-2404**	2	FILM-IDENTIFICATION (LRR)	
	40	4	**310-6252**	1	FILM-INSTRUCTION (BACKUP CONTROL, READ OMM)	

E-ORDER BY THE CENTIMETER

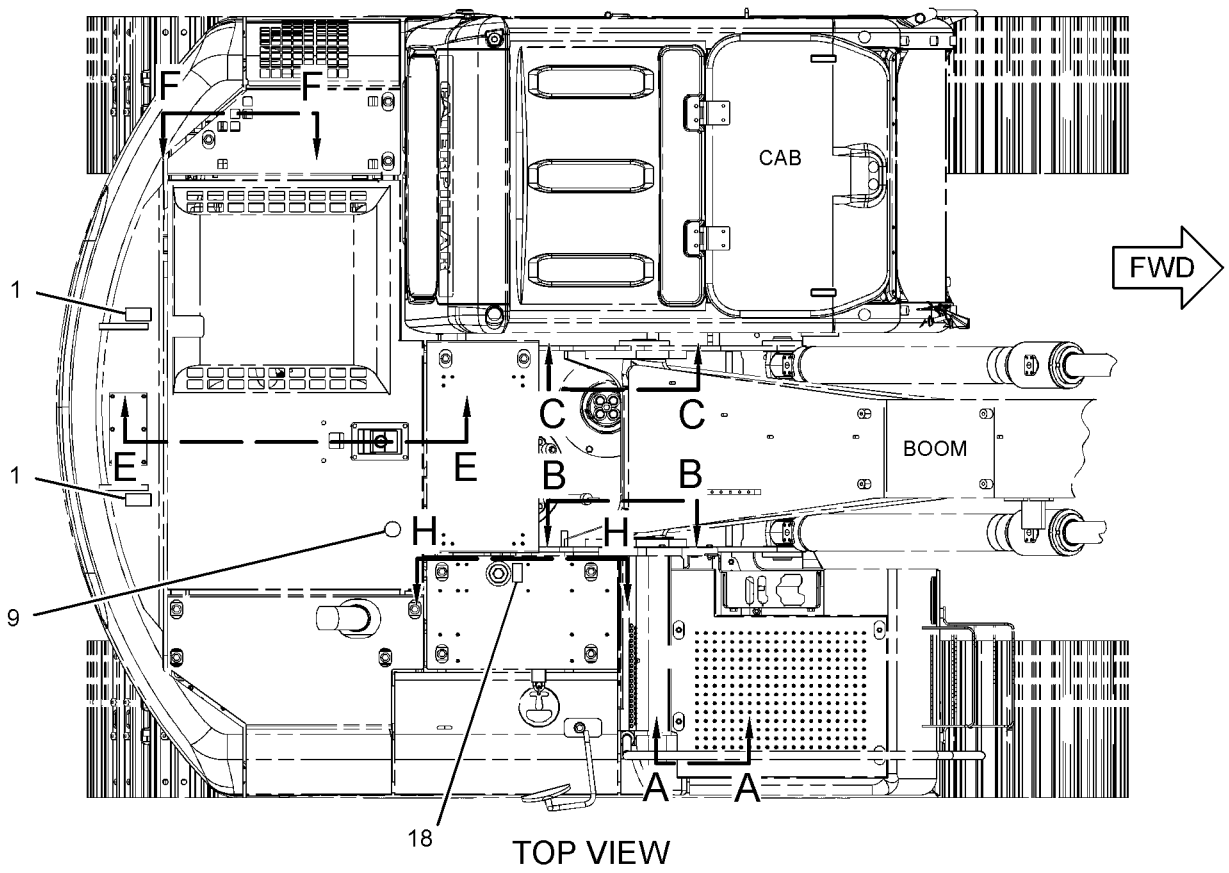

TOP VIEW

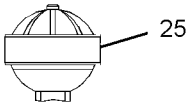

VIEW A-A

REFER TO ALL ILLUSTRATIONS OF
THIS GROUP FOR AUXILIARY VIEWS

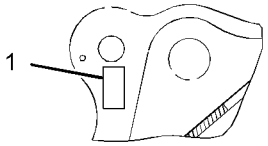

VIEW B-B

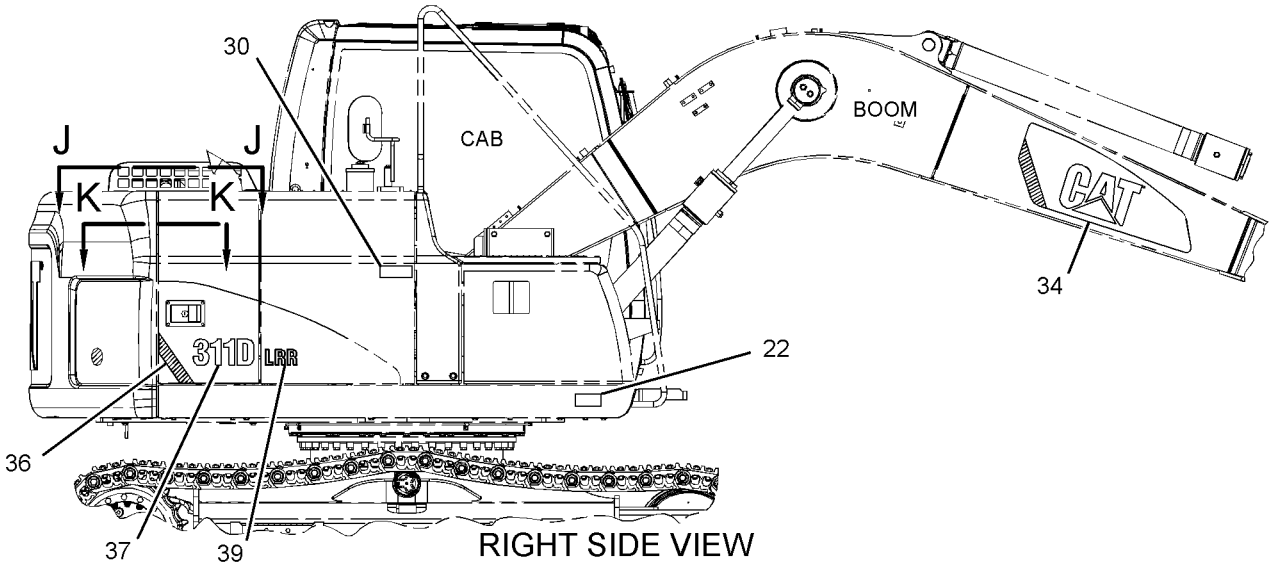

RIGHT SIDE VIEW

GRAPHIC #1 g01622254

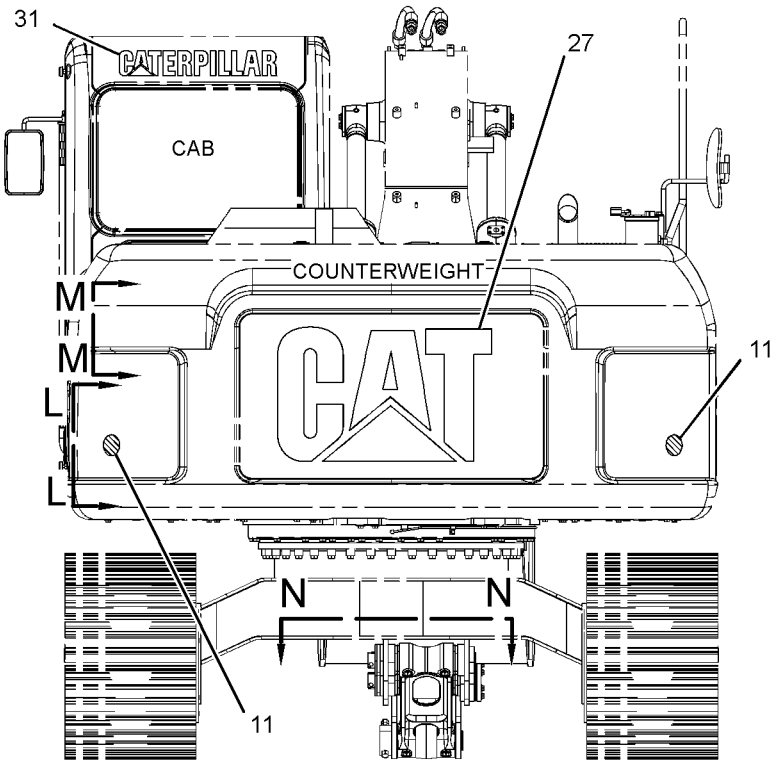

REAR VIEW

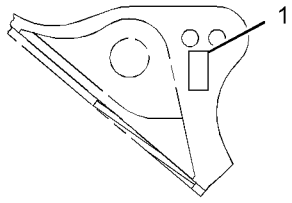

VIEW C-C

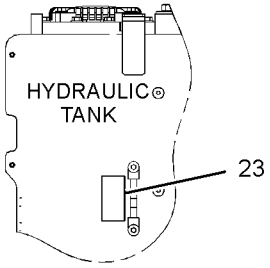

VIEW H-H

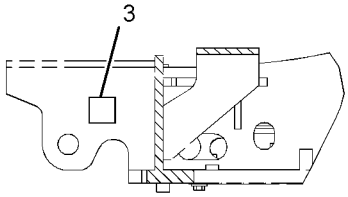

VIEW E-E

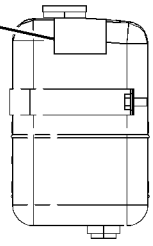

VIEW F-F

REFER TO ALL ILLUSTRATIONS OF
THIS GROUP FOR AUXILIARY VIEWS

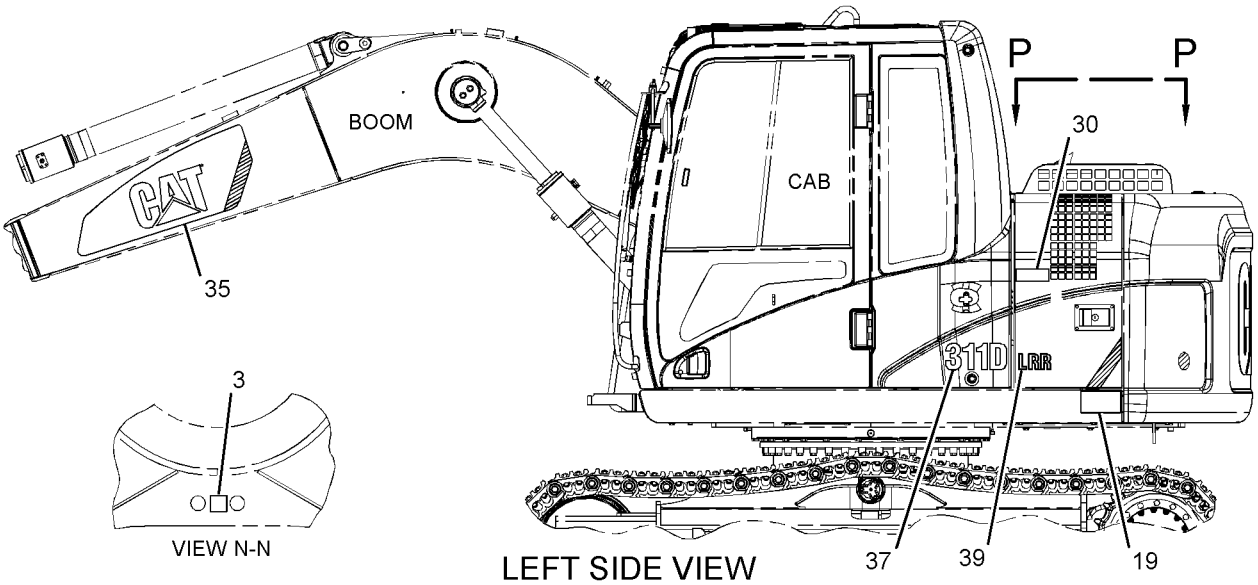

VIEW N-N

LEFT SIDE VIEW

GRAPHIC #2

g01416505

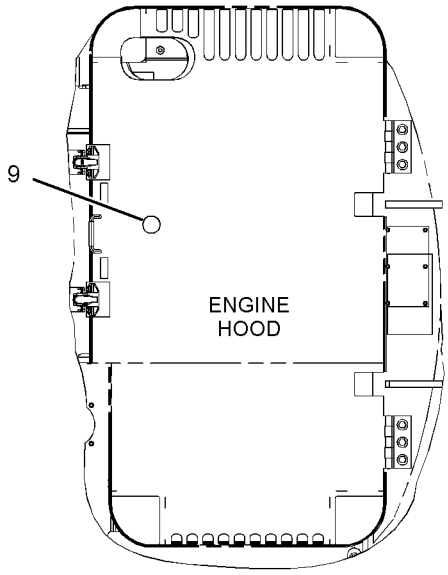

VIEW P-P

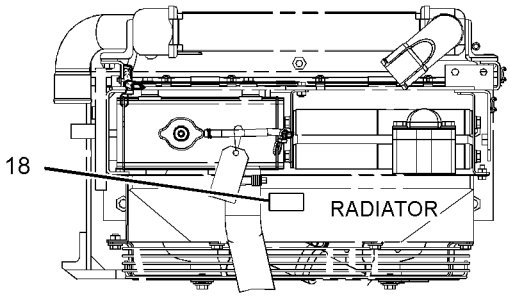

VIEW J-J

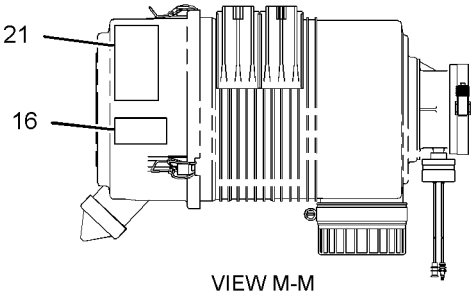

VIEW M-M

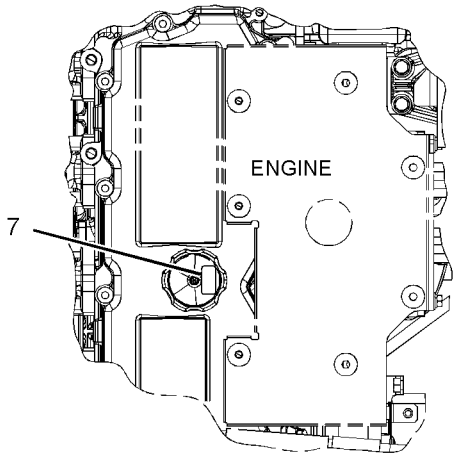

VIEW K-K

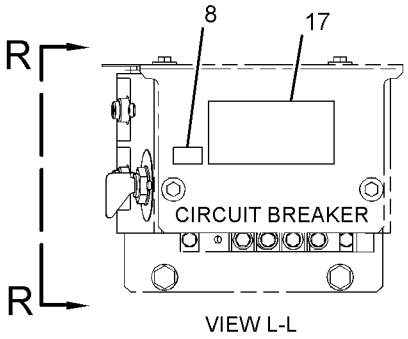

VIEW L-L

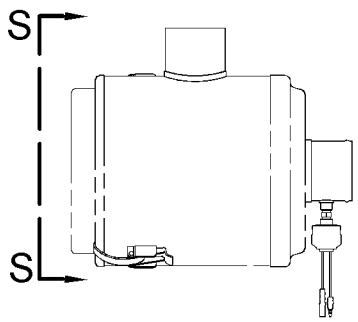

VIEW M-M
(WITH PRE CLEANER)

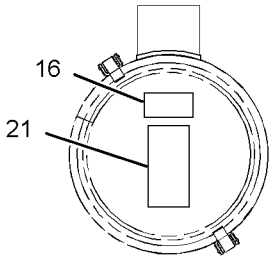

VIEW S-S

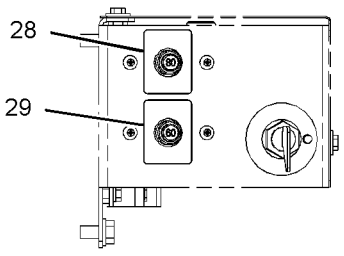

VIEW R-R

GRAPHIC #3

g01416506

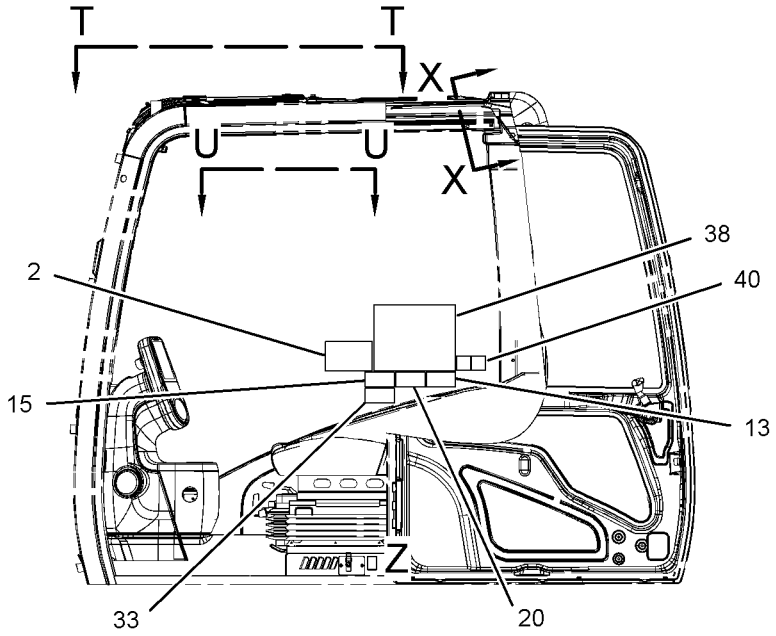

LEFT SIDE VIEW
(CAB)

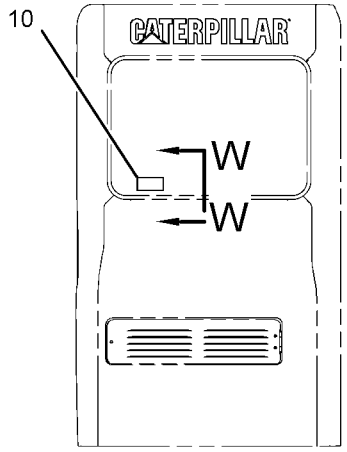

REAR VIEW
(CAB)

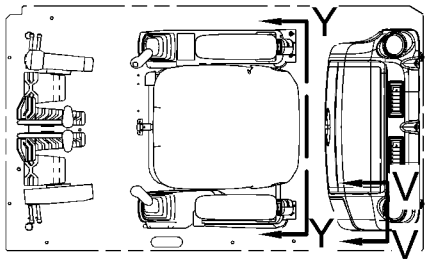

VIEW U-U

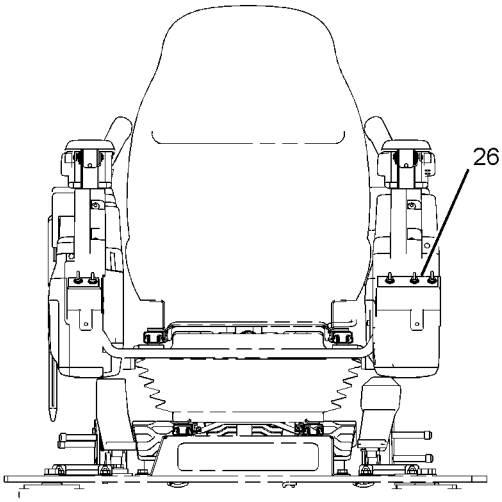

VIEW Y-Y

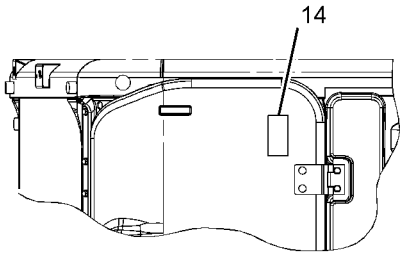

VIEW T-T

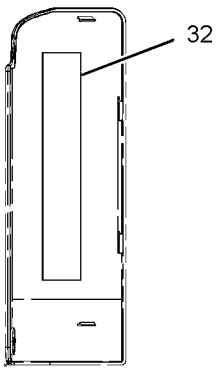

VIEW V-V

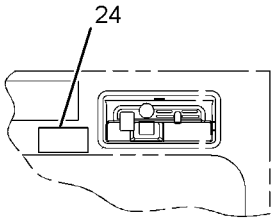

VIEW X-X

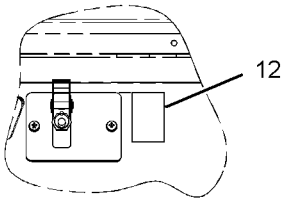

VIEW OF AREA Z

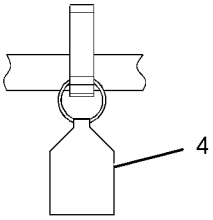

VIEW W-W

GRAPHIC #4 **<END>** g01543295

SERVICE EQUIPMENT AND SUPPLIES

260-7234 PLATE & FILM GP

S/N: CLA1-UP
PART OF 260-7231 CHASSIS AR
TYPE 2

SMCS-7405, 7557 **i03236140**

NOTE	REF NO	GRAPHIC REF	PART NUMBER	QTY	PART NAME 1 2 3 4 5 6 (PRODUCT LEVEL)	SEE PAGE
	1	1,2	**1P-2807**	4	FILM-INFORMATION (LIFT EYE LOCATION)	
	2	4	**4I-8472**	1	FILM-INSTRUCTION (OPERATOR CONTROLS, READ OMM)	
	3	2	**7X-7644**	4	FILM-INFORMATION (TIE-DOWN)	
	4	4	**8T-6842**	1	FILM-INSTRUCTION (PULL RING, ALTERNATE EXIT)	
	6	2	**134-7258**	1	FILM-INFORMATION (EXTENDED LIFE COOLANT,READ OMM)	
	7	3	**144-9126**	1	FILM-INSTRUCTION (OIL)	
	8	3	**146-6747**	1	FILM-INFORMATION (24-VOLT)	
	9	1,3	**167-7270**	2	FILM-INSTRUCTION (NO STEP)	
	10	4	**187-0661**	1	FILM-INSTRUCTION (ALTERNATE EXIT)	
	11	2	**190-5386**	2	FILM-STRIPE (ROUND RED REFLECTIVE)	
	12	4	**214-7915**	1	FILM-INSTRUCTION (ENGINE SHUTOFF)	
	13	4	**221-8045**	1	FILM-WARNING (SEAT BELT, INTERNATIONAL)	
	14	4	**223-9818**	1	FILM-INSTRUCTION (WINDOW CLEANING, READ OMM)	
	15	4	**224-0554**	1	FILM-WARNING (UNIVERSAL, READ OMM, INTL)	
	16	3	**224-8946**	1	FILM-WARNING (NO ETHER SPRAY/AIR INTK, INTL)	
	17	3	**225-0312**	1	FILM-WARNING (JUMP START, READ OMM)	
	18	1,3	**225-4257**	2	FILM-WARNING (HOT FLUID UNDER PRESS, INTL)	
	19	2	**228-2781**	2	FILM-WARNING (MACHINE SWING, CRUSHING, INTL)	
	20	4	**228-9254**	1	FILM-WARNING (ELEC HAZARD, READ OMM, INTL)	
	21	3	**229-0887**	1	FILM-INFORMATION (AIR CLEANER)	
	22	1	**239-6986**	1	PLATE-IDENTIFICATION (MACHINE)	
	23	2	**242-1510**	1	FILM-INSTRUCTION (HYDRAULIC OIL CHECK)	
	24	4	**242-1588**	1	FILM-WARNING (FRONT WINDOW, READ OMM, INTL)	
	25	1	**242-6092**	1	FILM-WARNING (ACCUMULATOR PRESSURE)	
	26	4	**245-5457**	1	FILM-INSTRUCTION (BACKUP CONTROL)	
	27	2	**247-7436**	1	FILM-IDENTIFICATION (CAT)	
	28	3	**247-7437**	1	FILM-IDENTIFICATION (BATTERY CIRCUIT BREAKER)	
	29	3	**247-7438**	1	FILM-IDENTIFICATION (ELECTRICAL CIRCUIT BREAKER)	
	30	1,2	**253-0861**	2	FILM-INFORMATION (CAT POWER, ACERT TECHNOLOGY)	
	31	2	**257-4502**	1	FILM-IDENTIFICATION (CATERPILLAR)	
	32	4	**260-7135**	1	FILM-IDENTIFICATION (FUSE PANEL)	
	33	4	**266-5431**	1	FILM-WARNING (CRUSH HAZARD, READ OMM, INTL)	
	34	1	**283-9074**	1	FILM-IDENTIFICATION (CAT, RH)	
	35	2	**283-9075**	1	FILM-IDENTIFICATION (CAT, LH)	
E	36	1	**290-1908**		FILM-STRIPE (40-CM EACH)	
	37	1,2	**301-2399**	2	FILM-IDENTIFICATION (311D)	
	39	1,2	**301-2404**	2	FILM-IDENTIFICATION (LRR)	
	40	4	**310-6252**	1	FILM-INSTRUCTION (BACKUP CONTROL, READ OMM)	

E-ORDER BY THE CENTIMETER

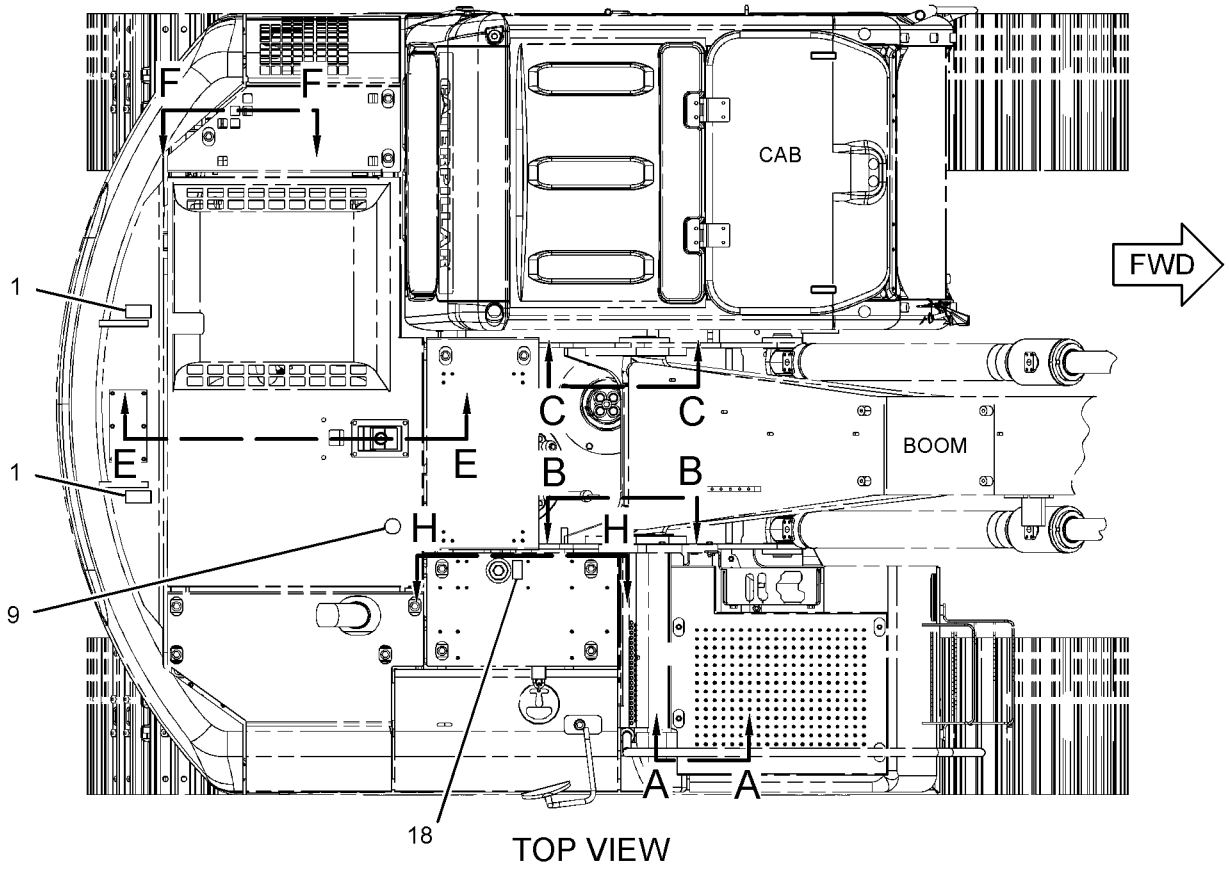

TOP VIEW

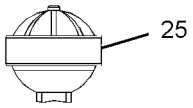

VIEW A-A

REFER TO ALL ILLUSTRATIONS OF THIS GROUP FOR AUXILIARY VIEWS

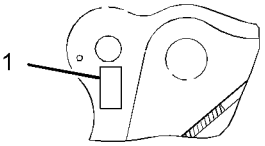

VIEW B-B

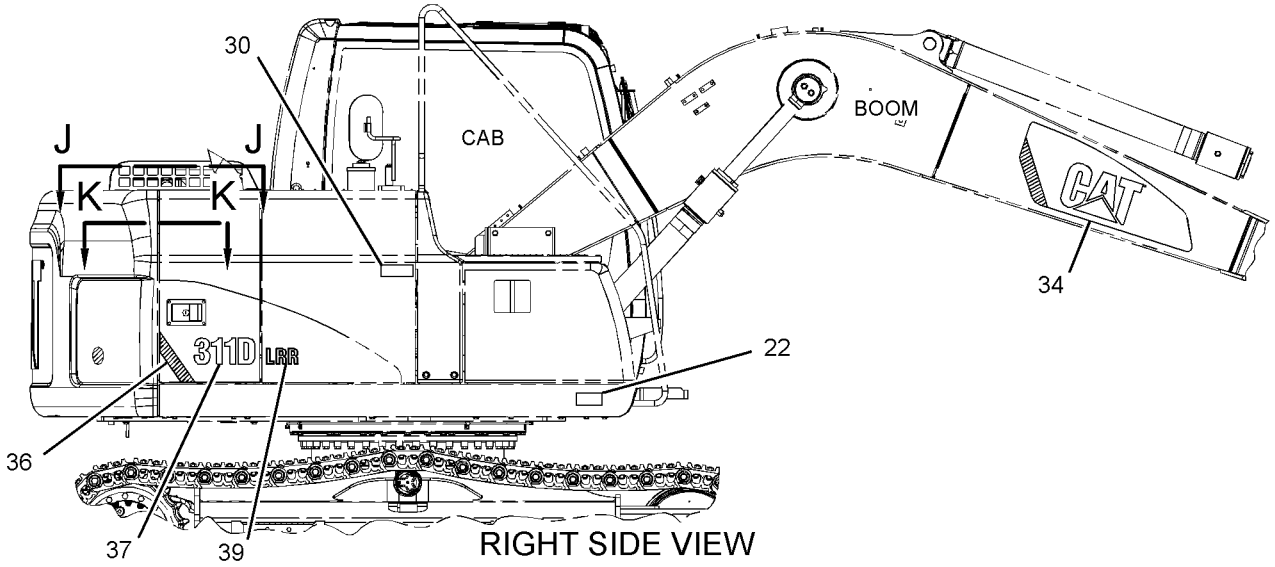

RIGHT SIDE VIEW

GRAPHIC #1

g01622254

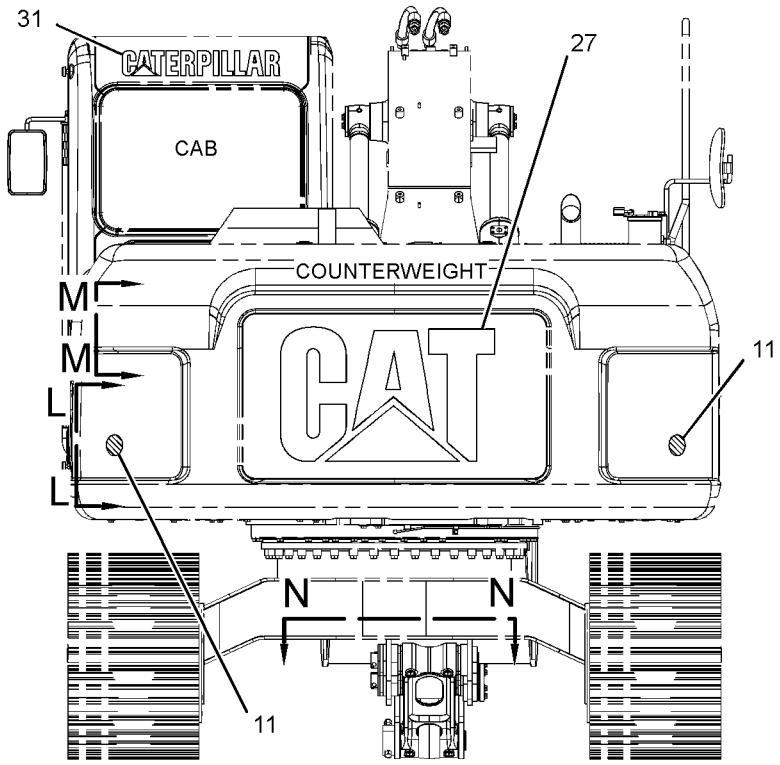

REAR VIEW

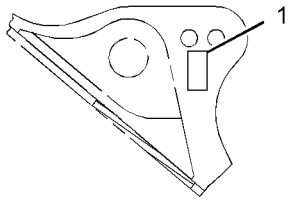

VIEW C-C

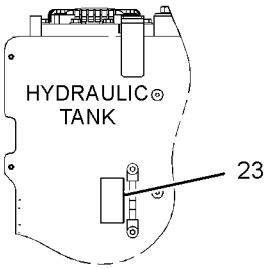

VIEW H-H

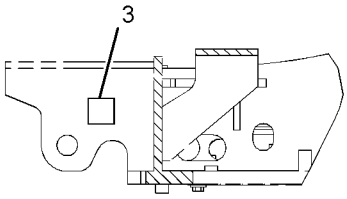

VIEW E-E

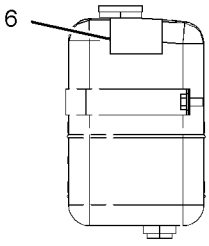

VIEW F-F

REFER TO ALL ILLUSTRATIONS OF
THIS GROUP FOR AUXILIARY VIEWS

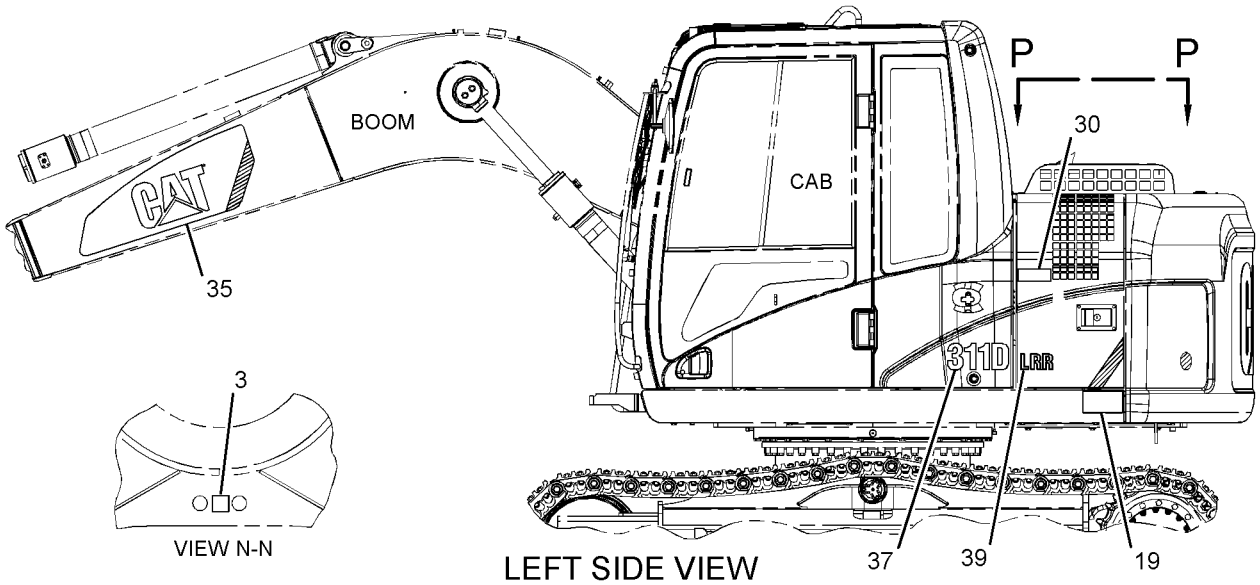

LEFT SIDE VIEW

VIEW N-N

GRAPHIC #2

g01416505

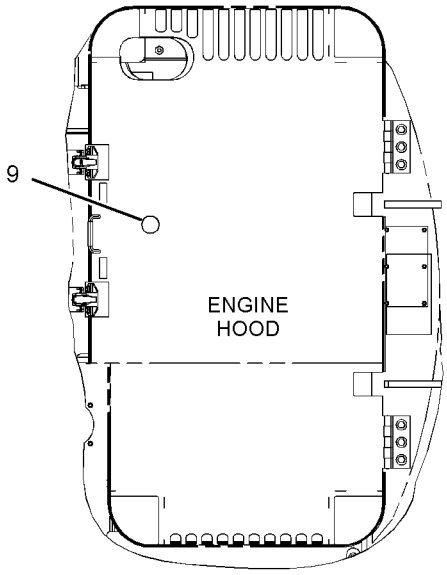

VIEW P-P

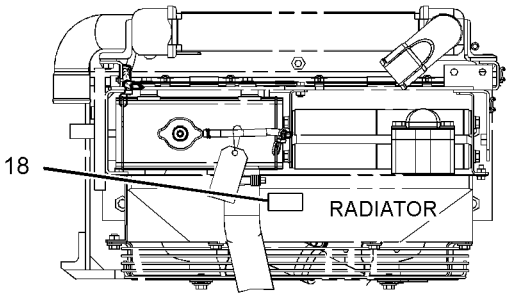

VIEW J-J

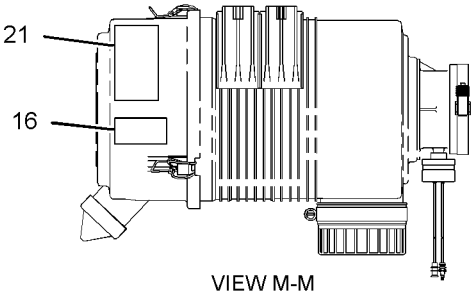

VIEW M-M

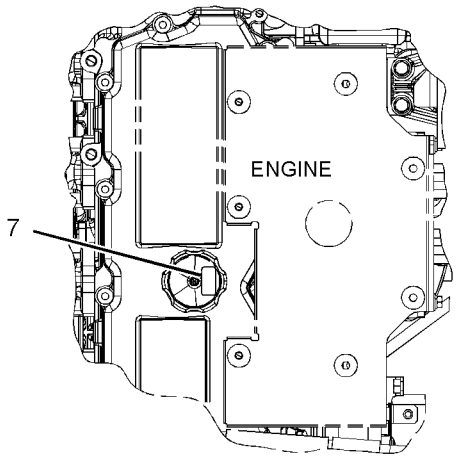

VIEW K-K

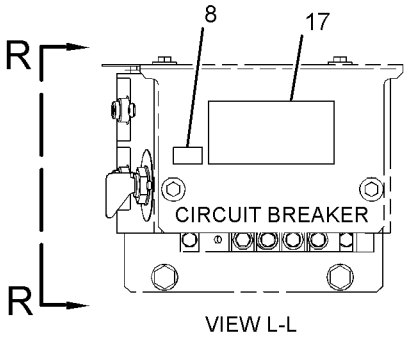

VIEW L-L

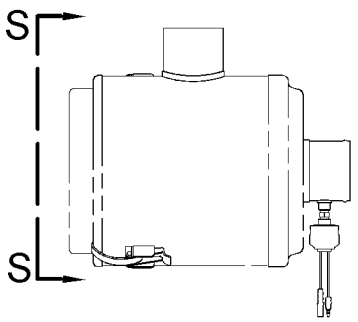

VIEW M-M
(WITH PRE CLEANER)

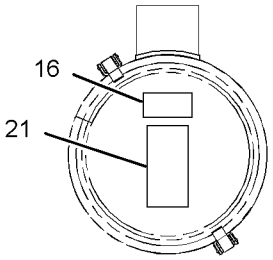

VIEW S-S

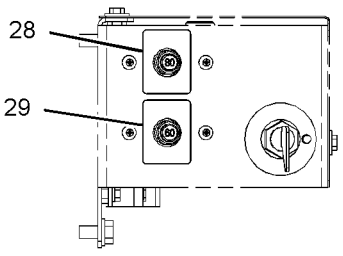

VIEW R-R

GRAPHIC #3

g01416506

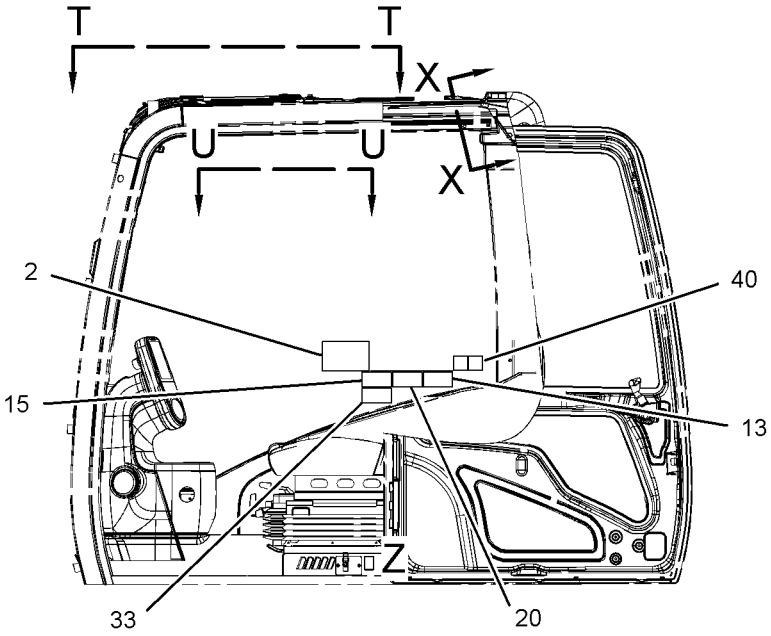

LEFT SIDE VIEW
(CAB)

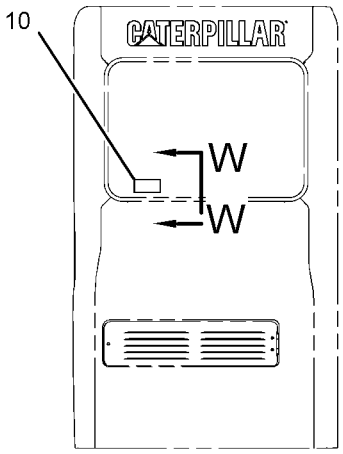

REAR VIEW
(CAB)

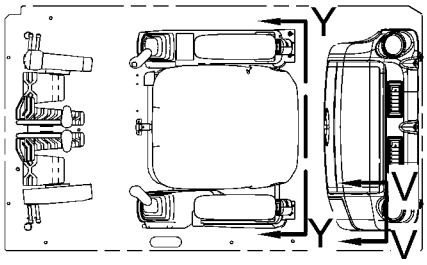

VIEW U-U

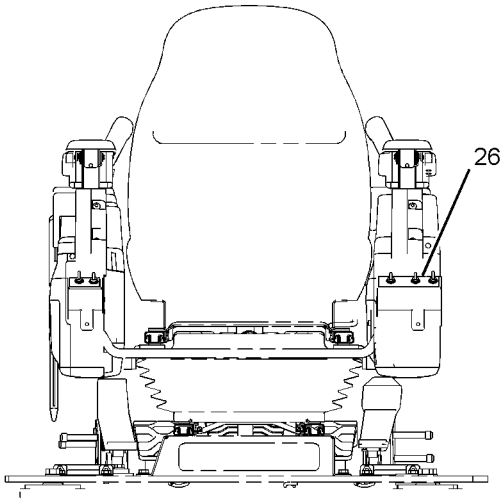

VIEW Y-Y

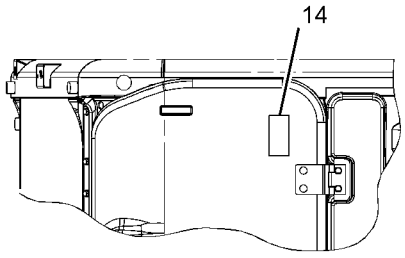

VIEW T-T

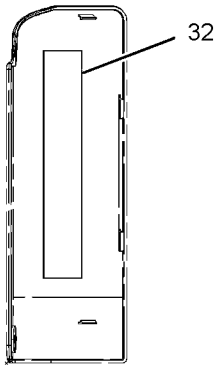

VIEW V-V

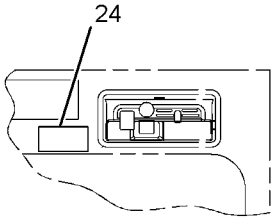

VIEW X-X

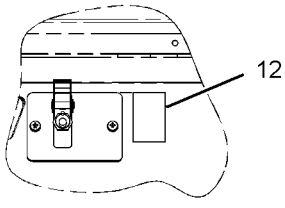

VIEW OF AREA Z

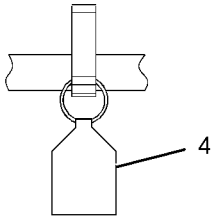

VIEW W-W

GRAPHIC #4 **<END>** g01645736

SERVICE EQUIPMENT AND SUPPLIES

298-4306 PLATE & FILM GP

S/N: CLA1-UP

PART OF 330-8764 PLATE & FILM GP

AN ATTACHMENT

SMCS-7405, 7557 **i02890825**

NOTE	REF NO	GRAPHIC REF	PART NUMBER	QTY	PART NAME 1 2 3 4 5 6 (PRODUCT LEVEL)	SEE PAGE
	1	2	**224-7717**	1	FILM-WARNING (SEAT BELT, U.S.)	
	2	2	**224-8945**	1	FILM-WARNING (DO NOT USE ETHER, U.S)	
	3	2	**225-0313**	1	FILM-WARNING (JUMP START, READ OMM, U.S.)	
	4	2	**225-3305**	1	FILM-WARNING (UNIVERSAL, READ OMM, U.S.)	
	5	1,2	**225-4256**	2	FILM-WARNING (HOT FLUID UNDER PRESSURE, U.S.)	
	6	1	**228-2780**	2	FILM-WARNING (MACHINE SWING, CRUSHING, U.S.)	
	7	2	**228-9253**	1	FILM-WARNING (ELECTRICAL HAZARD, U.S.)	
	8	2	**242-1589**	1	FILM-WARNING (FRONT WINDOW, READ OMM, U.S.)	
	9	2	**267-4495**	1	FILM-WARNING (CRUSH HAZARD, READ OMM, U.S.)	

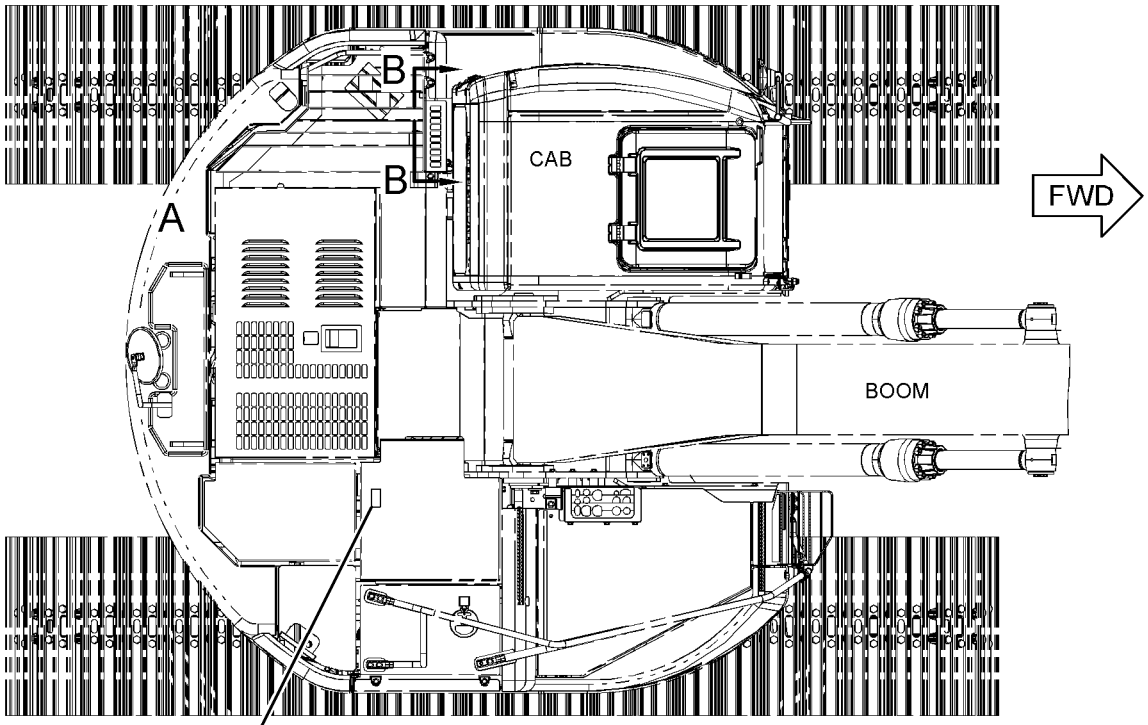

TOP VIEW

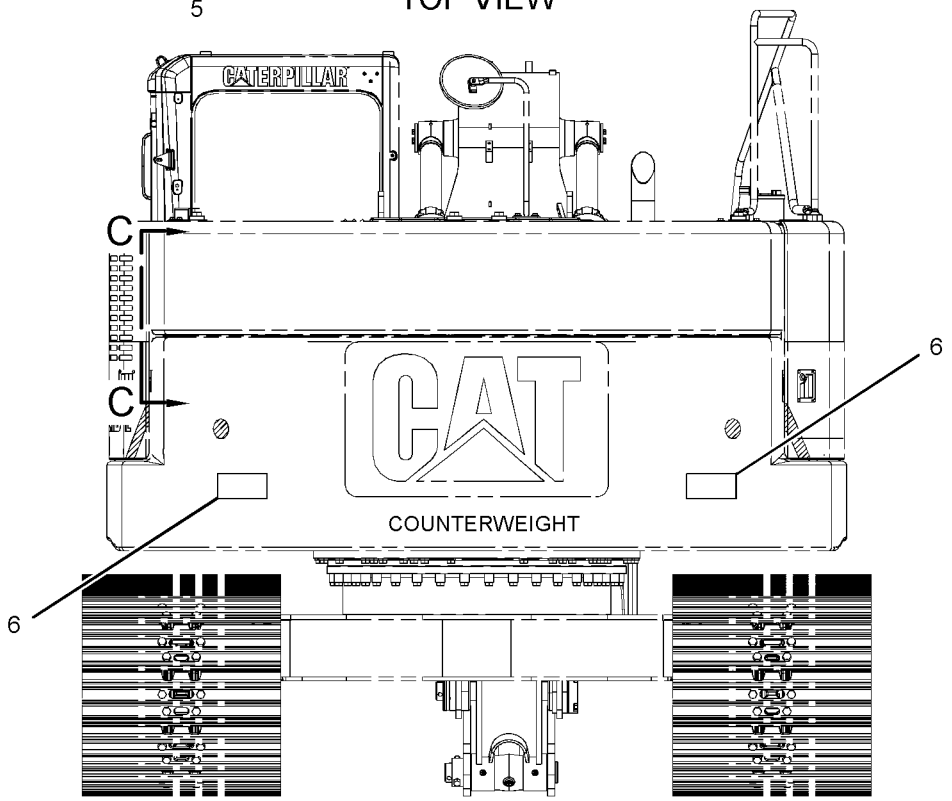

REAR VIEW

REFER TO ALL ILLUSTRATIONS OF THIS GROUP FOR AUXILIARY VIEWS

GRAPHIC #1

g01442506

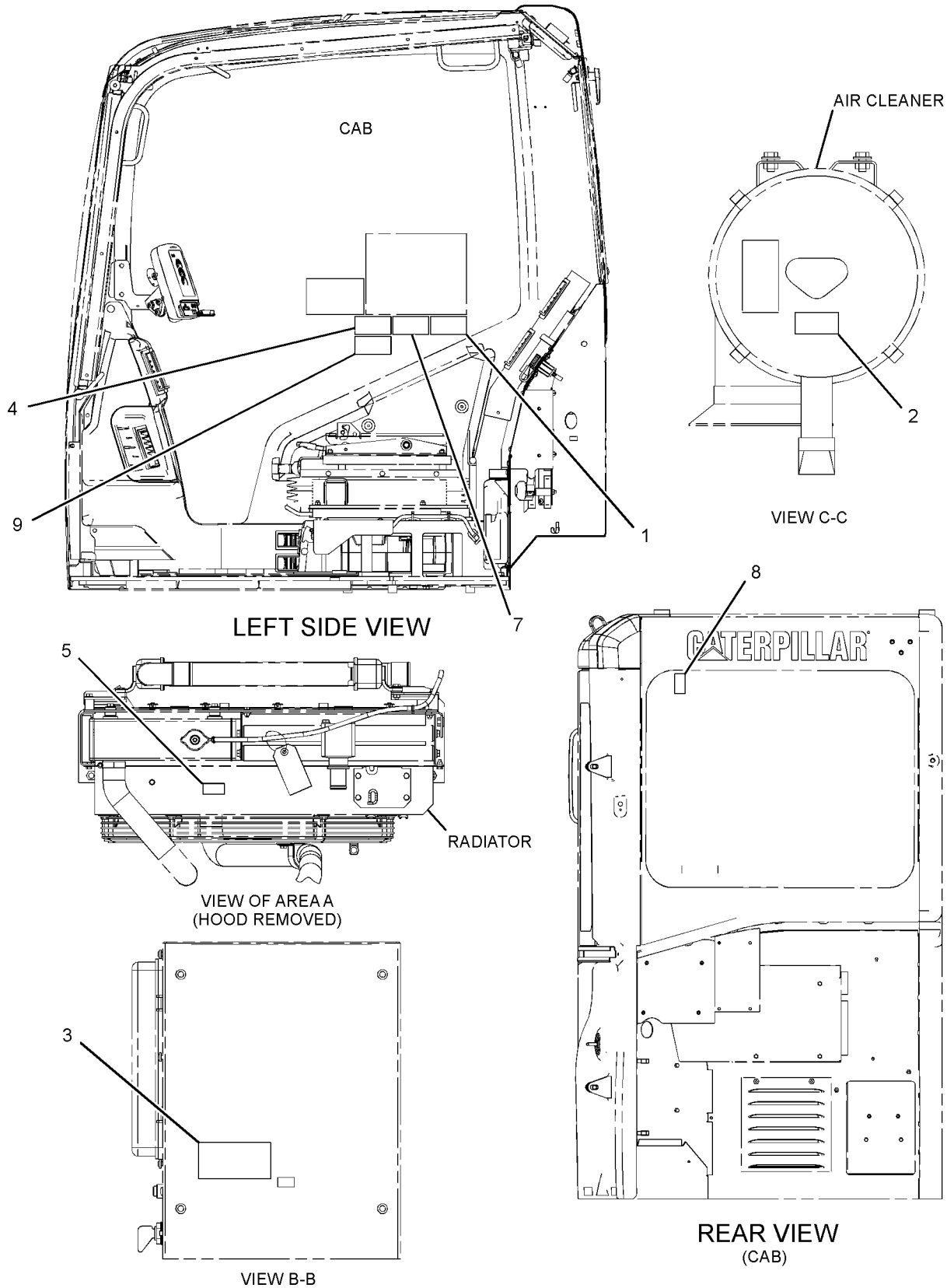

GRAPHIC #2 **<END>** g01442508

SERVICE EQUIPMENT AND SUPPLIES

330-8764 PLATE & FILM GP

S/N: CLA1-UP
U.S. MARKET
AN ATTACHMENT

SMCS-7405, 7557 **i03144622**

NOTE	REF NO	GRAPHIC REF	PART NUMBER	QTY	PART NAME 1 2 3 4 5 6 (PRODUCT LEVEL)	SEE PAGE
	1	1	**301-2700**	1	FILM-LIFTING CAP	
FY			*298-4306*	1	PLATE & FILM GP	960

F-NOT SHOWN
Y-SEPARATE ILLUSTRATION

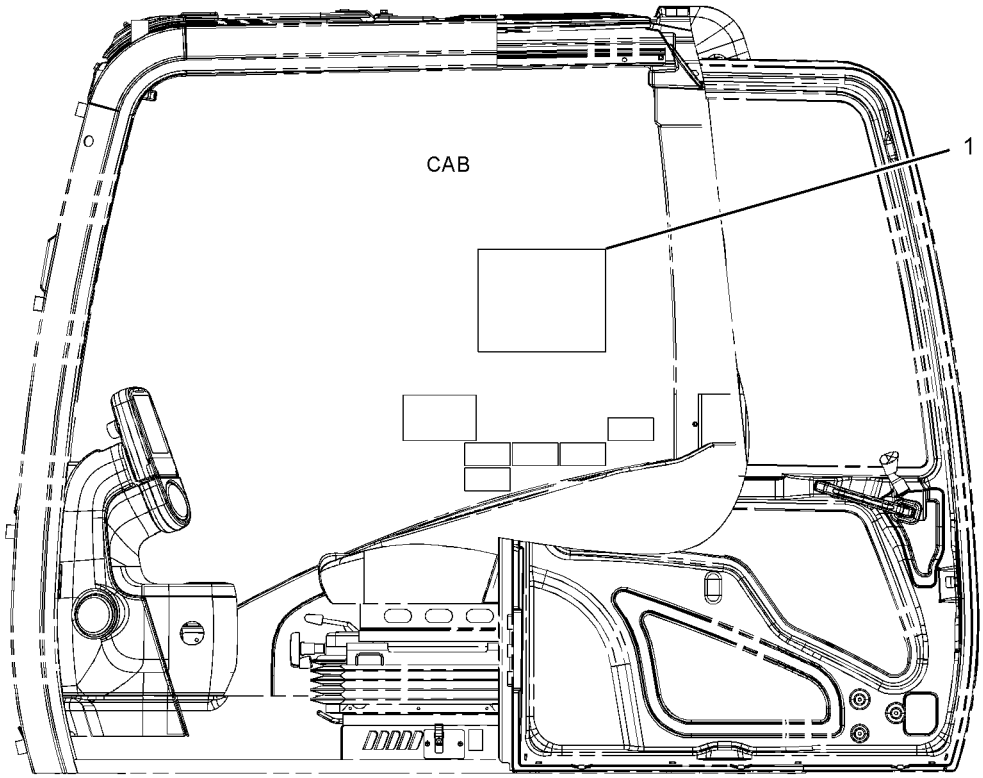

LEFT SIDE VIEW

GRAPHIC #1 **<END>** g01623823

MEMORANDA

PART NUMBER INDEX

Part	Page
1	
1B-5174	101
	103
	376
	378
	381
1H-3338	178
1H-7339	563
1H-8278	556
	579
1J-2890	64
1J-6472	563
1K-8850	264
1M-6119	186
1M-6120	186
1M-7250	62
1P-2807	946
	950
	955
1P-3703	406
	410
	413
	416
1P-4576	542
1P-4578	465
1P-4579	439
1P-4582	439
1R-0739	387
1R-0751	77
1R-5998	736
	740
1R-6009	336
1R-6010	337
1R-6011	339
1R-6072	82
	110
1R-6224	658
	660
	662
	678
	679
	680
	681
	682
1R-6226	658
	660
1R-6229	279
	281
1R-6573	81
1R-7128	252
	253
	255
	256
	258
	259
1S-7251	186
1S-7252	110
	186
1S-9593	649
	650
1U-3252	711
1U-3302	710
1U-8846	243
	283
	285
	374
	383
	546
2	
2A-5222	46
2B-0858	579
2C-9259	694
	695
	696
	697
	698
	699
	702
2C-9460	707
2C-9548	703
	704
	▶707
2D-6642	633
2G-1830	186
2H-3814	52
2H-3922	176
	929
2H-3934	579
2H-9247	402
2J-3506	707
2L-8076	180
2M-9780	384
	536
	538
	579
	655
2Q-4703	771
2R-1498	82
2S-3440	44
	50
2S-4078	101
	103
	180
2S-5926	334
2T-2991	387
2U-2552	724
2U-5338	370
2Y-5685	818
	820
	829
3	
3B-4501	139
3B-4505	41
	47
	50
	796
	800
3B-4618	271
	301
	312
3B-8489	283
	285
	354
	355
	356
	357
	358
	359
	664
	666
	667
	670
	672
	674
	676
	678
	679
	680
	681
	682
	706
3D-2824	180
	384
	397
	398
	406
	421
	429
	432
	437
	455
	457
	459
	491
	536
	538
	543
	546
	579
	590
	605
3D-2891	402
3D-4603	330
3E-2310	447
	451
	482
	498
	503
	508
	513
	513
3E-2338	243
3E-3371	171
	406
	432
	527
3E-3377	368
3E-3383	181
3E-4297	391
3E-5169	235
3E-6602	57
3E-7410	432
	505
	514
	527
3E-8020	736
	740
3E-8048	171
3E-8320	154
	156
3E-9872	912
	932
3E-9874	736
	740
3F-5108	689
	690
	691
3F-9556	177
3J-1907	82
	97
	99
	101
	103
	105
	384
	402
	429
	432
	441
	447
	451
	468
	470
	471
	473
	474
	476
	478
	480
	482
	485
	486
	487
	491
	494
	495
	498
	499
	500
	503
	504
	505
	508
	509
	513
	514
	517
	519
	521
	522
	523
	525
	527
	528
	530
	532
	534
	536
	538
	543
	546
	549
	551
	554

▶ **PRIMARY REFERENCE**

PART NUMBER INDEX

Part	Page
	563
	576
	605
	611
	633
	634
	635
	655
3J-7283	684
	685
	687
3J-7354	384
	430
	441
	579
3K-0360	345
	376
	378
	381
	384
	406
	411
	414
	417
	421
	430
	432
	455
	461
	470
	473
	486
	487
	491
	525
	530
	532
	534
	546
	549
	550
	556
	577
	579
	594
	655
3P-1896	18
3Q-2034	689
3S-2093	57
	66
	110
	124
	132
	133
	134
	141
	146
	149
	158
	160
	162
	164
	172
	179
	184
	188
	191
	193
	194
	196
	197
	202
	203
	205
	206
	207
	210
	212
	213
	215
	223
	225
	226
	227
	228
	229
	231
	232
	233
	235
	238
	240
	714
	834
	838
	840
	841
	843
	895
	911
	912
	929
3T-4004	196
3T-5760	110
3T-7528	391
3V-0046	441
3V-2431	368
3W-6399	911

4

Part	Page
4B-2049	180
4B-4158	331
	332
4B-5984	376
	378
	381
4B-7739	579
4B-9783	634
	635
4B-9880	637
4D-1836	235
4D-7735	487
4H-1225	530
	532
4H-6112	381
4I-0006	258
	259
4I-0232	271
4I-0378	97
	99
	101
	103
4I-0379	82
4I-0420	914
	915
4I-0754	579
4I-0797	485
4I-0800	485
	494
4I-0812	482
4I-0818	485
4I-0833	485
4I-0836	485
4I-1163	929
4I-1205	736
	740
4I-1206	736
	740
4I-1260	830
4I-1536	▶340
	343
4I-1539	340
4I-1674	406
	426
	428
4I-1754	485
4I-1783	498
	503
	508
4I-1878	485
4I-2885	940
	942
4I-3038	179
4I-3063	736
	740
4I-3090	737
	741
	932
4I-3123	736
	740
4I-3144	736
	740
4I-3266	866
4I-3309	658
	660
	662
4I-3941	498
	503
	508
	513
4I-3988	482
4I-4270	736
	740
4I-4286	796
	798
	800
	803
4I-4298	924
4I-4300	924
4I-4361	830
4I-4392	736
	740
4I-4580	848
	851
4I-5020	929
4I-5021	929
4I-5049	910
4I-5394	579
4I-5399	110
4I-5426	110
4I-5479	110
4I-5480	110
4I-5490	579
4I-5795	447
	451
	494
4I-5862	340
4I-5906	485
	525
4I-6003	493
4I-6121	384
4I-6136	482
	513
4I-6287	528
4I-6365	613
	618
	620
4I-6602	818
	820
	822
	823
4I-6914	▶683
	692
4I-7326	283
	285
4I-7337	▶323
	325
	326
4I-7343	692
	693
	703
	704
	▶709
4I-7345	328
	▶329
4I-7444	283
4I-7446	283
	285
4I-7472	246
4I-7475	327
4I-7476	327
4I-7477	327
4I-7478	327
4I-7488	323
4I-7511	283
4I-7512	283
4I-7538	335
	336
	337
	339
4I-7604	577
4I-7605	577
4I-7924	277
4I-7983	248
	249
4I-8019	271
4I-8267	341
4I-8472	950

▶ PRIMARY REFERENCE

PART NUMBER INDEX

Part	Page
	955
4I-9521	447
	451
	470
	473
	476
	478
	482
	485
	493
	498
	503
	527
4I-9522	447
	451
	470
	473
	478
	482
	485
	493
	494
	498
	503
	508
	513
4I-9523	384
	470
	473
	476
	478
	482
	485
	494
	498
	503
	508
	513
	517
	519
	523
	527
4I-9524	470
	473
	478
	482
	485
	494
	498
	503
	508
	513
4I-9525	470
	473
	476
	478
	482
	485
	493
	517
	519
	522
	527
4I-9526	470
	473
4I-9527	470
	473
	476
	478
	482
4I-9528	470
	473
	478
	482
	485
	494
	498
	503
	508
	513
	527
4I-9664	18
	23
	24
4J-0522	465
4J-0523	465
4J-0524	439
4J-0527	384
	439
	579
4J-5267	419
	420
	432
	434
	435
	436
	540
	541
	542
	543
	545
	579
4J-5477	442
	444
	446
	447
	451
	543
	546
	653
	654
4J-7533	391
	402
	549
	655
4K-0367	689
	478
	482
	493
	523
	525
	527
	470
	473
	476
	478
	482
	485
	493
	494
	498
	503
	508
	513
	527
4J-9664	18
	23
	24
4J-9667	465
4J-9668	465
4J-9669	439
4J-9672	384
	439
	579
4J-9712	419
	420
	432
	434
	435
	436
	540
	541
	542
	543
	545
	579
4J-9722	442
	444
	446
	447
	451
	543
	546
	653
	654
4J-9723	391
	402
	549
	655
4K-0367	689
	690
	691
4K-1388	626
4K-8501	264
	303
	304
4K-8864	110
	186
4N-9170	283
	285
4P-7428	226
4P-7429	110
4P-7581	110
	197
	206
	207
4P-8134	110
4S-1962	194
	848
	851
4T-3009	707
4T-6229	689
	690
	691
4T-9905	655

5

Part	Page
5A-3604	87
	421
	592
	594
	596
	598
	605
	871
	886
	887
	888
	889
	898
5B-5947	43
5C-2889	139
5C-2890	85
	156
	178
	197
	202
	203
	312
	929
5C-6074	180
5C-6108	90
	92
	▶180
5C-7261	47
	110
	301
	624
	712
	713
	725
	878
	879
5C-7793	736
	740
5C-7883	110
5C-8138	911
5C-8312	915
5C-9553	92
	154
	156
	186
	500
	505
	509
	514
	579
	714
	834
	929
5D-1026	848
	851
5D-4822	823
5D-8159	54
5H-1472	655
5I-3030	371
5I-3875	848
	851
5I-4076	494
5I-4190	455
5I-4199	364
5I-4363	576
	577
5I-4365	546
5I-4366	546
5I-4915	23
5I-4936	461
5I-4940	44
5I-4983	27
5I-4993	34
5I-5005	25
5I-5038	45
5I-5078	77
5I-5087	69
5I-5181	21
5I-5597	71
5I-5607	34
5I-6125	335
	336
	337
	338
	339
5I-7090	769
	780
5I-7505	18
5I-7525	18
5I-7528	18

▶ **PRIMARY REFERENCE**

PART NUMBER INDEX

Part	Page
5I-7529	18
5I-7540	38
	39
5I-7549	69
5I-7550	69
5I-7558	28
5I-7561	46
5I-7588	21
5I-7599	33
5I-7601	69
5I-7607	27
5I-7610	28
5I-7623	46
5I-7630	41
5I-7632	28
5I-7633	71
	75
5I-7639	71
5I-7642	45
5I-7645	44
5I-7646	50
5I-7650	14
5I-7654	21
5I-7656	28
5I-7660	27
5I-7663	34
5I-7667	36
5I-7677	70
5I-7678	70
5I-7683	28
5I-7691	47
5I-7696	52
5I-7697	52
5I-7724	18
5I-7725	44
5I-7735	50
5I-7750	30
5I-7784	21
5I-7785	21
5I-7786	21
5I-7787	21
5I-7788	21
5I-7789	21
5I-7842	34
5I-7848	71
5I-7862	47
5I-7864	43
5I-7867	50
5I-7896	28
5I-7933	75
5I-7937	71
5I-7941	74
5I-7942	74
5I-7985	108
5I-7987	108
5I-7997	108
5I-8009	18
5I-8010	50
5I-8021	70
5I-8023	70
5I-8056	50
5I-8058	46
	77
5I-8066	43
5I-8067	34
5I-8080	108
5I-8086	108
5I-8087	108
5I-8088	108
5I-8089	108
5I-8090	108
5I-8091	108
5I-8094	108
5I-8095	108
5I-8097	108
5I-8098	108
5I-8110	34
5I-8124	74
5I-8270	110
5I-8416	▶341
	343
5I-8670	389
5I-8825	480
5I-9368	110
5J-4771	707
5K-3294	848
5K-8451	82
	476
	495
5K-9090	406
	463
	536
	538
5K-9243	283
	285
	666
5L-3233	64
5L-4758	393
5L-6326	52
5N-2840	90
5P-0372	271
5P-0747	186
5P-0761	110
	186
5P-0767	848
	851
5P-1075	248
	249
5P-1076	62
	90
	92
	289
	290
	291
	321
	322
	400
	854
5P-1442	66
	82
5P-3454	228
5P-3779	340
	342
5P-4115	154
	156
	186
	271
5P-4116	107
	238
	248
	249
	543
	753
5P-4924	82
	97
	99
	101
	103
5P-4961	66
5P-5148	429
	455
	457
	459
	461
	463
	482
	498
	503
5P-5623	107
5P-5649	57
5P-5998	179
5P-6271	197
5P-7175	82
5P-7466	536
	538
5P-7467	536
	538
5P-7468	457
	459
5P-7469	457
	459
5P-7958	312
	853
5P-8112	536
	538
5P-8196	387
5P-8247	689
	690
	691
5P-8292	910
5P-8309	309
5P-8500	94
5P-8522	226
5P-8874	432
5P-9205	92
	97
	99
	101
	103
	267
	275
	296
	306
5P-9297	144
	146
5P-9617	387
5P-9909	57
5Q-4212	442
	443
	444
	446
6	
6C-3679	304
6C-6760	411
	414
	417
6C-8382	818
	820
	823
6D-1641	387
	848
	851
6D-3479	848
6D-4246	110
6D-4636	82
6F-4718	551
	554
6F-4855	399
6F-7045	176
6F-7556	28
6F-7557	28
6G-2263	110
	186
6I-1418	126
6I-1449	64
6I-5298	772
	773
6I-5342	830
6I-5470	737
	741
6I-6033	267
	271
	295
	296
	297
6I-6449	330
6I-6451	330
6I-6477	323
6I-6549	330
6I-6590	323
6I-6911	611
6I-6912	611
6I-6923	632
6J-2680	530
	532
6K-0806	781
	782
	783
	784
	785
	786
	787
	788
	789
	790
6K-6967	664
	667
6K-8178	82
6L-3616	666
6P-2216	277
6P-8855	848
	851
6V-0852	384
	447
	451

PART NUMBER INDEX

Part	Page	Part	Page	Part	Page	Part	Page
	485	6V-8187	154		527	6V-8641	447
	491		156		528		451
	500	6V-8202	869		534		543
	505		870		543		546
	509		871	6V-8398	384	6V-8642	536
	514		882		397		538
	523		883		408	6V-8713	421
	527		886		411		437
	536		887		414	6V-8716	437
	538		895		417		457
6V-1874	457	6V-8213	376		429		534
	459		378		430	6V-8721	384
6V-2235	848	6V-8223	368		442	6V-8722	421
6V-2369	156	6V-8231	33		443	6V-8724	429
	228		34		444		432
6V-2722	117		71		446		447
	186		932		455		451
6V-3265	848	6V-8236	28		461		470
	912	6V-8337	613		470		473
6V-3342	664	6V-8362	183		473		476
	667	6V-8363	929		486		478
6V-3965	384	6V-8370	929		487		480
	447	6V-8378	177		491		482
	451	6V-8397	376		546		486
	485		378		638		494
	491		423		640		499
	498		429		641		504
	503		430	6V-8400	616		509
	508		432		622		514
	513		442	6V-8467	364		517
	523		444		366		521
	528		446		368		522
	536		447	6V-8553	498		523
	538		451		503		525
6V-5049	172		468		508		527
6V-5210	139		470		513		534
	197		471	6V-8556	397	6V-8774	482
6V-5215	14		473	6V-8625	384	6V-8775	546
	28		474		455	6V-8777	536
	77		476	6V-8627	543		538
6V-5266	387		478	6V-8629	536	6V-8781	447
6V-5386	68		480	6V-8633	455		451
6V-5391	402		482	6V-8636	447		482
6V-5645	154		485		451		487
	156		486		468		494
6V-5683	724		487		470		499
6V-7357	271		491		473		504
	764		494		476		509
	765		495		478		514
	766		498		480		519
	767		499		482	6V-8782	430
	768		500		491	6V-8784	397
	848		503		494	6V-8785	406
	910		504		499	6V-8821	625
6V-7636	736		505		504	6V-8823	248
	740		508		509		249
6V-7646	771		509		514		794
6V-7658	329		513		521	6V-8932	393
	391		514		525	6V-8935	442
6V-7660	330		517		527		444
6V-7726	243		519	6V-8637	491		446
6V-8077	491		521		546		447
6V-8097	322		522	6V-8639	461		451
6V-8144	563		523		486	6V-8936	442
6V-8186	177		525		546		444

► **PRIMARY REFERENCE**

PART NUMBER INDEX

Part	Page
	446
6V-8937	447
	451
6V-8942	397
6V-8943	387
6V-8987	470
	473
6V-8994	423
6V-9001	432
	468
	482
	486
	494
	499
	504
	509
	514
	521
	525
	527
6V-9002	384
	491
6V-9004	491
6V-9005	536
	538
6V-9007	384
	387
	406
	429
	437
	457
	459
	543
6V-9008	463
	536
	538
6V-9168	423
	432
	471
	474
6V-9182	437
	439
	457
	459
	463
	534
6V-9491	158
	160
	162
	164
6V-9632	149
6V-9672	197
6V-9746	384
	385
	397
	406
	410
	413
	416
	425
	426
	428
	429
	437
	439
	457
	459
	463
	491
	530
	532
	534
	536
	538
	543
	545
	546
6V-9836	485
	487
	517
	519
	522
6V-9837	455
6V-9839	457
6V-9850	480
	486
	494
	499
	504
	509
	514
6V-9852	387
6V-9853	385
	387
	457
	459
6V-9876	470
	473
	534
6W-2464	441
6W-6005	110

7

Part	Page
7C-1493	387
7D-7233	478
7F-0560	117
7F-3708	301
7G-1060	235
7H-3171	323
	329
7I-0057	551
	554
7I-0058	551
	554
7I-0168	551
7I-0375	848
	851
7I-0676	252
	253
	255
	256
	258
	259
7I-0986	642
7I-1303	546
7I-1418	271
7I-2272	549
	550
7I-2673	57
	64
	144
	146
	147
	149
	188
	191
	848
	895
	904
7I-2753	611
7I-6843	670
	672
	674
	676
7I-6896	666
7I-7192	605
7I-7203	567
	568
	569
	570
	571
	572
	573
	574
	575
	591
7I-7204	592
	594
	596
	598
	605
7I-7206	592
	594
	596
	598
	605
7I-7207	592
	594
	596
	598
	605
7I-7208	592
	594
	596
	598
	605
7I-7235	605
7I-7241	605
7I-7250	606
7I-7321	576
	577
7I-7403	642
7I-7625	374
7I-7626	374
7I-7632	374
7I-7633	374
7I-7634	374
7I-7635	374
7I-7636	374
7I-7638	374
7I-7639	374
7I-7640	374
7I-7641	374
7I-7642	374
7I-7643	374
7I-7644	374
7I-7645	374
7I-7646	374
7I-7647	374
7I-7648	374
7I-7649	374
7I-8081	625
7I-8084	599
	601
	603
	605
	637
	643
7I-8087	625
7I-8095	625
7I-8096	625
7I-8098	625
7I-8100	625
7I-8102	642
7I-8252	482
7J-8611	664
	667
7J-9108	398
	408
	419
	420
	421
	426
	428
	429
	430
	432
	434
	435
	436
	437
	536
	538
	599
	601
	603
7K-1181	110
	188
	191
	202
	203
	205
	206
	207
	210
	212
	213
	215
	217
	226
	227
	228
	229
	230
	231

PART NUMBER INDEX

Part	Page	Part	Page	Part	Page	Part	Page
	232	7T-8890	911	7Y-0468	349		182
	233	7W-1890	90		350	7Y-5505	196
	235		92		613	7Y-7364	932
	238	7W-9028	387	7Y-0623	818	7Y-7394	845
	240	7X-0578	736		820		846
	384		740		823		907
	423		915	7Y-1900	349	7Y-8169	111
	432	7X-0796	28	7Y-1901	349	7Y-8379	498
	437		33	7Y-1902	349		503
	447		34	7Y-1904	349		508
	451		49	7Y-1976	54		513
	461	7X-0820	432		57	7Y-8436	626
	463	7X-0872	536	7Y-2155	329	7Y-8437	626
	470		538	7Y-2158	329	7Y-8463	774
	473	7X-2459	491	7Y-2159	329		775
	476	7X-2533	136	7Y-2162	329		776
	478	7X-2536	769	7Y-3281	227		777
	480		780	7Y-3470	932		785
	482	7X-2538	848	7Y-3472	932		786
	485		851	7Y-3474	911	7Y-8621	827
	491	7X-2543	167	7Y-3919	838		828
	493	7X-2549	406	7Y-3920	838	7Y-8622	827
	494		408	7Y-3950	184		828
	498		443	7Y-3951	196		
	503	7X-2550	854	7Y-3952	196		
	508	7X-2552	658	7Y-3953	184	**8**	
	513		660	7Y-3954	196		
	517		861	7Y-3955	196	8C-0597	487
	519	7X-2553	311	7Y-3958	196	8C-3205	540
	522		563	7Y-3962	89		541
	523		662		140	8C-3290	252
	525		818		141		253
	527		820	7Y-3963	89		255
	532		823		140		256
	546		866		141		258
	756	7X-2554	57		215		259
	758	7X-2555	283	7Y-3964	89	8C-3338	563
	840		285		140	8C-3445	387
	841		328		141	8C-3446	384
	843		581	7Y-3965	89		387
	848	7X-2556	563		140	8C-3451	384
	851	7X-2559	825		141	8C-5607	136
7M-7410	550	7X-2561	281		215	8C-5608	123
7M-8485	243	7X-2619	110	7Y-3967	215		136
	406		156	7Y-4193	493	8C-5917	110
	437		203	7Y-4199	494		186
	439	7X-2621	130		498	8C-5918	110
	455		131		503	8C-6354	197
	457		134		523	8C-6358	117
	459		172	7Y-4224	556	8C-6364	706
	463		235		655	8C-6561	441
	530	7X-3164	411	7Y-4384	498	8C-6869	376
	532		414		503		378
	534		417		508	8C-6965	622
	536	7X-6315	128		513	8C-8400	429
	538	7X-7644	950	7Y-4868	406		491
	590		955		410	8C-8451	111
7N-0718	154	7X-7729	57		413		123
	156		62		416	8C-8580	771
	▶176		461	7Y-5226	111	8C-8988	447
7N-2353	184		714	7Y-5237	465		451
	202		834	7Y-5456	110		486
7N-3718	146	7Y-0203	709	7Y-5458	181		494
7T-1099	110	7Y-0204	709		182		509
7T-6799	183	7Y-0466	349	7Y-5464	181		514

▶ **PRIMARY REFERENCE**

PART NUMBER INDEX

Part	Page	Part	Page	Part	Page	Part	Page
8C-8992	290		101		82		474
	321		103		90		476
8D-1470	206		105		92		478
	207		111		111		480
8E-6258	711		154		118		487
8E-6259	710		156		130		495
	711		197		131		500
8E-9490	700		225		133		505
	701		714		134		509
	702		834		140		514
8F-1434	177	8T-0337	235		141		523
	929	8T-0343	616		144		525
8H-2282	827	8T-0347	551		146		530
	828		554		147		532
8H-3481	909	8T-0357	283		149		540
8H-5303	176		285		152		541
8H-5306	176	8T-0404	432		153		542
8H-9819	579	8T-1158	243		166		543
8J-1256	111		611		167		545
8J-9236	180		616		172		546
8L-8413	186		622		186		561
8N-0869	110	8T-1159	329		188		562
	186		632		191		563
8P-9770	694	8T-1160	166		194		576
	695	8T-1687	384		206		577
	696	8T-1718	538		207		579
	697	8T-1779	499		210		662
	698		504		217		664
	700		509		219		666
	701		517		223		667
	702		519		225		714
8S-0934	872	8T-1905	476		229		753
	875		478		235		754
8S-1812	180		480		264		756
8S-1814	180		487		266		758
8S-1815	180		491		267		769
8S-2634	186		495		271		770
8S-4723	872		499		275		771
	875		504		281		779
8S-4724	872		509		283		780
	875		514		285		834
8T-0075	486		523		301		837
	499		528		312		849
	504	8T-2530	421		374		851
8T-0077	487	8T-2920	291		384		863
8T-0114	769	8T-3490	436		387		866
	780		508		401		899
8T-0120	398	8T-3518	117		408		901
	536	8T-3519	117		411		912
	538	8T-3597	62		414		929
8T-0197	534		257		417	8T-4122	328
8T-0266	750		260		419	8T-4127	197
8T-0269	771	8T-3612	299		420	8T-4132	402
	855		429		432		670
	858		508		434		672
8T-0273	579	8T-3647	753		435		674
8T-0288	643	8T-4121	49		436		676
	644		52		442	8T-4133	111
	645		54		444		140
	651		57		446		141
	652		65		447		144
	653		66		451		146
	654		68		465		147
8T-0328	97		71		468		149
	99		77		471		166

PART NUMBER INDEX

Part	Page	Part	Page	Part	Page	Part	Page
	194		153		534		420
	248		172	8T-4171	138		545
	249		186		154		563
	264		188		156	8T-4186	281
	312		191		217		495
	402		225		219		500
	408		235		271		505
	566		243		333		509
	616		266		755		514
	622		267		841		543
	664		331		843		662
	666		332	8T-4172	28	8T-4189	54
	667		387		753		107
8T-4134	932		468		851		147
8T-4136	57		471	8T-4174	31		149
	65		474		825		393
	68		476	8T-4175	856		401
	82		487	8T-4176	408		491
	111		546	8T-4177	500		543
	186		563		505		910
	207		579		509	8T-4190	138
	210		714		514		144
	217		754	8T-4178	471		146
	219		770		474		147
	283		771		525		149
	285		834	8T-4179	111		255
	301		837		279		256
	384		849		281		720
	387		851		289		726
	411	8T-4138	124		478		730
	414		312		658		746
	417		720		660	8T-4191	18
	468		828		662		21
	471		848		678		90
	474	8T-4139	111		679		111
	487		151		680		133
	500		406		681		194
	505		408		682		206
	509		411		684		207
	514		414		685		210
	523		417		687		223
	563		426		726		229
	576		428		730		476
	577		442		746		478
	579		443	8T-4182	419		487
	714		444		420		666
	769		446		432		769
	779		457		434		779
	780		459		435		780
	834		463		436		849
	849		487		753		851
8T-4137	28		500	8T-4183	402		866
	30		505		430		899
	57		563		439		901
	62		770		683		912
	66		818	8T-4184	393		929
	82		820		406	8T-4192	62
	90		823	8T-4185	111		90
	111	8T-4140	94		186		92
	118		325		243		291
	140		326		408		400
	141		559		411		402
	147		563		414		406
	149	8T-4149	530		417		411
	152		532		419		414

► **PRIMARY REFERENCE**

PART NUMBER INDEX

Part	Page
	417
	421
	430
	461
	465
	482
	536
	538
	658
	660
	662
	818
	820
	822
	823
8T-4193	383
	857
8T-4194	291
	401
	419
	420
	421
	436
	579
8T-4195	49
	54
	82
	92
	166
	194
	235
	374
	410
	413
	416
	432
	434
	435
	442
	444
	446
	478
	562
	756
	758
	863
8T-4196	90
	387
	401
	419
	420
	432
	434
	435
	436
	447
	451
	465
	543
	545
8T-4197	387
	487
8T-4198	530
	532
8T-4199	283
	285
8T-4200	57
	60
	87
	487
	827
	828
	838
	849
	851
8T-4205	154
	156
8T-4223	30
	31
	90
	111
	139
	151
	220
	291
	380
	382
	384
	393
	401
	406
	408
	410
	411
	413
	414
	416
	417
	419
	420
	421
	423
	425
	426
	428
	430
	436
	439
	442
	443
	444
	446
	457
	459
	461
	463
	465
	478
	482
	487
	500
	505
	534
	536
	538
8T-4240	543
8T-4241	545
8T-4244	558
	579
	683
	726
	730
	746
	753
	770
	818
	820
	822
	823
	851
8T-4224	15
	54
	57
	60
	126
	147
	149
	166
	167
	301
	385
	387
	393
	401
	447
	451
	487
	491
	712
	713
	725
	753
	769
	780
	800
	803
	818
	820
	823
	827
	828
	838
	849
	851
	878
	879
	880
	881
	884
	885
	893
	894
	897
	900
	902
	905
	906
	910
8T-4226	111
8T-4240	556
8T-4241	371
8T-4244	139
	291
	293
	406
	443
8T-4648	411
	414
	417
	430
	558
8T-4779	320
	736
	740
8T-4780	279
8T-4896	410
	413
	416
8T-4908	47
	385
8T-4910	384
	408
	410
	413
	416
	430
	443
	543
	545
	726
	730
	746
	753
	851
8T-4944	556
8T-4956	31
	406
	430
	457
	459
	465
	534
8T-4970	121
	154
	156
	393
	911
	912
8T-4971	166
	167
	754
	849
8T-4984	57
	65
	68
8T-4985	62
	530
	532
8T-5001	385
	534
8T-5005	530
	532
	540
	541
	542
8T-5041	380
	382
	423
8T-5412	406
	425

PART NUMBER INDEX

Part	Page
8T-5413	264
8T-5878	328
8T-6411	248
	249
8T-6429	350
8T-6466	235
	480
	561
8T-6693	197
8T-6703	57
	65
8T-6726	60
8T-6757	666
8T-6759	550
	576
	577
	616
	646
	648
8T-6763	359
8T-6842	950
	955
8T-6868	426
	428
	726
	730
	746
8T-6870	50
	500
	505
	509
	514
	523
	528
8T-6876	429
8T-6912	447
	451
8T-7338	246
	310
	383
8T-7521	491
8T-7546	430
8T-7547	387
	563
8T-7929	423
	443
8T-7964	41
8T-7971	411
	414
	417
8T-8729	752
8T-8737	181
	182
	368
	776
	777
	791
	843
	851
	860
8T-8799	228
8T-8887	500
	505
	509
	514
8T-8894	368
8T-9515	655
8T-9598	37
	52
8T-9599	563
8T-9756	110
8V-1715	825
8Y-4804	249
8Y-6352	734
	744
8Y-6967	726
	730
	746
9	
9B-4499	180
9B-7233	183
9F-2167	437
9F-5644	176
9G-0002	110
9G-0004	110
	186
9G-0005	110
9G-4343	154
	156
	196
	228
9G-7641	158
	160
	162
	164
	▶183
9J-3167	692
	693
	▶710
9J-3169	703
	704
	▶711
9L-9188	387
9M-2307	307
9M-5732	307
9M-7958	90
	92
9M-7959	62
9M-8406	82
9M-9439	62
9S-4167	82
9S-4180	391
9S-4181	437
	457
	530
	532
	590
9S-4182	579
9S-4183	406
	590
	605
9S-4185	486
	525
	530
	532
	594
9S-4188	387
9S-4191	384
	432
	470
	473
	486
	494
	499
	504
	525
	528
	530
	532
	543
	551
	554
	563
	605
9S-6130	101
	103
9S-8001	402
	549
	655
9S-8004	82
	549
	576
	655
9S-8005	549
	550
	556
	577
	655
9S-8006	655
9V-3659	264
9W-0335	196
9W-0742	▶117
	186
9W-0852	89
9W-1951	197
9W-3340	370
9X-0199	929
9X-1386	368
9X-1813	107
	171
9X-2026	720
9X-2041	736
	740
	760
	762
	795
	806
9X-2042	141
	149
	197
	202
	215
	239
	734
	736
	740
	744
	762
	796
	798
	800
	803
9X-2043	141
	149
9X-2044	197
	734
	736
	740
	909
	915
	926
	928
	929
	932
9X-2045	267
	295
	296
	297
	736
	740
	756
	758
	830
	915
9X-2046	756
	758
	859
	909
9X-2065	166
9X-2085	470
	473
9X-2201	68
9X-2480	127
9X-2537	611
9X-2616	890
	891
	892
9X-3401	97
	99
	101
	103
	171
	182
	215
	368
	406
	468
	476
	486
	494
	499
	504
	509
	513
	527
	579
	774
	775
	776
	777
	791
	860
9X-3402	486

▶ **PRIMARY REFERENCE**

PART NUMBER INDEX

Part	Page
9X-3404	116
9X-3463	139
	140
	141
	147
	149
9X-3592	360
	362
9X-6153	724
9X-6165	123
	136
	720
9X-6582	442
	444
	446
	447
	451
9X-7298	364
	366
	368
9X-7301	371
9X-8256	85
	92
	111
	121
	124
	127
	138
	154
	156
	166
	167
	197
	202
	203
	217
	219
	248
	249
	271
	312
	500
	505
	509
	514
	579
	714
	754
	755
	764
	765
	766
	767
	768
	771
	834
	841
	843
	848
	849
	855
	858
	909
	910
	911
	912
	915
	929
9X-8257	31
	138
	144
	146
	147
	149
	310
	311
	320
	383
	471
	474
	720
	726
	730
	737
	741
	746
	818
	820
	823
	825
	856
	857
	861
	866
9X-8408	455
9X-8600	76
9X-9896	123

0

Part	Page
003-7764	82
	97
	99
	101
	103
012-0380	178
033-5853	387
033-6038	387
033-8248	664
	666
	667
061-7539	77
085-6444	924
085-6447	924
085-6448	924
085-6449	830
	924
085-6452	737
	741
085-7075	632
085-7076	632
085-7077	632
085-7078	632
085-7079	632
085-7080	632
085-7081	632
085-7082	632
085-7083	632
085-7084	632
085-7085	632
085-7356	429
	447
	451
	476
	480
	485
	494
	498
	503
	508
	513
	519
	523
085-8037	912
085-8828	683
085-9310	94
	283
	285
085-9429	108
085-9513	17
085-9768	605
085-9769	556
	683
086-0297	279
	281
	658
	660
	662
	678
	679
	680
	681
	682
	684
	685
	687
086-0298	658
	660
	662
086-0299	279
086-0414	683
086-0415	683
086-0416	683
086-0523	670
	672
	674
	676
	708
087-3908	271
087-3909	271
087-4402	470
	473
	480
087-4441	485
087-4454	341
	▶342
087-4456	▶343
	345
087-4531	485
	527
087-4532	485
087-4575	342
087-4576	342
087-4577	342
087-4683	179
087-4710	616
	622
087-4742	556
087-5631	655
087-5708	616
	622
087-5762	521
087-5764	498
	503
	508
	513
087-5766	480
	527
087-5771	491
	498
	503
	508
	513
087-5772	485
087-5778	525
087-5840	664
	667
087-5891	667
087-5899	664
087-8894	271
087-8895	271
087-8896	271
090-8865	825
091-3474	41
	69
091-5928	370
091-9035	499
	503
	504
	508
	513
093-0065	279
	281
	684
	685
	687
093-0083	279
	281
093-0097	279
	281
	684
	685
	687
093-0115	279
	281
	658
	660
	662
093-0349	281
093-0357	279
	281
	658
	660
	662
	678
	679
	680
	681
	682

▶ PRIMARY REFERENCE

PART NUMBER INDEX

Part	Page	Part	Page	Part	Page	Part	Page
	684	095-0772	800	095-1581	376	095-1625	576
	685	095-0826	579		378		577
	687		838	095-1582	395	095-1627	371
093-1291	401	095-0827	755		599	095-1628	360
	408	095-0843	248		601		362
	419		249		603	095-1662	323
	420	095-0863	327		605	095-1663	393
	436	095-0879	368		624		563
093-1292	543	095-0893	374		625	095-1674	371
	545	095-0910	720		632	095-1676	360
093-1294	543	095-0913	848	095-1584	389		362
093-1295	421		851		599	095-1681	391
093-1296	429	095-0936	616		601	095-1682	393
093-1342	670	095-0965	605		603	095-1696	594
	672	095-1260	611		625		596
	674		616	095-1585	551		605
	676		622		554	095-1698	376
093-1519	364	095-1267	368		556		378
	366	095-1299	283		605		592
	368		285		611		594
093-2069	771	095-1386	82		655		596
093-3093	589	095-1390	194	095-1586	592		598
093-3094	589	095-1514	627		594		605
093-5432	54		628		596	095-1700	592
093-6089	374		629		598		594
093-7521	396		630		605		596
093-7676	709		631		614		598
094-0580	243	095-1519	399		618		605
094-0876	613		625		620	095-1701	334
	618		627		626		655
	620		628		638	095-1710	632
094-1875	402		629		639	095-1713	364
	556		630		640		366
	563		631		641		368
094-1881	402		642		647	095-1716	576
094-1882	556	095-1543	54	095-1589	599		577
	563	095-1547	590		601	095-1717	395
094-2080	196	095-1552	566		603	095-1725	579
094-4628	14	095-1573	599	095-1590	389	095-1750	638
	17		601		599		640
094-6526	590		603		601		641
094-7134	36	095-1575	622		603	095-1751	638
094-7154	36		625		624		640
094-7516	36		627		632		641
094-7741	18		628	095-1591	627	095-1777	491
094-9267	47		629		628	095-1783	625
094-9424	18		630		629		627
094-9525	41		631		630		628
094-9725	77	095-1578	592		631		629
094-9950	174		594	095-1592	457		630
094-9980	174		596		459		631
095-0085	174		598		599	095-1784	551
095-0410	174		605		601		554
095-0673	622		611		603	095-1785	626
095-0723	197		637		606	095-1787	632
095-0728	779		642		627	095-1788	402
095-0735	769	095-1579	592		628	095-1789	551
	780		594		629		554
095-0736	97		598		630	095-2005	18
	99		606		631	095-2038	77
	101		653	095-1593	625	095-2039	18
	103		654	095-1594	551		21
	840	095-1580	551		554		85
095-0742	197		554	095-1596	389	095-2040	34
095-0757	393		624	095-1608	579	095-2927	334

► **PRIMARY REFERENCE**

PART NUMBER INDEX

Part	Page
095-6639	566
095-6824	658
	660
	662
095-7101	334
095-7380	556
095-7382	556
095-7930	312
	838
095-8024	627
	628
	629
	630
	631
095-8575	43
095-8638	69
095-8799	15
	87
096-0061	121
096-1024	28
096-1043	338
096-1054	360
	362
096-1519	556
096-1628	613
	618
	620
096-2500	77
096-2501	21
	25
	220
096-2617	772
	773
096-2622	796
	798
	800
	803
096-3467	371
096-3741	18
	41
096-3780	248
	249
096-3872	138
096-3884	798
	803
096-4035	54
	57
096-4276	334
096-4498	613
096-4535	611
096-4543	611
096-4876	670
	672
	674
	676
	707
	708
096-4879	333
096-4882	818
	820
	823
096-4883	281
	465
	662
096-5863	82
096-5932	551
	554
096-5933	551
	554
096-5934	551
	554
096-5962	197
096-6073	395
096-6166	158
	160
	162
	164
	197
	235
	312
	779
096-7074	709
096-8139	360
	362
096-8490	70
096-8569	15
096-8619	50
096-9260	85
096-9435	28
096-9528	28
096-9532	28
	50
099-0139	924
099-0159	323
099-0160	323
099-0163	323
099-0172	334
099-0173	334
099-0183	329
099-0193	330
099-0194	330
099-0195	330
099-0233	374
099-0235	374
099-0320	551
	554
099-0321	551
	554
099-0322	551
	554
099-0328	551
	554
099-0329	551
	554
099-0330	551
	554
099-0331	551
	554
099-0332	551
	554
099-0333	551
	554
099-0334	551
	554
099-0335	551
	554
099-0361	611
099-0600	366
	368
099-0653	327
099-0660	371
099-0661	371
099-0674	371
099-0681	360
	362
099-0695	360
	362
099-0707	670
	672
	674
	676
099-0724	674
	707
	708
099-0822	642
	868
099-0823	736
	740
	915
099-0913	285
099-1319	848
	851
099-2374	714
	834
099-3506	829
099-3600	658
	660
	662
099-3607	736
	740
099-3629	922
	923
099-3645	853
099-3669	402
099-3671	402
099-4420	18
099-4437	77
	85
099-4460	220
099-4707	31
099-4739	329
099-4749	551
	554
099-5041	77
	85
099-5368	364
099-5399	364
	366
	368
099-5400	364
	366
	368
099-5408	429
099-6109	402
099-6110	402
099-6111	402
099-6112	402
099-6113	402
099-6115	402
099-6137	613
	616
	618
	620
	622
099-6141	616
	622
099-6144	616
	622
099-6145	616
	622
099-6418	273
	274
	302
	303
	304
	305
099-6530	551
	554
099-6531	551
	554
099-6532	551
	554
099-6535	551
	554
099-6607	57
099-7091	684
	685
	687
099-7127	196
100-2881	830
100-4336	848
101-2169	667
101-2846	197
101-7403	410
	413
	416
101-7404	465
101-8899	796
	798
	800
	803
	807
101-8900	796
	798
	800
	803
	815
	915
101-9848	277
	296
102-0818	611
102-1279	413
102-2244	368
102-5420	116
102-5474	949
102-7024	589
102-7964	196
	215
102-7965	215
102-8016	196
102-8274	523
102-8802	34
	106
	107
	141
	149

1

PART NUMBER INDEX

Part	Page	Part	Page	Part	Page	Part	Page
	156	107-6631	471	113-8493	196		696
	158		474	114-0515	626		697
	162		480	114-0517	626		698
	177		485	114-0623	638	119-3662	171
	178		494		640	119-5026	158
	468	107-7640	370		641		160
	476	108-0671	64	114-0750	371		162
	486	108-0672	64	114-0753	364		164
	494	108-1781	530		366		840
	499		532		368	119-5362	655
	504	108-7516	485	114-0755	360	119-5364	655
	509	108-7553	848		362	119-5388	616
	513		851	114-8223	374		622
	579	109-1839	940	114-8224	374	119-5389	616
	589	109-2013	97	114-8249	576		622
102-8803	141		99	114-8250	576	119-5391	616
	149		101	115-3796	455		622
	171		103	115-8620	542	119-5392	616
	179	109-5815	437	115-8634	384	119-5445	360
	197	109-5816	545	116-0114	156		362
102-8804	170	109-7556	485	116-0118	110	120-7199	317
	368	111-0973	485		130		▶320
102-8805	181	111-0985	480		131	120-9027	179
102-8806	215		534		133	121-0307	387
103-8411	605	111-4799	179		134	121-0987	217
103-8412	605	111-4816	196		144		219
103-8413	605	111-4836	110		172	121-1022	197
103-8441	371		144		193	121-1023	154
103-8442	371		188		194		156
103-9011	23		191		207	121-1029	534
104-3173	848		194		210	121-1168	197
104-8771	493		207		212	121-1459	626
104-8774	523		235		223	121-1490	▶640
104-8777	498		714		225		644
	503		834		228	121-1491	549
	508	111-4837	110		229		550
	513		144		235		▶641
104-8783	482		194		240	121-1865	769
104-8903	499		207	116-0210	196	121-5203	285
	504		210	116-3526	▶639	121-5204	285
	509		235		646	121-6222	436
	514	111-4838	110	117-1385	87	121-6223	401
104-8999	540		194	117-6306	915		432
105-1766	756		235	117-6349	779		434
	758		387	117-6350	779		435
105-2169	737	111-4839	110	117-6356	779		436
	741		235	117-8683	774	121-6303	498
	829		387		775		503
105-3479	411	111-9916	563		776		508
	414		▶638		777		513
	417		643	118-4086	614		▶642
105-3487	271		645		618	121-6304	642
105-7398	371		651		620	121-6447	541
105-7405	605		652	118-4087	613	121-6453	541
105-9526	912		653		618	121-7098	848
105-9527	912		654		620	121-7136	750
106-0107	158	111-9998	624	118-6948	62		848
	162	112-0083	480	118-9863	753	121-7137	848
	▶181		▶633	118-9881	13	121-7138	750
106-0210	181	112-0085	633		▶60		848
	182	113-6738	482	118-9882	60	121-8659	666
106-8715	429	113-8490	196		▶61	122-4021	90
	491	113-8491	196	118-9941	31		92
107-3308	710		203	119-3253	694	122-5311	854
107-6479	637	113-8492	196		695	122-5420	419

▶ **PRIMARY REFERENCE**

PART NUMBER INDEX

Part	Page
	420
122-5500	419
	420
122-9605	848
	851
122-9608	779
122-9609	779
122-9610	779
122-9617	756
	758
122-9657	848
123-1373	110
123-2003	393
123-2143	551
	554
123-2145	551
	554
123-2430	485
	527
	▶634
123-2511	635
123-2549	498
	503
	508
	513
	▶635
123-2552	634
	635
123-2636	429
123-2710	432
	434
	435
123-5349	666
123-9950	360
	362
124-0838	540
124-0841	542
124-3548	196
124-3953	932
124-3966	918
124-4009	772
	773
124-4010	772
	773
125-1551	360
	362
125-2947	52
125-2950	28
125-2968	34
125-2983	77
125-2994	30
	▶108
125-2995	108
125-7874	202
	215
125-7875	215
125-7876	89
	154
	156
	196
126-1767	182
	215
	406
	468
	476
	486
	494
	509
	513
	527
	774
	775
	776
	777
	791
	860
126-1865	616
	622
126-1866	616
	622
126-6514	639
	647
126-6515	639
	647
126-6516	639
	647
126-6872	485
	498
	503
	508
	513
	522
	527
126-7574	128
127-0580	736
	740
127-3913	678
	679
	680
	681
	682
	684
	685
	687
127-5937	174
127-5939	174
127-5940	174
127-5941	174
127-5943	174
127-5944	174
127-5947	174
127-5948	174
127-5949	174
127-5950	174
127-5952	174
127-5953	174
128-2135	726
	730
	734
	744
	746
	760
	762
128-2136	734
	744
128-2173	769
	780
128-4411	97
	99
	101
	103
129-3400	110
	579
129-6466	929
129-7784	566
129-7932	655
130-0270	848
130-1433	494
130-7596	17
131-3983	166
	167
131-5767	605
131-5768	605
131-5818	616
	622
131-5915	613
	618
	620
131-8901	61
131-8902	61
131-8903	61
131-8915	60
131-9850	540
	541
	542
132-1829	▶106
	196
132-4233	848
	851
132-5789	110
	188
	191
	197
	210
	238
	848
	851
132-9046	611
133-2425	279
	281
	658
	660
	662
133-2554	320
133-2717	279
	281
133-5813	82
	470
	473
	476
	482
	485
	498
	503
	508
	513
	517
	519
133-6686	366
133-8011	848
133-8016	736
	740
134-3284	144
	146
134-3296	197
134-3297	197
	235
134-4126	128
134-7178	670
	672
134-7179	670
	672
134-7258	950
	955
134-7665	491
134-7810	543
	545
135-2274	780
135-2366	174
135-2369	33
135-2370	33
135-2381	108
135-2382	108
135-2403	47
135-2407	49
135-3980	443
135-8572	277
135-8573	90
	92
	268
	269
	271
	275
	277
	301
	312
	315
	387
	429
135-8575	82
	266
	267
	291
	312
	315
135-8576	287
	288
135-8577	247
	275
	291
135-8578	291
135-8965	866
135-8966	866
137-2292	293
137-2294	293
137-2813	▶290
137-2853	290
137-2854	290
137-3623	391
137-3624	391
137-3625	391
137-3626	391
	393
137-3628	391
	393
137-5541	77
137-6114	335
139-1762	421
139-1765	421
139-1773	419

▶ PRIMARY REFERENCE

PART NUMBER INDEX

Part	Page	Part	Page	Part	Page	Part	Page
	420		546	148-8363	470	148-8411	486
139-7099	728	148-8327	491		473		525
	732		546		534		530
	748	148-8328	455	148-8364	384		532
	▶829	148-8336	447		455	148-8415	442
139-7100	795		451	148-8365	429		444
	▶796		468	148-8366	470		446
	▶798		470		473	148-8419	442
139-7101	728		473	148-8367	480		444
	732		476		486		446
	748		478		494		447
	▶915		480		499		451
139-7119	919		482		504	148-8428	429
139-7126	736		491		509	148-8431	406
	740		494		514	148-8433	487
139-7127	736		499	148-8368	543		517
	740		504	148-8371	447		519
139-7814	18		509		451		522
140-2187	691		514		486	148-8435	447
140-6836	690		521		494		451
141-2759	196		525		509		482
	841		527		514		487
142-0963	273	148-8338	486	148-8372	384		494
142-5546	779		499	148-8378	429		499
143-8024	368		504		432		504
143-8025	364	148-8339	437		447		509
	366		457		451		514
	368		534		470		519
143-8027	360	148-8340	461		473	148-8436	546
	362		486		476	148-8439	482
143-8031	371		546		478	148-8443	485
143-8033	368	148-8341	421		480		491
143-8149	364		437		482	148-8444	455
143-8150	371	148-8347	384		486	148-8447	536
143-8151	360		406		494		538
	362		429		499	148-8449	457
143-9397	720		437		504	149-1738	408
144-0195	911		457		509		411
	912		459		514		414
144-1636	181		543		517		417
	432	148-8353	432		521		426
144-9126	950		468		522		428
	955		482		523	149-5050	202
144-9691	918		486		525	149-5452	423
144-9692	918		494		527	150-3024	82
145-5106	343		499		534		97
	▶344		504	148-8382	432		99
146-6747	950		509	148-8388	536		101
	955		514	148-8392	385		103
146-7127	498		521		457	150-3035	538
	503		525		459	150-3036	476
	508		527	148-8407	384		478
	513	148-8354	384		432		480
147-4131	616		491		470		487
	622	148-8355	536		473		491
147-4921	902		538		486		495
	904	148-8357	463		494		499
148-4685	283		536		499		504
	285		538		504		509
148-8307	432	148-8360	437		525		514
148-8315	536		439		527		523
	538		457		530		528
148-8325	447		459		532	150-3037	421
	451		463		543	150-4027	447
	543		534	148-8408	406		451

▶ **PRIMARY REFERENCE**

PART NUMBER INDEX

Part	Page
	482
	498
	503
	508
	513
150-4044	499
	504
	509
	517
	519
150-4048	421
150-4049	530
	532
	534
150-6348	589
150-6351	589
151-6641	66
151-6703	796
	800
	815
	915
151-6704	796
	800
	815
	915
151-6705	918
151-6767	795
151-6777	795
	806
151-6778	815
	915
151-6785	915
151-6790	922
151-6792	796
	798
	800
	803
	▶924
151-6793	924
151-6813	815
	915
151-6815	815
	915
151-6831	815
	915
151-6832	815
	915
151-6841	924
151-6844	915
151-9461	796
	798
	800
	803
151-9497	796
	798
	800
	803
151-9557	915
151-9576	815
	915
151-9751	318
152-2938	387
152-2939	387
153-2521	▶139
	143
	144
	146
153-2602	197
153-4906	387
153-5223	616
	622
153-6232	398
	536
	538
153-6237	491
153-6242	534
153-6246	432
153-6249	499
	504
	509
	514
153-6252	455
153-6259	536
	538
153-8723	769
153-8800	558
153-8867	408
	426
	428
154-9024	50
155-0576	126
155-2260	197
	213
155-2265	215
155-2270	158
	162
	170
	197
	486
	771
155-2274	138
	158
	162
155-3624	579
155-7024	848
	851
155-7042	932
156-5970	649
	650
156-6469	922
156-6471	796
	798
156-6472	815
	914
	915
156-6473	919
156-6474	924
156-6475	924
156-6554	915
156-6555	915
156-6562	915
156-6579	915
156-6598	796
	798
	800
	803
156-6599	736
	740
156-6600	796
	798
156-6601	915
156-6617	736
156-6627	915
156-6631	919
156-6642	847
156-6643	796
	798
	800
	803
156-6644	796
	798
	800
	803
156-6645	796
	798
	800
	803
156-6646	929
156-6647	▶918
	929
156-6648	918
156-6656	734
156-6657	734
156-8801	546
156-8845	447
	451
157-0670	50
157-3180	527
158-8987	384
	▶389
159-4700	344
159-7782	576
	577
161-3128	196
161-3639	796
	798
	800
	803
161-3650	796
	798
	800
	803
161-3663	796
	798
	800
	803
161-3665	796
	798
	800
	803
161-3668	932
161-3669	932
161-3670	932
161-3677	932
161-3684	915
161-3685	736
	740
161-3694	830
161-3695	924
161-3697	736
	740
161-3698	815
	914
	915
161-3705	924
161-3717	866
161-3750	▶910
161-3751	▶909
161-6987	720
162-4304	327
162-4305	327
162-4306	327
162-4307	327
162-4695	421
	▶576
162-4696	546
	▶577
163-6659	196
163-6699	196
163-6704	141
	149
163-6711	215
163-6758	196
163-6773	235
163-6795	140
	141
	196
	213
	215
	911
	912
	932
163-6803	196
164-0497	817
	▶825
164-0514	798
	800
	803
164-0515	796
	798
	800
	803
164-0516	924
164-0517	924
164-0518	924
164-0519	798
	800
	803
164-0523	736
	740
164-0527	736
	740
164-0528	736
	740
	▶847
164-0534	▶818
	▶820
164-0535	▶822
164-0614	780
164-0617	780
164-0618	910
164-0619	910
164-0620	910
164-0639	909
164-0643	828
164-0646	734
	744
164-0648	915

▶ PRIMARY REFERENCE

PART NUMBER INDEX

Part	Page
164-0655	734
	744
164-0664	847
164-0666	922
	923
164-4180	437
	457
	530
	532
164-4858	▶76
	97
	99
	101
	103
164-5546	432
	505
	514
	527
164-5549	528
164-5567	384
	447
	451
	485
	491
	498
	503
	508
	513
	523
	528
	536
	538
164-5589	487
164-5590	384
164-5608	384
164-5624	470
	473
164-5628	471
	474
	480
	485
	494
164-5629	485
164-6872	384
164-6874	429
	447
	451
	476
	480
	485
	494
	498
	503
	508
	513
	519
	523
164-6981	▶345
	485
164-7908	430
164-8474	726
	730
	734
	744
	746
164-8908	487
165-2793	556
	563
165-2799	556
	563
165-2801	563
165-2802	563
165-2804	563
165-2805	563
165-2976	274
165-3838	563
165-3839	563
165-3847	563
165-3853	563
165-4931	491
165-5803	556
165-5804	556
165-5806	556
165-5809	556
165-5811	556
165-5814	556
165-5816	556
165-5817	556
165-5818	556
165-5819	556
165-5820	556
165-5821	556
165-5822	556
165-5823	556
165-5824	556
165-5826	556
165-5828	556
165-5831	556
165-5837	655
165-5839	626
165-5840	626
165-5846	655
165-5850	655
165-5854	243
165-5855	243
165-5856	243
165-5857	243
165-5859	243
165-5860	243
165-5864	243
165-5865	243
165-5866	243
165-5867	243
165-5868	243
165-9283	364
	366
	368
165-9284	371
165-9285	360
	362
165-9431	613
	618
	620
165-9435	614
	618
	620
165-9436	613
	618
	620
165-9438	614
	618
	620
165-9439	613
165-9442	613
	618
	620
165-9443	614
	618
	620
165-9444	613
	618
	620
165-9448	613
165-9460	613
	618
	620
165-9461	613
	620
165-9463	616
	622
165-9464	637
165-9497	594
	596
165-9523	780
165-9551	616
165-9552	616
	622
165-9553	616
	622
165-9554	616
	622
166-1481	678
	679
	680
	681
	682
166-1482	670
	672
	674
	676
166-1486	658
	660
	662
166-1492	354
	355
	356
	357
	358
	359
	678
	679
	680
	681
	682
	684
	685
	687
166-1494	356
	658
	660
	662
	678
	679
	680
	681
166-1579	666
166-3215	928
167-0261	699
167-0279	▶699
	704
167-0316	704
	▶707
167-3542	185
	196
	197
	223
	231
	232
	233
	841
	843
	895
167-3543	185
	196
	197
	223
	231
	232
	233
	841
	843
	895
167-3593	196
167-7018	736
	740
167-7036	923
167-7037	923
167-7038	800
	803
167-7039	796
	798
	800
	803
167-7042	736
	740
167-7055	822
167-7079	929
167-7135	866
167-7141	825
167-7270	950
	955
168-0794	613
168-1968	485
	498
	503
	508
	513
	522
	527
168-6728	245
	▶246
168-9759	470
	473
	525
169-0417	166
	167
	▶171
169-1165	632
169-5549	▶374

▶ **PRIMARY REFERENCE**

PART NUMBER INDEX

Part	Page	Part	Page	Part	Page	Part	Page
	380	171-0126	624	174-7222	402	176-4872	327
	382	171-0127	624	174-7791	139	176-8131	556
169-5567	▶283	171-0128	624	174-9570	▶80		563
	317	171-0188	498		82	176-8132	563
169-5568	283		503	175-6085	406	176-8571	556
	285		509	175-6174	393	176-8573	556
169-7904	317		514	175-6175	393	176-8574	243
	▶321		▶643	175-6176	393	176-8579	556
169-7905	321	171-0198	▶636		579	176-8585	655
169-8089	338		643	175-6177	579	176-8590	626
169-8091	338	171-0596	406	175-6178	393	177-2553	391
170-2570	854		432	176-1902	848	177-2617	393
170-3014	301		527	176-1916	756	177-2619	393
170-3016	92	171-2208	154		758	177-2620	393
	312		156	176-1925	823	177-2621	393
170-6738	561	171-2210	154	176-1928	818	177-2623	393
170-6888	196		156		820	177-2625	393
170-6929	110	171-3369	57		823	177-2768	582
170-6941	838	171-7325	722	176-1931	911		585
170-6993	139		723	176-1932	912	177-5867	252
170-9294	▶140		762	176-1937	736		253
170-9295	140	171-7370	866		740		255
	141	171-7413	924	176-1938	736		256
170-9324	158	171-7414	924		740		258
	160	171-7420	734	176-1939	736		259
170-9394	197		744		740	177-5879	291
170-9417	139	171-7426	736	176-1941	847	177-5880	291
170-9418	139		740	176-1942	736	177-9778	82
170-9419	579	171-7477	830		740	178-2334	170
170-9492	912	171-7485	817	176-1946	734	178-2335	170
170-9497	▶779		▶823	176-1947	734	178-2345	▶170
	865	171-7503	728	176-1951	924		172
170-9498	779		732	176-1952	924	178-5422	756
170-9499	779		748	176-1953	924		758
170-9722	815		▶815	176-1954	924	178-5423	756
	914	171-9406	245	176-1955	924		758
	915		▶383	176-1956	924	178-5431	911
170-9724	734	171-9420	376	176-1957	924	178-5500	912
	744		378	176-1958	728	178-5528	770
170-9841	364		381		732	178-5549	▶817
	366	171-9423	376		748	178-5569	919
	368		378		▶919	178-5570	736
170-9842	371		381	176-1964	732		740
170-9843	360	172-1482	171		▶800	178-5572	922
	362	172-3080	658		▶803		923
170-9857	364		660		806	178-5573	796
	366		662	176-1972	734		798
	368	172-8406	370		744		800
170-9858	371	172-8488	370	176-1986	736		803
170-9859	360	173-1170	402		740		922
	362	173-1203	563	176-1996	807		923
170-9928	364	173-3351	371	176-2815	939	178-5574	796
170-9946	360	173-3389	402	176-4703	559		798
	362	173-3510	393	176-4768	527		800
170-9997	592	173-3513	391	176-4863	▶335		803
	594	173-3515	391	176-4864	▶336		922
	598	173-3516	391	176-4865	▶337		923
	606	173-3517	391		339		926
171-0024	478	173-3529	391	176-4869	▶338	178-5576	915
	▶632	173-7895	426	176-4870	▶327	178-5659	879
171-0087	613		428		335		880
	618	174-3016	197		336		892
	620	174-3181	491		337	178-5870	291
171-0123	624	174-7220	402		338	178-5871	291
171-0124	624	174-7221	402		339	178-6450	57

▶ PRIMARY REFERENCE

PART NUMBER INDEX

Part	Page	Part	Page	Part	Page	Part	Page
	559	184-8862	273	185-8977	49	189-2796	806
178-6537	28		302	185-9123	▶322	189-2847	829
178-6538	28		303	185-9124	322	189-2849	829
178-6543	36		304	185-9125	322		▶830
178-6544	36		305	185-9208	158	189-2853	744
178-6545	36	184-9156	423		160	189-2854	744
178-6554	69	184-9315	429		162	189-2855	734
178-6572	47	184-9317	429		164		744
178-6599	30	184-9318	437	186-1305	921	189-2864	737
178-6600	30	184-9330	437		▶934		741
178-6601	30		457	186-3735	106	189-3396	736
178-6633	52		459		107		740
178-6634	52	184-9336	470		141	189-3409	736
178-6635	52		473		149		740
178-6636	52	184-9444	482		156	189-9377	387
179-3030	▶339	184-9592	429		162	189-9763	402
179-5030	443	185-0169	402		170		563
179-5254	406	185-0383	468		177	190-4896	563
179-5764	333	185-0400	594		178		646
179-7468	579		596		179		648
179-7591	434	185-0407	636		579	190-5283	90
179-7594	435	185-0423	624		589		92
179-7598	353	185-0462	468		649	190-5386	950
	▶436		▶637		650		955
179-7599	436	185-0463	637	186-3736	170	190-5830	77
179-7601	▶540	185-0508	583	186-5644	670	190-7674	402
	677		584		672	190-7695	▶611
179-7602	352	185-2478	527	187-0661	950		770
	▶419	185-2793	43		955	190-7750	613
179-7603	419	185-8161	756	187-5564	439	190-7751	613
179-7604	352		758	187-5588	437	190-7826	590
	▶420	185-8180	796	187-5718	581	190-9775	76
179-7605	420		798	187-6692	410	191-0862	243
179-7616	482		800	187-7171	393	191-2543	383
179-7770	546		803	187-9862	443	191-2544	283
179-7771	546	185-8181	915	188-2199	368		285
179-7874	421	185-8182	915	188-4142	▶391	191-2599	374
179-7875	421	185-8187	915		393	191-2600	374
179-9618	393	185-8196	736	188-4143	391	191-2601	374
179-9806	391		740	188-4145	▶393	191-2602	374
180-3861	139	185-8197	915		579	191-2603	374
180-7758	666	185-8200	926	189-2678	734	191-2604	374
183-1032	147	185-8201	926		744	191-2605	374
	149	185-8203	▶926	189-2690	796	191-2607	374
183-1035	140		928		798	191-2608	374
	141	185-8204	926		800	191-2609	374
	147	185-8205	734		803	191-2610	374
	149		744	189-2693	830	191-2611	374
183-8111	54	185-8206	928	189-2694	830	191-2612	374
183-8112	54	185-8209	926	189-2702	919	191-2613	374
183-8176	34	185-8214	734	189-2704	736	191-2614	374
184-3971	926		744		740	191-2615	374
184-3978	926	185-8221	915	189-2705	928	191-2661	376
184-3979	926	185-8280	847	189-2711	796		378
184-3980	926	185-8281	847		798		381
184-7495	706	185-8284	760	189-2712	926	191-2662	376
184-8442	254		843	189-2716	830		378
	257	185-8286	179	189-2759	921		381
	260		722		▶928	192-0573	563
	261		723	189-2768	728	192-2376	402
	262	185-8290	932		748	192-3039	254
	263	185-8293	848		▶795		257
184-8580	249	185-8300	717	189-2778	▶921		260
184-8807	1		778	189-2793	732	193-2812	54
	▶854	185-8302	717		▶806	193-2888	62

▶ **PRIMARY REFERENCE**

PART NUMBER INDEX

Part	Page
193-2889	62
193-6606	408
	443
193-9776	173
	▶264
193-9793	264
194-0325	480
194-0334	▶541
	677
194-0335	3
	4
	5
	▶542
	677
194-8400	551
194-8401	551
	554
194-8936	2
	▶949
194-9041	429
194-9043	437
195-0035	275
195-0036	439
195-0037	429
195-0106	530
	534
	536
	538
195-8212	28
195-8225	28
195-8256	85
195-8322	46
195-8351	45
196-1569	818
	820
	823
196-1571	818
	820
	823
196-1572	818
	820
	823
196-1599	818
196-1666	778
196-7973	168
196-8012	71
196-8013	71
196-8014	71
196-8015	71
196-8019	45
196-8037	54
196-8366	28
	46
	47
197-0143	605
197-0144	605
197-0145	599
	601
	603
	605
197-0146	606
197-0147	606
197-0148	567
	568
	569
	570
	571
	572
	573
	574
	575
	591
197-0149	567
	568
	569
	570
	572
	573
	574
	575
	591
197-0150	567
	568
	569
	570
	571
	572
	573
	591
197-0151	567
	569
	570
	571
	572
	568
197-0152	574
197-0153	568
	575
197-0156	567
197-0158	568
197-0165	592
	594
	596
	598
	605
197-0166	605
197-0167	605
197-0168	592
	594
	596
	598
	605
197-0169	605
197-0170	592
	594
	596
	598
	605
197-0173	▶567
	592
	594
	596
	598
	605
197-0175	▶568
	605
197-0196	549
	550
197-0199	549
	550
197-0211	▶569
	606
197-0212	569
197-0217	▶570
	606
197-0218	570
197-0225	594
	596
	598
	605
197-0226	594
	596
197-0254	591
197-0256	▶591
	605
197-0272	605
197-0273	549
	550
197-0758	611
	632
197-2150	426
	428
197-4330	156
198-0370	442
	444
	446
198-3899	713
	900
	905
	906
198-7543	611
198-8153	611
198-8154	611
198-8156	611
198-8159	611
198-8160	611
198-8161	611
198-8162	611
198-8165	611
198-8166	611
198-8167	611
198-8168	611
198-8176	611
198-8178	611
199-0159	302
	303
	304
	305
199-0314	275
199-0377	301
199-0518	563
199-1676	457
	459
199-1986	429
199-2187	41
199-2188	41
199-2189	41
199-2241	77
199-4573	2
	▶285
199-5152	655
199-6408	655
199-6921	655
199-7854	235
	2
200-3244	402
200-3255	402
200-3335	551
	554
200-4856	589
201-3663	706
201-4391	798
	800
	803
201-4417	736
	740
201-4530	736
	740
201-4534	818
	820
	823
201-4535	818
	820
	823
201-9271	605
201-9283	599
	601
	603
201-9285	599
	601
	603
201-9287	599
	601
	603
201-9288	599
	601
	603
201-9289	599
	601
	603
201-9290	603
201-9291	599
	601
	603
201-9294	599
	601
	603
201-9295	599
	601
	603
201-9296	599
	601
	603
201-9299	391
201-9330	599
	601
	603
201-9331	599
	601
	603
201-9394	611
202-1699	437
202-1771	527
202-7000	406
203-2059	376

▶ PRIMARY REFERENCE

PART NUMBER INDEX

Part	Page	Part	Page	Part	Page	Part	Page
	378	207-6204	517		697		463
203-5001	302		519		698	224-1943	934
	303	207-6403	579	216-5847	696	224-2908	154
	304	207-6404	579	216-5848	696		156
203-5005	302	207-6418	476	216-5883	697	224-7717	960
	303		485	216-5884	697	224-8945	960
	304	208-9277	177	216-5886	698	224-8946	950
	305	209-0348	906	216-5887	698		955
203-5292	312	209-4280	905	216-6485	442	225-0224	402
203-5695	432	209-5582	177	216-6676	395	225-0225	402
203-5696	432	209-5931	603	216-6677	395	225-0312	950
204-1086	243	209-6002	566	216-6678	395		955
204-1611	110	210-5808	736	217-3312	368	225-0313	960
	194		740	217-5589	47	225-3305	960
	226	210-5827	909	217-8763	368	225-4256	960
	231	210-5828	909	218-0404	136	225-4257	950
	232	210-5829	909	218-0557	561		955
	233	210-5834	909	218-4246	243	225-4539	429
	238	210-5836	909	218-4247	243	225-4815	613
	447	210-5837	909	218-8054	312	225-4816	613
	451	210-5838	909	218-8055	312	225-5707	849
204-1635	110	212-0907	368	219-0305	823	225-5714	849
204-1790	203	212-2837	279		825		851
204-1974	611		281	219-6314	136	225-5730	▶780
204-1976	611	212-5230	545	220-8678	80		865
204-2762	391	212-5402	498	221-4807	498	225-6216	563
205-0826	162		503		503	226-0291	248
	164	212-8489	69		508		249
205-1340	771	212-8491	71		513		794
205-6295	736	212-8521	108	221-4882	485	226-0326	249
	740	212-8571	28	221-5069	384		794
205-6788	25	212-8572	28		▶397	226-1311	694
205-8257	162	213-0677	34	221-5070	397	226-1319	694
206-3288	611		579	221-5071	397	226-1320	694
206-3290	611	213-0772	196	221-8045	950	226-3109	498
206-3305	▶613	213-9100	107		955		503
	781	213-9433	77	221-8813	▶859		▶644
	782	214-4531	940		865	227-0590	579
	783	214-4532	940	221-8859	406	227-0620	▶399
	784	214-7568	513		432		579
206-5162	136	214-7915	950	221-8861	1	227-7575	196
206-5208	164		955		▶129	227-7581	▶136
207-0144	728	215-1942	368	221-8872	▶127	227-7625	769
	732	215-4855	605		865	228-2780	960
	748	215-4872	606	221-8874	127	228-2781	950
	▶914	215-4893	611	221-8884	▶769		955
207-0159	817	215-4909	389		865	228-7092	387
	▶827	215-5023	599	221-8912	491	228-8146	480
207-0160	817		601	222-0225	772	228-9253	960
	▶828		603		773	228-9254	950
207-0161	827	215-5032	653	222-2062	561		955
207-0164	827		654	222-8238	47	229-0887	950
	828	215-5033	653	222-8292	28		955
207-0167	827		654	223-7074	429	229-0960	439
	828	215-5034	653	223-7577	▶177	229-0964	465
207-0170	827		654		220	229-0992	551
	828	215-5035	653	223-8666	517		554
207-0173	827		654		519	229-1077	283
	828	215-5037	485		522		285
207-0176	828		▶548	223-9818	950	229-1078	283
207-0216	818	216-5837	695		955		285
	820	216-5838	695	224-0554	950	229-1091	678
207-2985	563	216-5841	694		955		679
207-3852	432		695	224-1685	395		680
	435		696	224-1687	▶395		681

▶ **PRIMARY REFERENCE**

PART NUMBER INDEX

Part	Page	Part	Page	Part	Page	Part	Page
	682	230-4012	649		744		834
229-1092	670		650	234-6493	732	235-8874	714
	672	230-4013	197	234-6497	734		834
	674		841		744	235-8875	714
	676	230-5008	215	234-6498	734		834
229-1095	678	230-5010	213		744	235-8876	807
	679		215	234-6499	792	235-8877	807
	680		841	234-6500	▶793	235-8878	807
	681		843	234-6501	726	235-8879	807
	682	231-1771	▶107		730	235-8880	755
229-1145	482	231-1836	▶213		746	235-8891	848
229-3218	77		214		▶792	235-8893	756
229-7650	695	231-2295	215	234-6502	792		758
229-7653	696		843	234-6521	734	235-8894	756
229-7656	697	233-1277	17		744		758
229-7659	698	233-1279	174	234-6547	734	235-8908	728
229-7685	▶692	233-1280	174		744		732
229-7687	702	234-1034	154	234-6548	734		▶734
229-7688	702		156		744	235-8909	728
229-7689	702	234-1036	154	234-6549	734		748
229-7690	702		156		744		▶922
229-9070	▶911	234-1037	154	234-6550	734	235-8910	728
229-9075	869		156		744		732
	▶893	234-1038	154	234-6579	734		▶736
229-9076	▶878		156		744		▶740
	881	234-1097	196		760		748
	893	234-1122	235		762	235-8911	923
229-9077	893	234-1124	843	234-6580	760	235-8912	736
	894	234-1156	158		762		740
	▶902		160	234-6593	792	235-8914	760
229-9082	716		162	234-6594	728		762
	▶807		164		732	235-8915	732
	836	234-1158	158		748		▶923
229-9084	▶834		160		▶932	235-8916	728
	836	234-3344	90	234-6602	760		748
229-9088	▶912		92	234-6603	762	235-8917	▶744
	931	234-4796	45	234-6604	760		748
229-9089	870	234-6468	734	234-6605	762	235-8922	734
	▶894		744	234-6608	760		744
229-9090	▶879	234-6469	734		762	235-8923	734
	894		744	234-6609	760		744
229-9093	▶880	234-6470	734		762	235-8926	734
	897		744	234-6610	760	235-8928	734
229-9094	▶831	234-6471	734		762	235-8929	734
	879		744	234-6611	762	235-8930	744
	880	234-6472	734	234-6612	762	235-8932	932
229-9095	881		744	234-6613	▶179	235-8933	736
	884	234-6473	734		762		740
	▶903		744	234-6614	762	235-8950	734
229-9098	▶726	234-6474	734	234-6615	179		744
229-9099	726		744	235-7520	318	235-8951	722
	▶728	234-6476	734	235-7679	357	235-8952	723
229-9100	▶730		744		358	235-8965	762
229-9101	730	234-6477	734		670	235-8966	760
	▶732		744		672	235-8969	▶772
230-1340	124	234-6480	734		674		786
230-1341	124		744		676	235-8970	▶773
230-2720	384	234-6483	734	235-7764	▶310		785
	▶590		744		339	235-8971	772
230-4009	197	234-6485	734	235-7765	310	235-8972	773
	215		744	235-8856	865	235-8996	722
230-4011	197	234-6489	922		▶899		723
	213	234-6490	734	235-8857	899	235-8997	722
	215		744	235-8862	863	235-8998	723
	838	234-6491	734	235-8873	714	235-9001	726

▶ **PRIMARY REFERENCE**

PART NUMBER INDEX

Part	Page	Part	Page	Part	Page	Part	Page
	730		239	243-4508	138	245-7872	807
	746	238-2479	184		182	245-7873	807
235-9003	▶716	238-2485	▶239		202	245-7881	▶868
235-9004	▶714		347		213	245-7882	885
	716	238-2501	110	243-4509	843	245-7883	878
235-9005	714	238-2528	110	243-4510	215	245-7884	879
235-9012	911	238-6189	480	244-8494	613	245-7885	880
	912		517	244-8495	613	245-7886	713
235-9014	848		519	244-8496	613	245-7887	878
	851	239-6604	69	244-8497	614		879
235-9015	848	239-6626	40	244-8498	613		880
	851	239-6627	40	244-8499	614		885
235-9020	▶872	239-6630	40	244-8500	613	245-7888	878
	874	239-6631	40	244-8501	614		879
235-9028	▶881	239-6632	40	245-5457	950		880
	882	239-6681	108		955		885
236-2838	470	239-6986	950	245-7749	754	245-7889	▶712
	473		955		▶755		902
236-2843	470	239-7352	213	245-7750	755		903
	473		215	245-7751	755		904
236-2844	470	239-7356	197	245-7760	196	245-7890	▶725
	473	239-8697	548	245-7790	734		902
236-3257	399		▶549		744		903
236-3258	399	239-8998	548		760		904
236-3259	399		▶550		762	245-7891	▶900
236-3404	301	240-4999	▶869	245-7791	807		903
236-4153	441	240-5001	▶882	245-7792	807	245-7892	902
	▶706	240-5003	▶870	245-7793	807		▶905
236-6365	674	240-5037	▶873	245-7811	1	245-7895	845
	676	240-5039	▶874		▶863		846
237-1040	536	240-5056	▶883	245-7813	778		902
	538	240-5057	883	245-7814	778		903
237-3227	416		▶884	245-7815	778		904
238-0112	168	240-5058	884	245-7816	778	245-7896	▶713
238-0118	168		▶885	245-7817	717		902
238-0120	87	240-5063	897	245-7818	717		903
	168		▶904	245-7819	717		904
238-0751	485	240-5064	▶895	245-7820	717	245-7897	712
	▶651	240-5065	895	245-7823	717		713
238-1463	843		▶897	245-7824	717		725
238-1506	154	240-5074	807	245-7825	717		900
238-1628	▶141	242-1510	950	245-7826	717		902
238-2208	▶185		955	245-7827	717		905
	931	242-1588	950	245-7828	717		906
238-2209	185		955	245-7829	717	245-7898	713
238-2210	185	242-1589	960	245-7830	717		878
238-2211	895	242-6092	950	245-7831	717		879
238-2212	196		955	245-7832	717		880
	223	242-8768	902	245-7833	717		885
238-2215	231		903	245-7834	717		900
	232		904	245-7835	717		905
238-2216	841	243-4505	97	245-7836	717		906
	843		99		▶750	245-7899	712
238-2260	840		101	245-7837	750		725
238-2280	154		103	245-7838	717		900
	156		197	245-7839	717		902
238-2318	196		213	245-7842	772		905
238-2319	197		215	245-7844	773		906
238-2326	141		752	245-7846	717	245-7900	279
	149		841		▶778		281
238-2390	196		843	245-7847	717	245-7901	279
238-2391	196		851	245-7850	848		281
238-2392	154	243-4506	89	245-7851	848	245-7905	750
	156		197	245-7856	717	245-7922	▶756
238-2478	▶184		841	245-7858	834		▶758

▶ **PRIMARY REFERENCE**

PART NUMBER INDEX

Part	Page	Part	Page	Part	Page	Part	Page
	865		▶670		332		865
245-7925	762	248-7822	670	253-2111	154	259-5294	▶131
245-7926	760		672		156		347
245-7929	792		674	253-6276	406	259-5295	▶132
245-7931	932		676	253-6396	▶441		345
245-7948	760	248-7823	670		705	259-5296	196
	762		672	253-6406	705	259-7180	239
245-9205	57		674		▶708	259-7202	762
245-9212	54		676	255-1947	465	259-7214	868
245-9216	54	248-7824	670	255-2966	61	259-7215	868
245-9217	54	248-7835	670		64	259-7219	202
245-9218	54		672	255-3016	753	259-7244	▶752
246-2641	94		674	255-3018	▶40		753
246-9113	368		676		753	259-7286	752
247-2693	213	248-7836	670	255-3020	40	259-7295	▶724
	215		672	255-3021	40		736
	774		674	255-3022	40		740
	775		676	255-3027	▶350	259-7345	723
	776		678		562	259-7346	▶722
	777		679	255-3035	13		760
	791		680		▶31	259-7347	▶723
247-2694	860		681	255-3171	942		762
247-2695	860		682	255-3173	942	259-7348	756
247-5112	791	248-7837	669	255-4410	868		758
247-6019	87		▶672	255-5843	▶345		▶760
247-7410	345	248-7838	672	255-5844	▶345	259-7349	756
	▶935	248-7857	366	255-5845	▶865		758
247-7411	345		368	256-9786	706		▶762
	▶937	248-9428	384	256-9787	706	259-7353	744
247-7418	865	248-9443	523	256-9788	706	259-7354	796
	▶938	248-9470	485	256-9790	706		798
247-7436	950	250-1440	411	256-9791	706		800
	955		414	256-9792	706		803
247-7437	950		417	256-9793	706	259-7430	508
	955	250-6450	700	257-4502	950		513
247-7438	950		701		955		523
	955	250-8054	935	257-4547	940		▶645
247-7465	347		937	257-5015	942	259-7545	461
	▶939		938	258-0330	818		▶589
247-7494	586		939		820	259-7598	345
	▶940	251-0299	235		823		▶764
248-5474	676	251-0433	▶214	259-0917	2		▶765
248-7172	334		865		346	259-7599	345
248-7184	317	251-0435	214		▶561		▶766
	▶324		▶215	259-0918	566		▶767
248-7191	333	251-0538	▶840	259-4877	215	259-7762	764
248-7194	333		865	259-4883	196		▶781
248-7197	334	251-0542	▶158	259-4884	239	259-7763	764
248-7200	331		▶160	259-4887	210		▶782
	332	251-0543	158	259-4914	840	259-7764	766
248-7203	331		162	259-4940	210		▶783
	332	251-0544	136		212	259-7765	766
248-7259	328		▶162	259-5050	▶116		▶784
	▶330		▶164		173	259-7804	583
248-7260	330	251-0580	213	259-5161	▶196		▶592
248-7261	330	251-0602	215		865	260-2042	123
248-7262	330	251-0637	196	259-5165	▶202		138
248-7268	317	251-4162	120		346	260-2109	▶774
	▶328	251-8248	206	259-5253	▶841		781
248-7284	349	252-6601	589	259-5254	841		787
248-7820	670	252-6602	589	259-5274	154	260-2110	▶775
	672	252-6603	589		156		782
	674	253-0861	950		▶178		788
	676		955	259-5290	196	260-2111	774
248-7821	669	253-1346	331	259-5293	▶130		775

▶ PRIMARY REFERENCE

PART NUMBER INDEX

Part	Page	Part	Page	Part	Page	Part	Page
	776	266-6204	31		451		474
	777	266-6205	31	268-5145	429	272-4774	33
260-2127	▶776	266-6206	31	268-6263	563		▶174
	783	266-6231	49	268-6265	563	273-4147	▶370
	789	266-6258	31	268-8872	943		706
260-2128	▶777	266-6259	31	269-0120	943	273-4148	706
	784	266-6280	▶349	269-0121	943	273-4149	706
	790		350	269-1645	317	273-5274	915
260-2180	491	266-6303	31		▶318	273-5345	815
260-2191	491	266-6304	31		319		915
260-3877	447	266-7932	376	269-1647	318	273-5346	815
	▶649		▶646	269-1648	318		915
260-3883	649	266-7940	429	269-2433	563	273-5347	13
	650	266-7941	429	269-9691	485		▶754
260-5656	81	266-8070	646	269-9853	579	273-5348	1
260-6692	105		648	269-9890	384		▶848
260-6941	935	267-1626	402	269-9990	432	273-5363	1
260-6942	937	267-1628	563	270-5320	80		▶865
260-6948	865	267-1629	563	270-5433	138	273-5384	904
	938	267-4051	447	270-5603	3		▶906
260-7006	586		451		5	273-5386	906
	▶942	267-4063	546		▶861	273-5388	▶931
260-7065	▶669	267-4495	960	270-5664	476	273-5389	▶929
260-7066	▶669	267-6744	381	270-5672	406		931
260-7067	▶669	267-6786	381	270-5757	406	273-5390	929
260-7135	950	267-6841	348	270-5766	498	273-5395	770
	955		▶376		503	273-5433	865
260-7228	▶1		▶378		▶652		▶866
260-7231	1	267-6842	376	270-5869	▶586	273-5434	866
260-7234	1		378	270-5871	▶586	273-5440	▶836
	▶950		▶380	270-5948	470	273-5441	836
	▶955	267-6846	245		▶616		▶851
260-7236	▶657		▶381	270-5949	616	273-5442	848
260-7237	▶677	267-6847	381		622	273-5443	848
260-7238	▶677		▶382	270-5950	616	273-5444	848
260-7239	▶677	267-6849	1		622	273-5445	848
260-7240	▶677		▶245	270-5953	618	273-5446	873
260-7891	346	267-6856	376	270-5977	404		▶875
	▶468		378		582	273-6810	366
260-9174	437	267-7639	197		583		368
262-1421	123	267-7683	110		584	273-6811	364
	▶128	267-7689	110		585		371
263-9088	124	267-7692	202		▶605	273-6813	364
	▶867	267-7693	202	270-5978	605	273-6814	658
264-7029	197	267-7694	202		▶625		660
264-7030	197	267-7695	202	270-5992	1		662
264-7034	197	267-7976	158		▶404		678
264-9982	752		160	270-6025	▶346		679
264-9983	752	267-7977	162	270-6030	▶346		680
264-9984	752		164	270-6037	▶346		681
265-3545	57	267-8084	556	270-6043	▶347		682
265-3608	▶54		563	270-6106	▶347	273-6945	360
	57	268-0408	312	270-6107	347		362
265-3609	13	268-0417	312		▶771		689
	▶65		▶794	270-6110	457		690
265-3630	54	268-0418	794		459		691
265-3654	57	268-0419	794	270-6259	126	273-8315	561
265-3659	65	268-0457	303	270-6338	50	273-8316	402
265-3661	65	268-0727	312	271-2158	▶89	273-8317	402
265-3662	65	268-1964	196		90	273-8318	402
265-3663	65	268-4201	402	272-0709	89	273-8320	563
266-0136	168	268-4203	402		92	274-2565	554
266-5431	950	268-4530	943	272-0710	89	274-2635	382
	955	268-4531	943		92		▶551
266-6203	31	268-5109	447	272-4514	471	274-2637	380

▶ **PRIMARY REFERENCE**

PART NUMBER INDEX

Part	Page	Part	Page	Part	Page	Part	Page
	▶554		586		543	282-5631	▶411
274-2678	2	278-6721	▶478	281-3494	57	282-5633	▶444
	▶352		586	281-3533	54	282-5634	▶347
274-2679	2	278-6726	▶480	281-3625	54	282-5636	▶543
	▶352		865	281-3626	54		586
274-2680	352	278-6768	498	281-3627	54	282-5637	▶423
	▶354		503	281-3628	54		586
274-2681	352		508	281-3629	54	282-5691	558
	▶355		513	281-3630	54	282-5705	347
274-2682	354	278-6867	486	281-3631	54		▶943
	▶360	278-6920	242	281-3632	54	282-5711	408
274-2683	355		▶243	281-3633	54	282-5734	346
	▶362	278-9264	1	281-6847	402		▶425
274-6720	168		▶279	281-8986	368	282-5755	414
274-6721	168	278-9265	279	282-4476	657	282-5779	408
275-1442	485		281		▶658	282-5841	406
275-1443	485	278-9280	▶311	282-4477	658	282-5894	410
275-1444	486		339	282-4480	677		413
275-1538	478	278-9281	311		▶678		416
275-3667	1	278-9284	2	282-4481	678		▶588
	▶853		▶319	282-4483	3	282-7092	486
275-6810	235	278-9293	3		4		498
275-6874	1		4		5		503
	▶837		5		▶664		508
275-6875	837		669		677		513
	▶838		▶674	282-4484	677	282-7095	476
275-6876	838	279-2984	167		▶679	282-7106	498
275-6879	▶843	279-3161	722	282-4485	679		503
275-6883	▶217	279-7576	1	282-4488	677		508
275-6884	▶219		▶128		▶680		513
275-6926	▶152	279-7750	174	282-4489	680	282-7120	498
	▶153	279-7755	404	282-4494	677		503
	865		▶562		▶681	282-7128	498
275-6927	152	279-7758	13	282-4495	681		503
	▶154		▶68	282-4502	279		508
275-7014	1	279-7779	9	282-4503	674		513
	▶143		10		676	282-7171	470
275-7048	217		12	282-4576	▶684		473
	219		▶38	282-4577	684	282-7206	470
275-7051	▶235	279-7787	69		▶689		473
	865	279-7797	1	282-4578	689	282-7317	476
275-7063	▶133		▶8	282-4579	▶685	282-7377	404
	586	279-7800	▶9	282-4580	685		▶581
275-7104	235		48		▶690	282-7378	▶384
277-1172	▶442	279-7802	▶10	282-4581	690		581
277-1251	444		48	282-4582	▶687	282-7379	▶579
277-6695	▶242	279-7803	7	282-4583	687		581
	245		▶11		▶691	282-7383	404
277-6697	242	279-7804	▶12	282-4584	691		▶559
	▶556		48	282-4670	▶250	282-7384	404
278-1585	853	279-7805	▶6	282-5482	443		▶437
278-1980	243		8	282-5527	408	282-7385	404
278-3858	254		9	282-5528	408		▶429
278-4013	254		10	282-5536	▶705	282-7386	404
	257		11	282-5537	▶705		▶439
	260		12	282-5540	▶676	282-7387	404
	261	279-7830	1		705		▶465
	262		▶13	282-5612	443	282-7388	404
	263	279-7832	▶62	282-5624	404		▶482
278-6511	404		73		▶406	282-7389	404
	▶546	279-7833	▶172	282-5627	404		▶485
278-6672	404	279-7847	▶7		▶408	282-7390	404
	▶470	279-7859	14	282-5629	405		▶491
	▶473	280-2747	432		▶443	282-7393	353
278-6720	▶476		439	282-5630	▶410		▶545

▶ PRIMARY REFERENCE

PART NUMBER INDEX

Part	Page
282-7394	3
	4
	5
	▶426
	657
282-7395	▶493
	865
282-7397	2
	▶421
282-7399	2
	▶494
282-7403	404
	▶530
	▶532
282-7408	347
	▶447
	▶451
282-7417	347
	▶455
282-7420	346
	▶457
282-7421	346
	▶498
	▶503
282-7422	348
	▶398
282-7423	346
	▶534
282-7425	346
	▶459
282-7426	346
	▶508
	▶513
282-7427	▶517
	▶519
	586
282-7435	346
	▶461
282-7436	346
	▶521
282-7437	346
	▶536
282-7446	▶522
	586
	587
282-7447	347
	▶523
282-7449	▶525
282-7451	390
	▶463
282-7453	▶432
	586
	587
282-7525	429
282-7615	486
282-8567	220
282-9153	▶402
	563
282-9192	563
283-1224	177
283-2593	225
283-2594	146
283-2595	223
283-2597	240
283-2600	1
283-2602	3
	4
	5
	▶110
	▶144
	657
283-2603	▶146
283-2604	135
	▶210
283-2605	135
	▶212
283-2607	▶223
	348
283-2608	▶186
283-2609	▶227
	390
283-2610	▶240
	347
283-2614	▶188
	346
283-2617	▶191
	346
283-2618	▶229
	346
283-2619	▶230
	347
283-2620	88
	▶225
283-2650	110
283-2654	188
283-2655	229
283-2657	186
283-2658	110
283-2662	110
283-2664	110
283-2666	110
283-2668	186
283-2669	186
283-2758	223
283-2783	217
	219
	841
	843
283-2800	97
	99
	101
	103
283-2893	851
283-3060	231
283-3074	203
	215
283-3659	1
	▶287
283-3661	▶288
283-3664	1
	▶294
283-3666	▶312
	817
283-3671	48
	▶300
283-3672	73
	▶270
283-3675	1
	▶94
283-3676	94
283-3677	88
	▶95
283-3678	95
	▶96
283-3692	251
	▶252
	▶253
283-3693	252
	▶254
283-3696	88
	▶314
283-3739	1
	▶82
283-3772	▶265
	390
283-3778	287
283-3779	287
283-3780	287
283-3781	287
283-3782	287
283-3783	287
283-3784	287
283-3817	82
283-3821	82
283-3827	254
	257
	260
	261
	262
	263
283-3828	254
	257
	260
	261
	262
	263
283-3829	254
	257
	260
	261
	262
	263
283-3830	254
	257
	260
	261
	262
	263
283-3864	▶271
	294
283-3865	▶266
	▶267
	294
283-3866	294
	▶315
283-3867	▶277
	294
283-3868	294
	▶301
283-3875	274
283-3881	271
	▶273
283-3882	273
283-3883	273
283-3884	273
283-3885	265
283-3886	266
283-3887	266
	267
283-3888	266
283-3890	266
	267
283-3930	309
283-3931	309
283-3973	270
283-3977	301
	▶302
283-3978	302
283-3981	315
283-3982	315
283-3983	315
283-3984	315
283-3988	315
283-3989	315
283-3990	315
283-3991	315
283-3994	277
283-3996	277
283-3997	277
283-3999	277
	▶306
283-4000	307
283-4002	277
	▶307
283-4004	277
	▶308
283-4005	308
283-4006	308
283-4008	277
283-4010	307
283-4012	306
283-4013	302
	303
	304
	305
283-4038	247
283-4715	402
283-5926	371
283-5927	371
283-5952	366
283-5953	364
	366
283-5971	371
283-5995	364
283-6008	364
283-6014	364
283-6080	360
283-6081	362
283-6083	360
	362
283-6098	551
	554
283-6099	646
	648
283-6102	▶566
	579
283-6173	3
	4
	5

▶ **PRIMARY REFERENCE**

PART NUMBER INDEX

Part	Page
	▶352
	657
283-6174	3
	4
	5
	▶352
	657
283-6175	352
	▶356
283-6176	356
	▶364
283-6177	364
283-6179	364
	366
283-8786	▶817
283-8787	▶390
283-8788	88
	▶90
283-8789	▶2
283-8792	▶348
283-8793	▶48
283-8797	▶88
283-8799	1
	▶317
283-8819	▶48
283-8820	▶48
283-8837	▶817
283-8842	▶73
283-8848	▶339
283-8856	90
283-8860	90
283-8862	90
	351
283-8863	90
	▶248
283-8864	248
283-8880	248
	249
283-8882	90
283-8900	248
	249
283-8934	▶339
283-9062	▶657
283-9074	950
	955
283-9075	950
	955
284-4376	▶808
284-4377	▶809
284-4378	▶810
284-4379	▶811
284-4404	754
284-4406	754
284-4424	848
284-4425	848
284-4426	736
	740
284-7070	3
	4
	5
	657
	▶666
285-1332	771
285-1333	771
285-1337	771
285-1503	605
285-1504	▶571
	605
285-1505	▶572
	606
285-1506	605
285-1507	605
285-1600	585
	▶594
285-1613	486
	▶624
285-1641	572
285-1753	347
	▶582
285-1755	346
	▶583
	▶584
285-1815	432
	▶599
285-1816	432
	▶601
285-2663	491
	498
	503
	508
	513
	523
285-2718	482
285-2719	482
285-2721	429
285-2722	429
285-2723	429
285-2727	429
285-2728	429
285-2749	437
285-2751	437
285-2755	437
285-2759	437
285-2762	437
285-2776	426
	428
285-2777	426
	428
285-2778	426
	428
285-2779	426
	428
285-2795	437
285-2798	429
285-2799	429
285-2826	457
	459
285-2830	457
	459
285-2844	498
	508
285-2861	463
285-2876	455
285-2880	455
285-2884	486
286-3683	126
286-4271	▶120
	121
286-6130	302
	303
	304
	305
286-6132	303
	304
	305
286-6396	2
	▶538
286-6397	461
286-6402	461
286-6406	461
286-6410	426
	428
286-6455	486
286-6458	486
286-6461	486
286-6468	457
	534
286-6469	457
	534
286-6474	545
286-6482	421
286-6489	499
	503
	508
	513
286-6491	499
	504
	508
	513
286-6493	499
	504
286-6494	499
	504
286-6497	486
286-6499	437
	457
	459
286-6504	530
	532
286-6505	530
	532
286-6508	530
	532
286-6512	530
	532
286-6533	465
286-6536	465
286-6541	465
286-6568	437
286-6633	536
286-6694	534
286-6698	534
286-6702	534
286-6706	534
286-6710	534
286-6815	499
	504
287-0118	66
287-0125	62
287-0126	62
287-0129	62
288-7396	▶413
288-7397	▶414
288-7400	▶416
288-7401	▶417
288-7403	▶446
288-7688	413
288-7690	410
	413
	416
288-7692	414
288-7693	411
	414
	417
288-7694	411
	414
	417
288-7698	442
288-7699	442
288-7721	410
288-7722	411
288-7723	411
288-7727	444
288-7730	444
289-5273	457
289-5378	447
	451
289-5448	530
	532
289-5474	527
289-5700	437
	463
	532
289-7697	▶353
	669
	705
289-7698	353
	▶357
289-7699	357
	▶366
289-7700	366
289-7702	366
	368
289-7724	3
	4
	5
	▶353
	657
289-7725	353
	▶359
289-7726	359
	▶371
289-7727	371
289-7729	371
289-7733	371
289-7743	366
289-7814	2
	▶400
289-7815	400
289-7816	400
289-8194	384
	▶396
289-8195	396
290-1908	950
	955
290-9044	664
290-9045	664
290-9378	3
	4
	5

▶ PRIMARY REFERENCE

PART NUMBER INDEX

Part	Page
290-9429	▶128
291-7506	▶231
	▶232
	586
291-7700	138
291-7701	▶138
291-7760	110
291-7764	2
	▶134
291-7841	110
291-7862	▶147
291-7863	▶149
291-7864	147
	149
291-7880	▶193
	404
291-7881	193
291-7883	144
291-7916	230
291-7917	191
292-3751	87
292-7176	527
292-7419	482
292-7423	470
	473
292-7424	470
	473
292-7425	470
	473
292-7427	470
	473
292-7428	470
	473
292-7429	470
	473
292-7431	470
	473
292-7493	486
292-7513	470
	473
292-7548	429
292-7555	476
292-7628	522
292-7630	384
292-7631	486
292-7637	▶428
	657
293-1135	848
293-1136	714
293-1137	717
293-1138	834
293-1184	807
293-1222	▶812
293-1238	848
293-1239	▶865
293-1243	849
	851
293-1256	912
293-6658	271
	▶274
293-6659	274
293-6747	315
293-6748	315
293-6752	300
	▶303
293-6753	303
293-6754	302
	303
	304
	305
293-6755	302
	303
	304
	305
293-6756	302
	303
	304
	305
293-6757	271
293-6760	315
293-6762	271
293-6764	306
293-6765	306
	307
293-6936	301
293-6937	301
	▶309
293-6989	1
	▶275
293-6990	1
	▶269
293-7050	1
	▶247
293-7057	247
293-7060	275
293-7061	269
294-1385	▶667
	677
294-1389	667
294-1414	657
	▶660
294-1415	660
294-1582	250
294-1584	250
294-1683	24
294-1684	41
294-1685	41
294-1686	41
294-1687	41
294-1688	41
294-1689	41
294-1693	41
294-1698	41
294-1699	41
294-1700	15
	70
294-1702	41
294-1708	15
294-1710	15
294-1711	15
294-1712	15
294-1713	15
294-1714	15
294-1716	14
294-1720	18
294-1721	18
294-1722	18
294-1723	21
294-1724	21
294-1726	27
	28
	43
294-1728	28
294-1729	28
294-1731	28
294-1732	28
294-1733	28
294-1734	28
294-1735	28
294-1737	27
294-1738	27
	38
	47
	52
294-1739	27
294-1747	36
294-1748	36
294-1751	17
294-1753	26
294-1754	26
294-1755	26
294-1756	26
294-1757	26
294-1766	46
294-1767	45
294-1768	45
	220
294-1774	44
294-1775	44
	126
294-1777	50
294-1778	50
294-1780	50
294-1784	37
294-1785	37
294-1786	37
	41
294-1788	85
294-1796	81
294-1800	81
294-1802	85
294-1803	81
294-1804	77
	168
294-1805	81
294-1808	85
294-1809	77
294-1810	77
294-1811	77
294-1812	85
294-1819	77
294-1820	77
294-1821	15
	77
294-1822	77
294-1831	77
294-1834	87
294-1836	87
294-1837	77
294-1838	77
294-1839	87
294-1841	87
294-1842	87
294-1843	87
294-1844	77
294-1845	77
294-1846	87
294-1850	33
294-1851	33
294-1855	174
294-1857	174
294-1858	174
294-1860	30
294-1861	30
294-5289	368
294-6428	▶404
294-6533	406
294-6534	406
294-6538	406
294-6542	406
294-6565	443
294-6567	443
294-7251	27
	28
295-1407	368
295-2006	358
	▶368
295-2534	368
295-9127	87
295-9563	401
295-9675	3
	4
	5
	▶401
296-4618	220
296-4619	220
296-4621	168
	220
296-4631	168
296-4633	168
296-4637	6
	▶33
296-4651	6
	▶26
296-4655	6
	▶52
296-4663	36
296-4672	18
296-4673	26
296-4689	24
296-4692	15
296-4694	15
296-4695	15
296-4696	15
296-4699	▶18
	21
296-4700	28
296-4701	27
296-4702	34
296-4703	34
296-4704	34
296-4706	34
296-4710	17
296-4713	25
296-4714	70
296-4716	69
296-4725	46
296-4726	46
296-4727	47
296-4728	43

▶ **PRIMARY REFERENCE**

PART NUMBER INDEX

Part	Page
296-4729	43
296-4733	50
296-4738	▶37
	38
296-4739	37
296-4740	85
296-4741	85
296-4742	85
296-4743	85
296-4744	85
296-4747	85
296-4748	85
296-4749	77
296-4750	77
296-4752	77
296-4753	77
296-4754	77
296-4755	220
296-4758	30
296-4759	30
296-4761	126
296-4762	126
296-4766	220
296-4777	6
	▶46
296-4780	6
	▶34
296-4781	6
	▶45
296-4782	6
	▶47
296-4783	6
	▶25
296-4784	6
	▶24
296-4786	6
	▶15
296-4787	6
	▶21
296-4788	6
	▶28
296-4789	6
	▶17
296-4790	6
	▶70
296-4791	6
	▶69
296-4792	6
	▶43
296-4793	6
	▶85
296-4794	6
	▶77
296-4795	6
	▶50
296-4796	6
	▶36
296-4798	6
	▶30
296-4800	6
	▶126
296-4801	6
	▶220
296-4802	6
	▶168
296-4803	6
	▶27
296-4812	85
296-6928	527
296-6953	437
296-6956	437
296-7058	439
296-7064	465
296-7066	465
296-7083	530
	532
296-7084	530
	532
296-7085	530
	532
296-7086	530
	534
	536
	538
296-7170	486
296-7184	432
296-7186	432
296-7187	432
296-7195	432
	434
296-7220	491
296-7229	499
	504
296-7235	447
	451
296-7268	523
296-7283	559
296-7325	352
	▶434
296-7326	352
	▶435
297-0189	543
	▶603
297-0195	▶586
297-0196	▶586
297-0235	▶573
	605
297-0366	571
297-0374	582
	▶596
297-0529	▶618
	785
	786
297-0532	768
	▶785
297-0533	768
	▶786
297-0534	765
	▶787
297-0535	765
	▶788
297-0536	767
	▶789
297-0537	767
	▶790
297-0589	▶620
	787
	788
	789
	790
297-0684	527
	▶653
297-0685	527
	▶654
297-0687	603
297-4589	774
297-4590	775
297-4595	776
	777
297-7646	28
297-7647	28
297-7648	36
297-7649	36
297-7650	36
297-7655	50
297-7657	85
297-7658	85
297-7660	77
297-7661	77
297-7667	753
	851
297-7706	77
297-7749	68
297-7839	49
297-9133	334
297-9134	334
297-9137	333
297-9138	324
	▶325
297-9139	324
	▶326
297-9140	325
	▶331
297-9141	326
	▶332
297-9142	331
	332
	▶333
297-9143	333
	▶334
297-9161	333
298-2892	254
	257
	260
	261
	262
	263
298-2942	273
	274
	302
	304
	305
298-2985	301
298-3008	288
298-3010	288
298-3012	288
298-3014	288
298-3016	288
298-3018	288
298-3020	288
298-3147	82
	▶105
298-3166	268
298-3257	105
298-3258	105
298-4105	▶173
298-4195	823
298-4196	825
298-4306	▶960
	963
298-5732	556
	563
299-2662	231
299-2697	3
	4
	5
	▶203
299-2701	203
299-2841	203
299-2952	203
	3
301-0091	186
301-0589	720
301-2399	950
	955
301-2403	950
301-2404	950
	955
301-2477	92
301-2478	92
301-2524	92
301-2527	92
301-2552	▶3
301-2555	▶4
301-2573	88
	▶944
301-2583	▶135
301-2584	▶135
301-2641	▶88
301-2642	88
	▶92
301-2643	92
	▶351
301-2644	351
301-2646	92
	▶249
301-2647	▶5
301-2648	249
301-2650	351
301-2654	▶251
301-2655	251
	▶946
301-2700	963
301-6874	402
301-8294	402
301-9823	248
	249
	794
302-2863	463
302-2866	463
302-3098	421
302-3101	421
302-9321	416
302-9356	417
302-9408	446
302-9411	446
302-9466	588

▶ PRIMARY REFERENCE

PART NUMBER INDEX

Part	Page	Part	Page	Part	Page	Part	Page
302-9509	417	305-1607	▶692		4		▶296
302-9513	446	305-1608	692		5	307-8069	5
302-9532	543		▶700		▶238		▶297
302-9554	425	305-1609	700	306-8511	3	307-8070	4
302-9565	384	305-1623	700		4		▶299
302-9582	423	305-1624	▶692		5	307-8071	3
302-9646	543	305-1629	▶693		▶226		5
302-9654	543	305-1630	▶692	306-8513	238		▶255
302-9656	543		693	306-8535	3		▶256
302-9657	543	305-1631	692		4	307-8072	255
302-9659	543		▶701		5		▶257
303-2787	119	305-1632	701		▶207	307-9371	243
	▶947	305-4680	6	306-8536	3	308-8787	3
303-4484	556		▶87		4		4
	▶655	305-4691	70		5		5
303-6261	70	305-4728	13		▶194		▶281
303-9665	266		▶66	306-8537	207	308-8809	662
	267	305-4729	66	306-8570	226	308-8811	3
303-9666	277	305-4730	66	306-8590	205		4
303-9667	277	305-4746	41	306-8609	194		5
303-9670	308	305-4747	41	306-8657	207		▶662
303-9933	97	305-4750	41	306-8769	110	308-8812	662
	99	305-4751	41	306-8802	840	308-8814	3
	101	305-4758	14	307-4966	521		4
	103	305-4766	▶23	307-5071	486		5
303-9937	97		24	307-5147	3		▶682
	99	305-4767	15		4	308-8815	682
	101	305-4768	15		5	308-8823	281
	103	305-4769	74		▶527	308-8914	281
303-9946	312	305-4771	44	307-5153	480		662
304-0041	82	305-4772	85	307-5162	536	309-3872	944
304-0076	▶268	305-4883	23		538	309-5694	166
	817	305-4884	23	307-5165	538		167
304-0077	268	305-4885	23	307-5168	536	309-5695	166
	314	305-4886	77		538	309-5733	166
304-0078	92	305-4891	220	307-5228	478	309-5734	166
	268	305-4892	43	307-5232	457	309-5741	3
304-0080	275	305-4895	220		459		5
304-3961	▶626	305-4896	220	307-5248	470		▶151
	655	305-4897	220		473	309-5742	151
305-0327	▶813	305-4898	220	307-5277	534	309-5745	3
305-0329	807	305-4900	77	307-5289	499		4
305-0330	734	305-4901	77		504		5
	744	305-4902	77		508		▶166
305-0331	775	305-4922	▶74		513	309-5746	166
	777		75		527	309-5747	3
305-0332	774	305-4927	41	307-7740	1		4
	776	305-4929	41		▶291		5
305-0333	734	305-4931	41	307-7750	291		▶289
	744	305-4944	8	307-7817	277	309-5748	289
305-0361	919		11	307-7840	291	309-5751	720
305-0399	3		▶39	307-7842	291	309-5768	486
	4	305-4954	6		▶293	309-5769	468
	5		▶41	307-7843	293		476
	▶814	305-4955	6	307-7845	293		486
305-0430	814		▶14	307-7912	268		494
305-0431	814	305-4965	74		314		499
305-0441	849	305-7591	57	307-7956	82		504
	851	305-7595	57	307-7957	82		508
305-0442	849	305-7596	57	307-7958	82		513
	851	305-7597	65	307-7966	277	309-5773	3
305-0466	▶876	305-7598	57	307-7968	277		4
305-0467	▶877	305-7600	13	307-7969	315		5
305-1592	692		▶57	307-8067	3		▶167
	▶702	306-8509	3		▶295	309-5790	207

▶ **PRIMARY REFERENCE**

PART NUMBER INDEX

Part	Page
309-5808	769
	▶791
309-5842	▶123
	135
309-5849	861
309-9973	457
	459
	605
	▶627
309-9974	605
	▶628
309-9976	592
	▶629
310-0037	534
310-0056	▶574
	605
310-0062	592
	598
	▶630
310-0063	594
	596
	▶631
310-0078	▶768
310-0156	347
	▶585
310-0157	584
	▶598
310-0234	421
310-0356	599
	601
310-0406	599
	601
310-0415	473
	▶622
310-0417	▶575
	605
310-0419	622
310-0420	622
310-1789	3
	4
	5
	▶353
310-1790	353
	▶358
310-2391	720
310-4980	243
310-6252	950
	955
310-9489	36
310-9490	36
310-9491	36
310-9499	13
	▶753
310-9528	70
310-9529	77
310-9530	77
310-9531	77
310-9532	24
310-9537	85
310-9538	38
	39
310-9539	74
310-9540	44
310-9541	39
310-9543	39
310-9546	6
	▶44
310-9549	6
	▶49
310-9551	6
	▶71
310-9568	387
310-9569	387
310-9591	38
310-9592	38
310-9609	6
	▶81
310-9620	6
	▶75
310-9621	61
310-9622	61
310-9626	13
	▶387
310-9627	387
310-9671	62
	▶64
310-9688	220
310-9724	387
311-6631	85
311-7403	562
	▶563
311-7407	563
311-9538	401
311-9539	401
313-7833	118
	▶121
313-7856	295
	296
	297
	299
313-7857	295
	296
	297
	299
313-7861	794
313-7972	297
	▶304
313-7973	304
313-7974	267
	295
	296
	297
313-7975	295
	297
313-7976	295
	297
	315
313-7992	267
	295
	296
	297
313-7994	295
	296
	297
313-7997	295
	296
	297
313-8005	295
	296
	▶305
313-8036	257
314-3768	587
	▶948
314-8083	486
314-8139	530
	532
314-8198	527
314-8199	527
314-8209	457
	459
315-2761	6
315-4412	▶647
	648
316-3790	404
	405
	▶558
316-3871	408
316-3872	408
316-4076	441
316-4077	441
316-8811	714
	▶717
	834
316-8814	▶746
316-8815	746
	▶748
316-8845	717
316-8846	717
316-8847	717
316-8848	717
316-8849	717
316-8850	717
316-8851	2
	▶770
316-8872	▶844
316-8906	849
316-8908	823
316-8987	871
	886
	887
	888
	889
	890
	891
	892
	898
	907
	908
316-8989	857
317-4859	429
319-1036	110
319-1149	210
	212
319-1150	227
319-1170	153
	▶156
319-1219	186
319-1344	156
319-1346	156
319-1354	156
319-1355	156
319-1367	228
319-1370	228
319-1399	1
	▶228
319-4254	135
	▶720
319-4256	▶124
	135
319-4353	859
	▶860
319-4420	160
	164
	▶182
319-4433	128
319-4434	128
319-4474	167
319-9152	947
319-9706	465
319-9751	429
319-9781	384
319-9782	384
319-9903	509
	514
319-9906	499
	504
	509
	514
319-9910	499
	504
	509
	514
319-9987	429
320-0195	503
	513
320-5392	121
320-5396	118
320-5457	1
	▶258
	▶259
320-5458	258
	▶260
320-5459	260
320-5461	794
320-5593	858
321-0520	▶404
321-0521	▶405
322-4582	948
322-8717	378
	▶648
323-7792	▶587
324-5664	225
324-5753	232
	233
324-5826	232
	233
325-8982	295
	296
	297
	299
325-9140	559
325-9217	559
326-1644	80
327-3062	858
327-3063	858
327-3329	▶118
	119
327-3599	▶703
327-3600	▶694
	703

▶ PRIMARY REFERENCE

PART NUMBER INDEX

Part	Page	Part	Page	Part	Page	Part	Page
327-3601	694		891		907		
327-3602	▶703		892		908		
327-3603	▶695	327-6644	908	333-4181	845		
	703	327-6645	▶845		846		
327-3604	695		908				
327-3605	▶703	327-6646	845				
327-3606	▶696	327-6647	845				
	703	327-6648	907				
327-3607	696		908				
327-3608	▶704	327-7391	128				
327-3609	▶697	327-7394	128				
	704	327-7483	129				
327-3610	697	327-7486	129				
327-3611	▶704	327-9998	205				
327-3612	▶698	328-0021	160				
	704		164				
327-3613	698	328-0028	233				
327-3649	▶704	328-0048	119				
327-6498	▶886		▶205				
327-6499	▶887	328-0080	119				
327-6501	▶871		▶206				
327-6504	886	328-0089	▶233				
	▶888		587				
327-6505	887	328-2035	451				
	▶889		▶650				
327-6507	871	328-4912	406				
	▶898	328-4917	406				
327-6510	888	330-1201	253				
	▶890		▶261				
327-6511	889	330-1202	261				
	▶891	330-1204	259				
327-6512	▶892		▶262				
	898	330-1205	262				
327-6514	▶832	330-1207	256				
327-6515	▶833		▶263				
	892	330-1208	263				
327-6517	888	330-1320	839				
	889		▶858				
	▶907	330-1389	96				
327-6520	898		▶97				
	▶908	330-1390	96				
327-6523	865		▶99				
	▶901	330-1393	96				
327-6538	901		▶101				
327-6540	876	330-1394	96				
327-6541	877		▶103				
327-6550	740	330-1620	267				
	▶855	330-3408	867				
	856	330-3409	128				
	857	330-3410	128				
327-6552	▶856	330-8746	▶839				
327-6553	▶857	330-8747	▶119				
327-6576	856		839				
327-6579	798	330-8764	▶963				
	803	333-4160	892				
327-6581	910	333-4172	890				
327-6601	820	333-4173	▶846				
327-6639	891		907				
327-6640	890	333-4174	846				
	891	333-4175	907				
	892	333-4179	890				
327-6642	890		891				
	891		892				
	892	333-4180	845				
327-6643	890		846				

▶ **PRIMARY REFERENCE**

MEMORANDA



© 2008 CATERPILLAR
ALL RIGHTS RESERVED

CAT, CATERPILLAR, THEIR RESPECTIVE LOGOS, “CATERPILLAR YELLOW” AND THE POWER EDGE TRADE DRESS, AS WELL AS CORPORATE AND PRODUCT IDENTITY USED HEREIN, ARE TRADEMARKS OF CATERPILLAR AND MAY NOT BE USED WITHOUT PERMISSION.

PRINTED IN U.S.A.