XEBP7955-05
January 2010

RUTHZIL TRATOR COMERCIAL DE PEÇAS LTDA 11 97083-6812 ROLANDO CITRANGULO

312C
Track-Type Excavator

Powered by 3064 Engine

SERIAL NUMBER
CAE1201 To Last Built(Vehicle)
6LK26372 To Last Installed(Engine)

© 2010 Caterpillar
All Rights Reserved

HOW TO USE THE PARTS MANUAL

Caterpillar Parts Manuals include illustrations of the groups or assemblies which make up the machine. These illustrations show the standard components plus many of the attachments available for the machine.

The alphabetical index located in the front part of the book should be used to determine the page number on which specific illustrations are shown. Reference to those pages will identify each of the individual serviceable parts.

Captions

The caption under each illustration identifies the part number and name of the group or assembly shown. If more than one illustration is included for any group, the caption identifies the specific machine serial numbers to which each illustration applies. In some cases it is not possible to determine the specific machine serial numbers to which different illustrations are applicable. In those cases the caption identifies the illustration as “First Type”, “Second Type”, etc. Reference to the actual group or assembly is necessary in those cases to determine which illustration should be used.

Captions provide additional information such as page numbers where illustrations of sub assemblies are shown, information regarding quantities used and other information intended to assist the user in determining parts needs.

This information indicates the effective serial number or effective date on which changes became effective.

Example :

D95.05- : Applicable on and after May 1995

↑ D indicates the nineteen hundreds.

T00.05- : Applicable on and after May 2000

↑ T indicates the two thousands.

Indented Part Names

Within each illustration is a parts list identifying each serviceable part in the illustration. When a part name is indented in this list, it means that serviceable item is a part of the serviceable item under which it is indented.

Abbreviations and Symbols

R.H.	Right Hand	Refers to the side of the machine as viewed from the operator's compartment.
L.H.	Left Hand	
L	Length	
T	Thickness	
Z	Number of Gear Teeth	
O.D.	Outside Diameter	
I.D.	Inside Diameter	
O.S.	Over Size	
U.S.	Under Size	
N/S	Not Serviced	
AS	Assembly	
NOM	Nominal	

Abbreviations of Wire Colors

RD	:Red	BR	:Brown
WH	:White	GN	:Green
OR	:Orange	BU	:Blue
YL	:Yellow	T	:Tan
PK	:Pink	DK/BU	:Dark Blue
BK	:Black	DK/GN	:Dark Green
GY	:Gray	LT/BU	:Light Blue
PU	:Purple	LT/GN	:Light Green

Note

Continuing improvement and advancement of product design may cause changes to your machine which may not be included in this publication. Each publication is reviewed and revised, as required, to update and include these changes in later editions.

Whenever a question arises regarding your Caterpillar product, or this publication, please consult your Caterpillar dealer for the latest available information.

MODEL VIEW

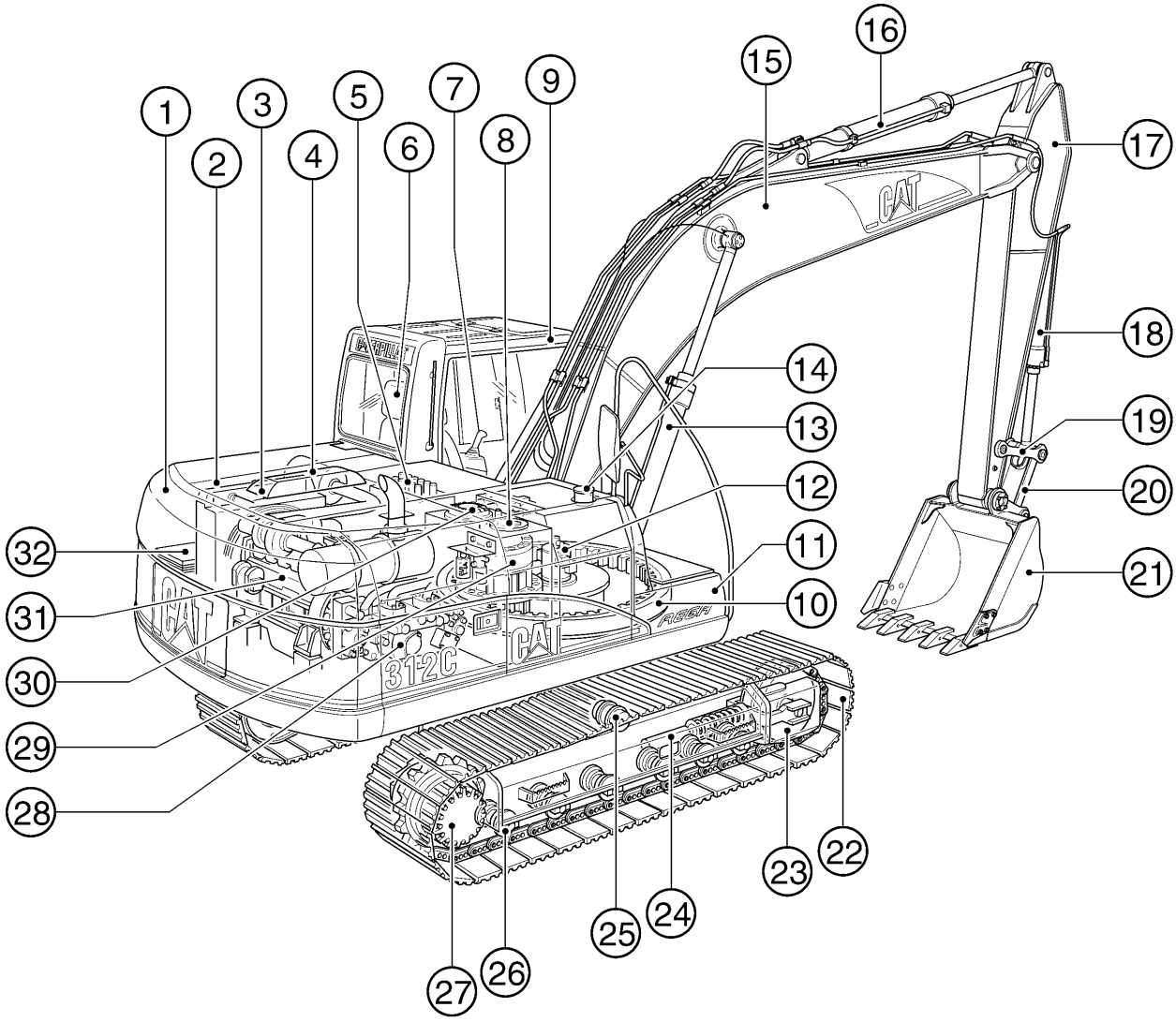

	PAGE		PAGE		PAGE
① Counterweight	232	⑫ Swivel	432	㉓ Idler	247
② Engine Cover	204	⑬ Boom Cylinder	298	㉔ Track Adjuster	251
③ Radiator & Oil Cooler	38	⑭ Fuel Tank	67	㉕ Carrier Roller	252
④ Air Cleaner	51	⑮ Boom	638	㉖ Track Roller	252
⑤ Control Valve	450	⑯ Stick Cylinder	299	㉗ Final Drive	196
⑥ Operator Seat	594	⑰ Stick	644	㉘ Pump	273
⑦ Control Lever	434	⑱ Bucket Cylinder	300	㉙ Swing Drive	424
⑧ Hydraulic Tank	262	⑲ Link	661	㉚ Return Filter	288
⑨ Cab	513	⑳ Rod	661	㉛ Engine	11.01
⑩ Swing Bearing	238	㉑ Bucket	679	㉜ Battery	86
⑪ Storage Box	227	㉒ Track	258		

REPLACEMENT ITEMS

The following chart provides a convenient listing of those items which require occasional replacement during normal operation or maintenance.

DESCRIPTION	PART NO.	QTY. USED	PAGE NO.
Filter			
Air Conditioner Filter	305-0367	1	609
Air Filter			
Primary Filter Assembly	131-8902	1	52
Cab Air Filter	293-1184	1	611
Engine Oil Filter	1R-0739	1	35
Fuel Filter	1R-0751	1	73
Hydraulic Oil Drain Filter	093-7521	1	286
Hydraulic Oil Pilot Filter	215-4909	1	287.01
	5I-8670	1	287.02
Hydraulic Tank Return Filter	126-2081	1	289
	179-9806	1	291
V-Belt			
Alternator & Fan V-Belt Set	217-5420	1	31
Refrigerant Compressor V-Belt	255-3014	1	625

LIST OF ATTACHMENTS

The following chart provides a convenient listing of attachments with their reference page numbers as a quick reference for parts ordering.

Consists of:		Page
	AIR CLEANER	
118-9881	WITH DOUBLE ELEMENT	53
183-1536	AIR PREFILTER	55
170-6821	**ALARM, TRAVEL**	176
	BLADE	
151-1493	2500MM WIDE	634
198-2120	2500MM WIDE (With Auxiliary Pump Control)	633
183-1476	2600MM WIDE	635
151-1494	2700MM WIDE	636
198-2121	2700MM WIDE (With Auxiliary Pump Control)	633
	BOOM	
151-1487	R-BOOM, REACH 4.65M	628
171-0020	**BOOM LOWERING CONTROL**	359
283-8801	**Product Link Japan**	168.01
	BUCKET	
	EXCAVATION (X)	
150-2239	600MM Wide-0.32Cu.M.-Adapter Size J250 (CAE01201-T04.11)	669
250-6367	564MM Wide-0.32Cu.M.-Adapter Size J250 (CAE T04.12-Up)	669.01
150-2240	700MM Wide-0.38Cu.M.-Adapter Size J250 (CAE01201-T04.11)	669
250-6370	664MM Wide-0.38Cu.M.-Adapter Size J250 (CAE T04.12-Up)	669.01
150-2241	895MM Wide-0.45Cu.M.-Adapter Size J250 (CAE01201-T04.11)	670
250-6373	794MM Wide-0.45Cu.M.-Adapter Size J250 (CAE T04.12-Up)	670.01
168-2878	895MM Wide-0.45Cu.M. (ESCO) (CAE01201-T04.11)	672
250-6385	780MM Wide-0.45Cu.M. (ESCO) (CAE T04.12-Up)	672.01
150-2242	990MM Wide-0.52Cu.M.-Adapter Size J250 (CAE01201-T04.11)	670
250-6376	884MM Wide-0.52Cu.M.-Adapter Size J250 (CAE T04.12-Up)	670.01
159-5676	990MM Wide-0.52Cu.M. (ESCO) (CAE01201-T04.11)	673
250-6388	875MM Wide-0.52Cu.M. (ESCO) (CAE T04.12-Up)	673
150-2243	1000MM Wide-0.57Cu.M.-Adapter Size J250 (CAE01201-T04.11)	671
250-6379	964MM Wide-0.57Cu.M.-Adapter Size J250 (CAE T04.12-Up)	671.01
150-2244	1090MM Wide-0.63Cu.M.-Adapter Size J250 (CAE01201-T04.11)	671
250-6382	1054MM Wide-0.63Cu.M.-Adapter Size J250 (CAE T04.12-Up)	671.01
	For Demolition	
168-2884	990MM Wide-0.52Cu.M.-Adapter Size J250 (CAE01201-T04.11)	672
250-6391	884MM Wide-0.52Cu.M.-Adapter Size J250 (CAE T04.12-Up)	672.01

LIST OF ATTACHMENTS

	Consists of:	Page
	BUCKET LINKAGE	
151-1491	CASTING TYPE (CAE01201-02264)	631
251-2864	CASTING TYPE (CAE02265-Up)	631.01
194-8960	FABRICATION TYPE (CAE01201-02264)	632
251-2866	FABRICATION TYPE (CAE02265-Up)	632.01
211-6353	FABRICATION TYPE (Heavy Duty) (CAE01201-02264)	632
251-2922	FABRICATION TYPE (Heavy Duty) (CAE02265-Up)	631.02
192-8381	**BUMPER, SIDE**	244
	CAB	
171-7345	METAL ROOF HATCH CAB	514
161-3739	SKYLIGHT HATCH CAB	513
164-0555	WITH ELECTRIC OPENABLE FRONT WINDSHIELD	515
170-2595	**COUNTERWEIGHT (WITH LIFTING EYE)**	233
194-8945	**DEMOLITION**	11
183-1535	**FIXED TYPE OIL COOLER**	49
	GUARD	
170-2607	BOTTOM, HEAVY DUTY	222
194-8257	BUCKET CYLINDER	321
215-9876	BUCKET CYLINDER (For Demolition) (CAE01201-02264)	321.01
229-1067	BUCKET CYLINDER (For Demolition) (CAE02265-Up)	321.02
164-0534	CAB FRONT (Full Net)	578
164-0535	CAB FRONT (Half Net)	580
178-5549	FOGS	574
171-7485	Cab Front	576
164-0497	Cab Top	575
137-2813	SWIVEL	224
120-7199	TRACK GUIDE	255
171-0019	**HAND CONTROL PATTERN CHANGER (4 Ways)**	358
196-1609	**HEATER & DEFROSTER**	617
	HYDRAULIC SYSTEMS, AUXILIARY	
	BOOM LINE GROUPS	
	R-Boom (4.65M)	
179-5081	Drain Lines	344
179-5075	High Pressure Lines	328
179-5079	Medium Pressure Lines	338
198-0506	Quick Coupler Lines	628
216-6534	QUICK COUPLER LINES (On Upper Frame And Control)	358

LIST OF ATTACHMENTS

	Consists of:	Page
	STICK LINE GROUPS	
	R2.5 Stick	
179-5082	Drain Lines	347
179-5077	High Pressure Lines	329
179-5080	Medium Pressure Lines	342
215-5931	Quick Coupler Lines	630
	R3.0 Stick	
187-9964	Drain Lines	346
187-9966	High Pressure Lines	329
187-9962	Medium Pressure Lines	340
	TOOL CONTROL	
165-0965	Auxiliary Pump	357
	Combined Function	
179-5071	2 Pump	355
165-0976	2 Pump (For Demolition)	357
165-0964	2 Pump (Medium Pressure)	356
	Double Function	
200-6637	1 Pump (Joystick Control)	357.01
165-0967	1 Pump (Pedal Control)	357.01
	Single Function	
165-0962	1 Pump	354
165-0963	2 Pump	354
196-0926	**HYDRAULIC TANK (CAE01201-02264)**	263
196-1420	**LARGE BOX COVER**	560
	LIGHT	
197-4423	R-BOOM, RIGHT SIDE	184
	WORKING, CAB MOUNTED (Time Delay)	
204-1810	For Use With Cab Guard	180
163-6631	Without Cab Guard	178
	OPTIONAL SEAT	
164-0502	KAB 527P SEAT	596
171-7352	KAB T1P SEAT	598
178-5624	KAB T8P SEAT	597
164-0477	HEADREST (For KAB 528P, KAB T8P Seat)	604
	RADIO	
163-6634	AM	571
163-6633	AM/FM	572
163-6636	AM/FM (With Cassette)	573

LIST OF ATTACHMENTS

Consists of:		Page
161-3750	**RAIN PROTECTOR, CAB FRONT**	581
4I-7343	**SIDECUTTER**	685
	STARTING, COLD WEATHER	
183-1500	FILM (32WR Hydraulic Oil Package)	707
198-2321	STARTING AID	92
	STICK	
	FOR THE REACH (4.65M) BOOM ONLY	
151-1489	R2.5 Stick	629
194-8988	R2.5 Stick (Heavy Duty) (CAE01201-02264)	631
229-1056	R2.5 Stick (Heavy Duty) (CAE02265-Up)	631.01
151-1488	R3.0 Stick	629
206-3231	**STICK LOWERING CONTROL**	359
161-3751	**SUN VISOR**	582
	TIP	
	ADAPTER SIZE J250	
8E-3755	Abrasion, Heavy Duty	688
9J-3169	Long	686
8E-3750	Long, Heavy Duty	688
100-6462	Penetration	689
100-6464	Sharp-Center	689
100-6463	Sharp-Corner	690
9J-3178	Short	687
101-2927	Wide	686
169-7722	**TOOL KIT**	692
	TRACK	
	RUBBER BELT	
176-4869	500MM	260
	TRIPLE GROUSER	
176-4864	600MM	258
176-4865	700MM	259
176-1903	**WIPER, LOWER WINDSHIELD**	565
170-6819	**12V-7A POWER SUPPLY SOCKET**	155

INDEX

Name Page

A

ACCUMULATOR GP 294
ADJUSTER GP - BUCKET 684
ADJUSTMENT GP - HYDRAULIC TRACK 251
AIR CLEANER AR 55
AIR CLEANER GP 51
56

AIR CONDITIONER & MOUNTING GP 606
AIR CONDITIONER GP 605
608

ALARM GP 142
ALARM GP - TRAVEL 176
ALTERNATOR GP - CHARGING 174
ARM AS - WIPER 557

B

BATTERY & WIRING AR - COLD WEATH 92
BATTERY & WIRING GP 86
BATTERY & WIRING GP - COLD WEATH 93
BLADE & MOUNTING GP 651
BLADE AR 633
BLADE GP 654
BLOCK GP - HYDRAULIC 292
BOOM AR 628
BOOM AR - 1 PIECE LONG 628
BOOM GP 638
BOX & MTG GP - STORAGE 227
BOX GP - STORAGE 228
BREATHER GP 33
BUCKET & ADJUSTER GP 674
BUCKET AR 669
BUCKET AS 679
BUMPER SET 244

C

CAB GP 513
CAB GP (BASIC) 516
CAB GP - EXTERIOR 536
CAB GP - INTERIOR 524
CABLE AS 100

Name Page

CAMSHAFT GP 22
CARTRIDGE AS - TURBOCHARGER 65
COMPRESSOR GP - REFRIGERANT 624
CONDENSER & MTG GP - REFRIGERANT 626
CONSOLE GP 590
592.01

CONSOLE GP - OPERATOR 589
CONTROL & MTG GP - ELECTRONIC 168
CONTROL AR 168.01
CONTROL AR - AUXILIARY 354
CONTROL AR - QUICK COUPLER 358
CONTROL GP - BLADE 442
CONTROL GP - ELECTRIC HAND 194.01
CONTROL GP - ELECTRONIC 170
CONTROL GP - GOVERNOR 84
CONTROL GP - HYDRAULIC 443
CONTROL GP - PILOT OPERATED HYD 436
440

COOLER AR 49
COOLER GP - ENGINE OIL 46
COUNTERWEIGHT GP 232
COUPLING GP - PUMP 275
COVER GP 219
559

COVER GP - STORAGE BOX 230
COVER GP - VALVE MECHANISM 20
CRANKSHAFT GP 21
CYLINDER & LINES GP - BLADE 297
CYLINDER & LINES GP - BOOM 295
CYLINDER & LINES GP - BUCKET 296
CYLINDER & LINES GP - STICK 296
CYLINDER & SEAL GP - BLADE 301
CYLINDER & SEAL GP - BOOM 298
CYLINDER & SEAL GP - BUCKET 300
CYLINDER & SEAL GP - STICK 299
CYLINDER BLOCK GP 18
CYLINDER GP - BLADE 307
CYLINDER GP - BOOM 303
CYLINDER GP - BUCKET 306
CYLINDER GP - STICK 304
CYLINDER HEAD GP 15

INDEX

Name Page

D

DOOR GP - CAB 539
DOOR GP - HOOD 217
DRIVE AS - WINDSHIELD - AUTO 550
DRIVE GP - SWING 424
DUCT AS 612
DUCT GP - AIR 610

E

ELECTRONICS GP 169
ENGINE AR 11.01

F

FAN GP - SUCTION 50
FASTENER GP - SWING & FINAL DR 202
FENDER & COVER GP 231
FILM GP 701
FILTER GP - ENGINE OIL 34
FILTER GP - FUEL 72
FILTER GP - HYDRAULIC 286
FINAL DRIVE GP 196
FLYWHEEL GP 27
FRAME AS - UNDERCARRIAGE 245
FRAME GP - UPPER 242

G

GEAR & BEARING GP - SWING 238
GEAR GP - FRONT 24
GUARD AR - OVERHEAD 574
GUARD GP - BLADE CYLINDER 320
GUARD GP - BOTTOM 221
GUARD GP - BUCKET CYLINDER 321
GUARD GP - FRONT WINDOW 576
GUARD GP - OVERHEAD 575
GUARD GP - SNOW 226
GUARD GP - SWIVEL 224
GUARD GP - TRACK GUIDE 255
GUARD GP - TRAVEL MOTOR 256

Name Page

H

HANDHOLD GP 225
HARNESS AS 94
102
112
161.05
186
190
HARNESS AS - CONSOLE 129
HARNESS AS - WIRING 128.02
143
152
156
163
HATCH AS 544
HATCH GP 543
545
HEAD GP - PUMP CONTROL 284
HEADREST AS 604
HEATER & MTG GP - CAB 618
HEATER AR - CAB 617
HEATER GP - CAB 620
HOOD & GUARD GP 204
HOOD GP 216
HOOD GP - ENGINE 215
HORN GP - ELECTRIC 583
HOUSING GP - FILTER 293
HOUSING GP - FLYWHEEL 26
HOUSING GP - FRONT 25

I

IDLER GP - FRONT 247

K

KNOB AS 438

INDEX

Name Page

L

LAMP GP - FLOOD 187
LEVER GP 587
LIGHTING GP - BOOM 182
LIGHTING GP - CAB 178
LIGHTING GP - CHASSIS 177
LINES AR - AUXILIARY HYDRAULIC 328
LINES GP - AIR 59
LINES GP - AIR CONDITIONER 614
LINES GP - AUXILIARY HYDRAULIC 330
334
LINES GP - BLADE CYL & VALVE 410
LINES GP - BLADE CYLINDER 317
LINES GP - BOOM 322
LINES GP - BOOM CYLINDER 310
LINES GP - BUCKET CYLINDER 316
LINES GP - DRAIN 61
344
414
LINES GP - ENGINE OIL 32
LINES GP - FRONT 386
LINES GP - FUEL 70
74
LINES GP - GREASE 657
LINES GP - HEATER 622
LINES GP - OIL DRAIN 37
LINES GP - PILOT 360
LINES GP - PUMP 352
LINES GP - QUICK COUPLER 332
349
LINES GP - RETURN & FILTER 416
LINES GP - STICK 325
LINES GP - STICK CYLINDER 314
LINES GP - SWING MOTOR 422
LINES GP - TRAVEL MOTOR 350
LINES GP - TURBOCHARGER OIL 36
LINES GP - WATER 48
LINK AS 592
LINK AS - TRACK 261
LINKAGE AR - BUCKET 631
LINKAGE AR - FRONT 631.02

Name Page

LINKAGE GP - BUCKET 660
LITERATURE GP 605

M

MANIFOLD GP - EXHAUST 63
MANIFOLD GP - INLET 62
MIRROR GP - REAR VIEW 584
MONITOR & MTG GP - OPERATOR 563
MONITOR GP - OPERATOR 564
MOTOR GP - TRAVEL 431.01
MOTOR AS - WINDOW WIPER 558
MOTOR GP - SWING 430
MOUNTING GP 170.02
MOUNTING GP - ALTERNATOR 29
MOUNTING GP - ENGINE 30
MOUNTING GP - GREASE GUN 220
MOUNTING GP - STARTING MOTOR 171
MOUNTING GP - VALVE 447
MUFFLER GP 58

N

NOZZLE GP - UNIT INJECTOR 82

P

PAN GP - OIL 28
PANEL GP - CIRCUIT BREAKER 104
PISTON & ROD GP 23
PLATE & FILM GP 694
PLATFORM GP - OPERATOR 585
PULLEY GP 31
PUMP & MOUNTING GP 273
PUMP AS - WATER 47
PUMP GP - FUEL INJECTION 76
PUMP GP - MAIN HYDRAULIC 276

R

RADIATOR & HYD OIL COOLER GP 38
RADIO GP - AM 571
RADIO GP - AM/FM 572
ROLLER AR - TRACK & CARRIER 252

INDEX

Name Page

ROLLER GP - TRACK CARRIER 254
ROLLER GP - TRACK - SINGLE FLANGE 253

S

SCREEN GP 272
SEAT BELT GP 602
SEAT GP 594
SEPARATOR - WATER 71.01
SIDECUTTER GP 685
SPECIAL AR 11
SPRING GP - RECOIL 250
SPROCKET GP - NONSEGMENTED 195
STARTING MOTOR GP - ELECTRIC 172
STICK AR - COUPLER 630
STICK AR - HOE 629
631
STICK GP 645
649
STICK GP - COUPLER 650
STICK GP - HOE 644
647
SUPPORT GP - SEAT 593
SUSPENSION GP - SEAT 599
SWITCH AS 123.01
191
193
SWITCH AS - DISCONNECT 120
SWITCH AS - MAGNETIC 121
SWITCH AS - ROLLER 191
SWITCH AS - ROTARY 138
SWITCH GP - START 137
SWIVEL GP 432

T

TANK & FILTER GP - HYDRAULIC 264
TANK & MTG GP - FUEL 67
TANK & MTG GP - HYDRAULIC 262
TANK AS - WINDOW WASHER 570
TANK GP - FUEL 68

Name Page

TIMER AS 124
192
TIP GP 689
TIP GP - ABRASION 688
TIP GP - LONG 686
688
TIP GP - PENETRATION 689
TIP GP - SHORT 687
TIP GP - WIDE 686
TOOL AR 692
TOOL GP 693
TRACK GP 258
TURBOCHARGER GP 64

V

VALVE & MOUNTING GP 448
VALVE AR 358
VALVE AR - BOOM LOWERING CONTROL 359
VALVE AR - STICK LOWERING CONT 359
VALVE AS - BALL 512
VALVE GP - CHECK 489
VALVE GP - CONTROL 460
471
478
VALVE GP - MAIN CONTROL 450
VALVE GP - PILOT 434
494
VALVE GP - PRESS REDUCING SOL 485
VALVE GP - PRESSURE REDUCING 484
VALVE GP - RELIEF 470
473
483
VALVE GP - SELECTOR 492
VALVE GP - SHUTTLE 510
VALVE GP - SOLENOID 486
491
VALVE MECHANISM GP 16
VISOR GP - PROTECTION - RAIN 581
VISOR GP - SUN 582

INDEX

Name Page Name Page

W

WASHER GP - WINDOW 568
WINDOW AS 555
WINDOW GP 546
551
WINDOW GP - DOOR 542
WIPER & WASHER GP - WINDOW 566
WIPER AR - WINDOW 565
WIPER GP - WINDOW 556
WIRING GP 151
155
157
194
WIRING GP - CAB 140
WIRING GP - CONSOLE 125
WIRING GP - LOWER WIPER 154
WIRING GP - QUICK COUPLER 128
162

Consists of :

			Page
1	120-7199	GUARD GP-TRACK GUIDE	255
1	137-2813	GUARD GP-SWIVEL	224
1	170-2607	GUARD GP-BOTTOM	222
1	185-9123	GUARD GP-TRAVEL MOTOR	257
1	192-8381	BUMPER SET	244
1	193-9455	COUNTERWEIGHT GP	234
1	194-8941	FILM GP	706

H91641E 02

ENGINE ARRANGEMENT

Consists of :

			Page
1	201-3870	ENGINE AR	12
1	205-6810	PULLEY GP	31

H84326E 01

217-5535 ENGINE AR

MEMORANDA

ENGINE ARRANGEMENT

Consists of :

			Page
		BASIC ENGINE	
1	212-8523	PAN GP-OIL	28
1	196-7979	CAMSHAFT GP	22
1	205-6811	CRANKSHAFT GP	21
1	205-6839	CYLINDER BLOCK GP	18
1	205-6837	CYLINDER HEAD GP	15
1	205-6838	VALVE MECHANISM GP	16
1	196-8072	COVER GP-VALVE MECHANISM	20
1	205-6782	FLYWHEEL GP	27
1	212-8459	HOUSING GP-FLYWHEEL	26
1	178-6519	GEAR GP-FRONT	24
1	205-6840	HOUSING GP-FRONT	25
1	212-8461	PISTON & ROD GP	23
1	178-6531	MOUNTING GP-ALTERNATOR	29
		LUBRICATION SYSTEM	
1	212-8466	FILTER GP-ENGINE OIL	34
1	196-7990	LINES GP-ENGINE OIL	32
1	217-5491	BREATHER GP	33
1	196-7991	LINES GP-TURBOCHARGER OIL	36
		COOLING SYSTEM	
1	178-6633	PUMP AS-WATER	47

H93798E 08

201-3870 ENGINE AR (1/2)
Part of 217-5535-Page11.01

ENGINE ARRANGEMENT

Consists of :

			Page
		COOLING SYSTEM	
1	196-7995	LINES GP-WATER	48
1	5I-8132	COOLER GP-ENGINE OIL	46
1	196-7994	FAN GP-SUCTION	50
		AIR INLET AND EXHAUST SYSTEM	
1	212-8462	MANIFOLD GP-INLET	62
1	212-8464	LINES GP-AIR	59
1	212-8463	MANIFOLD GP-EXHAUST	63
1	196-7988	TURBOCHARGER GP	64
1	212-8465	MUFFLER GP	58
		FUEL SYSTEM	
1	212-8471	FILTER GP-FUEL	72
1	212-8468	LINES GP-FUEL	74
1	212-8469	PUMP GP-FUEL INJECTION	76
4	212-8470	NOZZLE GP-UNIT INJECTOR	82
		ELECTRICAL AND STARTING SYSTEM	
1	125-2963	MOUNTING GP-STARTING MOTOR	171
1	272-4774	STARTING MOTOR GP-ELECTRIC	173.01
1	212-8622	ALTERNATOR GP-CHARGING	174

THE FOLLOWING REPAIR KIT IS AVAILABLE:

1	239-6684	CAP KIT

H93799E 08

201-3870 ENGINE AR (2/2)
Part of 217-5535-Page11.01

MEMORANDA

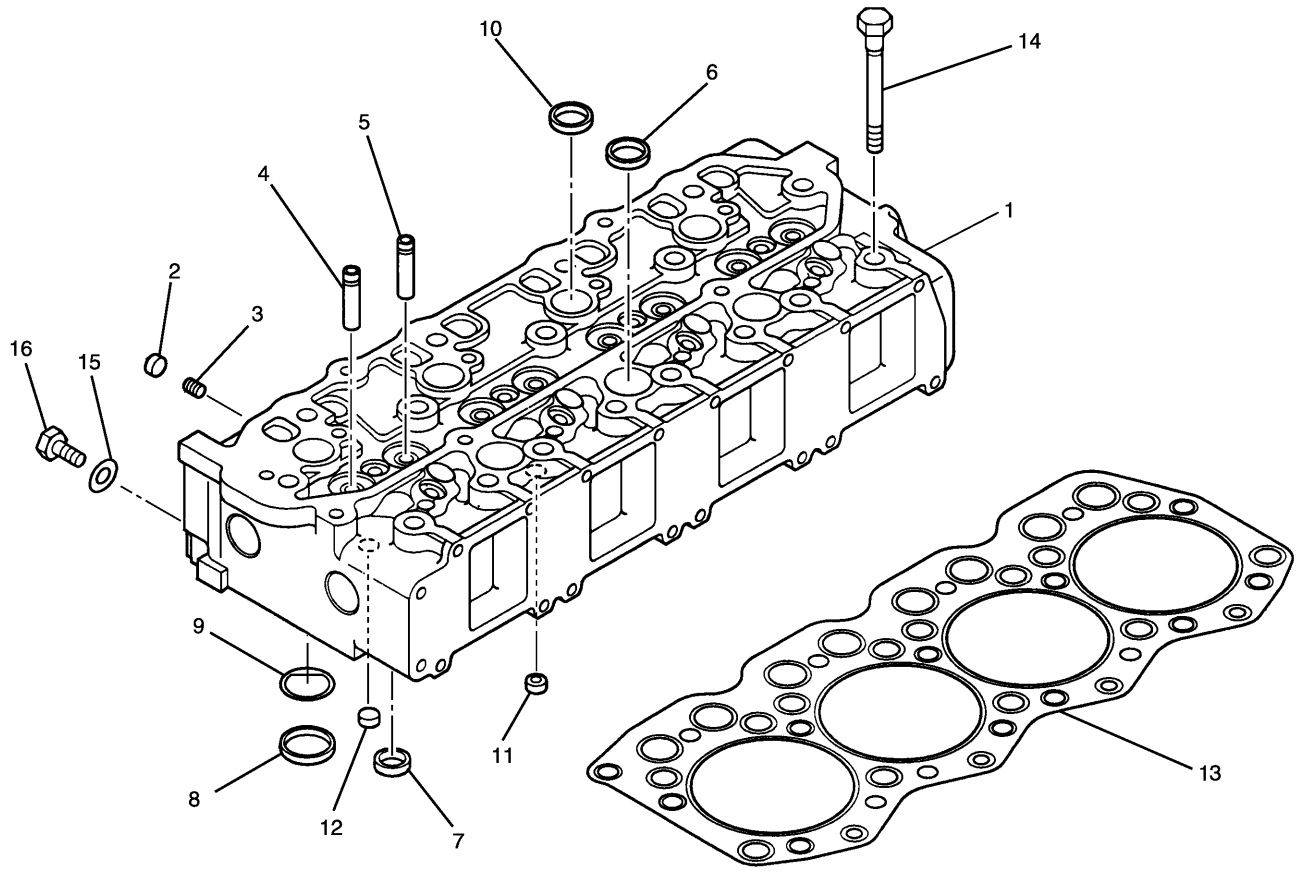

NOTE	No.	PART No.	QTY	PART NAME	NOTE	No.	PART No.	QTY	PART NAME
	1	212-8472	1	HEAD AS					
	2	099-4388	4	CAP					
	3	5I-7505	4	PLUG					
	4	183-8172	4	GUIDE (INTAKE)					
	5	183-8173	4	GUIDE (EXHAUST)					
	6	5I-4915	10	CAP					
	7	5I-8012	4	INSERT (EXHAUST)					
	8	212-8474	4	INSERT (INTAKE)					
	9	212-8473	4	PLATE					
	10	212-8475	4	CAP					
	11	212-8476	3	CAP					
	12	5I-7583	2	CAP					
	13	222-8330	1	GASKET					
	14	5I-7718	17	BOLT (L=125mm)					
	15	095-2038	1	WASHER					
	16	5I-5591	1	PLUG					

H82693E 01

205-6837 CYLINDER HEAD GP

Part of 201-3870-Page12

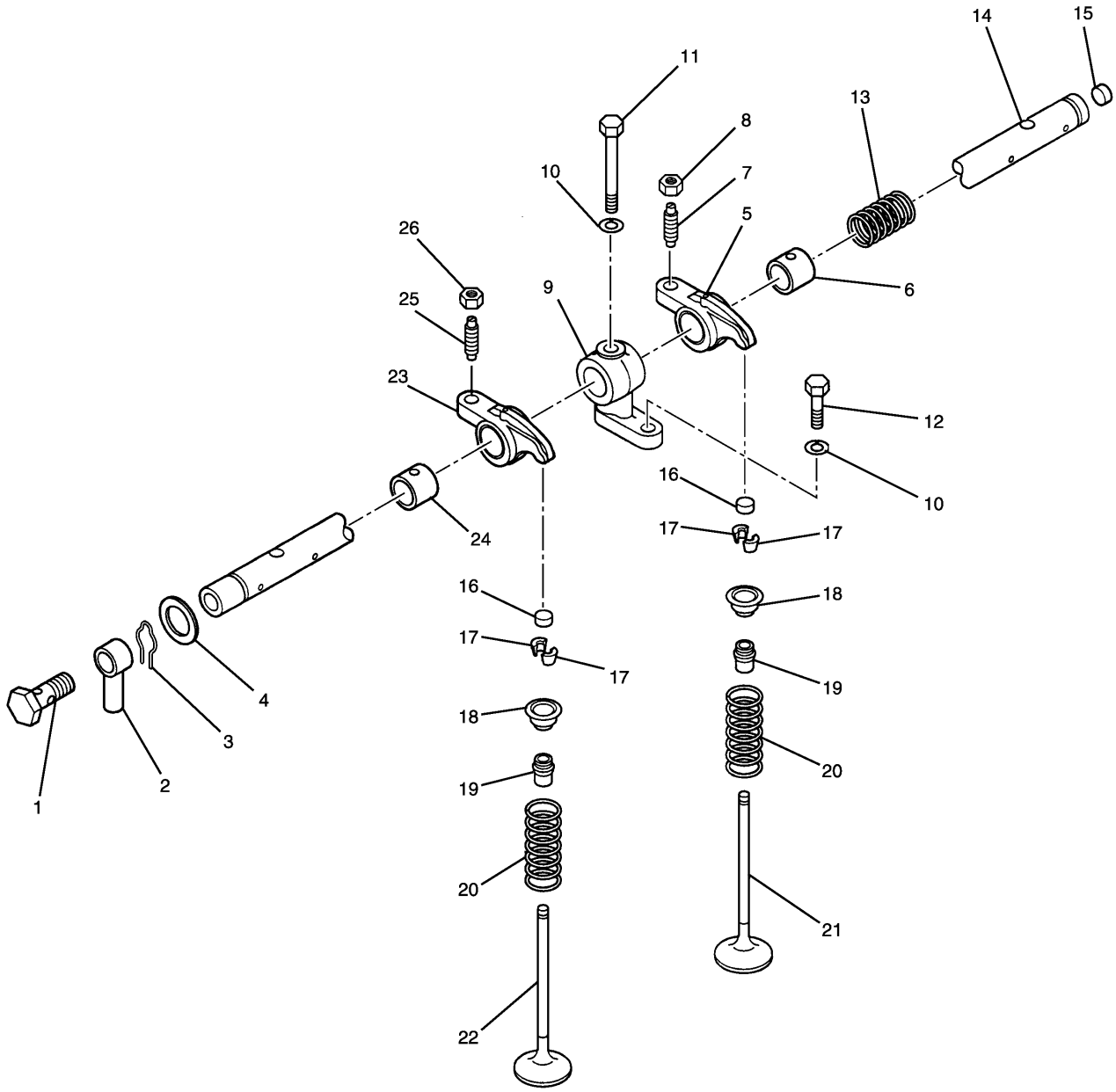

205-6838 VALVE MECHANISM GP
Part of 201-3870-Page12

BASIC ENGINE

NOTE	No.	PART No.	QTY	PART NAME	NOTE	No.	PART No.	QTY	PART NAME
	1	5I-4921	1	BOLT (L=21mm)					
	2	5I-7720	1	PIPE					
	3	5I-7622	2	RING					
	4	2W-6047	2	WASHER					
	5	5I-7590	4	ROCKER AS					
	6	5I-7631	1	BUSHING					
	7	094-9525	1	SCREW					
	8	091-3474	1	NUT					
	9	5I-7722	4	BRACKET					
	10	095-8638	8	WASHER					
	11	5I-5010	4	BOLT (L=65mm)					
	12	8T-4189	4	BOLT (L=20mm)					
	13	5I-7721	3	SPRING					
	14	5I-7883	1	SHAFT AS					
	15	094-4696	1	PLUG					
	16	5I-7630	8	CAP					
	17	5I-7719	16	COTTER					
	18	5I-7625	8	RETAINER					
	19	5I-7624	8	SEAL					
	20	5I-7740	8	SPRING					
	21	5I-7739	4	VALVE (EXHAUST)					
	22	212-8477	4	VALVE (INTAKE)					
	23	178-6532	4	ROCKER AS					
	24	5I-7631	1	BUSHING					
	25	094-9525	1	SCREW					
	26	091-3474	1	NUT					

H76921E 00

205-6838 VALVE MECHANISM GP

Part of 201-3870-Page12

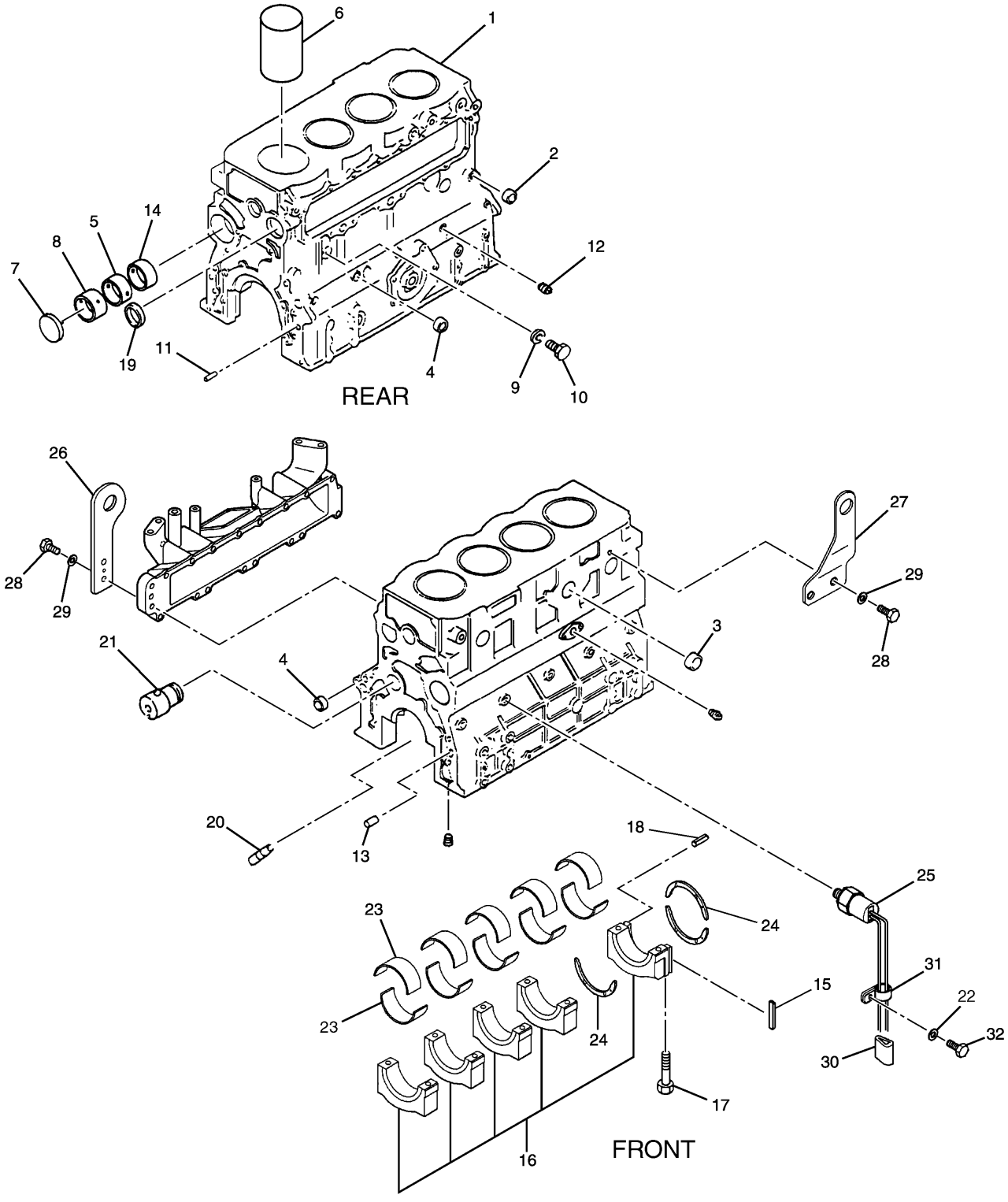

H97622E 01

205-6839 CYLINDER BLOCK GP
Part of 201-3870-Page12

BASIC ENGINE

NOTE	No.	PART No.	QTY	PART NAME	NOTE	No.	PART No.	QTY	PART NAME
	1	212-8478	1	CRANKCASE AS					
	2	095-2005	2	CAP					
	3	3P-1896	5	PLUG					
	4	096-3741	5	CAP					
	5	5I-7528	1	BUSHING					
	6	5I-7523	4	SLEEVE					
	7	5I-7525	1	PLUG					
	8	5I-7529	1	BUSHING					
	9	095-2039	1	WASHER					
	10	8T-4191	1	BOLT (L=16mm)					
	11	099-4420	2	PIN					
	12	5I-7505	10	PLUG					
	13	5I-7724	2	PIN					
	14	5I-8009	1	BUSHING					
	15	5I-7524	2	SEAL					
	16	5I-7839	1	CAP SET					
	17	094-7741	10	BOLT					
	18	6V-8236	6	PIN					
	19	095-2011	1	CAP					
	20	5I-7526	4	VALVE					
	21	222-8201	1	SHAFT					
	22	095-8638	1	WASHER					
	23	5I-7588	5	BEARING SET (STANDARD)					
A		5I-7784	5	BEARING SET (US=0.25mm)					
A		5I-7785	5	BEARING SET (US=0.50mm)					
A		5I-7786	5	BEARING SET (US=0.75mm)					
	24	5I-7654	3	PLATE (STANDARD)					
A		5I-7787	3	PLATE (OS=0.15mm)					
A		5I-7788	3	PLATE (OS=0.30mm)					
A		5I-7789	3	PLATE (OS=0.45mm)					
	25	266-6210	1	SWITCH					
	26	212-8479	1	EYE					
	27	212-8511	1	EYE					
	28	8T-4179	4	BOLT (L=20mm)					
	29	096-2501	4	WASHER					
	30	5I-7978	1	SHEET					
	31	4D-7794	1	CLIP					
	32	7X-2536	1	BOLT (L=14mm)					

A—NOT PART OF THIS GROUP

H97622E 01

205-6839 CYLINDER BLOCK GP

Part of 201-3870-Page12

BASIC ENGINE

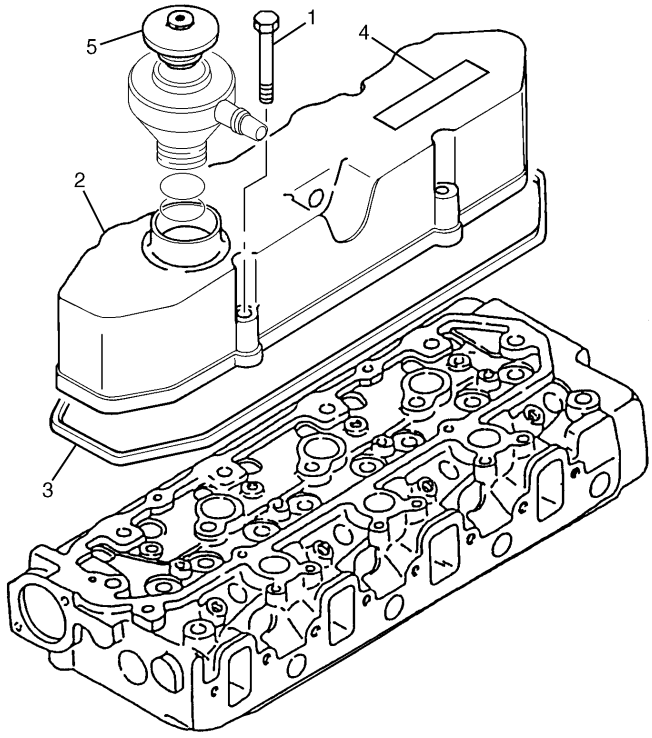

NOTE	No.	PART No.	QTY	PART NAME
	1	8T-4186	4	BOLT (L=40mm)
	2	5I-7904	1	COVER
	3	5I-7905	1	GASKET
	4	4P-6445	1	PLATE (CAT)
	5	297-7662	1	CAP

H98132E 04

196-8072 COVER GP-VALVE MECHANISM

Part of 201-3870-Page12

BASIC ENGINE

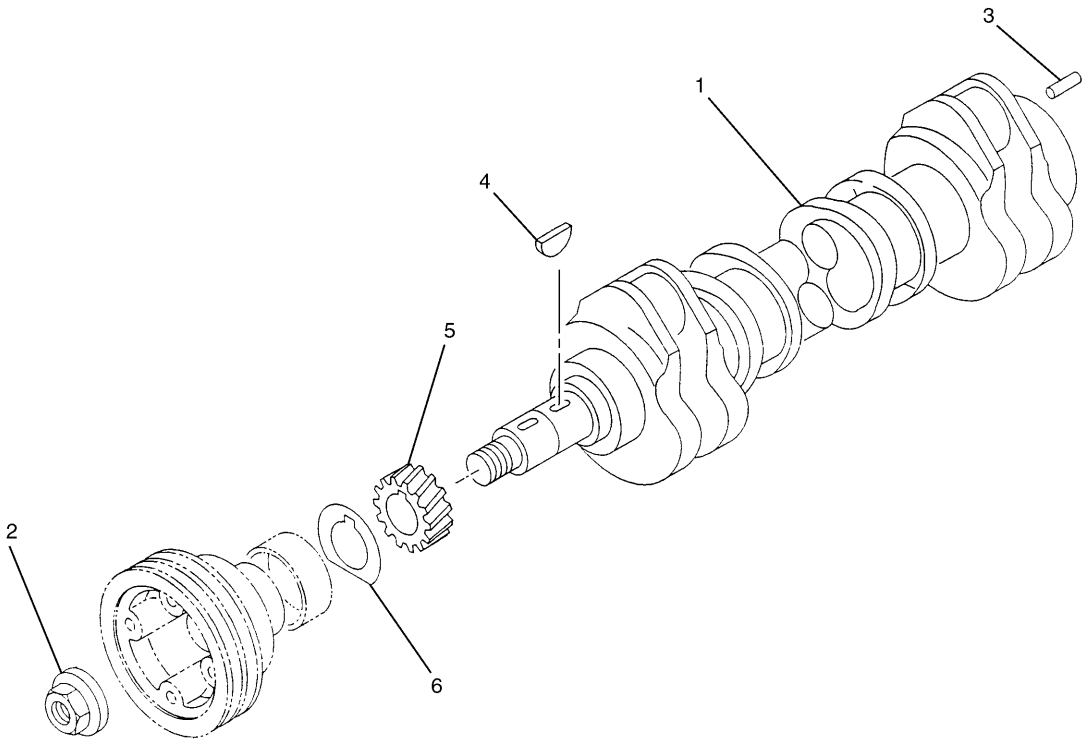

NOTE	No.	PART No.	QTY	PART NAME	NOTE	No.	PART No.	QTY	PART NAME
	1	135-2419	1	CRANKSHAFT AS					
	2	130-7596	1	NUT					
	3	085-9513	2	PIN					
	4	094-4628	2	KEY					
	5	5I-7674	1	GEAR (Z=23)					
	6	233-1277	1	PLATE					

H85507E 01

205-6811 CRANKSHAFT GP

Part of 201-3870-Page12

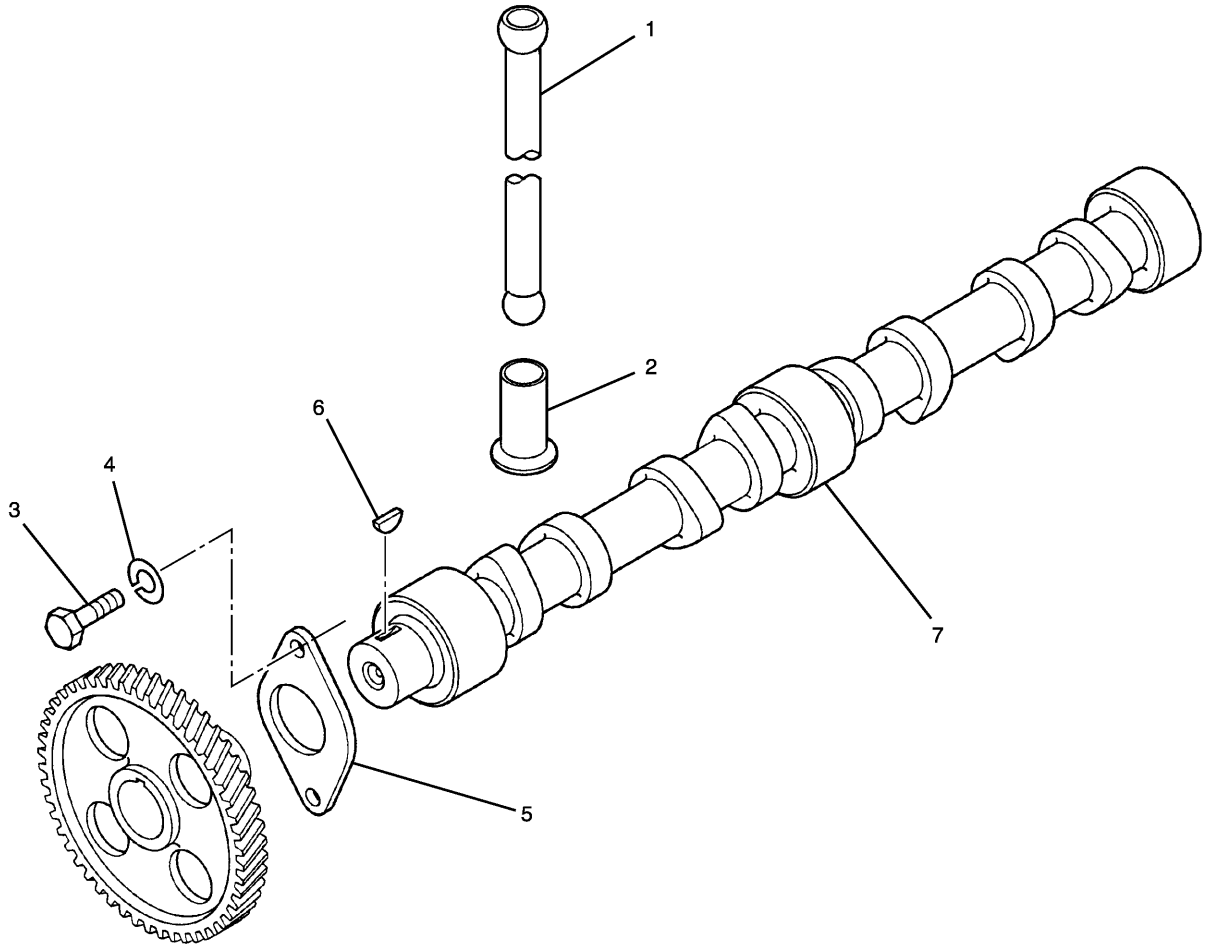

NOTE	No.	PART No.	QTY	PART NAME	NOTE	No.	PART No.	QTY	PART NAME
	1	5I-7723	8	PUSHROD					
	2	279-7859	8	TAPPET					
	3	8T-4200	2	BOLT (L=16mm)					
	4	095-8638	2	WASHER					
	5	5I-7650	1	PLATE					
	6	094-4628	1	KEY					
	7	196-7999	1	CAMSHAFT					

H93739E 03

196-7979 CAMSHAFT GP
Part of 201-3870-Page12

BASIC ENGINE

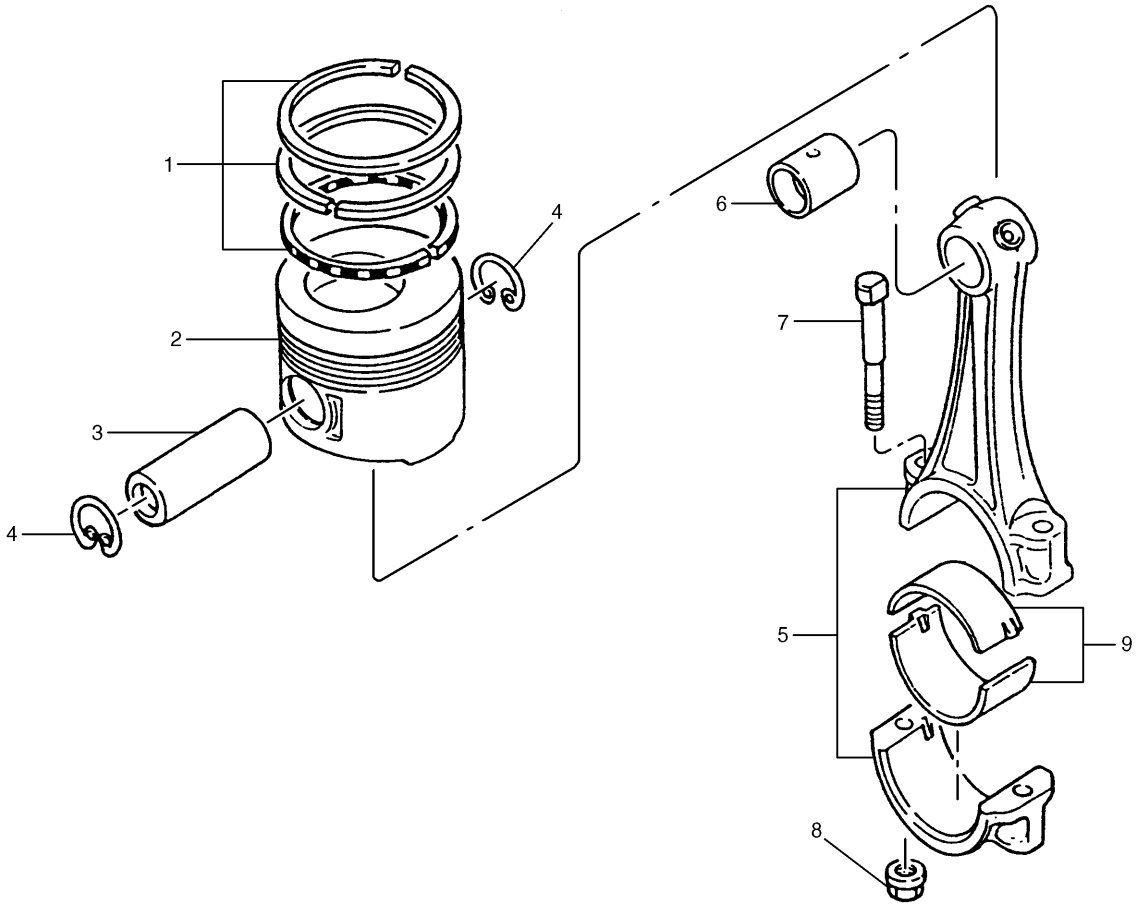

NOTE	No.	PART No.	QTY	PART NAME	NOTE	No.	PART No.	QTY	PART NAME
	1	178-6543	4	RING SET (STANDARD)					
A		178-6544	4	RING SET (OS=0.25mm)					
A		178-6545	4	RING SET (OS=0.50mm)					
	2	297-7750	4	PISTON (STANDARD)					
A		297-7754	4	PISTON (OS=0.25mm)					
A		297-7755	4	PISTON (OS=0.50mm)					
	3	094-7134	4	PIN					
	4	5I-7667	8	RING					
	5	5I-7668	4	ROD AS					
	6	5I-7539	1	BUSHING					
	7	094-7154	2	BOLT (L=85mm)					
	8	094-7516	2	NUT					
	9	5I-7637	8	BEARING					
A		5I-7794	8	BEARING (US=0.25mm)					
A		5I-7795	8	BEARING (US=0.50mm)					
A		5I-7796	8	BEARING (US=0.75mm)					

A—NOT PART OF THIS GROUP

H97621E 01

212-8461 PISTON & ROD GP

Part of 201-3870-Page12

BASIC ENGINE

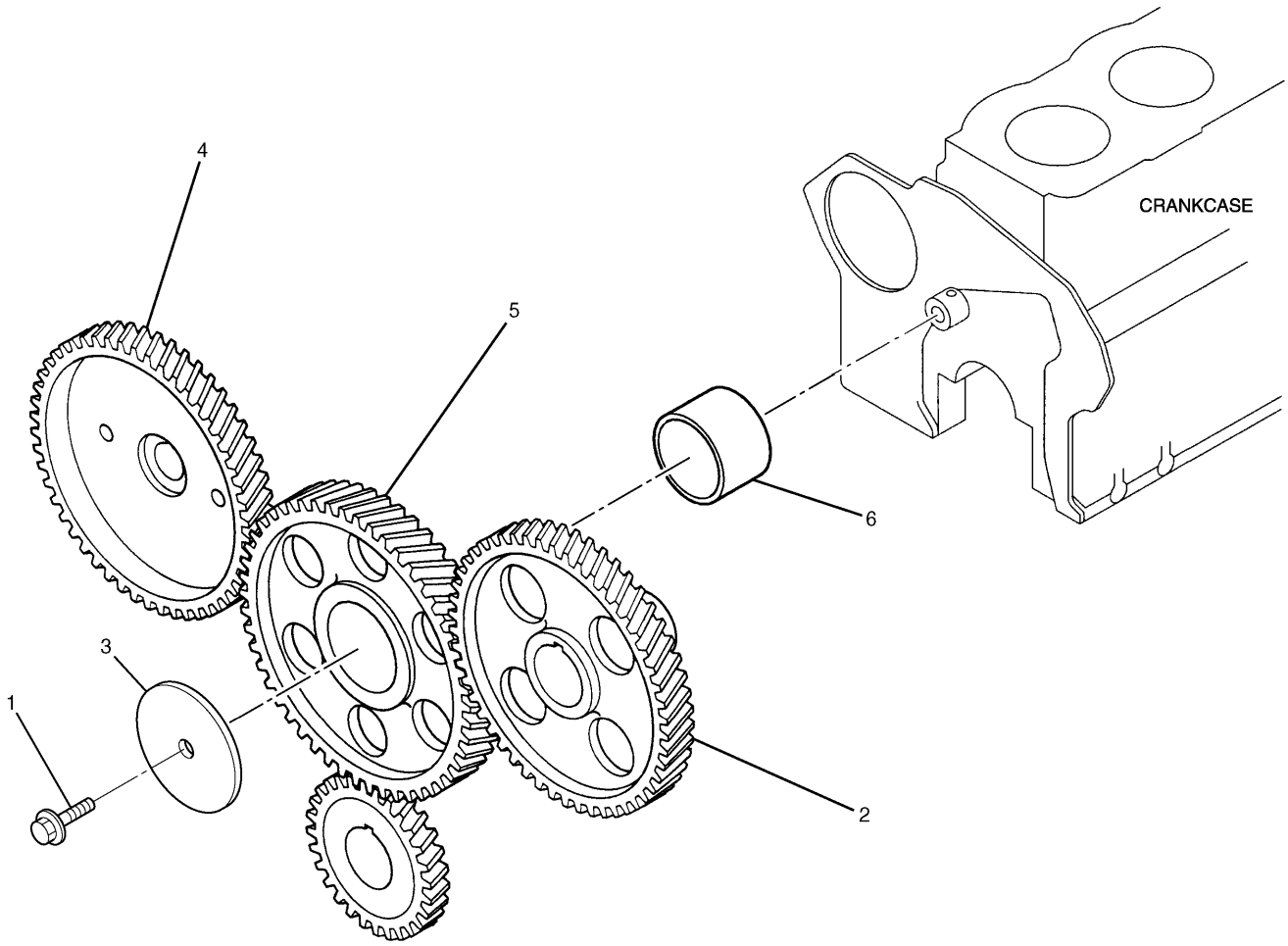

NOTE	No.	PART No.	QTY	PART NAME	NOTE	No.	PART No.	QTY	PART NAME
	1	222-8212	1	BOLT (L=20mm)					
	2	5I-7673	1	GEAR (Z=46)					
	3	222-8202	1	PLATE					
	4	178-6550	1	GEAR (Z=46)					
	5	5I-7611	1	IDLER AS					
	6	5I-7542	1	BUSHING					

H82576E 02

178-6519 GEAR GP-FRONT
Part of 201-3870-Page12

BASIC ENGINE

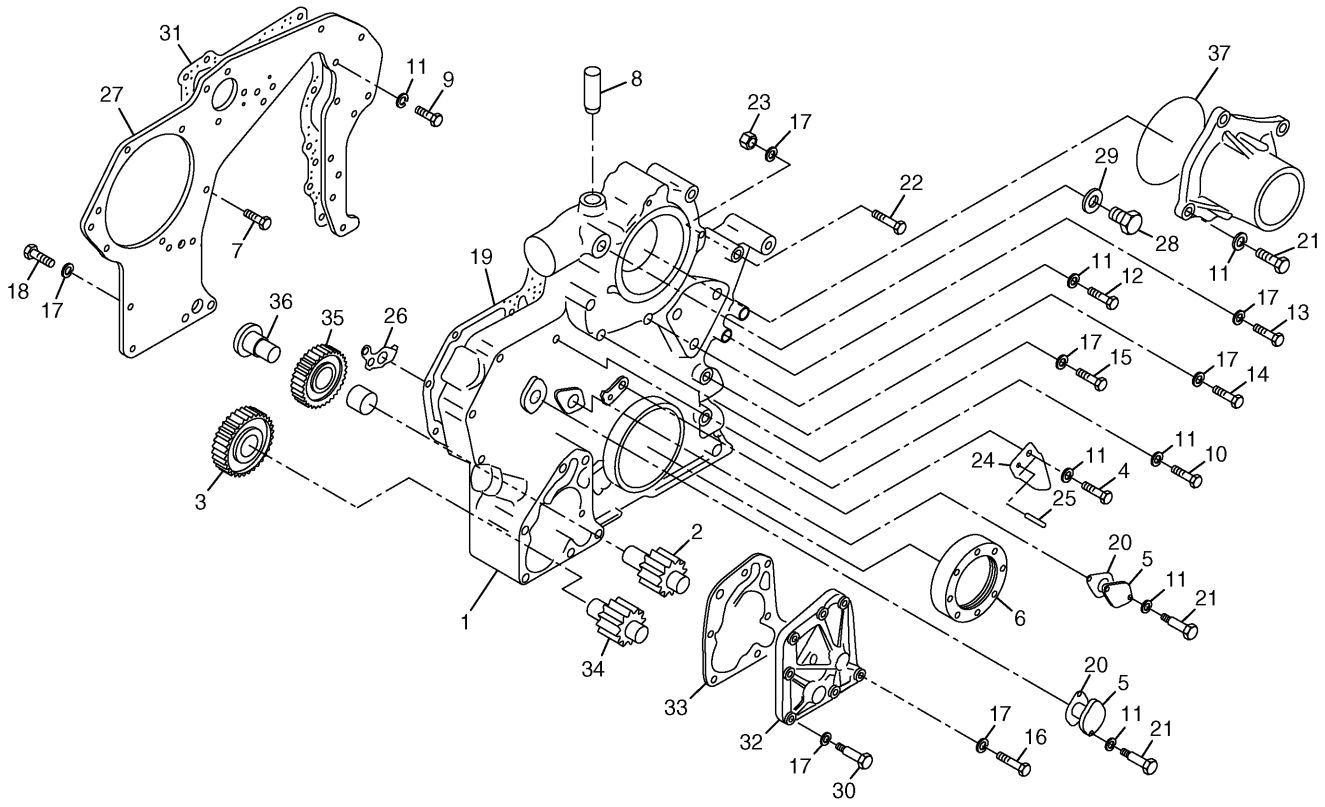

NOTE	No.	PART No.	QTY	PART NAME	NOTE	No.	PART No.	QTY	PART NAME
	1	196-8001	1	BODY AS		21	8T-4189	6	BOLT (L=20mm)
	2	5I-8125	1	GEAR AS		22	5I-4969	2	BOLT (L=70mm)
	3	125-2951	1	GEAR (Z=23)		23	212-8510	2	NUT
	4	7X-2536	1	BOLT (L=14mm)		24	5I-7533	1	POINTER
	5	6F-7556	2	COVER		25	6V-8236	1	PIN
	6	5I-7656	1	SEAL		26	5I-7657	1	GASKET
	7	5I-7610	1	BOLT (L=20mm)		27	5I-7659	1	PLATE
	8	5I-7632	1	PIPE		28	096-9435	1	PLUG
	9	8T-4200	2	BOLT (L=16mm)		29	096-9532	1	WASHER
	10	8T-6870	4	BOLT (L=70mm)		30	8T-4195	4	BOLT (L=30mm)
	11	095-8638	15	WASHER		31	5I-7534	1	GASKET
	12	8T-4177	2	BOLT (L=90mm)		32	178-6538	1	COVER AS
	13	8T-6466	1	BOLT (L=60mm)		33	178-6537	1	GASKET
	14	8T-5005	4	BOLT (L=70mm)		34	5I-7858	1	GEAR AS
	15	8T-4172	2	BOLT (L=80mm)		35	5I-7686	1	GEAR AS (Z=24)
	16	5I-7896	4	BOLT (L=95mm)		36	5I-7683	1	SPINDLE
	17	7X-0796	17	LOCKWASHER		37	096-9528	1	SEAL-O-RING (ID=109.50mm)
	18	8T-4137	2	BOLT (L=20mm)					
	19	5I-7658	1	GASKET					
	20	6F-7557	2	GASKET					

H76924E 00

205-6840 HOUSING GP-FRONT

Part of 201-3870-Page12

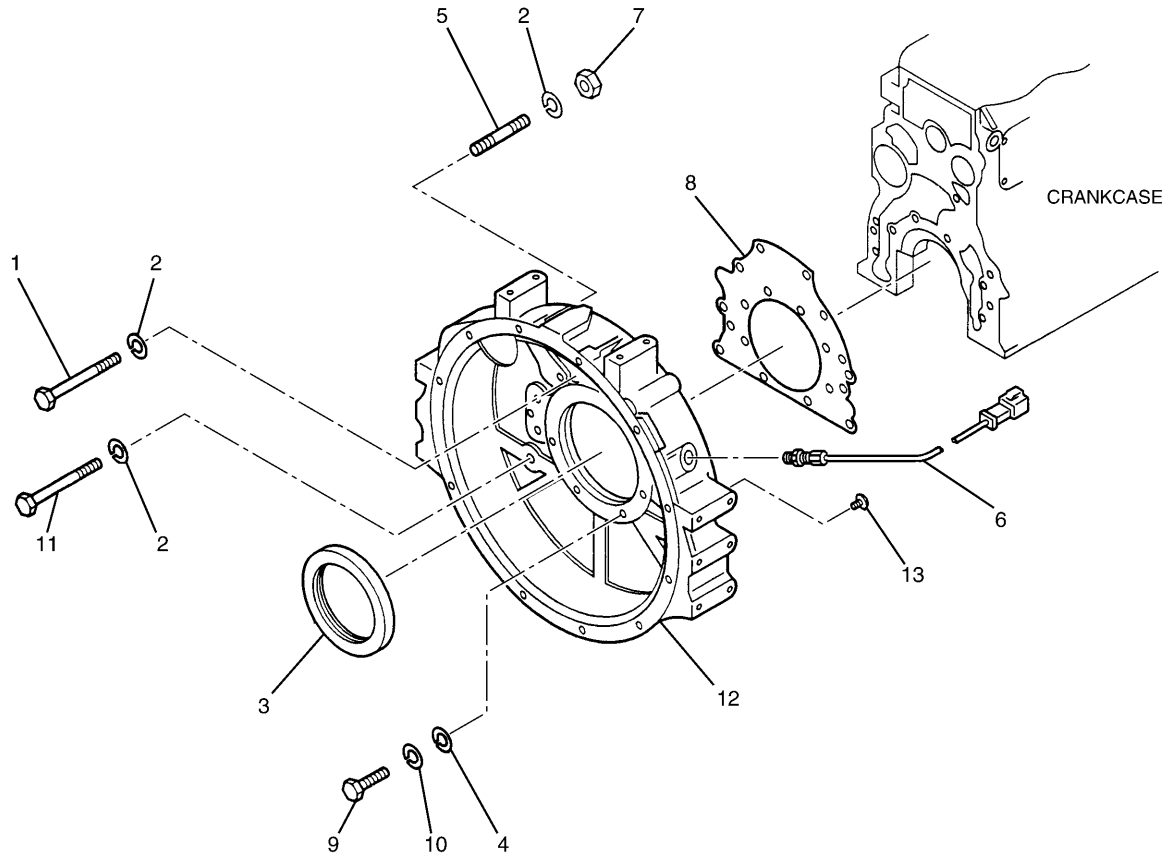

NOTE	No.	PART No.	QTY	PART NAME	NOTE	No.	PART No.	QTY	PART NAME
	1	8T-4136	2	BOLT (L=25mm)					
	2	7X-0796	12	LOCKWASHER					
	3	5I-7660	1	SEAL AS					
	4	8T-4224	4	WASHER					
	5	5I-4983	2	STUD (STARTER)					
	6	196-7973	1	SENSOR					
	7	6V-8231	2	NUT					
	8	5I-7661	1	GASKET					
	9	8T-7547	4	BOLT (L=30mm)					
	10	095-8638	4	WASHER					
	11	8T-4195	8	BOLT (L=30mm)					
	12	212-8482	1	HOUSING					
	13	5I-7607	1	PLUG					

H76925E 00

212-8459 HOUSING GP-FLYWHEEL

Part of 201-3870-Page12

BASIC ENGINE

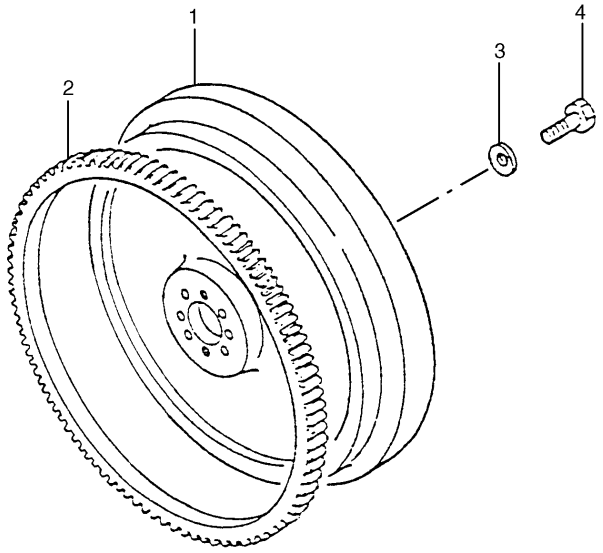

NOTE	No.	PART No.	QTY	PART NAME
	1	205-6783	1	FLYWHEEL AS
	2	205-6788	1	GEAR
	3	096-2501	6	WASHER
	4	5I-5005	6	BOLT (L=35mm)

H78534E 01

205-6782 FLYWHEEL GP

Part of 201-3870-Page12

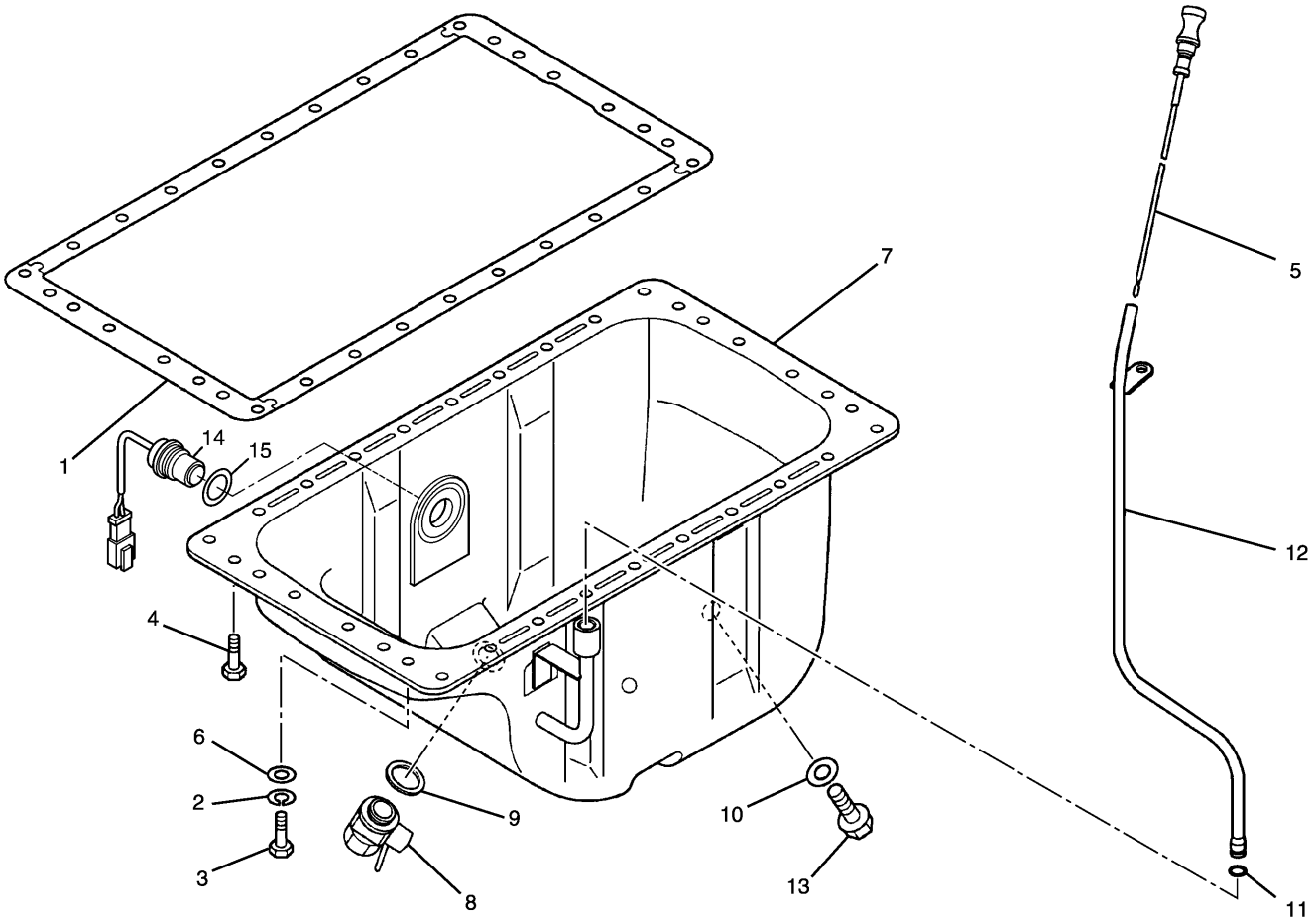

NOTE	No.	PART No.	QTY	PART NAME	NOTE	No.	PART No.	QTY	PART NAME
	1	5I-7842	1	GASKET					
	2	095-8638	17	WASHER					
	3	8T-4908	17	BOLT (L=25mm)					
	4	5I-7663	11	BOLT					
	5	135-2402	1	GAUGE					
	6	8T-4224	17	WASHER					
	7	196-8213	1	PAN					
	8	5I-8015	1	COCK AS					
	9	5I-8067	1	WASHER					
	10	095-2040	1	WASHER					
	11	5I-4993	1	SEAL					
	12	212-8483	1	GUIDE					
	13	5I-5607	1	PLUG					
	14	213-0677	1	SWITCH AS					
		102-8802	1	RECEPTACLE KIT					
		9X-3401	2	PIN					
	15	125-2968	1	SEAL					

H84329E 01

212-8523 PAN GP-OIL

Part of 201-3870-Page12

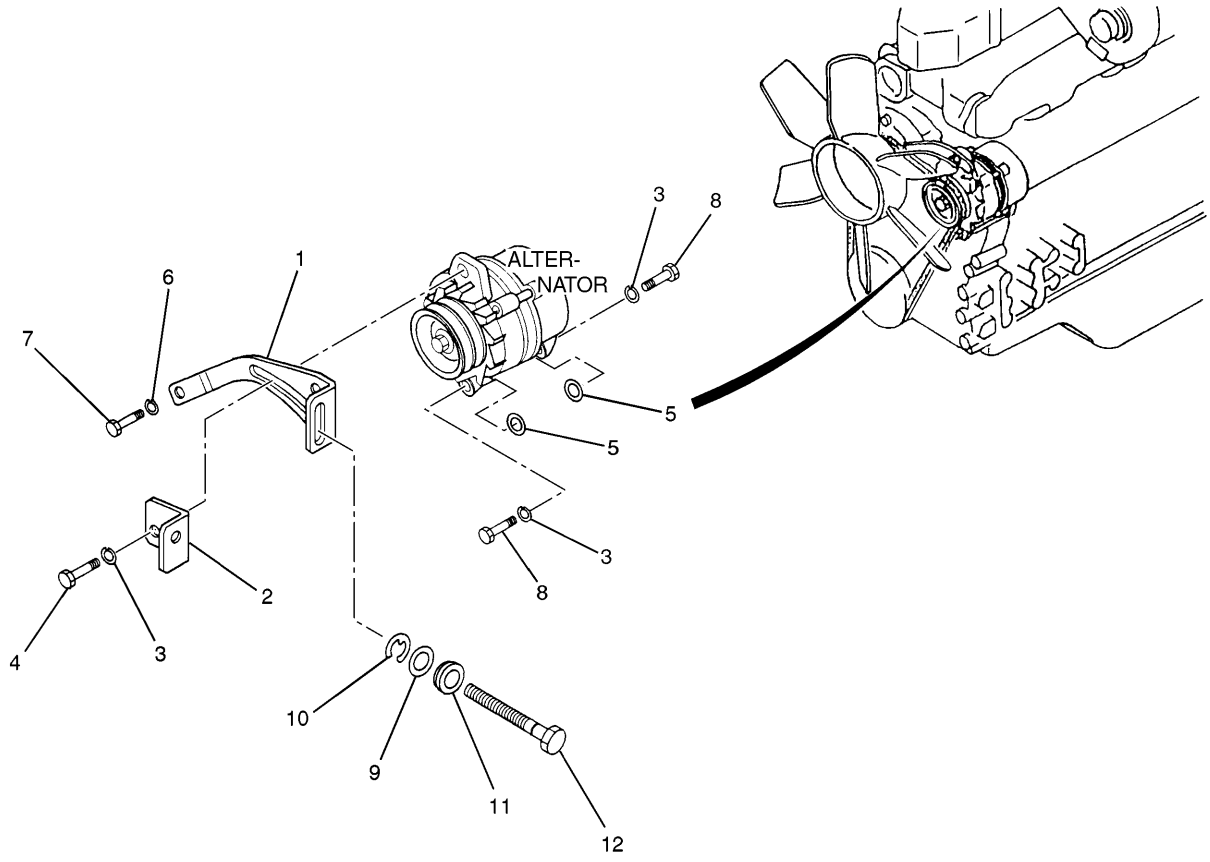

NOTE	No.	PART No.	QTY	PART NAME	NOTE	No.	PART No.	QTY	PART NAME
	1	178-6597	1	PLATE					
	2	178-6600	1	PULLER					
	3	096-2501	3	WASHER					
	4	099-4483	1	BOLT (L=30mm)					
	5	5I-7750	2	WASHER					
	6	7X-0796	1	LOCKWASHER					
	7	8T-4137	1	BOLT (L=20mm)					
	8	8T-4183	2	BOLT (L=40mm)					
	9	8T-4223	1	WASHER					
	10	178-6601	1	RING					
	11	178-6599	1	WASHER					
	12	178-6598	1	BOLT (L=135mm)					

H78535E 02

178-6531 MOUNTING GP-ALTERNATOR

Part of 201-3870-Page12

BASIC ENGINE

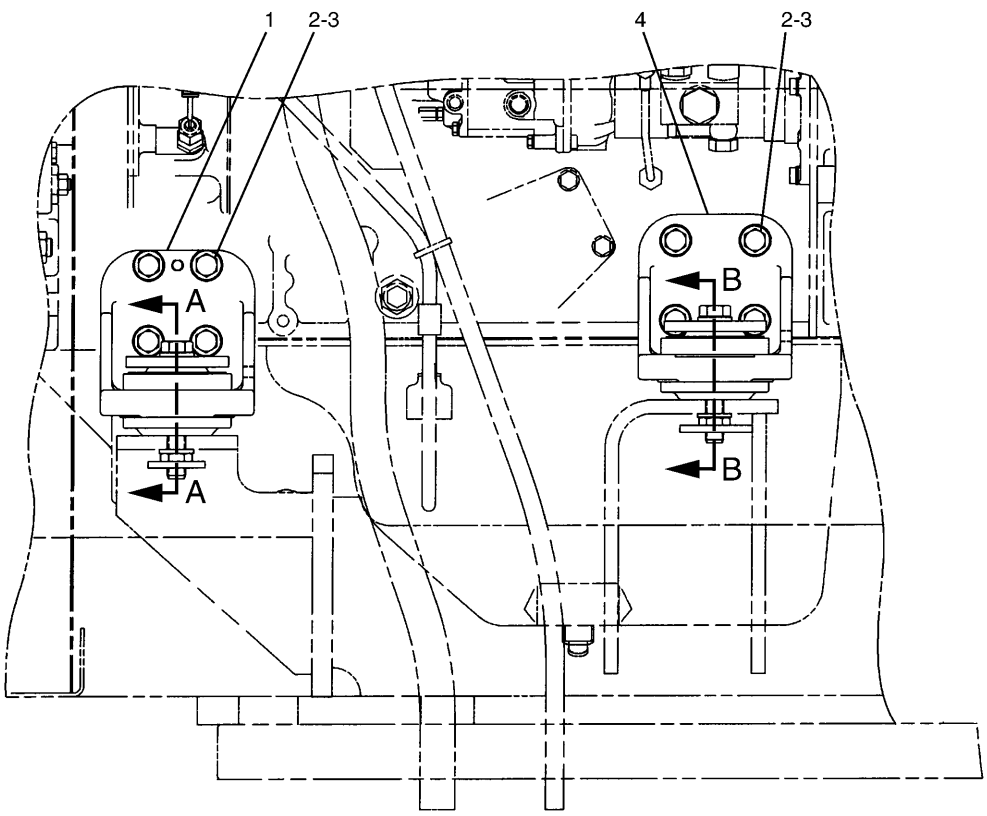

RIGHT SIDE VIEW ENGINE

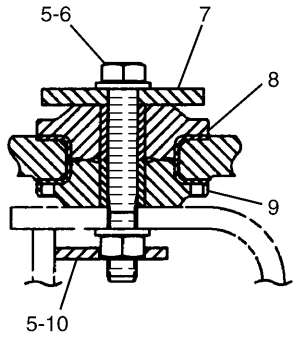

A – A

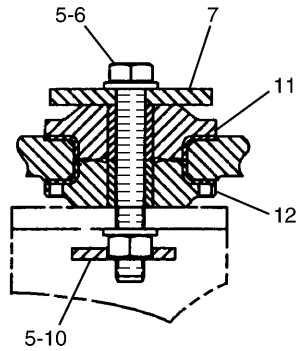

B – B

NOTE	No.	PART No.	QTY	PART NAME	NOTE	No.	PART No.	QTY	PART NAME
	1	178-6477	2	BRACKET					
	2	8T-4956	16	BOLT (L=35mm)					
	3	8T-4223	16	WASHER					
	4	118-9919	2	BRACKET					
	5	9X-8257	8	WASHER					
	6	8T-4173	4	BOLT (L=110mm)					
	7	099-4707	4	WASHER					
	8	118-9935	2	MOUNT					
	9	118-9936	2	MOUNT					
	10	118-9941	4	SUPPORT AS					
	11	193-2743	2	MOUNT					
	12	193-2744	2	MOUNT					

H71823E 01

162-6317 MOUNTING GP-ENGINE

BASIC ENGINE

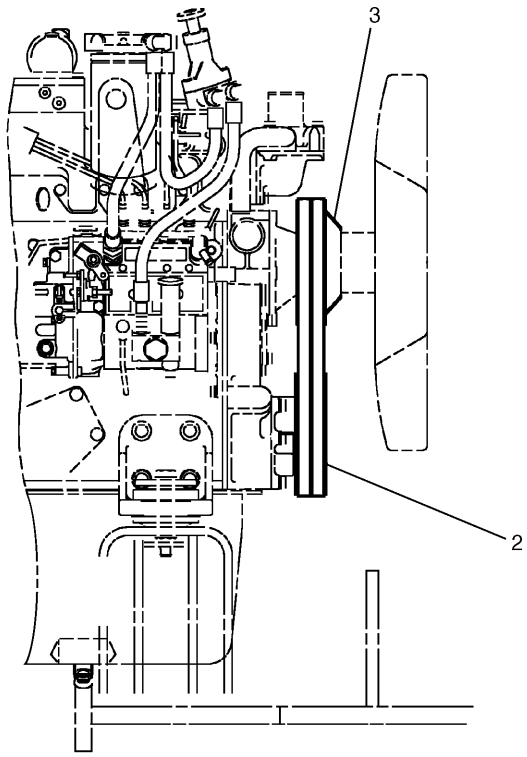

RIGHT SIDE VIEW
OF ENGINE

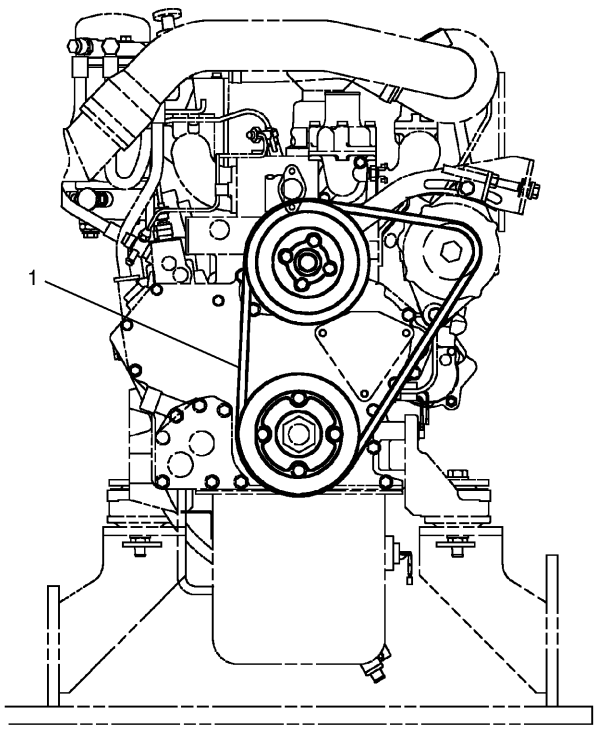

NOTE	No.	PART No.	QTY	PART NAME	NOTE	No.	PART No.	QTY	PART NAME
	1	217-5420	1	V-BELT					
	2	125-2969	1	PULLEY AS					
		5I-7540	1	SLEEVE					
	3	196-8020	1	PULLEY					

H88230E 01

205-6810 PULLEY GP
Part of 217-5535-Page11.01

LUBRICATION SYSTEM

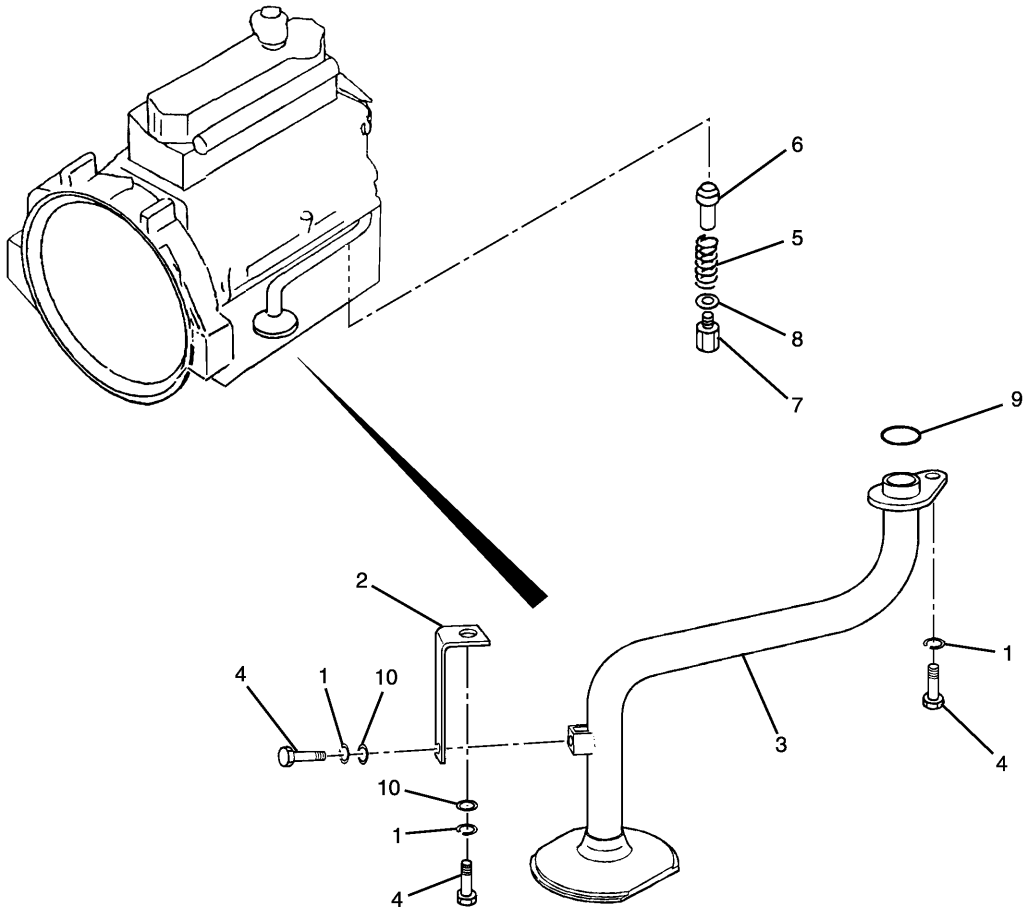

NOTE	No.	PART No.	QTY	PART NAME	NOTE	No.	PART No.	QTY	PART NAME
	1	095-8638	3	WASHER					
	2	5I-7642	1	PLATE					
	3	196-8019	1	STRAINER					
	4	8T-4200	3	BOLT (L=16mm)					
	5	5I-7640	1	SPRING					
	6	5I-7643	1	VALVE					
	7	5I-7644	1	PLUG					
	8	9J-2089	1	WASHER					
	9	5I-5038	1	SEAL-O-RING (ID=24.40mm)					
	10	8T-4224	2	WASHER					

H78536E 01

196-7990 LINES GP-ENGINE OIL

Part of 201-3870-Page12

LUBRICATION SYSTEM

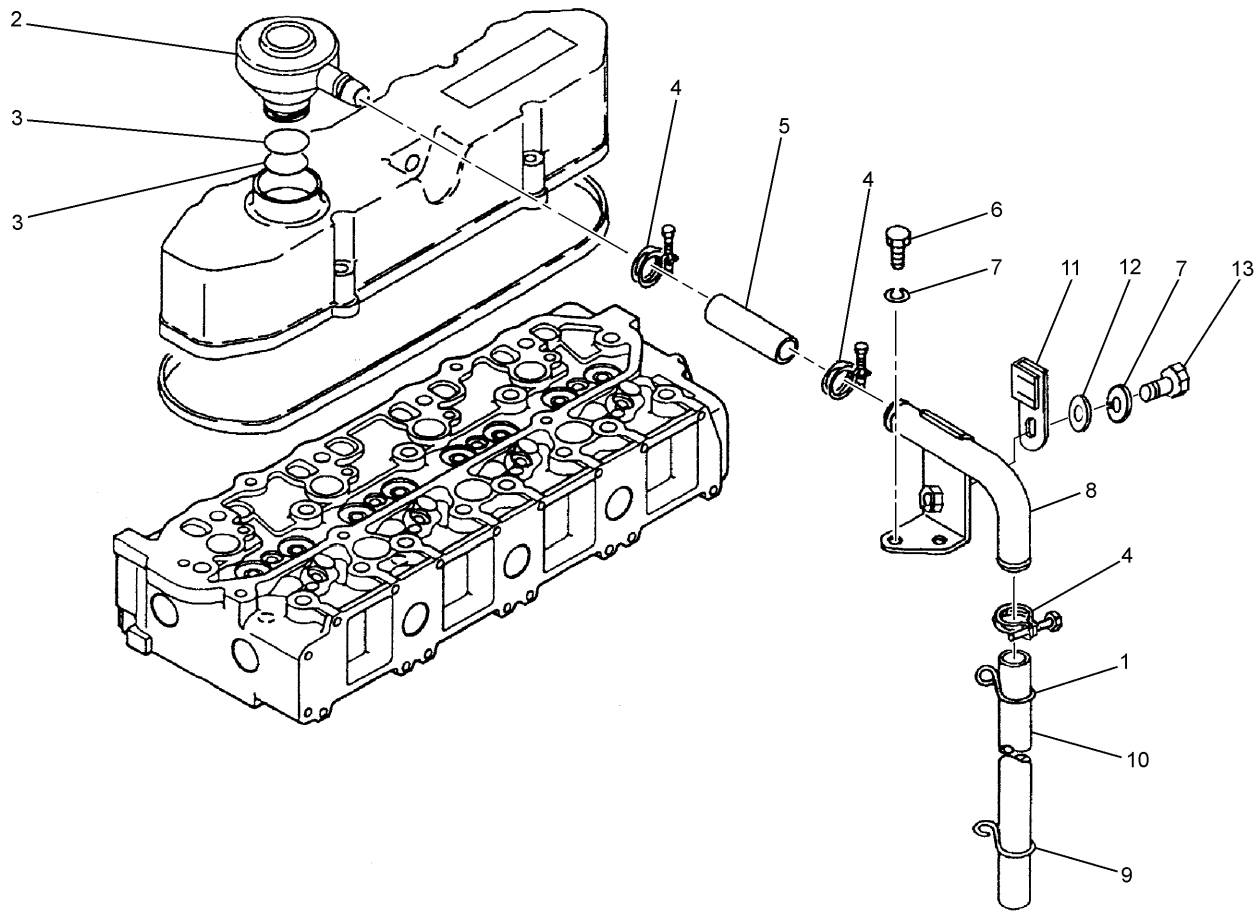

NOTE	No.	PART No.	QTY	PART NAME	NOTE	No.	PART No.	QTY	PART NAME
	1	178-6534	1	SUPPORT					
	2	5I-7886	1	BREATHER					
	3	094-9672	2	SEAL-O-RING (ID=41.20mm)					
	4	2S-3440	3	CLAMP					
	5	5I-4940	1	TUBE					
	6	8T-4137	2	BOLT (L=20mm)					
	7	7X-0796	3	LOCKWASHER					
	8	217-5492	1	PIPE					
	9	151-5334	1	CLAMP					
	10	212-8620	1	TUBE					
	11	116-0118	1	CLIP					
	12	8T-4121	1	WASHER					
	13	5I-4936	1	BOLT (L=20mm)					

HA3627E 00

217-5491 BREATHER GP
Part of 201-3870-Page12

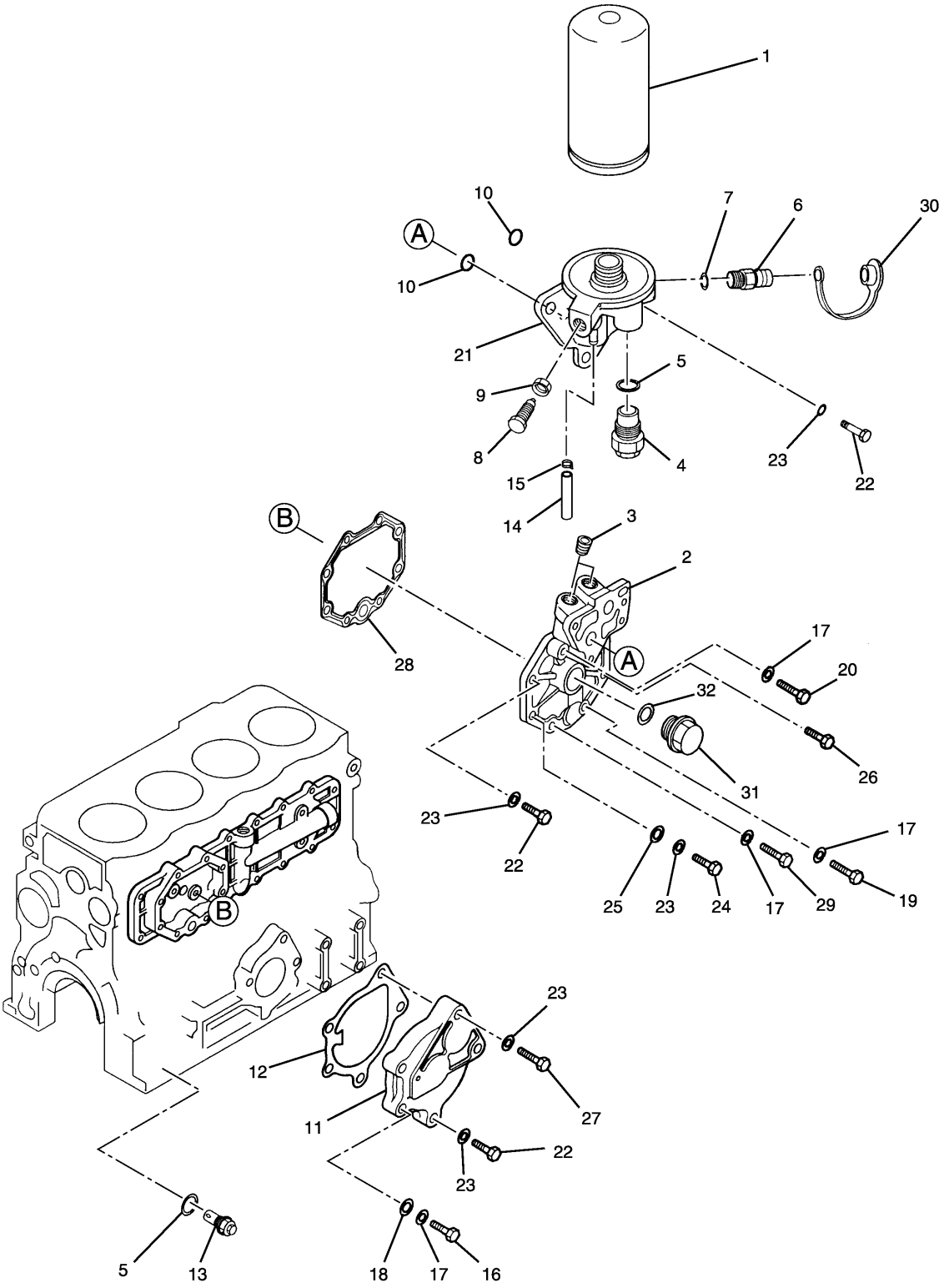

H76931E 00

212-8466 FILTER GP-ENGINE OIL
Part of 201-3870-Page12

LUBRICATION SYSTEM

NOTE	No.	PART No.	QTY	PART NAME	NOTE	No.	PART No.	QTY	PART NAME
	1	1R-0739	1	FILTER AS					
	2	183-8179	1	BASE AS					
	3	096-3321	2	PLUG					
	4	5I-8026	1	VALVE AS					
	5	5B-5947	2	GASKET					
	6	8C-3446	1	VALVE					
	7	178-6567	1	SEAL-O-RING (ID=8.92mm)					
	8	196-8192	1	BOLT (L=45mm)					
	9	178-6566	1	NUT					
	10	4I-9404	2	SEAL-O-RING (ID=27.70mm)					
	11	162-4898	1	COVER					
	12	135-2405	1	GASKET					
	13	5I-8066	1	VALVE AS					
	14	196-8229	1	HOSE					
	15	196-8227	1	CLAMP					
	16	8T-4908	2	BOLT (L=25mm)					
	17	095-8638	6	WASHER					
	18	8T-4224	2	WASHER					
	19	178-6576	1	BOLT (L=75mm)					
	20	178-6577	2	BOLT (L=100mm)					
	21	196-8191	1	BRACKET AS					
	22	8T-4136	7	BOLT (L=25mm)					
	23	7X-0796	9	LOCKWASHER					
	24	8T-4195	1	BOLT (L=30mm)					
	25	8T-4121	1	WASHER					
	26	8T-4137	1	BOLT (L=20mm)					
	27	8T-4186	2	BOLT (L=40mm)					
	28	125-2979	1	GASKET					
	29	8T-7329	1	BOLT (L=55mm)					
	30	8C-3445	1	CAP					
	31	178-6569	1	PLUG					
	32	178-6571	1	GASKET					

H76931E 00

212-8466 FILTER GP-ENGINE OIL

Part of 201-3870-Page12

LUBRICATION SYSTEM

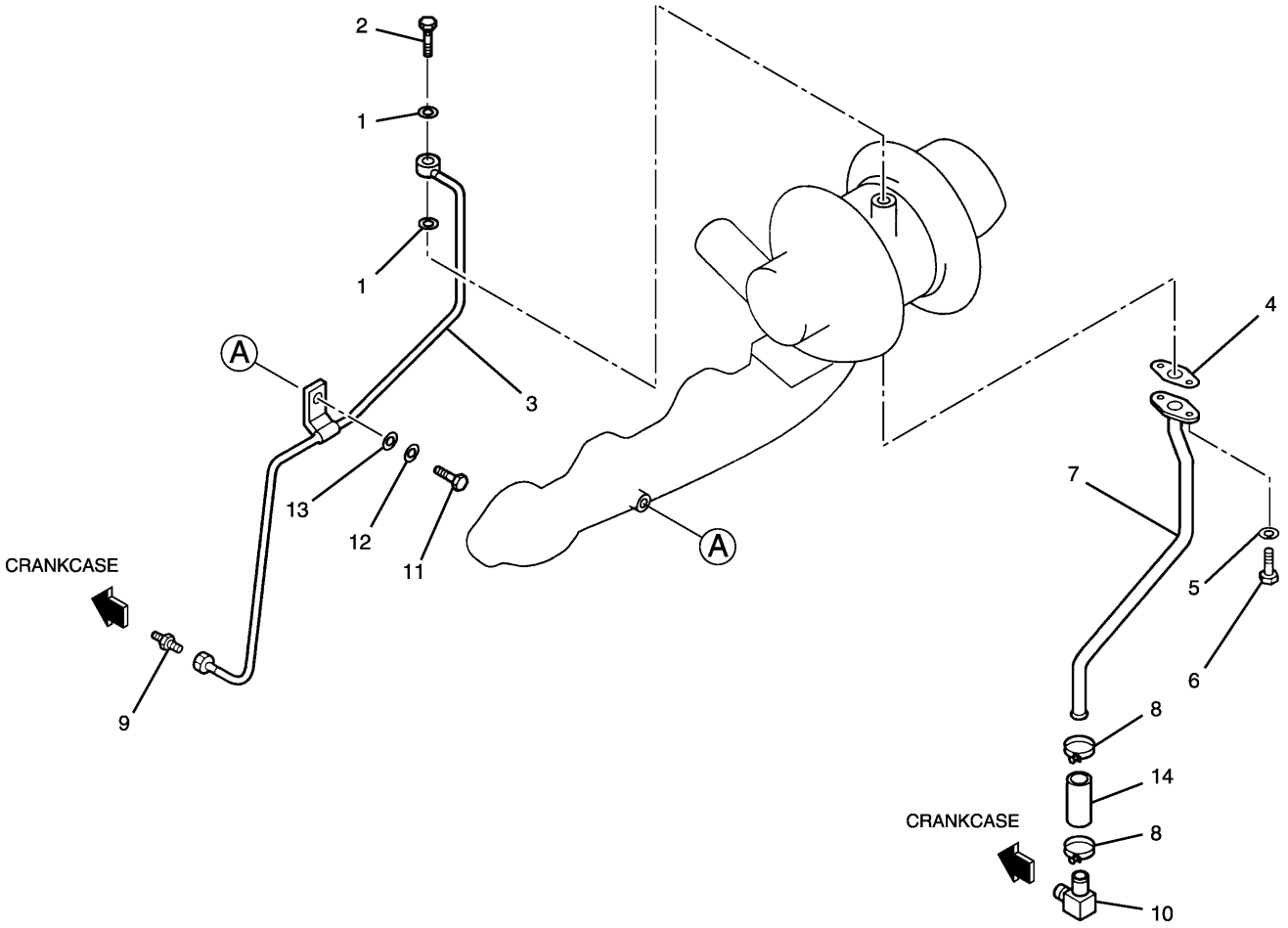

NOTE	No.	PART No.	QTY	PART NAME	NOTE	No.	PART No.	QTY	PART NAME
	1	2A-5222	2	WASHER					
	2	5I-7623	1	BOLT (L=20mm)					
	3	196-8017	1	PIPE					
	4	5I-7689	1	GASKET					
	5	096-2500	2	WASHER					
	6	5C-9553	2	BOLT (L=16mm)					
	7	196-8018	1	PIPE					
	8	096-4841	2	CLAMP					
	9	5I-8058	1	CONNECTOR					
	10	5I-8110	1	ELBOW					
	11	8T-4200	1	BOLT (L=16mm)					
	12	095-8638	1	WASHER					
	13	8T-4224	1	WASHER					
	14	5I-8109	1	HOSE					

H78538E 01

196-7991 LINES GP-TURBOCHARGER OIL
Part of 201-3870-Page12

LUBRICATION SYSTEM

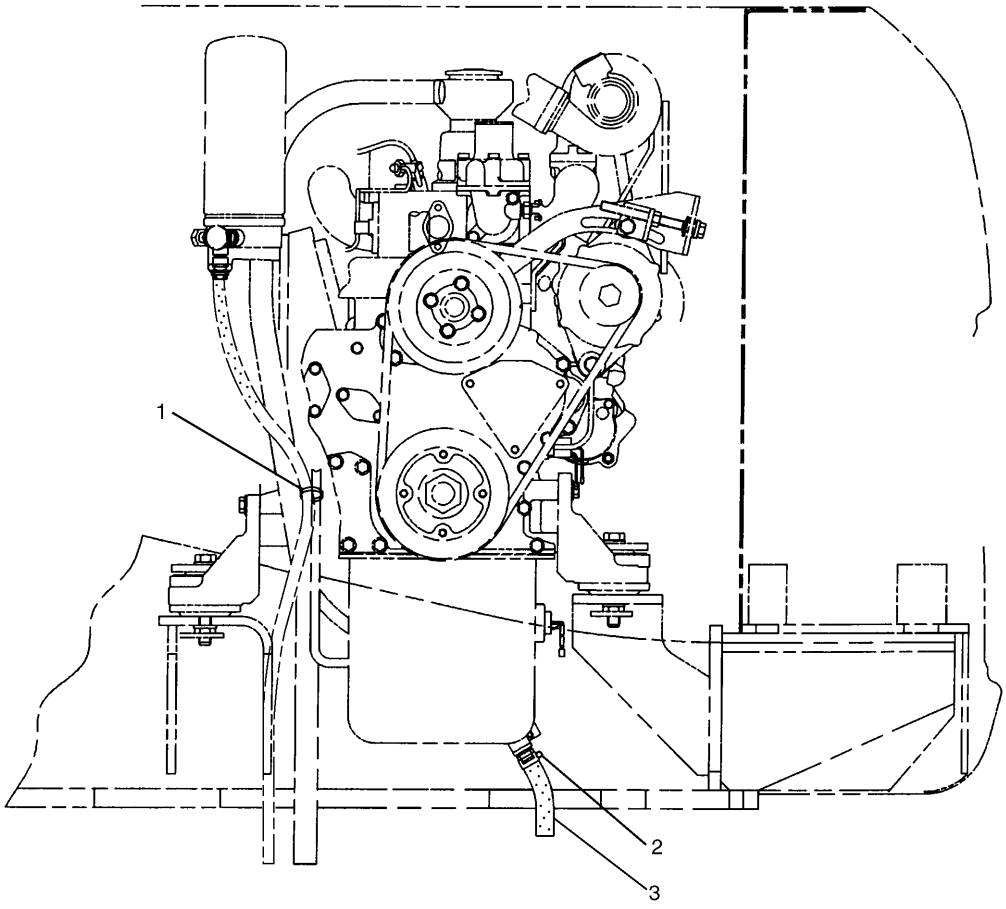

FRONT VIEW OF ENGINE

NOTE	No.	PART No.	QTY	PART NAME	NOTE	No.	PART No.	QTY	PART NAME
	1	096-0061	1	STRAP					
	2	095-1388	1	CLAMP					
E	3	5P-0743		HOSE…(12cm)					

E—ORDER BY THE CENTIMETER

H76561E 04

162-6321 LINES GP-OIL DRAIN

COOLING SYSTEM

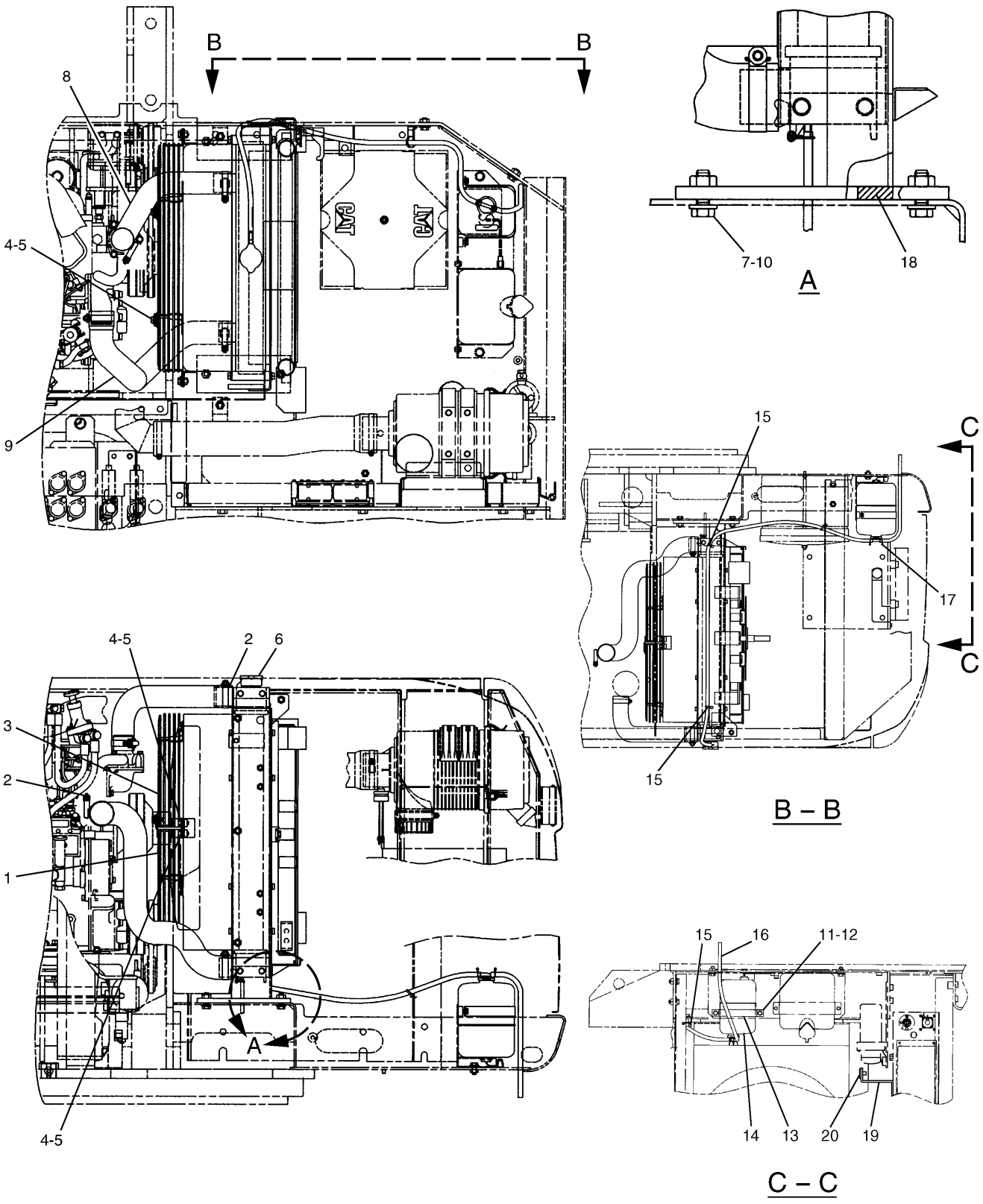

162-6331 RADIATOR & HYD OIL COOLER GP
196-8140-Page40

COOLING SYSTEM

NOTE	No.	PART No.	QTY	PART NAME	NOTE	No.	PART No.	QTY	PART NAME
	1	193-2741	1	GUARD AS					
	2	8T-4984	4	CLAMP					
	3	190-5921	1	GUARD AS					
	4	7X-7729	11	WASHER					
	5	8T-4137	11	BOLT (L=20mm)					
Y	6	196-8140	1	RADIATOR GP					
	7	8T-4956	4	BOLT (L=35mm)					
	8	171-9164	1	HOSE					
	9	171-9165	1	HOSE					
	10	8T-4223	4	WASHER					
	11	8T-4224	2	WASHER					
	12	8T-4200	2	BOLT (L=16mm)					
	13	171-9077	1	BAND					
	14	245-9205	1	TANK AS					
		171-3369	1	CAP AS					
	15	3S-2093	3	STRAP					
E	16	7Y-1976		HOSE…(39cm)					
	17	096-4035	1	CLIP					
D	18	5P-9909		SEAL…(0.6m)					
	19	229-0996	1	PLATE					
	20	170-3014	1	BUMPER					

D—ORDER BY THE METER
E—ORDER BY THE CENTIMETER
Y—SEE SEPARATE ILLUSTRATION

H87226E 06

162-6331 RADIATOR & HYD OIL COOLER GP

196-8140-Page40

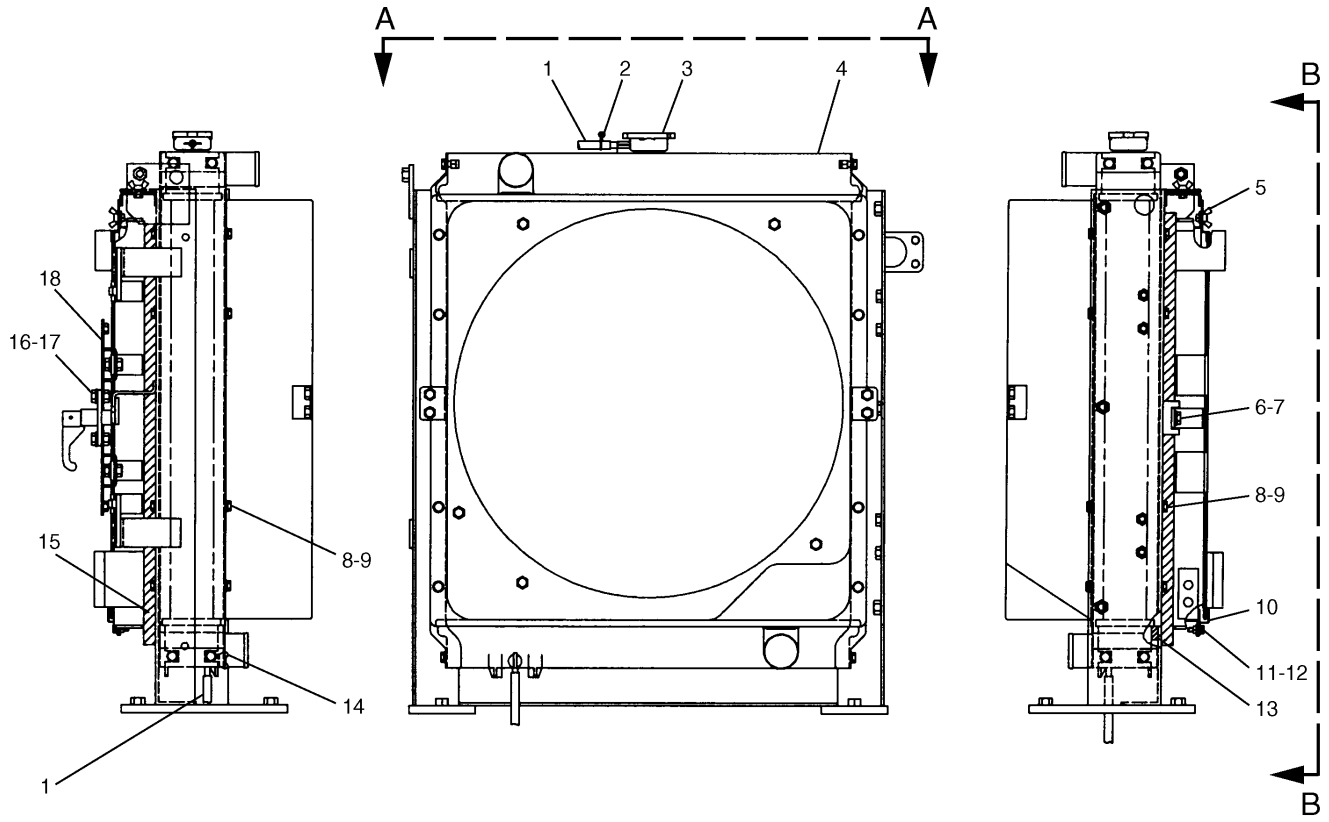

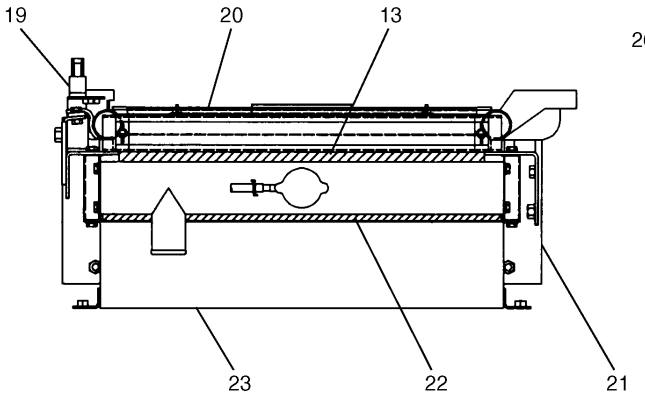

A – A

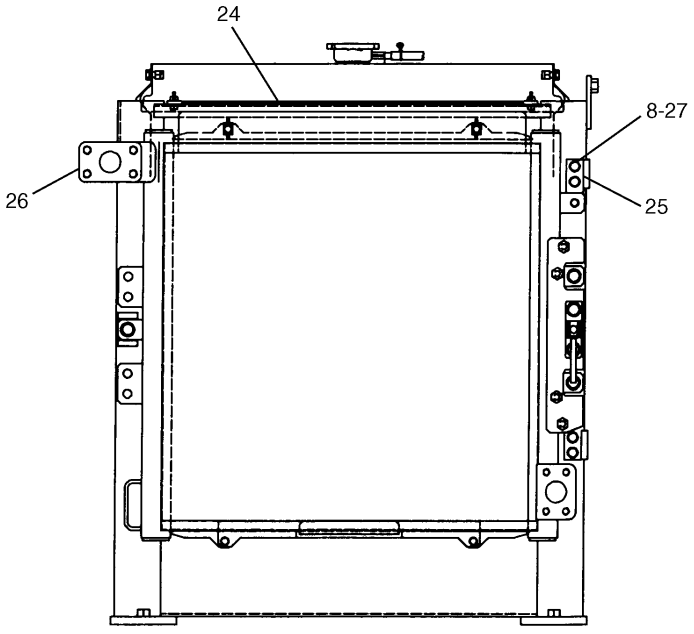

B – B

H75100E 01

196-8140 RADIATOR & HYD OIL COOLER GP
Part of 162-6331-Page39

COOLING SYSTEM

NOTE	No.	PART No.	QTY	PART NAME	NOTE	No.	PART No.	QTY	PART NAME
E	1	7Y-1976		HOSE…(200cm)					
	2	096-4035	2	CLIP					
	3	184-3949	1	CAP AS					
	4	196-8031	1	CORE AS (RADIATOR)					
	5	096-4034	4	BOLT					
	6	8T-4179	1	BOLT (L=20mm)					
	7	8T-4223	1	WASHER					
	8	8T-4189	20	BOLT (L=20mm)					
	9	8T-4224	16	WASHER					
	10	196-8145	1	PLATE					
	11	8T-4138	2	BOLT (L=20mm)					
	12	9X-8256	2	WASHER					
	13	178-6500	2	SEAL					
	14	124-1574	1	COCK AS					
	15	196-8038	2	SEAL					
	16	8T-4137	4	BOLT (L=20mm)					
	17	8T-4121	4	WASHER					
	18	196-8036	1	SUPPORT AS					
	19	193-2764	1	HANDLE AS					
	20	196-8143	1	SCREEN AS					
	21	196-8142	1	FRAME AS					
	22	196-8037	2	SEAL					
	23	196-8034	1	SHROUD AS					
	24	196-8144	1	SCREEN AS					
	25	193-2765	2	SUPPORT AS					
	26	196-8141	1	CORE AS (OIL COOLER)					
	27	5P-4116	4	WASHER					

E—ORDER BY THE CENTIMETER

H75100E 01

196-8140 RADIATOR & HYD OIL COOLER GP

Part of 162-6331-Page39

MEMORANDA

COOLING SYSTEM

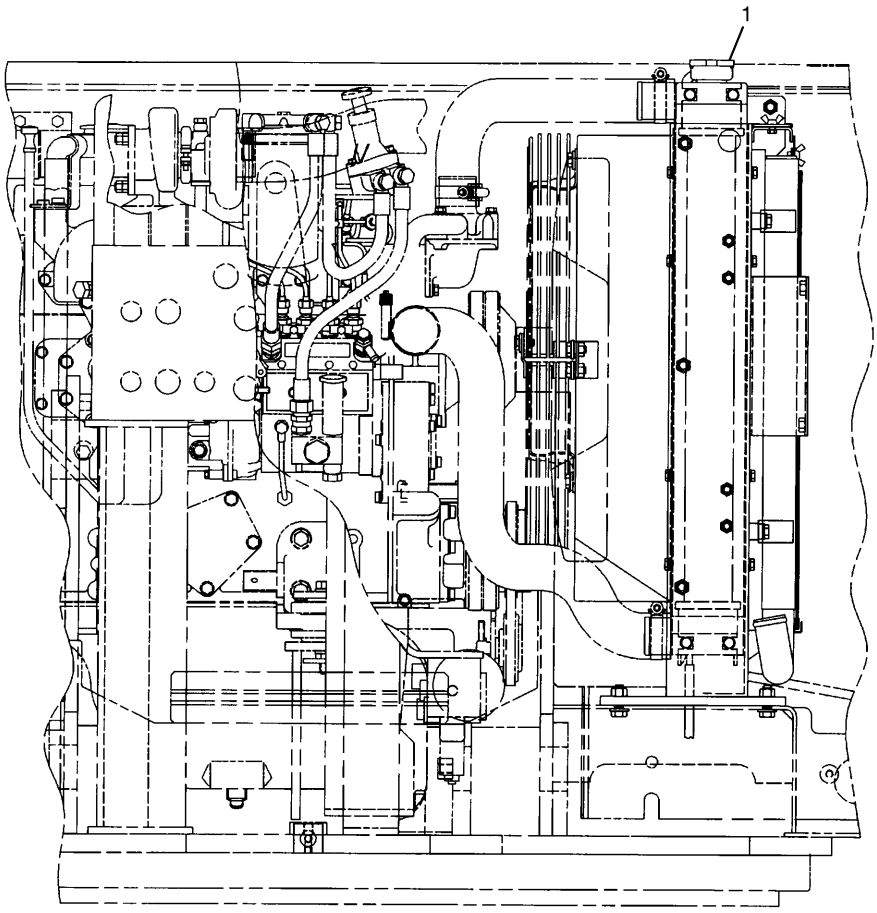

FRONT VIEW OF VEHICLE

NOTE	No.	PART No.	QTY	PART NAME	NOTE	No.	PART No.	QTY	PART NAME
Y	1	196-8146	1	RADIATOR GP					

Y—SEE SEPARATE ILLUSTRATION

H75101E 01

193-2877 RADIATOR & HYD OIL COOLER GP

Part of 183-1535-Page49
196-8146-Page44
An Attachment

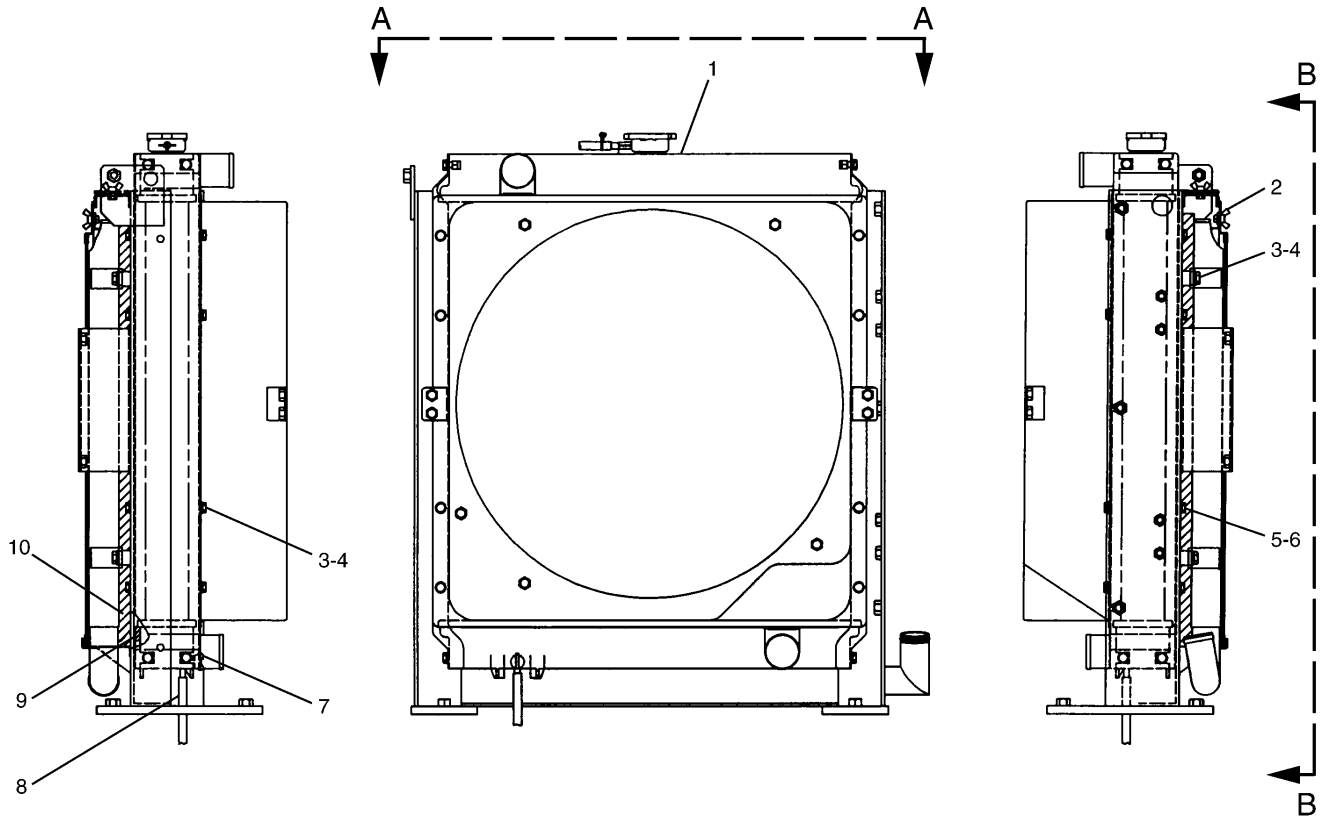

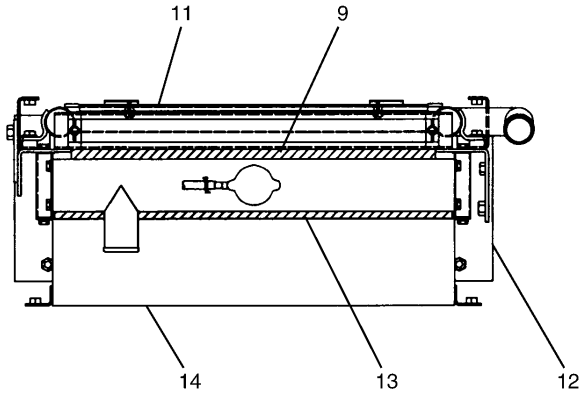

A – A

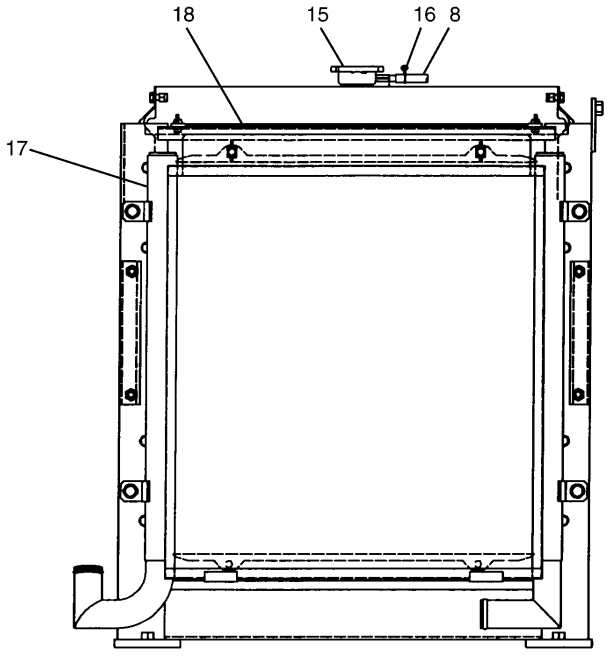

B – B

H75103E 00

196-8146 RADIATOR & HYD OIL COOLER GP
Part of 193-2877-Page43
An Attachment

COOLING SYSTEM

NOTE	No.	PART No.	QTY	PART NAME	NOTE	No.	PART No.	QTY	PART NAME
	1	196-8031	1	CORE AS (RADIATOR)					
	2	096-4034	4	BOLT					
	3	8T-4189	16	BOLT (L=20mm)					
	4	8T-4224	16	WASHER					
	5	8T-4137	4	BOLT (L=20mm)					
	6	8T-4121	4	WASHER					
	7	124-1574	1	COCK AS					
E	8	7Y-1976		HOSE…(200cm)					
	9	178-6500	2	SEAL					
	10	196-8038	2	SEAL					
	11	196-8149	1	SCREEN AS					
	12	196-8148	1	FRAME AS					
	13	196-8037	2	SEAL					
	14	196-8034	1	SHROUD AS					
	15	184-3949	1	CAP AS					
	16	096-4035	2	CLIP					
	17	196-8147	1	CORE AS (OIL COOLER)					
	18	196-8144	1	SCREEN AS					

E—ORDER BY THE CENTIMETER

H75103E 00

196-8146 RADIATOR & HYD OIL COOLER GP

Part of 193-2877-Page43
An Attachment

COOLING SYSTEM

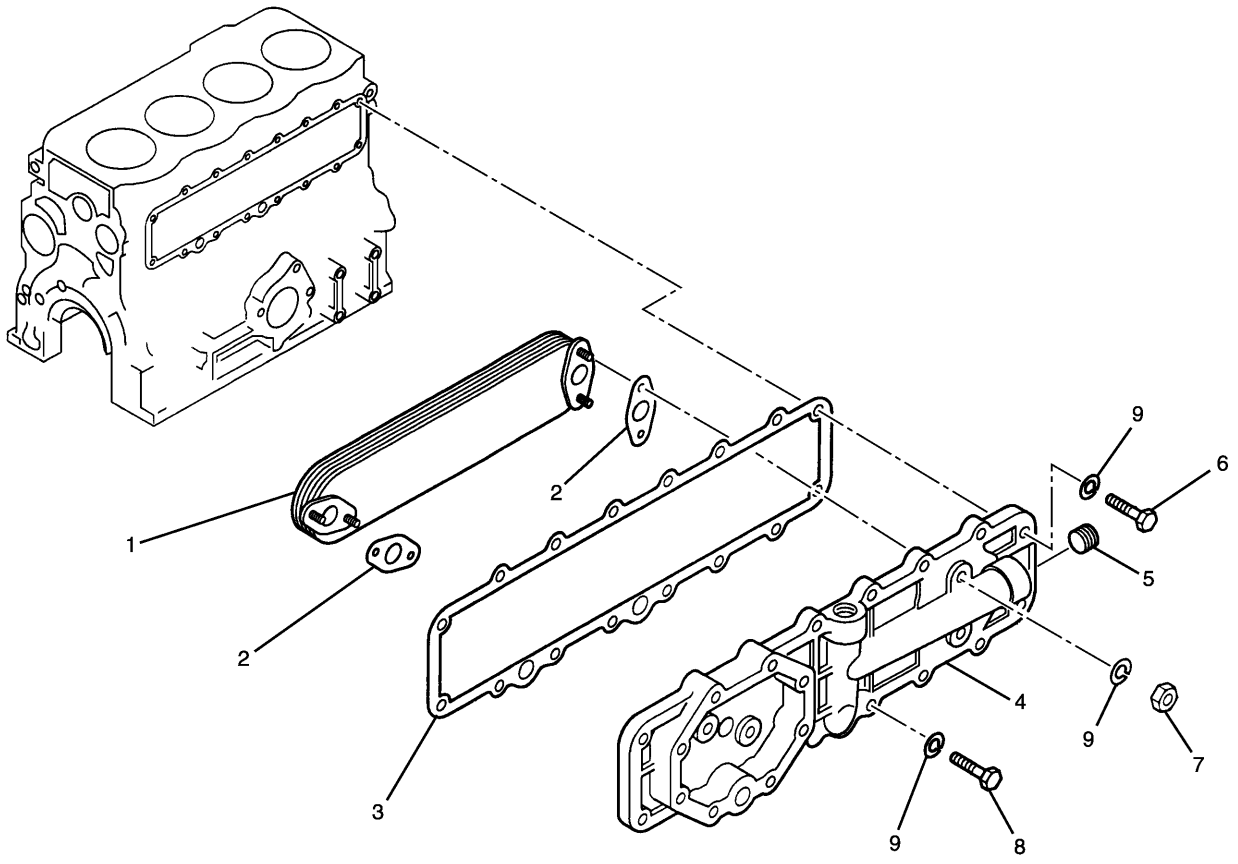

NOTE	No.	PART No.	QTY	PART NAME	NOTE	No.	PART No.	QTY	PART NAME
	1	135-2403	1	ELEMENT					
	2	5I-7691	2	GASKET					
	3	5I-7862	1	GASKET					
	4	212-8519	1	COVER AS					
	5	178-6572	2	PLUG					
	6	8T-4908	9	BOLT (L=25mm)					
	7	5C-7261	4	NUT					
	8	8T-4189	3	BOLT (L=20mm)					
	9	095-8638	16	WASHER					

H78539E 02

5I-8132 COOLER GP-ENGINE OIL

Part of 201-3870-Page13

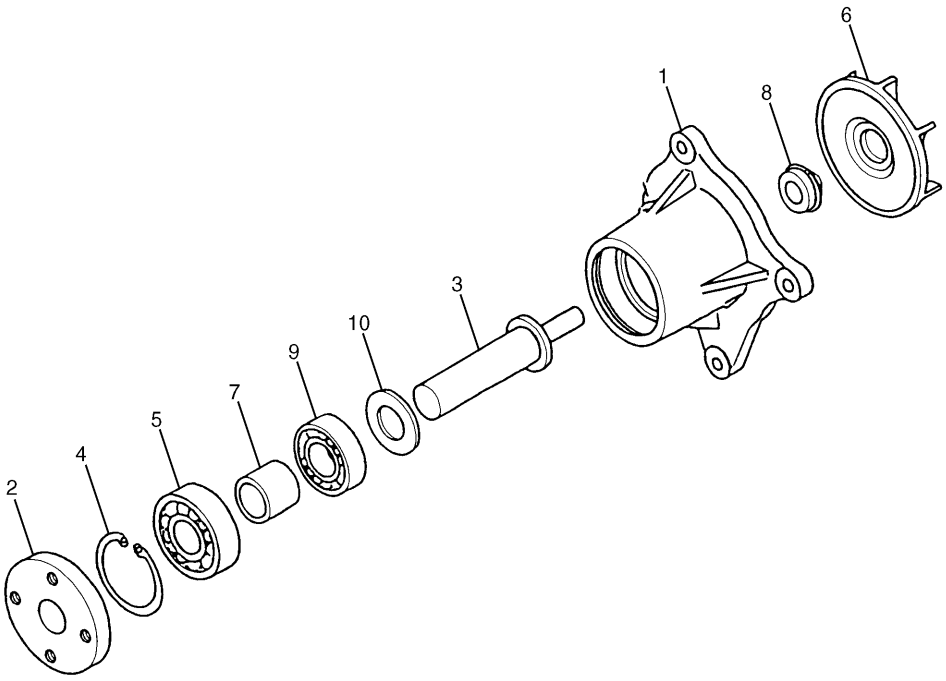

NOTE	No.	PART No.	QTY	PART NAME	NOTE	No.	PART No.	QTY	PART NAME
Z	1		1	CASE					
	2	5I-7696	1	FLANGE					
	3	178-6635	1	SHAFT					
	4	8T-9598	1	RING					
	5	5L-6326	1	BEARING					
	6	178-6634	1	IMPELLER					
	7	5I-7697	1	SPACER					
	8	178-6636	1	SEAL					
	9	2H-3814	1	BEARING					
	10	125-2947	1	WASHER					

Z—NOT SERVICED

H81949E 00

178-6633 PUMP AS-WATER
Part of 201-3870-Page12

COOLING SYSTEM

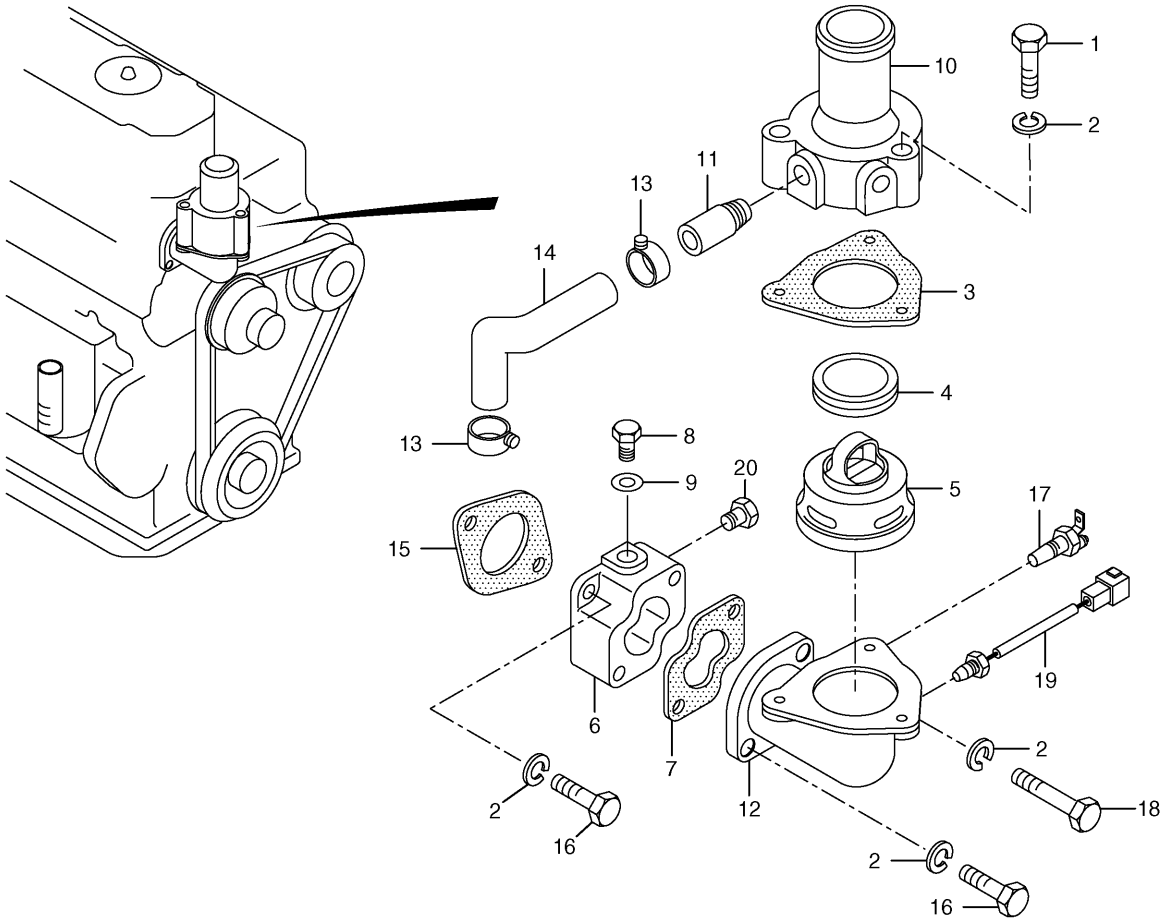

NOTE	No.	PART No.	QTY	PART NAME	NOTE	No.	PART No.	QTY	PART NAME
	1	8T-6912	3	BOLT (L=50mm)					
	2	095-8638	8	WASHER					
	3	5I-7572	1	GASKET					
	4	5I-7735	1	GASKET					
	5	5I-8010	1	REGULATOR					
	6	196-8021	1	SPACER					
	7	5I-7869	1	GASKET					
	8	5I-8056	1	PLUG					
	9	096-9532	1	WASHER					
	10	5I-7867	1	COVER AS					
	11	5I-7655	1	PIPE					
	12	5I-7646	1	ELBOW					
	13	2S-3440	2	CLAMP					
	14	5I-7868	1	HOSE					
	15	5I-7728	1	GASKET					
	16	8T-4908	4	BOLT (L=25mm)					
	17	5I-7578	1	SENDER					
	18	8T-4177	1	BOLT (L=90mm)					
	19	196-7975	1	SENSOR					
	20	183-8222	1	PLUG					

H78545E 01

196-7995 LINES GP-WATER
Part of 201-3870-Page13

COOLING SYSTEM

Consists of :

			Page
1	193-2877	RADIATOR & HYD OIL COOLER GP	43
1	193-9454	HOOD & GUARD GP	214
1	194-0194	LINES GP-RETURN & FILTER	420
1	196-1429	CONDENSER & MTG GP-REFRIGERANT	627

H71830E 01

183-1535 COOLER AR
An Attachment

COOLING SYSTEM

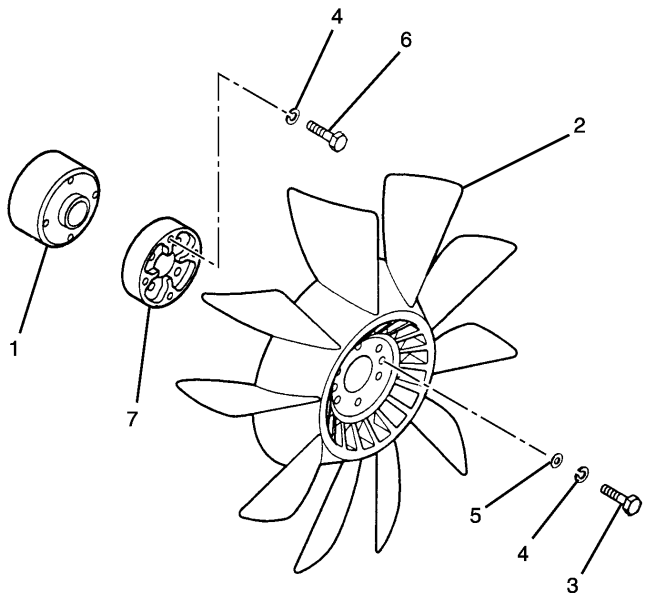

NOTE	No.	PART No.	QTY	PART NAME
	1	5I-7895	1	SPACER
	2	135-2407	1	FAN
	3	8T-4195	4	BOLT (L=30mm)
	4	7X-0796	8	LOCKWASHER
	5	8T-4121	4	WASHER
	6	8T-4198	4	BOLT (L=100mm)
	7	185-8977	1	SPACER

H78541E 01

196-7994 FAN GP-SUCTION

Part of 201-3870-Page13

AIR INLET AND EXHAUST SYSTEM

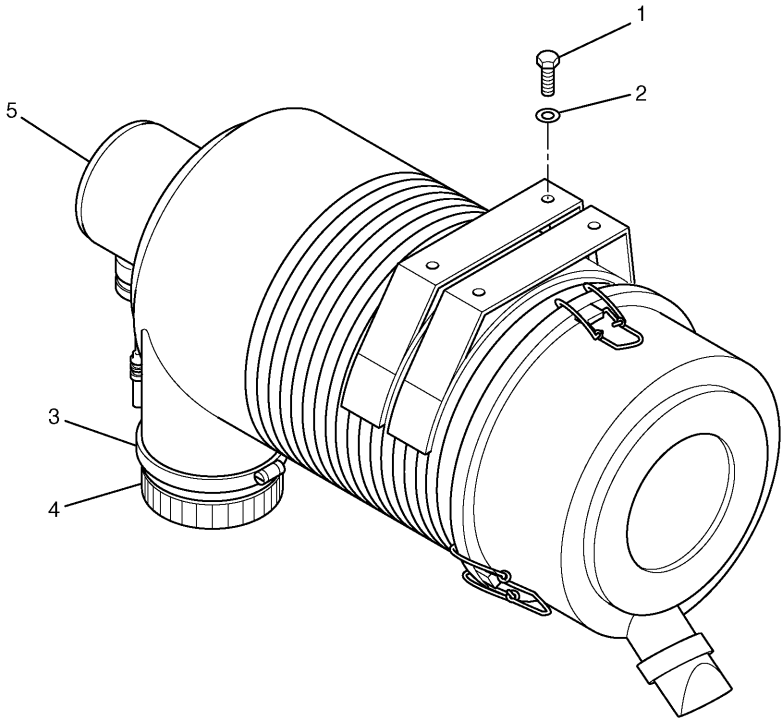

NOTE	No.	PART No.	QTY	PART NAME	NOTE	No.	PART No.	QTY	PART NAME
	1	8T-4200	4	BOLT (L=16mm)					
	2	8T-4224	4	WASHER					
	3	8T-6726	1	CLAMP					
	4	131-8915	1	CAP					
Y	5	131-8898	1	CLEANER GP					

Y—SEE SEPARATE ILLUSTRATION

H60737E 01

118-9874 AIR CLEANER GP
131-8898-Page52

AIR INLET AND EXHAUST SYSTEM

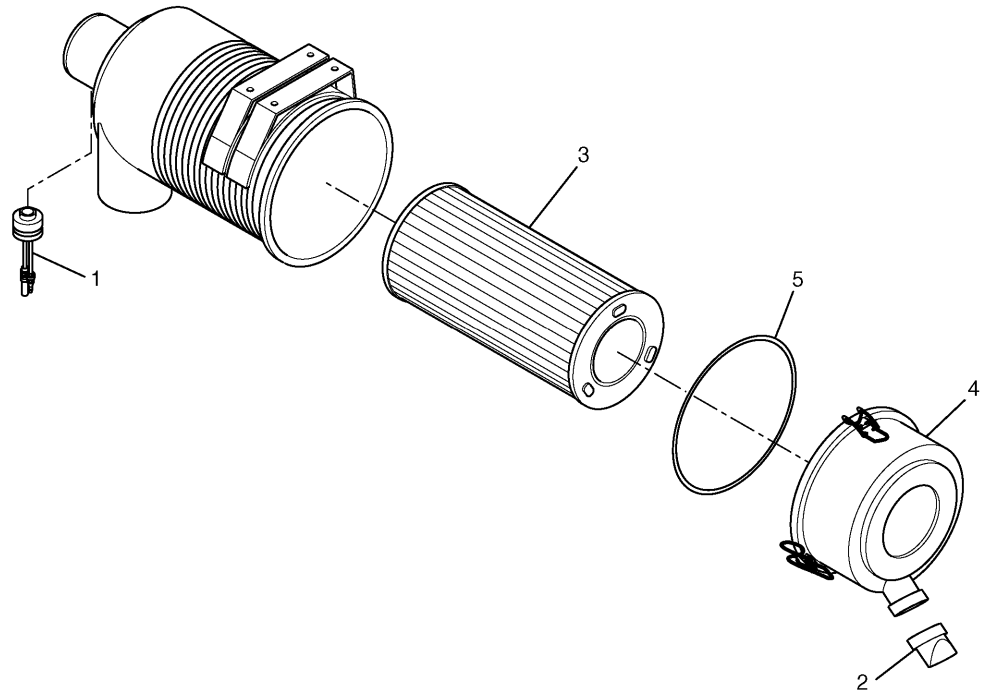

NOTE	No.	PART No.	QTY	PART NAME	NOTE	No.	PART No.	QTY	PART NAME
	1	255-2966	1	INDICATOR AS					
	2	131-8901	1	VALVE (VACUATOR)					
	3	131-8902	1	ELEMENT AS					
	4	310-9621	1	COVER AS					
	5	310-9622	1	SEAL					

H98638E 05

131-8898 AIR CLEANER GP
Part of 118-9874-Page51

AIR INLET AND EXHAUST SYSTEM

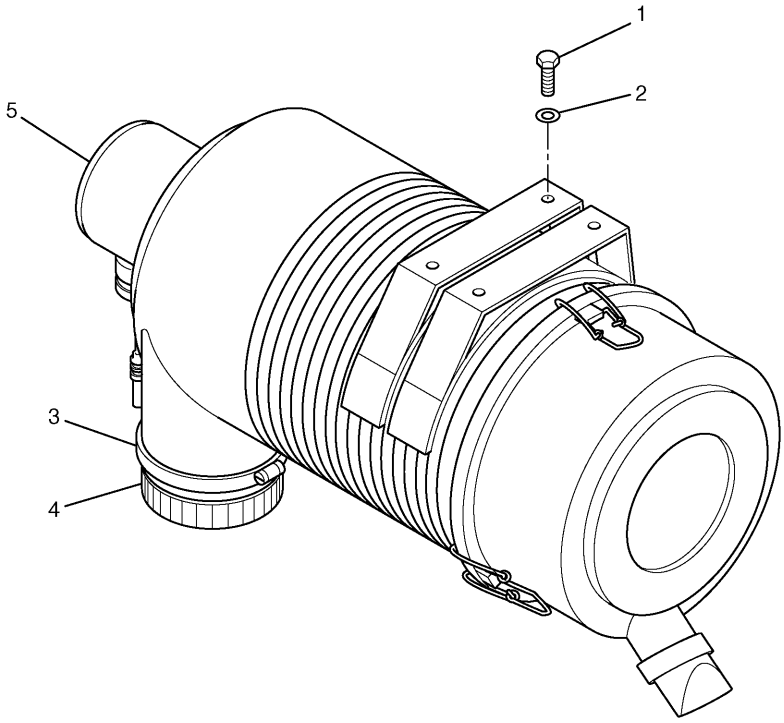

NOTE	No.	PART No.	QTY	PART NAME	NOTE	No.	PART No.	QTY	PART NAME
	1	8T-4200	4	BOLT (L=16mm)					
	2	8T-4224	4	WASHER					
	3	8T-6726	1	CLAMP					
	4	131-8915	1	CAP					
Y	5	118-9882	1	CLEANER GP					

Y—SEE SEPARATE ILLUSTRATION

H60738E 00

118-9881 AIR CLEANER GP

118-9882-Page54

An Attachment

AIR INLET AND EXHAUST SYSTEM

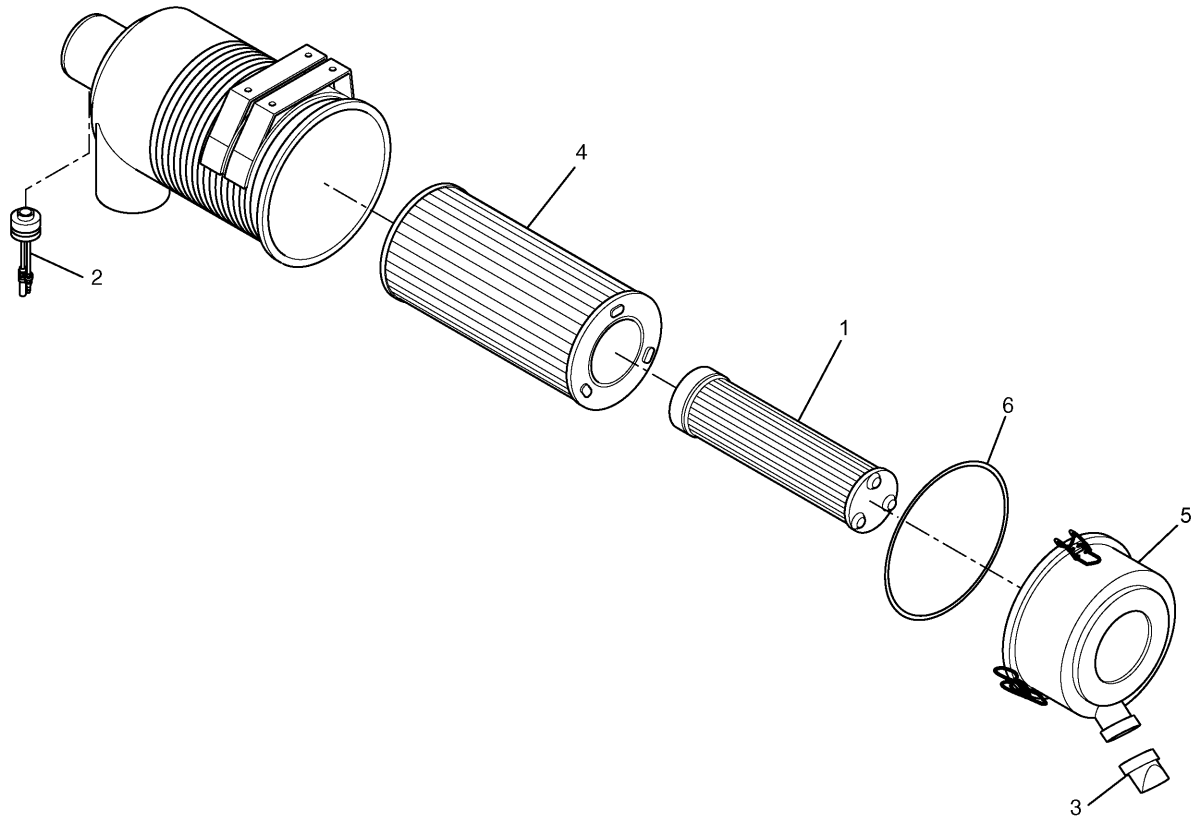

NOTE	No.	PART No.	QTY	PART NAME	NOTE	No.	PART No.	QTY	PART NAME
	1	131-8903	1	ELEMENT AS					
	2	255-2966	1	INDICATOR AS					
	3	131-8901	1	VALVE (VACUATOR)					
	4	131-8902	1	ELEMENT AS					
	5	310-9621	1	COVER AS					
	6	310-9622	1	SEAL					

H98639E 05

118-9882 AIR CLEANER GP

Double Elements

Part of 118-9881-Page53

An Attachment

AIR INLET AND EXHAUST SYSTEM

Consists of :

			Page
1	190-5920	AIR CLEANER GP	56
1	190-7158	HOOD GP	216

H71763E 01

183-1536 AIR CLEANER AR
An Attachment

AIR INLET AND EXHAUST SYSTEM

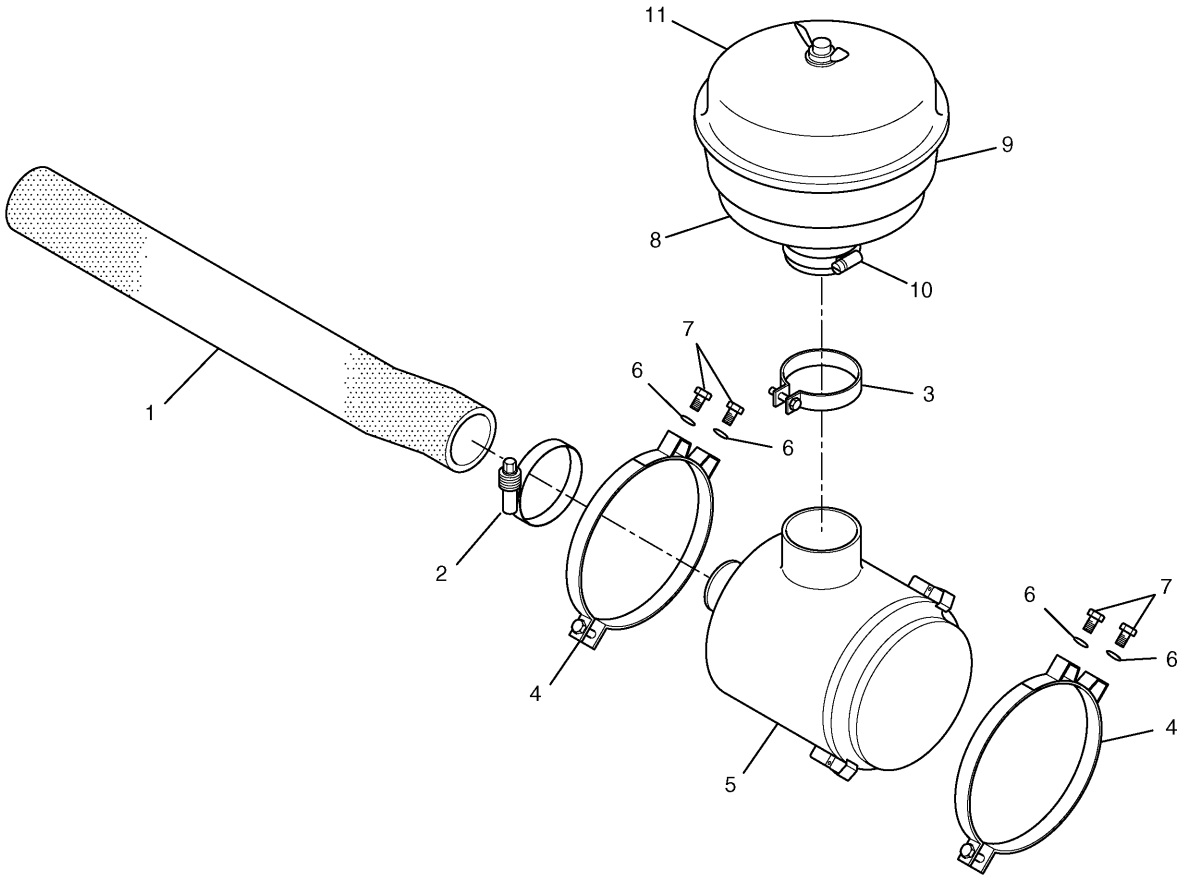

NOTE	No.	PART No.	QTY	PART NAME	NOTE	No.	PART No.	QTY	PART NAME
	1	193-2890	1	HOSE					
	2	8T-4985	1	CLAMP					
	3	193-2889	1	CLAMP AS					
	4	193-2888	2	BAND AS					
Y	5	193-2887	1	CLEANER GP					
	6	8T-4121	4	WASHER					
	7	8T-4137	4	BOLT (L=20mm)					
	8	118-6948	1	PRECLEANER AS					
	9	1M-7250	1	BOWL					
	10	9M-7959	1	CLAMP					
	11	9M-9439	1	COVER AS					

Y—SEE SEPARATE ILLUSTRATION

HA2009E 01

190-5920 AIR CLEANER GP

Part of 183-1536-Page55
193-2887-Page57
An Attachment

AIR INLET AND EXHAUST SYSTEM

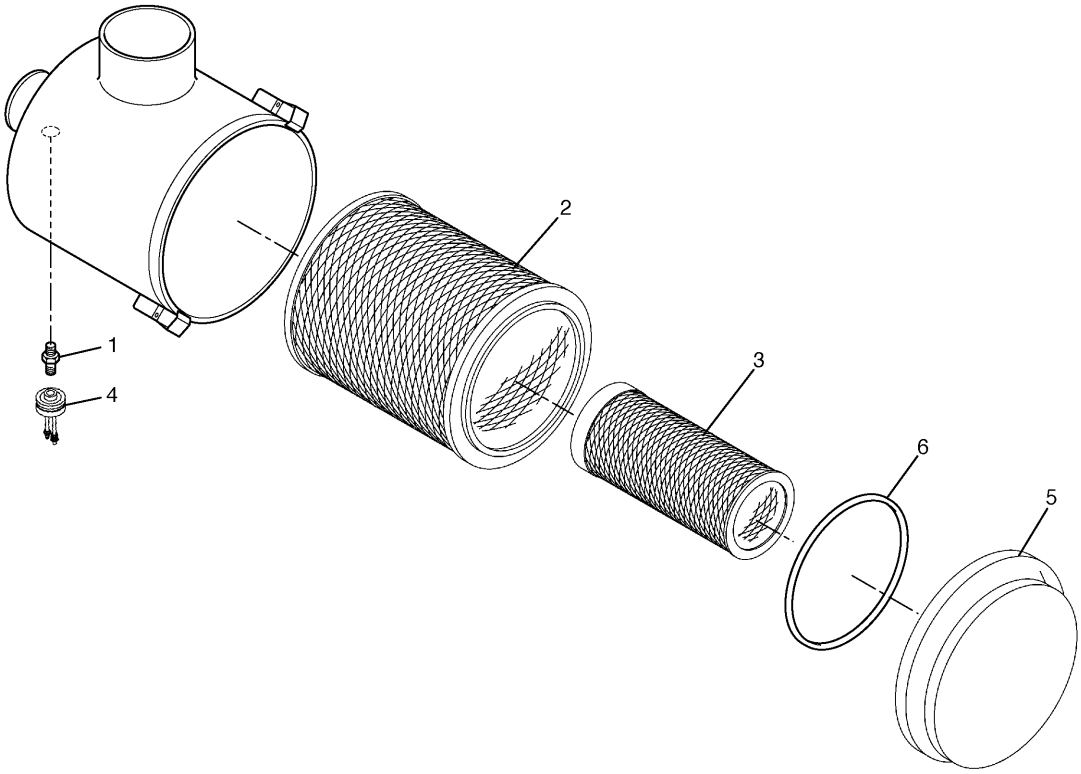

NOTE	No.	PART No.	QTY	PART NAME	NOTE	No.	PART No.	QTY	PART NAME
	1	5L-3233	1	FITTING					
	2	108-0671	1	ELEMENT AS					
	3	108-0672	1	ELEMENT AS					
	4	154-0498	1	INDICATOR AS					
	5	6I-1449	1	COVER AS					
	6	1J-2890	1	SEAL-O-RING (ID=227.97mm)					

H71765E 00

193-2887 AIR CLEANER GP
Part of 190-5920-Page56
An Attachment

AIR INLET AND EXHAUST SYSTEM

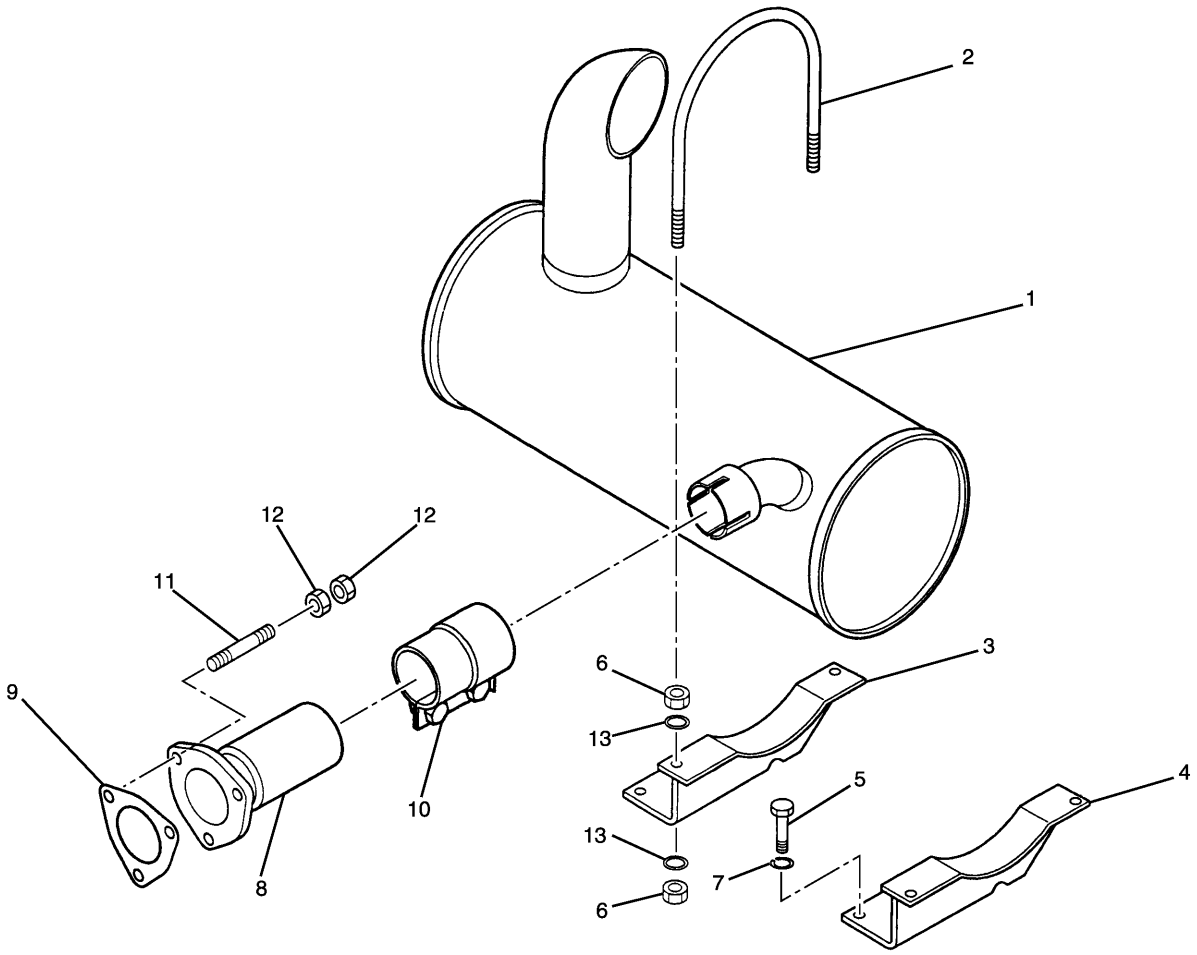

NOTE	No.	PART No.	QTY	PART NAME	NOTE	No.	PART No.	QTY	PART NAME
	1	212-8491	1	MUFFLER					
	2	5I-7848	2	U-BOLT					
	3	196-8012	1	BRACKET					
	4	196-8014	1	BRACKET					
	5	8T-4137	4	BOLT (L=20mm)					
	6	6V-8231	8	NUT					
	7	7X-0796	4	LOCKWASHER					
	8	196-8013	1	PIPE					
	9	5I-7937	1	GASKET					
	10	5I-7639	1	CLAMP AS					
	11	196-8015	3	STUD					
	12	5I-7633	6	NUT					
	13	8T-4121	8	WASHER					

H82694E 01

212-8465 MUFFLER GP
Part of 201-3870-Page13

AIR INLET AND EXHAUST SYSTEM

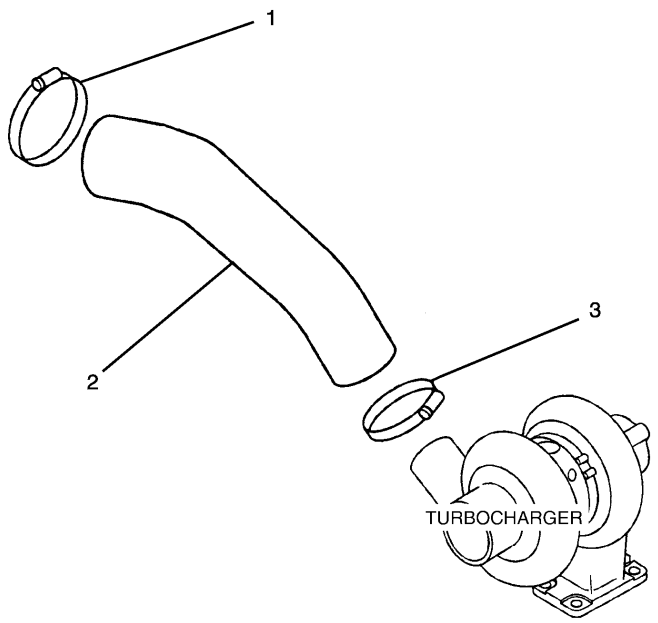

NOTE	No.	PART No.	QTY	PART NAME
	1	196-8010	1	CLAMP
	2	212-8490	1	HOSE
	3	196-8009	1	CLAMP

H76934E 00

212-8464 LINES GP-AIR

Part of 201-3870-Page13

AIR INLET AND EXHAUST SYSTEM

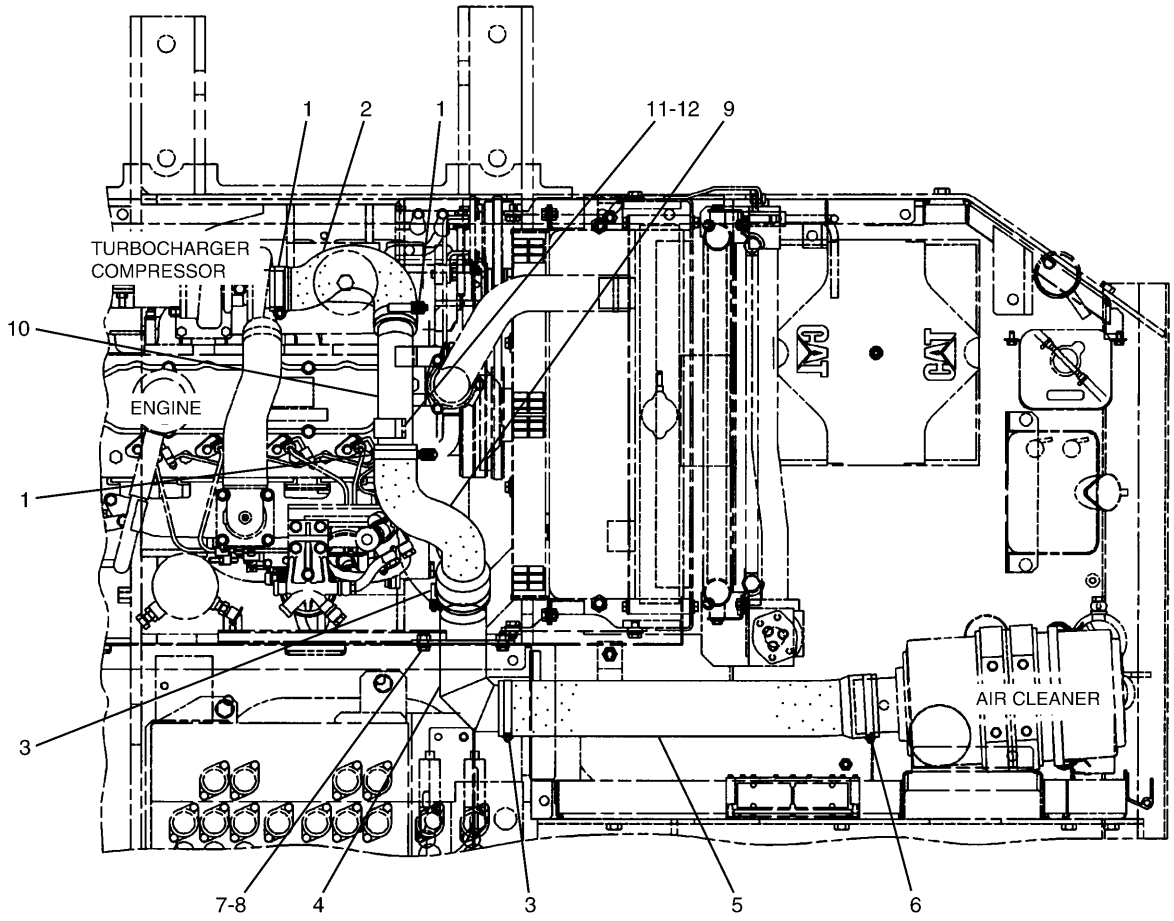

TOP VIEW

NOTE	No.	PART No.	QTY	PART NAME	NOTE	No.	PART No.	QTY	PART NAME
	1	8T-4984	3	CLAMP					
	2	190-5851	1	HOSE					
	3	8T-4985	2	CLAMP					
	4	178-6463	1	PIPE AS					
	5	171-9162	1	HOSE					
	6	9X-2201	1	CLAMP					
	7	8T-4136	4	BOLT (L=25mm)					
	8	8T-4121	4	WASHER					
	9	190-5852	1	HOSE					
	10	297-7807	1	PIPE AS					
	11	8T-4200	2	BOLT (L=16mm)					
	12	8T-4224	2	WASHER					

H98133E 02

162-6330 LINES GP-AIR

AIR INLET AND EXHAUST SYSTEM

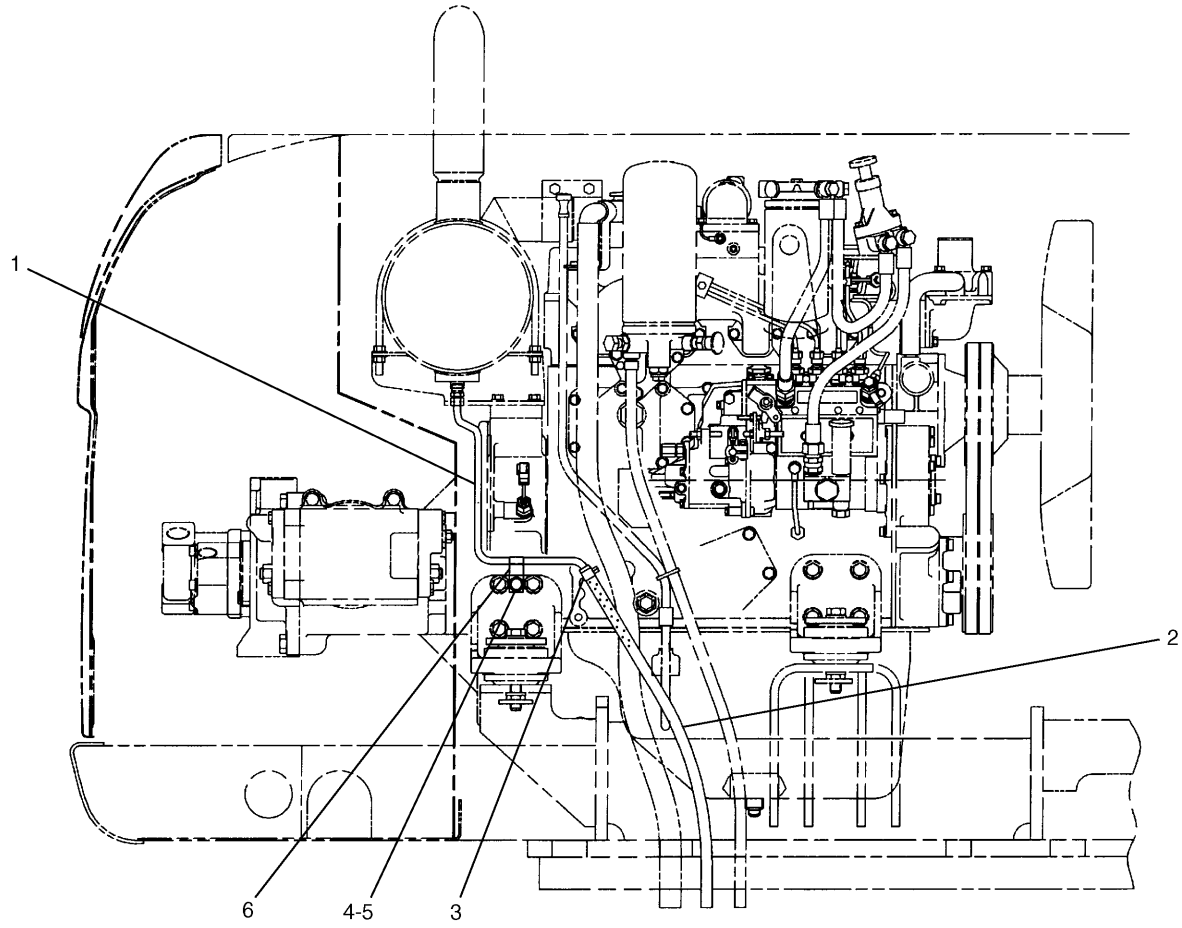

RIGHT SIDE VIEW OF ENGINE

NOTE	No.	PART No.	QTY	PART NAME	NOTE	No.	PART No.	QTY	PART NAME
	1	212-8515	1	PIPE AS					
E	2	5P-1442		HOSE…(56cm)					
	3	5P-4961	1	CLAMP					
	4	8T-4191	1	BOLT (L=16mm)					
	5	8T-4121	1	WASHER					
	6	171-9073	1	CLIP					

E—ORDER BY THE CENTIMETER

H78591E 00

212-8514 LINES GP-DRAIN

AIR INLET AND EXHAUST SYSTEM

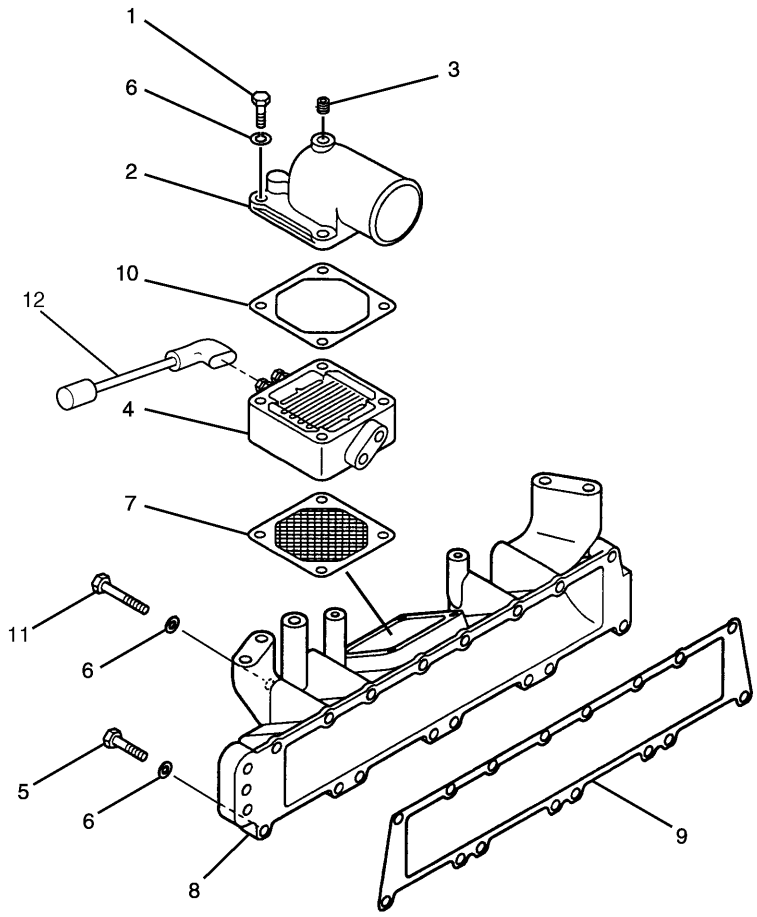

NOTE	No.	PART No.	QTY	PART NAME	NOTE	No.	PART No.	QTY	PART NAME
	1	5I-5010	4	BOLT (L=65mm)					
	2	5I-8021	1	ELBOW AS					
		5I-8022	1	ELBOW					
	3	5I-8023	1	PLUG					
	4	168-5057	1	HEATER					
	5	7X-2537	12	BOLT (L=35mm)					
	6	095-8638	24	WASHER					
	7	5I-7677	1	GASKET					
	8	212-8487	1	MANIFOLD					
	9	212-8488	1	GASKET					
	10	5I-7678	1	GASKET					
	11	8T-4177	4	BOLT (L=90mm)					
	12	222-8286	1	HARNESS AS					
		8T-8799	4	BOOT					
		9G-4343	1	TERMINAL					
		127-5484	2	RECEPTACLE AS					

H82583E 01

212-8462 MANIFOLD GP-INLET

Part of 201-3870-Page13

AIR INLET AND EXHAUST SYSTEM

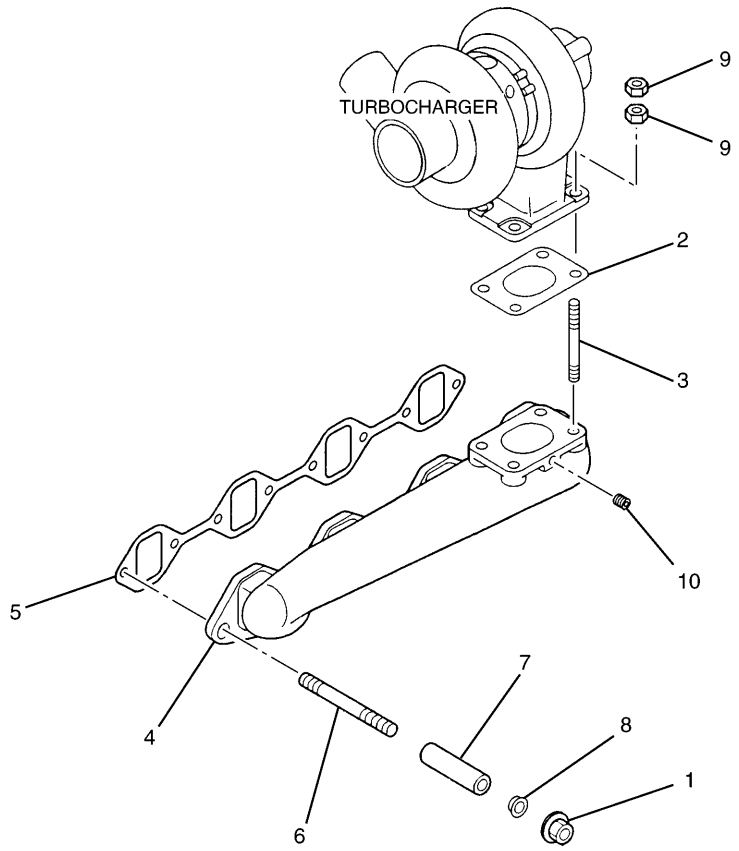

NOTE	No.	PART No.	QTY	PART NAME	NOTE	No.	PART No.	QTY	PART NAME
	1	212-8489	8	NUT					
	2	5I-7933	1	GASKET					
	3	178-6554	4	STUD					
	4	279-7787	1	MANIFOLD					
	5	196-8007	1	GASKET					
	6	5I-7549	8	STUD					
	7	5I-7550	8	SPACER					
	8	239-6604	8	WASHER					
	9	5I-7633	8	NUT					
	10	5I-5087	1	PLUG					

H93742E 03

212-8463 MANIFOLD GP-EXHAUST

Part of 201-3870-Page13

AIR INLET AND EXHAUST SYSTEM

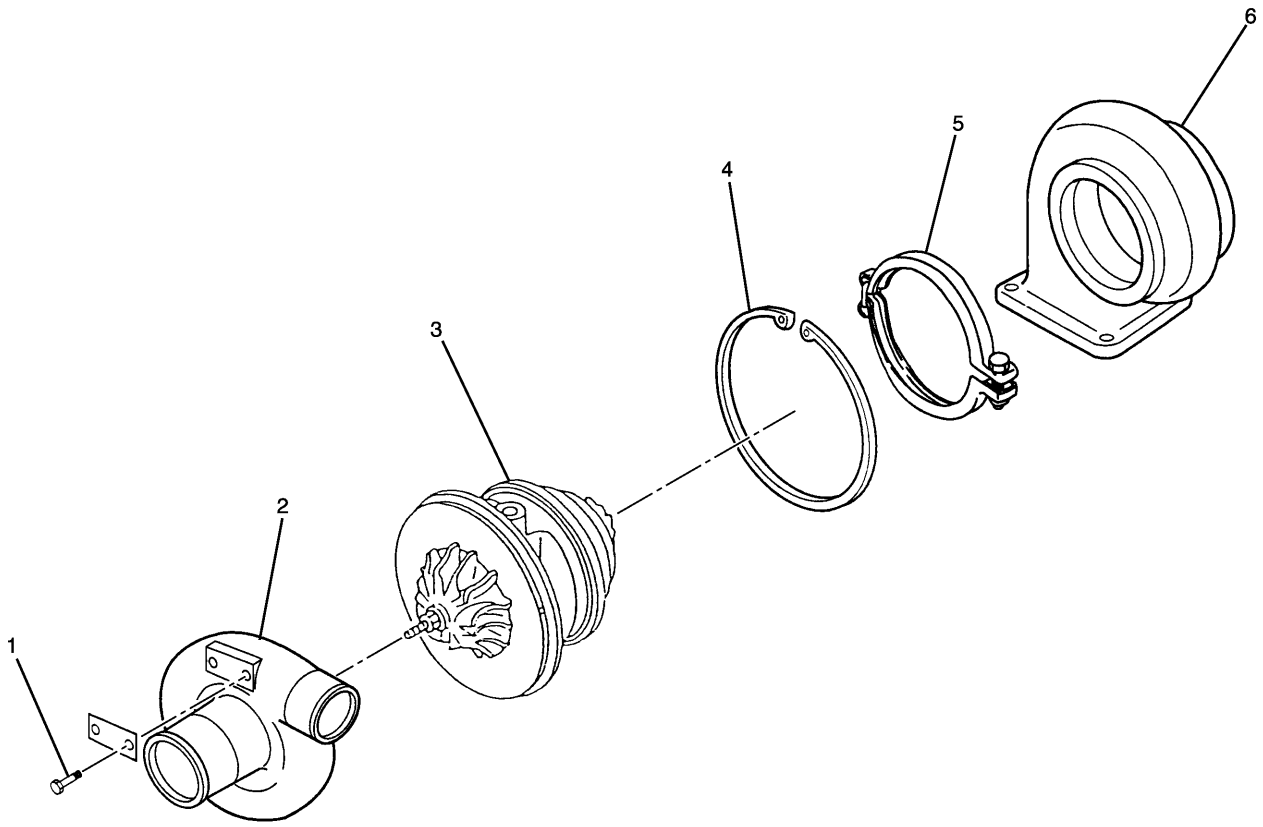

NOTE	No.	PART No.	QTY	PART NAME	NOTE	No.	PART No.	QTY	PART NAME
	1	5B-9304	2	SCREW					
	2	5I-7939	1	COVER					
Y	3	5I-7940	1	CARTRIDGE AS					
	4	5I-7941	1	RING					
	5	5I-7942	1	COUPLING AS					
	6	196-8016	1	HOUSING					

Y—SEE SEPARATE ILLUSTRATION

H71769E 00

196-7988 TURBOCHARGER GP
Part of 201-3870-Page13
5I-7940-Page65

AIR INLET AND EXHAUST SYSTEM

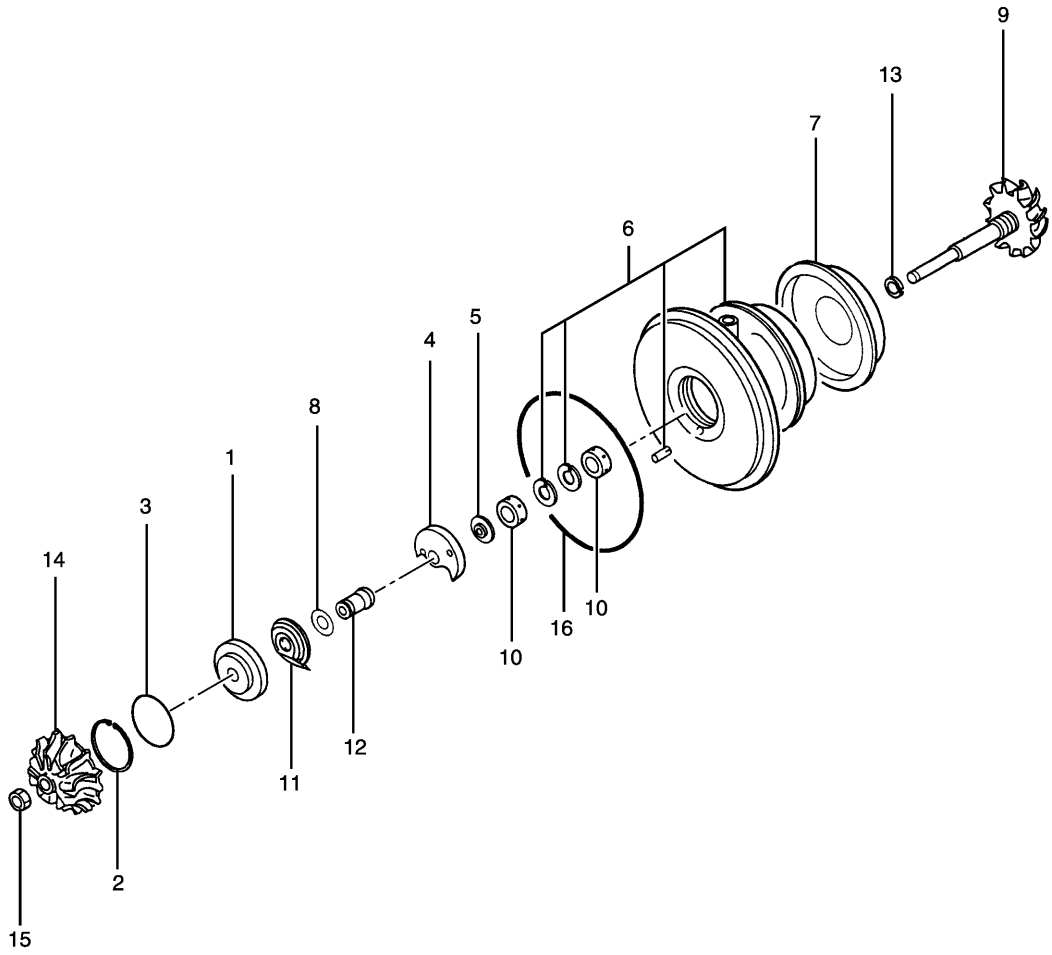

NOTE	No.	PART No.	QTY	PART NAME	NOTE	No.	PART No.	QTY	PART NAME
	1	135-2425	1	INSERT					
	2	135-2426	1	RING					
	3	135-2427	1	SEAL-O-RING (ID=39.40mm)					
	4	135-2429	1	BEARING					
	5	135-2428	1	RING					
	6	135-2433	1	HOUSING					
	7	141-4363	1	PLATE					
	8	135-2424	1	RING					
	9	135-2432	1	WHEEL AS					
	10	135-2431	2	BEARING					
	11	135-2430	1	DEFLECTOR					
	12	135-2423	1	SLEEVE					
	13	141-4364	1	RING					
	14	135-2421	1	WHEEL					
	15	135-2422	1	NUT					
	16	5I-8124	1	SEAL					

H60739E 01

5I-7940 CARTRIDGE AS-TURBOCHARGER

Part of 196-7988-Page64

MEMORANDA

FUEL SYSTEM

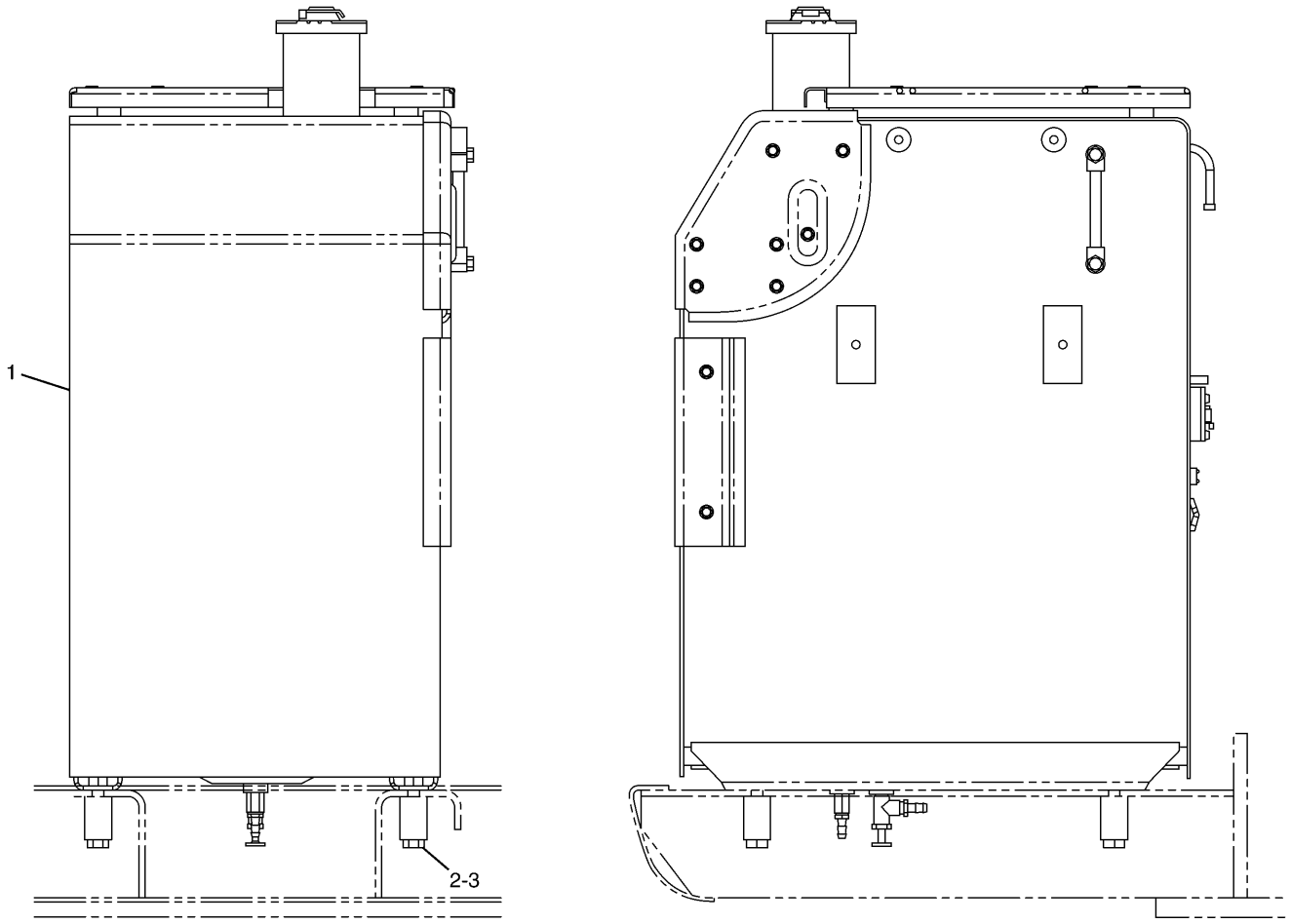

NOTE	No.	PART No.	QTY	PART NAME	NOTE	No.	PART No.	QTY	PART NAME
Y	1	208-4317	1	TANK GP					
	2	177-5987	4	SPACER					
	3	8T-4175	4	BOLT (L=90mm)					

Y—SEE SEPARATE ILLUSTRATION

H87227E 02

208-4316 TANK & MTG GP-FUEL

208-4317-Page68

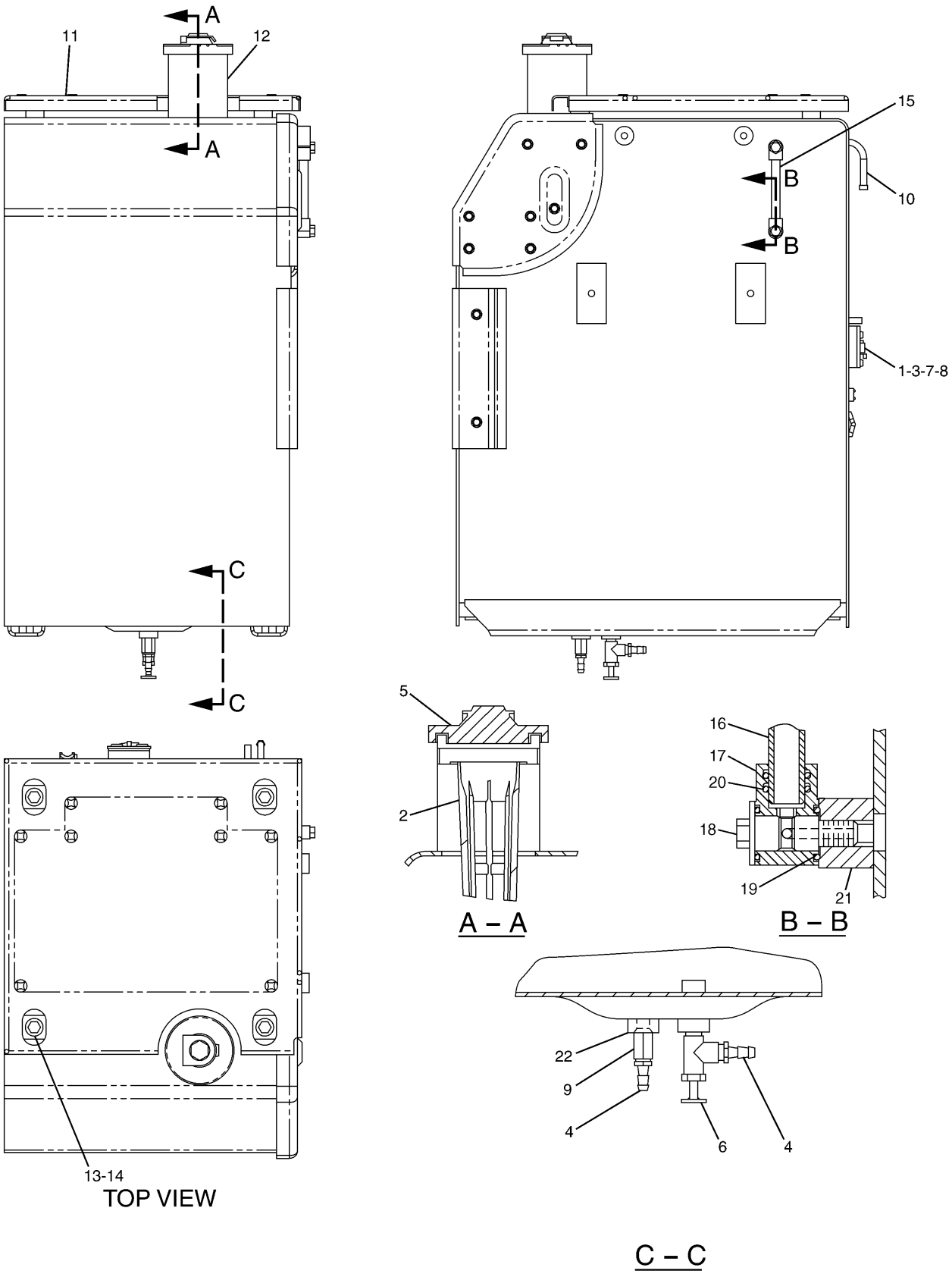

H86668E 02

208-4317 TANK GP-FUEL
S/N CAE 01201-02264
Part of 208-4316-Page67

FUEL SYSTEM

NOTE	No.	PART No.	QTY	PART NAME	NOTE	No.	PART No.	QTY	PART NAME
	1	4I-0378	1	PACKING					
	2	199-0355	1	STRAINER					
	3	095-0736	5	SCREW					
	4	003-7764	2	END					
	5	086-1781	1	CAP AS					
	6	128-4411	1	VALVE AS					
	7	8T-0328	5	WASHER					
	8	163-6700	1	SENSOR					
		8T-8729	2	PIN					
		102-8802	1	RECEPTACLE KIT					
	9	204-3716	1	ADAPTER					
	10	4I-0050	1	PIPE					
	11	170-2814	1	COVER AS					
	12	096-3937	1	FILLER					
	13	8T-4192	4	BOLT (L=25mm)					
	14	5P-1076	4	WASHER					
	15	223-3095	1	GAUGE AS					
	16	237-8526	1	PIPE					
	17	236-3258	2	BLOCK					
	18	236-3259	2	BOLT					
	19	095-1519	4	SEAL-O-RING (ID=15.80mm)					
	20	6F-4855	4	SEAL-O-RING (ID=13.94mm)					
	21	9R-3924	2	BOSS					
	22	3J-1907	1	SEAL-O-RING (ID=11.89mm)					

H86668E 02

208-4317 TANK GP-FUEL

S/N CAE 01201-02264
Part of 208-4316-Page67

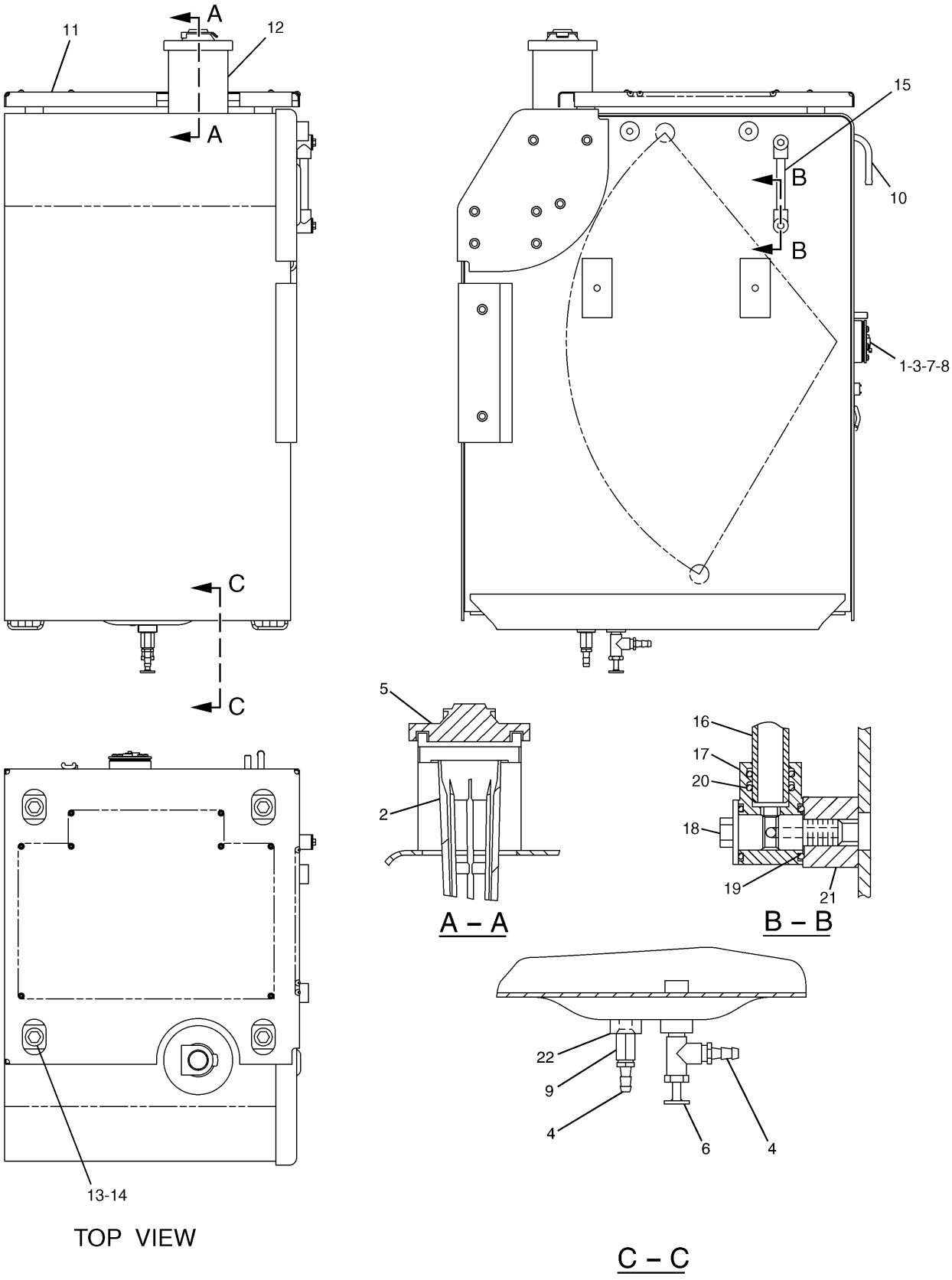

H87228E 03

208-4317 TANK GP-FUEL
S/N CAE 02265-Up
Part of 208-4316-Page67

FUEL SYSTEM

NOTE	No.	PART No.	QTY	PART NAME	NOTE	No.	PART No.	QTY	PART NAME
	1	4I-0378	1	PACKING					
	2	199-0355	1	STRAINER					
	3	095-0736	5	SCREW					
	4	003-7764	2	END					
	5	086-1781	1	CAP AS					
	6	128-4411	1	VALVE AS					
	7	8T-0328	5	WASHER					
	8	163-6700	1	SENSOR					
		8T-8729	2	PIN					
		102-8802	1	RECEPTACLE KIT					
	9	204-3716	1	ADAPTER					
	10	4I-0050	1	PIPE					
	11	248-7748	1	COVER AS					
	12	096-3937	1	FILLER					
	13	8T-4192	4	BOLT (L=25mm)					
	14	5P-1076	4	WASHER					
	15	223-3095	1	GAUGE AS					
	16	237-8526	1	PIPE					
	17	236-3258	2	BLOCK					
	18	236-3259	2	BOLT					
	19	095-1519	4	SEAL-O-RING (ID=15.80mm)					
	20	6F-4855	4	SEAL-O-RING (ID=13.94mm)					
	21	9R-3924	2	BOSS					
	22	3J-1907	1	SEAL-O-RING (ID=11.89mm)					

H87228E 03

208-4317 TANK GP-FUEL

S/N CAE 02265-Up

Part of 208-4316-Page67

FUEL SYSTEM

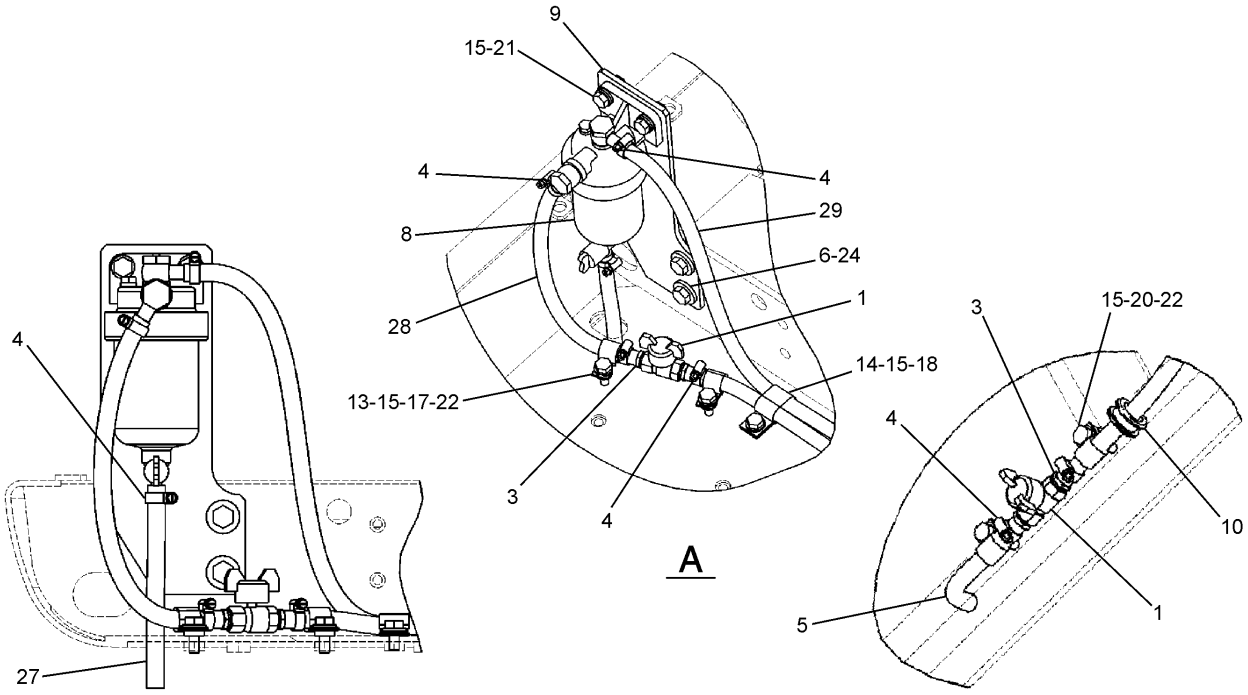

REAR VIEW OF THE FUEL FILTER

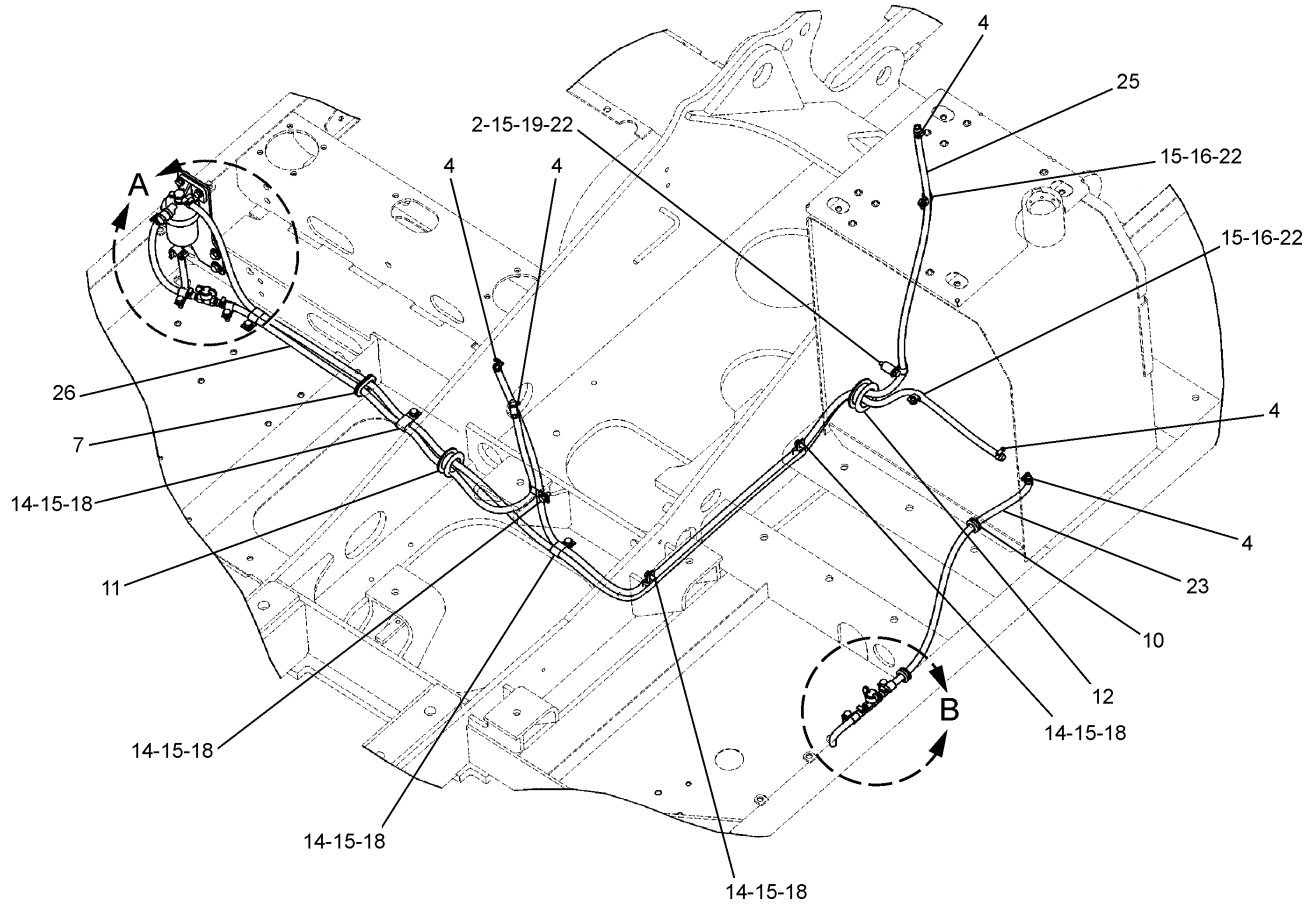

H98134E 01

251-2977 LINES GP-FUEL
171-9161-Page71.01

FUEL SYSTEM

NOTE	No.	PART No.	QTY	PART NAME	NOTE	No.	PART No.	QTY	PART NAME
	1	4I-0379	2	VALVE					
	2	6Y-9571	1	SPACER					
	3	003-7764	4	END					
	4	095-1386	12	CLAMP					
E	5	5P-1442		HOSE…(20cm)					
	6	8T-4139	2	BOLT (L=30mm)					
	7	170-2901	1	GROMMET					
Y	8	171-9161	1	SEPARATOR					
	9	251-2978	1	PLATE AS					
	10	2R-1498	2	GROMMET					
	11	4I-5399	1	GROMMET					
	12	4I-5426	1	GROMMET					
	13	5I-8748	2	SPACER					
	14	5K-8451	6	CLIP					
	15	8T-4121	17	WASHER					
	16	8T-4133	2	NUT					
	17	8T-4136	2	BOLT (L=25mm)					
	18	8T-4137	6	BOLT (L=20mm)					
	19	8T-4185	1	BOLT (L=50mm)					
	20	8T-4186	2	BOLT (L=40mm)					
	21	8T-4195	2	BOLT (L=30mm)					
	22	9M-8406	7	CLIP					
E	23	5P-1442		HOSE…(85cm)					
	24	5P-1076	2	WASHER					
E	25	5P-1442		HOSE…(280cm)					
E	26	5P-1442		HOSE…(160cm)					
E	27	5P-1442		HOSE…(19cm)					
E	28	5P-1442		HOSE…(35cm)					
E	29	5P-1442		HOSE…(300cm)					

E—ORDER BY THE CENTIMETER

Y—SEE SEPARATE ILLUSTRATION

H98134E 01

251-2977 LINES GP-FUEL

171-9161-Page71.01

FUEL SYSTEM

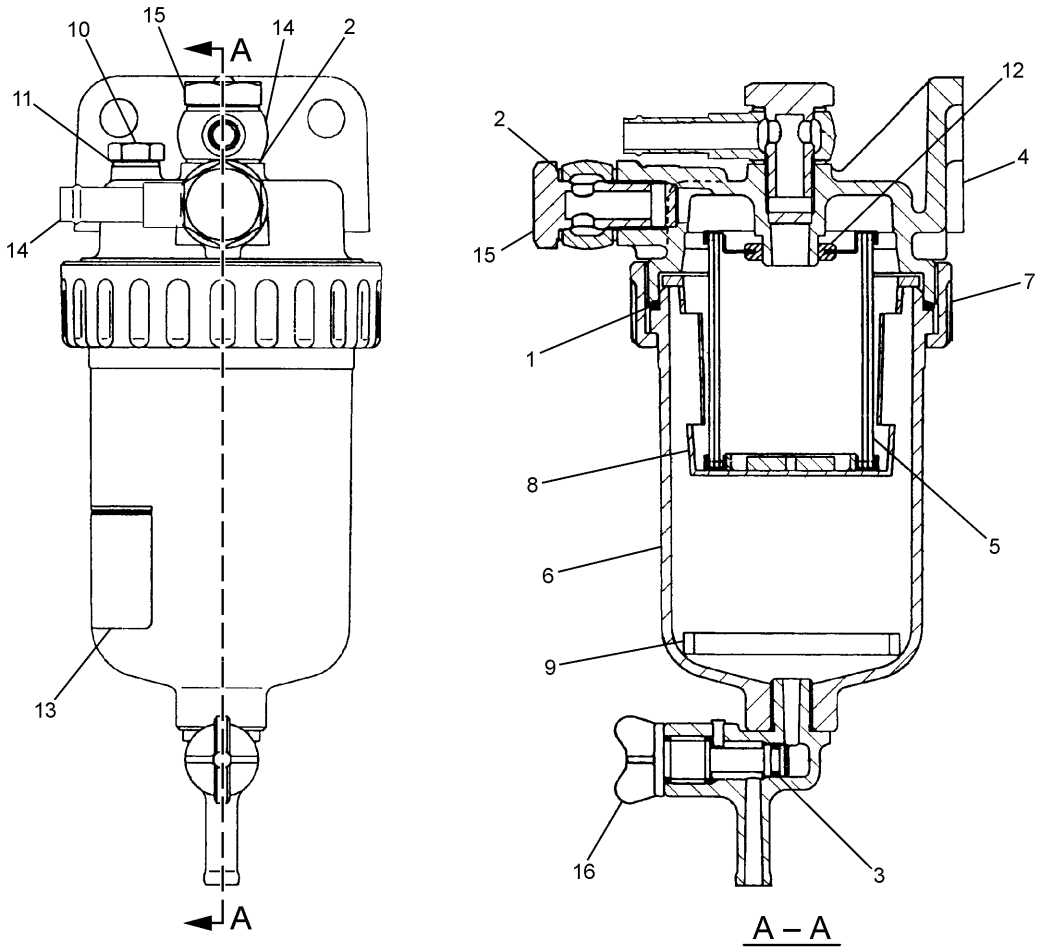

NOTE	No.	PART No.	QTY	PART NAME	NOTE	No.	PART No.	QTY	PART NAME
	1	6V-7659	1	SEAL-O-RING (ID=74.40mm)					
	2	095-1517	4	SEAL-O-RING (ID=13.80mm)					
	3	095-1511	1	SEAL-O-RING (ID=6.80mm)					
	4	287-0221	1	HEAD					
	5	287-0222	1	SCREEN AS					
	6	287-0223	1	CASE					
	7	287-0224	1	RING					
	8	287-0225	1	CASE					
	9	287-0226	1	RING					
	10	287-0227	1	PLUG					
	11	287-0228	1	GASKET					
	12	287-0229	1	GASKET					
	13	287-0230	1	FILM					
	14	110-6821	2	NIPPLE					
	15	287-0231	2	CONNECTOR					
	16	149-1479	1	COCK AS					

H95329E 01

171-9161 SEPARATOR-WATER
Part of 251-2977-Page71

MEMORANDA

FUEL SYSTEM

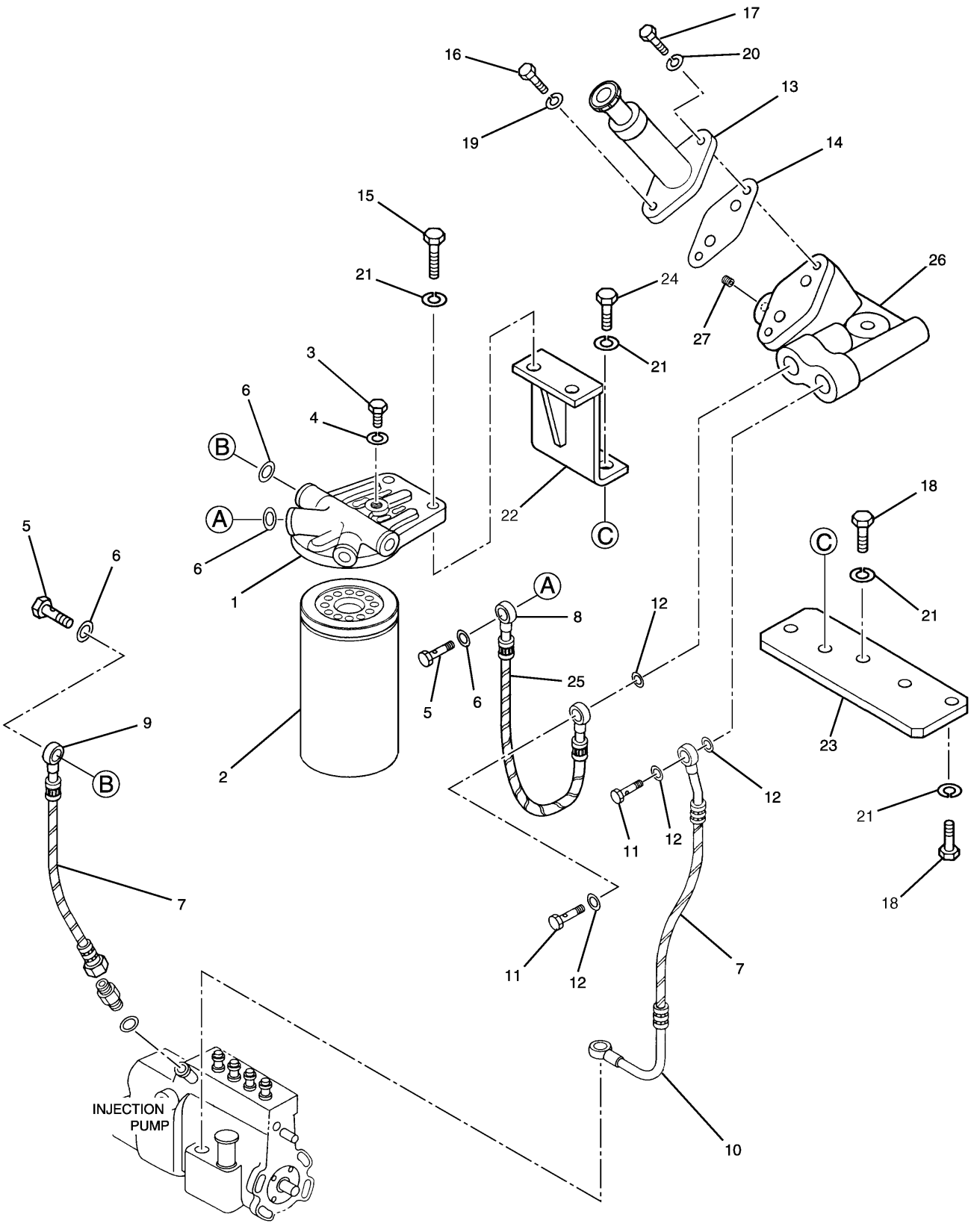

212-8471 FILTER GP-FUEL
Part of 201-3870-Page13

FUEL SYSTEM

NOTE	No.	PART No.	QTY	PART NAME	NOTE	No.	PART No.	QTY	PART NAME
	1	196-8236	1	FILTER AS					
	2	1R-0751	1	FILTER AS					
	3	094-9725	1	PLUG					
	4	095-2038	1	WASHER					
	5	094-9726	2	BOLT (L=26mm)					
	6	095-2040	4	WASHER					
	7	183-8224	2	TUBE					
	8	5I-7829	1	HOSE AS					
	9	178-6591	1	HOSE					
	10	196-8238	1	HOSE					
	11	099-5041	2	BOLT (L=27mm)					
	12	095-2040	4	WASHER					
	13	137-5541	1	PUMP AS					
	14	1P-0436	1	GASKET					
	15	8T-4186	2	BOLT (L=40mm)					
	16	178-6595	1	BOLT (L=30mm)					
	17	8T-7547	1	BOLT (L=30mm)					
	18	8T-4136	3	BOLT (L=25mm)					
	19	096-2500	1	WASHER					
	20	095-8638	1	WASHER					
	21	7X-0796	7	LOCKWASHER					
	22	212-8502	1	BRACKET					
	23	196-8216	1	BRACKET					
	24	8T-4196	2	BOLT (L=35mm)					
	25	183-8223	1	TUBE					
	26	196-8215	1	BASE AS					
	27	5I-7505	2	PLUG					

H81950E 01

212-8471 FILTER GP-FUEL
Part of 201-3870-Page13

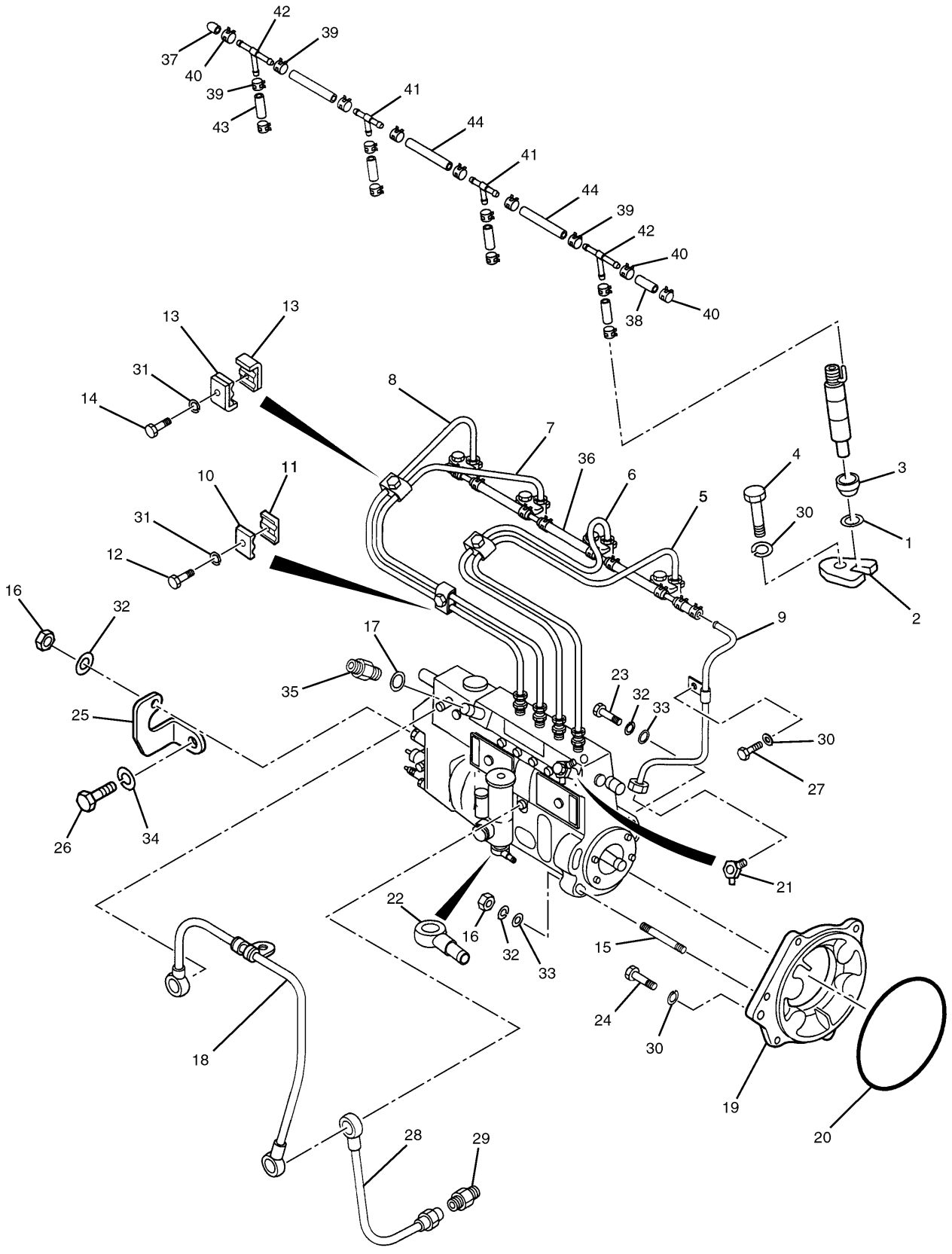

212-8468 LINES GP-FUEL
Part of 201-3870-Page13

FUEL SYSTEM

NOTE	No.	PART No.	QTY	PART NAME	NOTE	No.	PART No.	QTY	PART NAME
	1	1R-6573	4	GASKET					
	2	113-0363	4	SUPPORT					
	3	154-0489	4	SEAL					
	4	8T-4189	4	BOLT (L=20mm)					
	5	212-8492	1	PIPE					
	6	212-8493	1	PIPE					
	7	212-8494	1	PIPE					
	8	212-8495	1	PIPE					
	9	212-8501	1	PIPE					
	10	094-9596	1	CLAMP					
	11	094-9597	1	CLAMP					
	12	5C-9553	1	BOLT (L=16mm)					
	13	094-9581	4	CLAMP					
	14	6V-7357	2	BOLT (L=25mm)					
	15	212-8499	4	STUD					
	16	6V-8231	5	NUT					
	17	095-2040	1	WASHER					
	18	196-8026	1	PIPE					
	19	5I-7576	1	FLANGE					
	20	096-9529	1	SEAL-O-RING (ID=139.50mm)					
	21	5I-7743	1	JOINT					
	22	125-2983	1	JOINT					
	23	8T-4196	4	BOLT (L=35mm)					
	24	5I-5108	2	BOLT (L=18mm)					
	25	212-8509	1	BRACKET					
	26	8T-4179	1	BOLT (L=20mm)					
	27	7X-2536	1	BOLT (L=14mm)					
	28	5I-8112	1	PIPE					
	29	5I-8058	1	CONNECTOR					
	30	095-8638	14	WASHER					
	31	096-2500	3	WASHER					
	32	7X-0796	5	LOCKWASHER					
	33	8T-4121	4	WASHER					
	34	096-2501	1	WASHER					
	35	196-8235	1	CONNECTOR					
	36	212-8496	1	HOSE AS					
	37	094-7235	1	CAP					
	38	217-5474	1	HOSE					
	39	195-8372	14	CLIP					
	40	096-0174	3	CLIP					
	41	195-8369	2	JOINT					
	42	195-8366	2	JOINT					
	43	195-8368	4	HOSE					
	44	212-8497	3	HOSE					

H76940E 00

212-8468 LINES GP-FUEL

Part of 201-3870-Page13

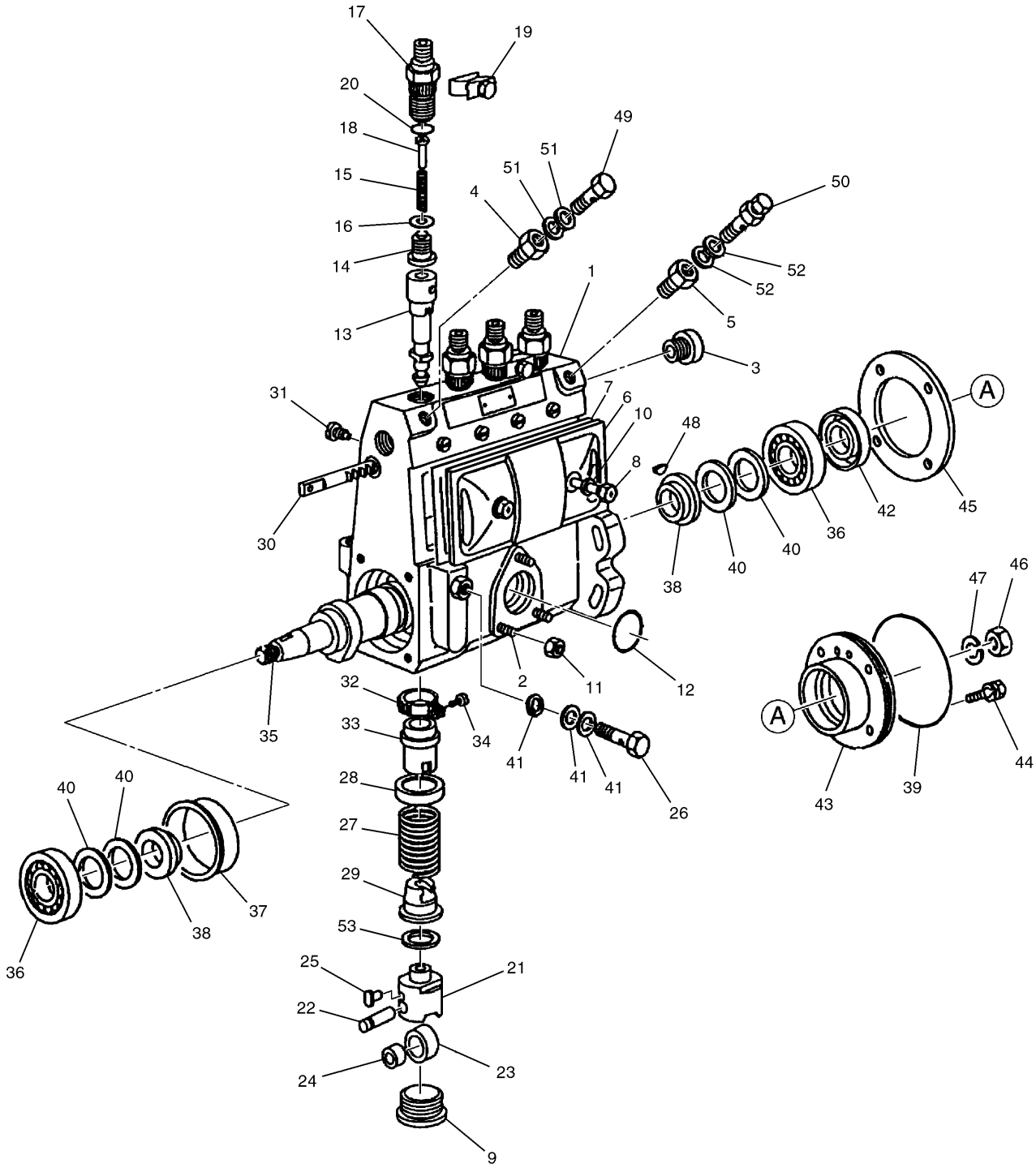

H93801E 06

212-8469 PUMP GP-FUEL INJECTION (1/3)
Part of 201-3870-Page13

FUEL SYSTEM

NOTE	No.	PART No.	QTY	PART NAME	NOTE	No.	PART No.	QTY	PART NAME
	1	5I-8117	1	HOUSING		45	125-2937	1	GASKET
	2	085-9659	3	STUD		46	5I-5146	1	NUT
	3	085-9199	1	PLUG		47	087-8884	1	WASHER
	4	125-2923	1	ADAPTER		48	085-9259	1	KEY
	5	125-2924	1	ADAPTER		49	085-9888	1	EYEBOLT
	6	099-8457	1	COVER		50	5I-5147	1	VALVE
	7	5I-8118	1	GASKET		51	095-2040	2	WASHER
	8	096-9486	2	SCREW		52	5I-5148	2	GASKET
	9	125-2925	4	PLUG	B	53	085-9241	1	SHIM (T=0.20mm)
	10	099-2389	2	GASKET	B		085-9242	1	SHIM (T=0.25mm)
	11	1R-9206	3	NUT	B		096-9408	1	SHIM (T=0.30mm)
	12	096-8294	1	SEAL-O-RING	B		085-9243	1	SHIM (T=0.35mm)
	13	217-5436	4	PLUNGER AS	B		085-9223	1	SHIM (T=0.40mm)
	14	217-5429	4	VALVE	B		085-9244	1	SHIM (T=0.45mm)
	15	125-2928	4	SPRING	B		085-9224	1	SHIM (T=0.50mm)
	16	096-8307	4	GASKET	B		085-9231	1	SHIM (T=0.55mm)
	17	217-5438	4	HOLDER	B		085-9225	1	SHIM (T=0.60mm)
	18	217-5439	4	STOPPER	B		085-9232	1	SHIM (T=0.65mm)
	19	096-9492	2	PLATE	B		096-9409	1	SHIM (T=0.70mm)
	20	239-6440	4	SEAL	B		085-9233	1	SHIM (T=0.75mm)
	21	125-2930	4	TAPPET	B		085-9226	1	SHIM (T=0.80mm)
	22	096-9495	4	PIN	B		085-9234	1	SHIM (T=0.85mm)
	23	125-2931	4	ROLLER	B		085-9227	1	SHIM (T=0.90mm)
	24	125-2932	4	BUSHING	B		085-9235	1	SHIM (T=0.95mm)
	25	125-2933	4	GUIDE	B		085-6719	1	SHIM (T=1.00mm)
	26	190-5859	1	EYEBOLT	B		085-9236	1	SHIM (T=1.05mm)
	27	096-8310	4	SPRING	B		085-9228	1	SHIM (T=1.10mm)
	28	096-9500	4	SEAT	B		085-9237	1	SHIM (T=1.15mm)
	29	096-9502	4	SEAT	B		085-9229	1	SHIM (T=1.20mm)
	30	085-9201	1	RACK	B		085-9238	1	SHIM (T=1.25mm)
	31	085-9838	1	SCREW	B		085-9230	1	SHIM (T=1.30mm)
	32	096-9503	4	PINION	B		085-9245	1	SHIM (T=1.35mm)
	33	096-9505	4	SLEEVE	B		085-6720	1	SHIM (T=1.40mm)
	34	085-9195	4	SCREW	B		085-9246	1	SHIM (T=1.45mm)
	35	217-5446	1	CAMSHAFT	B		085-9239	1	SHIM (T=1.50mm)
B	36	096-8273	2	BEARING	B		085-9247	1	SHIM (T=1.55mm)
B		085-6723	2	BEARING	B		085-9240	1	SHIM (T=1.60mm)
	37	096-9508	1	RING					
	38	287-0139	2	RING					
	39	096-7570	1	SEAL-O-RING					
B	40	096-9410	2	SHIM (T=0.10mm)					
B		085-9682	2	SHIM (T=0.12mm)					
B		085-9683	2	SHIM (T=0.14mm)					
B		085-9684	2	SHIM (T=0.16mm)					
B		085-9685	2	SHIM (T=0.18mm)					
B		085-9686	2	SHIM (T=0.30mm)					
B		096-9411	2	SHIM (T=0.50mm)					
B		5I-7831	2	SHIM (T=0.70mm)					
B		096-9412	2	SHIM (T=1.00mm)					
	41	096-7632	3	GASKET					
	42	096-7571	1	SEAL					
	43	085-9197	1	COVER					
	44	085-9258	4	BOLT					

B—USE AS REQUIRED

H93801E 06

212-8469 PUMP GP-FUEL INJECTION (1/3)

Part of 201-3870-Page13

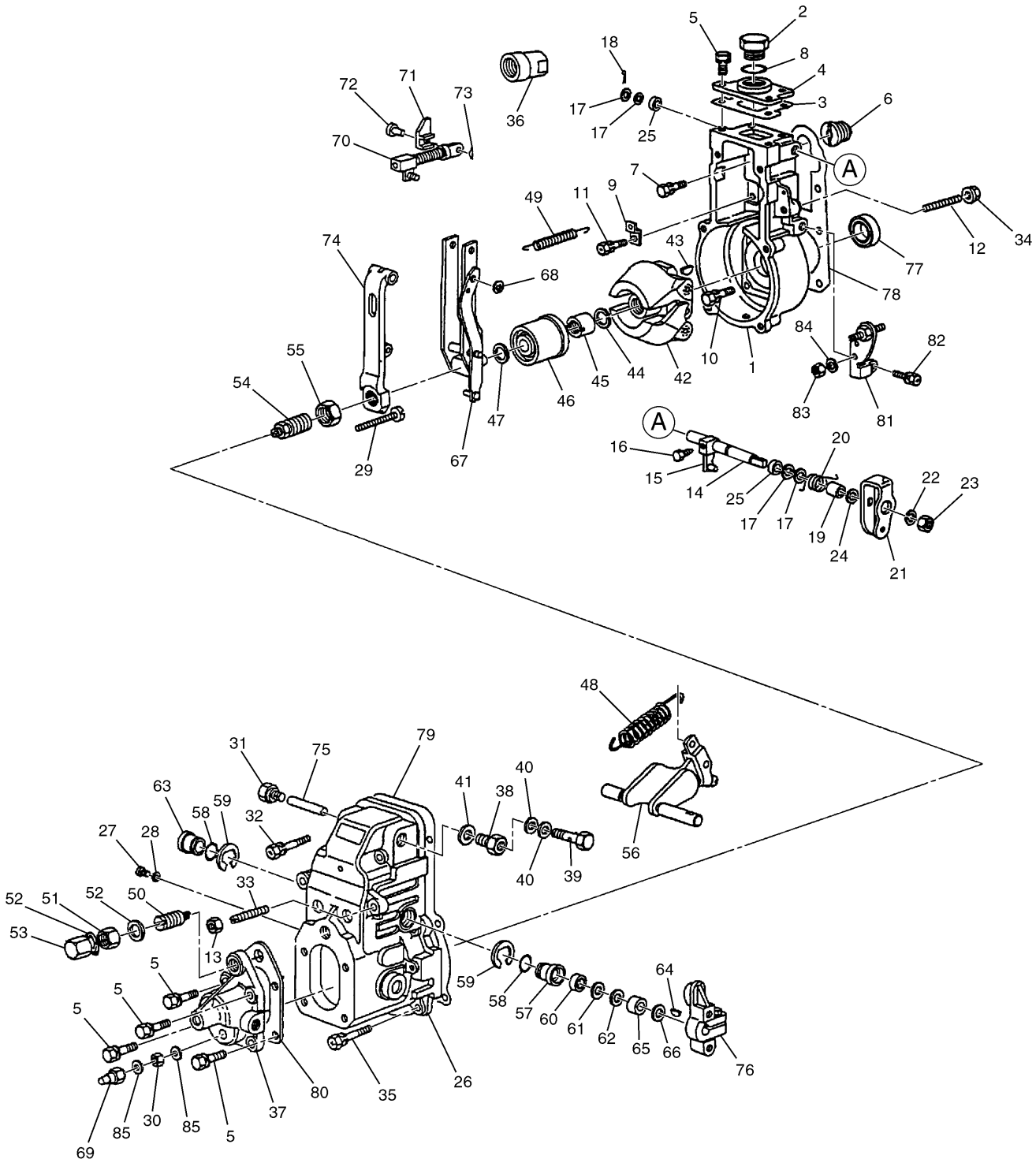

212-8469 PUMP GP-FUEL INJECTION (2/3)
Part of 201-3870-Page13

FUEL SYSTEM

NOTE	No.	PART No.	QTY	PART NAME
	1	190-5860	1	HOUSING
	2	085-9211	1	PLUG
	3	190-5861	1	GASKET
	4	190-5862	1	COVER
	5	085-7913	8	BOLT
	6	096-9585	1	ADAPTER
	7	085-9261	1	BOLT
	8	096-8292	1	SEAL-O-RING
	9	190-5863	1	PLATE
	10	085-9658	5	BOLT
	11	190-5864	1	BOLT
	12	190-5865	1	SCREW
	13	085-9205	1	NUT
	14	190-5866	1	SHAFT
	15	190-5867	1	LEVER
	16	190-5868	1	BOLT
B	17	190-5869	1	WASHER (T=1.00mm)
B		190-5870	1	WASHER (T=1.50mm)
	18	190-5871	1	PIN
	19	190-5872	1	COLLAR
	20	190-5873	1	SPRING
	21	190-5874	1	LEVER
	22	190-5875	1	WASHER
	23	190-5876	1	NUT
B	24	190-5877	1	SHIM
B		190-5878	1	SHIM
	25	190-5880	2	SEAL-O-RING
	26	190-5881	1	COVER
	27	190-5883	1	SCREW
	28	190-5884	1	WASHER
	29	190-5885	1	SCREW
	30	085-9865	1	NUT
	31	099-6495	1	PLUG
	32	190-5886	2	BOLT
	33	085-9209	1	SCREW
	34	190-5887	1	NUT
	35	085-9265	4	BOLT
	36	085-9906	1	LIMITER
	37	190-5888	1	COVER
	38	190-5911	1	ADAPTER
	39	190-5912	1	EYEBOLT
	40	190-5913	2	GASKET
	41	190-5914	1	GASKET
	42	085-9909	1	FLYWEIGHT AS
	43	085-9653	1	KEY
	44	096-8280	1	WASHER
	45	085-9267	1	NUT
	46	190-5889	1	SLEEVE
B	47	085-9677	1	SHIM (T=0.20mm)
B		085-9678	1	SHIM (T=0.30mm)
B		085-9679	1	SHIM (T=0.40mm)
B		085-9882	1	SHIM (T=0.50mm)
B		085-9680	1	SHIM (T=1.00mm)
B		085-9883	1	SHIM (T=1.50mm)
B		085-9884	1	SHIM (T=2.00mm)
B		085-9885	1	SHIM (T=3.00mm)
B		085-9886	1	SHIM (T=4.00mm)
	48	096-8356	1	SPRING
	49	085-9913	1	SPRING
	50	085-9914	1	SPRING
	51	196-8125	1	NUT
	52	096-8274	2	GASKET
	53	085-9206	1	NUT
	54	5I-5154	1	CAPSULE
	55	085-9269	1	NUT
	56	190-5892	1	LEVER
	57	190-5893	1	BUSHING
	58	096-8289	2	SEAL-O-RING
	59	085-9271	2	RING
	60	096-7567	1	SEAL
	61	085-9887	1	SHIM
B	62	190-5894	1	SHIM (T=0.50mm)
	63	190-5895	1	BUSHING
	64	085-9652	1	KEY
	65	085-7916	1	COLLAR
B	66	085-9207	1	WASHER (T=1.00mm)
	67	190-5896	1	LEVER AS
	68	085-9645	1	RING
	69	190-5910	1	NUT
	70	222-8218	1	LINK
	71	190-5899	1	CONNECTOR
	72	190-5900	1	PIN
	73	190-5901	1	PIN
	74	190-5902	1	LEVER
	75	190-5903	1	PIN
	76	085-9936	1	LEVER
	77	190-5904	1	SEAL
	78	125-2939	1	GASKET
	79	1R-9210	1	GASKET
	80	190-5905	1	GASKET
	81	190-5906	1	BRACKET
	82	190-5907	1	BOLT
	83	190-5908	1	NUT
	84	190-5909	1	SHIM
	85	085-9655	2	GASKET

B—USE AS REQUIRED

H93802E 06

212-8469 PUMP GP-FUEL INJECTION (2/3)

Part of 201-3870-Page13

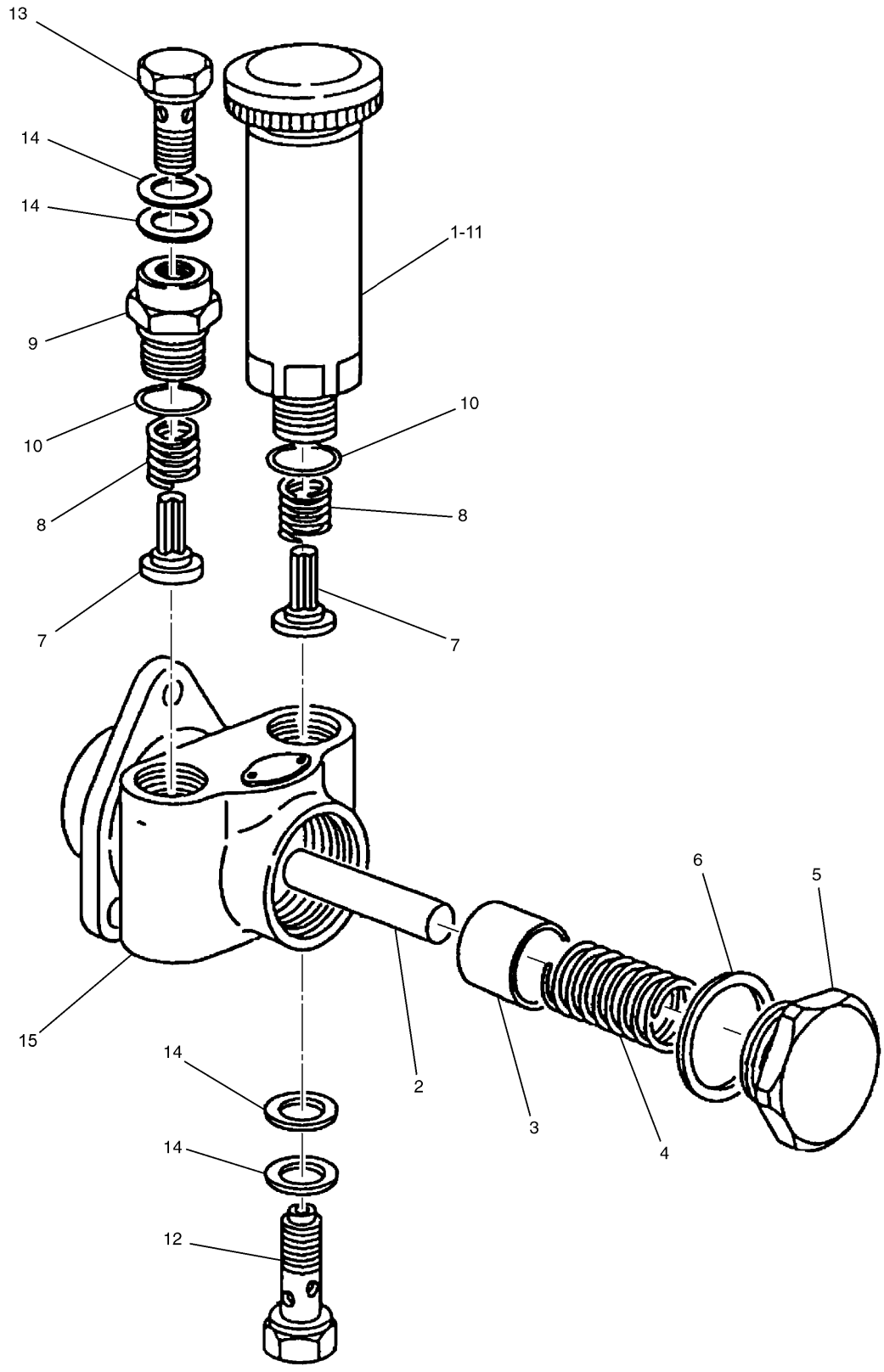

212-8469 PUMP GP-FUEL INJECTION (3/3)
Part of 201-3870-Page13

FUEL SYSTEM

NOTE	No.	PART No.	QTY	PART NAME	NOTE	No.	PART No.	QTY	PART NAME
	1	255-2969	1	PUMP AS (D.K.C)					
	2	125-2941	1	PUSHROD					
	3	125-2942	1	PISTON					
	4	096-8336	1	SPRING					
	5	51-5159	1	PLUG					
	6	125-2943	1	GASKET					
	7	095-2489	2	VALVE					
	8	095-2490	2	SPRING					
	9	085-9222	1	ADAPTER					
	10	096-8288	2	SEAL-O-RING					
	11	239-6656	1	PRIMING PUMP					
	12	085-9899	1	EYEBOLT					
	13	085-9888	1	EYEBOLT					
	14	095-2040	4	WASHER					
	15	125-2940	1	HOUSING					

H93803E 06

212-8469 PUMP GP-FUEL INJECTION (3/3)

Part of 201-3870-Page13

FUEL SYSTEM

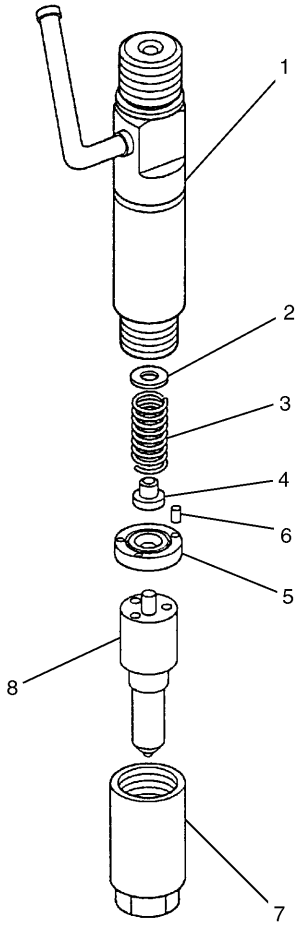

NOTE	No.	PART No.	QTY	PART NAME	NOTE	No.	PART No.	QTY	PART NAME
Z	1		1	HOLDER AS		8	212-8609	1	NOZZLE AS
B	2	125-3006	1	SHIM (T=0.10mm)					
B		125-3007	1	SHIM (T=0.20mm)					
B		125-3008	1	SHIM (T=0.30mm)					
B		125-3009	1	SHIM (T=0.40mm)					
B		125-3010	1	SHIM (T=0.50mm)					
B		193-2751	1	SHIM (T=0.51mm)					
B		125-3011	1	SHIM (T=0.52mm)					
B		193-2752	1	SHIM (T=0.53mm)					
B		125-3012	1	SHIM (T=0.54mm)					
B		159-6722	1	SHIM (T=0.55mm)					
B		125-3013	1	SHIM (T=0.56mm)					
B		193-2753	1	SHIM (T=0.57mm)					
B		125-3014	1	SHIM (T=0.58mm)					
B		193-2754	1	SHIM (T=0.59mm)					
	3	096-7928	1	SPRING					
	4	5I-5175	1	SEAT					
	5	096-9481	1	SPACER					
	6	096-9478	2	PIN					
	7	085-9275	1	NUT					

B—USE AS REQUIRED

Z—NOT SERVICED

H82980E 01

212-8470 NOZZLE GP-UNIT INJECTOR

Part of 201-3870-Page13

MEMORANDA

FUEL SYSTEM

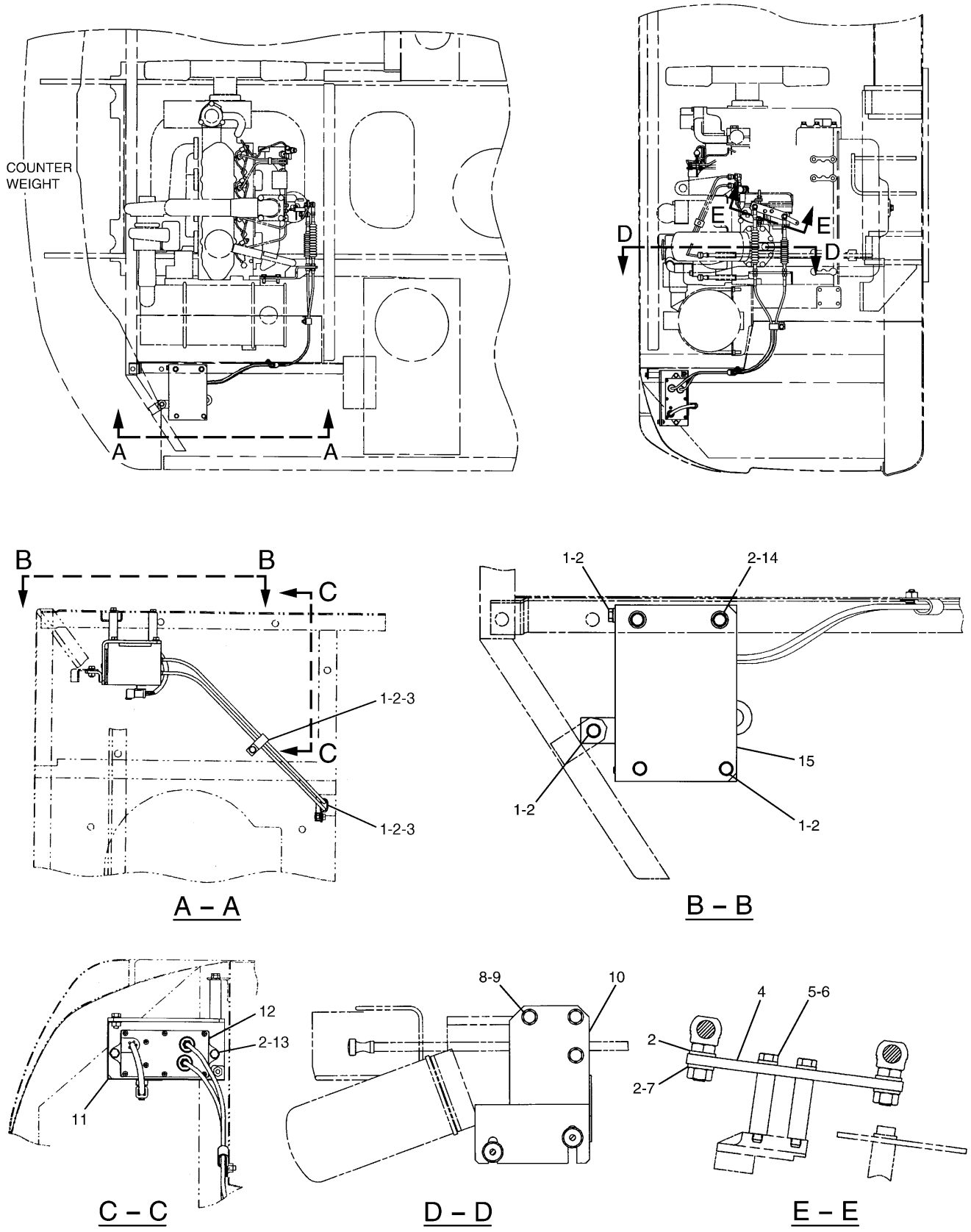

164-8276 CONTROL GP-GOVERNOR

FUEL SYSTEM

NOTE	No.	PART No.	QTY	PART NAME	NOTE	No.	PART No.	QTY	PART NAME
	1	8T-4189	6	BOLT (L=20mm)					
	2	8T-4224	14	WASHER					
	3	4D-6466	2	CLIP					
	4	120-0009	1	LEVER AS					
	5	7X-2534	2	BOLT (L=50mm)					
	6	9X-8256	2	WASHER					
	7	5C-7261	2	NUT					
	8	8T-4136	3	BOLT (L=25mm)					
	9	8T-4121	3	WASHER					
	10	195-8943	1	SUPPORT AS					
	11	177-7636	1	COVER AS					
	12	247-5207	1	MOTOR AS					
		102-8806	1	RECEPTACLE KIT					
		8T-8737	1	PLUG					
		9X-3401	7	PIN					
		157-3160	2	JOINT					
	13	7X-2537	2	BOLT (L=35mm)					
	14	8T-4200	2	BOLT (L=16mm)					
	15	195-8834	1	BRACKET AS					

H88198E 07

164-8276 CONTROL GP-GOVERNOR

ELECTRICAL AND STARTING SYSTEM

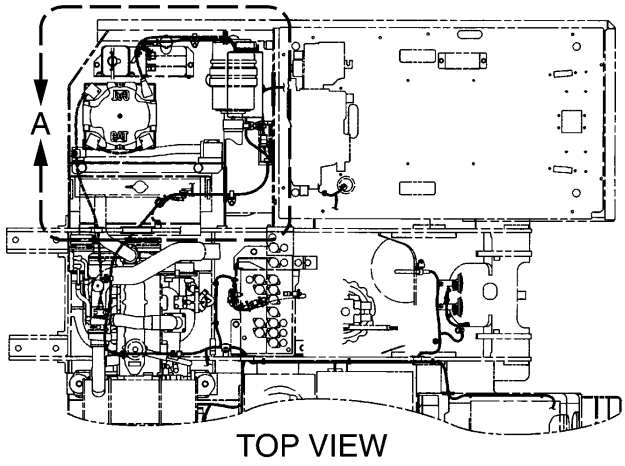

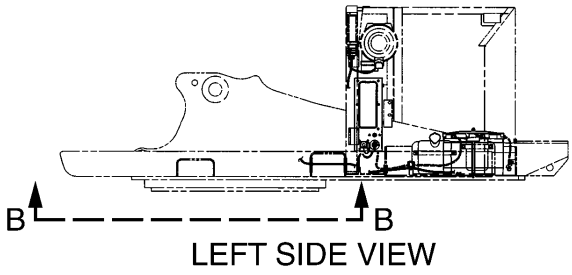

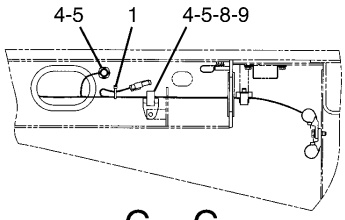

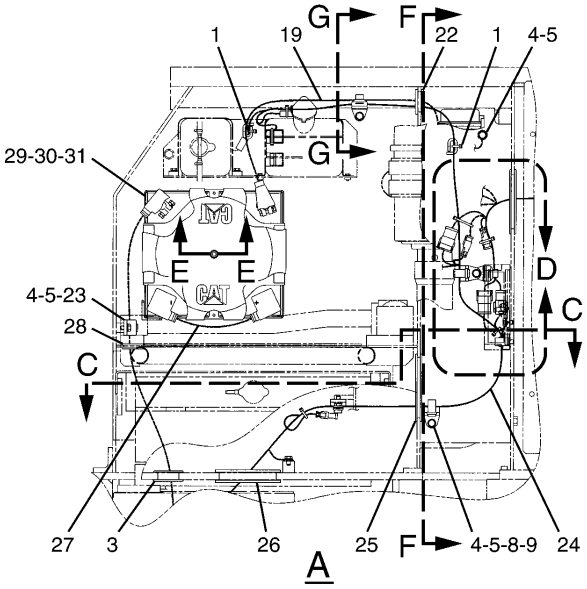

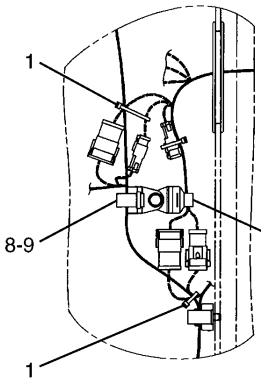

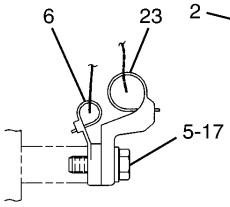

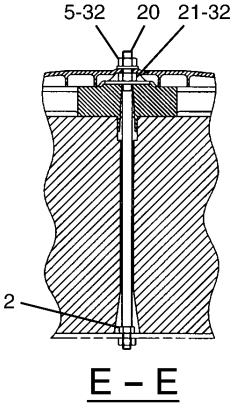

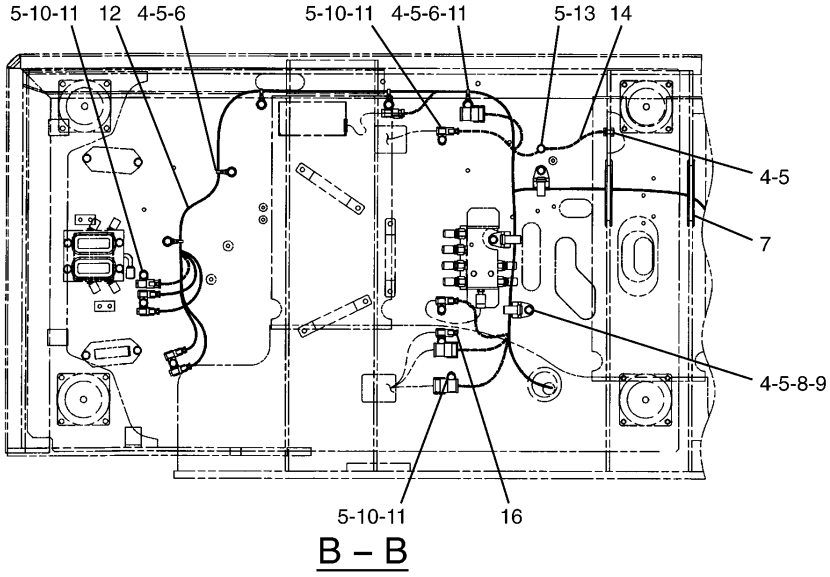

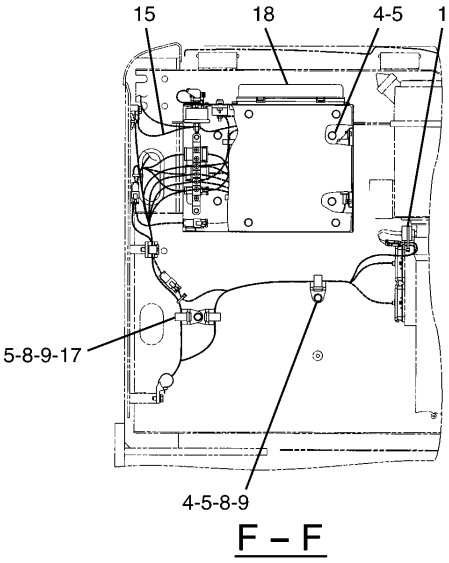

H87270E 10

170-6816 BATTERY & WIRING GP (1/3)

S/N CAE 01201-01923

251-0161-Page94,170-6927-Page98,170-6929-Page100,170-6930-Page101,204-1911-Page104

ELECTRICAL AND STARTING SYSTEM

NOTE	No.	PART No.	QTY	PART NAME	NOTE	No.	PART No.	QTY	PART NAME
	1	3S-2093	8	STRAP					
	2	5C-7261	1	NUT					
	3	4I-5399	1	GROMMET					
	4	8T-4137	19	BOLT (L=20mm)					
	5	8T-4121	31	WASHER					
	6	111-4836	6	CLIP					
	7	7Y-5456	2	GROMMET					
	8	111-4838	9	CLIP					
	9	111-4839	9	STRAP					
	10	7X-2621	7	BOLT (L=12mm)					
	11	116-0118	12	CLIP					
Y	12	170-6927	1	HARNESS AS					
	13	8T-4191	1	BOLT (L=16mm)					
	14	7G-1060	1	STRAP AS					
	15	132-1805	1	STRAP AS					
	16	186-4574	1	PLUG AS					
		9G-3695	2	PLUG					
	17	8T-4195	3	BOLT (L=30mm)					
Y	18	204-1911	1	PANEL GP					
Y	19	170-6930	1	CABLE AS					
	20	5I-8304	1	ROD					
	21	8T-4226	1	WASHER					
	22	093-2068	1	GROMMET					
	23	111-4837	3	CLIP					
Y	24	251-0161	1	HARNESS AS					
	25	170-6939	1	GROMMET					
	26	5I-4365	1	GROMMET					
Y	27	170-6929	1	CABLE AS					
	28	7Y-8169	1	GROMMET					
	29	3T-5760	2	BATTERY					
	30	6W-6005	1	HOLDDOWN					
	31	5I-8270	1	COVER					
	32	8T-4133	2	NUT					

Y—SEE SEPARATE ILLUSTRATION

H87270E 10

170-6816 BATTERY & WIRING GP (1/3)

S/N CAE 01201-01923

251-0161-Page94,170-6927-Page98,170-6929-Page100,170-6930-Page101,204-1911-Page104

ELECTRICAL AND STARTING SYSTEM

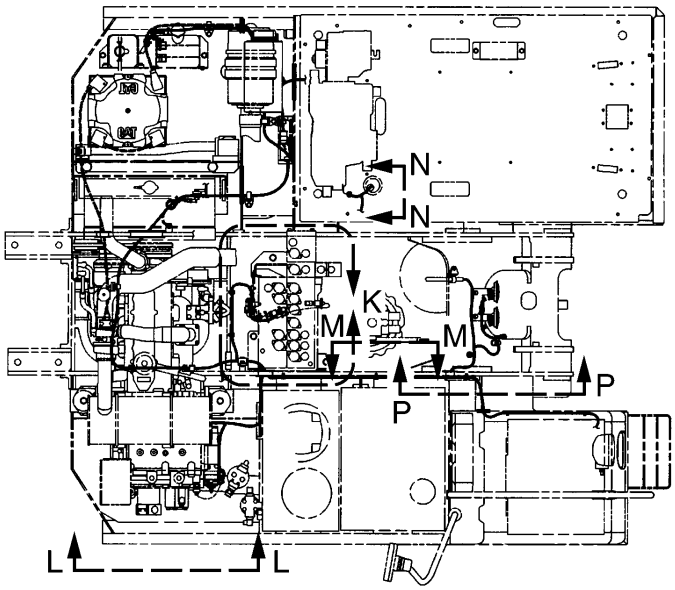

TOP VIEW

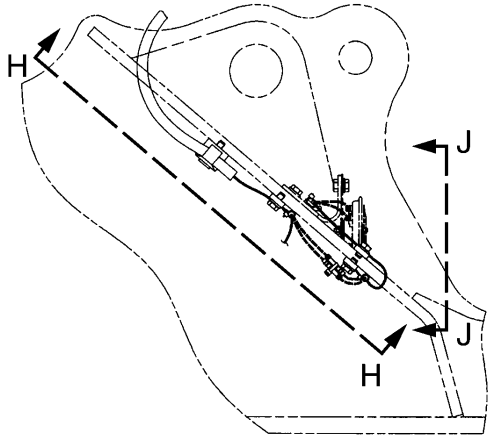

P – P

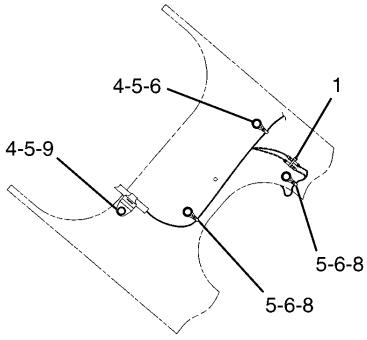

H – H

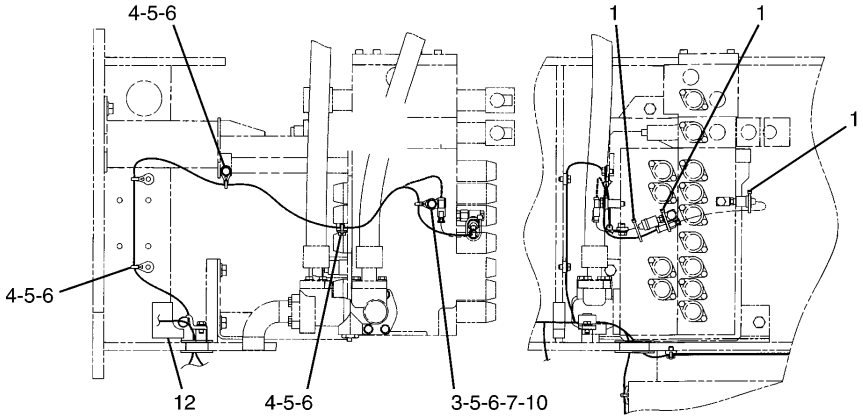

K

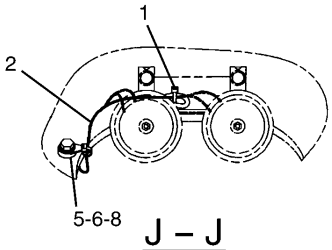

J – J

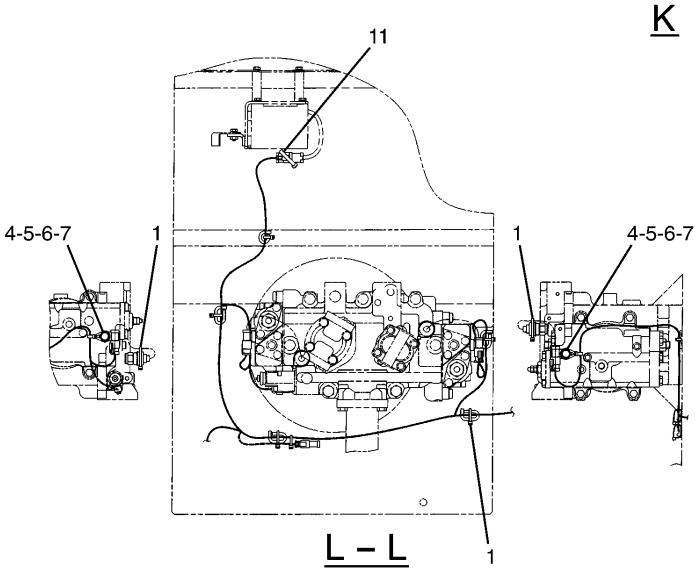

L – L

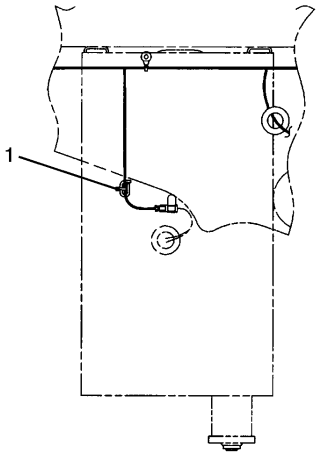

M – M

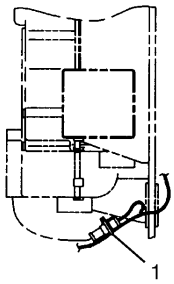

N – N

H87271E 10

170-6816 BATTERY & WIRING GP (2/3)
S/N CAE 01201-01923
183-1001-Page102

ELECTRICAL AND STARTING SYSTEM

NOTE	No.	PART No.	QTY	PART NAME	NOTE	No.	PART No.	QTY	PART NAME
	1	3S-2093	16	STRAP					
Y	2	183-1001	1	HARNESS AS					
	3	8T-4185	1	BOLT (L=50mm)					
	4	8T-4137	8	BOLT (L=20mm)					
	5	8T-4121	12	WASHER					
	6	111-4836	11	CLIP					
	7	116-0118	3	CLIP					
	8	8T-4191	3	BOLT (L=16mm)					
	9	111-4837	1	CLIP					
	10	6G-2263	1	SPACER					
	11	7K-1181	1	STRAP					
	12	204-1709	1	GROMMET					

Y—SEE SEPARATE ILLUSTRATION

H87271E 10

170-6816 BATTERY & WIRING GP (2/3)

S/N CAE 01201-01923
183-1001-Page102

ELECTRICAL AND STARTING SYSTEM

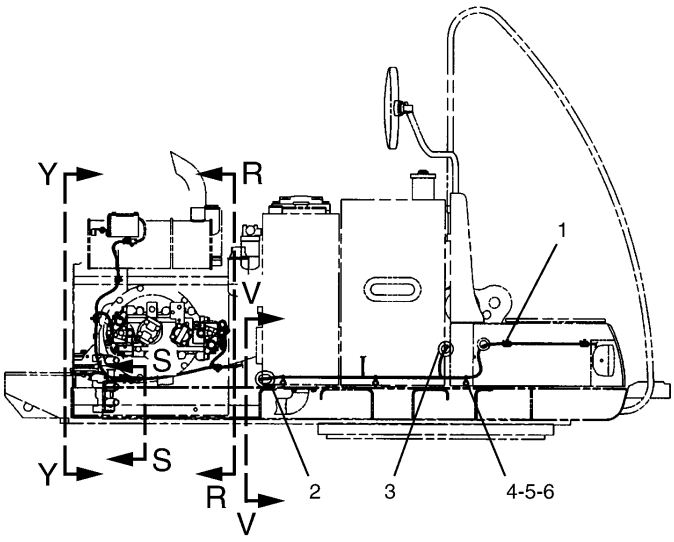

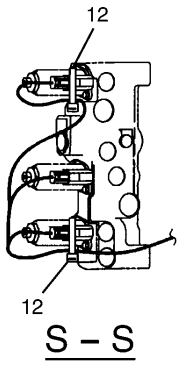

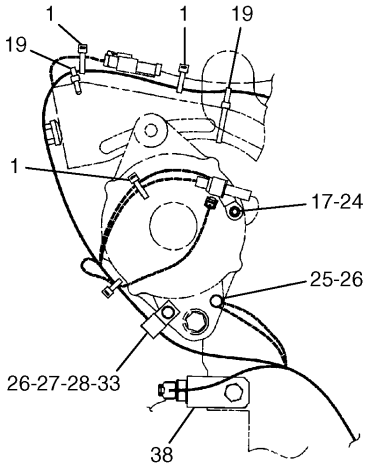

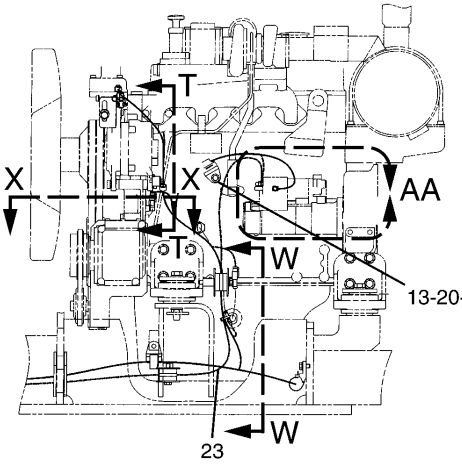

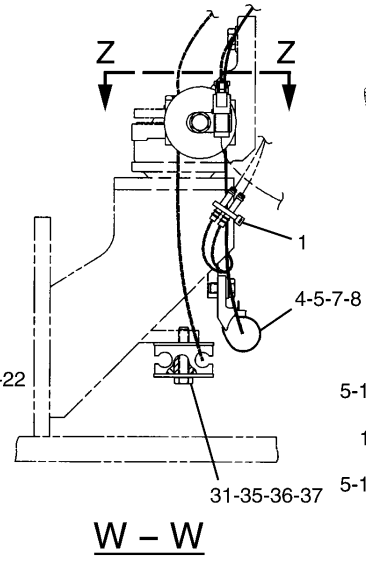

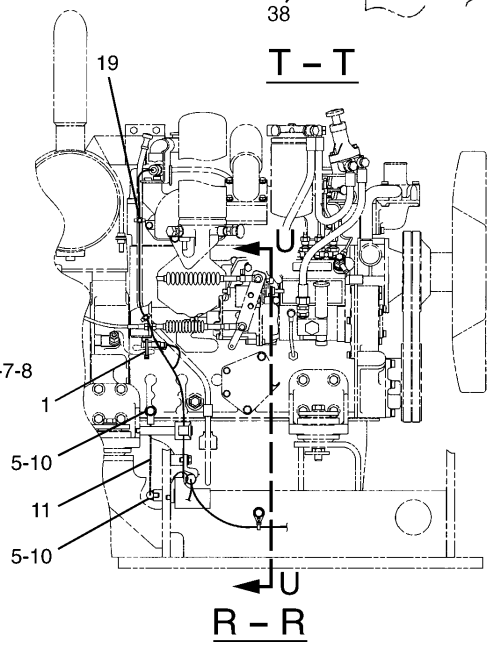

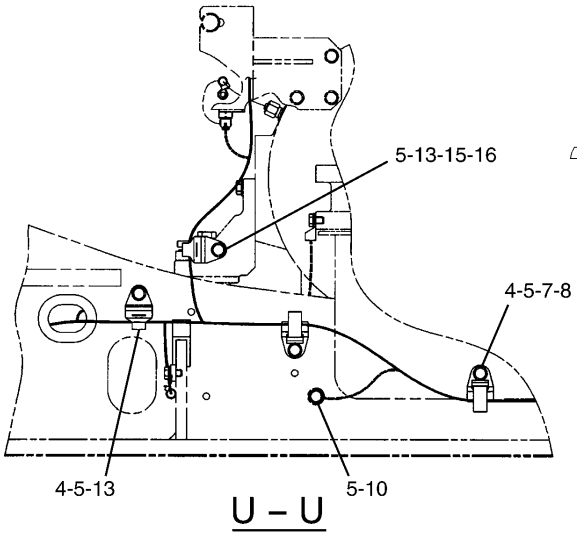

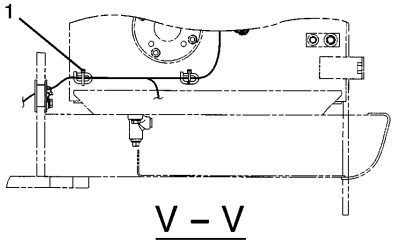

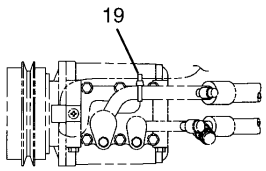

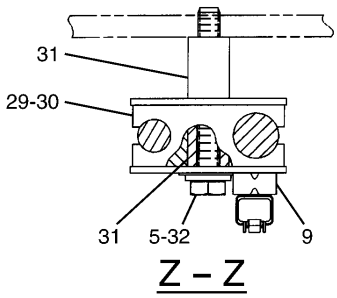

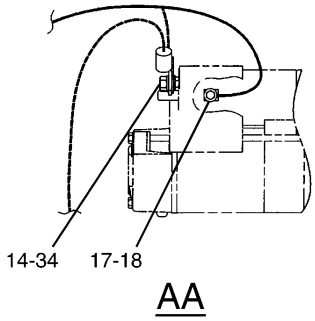

H87272E 10

170-6816 BATTERY & WIRING GP (3/3)
S/N CAE 01201-01923
204-1763-Page100

ELECTRICAL AND STARTING SYSTEM

NOTE	No.	PART No.	QTY	PART NAME	NOTE	No.	PART No.	QTY	PART NAME
	1	3S-2093	10	STRAP					
	2	4I-5426	1	GROMMET					
	3	4I-5399	1	GROMMET					
	4	8T-4137	7	BOLT (L=20mm)					
	5	8T-4121	12	WASHER					
	6	111-4836	3	CLIP					
	7	111-4838	3	CLIP					
	8	111-4839	3	STRAP					
	9	116-0118	1	CLIP					
	10	8T-4191	3	BOLT (L=16mm)					
	11	132-1805	1	STRAP AS					
	12	7K-1181	2	STRAP					
	13	111-4837	3	CLIP					
	14	5C-7261	1	NUT					
	15	102-7886	1	SLEEVE					
	16	8T-4198	1	BOLT (L=100mm)					
	17	8T-0328	2	WASHER					
	18	8T-0286	1	BOLT (L=8mm)					
	19	7I-2673	5	STRAP					
	20	5P-4116	1	WASHER					
	21	7I-4949	1	TUBE					
	22	8T-6870	1	BOLT (L=70mm)					
Y	23	204-1763	1	CABLE AS					
	24	7Y-5226	1	NUT					
	25	7X-2619	1	BOLT (L=10mm)					
	26	9X-8256	2	WASHER					
	27	5I-9368	1	SPACER					
	28	8J-1256	1	CLIP					
	29	4I-5479	1	CLAMP					
	30	4I-5480	2	WASHER					
	31	6G-2263	3	SPACER					
	32	8T-4172	1	BOLT (L=80mm)					
	33	7X-2533	1	BOLT (L=35mm)					
	34	8T-4224	1	WASHER					
	35	8T-4185	1	BOLT (L=50mm)					
	36	2G-8767	2	WASHER					
	37	6G-2256	1	CLAMP					
	38	204-1901	1	BRACKET AS					

Y—SEE SEPARATE ILLUSTRATION

H87272E 10

170-6816 BATTERY & WIRING GP (3/3)

S/N CAE 01201-01923
204-1763-Page100

ELECTRICAL AND STARTING SYSTEM

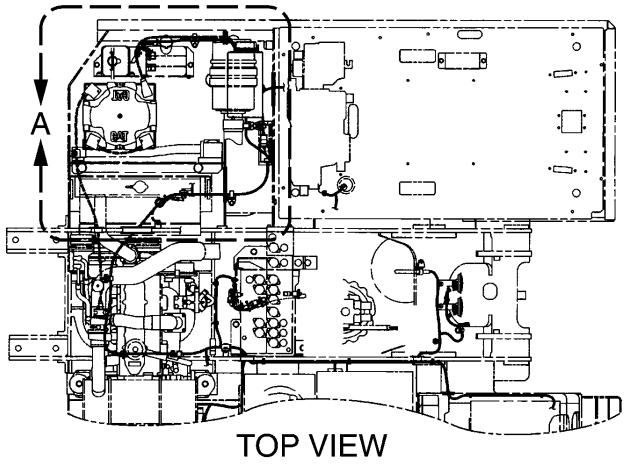

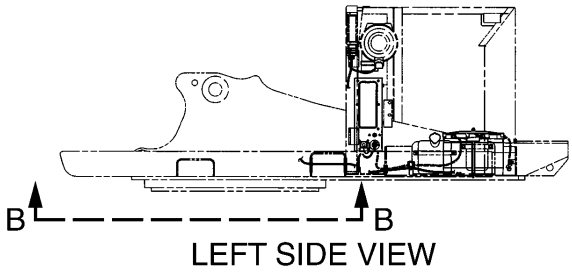

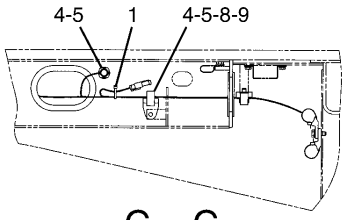

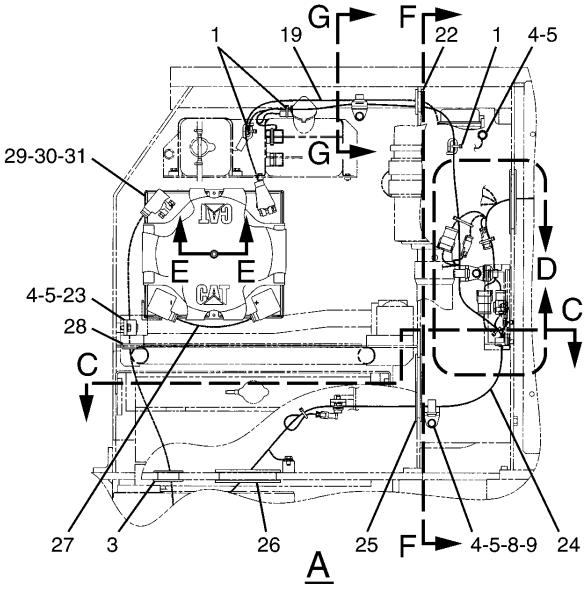

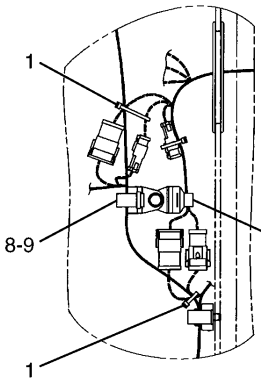

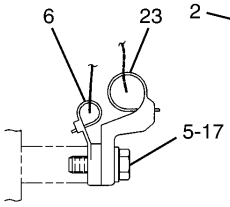

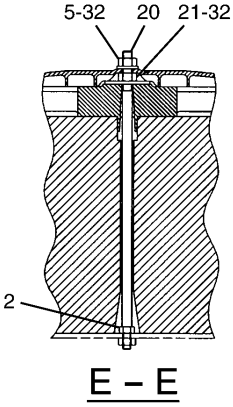

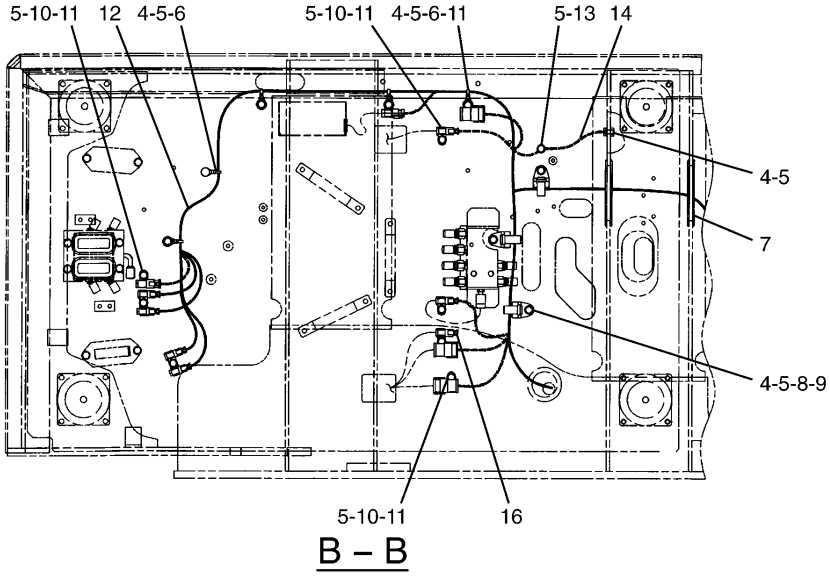

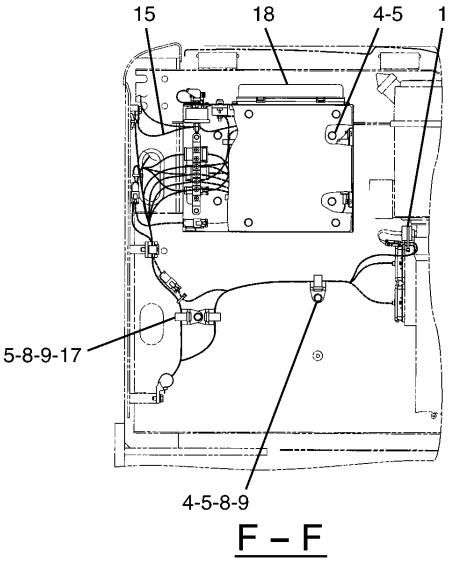

H87273E 12

170-6816 BATTERY & WIRING GP (1/3)

S/N CAE 01924-01962

251-0161-Page94,170-6927-Page98,170-6929-Page100,170-6930-Page101,204-1913-Page108

ELECTRICAL AND STARTING SYSTEM

NOTE	No.	PART No.	QTY	PART NAME	NOTE	No.	PART No.	QTY	PART NAME
	1	3S-2093	8	STRAP					
	2	5C-7261	1	NUT					
	3	4I-5399	1	GROMMET					
	4	8T-4137	19	BOLT (L=20mm)					
	5	8T-4121	31	WASHER					
	6	111-4836	6	CLIP					
	7	7Y-5456	2	GROMMET					
	8	111-4838	9	CLIP					
	9	111-4839	9	STRAP					
	10	7X-2621	7	BOLT (L=12mm)					
	11	116-0118	12	CLIP					
Y	12	170-6927	1	HARNESS AS					
	13	8T-4191	1	BOLT (L=16mm)					
	14	7G-1060	1	STRAP AS					
	15	132-1805	1	STRAP AS					
	16	186-4574	1	PLUG AS					
		9G-3695	2	PLUG					
	17	8T-4195	3	BOLT (L=30mm)					
Y	18	204-1913	1	PANEL GP					
Y	19	170-6930	1	CABLE AS					
	20	5I-8304	1	ROD					
	21	8T-4226	1	WASHER					
	22	093-2068	1	GROMMET					
	23	111-4837	3	CLIP					
Y	24	251-0161	1	HARNESS AS					
	25	170-6939	1	GROMMET					
	26	5I-4365	1	GROMMET					
Y	27	170-6929	1	CABLE AS					
	28	7Y-8169	1	GROMMET					
	29	3T-5760	2	BATTERY					
	30	6W-6005	1	HOLDDOWN					
	31	5I-8270	1	COVER					
	32	8T-4133	2	NUT					

Y—SEE SEPARATE ILLUSTRATION

H87273E 12

170-6816 BATTERY & WIRING GP (1/3)

S/N CAE 01924-01962

251-0161-Page94,170-6927-Page98,170-6929-Page100,170-6930-Page101,204-1913-Page108

ELECTRICAL AND STARTING SYSTEM

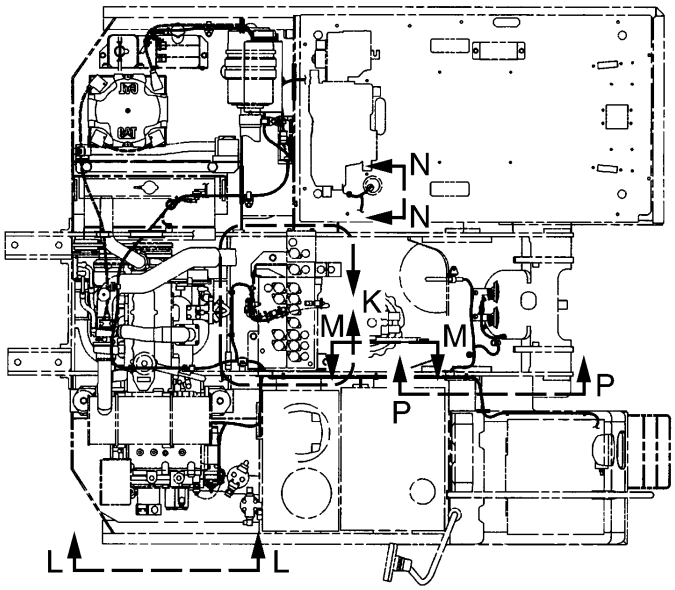

TOP VIEW

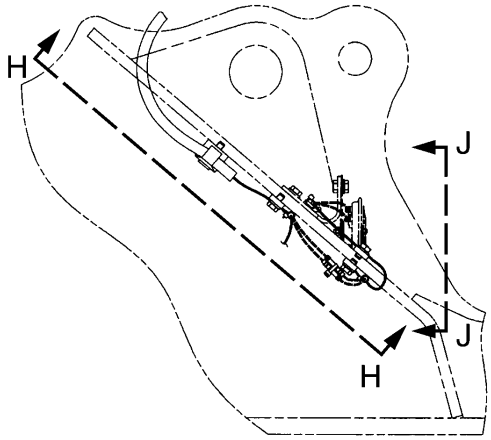

P – P

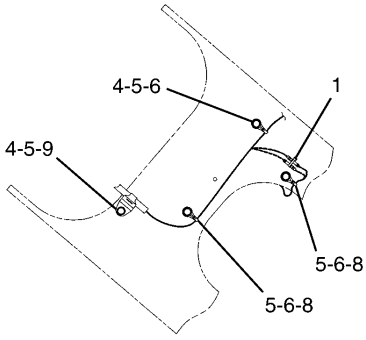

H – H

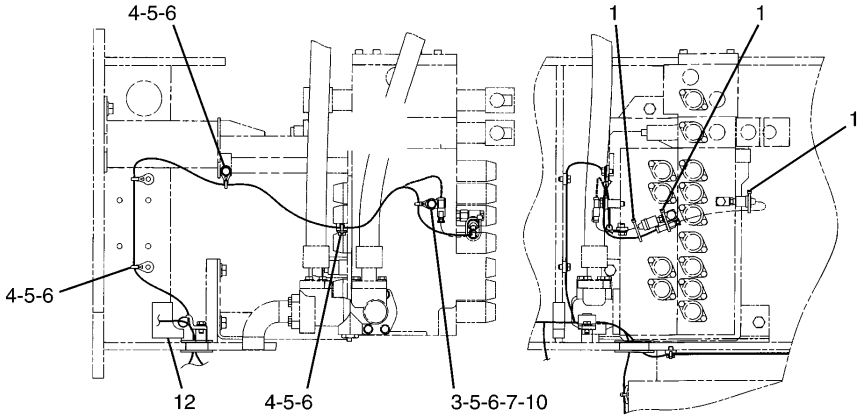

K

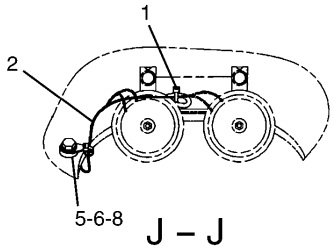

J – J

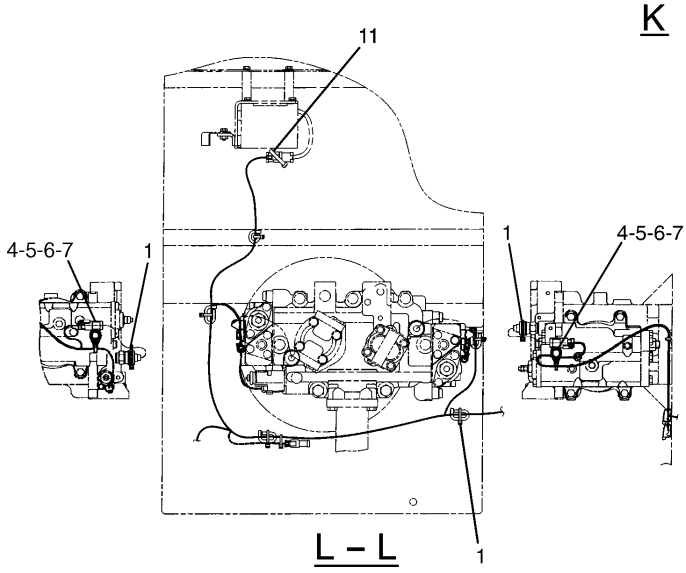

L – L

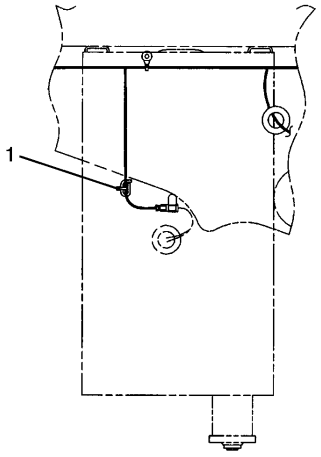

M – M

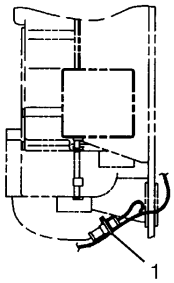

N – N

H87274E 12

170-6816 BATTERY & WIRING GP (2/3)
S/N CAE 01924-01962
183-1001-Page102

ELECTRICAL AND STARTING SYSTEM

NOTE	No.	PART No.	QTY	PART NAME	NOTE	No.	PART No.	QTY	PART NAME
	1	3S-2093	16	STRAP					
Y	2	183-1001	1	HARNESS AS					
	3	8T-4185	1	BOLT (L=50mm)					
	4	8T-4137	8	BOLT (L=20mm)					
	5	8T-4121	12	WASHER					
	6	111-4836	11	CLIP					
	7	116-0118	3	CLIP					
	8	8T-4191	3	BOLT (L=16mm)					
	9	111-4837	1	CLIP					
	10	6G-2263	1	SPACER					
	11	7K-1181	1	STRAP					
	12	204-1709	1	GROMMET					

Y—SEE SEPARATE ILLUSTRATION

H87274E 12

170-6816 BATTERY & WIRING GP (2/3)

S/N CAE 01924-01962
183-1001-Page102

ELECTRICAL AND STARTING SYSTEM

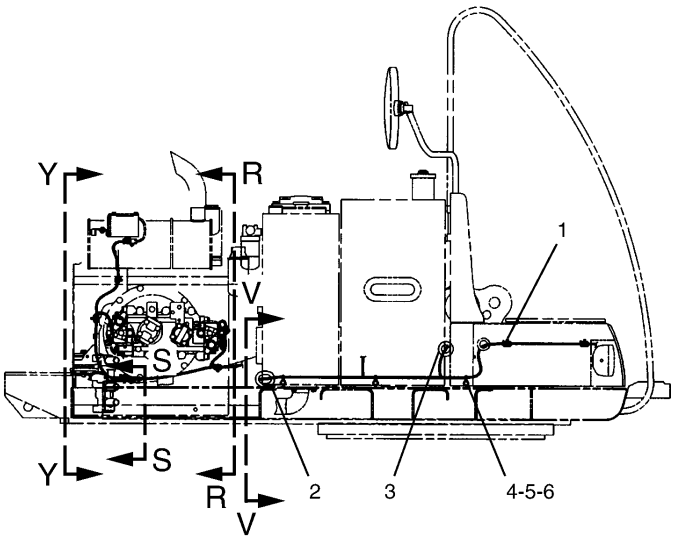

RIGHT SIDE VIEW

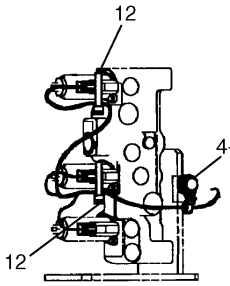

S – S

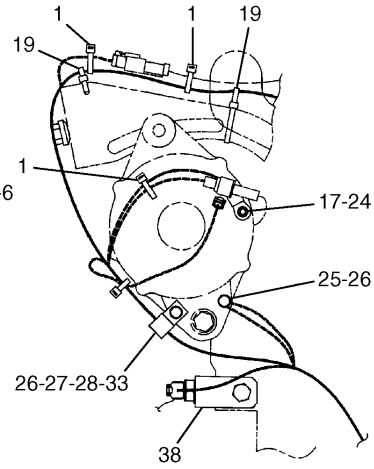

T – T

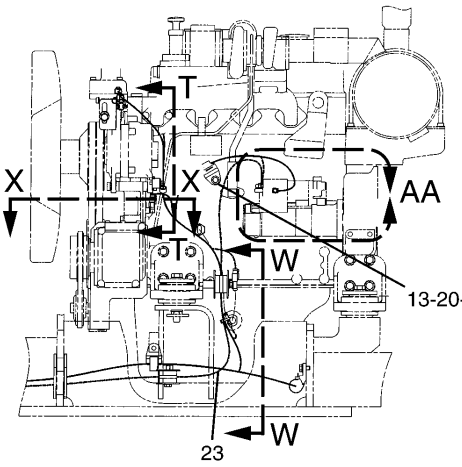

Y – Y

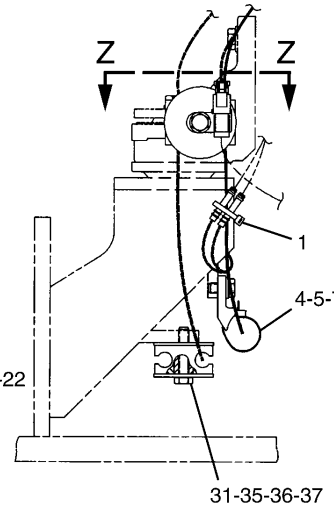

W – W

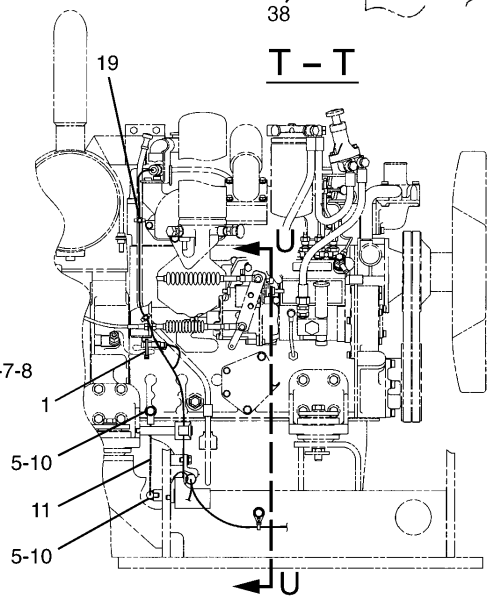

R – R

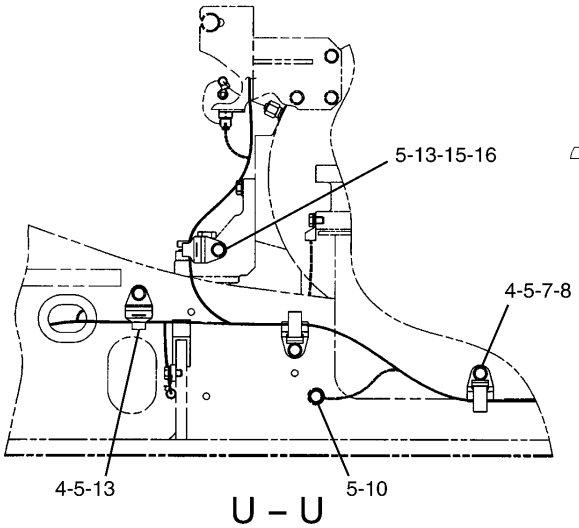

U – U

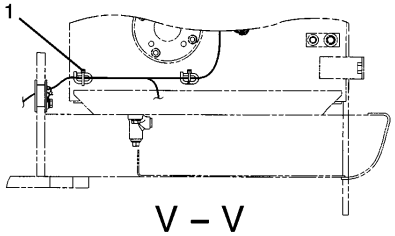

V – V

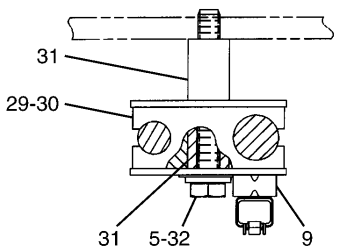

Z – Z

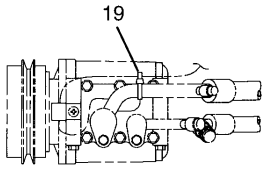

X – X

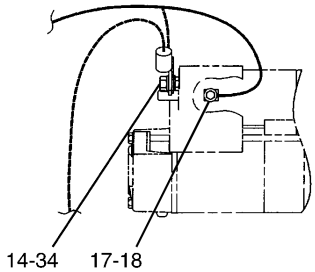

AA

H87275E 12

170-6816 BATTERY & WIRING GP (3/3)
S/N CAE 01924-01962
204-1763-Page100

ELECTRICAL AND STARTING SYSTEM

NOTE	No.	PART No.	QTY	PART NAME	NOTE	No.	PART No.	QTY	PART NAME
	1	3S-2093	10	STRAP					
	2	4I-5426	1	GROMMET					
	3	4I-5399	1	GROMMET					
	4	8T-4137	8	BOLT (L=20mm)					
	5	8T-4121	13	WASHER					
	6	111-4836	4	CLIP					
	7	111-4838	3	CLIP					
	8	111-4839	3	STRAP					
	9	116-0118	1	CLIP					
	10	8T-4191	3	BOLT (L=16mm)					
	11	132-1805	1	STRAP AS					
	12	7K-1181	2	STRAP					
	13	111-4837	3	CLIP					
	14	5C-7261	1	NUT					
	15	102-7886	1	SLEEVE					
	16	8T-4198	1	BOLT (L=100mm)					
	17	8T-0328	2	WASHER					
	18	8T-0286	1	BOLT (L=8mm)					
	19	7I-2673	5	STRAP					
	20	5P-4116	1	WASHER					
	21	7I-4949	1	TUBE					
	22	8T-6870	1	BOLT (L=70mm)					
Y	23	204-1763	1	CABLE AS					
	24	7Y-5226	1	NUT					
	25	7X-2619	1	BOLT (L=10mm)					
	26	9X-8256	2	WASHER					
	27	5I-9368	1	SPACER					
	28	8J-1256	1	CLIP					
	29	4I-5479	1	CLAMP					
	30	4I-5480	2	WASHER					
	31	6G-2263	3	SPACER					
	32	8T-4172	1	BOLT (L=80mm)					
	33	7X-2533	1	BOLT (L=35mm)					
	34	8T-4224	1	WASHER					
	35	8T-4185	1	BOLT (L=50mm)					
	36	2G-8767	2	WASHER					
	37	6G-2256	1	CLAMP					
	38	204-1901	1	BRACKET AS					

Y—SEE SEPARATE ILLUSTRATION

H87275E 12

170-6816 BATTERY & WIRING GP (3/3)

S/N CAE 01924-01962
204-1763-Page100

ELECTRICAL AND STARTING SYSTEM

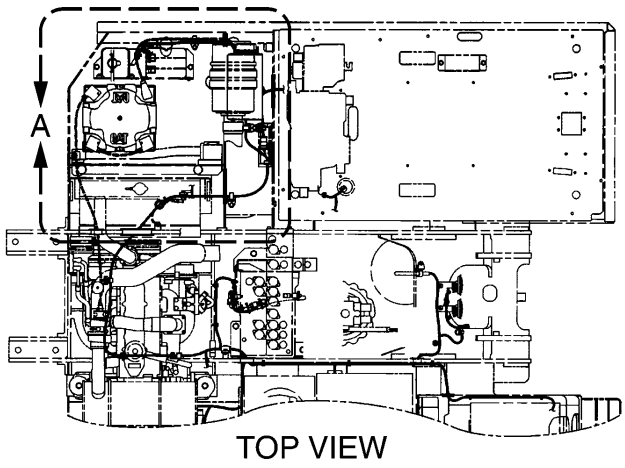

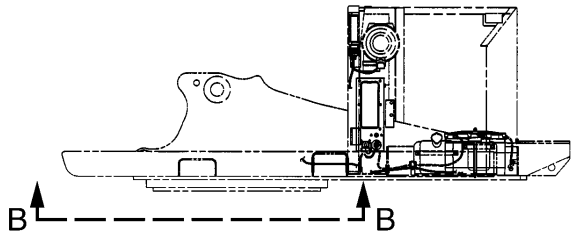

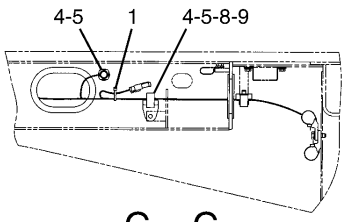

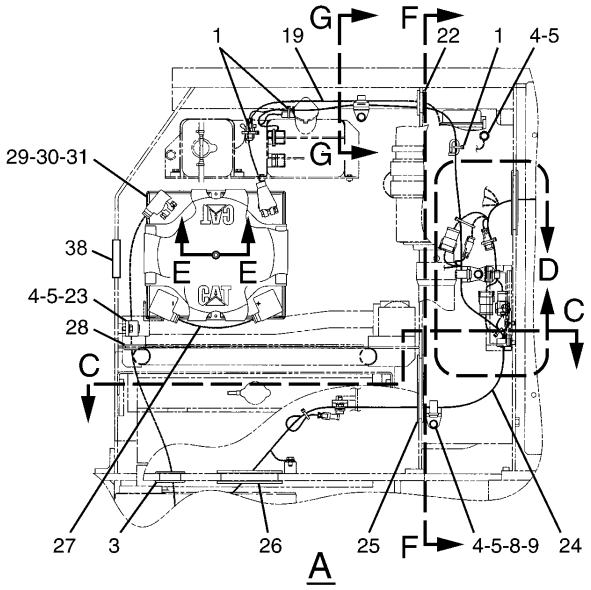

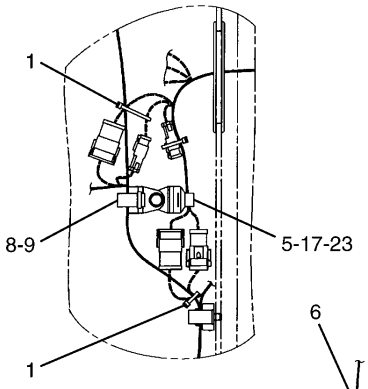

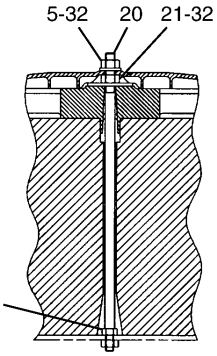

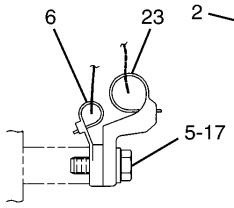

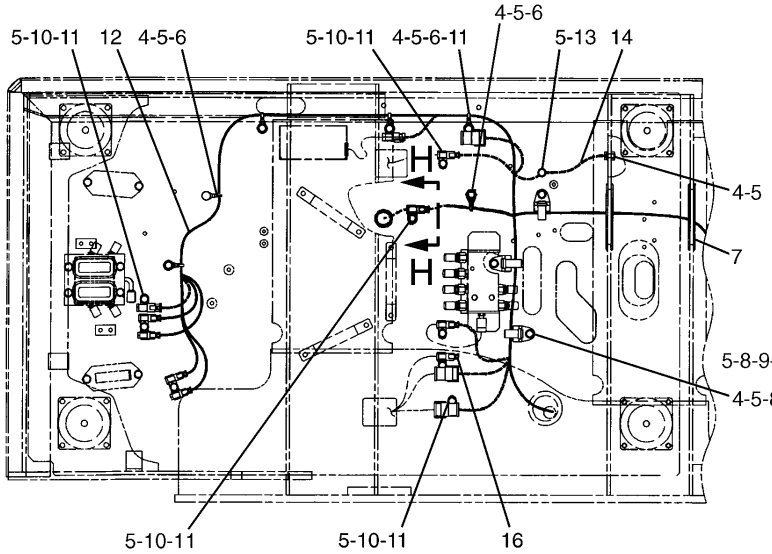

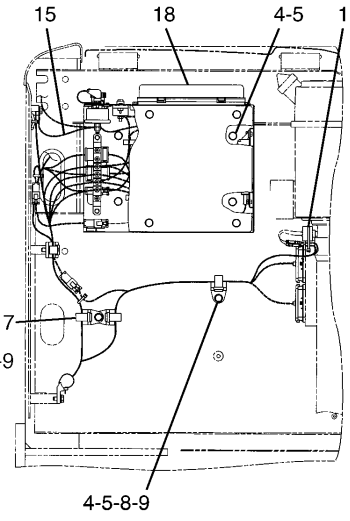

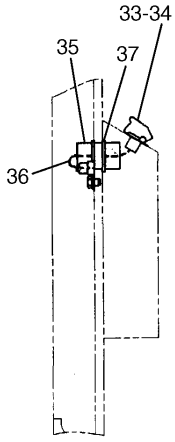

HA1964E 19

170-6816 BATTERY & WIRING GP (1/3)

S/N CAE 01963-Up

251-0161-Page94,238-1539-Page99.01,170-6929-Page100,170-6930-Page101,238-1497-Page103,204-1913-Page111.05

ELECTRICAL AND STARTING SYSTEM

NOTE	No.	PART No.	QTY	PART NAME	NOTE	No.	PART No.	QTY	PART NAME
	1	3S-2093	7	STRAP					
	2	5C-7261	1	NUT					
	3	4I-5399	1	GROMMET					
	4	8T-4137	20	BOLT (L=20mm)					
	5	8T-4121	33	WASHER					
	6	111-4836	7	CLIP					
	7	7Y-5456	2	GROMMET					
	8	111-4838	9	CLIP					
	9	111-4839	9	STRAP					
	10	7X-2621	8	BOLT (L=12mm)					
	11	116-0118	13	CLIP					
Y	12	238-1539	1	HARNESS AS					
	13	8T-4191	1	BOLT (L=16mm)					
	14	7G-1060	1	STRAP AS					
	15	132-1805	1	STRAP AS					
	16	186-4574	1	PLUG AS					
		8T-8737	2	PLUG					
	17	8T-4195	3	BOLT (L=30mm)					
Y	18	204-1913	1	PANEL GP					
Y	19	170-6930	1	CABLE AS					
	20	5I-8304	1	ROD					
	21	8T-4226	1	WASHER					
	22	093-2068	1	GROMMET					
	23	111-4837	3	CLIP					
Y	24	251-0161	1	HARNESS AS					
	25	170-6939	1	GROMMET					
	26	5I-4365	1	GROMMET					
Y	27	170-6929	1	CABLE AS					
	28	7Y-8169	1	GROMMET					
	29	3T-5760	2	BATTERY					
	30	6W-6005	1	HOLDDOWN					
	31	5I-8270	1	COVER					
	32	8T-4133	2	NUT					
	33	4D-1836	1	SWITCH					
	34	3E-5169	1	GUARD					
	35	204-1868	1	INSULATOR					
Y	36	238-1497	1	HARNESS AS					
	37	136-0344	1	GROMMET					
E	38	102-1173		GUARD…(10cm)					

E—ORDER BY THE CENTIMETER

Y—SEE SEPARATE ILLUSTRATION

170-6816 BATTERY & WIRING GP (1/3)

S/N CAE 01963-Up

251-0161-Page94,238-1539-Page99.01,170-6929-Page100,170-6930-Page101,238-1497-Page103,204-1913-Page111.05

ELECTRICAL AND STARTING SYSTEM

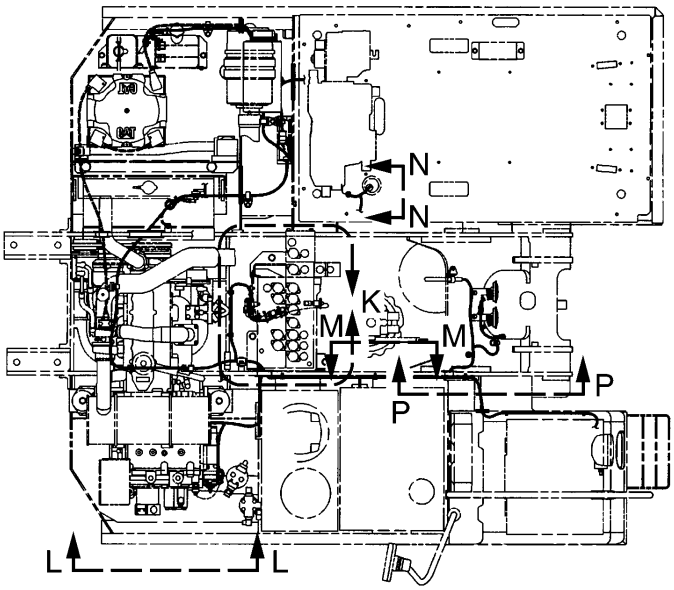

TOP VIEW

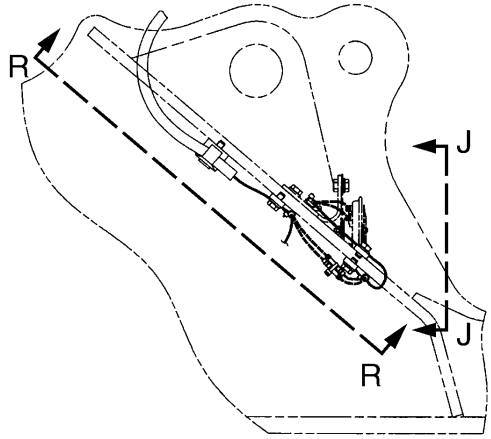

P – P

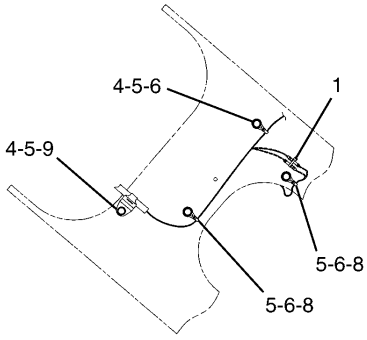

R – R

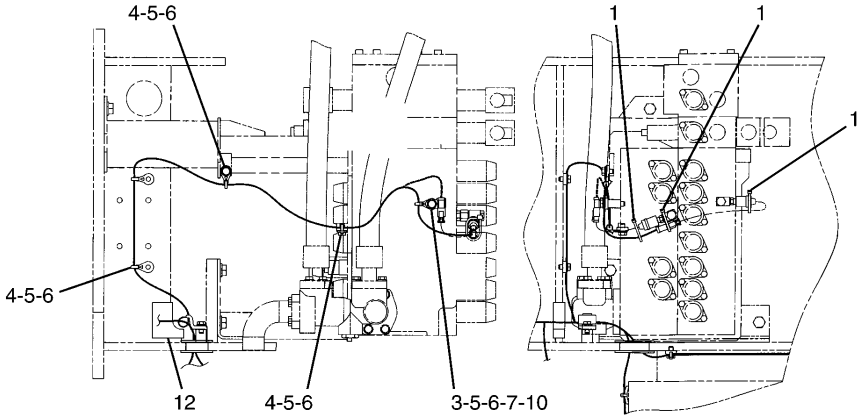

K

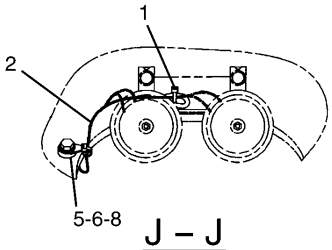

J – J

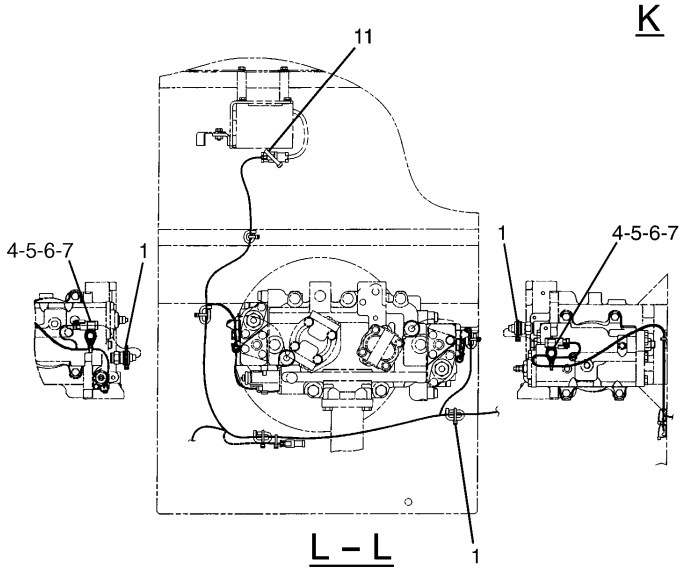

L – L

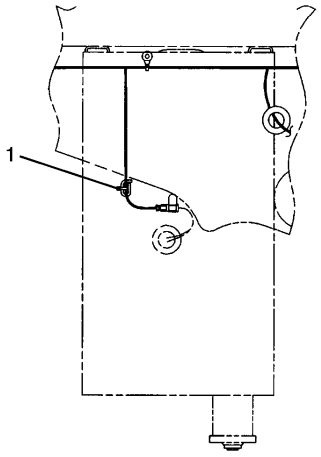

M – M

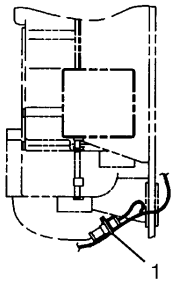

N – N

HA1965E 19

170-6816 BATTERY & WIRING GP (2/3)
S/N CAE 01963-Up
183-1001-Page102

ELECTRICAL AND STARTING SYSTEM

NOTE	No.	PART No.	QTY	PART NAME	NOTE	No.	PART No.	QTY	PART NAME
	1	3S-2093	15	STRAP					
Y	2	183-1001	1	HARNESS AS					
	3	8T-4185	1	BOLT (L=50mm)					
	4	8T-4137	8	BOLT (L=20mm)					
	5	8T-4121	12	WASHER					
	6	111-4836	11	CLIP					
	7	116-0118	3	CLIP					
	8	8T-4191	3	BOLT (L=16mm)					
	9	111-4837	1	CLIP					
	10	6G-2263	1	SPACER					
	11	7K-1181	1	STRAP					
	12	204-1709	1	GROMMET					

Y—SEE SEPARATE ILLUSTRATION

HA1965E 19

170-6816 BATTERY & WIRING GP (2/3)

S/N CAE 01963-Up
183-1001-Page102

ELECTRICAL AND STARTING SYSTEM

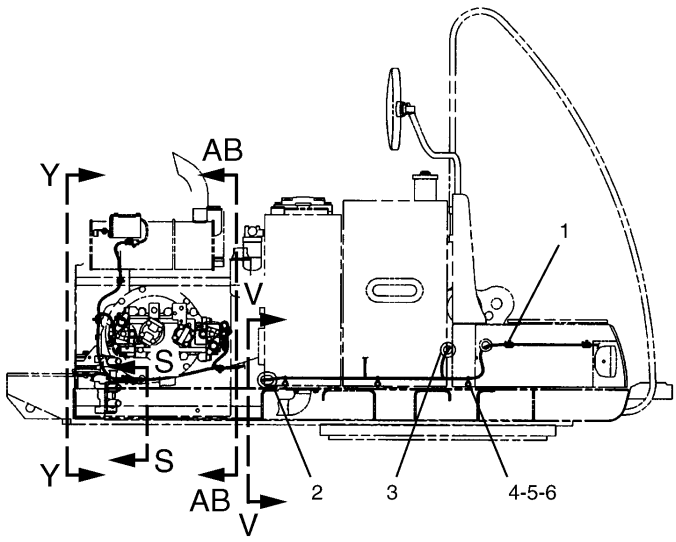

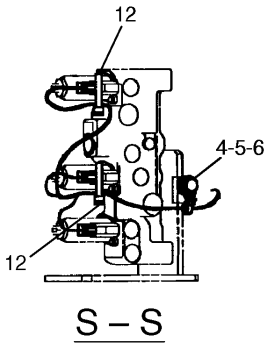

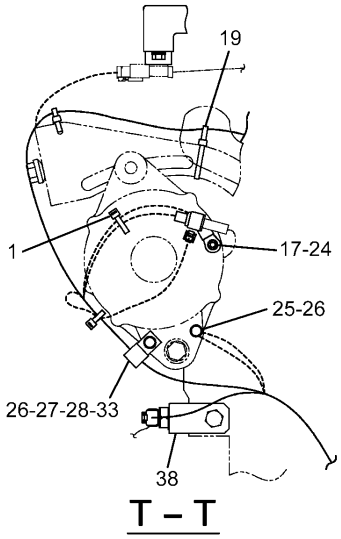

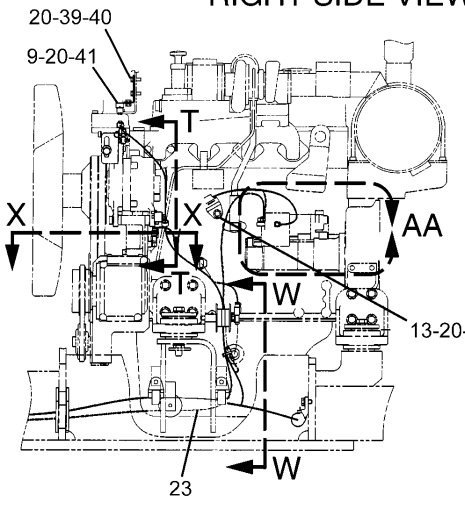

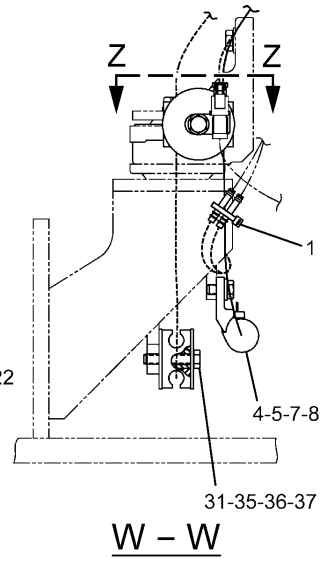

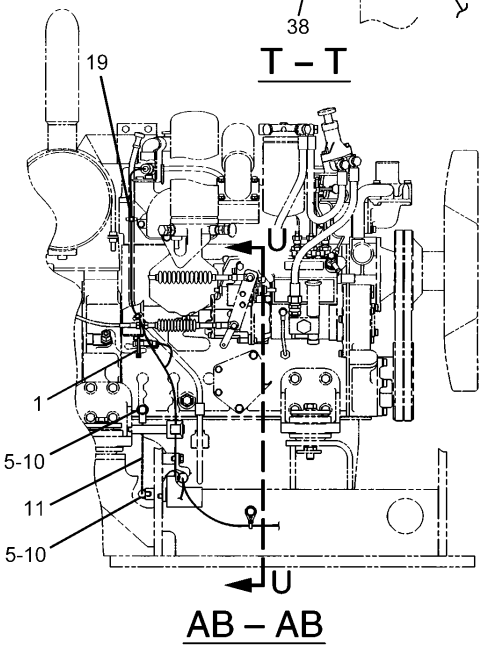

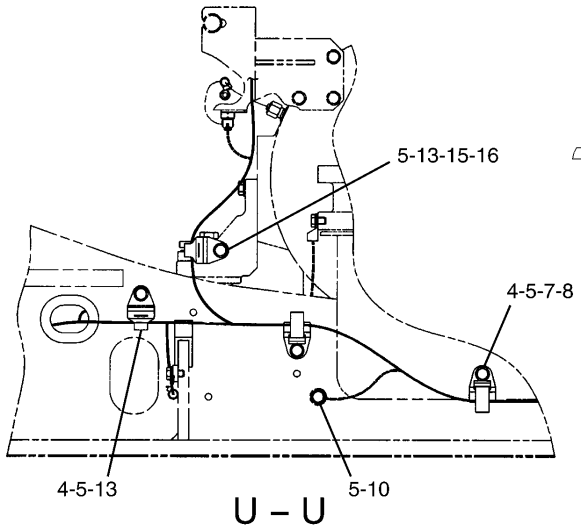

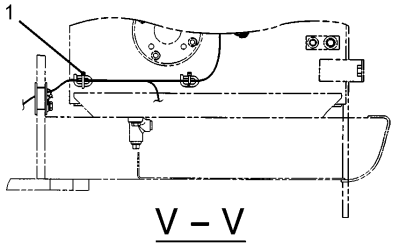

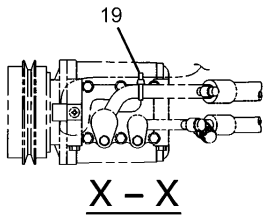

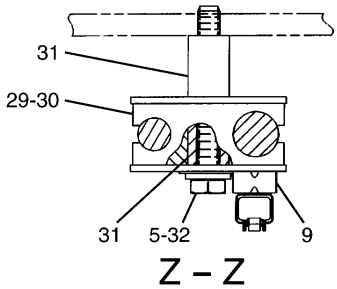

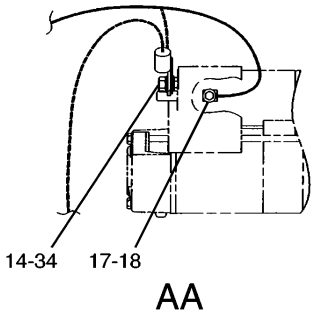

HA1966E 19

170-6816 BATTERY & WIRING GP (3/3)
S/N CAE 01963-Up
204-1763-Page100

ELECTRICAL AND STARTING SYSTEM

NOTE	No.	PART No.	QTY	PART NAME	NOTE	No.	PART No.	QTY	PART NAME
	1	3S-2093	10	STRAP					
	2	4I-5426	1	GROMMET					
	3	4I-5399	1	GROMMET					
	4	8T-4137	9	BOLT (L=20mm)					
	5	8T-4121	14	WASHER					
	6	111-4836	4	CLIP					
	7	111-4838	4	CLIP					
	8	111-4839	4	STRAP					
	9	116-0118	2	CLIP					
	10	8T-4191	3	BOLT (L=16mm)					
	11	132-1805	1	STRAP AS					
	12	7K-1181	2	STRAP					
	13	111-4837	3	CLIP					
	14	5C-7261	1	NUT					
	15	102-7886	1	SLEEVE					
	16	8T-4198	1	BOLT (L=100mm)					
	17	8T-0328	2	WASHER					
	18	8T-0286	1	BOLT (L=8mm)					
	19	7I-2673	5	STRAP					
	20	5P-4116	4	WASHER					
	21	7I-4949	1	TUBE					
	22	8T-6870	1	BOLT (L=70mm)					
Y	23	204-1763	1	CABLE AS					
	24	7Y-5226	1	NUT					
	25	7X-2619	1	BOLT (L=10mm)					
	26	9X-8256	2	WASHER					
	27	5I-9368	1	SPACER					
	28	8J-1256	1	CLIP					
	29	4I-5479	1	CLAMP					
	30	4I-5480	2	WASHER					
	31	6G-2263	3	SPACER					
	32	8T-4172	1	BOLT (L=80mm)					
	33	7X-2533	1	BOLT (L=35mm)					
	34	8T-4224	1	WASHER					
	35	8T-4185	1	BOLT (L=50mm)					
	36	2G-8767	2	WASHER					
	37	6G-2256	1	CLAMP					
	38	204-1901	1	BRACKET AS					
	39	8T-4189	2	BOLT (L=20mm)					
	40	299-2917	1	BRACKET AS					
	41	8T-4200	1	BOLT (L=16mm)					

Y—SEE SEPARATE ILLUSTRATION

HA1966E 19

170-6816 BATTERY & WIRING GP (3/3)

S/N CAE 01963-Up
204-1763-Page100

ELECTRICAL AND STARTING SYSTEM

Consists of :

			Page
1	193-3533	BATTERY & WIRING GP-COLD WEATH	93
1	193-9776	GUARD GP-SNOW.....	226

H74736E 00

198-2321 BATTERY & WIRING AR-COLD WEATH
An Attachment

ELECTRICAL AND STARTING SYSTEM

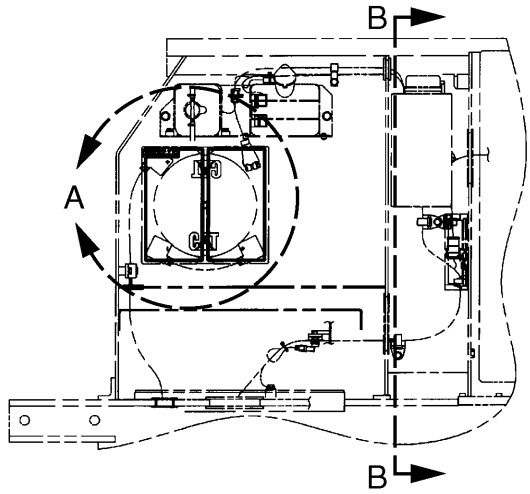

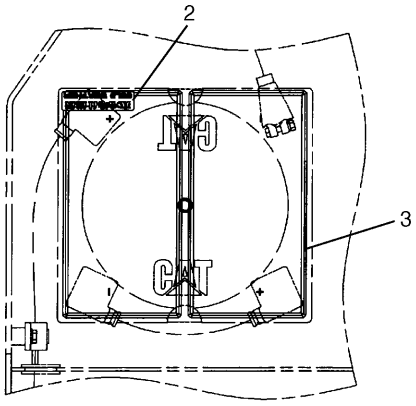

A

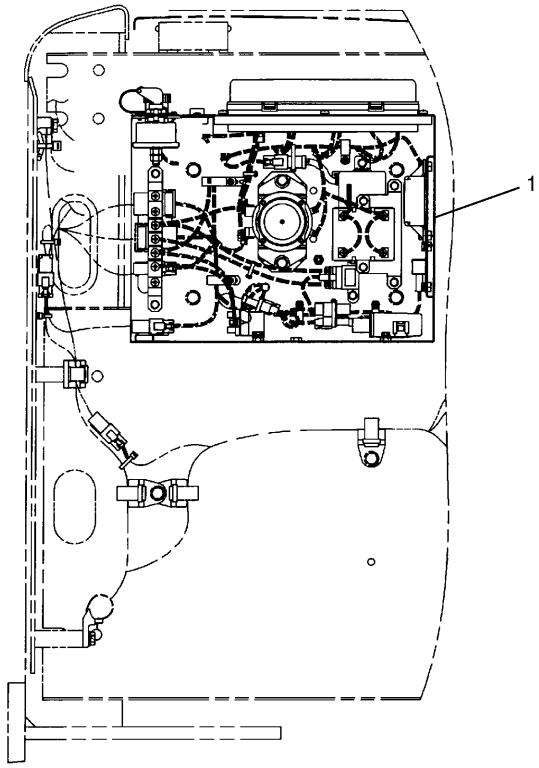

B – B

NOTE	No.	PART No.	QTY	PART NAME	NOTE	No.	PART No.	QTY	PART NAME
Y	1	204-1913	1	PANEL GP					
	2	102-5420	1	FILM (INSTRUCTION)					
	3	9X-3404	2	BATTERY					

Y—SEE SEPARATE ILLUSTRATION

H77503E 01

193-3533 BATTERY & WIRING GP-COLD WEATH

Part of 198-2321-Page92
204-1913-Page108
An Attachment

ELECTRICAL AND STARTING SYSTEM

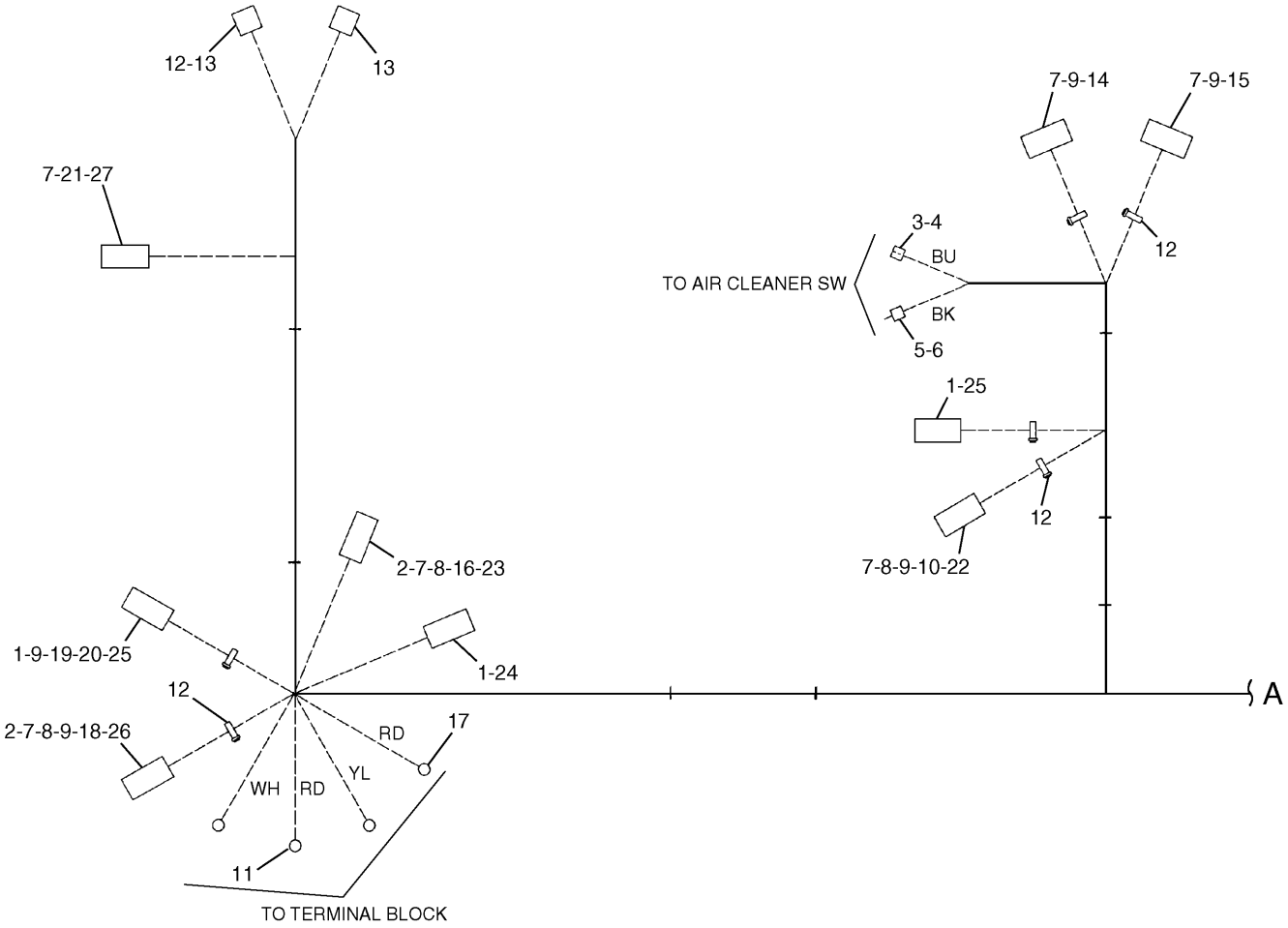

NOTE	No.	PART No.	QTY	PART NAME	NOTE	No.	PART No.	QTY	PART NAME
	1	9X-3401	18	PIN		21	155-2270	2	PLUG KIT
	2	9W-0844	3	SOCKET		22	155-2265	1	PLUG KIT
	3	7Y-3963	1	TERMINAL		23	155-2255	1	PLUG KIT
	4	7Y-3965	1	TUBE		24	102-8803	1	RECEPTACLE KIT
	5	7Y-3962	1	TERMINAL		25	102-8801	2	RECEPTACLE KIT
	6	7Y-3964	1	TUBE		26	155-2274	1	PLUG KIT
	7	126-1768	62	SOCKET		27	155-2261	1	WEDGE
	8	186-3736	11	SOCKET					
	9	8T-8737	62	PLUG					
	10	155-2259	1	WEDGE					
	11	2L-8050	2	TERMINAL					
	12	3S-2093	7	STRAP					
	13	9X-0196	2	TERMINAL AS					
	14	153-2620	1	PLUG AS					
	15	153-2630	1	PLUG AS					
	16	155-2258	1	WEDGE					
	17	9G-4343	2	TERMINAL					
	18	155-2263	1	WEDGE					
	19	186-3735	1	PIN					
	20	9W-0852	6	PIN					

H87235E 01

251-0161 HARNESS AS (1/3)

Part of 170-6816-Page87

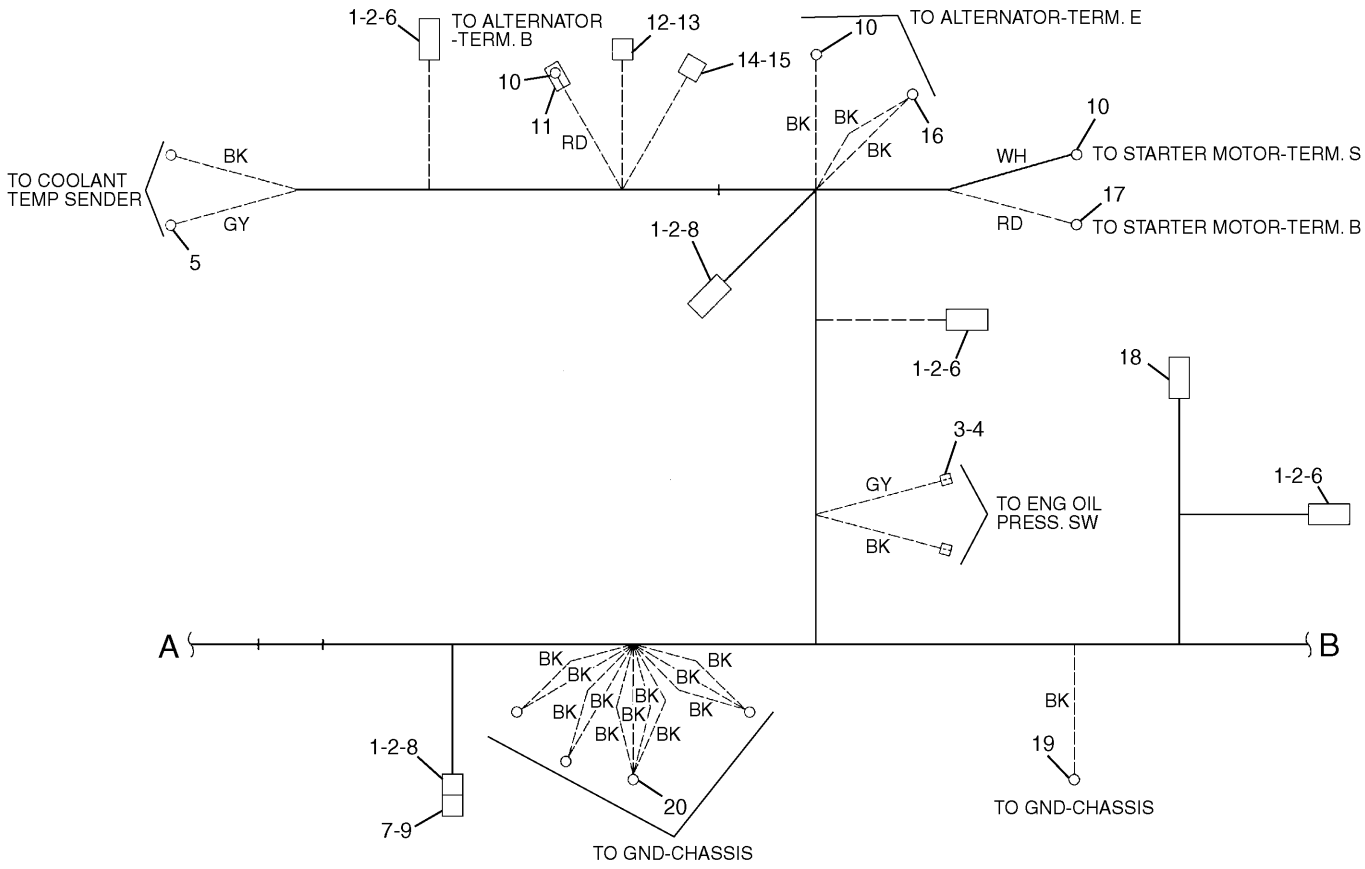

NOTE	No.	PART No.	QTY	PART NAME	NOTE	No.	PART No.	QTY	PART NAME
	1	155-2270	5	PLUG KIT					
	2	155-2261	5	WEDGE					
	3	7Y-3963	2	TERMINAL					
	4	7Y-3965	2	TUBE					
	5	2L-8075	2	TERMINAL					
	6	126-1768	6	SOCKET					
	7	102-8802	1	RECEPTACLE KIT					
	8	186-3736	4	SOCKET					
	9	8T-8737	2	PLUG					
	10	2L-8050	3	TERMINAL					
	11	8T-8799	1	BOOT					
	12	7Y-3820	1	HOUSING					
	13	7Y-3821	2	SOCKET					
	14	7Y-3995	1	CONNECTOR					
	15	7Y-3996	1	TERMINAL					
	16	2L-8077	1	TERMINAL					
	17	9G-4336	1	TERMINAL					
	18	127-5483	1	PLUG AS					
	19	3T-4692	1	TERMINAL					
	20	3T-4696	4	TERMINAL					

H87236E 01

251-0161 HARNESS AS (2/3)

Part of 170-6816-Page87

ELECTRICAL AND STARTING SYSTEM

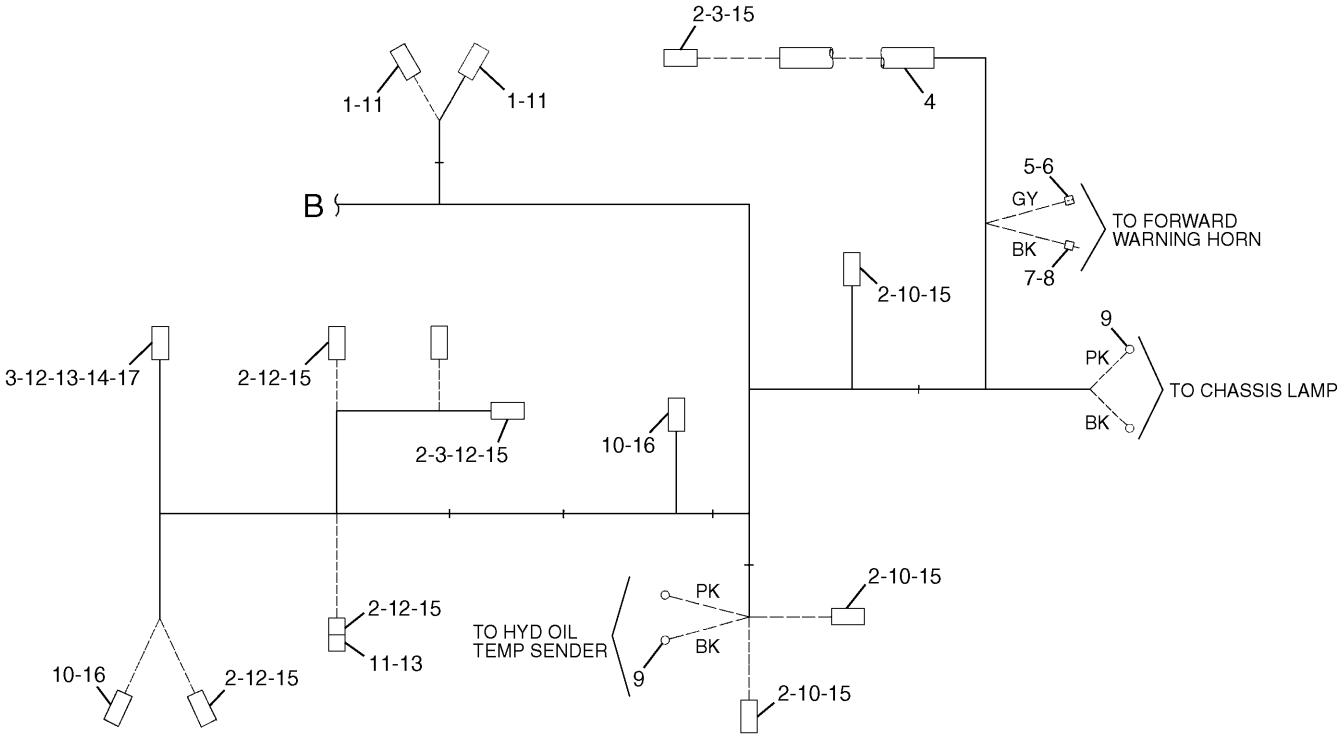

NOTE	No.	PART No.	QTY	PART NAME	NOTE	No.	PART No.	QTY	PART NAME
	1	9X-3401	4	PIN					
	2	155-2261	9	WEDGE					
	3	9W-0844	5	SOCKET					
E	4	103-2529		HOSE…(63cm)					
	5	7Y-3963	1	TERMINAL					
	6	7Y-3965	1	TUBE					
	7	7Y-3962	1	TERMINAL					
	8	7Y-3964	1	TUBE					
	9	2L-8075	4	TERMINAL					
	10	126-1768	12	SOCKET					
	11	102-8802	3	RECEPTACLE KIT					
	12	186-3736	14	SOCKET					
	13	8T-8737	3	PLUG					
	14	155-2259	1	WEDGE					
	15	155-2270	9	PLUG KIT					
	16	155-2260	2	PLUG KIT					
	17	155-2265	1	PLUG KIT					

E—ORDER BY THE CENTIMETER

H87237E 01

251-0161 HARNESS AS (3/3)

Part of 170-6816-Page87

MEMORANDA

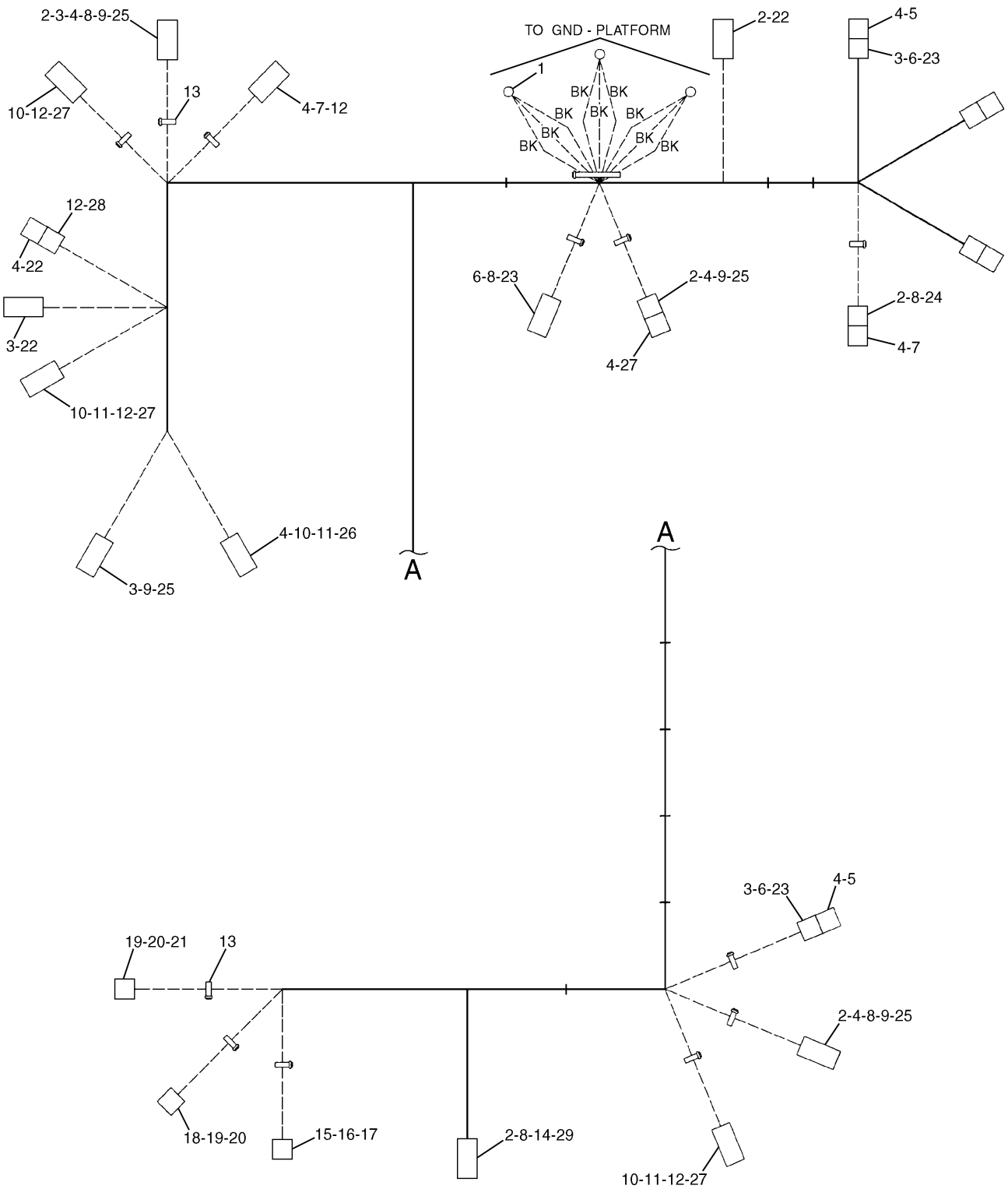

170-6927 HARNESS AS
S/N CAE 01201-01962
Part of 170-6816-Page87

ELECTRICAL AND STARTING SYSTEM

NOTE	No.	PART No.	QTY	PART NAME	NOTE	No.	PART No.	QTY	PART NAME
	1	3T-4696	3	TERMINAL					
	2	9W-0844	28	SOCKET					
	3	126-1768	26	SOCKET					
	4	8T-8737	37	PLUG					
	5	102-8802	5	RECEPTACLE KIT					
	6	155-2261	6	WEDGE					
	7	102-8804	2	RECEPTACLE KIT					
	8	186-3736	16	SOCKET					
	9	155-2258	4	WEDGE					
	10	186-3735	15	PIN					
	11	9X-3401	17	PIN					
	12	9W-0852	17	PIN					
	13	3S-2093	13	STRAP					
	14	155-2263	1	WEDGE					
	15	102-7964	1	CONNECTOR					
	16	125-4841	1	WEDGE					
	17	102-7965	16	TERMINAL					
	18	163-6699	1	CONNECTOR					
	19	163-6790	9	TERMINAL					
	20	125-4785	16	TERMINAL					
	21	163-6659	1	CONNECTOR					
	22	155-2260	3	PLUG KIT					
	23	155-2270	6	PLUG KIT					
	24	155-2271	1	PLUG KIT					
	25	155-2255	4	PLUG KIT					
	26	102-8806	1	RECEPTACLE KIT					
	27	102-8801	4	RECEPTACLE KIT					
	28	102-8803	1	RECEPTACLE KIT					
	29	155-2274	1	PLUG KIT					

H86365E 04

170-6927 HARNESS AS

S/N CAE 01201-01962

Part of 170-6816-Page87

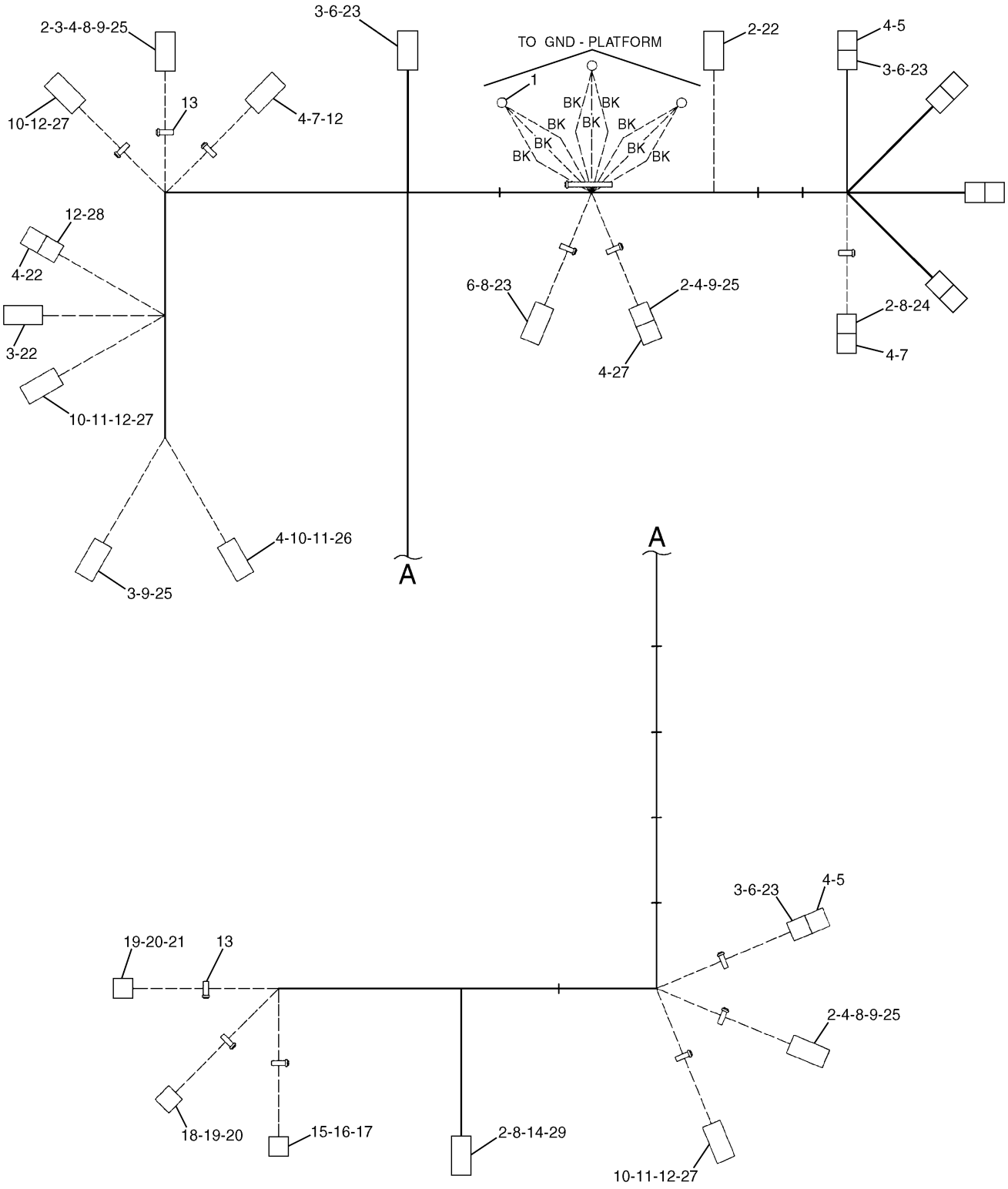

H86310E 00

238-1539 HARNESS AS
S/N CAE 01963-Up
Part of 170-6816-Page91.08

ELECTRICAL AND STARTING SYSTEM

NOTE	No.	PART No.	QTY	PART NAME	NOTE	No.	PART No.	QTY	PART NAME
	1	3T-4696	3	TERMINAL					
	2	9W-0844	28	SOCKET					
	3	126-1768	28	SOCKET					
	4	8T-8737	37	PLUG					
	5	102-8802	5	RECEPTACLE KIT					
	6	155-2261	7	WEDGE					
	7	102-8804	2	RECEPTACLE KIT					
	8	186-3736	16	SOCKET					
	9	155-2258	4	WEDGE					
	10	186-3735	15	PIN					
	11	9X-3401	17	PIN					
	12	9W-0852	17	PIN					
	13	3S-2093	13	STRAP					
	14	155-2263	1	WEDGE					
	15	102-7964	1	CONNECTOR					
	16	125-4841	1	WEDGE					
	17	102-7965	16	TERMINAL					
	18	163-6699	1	CONNECTOR					
	19	163-6790	9	TERMINAL					
	20	125-4785	16	TERMINAL					
	21	163-6659	1	CONNECTOR					
	22	155-2260	3	PLUG KIT					
	23	155-2270	7	PLUG KIT					
	24	155-2271	1	PLUG KIT					
	25	155-2255	4	PLUG KIT					
	26	102-8806	1	RECEPTACLE KIT					
	27	102-8801	4	RECEPTACLE KIT					
	28	102-8803	1	RECEPTACLE KIT					
	29	155-2274	1	PLUG KIT					

H86310E 00

238-1539 HARNESS AS

S/N CAE 01963-Up

Part of 170-6816-Page91.08

ELECTRICAL AND STARTING SYSTEM



NOTE	No.	PART No.	QTY	PART NAME
	1	9G-0004	1	COVER
	2	8C-5917	1	TERMINAL AS
	3	8N-0869	1	COVER
	4	1S-7252	1	TERMINAL

H82011E 00

204-1763 CABLE AS

Part of 170-6816-Page91



NOTE	No.	PART No.	QTY	PART NAME
	1	9G-0005	1	COVER
	2	8C-5918	1	TERMINAL AS
	3	9G-0002	1	COVER
	4	8T-9756	1	TERMINAL AS

H81970E 01

170-6929 CABLE AS

Part of 170-6816-Page87

ELECTRICAL AND STARTING SYSTEM



NOTE	No.	PART No.	QTY	PART NAME
	1	7N-5274	1	COVER
	2	3S-6050	1	TERMINAL AS
		1M-6119	1	BOLT
		1M-6120	1	NUT
	3	9G-8909	1	COVER
	4	1S-7252	1	TERMINAL

H71467E 02

170-6930 CABLE AS

Part of 170-6816-Page87

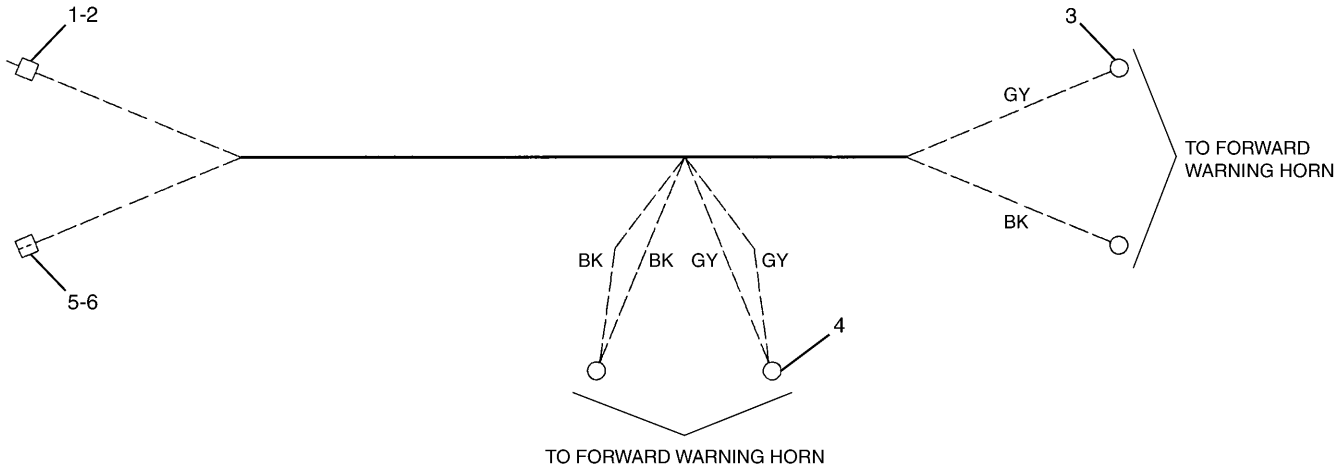

NOTE	No.	PART No.	QTY	PART NAME	NOTE	No.	PART No.	QTY	PART NAME
	1	7Y-3962	1	TERMINAL					
	2	7Y-3964	1	TUBE					
	3	2L-8075	2	TERMINAL					
	4	2L-8065	2	TERMINAL					
	5	7Y-3963	1	TERMINAL					
	6	7Y-3965	1	TUBE					

H71468E 01

183-1001 HARNESS AS

Part of 170-6816-Page89

ELECTRICAL AND STARTING SYSTEM

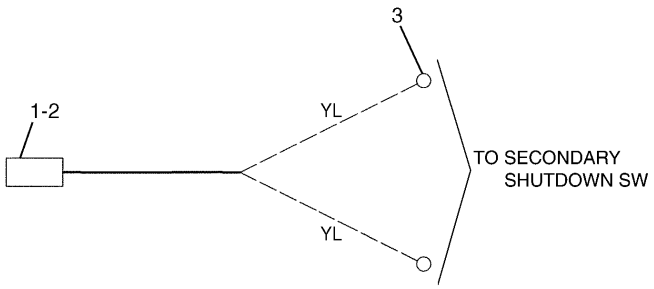

NOTE	No.	PART No.	QTY	PART NAME
	1	9X-3401	2	PIN
	2	102-8802	1	RECEPTACLE KIT
	3	2L-8074	2	TERMINAL

H86002E 00

238-1497 HARNESS AS

S/N CAE 01963-Up
Part of 170-6816-Page91.08

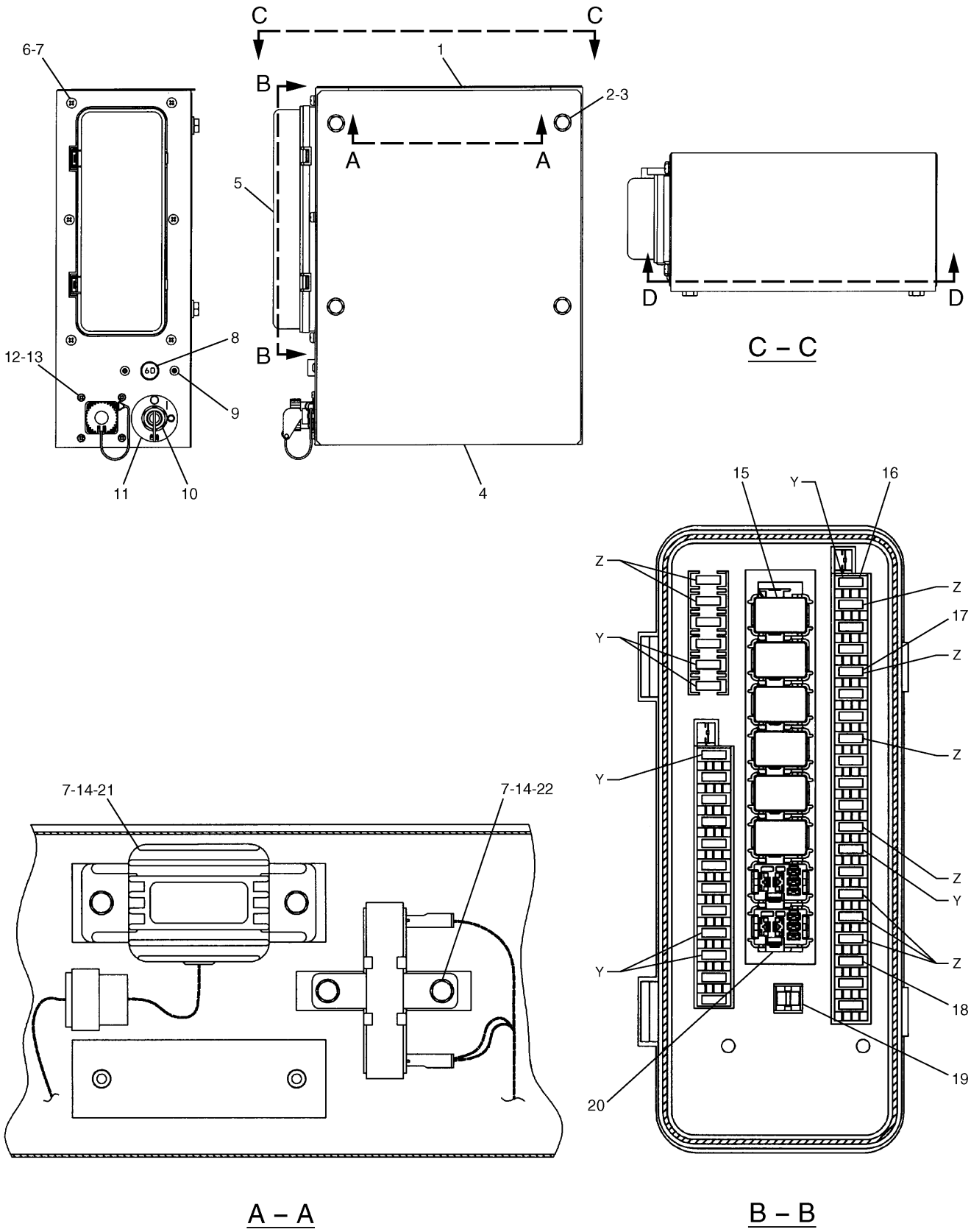

204-1911 PANEL GP-CIRCUIT BREAKER (1/2)
S/N CAE 01201-01357
Part of 170-6816-Page87
7N-0718-Page120

ELECTRICAL AND STARTING SYSTEM

NOTE	No.	PART No.	QTY	PART NAME	NOTE	No.	PART No.	QTY	PART NAME
	1	193-3531	1	BRACKET AS					
	2	8T-4191	4	BOLT (L=16mm)					
	3	8T-4121	4	WASHER					
	4	170-6933	1	COVER					
	5	170-6887	1	COVER					
	6	8T-6411	6	SCREW					
	7	9X-8256	10	WASHER					
	8	171-2208	1	BREAKER AS					
		1H-3244	2	LOCKWASHER					
		6V-8187	2	NUT					
		8T-4205	2	WASHER					
	9	6V-5645	2	SCREW					
Y	10	7N-0718	1	SWITCH AS (DISCONNECT)					
	11	3E-8320	1	PLATE (INSTRUCTION)					
	12	8C-7581	4	SCREW					
	13	096-6166	4	WASHER					
	14	7X-2619	4	BOLT (L=10mm)					
	15	161-3128	6	RELAY					
	16	113-8491	7	FUSE (15A)					
	17	141-2759	9	FUSE (5A)					
	18	113-8490	22	FUSE (10A)					
	19	170-6888	1	TOOL					
	20	149-5051	2	CONNECTOR					
	21	094-2080	1	RELAY					
	22	102-8016	1	RESISTOR AS					

Y—SEE SEPARATE ILLUSTRATION

H77513E 00

204-1911 PANEL GP-CIRCUIT BREAKER (1/2)

S/N CAE 01201-01357
Part of 170-6816-Page87
7N-0718-Page120

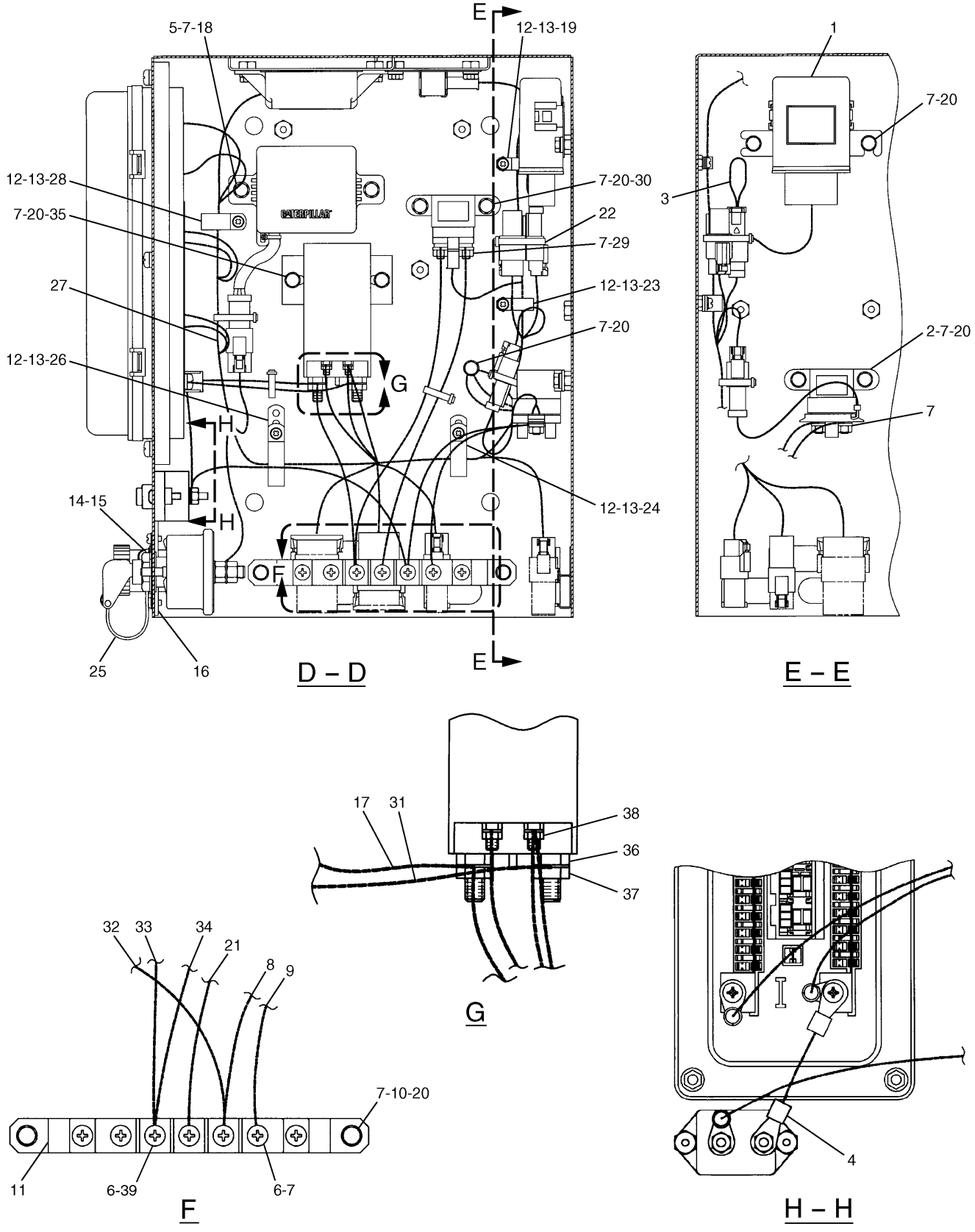

204-1911 PANEL GP-CIRCUIT BREAKER (2/2)
S/N CAE 01201-01357
Part of 170-6816-Page87
204-1912-Page112,125-1302-Page121,163-6703-Page124

ELECTRICAL AND STARTING SYSTEM

NOTE	No.	PART No.	QTY	PART NAME	NOTE	No.	PART No.	QTY	PART NAME
	1	197-4330	1	CONTROLLER		39	095-0742	5	SCREW
Y	2	125-1302	1	SWITCH AS (START RELAY)					
	3	163-6758	1	WIRE AS					
		102-8802	1	RECEPTACLE KIT					
		186-3735	2	PIN					
	4	170-9409	1	WIRE AS					
		2L-8050	2	TERMINAL					
	5	8T-4171	2	BOLT (L=12mm)					
	6	8T-6411	2	SCREW					
	7	9X-8256	24	WASHER					
	8	163-6757	1	WIRE AS					
		2L-8050	2	TERMINAL					
	9	111-4829	1	WIRE AS					
		2L-8050	2	TERMINAL					
	10	193-3520	1	BRACKET AS					
	11	121-1023	1	BLOCK					
	12	8C-7581	5	SCREW					
	13	096-6166	5	WASHER					
	14	3E-8048	4	SCREW					
	15	096-5962	4	WASHER					
	16	136-4055	1	STRIP					
	17	193-3526	1	WIRE AS					
		2L-8050	1	TERMINAL					
		2L-8051	1	TERMINAL					
Y	18	163-6703	1	TIMER AS					
	19	105-9980	1	CLIP					
	20	7X-2619	11	BOLT (L=10mm)					
	21	193-3528	1	CABLE AS					
		9G-4343	2	TERMINAL					
	22	3S-2093	5	STRAP					
	23	105-9982	1	CLIP					
	24	111-4719	1	CLIP					
	25	167-3593	1	STRAP					
	26	105-9986	1	CLIP					
Y	27	204-1912	1	HARNESS AS					
	28	105-9983	1	CLIP					
	29	5C-2890	2	NUT					
	30	9X-8124	1	SWITCH AS (HEATER RELAY)					
		8T-4134	2	NUT					
	31	193-3527	1	WIRE AS					
		2L-8050	1	TERMINAL					
		2L-8051	1	TERMINAL					
	32	170-6935	1	WIRE AS					
		2L-8050	2	TERMINAL					
	33	193-3525	1	WIRE AS					
		2L-8050	1	TERMINAL					
		2L-8051	1	TERMINAL					
	34	193-3529	1	CABLE AS					
		9G-4343	2	TERMINAL					
	35	165-4026	1	SWITCH AS (MAIN RELAY)					
	36	4F-2294	2	NUT					
	37	6V-8186	2	NUT					
	38	6V-8378	2	NUT					

Y—SEE SEPARATE ILLUSTRATION

H77515E 00

204-1911 PANEL GP-CIRCUIT BREAKER (2/2)

S/N CAE 01201-01357
Part of 170-6816-Page87
204-1912-Page112,125-1302-Page121,163-6703-Page124

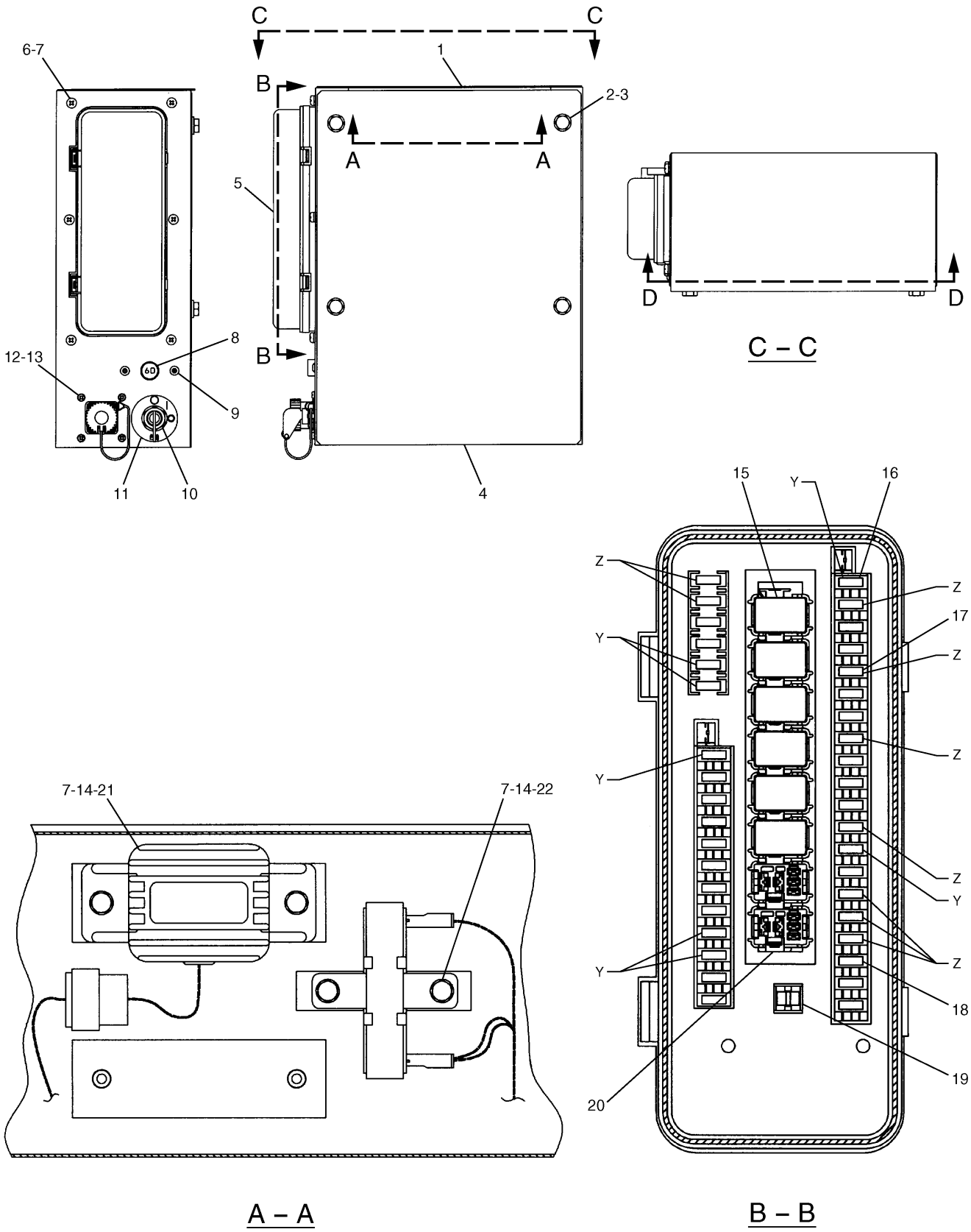

204-1911 PANEL GP-CIRCUIT BREAKER (1/2)
S/N CAE 01358-01923
Part of 170-6816-Page87
7N-0718-Page120

ELECTRICAL AND STARTING SYSTEM

NOTE	No.	PART No.	QTY	PART NAME	NOTE	No.	PART No.	QTY	PART NAME
	1	193-3531	1	BRACKET AS					
	2	8T-4191	4	BOLT (L=16mm)					
	3	8T-4121	4	WASHER					
	4	170-6933	1	COVER					
	5	170-6887	1	COVER					
	6	8T-6411	6	SCREW					
	7	9X-8256	10	WASHER					
	8	171-2208	1	BREAKER AS					
		1H-3244	2	LOCKWASHER					
		6V-8187	2	NUT					
		8T-4205	2	WASHER					
	9	6V-5645	2	SCREW					
Y	10	7N-0718	1	SWITCH AS (DISCONNECT)					
	11	3E-8320	1	PLATE (INSTRUCTION)					
	12	8C-7581	4	SCREW					
	13	096-6166	4	WASHER					
	14	7X-2619	4	BOLT (L=10mm)					
	15	161-3128	6	RELAY					
	16	113-8491	7	FUSE (15A)					
	17	141-2759	10	FUSE (5A)					
	18	113-8490	21	FUSE (10A)					
	19	170-6888	1	TOOL					
	20	149-5051	2	CONNECTOR					
	21	094-2080	1	RELAY					
	22	102-8016	1	RESISTOR AS					

Y—SEE SEPARATE ILLUSTRATION

H86368E 01

204-1911 PANEL GP-CIRCUIT BREAKER (1/2)

S/N CAE 01358-01923
Part of 170-6816-Page87
7N-0718-Page120

ELECTRICAL AND STARTING SYSTEM

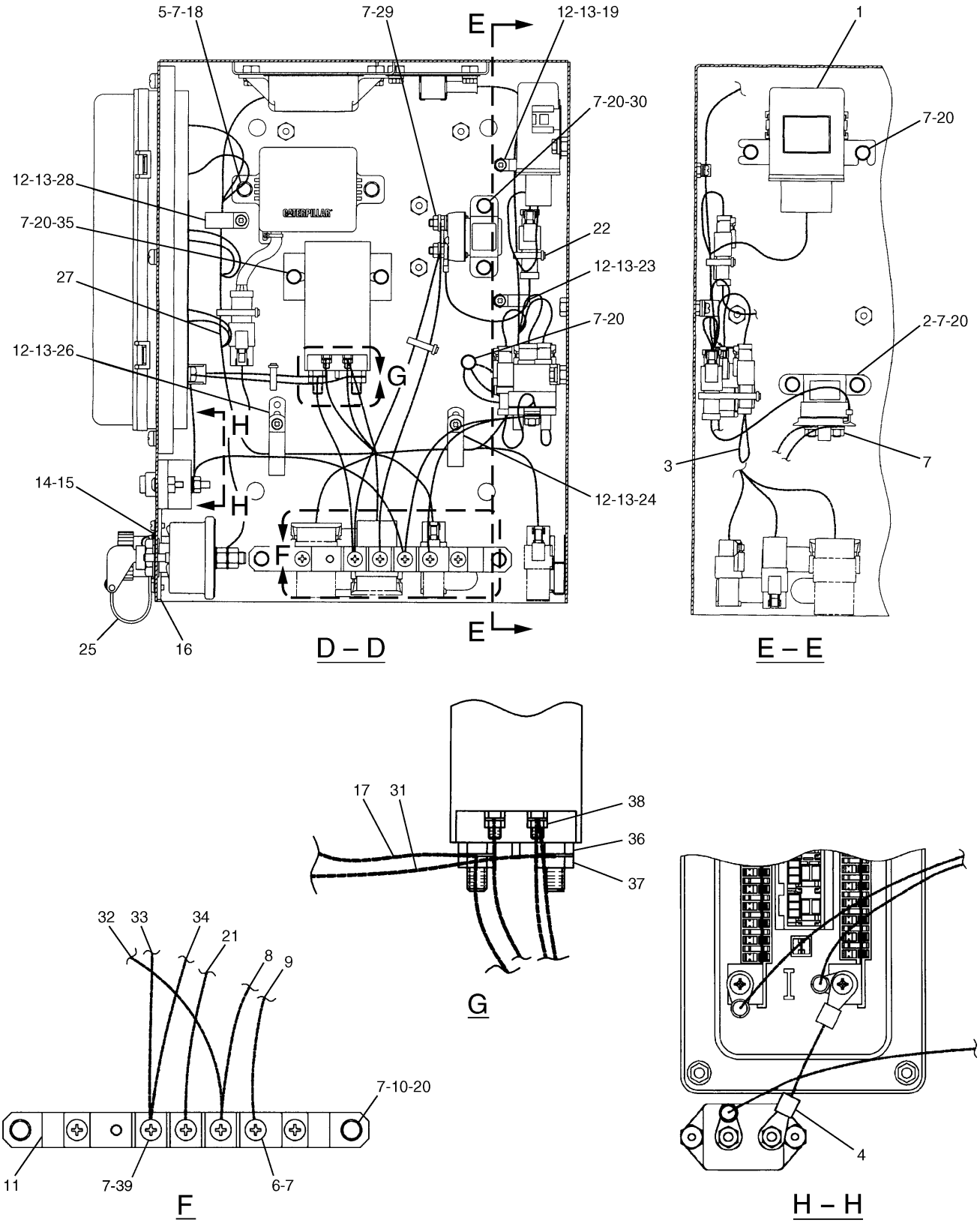

H86369E 01

204-1911 PANEL GP-CIRCUIT BREAKER (2/2)
S/N CAE 01358-01923
Part of 170-6816-Page87
213-0829-Page115.01,125-1302-Page121,163-6703-Page124

ELECTRICAL AND STARTING SYSTEM

NOTE	No.	PART No.	QTY	PART NAME
	1	197-4330	1	CONTROLLER
Y	2	125-1302	1	SWITCH AS (START RELAY)
	3	163-6758	1	WIRE AS
		102-8802	1	RECEPTACLE KIT
		186-3735	2	PIN
	4	170-9409	1	WIRE AS
		2L-8050	2	TERMINAL
	5	8T-4171	2	BOLT (L=12mm)
	6	8T-6411	2	SCREW
	7	9X-8256	23	WASHER
	8	163-6757	1	WIRE AS
		2L-8050	2	TERMINAL
	9	111-4829	1	WIRE AS
		2L-8050	2	TERMINAL
	10	193-3520	1	BRACKET AS
	11	121-1023	1	BLOCK
	12	8C-7581	5	SCREW
	13	096-6166	5	WASHER
	14	3E-8048	4	SCREW
	15	096-5962	4	WASHER
	16	136-4055	1	STRIP
	17	193-3526	1	WIRE AS
		2L-8050	1	TERMINAL
		2L-8051	1	TERMINAL
Y	18	163-6703	1	TIMER AS
	19	105-9980	1	CLIP
	20	7X-2619	11	BOLT (L=10mm)
	21	193-3528	1	CABLE AS
		9G-4343	2	TERMINAL
	22	3S-2093	5	STRAP
	23	105-9982	1	CLIP
	24	111-4719	1	CLIP
	25	167-3593	1	STRAP
	26	105-9986	1	CLIP
Y	27	213-0829	1	HARNESS AS
	28	105-9983	1	CLIP
	29	5C-2890	2	NUT
	30	116-0114	1	SWITCH AS (HEATER RELAY)
		8T-8729	2	PIN
		102-8802	1	RECEPTACLE KIT
	31	193-3527	1	WIRE AS
		2L-8050	1	TERMINAL
		2L-8051	1	TERMINAL
	32	170-6935	1	WIRE AS
		2L-8050	2	TERMINAL
	33	193-3525	1	WIRE AS
		2L-8050	1	TERMINAL
		2L-8051	1	TERMINAL
	34	193-3529	1	CABLE AS
		9G-4343	2	TERMINAL
	35	165-4026	1	SWITCH AS (MAIN RELAY)
	36	4F-2294	2	NUT
	37	6V-8186	2	NUT
	38	6V-8378	2	NUT
	39	095-0742	4	SCREW

Y—SEE SEPARATE ILLUSTRATION

H86369E 01

204-1911 PANEL GP-CIRCUIT BREAKER (2/2)

S/N CAE 01358-01923
Part of 170-6816-Page87
213-0829-Page115.01,125-1302-Page121,163-6703-Page124

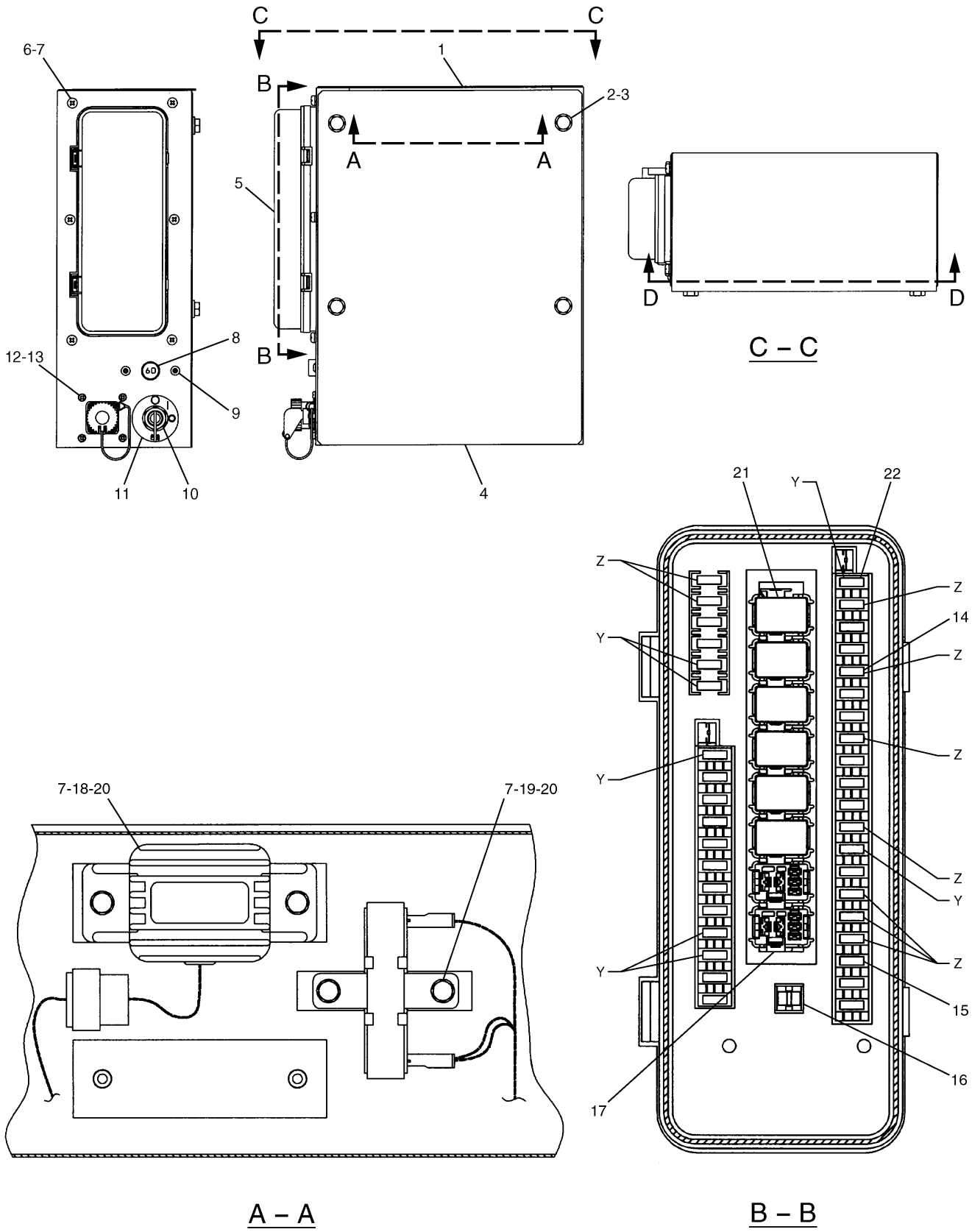

H77521E 00

204-1913 PANEL GP-CIRCUIT BREAKER (1/2)
S/N CAE 01201-(T02.09)
Part of 193-3533-Page93
7N-0718-Page120
An Attachment

ELECTRICAL AND STARTING SYSTEM

NOTE	No.	PART No.	QTY	PART NAME	NOTE	No.	PART No.	QTY	PART NAME
	1	193-3518	1	BRACKET AS					
	2	8T-4191	4	BOLT (L=16mm)					
	3	8T-4121	4	WASHER					
	4	170-6933	1	COVER					
	5	170-6887	1	COVER					
	6	8T-6411	6	SCREW					
	7	9X-8256	10	WASHER					
	8	171-2208	1	BREAKER AS					
		1H-3244	2	LOCKWASHER					
		6V-8187	2	NUT					
		8T-4205	2	WASHER					
	9	6V-5645	2	SCREW					
Y	10	7N-0718	1	SWITCH AS (DISCONNECT)					
	11	3E-8320	1	PLATE (INSTRUCTION)					
	12	8C-7581	4	SCREW					
	13	096-6166	4	WASHER					
	14	141-2759	9	FUSE (5A)					
	15	113-8490	22	FUSE (10A)					
	16	170-6888	1	TOOL					
	17	149-5051	2	CONNECTOR					
	18	094-2080	1	RELAY					
	19	102-8016	1	RESISTOR AS					
	20	7X-2619	4	BOLT (L=10mm)					
	21	161-3128	6	RELAY					
	22	113-8491	7	FUSE (15A)					

Y—SEE SEPARATE ILLUSTRATION

H77521E 00

204-1913 PANEL GP-CIRCUIT BREAKER (1/2)

S/N CAE 01201-(T02.09)
Part of 193-3533-Page93
7N-0718-Page120
An Attachment

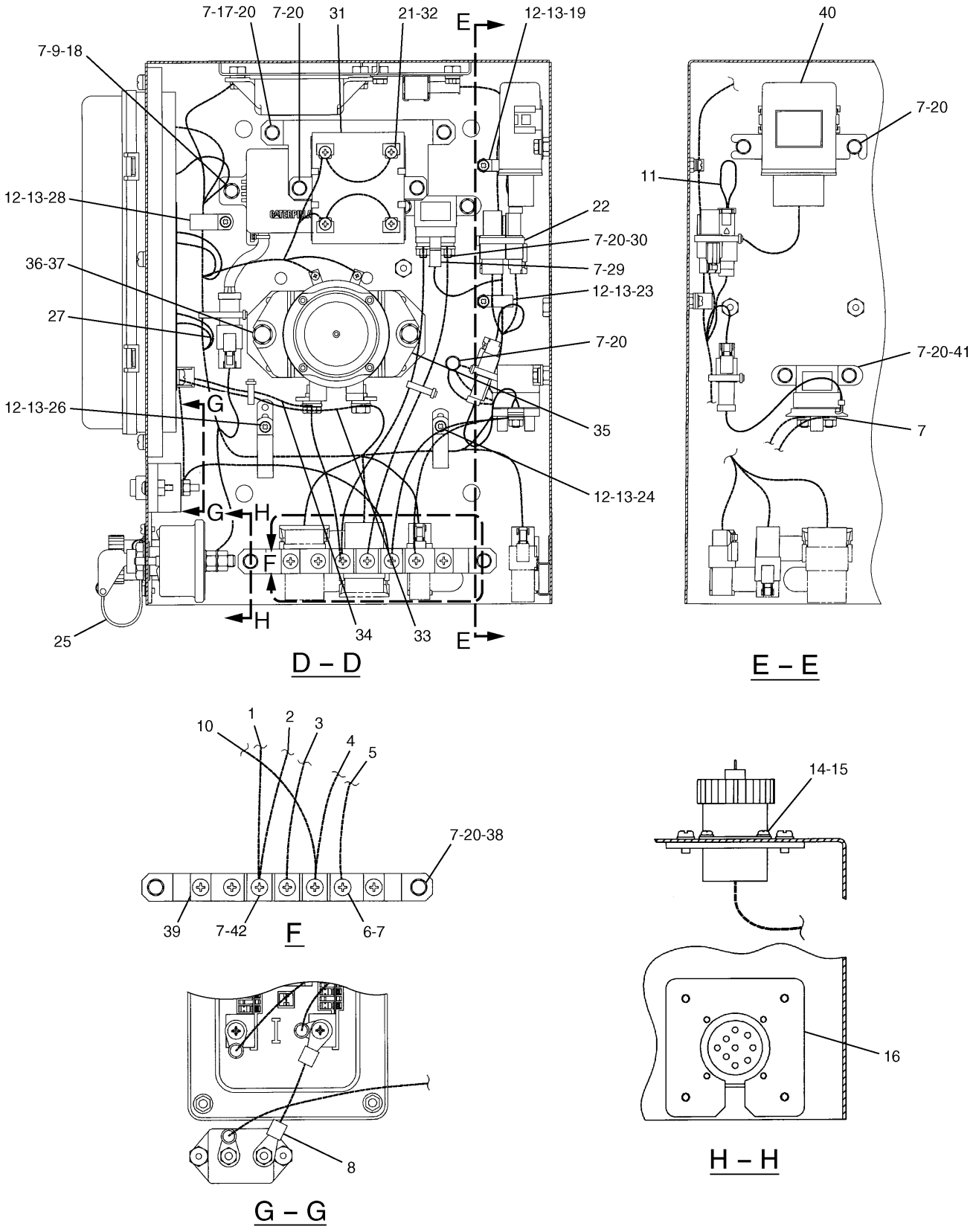

H77523E 00

204-1913 PANEL GP-CIRCUIT BREAKER (2/2)
S/N CAE 01201-(T02.09)
Part of 193-3533-Page93
204-1914-Page116,125-1302-Page121,163-6703-Page124
An Attachment

ELECTRICAL AND STARTING SYSTEM

NOTE	No.	PART No.	QTY	PART NAME	NOTE	No.	PART No.	QTY	PART NAME
	1	193-3525	1	WIRE AS		39	121-1023	1	BLOCK
		2L-8050	1	TERMINAL		40	197-4330	1	CONTROLLER
		2L-8051	1	TERMINAL	Y	41	125-1302	1	SWITCH AS (START RELAY)
	2	193-3529	1	CABLE AS		42	095-0742	5	SCREW
		9G-4343	2	TERMINAL					
	3	193-3528	1	CABLE AS					
		9G-4343	2	TERMINAL					
	4	163-6757	1	WIRE AS					
		2L-8050	2	TERMINAL					
	5	111-4829	1	WIRE AS					
		2L-8050	2	TERMINAL					
	6	8T-6411	2	SCREW					
	7	9X-8256	26	WASHER					
	8	170-9409	1	WIRE AS					
		2L-8050	2	TERMINAL					
	9	8T-4171	2	BOLT (L=12mm)					
	10	170-6935	1	WIRE AS					
		2L-8050	2	TERMINAL					
	11	163-6758	1	WIRE AS					
		102-8802	1	RECEPTACLE KIT					
		186-3735	2	PIN					
	12	8C-7581	5	SCREW					
	13	096-6166	5	WASHER					
	14	3E-8048	4	SCREW					
	15	096-5962	4	WASHER					
	16	136-4055	1	STRIP					
	17	193-3522	1	BRACKET AS					
Y	18	163-6703	1	TIMER AS					
	19	105-9980	1	CLIP					
	20	7X-2619	13	BOLT (L=10mm)					
	21	8T-0328	4	WASHER					
	22	3S-2093	5	STRAP					
	23	105-9982	1	CLIP					
	24	111-4719	1	CLIP					
	25	167-3593	1	STRAP					
	26	105-9986	1	CLIP					
Y	27	204-1914	1	HARNESS AS					
	28	105-9983	1	CLIP					
	29	5C-2890	2	NUT					
	30	9X-8124	1	SWITCH AS (HEATER RELAY)					
		8T-4134	2	NUT					
	31	163-6616	1	RESISTOR AS					
	32	095-0735	4	SCREW					
	33	193-3527	1	WIRE AS					
		2L-8050	1	TERMINAL					
		2L-8051	1	TERMINAL					
	34	193-3526	1	WIRE AS					
		2L-8050	1	TERMINAL					
		2L-8051	1	TERMINAL					
	35	159-9108	1	SWITCH AS (MAIN RELAY)					
	36	8T-4189	2	BOLT (L=20mm)					
	37	8T-4224	2	WASHER					
	38	193-3520	1	BRACKET AS					

Y—SEE SEPARATE ILLUSTRATION

H77523E 00

204-1913 PANEL GP-CIRCUIT BREAKER (2/2)

S/N CAE 01201-(T02.09)
Part of 193-3533-Page93
204-1914-Page116,125-1302-Page121,163-6703-Page124
An Attachment

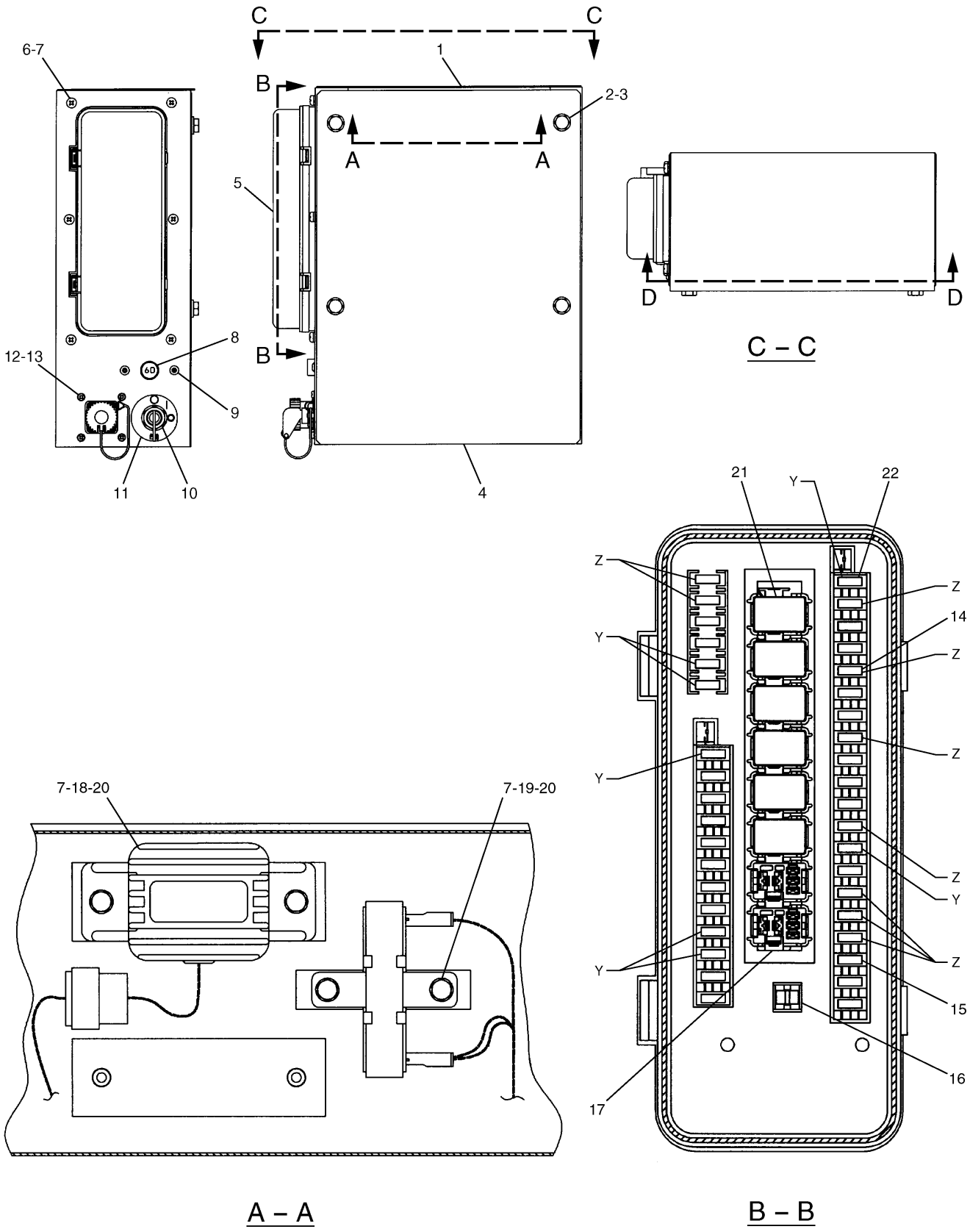

H88234E 04

204-1913 PANEL GP-CIRCUIT BREAKER (1/2)

S/N CAE (T02.10)-02824
Part of 170-6816-Page91.02,193-3533-Page93
7N-0718-Page120

ELECTRICAL AND STARTING SYSTEM

NOTE	No.	PART No.	QTY	PART NAME	NOTE	No.	PART No.	QTY	PART NAME
	1	213-0870	1	BRACKET AS					
	2	8T-4191	4	BOLT (L=16mm)					
	3	8T-4121	4	WASHER					
	4	170-6933	1	COVER					
	5	238-2526	1	COVER					
	6	8T-6411	6	SCREW					
	7	9X-8256	10	WASHER					
	8	171-2208	1	BREAKER AS					
		1H-3244	2	LOCKWASHER					
		6V-8187	2	NUT					
		8T-4205	2	WASHER					
	9	6V-5645	2	SCREW					
Y	10	7N-0718	1	SWITCH AS (DISCONNECT)					
	11	3E-8320	1	PLATE (INSTRUCTION)					
	12	8C-7581	4	SCREW					
	13	096-6166	4	WASHER					
	14	141-2759	10	FUSE (5A)					
	15	113-8490	21	FUSE (10A)					
	16	170-6888	1	TOOL					
	17	149-5051	2	CONNECTOR					
	18	094-2080	1	RELAY					
	19	102-8016	1	RESISTOR AS					
	20	7X-2619	4	BOLT (L=10mm)					
	21	161-3128	6	RELAY					
	22	113-8491	7	FUSE (15A)					

Y—SEE SEPARATE ILLUSTRATION

H88234E 04

204-1913 PANEL GP-CIRCUIT BREAKER (1/2)

S/N CAE (T02.10)-02824
Part of 170-6816-Page91.02,193-3533-Page93
7N-0718-Page120

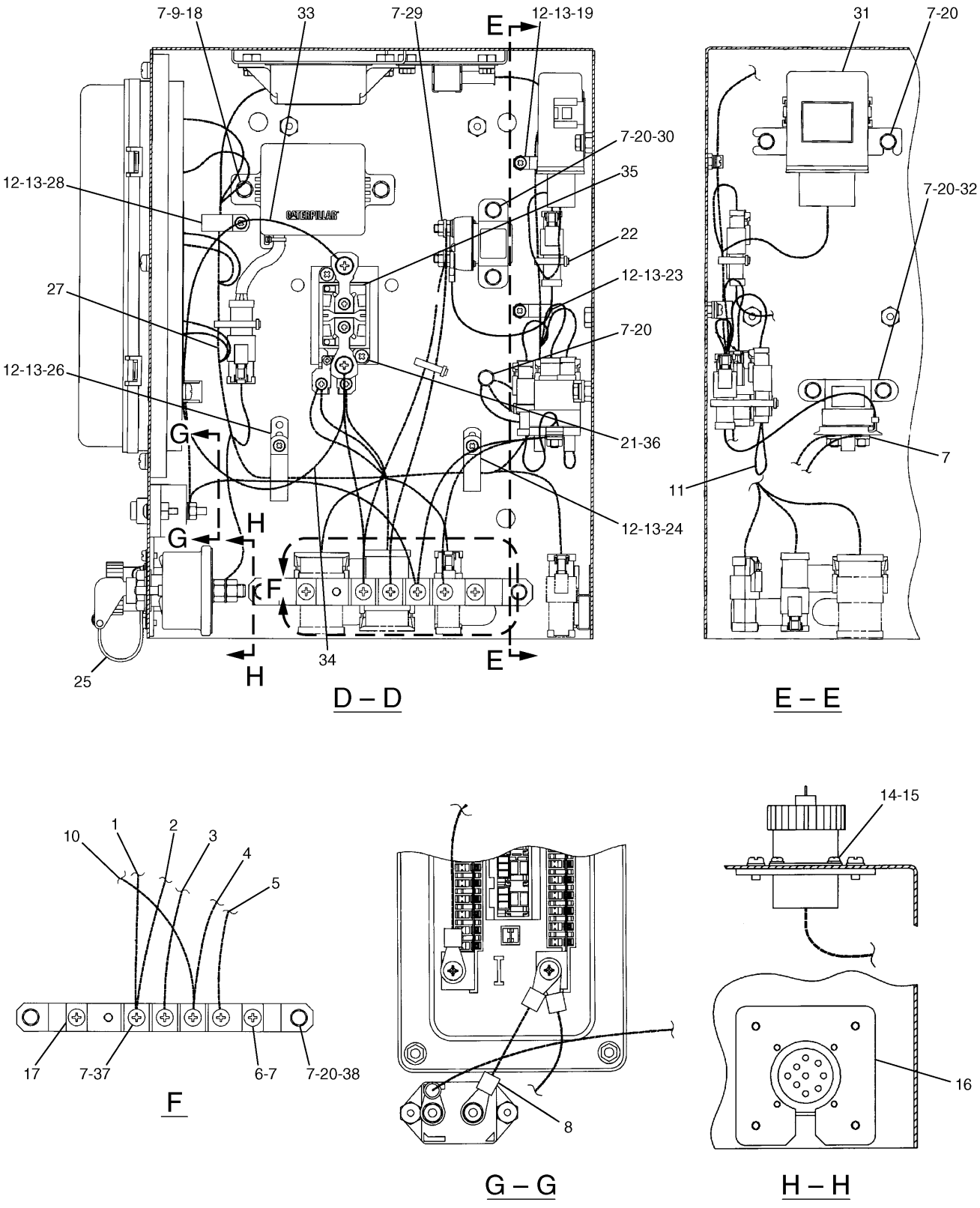

H88235E 04

204-1913 PANEL GP-CIRCUIT BREAKER (2/2)

S/N CAE (T02.10)-02824

Part of 170-6816-Page91.02,193-3533-Page93

259-4863-Page119.01,125-1302-Page121,163-6703-Page124

ELECTRICAL AND STARTING SYSTEM

NOTE	No.	PART No.	QTY	PART NAME	NOTE	No.	PART No.	QTY	PART NAME
	1	213-0871	1	WIRE AS					
		2L-8050	2	TERMINAL					
	2	193-3529	1	CABLE AS					
		9G-4343	2	TERMINAL					
	3	193-3528	1	CABLE AS					
		9G-4343	2	TERMINAL					
	4	163-6757	1	WIRE AS					
		2L-8050	2	TERMINAL					
	5	111-4829	1	WIRE AS					
		2L-8050	2	TERMINAL					
	6	8T-6411	2	SCREW					
	7	9X-8256	21	WASHER					
	8	170-9409	1	WIRE AS					
		2L-8050	2	TERMINAL					
	9	8T-4171	2	BOLT (L=12mm)					
	10	170-6935	1	WIRE AS					
		2L-8050	2	TERMINAL					
	11	163-6758	1	WIRE AS					
		102-8802	1	RECEPTACLE KIT					
		186-3735	2	PIN					
	12	8C-7581	5	SCREW					
	13	096-6166	5	WASHER					
	14	3E-8048	4	SCREW					
	15	096-5962	4	WASHER					
	16	136-4055	1	STRIP					
	17	121-1023	1	BLOCK					
Y	18	163-6703	1	TIMER AS					
	19	105-9980	1	CLIP					
	20	7X-2619	9	BOLT (L=10mm)					
	21	8T-0328	2	WASHER					
	22	3S-2093	4	STRAP					
	23	105-9982	1	CLIP					
	24	111-4719	1	CLIP					
	25	167-3593	1	STRAP					
	26	105-9986	1	CLIP					
Y	27	259-4863	1	HARNESS AS					
	28	105-9983	1	CLIP					
	29	5C-2890	2	NUT					
	30	116-0114	1	SWITCH AS (HEATER RELAY)					
		8T-8729	2	PIN					
		102-8802	1	RECEPTACLE KIT					
	31	197-4330	1	CONTROLLER					
Y	32	125-1302	1	SWITCH AS (START RELAY)					
	33	213-0872	1	WIRE AS					
		2L-8050	2	TERMINAL					
	34	213-0873	1	WIRE AS					
		2L-8050	2	TERMINAL					
	35	213-0772	1	SWITCH AS					
	36	8T-4127	2	SCREW					
	37	095-0742	4	SCREW					
	38	193-3520	1	BRACKET AS					

Y—SEE SEPARATE ILLUSTRATION

H88235E 04

204-1913 PANEL GP-CIRCUIT BREAKER (2/2)

S/N CAE (T02.10)-02824
Part of 170-6816-Page91.02,193-3533-Page93
259-4863-Page119.01,125-1302-Page121,163-6703-Page124

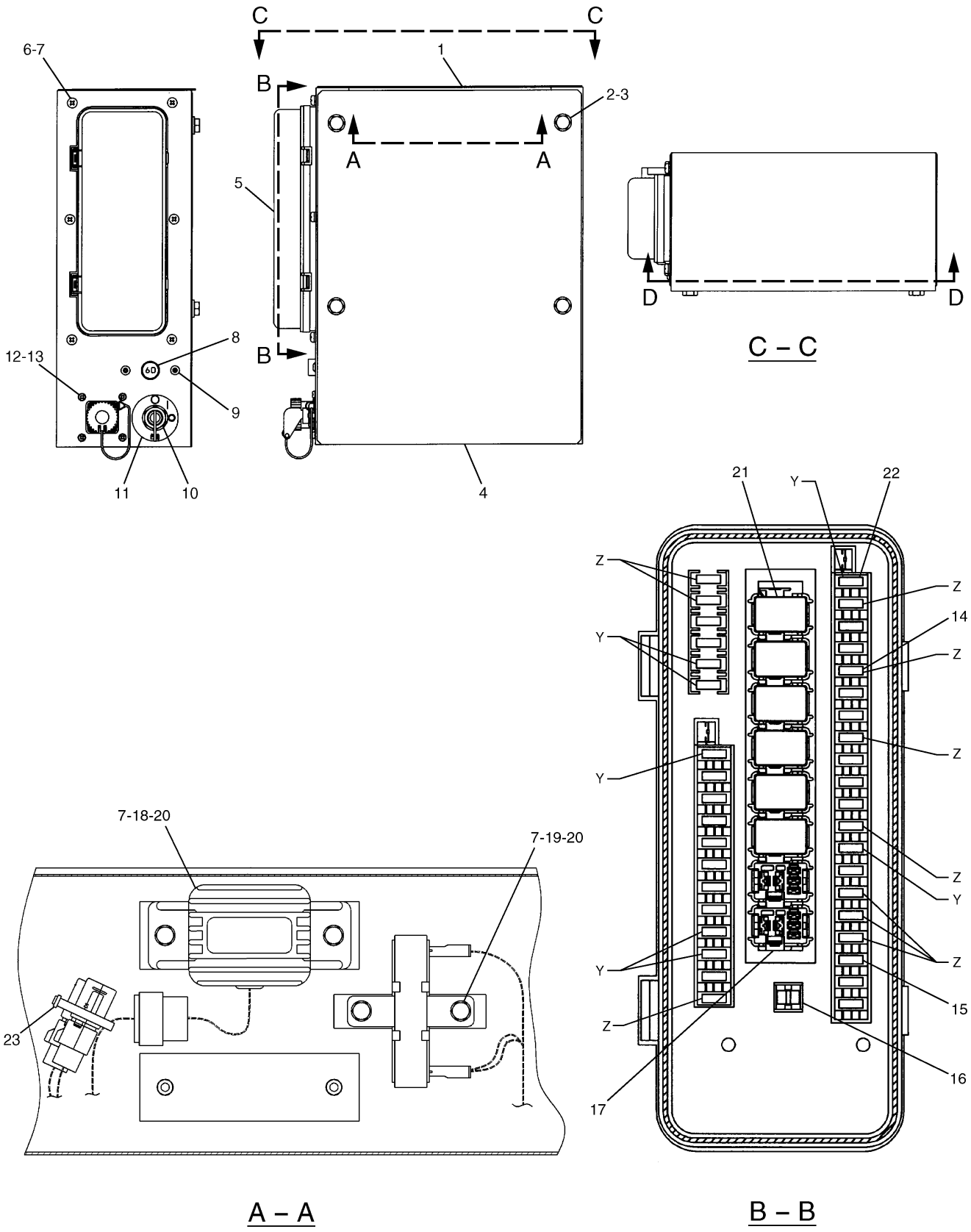

HA3628E 05

204-1913 PANEL GP-CIRCUIT BREAKER (1/2)

S/N CAE 02825-Up
Part of 170-6816-Page91.08,193-3533-Page93
7N-0718-Page120

ELECTRICAL AND STARTING SYSTEM

NOTE	No.	PART No.	QTY	PART NAME	NOTE	No.	PART No.	QTY	PART NAME
	1	213-0870	1	BRACKET AS					
	2	8T-4191	4	BOLT (L=16mm)					
	3	8T-4121	4	WASHER					
	4	170-6933	1	COVER					
	5	238-2526	1	COVER					
	6	8T-6411	6	SCREW					
	7	9X-8256	10	WASHER					
	8	171-2208	1	BREAKER AS					
		1H-3244	2	LOCKWASHER					
		6V-8187	2	NUT					
		8T-4205	2	WASHER					
	9	6V-5645	2	SCREW					
Y	10	7N-0718	1	SWITCH AS (DISCONNECT)					
	11	3E-8320	1	PLATE (INSTRUCTION)					
	12	8C-7581	4	SCREW					
	13	096-6166	4	WASHER					
	14	141-2759	10	FUSE (5A)					
	15	113-8490	21	FUSE (10A)					
	16	170-6888	1	TOOL					
	17	149-5051	2	CONNECTOR					
	18	094-2080	1	RELAY					
	19	102-8016	1	RESISTOR AS					
	20	7X-2619	4	BOLT (L=10mm)					
	21	161-3128	6	RELAY					
	22	113-8491	7	FUSE (15A)					
	23	3S-2093	1	STRAP					

Y—SEE SEPARATE ILLUSTRATION

HA3628E 05

204-1913 PANEL GP-CIRCUIT BREAKER (1/2)

S/N CAE 02825-Up
Part of 170-6816-Page91.08,193-3533-Page93
7N-0718-Page120

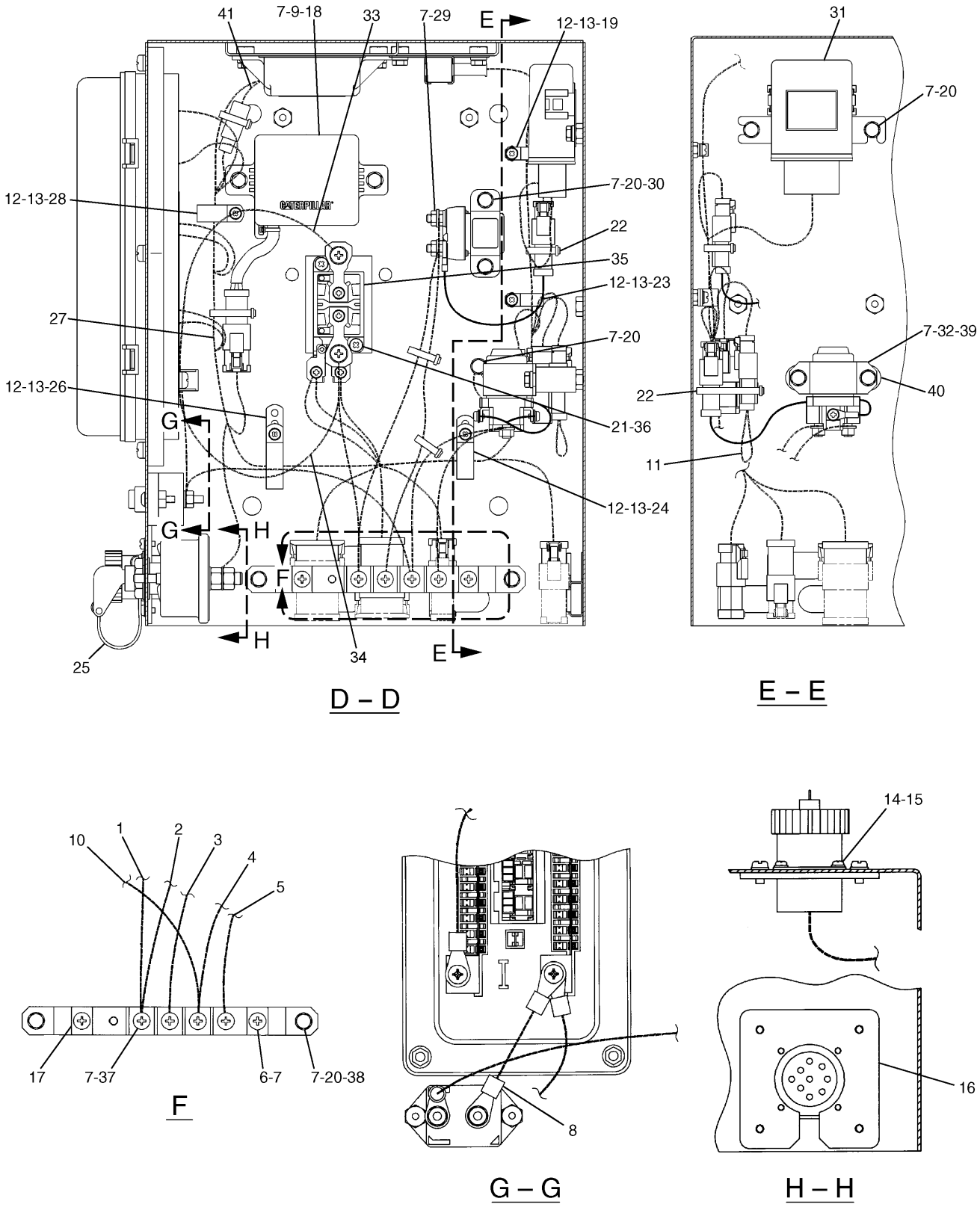

HA3629E 05

204-1913 PANEL GP-CIRCUIT BREAKER (2/2)

S/N CAE 02825-Up

Part of 170-6816-Page91.08,193-3533-Page93
267-7631-Page119.05,267-7596-Page119.09,259-5274-Page123.01,163-6703-Page124

ELECTRICAL AND STARTING SYSTEM

NOTE	No.	PART No.	QTY	PART NAME	NOTE	No.	PART No.	QTY	PART NAME
	1	213-0871	1	WIRE AS		40	085-7329	2	SPACER
					Y	41	267-7596	1	HARNESS AS
		2L-8050	2	TERMINAL					
	2	193-3529	1	CABLE AS					
		9G-4343	2	TERMINAL					
	3	193-3528	1	CABLE AS					
		9G-4343	2	TERMINAL					
	4	163-6757	1	WIRE AS					
		2L-8050	2	TERMINAL					
	5	111-4829	1	WIRE AS					
		2L-8050	2	TERMINAL					
	6	8T-6411	2	SCREW					
	7	9X-8256	19	WASHER					
	8	170-9409	1	WIRE AS					
		2L-8050	2	TERMINAL					
	9	8T-4171	2	BOLT (L=12mm)					
	10	170-6935	1	WIRE AS					
		2L-8050	2	TERMINAL					
	11	163-6758	1	WIRE AS					
		102-8802	1	RECEPTACLE KIT					
		186-3735	2	PIN					
	12	8C-7581	5	SCREW					
	13	096-6166	5	WASHER					
	14	3E-8048	4	SCREW					
	15	096-5962	4	WASHER					
	16	136-4055	1	STRIP					
	17	121-1023	1	BLOCK					
Y	18	163-6703	1	TIMER AS					
	19	105-9980	1	CLIP					
	20	7X-2619	7	BOLT (L=10mm)					
	21	8T-0328	2	WASHER					
	22	3S-2093	6	STRAP					
	23	105-9982	1	CLIP					
	24	111-4719	1	CLIP					
	25	167-3593	1	STRAP					
	26	105-9986	1	CLIP					
Y	27	267-7631	1	HARNESS AS					
	28	105-9983	1	CLIP					
	29	5C-2890	2	NUT					
	30	116-0114	1	SWITCH AS (HEATER RELAY)					
		8T-8729	2	PIN					
		102-8802	1	RECEPTACLE KIT					
	31	197-4330	1	CONTROLLER					
Y	32	259-5274	1	SWITCH AS (START RELAY)					
	33	213-0872	1	WIRE AS					
		2L-8050	2	TERMINAL					
	34	213-0873	1	WIRE AS					
		2L-8050	2	TERMINAL					
	35	213-0772	1	SWITCH AS					
	36	8T-4127	2	SCREW					
	37	095-0742	4	SCREW					
	38	193-3520	1	BRACKET AS					
	39	8C-8451	2	BOLT (L=40mm)					

Y—SEE SEPARATE ILLUSTRATION

HA3629E 05

204-1913 PANEL GP-CIRCUIT BREAKER (2/2)

S/N CAE 02825-Up

Part of 170-6816-Page91.08,193-3533-Page93
267-7631-Page119.05,267-7596-Page119.09,259-5274-Page123.01,163-6703-Page124

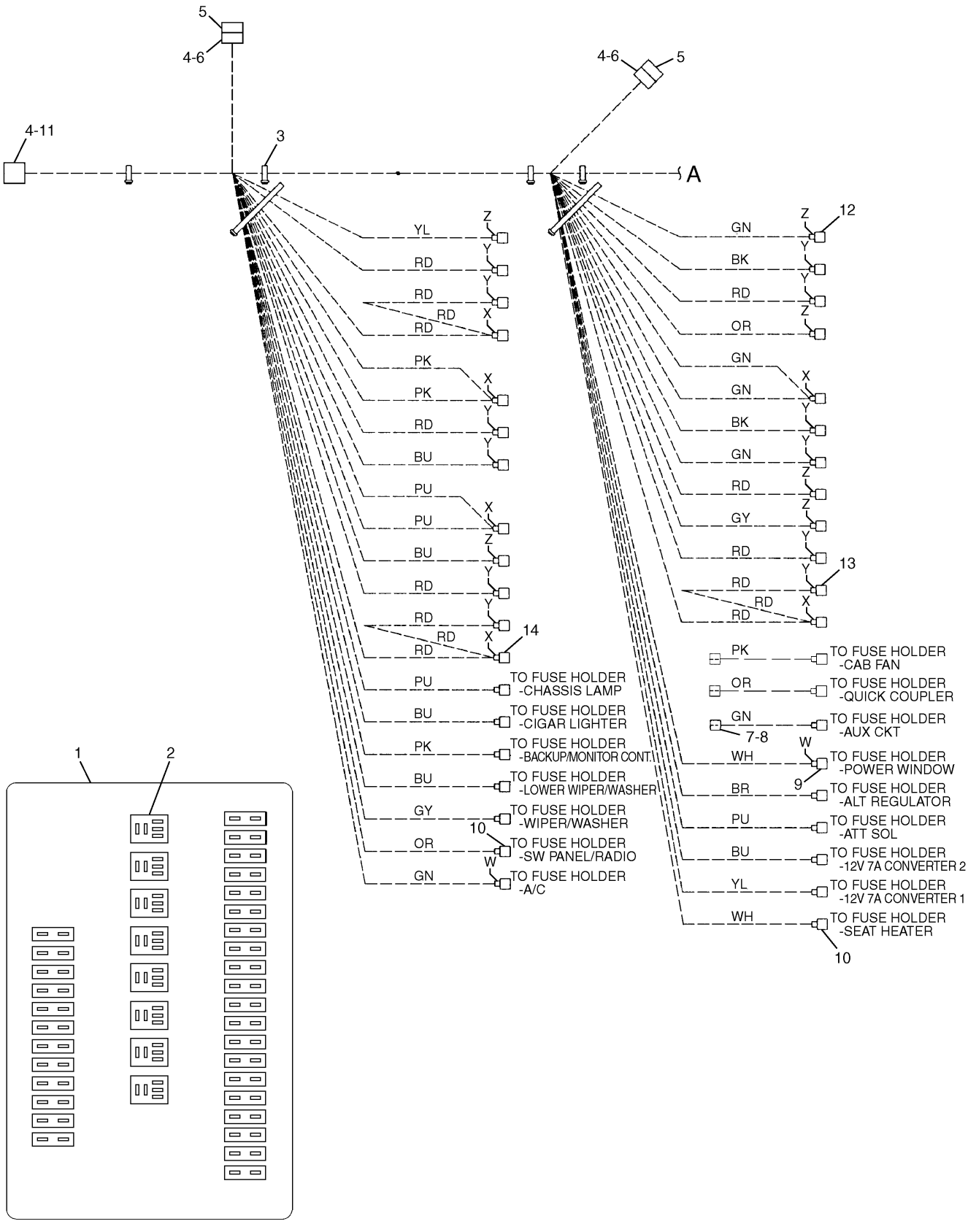

204-1912 HARNESS AS (1/2)
S/N CAE 01201-01357
Part of 204-1911-Page107

ELECTRICAL AND STARTING SYSTEM

NOTE	No.	PART No.	QTY	PART NAME	NOTE	No.	PART No.	QTY	PART NAME
	1	183-1000	1	BASE AS					
		9X-8256	2	WASHER					
		095-0742	2	SCREW					
		170-9394	32	TERMINAL					
	2	149-5051	6	CONNECTOR					
	3	3S-2093	8	STRAP					
	4	7Y-3951	9	TERMINAL					
	5	121-1022	2	DIODE					
	6	7Y-3952	2	CONNECTOR					
	7	7Y-3963	3	TERMINAL					
	8	7Y-3965	3	TUBE					
	9	170-6890	2	TERMINAL					
	10	170-6891	14	TERMINAL					
	11	7Y-3958	1	CONNECTOR					
	12	149-5069	6	TERMINAL					
	13	149-5070	12	TERMINAL					
	14	149-5071	6	TERMINAL					

H77517E 00

204-1912 HARNESS AS (1/2)

S/N CAE 01201-01357

Part of 204-1911-Page107

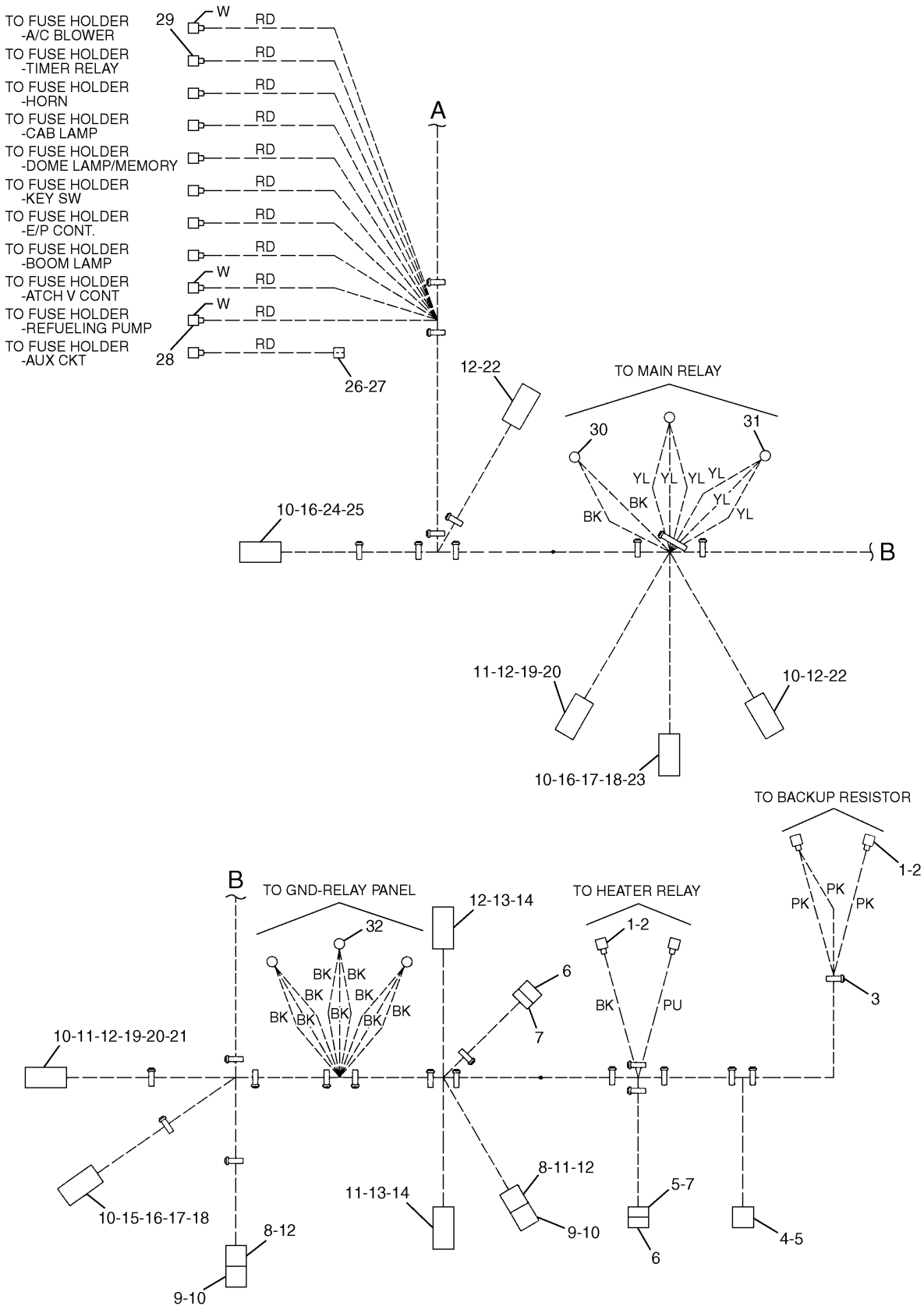

H77519E 00

204-1912 HARNESS AS (2/2)

S/N CAE 01201-01357
Part of 204-1911-Page107

ELECTRICAL AND STARTING SYSTEM

NOTE	No.	PART No.	QTY	PART NAME	NOTE	No.	PART No.	QTY	PART NAME
	1	153-2602	4	CONNECTOR					
	2	153-2631	4	TERMINAL					
	3	3S-2093	27	STRAP					
	4	104-6573	1	PLUG					
	5	7Y-3951	8	TERMINAL					
	6	121-1022	2	DIODE					
	7	7Y-3952	2	CONNECTOR					
	8	155-2260	2	PLUG KIT					
	9	102-8803	2	RECEPTACLE KIT					
	10	8T-8737	15	PLUG					
	11	186-3736	8	SOCKET					
	12	9W-0844	29	SOCKET					
	13	155-2270	2	PLUG KIT					
	14	155-2261	2	WEDGE					
	15	102-8805	1	RECEPTACLE KIT					
	16	9X-3401	8	PIN					
	17	186-3735	3	PIN					
	18	9W-0852	9	PIN					
	19	155-2255	2	PLUG KIT					
	20	155-2258	2	WEDGE					
	21	126-1768	3	SOCKET					
	22	155-2271	2	PLUG KIT					
	23	102-8801	1	RECEPTACLE KIT					
	24	9W-1951	1	RECEPTACLE					
	25	8C-6354	1	CAP					
	26	7Y-3963	1	TERMINAL					
	27	7Y-3965	1	TUBE					
	28	170-6890	3	TERMINAL					
	29	170-6891	8	TERMINAL					
	30	2L-8076	1	TERMINAL					
	31	2L-8066	2	TERMINAL					
	32	2L-8067	3	TERMINAL					

H77519E 00

204-1912 HARNESS AS (2/2)

S/N CAE 01201-01357

Part of 204-1911-Page107

ELECTRICAL AND STARTING SYSTEM

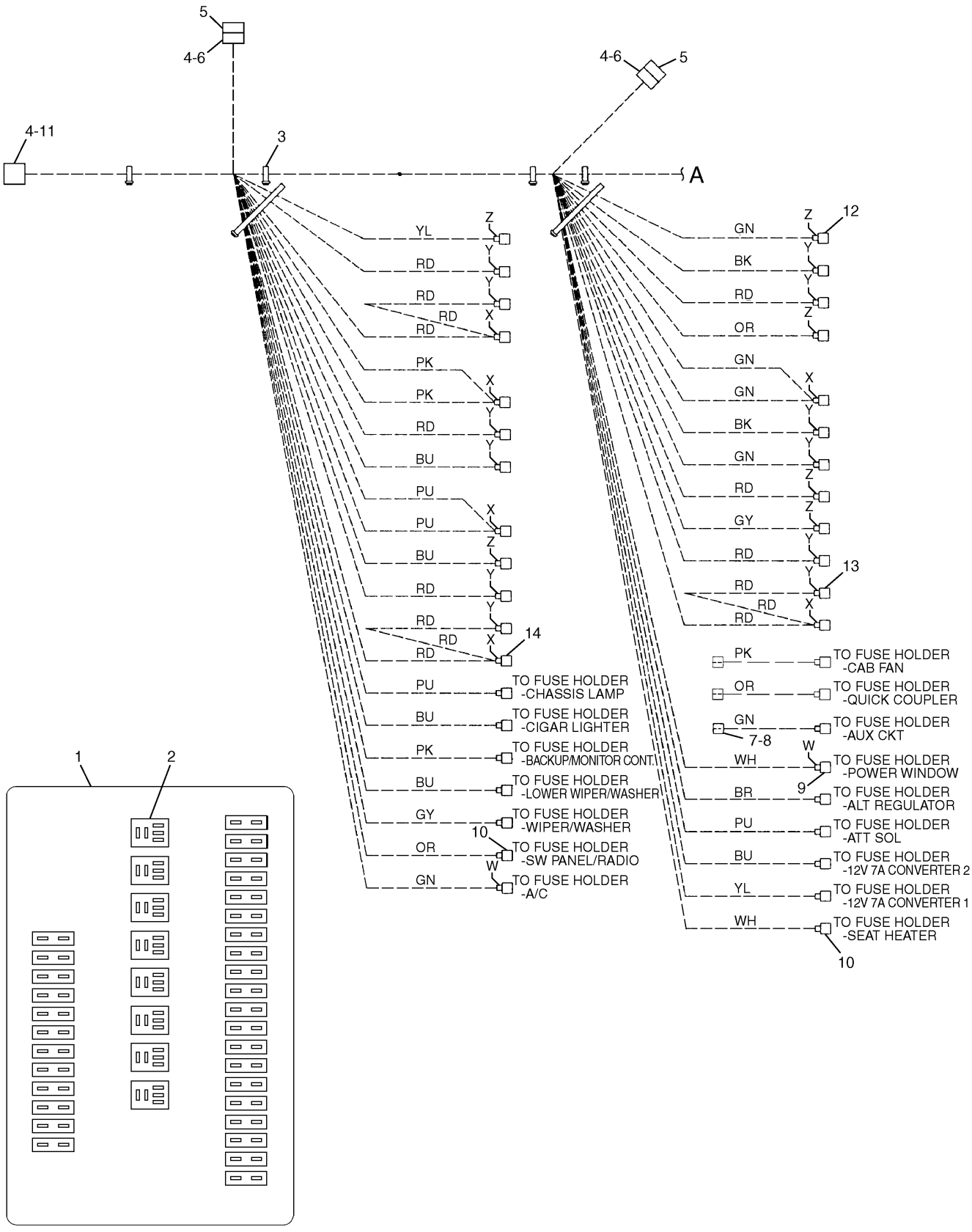

213-0829 HARNESS AS (1/2)
S/N CAE 01358-01923
Part of 204-1911-Page107.04

ELECTRICAL AND STARTING SYSTEM

NOTE	No.	PART No.	QTY	PART NAME	NOTE	No.	PART No.	QTY	PART NAME
	1	183-1000	1	BASE AS					
		9X-8256	2	WASHER					
		095-0742	2	SCREW					
		170-9394	32	TERMINAL					
	2	149-5051	6	CONNECTOR					
	3	3S-2093	8	STRAP					
	4	7Y-3951	9	TERMINAL					
	5	121-1022	2	DIODE					
	6	7Y-3952	2	CONNECTOR					
	7	7Y-3963	3	TERMINAL					
	8	7Y-3965	3	TUBE					
	9	170-6890	2	TERMINAL					
	10	170-6891	14	TERMINAL					
	11	7Y-3958	1	CONNECTOR					
	12	149-5069	6	TERMINAL					
	13	149-5070	12	TERMINAL					
	14	149-5071	6	TERMINAL					

H84338E 00

213-0829 HARNESS AS (1/2)

S/N CAE 01358-01923

Part of 204-1911-Page107.04

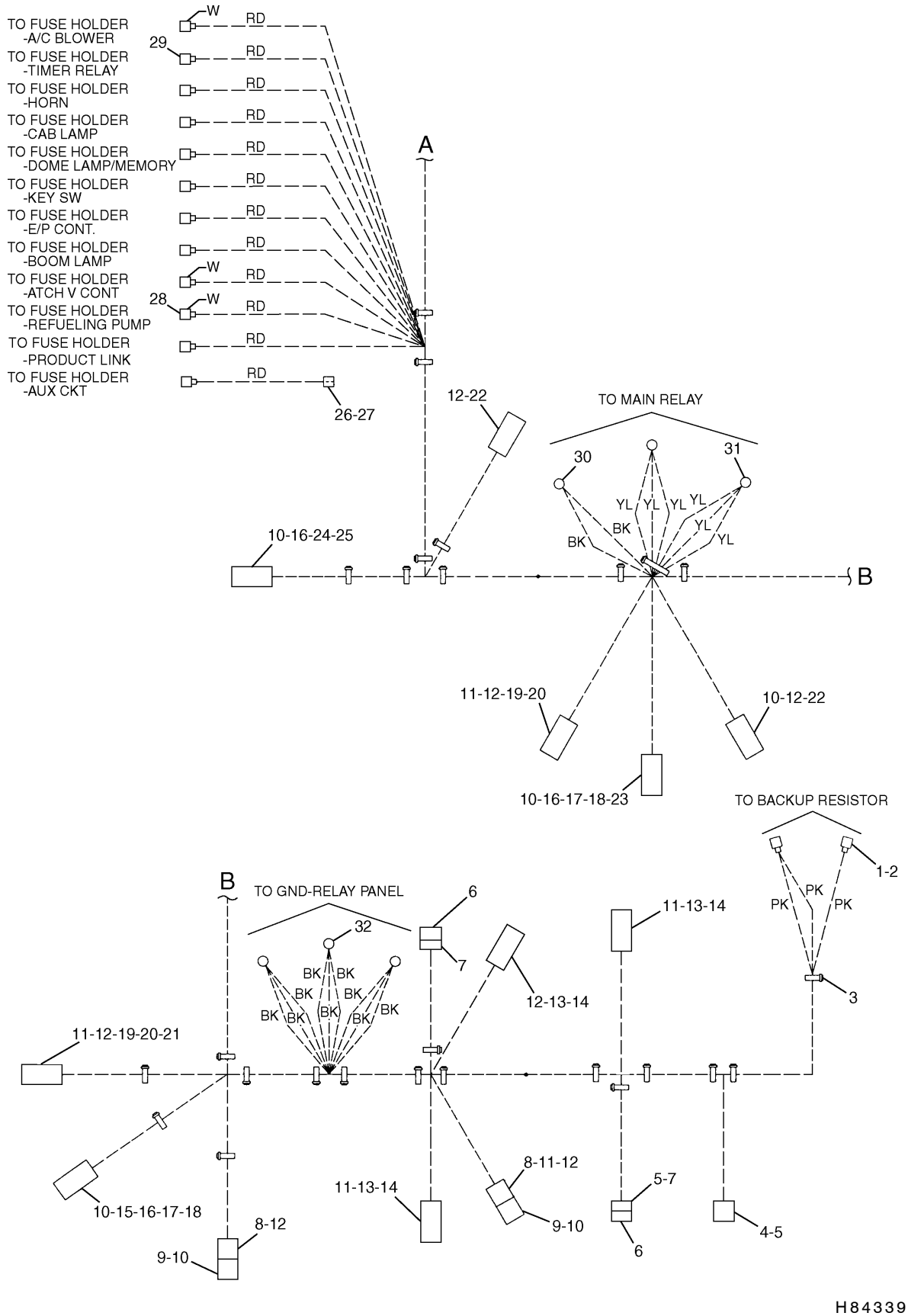

213-0829 HARNESS AS (2/2)
S/N CAE 01358-01923
Part of 204-1911-Page107.04

ELECTRICAL AND STARTING SYSTEM

NOTE	No.	PART No.	QTY	PART NAME	NOTE	No.	PART No.	QTY	PART NAME
	1	153-2602	2	CONNECTOR					
	2	153-2631	2	TERMINAL					
	3	3S-2093	26	STRAP					
	4	104-6573	1	PLUG					
	5	7Y-3951	8	TERMINAL					
	6	121-1022	2	DIODE					
	7	7Y-3952	2	CONNECTOR					
	8	155-2260	2	PLUG KIT					
	9	102-8803	2	RECEPTACLE KIT					
	10	8T-8737	14	PLUG					
	11	186-3736	11	SOCKET					
	12	9W-0844	29	SOCKET					
	13	155-2270	3	PLUG KIT					
	14	155-2261	3	WEDGE					
	15	102-8805	1	RECEPTACLE KIT					
	16	9X-3401	8	PIN					
	17	186-3735	3	PIN					
	18	9W-0852	9	PIN					
	19	155-2255	2	PLUG KIT					
	20	155-2258	2	WEDGE					
	21	126-1768	3	SOCKET					
	22	155-2271	2	PLUG KIT					
	23	102-8801	1	RECEPTACLE KIT					
	24	9W-1951	1	RECEPTACLE					
	25	8C-6354	1	CAP					
	26	7Y-3963	1	TERMINAL					
	27	7Y-3965	1	TUBE					
	28	170-6890	3	TERMINAL					
	29	170-6891	9	TERMINAL					
	30	2L-8076	1	TERMINAL					
	31	2L-8066	2	TERMINAL					
	32	2L-8067	3	TERMINAL					

H84339E 00

213-0829 HARNESS AS (2/2)

S/N CAE 01358-01923

Part of 204-1911-Page107.04

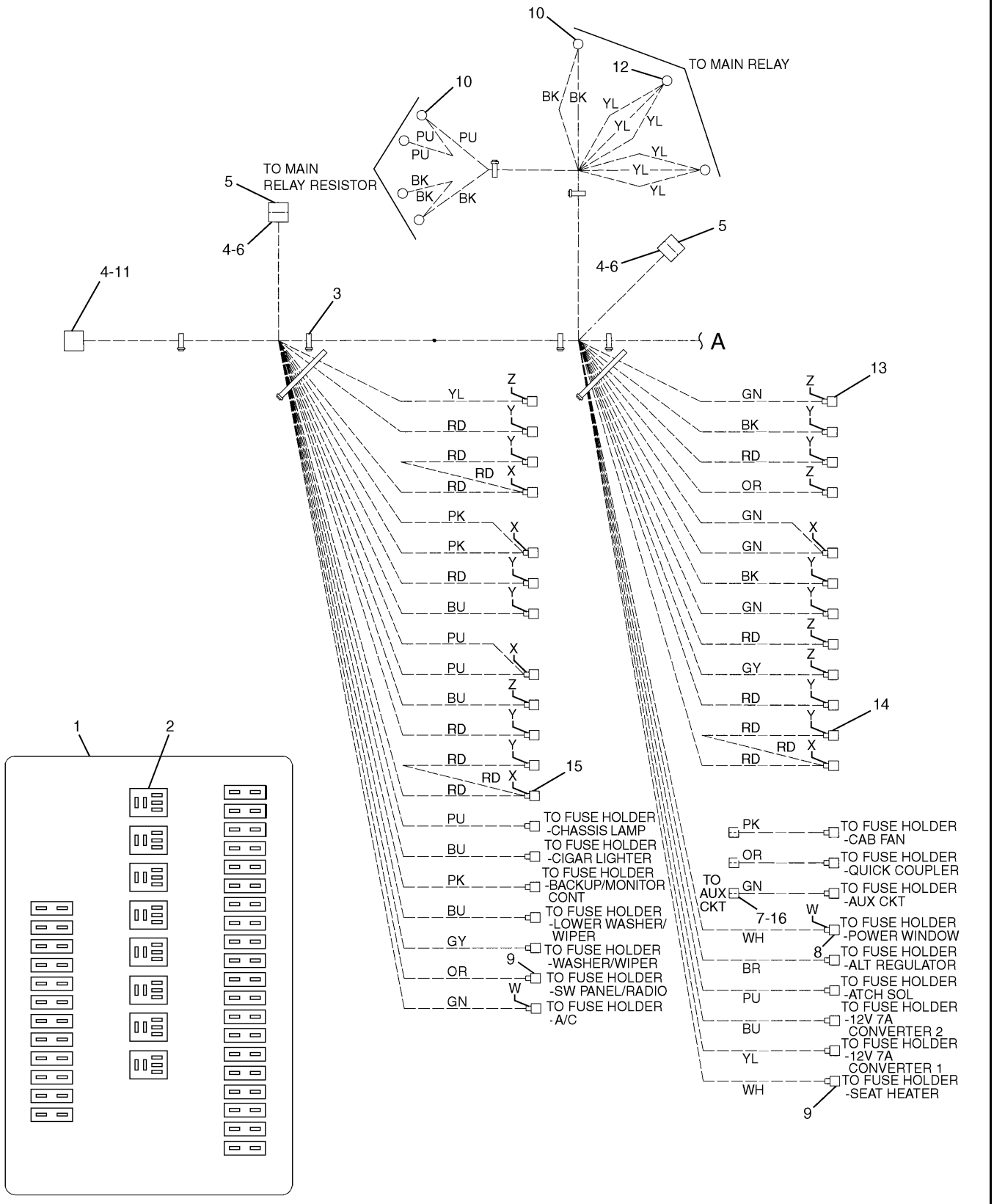

204-1914 HARNESS AS (1/2)
S/N CAE 01201-(T02.09)
Part of 204-1913-Page111
An Attachment

ELECTRICAL AND STARTING SYSTEM

NOTE	No.	PART No.	QTY	PART NAME	NOTE	No.	PART No.	QTY	PART NAME
	1	183-1000	1	BASE AS					
		9X-8256	2	WASHER					
		095-0742	2	SCREW					
		170-9394	32	TERMINAL					
	2	149-5051	6	CONNECTOR					
	3	3S-2093	8	STRAP					
	4	7Y-3951	9	TERMINAL					
	5	121-1022	2	DIODE					
	6	7Y-3952	2	CONNECTOR					
	7	7Y-3963	3	TERMINAL					
	8	170-6890	2	TERMINAL					
	9	170-6891	14	TERMINAL					
	10	2L-8076	5	TERMINAL					
	11	7Y-3958	1	CONNECTOR					
	12	2L-8066	2	TERMINAL					
	13	149-5069	6	TERMINAL					
	14	149-5070	12	TERMINAL					
	15	149-5071	6	TERMINAL					
	16	7Y-3965	3	TUBE					

H77525E 00

204-1914 HARNESS AS (1/2)

S/N CAE 01201-(T02.09)
Part of 204-1913-Page111
An Attachment

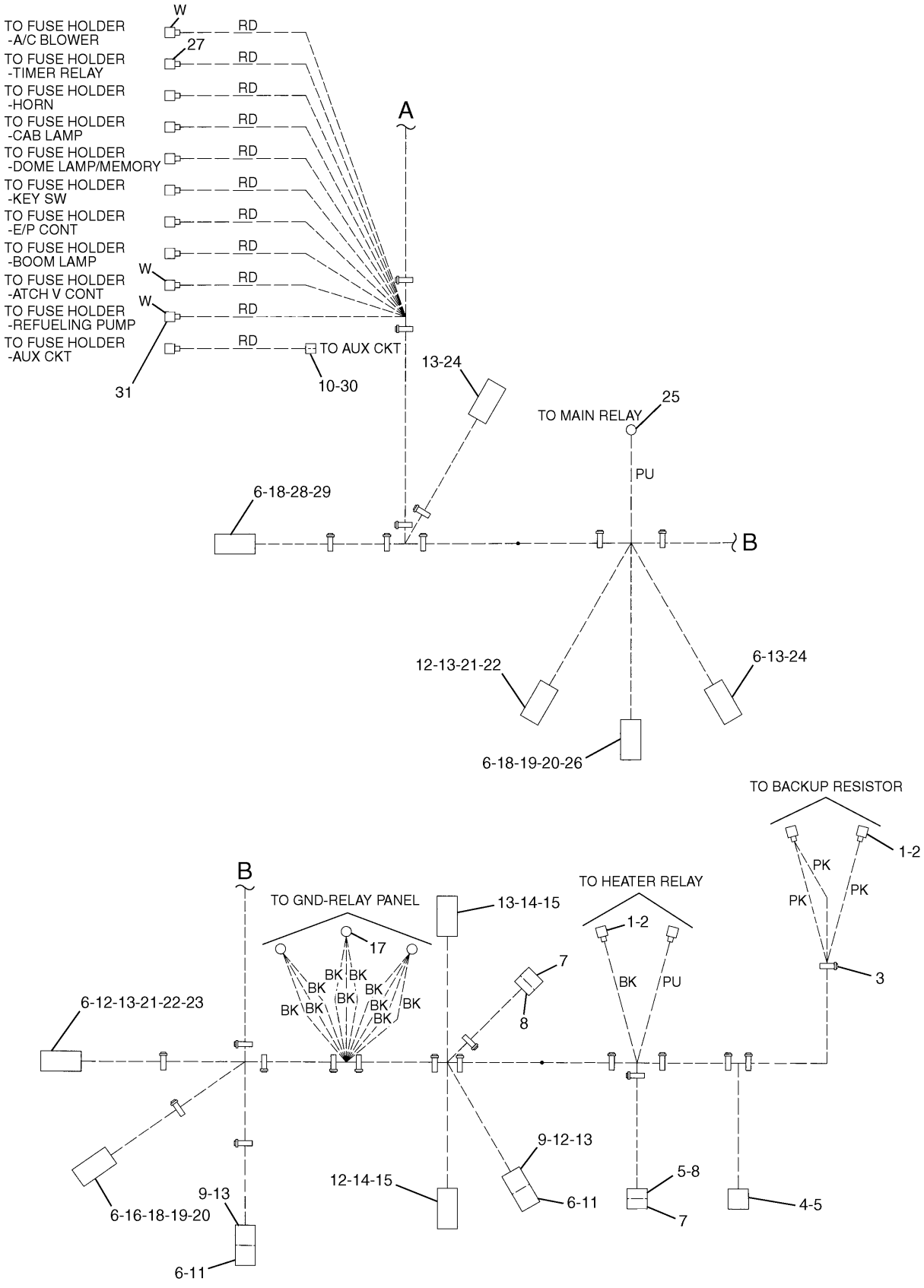

204-1914 HARNESS AS (2/2)
S/N CAE 01201-(T02.09)
Part of 204-1913-Page111
An Attachment

ELECTRICAL AND STARTING SYSTEM

NOTE	No.	PART No.	QTY	PART NAME	NOTE	No.	PART No.	QTY	PART NAME
	1	153-2602	4	CONNECTOR					
	2	153-2631	4	TERMINAL					
	3	3S-2093	25	STRAP					
	4	104-6573	1	PLUG					
	5	7Y-3951	8	TERMINAL					
	6	8T-8737	15	PLUG					
	7	121-1022	2	DIODE					
	8	7Y-3952	2	CONNECTOR					
	9	155-2260	2	PLUG KIT					
	10	7Y-3965	1	TUBE					
	11	102-8803	2	RECEPTACLE KIT					
	12	186-3736	8	SOCKET					
	13	9W-0844	29	SOCKET					
	14	155-2270	2	PLUG KIT					
	15	155-2261	2	WEDGE					
	16	102-8805	1	RECEPTACLE KIT					
	17	2L-8067	3	TERMINAL					
	18	9X-3401	8	PIN					
	19	186-3735	3	PIN					
	20	9W-0852	9	PIN					
	21	155-2255	2	PLUG KIT					
	22	155-2258	2	WEDGE					
	23	126-1768	3	SOCKET					
	24	155-2271	2	PLUG KIT					
	25	2L-8078	1	TERMINAL					
	26	102-8801	1	RECEPTACLE KIT					
	27	170-6891	8	TERMINAL					
	28	9W-1951	1	RECEPTACLE					
	29	8C-6354	1	CAP					
	30	7Y-3963	1	TERMINAL					
	31	170-6890	3	TERMINAL					

H77527E 00

204-1914 HARNESS AS (2/2)
S/N CAE 01201-(T02.09)
Part of 204-1913-Page111
An Attachment

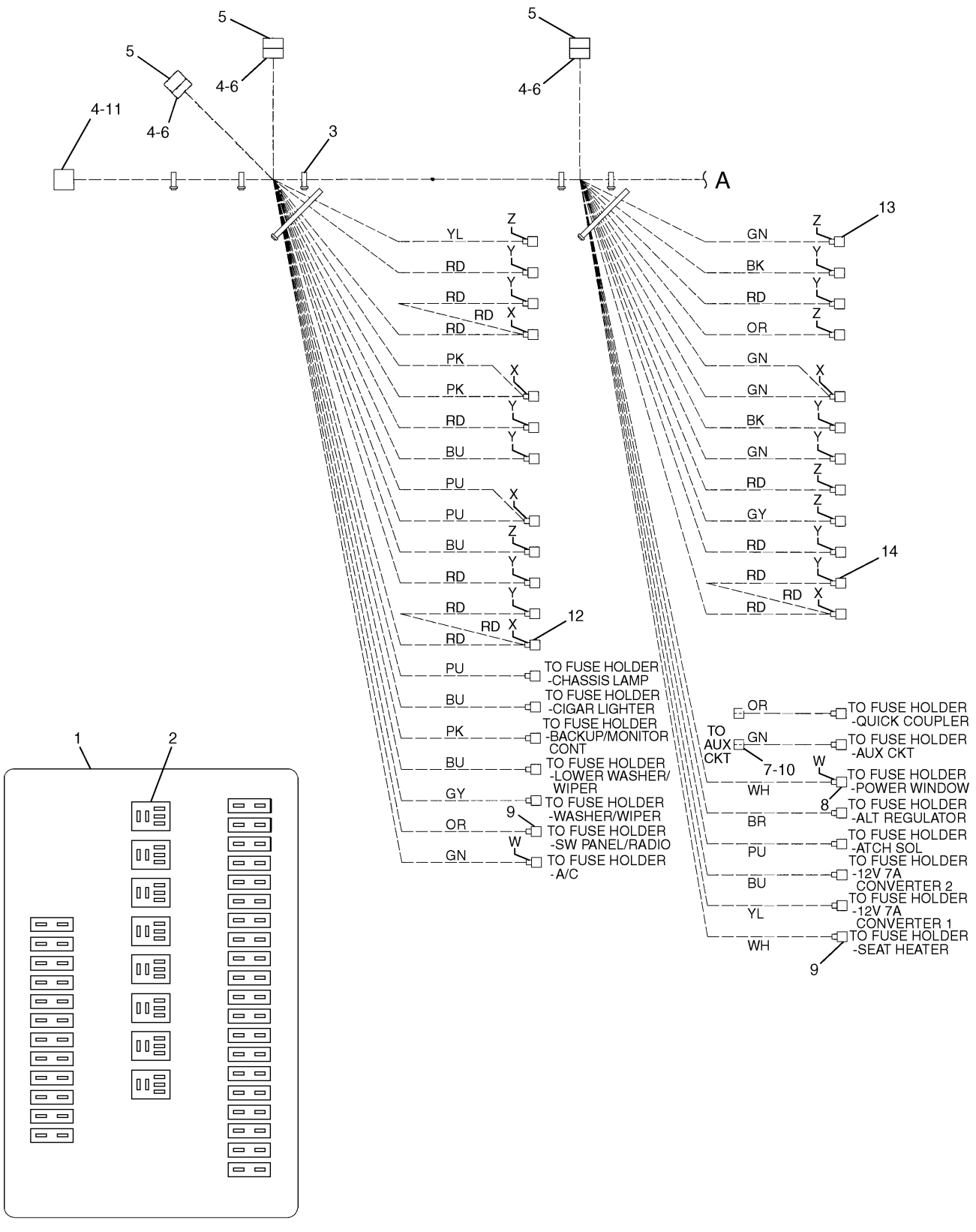

259-4863 HARNESS AS (1/2)
S/N CAE (T02.10)-02824
Part of 204-1913-Page111.04

ELECTRICAL AND STARTING SYSTEM

NOTE	No.	PART No.	QTY	PART NAME	NOTE	No.	PART No.	QTY	PART NAME
	1	183-1000	1	BASE AS					
		9X-8256	2	WASHER					
		095-0742	2	SCREW					
		170-9394	32	TERMINAL					
	2	149-5051	6	CONNECTOR					
	3	3S-2093	7	STRAP					
	4	7Y-3951	11	TERMINAL					
	5	121-1022	3	DIODE					
	6	7Y-3952	3	CONNECTOR					
	7	7Y-3963	2	TERMINAL					
	8	170-6890	2	TERMINAL					
	9	170-6891	13	TERMINAL					
	10	7Y-3965	2	TUBE					
	11	7Y-3958	1	CONNECTOR					
	12	149-5071	6	TERMINAL					
	13	149-5069	6	TERMINAL					
	14	149-5070	12	TERMINAL					

H88236E 00

259-4863 HARNESS AS (1/2)
S/N CAE (T02.10)-02824
Part of 204-1913-Page111.04

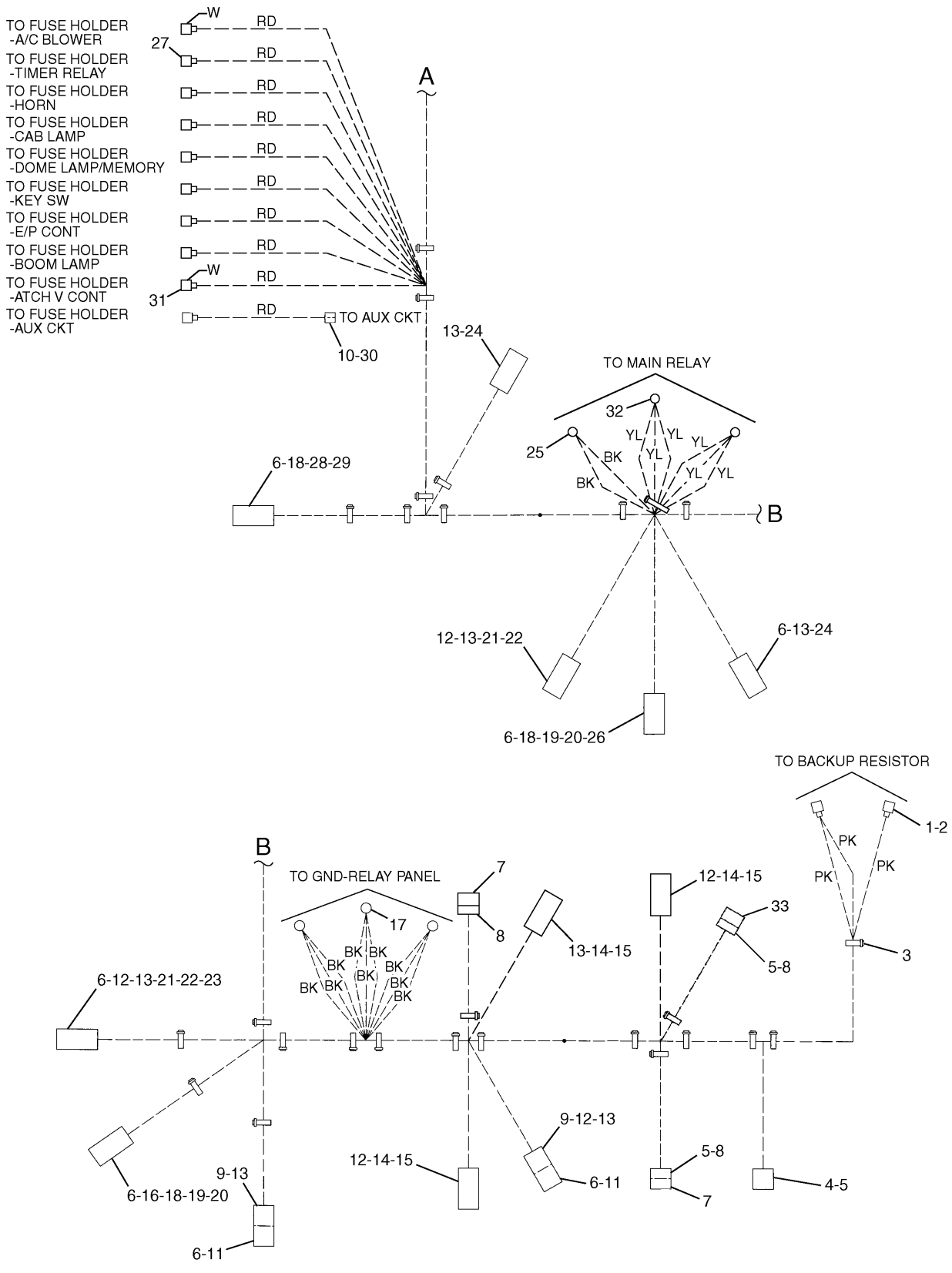

259-4863 HARNESS AS (2/2)
S/N CAE (T02.10)-02824
Part of 204-1913-Page111.04

ELECTRICAL AND STARTING SYSTEM

NOTE	No.	PART No.	QTY	PART NAME	NOTE	No.	PART No.	QTY	PART NAME
	1	153-2602	2	CONNECTOR					
	2	153-2631	2	TERMINAL					
	3	3S-2093	27	STRAP					
	4	104-6573	1	PLUG					
	5	7Y-3951	10	TERMINAL					
	6	8T-8737	16	PLUG					
	7	121-1022	2	DIODE					
	8	7Y-3952	3	CONNECTOR					
	9	155-2260	2	PLUG KIT					
	10	7Y-3965	1	TUBE					
	11	102-8803	2	RECEPTACLE KIT					
	12	186-3736	10	SOCKET					
	13	9W-0844	28	SOCKET					
	14	155-2270	3	PLUG KIT					
	15	155-2261	3	WEDGE					
	16	102-8805	1	RECEPTACLE KIT					
	17	2L-8067	3	TERMINAL					
	18	9X-3401	8	PIN					
	19	186-3735	3	PIN					
	20	9W-0852	9	PIN					
	21	155-2255	2	PLUG KIT					
	22	155-2258	2	WEDGE					
	23	126-1768	3	SOCKET					
	24	155-2271	2	PLUG KIT					
	25	2L-8075	1	TERMINAL					
	26	102-8801	1	RECEPTACLE KIT					
	27	170-6891	8	TERMINAL					
	28	9W-1951	1	RECEPTACLE					
	29	8C-6354	1	CAP					
	30	7Y-3963	1	TERMINAL					
	31	170-6890	2	TERMINAL					
	32	2L-8065	2	TERMINAL					
	33	7Y-3953	1	CONNECTOR					

H88237E 00

259-4863 HARNESS AS (2/2)
S/N CAE (T02.10)-02824
Part of 204-1913-Page111.04

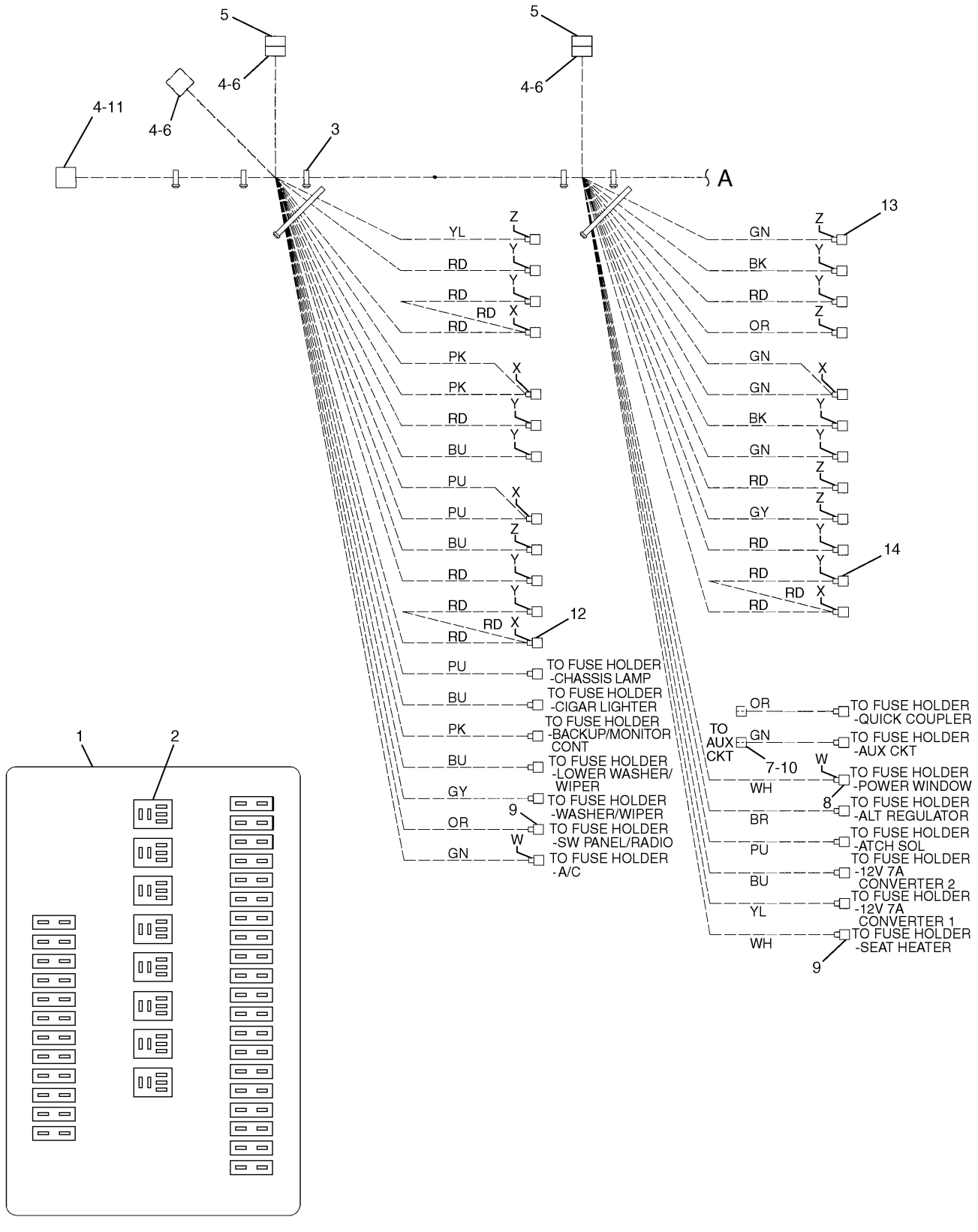

267-7631 HARNESS AS (1/2)
S/N CAE 02825-Up
Part of 204-1913-Page111.08

ELECTRICAL AND STARTING SYSTEM

NOTE	No.	PART No.	QTY	PART NAME	NOTE	No.	PART No.	QTY	PART NAME
	1	183-1000	1	BASE AS					
		9X-8256	2	WASHER					
		095-0742	2	SCREW					
		170-9394	32	TERMINAL					
	2	149-5051	6	CONNECTOR					
	3	3S-2093	7	STRAP					
	4	7Y-3951	11	TERMINAL					
	5	121-1022	2	DIODE					
	6	7Y-3952	3	CONNECTOR					
	7	7Y-3963	2	TERMINAL					
	8	170-6890	2	TERMINAL					
	9	170-6891	13	TERMINAL					
	10	7Y-3965	2	TUBE					
	11	7Y-3958	1	CONNECTOR					
	12	149-5071	6	TERMINAL					
	13	149-5069	6	TERMINAL					
	14	149-5070	12	TERMINAL					

H91672E 00

267-7631 HARNESS AS (1/2)
S/N CAE 02825-Up
Part of 204-1913-Page111.08

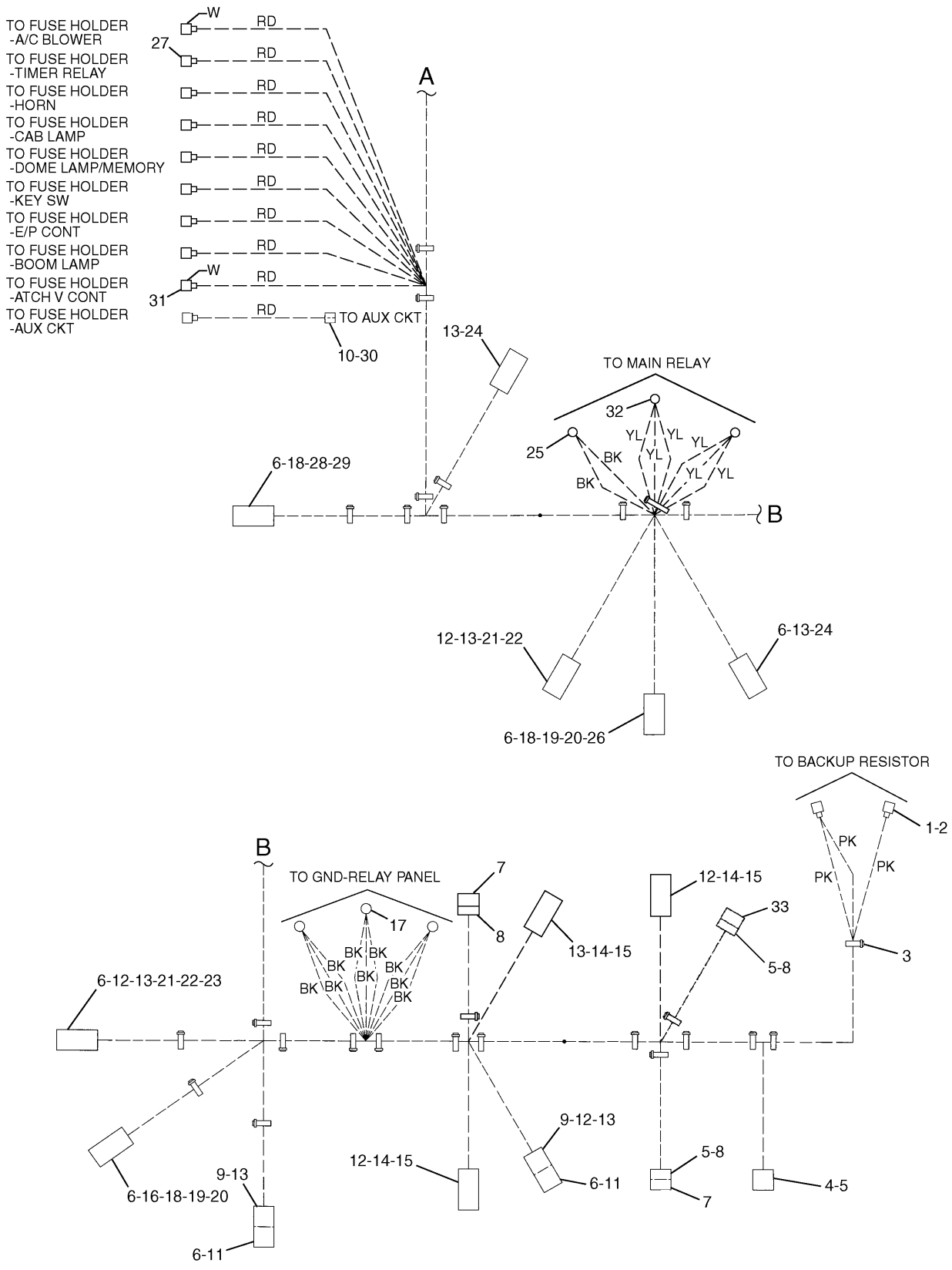

267-7631 HARNESS AS (2/2)
S/N CAE 02825-Up
Part of 204-1913-Page111.08

ELECTRICAL AND STARTING SYSTEM

NOTE	No.	PART No.	QTY	PART NAME	NOTE	No.	PART No.	QTY	PART NAME
	1	153-2602	2	CONNECTOR					
	2	153-2631	2	TERMINAL					
	3	3S-2093	27	STRAP					
	4	104-6573	1	PLUG					
	5	7Y-3951	10	TERMINAL					
	6	8T-8737	16	PLUG					
	7	121-1022	2	DIODE					
	8	7Y-3952	3	CONNECTOR					
	9	155-2260	2	PLUG KIT					
	10	7Y-3965	1	TUBE					
	11	102-8803	2	RECEPTACLE KIT					
	12	186-3736	10	SOCKET					
	13	9W-0844	28	SOCKET					
	14	155-2270	3	PLUG KIT					
	15	155-2261	3	WEDGE					
	16	102-8805	1	RECEPTACLE KIT					
	17	2L-8067	3	TERMINAL					
	18	9X-3401	8	PIN					
	19	186-3735	3	PIN					
	20	9W-0852	9	PIN					
	21	155-2255	2	PLUG KIT					
	22	155-2258	2	WEDGE					
	23	126-1768	3	SOCKET					
	24	155-2271	2	PLUG KIT					
	25	2L-8075	1	TERMINAL					
	26	102-8801	1	RECEPTACLE KIT					
	27	170-6891	8	TERMINAL					
	28	9W-1951	1	RECEPTACLE					
	29	8C-6354	1	CAP					
	30	7Y-3963	1	TERMINAL					
	31	170-6890	2	TERMINAL					
	32	2L-8065	2	TERMINAL					
	33	7Y-3953	1	CONNECTOR					

H91673E 00

267-7631 HARNESS AS (2/2)

S/N CAE 02825-Up

Part of 204-1913-Page111.08

ELECTRICAL AND STARTING SYSTEM

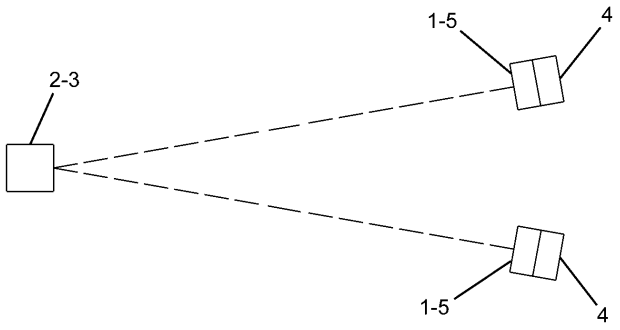

NOTE	No.	PART No.	QTY	PART NAME
	1	7Y-3951	4	TERMINAL
	2	7Y-3953	1	CONNECTOR
	3	7Y-3950	2	TERMINAL
	4	121-1022	2	DIODE
	5	7Y-3952	2	CONNECTOR

H89149E 00

267-7596 HARNESS AS
S/N CAE 02825-Up
Part of 204-1913-Page111.08

MEMORANDA

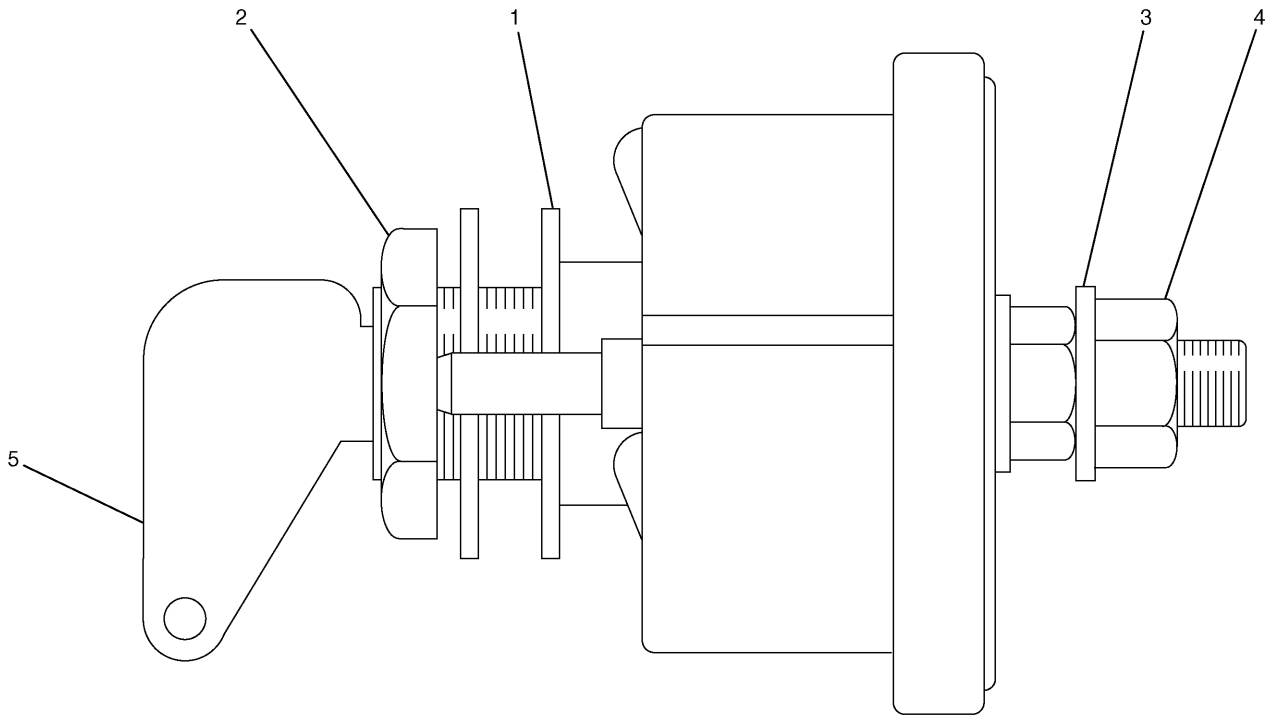

NOTE	No.	PART No.	QTY	PART NAME	NOTE	No.	PART No.	QTY	PART NAME
	1	2H-3922	2	LOCKWASHER					
	2	8H-5303	1	NUT					
	3	9F-5644	2	LOCKWASHER					
	4	6F-7045	2	NUT					
	5	8H-5306	1	KEY					

H67041E 13

7N-0718 SWITCH AS-DISCONNECT

Part of 204-1911-Page105,204-1913-Page109

Consists of :

			Page
1	175-2314	SWITCH AS-MAGNETIC	123
		-OR-	
1	175-2313	SWITCH AS-MAGNETIC	122

H68366E 01

125-1302 SWITCH AS-MAGNETIC

S/N CAE 01201-02824
Part of 204-1911-Page107,204-1913-Page111

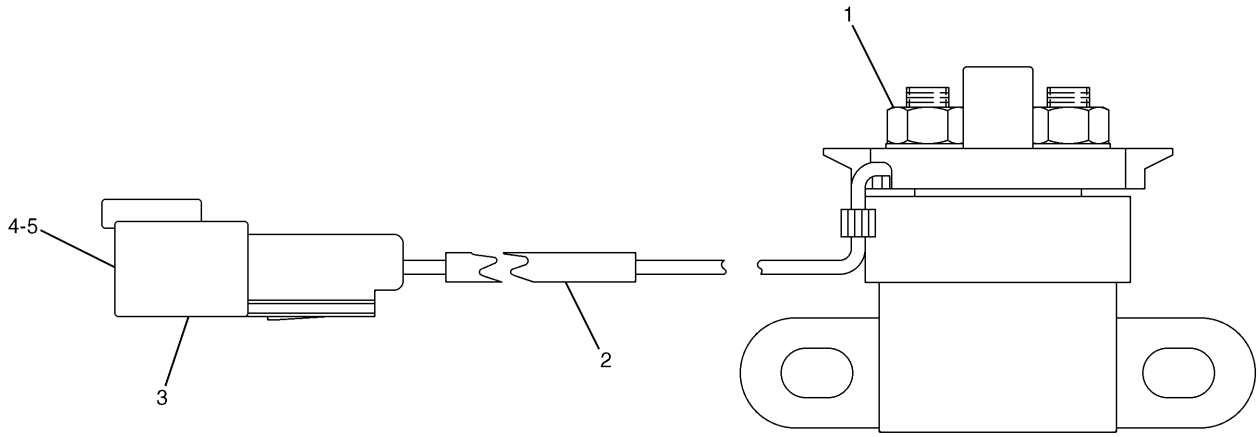

NOTE	No.	PART No.	QTY	PART NAME	NOTE	No.	PART No.	QTY	PART NAME
	1	5C-2890	2	NUT					
E	2	9X-1813		SLEEVE…(15.5cm)					
	3	102-8802	1	RECEPTACLE KIT					
	4	186-3735	2	PIN					
	5	3E-3365	1	WEDGE					

E—ORDER BY THE CENTIMETER

H68413E 00

175-2313 SWITCH AS-MAGNETIC

S/N CAE 01201-02824
Part of 125-1302-Page121

ELECTRICAL AND STARTING SYSTEM

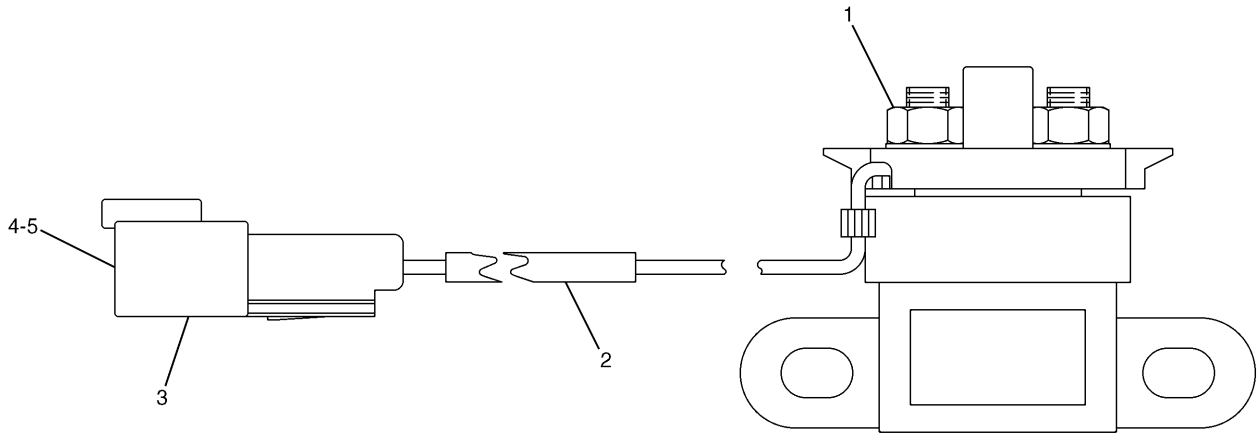

NOTE	No.	PART No.	QTY	PART NAME	NOTE	No.	PART No.	QTY	PART NAME
	1	5C-2890	2	NUT					
E	2	9X-1386		SLEEVE…(15.5cm)					
	3	102-8802	1	RECEPTACLE KIT					
	4	186-3735	2	PIN					
	5	3E-3365	1	WEDGE					

E—ORDER BY THE CENTIMETER

H68414E 00

175-2314 SWITCH AS-MAGNETIC

S/N CAE 01201-02824
Part of 125-1302-Page121

ELECTRICAL AND STARTING SYSTEM

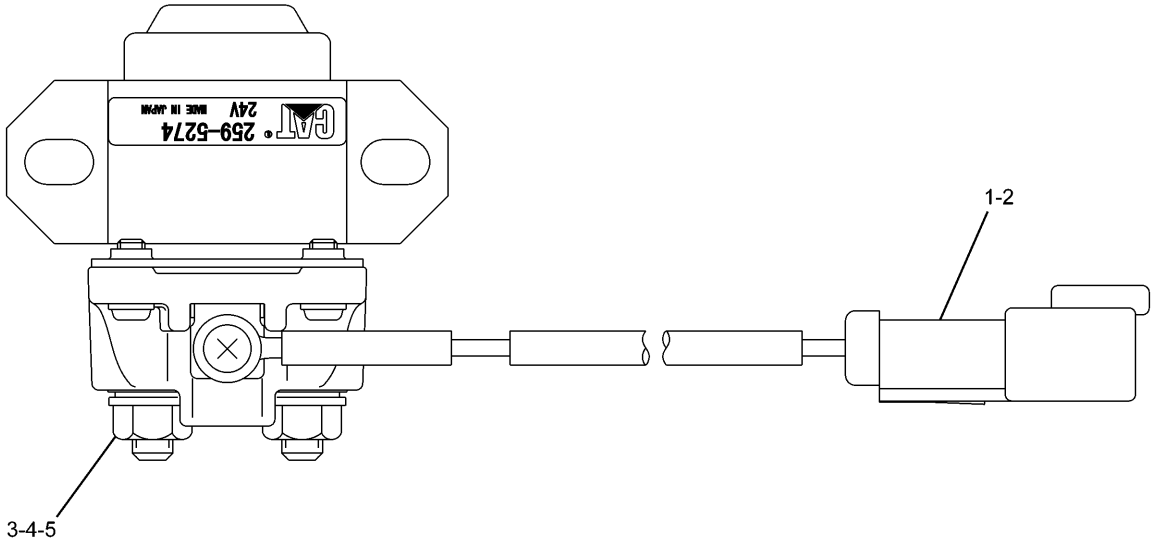

NOTE	No.	PART No.	QTY	PART NAME	NOTE	No.	PART No.	QTY	PART NAME
	1	102-8802	1	RECEPTACLE KIT					
	2	186-3735	2	PIN					
	3	1H-3338	2	LOCKWASHER					
	4	012-0380	2	LOCKWASHER					
	5	5C-2890	2	NUT					

H89144E 00

259-5274 SWITCH AS
S/N CAE 02825-Up
Part of 204-1913-Page111.08

MEMORANDA

ELECTRICAL AND STARTING SYSTEM

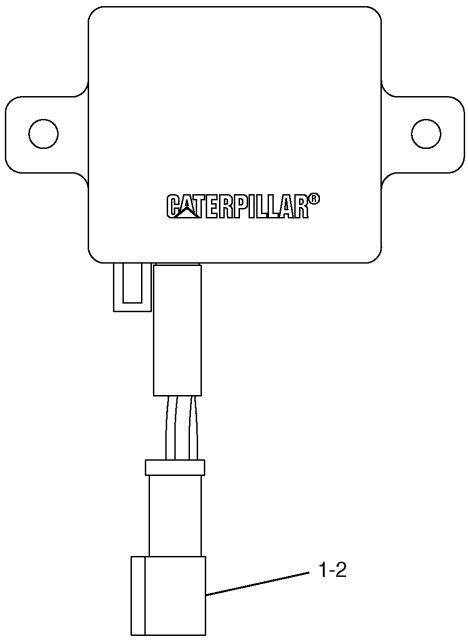

NOTE	No.	PART No.	QTY	PART NAME
	1	8T-8729	4	PIN
	2	102-8804	1	RECEPTACLE KIT

H67073E 01

163-6703 TIMER AS

Part of 204-1911-Page107,204-1913-Page111

Consists of :

			Page
1	163-6625	WIRING GP-CONSOLE.....	126
1	163-6626	WIRING GP-CONSOLE.....	127

H67066E 01

163-6624 WIRING GP-CONSOLE

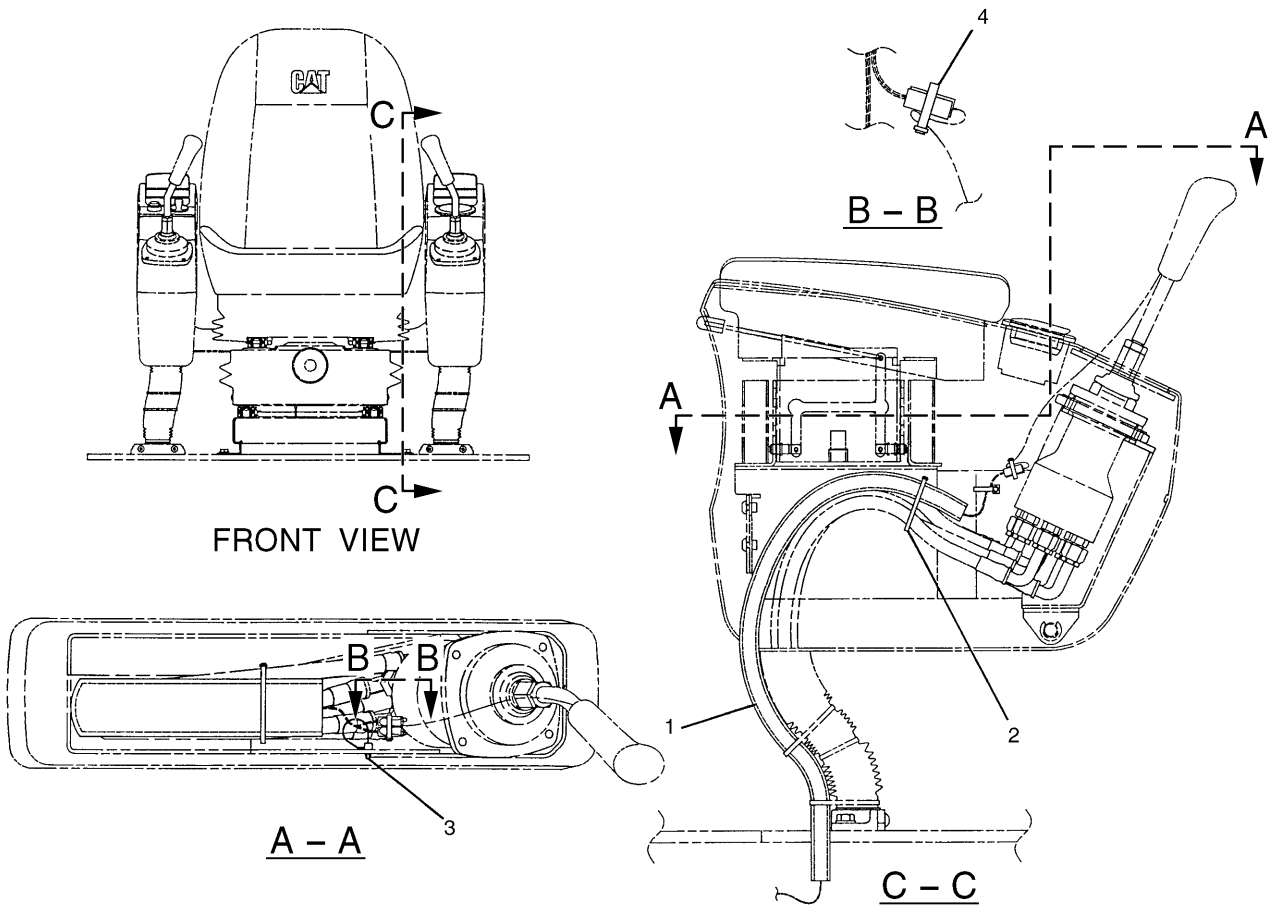

NOTE	No.	PART No.	QTY	PART NAME	NOTE	No.	PART No.	QTY	PART NAME
Y	1	163-6763	1	HARNESS AS					
	2	7K-1181	1	STRAP					
	3	163-6795	1	STRAP					
	4	3S-2093	1	STRAP					

Y—SEE SEPARATE ILLUSTRATION

H68375E 04

163-6625 WIRING GP-CONSOLE

Part of 163-6624-Page125
163-6763-Page129

ELECTRICAL AND STARTING SYSTEM

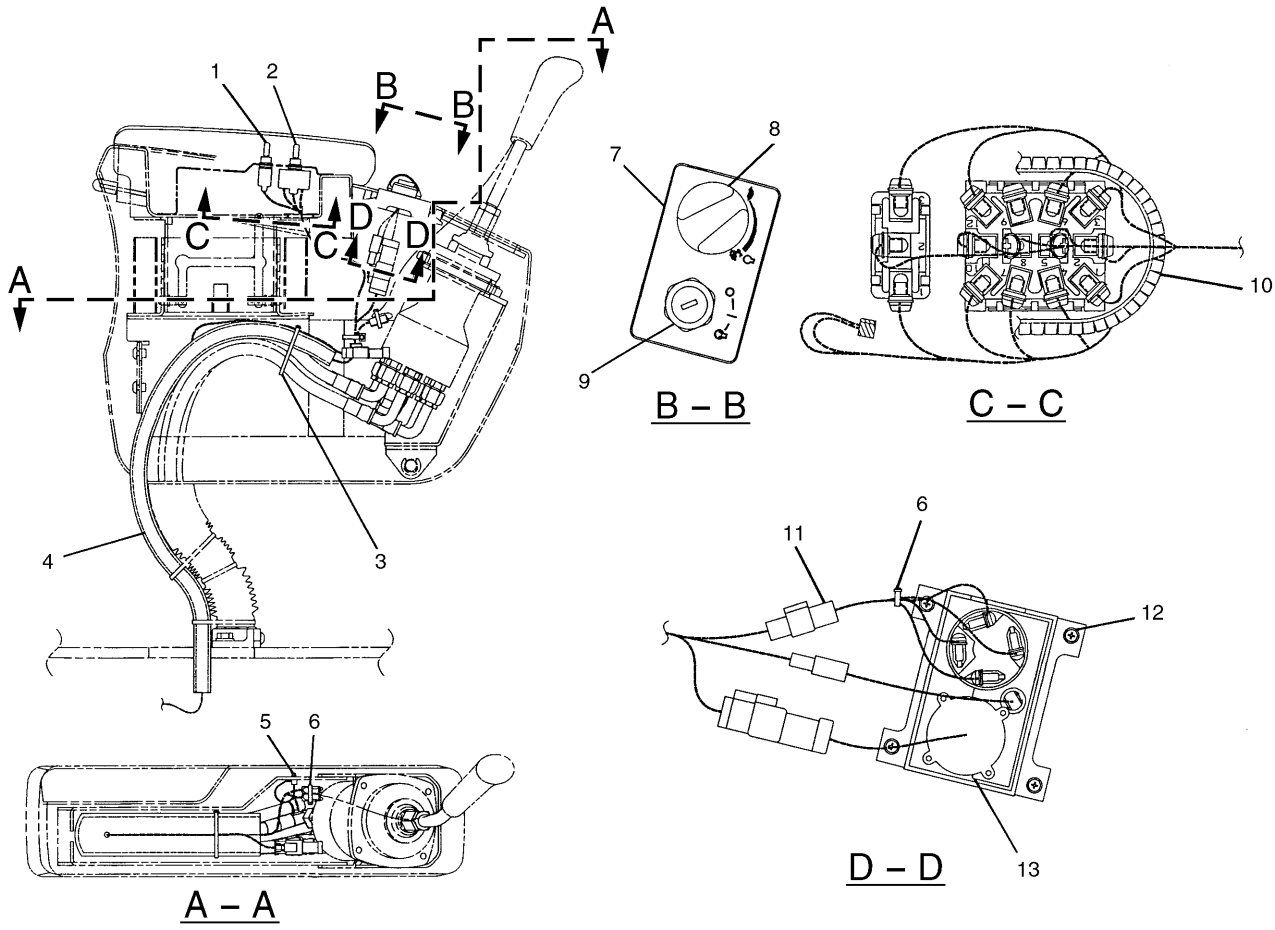

NOTE	No.	PART No.	QTY	PART NAME	NOTE	No.	PART No.	QTY	PART NAME
	1	163-6711	1	SWITCH AS (BACKUP)					
	2	283-3074	1	SWITCH AS (BACKUP)					
	3	7K-1181	1	STRAP					
Y	4	197-4276	1	HARNESS AS					
	5	163-6795	1	STRAP					
	6	3S-2093	2	STRAP					
	7	163-6702	1	PANEL AS					
		170-9324	1	BULB AS					
	8	185-9208	1	KNOB AS					
		185-9209	1	SPRING					
		124-4003	1	PLATE					
Y	9	9G-7641	1	SWITCH GP (ENGINE STARTER)					
D	10	6V-5738		TRIM…(0.13m)					
Y	11	170-6828	1	HARNESS AS					
	12	119-5026	4	SCREW					
Y	13	106-0107	1	SWITCH AS (ACCELERATOR)					

D—ORDER BY THE METER

Y—SEE SEPARATE ILLUSTRATION

H95198E 08

163-6626 WIRING GP-CONSOLE

Right Hand

Part of 163-6624-Page125

197-4276-Page132,170-6828-Page135,9G-7641-Page137,106-0107-Page138

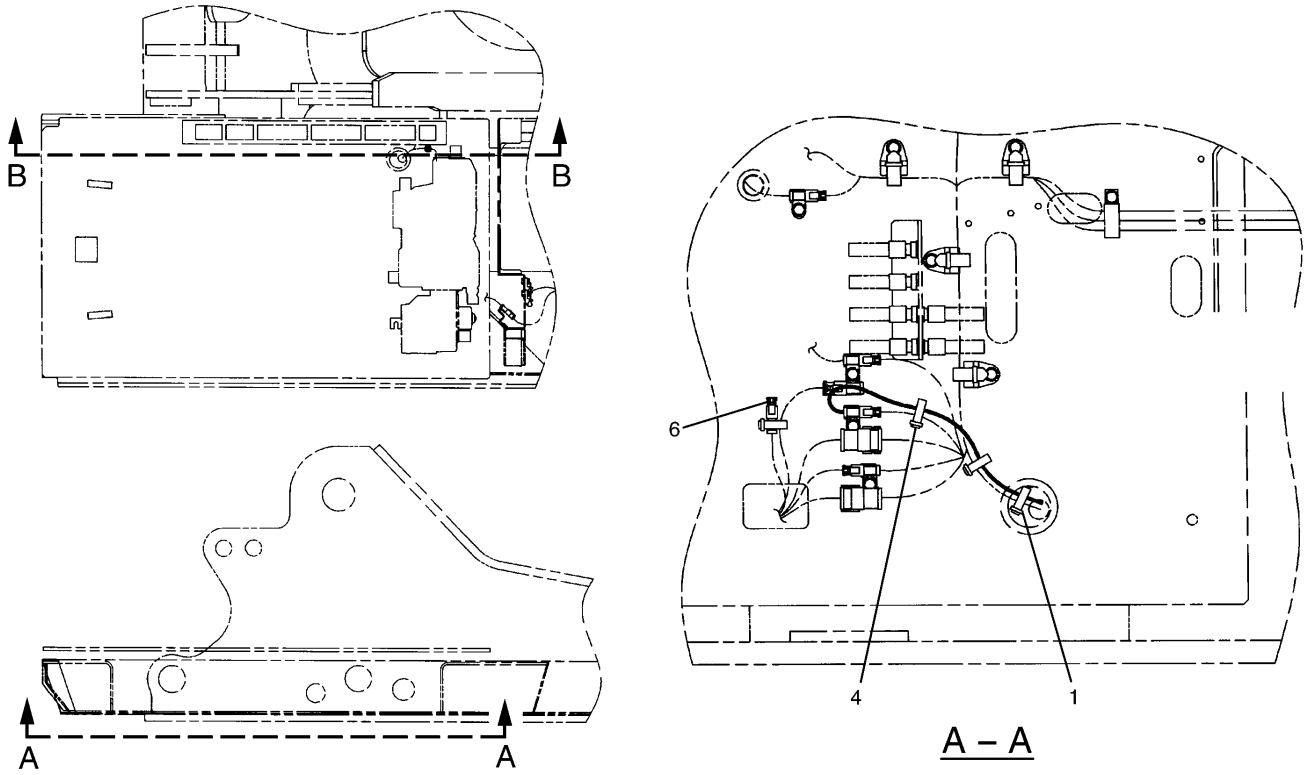

A – A

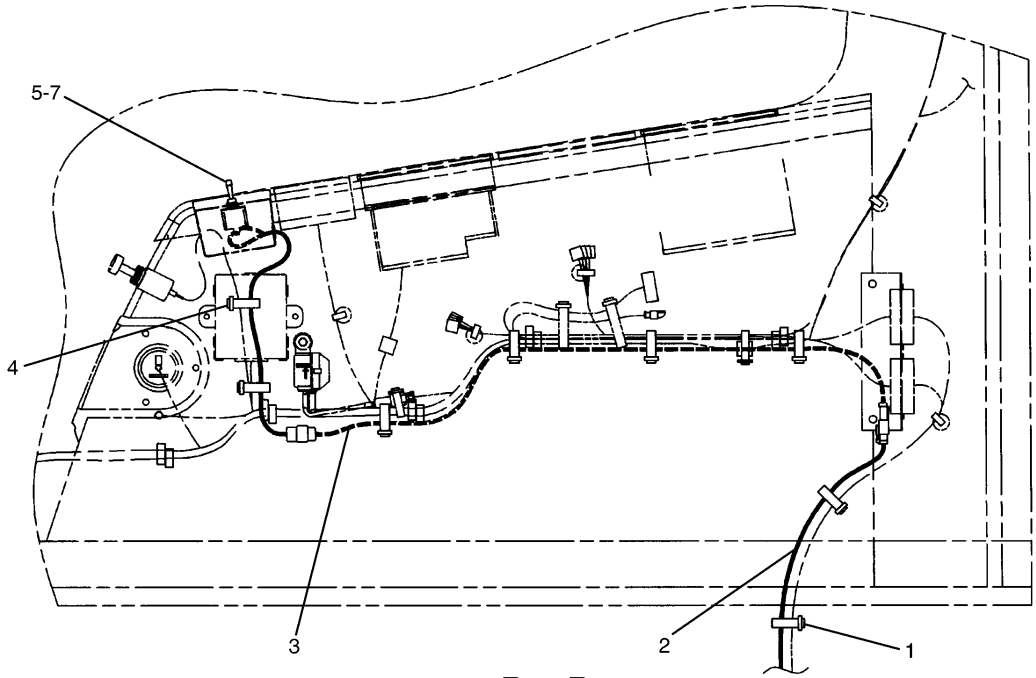

B – B

H86461E 00

204-1917 WIRING GP-QUICK COUPLER
Part of 216-6534-Page358
204-1923-Page128.02,204-1919,204-1920-Page128.03
An Attachment

ELECTRICAL AND STARTING SYSTEM

NOTE	No.	PART No.	QTY	PART NAME	NOTE	No.	PART No.	QTY	PART NAME
	1	7K-1181	4	STRAP					
Y	2	204-1923	1	HARNESS AS					
Y	3	204-1920	1	HARNESS AS					
	4	3S-2093	8	STRAP					
	5	7N-2353	1	SWITCH AS					
	6	186-4574	1	PLUG AS					
		9G-3695	2	PLUG					
Y	7	204-1919	1	HARNESS AS					

Y—SEE SEPARATE ILLUSTRATION

H86461E 00

204-1917 WIRING GP-QUICK COUPLER

Part of 216-6534-Page358
204-1923-Page128.02,204-1919,204-1920-Page128.03
An Attachment

ELECTRICAL AND STARTING SYSTEM



NOTE	No.	PART No.	QTY	PART NAME
	1	3E-3365	1	WEDGE
	2	8T-8729	2	PIN
	3	8T-8730	2	SOCKET
	4	155-2270	1	PLUG KIT
	5	155-2261	1	WEDGE
	6	102-8802	1	RECEPTACLE KIT

H80009E 00

204-1923 HARNESS AS-WIRING
Part of 204-1917-Page128.01
An Attachment

Consists of :

			Page
1	204-1921	HARNESS AS-WIRING.....	128.04
		-OR-	
1	204-1922	HARNESS AS-WIRING.....	128.04

H79988E 00

204-1920 HARNESS AS-WIRING
Part of 204-1917-Page128.01
An Attachment

Consists of :

			Page
1	204-1956	HARNESS AS-WIRING.....	128.05
		-OR-	
1	204-1957	HARNESS AS-WIRING.....	128.05

H79990E 00

204-1919 HARNESS AS-WIRING
Part of 204-1917-Page128.01
An Attachment

ELECTRICAL AND STARTING SYSTEM

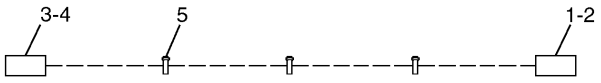

NOTE	No.	PART No.	QTY	PART NAME
	1	186-3735	2	PIN
	2	102-8802	1	RECEPTACLE KIT
	3	7Y-3951	2	TERMINAL
	4	7Y-3952	1	CONNECTOR
	5	3S-2093	3	STRAP

H84028E 00

204-1921 HARNESS AS-WIRING

Part of 204-1920-Page128.03
An Attachment

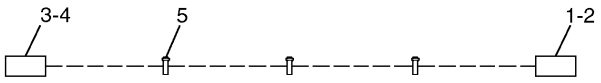

NOTE	No.	PART No.	QTY	PART NAME
	1	186-3735	2	PIN
	2	102-8802	1	RECEPTACLE KIT
	3	7Y-3951	2	TERMINAL
	4	7Y-3952	1	CONNECTOR
	5	3S-2093	3	STRAP

H84029E 00

204-1922 HARNESS AS-WIRING

Part of 204-1920-Page128.03
An Attachment

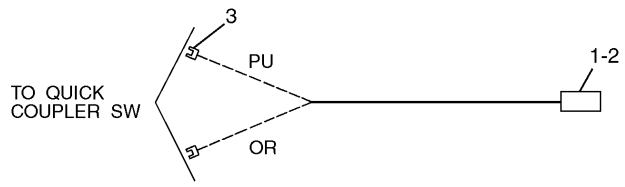

NOTE	No.	PART No.	QTY	PART NAME
	1	7Y-3950	2	TERMINAL
	2	7Y-3953	1	CONNECTOR
	3	5P-2321	2	TERMINAL

H80007E 00

204-1956 HARNESS AS-WIRING

Part of 204-1919-Page128.03
An Attachment

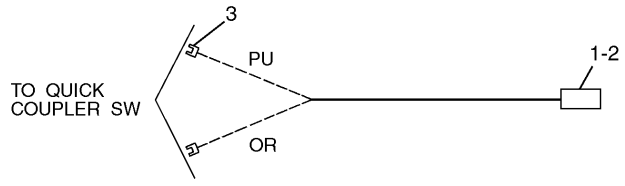

NOTE	No.	PART No.	QTY	PART NAME
	1	7Y-3950	2	TERMINAL
	2	7Y-3953	1	CONNECTOR
	3	5P-2321	2	TERMINAL

H79991E 00

204-1957 HARNESS AS-WIRING

Part of 204-1919-Page128.03
An Attachment

MEMORANDA

Consists of :

			Page
1	163-6764	HARNESS AS-CONSOLE	130
		-OR-	
1	163-6765	HARNESS AS-CONSOLE	131

H79552E 04

163-6763 HARNESS AS-CONSOLE

Part of 163-6625-Page126

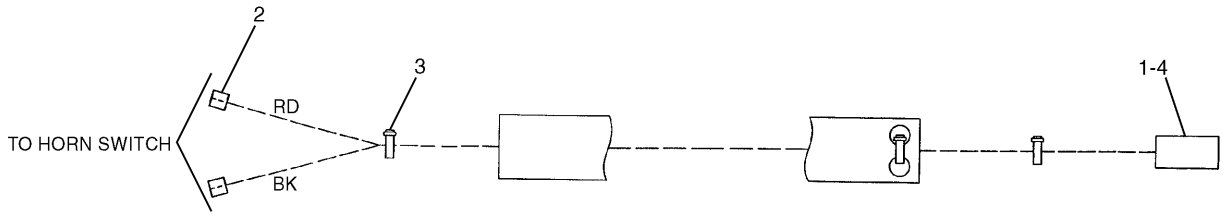

NOTE	No.	PART No.	QTY	PART NAME	NOTE	No.	PART No.	QTY	PART NAME
	1	102-8802	1	RECEPTACLE KIT					
	2	7Y-3963	2	TERMINAL					
		7Y-3965	2	TUBE					
	3	3S-2093	3	STRAP					
	4	186-3735	2	PIN					

H84025E 05

163-6764 HARNESS AS-CONSOLE

Part of 163-6763-Page129

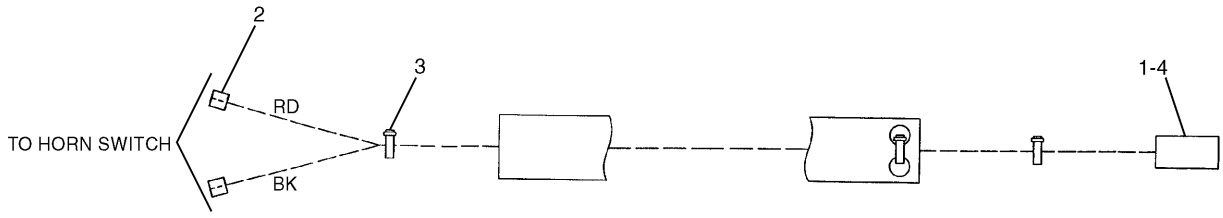

NOTE	No.	PART No.	QTY	PART NAME	NOTE	No.	PART No.	QTY	PART NAME
	1	102-8802	1	RECEPTACLE KIT					
	2	7Y-3963	2	TERMINAL					
		7Y-3965	2	TUBE					
	3	3S-2093	3	STRAP					
	4	186-3735	2	PIN					

H84026E 05

163-6765 HARNESS AS-CONSOLE

Part of 163-6763-Page129

Consists of :

			Page
1	197-4277	HARNESS AS-CONSOLE	133
		-OR-	
1	197-4278	HARNESS AS-CONSOLE	134

H81657E 02

197-4276 HARNESS AS-CONSOLE

Part of 163-6626-Page127

ELECTRICAL AND STARTING SYSTEM

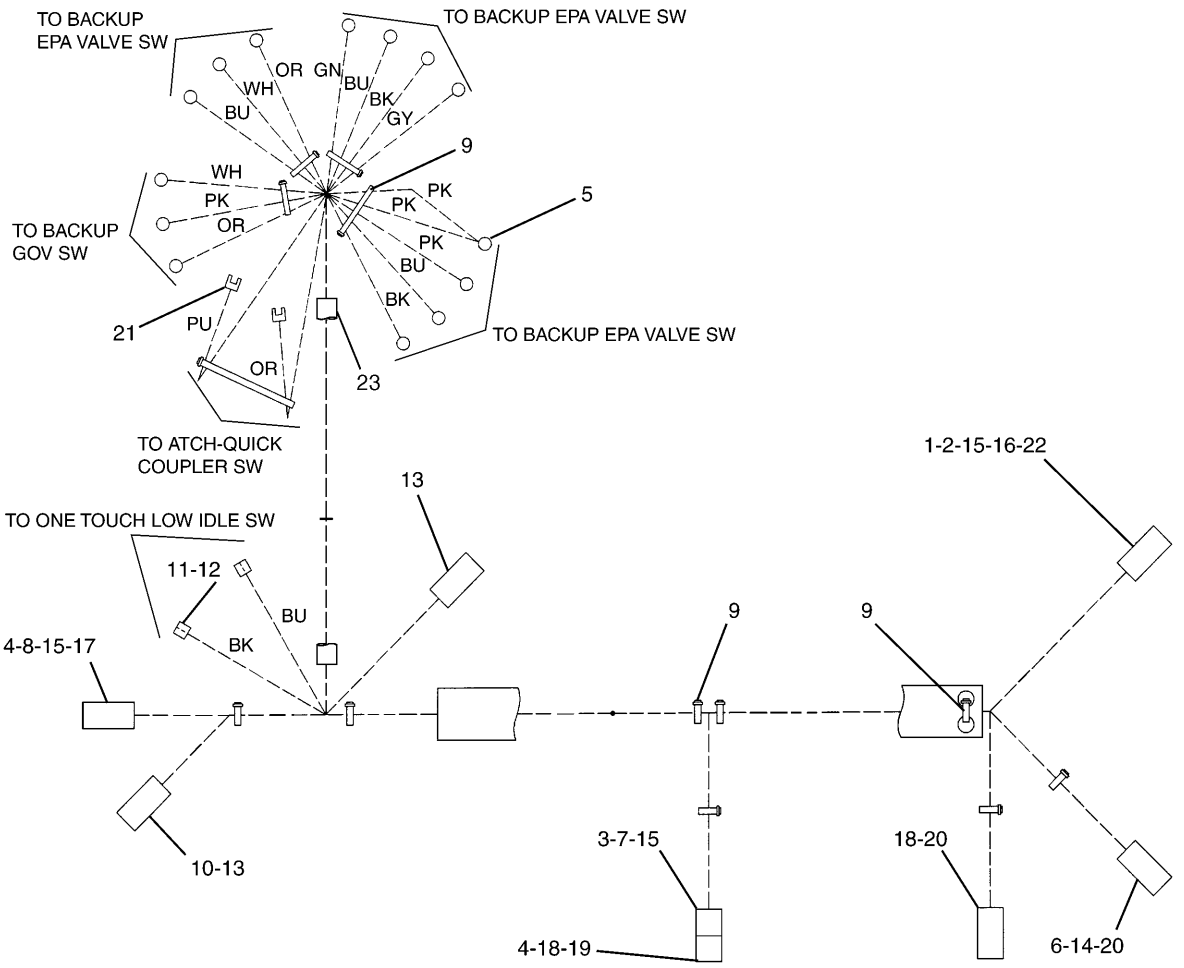

NOTE	No.	PART No.	QTY	PART NAME	NOTE	No.	PART No.	QTY	PART NAME
	1	155-2255	1	PLUG KIT		21	5P-2321	2	TERMINAL
	2	155-2258	1	WEDGE		22	126-1768	10	SOCKET
	3	155-2270	1	PLUG KIT	E	23	8C-5064		CONDUIT…(18cm)
	4	8T-8737	3	PLUG					
	5	2L-8074	14	TERMINAL					
	6	102-8801	1	RECEPTACLE KIT					
	7	155-2261	1	WEDGE					
	8	155-2274	1	PLUG KIT					
	9	3S-2093	13	STRAP					
	10	7Y-3952	1	CONNECTOR					
	11	7Y-3963	2	TERMINAL					
	12	7Y-3965	2	TUBE					
	13	7Y-3951	6	TERMINAL					
	14	9W-0852	4	PIN					
	15	186-3736	8	SOCKET					
	16	9W-0844	1	SOCKET					
	17	155-2263	1	WEDGE					
	18	102-8802	2	RECEPTACLE KIT					
	19	7K-1181	1	STRAP					
	20	186-3735	10	PIN					

E—ORDER BY THE CENTIMETER

H83616E 02

197-4277 HARNESS AS-CONSOLE

Part of 197-4276-Page132

ELECTRICAL AND STARTING SYSTEM

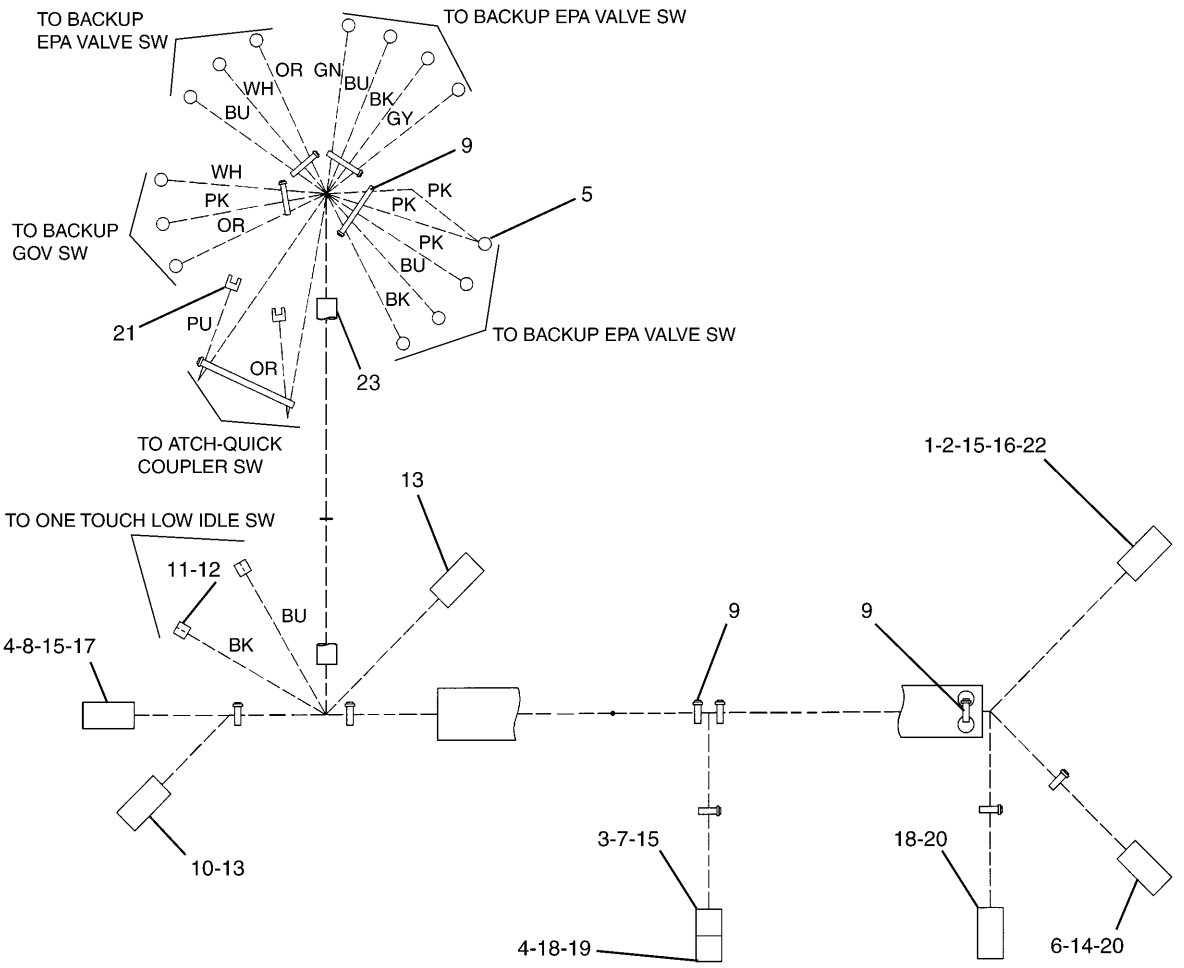

NOTE	No.	PART No.	QTY	PART NAME	NOTE	No.	PART No.	QTY	PART NAME
	1	155-2255	1	PLUG KIT		21	5P-2321	2	TERMINAL
	2	155-2258	1	WEDGE		22	126-1768	10	SOCKET
	3	155-2270	1	PLUG KIT	E	23	8C-5064		CONDUIT…(18cm)
	4	8T-8737	3	PLUG					
	5	2L-8074	14	TERMINAL					
	6	102-8801	1	RECEPTACLE KIT					
	7	155-2261	1	WEDGE					
	8	155-2274	1	PLUG KIT					
	9	3S-2093	13	STRAP					
	10	7Y-3952	1	CONNECTOR					
	11	7Y-3963	2	TERMINAL					
	12	7Y-3965	2	TUBE					
	13	7Y-3951	6	TERMINAL					
	14	9W-0852	4	PIN					
	15	186-3736	8	SOCKET					
	16	9W-0844	1	SOCKET					
	17	155-2263	1	WEDGE					
	18	102-8802	2	RECEPTACLE KIT					
	19	7K-1181	1	STRAP					
	20	186-3735	10	PIN					

E—ORDER BY THE CENTIMETER

H83617E 02

197-4278 HARNESS AS-CONSOLE

Part of 197-4276-Page132

Consists of :

			Page
1	170-6829	HARNESS AS-CONSOLE	136
		-OR-	
1	170-6830	HARNESS AS-CONSOLE	136

H67108E 01

170-6828 HARNESS AS-CONSOLE

Part of 163-6626-Page127

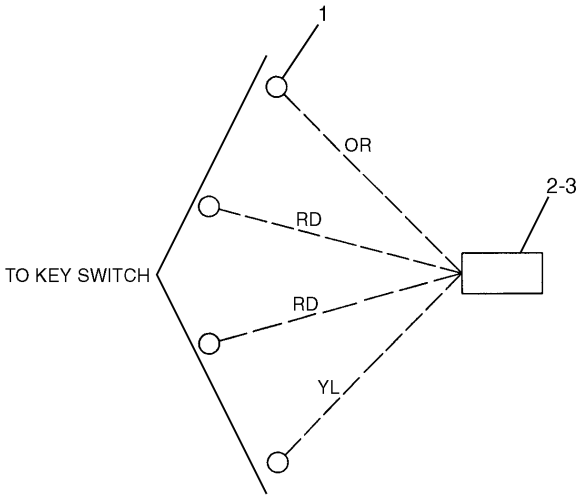

NOTE	No.	PART No.	QTY	PART NAME
	1	2L-8075	4	TERMINAL
	2	120-7724	1	CONNECTOR
	3	7Y-3950	4	TERMINAL

H67109E 01

170-6829 HARNESS AS-CONSOLE

Part of 170-6828-Page135

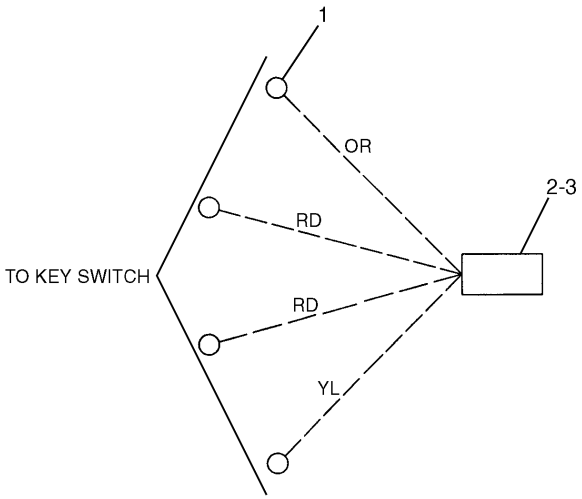

NOTE	No.	PART No.	QTY	PART NAME
	1	2L-8075	4	TERMINAL
	2	120-7724	1	CONNECTOR
	3	7Y-3950	4	TERMINAL

H67110E 01

170-6830 HARNESS AS-CONSOLE

Part of 170-6828-Page135

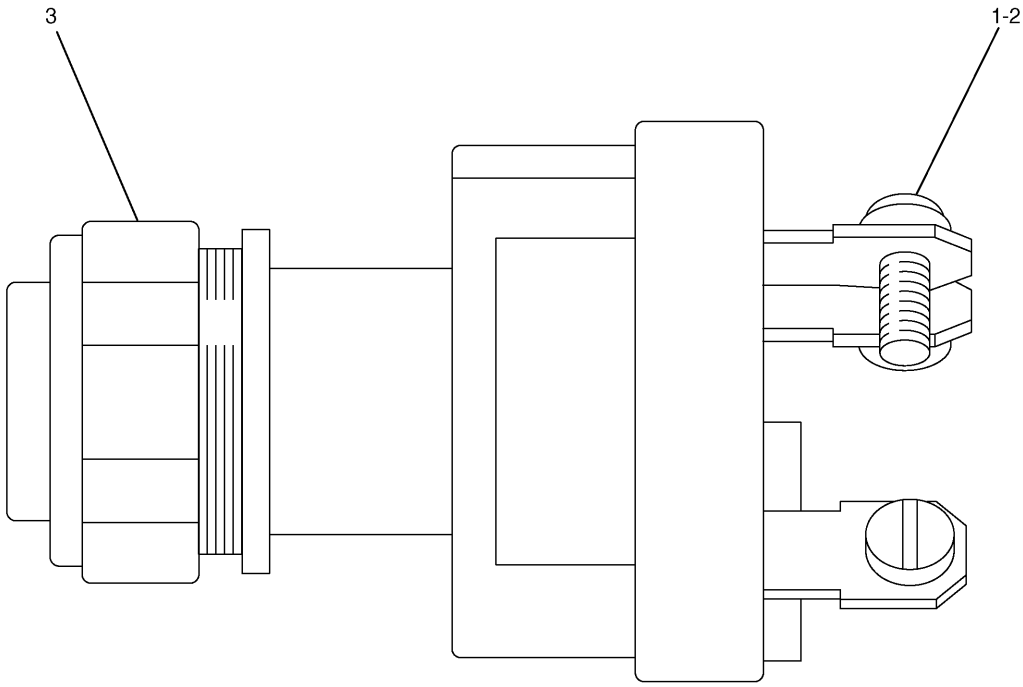

NOTE	No.	PART No.	QTY	PART NAME	NOTE	No.	PART No.	QTY	PART NAME
	1	6V-8362	4	SCREW					
	2	9B-7233	4	LOCKWASHER					
	3	7T-6799	1	NUT					

H67042E 06

9G-7641 SWITCH GP-START

Part of 163-6626-Page127

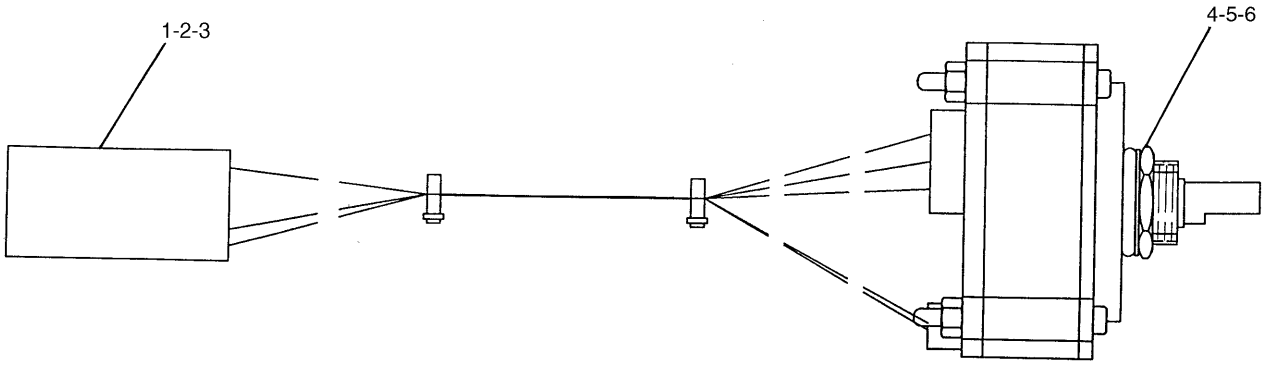

NOTE	No.	PART No.	QTY	PART NAME	NOTE	No.	PART No.	QTY	PART NAME
	1	8T-8737	1	PLUG					
	2	9X-3401	5	PIN					
	3	102-8805	1	RECEPTACLE KIT					
	4	106-0210	1	SEAL					
	5	7Y-5458	1	NUT					
	6	7Y-5464	1	WASHER					

H74274E 02

106-0107 SWITCH AS-ROTARY
Part of 163-6626-Page127

MEMORANDA

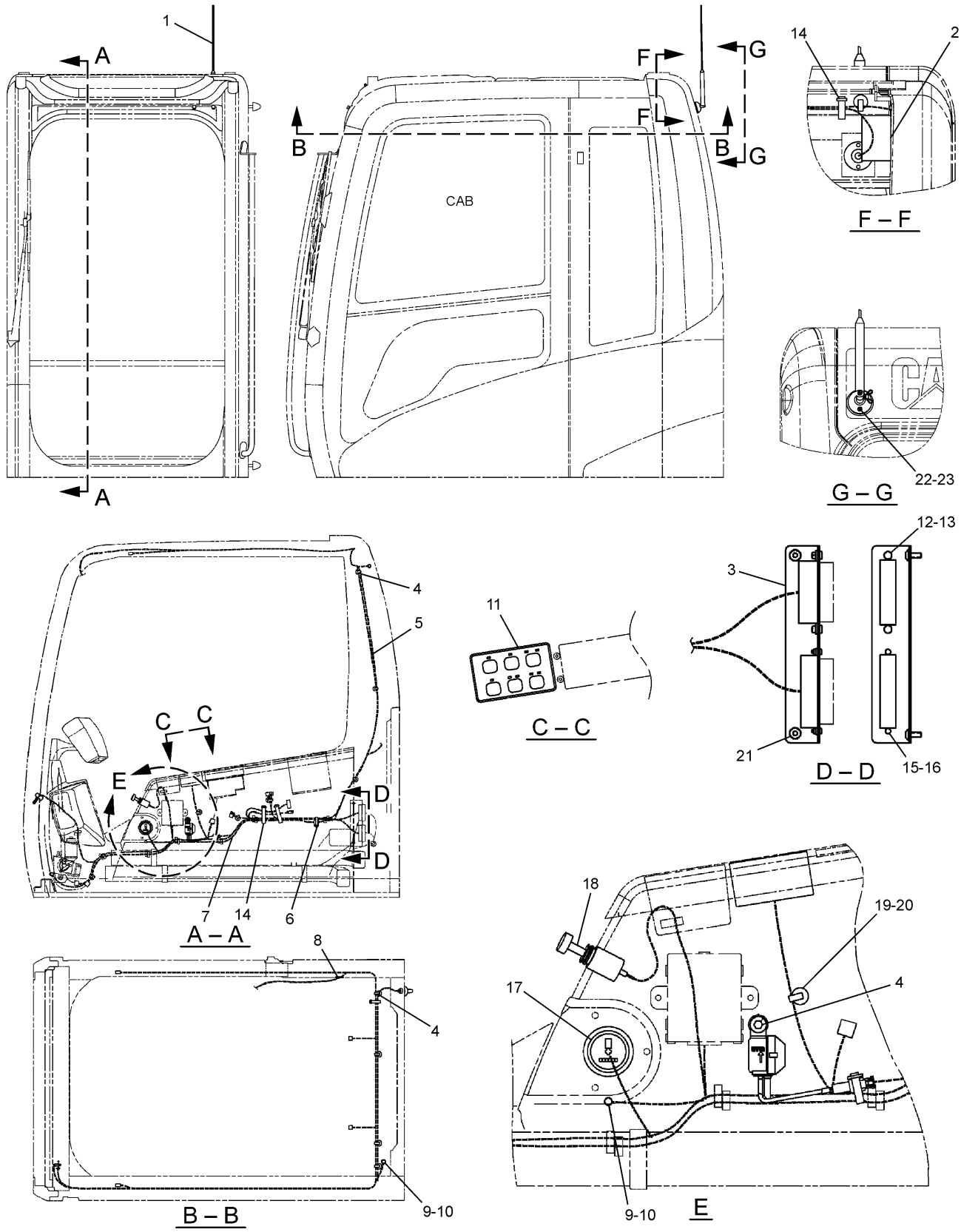

H88757E 10

163-6623 WIRING GP-CAB

Part of 189-3442,189-3446-Page516,293-1308,293-1312-Page516.01,189-3445,293-1311-Page517
132-1829-Page142,163-6787-Page143,163-6810-Page148

ELECTRICAL AND STARTING SYSTEM

NOTE	No.	PART No.	QTY	PART NAME	NOTE	No.	PART No.	QTY	PART NAME
	1	259-4883	1	ANTENNA AS					
		259-5081	1	ROD					
		259-5082	1	CABLE AS					
	2	251-0637	1	INSULATION					
	3	167-7023	1	BRACKET					
	4	163-6795	12	STRAP					
Y	5	163-6787	1	HARNESS AS					
	6	7K-1181	2	STRAP					
Y	7	163-6810	1	HARNESS AS					
E	8	101-2846		GUARD…(9.5cm)					
	9	8T-6693	2	SCREW					
	10	8T-0328	2	WASHER					
	11	163-6701	1	PANEL AS					
	12	5C-8312	2	NUT					
	13	8C-7581	2	SCREW					
	14	3S-2093	3	STRAP					
	15	6V-9669	2	SCREW					
	16	3C-6969	2	NUT					
	17	9W-1494	1	METER KIT					
	18	9W-0335	1	LIGHTER AS					
Y	19	132-1829	1	ALARM GP					
	20	9X-2042	1	SCREW					
	21	9X-2044	2	SCREW					
	22	6V-9672	2	SCREW					
	23	096-6166	2	WASHER					

E—ORDER BY THE CENTIMETER

Y—SEE SEPARATE ILLUSTRATION

H88757E 10

163-6623 WIRING GP-CAB

Part of 189-3442,189-3446-Page516,293-1308,293-1312-Page516.01,189-3445,293-1311-Page517
132-1829-Page142,163-6787-Page143,163-6810-Page148

ELECTRICAL AND STARTING SYSTEM

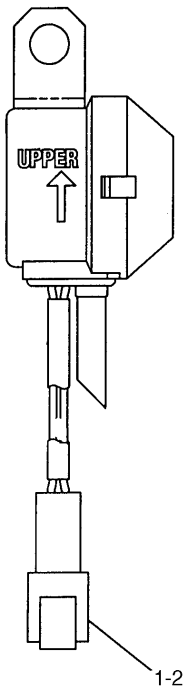

NOTE	No.	PART No.	QTY	PART NAME
	1	102-8802	1	RECEPTACLE KIT
	2	8T-8729	2	PIN

H84265E 01

132-1829 ALARM GP

Part of 163-6623-Page141

Consists of :

			Page
1	163-6788	HARNESS AS-WIRING.....	144
		-OR-	
1	163-6789	HARNESS AS-WIRING.....	146

H69869E 03

163-6787 HARNESS AS-WIRING

Part of 163-6623-Page141

ELECTRICAL AND STARTING SYSTEM

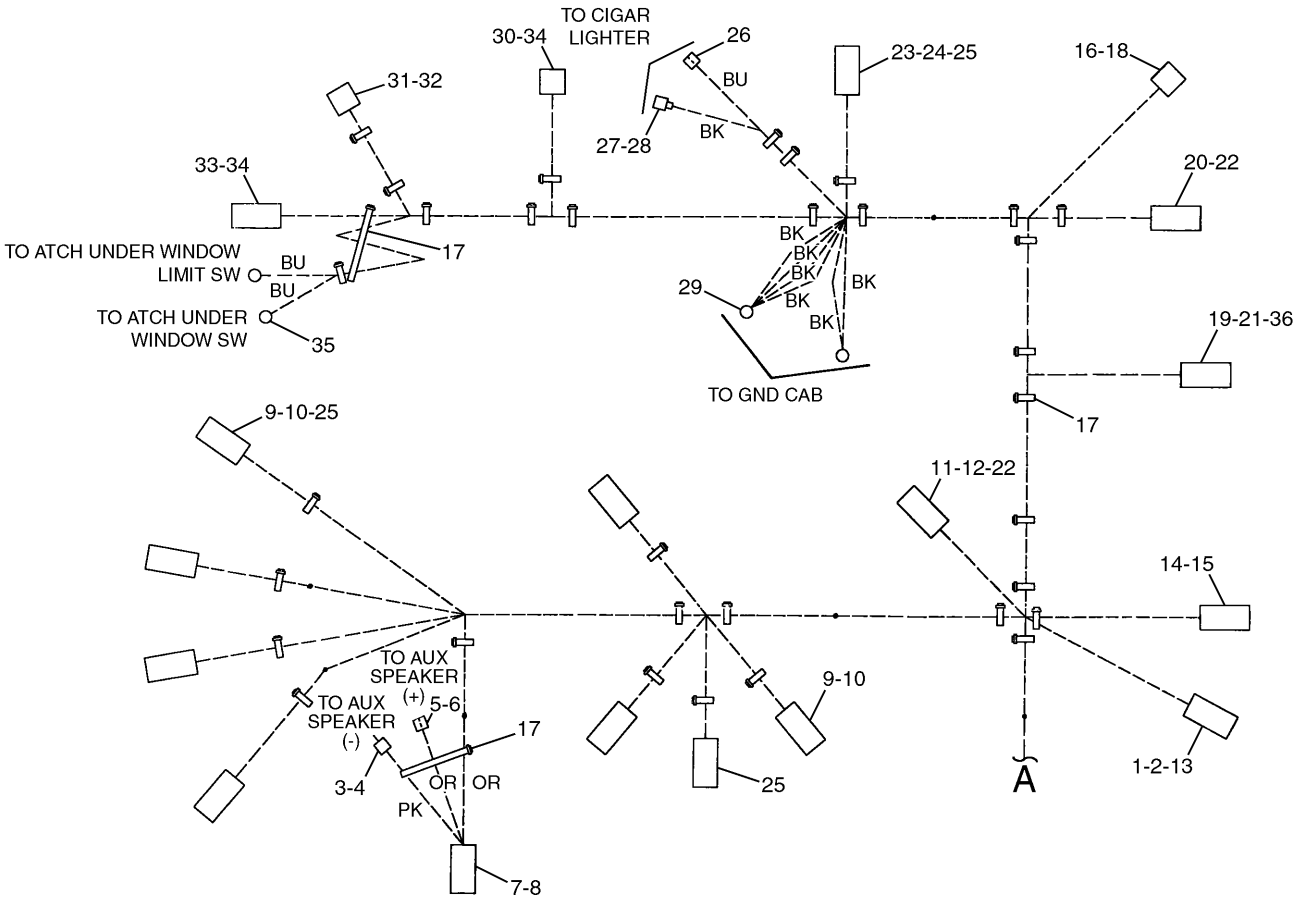

NOTE	No.	PART No.	QTY	PART NAME	NOTE	No.	PART No.	QTY	PART NAME
	1	163-6801	9	TERMINAL		21	186-3736	2	SOCKET
	2	170-6827	17	TERMINAL		22	125-4785	17	TERMINAL
	3	7Y-3962	1	TERMINAL		23	125-4840	1	WEDGE
	4	7Y-3964	1	TUBE		24	111-4816	1	CONNECTOR
	5	7Y-3963	1	TERMINAL		25	102-7965	46	TERMINAL
	6	7Y-3965	1	TUBE		26	5P-6271	1	CONNECTOR AS
	7	153-2541	1	CONNECTOR		27	153-2631	1	TERMINAL
	8	153-2540	10	TERMINAL		28	153-2602	1	CONNECTOR
	9	167-3487	8	WEDGE		29	2L-8066	2	TERMINAL
	10	163-6803	8	CONNECTOR		30	7Y-3952	1	CONNECTOR
	11	163-6804	1	CONNECTOR		31	121-1158	1	CONNECTOR
	12	163-6790	3	TERMINAL		32	121-1159	2	TERMINAL
	13	163-6800	1	CONNECTOR		33	7Y-3958	1	CONNECTOR
	14	121-1173	16	TERMINAL		34	7Y-3951	7	TERMINAL
	15	163-6799	1	CONNECTOR		35	2L-8076	2	TERMINAL
	16	121-1157	2	TERMINAL		36	155-2261	1	WEDGE
	17	3S-2093	35	STRAP					
	18	121-1156	1	CONNECTOR					
	19	155-2270	1	PLUG KIT					
	20	138-5184	1	CONNECTOR					

H84020E 06

163-6788 HARNESS AS-WIRING (1/2)

Part of 163-6787-Page143

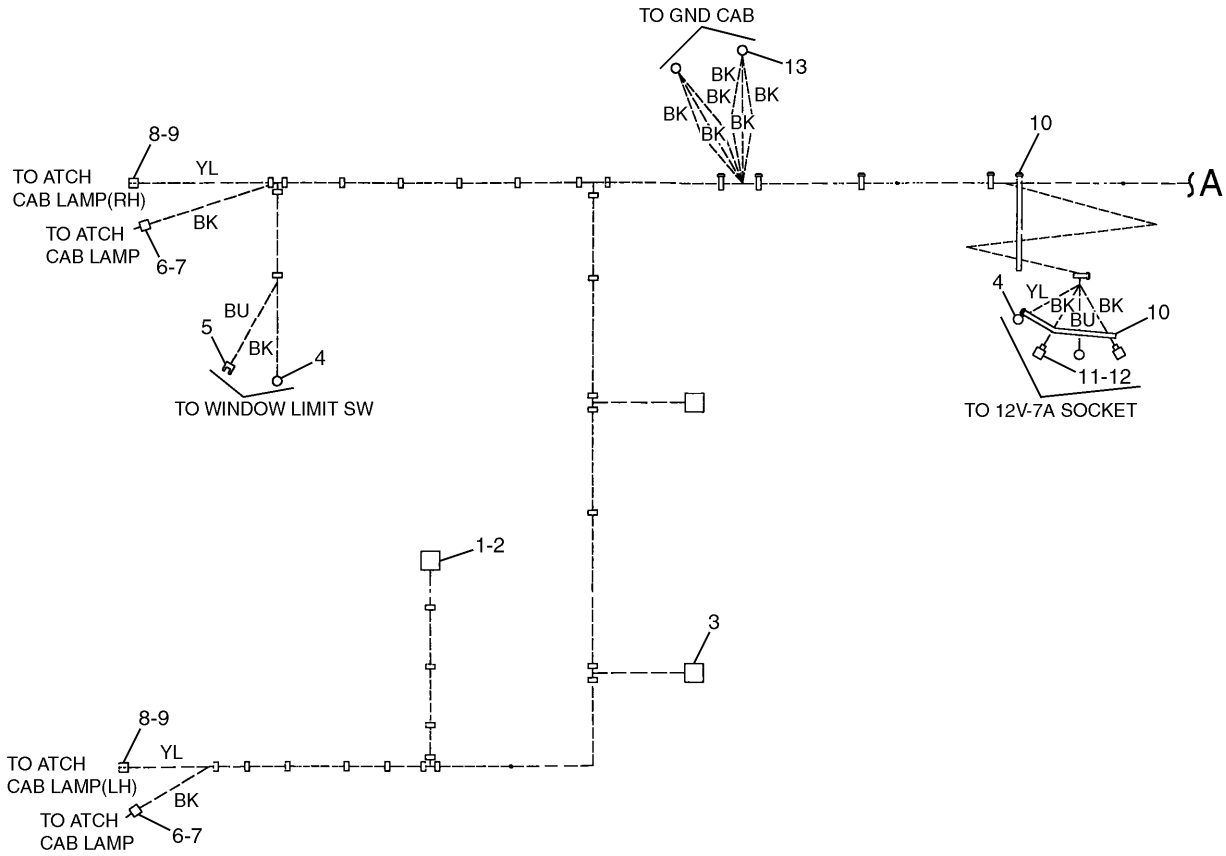

NOTE	No.	PART No.	QTY	PART NAME	NOTE	No.	PART No.	QTY	PART NAME
	1	167-3631	2	TERMINAL					
	2	167-3630	1	CONNECTOR					
	3	7Y-3950	4	TERMINAL					
	4	2L-8075	3	TERMINAL					
	5	5P-2321	1	TERMINAL					
	6	7Y-3962	2	TERMINAL					
	7	7Y-3964	2	TUBE					
	8	7Y-3963	2	TERMINAL					
	9	7Y-3965	2	TUBE					
	10	3S-2093	7	STRAP					
	11	153-2631	2	TERMINAL					
	12	153-2602	2	CONNECTOR					
	13	2L-8066	2	TERMINAL					

H84021E 06

163-6788 HARNESS AS-WIRING (2/2)

Part of 163-6787-Page143

ELECTRICAL AND STARTING SYSTEM

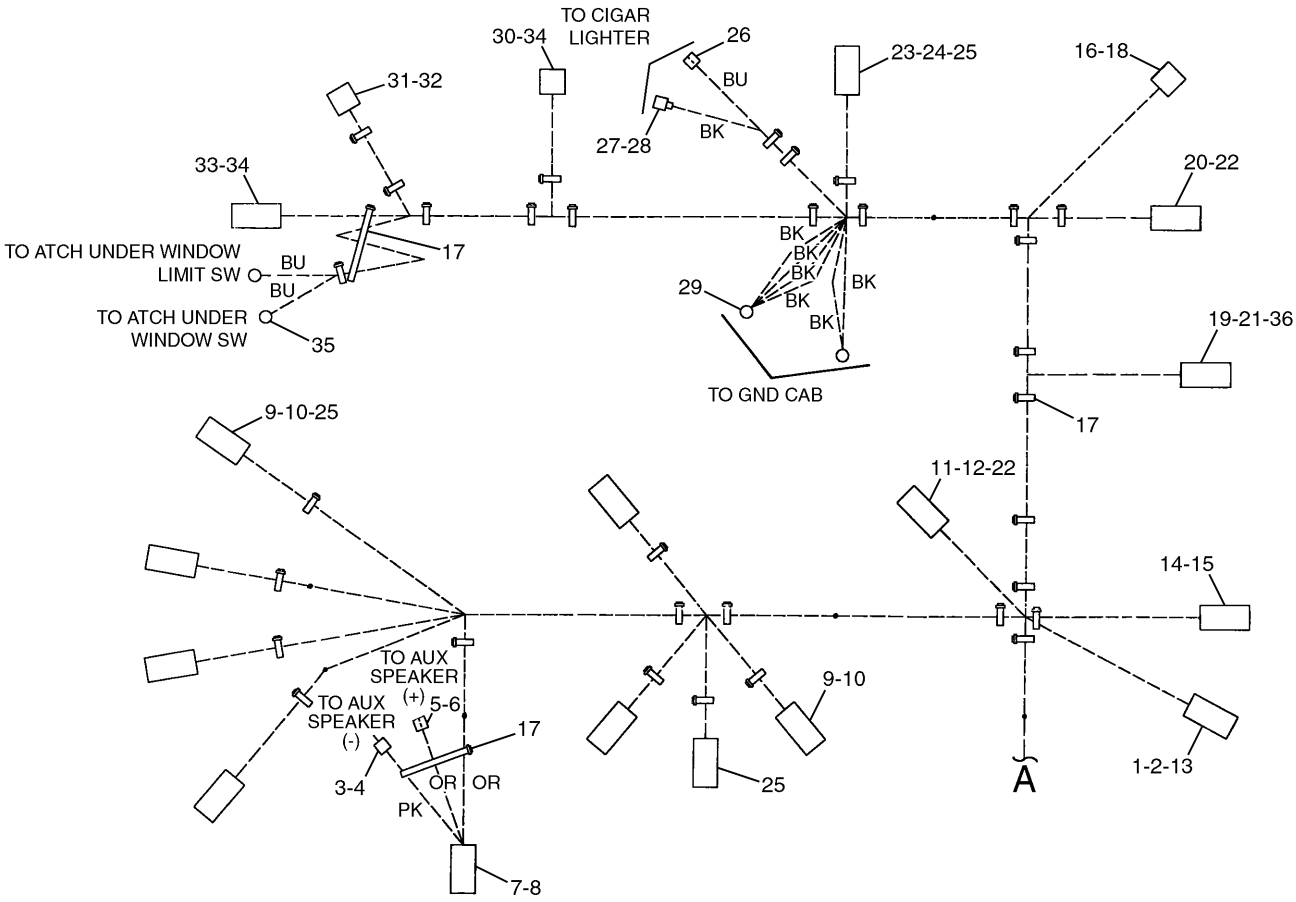

NOTE	No.	PART No.	QTY	PART NAME	NOTE	No.	PART No.	QTY	PART NAME
	1	163-6801	9	TERMINAL		21	186-3736	2	SOCKET
	2	170-6827	17	TERMINAL		22	125-4785	17	TERMINAL
	3	7Y-3962	1	TERMINAL		23	125-4840	1	WEDGE
	4	7Y-3964	1	TUBE		24	111-4816	1	CONNECTOR
	5	7Y-3963	1	TERMINAL		25	102-7965	46	TERMINAL
	6	7Y-3965	1	TUBE		26	5P-6271	1	CONNECTOR AS
	7	153-2541	1	CONNECTOR		27	153-2631	1	TERMINAL
	8	153-2540	10	TERMINAL		28	153-2602	1	CONNECTOR
	9	167-3487	8	WEDGE		29	2L-8066	2	TERMINAL
	10	163-6803	8	CONNECTOR		30	7Y-3952	1	CONNECTOR
	11	163-6804	1	CONNECTOR		31	121-1158	1	CONNECTOR
	12	163-6790	3	TERMINAL		32	121-1159	2	TERMINAL
	13	163-6800	1	CONNECTOR		33	7Y-3958	1	CONNECTOR
	14	121-1173	16	TERMINAL		34	7Y-3951	7	TERMINAL
	15	163-6799	1	CONNECTOR		35	2L-8076	2	TERMINAL
	16	121-1157	2	TERMINAL		36	155-2261	1	WEDGE
	17	3S-2093	35	STRAP					
	18	121-1156	1	CONNECTOR					
	19	155-2270	1	PLUG KIT					
	20	138-5184	1	CONNECTOR					

H84022E 06

163-6789 HARNESS AS-WIRING (1/2)

Part of 163-6787-Page143

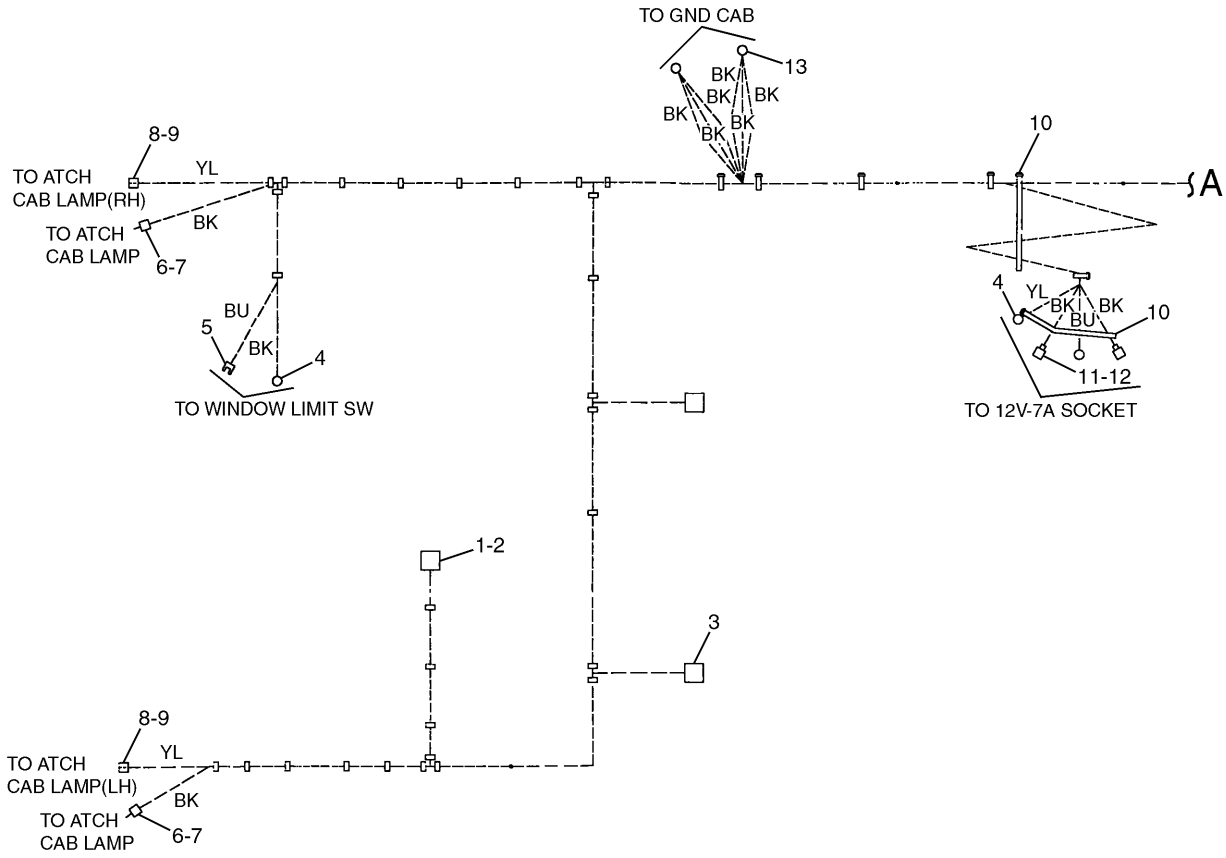

NOTE	No.	PART No.	QTY	PART NAME	NOTE	No.	PART No.	QTY	PART NAME
	1	167-3631	2	TERMINAL					
	2	167-3630	1	CONNECTOR					
	3	7Y-3950	4	TERMINAL					
	4	2L-8075	3	TERMINAL					
	5	5P-2321	1	TERMINAL					
	6	7Y-3962	2	TERMINAL					
	7	7Y-3964	2	TUBE					
	8	7Y-3963	2	TERMINAL					
	9	7Y-3965	2	TUBE					
	10	3S-2093	7	STRAP					
	11	153-2631	2	TERMINAL					
	12	153-2602	2	CONNECTOR					
	13	2L-8066	2	TERMINAL					

H84023E 06

163-6789 HARNESS AS-WIRING (2/2)

Part of 163-6787-Page143

Consists of :

			Page
1	163-6807	HARNESS AS-WIRING.....	149
		-OR-	
1	163-6811	HARNESS AS-WIRING.....	149

H67103E 01

163-6810 HARNESS AS-WIRING

Part of 163-6623-Page141

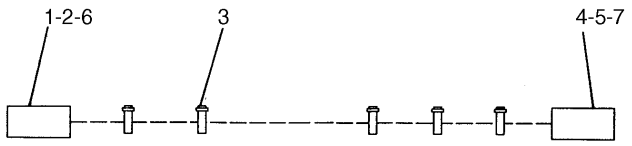

NOTE	No.	PART No.	QTY	PART NAME
	1	125-4785	4	TERMINAL
	2	163-6804	1	CONNECTOR
	3	3S-2093	5	STRAP
	4	163-6805	1	CONNECTOR
	5	163-6801	3	TERMINAL
	6	163-6790	2	TERMINAL
	7	170-6827	3	TERMINAL

H67102E 02

163-6807 HARNESS AS-WIRING

Part of 163-6810-Page148

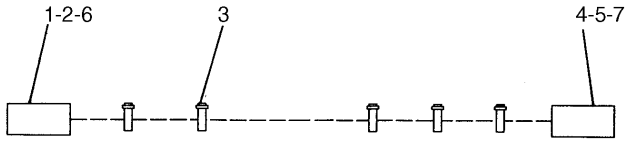

NOTE	No.	PART No.	QTY	PART NAME
	1	125-4785	4	TERMINAL
	2	163-6804	1	CONNECTOR
	3	3S-2093	5	STRAP
	4	163-6805	1	CONNECTOR
	5	163-6801	3	TERMINAL
	6	163-6790	2	TERMINAL
	7	170-6827	3	TERMINAL

H67104E 02

163-6811 HARNESS AS-WIRING

Part of 163-6810-Page148

MEMORANDA

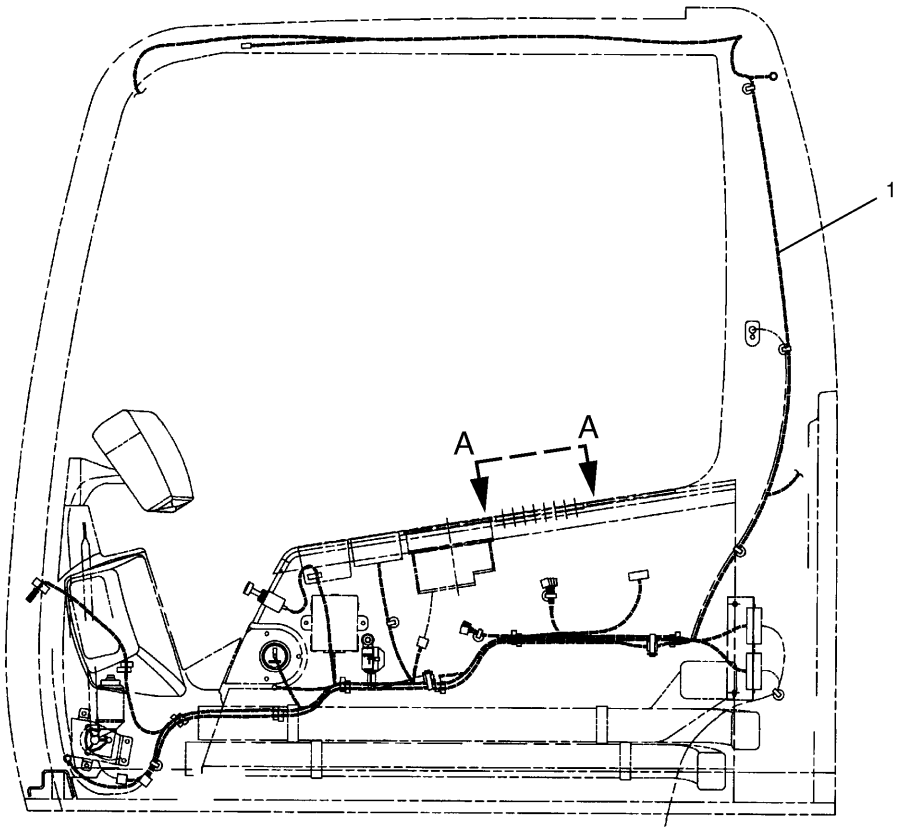

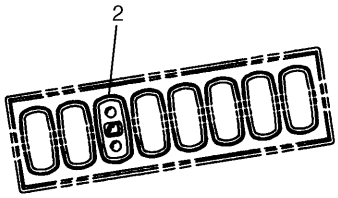

A – A

NOTE	No.	PART No.	QTY	PART NAME	NOTE	No.	PART No.	QTY	PART NAME
Y	1	170-6813	1	HARNESS AS					
	2	163-6720	1	SWITCH AS					
		167-3542	1	CONNECTOR					
		167-3543	5	TERMINAL					

Y—SEE SEPARATE ILLUSTRATION

H70402E 04

167-3622 WIRING GP

Part of 189-3445,293-1311-Page517,156-6582-Page549
170-6813-Page152
An Attachment

ELECTRICAL AND STARTING SYSTEM

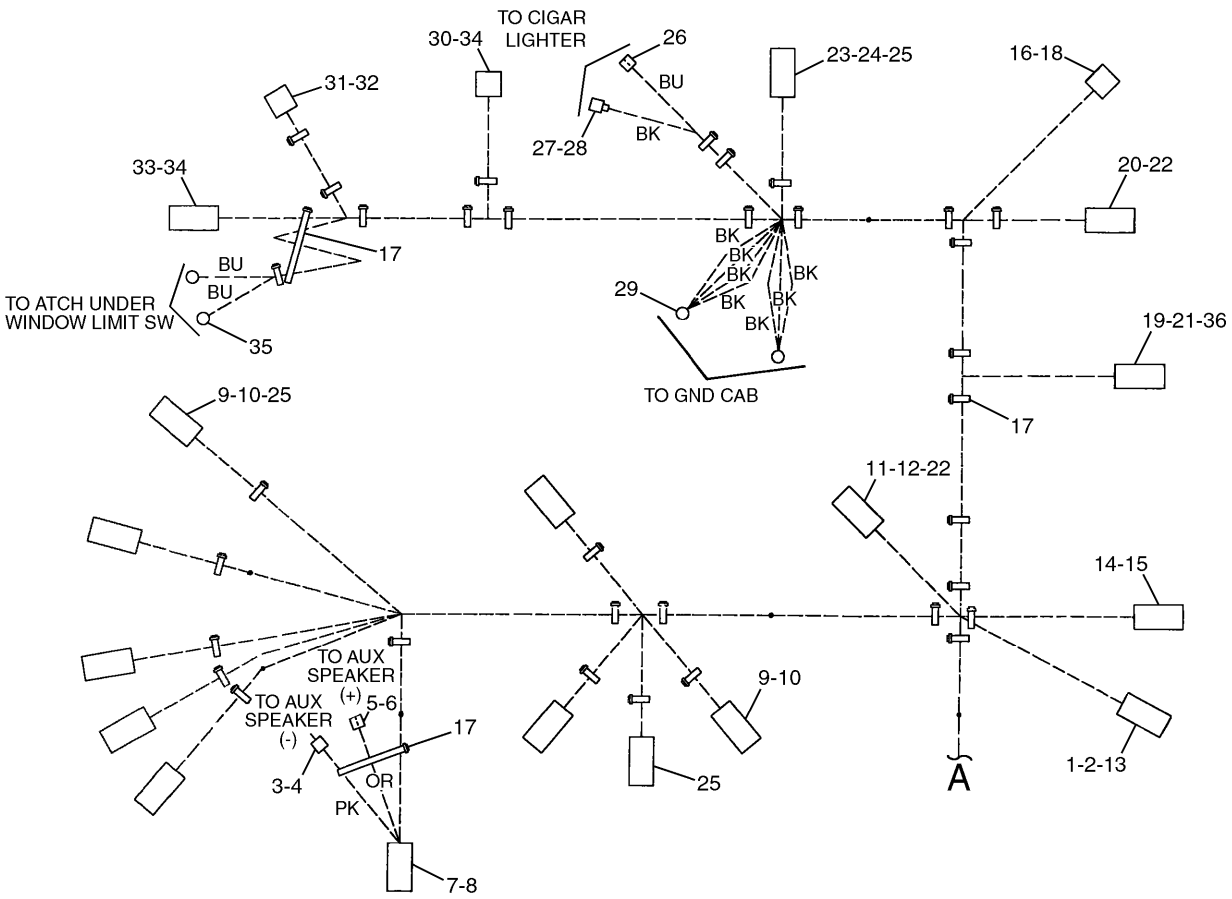

NOTE	No.	PART No.	QTY	PART NAME	NOTE	No.	PART No.	QTY	PART NAME
	1	163-6801	9	TERMINAL		21	186-3736	2	SOCKET
	2	170-6827	17	TERMINAL		22	125-4785	17	TERMINAL
	3	7Y-3962	1	TERMINAL		23	125-4840	1	WEDGE
	4	7Y-3964	1	TUBE		24	111-4816	1	CONNECTOR
	5	7Y-3963	1	TERMINAL		25	102-7965	52	TERMINAL
	6	7Y-3965	1	TUBE		26	5P-6271	1	CONNECTOR AS
	7	153-2541	1	CONNECTOR		27	153-2631	1	TERMINAL
	8	153-2540	10	TERMINAL		28	153-2602	1	CONNECTOR
	9	167-3487	9	WEDGE		29	2L-8066	2	TERMINAL
	10	163-6803	9	CONNECTOR		30	7Y-3952	1	CONNECTOR
	11	163-6804	1	CONNECTOR		31	121-1158	1	CONNECTOR
	12	163-6790	3	TERMINAL		32	121-1159	2	TERMINAL
	13	163-6800	1	CONNECTOR		33	7Y-3958	1	CONNECTOR
	14	121-1173	18	TERMINAL		34	7Y-3951	7	TERMINAL
	15	163-6799	1	CONNECTOR		35	2L-8076	2	TERMINAL
	16	121-1157	2	TERMINAL		36	155-2261	1	WEDGE
	17	3S-2093	36	STRAP					
	18	121-1156	1	CONNECTOR					
	19	155-2270	1	PLUG KIT					
	20	138-5184	1	CONNECTOR					

H71847E 04

170-6813 HARNESS AS-WIRING (1/2)

Part of 167-3622-Page151
An Attachment

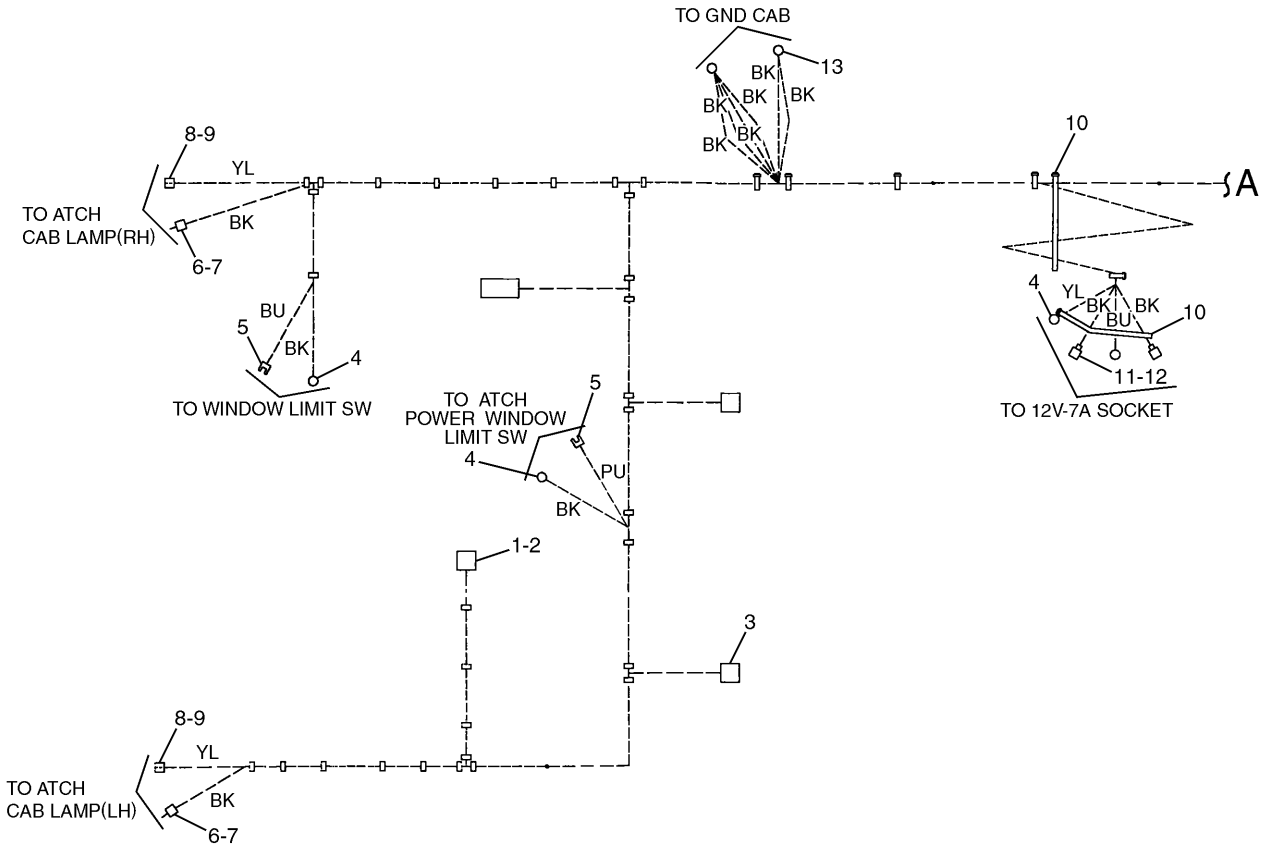

NOTE	No.	PART No.	QTY	PART NAME	NOTE	No.	PART No.	QTY	PART NAME
	1	167-3631	2	TERMINAL					
	2	167-3630	1	CONNECTOR					
	3	7Y-3950	4	TERMINAL					
	4	2L-8075	4	TERMINAL					
	5	5P-2321	2	TERMINAL					
	6	7Y-3962	2	TERMINAL					
	7	7Y-3964	2	TUBE					
	8	7Y-3963	2	TERMINAL					
	9	7Y-3965	2	TUBE					
	10	3S-2093	7	STRAP					
	11	153-2631	2	TERMINAL					
	12	153-2602	2	CONNECTOR					
	13	2L-8066	2	TERMINAL					

H71848E 04

170-6813 HARNESS AS-WIRING (2/2)

Part of 167-3622-Page151
An Attachment

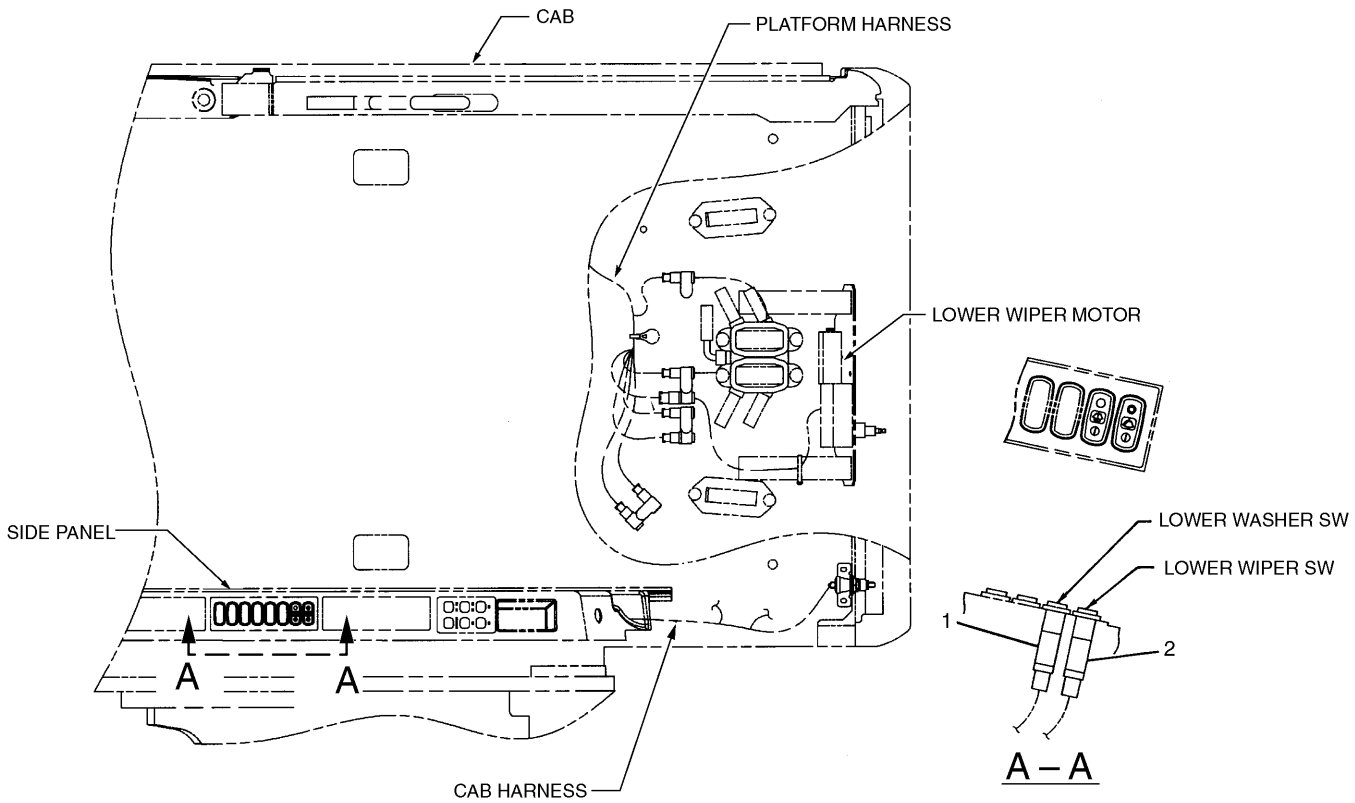

NOTE	No.	PART No.	QTY	PART NAME	NOTE	No.	PART No.	QTY	PART NAME
	1	163-6719	1	SWITCH AS					
		167-3542	1	CONNECTOR					
		167-3543	4	TERMINAL					
	2	163-6718	1	SWITCH AS					
		167-3542	1	CONNECTOR					
		167-3543	5	TERMINAL					

H68379E 02

163-6632 WIRING GP-LOWER WIPER

Part of 176-1903-Page565
An Attachment

ELECTRICAL AND STARTING SYSTEM

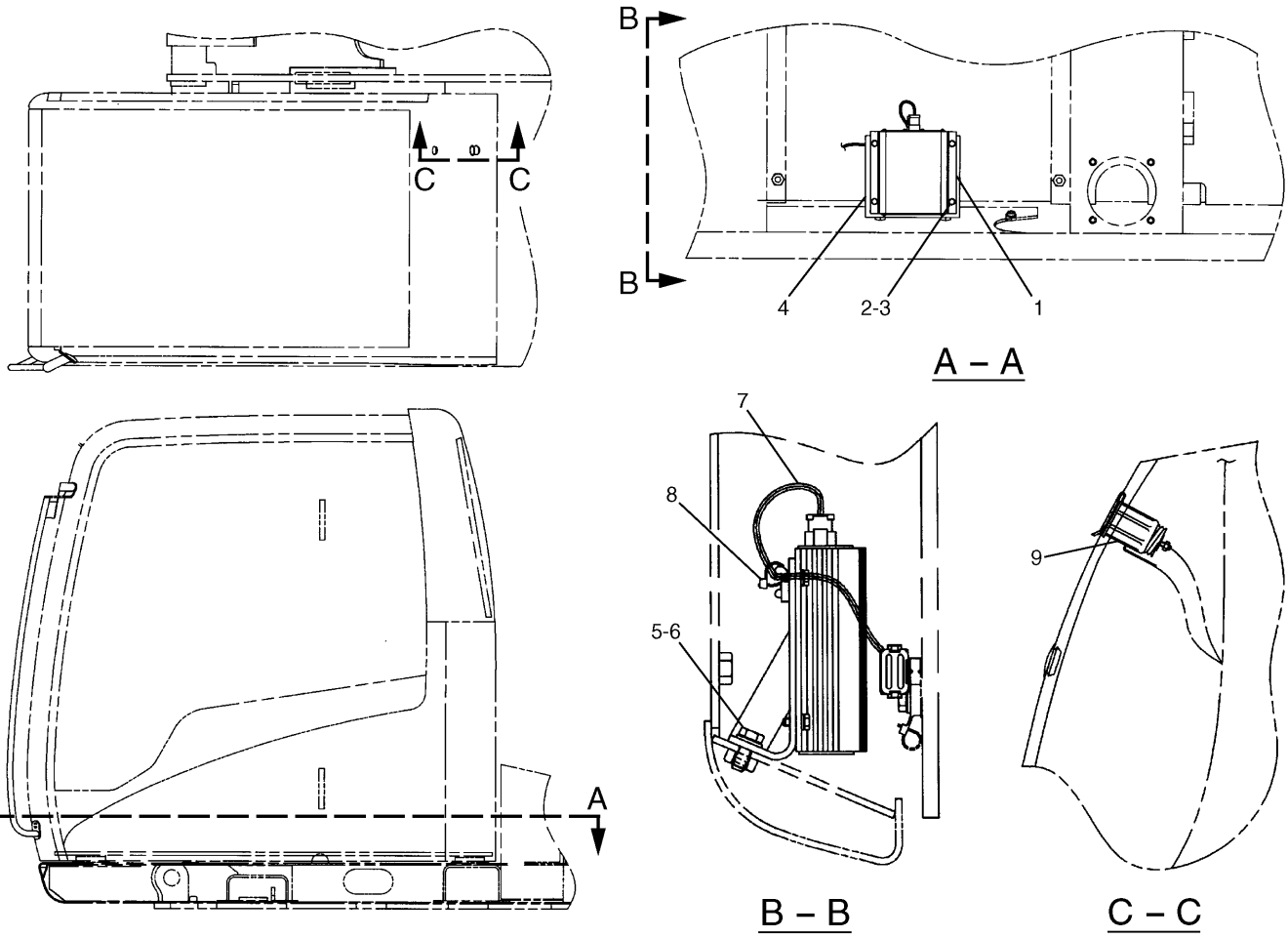

NOTE	No.	PART No.	QTY	PART NAME	NOTE	No.	PART No.	QTY	PART NAME
	1	167-3467	1	CONVERTER					
	2	8T-4171	4	BOLT (L=12mm)					
	3	9X-8256	4	WASHER					
	4	170-6921	1	BRACKET AS					
	5	8T-4136	2	BOLT (L=25mm)					
	6	8T-4121	2	WASHER					
Y	7	167-3457	1	HARNESS AS					
	8	3S-2093	1	STRAP					
	9	121-0987	1	SOCKET					

Y—SEE SEPARATE ILLUSTRATION

H71818E 01

170-6819 WIRING GP
167-3457-Page156
An Attachment

ELECTRICAL AND STARTING SYSTEM

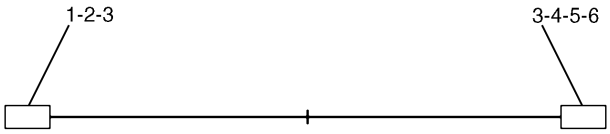

NOTE	No.	PART No.	QTY	PART NAME
	1	102-8801	1	RECEPTACLE KIT
	2	9W-0852	4	PIN
	3	9G-3695	9	PLUG
	4	155-2274	1	PLUG KIT
	5	155-2263	1	WEDGE
	6	9W-0844	5	SOCKET

H67107E 02

167-3457 HARNESS AS-WIRING
Part of 170-6819-Page155
An Attachment

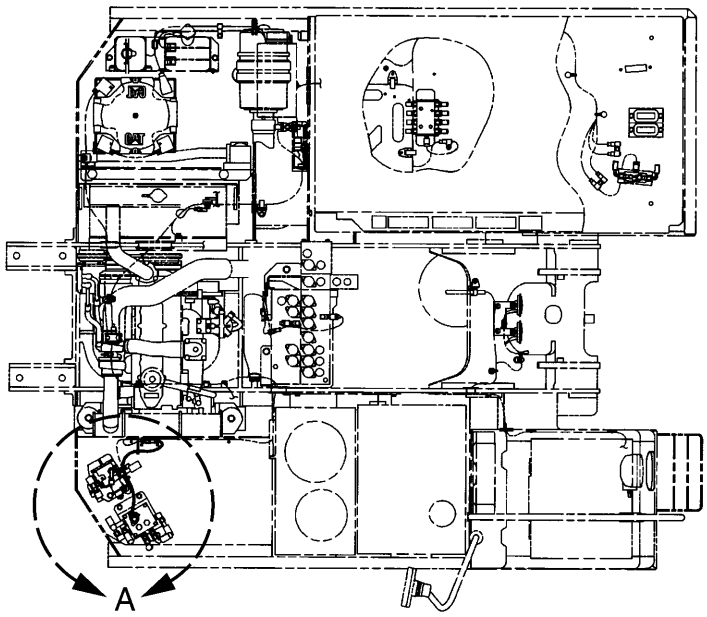

TOP VIEW

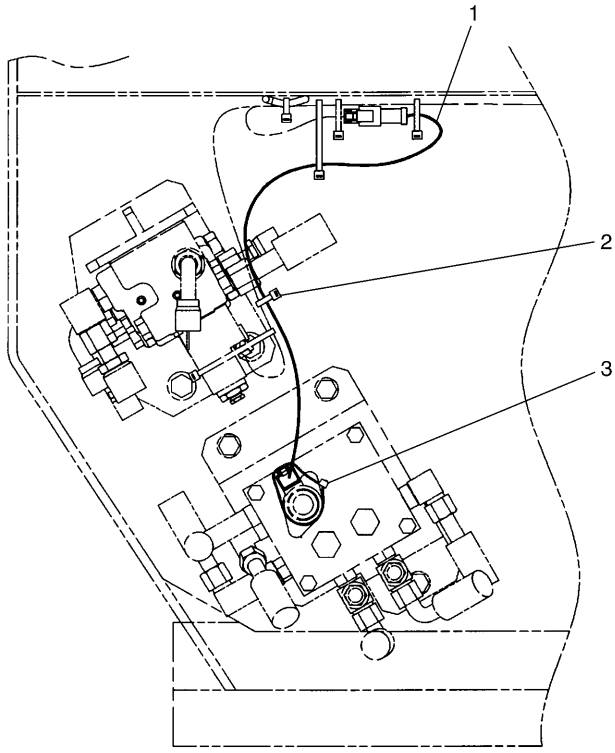

A

NOTE	No.	PART No.	QTY	PART NAME	NOTE	No.	PART No.	QTY	PART NAME
Y	1	186-4603	1	HARNESS AS					
	2	3S-2093	3	STRAP					
	3	7K-1181	1	STRAP					

Y—SEE SEPARATE ILLUSTRATION

H75131E 01

193-3409 WIRING GP

Part of 165-0962,165-0963-Page354
186-4603-Page163
An Attachment

ELECTRICAL AND STARTING SYSTEM

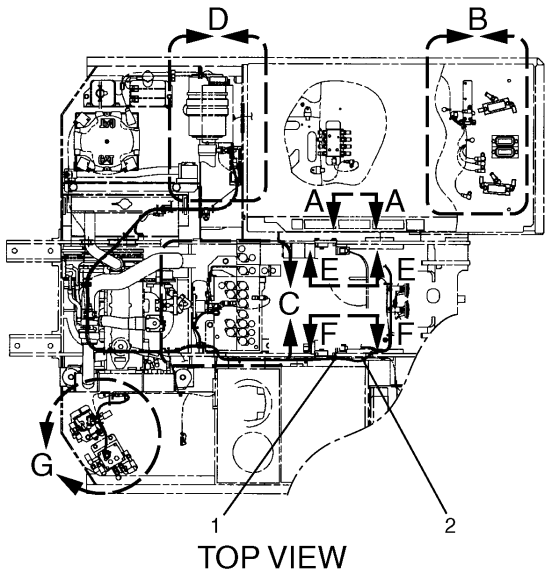

TOP VIEW

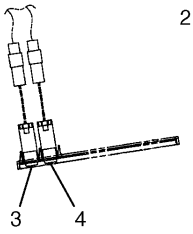

A – A

TYPE A

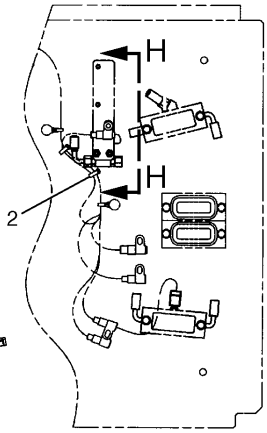

B

TYPE B

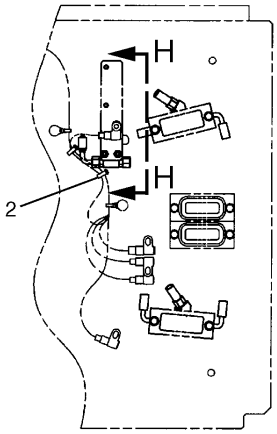

B

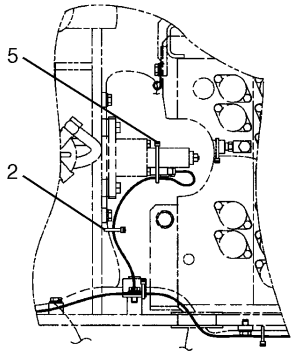

C

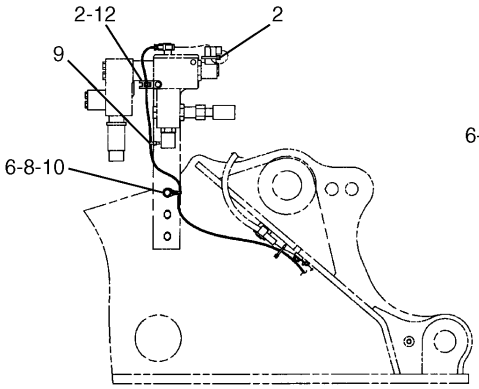

E – E

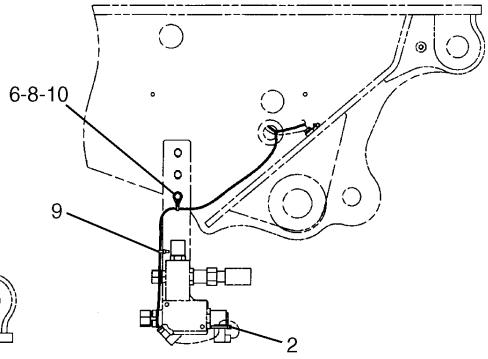

F – F

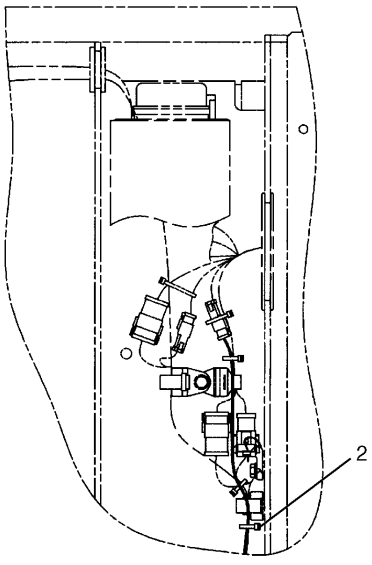

D

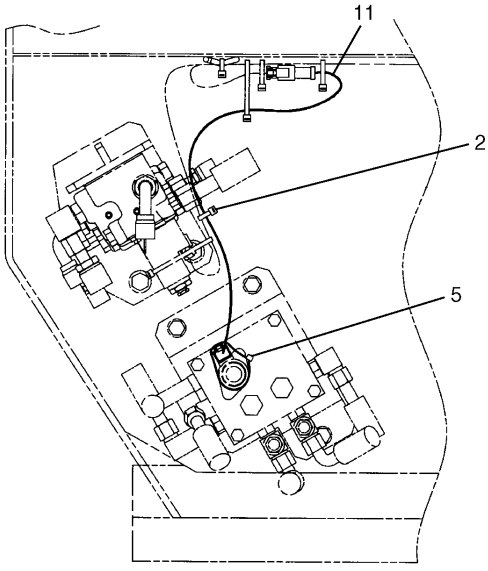

G

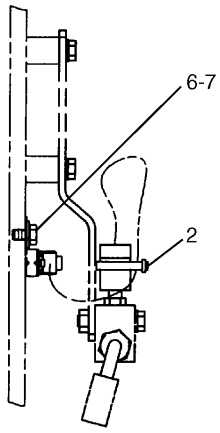

H – H

H71856E 02

170-6822 WIRING GP
Part of 179-5071-Page355,165-0964-Page356
186-4603-Page163,170-6923-Page164
An Attachment

ELECTRICAL AND STARTING SYSTEM

NOTE	No.	PART No.	QTY	PART NAME	NOTE	No.	PART No.	QTY	PART NAME
Y	1	170-6923	1	HARNESS AS					
	2	3S-2093	24	STRAP					
	3	170-6955	1	SWITCH AS					
		167-3542	1	CONNECTOR					
		167-3543	4	TERMINAL					
	4	170-6956	1	SWITCH AS					
		167-3542	1	CONNECTOR					
		167-3543	5	TERMINAL					
	5	7K-1181	2	STRAP					
	6	8T-4121	3	WASHER					
	7	7X-2621	1	BOLT (L=12mm)					
	8	111-4836	2	CLIP					
	9	7I-2673	2	STRAP					
	10	8T-4136	2	BOLT (L=25mm)					
Y	11	186-4603	1	HARNESS AS					
	12	4P-7428	1	CLIP					

Y—SEE SEPARATE ILLUSTRATION

H71856E 02

170-6822 WIRING GP

Part of 179-5071-Page355,165-0964-Page356
186-4603-Page163,170-6923-Page164
An Attachment

ELECTRICAL AND STARTING SYSTEM

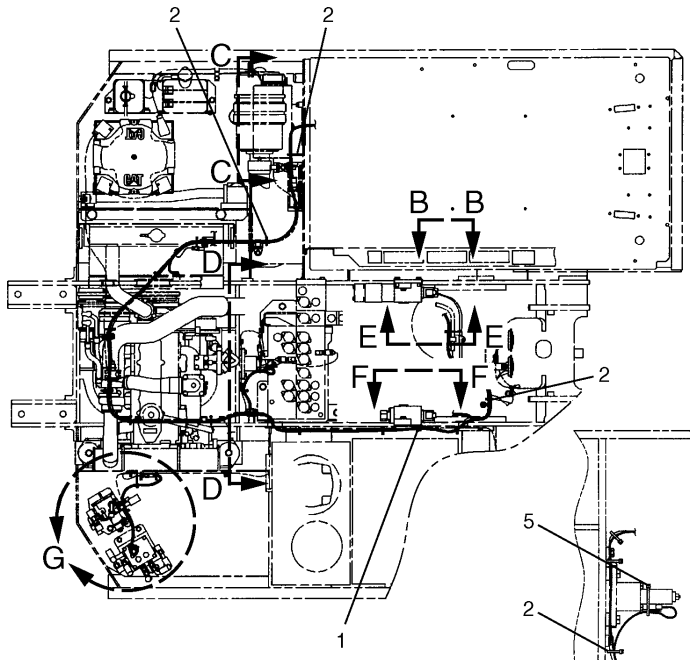

TOP VIEW

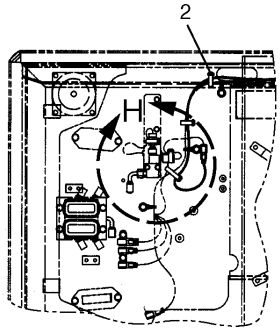

A – A

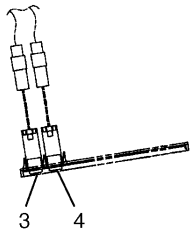

B – B

J – J

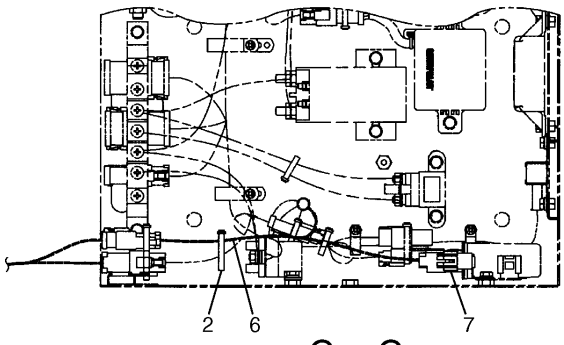

C – C

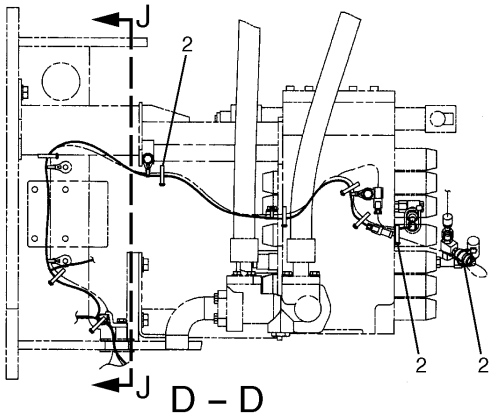

D – D

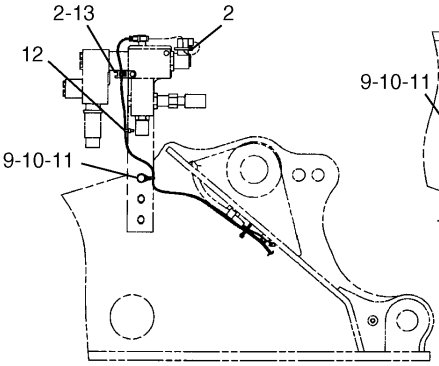

E – E

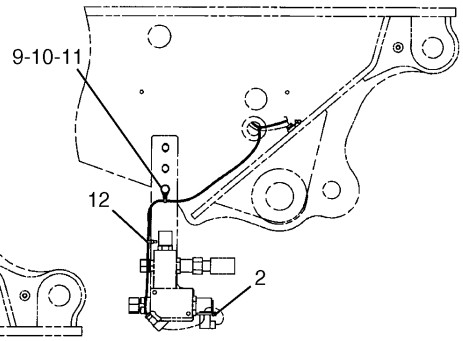

F – F

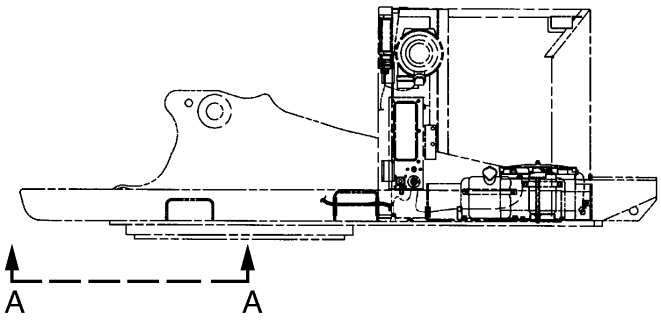

LEFT SIDE VIEW

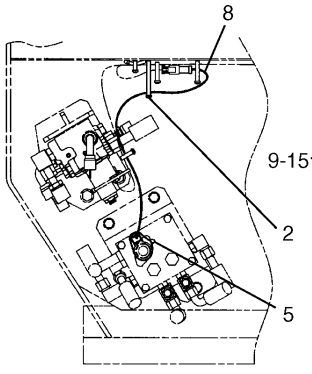

G

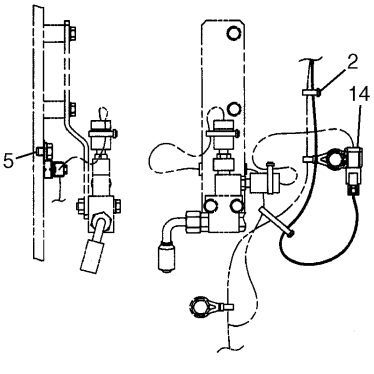

H

H75133E 02

193-3514 WIRING GP
Part of 165-0976-Page357
186-4603-Page163,193-3537-Page165,193-3538-Page166
An Attachment

ELECTRICAL AND STARTING SYSTEM

NOTE	No.	PART No.	QTY	PART NAME	NOTE	No.	PART No.	QTY	PART NAME
Y	1	193-3537	1	HARNESS AS					
	2	3S-2093	41	STRAP					
	3	170-6955	1	SWITCH AS					
		167-3542	1	CONNECTOR					
		167-3543	4	TERMINAL					
	4	170-6956	1	SWITCH AS					
		167-3542	1	CONNECTOR					
		167-3543	5	TERMINAL					
	5	7K-1181	2	STRAP					
Y	6	193-3538	1	HARNESS AS					
	7	149-5050	1	RELAY					
Y	8	186-4603	1	HARNESS AS					
	9	8T-4121	3	WASHER					
	10	111-4836	2	CLIP					
	11	8T-4136	2	BOLT (L=25mm)					
	12	7I-2673	2	STRAP					
	13	4P-7428	1	CLIP					
	14	116-0118	1	CLIP					
	15	7X-2621	1	BOLT (L=12mm)					

Y—SEE SEPARATE ILLUSTRATION

H75133E 02

193-3514 WIRING GP

Part of 165-0976-Page357
186-4603-Page163,193-3537-Page165,193-3538-Page166
An Attachment

ELECTRICAL AND STARTING SYSTEM

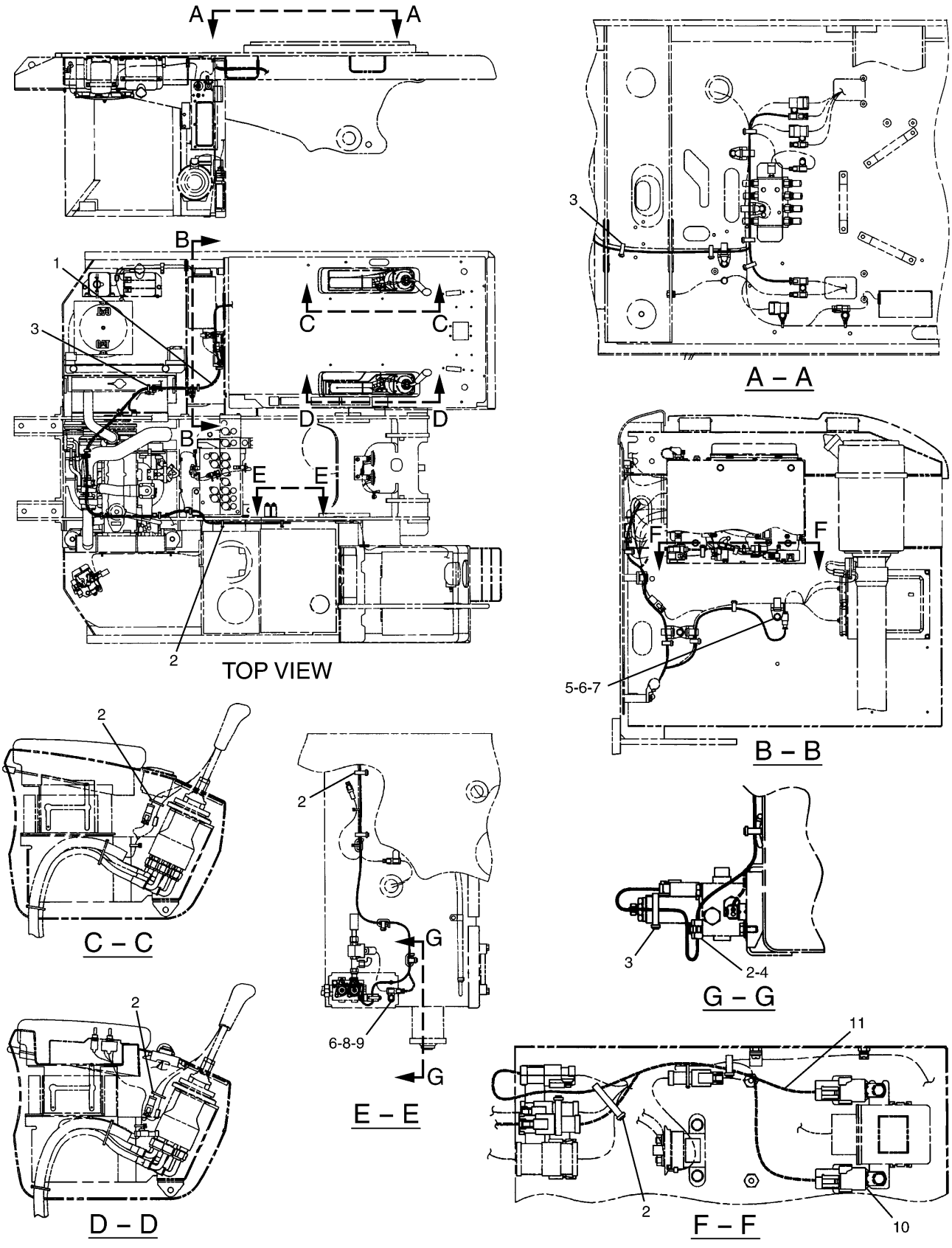

213-0613 WIRING GP

Part of 200-6637-Page357.01
213-0614-Page167.01,213-0617-Page167.02
An Attachment

ELECTRICAL AND STARTING SYSTEM

NOTE	No.	PART No.	QTY	PART NAME	NOTE	No.	PART No.	QTY	PART NAME
Y	1	213-0614	1	HARNESS AS					
	2	3S-2093	16	STRAP					
	3	7K-1181	12	STRAP					
	4	4P-7581	1	CLIP					
	5	4I-7889	1	SPACER					
	6	116-0118	2	CLIP					
	7	8T-5005	1	BOLT (L=70mm)					
	8	8T-4200	1	BOLT (L=16mm)					
	9	5P-4116	1	WASHER					
	10	149-5050	2	RELAY					
Y	11	213-0617	1	HARNESS AS					

Y—SEE SEPARATE ILLUSTRATION

H81767E 00

213-0613 WIRING GP

Part of 200-6637-Page357.01
213-0614-Page167.01,213-0617-Page167.02
An Attachment

ELECTRICAL AND STARTING SYSTEM

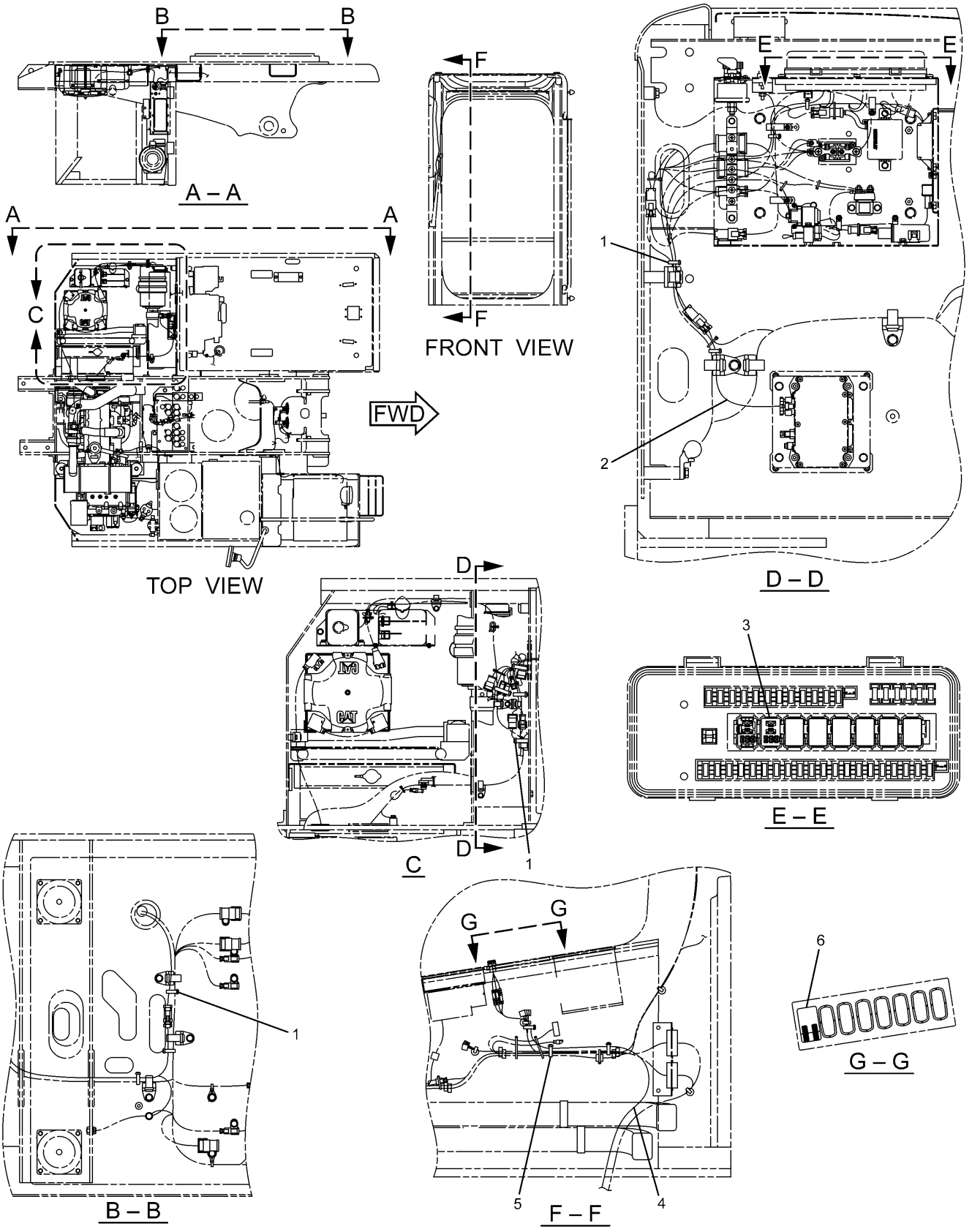

H98149E 00

283-2824 WIRING GP
Product Link Japan
Part of 283-8801-Page168.01
283-2873-Page161.05,283-2871-Page161.06
An Attachment

ELECTRICAL AND STARTING SYSTEM

NOTE	No.	PART No.	QTY	PART NAME	NOTE	No.	PART No.	QTY	PART NAME
	1	7K-1181	11	STRAP					
Y	2	283-2873	1	HARNESS AS					
	3	161-3128	1	RELAY					
Y	4	283-2871	1	HARNESS AS					
	5	3S-2093	3	STRAP					
	6	279-7694	1	LAMP AS					

Y—SEE SEPARATE ILLUSTRATION

H98149E 00

283-2824 WIRING GP
Product Link Japan
Part of 283-8801-Page168.01
283-2873-Page161.05,283-2871-Page161.06
An Attachment

ELECTRICAL AND STARTING SYSTEM

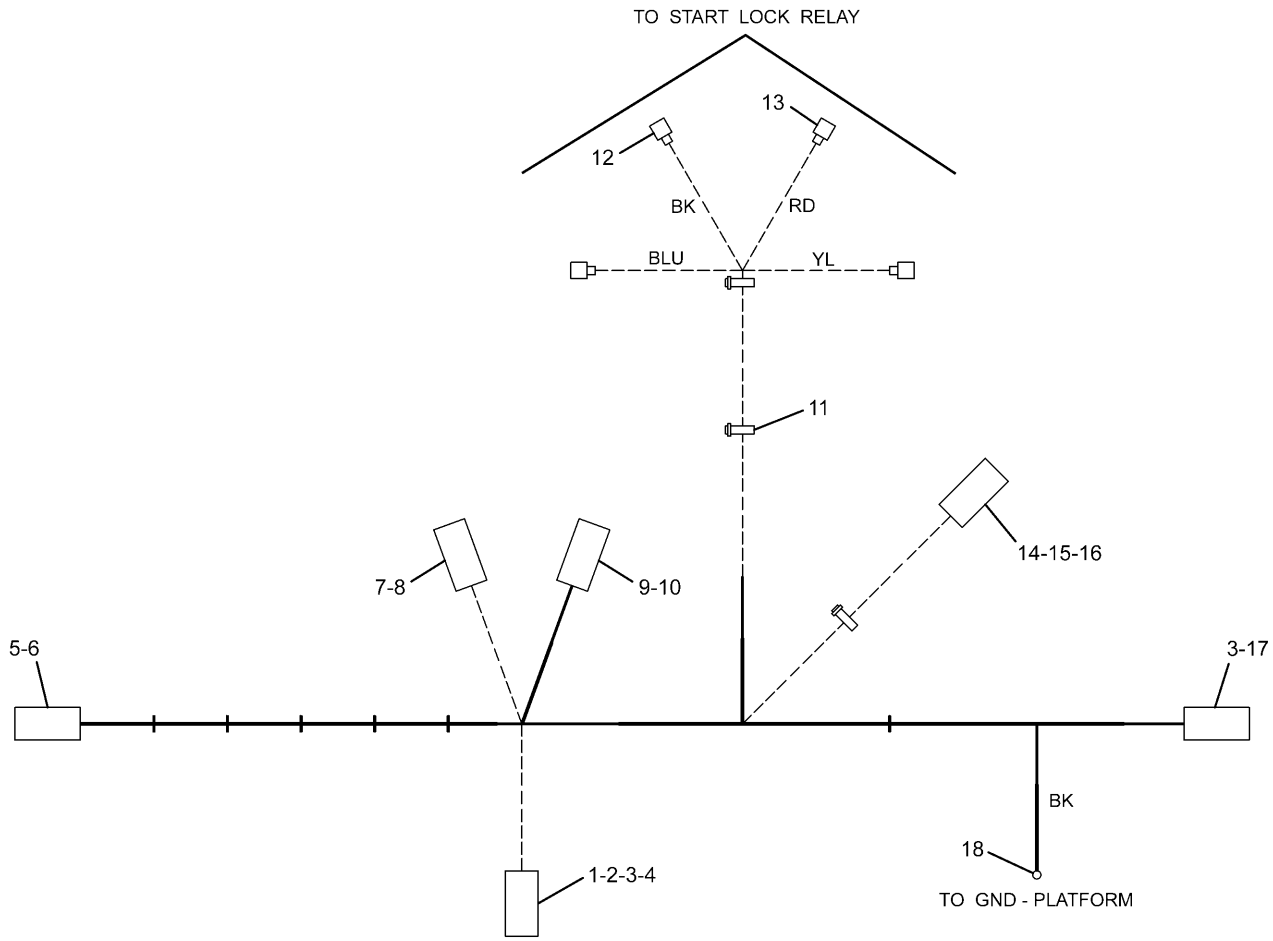

NOTE	No.	PART No.	QTY	PART NAME	NOTE	No.	PART No.	QTY	PART NAME
	1	155-2255	1	PLUG KIT					
	2	155-2258	1	WEDGE					
	3	186-3736	7	SOCKET					
	4	9W-0844	8	SOCKET					
	5	275-6785	1	PLUG AS					
	6	275-6786	7	TERMINAL					
	7	155-2260	1	PLUG KIT					
	8	126-1768	3	SOCKET					
	9	102-8803	1	RECEPTACLE KIT					
	10	9X-3401	3	PIN					
	11	3S-2093	3	STRAP					
	12	149-5070	3	TERMINAL					
	13	149-5069	1	TERMINAL					
	14	102-8801	1	RECEPTACLE KIT					
	15	186-3735	4	PIN					
	16	9W-0852	8	PIN					
	17	230-4013	1	PLUG AS					
	18	2L-8079	1	TERMINAL					

H98151E 01

283-2873 HARNESS AS
Part of 283-2824-Page161.04
An Attachment

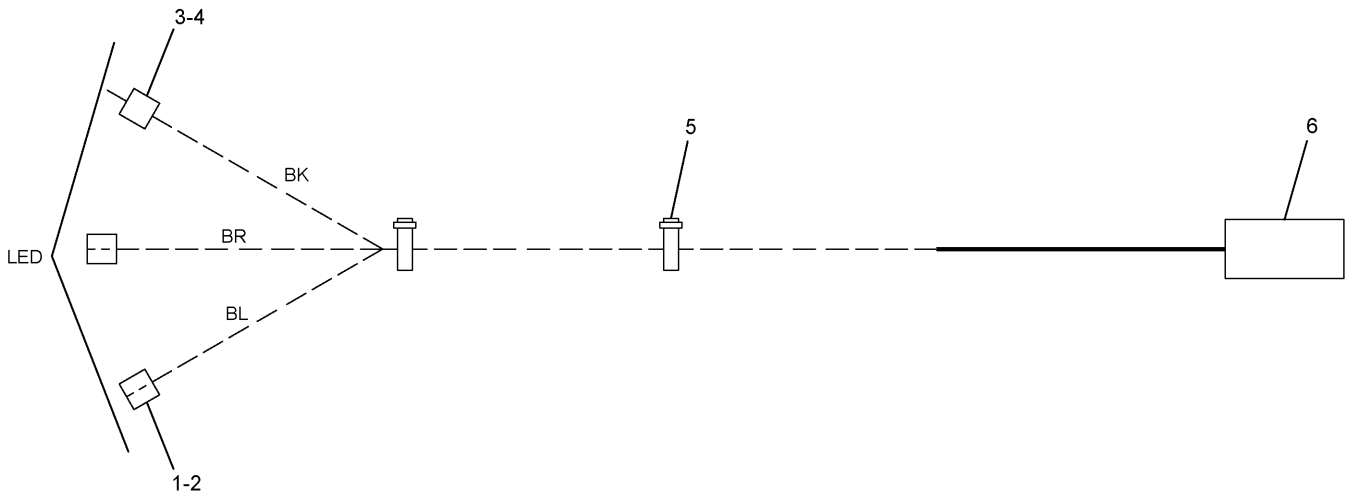

NOTE	No.	PART No.	QTY	PART NAME	NOTE	No.	PART No.	QTY	PART NAME
	1	7Y-3963	2	TERMINAL					
	2	7Y-3965	2	TUBE					
	3	7Y-3962	1	TERMINAL					
	4	7Y-3964	1	TUBE					
	5	3S-2093	2	STRAP					
	6	186-3735	3	PIN					

H96710E 00

283-2871 HARNESS AS
Part of 283-2824-Page161.04
An Attachment

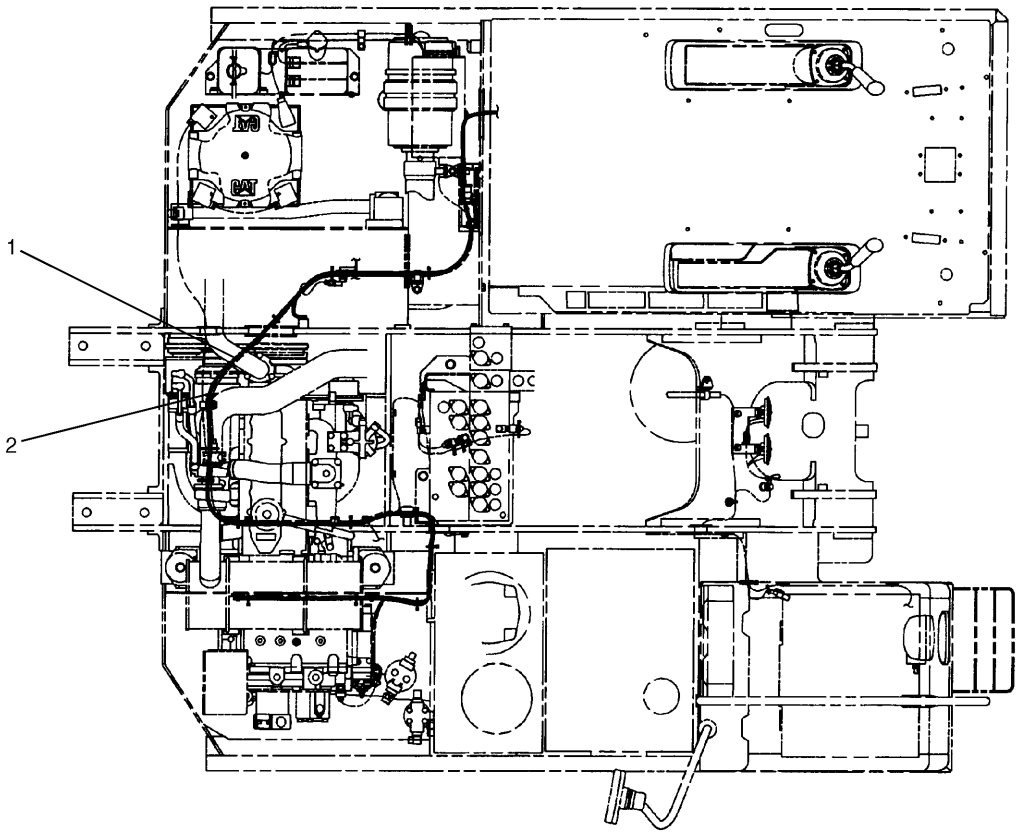

NOTE	No.	PART No.	QTY	PART NAME	NOTE	No.	PART No.	QTY	PART NAME
Y	1	186-4594	1	HARNESS AS					
	2	3S-2093	25	STRAP					

Y—SEE SEPARATE ILLUSTRATION

H86457E 00

186-4593 WIRING GP-QUICK COUPLER

Part of 216-6534-Page358
186-4594-Page167
An Attachment

ELECTRICAL AND STARTING SYSTEM

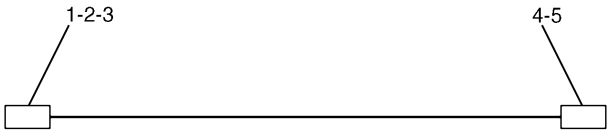

NOTE	No.	PART No.	QTY	PART NAME
	1	186-3736	2	SOCKET
	2	155-2270	1	PLUG KIT
	3	155-2261	1	WEDGE
	4	102-8802	1	RECEPTACLE KIT
	5	186-3735	2	PIN

H84027E 00

186-4603 HARNESS AS-WIRING

Part of 193-3409-Page157,170-6822-Page159,193-3514-Page161

An Attachment

ELECTRICAL AND STARTING SYSTEM

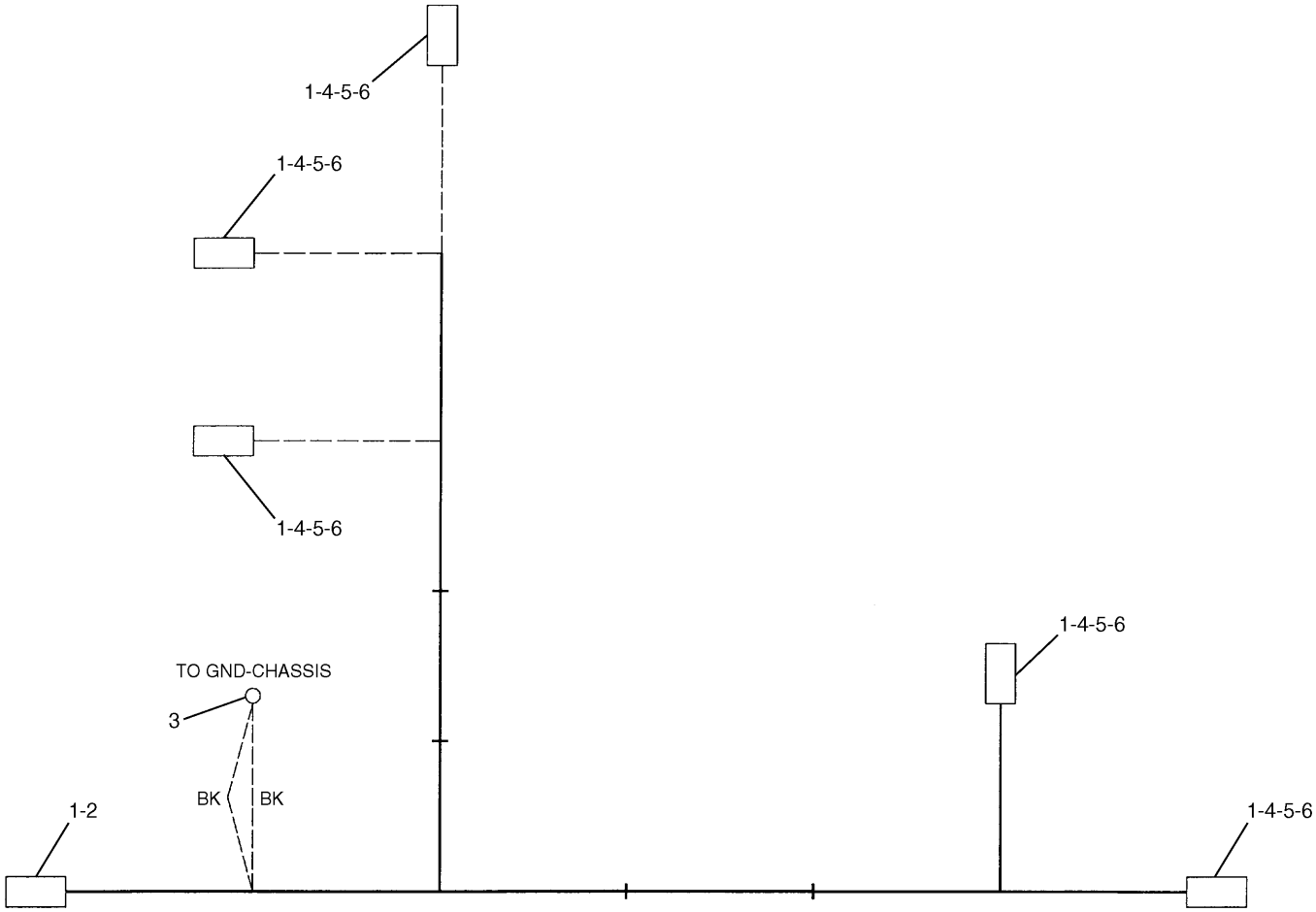

NOTE	No.	PART No.	QTY	PART NAME	NOTE	No.	PART No.	QTY	PART NAME
	1	106-9618	8	SOCKET					
	2	155-2260	1	PLUG KIT					
	3	3T-4696	1	TERMINAL					
	4	155-2270	5	PLUG KIT					
	5	155-2261	5	WEDGE					
	6	186-3736	5	SOCKET					

H71777E 01

170-6923 HARNESS AS-WIRING

Part of 170-6822-Page159
An Attachment

ELECTRICAL AND STARTING SYSTEM

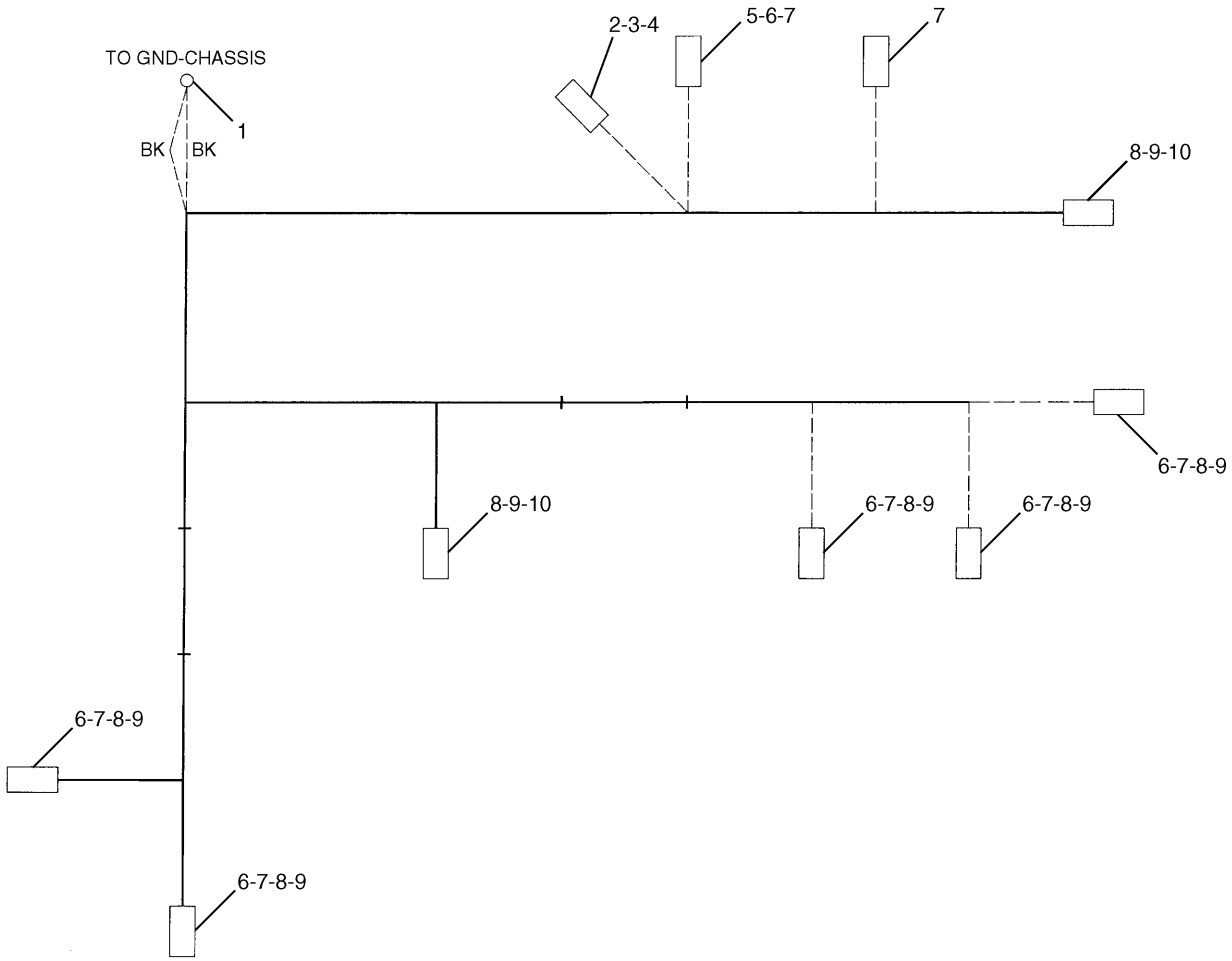

NOTE	No.	PART No.	QTY	PART NAME	NOTE	No.	PART No.	QTY	PART NAME
	1	3T-4696	1	TERMINAL					
	2	102-8803	1	RECEPTACLE KIT					
	3	9W-0852	1	PIN					
	4	8T-8737	2	PLUG					
	5	155-2260	2	PLUG KIT					
	6	186-3736	6	SOCKET					
	7	9W-0844	10	SOCKET					
	8	155-2270	7	PLUG KIT					
	9	155-2261	7	WEDGE					
	10	126-1768	4	SOCKET					

H75135E 01

193-3537 HARNESS AS-WIRING

Part of 193-3514-Page161
An Attachment

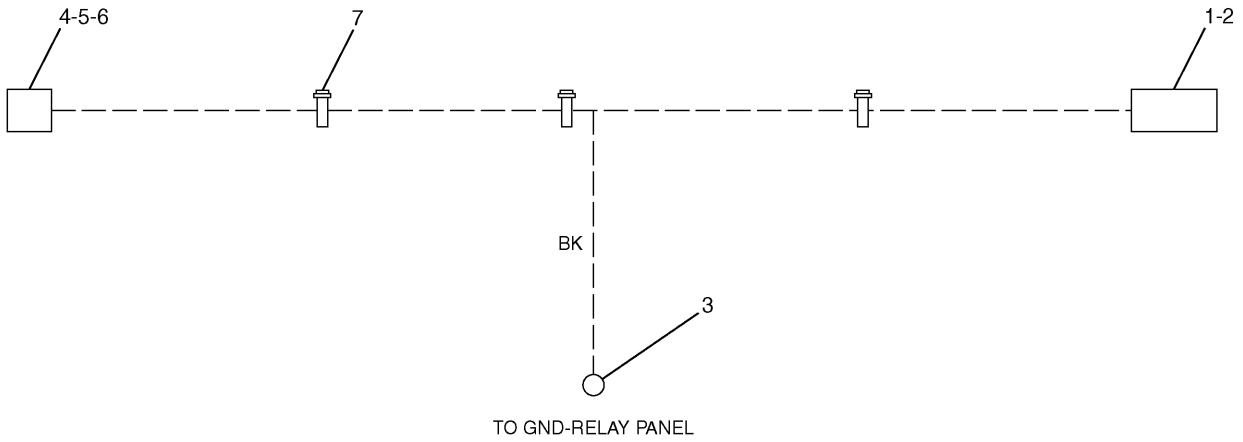

NOTE	No.	PART No.	QTY	PART NAME	NOTE	No.	PART No.	QTY	PART NAME
	1	102-8803	1	RECEPTACLE KIT					
	2	186-3735	3	PIN					
	3	2L-8077	1	TERMINAL					
	4	149-5070	1	TERMINAL					
	5	149-5069	1	TERMINAL					
	6	149-5051	1	CONNECTOR					
	7	3S-2093	3	STRAP					

H83904E 02

193-3538 HARNESS AS-WIRING
Part of 193-3514-Page161
An Attachment

ELECTRICAL AND STARTING SYSTEM

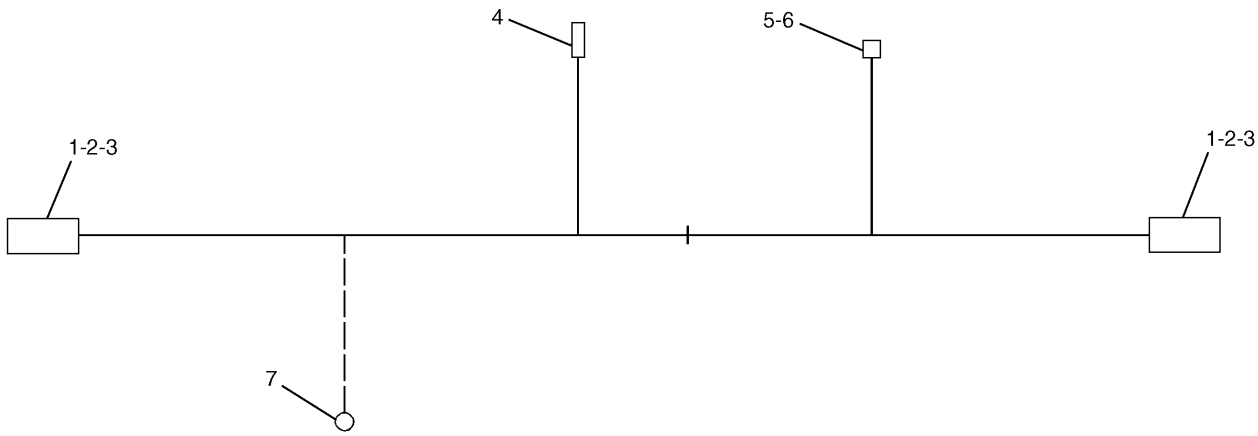

NOTE	No.	PART No.	QTY	PART NAME	NOTE	No.	PART No.	QTY	PART NAME
	1	155-2270	2	PLUG KIT					
	2	155-2261	2	WEDGE					
	3	186-3736	4	SOCKET					
	4	126-1768	1	SOCKET					
	5	7Y-3962	1	TERMINAL					
	6	7Y-3964	1	TUBE					
	7	3T-4696	1	TERMINAL					

H75137E 00

186-4594 HARNESS AS-WIRING

Part of 186-4593-Page162
An Attachment

ELECTRICAL AND STARTING SYSTEM

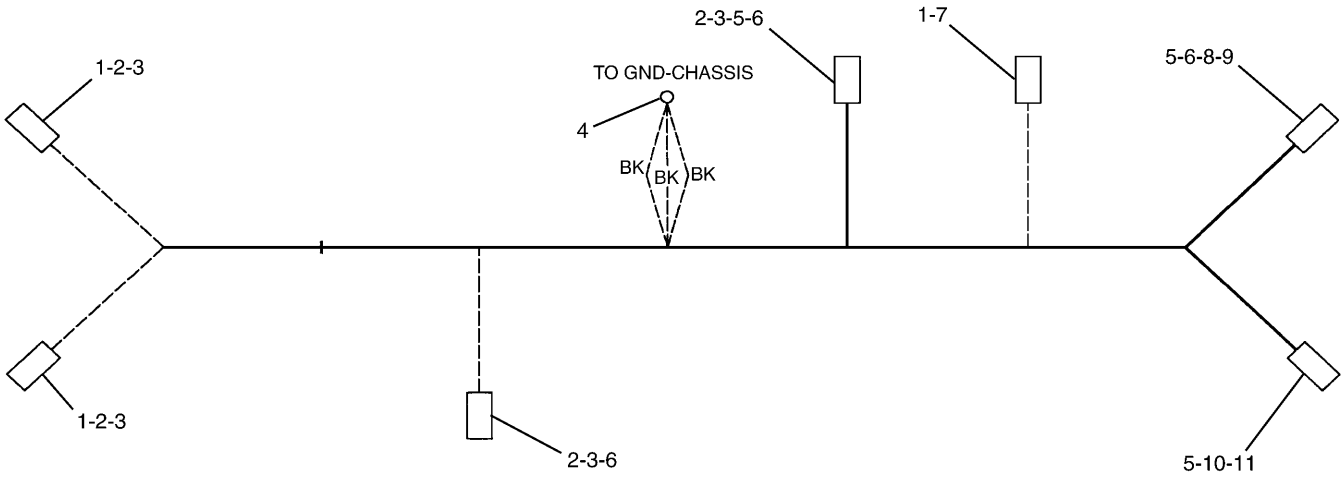

NOTE	No.	PART No.	QTY	PART NAME	NOTE	No.	PART No.	QTY	PART NAME
	1	186-3736	8	SOCKET					
	2	155-2270	4	PLUG KIT					
	3	155-2261	4	WEDGE					
	4	3T-4696	1	TERMINAL					
	5	8T-8737	8	PLUG					
	6	126-1768	5	SOCKET					
	7	155-2271	1	PLUG KIT					
	8	155-2274	1	PLUG KIT					
	9	155-2263	1	WEDGE					
	10	102-8804	1	RECEPTACLE KIT					
	11	9X-3401	1	PIN					

H81757E 00

213-0614 HARNESS AS-WIRING

Part of 213-0613-Page161.02
An Attachment

ELECTRICAL AND STARTING SYSTEM

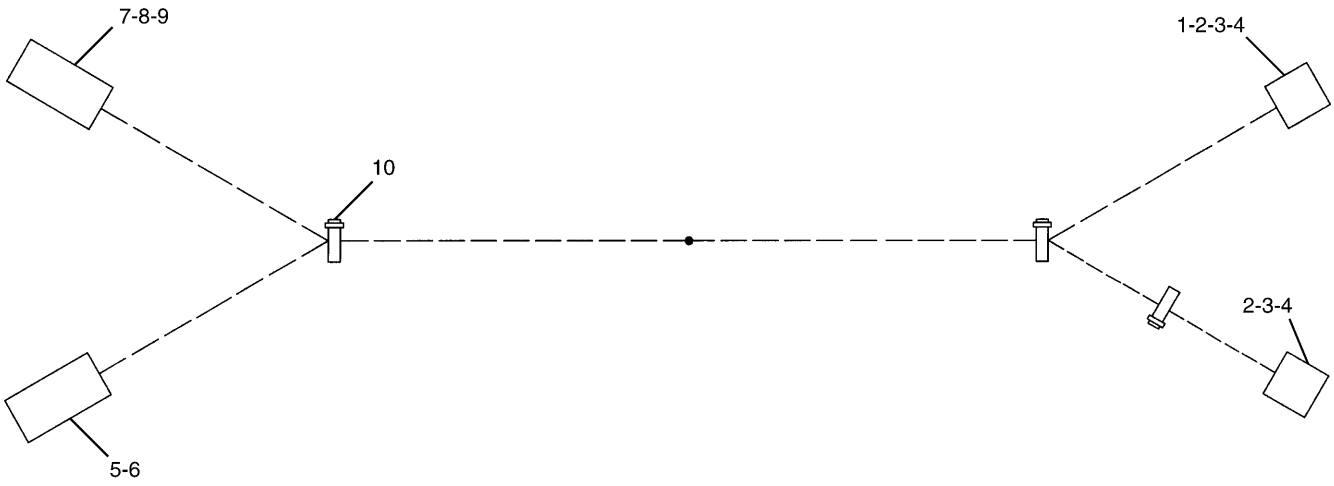

NOTE	No.	PART No.	QTY	PART NAME	NOTE	No.	PART No.	QTY	PART NAME
	1	149-5051	2	CONNECTOR					
	2	149-5071	2	TERMINAL					
	3	149-5069	2	TERMINAL					
	4	149-5070	4	TERMINAL					
	5	102-8804	1	RECEPTACLE KIT					
	6	186-3735	4	PIN					
	7	9W-0852	1	PIN					
	8	8T-8737	2	PLUG					
	9	102-8803	1	RECEPTACLE KIT					
	10	3S-2093	3	STRAP					

H84024E 00

213-0617 HARNESS AS-WIRING

Part of 213-0613-Page161.02
An Attachment

ELECTRICAL AND STARTING SYSTEM

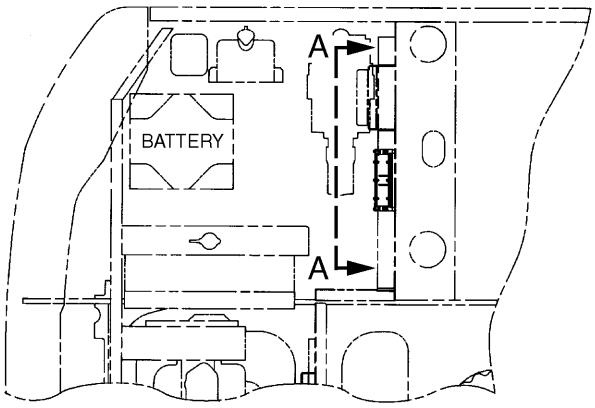

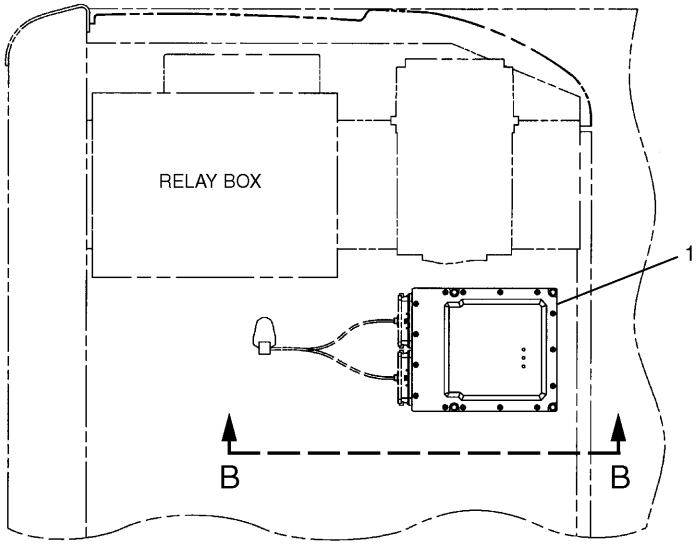

A – A

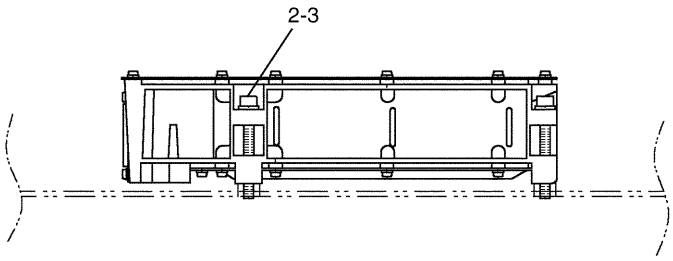

B – B

NOTE	No.	PART No.	QTY	PART NAME	NOTE	No.	PART No.	QTY	PART NAME
	1	157-3165	1	CONTROL GP					
	2	095-0645	4	BOLT (L=55mm)					
	3	9X-8256	4	WASHER					

H77493E 02

164-8274 CONTROL & MTG GP-ELECTRONIC

ELECTRICAL AND STARTING SYSTEM

Consists of :

			Page
1	270-5497	ELECTRONICS GP	169
1	279-7606	MOUNTING GP	170.02
1	283-2824	WIRING GP	161.03

H98153E 00

283-8801 CONTROL AR
Product Link Japan
An Attachment

MEMORANDA

Consists of :

			Page
1	260-2038	CONTROL GP-ELECTRONIC	170

H88979E 06

177-7650 ELECTRONICS GP

Consists of :

			Page
1	309-5707	CONTROL GP-ELECTRONIC	170.01

H97306E 10

270-5497 ELECTRONICS GP

Product Link Japan
Part of 283-8801-Page168.01
An Attachment

ELECTRICAL AND STARTING SYSTEM

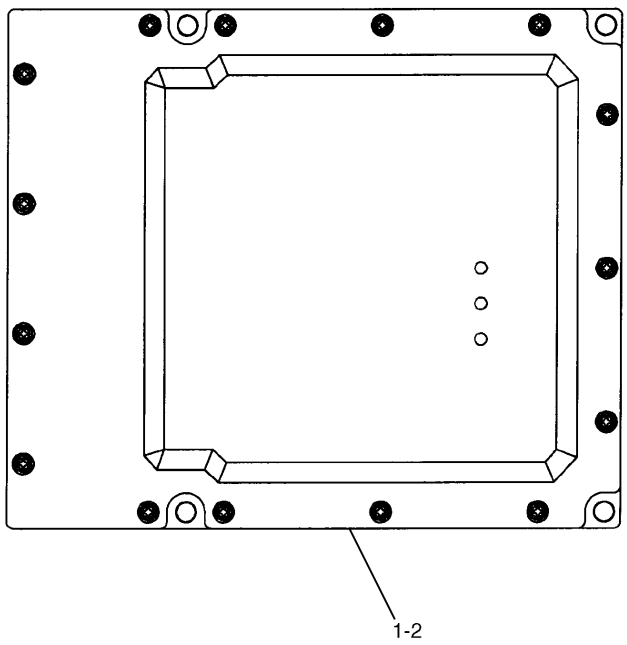

NOTE	No.	PART No.	QTY	PART NAME
	1	260-2037	1	SOFTWARE GP
	2	157-3165	1	CONTROL GP

H88978E 00

260-2038 CONTROL GP-ELECTRONIC

Part of 177-7650-Page169

ELECTRICAL AND STARTING SYSTEM

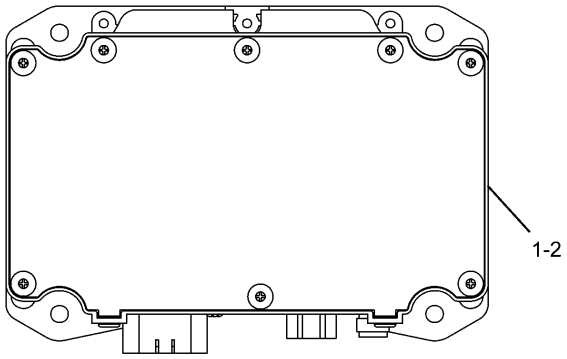

NOTE	No.	PART No.	QTY	PART NAME
	1	309-5706	1	CONTROL GP
	2	309-5705	1	SOFTWARE GP

H97307E 00

309-5707 CONTROL GP-ELECTRONIC

Product Link Japan
Part of 270-5497-Page169
An Attachment

ELECTRICAL AND STARTING SYSTEM

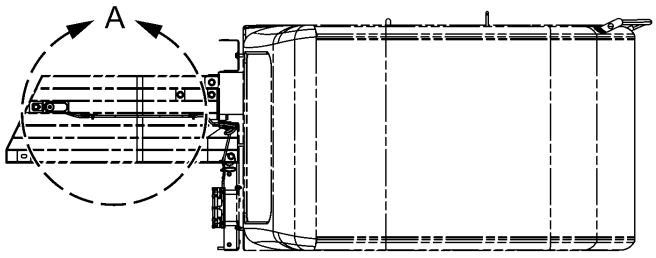

TOP VIEW

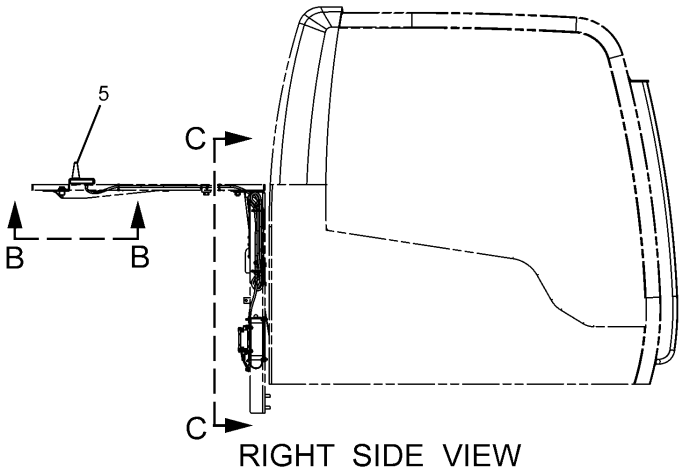

RIGHT SIDE VIEW

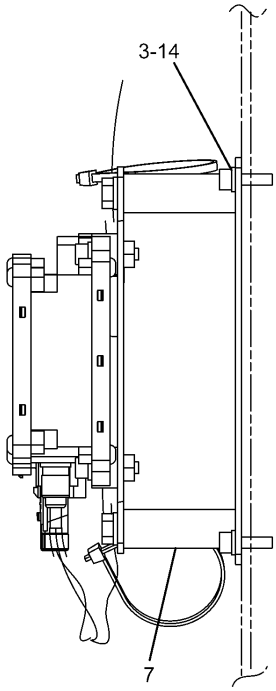

D – D

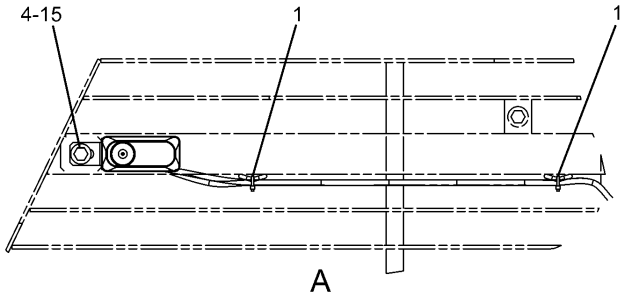

A

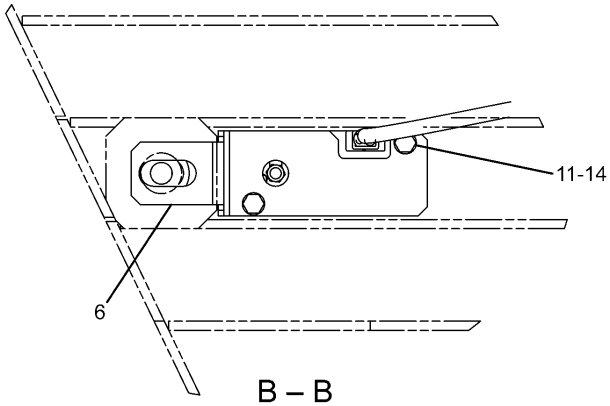

B – B

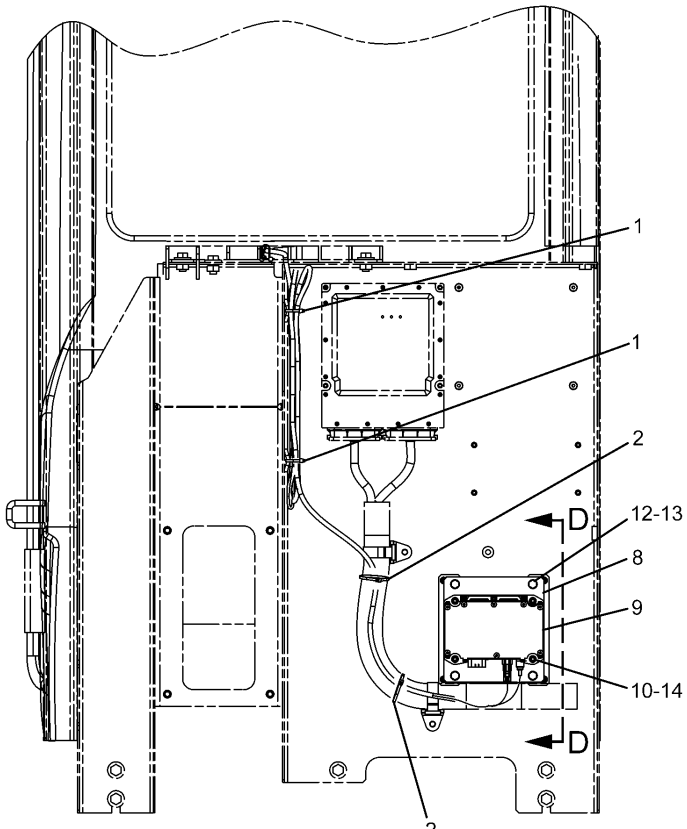

C – C

HA1961E 03

279-7606 MOUNTING GP
Product Link Japan
Part of 283-8801-Page168.01
An Attachment

ELECTRICAL AND STARTING SYSTEM

NOTE	No.	PART No.	QTY	PART NAME	NOTE	No.	PART No.	QTY	PART NAME
	1	3S-2093	4	STRAP					
	2	7K-1181	2	STRAP					
	3	134-7721	4	BOLT (L=12mm)					
	4	8T-4139	1	BOLT (L=30mm)					
	5	270-5501	1	ANTENNA AS					
	6	270-5559	1	BRACKET					
	7	279-7628	2	BRACKET AS					
	8	279-7631	1	BRACKET AS					
	9	309-5706	1	CONTROL GP					
	10	3T-0849	4	BOLT (L=25mm)					
	11	8T-4171	2	BOLT (L=12mm)					
	12	8T-4200	4	BOLT (L=16mm)					
	13	8T-4224	4	WASHER					
	14	9X-8256	10	WASHER					
	15	5P-1076	1	WASHER					

HA1961E 03

279-7606 MOUNTING GP

Product Link Japan
Part of 283-8801-Page168.01
An Attachment

MEMORANDA

ELECTRICAL AND STARTING SYSTEM

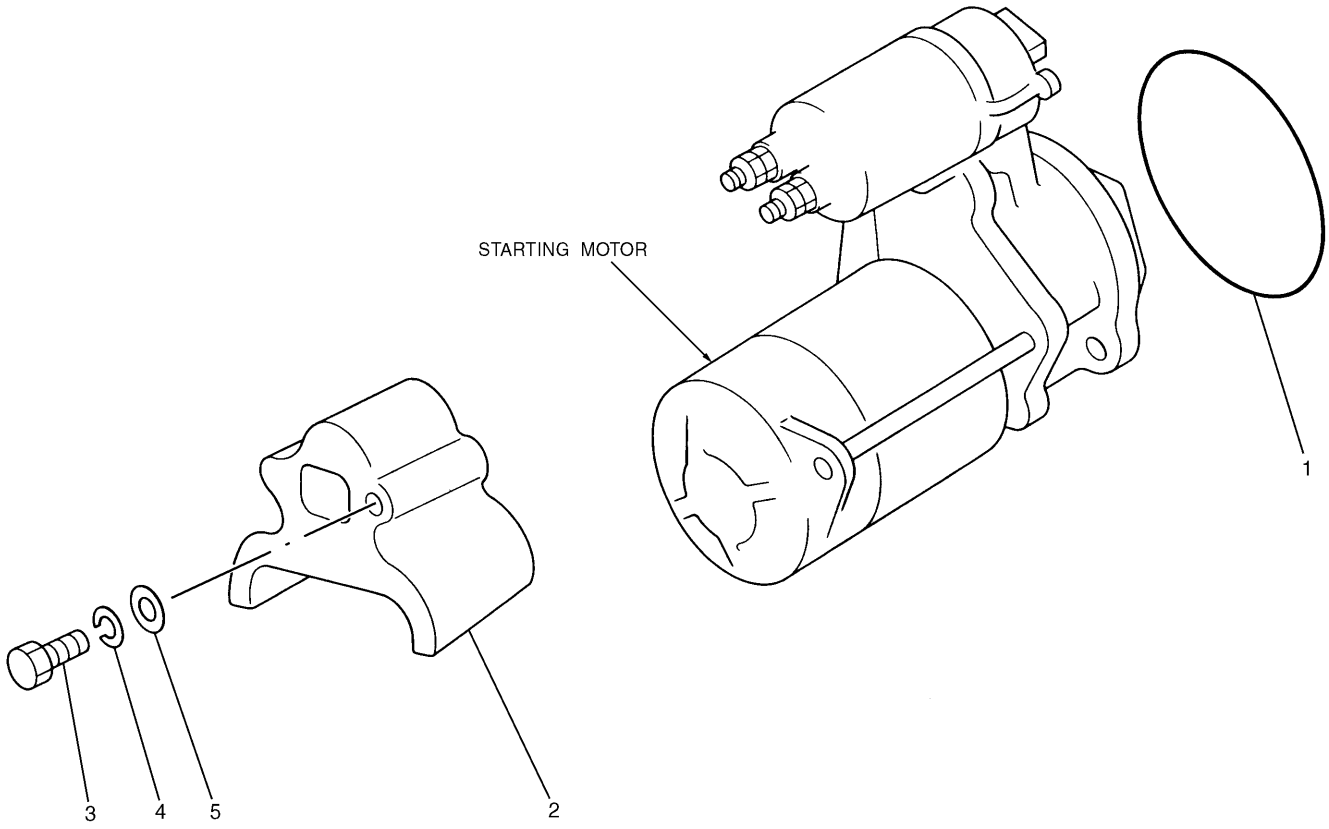

NOTE	No.	PART No.	QTY	PART NAME	NOTE	No.	PART No.	QTY	PART NAME
	1	5I-7599	1	SEAL-O-RING (ID=79.50mm)					
	2	135-2369	1	COVER					
	3	135-2370	1	BOLT (L=25mm)					
	4	3B-4503	1	LOCKWASHER					
	5	8T-0328	1	WASHER					

H78542E 02

125-2963 MOUNTING GP-STARTING MOTOR

Part of 201-3870-Page13

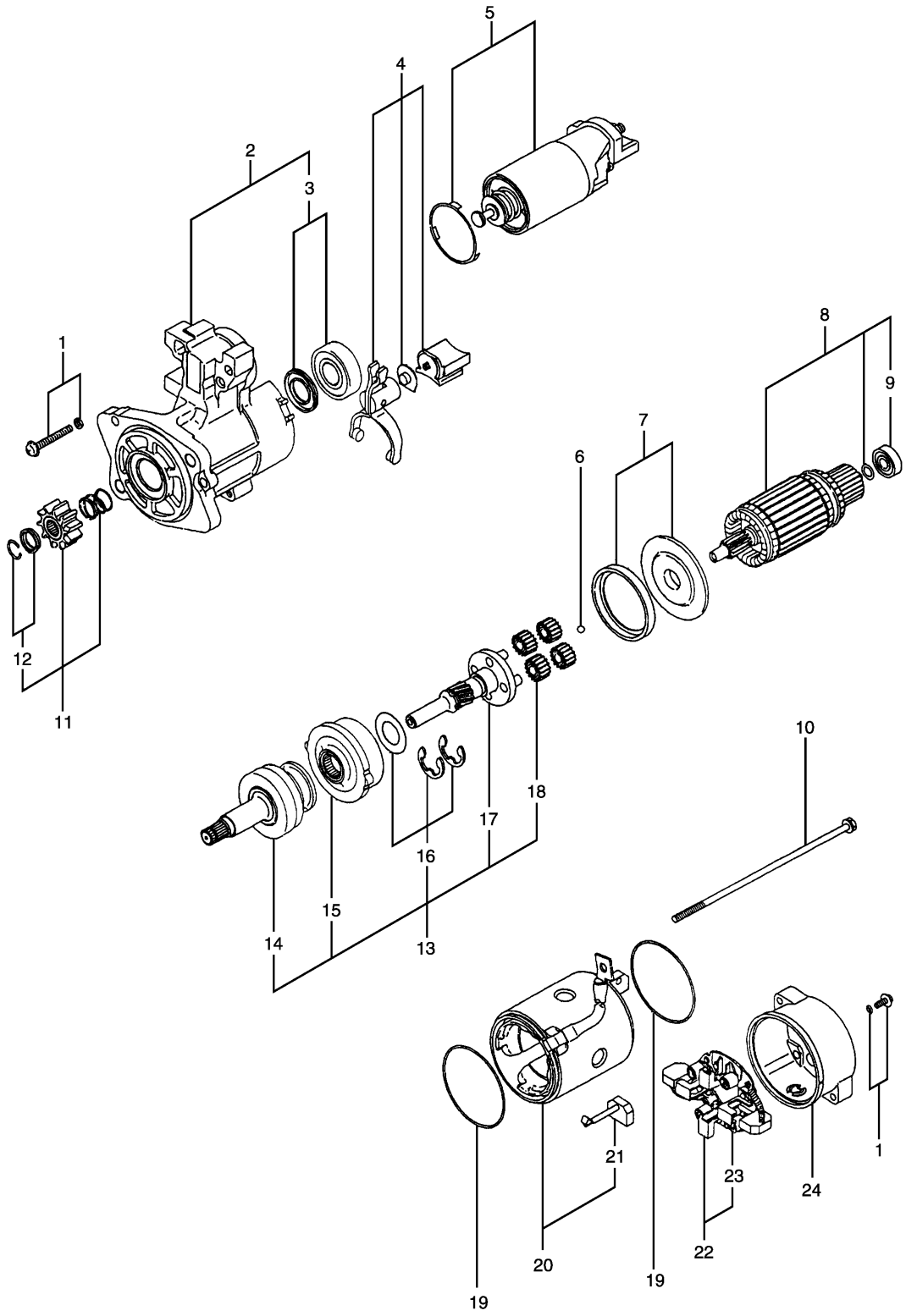

H86006E 03

125-2988 STARTING MOTOR GP-ELECTRIC
Engine S/N 6LK 26372-32378

ELECTRICAL AND STARTING SYSTEM

NOTE	No.	PART No.	QTY	PART NAME	NOTE	No.	PART No.	QTY	PART NAME
	1	127-5947	1	SETSCREW					
	2	135-2363	1	BRACKET AS					
	3	127-5937	1	BEARING AS					
	4	127-5944	1	LEVER AS					
	5	135-2364	1	SWITCH AS					
	6	127-5948	1	BALL					
	7	127-5949	1	PACKING AS					
	8	127-5950	1	ARMATURE AS					
	9	095-0410	1	BEARING					
	10	095-0085	1	BOLT SET					
	11	135-2365	1	PINION SET					
	12	094-9950	1	STOPPER SET					
	13	233-1279	1	SHAFT AS					
	14	233-1280	1	CLUTCH					
	15	127-5941	1	GEAR AS					
	16	127-5940	1	WASHER AS					
	17	127-5939	1	SHAFT AS					
	18	127-5943	4	GEAR AS					
	19	094-9980	2	GASKET					
	20	127-5952	1	YOKE AS					
	21	127-5953	2	BRUSH					
	22	127-5955	1	HOLDER AS					
	23	127-5956	4	SPRING					
	24	135-2366	1	BRACKET					

H86006E 03

125-2988 STARTING MOTOR GP-ELECTRIC

Engine S/N 6LK 26372-32378

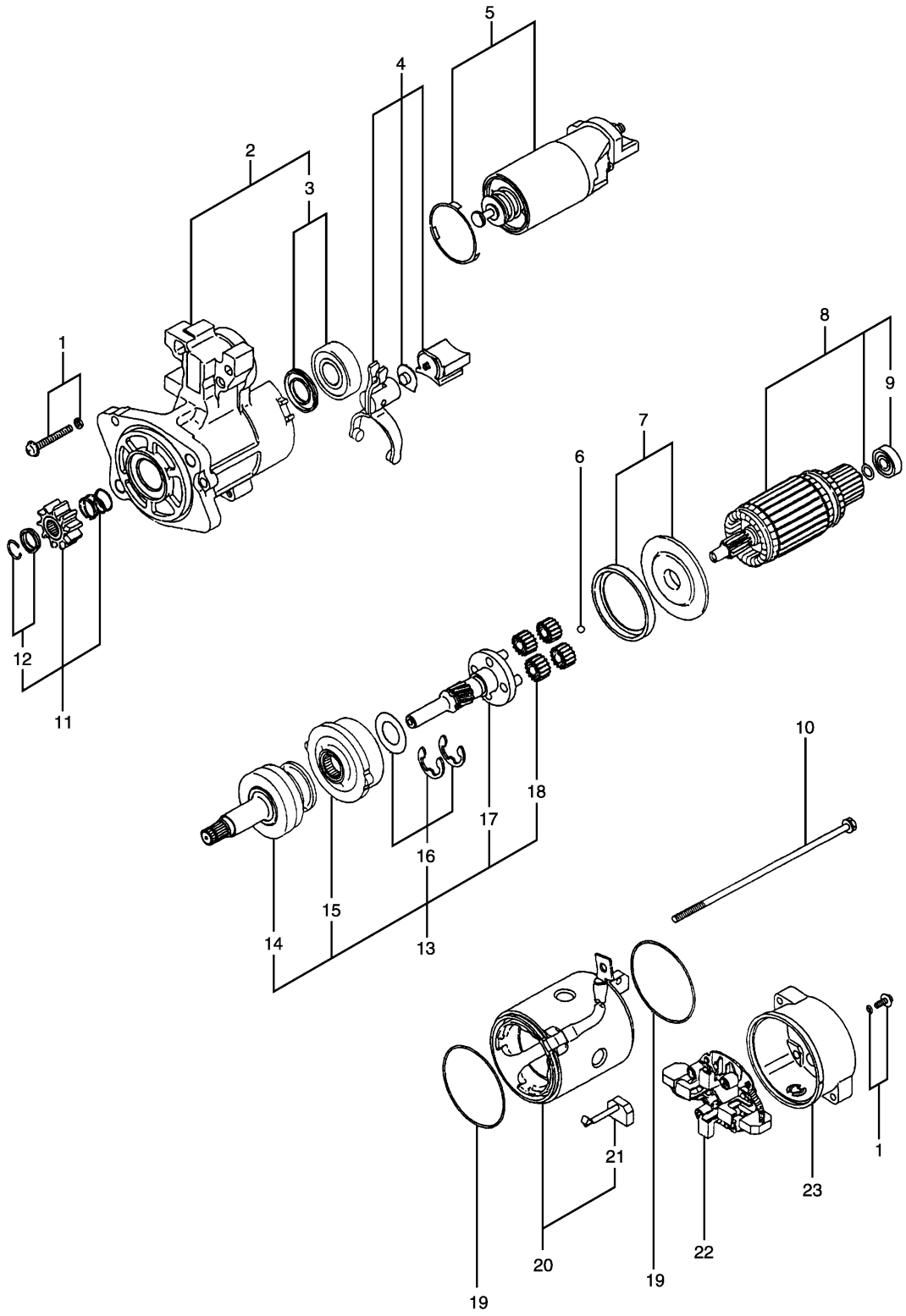

H98079E 01

272-4774 STARTING MOTOR GP-ELECTRIC
Engine S/N E 32379-Up
Part of 201-3870-Page13

ELECTRICAL AND STARTING SYSTEM

NOTE	No.	PART No.	QTY	PART NAME	NOTE	No.	PART No.	QTY	PART NAME
	1	127-5947	1	SETSCREW					
	2	294-1855	1	BRACKET AS					
	3	294-1856	1	BEARING AS					
	4	127-5944	1	LEVER AS					
	5	294-1857	1	SWITCH AS					
	6	127-5948	1	BALL					
	7	127-5949	1	PACKING AS					
	8	127-5950	1	ARMATURE AS					
	9	095-0410	1	BEARING					
	10	095-0085	1	BOLT SET					
	11	279-7750	1	PINION SET					
	12	094-9950	1	STOPPER SET					
	13	233-1279	1	SHAFT AS					
	14	233-1280	1	CLUTCH					
	15	127-5941	1	GEAR AS					
	16	127-5940	1	WASHER AS					
	17	127-5939	1	SHAFT AS					
	18	127-5943	4	GEAR AS					
	19	094-9980	2	GASKET					
	20	127-5952	1	YOKE AS					
	21	127-5953	2	BRUSH					
	22	294-1858	1	HOLDER AS					
	23	135-2366	1	BRACKET					

H98079E 01

272-4774 STARTING MOTOR GP-ELECTRIC

Engine S/N E 32379-Up

Part of 201-3870-Page13

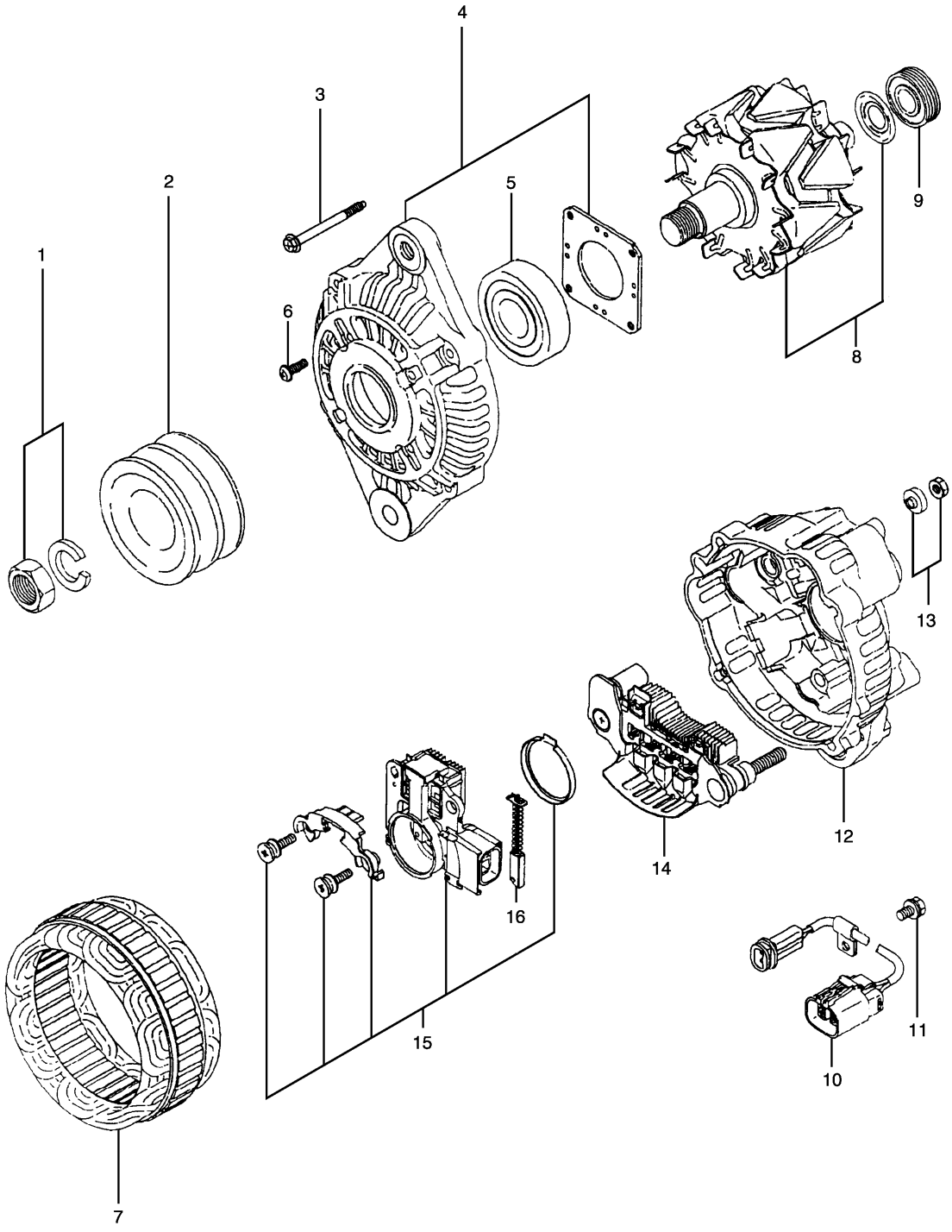

H79220E 00

212-8622 ALTERNATOR GP-CHARGING
Part of 201-3870-Page13

ELECTRICAL AND STARTING SYSTEM

NOTE	No.	PART No.	QTY	PART NAME	NOTE	No.	PART No.	QTY	PART NAME
	1	135-2382	1	NUT SET					
	2	5I-8072	1	PULLEY					
	3	5I-8073	1	SETSCREW					
	4	5I-8074	1	BRACKET AS					
	5	5I-9155	1	BEARING					
	6	5I-8075	1	SETSCREW					
	7	5I-8078	1	STATOR					
	8	5I-8076	1	ROTOR AS					
	9	5I-8077	1	BEARING					
	10	5I-8080	1	CONNECTOR AS					
	11	5I-8081	1	BOLT					
	12	5I-8079	1	BRACKET AS					
	13	085-9429	1	NUT SET					
	14	5I-8082	1	RECTIFIER AS					
	15	5I-8083	1	REGULATOR AS					
	16	5I-8084	2	BRUSH					

H79220E 00

212-8622 ALTERNATOR GP-CHARGING
Part of 201-3870-Page13

ELECTRICAL AND STARTING SYSTEM

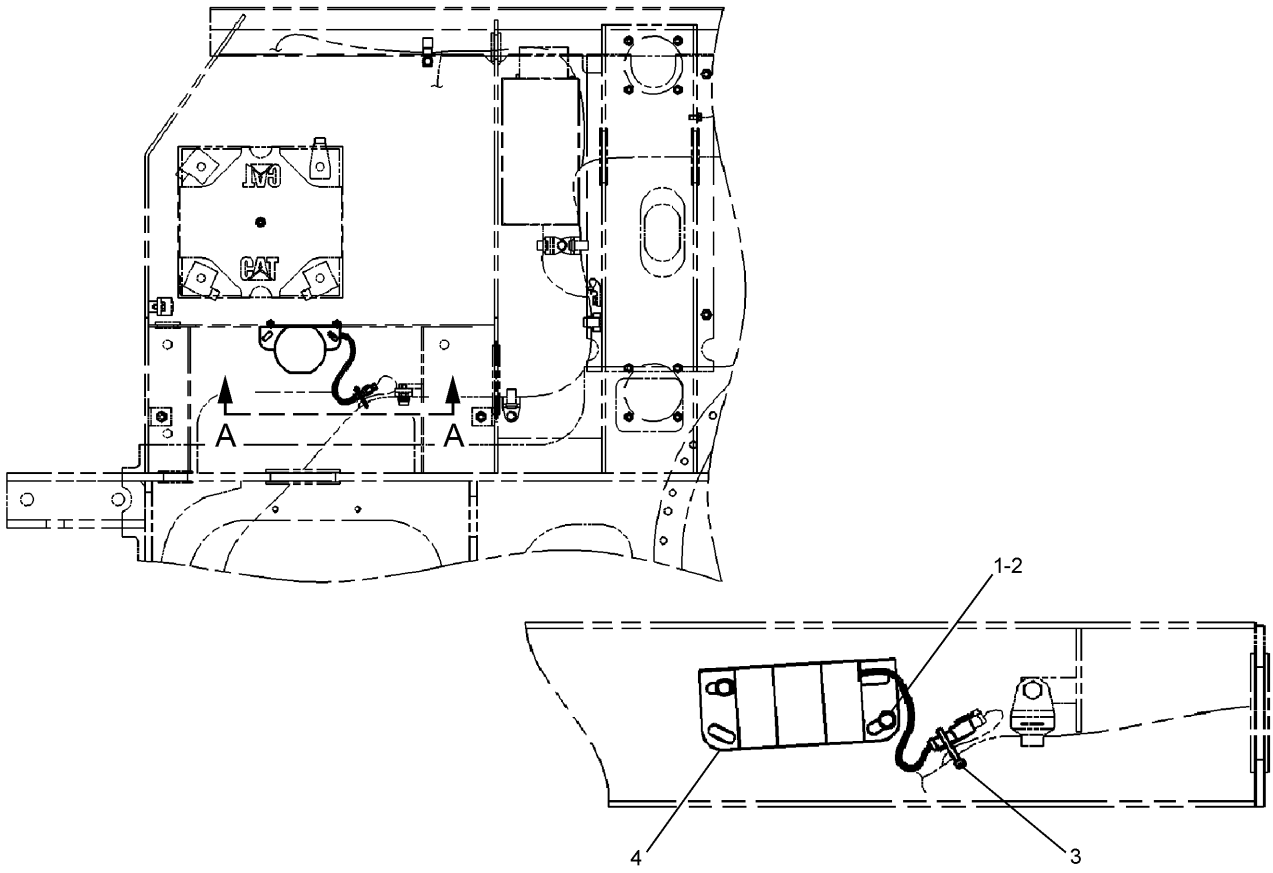

NOTE	No.	PART No.	QTY	PART NAME	NOTE	No.	PART No.	QTY	PART NAME
	1	8T-4200	2	BOLT (L=16mm)					
	2	8T-4224	2	WASHER					
	3	7K-1181	1	STRAP					
	4	213-9100	1	ALARM AS					
		102-8802	1	RECEPTACLE KIT					
		186-3735	2	PIN					

H89191E 04

170-6821 ALARM GP-TRAVEL
An Attachment

ELECTRICAL AND STARTING SYSTEM

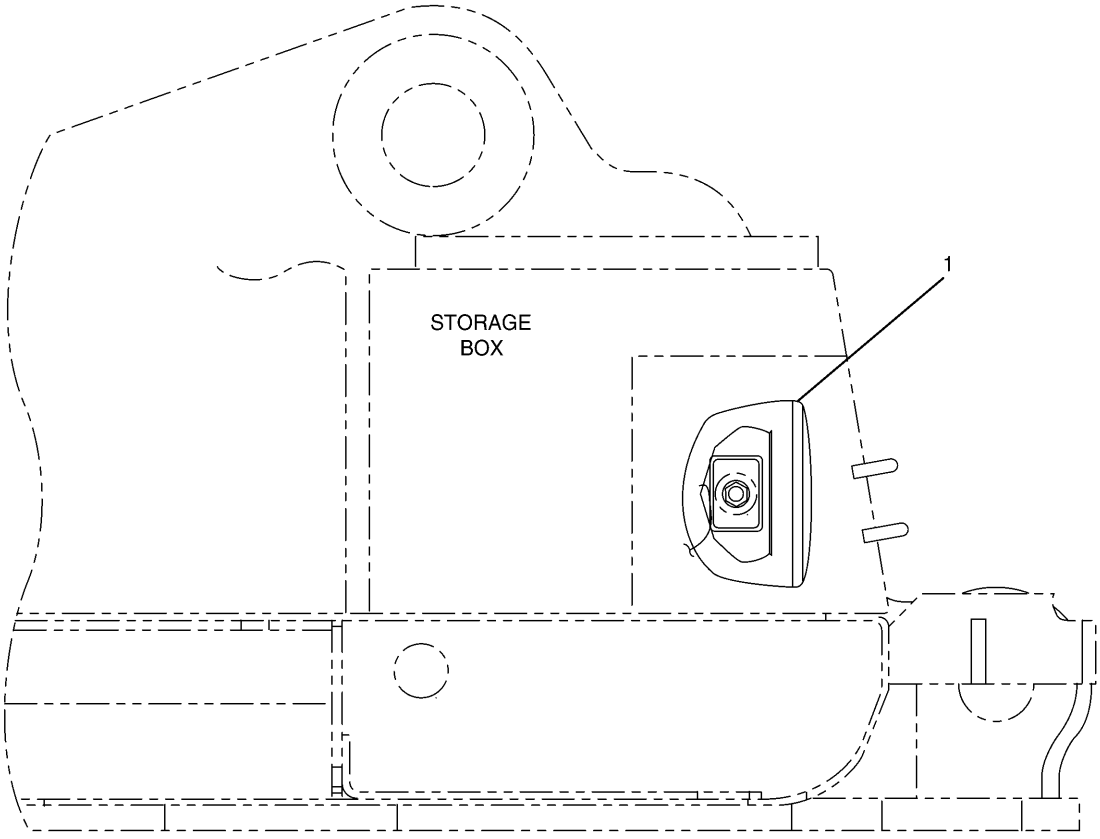

NOTE	No.	PART No.	QTY	PART NAME	NOTE	No.	PART No.	QTY	PART NAME
Y	1	153-2523	1	LAMP GP					

Y—SEE SEPARATE ILLUSTRATION

H62242E 03

4I-5409 LIGHTING GP-CHASSIS

153-2523-Page187

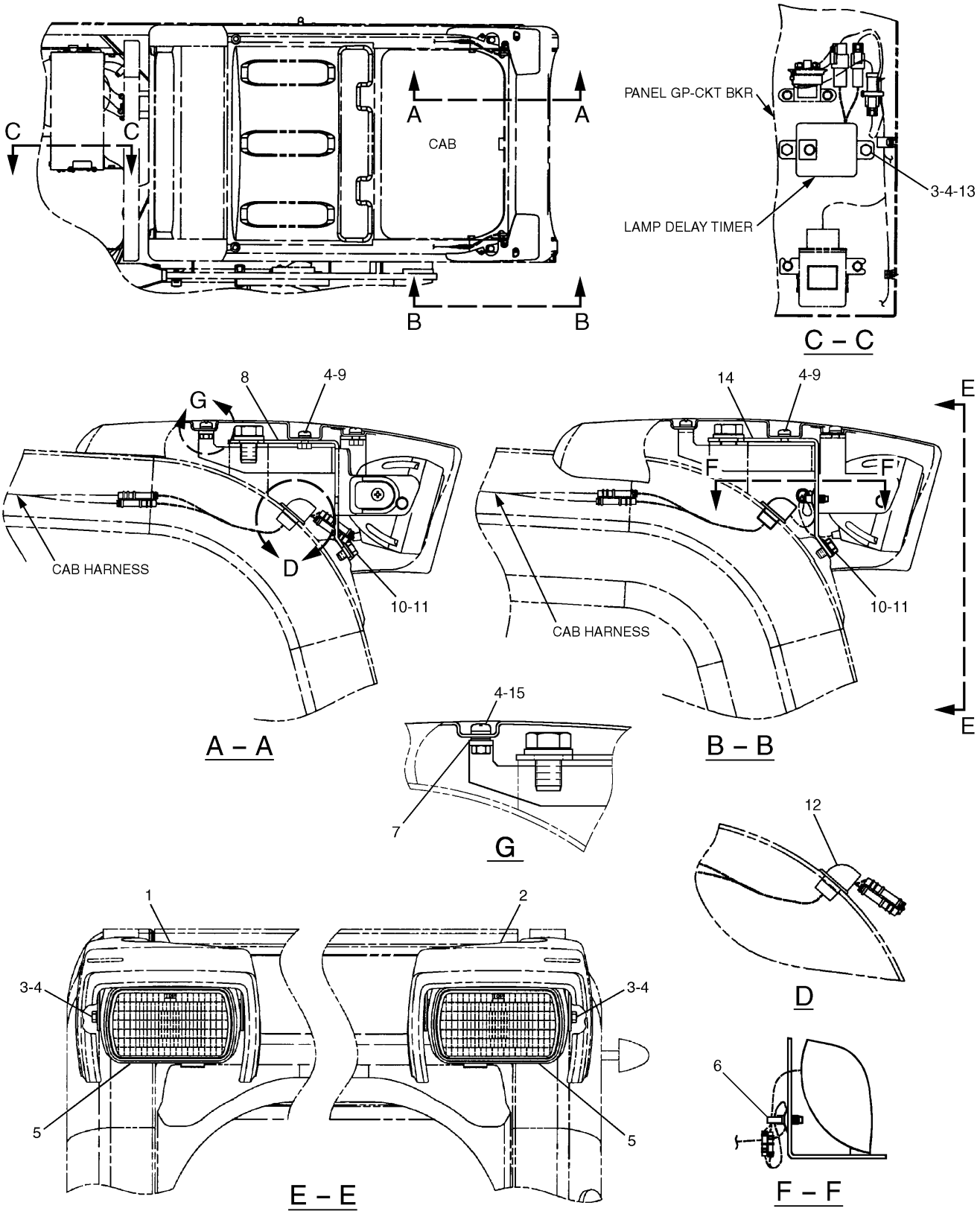

H86219E 08

163-6631 LIGHTING GP-CAB
167-3441-Page189,167-3456-Page190,163-6704-Page192
An Attachment

ELECTRICAL AND STARTING SYSTEM

NOTE	No.	PART No.	QTY	PART NAME	NOTE	No.	PART No.	QTY	PART NAME
	1	163-6814	1	COVER					
	2	163-6813	1	COVER					
	3	8T-4970	6	BOLT (L=14mm)					
	4	9X-8256	14	WASHER					
Y	5	167-3441	2	LAMP GP					
	6	163-6795	2	STRAP					
B	7	9X-8256	4	WASHER					
	8	167-3437	1	BRACKET AS					
	9	8T-6411	6	SCREW					
	10	8T-4199	2	BOLT (L=12mm)					
	11	8T-4224	2	WASHER					
Y	12	167-3456	2	HARNESS AS					
Y	13	163-6704	1	TIMER AS					
	14	167-3438	1	BRACKET AS					
	15	8T-6412	2	SCREW					

B—USE AS REQUIRED

Y—SEE SEPARATE ILLUSTRATION

H86219E 08

163-6631 LIGHTING GP-CAB

167-3441-Page189,167-3456-Page190,163-6704-Page192

An Attachment

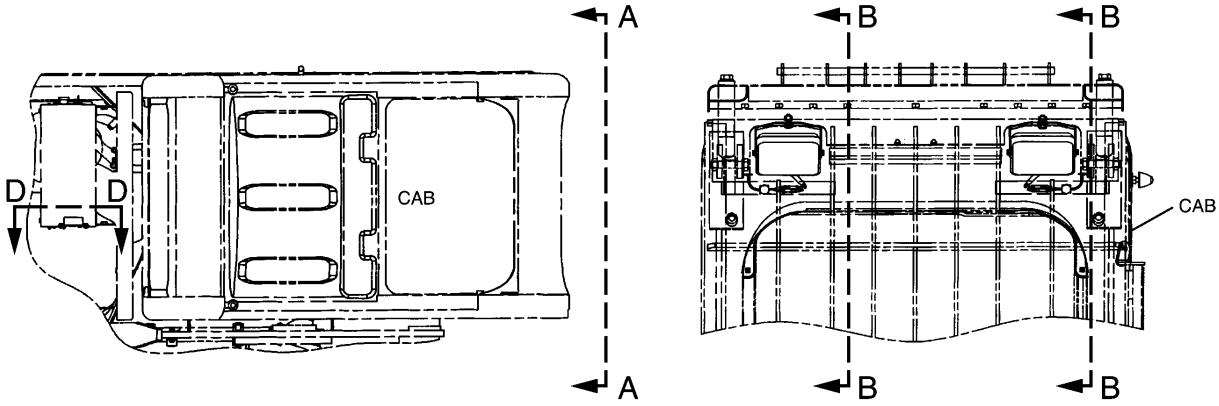

A – A

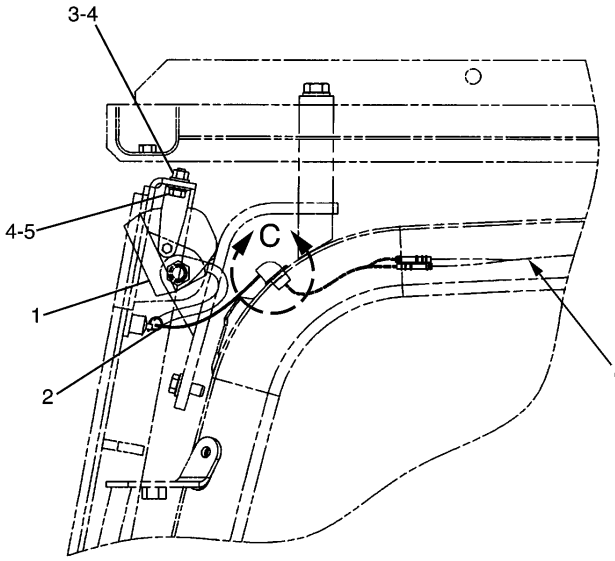

B – B

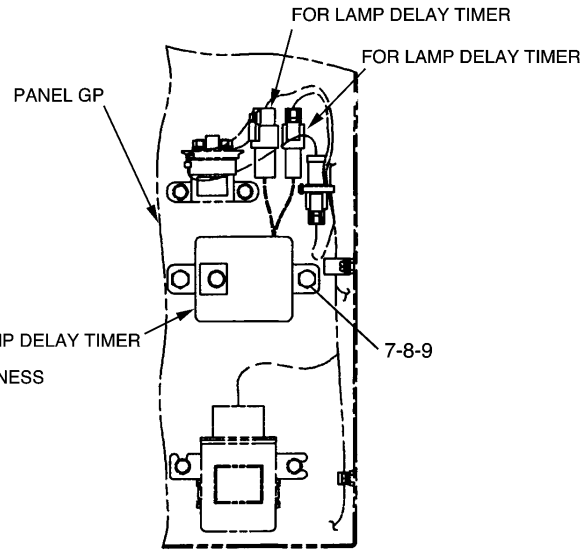

D – D

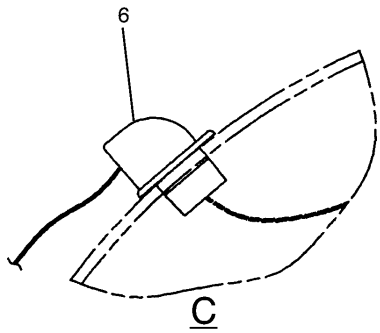

C

H78593E 00

204-1810 LIGHTING GP-CAB
183-1035-Page189,170-9295-Page190,163-6704-Page192
An Attachment

ELECTRICAL AND STARTING SYSTEM

NOTE	No.	PART No.	QTY	PART NAME	NOTE	No.	PART No.	QTY	PART NAME
Y	1	183-1035	2	LAMP GP					
	2	163-6795	2	STRAP					
	3	8T-4133	2	NUT					
	4	8T-4121	4	WASHER					
	5	8T-4137	2	BOLT (L=20mm)					
Y	6	170-9295	2	HARNESS AS					
	7	8T-4970	2	BOLT (L=14mm)					
	8	9X-8256	2	WASHER					
Y	9	163-6704	1	TIMER AS					

Y—SEE SEPARATE ILLUSTRATION

H78593E 00

204-1810 LIGHTING GP-CAB

183-1035-Page189,170-9295-Page190,163-6704-Page192

An Attachment

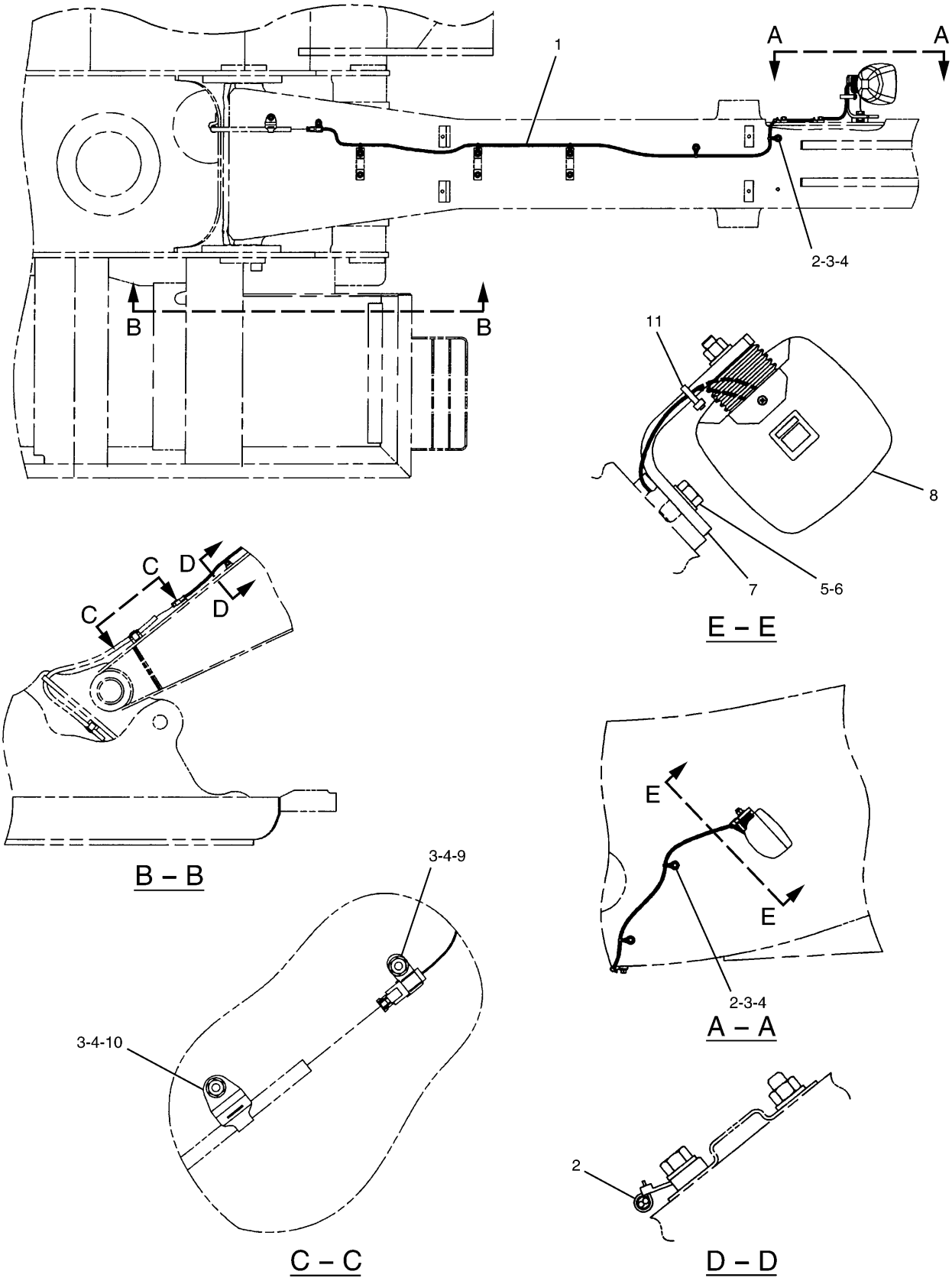

H77506E 00

197-4421 LIGHTING GP-BOOM
Part of 151-1487-Page628
197-4422-Page186,153-2521-Page188
An Attachment

ELECTRICAL AND STARTING SYSTEM

NOTE	No.	PART No.	QTY	PART NAME	NOTE	No.	PART No.	QTY	PART NAME
Y	1	197-4422	1	HARNESS AS					
	2	111-4836	7	CLIP					
	3	8T-4133	6	NUT					
	4	8T-4121	6	WASHER					
	5	8T-4190	1	BOLT (L=25mm)					
	6	9X-8257	1	WASHER					
	7	134-3284	1	BRACKET					
Y	8	153-2521	1	LAMP GP					
	9	116-0118	1	CLIP					
	10	111-4837	1	CLIP					
	11	3S-2093	1	STRAP					

Y—SEE SEPARATE ILLUSTRATION

H77506E 00

197-4421 LIGHTING GP-BOOM

Part of 151-1487-Page628
197-4422-Page186,153-2521-Page188
An Attachment

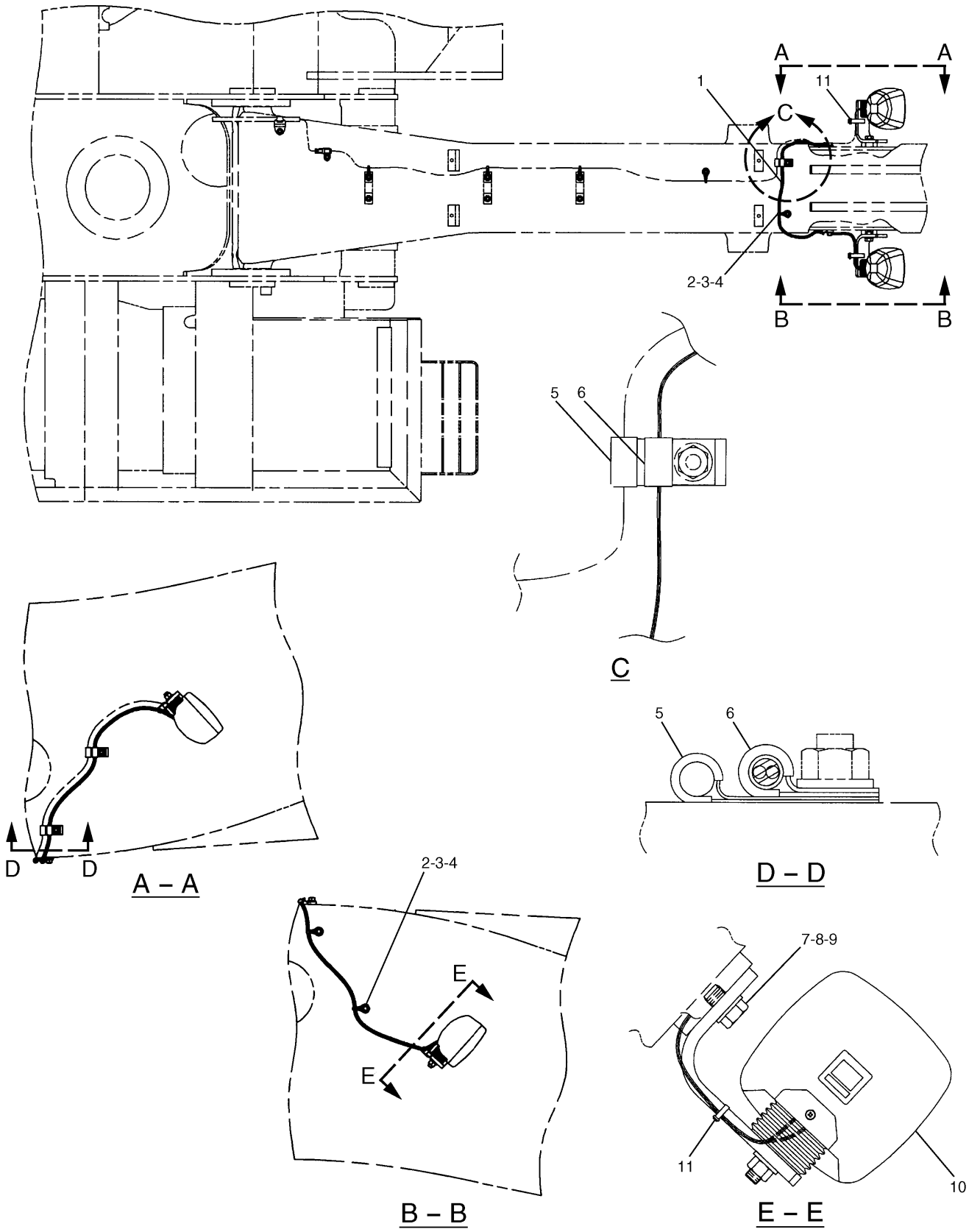

197-4423 LIGHTING GP-BOOM
153-2521-Page188
An Attachment

ELECTRICAL AND STARTING SYSTEM

NOTE	No.	PART No.	QTY	PART NAME	NOTE	No.	PART No.	QTY	PART NAME
	1	197-4424	1	HARNESS AS					
		2L-8075	4	TERMINAL					
	2	111-4836	3	CLIP					
	3	8T-4133	3	NUT					
	4	8T-4121	3	WASHER					
	5	7N-3718	3	CLIP					
	6	5P-9297	3	CLIP					
	7	134-3284	1	BRACKET					
	8	8T-4190	1	BOLT (L=25mm)					
	9	9X-8257	1	WASHER					
Y	10	153-2521	1	LAMP GP					
	11	3S-2093	2	STRAP					

Y—SEE SEPARATE ILLUSTRATION

H75141E 00

197-4423 LIGHTING GP-BOOM

153-2521-Page188
An Attachment

ELECTRICAL AND STARTING SYSTEM

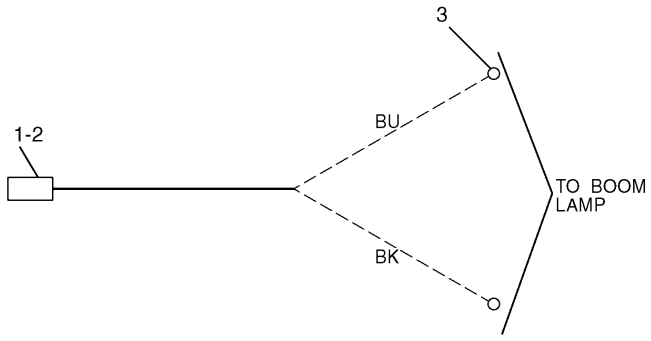

NOTE	No.	PART No.	QTY	PART NAME
	1	9W-0852	2	PIN
	2	102-8802	1	RECEPTACLE KIT
	3	2L-8075	2	TERMINAL

H77507E 00

197-4422 HARNESS AS

Part of 197-4421-Page183
An Attachment

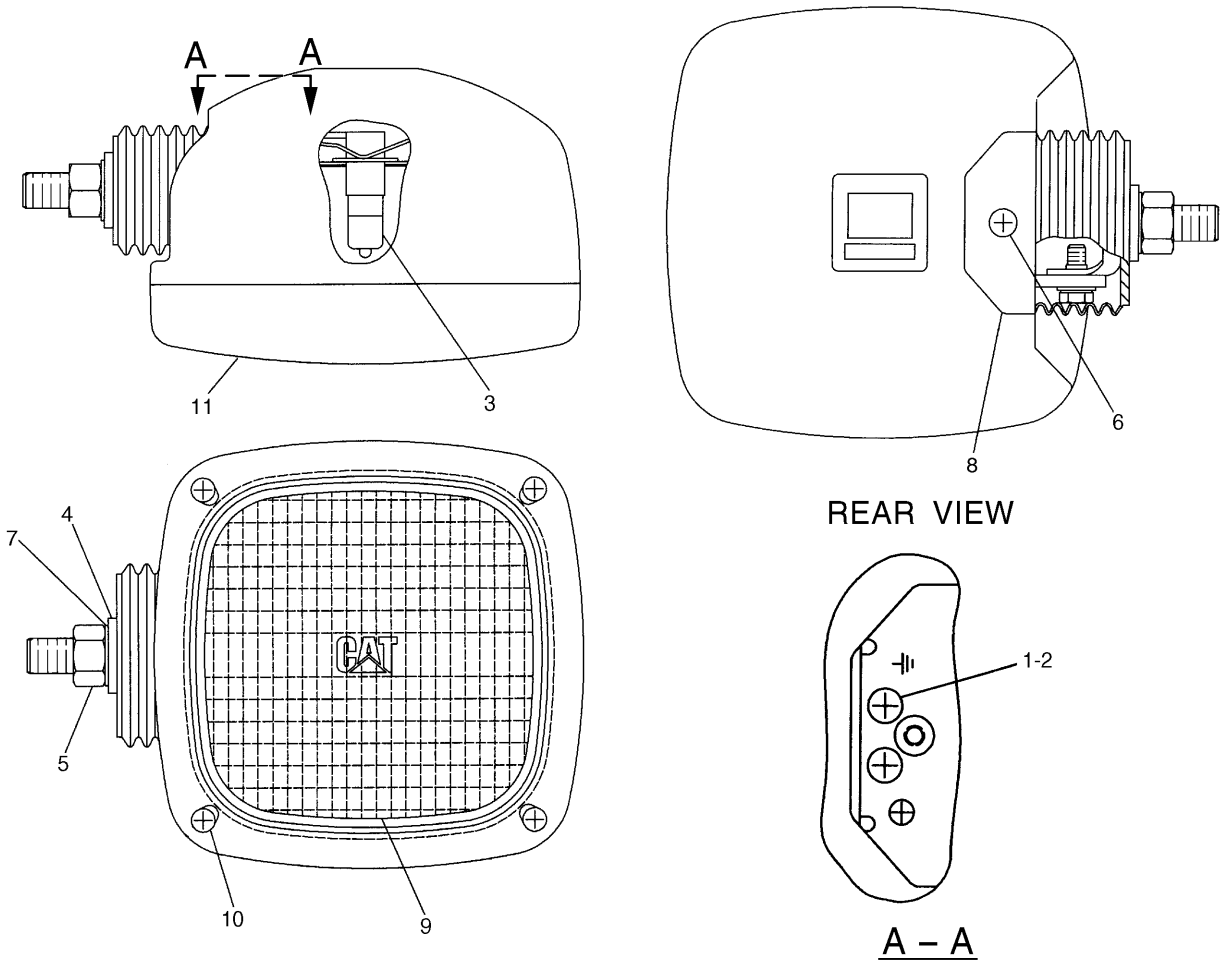

NOTE	No.	PART No.	QTY	PART NAME	NOTE	No.	PART No.	QTY	PART NAME
	1	6V-5210	2	SCREW					
	2	3B-4501	2	LOCKWASHER					
	3	9X-3463	1	BULB					
	4	8T-4223	1	WASHER					
	5	8T-4244	1	NUT					
	6	174-7791	1	SCREW					
	7	5C-2889	1	LOCKWASHER					
	8	170-6993	1	COVER					
	9	170-9417	1	LENS AS					
	10	180-3861	4	SCREW					
	11	170-9418	1	BAND					

H66567E 02

153-2523 LAMP GP-FLOOD

Part of 4I-5409-Page177

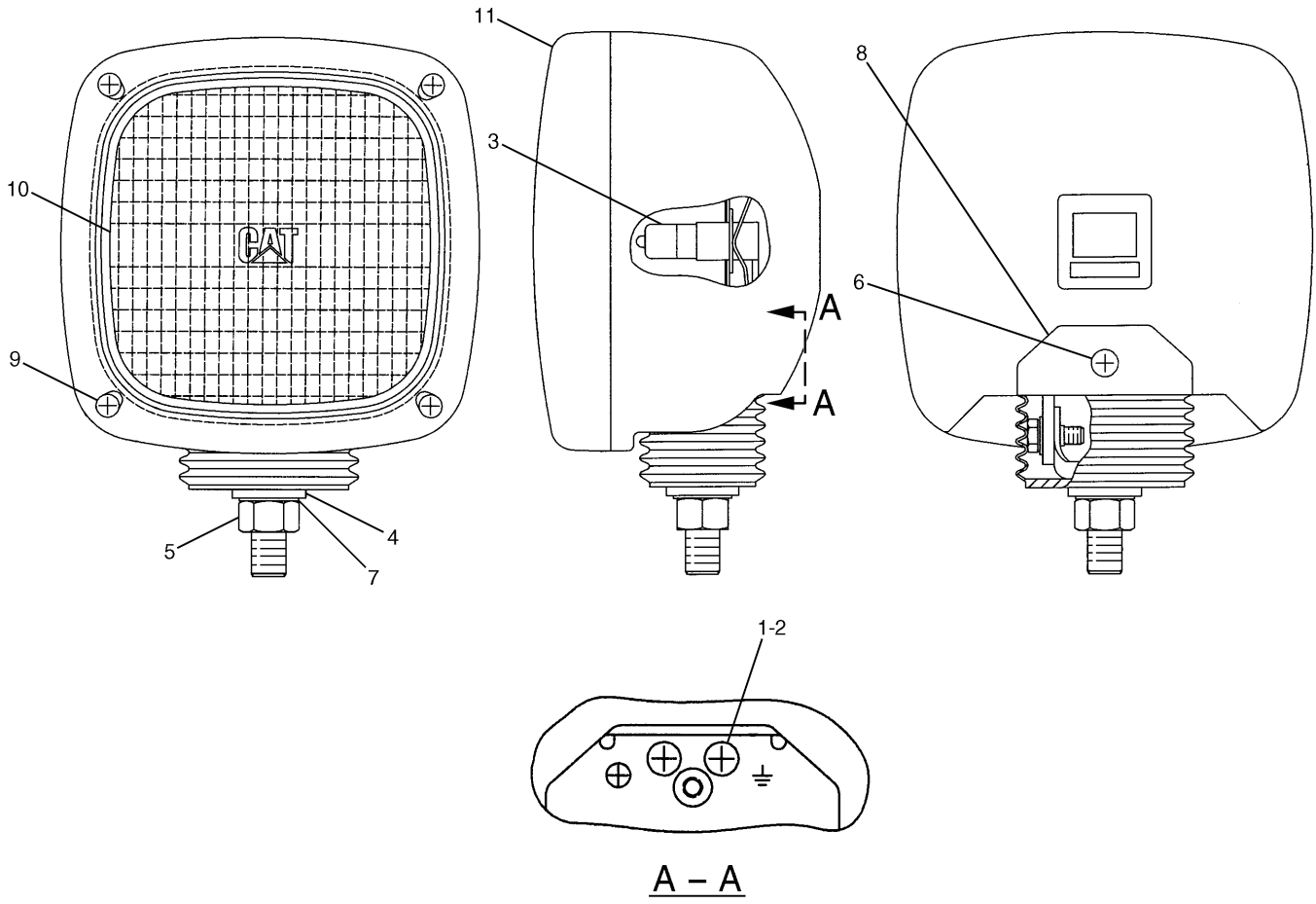

A – A

NOTE	No.	PART No.	QTY	PART NAME	NOTE	No.	PART No.	QTY	PART NAME
	1	6V-5210	2	SCREW					
	2	3B-4501	2	LOCKWASHER					
	3	9X-3463	1	BULB					
	4	8T-4223	1	WASHER					
	5	8T-4244	1	NUT					
	6	174-7791	1	SCREW					
	7	5C-2889	1	LOCKWASHER					
	8	170-6993	1	COVER					
	9	180-3861	4	SCREW					
	10	170-9417	1	LENS AS					
	11	170-9418	1	BAND					

H66565E 02

153-2521 LAMP GP-FLOOD

Part of 197-4421-Page183,197-4423-Page185
An Attachment

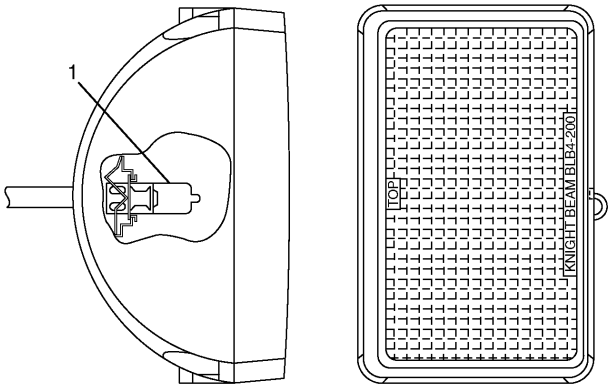

NOTE	No.	PART No.	QTY	PART NAME
	1	9X-3463	1	BULB

H67105E 02

167-3441 LAMP GP-FLOOD

Part of 163-6631-Page179
An Attachment

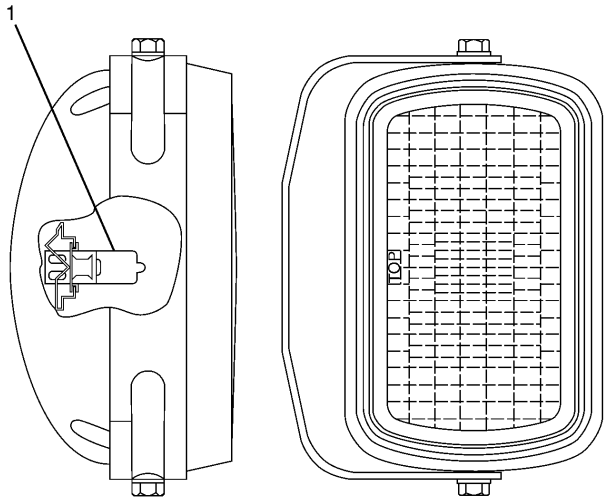

NOTE	No.	PART No.	QTY	PART NAME
	1	9X-3463	1	BULB

H78658E 00

183-1035 LAMP GP-FLOOD

Part of 204-1810-Page181
An Attachment

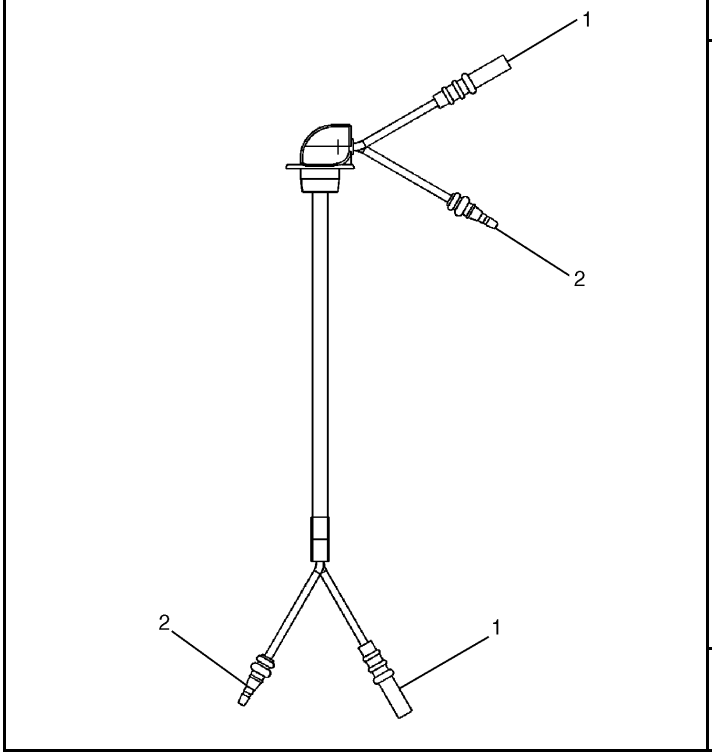

NOTE	No.	PART No.	QTY	PART NAME
	1	7Y-3963	2	TERMINAL
		7Y-3965	2	TUBE
	2	7Y-3962	2	TERMINAL
		7Y-3964	2	TUBE

H86647E 03

167-3456 HARNESS AS

Part of 163-6631-Page179
An Attachment

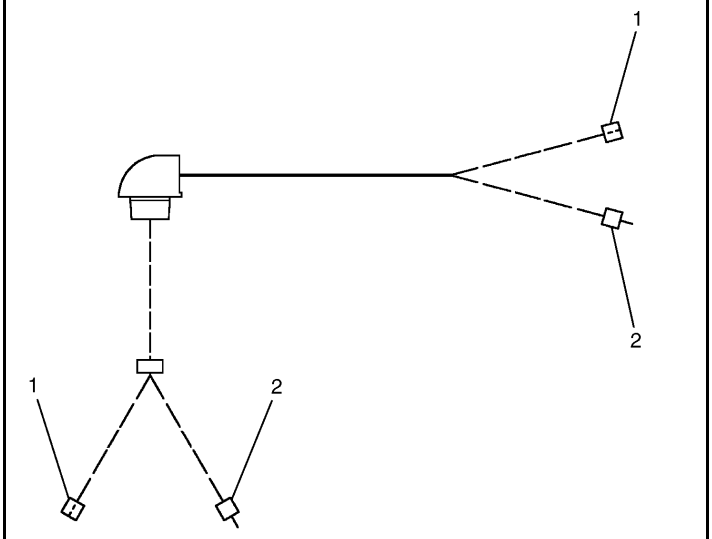

NOTE	No.	PART No.	QTY	PART NAME
	1	7Y-3963	2	TERMINAL
		7Y-3965	2	TUBE
	2	7Y-3962	2	TERMINAL
		7Y-3964	2	TUBE

H78595E 00

170-9295 HARNESS AS

Part of 204-1810-Page181
An Attachment

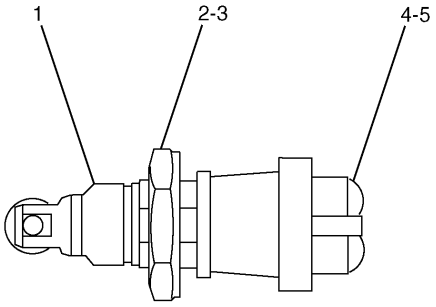

NOTE	No.	PART No.	QTY	PART NAME
	1	9X-0199	1	BOOT
	2	6V-8370	1	NUT
	3	2H-3922	1	LOCKWASHER
	4	6V-8363	2	SCREW
	5	8F-1434	2	LOCKWASHER

H74275E 01

129-6466 SWITCH AS-ROLLER

Part of 176-1904-Page567
An Attachment

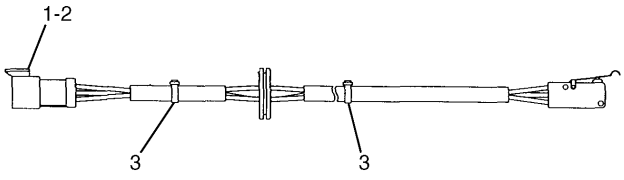

NOTE	No.	PART No.	QTY	PART NAME
	1	186-3735	3	PIN
	2	102-8803	1	RECEPTACLE KIT
	3	3S-2093	2	STRAP

H68392E 02

163-6785 SWITCH AS

Limit
Part of 167-7080-Page588

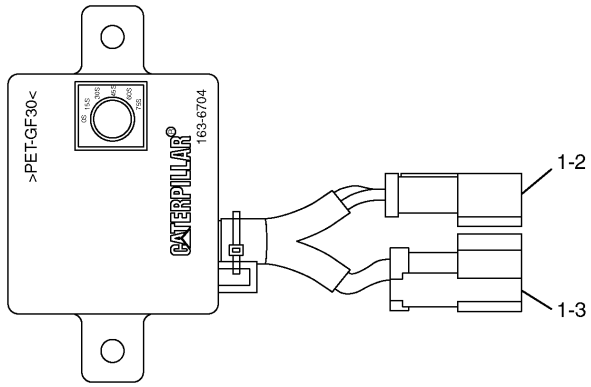

NOTE	No.	PART No.	QTY	PART NAME
	1	186-3735	5	PIN
	2	102-8802	1	RECEPTACLE KIT
	3	102-8803	1	RECEPTACLE KIT

H69865E 02

163-6704 TIMER AS
Part of 163-6631-Page179,204-1810-Page181
An Attachment

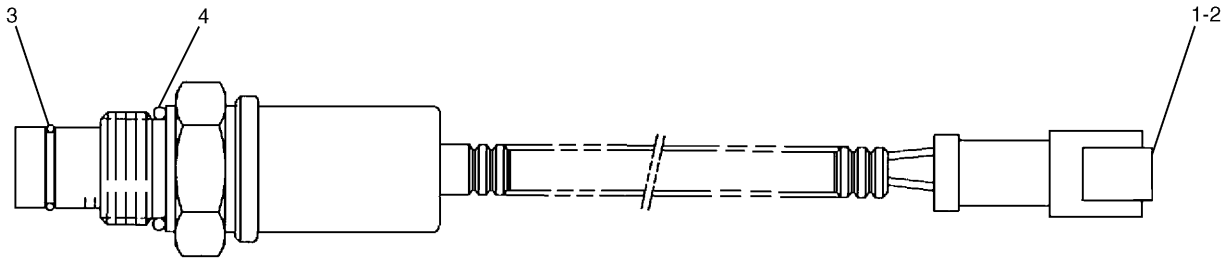

NOTE	No.	PART No.	QTY	PART NAME	NOTE	No.	PART No.	QTY	PART NAME
	1	102-8802	1	RECEPTACLE KIT					
	2	8T-8729	2	PIN					
	3	4I-0754	1	SEAL					
	4	2M-9780	1	SEAL-O-RING (ID=19.18mm)					

H68409E 00

170-9419 SWITCH AS

Part of 168-9526-Page265,196-0927-Page269

ELECTRICAL AND STARTING SYSTEM

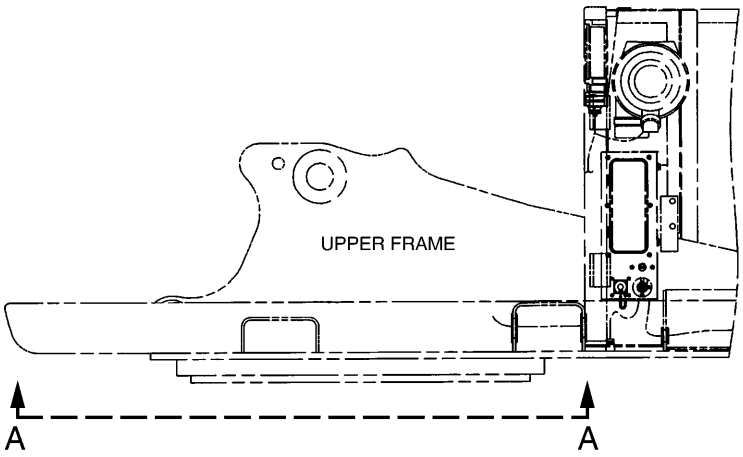

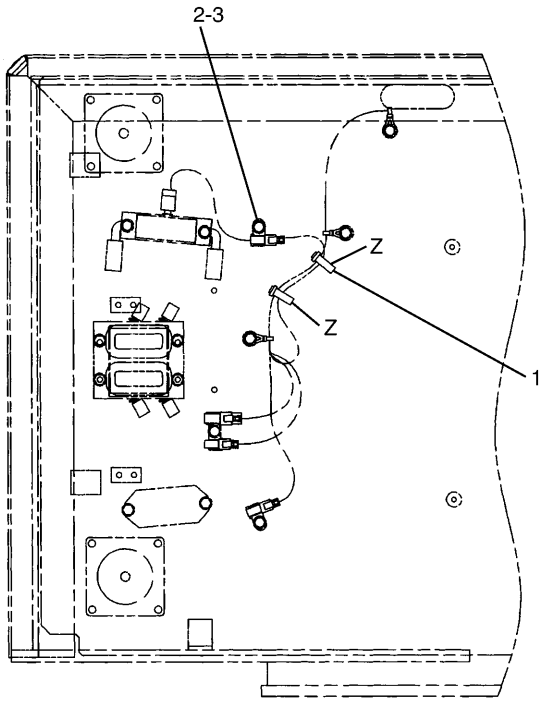

A – A

NOTE	No.	PART No.	QTY	PART NAME	NOTE	No.	PART No.	QTY	PART NAME
	1	3S-2093	2	STRAP					
	2	7X-2621	1	BOLT (L=12mm)					
	3	8T-4121	1	WASHER					

H81758E 01

193-3550 WIRING GP
Part of 165-0967-Page357.01
An Attachment

ELECTRICAL AND STARTING SYSTEM

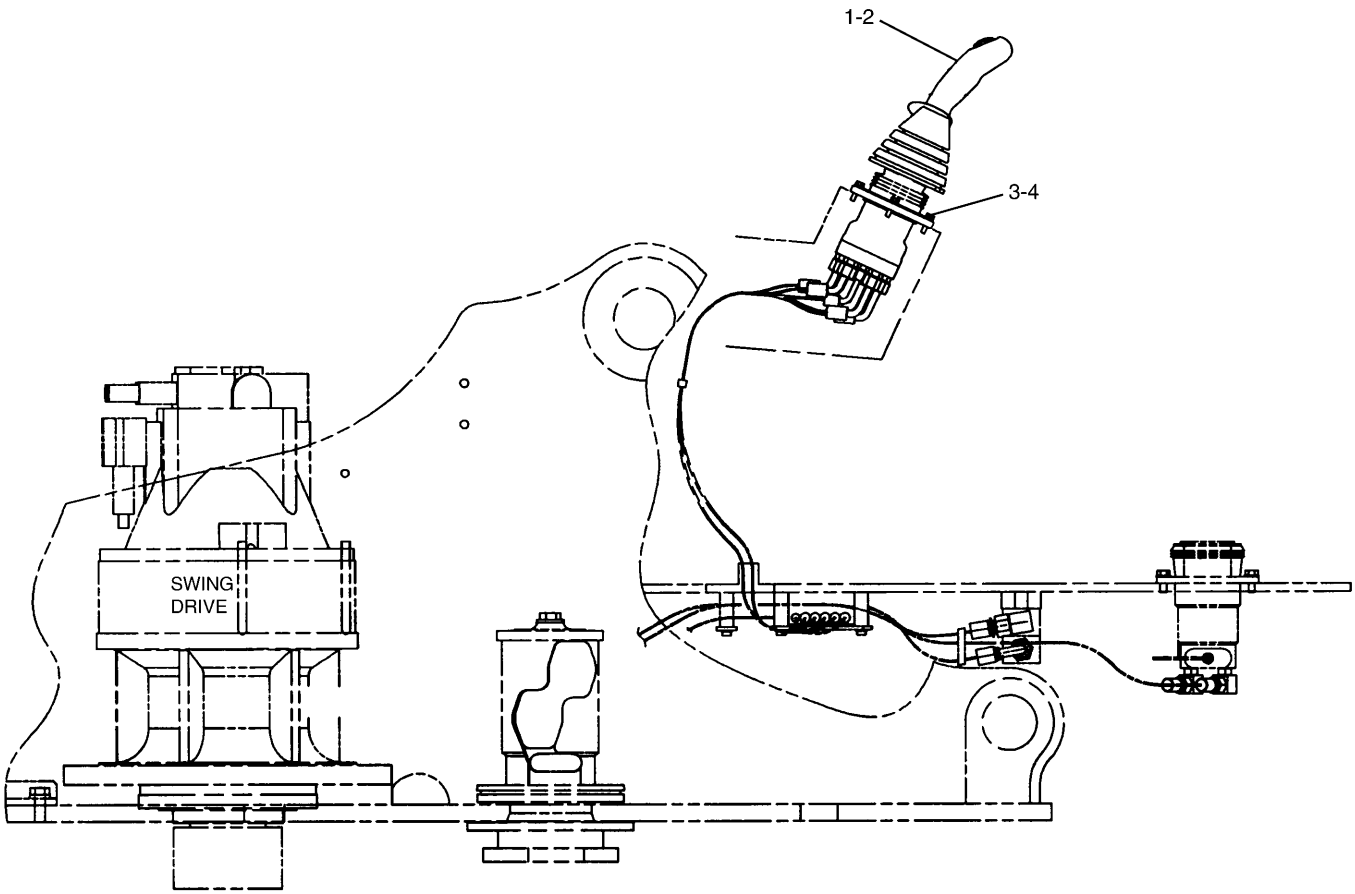

NOTE	No.	PART No.	QTY	PART NAME	NOTE	No.	PART No.	QTY	PART NAME
Y	1	216-6748	1	VALVE GP (LH)					
Y	2	216-6749	1	VALVE GP (RH)					
	3	6V-7357	6	BOLT (L=25mm)					
	4	9X-8256	6	WASHER					

Y—SEE SEPARATE ILLUSTRATION

H85817E 02

165-0989 CONTROL GP-ELECTRIC HAND

Part of 200-6637-Page357.01
216-6749-Page435.01,216-6748-Page435.02
An Attachment

MEMORANDA

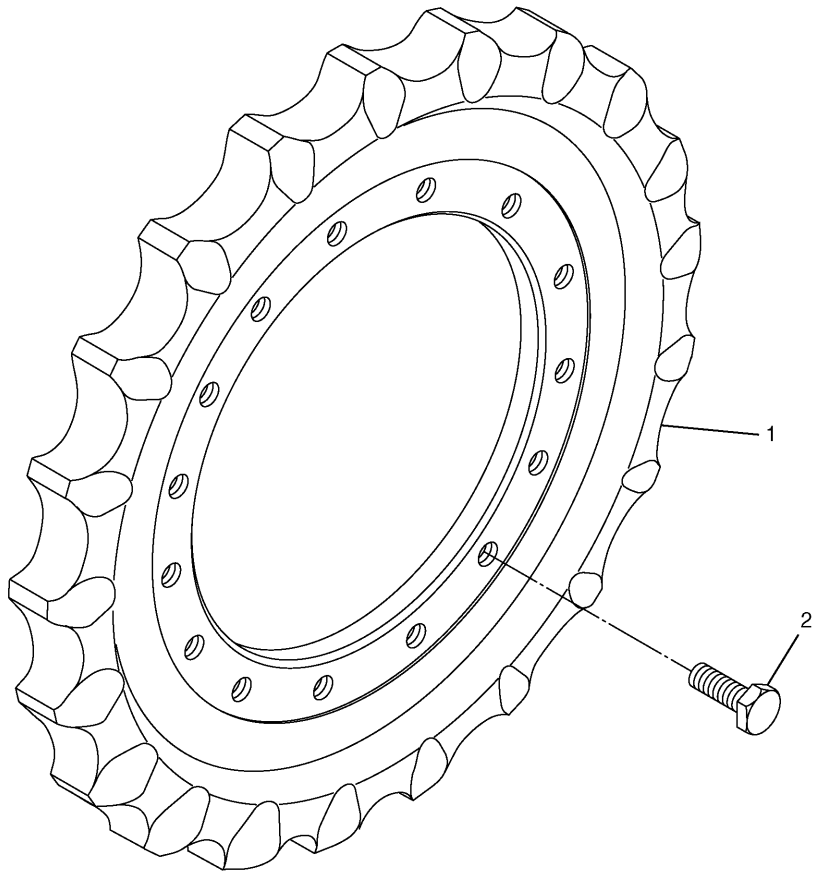

NOTE	No.	PART No.	QTY	PART NAME	NOTE	No.	PART No.	QTY	PART NAME
	1	4I-7472	1	SPROCKET					
	2	8T-7338	15	BOLT (L=45mm)					

H71873E 01

168-6728 SPROCKET GP-NONSEGMENTED

2 Required

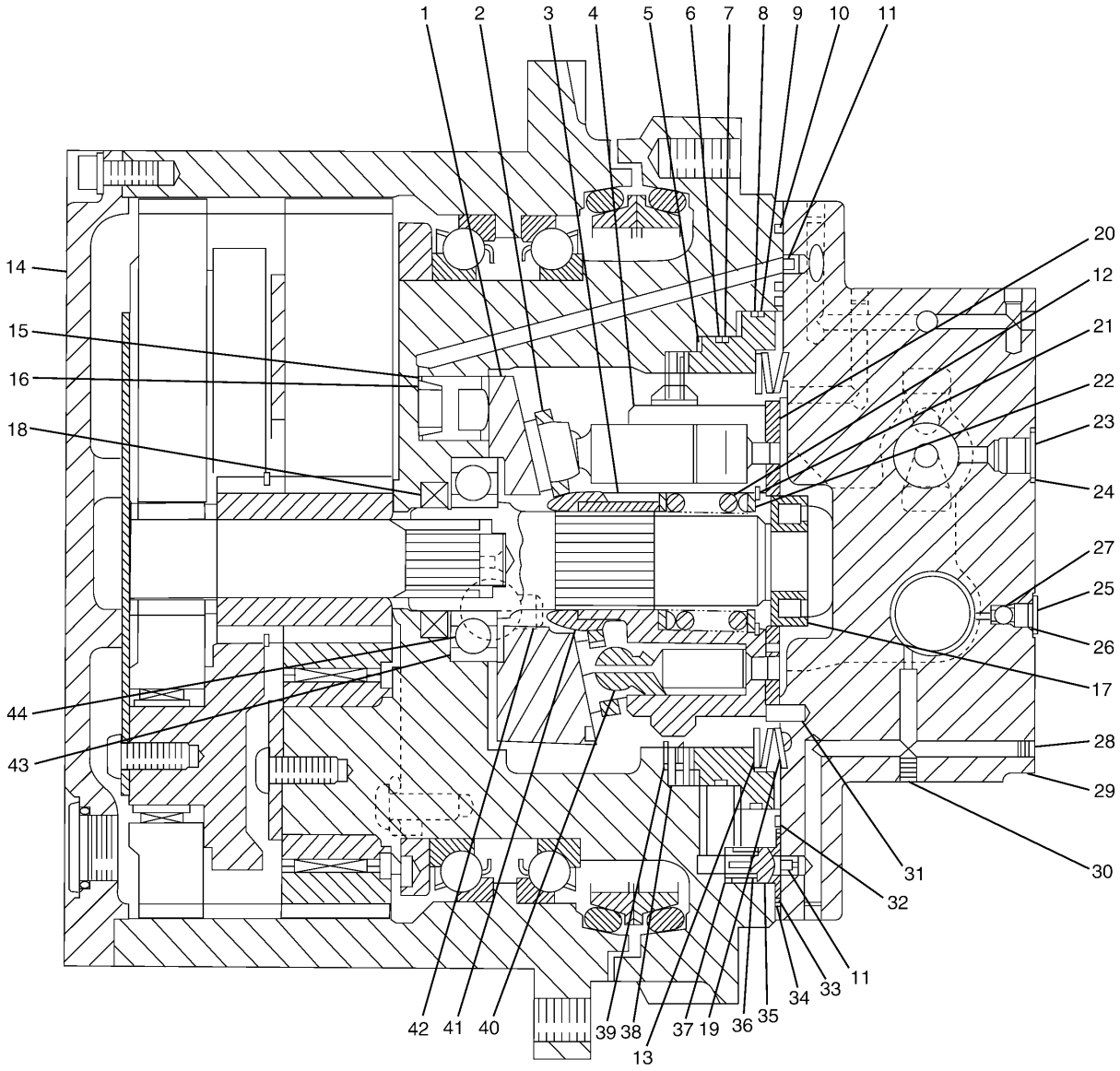

H84345E 03

191-2666 FINAL DRIVE GP (1/2)
S/N CAE 01201-03088
191-2619-Page200

POWER TRAIN

NOTE	No.	PART No.	QTY	PART NAME	NOTE	No.	PART No.	QTY	PART NAME
	1	194-8284	1	SWASHPLATE					
	2	194-8283	1	RETAINER					
	3	1R-5875	3	PIN					
	4	194-8281	1	BARREL					
	5	194-8290	1	PISTON					
	6	095-7386	1	RING					
	7	095-7383	1	SEAL-O-RING (ID=174.00mm)					
	8	096-4377	1	SEAL-O-RING (ID=190.00mm)					
	9	1R-5883	1	RING					
	10	095-1578	1	SEAL-O-RING (ID=9.80mm)					
	11	114-8229	2	ORIFICE					
	12	194-8289	1	SPRING					
B	13	096-1521	1	SHIM (T=1.00mm)					
B		096-3785	1	SHIM (T=1.20mm)					
B		096-3786	1	SHIM (T=1.40mm)					
B		096-3787	1	SHIM (T=1.60mm)					
B		096-3788	1	SHIM (T=1.80mm)					
B		096-1522	1	SHIM (T=2.00mm)					
Y	14	191-2619	1	DRIVE GP					
	15	194-8288	1	PISTON AS					
	16	7I-1082	1	SPRING					
	17	1R-5870	1	BEARING					
	18	1R-5871	1	SEAL					
	19	1R-5881	2	SPRING					
	20	194-8286	1	PLATE					
	21	095-0939	1	RING					
	22	194-8295	2	WASHER					
	23	9S-8004	2	PLUG					
	24	3J-1907	2	SEAL-O-RING (ID=11.89mm)					
	25	7I-1104	2	PLUG					
	26	095-1575	2	SEAL-O-RING (ID=7.80mm)					
	27	3Y-9267	2	BALL					
	28	096-1445	1	PLUG					
	29	194-8394	1	COVER AS					
		1R-8962	2	ORIFICE					
	30	8T-6759	3	PLUG					
	31	095-0882	1	PIN					
	32	7Y-4277	1	SEAL-O-RING (ID=202.79mm)					
	33	096-1519	1	SEAT					
	34	095-1585	1	SEAL-O-RING (ID=17.80mm)					
	35	095-7381	1	VALVE					
	36	095-7380	1	SPRING					
	37	194-8292	1	RETAINER					
	38	1R-5880	2	PLATE					
	39	194-8291	2	PLATE					
	40	194-8285	9	PISTON AS					
	41	194-8282	1	GUIDE					
	42	194-8280	1	SHAFT					
	43	7I-1125	1	BEARING					
	44	1R-5874	2	BALL					

B—USE AS REQUIRED

Y—SEE SEPARATE ILLUSTRATION

H84345E 03

191-2666 FINAL DRIVE GP (1/2)

S/N CAE 01201-03088

191-2619-Page200

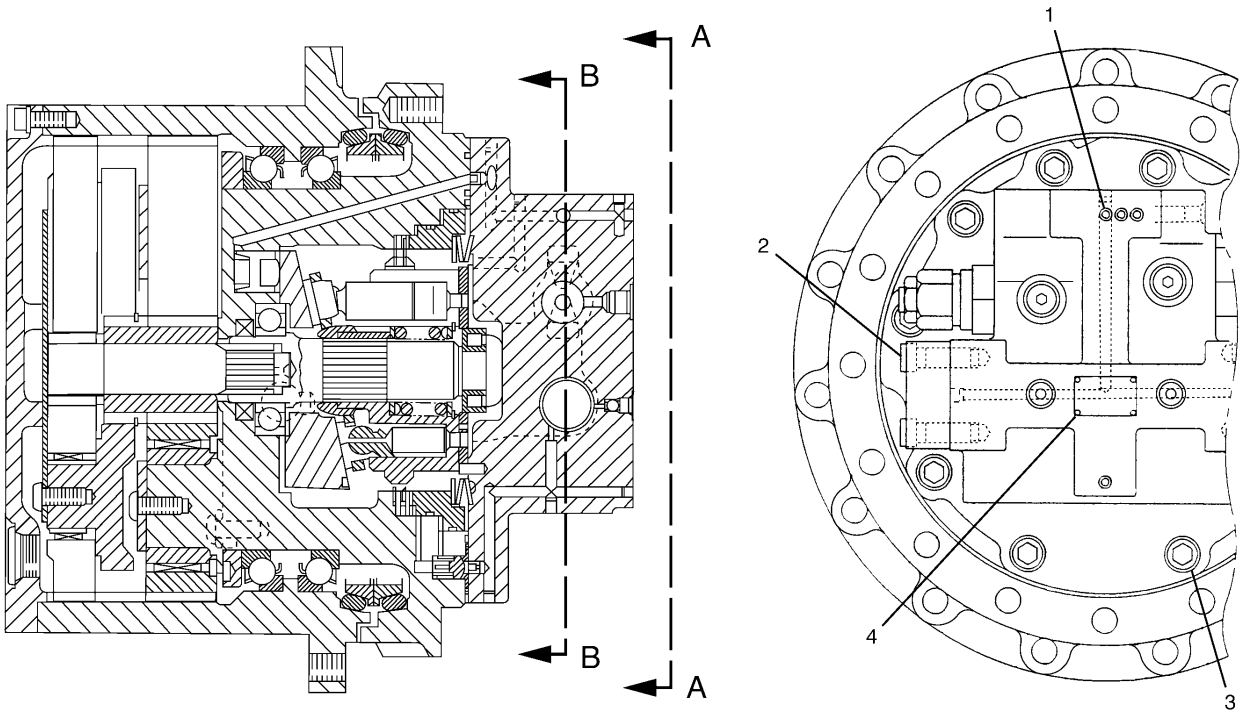

A – A

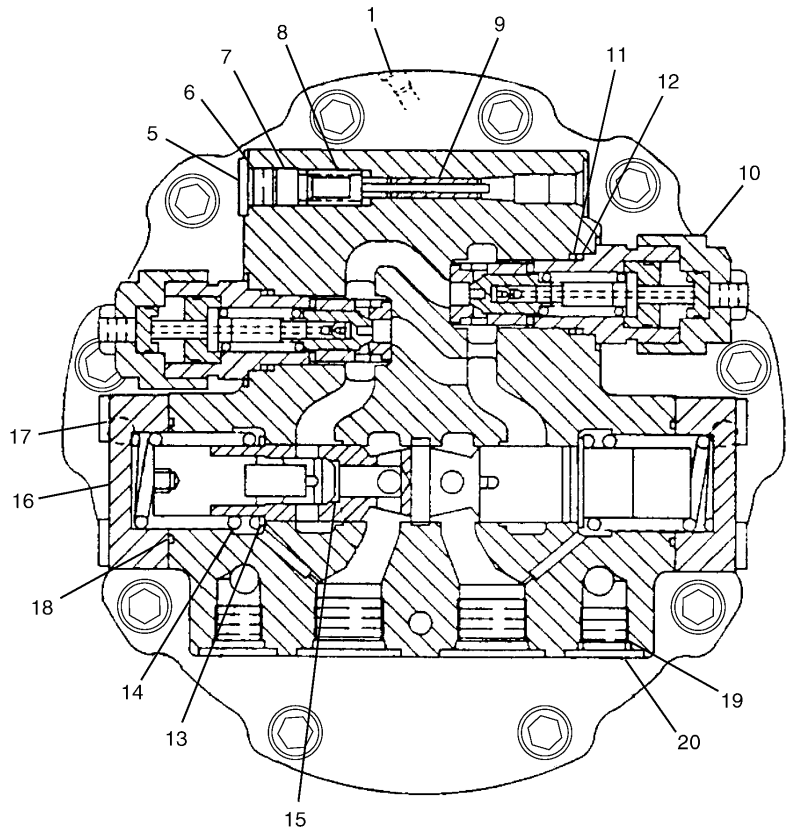

B – B

H84346E 03

191-2666 FINAL DRIVE GP (2/2)
S/N CAE 01201-03088

POWER TRAIN

NOTE	No.	PART No.	QTY	PART NAME	NOTE	No.	PART No.	QTY	PART NAME
	1	8T-6759	7	PLUG					
	2	6V-8200	8	BOLT (L=35mm)					
	3	095-0687	10	BOLT (L=45mm)					
	4	114-8231	4	SCREW					
	5	1R-5889	1	PLUG					
	6	095-1517	1	SEAL-O-RING (ID=13.80mm)					
	7	7I-1129	1	STOPPER					
	8	096-3978	1	SPRING					
	9	209-6060	1	SPOOL					
	10	194-8299	2	VALVE GP					
	11	095-1594	1	SEAL-O-RING (ID=25.70mm)					
	12	095-1789	1	RING					
	13	7I-1137	2	WASHER					
	14	7I-1138	2	SPRING					
	15	225-4484	1	SPOOL AS					
	16	7I-1141	2	COVER					
	17	1R-5891	2	PIN					
	18	5P-2568	2	SEAL-O-RING (ID=44.12mm)					
	19	6V-8399	1	SEAL-O-RING (ID=17.17mm)					
	20	9S-8005	1	PLUG					

H84346E 03

191-2666 FINAL DRIVE GP (2/2)

S/N CAE 01201-03088

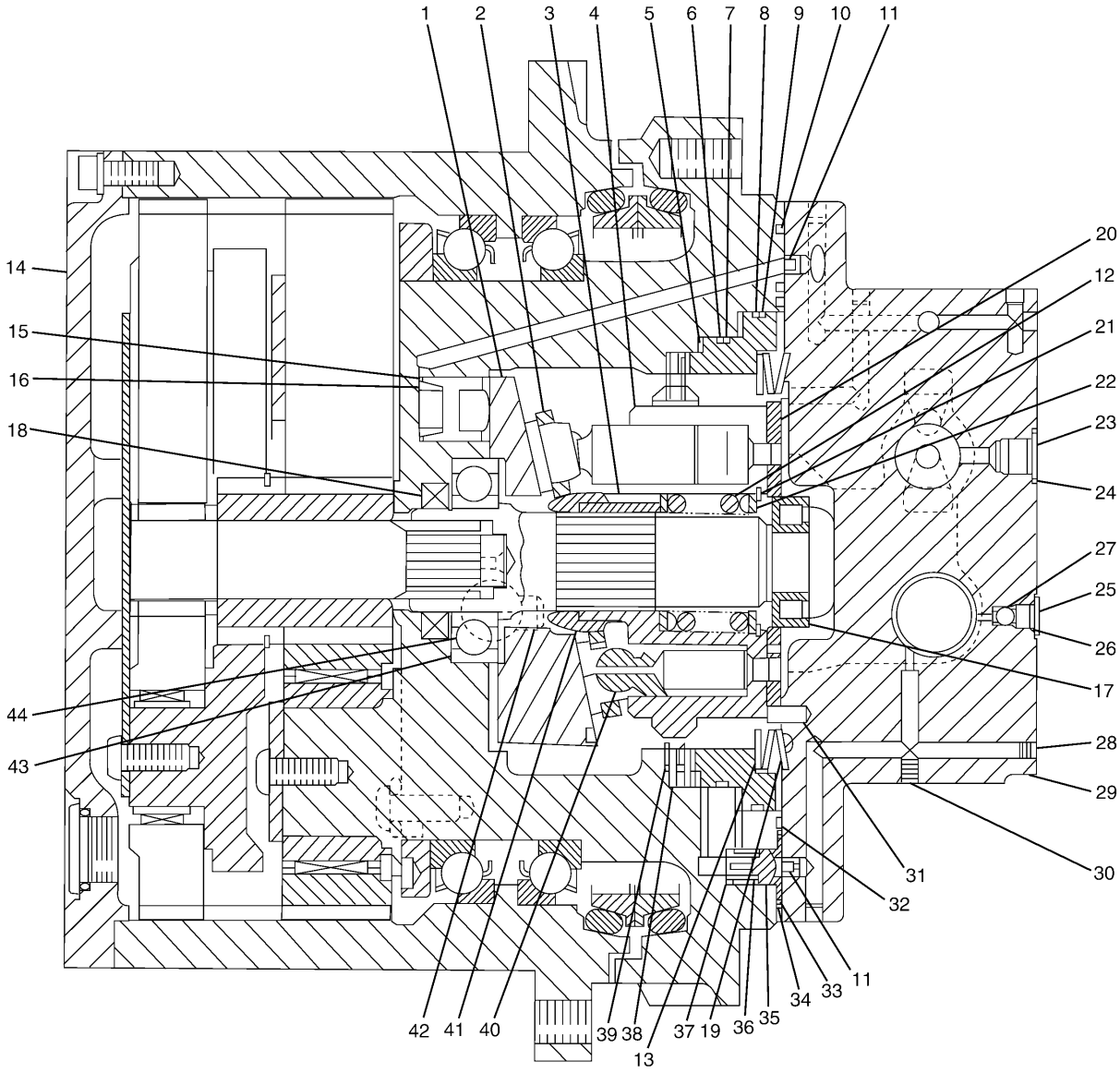

H93804E 00

267-6824 FINAL DRIVE GP (1/2)
S/N CAE 03089-04515
191-2619-Page200

POWER TRAIN

NOTE	No.	PART No.	QTY	PART NAME	NOTE	No.	PART No.	QTY	PART NAME
	1	194-8284	1	SWASHPLATE					
	2	194-8283	1	RETAINER					
	3	1R-5875	3	PIN					
	4	194-8281	1	BARREL					
	5	194-8290	1	PISTON					
	6	095-7386	1	RING					
	7	095-7383	1	SEAL-O-RING (ID=174.00mm)					
	8	096-4377	1	SEAL-O-RING (ID=190.00mm)					
	9	1R-5883	1	RING					
	10	095-1578	1	SEAL-O-RING (ID=9.80mm)					
	11	114-8229	2	ORIFICE					
	12	194-8289	1	SPRING					
B	13	096-1521	1	SHIM (T=1.00mm)					
B		096-3785	1	SHIM (T=1.20mm)					
B		096-3786	1	SHIM (T=1.40mm)					
B		096-3787	1	SHIM (T=1.60mm)					
B		096-3788	1	SHIM (T=1.80mm)					
B		096-1522	1	SHIM (T=2.00mm)					
Y	14	191-2619	1	DRIVE GP					
	15	194-8288	1	PISTON AS					
	16	7I-1082	1	SPRING					
	17	1R-5870	1	BEARING					
	18	1R-5871	1	SEAL					
	19	1R-5881	2	SPRING					
	20	194-8286	1	PLATE					
	21	095-0939	1	RING					
	22	194-8295	2	WASHER					
	23	9S-8004	2	PLUG					
	24	3J-1907	2	SEAL-O-RING (ID=11.89mm)					
	25	7I-1104	2	PLUG					
	26	095-1575	2	SEAL-O-RING (ID=7.80mm)					
	27	3Y-9267	2	BALL					
	28	096-1445	1	PLUG					
	29	274-2700	1	COVER AS					
	30	8T-6759	3	PLUG					
	31	095-0882	1	PIN					
	32	7Y-4277	1	SEAL-O-RING (ID=202.79mm)					
	33	096-1519	1	SEAT					
	34	095-1585	1	SEAL-O-RING (ID=17.80mm)					
	35	095-7381	1	VALVE					
	36	095-7380	1	SPRING					
	37	194-8292	1	RETAINER					
	38	1R-5880	2	PLATE					
	39	194-8291	2	PLATE					
	40	194-8285	9	PISTON AS					
	41	194-8282	1	GUIDE					
	42	194-8280	1	SHAFT					
	43	7I-1125	1	BEARING					
	44	1R-5874	2	BALL					

B—USE AS REQUIRED

Y—SEE SEPARATE ILLUSTRATION

H93804E 00

267-6824 FINAL DRIVE GP (1/2)

S/N CAE 03089-04515

191-2619-Page200

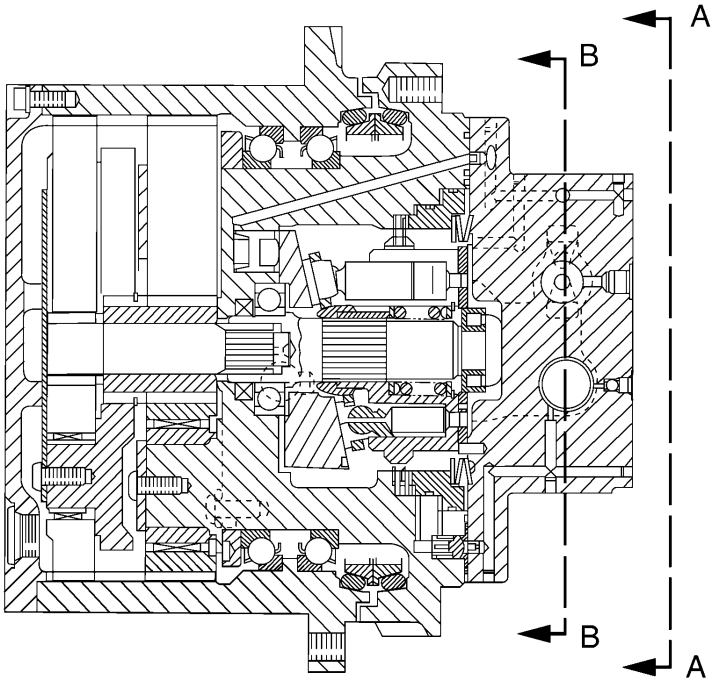

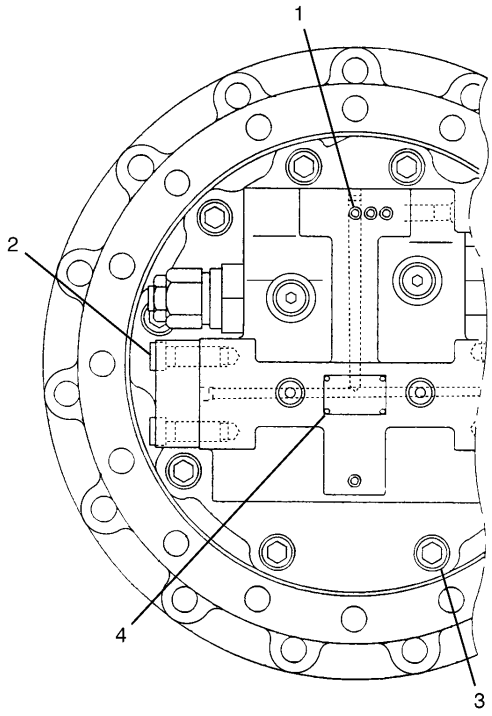

A – A

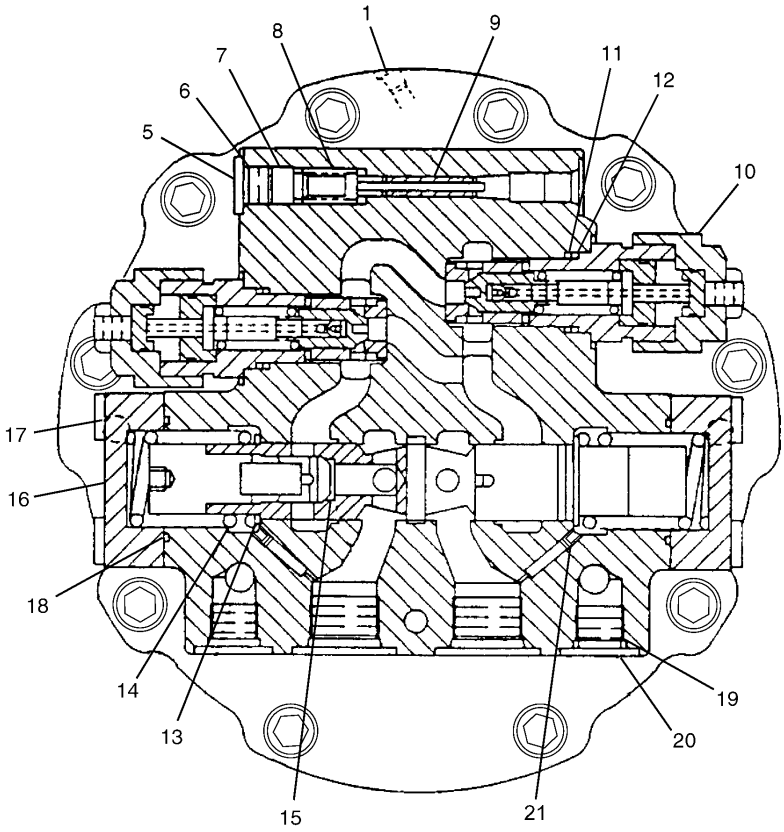

B – B

H93805E 00

267-6824 FINAL DRIVE GP (2/2)
S/N CAE 03089-04515

POWER TRAIN

NOTE	No.	PART No.	QTY	PART NAME	NOTE	No.	PART No.	QTY	PART NAME
	1	8T-6759	7	PLUG					
	2	6V-8200	8	BOLT (L=35mm)					
	3	095-0687	10	BOLT (L=45mm)					
	4	114-8231	4	SCREW					
	5	1R-5889	1	PLUG					
	6	095-1517	1	SEAL-O-RING (ID=13.80mm)					
	7	7I-1129	1	STOPPER					
	8	096-3978	1	SPRING					
	9	209-6060	1	SPOOL					
	10	194-8299	2	VALVE GP					
	11	095-1594	1	SEAL-O-RING (ID=25.70mm)					
	12	095-1789	1	RING					
	13	7I-1137	2	WASHER					
	14	7I-1138	2	SPRING					
	15	225-4484	1	SPOOL AS					
	16	7I-1141	2	COVER					
	17	1R-5891	2	PIN					
	18	5P-2568	2	SEAL-O-RING (ID=44.12mm)					
	19	6V-8399	1	SEAL-O-RING (ID=17.17mm)					
	20	9S-8005	1	PLUG					
	21	1R-8962	2	ORIFICE					

H93805E 00

267-6824 FINAL DRIVE GP (2/2)

S/N CAE 03089-04515

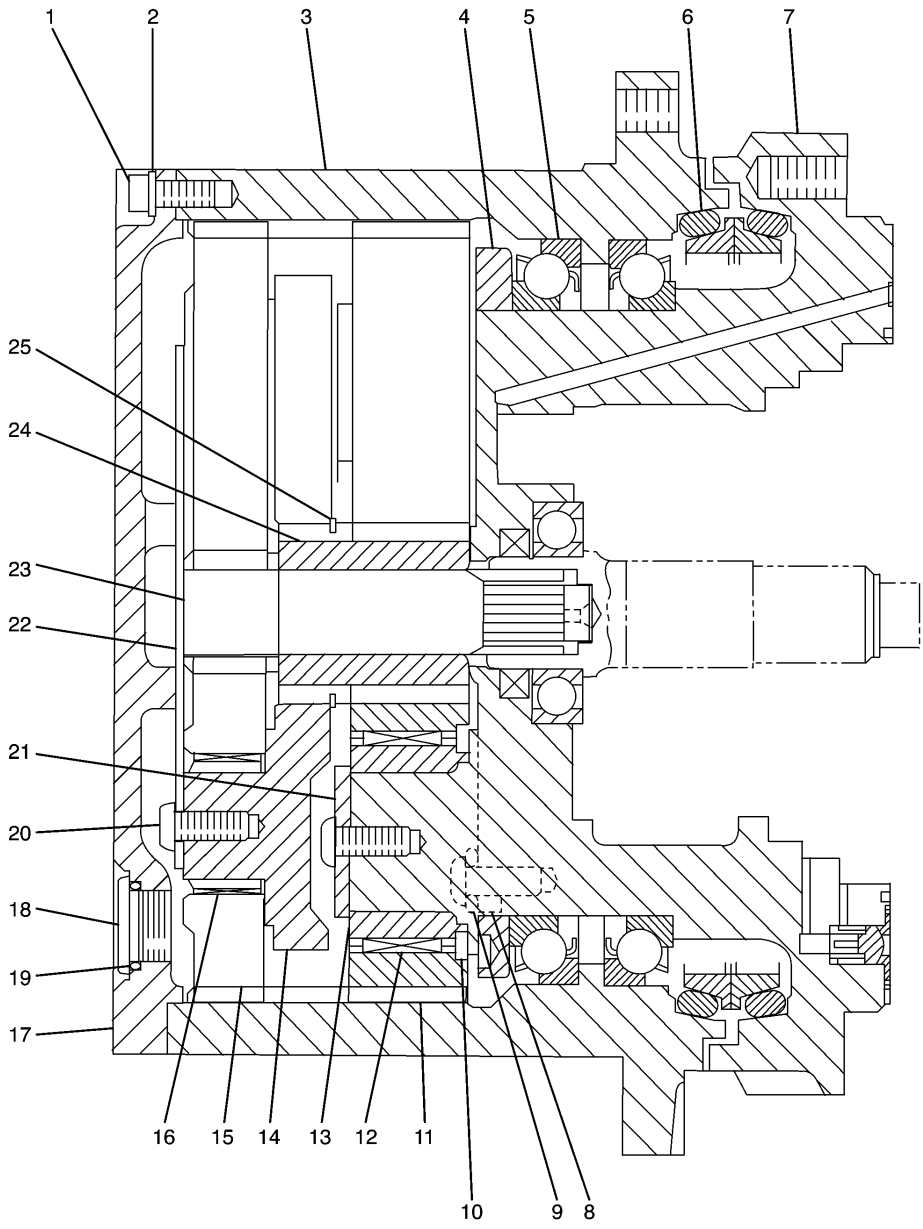

H72113E 00

191-2619 FINAL DRIVE GP

S/N CAE 01201-04515
Part of 191-2666-Page197,267-6824-Page199.02

POWER TRAIN

NOTE	No.	PART No.	QTY	PART NAME	NOTE	No.	PART No.	QTY	PART NAME
	1	5A-3604	16	BOLT (L=25mm)					
	2	3B-4505	16	LOCKWASHER					
	3	191-2623	1	HOUSING					
	4	1R-5839	1	NUT					
	5	191-2622	2	BEARING					
	6	191-2621	1	SEAL GP					
	7	191-2620	1	HOUSING					
	8	5I-4898	1	DOWEL					
	9	5I-4897	1	WASHER					
	10	6I-6530	4	PLATE					
	11	1R-5846	4	GEAR					
	12	1R-5848	4	BEARING					
	13	1R-5847	4	RACE					
	14	191-2627	1	CARRIER					
	15	191-2625	3	GEAR					
	16	191-2626	3	BEARING					
	17	191-2630	1	COVER					
	18	191-2633	2	PLUG					
	19	095-1525	2	SEAL-O-RING (ID=22.10mm)					
	20	1R-5854	8	SCREW					
	21	1R-5852	1	PLATE					
	22	191-2629	1	PLATE					
	23	191-2624	1	GEAR					
	24	191-2628	1	GEAR					
	25	1R-5849	1	RING					

H72113E 00

191-2619 FINAL DRIVE GP

S/N CAE 01201-04515

Part of 191-2666-Page197,267-6824-Page199.02

POWER TRAIN

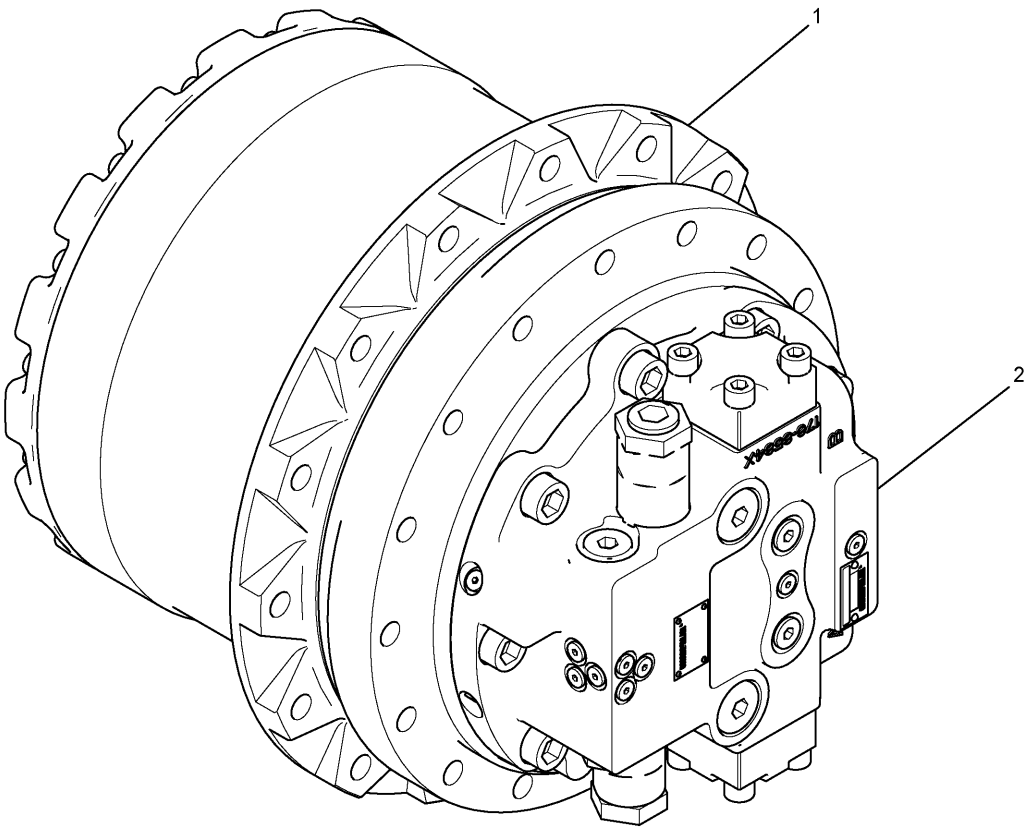

NOTE	No.	PART No.	QTY	PART NAME	NOTE	No.	PART No.	QTY	PART NAME
Y	1	278-6920	1	DRIVE GP					
Y	2	302-9179	1	MOTOR GP					

Y—SEE SEPARATE ILLUSTRATION

H96639E 00

302-1688 FINAL DRIVE GP

2 Required
S/N CAE 04516-Up
278-6920-Page201.03,302-9179-Page431.01

MEMORANDA

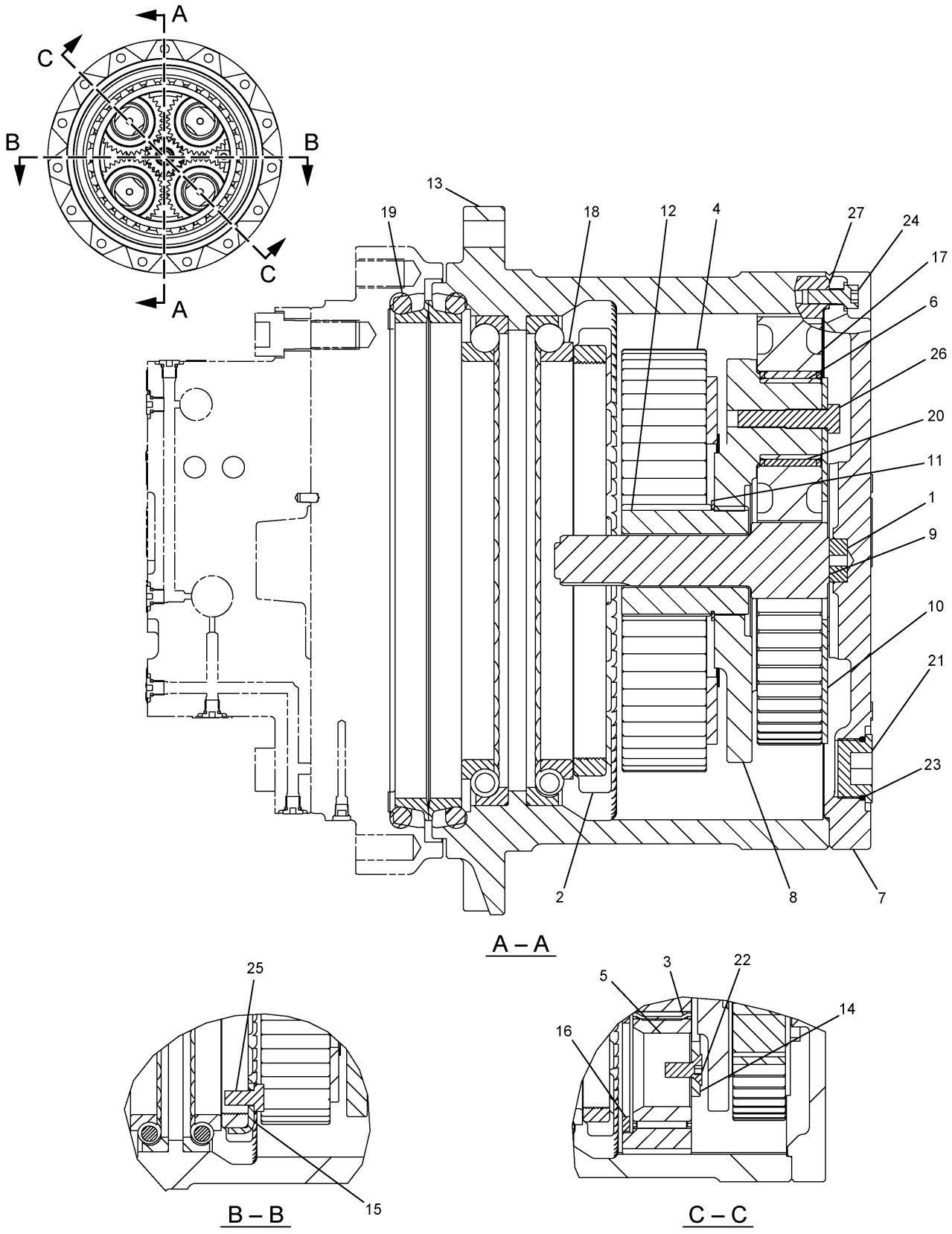

H96227E 00

278-6920 FINAL DRIVE GP
S/N CAE 04516-Up
Part of 302-1688-Page201.01

POWER TRAIN

NOTE	No.	PART No.	QTY	PART NAME	NOTE	No.	PART No.	QTY	PART NAME
	1	094-0580	1	PLATE (T=10.00mm)					
	2	165-5854	1	NUT					
	3	165-5855	4	BEARING					
	4	165-5856	4	GEAR (Z=37)					
	5	165-5857	4	RACE					
	6	165-5859	3	RACE					
	7	165-5860	1	COVER					
	8	165-5863	1	CARRIER					
	9	165-5864	1	GEAR (Z=12/17)					
	10	165-5865	1	PLATE					
	11	165-5866	1	RING					
	12	165-5867	1	GEAR (Z=19)					
	13	165-5868	1	HOUSING					
	14	176-8574	1	PLATE					
	15	191-0862	1	PLATE					
	16	204-1086	4	PLATE					
	17	218-4246	3	GEAR (Z=40)					
	18	218-4247	2	BEARING					
	19	229-1410	1	SEAL					
	20	278-1980	3	BEARING AS					
	21	3E-2338	2	PLUG					
	22	6V-7726	4	SCREW					
	23	7M-8485	2	SEAL-O-RING (ID=29.74mm)					
	24	8T-1158	16	BOLT (L=20mm)					
	25	8T-4137	1	BOLT (L=20mm)					
	26	8T-4185	3	BOLT (L=50mm)					
B	27	1U-8846		GASKET MAKER…(10ml)					

B—USE AS REQUIRED

H96227E 00

278-6920 FINAL DRIVE GP

S/N CAE 04516-Up

Part of 302-1688-Page201.01

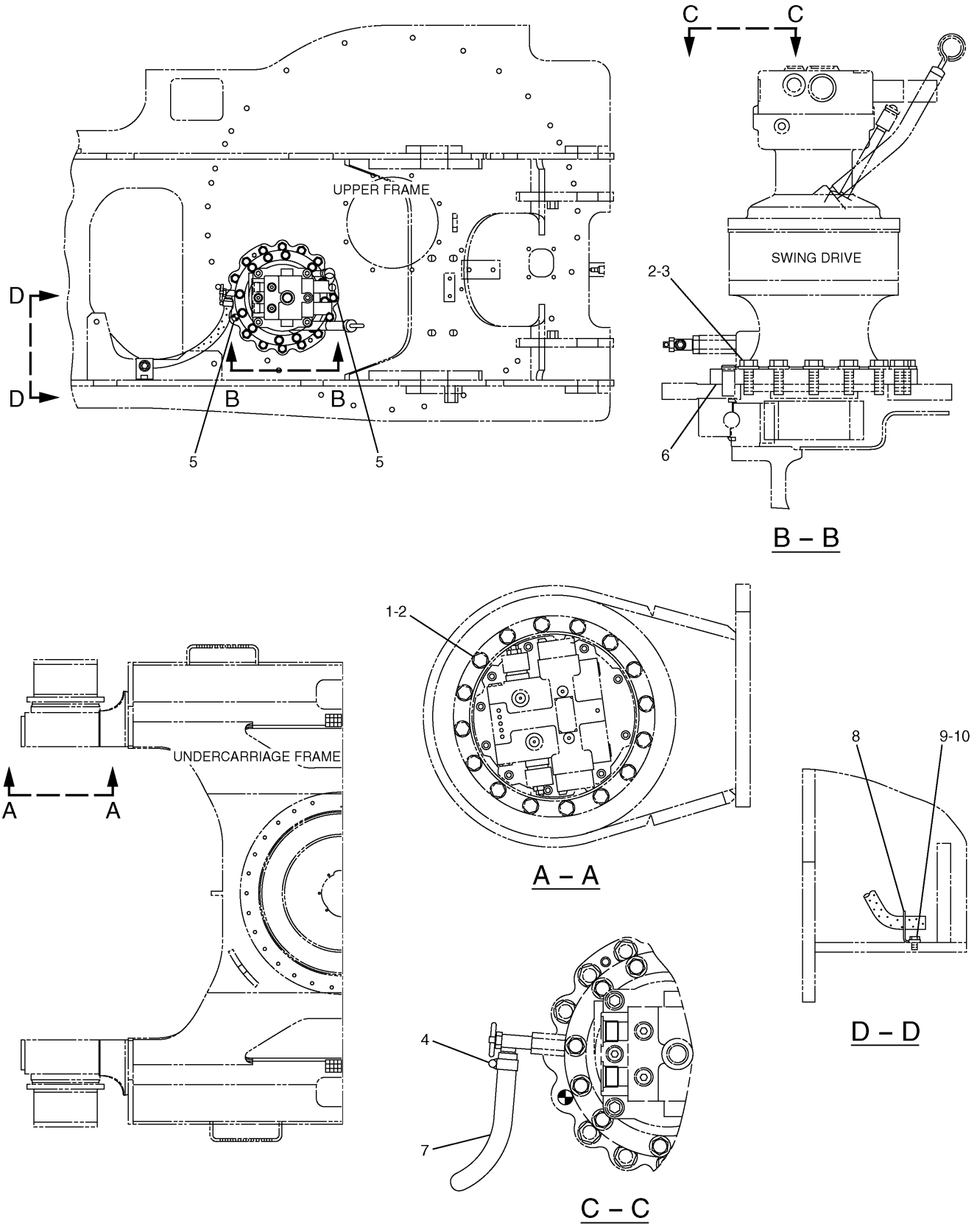

169–5545 FASTENER GP–SWING & FINAL DR

FRAME AND BODY

NOTE	No.	PART No.	QTY	PART NAME	NOTE	No.	PART No.	QTY	PART NAME
	1	8T-4193	32	BOLT (L=50mm)					
	2	9X-8257	46	WASHER					
	3	8T-7338	14	BOLT (L=45mm)					
	4	5D-1026	1	CLAMP					
	5	191-2543	2	PIN					
B	6	1U-8846		GASKET MAKER…(15ml)					
E	7	5P-0767		HOSE…(62cm)					
	8	114-1374	1	SUPPORT					
	9	8T-4191	1	BOLT (L=16mm)					
	10	8T-4121	1	WASHER					

B—USE AS REQUIRED

E—ORDER BY THE CENTIMETER

H75143E 05

169-5545 FASTENER GP-SWING & FINAL DR

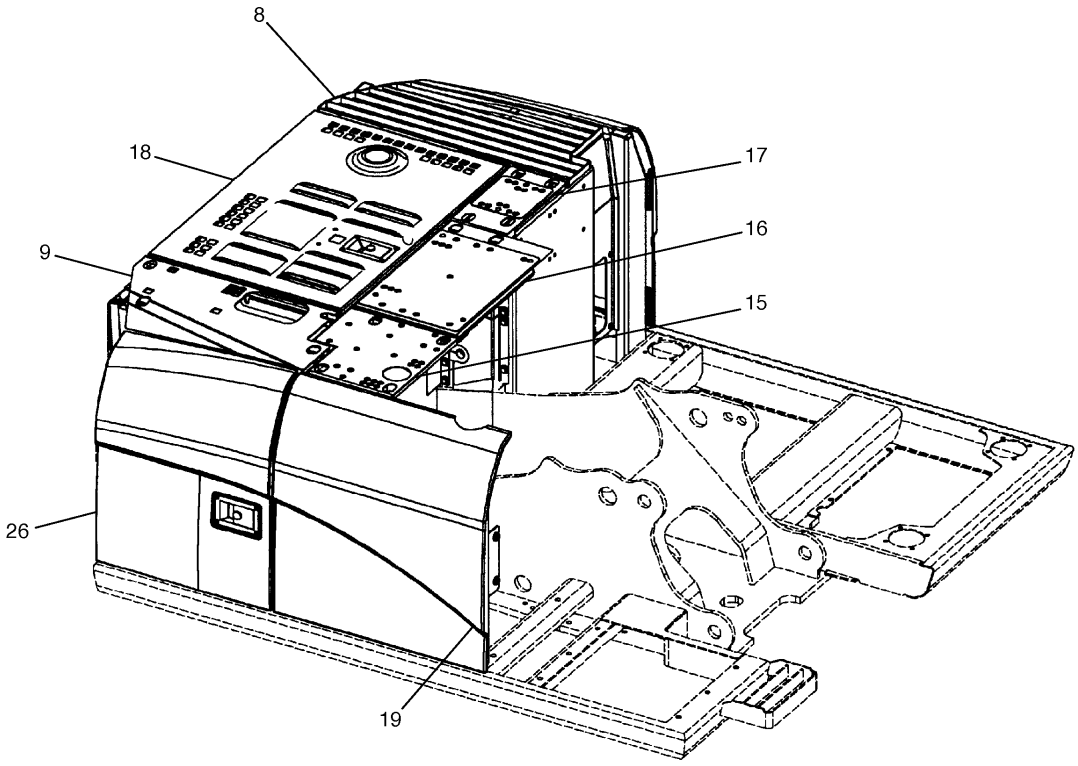

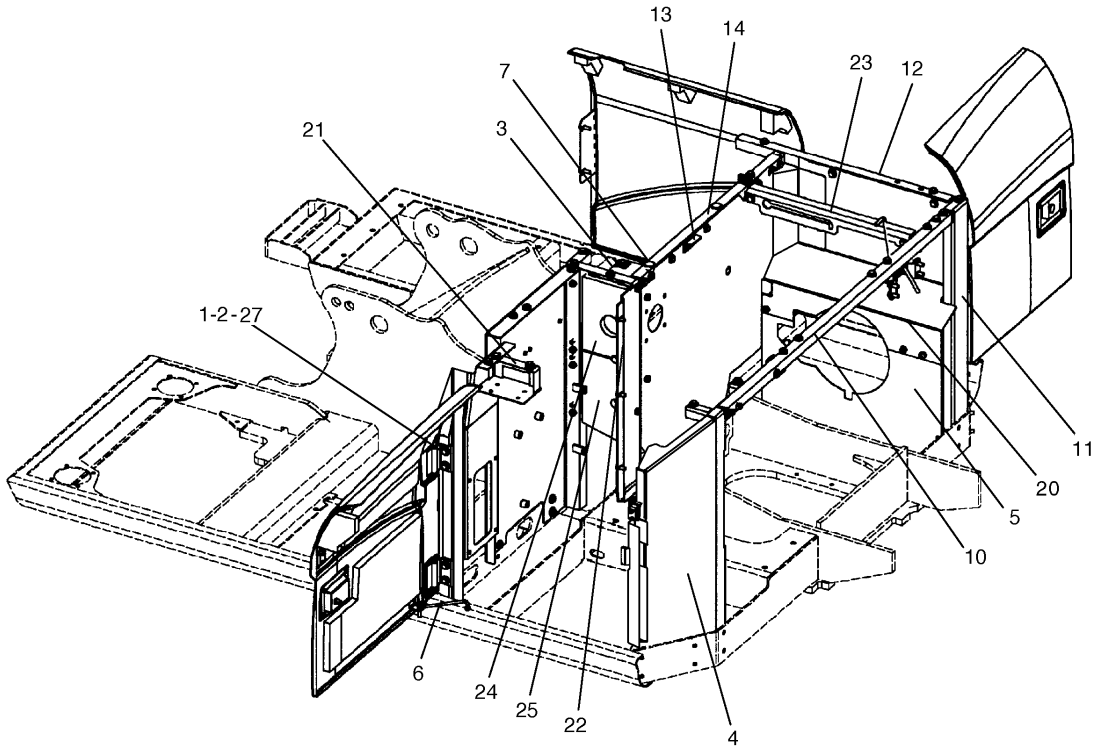

H86640E 06

170-2600 HOOD & GUARD GP (1/5)

S/N CAE 01201-02264
177-5970-Page215,177-6137-Page218,177-5796-Page219

FRAME AND BODY

NOTE	No.	PART No.	QTY	PART NAME	NOTE	No.	PART No.	QTY	PART NAME
	1	5P-1076	4	WASHER					
	2	8T-4192	4	BOLT (L=25mm)					
	3	190-7256	1	SHEET AS					
		190-7257	1	LINER					
	4	177-5526	1	SHEET AS					
	5	190-7215	1	SHEET AS					
	6	184-8874	2	ROD					
	7	170-3014	2	BUMPER					
	8	175-0946	1	SHEET AS					
	9	175-0947	1	SHEET AS					
	10	177-5519	1	SUPPORT AS					
		177-6116	1	LINER					
	11	177-5527	1	SHEET AS					
	12	177-5528	1	SHEET AS					
	13	199-0377	1	PLATE					
	14	199-0376	1	SUPPORT AS					
	15	177-5788	1	SHEET AS					
	16	177-5790	1	COVER GP					
		5C-7261	5	NUT					
		5P-4116	5	WASHER					
		137-2255	5	BOLT					
Y	17	177-5796	1	COVER GP					
Y	18	177-5970	1	HOOD GP					
	19	177-5972	1	DOOR AS					
		177-5738	1	LINER					
		184-8817	1	LINER					
		199-0126	1	LINER					
		199-0129	1	LINER					
	20	208-4044	1	SHEET AS					
	21	177-5977	1	SHEET AS					
	22	177-5981	1	SHEET AS					
		101-2383	1	LINER					
		177-6111	1	LINER					
		190-7244	1	SHEET AS					
	23	184-8683	1	ANGLE					
	24	177-5985	1	SHEET AS					
		177-5986	1	INSULATION					
	25	177-6113	1	SHEET AS					
		177-6108	1	INSULATION					
Y	26	177-6137	1	DOOR GP					
B	27	229-1106	2	SHIM (T=2mm)					
B		229-1107	2	SHIM (T=1mm)					

B—USE AS REQUIRED

Y—SEE SEPARATE ILLUSTRATION

H86640E 06

170-2600 HOOD & GUARD GP (1/5)

S/N CAE 01201-02264

177-5970-Page215,177-6137-Page218,177-5796-Page219

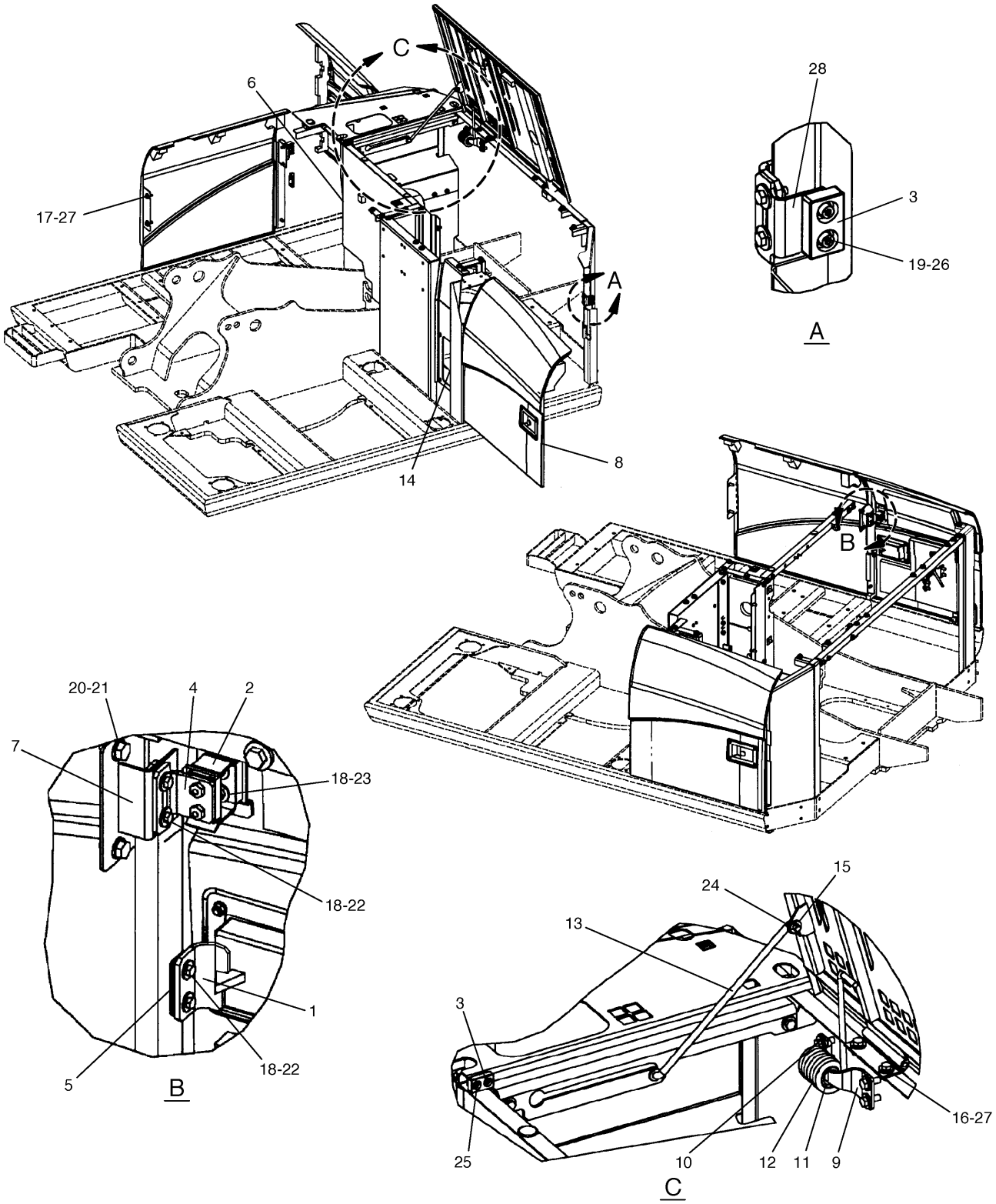

H86641E 06

170-2600 HOOD & GUARD GP (2/5)
S/N CAE 01201-02264
177-6136-Page217

FRAME AND BODY

NOTE	No.	PART No.	QTY	PART NAME	NOTE	No.	PART No.	QTY	PART NAME
	1	4I-0232	1	STRIKER					
	2	4I-8019	1	SUPPORT					
	3	6I-6033	2	STOPPER					
	4	7I-1418	1	SUPPORT AS					
B	5	087-3908	2	SHIM (T=1.00mm)					
B		087-3909	2	SHIM (T=2.00mm)					
	6	208-4041	1	SHEET AS					
		193-9387	1	LINER					
	7	177-5982	1	SHEET AS					
Y	8	177-6136	1	DOOR GP					
	9	177-6295	1	ANGLE					
	10	177-6296	1	ANGLE					
	11	177-6298	1	PIPE					
	12	177-6299	1	SPRING					
	13	184-8833	1	ROD AS					
	14	190-7258	1	SHEET AS					
		190-7259	1	LINER					
	15	3B-4618	1	COTTER					
	16	8T-4192	4	BOLT (L=25mm)					
	17	8T-4139	2	BOLT (L=30mm)					
	18	5P-4115	6	WASHER					
	19	105-3487	2	BOLT (L=20mm)					
	20	8T-4121	2	WASHER					
	21	8T-4137	2	BOLT (L=20mm)					
	22	8T-4138	6	BOLT (L=20mm)					
	23	8T-4171	2	BOLT (L=12mm)					
	24	8T-4223	1	WASHER					
	25	9X-2045	2	SCREW					
	26	9X-8256	2	WASHER					
	27	5P-1076	6	WASHER					
	28	199-0067	1	SUPPORT AS					

B—USE AS REQUIRED

Y—SEE SEPARATE ILLUSTRATION

H86641E 06

170-2600 HOOD & GUARD GP (2/5)

S/N CAE 01201-02264

177-6136-Page217

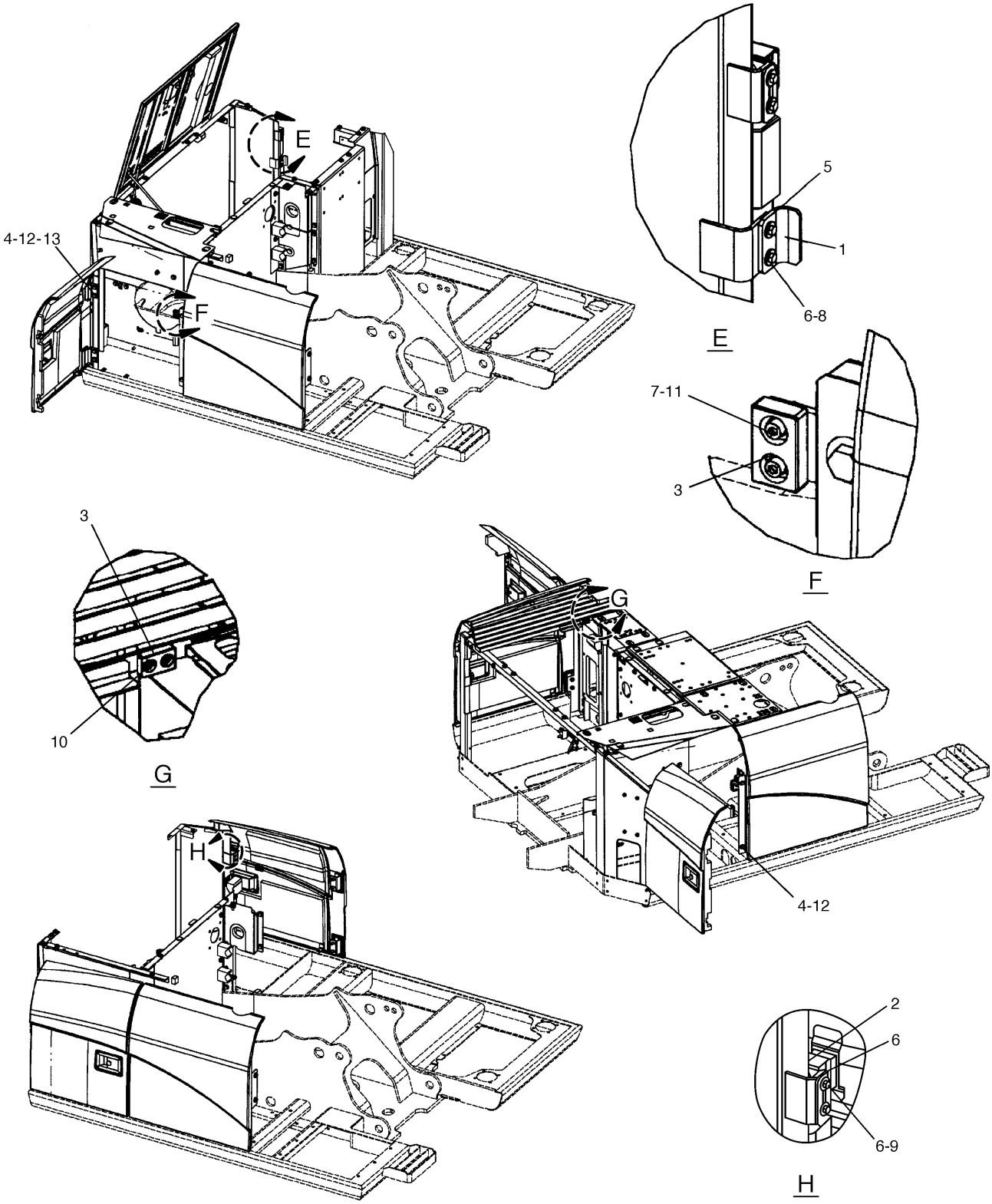

H86642E 06

170-2600 HOOD & GUARD GP (3/5)
S/N CAE 01201-02264

FRAME AND BODY

NOTE	No.	PART No.	QTY	PART NAME	NOTE	No.	PART No.	QTY	PART NAME
	1	4I-0232	1	STRIKER					
	2	4I-8019	1	SUPPORT					
	3	6I-6033	2	STOPPER					
	4	8T-4192	6	BOLT (L=25mm)					
B	5	087-3908	2	SHIM (T=1.00mm)					
B		087-3909	2	SHIM (T=2.00mm)					
	6	5P-4115	6	WASHER					
	7	105-3487	2	BOLT (L=20mm)					
	8	8T-4138	2	BOLT (L=20mm)					
	9	8T-4171	2	BOLT (L=12mm)					
	10	9X-2045	2	SCREW					
	11	9X-8256	2	WASHER					
	12	5P-1076	6	WASHER					
B	13	229-1106	2	SHIM (T=2mm)					
B		229-1107	2	SHIM (T=1mm)					

B—USE AS REQUIRED

H86642E 06

170-2600 HOOD & GUARD GP (3/5)

S/N CAE 01201-02264

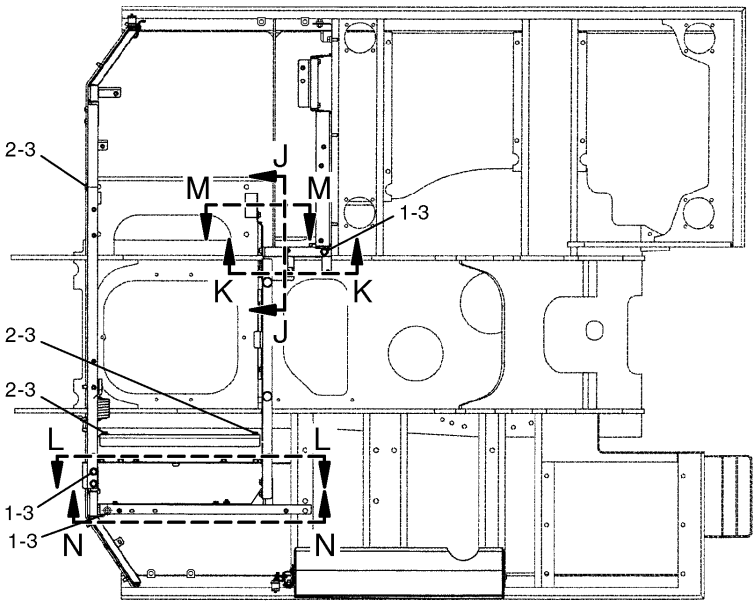

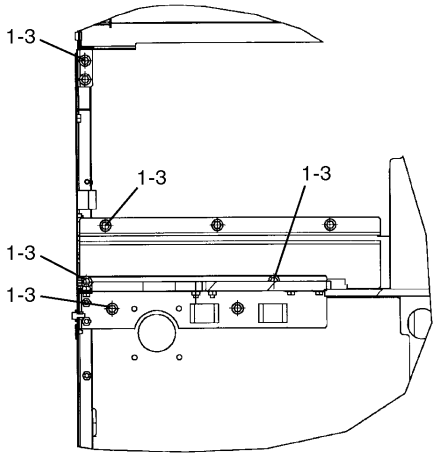

J – J

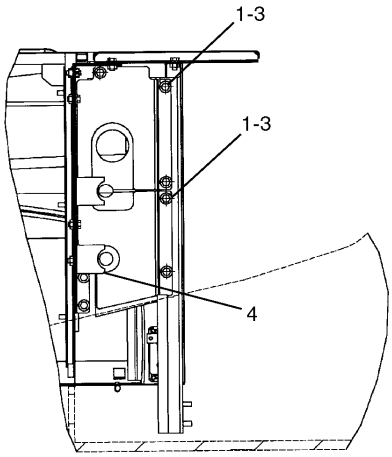

K – K

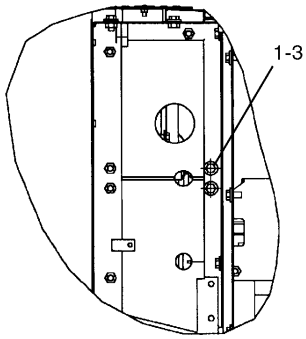

M – M

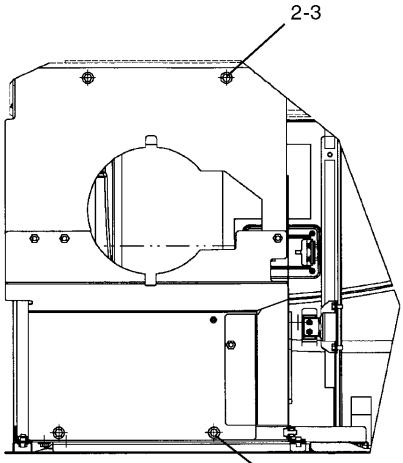

L – L

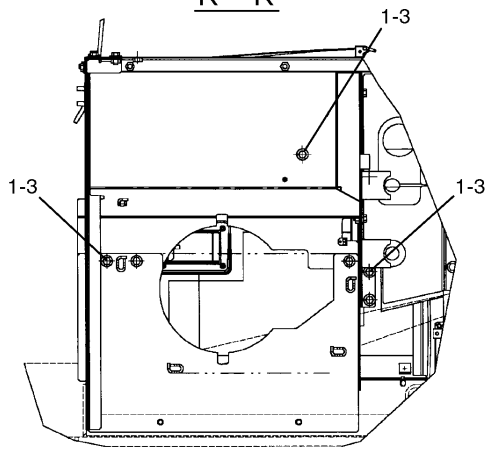

N – N

H86643E 06

170–2600 HOOD & GUARD GP (4/5)
S/N CAE 01201–02264

FRAME AND BODY

NOTE	No.	PART No.	QTY	PART NAME	NOTE	No.	PART No.	QTY	PART NAME
	1	8T-4192	28	BOLT (L=25mm)					
	2	8T-4139	5	BOLT (L=30mm)					
	3	5P-1076	33	WASHER					
	4	199-0172	2	LINER					

H86643E 06

170-2600 HOOD & GUARD GP (4/5)
S/N CAE 01201-02264

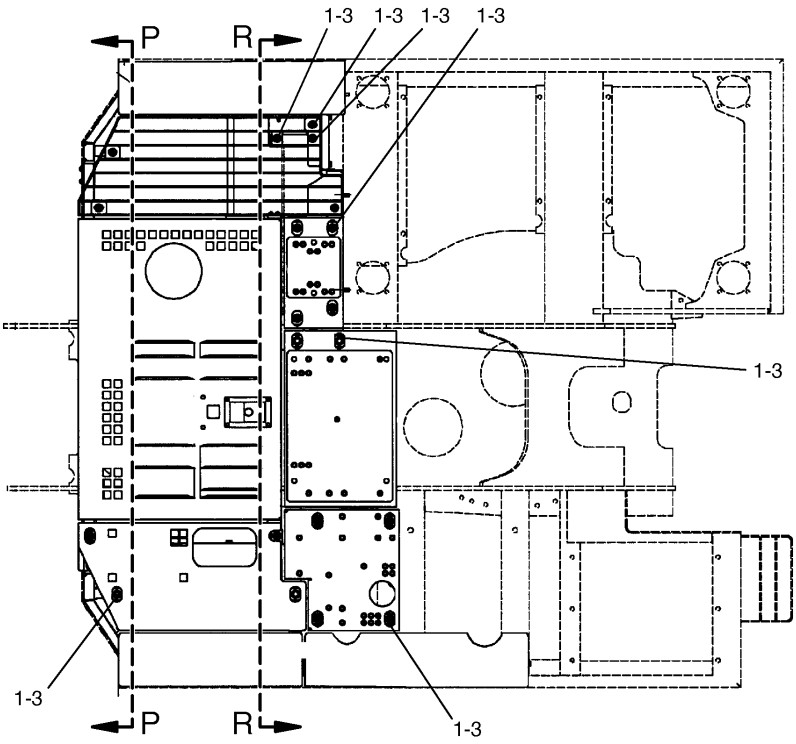

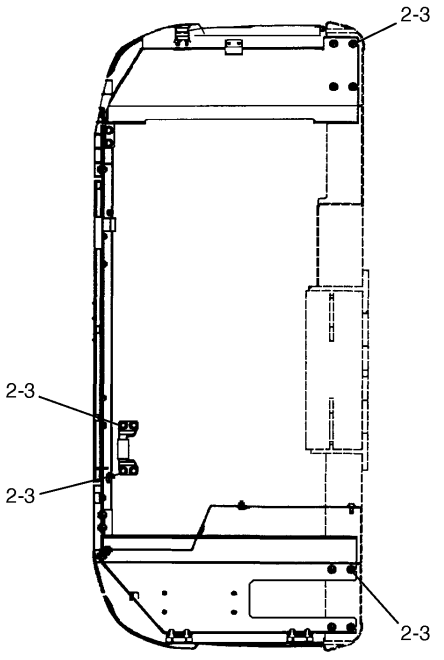

P – P

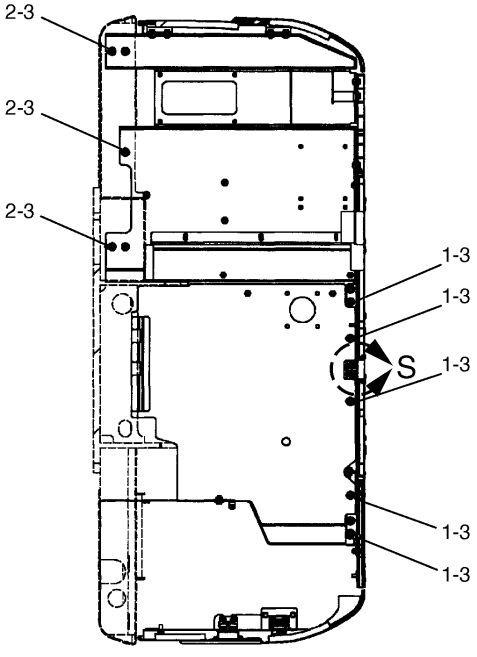

R – R

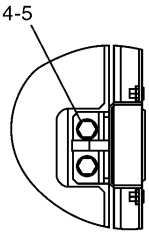

S

H86644E 06

170–2600 HOOD & GUARD GP (5/5)
S/N CAE 01201–02264

FRAME AND BODY

NOTE	No.	PART No.	QTY	PART NAME	NOTE	No.	PART No.	QTY	PART NAME
	1	8T-4192	27	BOLT (L=25mm)					
	2	8T-4139	17	BOLT (L=30mm)					
	3	5P-1076	44	WASHER					
	4	8T-4121	2	WASHER					
	5	8T-4136	2	BOLT (L=25mm)					

H86644E 06

170-2600 HOOD & GUARD GP (5/5)
S/N CAE 01201-02264

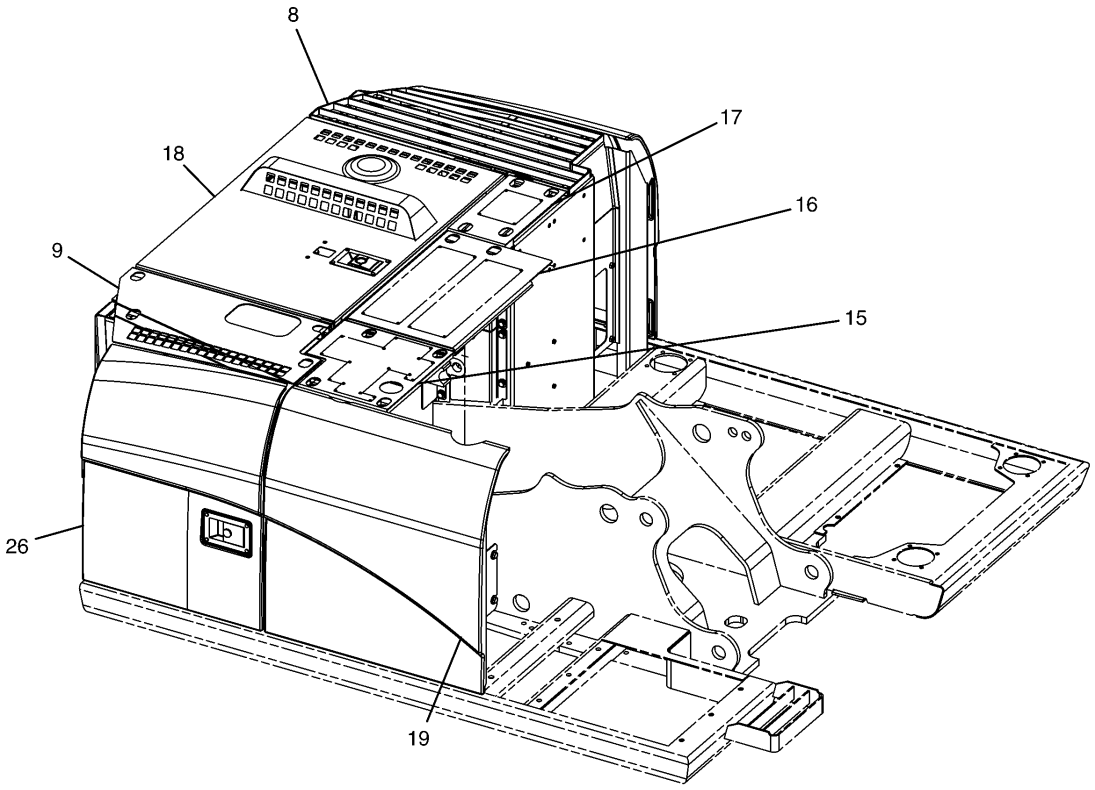

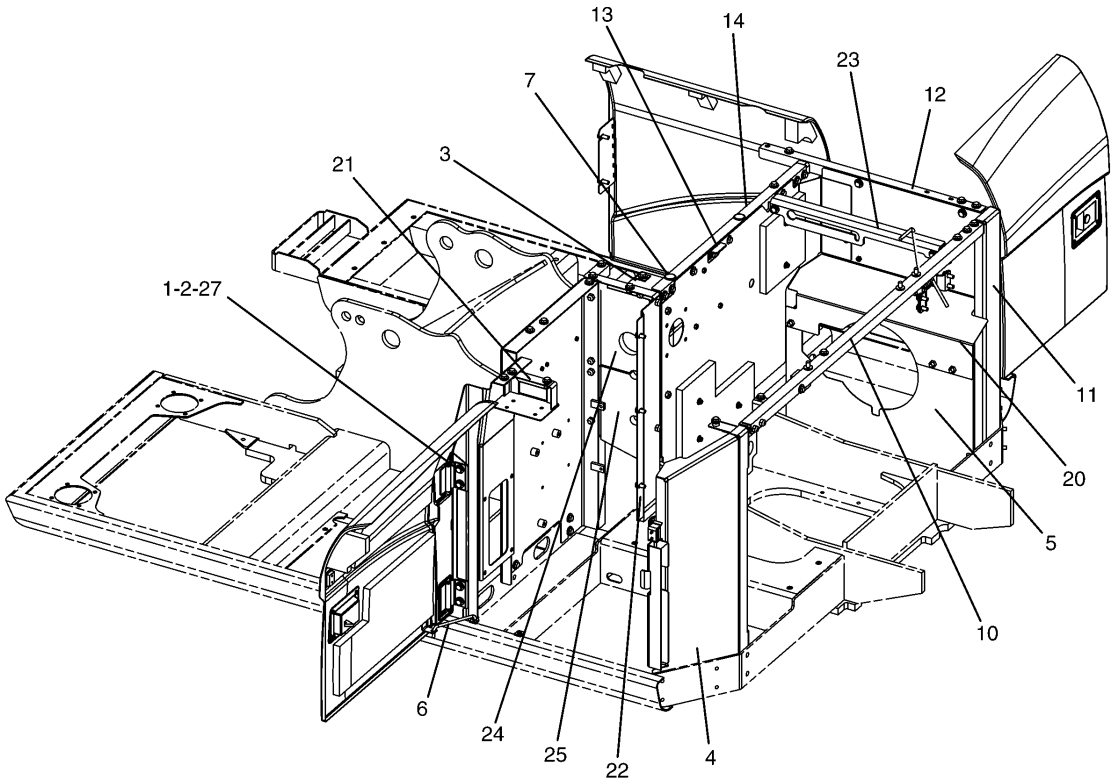

H93818E 02

248-7898 HOOD & GUARD GP (1/5)
S/N CAE 02265-Up
248-7802-Page215.01,177-6137-Page218

FRAME AND BODY

NOTE	No.	PART No.	QTY	PART NAME	NOTE	No.	PART No.	QTY	PART NAME
	1	5P-1076	4	WASHER					
	2	8T-4192	4	BOLT (L=25mm)					
	3	190-7256	1	SHEET AS					
		190-7257	1	LINER					
	4	177-5526	1	SHEET AS					
	5	190-7215	1	SHEET AS					
	6	184-8874	2	ROD					
	7	170-3014	2	BUMPER					
	8	175-0946	1	SHEET AS					
	9	248-7799	1	SHEET AS					
		6P-2216	2	CAP					
		170-2789	1	LINER					
	10	177-5519	1	SUPPORT AS					
		177-6116	1	LINER					
	11	177-5527	1	SHEET AS					
	12	177-5528	1	SHEET AS					
	13	199-0377	1	PLATE					
	14	199-0376	1	SUPPORT AS					
	15	248-7741	1	SHEET AS					
	16	248-7743	1	SHEET AS					
	17	248-7745	1	SHEET AS					
		190-7077	1	LINER					
		190-7245	1	LINER					
Y	18	248-7802	1	HOOD GP					
	19	177-5972	1	DOOR AS					
		177-5738	1	LINER					
		184-8817	1	LINER					
		199-0126	1	LINER					
		199-0129	1	LINER					
	20	208-4044	1	SHEET AS					
	21	177-5977	1	SHEET AS					
	22	177-5981	1	SHEET AS					
		101-2383	1	LINER					
		177-6111	1	LINER					
		190-7244	1	SHEET AS					
	23	184-8683	1	ANGLE					
	24	177-5985	1	SHEET AS					
		177-5986	1	INSULATION					
	25	177-6113	1	SHEET AS					
		177-6108	1	INSULATION					
Y	26	177-6137	1	DOOR GP					
B	27	229-1106	2	SHIM (T=2mm)					
B		229-1107	2	SHIM (T=1mm)					

B—USE AS REQUIRED

Y—SEE SEPARATE ILLUSTRATION

H93818E 02

248-7898 HOOD & GUARD GP (1/5)

S/N CAE 02265-Up

248-7802-Page215.01,177-6137-Page218

FRAME AND BODY

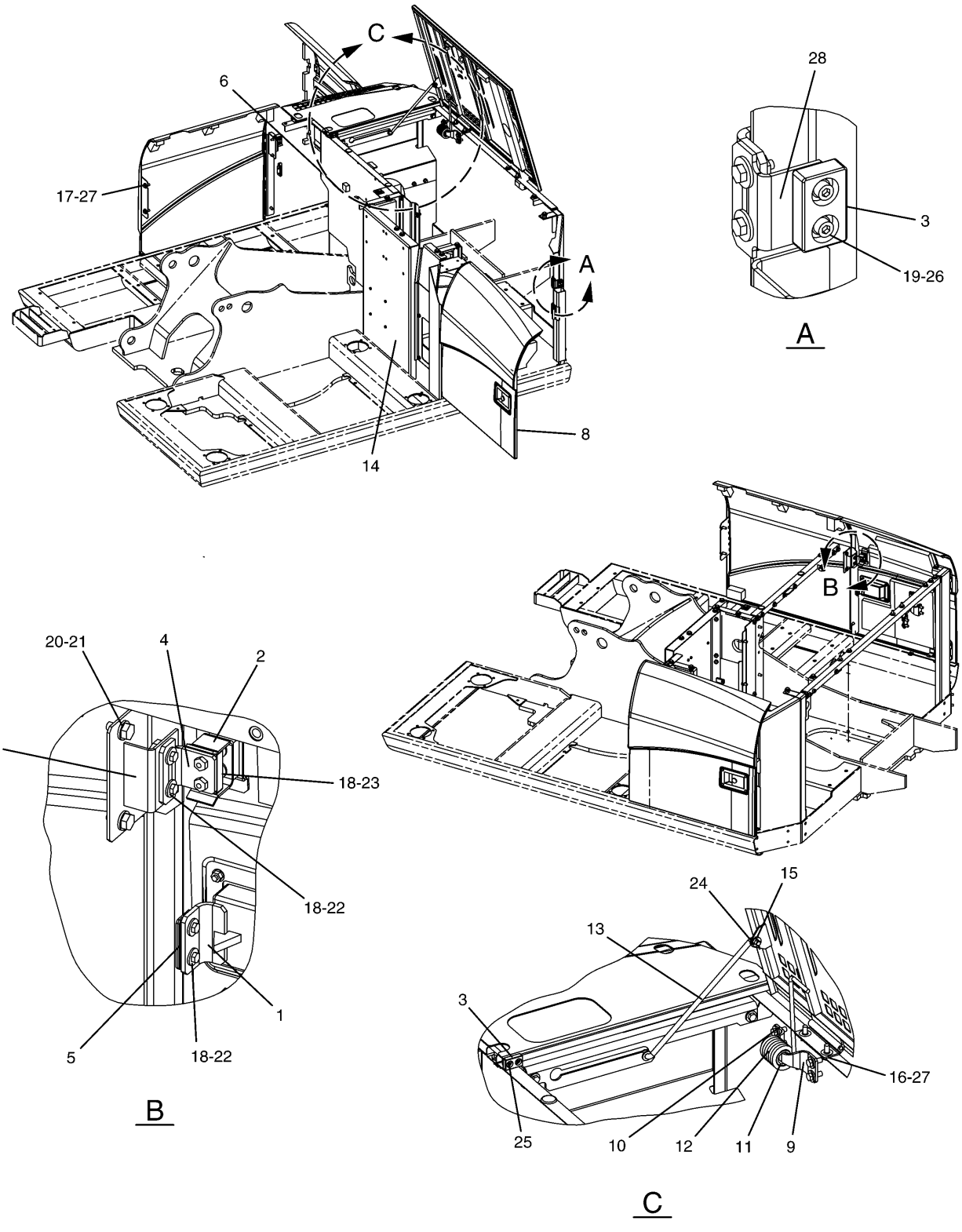

H93819E 02

248-7898 HOOD & GUARD GP (2/5)
S/N CAE 02265-Up
177-6136-Page217

FRAME AND BODY

NOTE	No.	PART No.	QTY	PART NAME	NOTE	No.	PART No.	QTY	PART NAME
	1	4I-0232	1	STRIKER					
	2	4I-8019	1	SUPPORT					
	3	6I-6033	2	STOPPER					
	4	7I-1418	1	SUPPORT AS					
B	5	087-3908	2	SHIM (T=1.00mm)					
B		087-3909	2	SHIM (T=2.00mm)					
	6	248-7805	1	SHEET AS					
		193-9387	1	LINER					
		170-2785	1	LINER					
		286-6921	1	INSULATION					
		6P-2216	5	CAP					
	7	177-5982	1	SHEET AS					
Y	8	177-6136	1	DOOR GP					
	9	177-6295	1	ANGLE					
	10	177-6296	1	ANGLE					
	11	177-6298	1	PIPE					
	12	177-6299	1	SPRING					
	13	184-8833	1	ROD AS					
	14	268-5166	1	SHEET AS					
		190-7259	1	LINER					
	15	3B-4618	1	COTTER					
	16	8T-4192	4	BOLT (L=25mm)					
	17	8T-4139	2	BOLT (L=30mm)					
	18	5P-4115	6	WASHER					
	19	105-3487	2	BOLT (L=20mm)					
	20	8T-4121	2	WASHER					
	21	8T-4137	2	BOLT (L=20mm)					
	22	8T-4138	6	BOLT (L=20mm)					
	23	8T-4171	2	BOLT (L=12mm)					
	24	8T-4223	1	WASHER					
	25	9X-2045	2	SCREW					
	26	9X-8256	2	WASHER					
	27	5P-1076	6	WASHER					
	28	199-0067	1	SUPPORT AS					

B—USE AS REQUIRED

Y—SEE SEPARATE ILLUSTRATION

H93819E 02

248-7898 HOOD & GUARD GP (2/5)

S/N CAE 02265-Up

177-6136-Page217

FRAME AND BODY

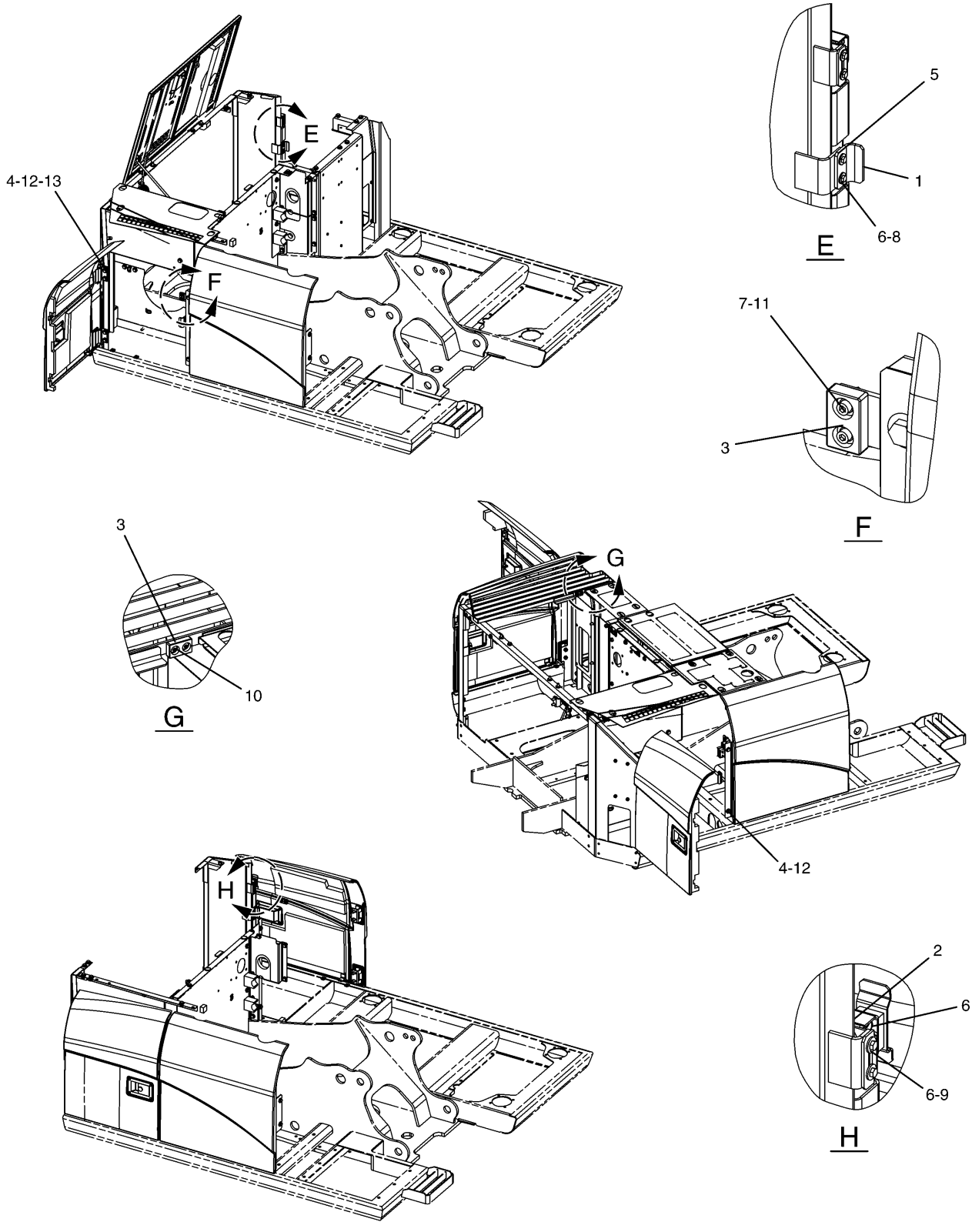

H93820E 02

248-7898 HOOD & GUARD GP (3/5)
S/N CAE 02265-Up

FRAME AND BODY

NOTE	No.	PART No.	QTY	PART NAME	NOTE	No.	PART No.	QTY	PART NAME
	1	4I-0232	1	STRIKER					
	2	4I-8019	1	SUPPORT					
	3	6I-6033	2	STOPPER					
	4	8T-4192	6	BOLT (L=25mm)					
B	5	087-3908	2	SHIM (T=1.00mm)					
B		087-3909	2	SHIM (T=2.00mm)					
	6	5P-4115	6	WASHER					
	7	105-3487	2	BOLT (L=20mm)					
	8	8T-4138	2	BOLT (L=20mm)					
	9	8T-4171	2	BOLT (L=12mm)					
	10	9X-2045	2	SCREW					
	11	9X-8256	2	WASHER					
	12	5P-1076	6	WASHER					
B	13	229-1106	2	SHIM (T=2mm)					
B		229-1107	2	SHIM (T=1mm)					

B—USE AS REQUIRED

H93820E 02

248-7898 HOOD & GUARD GP (3/5)

S/N CAE 02265-Up

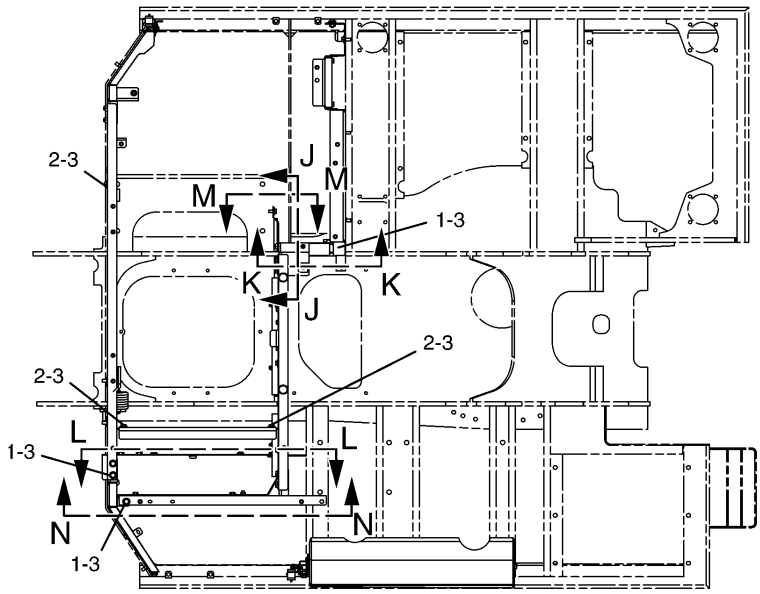

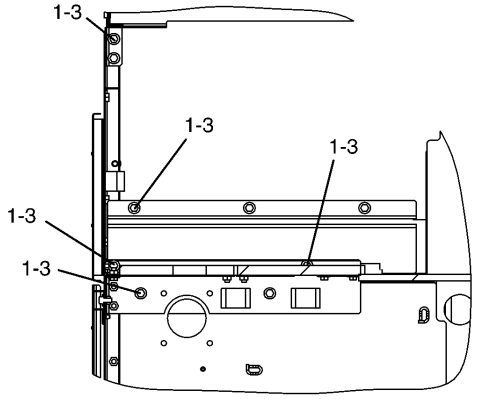

J – J

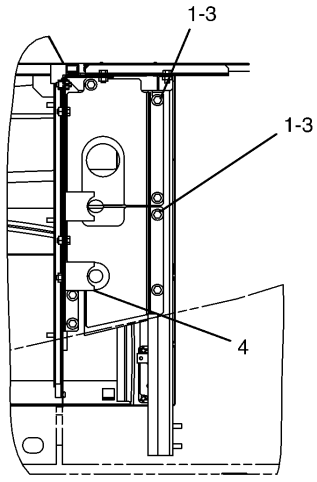

K – K

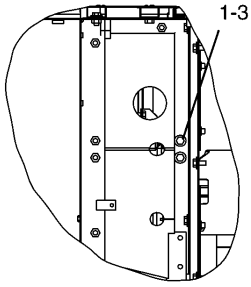

M – M

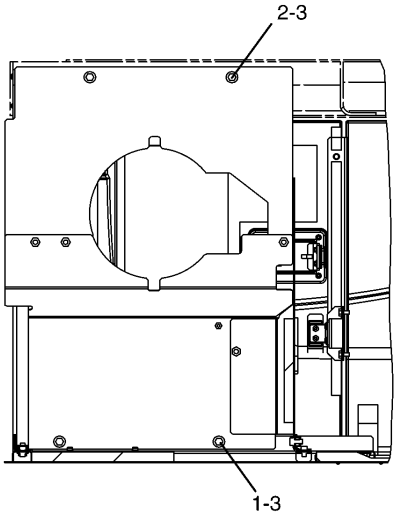

L – L

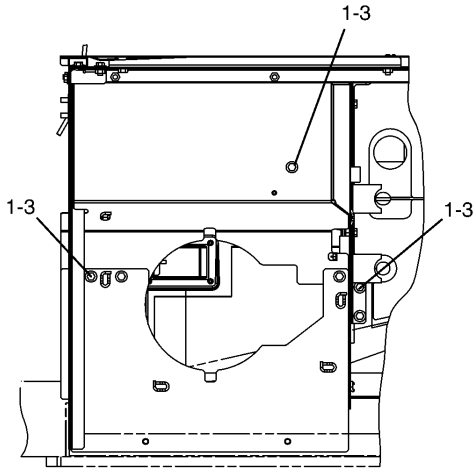

N – N

H93821E 02

248-7898 HOOD & GUARD GP (4/5)
S/N CAE 02265-Up

FRAME AND BODY

NOTE	No.	PART No.	QTY	PART NAME	NOTE	No.	PART No.	QTY	PART NAME
	1	8T-4192	28	BOLT (L=25mm)					
	2	8T-4139	5	BOLT (L=30mm)					
	3	5P-1076	33	WASHER					
	4	199-0172	2	LINER					

H93821E 02

248-7898 HOOD & GUARD GP (4/5)
S/N CAE 02265-Up

FRAME AND BODY

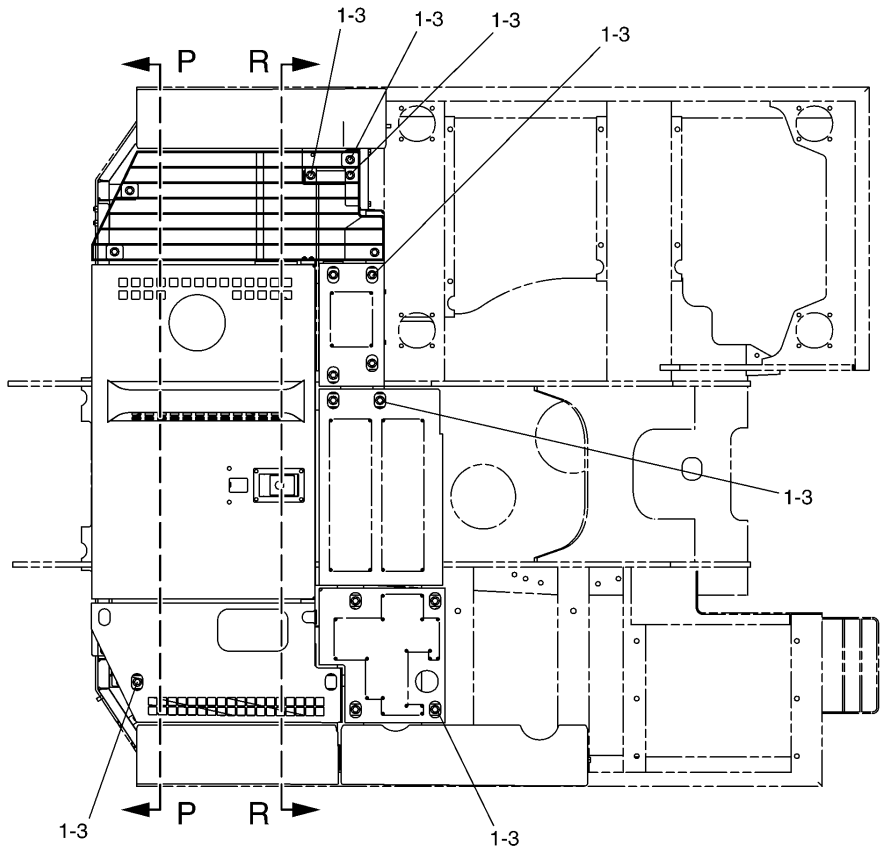

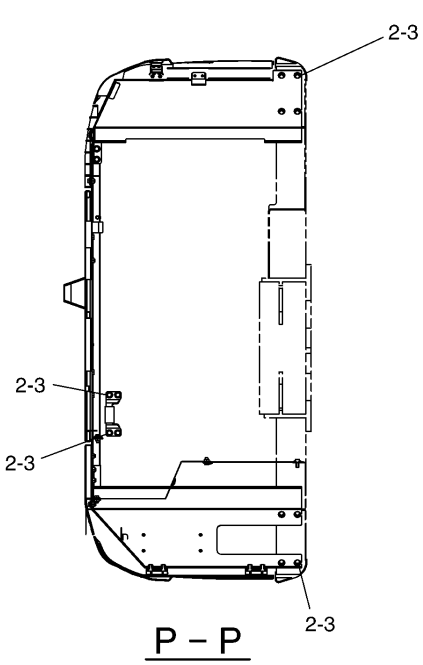

P – P

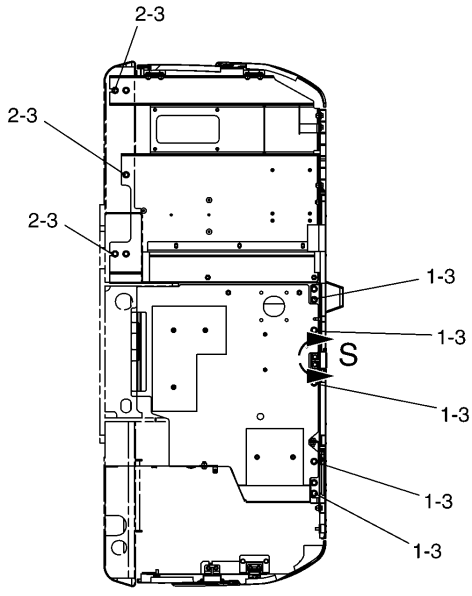

R – R

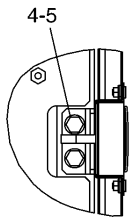

S

H93822E 02

248-7898 HOOD & GUARD GP (5/5)
S/N CAE 02265-Up

FRAME AND BODY

NOTE	No.	PART No.	QTY	PART NAME	NOTE	No.	PART No.	QTY	PART NAME
	1	8T-4192	27	BOLT (L=25mm)					
	2	8T-4139	17	BOLT (L=30mm)					
	3	5P-1076	44	WASHER					
	4	8T-4121	2	WASHER					
	5	8T-4136	2	BOLT (L=25mm)					

H93822E 02

248-7898 HOOD & GUARD GP (5/5)

S/N CAE 02265-Up

FRAME AND BODY

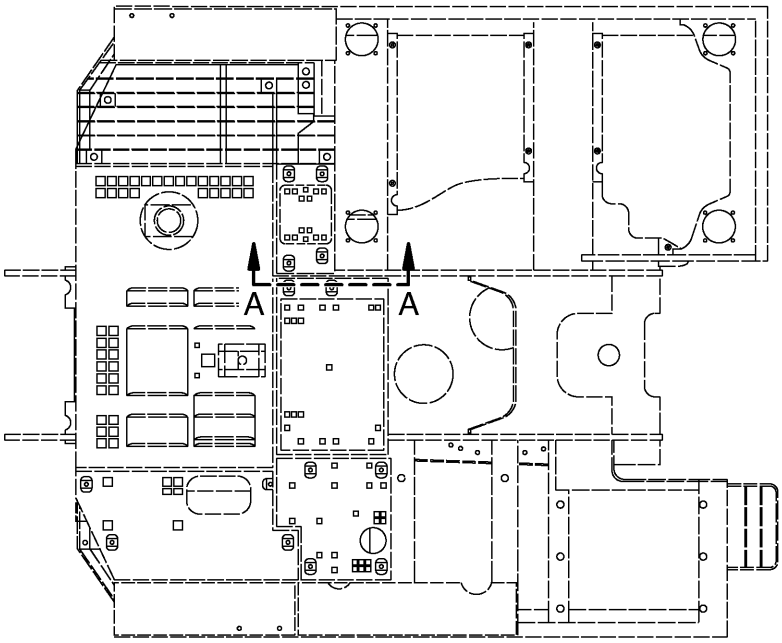

TOP VIEW

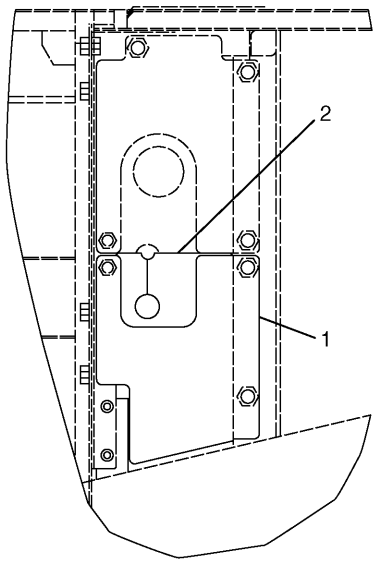

A – A

NOTE	No.	PART No.	QTY	PART NAME	NOTE	No.	PART No.	QTY	PART NAME
	1	193-9450	1	SHEET AS					
	2	193-9449	1	INSULATION					

H71800E 00

193-9454 HOOD & GUARD GP

Part of 183-1535-Page49
An Attachment

FRAME AND BODY

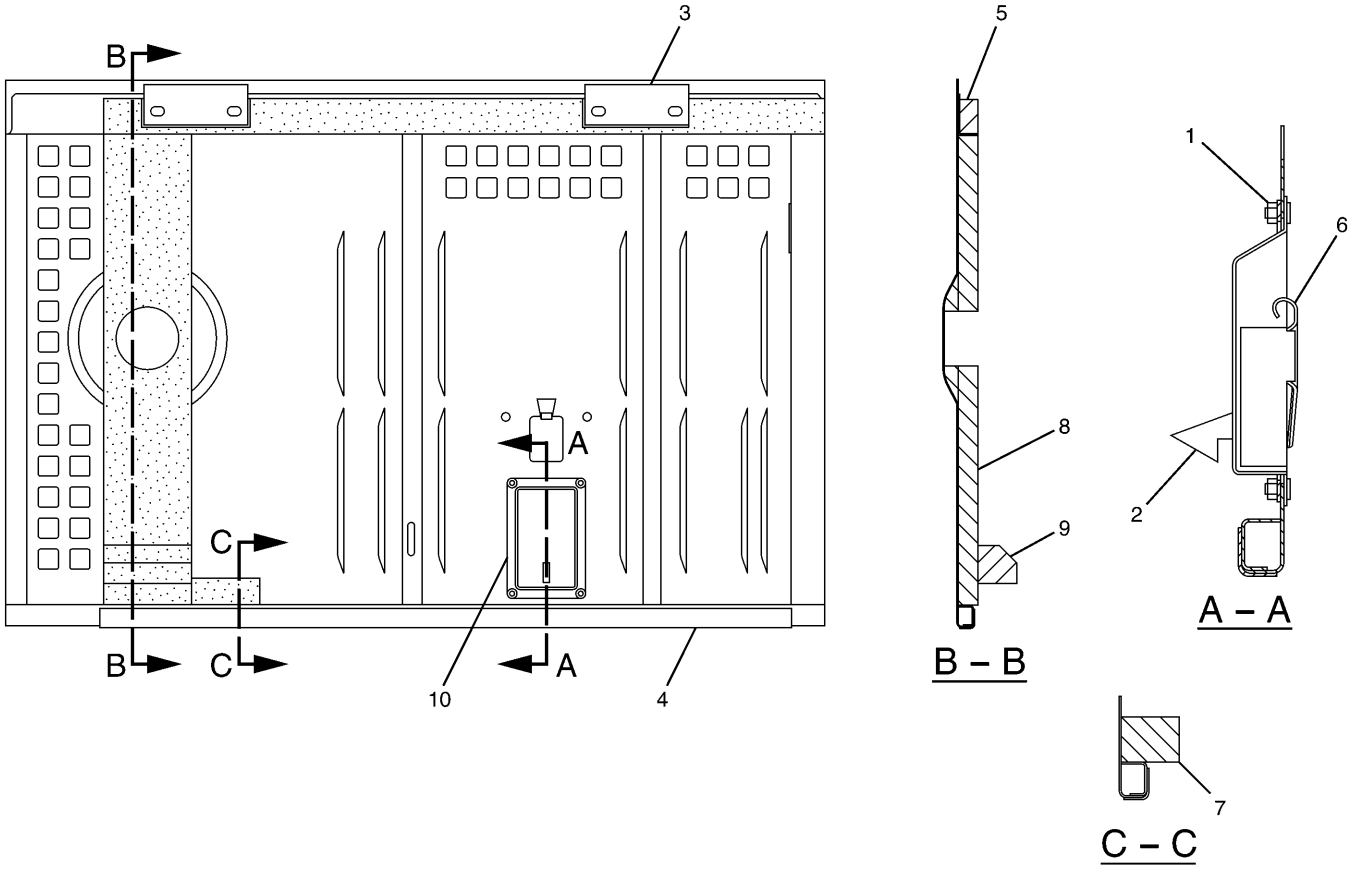

NOTE	No.	PART No.	QTY	PART NAME	NOTE	No.	PART No.	QTY	PART NAME
	1	099-6418	4	NUT					
	2	142-5542	1	LOCK AS					
	3	203-5001	2	HINGE					
	4	177-6101	1	GUARD					
	5	177-6115	1	LINER					
	6	184-8862	1	COVER					
	7	190-7243	1	LINER					
	8	193-9431	1	LINER AS					
	9	199-0157	1	LINER					
	10	203-5005	1	SHEET					

H77545E 02

177-5970 HOOD GP-ENGINE
S/N CAE 01201-02264
Part of 170-2600-Page205

FRAME AND BODY

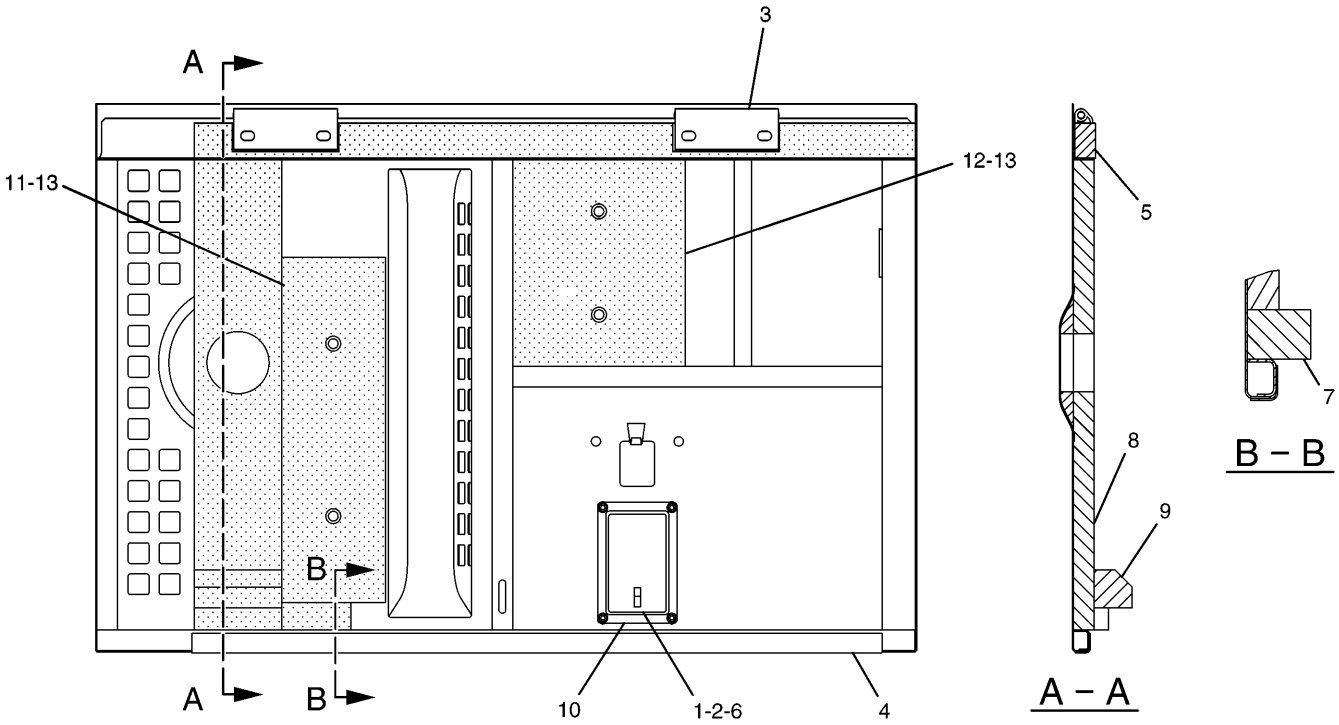

NOTE	No.	PART No.	QTY	PART NAME	NOTE	No.	PART No.	QTY	PART NAME
	1	099-6418	4	NUT					
	2	298-2942	1	LOCK AS					
	3	203-5001	2	HINGE					
	4	177-6101	1	GUARD					
	5	177-6115	1	LINER					
	6	184-8862	1	COVER					
	7	190-7243	1	LINER					
	8	193-9431	1	LINER AS					
	9	199-0157	1	LINER					
	10	203-5005	1	SHEET					
	11	236-9575	1	INSULATION					
	12	236-9576	1	INSULATION					
	13	6P-2216	4	CAP					

H98157E 03

248-7802 HOOD GP-ENGINE

S/N CAE 02265-Up
Part of 248-7898-Page213.02

MEMORANDA

FRAME AND BODY

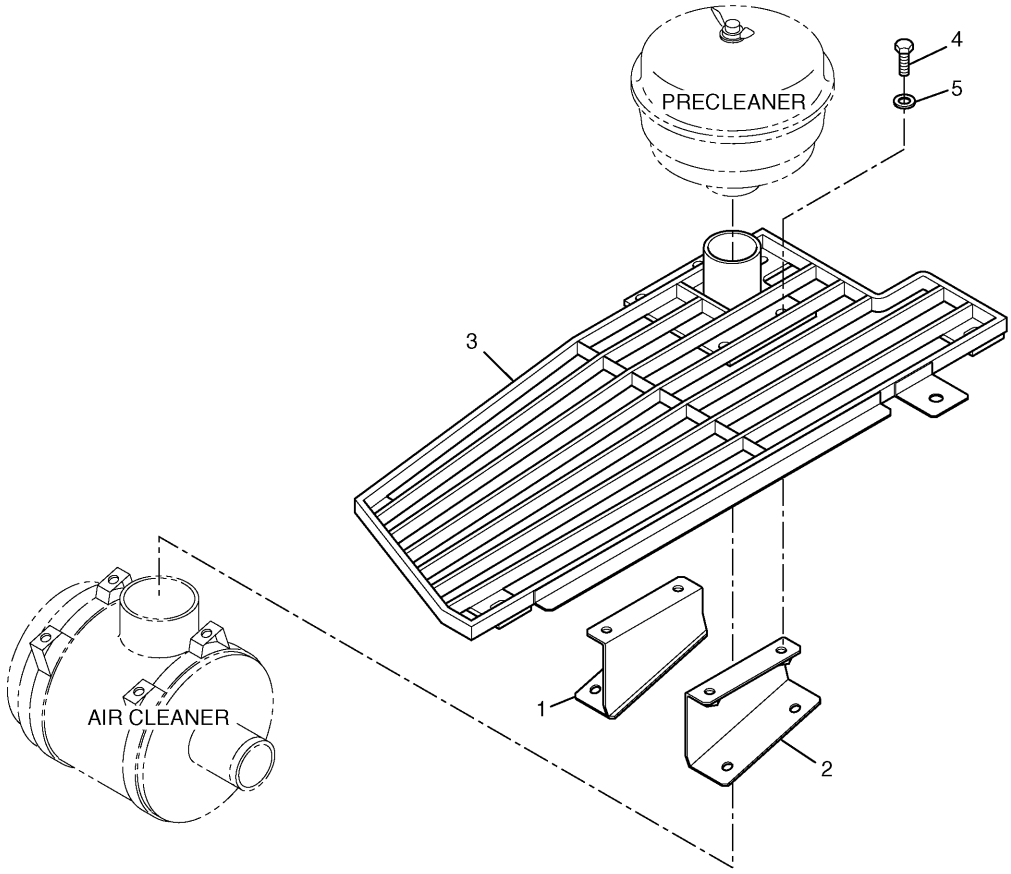

NOTE	No.	PART No.	QTY	PART NAME	NOTE	No.	PART No.	QTY	PART NAME
	1	190-7144	1	SUPPORT AS					
	2	190-7147	1	SUPPORT AS					
	3	190-7150	1	SHEET AS					
	4	8T-4192	2	BOLT (L=25mm)					
	5	5P-1076	2	WASHER					

H71798E 00

190-7158 HOOD GP
Part of 183-1536-Page55
An Attachment

FRAME AND BODY

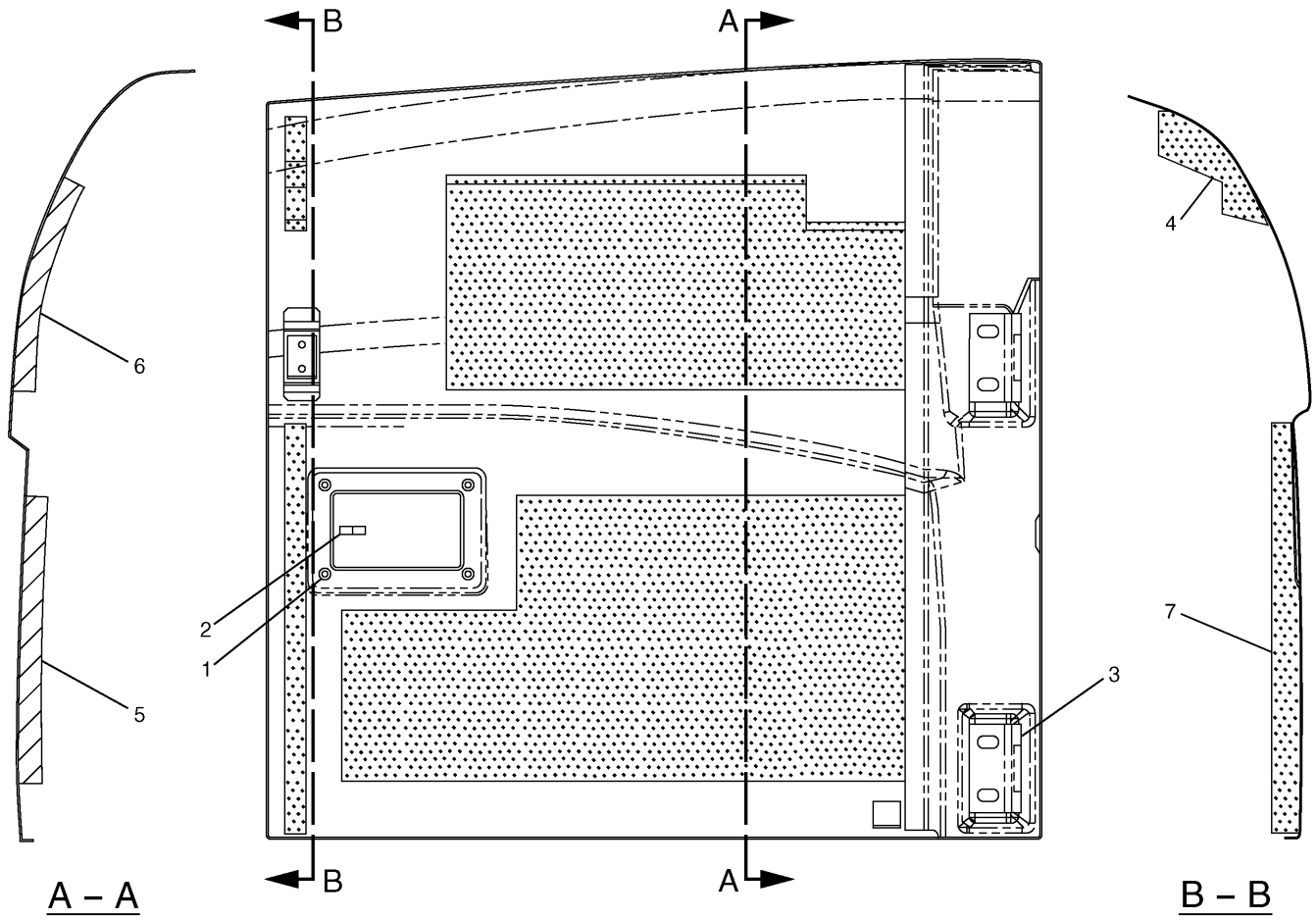

NOTE	No.	PART No.	QTY	PART NAME	NOTE	No.	PART No.	QTY	PART NAME
	1	099-6418	4	NUT					
	2	298-2942	1	LOCK AS					
	3	184-8898	2	HINGE					
	4	177-6133	1	LINER					
	5	177-6134	1	INSULATION					
	6	198-9996	1	INSULATION					
	7	199-0040	1	LINER					

H98158E 04

177-6136 DOOR GP-HOOD

Part of 170-2600-Page207,248-7898-Page213.04

FRAME AND BODY

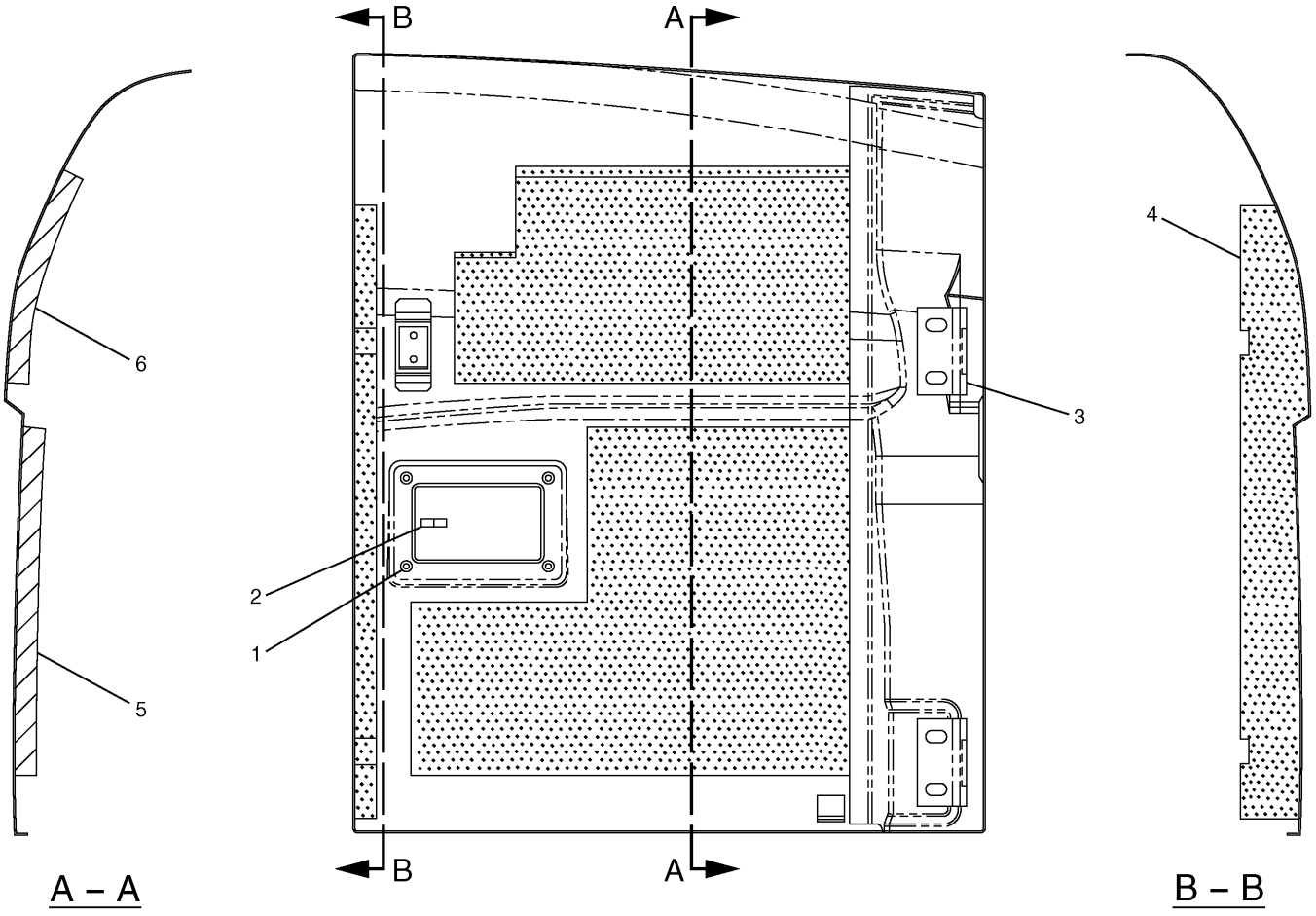

NOTE	No.	PART No.	QTY	PART NAME	NOTE	No.	PART No.	QTY	PART NAME
	1	099-6418	4	NUT					
	2	298-2942	1	LOCK AS					
	3	184-8899	2	HINGE					
	4	177-6110	1	LINER					
	5	177-6135	1	INSULATION					
	6	184-8822	1	INSULATION					

H98159E 06

177-6137 DOOR GP-HOOD

Part of 170-2600-Page205,248-7898-Page213.02

FRAME AND BODY

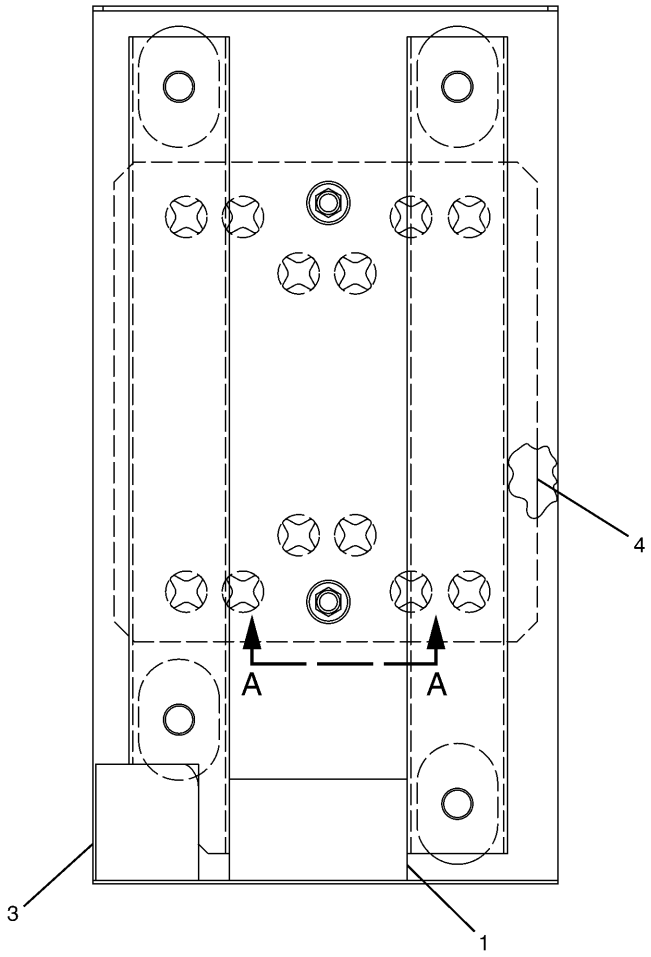

A – A

NOTE	No.	PART No.	QTY	PART NAME	NOTE	No.	PART No.	QTY	PART NAME
	1	190-7077	1	LINER					
	2	5P-4116	2	WASHER					
	3	190-7245	1	LINER					
	4	193-9368	1	SHEET					
	5	137-2255	2	BOLT					
	6	5C-7261	2	NUT					

H77544E 02

177-5796 COVER GP
S/N CAE 01201-02264
Part of 170-2600-Page205

FRAME AND BODY

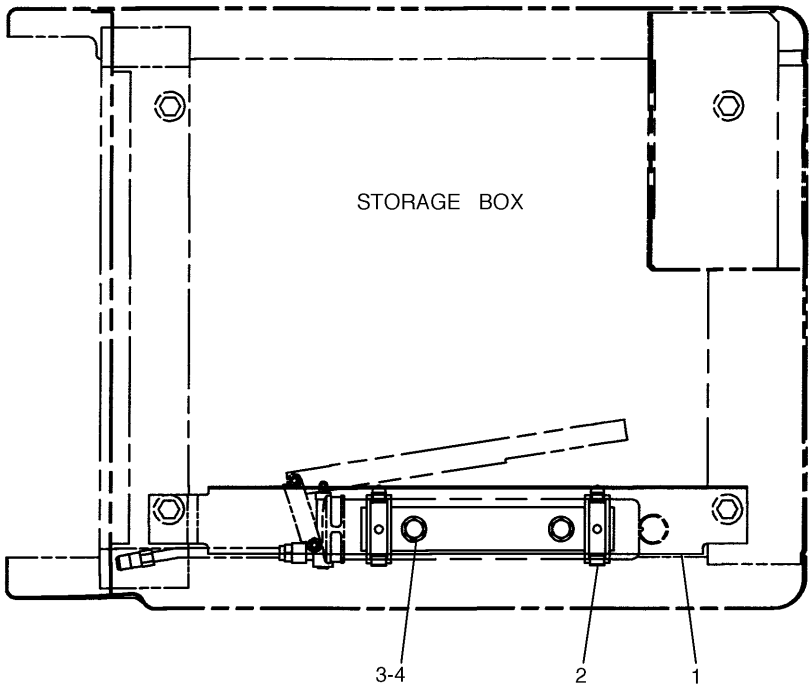

NOTE	No.	PART No.	QTY	PART NAME	NOTE	No.	PART No.	QTY	PART NAME
	1	194-8765	1	SHEET AS					
	2	41-8384	1	SUPPORT					
	3	8T-4192	2	BOLT (L=25mm)					
	4	8T-4223	2	WASHER					

H71793E 01

169-7723 MOUNTING GP-GREASE GUN

Part of 169-7722-Page692
An Attachment

FRAME AND BODY

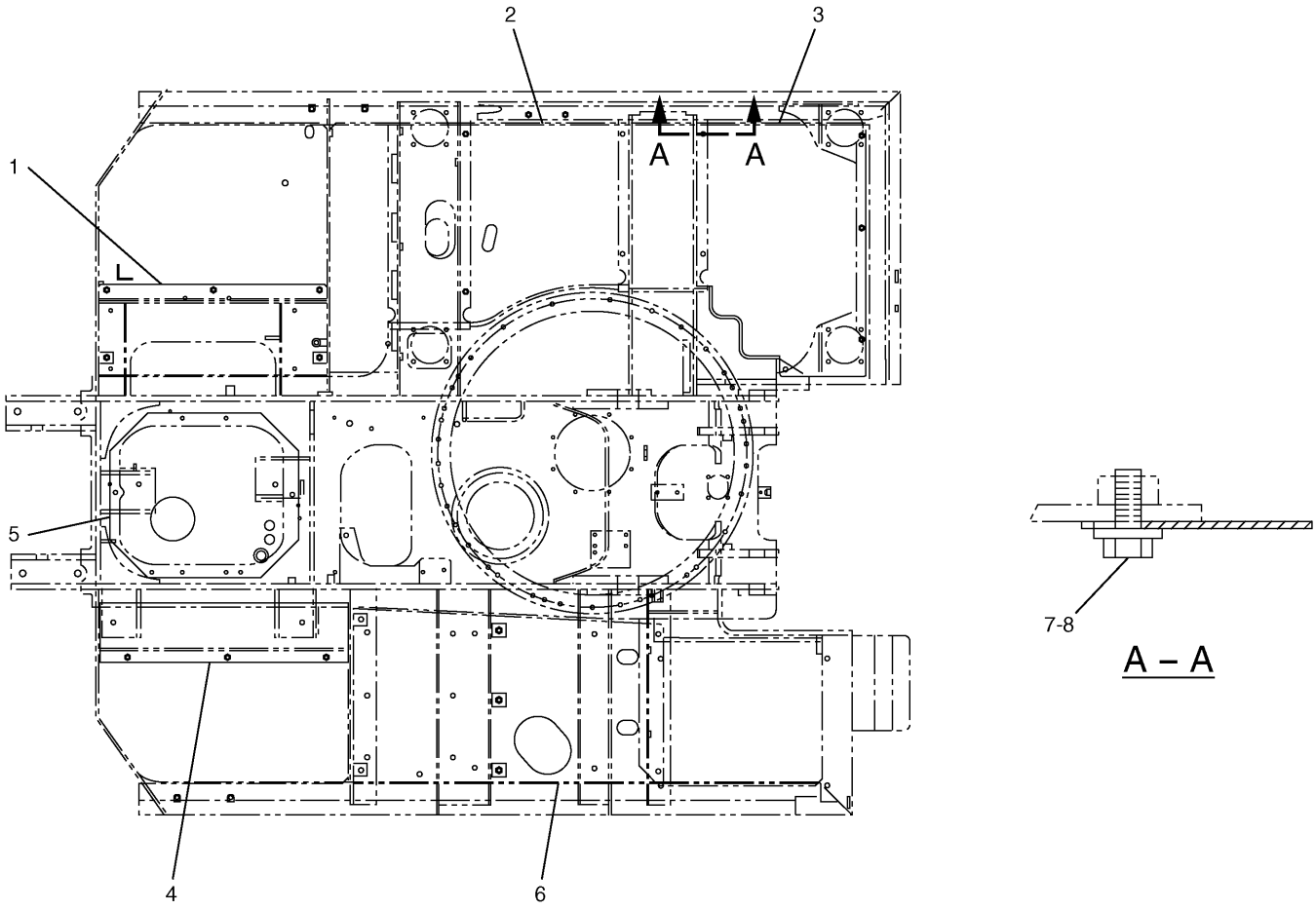

NOTE	No.	PART No.	QTY	PART NAME	NOTE	No.	PART No.	QTY	PART NAME
	1	175-0949	1	SHEET					
	2	175-0950	1	SHEET					
	3	175-0951	1	SHEET					
	4	175-0953	1	SHEET					
	5	208-4075	1	SHEET					
	6	184-8825	1	SHEET AS					
	7	8C-8992	28	BOLT (L=30mm)					
	8	5P-1076	28	WASHER					

H86317E 06

170-2598 GUARD GP-BOTTOM
S/N CAE 01201-02007

FRAME AND BODY

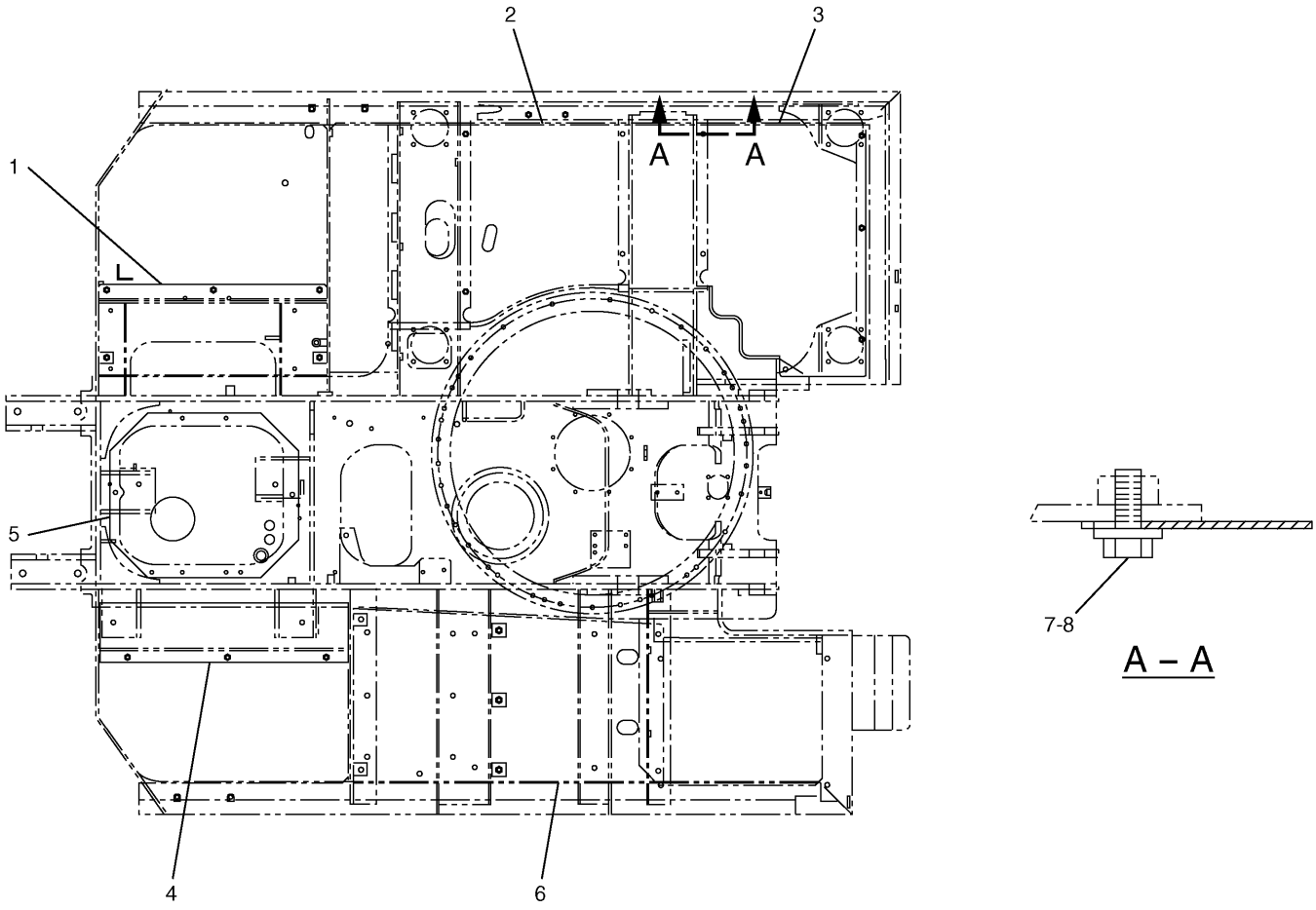

NOTE	No.	PART No.	QTY	PART NAME	NOTE	No.	PART No.	QTY	PART NAME
	1	175-0949	1	SHEET					
	2	175-0950	1	SHEET					
	3	175-0951	1	SHEET					
	4	175-0953	1	SHEET					
	5	208-4075	1	SHEET					
	6	229-1102	1	SHEET AS					
	7	8C-8992	28	BOLT (L=30mm)					
	8	5P-1076	28	WASHER					

H86318E 07

170-2598 GUARD GP-BOTTOM
S/N CAE 02008-Up

MEMORANDA

FRAME AND BODY

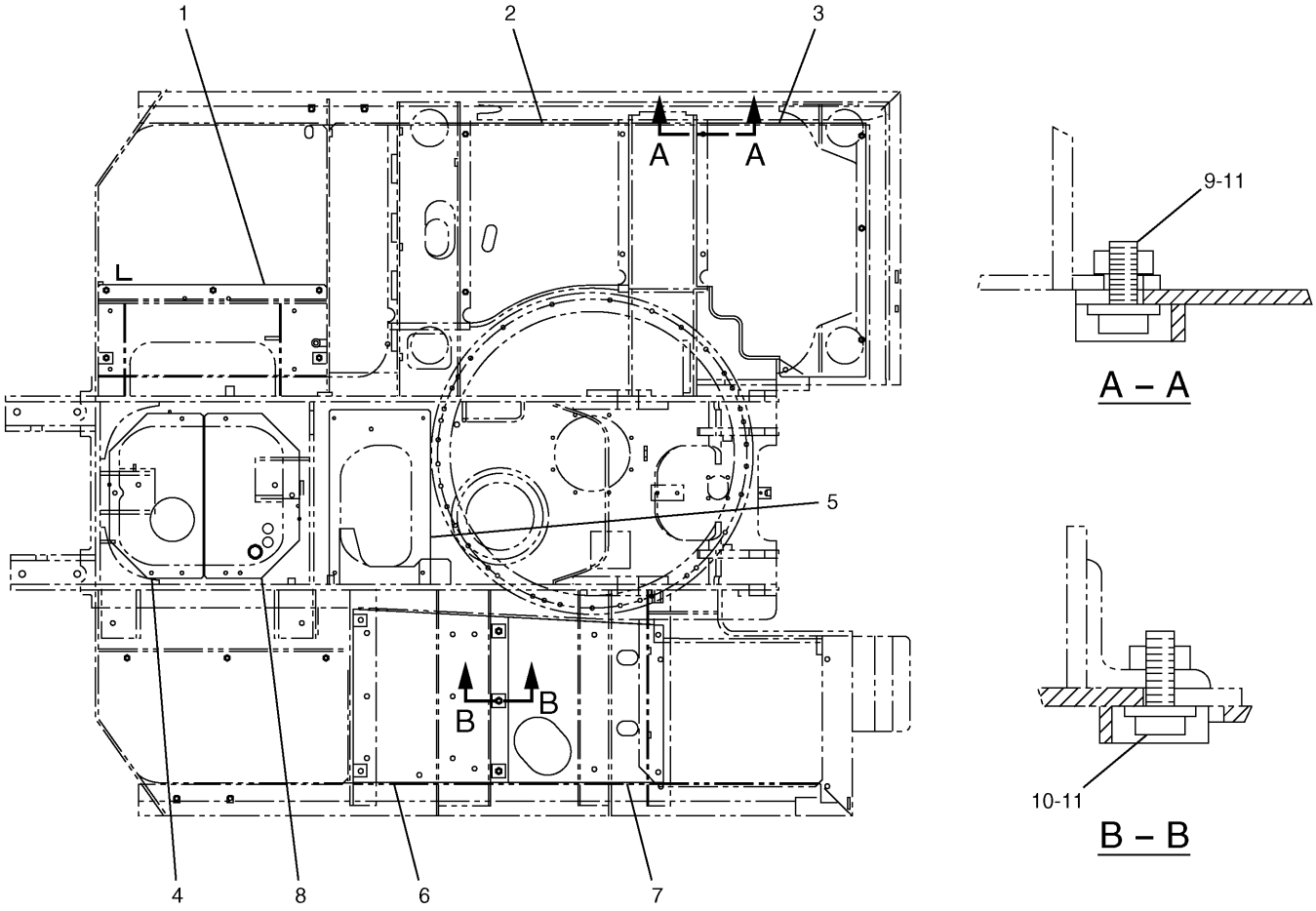

NOTE	No.	PART No.	QTY	PART NAME	NOTE	No.	PART No.	QTY	PART NAME
	1	193-9350	1	PLATE AS					
	2	193-9351	1	PLATE AS					
	3	193-9352	1	PLATE AS					
	4	193-9353	1	PLATE AS					
	5	193-9354	1	PLATE AS					
	6	193-9355	1	PLATE AS					
	7	193-9356	1	PLATE AS					
	8	193-9379	1	PLATE AS					
	9	8C-8992	29	BOLT (L=30mm)					
	10	7X-7478	3	BOLT (L=35mm)					
	11	5P-1076	32	WASHER					

H86319E 05

170-2607 GUARD GP-BOTTOM

S/N CAE 01201-(T03.12)
Part of 194-8945-Page11
An Attachment

FRAME AND BODY

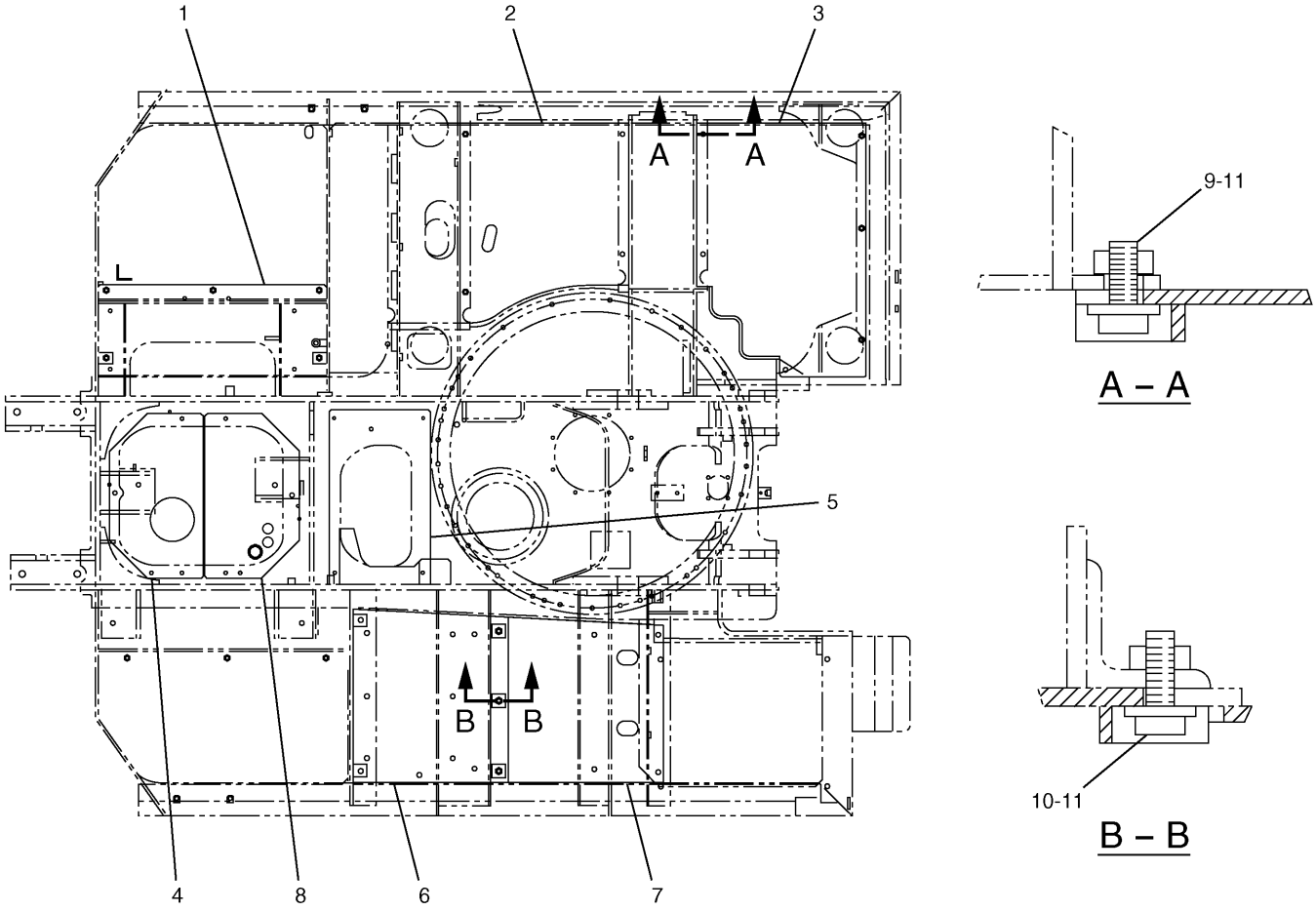

NOTE	No.	PART No.	QTY	PART NAME	NOTE	No.	PART No.	QTY	PART NAME
	1	193-9350	1	PLATE AS					
	2	193-9351	1	PLATE AS					
	3	193-9352	1	PLATE AS					
	4	193-9353	1	PLATE AS					
	5	193-9354	1	PLATE AS					
	6	193-9355	1	PLATE AS					
	7	229-1104	1	PLATE AS					
	8	193-9379	1	PLATE AS					
	9	8C-8992	29	BOLT (L=30mm)					
	10	7X-7478	3	BOLT (L=35mm)					
	11	5P-1076	32	WASHER					

H86320E 06

170-2607 GUARD GP-BOTTOM

S/N CAE (T04.01)-Up
Part of 194-8945-Page11
An Attachment

MEMORANDA

FRAME AND BODY

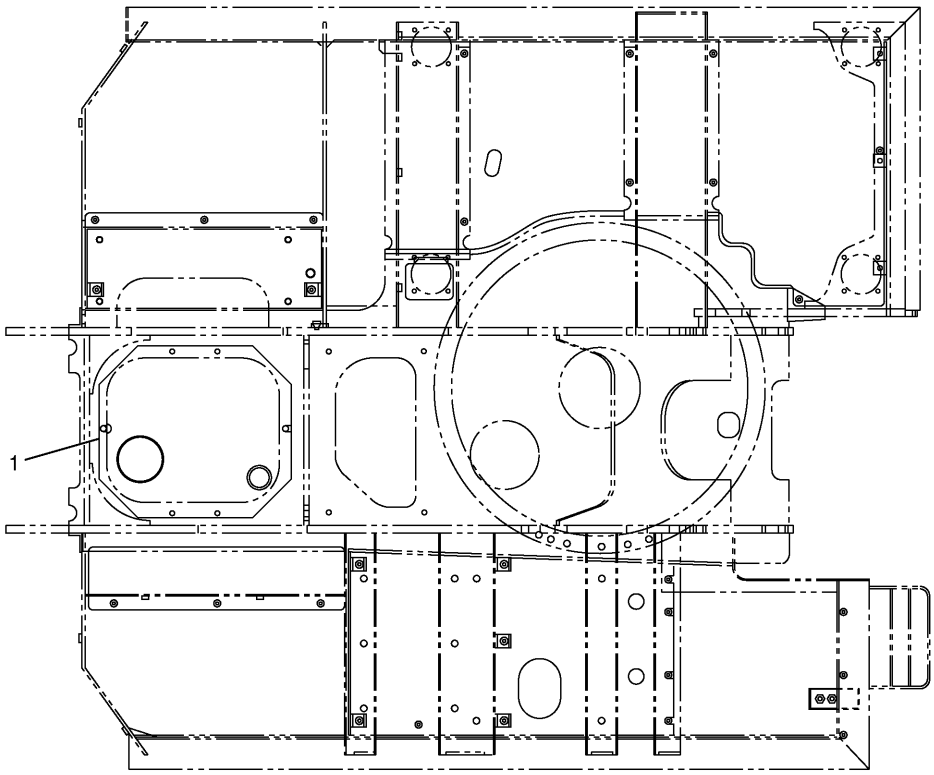

NOTE	No.	PART No.	QTY	PART NAME	NOTE	No.	PART No.	QTY	PART NAME
	1	184-8210	1	SHEET AS					

H77548E 04

184-8209 GUARD GP-BOTTOM

Part of 151-1493-Page634,183-1476-Page635,151-1494-Page636
An Attachment

FRAME AND BODY

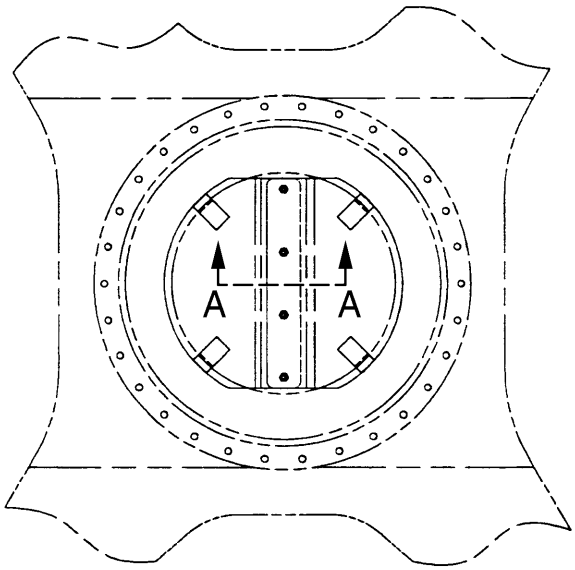

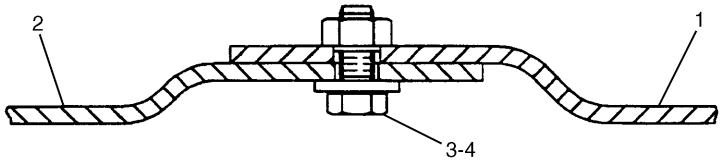

A – A

NOTE	No.	PART No.	QTY	PART NAME	NOTE	No.	PART No.	QTY	PART NAME
	1	137-2853	1	PLATE AS					
	2	137-2854	1	PLATE AS					
	3	8C-8992	4	BOLT (L=30mm)					
	4	5P-1076	4	WASHER					

H52346E 00

137-2813 GUARD GP-SWIVEL
Part of 194-8945-Page11
An Attachment

FRAME AND BODY

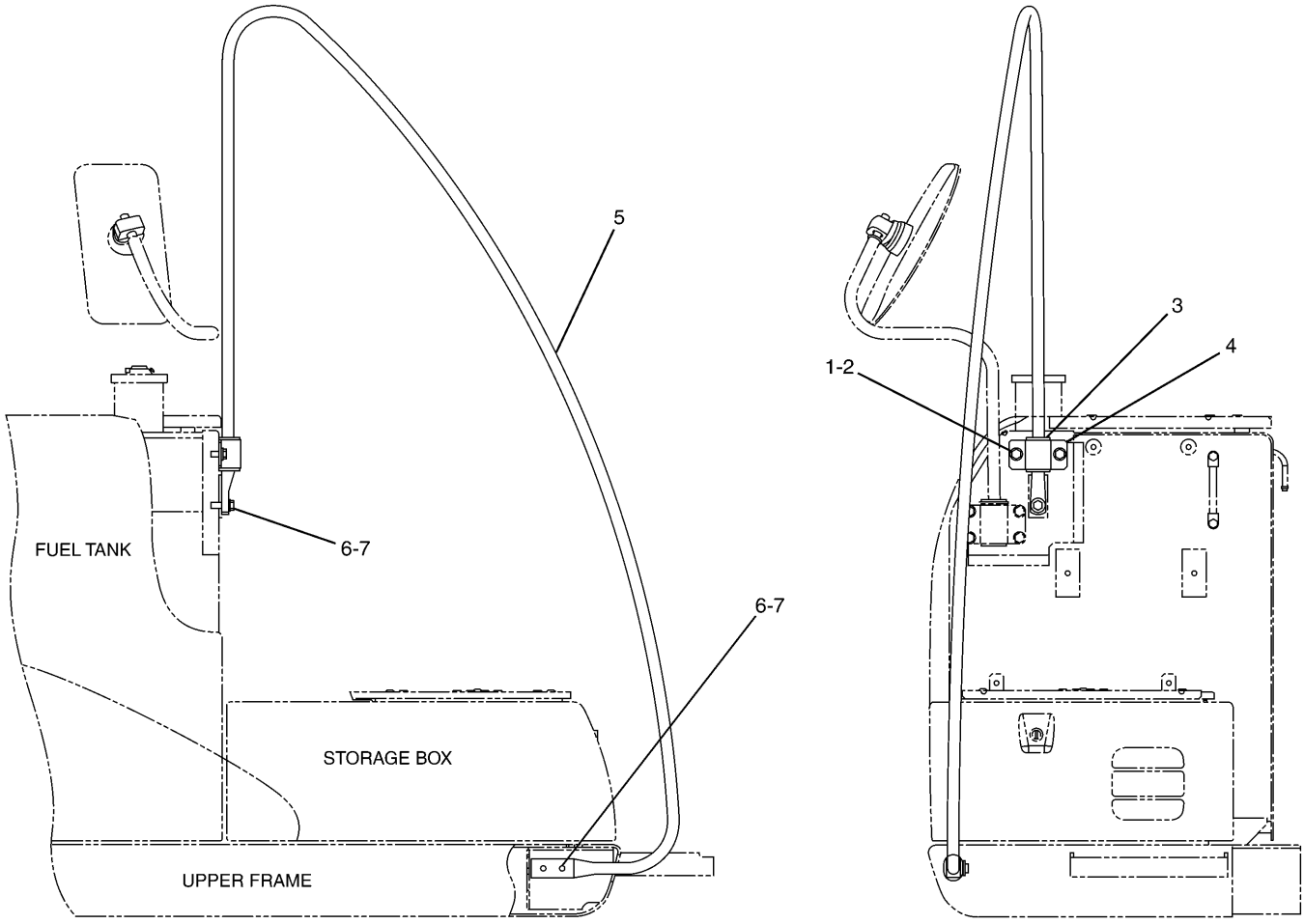

NOTE	No.	PART No.	QTY	PART NAME	NOTE	No.	PART No.	QTY	PART NAME
	1	8T-4223	2	WASHER					
	2	8T-4192	2	BOLT (L=25mm)					
	3	177-5880	2	SLEEVE					
	4	177-5879	1	CLAMP					
	5	193-9712	1	HANDHOLD AS					
	6	8T-4183	3	BOLT (L=40mm)					
	7	5P-1076	3	WASHER					

H85086E 04

170-2602 HANDHOLD GP

FRAME AND BODY

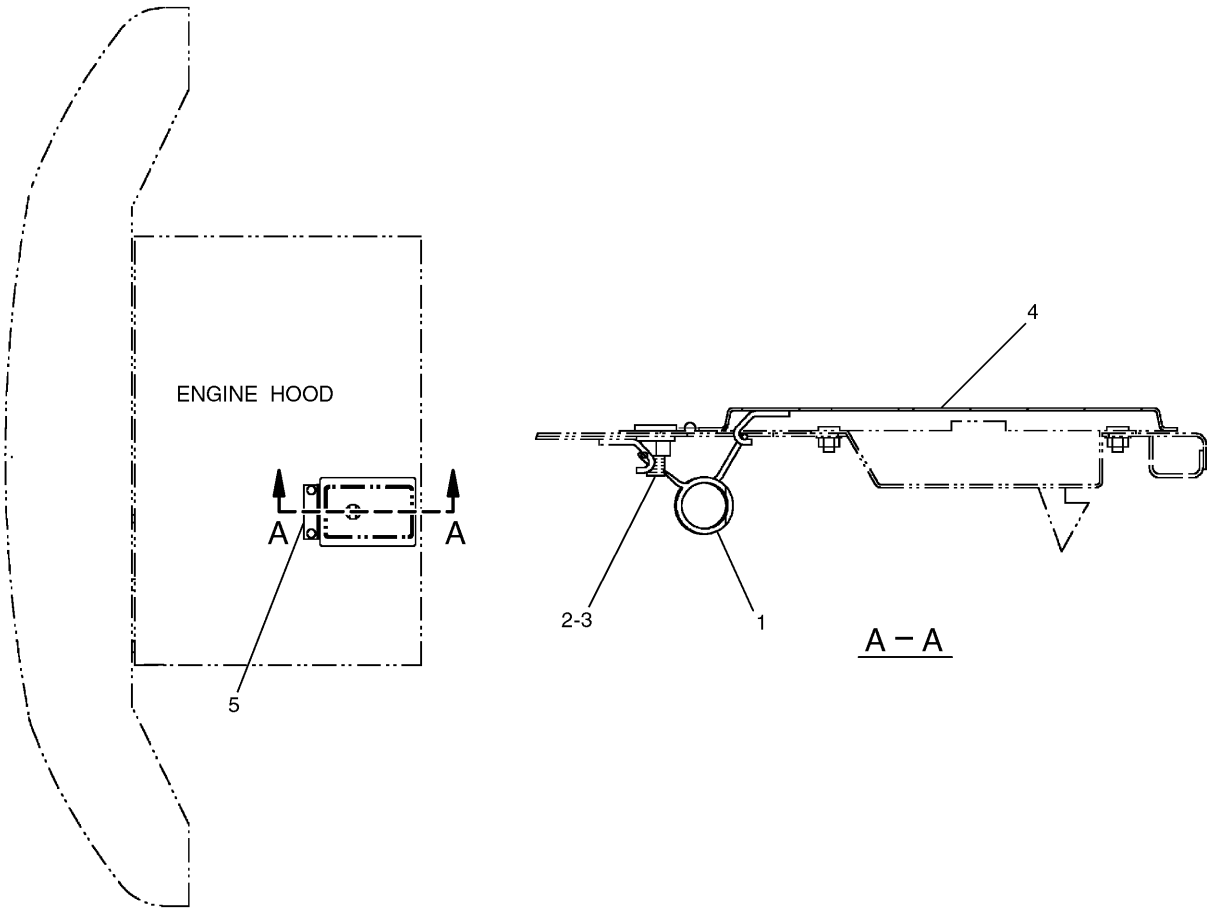

NOTE	No.	PART No.	QTY	PART NAME	NOTE	No.	PART No.	QTY	PART NAME
	1	1K-8850	1	SPRING					
	2	8T-4121	2	WASHER					
	3	8T-4133	2	NUT					
	4	193-9793	1	DOOR AS					
	5	9V-3659	1	HINGE					

H74236E 00

193-9776 GUARD GP-SNOW

Part of 198-2321-Page92,183-1500-Page707

An Attachment

FRAME AND BODY

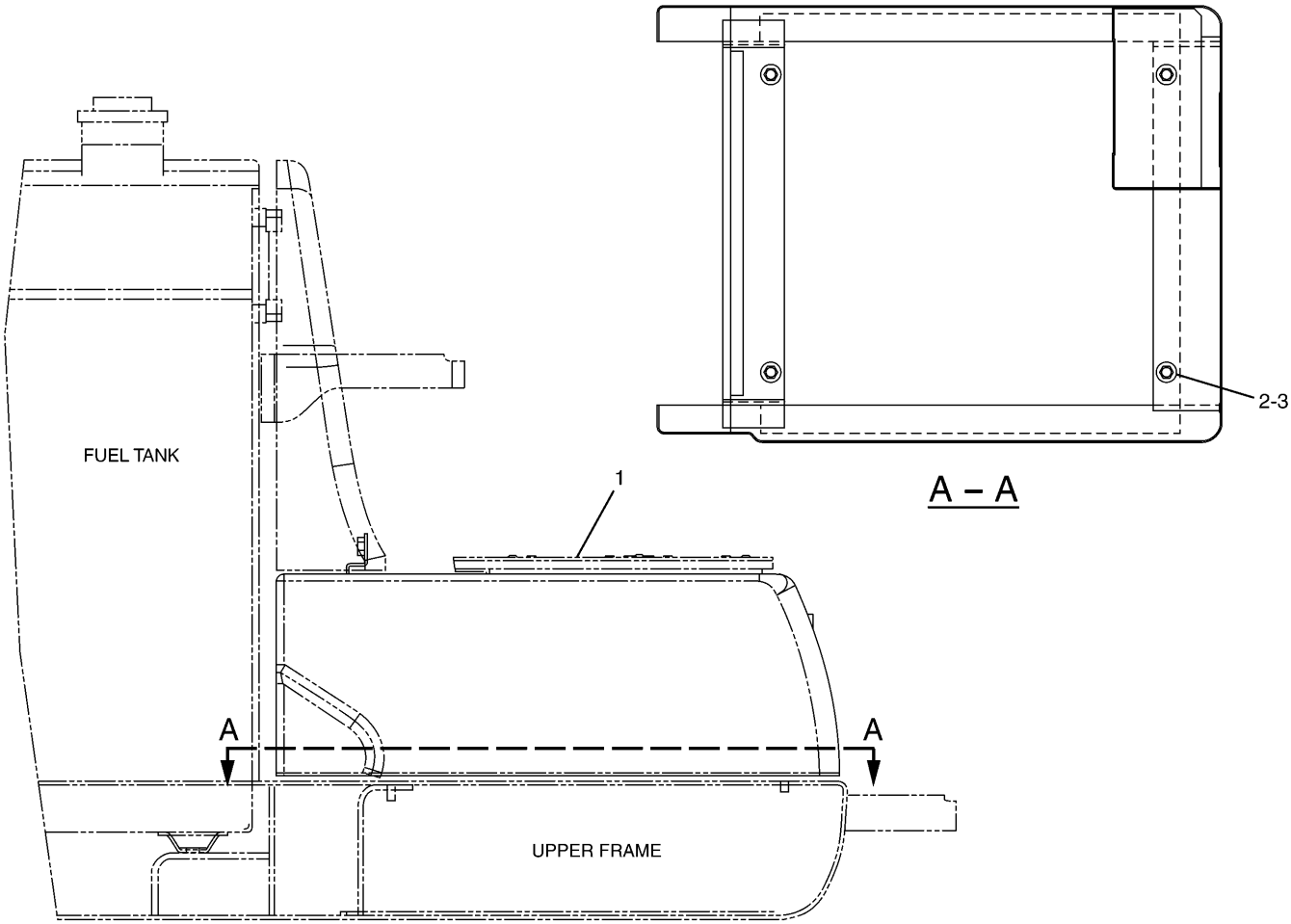

NOTE	No.	PART No.	QTY	PART NAME	NOTE	No.	PART No.	QTY	PART NAME
Y	1	142-3854	1	BOX GP					
	2	5P-1076	4	WASHER					
	3	8T-4956	4	BOLT (L=35mm)					

Y—SEE SEPARATE ILLUSTRATION

H85064E 06

142-3853 BOX & MTG GP-STORAGE

S/N CAE 01201-02264

142-3854-Page228

FRAME AND BODY

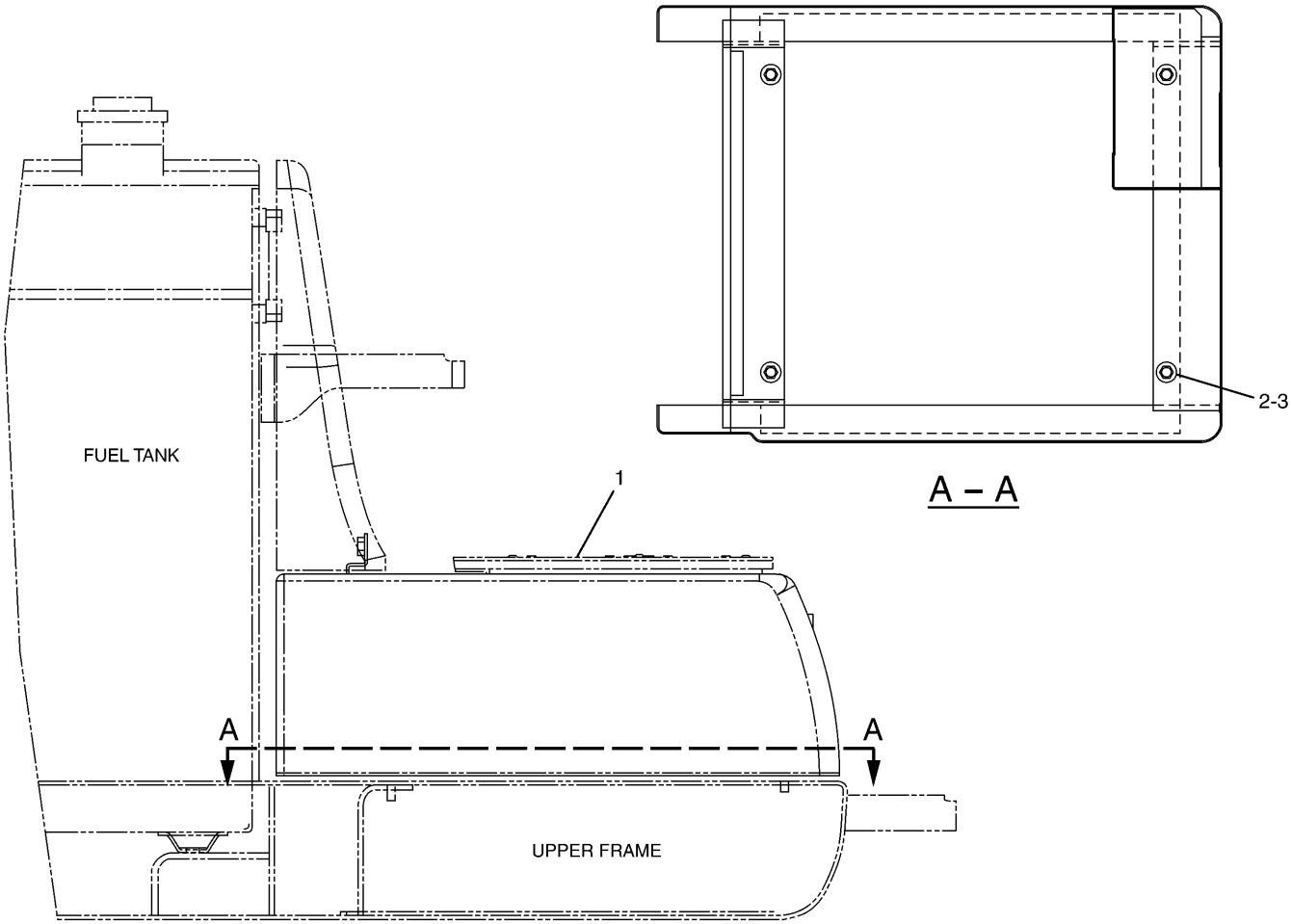

NOTE	No.	PART No.	QTY	PART NAME	NOTE	No.	PART No.	QTY	PART NAME
Y	1	248-7792	1	BOX GP					
	2	5P-1076	4	WASHER					
	3	8T-4956	4	BOLT (L=35mm)					

Y—SEE SEPARATE ILLUSTRATION

H87051E 00

248-7793 BOX & MTG GP-STORAGE

S/N CAE 02265-Up
248-7792-Page229.01

MEMORANDA

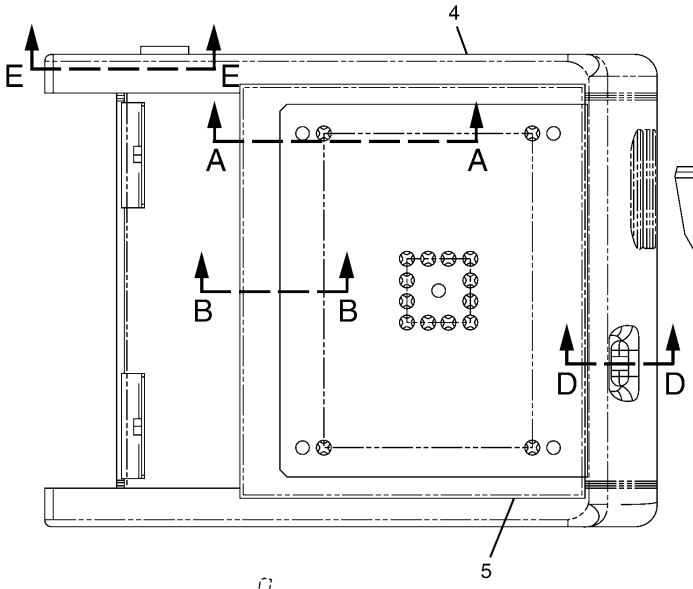

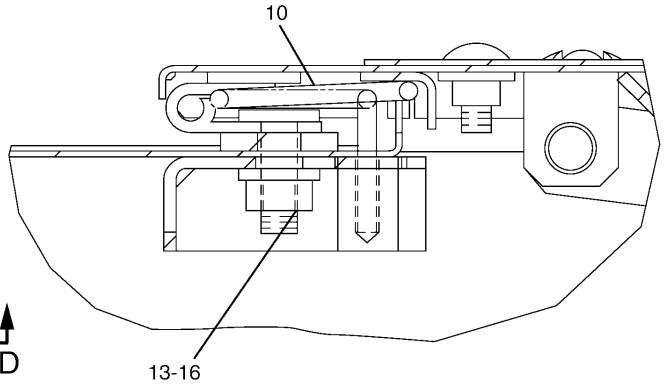

B – B

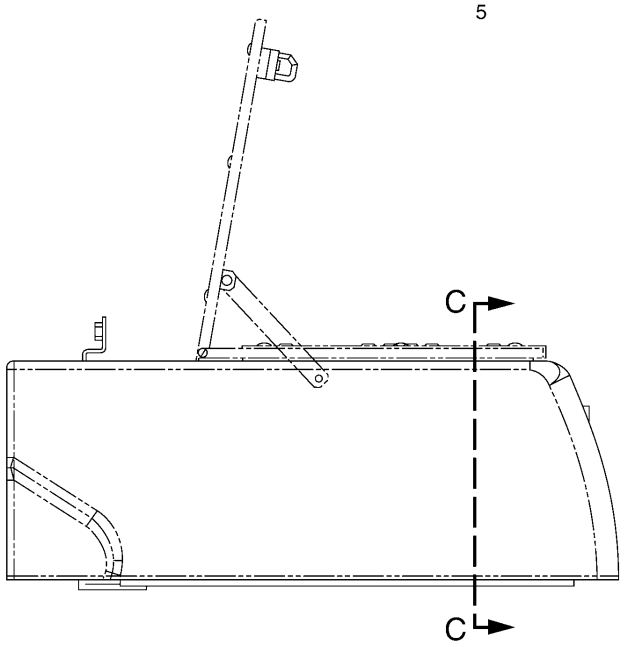

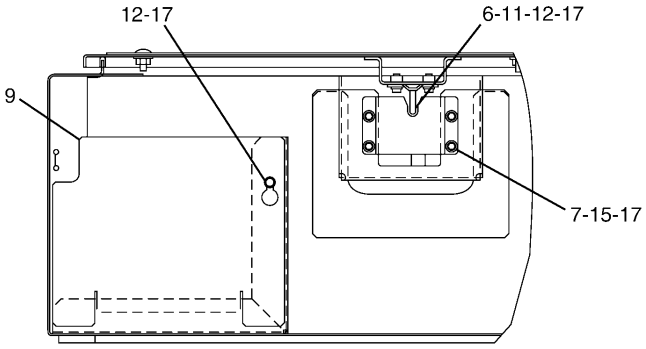

C – C

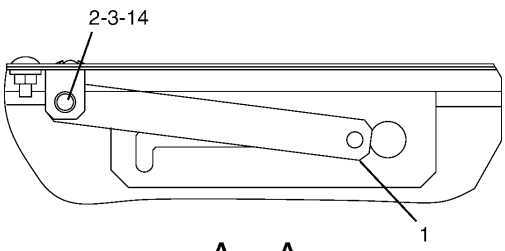

A – A

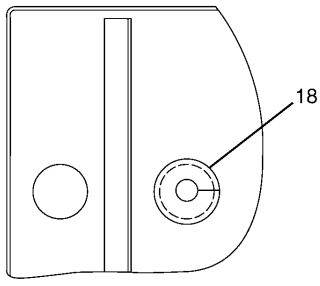

E – E

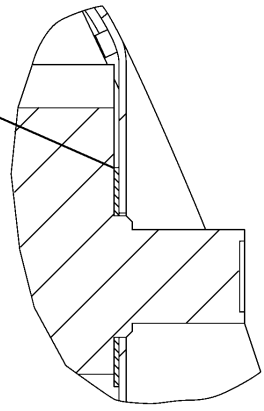

D – D

H77529E 06

142-3854 BOX GP-STORAGE
S/N CAE 01201-02264
Part of 142-3853-Page227
175-0651-Page230

FRAME AND BODY

NOTE	No.	PART No.	QTY	PART NAME	NOTE	No.	PART No.	QTY	PART NAME
	1	41-2187	1	SUPPORT AS					
	2	095-0843	1	COTTER					
	3	096-3780	1	PIN					
	4	170-2980	1	BODY AS					
E		184-8580		SEAL…(170cm)					
Y	5	175-0651	1	COVER GP					
	6	170-2755	1	HOOK AS					
	7	170-2982	1	LOCK AS					
	8	170-2983	1	SEAL					
	9	170-2984	1	SHEET					
	10	184-8148	1	SPRING					
B	11	184-8850	2	SHIM (T=0.50mm)					
	12	5C-9553	3	BOLT (L=16mm)					
	13	5P-1075	4	WASHER					
	14	5P-4116	1	WASHER					
	15	105-3487	4	BOLT (L=20mm)					
	16	8T-4133	4	NUT					
	17	9X-8256	7	WASHER					
	18	170-9360	1	GROMMET					

B—USE AS REQUIRED
E—ORDER BY THE CENTIMETER
Y—SEE SEPARATE ILLUSTRATION

H77529E 06

142-3854 BOX GP-STORAGE

S/N CAE 01201-02264
Part of 142-3853-Page227
175-0651-Page230

FRAME AND BODY

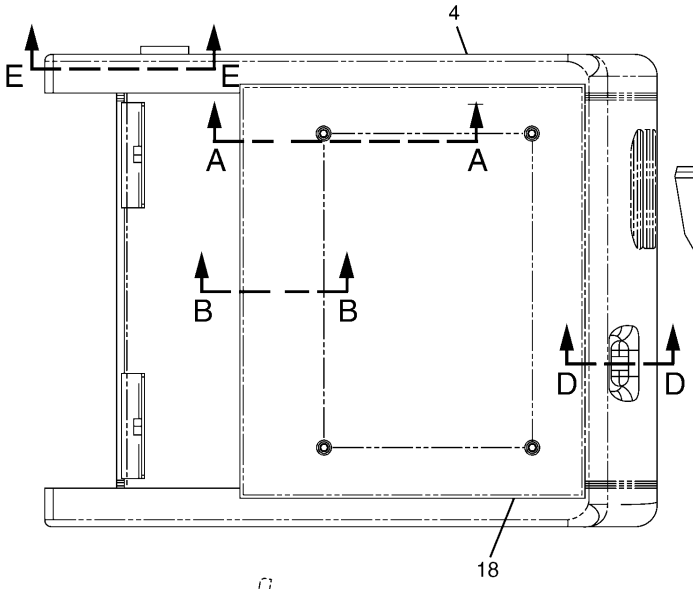

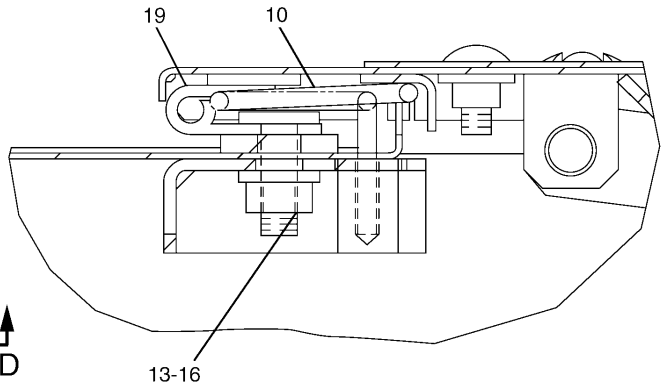

B – B

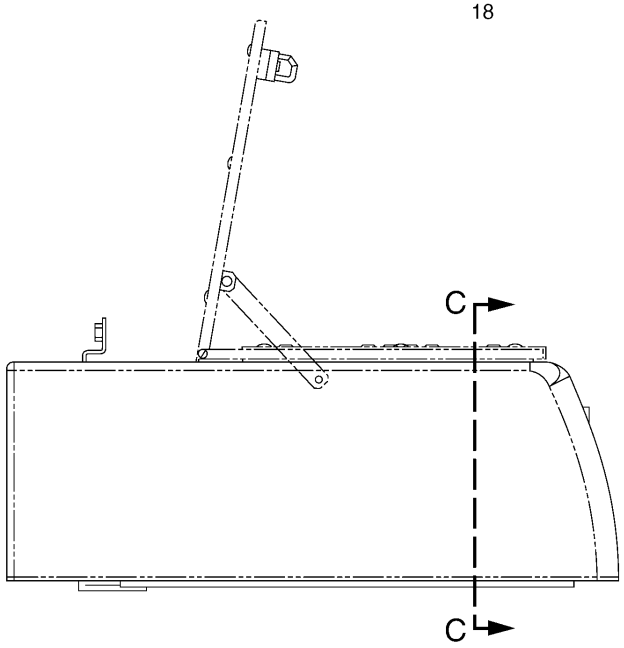

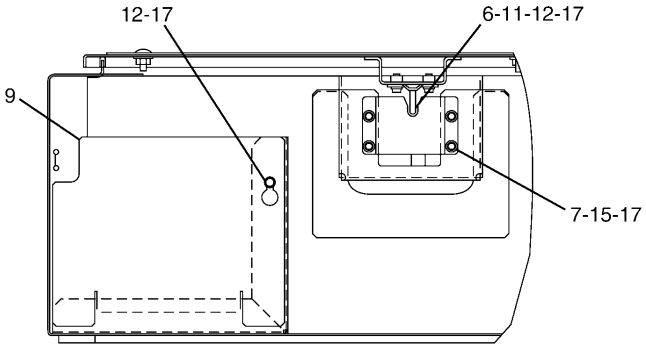

C – C

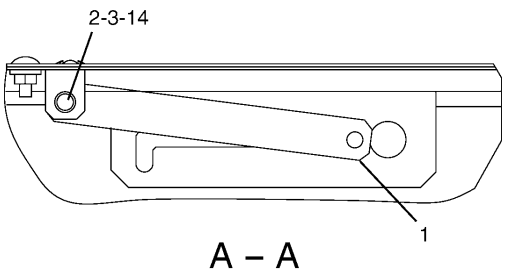

A – A

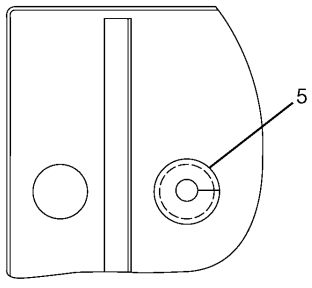

E – E

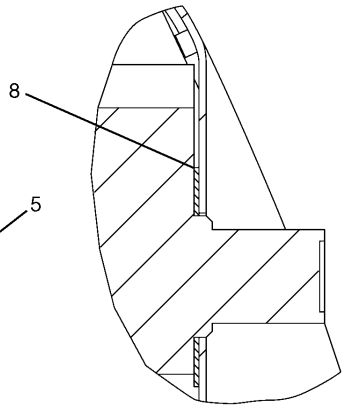

D – D

H87052E 00

248-7792 BOX GP-STORAGE
S/N CAE 02265-Up
Part of 248-7793-Page227.01

FRAME AND BODY

NOTE	No.	PART No.	QTY	PART NAME	NOTE	No.	PART No.	QTY	PART NAME
	1	4I-2187	1	SUPPORT AS					
	2	095-0843	1	COTTER					
	3	096-3780	1	PIN					
	4	170-2980	1	BODY AS					
D		168-1541		SEAL…(1.7m)					
	5	170-9360	1	GROMMET					
	6	170-2755	1	HOOK AS					
	7	170-2982	1	LOCK AS					
	8	170-2983	1	SEAL					
	9	170-2984	1	SHEET					
	10	184-8148	1	SPRING					
B	11	184-8850	2	SHIM (T=0.50mm)					
	12	5C-9553	3	BOLT (L=16mm)					
	13	5P-1075	4	WASHER					
	14	5P-4116	1	WASHER					
	15	105-3487	4	BOLT (L=20mm)					
	16	8T-4133	4	NUT					
	17	9X-8256	7	WASHER					
	18	248-7739	1	COVER AS					
	19	3D-9143	2	HINGE					

B—USE AS REQUIRED

D—ORDER BY THE METER

H87052E 00

248-7792 BOX GP-STORAGE

S/N CAE 02265-Up

Part of 248-7793-Page227.01

FRAME AND BODY

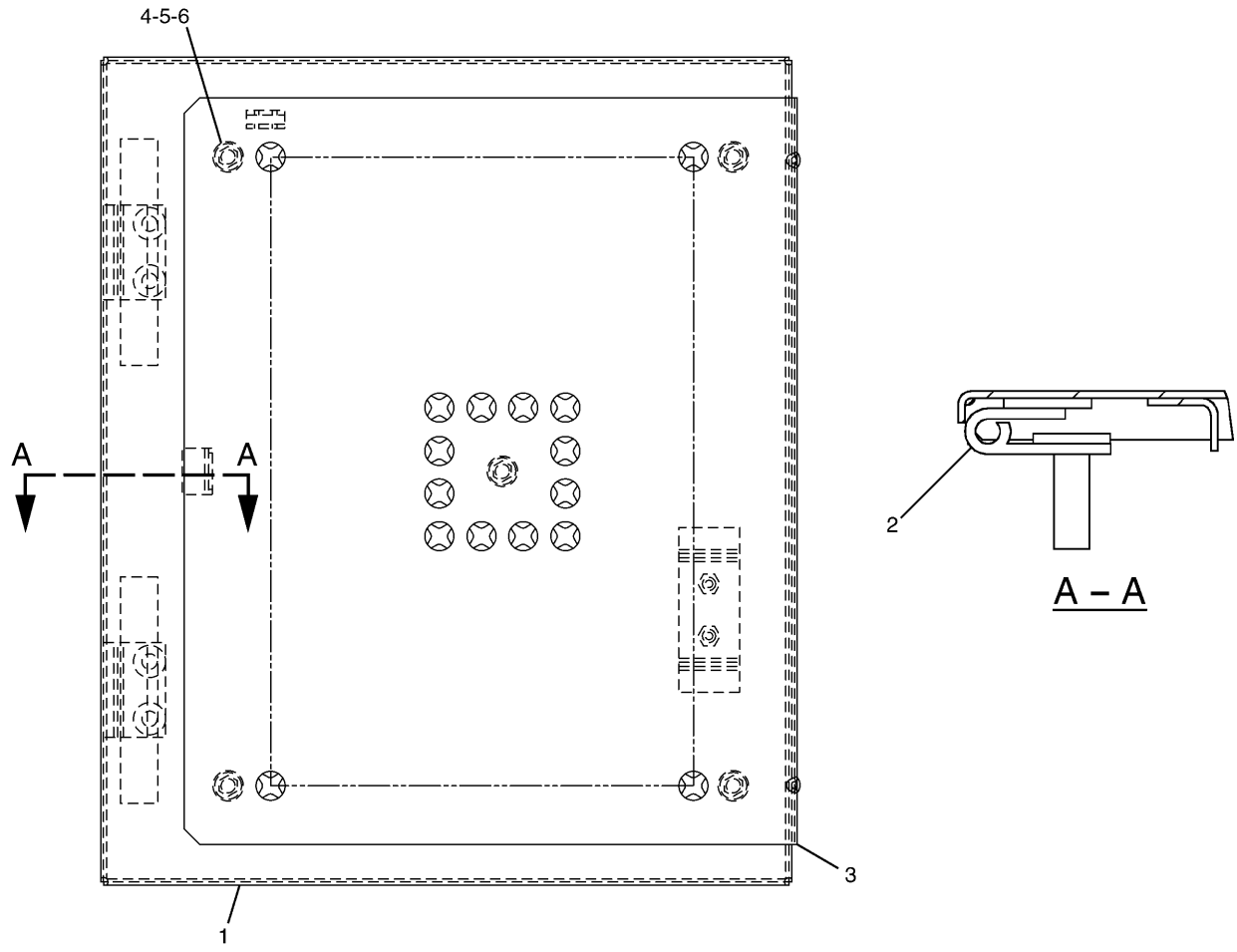

NOTE	No.	PART No.	QTY	PART NAME	NOTE	No.	PART No.	QTY	PART NAME
	1	175-0652	1	COVER AS					
	2	3D-9143	2	HINGE					
	3	175-0654	1	SHEET					
	4	5C-7261	5	NUT					
	5	5P-4116	5	WASHER					
	6	137-2255	5	BOLT					

H86371E 04

175-0651 COVER GP-STORAGE BOX
S/N CAE 01201-02264
Part of 142-3854-Page229

FRAME AND BODY

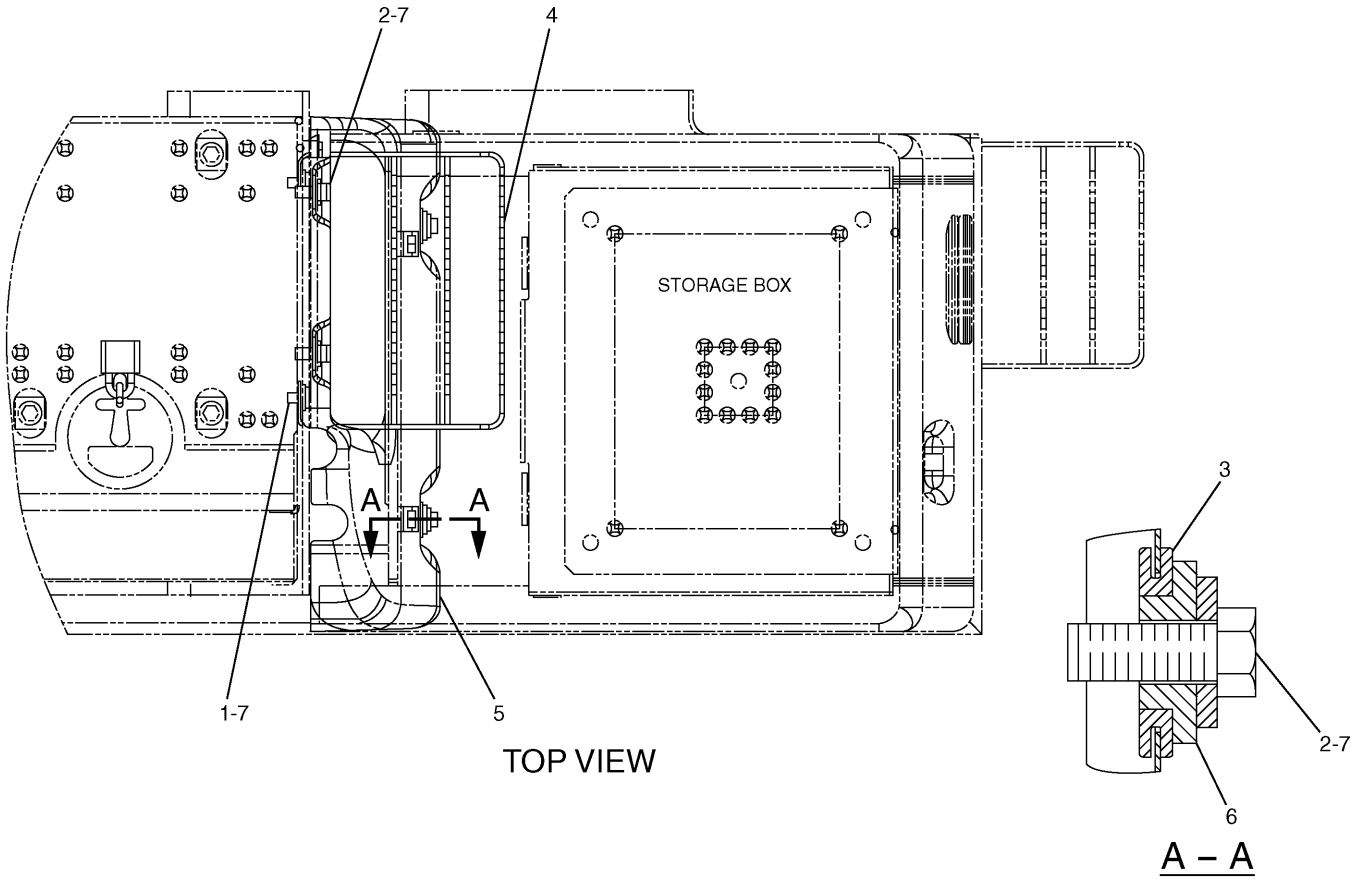

NOTE	No.	PART No.	QTY	PART NAME	NOTE	No.	PART No.	QTY	PART NAME
	1	8T-4192	2	BOLT (L=25mm)					
	2	8T-4139	4	BOLT (L=30mm)					
	3	170-2986	2	GROMMET					
	4	193-9766	1	STEP AS					
	5	184-8838	1	COVER					
	6	7Y-2853	2	SPACER					
	7	5P-1076	6	WASHER					

H77549E 02

184-8861 FENDER & COVER GP

FRAME AND BODY

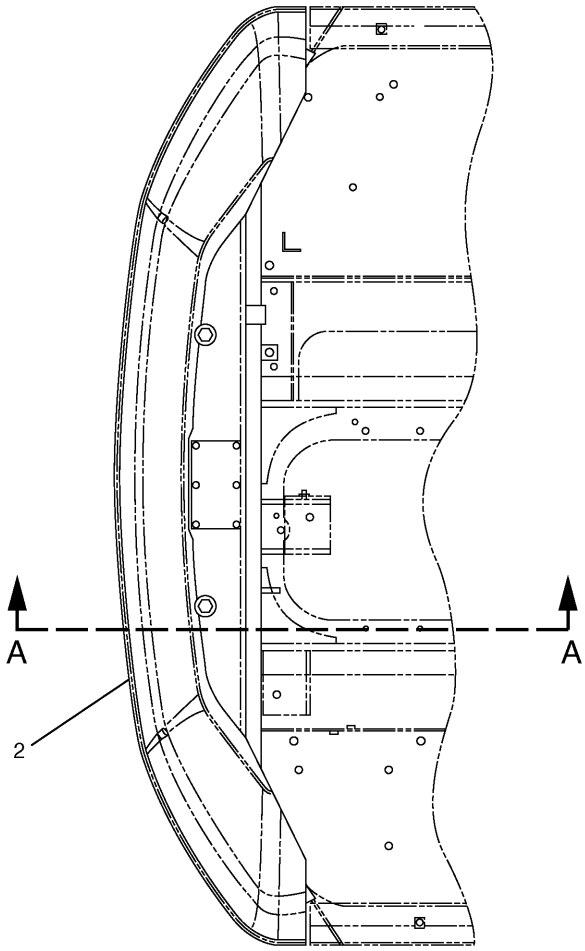

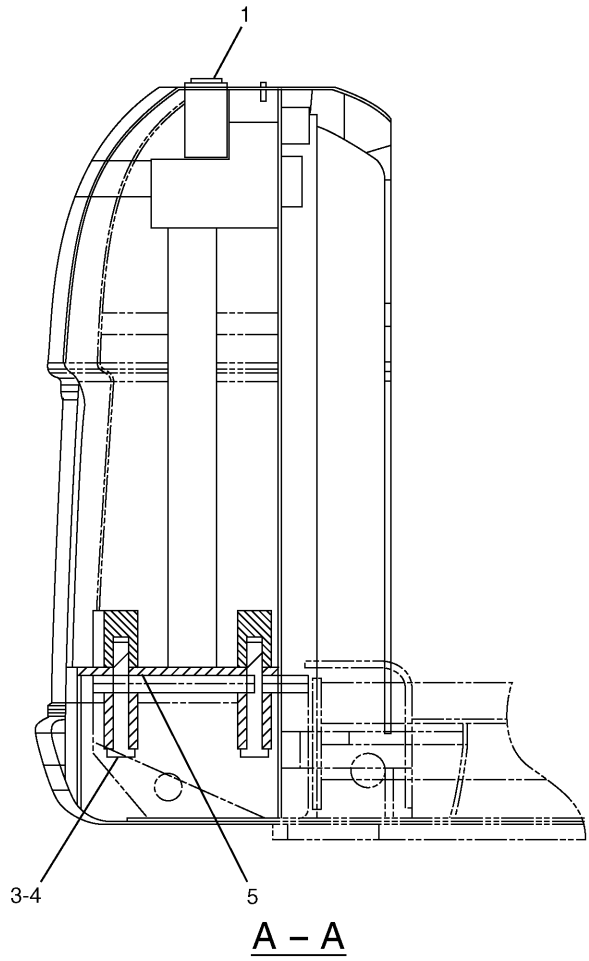

A – A

NOTE	No.	PART No.	QTY	PART NAME	NOTE	No.	PART No.	QTY	PART NAME
	1	41-0006	2	CAP					
Y	2	170-2596	1	COUNTERWEIGHT GP					
	3	177-5867	4	SPACER					
	4	8T-0671	4	BOLT (L=150mm)					
B	5	1R-7128	4	SHIM (T=1.00mm)					
B		71-0676	4	SHIM (T=1.60mm)					

B—USE AS REQUIRED

Y—SEE SEPARATE ILLUSTRATION

H91642E 02

170-2594 COUNTERWEIGHT GP

170-2596-Page235

FRAME AND BODY

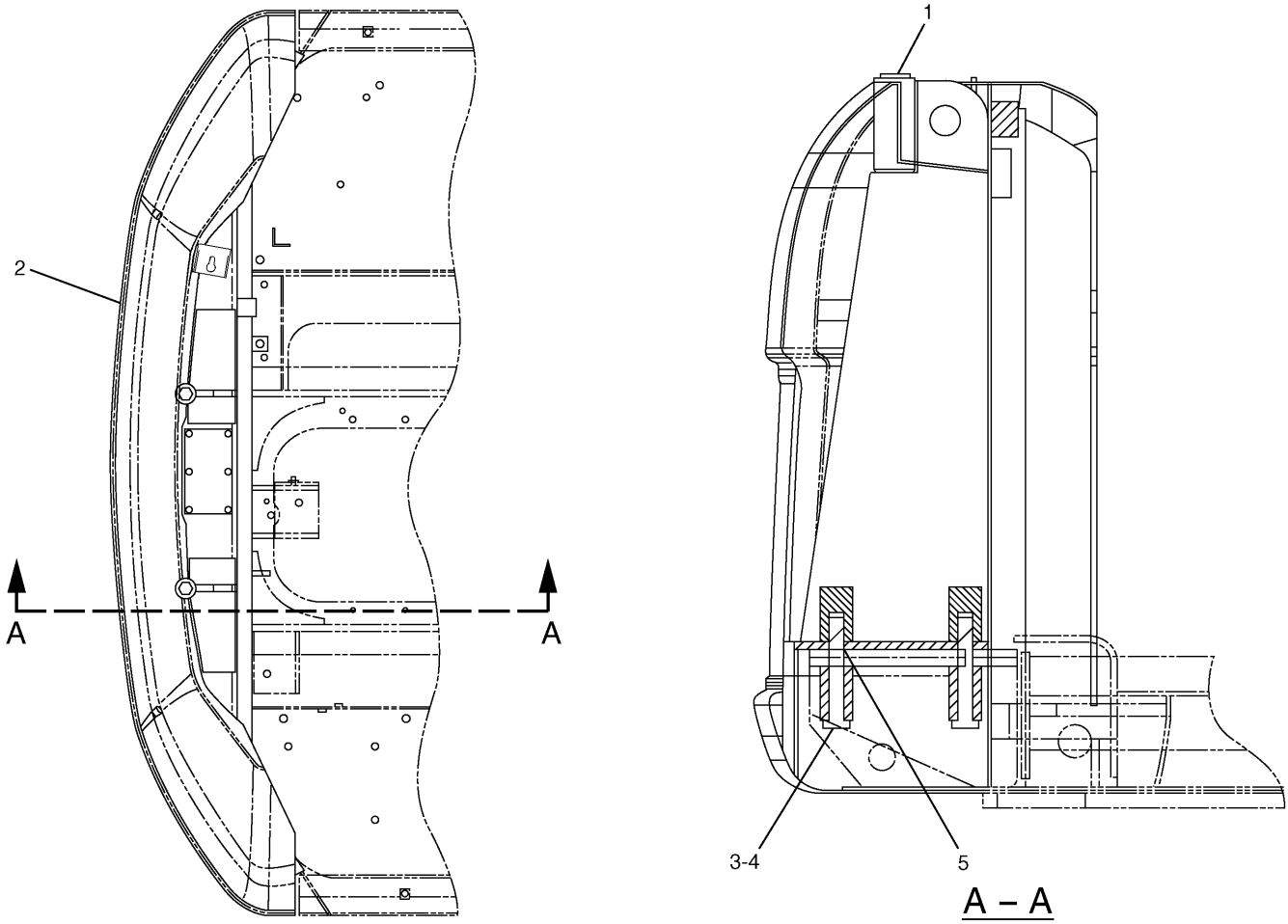

NOTE	No.	PART No.	QTY	PART NAME	NOTE	No.	PART No.	QTY	PART NAME
	1	4I-0006	2	CAP					
Y	2	170-2597	1	COUNTERWEIGHT GP					
	3	177-5867	4	SPACER					
	4	8T-0671	4	BOLT (L=150mm)					
B	5	1R-7128	4	SHIM (T=1.00mm)					
B		7I-0676	4	SHIM (T=1.60mm)					

B—USE AS REQUIRED

Y—SEE SEPARATE ILLUSTRATION

H81915E 02

170-2595 COUNTERWEIGHT GP

170-2597-Page236

An Attachment

FRAME AND BODY

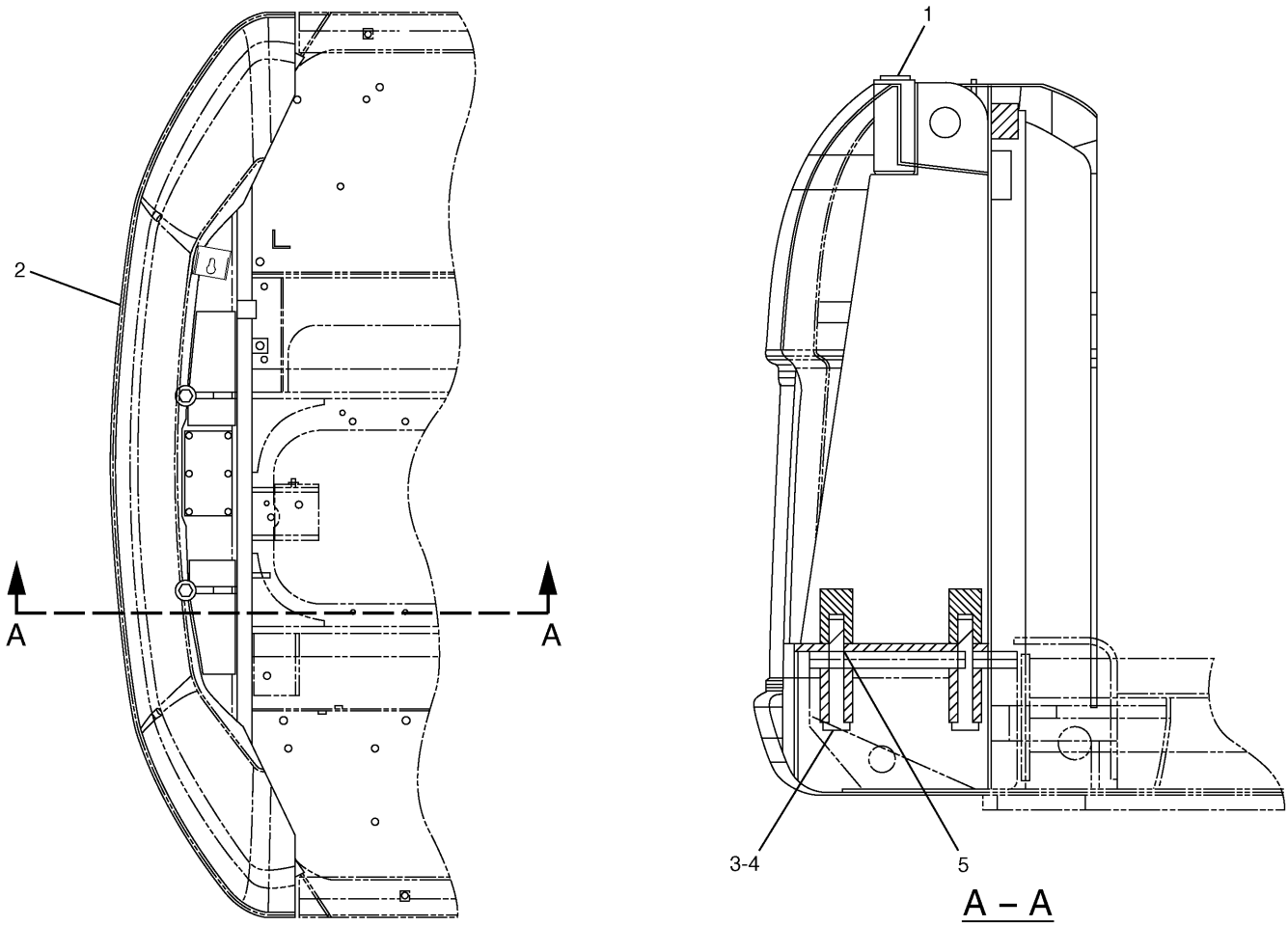

NOTE	No.	PART No.	QTY	PART NAME	NOTE	No.	PART No.	QTY	PART NAME
	1	41-0006	2	CAP					
Y	2	193-9456	1	COUNTERWEIGHT GP					
	3	177-5867	4	SPACER					
	4	8T-0671	4	BOLT (L=150mm)					
B	5	1R-7128	4	SHIM (T=1.00mm)					
B		7I-0676	4	SHIM (T=1.60mm)					

B—USE AS REQUIRED

Y—SEE SEPARATE ILLUSTRATION

H81916E 02

193-9455 COUNTERWEIGHT GP

Part of 194-8945-Page11
193-9456-Page237
An Attachment

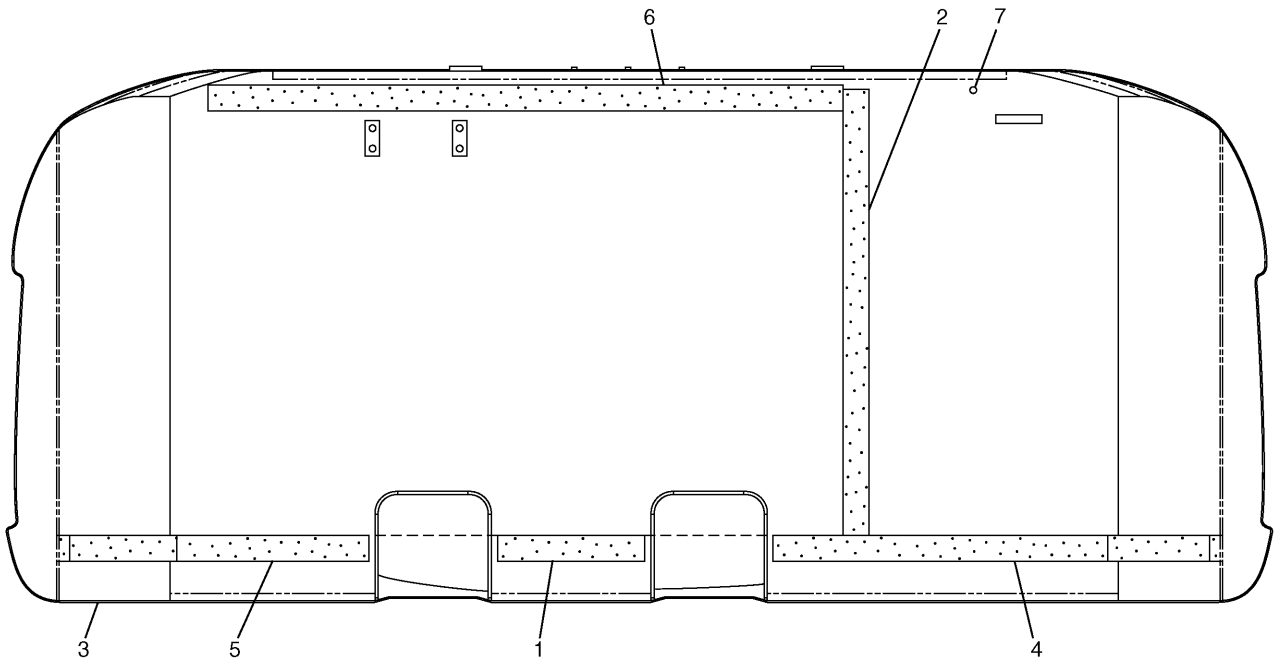

NOTE	No.	PART No.	QTY	PART NAME	NOTE	No.	PART No.	QTY	PART NAME
	1	41-8434	1	LINER					
	2	165-3103	1	LINER					
	3	177-6022	1	COUNTERWEIGHT AS					
	4	177-6048	1	LINER					
	5	177-6049	1	LINER					
	6	177-6050	1	LINER					
	7	262-2355	1	CAP					

H91639E 02

170-2596 COUNTERWEIGHT GP

Part of 170-2594-Page232

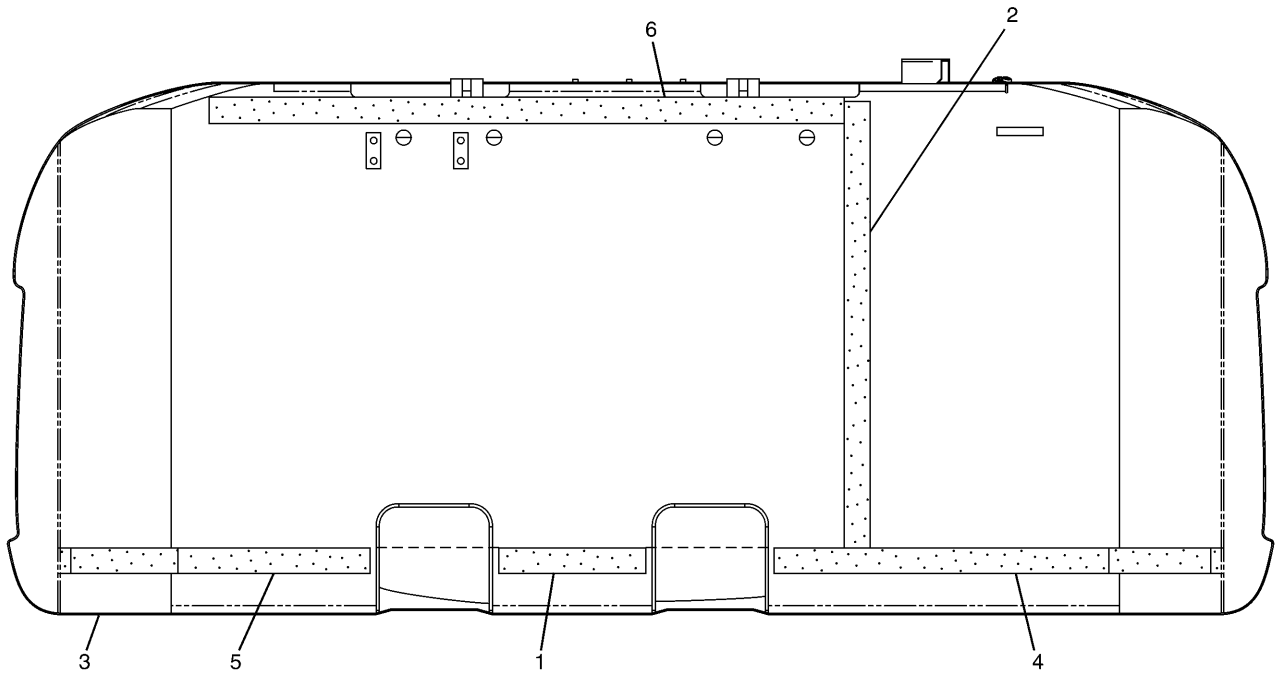

NOTE	No.	PART No.	QTY	PART NAME	NOTE	No.	PART No.	QTY	PART NAME
	1	41-8434	1	LINER					
	2	165-3103	1	LINER					
	3	177-6031	1	COUNTERWEIGHT AS					
	4	177-6048	1	LINER					
	5	177-6049	1	LINER					
	6	177-6050	1	LINER					

H78603E 02

170-2597 COUNTERWEIGHT GP

Part of 170-2595-Page233
An Attachment

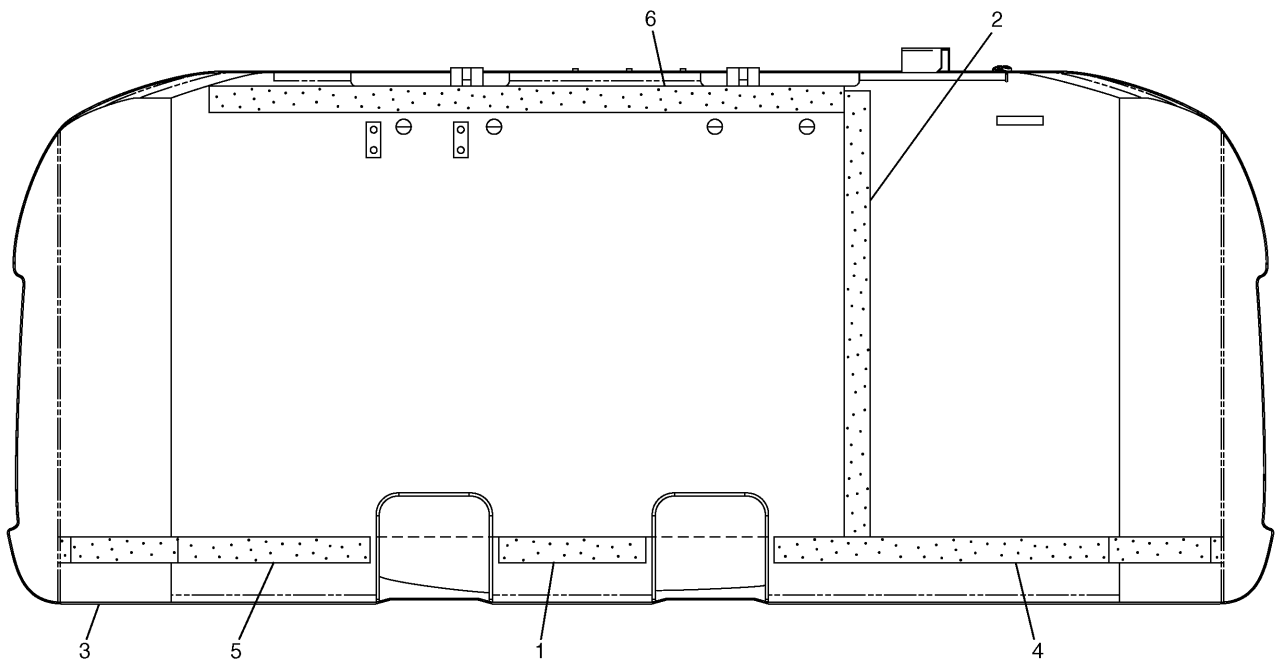

NOTE	No.	PART No.	QTY	PART NAME	NOTE	No.	PART No.	QTY	PART NAME
	1	41-8434	1	LINER					
	2	165-3103	1	LINER					
	3	193-9457	1	COUNTERWEIGHT AS					
	4	177-6048	1	LINER					
	5	177-6049	1	LINER					
	6	177-6050	1	LINER					

H78604E 02

193-9456 COUNTERWEIGHT GP

Part of 193-9455-Page234
An Attachment

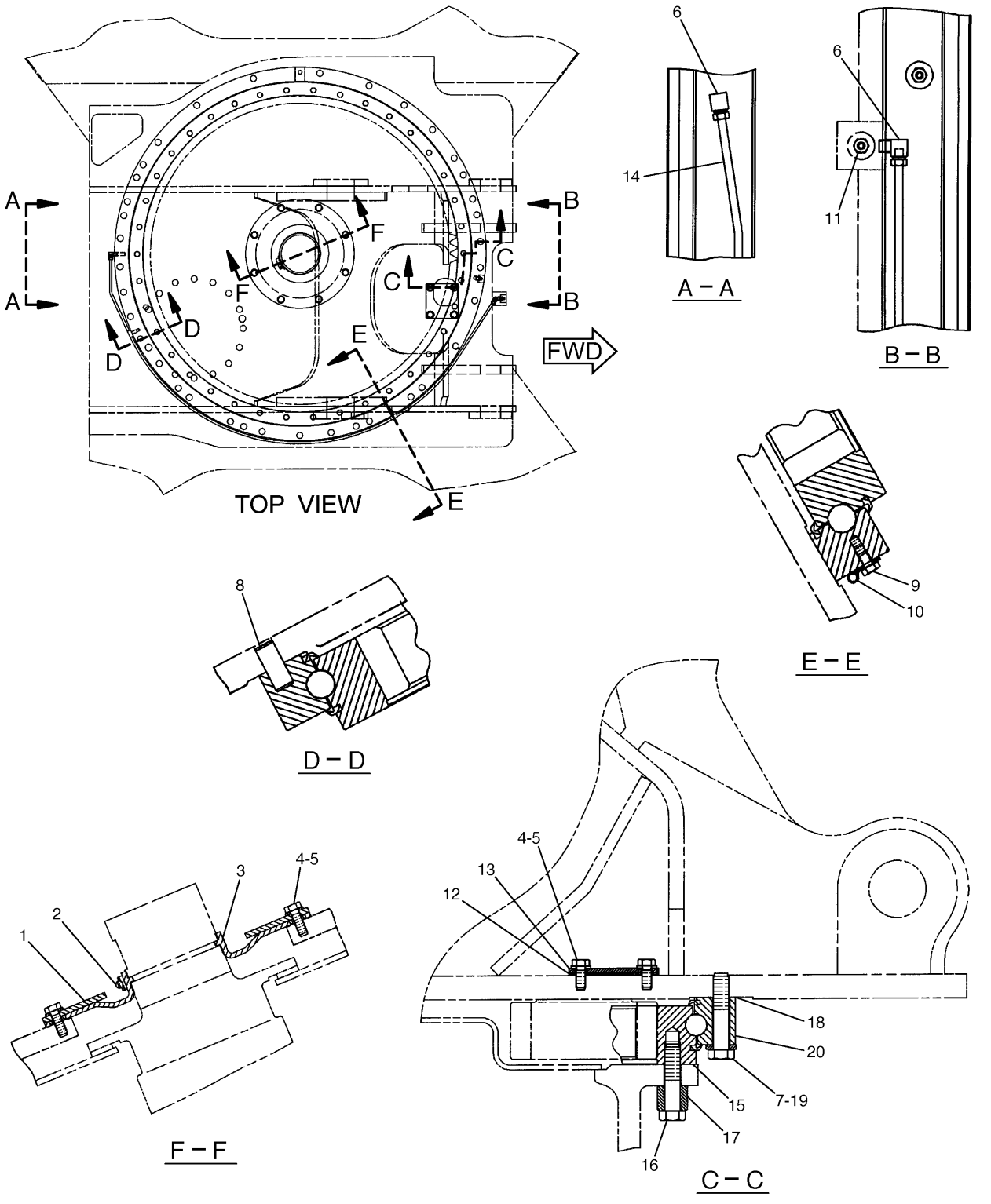

HA3570E 04

169-5567 GEAR & BEARING GP-SWING
229-1077-Page241.01

FRAME AND BODY

NOTE	No.	PART No.	QTY	PART NAME	NOTE	No.	PART No.	QTY	PART NAME
	1	4I-7511	1	RETAINER					
	2	4I-7512	1	CLAMP					
	3	4I-7444	1	BOOT					
	4	8T-4136	12	BOLT (L=25mm)					
	5	8T-4121	12	WASHER					
	6	5K-9243	2	ELBOW					
	7	7X-2555	34	BOLT (L=80mm)					
	8	095-1299	1	DOWEL					
	9	8T-4199	2	BOLT (L=12mm)					
	10	4N-9170	2	CLIP					
	11	3B-8489	1	FITTING					
	12	4I-7446	1	GASKET					
	13	4I-7326	1	STRIP					
	14	169-5568	1	TUBE AS					
B	15	1U-8846		GASKET MAKER…(30ml)					
	16	8T-0357	38	BOLT (L=70mm)					
	17	085-9310	38	SPACER					
B	18	1U-8846		GASKET MAKER…(33ml)					
	19	191-2544	34	WASHER					
Y	20	229-1077	1	GEAR GP					

B—USE AS REQUIRED

Y—SEE SEPARATE ILLUSTRATION

HA3570E 04

169-5567 GEAR & BEARING GP-SWING

229-1077-Page241.01

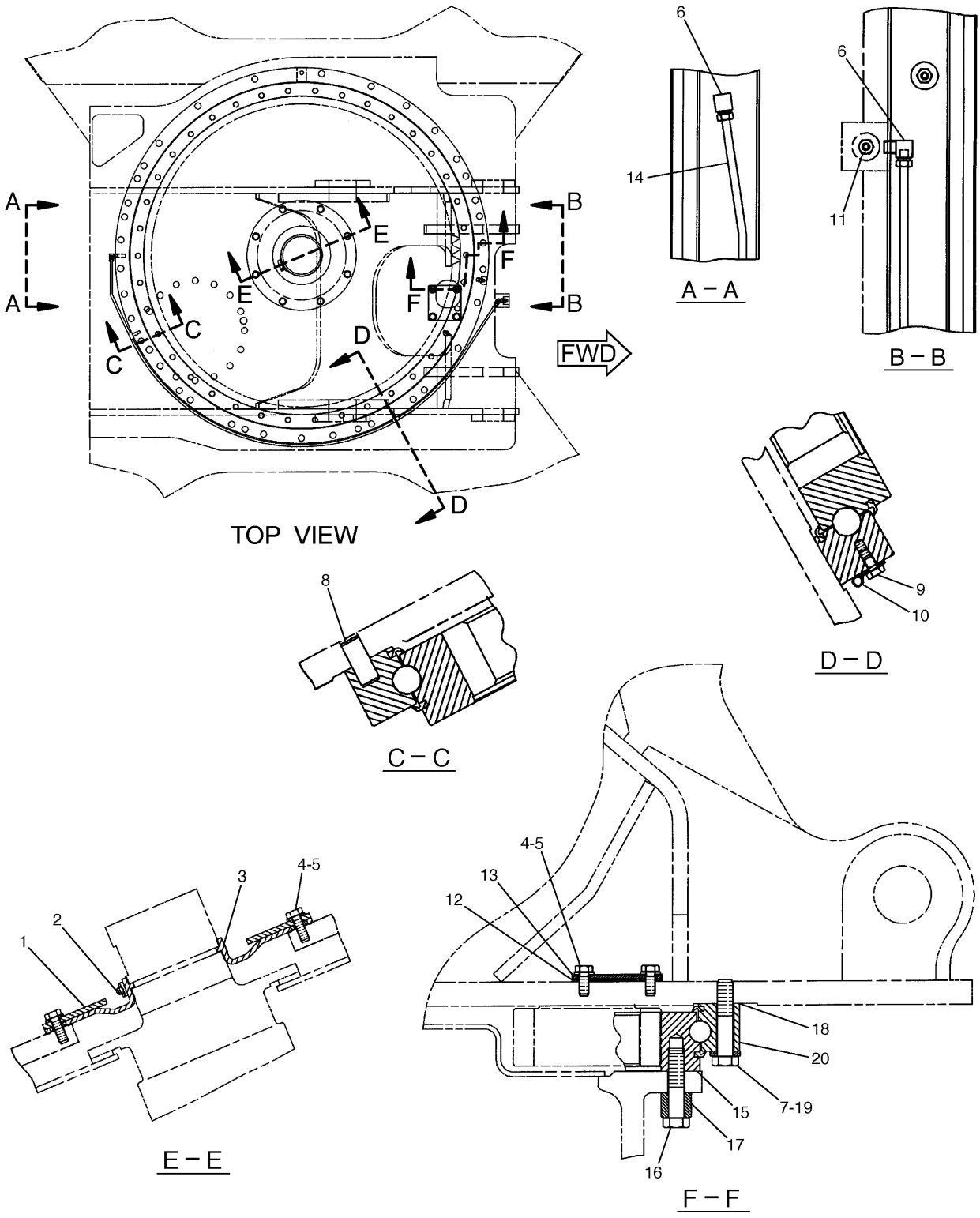

199-4573 GEAR & BEARING GP-SWING
Part of 151-1493-Page634,183-1476-Page635,151-1494-Page636
229-1077-Page241.01
An Attachment

FRAME AND BODY

NOTE	No.	PART No.	QTY	PART NAME	NOTE	No.	PART No.	QTY	PART NAME
	1	121-5204	1	RETAINER					
	2	099-0913	1	CLAMP					
	3	121-5203	1	BOOT					
	4	8T-4136	12	BOLT (L=25mm)					
	5	8T-4121	12	WASHER					
	6	5K-9243	2	ELBOW					
	7	7X-2555	34	BOLT (L=80mm)					
	8	095-1299	1	DOWEL					
	9	8T-4199	2	BOLT (L=12mm)					
	10	4N-9170	2	CLIP					
	11	3B-8489	1	FITTING					
	12	4I-7446	1	GASKET					
	13	4I-7326	1	STRIP					
	14	169-5568	1	TUBE AS					
B	15	1U-8846		GASKET MAKER…(30ml)					
	16	8T-0357	38	BOLT (L=70mm)					
	17	085-9310	38	SPACER					
B	18	1U-8846		GASKET MAKER…(33ml)					
	19	191-2544	34	WASHER					
Y	20	229-1077	1	GEAR GP					

B—USE AS REQUIRED

Y—SEE SEPARATE ILLUSTRATION

H98993E 01

199-4573 GEAR & BEARING GP-SWING

Part of 151-1493-Page634,183-1476-Page635,151-1494-Page636
229-1077-Page241.01
An Attachment

FRAME AND BODY

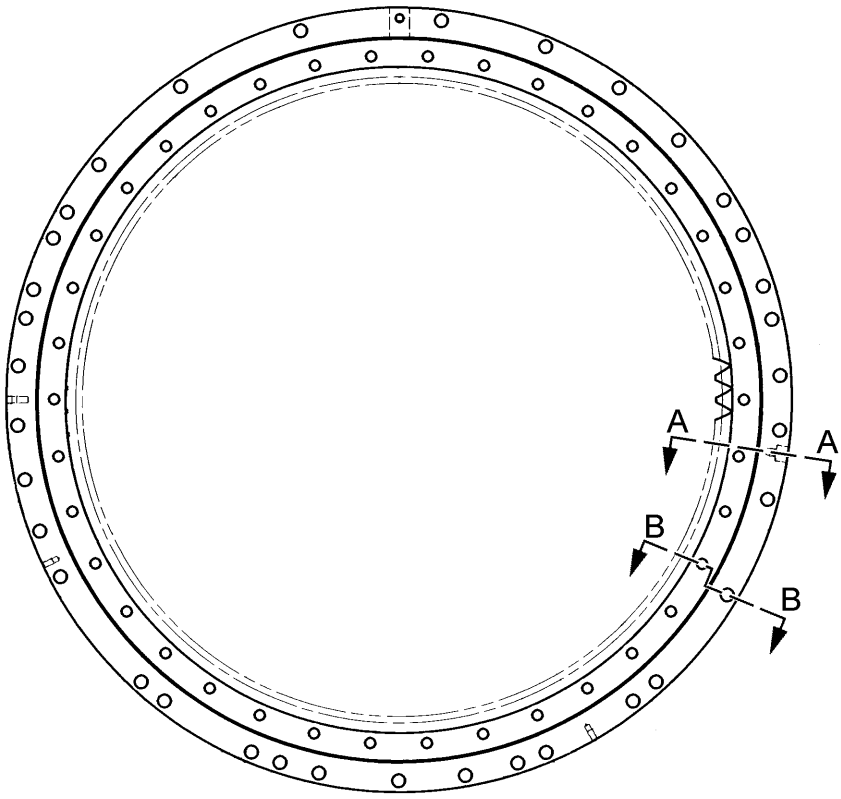

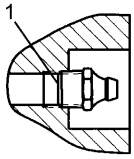

A – A

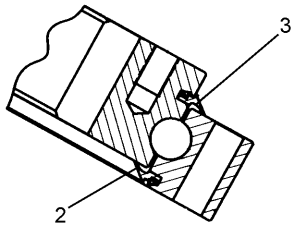

B – B

NOTE	No.	PART No.	QTY	PART NAME	NOTE	No.	PART No.	QTY	PART NAME
	1	3B-8489	1	FITTING					
	2	229-1078	1	SEAL					
E	3	148-4685		SEAL…(309cm)					

E—ORDER BY THE CENTIMETER

H98006E 00

229-1077 GEAR & BEARING GP-SWING

Part of 169-5567-Page239,199-4573-Page241

MEMORANDA

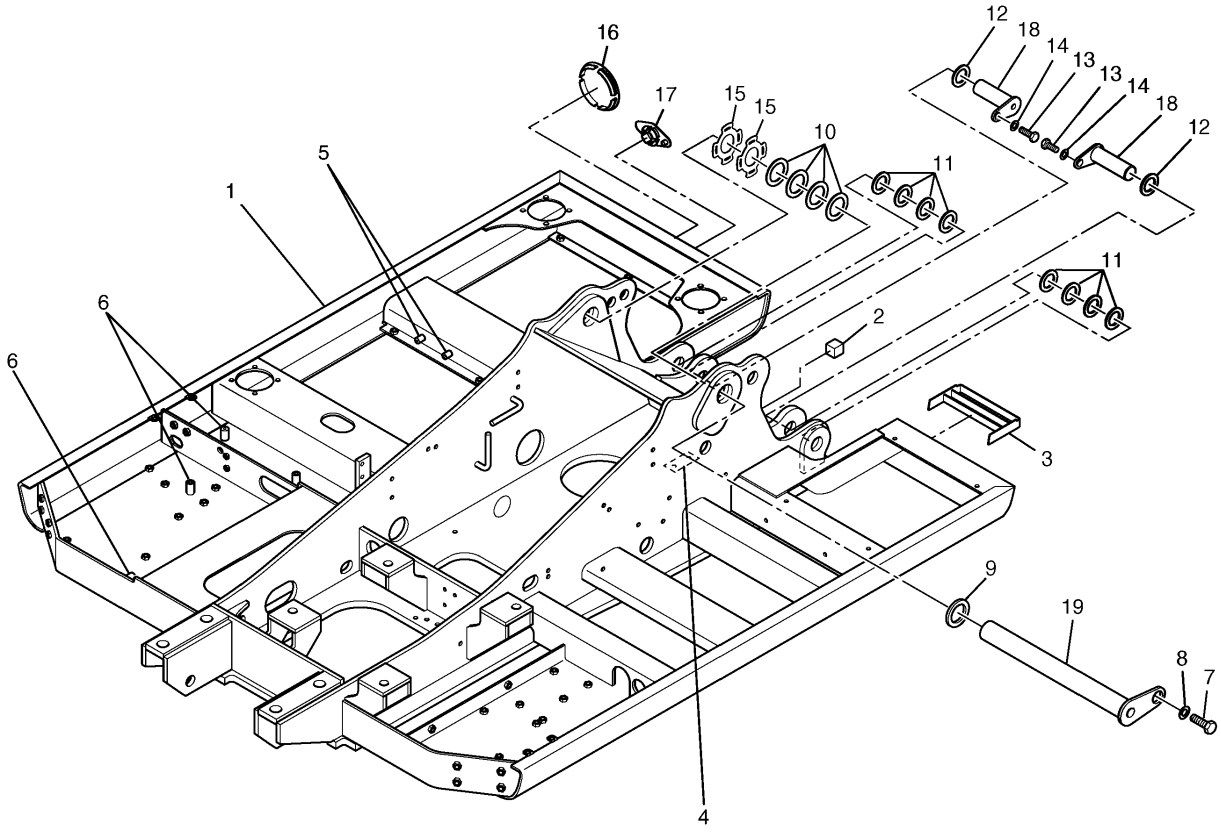

H82012E 04

167-9995 FRAME GP-UPPER

FRAME AND BODY

NOTE	No.	PART No.	QTY	PART NAME	NOTE	No.	PART No.	QTY	PART NAME
	1	178-0734	1	FRAME AS					
	2	7Y-0633	1	BOSS					
	3	186-5639	1	PLATE AS					
	4	7Y-2436	1	PLATE					
	5	7Y-3459	2	BOSS					
	6	9R-3924	3	BOSS					
	7	8T-4780	1	BOLT (L=30mm)					
	8	086-0299	1	WASHER					
	9	093-0363	1	SPACER					
B	10	133-2425	2	SHIM (T=0.50mm)					
B		093-0083	1	SHIM (T=1.00mm)					
B		093-0115	1	SHIM (T=2.00mm)					
B	11	133-2717	4	SHIM (T=0.50mm)					
B		093-0065	2	SHIM (T=1.00mm)					
B		093-0097	2	SHIM (T=2.00mm)					
	12	093-0357	2	WASHER					
	13	8T-4179	2	BOLT (L=20mm)					
	14	086-0297	2	WASHER					
	15	212-2837	2	SHIM (T=2.00mm)					
	16	196-1603	1	CAP					
	17	178-5611	1	CAP					
	18	1R-6229	2	PIN AS					
	19	1R-6228	1	PIN AS					
				THE FOLLOWING SERVICE REPAIR IS AVAILABLE:					
		180-7614	1	PLATE (L=1100mm)					

B—USE AS REQUIRED

H82012E 04

167-9995 FRAME GP-UPPER

FRAME AND BODY

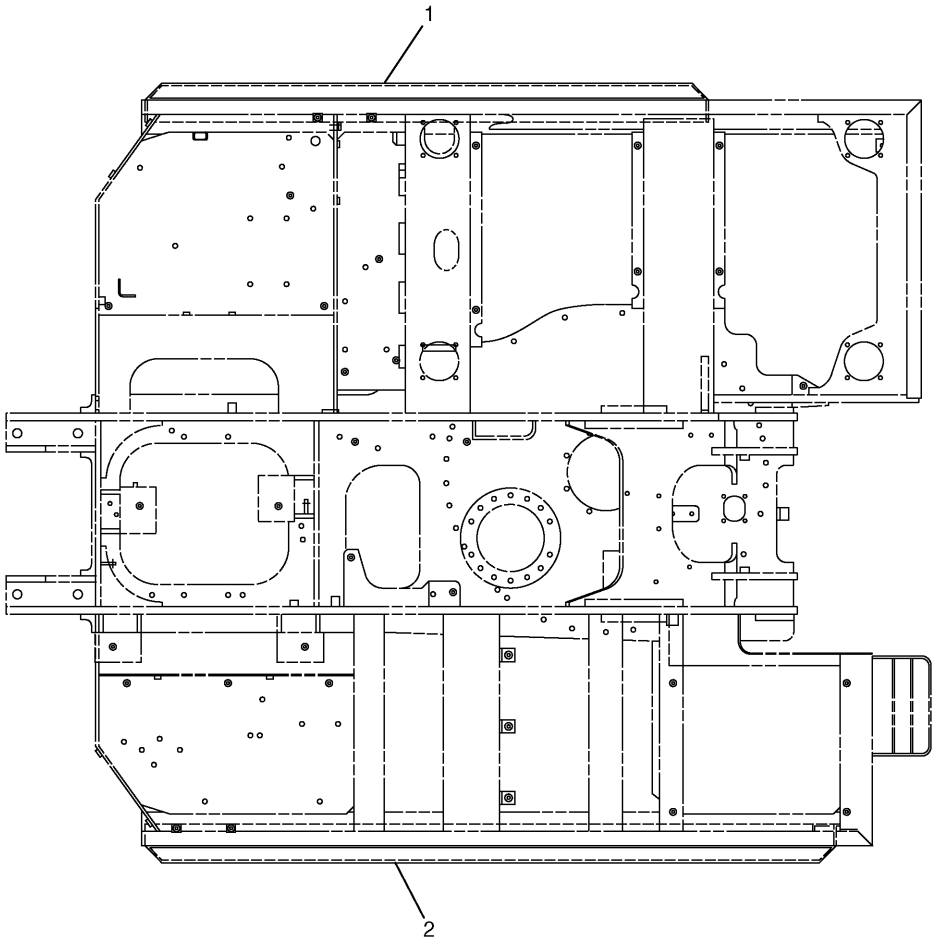

NOTE	No.	PART No.	QTY	PART NAME	NOTE	No.	PART No.	QTY	PART NAME
	1	192-8382	1	BUMPER AS					
	2	192-8384	1	BUMPER AS					

H77550E 01

192-8381 BUMPER SET

Side Steel Bumper

Part of 194-8945-Page11

An Attachment

FRAME AND BODY

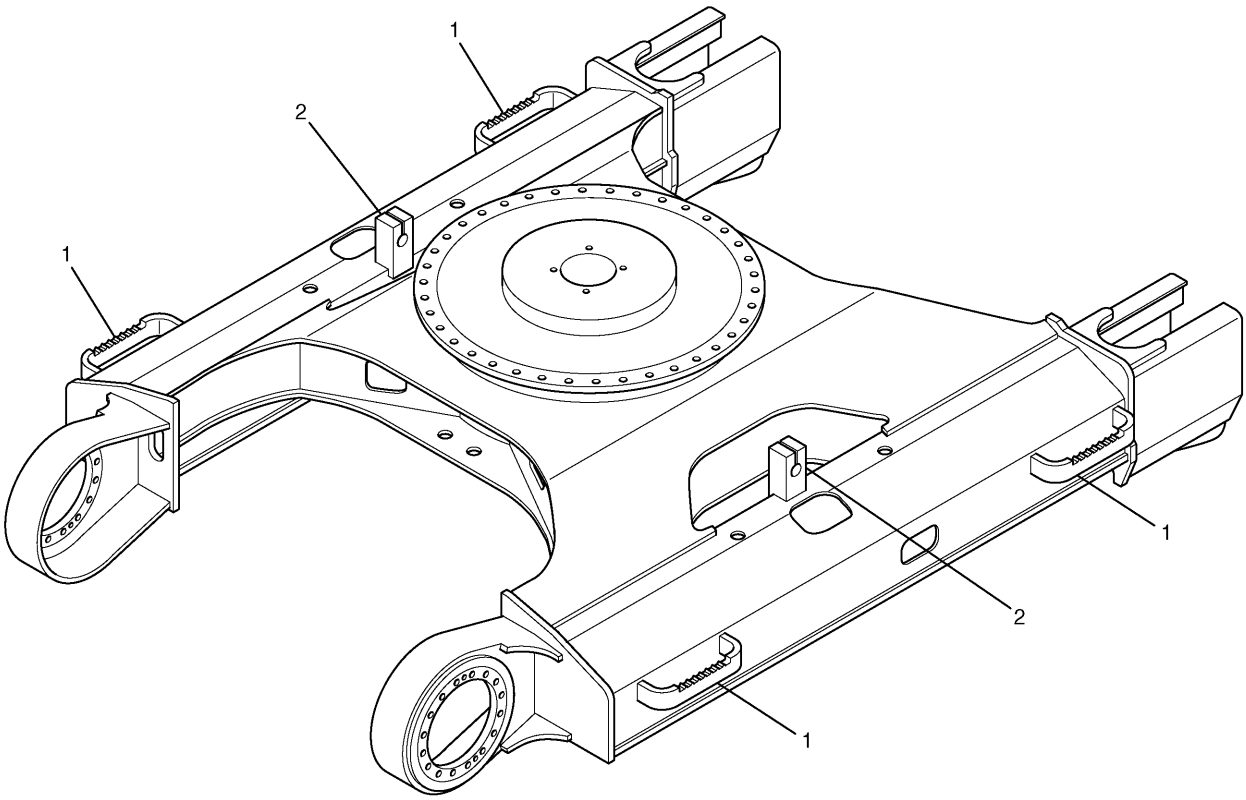

NOTE	No.	PART No.	QTY	PART NAME	NOTE	No.	PART No.	QTY	PART NAME
	1	120-7215	4	STEP					
	2	151-9751	2	BRACKET					

H71884E 02

167-9996 FRAME AS-UNDERCARRIAGE

FRAME AND BODY

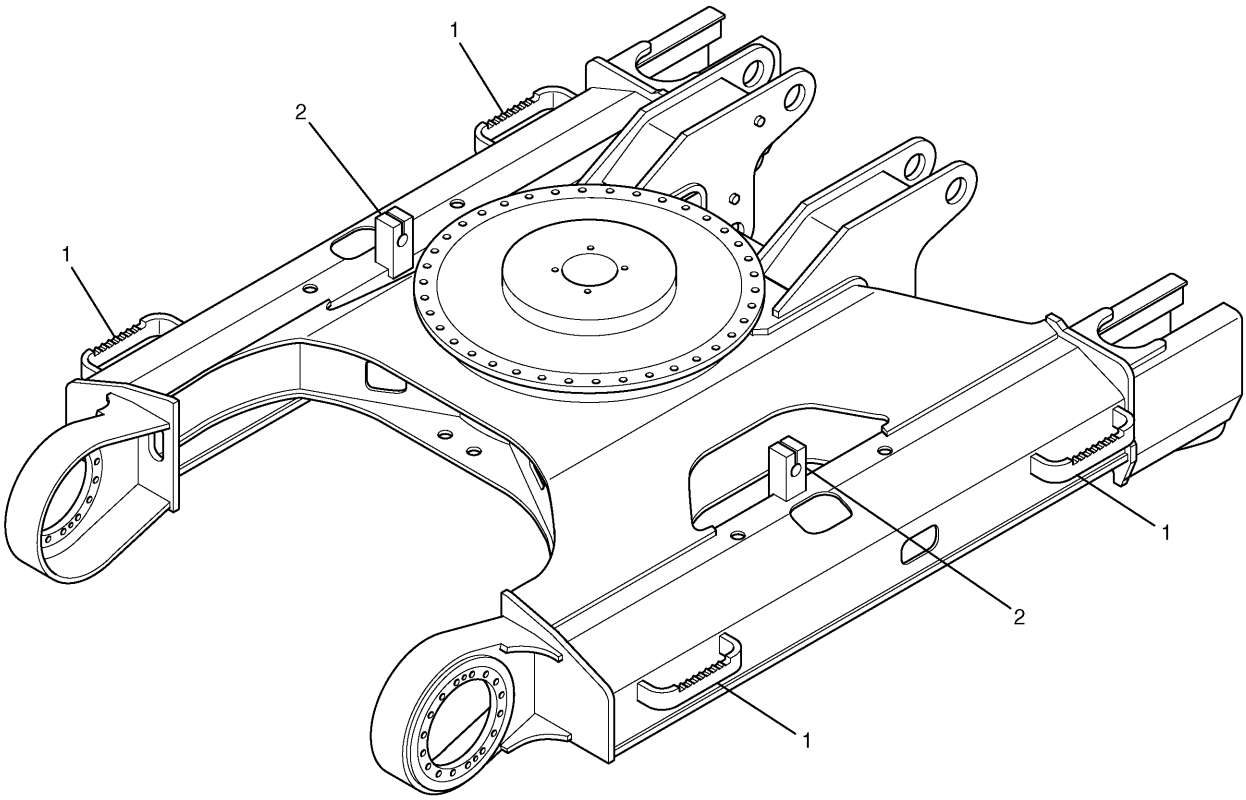

NOTE	No.	PART No.	QTY	PART NAME	NOTE	No.	PART No.	QTY	PART NAME
	1	120-7215	4	STEP					
	2	151-9751	2	BRACKET					

H76613E 01

168-0000 FRAME AS-UNDERCARRIAGE

Blade

Part of 151-1493-Page634,183-1476-Page635,151-1494-Page636

An Attachment

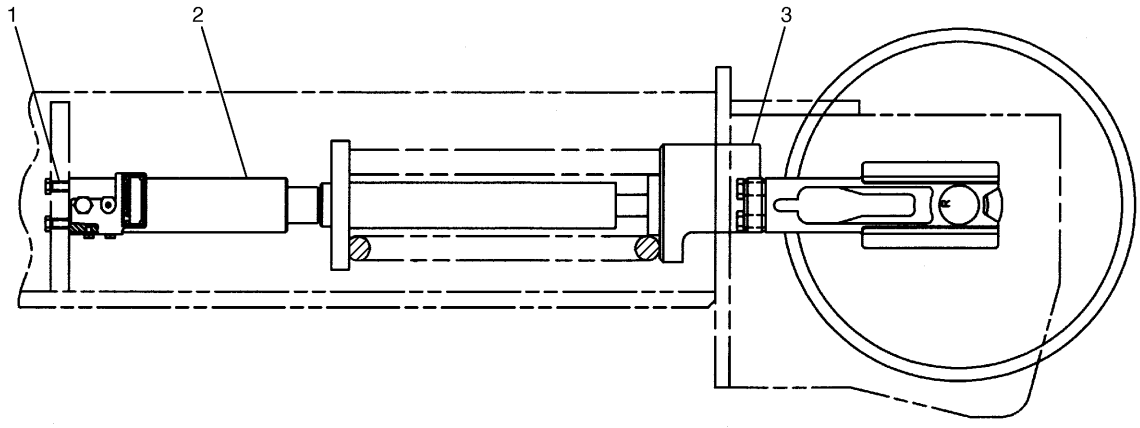

NOTE	No.	PART No.	QTY	PART NAME	NOTE	No.	PART No.	QTY	PART NAME
	1	8T-4183	4	BOLT (L=40mm)					
Y	2	168-6684	2	ADJUSTMENT GP					
Y	3	168-6732	2	IDLER GP					

Y—SEE SEPARATE ILLUSTRATION

H71789E 01

168-6731 IDLER GP-FRONT

S/N CAE 01201-02290

168-6732-Page248,168-6684-Page251

FRAME AND BODY

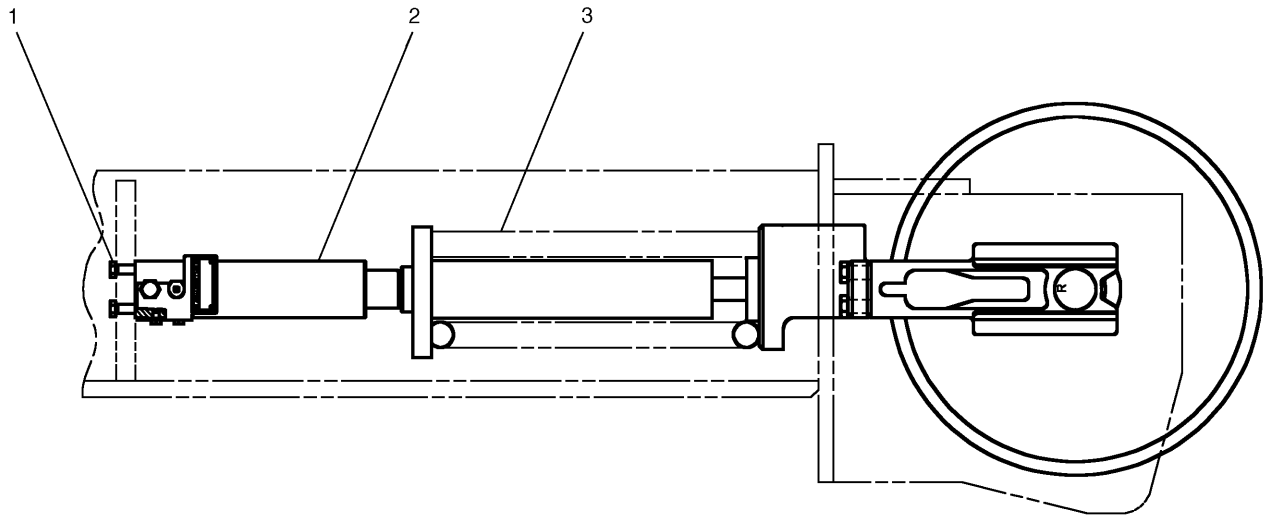

NOTE	No.	PART No.	QTY	PART NAME	NOTE	No.	PART No.	QTY	PART NAME
	1	8T-4183	4	BOLT (L=40mm)					
Y	2	168-6684	2	ADJUSTMENT GP					
Y	3	239-4413	2	IDLER GP					

Y—SEE SEPARATE ILLUSTRATION

H87762E 02

168-6731 IDLER GP-FRONT

S/N CAE 02291-Up

239-4413-Page248.01,168-6684-Page251

MEMORANDA

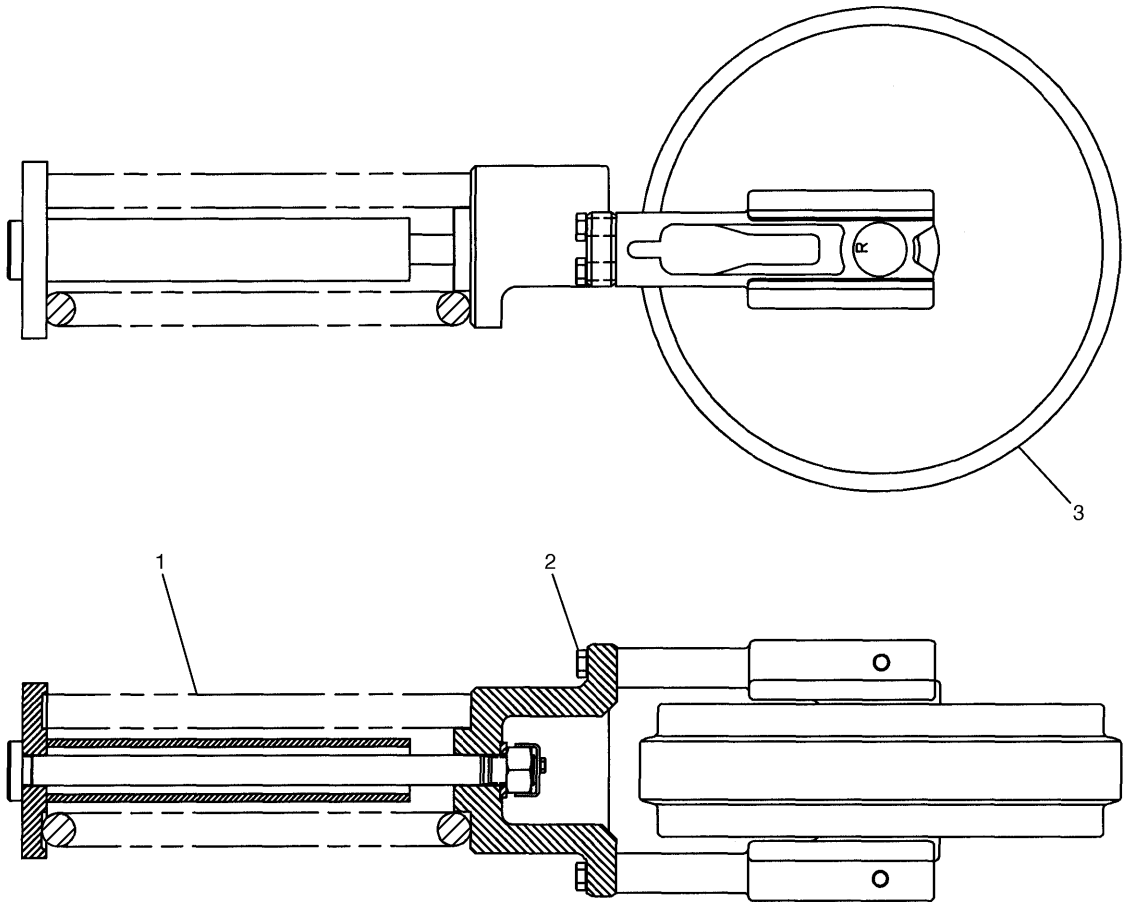

NOTE	No.	PART No.	QTY	PART NAME	NOTE	No.	PART No.	QTY	PART NAME
Y	1	168-6687	1	SPRING GP					
	2	8T-4193	4	BOLT (L=50mm)					
Y	3	4I-7337	1	IDLER GP					

Y—SEE SEPARATE ILLUSTRATION

H71790E 01

168-6732 IDLER GP-FRONT

S/N CAE 01201-02290
Part of 168-6731-Page247
4I-7337-Page249,168-6687-Page250

FRAME AND BODY

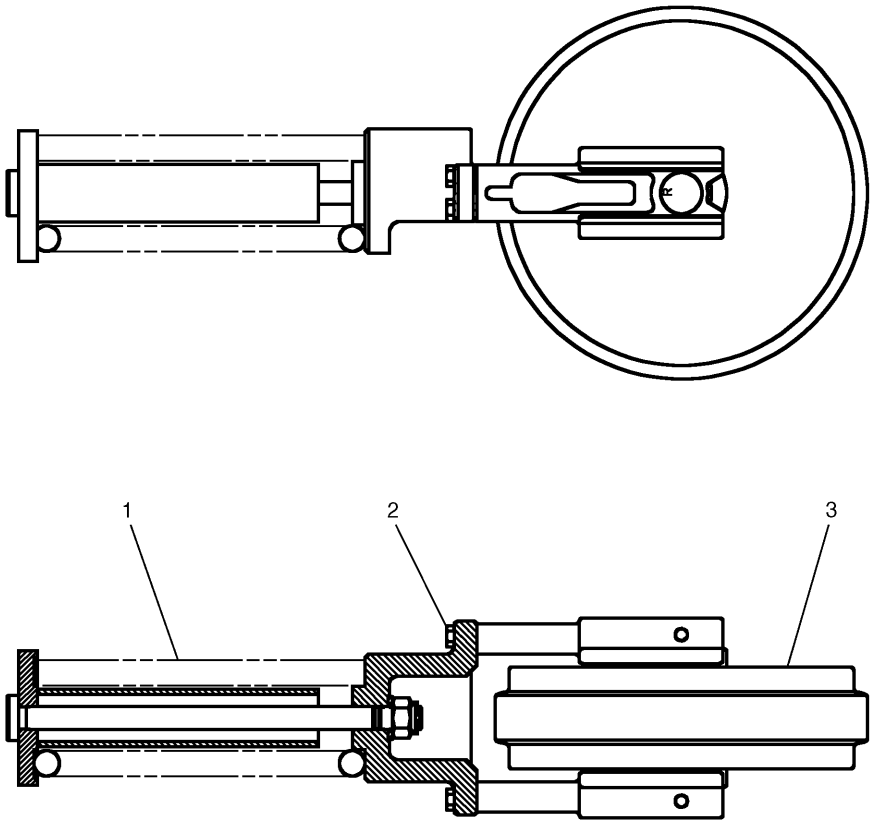

NOTE	No.	PART No.	QTY	PART NAME	NOTE	No.	PART No.	QTY	PART NAME
Y	1	239-4414	1	SPRING GP					
	2	8T-4193	4	BOLT (L=50mm)					
Y	3	4I-7337	1	IDLER GP					

Y—SEE SEPARATE ILLUSTRATION

H87764E 00

239-4413 IDLER GP-FRONT

S/N CAE 02291-Up
Part of 168-6731-Page247.01
4I-7337-Page249,239-4414-Page250.01

MEMORANDA

FRAME AND BODY

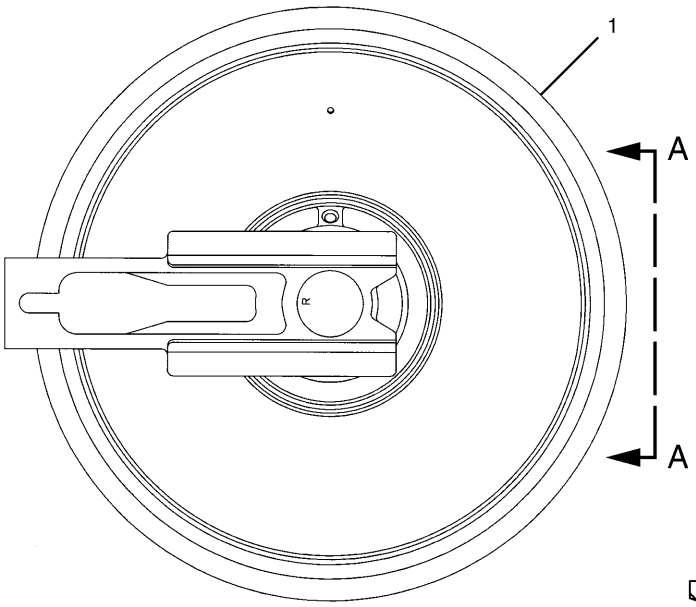

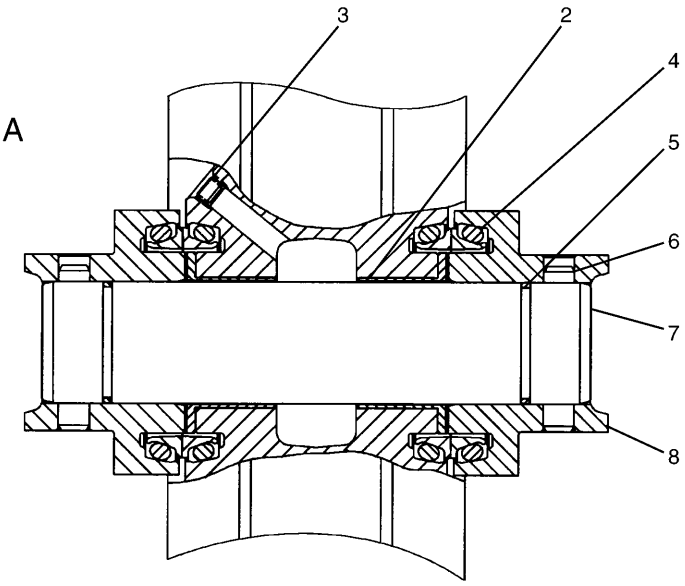

A – A

NOTE	No.	PART No.	QTY	PART NAME	NOTE	No.	PART No.	QTY	PART NAME
	1	6I-6590	1	IDLER AS					
	2	099-0157	2	BEARING					
	3	7H-3171	1	PLUG					
	4	099-0159	2	SEAL GP					
	5	095-1662	2	SEAL-O-RING (ID=49.40mm)					
	6	099-0163	2	PIN					
	7	6I-6477	1	SHAFT					
	8	4I-7488	2	BEARING					

H71876E 01

4I-7337 IDLER GP-FRONT

Part of 168-6732-Page248,239-4413-Page248.01

FRAME AND BODY

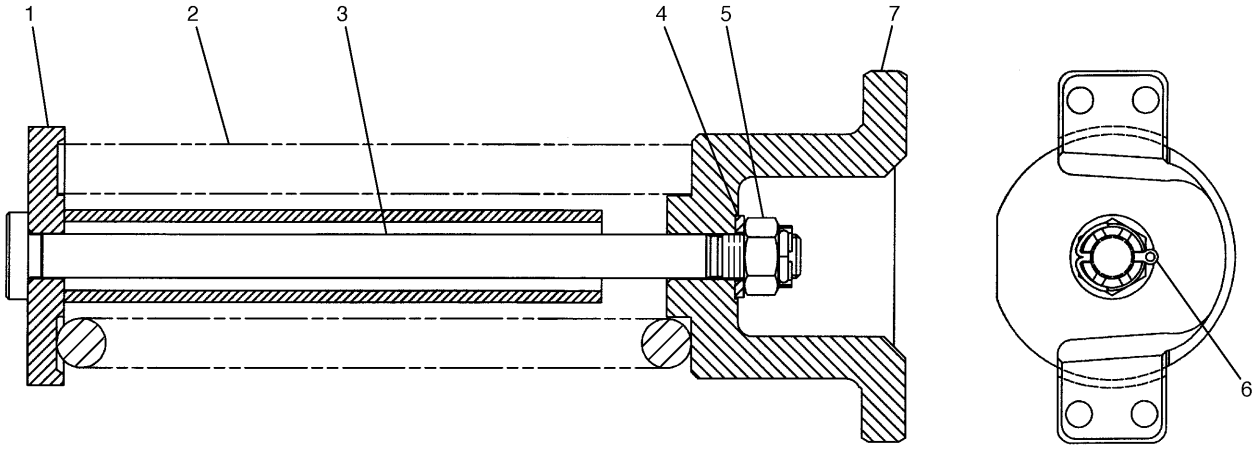

NOTE	No.	PART No.	QTY	PART NAME	NOTE	No.	PART No.	QTY	PART NAME
	1	168-6688	1	SUPPORT AS					
	2	168-6690	1	SPRING					
	3	179-2980	1	ROD					
	4	9X-8258	1	WASHER					
	5	095-1232	1	NUT					
	6	099-2336	1	COTTER					
	7	168-6692	1	SUPPORT					

H71788E 02

168-6687 SPRING GP-RECOIL
S/N CAE 01201-02290
Part of 168-6732-Page248

FRAME AND BODY

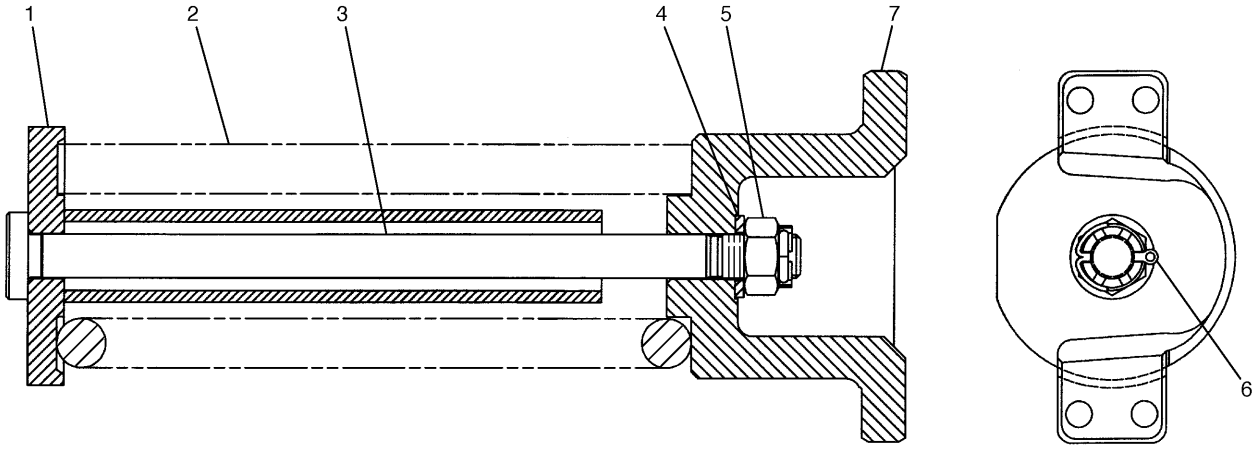

NOTE	No.	PART No.	QTY	PART NAME	NOTE	No.	PART No.	QTY	PART NAME
	1	168-6688	1	SUPPORT AS					
	2	239-4376	1	SPRING					
	3	239-4415	1	ROD					
	4	9X-8258	1	WASHER					
	5	095-1232	1	NUT					
	6	099-2336	1	COTTER					
	7	168-6692	1	SUPPORT					

H87768E 00

239-4414 SPRING GP-RECOIL
S/N CAE 02291-Up
Part of 239-4413-Page248.01

MEMORANDA

FRAME AND BODY

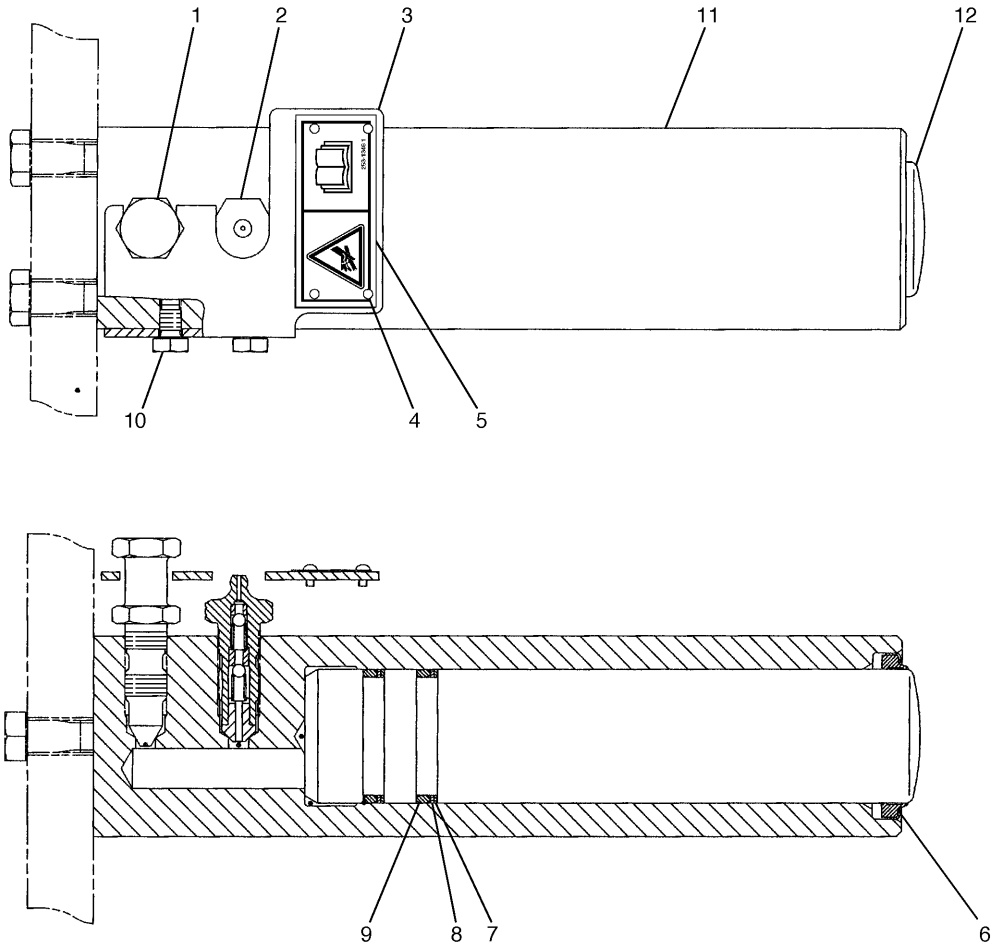

NOTE	No.	PART No.	QTY	PART NAME	NOTE	No.	PART No.	QTY	PART NAME
	1	2S-5926	1	VALVE (RELIEF)					
	2	095-2927	1	VALVE (FILL)					
	3	108-9122	1	PLATE AS					
	4	4B-4158	4	SCREW					
	5	253-1346	1	PLATE (WARNING)					
	6	095-7101	1	SEAL					
	7	099-0172	2	RING					
	8	099-0173	2	RING					
	9	095-1607	2	SEAL-O-RING (ID=43.70mm)					
	10	8T-4199	2	BOLT (L=12mm)					
	11	168-6686	1	CYLINDER					
	12	168-6685	1	PISTON					

H89131E 01

168-6684 ADJUSTMENT GP-HYDRAULIC TRACK

Part of 168-6731-Page247

FRAME AND BODY

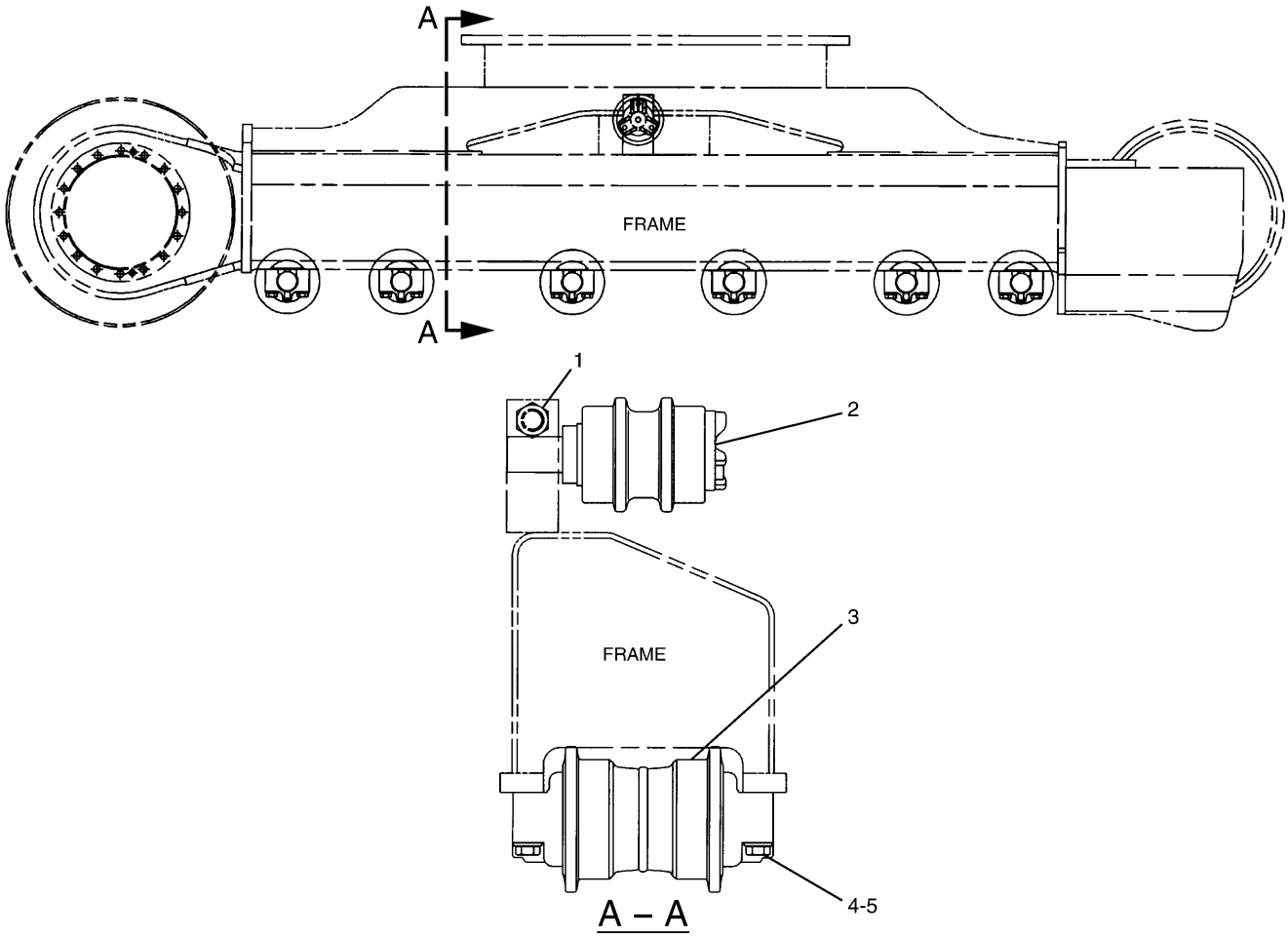

NOTE	No.	PART No.	QTY	PART NAME	NOTE	No.	PART No.	QTY	PART NAME
	1	8T-5878	2	BOLT (L=80mm)					
Y	2	4I-7345	2	ROLLER GP					
Y	3	151-9747	12	ROLLER GP					
	4	7X-2555	48	BOLT (L=80mm)					
	5	8T-4122	48	WASHER					

Y—SEE SEPARATE ILLUSTRATION

H78607E 05

4I-7344 ROLLER AR-TRACK & CARRIER

151-9747-Page253,4I-7345-Page254

FRAME AND BODY

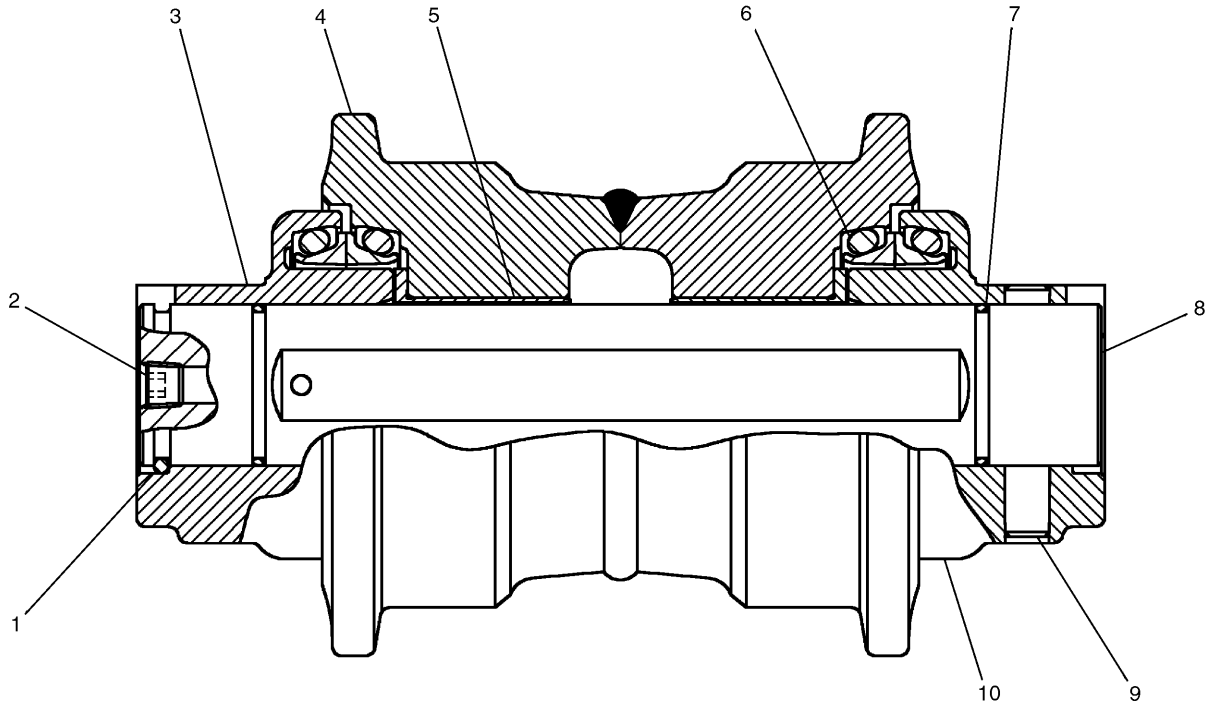

NOTE	No.	PART No.	QTY	PART NAME	NOTE	No.	PART No.	QTY	PART NAME
	1	6I-6454	1	RING					
	2	7H-3171	1	PLUG					
	3	6I-6570	1	COLLAR					
	4	6I-6451	1	ROLLER AS					
	5	099-0195	2	BEARING					
	6	099-0193	2	SEAL GP					
	7	6V-7660	2	SEAL-O-RING (ID=44.40mm)					
	8	151-9748	1	SHAFT					
	9	6I-6549	1	DOWEL					
	10	4I-7489	1	COLLAR					

H72531E 00

151-9747 ROLLER GP-TRACK-SINGLE FLANGE

Part of 4I-7344-Page252

FRAME AND BODY

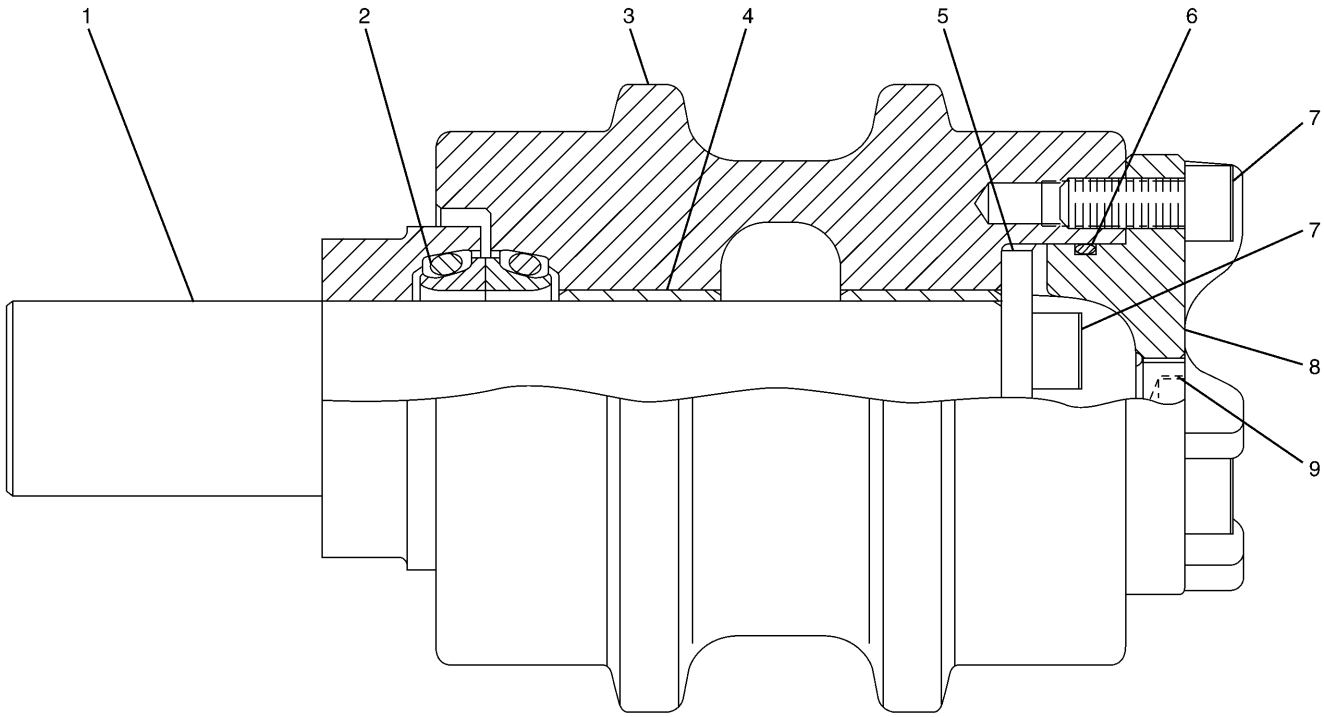

NOTE	No.	PART No.	QTY	PART NAME	NOTE	No.	PART No.	QTY	PART NAME
	1	7Y-2159	1	SHAFT AS					
	2	099-0183	1	SEAL GP					
	3	7Y-2155	1	ROLLER AS					
	4	099-0185	2	BEARING					
	5	7Y-2162	1	RETAINER					
	6	6V-7658	1	SEAL-O-RING (ID=59.40mm)					
	7	8T-1159	5	BOLT (L=25mm)					
	8	7Y-2158	1	COVER					
	9	7H-3171	1	PLUG					

H71878E 00

4I-7345 ROLLER GP-TRACK CARRIER
Part of 4I-7344-Page252

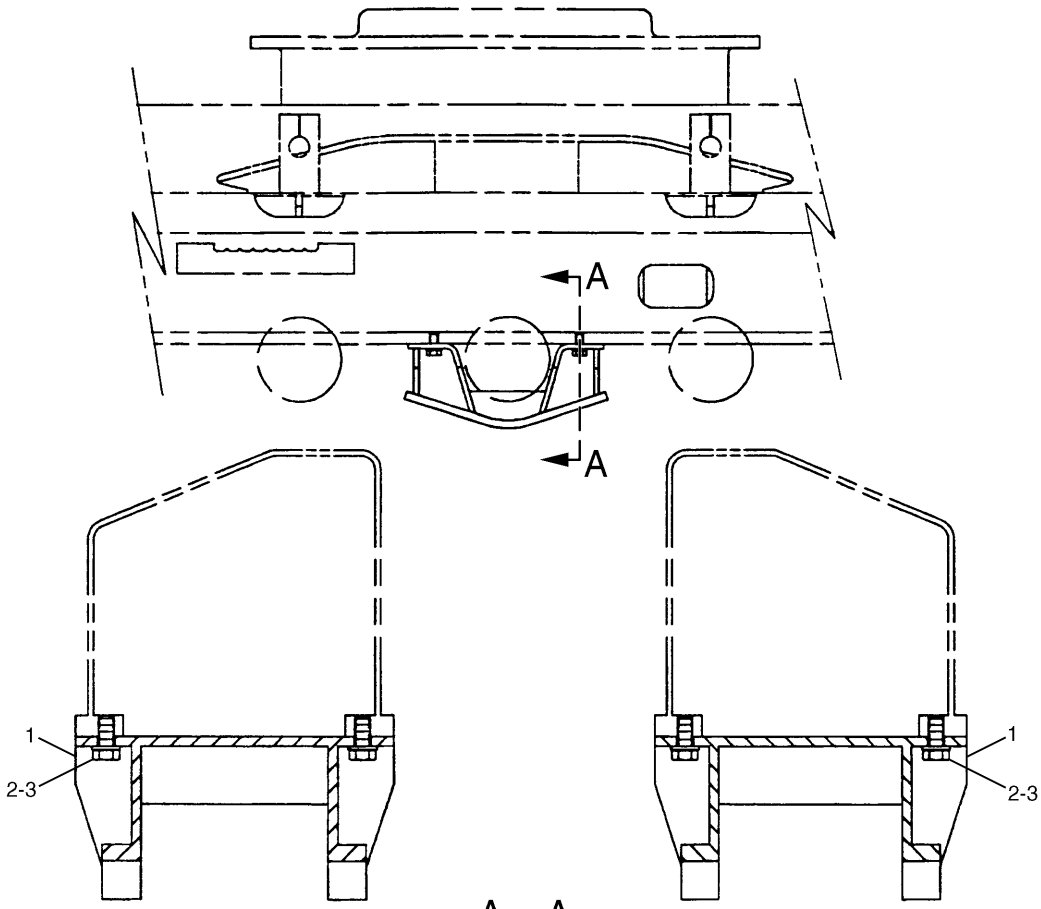

A – A

NOTE	No.	PART No.	QTY	PART NAME	NOTE	No.	PART No.	QTY	PART NAME
	1	133-2554	2	GUARD AS					
	2	8T-4779	8	BOLT (L=35mm)					
	3	9X-8257	8	WASHER					

H51232E 01

120-7199 GUARD GP-TRACK GUIDE

Part of 194-8945-Page11
An Attachment

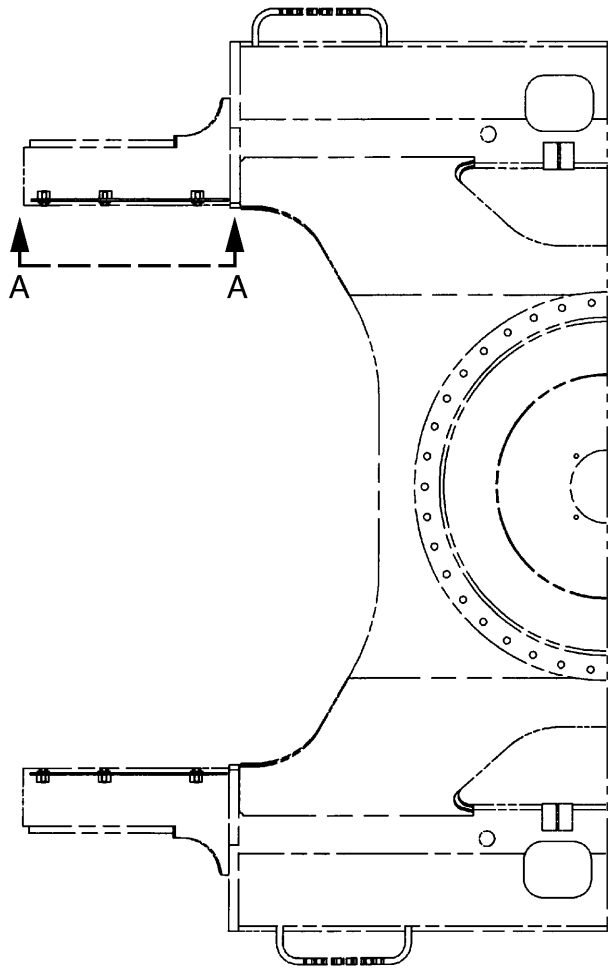

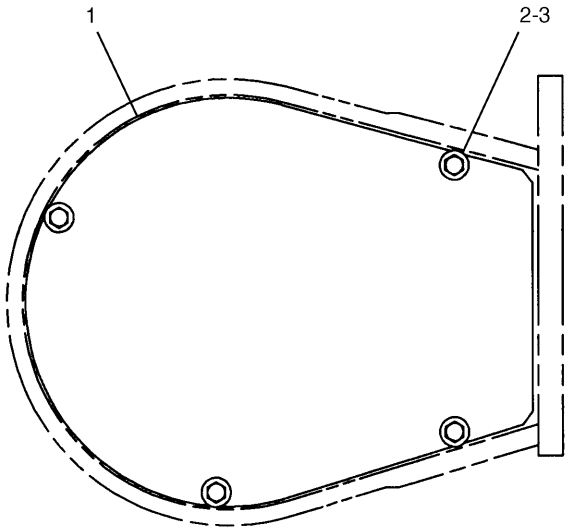

A – A

NOTE	No.	PART No.	QTY	PART NAME	NOTE	No.	PART No.	QTY	PART NAME
	1	169-7905	2	PLATE					
	2	8C-8992	8	BOLT (L=30mm)					
	3	5P-1076	8	WASHER					

H76614E 01

169-7904 GUARD GP-TRAVEL MOTOR

FRAME AND BODY

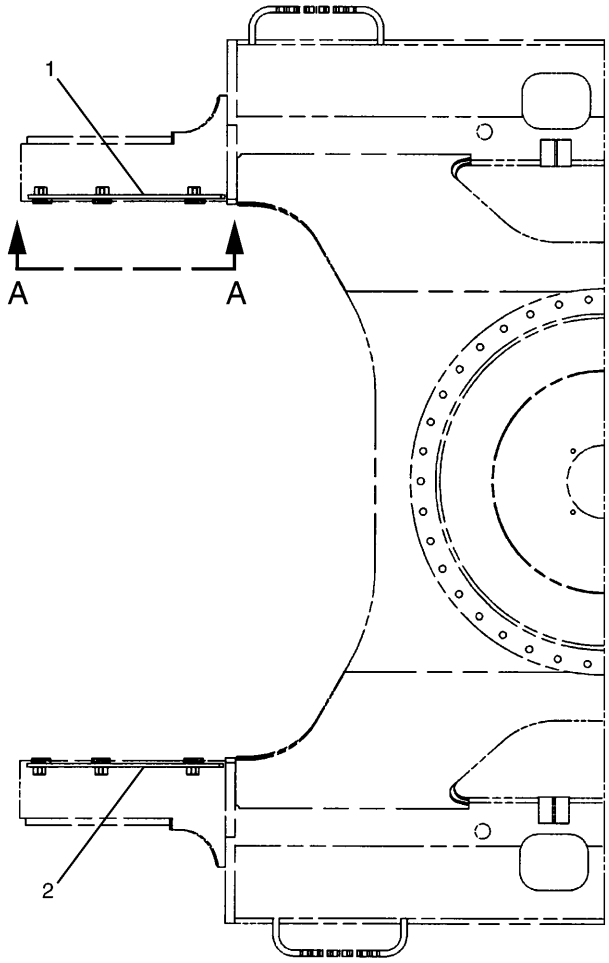

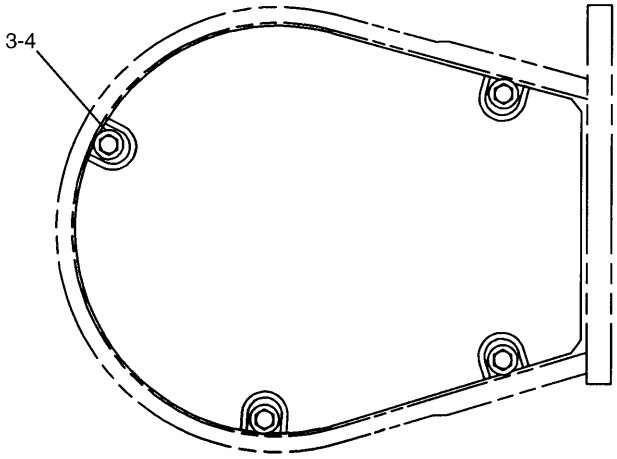

A – A

NOTE	No.	PART No.	QTY	PART NAME	NOTE	No.	PART No.	QTY	PART NAME
	1	185-9124	1	COVER AS					
	2	185-9125	1	COVER AS					
	3	6V-8097	8	BOLT (L=30mm)					
	4	5P-1076	8	WASHER					

H71908E 01

185-9123 GUARD GP-TRAVEL MOTOR

Part of 194-8945-Page11
An Attachment

Consists of :

			Page
1	176-4870	LINK AS-TRACK	261
43	137-6114	SHOE	
172	4I-7538	BOLT (L=46mm)	
172	5I-6125	NUT	

H71900E 01

176-4863 TRACK GP

Consists of :

			Page
1	176-4870	LINK AS-TRACK	261
43	1R-6009	SHOE	
172	4I-7538	BOLT (L=46mm)	
172	5I-6125	NUT	

H71901E 00

176-4864 TRACK GP
An Attachment

Consists of :

			Page
1	176-4870	LINK AS-TRACK	261
43	1R-6010	SHOE	
172	4I-7538	BOLT (L=46mm)	
172	5I-6125	NUT	

H71902E 00

176-4865 TRACK GP
An Attachment

FRAME AND BODY

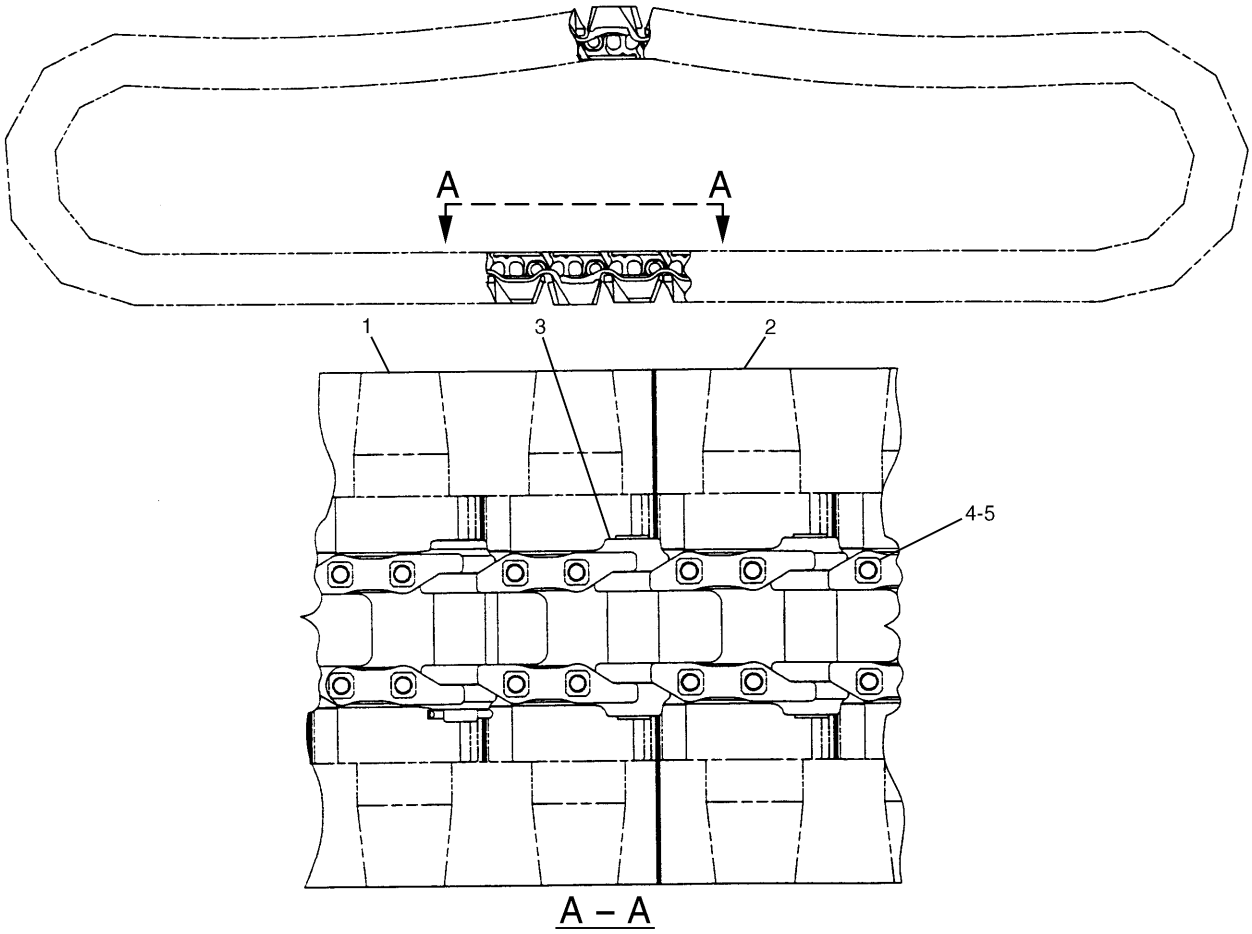

NOTE	No.	PART No.	QTY	PART NAME	NOTE	No.	PART No.	QTY	PART NAME
	1	169-8089	1	SHOE AS					
		169-8093	1	SHOE					
	2	169-8091	1	SHOE AS					
		169-8093	1	SHOE					
Y	3	176-4870	1	LINK AS					
	4	096-1043	172	BOLT (L=55mm)					
	5	5I-6125	172	NUT					

Y—SEE SEPARATE ILLUSTRATION

H71903E 00

176-4869 TRACK GP
176-4870-Page261
An Attachment

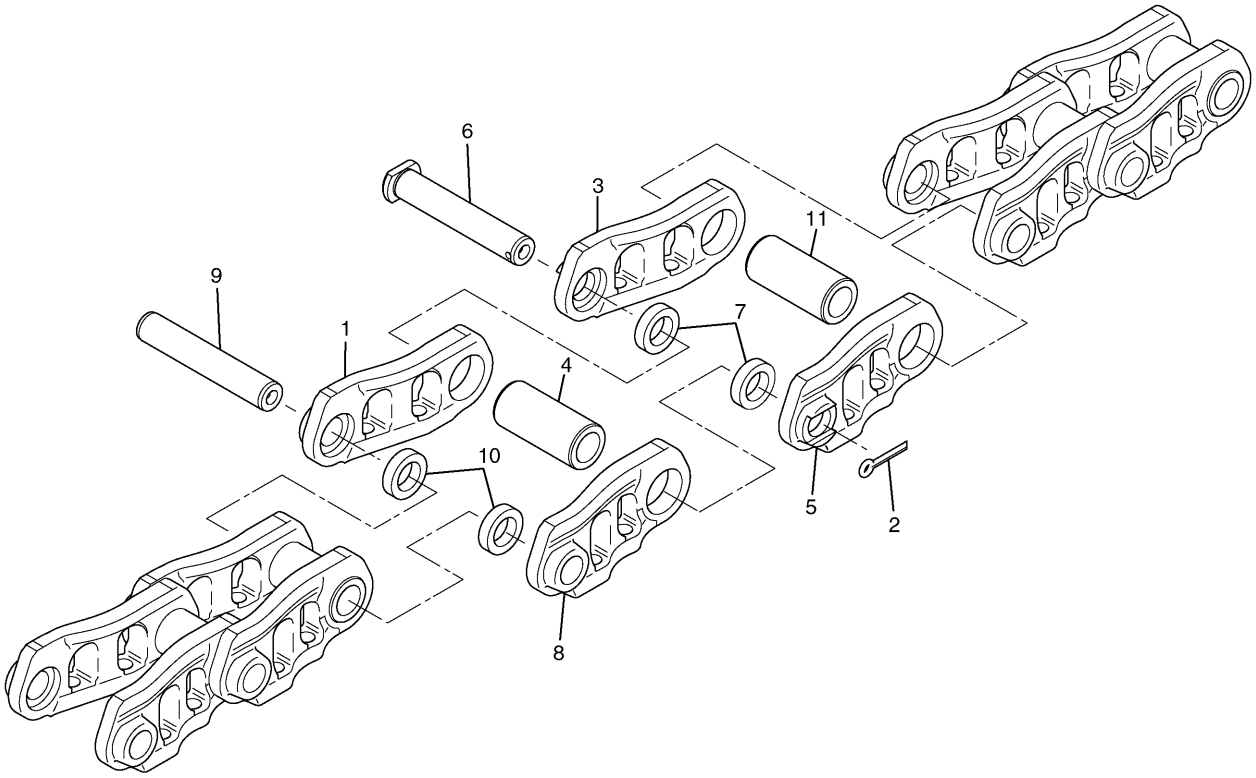

NOTE	No.	PART No.	QTY	PART NAME	NOTE	No.	PART No.	QTY	PART NAME
	1	4I-7476	42	LINK					
	2	095-0863	1	COTTER					
	3	4I-7478	1	LINK					
	4	162-4306	1	BUSHING					
	5	4I-7477	1	LINK					
	6	099-0653	1	PIN					
	7	176-4872	2	SEAL					
	8	4I-7475	42	LINK					
	9	162-4305	42	PIN					
	10	162-4307	84	SEAL					
	11	162-4304	42	BUSHING					

H71796E 01

176-4870 LINK AS-TRACK

Part of 176-4863,176-4864-Page258,176-4865-Page259,176-4869-Page260

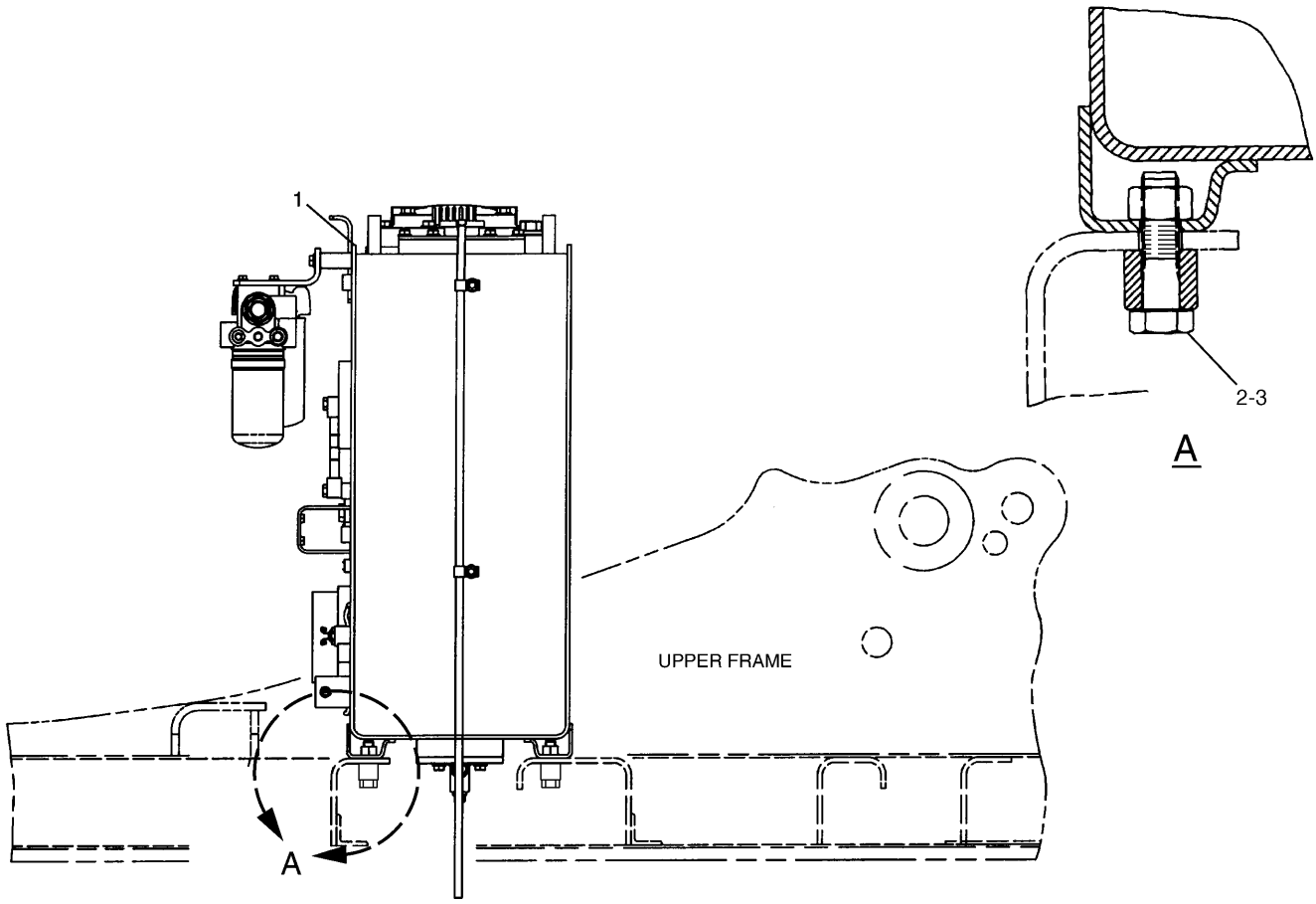

RIGHT SIDE VIEW

NOTE	No.	PART No.	QTY	PART NAME	NOTE	No.	PART No.	QTY	PART NAME
Y	1	168-9526	1	TANK GP					
	2	8T-4140	6	BOLT (L=60mm)					
	3	085-9310	6	SPACER					

Y—SEE SEPARATE ILLUSTRATION

H84353E 03

168-9525 TANK & MTG GP-HYDRAULIC

S/N CAE 01201-02264

168-9526-Page264

HYDRAULIC SYSTEM

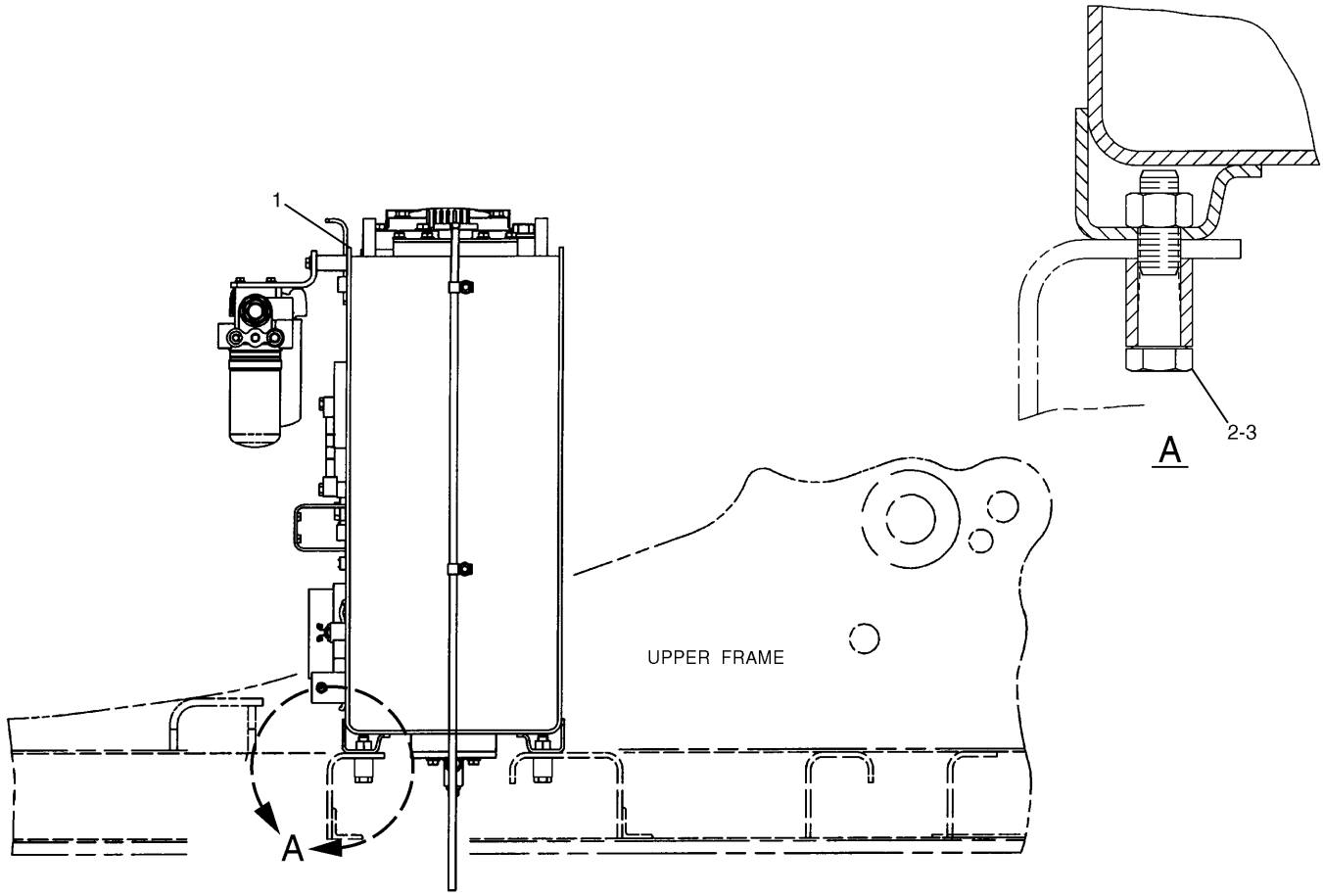

RIGHT SIDE VIEW

NOTE	No.	PART No.	QTY	PART NAME	NOTE	No.	PART No.	QTY	PART NAME
Y	1	196-0927	1	TANK GP					
	2	8T-4140	6	BOLT (L=60mm)					
	3	085-9310	6	SPACER					

Y—SEE SEPARATE ILLUSTRATION

H88199E 03

196-0926 TANK & MTG GP-HYDRAULIC

196-0927-Page268

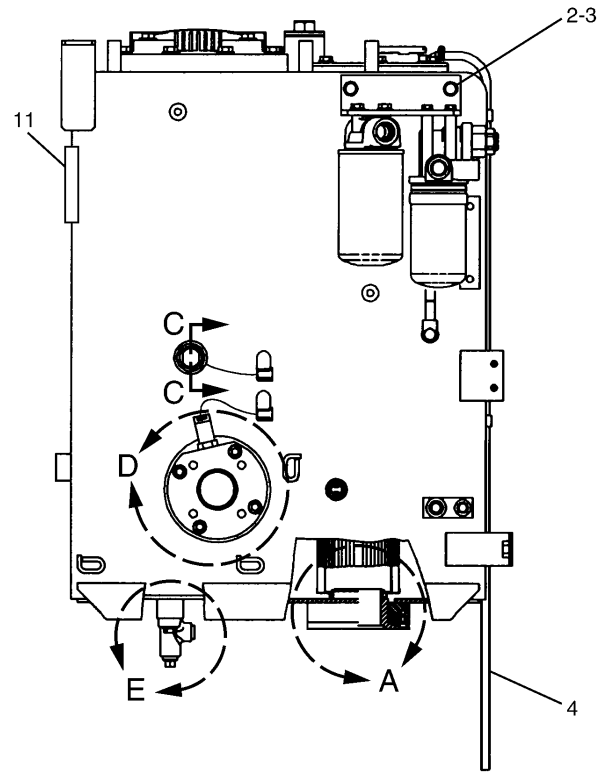

REAR VIEW

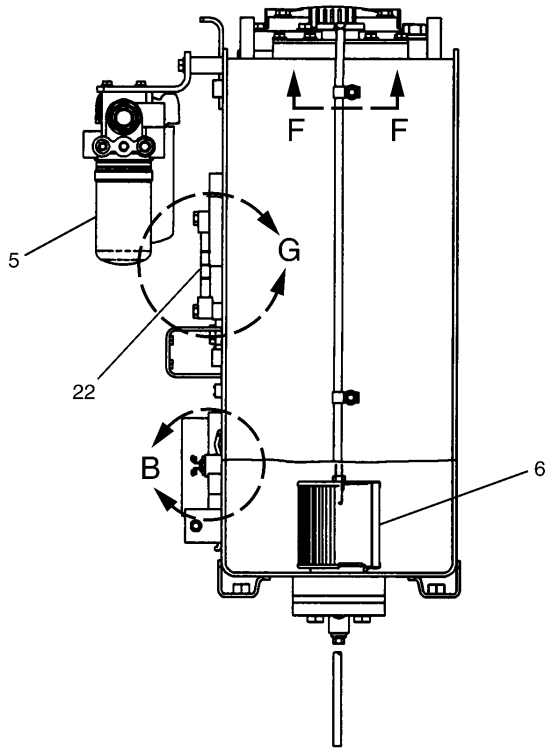

RIGHT SIDE VIEW

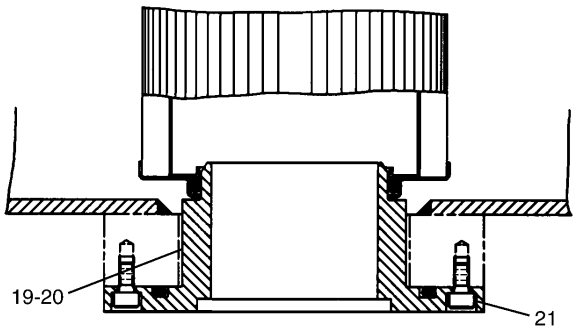

A

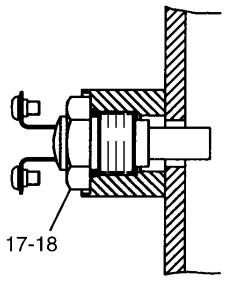

B

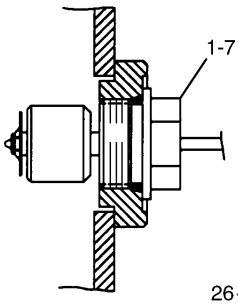

C – C

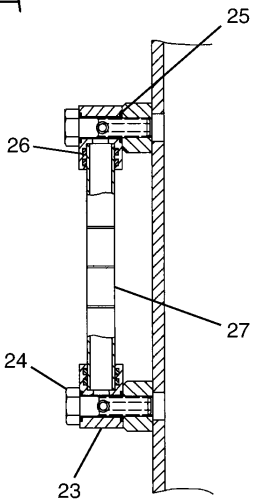

G

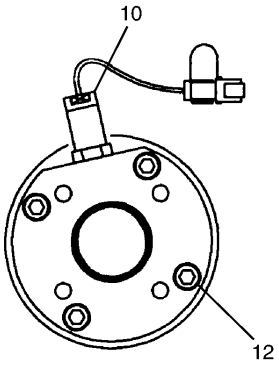

D

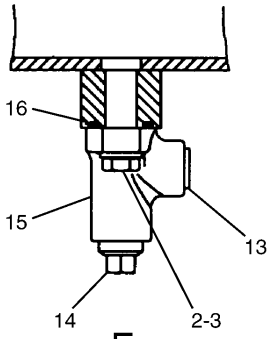

E

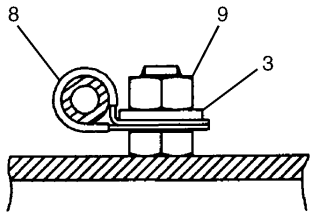

F – F

H86377E 06

168-9526 TANK & FILTER GP-HYDRAULIC (1/2)

S/N CAE 01201-01816
Part of 168-9525-Page262
170-9419-Page193,170-9826-Page272,158-8987-Page287

HYDRAULIC SYSTEM

NOTE	No.	PART No.	QTY	PART NAME	NOTE	No.	PART No.	QTY	PART NAME
	1	213-0677	1	SWITCH AS					
		102-8802	1	RECEPTACLE KIT					
		9X-3401	2	PIN					
	2	8T-4136	4	BOLT (L=25mm)					
	3	8T-4121	6	WASHER					
E	4	7Y-1976		HOSE…(110cm)					
Y	5	158-8987	1	FILTER GP					
Y	6	170-9826	1	SCREEN GP					
	7	3D-2824	1	SEAL-O-RING (ID=23.47mm)					
	8	8M-2770	2	CLIP					
	9	8T-4133	2	NUT					
Y	10	170-9419	1	SWITCH AS					
	11	129-3400	1	GUARD					
	12	8T-0273	4	BOLT (L=40mm)					
	13	2B-0858	1	PLUG					
	14	4B-7739	1	PLUG					
	15	8H-9819	1	ADAPTER					
	16	4J-5267	1	SEAL-O-RING (ID=24.99mm)					
	17	4I-5394	1	SENDER					
		4I-5490	2	SCREW					
		095-0826	2	LOCKWASHER					
	18	3K-0360	1	SEAL-O-RING (ID=16.36mm)					
	19	179-7541	1	PIPE AS					
	20	1J-2859	1	SEAL-O-RING (ID=104.14mm)					
	21	8T-0267	2	BOLT (L=12mm)					
	22	094-3245	1	GAUGE AS					
	23	7Y-4754	2	BLOCK					
	24	094-3247	2	BOLT (L=36mm)					
	25	095-1514	4	SEAL-O-RING (ID=9.80mm)					
	26	095-1517	4	SEAL-O-RING (ID=13.80mm)					
	27	096-4754	1	PIPE					

E—ORDER BY THE CENTIMETER

Y—SEE SEPARATE ILLUSTRATION

H86377E 06

168-9526 TANK & FILTER GP-HYDRAULIC (1/2)

S/N CAE 01201-01816

Part of 168-9525-Page262

170-9419-Page193,170-9826-Page272,158-8987-Page287

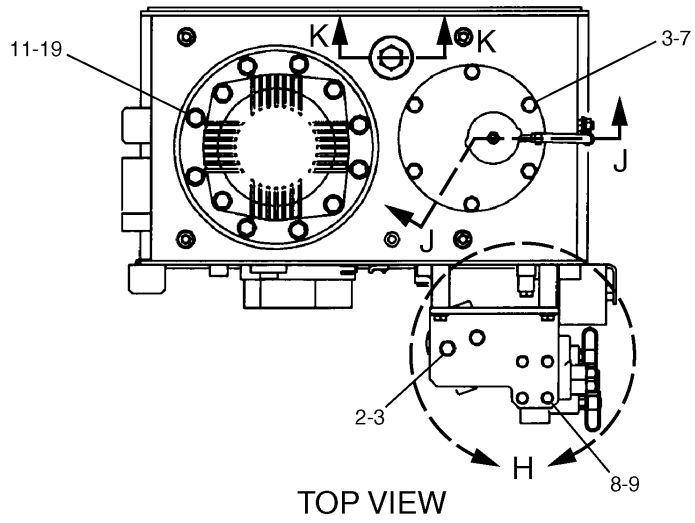

TOP VIEW

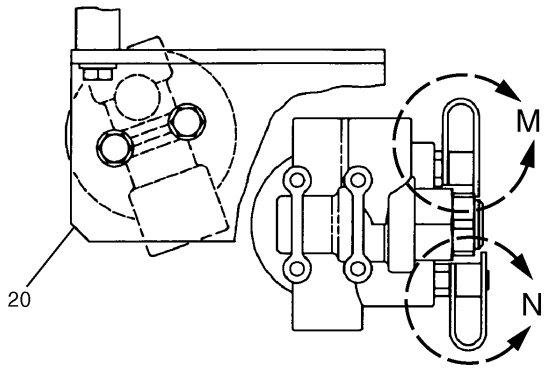

H

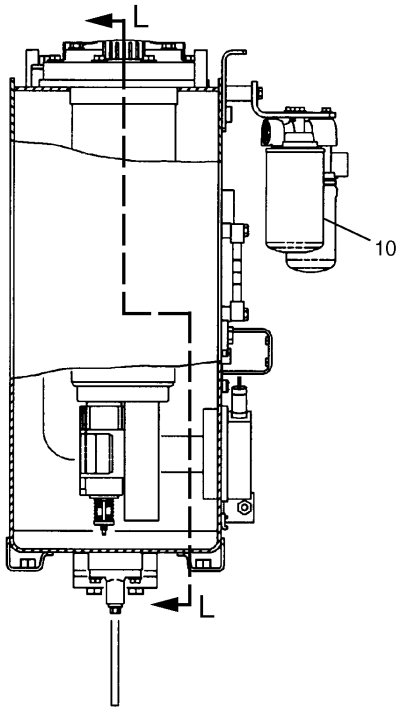

LEFT SIDE VIEW

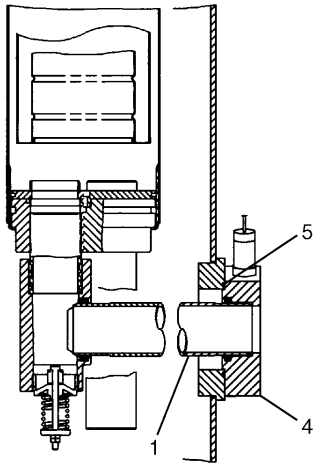

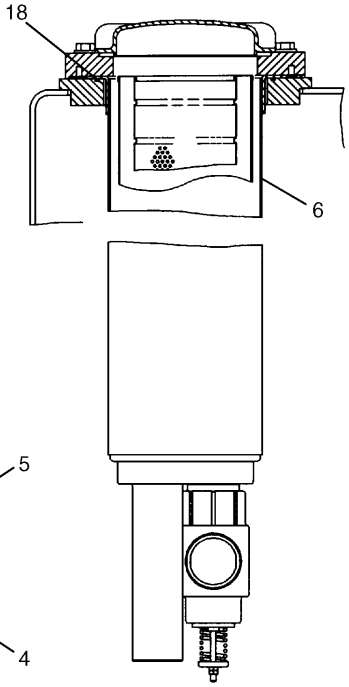

L – L

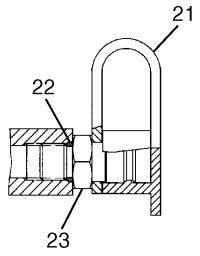

M

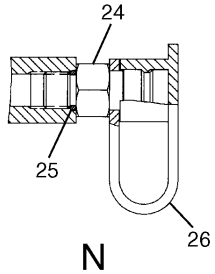

N

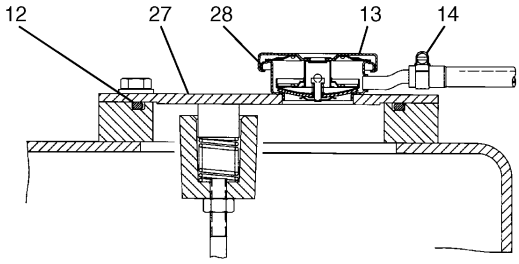

J – J

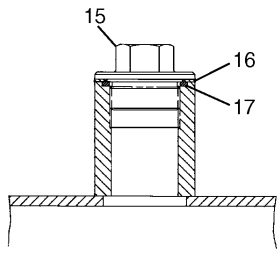

K – K

H86378E 06

168-9526 TANK & FILTER GP-HYDRAULIC (2/2)
S/N CAE 01201-01816
Part of 168-9525-Page262
126-2075-Page286,173-3434-Page288

HYDRAULIC SYSTEM

NOTE	No.	PART No.	QTY	PART NAME	NOTE	No.	PART No.	QTY	PART NAME
	1	179-7468	1	PIPE					
	2	8T-4136	2	BOLT (L=25mm)					
	3	8T-4121	8	WASHER					
	4	175-6177	1	FLANGE AS					
		175-6176	1	SEAL-O-RING (ID=56.00mm)					
	5	2H-3934	1	SEAL-O-RING (ID=98.02mm)					
Y	6	173-3434	1	FILTER GP					
	7	8T-4137	6	BOLT (L=20mm)					
	8	8T-4908	4	BOLT (L=25mm)					
	9	8T-4224	4	WASHER					
Y	10	126-2075	1	FILTER GP					
	11	8T-4194	8	BOLT (L=50mm)					
	12	095-1725	1	SEAL-O-RING (ID=154.30mm)					
	13	4I-3745	1	CAP					
	14	1P-4278	1	CLAMP					
	15	207-6403	1	PLUG					
	16	207-6404	1	WASHER					
	17	095-1608	1	SEAL-O-RING (ID=44.70mm)					
	18	1H-8278	1	SEAL-O-RING (ID=196.44mm)					
	19	8T-4223	8	WASHER					
	20	202-3792	1	SUPPORT					
	21	6V-0852	1	CAP					
	22	3J-1907	1	SEAL-O-RING (ID=11.89mm)					
	23	6V-3965	1	NIPPLE AS					
	24	8C-3446	1	VALVE					
	25	3J-7354	1	SEAL-O-RING (ID=8.92mm)					
	26	8C-3451	1	CAP					
	27	179-7536	1	COVER AS					
	28	4I-3743	1	FILLER AS					

Y—SEE SEPARATE ILLUSTRATION

H86378E 06

168-9526 TANK & FILTER GP-HYDRAULIC (2/2)

S/N CAE 01201-01816
Part of 168-9525-Page262
126-2075-Page286,173-3434-Page288

HYDRAULIC SYSTEM

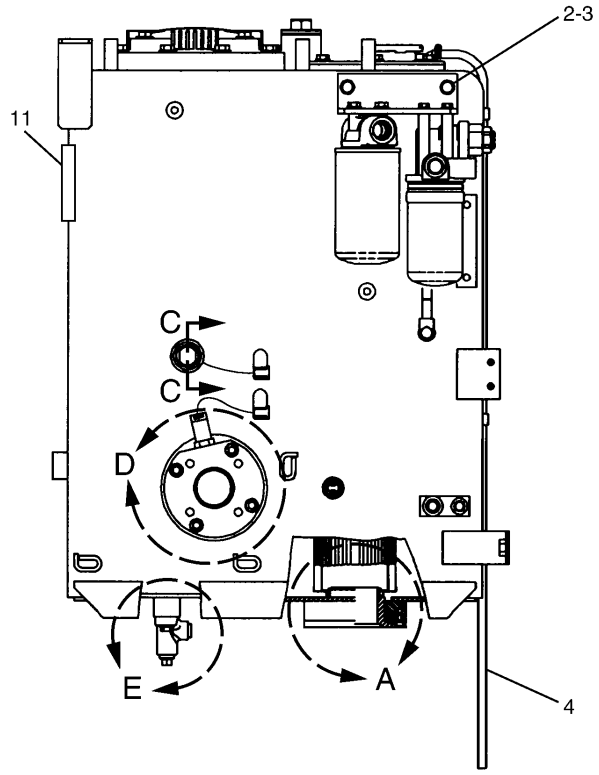

REAR VIEW

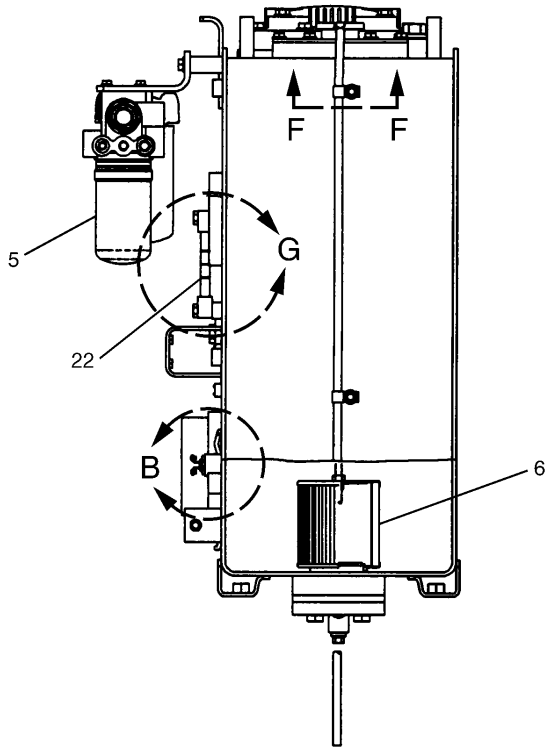

RIGHT SIDE VIEW

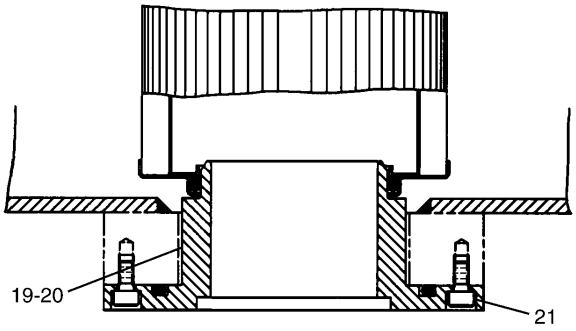

A

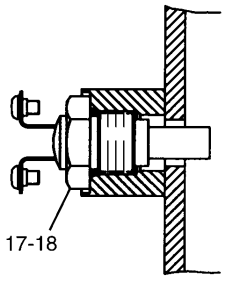

B

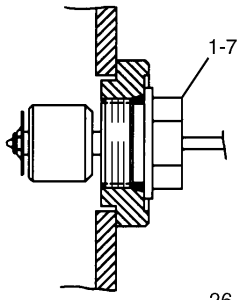

C – C

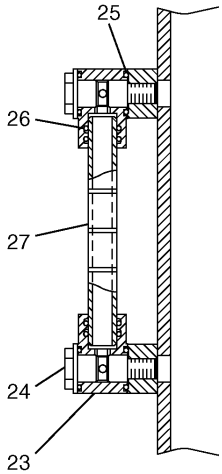

G

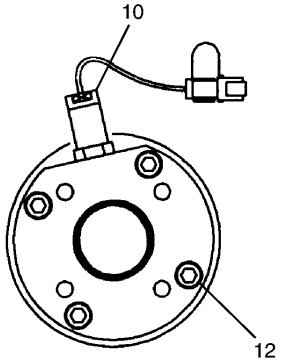

D

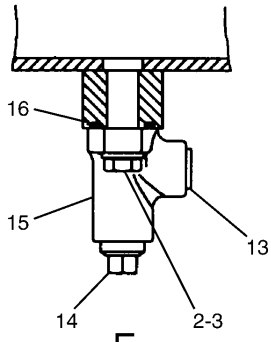

E

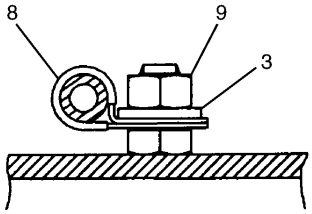

F – F

H86322E 07

168-9526 TANK & FILTER GP-HYDRAULIC (1/2)

S/N CAE 01817-02264
Part of 168-9525-Page262
170-9419-Page193,170-9826-Page272,158-8987-Page287

HYDRAULIC SYSTEM

NOTE	No.	PART No.	QTY	PART NAME	NOTE	No.	PART No.	QTY	PART NAME
	1	213-0677	1	SWITCH AS					
		102-8802	1	RECEPTACLE KIT					
		9X-3401	2	PIN					
	2	8T-4136	4	BOLT (L=25mm)					
	3	8T-4121	6	WASHER					
E	4	7Y-1976		HOSE…(110cm)					
Y	5	158-8987	1	FILTER GP					
Y	6	170-9826	1	SCREEN GP					
	7	3D-2824	1	SEAL-O-RING (ID=23.47mm)					
	8	8M-2770	2	CLIP					
	9	8T-4133	2	NUT					
Y	10	170-9419	1	SWITCH AS					
	11	129-3400	1	GUARD					
	12	8T-0273	4	BOLT (L=40mm)					
	13	2B-0858	1	PLUG					
	14	4B-7739	1	PLUG					
	15	8H-9819	1	ADAPTER					
	16	4J-5267	1	SEAL-O-RING (ID=24.99mm)					
	17	4I-5394	1	SENDER					
		4I-5490	2	SCREW					
		095-0826	2	LOCKWASHER					
	18	3K-0360	1	SEAL-O-RING (ID=16.36mm)					
	19	179-7541	1	PIPE AS					
	20	1J-2859	1	SEAL-O-RING (ID=104.14mm)					
	21	8T-0267	2	BOLT (L=12mm)					
	22	227-0620	1	GAUGE AS					
	23	236-3258	2	BLOCK					
	24	236-3259	2	BOLT					
	25	095-1519	4	SEAL-O-RING (ID=15.80mm)					
	26	6F-4855	4	SEAL-O-RING (ID=13.94mm)					
	27	236-3257	1	PIPE					

E—ORDER BY THE CENTIMETER

Y—SEE SEPARATE ILLUSTRATION

H86322E 07

168-9526 TANK & FILTER GP-HYDRAULIC (1/2)

S/N CAE 01817-02264

Part of 168-9525-Page262

170-9419-Page193,170-9826-Page272,158-8987-Page287

HYDRAULIC SYSTEM

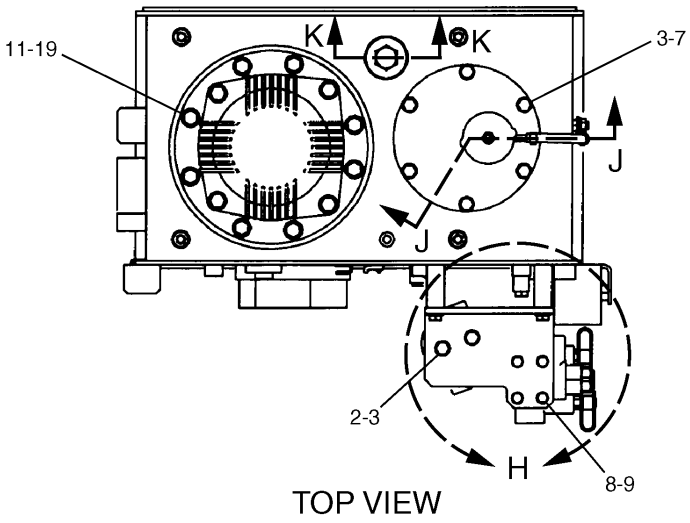

TOP VIEW

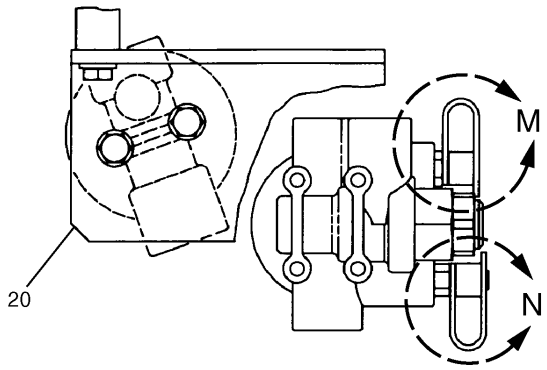

H

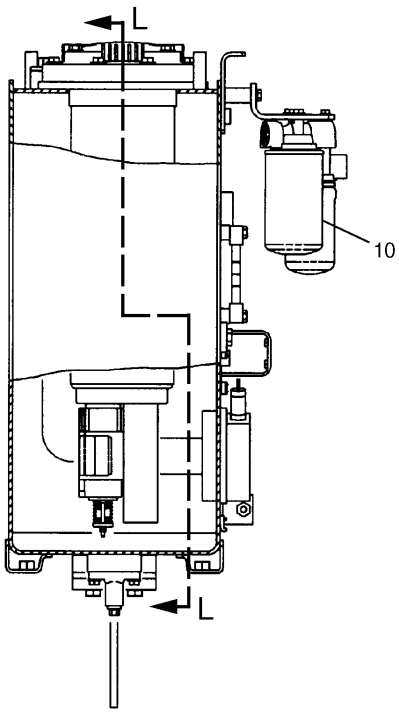

LEFT SIDE VIEW

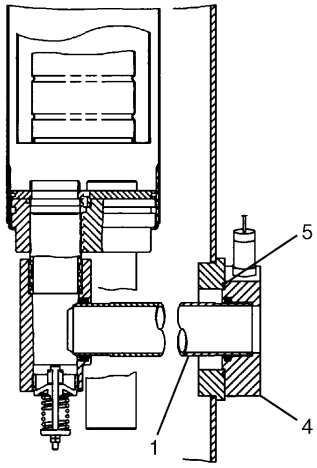

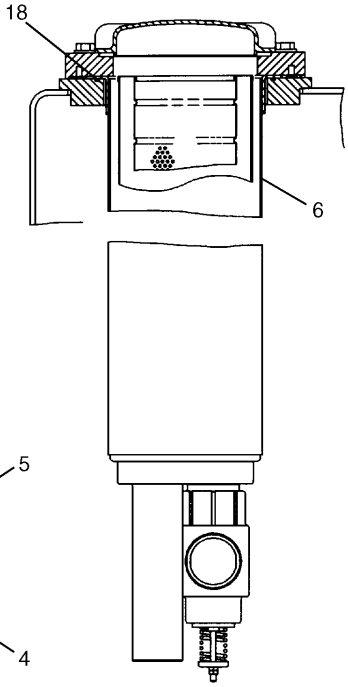

L – L

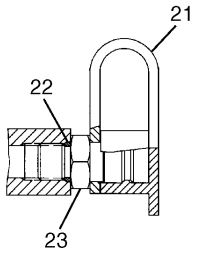

M

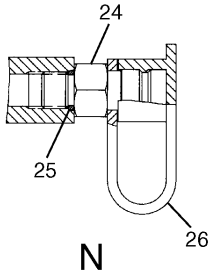

N

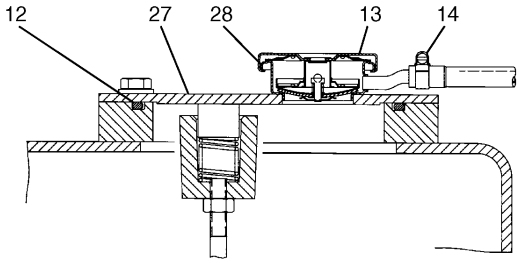

J – J

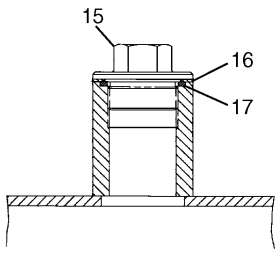

K – K

H86323E 07

168-9526 TANK & FILTER GP-HYDRAULIC (2/2)
S/N CAE 01817-02264
Part of 168-9525-Page262
126-2075-Page286,173-3434-Page288

HYDRAULIC SYSTEM

NOTE	No.	PART No.	QTY	PART NAME	NOTE	No.	PART No.	QTY	PART NAME
	1	179-7468	1	PIPE					
	2	8T-4136	2	BOLT (L=25mm)					
	3	8T-4121	8	WASHER					
	4	175-6177	1	FLANGE AS					
		175-6176	1	SEAL-O-RING (ID=56.00mm)					
	5	2H-3934	1	SEAL-O-RING (ID=98.02mm)					
Y	6	173-3434	1	FILTER GP					
	7	8T-4137	6	BOLT (L=20mm)					
	8	8T-4908	4	BOLT (L=25mm)					
	9	8T-4224	4	WASHER					
Y	10	126-2075	1	FILTER GP					
	11	8T-4194	8	BOLT (L=50mm)					
	12	095-1725	1	SEAL-O-RING (ID=154.30mm)					
	13	4I-3745	1	CAP					
	14	1P-4278	1	CLAMP					
	15	207-6403	1	PLUG					
	16	207-6404	1	WASHER					
	17	095-1608	1	SEAL-O-RING (ID=44.70mm)					
	18	1H-8278	1	SEAL-O-RING (ID=196.44mm)					
	19	8T-4223	8	WASHER					
	20	202-3792	1	SUPPORT					
	21	6V-0852	1	CAP					
	22	3J-1907	1	SEAL-O-RING (ID=11.89mm)					
	23	6V-3965	1	NIPPLE AS					
	24	8C-3446	1	VALVE					
	25	3J-7354	1	SEAL-O-RING (ID=8.92mm)					
	26	8C-3451	1	CAP					
	27	179-7536	1	COVER AS					
	28	4I-3743	1	FILLER AS					

Y—SEE SEPARATE ILLUSTRATION

H86323E 07

168-9526 TANK & FILTER GP-HYDRAULIC (2/2)

S/N CAE 01817-02264
Part of 168-9525-Page262
126-2075-Page286,173-3434-Page288

HYDRAULIC SYSTEM

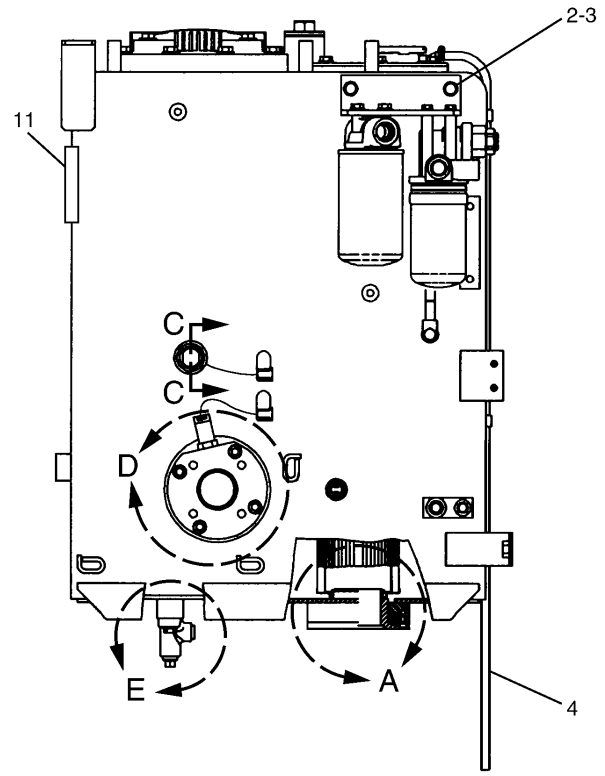

REAR VIEW

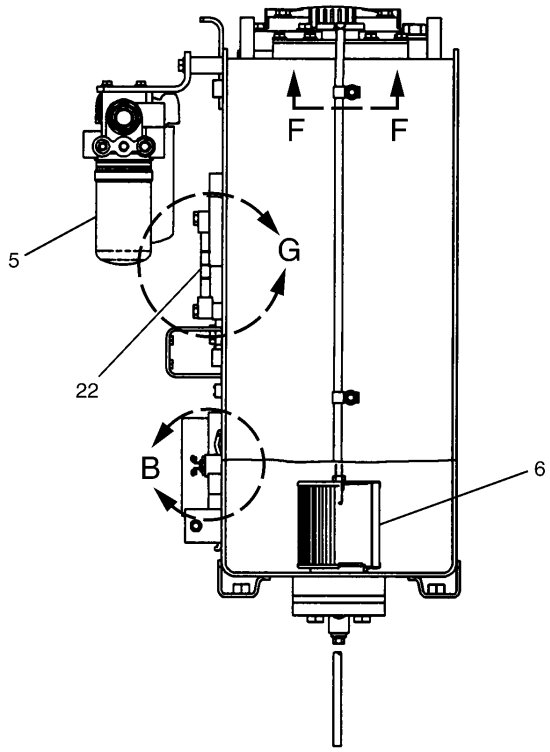

RIGHT SIDE VIEW

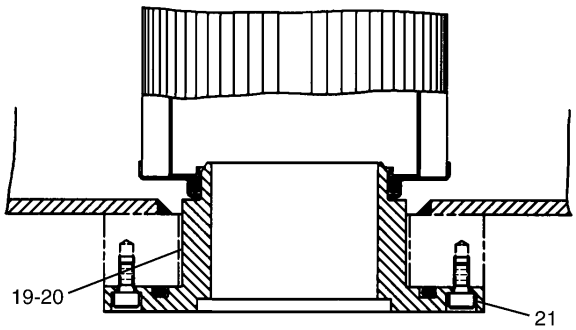

A

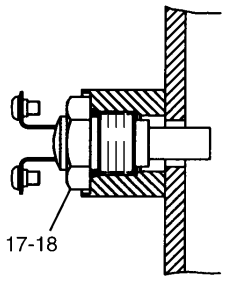

B

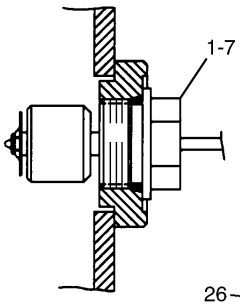

C – C

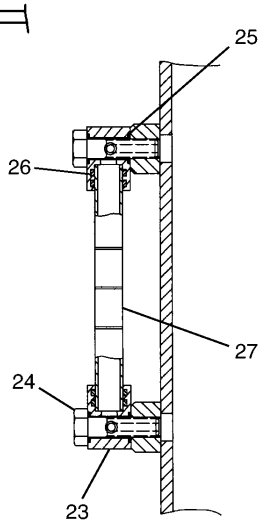

G

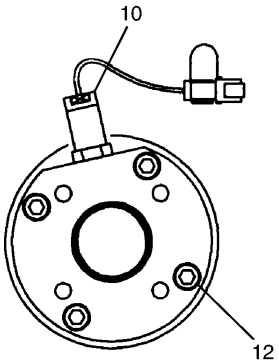

D

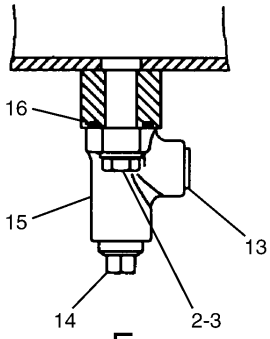

E

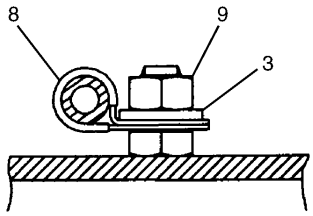

F – F

H86405E 04

196-0927 TANK & FILTER GP-HYDRAULIC (1/2)
S/N CAE 01201-(T03.07)
Part of 196-0926-Page263
170-9419-Page193,170-9826-Page272,158-8987-Page287
An Attachment

HYDRAULIC SYSTEM

NOTE	No.	PART No.	QTY	PART NAME	NOTE	No.	PART No.	QTY	PART NAME
	1	213-0677	1	SWITCH AS					
		102-8802	1	RECEPTACLE KIT					
		9X-3401	2	PIN					
	2	8T-4136	4	BOLT (L=25mm)					
	3	8T-4121	6	WASHER					
E	4	7Y-1976		HOSE…(110cm)					
Y	5	158-8987	1	FILTER GP					
Y	6	170-9826	1	SCREEN GP					
	7	3D-2824	1	SEAL-O-RING (ID=23.47mm)					
	8	8M-2770	2	CLIP					
	9	8T-4133	2	NUT					
Y	10	170-9419	1	SWITCH AS					
	11	129-3400	1	GUARD					
	12	8T-0273	4	BOLT (L=40mm)					
	13	2B-0858	1	PLUG					
	14	4B-7739	1	PLUG					
	15	8H-9819	1	ADAPTER					
	16	4J-5267	1	SEAL-O-RING (ID=24.99mm)					
	17	4I-5394	1	SENDER					
		4I-5490	2	SCREW					
		095-0826	2	LOCKWASHER					
	18	3K-0360	1	SEAL-O-RING (ID=16.36mm)					
	19	179-7541	1	PIPE AS					
	20	1J-2859	1	SEAL-O-RING (ID=104.14mm)					
	21	8T-0267	2	BOLT (L=12mm)					
	22	094-3245	1	GAUGE AS					
	23	7Y-4754	2	BLOCK					
	24	094-3247	2	BOLT (L=36mm)					
	25	095-1514	4	SEAL-O-RING (ID=9.80mm)					
	26	095-1517	4	SEAL-O-RING (ID=13.80mm)					
	27	096-4754	1	PIPE					

E—ORDER BY THE CENTIMETER

Y—SEE SEPARATE ILLUSTRATION

H86405E 04

196-0927 TANK & FILTER GP-HYDRAULIC (1/2)

S/N CAE 01201-(T03.07)

Part of 196-0926-Page263

170-9419-Page193,170-9826-Page272,158-8987-Page287

An Attachment

HYDRAULIC SYSTEM

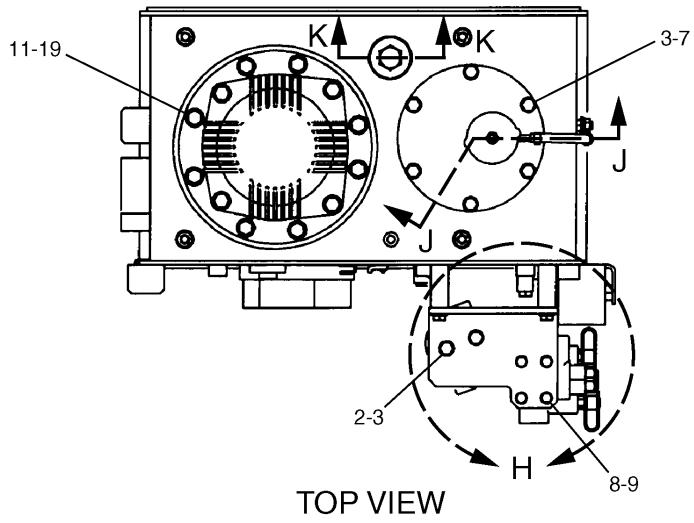

TOP VIEW

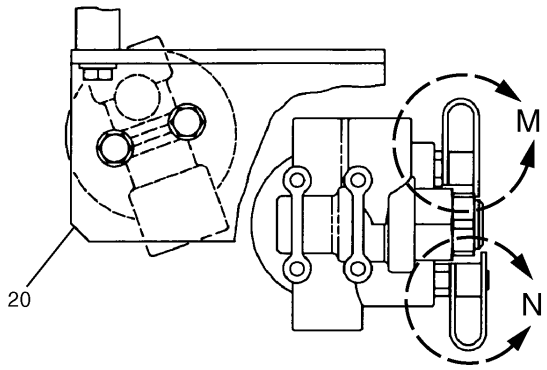

H

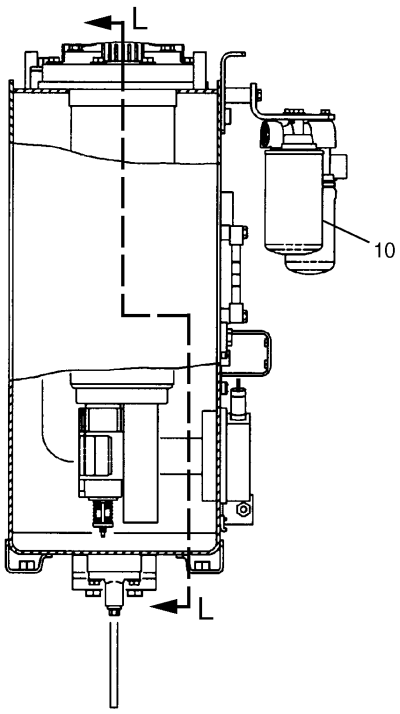

LEFT SIDE VIEW

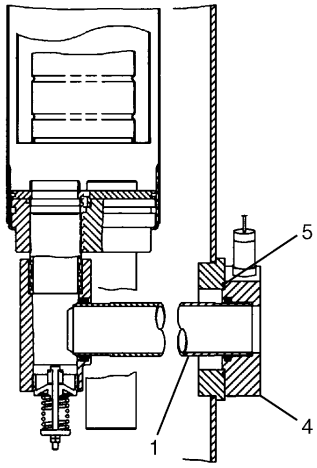

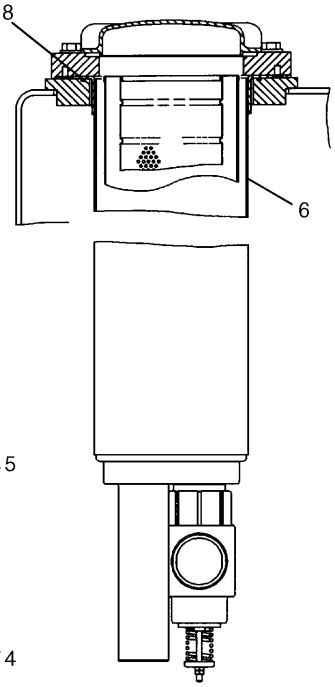

L – L

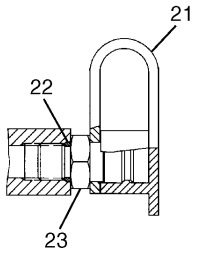

M

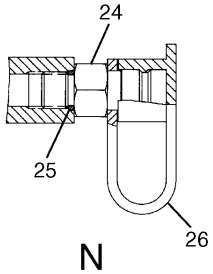

N

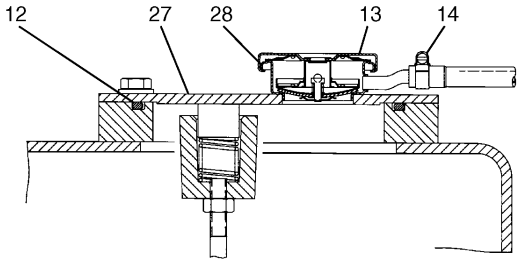

J – J

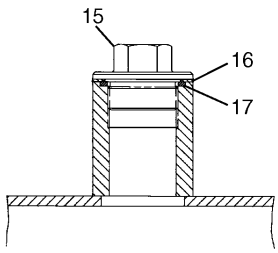

K – K

H86406E 04

196-0927 TANK & FILTER GP-HYDRAULIC (2/2)
S/N CAE 01201-(T03.07)
Part of 196-0926-Page263
126-2075-Page286,188-4145-Page290
An Attachment

HYDRAULIC SYSTEM

NOTE	No.	PART No.	QTY	PART NAME	NOTE	No.	PART No.	QTY	PART NAME
	1	179-7468	1	PIPE					
	2	8T-4136	2	BOLT (L=25mm)					
	3	8T-4121	8	WASHER					
	4	175-6177	1	FLANGE AS					
		175-6176	1	SEAL-O-RING (ID=56.00mm)					
	5	2H-3934	1	SEAL-O-RING (ID=98.02mm)					
Y	6	188-4145	1	FILTER GP					
	7	8T-4137	6	BOLT (L=20mm)					
	8	8T-4908	4	BOLT (L=25mm)					
	9	8T-4224	4	WASHER					
Y	10	126-2075	1	FILTER GP					
	11	8T-4194	8	BOLT (L=50mm)					
	12	095-1725	1	SEAL-O-RING (ID=154.30mm)					
	13	4I-3745	1	CAP					
	14	1P-4278	1	CLAMP					
	15	207-6403	1	PLUG					
	16	207-6404	1	WASHER					
	17	095-1608	1	SEAL-O-RING (ID=44.70mm)					
	18	1H-8278	1	SEAL-O-RING (ID=196.44mm)					
	19	8T-4223	8	WASHER					
	20	202-3792	1	SUPPORT					
	21	6V-0852	1	CAP					
	22	3J-1907	1	SEAL-O-RING (ID=11.89mm)					
	23	6V-3965	1	NIPPLE AS					
	24	8C-3446	1	VALVE					
	25	3J-7354	1	SEAL-O-RING (ID=8.92mm)					
	26	8C-3451	1	CAP					
	27	179-7536	1	COVER AS					
	28	4I-3743	1	FILLER AS					

Y—SEE SEPARATE ILLUSTRATION

H86406E 04

196-0927 TANK & FILTER GP-HYDRAULIC (2/2)

S/N CAE 01201-(T03.07)
Part of 196-0926-Page263
126-2075-Page286,188-4145-Page290
An Attachment

HYDRAULIC SYSTEM

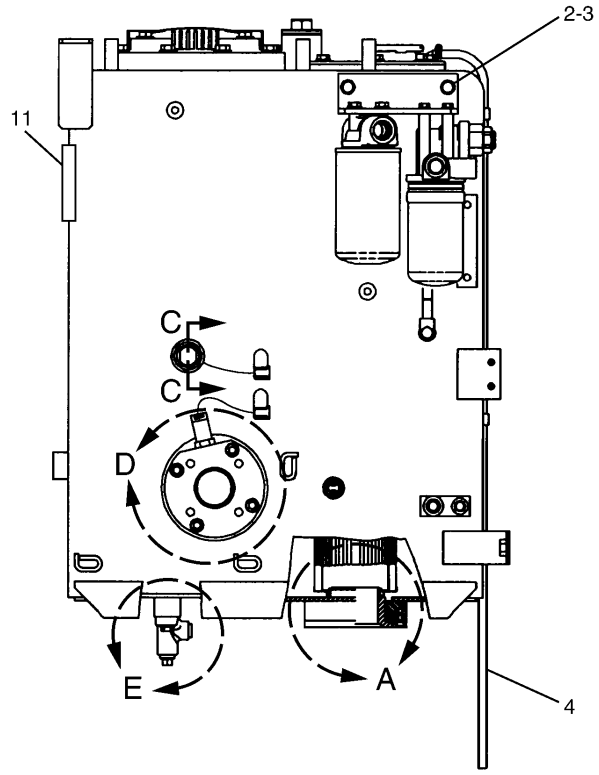

REAR VIEW

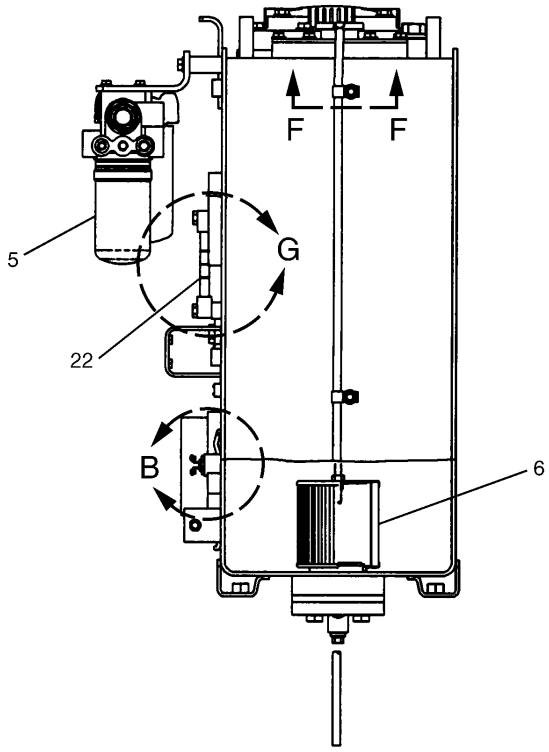

RIGHT SIDE VIEW

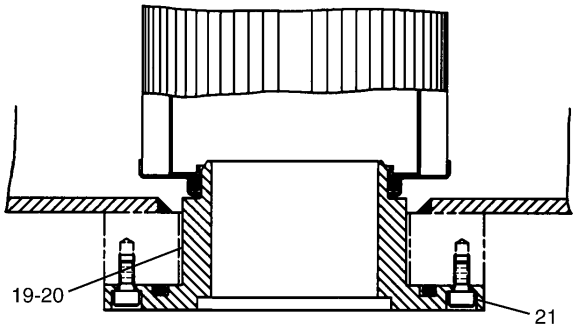

A

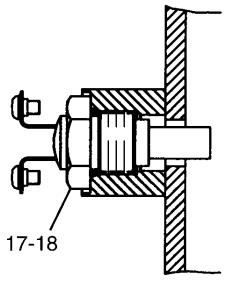

B

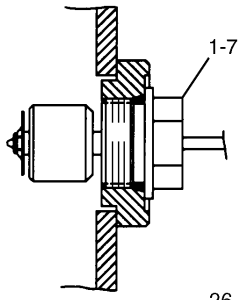

C – C

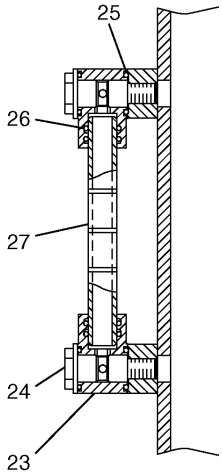

G

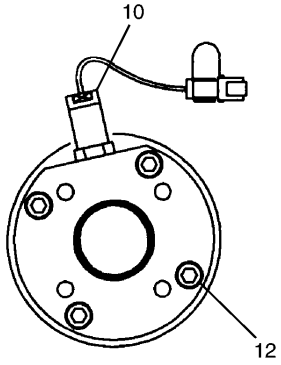

D

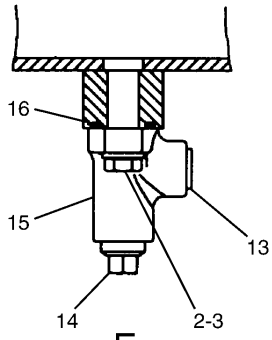

E

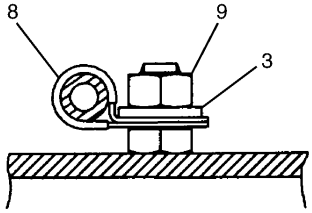

F – F

H86324E 05

196-0927 TANK & FILTER GP-HYDRAULIC (1/2)

S/N CAE (T03.08)-04508

Part of 196-0926-Page263

170-9419-Page193,170-9826-Page272,158-8987-Page287

HYDRAULIC SYSTEM

NOTE	No.	PART No.	QTY	PART NAME	NOTE	No.	PART No.	QTY	PART NAME
	1	213-0677	1	SWITCH AS					
		102-8802	1	RECEPTACLE KIT					
		9X-3401	2	PIN					
	2	8T-4136	4	BOLT (L=25mm)					
	3	8T-4121	6	WASHER					
E	4	7Y-1976		HOSE…(110cm)					
Y	5	158-8987	1	FILTER GP					
Y	6	170-9826	1	SCREEN GP					
	7	3D-2824	1	SEAL-O-RING (ID=23.47mm)					
	8	8M-2770	2	CLIP					
	9	8T-4133	2	NUT					
Y	10	170-9419	1	SWITCH AS					
	11	129-3400	1	GUARD					
	12	8T-0273	4	BOLT (L=40mm)					
	13	2B-0858	1	PLUG					
	14	4B-7739	1	PLUG					
	15	8H-9819	1	ADAPTER					
	16	4J-5267	1	SEAL-O-RING (ID=24.99mm)					
	17	4I-5394	1	SENDER					
		4I-5490	2	SCREW					
		095-0826	2	LOCKWASHER					
	18	3K-0360	1	SEAL-O-RING (ID=16.36mm)					
	19	179-7541	1	PIPE AS					
	20	1J-2859	1	SEAL-O-RING (ID=104.14mm)					
	21	8T-0267	2	BOLT (L=12mm)					
	22	227-0620	1	GAUGE AS					
	23	236-3258	2	BLOCK					
	24	236-3259	2	BOLT					
	25	095-1519	4	SEAL-O-RING (ID=15.80mm)					
	26	6F-4855	4	SEAL-O-RING (ID=13.94mm)					
	27	236-3257	1	PIPE					

E—ORDER BY THE CENTIMETER

Y—SEE SEPARATE ILLUSTRATION

H86324E 05

196-0927 TANK & FILTER GP-HYDRAULIC (1/2)

S/N CAE (T03.08)-04508

Part of 196-0926-Page263

170-9419-Page193,170-9826-Page272,158-8987-Page287

HYDRAULIC SYSTEM

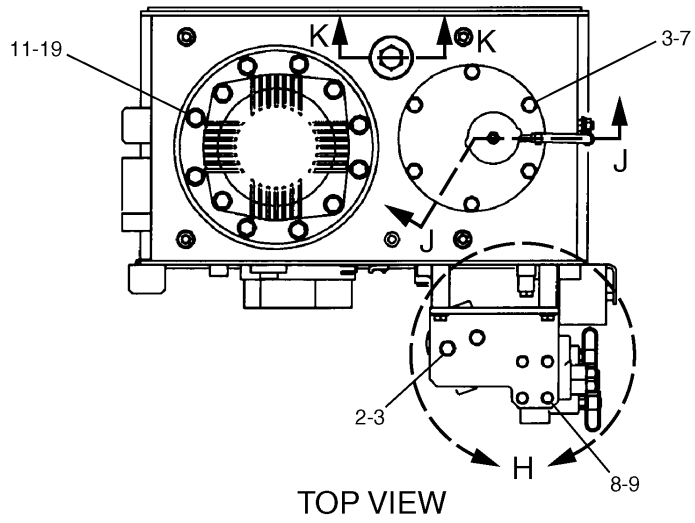

TOP VIEW

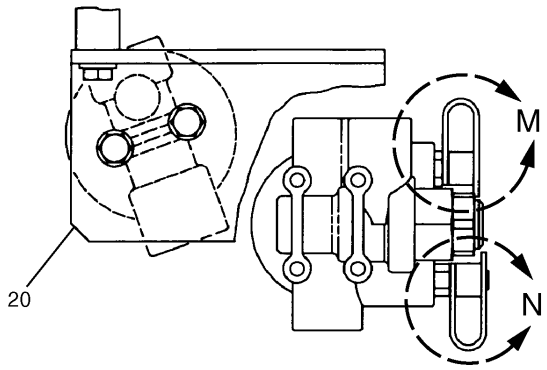

H

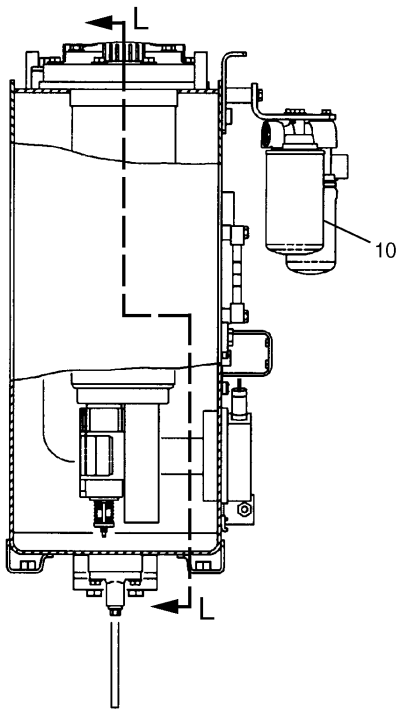

LEFT SIDE VIEW

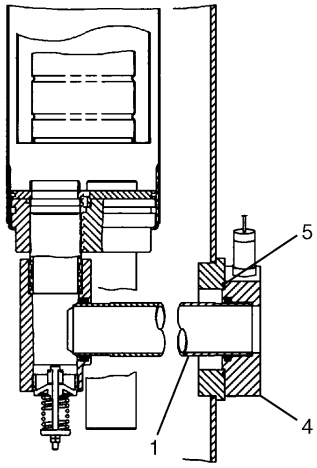

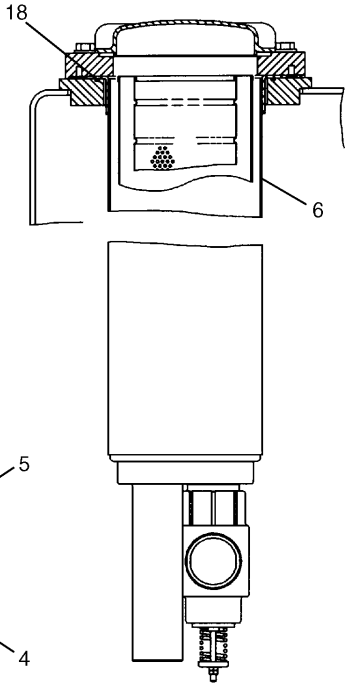

L – L

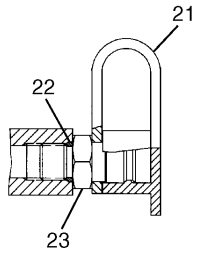

M

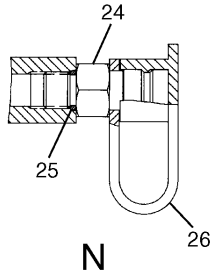

N

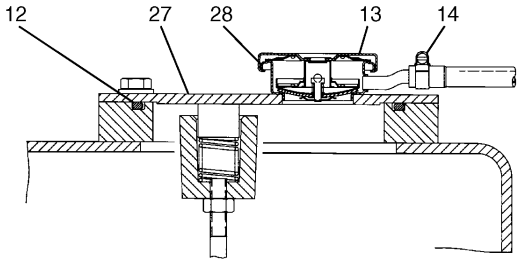

J – J

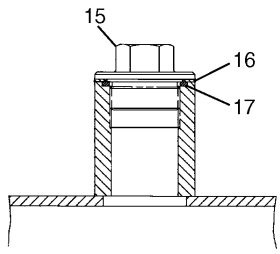

K – K

H86325E 05

196-0927 TANK & FILTER GP-HYDRAULIC (2/2)
S/N CAE (T03.08)-04508
Part of 196-0926-Page263
126-2075-Page286,188-4145-Page290

HYDRAULIC SYSTEM

NOTE	No.	PART No.	QTY	PART NAME	NOTE	No.	PART No.	QTY	PART NAME
	1	179-7468	1	PIPE					
	2	8T-4136	2	BOLT (L=25mm)					
	3	8T-4121	8	WASHER					
	4	175-6177	1	FLANGE AS					
		175-6176	1	SEAL-O-RING (ID=56.00mm)					
	5	2H-3934	1	SEAL-O-RING (ID=98.02mm)					
Y	6	188-4145	1	FILTER GP					
	7	8T-4137	6	BOLT (L=20mm)					
	8	8T-4908	4	BOLT (L=25mm)					
	9	8T-4224	4	WASHER					
Y	10	126-2075	1	FILTER GP					
	11	8T-4194	8	BOLT (L=50mm)					
	12	095-1725	1	SEAL-O-RING (ID=154.30mm)					
	13	4I-3745	1	CAP					
	14	1P-4278	1	CLAMP					
	15	207-6403	1	PLUG					
	16	207-6404	1	WASHER					
	17	095-1608	1	SEAL-O-RING (ID=44.70mm)					
	18	1H-8278	1	SEAL-O-RING (ID=196.44mm)					
	19	8T-4223	8	WASHER					
	20	202-3792	1	SUPPORT					
	21	6V-0852	1	CAP					
	22	3J-1907	1	SEAL-O-RING (ID=11.89mm)					
	23	6V-3965	1	NIPPLE AS					
	24	8C-3446	1	VALVE					
	25	3J-7354	1	SEAL-O-RING (ID=8.92mm)					
	26	8C-3451	1	CAP					
	27	179-7536	1	COVER AS					
	28	4I-3743	1	FILLER AS					

Y—SEE SEPARATE ILLUSTRATION

H86325E 05

196-0927 TANK & FILTER GP-HYDRAULIC (2/2)

S/N CAE (T03.08)-04508
Part of 196-0926-Page263
126-2075-Page286,188-4145-Page290

HYDRAULIC SYSTEM

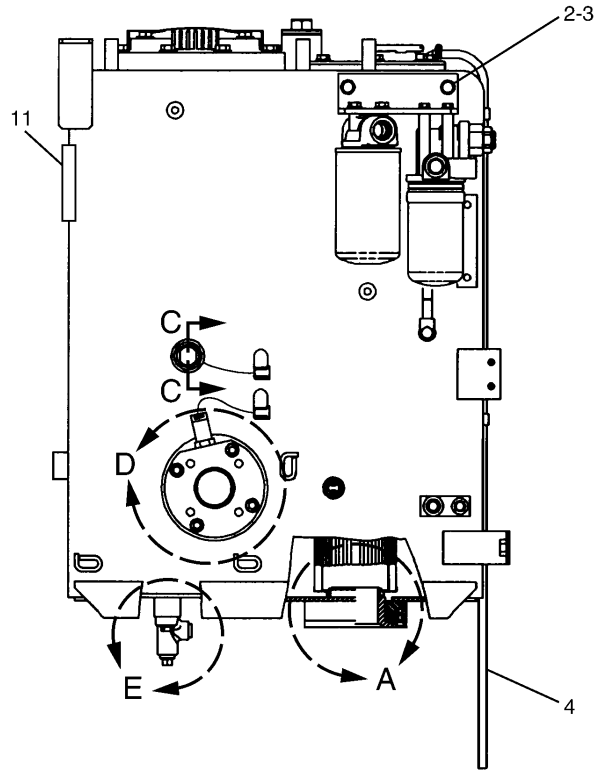

REAR VIEW

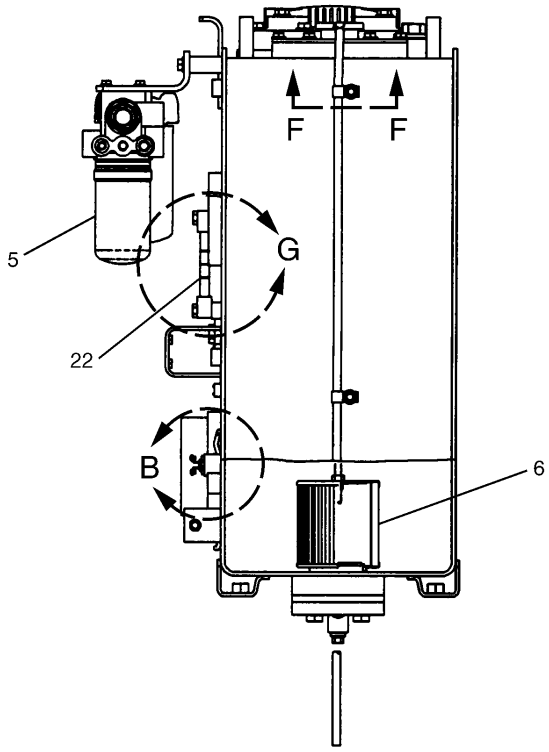

RIGHT SIDE VIEW

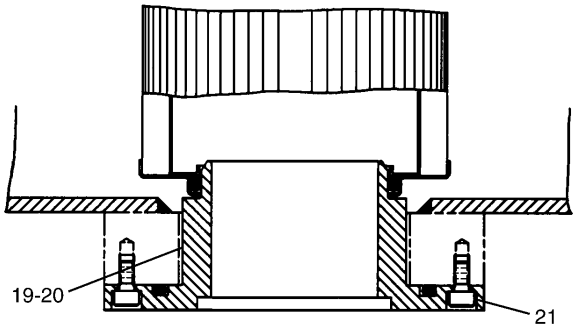

A

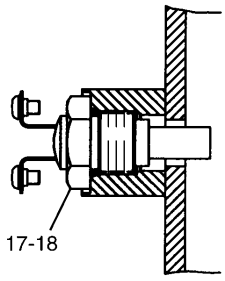

B

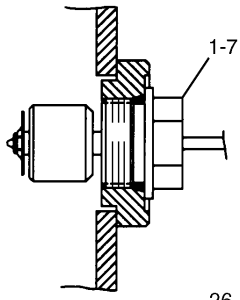

C – C

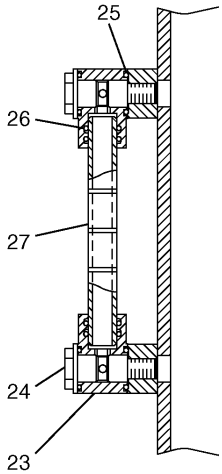

G

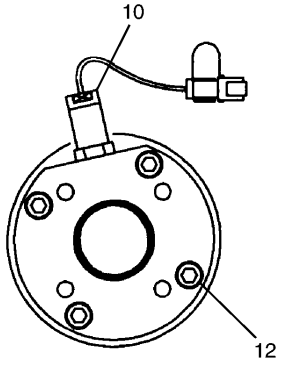

D

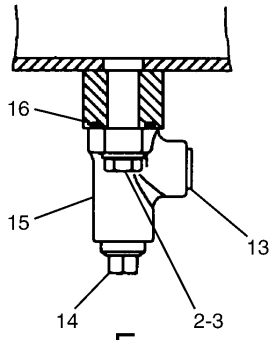

E

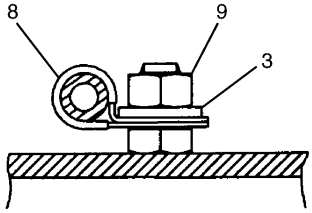

F – F

H96571E 06

196-0927 TANK & FILTER GP-HYDRAULIC (1/2)

S/N CAE 04509-Up
Part of 196-0926-Page263
170-9419-Page193,170-9826-Page272,158-8987-Page287

HYDRAULIC SYSTEM

NOTE	No.	PART No.	QTY	PART NAME	NOTE	No.	PART No.	QTY	PART NAME
	1	213-0677	1	SWITCH AS					
		102-8802	1	RECEPTACLE KIT					
		9X-3401	2	PIN					
	2	8T-4136	4	BOLT (L=25mm)					
	3	8T-4121	6	WASHER					
E	4	7Y-1976		HOSE…(110cm)					
Y	5	158-8987	1	FILTER GP					
Y	6	170-9826	1	SCREEN GP					
	7	3D-2824	1	SEAL-O-RING (ID=23.47mm)					
	8	8M-2770	2	CLIP					
	9	8T-4133	2	NUT					
Y	10	170-9419	1	SWITCH AS					
	11	129-3400	1	GUARD					
	12	8T-0273	4	BOLT (L=40mm)					
	13	2B-0858	1	PLUG					
	14	4B-7739	1	PLUG					
	15	8H-9819	1	ADAPTER					
	16	4J-5267	1	SEAL-O-RING (ID=24.99mm)					
	17	4I-5394	1	SENDER					
		4I-5490	2	SCREW					
		095-0826	2	LOCKWASHER					
	18	3K-0360	1	SEAL-O-RING (ID=16.36mm)					
	19	179-7541	1	PIPE AS					
	20	1J-2859	1	SEAL-O-RING (ID=104.14mm)					
	21	8T-0267	2	BOLT (L=12mm)					
	22	227-0620	1	GAUGE AS					
	23	236-3258	2	BLOCK					
	24	236-3259	2	BOLT					
	25	095-1519	4	SEAL-O-RING (ID=15.80mm)					
	26	6F-4855	4	SEAL-O-RING (ID=13.94mm)					
	27	236-3257	1	PIPE					

E—ORDER BY THE CENTIMETER

Y—SEE SEPARATE ILLUSTRATION

H96571E 06

196-0927 TANK & FILTER GP-HYDRAULIC (1/2)

S/N CAE 04509-Up

Part of 196-0926-Page263

170-9419-Page193,170-9826-Page272,158-8987-Page287

HYDRAULIC SYSTEM

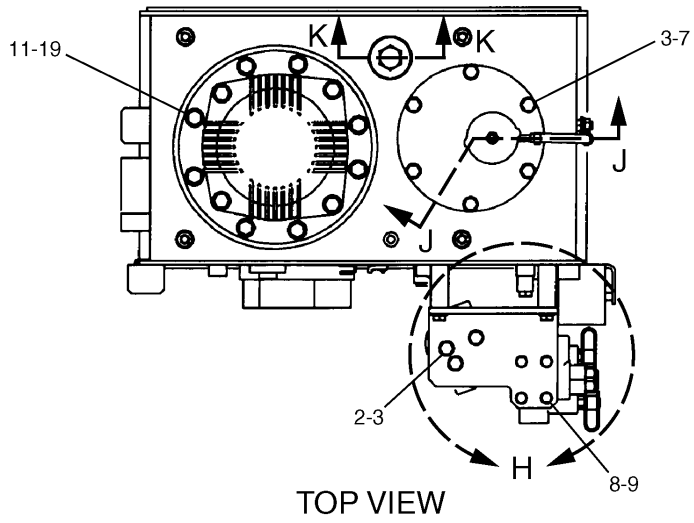

TOP VIEW

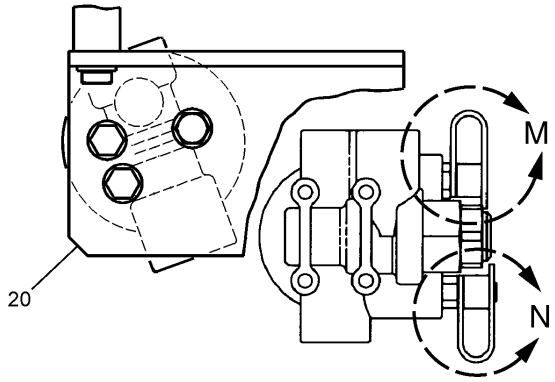

H

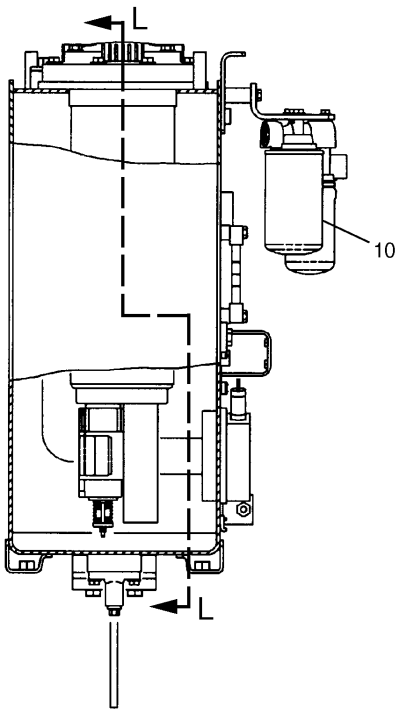

LEFT SIDE VIEW

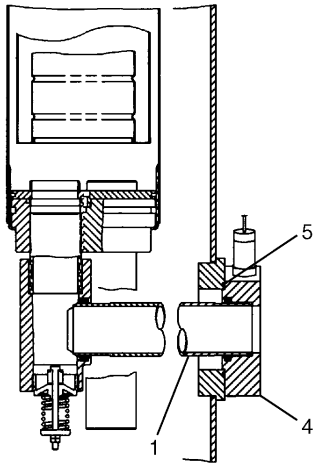

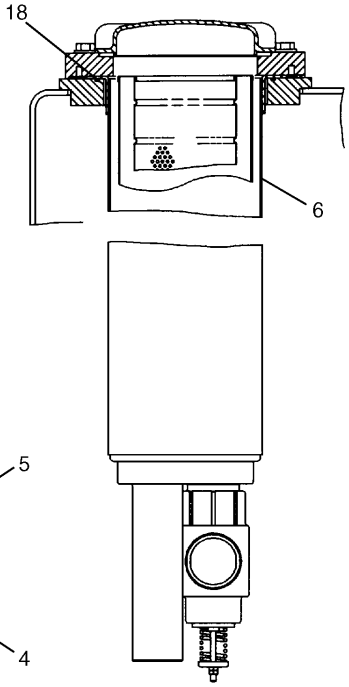

L – L

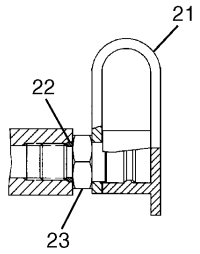

M

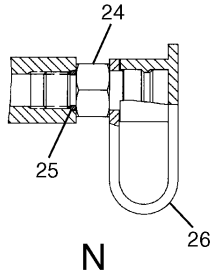

N

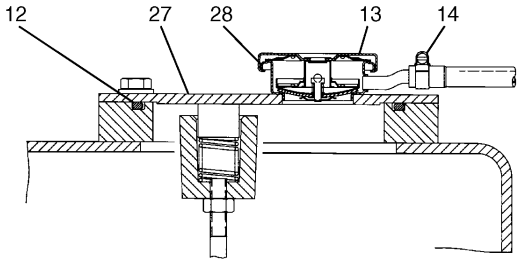

J – J

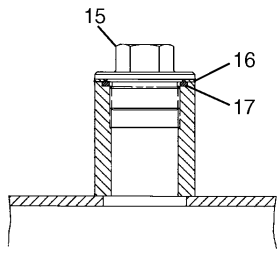

K – K

H96572E 06

196-0927 TANK & FILTER GP-HYDRAULIC (2/2)
S/N CAE 04509-Up
Part of 196-0926-Page263
289-8194-Page286.01

HYDRAULIC SYSTEM

NOTE	No.	PART No.	QTY	PART NAME	NOTE	No.	PART No.	QTY	PART NAME
	1	179-7468	1	PIPE					
	2	8T-4136	3	BOLT (L=25mm)					
	3	8T-4121	9	WASHER					
	4	175-6177	1	FLANGE AS					
		175-6176	1	SEAL-O-RING (ID=56.00mm)					
	5	2H-3934	1	SEAL-O-RING (ID=98.02mm)					
Y	6	289-8194	1	FILTER GP					
	7	8T-4137	6	BOLT (L=20mm)					
	8	8T-4908	4	BOLT (L=25mm)					
	9	8T-4224	4	WASHER					
Y	10	126-2075	1	FILTER GP					
	11	8T-4194	8	BOLT (L=50mm)					
	12	095-1725	1	SEAL-O-RING (ID=154.30mm)					
	13	4I-3745	1	CAP					
	14	1P-4278	1	CLAMP					
	15	207-6403	1	PLUG					
	16	207-6404	1	WASHER					
	17	095-1608	1	SEAL-O-RING (ID=44.70mm)					
	18	1H-8278	1	SEAL-O-RING (ID=196.44mm)					
	19	8T-4223	8	WASHER					
	20	292-7461	1	SUPPORT					
	21	6V-0852	1	CAP					
	22	3J-1907	1	SEAL-O-RING (ID=11.89mm)					
	23	6V-3965	1	NIPPLE AS					
	24	8C-3446	1	VALVE					
	25	3J-7354	1	SEAL-O-RING (ID=8.92mm)					
	26	8C-3451	1	CAP					
	27	179-7536	1	COVER AS					
	28	4I-3743	1	FILLER AS					

Y—SEE SEPARATE ILLUSTRATION

H96572E 06

196-0927 TANK & FILTER GP-HYDRAULIC (2/2)

S/N CAE 04509-Up
Part of 196-0926-Page263
289-8194-Page286.01

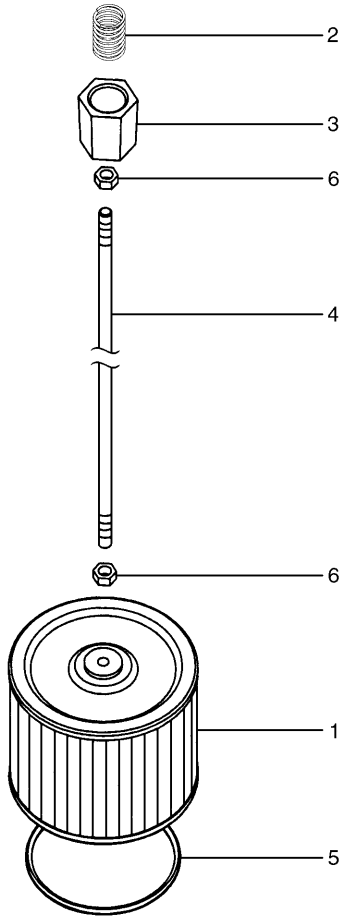

NOTE	No.	PART No.	QTY	PART NAME	NOTE	No.	PART No.	QTY	PART NAME
	1	209-6002	1	SCREEN AS					
	2	095-6639	1	SPRING					
	3	259-0918	1	GUIDE					
	4	087-5317	1	ROD					
	5	095-1552	1	SEAL-O-RING (ID=74.60mm)					
	6	8T-4133	2	NUT					

H90984E 02

170-9826 SCREEN GP

Part of 168-9526-Page265,196-0927-Page269

HYDRAULIC SYSTEM

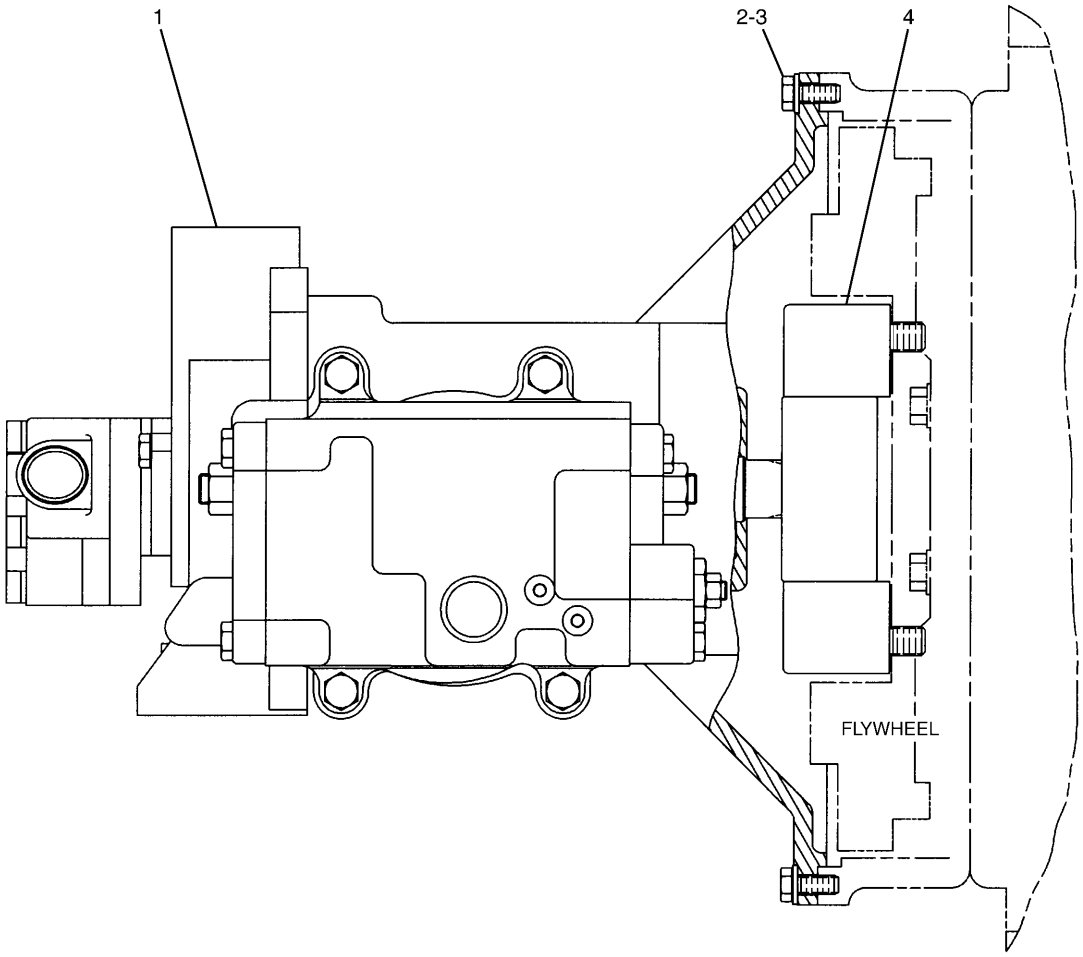

NOTE	No.	PART No.	QTY	PART NAME	NOTE	No.	PART No.	QTY	PART NAME
Y	1	173-0663	1	PUMP GP					
	2	8T-4136	12	BOLT (L=25mm)					
	3	8T-4121	12	WASHER					
Y	4	190-5846	1	COUPLING GP					

Y—SEE SEPARATE ILLUSTRATION

H81917E 02

162-6327 PUMP & MOUNTING GP

190-5846-Page275,173-0663-Page276

HYDRAULIC SYSTEM

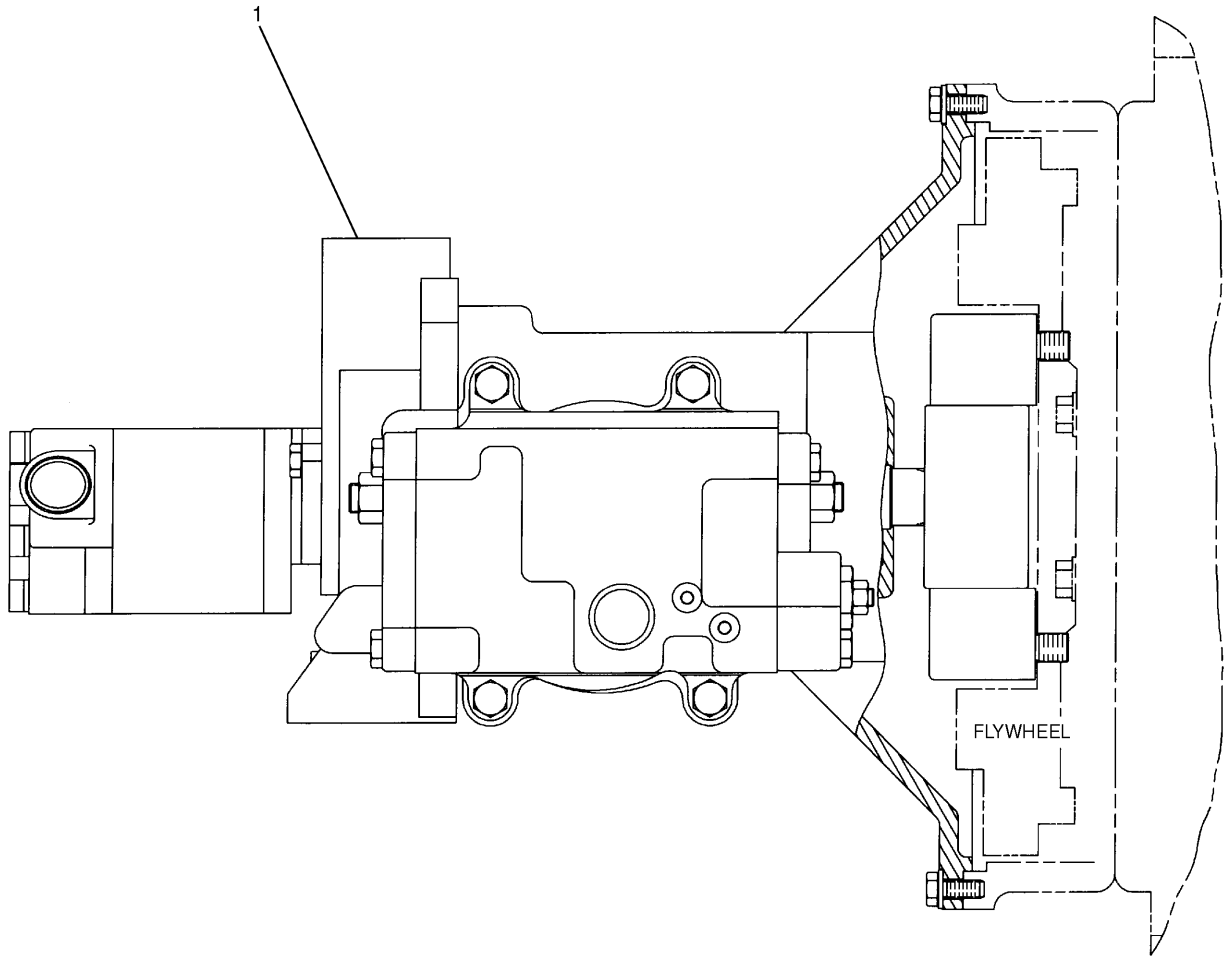

NOTE	No.	PART No.	QTY	PART NAME	NOTE	No.	PART No.	QTY	PART NAME
Y	1	183-8289	1	PUMP GP					

Y—SEE SEPARATE ILLUSTRATION

H75176E 02

183-8098 PUMP & MOUNTING GP

Part of 165-0965-Page357,151-1493-Page634,183-1476-Page635,151-1494-Page636
183-8289-Page280
An Attachment

HYDRAULIC SYSTEM

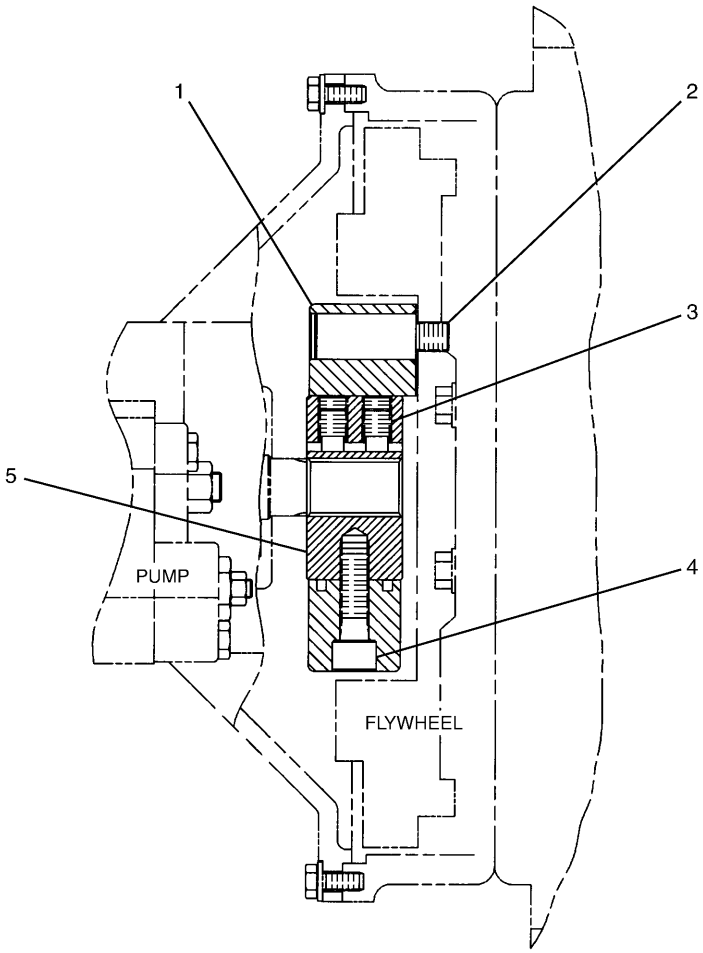

NOTE	No.	PART No.	QTY	PART NAME	NOTE	No.	PART No.	QTY	PART NAME
	1	099-0149	1	COUPLING					
	2	099-0144	4	BOLT					
	3	7Y-0466	2	SETSCREW					
	4	8T-0348	4	BOLT (L=50mm)					
	5	255-2940	1	HUB					

H91656E 01

190-5846 COUPLING GP-PUMP

Part of 162-6327-Page273

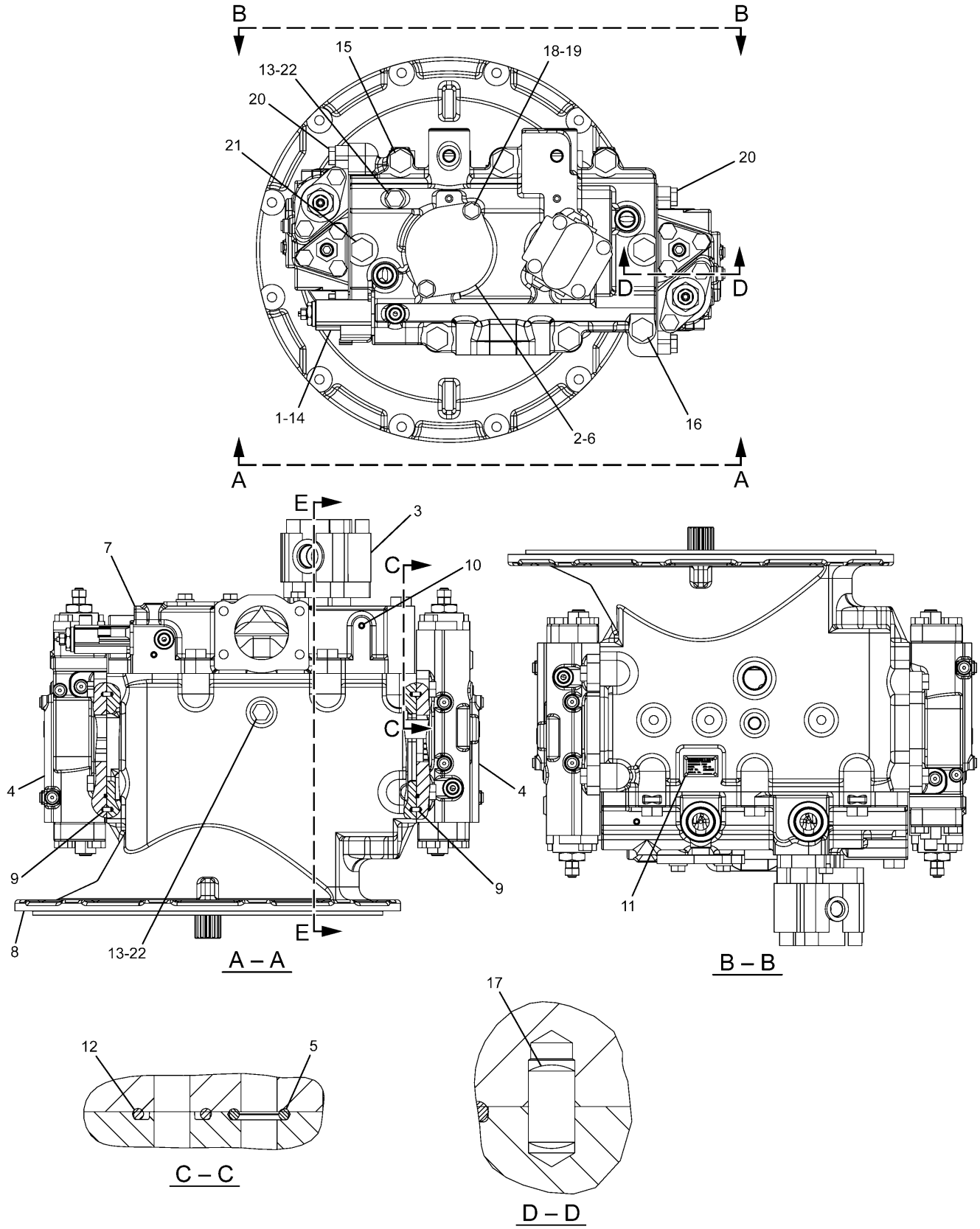

H98161E 18

173-0663 PUMP GP-MAIN HYDRAULIC (1/2)
Part of 162-6327-Page273
173-1168-Page284,111-9916-Page485

HYDRAULIC SYSTEM

NOTE	No.	PART No.	QTY	PART NAME	NOTE	No.	PART No.	QTY	PART NAME
Y	1	111-9916	1	VALVE GP					
	2	165-2804	1	FLANGE					
	3	173-1203	1	PUMP GP					
Y	4	173-1168	2	HEAD GP					
	5	199-0518	2	SEAL-O-RING (ID=6.80mm)					
	6	225-6216	1	GASKET					
	7	282-8602	1	BLOCK					
	8	282-9192	1	CASE					
	9	094-1875	4	DOWEL					
	10	094-1882	12	PLUG					
	11	095-7419	4	SCREW					
	12	189-9763	4	SEAL-O-RING (ID=9.80mm)					
	13	3J-1907	2	SEAL-O-RING (ID=11.89mm)					
	14	7I-2272	2	BOLT (L=12mm)					
	15	7X-2553	5	BOLT (L=40mm)					
	16	7X-2556	1	BOLT (L=100mm)					
	17	8C-3338	2	DOWEL					
	18	8T-4121	2	WASHER					
	19	8T-4136	2	BOLT (L=25mm)					
	20	8T-4139	8	BOLT (L=30mm)					
	21	8T-4140	2	BOLT (L=60mm)					
	22	9S-4191	2	PLUG					

Y—SEE SEPARATE ILLUSTRATION

H98161E 18

173-0663 PUMP GP-MAIN HYDRAULIC (1/2)

Part of 162-6327-Page273
173-1168-Page284,111-9916-Page485

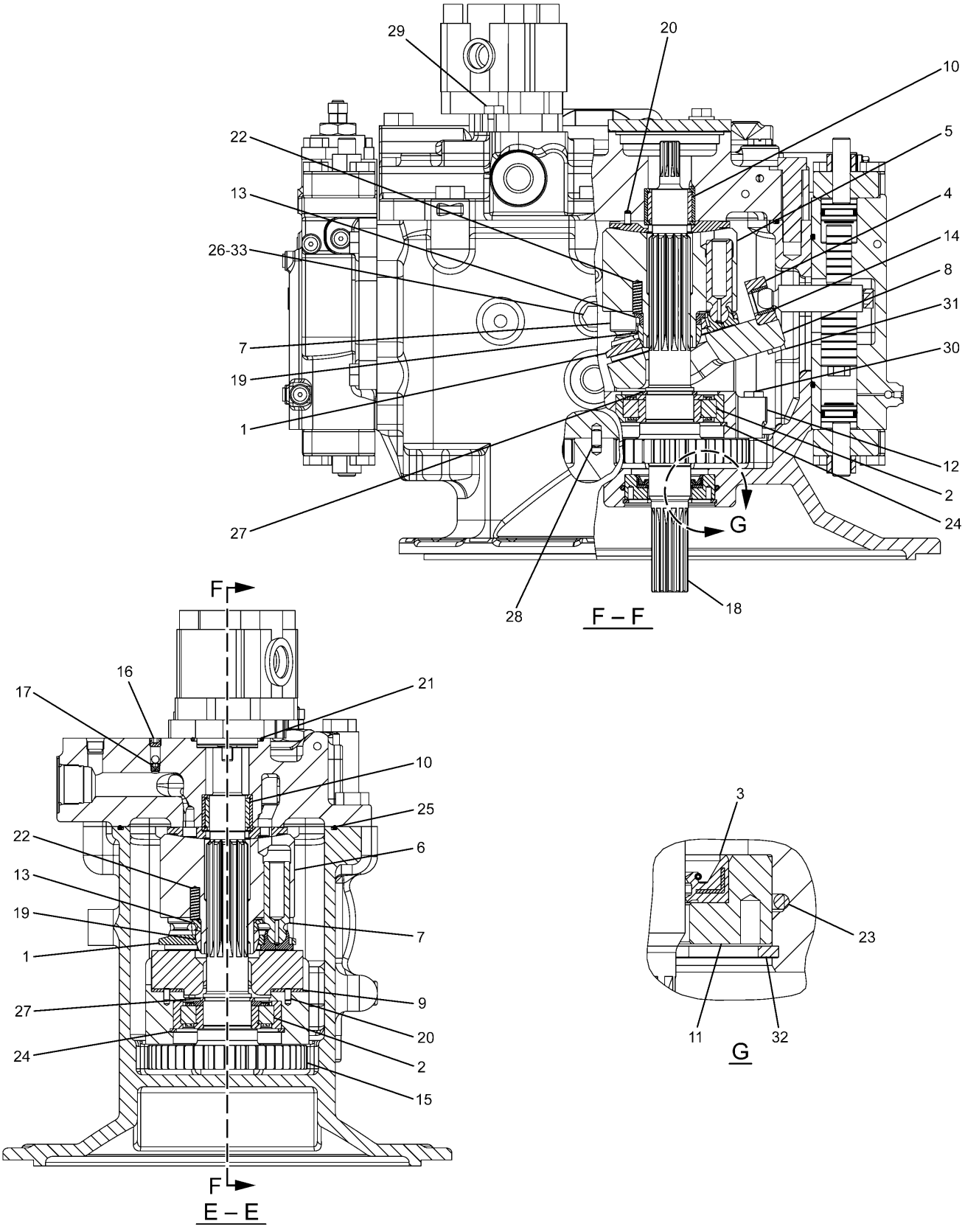

H98162E 18

173-0663 PUMP GP-MAIN HYDRAULIC (2/2)
Part of 162-6327-Page273

HYDRAULIC SYSTEM

NOTE	No.	PART No.	QTY	PART NAME	NOTE	No.	PART No.	QTY	PART NAME
	1	165-2793	2	RETAINER					
	2	165-2801	2	BEARING					
	3	165-2802	1	SEAL					
	4	165-2805	2	BLOCK					
	5	165-3838	1	BARREL AS					
	6	165-3839	1	BARREL AS					
	7	165-3847	18	PISTON AS					
	8	165-3849	2	CAM					
	9	165-3851	4	BEARING					
	10	165-3852	2	BEARING					
	11	165-3853	1	COVER					
	12	176-1026	1	PLATE					
	13	176-8131	2	SPACER					
	14	176-8132	2	BEARING					
	15	178-8802	1	SHAFT					
	16	190-4896	2	PLUG					
	17	207-2985	2	ORIFICE					
	18	222-2063	1	SHAFT					
	19	298-5732	2	RETAINER					
	20	094-1875	6	DOWEL					
	21	095-1663	1	SEAL-O-RING (ID=54.40mm)					
	22	165-2799	12	SPRING					
	23	1H-7339	1	SEAL-O-RING (ID=75.79mm)					
	24	1J-6472	2	RING					
	25	273-8320	1	SEAL-O-RING (ID=291.69mm)					
	26	3J-1907	1	SEAL-O-RING (ID=11.89mm)					
	27	6V-8144	2	RING					
	28	8C-3338	2	DOWEL					
	29	8T-4137	2	BOLT (L=20mm)					
	30	8T-4185	4	BOLT (L=50mm)					
	31	8T-7547	4	BOLT (L=30mm)					
	32	8T-9599	1	RING					
	33	9S-4191	1	PLUG					

H98162E 18

173-0663 PUMP GP-MAIN HYDRAULIC (2/2)

Part of 162-6327-Page273

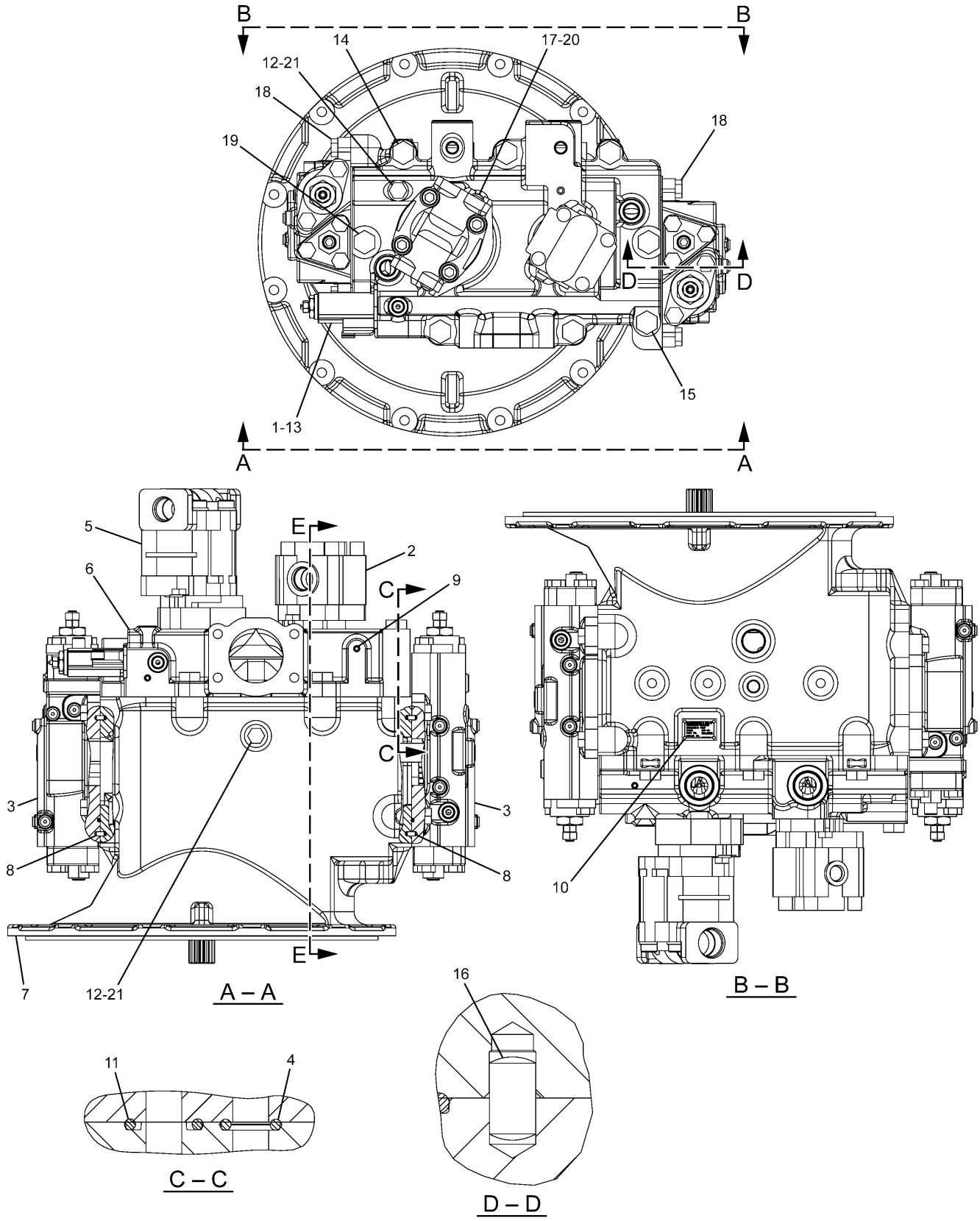

H98163E 16

183-8289 PUMP GP-MAIN HYDRAULIC (1/2)
Part of 183-8098-Page274
173-1168-Page284,111-9916-Page485
An Attachment

HYDRAULIC SYSTEM

NOTE	No.	PART No.	QTY	PART NAME	NOTE	No.	PART No.	QTY	PART NAME
Y	1	111-9916	1	VALVE GP					
	2	173-1203	1	PUMP GP					
Y	3	173-1168	2	HEAD GP					
	4	199-0518	2	SEAL-O-RING (ID=6.80mm)					
	5	218-0557	1	PUMP GP					
	6	282-8602	1	BLOCK					
	7	282-9192	1	CASE					
	8	094-1875	4	DOWEL					
	9	094-1882	12	PLUG					
	10	095-7419	4	SCREW					
	11	189-9763	4	SEAL-O-RING (ID=9.80mm)					
	12	3J-1907	2	SEAL-O-RING (ID=11.89mm)					
	13	7I-2272	2	BOLT (L=12mm)					
	14	7X-2553	5	BOLT (L=40mm)					
	15	7X-2556	1	BOLT (L=100mm)					
	16	8C-3338	2	DOWEL					
	17	8T-4121	2	WASHER					
	18	8T-4139	8	BOLT (L=30mm)					
	19	8T-4140	2	BOLT (L=60mm)					
	20	8T-6466	2	BOLT (L=60mm)					
	21	9S-4191	2	PLUG					

Y—SEE SEPARATE ILLUSTRATION

H98163E 16

183-8289 PUMP GP-MAIN HYDRAULIC (1/2)

Part of 183-8098-Page274
173-1168-Page284,111-9916-Page485
An Attachment

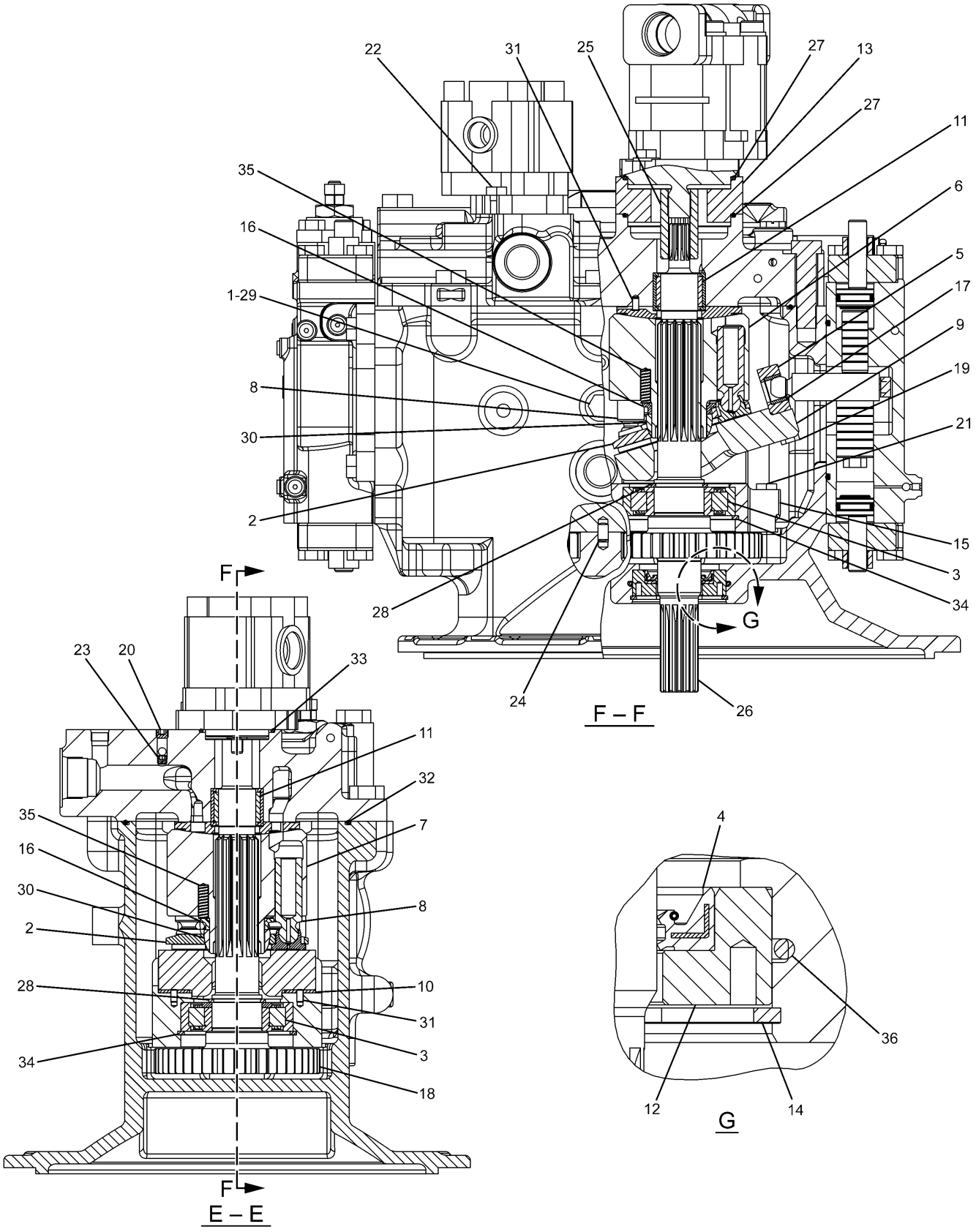

H98164E 16

183-8289 PUMP GP-MAIN HYDRAULIC (2/2)
Part of 183-8098-Page274
An Attachment

HYDRAULIC SYSTEM

NOTE	No.	PART No.	QTY	PART NAME	NOTE	No.	PART No.	QTY	PART NAME
	1	9S-4191	1	PLUG					
	2	165-2793	2	RETAINER					
	3	165-2801	2	BEARING					
	4	165-2802	1	SEAL					
	5	165-2805	2	BLOCK					
	6	165-3838	1	BARREL AS					
	7	165-3839	1	BARREL AS					
	8	165-3847	18	PISTON AS					
	9	165-3849	2	CAM					
	10	165-3851	4	BEARING					
	11	165-3852	2	BEARING					
	12	165-3853	1	COVER					
	13	170-6738	1	SPACER					
	14	8T-9599	1	RING					
	15	176-1026	1	PLATE					
	16	176-8131	2	SPACER					
	17	176-8132	2	BEARING					
	18	178-8802	1	SHAFT					
	19	8T-7547	4	BOLT (L=30mm)					
	20	190-4896	2	PLUG					
	21	8T-4185	4	BOLT (L=50mm)					
	22	8T-4137	2	BOLT (L=20mm)					
	23	207-2985	2	ORIFICE					
	24	8C-3338	2	DOWEL					
	25	222-2062	1	COUPLING					
	26	222-2063	1	SHAFT					
	27	273-8315	2	SEAL-O-RING (ID=84.40mm)					
	28	6V-8144	2	RING					
	29	3J-1907	1	SEAL-O-RING (ID=11.89mm)					
	30	298-5732	2	RETAINER					
	31	094-1875	6	DOWEL					
	32	273-8320	1	SEAL-O-RING (ID=291.69mm)					
	33	095-1663	1	SEAL-O-RING (ID=54.40mm)					
	34	1J-6472	2	RING					
	35	165-2799	12	SPRING					
	36	1H-7339	1	SEAL-O-RING (ID=75.79mm)					

H98164E 16

183-8289 PUMP GP-MAIN HYDRAULIC (2/2)

Part of 183-8098-Page274
An Attachment

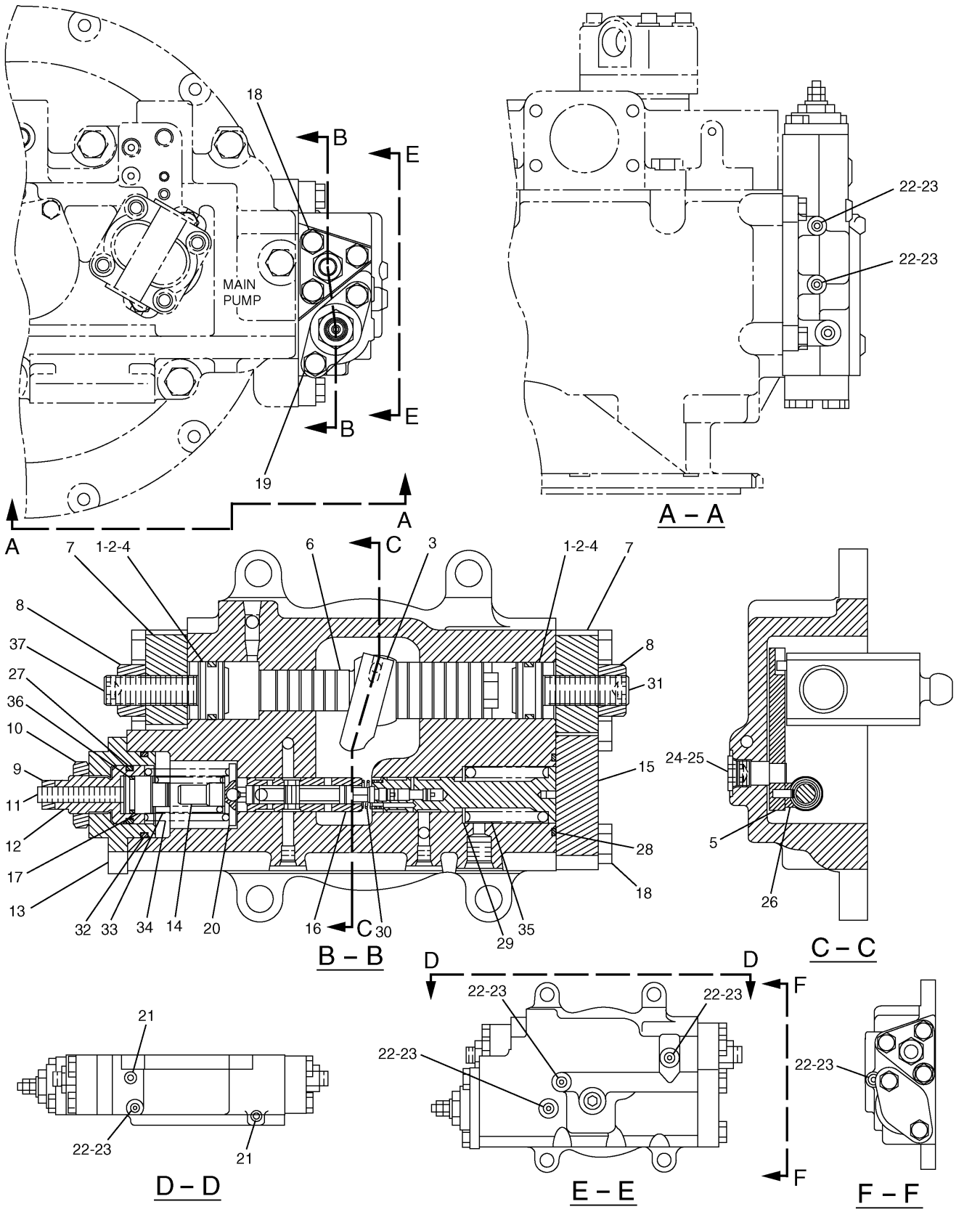

173-1168 HEAD GP-PUMP CONTROL
S/N CAE 01201-04457
Part of 173-0663-Page277,183-8289-Page281

HYDRAULIC SYSTEM

NOTE	No.	PART No.	QTY	PART NAME	NOTE	No.	PART No.	QTY	PART NAME
	1	190-7674	2	SEAL-O-RING (ID=23.70mm)					
	2	173-3389	2	STOPPER					
	3	192-2376	1	PIN AS					
		192-0573	1	PIN					
	4	185-0347	2	RING					
	5	192-2374	1	LEVER AS					
		094-1875	1	DOWEL					
	6	174-7213	1	PISTON					
	7	174-7220	2	COVER					
	8	8T-4132	2	NUT					
	9	200-3254	1	NUT					
	10	200-3255	1	NUT					
	11	225-0417	1	SETSCREW					
	12	173-3387	1	ADJUSTER					
	13	174-7222	1	COVER					
	14	176-8133	1	GUIDE					
	15	174-7221	1	COVER					
	16	176-0578	1	SPOOL AS					
	17	185-0172	1	RETAINER					
	18	8T-4183	8	BOLT (L=40mm)					
	19	8T-4192	2	BOLT (L=25mm)					
	20	3D-2891	1	BALL					
	21	190-4896	2	PLUG					
	22	9S-8001	7	PLUG					
	23	4J-7533	7	SEAL-O-RING (ID=6.07mm)					
	24	176-0577	1	PIN					
	25	3J-1907	1	SEAL-O-RING (ID=11.89mm)					
	26	094-1881	1	PLATE					
	27	273-8317	1	SEAL-O-RING (ID=24.70mm)					
	28	6V-5391	1	SEAL-O-RING (ID=37.77mm)					
B	29	099-3669	2	SHIM (T=1.00mm)					
B		099-6109	2	SHIM (T=1.05mm)					
B		099-6110	2	SHIM (T=1.10mm)					
B		099-6111	2	SHIM (T=1.15mm)					
B		099-6112	2	SHIM (T=1.20mm)					
B		099-6113	2	SHIM (T=1.25mm)					
B		099-6115	2	SHIM (T=1.30mm)					
	30	099-3671	1	SPRING					
	31	225-0225	1	SETSCREW					
	32	273-8318	1	SEAL-O-RING (ID=38.70mm)					
	33	173-1170	1	SPRING					
	34	173-1169	1	SPRING					
	35	184-2565	1	SPRING					
	36	273-8316	1	SEAL-O-RING (ID=15.80mm)					
	37	225-0224	1	SETSCREW					

B—USE AS REQUIRED

H96288E 18

173-1168 HEAD GP-PUMP CONTROL

S/N CAE 01201-04457

Part of 173-0663-Page277,183-8289-Page281

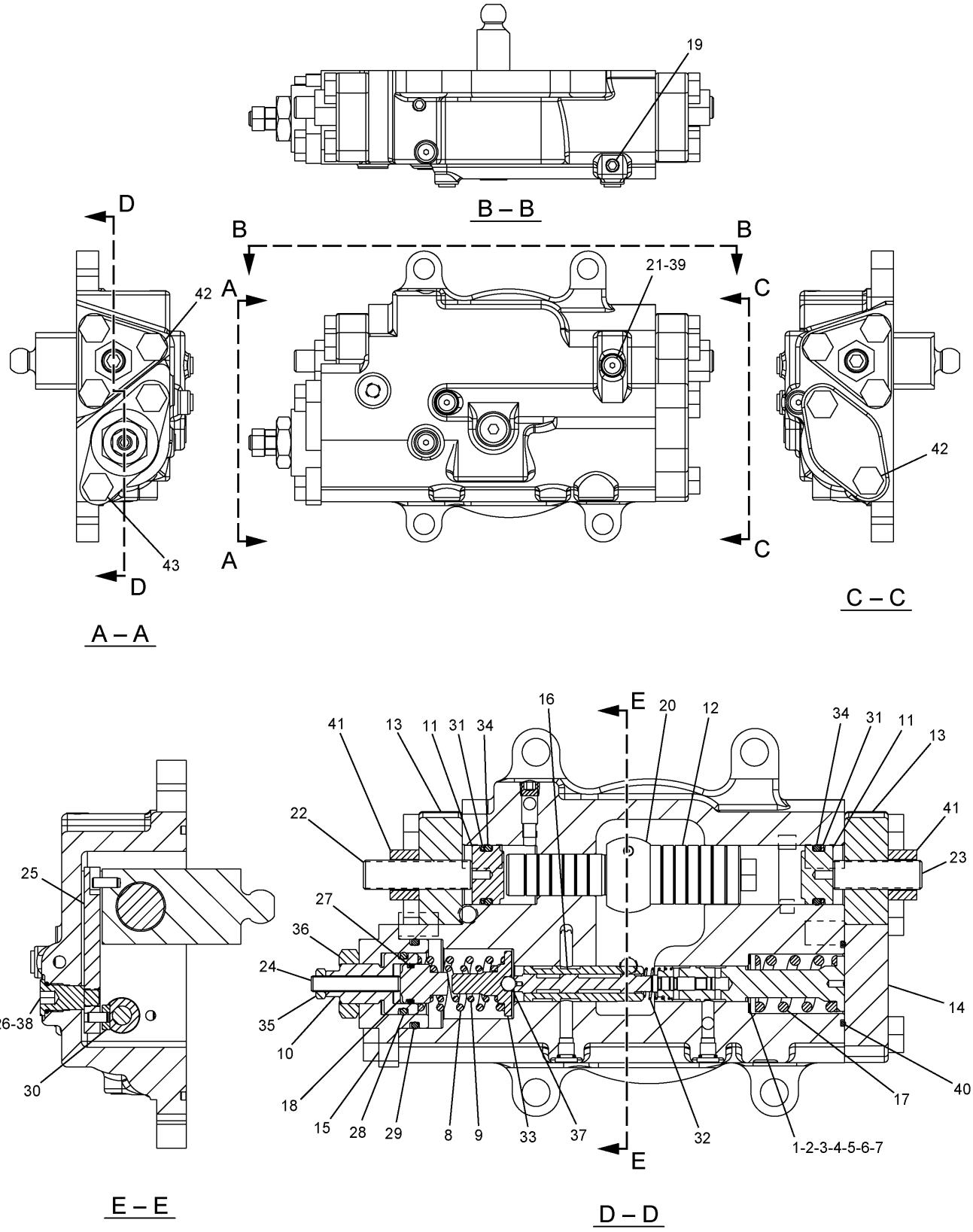

H96562E 20

173-1168 HEAD GP-PUMP CONTROL
S/N CAE 04458-04498
Part of 173-0663-Page277,183-8289-Page281

HYDRAULIC SYSTEM

NOTE	No.	PART No.	QTY	PART NAME	NOTE	No.	PART No.	QTY	PART NAME
B	1	099-3669	2	SHIM (T=1.00mm)					
B	2	099-6109	2	SHIM (T=1.05mm)					
B	3	099-6110	2	SHIM (T=1.10mm)					
B	4	099-6111	2	SHIM (T=1.15mm)					
B	5	099-6112	2	SHIM (T=1.20mm)					
B	6	099-6113	2	SHIM (T=1.25mm)					
B	7	099-6115	2	SHIM (T=1.30mm)					
	8	173-1169	1	SPRING					
	9	173-1170	1	SPRING					
	10	173-3387	1	ADJUSTER					
	11	173-3389	2	STOPPER					
	12	174-7213	1	PISTON					
	13	174-7220	2	COVER					
	14	174-7221	1	COVER					
	15	174-7222	1	COVER					
	16	176-0578	1	SPOOL AS					
	17	184-2565	1	SPRING					
	18	185-0172	1	RETAINER					
	19	190-4896	2	PLUG					
	20	192-2376	1	PIN AS					
	21	9S-8001	7	PLUG					
	22	225-0224	1	SETSCREW					
	23	225-0225	1	SETSCREW					
	24	225-0417	1	SETSCREW					
	25	268-4201	1	LEVER AS					
	26	268-4203	1	PIN					
	27	273-8316	1	SEAL-O-RING (ID=15.80mm)					
	28	273-8317	1	SEAL-O-RING (ID=24.70mm)					
	29	273-8318	1	SEAL-O-RING (ID=38.70mm)					
	30	094-1881	1	PLATE					
	31	095-1788	2	RING					
	32	099-3671	1	SPRING					
	33	185-0169	1	GUIDE					
	34	190-7674	2	SEAL-O-RING (ID=23.70mm)					
	35	200-3254	1	NUT					
	36	200-3255	1	NUT					
	37	3D-2891	1	BALL					
	38	3J-1907	1	SEAL-O-RING (ID=11.89mm)					
	39	4J-7533	7	SEAL-O-RING (ID=6.07mm)					
	40	6V-5391	1	SEAL-O-RING (ID=37.77mm)					
	41	8T-4132	2	NUT					
	42	8T-4183	8	BOLT (L=40mm)					
	43	8T-4192	2	BOLT (L=25mm)					

B—USE AS REQUIRED

H96562E 20

173-1168 HEAD GP-PUMP CONTROL

S/N CAE 04458-04498

Part of 173-0663-Page277,183-8289-Page281

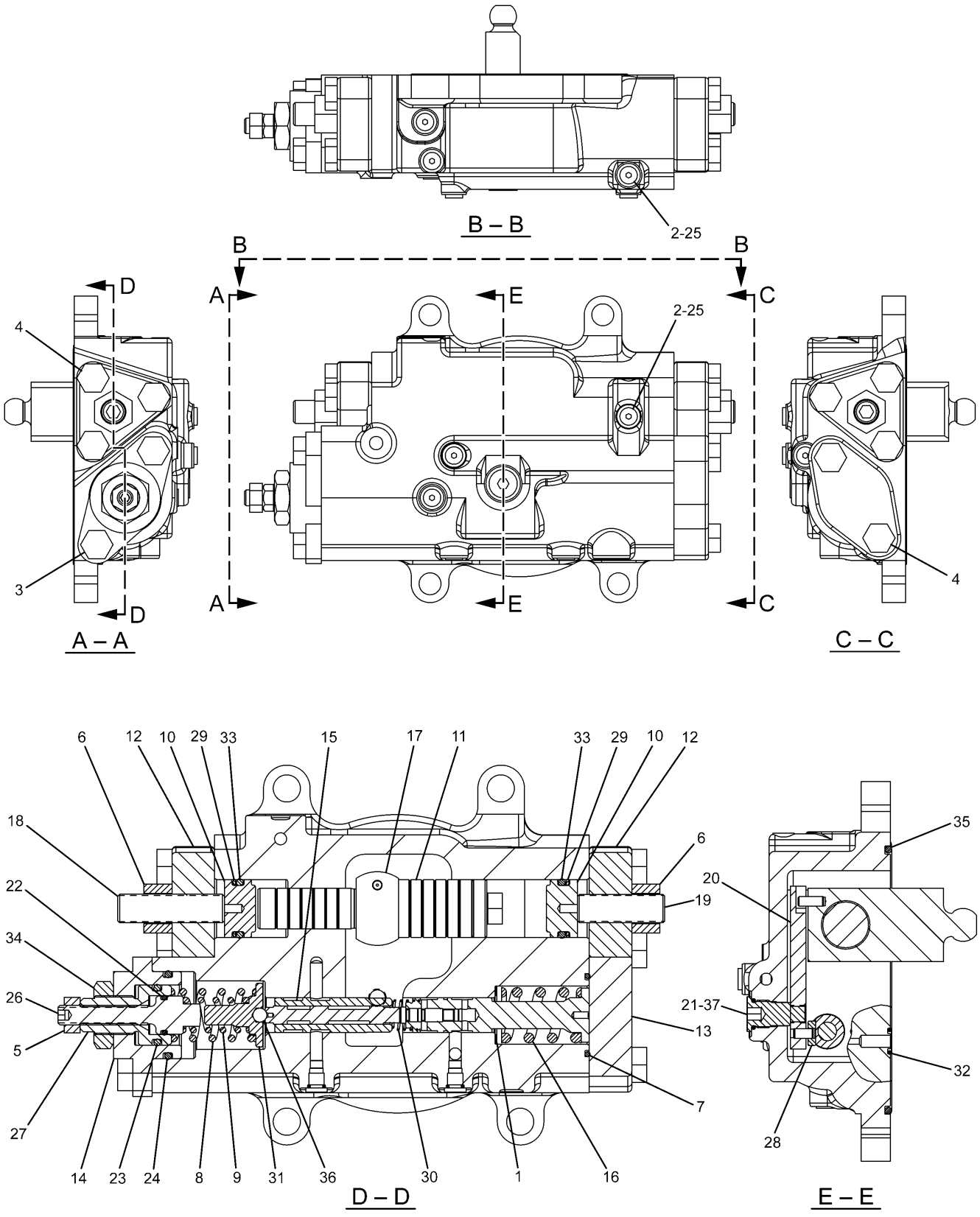

H97655E 25

173-1168 HEAD GP-PUMP CONTROL

S/N CAE 04497-Up

Part of 173-0663-Page277,183-8289-Page281

HYDRAULIC SYSTEM

NOTE	No.	PART No.	QTY	PART NAME	NOTE	No.	PART No.	QTY	PART NAME
B	1	099-3669	2	SHIM (T=1.00mm)					
B		099-6109	2	SHIM (T=1.05mm)					
B		099-6110	2	SHIM (T=1.10mm)					
B		099-6111	2	SHIM (T=1.15mm)					
B		099-6112	2	SHIM (T=1.20mm)					
B		099-6113	2	SHIM (T=1.25mm)					
B		099-6115	2	SHIM (T=1.30mm)					
	2	9S-8001	9	PLUG					
	3	8T-4192	2	BOLT (L=25mm)					
	4	8T-4183	8	BOLT (L=40mm)					
	5	8T-4133	1	NUT					
	6	8T-4132	2	NUT					
	7	6V-5391	1	SEAL-O-RING (ID=37.77mm)					
	8	173-1169	1	SPRING					
	9	173-1170	1	SPRING					
	10	173-3389	2	STOPPER					
	11	174-7213	1	PISTON					
	12	174-7220	2	COVER					
	13	174-7221	1	COVER					
	14	174-7222	1	COVER					
	15	176-0578	1	SPOOL AS					
	16	184-2565	1	SPRING					
	17	192-2376	1	PIN AS					
		192-0573	1	PIN					
	18	225-0224	1	SETSCREW					
	19	225-0225	1	SETSCREW					
	20	268-4201	1	LEVER AS					
		094-1875	1	DOWEL					
		268-4202	1	LEVER					
	21	268-4203	1	PIN					
	22	273-8316	1	SEAL-O-RING (ID=15.80mm)					
	23	273-8317	1	SEAL-O-RING (ID=24.70mm)					
	24	273-8318	1	SEAL-O-RING (ID=38.70mm)					
	25	4J-7533	9	SEAL-O-RING (ID=6.07mm)					
	26	301-6874	1	RETAINER					
	27	301-8294	1	ADJUSTER					
	28	094-1881	1	PLATE					
	29	095-1788	2	RING					
	30	099-3671	1	SPRING					
	31	185-0169	1	GUIDE					
	32	189-9763	3	SEAL-O-RING (ID=9.80mm)					
	33	190-7674	2	SEAL-O-RING (ID=23.70mm)					
	34	200-3255	1	NUT					
	35	2H-9247	1	SEAL-O-RING (ID=132.94mm)					
	36	3D-2891	1	BALL					
	37	3J-1907	1	SEAL-O-RING (ID=11.89mm)					

B—USE AS REQUIRED

H97655E 25

173-1168 HEAD GP-PUMP CONTROL

S/N CAE 04497-Up

Part of 173-0663-Page277,183-8289-Page281

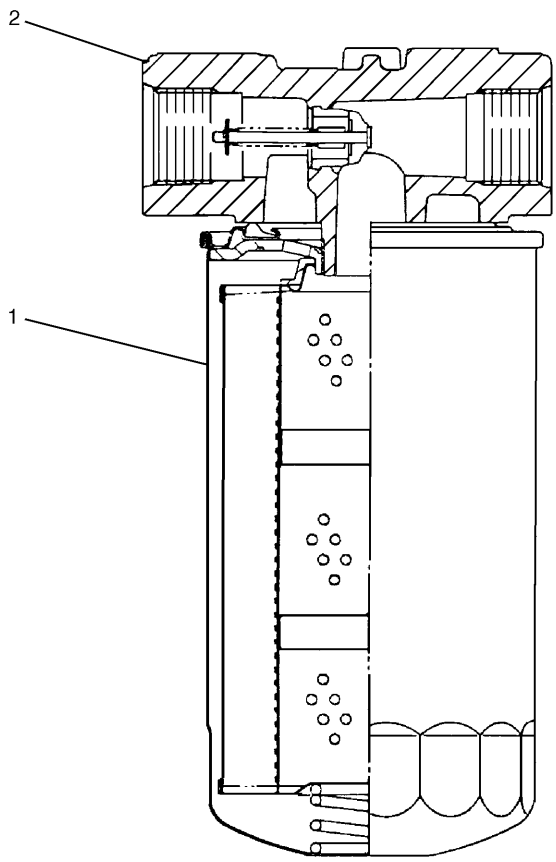

NOTE	No.	PART No.	QTY	PART NAME	NOTE	No.	PART No.	QTY	PART NAME
	1	093-7521	1	FILTER					
	2	126-2076	1	HEAD AS					

H84895E 01

126-2075 FILTER GP-HYDRAULIC

Basic
S/N CAE 01201-04508
Part of 168-9526-Page267,196-0927-Page271

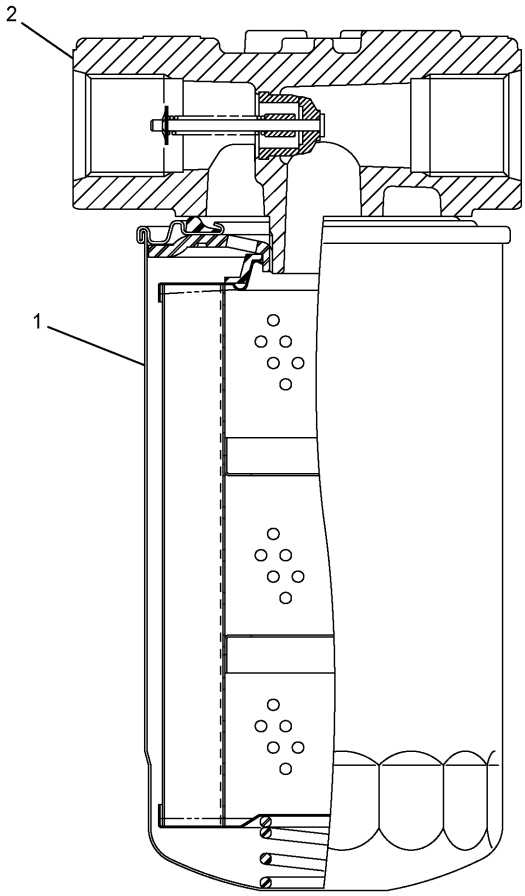

NOTE	No.	PART No.	QTY	PART NAME	NOTE	No.	PART No.	QTY	PART NAME
	1	093-7521	1	FILTER					
	2	289-8195	1	HEAD AS					

H94248E 00

289-8194 FILTER GP-HYDRAULIC

S/N CAE 04509-Up
Part of 196-0927-Page271.08

MEMORANDA

HYDRAULIC SYSTEM

Consists of :

			Page
1	188-2084	FILTER GP-HYDRAULIC.....	287.01
		-OR-	
1	289-7836	FILTER GP-HYDRAULIC.....	287.02

H93564E 07

158-8987 FILTER GP-HYDRAULIC

Part of 168-9526-Page265,196-0927-Page269

HYDRAULIC SYSTEM

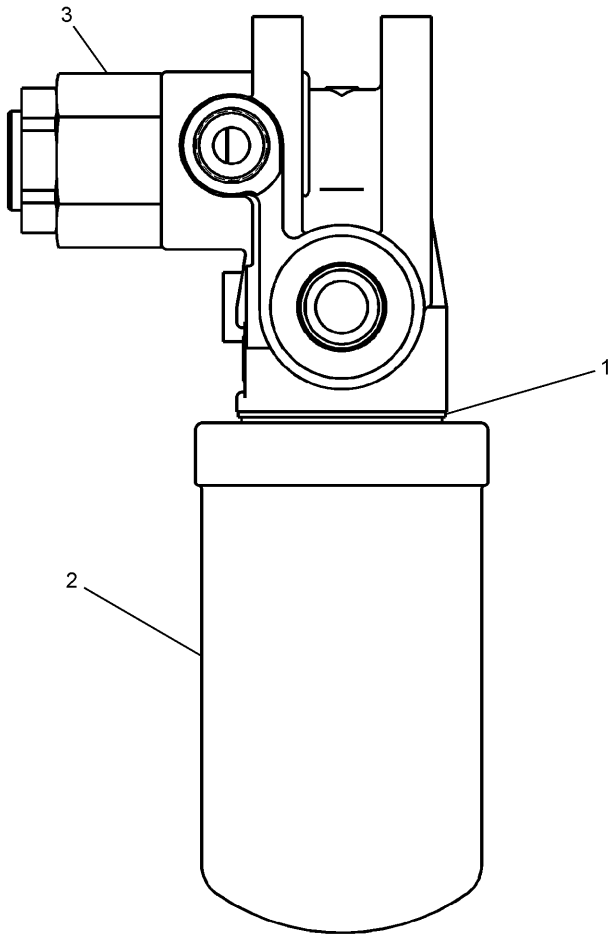

NOTE	No.	PART No.	QTY	PART NAME	NOTE	No.	PART No.	QTY	PART NAME
	1	103-8236	1	RING					
	2	126-1813	1	FILTER AS					
Y	3	215-4909	1	VALVE GP					

Y—SEE SEPARATE ILLUSTRATION

H93558E 04

188-2084 FILTER GP-HYDRAULIC

Part of 158-8987-Page287
215-4909-Page477

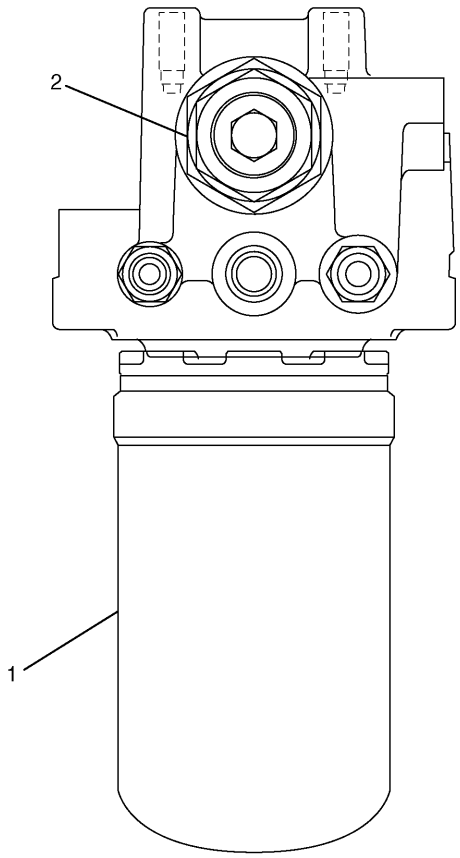

NOTE	No.	PART No.	QTY	PART NAME	NOTE	No.	PART No.	QTY	PART NAME
	1	5I-8670	1	FILTER AS					
Y	2	215-4909	1	VALVE GP					

Y—SEE SEPARATE ILLUSTRATION

H95450E 00

289-7836 FILTER GP-HYDRAULIC

Part of 158-8987-Page287
215-4909-Page477

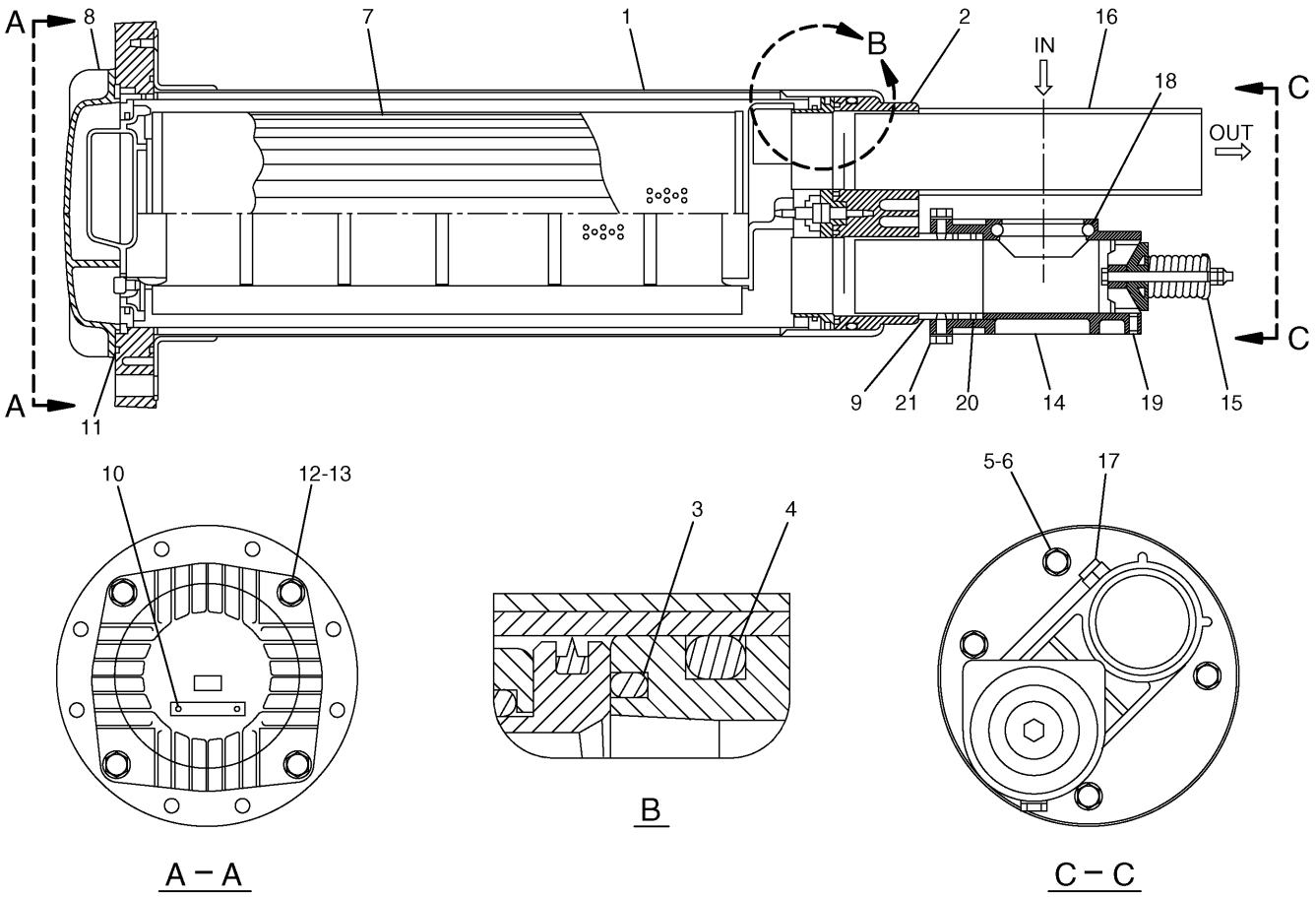

NOTE	No.	PART No.	QTY	PART NAME	NOTE	No.	PART No.	QTY	PART NAME
Y	1	177-2620	1	HOUSING GP		21	187-7171	2	BOLT (L=14mm)
Y	2	177-2617	1	BLOCK GP					
	3	177-2625	1	PACKING					
	4	095-1682	1	SEAL-O-RING (ID=149.30mm)					
	5	8T-4189	4	BOLT (L=20mm)					
	6	8T-4224	4	WASHER					
Y	7	173-3511	1	FILTER GP					
	8	173-3510	1	COVER					
	9	175-6175	1	PIPE					
	10	116-3522	2	SCREW					
	11	123-2003	1	SEAL-O-RING (ID=185.00mm)					
	12	8T-4184	4	BOLT (L=45mm)					
	13	8T-4223	4	WASHER					
	14	175-6178	1	HOUSING					
	15	177-2623	1	VALVE AS					
	16	175-6174	1	PIPE					
	17	8T-4970	2	BOLT (L=14mm)					
	18	175-6176	1	SEAL-O-RING (ID=56.00mm)					
	19	6V-8932	1	SCREW					
	20	095-1663	2	SEAL-O-RING (ID=54.40mm)					

Y—SEE SEPARATE ILLUSTRATION

H77432E 03

173-3434 FILTER GP-HYDRAULIC

S/N CAE 01201-02264
Part of 168-9526-Page267
173-3511-Page289,177-2617-Page292,177-2620-Page293

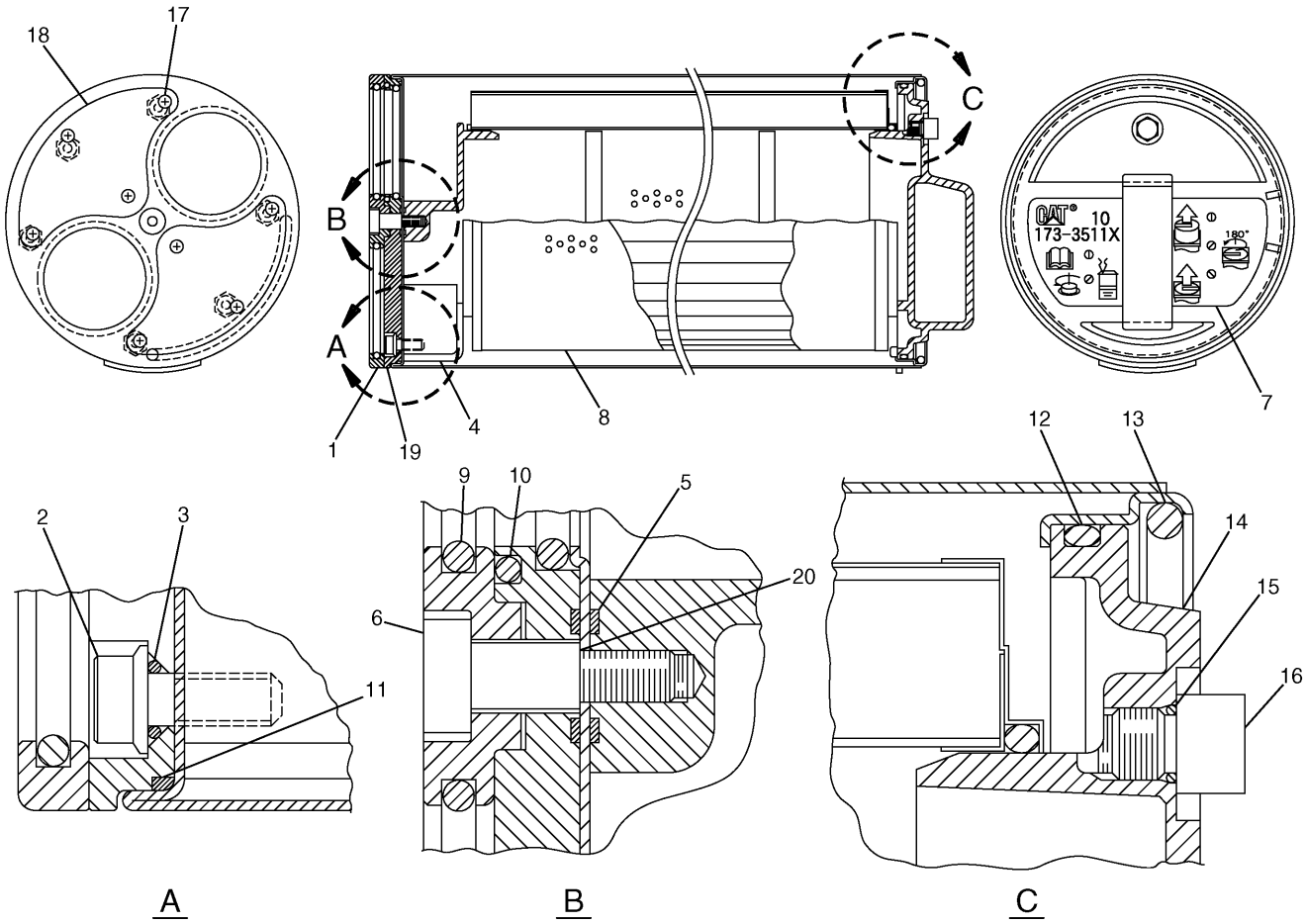

NOTE	No.	PART No.	QTY	PART NAME	NOTE	No.	PART No.	QTY	PART NAME
	1	204-2762	1	PLATE					THE FOLLOWING REPAIR
J	2	173-3529	6	BOLT (L=15mm)					KIT IS AVAILABLE:
J	3	3T-7528	6	SEAL-O-RING (ID=5.80mm)			201-9299	1	SERVICE KIT
	4	173-3513	1	BASE					(INCLUDES PARTS MARKED J)
J	5	3E-4297	2	SEAL-O-RING (ID=10.00mm)					
	6	137-3626	1	BOLT					
	7	173-3508	1	FILM (INSTRUCTION)					
	8	126-2081	1	ELEMENT					
J	9	137-3623	4	SEAL-O-RING (ID=55.60mm)					
J	10	6V-7658	2	SEAL-O-RING (ID=59.40mm)					
J	11	177-2553	1	SEAL-O-RING (ID=149.50mm)					
J	12	095-1681	1	SEAL-O-RING (ID=144.40mm)					
	13	173-3515	1	RING					
	14	173-3516	1	HANDLE					
J	15	4J-7533	1	SEAL-O-RING (ID=6.07mm)					
J	16	9S-4180	1	PLUG					
J	17	137-3624	8	SCREW					
J	18	137-3625	2	PAD					
	19	173-3517	1	PLATE					
J	20	137-3628	1	SHIM (T=0.10mm)					

H77433E 02

173-3511 FILTER GP-HYDRAULIC

S/N CAE 01201-02264
Part of 173-3434-Page288

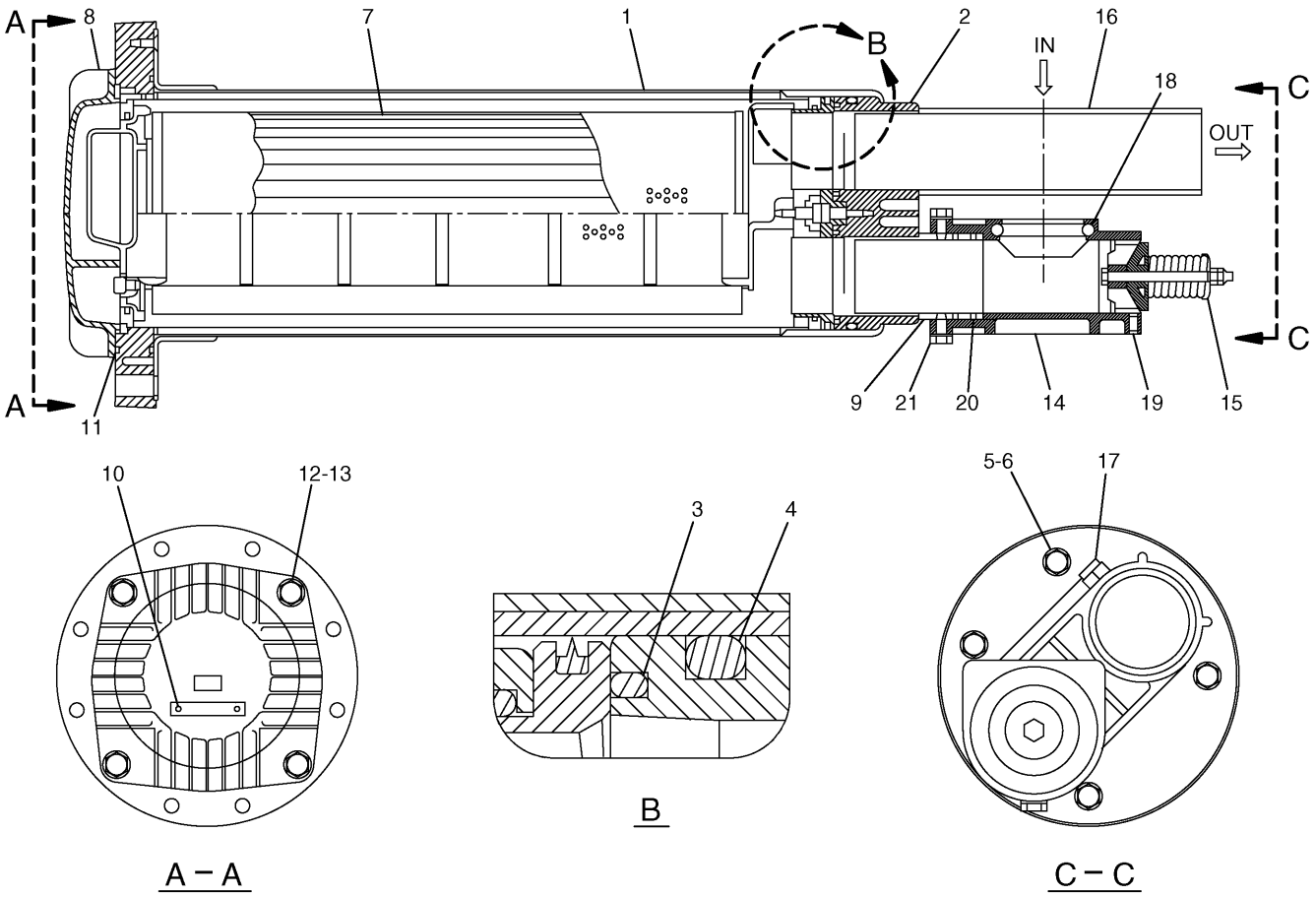

NOTE	No.	PART No.	QTY	PART NAME	NOTE	No.	PART No.	QTY	PART NAME
Y	1	177-2620	1	HOUSING GP		21	187-7171	2	BOLT (L=14mm)
Y	2	177-2617	1	BLOCK GP					
	3	177-2625	1	PACKING					
	4	095-1682	1	SEAL-O-RING (ID=149.30mm)					
	5	8T-4189	4	BOLT (L=20mm)					
	6	8T-4224	4	WASHER					
Y	7	188-4142	1	FILTER GP					
	8	173-3510	1	COVER					
	9	175-6175	1	PIPE					
	10	116-3522	2	SCREW					
	11	123-2003	1	SEAL-O-RING (ID=185.00mm)					
	12	8T-4184	4	BOLT (L=45mm)					
	13	8T-4223	4	WASHER					
	14	175-6178	1	HOUSING					
	15	177-2623	1	VALVE AS					
	16	175-6174	1	PIPE					
	17	8T-4970	2	BOLT (L=14mm)					
	18	175-6176	1	SEAL-O-RING (ID=56.00mm)					
	19	6V-8932	1	SCREW					
	20	095-1663	2	SEAL-O-RING (ID=54.40mm)					

Y—SEE SEPARATE ILLUSTRATION

H77562E 02

188-4145 FILTER GP-HYDRAULIC

Part of 196-0927-Page271
188-4142-Page291,177-2617-Page292,177-2620-Page293

HYDRAULIC SYSTEM

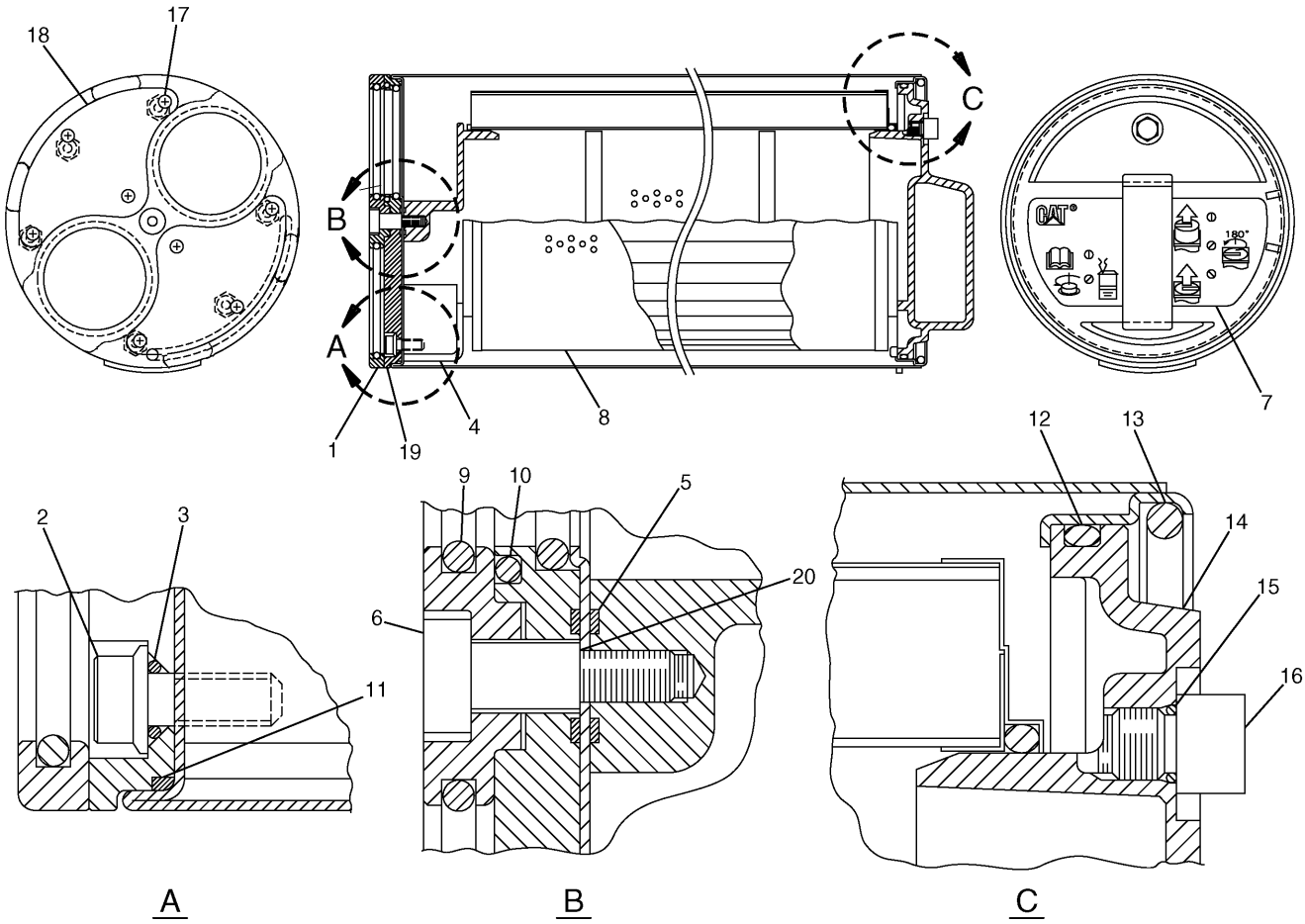

NOTE	No.	PART No.	QTY	PART NAME	NOTE	No.	PART No.	QTY	PART NAME
	1	204-2762	1	PLATE					THE FOLLOWING REPAIR
J	2	173-3529	6	BOLT (L=15mm)					KIT IS AVAILABLE:
J	3	3T-7528	6	SEAL-O-RING (ID=5.80mm)			201-9299	1	SERVICE KIT
	4	173-3513	1	BASE					(INCLUDES PARTS MARKED J)
J	5	3E-4297	2	SEAL-O-RING (ID=10.00mm)					
	6	137-3626	1	BOLT					
	7	188-4143	1	FILM (INSTRUCTION)					
	8	179-9806	1	ELEMENT					
J	9	137-3623	4	SEAL-O-RING (ID=55.60mm)					
J	10	6V-7658	2	SEAL-O-RING (ID=59.40mm)					
J	11	177-2553	1	SEAL-O-RING (ID=149.50mm)					
J	12	095-1681	1	SEAL-O-RING (ID=144.40mm)					
	13	173-3515	1	RING					
	14	173-3516	1	HANDLE					
J	15	4J-7533	1	SEAL-O-RING (ID=6.07mm)					
J	16	9S-4180	1	PLUG					
J	17	137-3624	8	SCREW					
J	18	137-3625	2	PAD					
	19	173-3517	1	PLATE					
J	20	137-3628	1	SHIM (T=0.10mm)					

H77561E 02

188-4142 FILTER GP-HYDRAULIC

Part of 188-4145-Page290

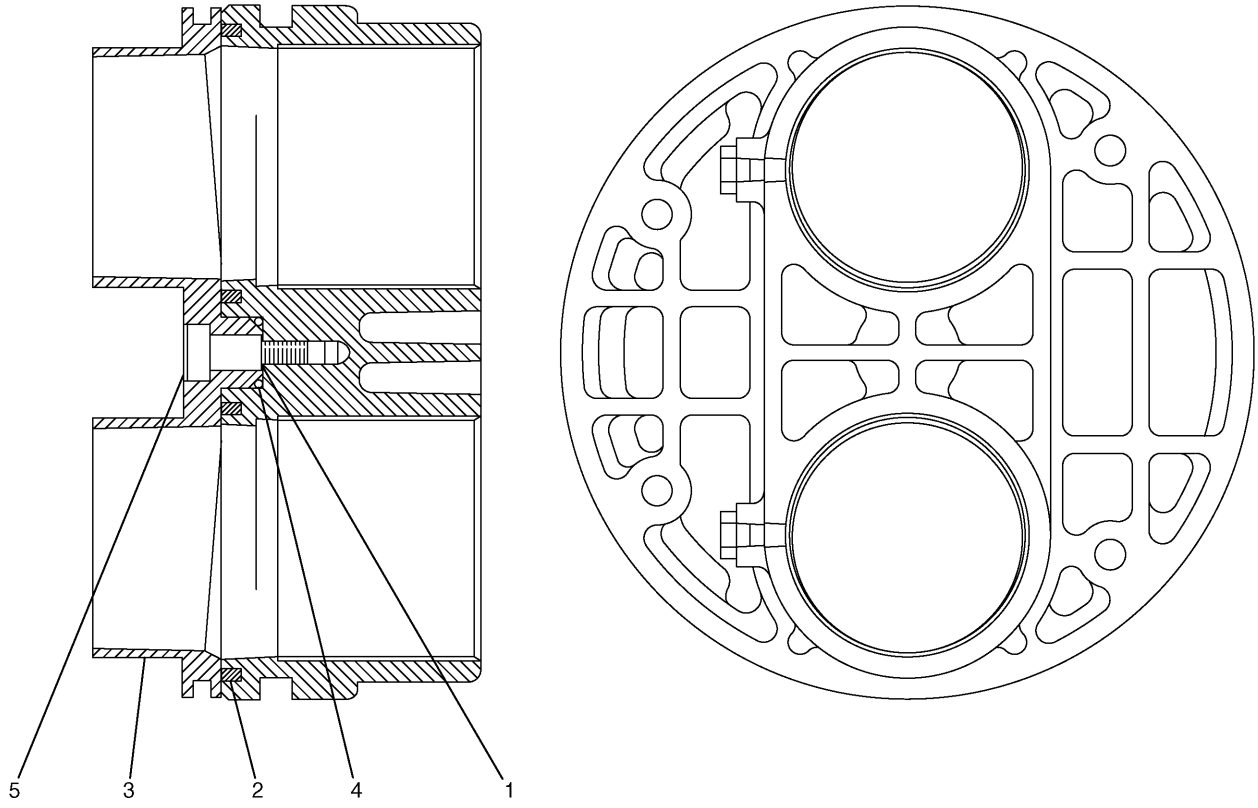

NOTE	No.	PART No.	QTY	PART NAME	NOTE	No.	PART No.	QTY	PART NAME
	1	137-3628	1	SHIM (T=0.10mm)					
	2	177-2619	2	PACKING					
	3	179-9618	1	PLATE					
	4	5L-4758	1	SEAL-O-RING (ID=14.00mm)					
	5	137-3626	1	BOLT					

H68479E 00

177-2617 BLOCK GP-HYDRAULIC

Part of 173-3434-Page288,188-4145-Page290

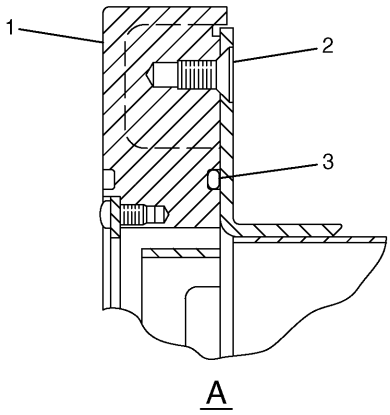

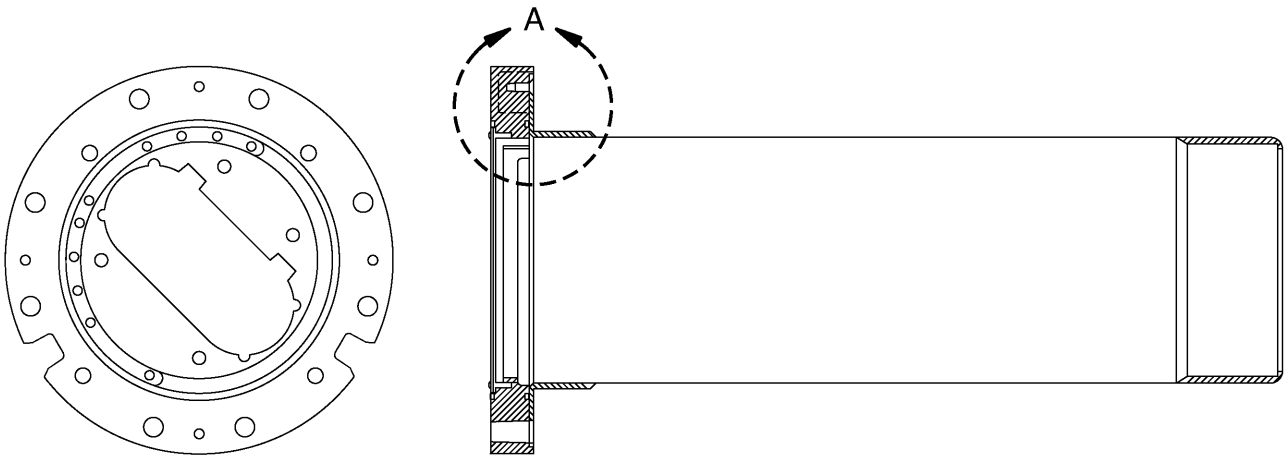

NOTE	No.	PART No.	QTY	PART NAME	NOTE	No.	PART No.	QTY	PART NAME
	1	177-2621	1	FLANGE AS					
	2	095-0757	4	SCREW					
	3	123-2003	1	SEAL-O-RING (ID=185.00mm)					

H71924E 01

177-2620 HOUSING GP-FILTER

Part of 173-3434-Page288,188-4145-Page290

Consists of :

Page

1	3K-0360	SEAL-O-RING (ID=16.36mm)
1	087-4456	ACCUMULATOR GP

H69979E 00

164-6981 ACCUMULATOR GP

Part of 168-9538-Page363

Consists of :

			Page
1	170-9834	CYLINDER & SEAL GP-BOOM	298
1	179-7590	LINES GP-BOOM CYLINDER	310

H71501E 02

170-9831 CYLINDER & LINES GP-BOOM
Part of 151-1487-Page628
An Attachment

Consists of :

			Page
1	170-9834	CYLINDER & SEAL GP-BOOM	298
1	179-7593	LINES GP-BOOM CYLINDER	311

H71502E 02

170-9832 CYLINDER & LINES GP-BOOM
Part of 151-1487-Page628
An Attachment

Consists of :

			Page
1	194-8311	CYLINDER & SEAL GP-STICK	299
1	194-8989	LINES GP-STICK CYLINDER	314

H76763E 01

194-8310 CYLINDER & LINES GP-STICK

S/N CAE 01201-(T04.05)
Part of 151-1487-Page628
An Attachment

Consists of :

			Page
1	179-7598	LINES GP-BUCKET CYLINDER	316
1	170-9803	CYLINDER & SEAL GP-BUCKET	300

HA2983E 02

165-9424 CYLINDER & LINES GP-BUCKET

S/N CAE 01201-02264
Part of 151-1491-Page631,194-8960-Page632
An Attachment

Consists of :

			Page
1	251-2893	CYLINDER & SEAL GP-STICK	299.01
1	194-8989	LINES GP-STICK CYLINDER	314

H87135E 02

194-8310 CYLINDER & LINES GP-STICK

S/N CAE (T04.06)-Up
Part of 151-1487-Page628
An Attachment

Consists of :

			Page
1	248-7854	CYLINDER & SEAL GP-BUCKET	300A
1	179-7598	LINES GP-BUCKET CYLINDER	316

H87134E 00

248-7866 CYLINDER & LINES GP-BUCKET

S/N CAE 02265-Up
Part of 251-2864-Page631.01,251-2866-Page632.01
An Attachment

Consists of :

			Page
1	209-5897	CYLINDER & SEAL GP-BUCKET	300.01
1	212-5228	LINES GP-BUCKET CYLINDER	316.01

H81961E 00

209-5896 CYLINDER & LINES GP-BUCKET

S/N CAE 01201-02264
Part of 211-6353-Page632
An Attachment

Consists of :

			Page
1	248-7861	CYLINDER & SEAL GP-BUCKET	300.02
1	229-1044	LINES GP-BUCKET CYLINDER	316.02

H87176E 00

248-7860 CYLINDER & LINES GP-BUCKET

S/N CAE 02265-Up
Part of 251-2869-Page632.01
An Attachment

Consists of :

			Page
1	170-9804	CYLINDER & SEAL GP-BLADE.....	301
1	179-7602	LINES GP-BLADE CYLINDER.....	317

H71493E 02

165-9425 CYLINDER & LINES GP-BLADE

Part of 151-1493-Page634,183-1476-Page635,151-1494-Page636
An Attachment

Consists of :

			Page
1	170-9805	CYLINDER & SEAL GP-BLADE.....	302
1	179-7604	LINES GP-BLADE CYLINDER.....	318

H71494E 02

170-9800 CYLINDER & LINES GP-BLADE

Part of 151-1493-Page634,183-1476-Page635,151-1494-Page636
An Attachment

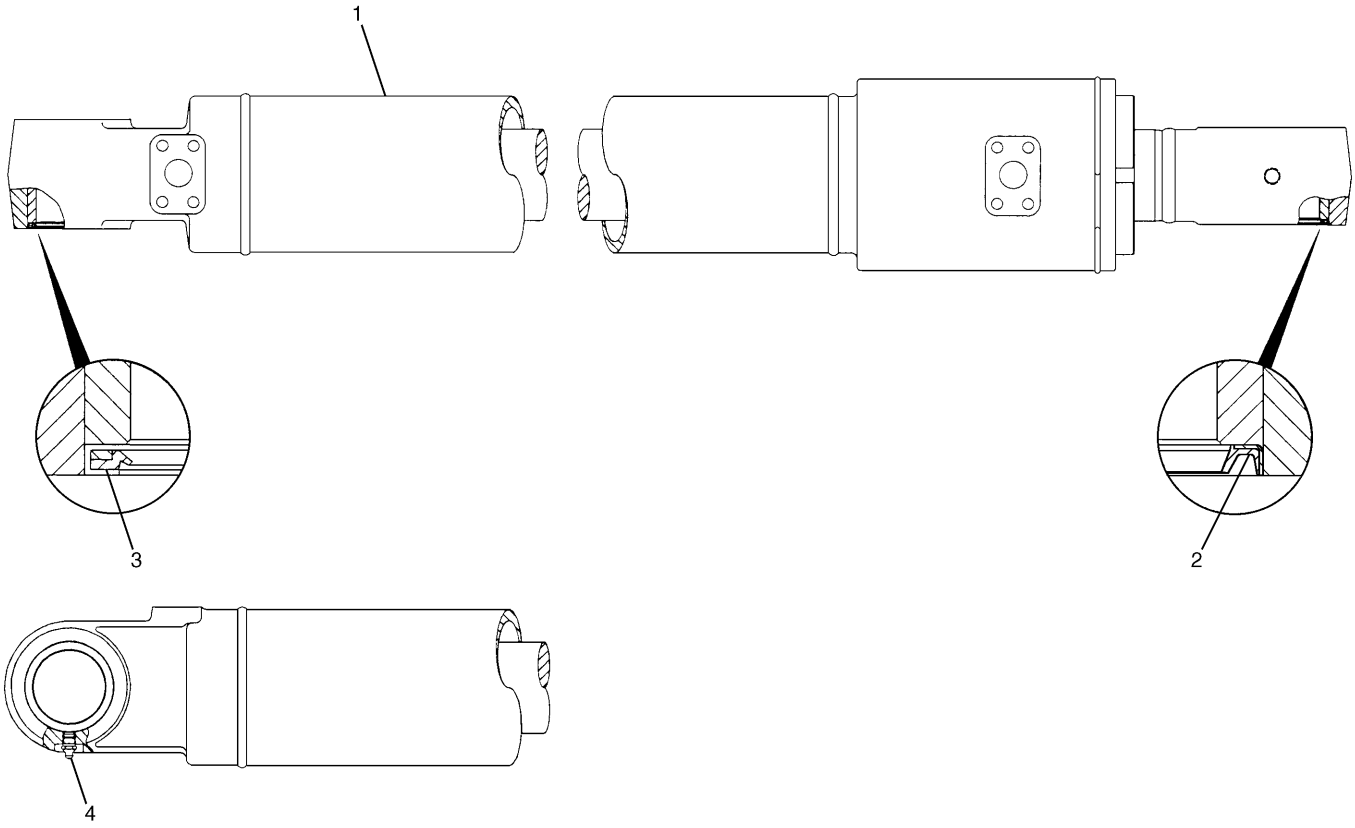

NOTE	No.	PART No.	QTY	PART NAME	NOTE	No.	PART No.	QTY	PART NAME
Y	1	170-9836	1	CYLINDER GP					
	2	166-1494	2	SEAL					
	3	093-1433	2	SEAL					
	4	3B-8489	1	FITTING					

Y—SEE SEPARATE ILLUSTRATION

H71504E 01

170-9834 CYLINDER & SEAL GP-BOOM

Part of 170-9831,170-9832-Page295
170-9836-Page303
An Attachment

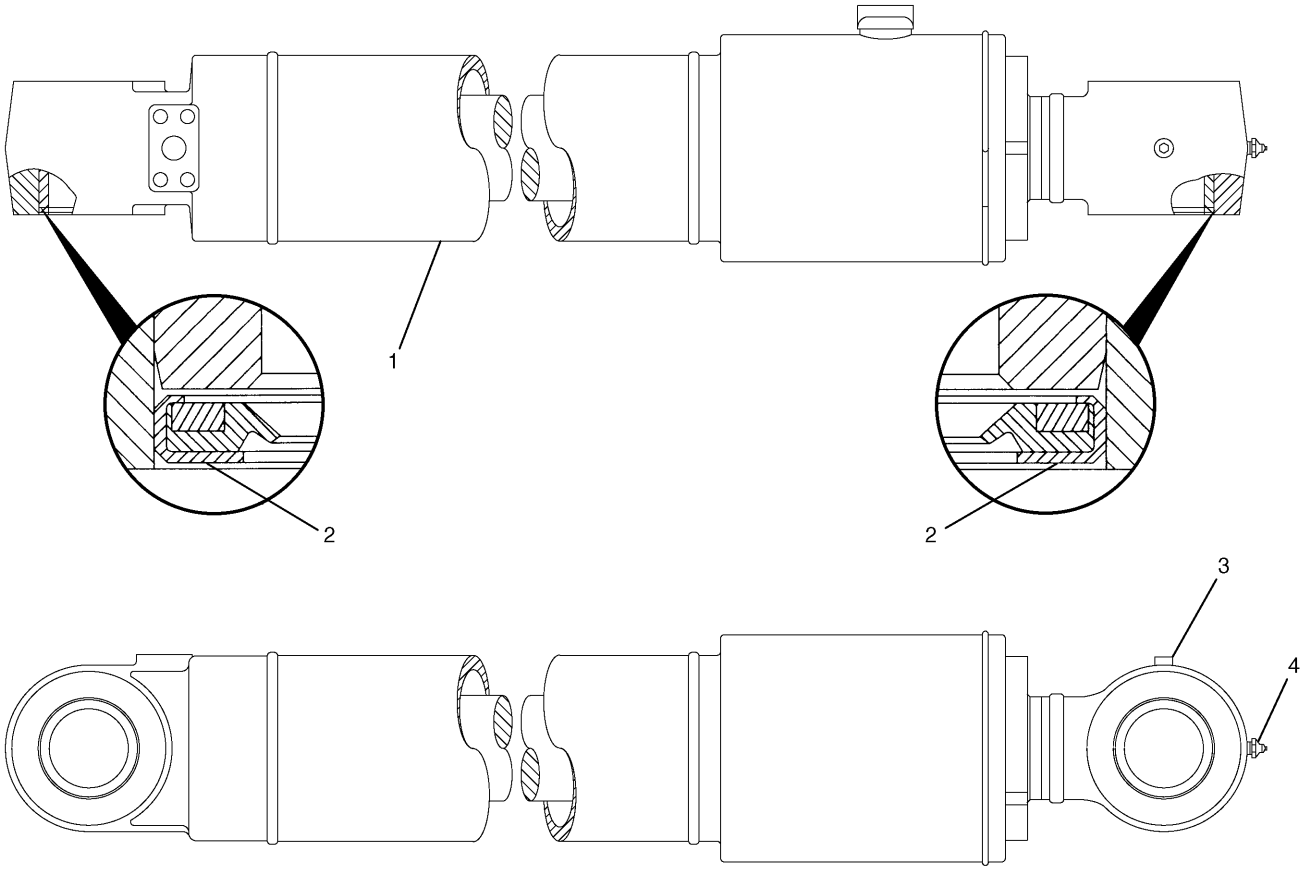

NOTE	No.	PART No.	QTY	PART NAME	NOTE	No.	PART No.	QTY	PART NAME
Y	1	194-8312	1	CYLINDER GP					
	2	093-1433	4	SEAL					
	3	8T-6763	1	PLUG					
	4	3B-8489	1	FITTING					

Y—SEE SEPARATE ILLUSTRATION

H76642E 01

194-8311 CYLINDER & SEAL GP-STICK

S/N CAE 01201-(T04.05)
Part of 194-8310-Page296
194-8312-Page304
An Attachment

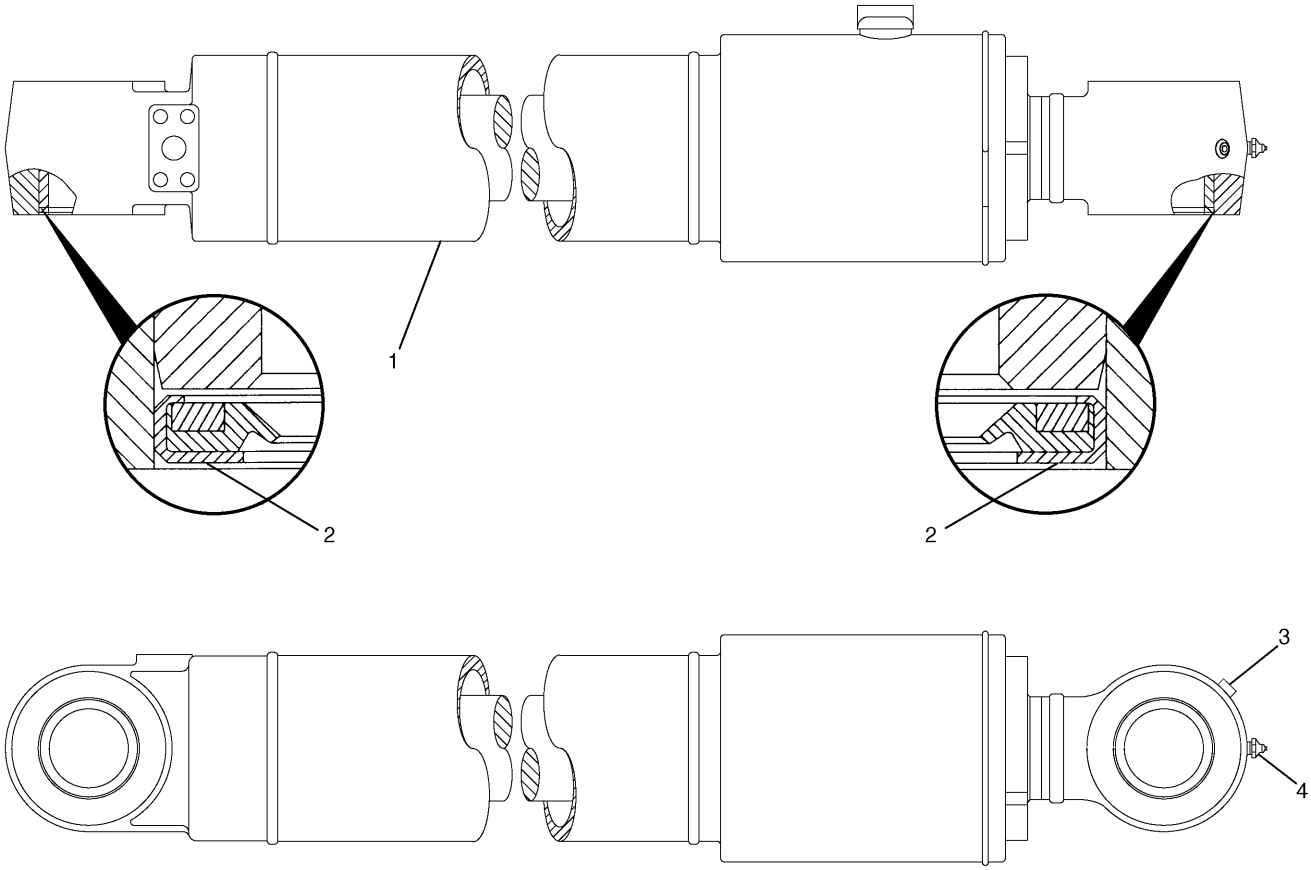

NOTE	No.	PART No.	QTY	PART NAME	NOTE	No.	PART No.	QTY	PART NAME
Y	1	251-2894	1	CYLINDER GP					
	2	093-1433	4	SEAL					
	3	8T-6763	1	PLUG					
	4	3B-8489	1	FITTING					

Y—SEE SEPARATE ILLUSTRATION

H87136E 00

251-2893 CYLINDER & SEAL GP-STICK

S/N CAE (T04.06)-Up
Part of 194-8310-Page296.01
251-2894-Page305.01
An Attachment

MEMORANDA

HYDRAULIC SYSTEM

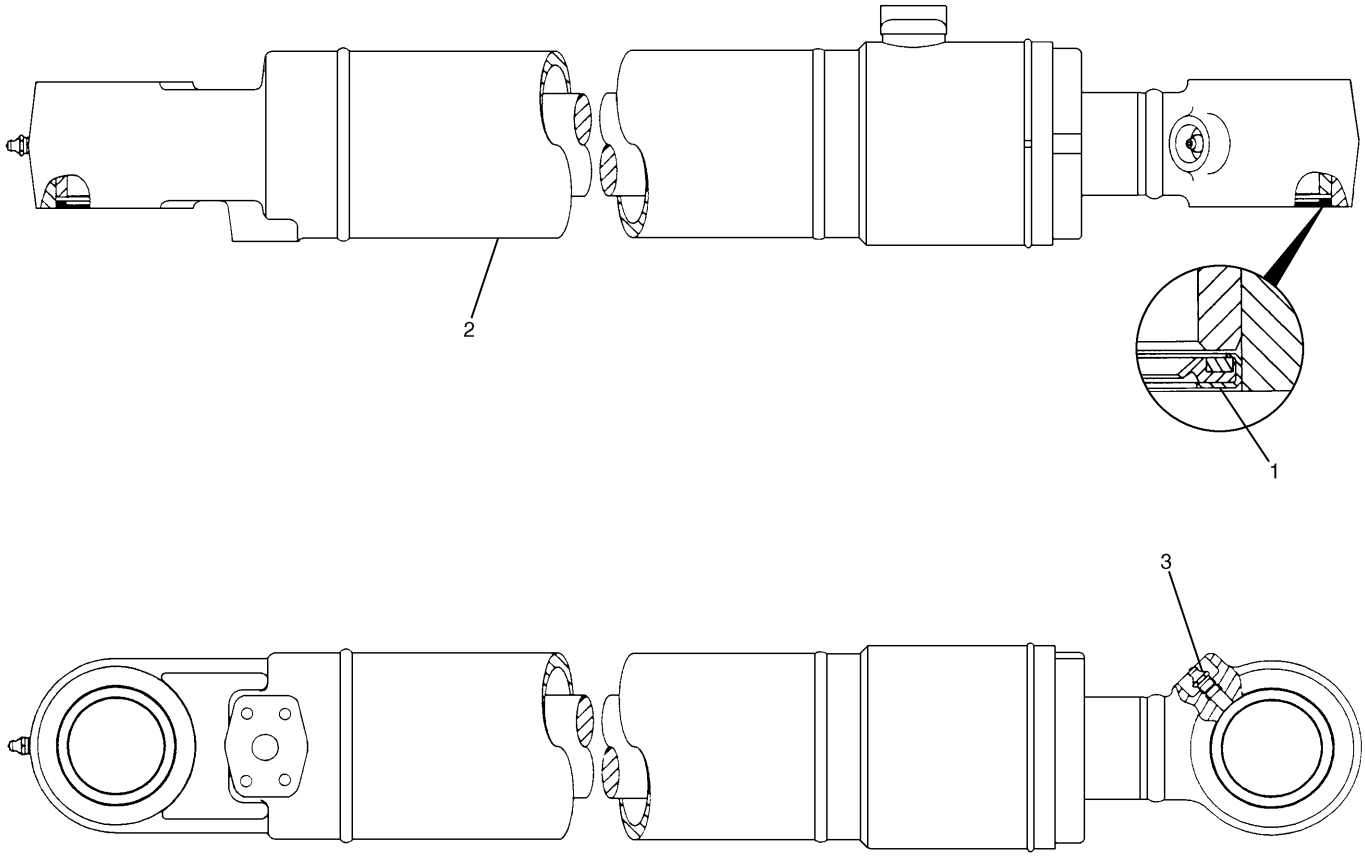

NOTE	No.	PART No.	QTY	PART NAME	NOTE	No.	PART No.	QTY	PART NAME
	1	093-1433	4	SEAL					
Y	2	170-9808	1	CYLINDER GP					
	3	3B-8489	2	FITTING					

Y—SEE SEPARATE ILLUSTRATION

H71495E 01

170-9803 CYLINDER & SEAL GP-BUCKET

S/N CAE 01201-02264
Part of 165-9424-Page296
170-9808-Page306
An Attachment

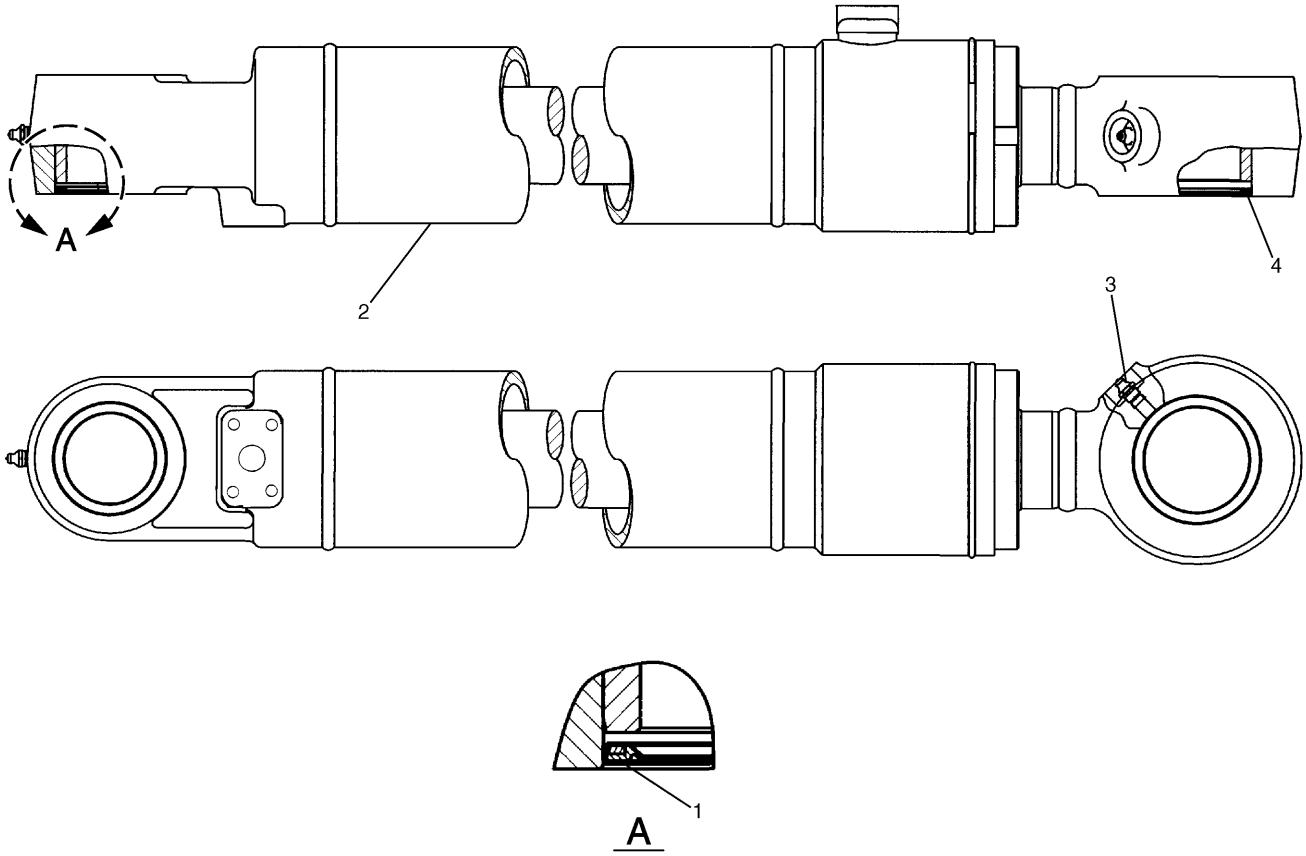

NOTE	No.	PART No.	QTY	PART NAME	NOTE	No.	PART No.	QTY	PART NAME
	1	093-1433	2	SEAL					
Y	2	248-7855	1	CYLINDER GP					
	3	3B-8489	2	FITTING					
	4	235-7679	2	SEAL					

Y—SEE SEPARATE ILLUSTRATION

H87137E 00

248-7854 CYLINDER & SEAL GP-BUCKET

S/N CAE 02265-Up
Part of 248-7866-Page296.01
248-7855-Page306.01A
An Attachment

MEMORANDA

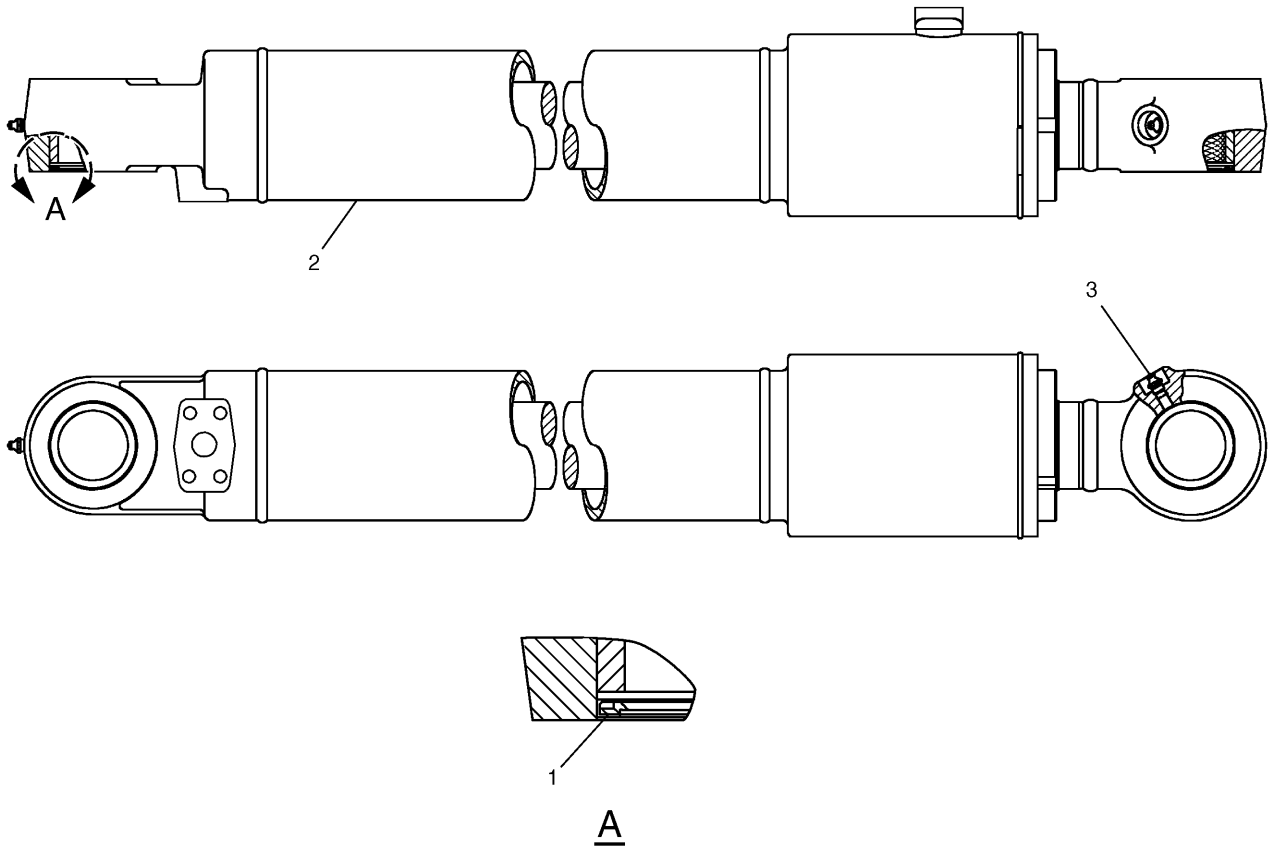

NOTE	No.	PART No.	QTY	PART NAME	NOTE	No.	PART No.	QTY	PART NAME
	1	093-1433	4	SEAL					
Y	2	209-5898	1	CYLINDER GP					
	3	3B-8489	2	FITTING					

Y—SEE SEPARATE ILLUSTRATION

H81962E 00

209-5897 CYLINDER & SEAL GP-BUCKET

S/N CAE 01201-02264
Part of 209-5896-Page296.02
209-5898-Page306.02
An Attachment

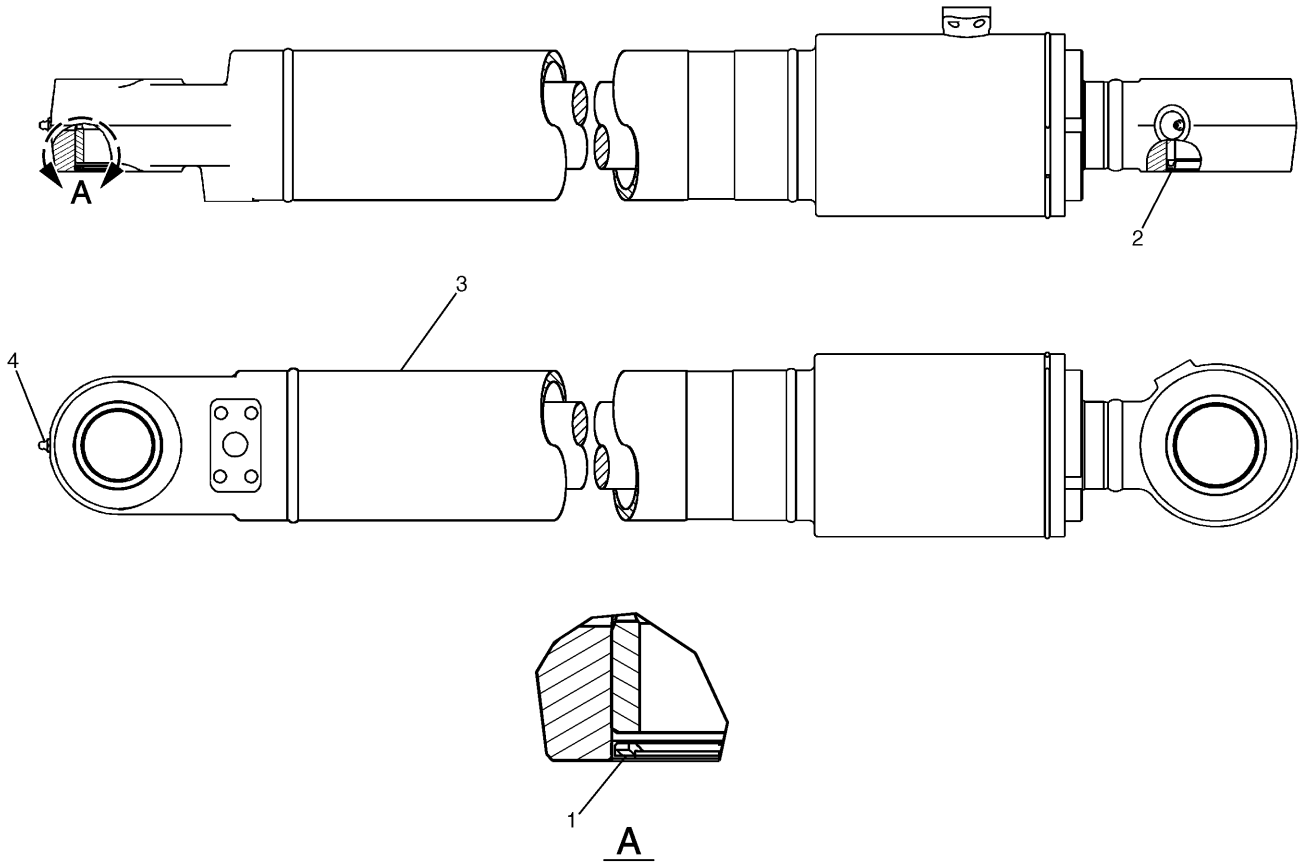

NOTE	No.	PART No.	QTY	PART NAME	NOTE	No.	PART No.	QTY	PART NAME
	1	093-1433	2	SEAL					
	2	235-7679	2	SEAL					
Y	3	248-7862	1	CYLINDER GP					
	4	3B-8489	2	FITTING					

Y—SEE SEPARATE ILLUSTRATION

H87177E 00

248-7861 CYLINDER & SEAL GP-BUCKET

S/N CAE 02265-Up
Part of 248-7860-Page296.02
248-7862-Page306.04
An Attachment

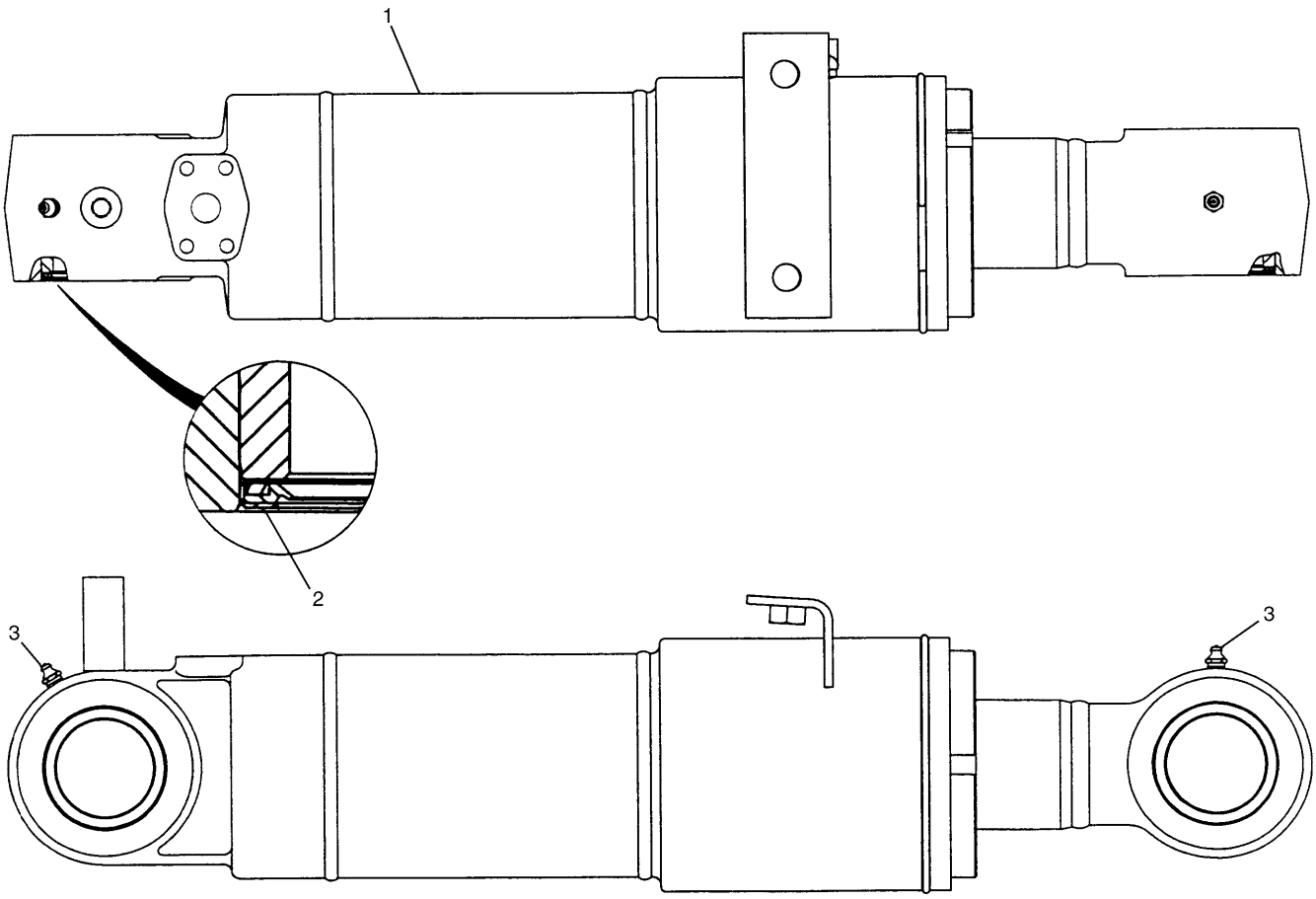

NOTE	No.	PART No.	QTY	PART NAME	NOTE	No.	PART No.	QTY	PART NAME
Y	1	170-9809	1	CYLINDER GP					
	2	093-1433	4	SEAL					
	3	3B-8489	2	FITTING					

Y—SEE SEPARATE ILLUSTRATION

H71496E 01

170-9804 CYLINDER & SEAL GP-BLADE

Part of 165-9425-Page297
170-9809-Page307
An Attachment

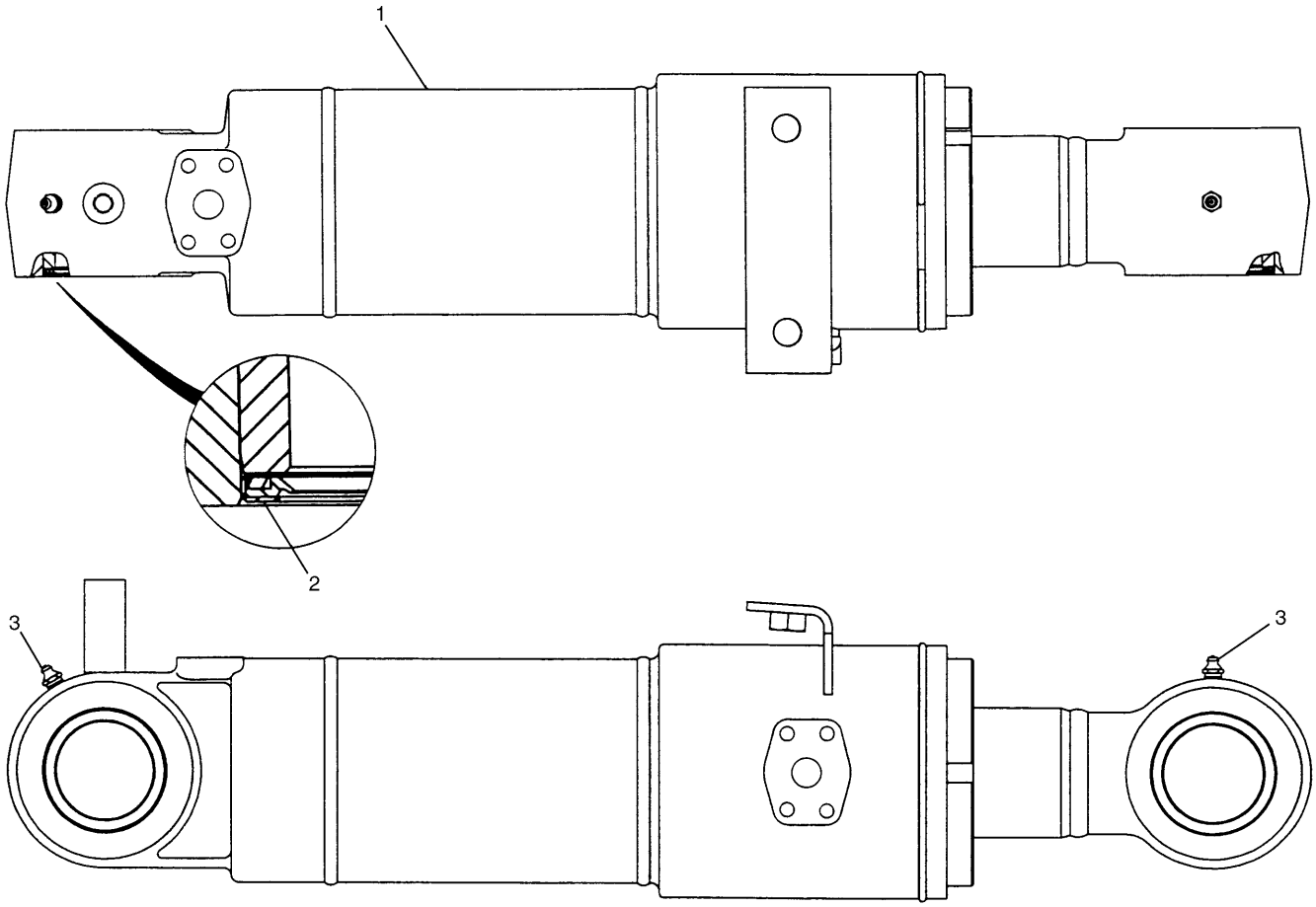

NOTE	No.	PART No.	QTY	PART NAME	NOTE	No.	PART No.	QTY	PART NAME
Y	1	170-9810	1	CYLINDER GP					
	2	093-1433	4	SEAL					
	3	3B-8489	2	FITTING					

Y—SEE SEPARATE ILLUSTRATION

H71497E 01

170-9805 CYLINDER & SEAL GP-BLADE

Part of 170-9800-Page297
170-9810-Page308
An Attachment

HYDRAULIC SYSTEM

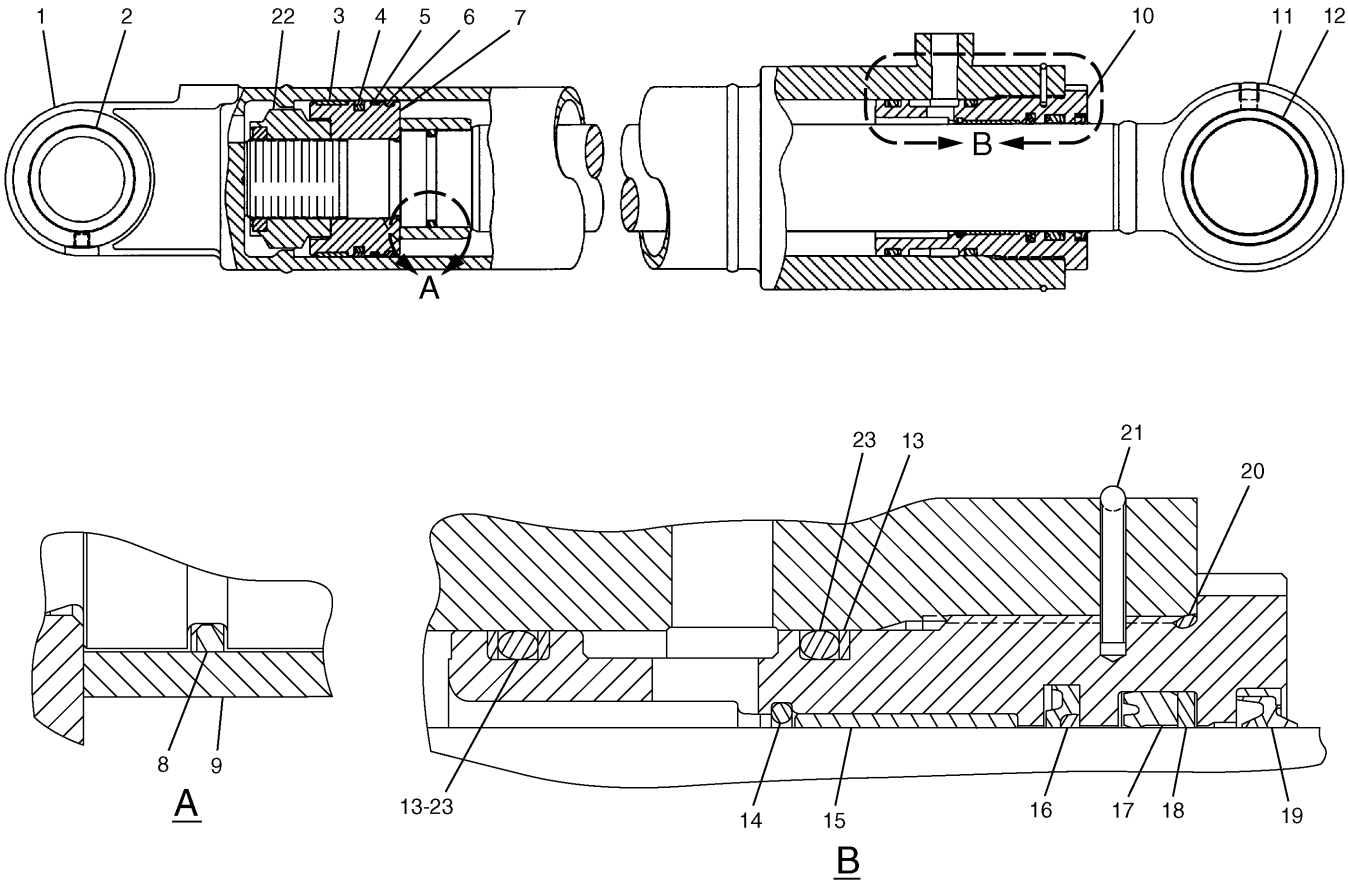

NOTE	No.	PART No.	QTY	PART NAME	NOTE	No.	PART No.	QTY	PART NAME
	1	173-3346	1	CYLINDER AS		21	099-0674	1	RING
	2	229-1007	1	BEARING		22	143-8150	1	LOCKNUT
J	3	143-8030	1	RING	J	23	095-1627	2	SEAL-O-RING (ID=99.60mm)
J	4	9X-7301	1	SEAL AS					
J	5	143-8034	1	RING					THE FOLLOWING REPAIR
J	6	143-8031	1	RING					KIT IS AVAILABLE:
	7	143-8029	1	PISTON			170-9937	1	SEAL KIT
J	8	185-9051	1	RING					
	9	173-3350	1	STOP					
	10	173-3351	1	HEAD					
	11	173-3349	1	ROD AS					
	12	229-1008	1	BEARING					
J	13	099-0660	3	RING					
	14	099-0661	1	RING					
	15	114-0750	1	BEARING					
J	16	170-9842	1	SEAL					
J	17	170-9858	1	SEAL					
J	18	096-3467	1	RING					
J	19	165-9284	1	SEAL					
J	20	095-1674	1	SEAL-O-RING (ID=109.40mm)					

H86335E 02

170-9836 CYLINDER GP-BOOM

Part of 170-9834-Page298
An Attachment

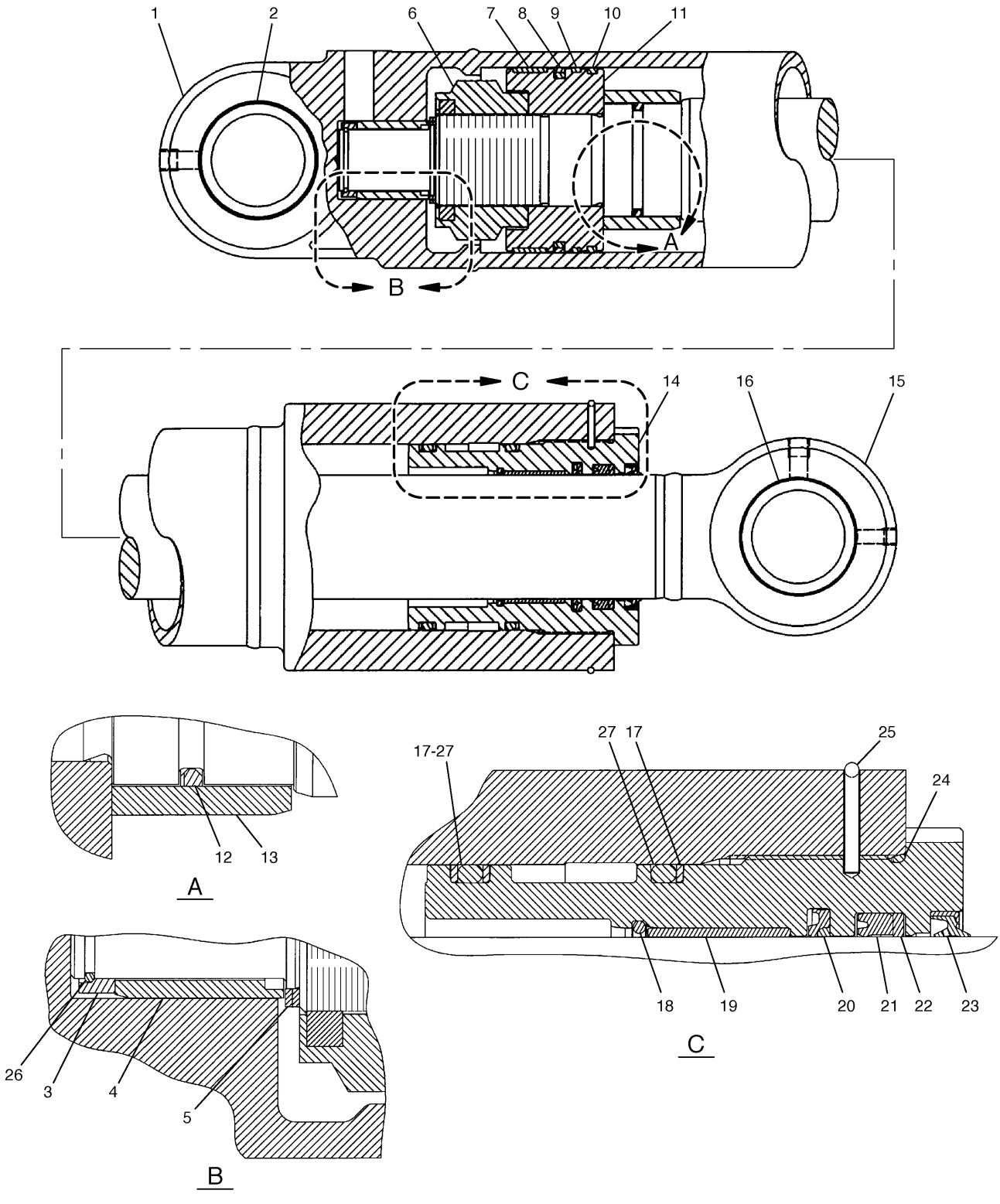

H85578E 01

194-8312 CYLINDER GP-STICK
S/N CAE 01201-(T04.05)
Part of 194-8311-Page299
An Attachment

HYDRAULIC SYSTEM

NOTE	No.	PART No.	QTY	PART NAME	NOTE	No.	PART No.	QTY	PART NAME
	1	194-8313	1	CYLINDER AS					
	2	229-1010	1	BEARING					
	3	103-8442	1	RING					
	4	105-7398	1	STOP					
	5	8T-4241	2	RING					
	6	143-8151	1	LOCKNUT					
J	7	143-8028	1	RING					
J	8	9X-3592	1	SEAL AS					
J	9	143-8035	1	RING					
J	10	143-8027	1	RING					
	11	143-8026	1	PISTON					
J	12	185-9050	1	RING					
	13	5I-3046	1	STOP					
	14	173-3358	1	HEAD					
	15	173-3356	1	ROD AS					
	16	229-1010	1	BEARING					
J	17	099-0681	3	RING					
	18	096-8139	1	RING					
	19	114-0755	1	BEARING					
J	20	170-9843	1	SEAL					
J	21	170-9859	1	SEAL					
J	22	096-1054	1	RING					
J	23	165-9285	1	SEAL					
J	24	095-1676	1	SEAL-O-RING (ID=119.40mm)					
	25	123-2002	1	RING					
	26	103-8441	1	RING					
J	27	095-1628	2	SEAL-O-RING (ID=109.60mm)					
				THE FOLLOWING REPAIR KIT IS AVAILABLE:					
		170-9999	1	SEAL KIT (INCLUDES PARTS MARKED J)					

H85578E 01

194-8312 CYLINDER GP-STICK

S/N CAE 01201-(T04.05)
Part of 194-8311-Page299
An Attachment

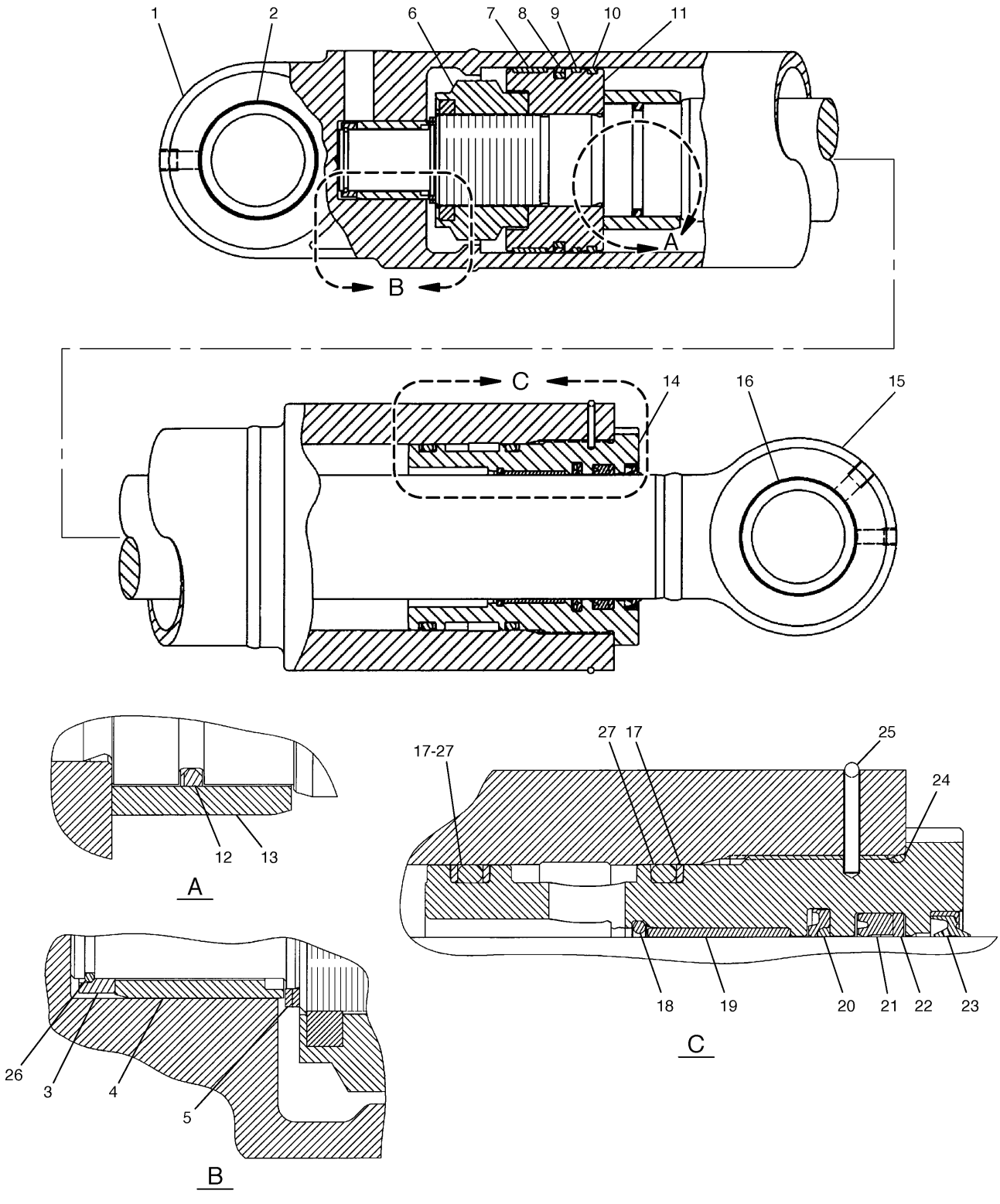

H87138E 00

251-2894 CYLINDER GP-STICK
S/N CAE (T04.06)-Up
Part of 251-2893-Page299.01
An Attachment

HYDRAULIC SYSTEM

NOTE	No.	PART No.	QTY	PART NAME
	1	194-8313	1	CYLINDER AS
	2	229-1010	1	BEARING
	3	103-8442	1	RING
	4	105-7398	1	STOP
	5	8T-4241	2	RING
	6	143-8151	1	LOCKNUT
J	7	143-8028	1	RING
J	8	9X-3592	1	SEAL AS
J	9	143-8035	1	RING
J	10	143-8027	1	RING
	11	229-1131	1	PISTON
J	12	185-9050	1	RING
	13	5I-3046	1	STOP
	14	173-3358	1	HEAD
	15	251-2895	1	ROD AS
	16	229-1010	1	BEARING
J	17	099-0681	3	RING
	18	096-8139	1	RING
	19	114-0755	1	BEARING
J	20	170-9843	1	SEAL
J	21	170-9859	1	SEAL
J	22	096-1054	1	RING
J	23	165-9285	1	SEAL
J	24	095-1676	1	SEAL-O-RING (ID=119.40mm)
	25	123-2002	1	RING
	26	103-8441	1	RING
J	27	095-1628	2	SEAL-O-RING (ID=109.60mm)
				THE FOLLOWING REPAIR KIT IS AVAILABLE:
		170-9999	1	SEAL KIT (INCLUDES PARTS MARKED J)

H87138E 00

251-2894 CYLINDER GP-STICK

S/N CAE (T04.06)-Up
Part of 251-2893-Page299.01
An Attachment

HYDRAULIC SYSTEM

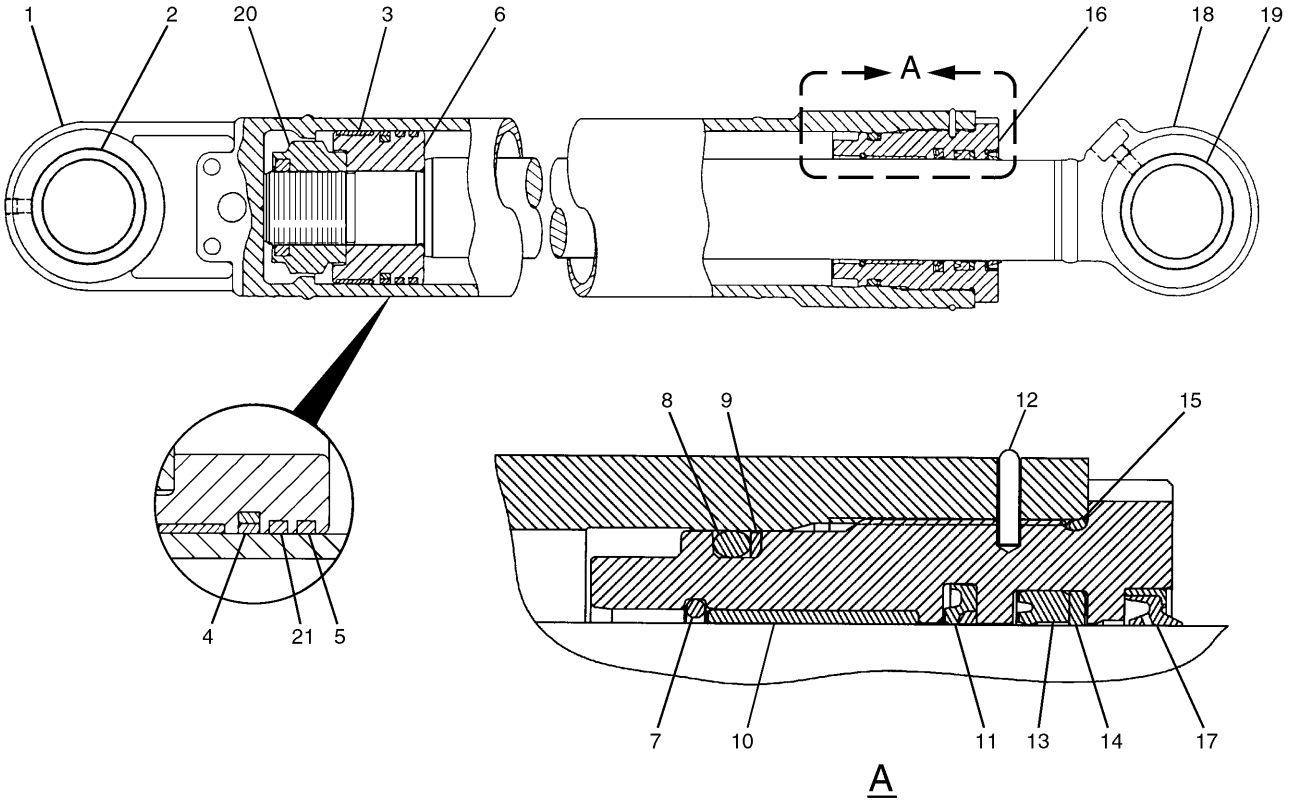

NOTE	No.	PART No.	QTY	PART NAME	NOTE	No.	PART No.	QTY	PART NAME
	1	170-9938	1	CYLINDER AS	J	21	143-8033	1	RING
	2	229-1009	1	BEARING					
J	3	143-8024	1	RING					THE FOLLOWING REPAIR
J	4	9X-7298	1	SEAL AS					KIT IS AVAILABLE:
J	5	143-8025	1	RING			170-9941	1	SEAL KIT
	6	143-8023	1	PISTON					(INCLUDES PARTS MARKED J)
	7	099-0700	1	RING					
J	8	095-1625	1	SEAL-O-RING (ID=89.60mm)					
J	9	099-0699	1	RING					
	10	114-0754	1	BEARING					
J	11	170-9840	1	SEAL					
	12	099-0600	1	RING					
J	13	170-9856	1	SEAL					
J	14	096-1055	1	RING					
J	15	6V-8467	1	SEAL-O-RING (ID=99.40mm)					
	16	099-0596	1	HEAD					
J	17	165-9282	1	SEAL					
	18	170-9940	1	ROD AS					
	19	229-1094	1	BEARING					
	20	143-8149	1	LOCKNUT					

H87959E 01

170-9808 CYLINDER GP-BUCKET

S/N CAE 01201-02264
Part of 170-9803-Page300
An Attachment

MEMORANDA

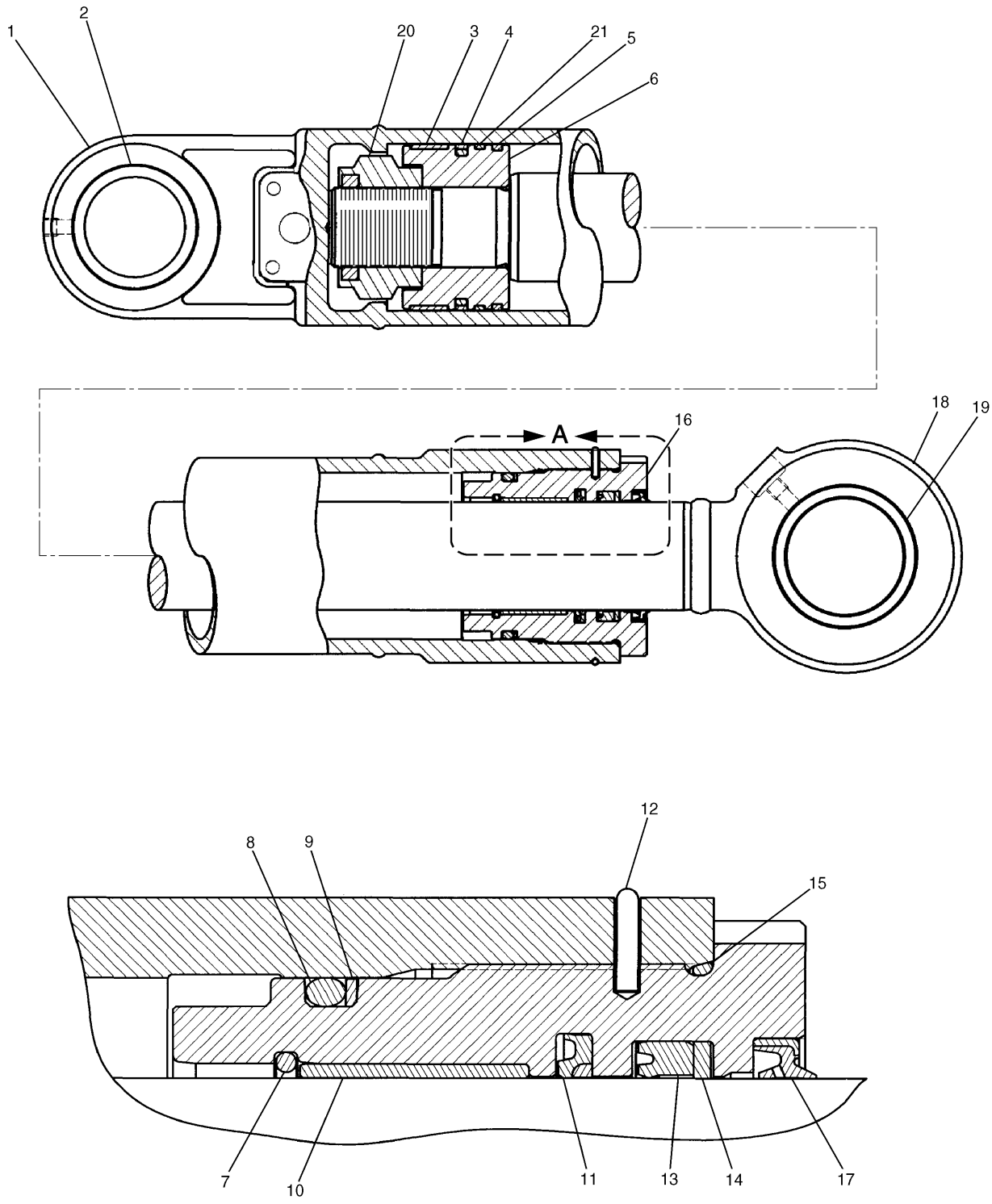

A

H87960E 00

248-7855 CYLINDER GP-BUCKET
S/N CAE 02265-Up
Part of 248-7854-Page300A
An Attachment

HYDRAULIC SYSTEM

NOTE	No.	PART No.	QTY	PART NAME	NOTE	No.	PART No.	QTY	PART NAME
	1	170-9938	1	CYLINDER AS					
	2	229-1009	1	BEARING					
J	3	143-8024	1	RING					
J	4	9X-7298	1	SEAL AS					
J	5	143-8025	1	RING					
	6	143-8023	1	PISTON					
	7	099-0700	1	RING					
J	8	095-1625	1	SEAL-O-RING (ID=89.60mm)					
J	9	099-0699	1	RING					
	10	114-0754	1	BEARING					
J	11	170-9840	1	SEAL					
	12	099-0600	1	RING					
J	13	170-9856	1	SEAL					
J	14	096-1055	1	RING					
J	15	6V-8467	1	SEAL-O-RING (ID=99.40mm)					
	16	099-0596	1	HEAD					
J	17	165-9282	1	SEAL					
	18	248-7856	1	ROD AS					
	19	248-7857	1	BEARING					
	20	143-8149	1	LOCKNUT					
J	21	143-8033	1	RING					
				THE FOLLOWING REPAIR KIT IS AVAILABLE:					
		170-9941	1	SEAL KIT (INCLUDES PARTS MARKED J)					

H87960E 00

248-7855 CYLINDER GP-BUCKET

S/N CAE 02265-Up
Part of 248-7854-Page300A
An Attachment

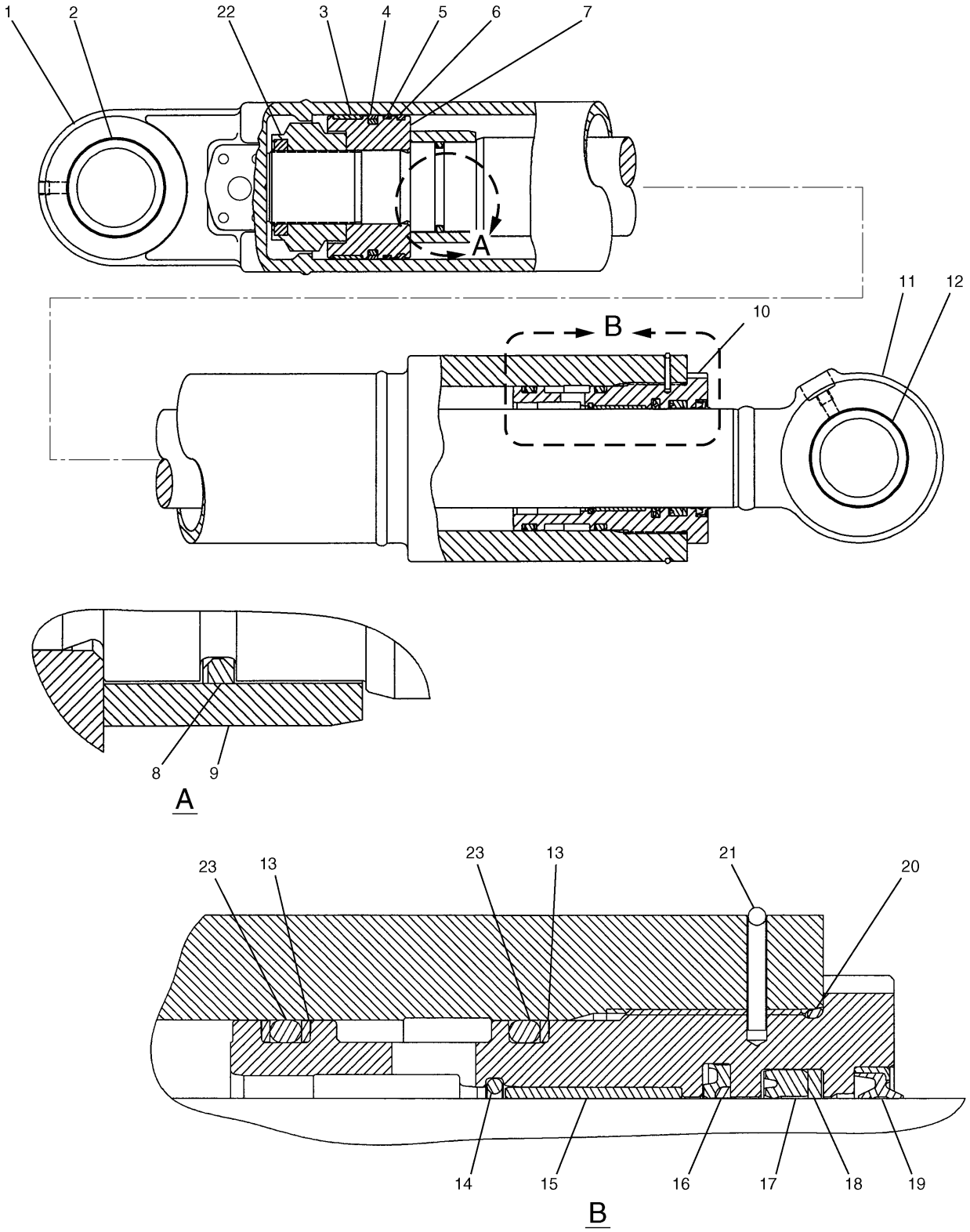

H85595E 01

209-5898 CYLINDER GP-BUCKET
S/N CAE 01201-02264
Part of 209-5897-Page300.01
An Attachment

HYDRAULIC SYSTEM

NOTE	No.	PART No.	QTY	PART NAME	NOTE	No.	PART No.	QTY	PART NAME
	1	209-5899	1	CYLINDER AS					
	2	229-1009	1	BEARING					
J	3	143-8030	1	RING					
J	4	9X-7301	1	SEAL AS					
J	5	143-8034	1	RING					
J	6	143-8031	1	RING					
	7	143-8029	1	PISTON					
J	8	185-9051	1	RING					
	9	173-3350	1	STOP					
	10	173-3351	1	HEAD					
	11	209-5904	1	ROD AS					
	12	229-1094	1	BEARING					
J	13	099-0660	3	RING					
	14	099-0661	1	RING					
	15	114-0750	1	BEARING					
J	16	170-9842	1	SEAL					
J	17	170-9858	1	SEAL					
J	18	096-3467	1	RING					
J	19	165-9284	1	SEAL					
J	20	095-1674	1	SEAL-O-RING (ID=109.40mm)					
	21	099-0674	1	RING					
	22	143-8150	1	LOCKNUT					
J	23	095-1627	2	SEAL-O-RING (ID=99.60mm)					
				THE FOLLOWING REPAIR KIT IS AVAILABLE:					
		170-9937	1	SEAL KIT (INCLUDES PARTS MARKED J)					

H85595E 01

209-5898 CYLINDER GP-BUCKET

S/N CAE 01201-02264
Part of 209-5897-Page300.01
An Attachment

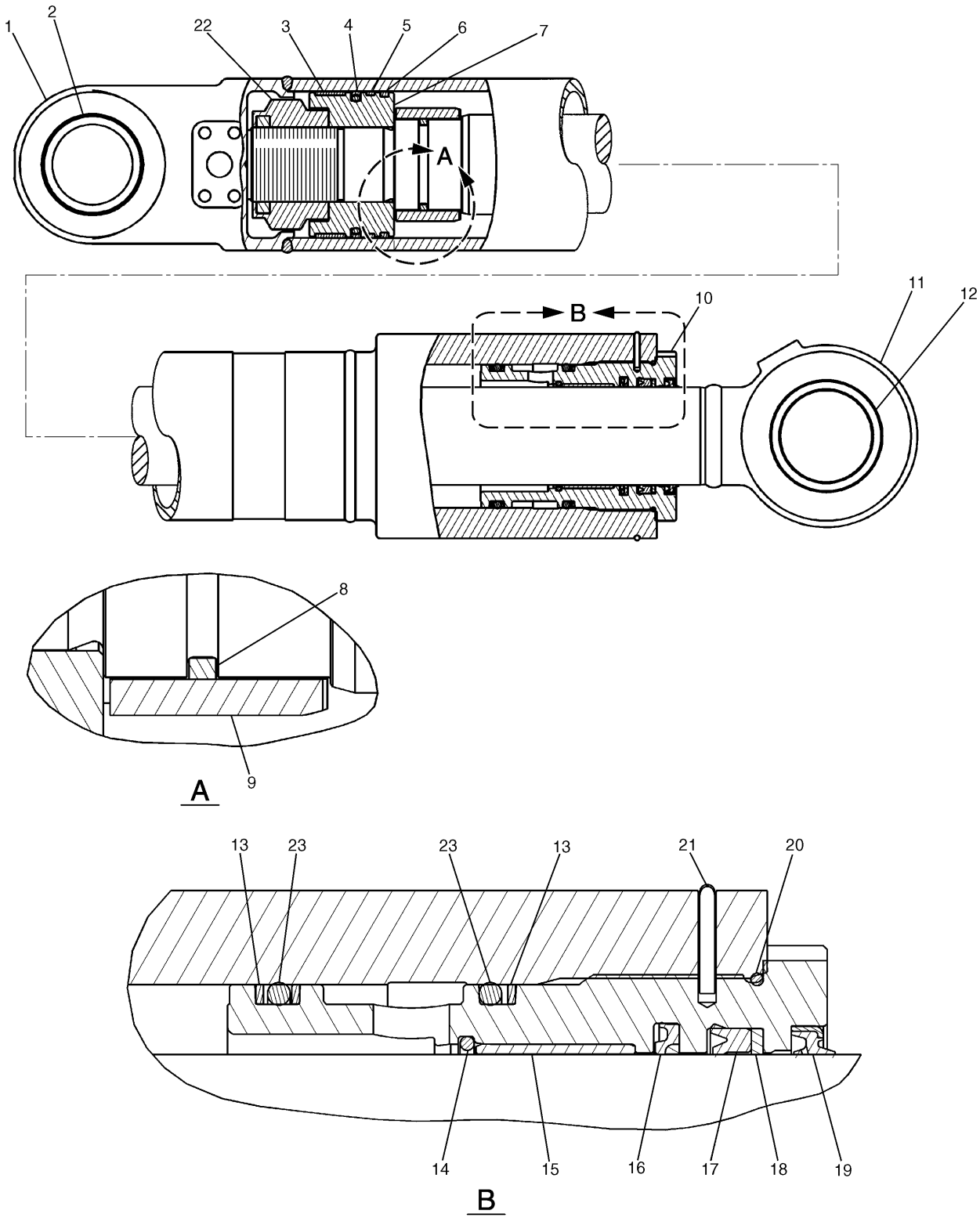

H87178E 00

248-7862 CYLINDER GP-BUCKET
S/N CAE 02265-Up
Part of 248-7861-Page300.02
An Attachment

HYDRAULIC SYSTEM

NOTE	No.	PART No.	QTY	PART NAME	NOTE	No.	PART No.	QTY	PART NAME
	1	229-1046	1	CYLINDER AS					
	2	229-1009	1	BEARING					
J	3	143-8030	1	RING					
J	4	9X-7301	1	SEAL AS					
J	5	143-8034	1	RING					
J	6	143-8031	1	RING					
	7	143-8029	1	PISTON					
J	8	185-9051	1	RING					
	9	173-3350	1	STOP					
	10	173-3351	1	HEAD					
	11	248-7863	1	ROD AS					
	12	248-7857	1	BEARING					
J	13	099-0660	3	RING					
	14	099-0661	1	RING					
	15	114-0750	1	BEARING					
J	16	170-9842	1	SEAL					
J	17	170-9858	1	SEAL					
J	18	096-3467	1	RING					
J	19	165-9284	1	SEAL					
J	20	095-1674	1	SEAL-O-RING (ID=109.40mm)					
	21	099-0674	1	RING					
	22	143-8150	1	LOCKNUT					
J	23	095-1627	2	SEAL-O-RING (ID=99.60mm)					
				THE FOLLOWING REPAIR KIT IS AVAILABLE:					
		170-9937	1	SEAL KIT (INCLUDES PARTS MARKED J)					

H87178E 00

248-7862 CYLINDER GP-BUCKET

S/N CAE 02265-Up
Part of 248-7861-Page300.02
An Attachment

MEMORANDA

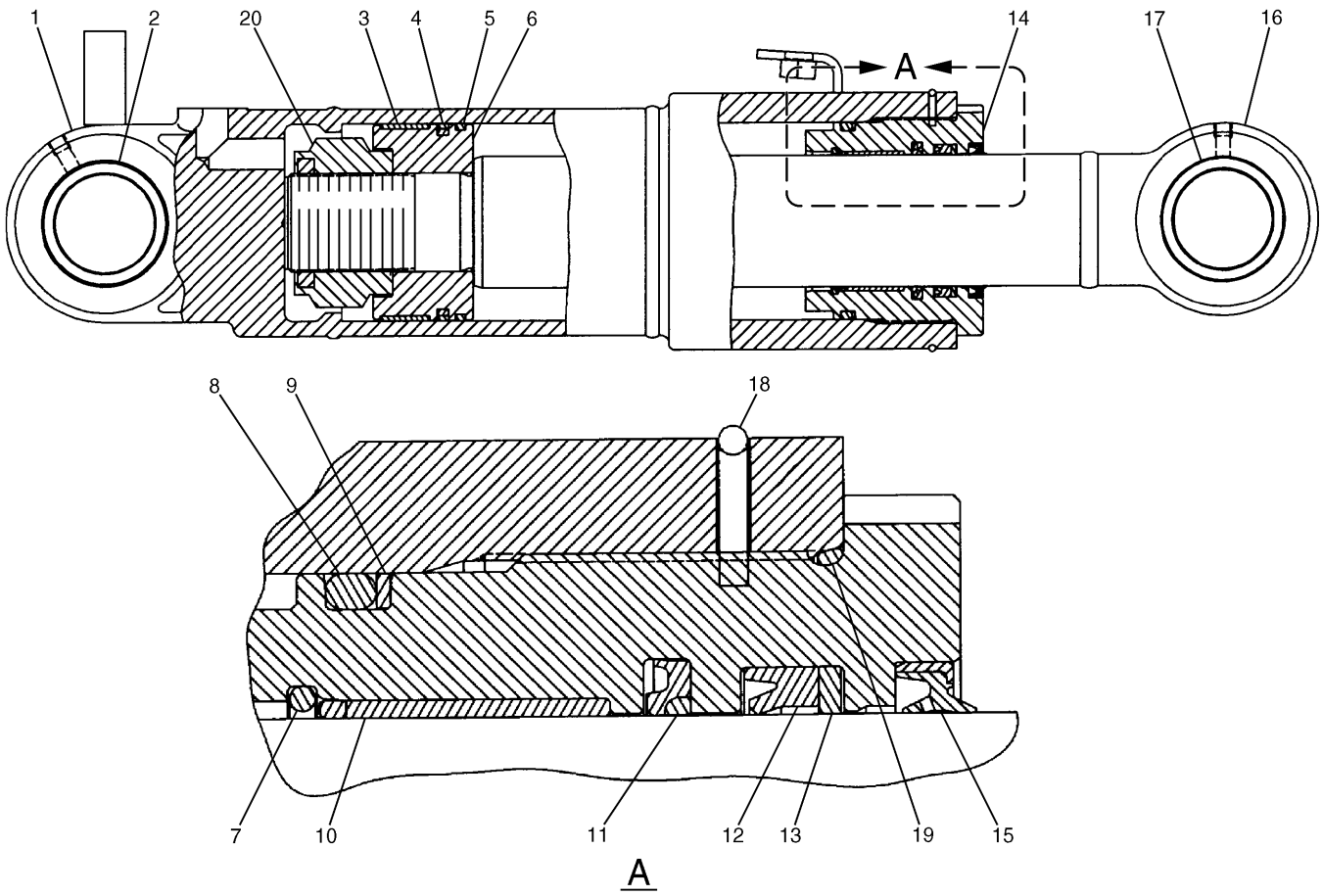

NOTE	No.	PART No.	QTY	PART NAME	NOTE	No.	PART No.	QTY	PART NAME
	1	170-9942	1	CYLINDER AS					THE FOLLOWING REPAIR
	2	229-1093	1	BEARING					KIT IS AVAILABLE:
J	3	119-5445	1	RING			170-9946	1	SEAL KIT
J	4	9X-3592	1	SEAL AS					(INCLUDES PARTS MARKED J)
J	5	143-8027	1	RING					
	6	125-1551	1	PISTON					
	7	096-8139	1	RING					
J	8	095-1628	1	SEAL-O-RING (ID=109.60mm)					
J	9	099-0681	1	RING					
	10	114-0755	1	BEARING					
J	11	170-9843	1	SEAL					
J	12	170-9859	1	SEAL					
J	13	096-1054	1	RING					
	14	123-9950	1	HEAD					
J	15	165-9285	1	SEAL					
	16	170-9945	1	ROD AS					
	17	229-1093	1	BEARING					
	18	099-0695	1	RING					
J	19	095-1676	1	SEAL-O-RING (ID=119.40mm)					
	20	143-8151	1	LOCKNUT					

H85600E 01

170-9809 CYLINDER GP-BLADE

Left Hand

Part of 170-9804-Page301

An Attachment

HYDRAULIC SYSTEM

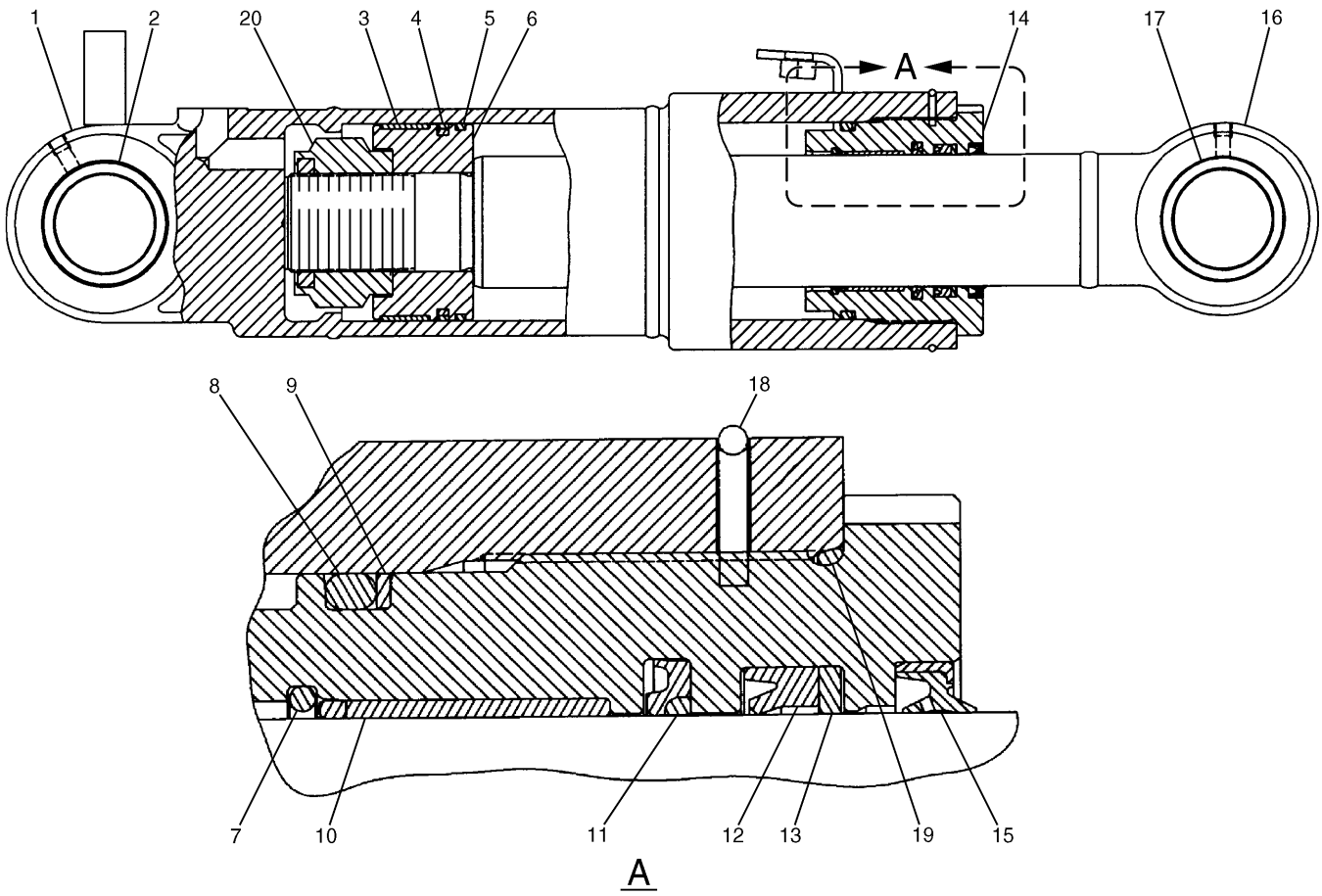

NOTE	No.	PART No.	QTY	PART NAME	NOTE	No.	PART No.	QTY	PART NAME
	1	170-9943	1	CYLINDER AS					THE FOLLOWING REPAIR
	2	229-1093	1	BEARING					KIT IS AVAILABLE:
J	3	119-5445	1	RING			170-9946	1	SEAL KIT
J	4	9X-3592	1	SEAL AS					(INCLUDES PARTS MARKED J)
J	5	143-8027	1	RING					
	6	125-1551	1	PISTON					
	7	096-8139	1	RING					
J	8	095-1628	1	SEAL-O-RING (ID=109.60mm)					
J	9	099-0681	1	RING					
	10	114-0755	1	BEARING					
J	11	170-9843	1	SEAL					
J	12	170-9859	1	SEAL					
J	13	096-1054	1	RING					
	14	123-9950	1	HEAD					
J	15	165-9285	1	SEAL					
	16	170-9945	1	ROD AS					
	17	229-1093	1	BEARING					
	18	099-0695	1	RING					
J	19	095-1676	1	SEAL-O-RING (ID=119.40mm)					
	20	143-8151	1	LOCKNUT					

H85601E 01

170-9810 CYLINDER GP-BLADE

Right Hand

Part of 170-9805-Page302

An Attachment

MEMORANDA

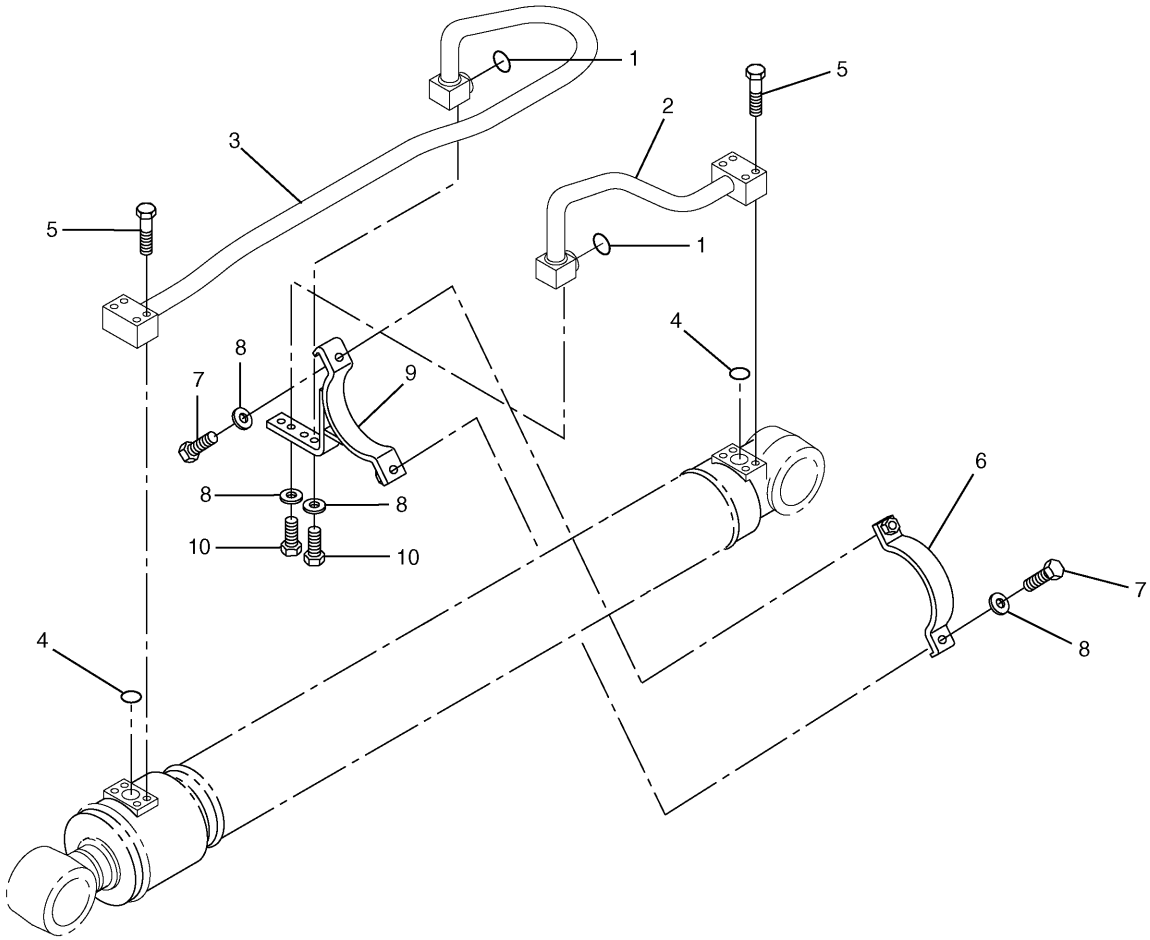

NOTE	No.	PART No.	QTY	PART NAME	NOTE	No.	PART No.	QTY	PART NAME
	1	7J-9108	2	SEAL-O-RING (OD=19.28mm)					
	2	179-7591	1	TUBE AS					
	3	202-3815	1	TUBE AS					
	4	4J-5267	2	SEAL-O-RING (ID=24.99mm)					
	5	8T-4182	8	BOLT (L=45mm)					
	6	121-6217	1	SUPPORT AS					
	7	8T-4196	2	BOLT (L=35mm)					
	8	8T-4121	6	WASHER					
	9	121-6216	1	SUPPORT AS					
	10	8T-4195	4	BOLT (L=30mm)					

H75183E 02

179-7590 LINES GP-BOOM CYLINDER

Part of 170-9831-Page295
An Attachment

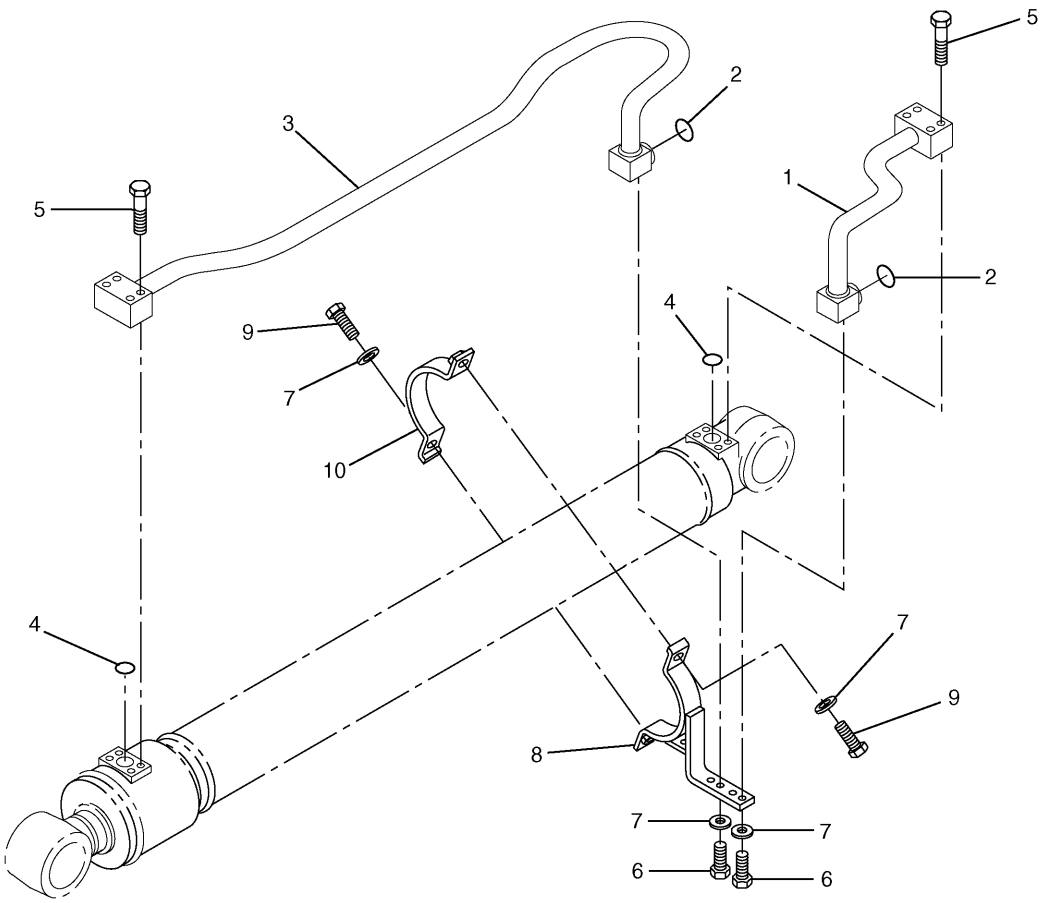

NOTE	No.	PART No.	QTY	PART NAME	NOTE	No.	PART No.	QTY	PART NAME
	1	179-7594	1	TUBE AS					
	2	7J-9108	2	SEAL-O-RING (OD=19.28mm)					
	3	202-3816	1	TUBE AS					
	4	4J-5267	2	SEAL-O-RING (ID=24.99mm)					
	5	8T-4182	8	BOLT (L=45mm)					
	6	8T-4195	4	BOLT (L=30mm)					
	7	8T-4121	6	WASHER					
	8	121-6216	1	SUPPORT AS					
	9	8T-4196	2	BOLT (L=35mm)					
	10	121-6217	1	SUPPORT AS					

H75420E 02

179-7593 LINES GP-BOOM CYLINDER

Part of 170-9832-Page295
An Attachment

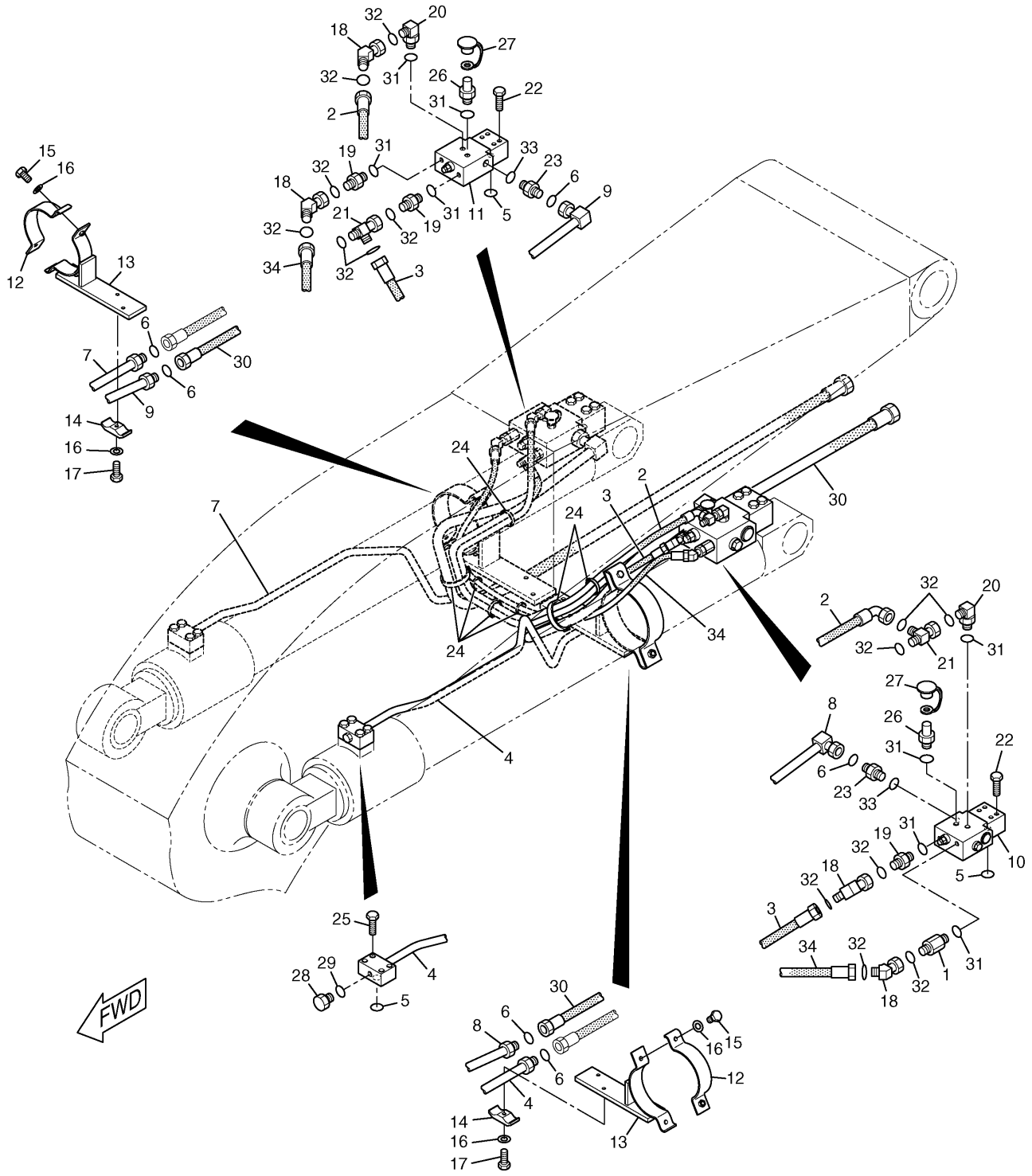

168-9560 LINES GP-BOOM CYLINDER

S/N CAE 01201-(T02.06)
Part of 171-0020-Page359
190-7830-Page504,190-7831-Page506
An Attachment

HYDRAULIC SYSTEM

NOTE	No.	PART No.	QTY	PART NAME	NOTE	No.	PART No.	QTY	PART NAME
	1	8T-0075	1	CONNECTOR					
	2	202-3772	1	HOSE AS					
E		7I-7439		GUARD…(132cm)					
	3	121-6376	1	HOSE AS					
	4	196-3254	1	TUBE AS					
	5	4J-5267	4	SEAL-O-RING (ID=24.99mm)					
	6	7J-9108	6	SEAL-O-RING (OD=19.28mm)					
	7	196-0729	1	TUBE AS					
	8	196-0730	1	TUBE AS					
	9	196-0731	1	TUBE AS					
Y	10	190-7830	1	VALVE GP					
Y	11	190-7831	1	VALVE GP					
	12	121-6217	2	SUPPORT AS					
	13	124-0863	2	SUPPORT AS					
	14	096-5766	2	CLAMP					
	15	8T-4196	4	BOLT (L=35mm)					
	16	8T-4121	6	WASHER					
	17	8T-4185	2	BOLT (L=50mm)					
	18	8C-8988	4	ELBOW					
	19	6V-8636	3	CONNECTOR					
	20	6V-8724	2	ELBOW					
	21	6V-9836	2	TEE					
	22	8T-0341	8	BOLT (L=60mm)					
	23	6V-8713	2	CONNECTOR					
	24	7K-1181	7	STRAP					
	25	8T-4182	8	BOLT (L=45mm)					
	26	6V-3965	2	NIPPLE AS					
	27	6V-0852	2	CAP					
	28	096-6073	1	PLUG					
	29	095-1582	1	SEAL-O-RING (ID=13.80mm)					
	30	123-2636	2	HOSE AS					
	31	3J-1907	8	SEAL-O-RING (ID=11.89mm)					
	32	6V-8397	14	SEAL-O-RING (OD=12.83mm)					
	33	3D-2824	2	SEAL-O-RING (ID=23.47mm)					
	34	196-3369	1	HOSE AS					

E—ORDER BY THE CENTIMETER

Y—SEE SEPARATE ILLUSTRATION

H77552E 02

168-9560 LINES GP-BOOM CYLINDER

S/N CAE 01201-(T02.06)

Part of 171-0020-Page359

190-7830-Page504,190-7831-Page506

An Attachment

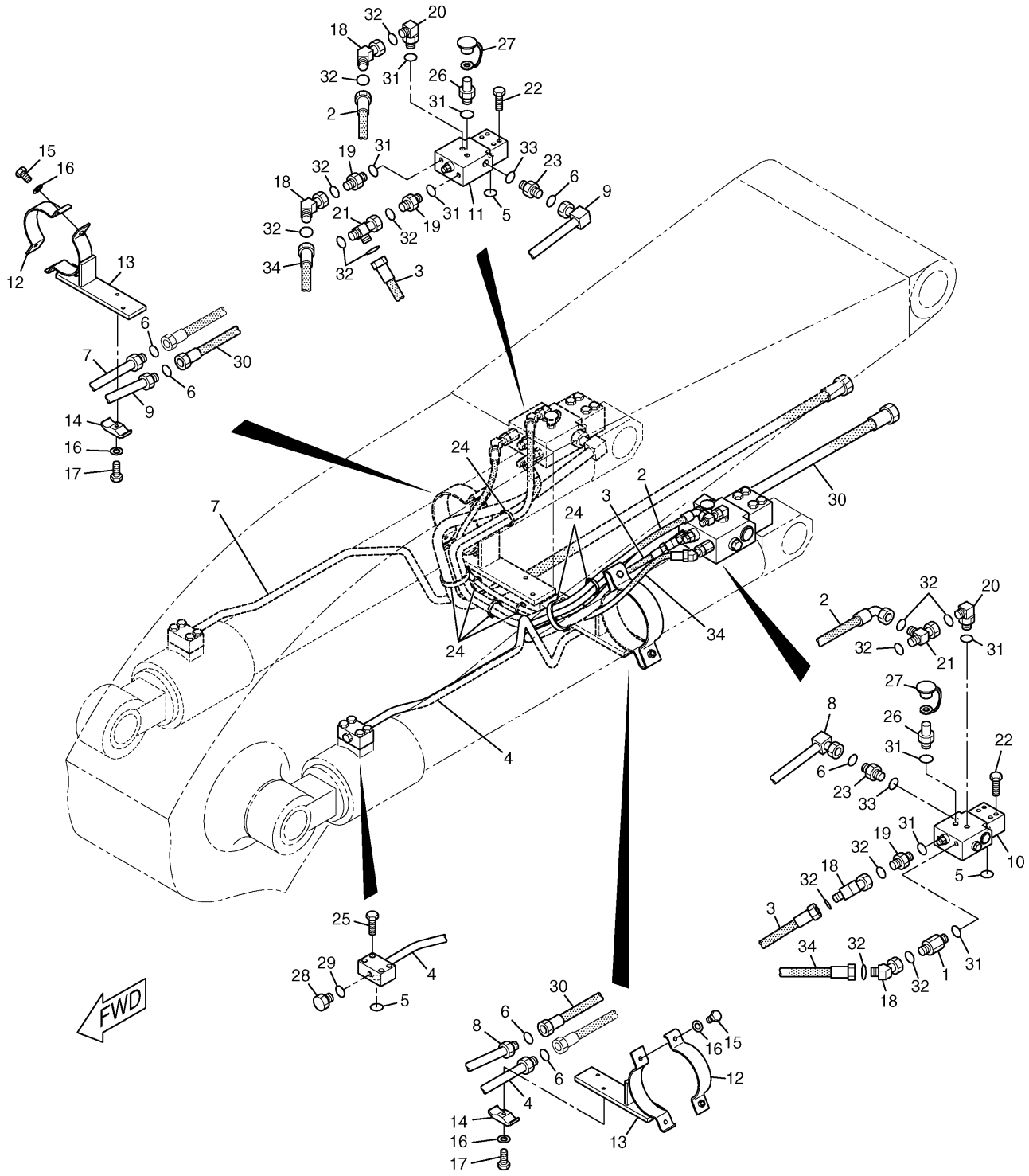

H86339E 03

168-9560 LINES GP-BOOM CYLINDER

S/N CAE (T02.07)-(T03.12)
Part of 171-0020-Page359
225-4655-Page505.01,225-4656-Page507.01
An Attachment

HYDRAULIC SYSTEM

NOTE	No.	PART No.	QTY	PART NAME	NOTE	No.	PART No.	QTY	PART NAME
	1	8T-0075	1	CONNECTOR					
	2	202-3772	1	HOSE AS					
E		7I-7439		GUARD…(132cm)					
	3	121-6376	1	HOSE AS					
	4	196-3254	1	TUBE AS					
	5	4J-5267	4	SEAL-O-RING (ID=24.99mm)					
	6	7J-9108	6	SEAL-O-RING (OD=19.28mm)					
	7	196-0729	1	TUBE AS					
	8	196-0730	1	TUBE AS					
	9	196-0731	1	TUBE AS					
Y	10	225-4655	1	VALVE GP					
Y	11	225-4656	1	VALVE GP					
	12	121-6217	2	SUPPORT AS					
	13	124-0863	2	SUPPORT AS					
	14	096-5766	2	CLAMP					
	15	8T-4196	4	BOLT (L=35mm)					
	16	8T-4121	6	WASHER					
	17	8T-4185	2	BOLT (L=50mm)					
	18	8C-8988	4	ELBOW					
	19	6V-8636	3	CONNECTOR					
	20	6V-8724	2	ELBOW					
	21	6V-9836	2	TEE					
	22	8T-0341	8	BOLT (L=60mm)					
	23	6V-8713	2	CONNECTOR					
	24	7K-1181	7	STRAP					
	25	8T-4182	8	BOLT (L=45mm)					
	26	6V-3965	2	NIPPLE AS					
	27	6V-0852	2	CAP					
	28	096-6073	1	PLUG					
	29	095-1582	1	SEAL-O-RING (ID=13.80mm)					
	30	123-2636	2	HOSE AS					
	31	3J-1907	8	SEAL-O-RING (ID=11.89mm)					
	32	6V-8397	14	SEAL-O-RING (OD=12.83mm)					
	33	3D-2824	2	SEAL-O-RING (ID=23.47mm)					
	34	196-3369	1	HOSE AS					

E—ORDER BY THE CENTIMETER

Y—SEE SEPARATE ILLUSTRATION

H86339E 03

168-9560 LINES GP-BOOM CYLINDER

S/N CAE (T02.07)-(T03.12)

Part of 171-0020-Page359

225-4655-Page505.01,225-4656-Page507.01

An Attachment

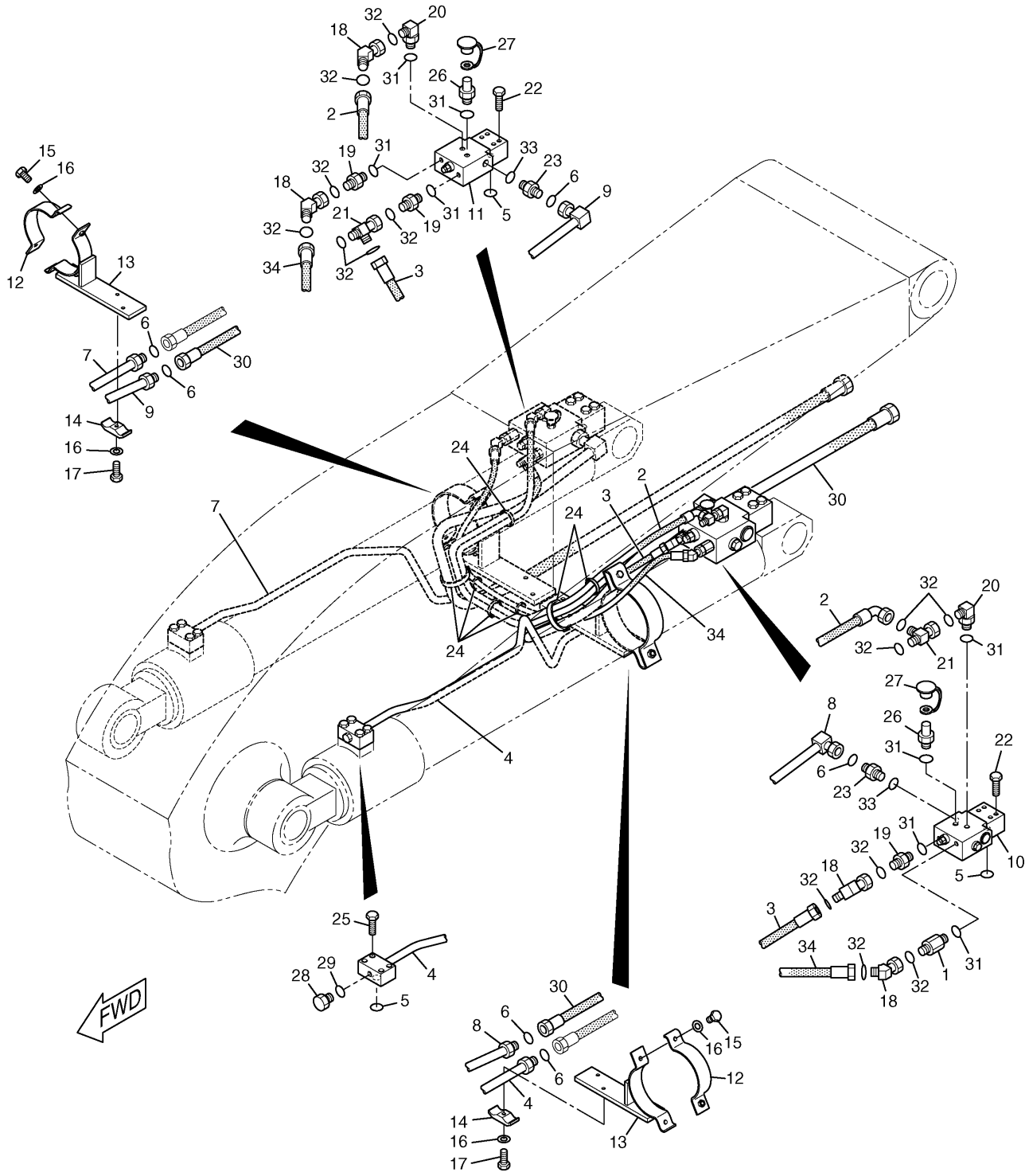

H86340E 04

168-9560 LINES GP-BOOM CYLINDER

S/N CAE (T04.01)-Up
Part of 171-0020-Page359
225-4655-Page505.01,225-4656-Page507.01
An Attachment

HYDRAULIC SYSTEM

NOTE	No.	PART No.	QTY	PART NAME	NOTE	No.	PART No.	QTY	PART NAME
	1	8T-0075	1	CONNECTOR					
	2	202-3772	1	HOSE AS					
E		7I-7439		GUARD…(132cm)					
	3	121-6376	1	HOSE AS					
	4	229-1114	1	TUBE AS					
	5	4J-5267	4	SEAL-O-RING (ID=24.99mm)					
	6	7J-9108	6	SEAL-O-RING (OD=19.28mm)					
	7	196-0729	1	TUBE AS					
	8	196-0730	1	TUBE AS					
	9	196-0731	1	TUBE AS					
Y	10	225-4655	1	VALVE GP					
Y	11	225-4656	1	VALVE GP					
	12	121-6217	2	SUPPORT AS					
	13	124-0863	2	SUPPORT AS					
	14	096-5766	2	CLAMP					
	15	8T-4196	4	BOLT (L=35mm)					
	16	8T-4121	6	WASHER					
	17	8T-4185	2	BOLT (L=50mm)					
	18	8C-8988	4	ELBOW					
	19	6V-8636	3	CONNECTOR					
	20	6V-8724	2	ELBOW					
	21	6V-9836	2	TEE					
	22	8T-0341	8	BOLT (L=60mm)					
	23	6V-8713	2	CONNECTOR					
	24	7K-1181	7	STRAP					
	25	8T-4182	8	BOLT (L=45mm)					
	26	6V-3965	2	NIPPLE AS					
	27	6V-0852	2	CAP					
	28	9S-4185	1	PLUG					
	29	3K-0360	1	SEAL-O-RING (ID=16.36mm)					
	30	123-2636	2	HOSE AS					
	31	3J-1907	8	SEAL-O-RING (ID=11.89mm)					
	32	6V-8397	14	SEAL-O-RING (OD=12.83mm)					
	33	3D-2824	2	SEAL-O-RING (ID=23.47mm)					
	34	196-3369	1	HOSE AS					

E—ORDER BY THE CENTIMETER

Y—SEE SEPARATE ILLUSTRATION

H86340E 04

168-9560 LINES GP-BOOM CYLINDER

S/N CAE (T04.01)-Up

Part of 171-0020-Page359

225-4655-Page505.01,225-4656-Page507.01

An Attachment

HYDRAULIC SYSTEM

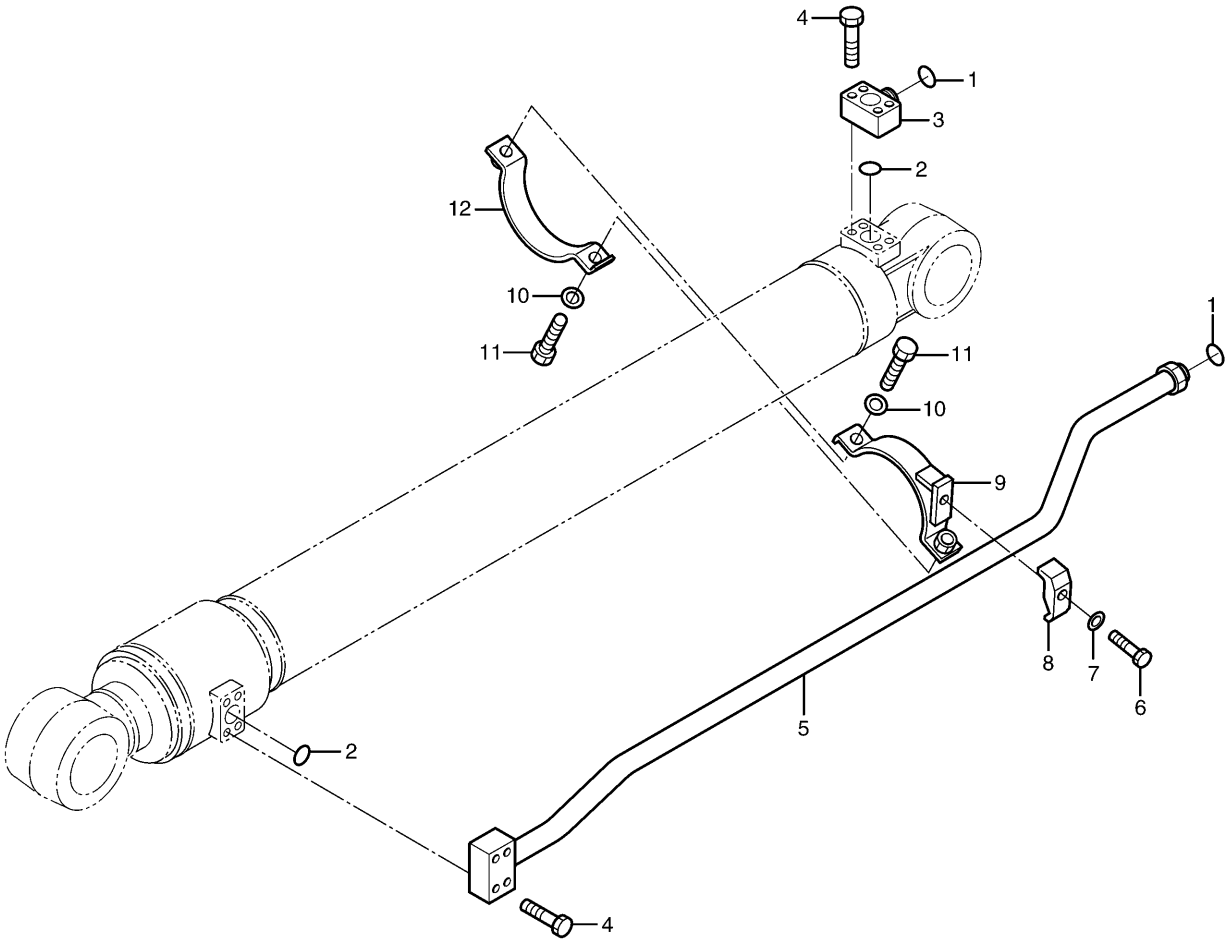

NOTE	No.	PART No.	QTY	PART NAME	NOTE	No.	PART No.	QTY	PART NAME
	1	6V-9746	2	SEAL-O-RING (OD=22.50mm)					
	2	4J-5267	2	SEAL-O-RING (ID=24.99mm)					
	3	109-5816	1	ELBOW					
	4	8T-4185	8	BOLT (L=50mm)					
	5	194-9124	1	TUBE AS					
	6	8T-4910	1	BOLT (L=60mm)					
	7	8T-4223	1	WASHER					
	8	093-1292	1	CLAMP					
	9	121-6219	1	SUPPORT AS					
	10	8T-4121	2	WASHER					
	11	8T-4196	2	BOLT (L=35mm)					
	12	121-6220	1	SUPPORT AS					

H76768E 01

194-8989 LINES GP-STICK CYLINDER

Part of 194-8310-Page296
An Attachment

HYDRAULIC SYSTEM

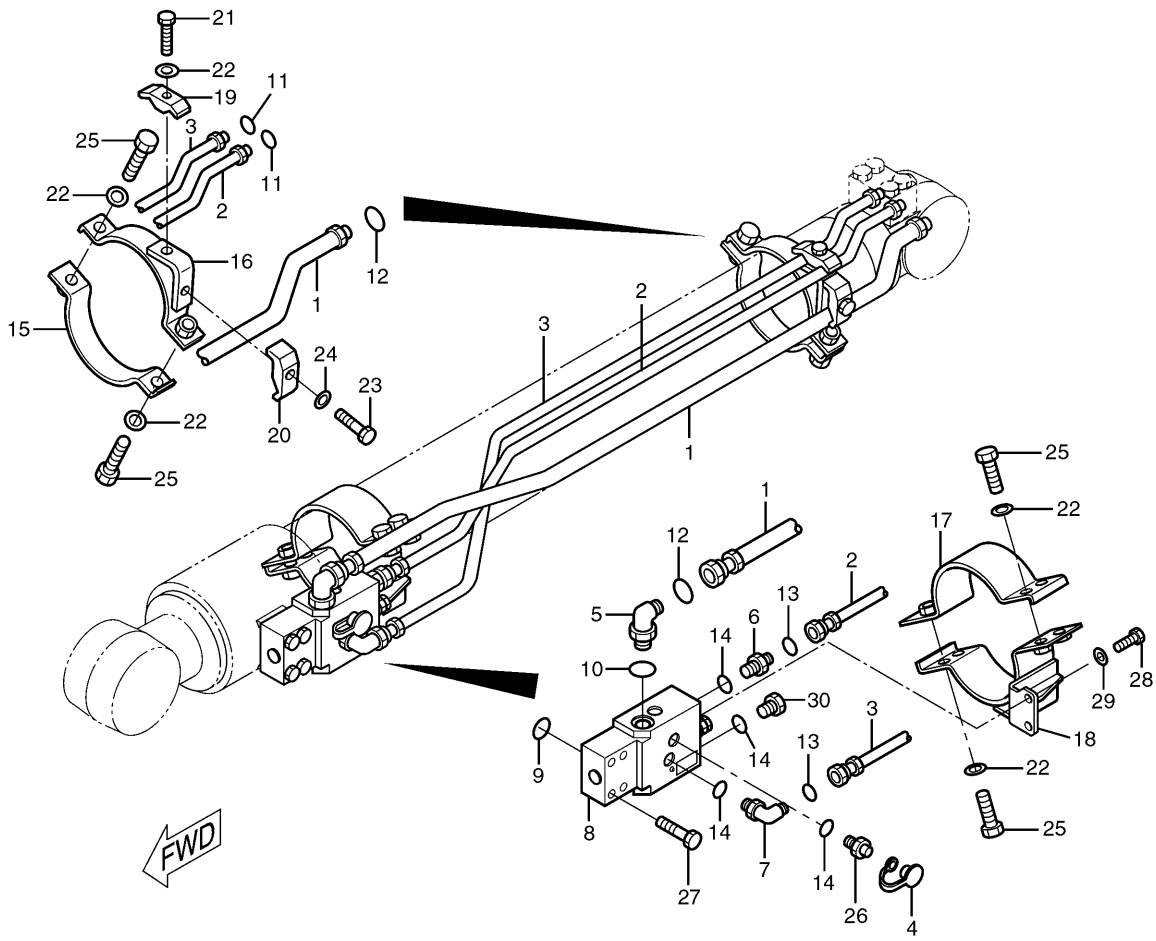

NOTE	No.	PART No.	QTY	PART NAME	NOTE	No.	PART No.	QTY	PART NAME
	1	202-7139	1	TUBE AS		19	093-1294	1	CLAMP
	2	202-7140	1	PIPE AS		20	093-1292	1	CLAMP
	3	202-7142	1	PIPE AS		21	8T-4186	1	BOLT (L=40mm)
	4	6V-0852	1	CAP		22	8T-4121	7	WASHER
	5	6V-9007	1	ELBOW		23	8T-4910	1	BOLT (L=60mm)
	6	6V-8641	1	CONNECTOR		24	8T-4223	1	WASHER
	7	6V-8627	1	ELBOW		25	8T-4196	6	BOLT (L=35mm)
Y	8	206-3220	1	VALVE GP		26	6V-3965	1	NIPPLE AS
	9	4J-5267	1	SEAL-O-RING (ID=24.99mm)		27	8T-0341	4	BOLT (L=60mm)
	10	3D-2824	1	SEAL-O-RING (ID=23.47mm)		28	8T-4189	2	BOLT (L=20mm)
	11	6V-8397	2	SEAL-O-RING (OD=12.83mm)		29	8T-4224	2	WASHER
	12	6V-9746	2	SEAL-O-RING (OD=22.50mm)		30	9S-4191	1	PLUG
	13	4J-5477	2	SEAL-O-RING (OD=11.23mm)					
	14	3J-1907	4	SEAL-O-RING (ID=11.89mm)					
	15	121-6220	1	SUPPORT AS					
	16	193-6496	1	SUPPORT AS					
		121-6220	1	SUPPORT AS					
	17	197-2198	1	SUPPORT AS					
	18	202-7144	1	SUPPORT AS					
		197-2198	1	SUPPORT AS					

Y—SEE SEPARATE ILLUSTRATION

H98168E 02

202-7138 LINES GP-STICK CYLINDER

S/N CAE 01201-(T02.08)
Part of 206-3231-Page359
206-3220-Page508
An Attachment

HYDRAULIC SYSTEM

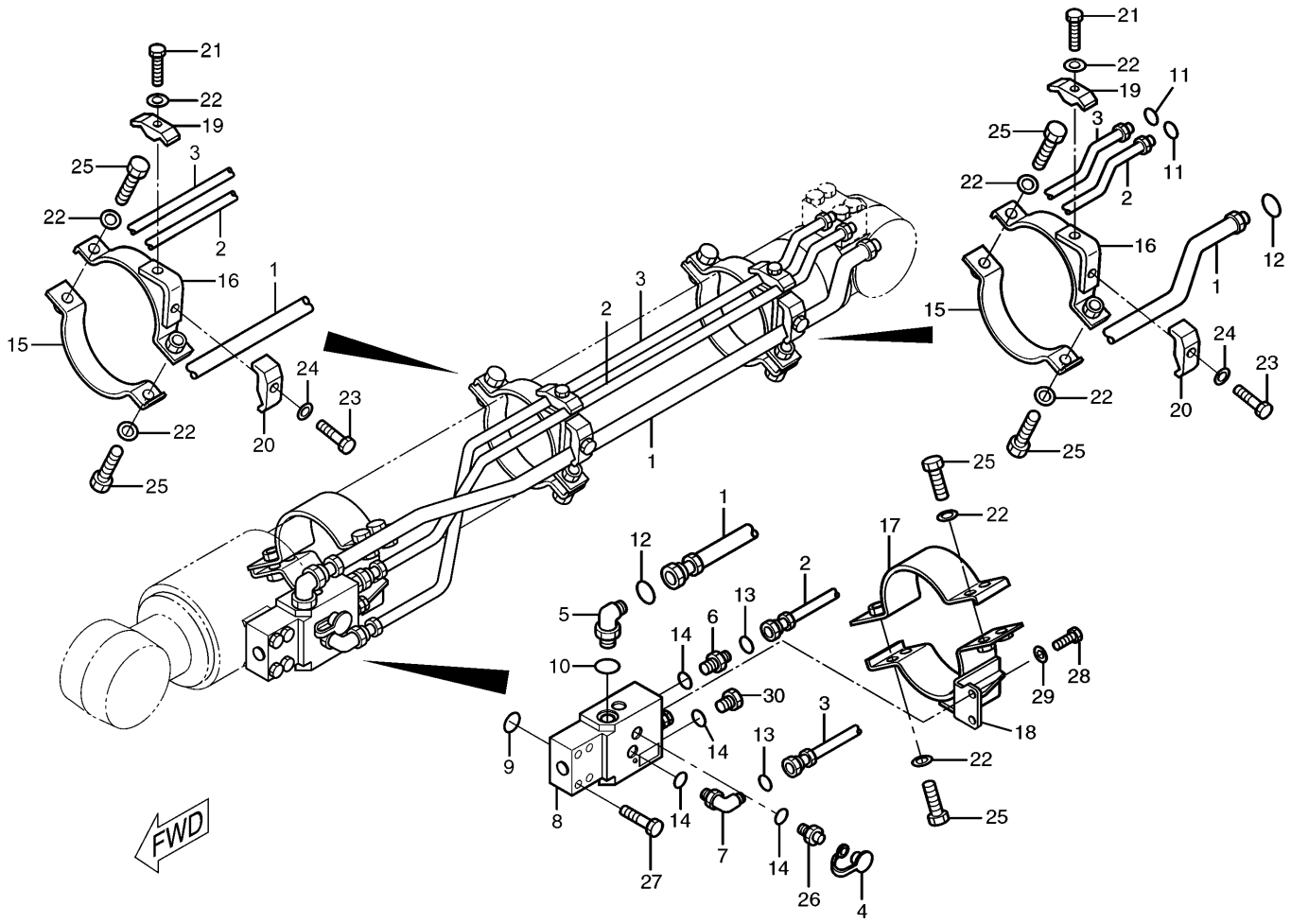

NOTE	No.	PART No.	QTY	PART NAME	NOTE	No.	PART No.	QTY	PART NAME
	1	202-7139	1	TUBE AS		19	093-1294	2	CLAMP
	2	202-7140	1	PIPE AS		20	093-1292	2	CLAMP
	3	202-7142	1	PIPE AS		21	8T-4186	2	BOLT (L=40mm)
	4	6V-0852	1	CAP		22	8T-4121	10	WASHER
	5	6V-9007	1	ELBOW		23	8T-4910	2	BOLT (L=60mm)
	6	6V-8641	1	CONNECTOR		24	8T-4223	2	WASHER
	7	6V-8627	1	ELBOW		25	8T-4196	8	BOLT (L=35mm)
Y	8	225-4657	1	VALVE GP		26	6V-3965	1	NIPPLE AS
	9	4J-5267	1	SEAL-O-RING (ID=24.99mm)		27	8T-0341	4	BOLT (L=60mm)
	10	3D-2824	1	SEAL-O-RING (ID=23.47mm)		28	8T-4189	2	BOLT (L=20mm)
	11	6V-8397	2	SEAL-O-RING (OD=12.83mm)		29	5P-4116	2	WASHER
	12	6V-9746	2	SEAL-O-RING (OD=22.50mm)		30	9S-4191	1	PLUG
	13	4J-5477	2	SEAL-O-RING (OD=11.23mm)					
	14	3J-1907	4	SEAL-O-RING (ID=11.89mm)					
	15	121-6220	2	SUPPORT AS					
	16	193-6496	2	SUPPORT AS					
		121-6220	1	SUPPORT AS					
	17	197-2198	1	SUPPORT AS					
	18	202-7144	1	SUPPORT AS					
		197-2198	1	SUPPORT AS					

Y—SEE SEPARATE ILLUSTRATION

H98169E 05

202-7138 LINES GP-STICK CYLINDER

S/N CAE (T02.09)-Up
Part of 206-3231-Page359
225-4657-Page509.01
An Attachment

MEMORANDA

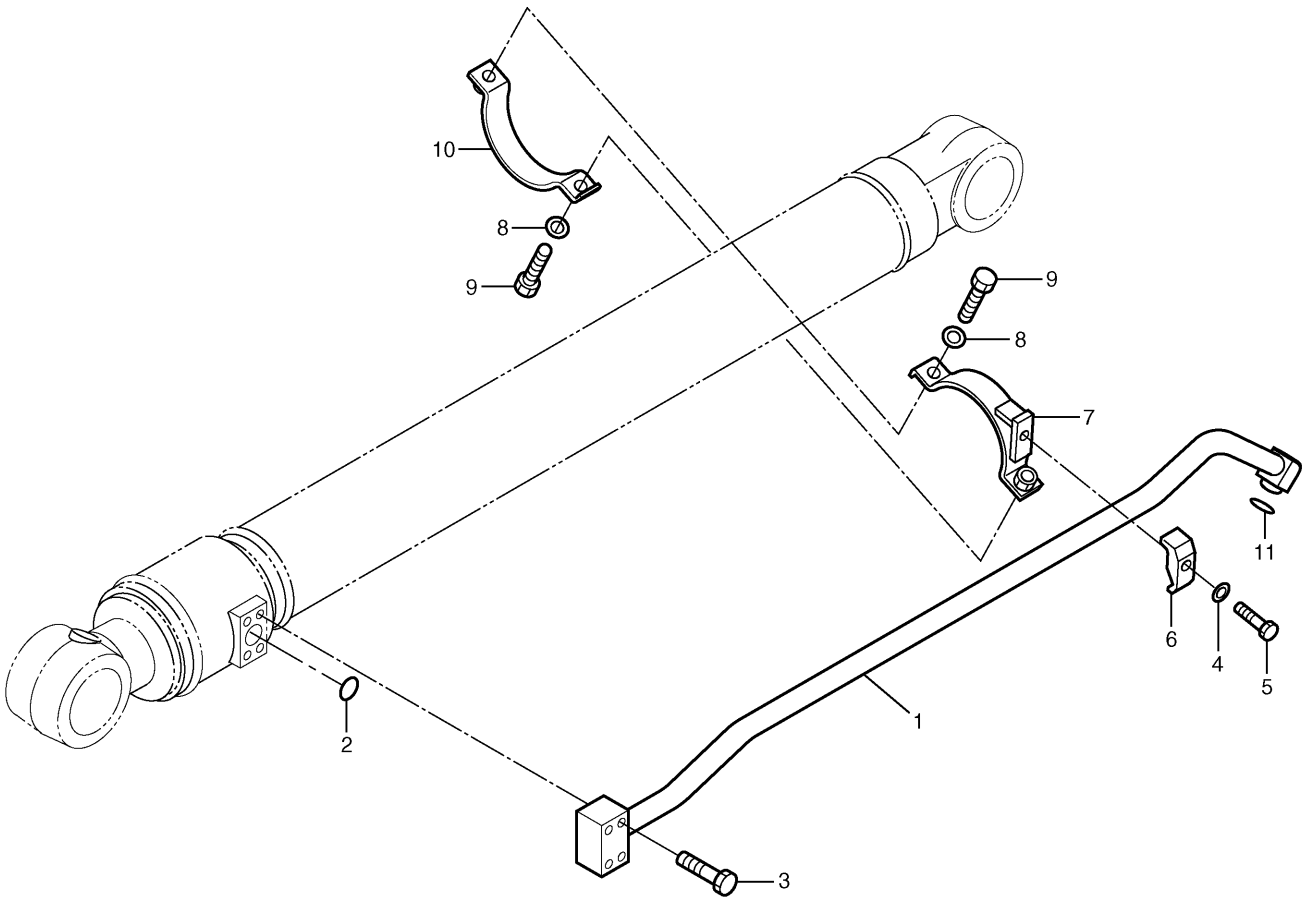

NOTE	No.	PART No.	QTY	PART NAME	NOTE	No.	PART No.	QTY	PART NAME
	1	179-7599	1	TUBE AS					
	2	4J-5267	1	SEAL-O-RING (ID=24.99mm)					
	3	8T-4182	4	BOLT (L=45mm)					
	4	8T-4223	1	WASHER					
	5	8T-4194	1	BOLT (L=50mm)					
	6	093-1291	1	CLAMP					
	7	121-6222	1	SUPPORT AS					
	8	8T-4121	2	WASHER					
	9	8T-4196	2	BOLT (L=35mm)					
	10	121-6223	1	SUPPORT AS					
	11	7J-9108	1	SEAL-O-RING (OD=19.28mm)					

H71511E 01

179-7598 LINES GP-BUCKET CYLINDER

Part of 165-9424-Page296,248-7866-Page296.01
An Attachment

HYDRAULIC SYSTEM

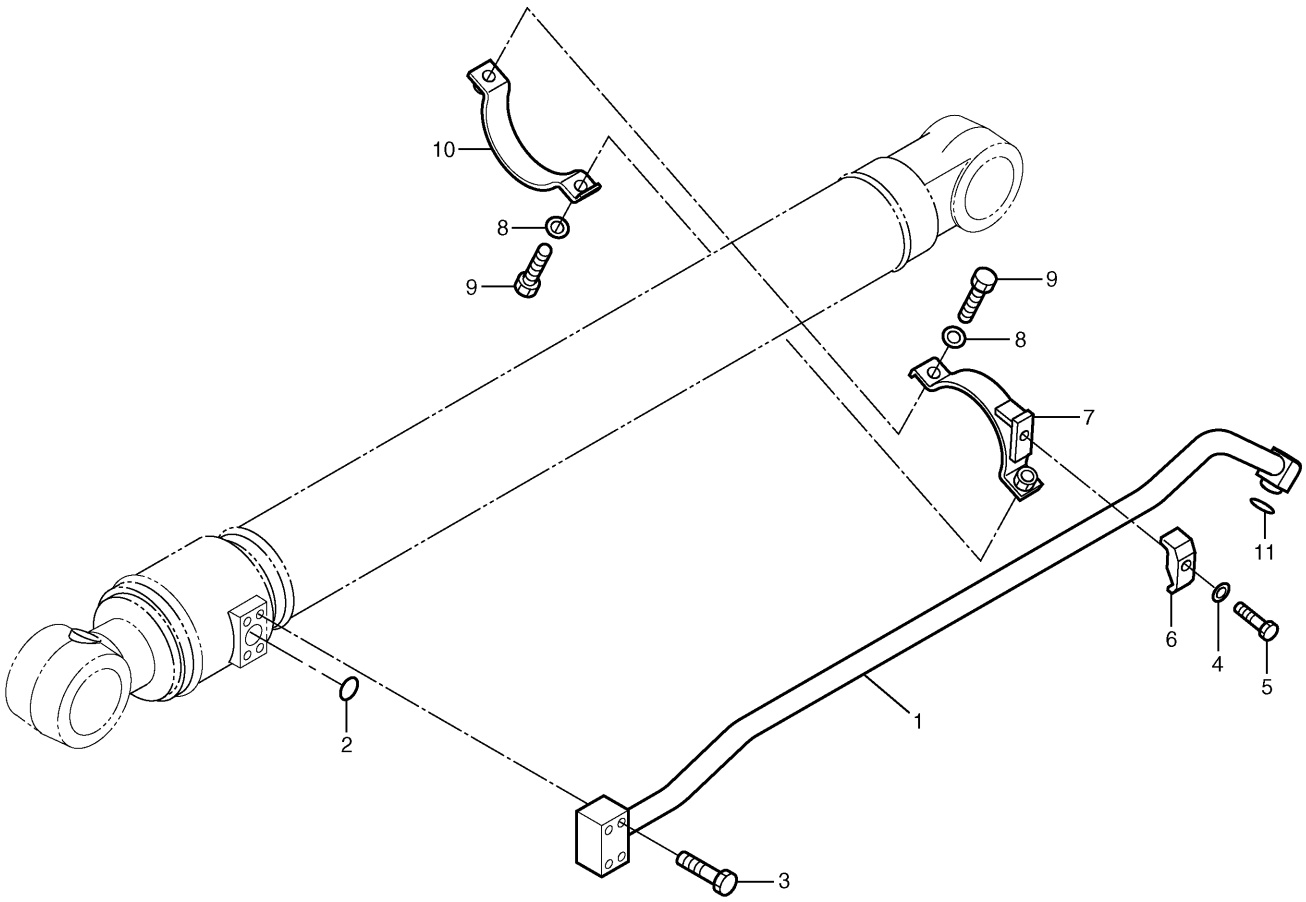

NOTE	No.	PART No.	QTY	PART NAME	NOTE	No.	PART No.	QTY	PART NAME
	1	212-5229	1	TUBE AS					
	2	4J-5267	1	SEAL-O-RING (ID=24.99mm)					
	3	8T-4182	4	BOLT (L=45mm)					
	4	8T-4223	1	WASHER					
	5	8T-4194	1	BOLT (L=50mm)					
	6	093-1291	1	CLAMP					
	7	212-5230	1	SUPPORT AS					
	8	8T-4121	2	WASHER					
	9	8T-4196	2	BOLT (L=35mm)					
	10	134-7810	1	SUPPORT AS					
	11	7J-9108	1	SEAL-O-RING (OD=19.28mm)					

H81964E 00

212-5228 LINES GP-BUCKET CYLINDER

S/N CAE 01201-02264
Part of 209-5896-Page296.02
An Attachment

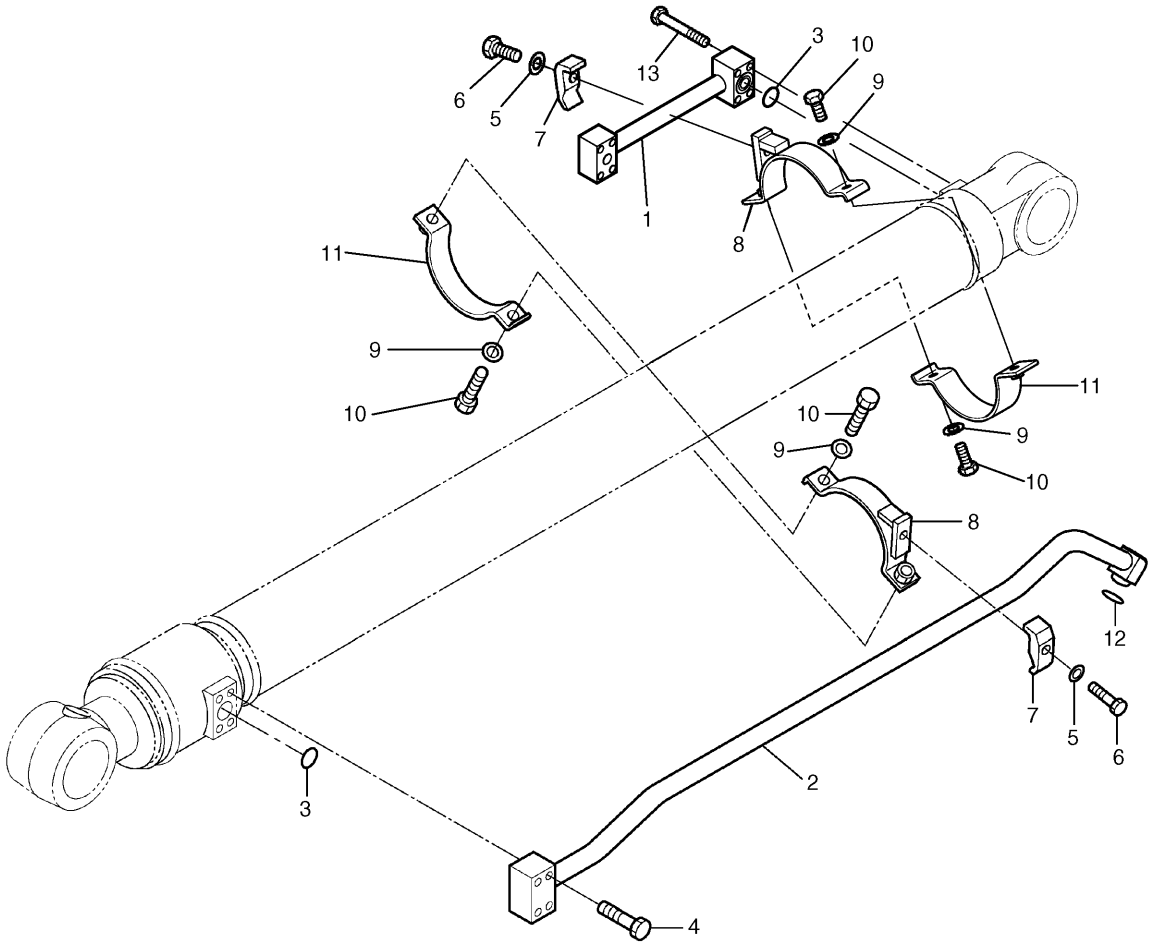

NOTE	No.	PART No.	QTY	PART NAME	NOTE	No.	PART No.	QTY	PART NAME
	1	229-1052	1	TUBE AS					
	2	229-1051	1	TUBE AS					
	3	4J-5267	2	SEAL-O-RING (ID=24.99mm)					
	4	8T-4182	4	BOLT (L=45mm)					
	5	8T-4223	2	WASHER					
	6	8T-4194	2	BOLT (L=50mm)					
	7	093-1291	2	CLAMP					
	8	212-5230	2	SUPPORT AS					
	9	8T-4121	4	WASHER					
	10	8T-4196	4	BOLT (L=35mm)					
	11	134-7810	2	SUPPORT AS					
	12	7J-9108	1	SEAL-O-RING (OD=19.28mm)					
	13	8T-6466	4	BOLT (L=60mm)					

H86342E 00

229-1044 LINES GP-BUCKET CYLINDER

S/N CAE 02265-Up
Part of 248-7860-Page296.02
An Attachment

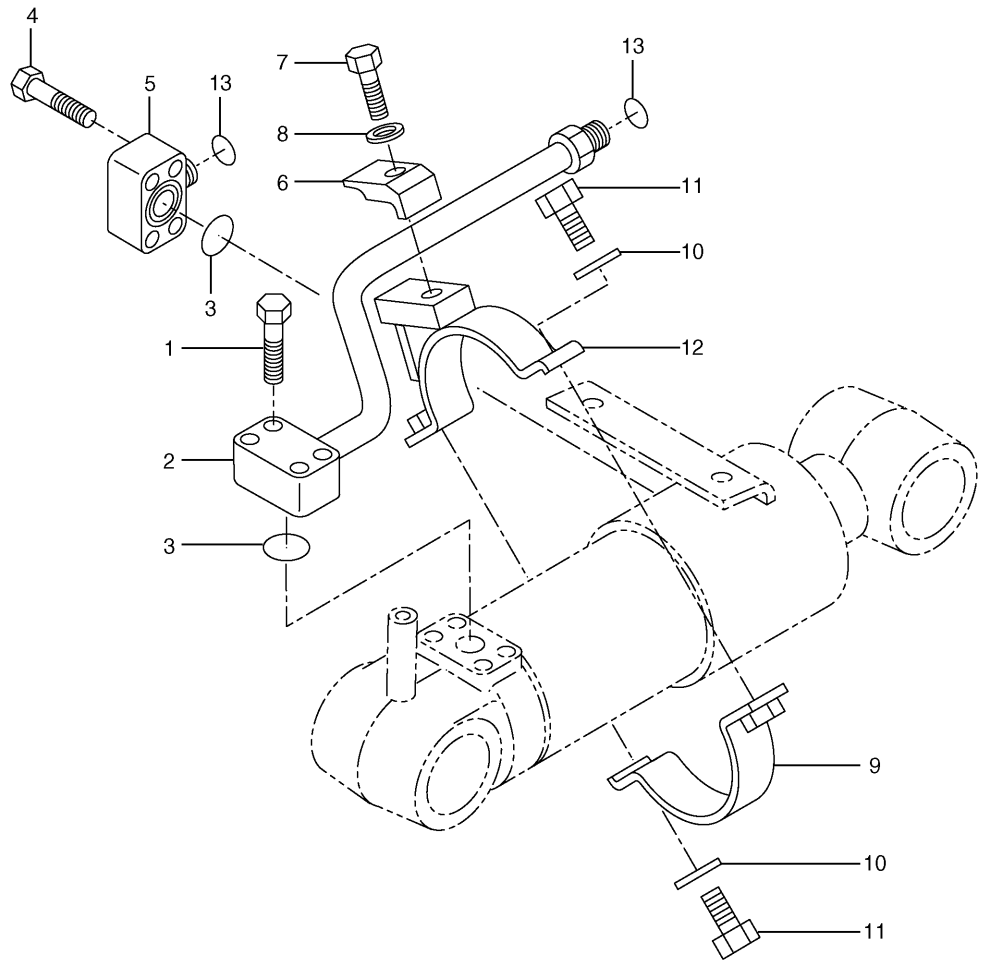

NOTE	No.	PART No.	QTY	PART NAME	NOTE	No.	PART No.	QTY	PART NAME
	1	8T-4182	4	BOLT (L=45mm)					
	2	179-7603	1	PIPE AS					
	3	4J-5267	2	SEAL-O-RING (ID=24.99mm)					
	4	8T-4185	4	BOLT (L=50mm)					
	5	139-1773	1	ELBOW					
	6	093-1291	1	CLAMP					
	7	8T-4194	1	BOLT (L=50mm)					
	8	8T-4223	1	WASHER					
	9	122-5500	1	SUPPORT AS					
	10	8T-4121	2	WASHER					
	11	8T-4196	2	BOLT (L=35mm)					
	12	122-5420	1	SUPPORT AS					
	13	7J-9108	2	SEAL-O-RING (OD=19.28mm)					

H82618E 03

179-7602 LINES GP-BLADE CYLINDER

Left Hand

Part of 165-9425-Page297

An Attachment

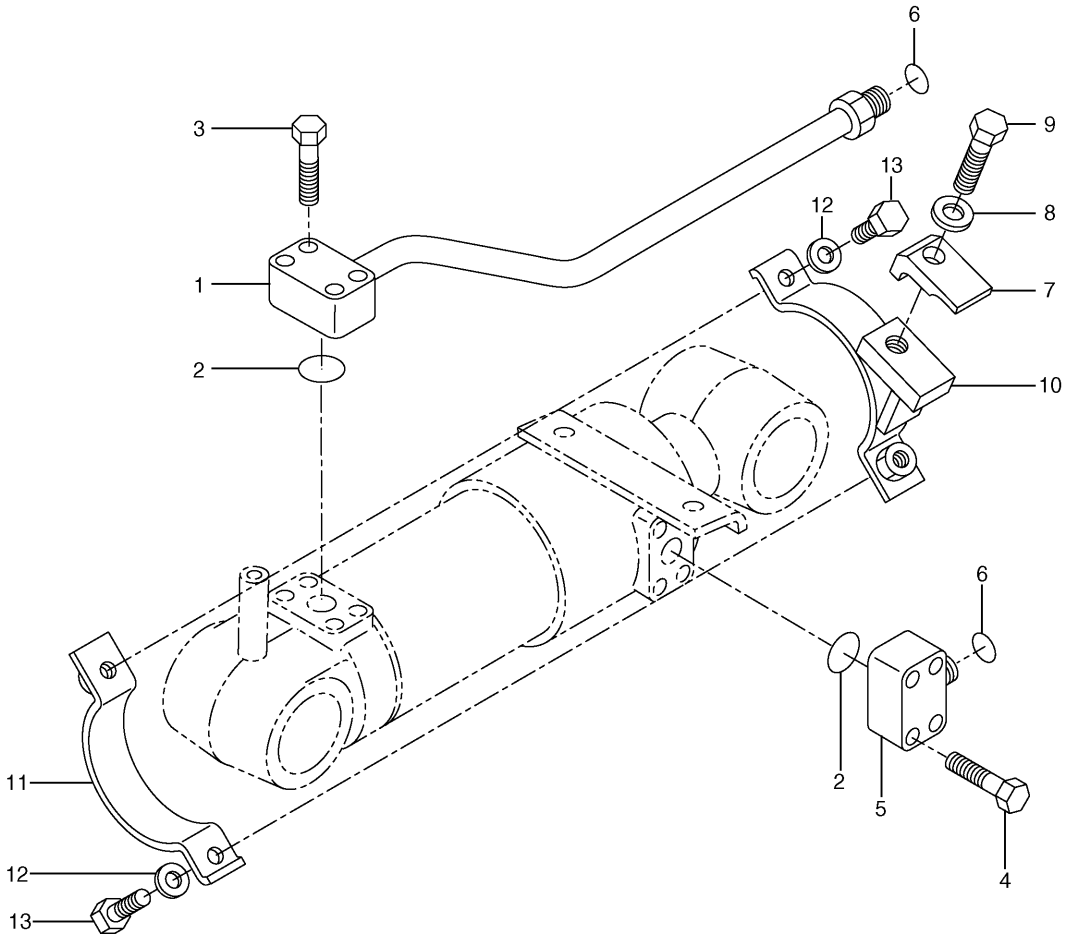

NOTE	No.	PART No.	QTY	PART NAME	NOTE	No.	PART No.	QTY	PART NAME
	1	179-7605	1	PIPE AS					
	2	4J-5267	2	SEAL-O-RING (ID=24.99mm)					
	3	8T-4182	4	BOLT (L=45mm)					
	4	8T-4185	4	BOLT (L=50mm)					
	5	139-1773	1	ELBOW					
	6	7J-9108	2	SEAL-O-RING (OD=19.28mm)					
	7	093-1291	1	CLAMP					
	8	8T-4223	1	WASHER					
	9	8T-4194	1	BOLT (L=50mm)					
	10	122-5420	1	SUPPORT AS					
	11	122-5500	1	SUPPORT AS					
	12	8T-4121	2	WASHER					
	13	8T-4196	2	BOLT (L=35mm)					

H82619E 03

179-7604 LINES GP-BLADE CYLINDER

Right Hand

Part of 170-9800-Page297

An Attachment

MEMORANDA

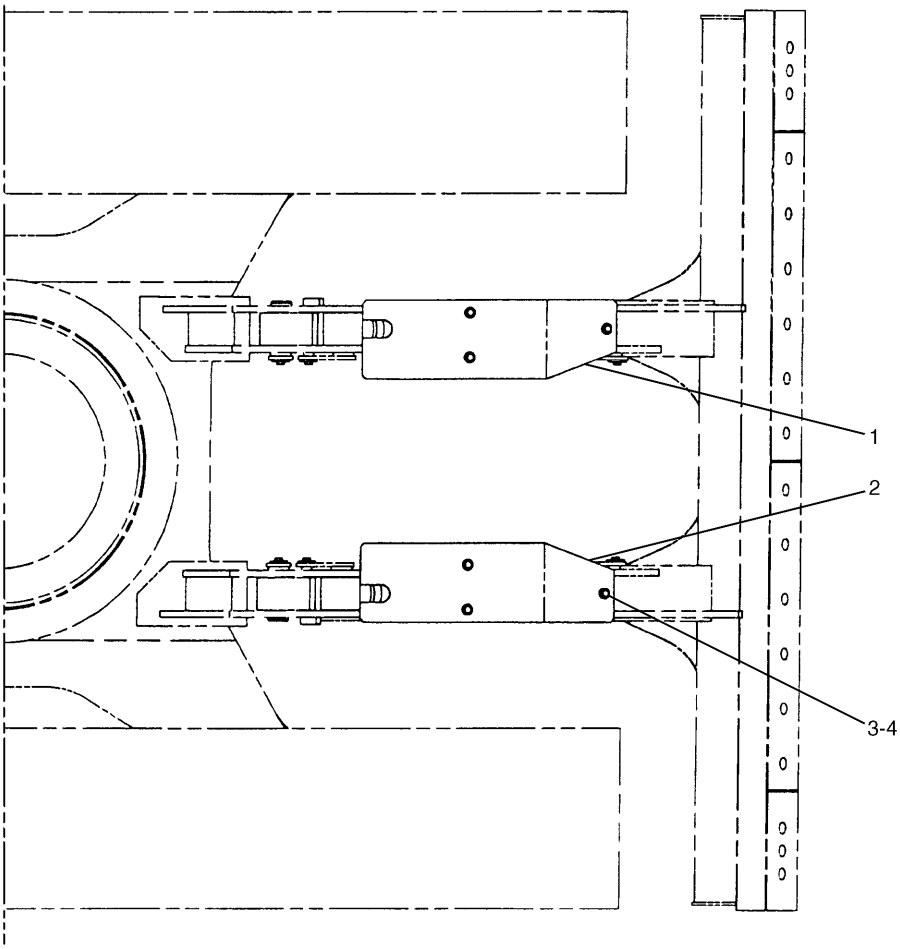

NOTE	No.	PART No.	QTY	PART NAME	NOTE	No.	PART No.	QTY	PART NAME
	1	160-1995	1	COVER					
	2	160-1996	1	COVER					
	3	8T-4192	6	BOLT (L=25mm)					
	4	5P-1076	6	WASHER					

H67488E 01

160-1994 GUARD GP-BLADE CYLINDER

Part of 151-1493-Page634,183-1476-Page635,151-1494-Page636
An Attachment

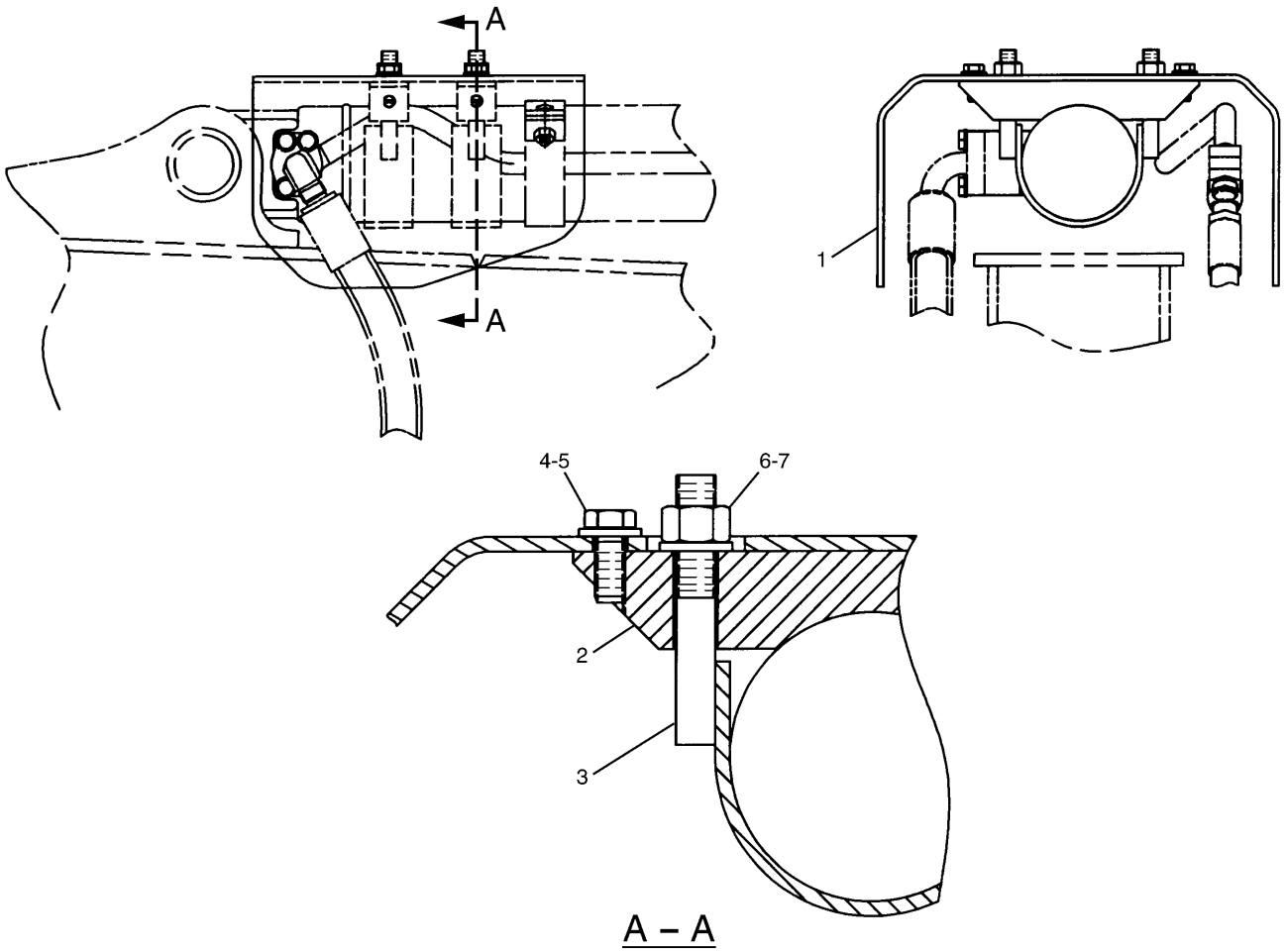

NOTE	No.	PART No.	QTY	PART NAME	NOTE	No.	PART No.	QTY	PART NAME
	1	194-8382	1	GUARD					
	2	191-5723	2	SUPPORT					
	3	191-5724	2	SUPPORT AS					
	4	8T-4139	4	BOLT (L=30mm)					
	5	8T-4223	4	WASHER					
	6	9X-8257	4	WASHER					
	7	8T-4132	4	NUT					

H77563E 01

194-8257 GUARD GP-BUCKET CYLINDER
An Attachment

HYDRAULIC SYSTEM

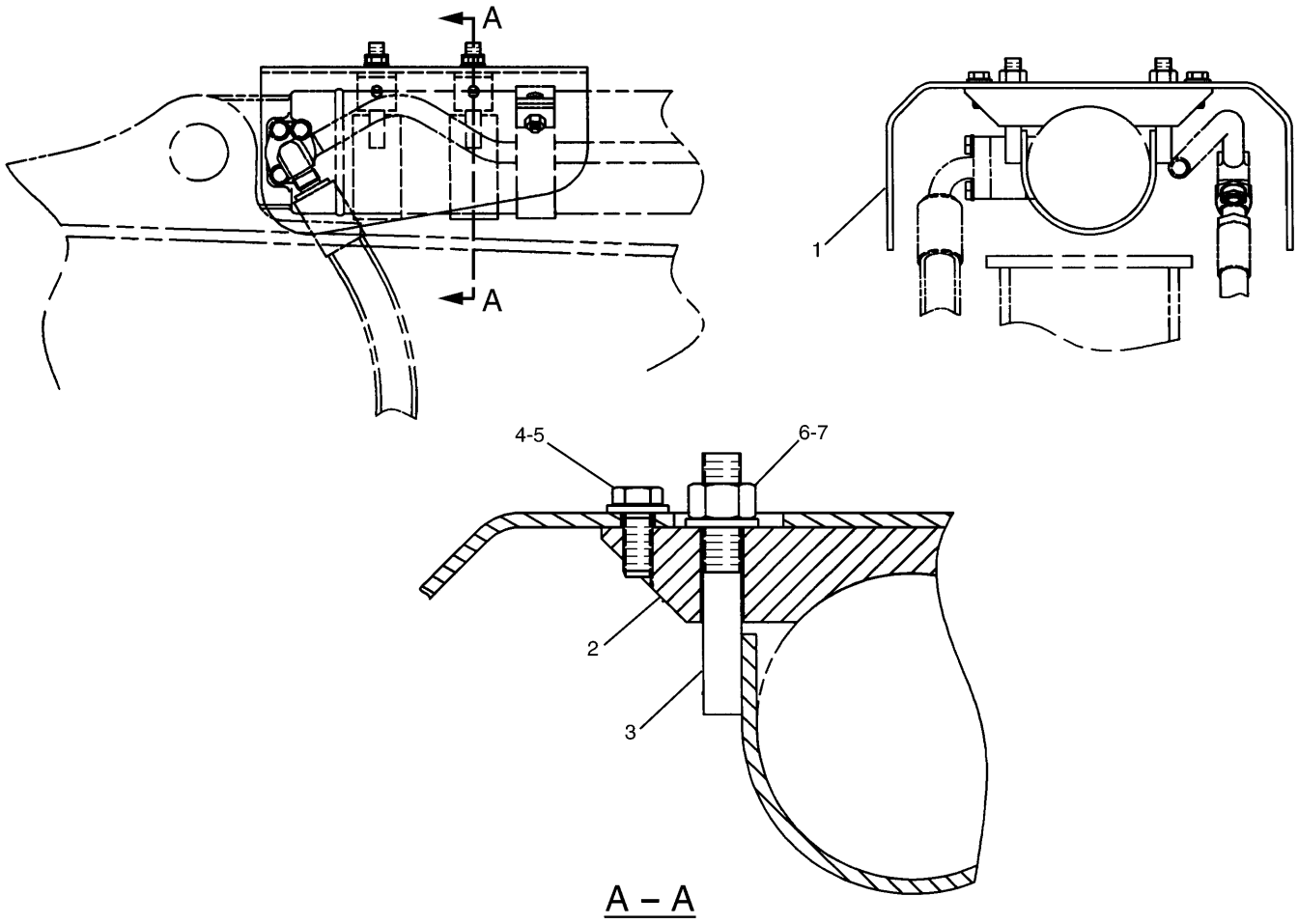

NOTE	No.	PART No.	QTY	PART NAME	NOTE	No.	PART No.	QTY	PART NAME
	1	215-9878	1	GUARD					
	2	215-9879	2	SUPPORT					
	3	215-9880	2	SUPPORT AS					
	4	8T-4139	4	BOLT (L=30mm)					
	5	8T-4223	4	WASHER					
	6	9X-8257	4	WASHER					
	7	8T-4132	4	NUT					

H81746E 00

215-9876 GUARD GP-BUCKET CYLINDER

S/N CAE 01201-02264
An Attachment

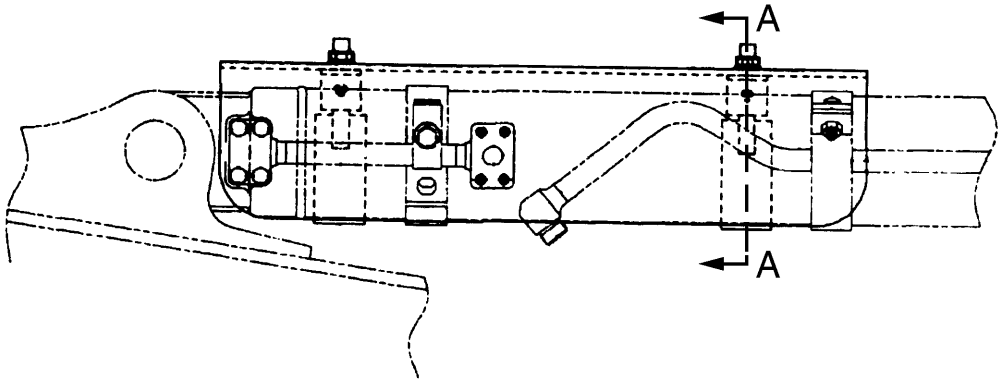

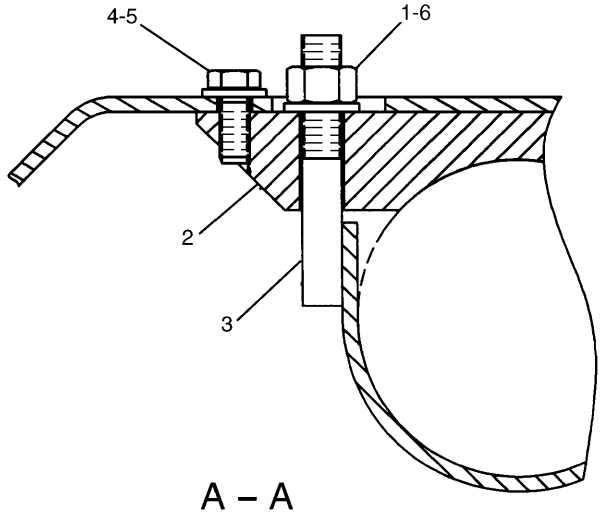

A – A

NOTE	No.	PART No.	QTY	PART NAME	NOTE	No.	PART No.	QTY	PART NAME
	1	8T-4132	4	NUT					
	2	215-9879	2	SUPPORT					
	3	215-9880	2	SUPPORT AS					
	4	8T-4139	4	BOLT (L=30mm)					
	5	8T-4223	4	WASHER					
	6	9X-8257	4	WASHER					

H86343E 00

229-1067 GUARD GP-BUCKET CYLINDER

S/N CAE 02265-Up
An Attachment

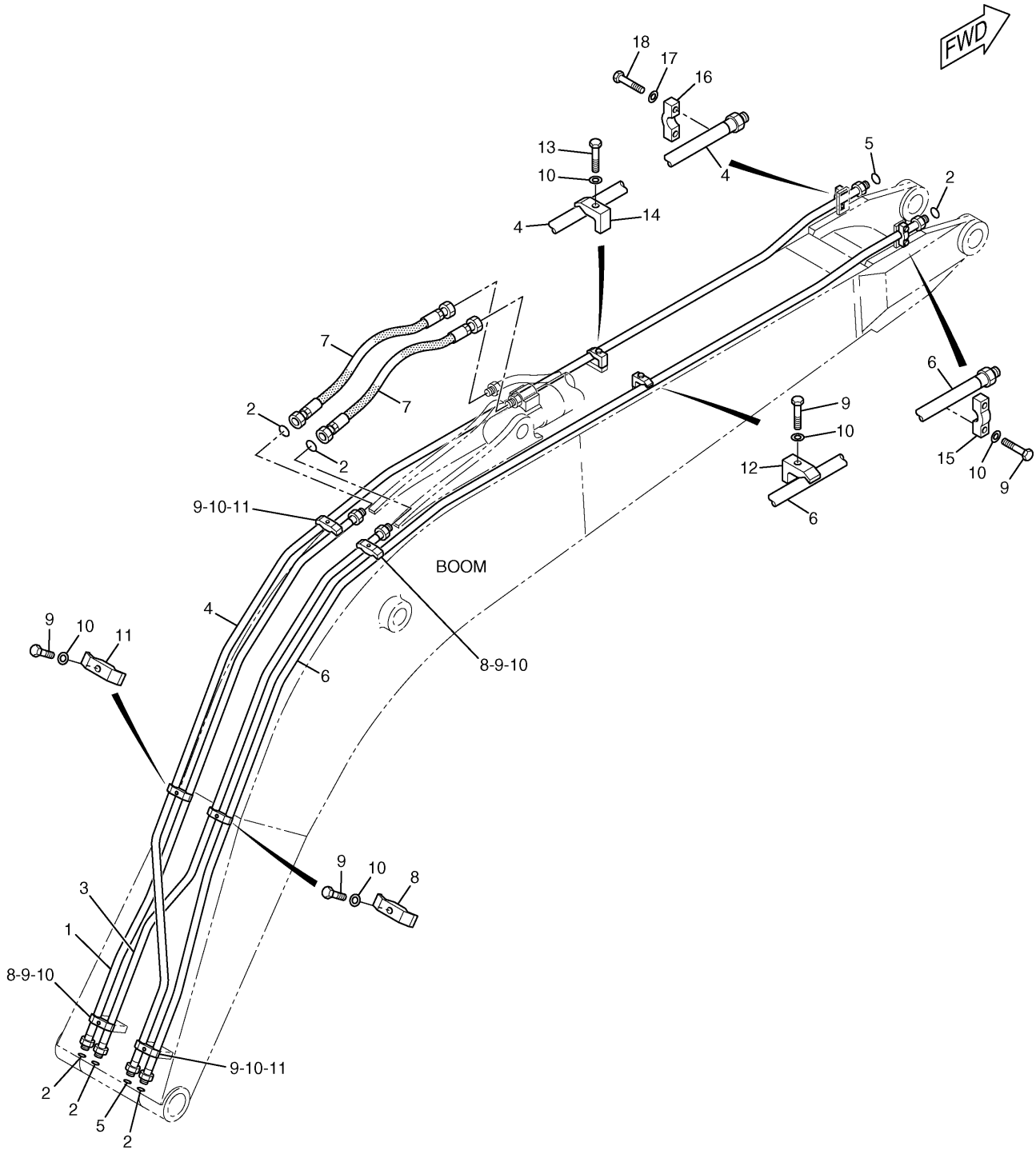

207-6501 LINES GP-BOOM
Part of 151-1487-Page628
An Attachment

HYDRAULIC SYSTEM

NOTE	No.	PART No.	QTY	PART NAME	NOTE	No.	PART No.	QTY	PART NAME
	1	204-8546	1	TUBE AS					
	2	6V-9746	6	SEAL-O-RING (OD=22.50mm)					
	3	204-8547	1	TUBE AS					
	4	179-7498	1	TUBE AS					
	5	7J-9108	2	SEAL-O-RING (OD=19.28mm)					
	6	179-7499	1	TUBE AS					
	7	4I-1095	2	HOSE AS					
	8	093-1295	3	CLAMP					
	9	8T-4910	9	BOLT (L=60mm)					
	10	8T-4223	10	WASHER					
	11	099-5408	3	CLAMP					
	12	093-1292	1	CLAMP					
	13	8T-4194	1	BOLT (L=50mm)					
	14	093-1291	1	CLAMP					
	15	093-1300	1	CLAMP					
	16	093-1299	1	CLAMP					
	17	8T-4121	2	WASHER					
	18	8T-4185	2	BOLT (L=50mm)					

H77573E 00

207-6501 LINES GP-BOOM

Part of 151-1487-Page628
An Attachment

HYDRAULIC SYSTEM

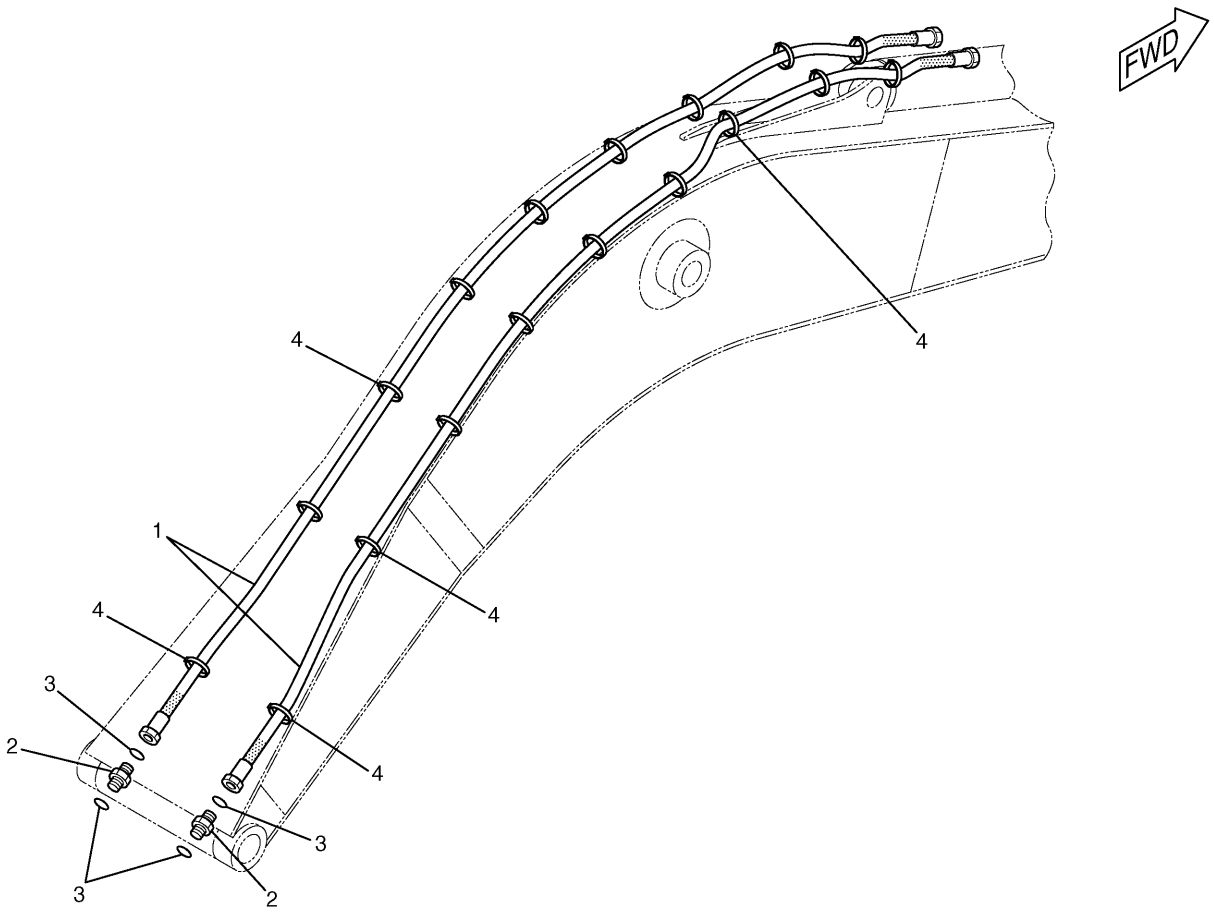

NOTE	No.	PART No.	QTY	PART NAME	NOTE	No.	PART No.	QTY	PART NAME
	1	087-6584	2	HOSE AS					
	2	6V-8730	2	UNION					
	3	199-1901	4	SEAL-O-RING (OD=12.83mm)					
	4	7K-1181	18	STRAP					

H78609E 03

197-2160 LINES GP-BOOM

Part of 206-3231-Page359
An Attachment

HYDRAULIC SYSTEM

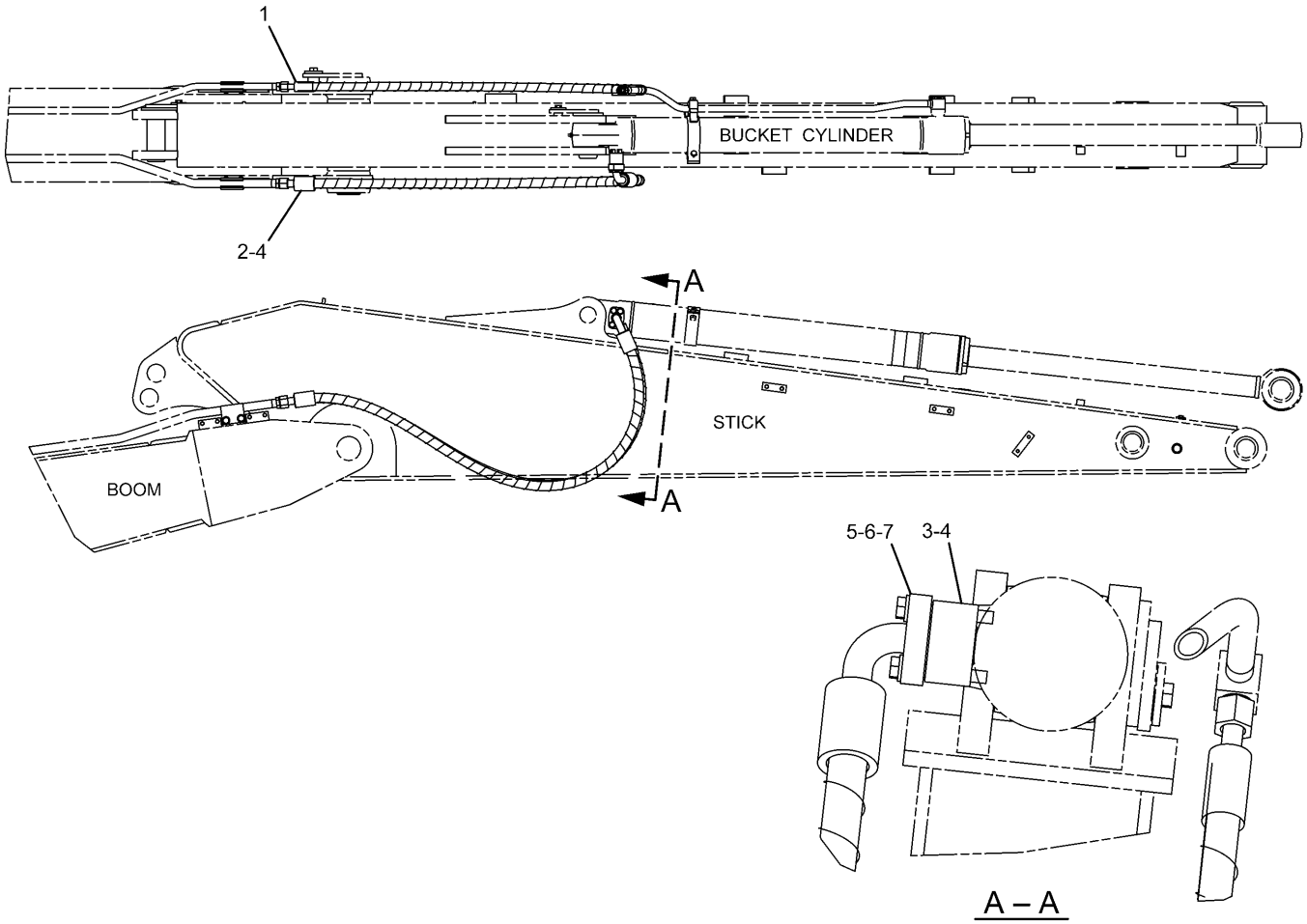

NOTE	No.	PART No.	QTY	PART NAME	NOTE	No.	PART No.	QTY	PART NAME
	1	123-2729	1	HOSE AS					
	2	124-1305	1	HOSE AS					
	3	131-9850	1	BLOCK					
	4	4J-5267	2	SEAL-O-RING (ID=24.99mm)					
	5	8C-3205	2	FLANGE					
	6	8T-4121	4	WASHER					
	7	8T-5005	4	BOLT (L=70mm)					

H98171E 02

179-7600 LINES GP-STICK

Part of 151-1488-Page629
An Attachment

HYDRAULIC SYSTEM

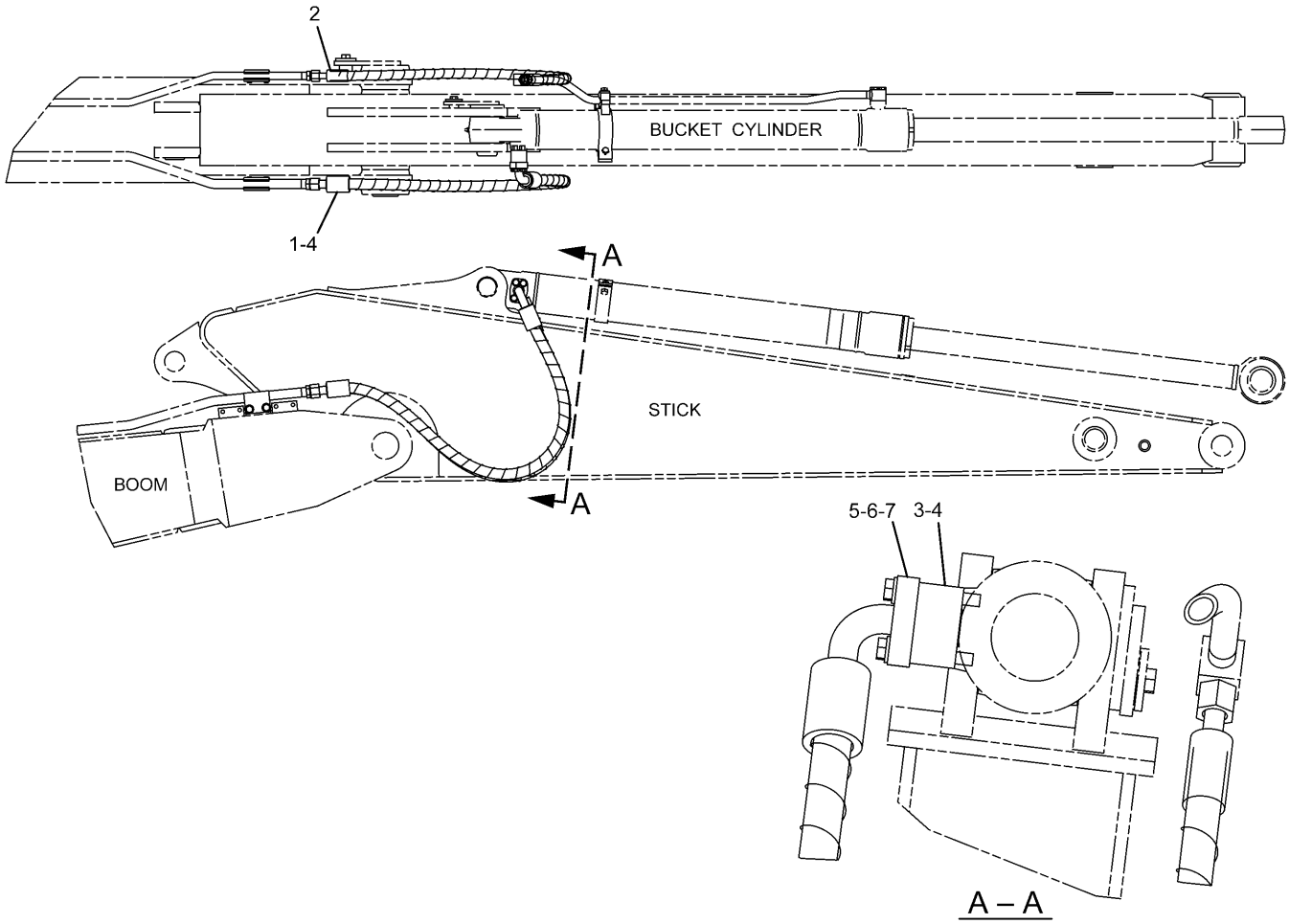

NOTE	No.	PART No.	QTY	PART NAME	NOTE	No.	PART No.	QTY	PART NAME
	1	104-8999	1	HOSE AS					
	2	124-0838	1	HOSE AS					
	3	131-9850	1	BLOCK					
	4	4J-5267	2	SEAL-O-RING (ID=24.99mm)					
	5	8C-3205	2	FLANGE					
	6	8T-4121	4	WASHER					
	7	8T-5005	4	BOLT (L=70mm)					

H98172E 02

179-7601 LINES GP-STICK

Part of 151-1489-Page629,194-8988-Page631
An Attachment

HYDRAULIC SYSTEM

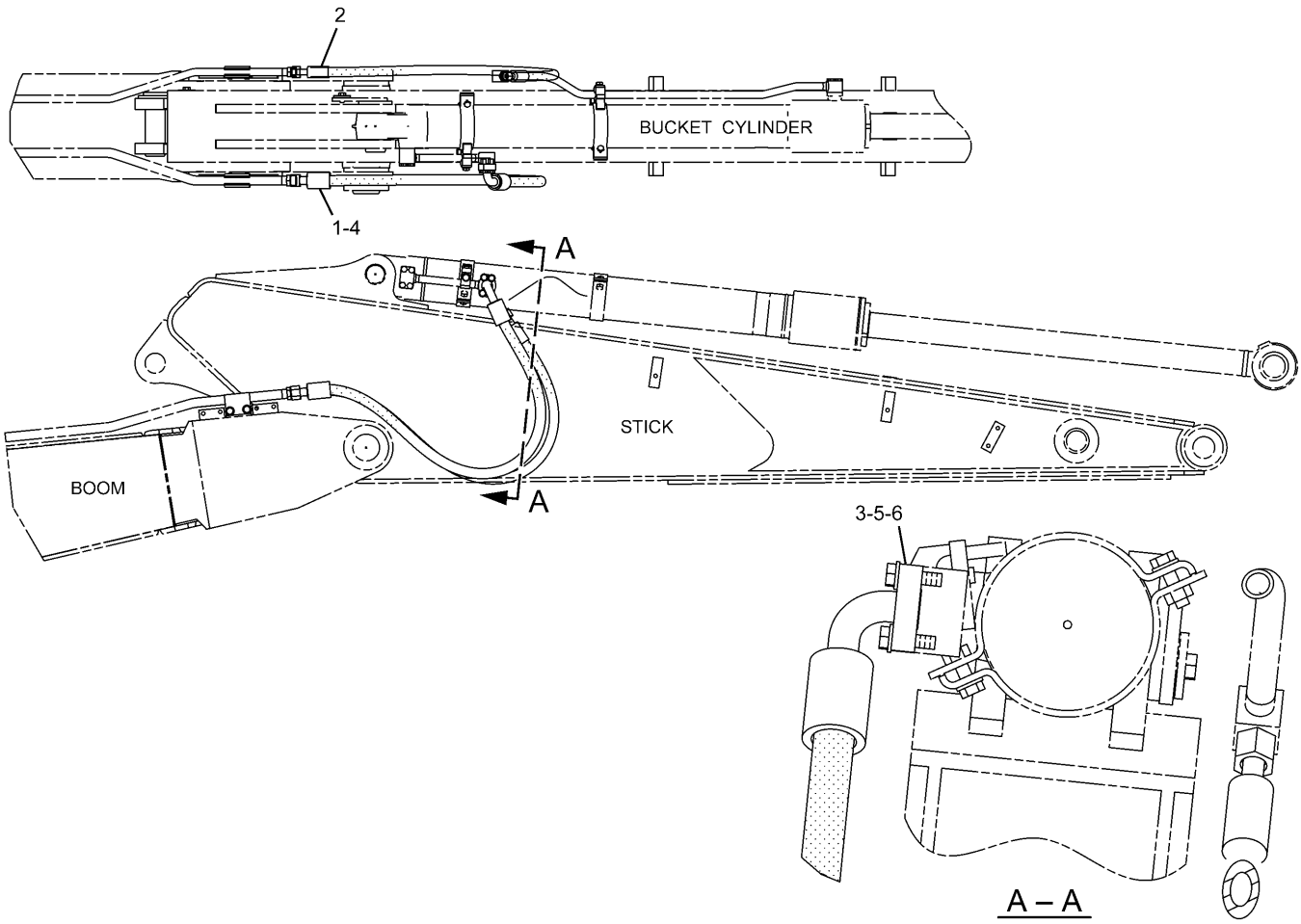

NOTE	No.	PART No.	QTY	PART NAME	NOTE	No.	PART No.	QTY	PART NAME
	1	104-8999	1	HOSE AS					
	2	124-0838	1	HOSE AS					
	3	1P-4576	2	FLANGE					
	4	4J-5267	1	SEAL-O-RING (ID=24.99mm)					
	5	8T-4121	4	WASHER					
	6	8T-4196	4	BOLT (L=35mm)					

H93826E 00

289-5279 LINES GP-STICK

S/N CAE 02265-Up
Part of 229-1056-Page631.01
An Attachment

Consists of :

			Page
1	197-2249	LINES GP-AUXILIARY HYDRAULIC	330
1	179-5076	BOOM GP	640

H75186E 02

179-5075 LINES AR-AUXILIARY HYDRAULIC
An Attachment

HYDRAULIC SYSTEM

Consists of :

			Page
1	116-9202	LINES GP-AUXILIARY HYDRAULIC	334
1	187-9968	STICK GP	645

H92781E 01

187-9966 LINES AR-AUXILIARY HYDRAULIC
An Attachment

Consists of :

			Page
1	127-6705	LINES GP-AUXILIARY HYDRAULIC	336
1	179-5078	STICK GP	649

H71820E 01

179-5077 LINES AR-AUXILIARY HYDRAULIC
An Attachment

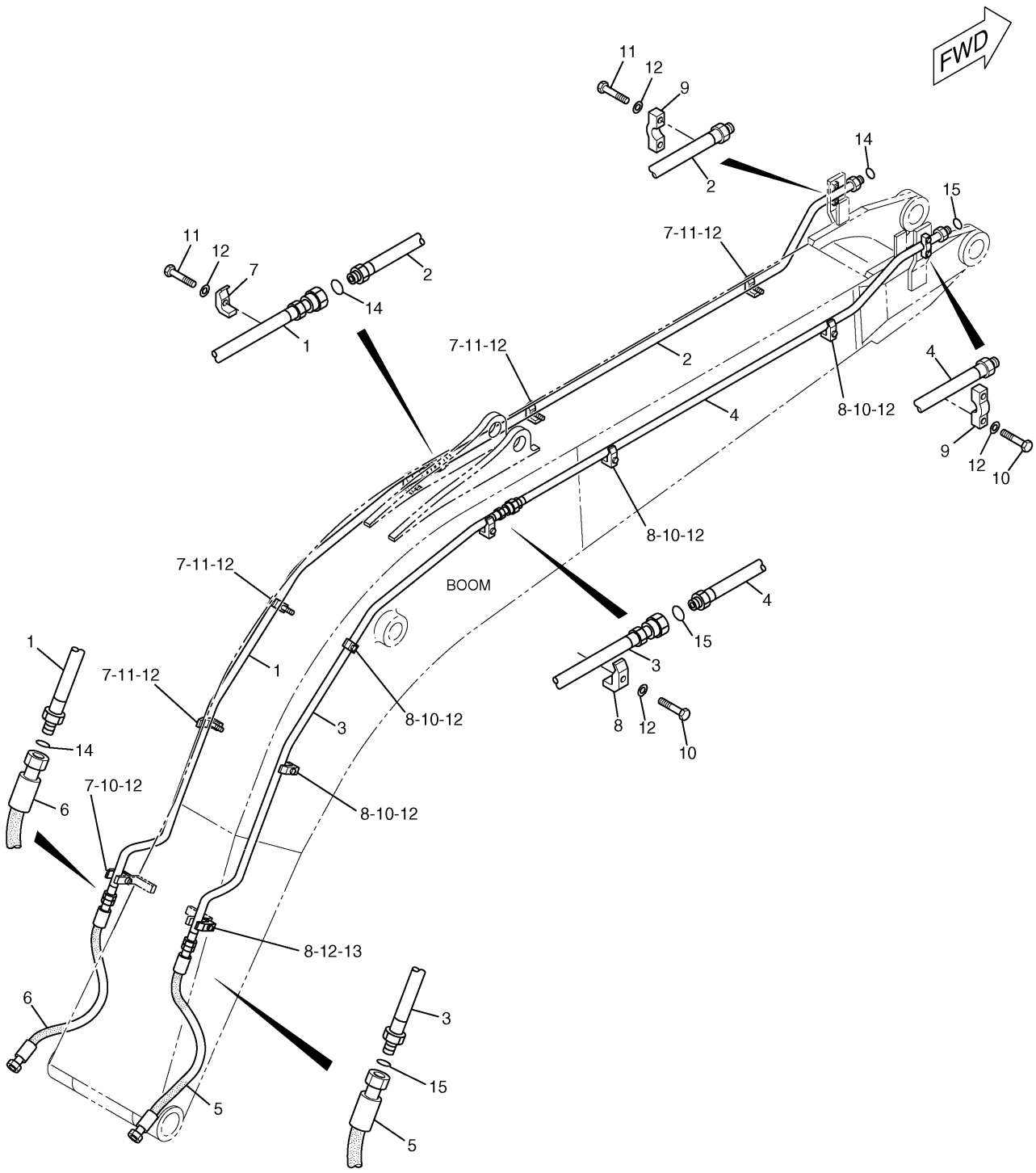

H75188E 00

197-2249 LINES GP-AUXILIARY HYDRAULIC

S/N CAE 01201-(T02.11)
Part of 179-5075-Page328
An Attachment

HYDRAULIC SYSTEM

NOTE	No.	PART No.	QTY	PART NAME	NOTE	No.	PART No.	QTY	PART NAME
	1	197-2250	1	TUBE AS					
	2	7I-8434	1	TUBE AS					
	3	197-2251	1	TUBE AS					
	4	132-1566	1	TUBE AS					
	5	109-6072	1	HOSE AS					
		3E-4069	2	CLIP					
E		5P-0201		HOSE…(84cm)					
		5P-1010	2	SLEEVE					
E		6V-0746		GUARD…(108cm)					
		7X-1452	2	STEM AS (STRAIGHT)					
	6	108-7497	1	HOSE AS					
		3E-4069	2	CLIP					
E		5P-0200		HOSE…(83cm)					
		5P-1027	2	SLEEVE					
E		6V-0745		GUARD…(109cm)					
		7X-1451	2	STEM AS (STRAIGHT)					
	7	093-1292	6	CLAMP					
	8	093-1293	6	CLAMP					
	9	093-1300	2	CLAMP					
	10	8T-4648	8	BOLT (L=70mm)					
	11	8T-4910	7	BOLT (L=60mm)					
	12	8T-4223	16	WASHER					
	13	8T-6868	1	BOLT (L=80mm)					
	14	4I-8889	3	SEAL					
	15	4I-8891	3	SEAL					

E—ORDER BY THE CENTIMETER

H75188E 00

197-2249 LINES GP-AUXILIARY HYDRAULIC

S/N CAE 01201-(T02.11)
Part of 179-5075-Page328
An Attachment

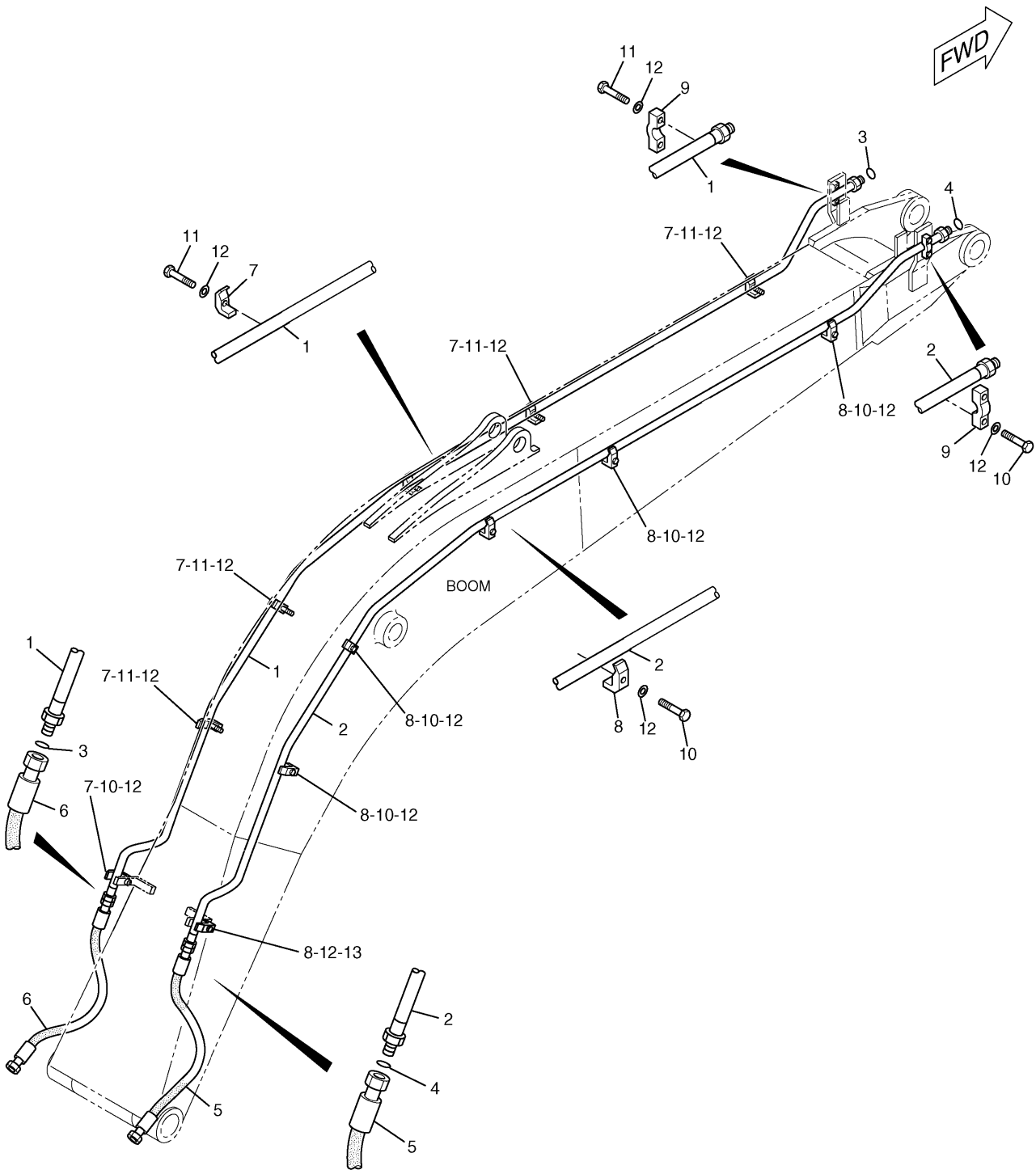

H84360E 01

197-2249 LINES GP-AUXILIARY HYDRAULIC

S/N CAE (T02.12)-Up
Part of 179-5075-Page328
An Attachment

HYDRAULIC SYSTEM

NOTE	No.	PART No.	QTY	PART NAME	NOTE	No.	PART No.	QTY	PART NAME
	1	226-3051	1	TUBE AS					
	2	226-3049	1	TUBE AS					
	3	4I-8889	2	SEAL					
	4	4I-8891	2	SEAL					
	5	109-6072	1	HOSE AS					
		3E-4069	2	CLIP					
E		5P-0201		HOSE…(84cm)					
		5P-1010	2	SLEEVE					
E		6V-0746		GUARD…(108cm)					
		7X-1452	2	STEM AS (STRAIGHT)					
	6	108-7497	1	HOSE AS					
		3E-4069	2	CLIP					
E		5P-0200		HOSE…(83cm)					
		5P-1027	2	SLEEVE					
E		6V-0745		GUARD…(109cm)					
		7X-1451	2	STEM AS (STRAIGHT)					
	7	093-1292	6	CLAMP					
	8	093-1293	6	CLAMP					
	9	093-1300	2	CLAMP					
	10	8T-4648	8	BOLT (L=70mm)					
	11	8T-4910	7	BOLT (L=60mm)					
	12	8T-4223	16	WASHER					
	13	8T-6868	1	BOLT (L=80mm)					

E—ORDER BY THE CENTIMETER

H84360E 01

197-2249 LINES GP-AUXILIARY HYDRAULIC

S/N CAE (T02.12)-Up
Part of 179-5075-Page328
An Attachment

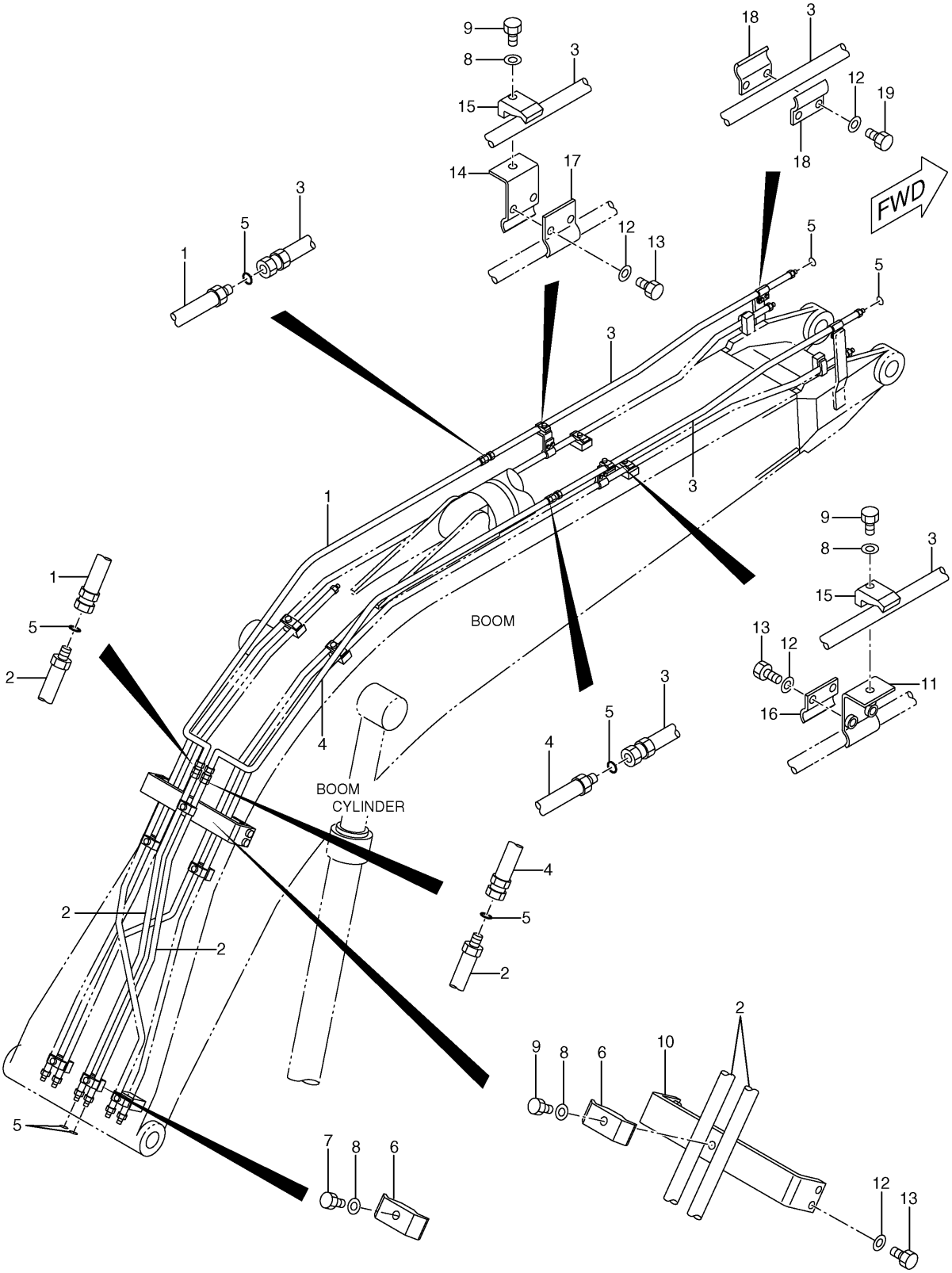

198-0421 LINES GP-QUICK COUPLER

Part of 198-0506-Page628
An Attachment

HYDRAULIC SYSTEM

NOTE	No.	PART No.	QTY	PART NAME	NOTE	No.	PART No.	QTY	PART NAME
	1	198-0519	1	TUBE AS					
	2	198-0515	2	TUBE AS					
	3	198-0527	2	TUBE AS					
	4	198-0523	1	TUBE AS					
	5	6V-8398	8	SEAL-O-RING (OD=16.03mm)					
	6	096-5766	2	CLAMP					
	7	8T-4185	1	BOLT (L=50mm)					
	8	8T-4121	4	WASHER					
	9	8T-4182	3	BOLT (L=45mm)					
	10	198-0531	1	PLATE AS					
	11	198-0533	1	PLATE AS					
	12	8T-4223	12	WASHER					
	13	8T-4139	8	BOLT (L=30mm)					
	14	198-0535	1	PLATE AS					
	15	093-1290	2	CLAMP					
	16	7Y-4868	1	CLIP					
	17	149-1738	1	CLIP					
	18	5Q-4212	4	CLIP					
	19	8T-4956	4	BOLT (L=35mm)					

H86452E 00

198-0421 LINES GP-QUICK COUPLER

Part of 198-0506-Page628
An Attachment

HYDRAULIC SYSTEM

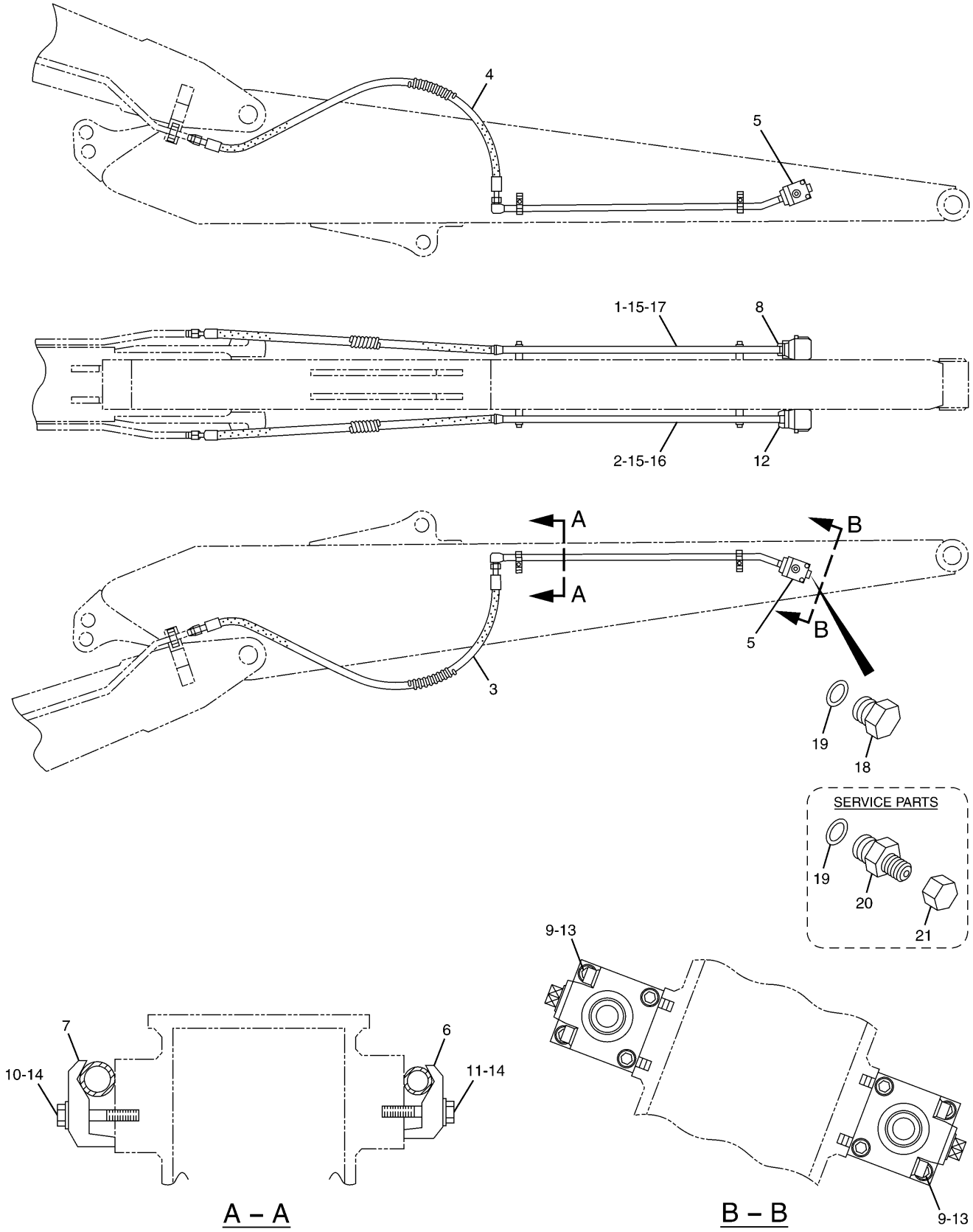

116–9202 LINES GP–AUXILIARY HYDRAULIC

R3.0 Stick

Part of 187–9966–Page329

282–5894–Page512.03

An Attachment

HYDRAULIC SYSTEM

NOTE	No.	PART No.	QTY	PART NAME	NOTE	No.	PART No.	QTY	PART NAME
	1	132-1775	1	TUBE AS					
	2	132-1776	1	TUBE AS					
	3	146-1317	1	HOSE AS					
		3E-4069	2	CLIP					
E		5P-0201		HOSE…(159cm)					
		5P-1010	2	SLEEVE					
E		6V-0746		GUARD…(219cm)					
		7X-1452	2	STEM AS (STRAIGHT)					
	4	102-1279	1	HOSE AS					
		3E-4069	2	CLIP					
E		5P-0200		HOSE…(157cm)					
		5P-1027	2	SLEEVE					
E		6V-0756		GUARD…(220cm)					
		7X-1451	2	STEM AS (STRAIGHT)					
Y	5	282-5894	2	VALVE AS					
	6	093-1292	2	CLAMP					
	7	093-1293	2	CLAMP					
	8	8T-4196	4	BOLT (L=35mm)					
	9	8T-0342	4	BOLT (L=80mm)					
	10	8T-4648	2	BOLT (L=70mm)					
	11	8T-4910	2	BOLT (L=60mm)					
	12	8T-4956	4	BOLT (L=35mm)					
	13	095-9397	4	LOCKWASHER					
	14	8T-4223	4	WASHER					
	15	1P-3703	2	SEAL					
	16	5K-9090	1	SEAL-O-RING (OD=27.22mm)					
	17	6V-9746	1	SEAL-O-RING (OD=22.50mm)					
	18	9S-4181	2	PLUG					
	19	7M-8485	2	SEAL-O-RING (ID=29.74mm)					

E—ORDER BY THE CENTIMETER

Y—SEE SEPARATE ILLUSTRATION

H98173E 05

116-9202 LINES GP-AUXILIARY HYDRAULIC

R3.0 Stick

Part of 187-9966-Page329

282-5894-Page512.03

An Attachment

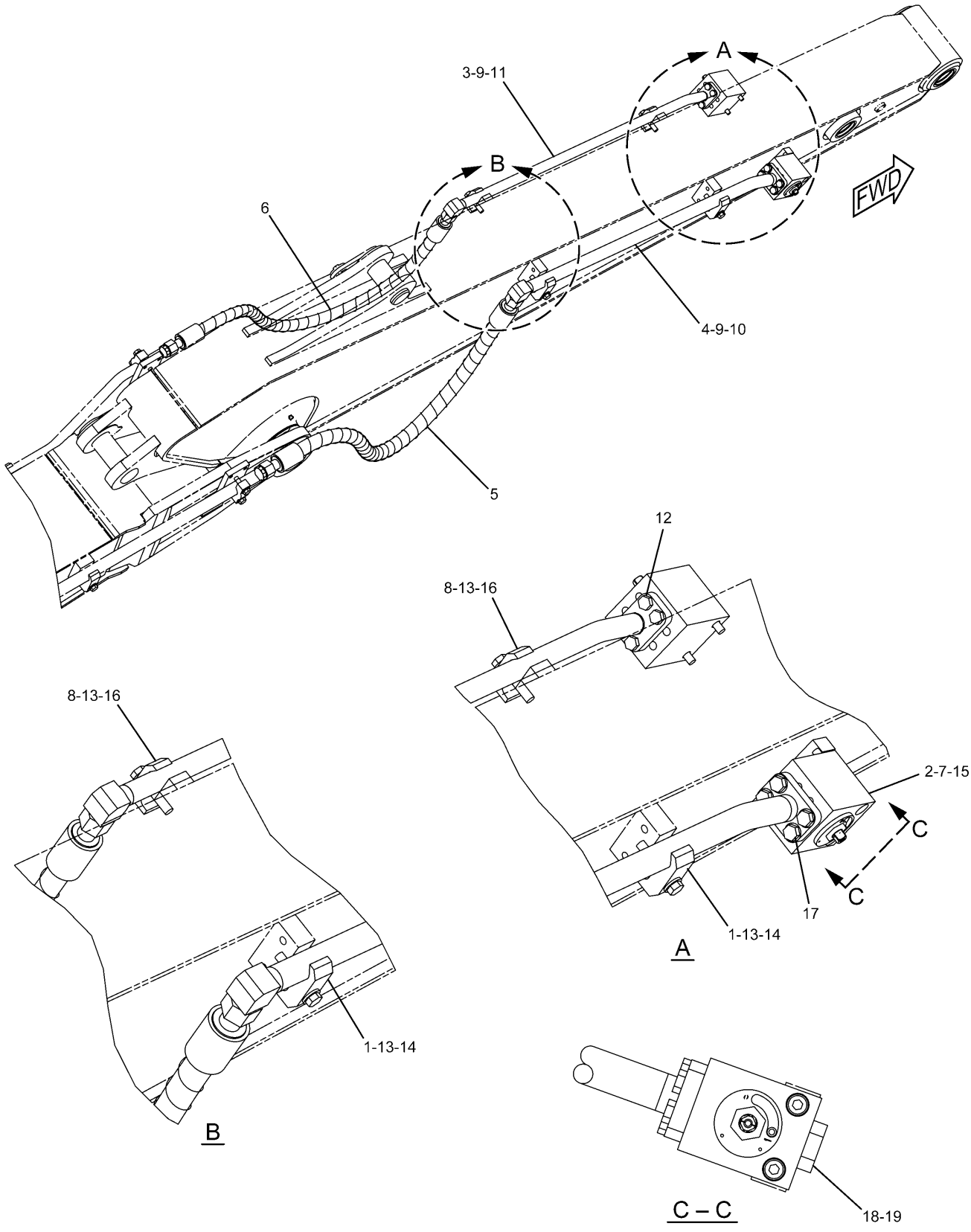

127-6705 LINES GP-AUXILIARY HYDRAULIC
High Pressure Lines/R2.5 Stick
Part of 179-5077-Page329
282-5894-Page512.03
An Attachment

HYDRAULIC SYSTEM

NOTE	No.	PART No.	QTY	PART NAME	NOTE	No.	PART No.	QTY	PART NAME
	1	093-1293	2	CLAMP					
	2	101-7403	4	BOLT (L=80mm)					
	3	132-1567	1	TUBE AS					
	4	132-1568	1	TUBE AS					
	5	146-1321	1	HOSE AS					
	6	146-1325	1	HOSE AS					
Y	7	282-5894	2	VALVE AS					
	8	093-1292	2	CLAMP					
	9	1P-3703	2	SEAL					
	10	5K-9090	1	SEAL-O-RING (OD=27.22mm)					
	11	6V-9746	1	SEAL-O-RING (OD=22.50mm)					
	12	8T-4196	4	BOLT (L=35mm)					
	13	8T-4223	4	WASHER					
	14	8T-4648	2	BOLT (L=70mm)					
	15	8T-4896	4	WASHER					
	16	8T-4910	2	BOLT (L=60mm)					
	17	8T-4956	4	BOLT (L=35mm)					
	18	9S-4181	2	PLUG					
	19	7M-8485	2	SEAL-O-RING (ID=29.74mm)					

Y—SEE SEPARATE ILLUSTRATION

H98174E 08

127-6705 LINES GP-AUXILIARY HYDRAULIC

High Pressure Lines/R2.5 Stick
Part of 179-5077-Page329
282-5894-Page512.03
An Attachment

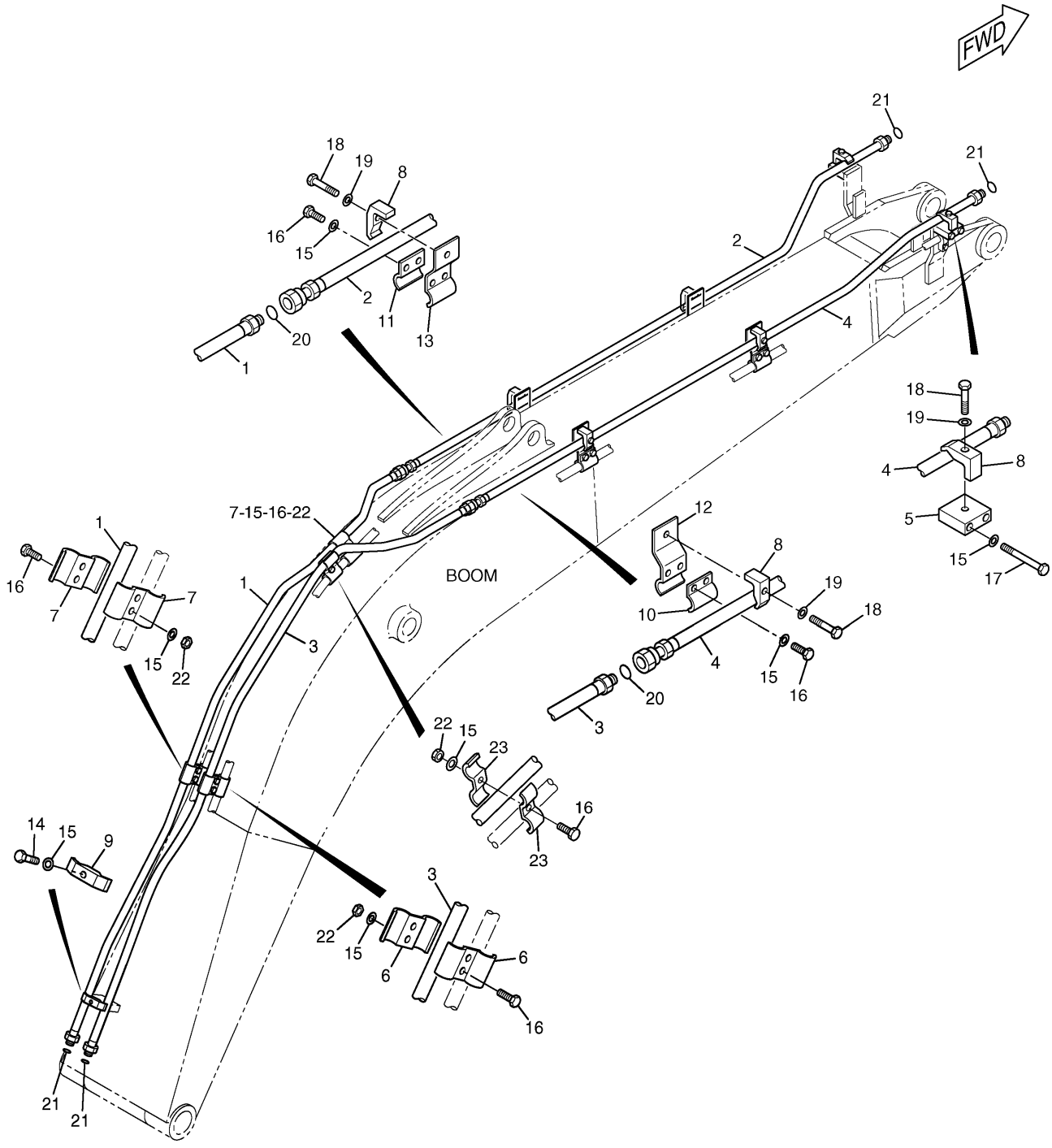

179-5079 LINES GP-AUXILIARY HYDRAULIC

S/N CAE 01201-(T02.11)
An Attachment

HYDRAULIC SYSTEM

NOTE	No.	PART No.	QTY	PART NAME	NOTE	No.	PART No.	QTY	PART NAME
	1	173-7884	1	TUBE AS					
	2	173-7885	1	TUBE AS					
	3	197-2314	1	TUBE AS					
	4	193-6489	1	TUBE AS					
	5	193-6565	2	PLATE					
	6	173-7895	2	CLIP					
	7	153-8867	4	CLIP					
	8	093-1291	6	CLAMP					
	9	093-1295	1	CLAMP					
	10	7Y-3732	2	CLIP					
	11	7Y-4868	2	CLIP					
	12	173-7892	2	CLIP AS					
	13	173-7890	2	CLIP AS					
	14	096-9986	1	BOLT (L=55mm)					
	15	8T-4223	20	WASHER					
	16	8T-4139	15	BOLT (L=30mm)					
	17	7X-2550	4	BOLT (L=110mm)					
	18	8T-4185	6	BOLT (L=50mm)					
	19	8T-4121	6	WASHER					
	20	4I-8888	2	SEAL					
	21	6V-8398	4	SEAL-O-RING (OD=16.03mm)					
	22	8T-4244	7	NUT					
	23	202-7146	2	CLIP					

H81748E 04

179-5079 LINES GP-AUXILIARY HYDRAULIC

S/N CAE 01201-(T02.11)
An Attachment

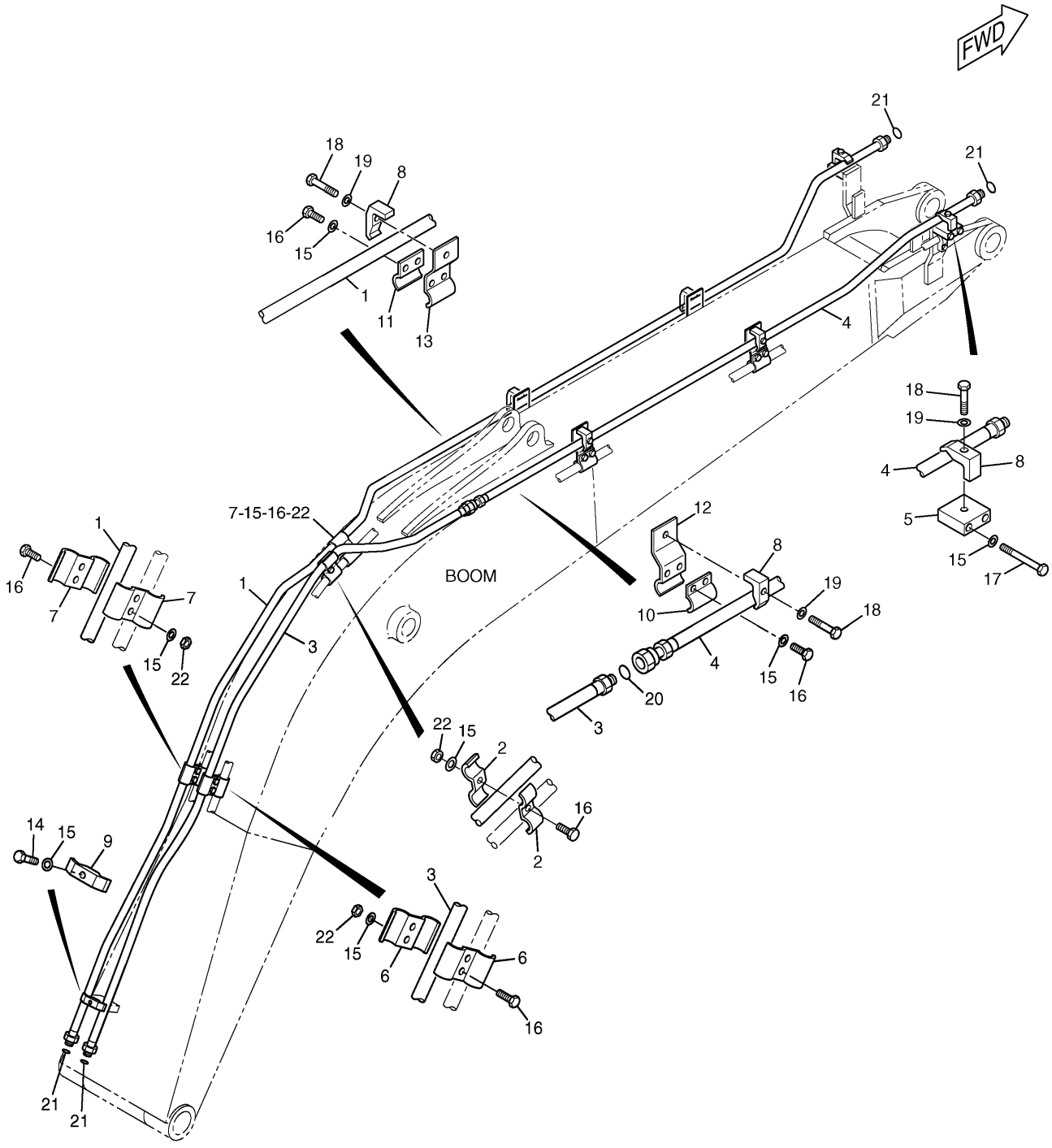

179–5079 LINES GP–AUXILIARY HYDRAULIC

S/N CAE (T02.12)–(T03.02)
An Attachment

HYDRAULIC SYSTEM

NOTE	No.	PART No.	QTY	PART NAME	NOTE	No.	PART No.	QTY	PART NAME
	1	226-3053	1	TUBE AS					
	2	202-7146	2	CLIP					
	3	197-2314	1	TUBE AS					
	4	193-6489	1	TUBE AS					
	5	193-6565	2	PLATE					
	6	173-7895	2	CLIP					
	7	153-8867	4	CLIP					
	8	093-1291	6	CLAMP					
	9	093-1295	1	CLAMP					
	10	7Y-3732	2	CLIP					
	11	7Y-4868	2	CLIP					
	12	173-7892	2	CLIP AS					
	13	173-7890	2	CLIP AS					
	14	096-9986	1	BOLT (L=55mm)					
	15	8T-4223	20	WASHER					
	16	8T-4139	15	BOLT (L=30mm)					
	17	7X-2550	4	BOLT (L=110mm)					
	18	8T-4185	6	BOLT (L=50mm)					
	19	8T-4121	6	WASHER					
	20	4I-8888	2	SEAL					
	21	6V-8398	4	SEAL-O-RING (OD=16.03mm)					
	22	8T-4244	7	NUT					

H84361E 05

179-5079 LINES GP-AUXILIARY HYDRAULIC

S/N CAE (T02.12)-(T03.02)
An Attachment

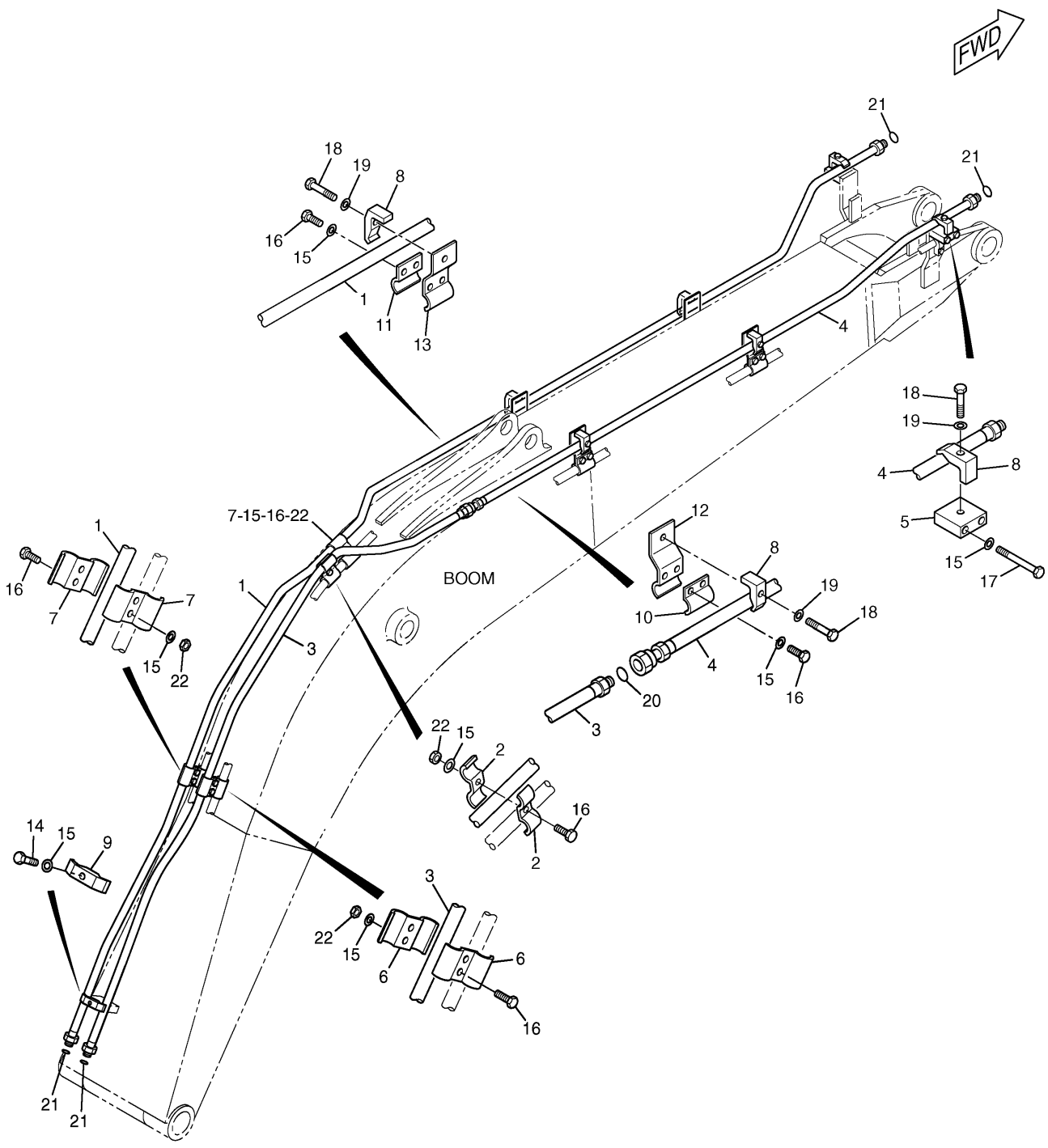

179–5079 LINES GP–AUXILIARY HYDRAULIC

S/N CAE (T03.03)–Up
An Attachment

HYDRAULIC SYSTEM

NOTE	No.	PART No.	QTY	PART NAME	NOTE	No.	PART No.	QTY	PART NAME
	1	226-3053	1	TUBE AS					
	2	202-7146	2	CLIP					
	3	197-2314	1	TUBE AS					
	4	193-6489	1	TUBE AS					
	5	193-6565	2	PLATE					
	6	173-7895	2	CLIP					
	7	153-8867	4	CLIP					
	8	093-1291	6	CLAMP					
	9	093-1295	1	CLAMP					
	10	7Y-3732	2	CLIP					
	11	7Y-4868	2	CLIP					
	12	173-7892	2	CLIP AS					
	13	173-7890	2	CLIP AS					
	14	096-9986	1	BOLT (L=55mm)					
	15	8T-4223	20	WASHER					
	16	8T-4139	15	BOLT (L=30mm)					
	17	7X-2550	4	BOLT (L=110mm)					
	18	8T-4185	6	BOLT (L=50mm)					
	19	8T-4121	6	WASHER					
	20	7J-1908	2	SEAL					
	21	6V-8398	4	SEAL-O-RING (OD=16.03mm)					
	22	8T-4244	7	NUT					

H84362E 06

179-5079 LINES GP-AUXILIARY HYDRAULIC

S/N CAE (T03.03)-Up
An Attachment

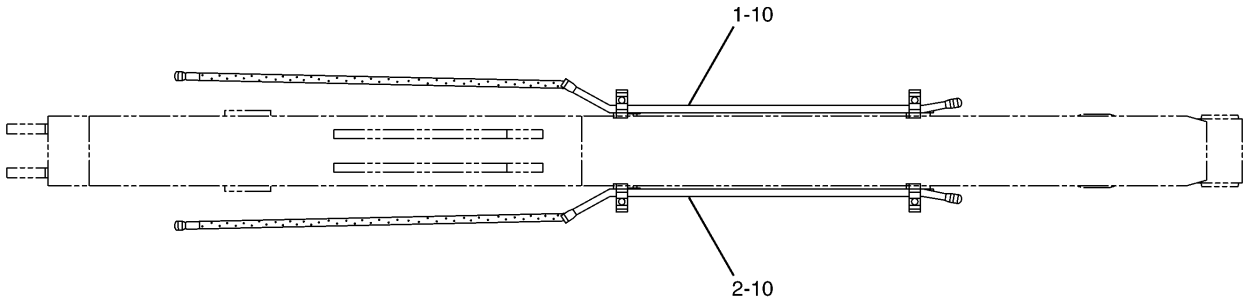

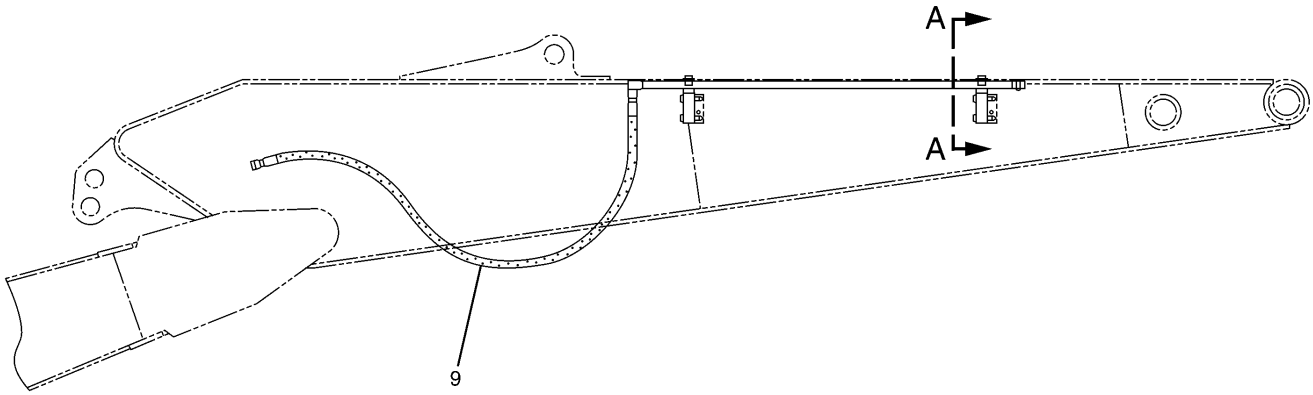

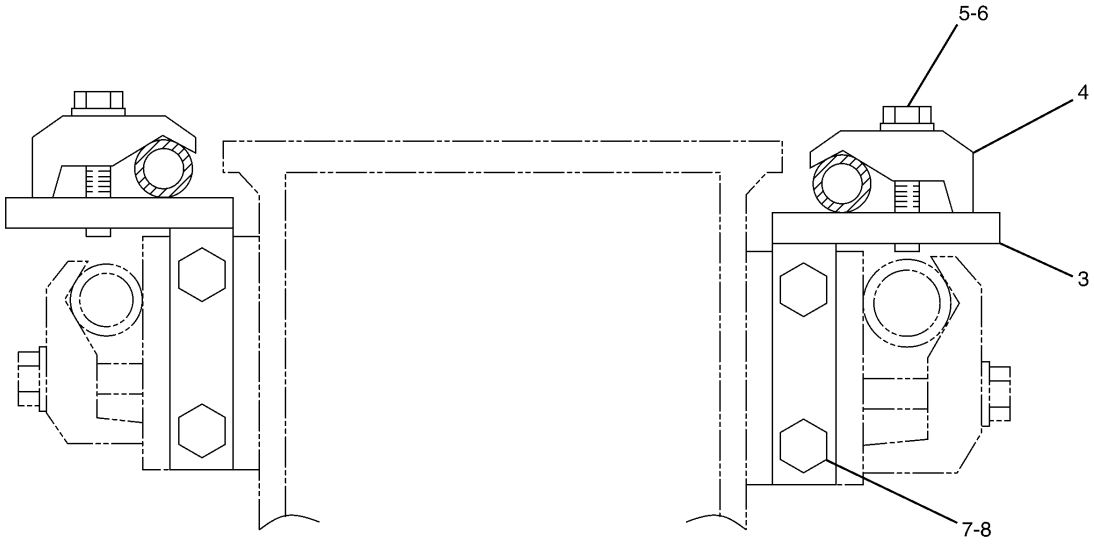

A – A

H71529E 00

187-9962 LINES GP-AUXILIARY HYDRAULIC
An Attachment

HYDRAULIC SYSTEM

NOTE	No.	PART No.	QTY	PART NAME	NOTE	No.	PART No.	QTY	PART NAME
	1	193-6547	1	TUBE AS					
	2	193-6548	1	TUBE AS					
	3	173-7899	4	SUPPORT AS					
	4	093-1291	4	CLAMP					
	5	8T-4185	4	BOLT (L=50mm)					
	6	8T-4121	4	WASHER					
	7	8T-4910	8	BOLT (L=60mm)					
	8	8T-4223	8	WASHER					
	9	193-6549	2	HOSE AS					
	10	6V-8398	4	SEAL-O-RING (OD=16.03mm)					

H71529E 00

187-9962 LINES GP-AUXILIARY HYDRAULIC
An Attachment

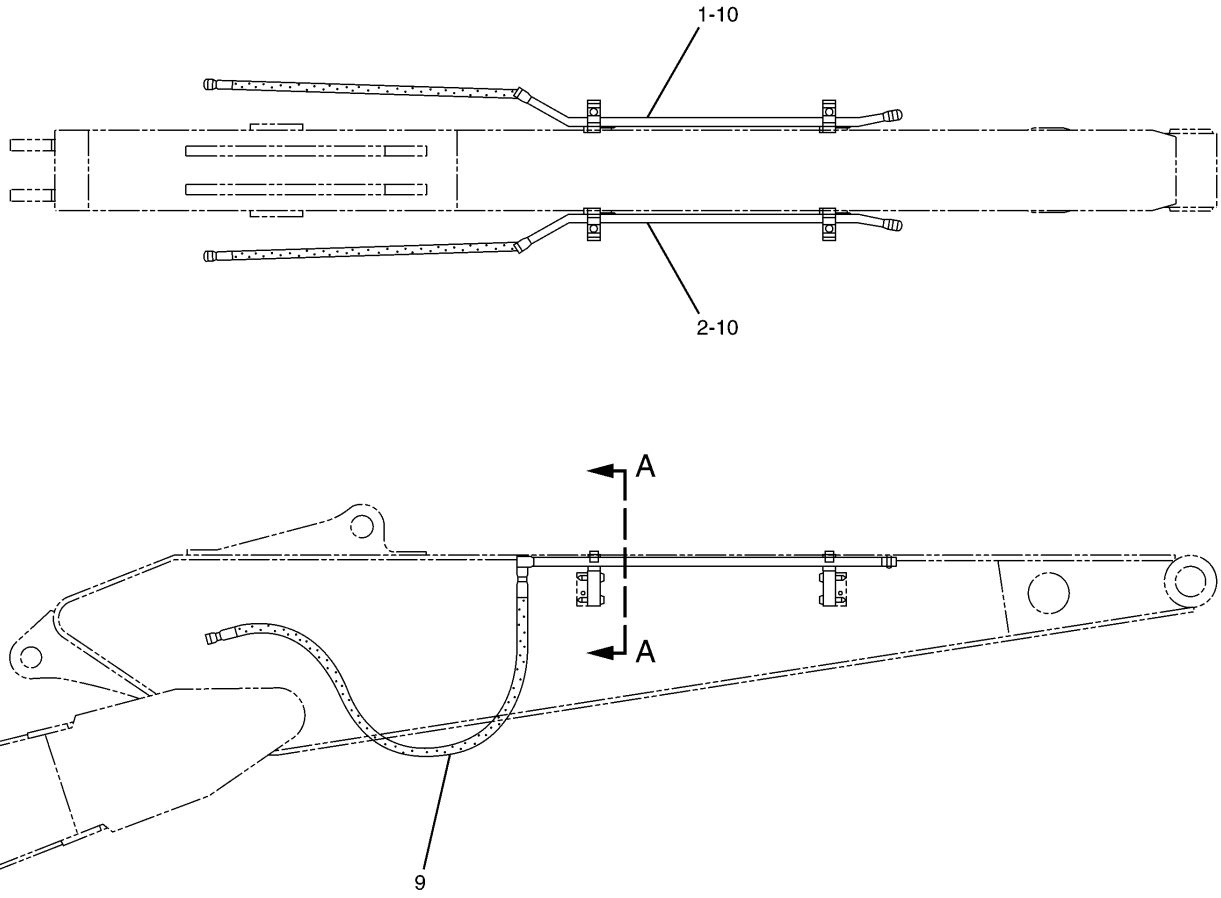

A – A

H71523E 01

179–5080 LINES GP–AUXILIARY HYDRAULIC
An Attachment

HYDRAULIC SYSTEM

NOTE	No.	PART No.	QTY	PART NAME	NOTE	No.	PART No.	QTY	PART NAME
	1	173-7897	1	TUBE AS					
	2	173-7898	1	TUBE AS					
	3	173-7899	4	SUPPORT AS					
	4	093-1291	4	CLAMP					
	5	8T-4185	4	BOLT (L=50mm)					
	6	8T-4121	4	WASHER					
	7	8T-4910	8	BOLT (L=60mm)					
	8	8T-4223	8	WASHER					
	9	173-7910	2	HOSE AS					
	10	6V-8398	4	SEAL-O-RING (OD=16.03mm)					

H71523E 01

179-5080 LINES GP-AUXILIARY HYDRAULIC
An Attachment

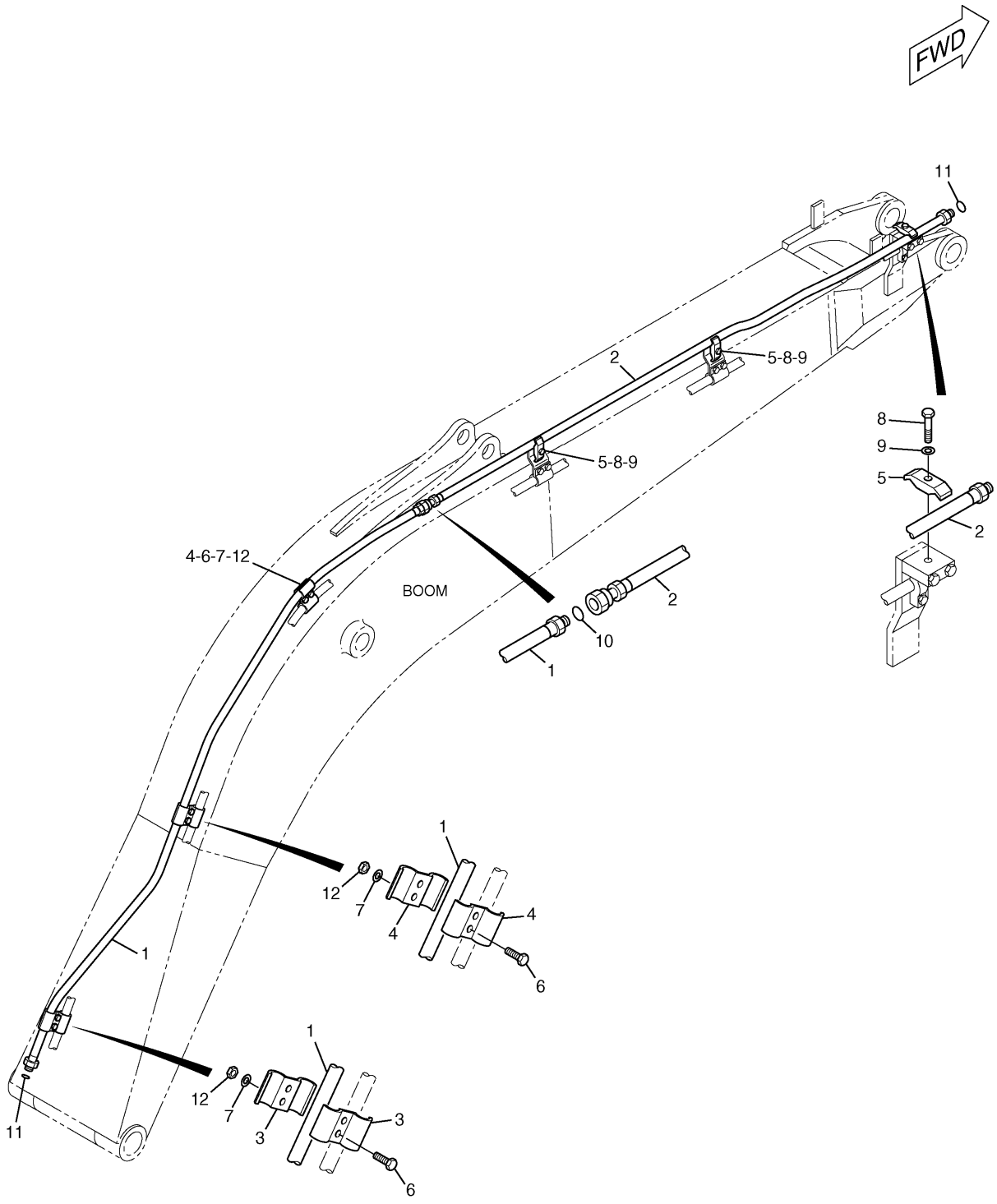

H75196E 03

179-5081 LINES GP-DRAIN
S/N CAE 01201-(T03.02)
An Attachment

HYDRAULIC SYSTEM

NOTE	No.	PART No.	QTY	PART NAME	NOTE	No.	PART No.	QTY	PART NAME
	1	197-2315	1	TUBE AS					
	2	197-2316	1	TUBE AS					
	3	153-8867	2	CLIP					
	4	173-7895	4	CLIP					
	5	096-5766	3	CLAMP					
	6	8T-4139	6	BOLT (L=30mm)					
	7	8T-4223	6	WASHER					
	8	8T-4185	3	BOLT (L=50mm)					
	9	8T-4121	3	WASHER					
	10	4I-8888	1	SEAL					
	11	6V-8398	2	SEAL-O-RING (OD=16.03mm)					
	12	8T-4244	6	NUT					

H75196E 03

179-5081 LINES GP-DRAIN

S/N CAE 01201-(T03.02)
An Attachment

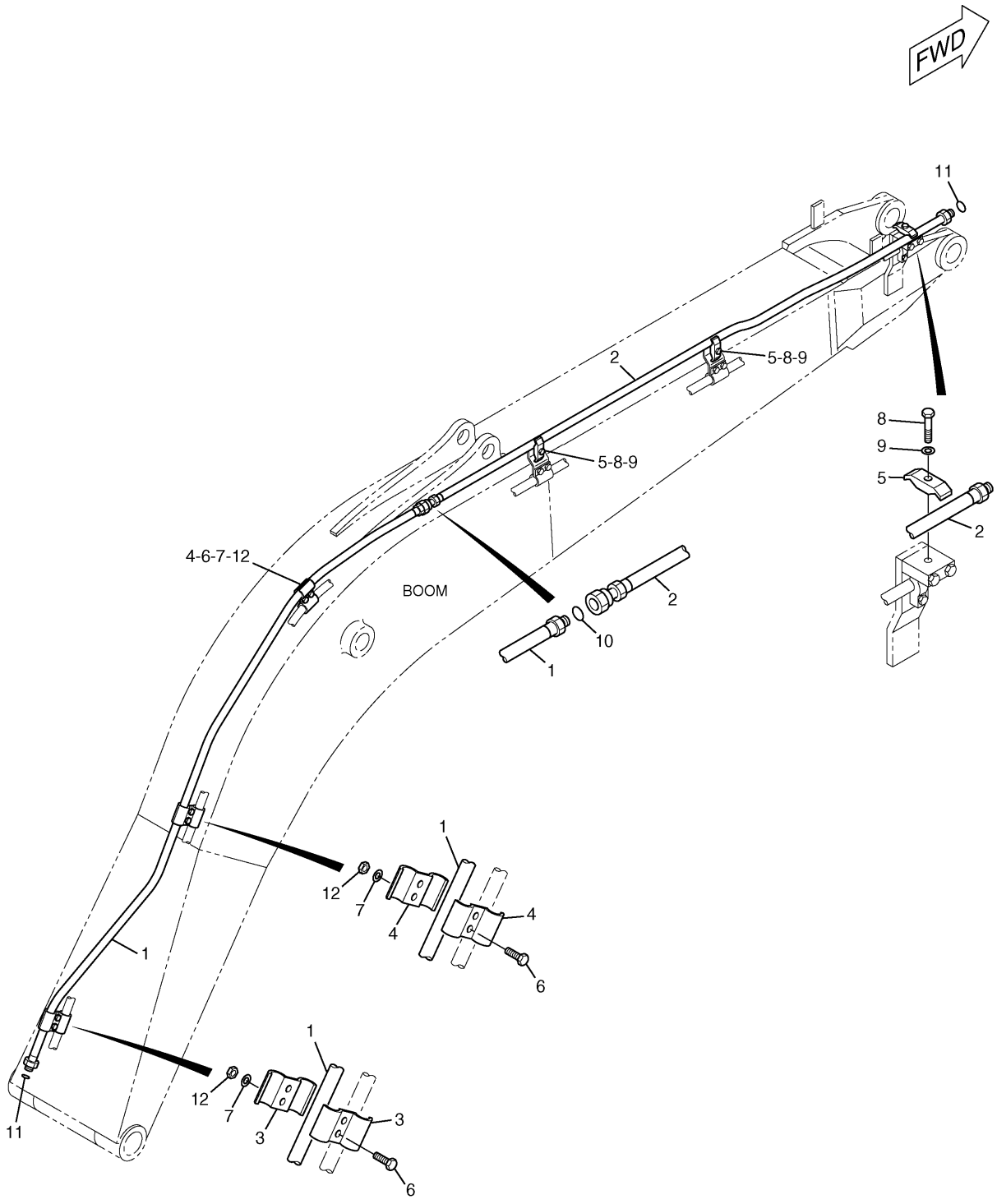

H84363E 04

179-5081 LINES GP-DRAIN
S/N CAE (T03.03)-Up
An Attachment

HYDRAULIC SYSTEM

NOTE	No.	PART No.	QTY	PART NAME	NOTE	No.	PART No.	QTY	PART NAME
	1	197-2315	1	TUBE AS					
	2	197-2316	1	TUBE AS					
	3	153-8867	2	CLIP					
	4	173-7895	4	CLIP					
	5	096-5766	3	CLAMP					
	6	8T-4139	6	BOLT (L=30mm)					
	7	8T-4223	6	WASHER					
	8	8T-4185	3	BOLT (L=50mm)					
	9	8T-4121	3	WASHER					
	10	7J-9108	1	SEAL-O-RING (OD=19.28mm)					
	11	6V-8398	2	SEAL-O-RING (OD=16.03mm)					
	12	8T-4244	6	NUT					

H84363E 04

179-5081 LINES GP-DRAIN

S/N CAE (T03.03)-Up

An Attachment

HYDRAULIC SYSTEM

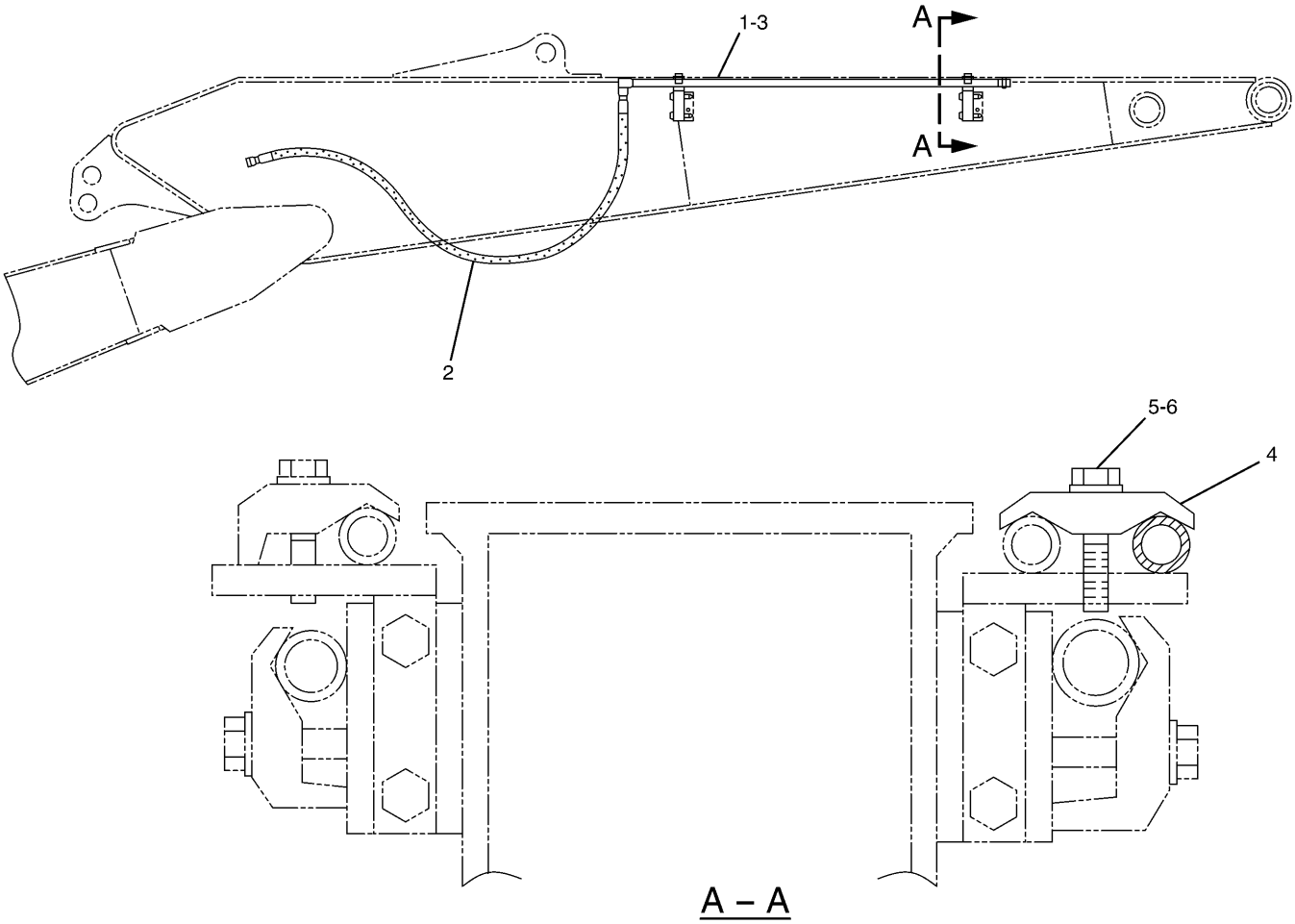

A – A

NOTE	No.	PART No.	QTY	PART NAME	NOTE	No.	PART No.	QTY	PART NAME
	1	193-6548	1	TUBE AS					
	2	193-6549	1	HOSE AS					
	3	6V-8398	2	SEAL-O-RING (OD=16.03mm)					
	4	096-5766	2	CLAMP					
	5	8T-4185	2	BOLT (L=50mm)					
	6	8T-4121	2	WASHER					

H71547E 00

187-9964 LINES GP-DRAIN
An Attachment

HYDRAULIC SYSTEM

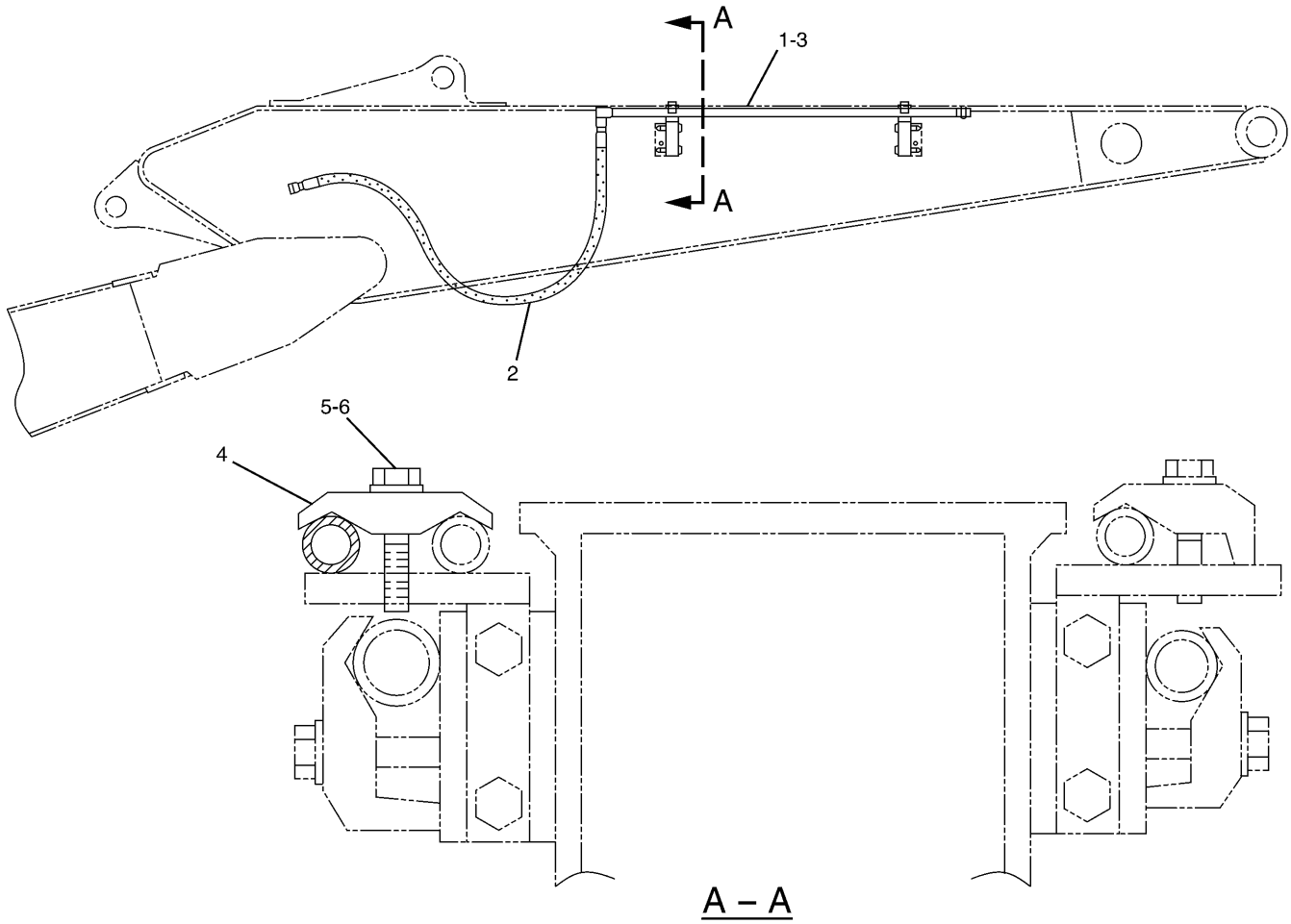

A – A

NOTE	No.	PART No.	QTY	PART NAME	NOTE	No.	PART No.	QTY	PART NAME
	1	173-7898	1	TUBE AS					
	2	173-7910	1	HOSE AS					
	3	6V-8398	2	SEAL-O-RING (OD=16.03mm)					
	4	096-5766	2	CLAMP					
	5	8T-4185	2	BOLT (L=50mm)					
	6	8T-4121	2	WASHER					

H71546E 01

179-5082 LINES GP-DRAIN
An Attachment

MEMORANDA

HYDRAULIC SYSTEM

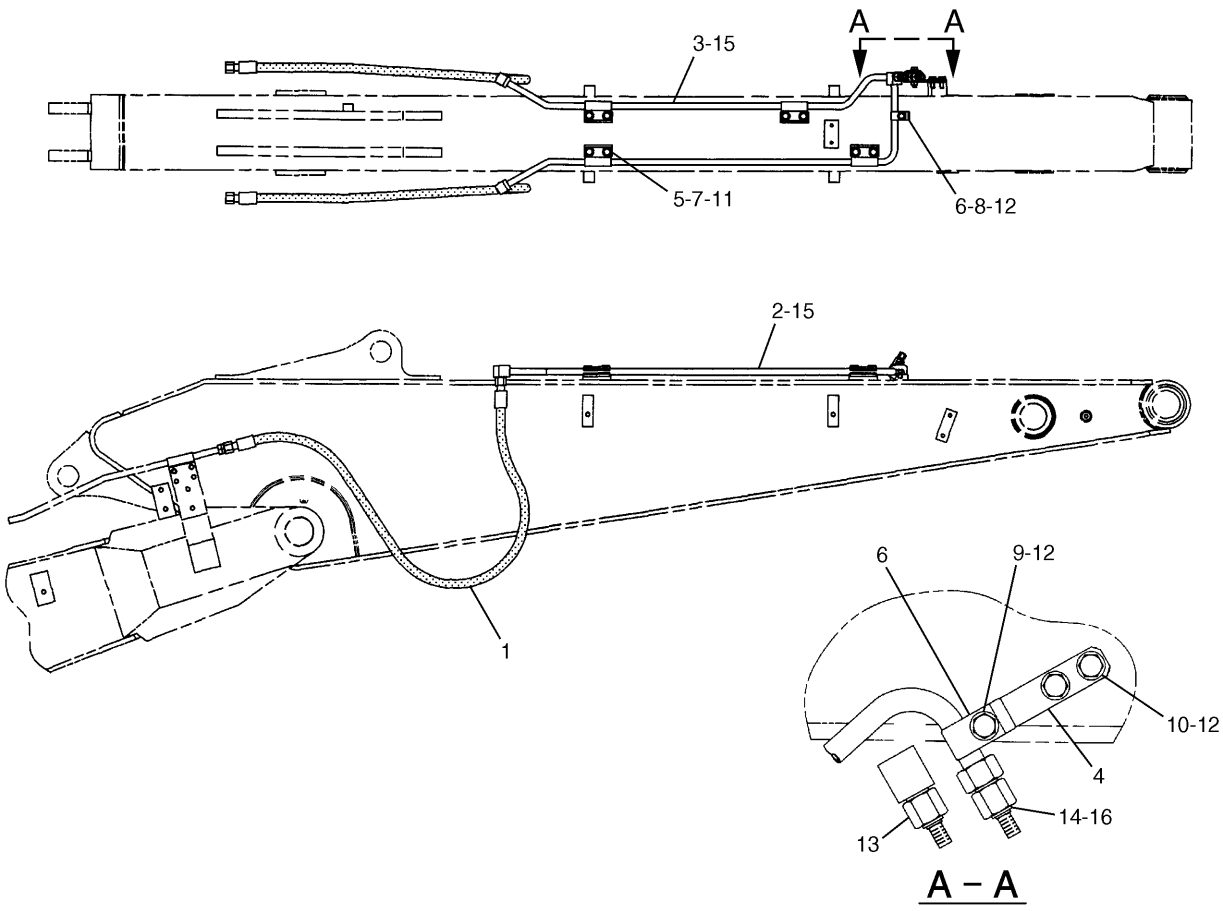

NOTE	No.	PART No.	QTY	PART NAME	NOTE	No.	PART No.	QTY	PART NAME
	1	177-8407	2	HOSE AS					
	2	215-5943	1	TUBE AS					
	3	215-5945	1	TUBE AS					
	4	215-5947	1	PLATE AS					
	5	5Q-4212	8	CLIP					
	6	093-1290	2	CLAMP					
	7	8T-4139	8	BOLT (L=30mm)					
	8	8T-4186	1	BOLT (L=40mm)					
	9	8T-4185	1	BOLT (L=50mm)					
	10	8T-4136	2	BOLT (L=25mm)					
	11	8T-4223	8	WASHER					
	12	8T-4121	4	WASHER					
	13	6V-8554	2	NUT					
	14	6V-8935	2	REDUCER					
	15	6V-8398	4	SEAL-O-RING (OD=16.03mm)					
	16	4J-5477	2	SEAL-O-RING (OD=11.23mm)					

H86453E 01

215-5942 LINES GP-QUICK COUPLER

R2.5 Stick

Part of 215-5931-Page630

An Attachment

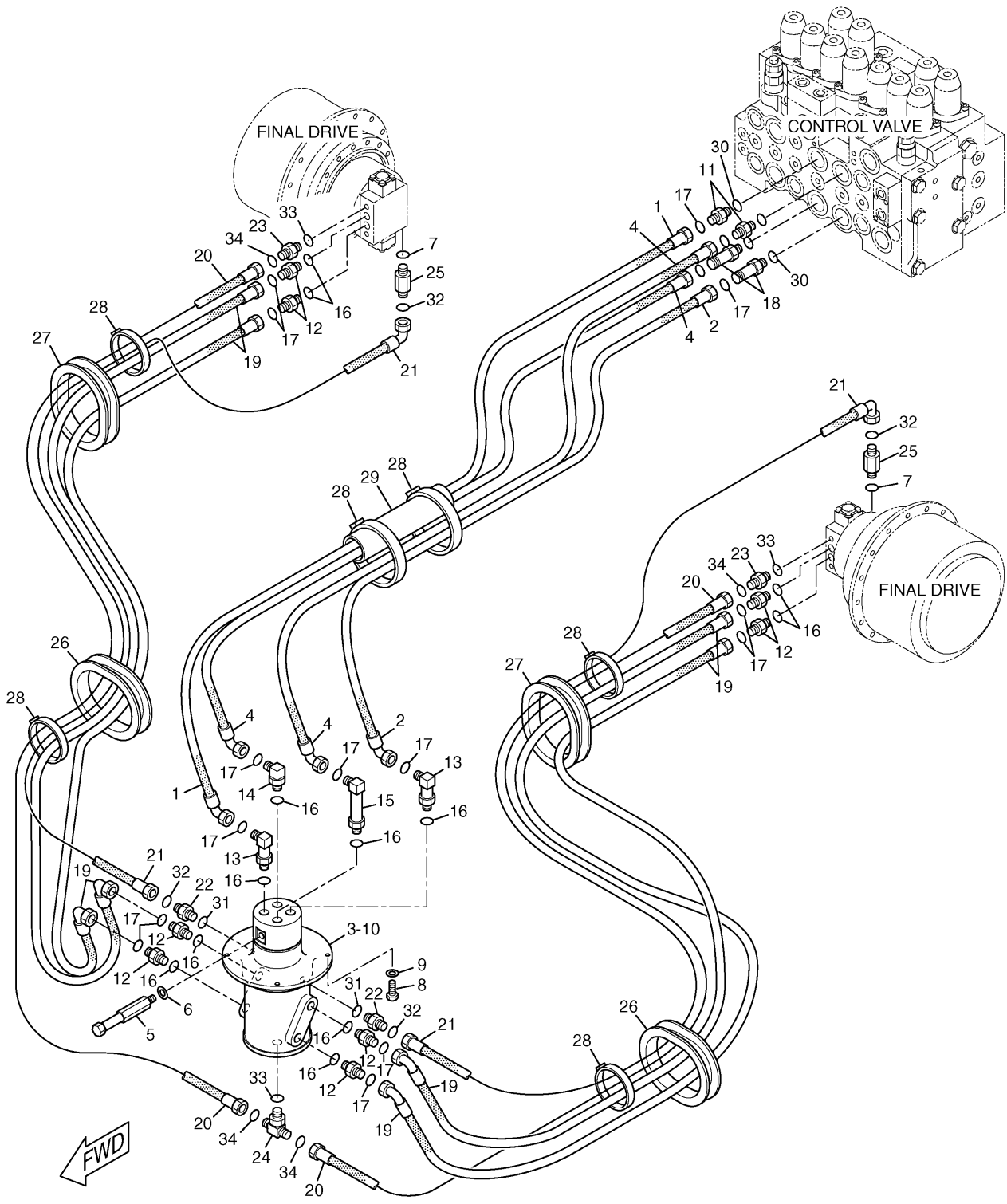

H93832E 02

168-9531 LINES GP-TRAVEL MOTOR
S/N CAE 01201-04515
162-4696-Page432

HYDRAULIC SYSTEM

NOTE	No.	PART No.	QTY	PART NAME	NOTE	No.	PART No.	QTY	PART NAME
	1	121-6407	1	HOSE AS					
	2	179-7586	1	HOSE AS					
Y	3	162-4696	1	SWIVEL GP					
	4	5I-8879	2	HOSE AS					
	5	200-3261	1	ROD					
	6	225-4539	1	WASHER					
	7	3J-7354	2	SEAL-O-RING (ID=8.92mm)					
	8	8T-4137	4	BOLT (L=20mm)					
	9	8T-4121	4	WASHER					
B	10	1U-8846		GASKET MAKER…(2ml)					
	11	6V-8716	2	CONNECTOR					
	12	6V-8637	8	CONNECTOR					
	13	8C-8400	2	ELBOW					
	14	6V-9007	1	ELBOW					
	15	194-9041	1	ELBOW					
	16	3D-2824	12	SEAL-O-RING (ID=23.47mm)					
	17	6V-9746	16	SEAL-O-RING (OD=22.50mm)					
	18	8T-0197	2	CONNECTOR					
	19	7I-1303	4	HOSE AS					
	20	179-7770	2	HOSE AS					
	21	179-7771	2	HOSE AS					
	22	6V-8641	2	CONNECTOR					
	23	6V-8639	2	CONNECTOR					
	24	6V-8775	1	TEE					
	25	6V-9010	2	CONNECTOR					
	26	5I-4365	2	GROMMET					
	27	5I-4366	2	GROMMET					
	28	7K-1181	6	STRAP					
	29	115-8645	1	GUARD					
	30	7M-8485	4	SEAL-O-RING (ID=29.74mm)					
	31	3J-1907	2	SEAL-O-RING (ID=11.89mm)					
	32	4J-5477	4	SEAL-O-RING (OD=11.23mm)					
	33	3K-0360	3	SEAL-O-RING (ID=16.36mm)					
	34	6V-8398	4	SEAL-O-RING (OD=16.03mm)					

B—USE AS REQUIRED

Y—SEE SEPARATE ILLUSTRATION

H93832E 02

168-9531 LINES GP-TRAVEL MOTOR

S/N CAE 01201-04515

162-4696-Page432

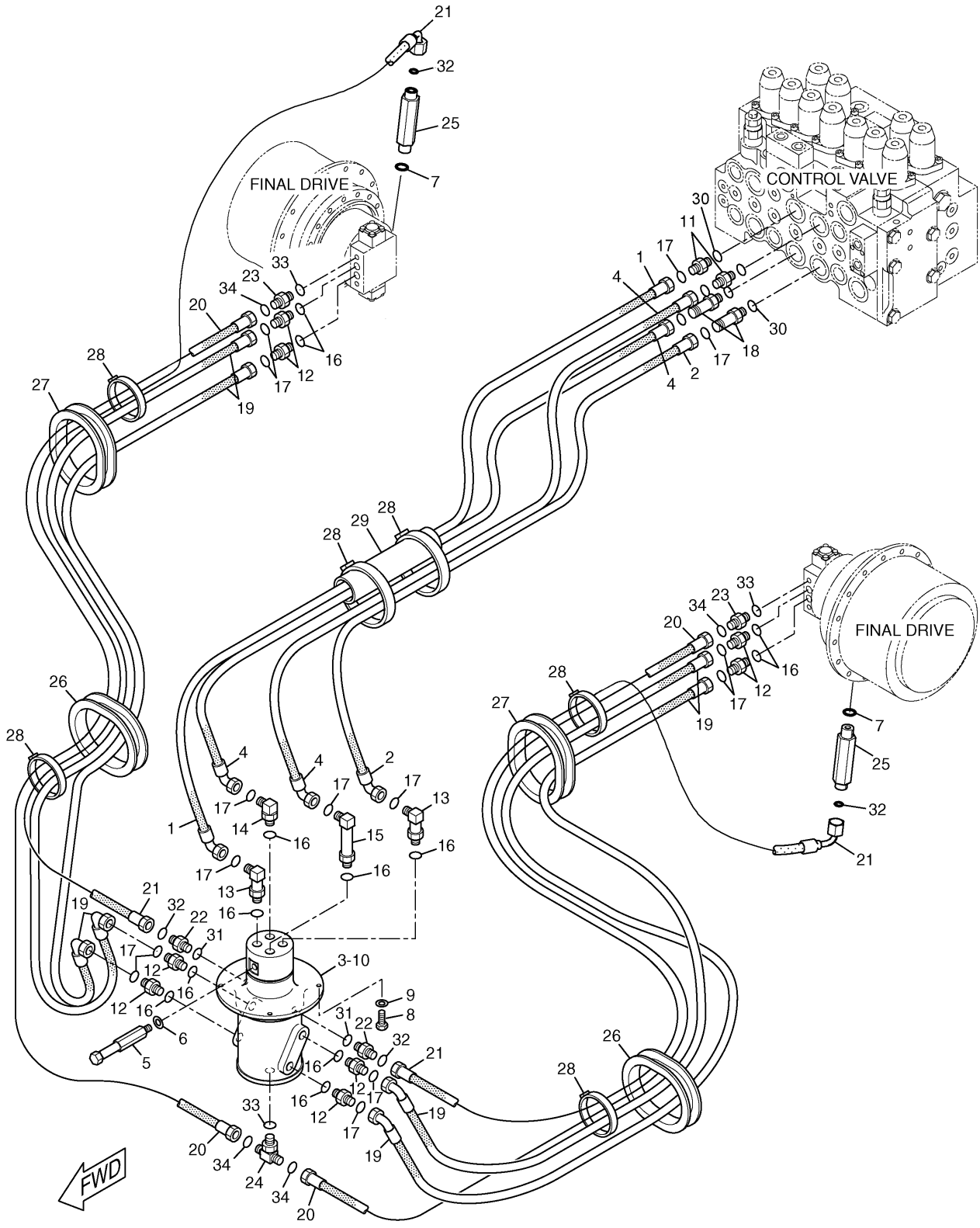

H96152E 03

168-9531 LINES GP-TRAVEL MOTOR

S/N CAE 04516-Up
162-4696-Page432

HYDRAULIC SYSTEM

NOTE	No.	PART No.	QTY	PART NAME	NOTE	No.	PART No.	QTY	PART NAME
	1	121-6407	1	HOSE AS					
	2	179-7586	1	HOSE AS					
Y	3	162-4696	1	SWIVEL GP					
	4	5I-8879	2	HOSE AS					
	5	200-3261	1	ROD					
	6	225-4539	1	WASHER					
	7	3J-1907	2	SEAL-O-RING (ID=11.89mm)					
	8	8T-4137	4	BOLT (L=20mm)					
	9	8T-4121	4	WASHER					
B	10	1U-8846		GASKET MAKER…(2ml)					
	11	6V-8716	2	CONNECTOR					
	12	6V-8637	8	CONNECTOR					
	13	8C-8400	2	ELBOW					
	14	6V-9007	1	ELBOW					
	15	194-9041	1	ELBOW					
	16	3D-2824	12	SEAL-O-RING (ID=23.47mm)					
	17	6V-9746	16	SEAL-O-RING (OD=22.50mm)					
	18	8T-0197	2	CONNECTOR					
	19	7I-1303	4	HOSE AS					
	20	179-7770	2	HOSE AS					
	21	179-7771	2	HOSE AS					
	22	6V-8641	2	CONNECTOR					
	23	6V-8639	2	CONNECTOR					
	24	6V-8775	1	TEE					
	25	156-8011	2	CONNECTOR					
	26	5I-4365	2	GROMMET					
	27	5I-4366	2	GROMMET					
	28	7K-1181	6	STRAP					
	29	115-8645	1	GUARD					
	30	7M-8485	4	SEAL-O-RING (ID=29.74mm)					
	31	3J-1907	2	SEAL-O-RING (ID=11.89mm)					
	32	4J-5477	4	SEAL-O-RING (OD=11.23mm)					
	33	3K-0360	3	SEAL-O-RING (ID=16.36mm)					
	34	6V-8398	4	SEAL-O-RING (OD=16.03mm)					

B—USE AS REQUIRED

Y—SEE SEPARATE ILLUSTRATION

H96152E 03

168-9531 LINES GP-TRAVEL MOTOR

S/N CAE 04516-Up

162-4696-Page432

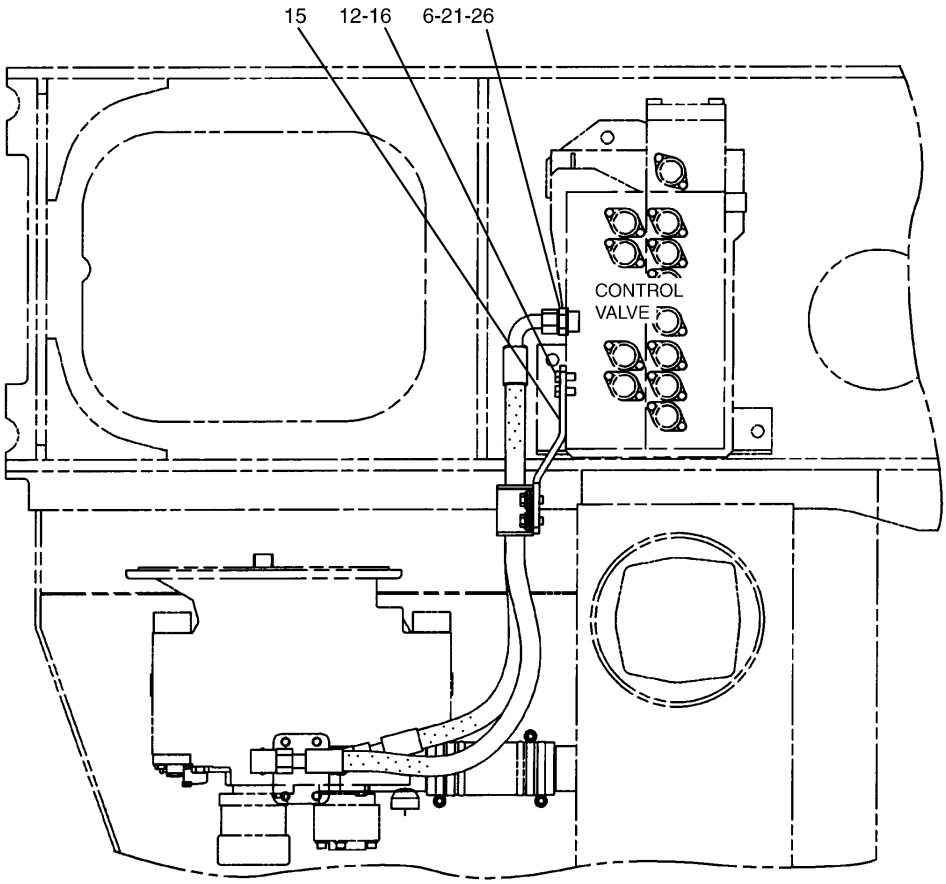

TOP VIEW

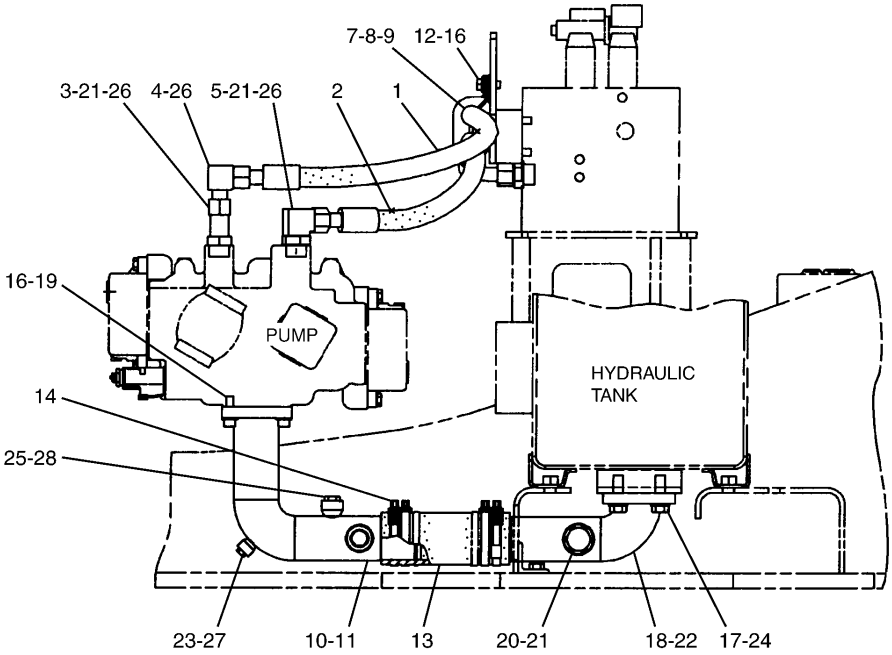

RIGHT SIDE VIEW

H78611E 02

168-9536 LINES GP-PUMP

HYDRAULIC SYSTEM

NOTE	No.	PART No.	QTY	PART NAME	NOTE	No.	PART No.	QTY	PART NAME
	1	146-7196	1	HOSE AS					
	2	7I-1288	1	HOSE AS					
	3	8T-0197	1	CONNECTOR					
	4	6V-9853	1	ELBOW					
	5	6V-9182	1	ELBOW					
	6	6V-8716	2	CONNECTOR					
	7	7G-5984	1	CLIP					
	8	7G-5985	1	CLIP					
	9	6V-1876	1	GROMMET					
	10	194-0097	1	PIPE AS					
	11	6J-2680	1	SEAL-O-RING (ID=69.44mm)					
	12	8T-4192	4	BOLT (L=25mm)					
	13	111-6716	1	HOSE					
	14	8T-6675	4	CLAMP					
	15	173-4753	1	SUPPORT					
	16	8T-4223	8	WASHER					
	17	8T-4193	4	BOLT (L=50mm)					
	18	192-6840	1	PIPE AS					
	19	6V-8200	4	BOLT (L=35mm)					
	20	9S-4181	1	PLUG					
	21	7M-8485	5	SEAL-O-RING (ID=29.74mm)					
	22	5H-8624	1	SEAL-O-RING (ID=94.62mm)					
	23	9S-4182	1	PLUG					
	24	9X-8257	4	WASHER					
	25	9S-4185	1	PLUG					
	26	6V-9746	5	SEAL-O-RING (OD=22.50mm)					
	27	3J-7354	1	SEAL-O-RING (ID=8.92mm)					
	28	3K-0360	1	SEAL-O-RING (ID=16.36mm)					

H78611E 02

168-9536 LINES GP-PUMP

Consists of :

			Page
1	153-8761	CONTROL GP-HYDRAULIC	443
1	168-9539	LINES GP-FRONT	388
1	168-9540	LINES GP-PILOT	366
1	176-2707	FILM GP	701
1	193-3409	WIRING GP	157
1	196-0458	LINES GP-PILOT	370

HA2010E 03

165-0962 CONTROL AR-AUXILIARY
An Attachment

Consists of :

			Page
1	153-8761	CONTROL GP-HYDRAULIC	443
1	168-9541	LINES GP-FRONT	392
1	168-9542	LINES GP-PILOT	368
1	197-0200	VALVE & MOUNTING GP	449
1	176-2707	FILM GP	701
1	193-3409	WIRING GP	157
1	196-0458	LINES GP-PILOT	370

H84367E 03

165-0963 CONTROL AR-AUXILIARY
An Attachment

HYDRAULIC SYSTEM

Consists of :

			Page
1	167-7263	FILM GP	702
1	168-9543	LINES GP-FRONT	396
1	168-9544	LINES GP-PILOT	372
1	168-9545	LINES GP-PILOT	378
1	170-6822	WIRING GP	158
1	197-0200	VALVE & MOUNTING GP	449
1	179-4598	CONTROL GP-HYDRAULIC	444

H91682E 06

179-5071 CONTROL AR-AUXILIARY
An Attachment

Consists of :

			Page
1	168-9546	LINES GP-FRONT	400
1	168-9545	LINES GP-PILOT	378
1	168-9550	LINES GP-FRONT	404
1	168-9551	LINES GP-DRAIN	414
1	170-6822	WIRING GP	158
1	176-2709	FILM GP	703
1	179-4598	CONTROL GP-HYDRAULIC	444
1	196-0457	LINES GP-PILOT	374
1	197-0201	VALVE & MOUNTING GP	448

H91683E 05

165-0964 CONTROL AR-AUXILIARY
An Attachment

HYDRAULIC SYSTEM

Consists of :

			Page
1	167-7263	FILM GP	702
1	168-9543	LINES GP-FRONT	396
1	168-9545	LINES GP-PILOT	378
1	197-0200	VALVE & MOUNTING GP	449
1	179-4598	CONTROL GP-HYDRAULIC	444
1	193-3514	WIRING GP	160
1	196-0456	LINES GP-PILOT	376

H91684E 03

165-0976 CONTROL AR-AUXILIARY
An Attachment

Consists of :

			Page
1	168-9551	LINES GP-DRAIN	414
1	183-8098	PUMP & MOUNTING GP	274
1	196-0463	LINES GP-FRONT	406

H84371E 04

165-0965 CONTROL AR-AUXILIARY
Part of 198-2120,198-2121-Page633
An Attachment

HYDRAULIC SYSTEM

Consists of :

			Page
1	165-0989	CONTROL GP-ELECTRIC HAND	194.01
1	196-0460	LINES GP-FRONT	403.05
1	209-2879	FILM GP	708
1	212-5187	LINES GP-PILOT	377.01
1	213-0613	WIRING GP	161.01

H81759E 01

200-6637 CONTROL AR-AUXILIARY
An Attachment

Consists of :

			Page
1	153-8767	CONTROL GP-HYDRAULIC	446
1	176-2711	FILM GP	709
1	193-3550	WIRING GP	194
1	196-0460	LINES GP-FRONT	403.05
1	196-0461	LINES GP-PILOT	377.03
1	199-9462	FILM GP	704

H81760E 03

165-0967 CONTROL AR-AUXILIARY
An Attachment

MEMORANDA

Consists of :

			Page
1	198-0397	LINES GP-FRONT	408
1	186-4593	WIRING GP-QUICK COUPLER	162
1	204-1917	WIRING GP-QUICK COUPLER	128
1	215-5925	CONSOLE GP	592.01

H86454E 00

216-6534 CONTROL AR-QUICK COUPLER
An Attachment

Consists of :

			Page
1	168-9559	LINES GP-PILOT	380
1	183-1499	FILM GP	705

H72009E 00

171-0019 VALVE AR
An Attachment

Consists of :

			Page
1	168-9560	LINES GP-BOOM CYLINDER	312
1	168-9562	LINES GP-PILOT	383

H74714E 00

171-0020 VALVE AR-BOOM LOWERING CONTROL
An Attachment

Consists of :

			Page
1	202-7138	LINES GP-STICK CYLINDER	315
1	197-2160	LINES GP-BOOM	324
1	194-0192	LINES GP-PILOT	384

H77605E 00

206-3231 VALVE AR-STICK LOWERING CONT
An Attachment

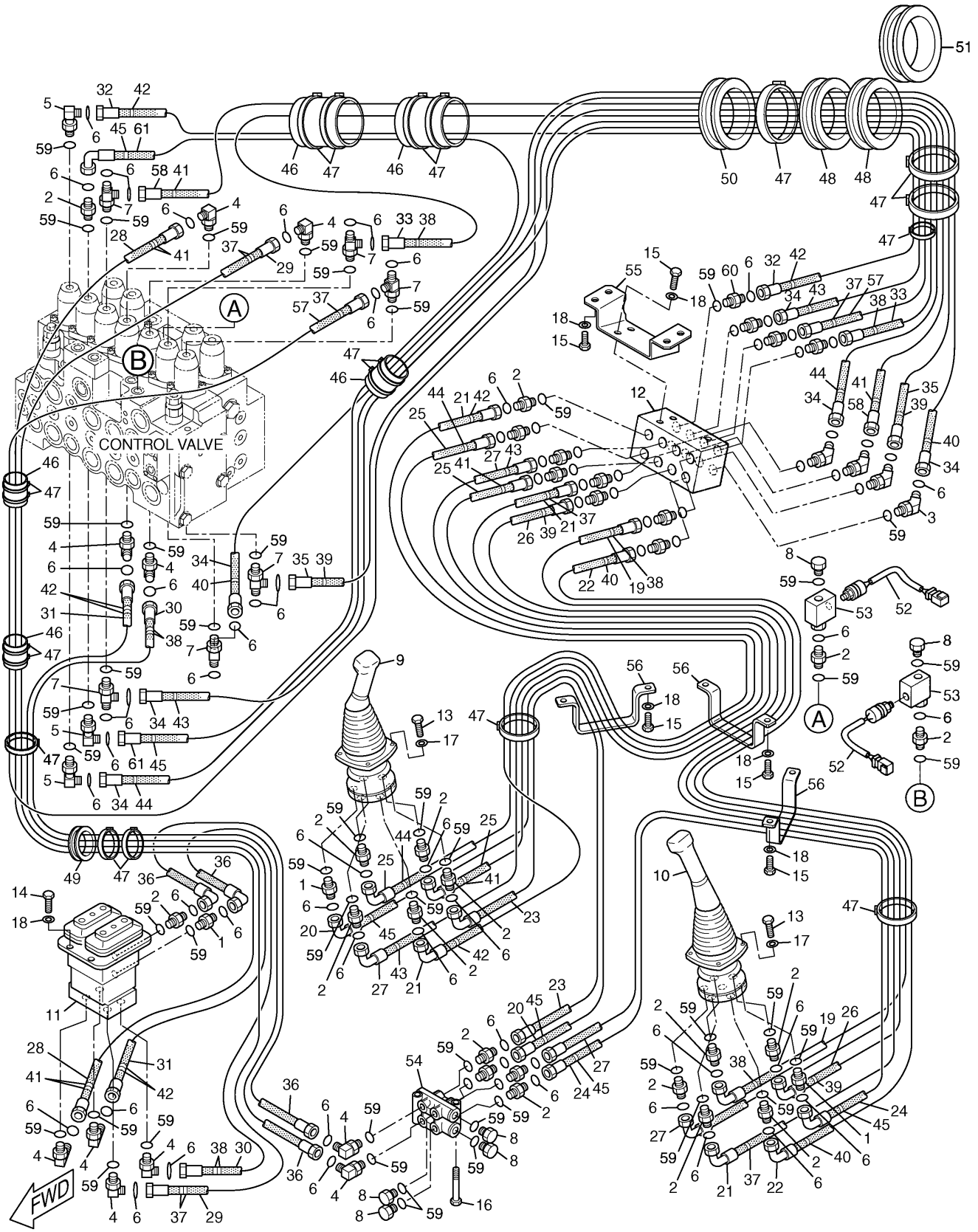

168-9537 LINES GP-PILOT

S/N CAE 01201-02264

206-3303-Page434,206-3304-Page435,165-9522-Page496

HYDRAULIC SYSTEM

NOTE	No.	PART No.	QTY	PART NAME
	1	107-6631	3	CONNECTOR
	2	6V-8636	26	CONNECTOR
	3	6V-9001	4	ELBOW
	4	6V-8724	10	ELBOW
	5	8T-1905	3	ELBOW
	6	6V-8397	62	SEAL-O-RING (OD=12.83mm)
	7	6V-8781	6	TEE
	8	9S-4191	6	PLUG
Y	9	206-3303	1	VALVE GP (WORKING CONTROL)
Y	10	206-3304	1	VALVE GP (WORKING CONTROL)
Y	11	165-9522	1	VALVE GP (TRAVEL CONTROL)
	12	196-0715	1	BLOCK
	13	6V-7357	6	BOLT (L=25mm)
	14	8T-4136	4	BOLT (L=25mm)
	15	8T-4137	13	BOLT (L=20mm)
	16	8T-4198	2	BOLT (L=100mm)
	17	9X-8256	6	WASHER
	18	8T-4121	17	WASHER
	19	184-9283	1	HOSE AS (NOM 06, L=1250mm)
	20	184-9284	1	HOSE AS (NOM 06, L=1130mm)
	21	184-9285	2	HOSE AS (NOM 06, L=1230mm)
	22	184-9286	1	HOSE AS (NOM 06, L=1270mm)
	23	176-4556	1	HOSE AS (NOM 06, L=1100mm)
	24	176-4557	1	HOSE AS (NOM 06, L=1170mm)
	25	176-4558	2	HOSE AS (NOM 06, L=1230mm)
	26	176-4559	1	HOSE AS (NOM 06, L=1300mm)
	27	176-4561	2	HOSE AS (NOM 06, L=1170mm)
	28	104-8768	1	HOSE AS (NOM 06, L=2700mm)
	29	4I-0769	1	HOSE AS (NOM 06, L=2850mm)
	30	7Y-4193	1	HOSE AS (NOM 06, L=2500mm)
	31	7I-8252	1	HOSE AS (NOM 06, L=2350mm)
	32	4I-3988	1	HOSE AS (NOM 06, L=2250mm)
	33	4I-3991	1	HOSE AS (NOM 06, L=2100mm)
	34	7Y-4199	3	HOSE AS (NOM 06, L=1800mm)
	35	110-5499	1	HOSE AS (NOM 06, L=1570mm)
	36	087-4402	2	HOSE AS (NOM 06, L=480mm)
	37	4I-9521	8	BAND (L1,RED)
	38	4I-9522	8	BAND (L2,YELLOW)
	39	4I-9523	4	BAND (L3,BLUE)
	40	4I-9524	4	BAND (L4,BROWN)
	41	4I-9525	8	BAND (R1,ORANGE)
	42	4I-9526	8	BAND (R2,WHITE)
	43	4I-9527	4	BAND (R3,GREEN)
	44	4I-9528	4	BAND (R4,PURPLE)
	45	133-5813	4	BAND (P,GRAY)
	46	115-8645	5	GUARD
	47	7K-1181	19	STRAP
	48	4I-3953	2	GROMMET
	49	5I-4365	1	GROMMET
	50	5I-4366	1	GROMMET
	51	087-4476	1	GROMMET
	52	170-9335	2	SWITCH AS (PRESSURE)
		126-1768	2	SOCKET
		155-2270	1	PLUG KIT
		155-2261	1	WEDGE
	53	4I-3941	2	FITTING AS
	54	168-9759	1	BLOCK
	55	185-0383	1	BRACKET
	56	184-9336	3	SUPPORT
	57	104-8771	1	HOSE AS (NOM 06, L=2430mm)
	58	104-8783	1	HOSE AS (NOM 06, L=2150mm)
	59	3J-1907	62	SEAL-O-RING (ID=11.89mm)
	60	8T-0075	4	CONNECTOR
	61	4I-0800	1	HOSE AS (NOM 06, L=1300mm)

Y—SEE SEPARATE ILLUSTRATION

H81749E 04

168-9537 LINES GP-PILOT

S/N CAE 01201-02264

206-3303-Page434,206-3304-Page435,165-9522-Page496

HYDRAULIC SYSTEM

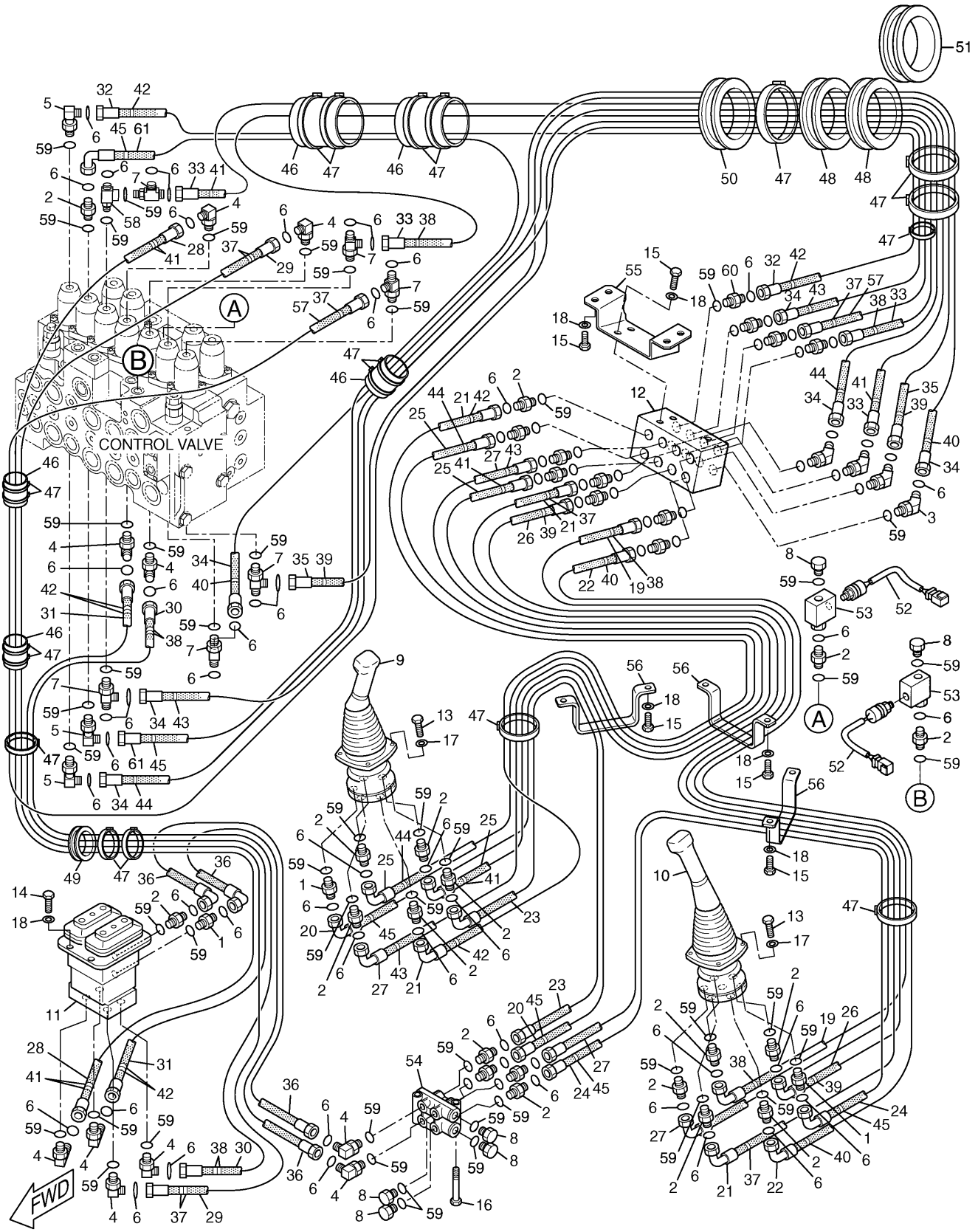

168-9537 LINES GP-PILOT

S/N CAE 02265-Up

206-3303-Page434,206-3304-Page435,165-9522-Page496

HYDRAULIC SYSTEM

NOTE	No.	PART No.	QTY	PART NAME
	1	107-6631	3	CONNECTOR
	2	6V-8636	26	CONNECTOR
	3	6V-9001	4	ELBOW
	4	6V-8724	10	ELBOW
	5	8T-1905	3	ELBOW
	6	6V-8397	63	SEAL-O-RING (OD=12.83mm)
	7	6V-8781	6	TEE
	8	9S-4191	6	PLUG
Y	9	206-3303	1	VALVE GP (WORKING CONTROL)
Y	10	206-3304	1	VALVE GP (WORKING CONTROL)
Y	11	165-9522	1	VALVE GP (TRAVEL CONTROL)
	12	196-0715	1	BLOCK
	13	6V-7357	6	BOLT (L=25mm)
	14	8T-4136	4	BOLT (L=25mm)
	15	8T-4137	13	BOLT (L=20mm)
	16	8T-4198	2	BOLT (L=100mm)
	17	9X-8256	6	WASHER
	18	8T-4121	17	WASHER
	19	184-9283	1	HOSE AS (NOM 06, L=1250mm)
	20	184-9284	1	HOSE AS (NOM 06, L=1130mm)
	21	184-9285	2	HOSE AS (NOM 06, L=1230mm)
	22	184-9286	1	HOSE AS (NOM 06, L=1270mm)
	23	176-4556	1	HOSE AS (NOM 06, L=1100mm)
	24	176-4557	1	HOSE AS (NOM 06, L=1170mm)
	25	176-4558	2	HOSE AS (NOM 06, L=1230mm)
	26	176-4559	1	HOSE AS (NOM 06, L=1300mm)
	27	176-4561	2	HOSE AS (NOM 06, L=1170mm)
	28	104-8768	1	HOSE AS (NOM 06, L=2700mm)
	29	4I-0769	1	HOSE AS (NOM 06, L=2850mm)
	30	7Y-4193	1	HOSE AS (NOM 06, L=2500mm)
	31	7I-8252	1	HOSE AS (NOM 06, L=2350mm)
	32	4I-3988	1	HOSE AS (NOM 06, L=2250mm)
	33	4I-3991	2	HOSE AS (NOM 06, L=2100mm)
	34	7Y-4199	3	HOSE AS (NOM 06, L=1800mm)
	35	110-5499	1	HOSE AS (NOM 06, L=1570mm)
	36	087-4402	2	HOSE AS (NOM 06, L=480mm)
	37	4I-9521	8	BAND (L1,RED)
	38	4I-9522	8	BAND (L2,YELLOW)
	39	4I-9523	4	BAND (L3,BLUE)
	40	4I-9524	4	BAND (L4,BROWN)
	41	4I-9525	8	BAND (R1,ORANGE)
	42	4I-9526	8	BAND (R2,WHITE)
	43	4I-9527	4	BAND (R3,GREEN)
	44	4I-9528	4	BAND (R4,PURPLE)
	45	133-5813	4	BAND (P,GRAY)
	46	115-8645	5	GUARD
	47	7K-1181	19	STRAP
	48	4I-3953	2	GROMMET
	49	5I-4365	1	GROMMET
	50	5I-4366	1	GROMMET
	51	087-4476	1	GROMMET
	52	309-5768	2	SWITCH AS (PRESSURE)
		126-1768	2	SOCKET
		155-2270	1	PLUG KIT
		155-2261	1	WEDGE
	53	4I-3941	2	FITTING AS
	54	168-9759	1	BLOCK
	55	185-0383	1	BRACKET
	56	184-9336	3	SUPPORT
	57	104-8771	1	HOSE AS (NOM 06, L=2430mm)
	58	3E-2310	1	TEE
	59	3J-1907	63	SEAL-O-RING (ID=11.89mm)
	60	8T-0075	4	CONNECTOR
	61	4I-0800	1	HOSE AS (NOM 06, L=1300mm)

Y—SEE SEPARATE ILLUSTRATION

HA1974E 06

168-9537 LINES GP-PILOT

S/N CAE 02265-Up

206-3303-Page434,206-3304-Page435,165-9522-Page496

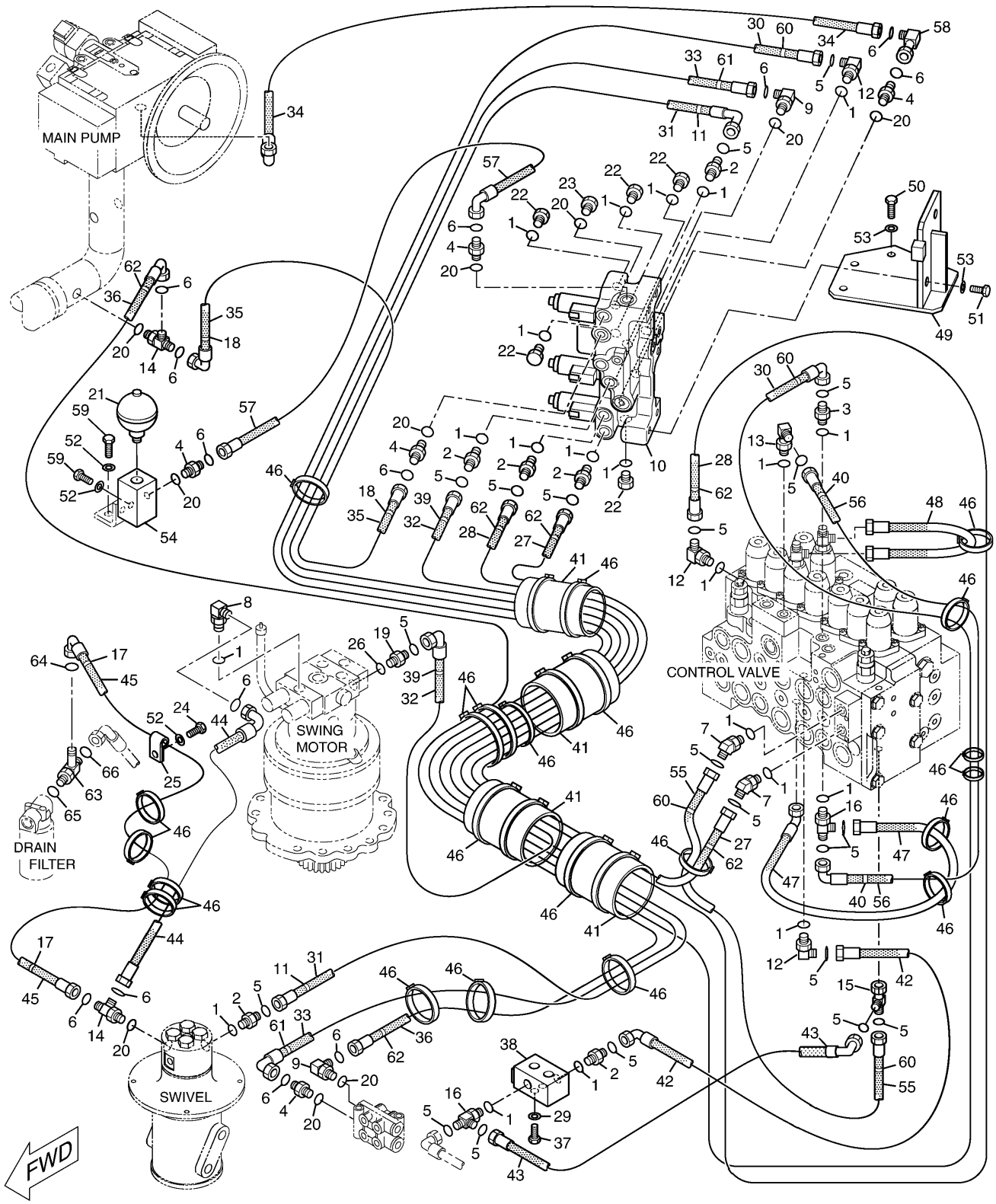

168-9538 LINES GP-PILOT (1/2)

S/N CAE 01201-01854

164-6981-Page294,148-6218-Page484,158-8251-Page492

HYDRAULIC SYSTEM

NOTE	No.	PART No.	QTY	PART NAME	NOTE	No.	PART No.	QTY	PART NAME
	1	3J-1907	21	SEAL-O-RING (ID=11.89mm)		53	8T-4223	5	WASHER
	2	6V-8636	6	CONNECTOR		54	176-4469	1	BLOCK
	3	107-6631	1	CONNECTOR		55	5I-4076	1	HOSE AS (NOM 06, L=1350mm)
	4	6V-8639	5	CONNECTOR		56	7Y-8478	1	HOSE AS (NOM 06, L=2100mm)
	5	6V-8397	20	SEAL-O-RING (OD=12.83mm)		57	194-0319	1	HOSE AS (NOM 08, L=750mm)
	6	6V-8398	13	SEAL-O-RING (OD=16.03mm)		58	6V-9851	1	ELBOW
	7	6V-9001	2	ELBOW		59	8T-4136	4	BOLT (L=25mm)
	8	8T-6876	1	ELBOW		60	4I-9521	4	BAND (L1,RED)
	9	6V-8625	2	ELBOW		61	4I-9522	2	BAND (L2,YELLOW)
Y	10	158-8251	1	VALVE GP		62	4I-9523	8	BAND (L3,BLUE)
	11	4I-9524	2	BAND (L4,BROWN)		63	221-5069	1	TEE AS
	12	6V-8724	3	ELBOW		64	6V-8398	1	SEAL-O-RING (OD=16.03mm)
	13	8T-1905	1	ELBOW		65	3D-2824	1	SEAL-O-RING (ID=23.47mm)
	14	6V-8782	2	TEE		66	6V-9746	1	SEAL-O-RING (OD=22.50mm)
	15	6V-9836	1	TEE					
	16	6V-8781	2	TEE					
	17	4I-9527	2	BAND (R3,GREEN)					
	18	4I-9528	2	BAND (R4,PURPLE)					
	19	6V-9872	1	CONNECTOR					
	20	3K-0360	10	SEAL-O-RING (ID=16.36mm)					
Y	21	164-6981	1	ACCUMULATOR GP					
	22	9S-4191	5	PLUG					
	23	9S-4185	1	PLUG					
	24	8T-4137	1	BOLT (L=20mm)					
	25	6D-4636	1	CLIP					
	26	3J-7354	1	SEAL-O-RING (ID=8.92mm)					
	27	087-6583	1	HOSE AS (NOM 06, L=2530mm)					
	28	4I-0772	1	HOSE AS (NOM 06, L=3550mm)					
	29	8T-4224	2	WASHER					
	30	194-0321	1	HOSE AS (NOM 06, L=3150mm)					
	31	194-0322	1	HOSE AS (NOM 06, L=2550mm)					
	32	187-7050	1	HOSE AS (NOM 06, L=1700mm)					
	33	194-0323	1	HOSE AS (NOM 08, L=3550mm)					
	34	194-0324	1	HOSE AS (NOM 08, L=450mm)					
	35	108-7351	1	HOSE AS (NOM 08, L=570mm)					
	36	129-5940	1	HOSE AS (NOM 08, L=2800mm)					
	37	8T-4189	2	BOLT (L=20mm)					
Y	38	148-6218	1	VALVE GP					
	39	133-5813	2	BAND (P,GRAY)					
	40	4I-9525	2	BAND (R1,ORANGE)					
	41	115-8645	4	GUARD					
	42	087-5774	1	HOSE AS (NOM 06, L=1060mm)					
	43	087-6585	1	HOSE AS (NOM 06, L=350mm)					
	44	194-0318	1	HOSE AS (NOM 08, L=720mm)					
	45	199-1954	1	HOSE AS (NOM 08, L=2000mm)					
E		7I-1024		GUARD…(190cm)					
	46	7K-1181	25	STRAP					
	47	087-5769	1	HOSE AS (NOM 06, L=870mm)					
	48	4I-1760	1	HOSE AS (NOM 06, L=500mm)					
	49	187-7028	1	SUPPORT AS					
	50	8T-4139	3	BOLT (L=30mm)					
	51	8T-4192	2	BOLT (L=25mm)					
	52	8T-4121	5	WASHER					

E—ORDER BY THE CENTIMETER

Y—SEE SEPARATE ILLUSTRATION

H86424E 06

168-9538 LINES GP-PILOT (1/2)

S/N CAE 01201-01854

164-6981-Page294,148-6218-Page484,158-8251-Page492

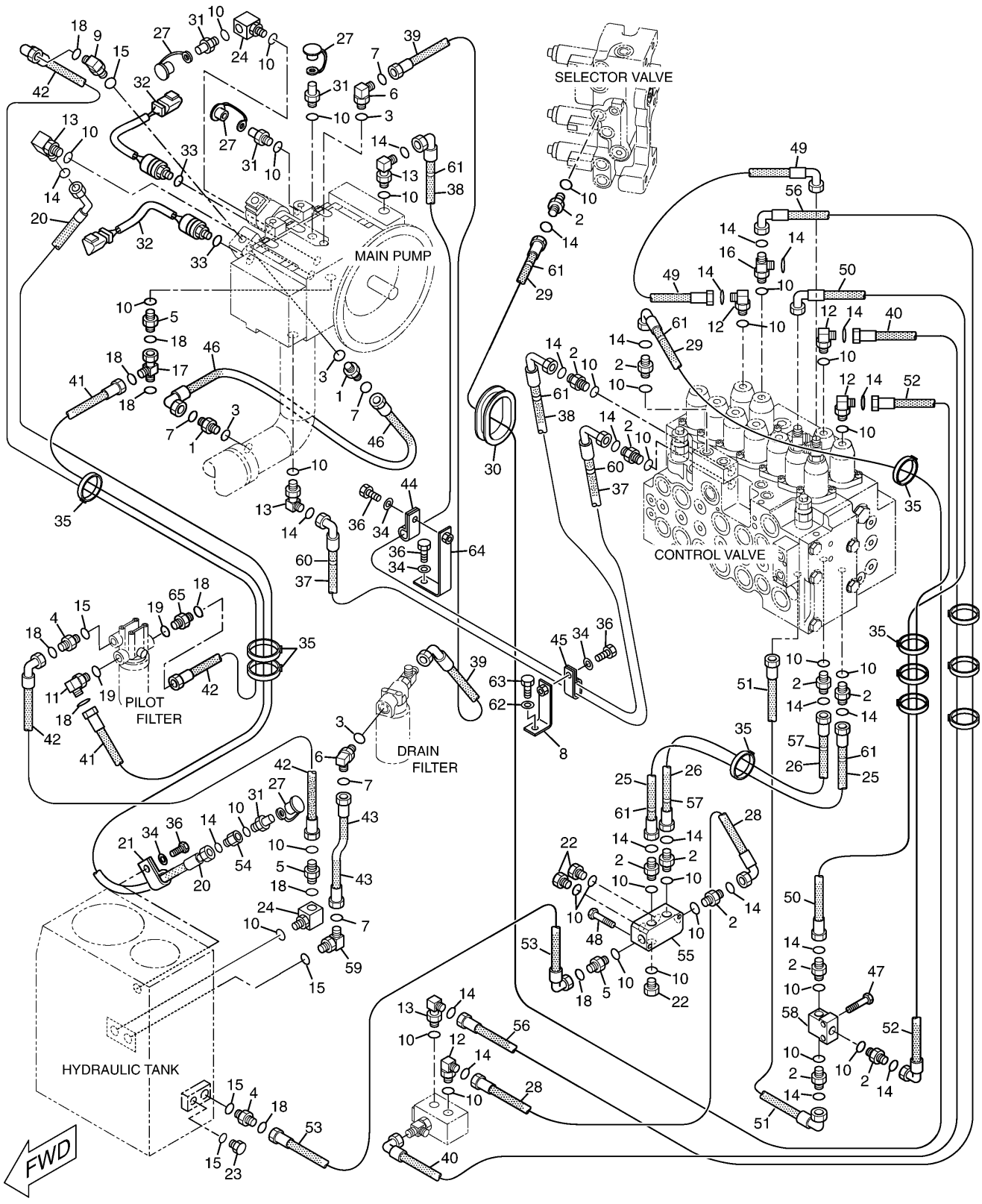

168-9538 LINES GP-PILOT (2/2)
S/N CAE 01201-01854
123-2430-Page510

HYDRAULIC SYSTEM

NOTE	No.	PART No.	QTY	PART NAME
	1	6V-8637	2	CONNECTOR
	2	6V-8636	12	CONNECTOR
	3	3D-2824	4	SEAL-O-RING (ID=23.47mm)
	4	6V-8639	2	CONNECTOR
	5	6V-9873	3	CONNECTOR
	6	6V-9007	2	ELBOW
	7	6V-9746	5	SEAL-O-RING (OD=22.50mm)
	8	199-1956	1	SUPPORT AS
	9	6V-8625	1	ELBOW
	10	3J-1907	33	SEAL-O-RING (ID=11.89mm)
	11	6V-8721	1	ELBOW
	12	6V-8724	4	ELBOW
	13	8T-1905	4	ELBOW
	14	6V-8397	23	SEAL-O-RING (OD=12.83mm)
	15	3K-0360	5	SEAL-O-RING (ID=16.36mm)
	16	6V-8781	1	TEE
	17	6V-9837	1	TEE
	18	6V-8398	10	SEAL-O-RING (OD=16.03mm)
	19	2M-9780	2	SEAL-O-RING (ID=19.18mm)
	20	199-2013	1	HOSE AS (NOM 06, L=960mm)
E		7I-7439		GUARD…(98cm)
	21	6K-8178	1	CLIP
	22	9S-4191	3	PLUG
	23	9S-4185	1	PLUG
	24	085-7356	2	FITTING
	25	194-0325	1	HOSE AS (NOM 06, L=340mm)
	26	194-0328	1	HOSE AS (NOM 06, L=360mm)
	27	6V-0852	4	CAP
	28	087-4411	1	HOSE AS (NOM 06, L=450mm)
	29	7Y-4384	1	HOSE AS (NOM 06, L=3050mm)
	30	4I-6039	1	GROMMET
	31	6V-3965	4	NIPPLE AS
	32	157-3182	2	SENSOR AS
	33	3K-0360	1	SEAL-O-RING (ID=16.36mm)
		9X-3401	3	PIN
	34	8T-4121	4	WASHER
	35	7K-1181	8	STRAP
	36	8T-4137	4	BOLT (L=20mm)
	37	179-7618	1	HOSE AS (NOM 06, L=850mm)
	38	179-7619	1	HOSE AS (NOM 06, L=1750mm)
	39	113-6394	1	HOSE AS (NOM 12, L=750mm)
	40	111-0988	1	HOSE AS (NOM 06, L=1950mm)
	41	121-6369	1	HOSE AS (NOM 08, L=950mm)
	42	4I-0788	2	HOSE AS (NOM 08, L=535mm)
	43	128-9166	1	HOSE AS (NOM 12, L=540mm)
	44	6D-4636	1	CLIP
	45	6D-1641	1	CLIP
	46	131-9869	1	HOSE AS (NOM 12, L=480mm)
	47	099-3649	2	BOLT (L=40mm)
	48	8T-9535	2	BOLT (L=60mm)
	49	4I-0821	1	HOSE AS (NOM 06, L=650mm)
	50	087-5772	1	HOSE AS (NOM 06, L=1000mm)
	51	087-5765	1	HOSE AS (NOM 06, L=570mm)
	52	087-5771	1	HOSE AS (NOM 06, L=960mm)
	53	131-9453	1	HOSE AS (NOM 08, L=600mm)
	54	8T-6663	1	ADAPTER
	55	176-4791	1	BLOCK
	56	7Y-8478	1	HOSE AS (NOM 06, L=2100mm)
	57	4I-9528	2	BAND (R4,PURPLE)
Y	58	123-2430	1	VALVE GP
	59	6V-9877	1	ELBOW
	60	4I-9523	2	BAND (L3,BLUE)
	61	4I-9527	6	BAND (R3,GREEN)
	62	8T-4223	1	WASHER
	63	8T-4179	1	BOLT (L=20mm)
	64	199-2010	1	SUPPORT AS
	65	6V-8638	1	CONNECTOR

E—ORDER BY THE CENTIMETER

Y—SEE SEPARATE ILLUSTRATION

H86425E 06

168-9538 LINES GP-PILOT (2/2)

S/N CAE 01201-01854

123-2430-Page510

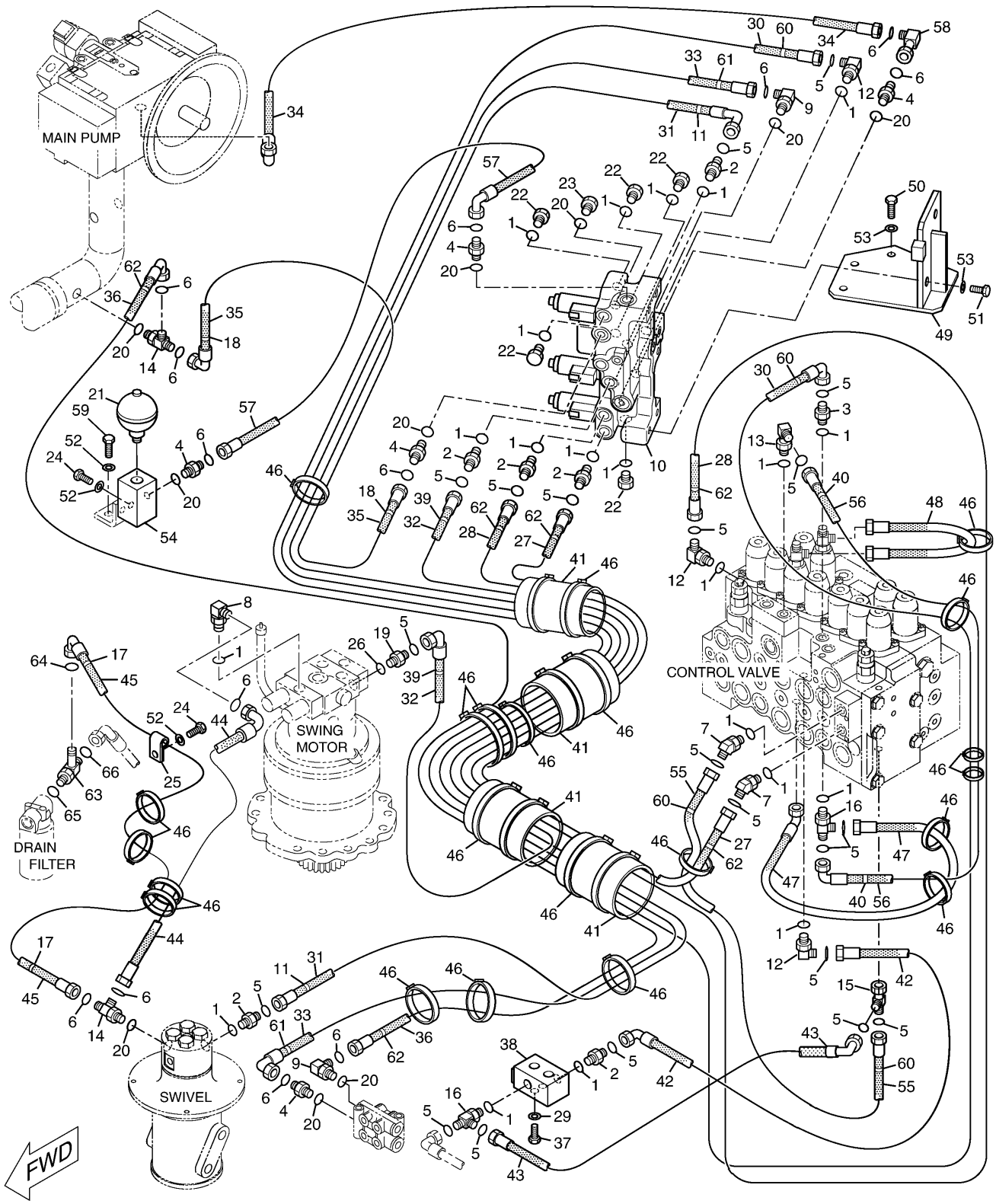

168-9538 LINES GP-PILOT (1/2)

S/N CAE 01855-02264

164-6981-Page294,148-6218-Page484,215-5037-Page493.01

HYDRAULIC SYSTEM

NOTE	No.	PART No.	QTY	PART NAME	NOTE	No.	PART No.	QTY	PART NAME
	1	3J-1907	21	SEAL-O-RING (ID=11.89mm)		53	8T-4223	5	WASHER
	2	6V-8636	6	CONNECTOR		54	176-4469	1	BLOCK
	3	107-6631	1	CONNECTOR		55	5I-4076	1	HOSE AS (NOM 06, L=1350mm)
	4	6V-8639	5	CONNECTOR		56	7Y-8478	1	HOSE AS (NOM 06, L=2100mm)
	5	6V-8397	20	SEAL-O-RING (OD=12.83mm)		57	194-0319	1	HOSE AS (NOM 08, L=750mm)
	6	6V-8398	13	SEAL-O-RING (OD=16.03mm)		58	6V-9851	1	ELBOW
	7	6V-9001	2	ELBOW		59	8T-4136	2	BOLT (L=25mm)
	8	8T-6876	1	ELBOW		60	4I-9521	4	BAND (L1,RED)
	9	6V-8625	2	ELBOW		61	4I-9522	2	BAND (L2,YELLOW)
Y	10	215-5037	1	VALVE GP		62	4I-9523	8	BAND (L3,BLUE)
	11	4I-9524	2	BAND (L4,BROWN)		63	221-5069	1	TEE AS
	12	6V-8724	3	ELBOW		64	6V-8398	1	SEAL-O-RING (OD=16.03mm)
	13	8T-1905	1	ELBOW		65	3D-2824	1	SEAL-O-RING (ID=23.47mm)
	14	6V-8782	2	TEE		66	6V-9746	1	SEAL-O-RING (OD=22.50mm)
	15	6V-9836	1	TEE					
	16	6V-8781	2	TEE					
	17	4I-9527	2	BAND (R3,GREEN)					
	18	4I-9528	2	BAND (R4,PURPLE)					
	19	6V-9872	1	CONNECTOR					
	20	3K-0360	10	SEAL-O-RING (ID=16.36mm)					
Y	21	164-6981	1	ACCUMULATOR GP					
	22	9S-4191	5	PLUG					
	23	9S-4185	1	PLUG					
	24	8T-4137	3	BOLT (L=20mm)					
	25	6D-4636	1	CLIP					
	26	3J-7354	1	SEAL-O-RING (ID=8.92mm)					
	27	087-6583	1	HOSE AS (NOM 06, L=2530mm)					
	28	4I-0772	1	HOSE AS (NOM 06, L=3550mm)					
	29	8T-4224	2	WASHER					
	30	194-0321	1	HOSE AS (NOM 06, L=3150mm)					
	31	194-0322	1	HOSE AS (NOM 06, L=2550mm)					
	32	187-7050	1	HOSE AS (NOM 06, L=1700mm)					
	33	194-0323	1	HOSE AS (NOM 08, L=3550mm)					
	34	194-0324	1	HOSE AS (NOM 08, L=450mm)					
	35	108-7351	1	HOSE AS (NOM 08, L=570mm)					
	36	129-5940	1	HOSE AS (NOM 08, L=2800mm)					
	37	8T-4189	2	BOLT (L=20mm)					
Y	38	148-6218	1	VALVE GP					
	39	133-5813	2	BAND (P,GRAY)					
	40	4I-9525	2	BAND (R1,ORANGE)					
	41	115-8645	4	GUARD					
	42	087-5774	1	HOSE AS (NOM 06, L=1060mm)					
	43	087-6585	1	HOSE AS (NOM 06, L=350mm)					
	44	194-0318	1	HOSE AS (NOM 08, L=720mm)					
	45	199-1954	1	HOSE AS (NOM 08, L=2000mm)					
E		7I-1024		GUARD…(190cm)					
	46	7K-1181	25	STRAP					
	47	087-5769	1	HOSE AS (NOM 06, L=870mm)					
	48	4I-1760	1	HOSE AS (NOM 06, L=500mm)					
	49	187-7028	1	SUPPORT AS					
	50	8T-4139	3	BOLT (L=30mm)					
	51	8T-4192	2	BOLT (L=25mm)					
	52	8T-4121	5	WASHER					

E—ORDER BY THE CENTIMETER

Y—SEE SEPARATE ILLUSTRATION

H86344E 10

168-9538 LINES GP-PILOT (1/2)

S/N CAE 01855-02264

164-6981-Page294,148-6218-Page484,215-5037-Page493.01

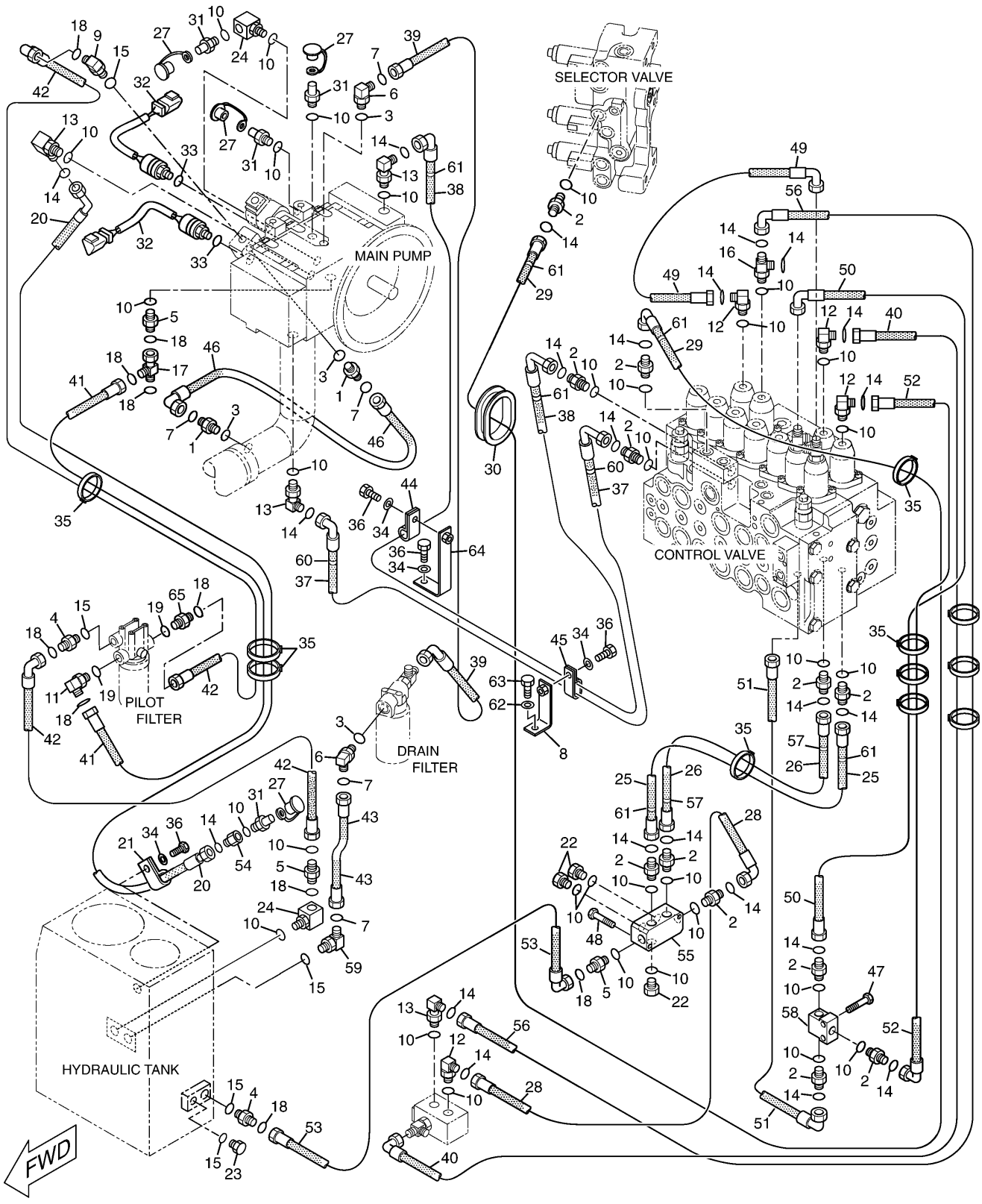

168-9538 LINES GP-PILOT (2/2)
S/N CAE 01855-02264
123-2430-Page510

HYDRAULIC SYSTEM

NOTE	No.	PART No.	QTY	PART NAME
	1	6V-8637	2	CONNECTOR
	2	6V-8636	12	CONNECTOR
	3	3D-2824	4	SEAL-O-RING (ID=23.47mm)
	4	6V-8639	2	CONNECTOR
	5	6V-9873	3	CONNECTOR
	6	6V-9007	2	ELBOW
	7	6V-9746	5	SEAL-O-RING (OD=22.50mm)
	8	199-1956	1	SUPPORT AS
	9	6V-8625	1	ELBOW
	10	3J-1907	33	SEAL-O-RING (ID=11.89mm)
	11	6V-8721	1	ELBOW
	12	6V-8724	4	ELBOW
	13	8T-1905	4	ELBOW
	14	6V-8397	23	SEAL-O-RING (OD=12.83mm)
	15	3K-0360	5	SEAL-O-RING (ID=16.36mm)
	16	6V-8781	1	TEE
	17	6V-9837	1	TEE
	18	6V-8398	10	SEAL-O-RING (OD=16.03mm)
	19	2M-9780	2	SEAL-O-RING (ID=19.18mm)
	20	199-2013	1	HOSE AS (NOM 06, L=960mm)
E		7I-7439		GUARD…(98cm)
	21	6K-8178	1	CLIP
	22	9S-4191	3	PLUG
	23	9S-4185	1	PLUG
	24	085-7356	2	FITTING
	25	194-0325	1	HOSE AS (NOM 06, L=340mm)
	26	194-0328	1	HOSE AS (NOM 06, L=360mm)
	27	6V-0852	4	CAP
	28	087-4411	1	HOSE AS (NOM 06, L=450mm)
	29	7Y-4384	1	HOSE AS (NOM 06, L=3050mm)
	30	4I-6039	1	GROMMET
	31	6V-3965	4	NIPPLE AS
	32	221-8859	2	SENSOR AS
	33	3K-0360	1	SEAL-O-RING (ID=16.36mm)
		9X-3401	3	PIN
	34	8T-4121	4	WASHER
	35	7K-1181	8	STRAP
	36	8T-4137	4	BOLT (L=20mm)
	37	179-7618	1	HOSE AS (NOM 06, L=850mm)
	38	179-7619	1	HOSE AS (NOM 06, L=1750mm)
	39	113-6394	1	HOSE AS (NOM 12, L=750mm)
	40	111-0988	1	HOSE AS (NOM 06, L=1950mm)
	41	121-6369	1	HOSE AS (NOM 08, L=950mm)
	42	4I-0788	2	HOSE AS (NOM 08, L=535mm)
	43	128-9166	1	HOSE AS (NOM 12, L=540mm)
	44	6D-4636	1	CLIP
	45	6D-1641	1	CLIP
	46	131-9869	1	HOSE AS (NOM 12, L=480mm)
	47	099-3649	2	BOLT (L=40mm)
	48	8T-9535	2	BOLT (L=60mm)
	49	4I-0821	1	HOSE AS (NOM 06, L=650mm)
	50	087-5772	1	HOSE AS (NOM 06, L=1000mm)
	51	087-5765	1	HOSE AS (NOM 06, L=570mm)
	52	087-5771	1	HOSE AS (NOM 06, L=960mm)
	53	131-9453	1	HOSE AS (NOM 08, L=600mm)
	54	8T-6663	1	ADAPTER
	55	176-4791	1	BLOCK
	56	7Y-8478	1	HOSE AS (NOM 06, L=2100mm)
	57	4I-9528	2	BAND (R4,PURPLE)
Y	58	123-2430	1	VALVE GP
	59	6V-9877	1	ELBOW
	60	4I-9523	2	BAND (L3,BLUE)
	61	4I-9527	6	BAND (R3,GREEN)
	62	8T-4223	1	WASHER
	63	8T-4179	1	BOLT (L=20mm)
	64	199-2010	1	SUPPORT AS
	65	6V-8638	1	CONNECTOR

E—ORDER BY THE CENTIMETER

Y—SEE SEPARATE ILLUSTRATION

H86345E 10

168-9538 LINES GP-PILOT (2/2)

S/N CAE 01855-02264

123-2430-Page510

HYDRAULIC SYSTEM

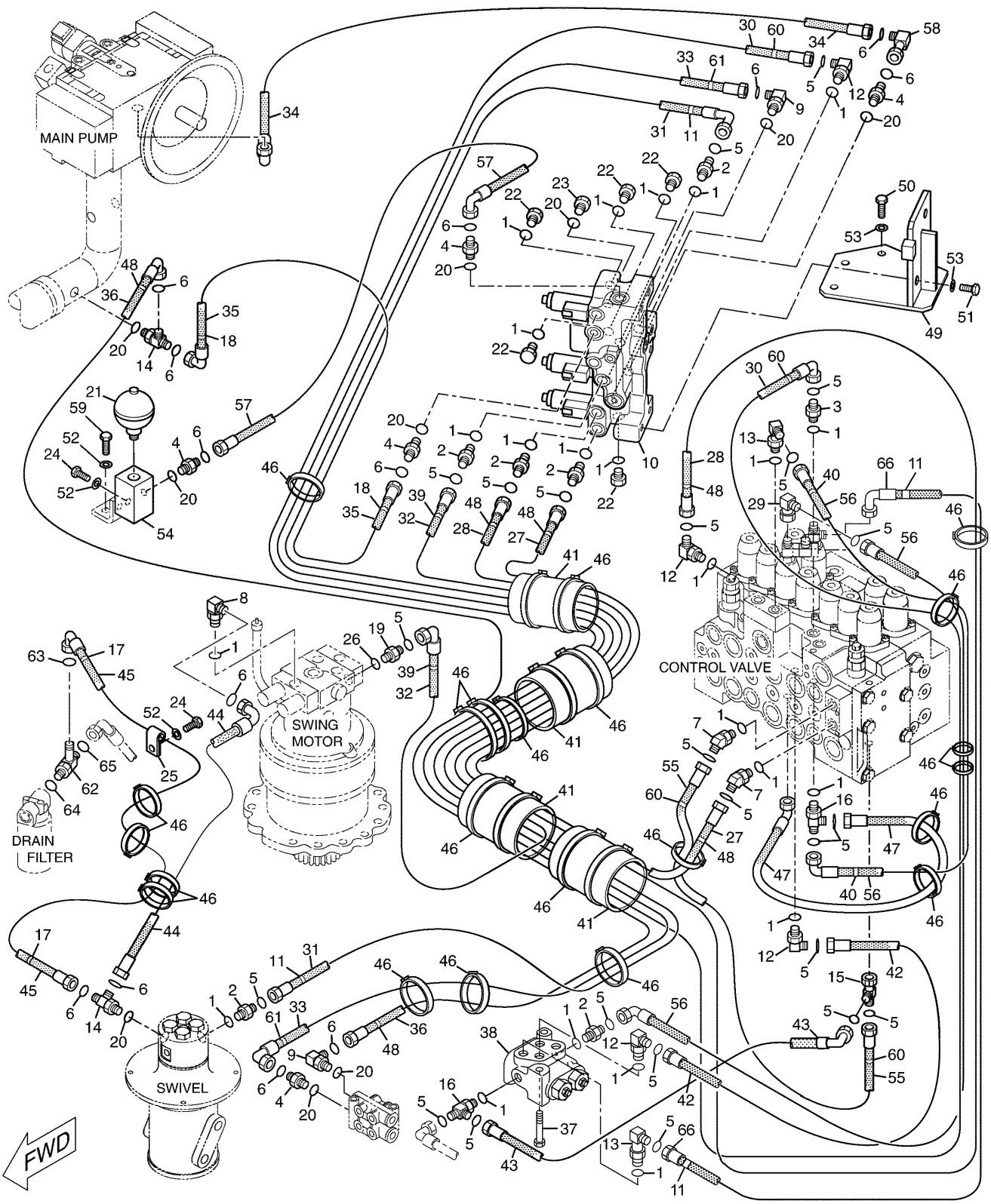

HA2011E 16

168-9538 LINES GP-PILOT (1/2)

S/N CAE 02265-Up

164-6981-Page294,232-4102-Page484.01,215-5037-Page493.01

HYDRAULIC SYSTEM

NOTE	No.	PART No.	QTY	PART NAME
	1	3J-1907	23	SEAL-O-RING (ID=11.89mm)
	2	6V-8636	6	CONNECTOR
	3	107-6631	1	CONNECTOR
	4	6V-8639	5	CONNECTOR
	5	6V-8397	23	SEAL-O-RING (OD=12.83mm)
	6	6V-8398	13	SEAL-O-RING (OD=16.03mm)
	7	6V-9001	2	ELBOW
	8	8T-6876	1	ELBOW
	9	6V-8625	2	ELBOW
Y	10	215-5037	1	VALVE GP
	11	4I-9524	4	BAND (L4,BROWN)
	12	6V-8724	4	ELBOW
	13	8T-1905	2	ELBOW
	14	6V-8782	2	TEE
	15	6V-9836	1	TEE
	16	6V-8781	2	TEE
	17	4I-9527	2	BAND (R3,GREEN)
	18	4I-9528	2	BAND (R4,PURPLE)
	19	6V-9872	1	CONNECTOR
	20	3K-0360	10	SEAL-O-RING (ID=16.36mm)
Y	21	164-6981	1	ACCUMULATOR GP
	22	9S-4191	5	PLUG
	23	9S-4185	1	PLUG
	24	8T-4137	3	BOLT (L=20mm)
	25	6D-4636	1	CLIP
	26	3J-7354	1	SEAL-O-RING (ID=8.92mm)
	27	087-6583	1	HOSE AS (NOM 06, L=2530mm)
	28	4I-0772	1	HOSE AS (NOM 06, L=3550mm)
	29	6V-9850	1	ELBOW
	30	194-0321	1	HOSE AS (NOM 06, L=3150mm)
	31	194-0322	1	HOSE AS (NOM 06, L=2550mm)
	32	187-7050	1	HOSE AS (NOM 06, L=1700mm)
	33	194-0323	1	HOSE AS (NOM 08, L=3550mm)
	34	194-0324	1	HOSE AS (NOM 08, L=450mm)
	35	108-7351	1	HOSE AS (NOM 08, L=570mm)
	36	129-5940	1	HOSE AS (NOM 08, L=2800mm)
	37	8T-5005	2	BOLT (L=70mm)
Y	38	232-4102	1	VALVE GP
	39	133-5813	2	BAND (P,GRAY)
	40	4I-9525	2	BAND (R1,ORANGE)
	41	115-8645	4	GUARD
	42	087-5760	1	HOSE AS (NOM 06, L=1030mm)
	43	087-6585	1	HOSE AS (NOM 06, L=350mm)
	44	194-0318	1	HOSE AS (NOM 08, L=720mm)
	45	199-1954	1	HOSE AS (NOM 08, L=2000mm)
E		7I-1024		GUARD…(190cm)
	46	7K-1181	25	STRAP
	47	087-5769	1	HOSE AS (NOM 06, L=870mm)
	48	4I-9523	8	BAND (L3,BLUE)
	49	187-7028	1	SUPPORT AS
	50	8T-4139	3	BOLT (L=30mm)
	51	8T-4192	2	BOLT (L=25mm)
	52	8T-4121	5	WASHER
	53	8T-4223	5	WASHER
	54	176-4469	1	BLOCK
	55	5I-4076	1	HOSE AS (NOM 06, L=1350mm)
	56	7Y-8478	2	HOSE AS (NOM 06, L=2100mm)
	57	194-0319	1	HOSE AS (NOM 08, L=750mm)
	58	6V-9851	1	ELBOW
	59	8T-4136	2	BOLT (L=25mm)
	60	4I-9521	4	BAND (L1,RED)
	61	4I-9522	2	BAND (L2,YELLOW)
	62	221-5069	1	TEE AS
	63	6V-8398	1	SEAL-O-RING (OD=16.03mm)
	64	3D-2824	1	SEAL-O-RING (ID=23.47mm)
	65	6V-9746	1	SEAL-O-RING (OD=22.50mm)
	66	4I-0800	1	HOSE AS (NOM 06, L=1300mm)

E—ORDER BY THE CENTIMETER

Y—SEE SEPARATE ILLUSTRATION

HA2011E 16

168-9538 LINES GP-PILOT (1/2)

S/N CAE 02265-Up

164-6981-Page294,232-4102-Page484.01,215-5037-Page493.01

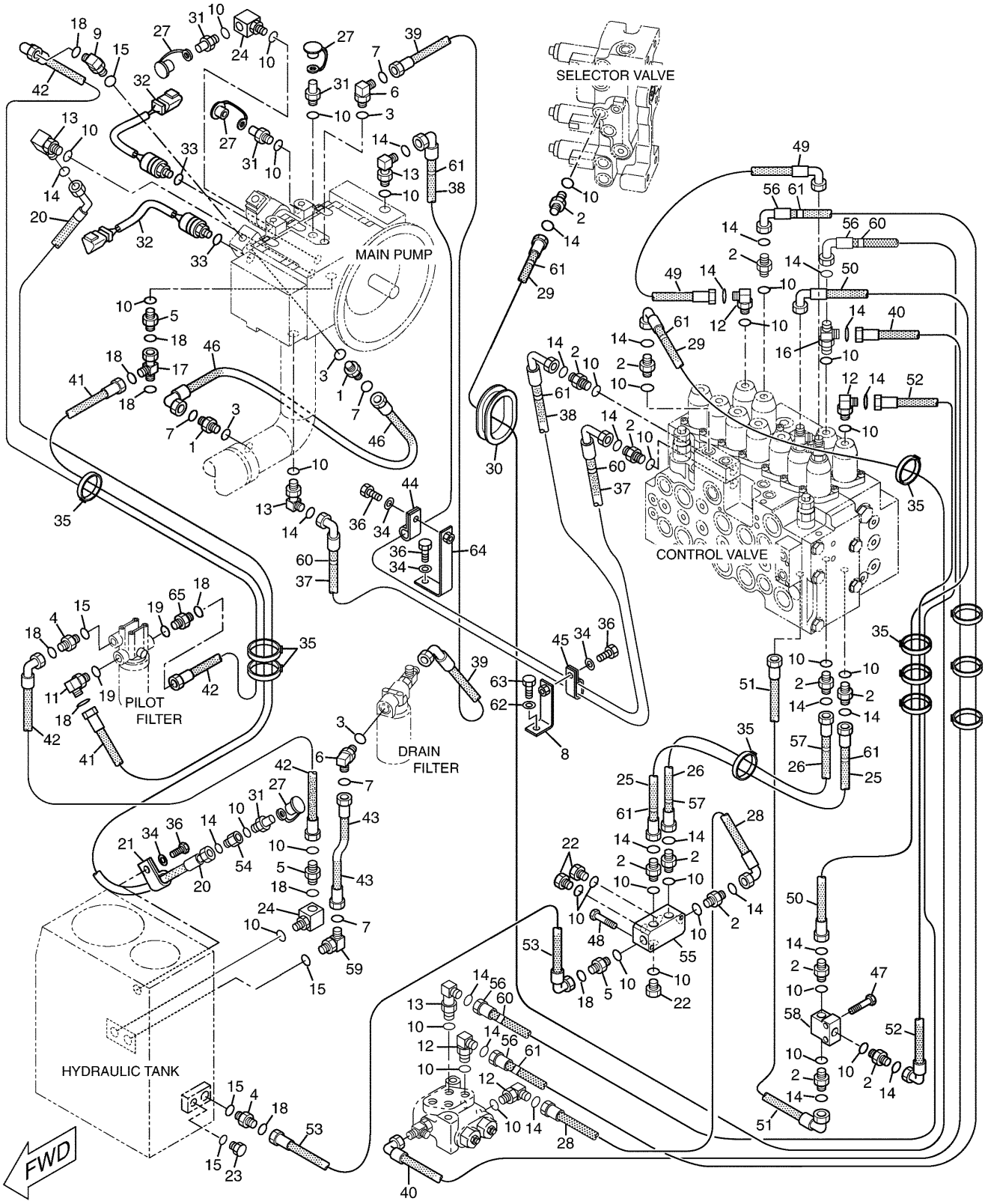

HA2012E 16

168-9538 LINES GP-PILOT (2/2)
S/N CAE 02265-Up
123-2430-Page510

HYDRAULIC SYSTEM

NOTE	No.	PART No.	QTY	PART NAME
	1	6V-8637	2	CONNECTOR
	2	6V-8636	13	CONNECTOR
	3	3D-2824	4	SEAL-O-RING (ID=23.47mm)
	4	6V-8639	2	CONNECTOR
	5	6V-9873	3	CONNECTOR
	6	6V-9007	2	ELBOW
	7	6V-9746	5	SEAL-O-RING (OD=22.50mm)
	8	199-1956	1	SUPPORT AS
	9	6V-8625	1	ELBOW
	10	3J-1907	34	SEAL-O-RING (ID=11.89mm)
	11	6V-8721	1	ELBOW
	12	6V-8724	4	ELBOW
	13	8T-1905	4	ELBOW
	14	6V-8397	24	SEAL-O-RING (OD=12.83mm)
	15	3K-0360	5	SEAL-O-RING (ID=16.36mm)
	16	6V-8781	1	TEE
	17	6V-9837	1	TEE
	18	6V-8398	10	SEAL-O-RING (OD=16.03mm)
	19	2M-9780	2	SEAL-O-RING (ID=19.18mm)
	20	199-2013	1	HOSE AS (NOM 06, L=960mm)
E		7I-7439		GUARD…(98cm)
	21	6K-8178	1	CLIP
	22	9S-4191	3	PLUG
	23	9S-4185	1	PLUG
	24	085-7356	2	FITTING
	25	194-0325	1	HOSE AS (NOM 06, L=340mm)
	26	194-0328	1	HOSE AS (NOM 06, L=360mm)
	27	6V-0852	4	CAP
	28	087-4411	1	HOSE AS (NOM 06, L=450mm)
	29	7Y-4384	1	HOSE AS (NOM 06, L=3050mm)
	30	4I-6039	1	GROMMET
	31	6V-3965	4	NIPPLE AS
	32	221-8859	2	SENSOR AS
	33	3K-0360	1	SEAL-O-RING (ID=16.36mm)
		9X-3401	3	PIN
	34	8T-4121	4	WASHER
	35	7K-1181	8	STRAP
	36	8T-4137	4	BOLT (L=20mm)
	37	179-7618	1	HOSE AS (NOM 06, L=850mm)
	38	179-7619	1	HOSE AS (NOM 06, L=1750mm)
	39	113-6394	1	HOSE AS (NOM 12, L=750mm)
	40	111-0988	1	HOSE AS (NOM 06, L=1950mm)
	41	121-6369	1	HOSE AS (NOM 08, L=950mm)
	42	4I-0788	2	HOSE AS (NOM 08, L=535mm)
	43	128-9166	1	HOSE AS (NOM 12, L=540mm)
	44	6D-4636	1	CLIP
	45	6D-1641	1	CLIP
	46	131-9869	1	HOSE AS (NOM 12, L=480mm)
	47	099-3649	2	BOLT (L=40mm)
	48	8T-6869	2	BOLT (L=60mm)
	49	4I-0821	1	HOSE AS (NOM 06, L=650mm)
	50	087-5772	1	HOSE AS (NOM 06, L=1000mm)
	51	087-5765	1	HOSE AS (NOM 06, L=570mm)
	52	087-5771	1	HOSE AS (NOM 06, L=960mm)
	53	131-9453	1	HOSE AS (NOM 08, L=600mm)
	54	8T-6663	1	ADAPTER
	55	176-4791	1	BLOCK
	56	4I-0800	2	HOSE AS (NOM 06, L=1300mm)
	57	4I-9528	2	BAND (R4,PURPLE)
Y	58	123-2430	1	VALVE GP
	59	6V-9877	1	ELBOW
	60	4I-9523	4	BAND (L3,BLUE)
	61	4I-9527	8	BAND (R3,GREEN)
	62	8T-4223	1	WASHER
	63	8T-4179	1	BOLT (L=20mm)
	64	199-2010	1	SUPPORT AS
	65	6V-8638	1	CONNECTOR

E—ORDER BY THE CENTIMETER

Y—SEE SEPARATE ILLUSTRATION

HA2012E 16

168-9538 LINES GP-PILOT (2/2)

S/N CAE 02265-Up

123-2430-Page510

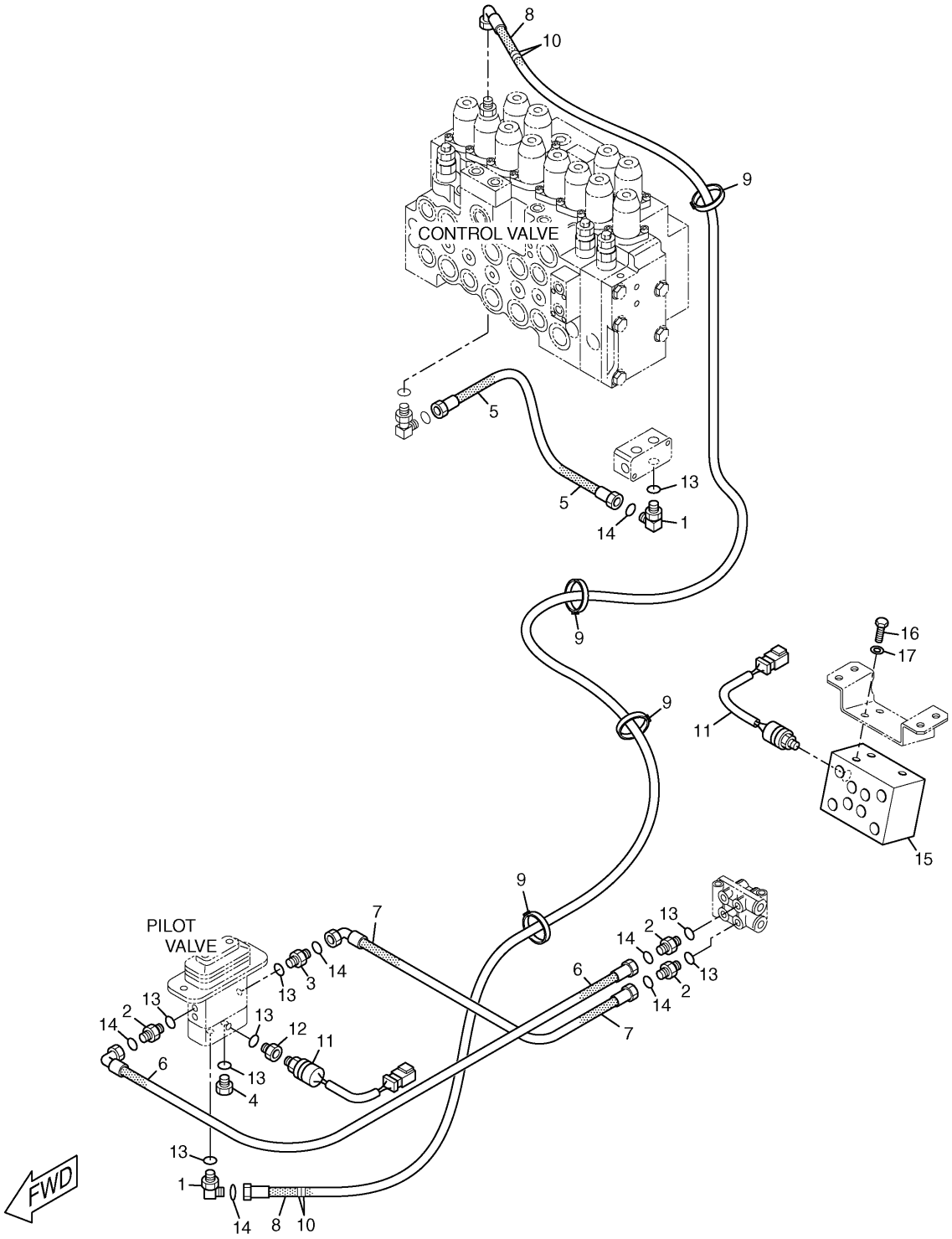

HA1975E 05

168-9540 LINES GP-PILOT
Part of 165-0962-Page354
185-0462-Page511
An Attachment

HYDRAULIC SYSTEM

NOTE	No.	PART No.	QTY	PART NAME	NOTE	No.	PART No.	QTY	PART NAME
	1	6V-8724	2	ELBOW					
	2	6V-8636	3	CONNECTOR					
	3	107-6631	1	CONNECTOR					
	4	9S-4191	1	PLUG					
	5	5I-4387	1	HOSE AS (NOM 06, L=700mm)					
	6	087-4402	1	HOSE AS (NOM 06, L=480mm)					
	7	179-7580	1	HOSE AS (NOM 06, L=360mm)					
	8	4I-0716	1	HOSE AS (NOM 06, L=3000mm)					
	9	7K-1181	4	STRAP					
	10	4I-9527	4	BAND (R3,GREEN)					
	11	309-5769	2	SWITCH AS (PRESSURE)					
		102-8802	1	RECEPTACLE KIT					
		9X-3401	2	PIN					
	12	108-7516	1	FITTING					
	13	3J-1907	8	SEAL-O-RING (ID=11.89mm)					
	14	6V-8397	6	SEAL-O-RING (OD=12.83mm)					
Y	15	185-0462	1	VALVE GP					
	16	8T-4137	3	BOLT (L=20mm)					
	17	8T-4121	3	WASHER					

Y—SEE SEPARATE ILLUSTRATION

HA1975E 05

168-9540 LINES GP-PILOT

Part of 165-0962-Page354
185-0462-Page511
An Attachment

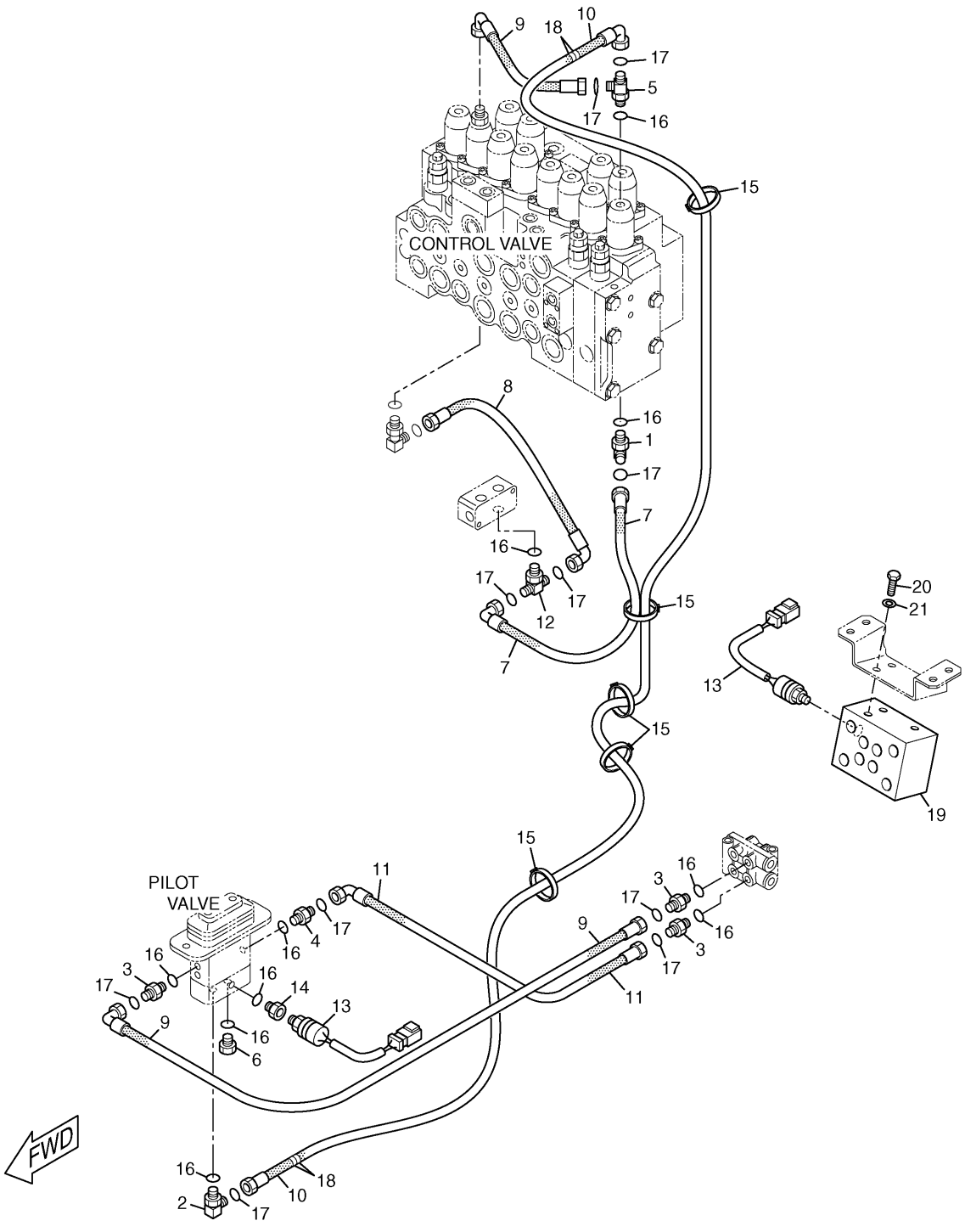

HA1976E 04

168-9542 LINES GP-PILOT
Part of 165-0963-Page354
185-0462-Page511
An Attachment

HYDRAULIC SYSTEM

NOTE	No.	PART No.	QTY	PART NAME	NOTE	No.	PART No.	QTY	PART NAME
	1	8T-1905	1	ELBOW					
	2	6V-8724	1	ELBOW					
	3	6V-8636	3	CONNECTOR					
	4	107-6631	1	CONNECTOR					
	5	6V-8781	1	TEE					
	6	9S-4191	1	PLUG					
	7	087-5773	1	HOSE AS (NOM 06, L=1050mm)					
	8	087-4531	1	HOSE AS (NOM 06, L=600mm)					
	9	087-4402	2	HOSE AS (NOM 06, L=480mm)					
	10	4I-0812	1	HOSE AS (NOM 06, L=2650mm)					
	11	179-7580	1	HOSE AS (NOM 06, L=360mm)					
	12	6V-8774	1	TEE					
	13	309-5769	2	SWITCH AS (PRESSURE)					
		102-8802	1	RECEPTACLE KIT					
		9X-3401	2	PIN					
	14	108-7516	1	FITTING					
	15	7K-1181	5	STRAP					
	16	3J-1907	10	SEAL-O-RING (ID=11.89mm)					
	17	6V-8397	10	SEAL-O-RING (OD=12.83mm)					
	18	4I-9527	4	BAND (R3,GREEN)					
Y	19	185-0462	1	VALVE GP					
	20	8T-4137	3	BOLT (L=20mm)					
	21	8T-4121	3	WASHER					

Y—SEE SEPARATE ILLUSTRATION

HA1976E 04

168-9542 LINES GP-PILOT

Part of 165-0963-Page354
185-0462-Page511
An Attachment

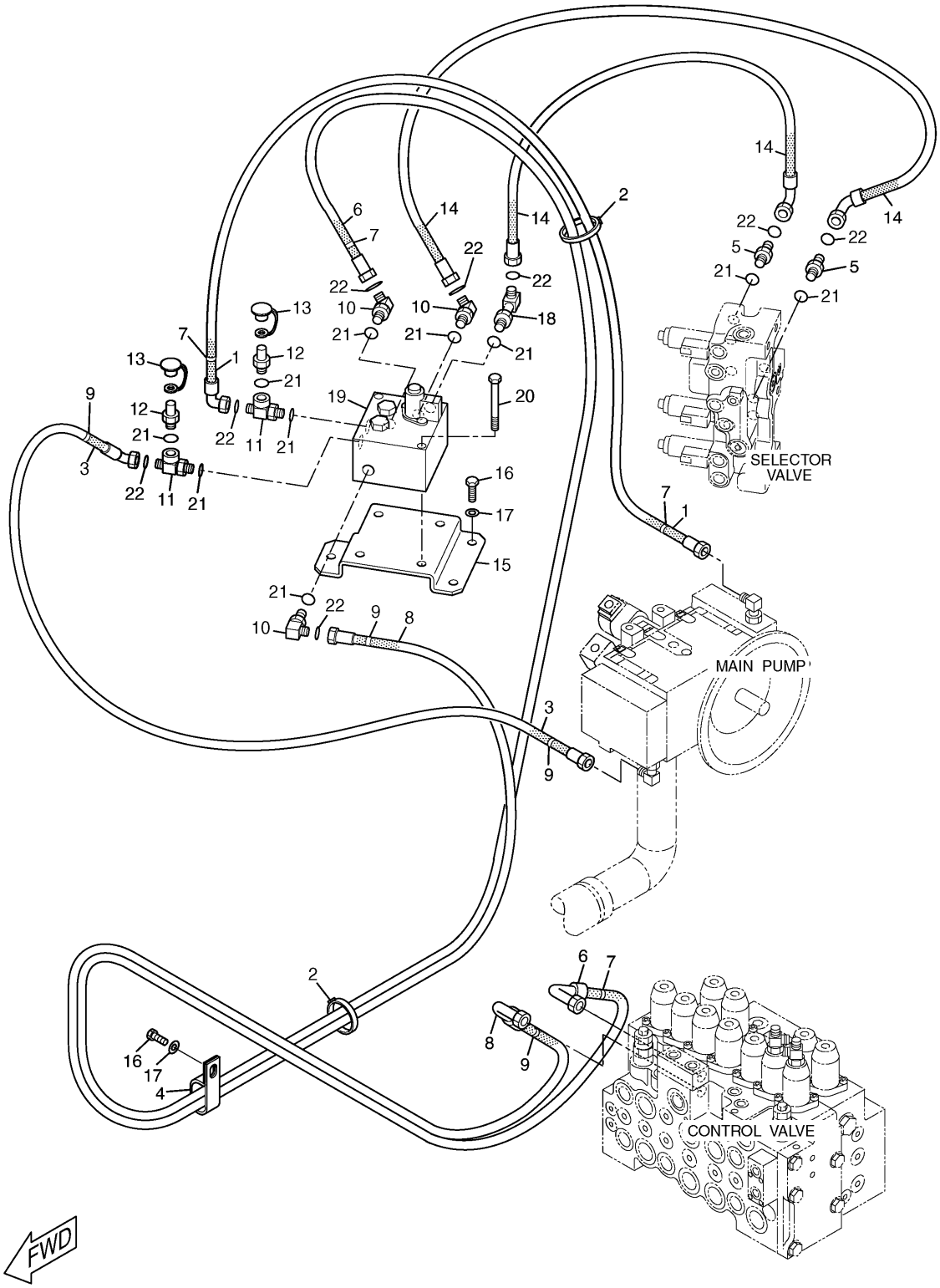

H77597E 01

196-0458 LINES GP-PILOT

Part of 165-0962,165-0963-Page354
171-0188-Page500
An Attachment

HYDRAULIC SYSTEM

NOTE	No.	PART No.	QTY	PART NAME	NOTE	No.	PART No.	QTY	PART NAME
	1	199-1802	1	HOSE AS (NOM 06, L=700mm)					
	2	7K-1181	2	STRAP					
	3	199-2067	1	HOSE AS (NOM 06, L=600mm)					
	4	6D-1641	1	CLIP					
	5	6V-8636	2	CONNECTOR					
	6	135-9000	1	HOSE AS (NOM 06, L=2500mm)					
	7	4I-9527	4	BAND (R3,GREEN)					
	8	199-2055	1	HOSE AS (NOM 06, L=1600mm)					
	9	4I-9523	4	BAND (L3,BLUE)					
	10	6V-8724	3	ELBOW					
	11	3E-2310	2	TEE					
	12	6V-3965	2	NIPPLE AS					
	13	6V-0852	2	CAP					
	14	4I-0821	2	HOSE AS (NOM 06, L=650mm)					
	15	192-6963	1	SUPPORT AS					
	16	8T-4137	4	BOLT (L=20mm)					
	17	8T-4121	4	WASHER					
	18	8T-1905	1	ELBOW					
Y	19	171-0188	1	VALVE GP					
	20	8T-4177	4	BOLT (L=90mm)					
	21	3J-1907	10	SEAL-O-RING (ID=11.89mm)					
	22	6V-8397	8	SEAL-O-RING (OD=12.83mm)					

Y—SEE SEPARATE ILLUSTRATION

H77597E 01

196-0458 LINES GP-PILOT

Part of 165-0962,165-0963-Page354
171-0188-Page500
An Attachment

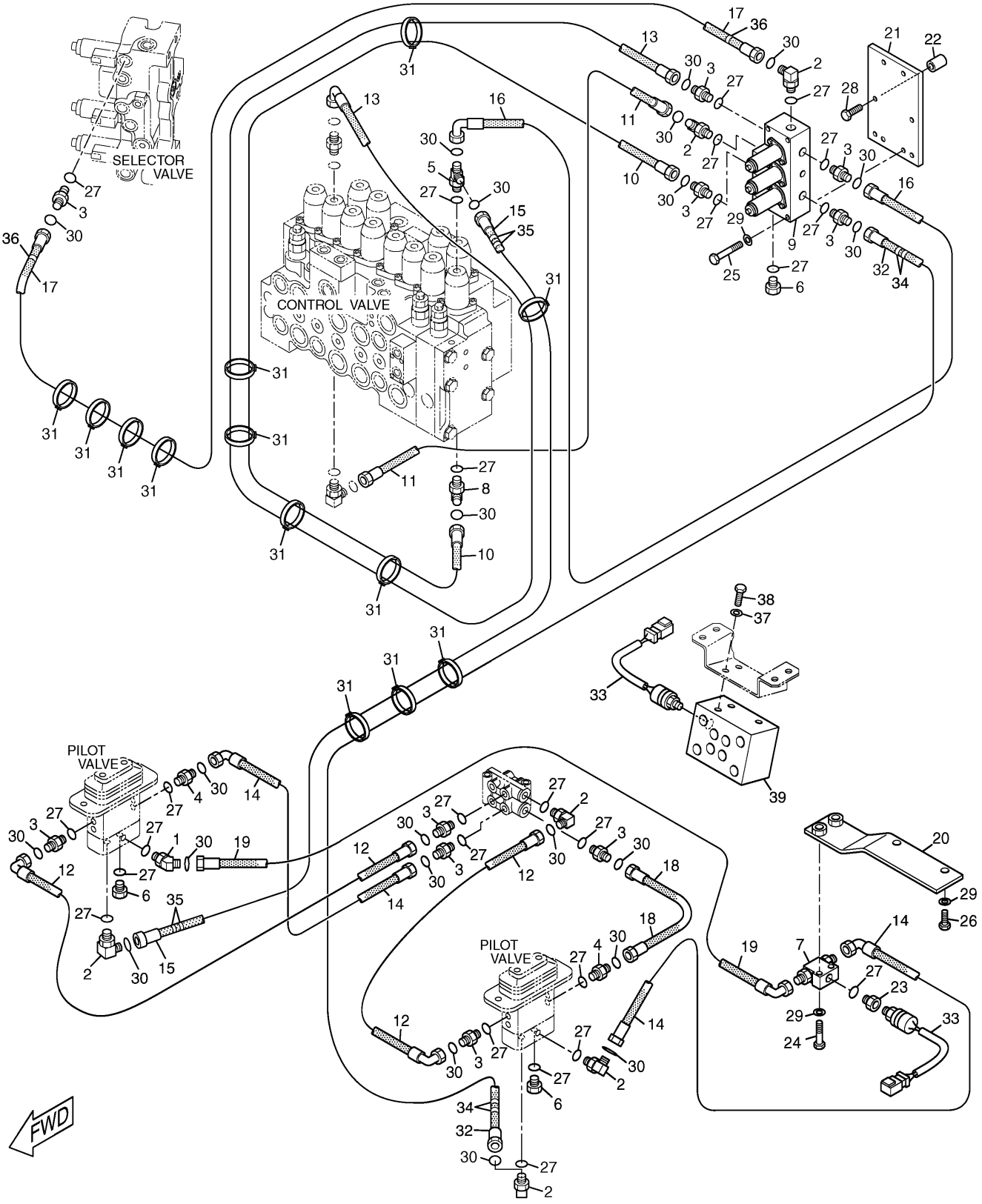

168-9544 LINES GP-PILOT

Part of 179-5071-Page355
165-9549-Page486,123-2430-Page510,185-0462-Page511
An Attachment

HYDRAULIC SYSTEM

NOTE	No.	PART No.	QTY	PART NAME	NOTE	No.	PART No.	QTY	PART NAME
	1	6V-9001	1	ELBOW					
	2	6V-8724	6	ELBOW					
	3	6V-8636	10	CONNECTOR					
	4	107-6631	2	CONNECTOR					
	5	6V-8781	1	TEE					
	6	9S-4191	3	PLUG					
Y	7	123-2430	1	VALVE GP					
	8	8T-1905	1	ELBOW					
Y	9	165-9549	1	VALVE GP					
	10	4I-6136	1	HOSE AS (NOM 06, L=1500mm)					
	11	087-5758	1	HOSE AS (NOM 06, L=550mm)					
	12	087-4402	2	HOSE AS (NOM 06, L=480mm)					
	13	111-6752	1	HOSE AS (NOM 06, L=2200mm)					
	14	087-6585	2	HOSE AS (NOM 06, L=350mm)					
	15	108-7203	1	HOSE AS (NOM 06, L=2600mm)					
	16	108-7402	1	HOSE AS (NOM 06, L=1100mm)					
	17	104-8950	1	HOSE AS (NOM 06, L=1200mm)					
	18	7Y-7955	1	HOSE AS (NOM 06, L=350mm)					
	19	179-7580	1	HOSE AS (NOM 06, L=360mm)					
	20	179-7578	1	SUPPORT AS					
	21	179-7871	1	BRACKET AS					
	22	081-6344	4	SPACER					
	23	108-7516	1	FITTING					
	24	7X-0818	2	BOLT (L=45mm)					
	25	8T-6870	4	BOLT (L=70mm)					
	26	8T-4189	2	BOLT (L=20mm)					
	27	3J-1907	25	SEAL-O-RING (ID=11.89mm)					
	28	8T-4910	4	BOLT (L=60mm)					
	29	8T-4224	8	WASHER					
	30	6V-8397	22	SEAL-O-RING (OD=12.83mm)					
	31	7K-1181	13	STRAP					
	32	7Y-4193	1	HOSE AS (NOM 06, L=2500mm)					
	33	309-5769	2	SWITCH AS (PRESSURE)					
		102-8802	1	RECEPTACLE KIT					
		9X-3401	2	PIN					
	34	4I-9523	4	BAND (L3,BLUE)					
	35	4I-9527	4	BAND (R3,GREEN)					
	36	4I-9528	2	BAND (R4,PURPLE)					
	37	8T-4121	3	WASHER					
	38	8T-4137	3	BOLT (L=20mm)					
Y	39	185-0462	1	VALVE GP					

Y—SEE SEPARATE ILLUSTRATION

HA1969E 05

168-9544 LINES GP-PILOT

Part of 179-5071-Page355
165-9549-Page486,123-2430-Page510,185-0462-Page511
An Attachment

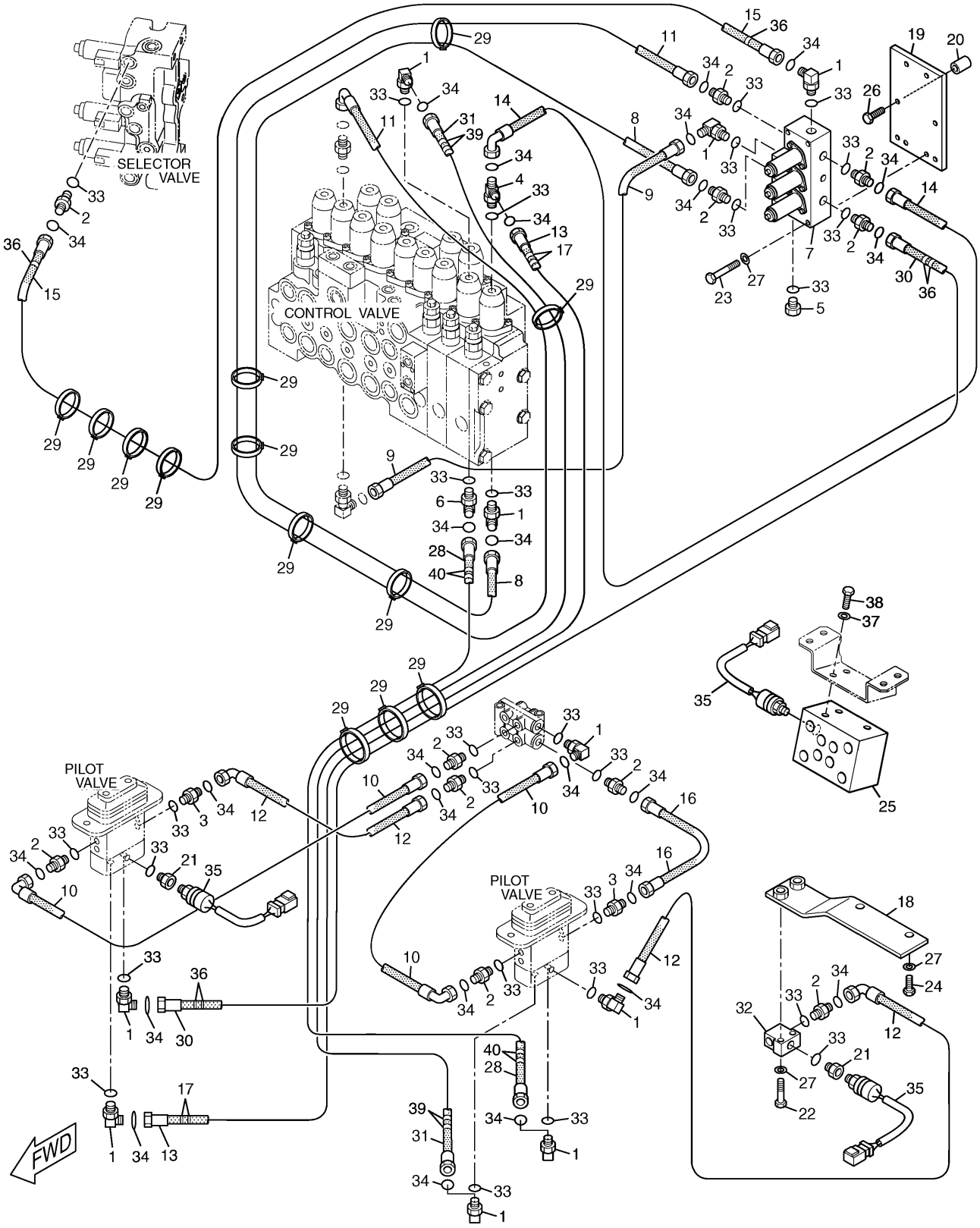

196-0457 LINES GP-PILOT

Part of 165-0964-Page356
165-9549-Page486,185-0462-Page511
An Attachment

HYDRAULIC SYSTEM

NOTE	No.	PART No.	QTY	PART NAME	NOTE	No.	PART No.	QTY	PART NAME
	1	6V-8724	10	ELBOW					
	2	6V-8636	11	CONNECTOR					
	3	107-6631	2	CONNECTOR					
	4	6V-8781	1	TEE					
	5	9S-4191	1	PLUG					
	6	8T-1905	1	ELBOW					
Y	7	165-9549	1	VALVE GP					
	8	4I-6136	1	HOSE AS (NOM 06, L=1500mm)					
	9	087-5758	1	HOSE AS (NOM 06, L=550mm)					
	10	087-4402	2	HOSE AS (NOM 06, L=480mm)					
	11	111-6752	1	HOSE AS (NOM 06, L=2200mm)					
	12	087-6585	2	HOSE AS (NOM 06, L=350mm)					
	13	108-7203	1	HOSE AS (NOM 06, L=2600mm)					
	14	108-7402	1	HOSE AS (NOM 06, L=1100mm)					
	15	104-8950	1	HOSE AS (NOM 06, L=1200mm)					
	16	7Y-7955	1	HOSE AS (NOM 06, L=350mm)					
	17	4I-9527	4	BAND (R3,GREEN)					
	18	179-7578	1	SUPPORT AS					
	19	179-7871	1	BRACKET AS					
	20	081-6344	4	SPACER					
	21	108-7516	2	FITTING					
	22	7X-0818	2	BOLT (L=45mm)					
	23	8T-6870	4	BOLT (L=70mm)					
	24	8T-4189	2	BOLT (L=20mm)					
Y	25	185-0462	1	VALVE GP					
	26	8T-4910	4	BOLT (L=60mm)					
	27	8T-4224	8	WASHER					
	28	104-8771	1	HOSE AS (NOM 06, L=2430mm)					
	29	7K-1181	13	STRAP					
	30	4I-3994	1	HOSE AS (NOM 06, L=2300mm)					
	31	4I-0769	1	HOSE AS (NOM 06, L=2850mm)					
	32	194-0149	1	BLOCK					
	33	3J-1907	28	SEAL-O-RING (ID=11.89mm)					
	34	6V-8397	26	SEAL-O-RING (OD=12.83mm)					
	35	309-5769	3	SWITCH AS (PRESSURE)					
		102-8802	1	RECEPTACLE KIT					
		9X-3401	2	PIN					
	36	4I-9528	6	BAND (R4,PURPLE)					
	37	8T-4121	3	WASHER					
	38	8T-4137	3	BOLT (L=20mm)					
	39	4I-9523	4	BAND (L3,BLUE)					
	40	4I-9524	4	BAND (L4,BROWN)					

Y—SEE SEPARATE ILLUSTRATION

HA1971E 05

196-0457 LINES GP-PILOT

Part of 165-0964-Page356
165-9549-Page486,185-0462-Page511
An Attachment

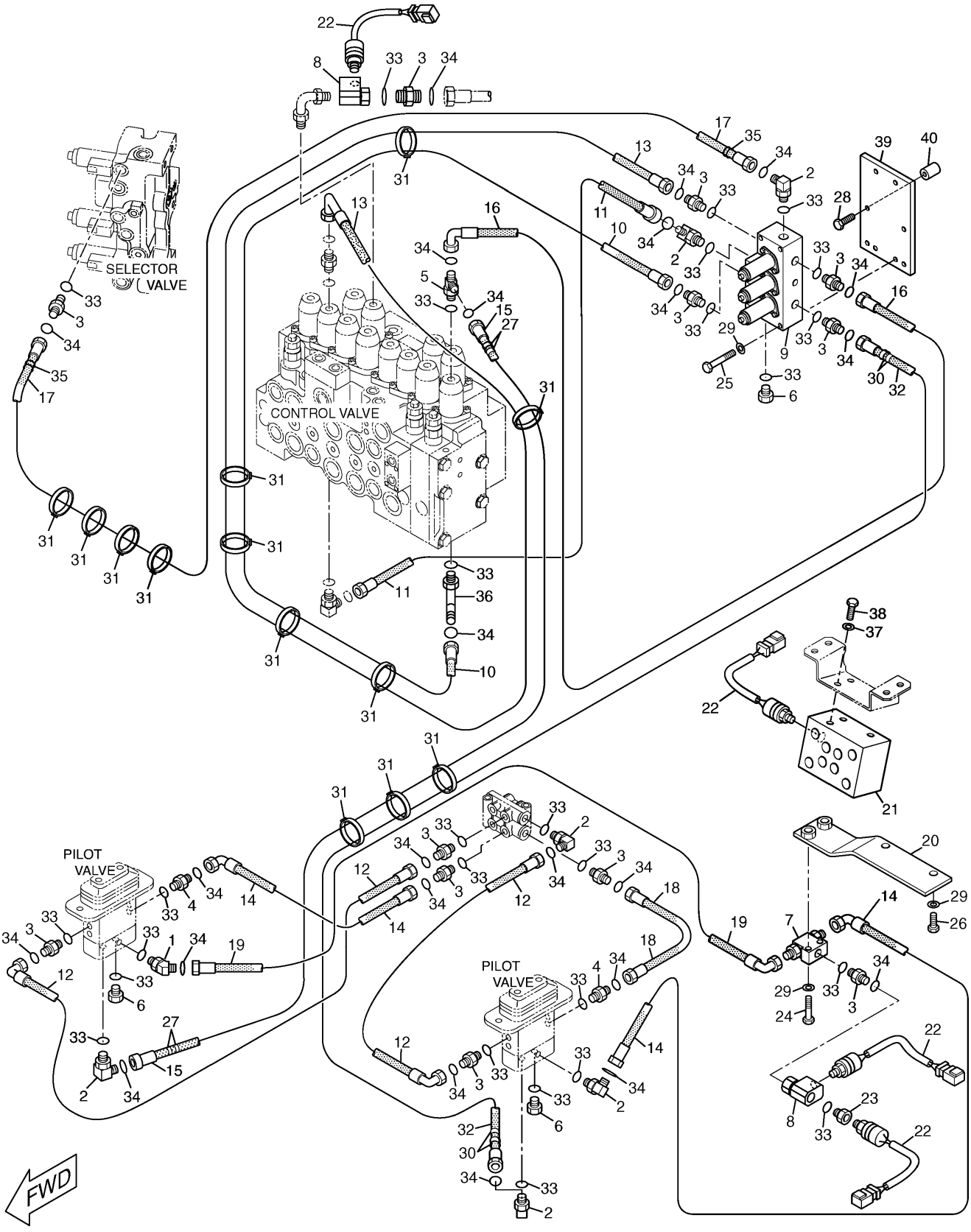

196-0456 LINES GP-PILOT

Part of 165-0976-Page357
165-9549-Page486,123-2430-Page510,185-0462-Page511
An Attachment

HYDRAULIC SYSTEM

NOTE	No.	PART No.	QTY	PART NAME	NOTE	No.	PART No.	QTY	PART NAME
	1	6V-9001	1	ELBOW					
	2	6V-8724	6	ELBOW					
	3	6V-8636	12	CONNECTOR					
	4	107-6631	2	CONNECTOR					
	5	6V-8781	1	TEE					
	6	9S-4191	3	PLUG					
Y	7	123-2430	1	VALVE GP					
	8	4I-3941	2	FITTING AS					
Y	9	165-9549	1	VALVE GP					
	10	4I-6136	1	HOSE AS (NOM 06, L=1500mm)					
	11	087-5758	1	HOSE AS (NOM 06, L=550mm)					
	12	087-4402	2	HOSE AS (NOM 06, L=480mm)					
	13	111-6752	1	HOSE AS (NOM 06, L=2200mm)					
	14	087-6585	2	HOSE AS (NOM 06, L=350mm)					
	15	108-7203	1	HOSE AS (NOM 06, L=2600mm)					
	16	108-7402	1	HOSE AS (NOM 06, L=1100mm)					
	17	104-8950	1	HOSE AS (NOM 06, L=1200mm)					
	18	7Y-7955	1	HOSE AS (NOM 06, L=350mm)					
	19	179-7580	1	HOSE AS (NOM 06, L=360mm)					
	20	179-7578	1	SUPPORT AS					
Y	21	185-0462	1	VALVE GP					
	22	309-5769	4	SWITCH AS (PRESSURE)					
		102-8802	1	RECEPTACLE KIT					
		9X-3401	2	PIN					
	23	108-7516	1	FITTING					
	24	7X-0818	2	BOLT (L=45mm)					
	25	8T-6870	4	BOLT (L=70mm)					
	26	8T-4189	2	BOLT (L=20mm)					
	27	4I-9527	4	BAND (R3,GREEN)					
	28	8T-4910	4	BOLT (L=60mm)					
	29	8T-4224	8	WASHER					
	30	4I-9523	4	BAND (L3,BLUE)					
	31	7K-1181	13	STRAP					
	32	7Y-4193	1	HOSE AS (NOM 06, L=2500mm)					
	33	3J-1907	27	SEAL-O-RING (ID=11.89mm)					
	34	6V-8397	24	SEAL-O-RING (OD=12.83mm)					
	35	4I-9528	2	BAND (R4,PURPLE)					
	36	8T-1905	1	ELBOW					
	37	8T-4121	3	WASHER					
	38	8T-4137	3	BOLT (L=20mm)					
	39	179-7871	1	BRACKET AS					
	40	081-6344	4	SPACER					

Y—SEE SEPARATE ILLUSTRATION

HA1977E 06

196-0456 LINES GP-PILOT

Part of 165-0976-Page357
165-9549-Page486,123-2430-Page510,185-0462-Page511
An Attachment

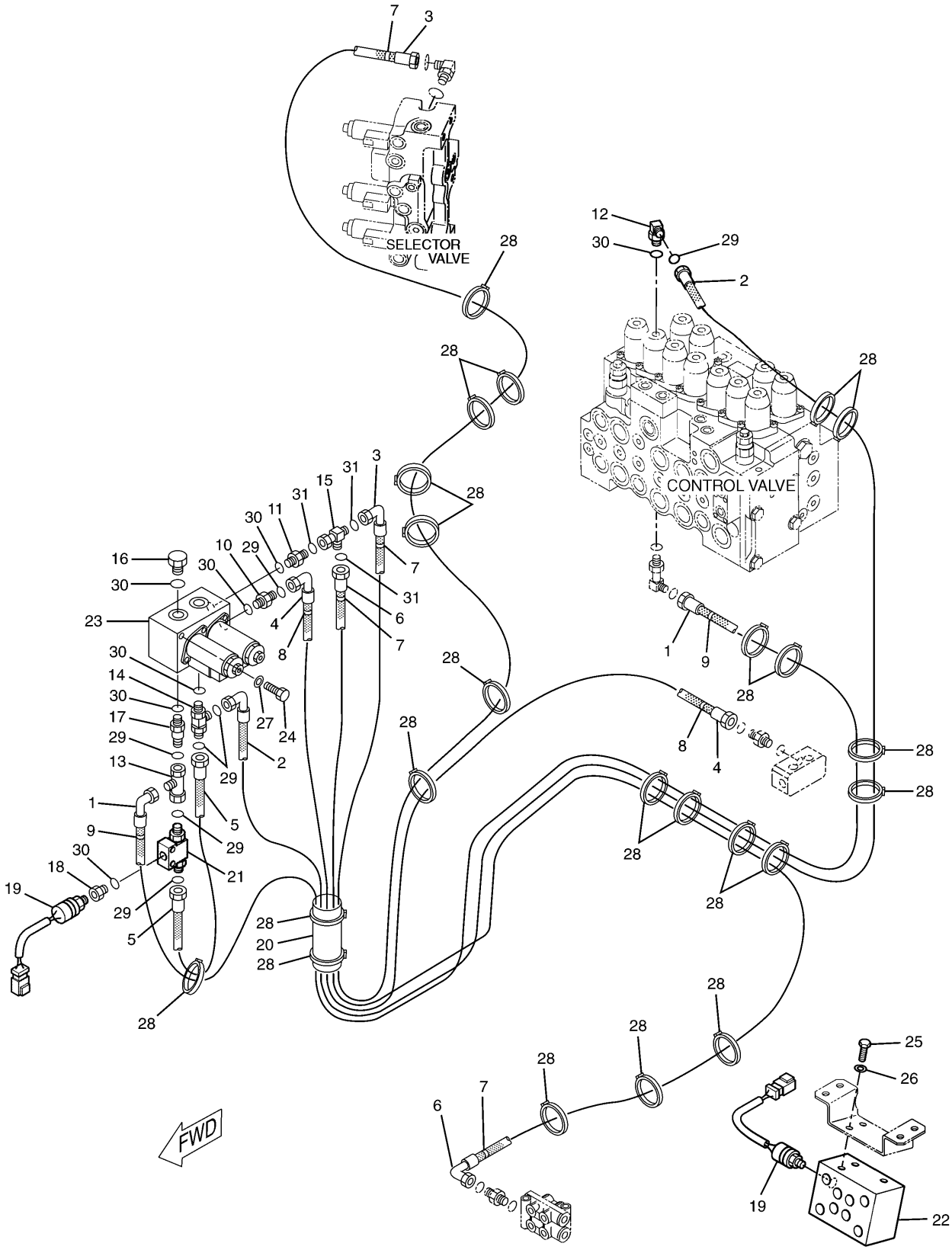

212-5187 LINES GP-PILOT

Part of 200-6637-Page357.01
190-7820-Page486.01,123-2430-Page510,185-0462-Page511
An Attachment

HYDRAULIC SYSTEM

NOTE	No.	PART No.	QTY	PART NAME	NOTE	No.	PART No.	QTY	PART NAME
	1	087-5780	1	HOSE AS (NOM 06, L=2550mm)					
	2	5I-8853	1	HOSE AS (NOM 06, L=2750mm)					
	3	194-0333	1	HOSE AS (NOM 08, L=2450mm)					
	4	4I-1783	1	HOSE AS (NOM 06, L=1500mm)					
	5	199-1824	1	HOSE AS (NOM 06, L=700mm)					
	6	129-5940	1	HOSE AS (NOM 08, L=2800mm)					
	7	4I-9522	4	BAND (L2,YELLOW)					
	8	4I-9524	2	BAND (L4,BROWN)					
	9	4I-9526	2	BAND (R2,WHITE)					
	10	6V-8636	1	CONNECTOR					
	11	6V-9873	1	CONNECTOR					
	12	6V-8724	1	ELBOW					
	13	6V-9836	1	TEE					
	14	6V-8781	1	TEE					
	15	6V-9837	1	TEE					
	16	9S-4191	2	PLUG					
	17	4I-6287	1	COUPLING AS					
	18	108-7516	1	FITTING					
	19	309-5769	2	SWITCH AS (PRESSURE)					
		102-8802	1	RECEPTACLE KIT					
		9X-3401	2	PIN					
	20	115-8645	1	GUARD					
Y	21	123-2430	1	VALVE GP					
Y	22	185-0462	1	VALVE GP					
Y	23	190-7820	1	VALVE GP					
	24	8T-6870	2	BOLT (L=70mm)					
	25	8T-4137	3	BOLT (L=20mm)					
	26	8T-4121	3	WASHER					
	27	8T-4224	2	WASHER					
	28	7K-1181	23	STRAP					
	29	6V-8397	8	SEAL-O-RING (OD=12.83mm)					
	30	3J-1907	9	SEAL-O-RING (ID=11.89mm)					
	31	6V-8398	3	SEAL-O-RING (OD=16.03mm)					

Y—SEE SEPARATE ILLUSTRATION

HA1973E 01

212-5187 LINES GP-PILOT

Part of 200-6637-Page357.01
190-7820-Page486.01,123-2430-Page510,185-0462-Page511
An Attachment

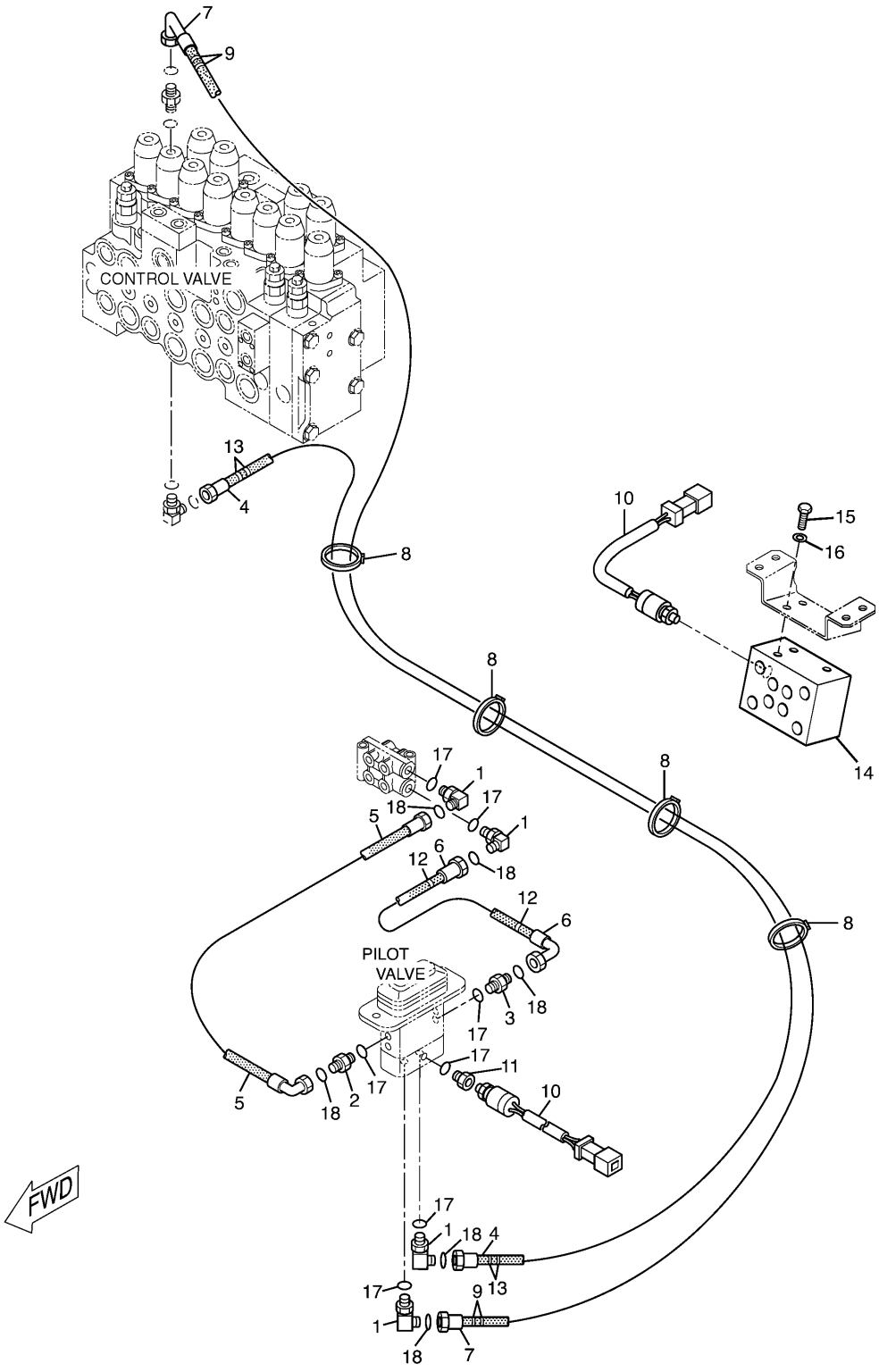

HA1972E 04

196-0461 LINES GP-PILOT

Part of 165-0967-Page357.01
185-0462-Page511
An Attachment

HYDRAULIC SYSTEM

NOTE	No.	PART No.	QTY	PART NAME	NOTE	No.	PART No.	QTY	PART NAME
	1	6V-8724	4	ELBOW					
	2	6V-8636	1	CONNECTOR					
	3	107-6631	1	CONNECTOR					
	4	087-6584	1	HOSE AS (NOM 06, L=3200mm)					
	5	087-4402	1	HOSE AS (NOM 06, L=480mm)					
	6	4I-1025	1	HOSE AS (NOM 06, L=300mm)					
	7	7I-1105	1	HOSE AS (NOM 06, L=3250mm)					
	8	7K-1181	4	STRAP					
	9	4I-9523	4	BAND (L3,BLUE)					
	10	309-5769	2	SWITCH AS (PRESSURE)					
		9X-3401	2	PIN					
		102-8802	1	RECEPTACLE KIT					
	11	108-7516	1	FITTING					
	12	133-5813	2	BAND (P,GRAY)					
	13	4I-9524	4	BAND (L4,BROWN)					
Y	14	185-0462	1	VALVE GP					
	15	8T-4137	3	BOLT (L=20mm)					
	16	8T-4121	3	WASHER					
	17	3J-1907	7	SEAL-O-RING (ID=11.89mm)					
	18	6V-8397	6	SEAL-O-RING (OD=12.83mm)					

Y—SEE SEPARATE ILLUSTRATION

HA1972E 04

196-0461 LINES GP-PILOT

Part of 165-0967-Page357.01
185-0462-Page511
An Attachment

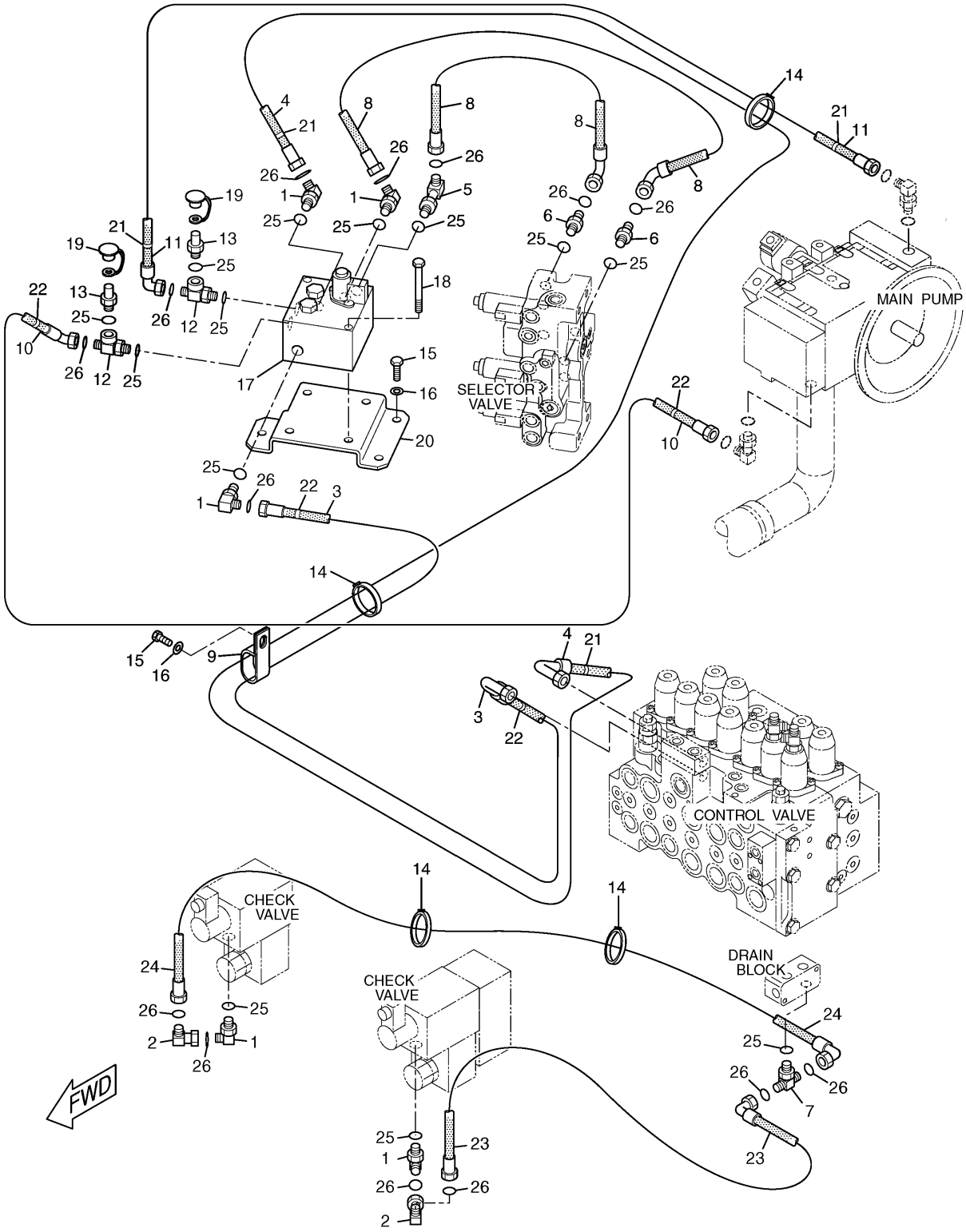

H77587E 01

168-9545 LINES GP-PILOT

Part of 179-5071-Page355,165-0964-Page356,165-0976-Page357
171-0188-Page500
An Attachment

HYDRAULIC SYSTEM

NOTE	No.	PART No.	QTY	PART NAME	NOTE	No.	PART No.	QTY	PART NAME
	1	6V-8724	5	ELBOW					
	2	6V-9850	2	ELBOW					
	3	199-2055	1	HOSE AS (NOM 06, L=1600mm)					
	4	135-9000	1	HOSE AS (NOM 06, L=2500mm)					
	5	8T-1905	1	ELBOW					
	6	6V-8636	2	CONNECTOR					
	7	6V-8774	1	TEE					
	8	4I-0821	2	HOSE AS (NOM 06, L=650mm)					
	9	6D-1641	1	CLIP					
	10	199-2067	1	HOSE AS (NOM 06, L=600mm)					
	11	199-1802	1	HOSE AS (NOM 06, L=700mm)					
	12	3E-2310	2	TEE					
	13	6V-3965	2	NIPPLE AS					
	14	7K-1181	4	STRAP					
	15	8T-4137	4	BOLT (L=20mm)					
	16	8T-4121	4	WASHER					
Y	17	171-0188	1	VALVE GP					
	18	8T-4177	4	BOLT (L=90mm)					
	19	6V-0852	2	CAP					
	20	192-6963	1	SUPPORT AS					
	21	4I-9527	4	BAND (R3,GREEN)					
	22	4I-9523	4	BAND (L3,BLUE)					
	23	110-5482	1	HOSE AS (NOM 06, L=1635mm)					
	24	4I-0995	1	HOSE AS (NOM 06, L=2000mm)					
	25	3J-1907	13	SEAL-O-RING (ID=11.89mm)					
	26	6V-8397	14	SEAL-O-RING (OD=12.83mm)					

Y—SEE SEPARATE ILLUSTRATION

H77587E 01

168-9545 LINES GP-PILOT

Part of 179-5071-Page355,165-0964-Page356,165-0976-Page357
171-0188-Page500
An Attachment

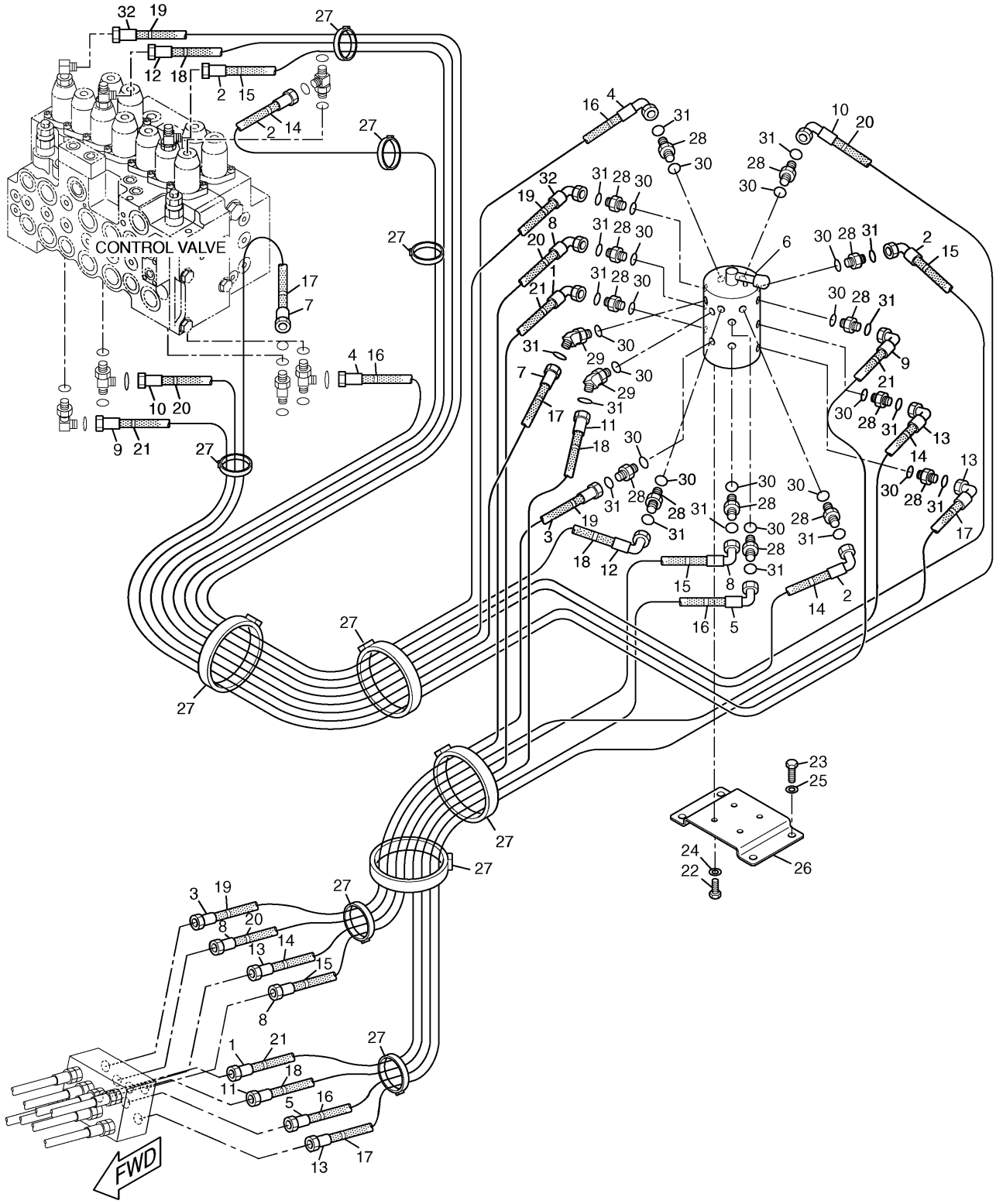

168-9559 LINES GP-PILOT

Part of 171-0019-Page358
165-9470-Page498
An Attachment

HYDRAULIC SYSTEM

NOTE	No.	PART No.	QTY	PART NAME	NOTE	No.	PART No.	QTY	PART NAME
	1	087-5773	1	HOSE AS (NOM 06, L=1050mm)					
	2	7Y-8478	2	HOSE AS (NOM 06, L=2100mm)					
	3	087-5760	1	HOSE AS (NOM 06, L=1030mm)					
	4	4I-0797	1	HOSE AS (NOM 06, L=1350mm)					
	5	087-5774	1	HOSE AS (NOM 06, L=1060mm)					
Y	6	165-9470	1	VALVE GP					
	7	4I-6136	1	HOSE AS (NOM 06, L=1500mm)					
	8	108-7402	2	HOSE AS (NOM 06, L=1100mm)					
	9	108-7313	1	HOSE AS (NOM 06, L=1900mm)					
	10	108-7572	1	HOSE AS (NOM 06, L=1650mm)					
	11	110-5511	1	HOSE AS (NOM 06, L=1000mm)					
	12	111-0988	1	HOSE AS (NOM 06, L=1950mm)					
	13	4I-0800	2	HOSE AS (NOM 06, L=1300mm)					
	14	4I-9521	4	BAND (L1,RED)					
	15	4I-9522	4	BAND (L2,YELLOW)					
	16	4I-9523	4	BAND (L3,BLUE)					
	17	4I-9524	4	BAND (L4,BROWN)					
	18	4I-9525	4	BAND (R1,ORANGE)					
	19	4I-9526	4	BAND (R2,WHITE)					
	20	4I-9527	4	BAND (R3,GREEN)					
	21	4I-9528	4	BAND (R4,PURPLE)					
	22	8T-4191	4	BOLT (L=16mm)					
	23	8T-4192	4	BOLT (L=25mm)					
	24	8T-4121	4	WASHER					
	25	8T-4223	4	WASHER					
	26	184-9551	1	SUPPORT					
	27	7K-1181	10	STRAP					
	28	6V-8636	14	CONNECTOR					
	29	6V-9001	2	ELBOW					
	30	3J-1907	16	SEAL-O-RING (ID=11.89mm)					
	31	6V-8397	16	SEAL-O-RING (OD=12.83mm)					
	32	4I-0995	1	HOSE AS (NOM 06, L=2000mm)					

Y—SEE SEPARATE ILLUSTRATION

H77589E 01

168-9559 LINES GP-PILOT

Part of 171-0019-Page358
165-9470-Page498
An Attachment

HYDRAULIC SYSTEM

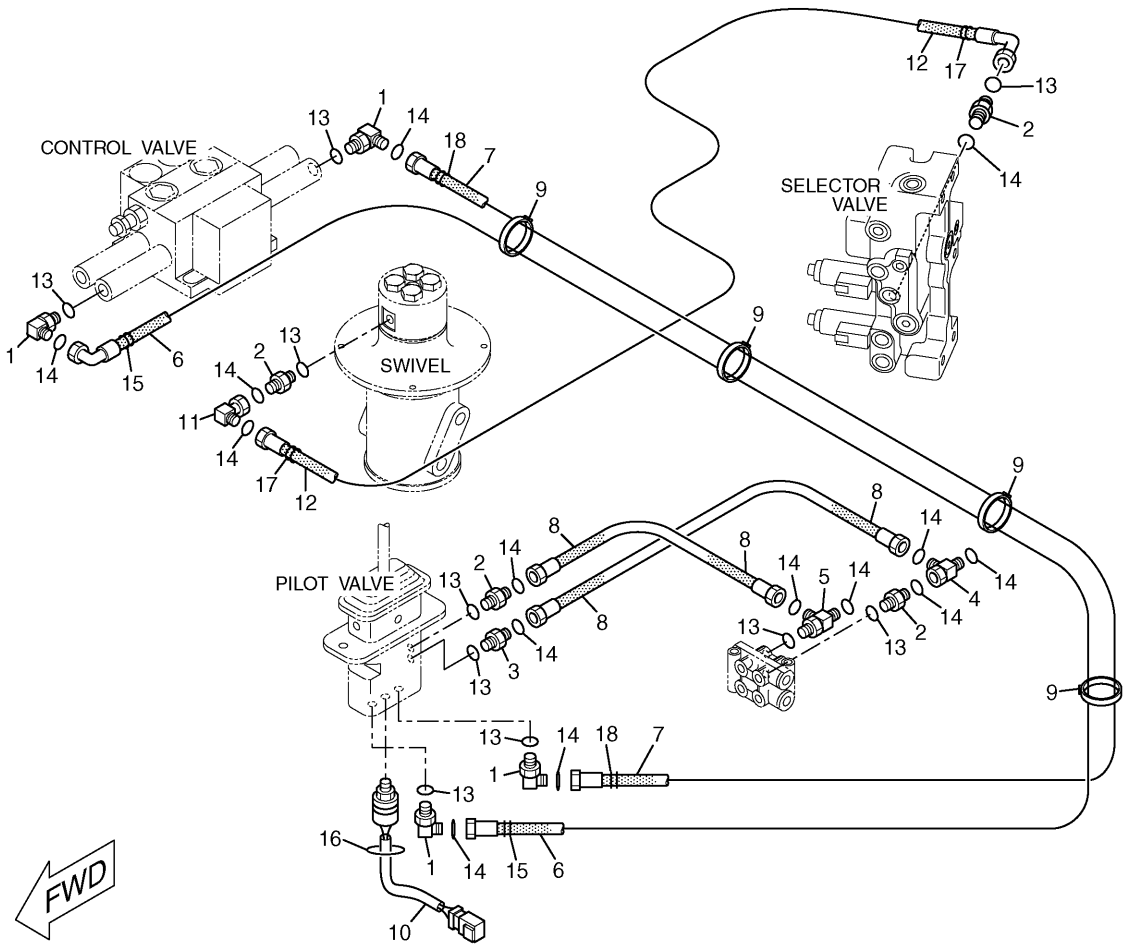

NOTE	No.	PART No.	QTY	PART NAME	NOTE	No.	PART No.	QTY	PART NAME
	1	6V-8724	4	ELBOW					
	2	6V-8636	4	CONNECTOR					
	3	107-6631	1	CONNECTOR					
	4	6V-9836	1	TEE					
	5	6V-8781	1	TEE					
	6	4I-0995	1	HOSE AS (NOM 06, L=2000mm)					
	7	104-8973	1	HOSE AS (NOM 06, L=1700mm)					
	8	109-7556	2	HOSE AS (NOM 06, L=450mm)					
	9	7K-1181	4	STRAP					
	10	309-5769	1	SWITCH AS (PRESSURE)					
		102-8802	1	RECEPTACLE KIT					
		9X-3401	2	PIN					
	11	6V-9850	1	ELBOW					
	12	194-0320	1	HOSE AS (NOM 06, L=2800mm)					
	13	3J-1907	10	SEAL-O-RING (ID=11.89mm)					
	14	6V-8397	14	SEAL-O-RING (OD=12.83mm)					
	15	4I-9528	2	BAND (R4,PURPLE)					
	16	3S-2093	1	STRAP					
	17	4I-9524	2	BAND (L4,BROWN)					
	18	4I-9527	2	BAND (R3,GREEN)					

HA1970E 02

168-9556 LINES GP-PILOT

Part of 151-1493-Page634,183-1476-Page635,151-1494-Page636
An Attachment

HYDRAULIC SYSTEM

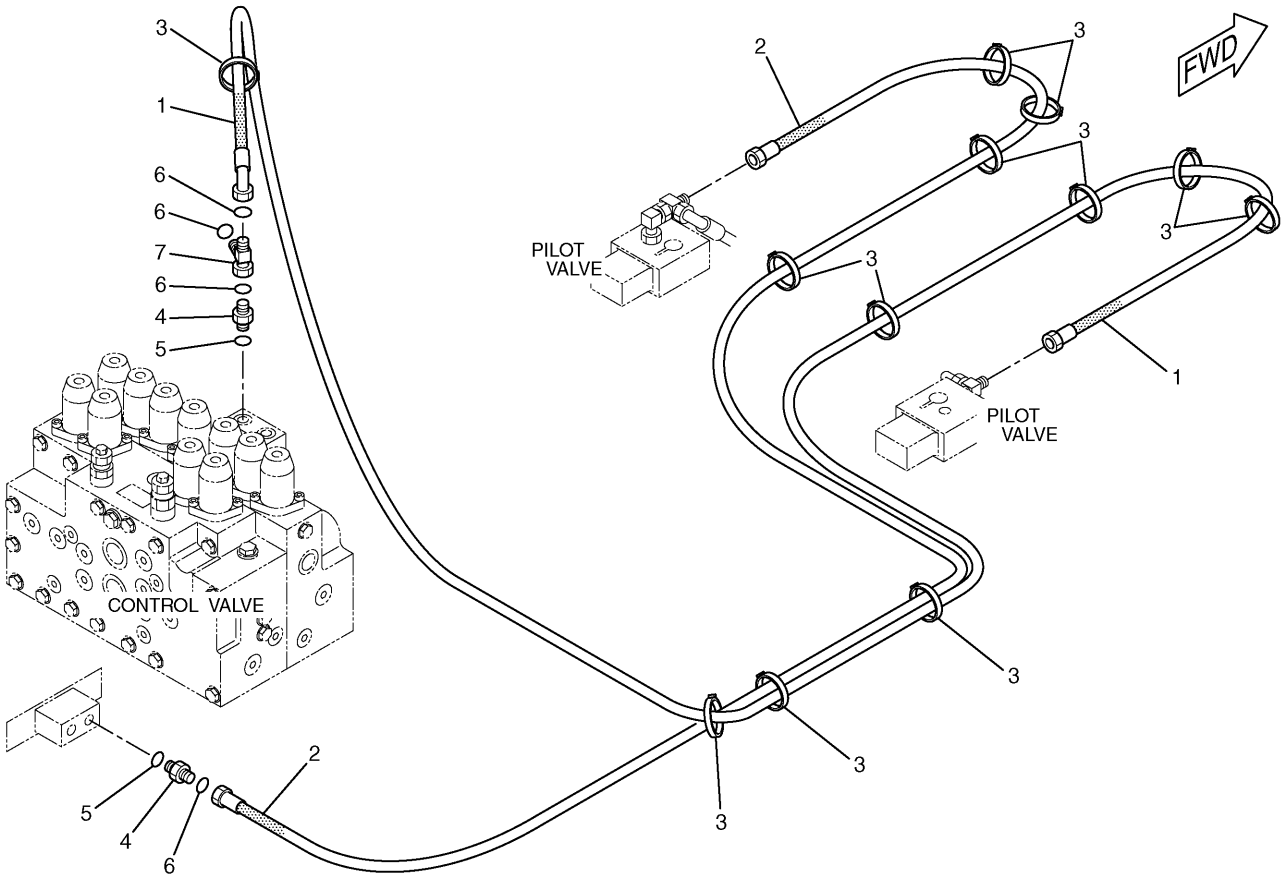

NOTE	No.	PART No.	QTY	PART NAME	NOTE	No.	PART No.	QTY	PART NAME
	1	202-3768	1	HOSE AS (NOM 06, L=3700mm)					
E		7I-7439		GUARD…(434cm)					
	2	202-3769	1	HOSE AS (NOM 06, L=2800mm)					
	3	7K-1181	12	STRAP					
	4	6V-8636	2	CONNECTOR					
	5	3J-1907	2	SEAL-O-RING (ID=11.89mm)					
	6	6V-8397	4	SEAL-O-RING (OD=12.83mm)					
	7	6V-9836	1	TEE					

E—ORDER BY THE CENTIMETER

H86462E 01

168-9562 LINES GP-PILOT

Part of 171-0020-Page359
An Attachment

HYDRAULIC SYSTEM

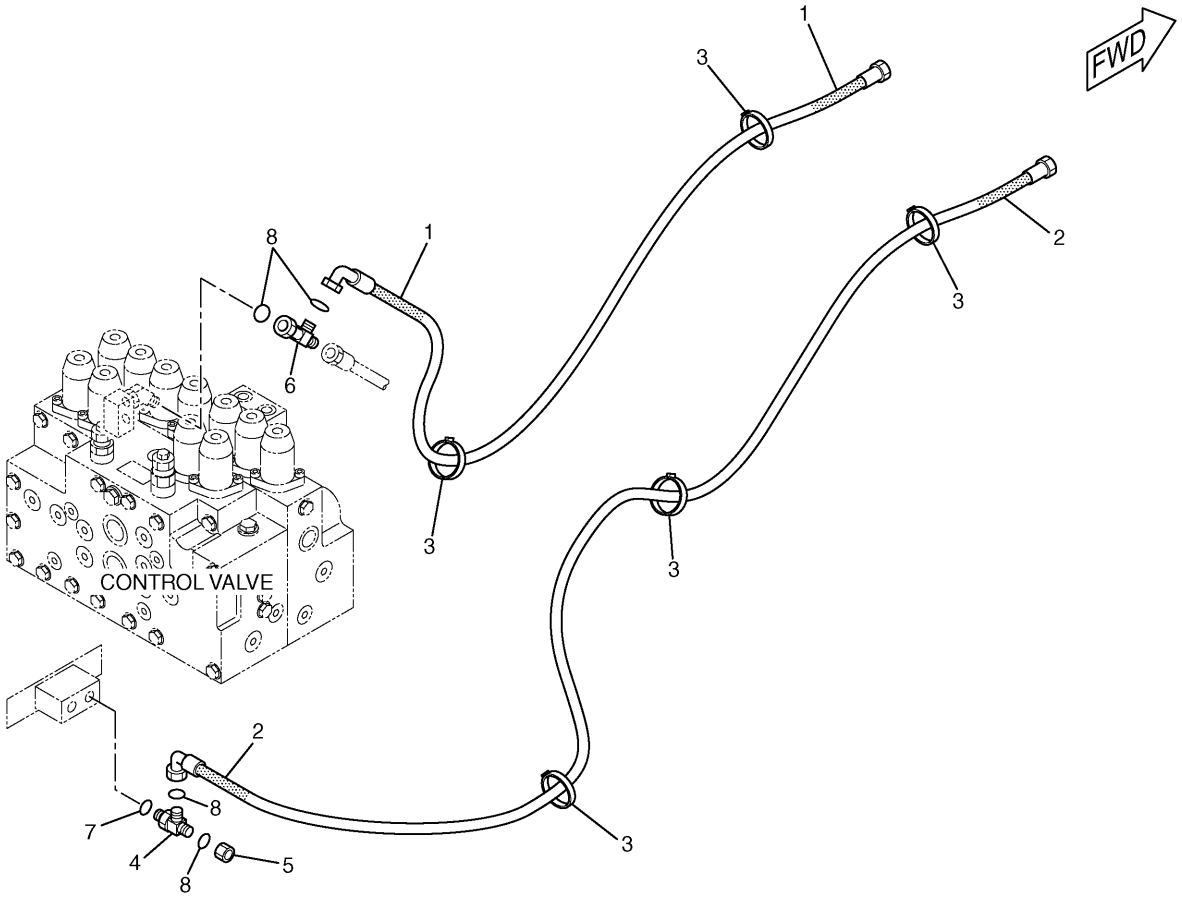

NOTE	No.	PART No.	QTY	PART NAME	NOTE	No.	PART No.	QTY	PART NAME
	1	111-0973	1	HOSE AS (NOM 06, L=1120mm)					
	2	4I-1780	1	HOSE AS (NOM 06, L=1450mm)					
	3	7K-1181	5	STRAP					
	4	6V-8781	1	TEE					
	5	6V-9829	1	CAP AS					
	6	6V-9836	1	TEE					
	7	3J-1907	1	SEAL-O-RING (ID=11.89mm)					
	8	6V-8397	4	SEAL-O-RING (OD=12.83mm)					

H73963E 01

194-0192 LINES GP-PILOT
Part of 206-3231-Page359
An Attachment

MEMORANDA

HYDRAULIC SYSTEM

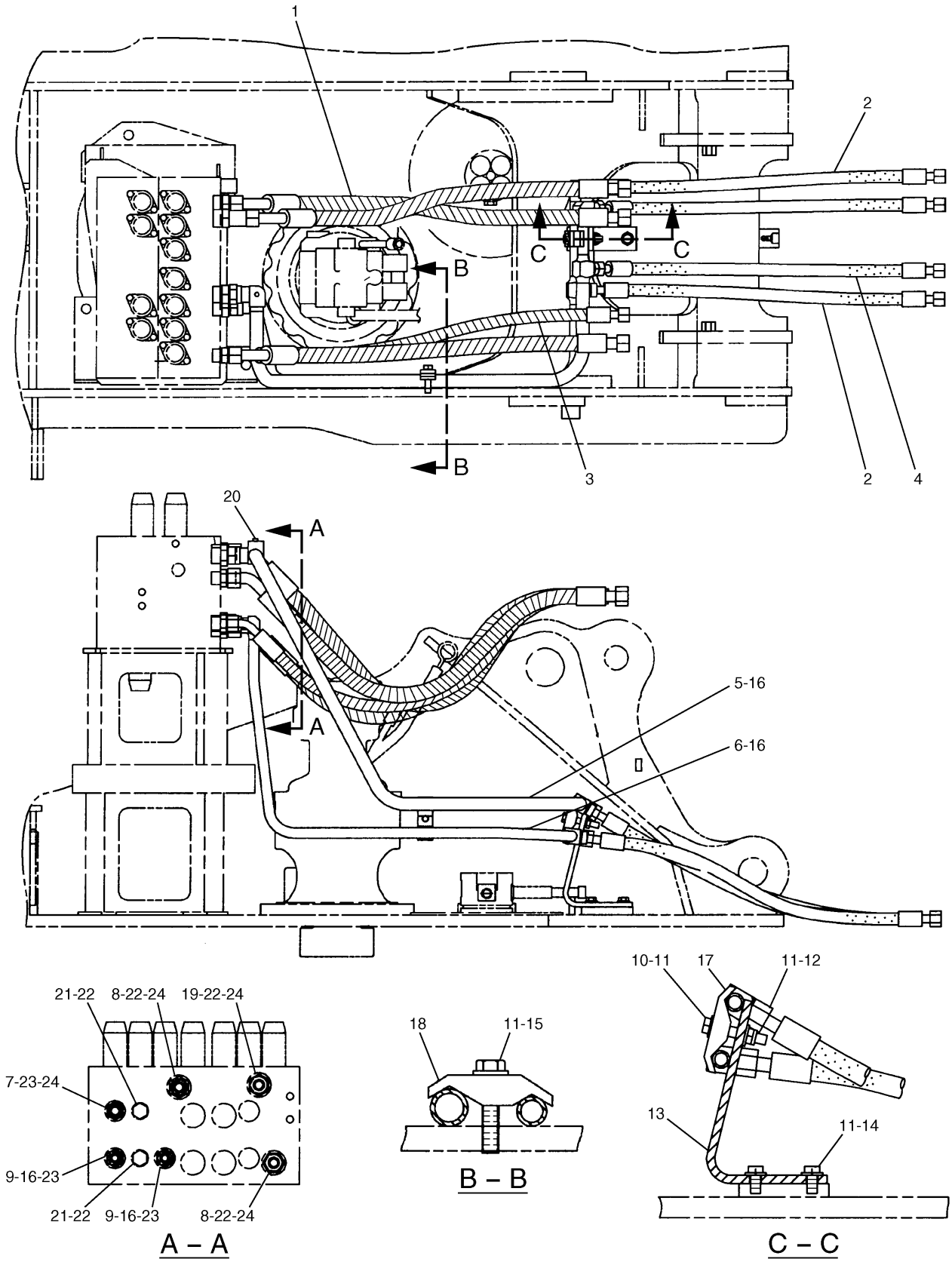

207-6500 LINES GP-FRONT

HYDRAULIC SYSTEM

NOTE	No.	PART No.	QTY	PART NAME	NOTE	No.	PART No.	QTY	PART NAME
	1	199-1689	3	HOSE AS					
E		7Y-5074		GUARD…(95cm)					
	2	123-2636	2	HOSE AS					
	3	179-7464	1	HOSE AS					
E		7Y-5074		GUARD…(90cm)					
	4	187-7173	2	HOSE AS					
	5	168-9754	1	TUBE AS					
	6	168-9755	1	TUBE AS					
	7	6V-8637	1	CONNECTOR					
	8	6V-8716	2	CONNECTOR					
	9	6V-8713	2	CONNECTOR					
	10	8T-4648	1	BOLT (L=70mm)					
	11	8T-4223	5	WASHER					
	12	096-4884	1	NUT					
	13	7I-7353	1	PLATE					
	14	8T-4192	2	BOLT (L=25mm)					
	15	8T-4910	1	BOLT (L=60mm)					
	16	7J-9108	6	SEAL-O-RING (OD=19.28mm)					
	17	093-1296	1	CLAMP					
	18	099-5408	1	CLAMP					
	19	8T-0197	1	CONNECTOR					
	20	9F-2167	1	SCREW					
	21	9S-4181	2	PLUG					
	22	7M-8485	5	SEAL-O-RING (ID=29.74mm)					
	23	3D-2824	3	SEAL-O-RING (ID=23.47mm)					
	24	6V-9746	4	SEAL-O-RING (OD=22.50mm)					

E—ORDER BY THE CENTIMETER

H77599E 00

207-6500 LINES GP-FRONT

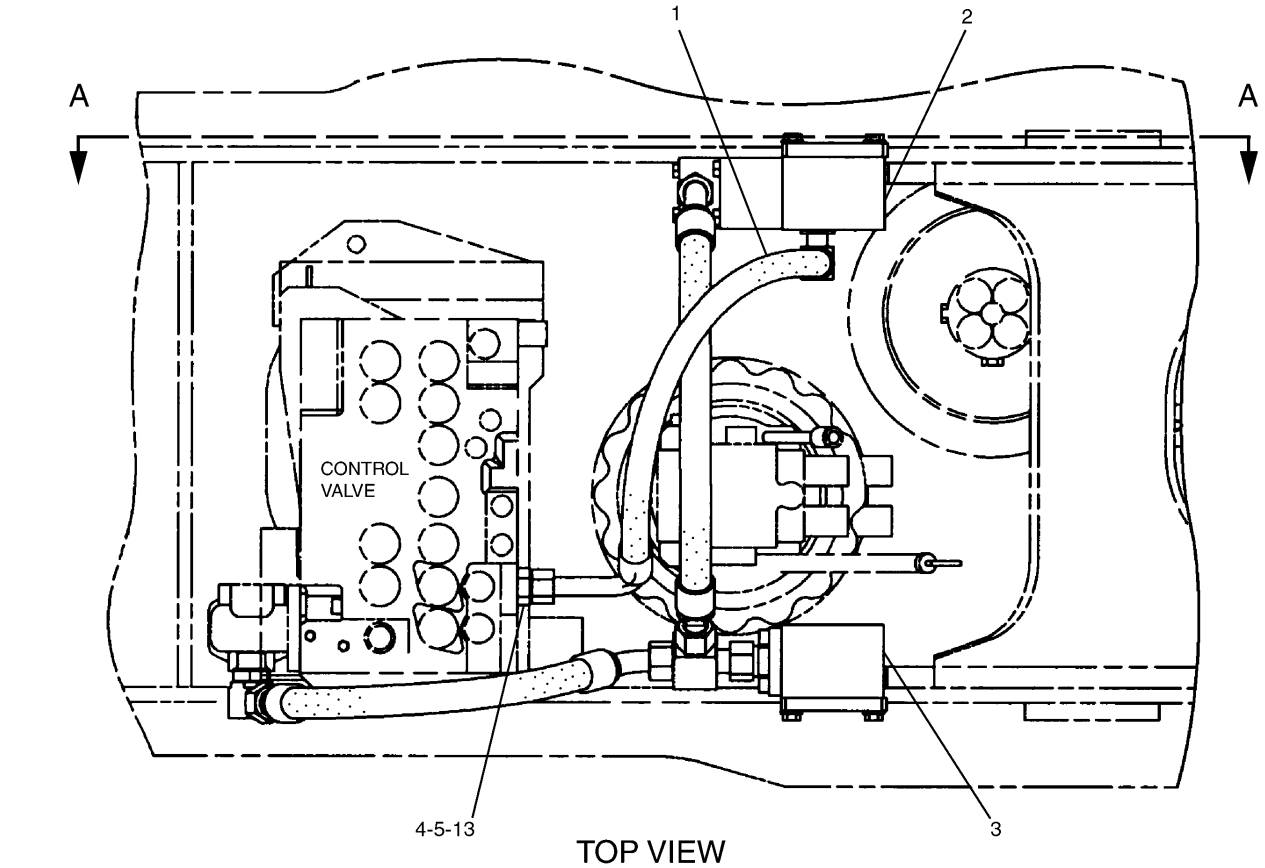

TOP VIEW

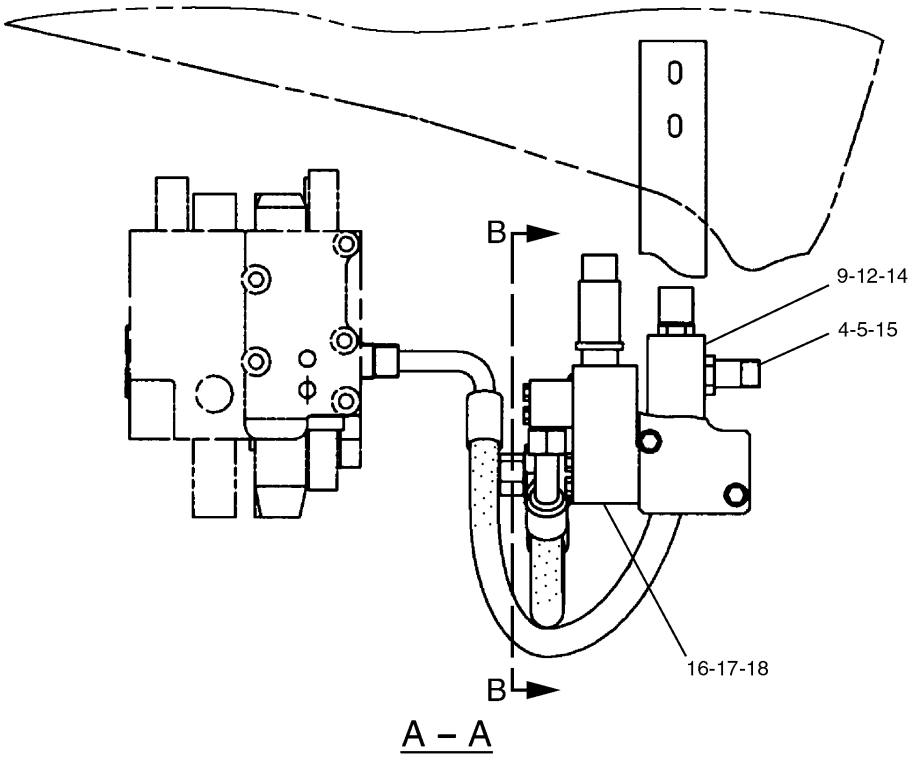

A – A

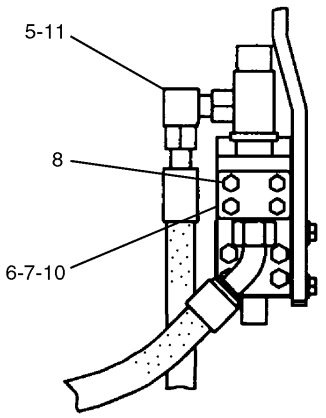

B – B

H71953E 00

168-9539 LINES GP-FRONT (1/2)
Part of 165-0962-Page354
177-2653-Page475
An Attachment

HYDRAULIC SYSTEM

NOTE	No.	PART No.	QTY	PART NAME	NOTE	No.	PART No.	QTY	PART NAME
	1	196-0627	1	HOSE AS					
	2	196-0637	1	BLOCK					
	3	179-7612	1	BLOCK					
	4	7M-8485	2	SEAL-O-RING (ID=29.74mm)					
	5	6V-9746	3	SEAL-O-RING (OD=22.50mm)					
	6	4J-0520	1	SEAL-O-RING (ID=32.92mm)					
	7	187-6913	1	FLANGE					
	8	8T-6466	4	BOLT (L=60mm)					
	9	1P-3703	1	SEAL					
	10	5K-9090	1	SEAL-O-RING (OD=27.22mm)					
	11	6V-9853	1	ELBOW					
	12	095-9804	4	BOLT (L=110mm)					
	13	6V-8716	1	CONNECTOR					
	14	194-0381	1	BLOCK					
	15	8T-0197	1	CONNECTOR					
Y	16	177-2653	1	VALVE GP					
	17	8T-4176	4	BOLT (L=90mm)					
	18	099-8232	1	SEAL-O-RING (ID=28.24mm)					

Y—SEE SEPARATE ILLUSTRATION

H71953E 00

168-9539 LINES GP-FRONT (1/2)

Part of 165-0962-Page354
177-2653-Page475
An Attachment

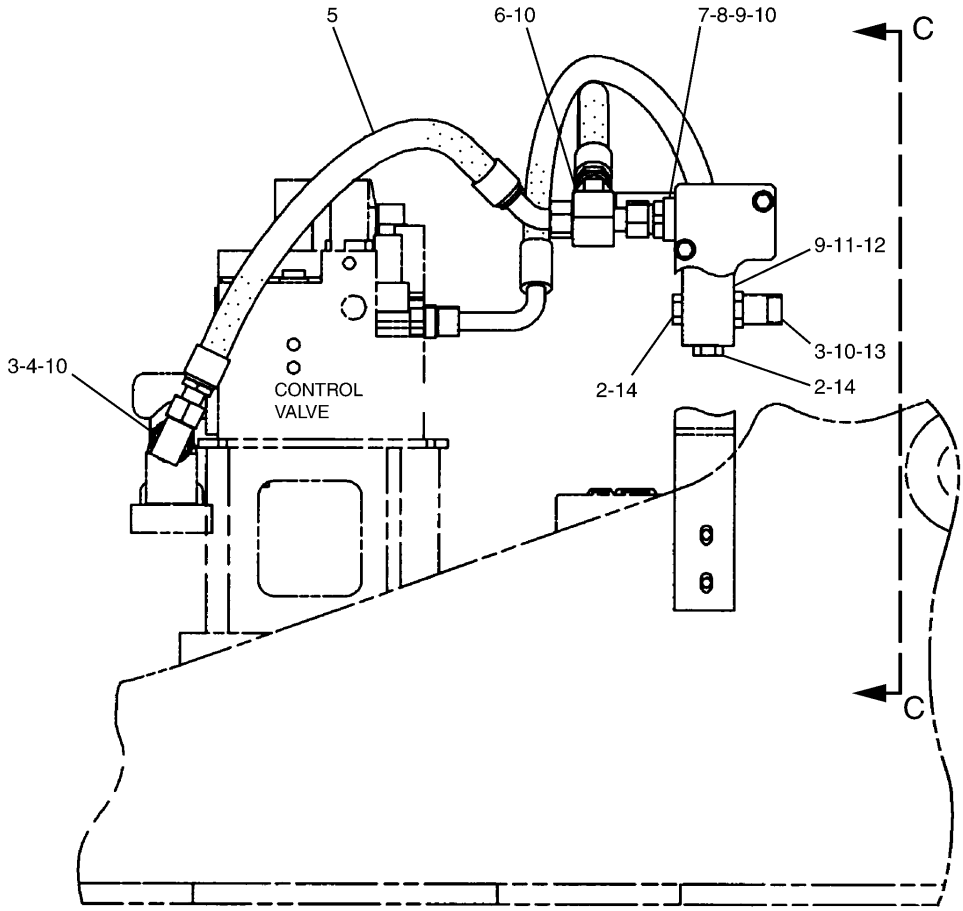

RIGHT SIDE VIEW

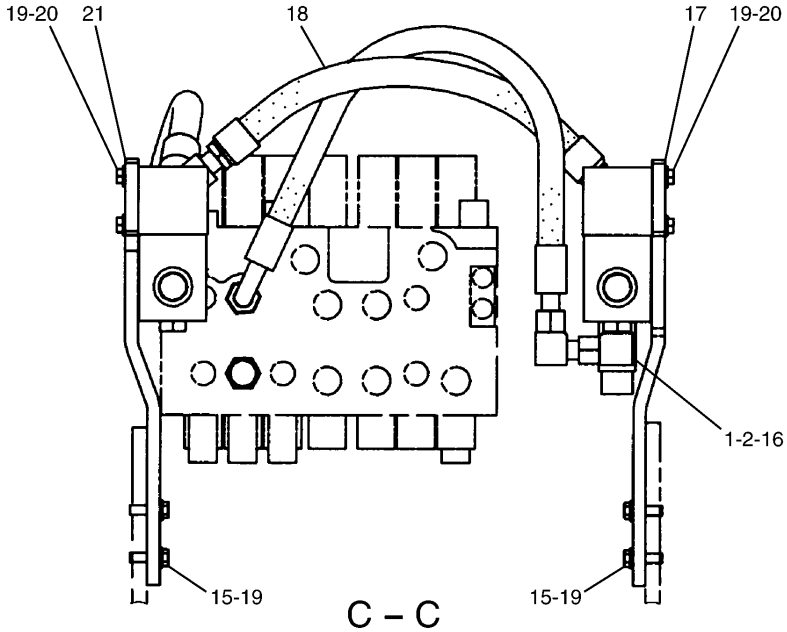

C – C

H71955E 00

168-9539 LINES GP-FRONT (2/2)
Part of 165-0962-Page354
An Attachment

HYDRAULIC SYSTEM

NOTE	No.	PART No.	QTY	PART NAME	NOTE	No.	PART No.	QTY	PART NAME
	1	6V-9746	1	SEAL-O-RING (OD=22.50mm)					
	2	3D-2824	3	SEAL-O-RING (ID=23.47mm)					
	3	7M-8485	2	SEAL-O-RING (ID=29.74mm)					
	4	6V-9008	1	ELBOW					
	5	128-7471	1	HOSE AS					
	6	6V-9840	1	TEE					
	7	173-4664	1	FLANGE					
	8	8T-3957	4	BOLT (L=30mm)					
	9	1P-3703	2	SEAL					
	10	5K-9090	5	SEAL-O-RING (OD=27.22mm)					
	11	179-7704	1	BLOCK					
	12	095-9804	4	BOLT (L=110mm)					
	13	8T-0198	1	CONNECTOR					
	14	9S-4183	2	PLUG					
	15	8T-4183	4	BOLT (L=40mm)					
	16	6V-9007	1	ELBOW					
	17	179-7706	1	SUPPORT AS					
	18	179-7701	1	HOSE AS					
	19	8T-4223	8	WASHER					
	20	8T-4956	4	BOLT (L=35mm)					
	21	179-7705	1	SUPPORT AS					

H71955E 00

168-9539 LINES GP-FRONT (2/2)

Part of 165-0962-Page354
An Attachment

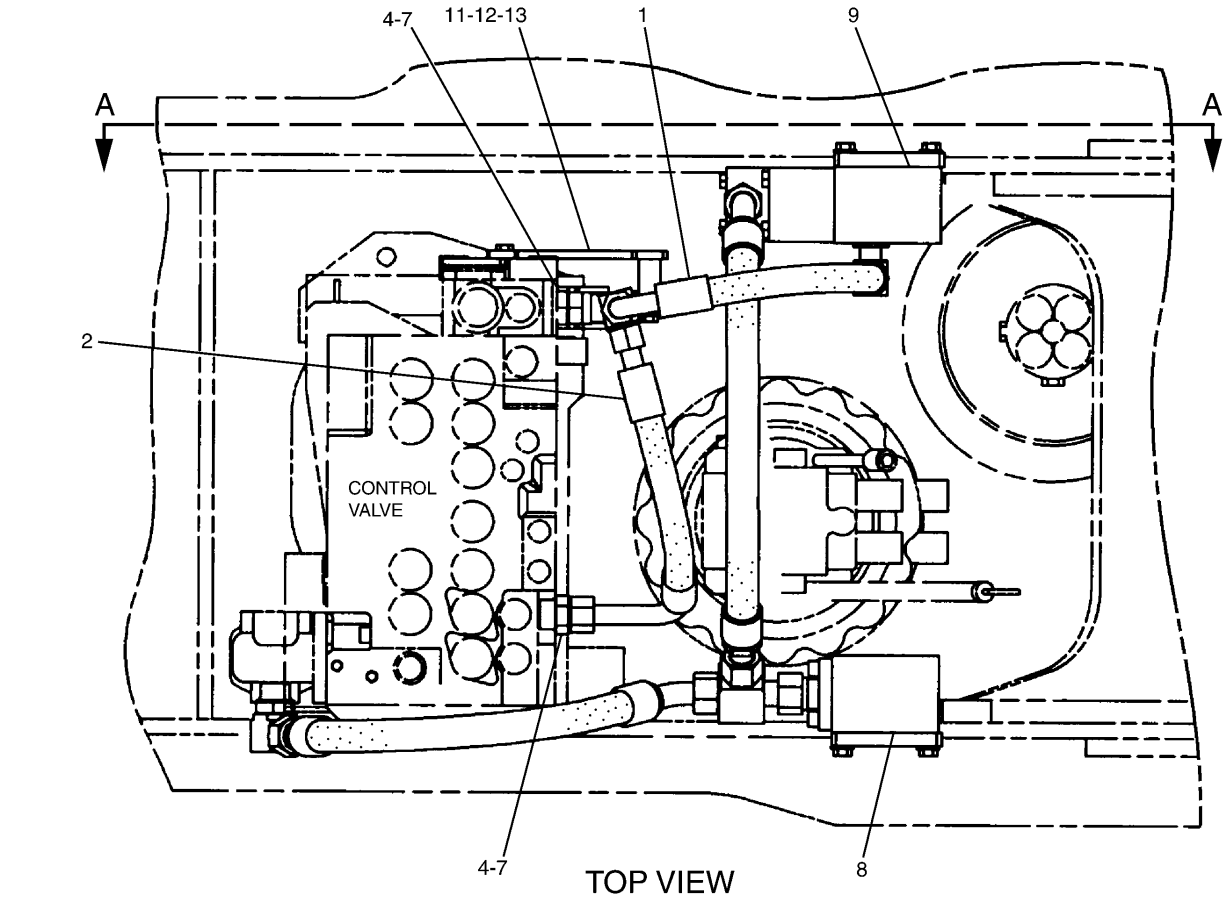

TOP VIEW

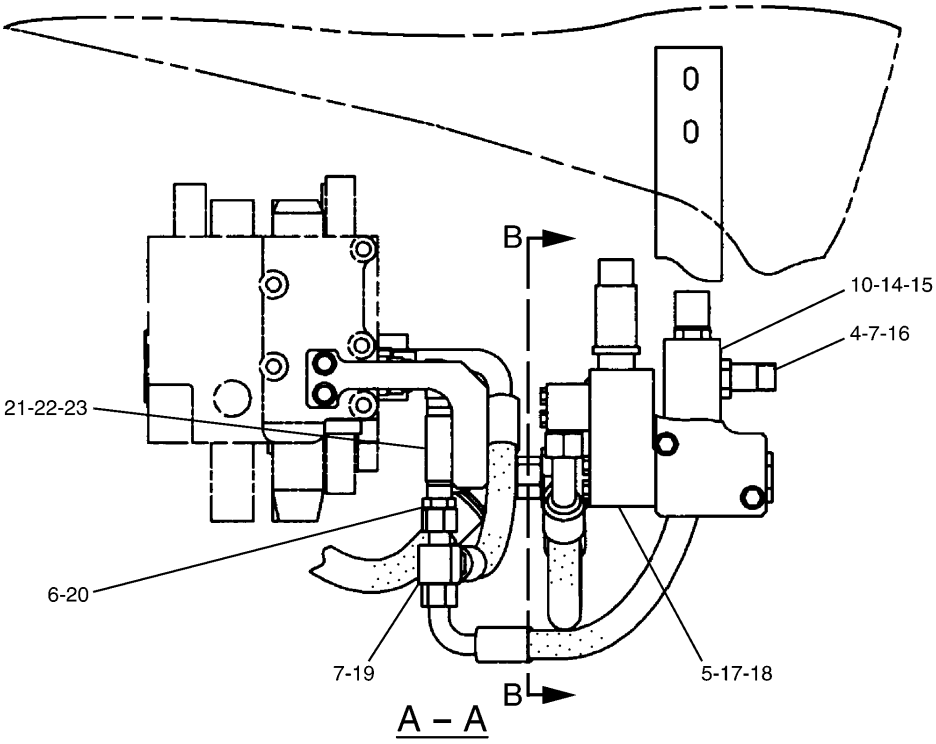

A – A

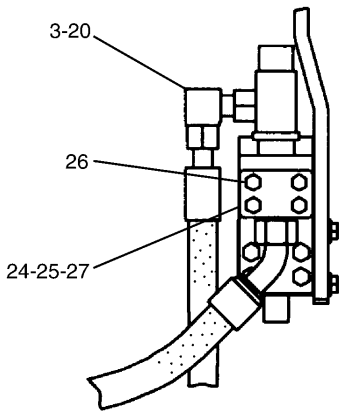

B – B

H88202E 00

168-9541 LINES GP-FRONT (1/2)
S/N CAE 01201-(T04.08)
Part of 165-0963-Page354
177-2653-Page475
An Attachment

HYDRAULIC SYSTEM

NOTE	No.	PART No.	QTY	PART NAME	NOTE	No.	PART No.	QTY	PART NAME
	1	194-0383	1	HOSE AS					
	2	113-6803	1	HOSE AS					
	3	6V-9853	1	ELBOW					
	4	7M-8485	3	SEAL-O-RING (ID=29.74mm)					
Y	5	177-2653	1	VALVE GP					
	6	179-7708	1	TUBE AS					
	7	6V-8716	2	CONNECTOR					
	8	179-7612	1	BLOCK					
	9	196-0637	1	BLOCK					
	10	194-0381	1	BLOCK					
	11	184-9390	1	SUPPORT AS					
	12	8T-4192	2	BOLT (L=25mm)					
	13	8T-4223	2	WASHER					
	14	095-9804	4	BOLT (L=110mm)					
	15	1P-3703	1	SEAL					
	16	8T-0197	1	CONNECTOR					
	17	8T-4176	4	BOLT (L=90mm)					
	18	099-8232	1	SEAL-O-RING (ID=28.24mm)					
	19	6V-9839	1	TEE					
	20	6V-9746	7	SEAL-O-RING (OD=22.50mm)					
	21	7Y-4868	2	CLIP					
	22	8T-4195	2	BOLT (L=30mm)					
	23	8T-4121	2	WASHER					
	24	4J-0520	1	SEAL-O-RING (ID=32.92mm)					
	25	187-6913	1	FLANGE					
	26	8T-6466	4	BOLT (L=60mm)					
	27	5K-9090	1	SEAL-O-RING (OD=27.22mm)					

Y—SEE SEPARATE ILLUSTRATION

H88202E 00

168-9541 LINES GP-FRONT (1/2)

S/N CAE 01201-(T04.08)
Part of 165-0963-Page354
177-2653-Page475
An Attachment

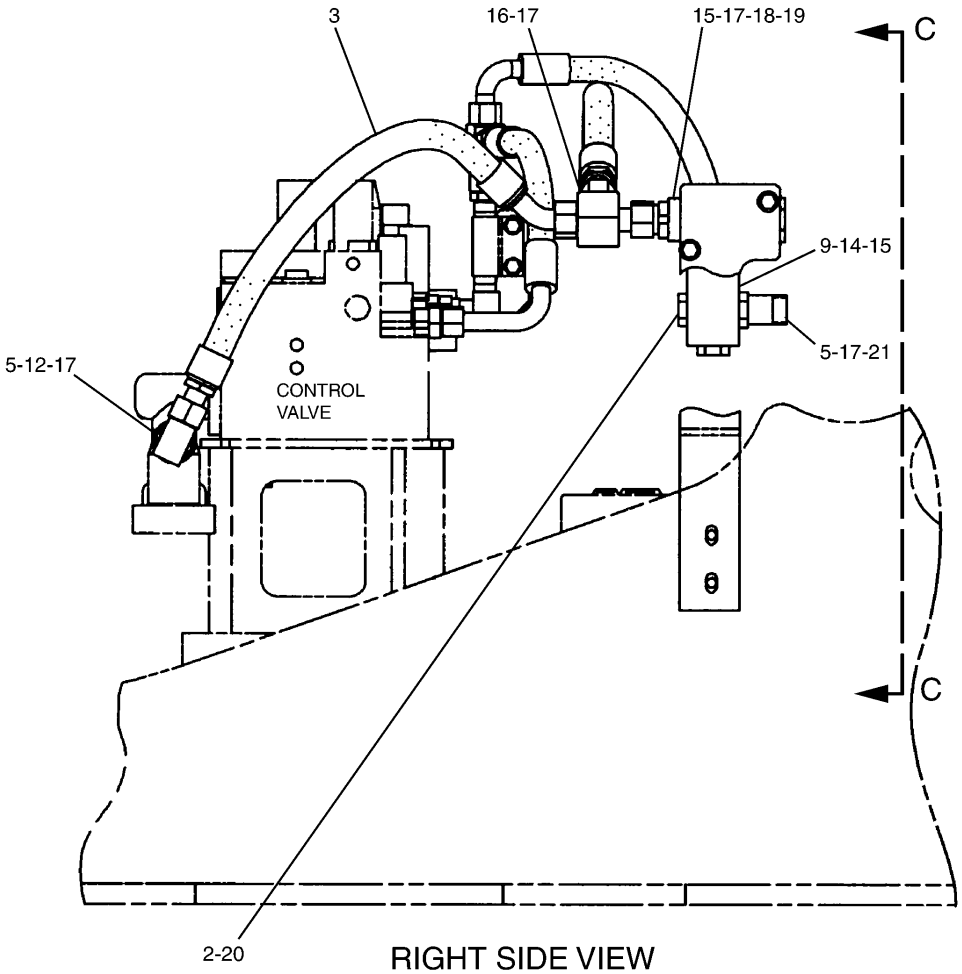

RIGHT SIDE VIEW

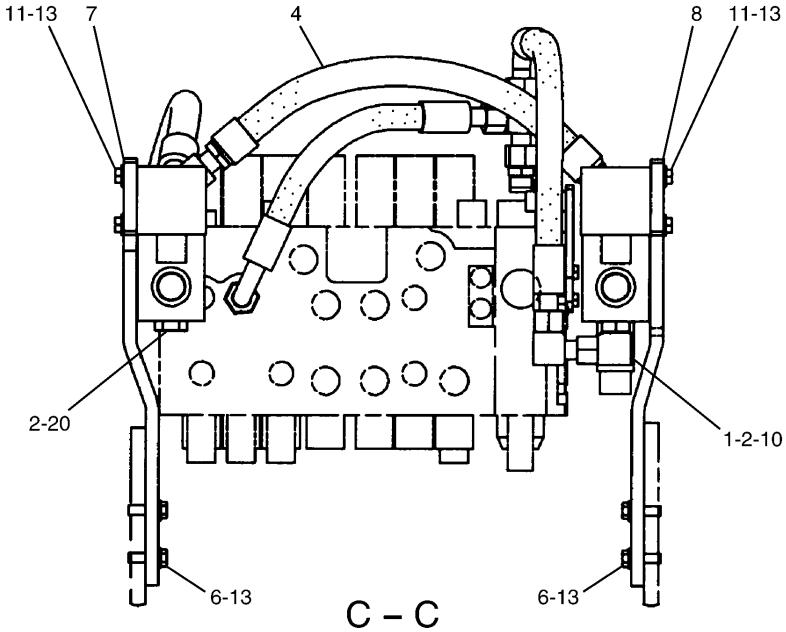

C – C

H88203E 00

168-9541 LINES GP-FRONT (2/2)
S/N CAE 01201-(T04.08)
Part of 165-0963-Page354
An Attachment

HYDRAULIC SYSTEM

NOTE	No.	PART No.	QTY	PART NAME	NOTE	No.	PART No.	QTY	PART NAME
	1	6V-9746	1	SEAL-O-RING (OD=22.50mm)					
	2	3D-2824	3	SEAL-O-RING (ID=23.47mm)					
	3	128-7471	1	HOSE AS					
	4	179-7701	1	HOSE AS					
	5	7M-8485	2	SEAL-O-RING (ID=29.74mm)					
	6	8T-4183	4	BOLT (L=40mm)					
	7	179-7705	1	SUPPORT AS					
	8	179-7706	1	SUPPORT AS					
	9	179-7704	1	BLOCK					
	10	6V-9007	1	ELBOW					
	11	8T-4956	4	BOLT (L=35mm)					
	12	6V-9008	1	ELBOW					
	13	8T-4223	8	WASHER					
	14	095-9804	4	BOLT (L=110mm)					
	15	1P-3703	2	SEAL					
	16	6V-9840	1	TEE					
	17	5K-9090	5	SEAL-O-RING (OD=27.22mm)					
	18	8T-3957	4	BOLT (L=30mm)					
	19	173-4664	1	FLANGE					
	20	9S-4183	2	PLUG					
	21	8T-0198	1	CONNECTOR					

H88203E 00

168-9541 LINES GP-FRONT (2/2)
S/N CAE 01201-(T04.08)
Part of 165-0963-Page354
An Attachment

HYDRAULIC SYSTEM

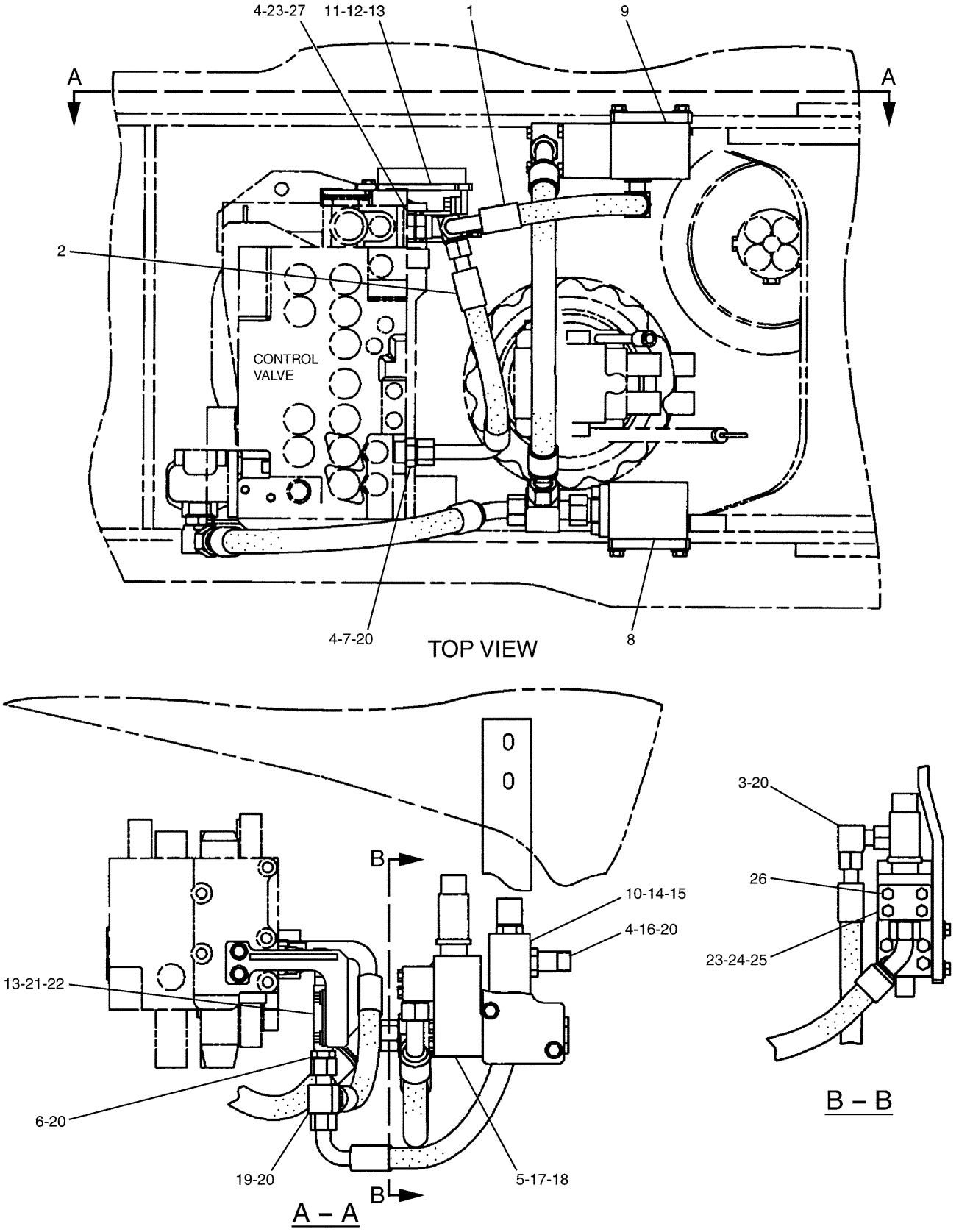

168-9541 LINES GP-FRONT (1/2)
S/N CAE (T04.09)-Up
Part of 165-0963-Page354
177-2653-Page475
An Attachment

HYDRAULIC SYSTEM

NOTE	No.	PART No.	QTY	PART NAME	NOTE	No.	PART No.	QTY	PART NAME
	1	194-0383	1	HOSE AS					
	2	113-6803	1	HOSE AS					
	3	6V-9853	1	ELBOW					
	4	7M-8485	3	SEAL-O-RING (ID=29.74mm)					
Y	5	177-2653	1	VALVE GP					
	6	286-6573	1	TUBE AS					
	7	6V-8716	1	CONNECTOR					
	8	179-7612	1	BLOCK					
	9	196-0637	1	BLOCK					
	10	194-0381	1	BLOCK					
	11	255-3193	1	SUPPORT AS					
	12	8T-4192	2	BOLT (L=25mm)					
	13	8T-4223	4	WASHER					
	14	095-9804	4	BOLT (L=110mm)					
	15	1P-3703	1	SEAL					
	16	8T-0197	1	CONNECTOR					
	17	8T-4176	4	BOLT (L=90mm)					
	18	099-8232	1	SEAL-O-RING (ID=28.24mm)					
	19	6V-9839	1	TEE					
	20	6V-9746	6	SEAL-O-RING (OD=22.50mm)					
	21	7Y-4531	2	CLAMP					
	22	8T-4139	2	BOLT (L=30mm)					
	23	5K-9090	2	SEAL-O-RING (OD=27.22mm)					
	24	4J-0520	1	SEAL-O-RING (ID=32.92mm)					
	25	187-6913	1	FLANGE					
	26	8T-6466	4	BOLT (L=60mm)					
	27	6V-8635	1	CONNECTOR					

Y—SEE SEPARATE ILLUSTRATION

H93834E 02

168-9541 LINES GP-FRONT (1/2)

S/N CAE (T04.09)-Up
Part of 165-0963-Page354
177-2653-Page475
An Attachment

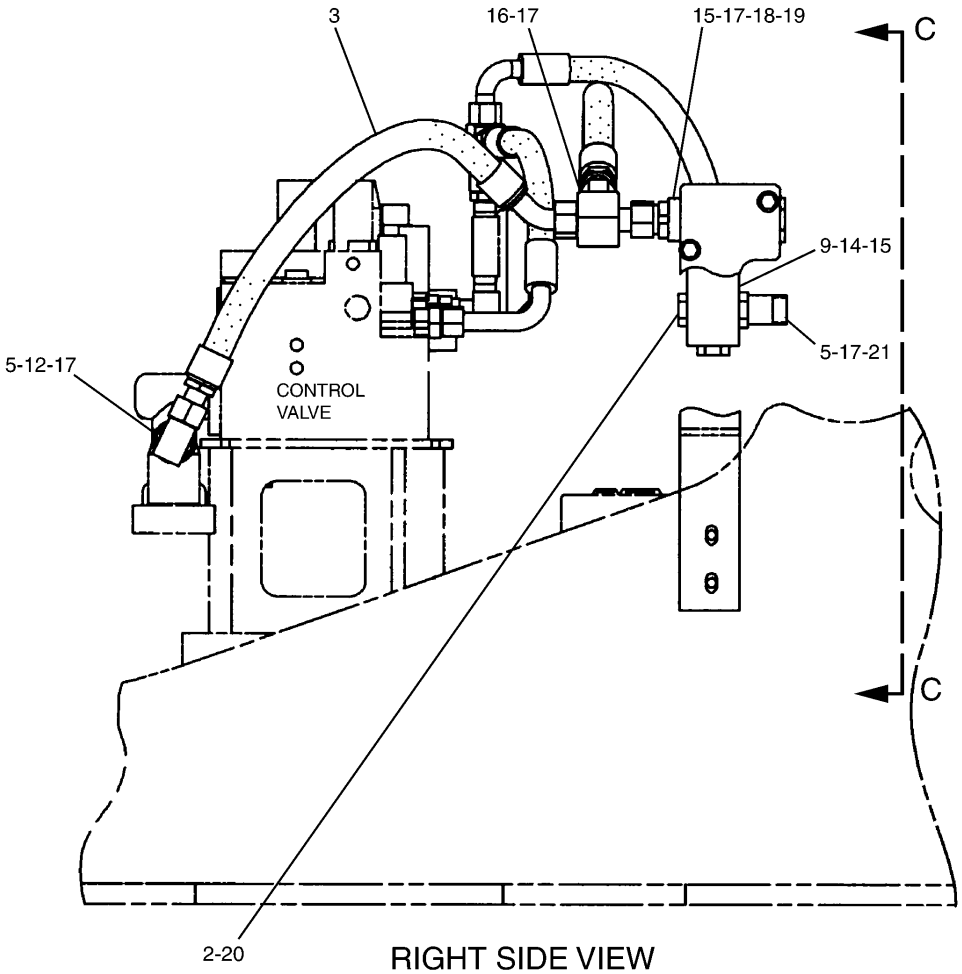

RIGHT SIDE VIEW

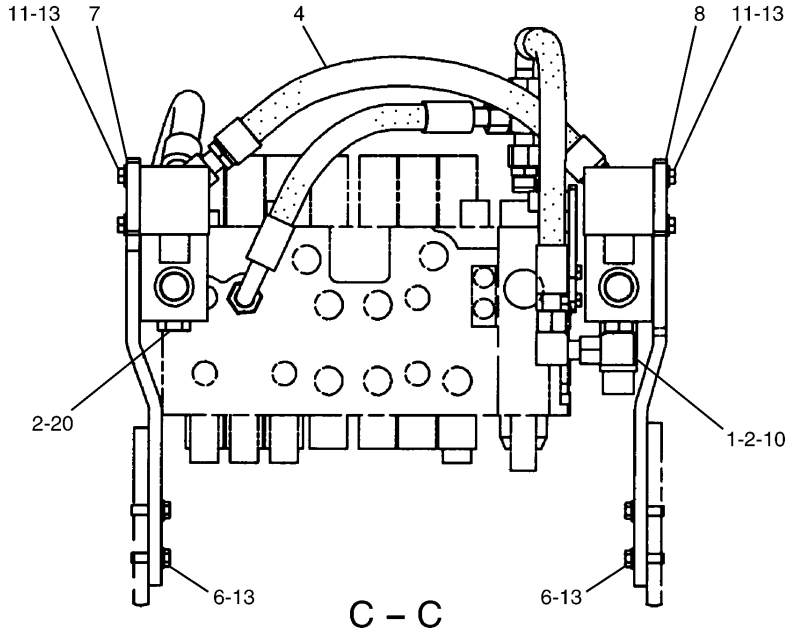

C – C

H93835E 02

168-9541 LINES GP-FRONT (2/2)
S/N CAE (T04.09)-Up
Part of 165-0963-Page354
An Attachment

HYDRAULIC SYSTEM

NOTE	No.	PART No.	QTY	PART NAME	NOTE	No.	PART No.	QTY	PART NAME
	1	6V-9746	1	SEAL-O-RING (OD=22.50mm)					
	2	3D-2824	3	SEAL-O-RING (ID=23.47mm)					
	3	128-7471	1	HOSE AS					
	4	179-7701	1	HOSE AS					
	5	7M-8485	2	SEAL-O-RING (ID=29.74mm)					
	6	8T-4183	4	BOLT (L=40mm)					
	7	179-7705	1	SUPPORT AS					
	8	179-7706	1	SUPPORT AS					
	9	179-7704	1	BLOCK					
	10	6V-9007	1	ELBOW					
	11	8T-4956	4	BOLT (L=35mm)					
	12	6V-9008	1	ELBOW					
	13	8T-4223	8	WASHER					
	14	095-9804	4	BOLT (L=110mm)					
	15	1P-3703	2	SEAL					
	16	6V-9840	1	TEE					
	17	5K-9090	5	SEAL-O-RING (OD=27.22mm)					
	18	8T-3957	4	BOLT (L=30mm)					
	19	173-4664	1	FLANGE					
	20	9S-4183	2	PLUG					
	21	8T-0198	1	CONNECTOR					

H93835E 02

168-9541 LINES GP-FRONT (2/2)
S/N CAE (T04.09)-Up
Part of 165-0963-Page354
An Attachment

HYDRAULIC SYSTEM

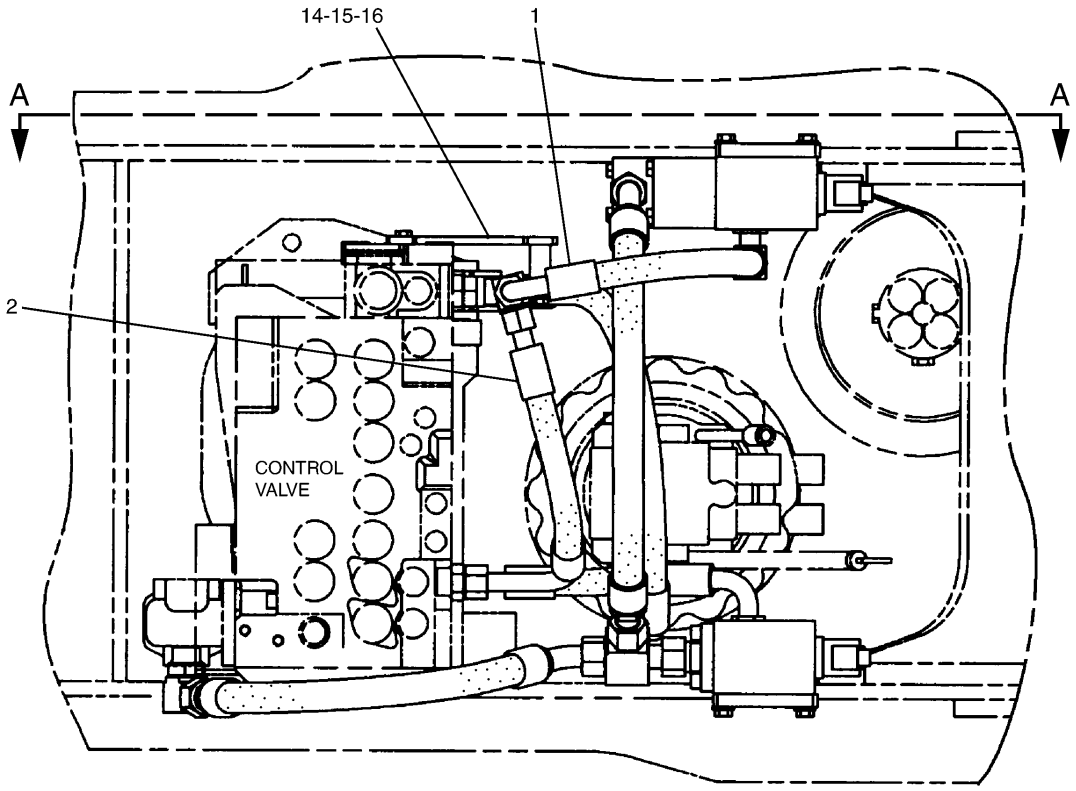

TOP VIEW

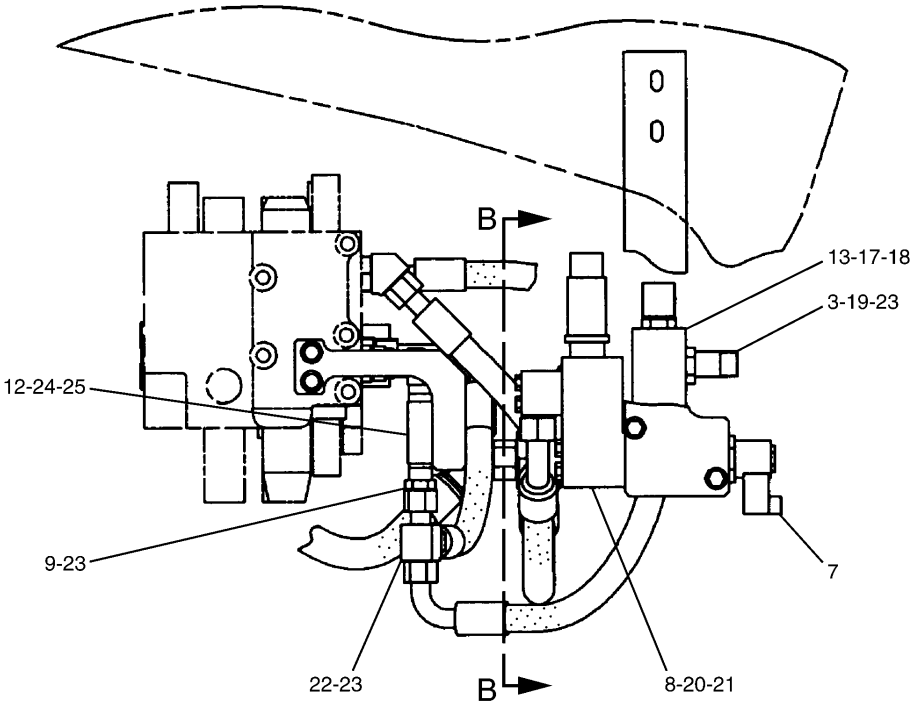

A – A

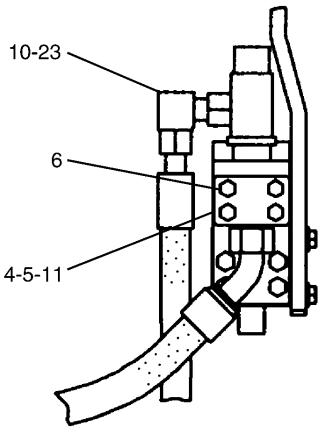

B – B

H81750E 01

168-9543 LINES GP-FRONT (1/2)
S/N CAE 01201-(T02.05)
Part of 179-5071-Page355,165-0976-Page357
177-2653-Page475,201-9367-Page490
An Attachment

HYDRAULIC SYSTEM

NOTE	No.	PART No.	QTY	PART NAME	NOTE	No.	PART No.	QTY	PART NAME
	1	194-0383	1	HOSE AS					
	2	113-6803	1	HOSE AS					
	3	7M-8485	1	SEAL-O-RING (ID=29.74mm)					
	4	4J-0520	1	SEAL-O-RING (ID=32.92mm)					
	5	187-6913	1	FLANGE					
	6	8T-6466	4	BOLT (L=60mm)					
Y	7	201-9367	1	VALVE GP					
Y	8	177-2653	1	VALVE GP					
	9	179-7708	1	TUBE AS					
	10	6V-9853	1	ELBOW					
	11	5K-9090	2	SEAL-O-RING (OD=27.22mm)					
	12	8T-4121	2	WASHER					
	13	194-0381	1	BLOCK					
	14	184-9390	1	SUPPORT AS					
	15	8T-4192	2	BOLT (L=25mm)					
	16	8T-4223	10	WASHER					
	17	095-9804	8	BOLT (L=110mm)					
	18	1P-3703	3	SEAL					
	19	8T-0197	1	CONNECTOR					
	20	8T-4176	4	BOLT (L=90mm)					
	21	099-8232	1	SEAL-O-RING (ID=28.24mm)					
	22	6V-9839	1	TEE					
	23	6V-9746	4	SEAL-O-RING (OD=22.50mm)					
	24	7Y-4868	2	CLIP					
	25	8T-4195	2	BOLT (L=30mm)					

Y—SEE SEPARATE ILLUSTRATION

H81750E 01

168-9543 LINES GP-FRONT (1/2)

S/N CAE 01201-(T02.05)
Part of 179-5071-Page355,165-0976-Page357
177-2653-Page475,201-9367-Page490
An Attachment

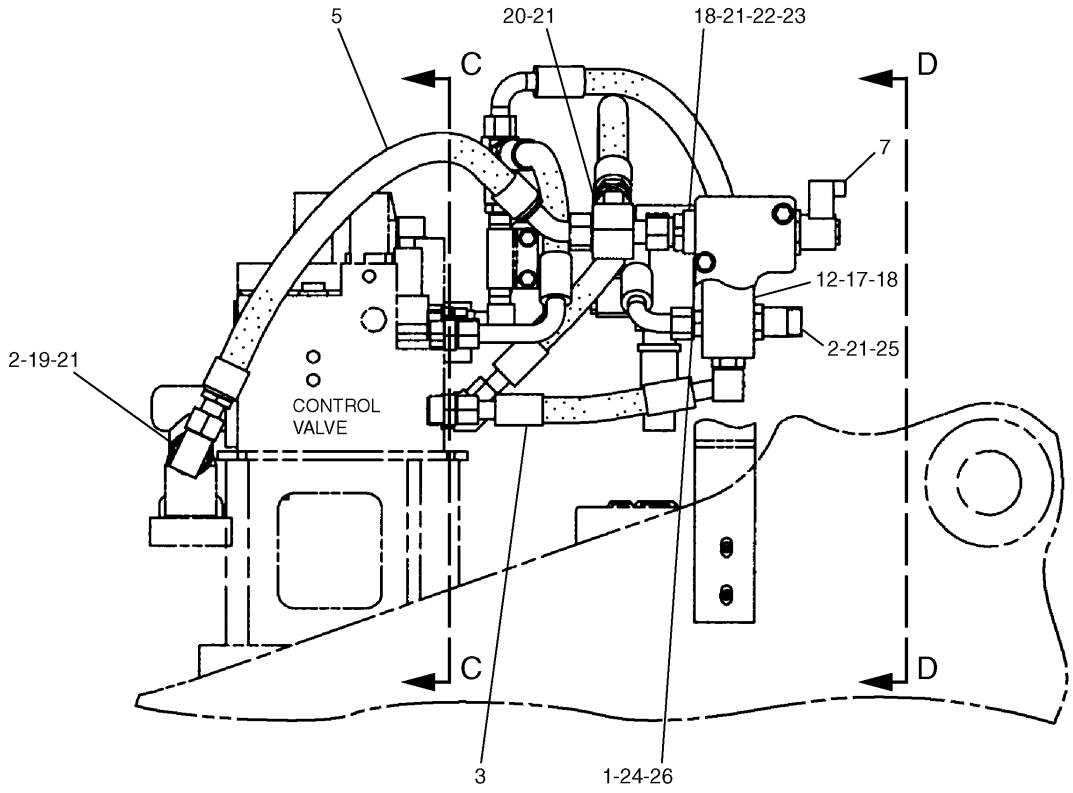

RIGHT SIDE VIEW

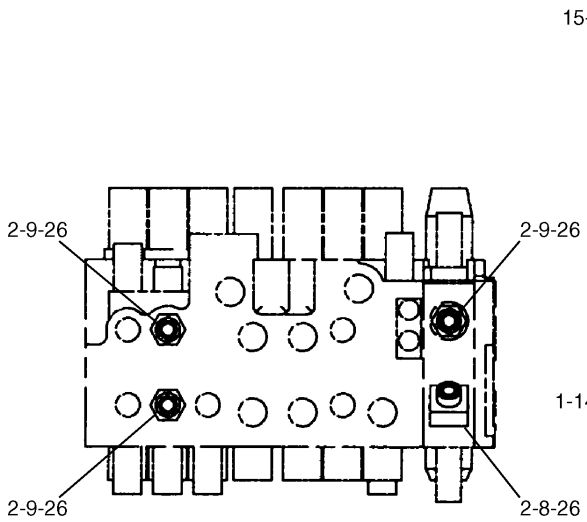

C – C

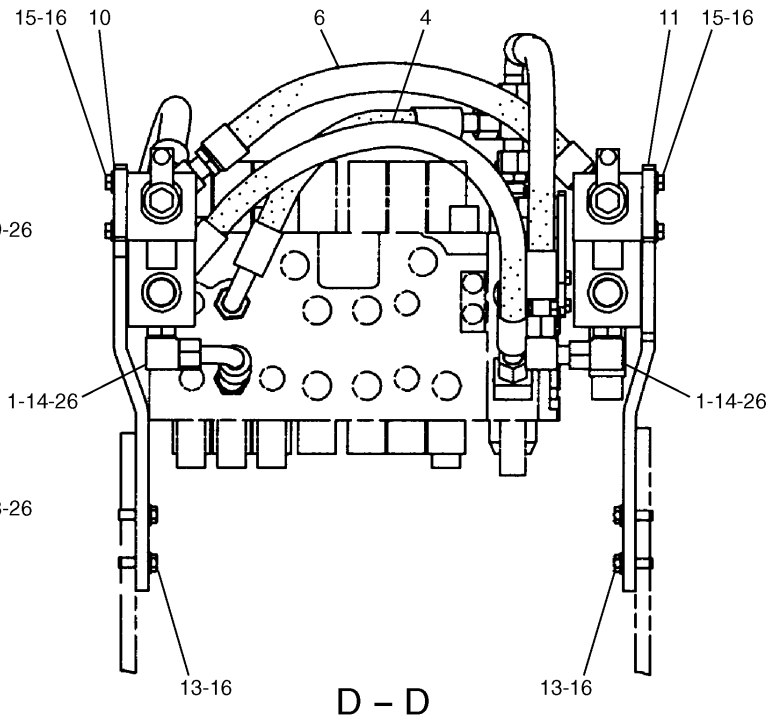

D – D

H81751E 01

168-9543 LINES GP-FRONT (2/2)
S/N CAE 01201-(T02.05)
Part of 179-5071-Page355,165-0976-Page357
201-9367-Page490
An Attachment

HYDRAULIC SYSTEM

NOTE	No.	PART No.	QTY	PART NAME	NOTE	No.	PART No.	QTY	PART NAME
	1	3D-2824	3	SEAL-O-RING (ID=23.47mm)					
	2	7M-8485	6	SEAL-O-RING (ID=29.74mm)					
	3	179-7697	1	HOSE AS					
	4	173-4868	1	HOSE AS					
	5	128-7471	1	HOSE AS					
	6	179-7701	1	HOSE AS					
Y	7	201-9367	1	VALVE GP					
	8	8T-4149	1	ELBOW					
	9	6V-8716	3	CONNECTOR					
	10	179-7705	1	SUPPORT AS					
	11	179-7706	1	SUPPORT AS					
	12	179-7704	1	BLOCK					
	13	8T-4183	4	BOLT (L=40mm)					
	14	6V-9007	2	ELBOW					
	15	8T-4956	4	BOLT (L=35mm)					
	16	8T-4223	10	WASHER					
	17	095-9804	8	BOLT (L=110mm)					
	18	1P-3703	3	SEAL					
	19	6V-9008	1	ELBOW					
	20	6V-9840	1	TEE					
	21	5K-9090	6	SEAL-O-RING (OD=27.22mm)					
	22	8T-3957	4	BOLT (L=30mm)					
	23	173-4664	1	FLANGE					
	24	6V-8637	1	CONNECTOR					
	25	8T-0198	1	CONNECTOR					
	26	6V-9746	8	SEAL-O-RING (OD=22.50mm)					

Y—SEE SEPARATE ILLUSTRATION

H81751E 01

168-9543 LINES GP-FRONT (2/2)

S/N CAE 01201-(T02.05)
Part of 179-5071-Page355,165-0976-Page357
201-9367-Page490
An Attachment

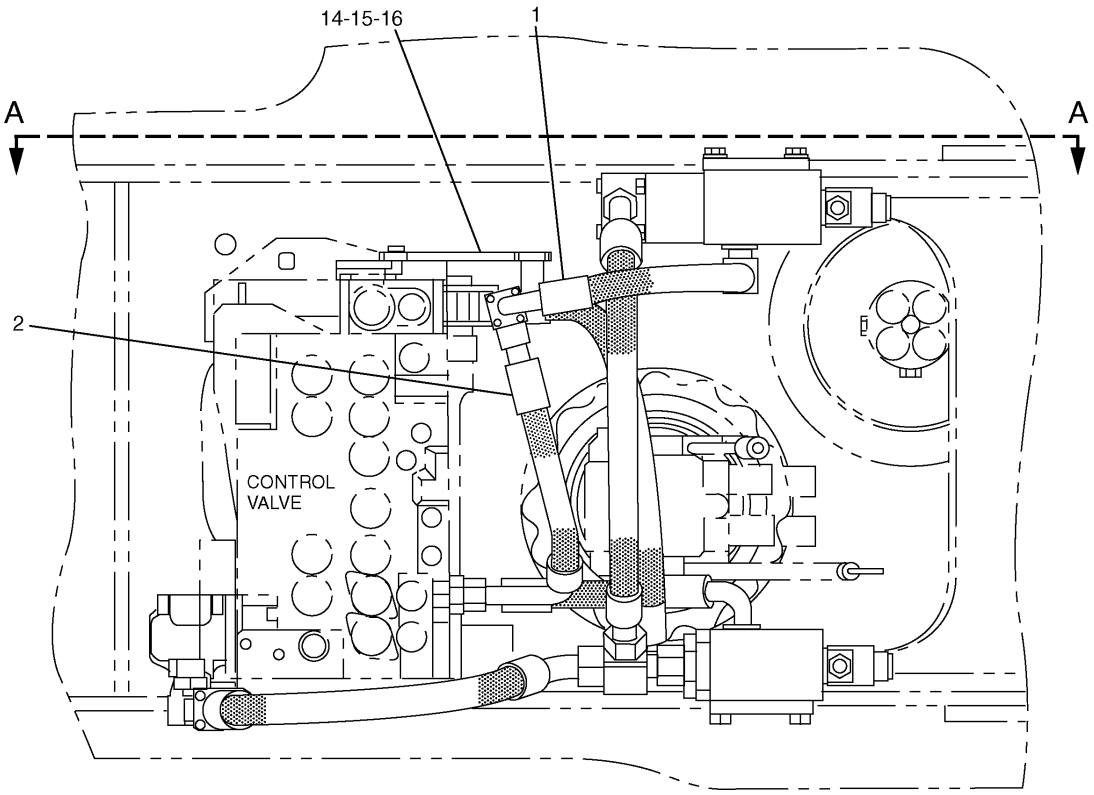

TOP VIEW

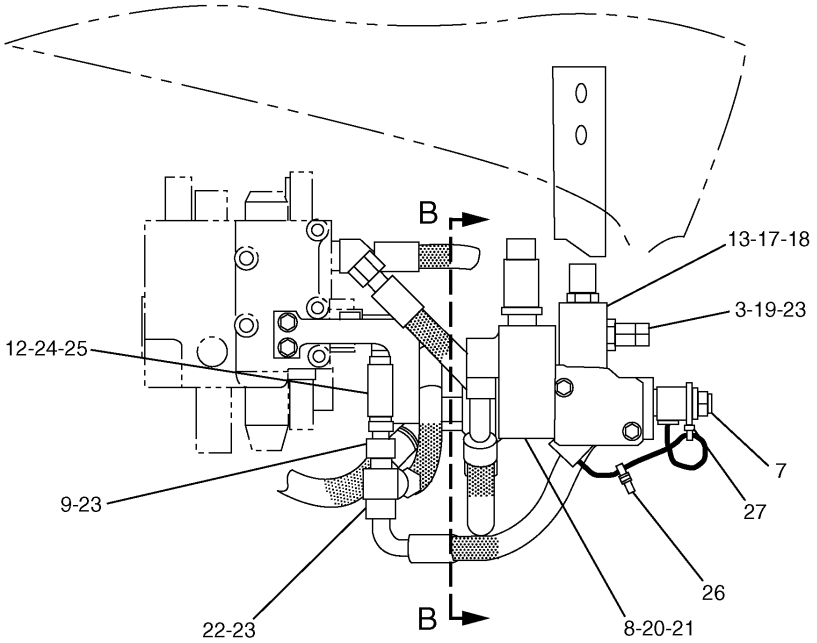

A – A

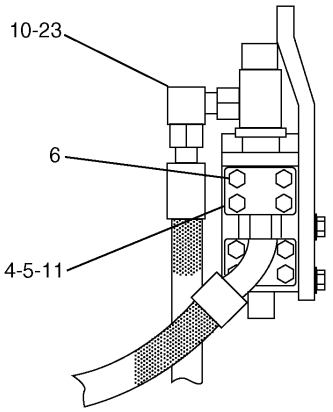

B – B

H91685E 02

168-9543 LINES GP-FRONT (1/2)
S/N CAE (T02.06)-(T04.08)
Part of 179-5071-Page355,165-0976-Page357
177-2653-Page475,215-4890-Page490.01
An Attachment

HYDRAULIC SYSTEM

NOTE	No.	PART No.	QTY	PART NAME	NOTE	No.	PART No.	QTY	PART NAME
	1	194-0383	1	HOSE AS					
	2	113-6803	1	HOSE AS					
	3	7M-8485	1	SEAL-O-RING (ID=29.74mm)					
	4	4J-0520	1	SEAL-O-RING (ID=32.92mm)					
	5	187-6913	1	FLANGE					
	6	8T-6466	4	BOLT (L=60mm)					
Y	7	215-4890	1	VALVE GP					
Y	8	177-2653	1	VALVE GP					
	9	179-7708	1	TUBE AS					
	10	6V-9853	1	ELBOW					
	11	5K-9090	1	SEAL-O-RING (OD=27.22mm)					
	12	8T-4121	2	WASHER					
	13	194-0381	1	BLOCK					
	14	184-9390	1	SUPPORT AS					
	15	8T-4192	2	BOLT (L=25mm)					
	16	8T-4223	2	WASHER					
	17	095-9804	4	BOLT (L=110mm)					
	18	1P-3703	1	SEAL					
	19	8T-0197	1	CONNECTOR					
	20	8T-4176	4	BOLT (L=90mm)					
	21	099-8232	1	SEAL-O-RING (ID=28.24mm)					
	22	6V-9839	1	TEE					
	23	6V-9746	5	SEAL-O-RING (OD=22.50mm)					
	24	7Y-4868	2	CLIP					
	25	8T-4195	2	BOLT (L=30mm)					
	26	7I-2673	1	STRAP					
	27	204-1611	1	STRAP					

Y—SEE SEPARATE ILLUSTRATION

H91685E 02

168-9543 LINES GP-FRONT (1/2)

S/N CAE (T02.06)-(T04.08)
Part of 179-5071-Page355,165-0976-Page357
177-2653-Page475,215-4890-Page490.01
An Attachment

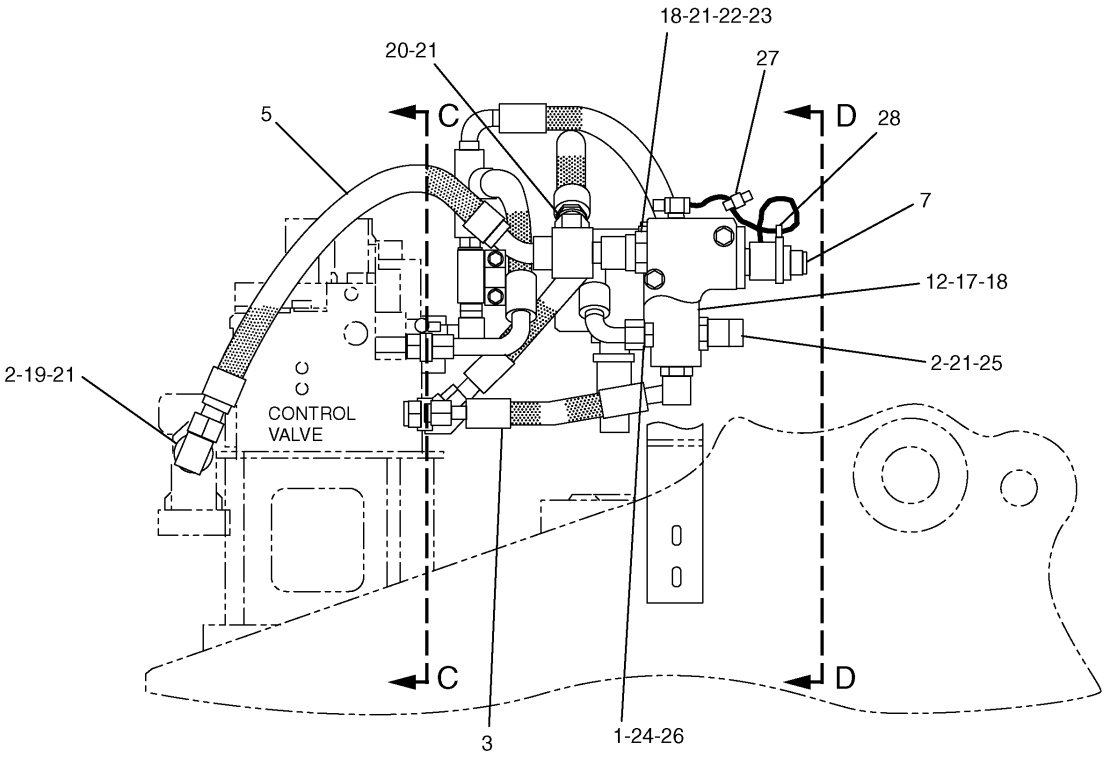

RIGHT SIDE VIEW

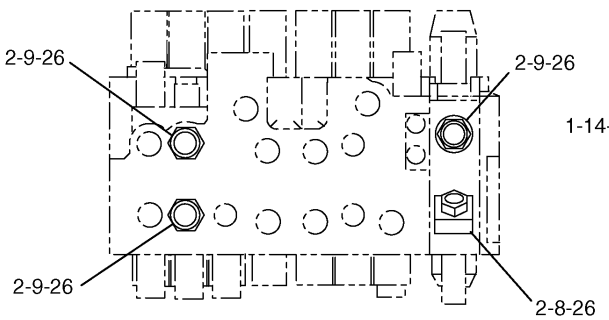

C – C

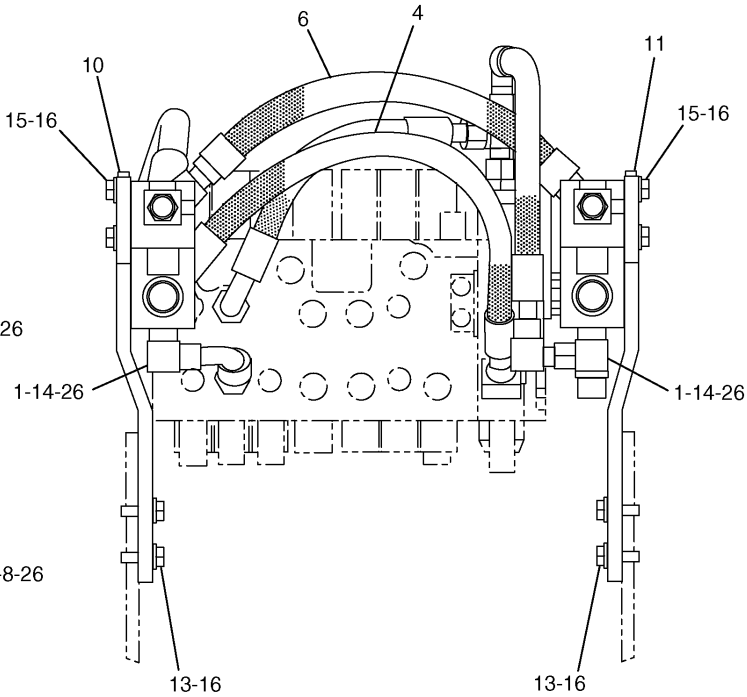

D – D

H91686E 02

168-9543 LINES GP-FRONT (2/2)
S/N CAE (T02.06)-(T04.08)
Part of 179-5071-Page355,165-0976-Page357
215-4890-Page490.01
An Attachment

HYDRAULIC SYSTEM

NOTE	No.	PART No.	QTY	PART NAME	NOTE	No.	PART No.	QTY	PART NAME
	1	3D-2824	3	SEAL-O-RING (ID=23.47mm)					
	2	7M-8485	6	SEAL-O-RING (ID=29.74mm)					
	3	179-7697	1	HOSE AS					
	4	173-4868	1	HOSE AS					
	5	128-7471	1	HOSE AS					
	6	179-7701	1	HOSE AS					
Y	7	215-4890	1	VALVE GP					
	8	8T-4149	1	ELBOW					
	9	6V-8716	3	CONNECTOR					
	10	179-7705	1	SUPPORT AS					
	11	179-7706	1	SUPPORT AS					
	12	179-7704	1	BLOCK					
	13	8T-4183	4	BOLT (L=40mm)					
	14	6V-9007	2	ELBOW					
	15	8T-4956	4	BOLT (L=35mm)					
	16	8T-4223	8	WASHER					
	17	095-9804	4	BOLT (L=110mm)					
	18	1P-3703	2	SEAL					
	19	6V-9008	1	ELBOW					
	20	6V-9840	1	TEE					
	21	5K-9090	5	SEAL-O-RING (OD=27.22mm)					
	22	8T-3957	4	BOLT (L=30mm)					
	23	173-4664	1	FLANGE					
	24	6V-8637	1	CONNECTOR					
	25	8T-0198	1	CONNECTOR					
	26	6V-9746	7	SEAL-O-RING (OD=22.50mm)					
	27	7I-2673	1	STRAP					
	28	204-1611	1	STRAP					

Y—SEE SEPARATE ILLUSTRATION

H91686E 02

168-9543 LINES GP-FRONT (2/2)

S/N CAE (T02.06)-(T04.08)
Part of 179-5071-Page355,165-0976-Page357
215-4890-Page490.01
An Attachment

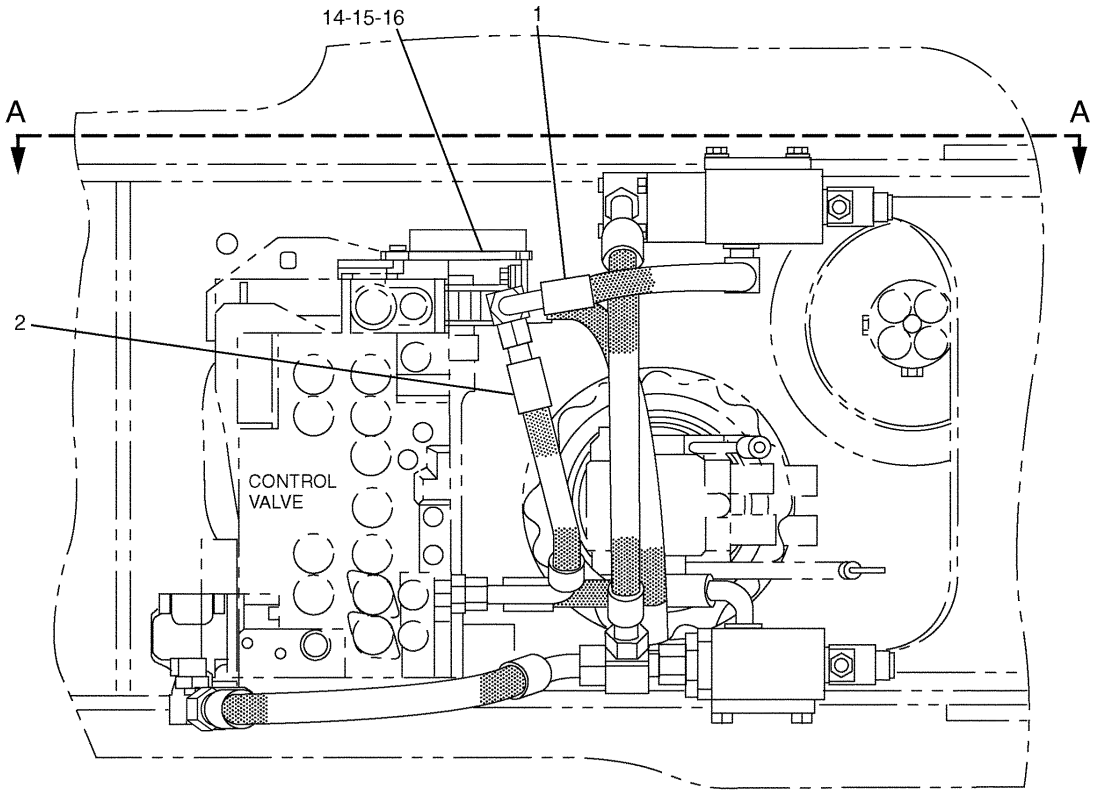

TOP VIEW

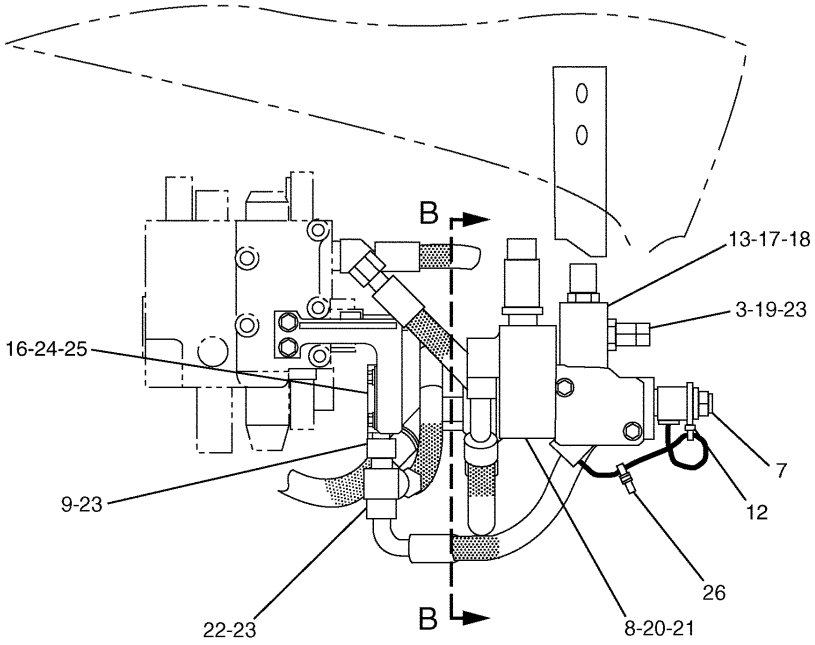

A – A

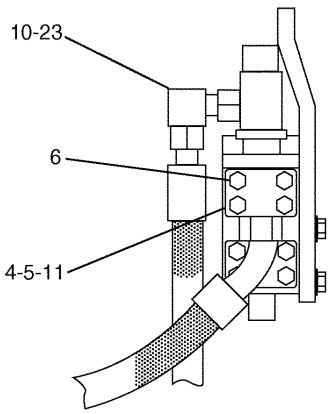

B – B

H98175E 05

168-9543 LINES GP-FRONT (1/2)
S/N CAE (T04.09)-Up
Part of 179-5071-Page355,165-0976-Page357
177-2653-Page475,297-0370-Page490.02
An Attachment

HYDRAULIC SYSTEM

NOTE	No.	PART No.	QTY	PART NAME	NOTE	No.	PART No.	QTY	PART NAME
	1	194-0383	1	HOSE AS					
	2	113-6803	1	HOSE AS					
	3	7M-8485	1	SEAL-O-RING (ID=29.74mm)					
	4	4J-0520	1	SEAL-O-RING (ID=32.92mm)					
	5	187-6913	1	FLANGE					
	6	8T-6466	4	BOLT (L=60mm)					
Y	7	297-0370	1	VALVE GP					
Y	8	177-2653	1	VALVE GP					
	9	286-6573	1	TUBE AS					
	10	6V-9853	1	ELBOW					
	11	5K-9090	1	SEAL-O-RING (OD=27.22mm)					
	12	204-1611	1	STRAP					
	13	194-0381	1	BLOCK					
	14	255-3193	1	SUPPORT AS					
	15	8T-4192	2	BOLT (L=25mm)					
	16	8T-4223	4	WASHER					
	17	095-9804	4	BOLT (L=110mm)					
	18	1P-3703	1	SEAL					
	19	8T-0197	1	CONNECTOR					
	20	8T-4176	4	BOLT (L=90mm)					
	21	099-8232	1	SEAL-O-RING (ID=28.24mm)					
	22	6V-9839	1	TEE					
	23	6V-9746	5	SEAL-O-RING (OD=22.50mm)					
	24	7Y-4531	2	CLAMP					
	25	8T-4139	2	BOLT (L=30mm)					
	26	7I-2673	1	STRAP					

Y—SEE SEPARATE ILLUSTRATION

H98175E 05

168-9543 LINES GP-FRONT (1/2)

S/N CAE (T04.09)-Up
Part of 179-5071-Page355,165-0976-Page357
177-2653-Page475,297-0370-Page490.02
An Attachment

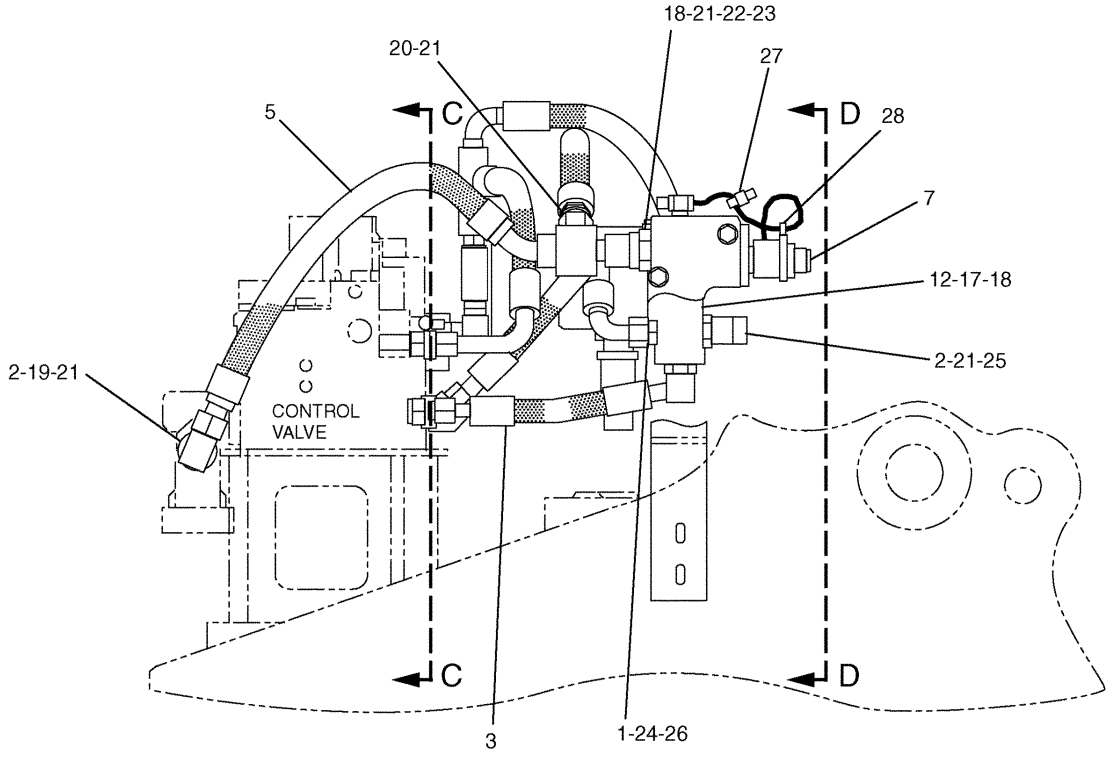

RIGHT SIDE VIEW

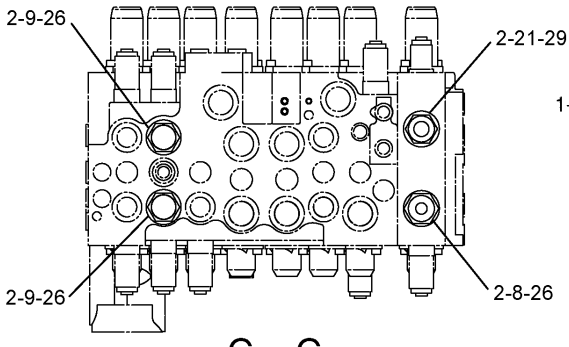

C – C

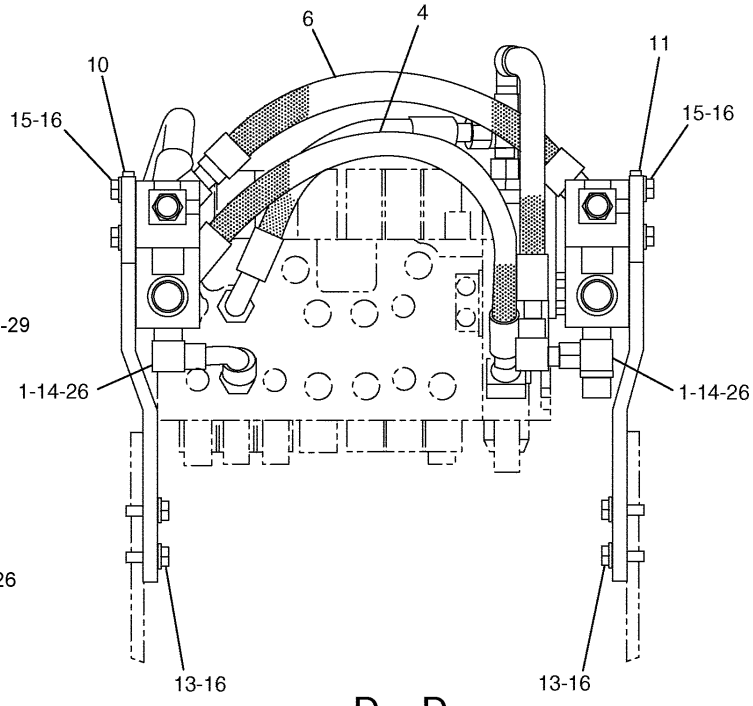

D – D

H98176E 05

168-9543 LINES GP-FRONT (2/2)
S/N CAE (T04.09)-Up
Part of 179-5071-Page355,165-0976-Page357
297-0370-Page490.02
An Attachment

HYDRAULIC SYSTEM

NOTE	No.	PART No.	QTY	PART NAME	NOTE	No.	PART No.	QTY	PART NAME
	1	3D-2824	3	SEAL-O-RING (ID=23.47mm)					
	2	7M-8485	6	SEAL-O-RING (ID=29.74mm)					
	3	179-7697	1	HOSE AS					
	4	173-4868	1	HOSE AS					
	5	128-7471	1	HOSE AS					
	6	179-7701	1	HOSE AS					
Y	7	297-0370	1	VALVE GP					
	8	8T-4149	1	ELBOW					
	9	6V-8716	2	CONNECTOR					
	10	179-7705	1	SUPPORT AS					
	11	179-7706	1	SUPPORT AS					
	12	179-7704	1	BLOCK					
	13	8T-4183	4	BOLT (L=40mm)					
	14	6V-9007	2	ELBOW					
	15	8T-4956	4	BOLT (L=35mm)					
	16	8T-4223	8	WASHER					
	17	095-9804	4	BOLT (L=110mm)					
	18	1P-3703	2	SEAL					
	19	6V-9008	1	ELBOW					
	20	6V-9840	1	TEE					
	21	5K-9090	6	SEAL-O-RING (OD=27.22mm)					
	22	8T-3957	4	BOLT (L=30mm)					
	23	173-4664	1	FLANGE					
	24	6V-8637	1	CONNECTOR					
	25	8T-0198	1	CONNECTOR					
	26	6V-9746	6	SEAL-O-RING (OD=22.50mm)					
	27	7I-2673	1	STRAP					
	28	204-1611	1	STRAP					
	29	6V-8635	1	CONNECTOR					

Y—SEE SEPARATE ILLUSTRATION

H98176E 05

168-9543 LINES GP-FRONT (2/2)

S/N CAE (T04.09)-Up
Part of 179-5071-Page355,165-0976-Page357
297-0370-Page490.02
An Attachment

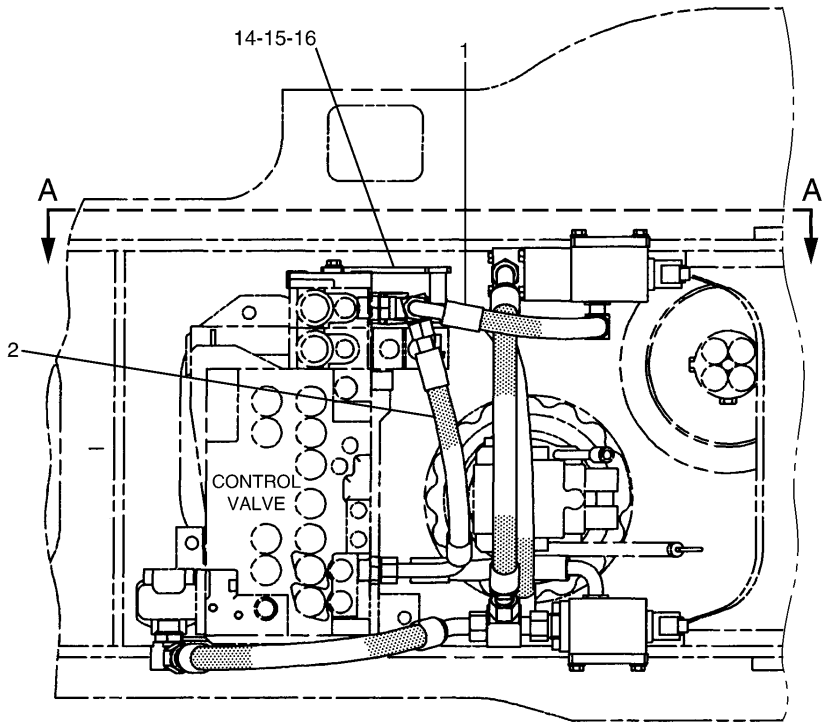

TOP VIEW

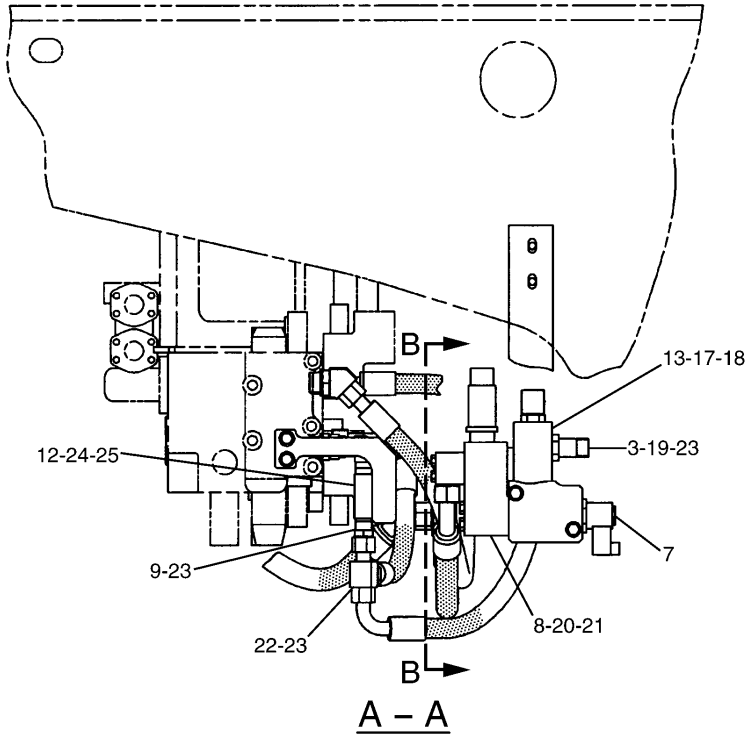

A – A

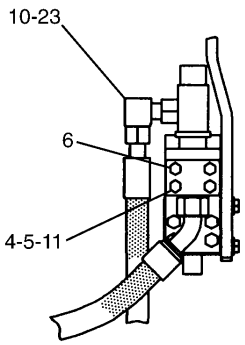

B – B

H81752E 02

168-9546 LINES GP-FRONT (1/2)
S/N CAE 01201-(T02.05)
Part of 165-0964-Page356
177-2653-Page475,201-9367-Page490
An Attachment

HYDRAULIC SYSTEM

NOTE	No.	PART No.	QTY	PART NAME	NOTE	No.	PART No.	QTY	PART NAME
	1	194-0383	1	HOSE AS					
	2	6I-6831	1	HOSE AS					
	3	7M-8485	1	SEAL-O-RING (ID=29.74mm)					
	4	4J-0520	1	SEAL-O-RING (ID=32.92mm)					
	5	187-6913	1	FLANGE					
	6	8T-6466	4	BOLT (L=60mm)					
Y	7	201-9367	1	VALVE GP					
Y	8	177-2653	1	VALVE GP					
	9	179-7708	1	TUBE AS					
	10	6V-9853	1	ELBOW					
	11	5K-9090	1	SEAL-O-RING (OD=27.22mm)					
	12	8T-4121	2	WASHER					
	13	194-0381	1	BLOCK					
	14	184-9390	1	SUPPORT AS					
	15	8T-4192	2	BOLT (L=25mm)					
	16	8T-4223	2	WASHER					
	17	095-9804	4	BOLT (L=110mm)					
	18	1P-3703	1	SEAL					
	19	8T-0197	1	CONNECTOR					
	20	8T-4176	4	BOLT (L=90mm)					
	21	099-8232	1	SEAL-O-RING (ID=28.24mm)					
	22	6V-9839	1	TEE					
	23	6V-9746	5	SEAL-O-RING (OD=22.50mm)					
	24	7Y-4868	2	CLIP					
	25	8T-4195	2	BOLT (L=30mm)					

Y—SEE SEPARATE ILLUSTRATION

H81752E 02

168-9546 LINES GP-FRONT (1/2)

S/N CAE 01201-(T02.05)
Part of 165-0964-Page356
177-2653-Page475,201-9367-Page490
An Attachment

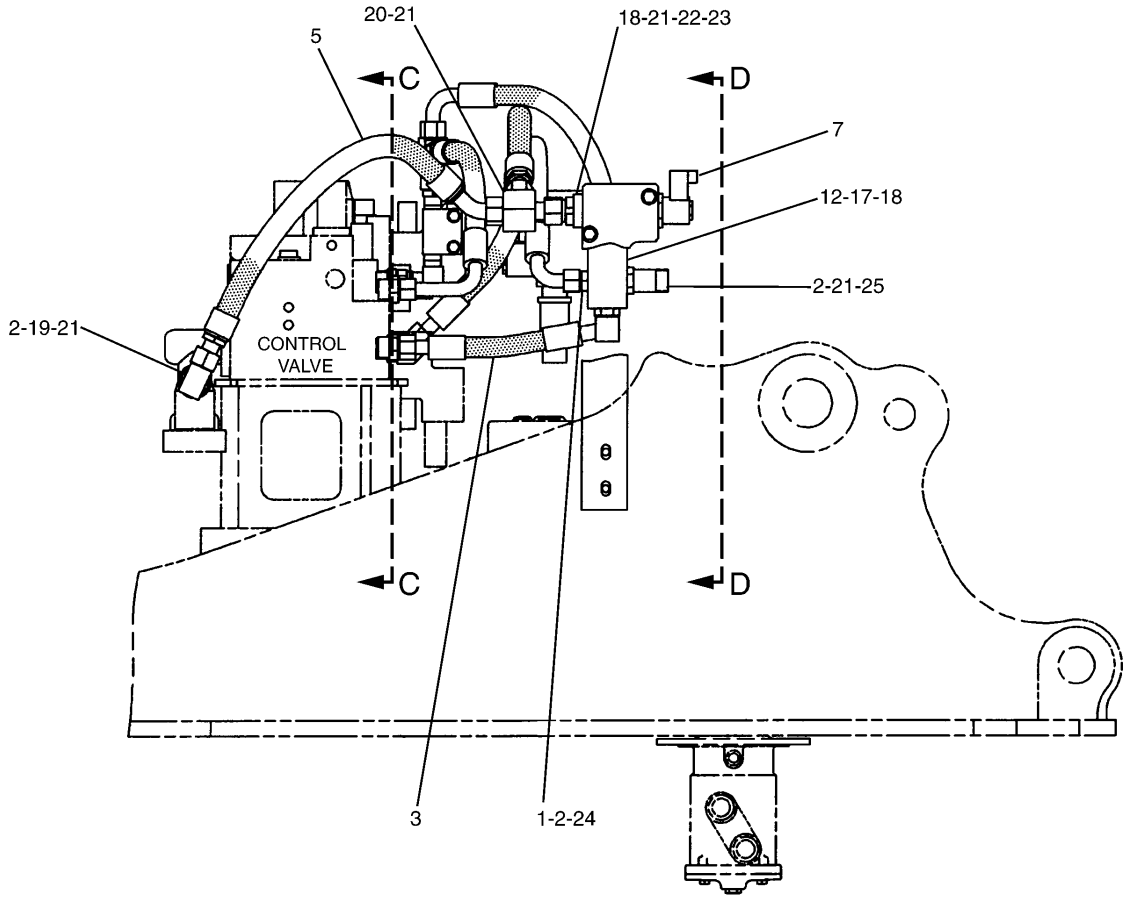

RIGHT SIDE VIEW

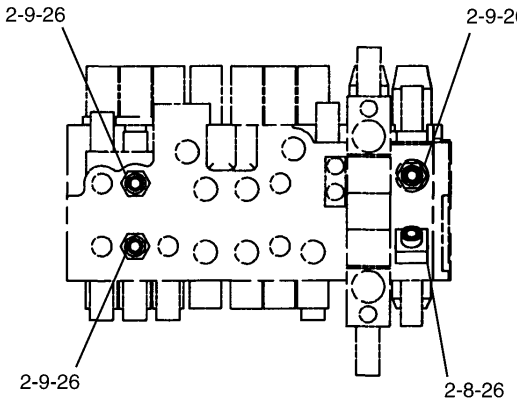

C – C

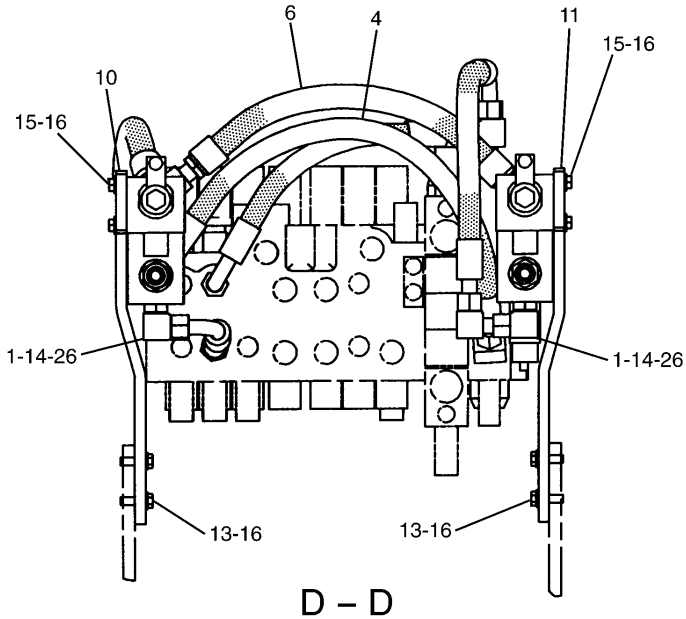

D – D

H81753E 02

168-9546 LINES GP-FRONT (2/2)
S/N CAE 01201-(T02.05)
Part of 165-0964-Page356
201-9367-Page490
An Attachment

HYDRAULIC SYSTEM

NOTE	No.	PART No.	QTY	PART NAME	NOTE	No.	PART No.	QTY	PART NAME
	1	3D-2824	3	SEAL-O-RING (ID=23.47mm)					
	2	7M-8485	6	SEAL-O-RING (ID=29.74mm)					
	3	179-7697	1	HOSE AS					
	4	173-4868	1	HOSE AS					
	5	128-7471	1	HOSE AS					
	6	179-7701	1	HOSE AS					
Y	7	201-9367	1	VALVE GP					
	8	8T-4149	1	ELBOW					
	9	6V-8716	3	CONNECTOR					
	10	179-7705	1	SUPPORT AS					
	11	179-7706	1	SUPPORT AS					
	12	179-7704	1	BLOCK					
	13	8T-4183	4	BOLT (L=40mm)					
	14	6V-9007	2	ELBOW					
	15	8T-4956	4	BOLT (L=35mm)					
	16	8T-4223	8	WASHER					
	17	095-9804	4	BOLT (L=110mm)					
	18	1P-3703	2	SEAL					
	19	6V-9008	1	ELBOW					
	20	6V-9840	1	TEE					
	21	5K-9090	5	SEAL-O-RING (OD=27.22mm)					
	22	8T-3957	4	BOLT (L=30mm)					
	23	173-4664	1	FLANGE					
	24	6V-8637	1	CONNECTOR					
	25	8T-0198	1	CONNECTOR					
	26	6V-9746	7	SEAL-O-RING (OD=22.50mm)					

Y—SEE SEPARATE ILLUSTRATION

H81753E 02

168-9546 LINES GP-FRONT (2/2)

S/N CAE 01201-(T02.05)
Part of 165-0964-Page356
201-9367-Page490
An Attachment

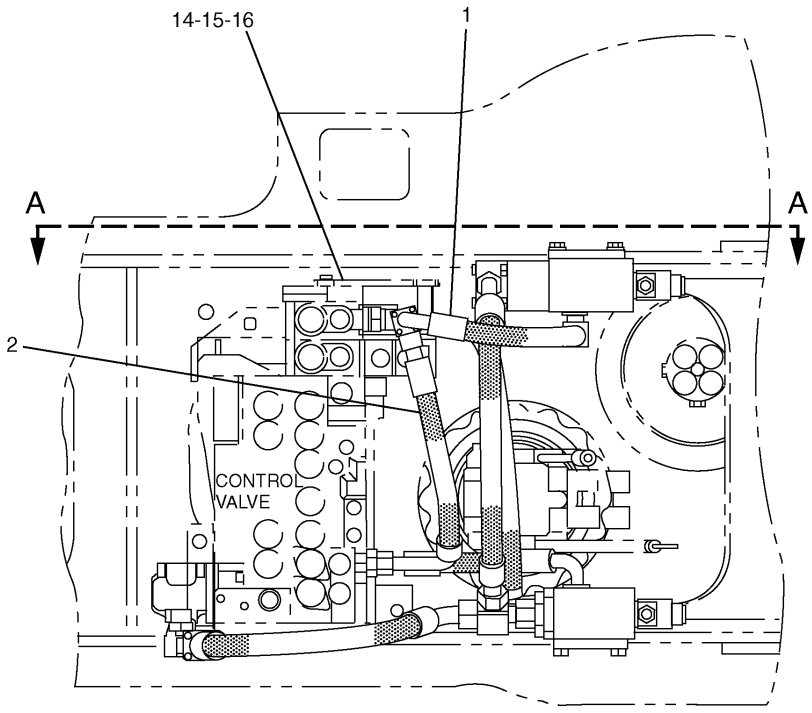

TOP VIEW

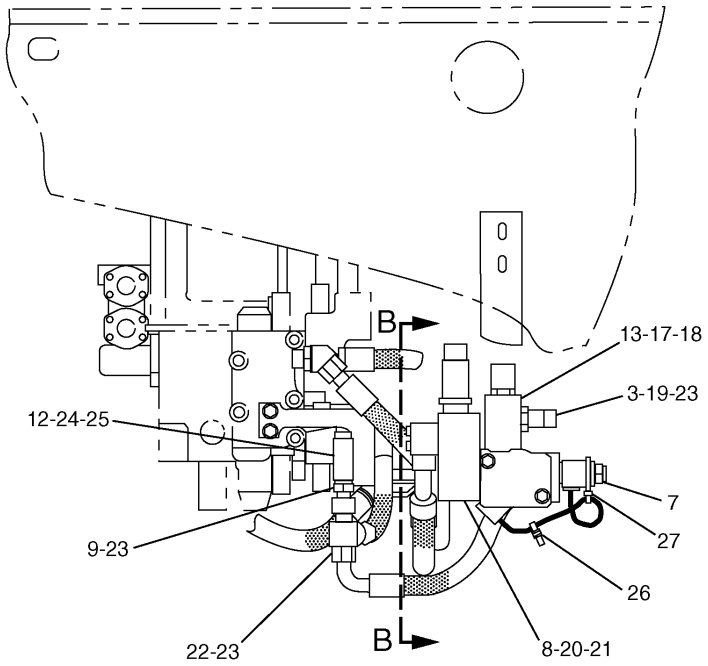

A – A

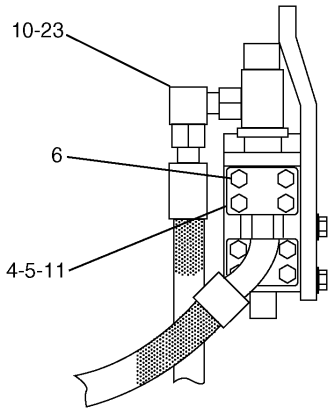

B – B

H91689E 03

168-9546 LINES GP-FRONT (1/2)
S/N CAE (T02.06)-(T04.08)
Part of 165-0964-Page356
177-2653-Page475,215-4890-Page490.01
An Attachment

HYDRAULIC SYSTEM

NOTE	No.	PART No.	QTY	PART NAME	NOTE	No.	PART No.	QTY	PART NAME
	1	194-0383	1	HOSE AS					
	2	6I-6831	1	HOSE AS					
	3	7M-8485	1	SEAL-O-RING (ID=29.74mm)					
	4	4J-0520	1	SEAL-O-RING (ID=32.92mm)					
	5	187-6913	1	FLANGE					
	6	8T-6466	4	BOLT (L=60mm)					
Y	7	215-4890	1	VALVE GP					
Y	8	177-2653	1	VALVE GP					
	9	179-7708	1	TUBE AS					
	10	6V-9853	1	ELBOW					
	11	5K-9090	1	SEAL-O-RING (OD=27.22mm)					
	12	8T-4121	2	WASHER					
	13	194-0381	1	BLOCK					
	14	184-9390	1	SUPPORT AS					
	15	8T-4192	2	BOLT (L=25mm)					
	16	8T-4223	2	WASHER					
	17	095-9804	4	BOLT (L=110mm)					
	18	1P-3703	1	SEAL					
	19	8T-0197	1	CONNECTOR					
	20	8T-4176	4	BOLT (L=90mm)					
	21	099-8232	1	SEAL-O-RING (ID=28.24mm)					
	22	6V-9839	1	TEE					
	23	6V-9746	5	SEAL-O-RING (OD=22.50mm)					
	24	7Y-4868	2	CLIP					
	25	8T-4195	2	BOLT (L=30mm)					
	26	7I-2673	1	STRAP					
	27	204-1611	1	STRAP					

Y—SEE SEPARATE ILLUSTRATION

H91689E 03

168-9546 LINES GP-FRONT (1/2)

S/N CAE (T02.06)-(T04.08)
Part of 165-0964-Page356
177-2653-Page475,215-4890-Page490.01
An Attachment

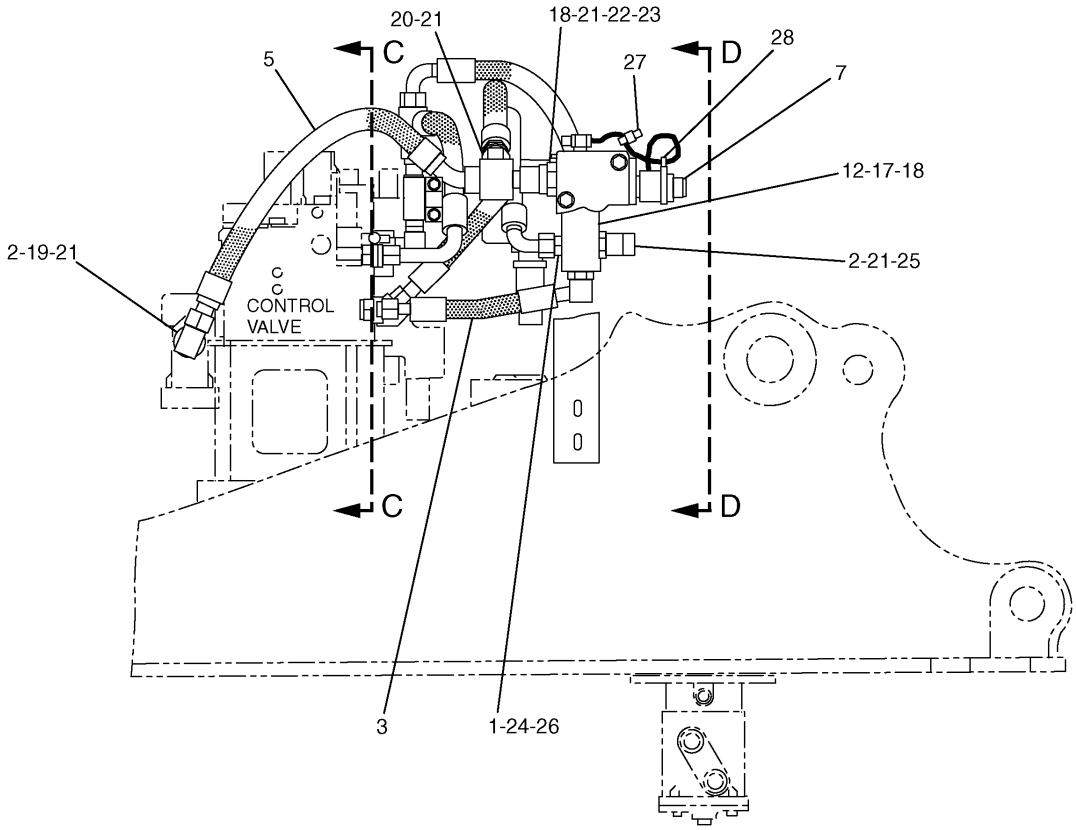

RIGHT SIDE VIEW

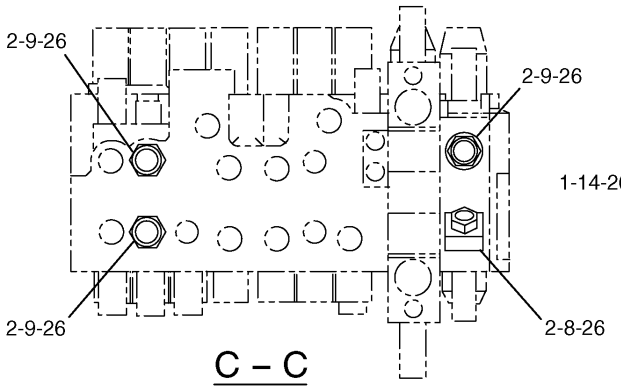

C – C

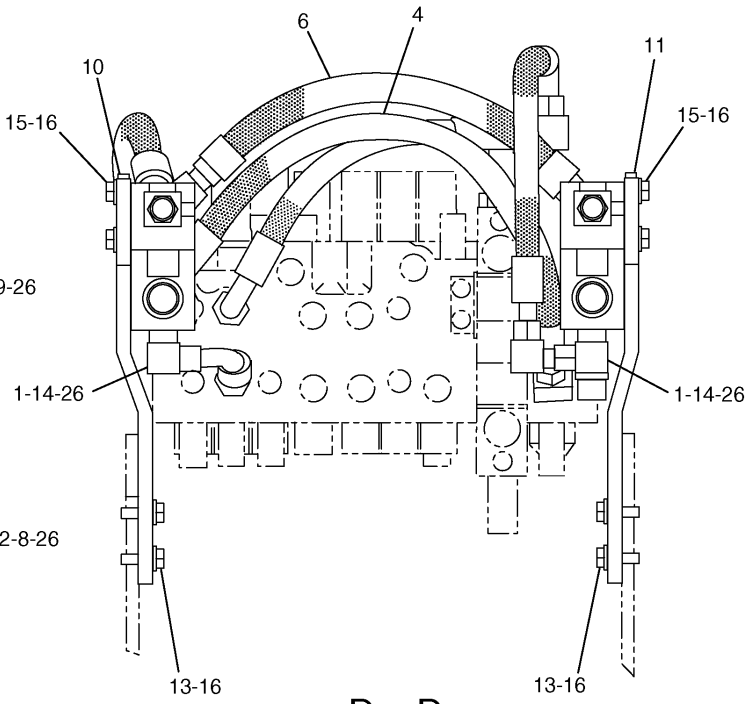

D – D

H91690E 03

168-9546 LINES GP-FRONT (2/2)
S/N CAE (T02.06)-(T04.08)
Part of 165-0964-Page356
215-4890-Page490.01
An Attachment

HYDRAULIC SYSTEM

NOTE	No.	PART No.	QTY	PART NAME	NOTE	No.	PART No.	QTY	PART NAME
	1	3D-2824	3	SEAL-O-RING (ID=23.47mm)					
	2	7M-8485	6	SEAL-O-RING (ID=29.74mm)					
	3	179-7697	1	HOSE AS					
	4	173-4868	1	HOSE AS					
	5	128-7471	1	HOSE AS					
	6	179-7701	1	HOSE AS					
Y	7	215-4890	1	VALVE GP					
	8	8T-4149	1	ELBOW					
	9	6V-8716	3	CONNECTOR					
	10	179-7705	1	SUPPORT AS					
	11	179-7706	1	SUPPORT AS					
	12	179-7704	1	BLOCK					
	13	8T-4183	4	BOLT (L=40mm)					
	14	6V-9007	2	ELBOW					
	15	8T-4956	4	BOLT (L=35mm)					
	16	8T-4223	8	WASHER					
	17	095-9804	4	BOLT (L=110mm)					
	18	1P-3703	2	SEAL					
	19	6V-9008	1	ELBOW					
	20	6V-9840	1	TEE					
	21	5K-9090	5	SEAL-O-RING (OD=27.22mm)					
	22	8T-3957	4	BOLT (L=30mm)					
	23	173-4664	1	FLANGE					
	24	6V-8637	1	CONNECTOR					
	25	8T-0198	1	CONNECTOR					
	26	6V-9746	7	SEAL-O-RING (OD=22.50mm)					
	27	7I-2673	1	STRAP					
	28	204-1611	1	STRAP					

Y—SEE SEPARATE ILLUSTRATION

H91690E 03

168-9546 LINES GP-FRONT (2/2)

S/N CAE (T02.06)-(T04.08)
Part of 165-0964-Page356
215-4890-Page490.01
An Attachment

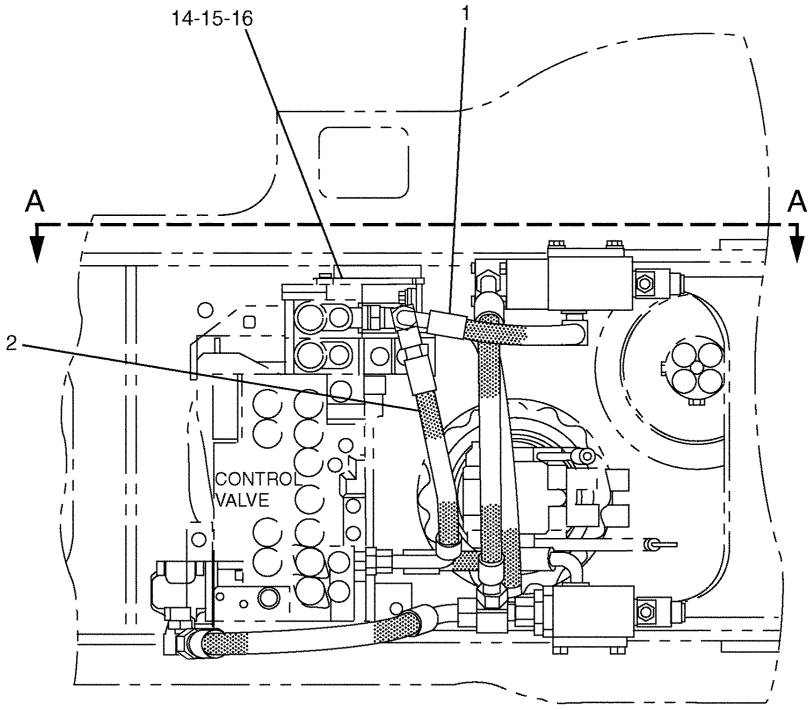

TOP VIEW

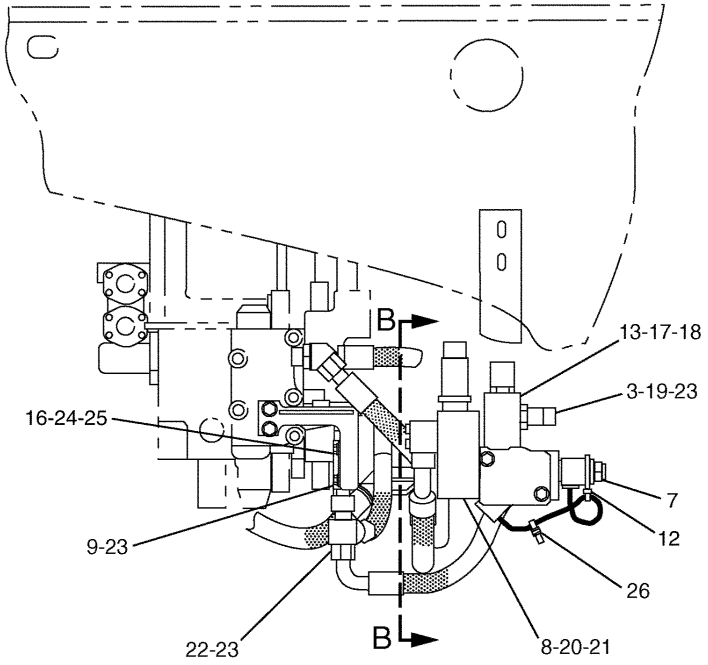

A – A

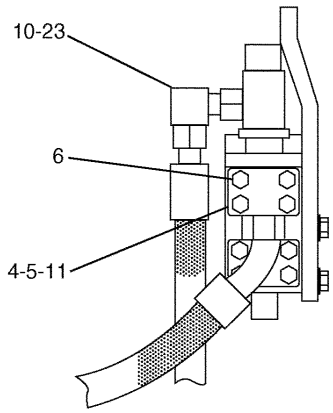

B – B

H98181E 06

168-9546 LINES GP-FRONT (1/2)
S/N CAE (T04.09)-Up
Part of 165-0964-Page356
177-2653-Page475,297-0370-Page490.02
An Attachment

HYDRAULIC SYSTEM

NOTE	No.	PART No.	QTY	PART NAME	NOTE	No.	PART No.	QTY	PART NAME
	1	194-0383	1	HOSE AS					
	2	6I-6831	1	HOSE AS					
	3	7M-8485	1	SEAL-O-RING (ID=29.74mm)					
	4	4J-0520	1	SEAL-O-RING (ID=32.92mm)					
	5	187-6913	1	FLANGE					
	6	8T-6466	4	BOLT (L=60mm)					
Y	7	297-0370	1	VALVE GP					
Y	8	177-2653	1	VALVE GP					
	9	286-6573	1	TUBE AS					
	10	6V-9853	1	ELBOW					
	11	5K-9090	1	SEAL-O-RING (OD=27.22mm)					
	12	204-1611	1	STRAP					
	13	194-0381	1	BLOCK					
	14	255-3193	1	SUPPORT AS					
	15	8T-4192	2	BOLT (L=25mm)					
	16	8T-4223	4	WASHER					
	17	095-9804	4	BOLT (L=110mm)					
	18	1P-3703	1	SEAL					
	19	8T-0197	1	CONNECTOR					
	20	8T-4176	4	BOLT (L=90mm)					
	21	099-8232	1	SEAL-O-RING (ID=28.24mm)					
	22	6V-9839	1	TEE					
	23	6V-9746	5	SEAL-O-RING (OD=22.50mm)					
	24	7Y-4531	2	CLAMP					
	25	8T-4139	2	BOLT (L=30mm)					
	26	7I-2673	1	STRAP					

Y—SEE SEPARATE ILLUSTRATION

H98181E 06

168-9546 LINES GP-FRONT (1/2)

S/N CAE (T04.09)-Up
Part of 165-0964-Page356
177-2653-Page475,297-0370-Page490.02
An Attachment

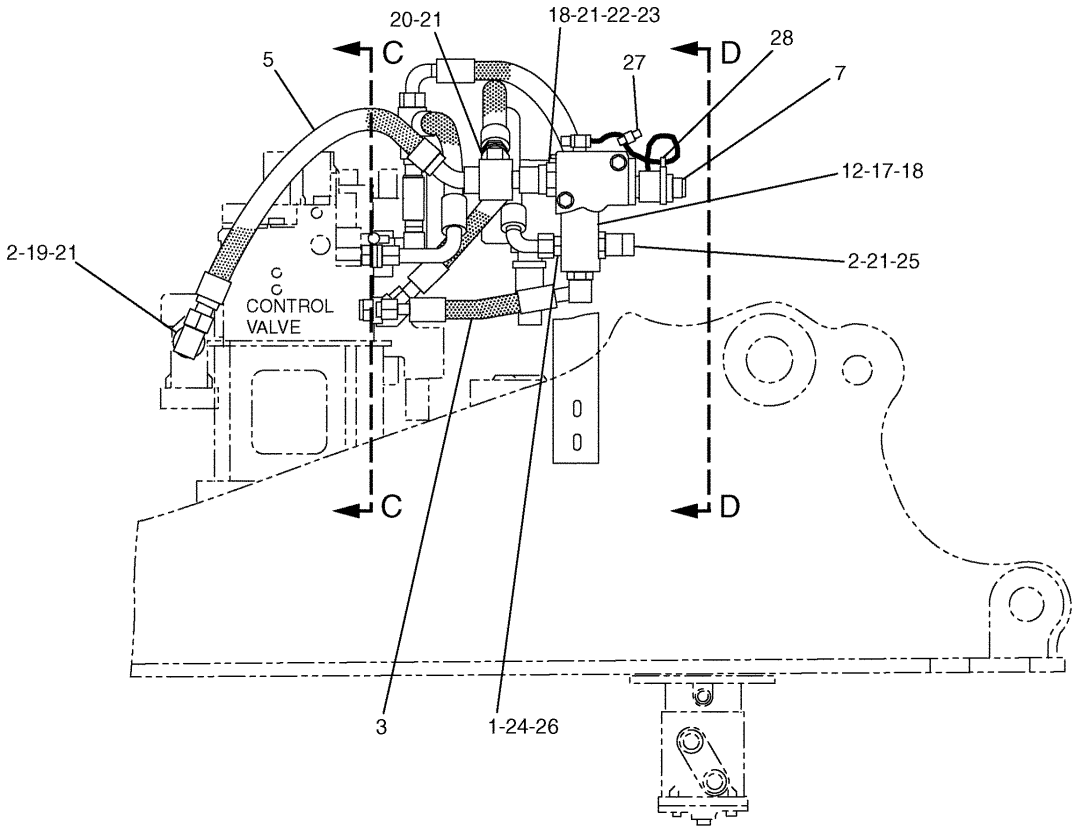

RIGHT SIDE VIEW

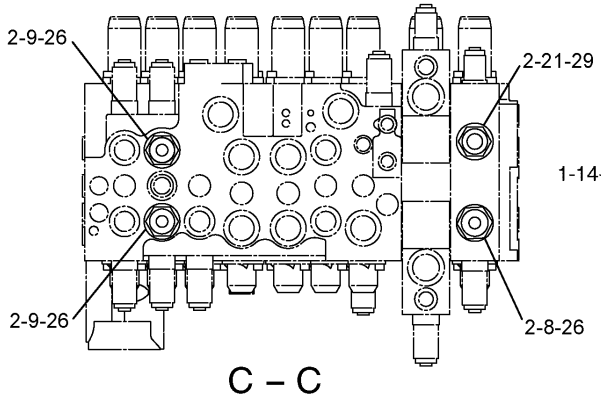

C – C

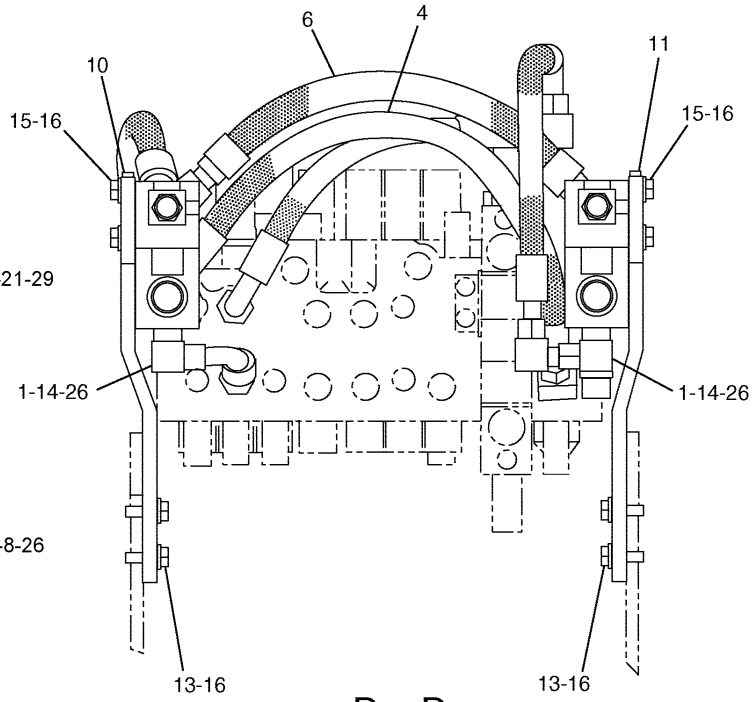

D – D

H98182E 06

168-9546 LINES GP-FRONT (2/2)
S/N CAE (T04.09)-Up
Part of 165-0964-Page356
297-0370-Page490.02
An Attachment

HYDRAULIC SYSTEM

NOTE	No.	PART No.	QTY	PART NAME	NOTE	No.	PART No.	QTY	PART NAME
	1	3D-2824	3	SEAL-O-RING (ID=23.47mm)					
	2	7M-8485	6	SEAL-O-RING (ID=29.74mm)					
	3	179-7697	1	HOSE AS					
	4	173-4868	1	HOSE AS					
	5	128-7471	1	HOSE AS					
	6	179-7701	1	HOSE AS					
Y	7	297-0370	1	VALVE GP					
	8	8T-4149	1	ELBOW					
	9	6V-8716	2	CONNECTOR					
	10	179-7705	1	SUPPORT AS					
	11	179-7706	1	SUPPORT AS					
	12	179-7704	1	BLOCK					
	13	8T-4183	4	BOLT (L=40mm)					
	14	6V-9007	2	ELBOW					
	15	8T-4956	4	BOLT (L=35mm)					
	16	8T-4223	8	WASHER					
	17	095-9804	4	BOLT (L=110mm)					
	18	1P-3703	2	SEAL					
	19	6V-9008	1	ELBOW					
	20	6V-9840	1	TEE					
	21	5K-9090	6	SEAL-O-RING (OD=27.22mm)					
	22	8T-3957	4	BOLT (L=30mm)					
	23	173-4664	1	FLANGE					
	24	6V-8637	1	CONNECTOR					
	25	8T-0198	1	CONNECTOR					
	26	6V-9746	6	SEAL-O-RING (OD=22.50mm)					
	27	7I-2673	1	STRAP					
	28	204-1611	1	STRAP					
	29	6V-8635	1	CONNECTOR					

Y—SEE SEPARATE ILLUSTRATION

H98182E 06

168-9546 LINES GP-FRONT (2/2)

S/N CAE (T04.09)-Up
Part of 165-0964-Page356
297-0370-Page490.02
An Attachment

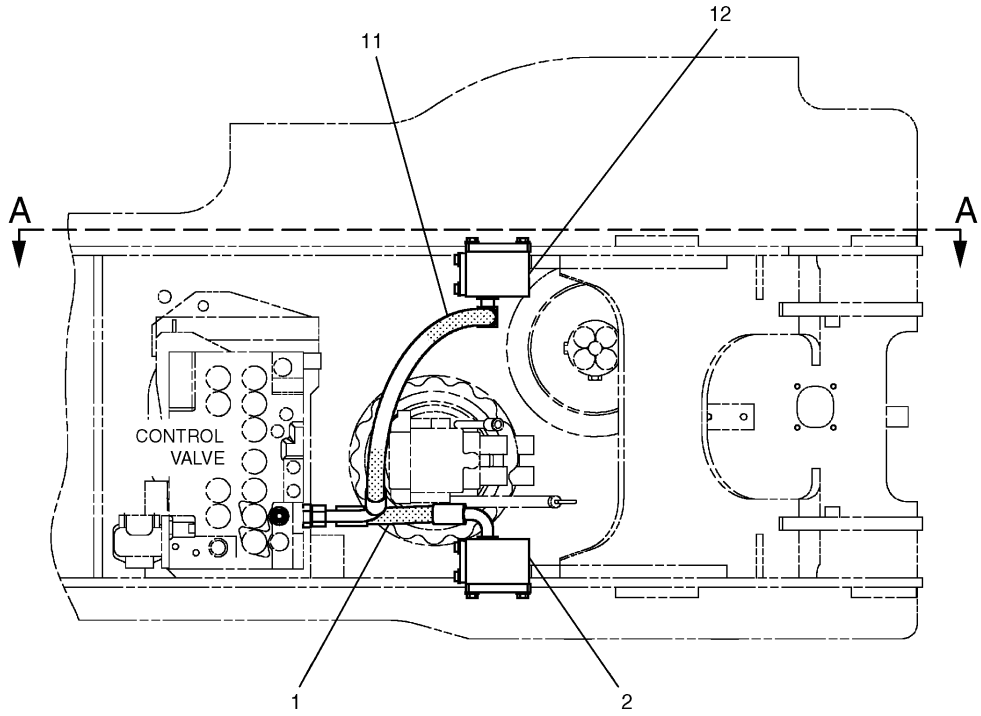

TOP VIEW

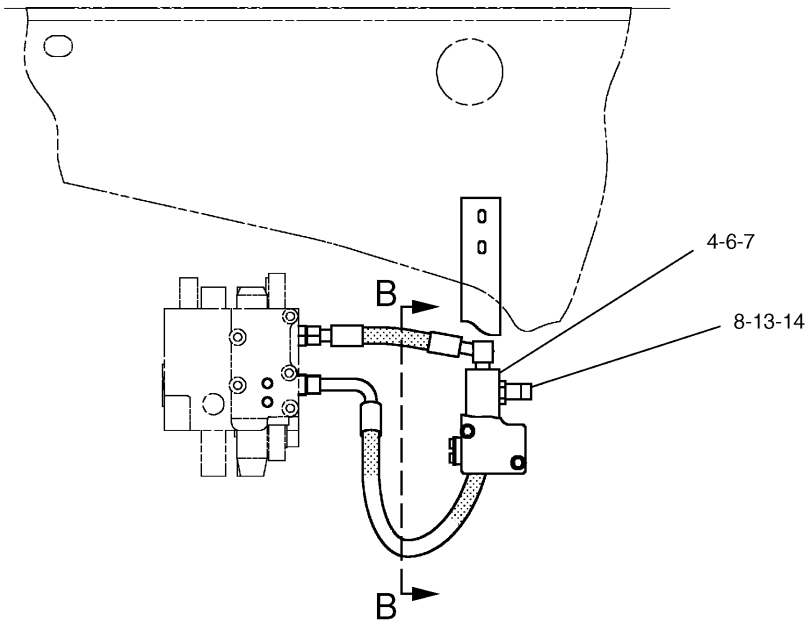

A – A

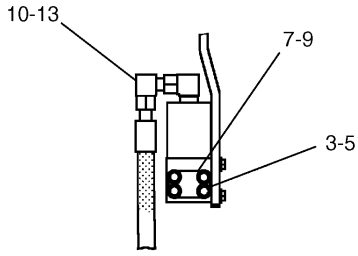

B – B

H81765E 01

196-0460 LINES GP-FRONT (1/2)
Part of 165-0967,200-6637-Page357.01
An Attachment

HYDRAULIC SYSTEM

NOTE	No.	PART No.	QTY	PART NAME	NOTE	No.	PART No.	QTY	PART NAME
	1	179-7697	1	HOSE AS					
	2	179-7612	1	BLOCK					
	3	8T-4139	4	BOLT (L=30mm)					
	4	194-0381	1	BLOCK					
	5	8T-4223	4	WASHER					
	6	095-9804	4	BOLT (L=110mm)					
	7	1P-3703	2	SEAL					
	8	8T-0197	1	CONNECTOR					
	9	179-7662	1	COVER					
	10	6V-9853	1	ELBOW					
	11	196-0627	1	HOSE AS					
	12	196-0637	1	BLOCK					
	13	6V-9746	2	SEAL-O-RING (OD=22.50mm)					
	14	7M-8485	1	SEAL-O-RING (ID=29.74mm)					

H81765E 01

196-0460 LINES GP-FRONT (1/2)

Part of 165-0967,200-6637-Page357.01

An Attachment

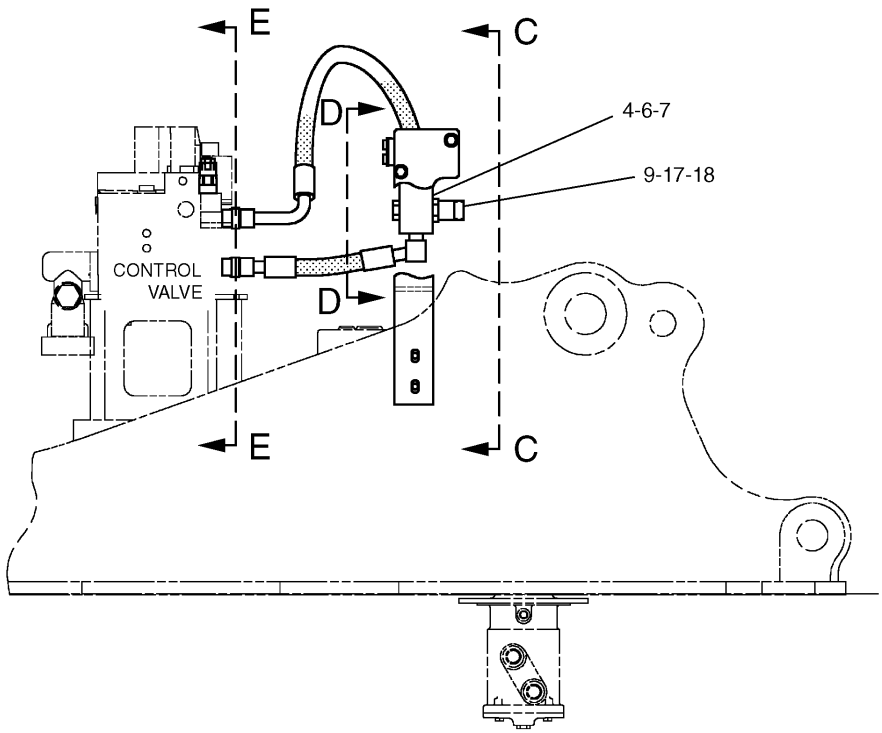

RIGHT SIDE VIEW

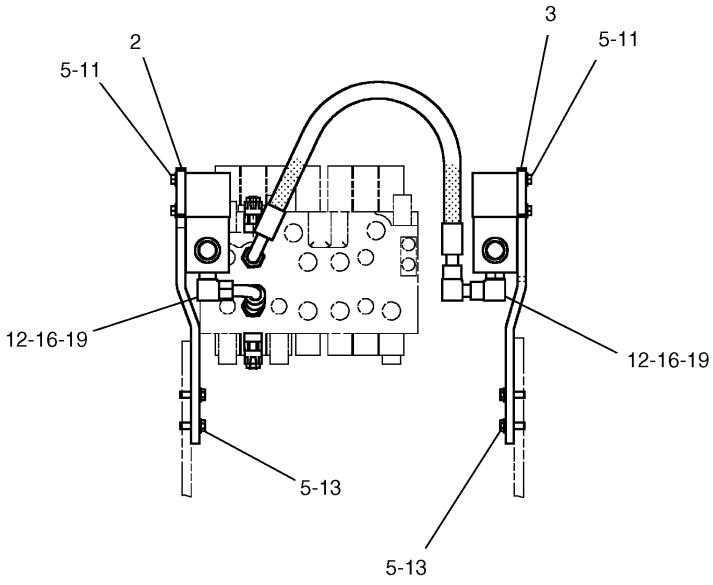

C – C

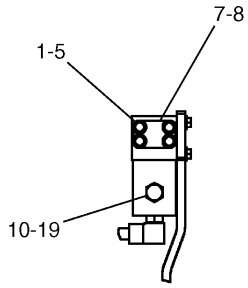

D – D

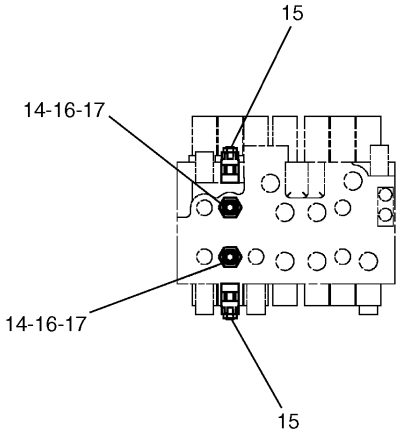

E – E

H81766E 01

196-0460 LINES GP-FRONT (2/2)
Part of 165-0967,200-6637-Page357.01
197-0223-Page473
An Attachment

HYDRAULIC SYSTEM

NOTE	No.	PART No.	QTY	PART NAME	NOTE	No.	PART No.	QTY	PART NAME
	1	8T-4139	4	BOLT (L=30mm)					
	2	179-7705	1	SUPPORT AS					
	3	179-7706	1	SUPPORT AS					
	4	179-7704	1	BLOCK					
	5	8T-4223	12	WASHER					
	6	095-9804	4	BOLT (L=110mm)					
	7	1P-3703	2	SEAL					
	8	179-7662	1	COVER					
	9	8T-0198	1	CONNECTOR					
	10	9S-4183	1	PLUG					
	11	8T-4956	4	BOLT (L=35mm)					
	12	6V-9007	2	ELBOW					
	13	8T-4183	4	BOLT (L=40mm)					
	14	6V-8716	2	CONNECTOR					
Y	15	197-0223	2	VALVE GP					
	16	6V-9746	4	SEAL-O-RING (OD=22.50mm)					
	17	7M-8485	3	SEAL-O-RING (ID=29.74mm)					
	18	5K-9090	1	SEAL-O-RING (OD=27.22mm)					
	19	3D-2824	3	SEAL-O-RING (ID=23.47mm)					

Y—SEE SEPARATE ILLUSTRATION

H81766E 01

196-0460 LINES GP-FRONT (2/2)

Part of 165-0967,200-6637-Page357.01
197-0223-Page473
An Attachment

HYDRAULIC SYSTEM

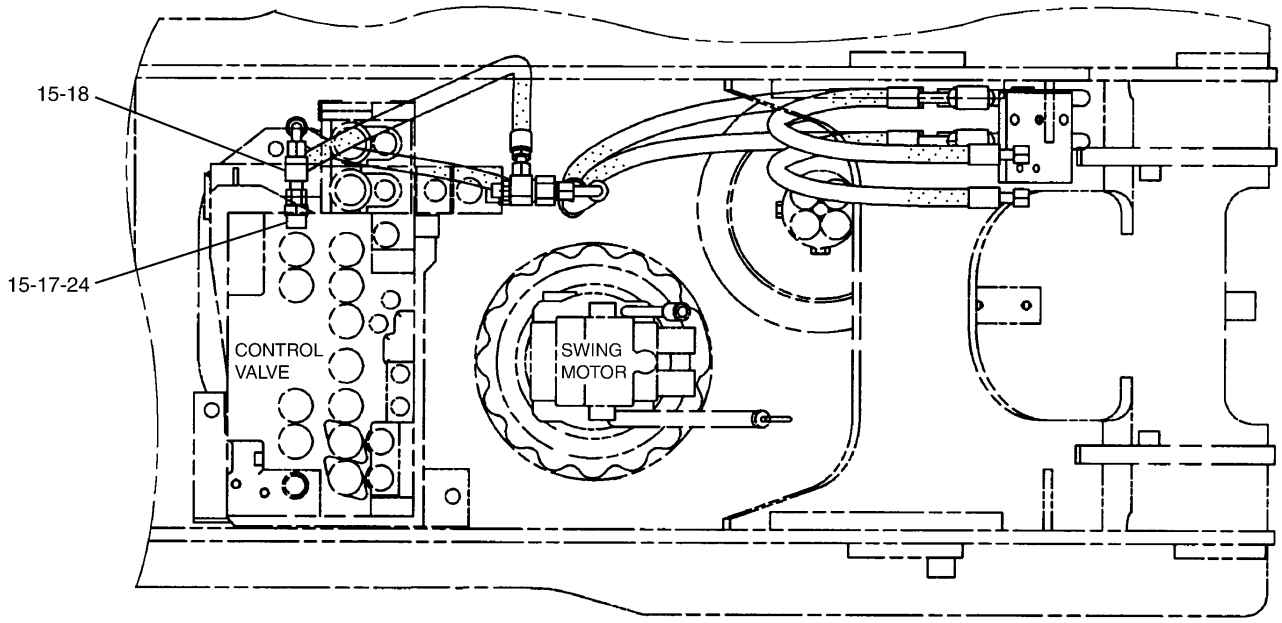

TOP VIEW

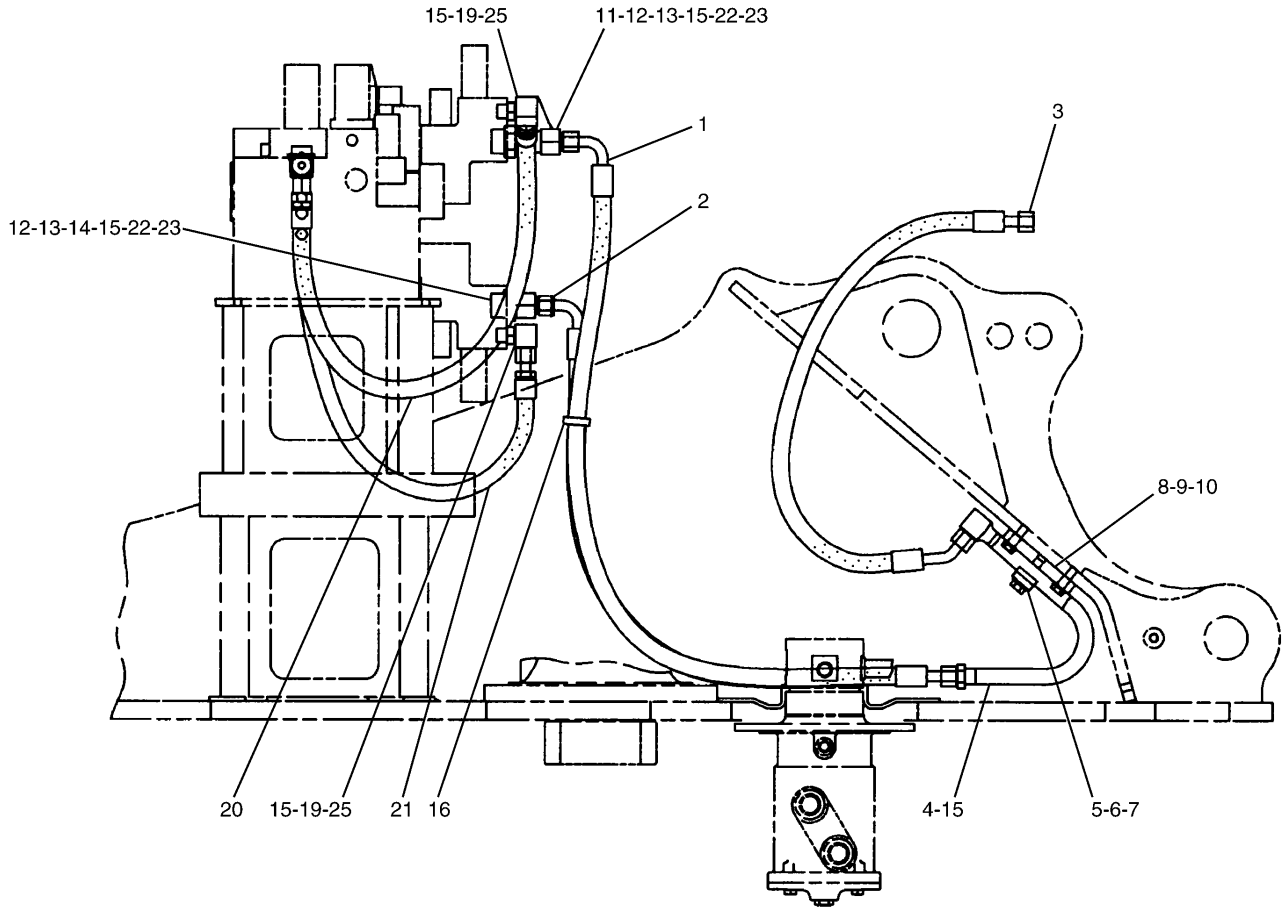

RIGHT SIDE VIEW

H75219E 02

168-9550 LINES GP-FRONT
Part of 165-0964-Page356
An Attachment

HYDRAULIC SYSTEM

NOTE	No.	PART No.	QTY	PART NAME	NOTE	No.	PART No.	QTY	PART NAME
	1	194-0387	1	HOSE AS					
	2	194-0392	1	HOSE AS					
	3	187-6900	2	HOSE AS					
	4	194-0391	2	TUBE AS					
	5	093-1295	1	CLAMP					
	6	8T-4184	1	BOLT (L=45mm)					
	7	8T-4223	1	WASHER					
	8	187-6912	1	PLATE					
	9	8T-4196	2	BOLT (L=35mm)					
	10	8T-4121	2	WASHER					
	11	8T-0197	1	CONNECTOR					
	12	6V-8942	2	REDUCER					
	13	6V-8556	2	NUT					
	14	6V-8716	1	CONNECTOR					
	15	6V-8398	11	SEAL-O-RING (OD=16.03mm)					
	16	7K-1181	1	STRAP					
	17	6V-8633	1	CONNECTOR					
	18	6V-9837	1	TEE					
	19	6V-8625	2	ELBOW					
	20	4I-5997	1	HOSE AS					
	21	113-6758	1	HOSE AS					
	22	6V-9746	2	SEAL-O-RING (OD=22.50mm)					
	23	7M-8485	2	SEAL-O-RING (ID=29.74mm)					
	24	3D-2824	1	SEAL-O-RING (ID=23.47mm)					
	25	3K-0360	1	SEAL-O-RING (ID=16.36mm)					

H75219E 02

168-9550 LINES GP-FRONT

Part of 165-0964-Page356
An Attachment

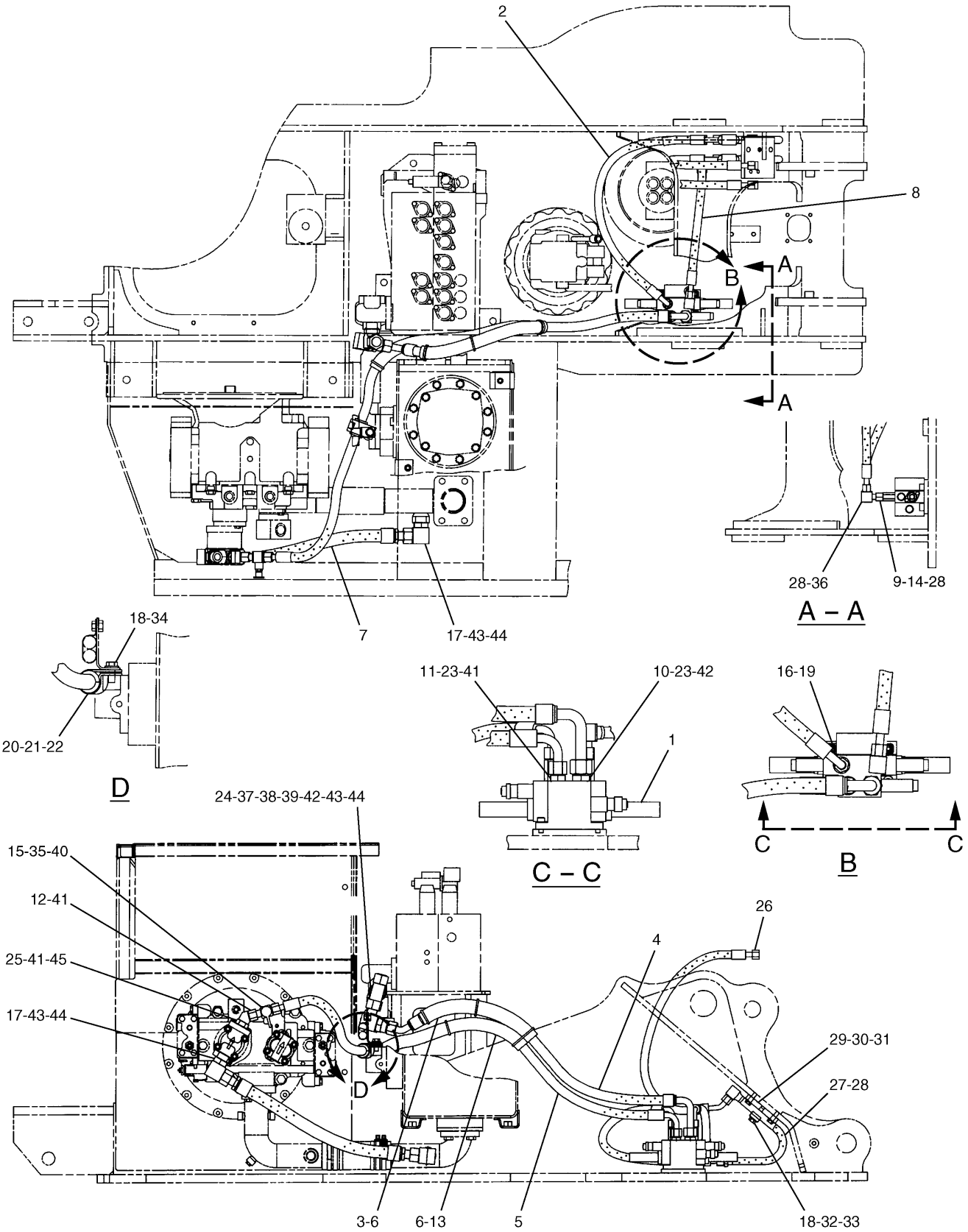

H75221E 03

196-0463 LINES GP-FRONT
Part of 165-0965-Page357
190-7727-Page480
An Attachment

HYDRAULIC SYSTEM

NOTE	No.	PART No.	QTY	PART NAME	NOTE	No.	PART No.	QTY	PART NAME
Y	1	190-7727	1	VALVE GP					
	2	196-0733	1	HOSE AS					
	3	134-6838	1	GUARD					
	4	187-6907	1	HOSE AS					
	5	187-6904	1	HOSE AS					
	6	7K-1181	6	STRAP					
	7	199-1657	1	HOSE AS					
	8	196-0737	1	HOSE AS					
	9	8T-0077	2	CONNECTOR					
	10	6V-8640	1	CONNECTOR					
	11	6V-8642	1	CONNECTOR					
	12	7X-0872	1	TEE					
	13	199-2046	1	GUARD					
	14	3K-0360	2	SEAL-O-RING (ID=16.36mm)					
	15	3J-1907	1	SEAL-O-RING (ID=11.89mm)					
	16	5A-3604	3	BOLT (L=25mm)					
	17	6V-9008	2	ELBOW					
	18	8T-4223	2	WASHER					
	19	8T-4224	3	WASHER					
	20	5P-7464	1	CLIP					
	21	5P-7465	1	CLIP					
	22	8T-2920	1	GROMMET					
	23	2M-9780	2	SEAL-O-RING (ID=19.18mm)					
	24	6V-8778	1	TEE					
	25	8T-0120	1	ELBOW					
	26	187-6900	2	HOSE AS					
	27	194-0391	2	TUBE AS					
	28	6V-8398	7	SEAL-O-RING (OD=16.03mm)					
	29	187-6912	1	PLATE					
	30	8T-4196	2	BOLT (L=35mm)					
	31	8T-4121	2	WASHER					
	32	093-1295	1	CLAMP					
	33	8T-4184	1	BOLT (L=45mm)					
	34	8T-4139	1	BOLT (L=30mm)					
	35	6V-3965	1	NIPPLE AS					
	36	6V-9851	1	ELBOW					
	37	6V-9854	1	ELBOW					
	38	6V-8946	1	REDUCER AS					
	39	6V-9833	1	CAP AS					
	40	6V-0852	1	CAP					
	41	7J-9108	3	SEAL-O-RING (OD=19.28mm)					
	42	6V-9746	2	SEAL-O-RING (OD=22.50mm)					
	43	5K-9090	5	SEAL-O-RING (OD=27.22mm)					
	44	7M-8485	3	SEAL-O-RING (ID=29.74mm)					
	45	3D-2824	1	SEAL-O-RING (ID=23.47mm)					

Y—SEE SEPARATE ILLUSTRATION

H75221E 03

196-0463 LINES GP-FRONT

Part of 165-0965-Page357
190-7727-Page480
An Attachment

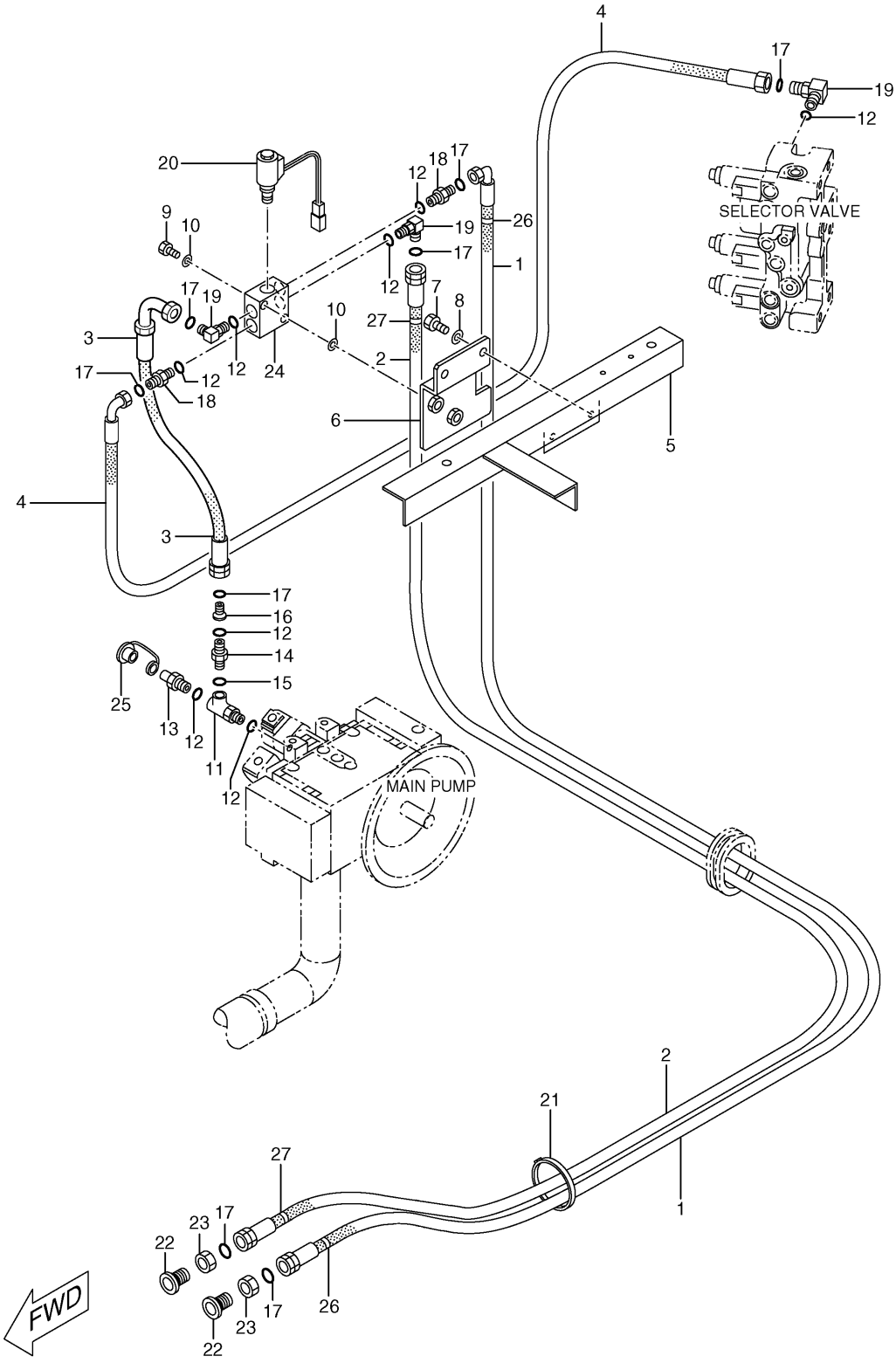

H86346E 04

198-0397 LINES GP-FRONT

Quick Coupler
S/N CAE 01201-(T05.08)
Part of 216-6534-Page358
152-8346-Page488
An Attachment

HYDRAULIC SYSTEM

NOTE	No.	PART No.	QTY	PART NAME	NOTE	No.	PART No.	QTY	PART NAME
	1	198-0398	1	HOSE AS					
	2	198-0401	1	HOSE AS					
	3	198-0404	1	HOSE AS					
	4	198-0407	1	HOSE AS					
	5	198-0410	1	SHEET AS					
	6	198-0412	1	SUPPORT AS					
	7	8T-4956	2	BOLT (L=35mm)					
	8	8T-4223	2	WASHER					
	9	8T-6869	2	BOLT (L=60mm)					
	10	8T-4224	4	WASHER					
	11	3E-7410	1	TEE					
	12	3J-1907	8	SEAL-O-RING (ID=11.89mm)					
	13	6V-3965	1	NIPPLE AS					
	14	123-4750	1	VALVE					
	15	6V-8397	1	SEAL-O-RING (OD=12.83mm)					
	16	6V-8934	1	REDUCER AS					
	17	4J-5477	8	SEAL-O-RING (OD=11.23mm)					
	18	6V-8641	2	CONNECTOR					
	19	6V-8627	3	ELBOW					
Y	20	152-8346	1	VALVE GP					
	21	7K-1181	1	STRAP					
	22	6V-8935	2	REDUCER					
	23	9X-6582	2	NUT					
	24	8T-8806	1	MANIFOLD					
	25	6V-0852	1	CAP					
	26	4I-9521	2	BAND (L1,RED)					
	27	4I-9522	2	BAND (L2,YELLOW)					

Y—SEE SEPARATE ILLUSTRATION

H86346E 04

198-0397 LINES GP-FRONT

Quick Coupler
S/N CAE 01201-(T05.08)
Part of 216-6534-Page358
152-8346-Page488
An Attachment

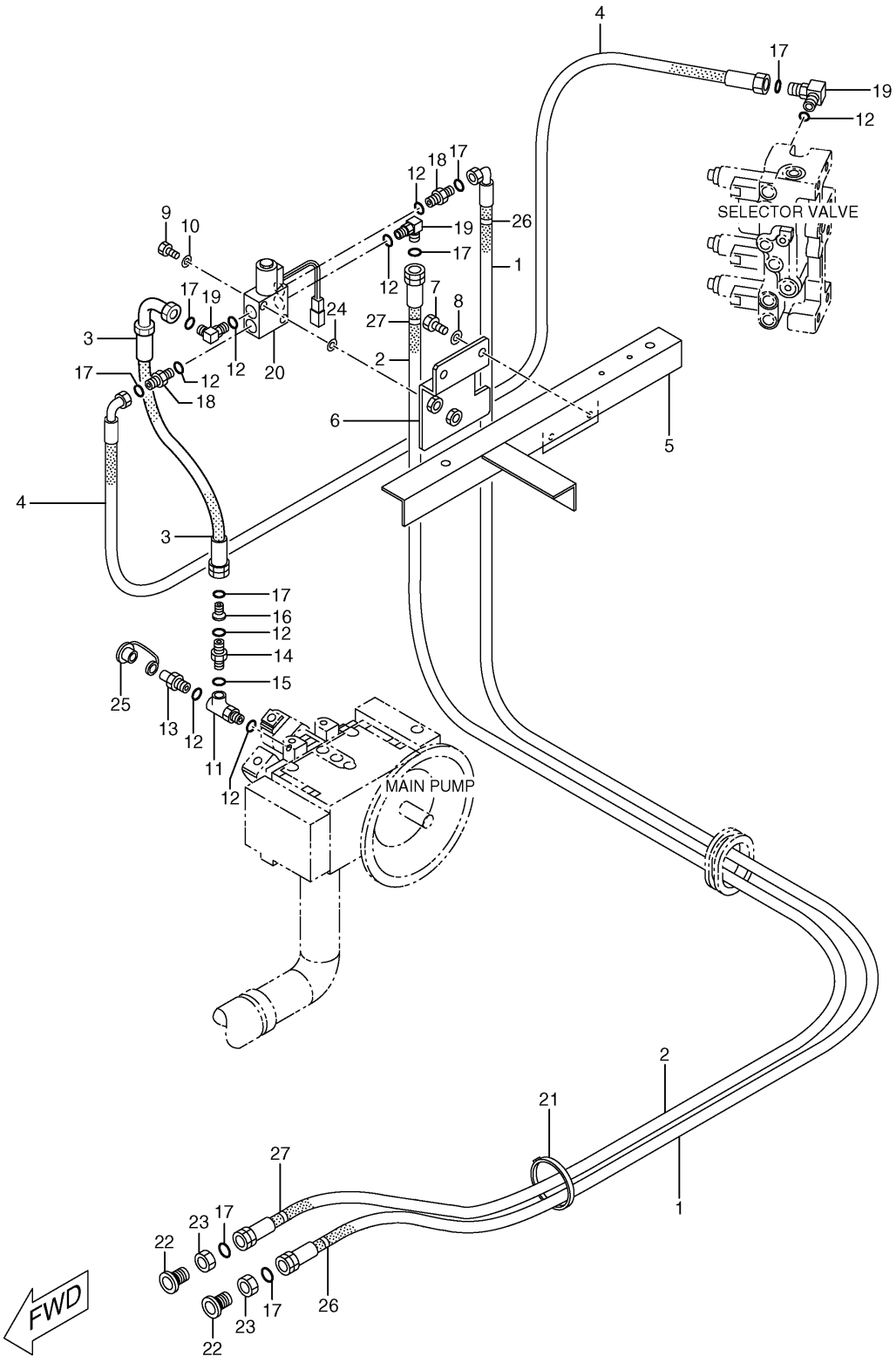

HA1967E 06

198-0397 LINES GP-FRONT

Quick Coupler
S/N CAE (T05.09)-Up
Part of 216-6534-Page358
247-6295-Page488.01
An Attachment

HYDRAULIC SYSTEM

NOTE	No.	PART No.	QTY	PART NAME	NOTE	No.	PART No.	QTY	PART NAME
	1	198-0398	1	HOSE AS					
	2	198-0401	1	HOSE AS					
	3	198-0404	1	HOSE AS					
	4	198-0407	1	HOSE AS					
	5	198-0410	1	SHEET AS					
	6	198-0412	1	SUPPORT AS					
	7	8T-4956	2	BOLT (L=35mm)					
	8	8T-4223	2	WASHER					
	9	8T-6869	2	BOLT (L=60mm)					
	10	8T-4224	2	WASHER					
	11	3E-7410	1	TEE					
	12	3J-1907	8	SEAL-O-RING (ID=11.89mm)					
	13	6V-3965	1	NIPPLE AS					
	14	6V-8636	1	CONNECTOR					
	15	6V-8397	1	SEAL-O-RING (OD=12.83mm)					
	16	6V-8934	1	REDUCER AS					
	17	4J-5477	8	SEAL-O-RING (OD=11.23mm)					
	18	6V-8641	2	CONNECTOR					
	19	6V-8627	3	ELBOW					
Y	20	247-6295	1	VALVE GP					
	21	7K-1181	1	STRAP					
	22	6V-8935	2	REDUCER					
	23	9X-6582	2	NUT					
	24	4I-4872	2	SPACER					
	25	6V-0852	1	CAP					
	26	4I-9521	2	BAND (L1,RED)					
	27	4I-9522	2	BAND (L2,YELLOW)					

Y—SEE SEPARATE ILLUSTRATION

HA1967E 06

198-0397 LINES GP-FRONT

Quick Coupler
S/N CAE (T05.09)-Up
Part of 216-6534-Page358
247-6295-Page488.01
An Attachment

HYDRAULIC SYSTEM

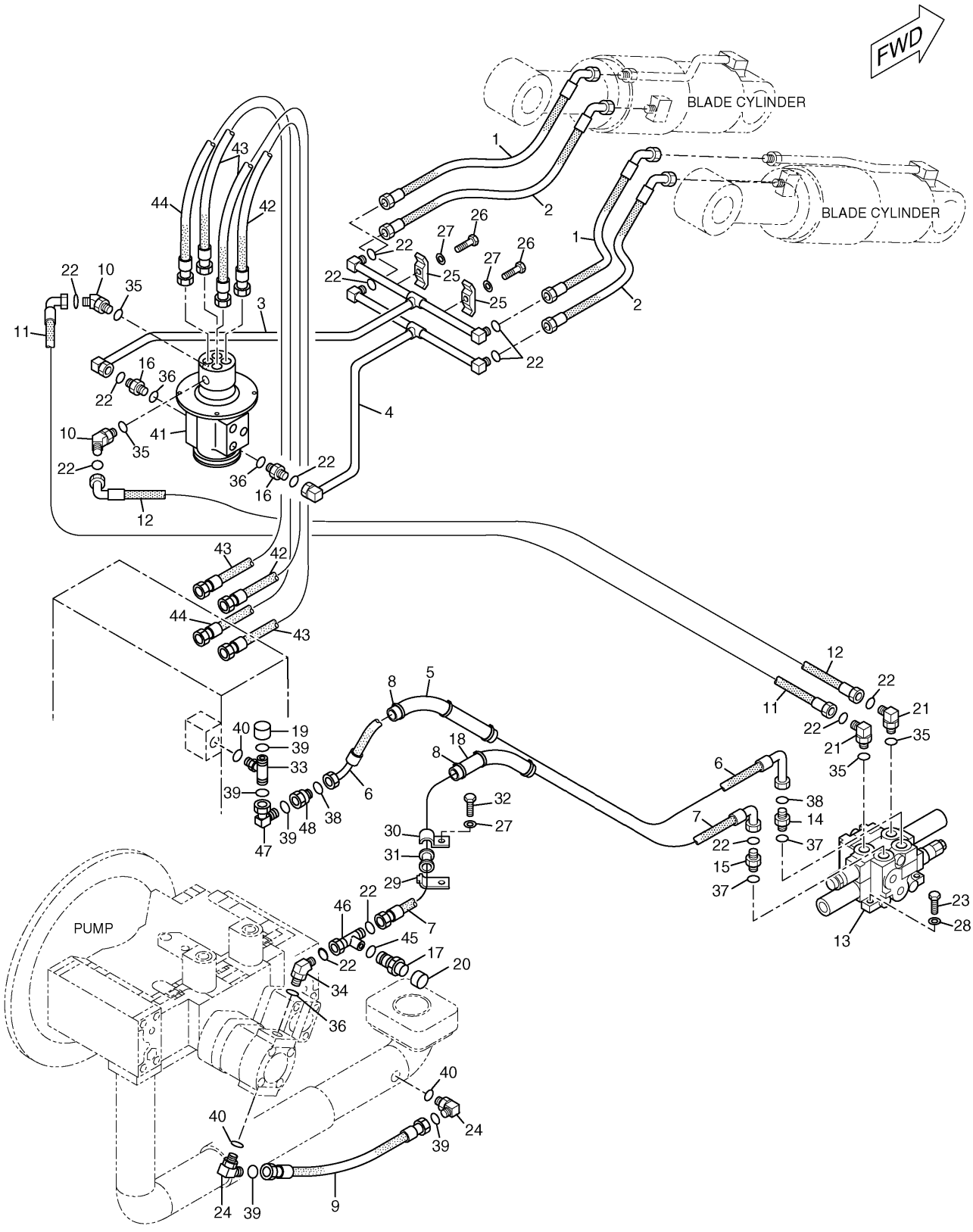

H75185E 03

168-9555 LINES GP-BLADE CYL & VALVE

Part of 151-1493-Page634,183-1476-Page635,151-1494-Page636
162-4695-Page433,122-5373-Page478
An Attachment

HYDRAULIC SYSTEM

NOTE	No.	PART No.	QTY	PART NAME	NOTE	No.	PART No.	QTY	PART NAME
	1	139-1762	2	HOSE AS					
	2	139-1765	2	HOSE AS					
	3	179-7874	1	TUBE AS					
	4	179-7875	1	TUBE AS					
	5	134-6838	1	GUARD					
	6	187-6907	1	HOSE AS					
	7	187-6904	1	HOSE AS					
	8	7K-1181	6	STRAP					
	9	199-1657	1	HOSE AS					
	10	8T-2530	2	ELBOW					
	11	187-7002	1	HOSE AS					
	12	187-7005	1	HOSE AS					
Y	13	122-5373	1	VALVE GP					
	14	6V-8640	1	CONNECTOR					
	15	6V-8642	1	CONNECTOR					
	16	6V-8713	2	CONNECTOR					
	17	6V-3965	1	NIPPLE AS					
	18	199-2046	1	GUARD					
	19	6V-9833	1	CAP AS					
	20	6V-0852	1	CAP					
	21	6V-8722	2	ELBOW					
	22	7J-9108	13	SEAL-O-RING (OD=19.28mm)					
	23	5A-3604	3	BOLT (L=25mm)					
	24	6V-9008	2	ELBOW					
	25	093-1295	2	CLAMP					
	26	8T-4194	2	BOLT (L=50mm)					
	27	8T-4223	3	WASHER					
	28	8T-4224	3	WASHER					
	29	5P-7464	1	CLIP					
	30	5P-7465	1	CLIP					
	31	8T-2920	1	GROMMET					
	32	8T-4139	1	BOLT (L=30mm)					
	33	6V-8778	1	TEE					
	34	8T-0120	1	ELBOW					
	35	3K-0360	4	SEAL-O-RING (ID=16.36mm)					
	36	3D-2824	3	SEAL-O-RING (ID=23.47mm)					
	37	2M-9780	2	SEAL-O-RING (ID=19.18mm)					
	38	6V-9746	2	SEAL-O-RING (OD=22.50mm)					
	39	5K-9090	5	SEAL-O-RING (OD=27.22mm)					
	40	7M-8485	3	SEAL-O-RING (ID=29.74mm)					
Y	41	162-4695	1	SWIVEL GP					
	42	131-9907	1	HOSE AS					
	43	179-7582	2	HOSE AS					
	44	199-1820	1	HOSE AS					
	45	3J-1907	1	SEAL-O-RING (ID=11.89mm)					
	46	7X-0872	1	TEE					
	47	6V-9854	1	ELBOW					
	48	6V-8946	1	REDUCER AS					

Y—SEE SEPARATE ILLUSTRATION

H75185E 03

168-9555 LINES GP-BLADE CYL & VALVE

Part of 151-1493-Page634,183-1476-Page635,151-1494-Page636
162-4695-Page433,122-5373-Page478
An Attachment

HYDRAULIC SYSTEM

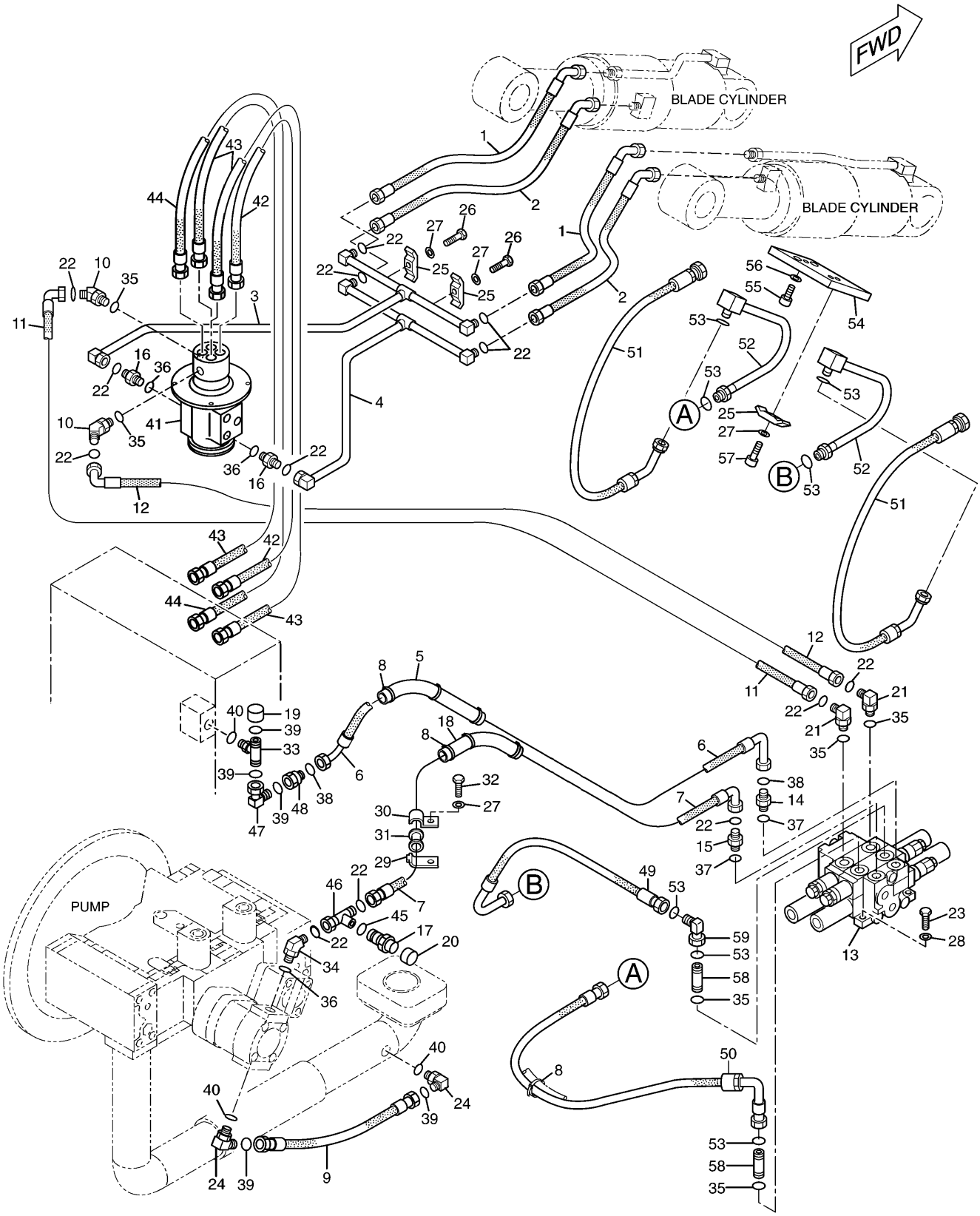

196-0475 LINES GP-BLADE CYL & VALVE

Part of 198-2120,198-2121-Page633
162-4695-Page433,185-0506-Page479
An Attachment

HYDRAULIC SYSTEM

NOTE	No.	PART No.	QTY	PART NAME	NOTE	No.	PART No.	QTY	PART NAME
	1	139-1762	2	HOSE AS		54	187-6912	1	PLATE
	2	139-1765	2	HOSE AS		55	8T-4196	2	BOLT (L=35mm)
	3	179-7874	1	TUBE AS		56	8T-4121	2	WASHER
	4	179-7875	1	TUBE AS		57	8T-4184	1	BOLT (L=45mm)
	5	134-6838	1	GUARD		58	8T-0077	2	CONNECTOR
	6	187-6907	1	HOSE AS		59	6V-9851	1	ELBOW
	7	187-6904	1	HOSE AS					
	8	7K-1181	7	STRAP					
	9	199-1657	1	HOSE AS					
	10	8T-2530	2	ELBOW					
	11	187-7002	1	HOSE AS					
	12	187-7005	1	HOSE AS					
Y	13	185-0506	1	VALVE GP					
	14	6V-8640	1	CONNECTOR					
	15	6V-8642	1	CONNECTOR					
	16	6V-8713	2	CONNECTOR					
	17	6V-3965	1	NIPPLE AS					
	18	199-2046	1	GUARD					
	19	6V-9833	1	CAP AS					
	20	6V-0852	1	CAP					
	21	6V-8722	2	ELBOW					
	22	7J-9108	13	SEAL-O-RING (OD=19.28mm)					
	23	5A-3604	3	BOLT (L=25mm)					
	24	6V-9008	2	ELBOW					
	25	093-1295	3	CLAMP					
	26	8T-4194	2	BOLT (L=50mm)					
	27	8T-4223	4	WASHER					
	28	8T-4224	3	WASHER					
	29	5P-7464	1	CLIP					
	30	5P-7465	1	CLIP					
	31	8T-2920	1	GROMMET					
	32	8T-4139	1	BOLT (L=30mm)					
	33	6V-8778	1	TEE					
	34	8T-0120	1	ELBOW					
	35	3K-0360	6	SEAL-O-RING (ID=16.36mm)					
	36	3D-2824	3	SEAL-O-RING (ID=23.47mm)					
	37	2M-9780	2	SEAL-O-RING (ID=19.18mm)					
	38	6V-9746	2	SEAL-O-RING (OD=22.50mm)					
	39	5K-9090	5	SEAL-O-RING (OD=27.22mm)					
	40	7M-8485	3	SEAL-O-RING (ID=29.74mm)					
Y	41	162-4695	1	SWIVEL GP					
	42	131-9907	1	HOSE AS					
	43	179-7582	2	HOSE AS					
	44	199-1820	1	HOSE AS					
	45	3J-1907	1	SEAL-O-RING (ID=11.89mm)					
	46	7X-0872	1	TEE					
	47	6V-9854	1	ELBOW					
	48	6V-8946	1	REDUCER AS					
	49	196-0737	1	HOSE AS					
	50	196-0733	1	HOSE AS					
	51	187-6900	2	HOSE AS					
	52	194-0391	2	TUBE AS					
	53	6V-8398	7	SEAL-O-RING (OD=16.03mm)					

Y—SEE SEPARATE ILLUSTRATION

H77565E 03

196-0475 LINES GP-BLADE CYL & VALVE

Part of 198-2120,198-2121-Page633
162-4695-Page433,185-0506-Page479
An Attachment

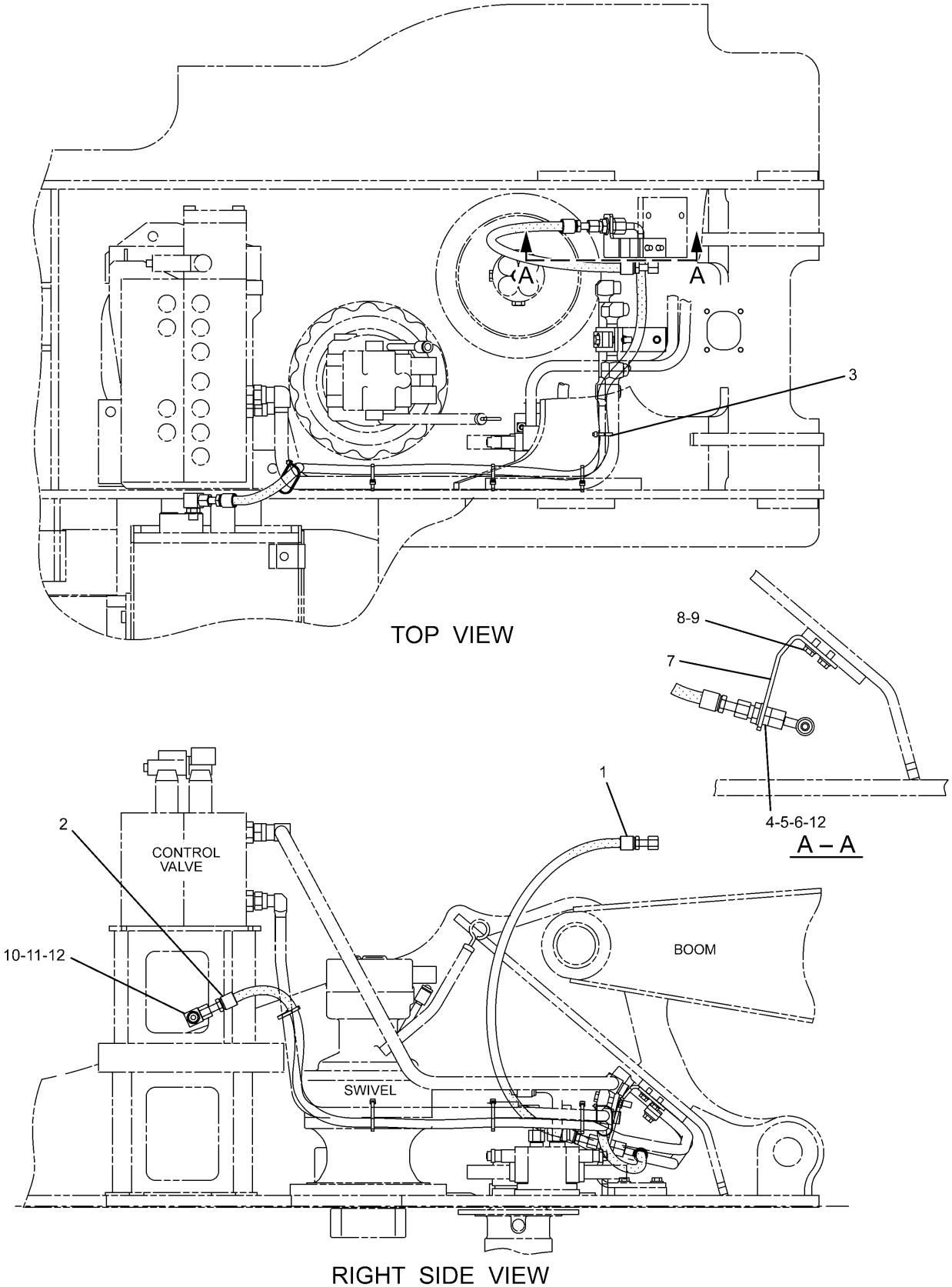

H98185E 02

168-9551 LINES GP-DRAIN
Part of 165-0964-Page356,165-0965-Page357
An Attachment

HYDRAULIC SYSTEM

NOTE	No.	PART No.	QTY	PART NAME	NOTE	No.	PART No.	QTY	PART NAME
	1	296-7308	1	HOSE AS					
	2	272-4330	1	HOSE AS					
	3	7K-1181	5	STRAP					
	4	6V-8995	1	UNION					
	5	6V-9169	1	NUT					
	6	8T-4123	1	WASHER					
	7	187-7073	1	SUPPORT					
	8	8T-4137	2	BOLT (L=20mm)					
	9	8T-4121	2	WASHER					
	10	6V-8625	1	ELBOW					
	11	3K-0360	1	SEAL-O-RING (ID=16.36mm)					
	12	6V-8398	3	SEAL-O-RING (OD=16.03mm)					

H98185E 02

168-9551 LINES GP-DRAIN

Part of 165-0964-Page356,165-0965-Page357

An Attachment

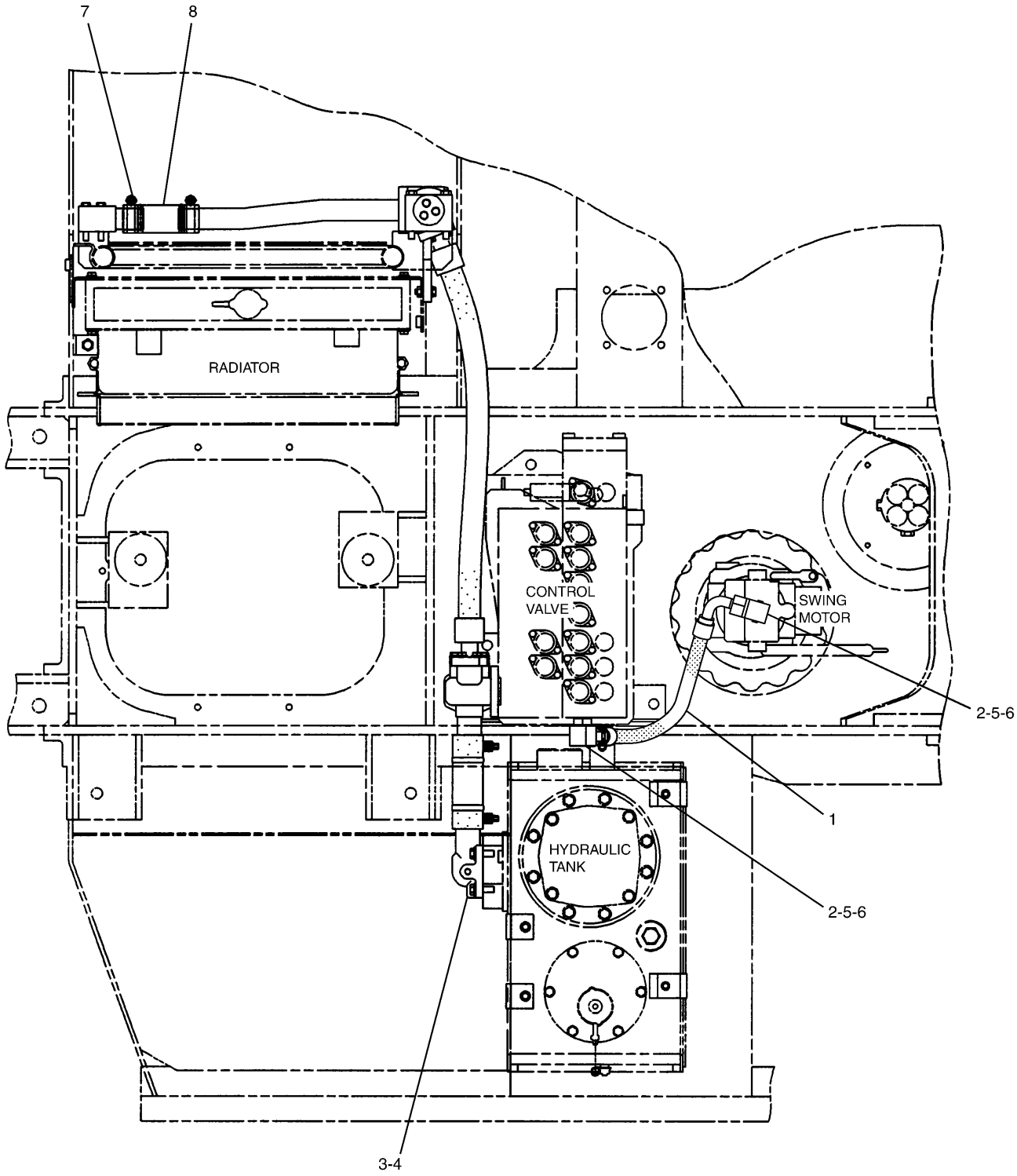

TOP VIEW

H86366E 03

168-9535 LINES GP-RETURN & FILTER (1/2)

HYDRAULIC SYSTEM

NOTE	No.	PART No.	QTY	PART NAME	NOTE	No.	PART No.	QTY	PART NAME
	1	131-9869	1	HOSE AS					
	2	6V-9007	2	ELBOW					
	3	8T-4121	4	WASHER					
	4	8T-4183	4	BOLT (L=40mm)					
	5	3D-2824	2	SEAL-O-RING (ID=23.47mm)					
	6	6V-9746	2	SEAL-O-RING (OD=22.50mm)					
	7	8T-6703	2	CLAMP					
	8	229-1021	1	HOSE					

H86366E 03

168-9535 LINES GP-RETURN & FILTER (1/2)

HYDRAULIC SYSTEM

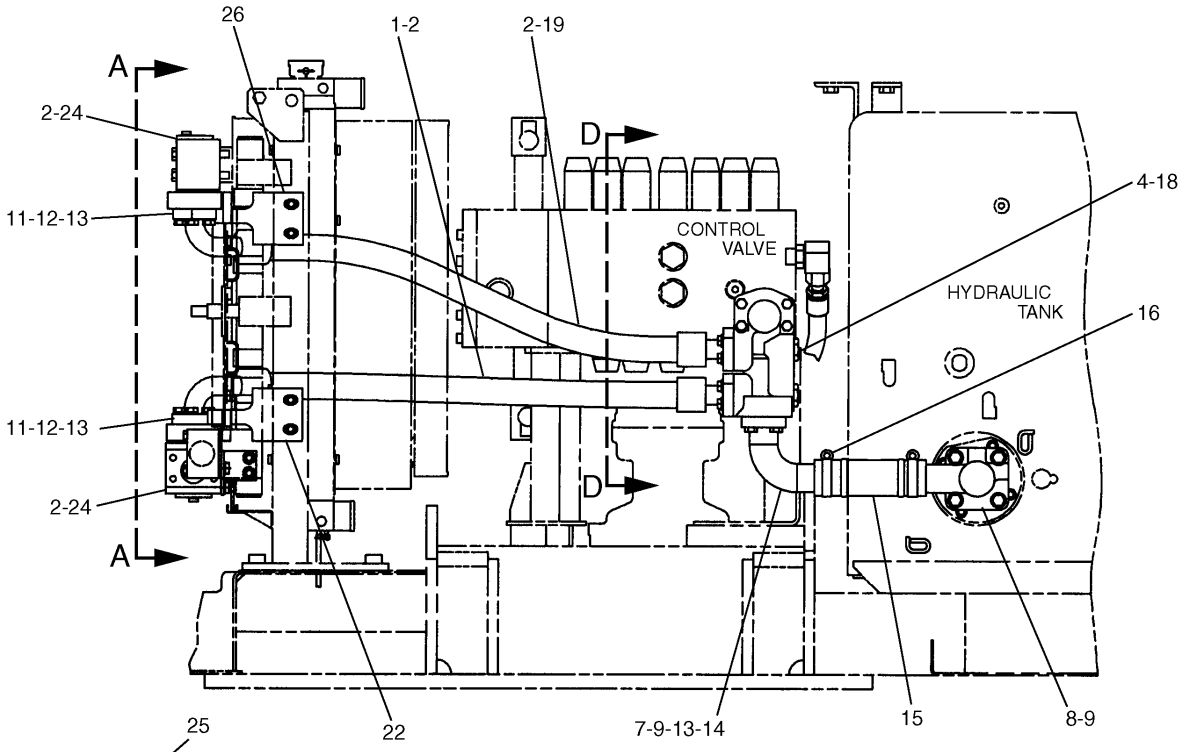

REAR VIEW

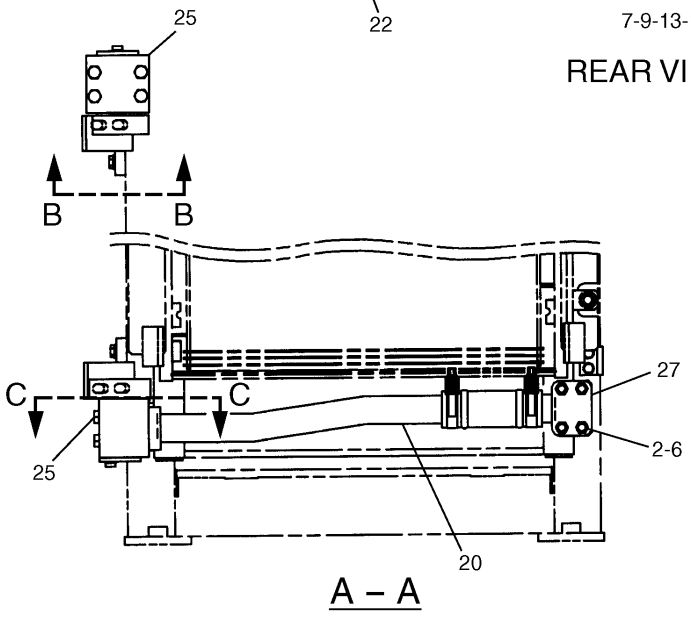

A – A

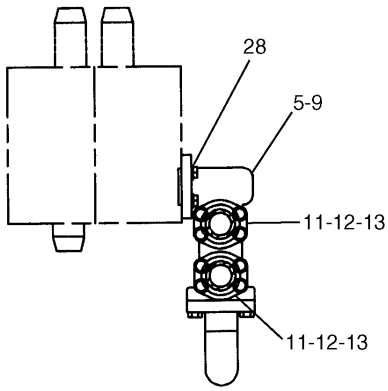

D – D

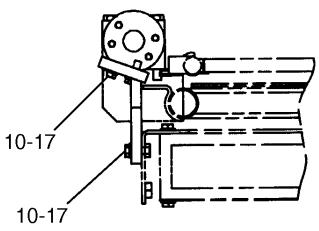

B – B

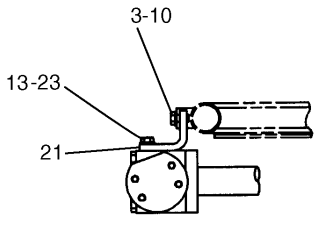

C – C

H86367E 03

168-9535 LINES GP-RETURN & FILTER (2/2)
171-0002-Page489

HYDRAULIC SYSTEM

NOTE	No.	PART No.	QTY	PART NAME	NOTE	No.	PART No.	QTY	PART NAME
	1	087-4432	1	HOSE AS					
	2	4J-0522	7	SEAL-O-RING (ID=37.69mm)					
	3	8T-4137	2	BOLT (L=20mm)					
	4	7M-8485	2	SEAL-O-RING (ID=29.74mm)					
Y	5	171-0002	1	VALVE GP					
	6	8T-5005	4	BOLT (L=70mm)					
	7	8T-4183	4	BOLT (L=40mm)					
	8	194-0202	1	PIPE					
	9	4J-0527	3	SEAL-O-RING (ID=56.74mm)					
	10	7X-7729	10	WASHER					
	11	1P-4578	8	FLANGE					
	12	8T-4196	16	BOLT (L=35mm)					
	13	8T-4121	22	WASHER					
	14	194-0201	1	PIPE AS					
	15	229-1023	1	HOSE					
	16	8T-6703	2	CLAMP					
	17	8T-4195	8	BOLT (L=30mm)					
	18	9S-4181	2	PLUG					
	19	173-4739	1	HOSE AS					
	20	196-0920	1	PIPE AS					
	21	179-7624	1	SUPPORT					
	22	187-7103	1	SUPPORT AS					
	23	8T-4136	2	BOLT (L=25mm)					
	24	179-7638	2	SWIVEL GP					
	25	8T-4176	8	BOLT (L=90mm)					
	26	187-7102	1	SUPPORT AS					
	27	196-0919	1	PIPE AS					
	28	9X-6032	4	BOLT (L=30mm)					

Y—SEE SEPARATE ILLUSTRATION

H86367E 03

168-9535 LINES GP-RETURN & FILTER (2/2)

171-0002-Page489

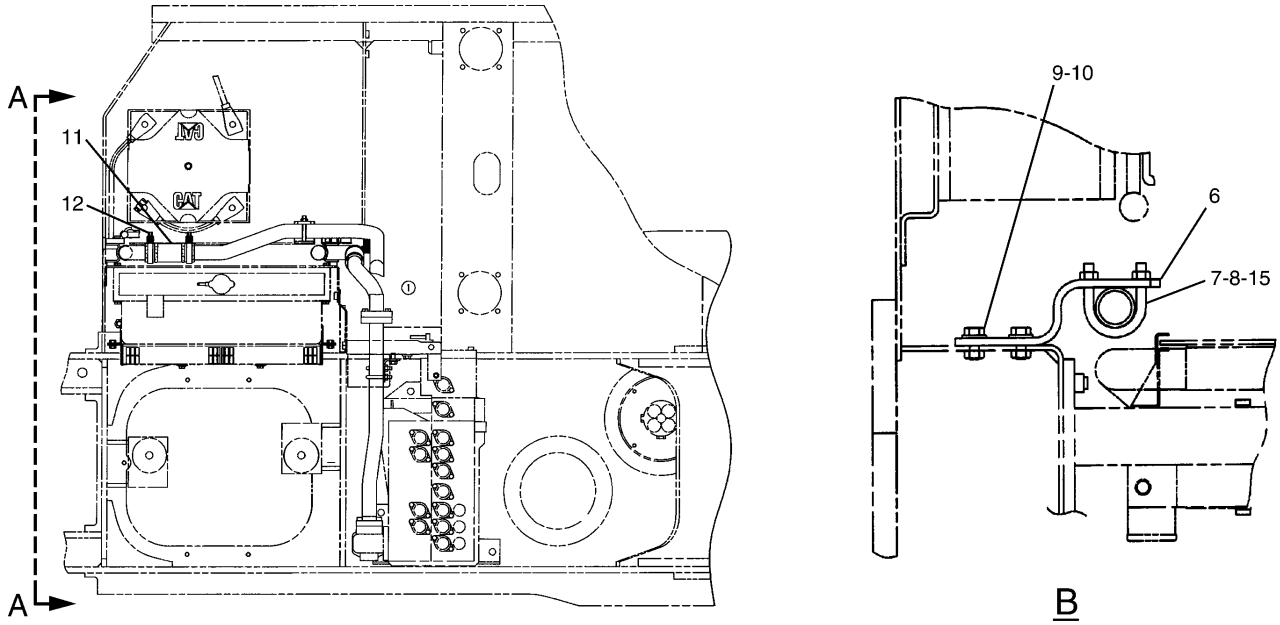

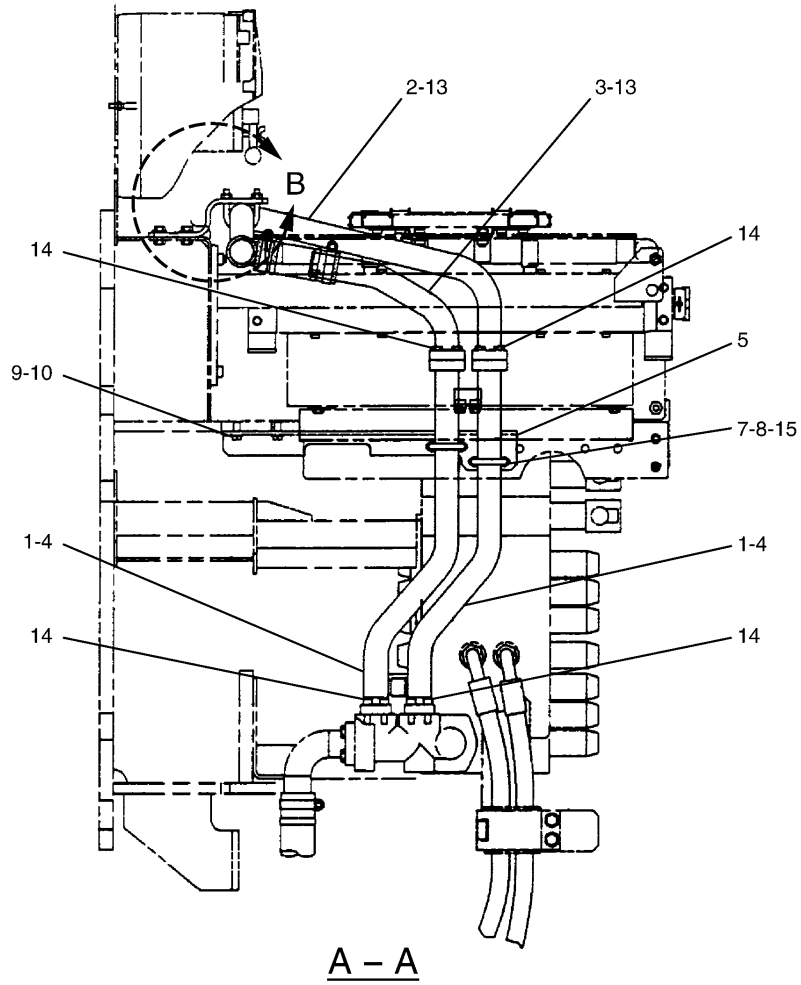

A – A

H91640E 04

194-0194 LINES GP-RETURN & FILTER
Part of 183-1535-Page49
An Attachment

HYDRAULIC SYSTEM

NOTE	No.	PART No.	QTY	PART NAME	NOTE	No.	PART No.	QTY	PART NAME
	1	194-0183	2	PIPE AS					
	2	194-0185	1	PIPE AS					
	3	199-1595	1	PIPE AS					
	4	4J-0522	2	SEAL-O-RING (ID=37.69mm)					
	5	199-1598	1	SUPPORT					
	6	194-0191	1	SUPPORT					
	7	7Y-5237	3	U-BOLT					
	8	096-4883	6	NUT					
	9	8T-4223	4	WASHER					
	10	8T-4192	4	BOLT (L=25mm)					
	11	229-1021	2	HOSE					
	12	8T-6703	4	CLAMP					
	13	4J-0523	2	SEAL-O-RING (ID=44.04mm)					
	14	8T-0271	16	BOLT (L=35mm)					
	15	8T-4121	6	WASHER					

H91640E 04

194-0194 LINES GP-RETURN & FILTER

Part of 183-1535-Page49
An Attachment

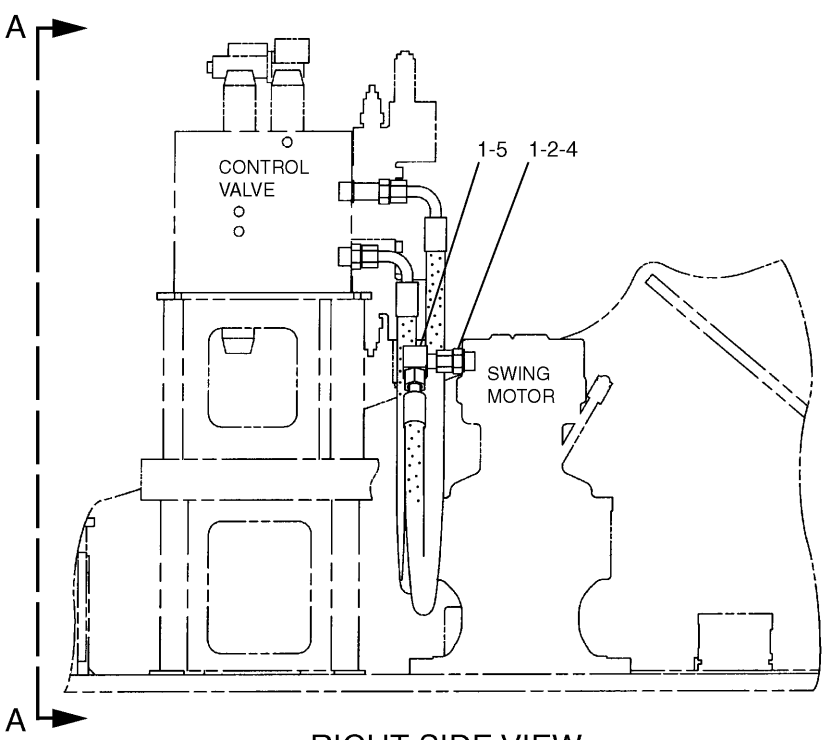

RIGHT SIDE VIEW

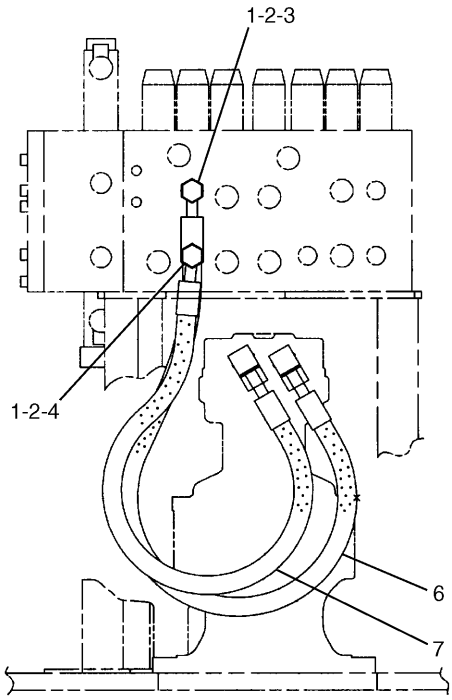

A – A

NOTE	No.	PART No.	QTY	PART NAME	NOTE	No.	PART No.	QTY	PART NAME
	1	7J-9108	6	SEAL-O-RING (OD=19.28mm)					
	2	3D-2824	4	SEAL-O-RING (ID=23.47mm)					
	3	109-5815	1	CONNECTOR					
	4	6V-8713	3	CONNECTOR					
	5	6V-9852	2	ELBOW					
	6	179-7461	1	HOSE AS					
	7	7I-1364	1	HOSE AS					

H71939E 00

168-9533 LINES GP-SWING MOTOR
S/N CAE 01201-02402

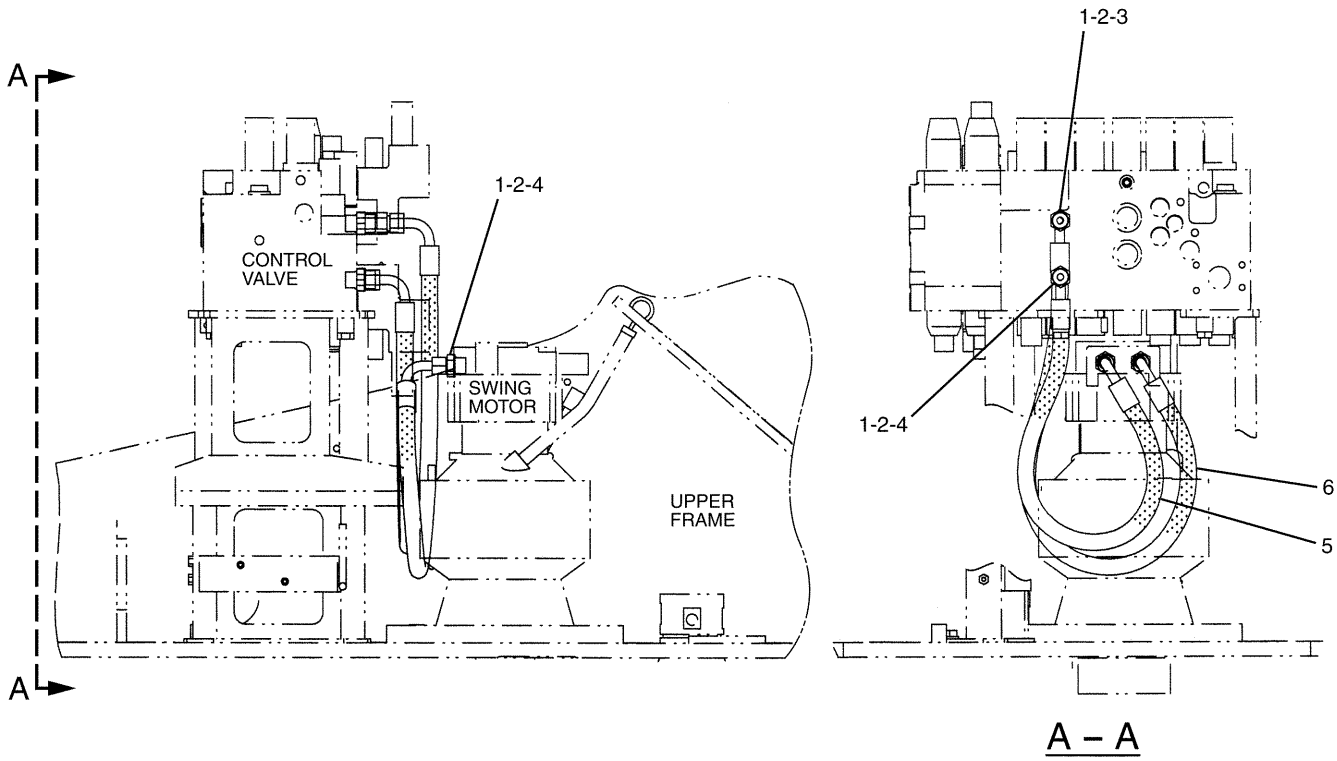

NOTE	No.	PART No.	QTY	PART NAME	NOTE	No.	PART No.	QTY	PART NAME
	1	7J-9108	4	SEAL-O-RING (OD=19.28mm)					
	2	3D-2824	4	SEAL-O-RING (ID=23.47mm)					
	3	109-5815	1	CONNECTOR					
	4	6V-8713	3	CONNECTOR					
	5	258-5721	1	HOSE AS					
	6	258-5718	1	HOSE AS					

H88216E 01

168-9533 LINES GP-SWING MOTOR
S/N CAE 02403-Up

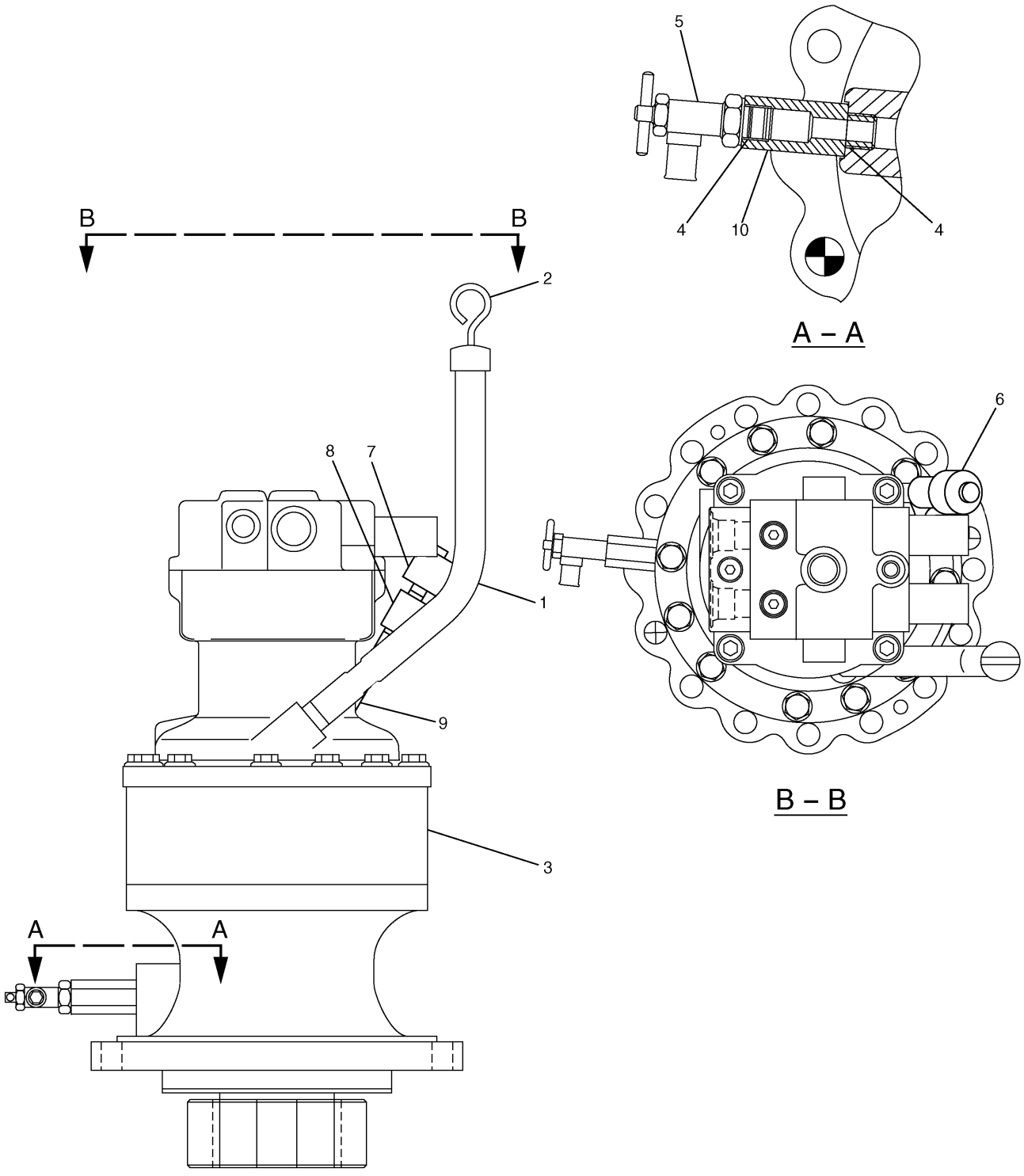

H91693E 07

169-5546 DRIVE GP-SWING
169-5569-Page426

HYDRAULIC SYSTEM

NOTE	No.	PART No.	QTY	PART NAME	NOTE	No.	PART No.	QTY	PART NAME
	1	191-2656	1	PIPE					
	2	191-2657	1	GAUGE					
Y	3	169-5569	1	DRIVE GP					
	4	3K-0360	2	SEAL-O-RING (ID=16.36mm)					
	5	6V-7238	1	VALVE					
	6	267-6744	1	BREATHER AS					
	7	4H-6112	1	BREATHER AS					
	8	227-6227	1	BOSS					
	9	267-6786	1	NIPPLE					
	10	099-3563	1	CONNECTOR					

Y—SEE SEPARATE ILLUSTRATION

H91693E 07

169-5546 DRIVE GP-SWING

169-5569-Page426

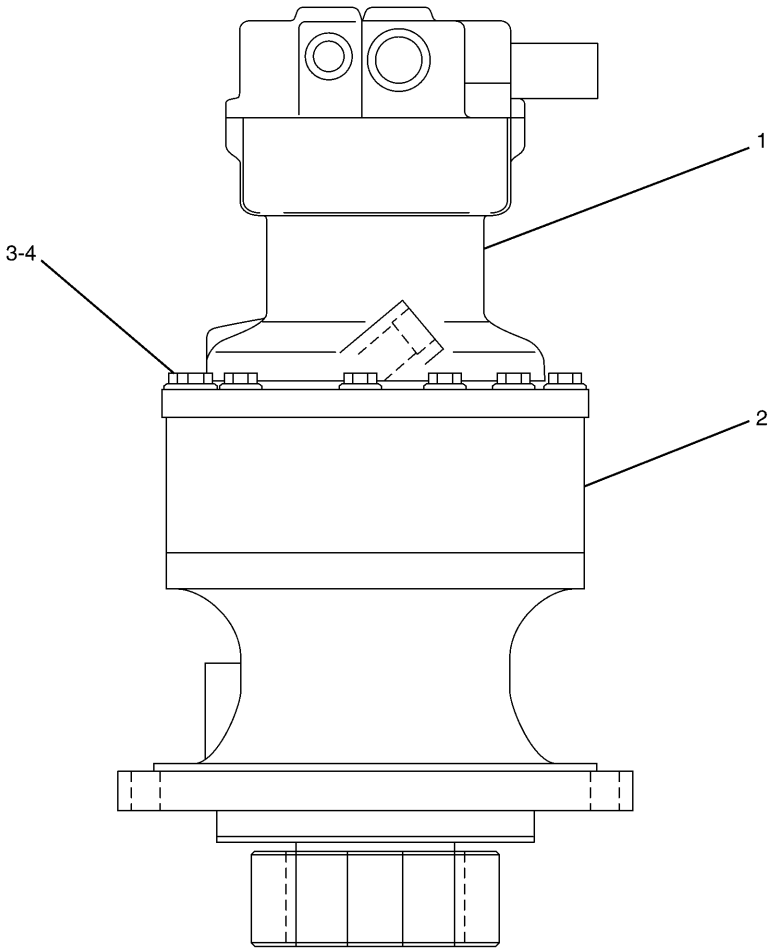

NOTE	No.	PART No.	QTY	PART NAME	NOTE	No.	PART No.	QTY	PART NAME
Y	1	170-9893	1	MOTOR GP					
Y	2	169-5549	1	DRIVE GP					
	3	8T-5041	12	BOLT (L=120mm)					
	4	8T-4223	12	WASHER					

Y—SEE SEPARATE ILLUSTRATION

H71999E 03

169-5569 DRIVE GP-SWING

Part of 169-5546-Page425
169-5549-Page428,170-9893-Page430

MEMORANDA

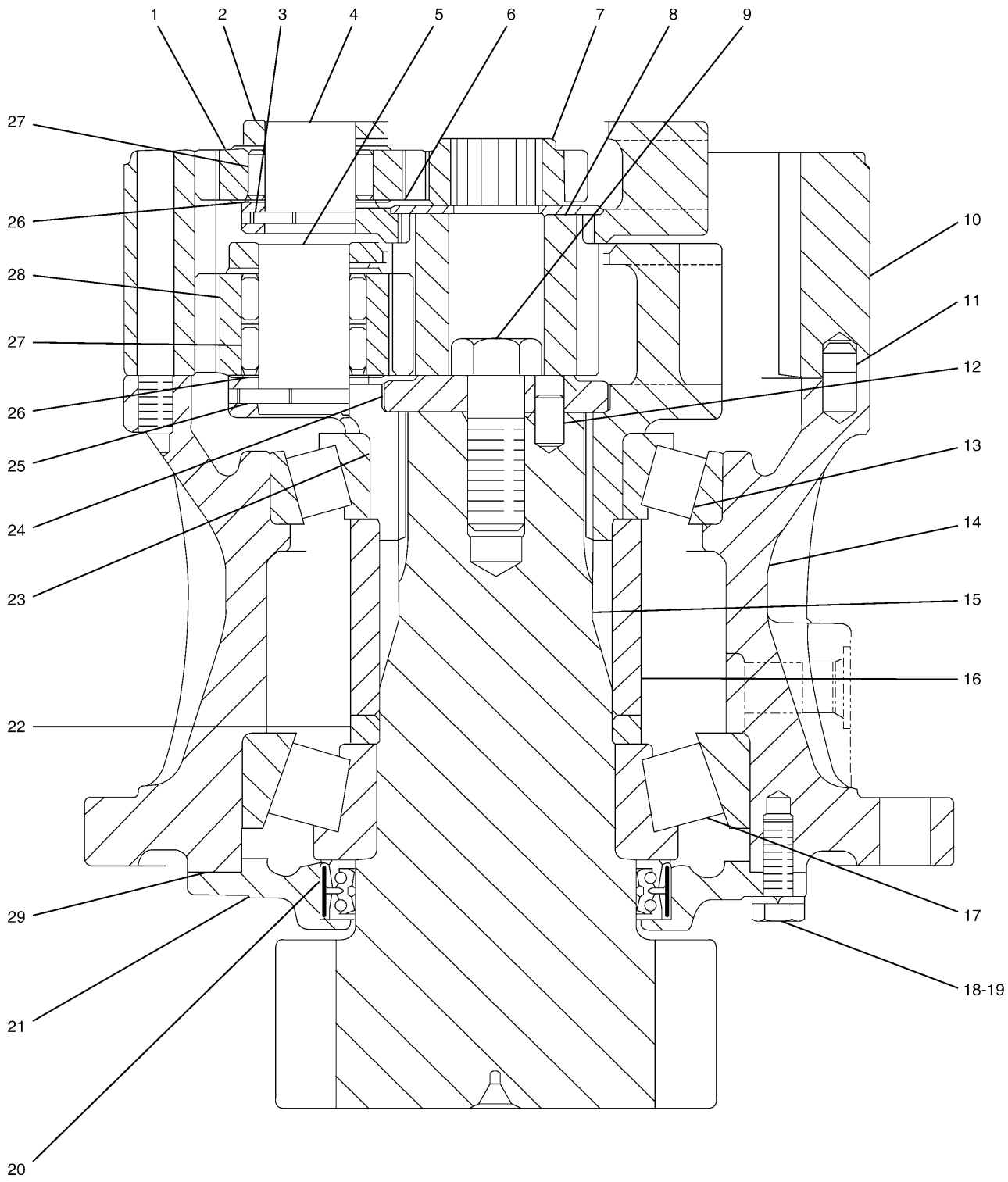

169-5549 DRIVE GP-SWING
Part of 169-5569-Page426

HYDRAULIC SYSTEM

NOTE	No.	PART No.	QTY	PART NAME	NOTE	No.	PART No.	QTY	PART NAME
	1	191-2600	3	GEAR (Z=21)					
	2	191-2599	1	CARRIER					
	3	191-2604	3	PIN					
	4	191-2603	3	SHAFT					
	5	191-2609	3	SHAFT					
	6	191-2605	1	WASHER					
	7	191-2611	1	GEAR (Z=14/16)					
	8	191-2612	1	GEAR (Z=19)					
	9	114-8224	1	BOLT (L=55mm)					
	10	191-2613	1	GEAR (Z=59)					
	11	093-6089	2	DOWEL					
	12	095-0893	1	PIN					
	13	7I-7625	1	BEARING AS					
	14	191-2615	1	HOUSING					
	15	191-2614	1	SHAFT					
B	16	7I-7632	1	SPACER (T=69.50mm)					
B		7I-7633	1	SPACER (T=69.80mm)					
B		7I-7634	1	SPACER (T=70.10mm)					
B		7I-7635	1	SPACER (T=70.40mm)					
B		7I-7636	1	SPACER (T=70.70mm)					
	17	7I-7626	1	BEARING AS					
	18	8T-4195	8	BOLT (L=30mm)					
	19	8T-4121	8	WASHER					
	20	099-0233	1	SEAL					
	21	099-0235	1	CAGE					
B	22	7I-7638	1	SPACER (T=10.00mm)					
B		7I-7639	1	SPACER (T=10.03mm)					
B		7I-7640	1	SPACER (T=10.05mm)					
B		7I-7641	1	SPACER (T=10.08mm)					
B		7I-7642	1	SPACER (T=10.10mm)					
B		7I-7643	1	SPACER (T=10.12mm)					
B		7I-7644	1	SPACER (T=10.15mm)					
B		7I-7645	1	SPACER (T=10.18mm)					
B		7I-7646	1	SPACER (T=10.20mm)					
B		7I-7647	1	SPACER (T=10.23mm)					
B		7I-7648	1	SPACER (T=10.25mm)					
B		7I-7649	1	SPACER (T=10.28mm)					
	23	191-2607	1	CARRIER					
	24	114-8223	1	RETAINER					
	25	191-2610	3	PIN					
	26	191-2602	12	WASHER					
	27	191-2601	9	BEARING					
	28	191-2608	3	GEAR (Z=20)					
B	29	1U-8846		GASKET MAKER…(3ml)					

B—USE AS REQUIRED

H72135E 03

169-5549 DRIVE GP-SWING

Part of 169-5569-Page426

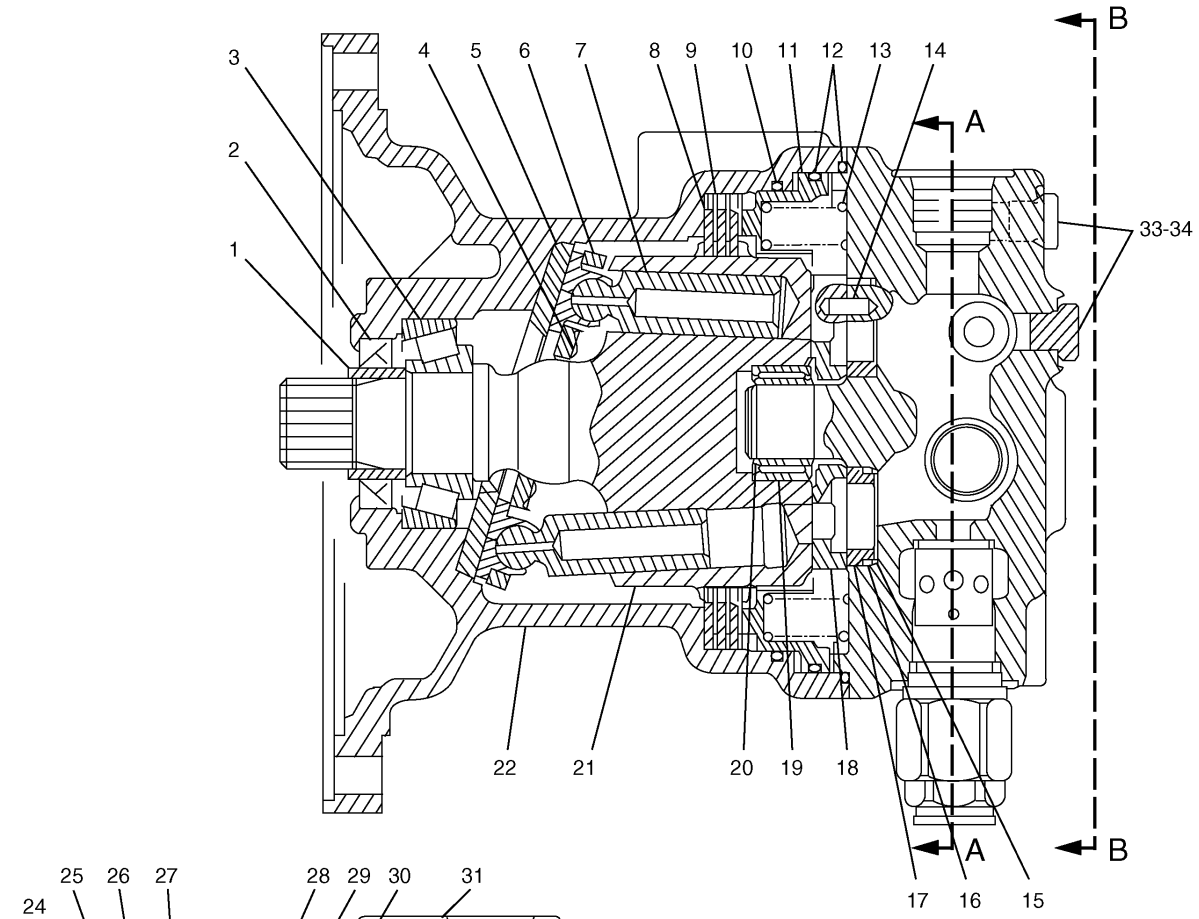

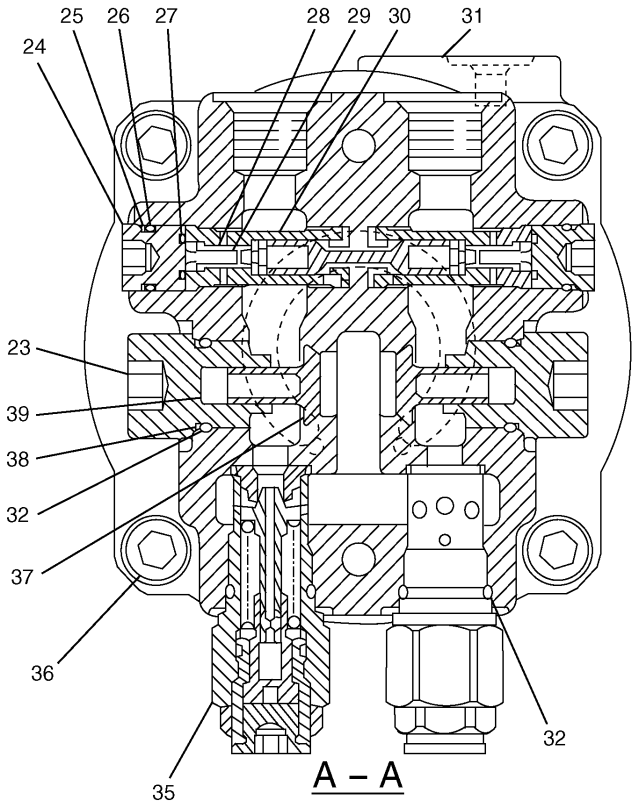

A – A

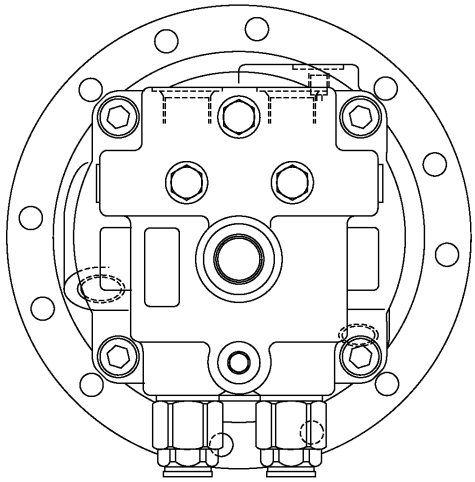

B – B

H84416E 04

170-9893 MOTOR GP-SWING
Part of 169-5569-Page426

HYDRAULIC SYSTEM

NOTE	No.	PART No.	QTY	PART NAME
	1	099-0320	1	BUSHING
J	2	099-0321	1	SEAL
	3	099-0322	1	BEARING
	4	7I-0057	1	SPRING
	5	099-4749	1	PLATE
	6	7I-0058	1	PLATE
	7	200-3335	1	PISTON AS
	8	099-6530	3	PLATE
	9	099-6531	3	PLATE
J	10	099-6532	1	SEAL-O-RING
	11	099-6535	1	PISTON
J	12	6F-4718	2	SEAL-O-RING (ID=164.69mm)
	13	099-0328	16	SPRING
	14	099-0329	2	PIN
	15	099-0330	4	SPRING
	16	099-0331	4	RING
	17	099-0332	4	BUSHING
	18	099-0333	1	PLATE
	19	099-0334	1	BEARING
	20	099-0335	1	RING
	21	123-2143	1	BARREL AS
	22	194-8401	1	HOUSING
	23	096-5932	2	PLUG
	24	7I-0060	2	PLUG
J	25	095-1784	2	RING
J	26	095-1585	2	SEAL-O-RING (ID=17.80mm)
J	27	095-1580	2	SEAL-O-RING (ID=11.80mm)
	28	7I-0061	2	VALVE
	29	7I-0062	2	SPRING
	30	7I-0063	2	SLEEVE AS
	31	194-8400	1	HEAD
J	32	095-1594	4	SEAL-O-RING (ID=25.70mm)
J	33	3J-1907	3	SEAL-O-RING (ID=11.89mm)
	34	9S-4191	3	PLUG
	35	229-0992	2	VALVE GP
		095-1594	1	SEAL-O-RING (ID=25.70mm)
	36	8T-0347	4	BOLT (L=45mm)
	37	096-5933	2	VALVE
J	38	095-1789	2	RING
	39	096-5934	2	SPRING
				THE FOLLOWING REPAIR KIT IS AVAILABLE:
		123-2145	1	SEAL KIT (INCLUDES PARTS MARKED J)

H84416E 04

170-9893 MOTOR GP-SWING

Part of 169-5569-Page426

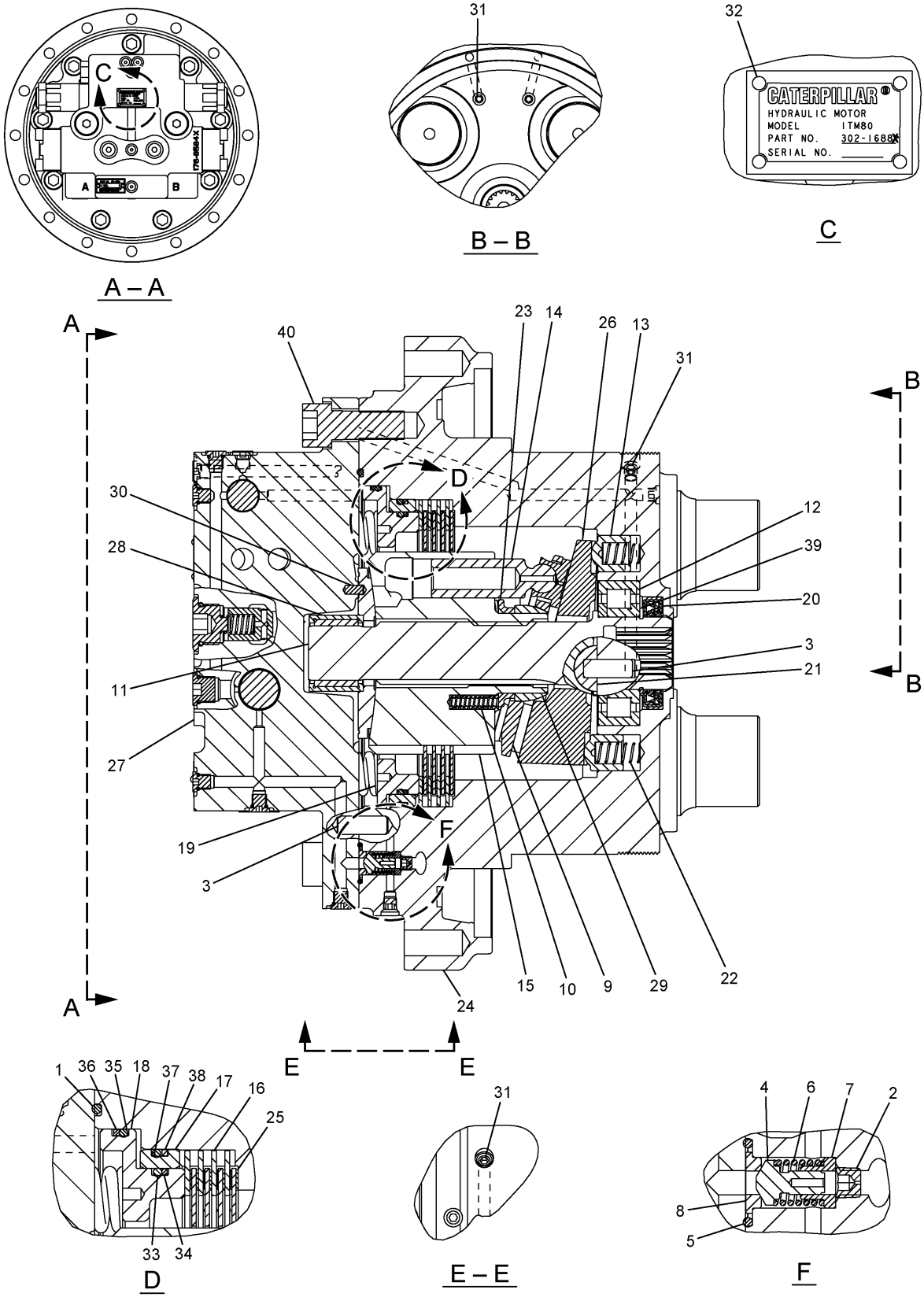

H96121E 01

302-9179 MOTOR GP-TRAVEL
S/N CAE 04516-Up
Part of 302-1688-Page201.01

HYDRAULIC SYSTEM

NOTE	No.	PART No.	QTY	PART NAME	NOTE	No.	PART No.	QTY	PART NAME
	1	1H-8278	1	SEAL-O-RING (ID=196.44mm)					
	2	7Y-4224	1	ORIFICE					
	3	085-9769	4	PIN					
	4	087-4742	1	VALVE					
	5	095-1585	1	SEAL-O-RING (ID=17.80mm)					
	6	095-7380	1	SPRING					
	7	095-7382	1	RETAINER					
	8	096-1519	1	SEAT					
	9	165-2793	1	RETAINER					
	10	165-2799	9	SPRING					
	11	165-5803	1	SHAFT					
	12	165-5804	1	BEARING					
	13	165-5806	2	PISTON					
	14	165-5809	9	PISTON AS					
	15	165-5811	1	BARREL AS					
	16	165-5814	4	PLATE					
	17	165-5816	1	GUIDE					
	18	165-5817	1	PISTON					
	19	165-5818	8	SPRING					
	20	165-5826	1	SEAL					
	21	165-5828	2	KEY					
	22	165-5831	2	SPRING					
	23	176-8131	1	SPACER					
	24	176-8571	1	BODY					
	25	176-8573	4	PLATE					
	26	176-8579	1	PLATE					
	27	176-8581	1	VALVE GP					
	28	267-8084	1	BEARING					
	29	298-5732	1	RETAINER					
	30	094-1875	1	DOWEL					
	31	094-1882	7	PLUG					
	32	095-7419	4	SCREW					
	33	165-5819	1	SEAL					
	34	165-5820	1	RING					
	35	165-5821	1	SEAL					
	36	165-5822	1	RING					
	37	165-5823	1	SEAL					
	38	165-5824	1	RING					
	39	8T-4240	1	RING					
	40	8T-4944	9	BOLT (L=40mm)					

H96121E 01

302-9179 MOTOR GP-TRAVEL

S/N CAE 04516-Up

Part of 302-1688-Page201.01

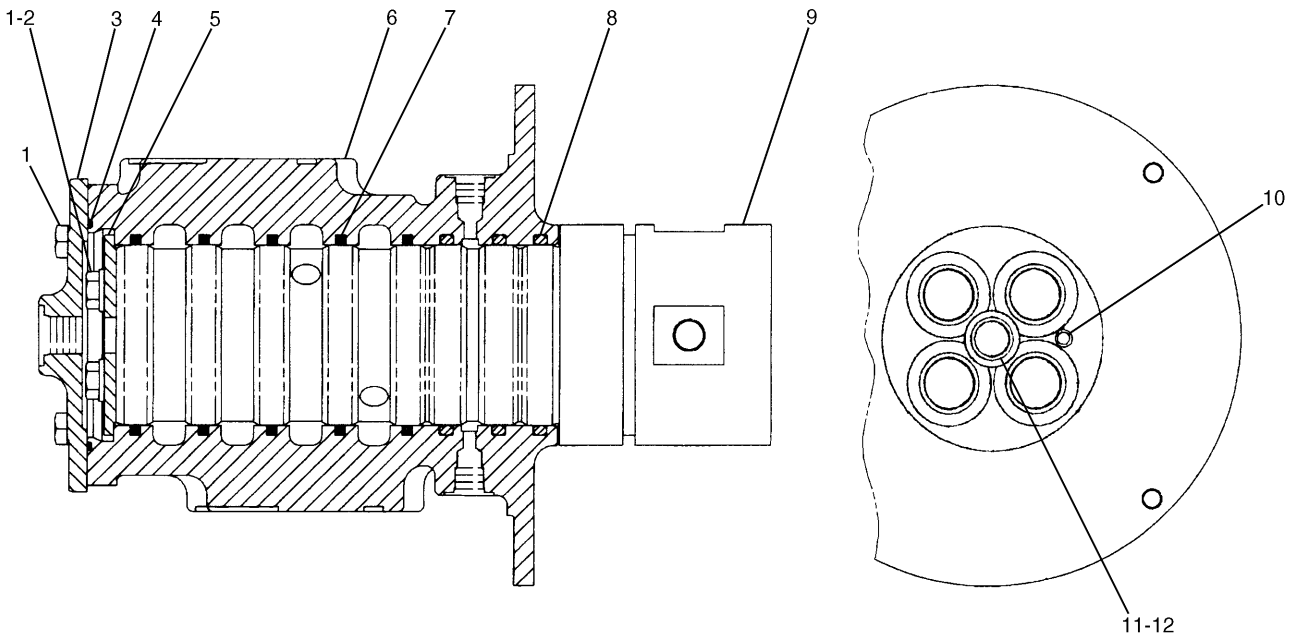

NOTE	No.	PART No.	QTY	PART NAME	NOTE	No.	PART No.	QTY	PART NAME
	1	8T-4136	6	BOLT (L=25mm)					
	2	8T-4121	2	WASHER					
	3	5I-4363	1	COVER					
	4	095-1716	1	SEAL-O-RING (ID=109.40mm)					
	5	7I-7321	1	RETAINER					
	6	4I-7604	1	HOUSING					
	7	159-7782	5	SEAL					
	8	095-1625	3	SEAL-O-RING (ID=89.60mm)					
	9	4I-7605	1	ROTOR					
	10	8T-6759	1	PLUG					
	11	3K-0360	1	SEAL-O-RING (ID=16.36mm)					
	12	9S-8005	1	PLUG					

H64310E 00

162-4696 SWIVEL GP
Part of 168-9531-Page351

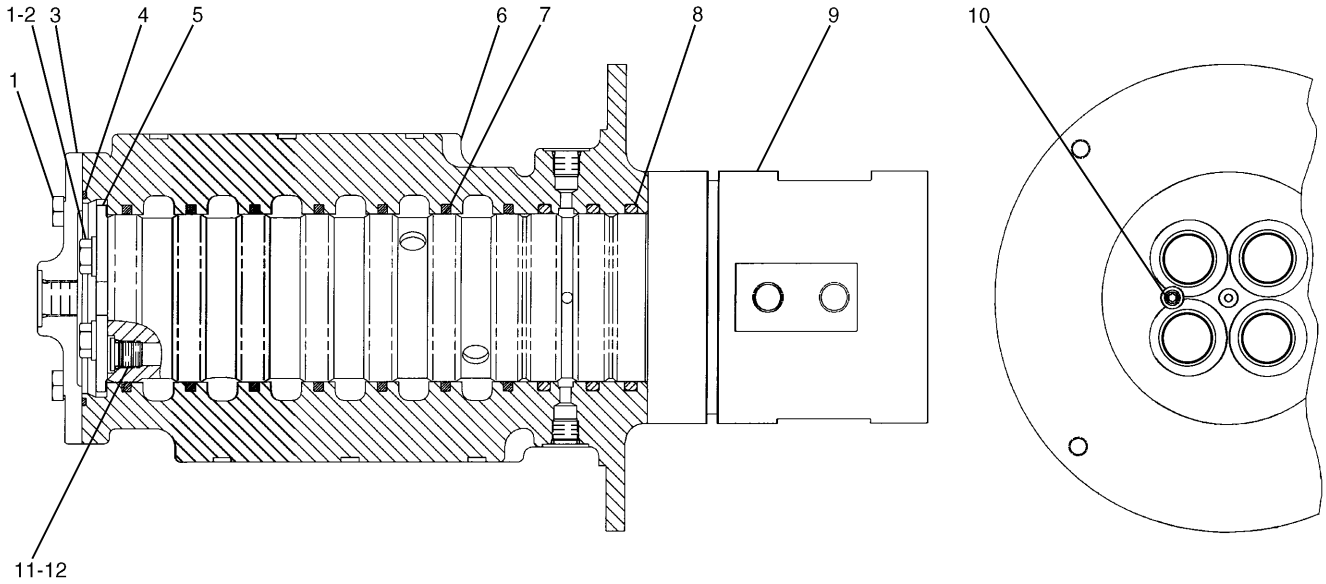

NOTE	No.	PART No.	QTY	PART NAME	NOTE	No.	PART No.	QTY	PART NAME
	1	8T-4136	6	BOLT (L=25mm)					
	2	8T-4121	2	WASHER					
	3	5I-4363	1	COVER					
	4	095-1716	1	SEAL-O-RING (ID=109.40mm)					
	5	7I-7321	1	RETAINER					
	6	114-8249	1	HOUSING					
	7	159-7782	7	SEAL					
	8	095-1625	3	SEAL-O-RING (ID=89.60mm)					
	9	114-8250	1	ROTOR					
	10	8T-6759	1	PLUG					
	11	3J-1907	2	SEAL-O-RING (ID=11.89mm)					
	12	9S-8004	2	PLUG					

H67509E 00

162-4695 SWIVEL GP

Part of 168-9555-Page411,196-0475-Page413
An Attachment

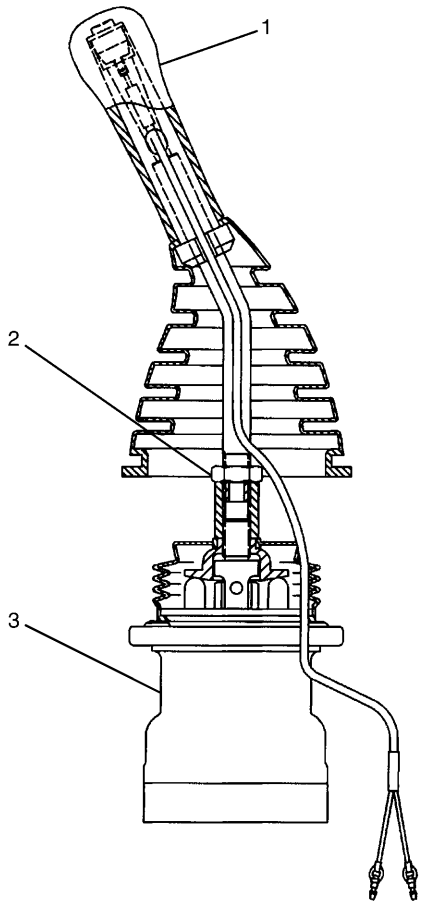

NOTE	No.	PART No.	QTY	PART NAME	NOTE	No.	PART No.	QTY	PART NAME
Y	1	164-0532	1	CONTROL GP					
	2	7Y-8463	1	NUT					
Y	3	206-3305	1	VALVE GP					

Y—SEE SEPARATE ILLUSTRATION

H78765E 00

206-3303 VALVE GP-PILOT

Part of 168-9537-Page361
164-0532-Page436,206-3305-Page494

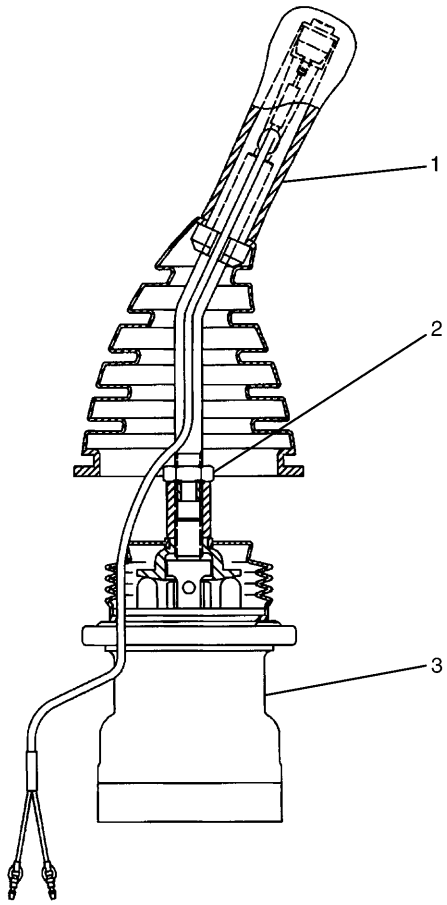

NOTE	No.	PART No.	QTY	PART NAME	NOTE	No.	PART No.	QTY	PART NAME
Y	1	164-0533	1	CONTROL GP					
	2	7Y-8463	1	NUT					
Y	3	206-3305	1	VALVE GP					

Y—SEE SEPARATE ILLUSTRATION

H78766E 00

206-3304 VALVE GP-PILOT

Part of 168-9537-Page361
164-0533-Page437,206-3305-Page494

HYDRAULIC SYSTEM

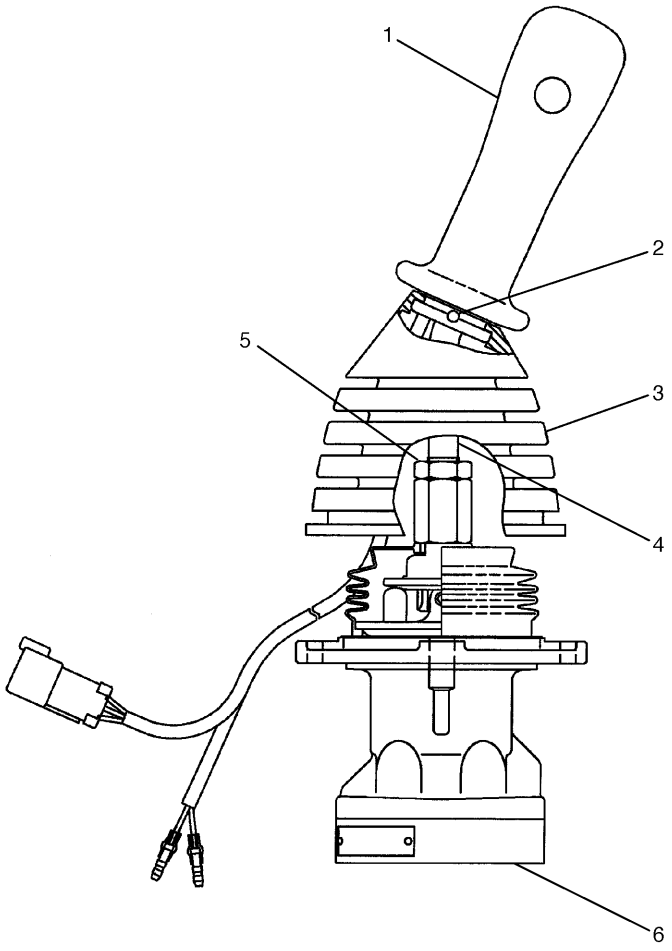

NOTE	No.	PART No.	QTY	PART NAME	NOTE	No.	PART No.	QTY	PART NAME
	1	187-9975	1	KNOB AS					
		102-8805	1	RECEPTACLE KIT					
		7Y-3962	2	TERMINAL					
		7Y-3964	2	TUBE					
		9X-3401	6	PIN					
	2	139-0922	1	PIN					
	3	187-9908	1	BOOT					
	4	149-1571	1	LEVER					
	5	7Y-8463	1	NUT					
Y	6	206-3305	1	VALVE GP					

Y—SEE SEPARATE ILLUSTRATION

H85876E 00

216-6749 VALVE GP-PILOT

Right Hand

Part of 165-0989-Page194.01

206-3305-Page494

An Attachment

HYDRAULIC SYSTEM

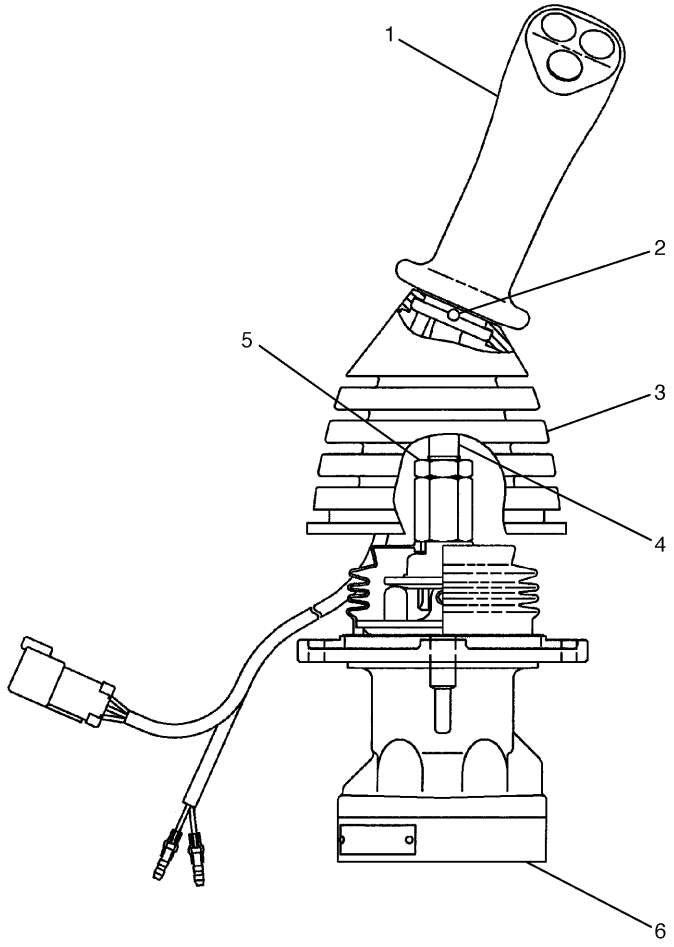

NOTE	No.	PART No.	QTY	PART NAME	NOTE	No.	PART No.	QTY	PART NAME
	1	187-9975	1	KNOB AS					
		102-8805	1	RECEPTACLE KIT					
		7Y-3962	2	TERMINAL					
		7Y-3964	2	TUBE					
		9X-3401	6	PIN					
	2	139-0922	1	PIN					
	3	187-9908	1	BOOT					
	4	149-1572	1	LEVER					
	5	7Y-8463	1	NUT					
Y	6	206-3305	1	VALVE GP					

Y—SEE SEPARATE ILLUSTRATION

H85877E 00

216-6748 VALVE GP-PILOT

Left Hand

Part of 165-0989-Page194.01
206-3305-Page494
An Attachment

HYDRAULIC SYSTEM

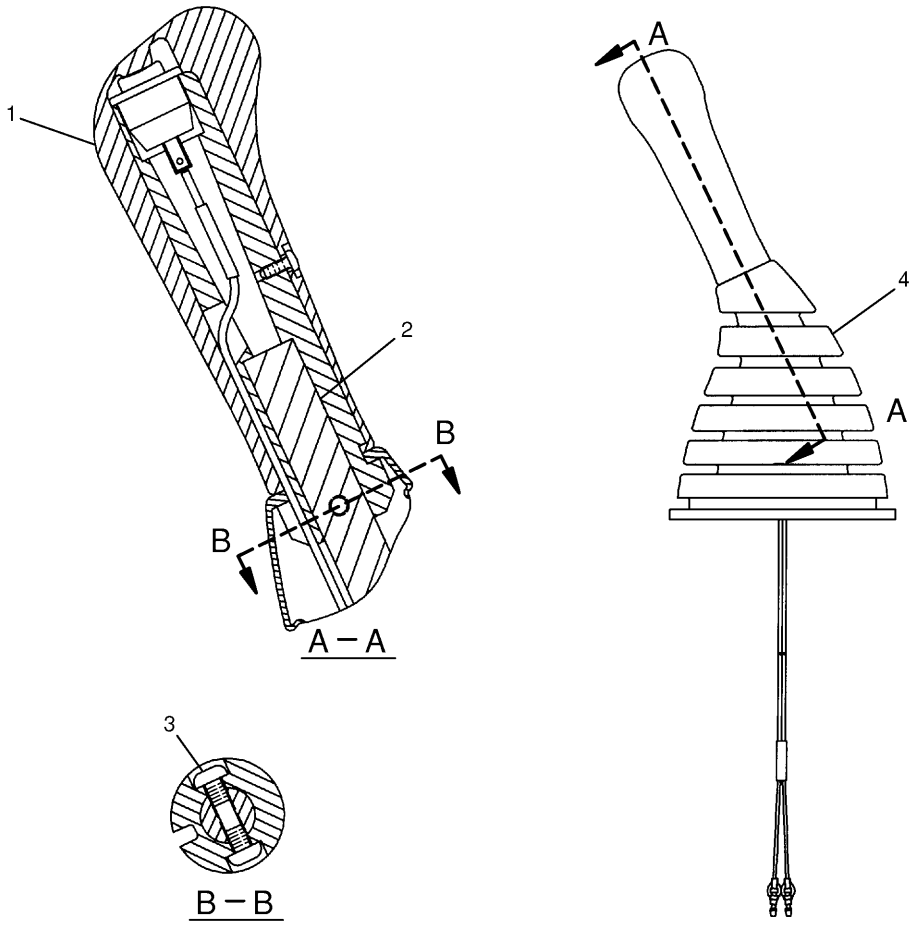

NOTE	No.	PART No.	QTY	PART NAME	NOTE	No.	PART No.	QTY	PART NAME
Y	1	167-7052	1	KNOB AS					
	2	124-4010	1	LEVER					
	3	096-2617	2	SCREW					
	4	167-7050	1	BOOT					

Y—SEE SEPARATE ILLUSTRATION

H70091E 02

164-0532 CONTROL GP-PILOT OPERATED HYD

Part of 206-3303-Page434
167-7052-Page438

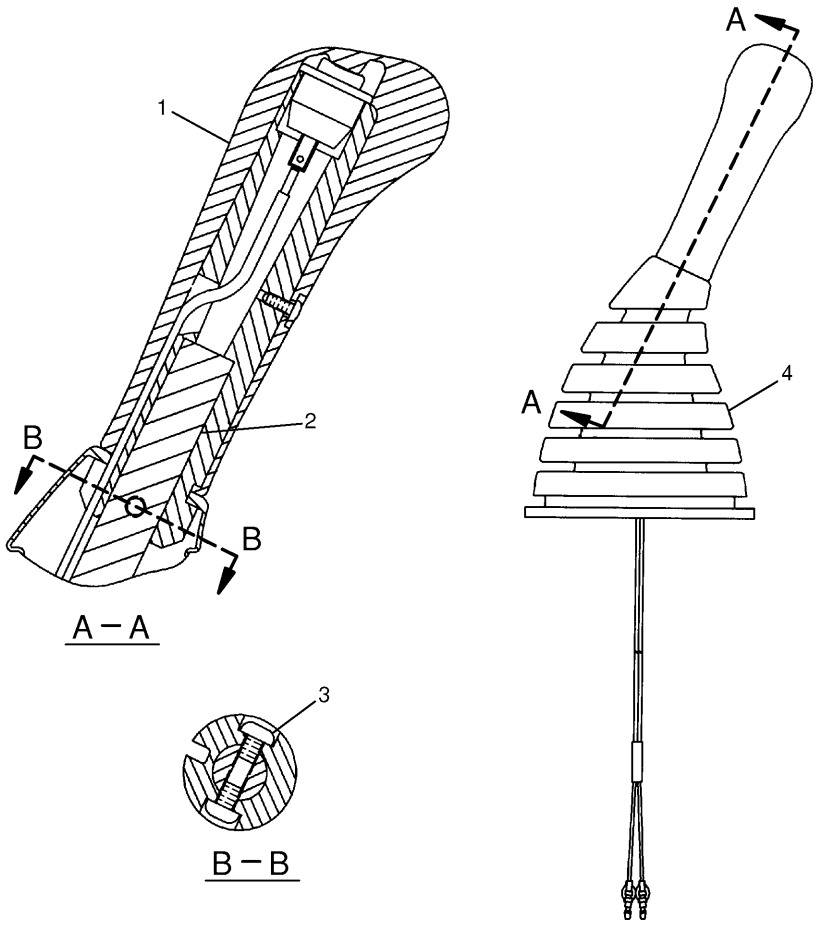

NOTE	No.	PART No.	QTY	PART NAME	NOTE	No.	PART No.	QTY	PART NAME
Y	1	167-7051	1	KNOB AS					
	2	124-4010	1	LEVER					
	3	096-2617	2	SCREW					
	4	167-7050	1	BOOT					

Y—SEE SEPARATE ILLUSTRATION

H70092E 02

164-0533 CONTROL GP-PILOT OPERATED HYD

Part of 206-3304-Page435
167-7051-Page439

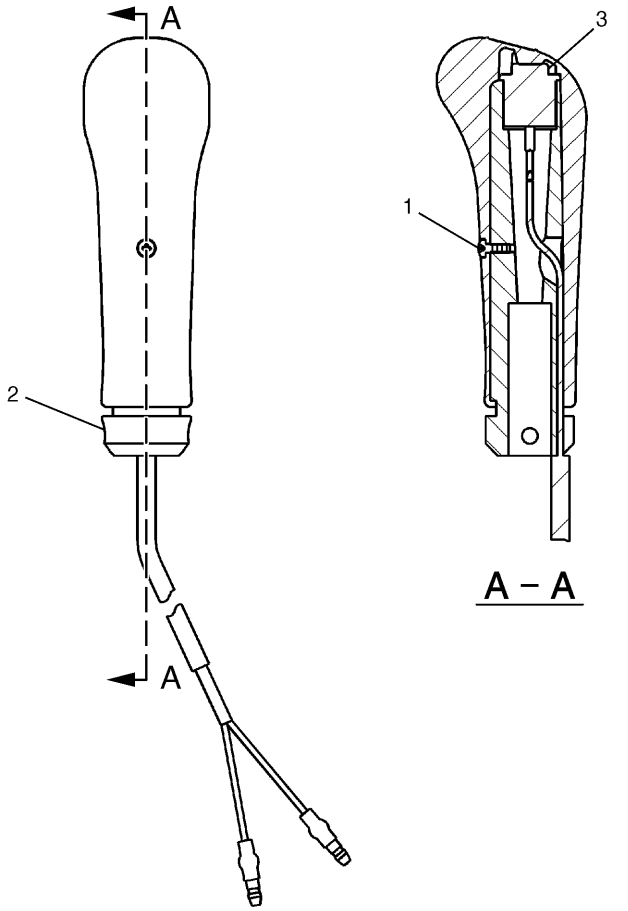

NOTE	No.	PART No.	QTY	PART NAME	NOTE	No.	PART No.	QTY	PART NAME
	1	61-5298	1	SCREW					
	2	124-4009	1	SHAFT					
	3	222-0225	1	SWITCH AS					

H82959E 03

167-7052 KNOB AS
Part of 164-0532-Page436

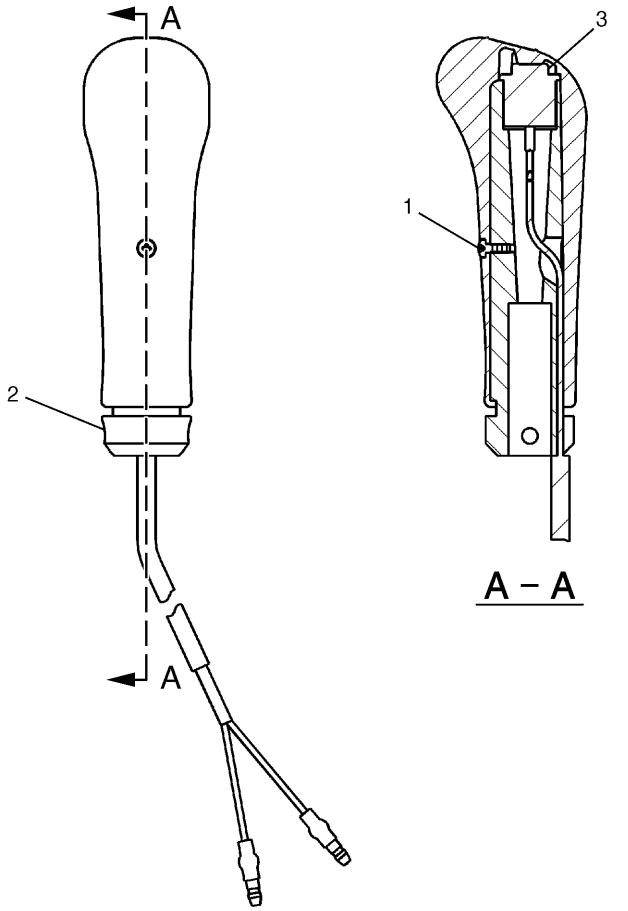

NOTE	No.	PART No.	QTY	PART NAME	NOTE	No.	PART No.	QTY	PART NAME
	1	61-5298	1	SCREW					
	2	124-4009	1	SHAFT					
	3	222-0225	1	SWITCH AS					

H82906E 03

167-7051 KNOB AS
Part of 164-0533-Page437

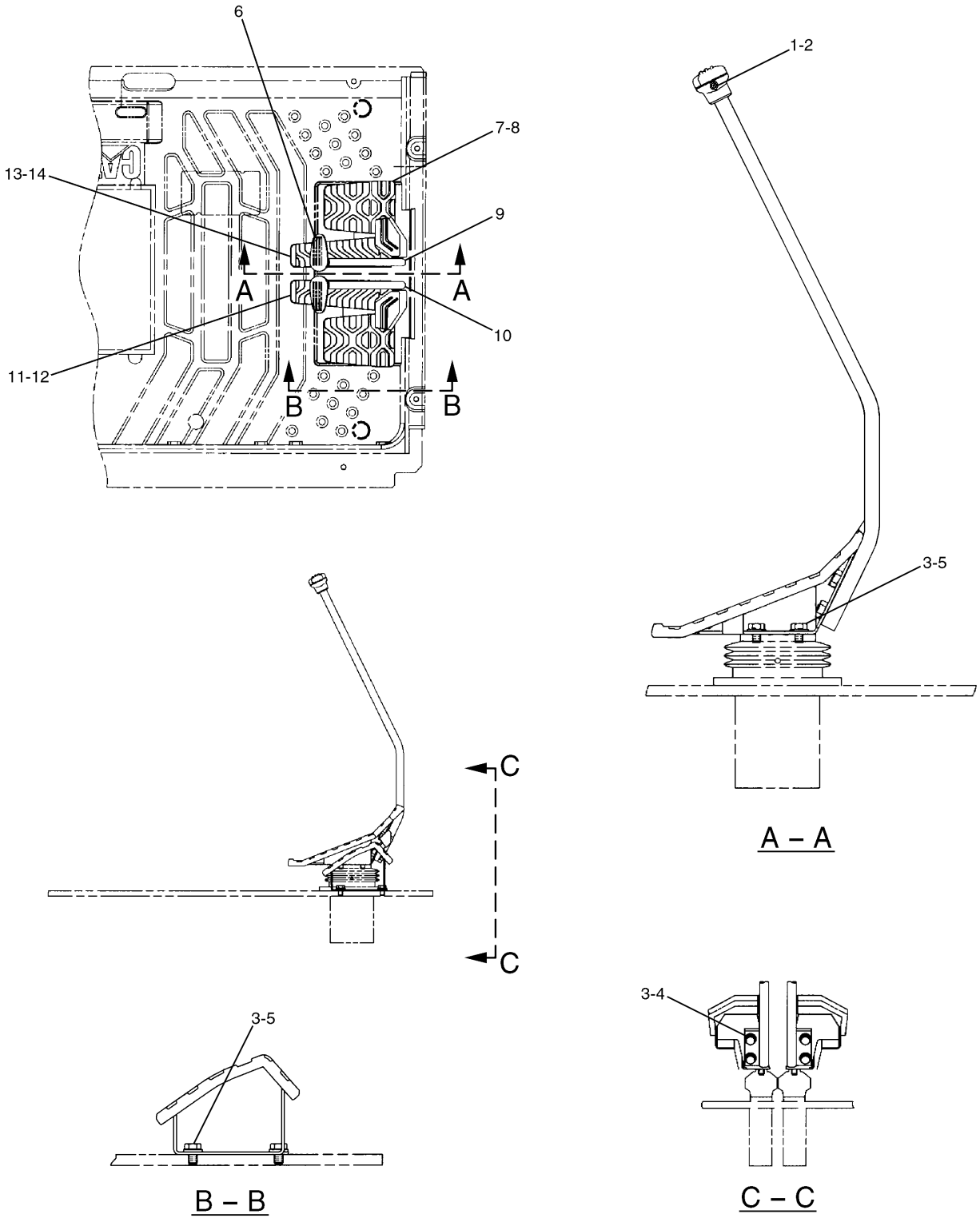

H70098E 02

170-9497 CONTROL GP-PILOT OPERATED HYD

HYDRAULIC SYSTEM

NOTE	No.	PART No.	QTY	PART NAME	NOTE	No.	PART No.	QTY	PART NAME
	1	096-6166	2	WASHER					
	2	095-0728	2	SCREW					
	3	8T-4121	12	WASHER					
	4	8T-4136	4	BOLT (L=25mm)					
	5	8T-4191	8	BOLT (L=16mm)					
	6	142-5546	2	KNOB					
	7	117-6356	2	STEP AS					
	8	122-9610	2	STEP					
	9	170-9499	1	LEVER AS (LH)					
	10	170-9498	1	LEVER AS (RH)					
	11	122-9608	1	PEDAL					
	12	117-6350	1	PEDAL AS (RH)					
	13	122-9609	1	PEDAL					
	14	117-6349	1	PEDAL AS (LH)					

H70098E 02

170-9497 CONTROL GP-PILOT OPERATED HYD

HYDRAULIC SYSTEM

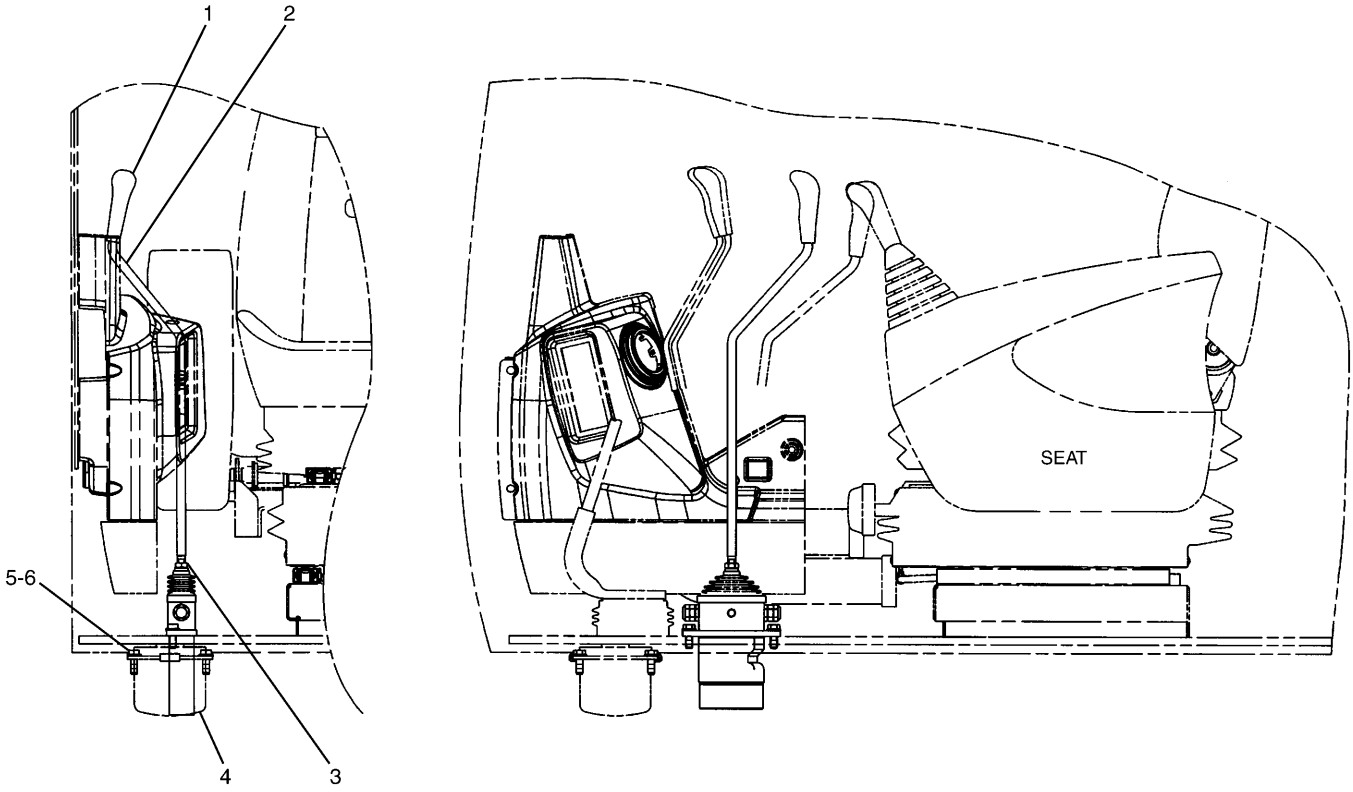

NOTE	No.	PART No.	QTY	PART NAME	NOTE	No.	PART No.	QTY	PART NAME
	1	110-5602	1	KNOB					
	2	189-2786	1	LEVER					
	3	096-6331	1	NUT					
Y	4	165-9582	1	VALVE GP					
	5	8T-4136	2	BOLT (L=25mm)					
	6	8T-4121	2	WASHER					

Y—SEE SEPARATE ILLUSTRATION

H71804E 01

171-7372 CONTROL GP-BLADE

Part of 151-1493-Page634,183-1476-Page635,151-1494-Page636
165-9582-Page502
An Attachment

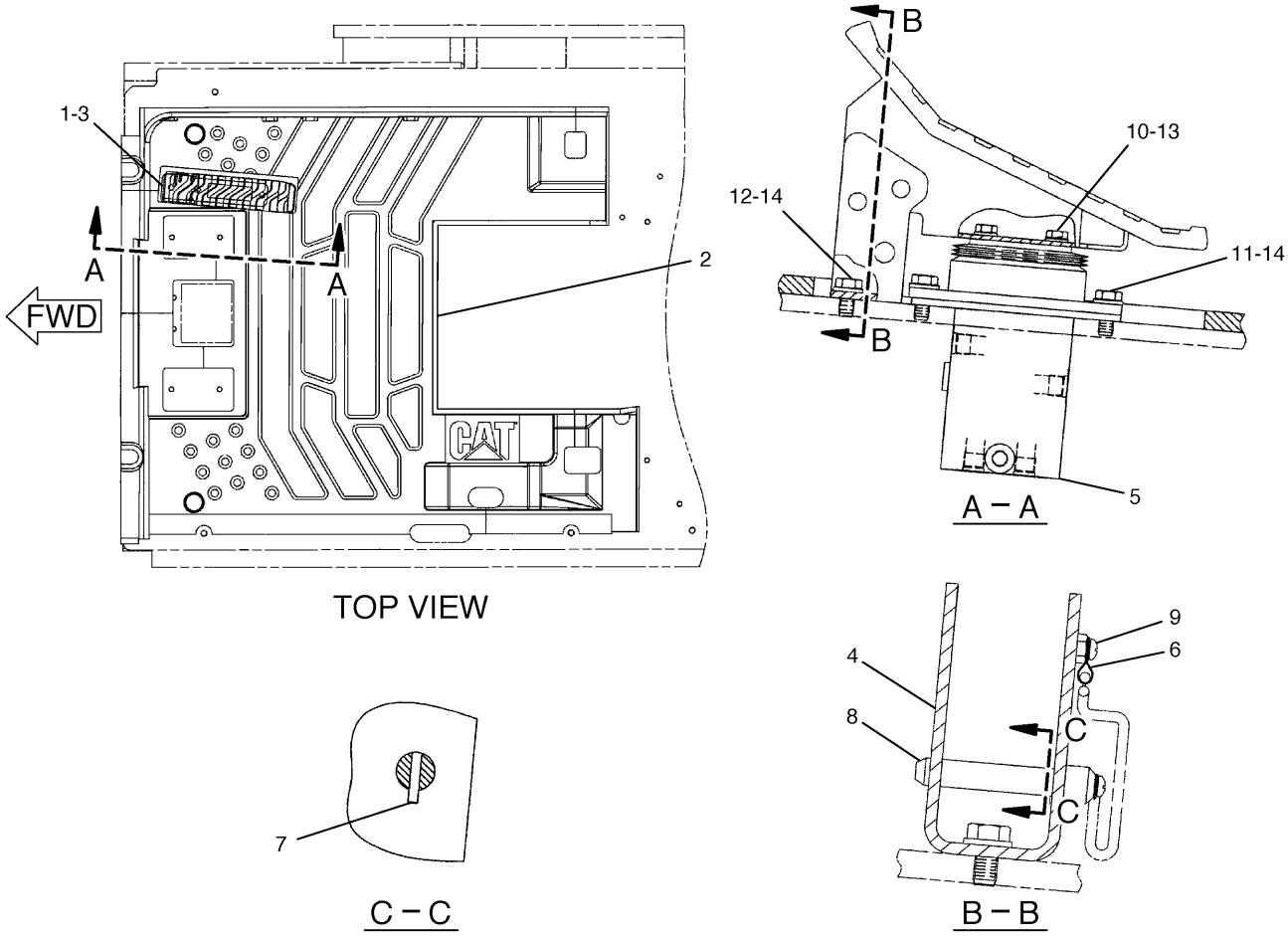

NOTE	No.	PART No.	QTY	PART NAME	NOTE	No.	PART No.	QTY	PART NAME
	1	122-9611	1	PEDAL					
	2	164-0615	1	FLOORMAT					
	3	153-8762	1	PEDAL AS					
	4	153-8763	1	SUPPORT AS					
Y	5	206-3336	1	VALVE GP					
	6	5I-7090	1	CHAIN AS					
	7	8T-0114	1	PIN					
	8	128-2173	1	PIN					
	9	095-0735	2	SCREW					
	10	7X-2536	2	BOLT (L=14mm)					
	11	8T-4136	2	BOLT (L=25mm)					
	12	8T-4137	1	BOLT (L=20mm)					
	13	8T-4224	2	WASHER					
	14	8T-4121	3	WASHER					

Y—SEE SEPARATE ILLUSTRATION

H80860E 04

153-8761 CONTROL GP-HYDRAULIC

Part of 165-0962,165-0963-Page354
206-3336-Page501
An Attachment

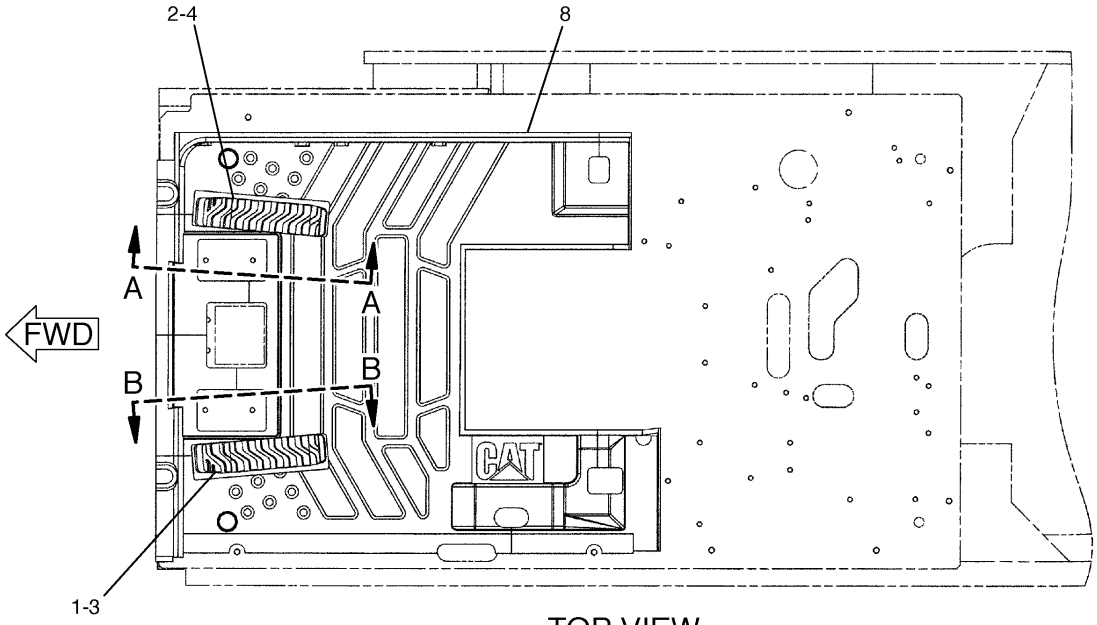

TOP VIEW

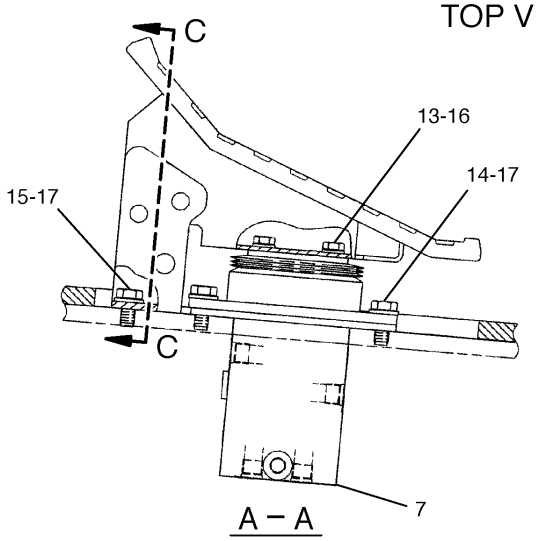

A – A

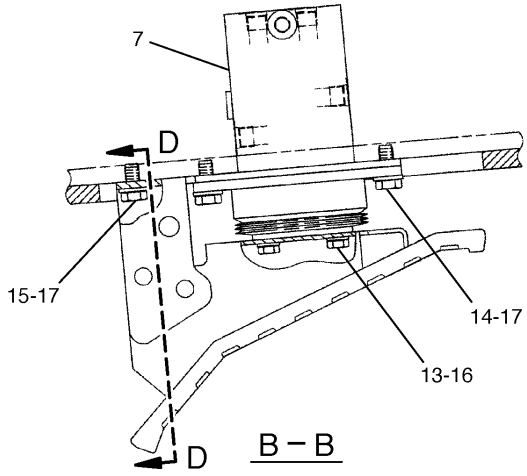

B – B

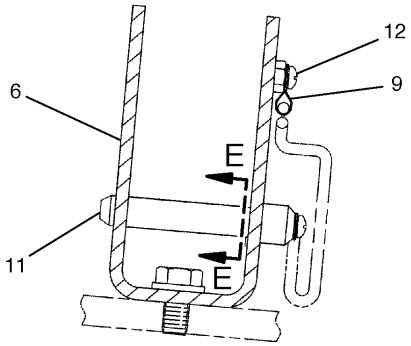

C – C

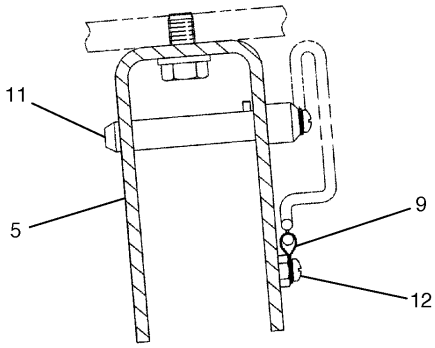

D – D

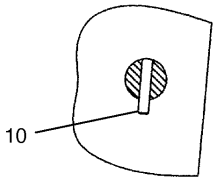

E – E

H78624E 03

179-4598 CONTROL GP-HYDRAULIC
Part of 179-5071-Page355,165-0964-Page356,165-0976-Page357
206-3336-Page501
An Attachment

HYDRAULIC SYSTEM

NOTE	No.	PART No.	QTY	PART NAME	NOTE	No.	PART No.	QTY	PART NAME
	1	121-1865	1	PEDAL					
	2	122-9611	1	PEDAL					
	3	153-8753	1	PEDAL AS					
	4	153-8762	1	PEDAL AS					
	5	179-5044	1	SUPPORT AS					
	6	153-8763	1	SUPPORT AS					
Y	7	206-3336	2	VALVE GP					
	8	179-5046	1	FLOORMAT					
	9	5I-7090	2	CHAIN AS					
	10	8T-0114	2	PIN					
	11	128-2173	2	PIN					
	12	095-0735	4	SCREW					
	13	7X-2536	4	BOLT (L=14mm)					
	14	8T-4136	4	BOLT (L=25mm)					
	15	8T-4137	2	BOLT (L=20mm)					
	16	8T-4224	4	WASHER					
	17	8T-4121	6	WASHER					

Y—SEE SEPARATE ILLUSTRATION

H78624E 03

179-4598 CONTROL GP-HYDRAULIC

Part of 179-5071-Page355,165-0964-Page356,165-0976-Page357
206-3336-Page501
An Attachment

HYDRAULIC SYSTEM

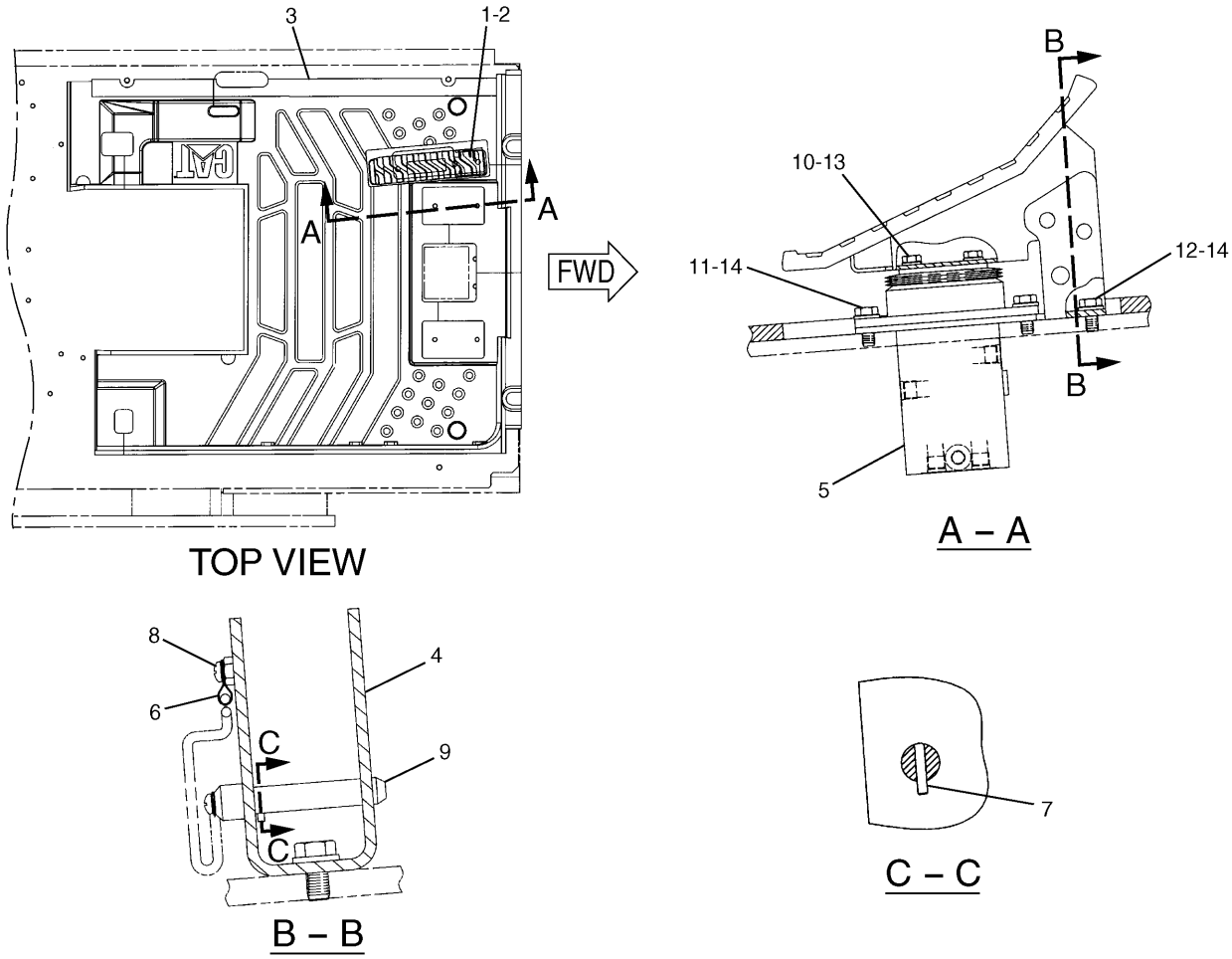

TOP VIEW

A – A

B – B

C – C

NOTE	No.	PART No.	QTY	PART NAME	NOTE	No.	PART No.	QTY	PART NAME
	1	121-1865	1	PEDAL					
	2	153-8753	1	PEDAL AS					
	3	179-5194	1	FLOORMAT					
	4	179-5044	1	SUPPORT AS					
Y	5	206-3336	1	VALVE GP					
	6	5I-7090	1	CHAIN AS					
	7	8T-0114	1	PIN					
	8	095-0735	2	SCREW					
	9	128-2173	1	PIN					
	10	7X-2536	2	BOLT (L=14mm)					
	11	8T-4136	2	BOLT (L=25mm)					
	12	8T-4137	1	BOLT (L=20mm)					
	13	8T-4224	2	WASHER					
	14	8T-4121	3	WASHER					

Y—SEE SEPARATE ILLUSTRATION

H81919E 04

153-8767 CONTROL GP-HYDRAULIC

Part of 165-0967-Page357.01
206-3336-Page501
An Attachment

HYDRAULIC SYSTEM

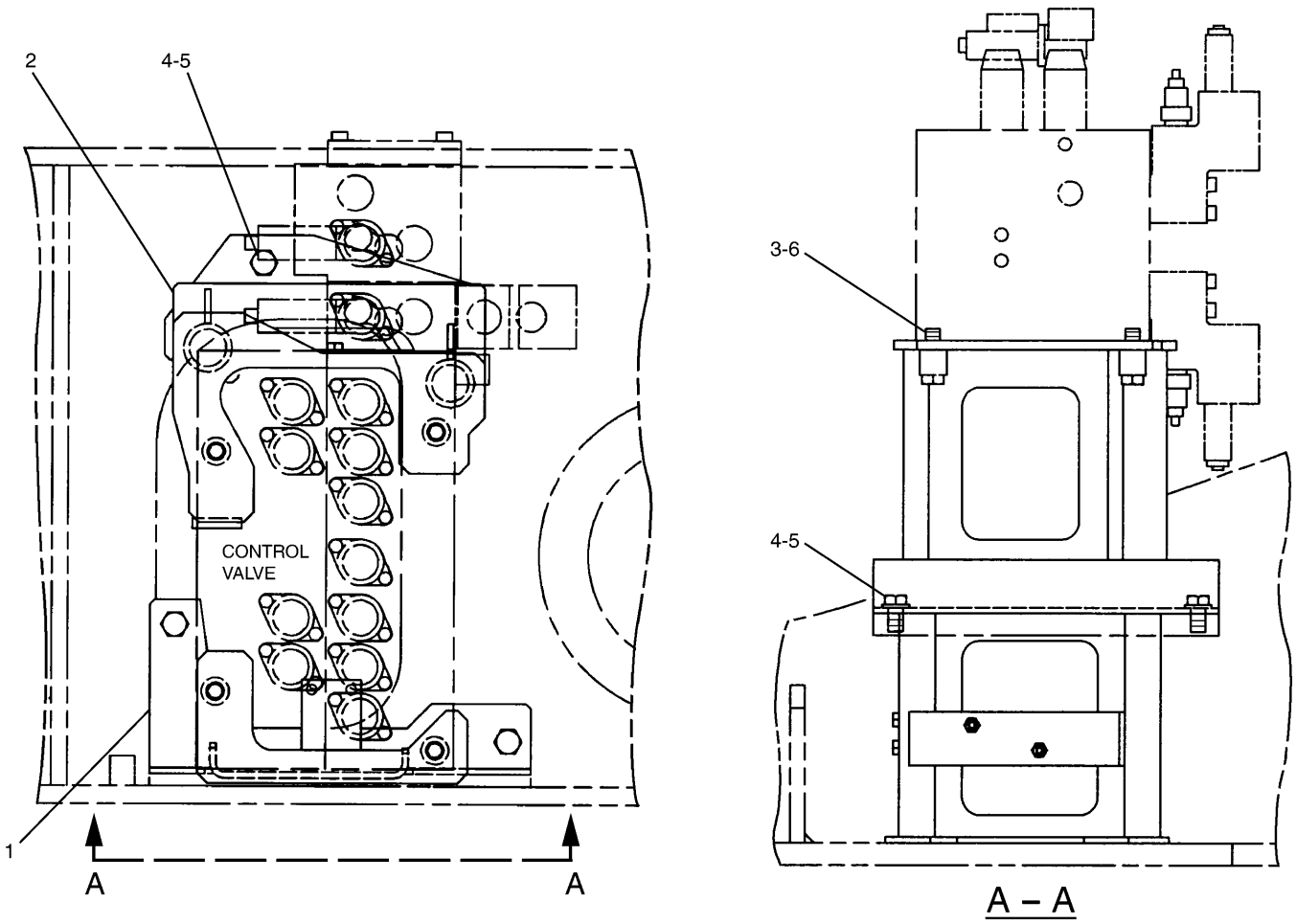

NOTE	No.	PART No.	QTY	PART NAME	NOTE	No.	PART No.	QTY	PART NAME
	1	187-6823	1	SUPPORT AS					
	2	196-0882	1	SUPPORT AS					
	3	8T-4193	4	BOLT (L=50mm)					
	4	7X-2552	3	BOLT (L=30mm)					
	5	9X-8257	3	WASHER					
	6	6I-6123	4	SPACER					

H72133E 04

168-9482 MOUNTING GP-VALVE

S/N CAE 01201-02264

HYDRAULIC SYSTEM

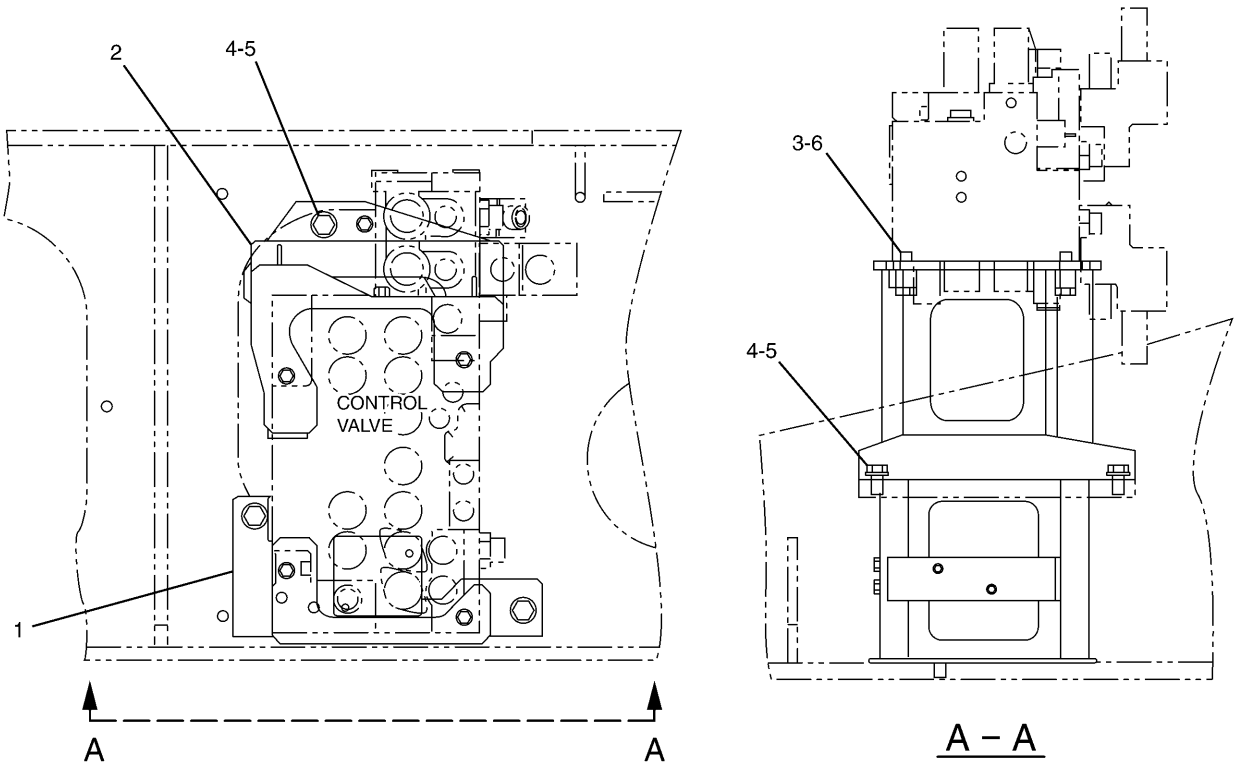

NOTE	No.	PART No.	QTY	PART NAME	NOTE	No.	PART No.	QTY	PART NAME
	1	251-2843	1	SUPPORT AS					
	2	196-0882	1	SUPPORT AS					
	3	8T-4193	4	BOLT (L=50mm)					
	4	7X-2552	3	BOLT (L=30mm)					
	5	9X-8257	3	WASHER					
	6	6I-6123	4	SPACER					

H87249E 05

168-9482 MOUNTING GP-VALVE
S/N CAE 02265-Up

MEMORANDA

HYDRAULIC SYSTEM

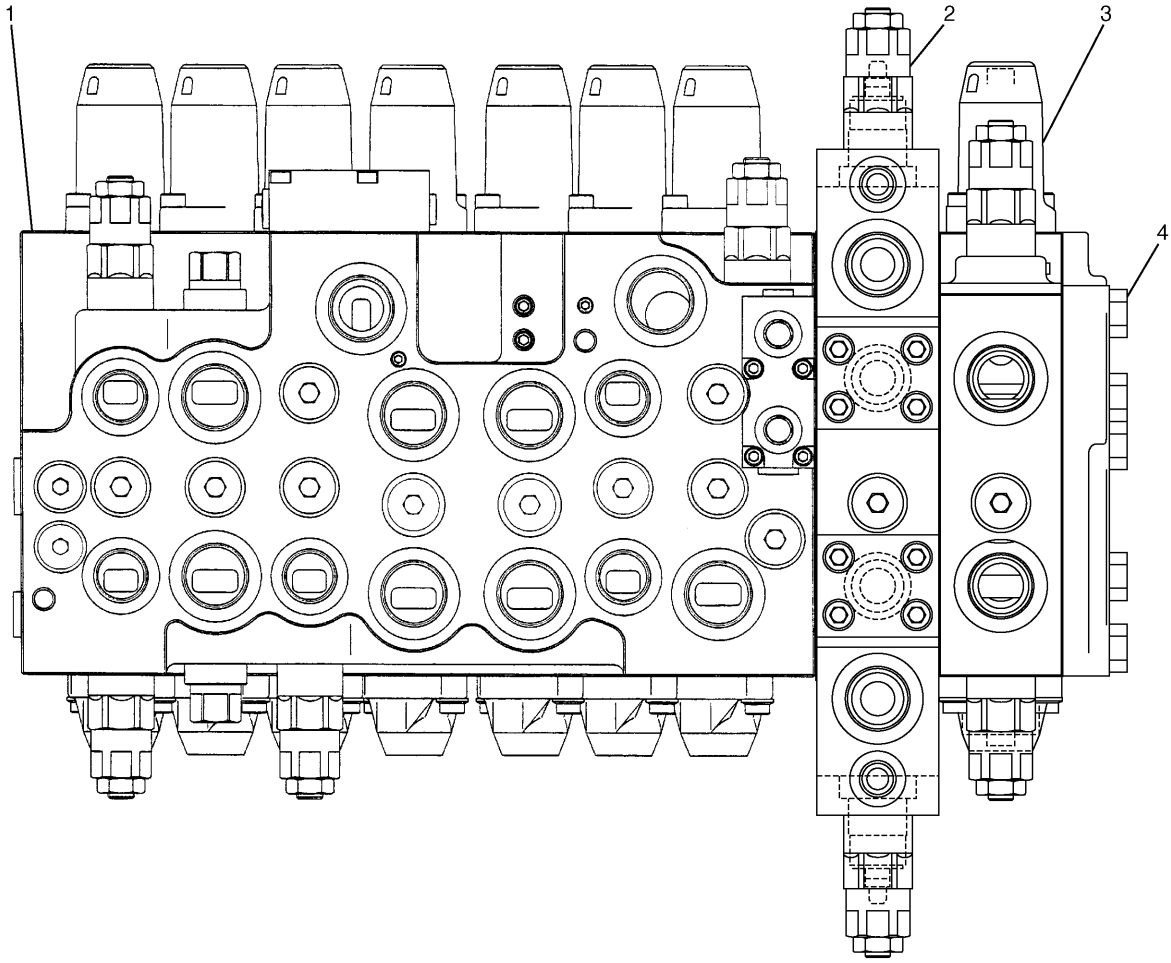

NOTE	No.	PART No.	QTY	PART NAME	NOTE	No.	PART No.	QTY	PART NAME
Y	1	171-0016	1	VALVE GP					
Y	2	177-2744	1	VALVE GP					
Y	3	171-0006	1	VALVE GP					
	4	190-7823	5	BOLT (L=170mm)					

Y—SEE SEPARATE ILLUSTRATION

H75235E 01

197-0201 VALVE & MOUNTING GP

Part of 165-0964-Page356
171-0016-Page450,171-0006-Page471,177-2744-Page472
An Attachment

HYDRAULIC SYSTEM

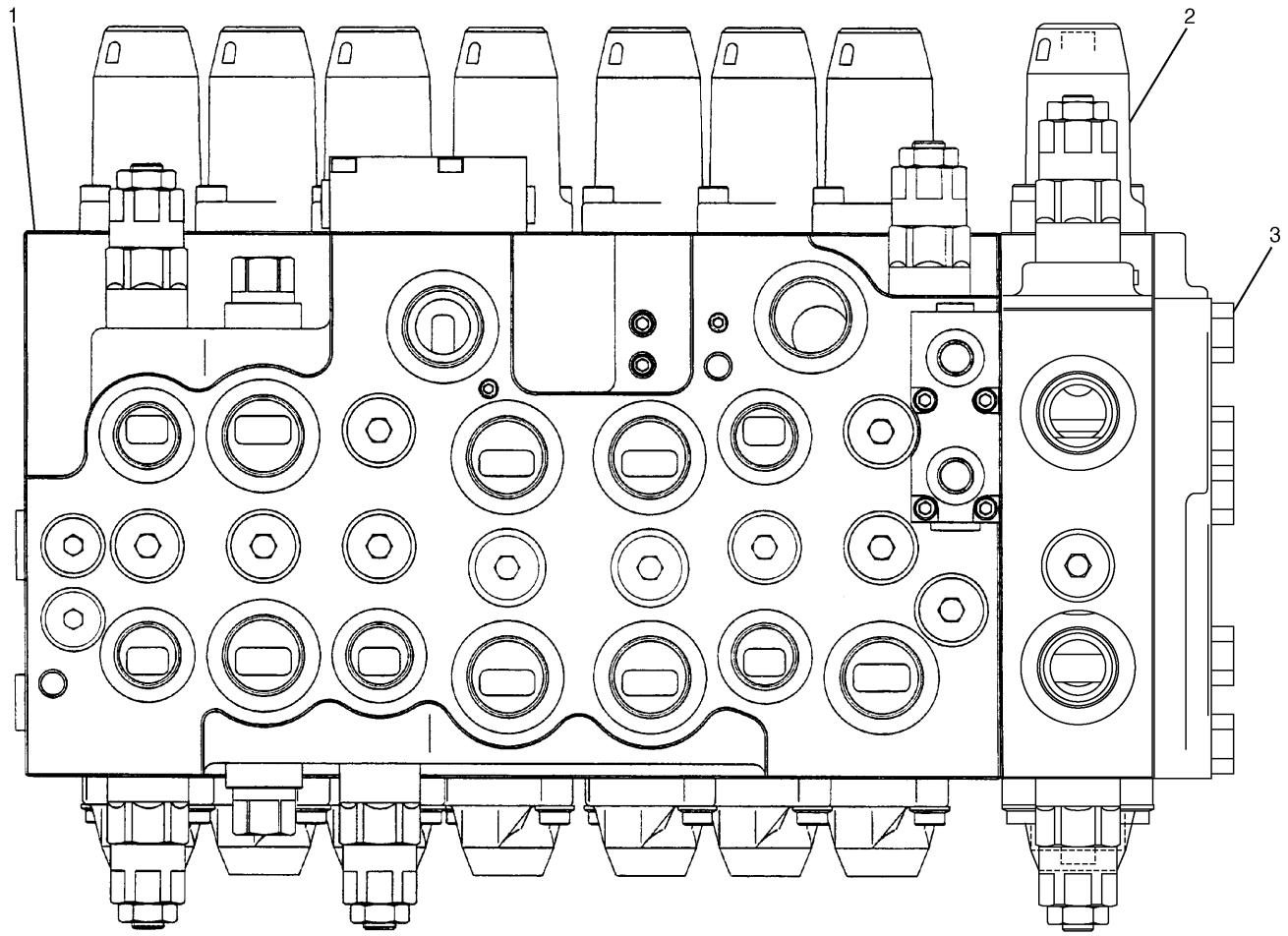

NOTE	No.	PART No.	QTY	PART NAME	NOTE	No.	PART No.	QTY	PART NAME
Y	1	171-0016	1	VALVE GP					
Y	2	171-0006	1	VALVE GP					
	3	177-2768	5	BOLT (L=105mm)					

Y—SEE SEPARATE ILLUSTRATION

H75236E 01

197-0200 VALVE & MOUNTING GP

Part of 165-0963-Page354,179-5071-Page355,165-0976-Page357
171-0016-Page450,171-0006-Page471
An Attachment

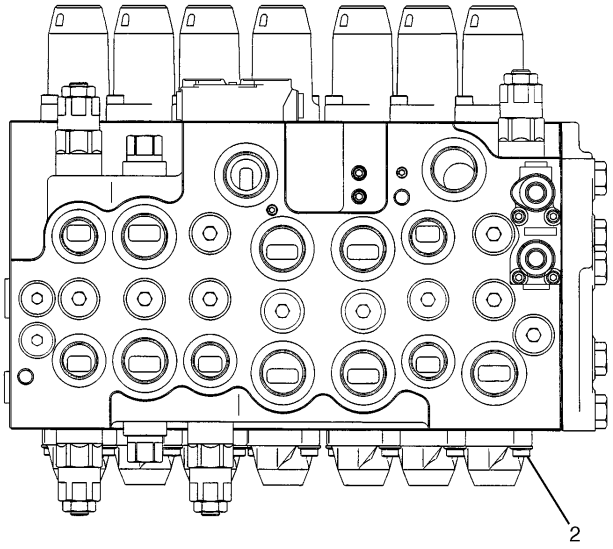

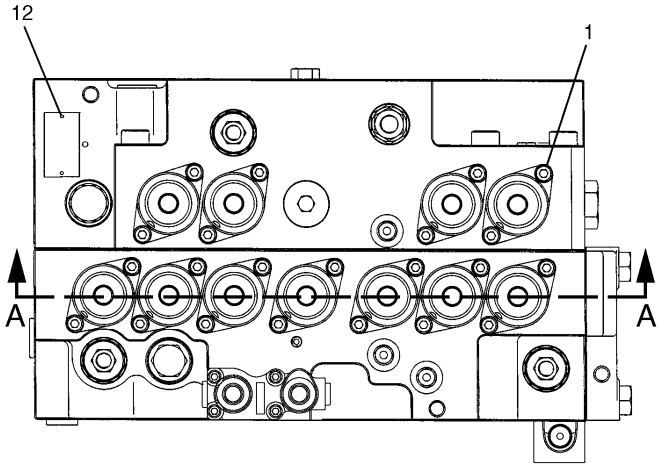

TOP VIEW

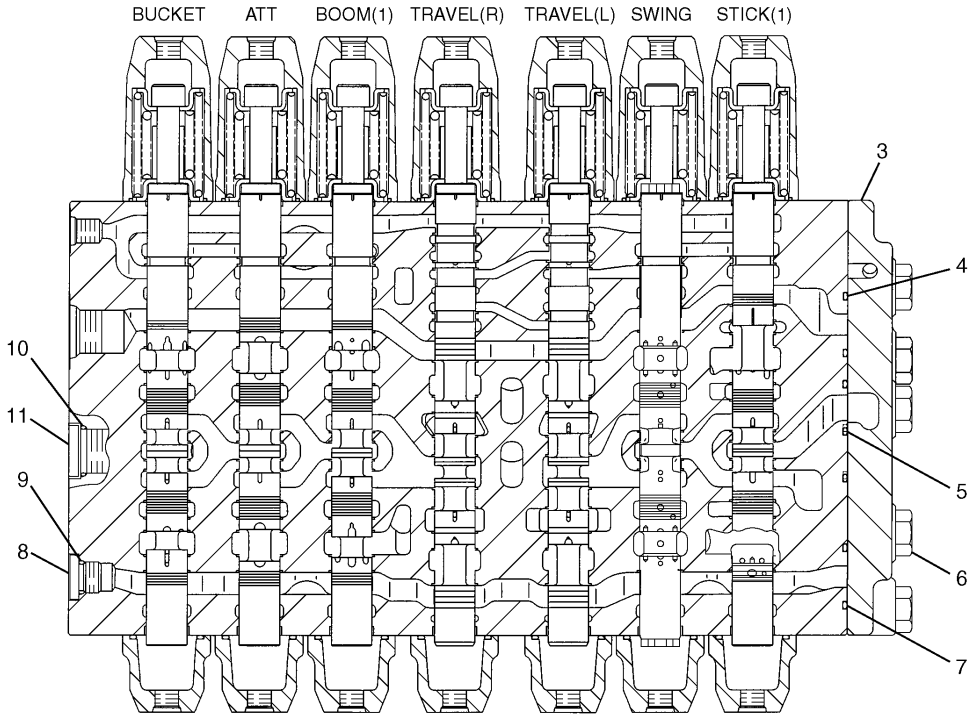

A – A

H84417E 05

171-0016 VALVE GP-MAIN CONTROL (1/5)
Part of 197-0201-Page448,197-0200-Page449

HYDRAULIC SYSTEM

NOTE	No.	PART No.	QTY	PART NAME	NOTE	No.	PART No.	QTY	PART NAME
	1	5A-3604	22	BOLT (L=25mm)					
	2	197-0165	22	BOLT					
	3	197-0167	1	PLATE					
	4	095-1578	4	SEAL-O-RING (ID=9.80mm)					
	5	095-1696	2	SEAL-O-RING (ID=24.40mm)					
	6	104-8107	5	BOLT					
	7	095-1698	3	SEAL-O-RING (ID=29.40mm)					
	8	197-0145	1	PLUG					
	9	095-1582	1	SEAL-O-RING (ID=13.80mm)					
	10	095-1585	1	SEAL-O-RING (ID=17.80mm)					
	11	197-0272	1	PLUG					
	12	5B-9304	2	SCREW					

H84417E 05

171-0016 VALVE GP-MAIN CONTROL (1/5)

Part of 197-0201-Page448,197-0200-Page449

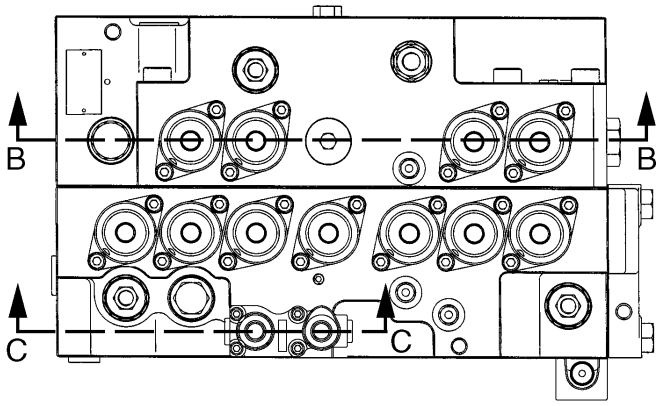

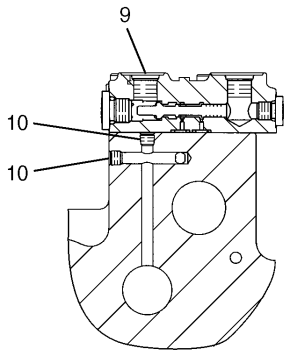

C – C

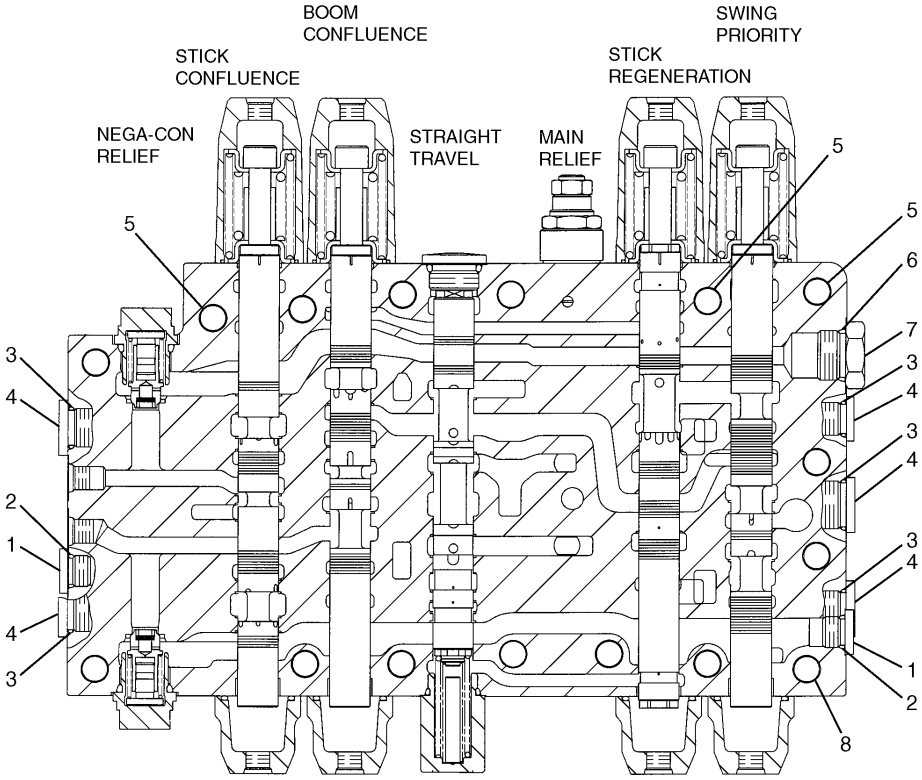

B – B

H84418E 05

171-0016 VALVE GP-MAIN CONTROL (2/5)
Part of 197-0201-Page448,197-0200-Page449

HYDRAULIC SYSTEM

NOTE	No.	PART No.	QTY	PART NAME	NOTE	No.	PART No.	QTY	PART NAME
	1	197-0145	2	PLUG					
	2	095-1582	2	SEAL-O-RING (ID=13.80mm)					
	3	095-1585	5	SEAL-O-RING (ID=17.80mm)					
	4	197-0272	5	PLUG					
	5	197-0143	3	BOLT					
	6	3D-2824	1	SEAL-O-RING (ID=23.47mm)					
	7	9S-4183	1	PLUG					
	8	197-0144	13	BOLT					
	9	197-0169	1	VALVE AS					
	10	7I-8084	2	PLUG					

H84418E 05

171-0016 VALVE GP-MAIN CONTROL (2/5)

Part of 197-0201-Page448,197-0200-Page449

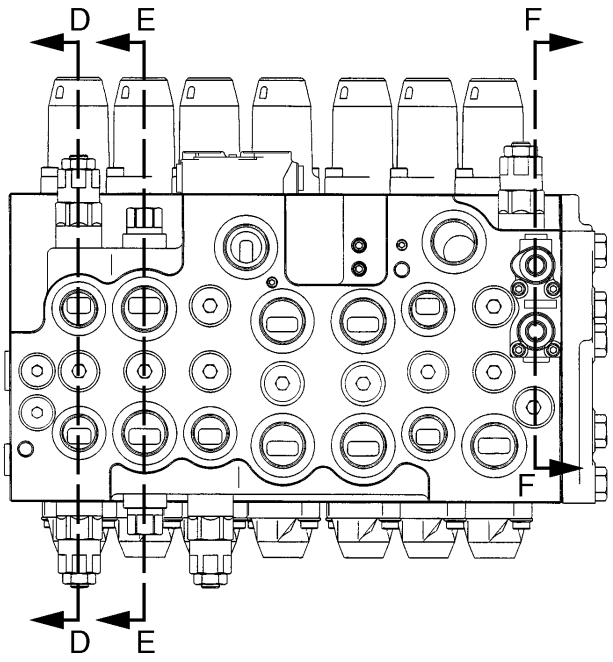

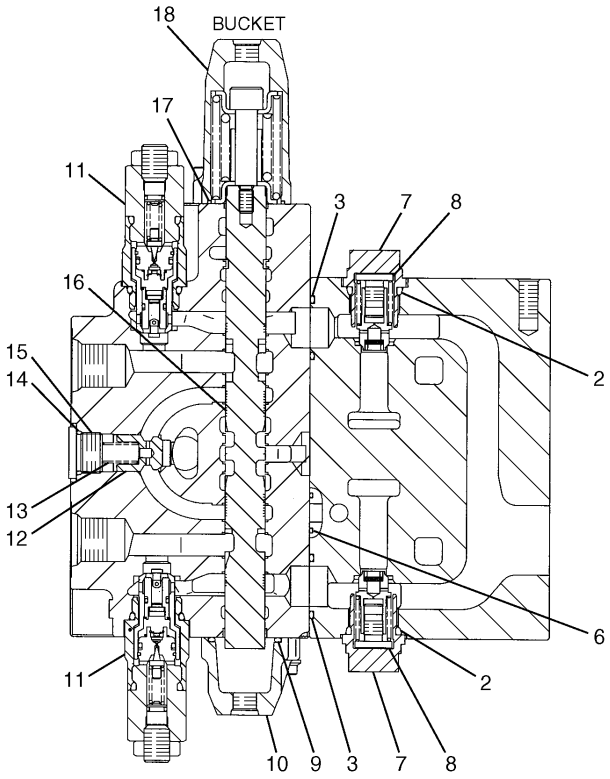

D – D

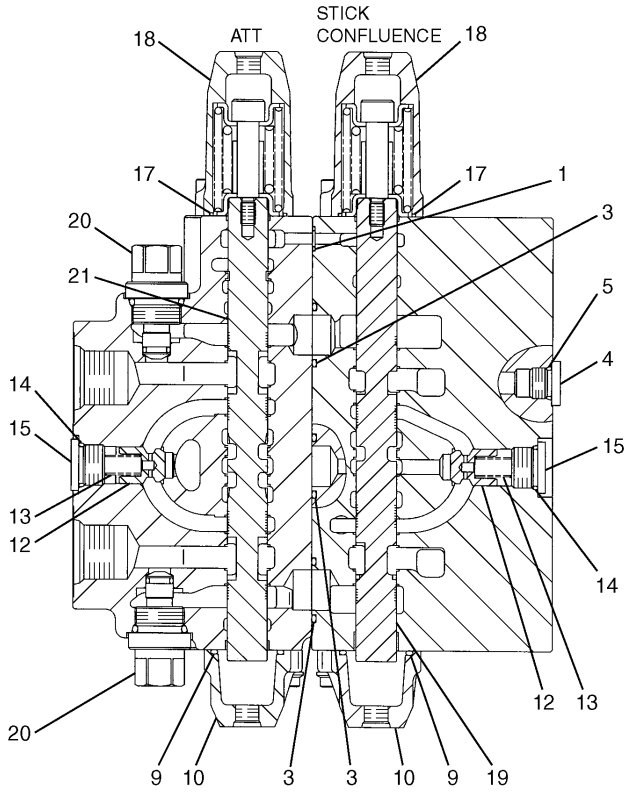

E – E

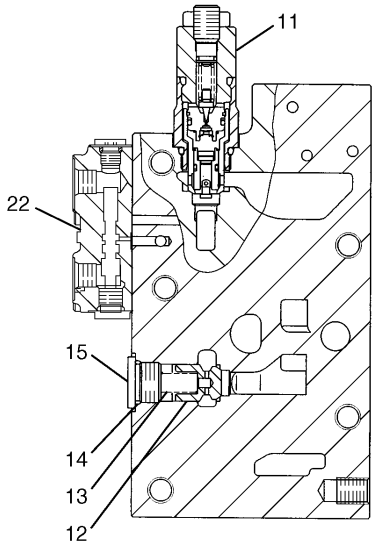

F – F

H84419E 05

171-0016 VALVE GP-MAIN CONTROL (3/5)

Part of 197-0201-Page448,197-0200-Page449
197-0173-Page463,197-0175-Page467,197-0213-Page469,197-0223-Page473

HYDRAULIC SYSTEM

NOTE	No.	PART No.	QTY	PART NAME	NOTE	No.	PART No.	QTY	PART NAME
	1	095-1578	1	SEAL-O-RING (ID=9.80mm)					
	2	095-1696	2	SEAL-O-RING (ID=24.40mm)					
	3	095-1698	5	SEAL-O-RING (ID=29.40mm)					
	4	197-0145	1	PLUG					
	5	095-1582	1	SEAL-O-RING (ID=13.80mm)					
	6	095-1585	1	SEAL-O-RING (ID=17.80mm)					
	7	71-7192	2	PLUG					
	8	147-4165	2	VALVE AS					
	9	095-1700	3	SEAL-O-RING (ID=34.40mm)					
	10	197-0168	3	COVER					
Y	11	197-0223	3	VALVE GP					
	12	71-7208	4	VALVE					
	13	71-7207	4	SPRING					
	14	095-1586	4	SEAL-O-RING (ID=19.80mm)					
	15	71-7206	4	PLUG					
Y	16	197-0213	1	VALVE GP					
	17	71-7204	3	SEAL-O-RING (ID=35.80mm)					
	18	197-0170	3	COVER					
Y	19	197-0175	1	VALVE GP					
	20	197-0225	2	PLUG AS					
Y	21	197-0173	1	VALVE GP					
	22	197-0169	1	VALVE AS					

Y—SEE SEPARATE ILLUSTRATION

H84419E 05

171-0016 VALVE GP-MAIN CONTROL (3/5)

Part of 197-0201-Page448,197-0200-Page449
197-0173-Page463,197-0175-Page467,197-0213-Page469,197-0223-Page473

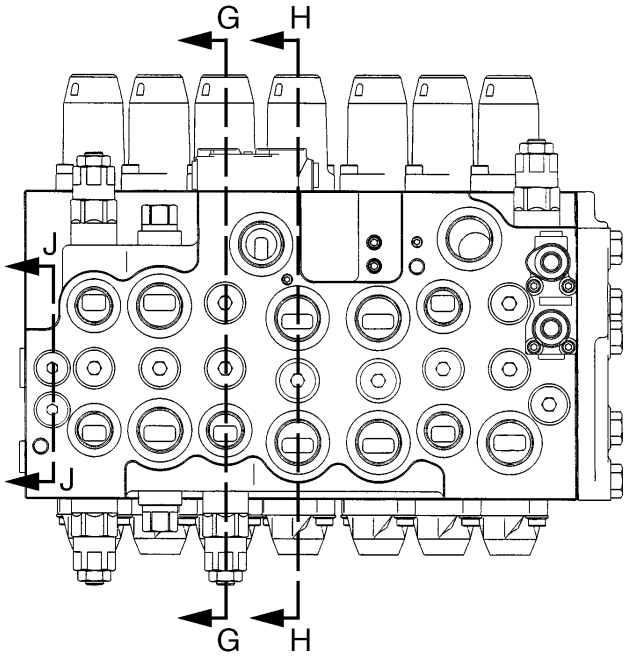

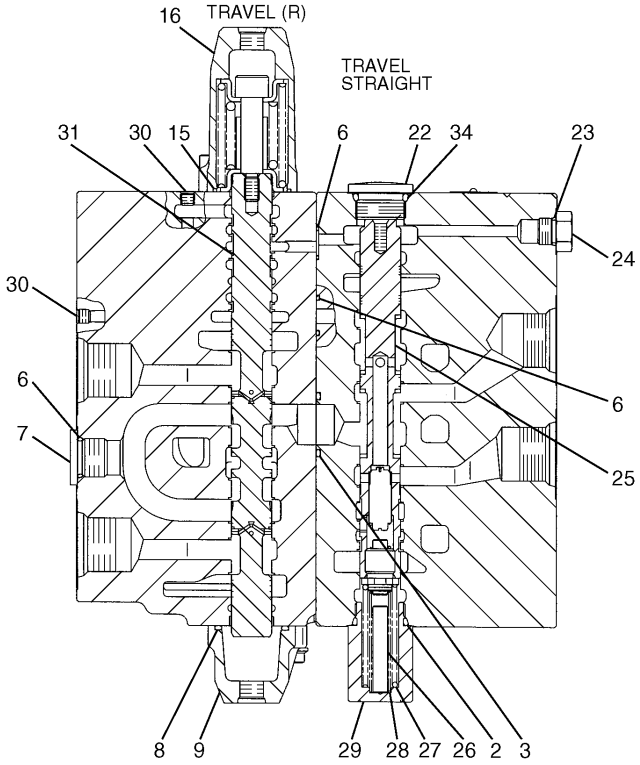

H – H

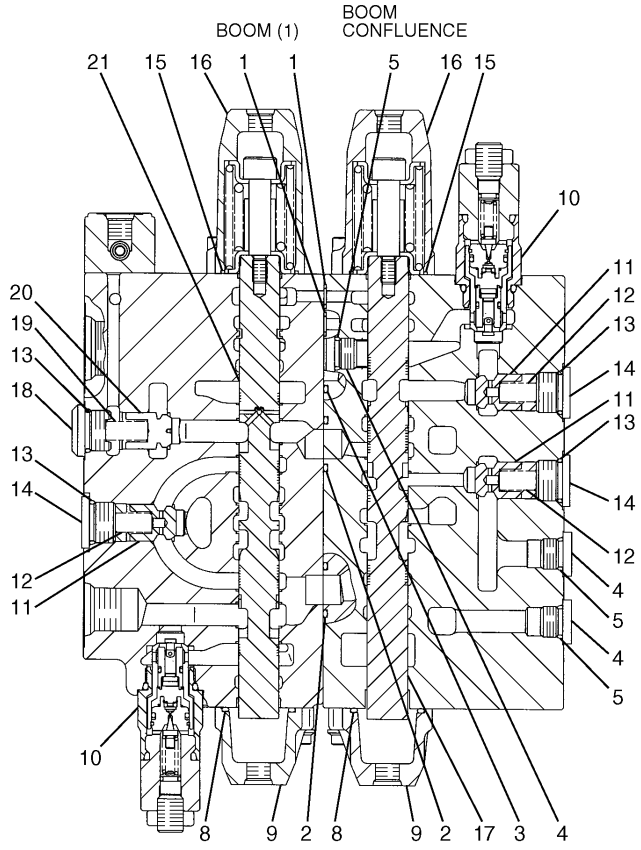

G – G

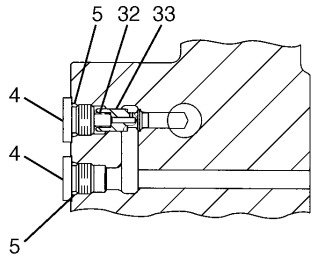

J – J

H84420E 05

171-0016 VALVE GP-MAIN CONTROL (4/5)

Part of 197-0201-Page448,197-0200-Page449
197-0219-Page460,197-0178-Page464,201-9376-Page465,197-0223-Page473

HYDRAULIC SYSTEM

NOTE	No.	PART No.	QTY	PART NAME	NOTE	No.	PART No.	QTY	PART NAME
	1	095-1578	2	SEAL-O-RING (ID=9.80mm)					
	2	095-1696	3	SEAL-O-RING (ID=24.40mm)					
	3	095-1698	2	SEAL-O-RING (ID=29.40mm)					
	4	197-0145	5	PLUG					
	5	095-1582	5	SEAL-O-RING (ID=13.80mm)					
	6	095-1585	3	SEAL-O-RING (ID=17.80mm)					
	7	197-0272	1	PLUG					
	8	095-1700	3	SEAL-O-RING (ID=34.40mm)					
	9	197-0168	3	COVER					
Y	10	197-0223	2	VALVE GP					
	11	7I-7208	3	VALVE					
	12	7I-7207	3	SPRING					
	13	095-1586	4	SEAL-O-RING (ID=19.80mm)					
	14	7I-7206	3	PLUG					
	15	7I-7204	3	SEAL-O-RING (ID=35.80mm)					
	16	197-0170	3	COVER					
Y	17	201-9376	1	VALVE GP					
	18	131-5767	1	PLUG					
	19	105-7405	1	SPRING					
	20	131-5768	1	VALVE					
Y	21	197-0178	1	VALVE GP					
	22	7I-7235	1	PLUG					
	23	3J-1907	1	SEAL-O-RING (ID=11.89mm)					
	24	9S-4191	1	PLUG					
	25	201-9271	1	SPOOL AS					
	26	103-8413	1	ROD					
	27	103-8412	1	SPRING					
	28	103-8411	1	SPRING					
	29	197-0166	1	PLUG					
	30	7I-8084	2	PLUG					
Y	31	197-0219	1	VALVE GP					
	32	197-0146	1	SPRING					
	33	197-0147	1	VALVE					
	34	095-1592	1	SEAL-O-RING (ID=23.70mm)					

Y—SEE SEPARATE ILLUSTRATION

H84420E 05

171-0016 VALVE GP-MAIN CONTROL (4/5)

Part of 197-0201-Page448,197-0200-Page449
197-0219-Page460,197-0178-Page464,201-9376-Page465,197-0223-Page473

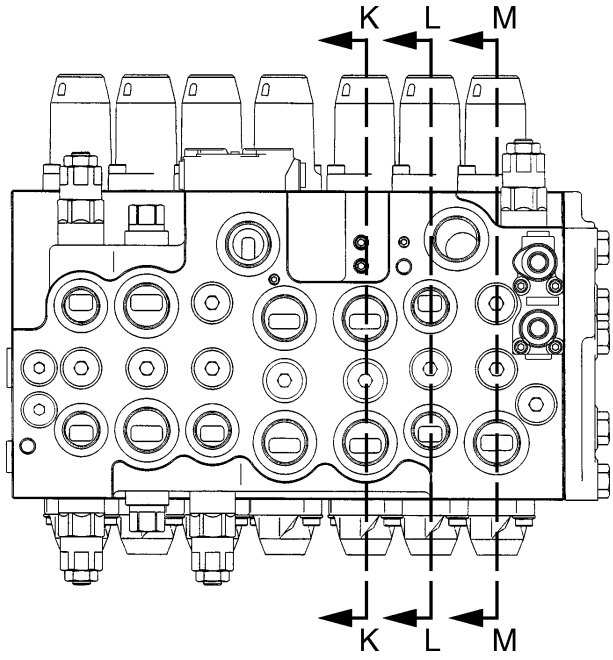

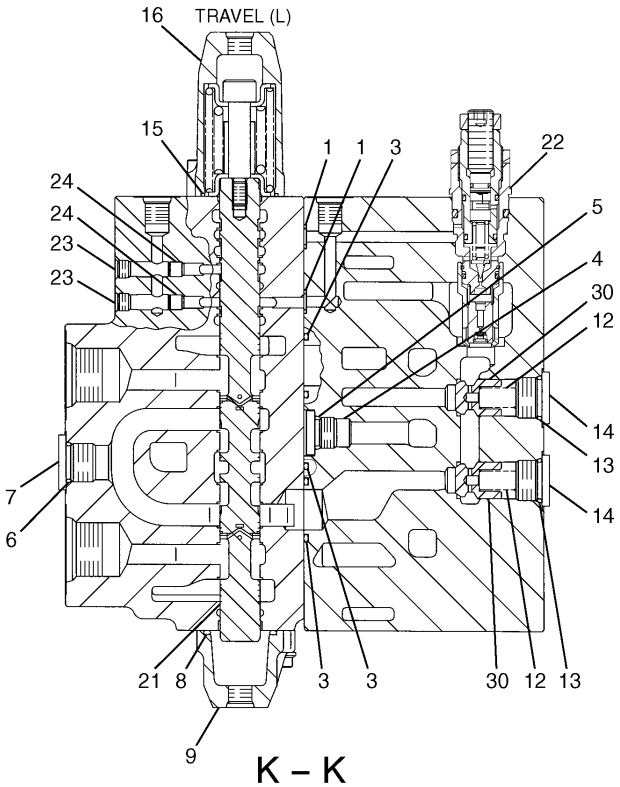

K – K

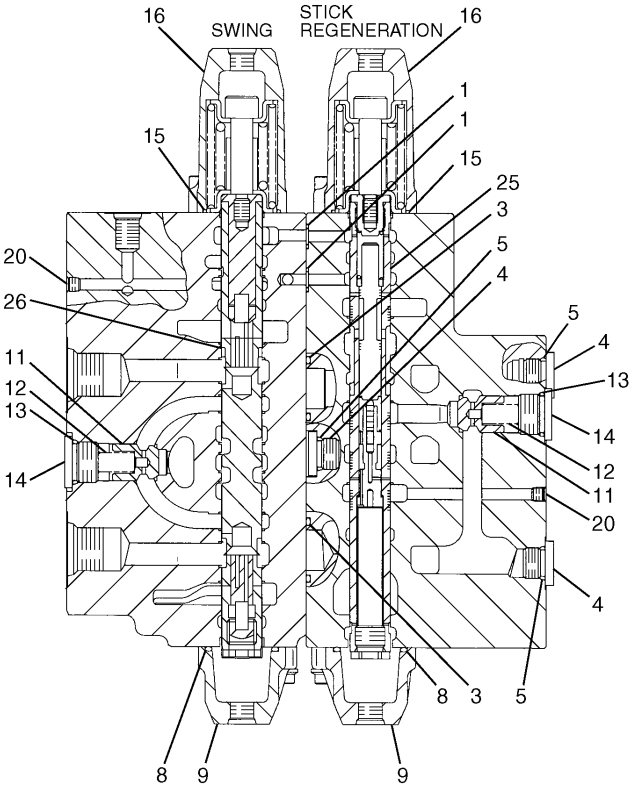

L – L

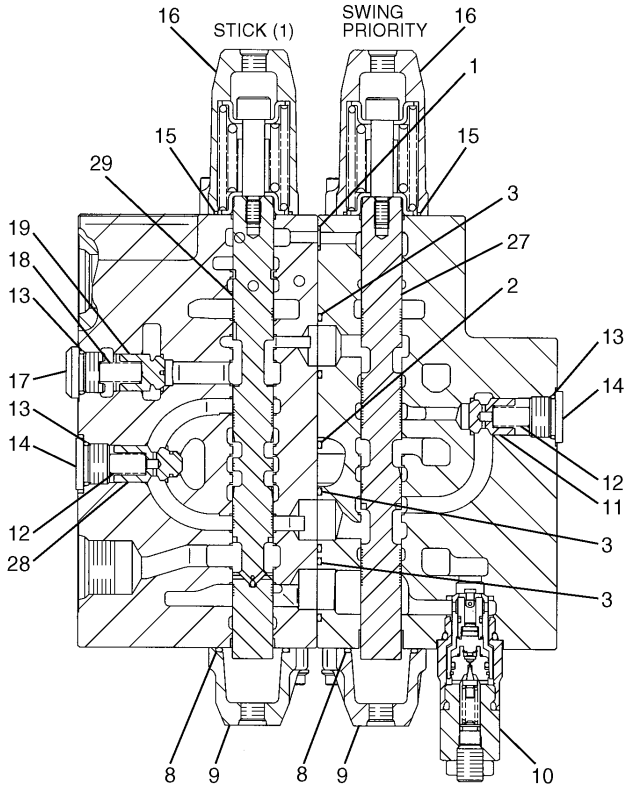

M – M

H84421E 05

171-0016 VALVE GP-MAIN CONTROL (5/5)

Part of 197-0201-Page448,197-0200-Page449
197-0219-Page460,206-3345-Page461,201-9392-Page462,197-0211-Page466,197-0217-Page468,206-3165-Page470
,197-0223-Page473

HYDRAULIC SYSTEM

NOTE	No.	PART No.	QTY	PART NAME	NOTE	No.	PART No.	QTY	PART NAME
	1	095-1578	5	SEAL-O-RING (ID=9.80mm)					
	2	095-1696	1	SEAL-O-RING (ID=24.40mm)					
	3	095-1698	8	SEAL-O-RING (ID=29.40mm)					
	4	197-0145	4	PLUG					
	5	095-1582	4	SEAL-O-RING (ID=13.80mm)					
	6	095-1585	1	SEAL-O-RING (ID=17.80mm)					
	7	197-0272	1	PLUG					
	8	095-1700	5	SEAL-O-RING (ID=34.40mm)					
	9	197-0168	5	COVER					
Y	10	197-0223	1	VALVE GP					
	11	7I-7208	3	VALVE					
	12	7I-7207	6	SPRING					
	13	095-1586	7	SEAL-O-RING (ID=19.80mm)					
	14	7I-7206	6	PLUG					
	15	7I-7204	5	SEAL-O-RING (ID=35.80mm)					
	16	197-0170	5	COVER					
	17	131-5767	1	PLUG					
	18	105-7405	1	SPRING					
	19	131-5768	1	VALVE					
	20	7I-8084	2	PLUG					
Y	21	197-0219	1	VALVE GP					
Y	22	206-3165	1	VALVE GP					
	23	095-0965	2	PLUG					
	24	7I-7241	2	ORIFICE					
Y	25	197-0217	1	VALVE GP					
Y	26	206-3345	1	VALVE GP					
Y	27	201-9392	1	VALVE GP					
	28	7I-7250	1	VALVE					
Y	29	197-0211	1	VALVE GP					
	30	215-4872	2	VALVE					

Y—SEE SEPARATE ILLUSTRATION

H84421E 05

171-0016 VALVE GP-MAIN CONTROL (5/5)

Part of 197-0201-Page448,197-0200-Page449
197-0219-Page460,206-3345-Page461,201-9392-Page462,197-0211-Page466,197-0217-Page468,206-3165-Page470
,197-0223-Page473

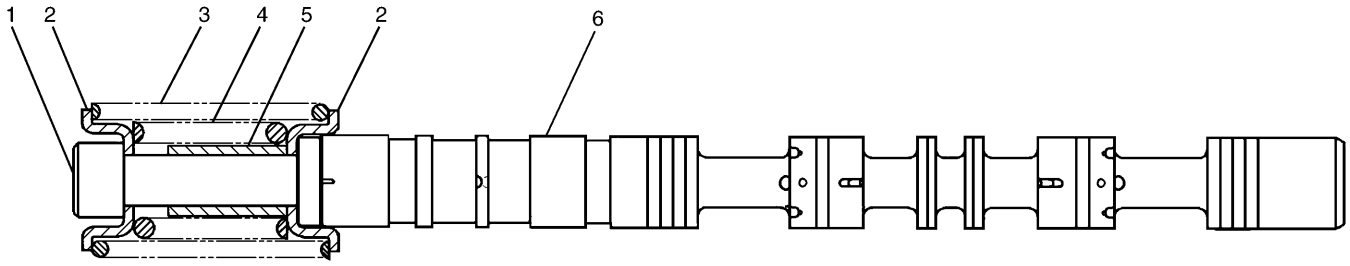

NOTE	No.	PART No.	QTY	PART NAME	NOTE	No.	PART No.	QTY	PART NAME
	1	197-0148	1	BOLT					
	2	71-7203	2	SEAT					
	3	197-0151	1	SPRING					
	4	197-0150	1	SPRING					
	5	197-0149	1	STOPPER					
	6	197-0220	1	SPOOL					

H72157E 00

197-0219 VALVE GP-CONTROL

Part of 171-0016-Page457

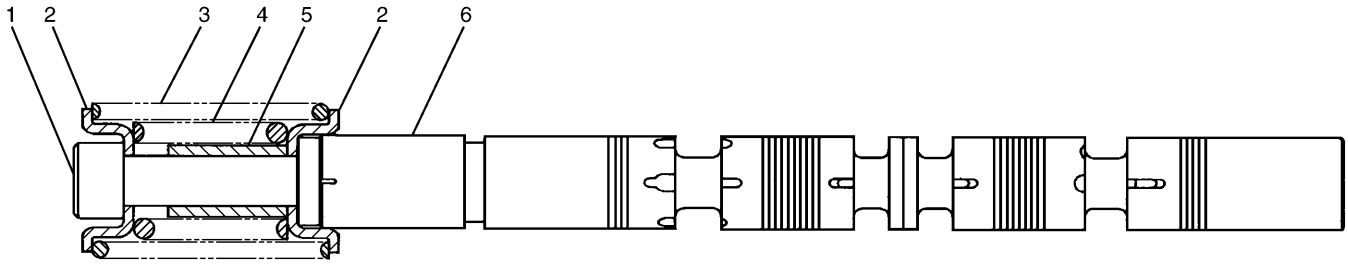

NOTE	No.	PART No.	QTY	PART NAME	NOTE	No.	PART No.	QTY	PART NAME
	1	197-0148	1	BOLT					
	2	71-7203	2	SEAT					
	3	197-0151	1	SPRING					
	4	197-0150	1	SPRING					
	5	197-0149	1	STOPPER					
	6	206-3346	1	SPOOL					

H78909E 00

206-3345 VALVE GP-CONTROL

Part of 171-0016-Page459

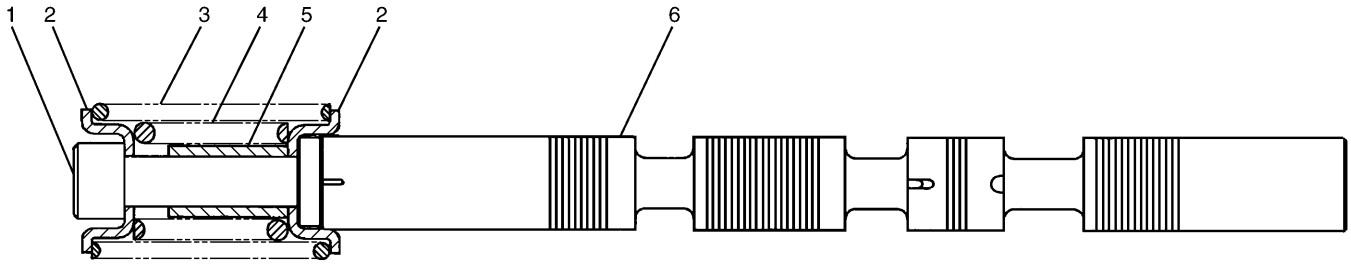

NOTE	No.	PART No.	QTY	PART NAME	NOTE	No.	PART No.	QTY	PART NAME
	1	197-0148	1	BOLT					
	2	71-7203	2	SEAT					
	3	197-0152	1	SPRING					
	4	197-0150	1	SPRING					
	5	197-0149	1	STOPPER					
	6	201-9393	1	SPOOL					

H76685E 00

201-9392 VALVE GP-CONTROL

Part of 171-0016-Page459

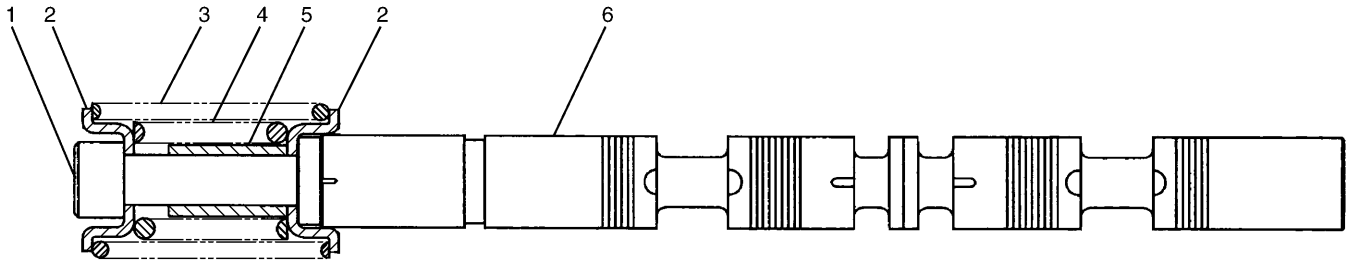

NOTE	No.	PART No.	QTY	PART NAME	NOTE	No.	PART No.	QTY	PART NAME
	1	197-0148	1	BOLT					
	2	71-7203	2	SEAT					
	3	197-0151	1	SPRING					
	4	197-0150	1	SPRING					
	5	197-0149	1	STOPPER					
	6	197-0156	1	SPOOL					

H72149E 00

197-0173 VALVE GP-CONTROL

Part of 171-0016-Page455,171-0006-Page471,177-2744-Page472

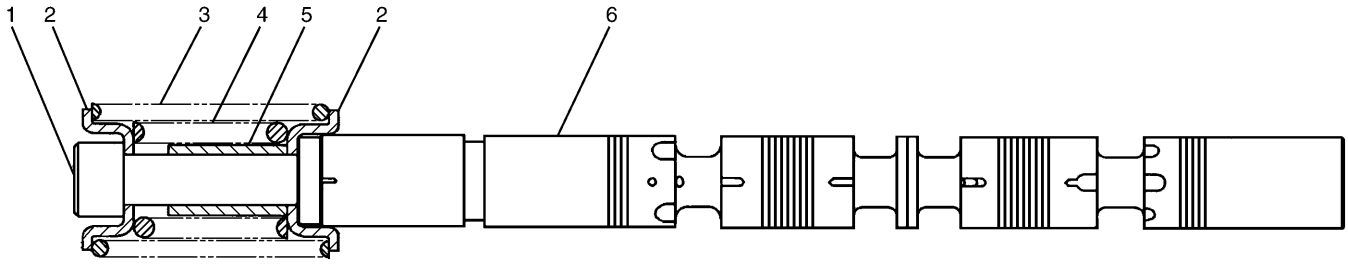

NOTE	No.	PART No.	QTY	PART NAME	NOTE	No.	PART No.	QTY	PART NAME
	1	197-0148	1	BOLT					
	2	71-7203	2	SEAT					
	3	197-0151	1	SPRING					
	4	197-0150	1	SPRING					
	5	197-0149	1	STOPPER					
	6	197-0162	1	SPOOL					

H72152E 00

197-0178 VALVE GP-CONTROL
Part of 171-0016-Page457

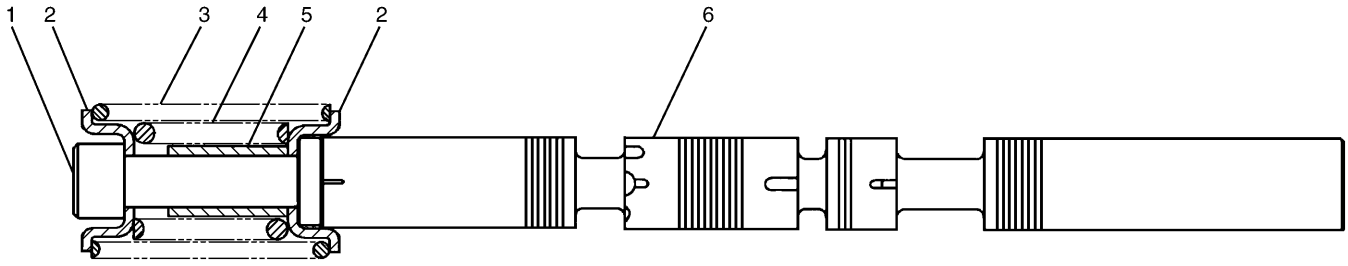

NOTE	No.	PART No.	QTY	PART NAME	NOTE	No.	PART No.	QTY	PART NAME
	1	197-0148	1	BOLT					
	2	71-7203	2	SEAT					
	3	197-0153	1	SPRING					
	4	197-0150	1	SPRING					
	5	197-0149	1	STOPPER					
	6	201-9377	1	SPOOL					

H76684E 00

201-9376 VALVE GP-CONTROL

Part of 171-0016-Page457

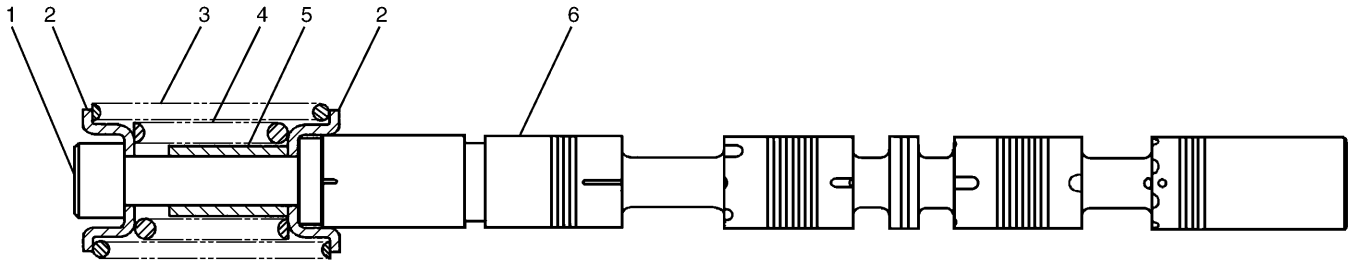

NOTE	No.	PART No.	QTY	PART NAME	NOTE	No.	PART No.	QTY	PART NAME
	1	197-0148	1	BOLT					
	2	71-7203	2	SEAT					
	3	197-0151	1	SPRING					
	4	197-0150	1	SPRING					
	5	197-0149	1	STOPPER					
	6	197-0212	1	SPOOL					

H72153E 00

197-0211 VALVE GP-CONTROL

Part of 171-0016-Page459

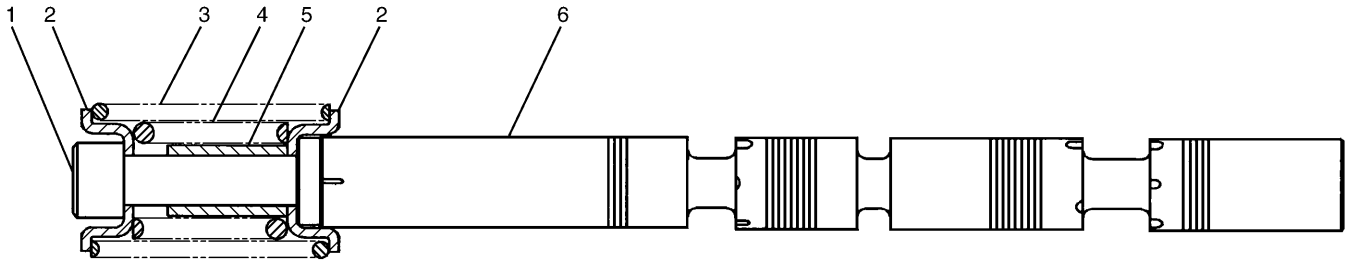

NOTE	No.	PART No.	QTY	PART NAME	NOTE	No.	PART No.	QTY	PART NAME
	1	197-0148	1	BOLT					
	2	71-7203	2	SEAT					
	3	197-0153	1	SPRING					
	4	197-0150	1	SPRING					
	5	197-0149	1	STOPPER					
	6	197-0158	1	SPOOL					

H72150E 00

197-0175 VALVE GP-CONTROL

Part of 171-0016-Page455

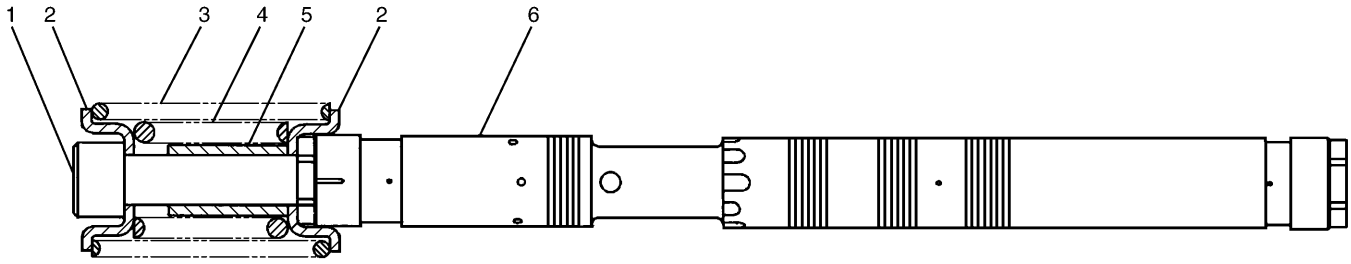

NOTE	No.	PART No.	QTY	PART NAME	NOTE	No.	PART No.	QTY	PART NAME
	1	197-0148	1	BOLT					
	2	71-7203	2	SEAT					
	3	197-0151	1	SPRING					
	4	197-0150	1	SPRING					
	5	197-0149	1	STOPPER					
	6	197-0218	1	SPOOL					

H72156E 00

197-0217 VALVE GP-CONTROL
Part of 171-0016-Page459

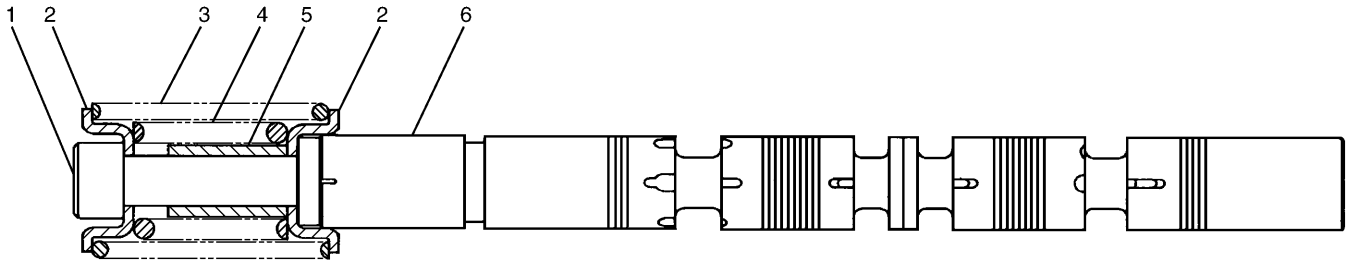

NOTE	No.	PART No.	QTY	PART NAME	NOTE	No.	PART No.	QTY	PART NAME
	1	197-0148	1	BOLT					
	2	71-7203	2	SEAT					
	3	197-0152	1	SPRING					
	4	197-0150	1	SPRING					
	5	197-0149	1	STOPPER					
	6	197-0214	1	SPOOL					

H72154E 00

197-0213 VALVE GP-CONTROL

Part of 171-0016-Page455

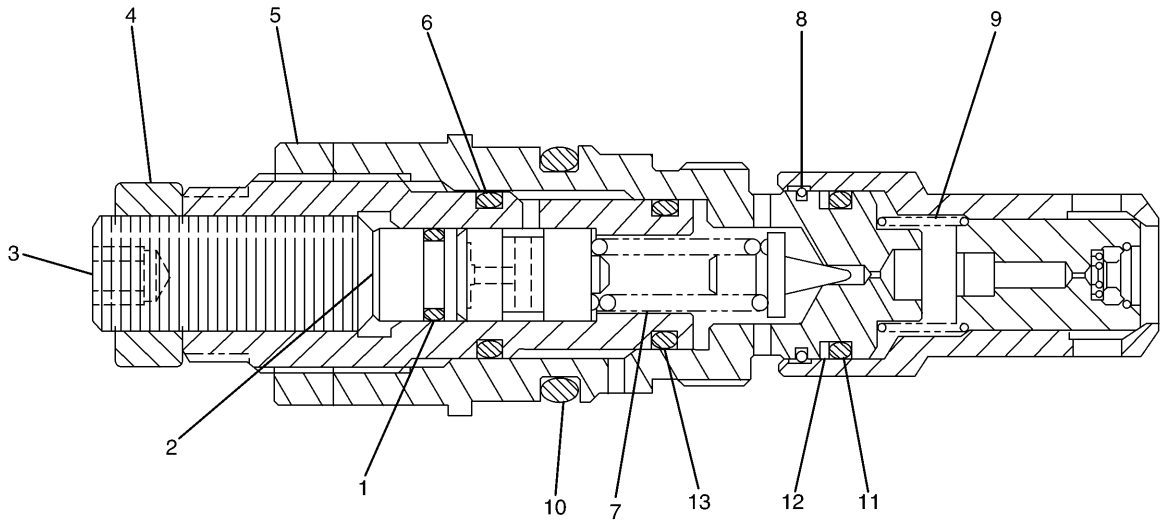

NOTE	No.	PART No.	QTY	PART NAME	NOTE	No.	PART No.	QTY	PART NAME
	1	095-1575	1	SEAL-O-RING (ID=7.80mm)					
	2	7I-8096	1	STOPPER					
	3	7I-8098	1	SETSCREW					
	4	6V-8821	1	NUT					
	5	7I-8100	1	NUT					
	6	095-1584	1	SEAL-O-RING (ID=15.80mm)					
	7	7I-8087	1	SPRING					
	8	7I-8095	1	RING					
	9	7I-8081	1	SPRING					
	10	095-1593	1	SEAL-O-RING (ID=24.70mm)					
	11	095-1519	1	SEAL-O-RING (ID=15.80mm)					
	12	095-1783	1	RING					
	13	095-1582	1	SEAL-O-RING (ID=13.80mm)					

H78635E 00

206-3165 VALVE GP-RELIEF

Part of 171-0016-Page459

HYDRAULIC SYSTEM

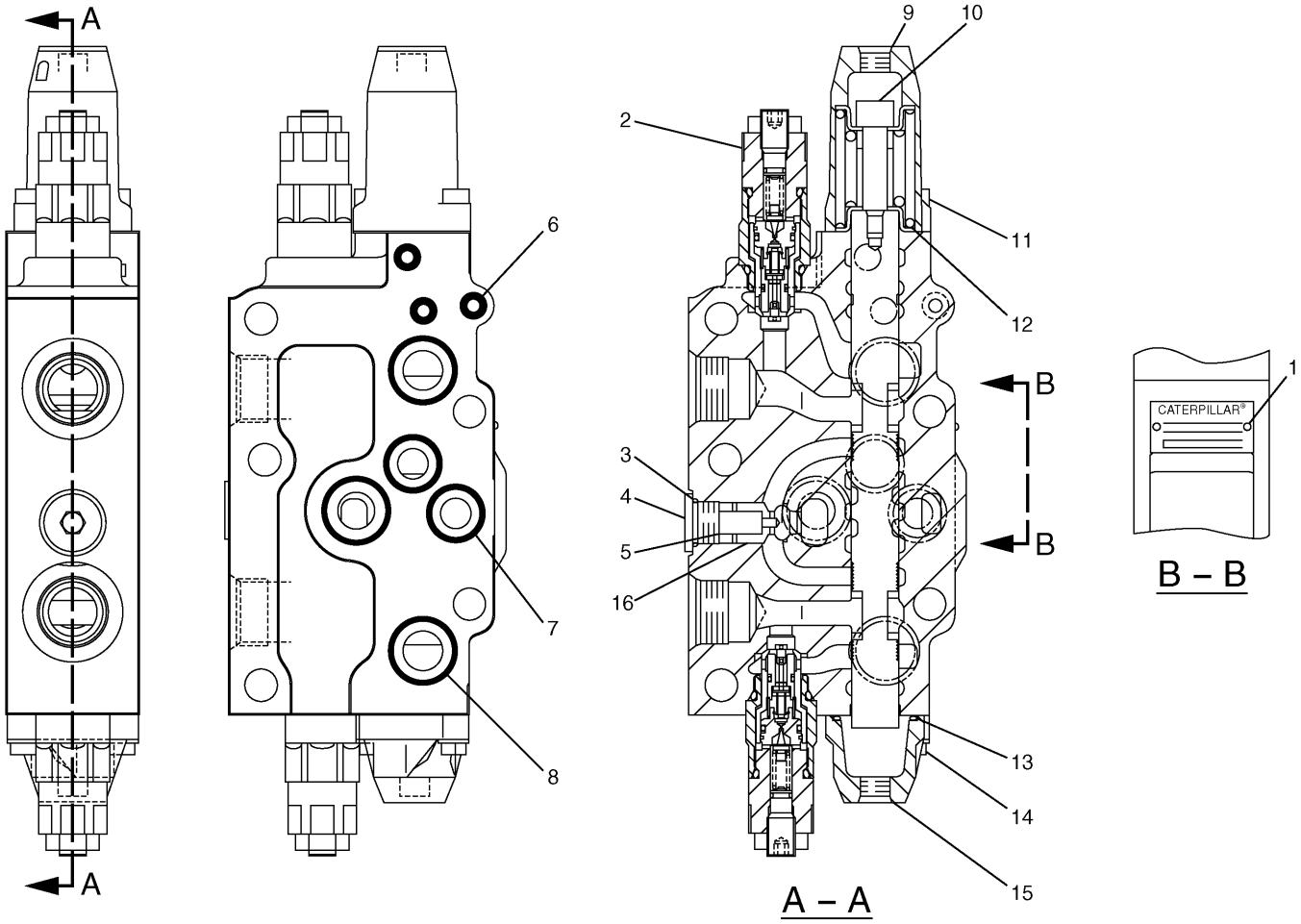

NOTE	No.	PART No.	QTY	PART NAME	NOTE	No.	PART No.	QTY	PART NAME
	1	5B-9304	2	SCREW					
Y	2	197-0223	2	VALVE GP					
	3	095-1586	1	SEAL-O-RING (ID=19.80mm)					
	4	7I-7206	1	PLUG					
	5	7I-7207	1	SPRING					
	6	095-1578	3	SEAL-O-RING (ID=9.80mm)					
	7	095-1696	2	SEAL-O-RING (ID=24.40mm)					
	8	095-1698	3	SEAL-O-RING (ID=29.40mm)					
	9	197-0170	1	COVER					
Y	10	197-0173	1	VALVE GP					
	11	5A-3604	2	BOLT (L=25mm)					
	12	7I-7204	1	SEAL-O-RING (ID=35.80mm)					
	13	095-1700	1	SEAL-O-RING (ID=34.40mm)					
	14	197-0165	2	BOLT					
	15	197-0168	1	COVER					
	16	7I-7208	1	VALVE					

Y—SEE SEPARATE ILLUSTRATION

H72136E 02

171-0006 VALVE GP-CONTROL

Part of 197-0201-Page448,197-0200-Page449
197-0173-Page463,197-0223-Page473
An Attachment

HYDRAULIC SYSTEM

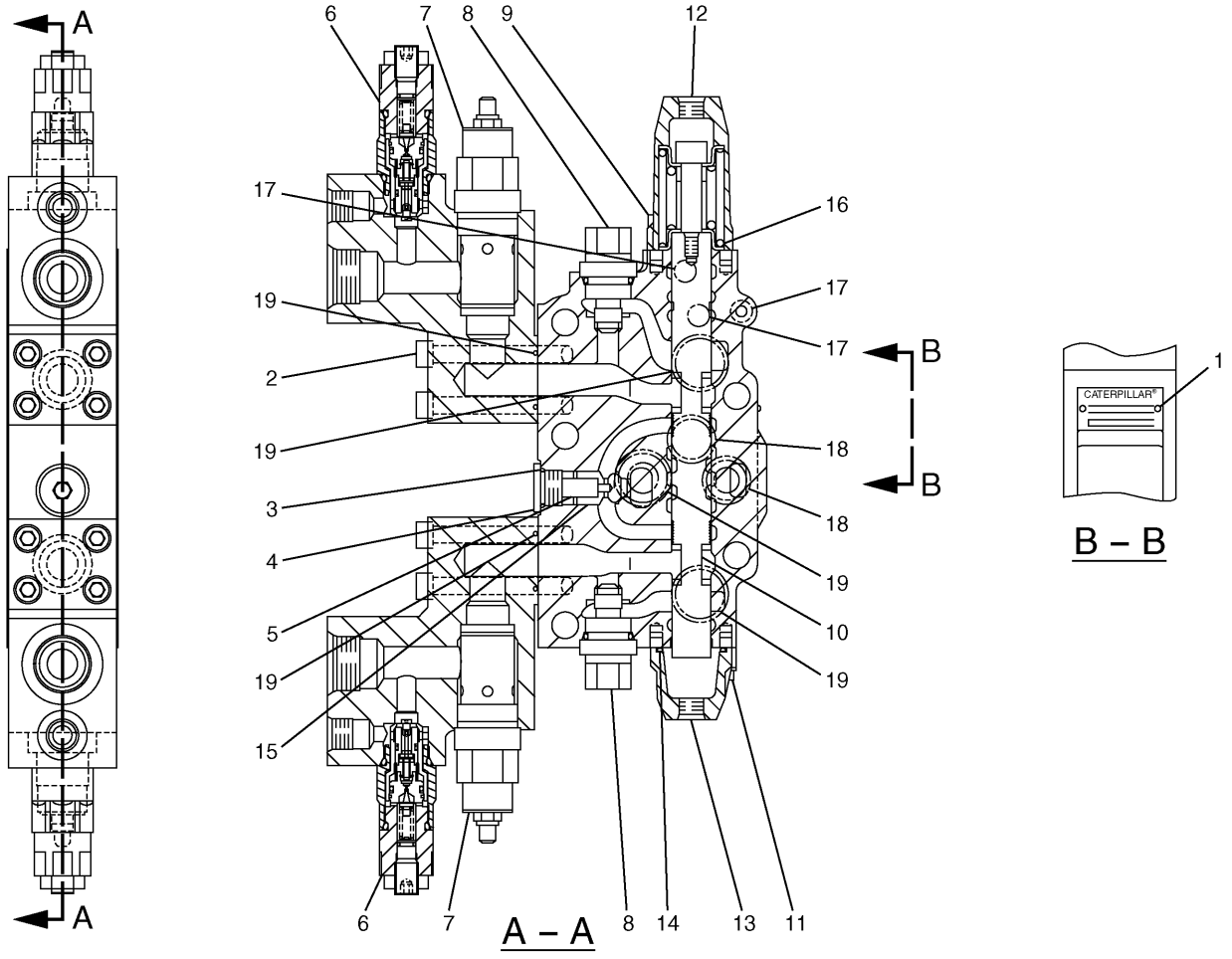

NOTE	No.	PART No.	QTY	PART NAME	NOTE	No.	PART No.	QTY	PART NAME
	1	5B-9304	2	SCREW					
	2	197-0226	8	BOLT (L=75mm)					
	3	095-1586	1	SEAL-O-RING (ID=19.80mm)					
	4	7I-7206	1	PLUG					
	5	7I-7207	1	SPRING					
Y	6	197-0270	2	VALVE GP					
	7	165-9497	2	VALVE GP					
		185-0400	1	SEAL KIT					
	8	197-0225	2	PLUG AS					
	9	5A-3604	2	BOLT (L=25mm)					
Y	10	197-0173	1	VALVE GP					
	11	197-0165	2	BOLT					
	12	197-0170	1	COVER					
	13	197-0168	1	COVER					
	14	095-1700	1	SEAL-O-RING (ID=34.40mm)					
	15	7I-7208	1	VALVE					
	16	7I-7204	1	SEAL-O-RING (ID=35.80mm)					
	17	095-1578	3	SEAL-O-RING (ID=9.80mm)					
	18	095-1696	2	SEAL-O-RING (ID=24.40mm)					
	19	095-1698	5	SEAL-O-RING (ID=29.40mm)					

Y—SEE SEPARATE ILLUSTRATION

H75237E 02

177-2744 VALVE GP-CONTROL

Part of 197-0201-Page448
197-0173-Page463,197-0270-Page474
An Attachment

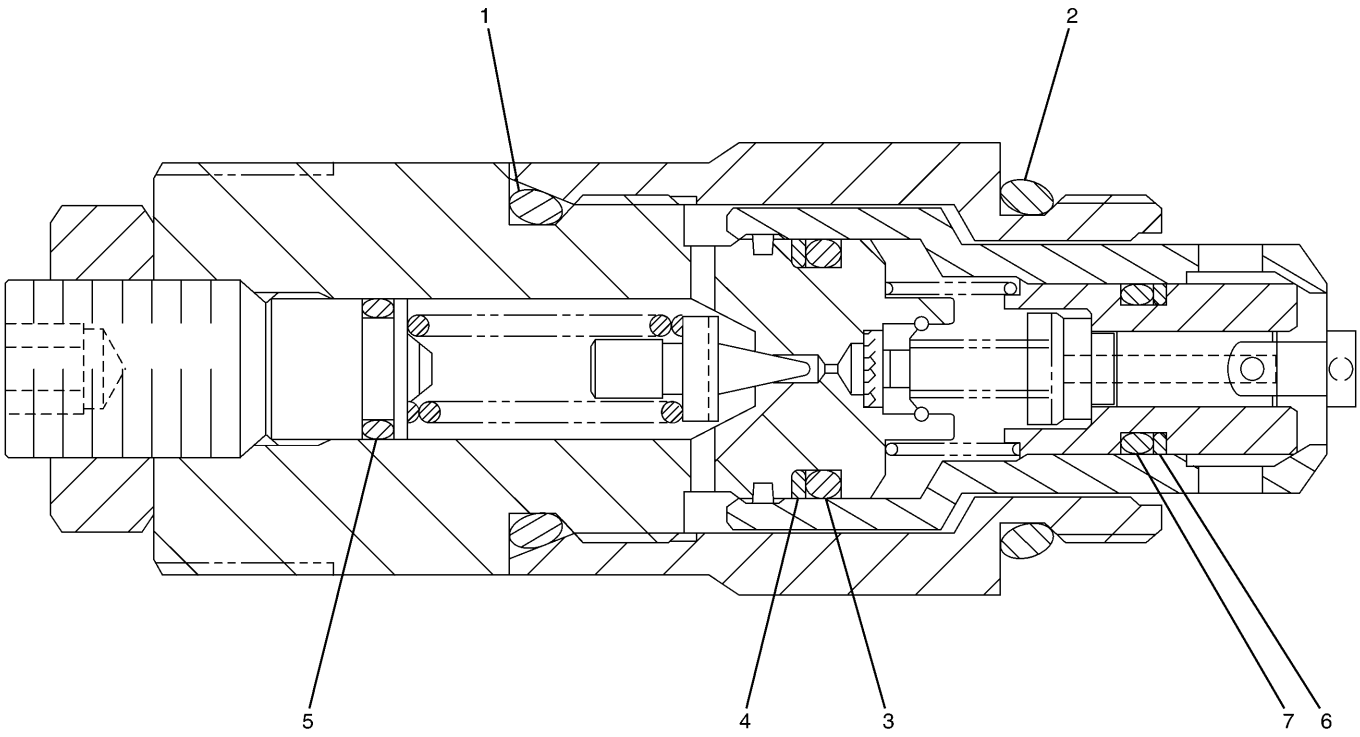

NOTE	No.	PART No.	QTY	PART NAME	NOTE	No.	PART No.	QTY	PART NAME
	1	095-1591	1	SEAL-O-RING (ID=22.10mm)					
	2	095-1592	1	SEAL-O-RING (ID=23.70mm)					
	3	095-1519	1	SEAL-O-RING (ID=15.80mm)					
	4	095-1783	1	RING					
	5	095-1575	1	SEAL-O-RING (ID=7.80mm)					
	6	095-8024	1	RING					
	7	095-1514	1	SEAL-O-RING (ID=9.80mm)					

H72159E 00

197-0223 VALVE GP-RELIEF

Part of 196-0460-Page403.08,171-0016-Page455,171-0006-Page471

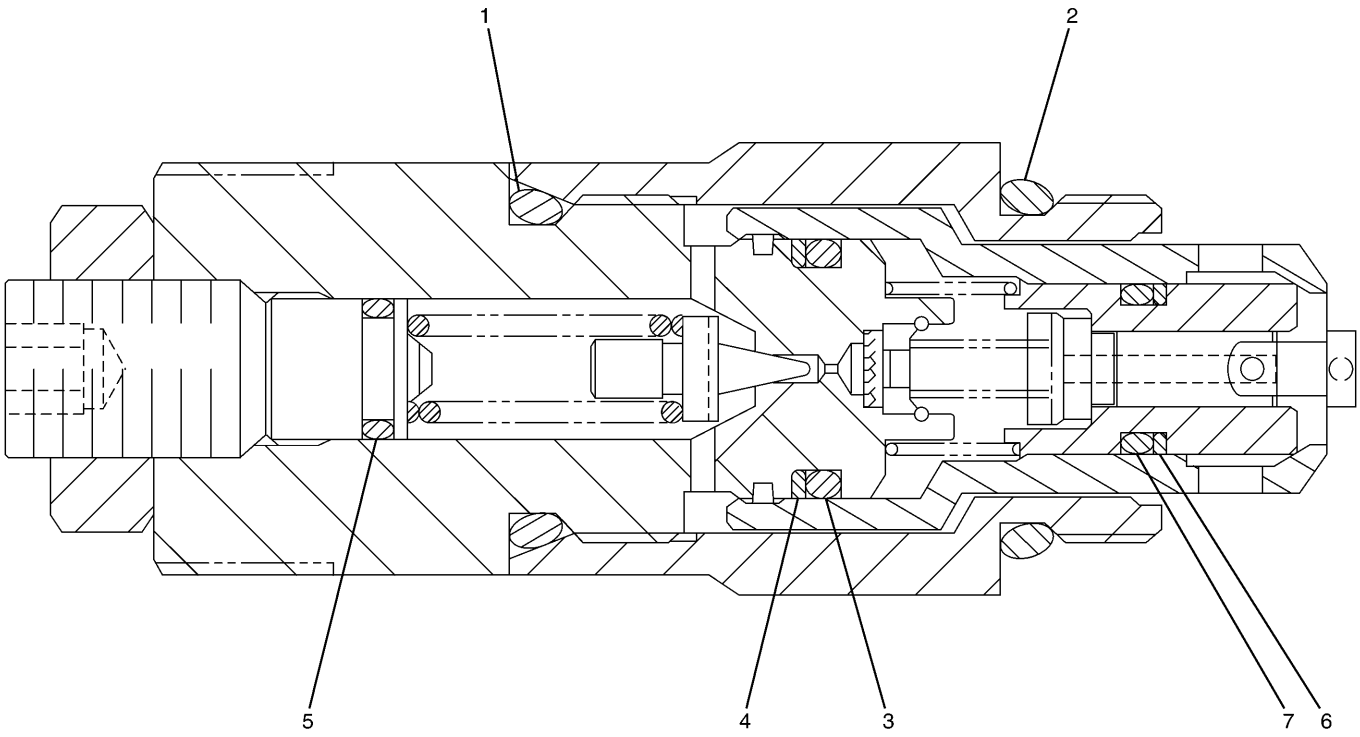

NOTE	No.	PART No.	QTY	PART NAME	NOTE	No.	PART No.	QTY	PART NAME
	1	095-1591	1	SEAL-O-RING (ID=22.10mm)					
	2	095-1592	1	SEAL-O-RING (ID=23.70mm)					
	3	095-1519	1	SEAL-O-RING (ID=15.80mm)					
	4	095-1783	1	RING					
	5	095-1575	1	SEAL-O-RING (ID=7.80mm)					
	6	095-8024	1	RING					
	7	095-1514	1	SEAL-O-RING (ID=9.80mm)					

H75238E 00

197-0270 VALVE GP-RELIEF

Part of 177-2744-Page472
An Attachment

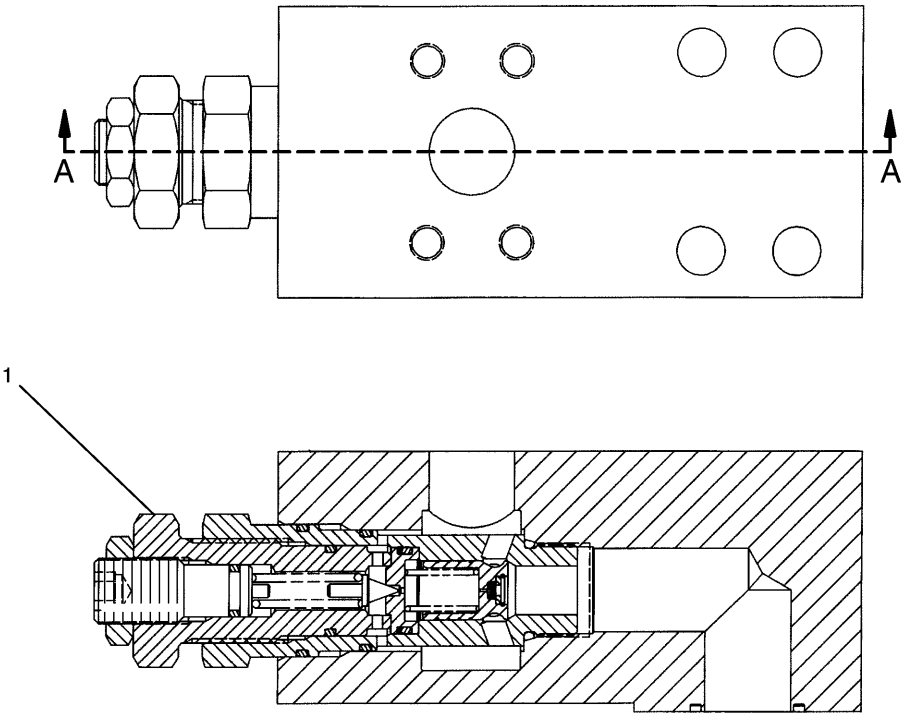

A – A

NOTE	No.	PART No.	QTY	PART NAME	NOTE	No.	PART No.	QTY	PART NAME
Y	1	222-0084	1	VALVE GP					

Y—SEE SEPARATE ILLUSTRATION

H81788E 01

177-2653 VALVE GP-RELIEF

Part of 168-9539-Page389,168-9541-Page393,168-9543-Page397,168-9546-Page401
222-0084-Page476
An Attachment

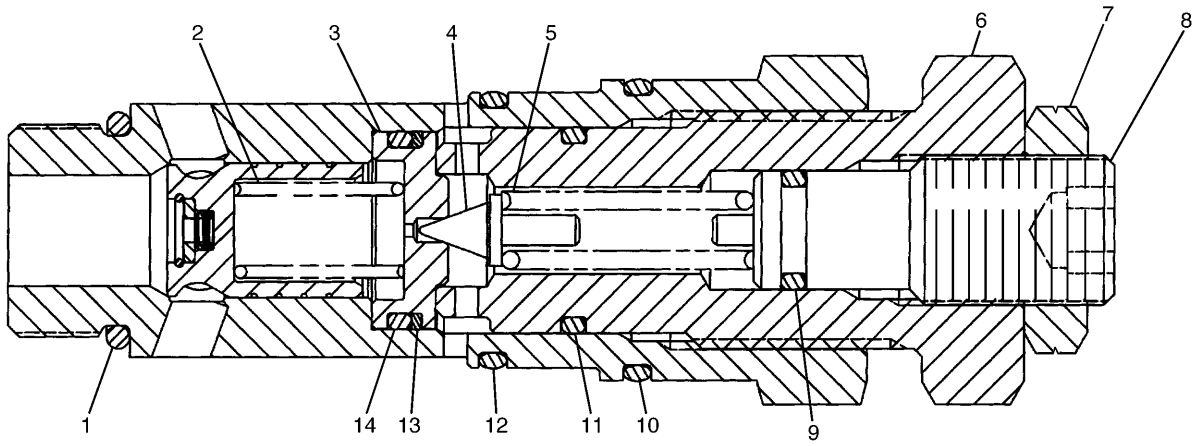

NOTE	No.	PART No.	QTY	PART NAME	NOTE	No.	PART No.	QTY	PART NAME
	1	3D-2824	1	SEAL-O-RING (ID=23.47mm)					
	2	6I-6795	1	SPRING					
	3	171-0034	1	SEAT					
	4	171-0037	1	VALVE					
	5	4I-3510	1	SPRING					
	6	171-0035	1	HOLDER					
	7	222-0085	1	NUT					
	8	171-0036	1	ADJUSTER					
	9	095-1579	1	SEAL-O-RING (ID=10.80mm)					
	10	6V-8218	1	SEAL-O-RING (ID=32.99mm)					
	11	095-1590	1	SEAL-O-RING (ID=21.80mm)					
	12	6V-8978	1	SEAL-O-RING (ID=29.82mm)					
	13	095-1786	1	RING					
	14	095-1587	1	SEAL-O-RING (ID=20.80mm)					

H81813E 00

222-0084 VALVE GP-RELIEF

Pilot Operated

Part of 177-2653-Page475

An Attachment

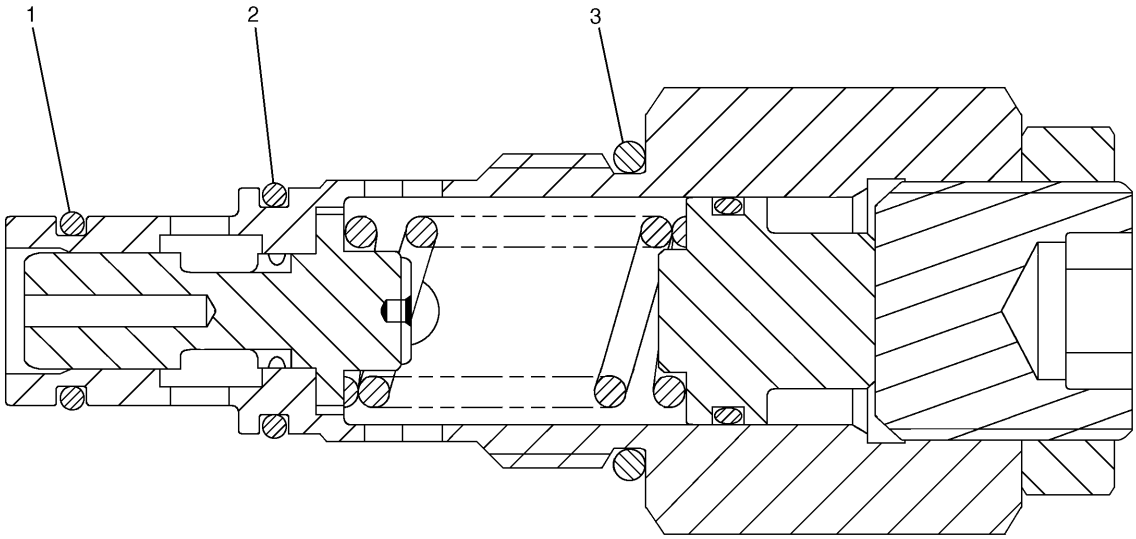

NOTE	No.	PART No.	QTY	PART NAME	NOTE	No.	PART No.	QTY	PART NAME
	1	095-1584	1	SEAL-O-RING (ID=15.80mm)					
	2	095-1590	1	SEAL-O-RING (ID=21.80mm)					
	3	095-1596	1	SEAL-O-RING (ID=28.70mm)					

H81796E 00

215-4909 VALVE GP-RELIEF

Direct Operated

Part of 188-2084-Page287.01,289-7836-Page287.02

HYDRAULIC SYSTEM

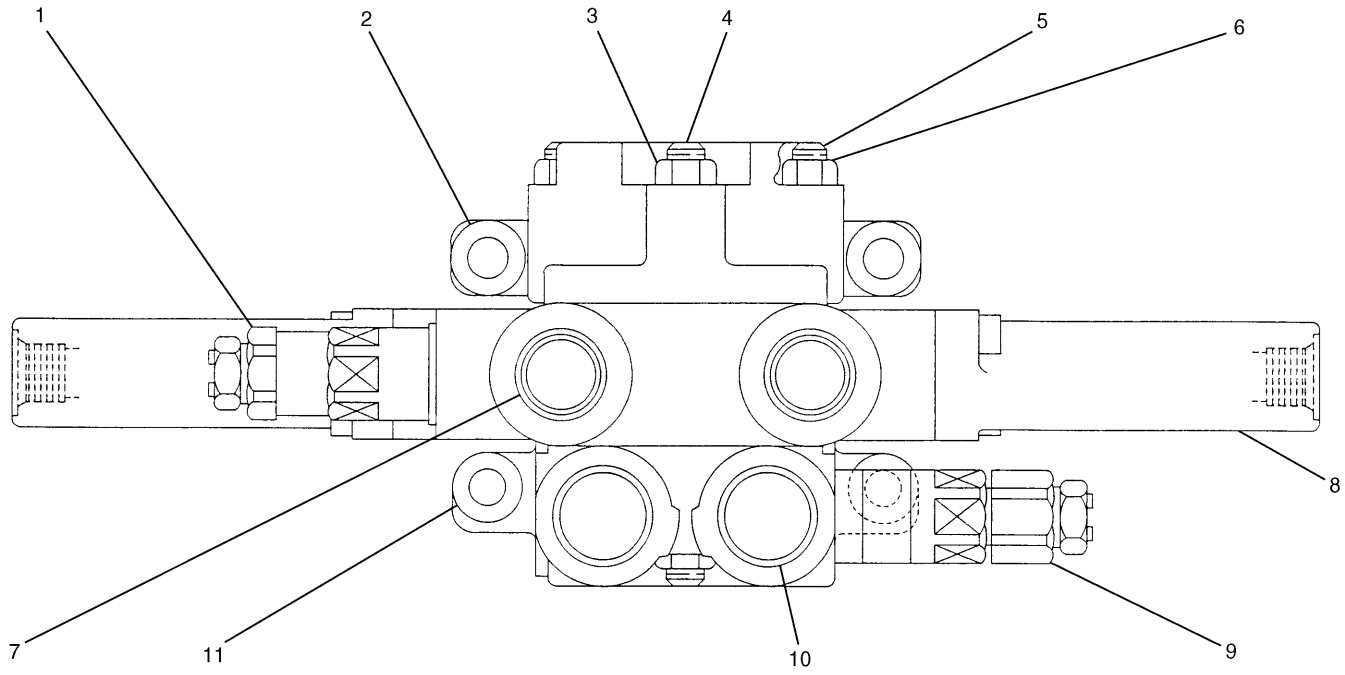

NOTE	No.	PART No.	QTY	PART NAME	NOTE	No.	PART No.	QTY	PART NAME
	1	125-7193	1	VALVE GP					
		2M-9780	1	SEAL-O-RING (ID=19.18mm)					
	2	099-3990	1	BODY					
	3	1R-6484	2	NUT					
	4	093-3093	1	ROD					
	5	093-3094	2	ROD					
	6	095-6636	4	NUT					
	7	7I-0135	2	PLUG					
Y	8	122-5400	1	VALVE GP					
	9	125-7192	1	VALVE GP					
		2M-9780	1	SEAL-O-RING (ID=19.18mm)					
	10	7I-0134	2	PLUG					
	11	122-5399	1	BODY					

Y—SEE SEPARATE ILLUSTRATION

H51350E 02

122-5373 VALVE GP-CONTROL

Part of 168-9555-Page411
122-5400-Page482
An Attachment

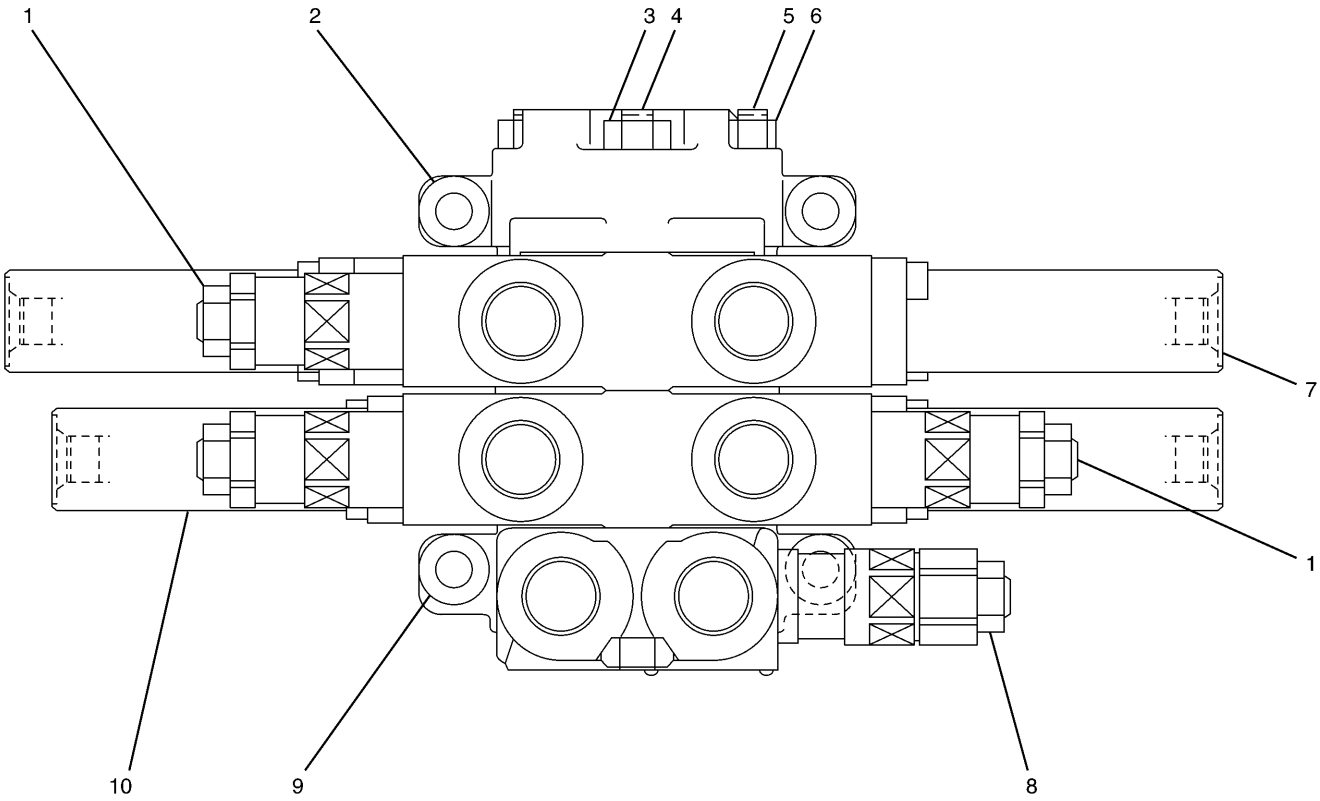

NOTE	No.	PART No.	QTY	PART NAME	NOTE	No.	PART No.	QTY	PART NAME
Y	1	085-5789	3	VALVE GP					
	2	099-3990	1	BODY					
	3	1R-6484	2	NUT					
	4	7I-0127	1	ROD					
	5	7I-0125	2	ROD					
	6	095-6636	4	NUT					
Y	7	122-5400	1	VALVE GP					
Y	8	102-7024	1	VALVE GP					
	9	122-5399	1	BODY					
Y	10	190-7733	1	VALVE GP					

Y—SEE SEPARATE ILLUSTRATION

H77602E 01

185-0506 VALVE GP-CONTROL

Part of 196-0475-Page413
190-7733-Page481,122-5400-Page482,085-5789,102-7024-Page483
An Attachment

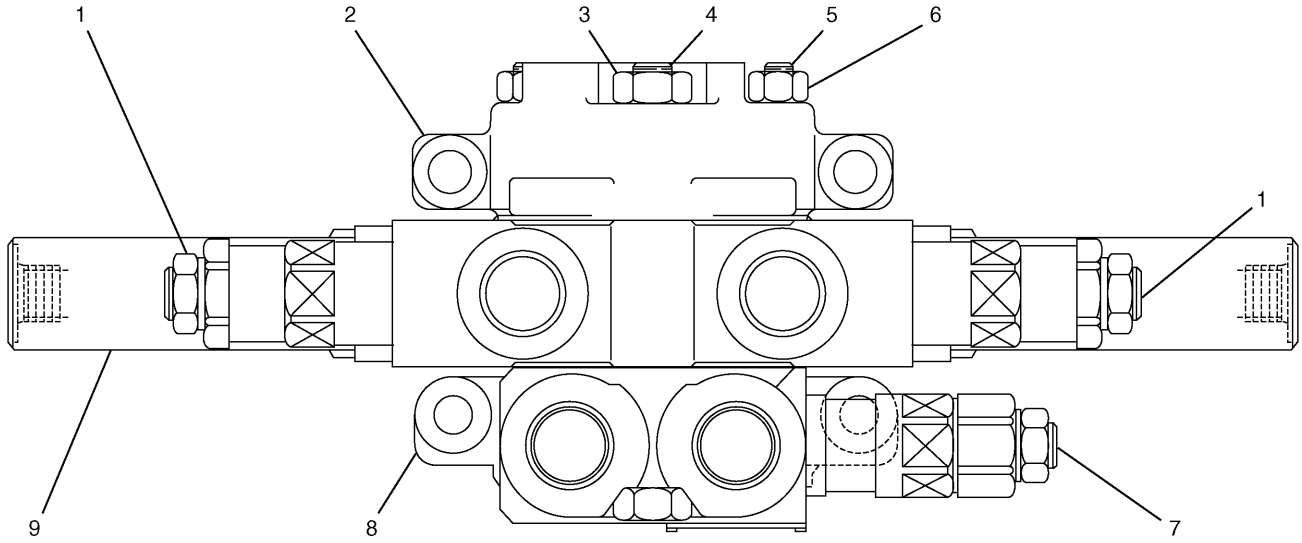

NOTE	No.	PART No.	QTY	PART NAME	NOTE	No.	PART No.	QTY	PART NAME
Y	1	085-5789	2	VALVE GP					
	2	099-3990	1	BODY					
	3	1R-6484	2	NUT					
	4	093-3093	1	ROD					
	5	093-3094	2	ROD					
	6	095-6636	4	NUT					
Y	7	102-7024	1	VALVE GP					
	8	122-5399	1	BODY					
Y	9	190-7733	1	VALVE GP					

Y—SEE SEPARATE ILLUSTRATION

H75239E 01

190-7727 VALVE GP-CONTROL

Part of 196-0463-Page407
190-7733-Page481,085-5789,102-7024-Page483
An Attachment

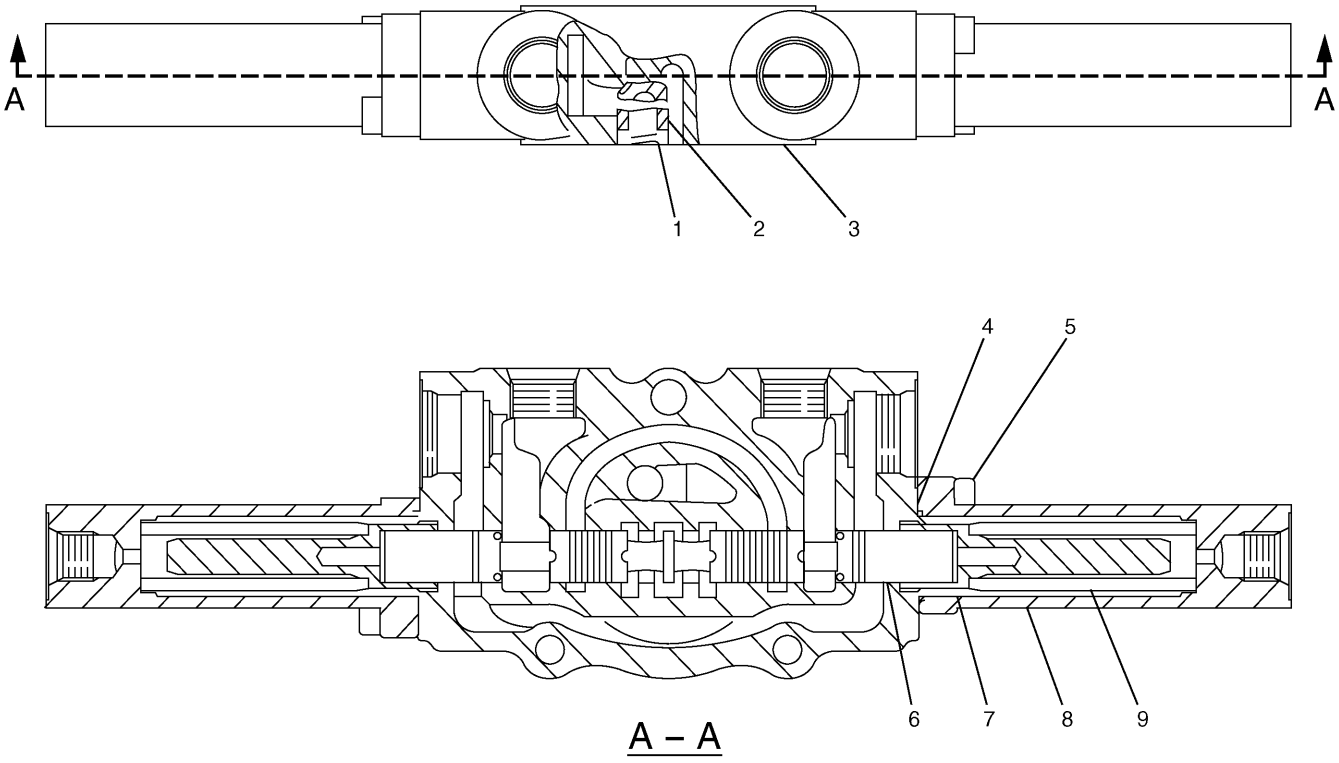

A – A

NOTE	No.	PART No.	QTY	PART NAME	NOTE	No.	PART No.	QTY	PART NAME
	1	095-6623	1	SPRING					
	2	095-6622	1	VALVE					
	3	4J-0527	1	SEAL-O-RING (ID=56.74mm)					
	4	7F-8607	2	SEAL-O-RING (ID=18.72mm)					
	5	6V-5683	4	BOLT (L=16mm)					
	6	197-0210	1	SPOOL					
	7	158-9077	2	SEAT					
	8	132-7603	2	CAP					
	9	158-9078	2	SPRING					

H75240E 00

190-7733 VALVE GP-CONTROL

Part of 185-0506-Page479,190-7727-Page480
An Attachment

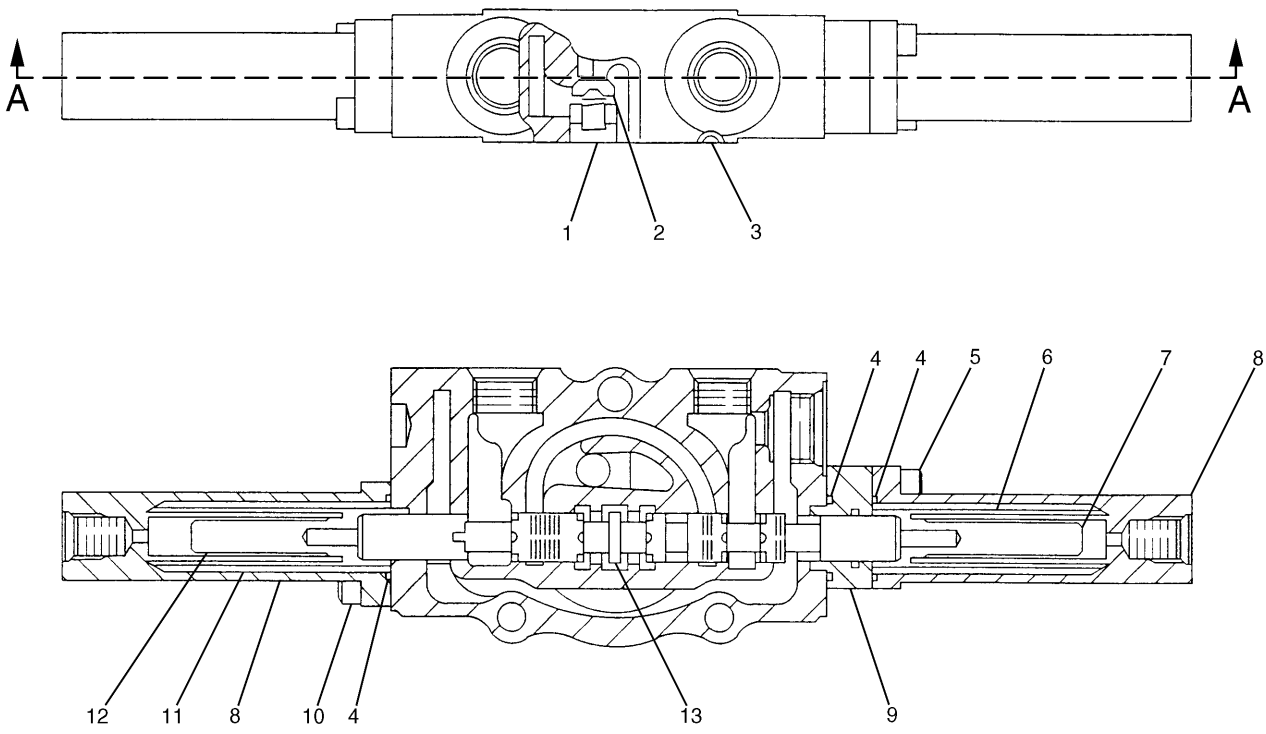

A – A

NOTE	No.	PART No.	QTY	PART NAME	NOTE	No.	PART No.	QTY	PART NAME
	1	095-6623	1	SPRING					
	2	095-6622	1	VALVE					
	3	4J-0527	1	SEAL-O-RING (ID=56.74mm)					
	4	7F-8607	3	SEAL-O-RING (ID=18.72mm)					
	5	111-5422	2	BOLT (L=32mm)					
	6	132-7600	1	SPRING					
	7	132-7599	1	SEAT					
	8	132-7603	2	CAP					
	9	096-2434	1	ADAPTER					
	10	132-7705	2	BOLT (L=14mm)					
	11	131-5868	1	SPRING					
	12	132-7601	1	SEAT					
	13	131-5867	1	SPOOL					

H52428E 01

122-5400 VALVE GP-CONTROL

Part of 122-5373-Page478,185-0506-Page479
An Attachment

HYDRAULIC SYSTEM

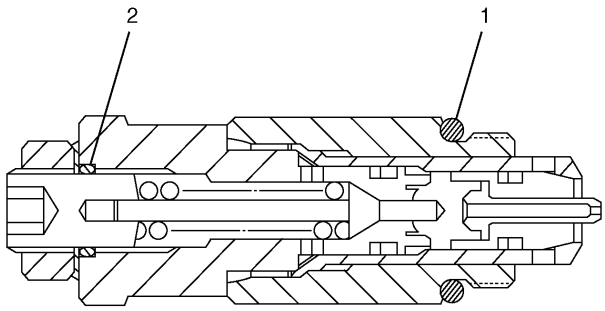

NOTE	No.	PART No.	QTY	PART NAME
	1	093-3328	1	SEAL-O-RING
	2	095-1578	1	SEAL-O-RING (ID=9.80mm)

H73026E 01

085-5789 VALVE GP-RELIEF

Part of 185-0506-Page479,190-7727-Page480
An Attachment

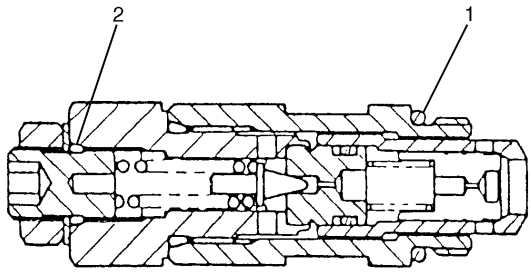

NOTE	No.	PART No.	QTY	PART NAME
	1	093-3328	1	SEAL-O-RING
	2	095-1578	1	SEAL-O-RING (ID=9.80mm)

H57935E 01

102-7024 VALVE GP-RELIEF

Part of 185-0506-Page479,190-7727-Page480
An Attachment

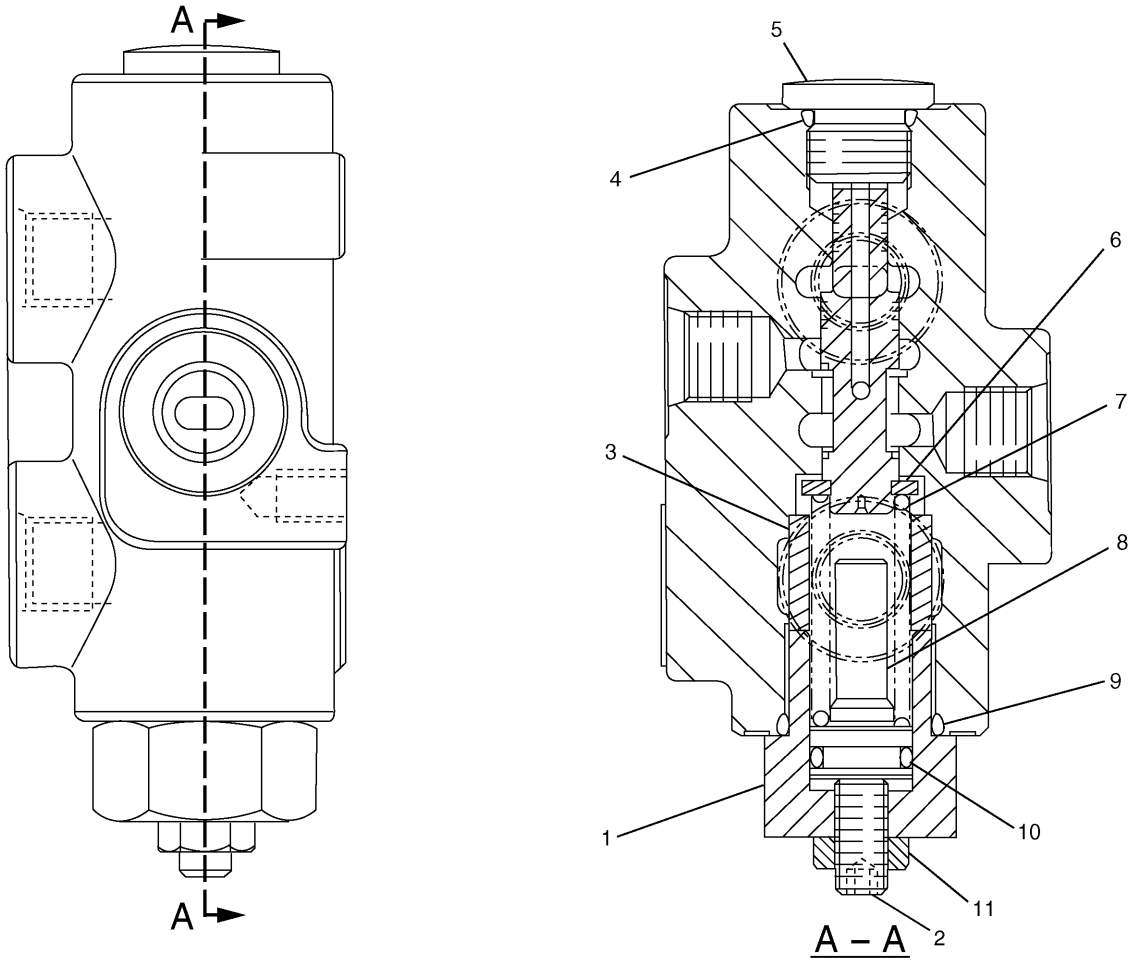

NOTE	No.	PART No.	QTY	PART NAME	NOTE	No.	PART No.	QTY	PART NAME
	1	171-0123	1	PLUG					
	2	171-0124	1	SETSCREW					
	3	185-0423	1	STOPPER					
	4	095-1582	1	SEAL-O-RING (ID=13.80mm)					
	5	111-9998	1	PLUG					
	6	171-0127	1	SEAT					
	7	171-0128	1	SPRING					
	8	171-0126	1	SEAT					
	9	095-1590	1	SEAL-O-RING (ID=21.80mm)					
	10	095-1580	1	SEAL-O-RING (ID=11.80mm)					
	11	5C-7261	1	NUT					

H73140E 02

148-6218 VALVE GP-PRESSURE REDUCING

S/N CAE 01201-02264
Part of 168-9538-Page363

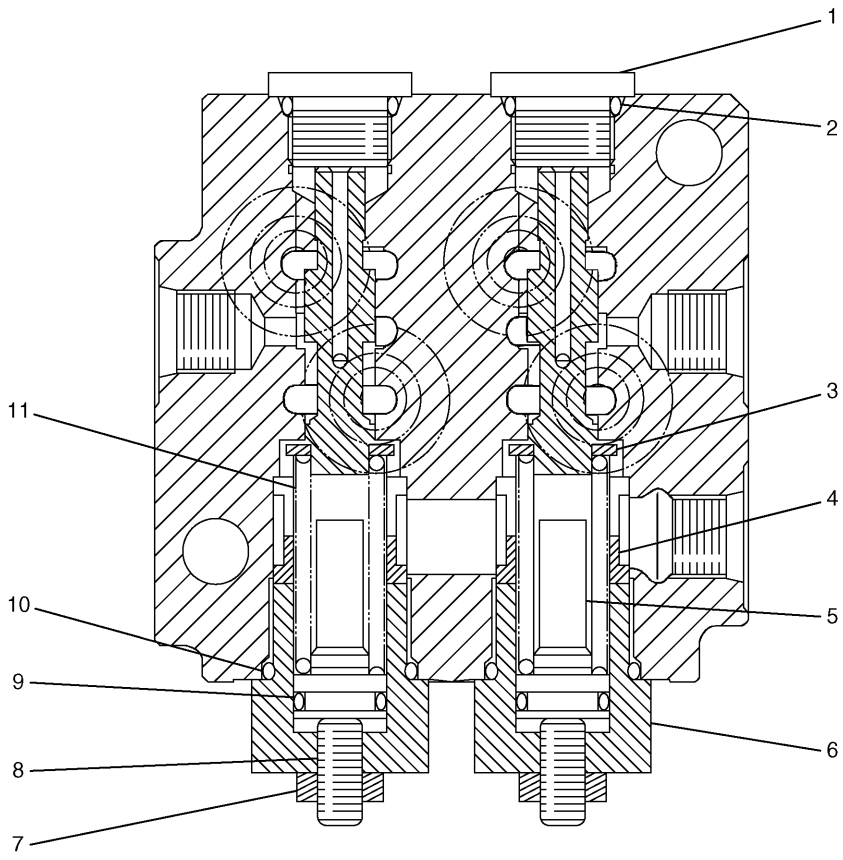

NOTE	No.	PART No.	QTY	PART NAME	NOTE	No.	PART No.	QTY	PART NAME
	1	111-9998	2	PLUG					
	2	095-1582	2	SEAL-O-RING (ID=13.80mm)					
	3	171-0127	2	SEAT					
	4	185-0423	2	STOPPER					
	5	171-0126	2	SEAT					
	6	171-0123	2	PLUG					
	7	5C-7261	2	NUT					
	8	171-0124	2	SETSCREW					
	9	095-1580	2	SEAL-O-RING (ID=11.80mm)					
	10	095-1590	2	SEAL-O-RING (ID=21.80mm)					
	11	171-0128	2	SPRING					

H85396E 00

232-4102 VALVE GP-PRESSURE REDUCING

S/N CAE 02265-Up

Part of 168-9538-Page365.06

MEMORANDA

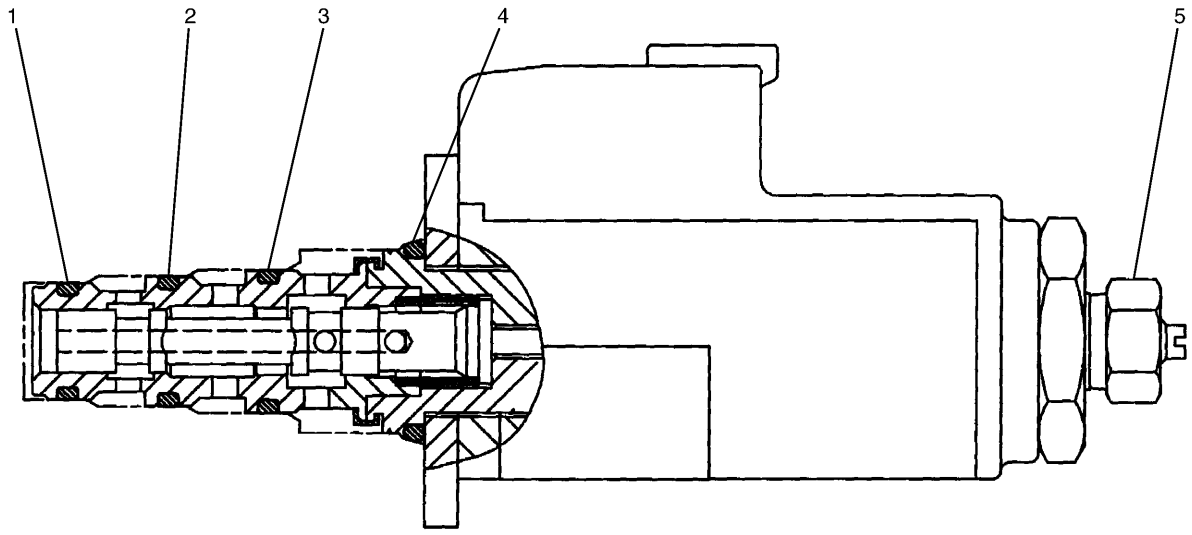

NOTE	No.	PART No.	QTY	PART NAME	NOTE	No.	PART No.	QTY	PART NAME
	1	6M-5062	1	SEAL-O-RING (ID=10.82mm)					
	2	4K-2039	1	SEAL-O-RING (ID=12.42mm)					
	3	5L-4758	1	SEAL-O-RING (ID=14.00mm)					
	4	095-1586	1	SEAL-O-RING (ID=19.80mm)					
	5	114-0623	1	NUT AS					

H67281E 02

111-9916 VALVE GP-PRESS REDUCING SOL

Part of 173-0663-Page277,183-8289-Page281,171-0188-Page500

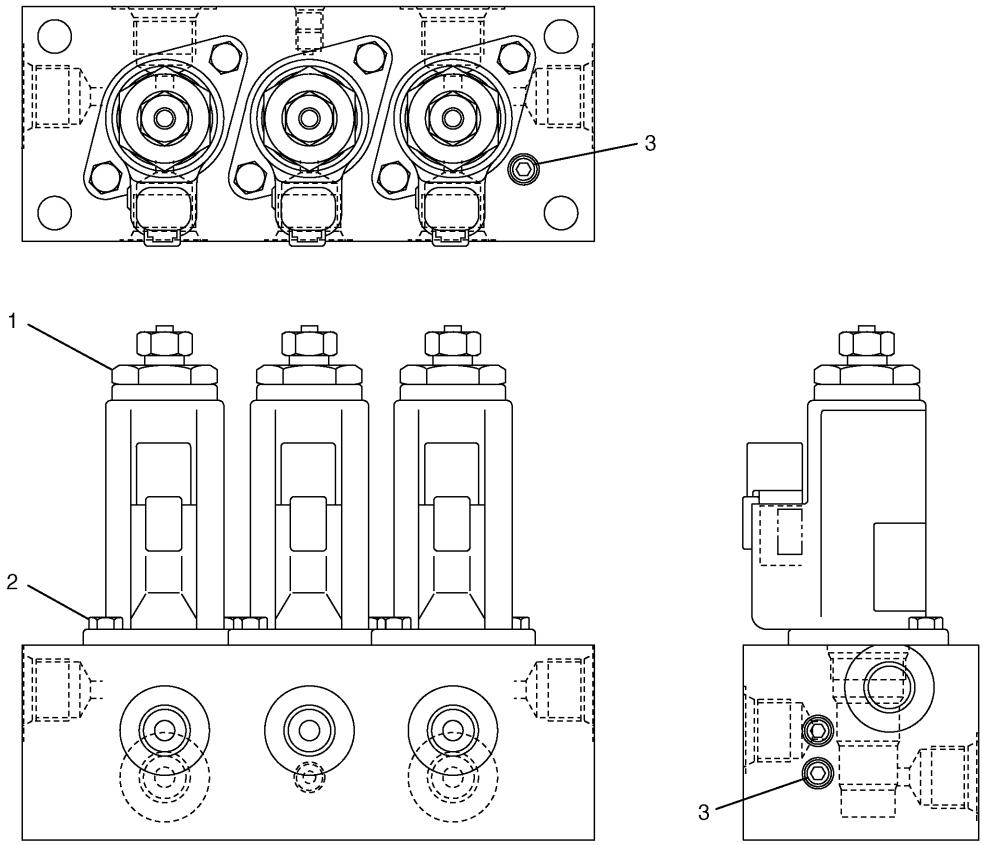

NOTE	No.	PART No.	QTY	PART NAME	NOTE	No.	PART No.	QTY	PART NAME
Y	1	121-1491	3	VALVE GP					
	2	8T-0288	6	BOLT (L=12mm)					
	3	7I-8084	4	PLUG					

Y—SEE SEPARATE ILLUSTRATION

H69644E 02

165-9549 VALVE GP-SOLENOID

Part of 168-9544-Page373,196-0457-Page375,196-0456-Page377
121-1491-Page487
An Attachment

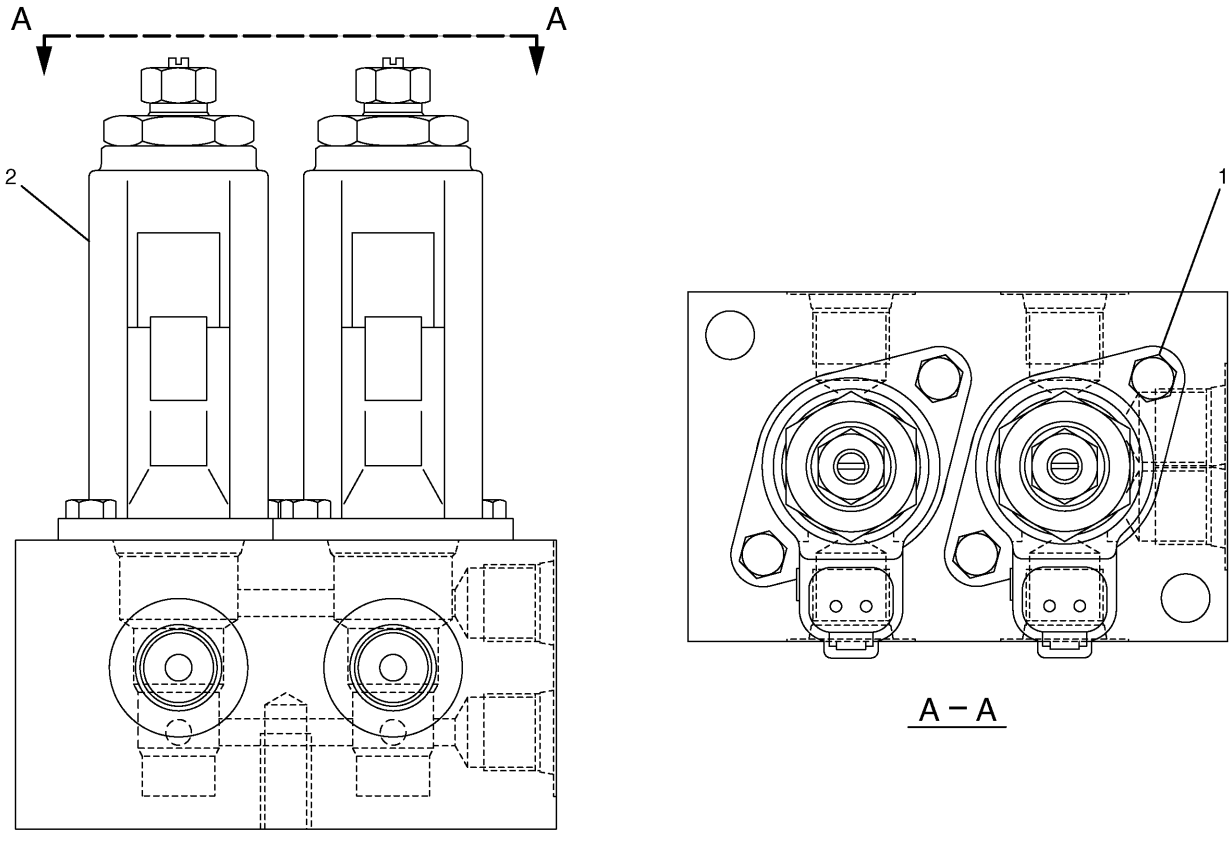

NOTE	No.	PART No.	QTY	PART NAME	NOTE	No.	PART No.	QTY	PART NAME
	1	8T-0288	4	BOLT (L=12mm)					
Y	2	121-1491	2	VALVE GP					

Y—SEE SEPARATE ILLUSTRATION

H79756E 01

190-7820 VALVE GP-SOLENOID

Part of 212-5187-Page377.02
121-1491-Page487
An Attachment

MEMORANDA

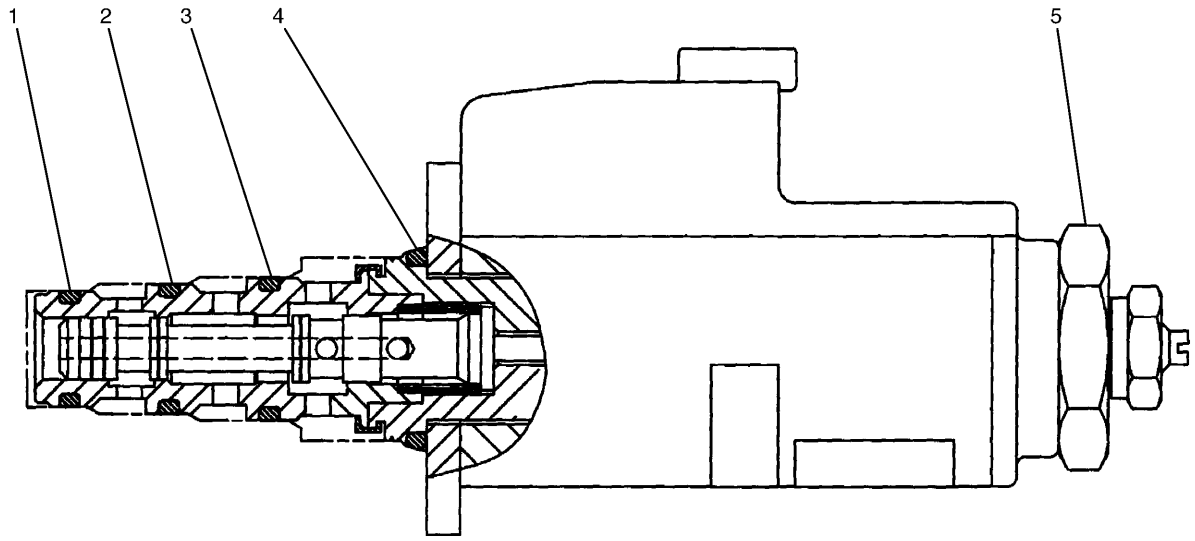

NOTE	No.	PART No.	QTY	PART NAME	NOTE	No.	PART No.	QTY	PART NAME
	1	095-1750	1	SEAL-O-RING (ID=10.82mm)					
	2	6V-8398	1	SEAL-O-RING (OD=16.03mm)					
	3	095-1751	1	SEAL-O-RING (ID=14.00mm)					
	4	095-1586	1	SEAL-O-RING (ID=19.80mm)					
	5	114-0623	1	NUT AS					

H81770E 05

121-1491 VALVE GP-SOLENOID

Part of 165-9549-Page486,190-7820-Page486.01,158-8251-Page493,239-8697-Page493.04,239-8998-Page493.06

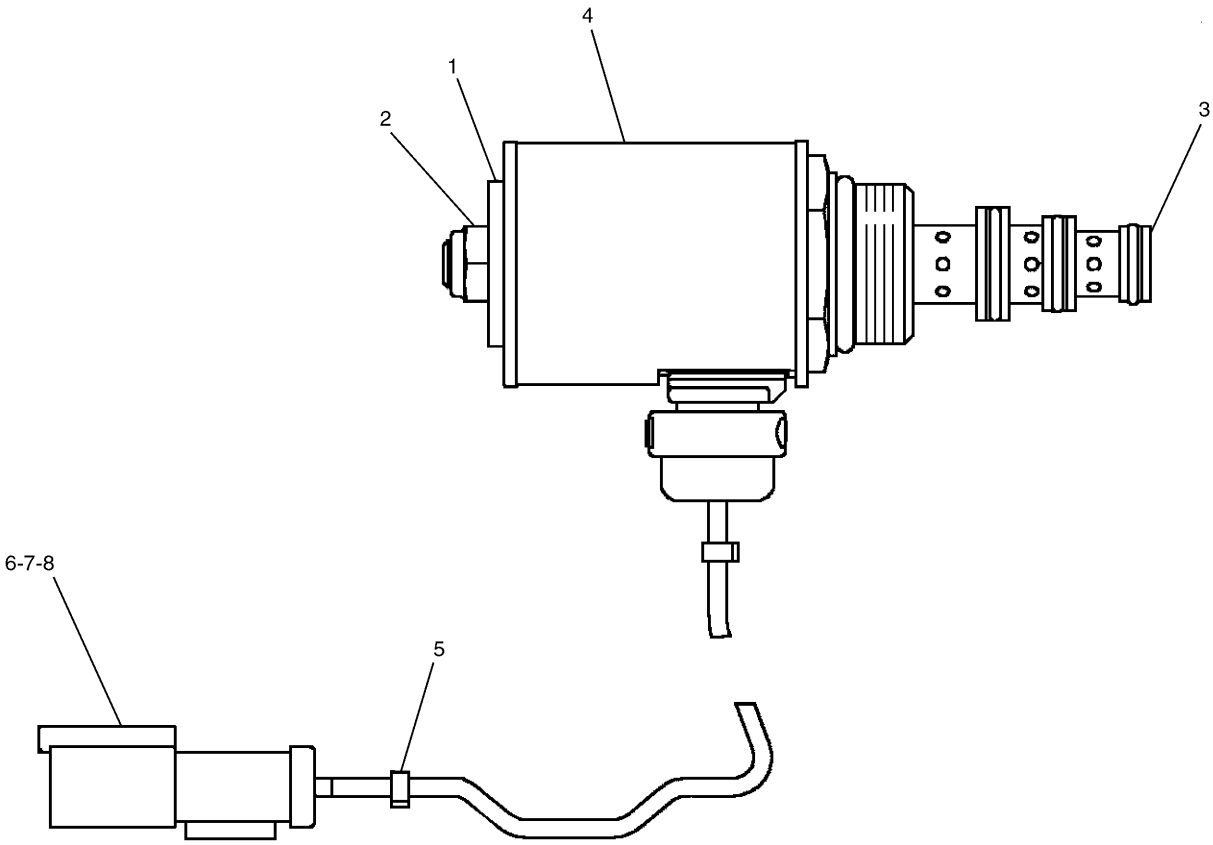

NOTE	No.	PART No.	QTY	PART NAME	NOTE	No.	PART No.	QTY	PART NAME
	1	8C-9987	1	WASHER					
	2	111-0343	1	LOCKNUT					
	3	170-7485	1	CARTRIDGE AS					
	4	189-0189	1	COIL AS					
	5	1S-9593	2	STRAP					
	6	102-8802	1	RECEPTACLE KIT					
	7	3E-3365	1	WEDGE					
	8	186-3735	2	PIN					
				THE FOLLOWING REPAIR					
				KIT IS AVAILABLE:					
		109-3036	1	SEAL KIT					

H82252E 02

152-8346 VALVE GP-SOLENOID

S/N CAE 01201-(T05.08)
Part of 198-0397-Page409
An Attachment

HYDRAULIC SYSTEM

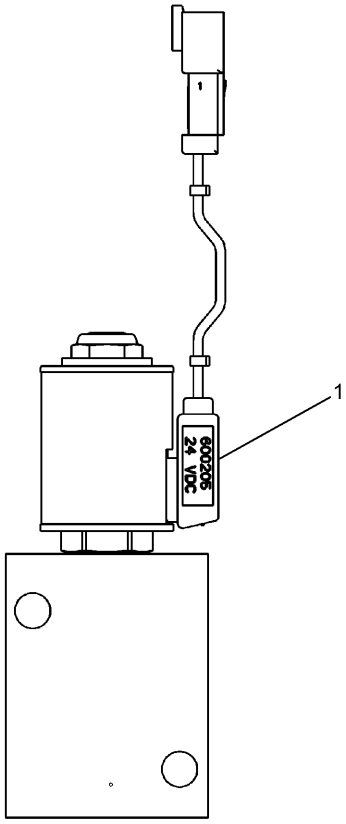

NOTE	No.	PART No.	QTY	PART NAME	NOTE	No.	PART No.	QTY	PART NAME
Y	1	244-8685	1	VALVE GP					

Y—SEE SEPARATE ILLUSTRATION

H91011E 00

247-6295 VALVE GP-SOLENOID

S/N CAE (T05.09)-Up
Part of 198-0397-Page409.02
244-8685-Page488.02
An Attachment

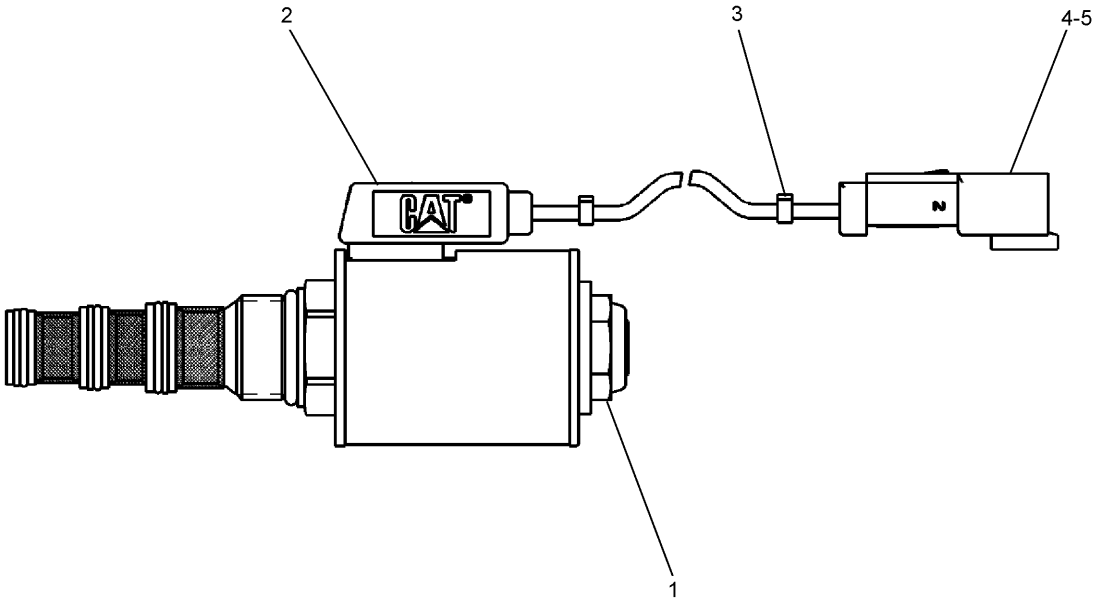

NOTE	No.	PART No.	QTY	PART NAME	NOTE	No.	PART No.	QTY	PART NAME
	1	156-5970	1	NUT					
	2	244-8691	1	COIL AS					
	3	1S-9593	2	STRAP					
	4	102-8802	1	RECEPTACLE KIT					
	5	186-3735	2	PIN					
				THE FOLLOWING REPAIR KIT IS AVAILABLE:					
		268-8209	1	SEAL KIT					

H91012E 02

244-8685 VALVE GP-SOLENOID

S/N CAE (T05.09)-Up
Part of 247-6295-Page488.01
An Attachment

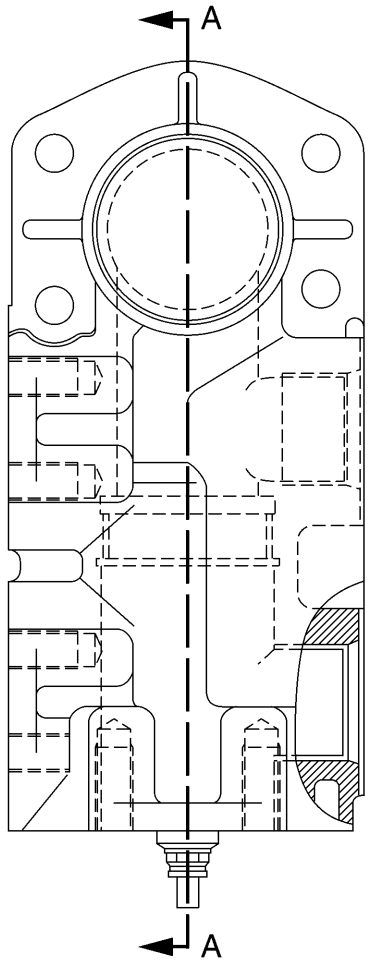

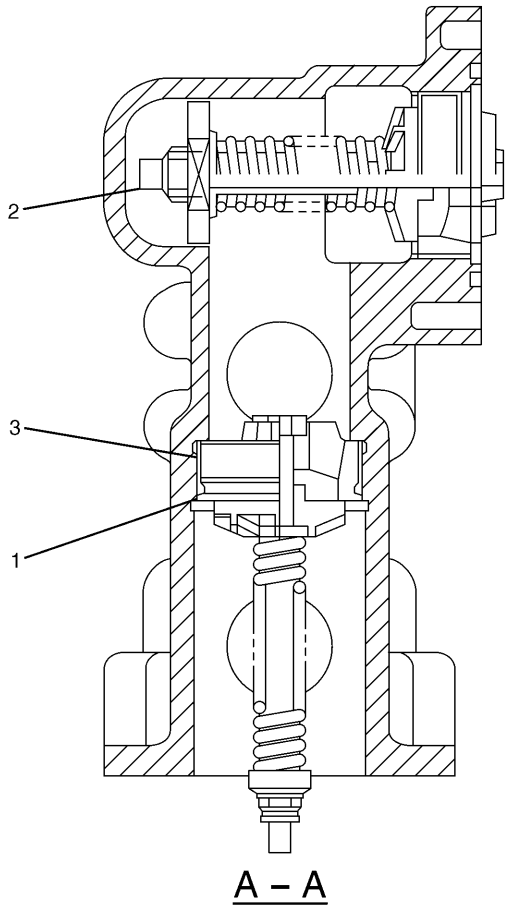

A – A

NOTE	No.	PART No.	QTY	PART NAME	NOTE	No.	PART No.	QTY	PART NAME
	1	184-3841	1	RING					
	2	177-2706	1	VALVE AS					
	3	190-7875	1	VALVE AS					

H72002E 03

171-0002 VALVE GP-CHECK

Part of 168-9535-Page419

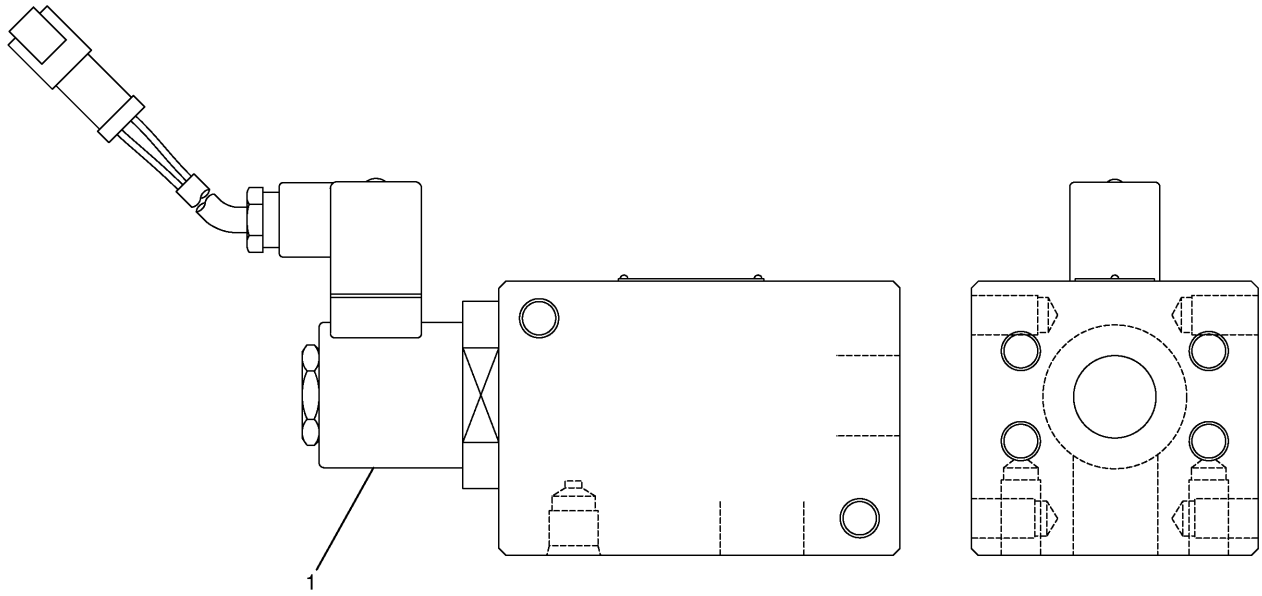

NOTE	No.	PART No.	QTY	PART NAME	NOTE	No.	PART No.	QTY	PART NAME
Y	1	197-0251	1	VALVE GP					

Y—SEE SEPARATE ILLUSTRATION

H80111E 00

201-9367 VALVE GP-CHECK

S/N CAE 01201-(T02.05)
Part of 168-9543-Page397,168-9546-Page401
197-0251-Page491
An Attachment

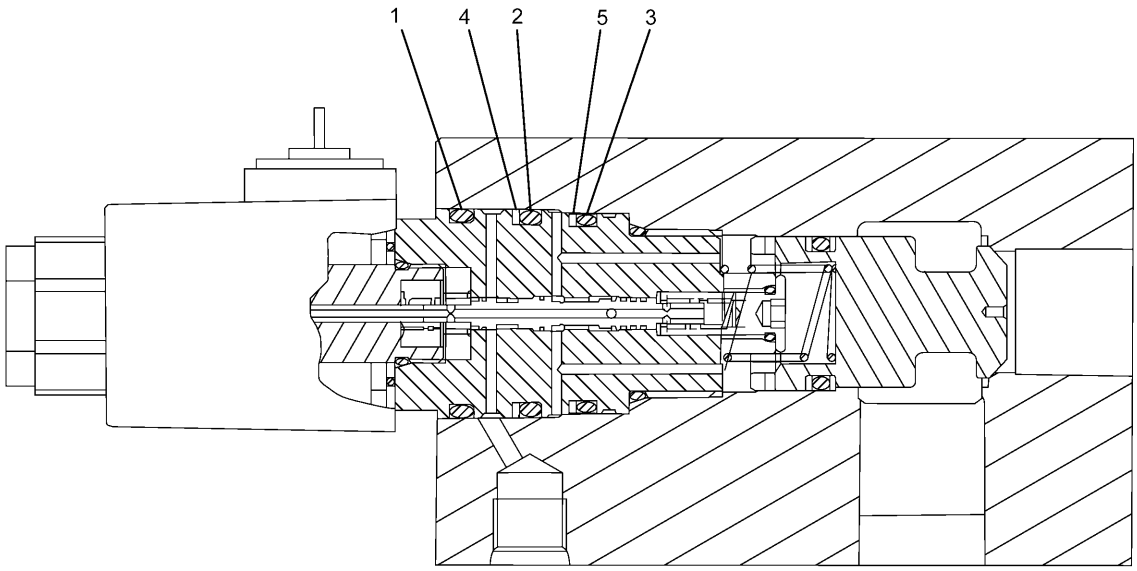

NOTE	No.	PART No.	QTY	PART NAME	NOTE	No.	PART No.	QTY	PART NAME
	1	095-1602	1	SEAL-O-RING (ID=35.70mm)					
	2	095-1601	1	SEAL-O-RING (ID=34.70mm)					
	3	095-1700	1	SEAL-O-RING (ID=34.40mm)					
	4	232-4113	1	RING					
	5	8T-3008	1	RING					

H88665E 02

215-4890 VALVE GP-CHECK

S/N CAE (T02.06)-(T04.08)
Part of 168-9543-Page399.02,168-9546-Page403.02
An Attachment

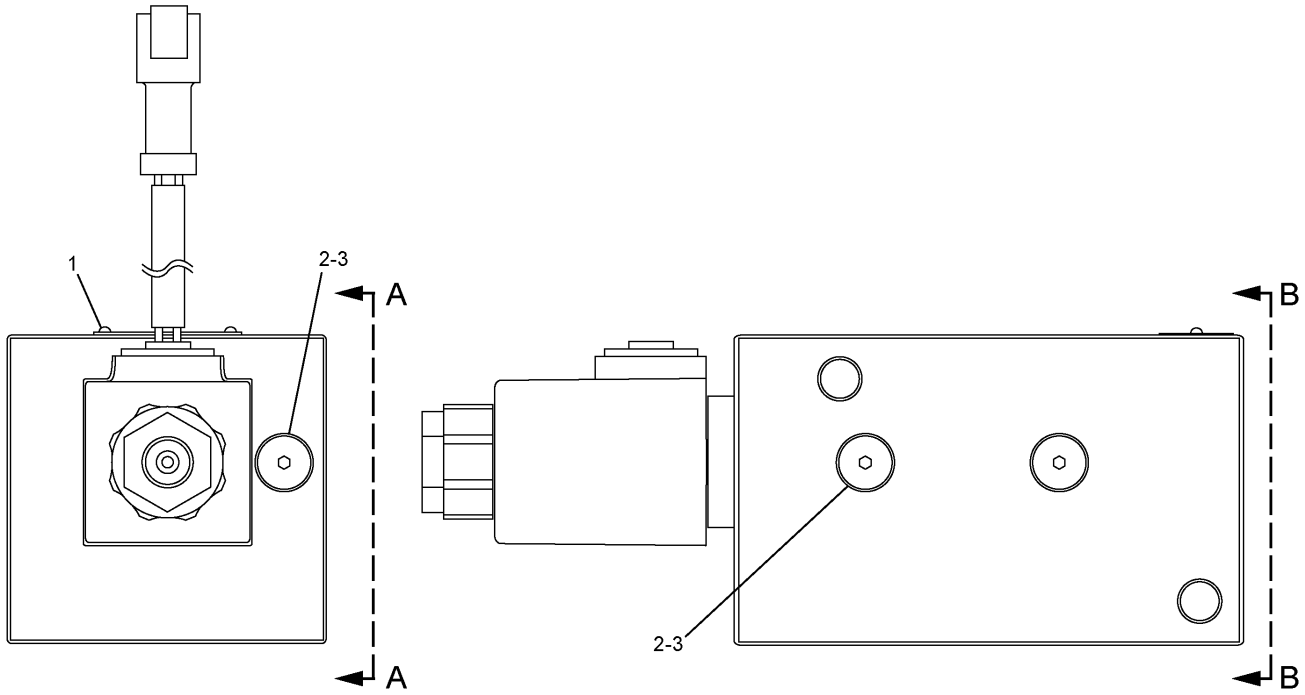

A – A

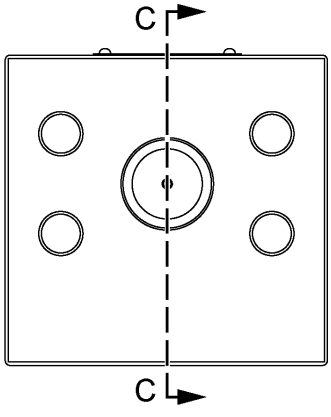

B – B

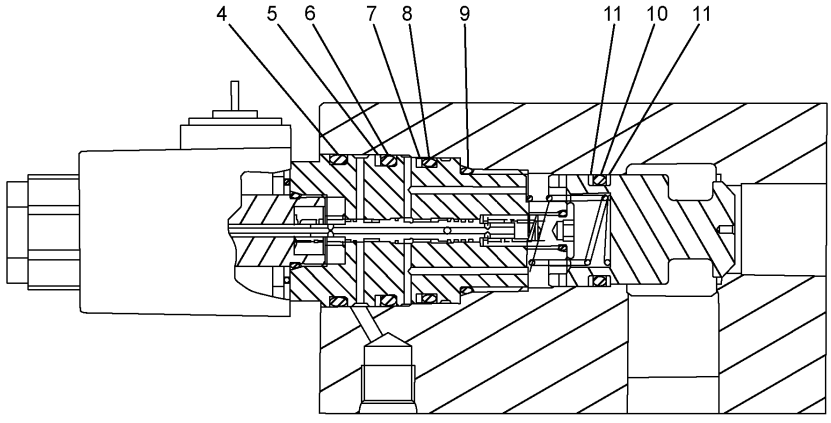

C – C

H97094E 01

297-0370 VALVE GP-CHECK
S/N CAE (T04.09)-Up
Part of 168-9543-Page399.06,168-9546-Page403.04B
An Attachment

HYDRAULIC SYSTEM

NOTE	No.	PART No.	QTY	PART NAME	NOTE	No.	PART No.	QTY	PART NAME
	1	197-0758	2	SCREW					
	2	225-4804	3	PLUG					
	3	4J-7533	3	SEAL-O-RING (ID=6.07mm)					
	4	095-1602	1	SEAL-O-RING (ID=35.70mm)					
	5	232-4113	1	RING					
	6	095-1601	1	SEAL-O-RING (ID=34.70mm)					
	7	8T-3008	1	RING					
	8	095-1700	1	SEAL-O-RING (ID=34.40mm)					
	9	7M-8485	1	SEAL-O-RING (ID=29.74mm)					
	10	095-1657	1	SEAL-O-RING (ID=24.40mm)					
	11	232-4114	2	RING					

H97094E 01

297-0370 VALVE GP-CHECK

S/N CAE (T04.09)-Up
Part of 168-9543-Page399.06,168-9546-Page403.04B
An Attachment

MEMORANDA

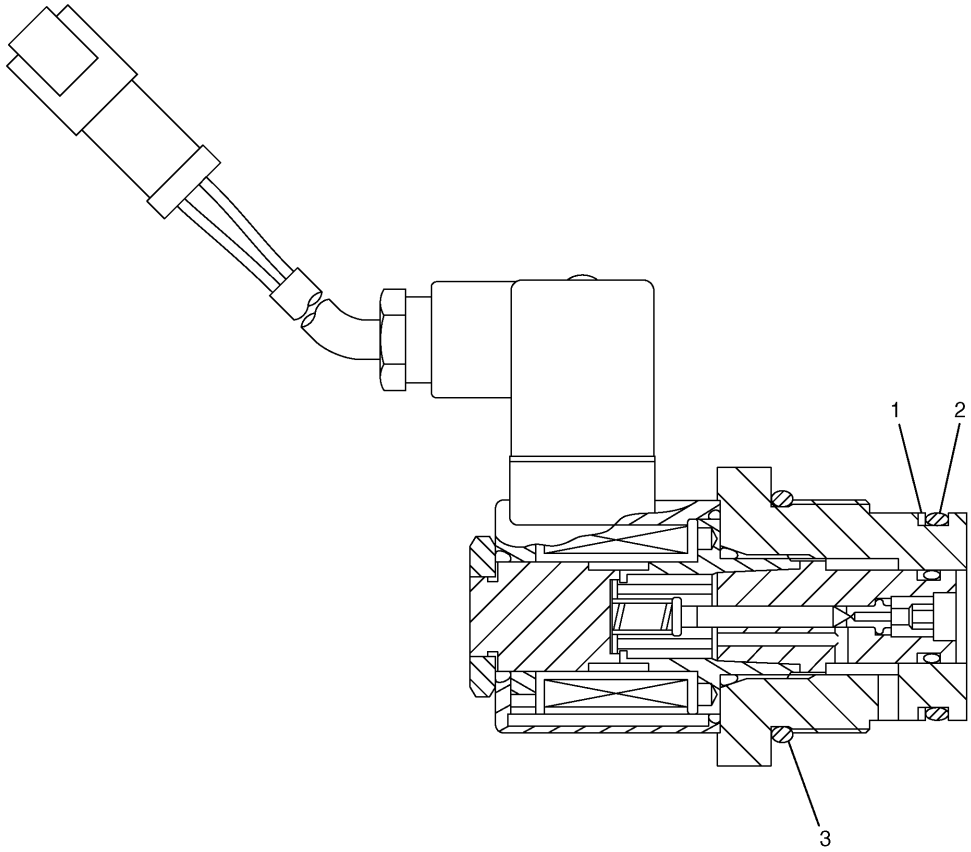

NOTE	No.	PART No.	QTY	PART NAME	NOTE	No.	PART No.	QTY	PART NAME
	1	8T-3008	1	RING					
	2	095-1700	1	SEAL-O-RING (ID=34.40mm)					
	3	085-7540	1	SEAL-O-RING (ID=42.52mm)					

H76015E 01

197-0251 VALVE GP-SOLENOID

S/N CAE 01201-(T02.05)
Part of 201-9367-Page490
An Attachment

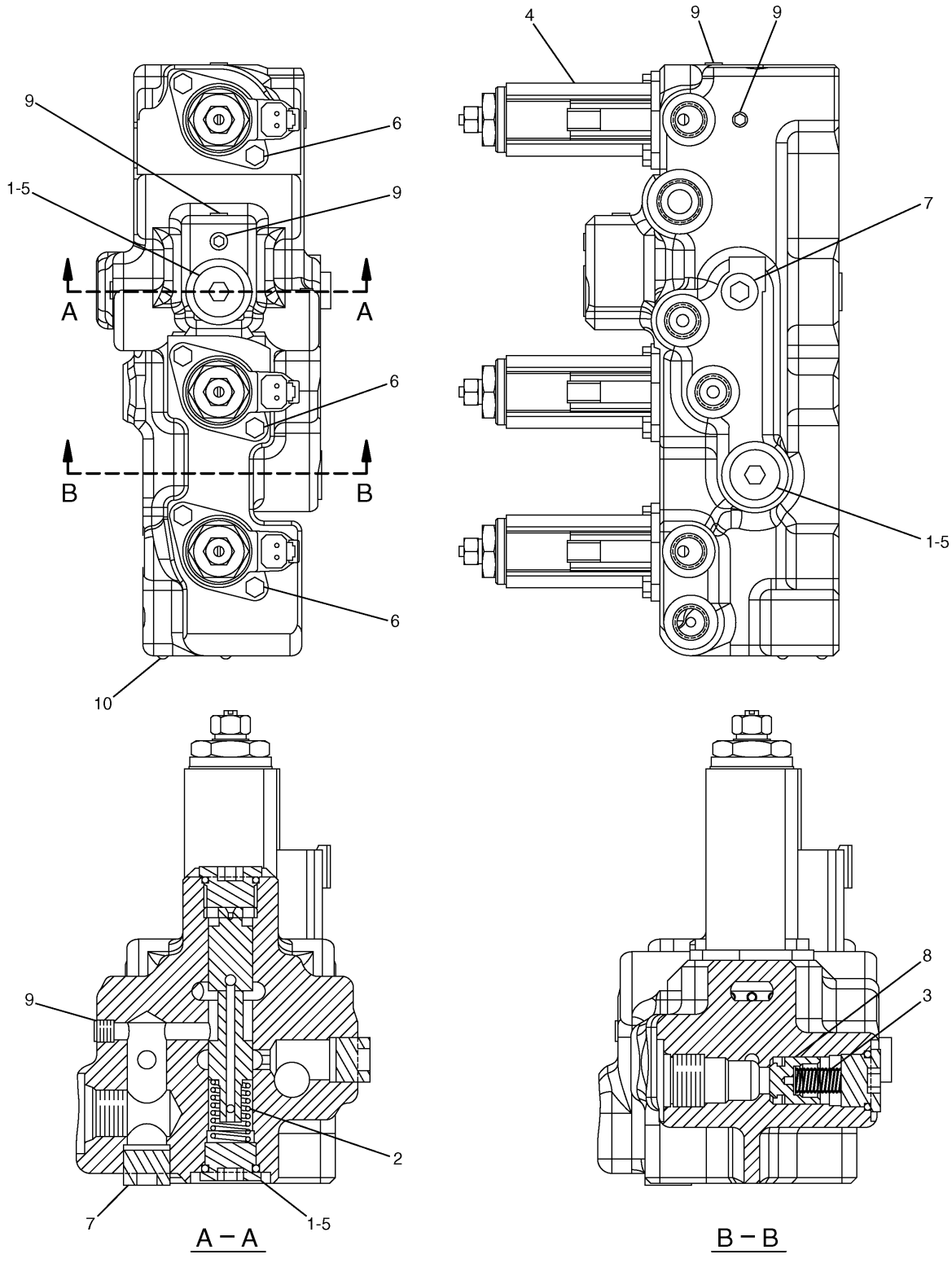

H74549E 04

158-8251 VALVE GP-SELECTOR
S/N CAE 01201-01854
Part of 168-9538-Page363
121-1491-Page487

HYDRAULIC SYSTEM

NOTE	No.	PART No.	QTY	PART NAME	NOTE	No.	PART No.	QTY	PART NAME
	1	9S-8005	3	PLUG					
	2	197-0273	1	SPRING					
	3	197-0199	1	SPRING					
Y	4	121-1491	3	VALVE GP					
	5	3K-0360	3	SEAL-O-RING (ID=16.36mm)					
	6	7I-2272	6	BOLT (L=12mm)					
	7	7M-7410	2	PLUG					
	8	197-0196	1	VALVE					
	9	8T-6759	6	PLUG					
	10	4B-4158	2	SCREW					

Y—SEE SEPARATE ILLUSTRATION

H74549E 04

158-8251 VALVE GP-SELECTOR

S/N CAE 01201-01854
Part of 168-9538-Page363
121-1491-Page487

HYDRAULIC SYSTEM

Consists of :

			Page
1	239-8697	VALVE GP-SELECTOR.....	493.03
		-OR-	
1	239-8998	VALVE GP-SELECTOR.....	493.05

H87213E 02

215-5037 VALVE GP-SELECTOR
S/N CAE 01855-Up
Part of 168-9538-Page365.02

MEMORANDA

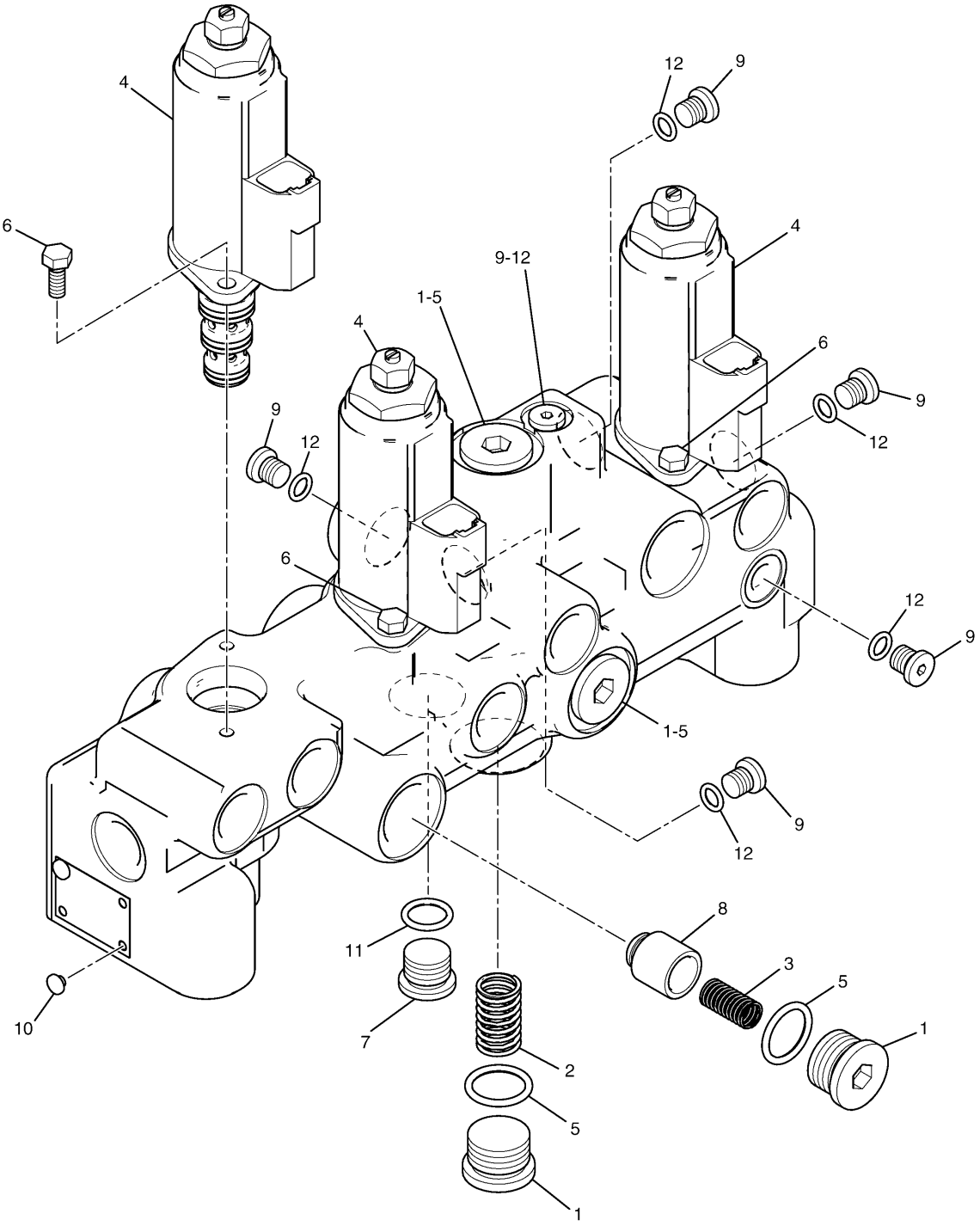

H87214E 00

239–8697 VALVE GP–SELECTOR

S/N CAE 01855–Up
Part of 215–5037–Page493.01
121–1491–Page487

HYDRAULIC SYSTEM

NOTE	No.	PART No.	QTY	PART NAME	NOTE	No.	PART No.	QTY	PART NAME
	1	9S-8005	4	PLUG					
	2	197-0273	1	SPRING					
	3	197-0199	1	SPRING					
Y	4	121-1491	3	VALVE GP					
	5	3K-0360	4	SEAL-O-RING (ID=16.36mm)					
	6	7I-2272	6	BOLT (L=12mm)					
	7	9S-8004	1	PLUG					
	8	197-0196	1	VALVE					
	9	9S-8001	6	PLUG					
	10	4B-4158	2	SCREW					
	11	3J-1907	1	SEAL-O-RING (ID=11.89mm)					
	12	4J-7533	6	SEAL-O-RING (ID=6.07mm)					

Y—SEE SEPARATE ILLUSTRATION

H87214E 00

239-8697 VALVE GP-SELECTOR

S/N CAE 01855-Up
Part of 215-5037-Page493.01
121-1491-Page487

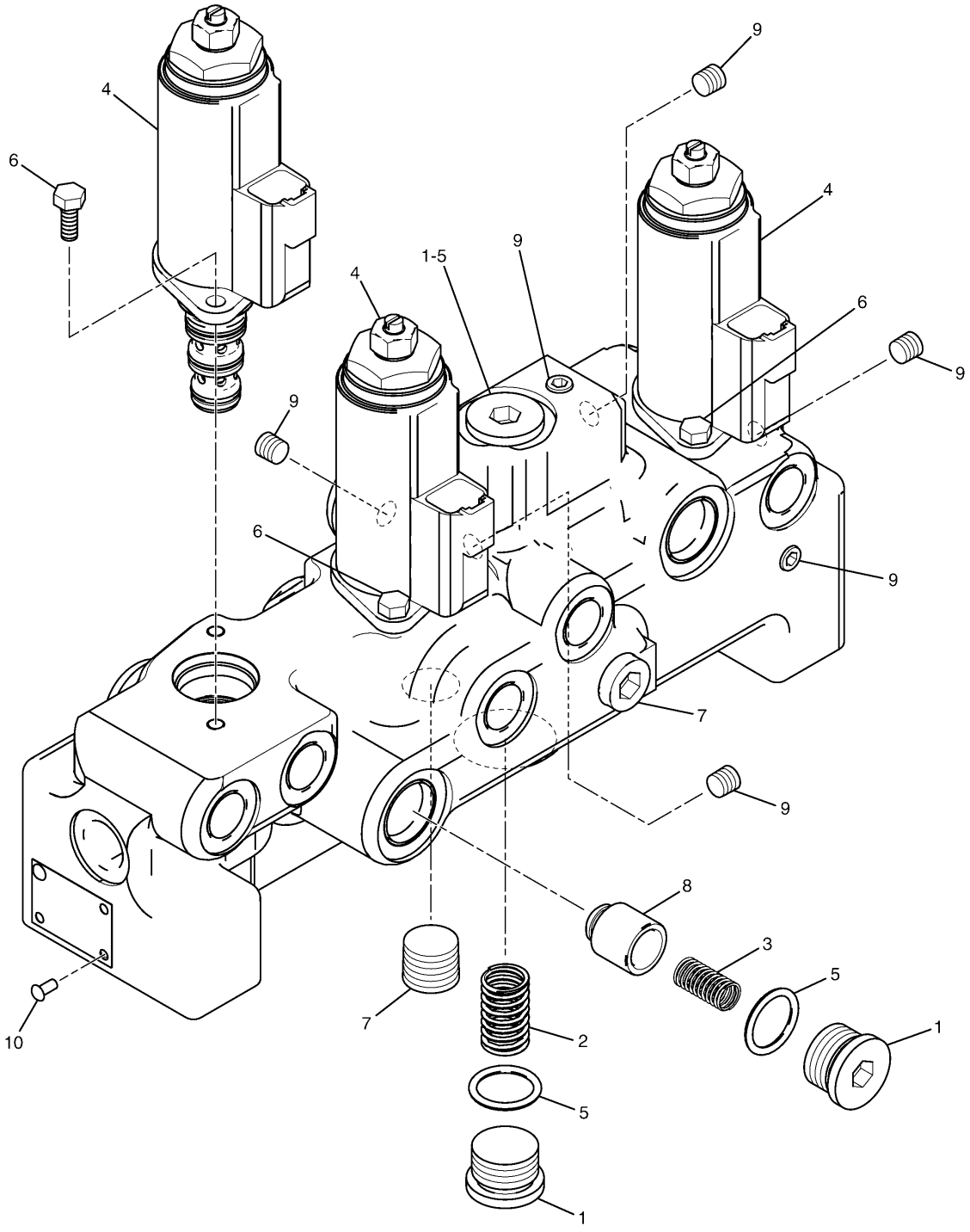

H87218E 00

239–8998 VALVE GP–SELECTOR

S/N CAE 01855–Up
Part of 215–5037–Page493.01
121–1491–Page487

HYDRAULIC SYSTEM

NOTE	No.	PART No.	QTY	PART NAME	NOTE	No.	PART No.	QTY	PART NAME
	1	9S-8005	3	PLUG					
	2	197-0273	1	SPRING					
	3	197-0199	1	SPRING					
Y	4	121-1491	3	VALVE GP					
	5	3K-0360	3	SEAL-O-RING (ID=16.36mm)					
	6	7I-2272	6	BOLT (L=12mm)					
	7	7M-7410	2	PLUG					
	8	197-0196	1	VALVE					
	9	8T-6759	6	PLUG					
	10	4B-4158	2	SCREW					

Y—SEE SEPARATE ILLUSTRATION

H87218E 00

239-8998 VALVE GP-SELECTOR

S/N CAE 01855-Up
Part of 215-5037-Page493.01
121-1491-Page487

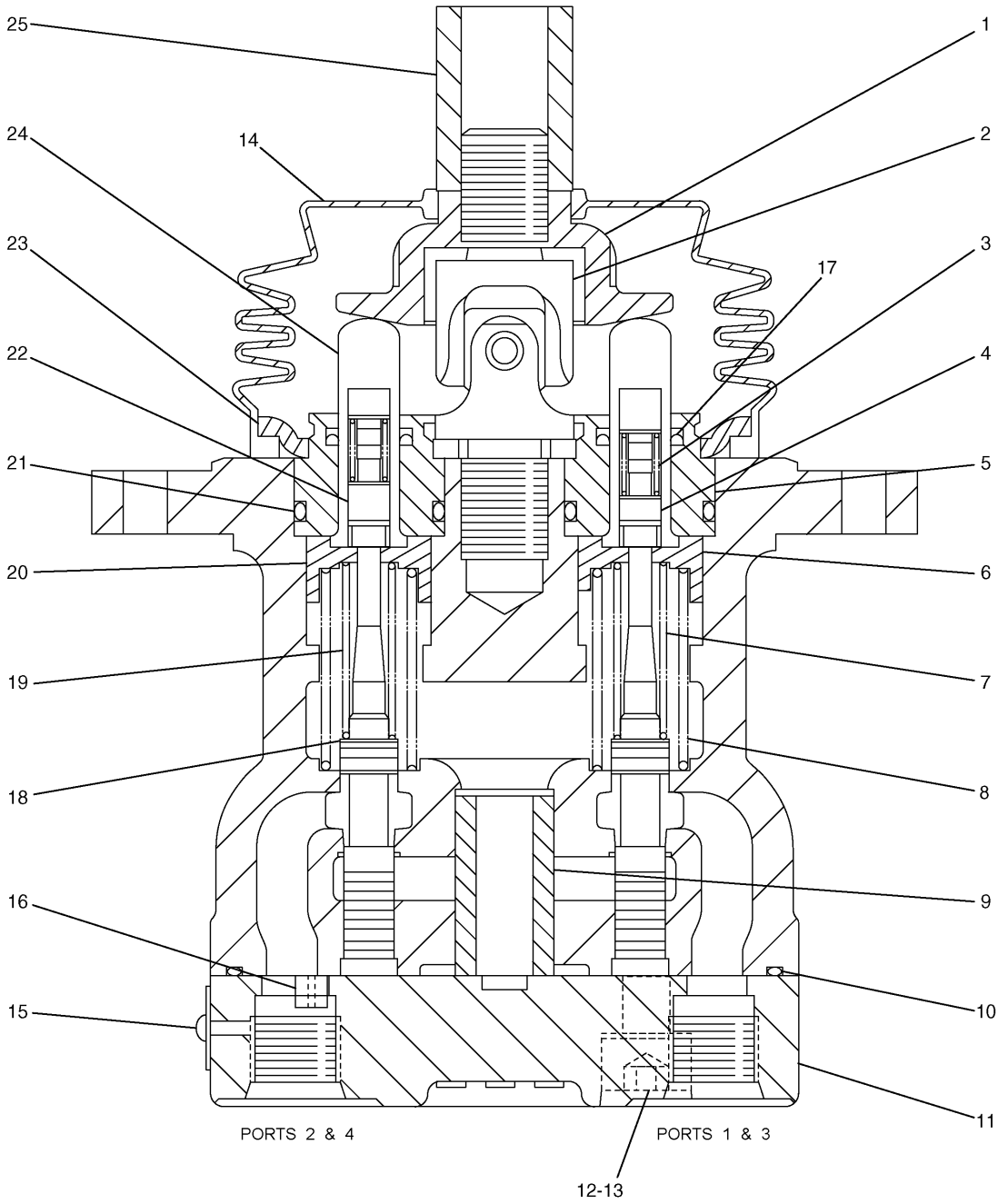

H92731E 02

206-3305 VALVE GP-PILOT

Part of 206-3303-Page434,206-3304-Page435,216-6749-Page435.01,216-6748-Page435.02

HYDRAULIC SYSTEM

NOTE	No.	PART No.	QTY	PART NAME	NOTE	No.	PART No.	QTY	PART NAME
	1	165-9431	1	PLATE					
	2	4I-6365	1	JOINT					
	3	118-4087	4	SPRING					
	4	165-9444	2	SEAT					
	5	096-1628	4	PLUG					
	6	165-9436	2	SEAT					
	7	165-9460	2	SPRING					
	8	165-9461	4	SPRING					
	9	165-9439	1	BUSHING					
	10	165-9448	1	SEAL-O-RING (ID=84.50mm)					
	11	168-0794	1	PLATE					
	12	096-4498	2	WASHER					
	13	6V-8337	2	BOLT (L=35mm)					
	14	171-0087	1	BELLOW					
	15	5B-9304	2	SCREW					
	16	7Y-0468	1	PIN					
	17	094-0876	4	SEAL					
B	18	099-6137	4	WASHER (T=0.2mm)					
	19	165-9442	2	SPRING					
	20	165-9435	2	SEAT					
	21	095-1586	4	SEAL-O-RING (ID=19.80mm)					
	22	165-9443	2	SEAT					
	23	165-9438	1	PLATE					
	24	118-4086	4	ROD					
	25	131-5915	1	NUT					

B—USE AS REQUIRED

H92731E 02

206-3305 VALVE GP-PILOT

Part of 206-3303-Page434,206-3304-Page435,216-6749-Page435.01,216-6748-Page435.02

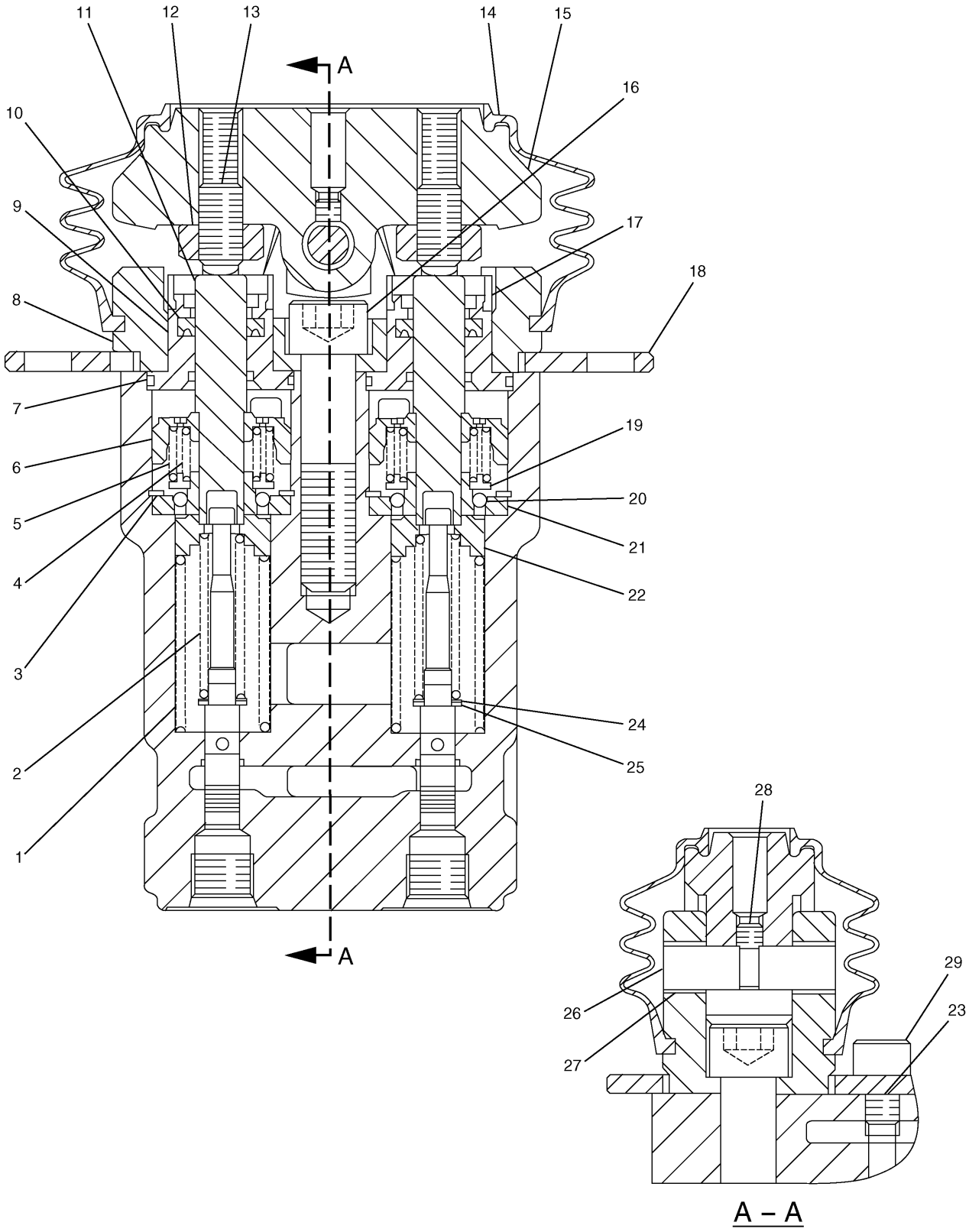

H75233E 02

165-9522 VALVE GP-PILOT
Part of 168-9537-Page361

HYDRAULIC SYSTEM

NOTE	No.	PART No.	QTY	PART NAME	NOTE	No.	PART No.	QTY	PART NAME
	1	087-4707	4	SPRING					
	2	131-5818	4	SPRING					
	3	095-0936	4	RING					
	4	126-1865	4	SPRING					
	5	126-1866	4	SPRING					
	6	147-4221	4	PISTON					
	7	6V-8400	4	SEAL-O-RING (ID=30.01mm)					
	8	165-9463	2	COVER					
	9	165-9554	4	PLUG					
	10	119-5389	4	PACKING					
	11	165-9552	4	PUSHROD					
	12	8T-4133	4	NUT					
	13	087-4710	4	SETSCREW					
	14	147-4131	2	BELLOW					
	15	087-5708	2	PEDAL					
	16	8T-0343	2	BOLT (L=55mm)					
	17	119-5388	4	CAP					
	18	165-9553	1	COVER					
	19	119-5391	4	SEAT					
	20	153-5223	12	BALL					
	21	119-5392	4	BUSHING					
	22	165-9551	4	SEAT					
	23	8T-6759	2	PLUG					
	24	099-6137	4	WASHER					
	25	099-6141	4	WASHER					
	26	099-6145	2	CAMSHAFT					
	27	099-6144	4	BUSHING					
	28	095-1260	2	SETSCREW					
	29	8T-1158	2	BOLT (L=20mm)					

H75233E 02

165-9522 VALVE GP-PILOT

Part of 168-9537-Page361

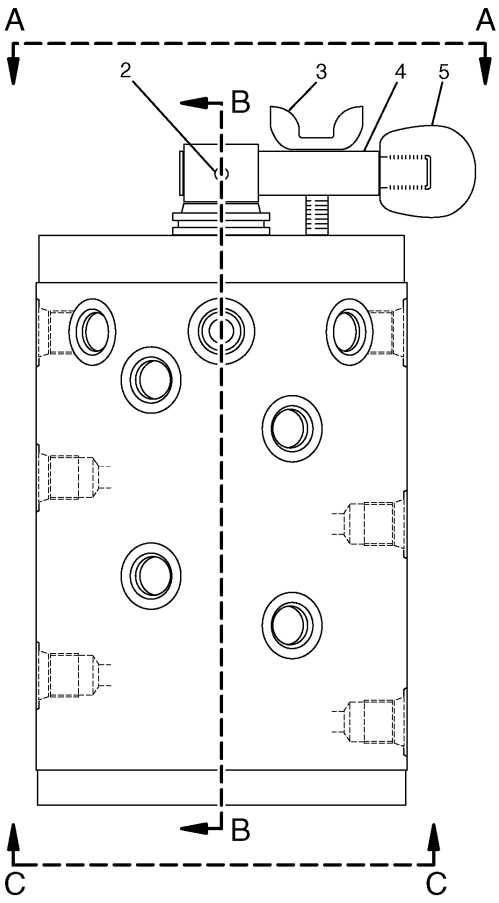

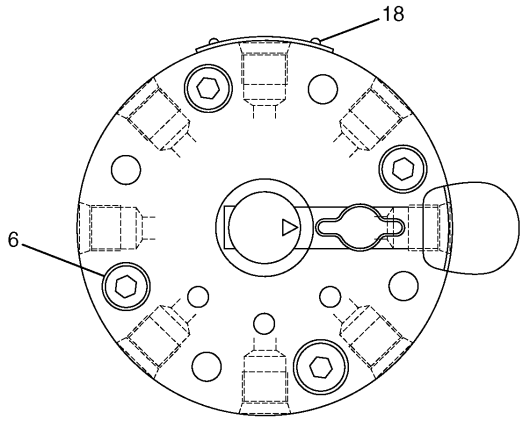

A – A

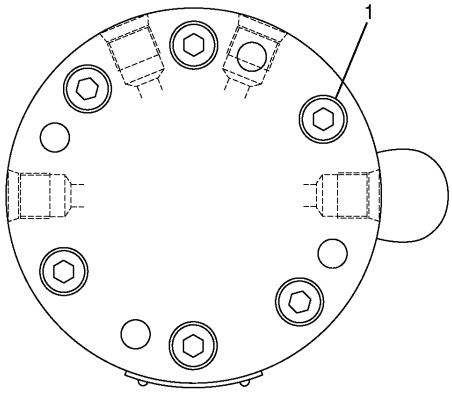

C – C

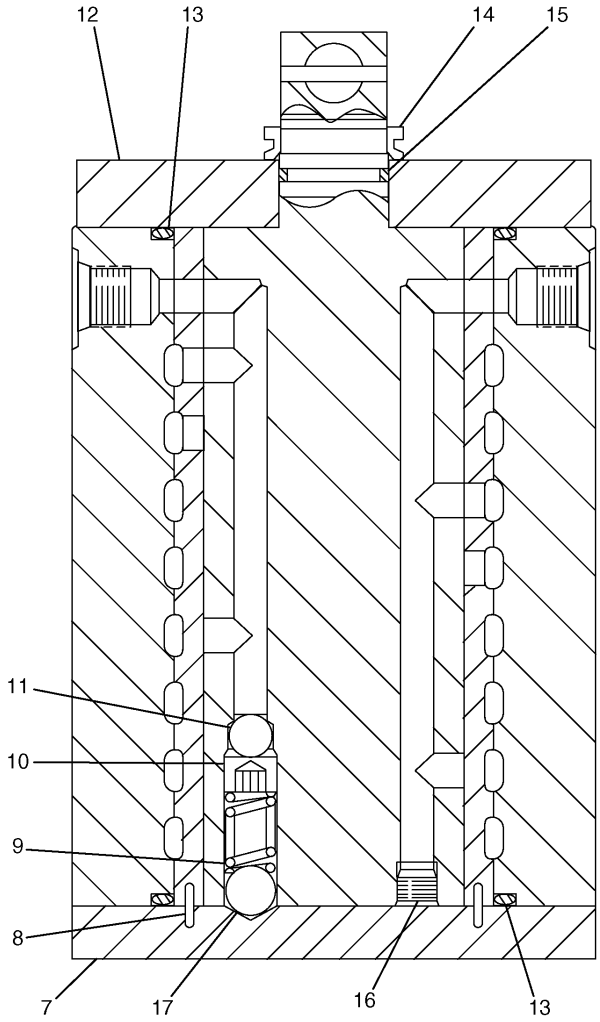

B – B

H67326E 01

165-9470 VALVE GP-PILOT
Part of 168-9559-Page381
An Attachment

HYDRAULIC SYSTEM

NOTE	No.	PART No.	QTY	PART NAME	NOTE	No.	PART No.	QTY	PART NAME
	1	6V-8202	6	BOLT (L=16mm)					
	2	085-7083	1	PIN					
	3	085-7084	1	BOLT					
	4	085-7080	1	LEVER					
	5	085-7079	1	GRIP					
	6	6V-3938	4	BOLT (L=20mm)					
	7	171-0185	1	COVER					
	8	085-7081	4	NEEDLE					
	9	171-0184	1	SPRING					
	10	8T-9533	1	SETSCREW					
	11	006-6803	1	BALL					
	12	171-0183	1	COVER					
	13	095-1710	2	SEAL-O-RING (ID=79.40mm)					
	14	6I-6923	1	SEAL					
	15	095-1590	1	SEAL-O-RING (ID=21.80mm)					
	16	095-0965	7	PLUG					
	17	1F-0425	1	BALL					
	18	126-9993	2	SCREW					

H67326E 01

165-9470 VALVE GP-PILOT

Part of 168-9559-Page381
An Attachment

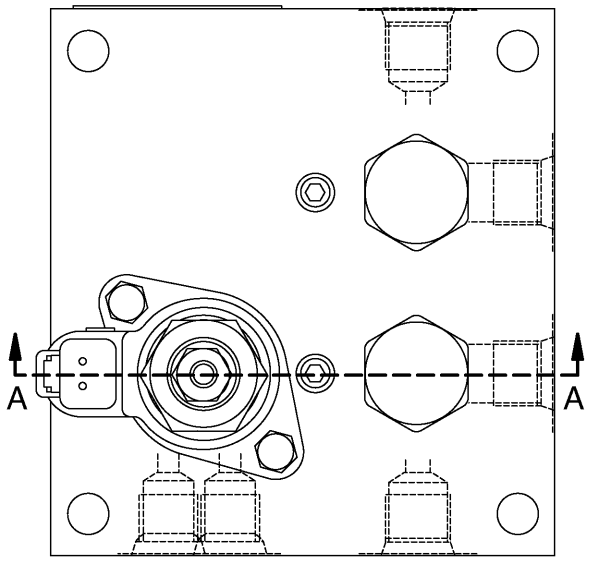

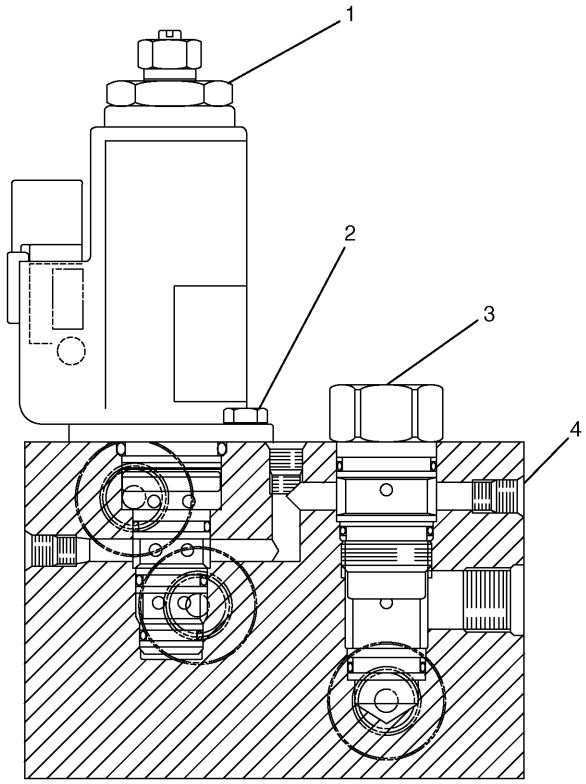

A – A

NOTE	No.	PART No.	QTY	PART NAME	NOTE	No.	PART No.	QTY	PART NAME
Y	1	111-9916	1	VALVE GP					
	2	8T-0288	2	BOLT (L=12mm)					
	3	171-0198	2	VALVE GP					
		185-0407	1	SEAL KIT					
	4	7I-8084	6	PLUG					

Y—SEE SEPARATE ILLUSTRATION

H68565E 01

171-0188 VALVE GP-PILOT

Part of 196-0458-Page371,168-9545-Page379
111-9916-Page485
An Attachment

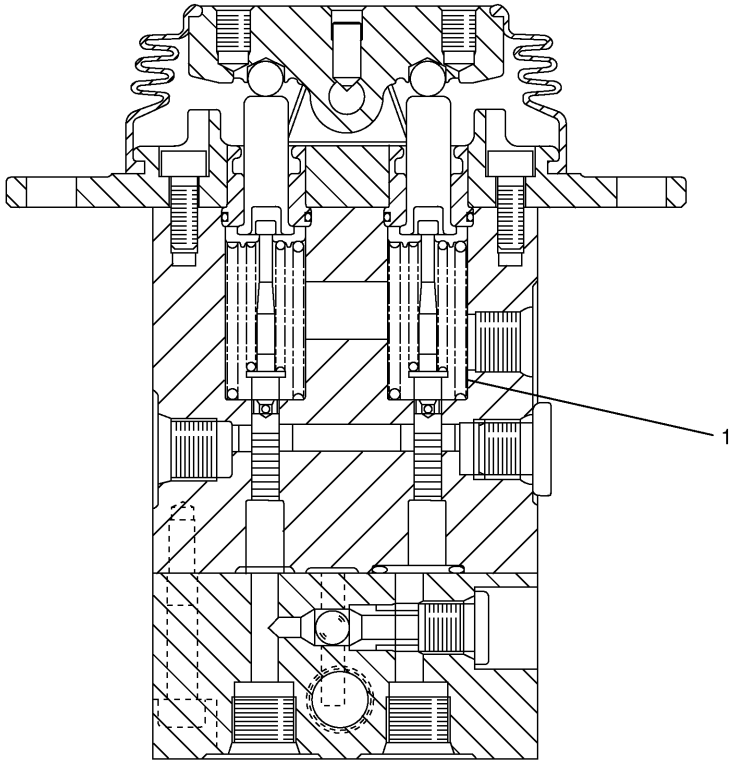

NOTE	No.	PART No.	QTY	PART NAME	NOTE	No.	PART No.	QTY	PART NAME
	1	190-7819	2	SPRING					

H78639E 00

206-3336 VALVE GP-PILOT

Part of 153-8761-Page443,179-4598-Page445,153-8767-Page446
An Attachment

HYDRAULIC SYSTEM

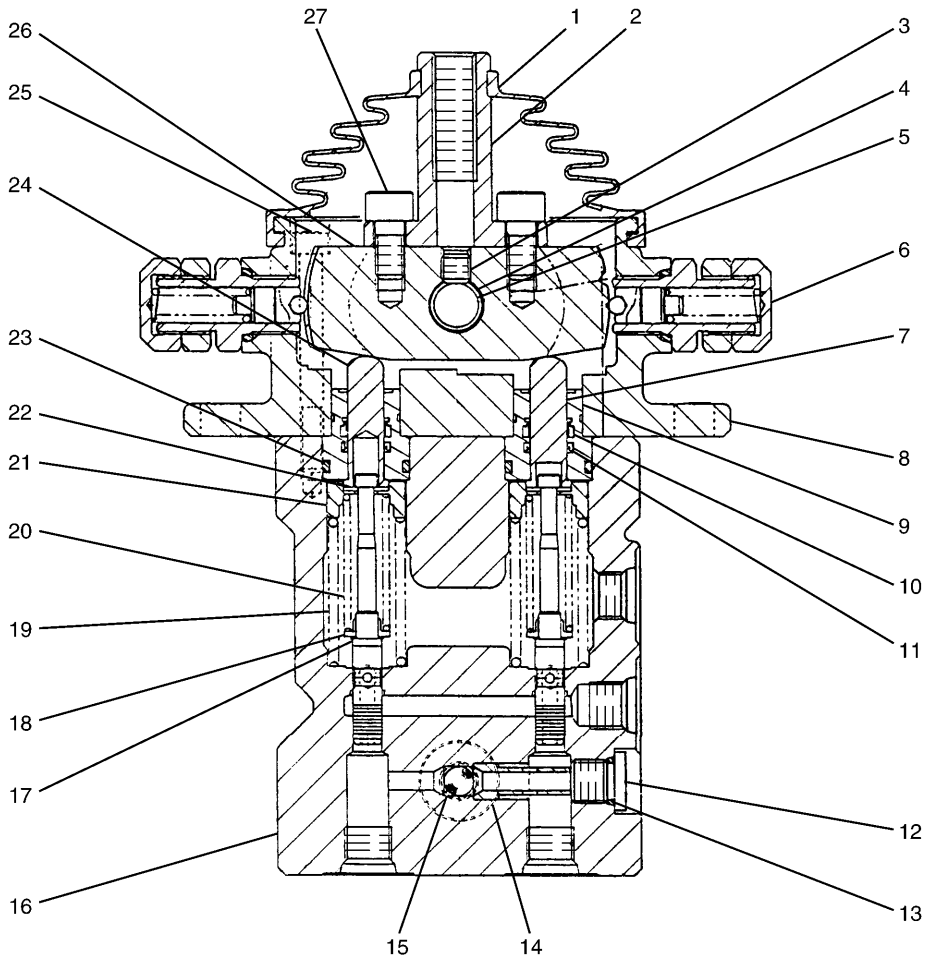

NOTE	No.	PART No.	QTY	PART NAME	NOTE	No.	PART No.	QTY	PART NAME
	1	132-7695	1	BELLOW		21	185-0521	2	SEAT
	2	132-7701	1	LEVER		22	099-6136	4	WASHER
	3	9X-2609	1	SETSCREW		23	095-1586	2	SEAL-O-RING (ID=19.80mm)
	4	132-7699	1	SHAFT		24	185-0519	1	ROD
	5	132-7713	2	BUSHING		25	8T-2396	2	BOLT (L=60mm)
	6	185-0526	2	BALL AS		26	185-0525	1	DISK
	7	132-7711	1	ROD		27	6V-8202	2	BOLT (L=16mm)
	8	185-0518	1	COVER					
	9	087-4703	2	PLUG					
	10	099-6135	2	SCRAPER					
	11	094-0876	2	SEAL					
	12	107-6479	1	PLUG					
	13	095-1578	1	SEAL-O-RING (ID=9.80mm)					
	14	107-6481	1	SEAT					
	15	7I-7258	1	BALL					
	16	190-7884	1	BODY AS					
	17	099-6137	2	WASHER					
	18	185-0522	2	SEAT					
	19	185-0524	2	SPRING					
	20	185-0523	2	SPRING					

H93182E 02

165-9582 VALVE GP-PILOT

Part of 171-7372-Page442
An Attachment

MEMORANDA

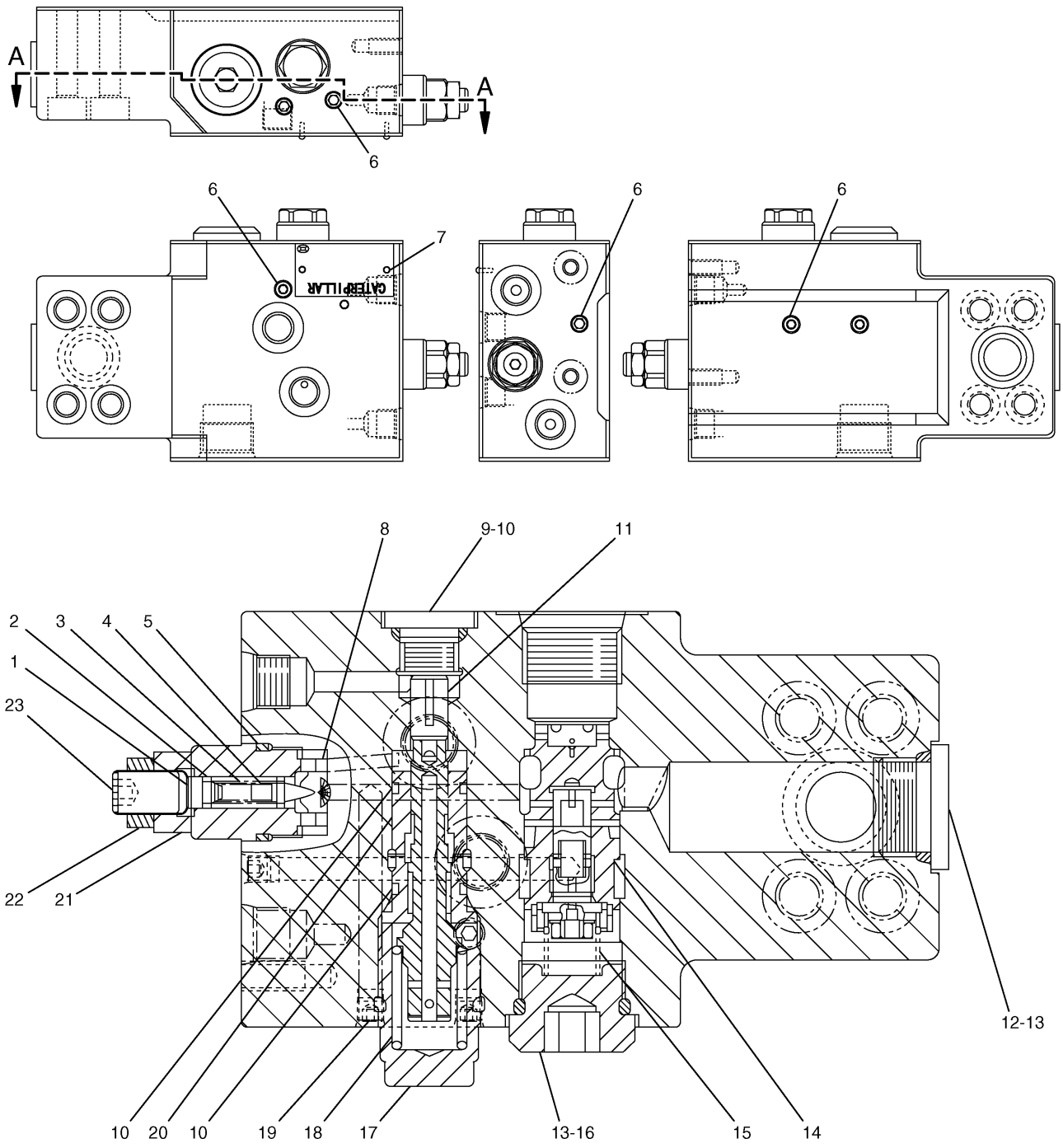

A – A

H86455E 01

190-7830 VALVE GP-PILOT
S/N CAE 01201-(T02.06)
Part of 168-9560-Page313
An Attachment

HYDRAULIC SYSTEM

NOTE	No.	PART No.	QTY	PART NAME	NOTE	No.	PART No.	QTY	PART NAME
	1	201-9285	1	SEAT					
	2	095-1573	1	SEAL-O-RING (ID=5.80mm)					
	3	201-9287	1	SPRING					
	4	201-9291	1	VALVE					
	5	095-1590	1	SEAL-O-RING (ID=21.80mm)					
	6	7I-8084	6	PLUG					
	7	5B-9304	2	SCREW					
	8	201-9283	1	SEAT AS					
	9	201-9293	1	PLUG					
	10	095-1584	3	SEAL-O-RING (ID=15.80mm)					
	11	201-9284	1	PISTON					
	12	7I-7235	1	PLUG					
	13	095-1592	2	SEAL-O-RING (ID=23.70mm)					
	14	201-9292	1	VALVE AS					
	15	201-9288	1	SPRING					
	16	201-9294	1	PLUG					
	17	201-9296	1	PLUG					
	18	201-9289	1	SPRING					
	19	095-1589	1	SEAL-O-RING (ID=21.70mm)					
	20	201-9286	1	SPOOL AS					
	21	201-9295	1	PLUG					
	22	201-9330	1	NUT					
	23	201-9331	1	SCREW					

H86455E 01

190-7830 VALVE GP-PILOT

S/N CAE 01201-(T02.06)
Part of 168-9560-Page313
An Attachment

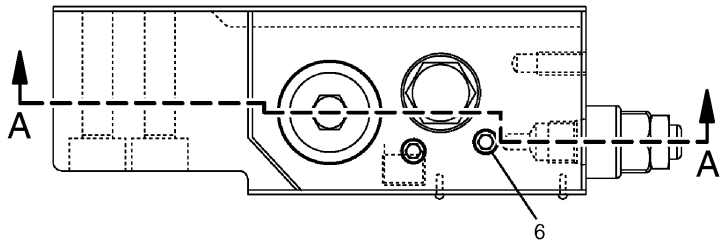

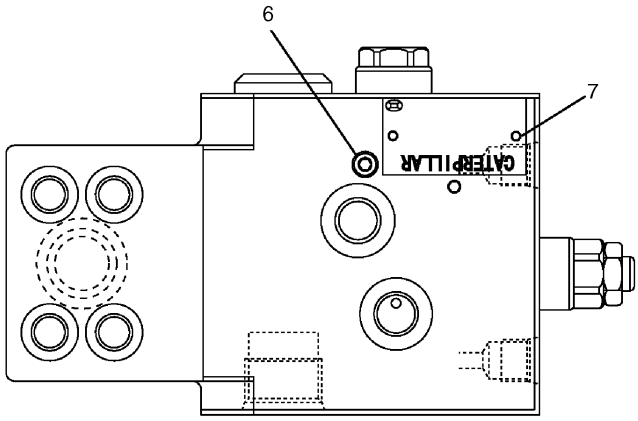

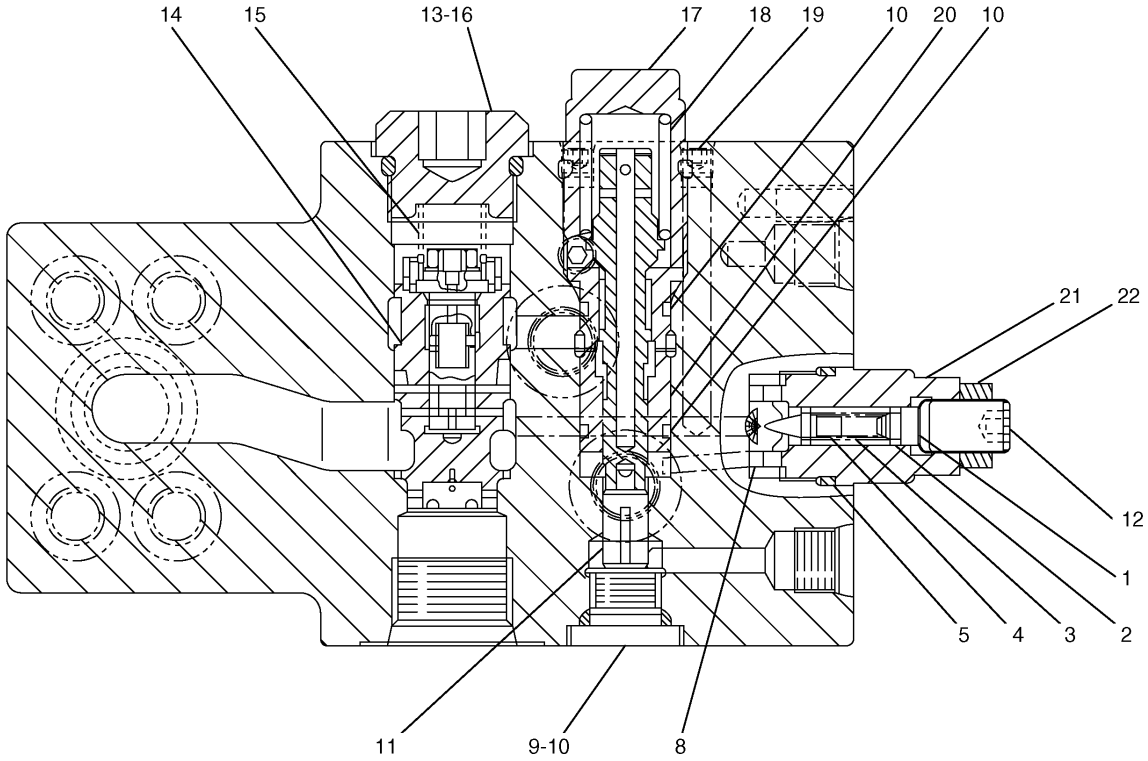

A – A

H86408E 00

225-4655 VALVE GP-PILOT

BOOM LOWERING CONTROL
S/N CAE (T02.07)-Up
Part of 168-9560-Page313.02
An Attachment

HYDRAULIC SYSTEM

NOTE	No.	PART No.	QTY	PART NAME	NOTE	No.	PART No.	QTY	PART NAME
	1	201-9285	1	SEAT					
	2	095-1573	1	SEAL-O-RING (ID=5.80mm)					
	3	201-9287	1	SPRING					
	4	201-9291	1	VALVE					
	5	095-1590	1	SEAL-O-RING (ID=21.80mm)					
	6	7I-8084	3	PLUG					
	7	5B-9304	2	SCREW					
	8	201-9283	1	SEAT AS					
	9	201-9293	1	PLUG					
	10	095-1584	3	SEAL-O-RING (ID=15.80mm)					
	11	215-5023	1	PISTON					
	12	201-9331	1	SCREW					
	13	095-1592	1	SEAL-O-RING (ID=23.70mm)					
	14	209-5931	1	VALVE AS					
	15	201-9288	1	SPRING					
	16	201-9294	1	PLUG					
	17	201-9296	1	PLUG					
	18	201-9289	1	SPRING					
	19	095-1589	1	SEAL-O-RING (ID=21.70mm)					
	20	201-9286	1	SPOOL AS					
	21	201-9295	1	PLUG					
	22	201-9330	1	NUT					

H86408E 00

225-4655 VALVE GP-PILOT

BOOM LOWERING CONTROL
S/N CAE (T02.07)-Up
Part of 168-9560-Page313.02
An Attachment

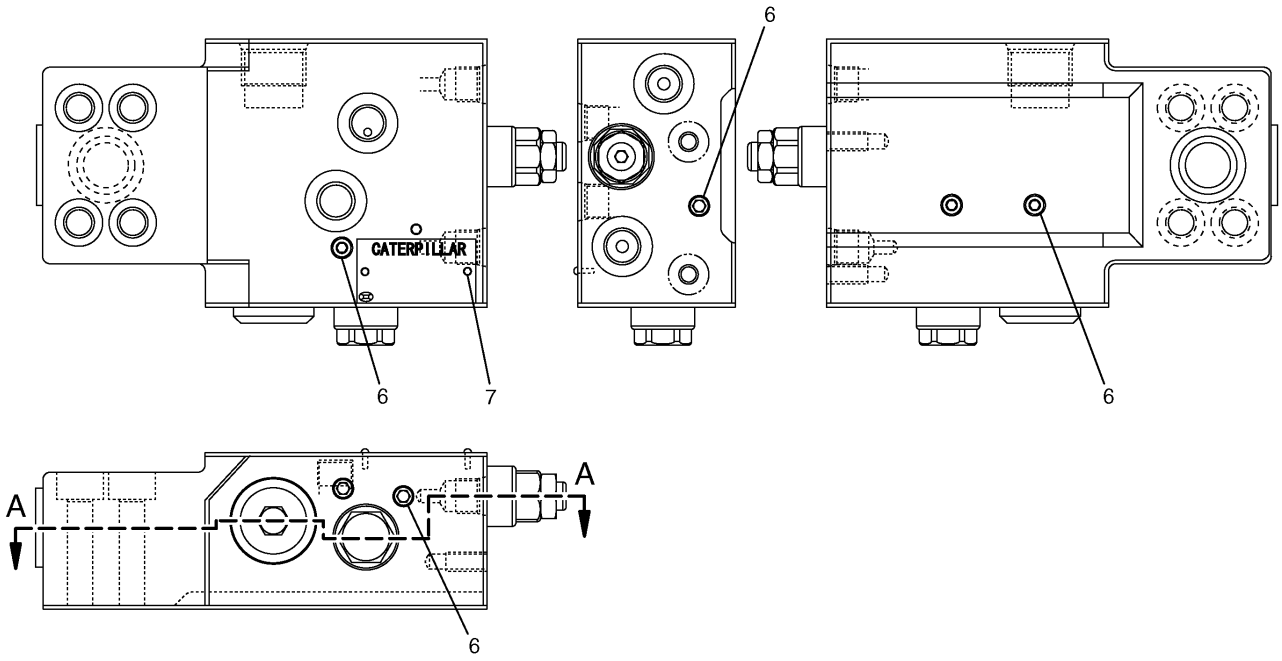

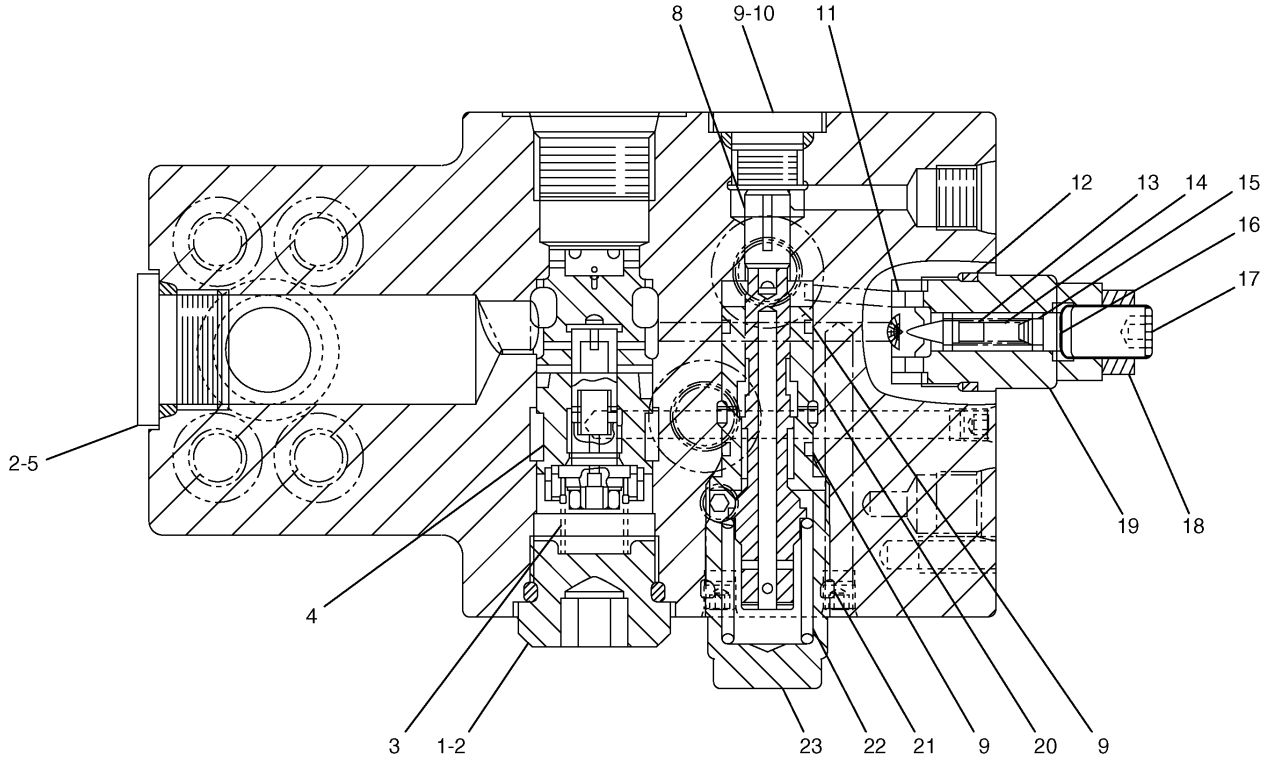

A – A

H74009E 01

190-7831 VALVE GP-PILOT
S/N CAE 01201-(T02.06)
Part of 168-9560-Page313
An Attachment

HYDRAULIC SYSTEM

NOTE	No.	PART No.	QTY	PART NAME	NOTE	No.	PART No.	QTY	PART NAME
	1	201-9294	1	PLUG					
	2	095-1592	2	SEAL-O-RING (ID=23.70mm)					
	3	201-9288	1	SPRING					
	4	201-9292	1	VALVE AS					
	5	71-7235	1	PLUG					
	6	71-8084	6	PLUG					
	7	5B-9304	2	SCREW					
	8	201-9284	1	PISTON					
	9	095-1584	3	SEAL-O-RING (ID=15.80mm)					
	10	201-9293	1	PLUG					
	11	201-9283	1	SEAT AS					
	12	095-1590	1	SEAL-O-RING (ID=21.80mm)					
	13	201-9291	1	VALVE					
	14	201-9287	1	SPRING					
	15	095-1573	1	SEAL-O-RING (ID=5.80mm)					
	16	201-9285	1	SEAT					
	17	201-9331	1	SCREW					
	18	201-9330	1	NUT					
	19	201-9295	1	PLUG					
	20	201-9286	1	SPOOL AS					
	21	095-1589	1	SEAL-O-RING (ID=21.70mm)					
	22	201-9289	1	SPRING					
	23	201-9296	1	PLUG					

H74009E 01

190-7831 VALVE GP-PILOT

S/N CAE 01201-(T02.06)
Part of 168-9560-Page313
An Attachment

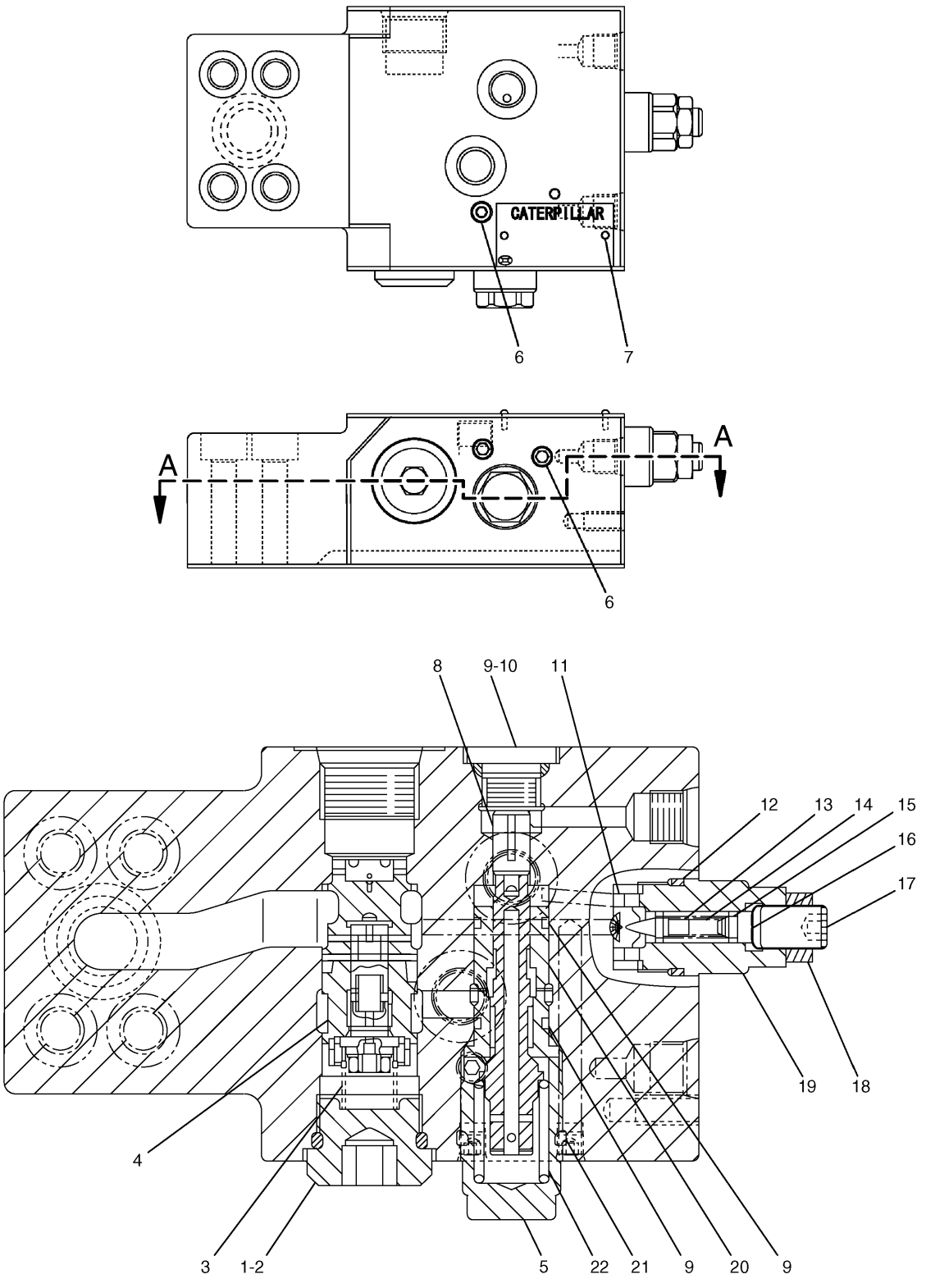

A – A

H86414E 00

225-4656 VALVE GP-PILOT
BOOM LOWERING CONTROL
S/N CAE (T02.07)-Up
Part of 168-9560-Page313.02
An Attachment

HYDRAULIC SYSTEM

NOTE	No.	PART No.	QTY	PART NAME	NOTE	No.	PART No.	QTY	PART NAME
	1	201-9294	1	PLUG					
	2	095-1592	1	SEAL-O-RING (ID=23.70mm)					
	3	201-9288	1	SPRING					
	4	209-5931	1	VALVE AS					
	5	201-9296	1	PLUG					
	6	7I-8084	3	PLUG					
	7	5B-9304	2	SCREW					
	8	215-5023	1	PISTON					
	9	095-1584	3	SEAL-O-RING (ID=15.80mm)					
	10	201-9293	1	PLUG					
	11	201-9283	1	SEAT AS					
	12	095-1590	1	SEAL-O-RING (ID=21.80mm)					
	13	201-9291	1	VALVE					
	14	201-9287	1	SPRING					
	15	095-1573	1	SEAL-O-RING (ID=5.80mm)					
	16	201-9285	1	SEAT					
	17	201-9331	1	SCREW					
	18	201-9330	1	NUT					
	19	201-9295	1	PLUG					
	20	201-9286	1	SPOOL AS					
	21	095-1589	1	SEAL-O-RING (ID=21.70mm)					
	22	201-9289	1	SPRING					

H86414E 00

225-4656 VALVE GP-PILOT

BOOM LOWERING CONTROL
S/N CAE (T02.07)-Up
Part of 168-9560-Page313.02
An Attachment

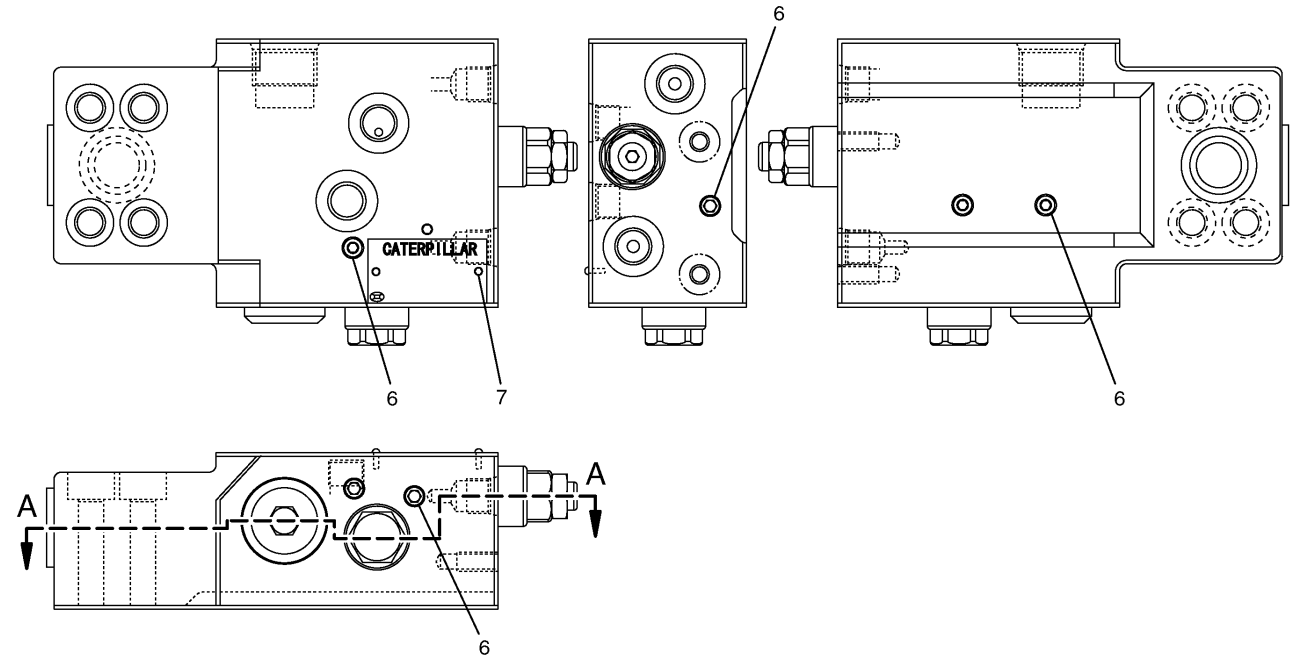

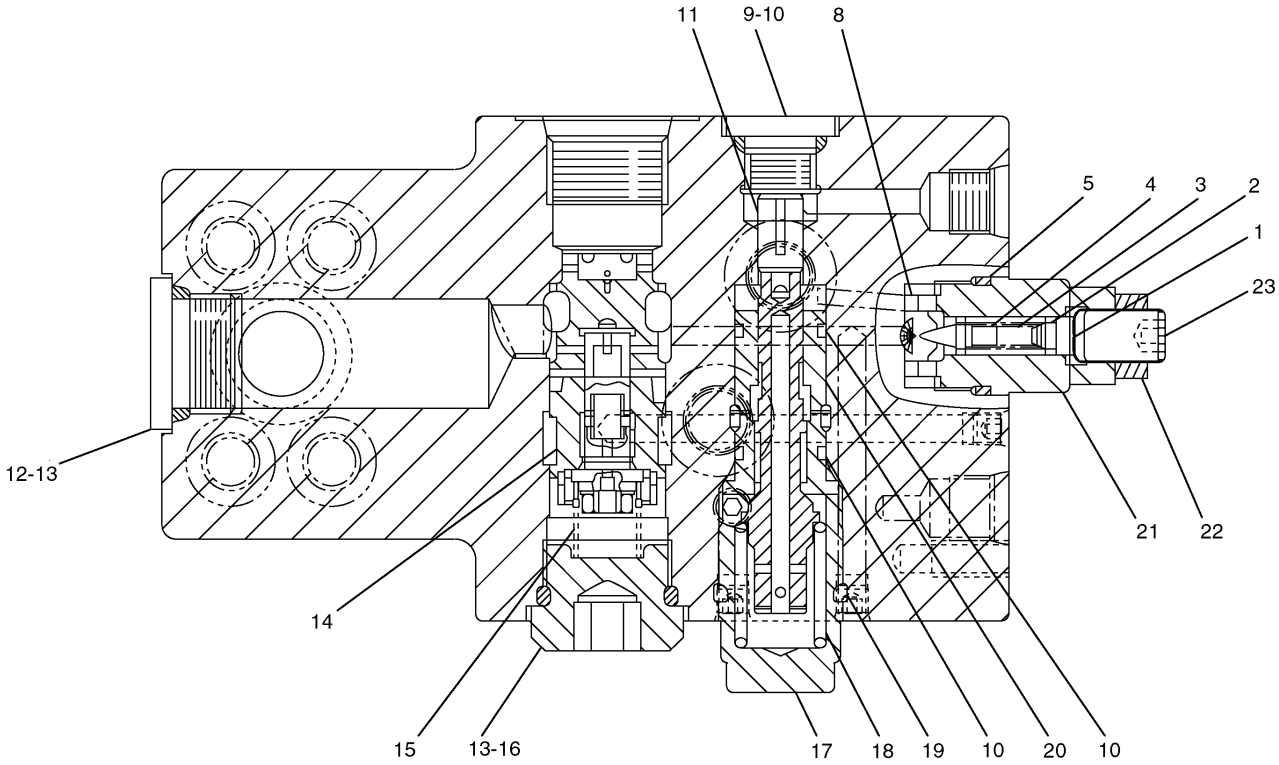

A – A

H77604E 00

206-3220 VALVE GP-PILOT
S/N CAE 01201-(T02.08)
Part of 202-7138-Page315
An Attachment

HYDRAULIC SYSTEM

NOTE	No.	PART No.	QTY	PART NAME	NOTE	No.	PART No.	QTY	PART NAME
	1	201-9285	1	SEAT					
	2	095-1573	1	SEAL-O-RING (ID=5.80mm)					
	3	201-9287	1	SPRING					
	4	201-9291	1	VALVE					
	5	095-1590	1	SEAL-O-RING (ID=21.80mm)					
	6	7I-8084	6	PLUG					
	7	5B-9304	2	SCREW					
	8	201-9283	1	SEAT AS					
	9	201-9293	1	PLUG					
	10	095-1584	3	SEAL-O-RING (ID=15.80mm)					
	11	201-9284	1	PISTON					
	12	7I-7235	1	PLUG					
	13	095-1592	2	SEAL-O-RING (ID=23.70mm)					
	14	201-9292	1	VALVE AS					
	15	201-9288	1	SPRING					
	16	201-9294	1	PLUG					
	17	201-9296	1	PLUG					
	18	201-9290	1	SPRING					
	19	095-1589	1	SEAL-O-RING (ID=21.70mm)					
	20	201-9286	1	SPOOL AS					
	21	201-9295	1	PLUG					
	22	201-9330	1	NUT					
	23	201-9331	1	SCREW					

H77604E 00

206-3220 VALVE GP-PILOT

S/N CAE 01201-(T02.08)
Part of 202-7138-Page315
An Attachment

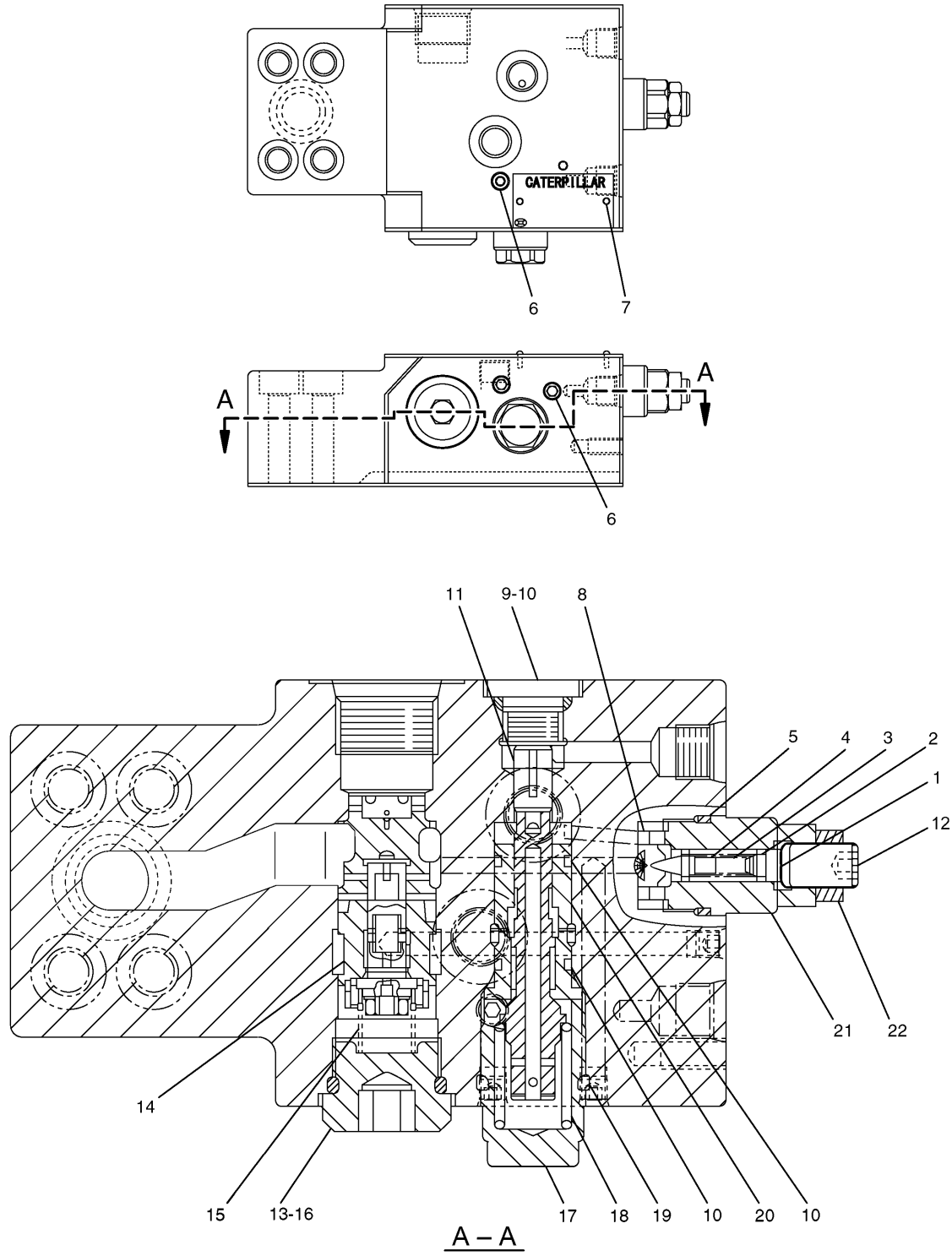

H98187E 01

225-4657 VALVE GP-PILOT
Stick Lowering Control
S/N CAE (T02.09)-Up
Part of 202-7138-Page315.01
An Attachment

HYDRAULIC SYSTEM

NOTE	No.	PART No.	QTY	PART NAME	NOTE	No.	PART No.	QTY	PART NAME
	1	201-9285	1	SEAT					
	2	095-1573	1	SEAL-O-RING (ID=5.80mm)					
	3	201-9287	1	SPRING					
	4	201-9291	1	VALVE					
	5	095-1590	1	SEAL-O-RING (ID=21.80mm)					
	6	7I-8084	3	PLUG					
	7	5B-9304	2	SCREW					
	8	201-9283	1	SEAT AS					
	9	201-9293	1	PLUG					
	10	095-1584	3	SEAL-O-RING (ID=15.80mm)					
	11	215-5023	1	PISTON					
	12	201-9331	1	SCREW					
	13	095-1592	1	SEAL-O-RING (ID=23.70mm)					
	14	209-5931	1	VALVE AS					
	15	201-9288	1	SPRING					
	16	201-9294	1	PLUG					
	17	201-9296	1	PLUG					
	18	201-9290	1	SPRING					
	19	095-1589	1	SEAL-O-RING (ID=21.70mm)					
	20	201-9286	1	SPOOL AS					
	21	201-9295	1	PLUG					
	22	201-9330	1	NUT					

H98187E 01

225-4657 VALVE GP-PILOT
Stick Lowering Control
S/N CAE (T02.09)-Up
Part of 202-7138-Page315.01
An Attachment

HYDRAULIC SYSTEM

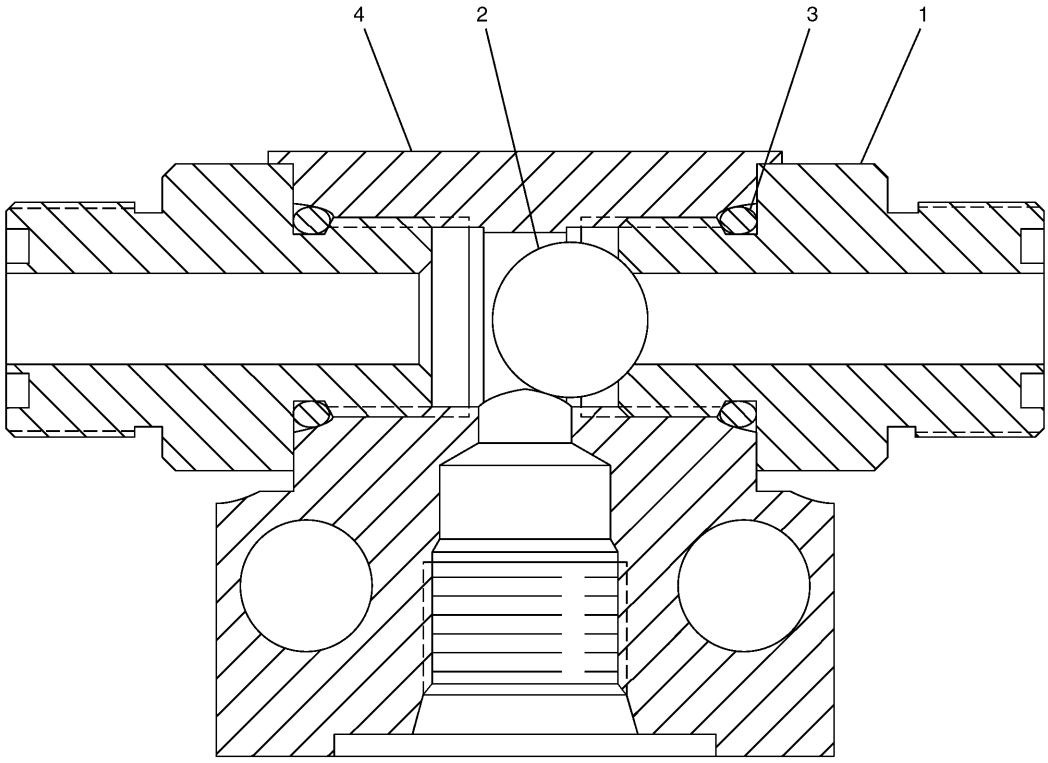

NOTE	No.	PART No.	QTY	PART NAME	NOTE	No.	PART No.	QTY	PART NAME
	1	123-2552	2	CONNECTOR					
	2	4B-9783	1	BALL					
	3	3J-1907	2	SEAL-O-RING (ID=11.89mm)					
	4	123-2431	1	BODY					

HA3674E 00

123-2430 VALVE GP-SHUTTLE

Part of 168-9538-Page365,168-9544-Page373,196-0456-Page377,212-5187-Page377.02

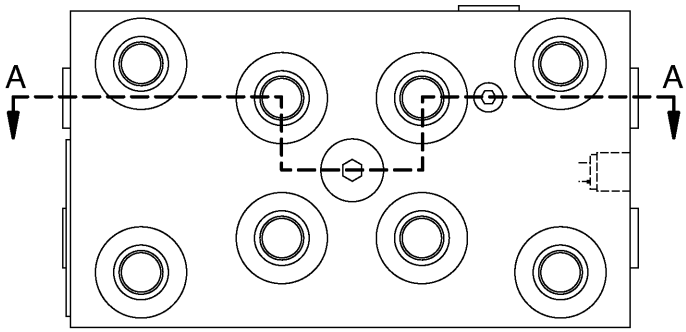

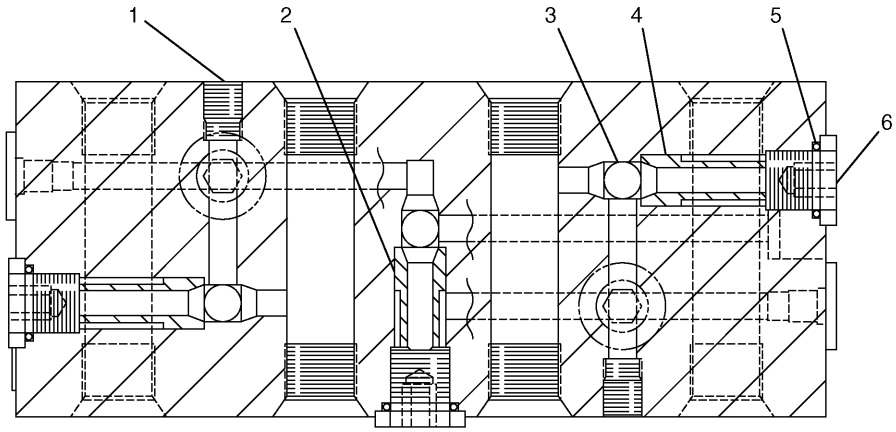

A – A

NOTE	No.	PART No.	QTY	PART NAME	NOTE	No.	PART No.	QTY	PART NAME
	1	71-8084	4	PLUG					
	2	185-0463	1	SEAT					
	3	4B-9880	7	BALL					
	4	165-9464	6	SEAT					
	5	095-1578	7	SEAL-O-RING (ID=9.80mm)					
	6	107-6479	7	PLUG					

H77601E 01

185-0462 VALVE GP-SHUTTLE

Part of 168-9540-Page367,168-9542-Page369,168-9544-Page373,196-0457-Page375,196-0456-Page377 ,212-5187-Page377.02,196-0461-Page377.04

An Attachment

Consists of :

			Page
1	230-0362	VALVE AS-BALL	512.01
		-OR-	
1	230-0363	VALVE AS-BALL	512.02

H84238E 04

146-1464 VALVE AS-BALL
An Attachment

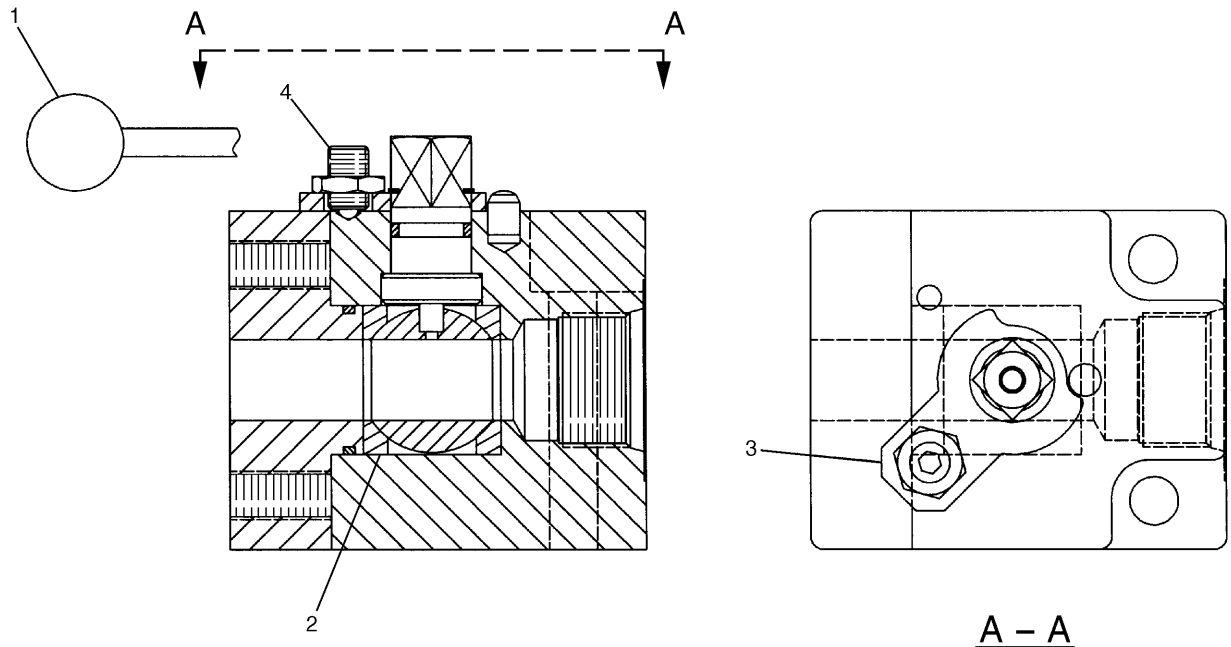

A – A

NOTE	No.	PART No.	QTY	PART NAME	NOTE	No.	PART No.	QTY	PART NAME
	1	61-6916	1	HANDLE					
	2	197-2139	2	SEAL					
	3	153-8644	1	STOPPER					
	4	153-8645	1	PLUNGER					

H84239E 00

230-0362 VALVE AS-BALL
Part of 146-1464-Page512
An Attachment

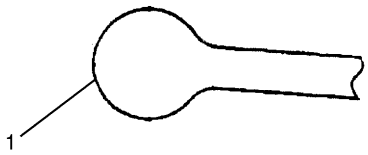

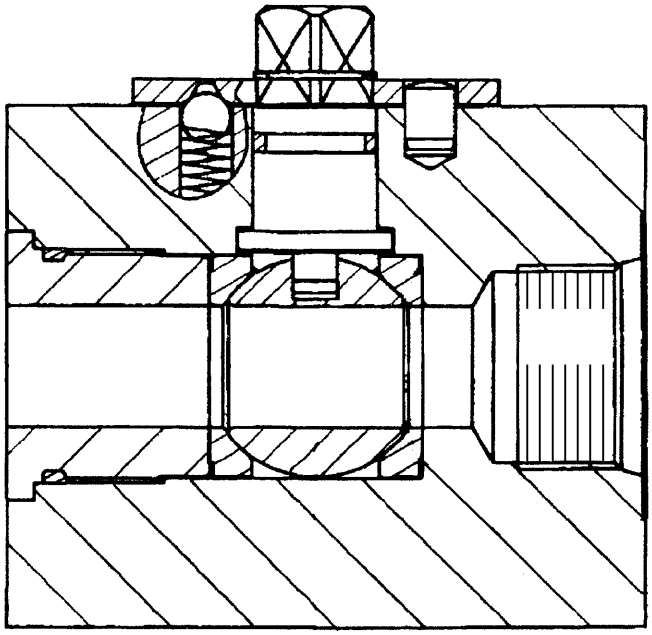

NOTE	No.	PART No.	QTY	PART NAME	NOTE	No.	PART No.	QTY	PART NAME
	1	119-9447	1	HANDLE					

H84240E 00

230-0363 VALVE AS-BALL

Part of 146-1464-Page512
An Attachment

HYDRAULIC SYSTEM

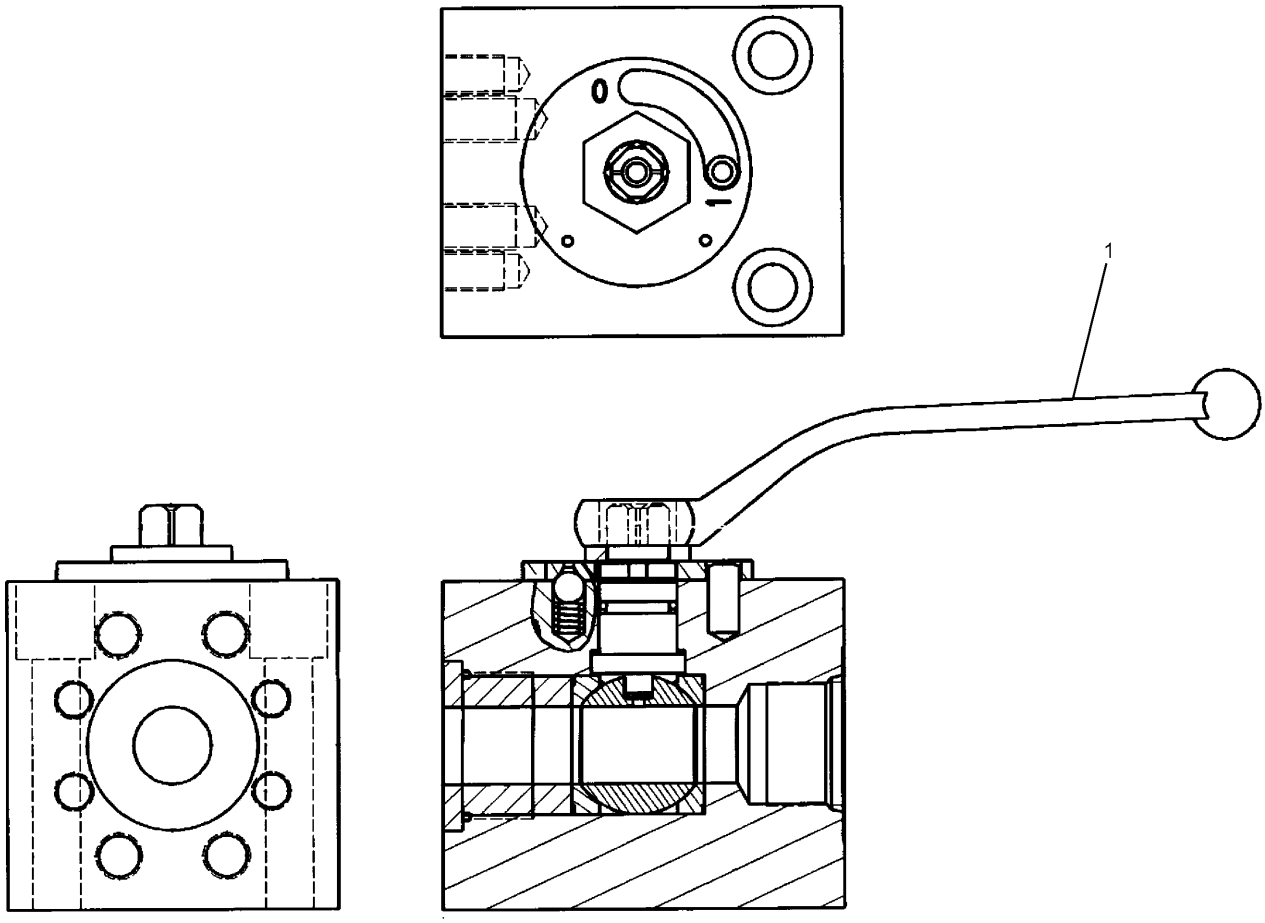

NOTE	No.	PART No.	QTY	PART NAME	NOTE	No.	PART No.	QTY	PART NAME
	1	119-9947	1	HANDLE					

H95351E 00

282-5894 VALVE AS-BALL

Part of 116-9202-Page335,127-6705-Page337
An Attachment

MEMORANDA

OPERATOR STATION

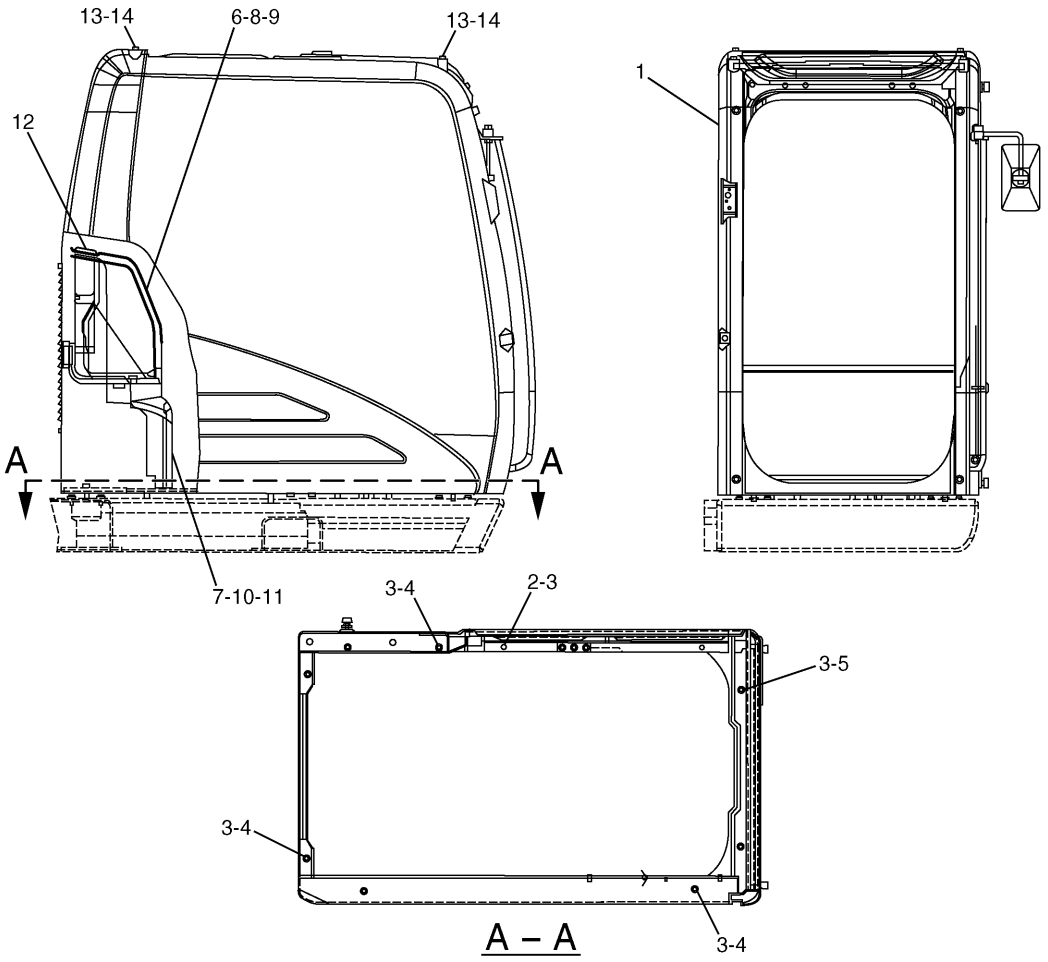

NOTE	No.	PART No.	QTY	PART NAME	NOTE	No.	PART No.	QTY	PART NAME
Y	1	139-7092	1	CAB GP					
	2	8T-4179	2	BOLT (L=20mm)					
	3	8T-4223	10	WASHER					
	4	8T-4910	6	BOLT (L=60mm)					
	5	8T-6868	2	BOLT (L=80mm)					
Y	6	196-1427	1	COVER GP					
	7	171-7336	1	COVER					
	8	128-2135	2	SCREW					
	9	128-2136	4	SCREW					
	10	8T-4191	2	BOLT (L=16mm)					
	11	124-7346	2	LOCKWASHER					
	12	8Y-6967	4	LOUVER AS					
	13	8T-4190	4	BOLT (L=25mm)					
	14	9X-8257	6	WASHER					

Y—SEE SEPARATE ILLUSTRATION

H74597E 07

161-3739 CAB GP

S/N CAE 01201-(T07.02)
139-7092-Page518,196-1427-Page559
An Attachment

OPERATOR STATION

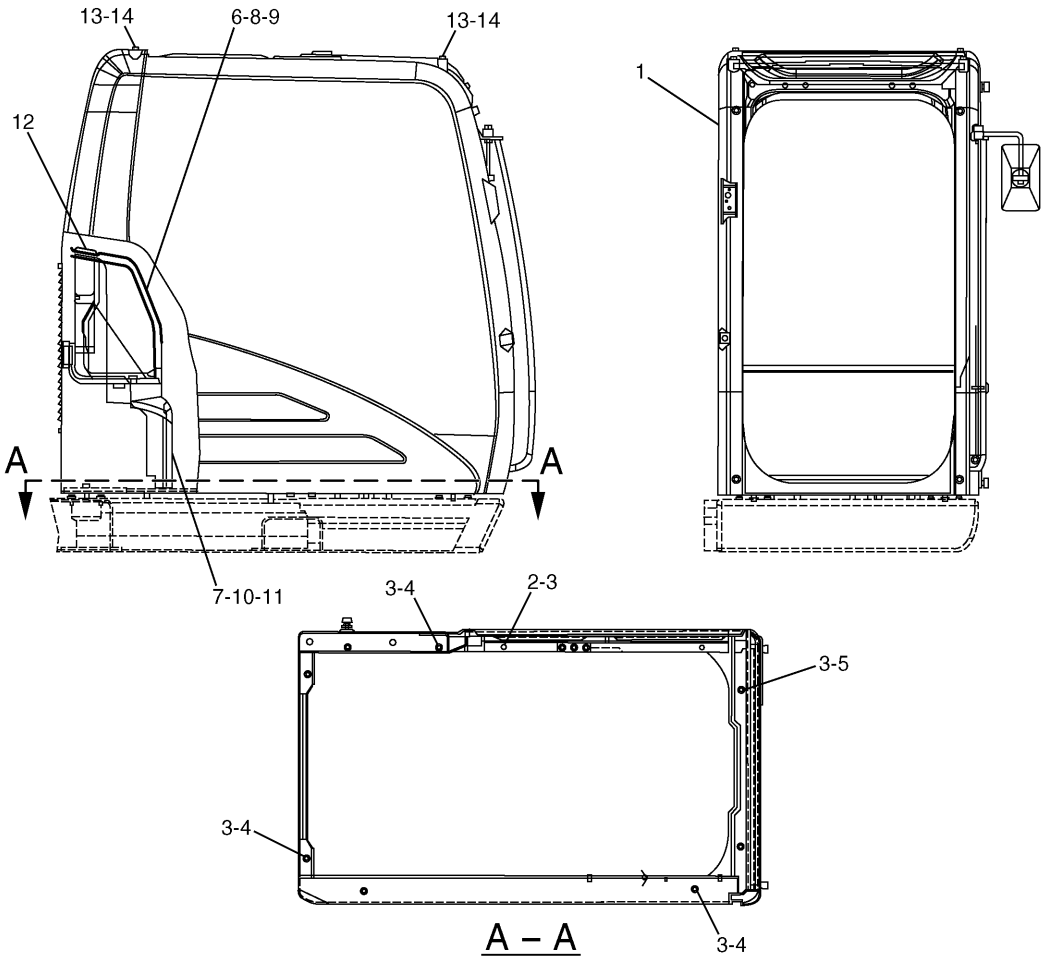

NOTE	No.	PART No.	QTY	PART NAME	NOTE	No.	PART No.	QTY	PART NAME
Y	1	293-1302	1	CAB GP					
	2	8T-4179	2	BOLT (L=20mm)					
	3	8T-4223	10	WASHER					
	4	8T-4910	6	BOLT (L=60mm)					
	5	8T-6868	2	BOLT (L=80mm)					
Y	6	196-1427	1	COVER GP					
	7	171-7336	1	COVER					
	8	128-2135	2	SCREW					
	9	128-2136	4	SCREW					
	10	8T-4191	2	BOLT (L=16mm)					
	11	124-7346	2	LOCKWASHER					
	12	8Y-6967	4	LOUVER AS					
	13	8T-4190	4	BOLT (L=25mm)					
	14	9X-8257	6	WASHER					

Y—SEE SEPARATE ILLUSTRATION

H97839E 08

161-3739 CAB GP

S/N CAE (T07.03)-Up
293-1302-Page519.01,196-1427-Page559
An Attachment

MEMORANDA

OPERATOR STATION

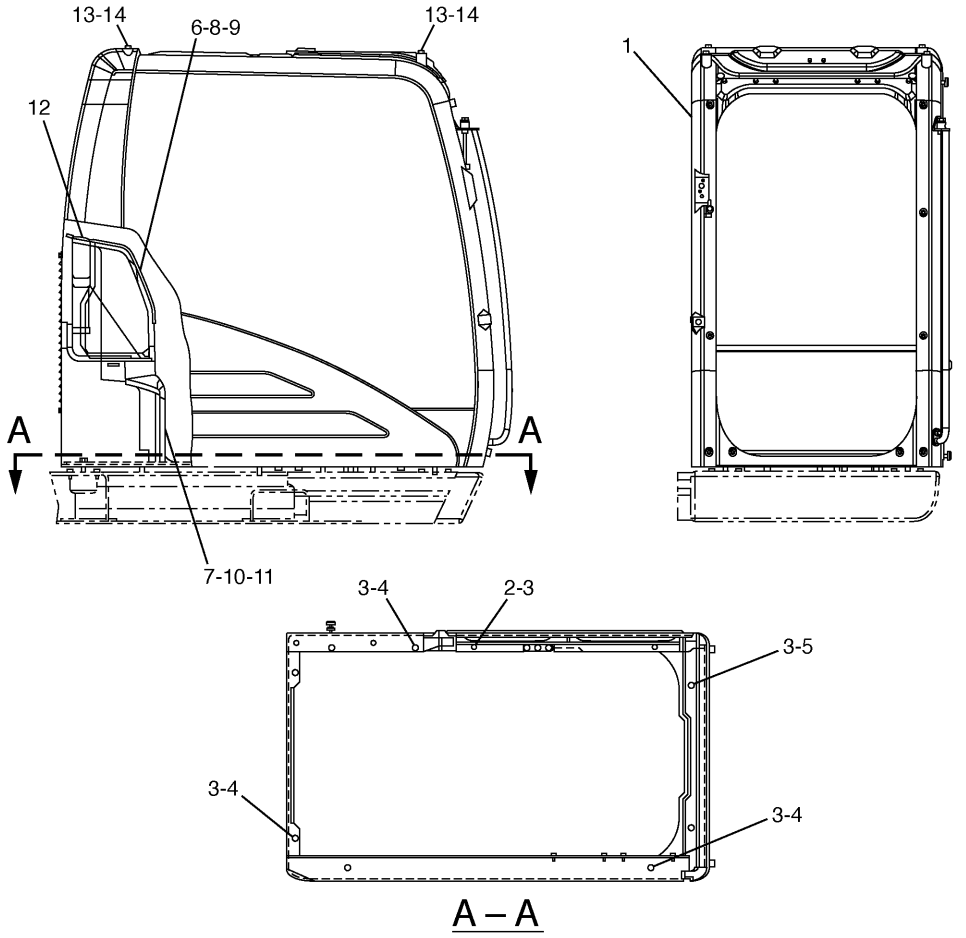

NOTE	No.	PART No.	QTY	PART NAME	NOTE	No.	PART No.	QTY	PART NAME
Y	1	171-7346	1	CAB GP					
	2	8T-4179	2	BOLT (L=20mm)					
	3	8T-4223	10	WASHER					
	4	8T-4910	6	BOLT (L=60mm)					
	5	8T-6868	2	BOLT (L=80mm)					
Y	6	196-1427	1	COVER GP					
	7	171-7336	1	COVER					
	8	128-2135	2	SCREW					
	9	128-2136	4	SCREW					
	10	8T-4191	2	BOLT (L=16mm)					
	11	124-7346	2	LOCKWASHER					
	12	8Y-6967	4	LOUVER AS					
	13	8T-4190	4	BOLT (L=25mm)					
	14	9X-8257	6	WASHER					

Y—SEE SEPARATE ILLUSTRATION

H77613E 05

171-7345 CAB GP

S/N CAE 01201-(T07.02)
171-7346-Page520,196-1427-Page559
An Attachment

OPERATOR STATION

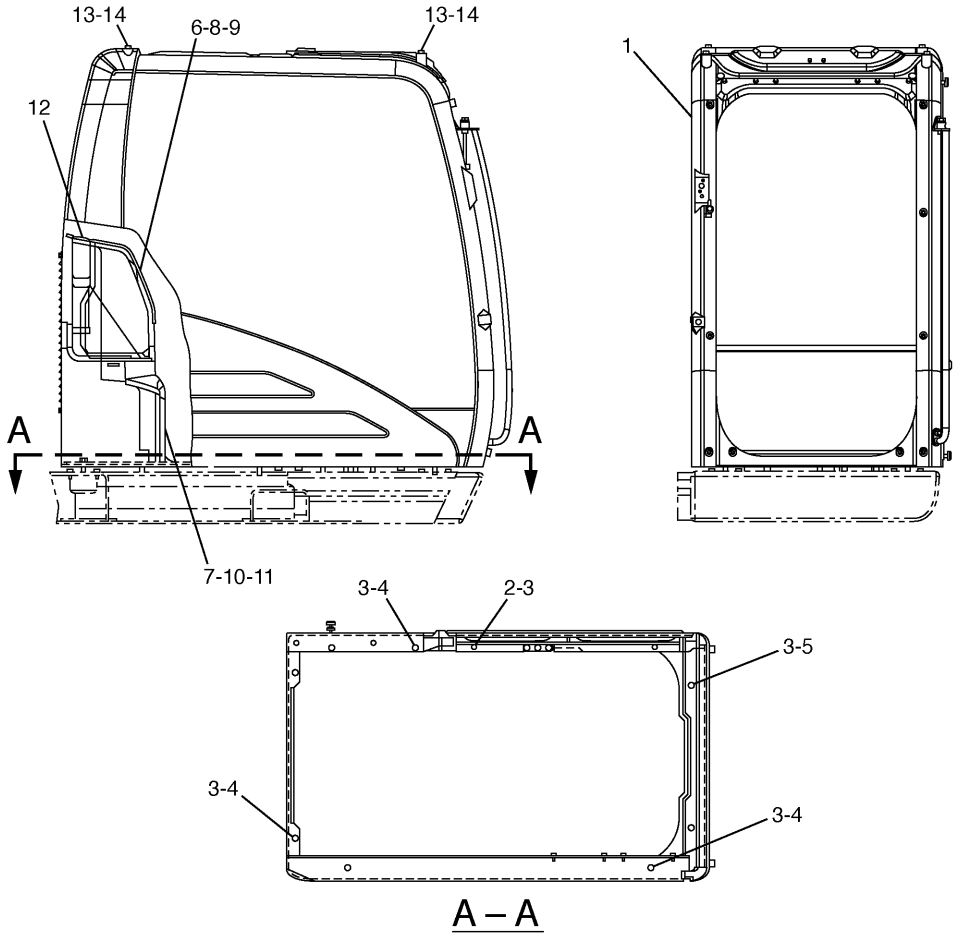

NOTE	No.	PART No.	QTY	PART NAME	NOTE	No.	PART No.	QTY	PART NAME
Y	1	293-1306	1	CAB GP					
	2	8T-4179	2	BOLT (L=20mm)					
	3	8T-4223	10	WASHER					
	4	8T-4910	6	BOLT (L=60mm)					
	5	8T-6868	2	BOLT (L=80mm)					
Y	6	196-1427	1	COVER GP					
	7	171-7336	1	COVER					
	8	128-2135	2	SCREW					
	9	128-2136	4	SCREW					
	10	8T-4191	2	BOLT (L=16mm)					
	11	124-7346	2	LOCKWASHER					
	12	8Y-6967	4	LOUVER AS					
	13	8T-4190	4	BOLT (L=25mm)					
	14	9X-8257	6	WASHER					

Y—SEE SEPARATE ILLUSTRATION

H97841E 06

171-7345 CAB GP

S/N CAE (T07.03)-Up
293-1306-Page521.01,196-1427-Page559
An Attachment

MEMORANDA

OPERATOR STATION

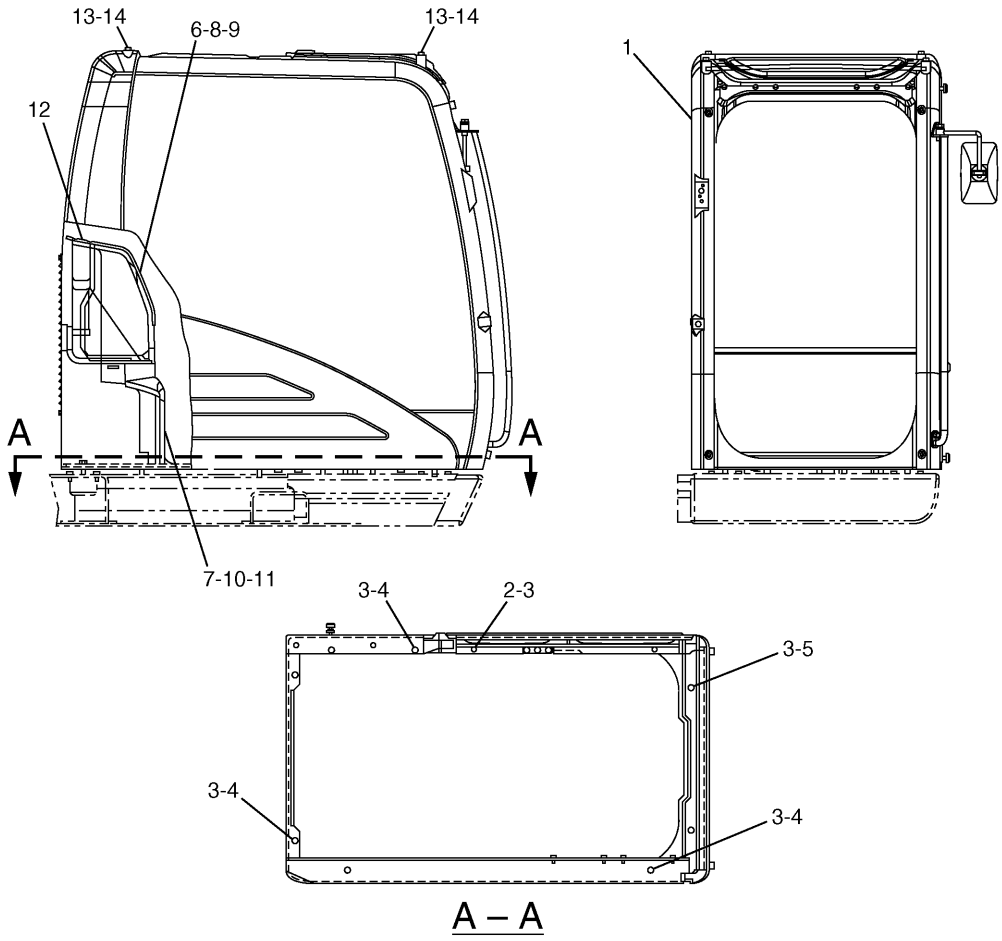

NOTE	No.	PART No.	QTY	PART NAME	NOTE	No.	PART No.	QTY	PART NAME
Y	1	164-0556	1	CAB GP					
	2	8T-4179	2	BOLT (L=20mm)					
	3	8T-4223	10	WASHER					
	4	8T-4910	6	BOLT (L=60mm)					
	5	8T-6868	2	BOLT (L=80mm)					
Y	6	196-1427	1	COVER GP					
	7	171-7336	1	COVER					
	8	128-2135	2	SCREW					
	9	128-2136	4	SCREW					
	10	8T-4191	2	BOLT (L=16mm)					
	11	124-7346	2	LOCKWASHER					
	12	8Y-6967	4	LOUVER AS					
	13	8T-4190	4	BOLT (L=25mm)					
	14	9X-8257	6	WASHER					

Y—SEE SEPARATE ILLUSTRATION

H74611E 04

164-0555 CAB GP

S/N CAE 01201-(T07.02)
164-0556-Page522,196-1427-Page559
An Attachment

OPERATOR STATION

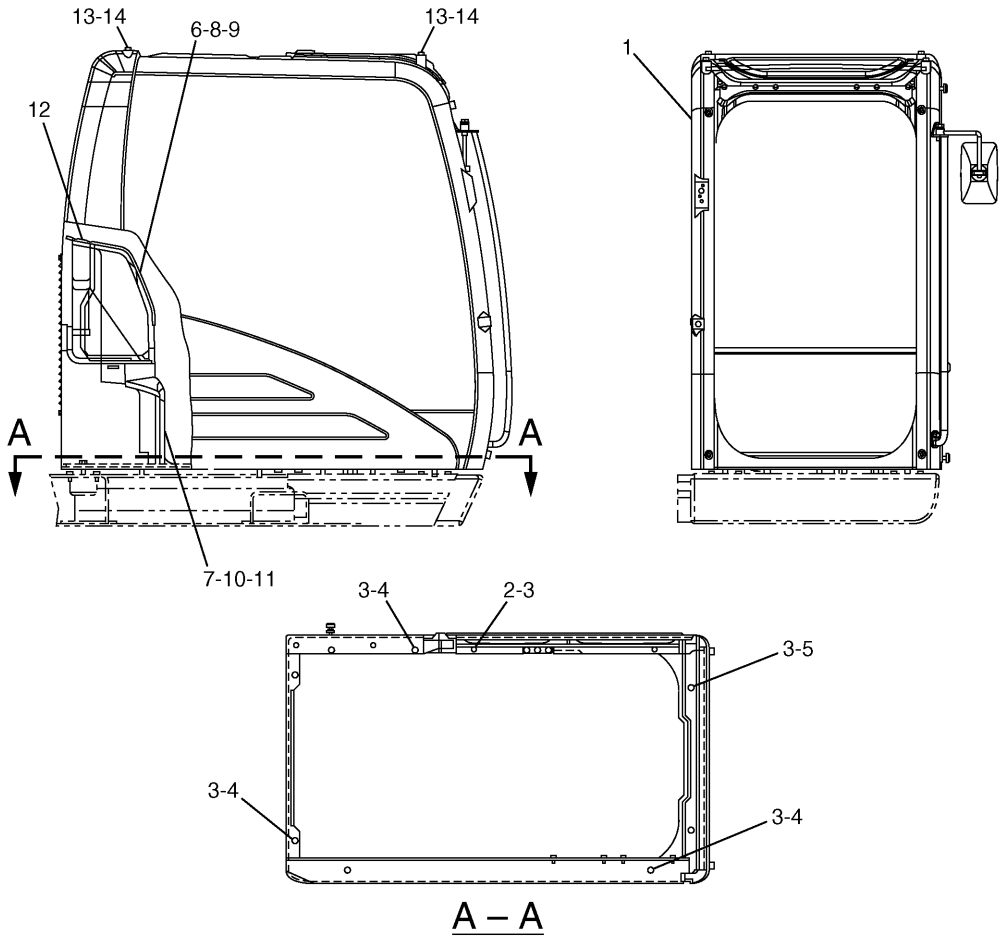

NOTE	No.	PART No.	QTY	PART NAME	NOTE	No.	PART No.	QTY	PART NAME
Y	1	293-1305	1	CAB GP					
	2	8T-4179	2	BOLT (L=20mm)					
	3	8T-4223	10	WASHER					
	4	8T-4910	6	BOLT (L=60mm)					
	5	8T-6868	2	BOLT (L=80mm)					
Y	6	196-1427	1	COVER GP					
	7	171-7336	1	COVER					
	8	128-2135	2	SCREW					
	9	128-2136	4	SCREW					
	10	8T-4191	2	BOLT (L=16mm)					
	11	124-7346	2	LOCKWASHER					
	12	8Y-6967	4	LOUVER AS					
	13	8T-4190	4	BOLT (L=25mm)					
	14	9X-8257	6	WASHER					

Y—SEE SEPARATE ILLUSTRATION

H98191E 05

164-0555 CAB GP

S/N CAE (T07.03)-Up
293-1305-Page523.01,196-1427-Page559
An Attachment

MEMORANDA

OPERATOR STATION

Consists of :

			Page
1	139-7092	CAB GP (BASIC)	518
1	163-6623	WIRING GP-CAB	140

H71002E 00

189-3442 CAB GP (BASIC)
S/N CAE 01201-(T07.02)
An Attachment

Consists of :

			Page
1	171-7346	CAB GP (BASIC)	520
1	163-6623	WIRING GP-CAB	140

H71003E 00

189-3446 CAB GP (BASIC)
S/N CAE 01201-(T07.02)
An Attachment

OPERATOR STATION

Consists of :

			Page
1	293-1302	CAB GP (BASIC)	519.01
1	163-6623	WIRING GP-CAB	140

H97842E 00

293-1308 CAB GP (BASIC)
S/N CAE (T07.03)-Up
An Attachment

Consists of :

			Page
1	293-1306	CAB GP (BASIC)	521.01
1	163-6623	WIRING GP-CAB	140

H97843E 00

293-1312 CAB GP (BASIC)
S/N CAE (T07.03)-Up
An Attachment

MEMORANDA

OPERATOR STATION

Consists of :

			Page
1	164-0556	CAB GP (BASIC)	522
1	163-6623	WIRING GP-CAB	140
1	167-3622	WIRING GP	151

H85902E 00

189-3445 CAB GP (BASIC)
S/N CAE 01201-(T07.02)
An Attachment

Consists of :

			Page
1	293-1305	CAB GP (BASIC)	523.01
1	163-6623	WIRING GP-CAB	140
1	167-3622	WIRING GP	151

H98192E 00

293-1311 CAB GP (BASIC)
S/N CAE (T07.03)-Up
An Attachment

OPERATOR STATION

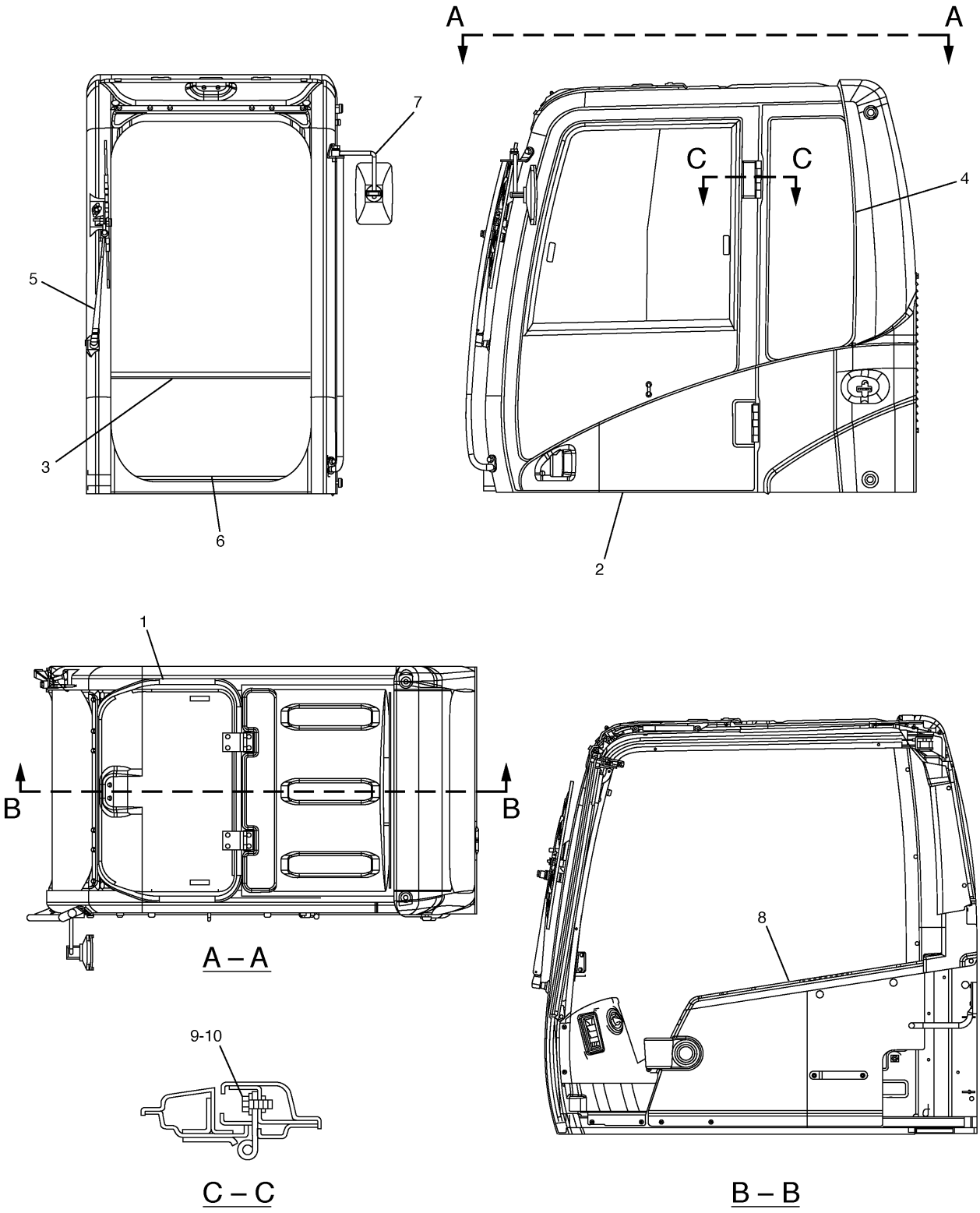

H97844E 06

139–7092 CAB GP (BASIC)

S/N CAE 01201–(T07.02)
Part of 161–3739–Page513,189–3442–Page516
185–8278–Page524,185–8277–Page536,189–2768–Page539,139–7099–Page543,139–7101–Page546,185–8279–Page553
,176–1958–Page554,171–7408–Page556
An Attachment

OPERATOR STATION

NOTE	No.	PART No.	QTY	PART NAME	NOTE	No.	PART No.	QTY	PART NAME
Y	1	139-7099	1	HATCH GP					
Y	2	189-2768	1	DOOR GP					
Y	3	139-7101	1	WINDOW GP					
Y	4	185-8279	1	WINDOW GP					
Y	5	171-7408	1	WIPER GP					
Y	6	176-1958	1	WINDOW GP					
Y	7	185-8277	1	CAB GP					
Y	8	185-8278	1	CAB GP					
	9	185-8187	6	WASHER					
	10	185-8182	6	BOLT (L=20mm)					

Y—SEE SEPARATE ILLUSTRATION

H97844E 06

139-7092 CAB GP (BASIC)

S/N CAE 01201-(T07.02)

Part of 161-3739-Page513,189-3442-Page516
185-8278-Page524,185-8277-Page536,189-2768-Page539,139-7099-Page543,139-7101-Page546,185-8279-Page553
,176-1958-Page554,171-7408-Page556

An Attachment

OPERATOR STATION

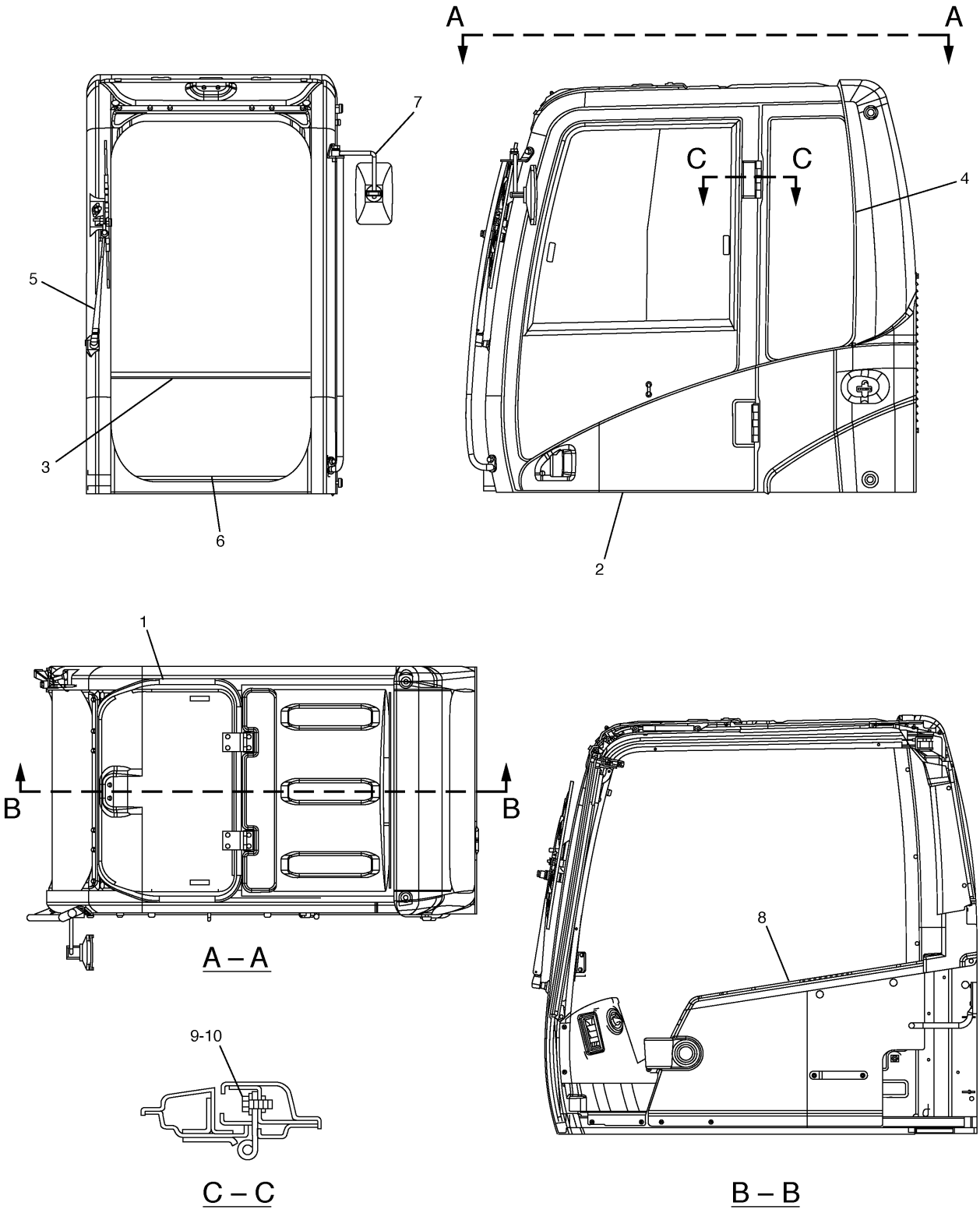

H97845E 00

293–1302 CAB GP (BASIC)
S/N CAE (T07.03)–Up
Part of 161–3739–Page513.01,293–1308–Page516.01
185–8278–Page524,185–8277–Page536,189–2768–Page539,139–7099–Page543,139–7101–Page546,185–8279–Page553
,176–1958–Page554,171–7408–Page556
An Attachment

OPERATOR STATION

NOTE	No.	PART No.	QTY	PART NAME	NOTE	No.	PART No.	QTY	PART NAME
Y	1	139-7099	1	HATCH GP					
Y	2	189-2768	1	DOOR GP					
Y	3	139-7101	1	WINDOW GP					
Y	4	185-8279	1	WINDOW GP					
Y	5	171-7408	1	WIPER GP					
Y	6	176-1958	1	WINDOW GP					
Y	7	185-8277	1	CAB GP					
Y	8	185-8278	1	CAB GP					
	9	185-8187	6	WASHER					
	10	185-8182	6	BOLT (L=20mm)					

Y—SEE SEPARATE ILLUSTRATION

H97845E 00

293-1302 CAB GP (BASIC)

S/N CAE (T07.03)-Up

Part of 161-3739-Page513.01,293-1308-Page516.01
185-8278-Page524,185-8277-Page536,189-2768-Page539,139-7099-Page543,139-7101-Page546,185-8279-Page553
,176-1958-Page554,171-7408-Page556

An Attachment

OPERATOR STATION

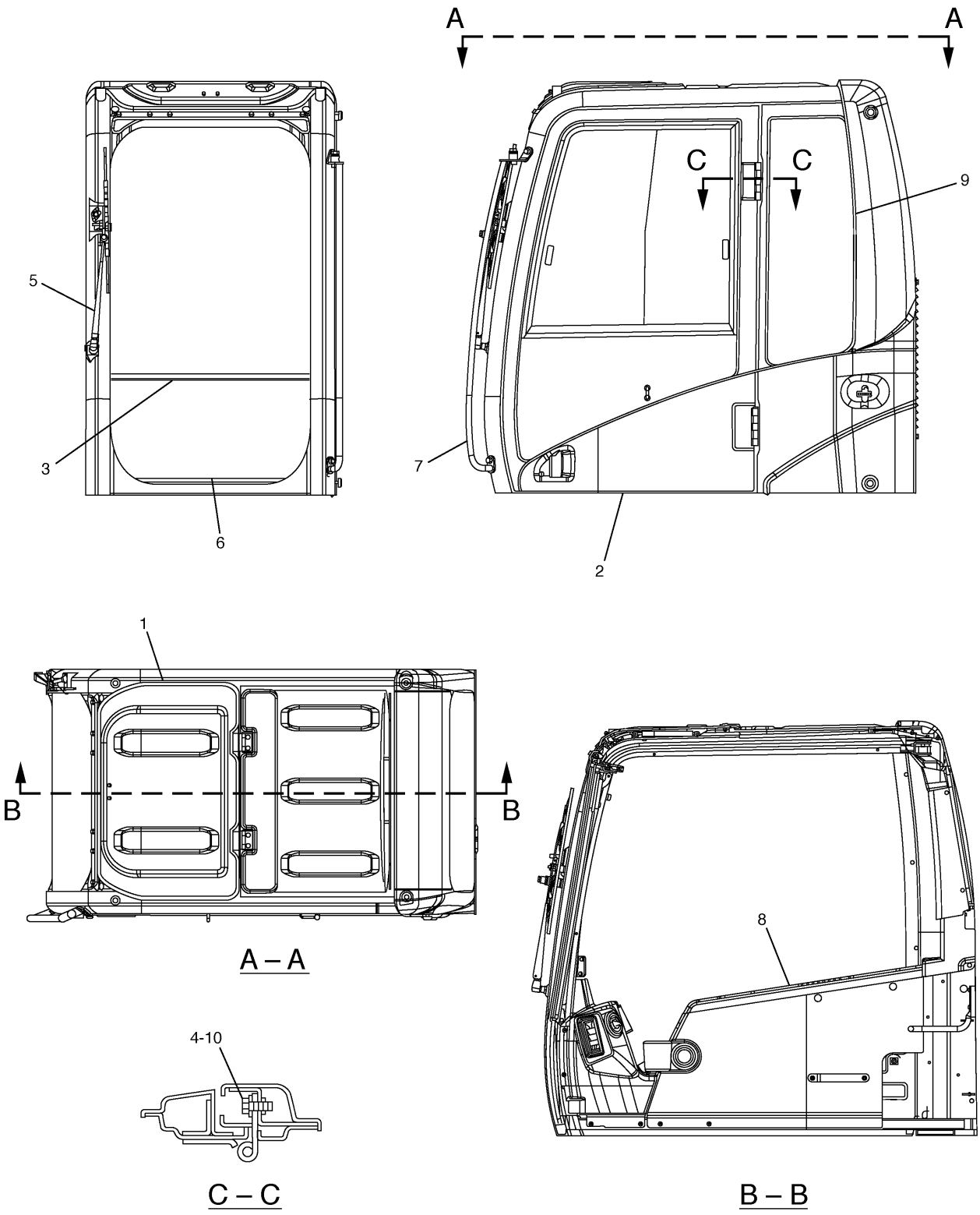

H97846E 08

171-7346 CAB GP (BASIC)

S/N CAE 01201-(T07.02)
Part of 171-7345-Page514,189-3446-Page516
176-1981-Page528,185-8277-Page536,189-2768-Page539,167-6976-Page545,139-7101-Page546,185-8279-Page553
,176-1958-Page554,171-7408-Page556
An Attachment

OPERATOR STATION

NOTE	No.	PART No.	QTY	PART NAME	NOTE	No.	PART No.	QTY	PART NAME
Y	1	167-6976	1	HATCH GP					
Y	2	189-2768	1	DOOR GP					
Y	3	139-7101	1	WINDOW GP					
	4	185-8187	6	WASHER					
Y	5	171-7408	1	WIPER GP					
Y	6	176-1958	1	WINDOW GP					
Y	7	185-8277	1	CAB GP					
Y	8	176-1981	1	CAB GP					
Y	9	185-8279	1	WINDOW GP					
	10	185-8182	6	BOLT (L=20mm)					

Y—SEE SEPARATE ILLUSTRATION

H97846E 08

171-7346 CAB GP (BASIC)

S/N CAE 01201-(T07.02)
Part of 171-7345-Page514,189-3446-Page516
176-1981-Page528,185-8277-Page536,189-2768-Page539,167-6976-Page545,139-7101-Page546,185-8279-Page553
,176-1958-Page554,171-7408-Page556
An Attachment

OPERATOR STATION

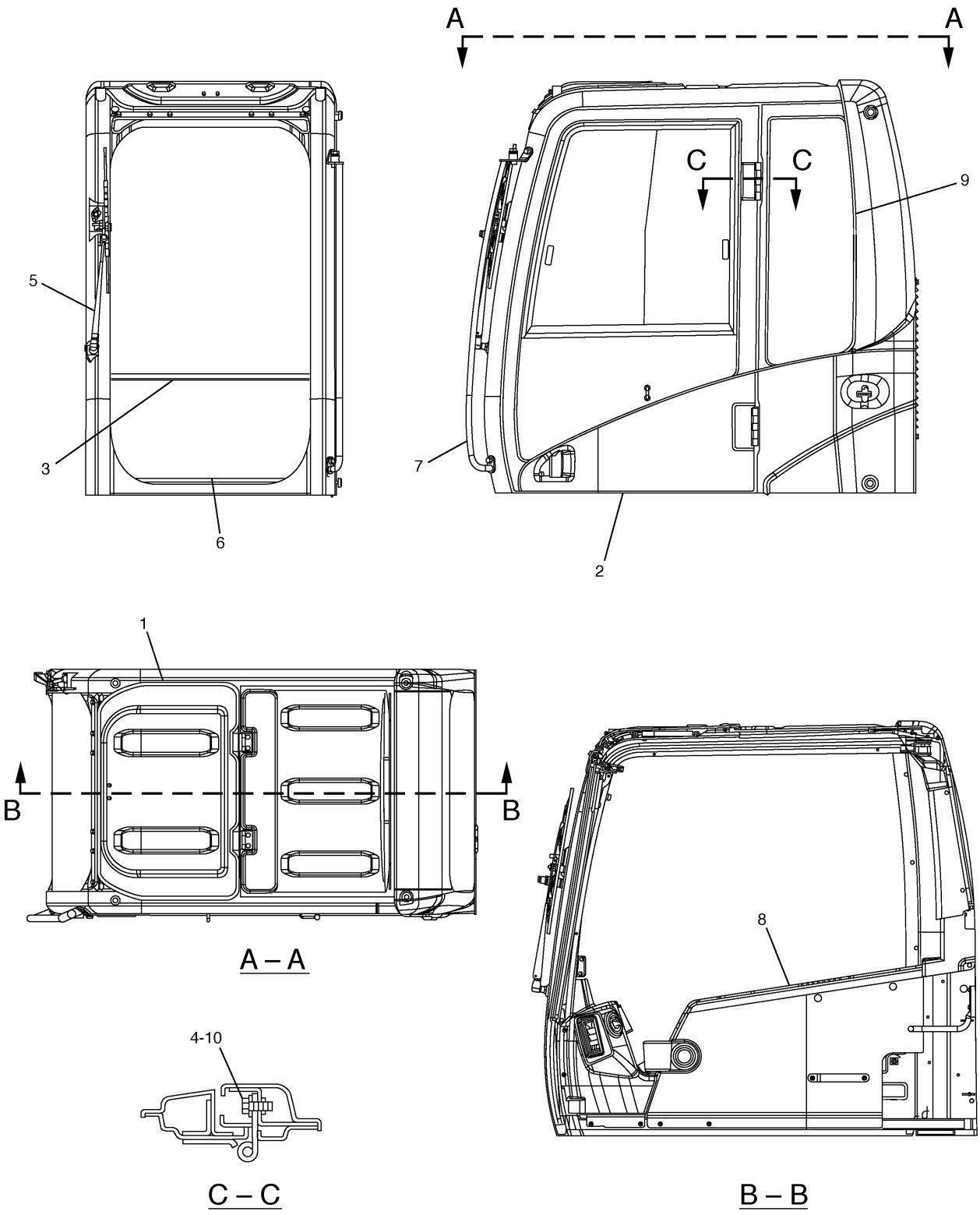

H97848E 00

293–1306 CAB GP (BASIC)
S/N CAE (T07.03)–Up
Part of 171–7345–Page514.01,293–1312–Page516.01
176–1981–Page528,185–8277–Page536,189–2768–Page539,167–6976–Page545,139–7101–Page546,185–8279–Page553
,176–1958–Page554,171–7408–Page556
An Attachment

OPERATOR STATION

NOTE	No.	PART No.	QTY	PART NAME	NOTE	No.	PART No.	QTY	PART NAME
Y	1	167-6976	1	HATCH GP					
Y	2	189-2768	1	DOOR GP					
Y	3	139-7101	1	WINDOW GP					
	4	185-8187	6	WASHER					
Y	5	171-7408	1	WIPER GP					
Y	6	176-1958	1	WINDOW GP					
Y	7	185-8277	1	CAB GP					
Y	8	176-1981	1	CAB GP					
Y	9	185-8279	1	WINDOW GP					
	10	185-8182	6	BOLT (L=20mm)					

Y—SEE SEPARATE ILLUSTRATION

H97848E 00

293-1306 CAB GP (BASIC)

S/N CAE (T07.03)-Up

Part of 171-7345-Page514.01,293-1312-Page516.01
176-1981-Page528,185-8277-Page536,189-2768-Page539,167-6976-Page545,139-7101-Page546,185-8279-Page553
,176-1958-Page554,171-7408-Page556

An Attachment

OPERATOR STATION

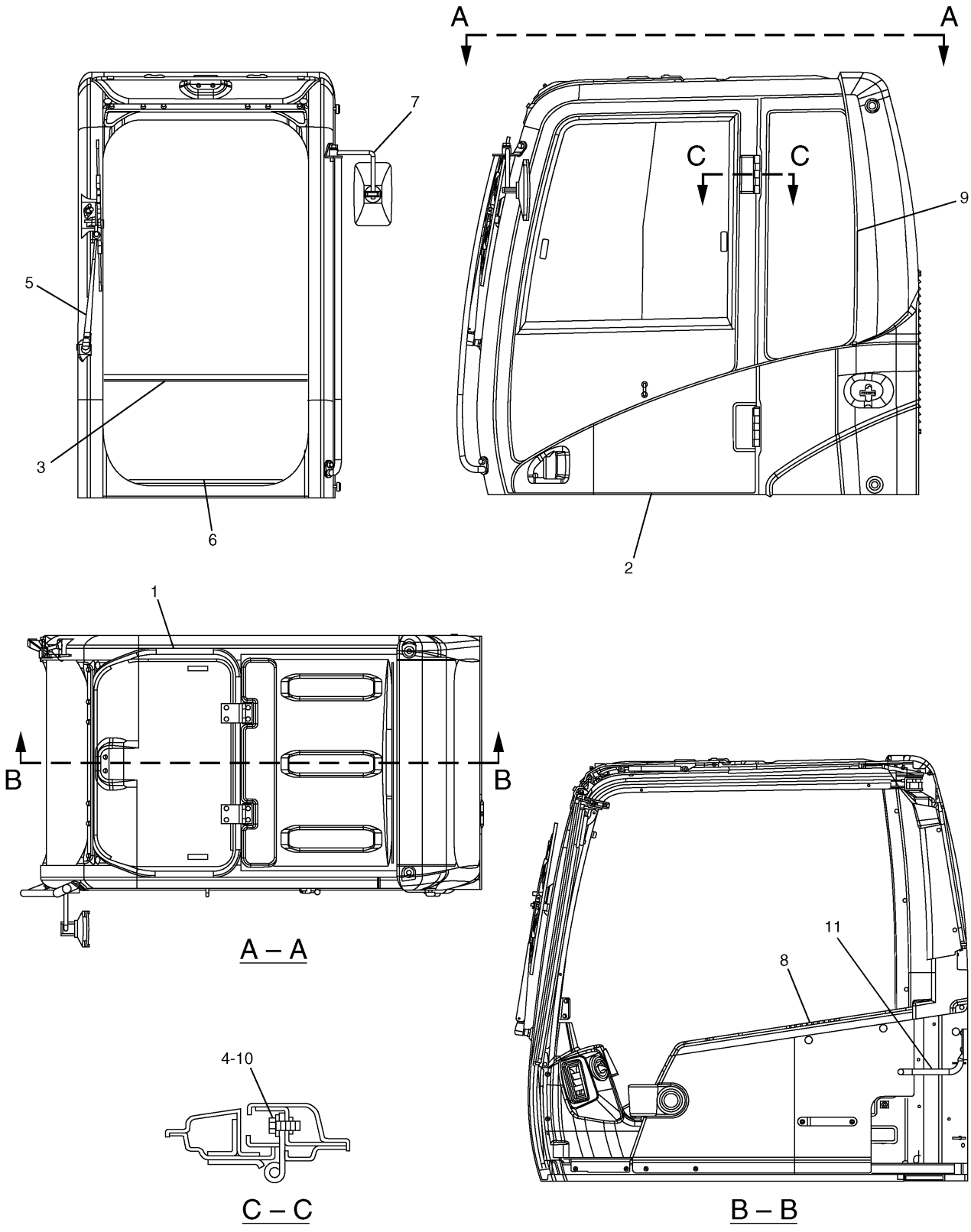

H98194E 04

164-0556 CAB GP (BASIC)

S/N CAE 01201-(T07.02)
Part of 164-0555-Page515,189-3445-Page517
176-1969-Page532,185-8277-Page536,189-2768-Page539,139-7099-Page543,156-6582-Page548,185-8279-Page553
,176-1958-Page554,171-7408-Page556
An Attachment

OPERATOR STATION

NOTE	No.	PART No.	QTY	PART NAME	NOTE	No.	PART No.	QTY	PART NAME
Y	1	139-7099	1	HATCH GP					
Y	2	189-2768	1	DOOR GP					
Y	3	156-6582	1	WINDOW GP					
	4	185-8187	6	WASHER					
Y	5	171-7408	1	WIPER GP					
Y	6	176-1958	1	WINDOW GP					
Y	7	185-8277	1	CAB GP					
Y	8	176-1969	1	CAB GP					
Y	9	185-8279	1	WINDOW GP					
	10	185-8182	6	BOLT (L=20mm)					
	11	128-2122	1	HANDLE					

Y—SEE SEPARATE ILLUSTRATION

H98194E 04

164-0556 CAB GP (BASIC)

S/N CAE 01201-(T07.02)
Part of 164-0555-Page515,189-3445-Page517
176-1969-Page532,185-8277-Page536,189-2768-Page539,139-7099-Page543,156-6582-Page548,185-8279-Page553
,176-1958-Page554,171-7408-Page556
An Attachment

OPERATOR STATION

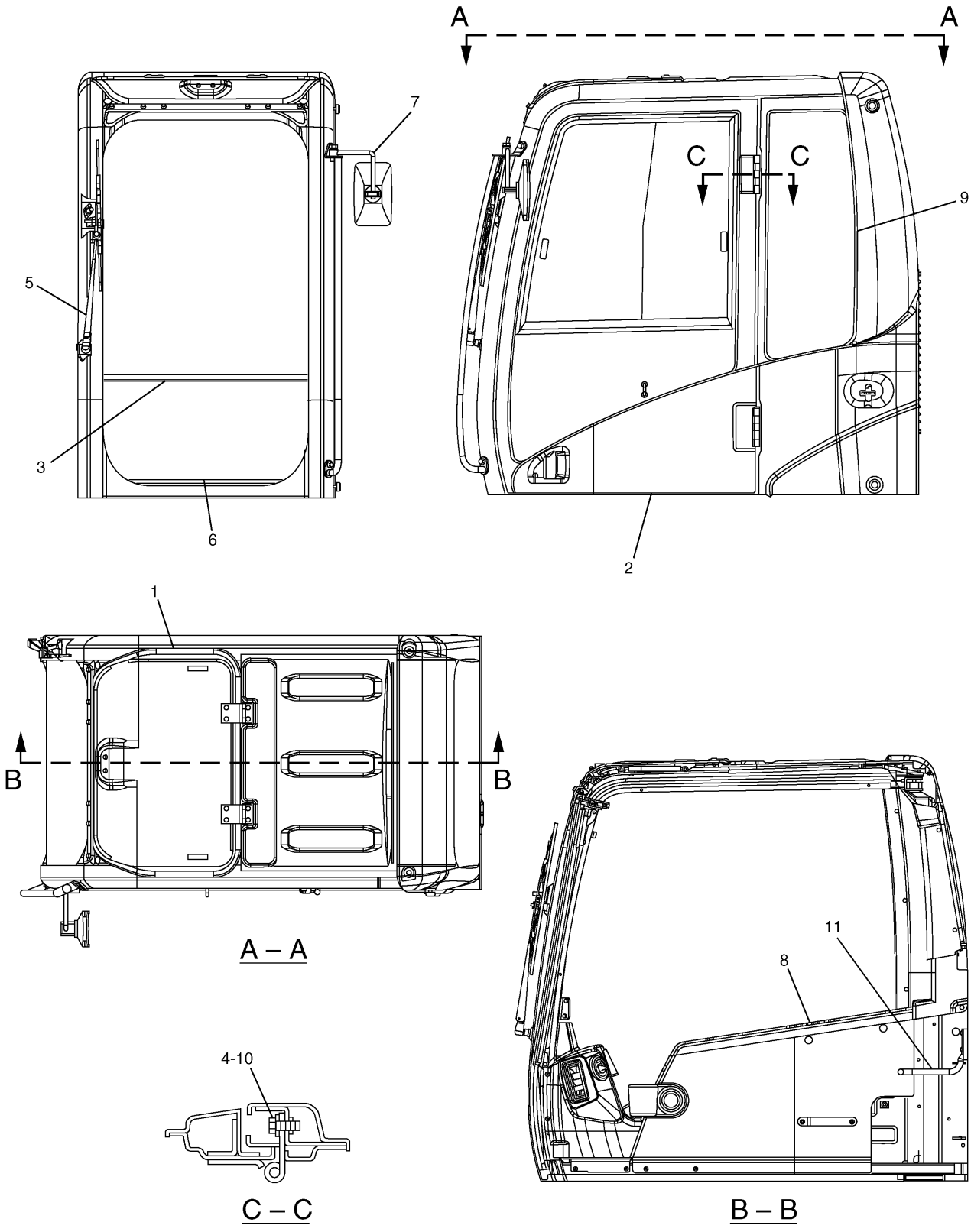

H98195E 00

293–1305 CAB GP (BASIC)

S/N CAE (T07.03)–Up

Part of 164–0555–Page515.01,293–1311–Page517
176–1969–Page532,185–8277–Page536,189–2768–Page539,139–7099–Page543,156–6582–Page548,185–8279–Page553
,176–1958–Page554,171–7408–Page556

An Attachment

OPERATOR STATION

NOTE	No.	PART No.	QTY	PART NAME	NOTE	No.	PART No.	QTY	PART NAME
Y	1	139-7099	1	HATCH GP					
Y	2	189-2768	1	DOOR GP					
Y	3	156-6582	1	WINDOW GP					
	4	185-8187	6	WASHER					
Y	5	171-7408	1	WIPER GP					
Y	6	176-1958	1	WINDOW GP					
Y	7	185-8277	1	CAB GP					
Y	8	176-1969	1	CAB GP					
Y	9	185-8279	1	WINDOW GP					
	10	185-8182	6	BOLT (L=20mm)					
	11	128-2122	1	HANDLE					

Y—SEE SEPARATE ILLUSTRATION

H98195E 00

293-1305 CAB GP (BASIC)

S/N CAE (T07.03)-Up

Part of 164-0555-Page515.01,293-1311-Page517

176-1969-Page532,185-8277-Page536,189-2768-Page539,139-7099-Page543,156-6582-Page548,185-8279-Page553

,176-1958-Page554,171-7408-Page556

An Attachment

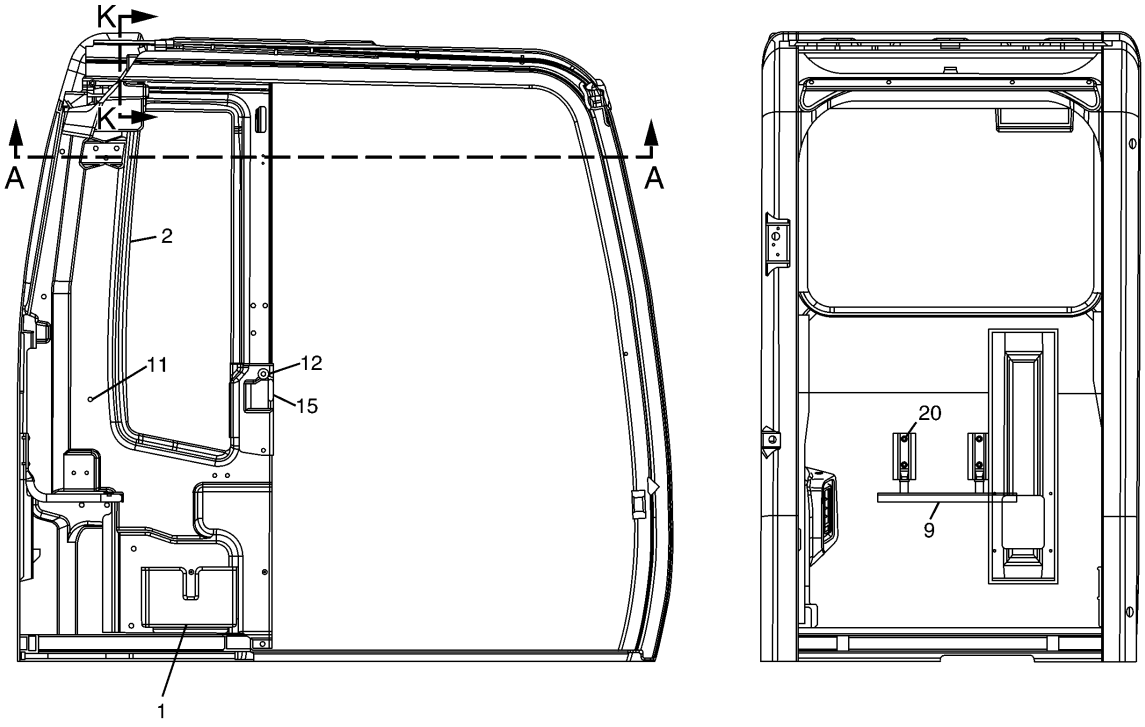

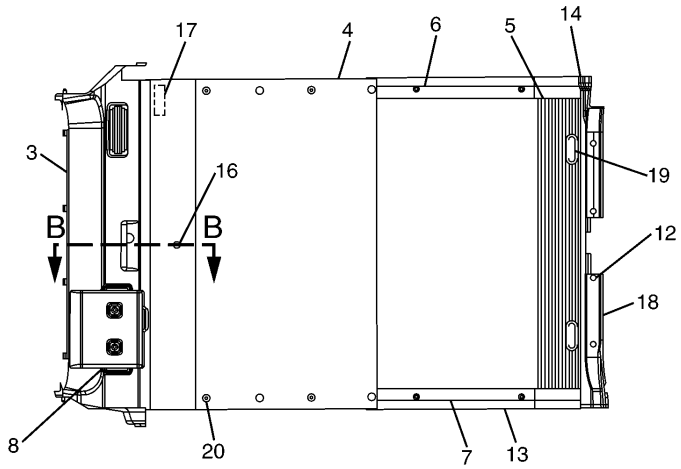

A – A

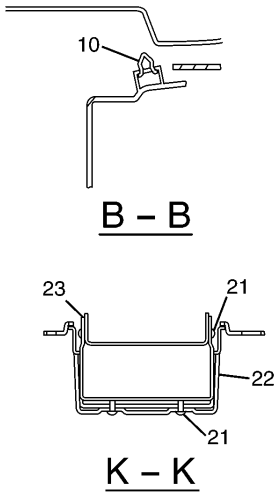

HA1765E 05

185-8278 CAB GP-INTERIOR (1/2)
Part of 139-7092-Page519,293-1302-Page519.02
An Attachment

OPERATOR STATION

NOTE	No.	PART No.	QTY	PART NAME	NOTE	No.	PART No.	QTY	PART NAME
	1	156-6565	1	COVER					
	2	156-6574	1	COVER					
	3	164-0675	1	COVER					
	4	156-6576	1	LINER					
	5	156-6578	1	VISOR					
	6	156-6656	1	RAIL					
	7	156-6657	1	RAIL					
	8	185-8223	1	COVER					
	9	164-0647	1	BRACKET AS					
	10	170-9724	5	CLIP					
	11	171-7323	4	CLIP					
	12	171-7420	6	CLIP					
	13	176-1946	1	PLATE					
	14	176-1947	1	PLATE					
	15	176-1972	1	COVER					
	16	185-8205	5	CLIP					
	17	189-2678	3	SPACER					
	18	189-2855	1	COVER					
	19	124-3940	2	HANDLE					
	20	9X-2044	10	SCREW					
	21	9X-2042	6	SCREW					
	22	185-8214	1	BRACKET AS					
	23	185-8218	1	COVER					

HA1765E 05

185-8278 CAB GP-INTERIOR (1/2)

Part of 139-7092-Page519,293-1302-Page519.02
An Attachment

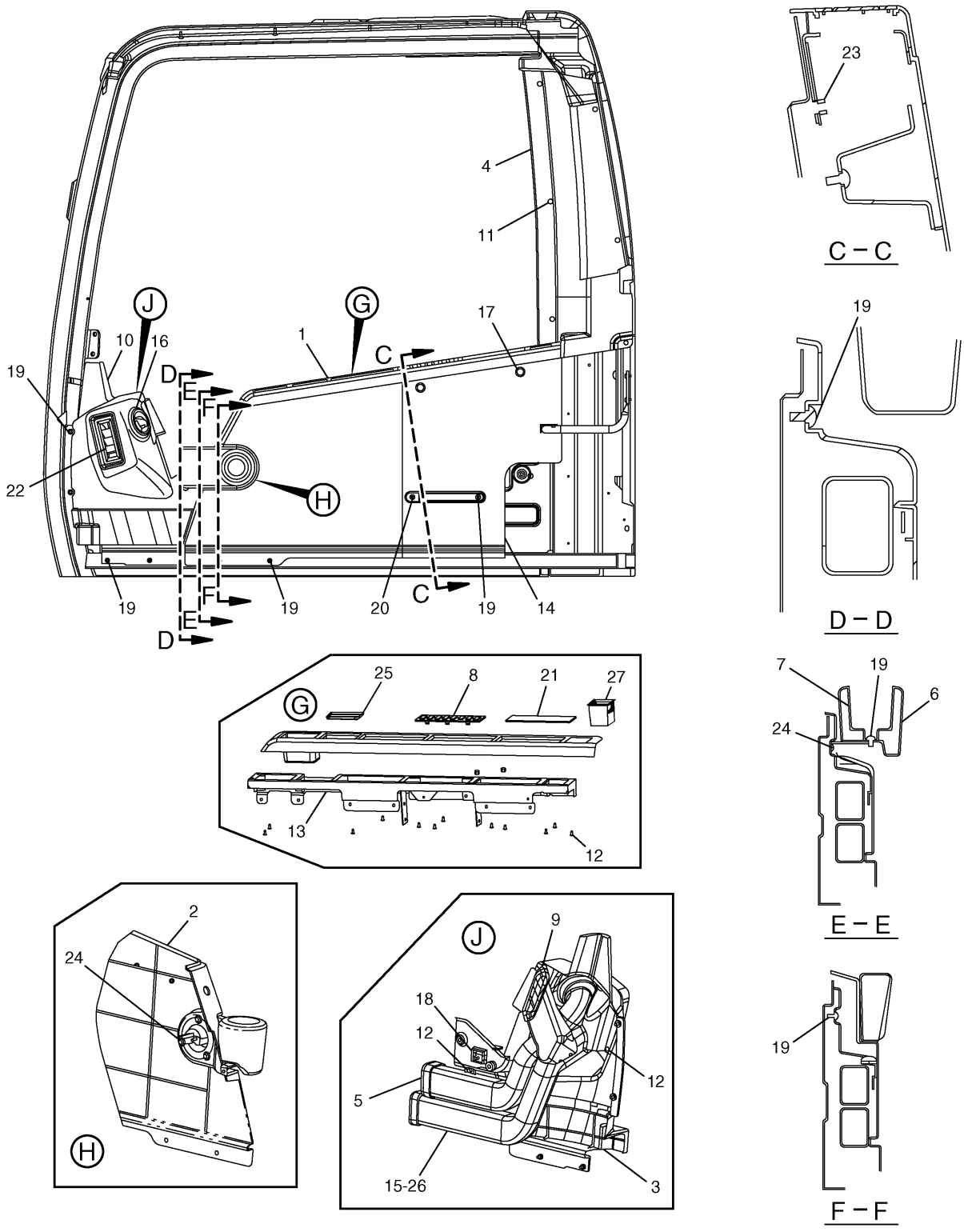

HA1766E 05

185-8278 CAB GP-INTERIOR (2/2)
Part of 139-7092-Page519,293-1302-Page519.02
170-9723-Page562
An Attachment

OPERATOR STATION

NOTE	No.	PART No.	QTY	PART NAME	NOTE	No.	PART No.	QTY	PART NAME
	1	156-6566	1	COVER					
	2	156-6567	1	COVER					
	3	156-6568	1	COVER					
	4	156-6573	1	COVER					
	5	156-6593	1	DUCT					
	6	164-0522	1	HOLDER					
	7	164-0646	1	CUP					
	8	164-0655	1	PANEL					
	9	167-7033	1	RUBBER					
Y	10	170-9723	1	COVER GP					
	11	171-7323	6	CLIP					
	12	171-7325	16	SCREW					
	13	171-7377	1	SUPPORT AS					
	14	171-7400	1	COVER					
	15	156-6594	1	DUCT					
	16	171-7415	1	LOUVER					
	17	171-7418	2	CLIP					
	18	171-7423	1	BRACKET AS					
	19	128-2135	11	SCREW					
	20	128-2136	1	SCREW					
	21	185-8284	1	COVER					
	22	5I-3707	1	LOUVER					
	23	8T-4134	5	NUT					
	24	9X-2042	4	SCREW					
	25	210-5809	1	COVER					
	26	171-7406	1	DUCT					
	27	250-2433	1	BOX					

Y—SEE SEPARATE ILLUSTRATION

HA1766E 05

185-8278 CAB GP-INTERIOR (2/2)

Part of 139-7092-Page519,293-1302-Page519.02
170-9723-Page562
An Attachment

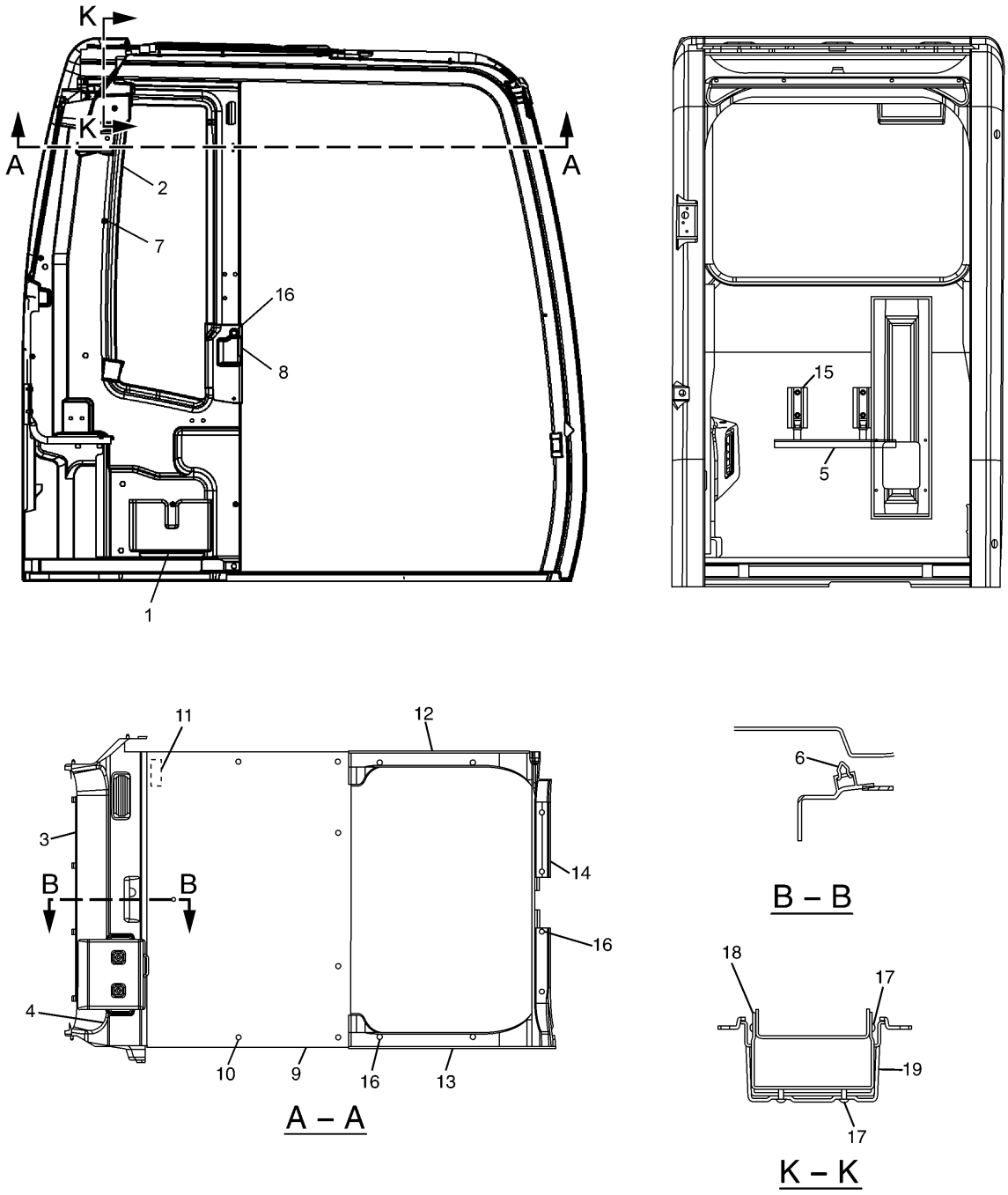

HA1952E 06

176-1981 CAB GP-INTERIOR (1/2)
Part of 171-7346-Page521,293-1306-Page521.02
An Attachment

OPERATOR STATION

NOTE	No.	PART No.	QTY	PART NAME	NOTE	No.	PART No.	QTY	PART NAME
	1	156-6565	1	COVER					
	2	156-6574	1	COVER					
	3	164-0675	1	COVER					
	4	185-8223	1	COVER					
	5	164-0647	1	BRACKET AS					
	6	170-9724	5	CLIP					
	7	171-7323	4	CLIP					
	8	176-1972	1	COVER					
	9	176-1980	1	LINER					
	10	185-8205	7	CLIP					
	11	189-2678	3	SPACER					
	12	189-2853	1	COVER					
	13	189-2854	1	COVER					
	14	189-2855	1	COVER					
	15	9X-2044	4	SCREW					
	16	171-7420	10	CLIP					
	17	9X-2042	6	SCREW					
	18	185-8214	1	BRACKET AS					
	19	185-8218	1	COVER					

HA1952E 06

176-1981 CAB GP-INTERIOR (1/2)

Part of 171-7346-Page521,293-1306-Page521.02
An Attachment

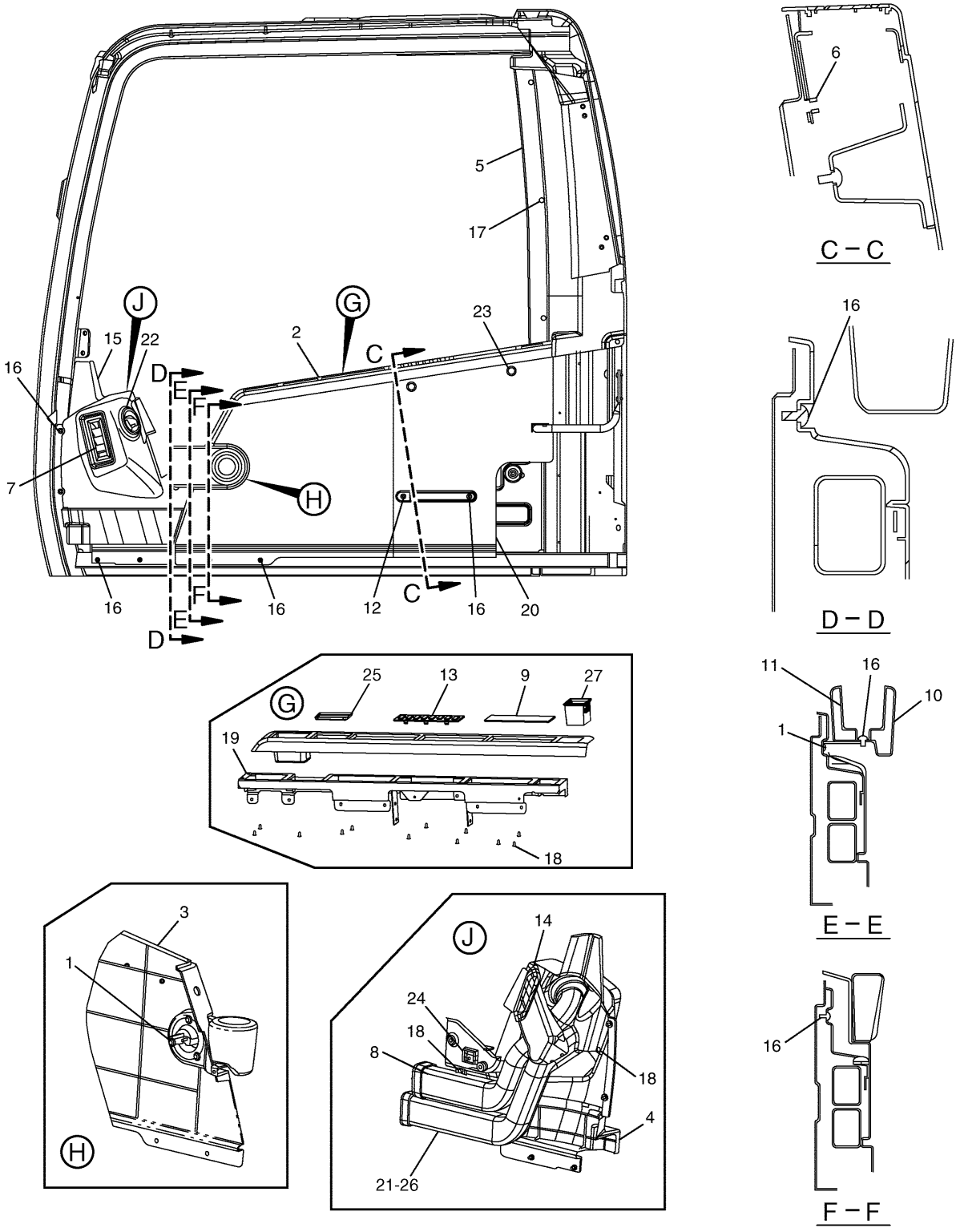

HA1953E 06

176-1981 CAB GP-INTERIOR (2/2)
Part of 171-7346-Page521,293-1306-Page521.02
170-9723-Page562
An Attachment

OPERATOR STATION

NOTE	No.	PART No.	QTY	PART NAME	NOTE	No.	PART No.	QTY	PART NAME
	1	9X-2042	4	SCREW					
	2	156-6566	1	COVER					
	3	156-6567	1	COVER					
	4	156-6568	1	COVER					
	5	156-6573	1	COVER					
	6	8T-4134	5	NUT					
	7	5I-3707	1	LOUVER					
	8	156-6593	1	DUCT					
	9	185-8284	1	COVER					
	10	164-0522	1	HOLDER					
	11	164-0646	1	CUP					
	12	128-2136	1	SCREW					
	13	164-0655	1	PANEL					
	14	167-7033	1	RUBBER					
Y	15	170-9723	1	COVER GP					
	16	128-2135	11	SCREW					
	17	171-7323	6	CLIP					
	18	171-7325	16	SCREW					
	19	171-7377	1	SUPPORT AS					
	20	171-7400	1	COVER					
	21	156-6594	1	DUCT					
	22	171-7415	1	LOUVER					
	23	171-7418	2	CLIP					
	24	171-7423	1	BRACKET AS					
	25	210-5809	1	COVER					
	26	171-7406	1	DUCT					
	27	250-2433	1	BOX					

Y—SEE SEPARATE ILLUSTRATION

HA1953E 06

176-1981 CAB GP-INTERIOR (2/2)

Part of 171-7346-Page521,293-1306-Page521.02
170-9723-Page562
An Attachment

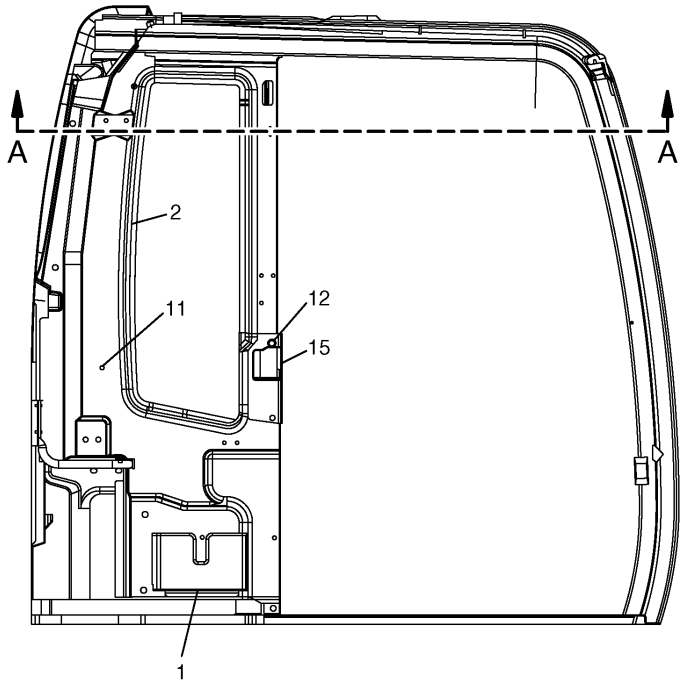

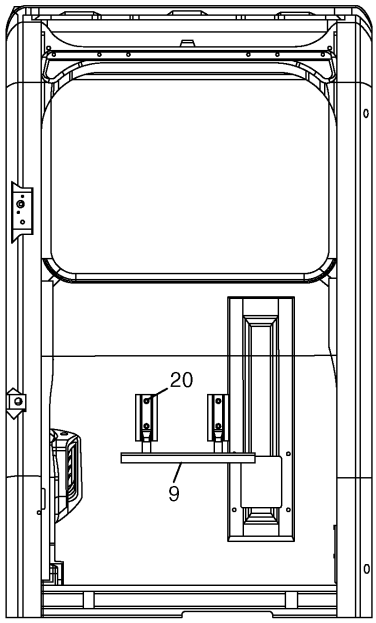

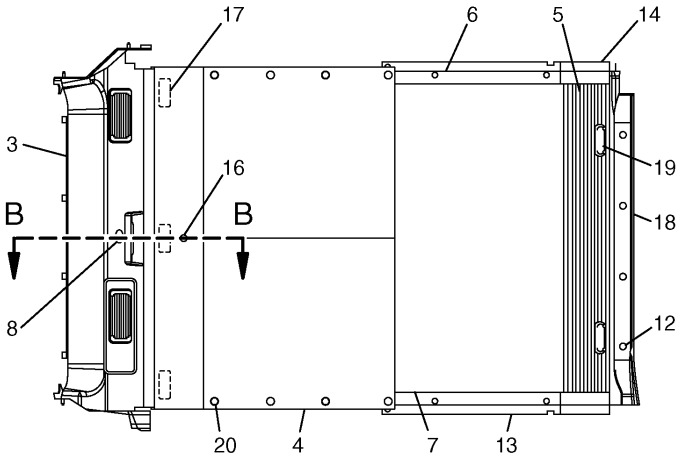

A – A

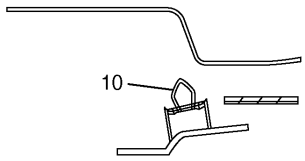

B – B

HA1767E 04

176-1969 CAB GP-INTERIOR (1/2)
Part of 164-0556-Page523,293-1305-Page523.02
An Attachment

OPERATOR STATION

NOTE	No.	PART No.	QTY	PART NAME	NOTE	No.	PART No.	QTY	PART NAME
	1	156-6565	1	COVER					
	2	156-6574	1	COVER					
	3	164-0674	1	COVER					
	4	171-7387	1	LINER					
	5	156-6578	1	VISOR					
	6	156-6656	1	RAIL					
	7	156-6657	1	RAIL					
	8	127-3735	1	SEAL					
	9	164-0647	1	BRACKET AS					
	10	170-9724	5	CLIP					
	11	171-7323	4	CLIP					
	12	171-7420	6	CLIP					
	13	189-2672	1	PLATE					
	14	189-2673	1	PLATE					
	15	176-1972	1	COVER					
	16	185-8205	5	CLIP					
	17	189-2678	3	SPACER					
	18	189-2856	1	COVER					
	19	124-3940	2	HANDLE					
	20	9X-2044	10	SCREW					

HA1767E 04

176-1969 CAB GP-INTERIOR (1/2)

Part of 164-0556-Page523,293-1305-Page523.02

An Attachment

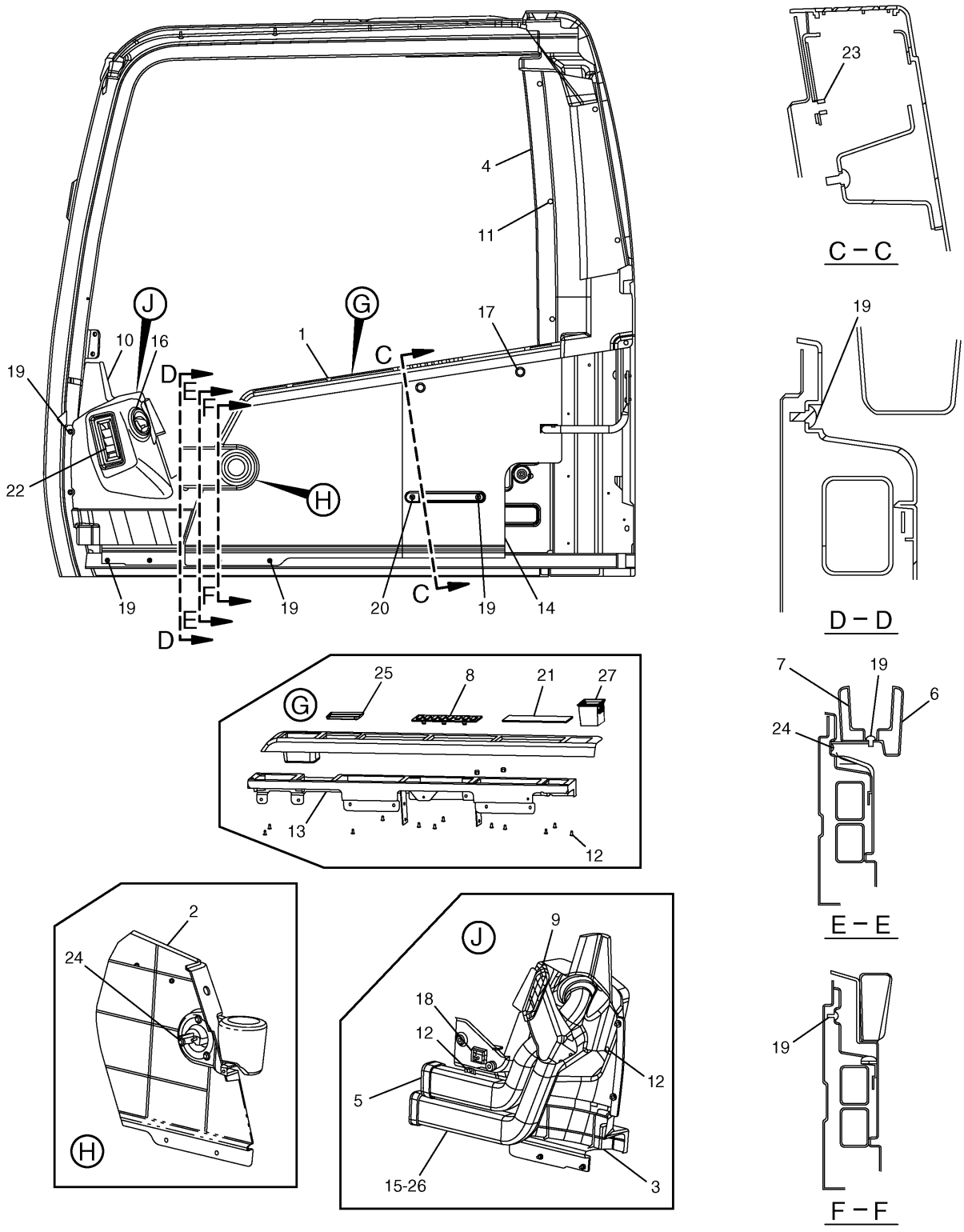

HA1768E 04

176-1969 CAB GP-INTERIOR (2/2)
Part of 164-0556-Page523,293-1305-Page523.02
170-9723-Page562
An Attachment

OPERATOR STATION

NOTE	No.	PART No.	QTY	PART NAME	NOTE	No.	PART No.	QTY	PART NAME
	1	156-6566	1	COVER					
	2	156-6567	1	COVER					
	3	156-6568	1	COVER					
	4	156-6573	1	COVER					
	5	156-6593	1	DUCT					
	6	164-0522	1	HOLDER					
	7	164-0646	1	CUP					
	8	164-0655	1	PANEL					
	9	167-7033	1	RUBBER					
Y	10	170-9723	1	COVER GP					
	11	171-7323	6	CLIP					
	12	171-7325	16	SCREW					
	13	171-7377	1	SUPPORT AS					
	14	171-7400	1	COVER					
	15	156-6594	1	DUCT					
	16	171-7415	1	LOUVER					
	17	171-7418	2	CLIP					
	18	171-7423	1	BRACKET AS					
	19	128-2135	11	SCREW					
	20	128-2136	1	SCREW					
	21	185-8284	1	COVER					
	22	5I-3707	1	LOUVER					
	23	8T-4134	5	NUT					
	24	9X-2042	4	SCREW					
	25	210-5809	1	COVER					
	26	171-7406	1	DUCT					
	27	250-2433	1	BOX					

Y—SEE SEPARATE ILLUSTRATION

HA1768E 04

176-1969 CAB GP-INTERIOR (2/2)

Part of 164-0556-Page523,293-1305-Page523.02
170-9723-Page562
An Attachment

OPERATOR STATION

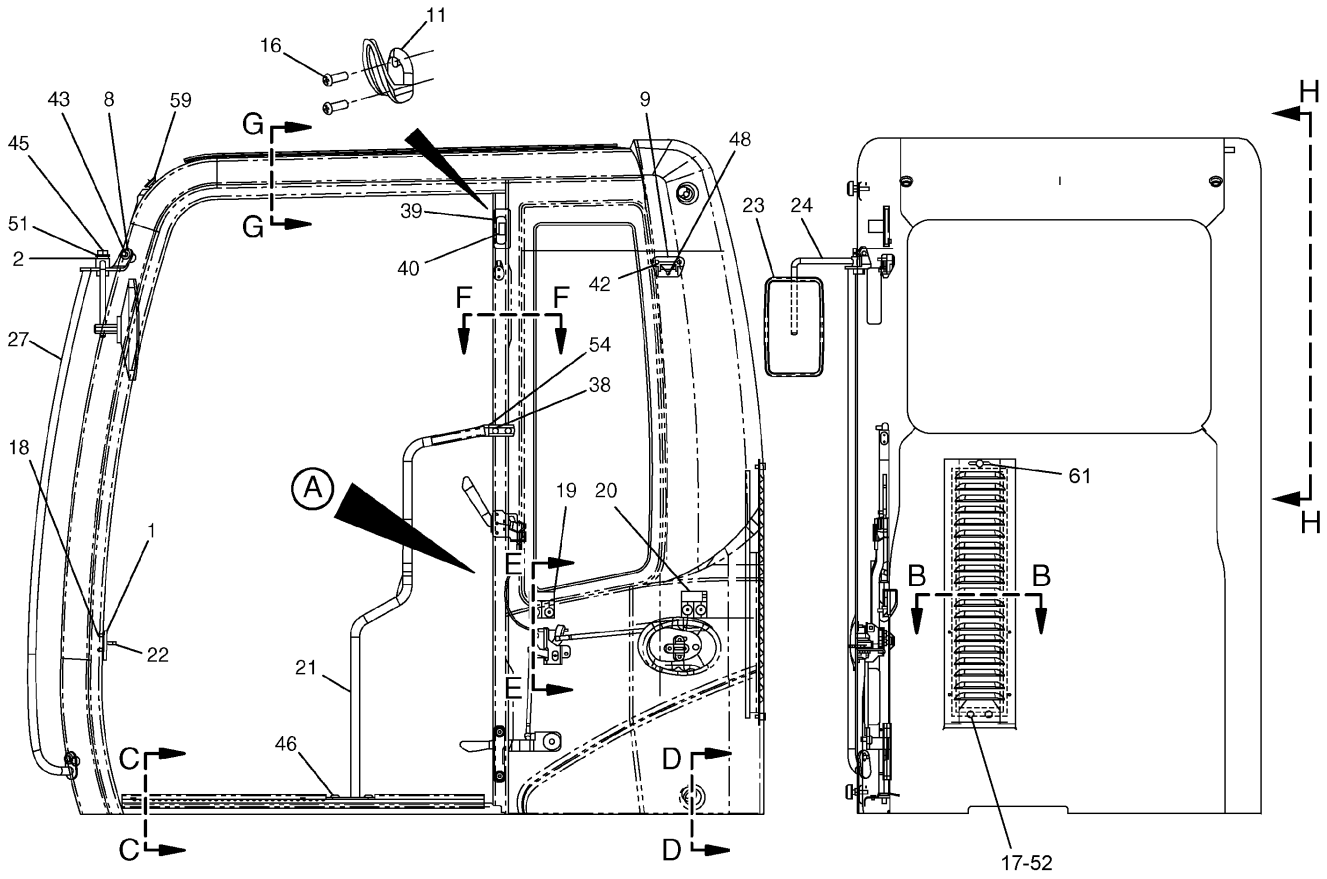

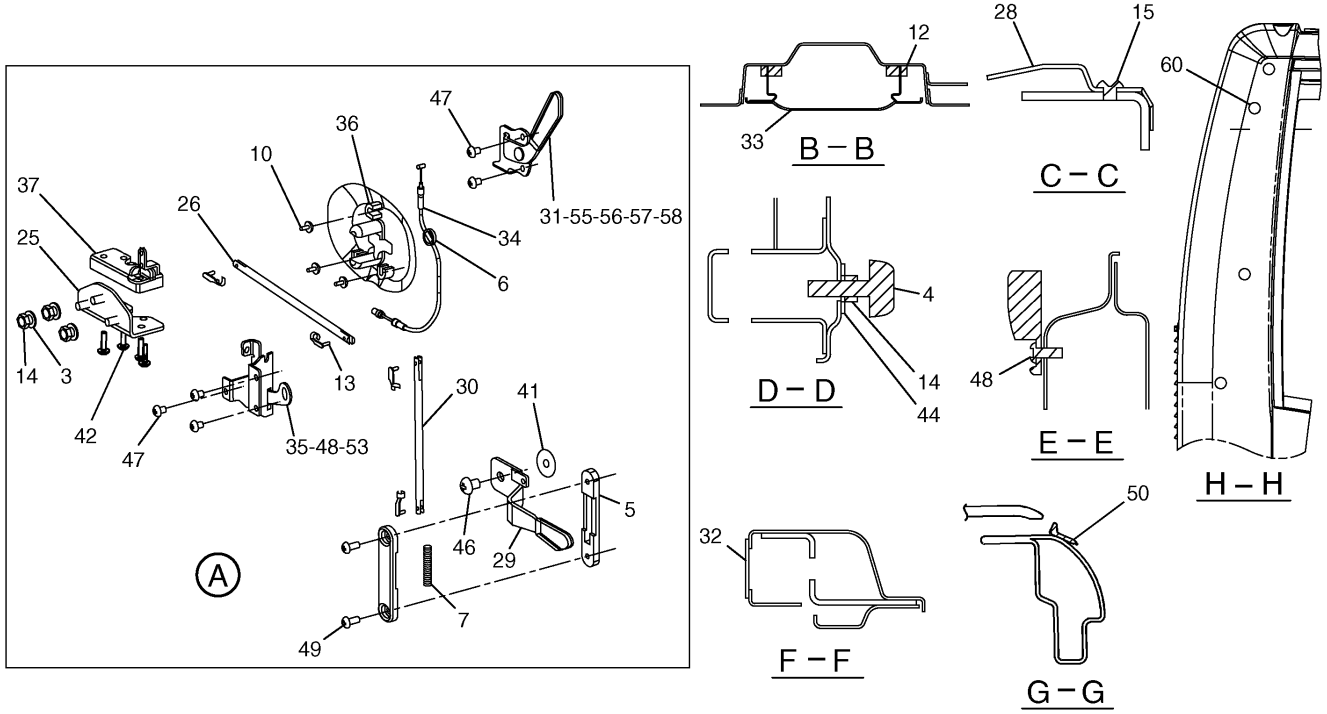

HA1764E 08

185-8277 CAB GP-EXTERIOR

Part of 139-7092-Page519,293-1302-Page519.02,171-7346-Page521,293-1306-Page521.02,164-0556-Page523
,293-1305-Page523.02
An Attachment

OPERATOR STATION

NOTE	No.	PART No.	QTY	PART NAME	NOTE	No.	PART No.	QTY	PART NAME
	1	1R-5998	2	LOCKWASHER		54	085-6452	2	WASHER
	2	3B-4510	1	LOCKWASHER		55	164-0664	1	BRACKET
	3	4B-4278	3	WASHER		56	176-1941	1	PIN
	4	4I-1205	2	BUMPER		57	185-8280	1	WASHER
	5	4I-1206	2	GUIDE		58	185-8281	1	SPRING
	6	185-8196	1	GROMMET		59	178-5570	2	GROMMET
	7	4I-3063	1	SPRING		60	262-9384	4	SEAL
	8	4I-3144	2	WASHER		61	284-4426	1	BOLT
	9	4I-4270	1	HOLDER					
	10	4I-4392	3	CLIP					
	11	5C-7793	1	HOOK					
E	12	6I-5470		SEAL…(150cm)					
	13	6V-7636	4	PIN AS					
	14	189-3396	5	NUT					
	15	099-0823	3	SCREW					
	16	095-0755	2	SCREW					
	17	8T-4200	2	BOLT (L=16mm)					
	18	127-0580	2	SCREW					
	19	139-7126	1	HOLDER					
	20	139-7127	1	HOLDER					
	21	196-1675	1	HANDLE AS					
	22	156-6599	1	STRIKER					
	23	156-6617	1	MIRROR					
	24	156-6618	1	SUPPORT AS					
	25	201-4530	1	BRACKET AS					
	26	161-3685	1	ROD					
	27	161-3690	1	HANDLE AS					
	28	161-3697	1	GUARD					
	29	164-0523	1	LEVER AS					
	30	164-0527	1	ROD					
	31	156-6642	1	LEVER AS					
	32	167-7042	2	SEAL					
	33	171-7396	1	COVER AS					
	34	171-7426	1	CABLE AS					
	35	176-1938	1	LEVER					
	36	176-1942	1	COVER					
	37	205-6295	1	LATCH AS					
	38	189-2864	2	SCREW					
	39	176-1986	1	LIGHT					
	40	201-4417	1	BULB					
	41	133-8016	1	PACKING					
	42	3E-8020	6	SCREW					
	43	8T-4137	2	BOLT (L=20mm)					
	44	7X-0578	2	WASHER					
	45	8T-4193	1	BOLT (L=50mm)					
	46	9X-2041	3	SCREW					
	47	9X-2042	5	SCREW					
	48	9X-2044	6	SCREW					
	49	9X-2045	2	SCREW					
	50	210-5808	1	SEAL					
	51	9X-8257	1	WASHER					
	52	8T-4224	2	WASHER					
	53	176-1937	1	BRACKET AS					

E—ORDER BY THE CENTIMETER

HA1764E 08

185-8277 CAB GP-EXTERIOR

Part of 139-7092-Page519,293-1302-Page519.02,171-7346-Page521,293-1306-Page521.02,164-0556-Page523
,293-1305-Page523.02
An Attachment

MEMORANDA

OPERATOR STATION

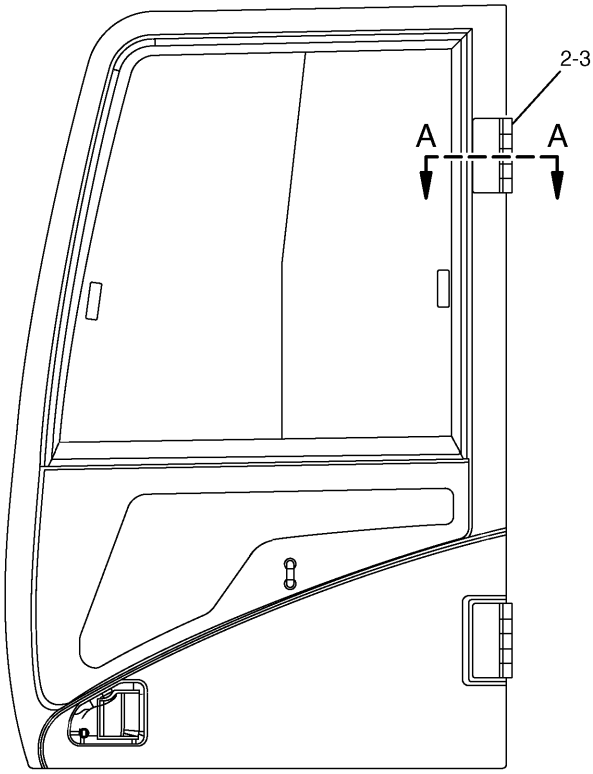

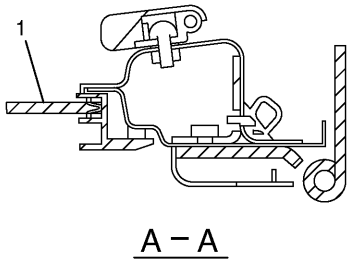

A – A

NOTE	No.	PART No.	QTY	PART NAME	NOTE	No.	PART No.	QTY	PART NAME
Y	1	139-7100	1	DOOR GP					
	2	151-6777	2	HINGE					
	3	9X-2041	6	SCREW					

Y—SEE SEPARATE ILLUSTRATION

H84457E 00

189-2768 DOOR GP-CAB

Part of 139-7092-Page519,293-1302-Page519.02,171-7346-Page521,293-1306-Page521.02,164-0556-Page523
,293-1305-Page523.02
139-7100-Page540
An Attachment

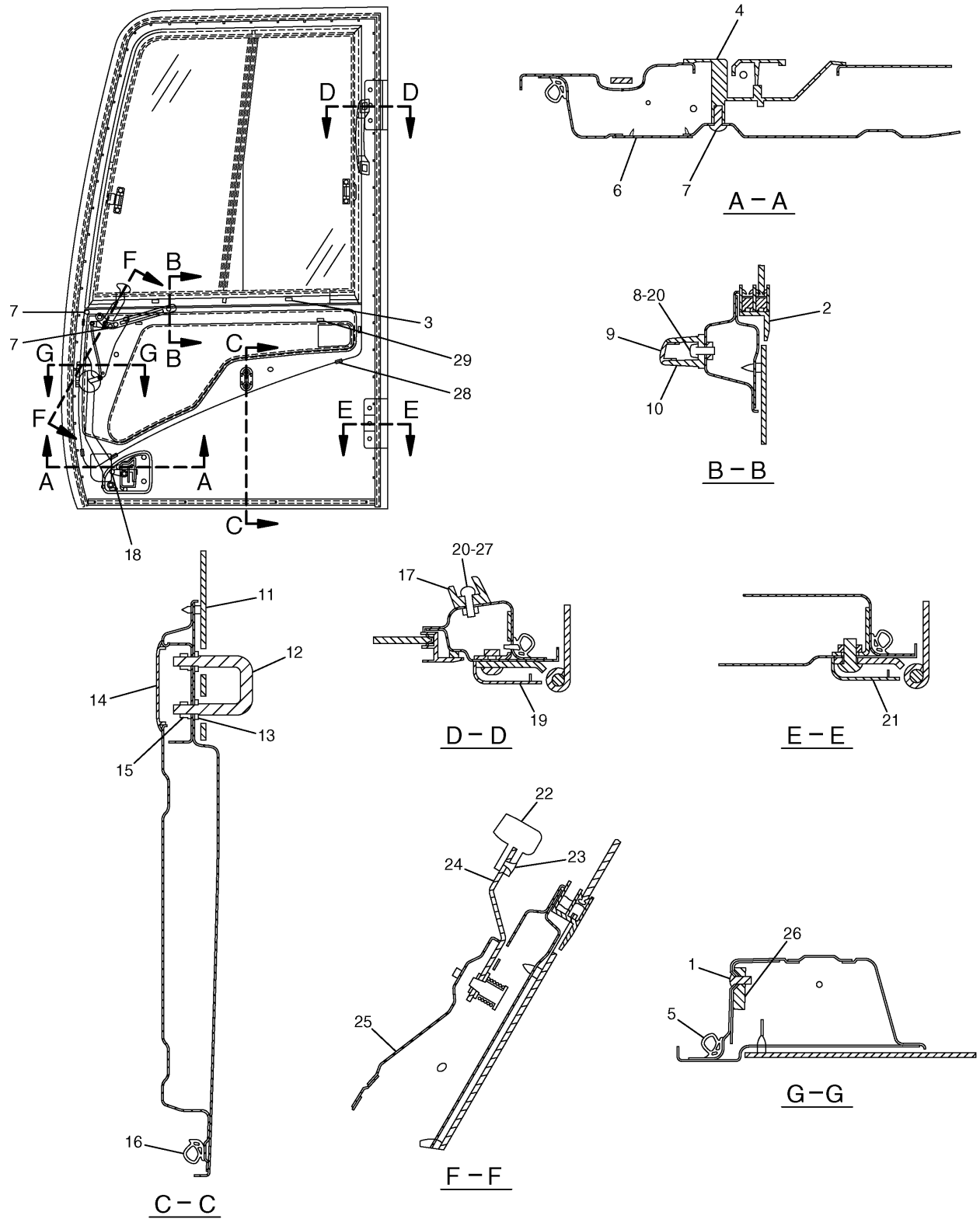

139–7100 DOOR GP–CAB
Part of 189–2768–Page539
151–6792–Page542
An Attachment

OPERATOR STATION

NOTE	No.	PART No.	QTY	PART NAME	NOTE	No.	PART No.	QTY	PART NAME
	1	185-8180	3	SCREW					
Y	2	151-6792	1	WINDOW GP					
	3	151-9461	4	SPACER					
	4	156-6645	1	HANDLE AS					
		201-4391	1	CLIP					
	5	161-3663	1	SEAL AS					
		151-9497	45	CLIP					
	6	259-7354	1	COVER					
	7	9X-2042	8	SCREW					
	8	095-0742	2	SCREW					
	9	151-6704	2	CAP					
	10	151-6703	1	HANDLE					
	11	156-6471	1	GLASS					
	12	156-6598	1	HOOK					
	13	8T-4224	2	WASHER					
	14	167-7039	1	GROMMET					
	15	096-3884	2	NUT					
	16	161-3665	1	SEAL					
	17	189-2690	1	HANDLE					
	18	164-0515	1	JOINT					
	19	156-6643	1	COVER					
	20	095-0827	4	LOCKWASHER					
	21	156-6644	1	COVER					
	22	4I-4286	1	KNOB					
	23	096-2622	2	SCREW					
	24	161-3639	1	HANDLE AS					
	25	161-3650	1	COVER AS					
	26	156-6600	1	LOCK AS					
		164-0514	1	CLIP					
		164-0519	1	CLIP					
	27	8T-6412	2	SCREW					
	28	178-5573	4	SPACER					
	29	178-5574	2	SPACER					

Y—SEE SEPARATE ILLUSTRATION

H93559E 06

139-7100 DOOR GP-CAB

Part of 189-2768-Page539
151-6792-Page542
An Attachment

OPERATOR STATION

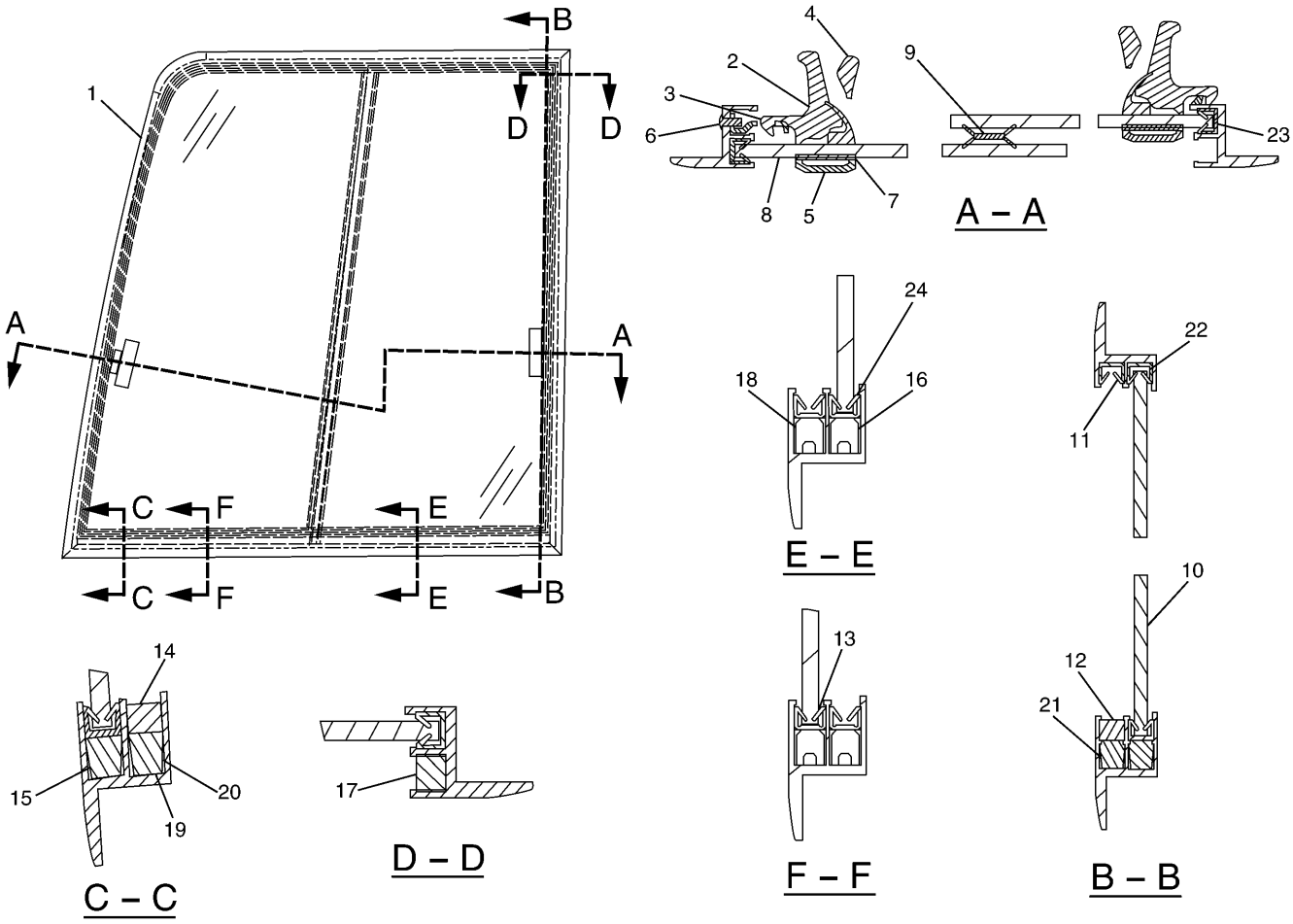

NOTE	No.	PART No.	QTY	PART NAME	NOTE	No.	PART No.	QTY	PART NAME
	1	151-6793	1	FRAME AS		19	176-1952	1	SPACER
		41-4300	1	CATCH		20	176-1953	1	STOPPER
		099-0139	3	RIVET		21	176-1954	1	RUBBER
	2	085-6444	2	LOCK AS		22	176-1955	1	SEAL
	3	085-6445	1	LOCK		23	176-1956	1	SEAL
	4	085-6446	1	LOCK		24	176-1957	1	SEAL
	5	085-6447	1	RETAINER					
	6	085-6448	1	SCREW					
	7	085-6449	1	PACKING					
	8	156-6475	1	GLASS					
	9	161-3705	1	SEAL					
	10	156-6474	1	GLASS					
	11	151-6841	1	SEAL					
	12	164-0516	1	RUBBER					
	13	161-3695	1	SEAL					
	14	164-0518	1	RUBBER					
	15	171-7413	1	SPACER					
	16	171-7414	1	SPACER					
	17	164-0517	1	RUBBER					
	18	176-1951	1	SPACER					

H78640E 03

151-6792 WINDOW GP-DOOR

Part of 139-7100-Page541
An Attachment

OPERATOR STATION

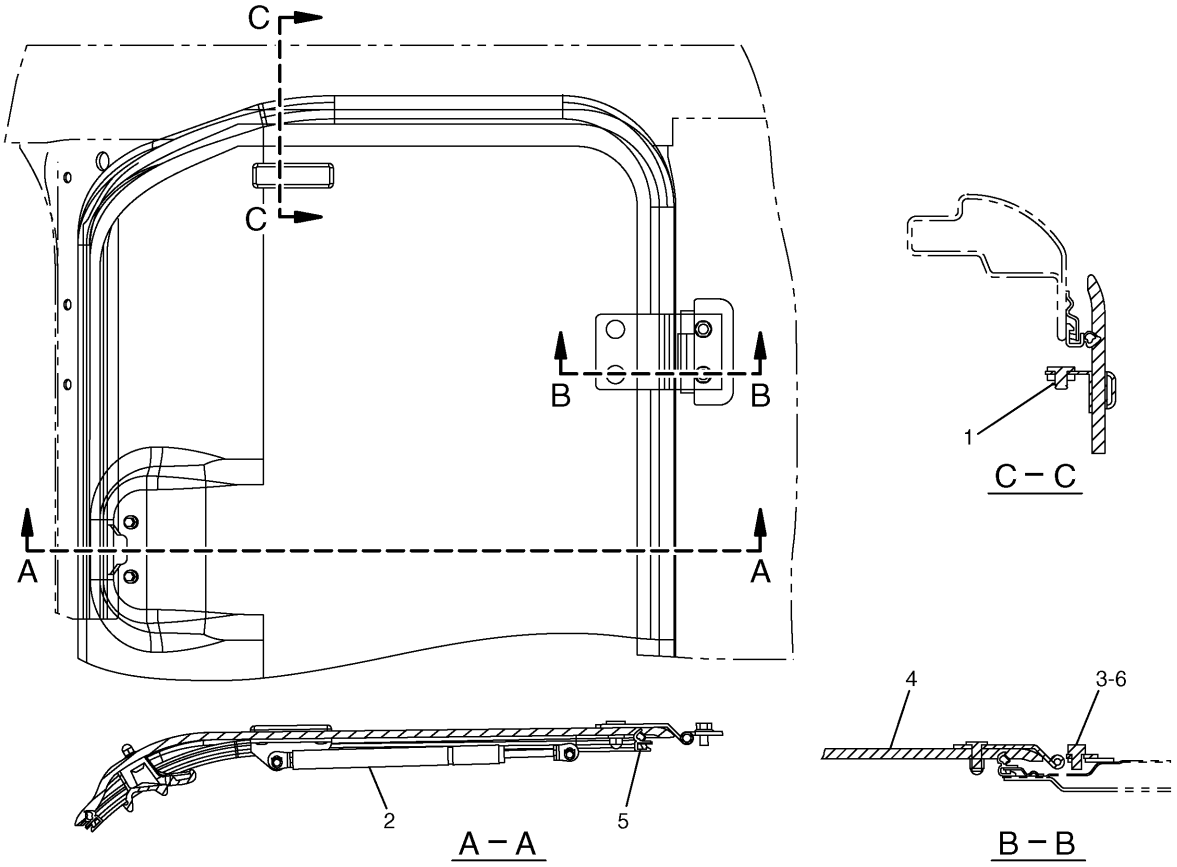

NOTE	No.	PART No.	QTY	PART NAME	NOTE	No.	PART No.	QTY	PART NAME
	1	2Y-5685	4	RING					
	2	099-3506	2	SPRING AS					
	3	8T-4200	4	BOLT (L=16mm)					
Y	4	189-2849	1	HATCH AS					
	5	189-2847	1	SEAL					
	6	8T-4224	4	WASHER					

Y—SEE SEPARATE ILLUSTRATION

H71324E 03

139-7099 HATCH GP

Part of 139-7092-Page519,293-1302-Page519.02,164-0556-Page523,293-1305-Page523.02
189-2849-Page544
An Attachment

OPERATOR STATION

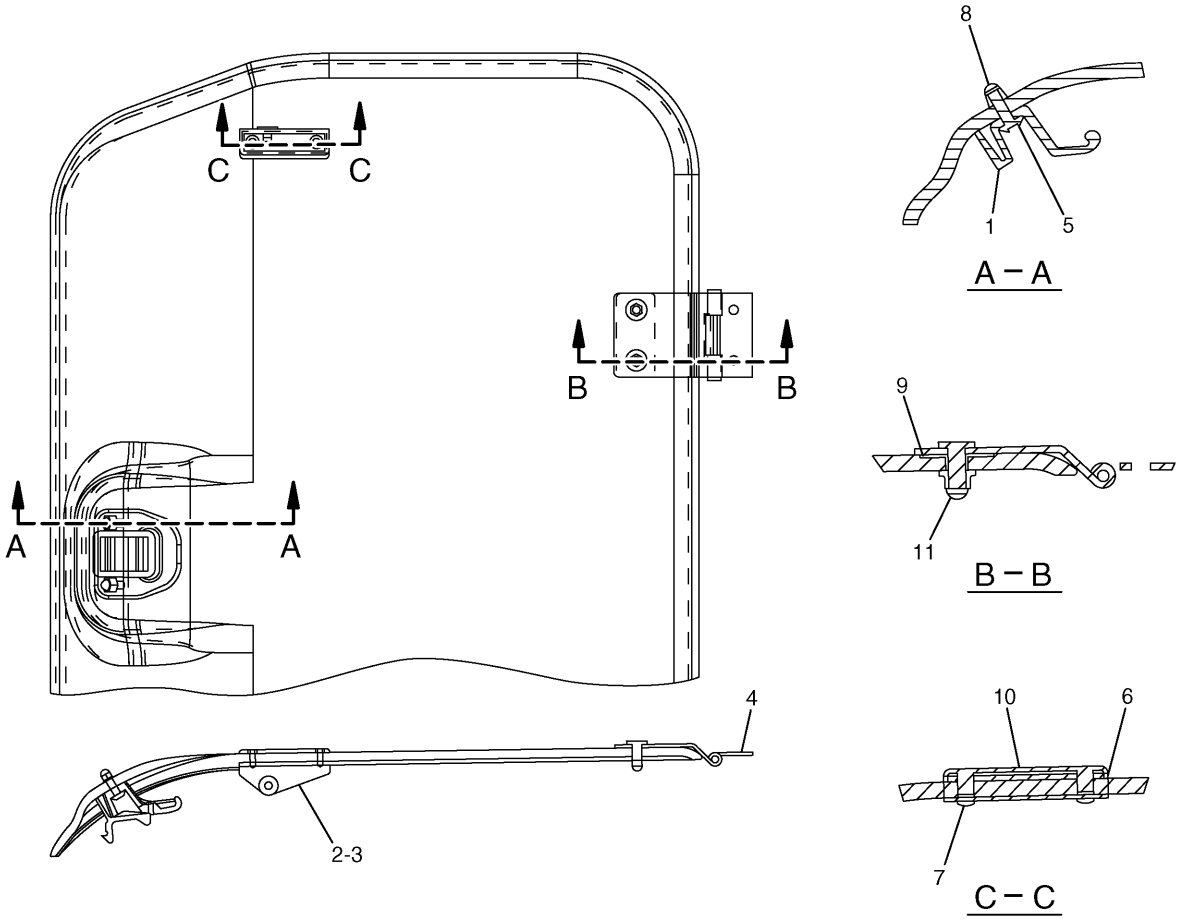

NOTE	No.	PART No.	QTY	PART NAME	NOTE	No.	PART No.	QTY	PART NAME
	1	161-3694	1	CATCH					
	2	189-2693	1	BRACKET AS (RH)					
	3	189-2694	1	BRACKET AS (LH)					
	4	189-2716	2	HINGE AS					
	5	9X-2045	2	SCREW					
	6	085-6449	2	PACKING					
	7	100-2881	4	SCREW					
	8	171-7477	2	NUT					
	9	4I-1260	2	PACKING					
	10	4I-4361	2	RETAINER					
	11	6I-5342	4	NUT					

H71325E 00

189-2849 HATCH AS
Part of 139-7099-Page543
An Attachment

OPERATOR STATION

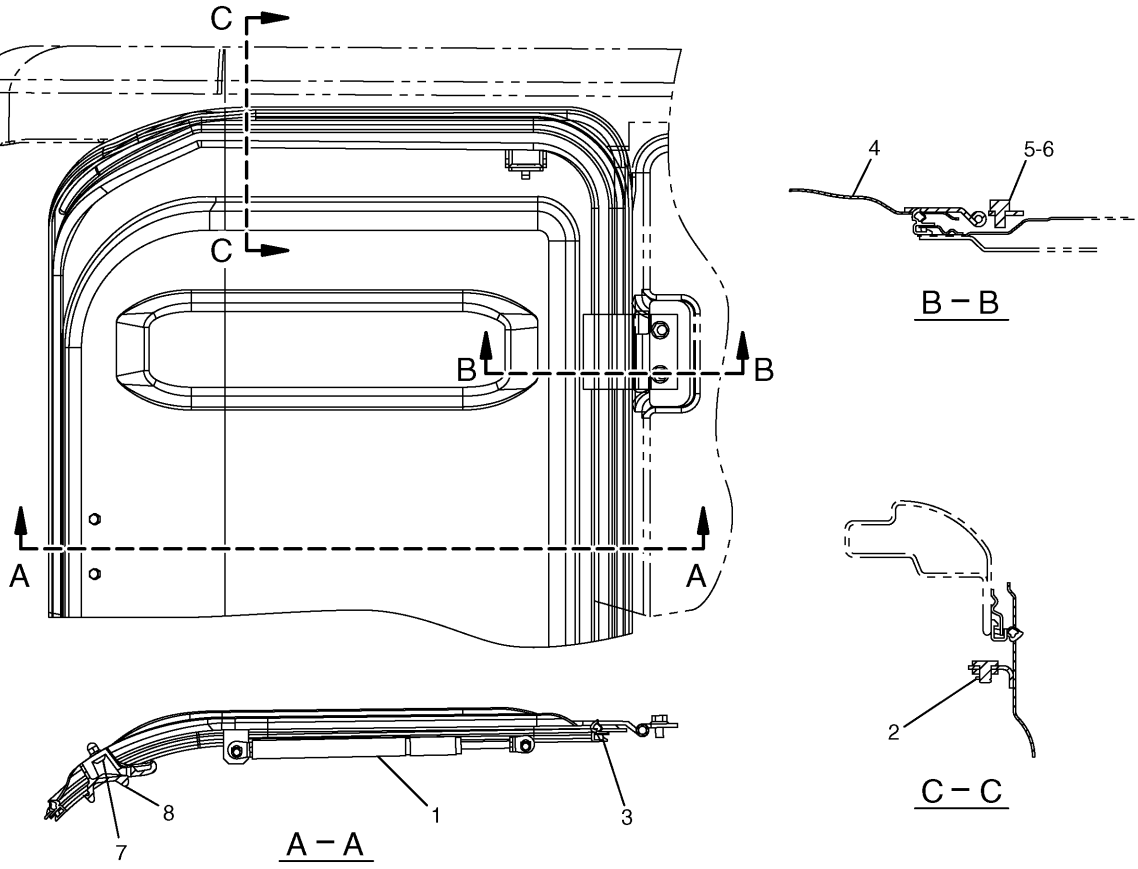

NOTE	No.	PART No.	QTY	PART NAME	NOTE	No.	PART No.	QTY	PART NAME
	1	099-3506	2	SPRING AS					
	2	5D-4822	4	RING					
	3	189-2847	1	SEAL					
	4	189-2851	1	HATCH AS					
	5	8T-4200	4	BOLT (L=16mm)					
	6	8T-4224	4	WASHER					
	7	9X-2042	2	SCREW					
	8	161-3694	1	CATCH					

H71326E 01

167-6976 HATCH GP
Part of 171-7346-Page521,293-1306-Page521.02
An Attachment

OPERATOR STATION

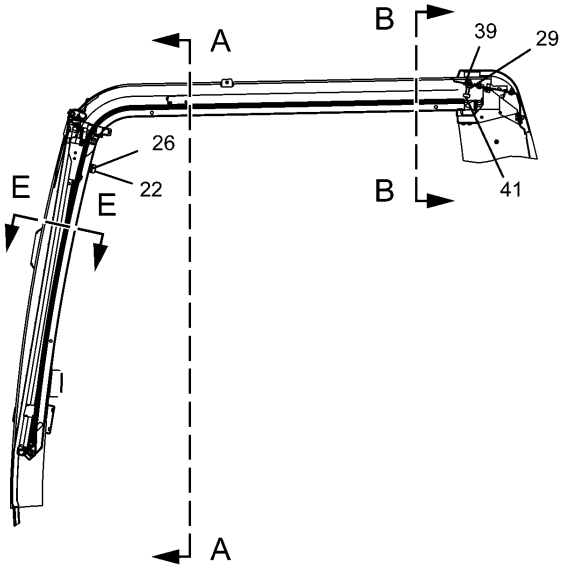

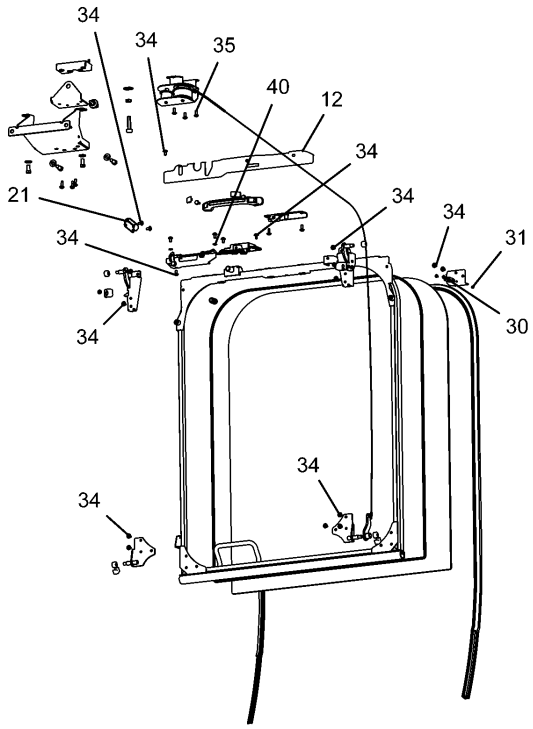

PICTORIAL VIEW

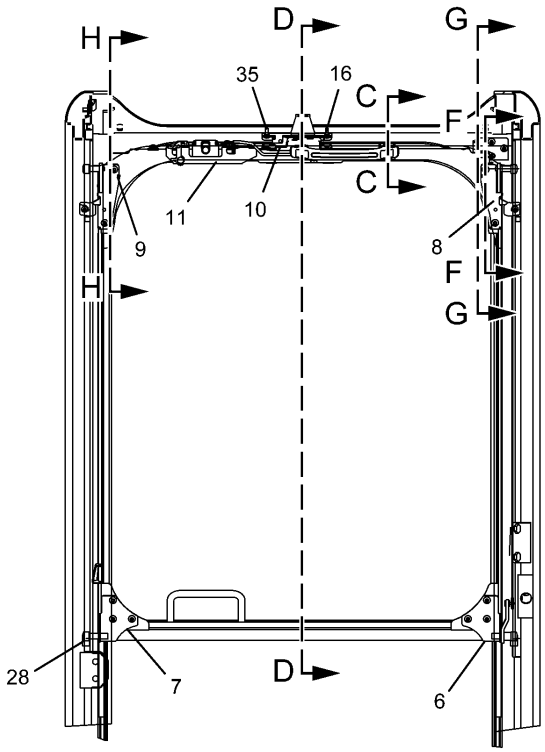

A – A

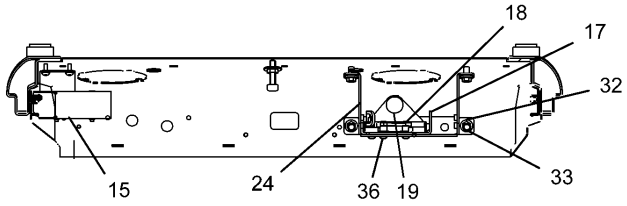

B – B

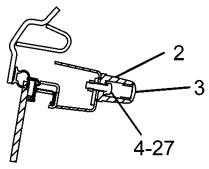

C – C

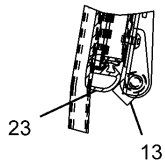

D – D

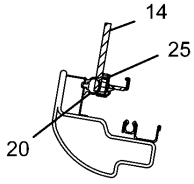

E – E

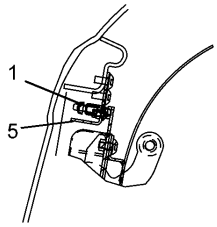

F – F

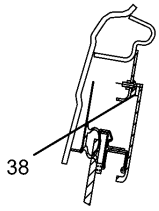

G – G

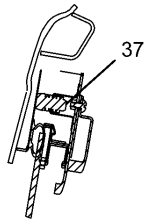

H – H

H93574E 06

139-7101 WINDOW GP

Part of 139-7092-Page519,293-1302-Page519.02,171-7346-Page521,293-1306-Page521.02
An Attachment

OPERATOR STATION

NOTE	No.	PART No.	QTY	PART NAME	NOTE	No.	PART No.	QTY	PART NAME
	1	117-6306	1	SWITCH					
	2	151-6703	1	HANDLE					
	3	151-6704	2	CAP					
	4	095-0827	2	LOCKWASHER					
	5	151-6785	1	BRACKET AS					
	6	151-6813	1	BRACKET AS					
	7	151-6815	1	BRACKET AS					
	8	273-5345	1	LINK AS					
	9	273-5346	1	LINK AS					
	10	151-6831	1	LOCK AS					
	11	151-6832	1	LEVER AS					
	12	151-6844	1	COVER					
	13	151-9557	2	STOPPER					
	14	156-6472	1	GLASS					
	15	156-6554	1	CABLE AS					
	16	156-6555	1	STRIKER AS					
	17	156-6562	1	BRACKET					
	18	273-5274	1	CATCH AS					
	19	156-6579	1	STOPPER					
	20	156-6601	1	SEAL AS					
	21	156-6627	1	STOPPER AS					
	22	161-3684	2	STOPPER					
	23	161-3698	1	SEAL					
	24	164-0648	1	BRACKET AS					
	25	170-9722	1	CUSHION					
	26	099-0823	2	SCREW					
	27	8T-6412	2	SCREW					
	28	151-9576	4	ROLLER					
	29	185-8197	1	NUT					
	30	185-8181	2	SCREW					
	31	185-8183	1	NUT					
	32	185-8187	4	WASHER					
	33	185-8182	4	BOLT (L=20mm)					
	34	9X-2042	20	SCREW					
	35	9X-2044	5	SCREW					
	36	9X-2045	3	SCREW					
	37	185-8221	1	STOPPER					
	38	4I-0420	1	STRIP					
	39	7X-0578	1	WASHER					
	40	9X-8256	2	WASHER					
	41	178-5576	1	STOPPER					

H93574E 06

139-7101 WINDOW GP

Part of 139-7092-Page519,293-1302-Page519.02,171-7346-Page521,293-1306-Page521.02
An Attachment

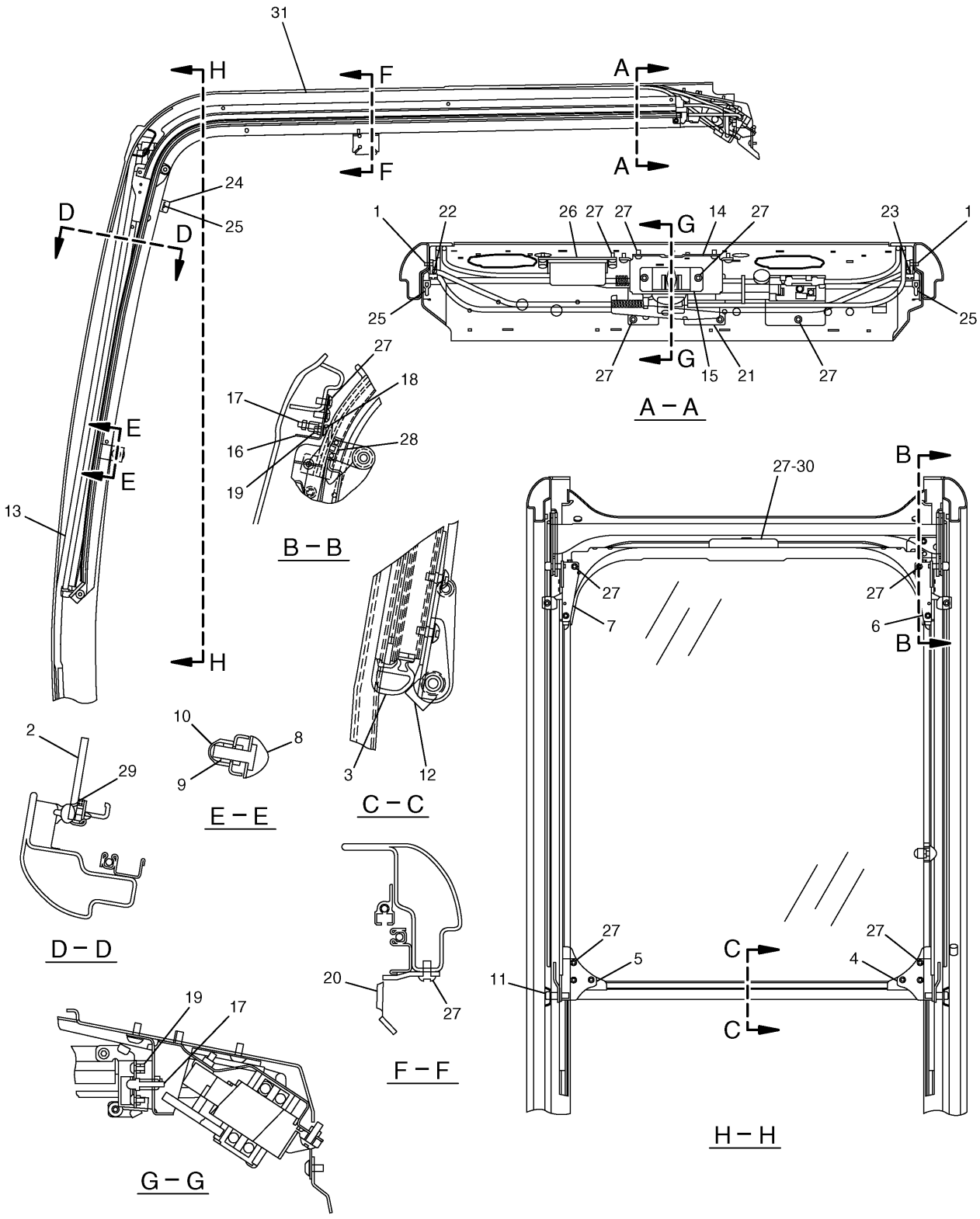

H96645E 03

156-6582 WINDOW GP

Part of 164-0556-Page523,293-1305-Page523.02
167-3622-Page151,156-6587-Page550
An Attachment

OPERATOR STATION

NOTE	No.	PART No.	QTY	PART NAME	NOTE	No.	PART No.	QTY	PART NAME
	1	6V-5683	8	BOLT (L=16mm)					
	2	156-6472	1	GLASS					
	3	161-3698	1	SEAL					
	4	151-6813	1	BRACKET AS					
	5	151-6815	1	BRACKET AS					
	6	156-6584	1	LINK AS					
	7	156-6585	1	LINK AS					
	8	4I-5153	1	BUMPER					
	9	8T-4133	1	NUT					
	10	128-2155	1	CAP					
	11	151-9576	4	ROLLER					
	12	151-9557	2	STOPPER					
	13	156-6601	1	SEAL AS					
	14	156-6637	1	BRACKET AS					
	15	156-6639	1	STOPPER AS					
	16	151-6785	1	BRACKET AS					
	17	117-6306	2	SWITCH					
	18	185-8181	4	SCREW					
	19	185-8183	2	NUT					
	20	151-6802	1	BRACKET					
Y	21	156-6587	1	DRIVE AS					
	22	156-6591	1	RAIL					
	23	156-6592	1	RAIL					
	24	161-3684	2	STOPPER					
	25	099-0823	4	SCREW					
	26	117-6305	1	CONTROL GP					
	27	9X-2042	30	SCREW					
	28	124-3960	4	BLOCK					
	29	170-9722	1	CUSHION					
	30	185-8210	1	BRACKET AS					
Y	31	167-3622	1	WIRING GP					

Y—SEE SEPARATE ILLUSTRATION

H96645E 03

156-6582 WINDOW GP

Part of 164-0556-Page523,293-1305-Page523.02
167-3622-Page151,156-6587-Page550
An Attachment

OPERATOR STATION

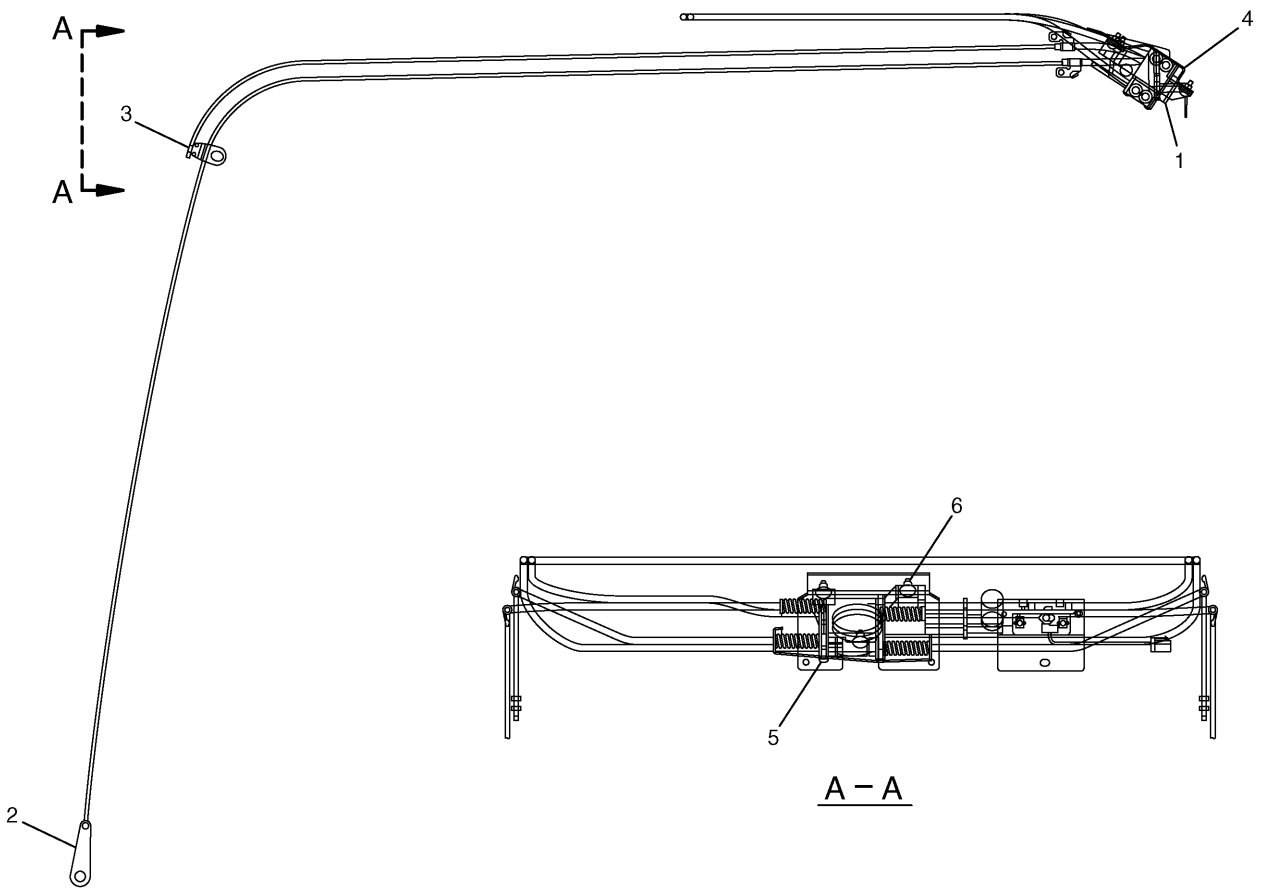

NOTE	No.	PART No.	QTY	PART NAME	NOTE	No.	PART No.	QTY	PART NAME
	1	128-2129	1	GEAR AS					
	2	189-2861	1	CABLE AS					
	3	189-2862	1	CABLE AS					
	4	189-2863	1	BRACKET AS					
	5	189-3394	2	SCREW					
	6	9X-2045	3	SCREW					

H74595E 01

156-6587 DRIVE AS-WINDSHIELD-AUTO

Part of 156-6582-Page549
An Attachment

OPERATOR STATION

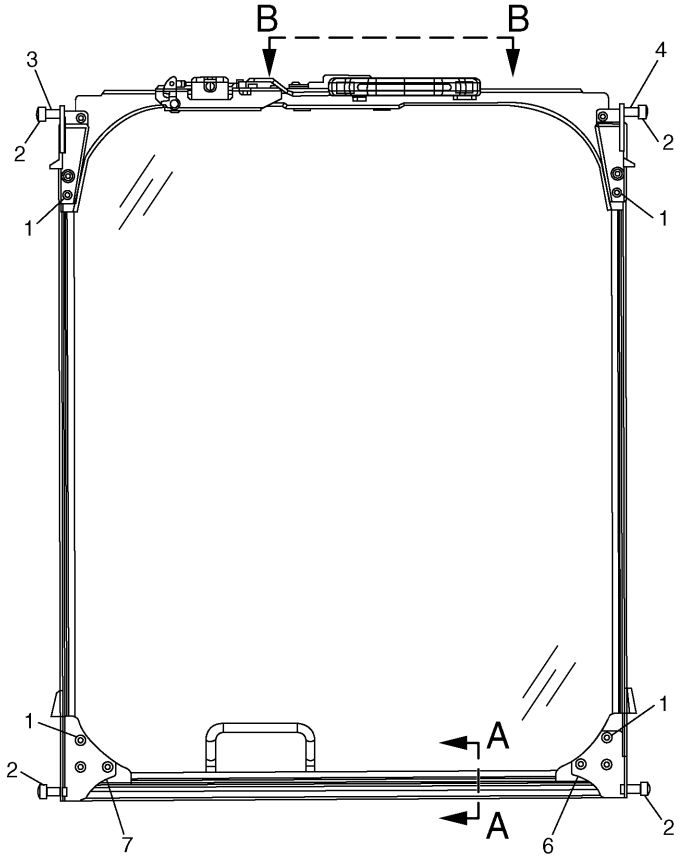

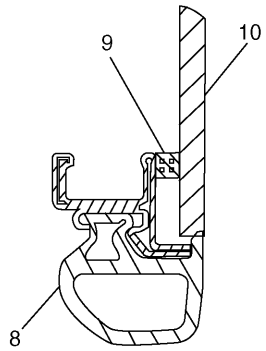

A – A

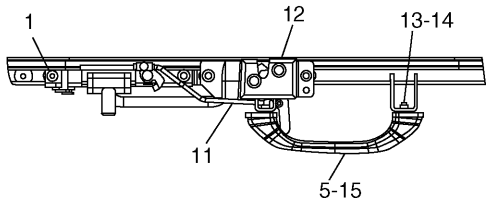

B – B

NOTE	No.	PART No.	QTY	PART NAME	NOTE	No.	PART No.	QTY	PART NAME
	1	9X-2042	15	SCREW					
	2	151-9576	4	ROLLER					
	3	273-5346	1	LINK AS					
	4	273-5345	1	LINK AS					
	5	151-6704	2	CAP					
	6	151-6813	1	BRACKET AS					
	7	151-6815	1	BRACKET AS					
	8	161-3698	1	SEAL					
	9	170-9722	1	CUSHION					
	10	156-6472	1	GLASS					
	11	151-6832	1	LEVER AS					
	12	151-6831	1	LOCK AS					
	13	095-0827	2	LOCKWASHER					
	14	8T-6412	2	SCREW					
	15	151-6703	1	HANDLE					

H93555E 03

171-7503 WINDOW GP
An Attachment

OPERATOR STATION

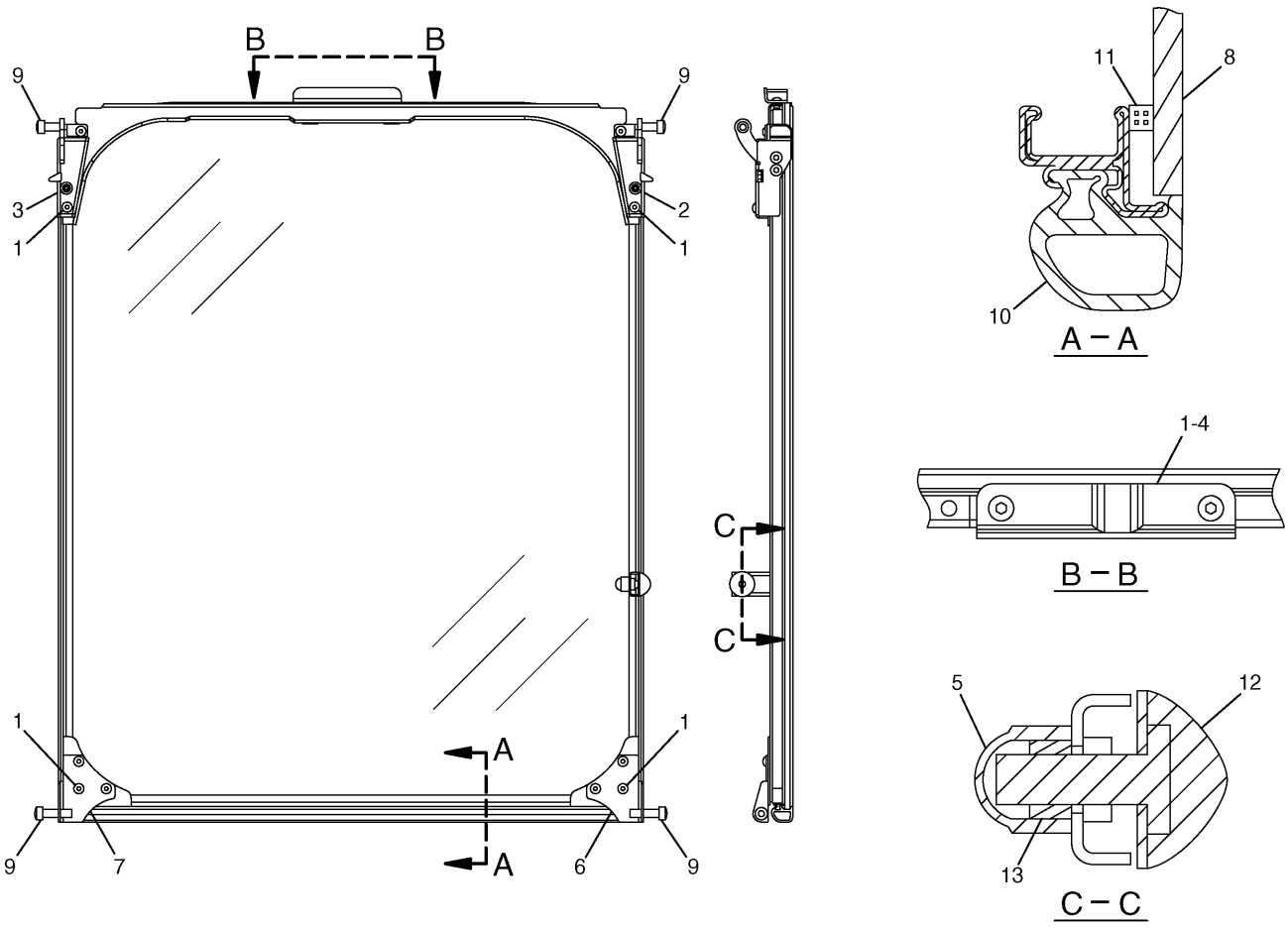

NOTE	No.	PART No.	QTY	PART NAME	NOTE	No.	PART No.	QTY	PART NAME
	1	9X-2042	12	SCREW					
	2	156-6584	1	LINK AS					
	3	156-6585	1	LINK AS					
	4	185-8210	1	BRACKET AS					
	5	128-2155	1	CAP					
	6	151-6813	1	BRACKET AS					
	7	151-6815	1	BRACKET AS					
	8	156-6472	1	GLASS					
	9	151-9576	4	ROLLER					
	10	161-3698	1	SEAL					
	11	170-9722	1	CUSHION					
	12	4I-5153	1	BUMPER					
	13	8T-4133	1	NUT					

H70423E 00

189-3452 WINDOW GP
An Attachment

OPERATOR STATION

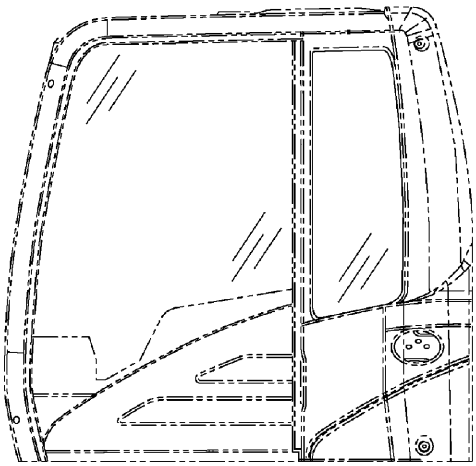

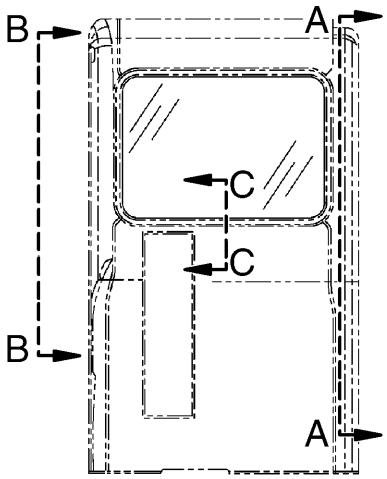

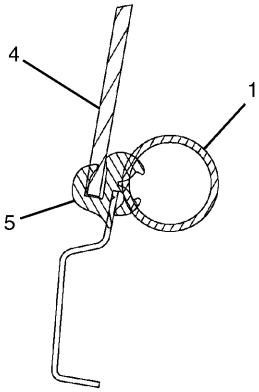

C – C

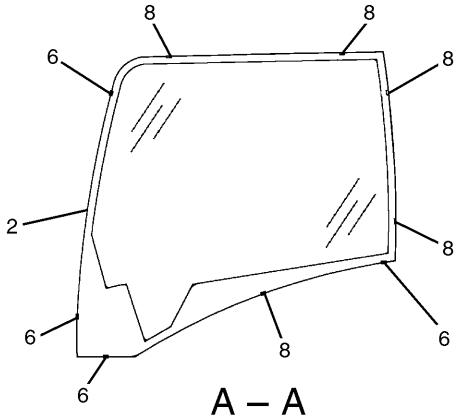

A – A

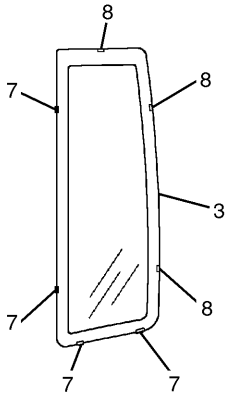

B – B

NOTE	No.	PART No.	QTY	PART NAME	NOTE	No.	PART No.	QTY	PART NAME
	1	099-3629	1	RING					
	2	151-6789	1	GLASS					
	3	151-6790	1	GLASS					
	4	156-6469	1	GLASS					
	5	164-0666	1	SEAL					
	6	178-5572	4	SPACER					
	7	178-5573	4	SPACER					
	8	178-5574	8	SPACER					

H97853E 03

185-8279 WINDOW GP

Part of 139-7092-Page519,293-1302-Page519.02,171-7346-Page521,293-1306-Page521.02,164-0556-Page523,293-1305-Page523.02

An Attachment

OPERATOR STATION

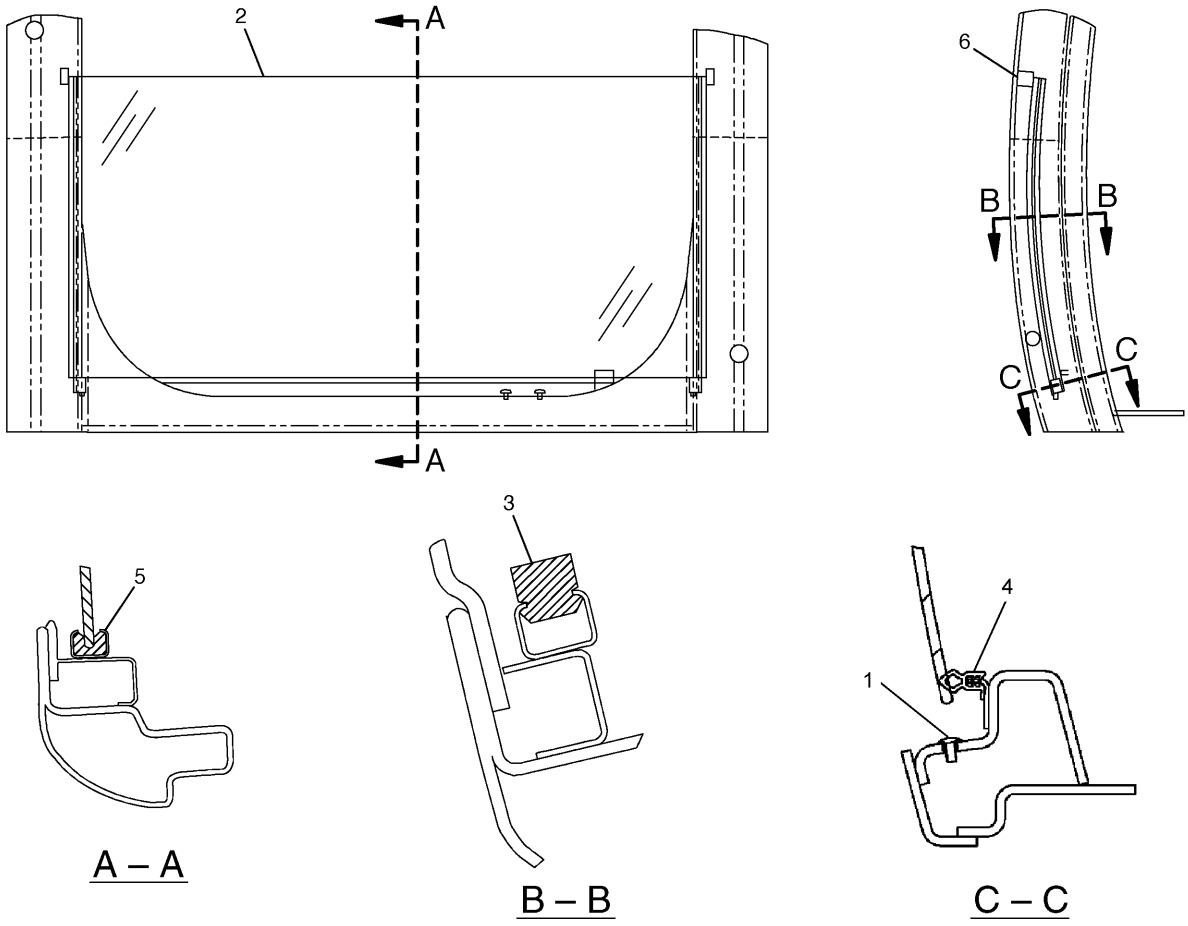

NOTE	No.	PART No.	QTY	PART NAME	NOTE	No.	PART No.	QTY	PART NAME
	1	139-7119	2	PLUG					
	2	156-6473	1	GLASS					
	3	156-6631	2	STOPPER					
	4	305-0361	1	SEAL					
	5	178-5569	2	SEAL					
	6	189-2702	2	SEAL					

HA1784E 02

176-1958 WINDOW GP

Lower

Part of 139-7092-Page519,293-1302-Page519.02,171-7346-Page521,293-1306-Page521.02,164-0556-Page523,293-1305-Page523.02

An Attachment

OPERATOR STATION

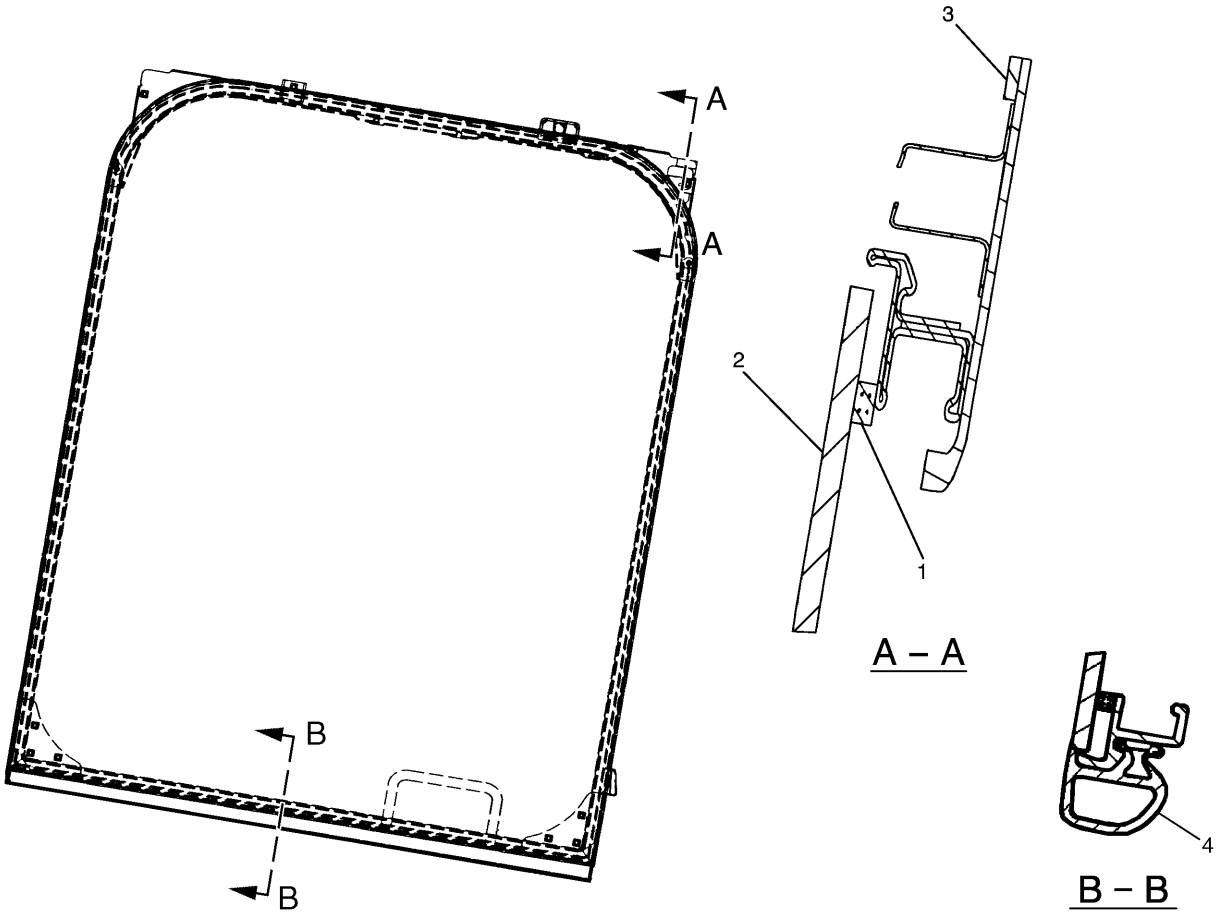

NOTE	No.	PART No.	QTY	PART NAME	NOTE	No.	PART No.	QTY	PART NAME
	1	170-9722	1	CUSHION					
	2	156-6472	1	GLASS					
	3	41-0420	1	STRIP					
	4	161-3698	1	SEAL					

H83151E 01

207-0144 WINDOW AS
An Attachment

OPERATOR STATION

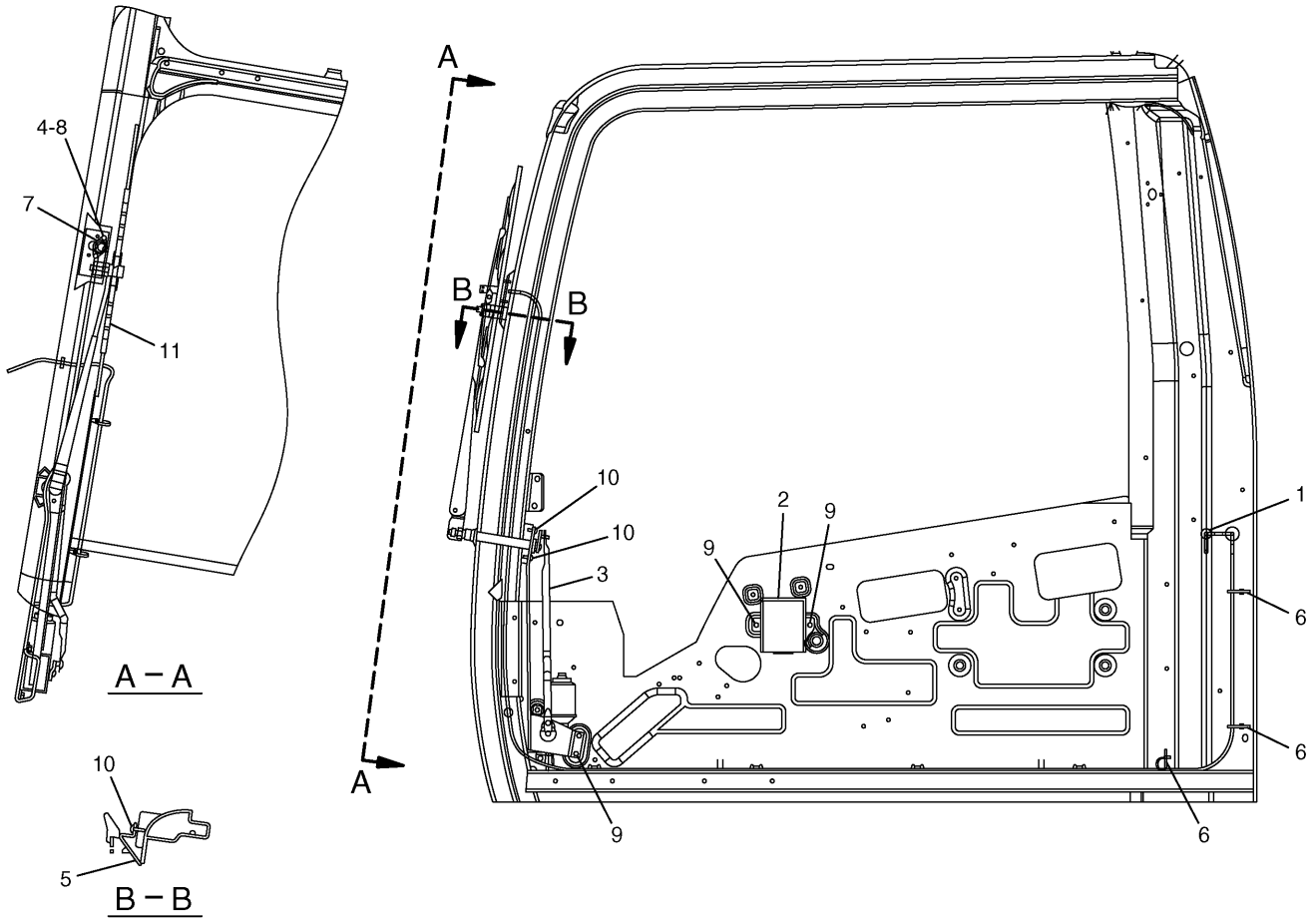

NOTE	No.	PART No.	QTY	PART NAME	NOTE	No.	PART No.	QTY	PART NAME
	1	7Y-7364	1	GROMMET					
	2	155-7042	1	RELAY AS					
Y	3	189-3424	1	MOTOR AS					
	4	096-6166	2	WASHER					
	5	161-3677	1	HOLDER					
	6	163-6795	3	STRAP					
	7	176-1948	1	NOZZLE AS					
	8	095-0728	2	SCREW					
	9	8T-4134	6	NUT					
	10	9X-2044	3	SCREW					
Y	11	161-3668	1	ARM AS					

Y—SEE SEPARATE ILLUSTRATION

H74617E 03

171-7408 WIPER GP-WINDOW

Part of 139-7092-Page519,293-1302-Page519.02,171-7346-Page521,293-1306-Page521.02,164-0556-Page523
,293-1305-Page523.02
161-3668-Page557,189-3424-Page558
An Attachment

OPERATOR STATION

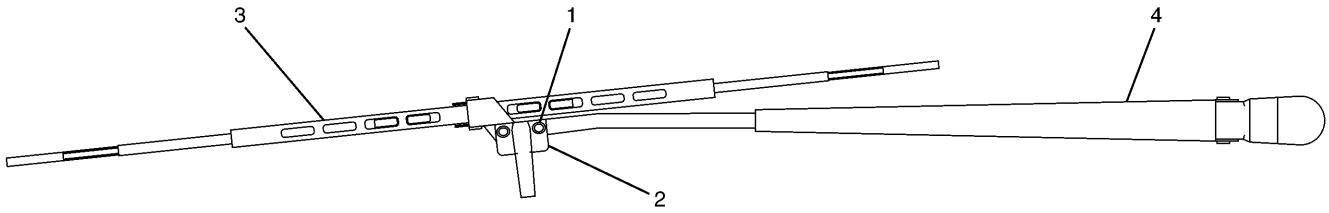

NOTE	No.	PART No.	QTY	PART NAME	NOTE	No.	PART No.	QTY	PART NAME
	1	185-8290	1	SCREW KIT					
	2	161-3669	1	GUIDE					
	3	161-3670	1	BLADE AS					
	4	161-3671	1	ARM AS					

H77606E 02

161-3668 ARM AS-WIPER

Part of 171-7408-Page556
An Attachment

OPERATOR STATION

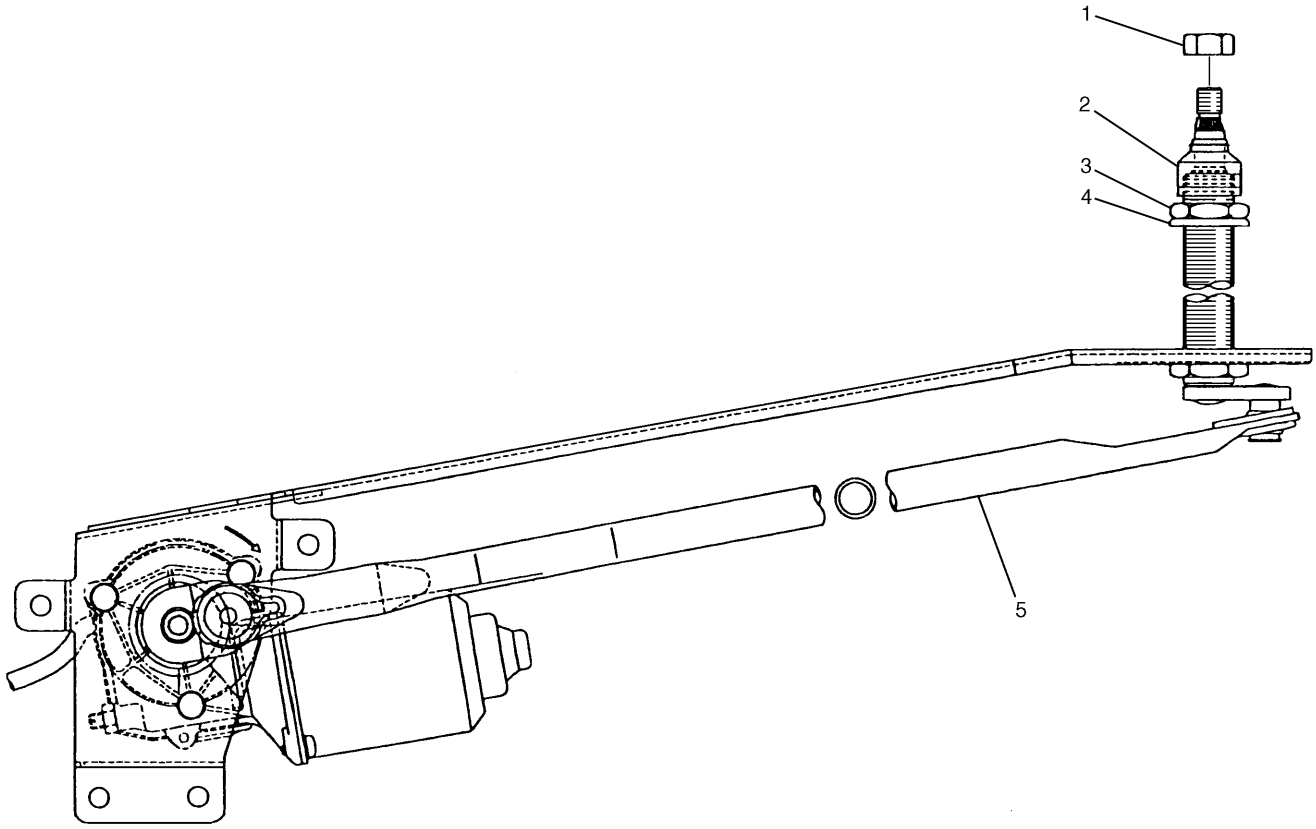

NOTE	No.	PART No.	QTY	PART NAME	NOTE	No.	PART No.	QTY	PART NAME
	1	6V-8231	1	NUT					
	2	7Y-3472	1	CAP					
	3	7Y-3470	1	NUT					
	4	124-3953	1	WASHER					
	5	227-6809	1	ROD					

H90840E 02

189-3424 MOTOR AS-WINDOW WIPER

Part of 171-7408-Page556
An Attachment

OPERATOR STATION

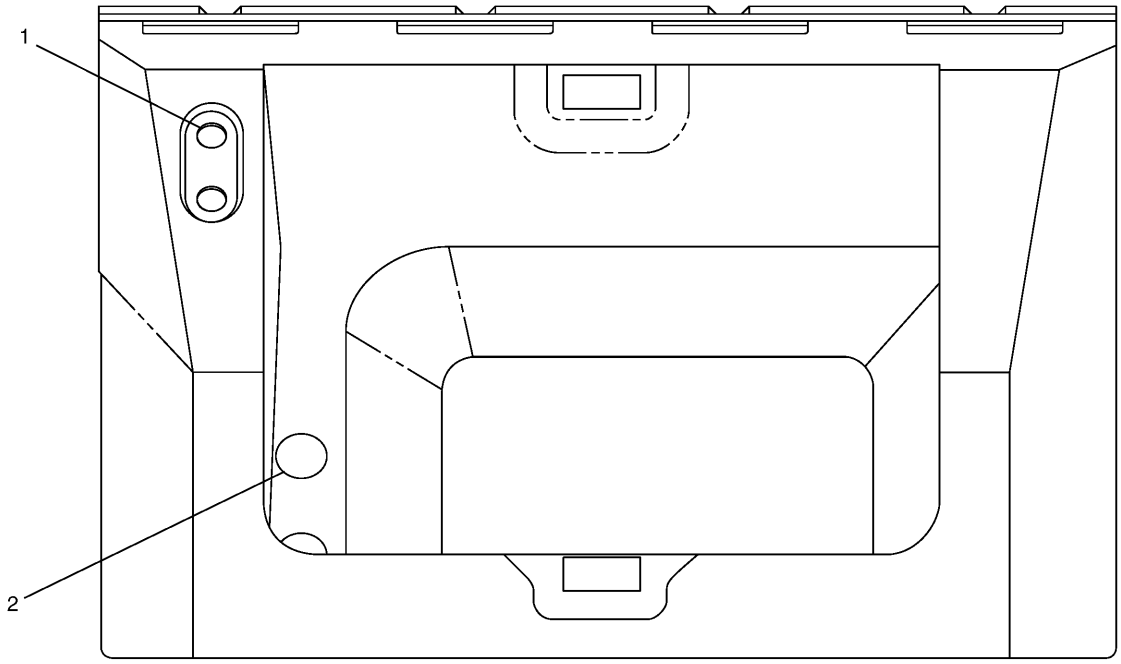

NOTE	No.	PART No.	QTY	PART NAME	NOTE	No.	PART No.	QTY	PART NAME
	1	176-2002	2	CAP					
	2	196-1423	2	CAP					

H71063E 00

196-1427 COVER GP

Part of 161-3739-Page513,171-7345-Page514,164-0555-Page515

An Attachment

OPERATOR STATION

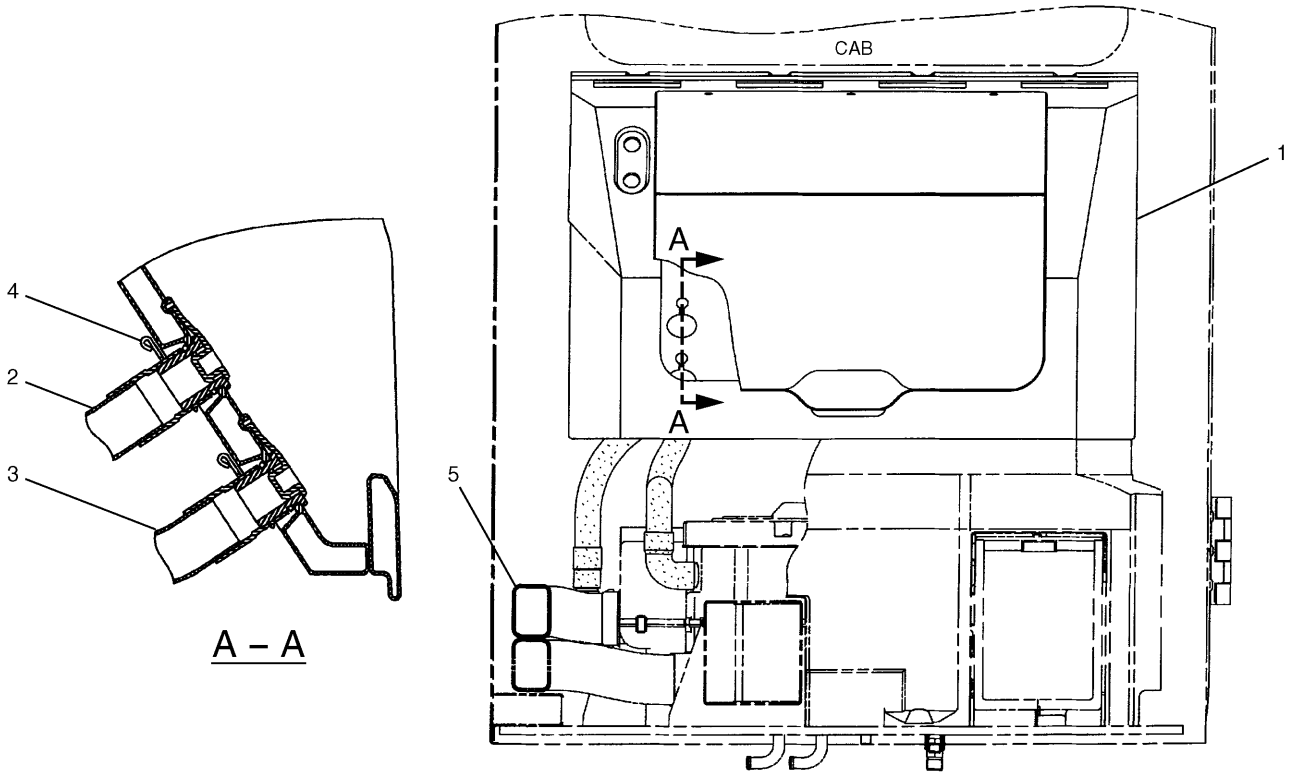

NOTE	No.	PART No.	QTY	PART NAME	NOTE	No.	PART No.	QTY	PART NAME
Y	1	196-1422	1	COVER GP					
	2	189-3462	1	HOSE					
	3	167-7110	1	HOSE					
	4	167-7114	4	CLAMP					
	5	189-3477	1	DUCT AS					
		189-3463	1	PIPE					
		095-1531	2	SEAL-O-RING (ID=29.70mm)					
		189-3415	1	INSULATOR					

Y—SEE SEPARATE ILLUSTRATION

H77619E 01

196-1420 COVER GP
196-1422-Page561
An Attachment

OPERATOR STATION

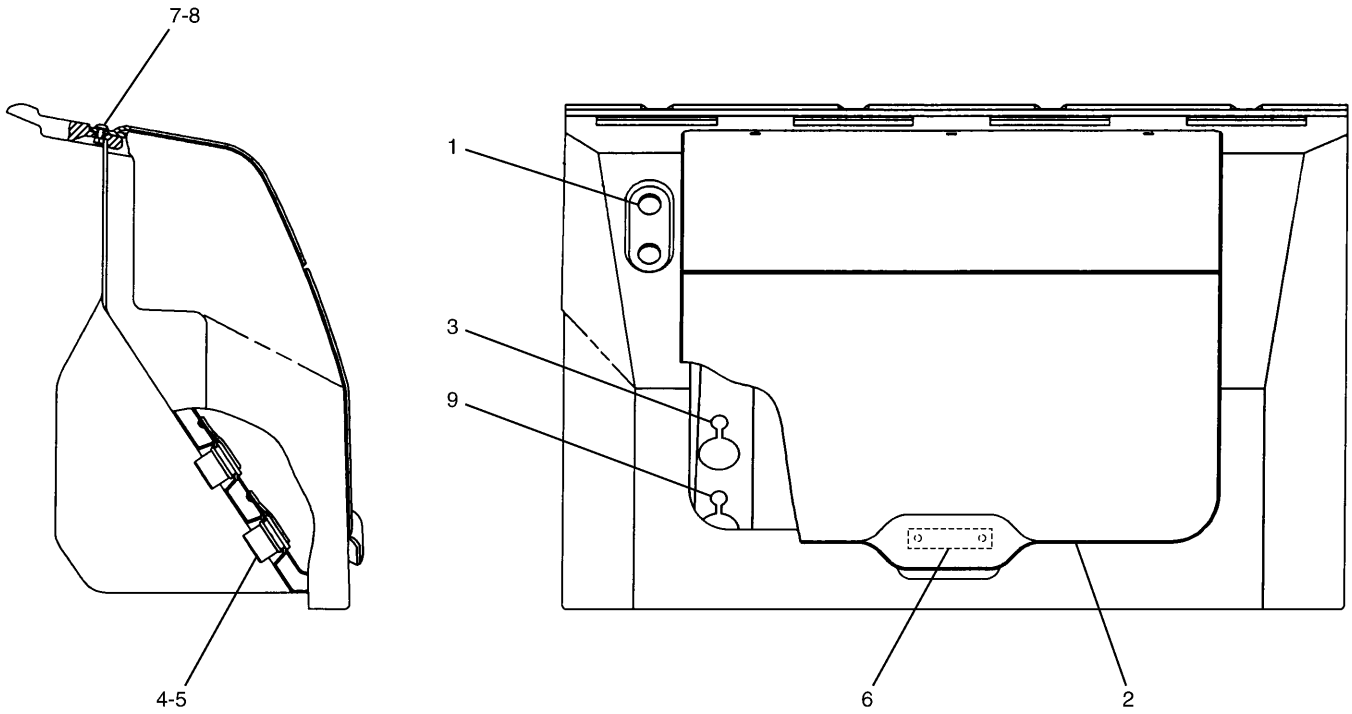

NOTE	No.	PART No.	QTY	PART NAME	NOTE	No.	PART No.	QTY	PART NAME
	1	176-2002	2	CAP					
	2	171-7339	1	COVER					
	3	196-1668	1	CAP					
	4	095-1531	2	SEAL-O-RING (ID=29.70mm)					
	5	189-3463	2	PIPE					
	6	196-1687	1	PLATE KIT					
	7	9X-2044	3	SCREW					
	8	100-7689	3	NUT AS					
	9	196-1669	1	CAP					

H74633E 01

196-1422 COVER GP

Part of 196-1420-Page560
An Attachment

OPERATOR STATION

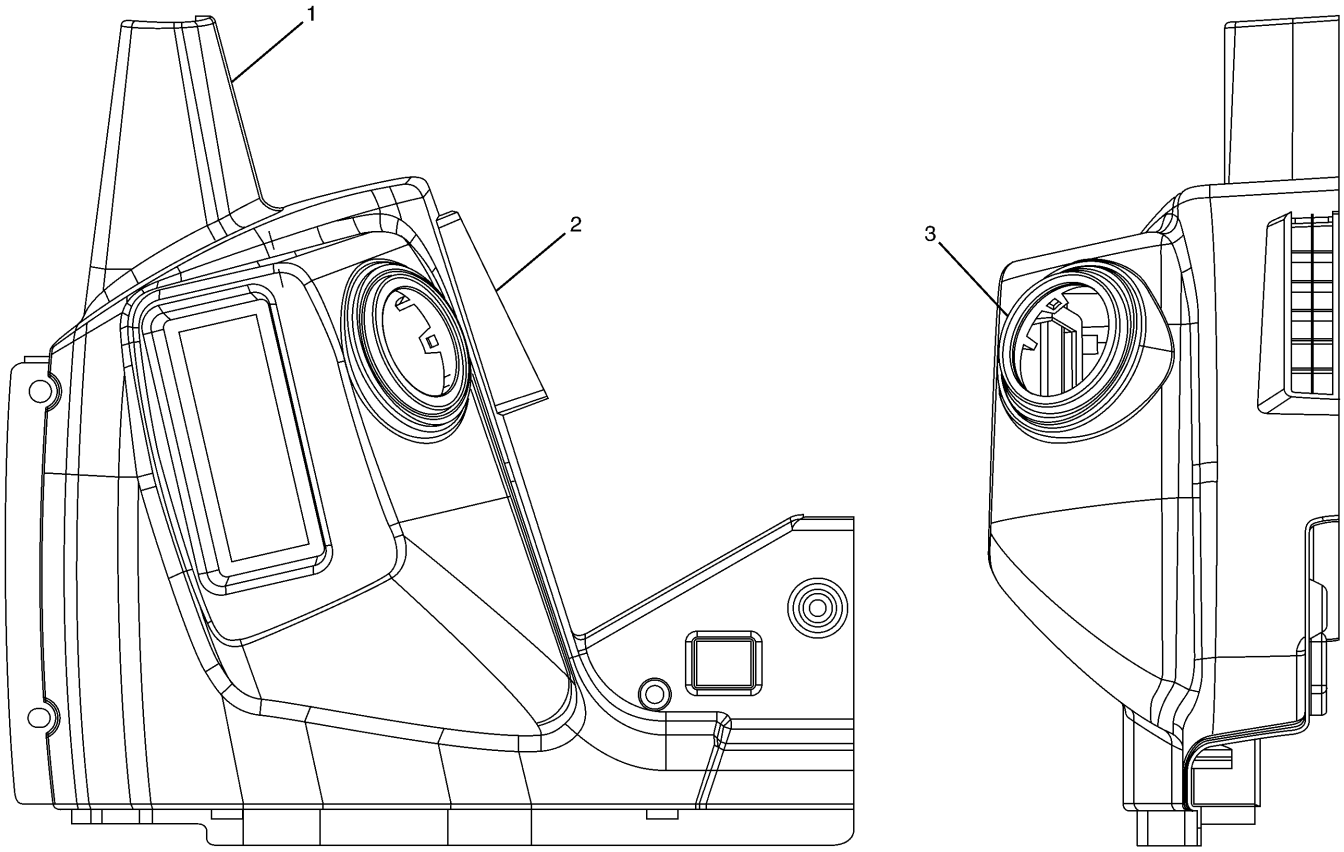

NOTE	No.	PART No.	QTY	PART NAME	NOTE	No.	PART No.	QTY	PART NAME
	1	156-6564	1	COVER					
	2	164-0673	1	LOUVER					
	3	156-6595	1	HOUSING					

H74616E 01

170-9723 COVER GP

Part of 185-8278-Page527,176-1981-Page531,176-1969-Page535
An Attachment

OPERATOR STATION

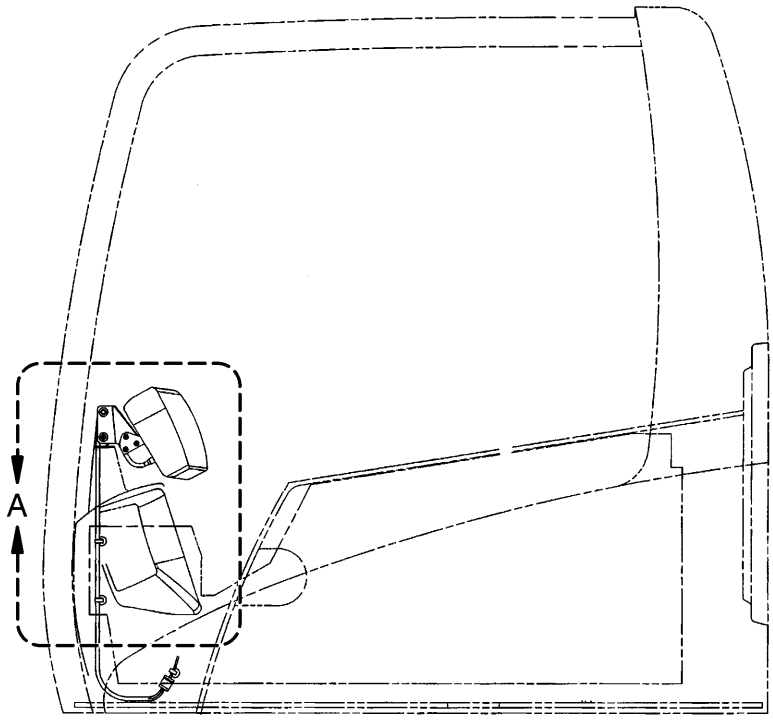

LEFT SIDE VIEW

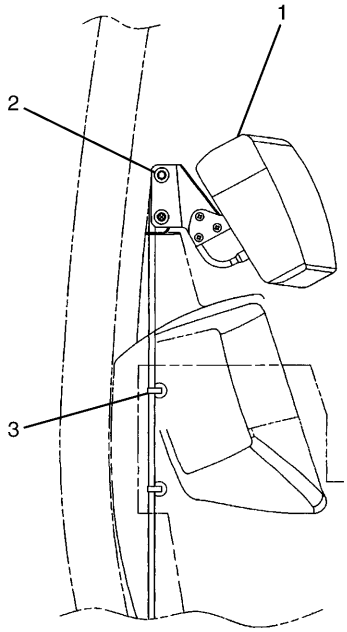

A

NOTE	No.	PART No.	QTY	PART NAME	NOTE	No.	PART No.	QTY	PART NAME
Y	1	260-2160	1	MONITOR GP					
	2	9X-2040	2	SCREW					
	3	163-6795	2	STRAP					

Y—SEE SEPARATE ILLUSTRATION

H90841E 04

157-3170 MONITOR & MTG GP-OPERATOR

260-2160-Page564

OPERATOR STATION

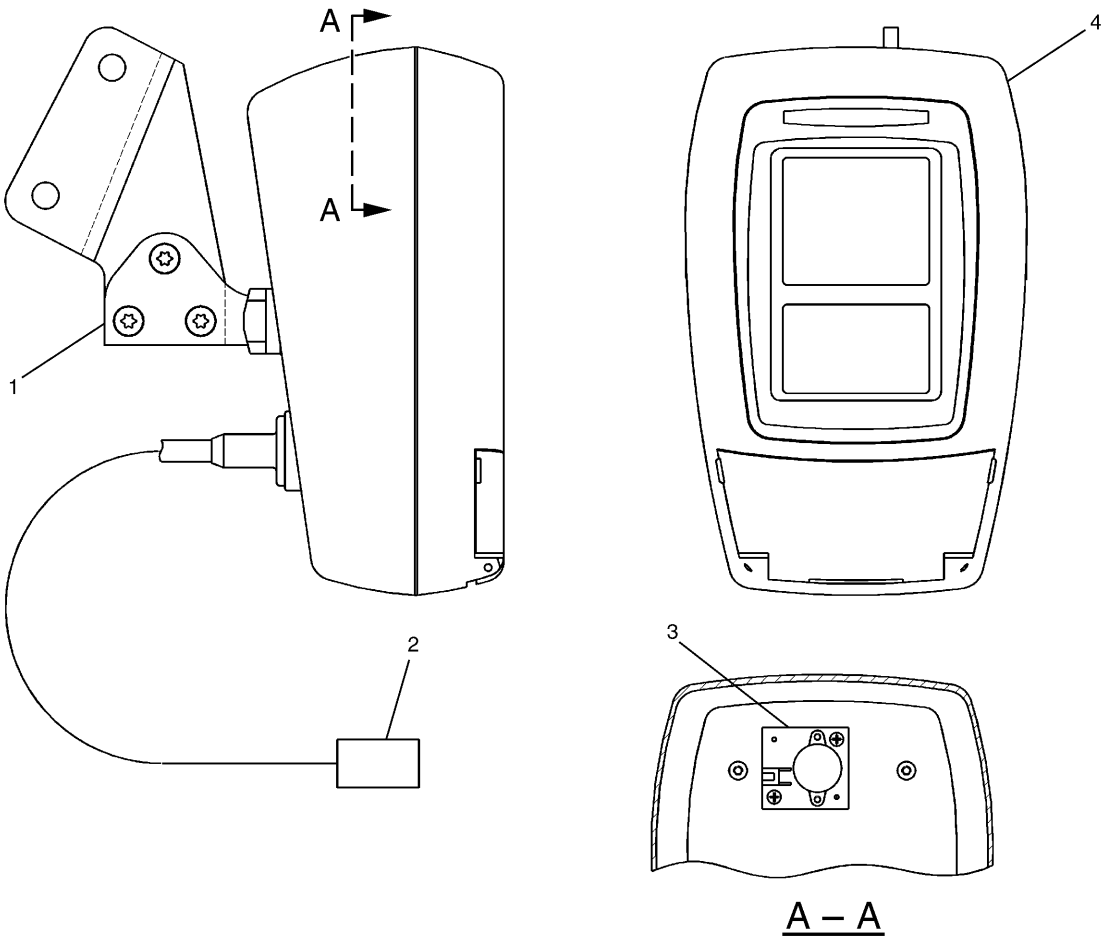

NOTE	No.	PART No.	QTY	PART NAME	NOTE	No.	PART No.	QTY	PART NAME
	1	177-7701	1	BRACKET AS					
	2	227-7567	1	CABLE AS					
		163-6801	3	TERMINAL					
		163-6805	1	CONNECTOR					
		170-6827	3	TERMINAL					
	3	177-7715	1	ALARM KIT					
	4	177-7716	1	COVER KIT					

H91010E 00

260-2160 MONITOR GP-OPERATOR

Part of 157-3170-Page563

OPERATOR STATION

Consists of :

			Page
1	163-6632	WIRING GP-LOWER WIPER	154
1	176-1904	WIPER & WASHER GP-WINDOW.....	566
1	176-1905	WASHER GP-WINDOW	568

H72033E 01

176-1903 WIPER AR-WINDOW

An Attachment

OPERATOR STATION

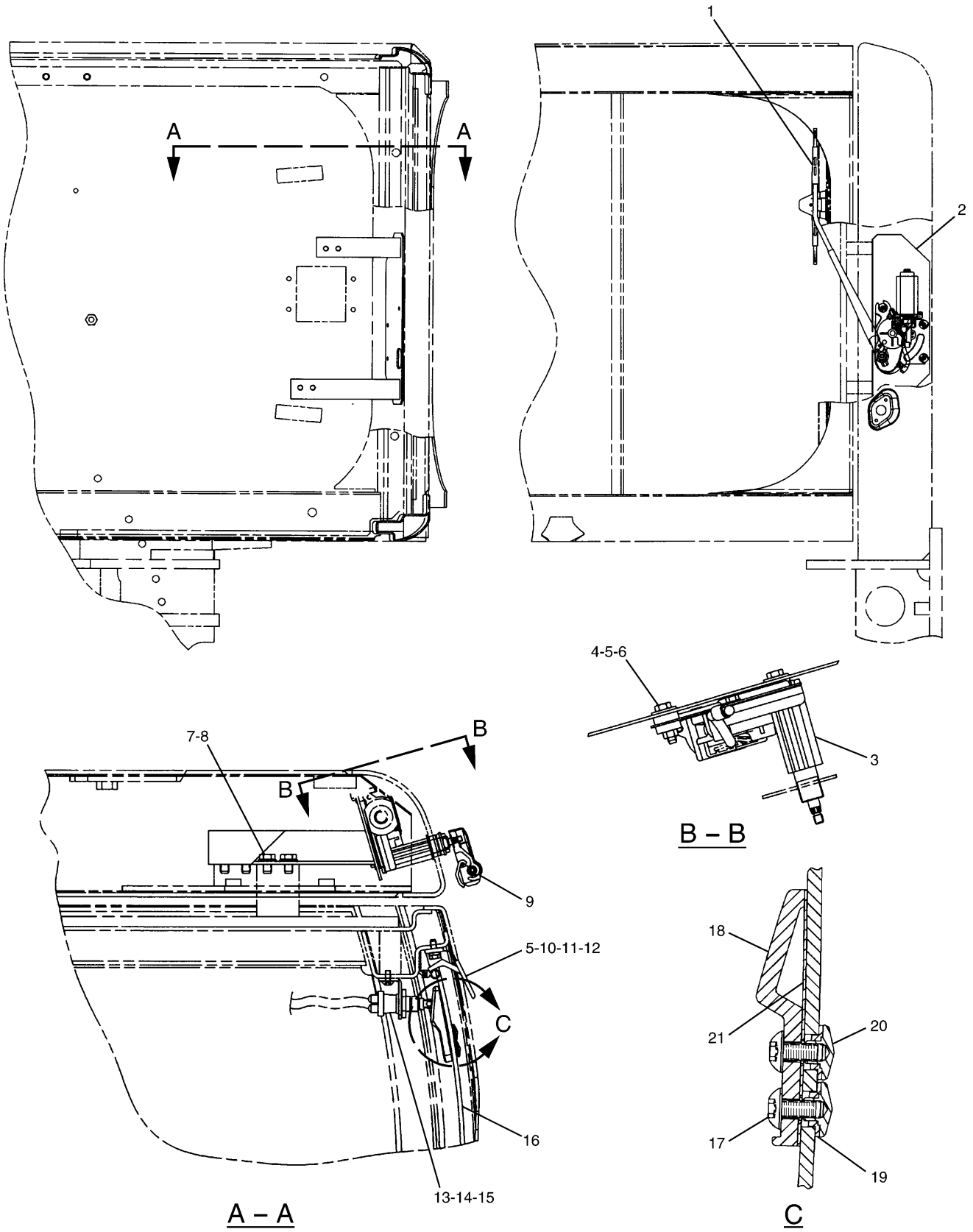

176-1904 WIPER & WASHER GP-WINDOW

Lower
Part of 176-1903-Page565
129-6466-Page191
An Attachment

OPERATOR STATION

NOTE	No.	PART No.	QTY	PART NAME	NOTE	No.	PART No.	QTY	PART NAME
	1	4I-5021	1	BLADE AS					
	2	196-1691	1	BRACKET AS					
	3	167-7079	1	MOTOR AS					
	4	6V-7357	3	BOLT (L=25mm)					
	5	9X-8256	5	WASHER					
	6	8T-4134	3	NUT					
	7	8T-4191	4	BOLT (L=16mm)					
	8	8T-4121	4	WASHER					
	9	4I-5020	1	ARM AS					
	10	4I-1163	1	BRACKET					
	11	5C-9553	2	BOLT (L=16mm)					
	12	8H-3481	2	LOCKWASHER					
Y	13	129-6466	1	SWITCH AS					
	14	156-6646	1	BRACKET					
	15	9X-2044	2	SCREW					
	16	156-6647	1	GLASS AS					
	17	9X-2042	2	SCREW					
	18	124-3966	1	STOPPER					
	19	144-9691	2	PACKING					
	20	144-9692	2	RETAINER					
	21	151-6705	1	PACKING					

Y—SEE SEPARATE ILLUSTRATION

H84088E 05

176-1904 WIPER & WASHER GP-WINDOW

Lower

Part of 176-1903-Page565
129-6466-Page191
An Attachment

OPERATOR STATION

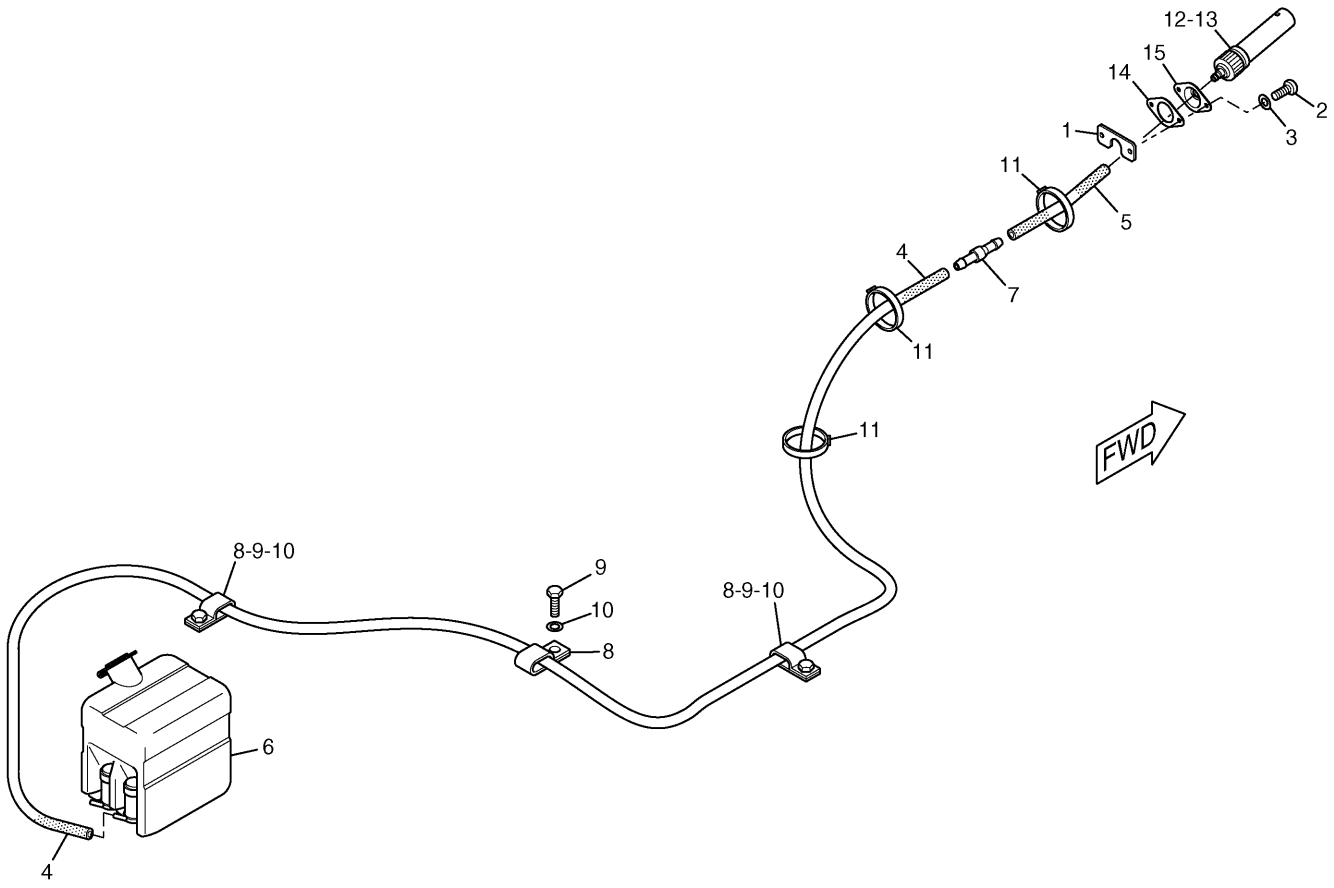

NOTE	No.	PART No.	QTY	PART NAME	NOTE	No.	PART No.	QTY	PART NAME
	1	170-9492	1	PLATE					
	2	095-0728	2	SCREW					
	3	096-6166	2	WASHER					
E	4	144-0195		HOSE…(340cm)					
E	5	144-0195		HOSE…(30cm)					
	6	176-1932	1	TANK AS					
	7	7Y-3474	1	VALVE AS					
	8	7S-4244	3	CLIP					
	9	8T-4137	3	BOLT (L=20mm)					
	10	8T-4121	3	WASHER					
	11	096-0061	3	STRAP					
	12	178-5500	1	NOZZLE AS					
	13	085-8037	1	NOZZLE					
	14	105-9527	1	PACKING					
	15	105-9526	1	ADAPTER					

E—ORDER BY THE CENTIMETER

H75244E 02

176-1905 WASHER GP-WINDOW

Part of 176-1903-Page565
An Attachment

OPERATOR STATION

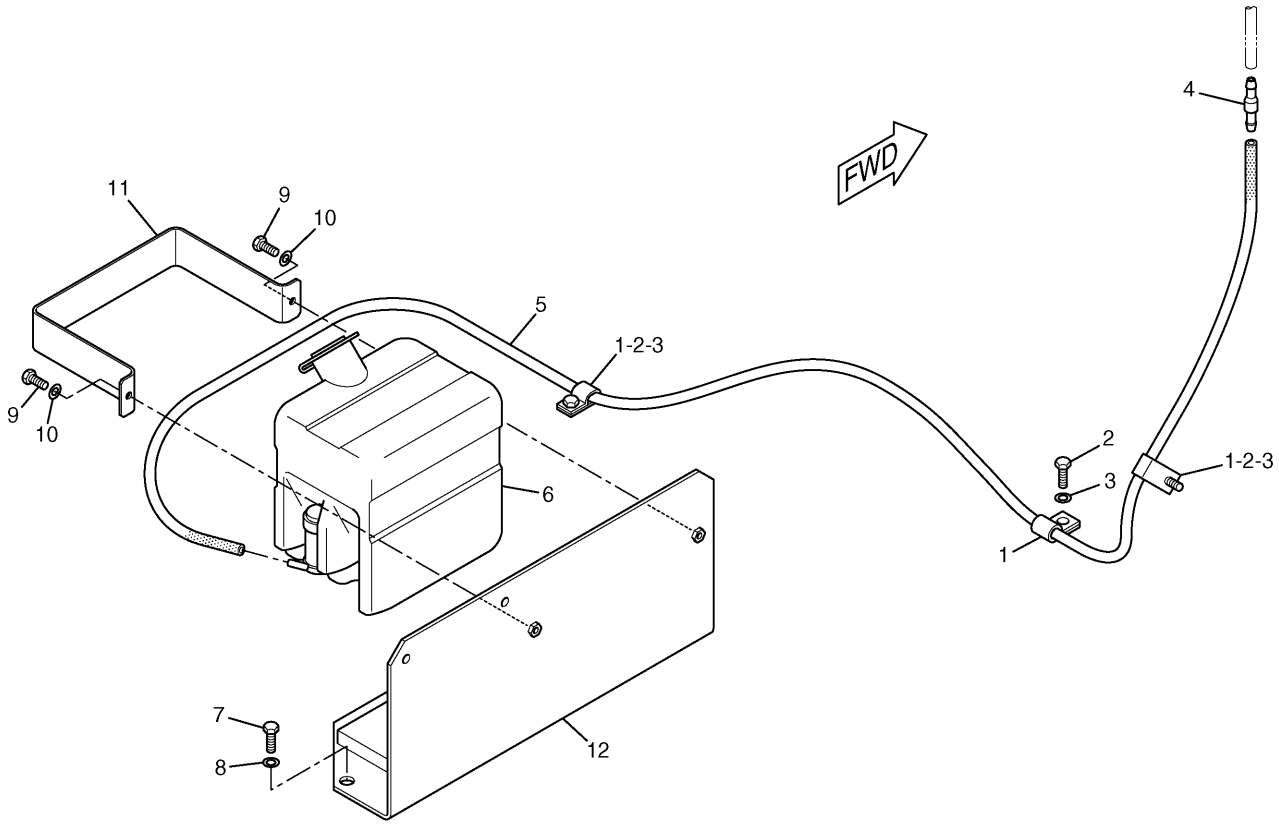

NOTE	No.	PART No.	QTY	PART NAME	NOTE	No.	PART No.	QTY	PART NAME
	1	6V-3265	3	CLIP					
	2	8T-4137	3	BOLT (L=20mm)					
	3	8T-4121	3	WASHER					
	4	7Y-3474	1	VALVE AS					
E	5	144-0195		HOSE…(190cm)					
Y	6	176-1931	1	TANK AS					
	7	8T-4192	2	BOLT (L=25mm)					
	8	8T-4223	2	WASHER					
	9	8T-4970	2	BOLT (L=14mm)					
	10	9X-8256	2	WASHER					
	11	176-1995	1	SUPPORT					
	12	189-2810	1	BRACKET AS					

E—ORDER BY THE CENTIMETER

Y—SEE SEPARATE ILLUSTRATION

H77608E 02

170-9702 WASHER GP-WINDOW

176-1931-Page570

OPERATOR STATION

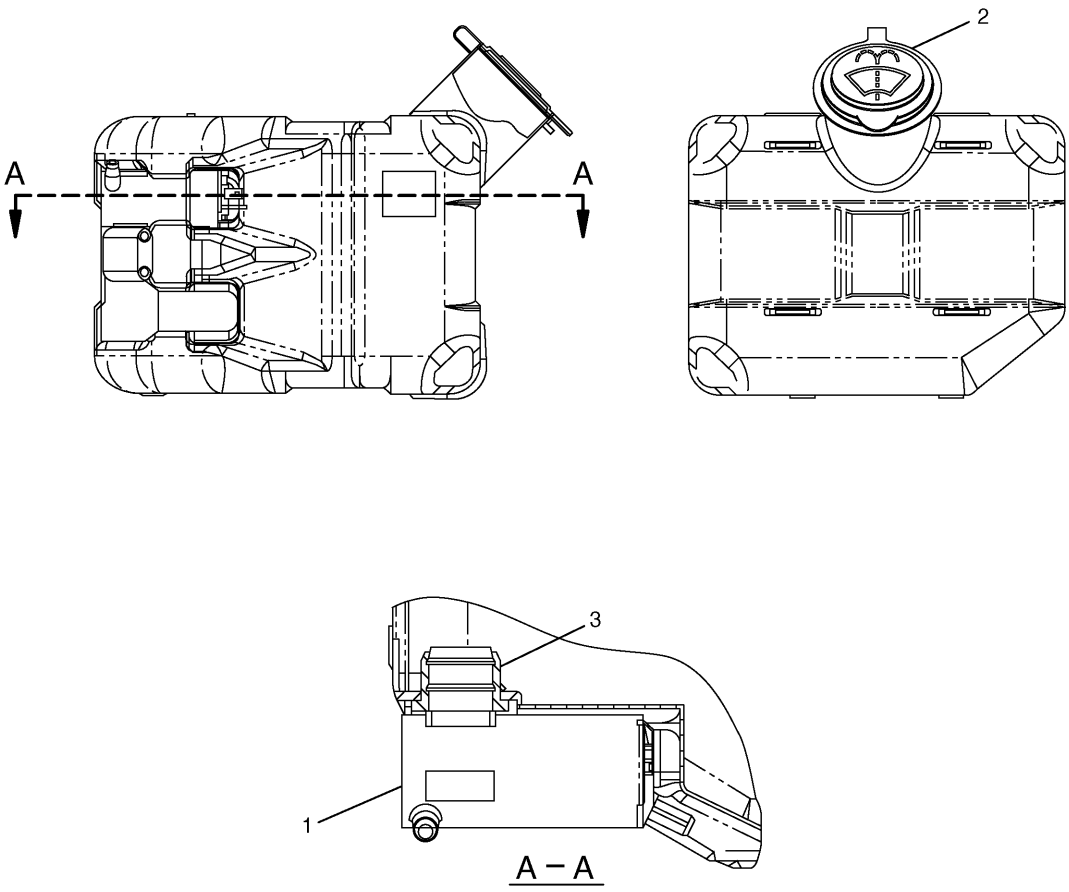

NOTE	No.	PART No.	QTY	PART NAME	NOTE	No.	PART No.	QTY	PART NAME
	1	7T-8890	1	PUMP AS					
	2	178-5431	1	CAP AS					
		3W-6399	1	PACKING					
	3	5C-8138	1	GROMMET					

H70149E 02

176-1931 TANK AS-WINDOW WASHER

Part of 170-9702-Page569

OPERATOR STATION

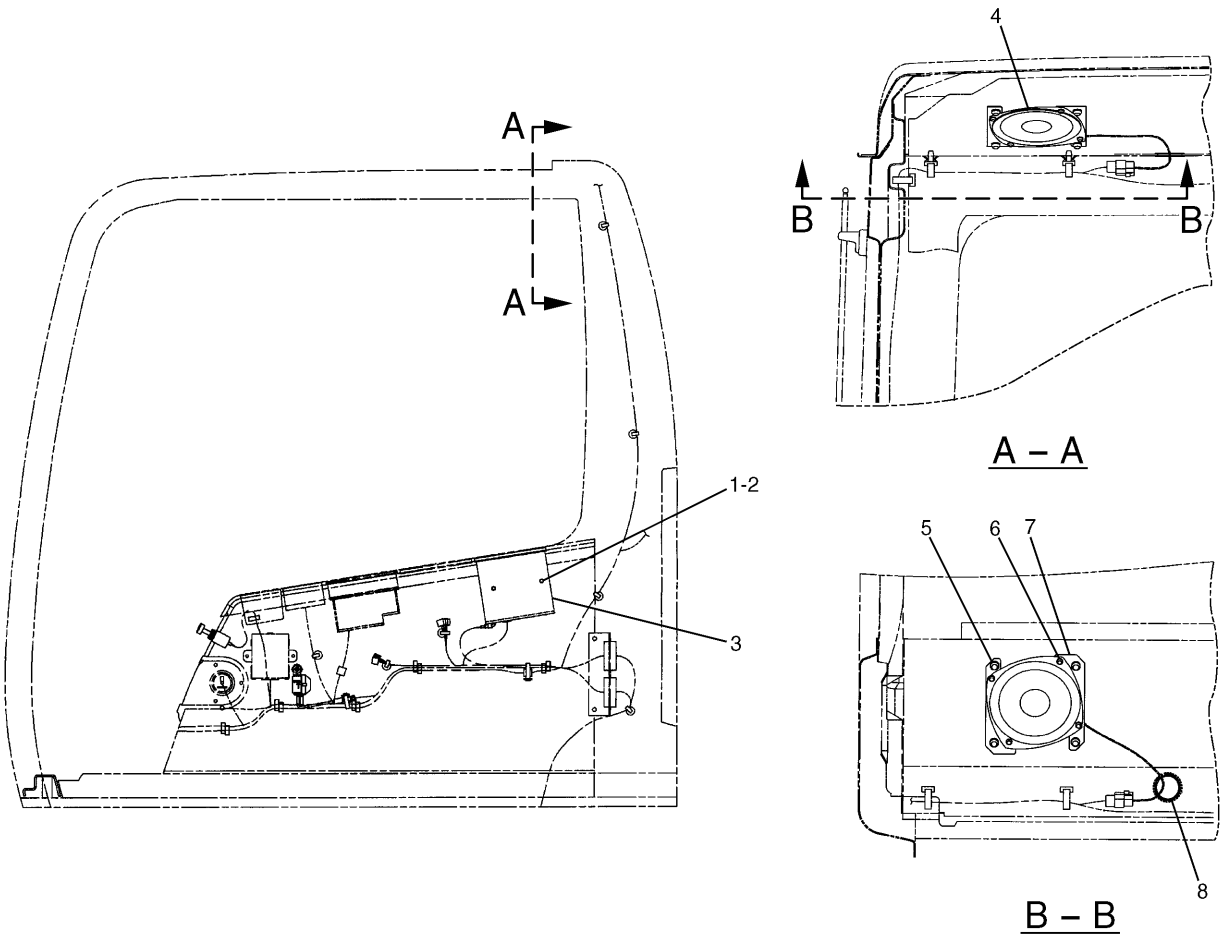

NOTE	No.	PART No.	QTY	PART NAME	NOTE	No.	PART No.	QTY	PART NAME
	1	095-0736	2	SCREW					
	2	8T-0328	2	WASHER					
	3	163-6706	1	RADIO (AM)					
	4	7Y-5505	1	SPEAKER AS					
		7Y-3951	2	TERMINAL					
	5	099-7127	4	SCREW					
	6	8C-7581	4	SCREW					
	7	116-0210	2	BRACKET AS					
E	8	101-2846		GUARD…(9cm)					

E—ORDER BY THE CENTIMETER

H77607E 03

163-6634 RADIO GP-AM
An Attachment

OPERATOR STATION

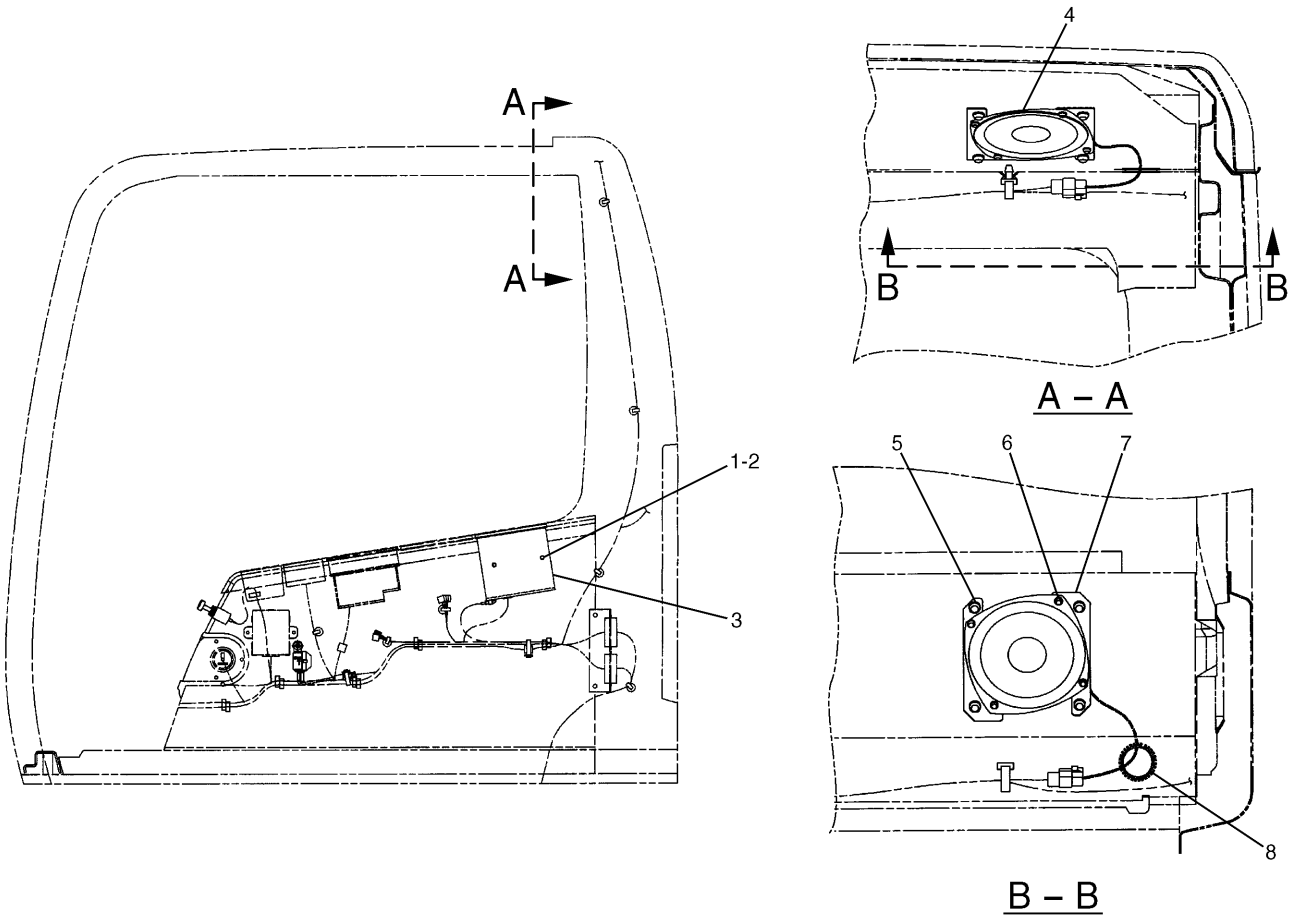

NOTE	No.	PART No.	QTY	PART NAME	NOTE	No.	PART No.	QTY	PART NAME
	1	095-0736	2	SCREW					
	2	8T-0328	2	WASHER					
	3	163-6707	1	RADIO (AM/FM)					
	4	7Y-5505	2	SPEAKER AS					
		7Y-3951	2	TERMINAL					
	5	099-7127	8	SCREW					
	6	8C-7581	8	SCREW					
	7	116-0210	4	BRACKET AS					
E	8	101-2846		GUARD…(9cm × 2)					

E—ORDER BY THE CENTIMETER

H85087E 03

163-6633 RADIO GP-AM/FM
An Attachment

OPERATOR STATION

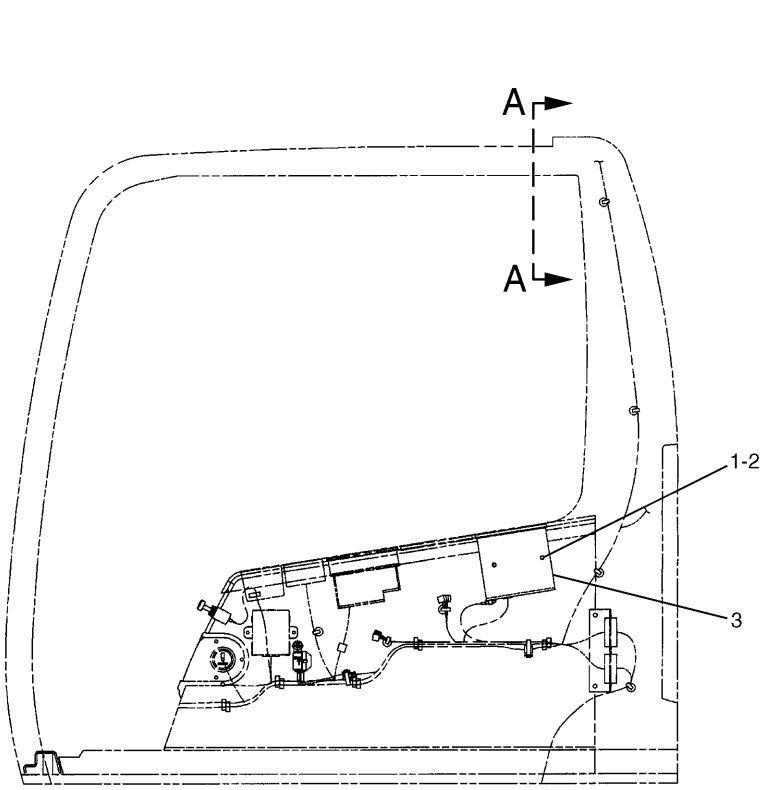

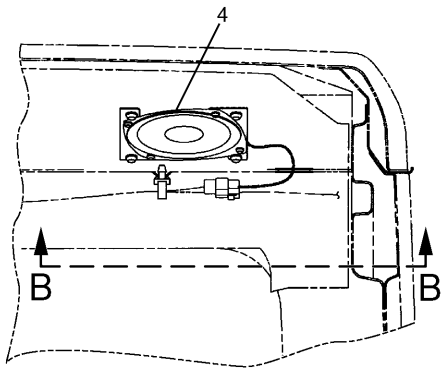

A – A

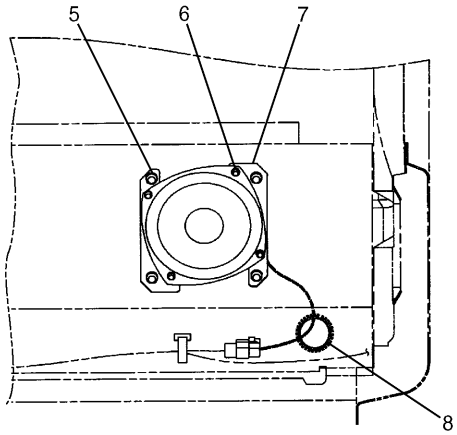

B – B

NOTE	No.	PART No.	QTY	PART NAME	NOTE	No.	PART No.	QTY	PART NAME
	1	095-0736	2	SCREW					
	2	8T-0328	2	WASHER					
	3	163-6709	1	RADIO (AM/FM)					
	4	7Y-5505	2	SPEAKER AS					
		7Y-3951	2	TERMINAL					
	5	099-7127	8	SCREW					
	6	8C-7581	8	SCREW					
	7	116-0210	4	BRACKET AS					
E	8	101-2846		GUARD…(9cm × 2)					

E—ORDER BY THE CENTIMETER

H85088E 03

163-6636 RADIO GP-AM/FM
An Attachment

OPERATOR STATION

Consists of :

			Page
1	164-0497	GUARD GP-OVERHEAD	575
1	171-7485	GUARD GP-FRONT WINDOW	576

H68609E 00

178-5549 GUARD AR-OVERHEAD
An Attachment

OPERATOR STATION

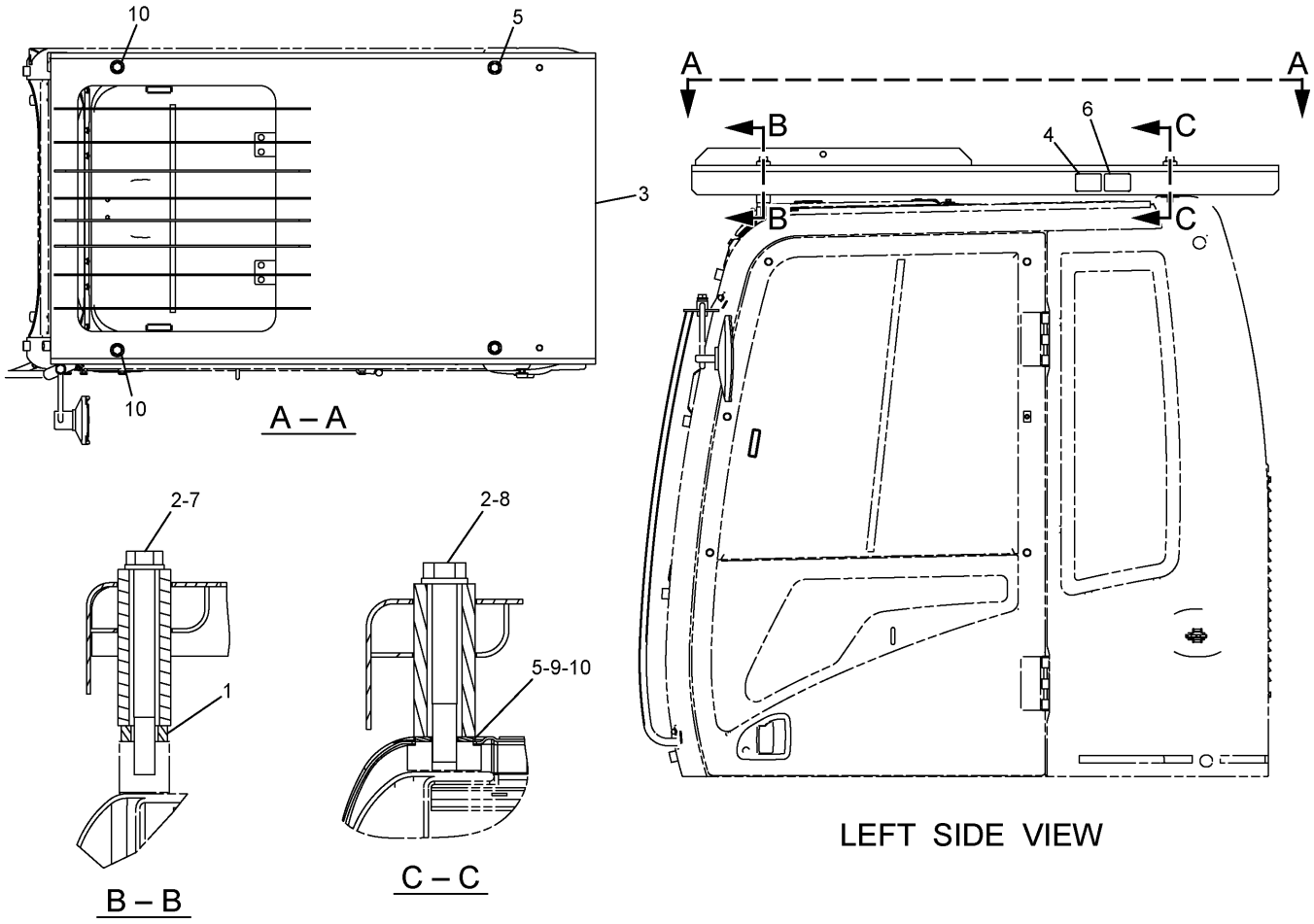

NOTE	No.	PART No.	QTY	PART NAME	NOTE	No.	PART No.	QTY	PART NAME
	1	8V-1715	2	SPACER					
	2	9X-8257	4	WASHER					
	3	167-7141	1	GUARD AS					
	4	219-0305	1	FILM (WARNING)					
B	5	090-8865	2	SPACER					
	6	298-4196	1	FILM (TOP GUARD)					
	7	7X-2559	2	BOLT (L=160mm)					
	8	8T-4174	2	BOLT (L=120mm)					
B	9	090-8865	3	SPACER					
B	10	090-8865	1	SPACER					

B—USE AS REQUIRED

H99195E 04

164-0497 GUARD GP-OVERHEAD

Part of 178-5549-Page574
An Attachment

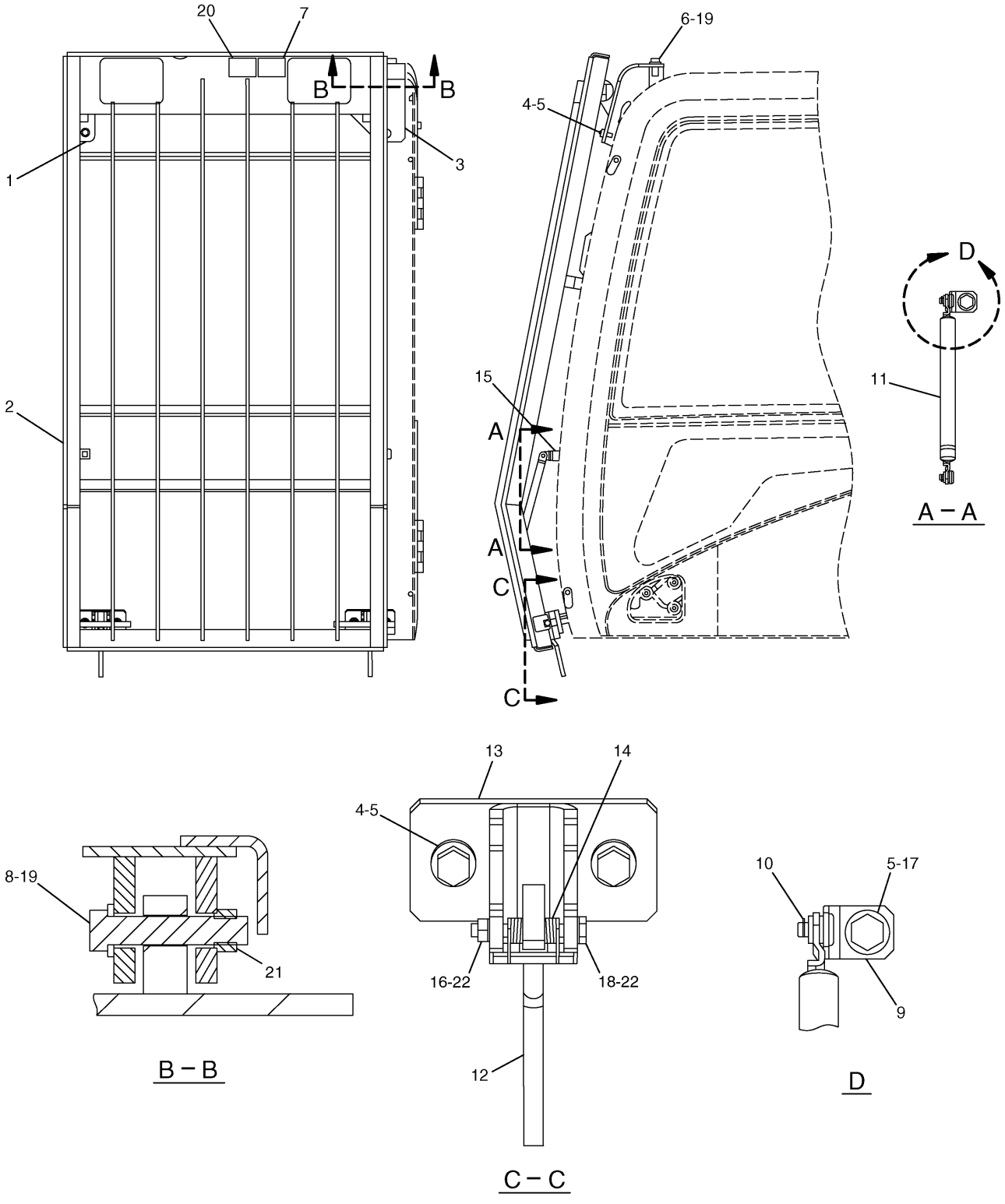

HA0199E 08

171-7485 GUARD GP-FRONT WINDOW
Part of 178-5549-Page574
An Attachment

OPERATOR STATION

NOTE	No.	PART No.	QTY	PART NAME	NOTE	No.	PART No.	QTY	PART NAME
	1	196-1571	1	SUPPORT AS					
	2	171-7486	1	GUARD AS					
	3	196-1569	1	SUPPORT AS					
	4	8T-4139	6	BOLT (L=30mm)					
	5	8T-4223	8	WASHER					
	6	7X-2553	2	BOLT (L=40mm)					
	7	298-4195	1	FILM (FRONT GUARD)					
	8	201-4534	2	PIN					
	9	176-1928	2	BRACKET AS					
	10	5D-4822	4	RING					
	11	176-1925	2	SPRING AS					
	12	196-1572	2	LATCH AS					
	13	258-0330	2	BRACKET AS					
	14	6C-8382	2	SPRING					
	16	096-4882	2	NUT					
	17	8T-4192	2	BOLT (L=25mm)					
	18	201-4535	2	PIN					
	19	9X-8257	4	WASHER					
	20	219-0305	1	FILM (WARNING)					
	21	7Y-0623	2	NUT					
	22	8T-4224	4	WASHER					

HA0199E 08

171-7485 GUARD GP-FRONT WINDOW

Part of 178-5549-Page574
An Attachment

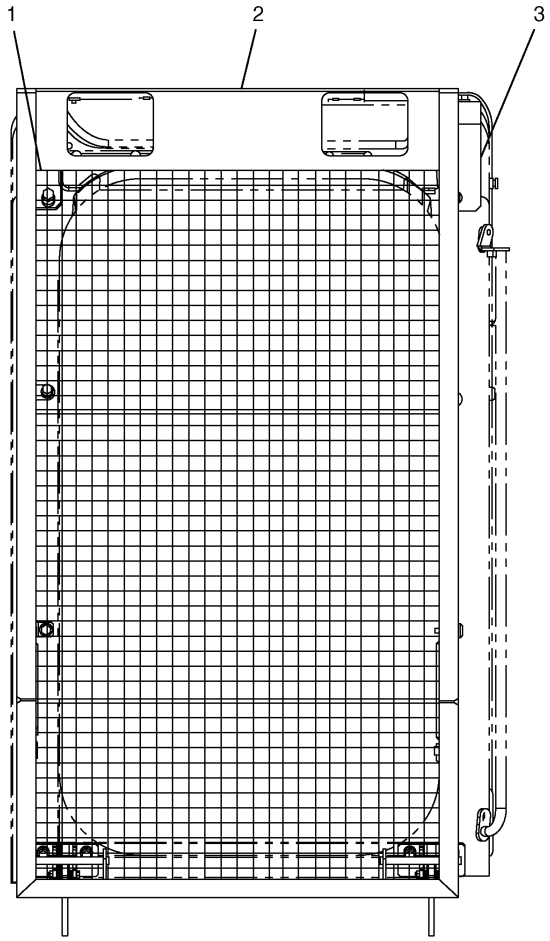

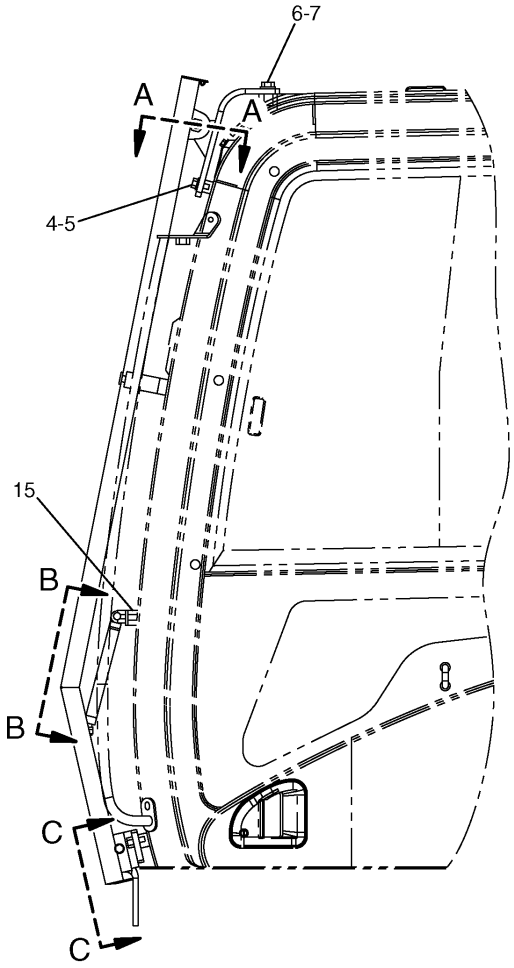

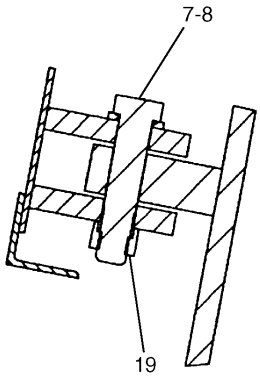

A – A

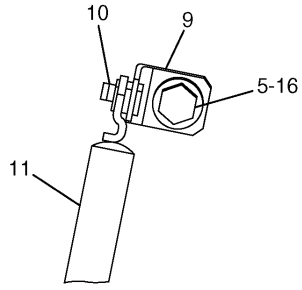

B – B

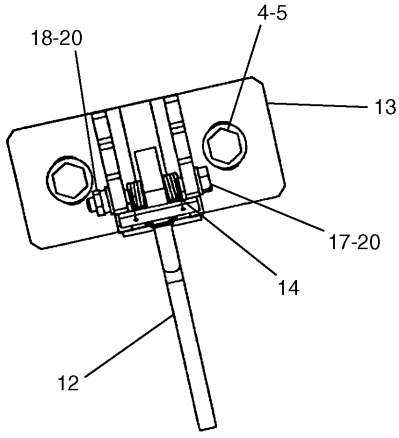

C – C

H88095E 06

164-0534 GUARD GP-FRONT WINDOW
An Attachment

OPERATOR STATION

NOTE	No.	PART No.	QTY	PART NAME	NOTE	No.	PART No.	QTY	PART NAME
	1	196-1571	1	SUPPORT AS					
	2	196-1599	1	FRAME AS					
	3	196-1569	1	SUPPORT AS					
	4	8T-4139	6	BOLT (L=30mm)					
	5	8T-4223	8	WASHER					
	6	7X-2553	2	BOLT (L=40mm)					
	7	9X-8257	4	WASHER					
	8	201-4534	2	PIN					
	9	176-1928	2	BRACKET AS					
	10	5D-4822	4	RING					
	11	207-0216	2	SPRING AS					
	12	196-1572	2	LATCH AS					
	13	258-0330	2	BRACKET AS					
	14	6C-8382	2	SPRING					
	15	4I-6602	8	BOSS					
	16	8T-4192	2	BOLT (L=25mm)					
	17	201-4535	2	PIN					
	18	096-4882	2	NUT					
	19	7Y-0623	2	NUT					
	20	8T-4224	4	WASHER					

H88095E 06

164-0534 GUARD GP-FRONT WINDOW
An Attachment

OPERATOR STATION

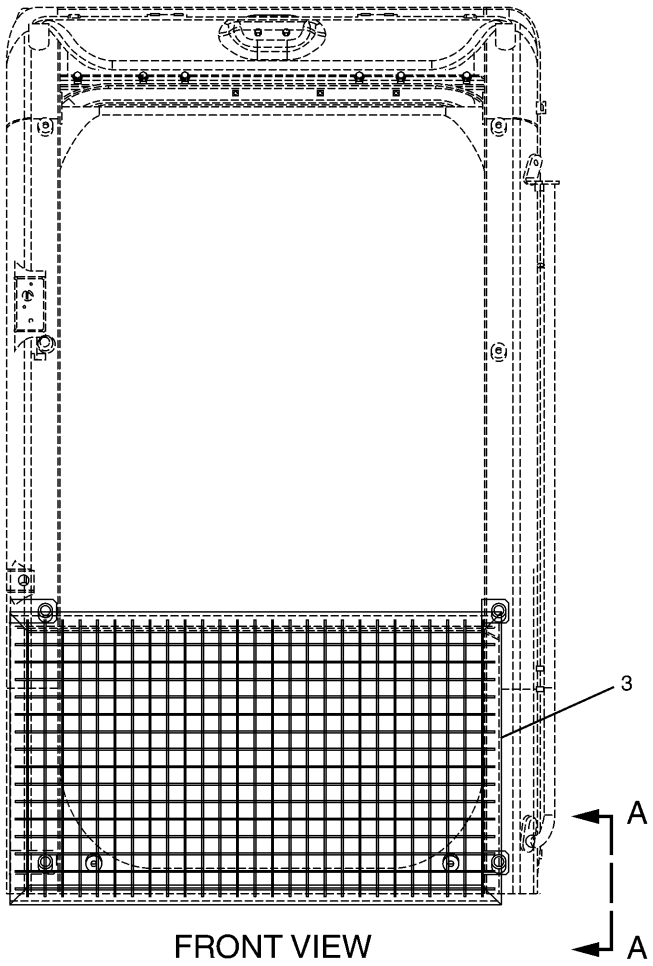

FRONT VIEW

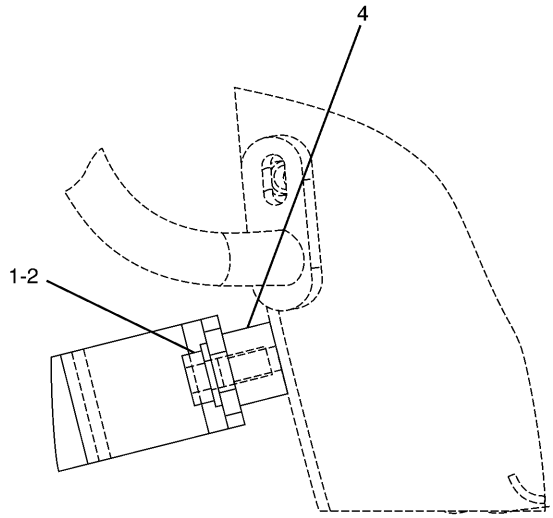

A – A

NOTE	No.	PART No.	QTY	PART NAME	NOTE	No.	PART No.	QTY	PART NAME
	1	8T-4192	4	BOLT (L=25mm)					
	2	8T-4223	4	WASHER					
	3	167-7055	1	FRAME AS					
	4	4I-6602	4	BOSS					

H74610E 02

164-0535 GUARD GP-FRONT WINDOW
An Attachment

OPERATOR STATION

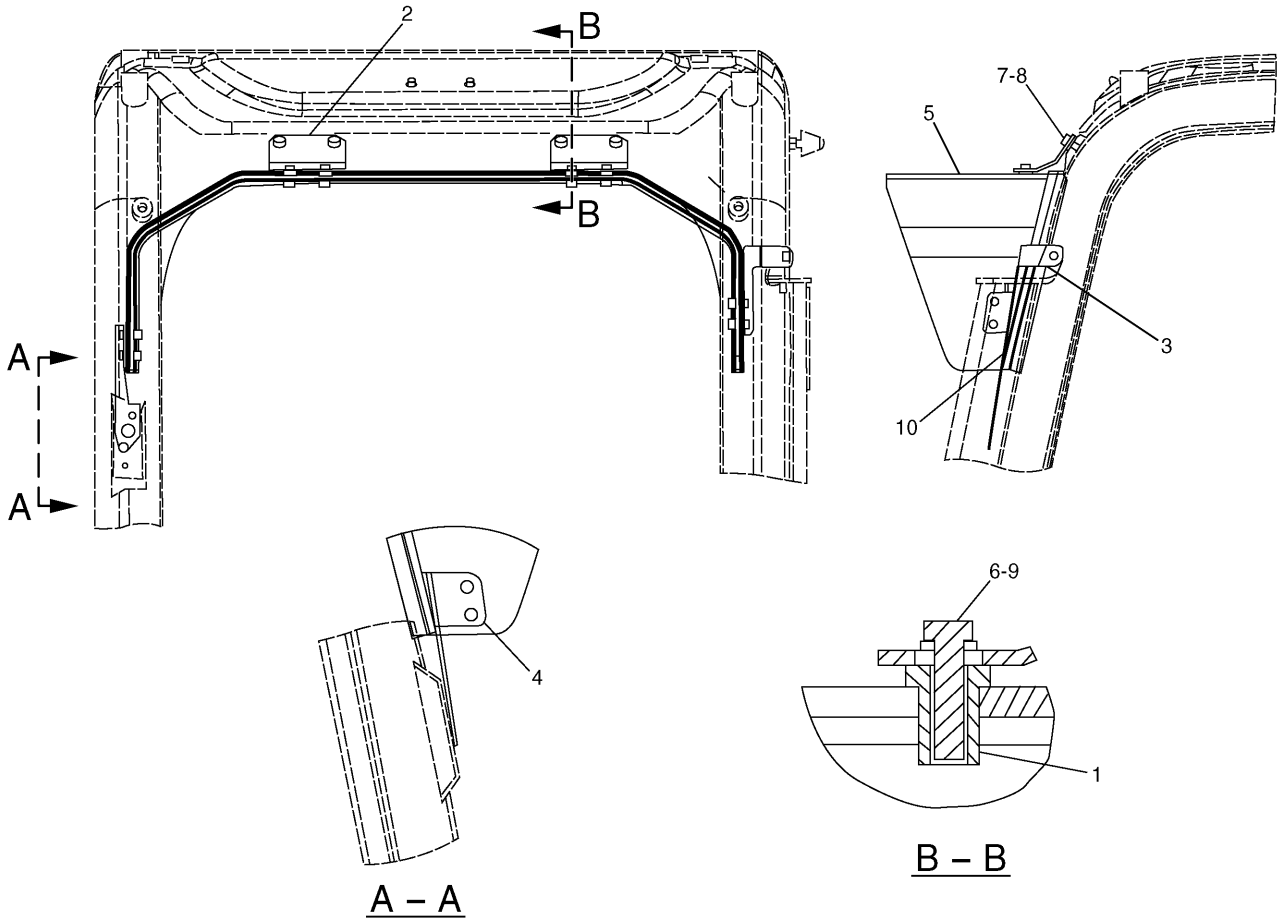

NOTE	No.	PART No.	QTY	PART NAME	NOTE	No.	PART No.	QTY	PART NAME
	1	4I-5049	8	NUT					
	2	164-0618	2	BRACKET					
	3	164-0619	1	BRACKET					
	4	164-0620	1	BRACKET					
	5	164-0621	1	VISOR					
	6	6V-7357	8	BOLT (L=25mm)					
	7	8T-4189	4	BOLT (L=20mm)					
	8	8T-4224	4	WASHER					
	9	9X-8256	8	WASHER					
D	10	5P-8292		SEAL…(1.4m)					

D—ORDER BY THE METER

H72014E 03

161-3750 VISOR GP-PROTECTION-RAIN
An Attachment

OPERATOR STATION

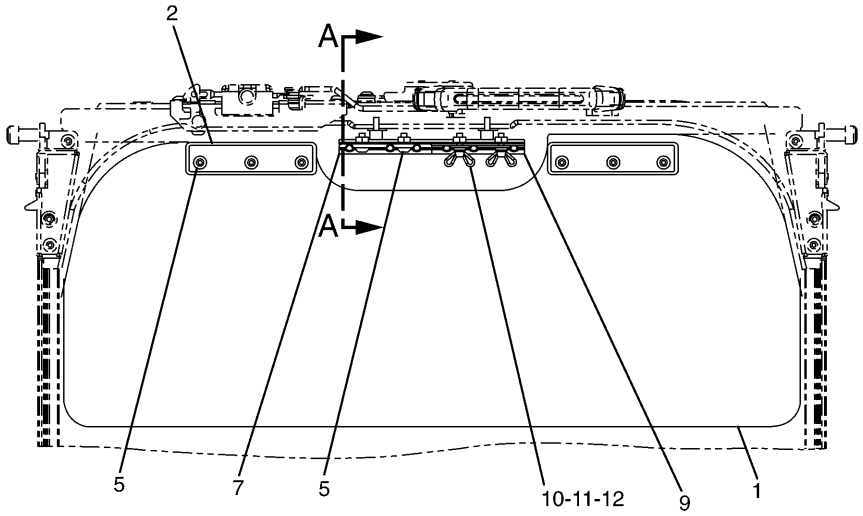

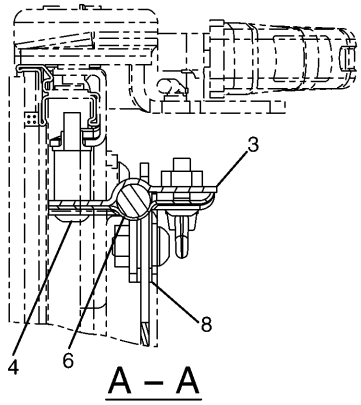

A – A

NOTE	No.	PART No.	QTY	PART NAME	NOTE	No.	PART No.	QTY	PART NAME
	1	210-5836	1	VISOR					
	2	210-5837	2	STRIP					
	3	164-0639	1	BRACKET AS					
	4	9X-2046	2	SCREW					
	5	9X-2044	8	SCREW					
	6	210-5834	1	BRACKET AS					
	7	210-5828	1	PLATE					
	8	210-5838	4	PACKING					
	9	210-5827	1	PLATE					
	10	210-5829	2	BOLT					
	11	8H-3481	2	LOCKWASHER					
	12	9X-8256	2	WASHER					

H78643E 04

161-3751 VISOR GP-SUN
An Attachment

OPERATOR STATION

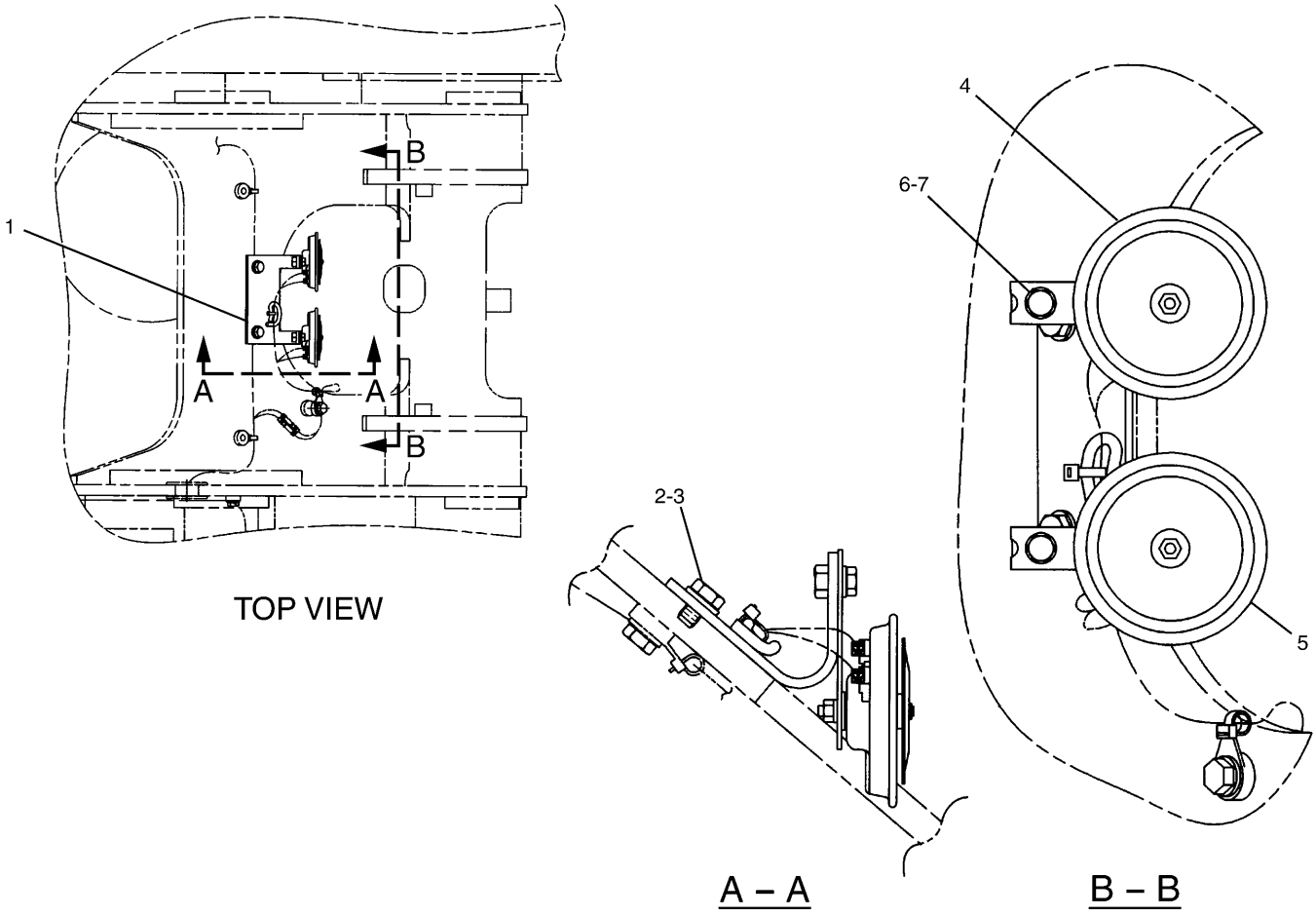

NOTE	No.	PART No.	QTY	PART NAME	NOTE	No.	PART No.	QTY	PART NAME
	1	170-6941	1	BRACKET AS					
	2	8T-4191	2	BOLT (L=16mm)					
	3	8T-4121	2	WASHER					
	4	7Y-3919	1	HORN AS					
		095-0826	2	LOCKWASHER					
		095-7930	2	SCREW					
	5	7Y-3920	1	HORN AS					
		095-0826	2	LOCKWASHER					
		095-7930	2	SCREW					
	6	8T-4200	2	BOLT (L=16mm)					
	7	8T-4224	2	WASHER					

H71531E 01

170-6940 HORN GP-ELECTRIC

OPERATOR STATION

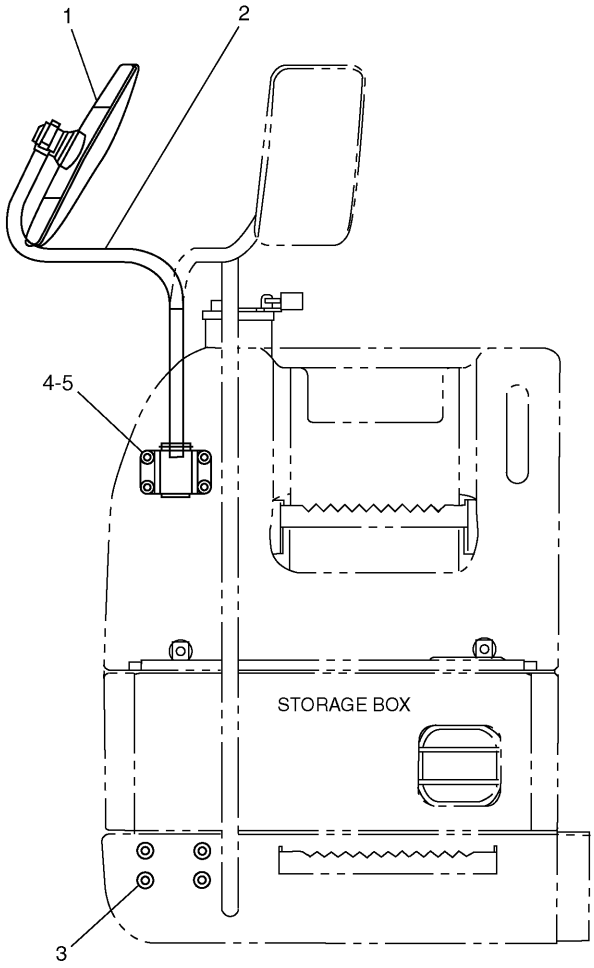

NOTE	No.	PART No.	QTY	PART NAME	NOTE	No.	PART No.	QTY	PART NAME
	1	137-2270	1	MIRROR					
	2	165-3065	1	BAR AS					
	3	177-6315	4	PLUG					
	4	8T-4192	4	BOLT (L=25mm)					
	5	2M-0849	4	WASHER					

H70124E 07

142-3836 MIRROR GP-REAR VIEW

OPERATOR STATION

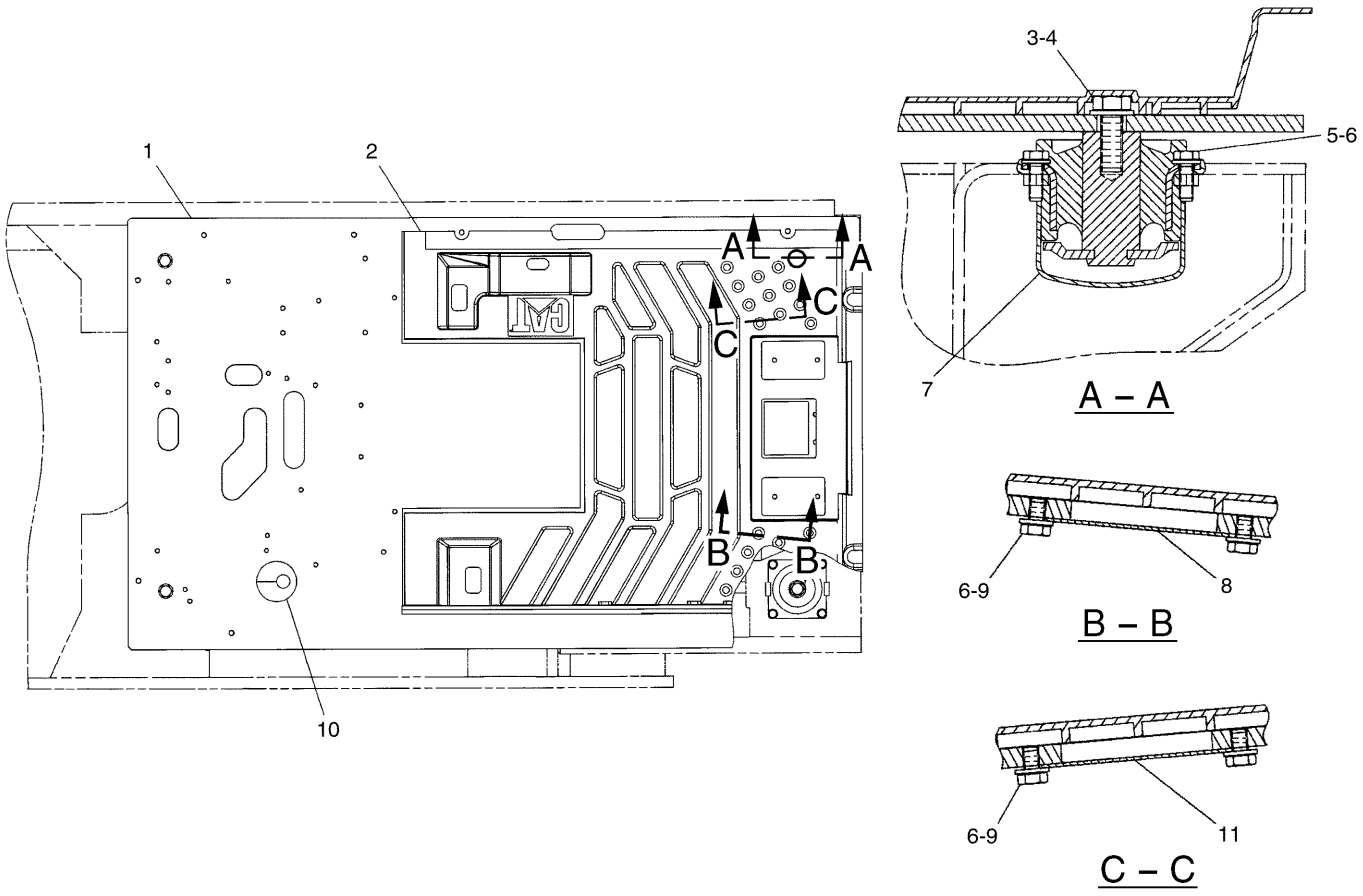

NOTE	No.	PART No.	QTY	PART NAME	NOTE	No.	PART No.	QTY	PART NAME
	1	164-0572	1	PLATFORM AS					
	2	164-0576	1	FLOORMAT					
	3	7X-2553	4	BOLT (L=40mm)					
	4	9X-8257	4	WASHER					
	5	8T-4195	16	BOLT (L=30mm)					
	6	8T-4121	20	WASHER					
	7	196-1601	4	MOUNT AS					
	8	4I-3266	1	STRIP					
	9	8T-4191	4	BOLT (L=16mm)					
	10	164-0616	1	GROMMET					
	11	161-3717	1	STRIP					

H86456E 01

196-1608 PLATFORM GP-OPERATOR
S/N CAE 01201-01893

OPERATOR STATION

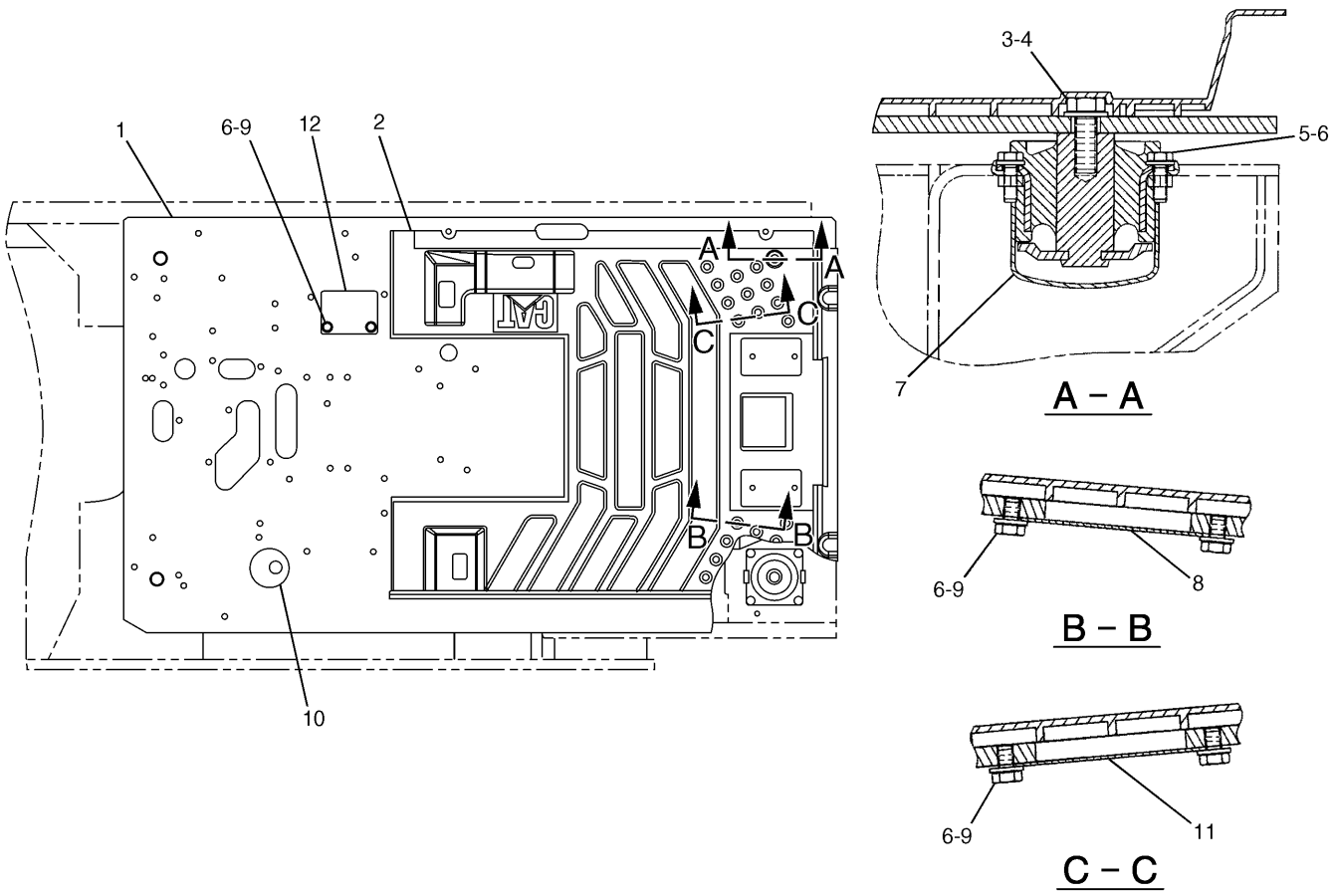

NOTE	No.	PART No.	QTY	PART NAME	NOTE	No.	PART No.	QTY	PART NAME
	1	210-5796	1	PLATFORM AS					
	2	164-0576	1	FLOORMAT					
	3	7X-2553	4	BOLT (L=40mm)					
	4	9X-8257	4	WASHER					
	5	8T-4195	16	BOLT (L=30mm)					
	6	8T-4121	22	WASHER					
	7	196-1601	4	MOUNT AS					
	8	4I-3266	1	STRIP					
	9	8T-4191	6	BOLT (L=16mm)					
	10	164-0616	1	GROMMET					
	11	161-3717	1	STRIP					
	12	201-4398	1	STRIP					

H97407E 01

229-1108 PLATFORM GP-OPERATOR
S/N CAE 01894-Up

MEMORANDA

OPERATOR STATION

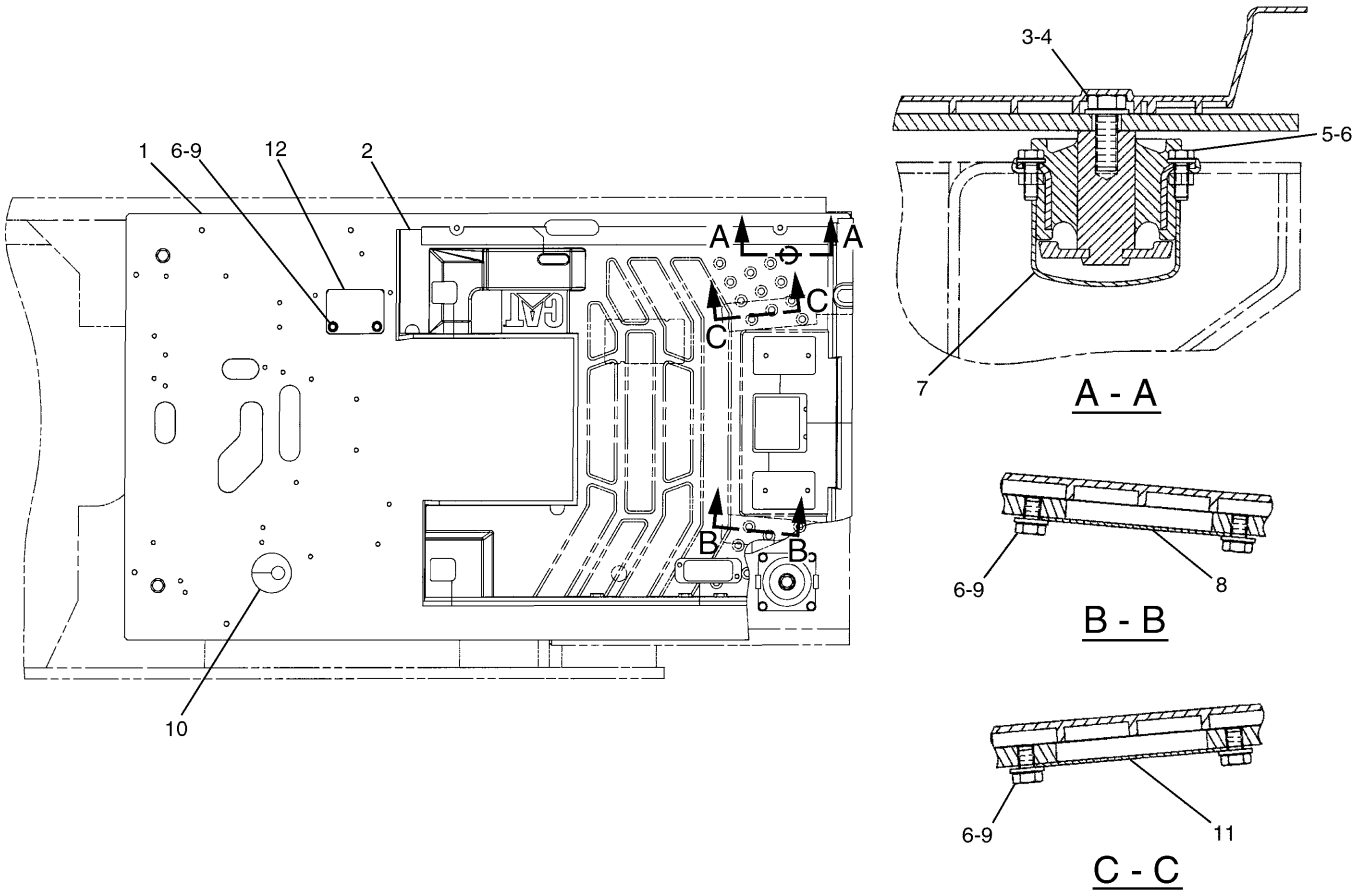

NOTE	No.	PART No.	QTY	PART NAME	NOTE	No.	PART No.	QTY	PART NAME
	1	171-7375	1	PLATFORM AS					
	2	189-2667	1	FLOORMAT					
	3	7X-2553	4	BOLT (L=40mm)					
	4	9X-8257	4	WASHER					
	5	8T-4195	16	BOLT (L=30mm)					
	6	8T-4121	22	WASHER					
	7	196-1601	4	MOUNT AS					
	8	4I-3266	1	STRIP					
	9	8T-4191	6	BOLT (L=16mm)					
	10	164-0616	1	GROMMET					
	11	161-3717	1	STRIP					
	12	201-4398	1	STRIP					

H75245E 04

171-7344 PLATFORM GP-OPERATOR

S/N CAE 01201-01893
Part of 151-1493-Page634,183-1476-Page635,151-1494-Page636
An Attachment

OPERATOR STATION

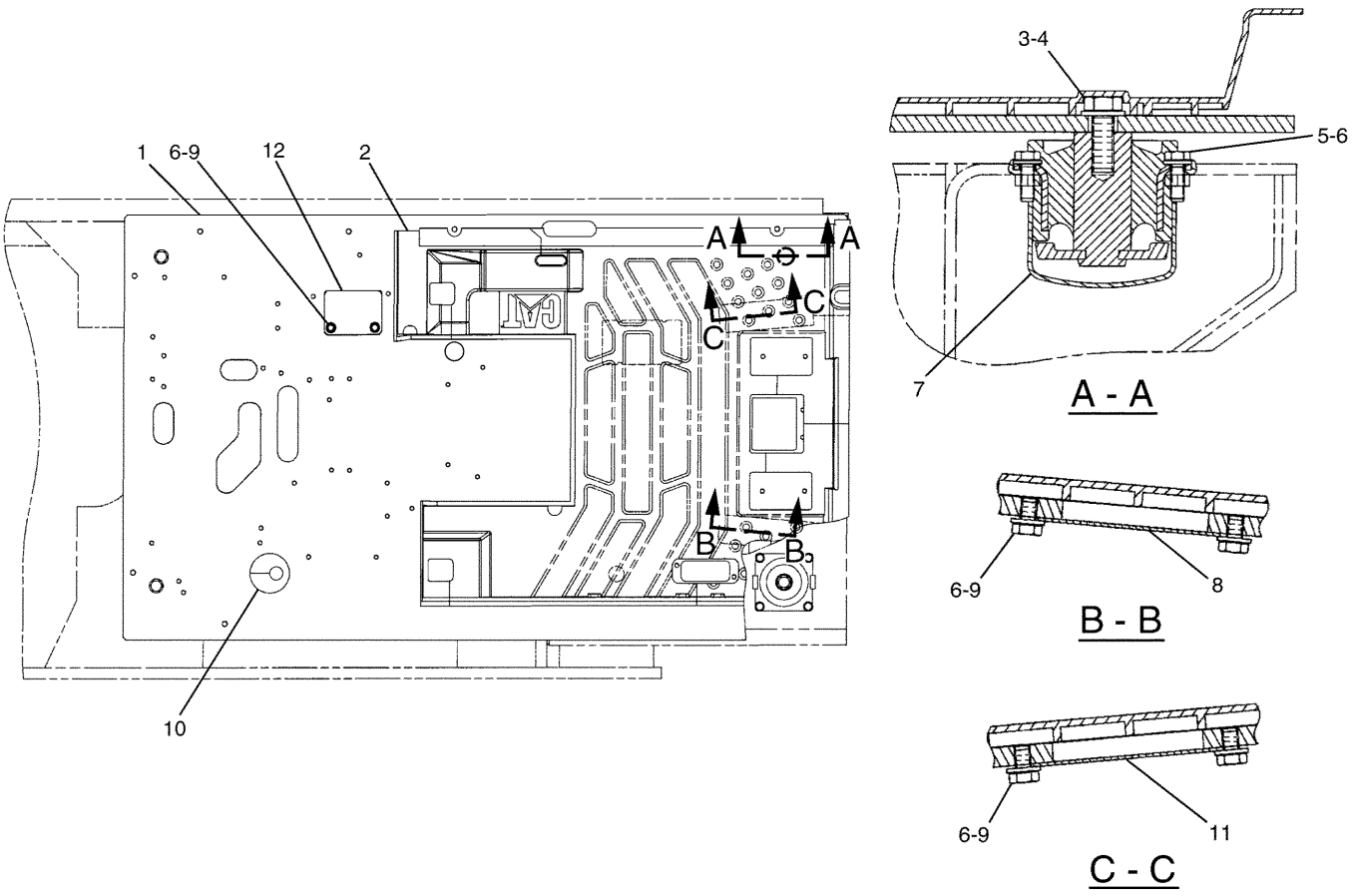

NOTE	No.	PART No.	QTY	PART NAME	NOTE	No.	PART No.	QTY	PART NAME
	1	244-5337	1	PLATFORM AS					
	2	189-2667	1	FLOORMAT					
	3	7X-2553	4	BOLT (L=40mm)					
	4	9X-8257	4	WASHER					
	5	8T-4195	16	BOLT (L=30mm)					
	6	8T-4121	22	WASHER					
	7	196-1601	4	MOUNT AS					
	8	4I-3266	1	STRIP					
	9	8T-4191	6	BOLT (L=16mm)					
	10	164-0616	1	GROMMET					
	11	161-3717	1	STRIP					
	12	201-4398	1	STRIP					

H87250E 00

244-5336 PLATFORM GP-OPERATOR

S/N CAE 01894-Up
Part of 151-1493-Page634.01,183-1476-Page635.01,151-1494-Page637
An Attachment

MEMORANDA

OPERATOR STATION

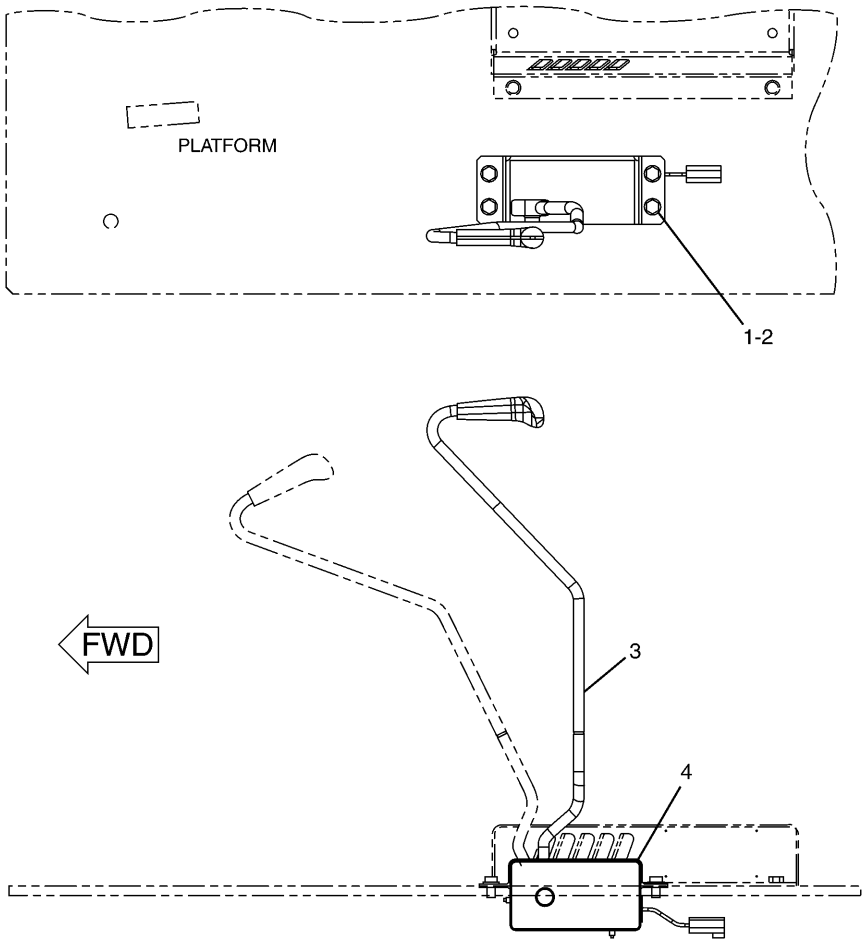

NOTE	No.	PART No.	QTY	PART NAME	NOTE	No.	PART No.	QTY	PART NAME
	1	8T-4137	4	BOLT (L=20mm)					
	2	8T-4121	4	WASHER					
Y	3	167-7080	1	LEVER GP					
	4	178-5508	1	COVER					

Y—SEE SEPARATE ILLUSTRATION

H73544E 06

161-3752 LEVER GP
167-7080-Page588

OPERATOR STATION

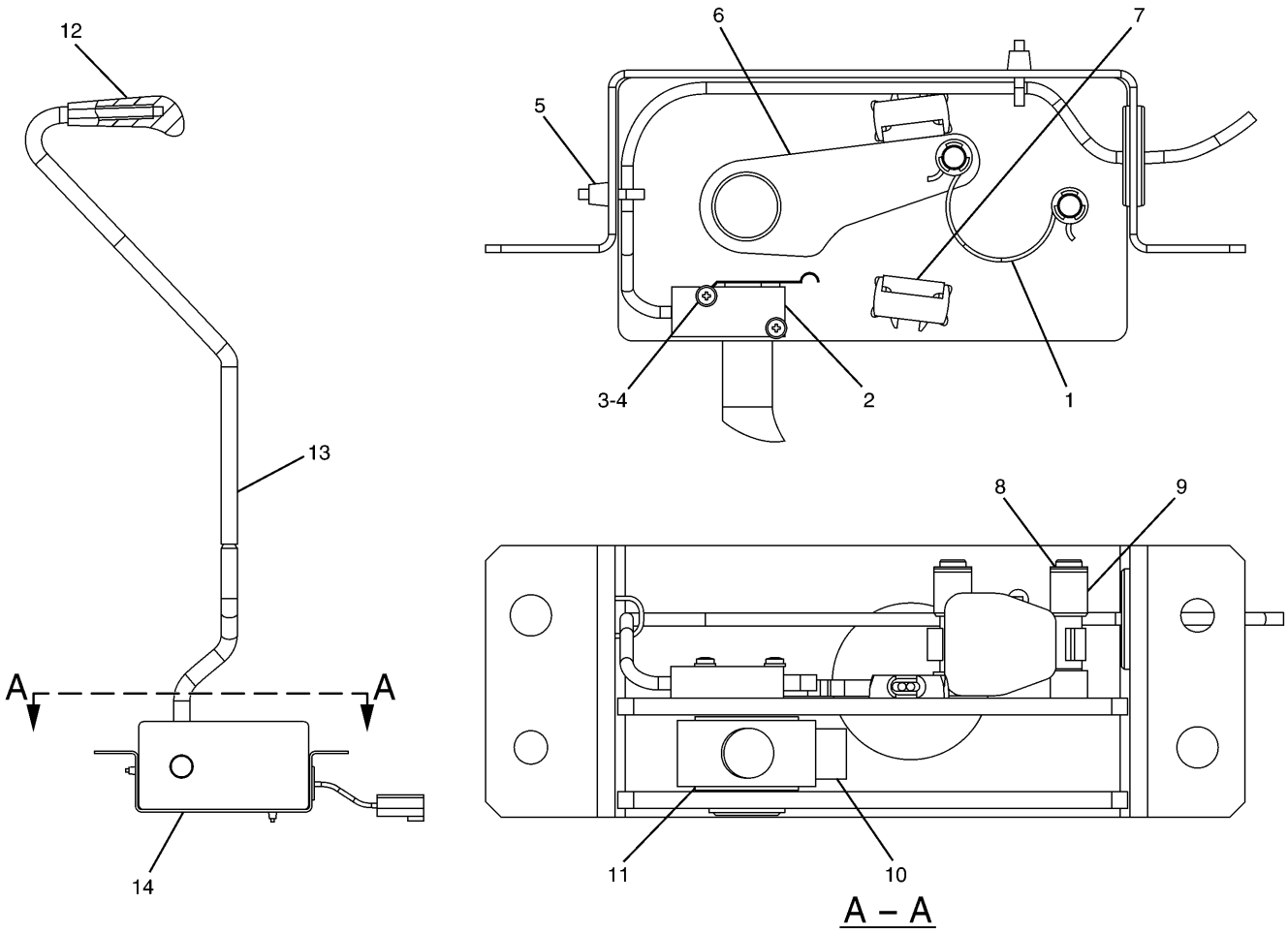

NOTE	No.	PART No.	QTY	PART NAME	NOTE	No.	PART No.	QTY	PART NAME
	1	178-5517	1	SPRING					
Y	2	163-6785	1	SWITCH AS					
	3	120-9027	2	SCREW					
	4	096-5962	2	WASHER					
	5	3S-2093	2	STRAP					
	6	178-5504	1	PLATE AS					
	7	178-5651	2	STOPPER					
	8	5D-4822	2	RING					
	9	178-5649	2	SPACER					
	10	9X-6032	1	BOLT (L=30mm)					
	11	178-5518	2	BUSHING					
	12	178-5528	1	KNOB					
	13	196-1703	1	LEVER AS					
	14	178-5509	1	BOX AS					

Y—SEE SEPARATE ILLUSTRATION

H73545E 02

167-7080 LEVER GP

Part of 161-3752-Page587
163-6785-Page191

OPERATOR STATION

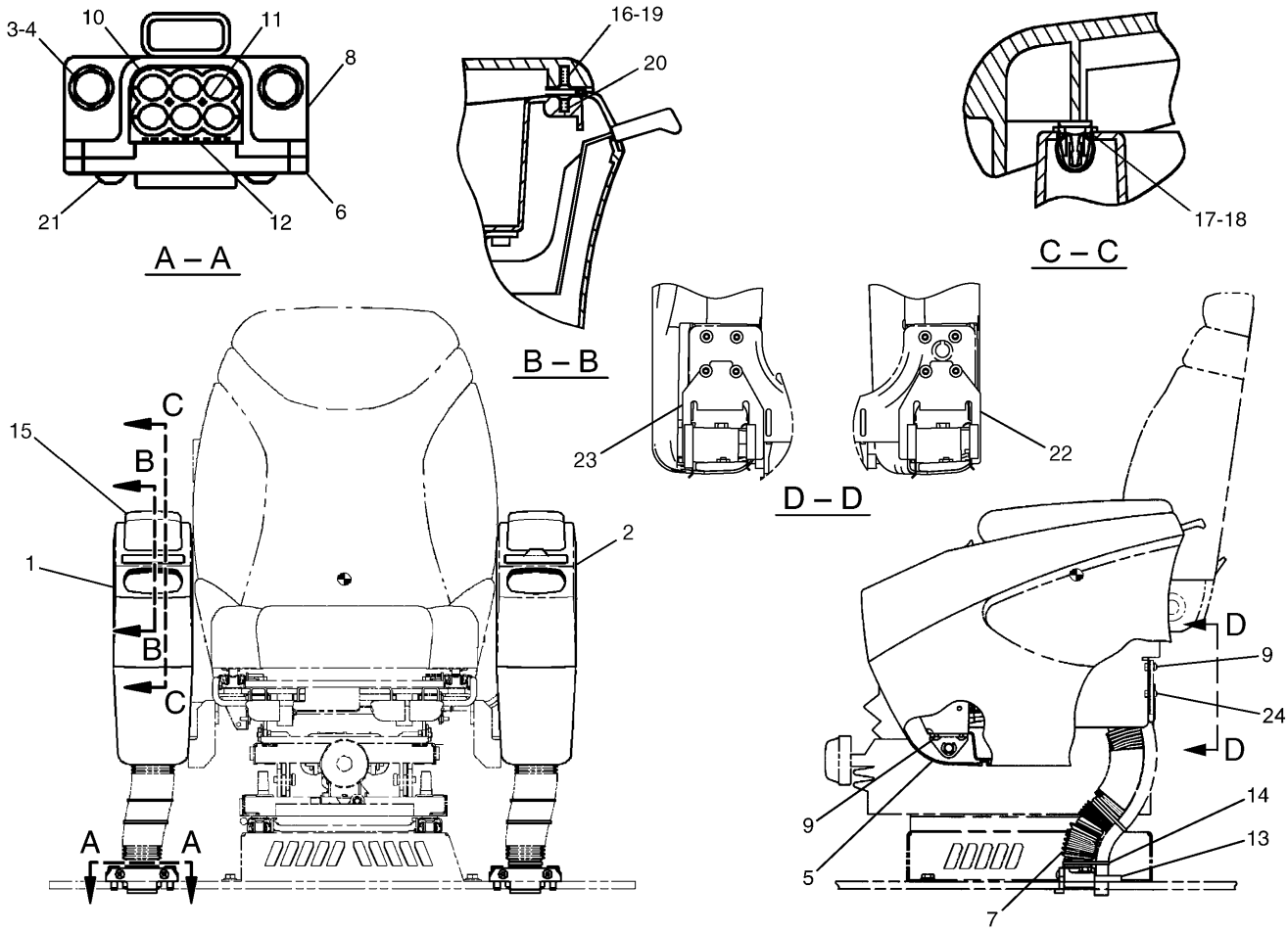

NOTE	No.	PART No.	QTY	PART NAME	NOTE	No.	PART No.	QTY	PART NAME
Y	1	161-3760	1	CONSOLE GP		21	9X-2045	4	SCREW
Y	2	161-3759	1	CONSOLE GP		22	273-5302	1	SUPPORT AS
	3	8T-4195	4	BOLT (L=30mm)		23	273-5301	1	SUPPORT AS
	4	8T-4121	4	WASHER		24	9X-2044	4	SCREW
	5	178-5523	2	COVER					
	6	176-1914	2	SUPPORT					
	7	176-1913	2	GUARD					
	8	176-1915	2	SUPPORT					
	9	9X-2043	12	SCREW					
	10	176-1916	2	GROMMET					
	11	178-5423	2	GROMMET					
	12	178-5422	2	GROMMET					
	13	185-8161	2	INSULATOR					
	14	7K-1181	6	STRAP					
	15	178-5408	1	CUSHION AS					
	16	178-5426	3	SCREW					
	17	178-5628	1	STRIKER					
	18	185-8287	2	SCREW					
	19	178-5627	1	HINGE					
	20	185-8162	2	SCREW					

Y—SEE SEPARATE ILLUSTRATION

H91096E 14

161-3758 CONSOLE GP-OPERATOR

161-3759-Page590,161-3760-Page591

OPERATOR STATION

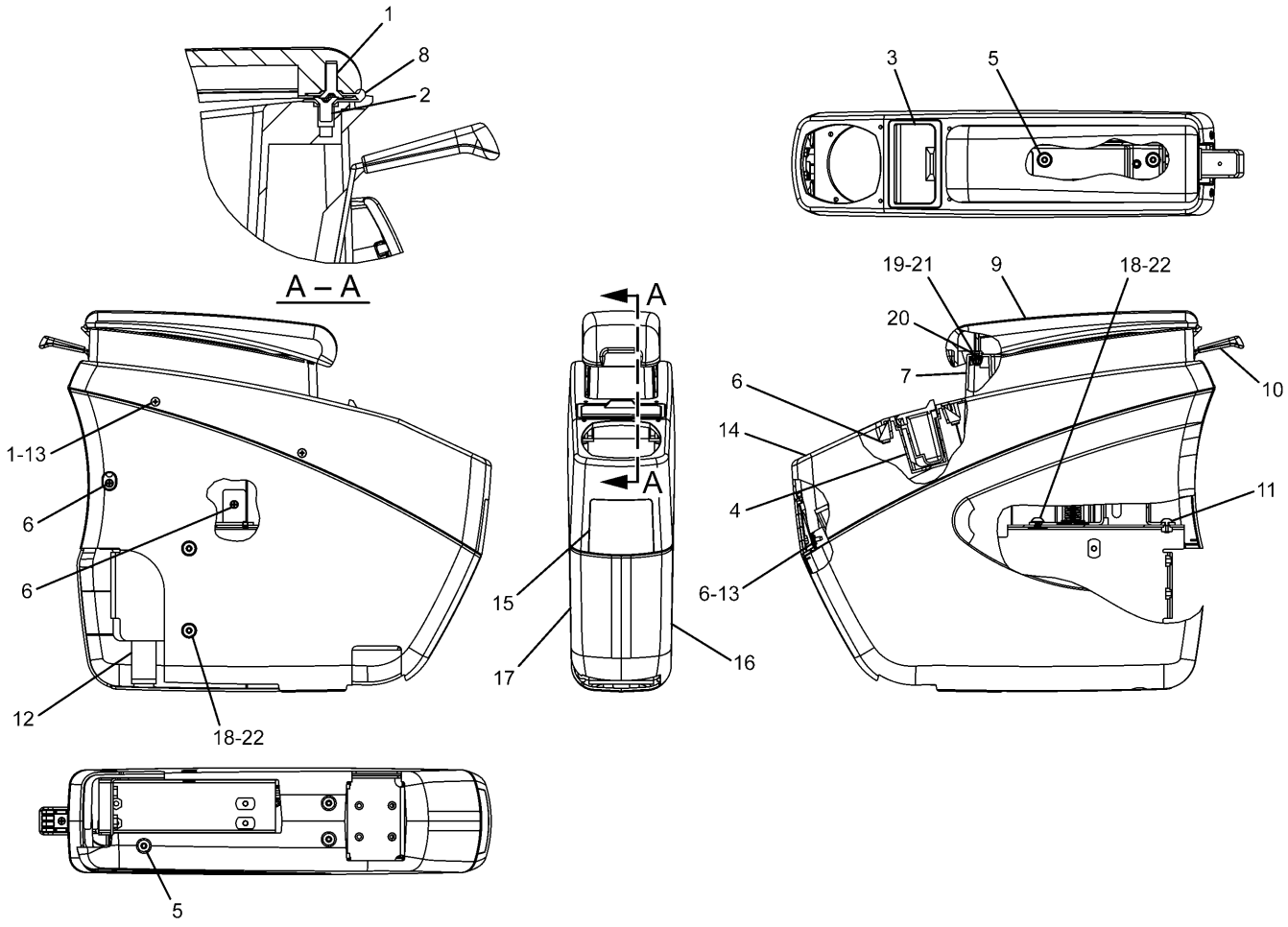

NOTE	No.	PART No.	QTY	PART NAME	NOTE	No.	PART No.	QTY	PART NAME
	1	178-5426	9	SCREW		21	185-8287	2	SCREW
	2	185-8162	2	SCREW		22	2Y-5687	4	WASHER
	3	178-5530	1	ASHTRAY					
	4	178-5531	1	CASE					
	5	128-2135	5	SCREW					
	6	119-5026	8	SCREW					
	7	284-4566	1	CASE					
	8	178-5627	1	HINGE					
	9	178-5408	1	CUSHION AS					
Y	10	178-5524	1	LINK AS					
	11	9X-2042	2	SCREW					
	12	178-5401	1	SUPPORT AS					
	13	155-7099	8	NUT					
	14	178-5521	1	COVER					
	15	178-5522	1	COVER					
	16	178-5520	1	COVER					
	17	178-5519	1	COVER					
	18	7Y-9096	4	SCREW					
	19	178-5628	1	STRIKER					
	20	178-5629	1	LATCH					

Y—SEE SEPARATE ILLUSTRATION

H97408E 08

161-3759 CONSOLE GP

Left Hand

Part of 161-3758-Page589
178-5524-Page592

OPERATOR STATION

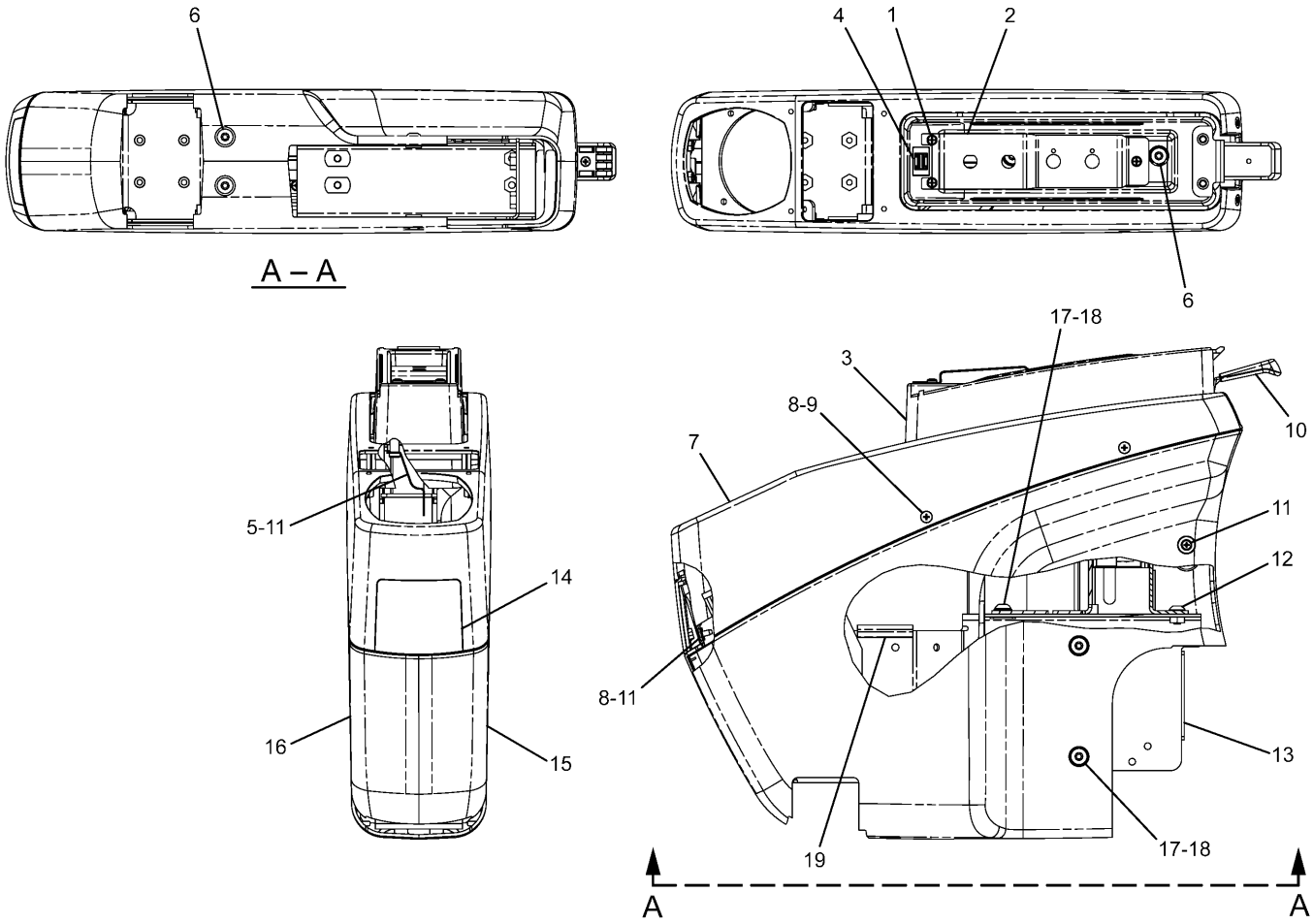

NOTE	No.	PART No.	QTY	PART NAME	NOTE	No.	PART No.	QTY	PART NAME
	1	185-8163	3	SCREW					
	2	178-5632	1	BRACKET					
	3	284-4567	1	CASE					
	4	178-5629	1	LATCH					
	5	196-1565	1	BRACKET					
	6	128-2135	4	SCREW					
	7	178-5548	1	COVER					
	8	155-7099	10	NUT					
	9	178-5426	8	SCREW					
Y	10	178-5524	1	LINK AS					
	11	119-5026	5	SCREW					
	12	9X-2042	2	SCREW					
	13	178-5400	1	SUPPORT AS					
	14	178-5522	1	COVER					
	15	178-5529	1	COVER					
	16	178-5519	1	COVER					
	17	7Y-9096	6	SCREW					
	18	2Y-5687	6	WASHER					
E	19	201-4441		SEAL…(5cm)					

E—ORDER BY THE CENTIMETER

Y—SEE SEPARATE ILLUSTRATION

H97409E 09

161-3760 CONSOLE GP

Right Hand

Part of 161-3758-Page589

178-5524-Page592

OPERATOR STATION

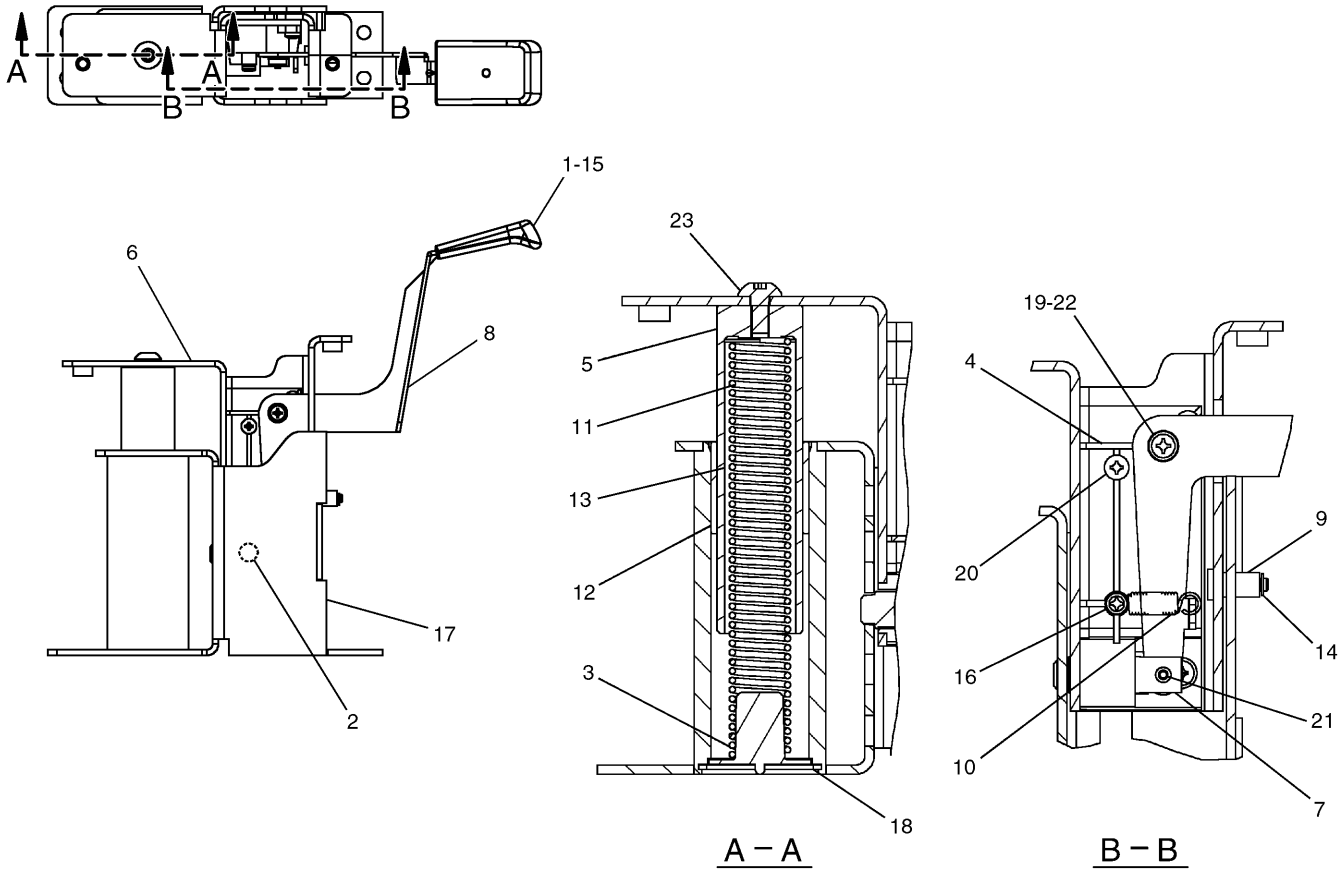

NOTE	No.	PART No.	QTY	PART NAME	NOTE	No.	PART No.	QTY	PART NAME
	1	178-5532	1	KNOB		21	8C-5899	1	PIN
	2	095-0736	1	SCREW		22	8T-0328	1	WASHER
	3	178-5633	1	GROMMET		23	9X-2042	1	SCREW
	4	178-5634	1	SUPPORT					
	5	185-8169	1	SHAFT					
	6	185-8257	1	SUPPORT AS					
	7	185-8260	1	PIN					
	8	185-8261	1	LEVER					
	9	185-8262	1	SPACER					
	10	185-8263	1	SPRING					
	11	185-8264	1	SPRING					
	12	185-8265	1	BEARING					
	13	185-8266	1	SHEET					
	14	185-8285	1	NUT					
	15	185-8286	1	SCREW					
	16	185-8287	1	SCREW					
	17	178-5630	1	SUPPORT AS					
	18	096-0015	1	RING					
	19	119-5026	1	SCREW					
	20	6V-5210	3	SCREW					

H74620E 01

178-5524 LINK AS

Part of 161-3759-Page590,161-3760-Page591

OPERATOR STATION

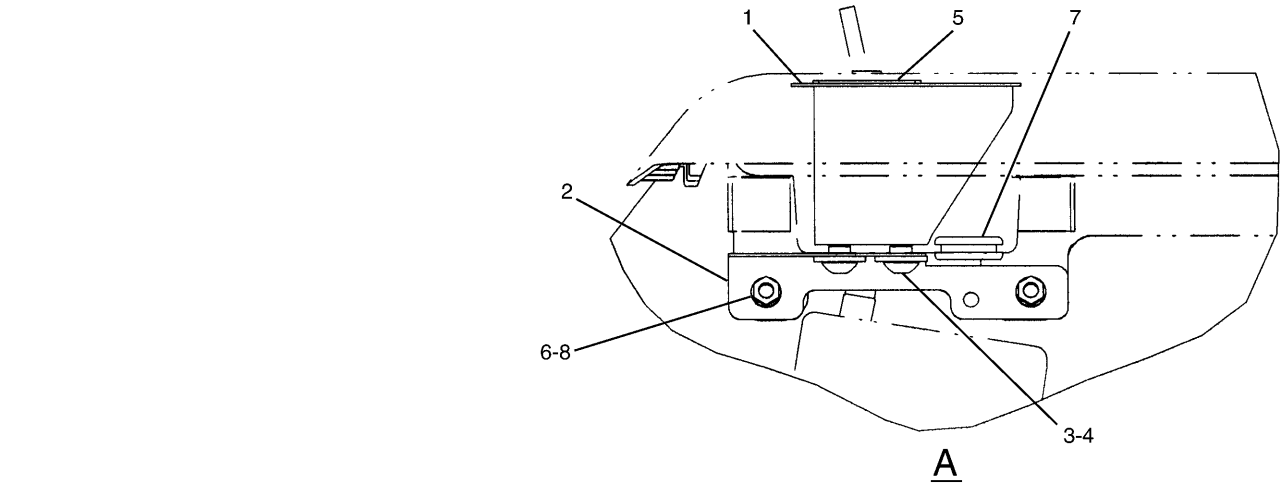

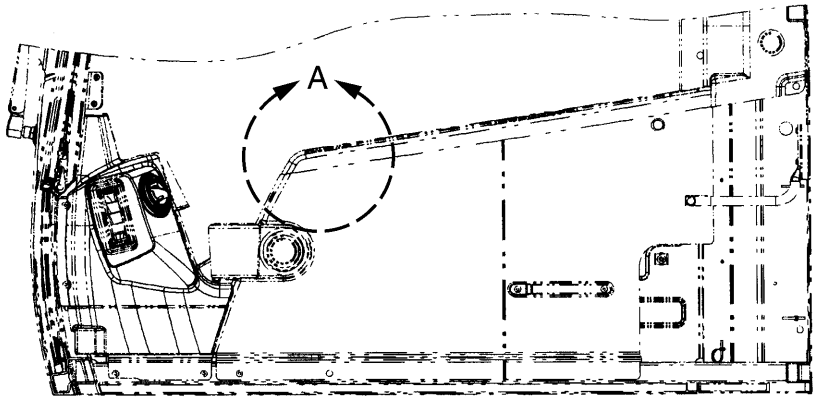

NOTE	No.	PART No.	QTY	PART NAME	NOTE	No.	PART No.	QTY	PART NAME
	1	215-5926	1	SUPPORT AS					
	2	215-5929	1	PLATE					
	3	095-0799	2	WASHER					
	4	128-2136	2	SCREW					
	5	172-4478	1	PLATE AS					
	6	5C-2890	2	NUT					
	7	7Y-8172	1	GROMMET					
	8	9X-8256	2	WASHER					

H79985E 00

215-5925 CONSOLE GP

Part of 216-6534-Page358
An Attachment

MEMORANDA

OPERATOR STATION

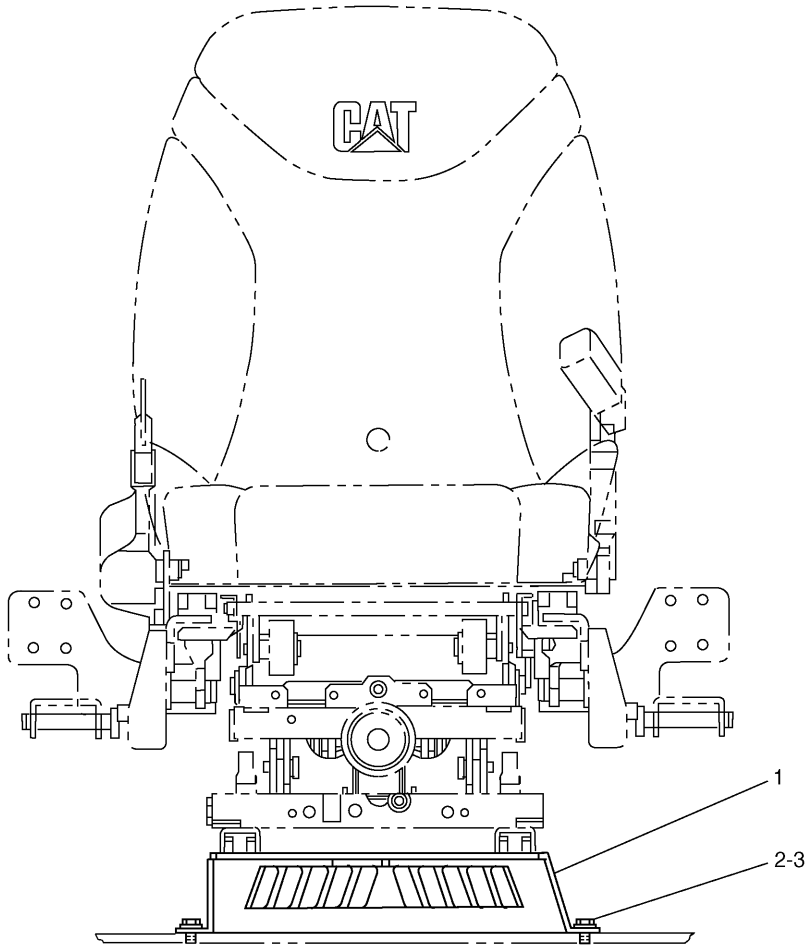

NOTE	No.	PART No.	QTY	PART NAME	NOTE	No.	PART No.	QTY	PART NAME
	1	167-7043	1	SUPPORT AS					
	2	8T-4121	4	WASHER					
	3	8T-4191	4	BOLT (L=16mm)					

H67359E 02

161-3757 SUPPORT GP-SEAT
S/N CAE 01201-01962

OPERATOR STATION

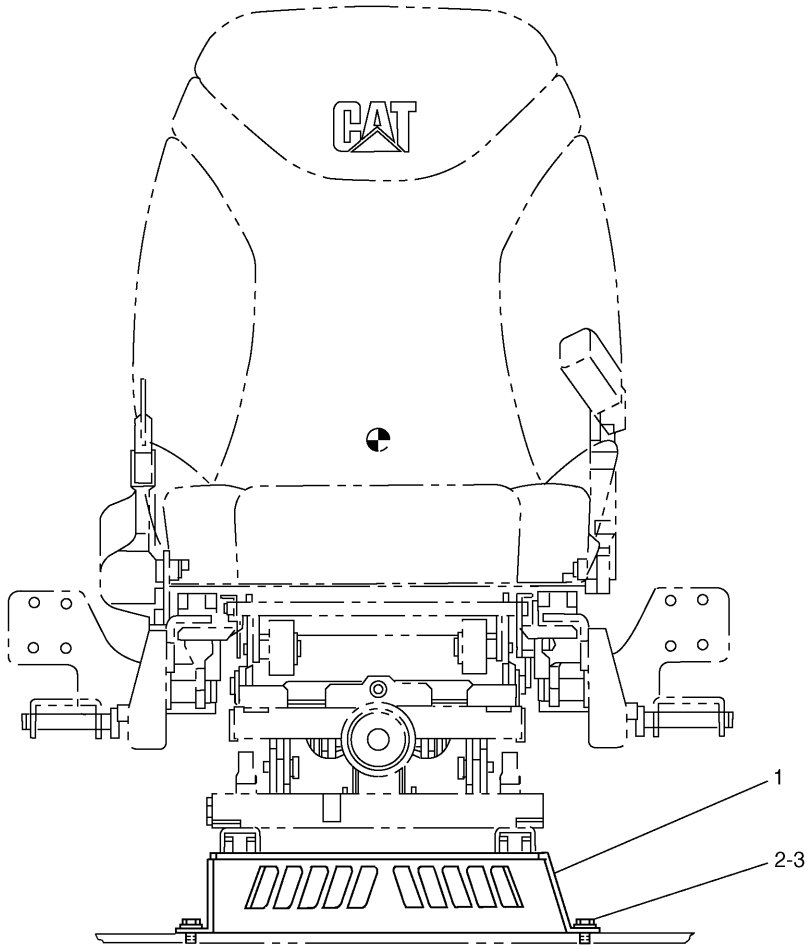

NOTE	No.	PART No.	QTY	PART NAME	NOTE	No.	PART No.	QTY	PART NAME
	1	210-5799	1	SUPPORT AS					
	2	8T-4121	4	WASHER					
	3	8T-4191	4	BOLT (L=16mm)					

H76857E 00

210-5798 SUPPORT GP-SEAT
S/N CAE 01963-Up

MEMORANDA

OPERATOR STATION

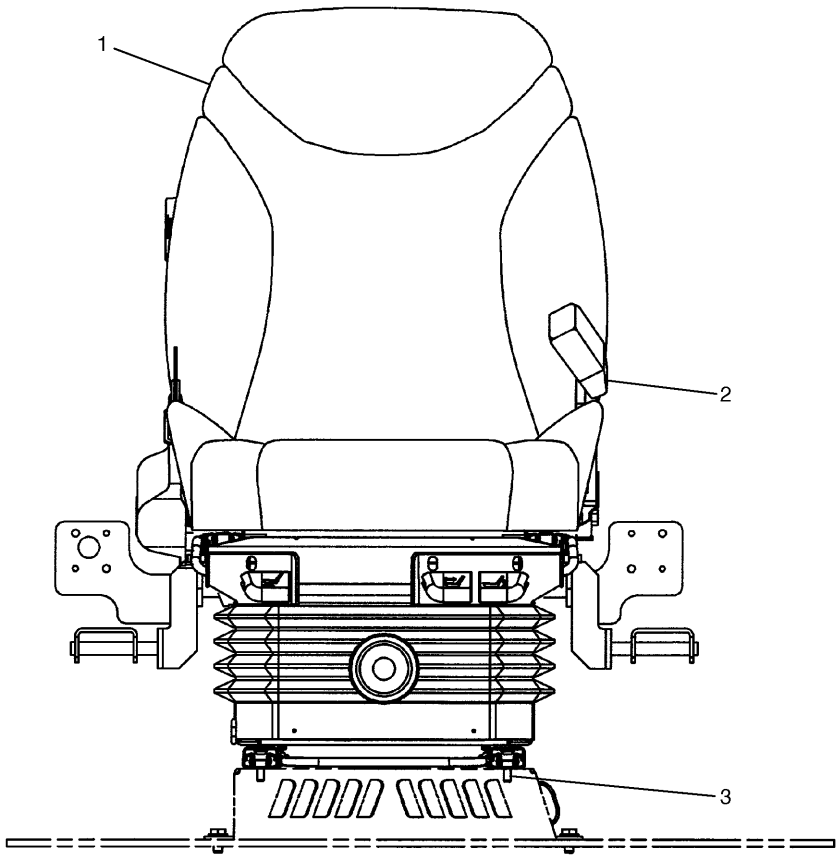

NOTE	No.	PART No.	QTY	PART NAME	NOTE	No.	PART No.	QTY	PART NAME
Y	1	161-3772	1	SEAT GP					
Y	2	201-4436	1	BELT GP					
	3	6V-8202	4	BOLT (L=16mm)					

Y—SEE SEPARATE ILLUSTRATION

H74602E 05

161-3771 SEAT GP

161-3772-Page595,201-4436-Page602

OPERATOR STATION

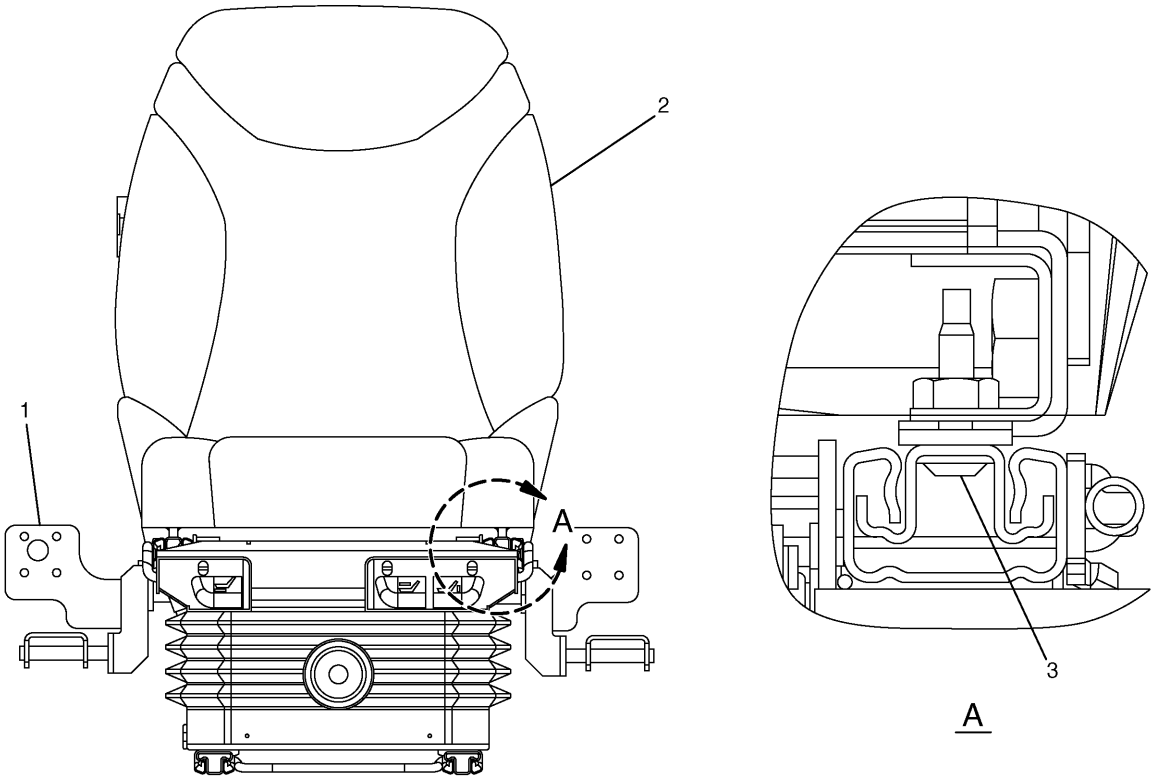

NOTE	No.	PART No.	QTY	PART NAME	NOTE	No.	PART No.	QTY	PART NAME
Y	1	164-0478	1	SUSPENSION GP					
	2	164-0504	1	SEAT GP					
		178-5660	1	HANDLE KIT (RECLINER)					
	3	178-5565	4	SCREW					

Y—SEE SEPARATE ILLUSTRATION

H91340E 06

161-3772 SEAT GP

Part of 161-3771-Page594
164-0478-Page599

OPERATOR STATION

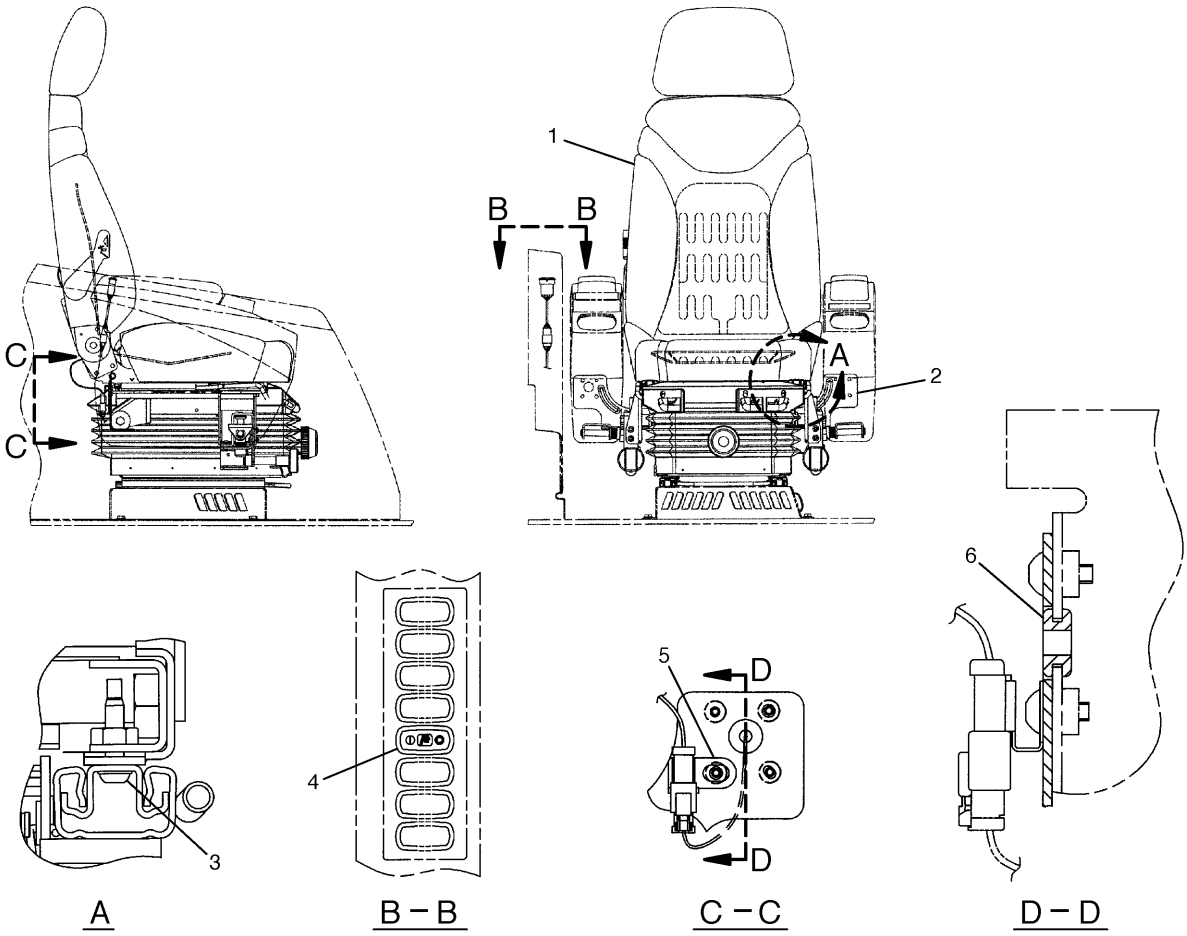

NOTE	No.	PART No.	QTY	PART NAME	NOTE	No.	PART No.	QTY	PART NAME
	1	164-0505	1	SEAT GP					
		178-5660	1	HANDLE KIT (RECLINER)					
		178-5659	1	HANDLE KIT (ADJUSTER)					
Y		164-0477	1	HEADREST AS					
Y	2	164-0503	1	SUSPENSION GP					
	3	178-5565	4	SCREW					
	4	163-6721	1	SWITCH AS					
		167-3542	1	CONNECTOR					
		167-3543	4	TERMINAL					
	5	116-0118	1	CLIP					
	6	9D-8508	1	GROMMET					

Y—SEE SEPARATE ILLUSTRATION

H98258E 05

164-0502 SEAT GP

164-0503-Page600,164-0477-Page604
An Attachment

OPERATOR STATION

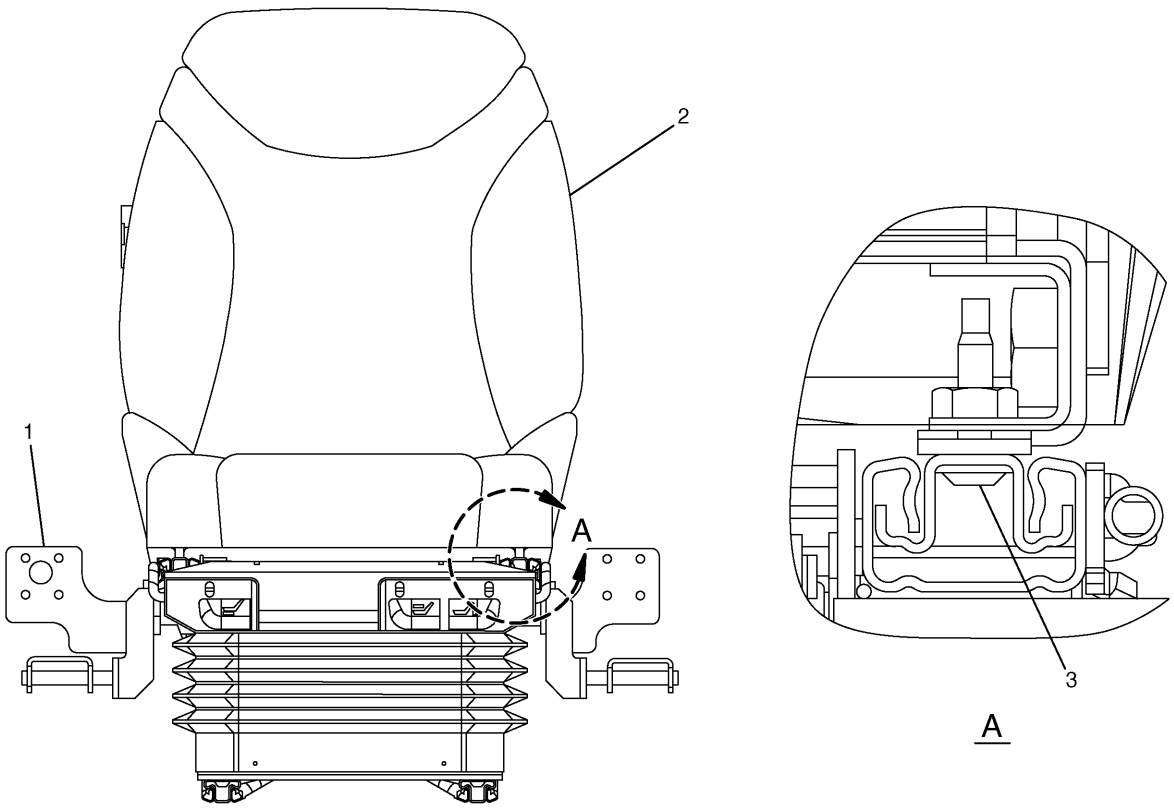

NOTE	No.	PART No.	QTY	PART NAME	NOTE	No.	PART No.	QTY	PART NAME
Y	1	164-0479	1	SUSPENSION GP					
	2	164-0504	1	SEAT GP					
		178-5660	1	HANDLE KIT (RECLINER)					
	3	178-5565	4	SCREW					

Y—SEE SEPARATE ILLUSTRATION

H77617E 04

178-5624 SEAT GP
164-0479-Page601
An Attachment

OPERATOR STATION

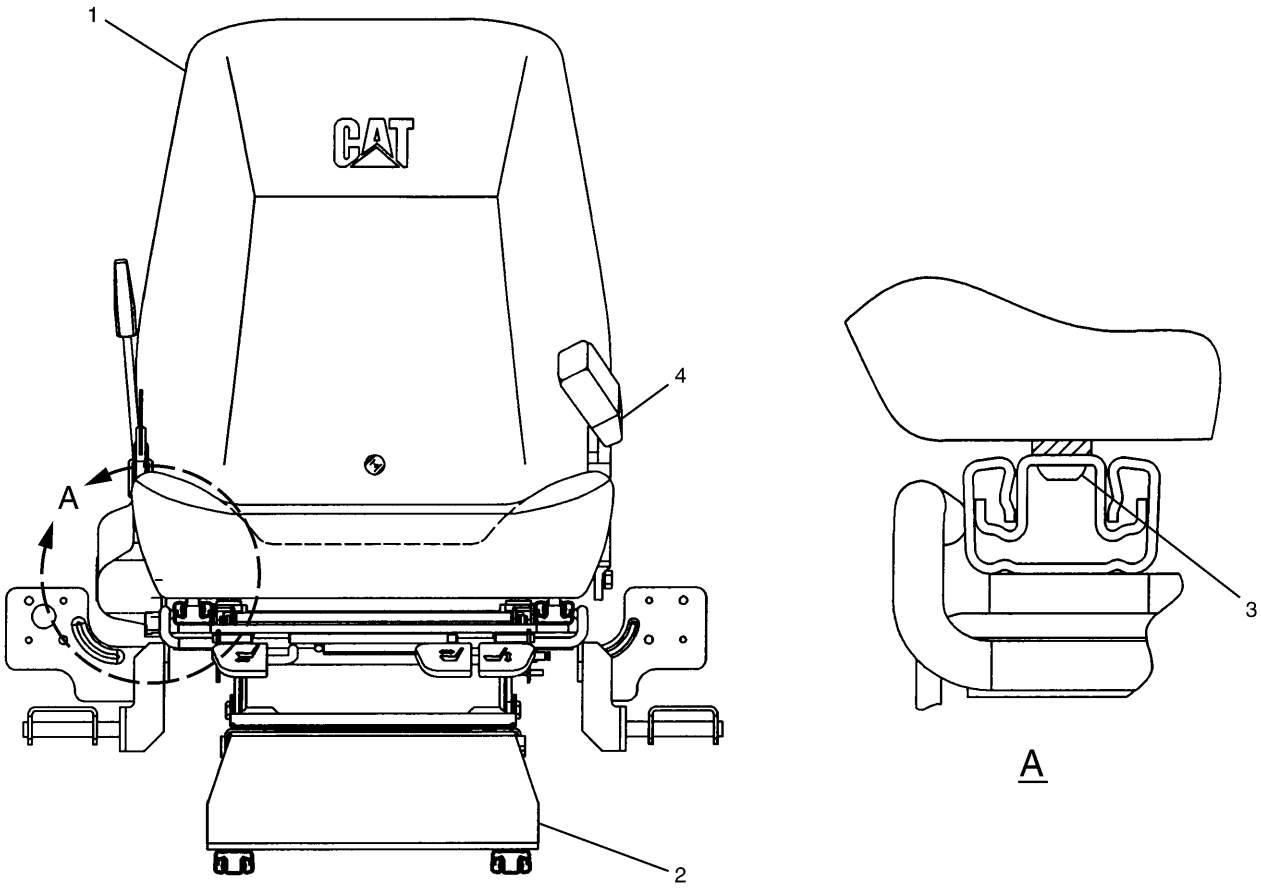

NOTE	No.	PART No.	QTY	PART NAME	NOTE	No.	PART No.	QTY	PART NAME
	1	171-7478	1	SEAT GP					
Y	2	164-0479	1	SUSPENSION GP					
	3	178-5565	4	SCREW					
Y	4	305-0398	1	BELT GP					

Y—SEE SEPARATE ILLUSTRATION

HA1790E 05

171-7352 SEAT GP

164-0479-Page601,305-0398-Page603

An Attachment

OPERATOR STATION

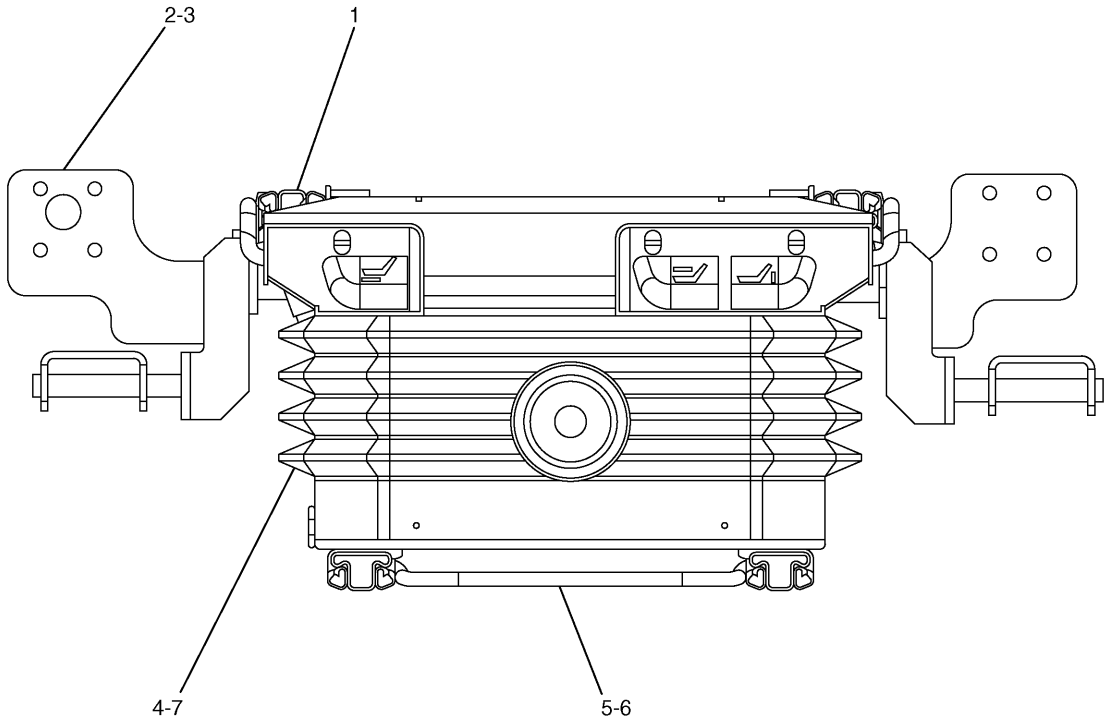

NOTE	No.	PART No.	QTY	PART NAME	NOTE	No.	PART No.	QTY	PART NAME
	1	178-5655	1	ADJUSTER KIT					
	2	185-8122	1	SUPPORT KIT					
		178-5658	1	HANDLE KIT					
	3	185-8124	1	RISER KIT					
	4	178-5653	1	COVER KIT					
		178-5647	14	CLIP					
		178-5648	4	STRAP					
	5	178-5656	1	ADJUSTER KIT					
	6	178-5657	1	CABLE KIT					
	7	185-8126	1	SUSPENSION KIT					

H71336E 05

164-0478 SUSPENSION GP-SEAT

Part of 161-3772-Page595

OPERATOR STATION

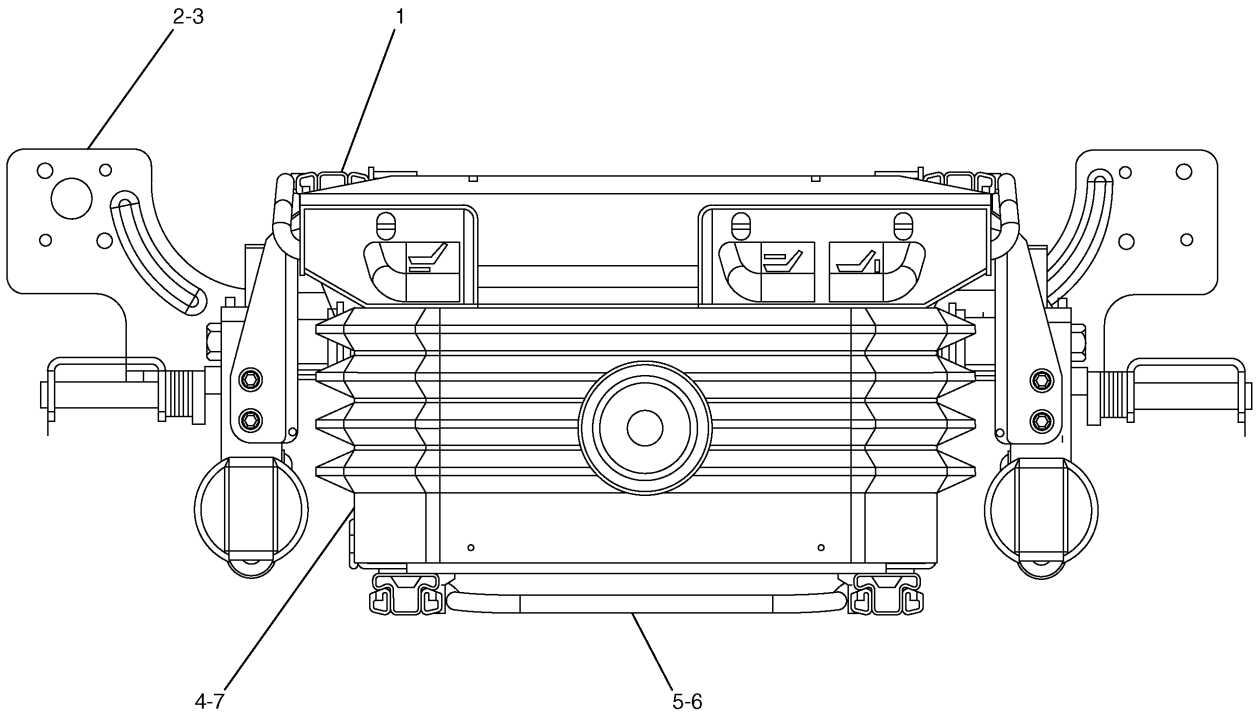

NOTE	No.	PART No.	QTY	PART NAME	NOTE	No.	PART No.	QTY	PART NAME
	1	178-5655	1	ADJUSTER KIT					
	2	185-8121	1	SUPPORT KIT					
		178-5658	1	HANDLE KIT					
	3	185-8124	1	RISER KIT					
	4	178-5654	1	COVER KIT					
		178-5647	14	CLIP					
		178-5648	4	STRAP					
	5	178-5656	1	ADJUSTER KIT					
	6	178-5657	1	CABLE KIT					
	7	185-8126	1	SUSPENSION KIT					

H74609E 06

164-0503 SUSPENSION GP-SEAT

Part of 164-0502-Page596
An Attachment

OPERATOR STATION

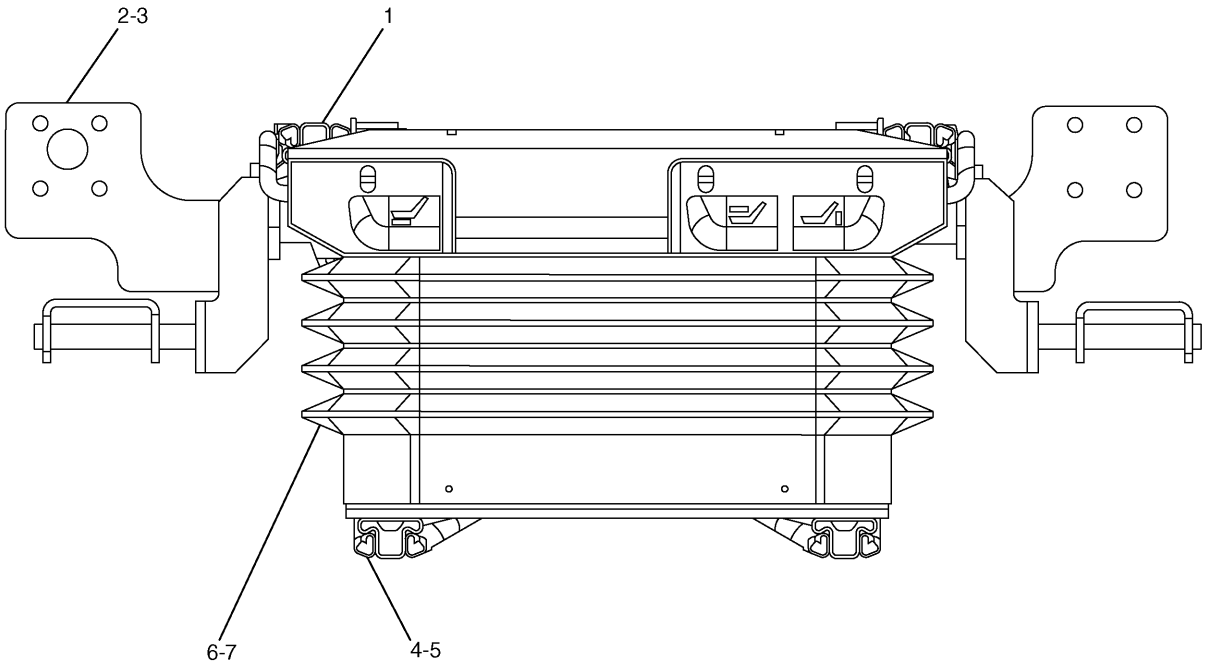

NOTE	No.	PART No.	QTY	PART NAME	NOTE	No.	PART No.	QTY	PART NAME
	1	178-5655	1	ADJUSTER KIT					
	2	185-8122	1	SUPPORT KIT					
		178-5658	1	HANDLE KIT					
	3	185-8125	1	RISER KIT (HEIGHT)					
	4	178-5661	1	CABLE KIT					
	5	178-5662	1	ADJUSTER KIT					
	6	185-8127	1	SUPPORT KIT					
	7	185-8143	1	COVER KIT					
		178-5647	14	CLIP					
		178-5648	4	STRAP					

H71338E 09

164-0479 SUSPENSION GP-SEAT

Part of 178-5624-Page597,171-7352-Page598
An Attachment

OPERATOR STATION

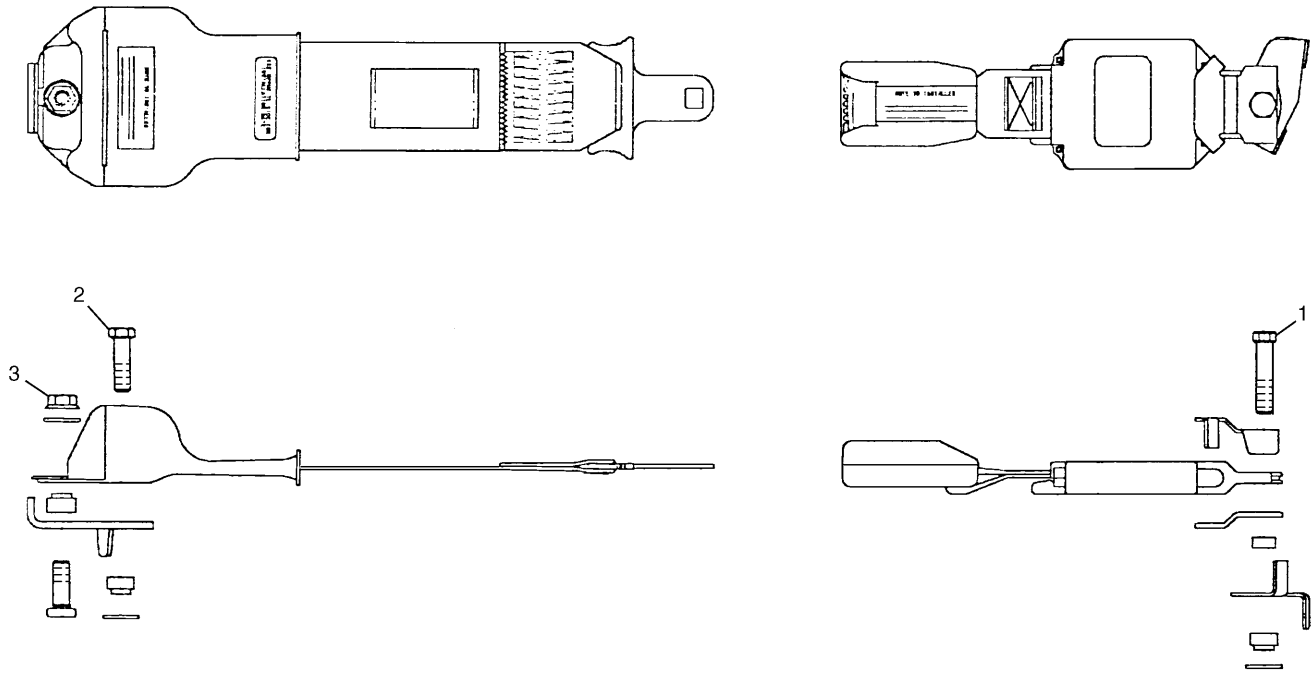

NOTE	No.	PART No.	QTY	PART NAME	NOTE	No.	PART No.	QTY	PART NAME
	1	8S-4724	1	BOLT (L=57mm)					
	2	9L-7816	1	BOLT					
	3	8S-0934	1	LOCKNUT					

H74634E 00

201-4436 SEAT BELT GP

Part of 161-3771-Page594

OPERATOR STATION

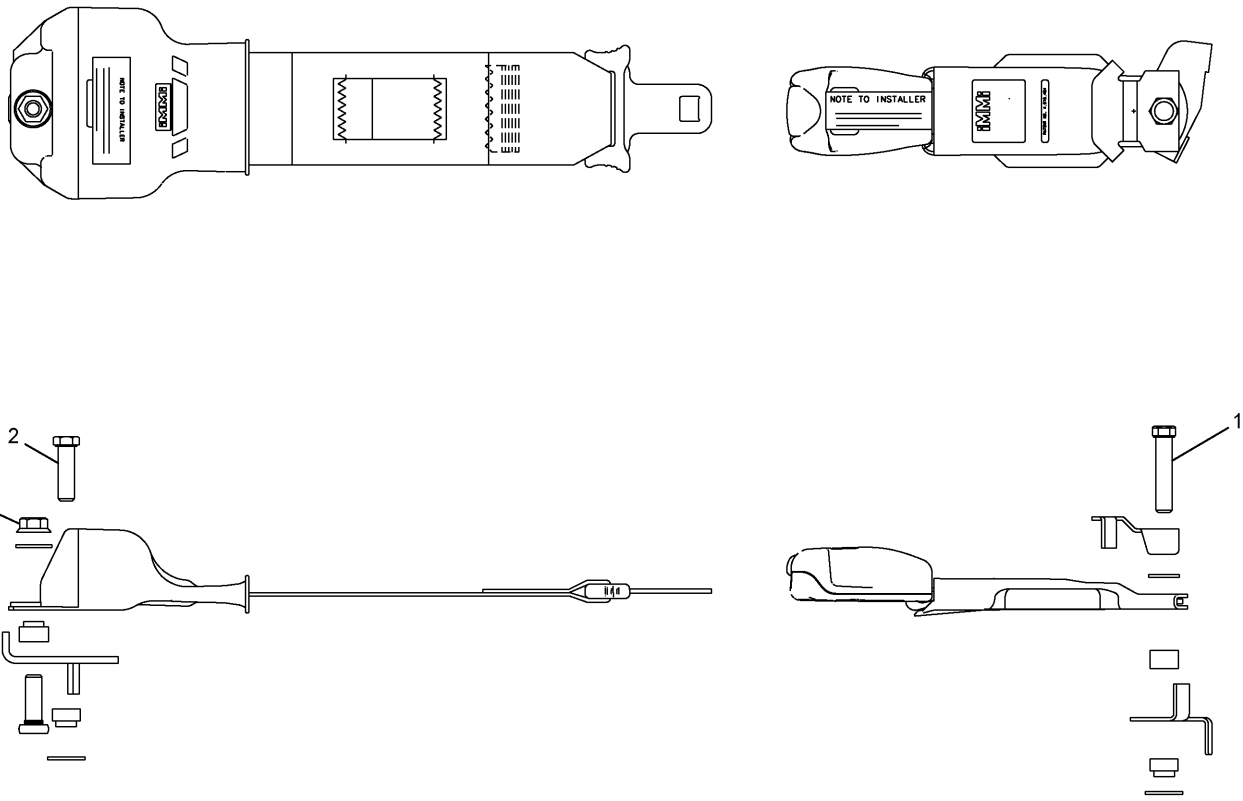

NOTE	No.	PART No.	QTY	PART NAME	NOTE	No.	PART No.	QTY	PART NAME
	1	8S-4724	1	BOLT (L=57mm)					
	2	9L-7816	1	BOLT					
	3	8S-0934	1	LOCKNUT					

HA1791E 00

305-0398 SEAT BELT GP

Part of 171-7352-Page598
An Attachment

OPERATOR STATION

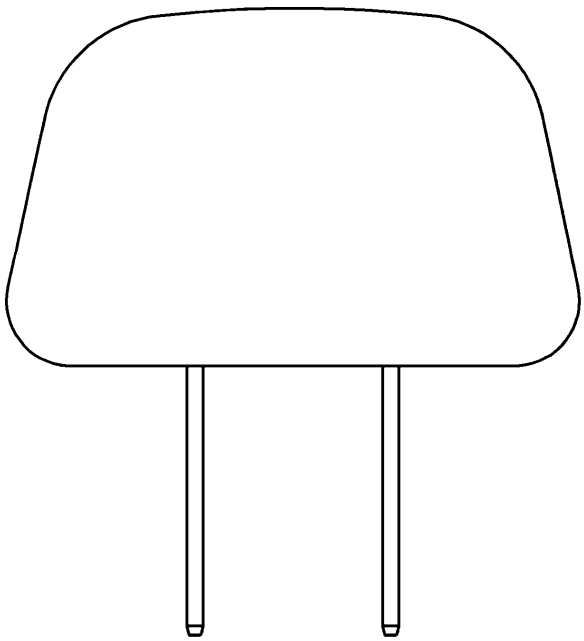

NOTE	No.	PART No.	QTY	PART NAME

H71339E 03

164-0477 HEADREST AS

Part of 164-0502-Page596
An Attachment

OPERATOR STATION

Consists of :

			Page
2	5P-7958	SLEEVE	
1	099-3645	CABLE	
2	278-1585	KEY	

H92032E 01

275-3667 LITERATURE GP

Consists of :

			Page
1	161-3764	DUCT GP-AIR.....	610
1	161-3770	AIR CONDITIONER & MOUNTING GP.....	606

H67363E 02

161-3762 AIR CONDITIONER GP

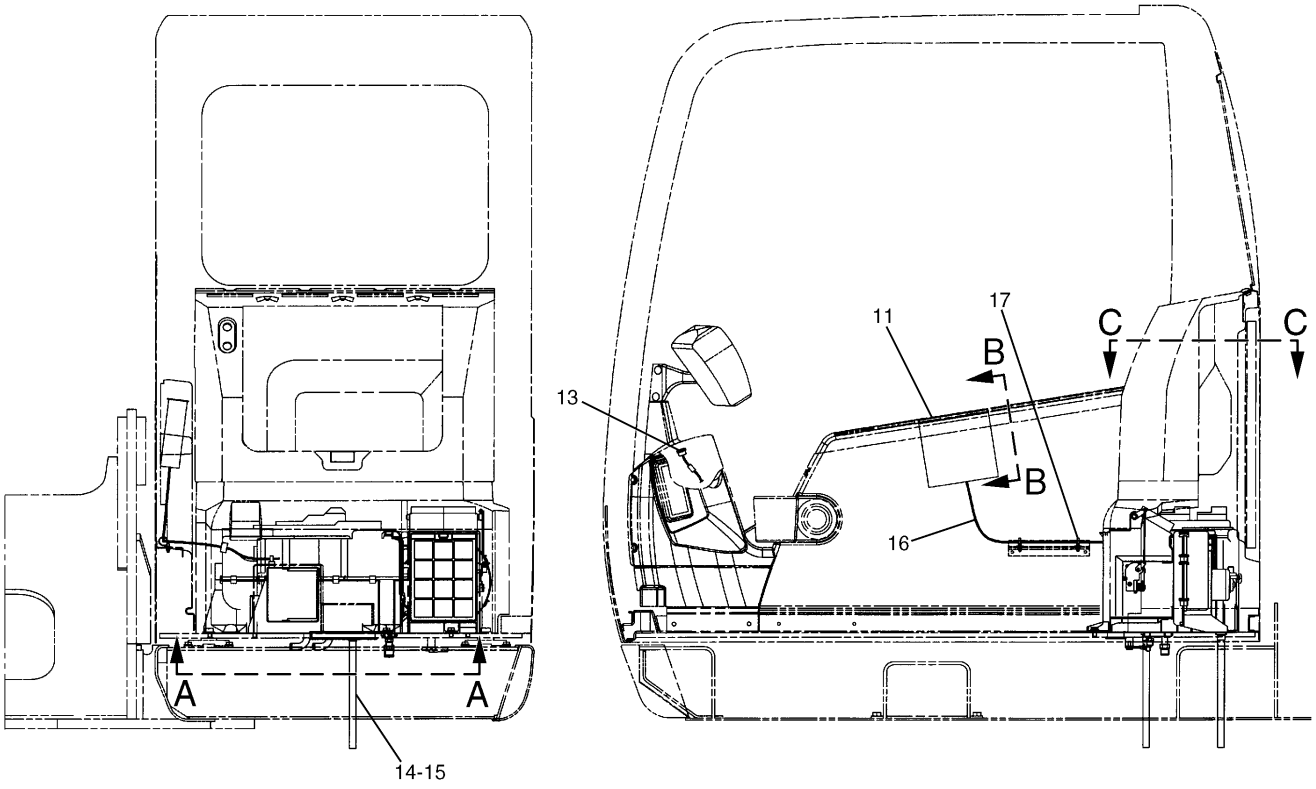

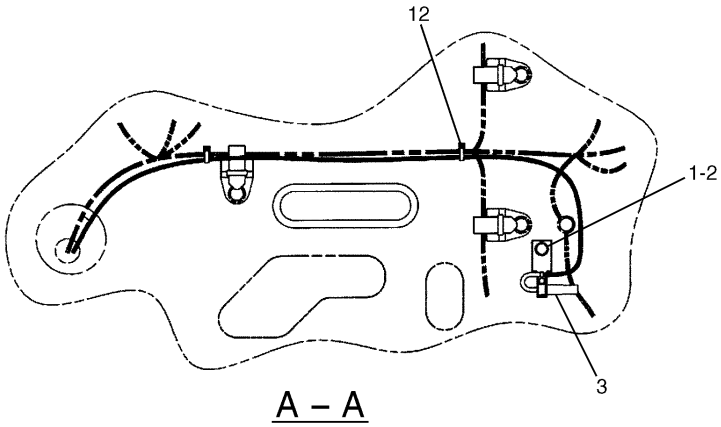

A – A

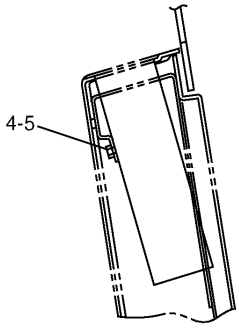

B – B

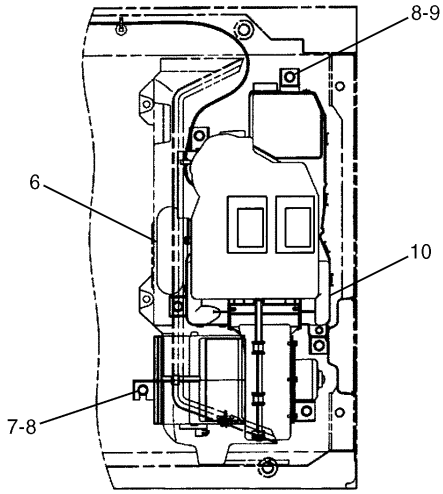

C – C

H86479E 07

161-3770 AIR CONDITIONER & MOUNTING GP

Part of 161-3762-Page605
161-3780-Page608

OPERATOR STATION

NOTE	No.	PART No.	QTY	PART NAME	NOTE	No.	PART No.	QTY	PART NAME
	1	8T-4200	1	BOLT (L=16mm)					
	2	8T-4224	1	WASHER					
	3	176-1917	1	SENSOR					
	4	8T-0286	2	BOLT (L=8mm)					
	5	8T-0328	2	WASHER					
	6	170-9711	1	GROMMET					
	7	7X-7729	1	WASHER					
	8	8T-4137	6	BOLT (L=20mm)					
	9	8T-4121	5	WASHER					
Y	10	161-3780	1	CONDITIONER GP					
	11	217-9361	1	PANEL AS					
	12	3S-2093	2	STRAP					
	13	167-7083	1	SENSOR					
	14	196-1632	2	HOSE					
	15	7I-6968	2	CLAMP					
	16	214-4393	1	HARNESS AS					
	17	163-6795	2	STRAP					

Y—SEE SEPARATE ILLUSTRATION

H86479E 07

161-3770 AIR CONDITIONER & MOUNTING GP

Part of 161-3762-Page605
161-3780-Page608

OPERATOR STATION

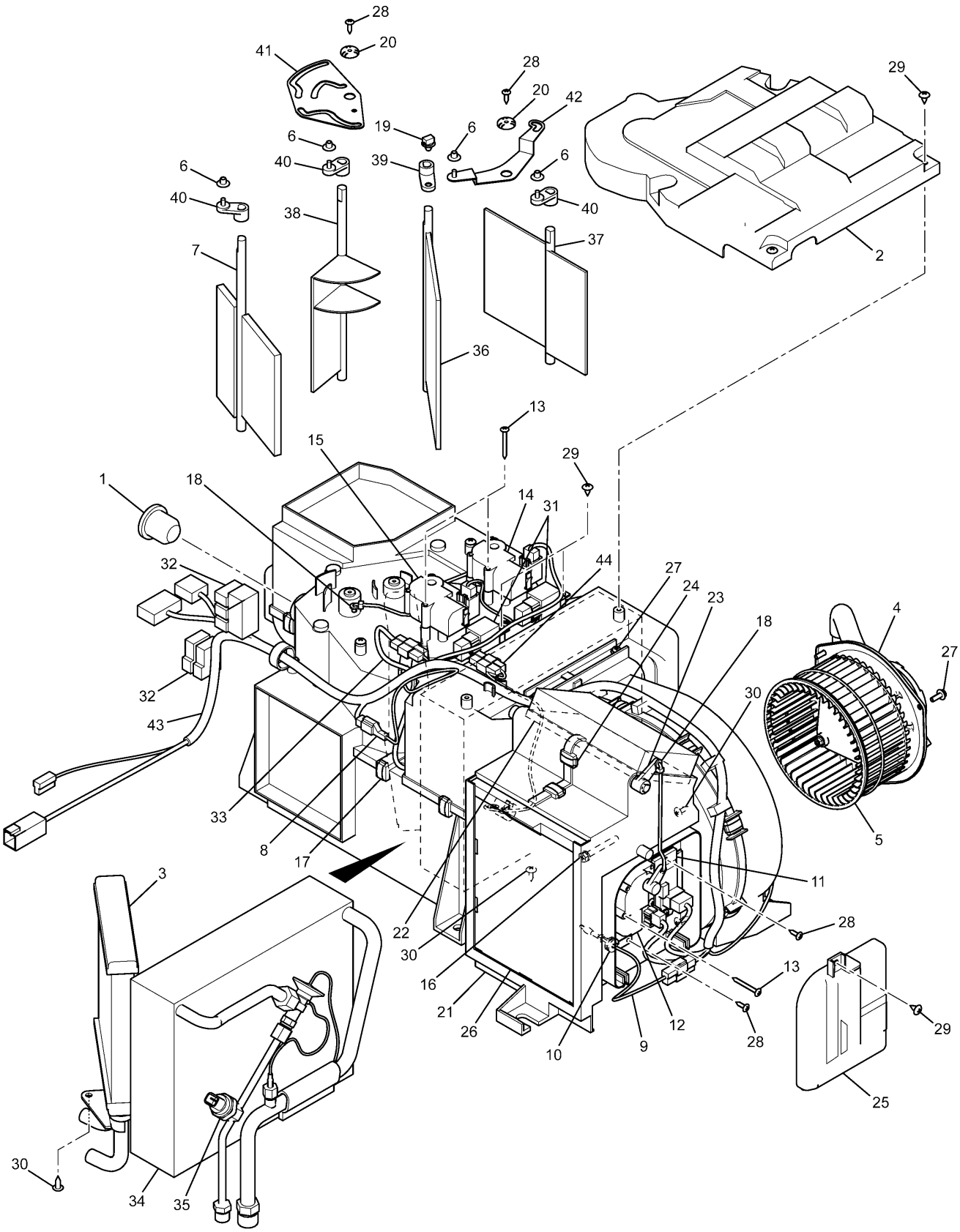

HA2008E 06

161-3780 AIR CONDITIONER GP
Part of 161-3770-Page607

OPERATOR STATION

NOTE	No.	PART No.	QTY	PART NAME	NOTE	No.	PART No.	QTY	PART NAME
	1	189-3479	1	CAP					
	2	178-5470	1	COVER					
	3	178-5477	1	CORE AS					
	4	178-5484	1	MOTOR AS					
	5	178-5485	1	FAN					
	6	178-5488	4	BUSHING					
	7	178-5478	1	DAMPER AS					
	8	133-7937	1	SENSOR					
	9	178-5483	1	SENSOR					
	10	130-0288	1	GROMMET					
	11	178-5486	1	CONTROL AS					
	12	178-5480	1	MOTOR AS					
	13	178-5492	6	SCREW					
	14	178-5481	1	MOTOR AS					
	15	178-5482	1	MOTOR AS					
	16	178-5491	1	BOLT AS					
	17	178-5489	13	CLIP					
	18	71-0392	2	CLIP					
	19	130-0319	1	CLIP					
	20	178-5493	2	WASHER					
	21	178-5474	1	BOX AS					
	22	178-5475	1	DAMPER					
	23	178-5476	1	LEVER					
	24	178-5489	5	CLIP					
	25	178-5471	1	COVER					
	26	305-0367	1	FILTER					
	27	178-5490	5	SCREW AS					
	28	161-3756	5	SCREW					
	29	178-5494	8	SCREW					
	30	71-6626	7	SCREW					
	31	178-5487	2	RELAY					
	32	185-8108	5	FUSE (3A)					
	33	124-3931	1	THERMISTOR					
	34	178-5472	1	CORE AS					
	35	178-5473	1	SWITCH AS (PRESSURE)					
	36	273-5323	1	DAMPER AS					
	37	273-5324	1	DAMPER AS					
	38	273-5325	1	DAMPER AS					
	39	273-5326	1	LEVER					
	40	273-5327	3	LEVER					
	41	273-5328	1	LEVER					
	42	273-5329	1	LEVER AS					
	43	273-5330	1	HARNESS AS					
	44	273-5331	1	HARNESS AS					

HA2008E 06

161-3780 AIR CONDITIONER GP

Part of 161-3770-Page607

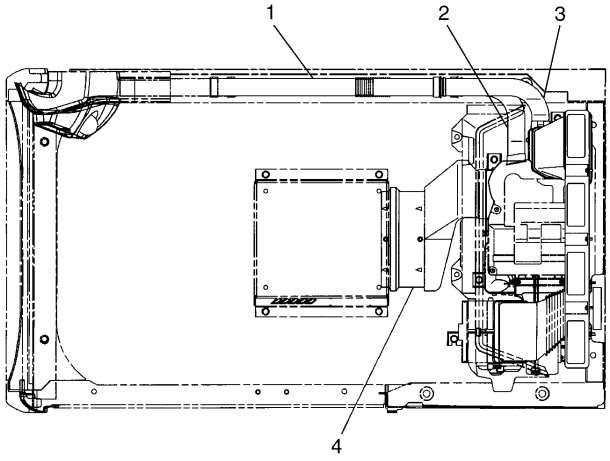

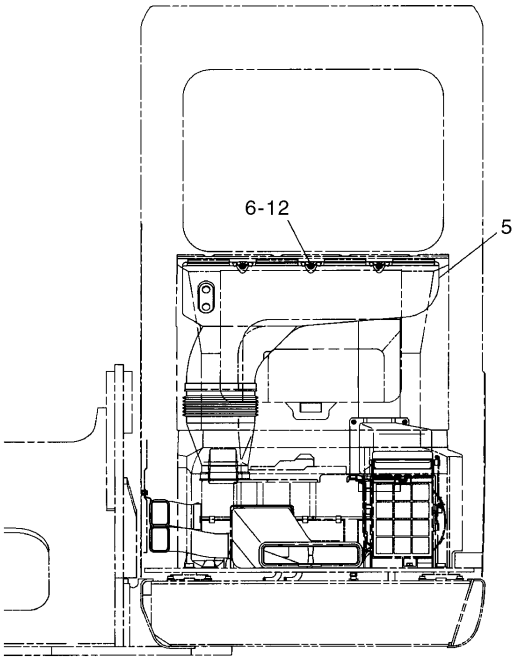

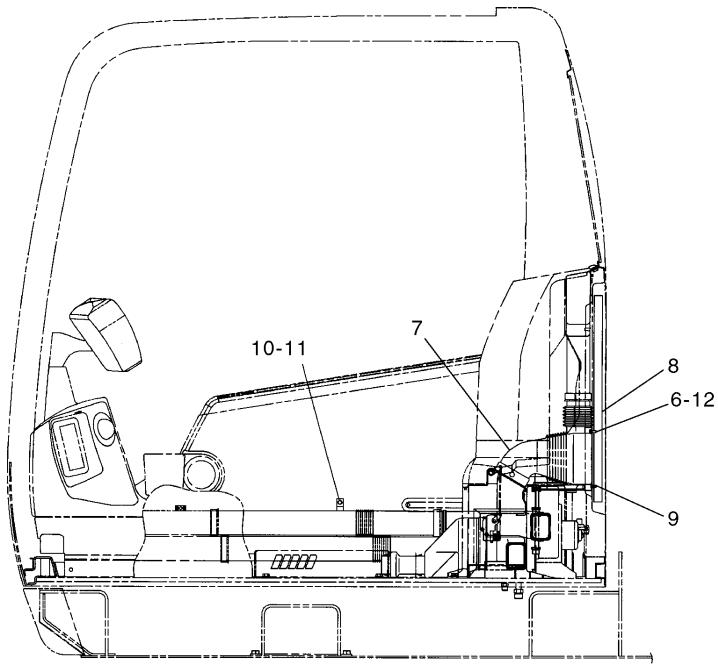

H97746E 01

161-3764 DUCT GP-AIR

Part of 161-3762-Page605
164-0590-Page612

OPERATOR STATION

NOTE	No.	PART No.	QTY	PART NAME	NOTE	No.	PART No.	QTY	PART NAME
	1	164-0592	1	DUCT AS					
		6I-5331	4	RIVET					
		189-3415	2	INSULATOR					
	2	164-0631	1	DUCT AS					
		189-3415	1	INSULATOR					
	3	164-0630	1	DUCT AS					
		189-3415	1	INSULATOR					
	4	164-0628	1	DUCT AS					
		189-3427	1	RUBBER					
Y	5	164-0590	1	DUCT AS					
	6	095-0742	5	SCREW					
	7	164-0632	1	DUCT AS					
		189-3455	1	INSULATOR					
	8	293-1183	1	FILTER AS					
		293-1184	1	FILTER					
	9	176-1996	2	CLIP					
	10	9X-8256	1	WASHER					
	11	8T-4171	1	BOLT (L=12mm)					
	12	095-0827	5	LOCKWASHER					

Y—SEE SEPARATE ILLUSTRATION

H97746E 01

161-3764 DUCT GP-AIR

Part of 161-3762-Page605
164-0590-Page612

OPERATOR STATION

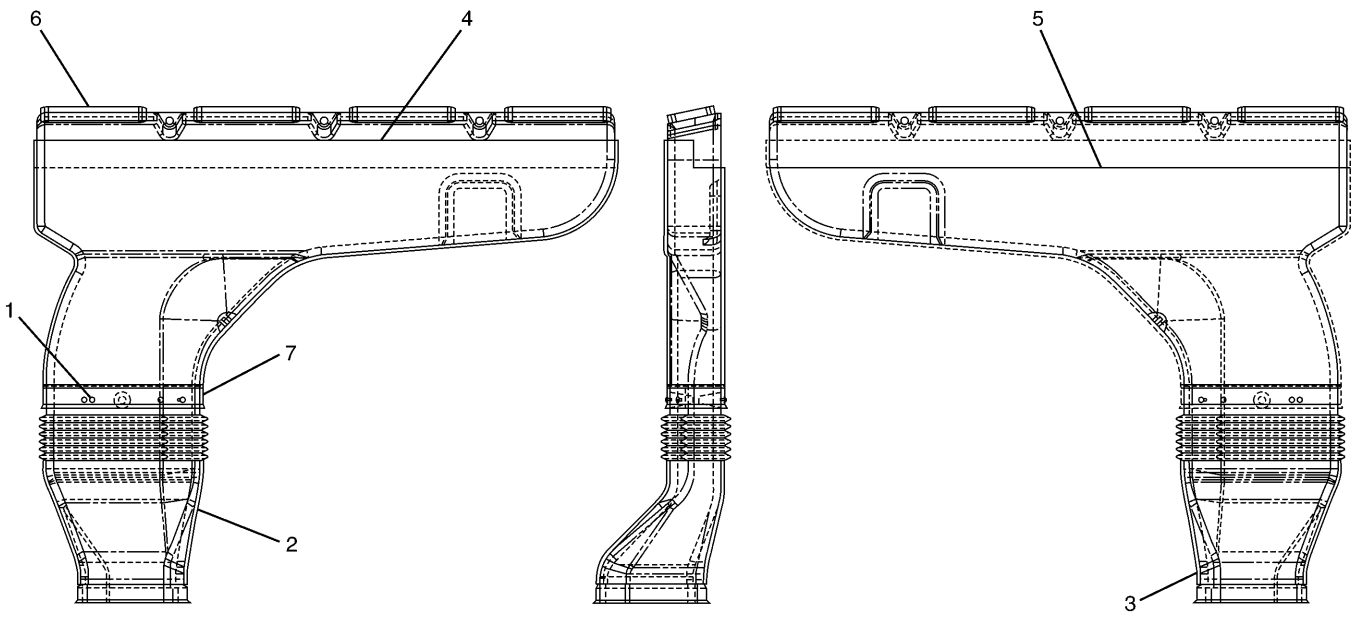

NOTE	No.	PART No.	QTY	PART NAME	NOTE	No.	PART No.	QTY	PART NAME
	1	61-5331	4	RIVET					
	2	189-3453	1	INSULATOR					
	3	189-3454	1	INSULATOR					
	4	167-7118	1	INSULATOR					
	5	167-7119	1	INSULATOR					
	6	189-3426	4	INSULATOR					
	7	189-3451	1	INSULATOR					

H72027E 02

164-0590 DUCT AS
Part of 161-3764-Page611

MEMORANDA

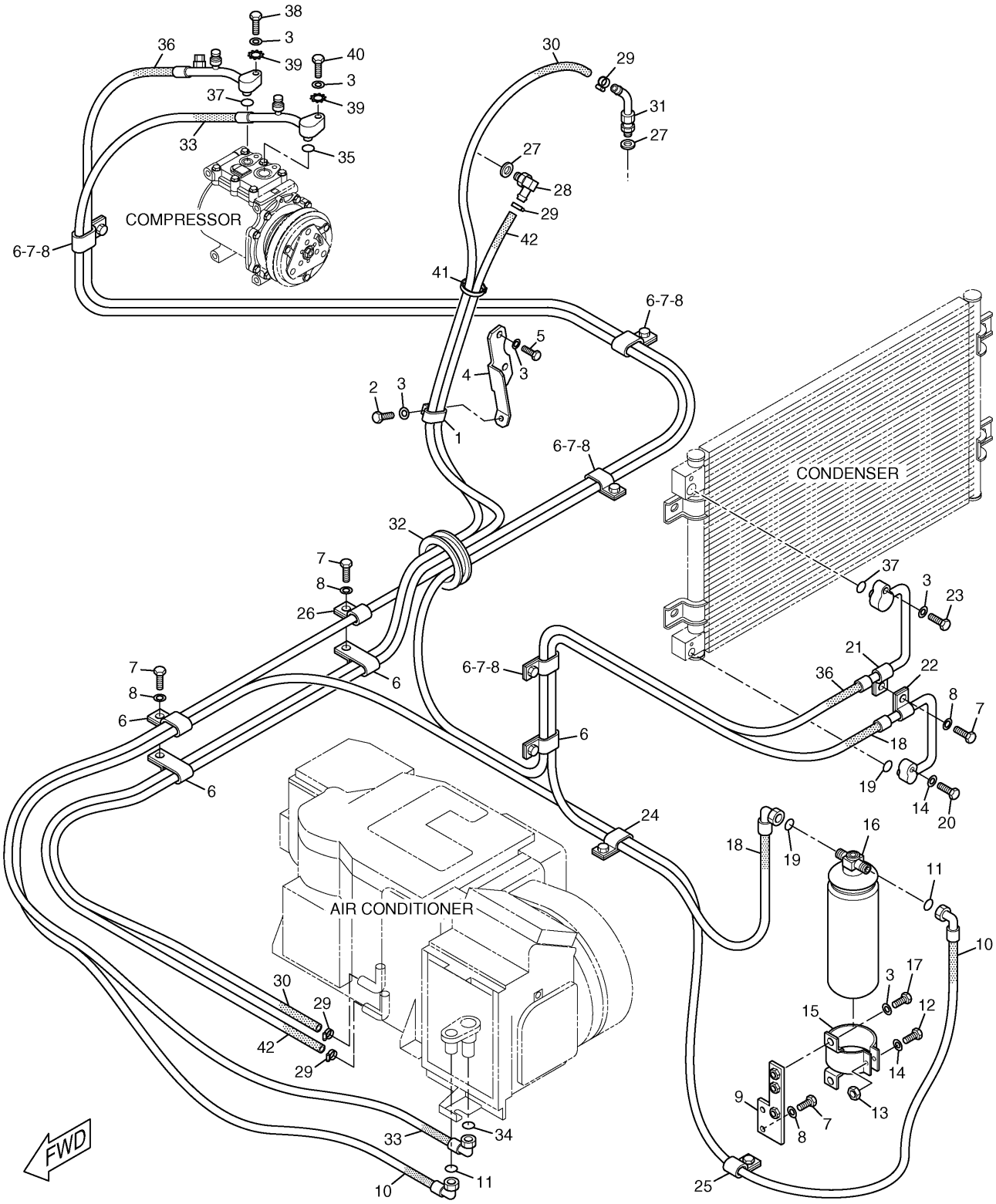

170-9712 LINES GP-AIR CONDITIONER

OPERATOR STATION

NOTE	No.	PART No.	QTY	PART NAME	NOTE	No.	PART No.	QTY	PART NAME
	1	095-0913	2	CLIP					
	2	8T-4189	1	BOLT (L=20mm)					
	3	8T-4224	8	WASHER					
	4	207-0145	1	SUPPORT AS					
	5	8T-3647	2	BOLT (L=80mm)					
	6	6D-1641	8	CLIP					
	7	8T-4137	9	BOLT (L=20mm)					
	8	8T-4121	9	WASHER					
	9	178-5550	1	SUPPORT AS					
	10	178-5554	1	HOSE AS					
	11	185-8110	2	SEAL-O-RING (ID=7.70mm)					
	12	6V-7357	1	BOLT (L=25mm)					
	13	5C-2890	1	NUT					
	14	9X-8256	2	WASHER					
	15	086-0950	1	BRACKET AS					
	16	164-0622	1	RECEIVER AS					
	17	8T-4200	2	BOLT (L=16mm)					
	18	178-5553	1	HOSE AS					
	19	7I-6601	2	SEAL-O-RING (ID=6.73mm)					
	20	8T-4971	1	BOLT (L=30mm)					
	21	6D-3479	1	CLIP					
	22	033-8248	1	CLIP					
	23	099-3649	1	BOLT (L=40mm)					
	24	5K-5338	1	CLIP					
	25	8M-2773	1	CLIP					
	26	7C-4354	1	CLIP					
	27	155-7024	2	SPACER					
	28	178-5425	1	ELBOW					
	29	235-9014	4	CLAMP					
E	30	5P-0767		HOSE…(260cm)					
	31	4I-4580	1	NIPPLE					
	32	7Y-8168	1	GROMMET					
	33	178-5555	1	HOSE AS					
	34	105-9409	1	SEAL-O-RING (ID=15.88mm)					
	35	185-8109	1	SEAL-O-RING (ID=16.20mm)					
	36	178-5552	1	HOSE AS					
	37	105-9410	2	SEAL-O-RING (ID=10.80mm)					
	38	7X-2537	1	BOLT (L=35mm)					
	39	7H-3937	2	LOCKWASHER					
	40	7X-0818	1	BOLT (L=45mm)					
	41	096-0061	1	STRAP					
E	42	5P-0767		HOSE…(225cm)					

E—ORDER BY THE CENTIMETER

H98945E 06

170-9712 LINES GP-AIR CONDITIONER

MEMORANDA

OPERATOR STATION

Consists of :

			Page
1	164-0485	HEATER & MTG GP-CAB.....	618
1	170-9715	LINES GP-HEATER.....	622

H86480E 02

196-1609 HEATER AR-CAB
An Attachment

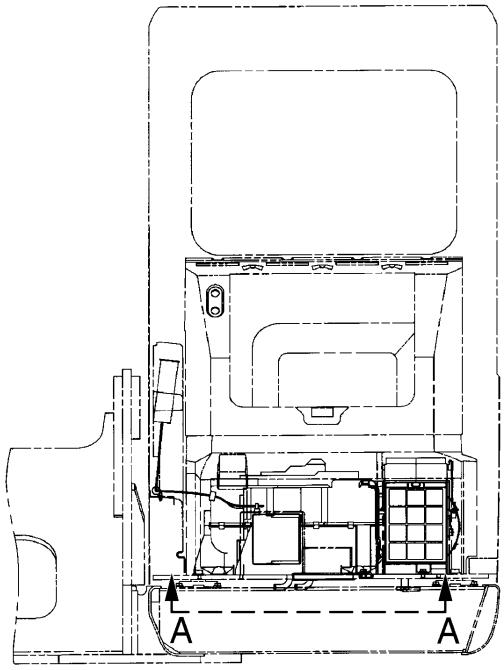

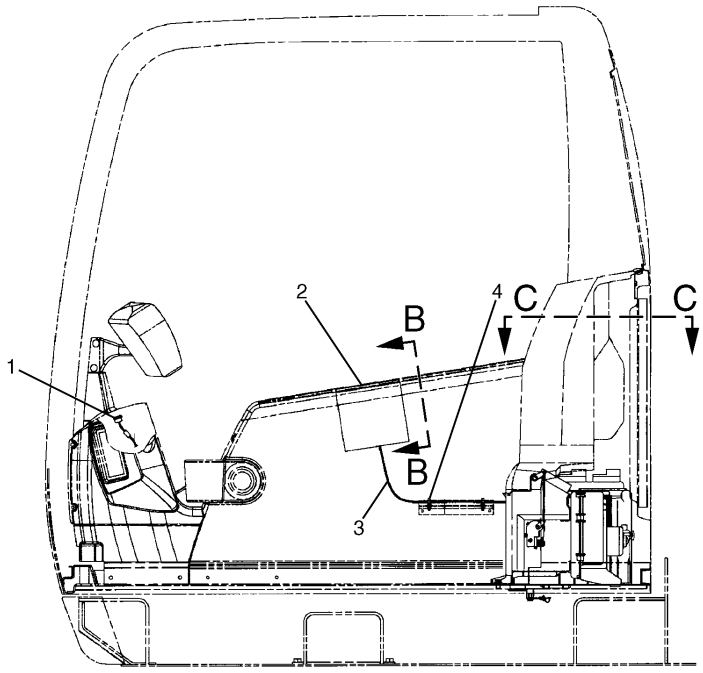

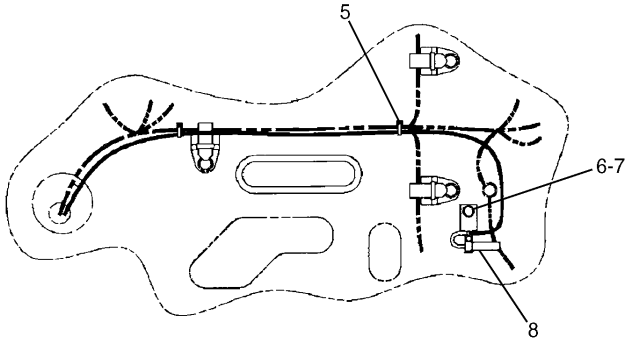

A – A

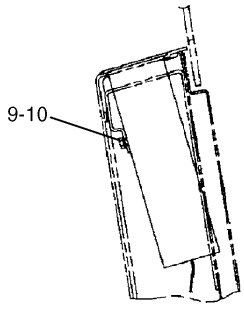

B – B

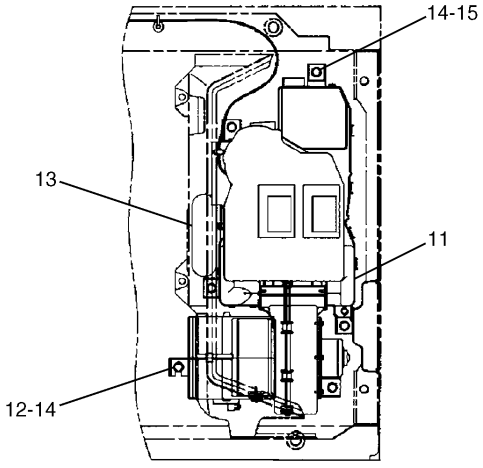

C – C

H86481E 04

164-0485 HEATER & MTG GP-CAB
Part of 196-1609-Page617
164-0486-Page620
An Attachment

OPERATOR STATION

NOTE	No.	PART No.	QTY	PART NAME	NOTE	No.	PART No.	QTY	PART NAME
	1	167-7083	1	SENSOR					
	2	217-9362	1	PANEL AS					
	3	214-4393	1	HARNESS AS					
	4	163-6795	2	STRAP					
	5	3S-2093	2	STRAP					
	6	8T-4200	1	BOLT (L=16mm)					
	7	8T-4224	1	WASHER					
	8	176-1917	1	SENSOR					
	9	8T-0286	2	BOLT (L=8mm)					
	10	8T-0328	2	WASHER					
Y	11	164-0486	1	HEATER GP					
	12	7X-7729	1	WASHER					
	13	170-9711	1	GROMMET					
	14	8T-4137	6	BOLT (L=20mm)					
	15	8T-4121	5	WASHER					

Y—SEE SEPARATE ILLUSTRATION

H86481E 04

164-0485 HEATER & MTG GP-CAB

Part of 196-1609-Page617
164-0486-Page620
An Attachment

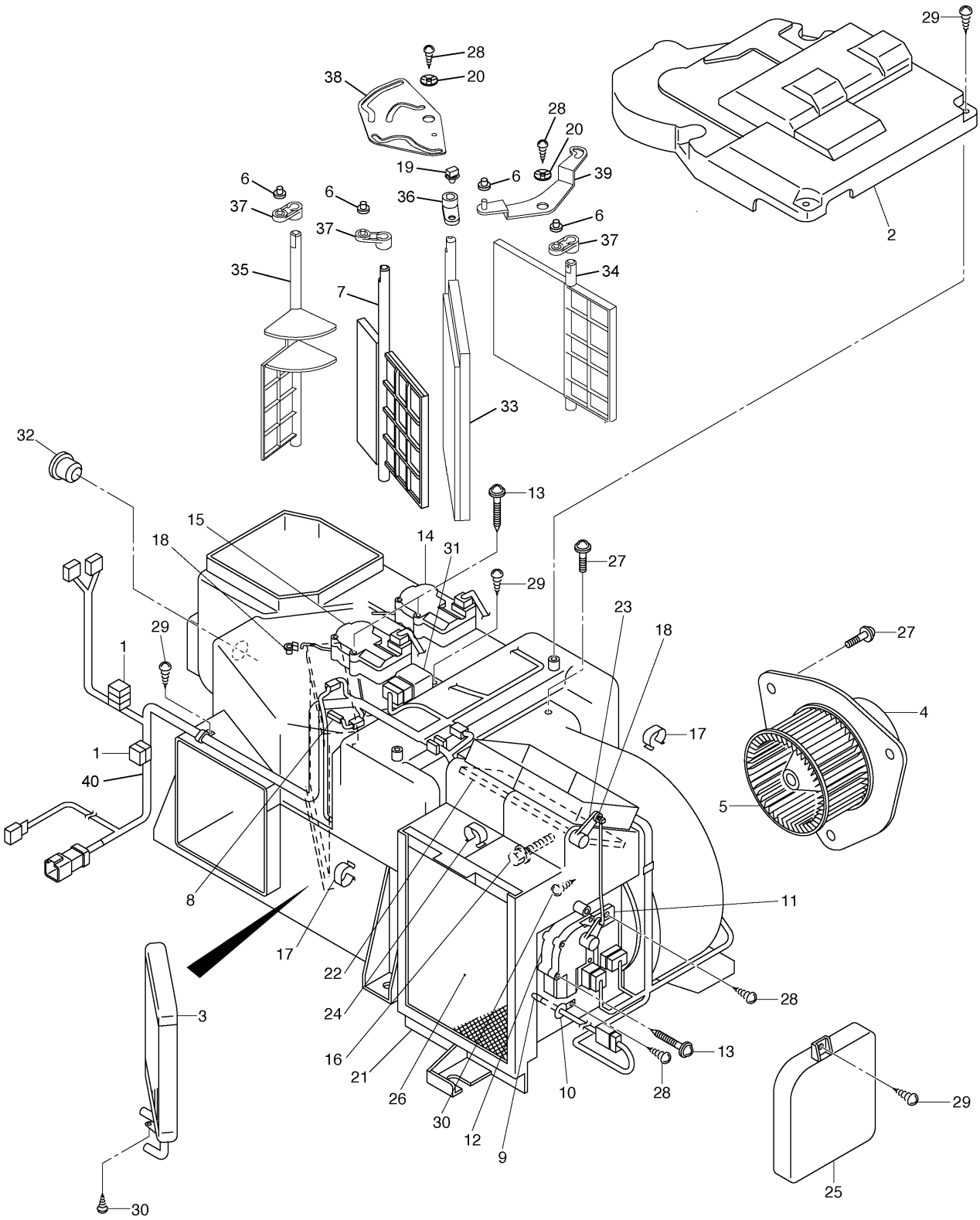

164-0486 HEATER GP-CAB

Part of 164-0485-Page619
An Attachment

OPERATOR STATION

NOTE	No.	PART No.	QTY	PART NAME	NOTE	No.	PART No.	QTY	PART NAME
	1	185-8108	4	FUSE (3A)					
	2	178-5470	1	COVER					
	3	178-5477	1	CORE AS					
	4	178-5484	1	MOTOR AS					
	5	178-5485	1	FAN					
	6	178-5488	4	BUSHING					
	7	178-5478	1	DAMPER AS					
	8	133-7937	1	SENSOR					
	9	178-5483	1	SENSOR					
	10	130-0288	1	GROMMET					
	11	178-5486	1	CONTROL AS					
	12	178-5480	1	MOTOR AS					
	13	178-5492	6	SCREW					
	14	178-5481	1	MOTOR AS					
	15	178-5482	1	MOTOR AS					
	16	178-5491	1	BOLT AS					
	17	178-5489	13	CLIP					
	18	7l-0392	2	CLIP					
	19	130-0319	1	CLIP					
	20	178-5493	2	WASHER					
	21	178-5474	1	BOX AS					
	22	178-5475	1	DAMPER					
	23	178-5476	1	LEVER					
	24	178-5489	5	CLIP					
	25	178-5471	1	COVER					
	26	178-5479	1	FILTER					
	27	178-5490	5	SCREW AS					
	28	161-3756	5	SCREW					
	29	178-5494	7	SCREW					
	30	7l-6626	6	SCREW					
	31	178-5487	1	RELAY					
	32	189-3479	1	CAP					
	33	273-5323	1	DAMPER AS					
	34	273-5324	1	DAMPER AS					
	35	273-5325	1	DAMPER AS					
	36	273-5326	1	LEVER					
	37	273-5327	3	LEVER					
	38	273-5328	1	LEVER					
	39	273-5329	1	LEVER AS					
	40	273-5332	1	HARNESS AS					

H91143E 04

164-0486 HEATER GP-CAB

Part of 164-0485-Page619
An Attachment

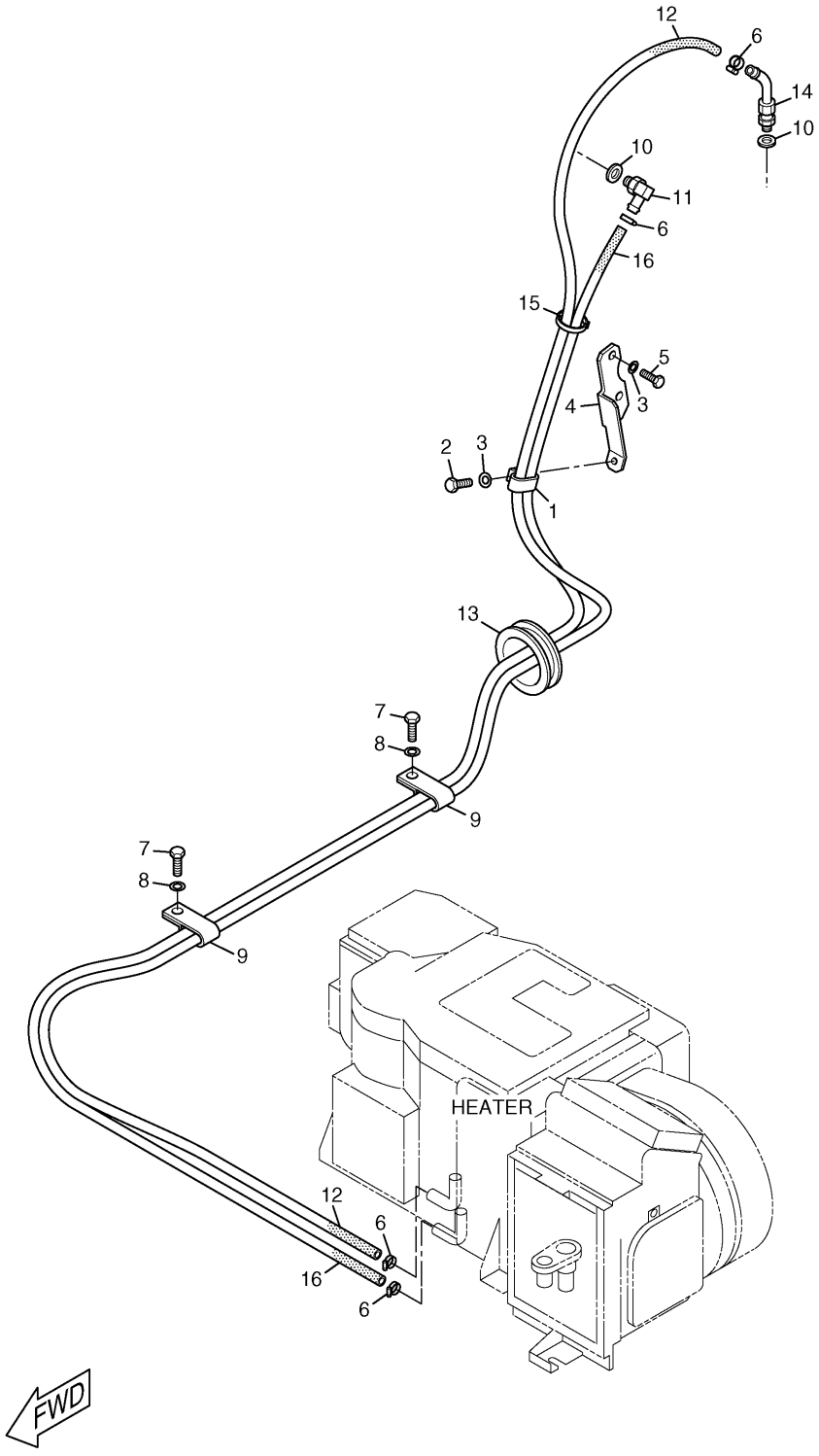

H98199E 05

170-9715 LINES GP-HEATER
Part of 196-1609-Page617
An Attachment

OPERATOR STATION

NOTE	No.	PART No.	QTY	PART NAME	NOTE	No.	PART No.	QTY	PART NAME
	1	095-0913	2	CLIP					
	2	8T-4189	1	BOLT (L=20mm)					
	3	8T-4224	3	WASHER					
	4	207-0145	1	SUPPORT AS					
	5	8T-3647	2	BOLT (L=80mm)					
	6	235-9014	4	CLAMP					
	7	8T-4137	2	BOLT (L=20mm)					
	8	8T-4121	2	WASHER					
	9	6D-1641	2	CLIP					
	10	155-7024	2	SPACER					
	11	178-5425	1	ELBOW					
E	12	5P-0767		HOSE…(260cm)					
	13	7Y-8168	1	GROMMET					
	14	4I-4580	1	NIPPLE					
	15	096-0061	1	STRAP					
E	16	5P-0767		HOSE…(225cm)					

E—ORDER BY THE CENTIMETER

H98199E 05

170-9715 LINES GP-HEATER

Part of 196-1609-Page617
An Attachment

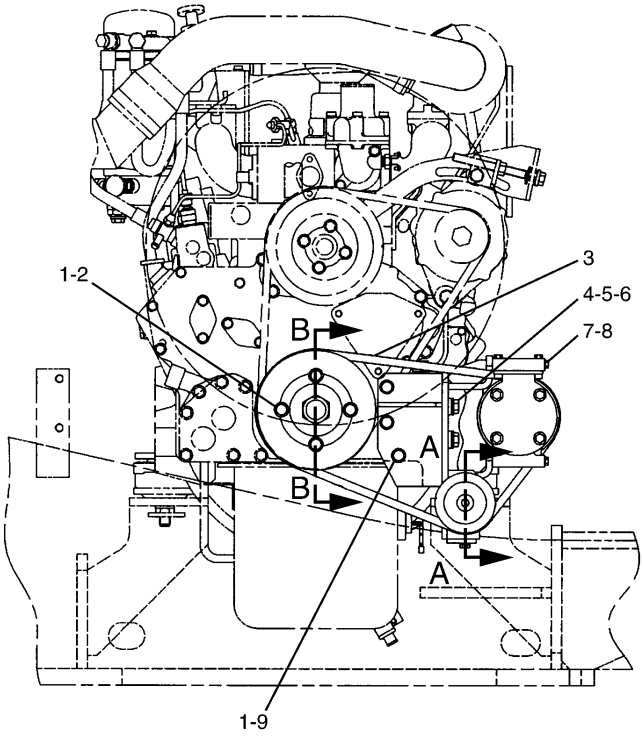

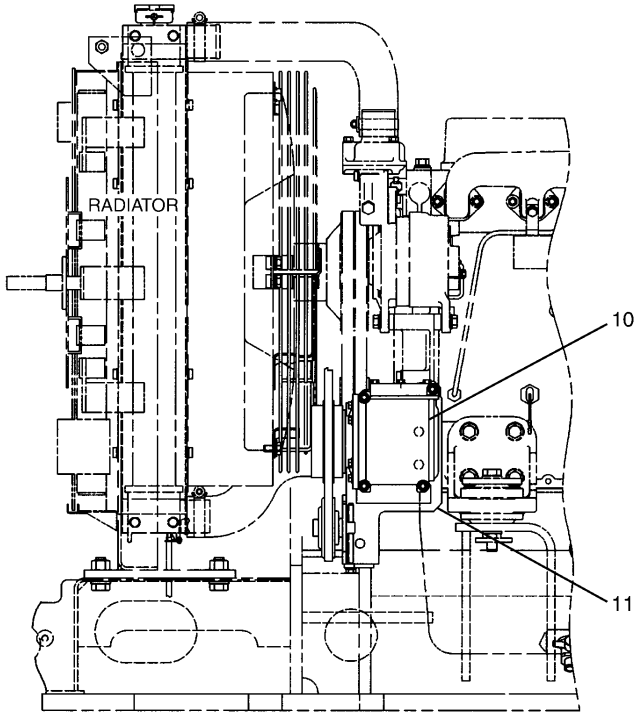

LEFT SIDE VIEW OF ENGINE

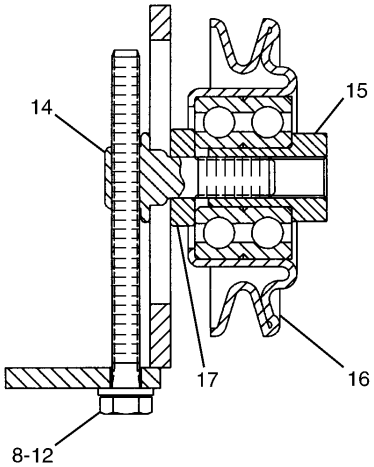

A – A

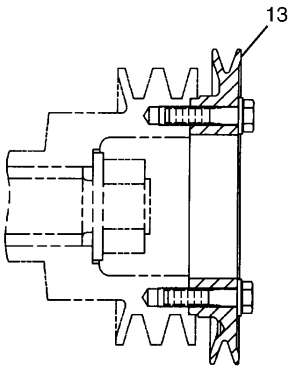

B – B

H89098E 03

OPERATOR STATION

NOTE	No.	PART No.	QTY	PART NAME	NOTE	No.	PART No.	QTY	PART NAME
	1	8T-4121	7	WASHER					
	2	8T-4182	4	BOLT (L=45mm)					
	3	255-3014	1	V-BELT					
	4	8T-4648	2	BOLT (L=70mm)					
	5	8T-4223	2	WASHER					
	6	2M-0849	2	WASHER					
	7	8T-4177	4	BOLT (L=90mm)					
	8	8T-4224	5	WASHER					
	9	8T-4172	3	BOLT (L=80mm)					
	10	171-7495	1	COMPRESSOR GP					
		171-7496	1	COIL AS					
		102-8802	1	RECEPTACLE KIT					
		186-3735	2	PIN					
	11	118-9862	1	BRACKET AS					
	12	085-9492	1	BOLT (L=100mm)					
	13	118-9863	1	PULLEY					
	14	118-9864	1	SHAFT					
	15	118-9865	1	COLLAR					
	16	118-9867	1	PULLEY AS					
	17	7Y-1972	1	SPACER					

H89098E 03

162-6325 COMPRESSOR GP-REFRIGERANT

OPERATOR STATION

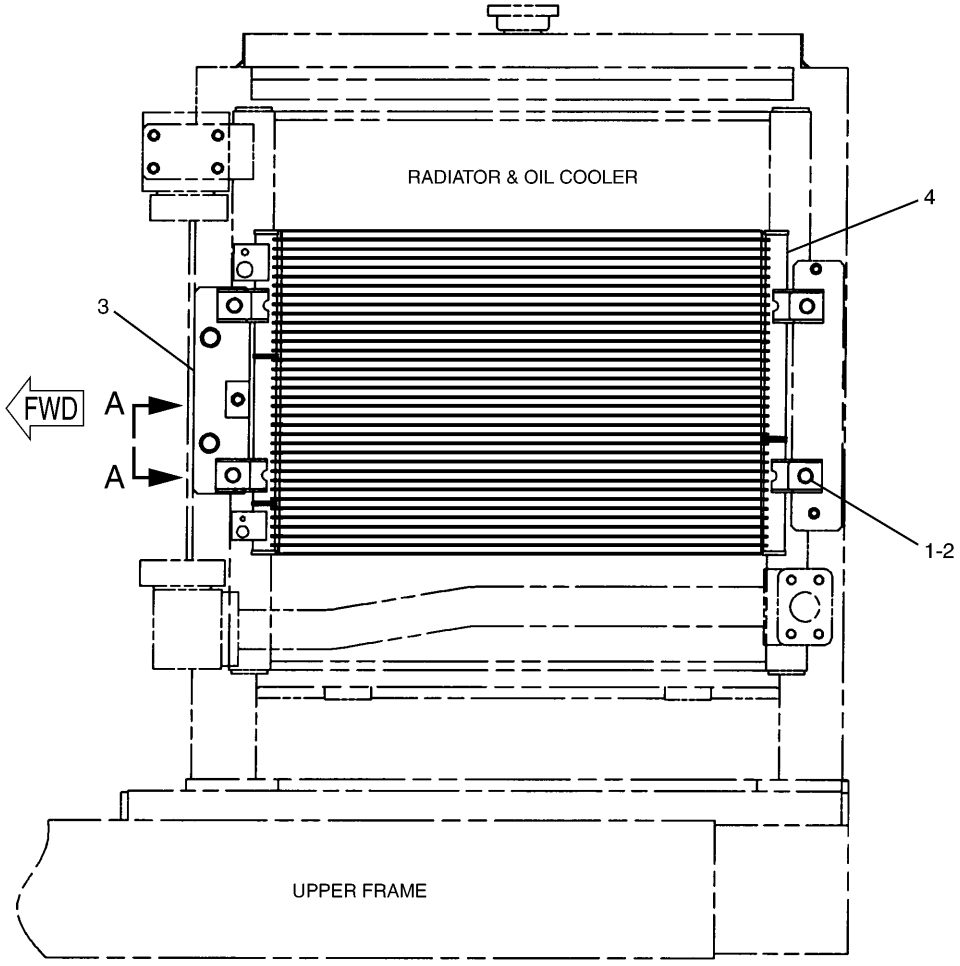

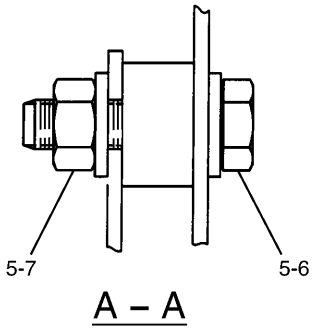

NOTE	No.	PART No.	QTY	PART NAME	NOTE	No.	PART No.	QTY	PART NAME
	1	8T-4224	4	WASHER					
	2	8T-4189	4	BOLT (L=20mm)					
	3	178-5535	1	BRACKET AS					
	4	171-7432	1	CONDENSER AS					
	5	8T-4121	4	WASHER					
	6	8T-4186	2	BOLT (L=40mm)					
	7	8T-4133	2	NUT					

H72029E 01

170-9704 CONDENSER & MTG GP-REFRIGERANT

OPERATOR STATION

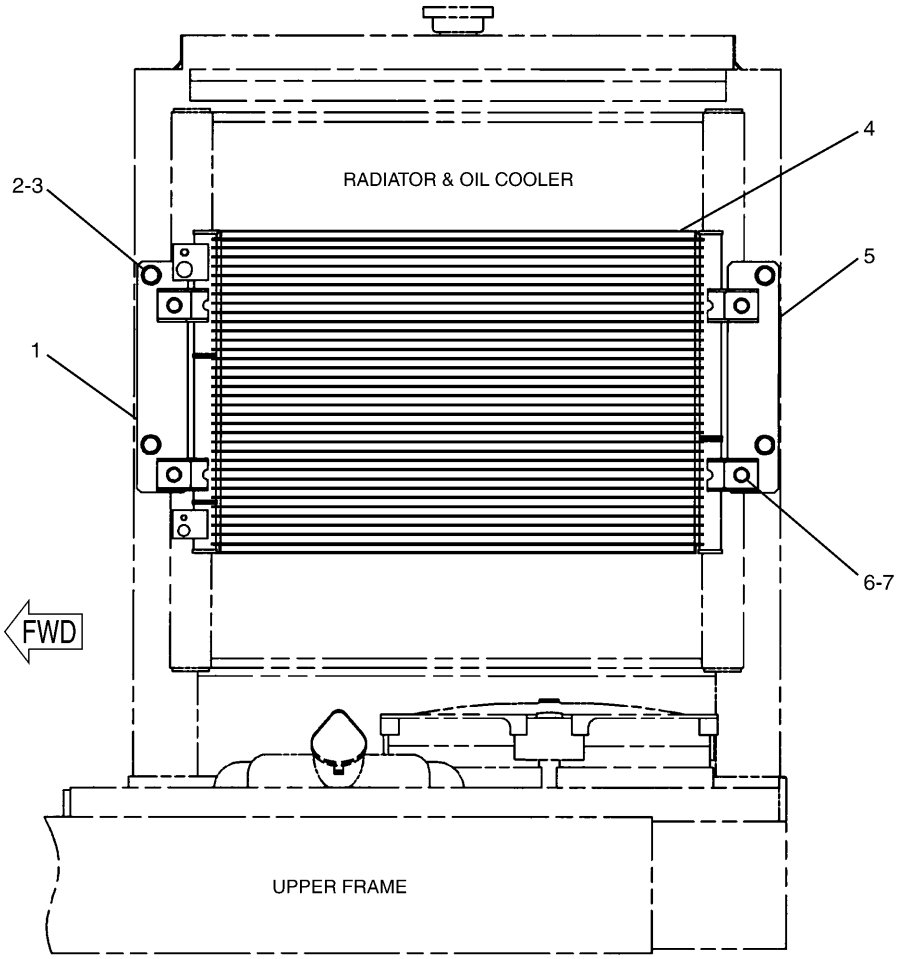

NOTE	No.	PART No.	QTY	PART NAME	NOTE	No.	PART No.	QTY	PART NAME
	1	196-1578	1	BRACKET AS					
	2	8T-4191	4	BOLT (L=16mm)					
	3	8T-4121	4	WASHER					
	4	171-7432	1	CONDENSER AS					
	5	196-1577	1	BRACKET AS					
	6	8T-4189	4	BOLT (L=20mm)					
	7	8T-4224	4	WASHER					

H75248E 01

196-1429 CONDENSER & MTG GP-REFRIGERANT

Part of 183-1535-Page49
An Attachment

Consists of :

			Page
1	197-4421	LIGHTING GP-BOOM	182
1	167-9976	BOOM GP	638
1	170-9831	CYLINDER & LINES GP-BOOM	295
1	170-9832	CYLINDER & LINES GP-BOOM	295
1	194-8310	CYLINDER & LINES GP-STICK	296
1	172-2965	LINES GP-GREASE	657
1	207-6501	LINES GP-BOOM	322

H77621E 04

151-1487 BOOM AR-1 PIECE LONG
An Attachment

Consists of :

			Page
1	198-0507	BOOM GP	642
1	198-0421	LINES GP-QUICK COUPLER	332

H75249E 00

198-0506 BOOM AR
An Attachment

Consists of :

			Page
1	7I-6926	LINES GP-GREASE	658
1	167-9973	STICK GP-HOE	644
1	179-7600	LINES GP-STICK	325

H71534E 02

151-1488 STICK AR-HOE

S/N CAE 01201-(T04.06)
An Attachment

Consists of :

			Page
1	167-9970	STICK GP-HOE	647
1	179-7601	LINES GP-STICK	326

H71535E 02

151-1489 STICK AR-HOE

An Attachment

IMPLEMENTS

Consists of :

			Page
1	251-2750	LINES GP-GREASE	659
1	251-2747	STICK GP-HOE	644.01
1	179-7600	LINES GP-STICK	325

H87149E 03

151-1488 STICK AR-HOE
S/N CAE (T04.07)-Up
An Attachment

MEMORANDA

Consists of :

			Page
1	215-5932	STICK GP-COUPLER	650
1	215-5942	LINES GP-QUICK COUPLER	349

H84424E 00

215-5931 STICK AR-COUPLER
An Attachment

Consists of :

			Page
1	195-5408	STICK GP-HOE	648
1	179-7601	LINES GP-STICK	326

H75252E 00

194-8988 STICK AR-HOE

S/N CAE 01201-02264
An Attachment

Consists of :

			Page
1	165-9424	CYLINDER & LINES GP-BUCKET	296
1	168-0014	LINKAGE GP-BUCKET	660

H82883E 02

151-1491 LINKAGE AR-BUCKET

S/N CAE 01201-02264
An Attachment

IMPLEMENTS

Consists of :

			Page
1	229-1057	STICK GP-HOE	648.01
1	289-5279	LINES GP-STICK	327

H93728E 01

229-1056 STICK AR-HOE

S/N CAE 02265-Up
Part of 251-2922-Page631.02
An Attachment

Consists of :

			Page
1	248-7866	CYLINDER & LINES GP-BUCKET	296.01
1	248-7837	LINKAGE GP-BUCKET	662.01

H87150E 00

251-2864 LINKAGE AR-BUCKET

S/N CAE 02265-Up
An Attachment

IMPLEMENTS

Consists of :

			Page
1	229-1056	STICK AR-HOE	631.01
1	251-2869	LINKAGE AR-BUCKET	632.01

H87188E 01

251-2922 LINKAGE AR-FRONT

Heavy Duty
S/N CAE 02265-Up
An Attachment

Consists of :

			Page
1	209-5896	CYLINDER & LINES GP-BUCKET.....	296.02
1	208-2020	LINKAGE GP-BUCKET.....	663

H82886E 00

211-6353 LINKAGE AR-BUCKET
S/N CAE 01201-02264
An Attachment

Consists of :

			Page
1	165-9424	CYLINDER & LINES GP-BUCKET.....	296
1	195-5411	LINKAGE GP-BUCKET.....	666

H82884E 00

194-8960 LINKAGE AR-BUCKET
S/N CAE 01201-02264
An Attachment

IMPLEMENTS

Consists of :

			Page
1	248-7860	CYLINDER & LINES GP-BUCKET.....	296.02
1	248-7840	LINKAGE GP-BUCKET.....	665.01

H87191E 00

251-2869 LINKAGE AR-BUCKET

Fabrication Type (Heavy Duty)
S/N CAE 02265-Up
Part of 251-2922-Page631.02
An Attachment

Consists of :

			Page
1	248-7866	CYLINDER & LINES GP-BUCKET.....	296.01
1	248-7821	LINKAGE GP-BUCKET.....	668.01

H87151E 00

251-2866 LINKAGE AR-BUCKET

S/N CAE 02265-Up
An Attachment

MEMORANDA

Consists of :

			Page
1	151-1493	BLADE AR	634
1	165-0965	CONTROL AR-AUXILIARY	357
1	196-0475	LINES GP-BLADE CYL & VALVE	412

H77625E 00

198-2120 BLADE AR
An Attachment

Consists of :

			Page
1	151-1494	BLADE AR	636
1	165-0965	CONTROL AR-AUXILIARY	357
1	196-0475	LINES GP-BLADE CYL & VALVE	412

H77626E 00

198-2121 BLADE AR
An Attachment

Consists of :

			Page
1	151-1496	PLATE & FILM GP	700
1	160-1994	GUARD GP-BLADE CYLINDER	320
1	165-9425	CYLINDER & LINES GP-BLADE	297
1	167-9991	BLADE & MOUNTING GP	651
1	168-0000	FRAME AS-UNDERCARRIAGE	246
1	168-9555	LINES GP-BLADE CYL & VALVE	410
1	168-9556	LINES GP-PILOT	382
1	170-9800	CYLINDER & LINES GP-BLADE	297
1	171-7344	PLATFORM GP-OPERATOR	586
1	171-7372	CONTROL GP-BLADE	442
1	183-8098	PUMP & MOUNTING GP	274
1	184-8209	GUARD GP-BOTTOM	223
1	199-4573	GEAR & BEARING GP-SWING	240

H75255E 02

151-1493 BLADE AR
S/N CAE 01201-01893
Part of 198-2120-Page633
An Attachment

Consists of :

			Page
1	151-1496	PLATE & FILM GP	700
1	160-1994	GUARD GP-BLADE CYLINDER	320
1	165-9425	CYLINDER & LINES GP-BLADE	297
1	167-9991	BLADE & MOUNTING GP	651
1	168-0000	FRAME AS-UNDERCARRIAGE	246
1	168-9555	LINES GP-BLADE CYL & VALVE	410
1	168-9556	LINES GP-PILOT	382
1	170-9800	CYLINDER & LINES GP-BLADE	297
1	244-5336	PLATFORM GP-OPERATOR	586.01
1	171-7372	CONTROL GP-BLADE	442
1	183-8098	PUMP & MOUNTING GP	274
1	184-8209	GUARD GP-BOTTOM	223
1	199-4573	GEAR & BEARING GP-SWING	240

H87251E 03

151-1493 BLADE AR
S/N CAE 01894-Up
Part of 198-2120-Page633
An Attachment

MEMORANDA

Consists of :

			Page
1	151-1496	PLATE & FILM GP	700
1	160-1994	GUARD GP-BLADE CYLINDER	320
1	165-9425	CYLINDER & LINES GP-BLADE	297
1	172-2993	BLADE & MOUNTING GP	652
1	168-0000	FRAME AS-UNDERCARRIAGE	246
1	168-9555	LINES GP-BLADE CYL & VALVE	410
1	168-9556	LINES GP-PILOT	382
1	170-9800	CYLINDER & LINES GP-BLADE	297
1	171-7344	PLATFORM GP-OPERATOR	586
1	171-7372	CONTROL GP-BLADE	442
1	183-8098	PUMP & MOUNTING GP	274
1	184-8209	GUARD GP-BOTTOM	223
1	199-4573	GEAR & BEARING GP-SWING	240

Consists of :

			Page
1	151-1496	PLATE & FILM GP	700
1	160-1994	GUARD GP-BLADE CYLINDER	320
1	165-9425	CYLINDER & LINES GP-BLADE	297
1	172-2993	BLADE & MOUNTING GP	652
1	168-0000	FRAME AS-UNDERCARRIAGE	246
1	168-9555	LINES GP-BLADE CYL & VALVE	410
1	168-9556	LINES GP-PILOT	382
1	170-9800	CYLINDER & LINES GP-BLADE	297
1	244-5336	PLATFORM GP-OPERATOR	586.01
1	171-7372	CONTROL GP-BLADE	442
1	183-8098	PUMP & MOUNTING GP	274
1	184-8209	GUARD GP-BOTTOM	223
1	199-4573	GEAR & BEARING GP-SWING	240

MEMORANDA

Consists of :

			Page
1	151-1496	PLATE & FILM GP	700
1	160-1994	GUARD GP-BLADE CYLINDER	320
1	165-9425	CYLINDER & LINES GP-BLADE	297
1	167-9993	BLADE & MOUNTING GP	653
1	168-0000	FRAME AS-UNDERCARRIAGE	246
1	168-9555	LINES GP-BLADE CYL & VALVE	410
1	168-9556	LINES GP-PILOT	382
1	170-9800	CYLINDER & LINES GP-BLADE	297
1	171-7344	PLATFORM GP-OPERATOR	586
1	171-7372	CONTROL GP-BLADE	442
1	183-8098	PUMP & MOUNTING GP	274
1	184-8209	GUARD GP-BOTTOM	223
1	199-4573	GEAR & BEARING GP-SWING	240

H75256E 02

151-1494 BLADE AR
S/N CAE 01201-01893
Part of 198-2121-Page633
An Attachment

Consists of :

			Page
1	151-1496	PLATE & FILM GP	700
1	160-1994	GUARD GP-BLADE CYLINDER	320
1	165-9425	CYLINDER & LINES GP-BLADE	297
1	167-9993	BLADE & MOUNTING GP	653
1	168-0000	FRAME AS-UNDERCARRIAGE	246
1	168-9555	LINES GP-BLADE CYL & VALVE	410
1	168-9556	LINES GP-PILOT	382
1	170-9800	CYLINDER & LINES GP-BLADE	297
1	244-5336	PLATFORM GP-OPERATOR	586.01
1	171-7372	CONTROL GP-BLADE	442
1	183-8098	PUMP & MOUNTING GP	274
1	184-8209	GUARD GP-BOTTOM	223
1	199-4573	GEAR & BEARING GP-SWING	240

H87253E 03

151-1494 BLADE AR
S/N CAE 01894-Up
Part of 198-2121-Page633
An Attachment

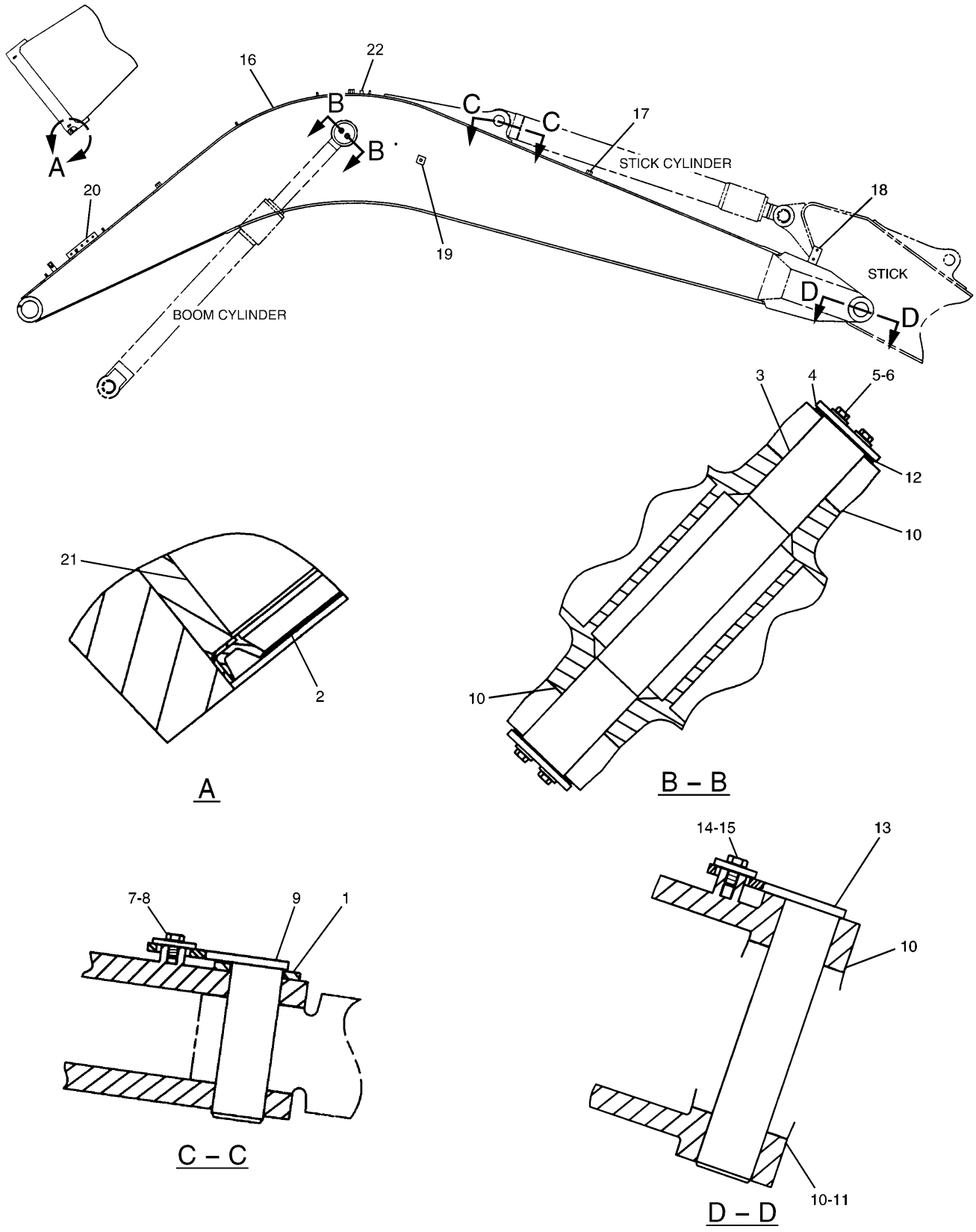

H98202E 02

167–9976 BOOM GP
Part of 151–1487–Page628
An Attachment

IMPLEMENTS

NOTE	No.	PART No.	QTY	PART NAME	NOTE	No.	PART No.	QTY	PART NAME
	1	093-0357	1	WASHER					
	2	166-1494	2	SEAL					
	3	172-3080	1	PIN					
	4	095-6824	2	PLATE					
	5	8T-4192	4	BOLT (L=25mm)					
	6	099-3600	4	WASHER					
	7	8T-4179	1	BOLT (L=20mm)					
	8	086-0297	1	WASHER					
	9	1R-6225	1	PIN AS					
	10	166-1486	4	SHIM (T=2.00mm)					
B	11	093-0115	1	SHIM (T=2.00mm)					
B		133-2425	1	SHIM (T=0.50mm)					
	12	4I-3309	2	SPACER					
	13	1R-6226	1	PIN AS					
	14	7X-2552	1	BOLT (L=30mm)					
	15	086-0298	1	WASHER					
	16	167-9977	1	BOOM AS					
	17	7I-6845	6	PLATE					
	18	7I-6846	1	PLATE					
	19	7Y-2579	2	BAR					
	20	113-2276	1	MANIFOLD					
	21	168-0062	2	BEARING					
	22	087-5841	1	PLATE					

B—USE AS REQUIRED

H98202E 02

167-9976 BOOM GP

Part of 151-1487-Page628

An Attachment

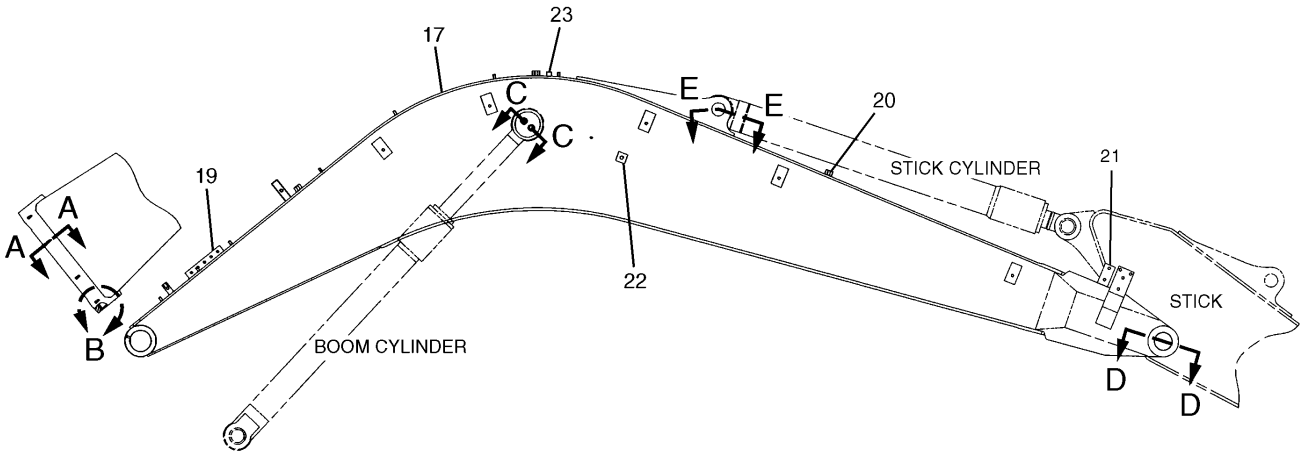

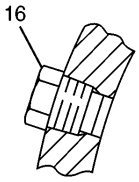

A – A

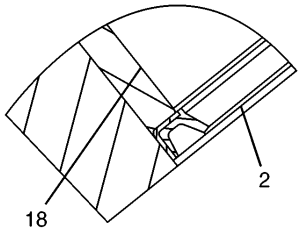

B

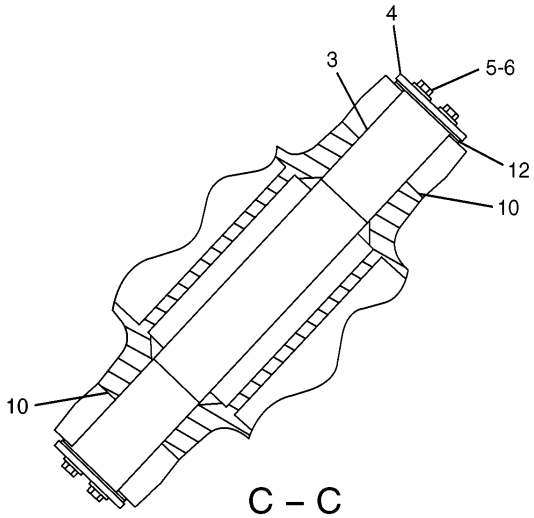

C – C

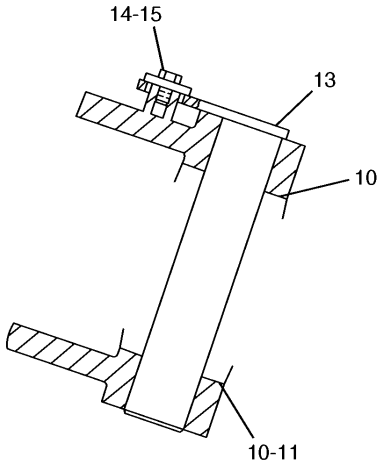

D – D

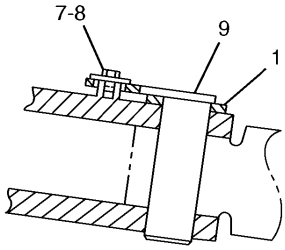

E – E

H98203E 02

179–5076 BOOM GP
Part of 179–5075–Page328
An Attachment

IMPLEMENTS

NOTE	No.	PART No.	QTY	PART NAME	NOTE	No.	PART No.	QTY	PART NAME
	1	093-0357	1	WASHER					
	2	166-1494	2	SEAL					
	3	172-3080	1	PIN					
	4	095-6824	2	PLATE					
	5	8T-4192	4	BOLT (L=25mm)					
	6	099-3600	4	WASHER					
	7	8T-4179	1	BOLT (L=20mm)					
	8	086-0297	1	WASHER					
	9	1R-6225	1	PIN AS					
	10	166-1486	4	SHIM (T=2.00mm)					
B	11	093-0115	1	SHIM (T=2.00mm)					
B		133-2425	1	SHIM (T=0.50mm)					
	12	4I-3309	2	SPACER					
	13	1R-6226	1	PIN AS					
	14	7X-2552	1	BOLT (L=30mm)					
	15	086-0298	1	WASHER					
	16	8T-6764	2	PLUG					
	17	173-7914	1	BOOM AS					
	18	168-0062	2	BEARING					
	19	113-2276	1	MANIFOLD					
	20	7I-6845	6	PLATE					
	21	7I-6846	1	PLATE					
	22	7Y-2579	2	BAR					
	23	087-5841	1	PLATE					

B—USE AS REQUIRED

H98203E 02

179-5076 BOOM GP

Part of 179-5075-Page328
An Attachment

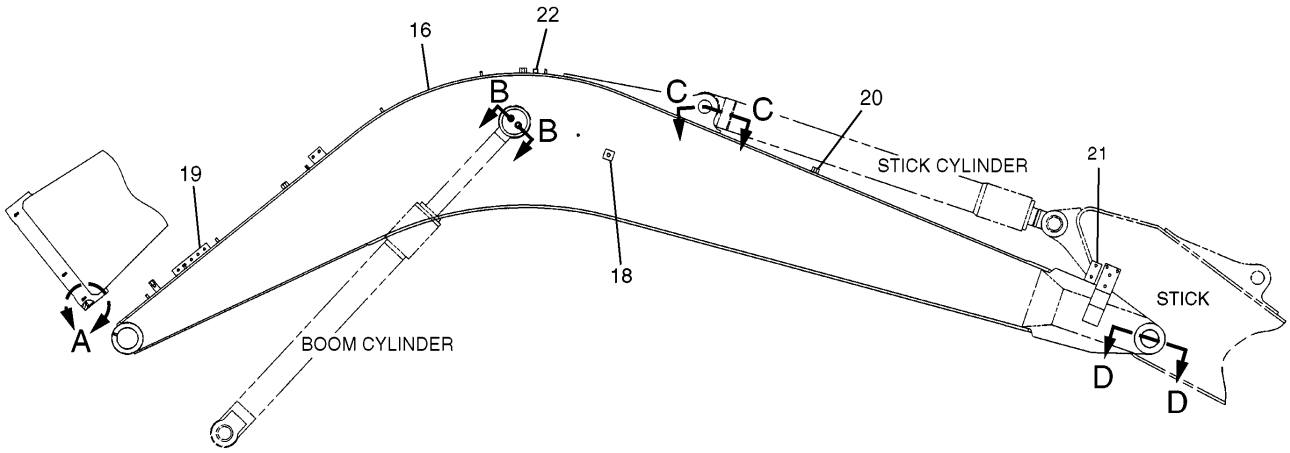

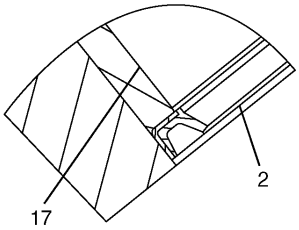

A

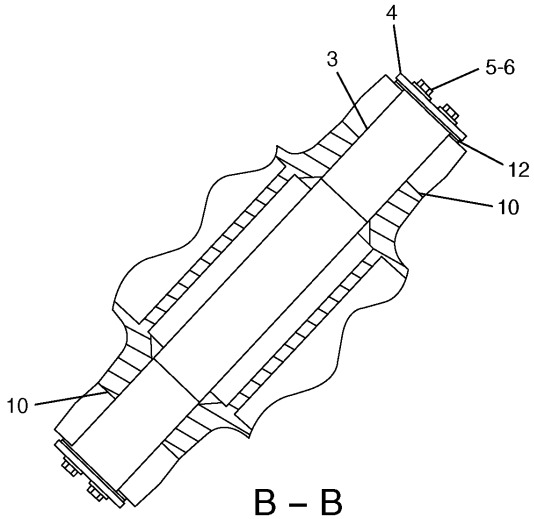

B – B

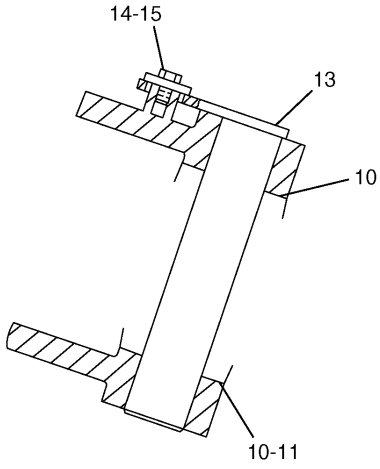

D – D

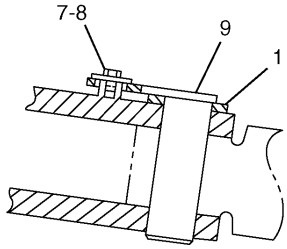

C – C

H98204E 00

198-0507 BOOM GP
Part of 198-0506-Page628
An Attachment

IMPLEMENTS

NOTE	No.	PART No.	QTY	PART NAME	NOTE	No.	PART No.	QTY	PART NAME
	1	093-0357	1	WASHER					
	2	166-1494	2	SEAL					
	3	172-3080	1	PIN					
	4	095-6824	2	PLATE					
	5	8T-4192	4	BOLT (L=25mm)					
	6	099-3600	4	WASHER					
	7	8T-4179	1	BOLT (L=20mm)					
	8	086-0297	1	WASHER					
	9	1R-6225	1	PIN AS					
	10	166-1486	4	SHIM (T=2.00mm)					
B	11	093-0115	1	SHIM (T=2.00mm)					
B		133-2425	1	SHIM (T=0.50mm)					
	12	4I-3309	2	SPACER					
	13	1R-6226	1	PIN AS					
	14	7X-2552	1	BOLT (L=30mm)					
	15	086-0298	1	WASHER					
	16	198-0508	1	BOOM AS					
	17	168-0062	2	BEARING					
	18	7Y-2579	2	BAR					
	19	113-2276	1	MANIFOLD					
	20	7I-6845	6	PLATE					
	21	7I-6846	1	PLATE					
	22	087-5841	1	PLATE					

B—USE AS REQUIRED

H98204E 00

198-0507 BOOM GP

Part of 198-0506-Page628
An Attachment

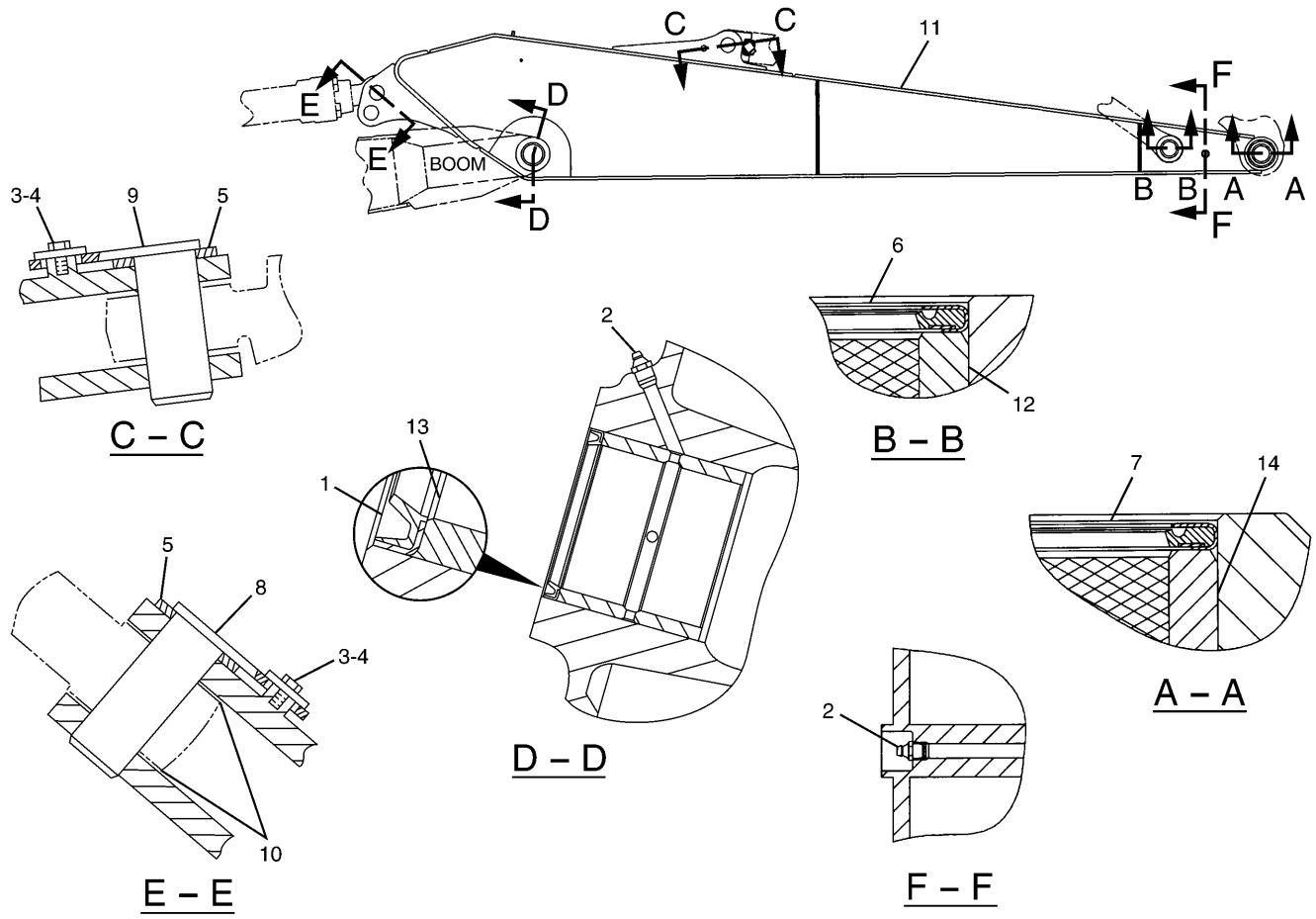

NOTE	No.	PART No.	QTY	PART NAME	NOTE	No.	PART No.	QTY	PART NAME
	1	166-1494	2	SEAL					
	2	3B-8489	3	FITTING					
	3	8T-4179	2	BOLT (L=20mm)					
	4	086-0297	2	WASHER					
	5	093-0357	2	WASHER					
	6	093-1433	2	SEAL					
	7	096-0131	2	SEAL					
	8	108-9191	1	PIN AS					
	9	127-3913	1	PIN AS					
	10	166-1481	2	SHIM (T=2.00mm)					
	11	167-9974	1	STICK AS					
	12	229-1095	2	BEARING					
	13	168-0062	2	BEARING					
	14	229-1091	2	BEARING					

H85587E 01

167-9973 STICK GP-HOE

S/N CAE 01201-(T04.06)
Part of 151-1488-Page629
An Attachment

IMPLEMENTS

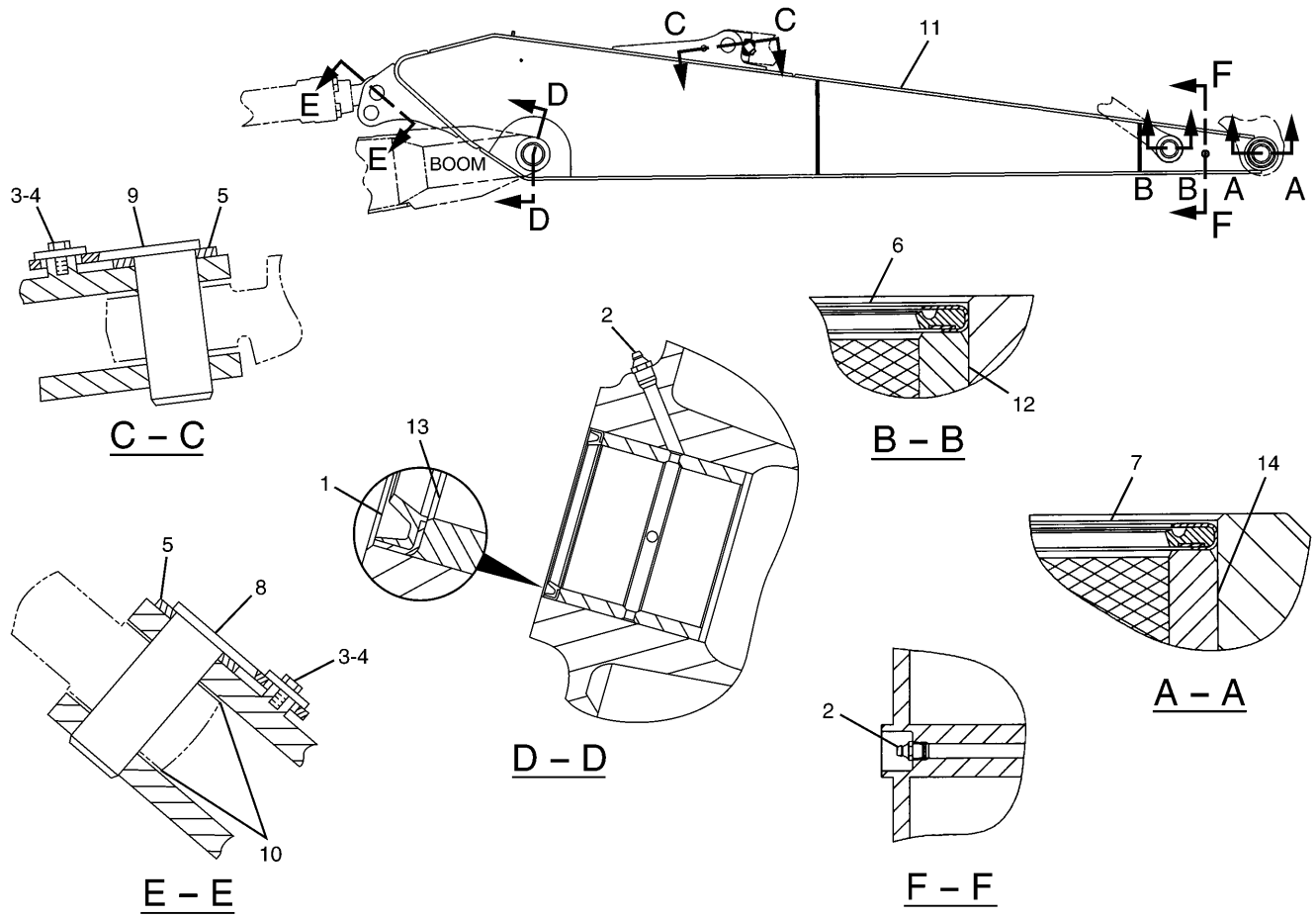

NOTE	No.	PART No.	QTY	PART NAME	NOTE	No.	PART No.	QTY	PART NAME
	1	166-1494	2	SEAL					
	2	3B-8489	3	FITTING					
	3	8T-4179	2	BOLT (L=20mm)					
	4	086-0297	2	WASHER					
	5	093-0357	2	WASHER					
	6	093-1433	2	SEAL					
	7	096-0131	2	SEAL					
	8	1R-6225	1	PIN AS					
	9	127-3913	1	PIN AS					
	10	166-1481	2	SHIM (T=2.00mm)					
	11	251-2748	1	STICK AS					
	12	229-1095	2	BEARING					
	13	168-0062	2	BEARING					
	14	229-1091	2	BEARING					

H87152E 00

251-2747 STICK GP-HOE
S/N CAE (T04.07)-Up
Part of 151-1488-Page629.01
An Attachment

MEMORANDA

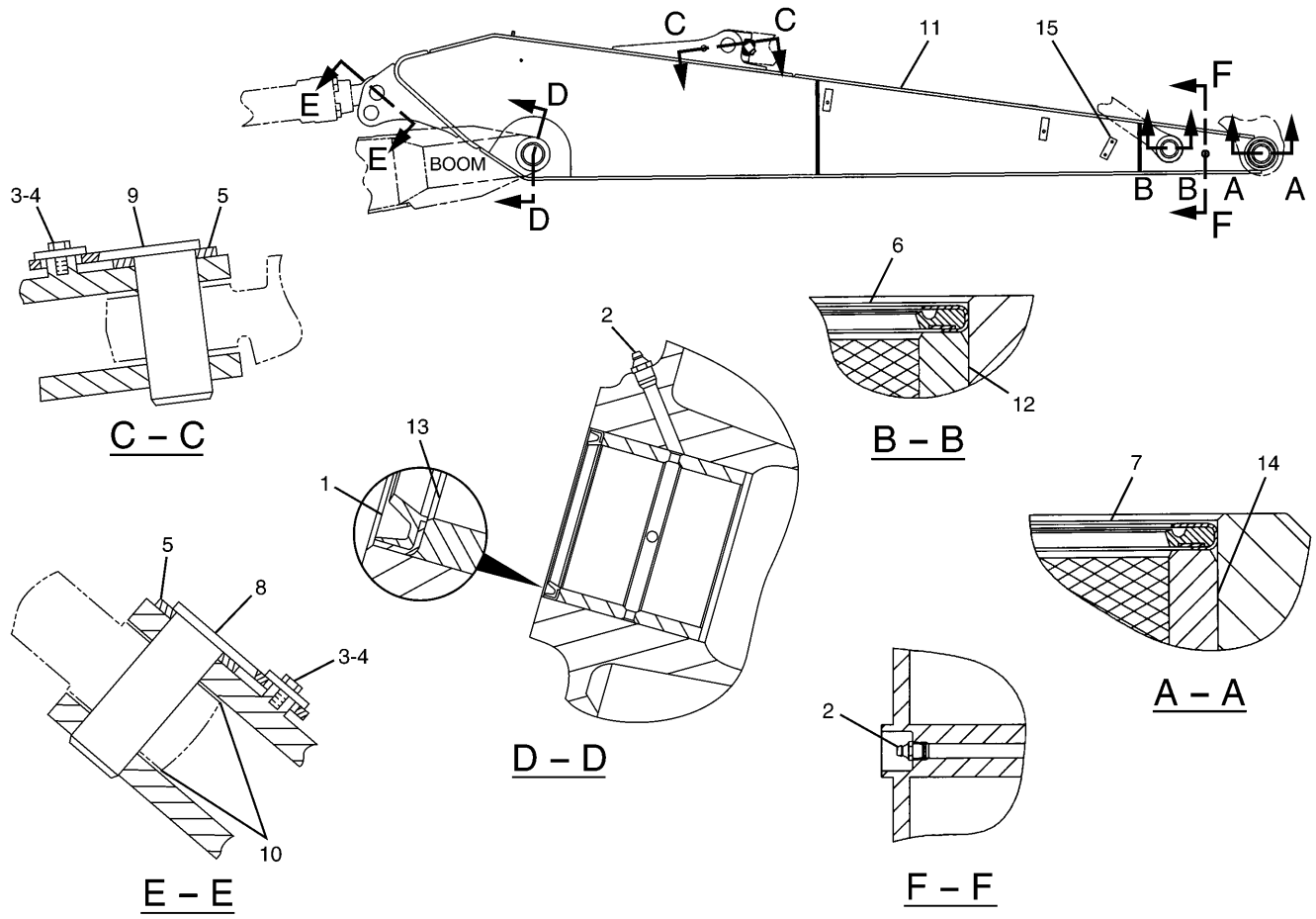

NOTE	No.	PART No.	QTY	PART NAME	NOTE	No.	PART No.	QTY	PART NAME
	1	166-1494	2	SEAL					
	2	3B-8489	3	FITTING					
	3	8T-4179	2	BOLT (L=20mm)					
	4	086-0297	2	WASHER					
	5	093-0357	2	WASHER					
	6	093-1433	2	SEAL					
	7	096-0131	2	SEAL					
	8	108-9191	1	PIN AS					
	9	127-3913	1	PIN AS					
	10	166-1481	2	SHIM (T=2.00mm)					
	11	187-9967	1	STICK AS					
	12	229-1095	2	BEARING					
	13	168-0062	2	BEARING					
	14	229-1091	2	BEARING					

H86669E 00

187-9968 STICK GP
Part of 187-9966-Page329
An Attachment

MEMORANDA

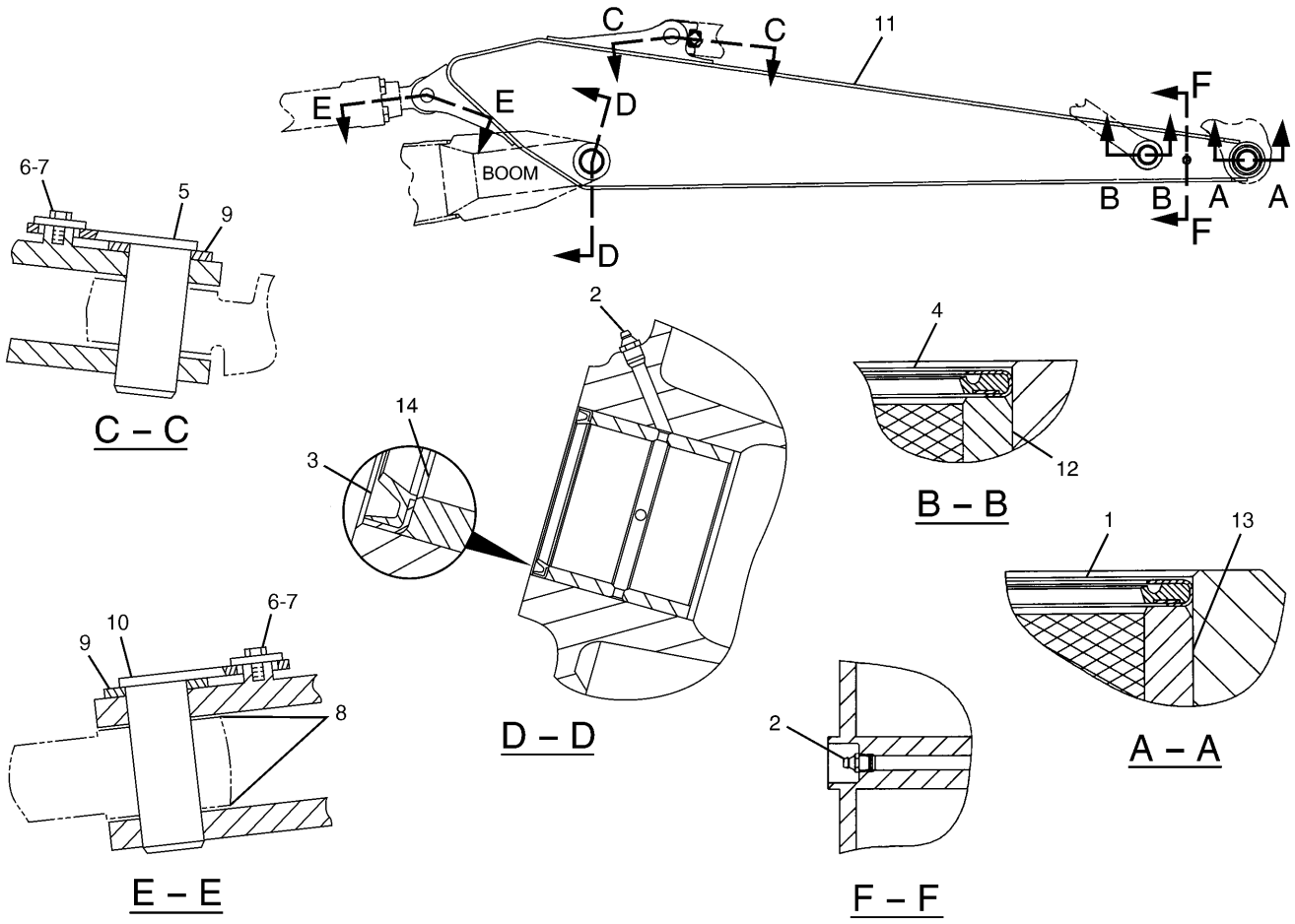

NOTE	No.	PART No.	QTY	PART NAME	NOTE	No.	PART No.	QTY	PART NAME
	1	096-0131	2	SEAL					
	2	3B-8489	3	FITTING					
	3	166-1494	2	SEAL					
	4	093-1433	2	SEAL					
	5	127-3913	1	PIN AS					
	6	8T-4179	2	BOLT (L=20mm)					
	7	086-0297	2	WASHER					
	8	166-1481	2	SHIM (T=2.00mm)					
	9	093-0357	2	WASHER					
	10	1R-6225	1	PIN AS					
	11	167-9971	1	STICK AS					
	12	229-1095	2	BEARING					
	13	229-1091	2	BEARING					
	14	168-0062	2	BEARING					

H85590E 01

167-9970 STICK GP-HOE
Part of 151-1489-Page629
An Attachment

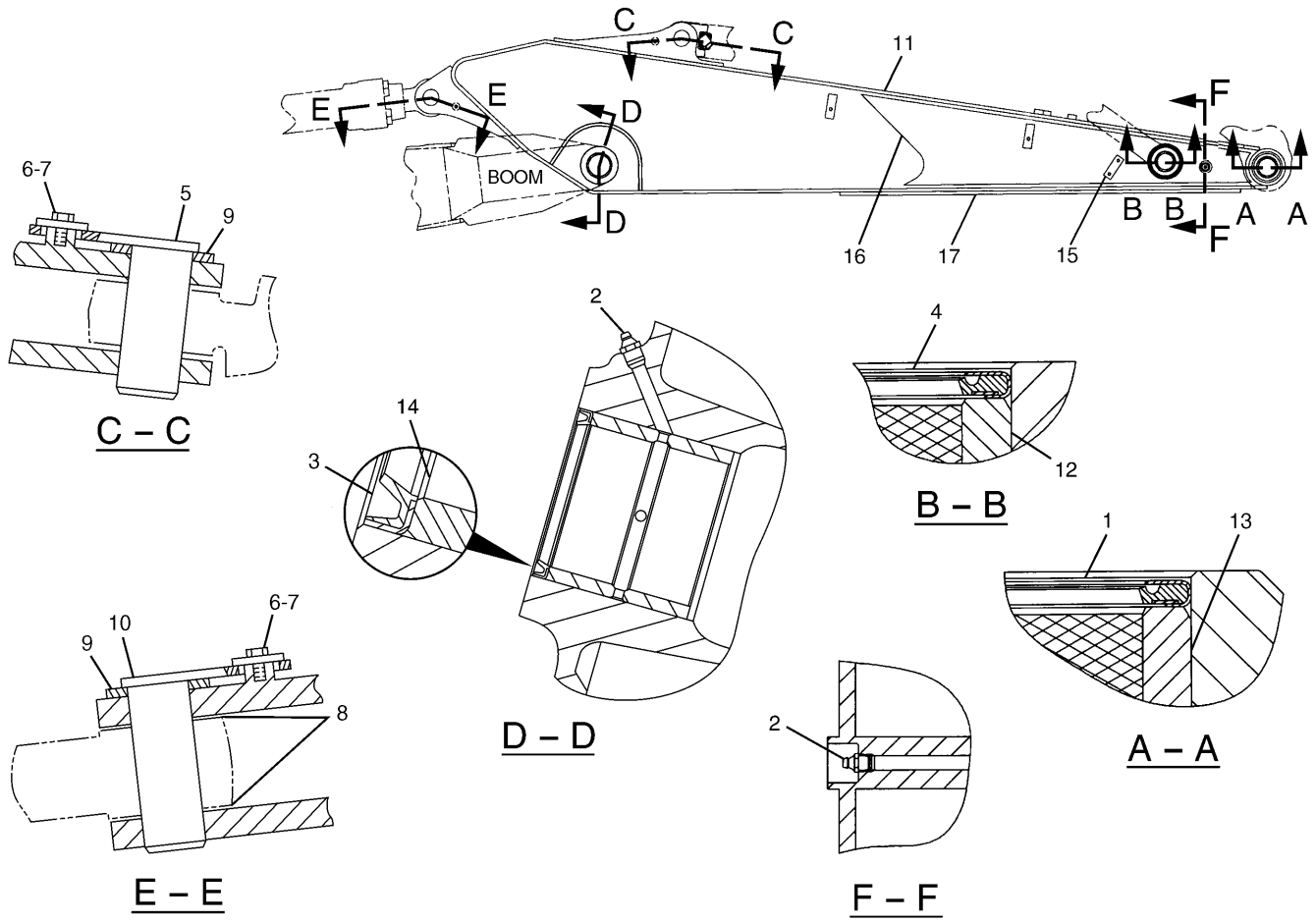

NOTE	No.	PART No.	QTY	PART NAME	NOTE	No.	PART No.	QTY	PART NAME
	1	096-0131	2	SEAL					
	2	3B-8489	3	FITTING					
	3	166-1494	2	SEAL					
	4	093-1433	2	SEAL					
	5	127-3913	1	PIN AS					
	6	8T-4179	2	BOLT (L=20mm)					
	7	086-0297	2	WASHER					
	8	166-1481	2	SHIM (T=2.00mm)					
	9	093-0357	2	WASHER					
	10	1R-6225	1	PIN AS					
	11	195-5409	1	STICK AS					
	12	229-1095	2	BEARING					
	13	229-1091	2	BEARING					
	14	168-0062	2	BEARING					
	15	9C-4935	1	PLATE (RH)					
		132-1645	1	PLATE (LH)					
	16	135-4110	1	PLATE (RH)					
		135-4111	1	PLATE (LH)					
	17	135-4114	1	PLATE					

H87254E 00

195-5408 STICK GP-HOE

S/N CAE 01201-02264
Part of 194-8988-Page631
An Attachment

IMPLEMENTS

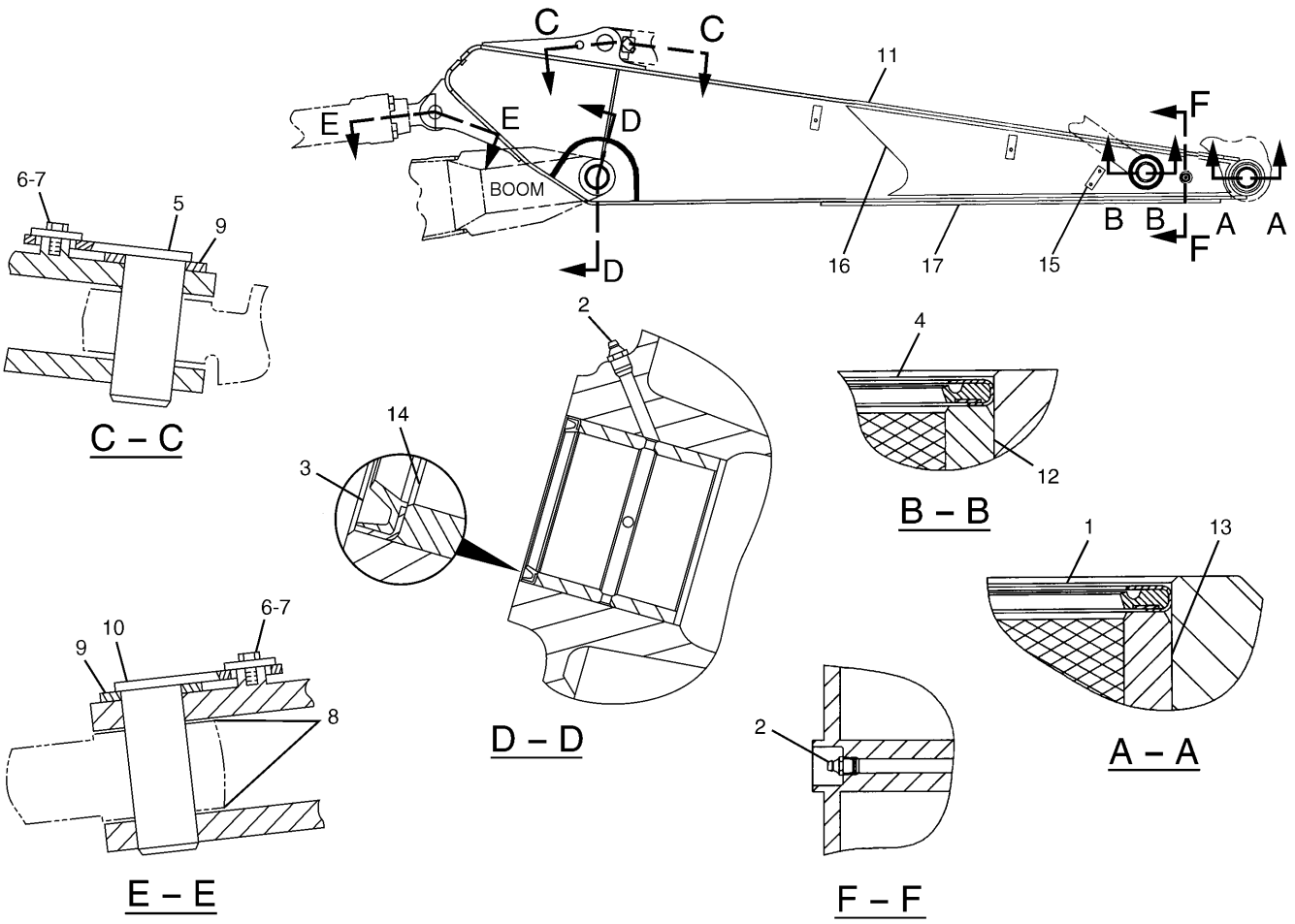

NOTE	No.	PART No.	QTY	PART NAME	NOTE	No.	PART No.	QTY	PART NAME
	1	096-0131	2	SEAL					
	2	3B-8489	3	FITTING					
	3	166-1494	2	SEAL					
	4	093-1433	2	SEAL					
	5	127-3913	1	PIN AS					
	6	8T-4179	2	BOLT (L=20mm)					
	7	086-0297	2	WASHER					
	8	166-1481	2	SHIM (T=2.00mm)					
	9	093-0357	2	WASHER					
	10	1R-6225	1	PIN AS					
	11	229-1058	1	STICK AS					
	12	229-1095	2	BEARING					
	13	229-1091	2	BEARING					
	14	168-0062	2	BEARING					
	15	9C-4935	1	PLATE (RH)					
		132-1645	1	PLATE (LH)					
	16	135-4110	1	PLATE (RH)					
		135-4111	1	PLATE (LH)					
	17	135-4114	1	PLATE					

H86428E 00

229-1057 STICK GP-HOE

S/N CAE 02265-Up
Part of 229-1056-Page631.01
An Attachment

MEMORANDA

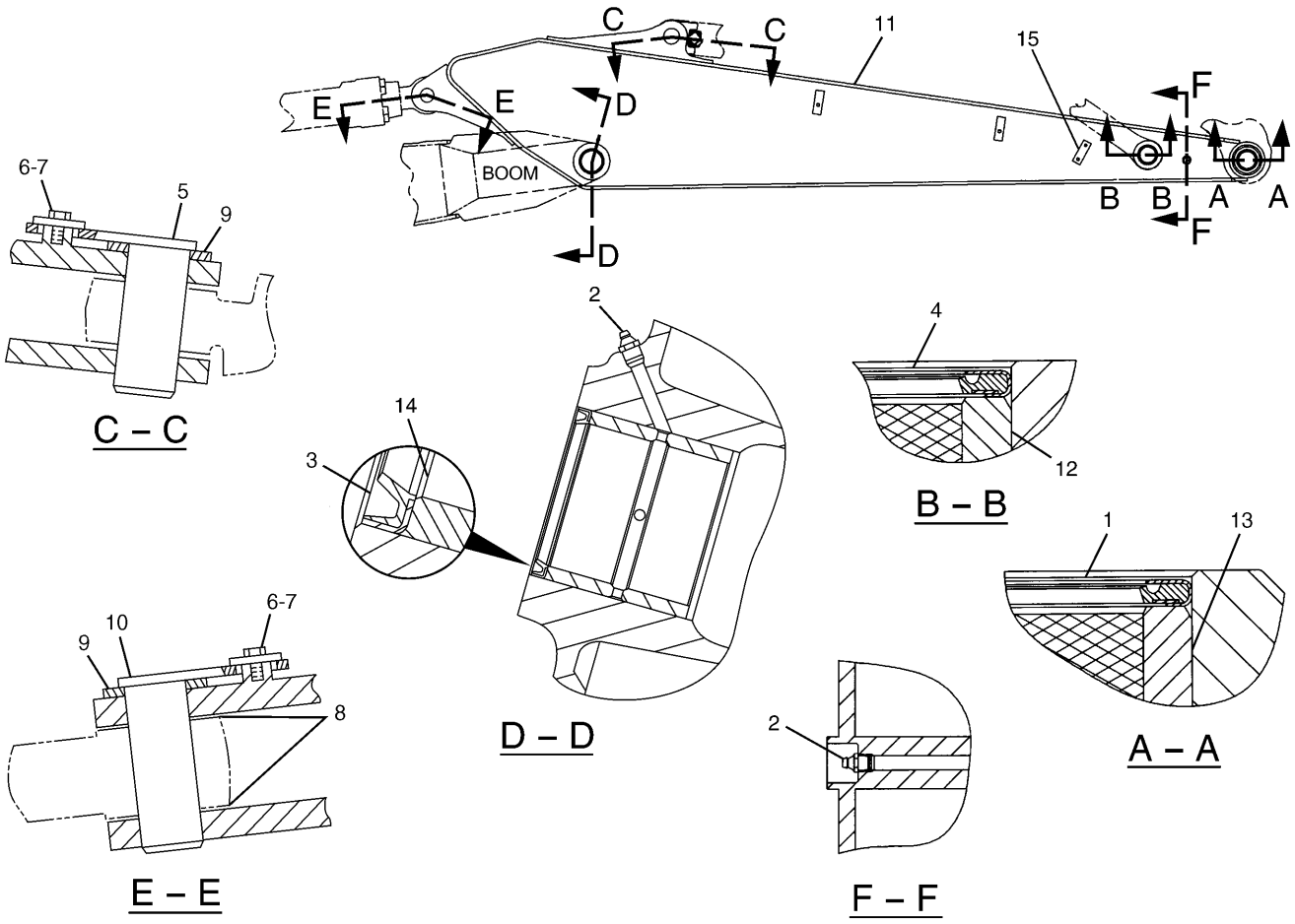

NOTE	No.	PART No.	QTY	PART NAME	NOTE	No.	PART No.	QTY	PART NAME
	1	096-0131	2	SEAL					
	2	3B-8489	3	FITTING					
	3	166-1494	2	SEAL					
	4	093-1433	2	SEAL					
	5	127-3913	1	PIN AS					
	6	8T-4179	2	BOLT (L=20mm)					
	7	086-0297	2	WASHER					
	8	166-1481	2	SHIM (T=2.00mm)					
	9	093-0357	2	WASHER					
	10	1R-6225	1	PIN AS					
	11	173-7915	1	STICK AS					
	12	229-1095	2	BEARING					
	13	229-1091	2	BEARING					
	14	168-0062	2	BEARING					

H86670E 01

179-5078 STICK GP
Part of 179-5077-Page329
An Attachment

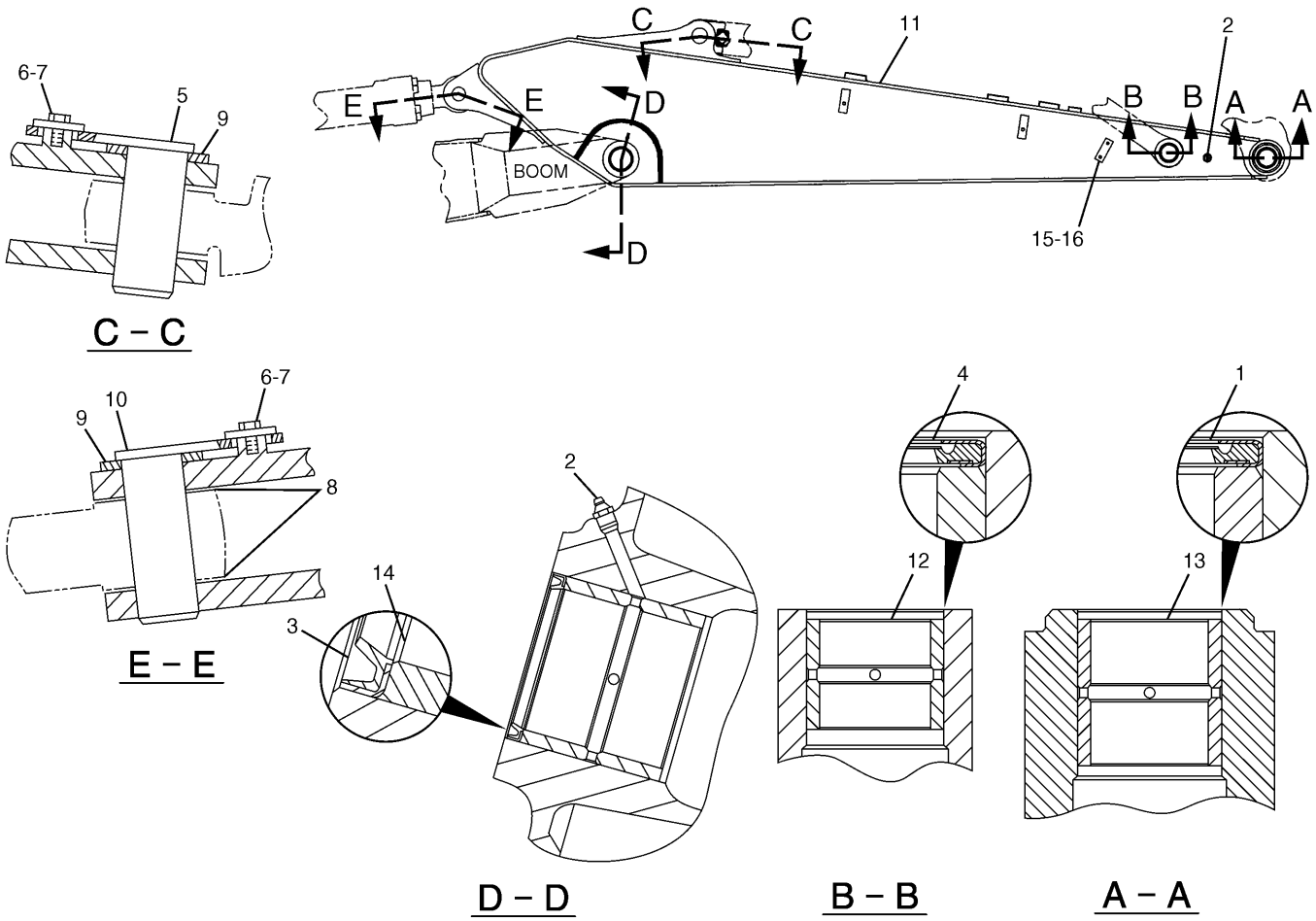

NOTE	No.	PART No.	QTY	PART NAME	NOTE	No.	PART No.	QTY	PART NAME
	1	096-0131	2	SEAL					
	2	3B-8489	3	FITTING					
	3	166-1494	2	SEAL					
	4	093-1433	2	SEAL					
	5	127-3913	1	PIN AS					
	6	8T-4179	2	BOLT (L=20mm)					
	7	086-0297	2	WASHER					
	8	166-1481	2	SHIM (T=2.00mm)					
	9	093-0357	2	WASHER					
	10	1R-6225	1	PIN AS					
	11	215-5933	1	STICK AS					
	12	143-3835	2	BEARING					
	13	189-3870	2	BEARING					
	14	168-0062	2	BEARING					
	15	9C-4935	1	PLATE (RH)					
	16	132-1645	1	PLATE (LH)					

H84426E 00

215-5932 STICK GP-COUPLER
Part of 215-5931-Page630
An Attachment

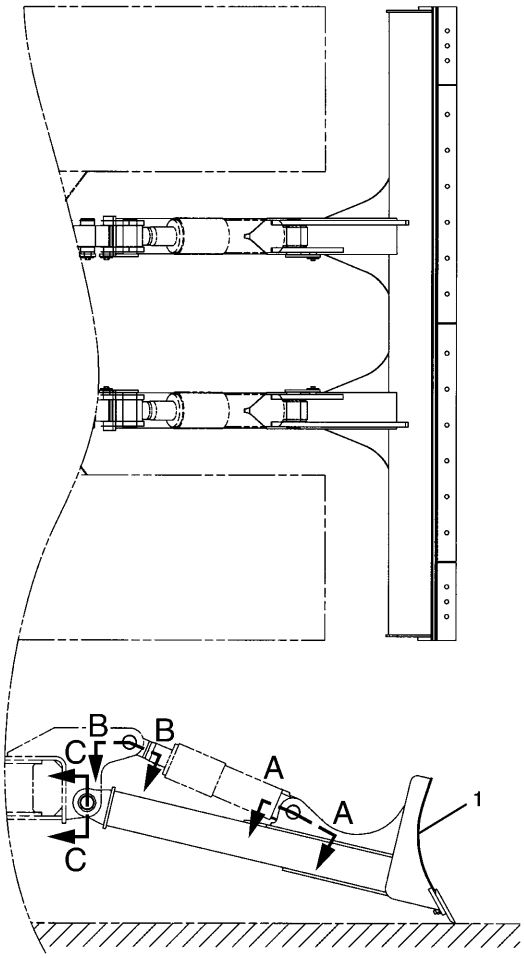

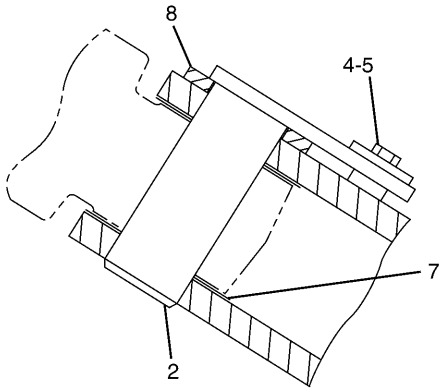

A – A

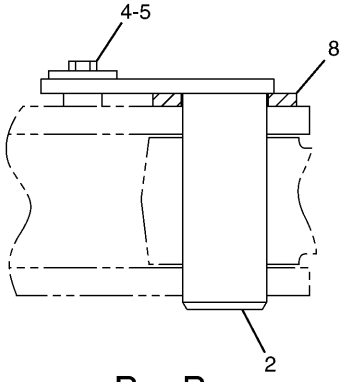

B – B

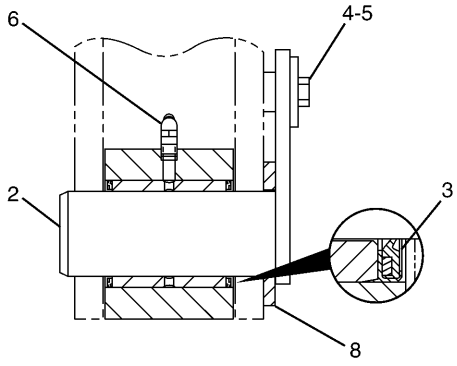

C – C

NOTE	No.	PART No.	QTY	PART NAME	NOTE	No.	PART No.	QTY	PART NAME
Y	1	172-2991	1	BLADE GP					
	2	127-3913	6	PIN AS					
	3	093-1433	4	SEAL					
	4	8T-4179	6	BOLT (L=20mm)					
	5	086-0297	6	WASHER					
	6	3J-7283	2	FITTING					
B	7	093-0065	8	SHIM (T=1.00mm)					
B		099-7091	4	SHIM (T=1.50mm)					
B		093-0097	4	SHIM (T=2.00mm)					
	8	093-0357	6	WASHER					

B—USE AS REQUIRED

Y—SEE SEPARATE ILLUSTRATION

H72039E 02

167-9991 BLADE & MOUNTING GP

Part of 151-1493-Page634
172-2991-Page654
An Attachment

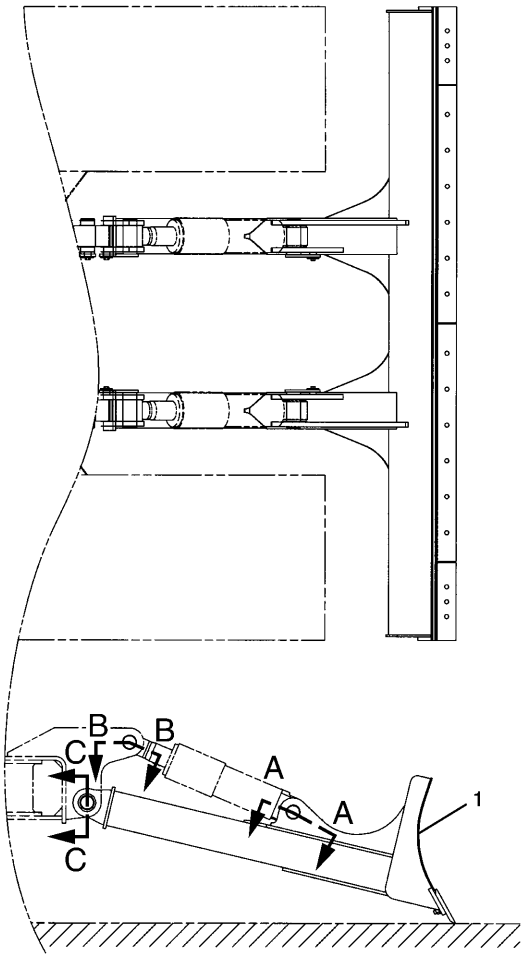

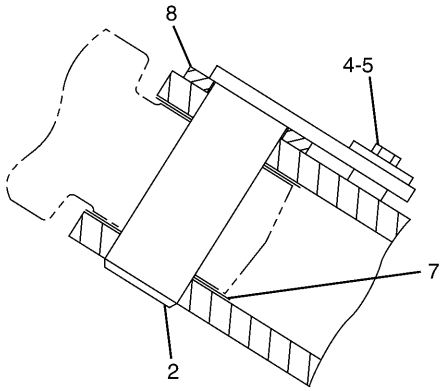

A – A

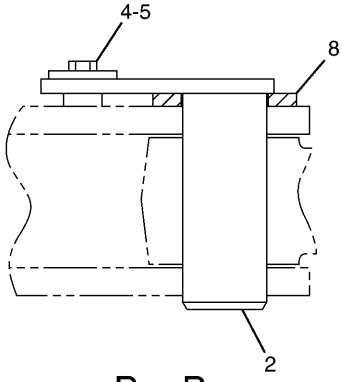

B – B

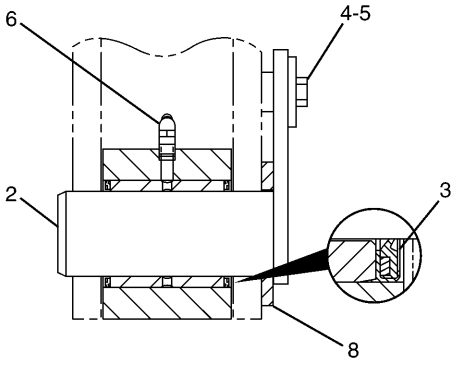

C – C

NOTE	No.	PART No.	QTY	PART NAME	NOTE	No.	PART No.	QTY	PART NAME
Y	1	172-2994	1	BLADE GP					
	2	127-3913	6	PIN AS					
	3	093-1433	4	SEAL					
	4	8T-4179	6	BOLT (L=20mm)					
	5	086-0297	6	WASHER					
	6	3J-7283	2	FITTING					
B	7	093-0065	8	SHIM (T=1.00mm)					
B		099-7091	4	SHIM (T=1.50mm)					
B		093-0097	4	SHIM (T=2.00mm)					
	8	093-0357	6	WASHER					

B—USE AS REQUIRED

Y—SEE SEPARATE ILLUSTRATION

H75264E 02

172-2993 BLADE & MOUNTING GP

Part of 183-1476-Page635
172-2994-Page655
An Attachment

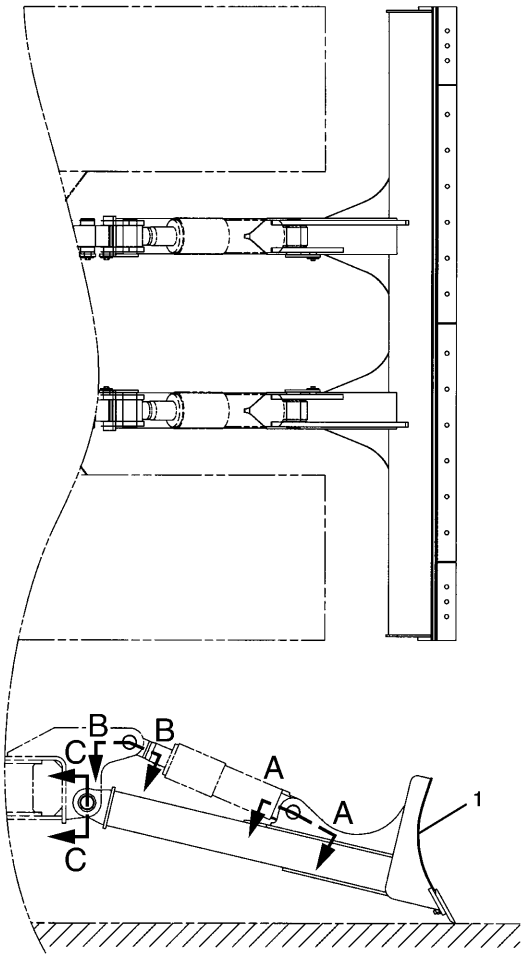

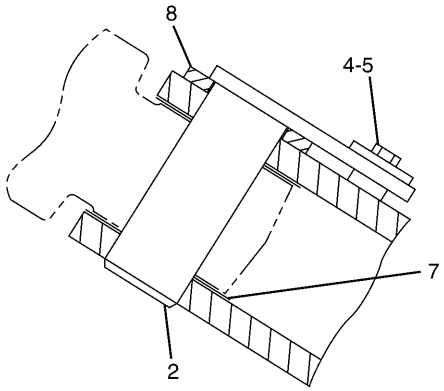

A – A

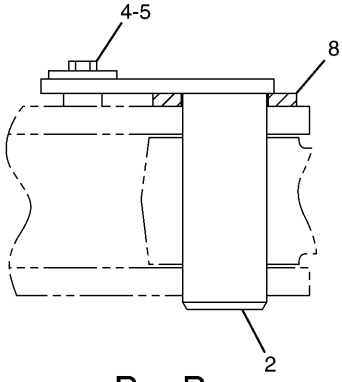

B – B

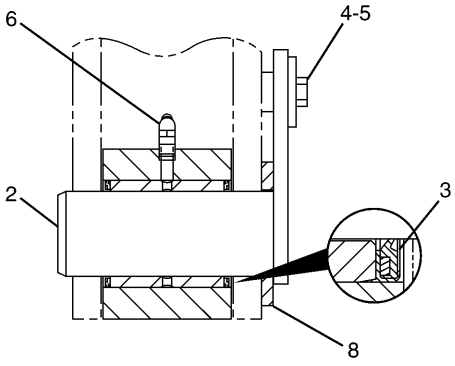

C – C

NOTE	No.	PART No.	QTY	PART NAME	NOTE	No.	PART No.	QTY	PART NAME
Y	1	172-2951	1	BLADE GP					
	2	127-3913	6	PIN AS					
	3	093-1433	4	SEAL					
	4	8T-4179	6	BOLT (L=20mm)					
	5	086-0297	6	WASHER					
	6	3J-7283	2	FITTING					
B	7	093-0065	8	SHIM (T=1.00mm)					
B		099-7091	4	SHIM (T=1.50mm)					
B		093-0097	4	SHIM (T=2.00mm)					
	8	093-0357	6	WASHER					

B—USE AS REQUIRED

Y—SEE SEPARATE ILLUSTRATION

H76808E 03

167-9993 BLADE & MOUNTING GP

Part of 151-1494-Page636
172-2951-Page656
An Attachment

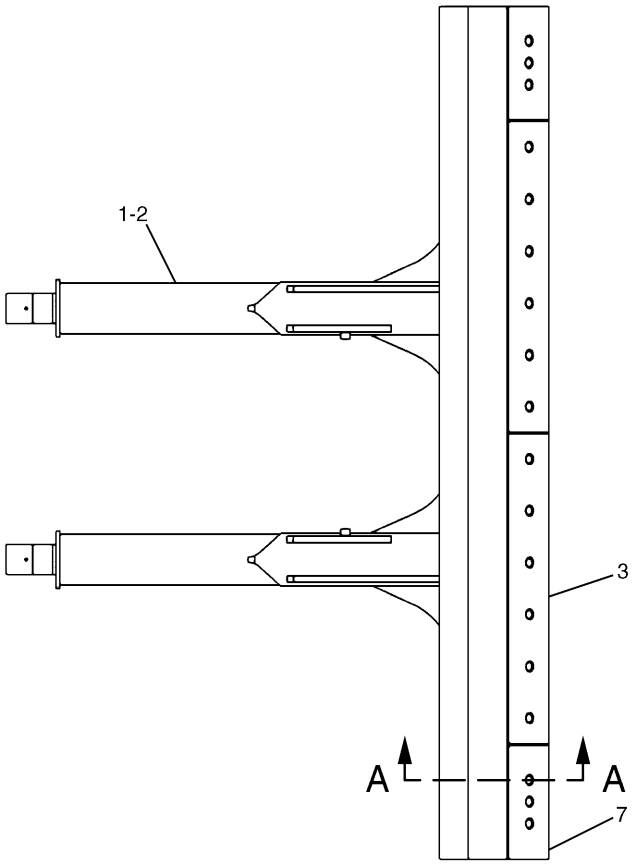

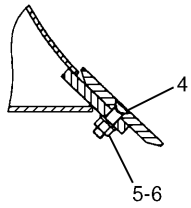

A – A

NOTE	No.	PART No.	QTY	PART NAME	NOTE	No.	PART No.	QTY	PART NAME
	1	167-9992	1	BLADE AS					
	2	229-1093	2	BEARING					
	3	3Q-2034	2	EDGE					
	4	3F-5108	18	BOLT					
	5	4K-0367	18	NUT					
	6	5P-8247	18	WASHER					
	7	4T-6229	2	BIT					

H85473E 01

172-2991 BLADE GP
Part of 167-9991-Page651
An Attachment

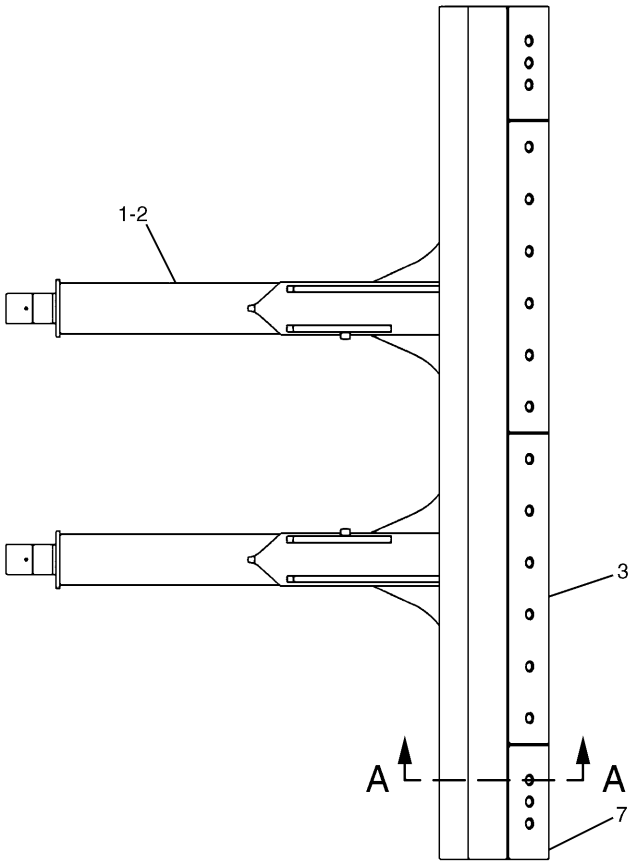

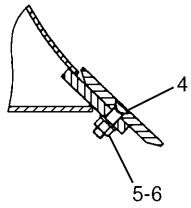

A – A

NOTE	No.	PART No.	QTY	PART NAME	NOTE	No.	PART No.	QTY	PART NAME
	1	172-2995	1	BLADE AS					
	2	229-1093	2	BEARING					
	3	140-6836	2	EDGE					
	4	3F-5108	18	BOLT					
	5	4K-0367	18	NUT					
	6	5P-8247	18	WASHER					
	7	4T-6229	2	BIT					

H86429E 00

172-2994 BLADE GP

Part of 172-2993-Page652
An Attachment

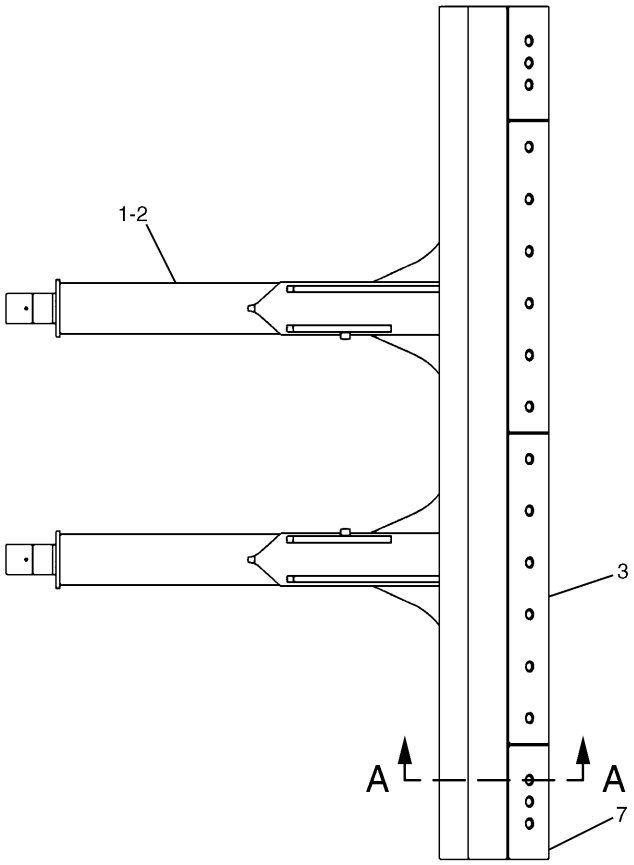

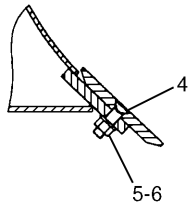

A – A

NOTE	No.	PART No.	QTY	PART NAME	NOTE	No.	PART No.	QTY	PART NAME
	1	167-9994	1	BLADE AS					
	2	229-1093	2	BEARING					
	3	140-2187	2	EDGE					
	4	3F-5108	18	BOLT					
	5	4K-0367	18	NUT					
	6	5P-8247	18	WASHER					
	7	4T-6229	2	BIT					

H85594E 01

172-2951 BLADE GP
Part of 167-9993-Page653
An Attachment

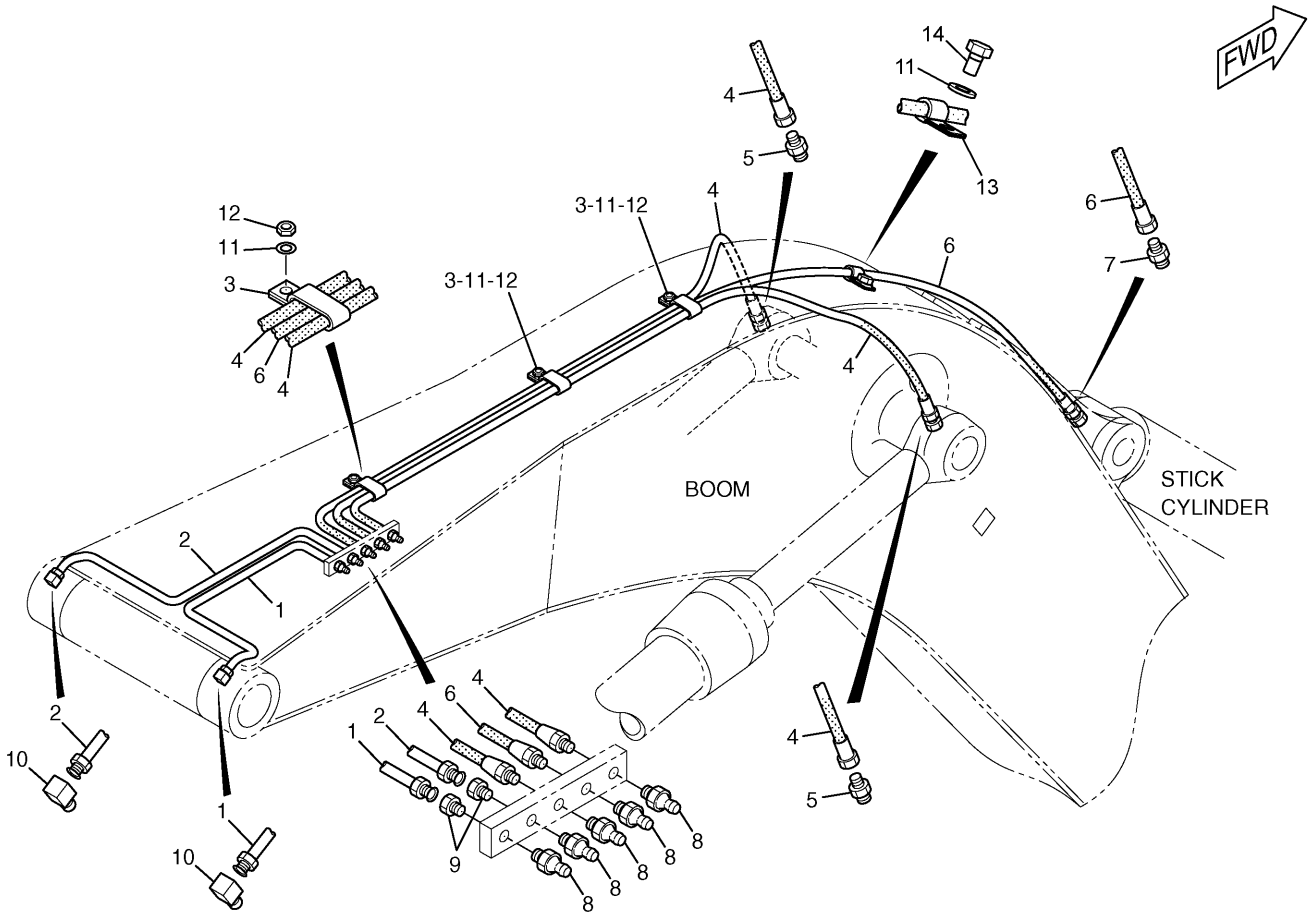

NOTE	No.	PART No.	QTY	PART NAME	NOTE	No.	PART No.	QTY	PART NAME
	1	7I-6896	1	TUBE AS					
	2	180-7758	1	TUBE AS					
	3	166-1579	3	CLIP					
	4	121-8659	2	HOSE AS					
	5	105-6431	2	CONNECTOR					
	6	121-8662	1	HOSE AS					
	7	105-6431	1	CONNECTOR					
	8	3B-8489	5	FITTING					
	9	6L-3616	2	CONNECTOR					
	10	5K-9243	2	ELBOW					
	11	8T-4121	4	WASHER					
	12	8T-4133	3	NUT					
	13	033-8248	1	CLIP					
	14	8T-4191	1	BOLT (L=16mm)					

H98013E 03

172-2965 LINES GP-GREASE

Part of 151-1487-Page628
An Attachment

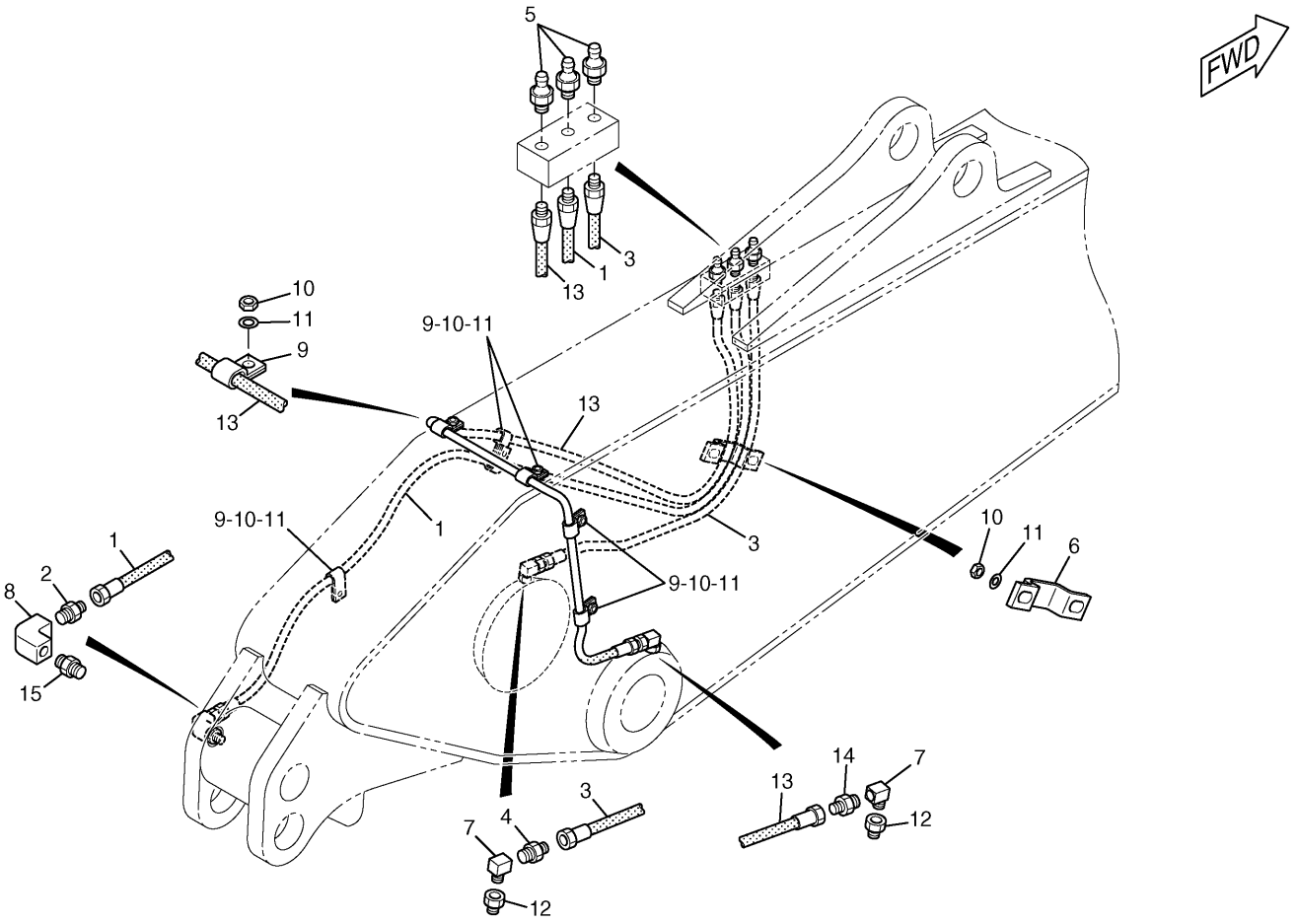

NOTE	No.	PART No.	QTY	PART NAME	NOTE	No.	PART No.	QTY	PART NAME
	1	108-9097	1	HOSE AS					
	2	105-6431	1	CONNECTOR					
	3	101-2170	1	HOSE AS					
	4	105-6431	1	CONNECTOR					
	5	3B-8489	3	FITTING					
	6	087-5840	1	PLATE					
	7	6V-3342	2	ELBOW					
	8	3B-6767	1	ELBOW					
	9	033-8248	7	CLIP					
	10	8T-4133	8	NUT					
	11	8T-4121	8	WASHER					
	12	6K-6967	2	ADAPTER					
	13	101-2169	1	HOSE AS					
	14	105-6431	1	CONNECTOR					
	15	5P-8998	1	NIPPLE					

H71532E 04

7I-6926 LINES GP-GREASE

S/N CAE 01201-(T04.06)
Part of 151-1488-Page629
An Attachment

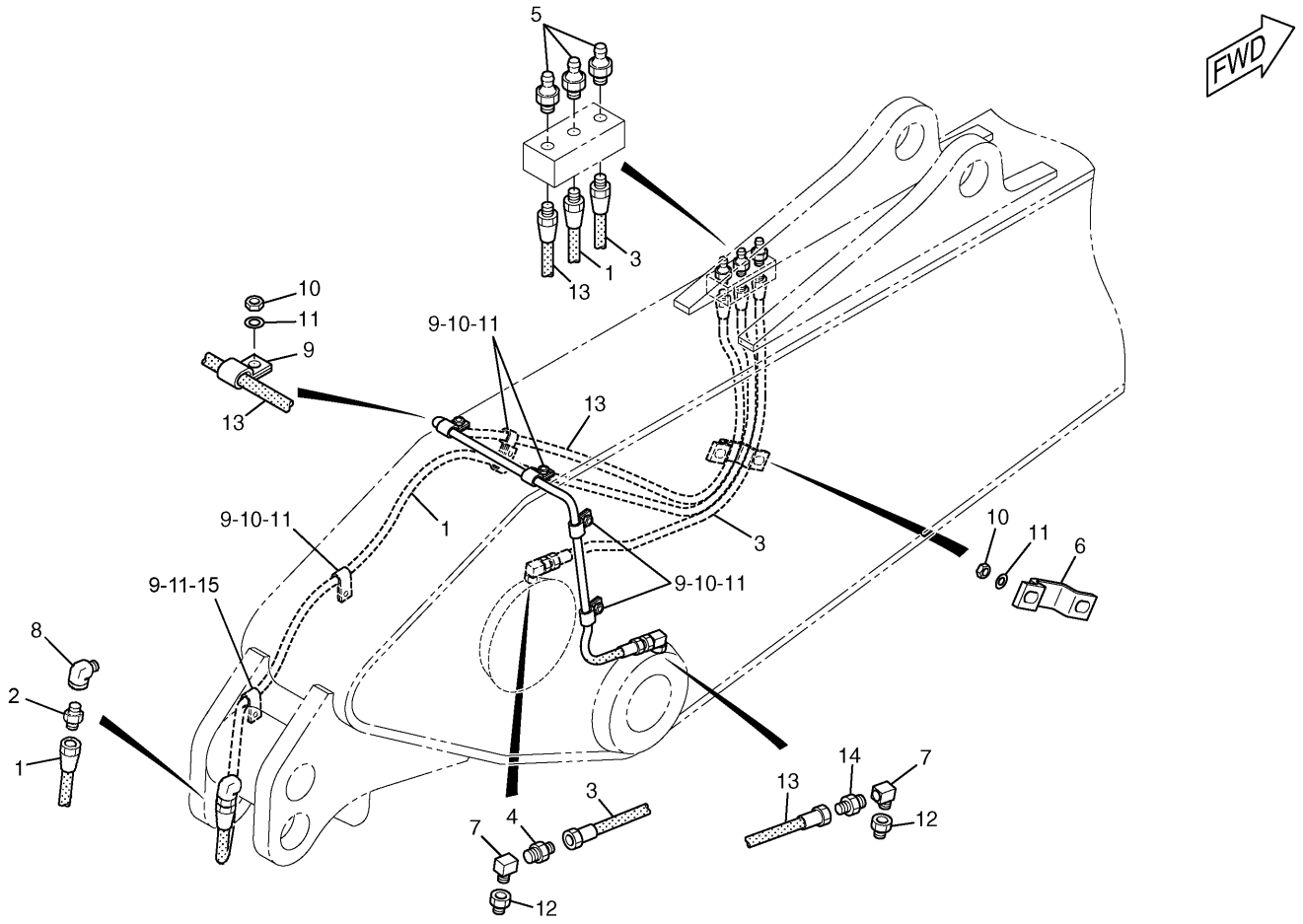

NOTE	No.	PART No.	QTY	PART NAME	NOTE	No.	PART No.	QTY	PART NAME
	1	251-2627	1	HOSE AS					
	2	105-6431	1	CONNECTOR					
	3	101-2170	1	HOSE AS					
	4	105-6431	1	CONNECTOR					
	5	3B-8489	3	FITTING					
	6	087-5840	1	PLATE					
	7	6V-3342	2	ELBOW					
	8	7J-8611	1	ELBOW					
	9	033-8248	8	CLIP					
	10	8T-4133	8	NUT					
	11	8T-4121	9	WASHER					
	12	6K-6967	2	ADAPTER					
	13	101-2169	1	HOSE AS					
	14	105-6431	1	CONNECTOR					
	15	8T-4137	1	BOLT (L=20mm)					

H96620E 00

251-2750 LINES GP-GREASE

R3.0 Stick
S/N CAE (T04.07)-Up
Part of 151-1488-Page629.01
An Attachment

Consists of :

			Page
1	198-5738	LINKAGE GP-BUCKET.....	661
		-OR-	
1	198-5739	LINKAGE GP-BUCKET.....	662

H82867E 02

168-0014 LINKAGE GP-BUCKET

S/N CAE 01201-02264
Part of 151-1491-Page631
An Attachment

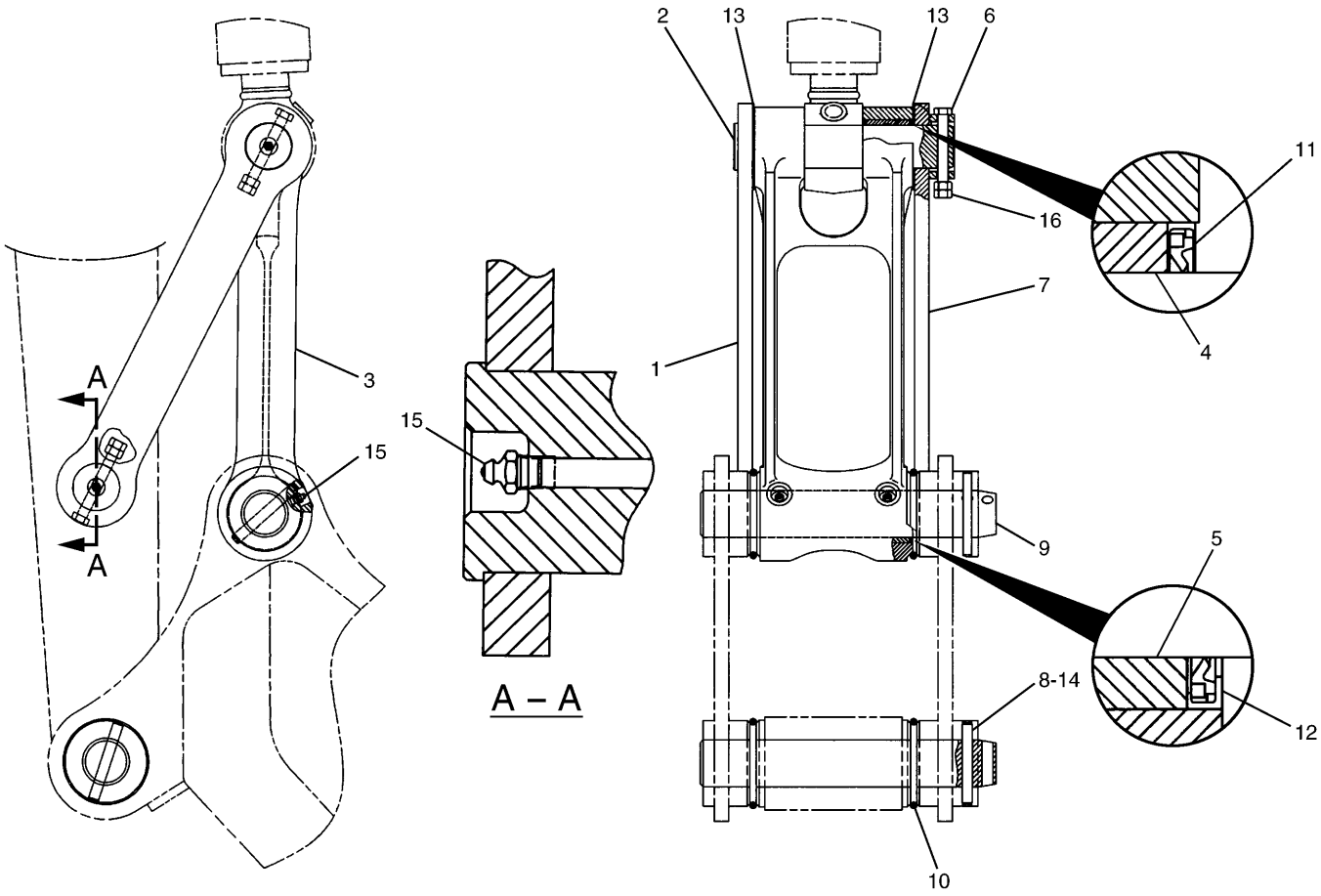

NOTE	No.	PART No.	QTY	PART NAME	NOTE	No.	PART No.	QTY	PART NAME
	1	198-5720	1	LINK					
	2	7I-6843	2	PIN					
	3	172-3002	1	LINK AS					
	4	229-1095	2	BEARING					
	5	229-1092	2	BEARING					
	6	099-0707	2	BOLT (L=115mm)					
	7	198-5719	1	LINK AS					
	8	134-7178	2	PIN					
	9	086-0523	2	PIN					
	10	093-1342	4	SEAL-O-RING (ID=96.00mm)					
	11	093-1433	4	SEAL					
	12	096-0131	2	SEAL					
	13	166-1481	2	SHIM (T=2.00mm)					
	14	134-7179	2	RING					
	15	3B-8489	4	FITTING					
	16	096-4876	4	NUT					

H85474E 01

198-5738 LINKAGE GP-BUCKET

Casting Type
S/N CAE 01201-02264
Part of 168-0014-Page660
An Attachment

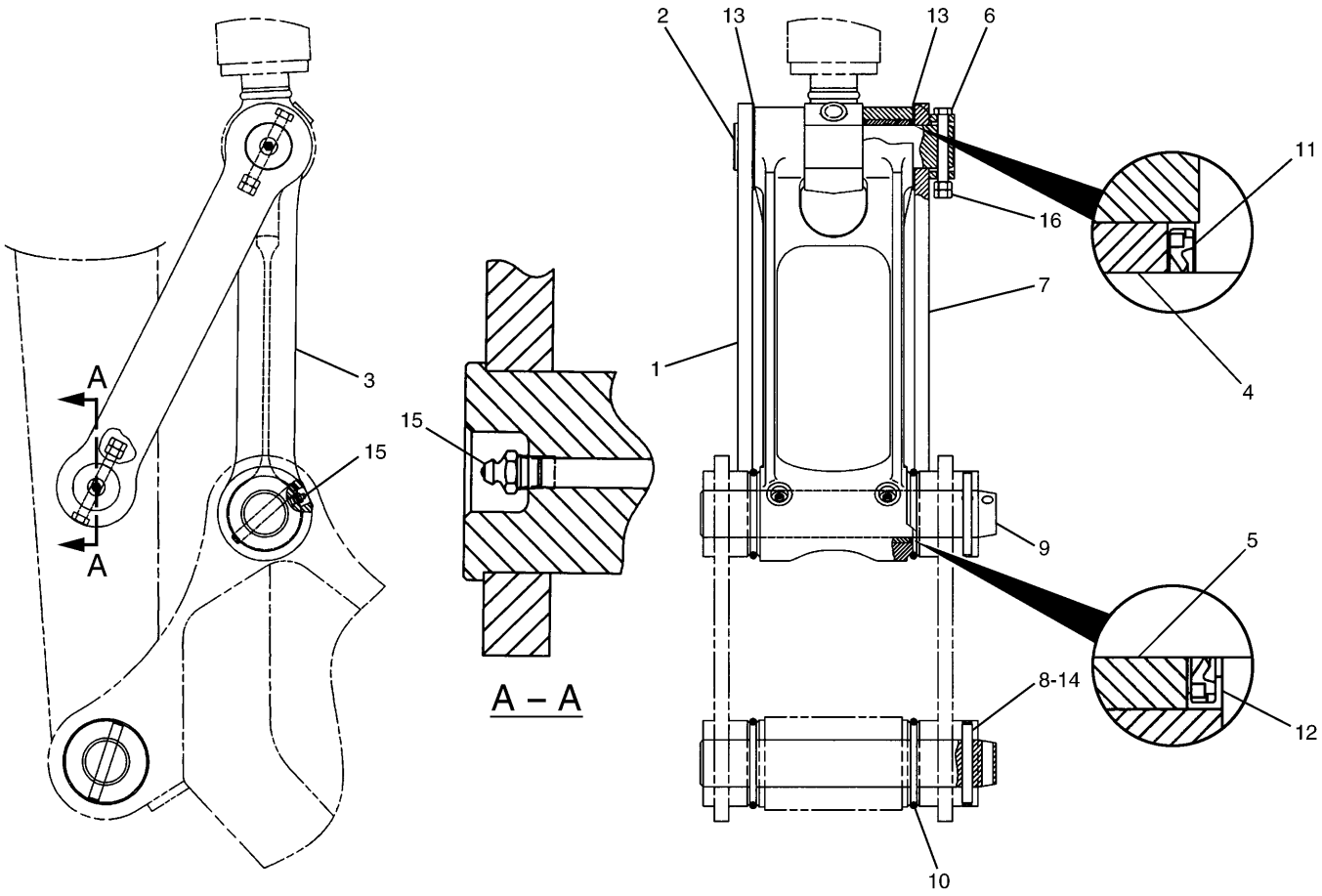

NOTE	No.	PART No.	QTY	PART NAME	NOTE	No.	PART No.	QTY	PART NAME
	1	198-5737	1	LINK					
	2	7I-6843	2	PIN					
	3	172-3002	1	LINK AS					
	4	229-1095	2	BEARING					
	5	229-1092	2	BEARING					
	6	099-0707	2	BOLT (L=115mm)					
	7	198-5736	1	LINK AS					
	8	134-7178	2	PIN					
	9	086-0523	2	PIN					
	10	093-1342	4	SEAL-O-RING (ID=96.00mm)					
	11	093-1433	4	SEAL					
	12	096-0131	2	SEAL					
	13	166-1481	2	SHIM (T=2.00mm)					
	14	134-7179	2	RING					
	15	3B-8489	4	FITTING					
	16	096-4876	4	NUT					

H85475E 01

198-5739 LINKAGE GP-BUCKET

Casting Type
S/N CAE 01201-02264
Part of 168-0014-Page660
An Attachment

IMPLEMENTS

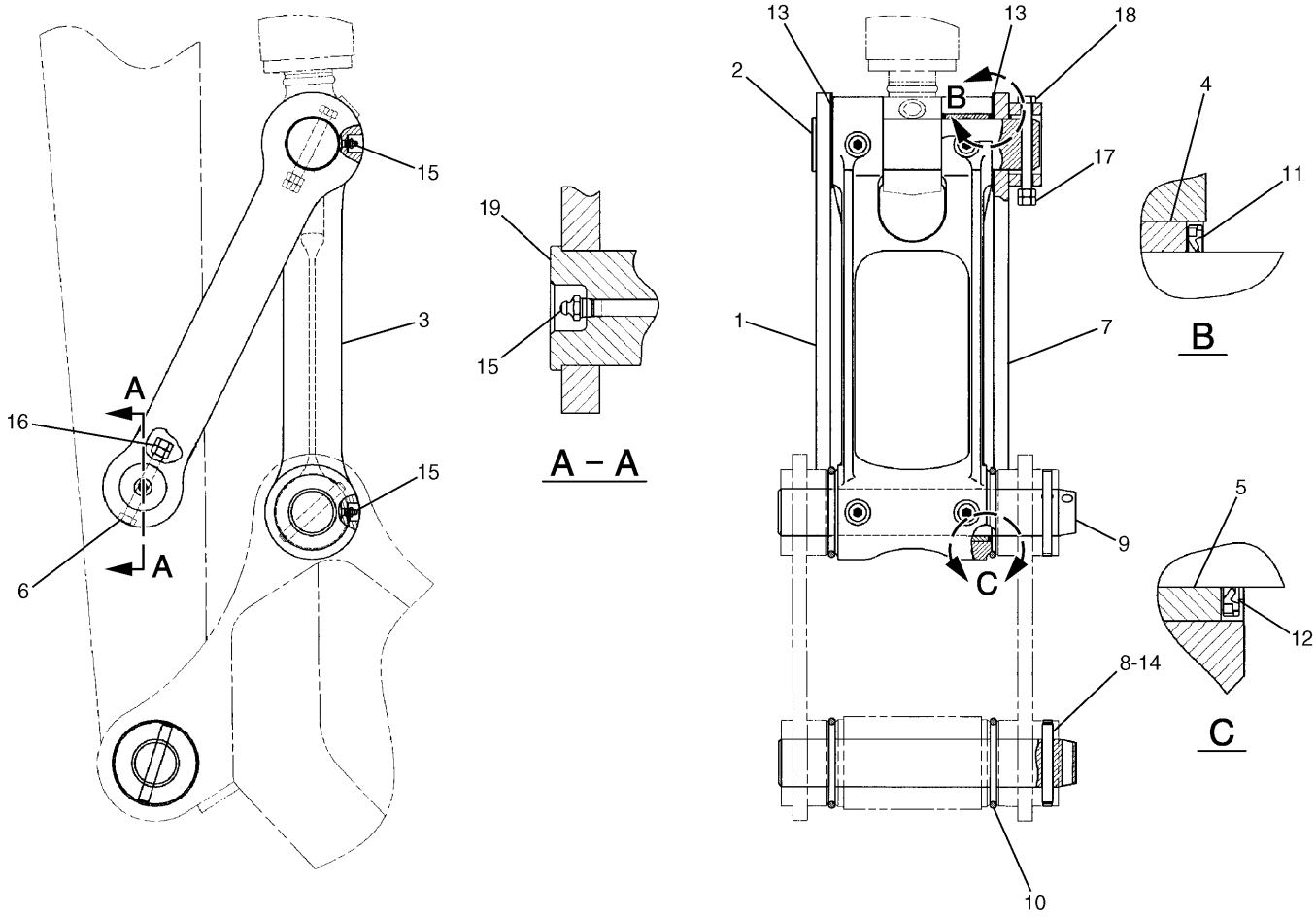

NOTE	No.	PART No.	QTY	PART NAME	NOTE	No.	PART No.	QTY	PART NAME
	1	248-7822	1	LINK					
	2	248-7820	1	PIN					
	3	248-7838	1	LINK AS					
	4	248-7835	2	BEARING					
	5	229-1092	2	BEARING					
	6	099-0707	1	BOLT (L=115mm)					
	7	248-7823	1	LINK AS					
	8	134-7178	2	PIN					
	9	086-0523	2	PIN					
	10	093-1342	4	SEAL-O-RING (ID=96.00mm)					
	11	235-7679	4	SEAL					
	12	248-7836	2	SEAL					
	13	166-1482	2	SHIM (T=2.00mm)					
	14	134-7179	2	RING					
	15	3B-8489	5	FITTING					
	16	096-4876	2	NUT					
	17	8T-4132	2	NUT					
	18	186-5644	1	BOLT (L=150mm)					
	19	7I-6843	1	PIN					

H87156E 00

248-7837 LINKAGE GP-BUCKET

S/N CAE 02265-Up
Part of 251-2864-Page631.01
An Attachment

MEMORANDA

Consists of :

			Page
1	208-2021	LINKAGE GP-BUCKET.....	664
		-OR-	
1	208-2022	LINKAGE GP-BUCKET.....	665

H82887E 00

208-2020 LINKAGE GP-BUCKET

S/N CAE 01201-02264
Part of 211-6353-Page632
An Attachment

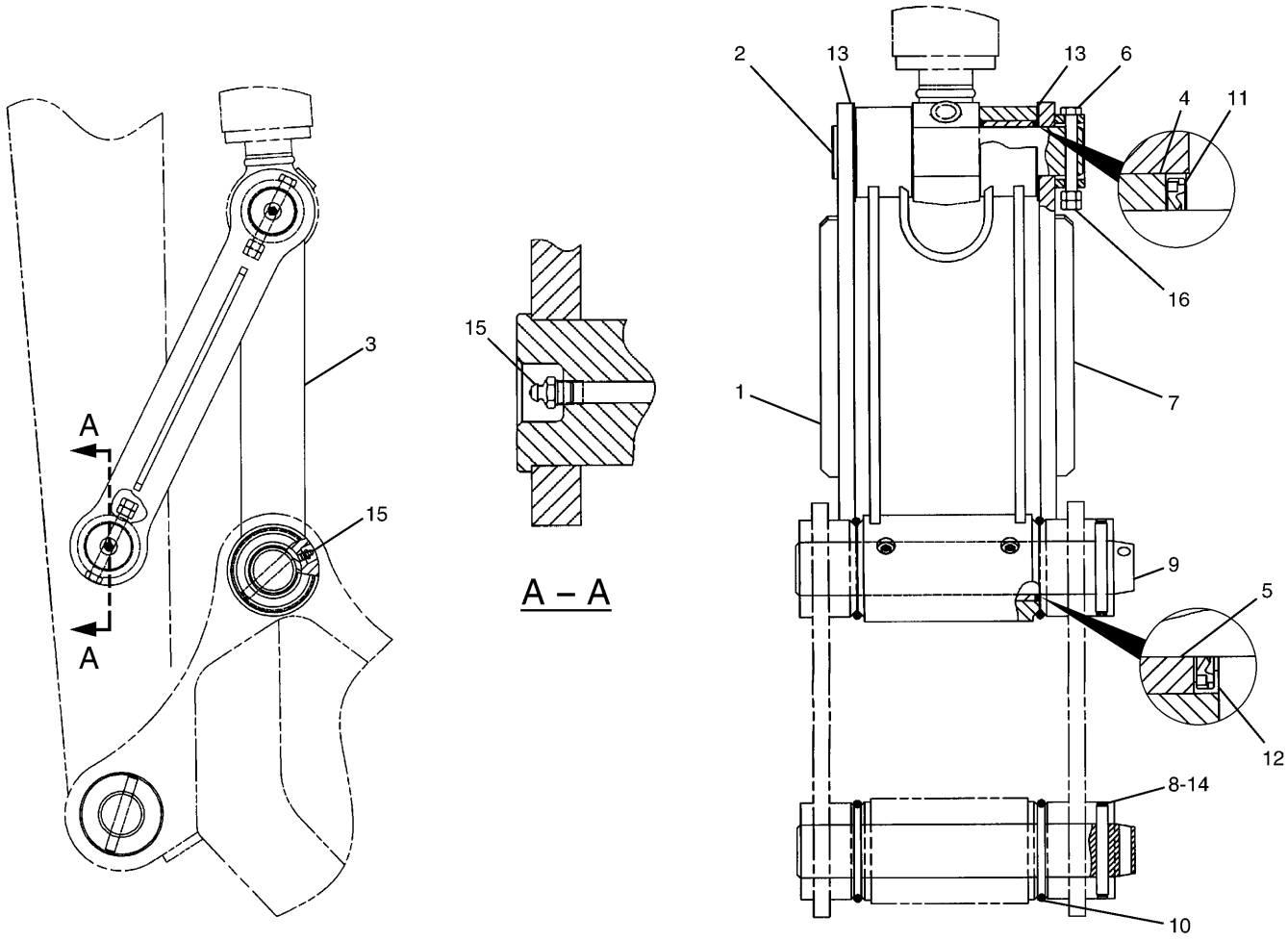

NOTE	No.	PART No.	QTY	PART NAME	NOTE	No.	PART No.	QTY	PART NAME
	1	208-2008	1	LINK AS					
	2	7I-6843	2	PIN					
	3	208-2012	1	LINK AS					
	4	229-1095	2	BEARING					
	5	229-1092	2	BEARING					
	6	099-0707	2	BOLT (L=115mm)					
	7	208-2009	1	LINK AS					
	8	134-7178	2	PIN					
	9	086-0523	2	PIN					
	10	093-1342	4	SEAL-O-RING (ID=96.00mm)					
	11	093-1433	4	SEAL					
	12	096-0131	2	SEAL					
	13	166-1481	2	SHIM (T=2.00mm)					
	14	134-7179	2	RING					
	15	3B-8489	4	FITTING					
	16	096-4876	4	NUT					

H85479E 01

208-2021 LINKAGE GP-BUCKET

Fabrication Type (Heavy Duty)
S/N CAE 01201-02264
Part of 208-2020-Page663
An Attachment

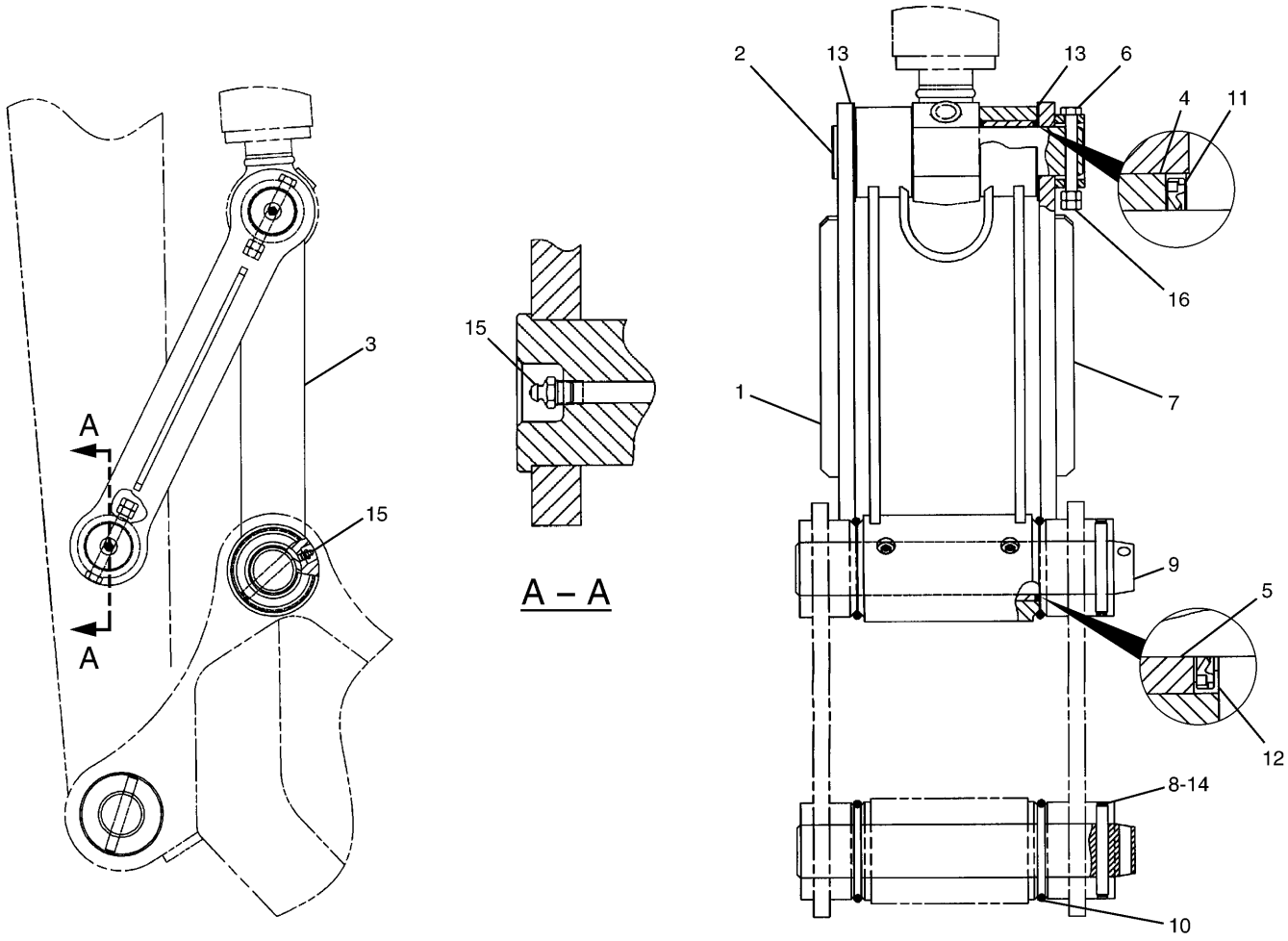

NOTE	No.	PART No.	QTY	PART NAME	NOTE	No.	PART No.	QTY	PART NAME
	1	208-2017	1	LINK AS					
	2	7I-6843	2	PIN					
	3	208-2012	1	LINK AS					
	4	229-1095	2	BEARING					
	5	229-1092	2	BEARING					
	6	099-0707	2	BOLT (L=115mm)					
	7	208-2016	1	LINK AS					
	8	134-7178	2	PIN					
	9	086-0523	2	PIN					
	10	093-1342	4	SEAL-O-RING (ID=96.00mm)					
	11	093-1433	4	SEAL					
	12	096-0131	2	SEAL					
	13	166-1481	2	SHIM (T=2.00mm)					
	14	134-7179	2	RING					
	15	3B-8489	4	FITTING					
	16	096-4876	4	NUT					

H85480E 01

208-2022 LINKAGE GP-BUCKET

Fabrication Type (Heavy Duty)
S/N CAE 01201-02264
Part of 208-2020-Page663
An Attachment

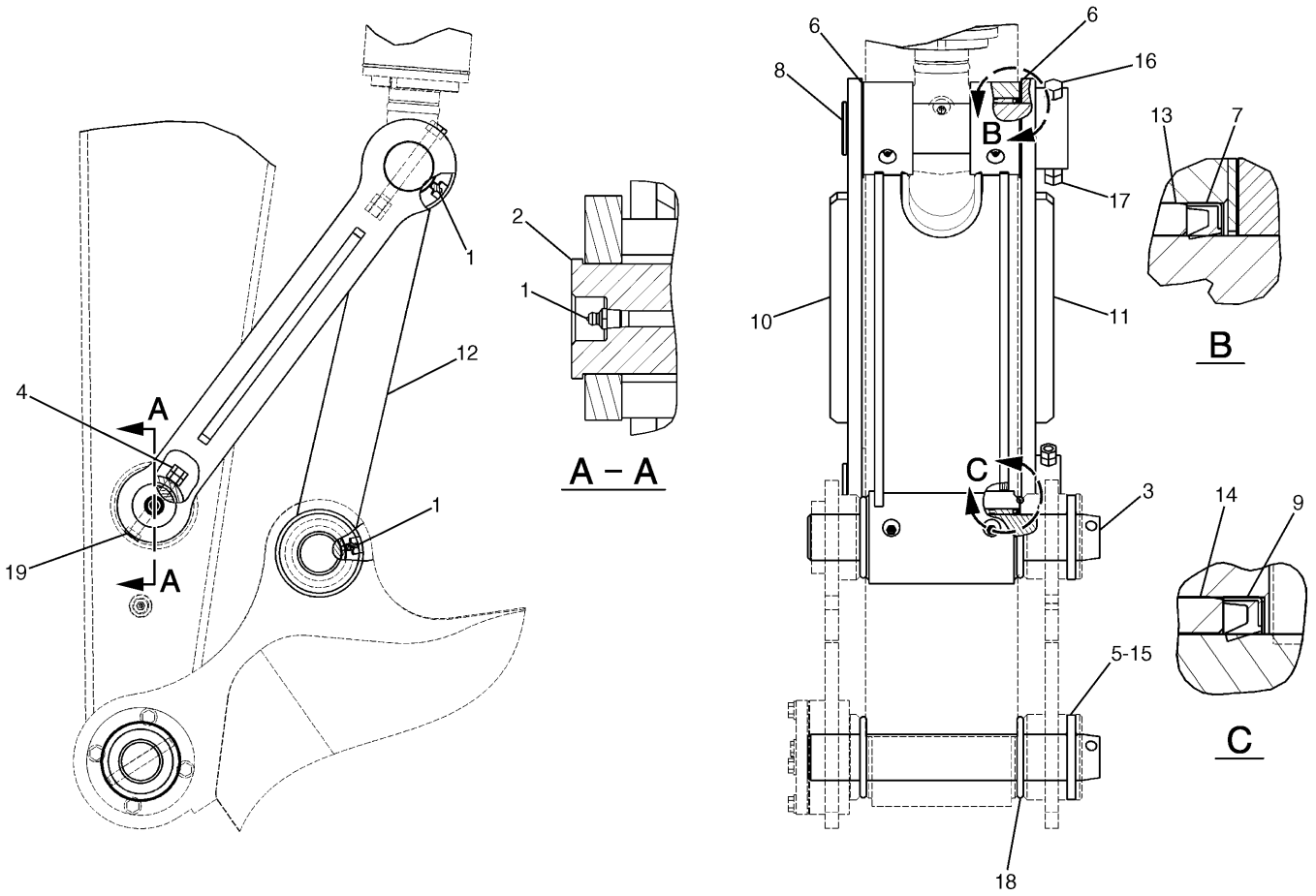

NOTE	No.	PART No.	QTY	PART NAME	NOTE	No.	PART No.	QTY	PART NAME
	1	3B-8489	5	FITTING					
	2	7I-6843	1	PIN					
	3	086-0523	2	PIN					
	4	096-4876	2	NUT					
	5	134-7179	2	RING					
	6	166-1482	2	SHIM (T=2.00mm)					
	7	235-7679	4	SEAL					
	8	248-7820	1	PIN					
	9	248-7836	2	SEAL					
	10	248-7841	1	LINK AS					
	11	248-7843	1	LINK AS					
	12	248-7844	1	LINK AS					
	13	248-7835	2	BEARING					
	14	229-1092	2	BEARING					
	15	134-7178	2	PIN					
	16	186-5644	1	BOLT (L=150mm)					
	17	8T-4132	2	NUT					
	18	093-1342	4	SEAL-O-RING (ID=96.00mm)					
	19	099-0707	1	BOLT (L=115mm)					

H87193E 00

248-7840 LINKAGE GP-BUCKET

Fabrication Type (Heavy Duty)
S/N CAE 02265-Up
Part of 251-2869-Page632.01
An Attachment

MEMORANDA

Consists of :

			Page
1	198-5740	LINKAGE GP-BUCKET.....	667
		-OR-	
1	198-5741	LINKAGE GP-BUCKET.....	668

H82870E 01

195-5411 LINKAGE GP-BUCKET

S/N CAE 01201-02264
Part of 194-8960-Page632
An Attachment

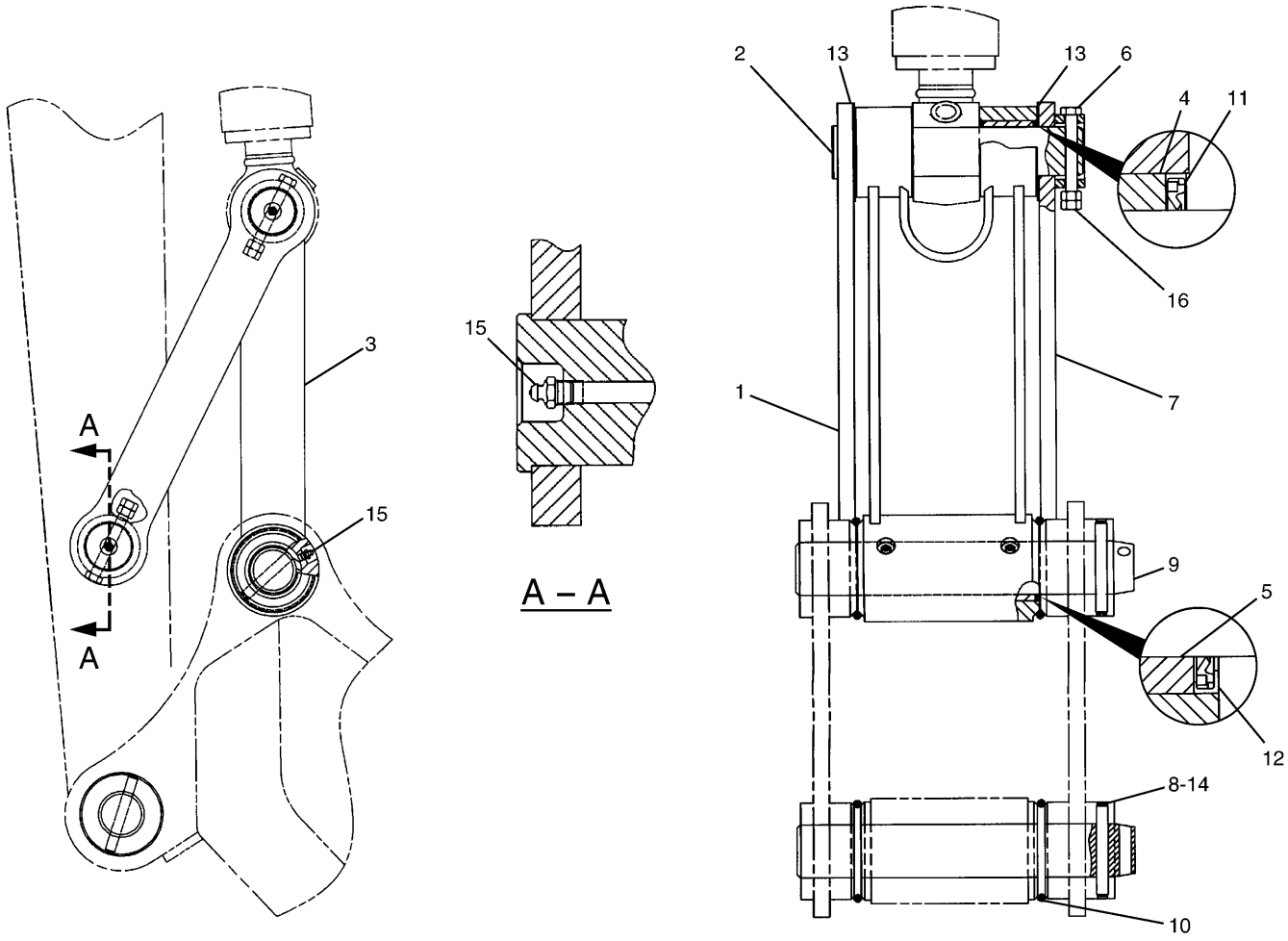

NOTE	No.	PART No.	QTY	PART NAME	NOTE	No.	PART No.	QTY	PART NAME
	1	198-5720	1	LINK					
	2	7I-6843	2	PIN					
	3	195-5361	1	LINK AS					
	4	229-1095	2	BEARING					
	5	229-1092	2	BEARING					
	6	099-0707	2	BOLT (L=115mm)					
	7	198-5719	1	LINK AS					
	8	134-7178	2	PIN					
	9	086-0523	2	PIN					
	10	093-1342	4	SEAL-O-RING (ID=96.00mm)					
	11	093-1433	4	SEAL					
	12	096-0131	2	SEAL					
	13	166-1481	2	SHIM (T=2.00mm)					
	14	134-7179	2	RING					
	15	3B-8489	4	FITTING					
	16	096-4876	4	NUT					

H85476E 01

198-5740 LINKAGE GP-BUCKET

Fabrication Type
S/N CAE 01201-02264
Part of 195-5411-Page666
An Attachment

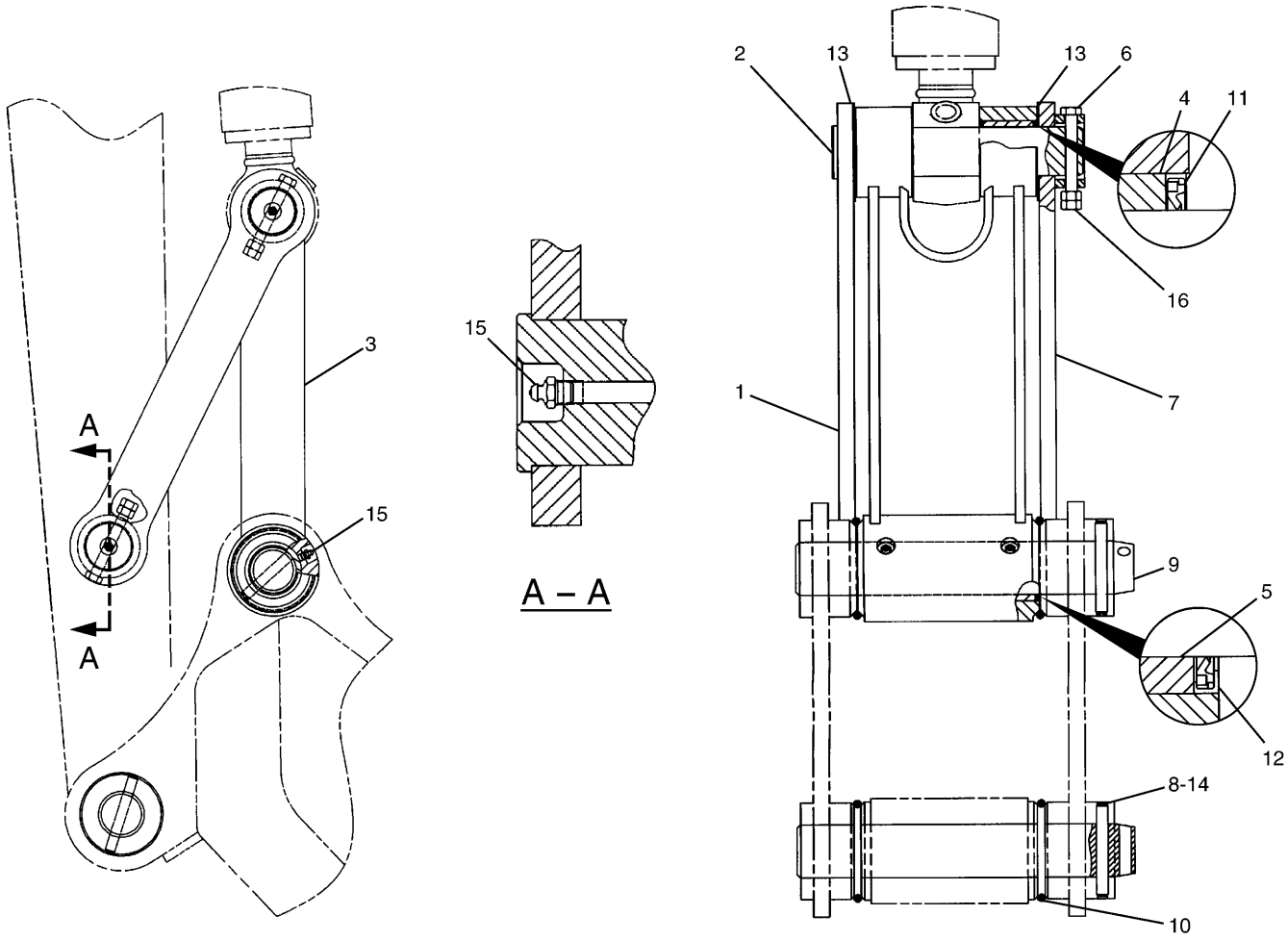

NOTE	No.	PART No.	QTY	PART NAME	NOTE	No.	PART No.	QTY	PART NAME
	1	198-5737	1	LINK					
	2	7I-6843	2	PIN					
	3	195-5361	1	LINK AS					
	4	229-1095	2	BEARING					
	5	229-1092	2	BEARING					
	6	099-0707	2	BOLT (L=115mm)					
	7	198-5736	1	LINK AS					
	8	134-7178	2	PIN					
	9	086-0523	2	PIN					
	10	093-1342	4	SEAL-O-RING (ID=96.00mm)					
	11	093-1433	4	SEAL					
	12	096-0131	2	SEAL					
	13	166-1481	2	SHIM (T=2.00mm)					
	14	134-7179	2	RING					
	15	3B-8489	4	FITTING					
	16	096-4876	4	NUT					

H85478E 01

198-5741 LINKAGE GP-BUCKET

Fabrication Type
S/N CAE 01201-02264
Part of 195-5411-Page666
An Attachment

IMPLEMENTS

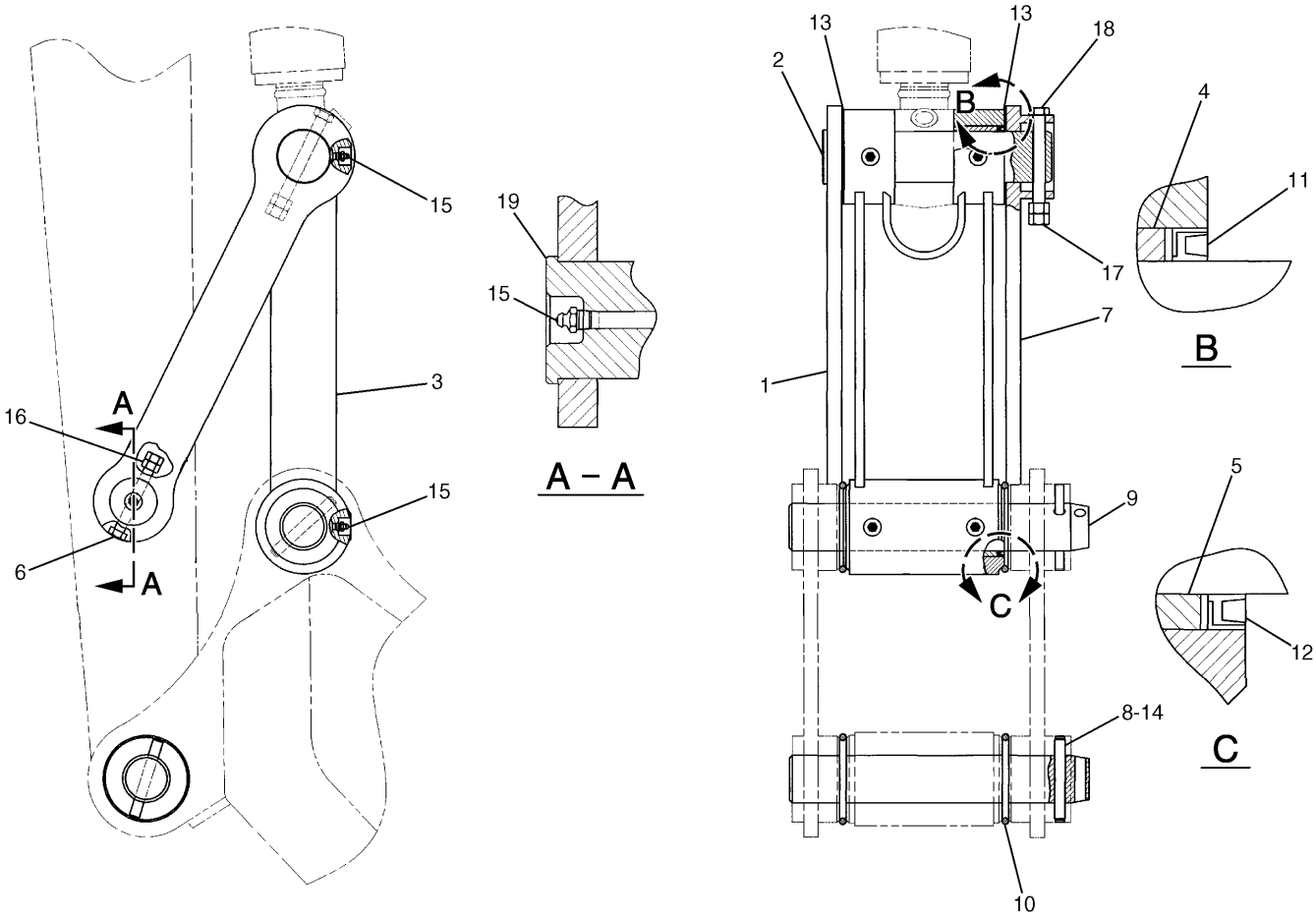

NOTE	No.	PART No.	QTY	PART NAME	NOTE	No.	PART No.	QTY	PART NAME
	1	248-7822	1	LINK					
	2	248-7820	1	PIN					
	3	248-7824	1	LINK AS					
	4	248-7835	2	BEARING					
	5	229-1092	2	BEARING					
	6	099-0707	1	BOLT (L=115mm)					
	7	248-7823	1	LINK AS					
	8	134-7178	2	PIN					
	9	086-0523	2	PIN					
	10	093-1342	4	SEAL-O-RING (ID=96.00mm)					
	11	235-7679	4	SEAL					
	12	248-7836	2	SEAL					
	13	166-1482	2	SHIM (T=2.00mm)					
	14	134-7179	2	RING					
	15	3B-8489	5	FITTING					
	16	096-4876	2	NUT					
	17	8T-4132	2	NUT					
	18	186-5644	1	BOLT (L=150mm)					
	19	7I-6843	1	PIN					

H87157E 00

248-7821 LINKAGE GP-BUCKET

S/N CAE 02265-Up
Part of 251-2866-Page632.01
An Attachment

MEMORANDA

Consists of :

			Page
3	9J-3169	TIP GP-LONG	686
1	150-2245	BUCKET & ADJUSTER GP	674

H60270E 00

150-2239 BUCKET AR

S/N CAE 01201-(T04.11)
An Attachment

Consists of :

			Page
4	9J-3169	TIP GP-LONG	686
1	150-2246	BUCKET & ADJUSTER GP	674

H60271E 00

150-2240 BUCKET AR

S/N CAE 01201-(T04.11)
An Attachment

Consists of :

			Page
3	9J-3169	TIP GP-LONG	686
1	250-6368	BUCKET & ADJUSTER GP	674.01

H87161E 00

250-6367 BUCKET AR
S/N CAE (T04.12)-Up
An Attachment

Consists of :

			Page
4	9J-3169	TIP GP-LONG	686
1	250-6371	BUCKET & ADJUSTER GP	674.01

H87162E 00

250-6370 BUCKET AR
S/N CAE (T04.12)-Up
An Attachment

MEMORANDA

Consists of :

			Page
1	4I-7343	SIDECUTTER GP	685
1	150-2247	BUCKET & ADJUSTER GP	675
5	9J-3169	TIP GP-LONG	686

H60273E 00

150-2241 BUCKET AR

S/N CAE 01201-(T04.11)
An Attachment

Consists of :

			Page
1	4I-7343	SIDECUTTER GP	685
1	150-2248	BUCKET & ADJUSTER GP	675
5	9J-3169	TIP GP-LONG	686

H60274E 00

150-2242 BUCKET AR

S/N CAE 01201-(T04.11)
An Attachment

IMPLEMENTS

Consists of :

			Page
1	4I-7343	SIDECUTTER GP	685
1	250-6374	BUCKET & ADJUSTER GP	675.01
5	9J-3169	TIP GP-LONG	686

H87163E 00

250-6373 BUCKET AR
S/N CAE (T04.12)-Up
An Attachment

Consists of :

			Page
1	4I-7343	SIDECUTTER GP	685
1	250-6377	BUCKET & ADJUSTER GP	675.01
5	9J-3169	TIP GP-LONG	686

H87164E 00

250-6376 BUCKET AR
S/N CAE (T04.12)-Up
An Attachment

MEMORANDA

Consists of :

			Page
5	9J-3169	TIP GP-LONG	686
1	150-2249	BUCKET & ADJUSTER GP	676

H60276E 00

150-2243 BUCKET AR

S/N CAE 01201-(T04.11)
An Attachment

Consists of :

			Page
5	9J-3169	TIP GP-LONG	686
1	150-2250	BUCKET & ADJUSTER GP	676

H60277E 00

150-2244 BUCKET AR

S/N CAE 01201-(T04.11)
An Attachment

Consists of :

			Page
5	9J-3169	TIP GP-LONG	686
1	250-6380	BUCKET & ADJUSTER GP	676.01

H87165E 00

250-6379 BUCKET AR
S/N CAE (T04.12)-Up
An Attachment

Consists of :

			Page
5	9J-3169	TIP GP-LONG	686
1	250-6383	BUCKET & ADJUSTER GP	676.01

H87255E 00

250-6382 BUCKET AR
S/N CAE (T04.12)-Up
An Attachment

MEMORANDA

Consists of :

			Page
1	4I-7343	SIDECUTTER GP	685
1	168-2906	BUCKET & ADJUSTER GP	677
5	9J-3169	TIP GP-LONG	686

H72192E 00

168-2884 BUCKET AR

S/N CAE 01201-(T04.11)
An Attachment

Consists of :

			Page
1	4I-7343	SIDECUTTER GP	685
1	168-2879	BUCKET & ADJUSTER GP	677
5	158-3963	TIP	
5	093-7682	PIN	
5	093-7683	RUBBER	

H72193E 00

168-2878 BUCKET AR

S/N CAE 01201-(T04.11)
An Attachment

Consists of :

			Page
1	250-6392	BUCKET & ADJUSTER GP	677.01
5	9J-3169	TIP GP-LONG	686
1	4I-7343	SIDECUTTER GP	685

H89146E 01

250-6391 BUCKET AR
S/N CAE (T04.12)-Up
An Attachment

Consists of :

			Page
1	250-6386	BUCKET & ADJUSTER GP	677.01
1	4I-7343	SIDECUTTER GP	685
5	255-0322	TIP GP	
1	093-7682	PIN	
1	093-7683	RUBBER	

H87257E 00

250-6385 BUCKET AR
S/N CAE (T04.12)-Up
An Attachment

MEMORANDA

Consists of :

			Page
1	4I-7343	SIDECUTTER GP	685
1	168-2880	BUCKET & ADJUSTER GP	678
5	158-3963	TIP	
5	093-7682	PIN	
5	093-7683	RUBBER	

H77622E 01

159-5676 BUCKET AR

S/N CAE 01201-(T04.11)
An Attachment

Consists of :

			Page
1	250-6389	BUCKET & ADJUSTER GP	678
1	4I-7343	SIDECUTTER GP	685
5	255-0322	TIP GP	
1	093-7682	PIN	
1	093-7683	RUBBER	

H87258E 00

250-6388 BUCKET AR

S/N CAE (T04.12)-Up
An Attachment

Consists of :

			Page
1	154-0614	BUCKET AS	679
1	4I-6914	ADJUSTER GP-BUCKET	684

H60264E 00

150-2245 BUCKET & ADJUSTER GP

S/N CAE 01201-(T04.11)
Part of 150-2239-Page669
An Attachment

Consists of :

			Page
1	154-0615	BUCKET AS	679
1	4I-6914	ADJUSTER GP-BUCKET	684

H60265E 00

150-2246 BUCKET & ADJUSTER GP

S/N CAE 01201-(T04.11)
Part of 150-2240-Page669
An Attachment

Consists of :

			Page
1	275-2811	BUCKET AS	679.01
1	4I-6914	ADJUSTER GP-BUCKET	684

H97629E 01

250-6368 BUCKET & ADJUSTER GP

S/N CAE (T04.12)-Up
Part of 250-6367-Page669.01
An Attachment

Consists of :

			Page
1	275-2816	BUCKET AS	679.01
1	4I-6914	ADJUSTER GP-BUCKET	684

H97630E 01

250-6371 BUCKET & ADJUSTER GP

S/N CAE (T04.12)-Up
Part of 250-6370-Page669.01
An Attachment

MEMORANDA

Consists of :

			Page
1	154-0616	BUCKET AS	680
1	4I-6914	ADJUSTER GP-BUCKET	684

H60261E 00

150-2247 BUCKET & ADJUSTER GP

S/N CAE 01201-(T04.11)
Part of 150-2241-Page670
An Attachment

Consists of :

			Page
1	154-0617	BUCKET AS	680
1	4I-6914	ADJUSTER GP-BUCKET	684

H60262E 00

150-2248 BUCKET & ADJUSTER GP

S/N CAE 01201-(T04.11)
Part of 150-2242-Page670
An Attachment

Consists of :

			Page
1	275-2821	BUCKET AS	680.01
1	4I-6914	ADJUSTER GP-BUCKET	684

H97631E 01

250-6374 BUCKET & ADJUSTER GP

S/N CAE (T04.12)-Up
Part of 250-6373-Page670.01
An Attachment

Consists of :

			Page
1	275-2827	BUCKET AS	680.01
1	4I-6914	ADJUSTER GP-BUCKET	684

H97634E 01

250-6377 BUCKET & ADJUSTER GP

S/N CAE (T04.12)-Up
Part of 250-6376-Page670.01
An Attachment

MEMORANDA

Consists of :

			Page
1	154-0618	BUCKET AS	681
1	4I-6914	ADJUSTER GP-BUCKET	684

H60267E 00

150-2249 BUCKET & ADJUSTER GP

S/N CAE 01201-(T04.11)
Part of 150-2243-Page671
An Attachment

Consists of :

			Page
1	154-0619	BUCKET AS	681
1	4I-6914	ADJUSTER GP-BUCKET	684

H60268E 00

150-2250 BUCKET & ADJUSTER GP

S/N CAE 01201-(T04.11)
Part of 150-2244-Page671
An Attachment

Consists of :

			Page
1	275-2832	BUCKET AS	681.01
1	4I-6914	ADJUSTER GP-BUCKET	684

H97635E 01

250-6380 BUCKET & ADJUSTER GP

S/N CAE (T04.12)-Up
Part of 250-6379-Page671.01
An Attachment

Consists of :

			Page
1	275-2837	BUCKET AS	681.01
1	4I-6914	ADJUSTER GP-BUCKET	684

H98930E 01

250-6383 BUCKET & ADJUSTER GP

S/N CAE (T04.12)-Up
Part of 250-6382-Page671.01
An Attachment

MEMORANDA

Consists of :

			Page
1	168-2885	BUCKET AS	682
1	41-6914	ADJUSTER GP-BUCKET	684

H72189E 00

168-2906 BUCKET & ADJUSTER GP

S/N CAE 01201-(T04.11)
Part of 168-2884-Page672
An Attachment

Consists of :

			Page
1	159-5678	BUCKET AS	682
1	41-6914	ADJUSTER GP-BUCKET	684

H72190E 00

168-2879 BUCKET & ADJUSTER GP

S/N CAE 01201-(T04.11)
Part of 168-2878-Page672
An Attachment

Consists of :

			Page
1	250-6393	BUCKET AS	682.01
1	4I-6914	ADJUSTER GP-BUCKET	684

H87260E 00

250-6392 BUCKET & ADJUSTER GP

S/N CAE (T04.12)-Up
Part of 250-6391-Page672.01
An Attachment

Consists of :

			Page
1	305-1578	BUCKET AS	682.01
1	4I-6914	ADJUSTER GP-BUCKET	684

HA2003E 01

250-6386 BUCKET & ADJUSTER GP

S/N CAE (T04.12)-Up
Part of 250-6385-Page672.01
An Attachment

MEMORANDA

Consists of :

			Page
1	159-5677	BUCKET AS	683
1	4I-6914	ADJUSTER GP-BUCKET	684

H72191E 00

168-2880 BUCKET & ADJUSTER GP

S/N CAE 01201-(T04.11)
Part of 159-5676-Page673
An Attachment

Consists of :

			Page
1	305-1579	BUCKET AS	683
1	4I-6914	ADJUSTER GP-BUCKET	684

HA2004E 01

250-6389 BUCKET & ADJUSTER GP

S/N CAE (T04.12)-Up
Part of 250-6388-Page673
An Attachment

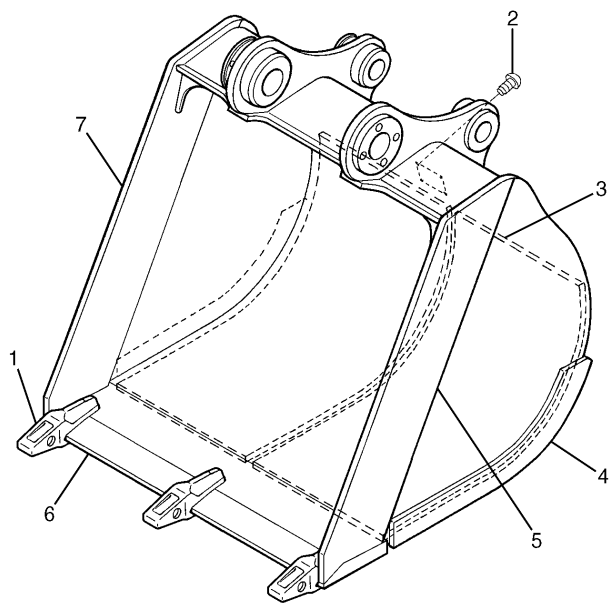

NOTE	No.	PART No.	QTY	PART NAME
	1	7Y-0254	3	ADAPTER
B	2	4B-4158	4	SCREW
	3	108-9043	2	PLATE
	4	7I-6823	2	PLATE
	5	102-3191	1	PLATE
	6	086-0811	1	EDGE
	7	102-3190	1	PLATE

B—USE AS REQUIRED

H78246E 03

154-0614 BUCKET AS

600MM Wide--0.32Cu.M.-Adapter Size J250
S/N CAE 01201-(T04.11)
Part of 150-2245-Page674
An Attachment

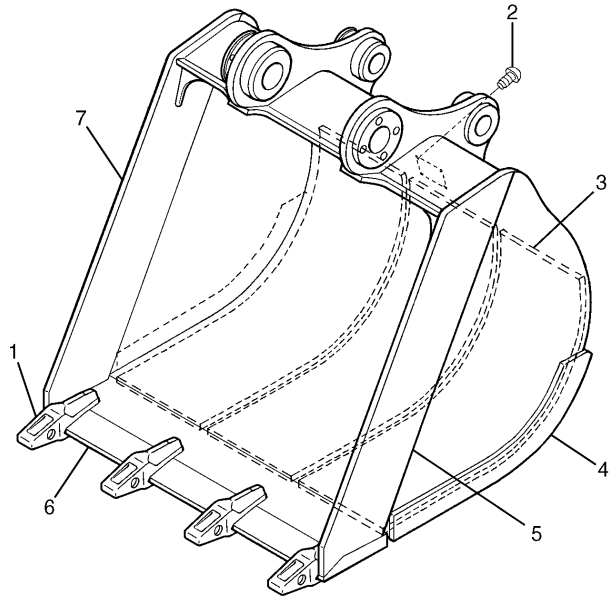

NOTE	No.	PART No.	QTY	PART NAME
	1	7Y-0254	4	ADAPTER
B	2	4B-4158	4	SCREW
	3	108-9041	3	PLATE
	4	7I-6823	2	PLATE
	5	102-3191	1	PLATE
	6	086-0812	1	EDGE
	7	102-3190	1	PLATE

B—USE AS REQUIRED

H78247E 03

154-0615 BUCKET AS

700MM Wide--0.38Cu.M.-Adapter Size J250
S/N CAE 01201-(T04.11)
Part of 150-2246-Page674
An Attachment

IMPLEMENTS

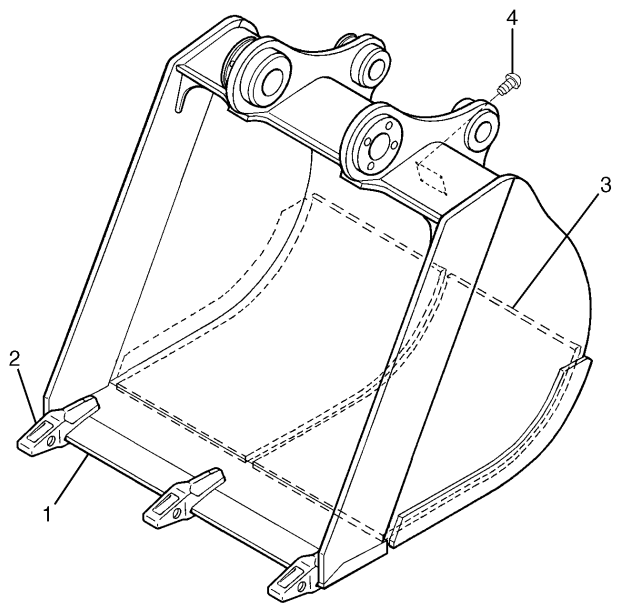

NOTE	No.	PART No.	QTY	PART NAME
	1	250-6440	1	EDGE AS
	2	7Y-0254	3	ADAPTER
	3	250-6465	2	PLATE
B	4	4B-4158	4	SCREW

B—USE AS REQUIRED

H97636E 00

275-2811 BUCKET AS

564MM Wide--0.32Cu.M.-Adapter Size J250
S/N CAE (T04.12)-Up
Part of 250-6368-Page674.01
An Attachment

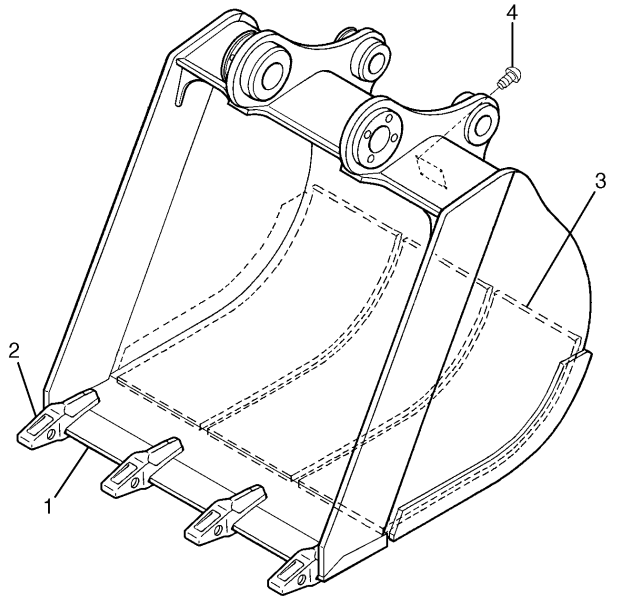

NOTE	No.	PART No.	QTY	PART NAME
	1	250-6462	1	EDGE AS
	2	7Y-0254	4	ADAPTER
	3	255-0317	3	PLATE
B	4	4B-4158	4	SCREW

B—USE AS REQUIRED

H97637E 00

275-2816 BUCKET AS

664MM Wide--0.38Cu.M.-Adapter Size J250
S/N CAE (T04.12)-Up
Part of 250-6371-Page674.01
An Attachment

MEMORANDA

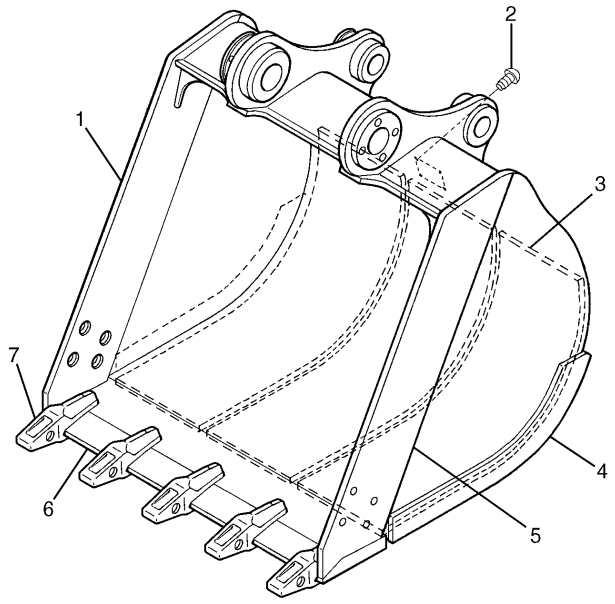

NOTE	No.	PART No.	QTY	PART NAME
	1	7I-6821	1	PLATE
B	2	4B-4158	4	SCREW
	3	108-9042	3	PLATE
	4	7I-6823	2	PLATE
	5	7I-6820	1	PLATE
	6	086-0809	1	EDGE
	7	7Y-0254	5	ADAPTER

B—USE AS REQUIRED

H78248E 03

154-0616 BUCKET AS

895MM Wide--0.45Cu.M.-Adapter Size J250
S/N CAE 01201-(T04.11)
Part of 150-2247-Page675
An Attachment

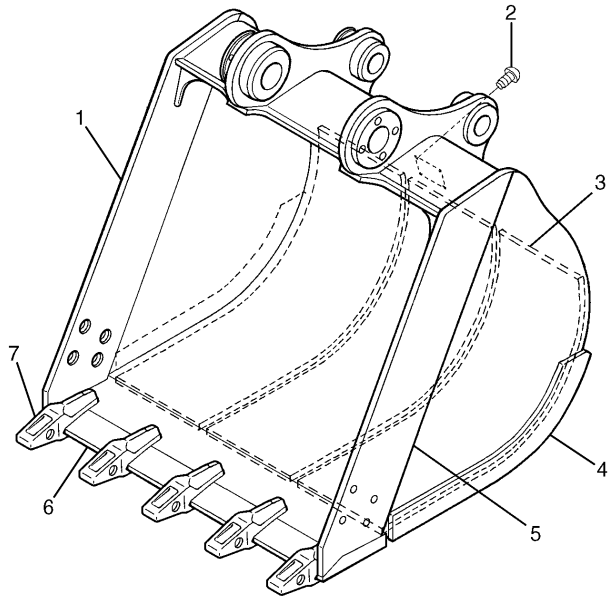

NOTE	No.	PART No.	QTY	PART NAME
	1	7I-6821	1	PLATE
B	2	4B-4158	4	SCREW
	3	108-9043	3	PLATE
	4	7I-6823	2	PLATE
	5	7I-6820	1	PLATE
	6	106-6857	1	EDGE AS
		085-9510	1	EDGE
	7	7Y-0254	5	ADAPTER

B—USE AS REQUIRED

H78644E 03

154-0617 BUCKET AS

990MM Wide--0.52Cu.M.-Adapter Size J250
S/N CAE 01201-(T04.11)
Part of 150-2248-Page675
An Attachment

IMPLEMENTS

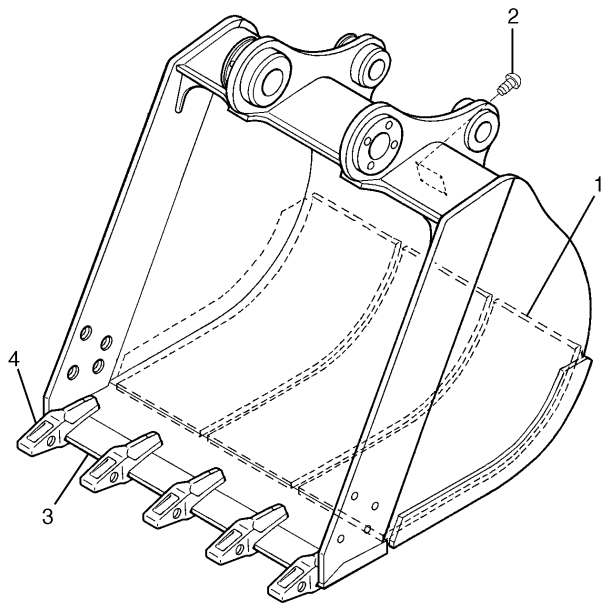

NOTE	No.	PART No.	QTY	PART NAME
	1	255-0316	3	PLATE
B	2	4B-4158	4	SCREW
	3	250-6451	1	EDGE AS
	4	7Y-0254	5	ADAPTER

B—USE AS REQUIRED

H97638E 00

275-2821 BUCKET AS

794MM Wide--0.45Cu.M.-Adapter Size J250
S/N CAE (T04.12)-Up
Part of 250-6374-Page675.01
An Attachment

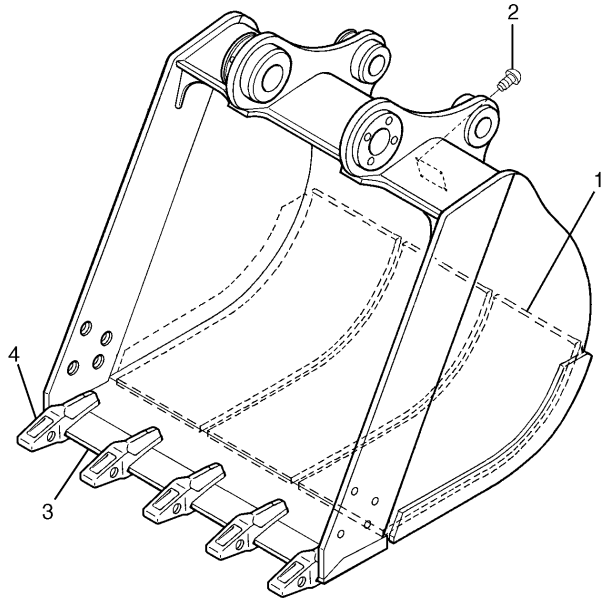

NOTE	No.	PART No.	QTY	PART NAME
	1	250-6465	3	PLATE
B	2	4B-4158	4	SCREW
	3	250-6421	1	EDGE AS
	4	7Y-0254	5	ADAPTER

B—USE AS REQUIRED

H97639E 00

275-2827 BUCKET AS

884MM Wide--0.52Cu.M.-Adapter Size J250
S/N CAE (T04.12)-Up
Part of 250-6377-Page675.01
An Attachment

MEMORANDA

IMPLEMENTS

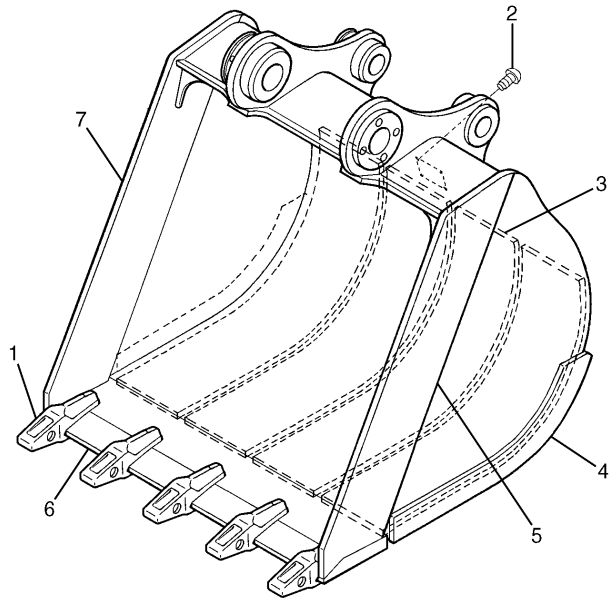

NOTE	No.	PART No.	QTY	PART NAME
	1	7Y-0254	5	ADAPTER
B	2	4B-4158	4	SCREW
	3	108-9041	4	PLATE
	4	7I-6823	2	PLATE
	5	102-3191	1	PLATE
	6	086-0813	1	EDGE
	7	102-3190	1	PLATE

B—USE AS REQUIRED

H78645E 03

154-0618 BUCKET AS

1000MM Wide--0.57Cu.M.-Adapter Size J250
S/N CAE 01201-(T04.11)
Part of 150-2249-Page676
An Attachment

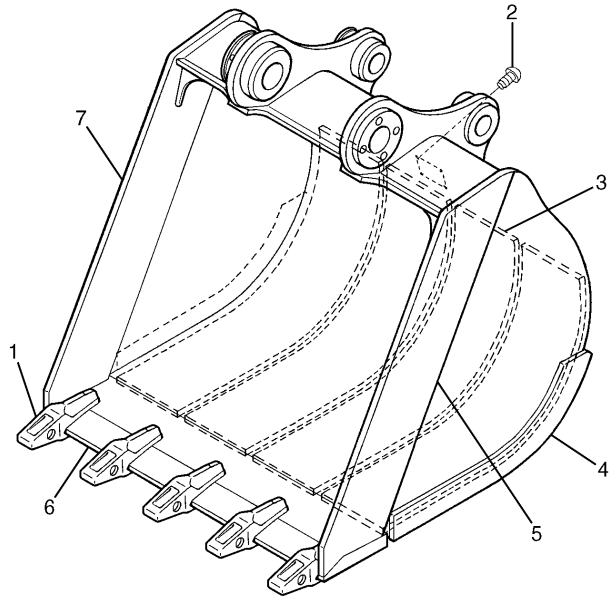

NOTE	No.	PART No.	QTY	PART NAME
	1	7Y-0254	5	ADAPTER
B	2	4B-4158	4	SCREW
	3	108-9042	4	PLATE
	4	7I-6823	2	PLATE
	5	102-3191	1	PLATE
	6	086-0814	1	EDGE
	7	102-3190	1	PLATE

B—USE AS REQUIRED

H78646E 03

154-0619 BUCKET AS

1090MM Wide--0.63Cu.M.-Adapter Size J250
S/N CAE 01201-(T04.11)
Part of 150-2250-Page676
An Attachment

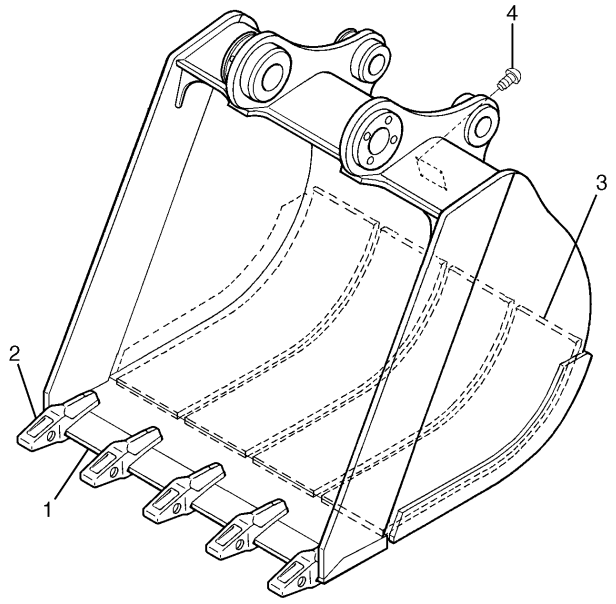

NOTE	No.	PART No.	QTY	PART NAME
	1	250-6478	1	EDGE AS
	2	7Y-0254	5	ADAPTER
	3	255-0317	4	PLATE
B	4	4B-4158	4	SCREW

B—USE AS REQUIRED

H97640E 00

275-2832 BUCKET AS

964MM Wide--0.57Cu.M.-Adapter Size J250
S/N CAE (T04.12)-Up
Part of 250-6380-Page676.01
An Attachment

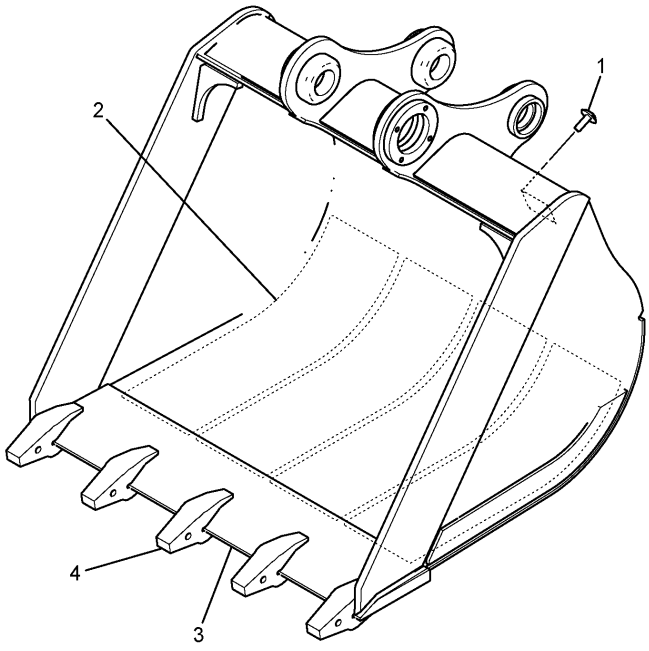

NOTE	No.	PART No.	QTY	PART NAME
B	1	4B-4158	4	SCREW
	2	255-0316	4	PLATE
	3	250-6492	1	EDGE AS
	4	119-3253	5	ADAPTER

B—USE AS REQUIRED

HA2018E 00

275-2837 BUCKET AS

1054MM Wide--0.63Cu.M.-Adapter Size J250
S/N CAE (T04.12)-Up
Part of 250-6383-Page676.01
An Attachment

MEMORANDA

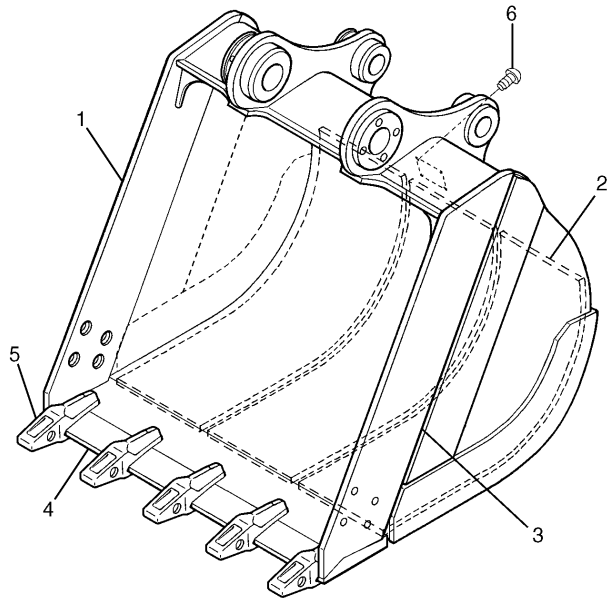

NOTE	No.	PART No.	QTY	PART NAME
	1	7I-6821	1	PLATE
	2	108-9043	3	PLATE
	3	7I-6820	1	PLATE
	4	106-6857	1	EDGE AS
		085-9510	1	EDGE
	5	7Y-0254	5	ADAPTER
B	6	4B-4158	4	SCREW

B—USE AS REQUIRED

H78647E 01

168-2885 BUCKET AS

990MM Wide--0.52Cu.M.-Adapter Size J250
S/N CAE 01201-(T04.11)
Part of 168-2906-Page677
An Attachment

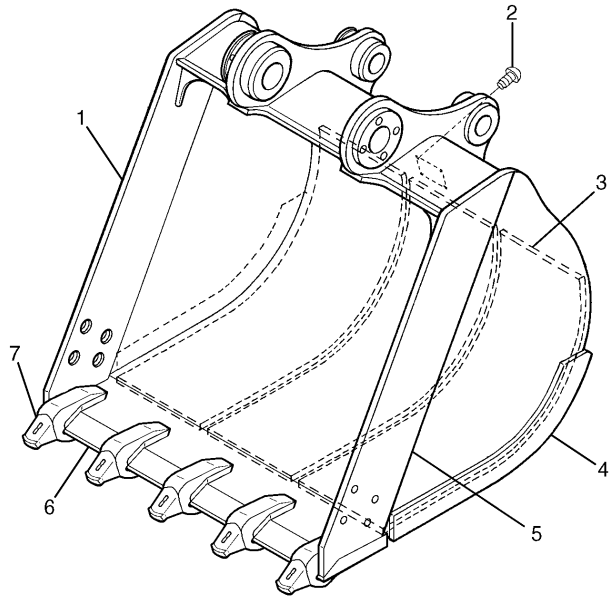

NOTE	No.	PART No.	QTY	PART NAME
	1	137-6121	1	PLATE
B	2	4B-4158	4	SCREW
	3	108-9042	3	PLATE
	4	7I-6823	2	PLATE
	5	137-6122	1	PLATE
	6	137-6120	1	EDGE
	7	093-7680	5	ADAPTER

B—USE AS REQUIRED

H86463E 03

159-5678 BUCKET AS

895MM Wide--0.45Cu.M.
S/N CAE 01201-(T04.11)
Part of 168-2879-Page677
An Attachment

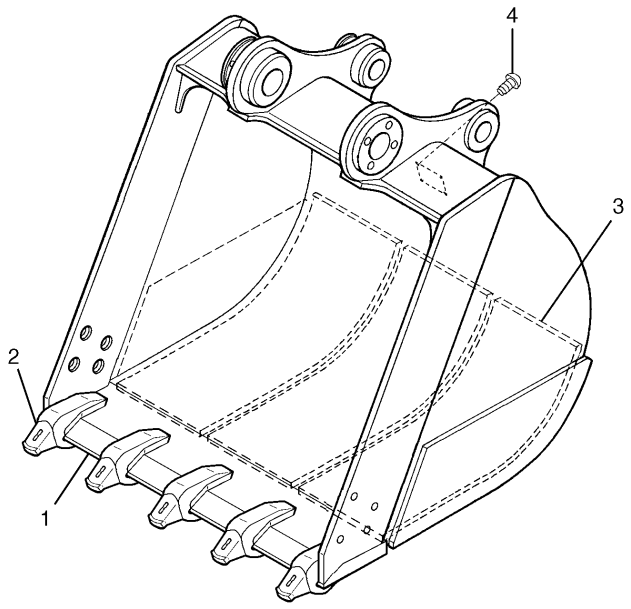

NOTE	No.	PART No.	QTY	PART NAME
	1	250-6421	1	EDGE AS
	2	7Y-0254	5	ADAPTER
	3	255-0332	3	PLATE
B	4	4B-4158	4	SCREW

B—USE AS REQUIRED

H87264E 00

250-6393 BUCKET AS

884MM Wide--0.52Cu.M.-Adapter Size J250
S/N CAE (T04.12)-Up
Part of 250-6392-Page677.01
An Attachment

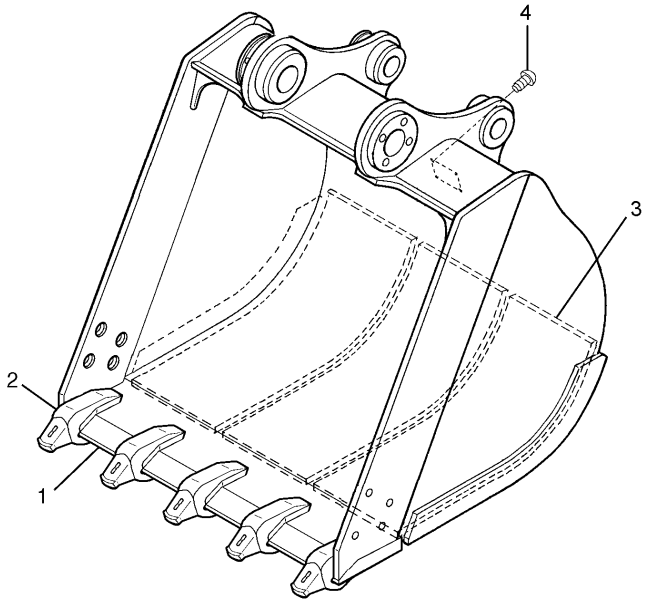

NOTE	No.	PART No.	QTY	PART NAME
	1	250-6481	1	EDGE AS
	2	250-6487	5	ADAPTER
	3	255-0316	3	PLATE
B	4	4B-4158	4	SCREW

B—USE AS REQUIRED

HA2005E 00

305-1578 BUCKET AS

ESCO
S/N CAE (T04.12)-Up
Part of 250-6386-Page677.01
An Attachment

MEMORANDA

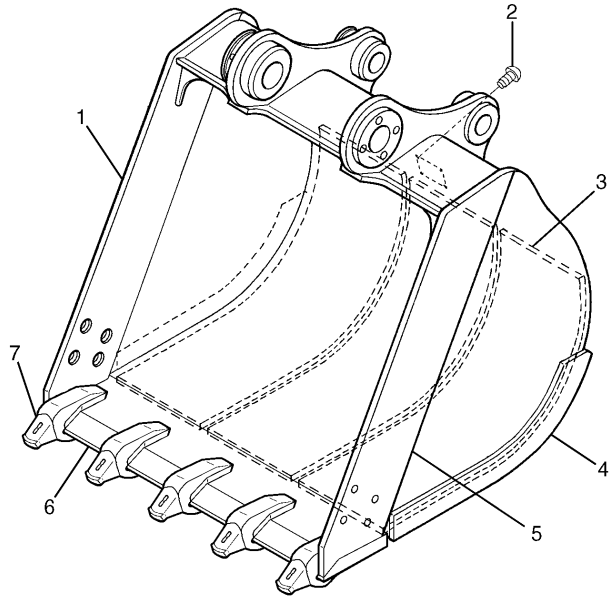

NOTE	No.	PART No.	QTY	PART NAME
	1	137-6121	1	PLATE
B	2	4B-4158	4	SCREW
	3	108-9043	3	PLATE
	4	7I-6823	2	PLATE
	5	137-6122	1	PLATE
	6	168-2881	1	EDGE
	7	093-7680	5	ADAPTER

B—USE AS REQUIRED

H86464E 03

159-5677 BUCKET AS

990MM Wide--0.52Cu.M.
S/N CAE 01201-(T04.11)
Part of 168-2880-Page678
An Attachment

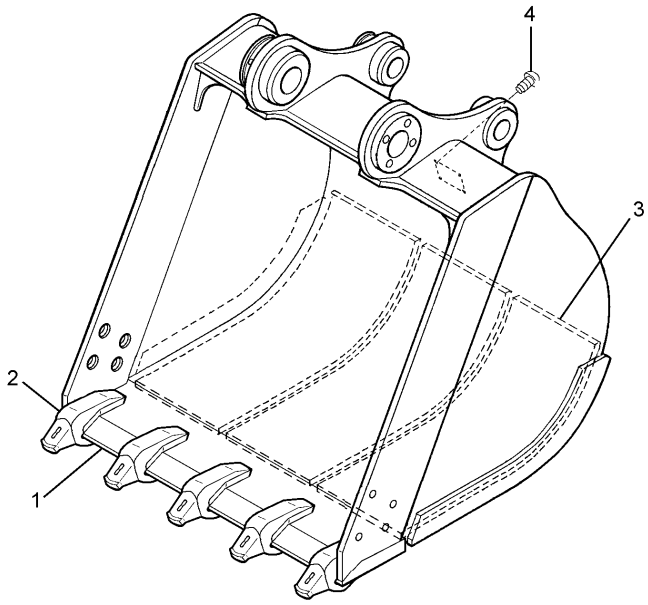

NOTE	No.	PART No.	QTY	PART NAME
	1	250-0333	1	EDGE AS
	2	250-6487	5	ADAPTER
	3	250-6465	3	PLATE
B	4	4B-4158	4	SCREW

B—USE AS REQUIRED

HA2006E 00

305-1579 BUCKET AS

ESCO
S/N CAE (T04.12)-Up
Part of 250-6389-Page678
An Attachment

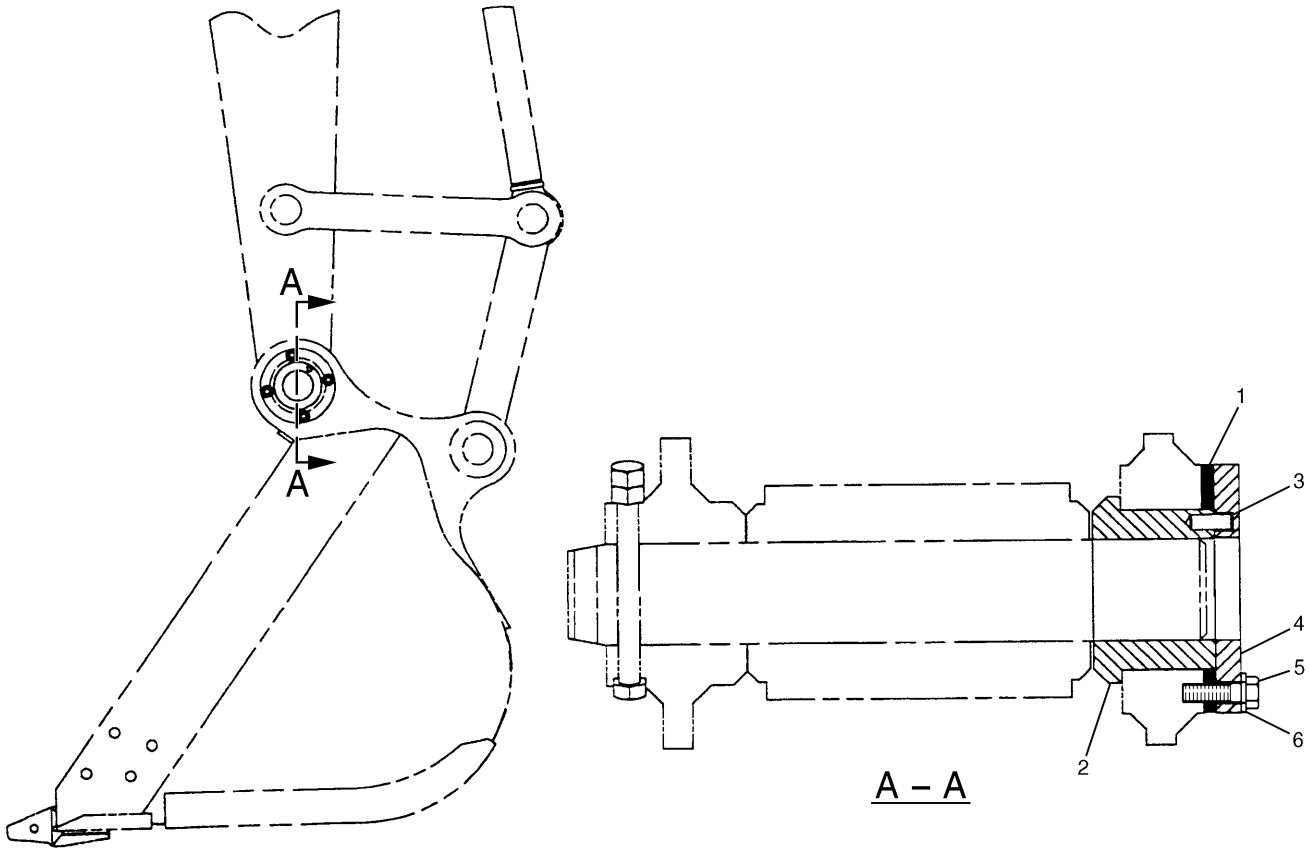

NOTE	No.	PART No.	QTY	PART NAME	NOTE	No.	PART No.	QTY	PART NAME
B	1	086-0416	6	SHIM (T=1.00mm)					
B		086-0415	4	SHIM (T=0.50mm)					
	2	086-0414	1	FLANGE					
	3	085-9769	1	PIN					
	4	085-8828	1	PLATE					
	5	8T-4183	4	BOLT (L=40mm)					
	6	8T-4223	4	WASHER					

B—USE AS REQUIRED

H64325E 01

4I-6914 ADJUSTER GP-BUCKET

Long Reach Front

Part of 150-2245,150-2246-Page674,250-6368,250-6371-Page674.01,150-2247,150-2248-Page675,250-6374 ,250-6377-Page675.01,150-2249,150-2250-Page676,250-6380,250-6383-Page676.01 ,168-2879,168-2906-Page677,250-6386,250-6392-Page677.01,168-2880,250-6389-Page678

An Attachment

IMPLEMENTS

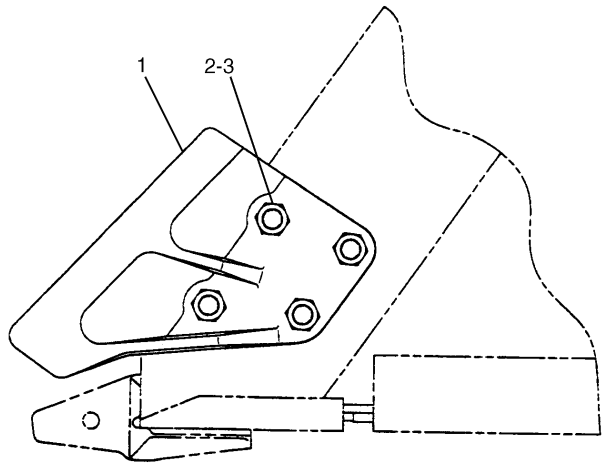

NOTE	No.	PART No.	QTY	PART NAME
	1	7Y-0204	1	SIDECUTTER (RH)
		7Y-0203	1	SIDECUTTER (LH)
	2	096-7074	8	BOLT (L=50mm)
	3	8T-4131	8	NUT

H88217E 03

4I-7343 SIDECUTTER GP

Part of 150-2241,150-2242-Page670,250-6373,250-6376-Page670.01,168-2878,168-2884-Page672,250-6385 ,250-6391-Page672.01,159-5676,250-6388-Page673

An Attachment

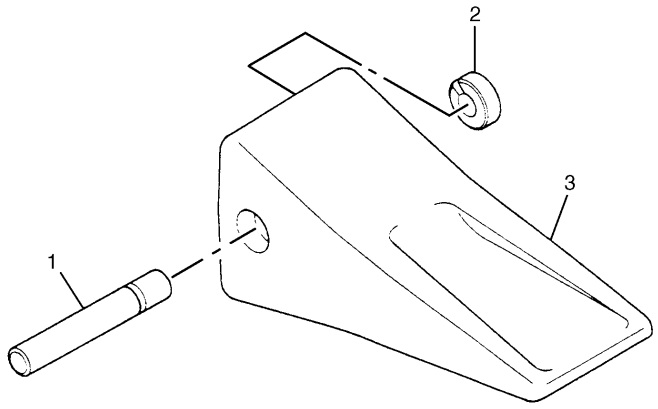

NOTE	No.	PART No.	QTY	PART NAME
	1	8E-6258	1	PIN
	2	8E-6259	1	RETAINER AS
	3	1U-3252	1	TIP

H78935E 06

9J-3169 TIP GP-LONG

Adapter Size J250

Part of 150-2239,150-2240-Page669,250-6367,250-6370-Page669.01,150-2241,150-2242-Page670,250-6373 ,250-6376-Page670.01,150-2243,150-2244-Page671,250-6379,250-6382-Page671.01,168-2884-Page672,250-6391-Page672.01

An Attachment

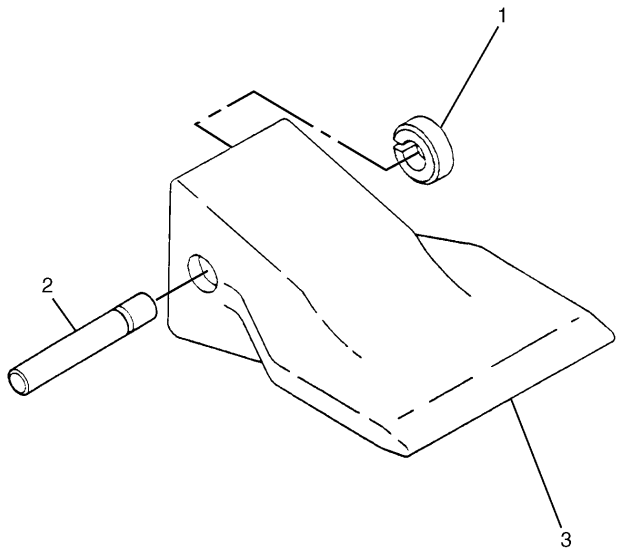

NOTE	No.	PART No.	QTY	PART NAME
	1	8E-6259	1	RETAINER AS
	2	8E-6258	1	PIN
	3	3G-8250	1	TIP

H51467E 00

101-2927 TIP GP-WIDE

Adapter Size J250

An Attachment

IMPLEMENTS

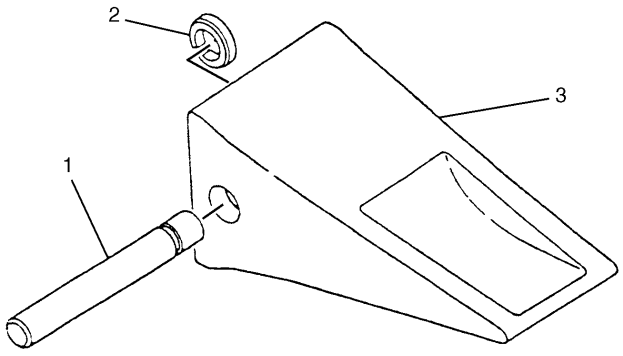

NOTE	No.	PART No.	QTY	PART NAME
	1	8E-6258	1	PIN
	2	8E-6259	1	RETAINER AS
	3	1U-3251	1	TIP

H78936E 07

9J-3178 TIP GP-SHORT
Adapter Size J250
An Attachment

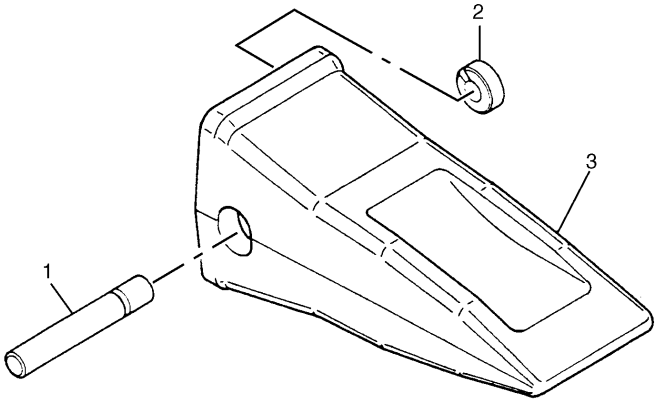

NOTE	No.	PART No.	QTY	PART NAME
	1	8E-6258	1	PIN
	2	8E-6259	1	RETAINER AS
	3	9N-4252	1	TIP

H51460E 01

8E-3750 TIP GP-LONG

Heavy Duty
Adapter Size J250
An Attachment

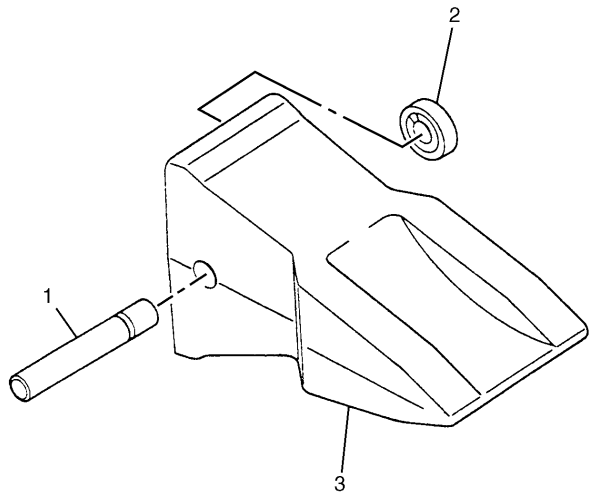

NOTE	No.	PART No.	QTY	PART NAME
	1	8E-6258	1	PIN
	2	8E-6259	1	RETAINER AS
	3	9N-4253	1	TIP

H51461E 01

8E-3755 TIP GP-ABRASION

Heavy Duty
Adapter Size J250
An Attachment

IMPLEMENTS

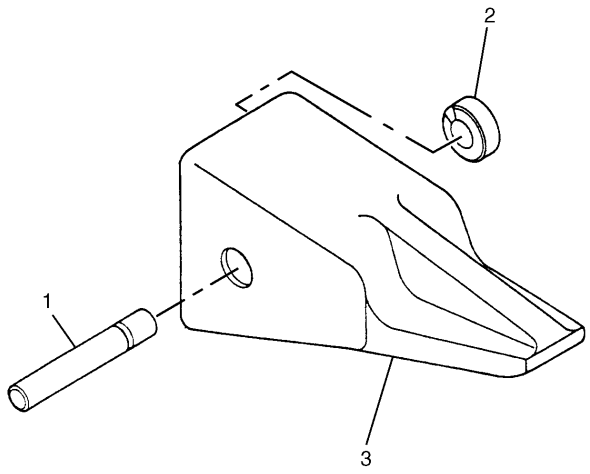

NOTE	No.	PART No.	QTY	PART NAME
	1	8E-6258	1	PIN
	2	8E-6259	1	RETAINER AS
	3	9J-4259	1	TIP

H51464E 00

100-6462 TIP GP-PENETRATION

Adapter Size J250
An Attachment

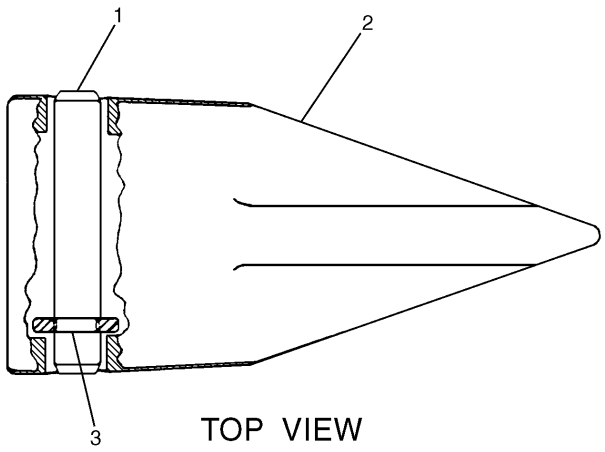

TOP VIEW

NOTE	No.	PART No.	QTY	PART NAME
	1	8E-6258	1	PIN
	2	9W-8259	1	TIP
	3	8E-6259	1	RETAINER AS

H51466E 00

100-6464 TIP GP

Sharp Center
Adapter Size J250
An Attachment

IMPLEMENTS

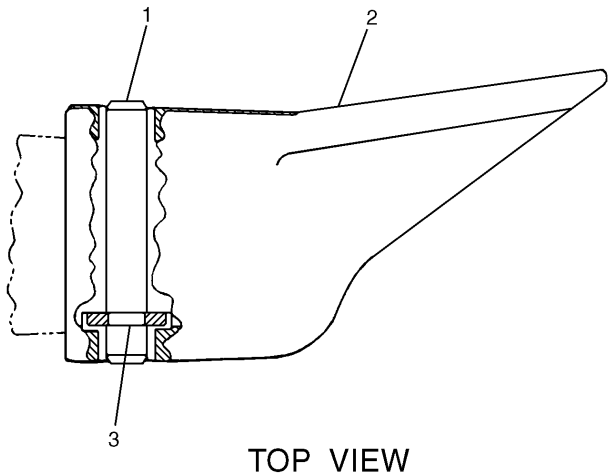

TOP VIEW

NOTE	No.	PART No.	QTY	PART NAME
	1	8E-6258	1	PIN
	2	9W-8258	1	TIP
	3	8E-6259	1	RETAINER AS

H51465E 00

100-6463 TIP GP
Sharp Corner
Adapter Size J250
An Attachment

MEMORANDA

SERVICE EQUIPMENT AND SUPPLIES

Consists of :

			Page
1	169-7721	TOOL GP	693
1	169-7723	MOUNTING GP-GREASE GUN	220

H71815E 01

169-7722 TOOL AR
An Attachment

SERVICE EQUIPMENT AND SUPPLIES

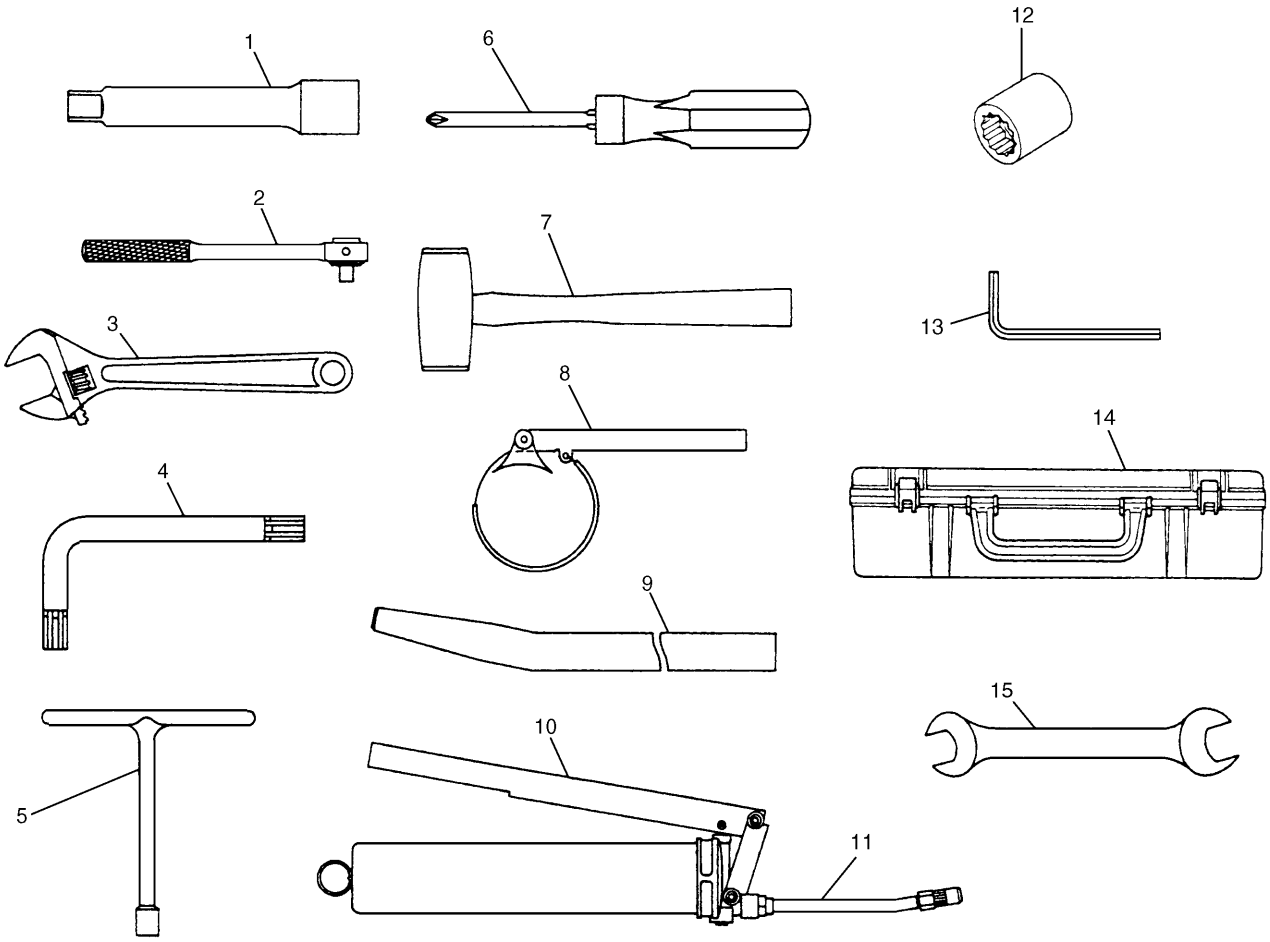

NOTE	No.	PART No.	QTY	PART NAME	NOTE	No.	PART No.	QTY	PART NAME
	1	099-3250	1	EXTENSION		12	095-1066	1	SOCKET (13MM)
	2	095-1852	1	RATCHET			099-3248	1	SOCKET (16MM)
	3	7I-6395	1	WRENCH (200MM)			099-3249	1	SOCKET (18MM)
	4	4I-2604	1	WRENCH (6MM)			095-1070	1	SOCKET (22MM)
		4I-2605	1	WRENCH (10MM)			096-8251	1	SOCKET (30MM)
	5	7Y-6108	1	WRENCH (11MM)		13	095-1083	1	WRENCH (12MM)
	6	095-1855	1	SCREWDRIVER		14	7Y-0070	1	TOOLBOX
	7	095-1857	1	HAMMER		15	099-3246	1	WRENCH (21MM × 24MM)
	8	2P-8250	1	WRENCH AS					
		1P-0551	1	PIN					
		2P-8253	1	STRAP					
		6H-7378	1	RING					
	9	093-7638	1	BAR					
	10	099-7464	1	GREASE GUN					
	11	199-7371	1	TUBE AS					
A		4Y-0426	1	GREASE (BELLOWS)					
A		3Y-7597	1	GREASE (FOR WINTER TIME)					
A		1P-0808	1	GREASE (PAPER TUBE)					

A—NOT PART OF THIS GROUP

H76872E 02

169-7721 TOOL GP
Part of 169-7722-Page692
An Attachment

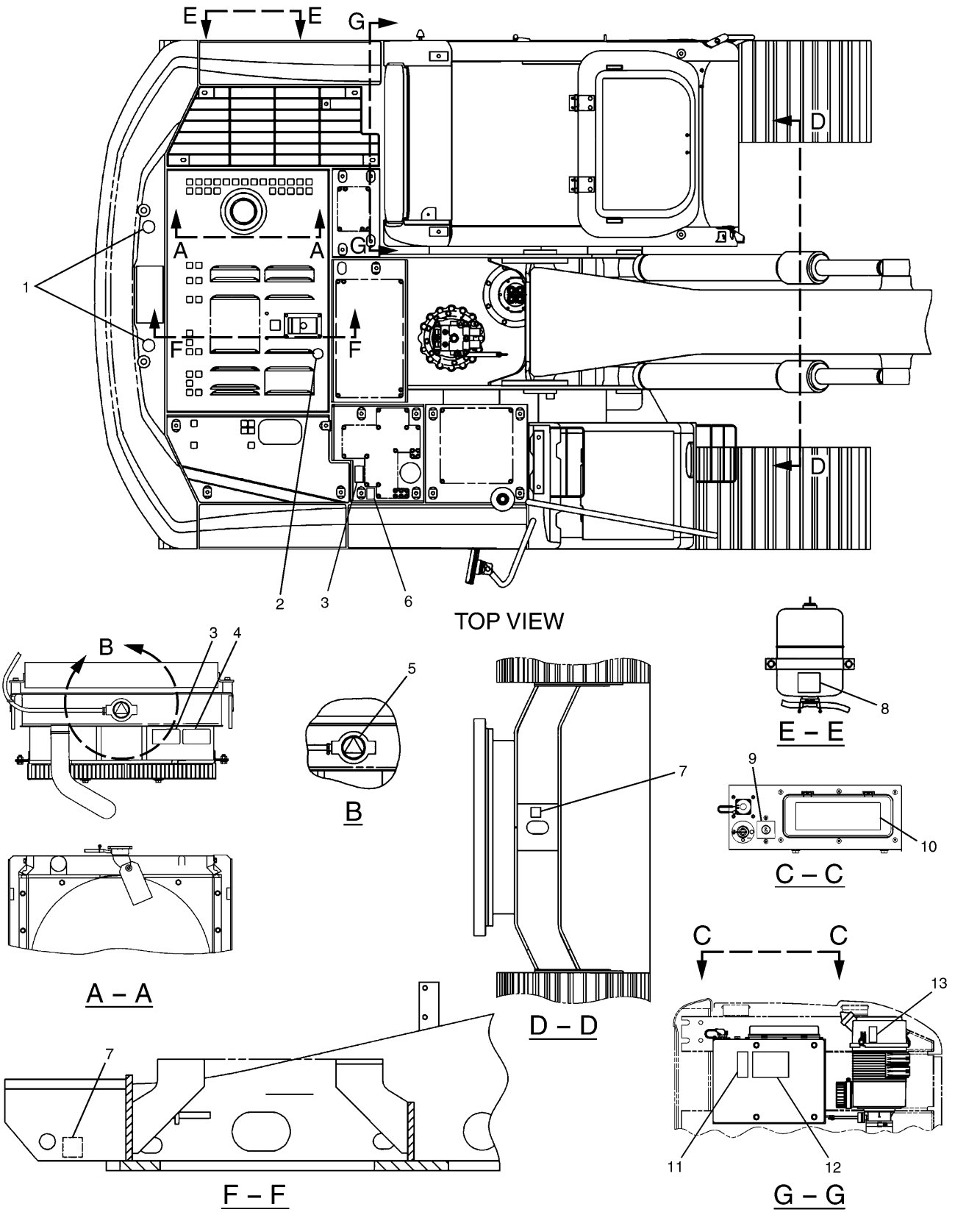

151-1482 PLATE & FILM GP (1/3)
S/N CAE 01201-02030

SERVICE EQUIPMENT AND SUPPLIES

NOTE	No.	PART No.	QTY	PART NAME	NOTE	No.	PART No.	QTY	PART NAME
	1	7Y-0063	2	FILM (LIFT EYE)					
	2	167-7270	1	FILM (NO STEP)					
	3	160-6822	2	FILM (WARNING)					
	4	160-6841	1	FILM (WARNING)					
	5	120-5107	1	FILM (INSTRUCTION)					
	6	186-1131	1	FILM					
		186-1133	1	FILM					
	7	7X-7644	3	FILM (TIE DOWN)					
	8	134-7258	1	FILM (ELC)					
	9	169-7659	1	FILM (CIRCUIT BREAKER)					
	10	183-1585	1	FILM (FUSE PANEL)					
	11	7I-6508	1	FILM (NOTICE)					
	12	3Y-8905	1	FILM (WARNING)					
	13	4P-6422	1	FILM (WARNING)					

H84427E 09

151-1482 PLATE & FILM GP (1/3)
S/N CAE 01201-02030

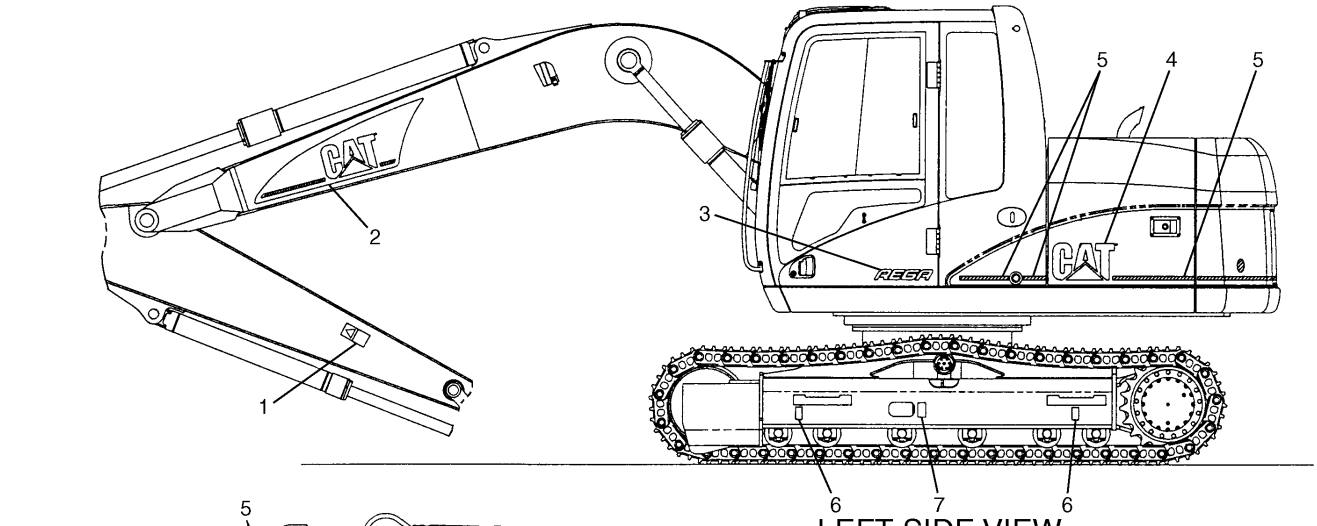

LEFT SIDE VIEW

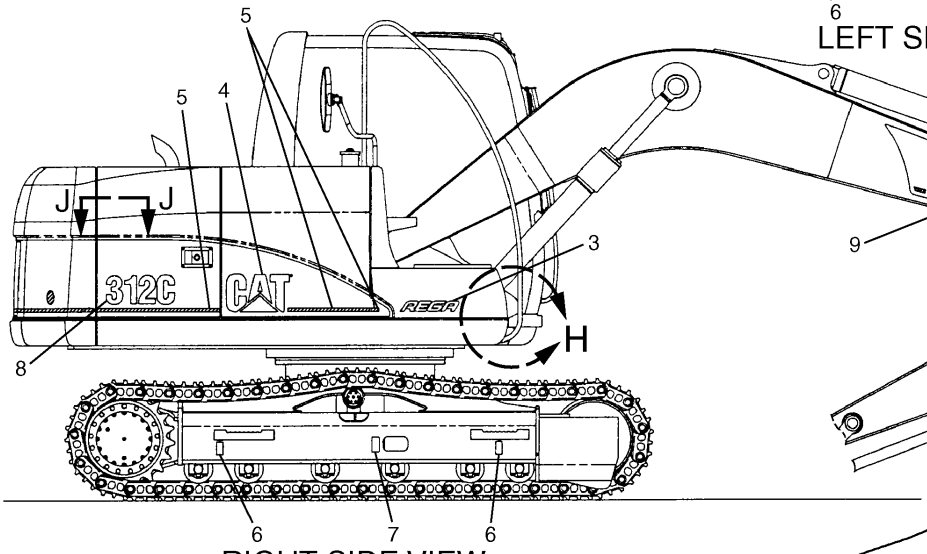

RIGHT SIDE VIEW

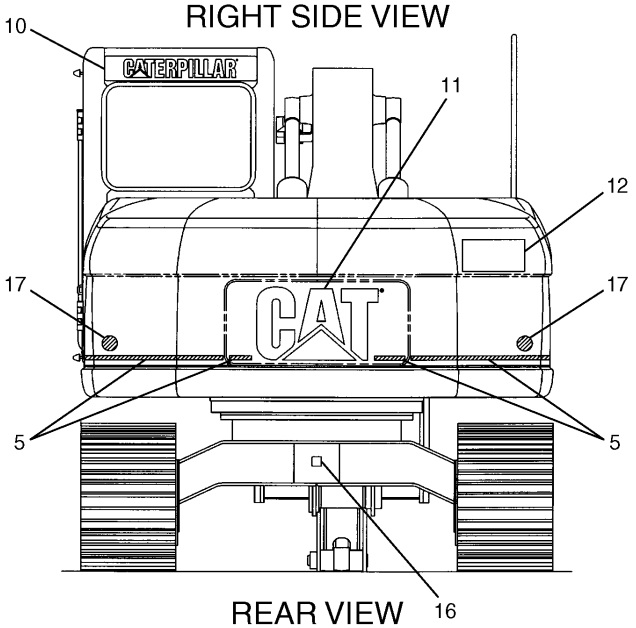

REAR VIEW

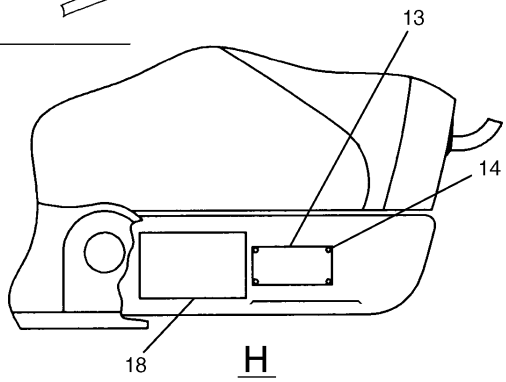

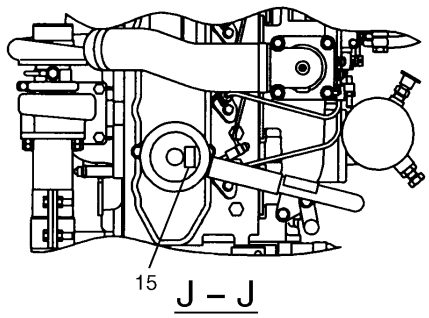

H84428E 09

151-1482 PLATE & FILM GP (2/3)
S/N CAE 01201-02030

SERVICE EQUIPMENT AND SUPPLIES

NOTE	No.	PART No.	QTY	PART NAME	NOTE	No.	PART No.	QTY	PART NAME
	1	160-6853	2	FILM (DANGER)					
	2	132-4100	1	FILM (CAT)					
	3	186-1147	2	FILM (REGA)					
	4	105-7545	2	FILM (CAT)					
E	5	134-6146		FILM (STRIPE)…(350cm)					
	6	1P-2807	4	FILM (LIFT)					
	7	160-6832	2	FILM (WARNING)					
	8	169-7617	1	FILM (312C)					
	9	132-4099	1	FILM (CAT)					
	10	167-7272	1	FILM (CAT)					
	11	150-8108	1	FILM (CAT)					
	12	160-6884	1	FILM (DANGER)					
Z	13		1	PLATE (PIN)					
	14	4B-4158	4	SCREW					
	15	144-9126	1	FILM (INSTRUCTION)					
	16	7X-7644	1	FILM (TIE DOWN)					
	17	190-5386	2	FILM (SAFETY)					
	18	169-7616	1	FILM (NOTICE)					

E—ORDER BY THE CENTIMETER

Z—NOT SERVICED

H84428E 09

151-1482 PLATE & FILM GP (2/3)

S/N CAE 01201-02030

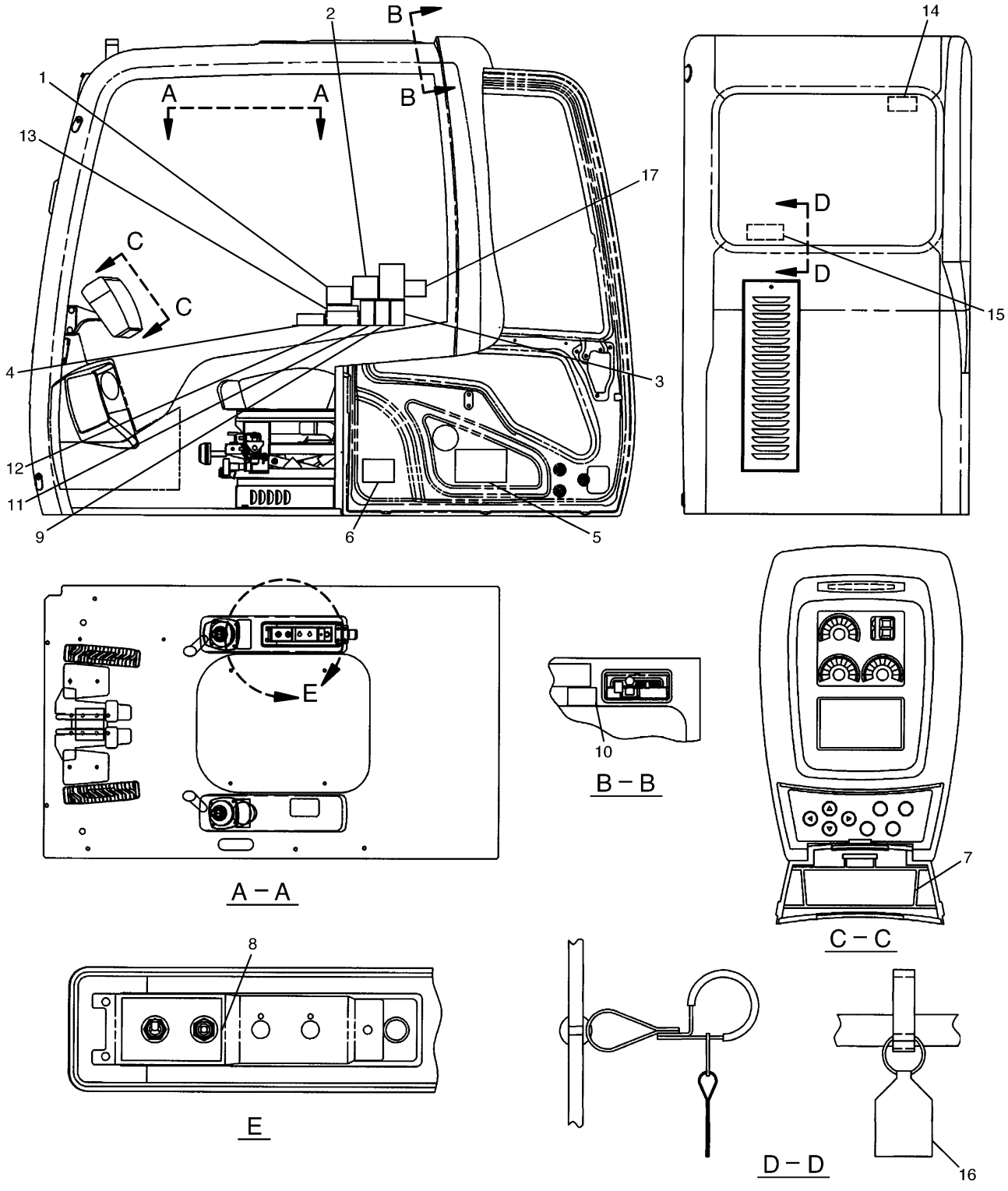

H84429E 09

151-1482 PLATE & FILM GP (3/3)
S/N CAE 01201-02030

SERVICE EQUIPMENT AND SUPPLIES

NOTE	No.	PART No.	QTY	PART NAME	NOTE	No.	PART No.	QTY	PART NAME
	1	127-5272	1	FILM (WARNING)					
	2	127-5295	1	FILM (WARNING)					
	3	160-6845	1	FILM (WARNING)					
	4	186-1214	1	FILM (NOTICE)					
	5	211-6189	1	FILM (LUBRICANT CHART)					
	6	169-7620	1	FILM					
	7	176-2712	1	FILM (INSTRUCTION)					
	8	176-2753	1	FILM (THROTTLE CONTROL)					
	9	160-6850	1	FILM (DANGER)					
	10	186-1149	1	FILM (WARNING)					
	11	160-6818	1	FILM (WARNING)					
	12	4I-2885	1	CASE					
	13	7I-1533	1	PLATE (INSTRUCTION)					
	14	187-0661	1	FILM (ALTERNATE EXIT)					
	15	6I-6075	1	FILM (EMERGENCY EXIT)					
	16	8T-6842	1	FILM (ALTERNATE EXIT)					
	17	219-3149	1	FILM (NOTICE)					

H84429E 09

151-1482 PLATE & FILM GP (3/3)
S/N CAE 01201-02030

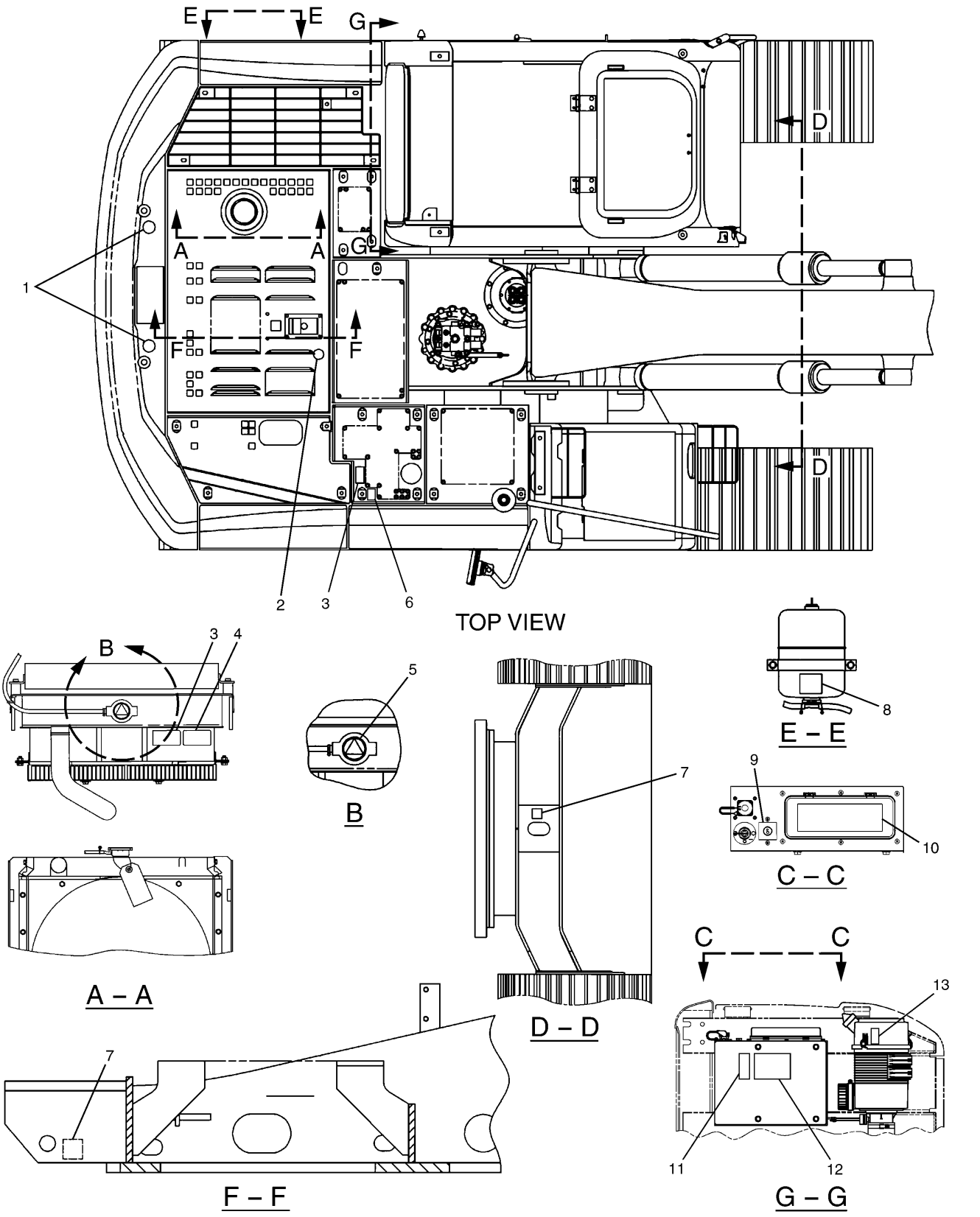

151-1482 PLATE & FILM GP (1/3)
S/N CAE 02031-02264

SERVICE EQUIPMENT AND SUPPLIES

NOTE	No.	PART No.	QTY	PART NAME	NOTE	No.	PART No.	QTY	PART NAME
	1	7Y-0063	2	FILM (LIFT EYE)					
	2	167-7270	1	FILM (NO STEP)					
	3	160-6822	2	FILM (WARNING)					
	4	160-6841	1	FILM (WARNING)					
	5	120-5107	1	FILM (INSTRUCTION)					
	6	186-1131	1	FILM					
		186-1133	1	FILM					
	7	7X-7644	3	FILM (TIE DOWN)					
	8	134-7258	1	FILM (ELC)					
	9	169-7659	1	FILM (CIRCUIT BREAKER)					
	10	183-1585	1	FILM (FUSE PANEL)					
	11	7I-6508	1	FILM (NOTICE)					
	12	3Y-8905	1	FILM (WARNING)					
	13	4P-6422	1	FILM (WARNING)					

151-1482 PLATE & FILM GP (1/3)
S/N CAE 02031-02264

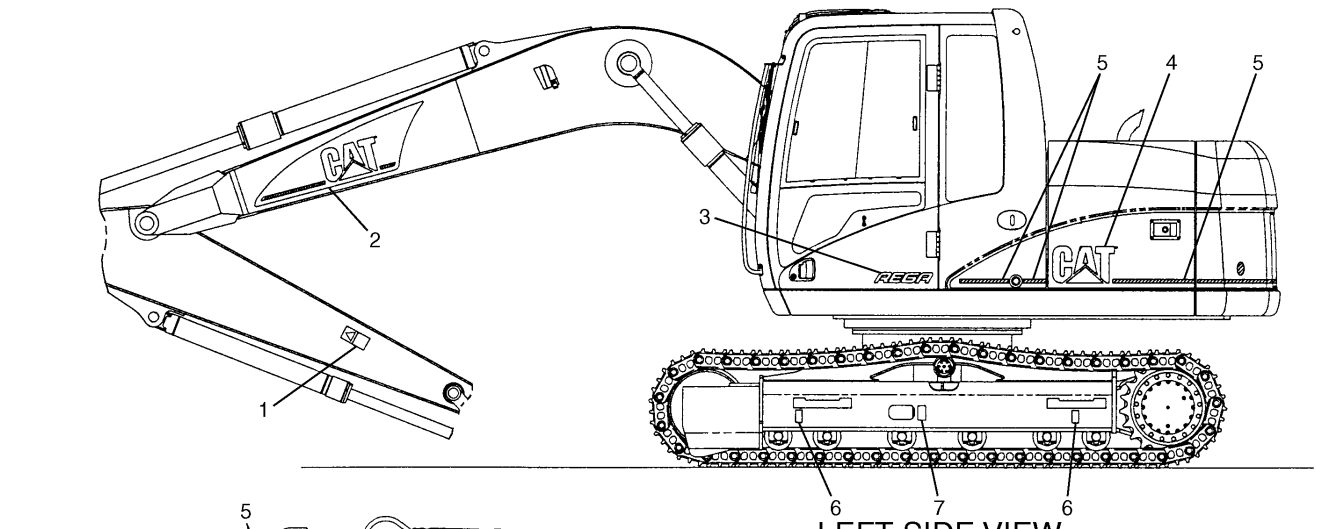

LEFT SIDE VIEW

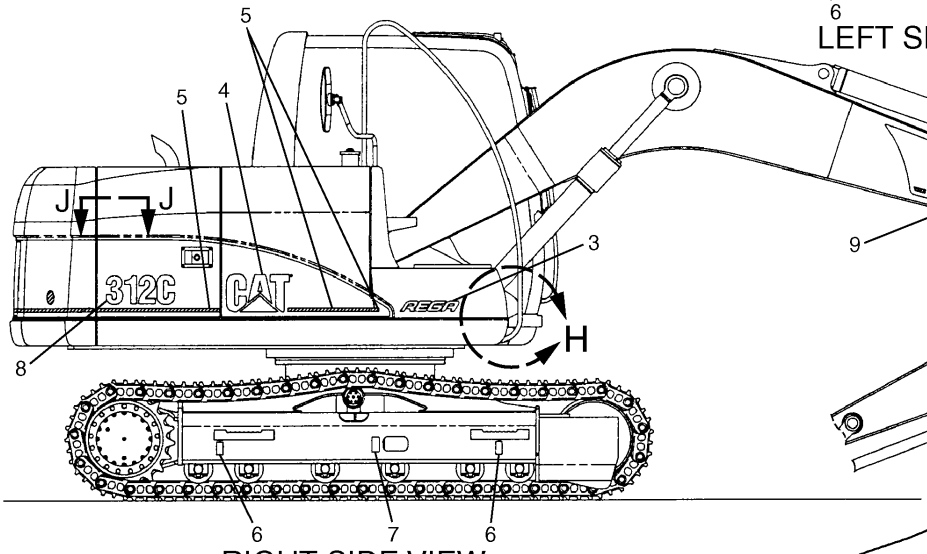

RIGHT SIDE VIEW

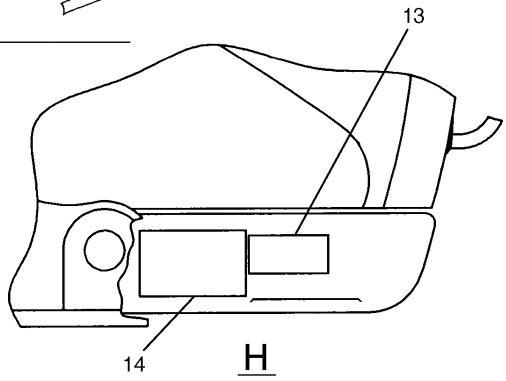

H

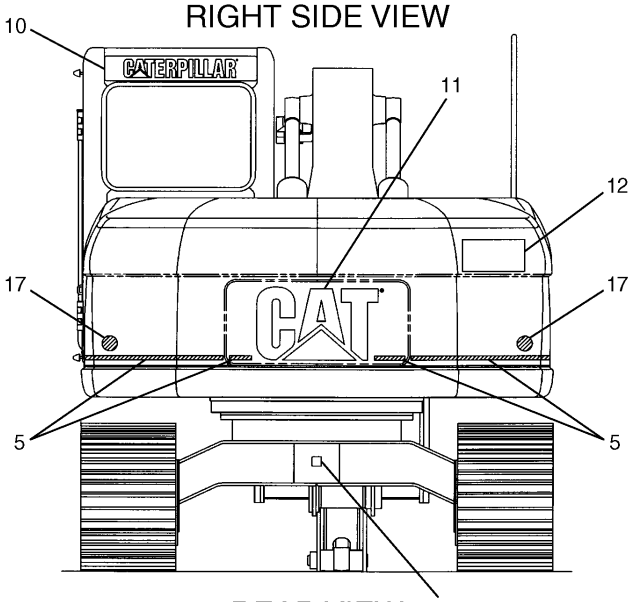

REAR VIEW

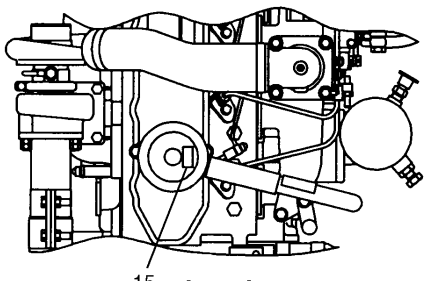

J – J

H86662E 11

151-1482 PLATE & FILM GP (2/3)
S/N CAE 02031-02264

SERVICE EQUIPMENT AND SUPPLIES

NOTE	No.	PART No.	QTY	PART NAME	NOTE	No.	PART No.	QTY	PART NAME
	1	160-6853	2	FILM (DANGER)					
	2	132-4100	1	FILM (CAT)					
	3	186-1147	2	FILM (REGA)					
	4	105-7545	2	FILM (CAT)					
E	5	134-6146		FILM (STRIPE)…(350cm)					
	6	1P-2807	4	FILM (LIFT)					
	7	160-6832	2	FILM (WARNING)					
	8	169-7617	1	FILM (312C)					
	9	132-4099	1	FILM (CAT)					
	10	167-7272	1	FILM (CAT)					
	11	150-8108	1	FILM (CAT)					
	12	160-6884	1	FILM (DANGER)					
Z	13		1	PLATE (PIN)					
	14	169-7616	1	FILM (NOTICE)					
	15	144-9126	1	FILM (INSTRUCTION)					
	16	7X-7644	1	FILM (TIE DOWN)					
	17	190-5386	2	FILM (SAFETY)					

E—ORDER BY THE CENTIMETER

Z—NOT SERVICED

H86662E 11

151-1482 PLATE & FILM GP (2/3)

S/N CAE 02031-02264

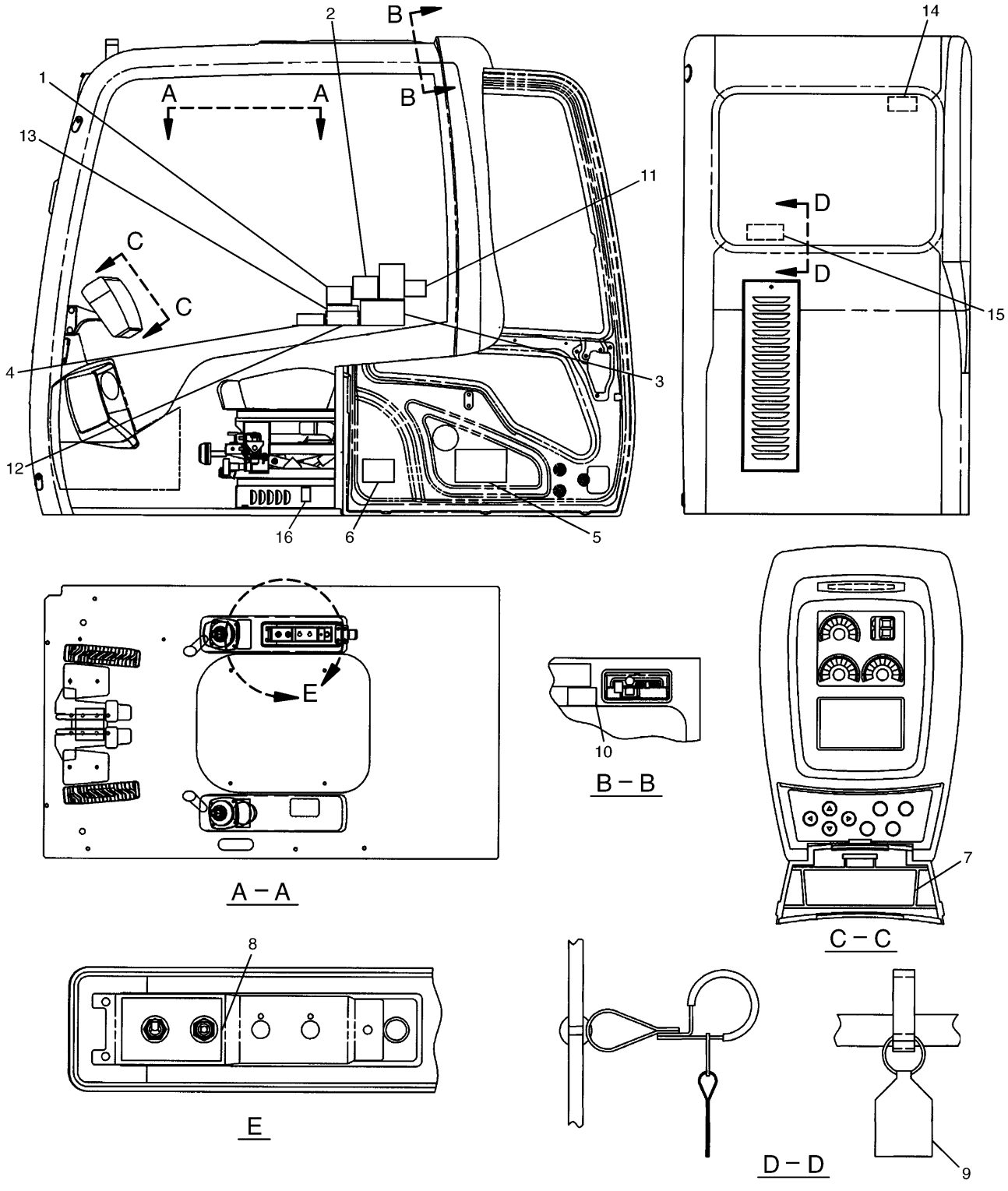

H86663E 11

151-1482 PLATE & FILM GP (3/3)
S/N CAE 02031-02264

SERVICE EQUIPMENT AND SUPPLIES

NOTE	No.	PART No.	QTY	PART NAME	NOTE	No.	PART No.	QTY	PART NAME
	1	127-5272	1	FILM (WARNING)					
	2	127-5295	1	FILM (WARNING)					
	3	244-5747	1	FILM (WARNING)					
	4	186-1214	1	FILM (NOTICE)					
	5	211-6189	1	FILM (LUBRICANT CHART)					
	6	169-7620	1	FILM					
	7	176-2712	1	FILM (INSTRUCTION)					
	8	176-2753	1	FILM (THROTTLE CONTROL)					
	9	8T-6842	1	FILM (ALTERNATE EXIT)					
	10	186-1149	1	FILM (WARNING)					
	11	219-3149	1	FILM (NOTICE)					
	12	4I-2885	1	CASE					
	13	7I-1533	1	PLATE (INSTRUCTION)					
	14	187-0661	1	FILM (ALTERNATE EXIT)					
	15	6I-6075	1	FILM (EMERGENCY EXIT)					
	16	214-7915	1	FILM (ENGINE SHUT OFF)					

151-1482 PLATE & FILM GP (3/3)
S/N CAE 02031-02264

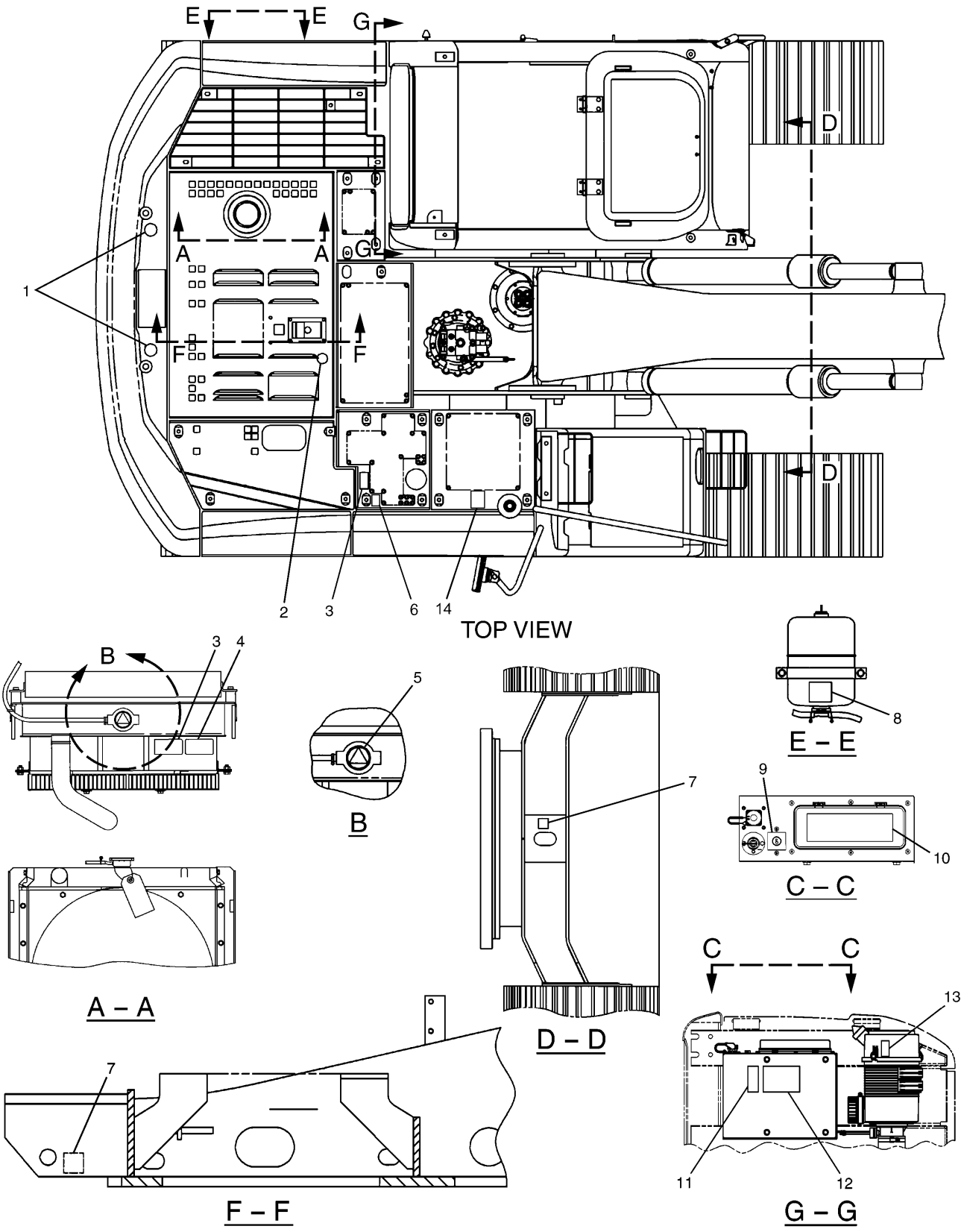

H98206E 16

151-1482 PLATE & FILM GP (1/3)
S/N CAE 02265-04778

SERVICE EQUIPMENT AND SUPPLIES

NOTE	No.	PART No.	QTY	PART NAME	NOTE	No.	PART No.	QTY	PART NAME
	1	7Y-0063	2	FILM (LIFT EYE)					
	2	167-7270	1	FILM (NO STEP)					
	3	160-6822	2	FILM (WARNING)					
	4	160-6841	1	FILM (WARNING)					
	5	120-5107	1	FILM (INSTRUCTION)					
	6	186-1131	1	FILM					
		186-1133	1	FILM					
	7	7X-7644	3	FILM (TIE DOWN)					
	8	134-7258	1	FILM (ELC)					
	9	169-7659	1	FILM (CIRCUIT BREAKER)					
	10	183-1585	1	FILM (FUSE PANEL)					
	11	7I-6508	1	FILM (NOTICE)					
	12	3Y-8905	1	FILM (WARNING)					
	13	4P-6422	1	FILM (WARNING)					
	14	291-9334	1	FILM (DIESEL FUEL)					

151-1482 PLATE & FILM GP (1/3)
S/N CAE 02265-04778

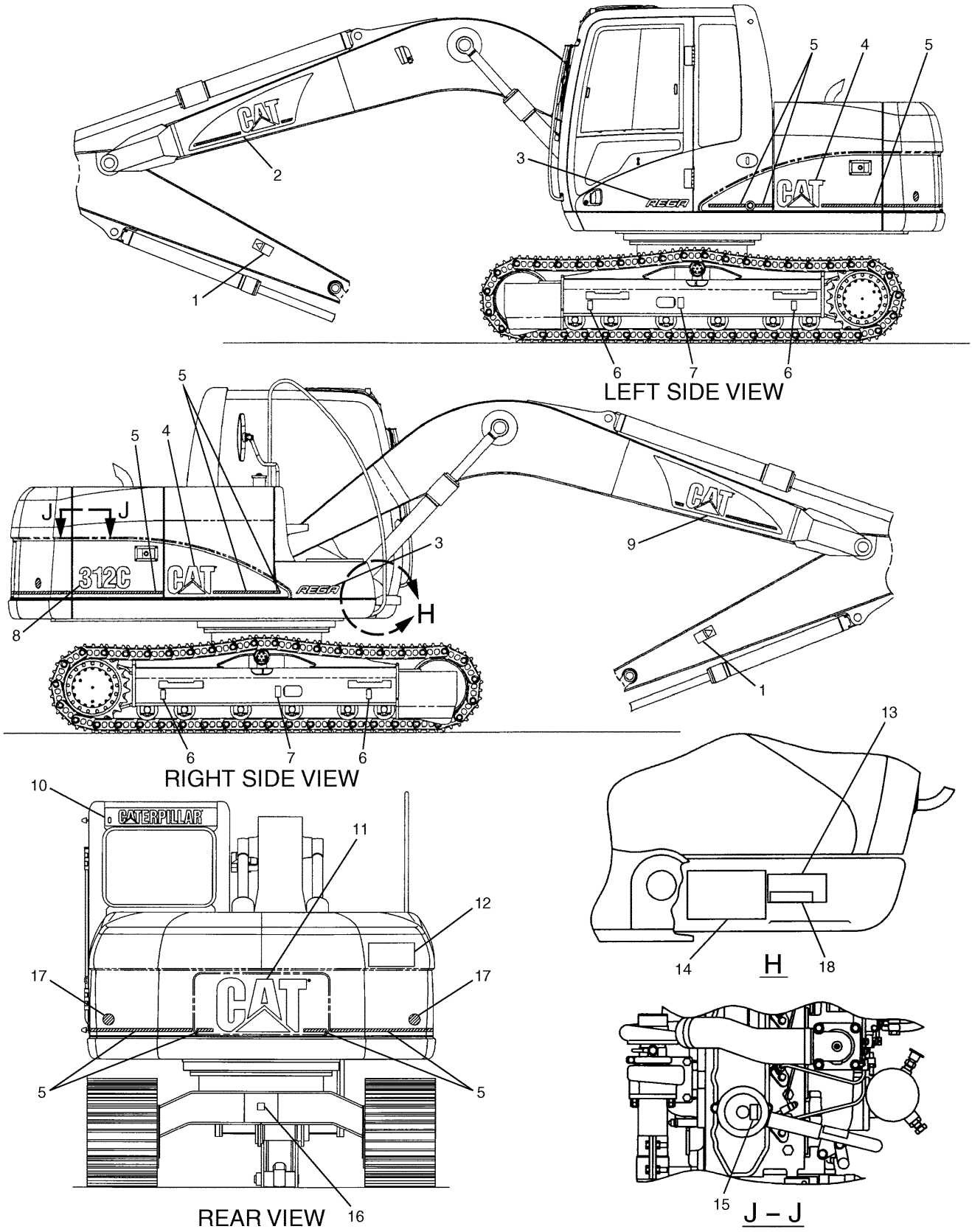

151-1482 PLATE & FILM GP (2/3)
S/N CAE 02265-04778

SERVICE EQUIPMENT AND SUPPLIES

NOTE	No.	PART No.	QTY	PART NAME	NOTE	No.	PART No.	QTY	PART NAME
	1	160-6853	2	FILM (DANGER)					
	2	132-4100	1	FILM (CAT)					
	3	186-1147	2	FILM (REGA)					
	4	105-7545	2	FILM (CAT)					
E	5	134-6146		FILM (STRIPE)…(350cm)					
	6	1P-2807	4	FILM (LIFT)					
	7	160-6832	2	FILM (WARNING)					
	8	169-7617	1	FILM (312C)					
	9	132-4099	1	FILM (CAT)					
	10	258-0342	1	FILM (CAT)					
	11	150-8108	1	FILM (CAT)					
	12	160-6884	1	FILM (DANGER)					
Z	13		1	PLATE (PIN)					
	14	169-7616	1	FILM (NOTICE)					
	15	144-9126	1	FILM (INSTRUCTION)					
	16	7X-7644	1	FILM (TIE DOWN)					
	17	190-5386	2	FILM (SAFETY)					
	18	255-3261	1	PLATE (312C-3)					

E—ORDER BY THE CENTIMETER

Z—NOT SERVICED

H98207E 16

151-1482 PLATE & FILM GP (2/3)

S/N CAE 02265-04778

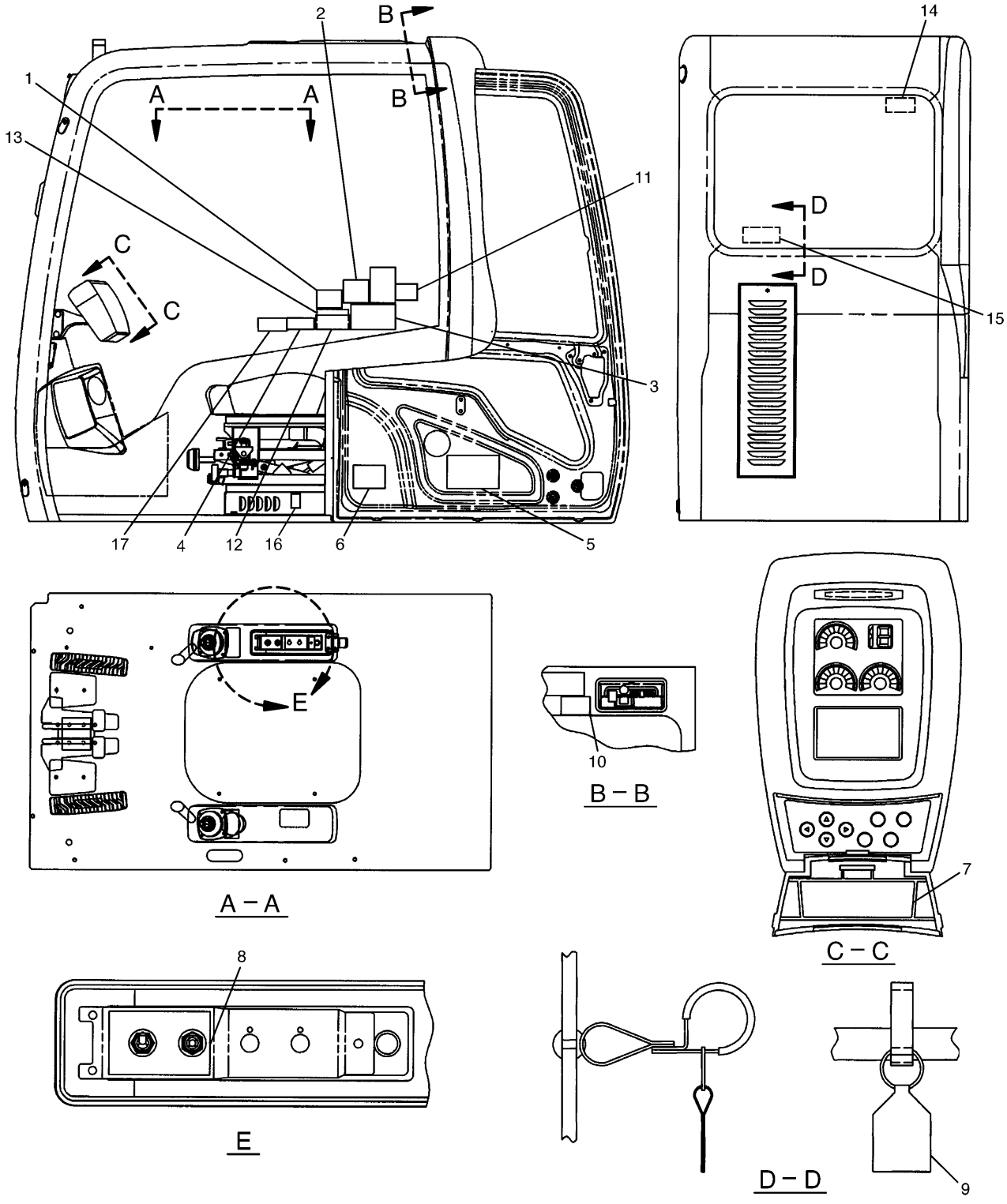

H98208E 16

151-1482 PLATE & FILM GP (3/3)
S/N CAE 02265-04778

SERVICE EQUIPMENT AND SUPPLIES

NOTE	No.	PART No.	QTY	PART NAME	NOTE	No.	PART No.	QTY	PART NAME
	1	127-5272	1	FILM (WARNING)					
	2	127-5295	1	FILM (WARNING)					
	3	244-5747	1	FILM (WARNING)					
	4	186-1214	1	FILM (NOTICE)					
	5	211-6189	1	FILM (LUBRICANT CHART)					
	6	169-7620	1	FILM					
	7	176-2712	1	FILM (INSTRUCTION)					
	8	176-2753	1	FILM (THROTTLE CONTROL)					
	9	8T-6842	1	FILM (ALTERNATE EXIT)					
	10	186-1149	1	FILM (WARNING)					
	11	219-3149	1	FILM (NOTICE)					
	12	4I-2885	1	CASE					
	13	7I-1533	1	PLATE (INSTRUCTION)					
	14	187-0661	1	FILM (ALTERNATE EXIT)					
	15	6I-6075	1	FILM (EMERGENCY EXIT)					
	16	214-7915	1	FILM (ENGINE SHUT OFF)					
	17	283-8827	1	FILM (WARNING)					

H98208E 16

151-1482 PLATE & FILM GP (3/3)
S/N CAE 02265-04778

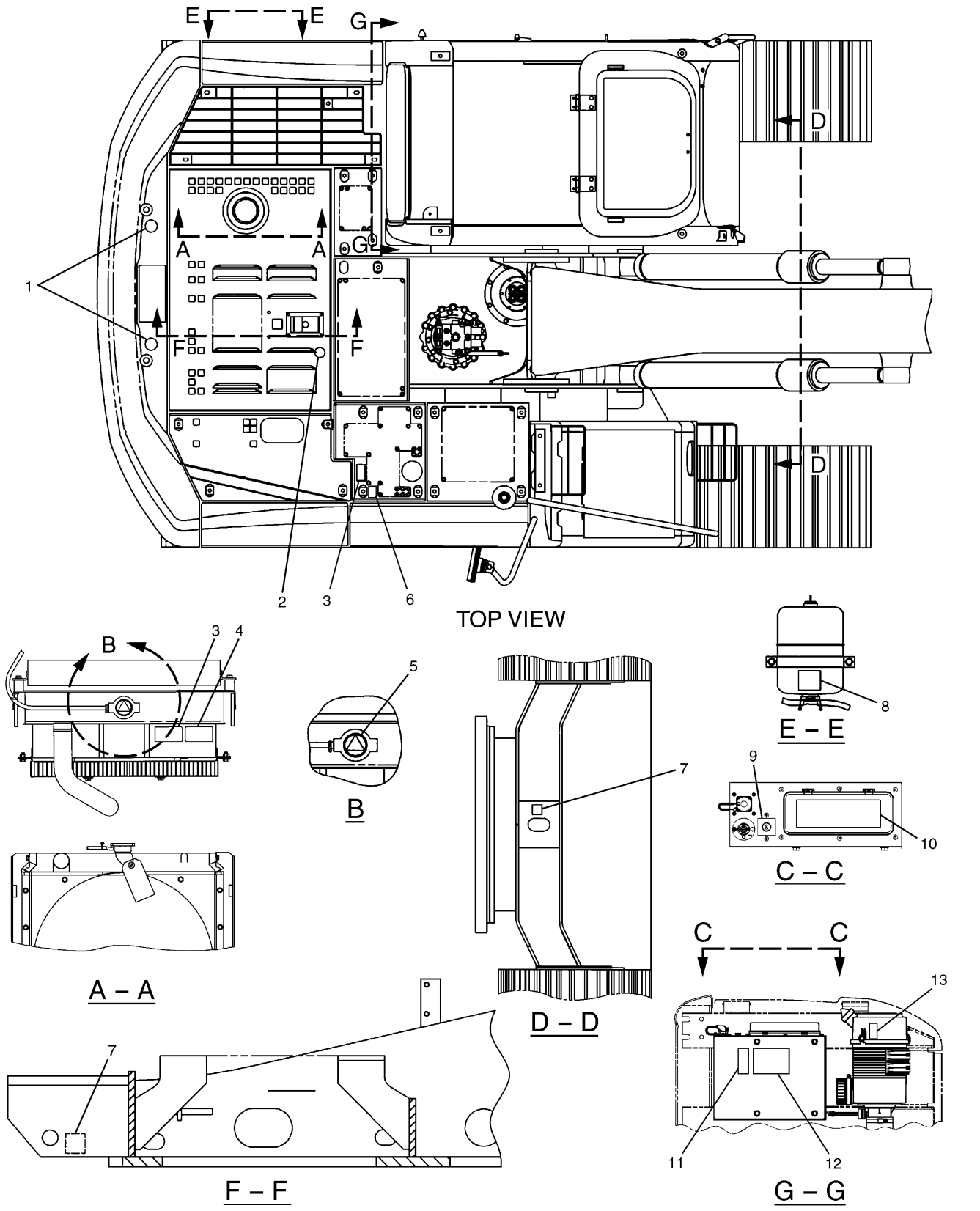

301-2450 PLATE & FILM GP (1/3)
S/N CAE 04779-Up

SERVICE EQUIPMENT AND SUPPLIES

NOTE	No.	PART No.	QTY	PART NAME	NOTE	No.	PART No.	QTY	PART NAME
	1	7Y-0063	2	FILM (LIFT EYE)					
	2	167-7270	1	FILM (NO STEP)					
	3	160-6822	2	FILM (WARNING)					
	4	160-6841	1	FILM (WARNING)					
	5	120-5107	1	FILM (INSTRUCTION)					
	6	186-1131	1	FILM					
		186-1133	1	FILM					
	7	7X-7644	3	FILM (TIE DOWN)					
	8	134-7258	1	FILM (ELC)					
	9	169-7659	1	FILM (CIRCUIT BREAKER)					
	10	183-1585	1	FILM (FUSE PANEL)					
	11	7I-6508	1	FILM (NOTICE)					
	12	3Y-8905	1	FILM (WARNING)					
	13	4P-6422	1	FILM (WARNING)					

H98209E 01

301-2450 PLATE & FILM GP (1/3)

S/N CAE 04779-Up

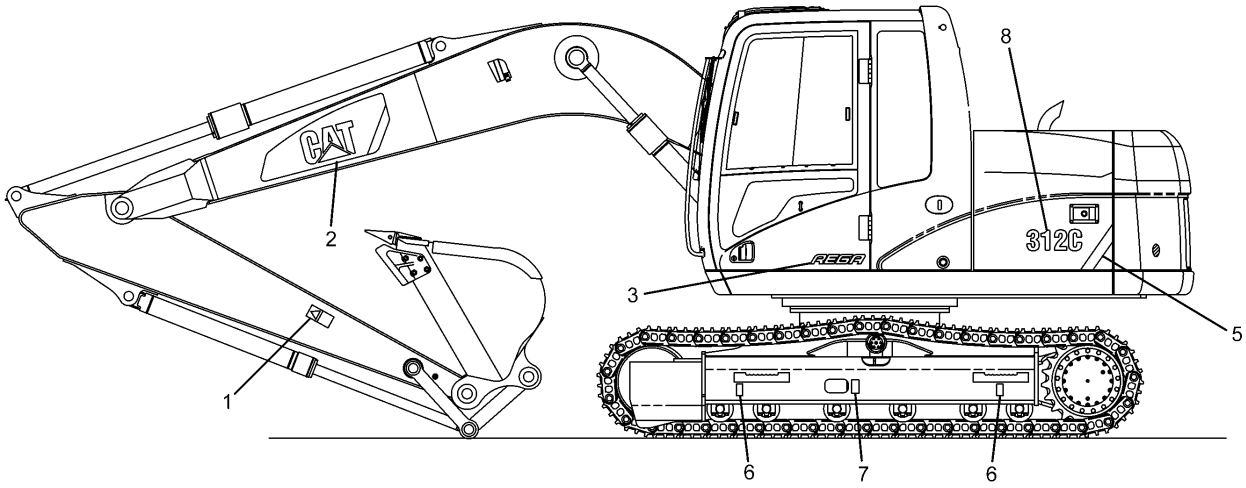

LEFT SIDE VIEW

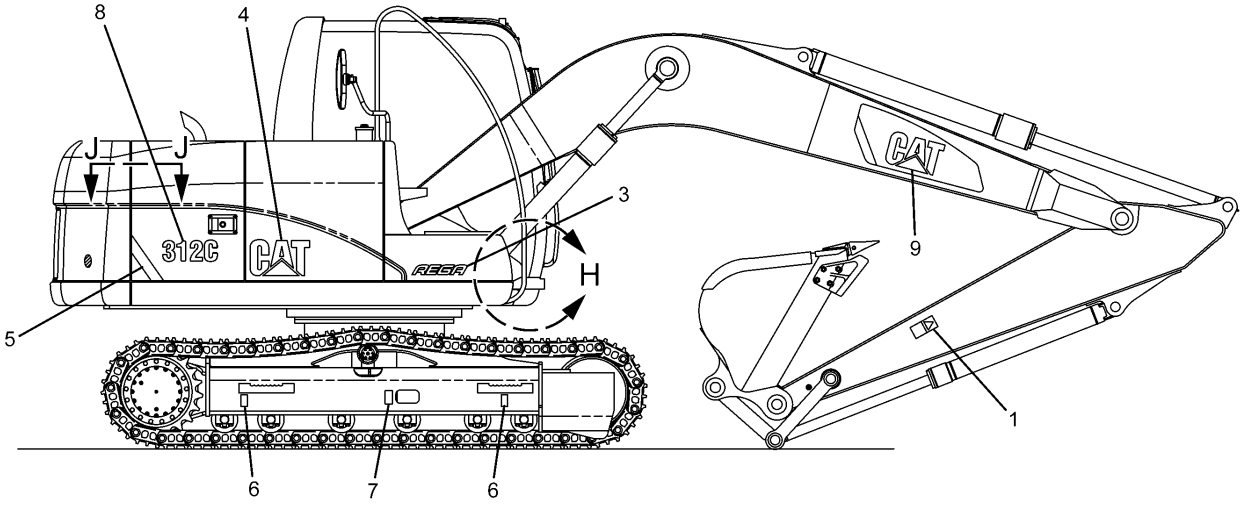

RIGHT SIDE VIEW

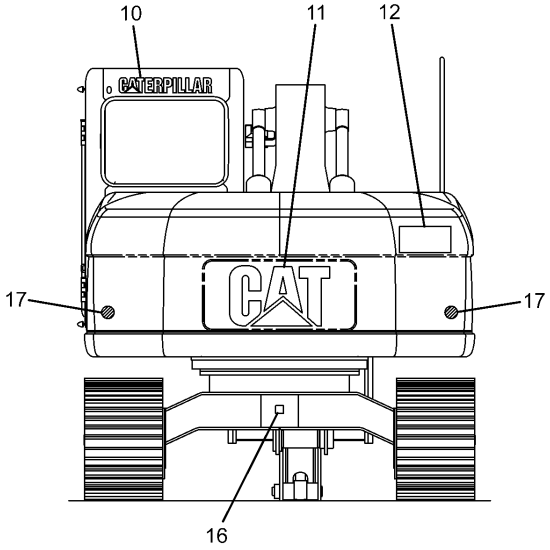

REAR VIEW

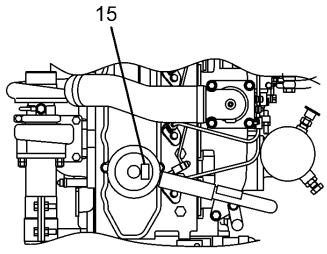

J – J

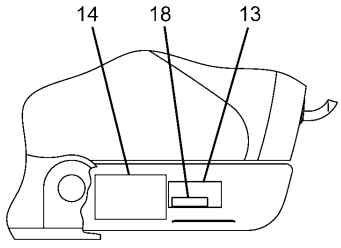

H

H98210E 01

301-2450 PLATE & FILM GP (2/3)
S/N CAE 04779-Up

SERVICE EQUIPMENT AND SUPPLIES

NOTE	No.	PART No.	QTY	PART NAME	NOTE	No.	PART No.	QTY	PART NAME
	1	160-6853	2	FILM (DANGER)					
	2	283-9075	1	FILM (CAT)					
	3	186-1147	2	FILM (REGA)					
	4	290-1729	1	FILM (CAT)					
	5	290-1906	2	FILM (STRIPE)					
	6	1P-2807	4	FILM (LIFT)					
	7	160-6832	2	FILM (WARNING)					
	8	301-2432	2	FILM (312C)					
	9	283-9074	1	FILM (CAT)					
	10	257-4502	1	FILM (CAT)					
	11	150-8108	1	FILM (CAT)					
	12	160-6884	1	FILM (DANGER)					
Z	13		1	PLATE (PIN)					
	14	169-7616	1	FILM (NOTICE)					
	15	144-9126	1	FILM (INSTRUCTION)					
	16	7X-7644	1	FILM (TIE DOWN)					
	17	190-5386	2	FILM (SAFETY)					
	18	255-3261	1	PLATE (312C-3)					

Z—NOT SERVICED

H98210E 01

301-2450 PLATE & FILM GP (2/3)

S/N CAE 04779-Up

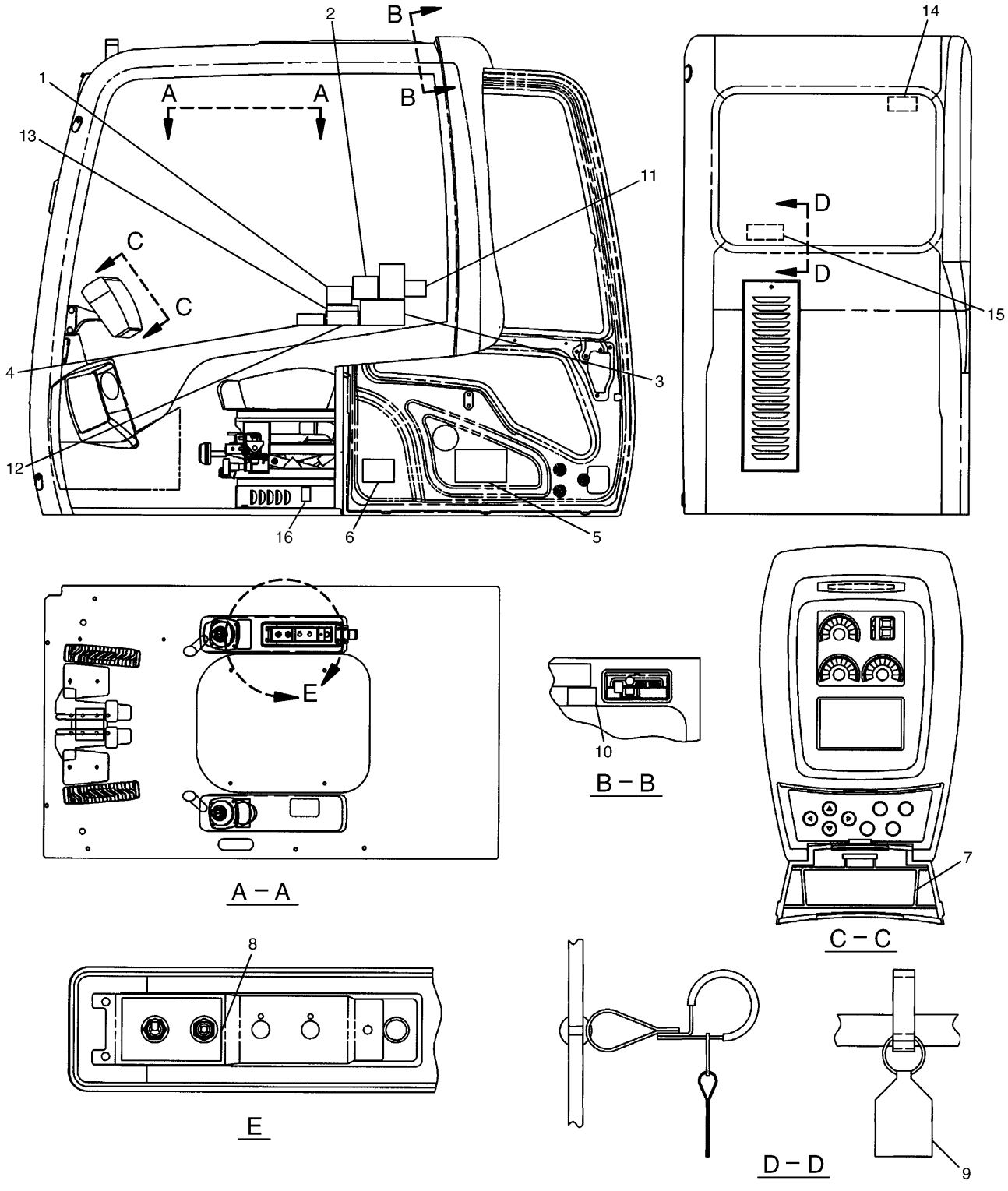

H98211E 01

301-2450 PLATE & FILM GP (3/3)
S/N CAE 04779-Up

SERVICE EQUIPMENT AND SUPPLIES

NOTE	No.	PART No.	QTY	PART NAME	NOTE	No.	PART No.	QTY	PART NAME
	1	127-5272	1	FILM (WARNING)					
	2	127-5295	1	FILM (WARNING)					
	3	244-5747	1	FILM (WARNING)					
	4	186-1214	1	FILM (NOTICE)					
	5	211-6189	1	FILM (LUBRICANT CHART)					
	6	169-7620	1	FILM					
	7	176-2712	1	FILM (INSTRUCTION)					
	8	176-2753	1	FILM (THROTTLE CONTROL)					
	9	8T-6842	1	FILM (ALTERNATE EXIT)					
	10	186-1149	1	FILM (WARNING)					
	11	219-3149	1	FILM (NOTICE)					
	12	4I-2885	1	CASE					
	13	7I-1533	1	PLATE (INSTRUCTION)					
	14	187-0661	1	FILM (ALTERNATE EXIT)					
	15	6I-6075	1	FILM (EMERGENCY EXIT)					
	16	214-7915	1	FILM (ENGINE SHUT OFF)					

H98211E 01

301-2450 PLATE & FILM GP (3/3)

S/N CAE 04779-Up

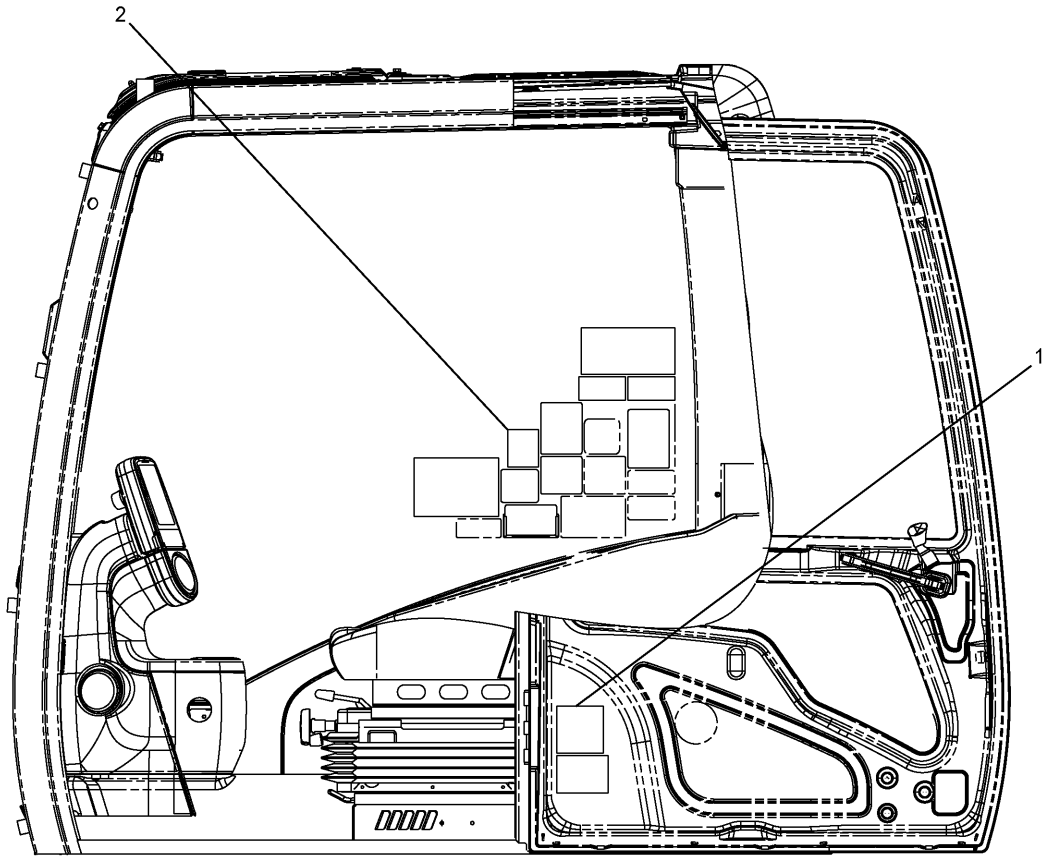

NOTE	No.	PART No.	QTY	PART NAME	NOTE	No.	PART No.	QTY	PART NAME
	1	194-8937	1	FILM (LUBRICANT CHART)					
	2	102-5474	1	FILM (INSTRUCTION) (BLADE)					

H98453E 04

151-1496 PLATE & FILM GP

Part of 151-1493-Page634,183-1476-Page635,151-1494-Page636
An Attachment

SERVICE EQUIPMENT AND SUPPLIES

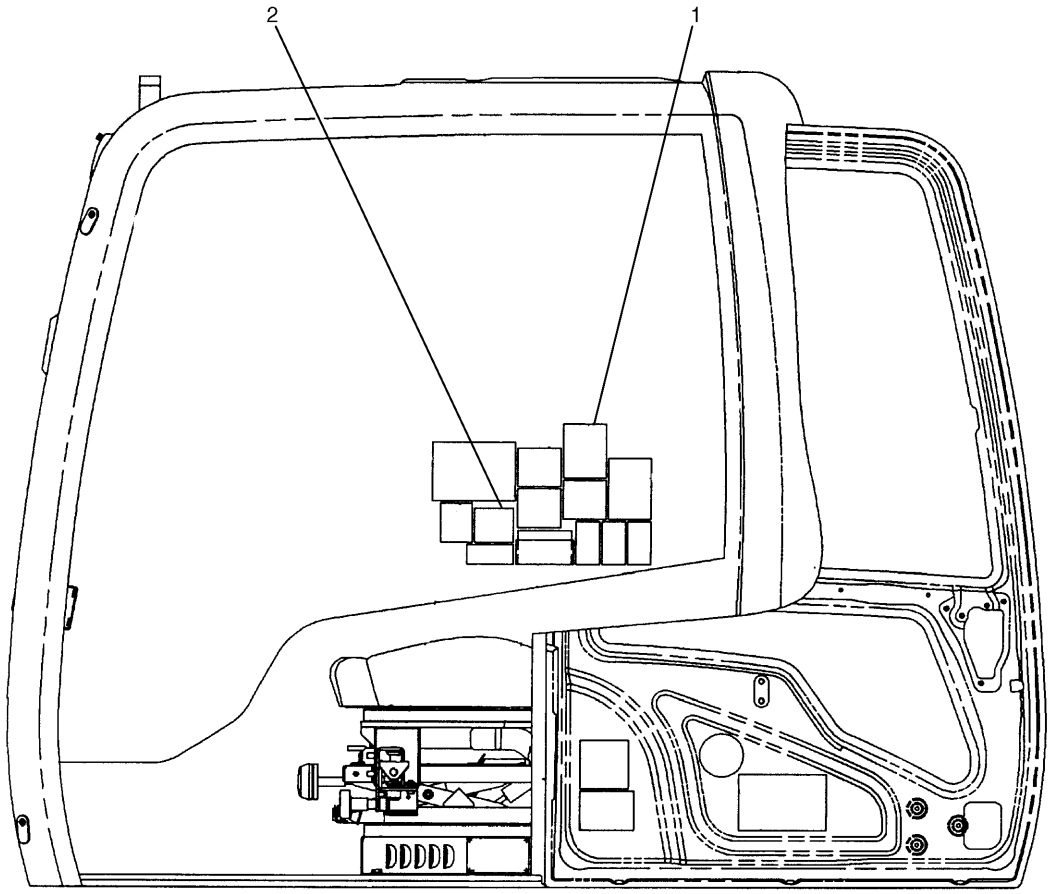

NOTE	No.	PART No.	QTY	PART NAME	NOTE	No.	PART No.	QTY	PART NAME
	1	118-6054	1	FILM (NOTICE)					
	2	127-5251	1	FILM (INSTRUCTION)					

H84433E 00

176-2707 FILM GP
Part of 165-0962,165-0963-Page354
An Attachment

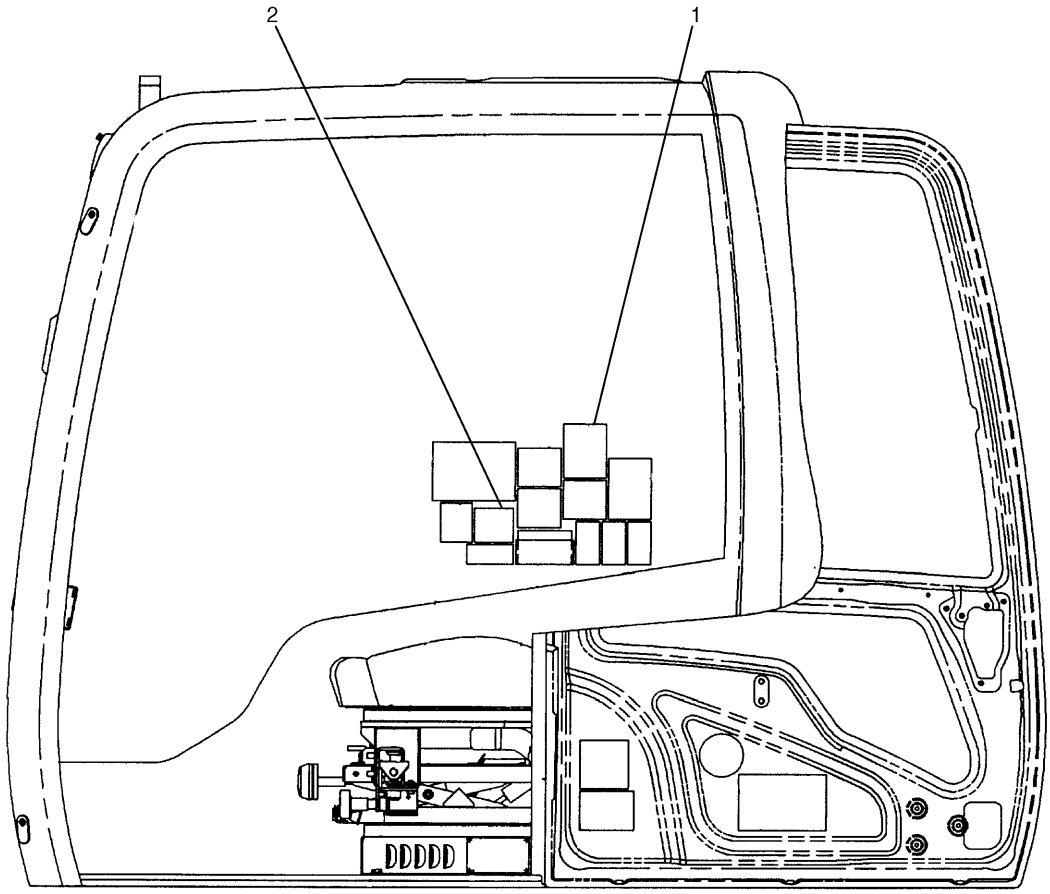

NOTE	No.	PART No.	QTY	PART NAME	NOTE	No.	PART No.	QTY	PART NAME
	1	118-6054	1	FILM (NOTICE)					
	2	134-6110	1	FILM (INSTRUCTION)					

H84434E 00

167-7263 FILM GP

Part of 179-5071-Page355,165-0976-Page357
An Attachment

SERVICE EQUIPMENT AND SUPPLIES

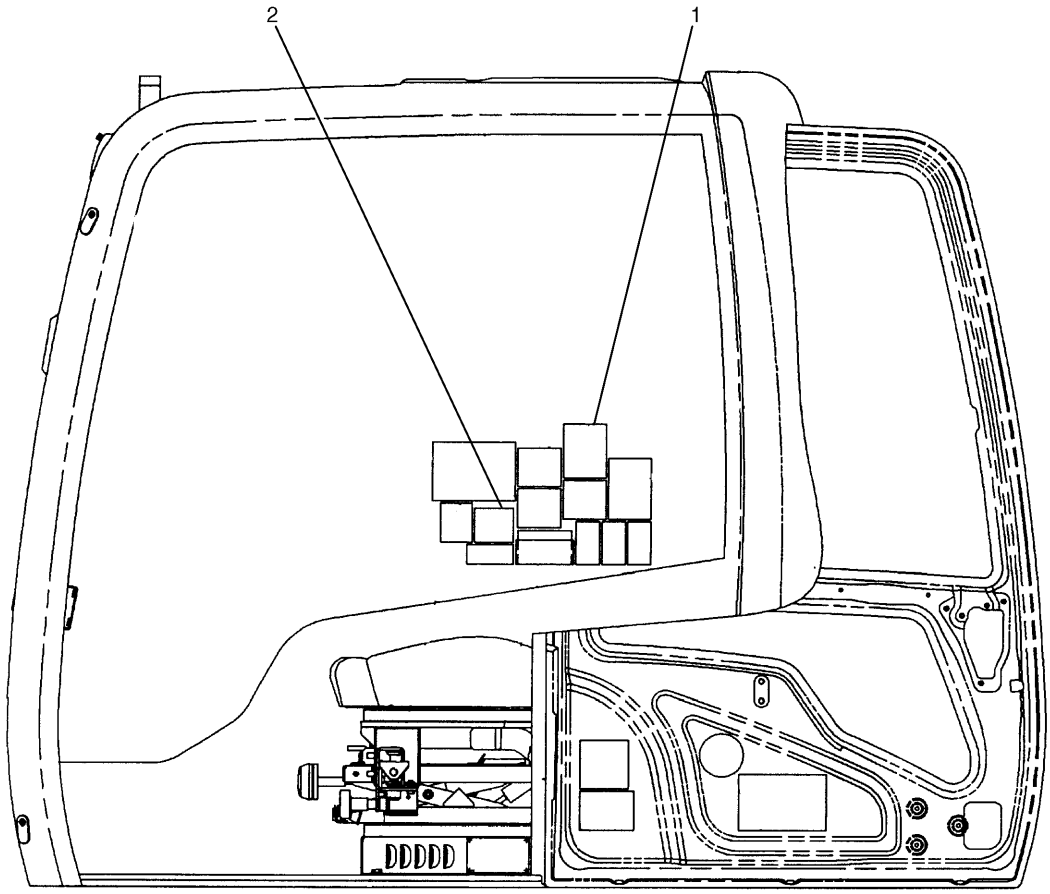

NOTE	No.	PART No.	QTY	PART NAME	NOTE	No.	PART No.	QTY	PART NAME
	1	118-6054	1	FILM (NOTICE)					
	2	176-2814	1	FILM (CONTROL)					

H84435E 00

176-2709 FILM GP
Part of 165-0964-Page356
An Attachment

SERVICE EQUIPMENT AND SUPPLIES

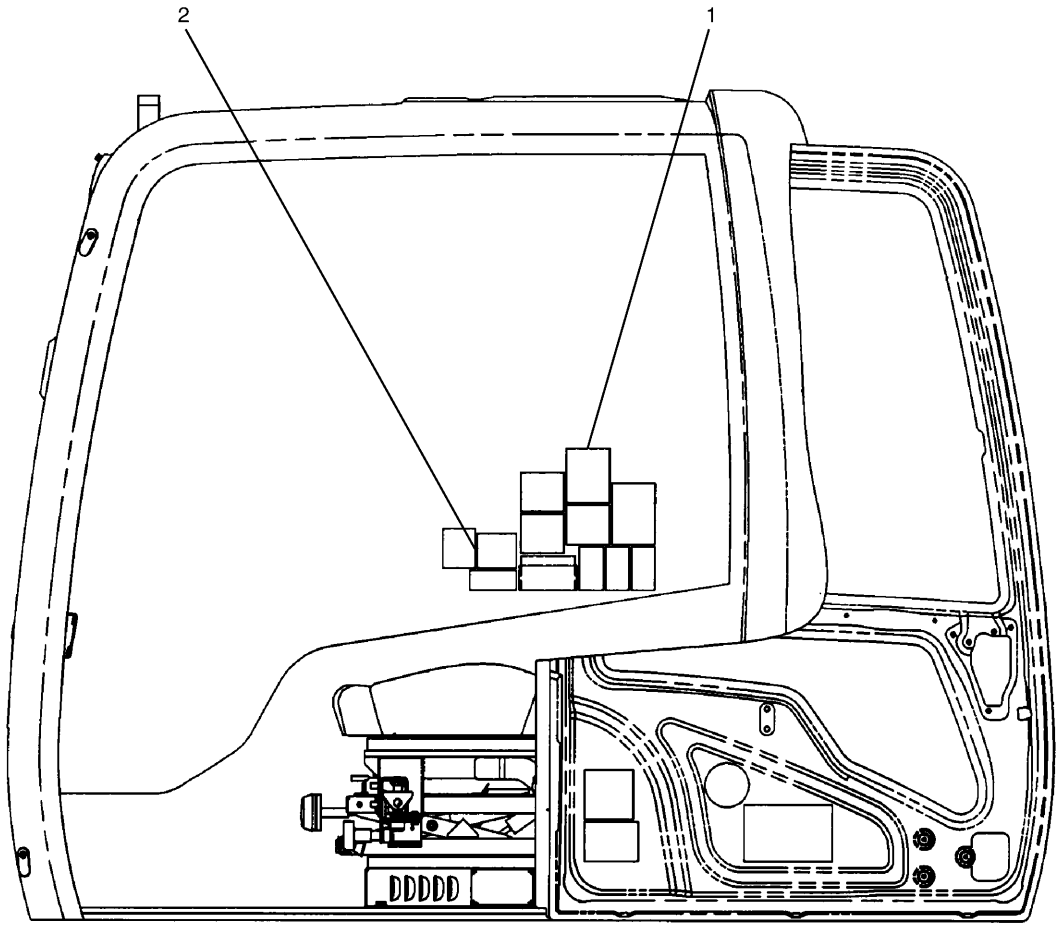

NOTE	No.	PART No.	QTY	PART NAME	NOTE	No.	PART No.	QTY	PART NAME
	1	118-6054	1	FILM (NOTICE)					
	2	139-3068	1	FILM (INSTRUCTION)					

H81931E 00

199-9462 FILM GP
Part of 165-0967-Page357.01
An Attachment

SERVICE EQUIPMENT AND SUPPLIES

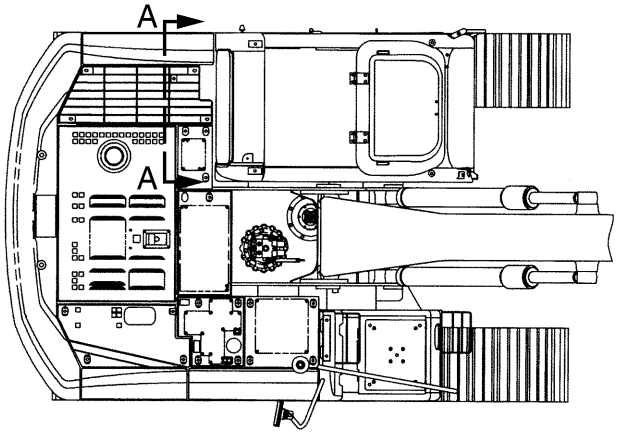

TOP VIEW

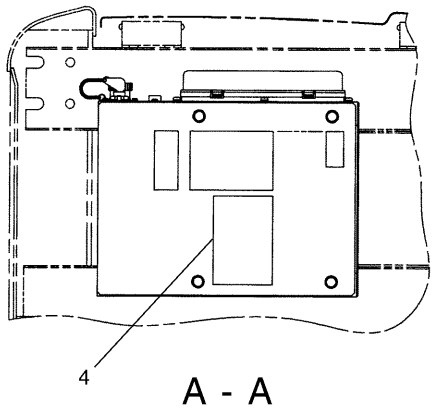

A - A

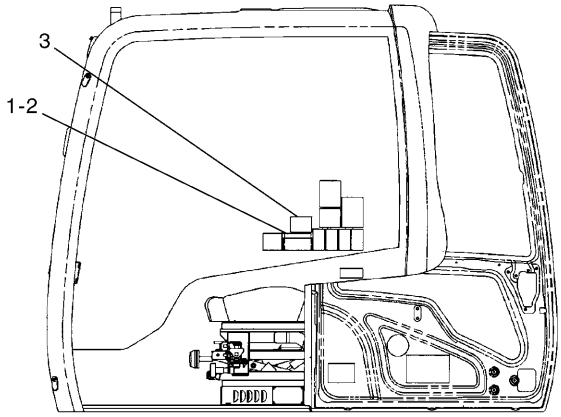

NOTE	No.	PART No.	QTY	PART NAME	NOTE	No.	PART No.	QTY	PART NAME
	1	102-4861	1	PLATE					
	2	102-4862	1	PLATE (KOB,JIS/SCM)					
	3	120-5054	1	FILM (WARNING)					
	4	176-2687	1	FILM (INSTRUCTION)					

H81979E 01

183-1499 FILM GP
4 Way Valve
Part of 171-0019-Page358
An Attachment

SERVICE EQUIPMENT AND SUPPLIES

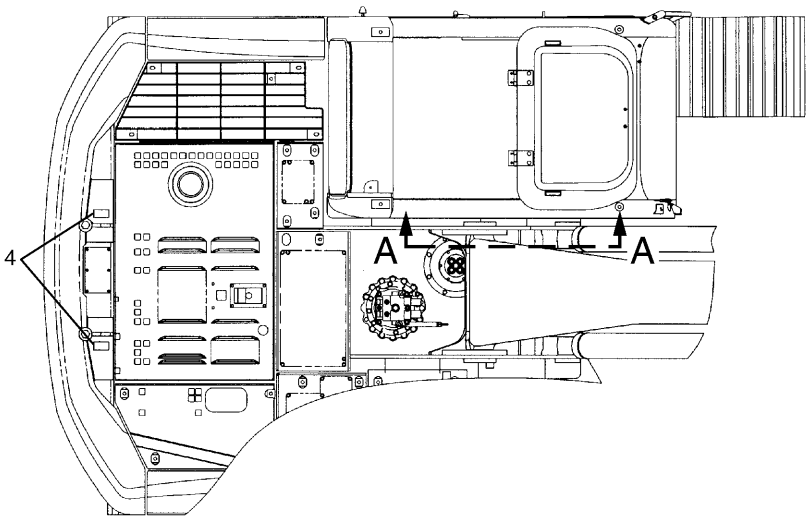

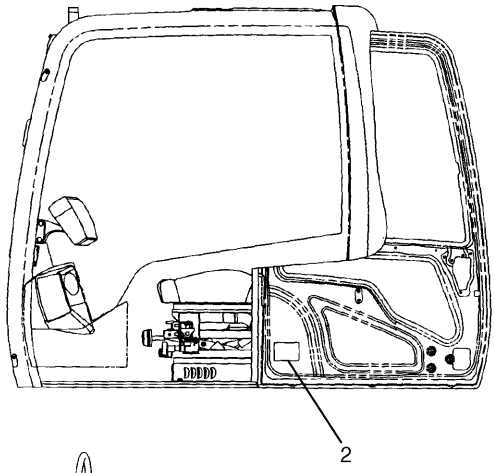

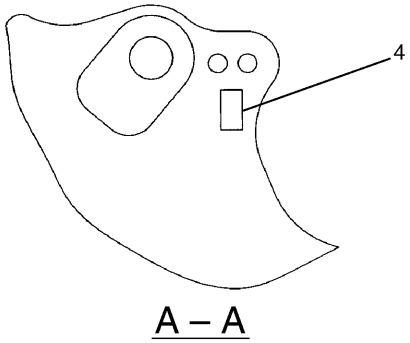

A – A

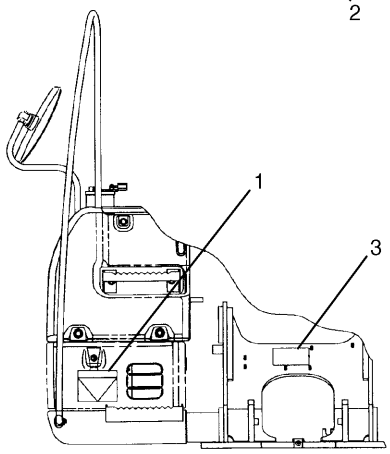

NOTE	No.	PART No.	QTY	PART NAME	NOTE	No.	PART No.	QTY	PART NAME
	1	127-5277	1	FILM (DEMOLITION)					
	2	194-8942	1	FILM					
	3	194-8943	1	FILM (NOTICE)					
	4	1P-2807	4	FILM (LIFT)					

H84436E 01

194-8941 FILM GP
Part of 194-8945-Page11
An Attachment

SERVICE EQUIPMENT AND SUPPLIES

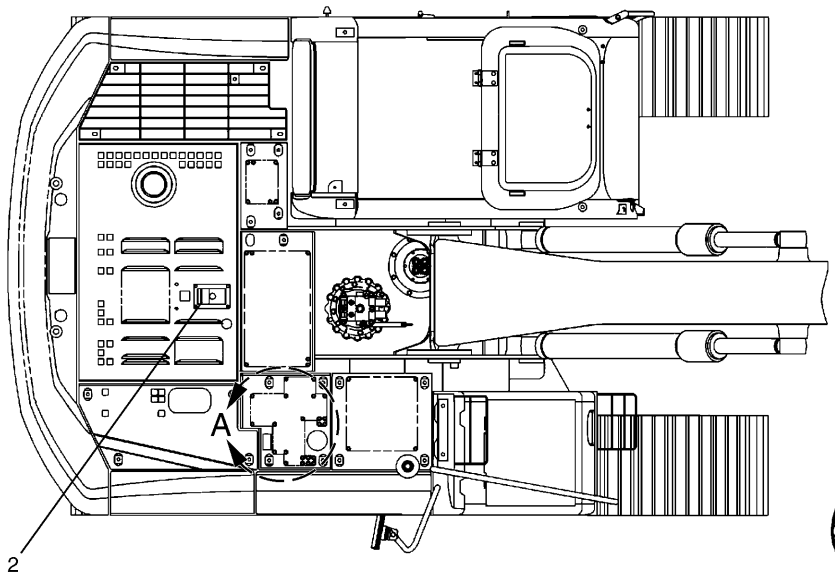

TOP VIEW

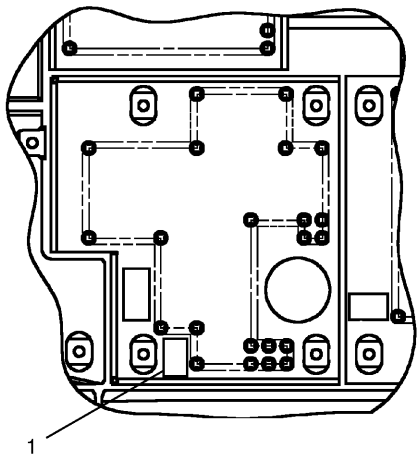

A

NOTE	No.	PART No.	QTY	PART NAME	NOTE	No.	PART No.	QTY	PART NAME
	1	186-1133	1	FILM					
Y	2	193-9776	1	GUARD GP					

Y—SEE SEPARATE ILLUSTRATION

H78655E 01

183-1500 FILM GP
193-9776-Page226
An Attachment

SERVICE EQUIPMENT AND SUPPLIES

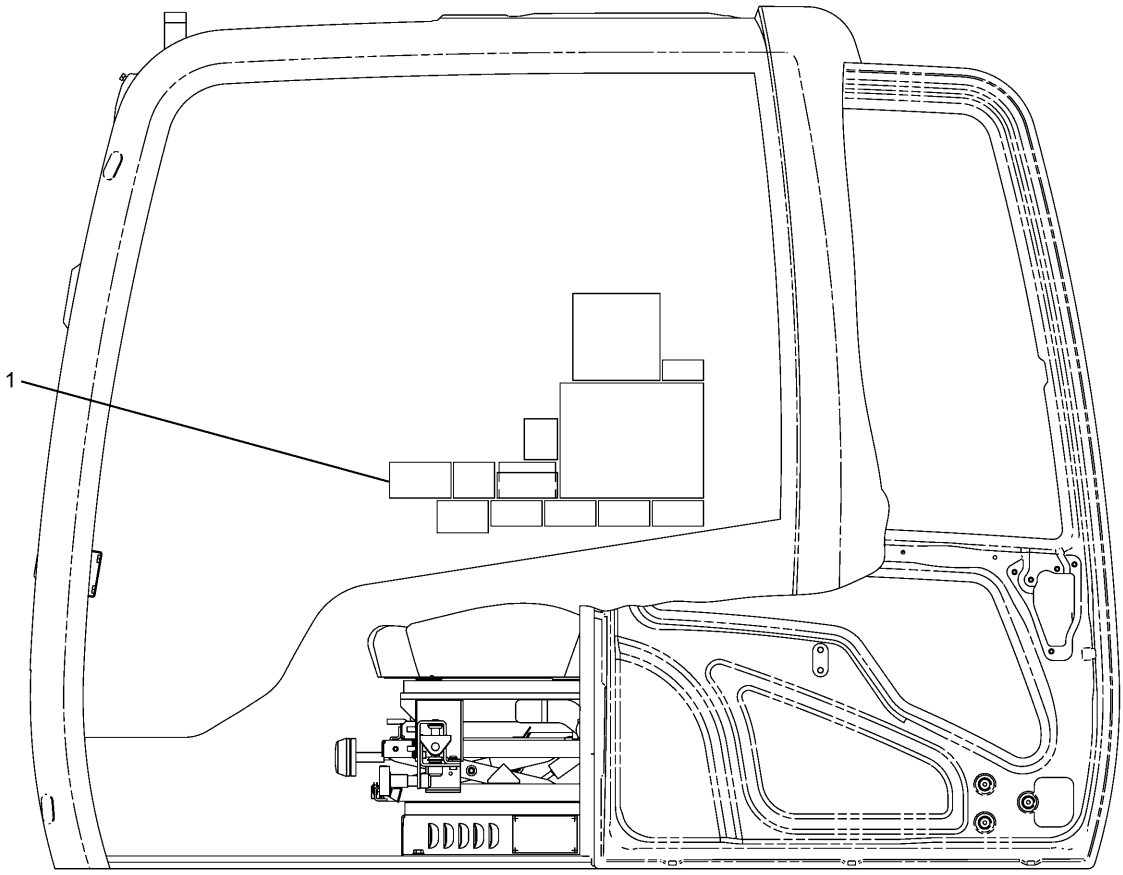

NOTE	No.	PART No.	QTY	PART NAME	NOTE	No.	PART No.	QTY	PART NAME
	1	209-2878	1	FILM (INSTRUCTION)					

H93847E 03

209-2879 FILM GP
Part of 200-6637-Page357.01
An Attachment

SERVICE EQUIPMENT AND SUPPLIES

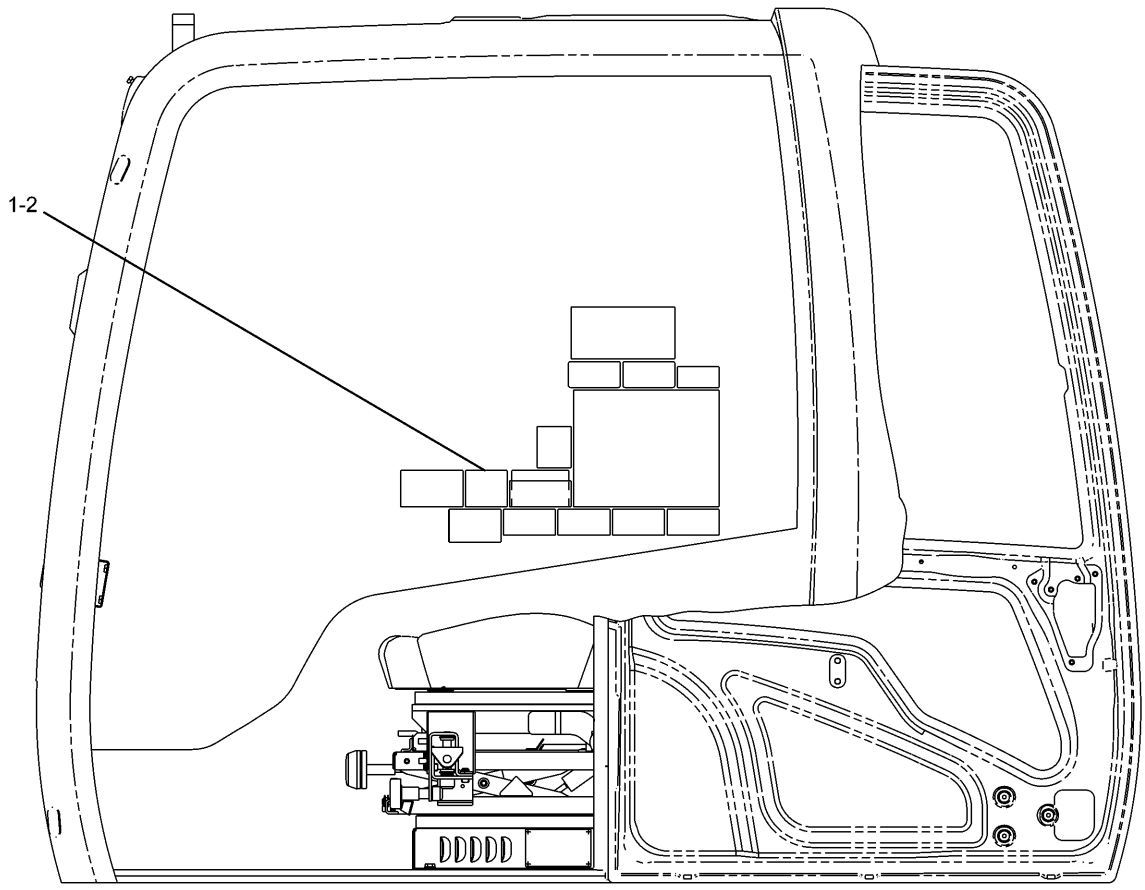

NOTE	No.	PART No.	QTY	PART NAME	NOTE	No.	PART No.	QTY	PART NAME
	1	127-5252	1	FILM (INSTRUCTION)					
	2	139-3068	1	FILM (INSTRUCTION)					

H92572E 01

176-2711 FILM GP
Double Function/1 Pump
Part of 165-0967-Page357.01
An Attachment

PART NUMBER INDEX

Part.No	Page
1	
1F-0425	499
1H-3244	105
	107.02
	109
	111.02
	111.06
1H-3338	123.01
1H-7339	279
	283
1H-8278	267
	267.04
	271
	271.04
	271.08
	431.02
1J-2859	265
	267.02
	269
	271.02
	271.06
1J-2890	57
1J-6472	279
	283
1K-8850	226
1M-6119	101
1M-6120	101
1M-7250	56
1P-0436	73
1P-0551	693
1P-0808	693
1P-2807	697
	699.04
	699.10
	699.16
	706
1P-3703	335
	337
	389
	391
	393
	395
	395.02
	395.04
	397
	399
	399.02
	399.04
	399.06
	399.08
	401
	403
	403.02
	403.04
	403.04B
	403.04D
	403.06
	403.08
1P-4278	267
	267.04
	271
	271.04
	271.08
1P-4576	327
1P-4578	419
1R-0739	35
1R-0751	73
1R-5839	201
1R-5846	201
1R-5847	201
1R-5848	201
1R-5849	201
1R-5852	201
1R-5854	201
1R-5870	197
	199.02
1R-5871	197
	199.02
1R-5874	197
	199.02
1R-5875	197
	199.02
1R-5880	197
	199.02
1R-5881	197
	199.02
1R-5883	197
	199.02
1R-5889	199
	199.04
1R-5891	199
	199.04
1R-5998	537
1R-6009	258
1R-6010	259
1R-6225	639
	641
	643
	644.01
	647
	648
	648.01
	649
	650
1R-6226	639
	641
	643
1R-6228	243
1R-6229	243
1R-6484	478
	479
	480
1R-6573	75
1R-7128	232
	233
	234
1R-8962	197
	199.04
1R-9206	77
1R-9210	79
1S-7252	100
	101
1S-9593	488
	488.02
1U-3251	687
1U-3252	686
1U-8846	201.04
	203
	239
	241
	351

PART NUMBER INDEX

Part.No	Page
	351.02
	429
2	
2A-5222	36
2B-0858	265
	267.02
	269
	271.02
	271.06
2G-8767	91
	91.06
	91.12
2H-3814	47
2H-3922	120
	191
2H-3934	267
	267.04
	271
	271.04
	271.08
2H-9247	285.04
2L-8050	94
	95
	107
	107.04
	111
	111.04
	111.08
2L-8051	107
	107.04
	111
2L-8065	102
	119.04
	119.08
2L-8066	115
	115.04
	117
	144
	145
	146
	147
	152
	153
2L-8067	115
	115.04
	119
	119.04
	119.08
2L-8074	103
	133
	134
2L-8075	95
	96
	102
	119.04
	119.08
	136
	145
	147
	153
	185
	186
2L-8076	115
	115.04
	117
	144
	146
	152
2L-8077	95
	166
2L-8078	119
2L-8079	161.05
2M-0849	584
	625
2M-9780	193
	365
	365.04
	365.08
	407
	411
	413
	478
2P-8250	693
2P-8253	693
2R-1498	71
2S-3440	33
	48
2S-5926	251
2W-6047	17
2Y-5685	543
2Y-5687	590
	591
3	
3B-4501	187
	188
3B-4503	171
3B-4505	201
3B-4510	537
3B-4618	207
	213.04
3B-6767	658
3B-8489	239
	241
	241.01
	298
	299
	299.01
	300
	300.01
	300.02
	300A
	301
	302
	644
	644.01
	645
	647
	648
	648.01
	649
	650
	657
	658
	659
	661
	662

PART NUMBER INDEX

Part.No	Page	Part.No	Page	Part.No	Page
	662.01		453		271
	664		476		271.04
	665	3D-2891	285		271.08
	665.01		285.02		277
	667		285.04		279
	668	3D-9143	229.02		281
	668.01		230		283
3C-6969	141	3E-2310	361.02		285
3D-2824	265		371		285.02
	267.02		379		285.04
	269	3E-2338	201.04		313
	271.02	3E-3365	122		313.02
	271.06		123		313.04
	313		128.02		315
	313.02		488		315.01
	313.04	3E-4069	331		351
	315		331.02		351.02
	315.01		335		361
	351	3E-4297	289		361.02
	351.02		291		363
	363	3E-5169	91.08		365
	365	3E-7410	409		365.02
	365.02		409.02		365.04
	365.04	3E-8020	537		365.06
	365.06	3E-8048	107		365.08
	365.08		107.04		367
	387		111		369
	391		111.04		371
	395		111.08		373
	395.04	3E-8320	105		375
	399		107.02		377
	399.04		109		377.02
	399.08		111.02		377.04
	403		111.06		379
	403.04	3F-5108	654		381
	403.04D		655		382
	403.08		656		383
	405	3G-8250	686		384
	407	3J-1907	69		407
	411		69.02		409
	413		197		409.02
	417		199.02		411
	422		267		413
	423		267.04		431

PART NUMBER INDEX

Part.No	Page
	433
	457
	493.04
	510
3J-7283	651
	652
	653
3J-7354	267
	267.04
	271
	271.04
	271.08
	351
	353
	363
	365.02
	365.06
3K-0360	265
	267.02
	269
	271.02
	271.06
	294
	313.04
	351
	351.02
	353
	363
	365
	365.02
	365.04
	365.06
	365.08
	405
	407
	411
	413
	415
	425
	432
	493
	493.04
	493.06
3P-1896	19
3Q-2034	654
3S-2093	39
	87
	89
	91
	91.02
	91.04
	91.06
	91.08
	91.10
	91.12
	94
	99
	99.02
	107
	107.04
	111
	111.04
	111.06
	111.08
	113
	115
	115.02
	115.04
	117
	119
	119.02
	119.04
	119.06
	119.08
	126
	127
	128.01
	128.04
	130
	131
	133
	134
	141
	144
	145
	146
	147
	149
	152
	153
	155
	157
	159
	161
	161.02
	161.04
	161.05
	161.06
	162
	166
	167.02
	170.03
	183
	185
	191
	194
	382
	588
	607
	619
3S-6050	101
3T-0849	170.03
3T-4692	95
3T-4696	95
	99
	99.02
	164
	165
	167
	167.01
3T-5760	87
	91.02
	91.08
3T-7528	289
	291
3W-6399	570
3Y-7597	693
3Y-8905	695
	699.02
	699.08
	699.14
3Y-9267	197

PART NUMBER INDEX

Part.No	Page
	199.02
4	
4B-4158	251
	493
	493.04
	493.06
	679
	679.01
	680
	680.01
	681
	681.01
	682
	682.01
	683
	697
4B-4278	537
4B-7739	265
	267.02
	269
	271.02
	271.06
4B-9783	510
4B-9880	511
4D-1836	91.08
4D-6466	85
4D-7794	19
4F-2294	107
	107.04
4H-6112	425
4I-0006	232
	233
	234
4I-0050	69
	69.02
4I-0232	207
	209
	213.04
	213.06
4I-0378	69
	69.02
4I-0379	71
4I-0420	547
	555
4I-0716	367
4I-0754	193
4I-0769	361
	361.02
	375
4I-0772	363
	365.02
	365.06
4I-0788	365
	365.04
	365.08
4I-0797	381
4I-0800	361
	361.02
	365.06
	365.08
	381
4I-0812	369
4I-0821	365
	365.04
	365.08
	371
	379
4I-0995	379
	381
	382
4I-1025	377.04
4I-1095	323
4I-1163	567
4I-1205	537
4I-1206	537
4I-1260	544
4I-1760	363
	365.02
4I-1780	384
4I-1783	377.02
4I-2187	229
	229.02
4I-2604	693
4I-2605	693
4I-2885	699
	699.06
	699.12
	699.18
4I-3063	537
4I-3144	537
4I-3266	585
	585.01
	586
	586.01
4I-3309	639
	641
	643
4I-3510	476
4I-3743	267
	267.04
	271
	271.04
	271.08
4I-3745	267
	267.04
	271
	271.04
	271.08
4I-3941	361
	361.02
	377
4I-3953	361
	361.02
4I-3988	361
	361.02
4I-3991	361
	361.02
4I-3994	375
4I-4270	537
4I-4286	541
4I-4300	542
4I-4361	544
4I-4392	537
4I-4580	615
	623
4I-4872	409.02
4I-5020	567
4I-5021	567
4I-5049	581

PART NUMBER INDEX

Part.No	Page
4I-5153	549
	552
4I-5394	265
	267.02
	269
	271.02
	271.06
4I-5399	71
	87
	91
	91.02
	91.06
	91.08
	91.12
4I-5409	177
4I-5426	71
	91
	91.06
	91.12
4I-5479	91
	91.06
	91.12
4I-5480	91
	91.06
	91.12
4I-5490	265
	267.02
	269
	271.02
	271.06
4I-5997	405
4I-6039	365
	365.04
	365.08
4I-6136	373
	375
	377
	381
4I-6287	377.02
4I-6365	495
4I-6602	579
	580
4I-6914	674
	674.01
	675
	675.01
	676
	676.01
	677
	677.01
	678
	684
4I-7326	239
	241
4I-7337	248
	248.01
	249
4I-7343	670
	670.01
	672
	672.01
	673
	685
4I-7344	252
4I-7345	252
	254
4I-7444	239
4I-7446	239
	241
4I-7472	195
4I-7475	261
4I-7476	261
4I-7477	261
4I-7478	261
4I-7488	249
4I-7489	253
4I-7511	239
4I-7512	239
4I-7538	258
	259
4I-7604	432
4I-7605	432
4I-7889	161.02
4I-8019	207
	209
	213.04
	213.06
4I-8384	220
4I-8434	235
	236
	237
4I-8888	339
	339.02
	345
4I-8889	331
	331.02
4I-8891	331
	331.02
4I-9404	35
4I-9521	361
	361.02
	363
	365.02
	365.06
	381
	409
	409.02
4I-9522	361
	361.02
	363
	365.02
	365.06
	377.02
	381
	409
	409.02
4I-9523	361
	361.02
	363
	365
	365.02
	365.04
	365.06
	365.08
	371
	373
	375
	377
	377.04
	379
	381
4I-9524	361

PART NUMBER INDEX

Part.No	Page
	361.02
	363
	365.02
	365.06
	375
	377.02
	377.04
	381
	382
4I-9525	361
	361.02
	363
	365.02
	365.06
	381
4I-9526	361
	361.02
	377.02
	381
4I-9527	361
	361.02
	363
	365
	365.02
	365.04
	365.06
	365.08
	367
	369
	371
	373
	375
	377
	379
	381
	382
4I-9528	361
	361.02
	363
	365
	365.02
	365.04
	365.06
	365.08
	373
	375
	377
	381
	382
4J-0520	389
	393
	395.02
	397
	399.02
	399.06
	401
	403.02
	403.04B
4J-0522	419
	421
4J-0523	421
4J-0527	419
	481
	482
4J-5267	265
	267.02
	269
	271.02
	271.06
	310
	311
	313
	313.02
	313.04
	314
	315
	315.01
	316
	316.01
	316.02
	317
	318
	325
	326
	327
4J-5477	315
	315.01
	349
	351
	351.02
	409
	409.02
4J-7533	285
	285.02
	285.04
	289
	291
	490.03
	493.04
4K-0367	654
	655
	656
4K-2039	485
4N-9170	239
	241
4P-6422	695
	699.02
	699.08
	699.14
4P-6445	20
4P-7428	159
	161
4P-7581	161.02
4T-6229	654
	655
	656
4Y-0426	693
5	
5A-3604	201
	407
	411
	413
	451
	471
	472
5B-5947	35
5B-9304	64
	451
	471

PART NUMBER INDEX

Part.No	Page	Part.No	Page	Part.No	Page
	472		579	5I-5159	81
	495		588	5I-5175	82
	505	5H-8624	353	5I-5591	15
	505.02	5I-3046	305	5I-5607	28
	507		305.02	5I-6125	258
	507.02	5I-3707	527		259
	509		531		260
	509.02		535	5I-7090	443
5C-2889	187	5I-4076	363		445
	188		365.02		446
5C-2890	107		365.06	5I-7505	15
	107.04	5I-4363	432		19
	111		433		73
	111.04	5I-4365	87	5I-7523	19
	111.08		91.02	5I-7524	19
	122		91.08	5I-7525	19
	123		351	5I-7526	19
	123.01		351.02	5I-7528	19
	592.01		361	5I-7529	19
	615		361.02	5I-7533	25
5C-7261	46	5I-4366	351	5I-7534	25
	85		351.02	5I-7539	23
	87		361	5I-7540	31
	91		361.02	5I-7542	24
	91.02	5I-4387	367	5I-7549	63
	91.06	5I-4897	201	5I-7550	63
	91.08	5I-4898	201	5I-7572	48
	91.12	5I-4915	15	5I-7576	75
	205	5I-4921	17	5I-7578	48
	219	5I-4936	33	5I-7583	15
	230	5I-4940	33	5I-7588	19
	484	5I-4969	25	5I-7590	17
	484.01	5I-4983	26	5I-7599	171
5C-7793	537	5I-4993	28	5I-7607	26
5C-8138	570	5I-5005	27	5I-7610	25
5C-8312	141	5I-5010	17	5I-7611	24
5C-9553	36		62	5I-7622	17
	75	5I-5038	32	5I-7623	36
	229	5I-5087	63	5I-7624	17
	229.02	5I-5108	75	5I-7625	17
	567	5I-5146	77	5I-7630	17
5D-1026	203	5I-5147	77	5I-7631	17
5D-4822	545	5I-5148	77	5I-7632	25
	577	5I-5154	79	5I-7633	58

PART NUMBER INDEX

Part.No	Page	Part.No	Page	Part.No	Page
	63	5I-7785	19	5I-8067	28
5I-7637	23	5I-7786	19	5I-8072	175
5I-7639	58	5I-7787	19	5I-8073	175
5I-7640	32	5I-7788	19	5I-8074	175
5I-7642	32	5I-7789	19	5I-8075	175
5I-7643	32	5I-7794	23	5I-8076	175
5I-7644	32	5I-7795	23	5I-8077	175
5I-7646	48	5I-7796	23	5I-8078	175
5I-7650	22	5I-7829	73	5I-8079	175
5I-7654	19	5I-7831	77	5I-8080	175
5I-7655	48	5I-7839	19	5I-8081	175
5I-7656	25	5I-7842	28	5I-8082	175
5I-7657	25	5I-7848	58	5I-8083	175
5I-7658	25	5I-7858	25	5I-8084	175
5I-7659	25	5I-7862	46	5I-8109	36
5I-7660	26	5I-7867	48	5I-8110	36
5I-7661	26	5I-7868	48	5I-8112	75
5I-7663	28	5I-7869	48	5I-8117	77
5I-7667	23	5I-7883	17	5I-8118	77
5I-7668	23	5I-7886	33	5I-8124	65
5I-7673	24	5I-7895	50	5I-8125	25
5I-7674	21	5I-7896	25	5I-8132	13
5I-7677	62	5I-7904	20		46
5I-7678	62	5I-7905	20	5I-8270	87
5I-7683	25	5I-7933	63		91.02
5I-7686	25	5I-7937	58		91.08
5I-7689	36	5I-7939	64	5I-8304	87
5I-7691	46	5I-7940	64		91.02
5I-7696	47		65		91.08
5I-7697	47	5I-7941	64	5I-8670	287.02
5I-7718	15	5I-7942	64	5I-8748	71
5I-7719	17	5I-7978	19	5I-8853	377.02
5I-7720	17	5I-8009	19	5I-8879	351
5I-7721	17	5I-8010	48		351.02
5I-7722	17	5I-8012	15	5I-9155	175
5I-7723	22	5I-8015	28	5I-9368	91
5I-7724	19	5I-8021	62		91.06
5I-7728	48	5I-8022	62		91.12
5I-7735	48	5I-8023	62	5K-5338	615
5I-7739	17	5I-8026	35	5K-8451	71
5I-7740	17	5I-8056	48	5K-9090	335
5I-7743	75	5I-8058	36		337
5I-7750	29		75		389
5I-7784	19	5I-8066	35		391

PART NUMBER INDEX

Part.No	Page
	393
	395
	395.02
	395.04
	397
	399
	399.02
	399.04
	399.06
	399.08
	401
	403
	403.02
	403.04
	403.04B
	403.04D
	403.08
	407
	411
	413
5K-9243	239
	241
	657
5L-3233	57
5L-4758	292
	485
5L-6326	47
5P-0200	331
	331.02
	335
5P-0201	331
	331.02
	335
5P-0743	37
5P-0767	203
	615
	623
5P-1010	331
	331.02
	335
5P-1027	331
	331.02
	335
5P-1075	229
	229.02
5P-1076	69
	69.02
	71
	170.03
	205
	207
	209
	211
	213
	213.02
	213.04
	213.06
	213.08
	213.10
	216
	221
	221.01
	222
	222.01
	224
	225
	227
	227.01
	231
	256
	257
	320
5P-1442	61
	71
5P-2321	128.05
	133
	134
	145
	147
	153
5P-2568	199
	199.04
5P-4115	207
	209
	213.04
	213.06
5P-4116	41
	91
	91.06
	91.12
	161.02
	205
	219
	229
	229.02
	230
	315.01
5P-4961	61
5P-6271	144
	146
	152
5P-7464	407
	411
	413
5P-7465	407
	411
	413
5P-7958	605
5P-8247	654
	655
	656
5P-8292	581
5P-8998	658
5P-9297	185
5P-9909	39
5Q-4212	333
	349
	6
6C-8382	577
	579
6D-1641	365
	365.04
	365.08
	371
	379
	615
	623
6D-3479	615
6D-4636	363

PART NUMBER INDEX

Part.No	Page
	365
	365.02
	365.04
	365.06
	365.08
6F-4718	431
6F-4855	69
	69.02
	267.02
	271.02
	271.06
6F-7045	120
6F-7556	25
6F-7557	25
6G-2256	91
	91.06
	91.12
6G-2263	89
	91
	91.04
	91.06
	91.10
	91.12
6H-7378	693
6I-1449	57
6I-5298	438
	439
6I-5331	611
	612
6I-5342	544
6I-5470	537
6I-6033	207
	209
	213.04
	213.06
6I-6075	699
	699.06
	699.12
	699.18
6I-6123	447
	447.01
6I-6451	253
6I-6454	253
6I-6477	249
6I-6530	201
6I-6549	253
6I-6570	253
6I-6590	249
6I-6795	476
6I-6831	401
	403.02
	403.04B
6I-6916	512.01
6I-6923	499
6J-2680	353
6K-6967	658
	659
6K-8178	365
	365.04
	365.08
6L-3616	657
6M-5062	485
6P-2216	213.02
	213.04
	215.01
6V-0745	331
	331.02
6V-0746	331
	331.02
	335
6V-0756	335
6V-0852	267
	267.04
	271
	271.04
	271.08
	313
	313.02
	313.04
	315
	315.01
	365
	365.04
	365.08
	371
	379
	407
	409
	409.02
	411
	413
6V-1876	353
6V-3265	569
6V-3342	658
	659
6V-3938	499
6V-3965	267
	267.04
	271
	271.04
	271.08
	313
	313.02
	313.04
	315
	315.01
	365
	365.04
	365.08
	371
	379
	407
	409
	409.02
	411
	413
6V-5210	187
	188
	592
6V-5391	285
	285.02
	285.04
6V-5645	105
	107.02
	109
	111.02
	111.06
6V-5683	481
	549
6V-5738	127
6V-7238	425
6V-7357	75

PART NUMBER INDEX

Part.No	Page
	194.01
	361
	361.02
	567
	581
	615
6V-7636	537
6V-7658	254
	289
	291
6V-7659	71.01
6V-7660	253
6V-7726	201.04
6V-8097	257
6V-8144	279
	283
6V-8186	107
	107.04
6V-8187	105
	107.02
	109
	111.02
	111.06
6V-8200	199
	199.04
	353
6V-8202	499
	502
	594
6V-8218	476
6V-8231	26
	58
	75
	558
6V-8236	19
	25
6V-8337	495
6V-8362	137
6V-8363	191
6V-8370	191
6V-8378	107
	107.04
6V-8397	313
	313.02
	313.04
	315
	315.01
	361
	361.02
	363
	365
	365.02
	365.04
	365.06
	365.08
	367
	369
	371
	373
	375
	377
	377.02
	377.04
	379
	381
	382
	383
	384
	409
	409.02
6V-8398	333
	339
	339.02
	339.04
	341
	343
	345
	345.02
	346
	347
	349
	351
	351.02
	363
	365
	365.02
	365.04
	365.06
	365.08
	377.02
	405
	407
	413
	415
	487
6V-8399	199
	199.04
6V-8400	497
6V-8467	306
	306.01B
6V-8554	349
6V-8556	405
6V-8625	363
	365
	365.02
	365.04
	365.06
	365.08
	405
	415
6V-8627	315
	315.01
	409
	409.02
6V-8633	405
6V-8635	395.02
	399.08
	403.04D
6V-8636	313
	313.02
	313.04
	361
	361.02
	363
	365
	365.02
	365.04
	365.06
	365.08
	367
	369
	371

PART NUMBER INDEX

Part.No	Page
	373
	375
	377
	377.02
	377.04
	379
	381
	382
	383
	409.02
6V-8637	351
	351.02
	365
	365.04
	365.08
	387
	399
	399.04
	399.08
	403
	403.04
	403.04D
6V-8638	365
	365.04
	365.08
6V-8639	351
	351.02
	363
	365
	365.02
	365.04
	365.06
	365.08
6V-8640	407
	411
	413
6V-8641	315
	315.01
	351
	351.02
	409
	409.02
6V-8642	407
	411
	413
6V-8713	313
	313.02
	313.04
	387
	411
	413
	422
	423
6V-8716	351
	351.02
	353
	387
	389
	393
	395.02
	399
	399.04
	399.08
	403
	403.04
	403.04D
	403.08
	405
6V-8721	365
	365.04
	365.08
6V-8722	411
	413
6V-8724	313
	313.02
	313.04
	361
	361.02
	363
	365
	365.02
	365.04
	365.06
	365.08
	367
	369
	371
	373
	375
	377
	377.02
	377.04
	379
	382
6V-8730	324
6V-8774	369
	379
6V-8775	351
	351.02
6V-8778	407
	411
	413
6V-8781	361
	361.02
	363
	365
	365.02
	365.04
	365.06
	365.08
	369
	373
	375
	377
	377.02
	382
	384
6V-8782	363
	365.02
	365.06
6V-8821	470
6V-8932	288
	290
6V-8934	409
	409.02
6V-8935	349
	409
	409.02
6V-8942	405
6V-8946	407
	411
	413

PART NUMBER INDEX

Part.No	Page
6V-8978	476
6V-8995	415
6V-9001	361
	361.02
	363
	365.02
	365.06
	373
	377
	381
6V-9007	315
	315.01
	351
	351.02
	365
	365.04
	365.08
	391
	395
	395.04
	399
	399.04
	399.08
	403
	403.04
	403.04D
	403.08
	417
6V-9008	391
	395
	395.04
	399
	399.04
	399.08
	403
	403.04
	403.04D
	407
	411
	413
6V-9010	351
6V-9169	415
6V-9182	353
6V-9669	141
6V-9672	141
6V-9746	314
	315
	315.01
	323
	335
	337
	351
	351.02
	353
	363
	365
	365.02
	365.04
	365.06
	365.08
	387
	389
	391
	393
	395
	395.02
	397
	399
	399.02
	399.04
	399.06
	399.08
	401
	403
	403.02
	403.04
	403.04B
	403.04D
	403.06
	403.08
	405
	407
	411
	413
6V-9829	384
6V-9833	407
	411
	413
6V-9836	313
	313.02
	313.04
	363
	365.02
	365.06
	377.02
	382
	383
	384
6V-9837	365
	365.04
	365.08
	377.02
	405
6V-9839	393
	395.02
	397
	399.02
	399.06
	401
	403.02
	403.04B
6V-9840	391
	395
	395.04
	399
	399.04
	399.08
	403
	403.04
	403.04D
6V-9850	365.06
	379
	382
6V-9851	363
	365.02
	365.06
	407
	413
6V-9852	422
6V-9853	353

PART NUMBER INDEX

Part.No	Page
	389
	393
	395.02
	397
	399.02
	399.06
	401
	403.02
	403.04B
	403.06
6V-9854	407
	411
	413
6V-9872	363
	365.02
	365.06
6V-9873	365
	365.04
	365.08
	377.02
6V-9877	365
	365.04
	365.08
6W-6005	87
	91.02
	91.08
6Y-9571	71
7	
7C-4354	615
7F-8607	481
	482
7G-1060	87
	91.02
	91.08
7G-5984	353
7G-5985	353
7H-3171	249
	253
	254
7H-3937	615
7I-0057	431
7I-0058	431
7I-0060	431
7I-0061	431
7I-0062	431
7I-0063	431
7I-0125	479
7I-0127	479
7I-0134	478
7I-0135	478
7I-0392	609
	621
7I-0676	232
	233
	234
7I-1024	363
	365.02
	365.06
7I-1082	197
	199.02
7I-1104	197
	199.02
7I-1105	377.04
7I-1125	197
	199.02
7I-1129	199
	199.04
7I-1137	199
	199.04
7I-1138	199
	199.04
7I-1141	199
	199.04
7I-1288	353
7I-1303	351
	351.02
7I-1364	422
7I-1418	207
	213.04
7I-1533	699
	699.06
	699.12
	699.18
7I-2272	277
	281
	493
	493.04
	493.06
7I-2673	91
	91.06
	91.12
	159
	161
	399.02
	399.04
	399.06
	399.08
	403.02
	403.04
	403.04B
	403.04D
7I-4949	91
	91.06
	91.12
7I-6395	693
7I-6508	695
	699.02
	699.08
	699.14
7I-6601	615
7I-6626	609
	621
7I-6820	680
	682
7I-6821	680
	682
7I-6823	679
	680
	681
	682
	683
7I-6843	661
	662
	662.01
	664
	665
	665.01
	667
	668

PART NUMBER INDEX

Part.No	Page
	668.01
7I-6845	639
	641
	643
7I-6846	639
	641
	643
7I-6896	657
7I-6926	629
	658
7I-6968	607
7I-7192	455
7I-7203	460
	461
	462
	463
	464
	465
	466
	467
	468
	469
7I-7204	455
	457
	459
	471
	472
7I-7206	455
	457
	459
	471
	472
7I-7207	455
	457
	459
	471
	472
7I-7208	455
	457
	459
	471
	472
7I-7235	457
	505
	507
	509
7I-7241	459
7I-7250	459
7I-7258	502
7I-7321	432
	433
7I-7353	387
7I-7439	313
	313.02
	313.04
	365
	365.04
	365.08
	383
7I-7625	429
7I-7626	429
7I-7632	429
7I-7633	429
7I-7634	429
7I-7635	429
7I-7636	429
7I-7638	429
7I-7639	429
7I-7640	429
7I-7641	429
7I-7642	429
7I-7643	429
7I-7644	429
7I-7645	429
7I-7646	429
7I-7647	429
7I-7648	429
7I-7649	429
7I-8081	470
7I-8084	453
	457
	459
	486
	500
	505
	505.02
	507.02
	509
	509.02
	511
7I-8087	470
7I-8095	470
7I-8096	470
7I-8098	470
7I-8100	470
7I-8252	361
	361.02
7I-8434	331
7J-1908	339.04
7J-8611	659
7J-9108	310
	311
	313
	313.02
	313.04
	316
	316.01
	316.02
	317
	318
	323
	345.02
	387
	407
	411
	413
	422
	423
7K-1181	89
	91
	91.04
	91.06
	91.10
	91.12
	126
	127
	128.01
	133
	134
	141
	157

PART NUMBER INDEX

Part.No	Page	Part.No	Page	Part.No	Page
	159		335	7X-0578	537
	161		337		547
	161.02		351	7X-0796	25
	161.04		351.02		26
	170.03		353		29
	176		387		33
	313		389		35
	313.02		391		50
	313.04		393		58
	324		395		73
	351		395.02		75
	351.02		395.04	7X-0818	373
	361		397		375
	361.02		399		377
	363		399.02		615
	365		399.04	7X-0872	407
	365.02		399.06		411
	365.04		399.08		413
	365.06		401	7X-1451	331
	365.08		403		331.02
	367		403.02		335
	369		403.04	7X-1452	331
	371		403.04B		331.02
	373		403.04D		335
	375		403.06	7X-2533	91
	377		403.08		91.06
	377.02		405		91.12
	377.04		407	7X-2534	85
	379		411	7X-2536	19
	381		413		25
	382		419		75
	383		490.03		443
	384	7N-0718	105		445
	405		107.02		446
	407		109	7X-2537	62
	409		111.02		85
	409.02		111.06		615
	411		120	7X-2550	339
	413	7N-2353	128.01		339.02
	415	7N-3718	185		339.04
	589	7N-5274	101	7X-2552	447
7M-7410	493	7S-4244	568		447.01
	493.06	7T-6799	137		639
7M-8485	201.04	7T-8890	570		641

PART NUMBER INDEX

Part.No	Page
	643
7X-2553	277
	281
	577
	579
	585
	585.01
	586
	586.01
7X-2555	239
	241
	252
7X-2556	277
	281
7X-2559	575
7X-2619	91
	91.06
	91.12
	105
	107
	107.02
	107.04
	109
	111
	111.02
	111.04
	111.06
	111.08
7X-2621	87
	91.02
	91.08
	159
	161
	194
7X-7478	222
	222.01
7X-7644	695
	697
	699.02
	699.04
	699.08
	699.10
	699.14
	699.16
7X-7729	39
	419
	607
	619
7Y-0063	695
	699.02
	699.08
	699.14
7Y-0070	693
7Y-0203	685
7Y-0204	685
7Y-0254	679
	679.01
	680
	680.01
	681
	681.01
	682
	682.01
7Y-0466	275
7Y-0468	495
7Y-0623	577
	579
7Y-0633	243
7Y-1972	625
7Y-1976	39
	41
	45
	265
	267.02
	269
	271.02
	271.06
7Y-2155	254
7Y-2158	254
7Y-2159	254
7Y-2162	254
7Y-2436	243
7Y-2579	639
	641
	643
7Y-2853	231
7Y-3459	243
7Y-3470	558
7Y-3472	558
7Y-3474	568
	569
7Y-3732	339
	339.02
	339.04
7Y-3820	95
7Y-3821	95
7Y-3919	583
7Y-3920	583
7Y-3950	119.09
	128.05
	136
	145
	147
	153
7Y-3951	113
	115
	115.02
	115.04
	117
	119
	119.02
	119.04
	119.06
	119.08
	119.09
	128.04
	133
	134
	144
	146
	152
	571
	572
	573
7Y-3952	113
	115
	115.02
	115.04
	117
	119
	119.02
	119.04

PART NUMBER INDEX

Part.No	Page
	119.06
	119.08
	119.09
	128.04
	133
	134
	144
	146
	152
7Y-3953	119.04
	119.08
	119.09
	128.05
7Y-3958	113
	115.02
	117
	119.02
	119.06
	144
	146
	152
7Y-3962	94
	96
	102
	144
	145
	146
	147
	152
	153
	161.06
	167
	190
	435.01
	435.02
7Y-3963	94
	95
	96
	102
	113
	115
	115.02
	115.04
	117
	119
	119.02
	119.04
	119.06
	119.08
	130
	131
	133
	134
	144
	145
	146
	147
	152
	153
	161.06
	190
7Y-3964	94
	96
	102
	144
	145
	146
	147
	152
	153
	161.06
	167
	190
	435.01
	435.02
7Y-3965	94
	95
	96
	102
	113
	115
	115.02
	115.04
	117
	119
	119.02
	119.04
	119.06
	119.08
	130
	131
	133
	134
	144
	145
	146
	147
	152
	153
	161.06
	190
7Y-3995	95
7Y-3996	95
7Y-4193	361
	361.02
	373
	377
7Y-4199	361
	361.02
7Y-4224	431.02
7Y-4277	197
	199.02
7Y-4384	365
	365.04
	365.08
7Y-4531	395.02
	399.06
	403.04B
7Y-4754	265
	269
7Y-4868	333
	339
	339.02
	339.04
	393
	397
	399.02
	401
	403.02
7Y-5074	387
7Y-5226	91
	91.06

PART NUMBER INDEX

Part.No	Page
	91.12
7Y-5237	421
7Y-5456	87
	91.02
	91.08
7Y-5458	138
7Y-5464	138
7Y-5505	571
	572
	573
7Y-6108	693
7Y-7364	556
7Y-7955	373
	375
	377
7Y-8168	615
	623
7Y-8169	87
	91.02
	91.08
7Y-8172	592.01
7Y-8463	434
	435
	435.01
	435.02
7Y-8478	363
	365
	365.02
	365.04
	365.06
	381
7Y-9096	590
	591
8	
8C-3205	325
	326
8C-3338	277
	279
	281
	283
8C-3445	35
8C-3446	35
	267
	267.04
	271
	271.04
	271.08
8C-3451	267
	267.04
	271
	271.04
	271.08
8C-5064	133
	134
8C-5899	592
8C-5917	100
8C-5918	100
8C-6354	115
	115.04
	119
	119.04
	119.08
8C-7581	105
	107
	107.02
	107.04
	109
	111
	111.02
	111.04
	111.06
	111.08
	141
	571
	572
	573
8C-8400	351
	351.02
8C-8451	111.08
8C-8988	313
	313.02
	313.04
8C-8992	221
	221.01
	222
	222.01
	224
	256
8C-9987	488
8E-3750	688
8E-3755	688
8E-6258	686
	687
	688
	689
	690
8E-6259	686
	687
	688
	689
	690
8F-1434	191
8H-3481	567
	582
8H-5303	120
8H-5306	120
8H-9819	265
	267.02
	269
	271.02
	271.06
8J-1256	91
	91.06
	91.12
8M-2770	265
	267.02
	269
	271.02
	271.06
8M-2773	615
8N-0869	100
8S-0934	602
	603
8S-4724	602
	603
8T-0075	313
	313.02
	313.04
	361

PART NUMBER INDEX

Part.No	Page
	361.02
8T-0077	407
	413
8T-0114	443
	445
	446
8T-0120	407
	411
	413
8T-0197	351
	351.02
	353
	387
	389
	393
	395.02
	397
	399.02
	399.06
	401
	403.02
	403.04B
	403.06
	405
8T-0198	391
	395
	395.04
	399
	399.04
	399.08
	403
	403.04
	403.04D
	403.08
8T-0267	265
	267.02
	269
	271.02
	271.06
8T-0271	421
8T-0273	265
	267.02
	269
	271.02
	271.06
8T-0286	91
	91.06
	91.12
	607
	619
8T-0288	486
	486.01
	500
8T-0328	69
	69.02
	91
	91.06
	91.12
	111
	111.04
	111.08
	141
	171
	571
	572
	573
	592
	607
	619
8T-0341	313
	313.02
	313.04
	315
	315.01
8T-0342	335
8T-0343	497
8T-0347	431
8T-0348	275
8T-0357	239
	241
8T-0671	232
	233
	234
8T-1158	201.04
	497
8T-1159	254
8T-1905	361
	361.02
	363
	365
	365.02
	365.04
	365.06
	365.08
	369
	371
	373
	375
	377
	379
8T-2396	502
8T-2530	411
	413
8T-2920	407
	411
	413
8T-3008	490.01
	490.03
	491
8T-3647	615
	623
8T-3957	391
	395
	395.04
	399
	399.04
	399.08
	403
	403.04
	403.04D
8T-4121	33
	35
	41
	45
	50
	56
	58
	60
	61
	71
	75
	85

PART NUMBER INDEX

Part.No	Page	Part.No	Page	Part.No	Page
	87		313		379
	89		313.02		381
	91		313.04		393
	91.02		314		397
	91.04		315		399.02
	91.06		315.01		401
	91.08		316		403.02
	91.10		316.01		405
	91.12		316.02		407
	105		317		413
	107.02		318		415
	109		323		417
	111.02		325		419
	111.06		326		421
	155		327		429
	159		333		432
	161		339		433
	181		339.02		441
	183		339.04		442
	185		341		443
	194		343		445
	203		345		446
	207		345.02		567
	213		346		568
	213.04		347		569
	213.10		349		583
	226		351		585
	239		351.02		585.01
	241		361		586
	265		361.02		586.01
	267		363		587
	267.02		365		589
	267.04		365.02		593
	269		365.04		593.01
	271		365.06		607
	271.02		365.08		615
	271.04		367		619
	271.06		369		623
	271.08		371		625
	273		373		626
	277		375		627
	281		377		657
	310		377.02		658
	311		377.04		659

PART NUMBER INDEX

Part.No	Page
8T-4122	252
8T-4123	415
8T-4127	111.04
	111.08
8T-4131	685
8T-4132	285
	285.02
	285.04
	321
	321.01
	321.02
	662.01
	665.01
	668.01
8T-4133	71
	87
	91.02
	91.08
	181
	183
	185
	226
	229
	229.02
	265
	267.02
	269
	271.02
	271.06
	272
	285.04
	497
	549
	552
	626
	657
	658
	659
8T-4134	107
	111
	527
	531
	535
	556
	567
8T-4136	26
	35
	60
	71
	73
	85
	155
	159
	161
	213
	213.10
	239
	241
	265
	267
	267.02
	267.04
	269
	271
	271.02
	271.04
	271.06
	271.08
	273
	277
	349
	361
	361.02
	363
	365.02
	365.06
	419
	432
	433
	441
	442
	443
	445
	446
8T-4137	25
	29
	33
	35
	39
	41
	45
	56
	58
	71
	87
	89
	91
	91.02
	91.04
	91.06
	91.08
	91.10
	91.12
	181
	201.04
	207
	213.04
	267
	267.04
	271
	271.04
	271.08
	279
	283
	351
	351.02
	361
	361.02
	363
	365
	365.02
	365.04
	365.06
	365.08
	367
	369
	371
	373
	375
	377
	377.02
	377.04

PART NUMBER INDEX

Part.No	Page
	379
	415
	419
	443
	445
	446
	537
	568
	569
	587
	607
	615
	619
	623
	659
8T-4138	41
	207
	209
	213.04
	213.06
8T-4139	71
	170.03
	207
	211
	213
	213.04
	213.08
	213.10
	231
	277
	281
	321
	321.01
	321.02
	333
	339
	339.02
	339.04
	345
	345.02
	349
	363
	365.02
	365.06
	395.02
	399.06
	403.04B
	403.06
	403.08
	407
	411
	413
	577
	579
8T-4140	262
	263
	277
	281
8T-4149	399
	399.04
	399.08
	403
	403.04
	403.04D
8T-4171	107
	107.04
	111
	111.04
	111.08
	155
	170.03
	207
	209
	213.04
	213.06
	611
8T-4172	25
	91
	91.06
	91.12
	625
8T-4173	30
8T-4174	575
8T-4175	67
8T-4176	389
	393
	395.02
	397
	399.02
	399.06
	401
	403.02
	403.04B
	419
8T-4177	25
	48
	62
	371
	379
	625
8T-4179	19
	41
	75
	243
	365
	365.04
	365.08
	513
	513.01
	514
	514.01
	515
	515.01
	639
	641
	643
	644
	644.01
	645
	647
	648
	648.01
	649
	650
	651
	652
	653
8T-4182	310
	311
	313
	313.02
	313.04

PART NUMBER INDEX

Part.No	Page
	316
	316.01
	316.02
	317
	318
	333
	625
8T-4183	29
	225
	247
	247.01
	285
	285.02
	285.04
	391
	395
	395.04
	399
	399.04
	399.08
	403
	403.04
	403.04D
	403.08
	417
	419
	684
8T-4184	288
	290
	405
	407
	413
8T-4185	71
	89
	91
	91.04
	91.06
	91.10
	91.12
	201.04
	279
	283
	313
	313.02
	313.04
	314
	317
	318
	323
	333
	339
	339.02
	339.04
	341
	343
	345
	345.02
	346
	347
	349
8T-4186	20
	35
	71
	73
	315
	315.01
	349
	626
8T-4189	17
	25
	41
	45
	46
	75
	85
	91.12
	111
	288
	290
	315
	315.01
	363
	365.02
	373
	375
	377
	581
	615
	623
	626
	627
8T-4190	183
	185
	513
	513.01
	514
	514.01
	515
	515.01
8T-4191	19
	61
	87
	89
	91
	91.02
	91.04
	91.06
	91.08
	91.10
	91.12
	105
	107.02
	109
	111.02
	111.06
	203
	381
	441
	513
	513.01
	514
	514.01
	515
	515.01
	567
	583
	585
	585.01
	586
	586.01
	593
	593.01

PART NUMBER INDEX

Part.No	Page
	627
	657
8T-4192	69
	69.02
	205
	207
	209
	211
	213
	213.02
	213.04
	213.06
	213.08
	213.10
	216
	220
	225
	231
	285
	285.02
	285.04
	320
	353
	363
	365.02
	365.06
	381
	387
	393
	395.02
	397
	399.02
	399.06
	401
	403.02
	403.04B
	421
	569
	577
	579
	580
	584
	639
	641
	643
8T-4193	203
	248
	248.01
	353
	447
	447.01
	537
8T-4194	267
	267.04
	271
	271.04
	271.08
	316
	316.01
	316.02
	317
	318
	323
	411
	413
8T-4195	25
	26
	35
	50
	71
	87
	91.02
	91.08
	310
	311
	393
	397
	399.02
	401
	403.02
	419
	429
	585
	585.01
	586
	586.01
	589
8T-4196	73
	75
	310
	311
	313
	313.02
	313.04
	314
	315
	315.01
	316
	316.01
	316.02
	317
	318
	327
	335
	337
	405
	407
	413
	419
8T-4198	50
	91
	91.06
	91.12
	361
	361.02
8T-4199	179
	239
	241
	251
8T-4200	22
	25
	32
	36
	39
	51
	53
	60
	85
	91.12
	161.02
	170.03
	176

PART NUMBER INDEX

Part.No	Page
	537
	543
	545
	583
	607
	615
	619
8T-4205	105
	107.02
	109
	111.02
	111.06
8T-4223	29
	30
	39
	41
	187
	188
	207
	213.04
	220
	225
	267
	267.04
	271
	271.04
	271.08
	288
	290
	314
	315
	315.01
	316
	316.01
	316.02
	317
	318
	321
	321.01
	321.02
	323
	331
	331.02
	333
	335
	337
	339
	339.02
	339.04
	341
	343
	345
	345.02
	349
	353
	363
	365
	365.02
	365.04
	365.06
	365.08
	381
	387
	391
	393
	395
	395.02
	395.04
	397
	399
	399.02
	399.04
	399.06
	399.08
	401
	403
	403.02
	403.04
	403.04B
	403.04D
	403.06
	403.08
	405
	407
	409
	409.02
	411
	413
	421
	426
	513
	513.01
	514
	514.01
	515
	515.01
	569
	577
	579
	580
	625
	684
8T-4224	26
	28
	32
	35
	36
	39
	41
	45
	51
	53
	60
	85
	91
	91.06
	91.12
	111
	170.03
	176
	179
	267
	267.04
	271
	271.04
	271.08
	288
	290
	315
	363
	365.02
	373

PART NUMBER INDEX

Part.No	Page
	375
	377
	377.02
	407
	409
	409.02
	411
	413
	443
	445
	446
	537
	541
	543
	545
	577
	579
	581
	583
	607
	615
	619
	623
	625
	626
	627
8T-4226	87
	91.02
	91.08
8T-4240	431.02
8T-4241	305
	305.02
8T-4244	187
	188
	339
	339.02
	339.04
	345
	345.02
8T-4648	331
	331.02
	335
	337
	387
	625
8T-4779	255
8T-4780	243
8T-4896	337
8T-4908	28
	35
	46
	48
	267
	267.04
	271
	271.04
	271.08
8T-4910	314
	315
	315.01
	323
	331
	331.02
	335
	337
	341
	343
	373
	375
	377
	387
	513
	513.01
	514
	514.01
	515
	515.01
8T-4944	431.02
8T-4956	30
	39
	227
	227.01
	333
	335
	337
	391
	395
	395.04
	399
	399.04
	399.08
	403
	403.04
	403.04D
	403.08
	409
	409.02
8T-4970	179
	181
	288
	290
	569
8T-4971	615
8T-4984	39
	60
8T-4985	56
	60
8T-5005	25
	161.02
	325
	326
	365.06
	419
8T-5041	426
8T-5878	252
8T-6411	105
	107
	107.02
	107.04
	109
	111
	111.02
	111.04
	111.06
	111.08
	179
8T-6412	179
	541
	547
	551
8T-6466	25
	281

PART NUMBER INDEX

Part.No	Page
	316.02
	389
	393
	395.02
	397
	399.02
	399.06
	401
	403.02
	403.04B
8T-6663	365
	365.04
	365.08
8T-6675	353
8T-6693	141
8T-6703	417
	419
	421
8T-6726	51
	53
8T-6759	197
	199
	199.02
	199.04
	432
	433
	493
	493.06
	497
8T-6763	299
	299.01
8T-6764	641
8T-6842	699
	699.06
	699.12
	699.18
8T-6868	331
	331.02
	513
	513.01
	514
	514.01
	515
	515.01
8T-6869	365.08
	409
	409.02
8T-6870	25
	91
	91.06
	91.12
	373
	375
	377
	377.02
8T-6876	363
	365.02
	365.06
8T-6912	48
8T-7329	35
8T-7338	195
	203
8T-7547	26
	73
	279
	283
8T-8729	69
	69.02
	107.04
	111.04
	111.08
	124
	128.02
	142
	193
8T-8730	128.02
8T-8737	85
	91.08
	94
	95
	96
	99
	99.02
	115
	115.04
	119
	119.04
	119.08
	133
	134
	138
	165
	167.01
	167.02
8T-8799	62
	95
8T-8806	409
8T-9533	499
8T-9535	365
	365.04
8T-9598	47
8T-9599	279
	283
8T-9756	100
8V-1715	575
8Y-6967	513
	513.01
	514
	514.01
	515
	515.01
9	
9B-7233	137
9C-4935	648
	648.01
	650
9D-8508	596
9F-2167	387
9F-5644	120
9G-0002	100
9G-0004	100
9G-0005	100
9G-3695	87
	91.02
	128.01
	156
9G-4336	95
9G-4343	62
	94

PART NUMBER INDEX

Part.No	Page
	107
	107.04
	111
	111.04
	111.08
9G-7641	127
	137
9G-8909	101
9J-2089	32
9J-3169	669
	669.01
	670
	670.01
	671
	671.01
	672
	672.01
	686
9J-3178	687
9J-4259	689
9L-7816	602
	603
9M-7959	56
9M-8406	71
9M-9439	56
9N-4252	688
9N-4253	688
9R-3924	69
	69.02
	243
9S-4180	289
	291
9S-4181	335
	337
	353
	387
	419
9S-4182	353
9S-4183	391
	395
	395.04
	403.08
	453
9S-4185	313.04
	353
	363
	365
	365.02
	365.04
	365.06
	365.08
9S-4191	277
	279
	281
	283
	315
	315.01
	361
	361.02
	363
	365
	365.02
	365.04
	365.06
	365.08
	367
	369
	373
	375
	377
	377.02
	431
	457
9S-8001	285
	285.02
	285.04
	493.04
9S-8004	197
	199.02
	433
	493.04
9S-8005	199
	199.04
	432
	493
	493.04
	493.06
9V-3659	226
9W-0335	141
9W-0844	94
	96
	99
	99.02
	115
	115.04
	119
	119.04
	119.08
	133
	134
	156
	161.05
	165
9W-0852	94
	99
	99.02
	115
	115.04
	119
	119.04
	119.08
	133
	134
	156
	161.05
	165
	167.02
	186
9W-1494	141
9W-1951	115
	115.04
	119
	119.04
	119.08
9W-8258	690
9W-8259	689
9X-0196	94
9X-0199	191
9X-1386	123
9X-1813	122
9X-2040	563
9X-2041	537

PART NUMBER INDEX

Part.No	Page
	539
9X-2042	141
	525
	527
	529
	531
	535
	537
	541
	545
	547
	549
	551
	552
	567
	590
	591
	592
9X-2043	589
9X-2044	141
	525
	529
	533
	537
	547
	556
	561
	567
	582
	589
9X-2045	207
	209
	213.04
	213.06
	537
	544
	547
	550
	589
9X-2046	582
9X-2201	60
9X-2609	502
9X-3401	28
	85
	94
	96
	99
	99.02
	103
	115
	115.04
	119
	119.04
	119.08
	138
	161.05
	167.01
	265
	267.02
	269
	271.02
	271.06
	365
	365.04
	365.08
	367
	369
	373
	375
	377
	377.02
	377.04
	382
	435.01
	435.02
9X-3404	93
9X-3463	187
	188
	189
9X-3592	305
	305.02
	307
	308
9X-6032	419
	588
9X-6582	409
	409.02
9X-7298	306
	306.01B
9X-7301	303
	306.03
	306.05
9X-8124	107
	111
9X-8256	41
	85
	91
	91.06
	91.12
	105
	107
	107.02
	107.04
	109
	111
	111.02
	111.04
	111.06
	111.08
	113
	115.02
	117
	119.02
	119.06
	155
	168
	170.03
	179
	181
	194.01
	207
	209
	213.04
	213.06
	229
	229.02
	361
	361.02
	547
	567
	569
	581

PART NUMBER INDEX

Part.No	Page	Part.No	Page	Part.No	Page
	582	081-6344	373	085-9226	77
	592.01		375	085-9227	77
	611		377	085-9228	77
	615	085-5789	479	085-9229	77
9X-8257	30		480	085-9230	77
	183		483	085-9231	77
	185	085-6444	542	085-9232	77
	203	085-6445	542	085-9233	77
	255	085-6446	542	085-9234	77
	321	085-6447	542	085-9235	77
	321.01	085-6448	542	085-9236	77
	321.02	085-6449	542	085-9237	77
	353		544	085-9238	77
	447	085-6452	537	085-9239	77
	447.01	085-6719	77	085-9240	77
	513	085-6720	77	085-9241	77
	513.01	085-6723	77	085-9242	77
	514	085-7079	499	085-9243	77
	514.01	085-7080	499	085-9244	77
	515	085-7081	499	085-9245	77
	515.01	085-7083	499	085-9246	77
	537	085-7084	499	085-9247	77
	575	085-7329	111.08	085-9258	77
	577	085-7356	365	085-9259	77
	579		365.04	085-9261	79
	585		365.08	085-9265	79
	585.01	085-7540	491	085-9267	79
	586	085-7913	79	085-9269	79
	586.01	085-7916	79	085-9271	79
9X-8258	250	085-8037	568	085-9275	82
	250.01	085-8828	684	085-9310	239
		085-9195	77		241
		085-9197	77		262
0		085-9199	77		263
		085-9201	77	085-9429	175
003-7764	69	085-9205	79	085-9492	625
	69.02	085-9206	79	085-9510	680
	71	085-9207	79		682
006-6803	499	085-9209	79	085-9513	21
012-0380	123.01	085-9211	79	085-9645	79
033-8248	615	085-9222	81	085-9652	79
	657	085-9223	77	085-9653	79
	658	085-9224	77	085-9655	79
	659	085-9225	77	085-9658	79

PART NUMBER INDEX

Part.No	Page
085-9659	77
085-9677	79
085-9678	79
085-9679	79
085-9680	79
085-9682	77
085-9683	77
085-9684	77
085-9685	77
085-9686	77
085-9769	431.02
	684
085-9838	77
085-9865	79
085-9882	79
085-9883	79
085-9884	79
085-9885	79
085-9886	79
085-9887	79
085-9888	77
	81
085-9899	81
085-9906	79
085-9909	79
085-9913	79
085-9914	79
085-9936	79
086-0297	243
	639
	641
	643
	644
	644.01
	645
	647
	648
	648.01
	649
	650
	651
	652
	653
086-0298	639
	641
	643
086-0299	243
086-0414	684
086-0415	684
086-0416	684
086-0523	661
	662
	662.01
	664
	665
	665.01
	667
	668
	668.01
086-0809	680
086-0811	679
086-0812	679
086-0813	681
086-0814	681
086-0950	615
086-1781	69
	69.02
087-3908	207
	209
	213.04
	213.06
087-3909	207
	209
	213.04
	213.06
087-4402	361
	361.02
	367
	369
	373
	375
	377
	377.04
087-4411	365
	365.04
	365.08
087-4432	419
087-4456	294
087-4476	361
	361.02
087-4531	369
087-4703	502
087-4707	497
087-4710	497
087-4742	431.02
087-5317	272
087-5708	497
087-5758	373
	375
	377
087-5760	365.06
	381
087-5765	365
	365.04
	365.08
087-5769	363
	365.02
	365.06
087-5771	365
	365.04
	365.08
087-5772	365
	365.04
	365.08
087-5773	369
	381
087-5774	363
	365.02
	381
087-5780	377.02
087-5840	658
	659
087-5841	639
	641
	643
087-6583	363
	365.02
	365.06
087-6584	324
	377.04
087-6585	363
	365.02

PART NUMBER INDEX

Part.No	Page
	365.06
	373
	375
	377
087-8884	77
090-8865	575
091-3474	17
093-0065	243
	651
	652
	653
093-0083	243
093-0097	243
	651
	652
	653
093-0115	243
	639
	641
	643
093-0357	243
	639
	641
	643
	644
	644.01
	645
	647
	648
	648.01
	649
	650
	651
	652
	653
093-0363	243
093-1290	333
	349
093-1291	316
	316.01
	316.02
	317
	318
	323
	339
	339.02
	339.04
	341
	343
093-1292	314
	315
	315.01
	323
	331
	331.02
	335
	337
093-1293	331
	331.02
	335
	337
093-1294	315
	315.01
093-1295	323
	339
	339.02
	339.04
	405
	407
	411
	413
093-1296	387
093-1299	323
093-1300	323
	331
	331.02
093-1342	661
	662
	662.01
	664
	665
	665.01
	667
	668
	668.01
093-1433	298
	299
	299.01
	300
	300.01
	300.02
	300A
	301
	302
	644
	644.01
	645
	647
	648
	648.01
	649
	650
	651
	652
	653
	661
	662
	664
	665
	667
	668
093-2068	87
	91.02
	91.08
093-3093	478
	480
093-3094	478
	480
093-3328	483
093-6089	429
093-7521	286
	286.01
093-7638	693
093-7680	682
	683
093-7682	672
	672.01
	673
093-7683	672
	672.01
	673
094-0580	201.04

PART NUMBER INDEX

Part.No	Page
094-0876	495
	502
094-1875	277
	279
	281
	283
	285
	285.04
	431.02
094-1881	285
	285.02
	285.04
094-1882	277
	281
	431.02
094-2080	105
	107.02
	109
	111.02
	111.06
094-3245	265
	269
094-3247	265
	269
094-4628	21
	22
094-4696	17
094-7134	23
094-7154	23
094-7235	75
094-7516	23
094-7741	19
094-9525	17
094-9581	75
094-9596	75
094-9597	75
094-9672	33
094-9725	73
094-9726	73
094-9950	173
	173.02
094-9980	173
	173.02
095-0085	173
	173.02
095-0410	173
	173.02
095-0645	168
095-0687	199
	199.04
095-0728	441
	556
	568
095-0735	111
	443
	445
	446
095-0736	69
	69.02
	571
	572
	573
	592
095-0742	107
	107.04
	111
	111.04
	111.08
	113
	115.02
	117
	119.02
	119.06
	541
	611
095-0755	537
095-0757	293
095-0799	592.01
095-0826	265
	267.02
	269
	271.02
	271.06
	583
095-0827	541
	547
	551
	611
095-0843	229
	229.02
095-0863	261
095-0882	197
	199.02
095-0893	429
095-0913	615
	623
095-0936	497
095-0939	197
	199.02
095-0965	459
	499
095-1066	693
095-1070	693
095-1083	693
095-1232	250
	250.01
095-1260	497
095-1299	239
	241
095-1386	71
095-1388	37
095-1511	71.01
095-1514	265
	269
	473
	474
095-1517	71.01
	199
	199.04
	265
	269
095-1519	69
	69.02
	267.02
	271.02
	271.06
	470
	473
	474
095-1525	201
095-1531	560
	561

PART NUMBER INDEX

Part.No	Page
095-1552	272
095-1573	505
	505.02
	507
	507.02
	509
	509.02
095-1575	197
	199.02
	470
	473
	474
095-1578	197
	199.02
	451
	455
	457
	459
	471
	472
	483
	502
	511
095-1579	476
095-1580	431
	484
	484.01
095-1582	313
	313.02
	451
	453
	455
	457
	459
	470
	484
	484.01
095-1584	470
	477
	505
	505.02
	507
	507.02
	509
	509.02
095-1585	197
	199.02
	431
	431.02
	451
	453
	455
	457
	459
095-1586	455
	457
	459
	471
	472
	485
	487
	495
	502
095-1587	476
095-1589	505
	505.02
	507
	507.02
	509
	509.02
095-1590	476
	477
	484
	484.01
	499
	505
	505.02
	507
	507.02
	509
	509.02
095-1591	473
	474
095-1592	457
	473
	474
	505
	505.02
	507
	509
	509.02
	507
	507.02
	509
	509.02
095-1593	470
095-1594	199
	199.04
	431
095-1596	477
095-1601	490.01
	490.03
095-1602	490.01
	490.03
095-1607	251
095-1608	267
	267.04
	271
	271.04
	271.08
095-1625	306
	306.01B
	432
	433
095-1627	303
	306.03
	306.05
095-1628	305
	305.02
	307
	308
095-1657	490.03
095-1662	249
095-1663	279
	283
	288
	290
095-1674	303
	306.03
	306.05
095-1676	305
	305.02
	307
	308
095-1681	289

PART NUMBER INDEX

Part.No	Page
	291
095-1682	288
	290
095-1696	451
	455
	457
	459
	471
	472
095-1698	451
	455
	457
	459
	471
	472
095-1700	455
	457
	459
	471
	472
	490.01
	490.03
	491
095-1710	499
095-1716	432
	433
095-1725	267
	267.04
	271
	271.04
	271.08
095-1750	487
095-1751	487
095-1783	470
	473
	474
095-1784	431
095-1786	476
095-1788	285.02
	285.04
095-1789	199
	199.04
	431
095-1852	693
095-1855	693
095-1857	693
095-2005	19
095-2011	19
095-2038	15
	73
095-2039	19
095-2040	28
	73
	75
	77
	81
095-2489	81
095-2490	81
095-2927	251
095-6622	481
	482
095-6623	481
	482
095-6636	478
	479
	480
095-6639	272
095-6824	639
	641
	643
095-7101	251
095-7380	197
	199.02
	431.02
095-7381	197
	199.02
095-7382	431.02
095-7383	197
	199.02
095-7386	197
	199.02
095-7419	277
	281
	431.02
095-7930	583
095-8024	473
	474
095-8638	17
	19
	22
	25
	26
	28
	32
	35
	36
	46
	48
	62
	73
	75
095-9397	335
095-9804	389
	391
	393
	395
	395.02
	395.04
	397
	399
	399.02
	399.04
	399.06
	399.08
	401
	403
	403.02
	403.04
	403.04B
	403.04D
	403.06
	403.08
096-0015	592
096-0061	37
	568
	615
	623
096-0131	644
	644.01
	645
	647
	648

PART NUMBER INDEX

Part.No	Page
	648.01
	649
	650
	661
	662
	664
	665
	667
	668
096-0174	75
096-1043	260
096-1054	305
	305.02
	307
	308
096-1055	306
	306.01B
096-1445	197
	199.02
096-1519	197
	199.02
	431.02
096-1521	197
	199.02
096-1522	197
	199.02
096-1628	495
096-2434	482
096-2500	36
	73
	75
096-2501	19
	27
	29
	75
096-2617	436
	437
096-2622	541
096-3321	35
096-3467	303
	306.03
	306.05
096-3741	19
096-3780	229
	229.02
096-3785	197
	199.02
096-3786	197
	199.02
096-3787	197
	199.02
096-3788	197
	199.02
096-3884	541
096-3937	69
	69.02
096-3978	199
	199.04
096-4034	41
	45
096-4035	39
	41
	45
096-4377	197
	199.02
096-4498	495
096-4754	265
	269
096-4841	36
096-4876	661
	662
	662.01
	664
	665
	665.01
	667
	668
	668.01
096-4882	577
	579
096-4883	421
096-4884	387
096-5766	313
	313.02
	313.04
	333
	345
	345.02
	346
	347
096-5932	431
096-5933	431
096-5934	431
096-5962	107
	107.04
	111
	111.04
	111.08
	588
096-6073	313
	313.02
096-6166	105
	107
	107.02
	107.04
	109
	111
	111.02
	111.04
	111.06
	111.08
	141
	441
	556
	568
096-6331	442
096-7074	685
096-7567	79
096-7570	77
096-7571	77
096-7632	77
096-7928	82
096-8139	305
	305.02
	307
	308
096-8251	693
096-8273	77
096-8274	79
096-8280	79
096-8288	81
096-8289	79

PART NUMBER INDEX

Part.No	Page	Part.No	Page	Part.No	Page
096-8292	79	099-0320	431	099-0823	537
096-8294	77	099-0321	431		547
096-8307	77	099-0322	431		549
096-8310	77	099-0328	431	099-0913	241
096-8336	81	099-0329	431	099-2336	250
096-8356	79	099-0330	431		250.01
096-9408	77	099-0331	431	099-2389	77
096-9409	77	099-0332	431	099-3246	693
096-9410	77	099-0333	431	099-3248	693
096-9411	77	099-0334	431	099-3249	693
096-9412	77	099-0335	431	099-3250	693
096-9435	25	099-0596	306	099-3506	543
096-9478	82		306.01B		545
096-9481	82	099-0600	306	099-3563	425
096-9486	77		306.01B	099-3600	639
096-9492	77	099-0653	261		641
096-9495	77	099-0660	303		643
096-9500	77		306.03	099-3629	553
096-9502	77		306.05	099-3645	605
096-9503	77	099-0661	303	099-3649	365
096-9505	77		306.03		365.04
096-9508	77		306.05		365.08
096-9528	25	099-0674	303		615
096-9529	75		306.03	099-3669	285
096-9532	25		306.05		285.02
	48	099-0681	305		285.04
096-9585	79		305.02	099-3671	285
096-9986	339		307		285.02
	339.02		308		285.04
	339.04	099-0695	307	099-3990	478
099-0139	542		308		479
099-0144	275	099-0699	306		480
099-0149	275		306.01B	099-4388	15
099-0157	249	099-0700	306	099-4420	19
099-0159	249		306.01B	099-4483	29
099-0163	249	099-0707	661	099-4707	30
099-0172	251		662	099-4749	431
099-0173	251		662.01	099-5041	73
099-0183	254		664	099-5408	323
099-0185	254		665		387
099-0193	253		665.01	099-6109	285
099-0195	253		667		285.02
099-0233	429		668		285.04
099-0235	429		668.01	099-6110	285

PART NUMBER INDEX

Part.No	Page
	285.02
	285.04
099-6111	285
	285.02
	285.04
099-6112	285
	285.02
	285.04
099-6113	285
	285.02
	285.04
099-6115	285
	285.02
	285.04
099-6135	502
099-6136	502
099-6137	495
	497
	502
099-6141	497
099-6144	497
099-6145	497
099-6418	215
	215.01
	217
	218
099-6495	79
099-6530	431
099-6531	431
099-6532	431
099-6535	431
099-7091	651
	652
	653
099-7127	571
	572
	573
099-7464	693
099-8232	389
	393
	395.02
	397
	399.02
	399.06
	401
	403.02
	403.04B
099-8457	77
100-2881	544
100-6462	689
100-6463	690
100-6464	689
100-7689	561
101-2169	658
	659
101-2170	658
	659
101-2383	205
	213.02
101-2846	141
	571
	572
	573
101-2927	686
101-7403	337
102-1173	91.08
102-1279	335
102-3190	679
	681
102-3191	679
	681
102-4861	705
102-4862	705
102-5420	93
102-5474	700
102-7024	479
	480
	483
102-7886	91
	91.06
	91.12
102-7964	99
	99.02
102-7965	99
	99.02
	144
	146
	152
102-8016	105
	107.02
	109
	111.02
	111.06
102-8801	94
	99
	99.02
	115
	115.04
	119
	119.04
	119.08
	133
	134
	156
	161.05
102-8802	28
	69
	69.02
	95
	96
	99
	99.02
	103
	107
	107.04
	111
	111.04
	111.08
	122
	123
	123.01
	128.02
	128.04
	130
	131
	133
	134
	142

PART NUMBER INDEX

Part.No	Page	Part.No	Page	Part.No	Page
	163		119.08		305.02
	176		138	105-7405	457
	186		435.01		459
	192		435.02	105-7545	697
	193	102-8806	85		699.04
	265		99		699.10
	267.02		99.02	105-9409	615
	269	103-2529	96	105-9410	615
	271.02	103-8236	287.01	105-9526	568
	271.06	103-8411	457	105-9527	568
	367	103-8412	457	105-9980	107
	369	103-8413	457		107.04
	373	103-8441	305		111
	375		305.02		111.04
	377	103-8442	305		111.08
	377.02		305.02	105-9982	107
	377.04	104-6573	115		107.04
	382		115.04		111
	488		119		111.04
	488.02		119.04		111.08
	625		119.08	105-9983	107
102-8803	94	104-8107	451		107.04
	99	104-8768	361		111
	99.02		361.02		111.04
	115	104-8771	361		111.08
	115.04		361.02	105-9986	107
	119		375		107.04
	119.04	104-8783	361		111
	119.08	104-8950	373		111.04
	161.05		375		111.08
	165		377	106-0107	127
	166	104-8973	382		138
	167.02	104-8999	326	106-0210	138
	191		327	106-6857	680
	192	105-3487	207		682
102-8804	99		209	106-9618	164
	99.02		213.04	107-6479	502
	124		213.06		511
	167.01		229	107-6481	502
	167.02		229.02	107-6631	361
102-8805	115	105-6431	657		361.02
	115.04		658		363
	119		659		365.02
	119.04	105-7398	305		365.06

PART NUMBER INDEX

Part.No	Page
	367
	369
	373
	375
	377
	377.04
	382
108-0671	57
108-0672	57
108-7203	373
	375
	377
108-7313	381
108-7351	363
	365.02
	365.06
108-7402	373
	375
	377
	381
108-7497	331
	331.02
108-7516	367
	369
	373
	375
	377
	377.02
	377.04
108-7572	381
108-9041	679
	681
108-9042	680
	681
	682
108-9043	679
	680
	682
	683
108-9097	658
108-9122	251
108-9191	644
	645
109-3036	488
109-5815	422
	423
109-5816	314
109-6072	331
	331.02
109-7556	382
110-5482	379
110-5499	361
	361.02
110-5511	381
110-5602	442
110-6821	71.01
111-0343	488
111-0973	384
111-0988	365
	365.04
	365.08
111-4719	107
	107.04
	111
	111.04
	111.08
111-4816	144
	146
	152
111-4829	107
	107.04
	111
	111.04
	111.08
111-4836	87
	89
	91
	91.02
	91.04
	91.06
	91.08
	91.10
	91.12
111-4837	87
	89
	91
	91.02
	91.04
	91.06
	91.08
	91.10
	91.12
	183
111-4838	87
	91
	91.02
	91.06
	91.08
	91.12
111-4839	87
	91
	91.02
	91.06
	91.08
	91.12
111-5422	482
111-6716	353
111-6752	373
	375
	377
111-9916	277
	281
	485
	500
111-9998	484
	484.01
113-0363	75
113-2276	639
	641
	643
113-6394	365
	365.04
	365.08
113-6758	405
113-6803	393
	395.02
	397

PART NUMBER INDEX

Part.No	Page	Part.No	Page	Part.No	Page
	399.02		87	118-9936	30
	399.06		89	118-9941	30
113-8490	105		91	119-3253	681.01
	107.02		91.02	119-5026	127
	109		91.04		590
	111.02		91.06		591
	111.06		91.08		592
113-8491	105		91.10	119-5388	497
	107.02		91.12	119-5389	497
	109		161	119-5391	497
	111.02		161.02	119-5392	497
	111.06		183	119-5445	307
114-0623	485		596		308
	487	116-0210	571	119-9447	512.02
114-0750	303		572	119-9947	512.03
	306.03		573	120-0009	85
	306.05	116-3522	288	120-5054	705
114-0754	306		290	120-5107	695
	306.01B	116-9202	329		699.02
114-0755	305		334		699.08
	305.02	117-6305	549		699.14
	307	117-6306	547	120-7199	11
	308		549		255
114-1374	203	117-6349	441	120-7215	245
114-8223	429	117-6350	441		246
114-8224	429	117-6356	441	120-7724	136
114-8229	197	118-4086	495	120-9027	588
	199.02	118-4087	495	121-0987	155
114-8231	199	118-6054	701	121-1022	113
	199.04		702		115
114-8249	433		703		115.02
114-8250	433		704		115.04
115-8645	351	118-6948	56		117
	351.02	118-9862	625		119
	361	118-9863	625		119.02
	361.02	118-9864	625		119.04
	363	118-9865	625		119.06
	365.02	118-9867	625		119.08
	365.06	118-9874	51		119.09
	377.02	118-9881	53	121-1023	107
116-0114	107.04	118-9882	53		107.04
	111.04		54		111
	111.08	118-9919	30		111.04
116-0118	33	118-9935	30		111.08

PART NUMBER INDEX

Part.No	Page
121-1156	144
	146
	152
121-1157	144
	146
	152
121-1158	144
	146
	152
121-1159	144
	146
	152
121-1173	144
	146
	152
121-1491	486
	486.01
	487
	493
	493.04
	493.06
121-1865	445
	446
121-5203	241
121-5204	241
121-6216	310
	311
121-6217	310
	311
	313
	313.02
	313.04
121-6219	314
121-6220	314
	315
	315.01
121-6222	316
121-6223	316
121-6369	365
	365.04
	365.08
121-6376	313
	313.02
	313.04
121-6407	351
	351.02
121-8659	657
121-8662	657
122-5373	411
	478
122-5399	478
	479
	480
122-5400	478
	479
	482
122-5420	317
	318
122-5500	317
	318
122-9608	441
122-9609	441
122-9610	441
122-9611	443
	445
123-2002	305
	305.02
123-2003	288
	290
	293
123-2143	431
123-2145	431
123-2430	365
	365.04
	365.08
	373
	377
	377.02
	510
123-2431	510
123-2552	510
123-2636	313
	313.02
	313.04
	387
123-2729	325
123-4750	409
123-9950	307
	308
124-0838	326
	327
124-0863	313
	313.02
	313.04
124-1305	325
124-1574	41
	45
124-3931	609
124-3940	525
	533
124-3953	558
124-3960	549
124-3966	567
124-4003	127
124-4009	438
	439
124-4010	436
	437
124-7346	513
	513.01
	514
	514.01
	515
	515.01
125-1302	107
	107.04
	111
	111.04
	121
125-1551	307
	308
125-2923	77
125-2924	77
125-2925	77
125-2928	77
125-2930	77
125-2931	77
125-2932	77
125-2933	77
125-2937	77
125-2939	79
125-2940	81

PART NUMBER INDEX

Part.No	Page
125-2941	81
125-2942	81
125-2943	81
125-2947	47
125-2951	25
125-2963	13
	171
125-2968	28
125-2969	31
125-2979	35
125-2983	75
125-2988	172
125-3006	82
125-3007	82
125-3008	82
125-3009	82
125-3010	82
125-3011	82
125-3012	82
125-3013	82
125-3014	82
125-4785	99
	99.02
	144
	146
	149
	152
125-4840	144
	146
	152
125-4841	99
	99.02
125-7192	478
125-7193	478
126-1768	94
	95
	96
	99
	99.02
	115
	115.04
	119
	119.04
	119.08
	133
	134
	161.05
	165
	167
	167.01
	361
	361.02
126-1813	287.01
126-1865	497
126-1866	497
126-2075	267
	267.04
	271
	271.04
	271.08
	286
126-2076	286
126-2081	289
126-9993	499
127-0580	537
127-3735	533
127-3913	644
	644.01
	645
	647
	648
	648.01
	649
	650
	651
	652
	653
127-5251	701
127-5252	709
127-5272	699
	699.06
	699.12
	699.18
127-5277	706
127-5295	699
	699.06
	699.12
	699.18
127-5483	95
127-5484	62
127-5937	173
127-5939	173
	173.02
127-5940	173
	173.02
127-5941	173
	173.02
127-5943	173
	173.02
127-5944	173
	173.02
127-5947	173
	173.02
127-5948	173
	173.02
127-5949	173
	173.02
127-5950	173
	173.02
127-5952	173
	173.02
127-5953	173
	173.02
127-5955	173
127-5956	173
127-6705	329
	336
128-2122	523
	523.02
128-2129	550
128-2135	513
	513.01
	514
	514.01
	515
	515.01
	527
	531
	535
	590
	591
128-2136	513

PART NUMBER INDEX

Part.No	Page	Part.No	Page	Part.No	Page
	513.01	131-5767	457	132-4099	697
	514		459		699.04
	514.01	131-5768	457		699.10
	515		459	132-4100	697
	515.01	131-5818	497		699.04
	527	131-5867	482		699.10
	531	131-5868	482	132-7599	482
	535	131-5915	495	132-7600	482
	592.01	131-8898	51	132-7601	482
128-2155	549		52	132-7603	481
	552	131-8901	52		482
128-2173	443		54	132-7695	502
	445	131-8902	52	132-7699	502
	446		54	132-7701	502
128-4411	69	131-8903	54	132-7705	482
	69.02	131-8915	51	132-7711	502
128-7471	391		53	132-7713	502
	395	131-9453	365	133-2425	243
	395.04		365.04		639
	399		365.08		641
	399.04	131-9850	325		643
	399.08		326	133-2554	255
	403	131-9869	365	133-2717	243
	403.04		365.04	133-5813	361
	403.04D		365.08		361.02
128-9166	365		417		363
	365.04	131-9907	411		365.02
	365.08		413		365.06
129-3400	265	132-1566	331		377.04
	267.02	132-1567	337	133-7937	609
	269	132-1568	337		621
	271.02	132-1645	648	133-8016	537
	271.06		648.01	134-3284	183
129-5940	363		650		185
	365.02	132-1775	335	134-6110	702
	365.06	132-1776	335	134-6146	697
	377.02	132-1805	87		699.04
129-6466	191		91		699.10
	567		91.02	134-6838	407
130-0288	609		91.06		411
	621		91.08		413
130-0319	609		91.12	134-7178	661
	621	132-1829	141		662
130-7596	21		142		662.01

PART NUMBER INDEX

Part.No	Page	Part.No	Page	Part.No	Page
	664	135-2430	65		683
	665	135-2431	65	138-5184	144
	665.01	135-2432	65		146
	667	135-2433	65		152
	668	135-4110	648	139-0922	435.01
	668.01		648.01		435.02
134-7179	661	135-4111	648	139-1762	411
	662		648.01		413
	662.01	135-4114	648	139-1765	411
	664		648.01		413
	665	135-9000	371	139-1773	317
	665.01		379		318
	667	136-0344	91.08	139-3068	704
	668	136-4055	107		709
	668.01		107.04	139-7092	513
134-7258	695		111		516
	699.02		111.04		518
	699.08		111.08	139-7099	519
	699.14	137-2255	205		519.02
134-7721	170.03		219		523
134-7810	316.01		230		523.02
	316.02	137-2270	584		543
135-2363	173	137-2813	11	139-7100	539
135-2364	173		224		540
135-2365	173	137-2853	224	139-7101	519
135-2366	173	137-2854	224		519.02
	173.02	137-3623	289		521
135-2369	171		291		521.02
135-2370	171	137-3624	289		546
135-2382	175		291	139-7119	554
135-2402	28	137-3625	289	139-7126	537
135-2403	46		291	139-7127	537
135-2405	35	137-3626	289	140-2187	656
135-2407	50		291	140-6836	655
135-2419	21		292	141-2759	105
135-2421	65	137-3628	289		107.02
135-2422	65		291		109
135-2423	65		292		111.02
135-2424	65	137-5541	73		111.06
135-2425	65	137-6114	258	141-4363	65
135-2426	65	137-6120	682	141-4364	65
135-2427	65	137-6121	682	142-3836	584
135-2428	65		683	142-3853	227
135-2429	65	137-6122	682	142-3854	227

PART NUMBER INDEX

Part.No	Page
	228
142-5542	215
142-5546	441
143-3835	650
143-8023	306
	306.01B
143-8024	306
	306.01B
143-8025	306
	306.01B
143-8026	305
143-8027	305
	305.02
	307
	308
143-8028	305
	305.02
143-8029	303
	306.03
	306.05
143-8030	303
	306.03
	306.05
143-8031	303
	306.03
	306.05
143-8033	306
	306.01B
143-8034	303
	306.03
	306.05
143-8035	305
	305.02
143-8149	306
	306.01B
143-8150	303
	306.03
	306.05
143-8151	305
	305.02
	307
	308
144-0195	568
	569
144-9126	697
	699.04
	699.10
	699.16
144-9691	567
144-9692	567
146-1317	335
146-1321	337
146-1325	337
146-1464	512
146-7196	353
147-4131	497
147-4165	455
147-4221	497
148-4685	241.01
148-6218	363
	365.02
	484
149-1479	71.01
149-1571	435.01
149-1572	435.02
149-1738	333
149-5050	161
	161.02
149-5051	105
	107.02
	109
	111.02
	111.06
	113
	115.02
	117
	119.02
	119.06
	166
	167.02
149-5069	113
	115.02
	117
	119.02
	119.06
	161.05
	166
	167.02
149-5070	113
	115.02
	117
	119.02
	119.06
	161.05
	166
	167.02
149-5071	113
	115.02
	117
	119.02
	119.06
	167.02
150-2239	669
150-2240	669
150-2241	670
150-2242	670
150-2243	671
150-2244	671
150-2245	669
	674
150-2246	669
	674
150-2247	670
	675
150-2248	670
	675
150-2249	671
	676
150-2250	671
	676
150-8108	697
	699.04
	699.10
	699.16
151-1482	694
	696
	698
	699.01
	699.03
	699.05
	699.07
	699.09

PART NUMBER INDEX

Part.No	Page
	699.11
151-1487	628
151-1488	629
	629.01
151-1489	629
151-1491	631
151-1493	633
	634
	634.01
151-1494	633
	636
	637
151-1496	634
	634.01
	635
	635.01
	636
	637
	700
151-5334	33
151-6703	541
	547
	551
151-6704	541
	547
	551
151-6705	567
151-6777	539
151-6785	547
	549
151-6789	553
151-6790	553
151-6792	541
	542
151-6793	542
151-6802	549
151-6813	547
	549
	551
	552
151-6815	547
	549
	551
	552
151-6831	547
	551
151-6832	547
	551
151-6841	542
151-6844	547
151-9461	541
151-9497	541
151-9557	547
	549
151-9576	547
	549
	551
	552
151-9747	252
	253
151-9748	253
151-9751	245
	246
152-8346	409
	488
153-2521	183
	185
	188
153-2523	177
	187
153-2540	144
	146
	152
153-2541	144
	146
	152
153-2602	115
	115.04
	119
	119.04
	119.08
	144
	145
	146
	147
	152
	153
153-2620	94
153-2630	94
153-2631	115
	115.04
	119
	119.04
	119.08
	144
	145
	146
	147
	152
	153
153-5223	497
153-8644	512.01
153-8645	512.01
153-8753	445
	446
153-8761	354
	443
153-8762	443
	445
153-8763	443
	445
153-8767	357.01
	446
153-8867	339
	339.02
	339.04
	345
	345.02
154-0489	75
154-0498	57
154-0614	674
	679
154-0615	674
	679
154-0616	675
	680
154-0617	675
	680
154-0618	676
	681
154-0619	676
	681

PART NUMBER INDEX

Part.No	Page
155-2255	94
	99
	99.02
	115
	115.04
	119
	119.04
	119.08
	133
	134
	161.05
155-2258	94
	99
	99.02
	115
	115.04
	119
	119.04
	119.08
	133
	134
	161.05
155-2259	94
	96
155-2260	96
	99
	99.02
	115
	115.04
	119
	119.04
	119.08
	161.05
	164
	165
155-2261	94
	95
	96
	99
	99.02
	115
	115.04
	119
	119.04
	119.08
	128.02
	133
	134
	144
	146
	152
	163
	164
	165
	167
	167.01
	361
	361.02
155-2263	94
	99
	99.02
	133
	134
	156
	167.01
155-2265	94
	96
155-2270	94
	95
	96
	99
	99.02
	115
	115.04
	119
	119.04
	119.08
	128.02
	133
	134
	144
	146
	152
	163
	164
	165
	167
	167.01
	361
	361.02
155-2271	99
	99.02
	115
	115.04
	119
	119.04
	119.08
	167.01
155-2274	94
	99
	99.02
	133
	134
	156
	167.01
155-7024	615
	623
155-7042	556
155-7099	590
	591
156-5970	488.02
156-6469	553
156-6471	541
156-6472	547
	549
	551
	552
	555
156-6473	554
156-6474	542
156-6475	542
156-6554	547
156-6555	547
156-6562	547
156-6564	562
156-6565	525
	529
	533
156-6566	527
	531
	535
156-6567	527

PART NUMBER INDEX

Part.No	Page
	531
	535
156-6568	527
	531
	535
156-6573	527
	531
	535
156-6574	525
	529
	533
156-6576	525
156-6578	525
	533
156-6579	547
156-6582	523
	523.02
	548
156-6584	549
	552
156-6585	549
	552
156-6587	549
	550
156-6591	549
156-6592	549
156-6593	527
	531
	535
156-6594	527
	531
	535
156-6595	562
156-6598	541
156-6599	537
156-6600	541
156-6601	547
	549
156-6617	537
156-6618	537
156-6627	547
156-6631	554
156-6637	549
156-6639	549
156-6642	537
156-6643	541
156-6644	541
156-6645	541
156-6646	567
156-6647	567
156-6656	525
	533
156-6657	525
	533
156-8011	351.02
157-3160	85
157-3165	168
	170
157-3170	563
157-3182	365
158-3963	672
	673
158-8251	363
	492
158-8987	265
	267.02
	269
	271.02
	271.06
	287
158-9077	481
158-9078	481
159-5676	673
159-5677	678
	683
159-5678	677
	682
159-6722	82
159-7782	432
	433
159-9108	111
160-1994	320
	634
	634.01
	635
	635.01
	636
	637
160-1995	320
160-1996	320
160-6818	699
160-6822	695
	699.02
	699.08
	699.14
160-6832	697
	699.04
	699.10
	699.16
160-6841	695
	699.02
	699.08
	699.14
160-6845	699
160-6850	699
160-6853	697
	699.04
	699.10
	699.16
160-6884	697
	699.04
	699.10
	699.16
161-3128	105
	107.02
	109
	111.02
	111.06
	161.04
161-3639	541
161-3650	541
161-3663	541
161-3665	541
161-3668	556
	557
161-3669	557
161-3670	557
161-3671	557
161-3677	556
161-3684	547
	549
161-3685	537

PART NUMBER INDEX

Part.No	Page
161-3690	537
161-3694	544
	545
161-3695	542
161-3697	537
161-3698	547
	549
	551
	552
	555
161-3705	542
161-3717	585
	585.01
	586
	586.01
161-3739	513
	513.01
161-3750	581
161-3751	582
161-3752	587
161-3756	609
	621
161-3757	593
161-3758	589
161-3759	589
	590
161-3760	589
	591
161-3762	605
161-3764	605
	610
161-3770	605
	606
161-3771	594
161-3772	594
	595
161-3780	607
	608
162-4304	261
162-4305	261
162-4306	261
162-4307	261
162-4695	411
	413
	433
162-4696	351
	351.02
	432
162-4898	35
162-6317	30
162-6321	37
162-6325	624
162-6327	273
162-6330	60
162-6331	38
163-6616	111
163-6623	140
	516
	516.01
	517
163-6624	125
163-6625	125
	126
163-6626	125
	127
163-6631	178
163-6632	154
	565
163-6633	572
163-6634	571
163-6636	573
163-6659	99
	99.02
163-6699	99
	99.02
163-6700	69
	69.02
163-6701	141
163-6702	127
163-6703	107
	107.04
	111
	111.04
	111.08
	124
163-6704	179
	181
	192
163-6706	571
163-6707	572
163-6709	573
163-6711	127
163-6718	154
163-6719	154
163-6720	151
163-6721	596
163-6757	107
	107.04
	111
	111.04
	111.08
163-6758	107
	107.04
	111
	111.04
	111.08
163-6763	126
	129
163-6764	129
	130
163-6765	129
	131
163-6785	191
	588
163-6787	141
	143
163-6788	143
	144
	145
163-6789	143
	146
	147
163-6790	99
	99.02
	144
	146
	149
	152
163-6795	126
	127
	141
	179

PART NUMBER INDEX

Part.No	Page	Part.No	Page	Part.No	Page
	181	164-0497	574	164-0621	581
	556		575	164-0622	615
	563	164-0502	596	164-0628	611
	607	164-0503	596	164-0630	611
	619		600	164-0631	611
163-6799	144	164-0504	595	164-0632	611
	146		597	164-0639	582
	152	164-0505	596	164-0646	527
163-6800	144	164-0514	541		531
	146	164-0515	541		535
	152	164-0516	542	164-0647	525
163-6801	144	164-0517	542		529
	146	164-0518	542		533
	149	164-0519	541	164-0648	547
	152	164-0522	527	164-0655	527
	564		531		531
163-6803	144		535		535
	146	164-0523	537	164-0664	537
	152	164-0527	537	164-0666	553
163-6804	144	164-0532	434	164-0673	562
	146		436	164-0674	533
	149	164-0533	435	164-0675	525
	152		437		529
163-6805	149	164-0534	578	164-6981	294
	564	164-0535	580		363
163-6807	148	164-0555	515		365.02
	149		515.01		365.06
163-6810	141	164-0556	515	164-8274	168
	148		517	164-8276	84
163-6811	148		522	165-0962	354
	149	164-0572	585	165-0963	354
163-6813	179	164-0576	585	165-0964	356
163-6814	179		585.01	165-0965	357
164-0477	596	164-0590	611		633
	604		612	165-0967	357.01
164-0478	595	164-0592	611	165-0976	357
	599	164-0615	443	165-0989	194.01
164-0479	597	164-0616	585		357.01
	598		585.01	165-2793	279
	601		586		283
164-0485	617		586.01		431.02
	618	164-0618	581	165-2799	279
164-0486	619	164-0619	581		283
	620	164-0620	581		431.02

PART NUMBER INDEX

Part.No	Page
165-2801	279
	283
165-2802	279
	283
165-2804	277
165-2805	279
	283
165-3065	584
165-3103	235
	236
	237
165-3838	279
	283
165-3839	279
	283
165-3847	279
	283
165-3849	279
	283
165-3851	279
	283
165-3852	279
	283
165-3853	279
	283
165-4026	107
	107.04
165-5803	431.02
165-5804	431.02
165-5806	431.02
165-5809	431.02
165-5811	431.02
165-5814	431.02
165-5816	431.02
165-5817	431.02
165-5818	431.02
165-5819	431.02
165-5820	431.02
165-5821	431.02
165-5822	431.02
165-5823	431.02
165-5824	431.02
165-5826	431.02
165-5828	431.02
165-5831	431.02
165-5854	201.04
165-5855	201.04
165-5856	201.04
165-5857	201.04
165-5859	201.04
165-5860	201.04
165-5863	201.04
165-5864	201.04
165-5865	201.04
165-5866	201.04
165-5867	201.04
165-5868	201.04
165-9282	306
	306.01B
165-9284	303
	306.03
	306.05
165-9285	305
	305.02
	307
	308
165-9424	296
	631
	632
165-9425	297
	634
	634.01
	635
	635.01
	636
	637
165-9431	495
165-9435	495
165-9436	495
165-9438	495
165-9439	495
165-9442	495
165-9443	495
165-9444	495
165-9448	495
165-9460	495
165-9461	495
165-9463	497
165-9464	511
165-9470	381
	498
165-9497	472
165-9522	361
	361.02
	496
165-9549	373
	375
	377
	486
165-9551	497
165-9552	497
165-9553	497
165-9554	497
165-9582	442
	502
166-1481	644
	644.01
	645
	647
	648
	648.01
	649
	650
	661
	662
	664
	665
	667
	668
166-1482	662.01
	665.01
	668.01
166-1486	639
	641
	643
166-1494	298
	639
	641
	643
	644
	644.01
	645

PART NUMBER INDEX

Part.No	Page	Part.No	Page	Part.No	Page
	647		545		634.01
	648	167-7023	141		651
	648.01	167-7033	527	167-9992	654
	649		531	167-9993	636
	650		535		637
166-1579	657	167-7039	541		653
167-3437	179	167-7042	537	167-9994	656
167-3438	179	167-7043	593	167-9995	242
167-3441	179	167-7050	436	167-9996	245
	189		437	168-0000	246
167-3456	179	167-7051	437		634
	190		439		634.01
167-3457	155	167-7052	436		635
	156		438		635.01
167-3467	155	167-7055	580		636
167-3487	144	167-7079	567		637
	146	167-7080	587	168-0014	631
	152		588		660
167-3542	151	167-7083	607	168-0062	639
	154		619		641
	159	167-7110	560		643
	161	167-7114	560		644
	596	167-7118	612		644.01
167-3543	151	167-7119	612		645
	154	167-7141	575		647
	159	167-7263	355		648
	161		357		648.01
	596		702		649
167-3593	107	167-7270	695		650
	107.04		699.02	168-0794	495
	111		699.08	168-1541	229.02
	111.04		699.14	168-2878	672
	111.08	167-7272	697	168-2879	672
167-3622	151		699.04		677
	517	167-9970	629	168-2880	673
	549		647		678
167-3630	145	167-9971	647	168-2881	683
	147	167-9973	629	168-2884	672
	153		644	168-2885	677
167-3631	145	167-9974	644		682
	147	167-9976	628	168-2906	672
	153		638		677
167-6976	521	167-9977	639	168-5057	62
	521.02	167-9991	634	168-6684	247

PART NUMBER INDEX

Part.No	Page
	247.01
	251
168-6685	251
168-6686	251
168-6687	248
	250
168-6688	250
	250.01
168-6690	250
168-6692	250
	250.01
168-6728	195
168-6731	247
	247.01
168-6732	247
	248
168-9482	447
	447.01
168-9525	262
168-9526	262
	264
	266
	267.01
	267.03
168-9531	350
	351.01
168-9533	422
	423
168-9535	416
	418
168-9536	352
168-9537	360
	361.01
168-9538	362
	364
	365.01
	365.03
	365.05
	365.07
168-9539	354
	388
	390
168-9540	354
	366
168-9541	354
	392
	394
	395.01
	395.03
168-9542	354
	368
168-9543	355
	357
	396
	398
	399.01
	399.03
	399.05
	399.07
168-9544	355
	372
168-9545	355
	356
	357
	378
168-9546	356
	400
	402
	403.01
	403.03
	403.04A
	403.04C
168-9550	356
	404
168-9551	356
	357
	414
168-9555	410
	634
	634.01
	635
	635.01
	636
	637
168-9556	382
	634
	634.01
	635
	635.01
	636
	637
168-9559	358
	380
168-9560	312
	313.01
	313.03
	359
168-9562	359
	383
168-9754	387
168-9755	387
168-9759	361
	361.02
169-5545	202
169-5546	424
169-5549	426
	428
169-5567	238
169-5568	239
	241
169-5569	425
	426
169-7616	697
	699.04
	699.10
	699.16
169-7617	697
	699.04
	699.10
169-7620	699
	699.06
	699.12
	699.18
169-7659	695
	699.02
	699.08
	699.14
169-7721	692
	693
169-7722	692
169-7723	220
	692

PART NUMBER INDEX

Part.No	Page
169-7904	256
169-7905	256
169-8089	260
169-8091	260
169-8093	260
170-2594	232
170-2595	233
170-2596	232
	235
170-2597	233
	236
170-2598	221
	221.01
170-2600	204
	206
	208
	210
	212
170-2602	225
170-2607	11
	222
	222.01
170-2755	229
	229.02
170-2785	213.04
170-2789	213.02
170-2814	69
170-2901	71
170-2980	229
	229.02
170-2982	229
	229.02
170-2983	229
	229.02
170-2984	229
	229.02
170-2986	231
170-3014	39
	205
	213.02
170-6738	283
170-6813	151
	152
	153
170-6816	86
	88
	90
	91.01
	91.03
	91.05
	91.07
	91.09
	91.11
170-6819	155
170-6821	176
170-6822	158
	355
	356
170-6827	144
	146
	149
	152
	564
170-6828	127
	135
170-6829	135
	136
170-6830	135
	136
170-6887	105
	107.02
	109
170-6888	105
	107.02
	109
	111.02
	111.06
170-6890	113
	115
	115.02
	115.04
	117
	119
	119.02
	119.04
	119.06
	119.08
170-6891	113
	115
	115.02
	115.04
170-6921	155
170-6923	159
	164
170-6927	87
	91.02
	98
170-6929	87
	91.02
	91.08
	100
170-6930	87
	91.02
	91.08
	101
170-6933	105
	107.02
	109
	111.02
	111.06
170-6935	107
	107.04
	111
	111.04
	111.08
170-6939	87
	91.02
	91.08
170-6940	583
170-6941	583
170-6955	159
	161
170-6956	159
	161
170-6993	187
	188

PART NUMBER INDEX

Part.No	Page
170-7485	488
170-9295	181
	190
170-9324	127
170-9335	361
170-9360	229
	229.02
170-9394	113
	115.02
	117
	119.02
	119.06
170-9409	107
	107.04
	111
	111.04
	111.08
170-9417	187
	188
170-9418	187
	188
170-9419	193
	265
	267.02
	269
	271.02
	271.06
170-9492	568
170-9497	440
170-9498	441
170-9499	441
170-9702	569
170-9704	626
170-9711	607
	619
170-9712	614
170-9715	617
	622
170-9722	547
	549
	551
	552
	555
170-9723	527
	531
	535
	562
170-9724	525
	529
	533
170-9800	297
	634
	634.01
	635
	635.01
	636
	637
170-9803	296
	300
170-9804	297
	301
170-9805	297
	302
170-9808	300
	306
170-9809	301
	307
170-9810	302
	308
170-9826	265
	267.02
	269
	271.02
	271.06
	272
170-9831	295
	628
170-9832	295
	628
170-9834	295
	298
170-9836	298
	303
170-9840	306
	306.01B
170-9842	303
	306.03
	306.05
170-9843	305
	305.02
	307
	308
170-9856	306
	306.01B
170-9858	303
	306.03
	306.05
170-9859	305
	305.02
	307
	308
170-9893	426
	430
170-9937	303
	306.03
	306.05
170-9938	306
	306.01B
170-9940	306
170-9941	306
	306.01B
170-9942	307
170-9943	308
170-9945	307
	308
170-9946	307
	308
170-9999	305
	305.02
171-0002	419
	489
171-0006	448
	449
	471
171-0016	448
	449
	450
	452
	454
	456
	458
171-0019	358

PART NUMBER INDEX

Part.No	Page
171-0020	359
171-0034	476
171-0035	476
171-0036	476
171-0037	476
171-0087	495
171-0123	484
	484.01
171-0124	484
	484.01
171-0126	484
	484.01
171-0127	484
	484.01
171-0128	484
	484.01
171-0183	499
171-0184	499
171-0185	499
171-0188	371
	379
	500
171-0198	500
171-2208	105
	107.02
	109
	111.02
	111.06
171-3369	39
171-7323	525
	527
	529
	531
	533
	535
171-7325	527
	531
	535
171-7336	513
	513.01
	514
	514.01
	515
	515.01
171-7339	561
171-7344	586
	634
	635
	636
171-7345	514
	514.01
171-7346	514
	516
	520
171-7352	598
171-7372	442
	634
	634.01
	635
	635.01
	636
	637
171-7375	586
171-7377	527
	531
	535
171-7387	533
171-7396	537
171-7400	527
	531
	535
171-7406	527
	531
	535
171-7408	519
	519.02
	521
	521.02
	523
	523.02
	556
171-7413	542
171-7414	542
171-7415	527
	531
	535
171-7418	527
	531
171-7420	525
	529
	533
171-7423	527
	531
	535
171-7426	537
171-7432	626
	627
171-7477	544
171-7478	598
171-7485	574
	576
171-7486	577
171-7495	625
171-7496	625
171-7503	551
171-9073	61
171-9077	39
171-9161	71
	71.01
171-9162	60
171-9164	39
171-9165	39
172-2951	653
	656
172-2965	628
	657
172-2991	651
	654
172-2993	635
	635.01
	652
172-2994	652
	655
172-2995	655
172-3002	661
	662
172-3080	639
	641
	643
172-4478	592.01
173-0663	273

PART NUMBER INDEX

Part.No	Page
	276
	278
173-1168	277
	281
	284
	285.01
	285.03
173-1169	285
	285.02
	285.04
173-1170	285
	285.02
	285.04
173-1203	277
	281
173-3346	303
173-3349	303
173-3350	303
	306.03
	306.05
173-3351	303
	306.03
	306.05
173-3356	305
173-3358	305
	305.02
173-3387	285
	285.02
173-3389	285
	285.02
	285.04
173-3434	267
	267.04
	288
173-3508	289
173-3510	288
	290
173-3511	288
	289
173-3513	289
	291
173-3515	289
	291
173-3516	289
	291
173-3517	289
	291
173-3529	289
	291
173-4664	391
	395
	395.04
	399
	399.04
	399.08
	403
	403.04
	403.04D
173-4739	419
173-4753	353
173-4868	399
	399.04
	399.08
	403
	403.04
	403.04D
173-7884	339
173-7885	339
173-7890	339
	339.02
	339.04
173-7892	339
	339.02
	339.04
173-7895	339
	339.02
	339.04
	345
	345.02
173-7897	343
173-7898	343
	347
173-7899	341
	343
173-7910	343
	347
173-7914	641
173-7915	649
174-7213	285
	285.02
	285.04
174-7220	285
	285.02
	285.04
174-7221	285
	285.02
	285.04
174-7222	285
	285.02
	285.04
174-7791	187
	188
175-0651	229
	230
175-0652	230
175-0654	230
175-0946	205
	213.02
175-0947	205
175-0949	221
	221.01
175-0950	221
	221.01
175-0951	221
	221.01
175-0953	221
	221.01
175-2313	121
	122
175-2314	121
	123
175-6174	288
	290
175-6175	288
	290
175-6176	267
	267.04
	271
	271.04
	271.08
	288
	290

PART NUMBER INDEX

Part.No	Page
175-6177	267
	267.04
	271
	271.04
	271.08
175-6178	288
	290
176-0577	285
176-0578	285
	285.02
	285.04
176-1026	279
	283
176-1903	565
176-1904	565
	566
176-1905	565
	568
176-1913	589
176-1914	589
176-1915	589
176-1916	589
176-1917	607
	619
176-1925	577
176-1928	577
	579
176-1931	569
	570
176-1932	568
176-1937	537
176-1938	537
176-1941	537
176-1942	537
176-1946	525
176-1947	525
176-1948	556
176-1951	542
176-1952	542
176-1953	542
176-1954	542
176-1955	542
176-1956	542
176-1957	542
176-1958	519
	519.02
	521
	521.02
	523
	523.02
	554
176-1969	523
	523.02
	532
	534
176-1972	525
	529
	533
176-1980	529
176-1981	521
	521.02
	528
	530
176-1986	537
176-1995	569
176-1996	611
176-2002	559
	561
176-2687	705
176-2707	354
	701
176-2709	356
	703
176-2711	357.01
	709
176-2712	699
	699.06
	699.12
	699.18
176-2753	699
	699.06
	699.12
	699.18
176-2814	703
176-4469	363
	365.02
	365.06
176-4556	361
	361.02
176-4557	361
	361.02
176-4558	361
	361.02
176-4559	361
	361.02
176-4561	361
	361.02
176-4791	365
	365.04
	365.08
176-4863	258
176-4864	258
176-4865	259
176-4869	260
176-4870	258
	259
	260
	261
176-4872	261
176-8131	279
	283
	431.02
176-8132	279
	283
176-8133	285
176-8571	431.02
176-8573	431.02
176-8574	201.04
176-8579	431.02
176-8581	431.02
177-2553	289
	291
177-2617	288
	290
	292
177-2619	292
177-2620	288
	290
	293
177-2621	293
177-2623	288
	290

PART NUMBER INDEX

Part.No	Page
177-2625	288
	290
177-2653	389
	393
	395.02
	397
	399.02
	399.06
	401
	403.02
	403.04B
	475
177-2706	489
177-2744	448
	472
177-2768	449
177-5519	205
	213.02
177-5526	205
	213.02
177-5527	205
	213.02
177-5528	205
	213.02
177-5738	205
	213.02
177-5788	205
177-5790	205
177-5796	205
	219
177-5867	232
	233
	234
177-5879	225
177-5880	225
177-5970	205
	215
177-5972	205
	213.02
177-5977	205
	213.02
177-5981	205
	213.02
177-5982	207
	213.04
177-5985	205
	213.02
177-5986	205
	213.02
177-5987	67
177-6022	235
177-6031	236
177-6048	235
	236
	237
177-6049	235
	236
	237
177-6050	235
	236
	237
177-6101	215
	215.01
177-6108	205
	213.02
177-6110	218
177-6111	205
	213.02
177-6113	205
	213.02
177-6115	215
	215.01
177-6116	205
	213.02
177-6133	217
177-6134	217
177-6135	218
177-6136	207
	213.04
	217
177-6137	205
	213.02
	218
177-6295	207
	213.04
177-6296	207
	213.04
177-6298	207
177-6299	207
	213.04
177-6315	584
177-7636	85
177-7650	169
177-7701	564
177-7715	564
177-7716	564
177-8407	349
178-0734	243
178-5400	591
178-5401	590
178-5408	589
	590
178-5422	589
178-5423	589
178-5425	615
	623
178-5426	589
	590
	591
178-5431	570
178-5470	609
	621
178-5471	609
	621
178-5472	609
178-5473	609
178-5474	609
	621
178-5475	609
	621
178-5476	609
	621
178-5477	609
	621
178-5478	609
	621
178-5479	621
178-5480	609
	621
178-5481	609
	621

PART NUMBER INDEX

Part.No	Page	Part.No	Page	Part.No	Page
178-5482	609	178-5530	590	178-5654	600
	621	178-5531	590	178-5655	599
178-5483	609	178-5532	592		600
	621	178-5535	626		601
178-5484	609	178-5548	591	178-5656	599
	621	178-5549	574		600
178-5485	609	178-5550	615	178-5657	599
	621	178-5552	615		600
178-5486	609	178-5553	615	178-5658	599
	621	178-5554	615		600
178-5487	609	178-5555	615		601
	621	178-5565	595	178-5659	596
178-5488	609		596	178-5660	595
	621		597		596
178-5489	609		598		597
	621	178-5569	554	178-5661	601
178-5490	609	178-5570	537	178-5662	601
	621	178-5572	553	178-6463	60
178-5491	609	178-5573	541	178-6477	30
	621		553	178-6500	41
178-5492	609	178-5574	541		45
	621		553	178-6519	12
178-5493	609	178-5576	547		24
	621	178-5611	243	178-6531	12
178-5494	609	178-5624	597		29
	621	178-5627	589	178-6532	17
178-5500	568		590	178-6534	33
178-5504	588	178-5628	589	178-6537	25
178-5508	587		590	178-6538	25
178-5509	588	178-5629	590	178-6543	23
178-5517	588		591	178-6544	23
178-5518	588	178-5630	592	178-6545	23
178-5519	590	178-5632	591	178-6550	24
	591	178-5633	592	178-6554	63
178-5520	590	178-5634	592	178-6566	35
178-5521	590	178-5647	599	178-6567	35
178-5522	590		600	178-6569	35
	591		601	178-6571	35
178-5523	589	178-5648	599	178-6572	46
178-5524	590		600	178-6576	35
	591		601	178-6577	35
	592	178-5649	588	178-6591	73
178-5528	588	178-5651	588	178-6595	73
178-5529	591	178-5653	599	178-6597	29

PART NUMBER INDEX

Part.No	Page
178-6598	29
178-6599	29
178-6600	29
178-6601	29
178-6633	12
	47
178-6634	47
178-6635	47
178-6636	47
178-8802	279
	283
179-2980	250
179-4598	355
	356
	357
	444
179-5044	445
	446
179-5046	445
179-5071	355
179-5075	328
179-5076	328
	640
179-5077	329
179-5078	329
	649
179-5079	338
	339.01
	339.03
179-5080	342
179-5081	344
	345.01
179-5082	347
179-5194	446
179-7461	422
179-7464	387
179-7468	267
	267.04
	271
	271.04
	271.08
179-7498	323
179-7499	323
179-7536	267
	267.04
	271
	271.04
	271.08
179-7541	265
	267.02
	269
	271.02
	271.06
179-7578	373
	375
	377
179-7580	367
	369
	373
	377
179-7582	411
	413
179-7586	351
	351.02
179-7590	295
	310
179-7591	310
179-7593	295
	311
179-7594	311
179-7598	296
	296.01
	316
179-7599	316
179-7600	325
	629
	629.01
179-7601	326
	629
	631
179-7602	297
	317
179-7603	317
179-7604	297
	318
179-7605	318
179-7612	389
	393
	395.02
	403.06
179-7618	365
	365.04
	365.08
179-7619	365
	365.04
	365.08
179-7624	419
179-7638	419
179-7662	403.06
	403.08
179-7697	399
	399.04
	399.08
	403
	403.04
	403.04D
	403.06
179-7701	391
	395
	395.04
	399
	399.04
	399.08
	403
	403.04
	403.04D
179-7704	391
	395
	395.04
	399
	399.04
	399.08
	403
	403.04
	403.04D
	403.08
179-7705	391
	395
	395.04
	399
	399.04
	399.08

PART NUMBER INDEX

Part.No	Page	Part.No	Page	Part.No	Page
	403		102		636
	403.04	183-1035	181		637
	403.04D		189	184-8210	223
	403.08	183-1476	635	184-8580	229
179-7706	391		635.01	184-8683	205
	395	183-1499	358		213.02
	395.04		705	184-8817	205
	399	183-1500	707		213.02
	399.04	183-1535	49	184-8822	218
	399.08	183-1536	55	184-8825	221
	403	183-1585	695	184-8833	207
	403.04		699.02		213.04
	403.04D		699.08	184-8838	231
	403.08		699.14	184-8850	229
179-7708	393	183-8098	274		229.02
	397		357	184-8861	231
	399.02		634	184-8862	215
	401		634.01		215.01
	403.02		635	184-8874	205
179-7770	351		635.01		213.02
	351.02		636	184-8898	217
179-7771	351		637	184-8899	218
	351.02	183-8172	15	184-9283	361
179-7871	373	183-8173	15		361.02
	375	183-8179	35	184-9284	361
	377	183-8222	48		361.02
179-7874	411	183-8223	73	184-9285	361
	413	183-8224	73		361.02
179-7875	411	183-8289	274	184-9286	361
	413		280		361.02
179-9618	292		282	184-9336	361
179-9806	291	184-2565	285		361.02
180-3861	187		285.02	184-9390	393
	188		285.04		397
180-7614	243	184-3841	489		399.02
180-7758	657	184-3949	41		401
183-1000	113		45		403.02
	115.02	184-8148	229	184-9551	381
	117		229.02	185-0169	285.02
	119.02	184-8209	223		285.04
	119.06		634	185-0172	285
183-1001	89		634.01		285.02
	91.04		635	185-0347	285
	91.10		635.01	185-0383	361

PART NUMBER INDEX

Part.No	Page
	361.02
185-0400	472
185-0407	500
185-0423	484
	484.01
185-0462	367
	369
	373
	375
	377
	377.02
	377.04
	511
185-0463	511
185-0506	413
	479
185-0518	502
185-0519	502
185-0521	502
185-0522	502
185-0523	502
185-0524	502
185-0525	502
185-0526	502
185-8108	609
	621
185-8109	615
185-8110	615
185-8121	600
185-8122	599
	601
185-8124	599
	600
185-8125	601
185-8126	599
	600
185-8127	601
185-8143	601
185-8161	589
185-8162	589
	590
185-8163	591
185-8169	592
185-8180	541
185-8181	547
	549
185-8182	519
	519.02
	521
	521.02
	523
	523.02
	547
185-8183	547
	549
185-8187	519
	519.02
	521
	521.02
	523
185-8196	537
185-8197	547
185-8205	525
	529
185-8210	549
	552
185-8214	525
	529
185-8218	525
	529
185-8221	547
185-8223	525
	529
185-8257	592
185-8260	592
185-8261	592
185-8262	592
185-8263	592
185-8264	592
185-8265	592
185-8266	592
185-8277	519
	519.02
	521
	521.02
	523
	523.02
185-8278	519
	519.02
	524
	526
185-8279	519
	519.02
	521
	521.02
	523
	523.02
	553
185-8280	537
185-8281	537
185-8284	527
	531
	535
185-8285	592
185-8286	592
185-8287	589
	590
	592
185-8290	557
185-8977	50
185-9050	305
	305.02
185-9051	303
	306.03
	306.05
185-9123	11
	257
185-9124	257
185-9125	257
185-9208	127
185-9209	127
186-1131	695
	699.02
	699.08
	699.14
186-1133	695
	699.02
	699.08

PART NUMBER INDEX

Part.No	Page
	699.14
	707
186-1147	697
	699.04
	699.10
	699.16
186-1149	699
	699.06
	699.12
	699.18
186-1214	699
	699.06
	699.12
	699.18
186-3735	94
	99
	99.02
	107
	107.04
	111
	111.04
	111.08
	115
	115.04
	119
	119.04
	119.08
	122
	123
	123.01
	128.04
	130
	131
	133
	134
	161.05
	161.06
	163
	166
	167.02
	176
	191
	192
	488
	488.02
	625
186-3736	94
	95
	96
	99
	99.02
	115
	115.04
	119
	119.04
	119.08
	133
	134
	144
	146
	152
	161.05
	163
	164
	165
	167
	167.01
186-4574	87
	91.02
	91.08
	128.01
186-4593	162
	358
186-4594	162
	167
186-4603	157
	159
	161
	163
186-5639	243
186-5644	662.01
	665.01
	668.01
187-0661	699
	699.06
	699.12
	699.18
187-6823	447
187-6900	405
	407
	413
187-6904	407
	411
	413
187-6907	407
	411
	413
187-6912	405
	407
	413
187-6913	389
	393
	395.02
	397
	399.02
	399.06
	401
	403.02
	403.04B
187-7002	411
	413
187-7005	411
	413
187-7028	363
	365.02
	365.06
187-7050	363
	365.02
	365.06
187-7073	415
187-7102	419
187-7103	419
187-7171	288
	290
187-7173	387
187-9908	435.01
	435.02
187-9962	340
187-9964	346
187-9966	329
187-9967	645
187-9968	329

PART NUMBER INDEX

Part.No	Page	Part.No	Page	Part.No	Page
	645	189-2862	550	190-5862	79
187-9975	435.01	189-2863	550	190-5863	79
	435.02	189-2864	537	190-5864	79
188-2084	287	189-3394	550	190-5865	79
	287.01	189-3396	537	190-5866	79
188-4142	290	189-3415	560	190-5867	79
	291		611	190-5868	79
188-4143	291	189-3424	556	190-5869	79
188-4145	271		558	190-5870	79
	271.04	189-3426	612	190-5871	79
	290	189-3427	611	190-5872	79
189-0189	488	189-3442	516	190-5873	79
189-2667	586	189-3445	517	190-5874	79
	586.01	189-3446	516	190-5875	79
189-2672	533	189-3451	612	190-5876	79
189-2673	533	189-3452	552	190-5877	79
189-2678	525	189-3453	612	190-5878	79
	529	189-3454	612	190-5880	79
	533	189-3455	611	190-5881	79
189-2690	541	189-3462	560	190-5883	79
189-2693	544	189-3463	560	190-5884	79
189-2694	544		561	190-5885	79
189-2702	554	189-3477	560	190-5886	79
189-2716	544	189-3479	609	190-5887	79
189-2768	519		621	190-5888	79
	519.02	189-3870	650	190-5889	79
	521	189-9763	277	190-5892	79
	521.02		281	190-5893	79
	523		285.04	190-5894	79
	523.02	190-4896	279	190-5895	79
	539		283	190-5896	79
189-2786	442		285	190-5899	79
189-2810	569		285.02	190-5900	79
189-2847	543	190-5386	697	190-5901	79
	545		699.04	190-5902	79
189-2849	543		699.10	190-5903	79
	544		699.16	190-5904	79
189-2851	545	190-5846	273	190-5905	79
189-2853	529		275	190-5906	79
189-2854	529	190-5851	60	190-5907	79
189-2855	525	190-5852	60	190-5908	79
	529	190-5859	77	190-5909	79
189-2856	533	190-5860	79	190-5910	79
189-2861	550	190-5861	79	190-5911	79

PART NUMBER INDEX

Part.No	Page
190-5912	79
190-5913	79
190-5914	79
190-5920	55
	56
190-5921	39
190-7077	213.02
	219
190-7144	216
190-7147	216
190-7150	216
190-7158	55
	216
190-7215	205
	213.02
190-7243	215
	215.01
190-7244	205
	213.02
190-7245	213.02
	219
190-7256	205
	213.02
190-7257	205
	213.02
190-7258	207
190-7259	207
	213.04
190-7674	285
	285.02
	285.04
190-7727	407
	480
190-7733	479
	480
	481
190-7819	501
190-7820	377.02
	486.01
190-7823	448
190-7830	313
	504
190-7831	313
	506
190-7875	489
190-7884	502
191-0862	201.04
191-2543	203
191-2544	239
	241
191-2599	429
191-2600	429
191-2601	429
191-2602	429
191-2603	429
191-2604	429
191-2605	429
191-2607	429
191-2608	429
191-2609	429
191-2610	429
191-2611	429
191-2612	429
191-2613	429
191-2614	429
191-2615	429
191-2619	197
	199.02
	200
191-2620	201
191-2621	201
191-2622	201
191-2623	201
191-2624	201
191-2625	201
191-2626	201
191-2627	201
191-2628	201
191-2629	201
191-2630	201
191-2633	201
191-2656	425
191-2657	425
191-2666	196
	198
191-5723	321
191-5724	321
192-0573	285
	285.04
192-2374	285
192-2376	285
	285.02
	285.04
192-6840	353
192-6963	371
	379
192-8381	11
	244
192-8382	244
192-8384	244
193-2741	39
193-2743	30
193-2744	30
193-2751	82
193-2752	82
193-2753	82
193-2754	82
193-2764	41
193-2765	41
193-2877	43
	49
193-2887	56
	57
193-2888	56
193-2889	56
193-2890	56
193-3409	157
	354
193-3514	160
	357
193-3518	109
193-3520	107
	107.04
	111
	111.04
	111.08
193-3522	111
193-3525	107
	107.04
	111
193-3526	107
	107.04

PART NUMBER INDEX

Part.No	Page
	111
193-3527	107
	107.04
	111
193-3528	107
	107.04
	111
	111.04
	111.08
193-3529	107
	107.04
	111
	111.04
	111.08
193-3531	105
	107.02
193-3533	92
	93
193-3537	161
	165
193-3538	161
	166
193-3550	194
	357.01
193-6489	339
	339.02
	339.04
193-6496	315
	315.01
193-6547	341
193-6548	341
	346
193-6549	341
	346
193-6565	339
	339.02
	339.04
193-9350	222
	222.01
193-9351	222
	222.01
193-9352	222
	222.01
193-9353	222
	222.01
193-9354	222
	222.01
193-9355	222
	222.01
193-9356	222
193-9368	219
193-9379	222
	222.01
193-9387	207
	213.04
193-9431	215
	215.01
193-9449	214
193-9450	214
193-9454	49
	214
193-9455	11
	234
193-9456	234
	237
193-9457	237
193-9712	225
193-9766	231
193-9776	92
	226
	707
193-9793	226
194-0097	353
194-0149	375
194-0183	421
194-0185	421
194-0191	421
194-0192	359
	384
194-0194	49
	420
194-0201	419
194-0202	419
194-0318	363
	365.02
	365.06
194-0319	363
	365.02
	365.06
194-0320	382
194-0321	363
	365.02
	365.06
194-0322	363
	365.02
	365.06
194-0323	363
	365.02
	365.06
194-0324	363
	365.02
	365.06
194-0325	365
	365.04
	365.08
194-0328	365
	365.04
	365.08
194-0333	377.02
194-0381	389
	393
	395.02
	397
	399.02
	399.06
	401
	403.02
	403.04B
	403.06
194-0383	393
	395.02
	397
	399.02
	399.06
	401
	403.02
	403.04B
194-0387	405
194-0391	405
	407
	413
194-0392	405

PART NUMBER INDEX

Part.No	Page
194-8257	321
194-8280	197
	199.02
194-8281	197
	199.02
194-8282	197
	199.02
194-8283	197
	199.02
194-8284	197
	199.02
194-8285	197
	199.02
194-8286	197
	199.02
194-8288	197
	199.02
194-8289	197
	199.02
194-8290	197
	199.02
194-8291	197
	199.02
194-8292	197
	199.02
194-8295	197
	199.02
194-8299	199
	199.04
194-8310	296
	296.01
	628
194-8311	296
	299
194-8312	299
	304
194-8313	305
	305.02
194-8382	321
194-8394	197
194-8400	431
194-8401	431
194-8765	220
194-8937	700
194-8941	11
	706
194-8942	706
194-8943	706
194-8945	11
194-8960	632
194-8988	631
194-8989	296
	296.01
	314
194-9041	351
	351.02
194-9124	314
195-5361	667
	668
195-5408	631
	648
195-5409	648
195-5411	632
	666
195-8366	75
195-8368	75
195-8369	75
195-8372	75
195-8834	85
195-8943	85
196-0456	357
	376
196-0457	356
	374
196-0458	354
	370
196-0460	357.01
	403.05
	403.07
196-0461	357.01
	377.03
196-0463	357
	406
196-0475	412
	633
196-0627	389
	403.06
196-0637	389
	393
	395.02
	403.06
196-0715	361
	361.02
196-0729	313
	313.02
	313.04
196-0730	313
	313.02
	313.04
196-0731	313
	313.02
	313.04
196-0733	407
	413
196-0737	407
	413
196-0882	447
	447.01
196-0919	419
196-0920	419
196-0926	263
196-0927	263
	268
	270
	271.01
	271.03
	271.05
	271.07
196-1420	560
196-1422	560
	561
196-1423	559
196-1427	513
	513.01
	514
	514.01
	515
	515.01
	559
196-1429	49
	627
196-1565	591

PART NUMBER INDEX

Part.No	Page	Part.No	Page	Part.No	Page
196-1569	577	196-8007	63	196-8227	35
	579	196-8009	59	196-8229	35
196-1571	577	196-8010	59	196-8235	75
	579	196-8012	58	196-8236	73
196-1572	577	196-8013	58	196-8238	73
	579	196-8014	58	197-0143	453
196-1577	627	196-8015	58	197-0144	453
196-1578	627	196-8016	64	197-0145	451
196-1599	579	196-8017	36		453
196-1601	585	196-8018	36		455
	585.01	196-8019	32		457
	586	196-8020	31		459
	586.01	196-8021	48	197-0146	457
196-1603	243	196-8026	75	197-0147	457
196-1608	585	196-8031	41	197-0148	460
196-1609	617		45		461
196-1632	607	196-8034	41		462
196-1668	561		45		463
196-1669	561	196-8036	41		464
196-1675	537	196-8037	41		465
196-1687	561		45		466
196-1691	567	196-8038	41		467
196-1703	588		45		468
196-3254	313	196-8072	12		469
	313.02		20	197-0149	460
196-3369	313	196-8125	79		461
	313.02	196-8140	39		462
	313.04		40		463
196-7973	26	196-8141	41		464
196-7975	48	196-8142	41		465
196-7979	12	196-8143	41		466
	22	196-8144	41		467
196-7988	13		45		468
	64	196-8145	41		469
196-7990	12	196-8146	43	197-0150	460
	32		44		461
196-7991	12	196-8147	45		462
	36	196-8148	45		463
196-7994	13	196-8149	45		464
	50	196-8191	35		465
196-7995	13	196-8192	35		466
	48	196-8213	28		467
196-7999	22	196-8215	73		468
196-8001	25	196-8216	73		469

PART NUMBER INDEX

Part.No	Page
197-0151	460
	461
	463
	464
	466
	468
197-0152	462
	469
197-0153	465
	467
197-0156	463
197-0158	467
197-0162	464
197-0165	451
	471
	472
197-0166	457
197-0167	451
197-0168	455
	457
	459
	471
	472
197-0169	453
	455
197-0170	455
	457
	459
	471
	472
197-0173	455
	463
	471
	472
197-0175	455
	467
197-0178	457
	464
197-0196	493
	493.04
	493.06
197-0199	493
	493.04
	493.06
197-0200	354
	355
	357
	449
197-0201	356
	448
197-0210	481
197-0211	459
	466
197-0212	466
197-0213	455
	469
197-0214	469
197-0217	459
	468
197-0218	468
197-0219	457
	459
	460
197-0220	460
197-0223	403.08
	455
	457
	459
	471
	473
197-0225	455
	472
197-0226	472
197-0251	490
	491
197-0270	472
	474
197-0272	451
	453
	457
197-0273	493
	493.04
	493.06
197-0758	490.03
197-2139	512.01
197-2160	324
	359
197-2198	315
	315.01
197-2249	328
	330
	331.01
197-2250	331
197-2251	331
197-2314	339
	339.02
	339.04
197-2315	345
	345.02
197-2316	345
	345.02
197-4276	127
	132
197-4277	132
	133
197-4278	132
	134
197-4330	107
	107.04
	111
	111.04
	111.08
197-4421	182
	628
197-4422	183
	186
197-4423	184
197-4424	185
198-0397	358
	408
	409.01
198-0398	409
	409.02
198-0401	409
	409.02
198-0404	409
	409.02
198-0407	409
	409.02
198-0410	409
	409.02

PART NUMBER INDEX

Part.No	Page
198-0412	409
	409.02
198-0421	332
	628
198-0506	628
198-0507	628
	642
198-0508	643
198-0515	333
198-0519	333
198-0523	333
198-0527	333
198-0531	333
198-0533	333
198-0535	333
198-2120	633
198-2121	633
198-2321	92
198-5719	661
	667
198-5720	661
	667
198-5736	662
	668
198-5737	662
	668
198-5738	660
	661
198-5739	660
	662
198-5740	666
	667
198-5741	666
	668
198-9996	217
199-0040	217
199-0067	207
	213.04
199-0126	205
	213.02
199-0129	205
	213.02
199-0157	215
	215.01
199-0172	211
	213.08
199-0355	69
	69.02
199-0376	205
	213.02
199-0377	205
	213.02
199-0518	277
	281
199-1595	421
199-1598	421
199-1657	407
	411
	413
199-1689	387
199-1802	371
	379
199-1820	411
	413
199-1824	377.02
199-1901	324
199-1954	363
	365.02
	365.06
199-1956	365
	365.04
	365.08
199-2010	365
	365.04
	365.08
199-2013	365
	365.04
	365.08
199-2046	407
	411
	413
199-2055	371
	379
199-2067	371
	379
199-4573	240
	634
	634.01
	635
	635.01
	636
	637
199-7371	693
199-9462	357.01
	704

2

Part.No	Page
200-3254	285
	285.02
200-3255	285
	285.02
	285.04
200-3261	351
	351.02
200-3335	431
200-6637	357.01
201-3870	11.01
	12
	13
201-4391	541
201-4398	585.01
	586
	586.01
201-4417	537
201-4436	594
	602
201-4441	591
201-4530	537
201-4534	577
	579
201-4535	577
	579
201-9271	457
201-9283	505
	505.02
	507
	507.02
	509
	509.02
201-9284	505

PART NUMBER INDEX

Part.No	Page
	507
	509
201-9285	505
	505.02
	507
	507.02
	509
	509.02
201-9286	505
	505.02
	507
	507.02
	509
	509.02
201-9287	505
	505.02
	507
	507.02
	509
	509.02
201-9288	505
	505.02
	507
	507.02
	509
	509.02
201-9289	505
	505.02
	507
	507.02
201-9290	509
	509.02
201-9291	505
	505.02
	507
	507.02
	509
	509.02
201-9292	505
	507
	509
201-9293	505
	505.02
	507
	507.02
	509
	509.02
201-9294	505
	505.02
	507
	507.02
	509
	509.02
201-9295	505
	505.02
	507
	507.02
	509
	509.02
201-9296	505
	505.02
	507
	507.02
	509
	509.02
201-9299	289
	291
201-9330	505
	505.02
	507
	507.02
	509
	509.02
201-9331	505
	505.02
	507
	507.02
	509
	509.02
201-9367	397
	399
	401
	403
	490
201-9376	457
	465
201-9377	465
201-9392	459
201-9393	462
202-3768	383
202-3769	383
202-3772	313
	313.02
	313.04
202-3792	267
	267.04
	271
	271.04
202-3815	310
202-3816	311
202-7138	315
	315.01
	359
202-7139	315
	315.01
202-7140	315
	315.01
202-7142	315
	315.01
202-7144	315
	315.01
202-7146	339
	339.02
	339.04
203-5001	215
	215.01
203-5005	215
	215.01
204-1086	201.04
204-1611	399.02
	399.04
	399.06
	399.08
	403.02
	403.04
	403.04B
	403.04D
204-1709	89
	91.04
	91.10
204-1763	91

PART NUMBER INDEX

Part.No	Page
	91.06
	91.12
	100
204-1810	180
204-1868	91.08
204-1901	91
	91.06
	91.12
204-1911	87
	104
	106
	107.01
	107.03
204-1912	107
	112
	114
204-1913	91.02
	91.08
	93
	108
	110
	111.01
	111.03
	111.05
	111.07
204-1914	111
	116
	118
204-1917	128
	358
204-1919	128.01
	128.03
204-1920	128.01
	128.03
204-1921	128.03
	128.04
204-1922	128.03
	128.04
204-1923	128.01
	128.02
204-1956	128.03
	128.05
204-1957	128.03
	128.05
204-2762	289
	291
204-3716	69
	69.02
204-8546	323
204-8547	323
205-6295	537
205-6782	12
	27
205-6783	27
205-6788	27
205-6810	11.01
	31
205-6811	12
	21
205-6837	12
	15
205-6838	12
	16
205-6839	12
	18
205-6840	12
	25
206-3165	459
	470
206-3220	315
	508
206-3231	359
206-3303	361
	361.02
	434
206-3304	361
	361.02
	435
206-3305	434
	435
	435.01
	435.02
	494
206-3336	443
	445
	446
	501
206-3345	459
	461
206-3346	461
207-0144	555
207-0145	615
	623
207-0216	579
207-2985	279
	283
207-6403	267
	267.04
	271
	271.04
	271.08
207-6404	267
	267.04
	271
	271.04
	271.08
207-6500	386
207-6501	322
	628
208-2008	664
208-2009	664
208-2012	664
	665
208-2016	665
208-2017	665
208-2020	632
	663
208-2021	663
	664
208-2022	663
	665
208-4041	207
208-4044	205
	213.02
208-4075	221
	221.01
208-4316	67
208-4317	67
	68
	69.01
209-2878	708
209-2879	357.01

PART NUMBER INDEX

Part.No	Page
	708
209-5896	296.02
	632
209-5897	296.02
	300.01
209-5898	300.01
	306.02
209-5899	306.03
209-5904	306.03
209-5931	505.02
	507.02
	509.02
209-6002	272
209-6060	199
	199.04
210-5796	585.01
210-5798	593.01
210-5799	593.01
210-5808	537
210-5809	527
	531
	535
210-5827	582
210-5828	582
210-5829	582
210-5834	582
210-5836	582
210-5837	582
210-5838	582
211-6189	699
	699.06
	699.12
	699.18
211-6353	632
212-2837	243
212-5187	357.01
	377.01
212-5228	296.02
	316.01
212-5229	316.01
212-5230	316.01
	316.02
212-8459	12
	26
212-8461	12
	23
212-8462	13
	62
212-8463	13
	63
212-8464	13
	59
212-8465	13
	58
212-8466	12
	34
212-8468	13
	74
212-8469	13
	76
	78
	80
212-8470	13
	82
212-8471	13
	72
212-8472	15
212-8473	15
212-8474	15
212-8475	15
212-8476	15
212-8477	17
212-8478	19
212-8479	19
212-8482	26
212-8483	28
212-8487	62
212-8488	62
212-8489	63
212-8490	59
212-8491	58
212-8492	75
212-8493	75
212-8494	75
212-8495	75
212-8496	75
212-8497	75
212-8499	75
212-8501	75
212-8502	73
212-8509	75
212-8510	25
212-8511	19
212-8514	61
212-8515	61
212-8519	46
212-8523	12
	28
212-8609	82
212-8620	33
212-8622	13
	174
213-0613	161.01
	357.01
213-0614	161.02
	167.01
213-0617	161.02
	167.02
213-0677	28
	265
	267.02
	269
	271.02
	271.06
213-0772	111.04
	111.08
213-0829	107.04
	115.01
	115.03
213-0870	111.02
	111.06
213-0871	111.04
	111.08
213-0872	111.04
	111.08
213-0873	111.04
	111.08
213-9100	176
214-4393	607
	619
214-7915	699.06
	699.12

PART NUMBER INDEX

Part.No	Page
	699.18
215-4872	459
215-4890	399.02
	399.04
	403.02
	403.04
	490.01
215-4909	287.01
	287.02
	477
215-5023	505.02
	507.02
	509.02
215-5037	365.02
	365.06
	493.01
215-5925	358
	592.01
215-5926	592.01
215-5929	592.01
215-5931	630
215-5932	630
	650
215-5933	650
215-5942	349
	630
215-5943	349
215-5945	349
215-5947	349
215-9876	321.01
215-9878	321.01
215-9879	321.01
	321.02
215-9880	321.01
	321.02
216-6534	358
216-6748	194.01
	435.02
216-6749	194.01
	435.01
217-5420	31
217-5429	77
217-5436	77
217-5438	77
217-5439	77
217-5446	77
217-5474	75
217-5491	12
	33
217-5492	33
217-5535	11.01
217-9361	607
217-9362	619
218-0557	281
218-4246	201.04
218-4247	201.04
219-0305	575
	577
219-3149	699
	699.06
	699.12
	699.18
221-5069	363
	365.02
	365.06
221-8859	365.04
	365.08
222-0084	475
	476
222-0085	476
222-0225	438
	439
222-2062	283
222-2063	279
	283
222-8201	19
222-8202	24
222-8212	24
222-8218	79
222-8286	62
222-8330	15
223-3095	69
	69.02
225-0224	285
	285.02
	285.04
225-0225	285
	285.02
	285.04
225-0417	285
	285.02
225-4484	199
	199.04
225-4539	351
	351.02
225-4655	313.02
	313.04
	505.01
225-4656	313.02
	313.04
	507.01
225-4657	315.01
	509.01
225-4804	490.03
225-6216	277
226-3049	331.02
226-3051	331.02
226-3053	339.02
	339.04
227-0620	267.02
	271.02
	271.06
227-6227	425
227-6809	558
227-7567	564
229-0992	431
229-0996	39
229-1007	303
229-1008	303
229-1009	306
	306.01B
	306.03
	306.05
229-1010	305
	305.02
229-1021	417
	421
229-1023	419
229-1044	296.02
	316.02
229-1046	306.05
229-1051	316.02

PART NUMBER INDEX

Part.No	Page
229-1052	316.02
229-1056	631.01
	631.02
229-1057	631.01
	648.01
229-1058	648.01
229-1067	321.02
229-1077	239
	241
	241.01
229-1078	241.01
229-1091	644
	644.01
	645
	647
	648
	648.01
	649
229-1092	661
	662
	662.01
	664
	665
	665.01
	667
	668
	668.01
229-1093	307
	308
	654
	655
	656
229-1094	306
	306.03
229-1095	644
	644.01
	645
	647
	648
	648.01
	649
	661
	662
	664
	665
	667
	668
229-1102	221.01
229-1104	222.01
229-1106	205
	209
	213.02
	213.06
229-1107	205
	209
	213.02
	213.06
229-1108	585.01
229-1114	313.04
229-1131	305.02
229-1410	201.04
230-0362	512
	512.01
230-0363	512
	512.02
230-4013	161.05
232-4102	365.06
	484.01
232-4113	490.01
	490.03
232-4114	490.03
233-1277	21
233-1279	173
	173.02
233-1280	173
	173.02
235-7679	300.02
	300A
	662.01
	665.01
	668.01
235-9014	615
	623
236-3257	267.02
	271.02
	271.06
236-3258	69
	69.02
236-3259	69
	69.02
	267.02
	271.02
	271.06
236-9575	215.01
236-9576	215.01
237-8526	69
	69.02
238-1497	91.08
	103
238-1539	91.08
	99.01
238-2526	111.02
	111.06
239-4376	250.01
239-4413	247.01
	248.01
239-4414	248.01
	250.01
239-4415	250.01
239-6440	77
239-6604	63
239-6656	81
239-6684	13
239-8697	493.01
	493.03
239-8998	493.01
	493.05
244-5336	586.01
	634.01
	635.01
	637
244-5337	586.01
244-5747	699.06
	699.12
	699.18
244-8685	488.01
	488.02
244-8691	488.02
245-9205	39

PART NUMBER INDEX

Part.No	Page
247-5207	85
247-6295	409.02
	488.01
248-7739	229.02
248-7741	213.02
248-7743	213.02
248-7745	213.02
248-7748	69.02
248-7792	227.01
	229.01
248-7793	227.01
248-7799	213.02
248-7802	213.02
	215.01
248-7805	213.04
248-7820	662.01
	665.01
	668.01
248-7821	632.01
	668.01
248-7822	662.01
	668.01
248-7823	662.01
	668.01
248-7824	668.01
248-7835	662.01
	665.01
	668.01
248-7836	662.01
	665.01
	668.01
248-7837	631.01
	662.01
248-7838	662.01
248-7840	632.01
	665.01
248-7841	665.01
248-7843	665.01
248-7844	665.01
248-7854	296.01
	300A
248-7855	300A
	306.01A
248-7856	306.01B
248-7857	306.01B
	306.05
248-7860	296.02
	632.01
248-7861	296.02
	300.02
248-7862	300.02
	306.04
248-7863	306.05
248-7866	296.01
	631.01
	632.01
248-7898	213.01
	213.03
	213.05
	213.07
	213.09
250-0333	683
250-2433	527
	531
	535
250-6367	669.01
250-6368	669.01
	674.01
250-6370	669.01
250-6371	669.01
	674.01
250-6373	670.01
250-6374	670.01
	675.01
250-6376	670.01
250-6377	670.01
	675.01
250-6379	671.01
250-6380	671.01
	676.01
250-6382	671.01
250-6383	671.01
	676.01
250-6385	672.01
250-6386	672.01
	677.01
250-6388	673
250-6389	673
	678
250-6391	672.01
250-6392	672.01
	677.01
250-6393	677.01
	682.01
250-6421	680.01
	682.01
250-6440	679.01
250-6451	680.01
250-6462	679.01
250-6465	679.01
	680.01
	683
250-6478	681.01
250-6481	682.01
250-6487	682.01
	683
250-6492	681.01
251-0161	87
	91.02
	91.08
	94
	95
	96
251-0637	141
251-2627	659
251-2747	629.01
	644.01
251-2748	644.01
251-2750	629.01
	659
251-2843	447.01
251-2864	631.01
251-2866	632.01
251-2869	631.02
	632.01
251-2893	296.01
	299.01
251-2894	299.01
	305.01
251-2895	305.02
251-2922	631.02
251-2977	70

PART NUMBER INDEX

Part.No	Page
251-2978	71
253-1346	251
255-0316	680.01
	681.01
	682.01
255-0317	679.01
	681.01
255-0322	672.01
	673
255-0332	682.01
255-2940	275
255-2966	52
	54
255-2969	81
255-3014	625
255-3193	395.02
	399.06
	403.04B
255-3261	699.10
	699.16
257-4502	699.16
258-0330	577
	579
258-0342	699.10
258-5718	423
258-5721	423
259-0918	272
259-4863	111.04
	119.01
	119.03
259-4883	141
259-5081	141
259-5082	141
259-5274	111.08
	123.01
259-7354	541
260-2037	170
260-2038	169
	170
260-2160	563
	564
262-2355	235
262-9384	537
266-6210	19
267-6744	425
267-6786	425
267-6824	199.01
	199.03
267-7596	111.08
	119.09
267-7631	111.08
	119.05
	119.07
267-8084	431.02
268-4201	285.02
	285.04
268-4202	285.04
268-4203	285.02
	285.04
268-5166	213.04
268-8209	488.02
270-5497	168.01
	169
270-5501	170.03
270-5559	170.03
272-4330	415
272-4774	13
	173.01
273-5274	547
273-5301	589
273-5302	589
273-5323	609
	621
273-5324	609
	621
273-5325	609
	621
273-5326	609
	621
273-5327	609
	621
273-5328	609
	621
273-5329	609
	621
273-5330	609
273-5331	609
273-5332	621
273-5345	547
	551
273-5346	547
	551
273-8315	283
273-8316	285
	285.02
	285.04
273-8317	285
	285.02
	285.04
273-8318	285
	285.02
	285.04
273-8320	279
	283
274-2700	199.02
275-2811	674.01
	679.01
275-2816	674.01
	679.01
275-2821	675.01
	680.01
275-2827	675.01
	680.01
275-2832	676.01
	681.01
275-2837	676.01
	681.01
275-3667	605
275-6785	161.05
275-6786	161.05
278-1585	605
278-1980	201.04
278-6920	201.01
	201.03
279-7606	168.01
	170.02
279-7628	170.03
279-7631	170.03
279-7694	161.04
279-7750	173.02
279-7787	63
279-7859	22

PART NUMBER INDEX

Part.No	Page
282-5894	335
	337
	512.03
282-8602	277
	281
282-9192	277
	281
283-2824	161.03
	168.01
283-2871	161.04
	161.06
283-2873	161.04
	161.05
283-3074	127
283-8801	168.01
283-8827	699.12
283-9074	699.16
283-9075	699.16
284-4426	537
284-4566	590
284-4567	591
286-6573	395.02
	399.06
	403.04B
286-6921	213.04
287-0139	77
287-0221	71.01
287-0222	71.01
287-0223	71.01
287-0224	71.01
287-0225	71.01
287-0226	71.01
287-0227	71.01
287-0228	71.01
287-0229	71.01
287-0230	71.01
287-0231	71.01
289-5279	327
	631.01
289-7836	287
	287.02
289-8194	271.08
	286.01
289-8195	286.01
290-1729	699.16
290-1906	699.16
291-9334	699.08
292-7461	271.08
293-1183	611
293-1184	611
293-1302	513.01
	516.01
	519.01
293-1305	515.01
	517
	523.01
293-1306	514.01
	516.01
	521.01
293-1308	516.01
293-1311	517
293-1312	516.01
294-1855	173.02
294-1856	173.02
294-1857	173.02
294-1858	173.02
296-7308	415
297-0370	399.06
	399.08
	403.04B
	403.04D
	490.02
297-7662	20
297-7750	23
297-7754	23
297-7755	23
297-7807	60
298-2942	215.01
	217
	218
298-4195	577
298-4196	575
298-5732	279
	283
	431.02
299-2917	91.12

3

Part.No	Page
301-2432	699.16
301-2450	699.13
	699.15
	699.17
301-6874	285.04
301-8294	285.04
302-1688	201.01
302-9179	201.01
	431.01
305-0361	554
305-0367	609
305-0398	598
	603
305-1578	677.01
	682.01
305-1579	678
	683
309-5705	170.01
309-5706	170.01
	170.03
309-5707	169
	170.01
309-5768	361.02
309-5769	367
	369
	373
	375
	377
	377.02
	377.04
	382
310-9621	52
	54
310-9622	52
	54