CCRP5370-23 (en-us)
June 2018

RUTHZIL TRATOR COMERCIAL DE PEÇAS LTDA 11 97083-6812 ROLANDO

Parts Manual

312D Excavator

DLP1-UP (Machine)
JKH1-UP (Engine)

Powered By C4.2 Engine

Product and Dealer Information

Note: For product identification plate locations, see the section “Product Identification Information” in the Operation and Maintenance Manual.

Delivery Date: _____

Product Information

Model: _____

Product Identification Number: _____

Engine Serial Number: _____

Transmission Serial Number: _____

Generator Serial Number: _____

Attachment Serial Numbers: _____

Attachment Information: _____

Customer Equipment Number: _____

Dealer Equipment Number: _____

Dealer Information

Name: _____ Branch: _____

Address: _____

_____

_____

	Dealer Contact	Phone Number	Hours
Sales:	_____	_____	_____
Parts:	_____	_____	_____
Service:	_____	_____	_____

MEMORANDA

TABLE OF CONTENTS

NAME	PAGE
GENERAL INFORMATION	A5
REPAIR ALTERNATIVES	A8
SUPPLEMENTAL COOLANT ADDITIVES	A9
MAINTENANCE PARTS	A10
INDEX	A15
MACHINE ARRANGEMENT	1
CHASSIS AR	1
DISTRIBUTION AR	1
GENERAL AR	4
INSTALLATION AR-BLADE	5
OPTION AR-CAB	6
OPTION AR-GUARD	7
OPTION AR-HYDRAULIC	8
OPTION AR-LIGHTING	9
OPTION AR-REGIONAL	9
OPTION AR-WORK TOOL	11
ENGINE ARRANGEMENT	12
ENGINE AR	12
ENGINE AR-COMPLETE	14
INSTALLATION AR-ENGINE	15
BASIC ENGINE	16
CAMSHAFT GP	16
COVER GP-VALVE MECHANISM	17
CRANKSHAFT GP	19
CYLINDER BLOCK GP	20
CYLINDER HEAD AS	25
CYLINDER HEAD GP	26
FLYWHEEL GP	27
GEAR GP-FRONT	28
HOUSING GP-FLYWHEEL	29
HOUSING GP-FRONT	30
MOUNTING GP-ALTERNATOR	32
MOUNTING GP-ENGINE	33
MOUNTING GP-STARTING MOTOR	35
PAN GP-OIL	36
PISTON & ROD GP	38
PULLEY AS-IDLER	40
PULLEY GP-FAN & ALT DRIVE	41
PULLEY GP-IDLER	43
VALVE MECHANISM GP	45
LUBRICATION SYSTEM	47
ADAPTER GP-REMOTE OIL FILTER	47
BREATHER GP	48
FILTER & MTG GP-ENGINE OIL	49
LINES GP-ENGINE OIL	53
LINES GP-TURBOCHARGER OIL	54
COOLING SYSTEM	55
COOLER GP-ENGINE OIL	55
COOLING AR-HIGH AMBIENT TEMP	56
FAN GP-SUCTION	57
HOUSING & REGULATOR GP	58
PUMP GP-WATER	60
RADIATOR & HYD OIL COOLER GP	62
AIR INLET AND EXHAUST SYSTEM	78
AIR CLEANER & MOUNTING GP	78
AIR CLEANER GP	79
DRAIN GP-MUFFLER	82
LINES GP-AIR	83
MANIFOLD GP-EXHAUST	85
MANIFOLD GP-INLET	86
MUFFLER GP	87
PRECLEANER AR	89
TURBOCHARGER GP	90
FUEL SYSTEM	92
CAP GP-FUEL FILLER	92
FILTER GP-FUEL	93
FILTER GP-WATER SEP & FUEL	102
INJECTOR GP-FUEL	103
KIT-FUEL PRIMING PUMP	104
LINES GP-FUEL	105
LINES GP-FUEL INJECTION	109
PUMP & MTG GP-FUEL INJECTION	111
PUMP AR-FUEL TRANSFER	113
PUMP GP-FUEL INJECTION	114
PUMP GP-FUEL PRIMING	117
PUMP GP-FUEL TRANSFER	118
TANK & MTG AR-FUEL	123
TANK & MTG GP-FUEL	124
TANK GP-FUEL	132
VALVE GP-FUEL SHUTOFF	154
ELECTRICAL AND STARTING SYSTEM	155
ALARM GP	155
ALARM GP-TRAVEL	156
ALTERNATOR GP-CHARGING	157
BATTERY & WIRING GP	159
BATTERY GP	179
BLOCK GP-JUNCTION	180
CAMERA & MOUNTING GP	181
CAMERA & WIRING GP	184
CAMERA GP	185
CONTROL & MTG GP-COMMUNICATION	186
CONTROL & MTG GP-ENGINE ELEK	187
CONTROL & MTG GP-MACHINE	188
CONTROL AR-COMMUNICATION	189
CONTROL GP-COMMUNICATION	189
CONTROL GP-UNPROGRAMMED	190

TABLE OF CONTENTS

NAME	PAGE
ELECTRONICS GP-MACHINE	191
ELECTRONICS GP-MONITOR	191
FASTENER GP-WIRING HARNESS	192
HARNESS AS-CONTROL	197
HARNESS AS-PANEL	197
HARNESS AS-PUMP	198
INSTALLATION GP-SECURITY	199
KIT-LIGHTING	201
LAMP GP-FLOOD	202
LIGHTING GP-FLOOD	206
MOUNTING GP-ELECTRONIC CONTROL	218
PANEL & MTG GP-CIRCUIT BREAKER	219
PANEL GP-CIRCUIT BREAKER	221
PANEL GP-SWITCH	233
SENSOR GP-ENGINE	247
SENSOR GP-LIQUID LEVEL	249
SENSOR GP-PRESSURE	253
STARTING AR-COLD WEATHER	254
STARTING MOTOR GP-ELECTRIC	255
SWITCH GP-DISCONNECT	257
SWITCH GP-MAGNETIC	258
SWITCH GP-ROTARY	262
SWITCH GP-START	264
SWITCH GP-TOGGLE	266
SWITCH GP-WIPER	268
WIRING GP-CAB	269
WIRING GP-CAMERA	285
WIRING GP-COMMUNICATION	287
WIRING GP-CONSOLE	293
WIRING GP-CONTROL	298
WIRING GP-CONVERTER	300
WIRING GP-ELECTRONIC CONTROL	303
WIRING GP-FUEL PUMP	308
WIRING GP-HEATER	309
WIRING GP-HYDRAULIC CONTROL	310
WIRING GP-MEDIUM PRESSURE	311
WIRING GP-PLATFORM	313
WIRING GP-QUICK COUPLER	316
POWER TRAIN	317
DRIVE GP-FINAL	317
MOTOR GP-TRAVEL	332
POWER TRAIN AR	336
SPROCKET GP	337
FRAME AND BODY	338
BOX & MTG GP-STORAGE	338
BOX GP-STORAGE	339
BUMPER GP	341
COUNTERWEIGHT & MOUNTING GP	342
COUNTERWEIGHT AR	344
COUNTERWEIGHT GP	345
COVER AS-ACCESS	359
COVER GP-ACCESS	361
DOOR & MTG GP-ACCESS	365
DOOR AS-ACCESS	369
DOOR GP-ACCESS	373
ENCLOSURE GP-ENGINE	396
FENDER & COVER GP	398
FRAME GP-UPPER	400
GEAR & BEARING GP-SWING	406
GUARD GP-BOTTOM	419
GUARD GP-SWIVEL	422
HANDRAIL GP	423
HOOD & GUARD GP	424
HOOD AS-ENGINE	425
HOOD GP-ENGINE	426
KIT-GUARD	428
SHEET AS-SOUND SUPPRESSION	429
STEP GP	432
STORAGE GP-VANDALISM GUARD	435
SUPPORT AS-ENCLOSURE	436
UNDERCARRIAGE	437
FRAME AR-UNDERCARRIAGE	437
FRAME AS-UNDERCARRIAGE	438
GUARD GP-TRACK GUIDE	443
GUARD GP-TRAVEL MOTOR	444
IDLER GP-FRONT	446
LINK AS-TRACK	450
ROLLER AR-TRACK & CARRIER	451
ROLLER GP-TRACK CARRIER	452
ROLLER GP-TRACK-SINGLE FLANGE	453
TRACK ADJUSTER & RECOIL GP	454
TRACK GP	458
HYDRAULIC SYSTEM	460
ACCUMULATOR GP-HYDRAULIC	460
CONTROL AR-AUXILIARY	468
CONTROL AR-COUPLER	471
COUPLING GP-FLEXIBLE	472
COUPLING GP-PUMP	474
CYLINDER & LINES GP-BLADE	476
CYLINDER & LINES GP-BOOM	477
CYLINDER & LINES GP-BUCKET	479
CYLINDER & LINES GP-STICK	479
CYLINDER & SEAL GP-BLADE	480
CYLINDER & SEAL GP-BOOM	488
CYLINDER & SEAL GP-BUCKET	492
CYLINDER & SEAL GP-STICK	493
CYLINDER GP-BLADE	497
CYLINDER GP-BOOM	505
CYLINDER GP-BUCKET	511
CYLINDER GP-COUPLER	513
CYLINDER GP-STICK	517
DRIVE GP-SWING	521
FASTENER GP-SWING & FINAL DR	529

TABLE OF CONTENTS

NAME	PAGE
FILTER & VALVE GP-PILOT	530
FILTER AR-HYDRAULIC	531
FILTER ELEMENT-OIL	532
FILTER GP-OIL	533
FITTING GP-HYDRAULIC	539
GAUGE GP-SIGHT	540
HEAD GP-PUMP	542
HYDRAULIC AR	545
LEVER GP-CONTROL	546
LINES AR-AUXILIARY HYDRAULIC	547
LINES AR-QUICK COUPLER	548
LINES GP-AUXILIARY HYDRAULIC	549
LINES GP-BLADE	561
LINES GP-BLADE CYLINDER	563
LINES GP-BOOM	569
LINES GP-BOOM CYLINDER	573
LINES GP-BUCKET CYLINDER	582
LINES GP-COUPLER	583
LINES GP-FRONT	598
LINES GP-HYDRAULIC	630
LINES GP-HYDRAULIC OIL COOLER	635
LINES GP-PILOT	638
LINES GP-PUMP	734
LINES GP-STICK	742
LINES GP-STICK CYLINDER	743
LINES GP-TRAVEL MOTOR	745
MANIFOLD GP-CONTROL	747
MOTOR GP-SWING	750
MOTOR GP-TRAVEL	752
MOUNTING GP-MAIN CONTROL VALVE	757
PUMP & MTG GP-AUXILIARY	758
PUMP & MTG GP-MAIN HYDRAULIC	760
PUMP GP-GEAR	761
PUMP GP-MAIN HYDRAULIC	762
SCREEN GP-HYDRAULIC	767
SPOOL GP-CONTROL VALVE	768
SUPPORT GP-LINES	783
SWIVEL GP	785
TANK & FILTER GP-HYDRAULIC	788
TANK & MTG GP-HYDRAULIC	794
VALVE & MTG GP-AUXILIARY	795
VALVE & MTG GP-CONTROL	796
VALVE AR	798
VALVE AR-ALT PATTERN CONTROL	798
VALVE GP-BANK	799
VALVE GP-CHECK	801
VALVE GP-CONTROL	802
VALVE GP-MAIN CONTROL	807
VALVE GP-MANUAL	825
VALVE GP-PILOT	826
VALVE GP-PRESSURE REDUCING	836
VALVE GP-RELIEF	839
VALVE GP-SELECTOR	843
VALVE GP-SHUTTLE	845
VALVE GP-SOLENOID	850
VALVE GP-SOLENOID & MANIFOLD	858
VALVE GP-SOLENOID & PRESS REDC	859
VALVE GP-SOLENOID & RELIEF	860
VALVE GP-TRAVEL COUNTERBALANCE	863
IMPLEMENTS	867
BOOM AR-1 PIECE LONG	867
BOOM GP	868
GUARD GP-CYLINDER	874
LINES GP-GREASE	876
LINKAGE AR-BUCKET	877
LINKAGE GP-BUCKET	878
STICK AR-HOE	884
STICK GP-HOE	885
WORK TOOLS	888
ADJUSTER GP-BUCKET	888
BLADE & MOUNTING GP	889
BLADE GP-STRAIGHT	892
BUCKET & ADJUSTER GP	894
BUCKET AR	898
BUCKET AR-GENERAL PURPOSE	899
BUCKET AR-HEAVY DUTY ROCK	901
BUCKET AR-SEVERE SERVICE ROCK	901
BUCKET AS-GENERAL PURPOSE	902
BUCKET AS-HEAVY DUTY ROCK	905
BUCKET AS-SEVERE SERVICE ROCK	909
BUCKET GP-HOE	910
BUCKET GP-UTILITY	913
COUPLER AR-QUICK	914
COUPLER GP-QUICK	915
PIN GP-COUPLER	923
SIDECUTTER GP	924
TIP GP-LONG	926
TIP GP-PENETRATION PLUS	928
OPERATOR STATION	929
ADJUSTER GP-SEAT	929
AIR CONDITIONER & MOUNTING GP	931
AIR CONDITIONER AR	935
AIR CONDITIONER GP	936
ARMREST GP	941
BRACKET GP-MIRROR	943
BRACKET GP-MOUNTING	944
CAB GP	945
COIL GP-EVAPORATOR	1000
COMPRESSOR GP-REFRIGERANT	1004

TABLE OF CONTENTS

NAME	PAGE
CONDENSER & MTG GP-REFRIGERANT	1007
CONDENSER GP-REFRIGERANT	1012
CONSOLE GP-OPERATOR	1013
CONTROL & MOUNTING GP	1023
CONTROL & MTG GP-JOYSTICK	1025
CONTROL & MTG GP-PEDAL	1028
CONTROL GP-BLADE	1029
CONTROL GP-HANDLE	1030
CONTROL GP-HEAT & AIR COND	1037
CONTROL GP-JOYSTICK	1038
CONTROL GP-PEDAL	1044
CONTROL GP-PILOT OPERATED HYD	1045
COVER GP-CAB	1046
COVER GP-STORAGE	1047
DOOR & MTG GP-CAB	1048
DOOR GP-CAB	1050
DUCT GP-CAB AIR	1054
FLOOR MAT	1055
GUARD AR-OVERHEAD	1058
GUARD AR-VANDALISM	1058
GUARD GP-FRONT WINDOW	1059
GUARD GP-OVERHEAD	1066
GUARD GP-VANDALISM	1070
HATCH GP-ROOF	1072
HEADREST AS-SEAT	1075
HEATER & MTG GP-CAB	1078
HEATER AR-CAB	1080
HORN GP-ELECTRIC	1081
INSTALLATION AR	1083
INSTALLATION GP-RADIO	1084
KIT-MIRROR	1086
KIT-OVERHEAD GUARD	1086
KIT-SEAT	1087
KIT-SEAT SUPPORT	1089
KIT-SEAT TILT	1091
KIT-WINDOW GUARD	1091
LATCH GP-WINDOW	1092
LEVER GP-CAB DOOR	1093
LINES GP-AIR CONDITIONER	1094
LINES GP-HEATER	1098
LITERATURE GP	1101
MIRROR GP	1102
MIRROR GP-DOWN VIEW	1103
MIRROR GP-REAR VIEW	1108
MONITOR & MTG GP-OPERATOR	1118
MONITOR GP-OPERATOR	1120
MOUNTING GP-ANTENNA	1122
MOUNTING GP-MIRROR	1124
MOUNTING GP-PLATFORM	1126
OPERATOR AR	1128
PARTS GP-DOOR	1130
PEDAL AR-AUXILIARY	1132
PLATFORM GP-OPERATOR	1133
RADIO GP	1134
SCREEN GP-SUN	1138
SEAT & MOUNTING GP	1139
SEAT BELT GP	1145
SEAT GP	1155
SEAT GP-SUSPENSION	1161
SUPPORT GP-SEAT	1166
SUSPENSION GP-SEAT	1167
VISOR GP-CAB	1173
WASHER GP-WINDOW	1174
WINDOW GP-CAB	1177
WINDOW GP-DOOR	1187
WIPER & WASHER GP-WINDOW	1189
WIPER AR-WINDOW	1191
WIPER GP-WINDOW	1192
SERVICE EQUIPMENT AND SUPPLIES	1194
FILM GP	1194
PLATE & FILM GP	1210
PART NUMBER INDEX	B1

1. MACHINE IDENTIFICATION

Cat machines are identified by Product Identification Numbers (PIN). Some components included in a machine may be identified by Serial Numbers (S/N). Typical components that will be serialized include engines, transmissions, bulldozers, and rippers. The machine and engine are further identified by arrangement numbers and in some cases modification numbers. These numbers are shown on the product identification plate(s) and on the master plate in the operator's compartment.

Cat dealers need all of these numbers to determine accurate parts identification.

Effective First Quarter 2001 the Cat Product Identification Number (PIN) changed from 8 to 17 characters. In an effort to provide uniform equipment identification, Caterpillar and other construction equipment manufacturers are moving to comply with the latest version of the product identification numbering standard. Non-road machine PINs are defined by ISO 10261. The new PIN format will apply to all Cat machines and generator sets. The PIN plates and frame marking will display the 17 character PIN. The new format will look like the following:

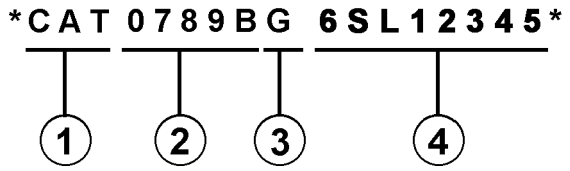

Where:

1. Caterpillar's World Manufacturing Code (characters 1-3)

2. Machine Descriptor (characters 4-8)

3. Check Character (character 9)

4. Machine Indicator Section (MIS) or Product Sequence Number (characters 10-17). These were previously referred to as the Serial Number.

Machines and generator sets produced before First Quarter 2001 will maintain their 8 character PIN format.

Components such as engines, transmissions, axles, etc. and work tools will continue to use an 8 character Serial Number (S/N).

2. ORDERING PARTS

⚠ WARNING

When replacement parts are required for this product Caterpillar recommends using Caterpillar replacement parts or parts with equivalent specifications including, but not limited to, physical dimensions, type, strength and material.

Failure to heed this warning can lead to premature failures, product damage, personal injury or death.

Quality Cat replacement parts are available from Cat dealers throughout the world. Their parts inventories are up to date and include all parts normally required to protect your investment in Cat machines. Dealers may offer repair kits or remanufactured parts to allow selection of the most effective repair alternative for a particular situation. When ordering parts, your order should specify the quantity, part number, part name, and the serial number/product identification number of the machine for which the parts are needed.

3. PARTS MANUAL ORGANIZATION

Product information in this manual is presented as "information elements" that represent all of the components for the specific model. Engine Arrangement and Seat Group are examples of information elements. The information elements are organized alphabetically by part name and secondarily by part number within each major section of the manual.

4. TABLE OF CONTENTS

A table of contents (TOC) is found at the beginning of the manual. The TOC lists each section of the manual with a complete list of all information elements organized as they appear in the manual. Page numbers are provided for quick reference to detailed parts identification illustrations and serviceable consist lists.

5. MAINTENANCE PARTS INDEX

The Maintenance Parts Index, located near the beginning of the manual, references most frequently used maintenance part numbers, providing description, quantity, usage and page number. This information is organized alphabetically by part description.

6. INDEX

The index located near the front of the manual is an alphabetical listing of all information elements included in the manual. Page numbers are provided for quick reference to detailed parts identification illustrations and serviceable consist lists.

7. PART NUMBER INDEX

A numerical index listing all part numbers and the corresponding page number(s) appears at the back of the manual.

8. CAPTIONS

Captions located at the beginning of each information element identify the part number and part name along with additional descriptive information. PIN and S/N information found in each caption should be used to select correct information for a specific machine. Field replacement options, identification of optional attachment components, and where used ("part of") information is also provided.

The first line of a caption is shown in larger type font to indicate the beginning of an information element. Captions for additional pages that may be required to illustrate an information element will be shown in standard type font and will include the term (contd.).

9. NON-SERVICED PARTS

In some instances it is necessary to display non-serviced parts that are a link to a lower level serviceable consist lists. These non-serviced part numbers are shown in italic type indicating that they are not available.

10. PARTS LIST REFERENCE NUMBERS

Numbers shown in the Ref No column correspond to numbers used in the associated graphic(s). An alphabetic suffix may be added to a reference number to identify lower level consist items. Numbers shown in the Graphic Ref column refer to the graphic number identifier displayed in the lower left corner of each illustration. The Graphic Ref number may be used in combination with the item Ref No to determine the correct part number. There may be intentional omission of a Ref No in a consist list as information is updated to reflect the latest serviceable part numbers.

11. INDENTED PART NAMES

When a part name is indented in a parts list, it is part of (included in) the group or assembly under which it is indented.

12. ILLUSTRATION REFERENCE LETTERS

When necessary, illustrations contain reference letters (A, B, C etc.) that are intended to track lines and harnesses from one point to another. They are also used to show where to reconnect illustrations that have been separated.

13. ABBREVIATIONS AND SYMBOLS

O.D. – Outside Diameter
I.D. – Inside Diameter
A – Not Part Of This Group
B – Use As Required
C – Change From Previous Type
D – Order By The Meter
E – Order By The Centimeter
F – Not Shown
G – Order By The Inch
I – Refer To Hydraulic Information System
M – Metric Part
R – Remfg Part May Be Available
Y – Separate Illustration
Z – Not Serviced Separately

14. DESCRIPTION OF TYPE CHANGES

Type - A type is defined as any configuration change that requires an additional Information Element for an Arrangement, Group, or Assembly. If serial number breaks for types are not available, a type # (Type 1, Type 2, etc.) will be displayed in the caption. These "type" changes are identified with a "C" note (change from previous type) in the Parts List. Only the "types" that apply to this Parts Manual will be included. Additional types may exist causing "C" notes to appear on an Information Element when no other types are shown.

15.<END>

This symbol indicates the end of an information element.

NOTE:

Continuing improvement and advancement of product design may cause changes to your machine which may not be included in this publication. Whenever a question arises regarding your Cat product or this publication, please consult your Cat dealer for the latest available information.

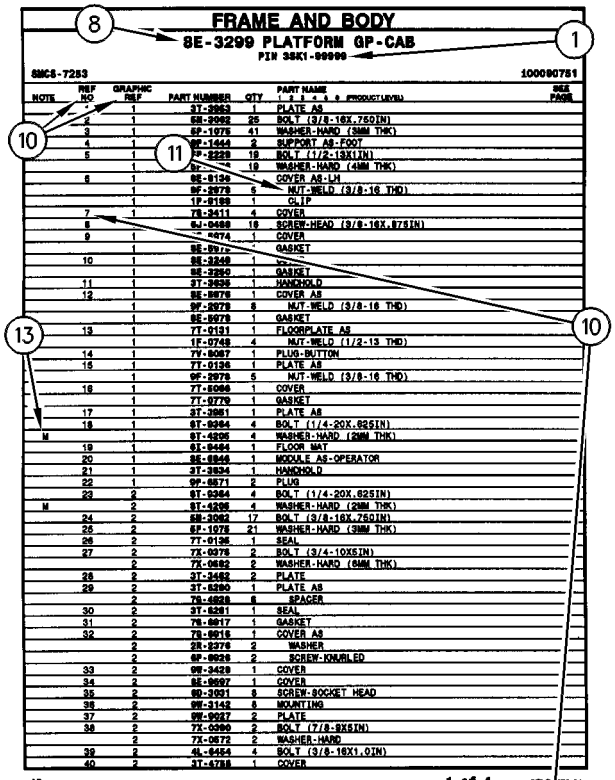

NOTE	REF NO	GRAPHIC REF	PART NUMBER	QTY	PART NAME (1 2 3 4 5 6 PRODUCT LEVEL)	SEE PAGE
	1	1	3T-3963	1	PLATE AS	
	2	1	5H-2062	25	BOLT (3/8-16X.750IN)	
	3	1	6P-1075	41	WASHER-HARD (3MM THK)	
	4	1	9F-1444	2	SUPPORT AS-FOOT	
	5	1	5P-2229	19	BOLT (1/2-13X1IN)	
		1	9J-[illegible]	19	WASHER-HARD (4MM THK)	
	6	1	9E-8134	1	COVER AS-LH	
		1	8F-2979	6	NUT-WELD (3/8-16 THD)	
		1	1F-8188	1	CLIP	
	7	1	7S-2411	4	COVER	
	8	1	5J-0468	19	SCREW-HEAD (3/8-16X.87SIN)	
	9	1	[illegible]074	1	COVER	
		1	9E-8[illegible]	1	GASKET	
	10	1	9E-3248	1	[illegible]	
		1	9E-3250	1	GASKET	
	11	1	3T-3830	1	HANDHOLD	
	12	1	9E-8078	1	COVER AS	
		1	9F-2979	6	NUT-WELD (3/8-16 THD)	
		1	9E-8079	1	GASKET	
	13	1	7T-0131	1	FLOORPLATE AS	
		1	1F-0748	4	NUT-WELD (1/2-13 THD)	
	14	1	7V-8067	1	PLUG-BUTTON	
	15	1	7T-0136	1	PLATE AS	
		1	9F-2978	5	NUT-WELD (3/8-16 THD)	
	16	1	7T-8066	1	COVER	
		1	7T-0779	1	GASKET	
	17	1	3T-3951	1	PLATE AS	
	18	1	9T-8364	4	BOLT (1/4-20X.62SIN)	
M		1	9T-4236	4	WASHER-HARD (2MM THK)	
	19	1	6I-8464	1	FLOOR MAT	
	20	1	9E-8846	1	MODULE AS-OPERATOR	
	21	1	3T-3834	1	HANDHOLD	
	22	1	9P-8571	2	PLUG	
	23	2	9T-8364	4	BOLT (1/4-20X.62SIN)	
M		2	9T-4236	4	WASHER-HARD (2MM THK)	
	24	2	5H-2062	17	BOLT (3/8-16X.750IN)	
	25	2	6P-1078	21	WASHER-HARD (9MM THK)	
	26	2	7T-0136	1	SEAL	
	27	2	7X-0378	2	BOLT (3/4-10X5IN)	
		2	7X-0682	2	WASHER-HARD (6MM THK)	
	28	2	3T-3482	2	PLATE	
	29	2	3T-8280	1	PLATE AS	
		2	7S-4828	6	SPACER	
	30	2	3T-8281	1	SEAL	
	31	2	7S-8017	1	GASKET	
	32	2	7S-8016	1	COVER AS	
		2	2R-2376	2	WASHER	
		2	6P-8626	2	SCREW-KNURLED	
	33	2	9W-3429	1	COVER	
	34	2	8E-8697	1	COVER	
	35	2	9D-3091	8	SCREW-SOCKET HEAD	
	36	2	9W-3142	8	MOUNTING	
	37	2	9W-9527	2	PLATE	
	38	2	7X-0390	2	BOLT (7/8-9X6IN)	
		2	7X-0672	2	WASHER-HARD	
	39	2	4L-8454	4	BOLT (3/8-16X1.0IN)	
	40	2	3T-4788	1	COVER	

12 FRAME AND BODY

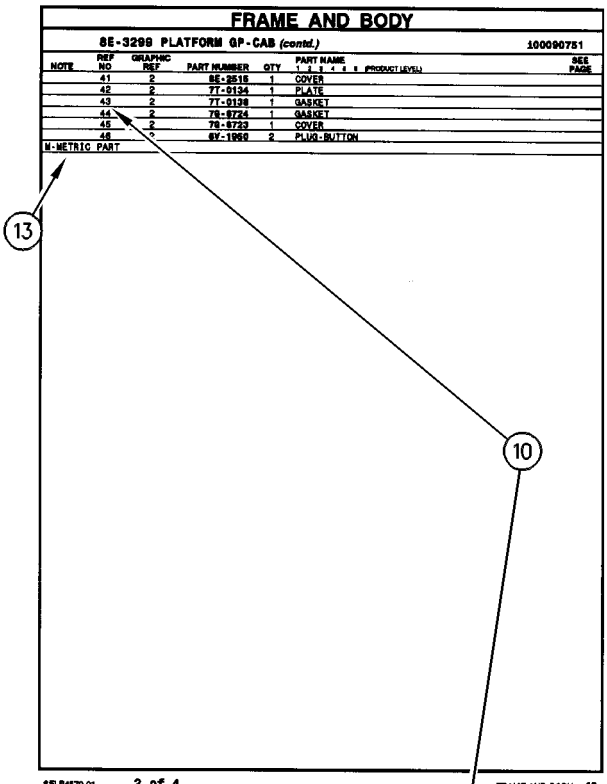

NOTE	REF NO	GRAPHIC REF	PART NUMBER	QTY	PART NAME (1 2 3 4 5 6 PRODUCT LEVEL)	SEE PAGE
	41	2	8E-2515	1	COVER	
	42	2	7T-0134	1	PLATE	
	43	2	7T-0128	1	GASKET	
	44	2	7S-8724	1	GASKET	
	45	2	7S-8723	1	COVER	
	46	2	6V-1960	2	PLUG-BUTTON	
M-METRIC PART						

FRAME AND BODY 13

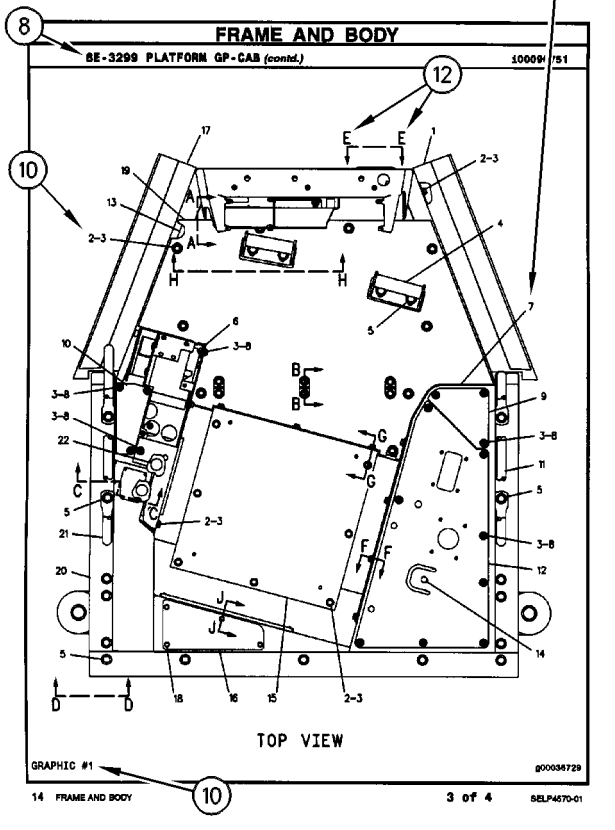

14 FRAME AND BODY

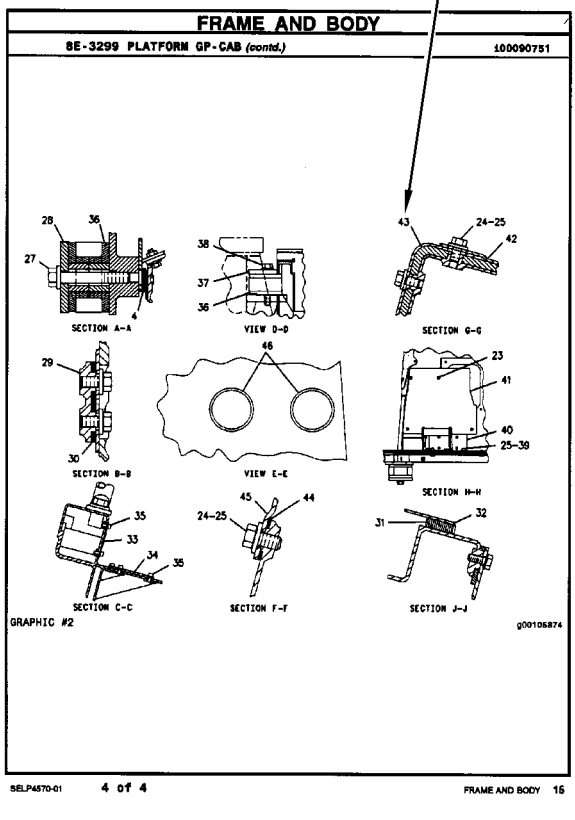

FRAME AND BODY 15

REMANUFACTURED COMPONENTS

As an option when making repairs consider Cat Remanufactured Components. Components that are available through the Cat Remanufactured Program are identified three ways in the parts book:

- with the letter R in the note field of the parts list
- with an R* at the beginning of the first line of the caption
- with an *R at the end of the first line of the caption

Typical components included in the Remanufacturing Program include:

ALTERNATORS
CONNECTING RODS
CRANKSHAFTS - UNDERSIZE
CRANKSHAFTS - UPGRADE TO NEW
CYLINDER HEADS
ELECTRONIC CONTROL MODULES (ECM)
ELECTRONIC SENSORS
FUEL INJECTORS
FUEL NOZZLES
FUEL PUMPS
GOVERNORS
OIL PUMPS
PISTONS
SHORT BLOCKS
STARTERS
TURBOCHARGERS - COMPLETE
TURBOCHARGER CARTRIDGES
WATER PUMPS

Cat Remanufactured engines for many engine arrangements are also available.

SUPPLEMENTAL COOLANT ADDITIVES

CUSTOMER BENEFITS:

Protects against cavitation, foam, erosion, corrosion, and scale buildup in cooling systems.

- Provides measured coolant conditioner.

DESCRIPTION:

Additives deplete from the coolant with normal operation. For this reason, Supplemental Coolant Additives (SCA) must be added to all heavy duty coolants at regular intervals. In addition, when not using a fully formulated, pre-charged antifreeze, like Cat DEAC, an initial charge of SCA must be added to the cooling system. The amount of SCA added to the system is dependent on the capacity of the system.

The SCA for initial fill is provided as a liquid. SCA's for maintenance intervals are available in liquid form and as a spin-on element. (No Spin-on available for 3600 Family of Engines)

NOTE:

The amount of SCA added at initial fill is not the same as the amount added at maintenance intervals.

The coolant additive elements can be used with any ethylene or propylene glycol type antifreeze which meets ASTM D4985 or ASTM D5345 Specifications.

NOTE:

For use with standard heavy duty coolant only, not for use with Extended Life Coolant.

PARTS NEEDED:

Cooling System Capacity		Liquid SCA at Initial Fill	Liquid SCA at Maintenance*	Spin-on SCA Maintenance Element*
Liters	Gallons			
22-30	(6-8)	3P-2044 (1)	6V-3542 (1)	111-2370 (1)
30-38	(8-10)	3P-2044 (1) 6V-3542 (1)	111-2372 (1)	111-2369 (1)
38-49	(10-13)	3P-2044 (1) 8T-1589 (1)	111-2372 (1)	111-2369 (1)
49-64	(13-17)	3P-2044 (2)	8T-1589 (1)	9N-3368 (1)
64-83	(17-22)	3P-2044 (2) 8T-1589 (1)	111-2372 (1) 6V-3542 (1)	111-2371 (1)
83-114	(22-30)	3P-2044 (3) 8T-1589 (1)	3P-2044 (1)	9N-3718 (1)
114-163	(30-43)	3P-2044 (5)	3P-2044 (1) 6V-3542 (1)	111-2371 (2)
163-242	(43-64)	3P-2044 (8)	3P-2044 (2)	9N-3718 (2)

* Normal maintenance period is 250 hrs. See your Operation and Maintenance Manual for complete coolant maintenance instructions.

( ) Indicates quantity required.

MAINTENANCE PARTS

DESCRIPTION	PART NUMBER	QTY	WHERE USED	PAGE
AIR INLET AND EXHAUST SYSTEM				
FILTER ELEMENT AS-AIR (PRIMARY)	131-8902	1	AIR CLEANER GP	80
FILTER ELEMENT AS-AIR (SECONDARY)	131-8903	1	AIR CLEANER GP	80
FILTER ELEMENT-AIR (PRIMARY)	108-0671	1	AIR CLEANER GP	81
FILTER ELEMENT-AIR (SECONDARY)	108-0672	1	AIR CLEANER GP	81
BASIC ENGINE				
BELT-SERPENTINE	310-9543	1	PULLEY GP-FAN & ALT DRIVE	42
CAP (ENGINE OIL FILLER)	294-1708	1	COVER GP-VALVE MECHANISM	17
GASKET (VALVE COVER)	296-4694	1	COVER GP-VALVE MECHANISM	17
PLUG (DRAIN, ENGINE OIL)	135-8432	1	PAN GP-OIL	36
COOLING SYSTEM				
CAP AS (COOLANT RECOVERY)	171-3369	1	RADIATOR & HYD OIL COOLER GP	65
		1	RADIATOR & HYD OIL COOLER GP	68
		1	RADIATOR & HYD OIL COOLER GP	71
CAP AS-RADIATOR	245-9212	1	RADIATOR & HYD OIL COOLER GP	62
		1	RADIATOR & HYD OIL COOLER GP	74
CAP-RADIATOR	360-9274	1	RADIATOR & HYD OIL COOLER GP	76
GASKET (WATER TEMPERATURE REGULATOR)	294-1780	1	HOUSING & REGULATOR GP	58
	5I-7735	1	HOUSING & REGULATOR GP	58
HOSE-RADIATOR	265-3654	1	RADIATOR & HYD OIL COOLER GP	65
	265-3655	1	RADIATOR & HYD OIL COOLER GP	65
HOSE-RADIATOR (LOWER RADIATOR)	305-7591	1	RADIATOR & HYD OIL COOLER GP	65
HOSE-RADIATOR (LOWER)	265-3655	1	RADIATOR & HYD OIL COOLER GP	68
		1	RADIATOR & HYD OIL COOLER GP	71
	305-7591	1	RADIATOR & HYD OIL COOLER GP	68
		1	RADIATOR & HYD OIL COOLER GP	71
HOSE-RADIATOR (UPPER)	265-3654	1	RADIATOR & HYD OIL COOLER GP	68
		1	RADIATOR & HYD OIL COOLER GP	71
REGULATOR (COOLANT TEMPERATURE)	324-4128	1	HOUSING & REGULATOR GP	58
SCREEN AS (OIL COOLER)	281-3632	1	RADIATOR & HYD OIL COOLER GP	62
		1	RADIATOR & HYD OIL COOLER GP	74
	355-1358	1	RADIATOR & HYD OIL COOLER GP	76
SCREEN AS (RADIATOR)	281-3633	1	RADIATOR & HYD OIL COOLER GP	62
		1	RADIATOR & HYD OIL COOLER GP	74
	355-1359	1	RADIATOR & HYD OIL COOLER GP	76
ELECTRICAL AND STARTING SYSTEM				
BATTERY (12-VOLT, MAINTENANCE FREE)	263-9574	2	BATTERY GP	179
BATTERY GP (12-VOLT, 750-CCA)	3T-5760	2	BATTERY & WIRING GP	159
		2	BATTERY & WIRING GP	165
		2	BATTERY & WIRING GP	171
CAP AS-FILLER (7/8-9-THD)	123-1373	6	BATTERY & WIRING GP	159

MAINTENANCE PARTS

DESCRIPTION	PART NUMBER	QTY	WHERE USED	PAGE
		6	BATTERY & WIRING GP	165
		6	BATTERY & WIRING GP	171
		6	BATTERY GP	179
CIRCUIT BREAKER AS (120-AMPERE) (HEATER)	216-4970	1	PANEL GP-CIRCUIT BREAKER	224
		1	PANEL GP-CIRCUIT BREAKER	228
CIRCUIT BREAKER AS (60-AMPERE) (ALTERNATOR)	171-2208	1	PANEL GP-CIRCUIT BREAKER	221
		1	PANEL GP-CIRCUIT BREAKER	224
		1	PANEL GP-CIRCUIT BREAKER	228
CIRCUIT BREAKER AS (80-AMPERE) (MAIN)	171-2210	1	PANEL GP-CIRCUIT BREAKER	221
		1	PANEL GP-CIRCUIT BREAKER	224
		1	PANEL GP-CIRCUIT BREAKER	228
FUSE (10-AMPERE)	113-8490	20	WIRING GP-CAB	269
		20	WIRING GP-CAB	276
FUSE (15-AMPERE)	113-8491	5	WIRING GP-CAB	269
		5	WIRING GP-CAB	276
FUSE (20-AMPERE)	113-8492	3	WIRING GP-CAB	269
		3	WIRING GP-CAB	276
FUSE (25-AMPERE)	113-8493	3	WIRING GP-CAB	269
		3	WIRING GP-CAB	276
FUSE (30-AMPERE)	124-3548	2	WIRING GP-CAB	269
		2	WIRING GP-CAB	276
FUSE (5-AMPERE)	141-2759	1	PANEL GP-CIRCUIT BREAKER	224
		1	PANEL GP-CIRCUIT BREAKER	228
		7	WIRING GP-CAB	269
		7	WIRING GP-CAB	276
KEY (BATTERY DISCONNECT)	8H-5306	1	SWITCH GP-DISCONNECT	257
LAMP AS-INDICATOR (24-VOLT, 3-WATT)	170-9324	1	PANEL GP-SWITCH	233
		1	PANEL GP-SWITCH	235
LAMP AS-INDICATOR (24-VOLT, 3-WATT) (OPERATOR CONSOLE)	170-9324	1	PANEL GP-SWITCH	237
LAMP-HALOGEN (24-VOLT, 70-WATT)	351-9918	1	LAMP GP-FLOOD	202
		1	LAMP GP-FLOOD	203
		1	LAMP GP-FLOOD	204
	9X-3463	1	KIT-LIGHTING	201
		1	LAMP GP-FLOOD	205
		1	LIGHTING GP-FLOOD	208
		1	LIGHTING GP-FLOOD	211
FUEL SYSTEM				
CAP AS-FUEL (LOCKABLE, VENTED)	349-7059	1	TANK GP-FUEL	140
		1	TANK GP-FUEL	142
		1	TANK GP-FUEL	144
		1	TANK GP-FUEL	146
		1	TANK GP-FUEL	148
		1	TANK GP-FUEL	150

DESCRIPTION	PART NUMBER	QTY	WHERE USED	PAGE
		1	TANK GP-FUEL	152
CAP GP-FUEL FILLER (EXTREME SERVICE, LOCKABLE)	164-4858	1	TANK GP-FUEL	132
		1	TANK GP-FUEL	134
		1	TANK GP-FUEL	136
		1	TANK GP-FUEL	138
FILTER AS-WATER SEP & FUEL (PRIMARY)	326-1644	1	FILTER GP-WATER SEP & FUEL	102
FILTER AS-WATER SEP & FUEL (ULTRA HIGH EFFICIENCY)	382-0664	1	LINES GP-FUEL	107
FILTER ELEMENT-FUEL	360-8960	1	FILTER GP-FUEL	96
FILTER-FUEL	364-5287	1	FILTER GP-FUEL	97
FILTER-FUEL (ADVANCED EFFICIENCY)	1R-0751	2	FILTER GP-FUEL	93
GASKET (FUEL PRIMING PUMP)	294-1820	1	FILTER GP-FUEL	93
		1	FILTER GP-FUEL	97
STRAINER (REFUELING)	451-6724	1	PUMP GP-FUEL TRANSFER	120
STRAINER AS-FUEL (FLOAT GAUGE)	303-9933	1	TANK GP-FUEL	132
		1	TANK GP-FUEL	134
		1	TANK GP-FUEL	136
		1	TANK GP-FUEL	138
		1	TANK GP-FUEL	140
		1	TANK GP-FUEL	142
		1	TANK GP-FUEL	144
		1	TANK GP-FUEL	146
		1	TANK GP-FUEL	148
		1	TANK GP-FUEL	150
		1	TANK GP-FUEL	152
HYDRAULIC SYSTEM				
BREATHER (HYDRAULIC TANK)	227-0590	1	TANK & FILTER GP-HYDRAULIC	788
		1	TANK & FILTER GP-HYDRAULIC	791
BREATHER (SWING DRIVE)	4H-6112	1	DRIVE GP-SWING	521
		1	DRIVE GP-SWING	525
BREATHER AS	267-6744	1	DRIVE GP-SWING	521
BREATHER AS (SWING DRIVE)	267-6744	1	DRIVE GP-SWING	525
ELEMENT (OIL FILTER)	342-1823	1	FILTER GP-OIL	538
FILTER ELEMENT AS-OIL (HYDRAULIC)	216-6676	1	FILTER GP-OIL	533
		1	FILTER GP-OIL	534
FILTER ELEMENT AS-OIL (HYDRAULIC) (MAIN RETURN)	266-7796	1	FILTER GP-OIL	536
FILTER-OIL (ADVANCED EFFICIENCY) (HYDRAULIC, CASE DRAIN)	093-7521	1	FILTER GP-OIL	537
FILTER-OIL (ADVANCED EFFICIENCY) (HYDRAULIC, PILOT)	5I-8670	1	FILTER & VALVE GP-PILOT	530
KEY	165-5828	2	MOTOR GP-TRAVEL	752
		2	MOTOR GP-TRAVEL	754
PLUG-DRAIN (HYDRAULIC TANK)	4B-7739	1	TANK & FILTER GP-HYDRAULIC	788
		1	TANK & FILTER GP-HYDRAULIC	791
SCREEN AS (HYDRAULIC TANK)	209-6002	1	SCREEN GP-HYDRAULIC	767

MAINTENANCE PARTS

DESCRIPTION	PART NUMBER	QTY	WHERE USED	PAGE
LUBRICATION SYSTEM				
BREATHER (CRANKCASE)	5I-7725	1	BREATHER GP	48
FILTER AS-ENGINE OIL (STANDARD EFFICIENCY)	1R-0739	1	FILTER & MTG GP-ENGINE OIL	49
		1	FILTER & MTG GP-ENGINE OIL	51
STRAINER	196-8019	1	LINES GP-ENGINE OIL	53
MACHINE ARRANGEMENT				
SEAT BELT GP (RETRACTABLE, 76-MM (3-IN))	305-0466	1	DISTRIBUTION AR	1
		1	OPTION AR-CAB	6
		1	OPTION AR-REGIONAL	9
		1	OPTION AR-REGIONAL	10
SEAT BELT GP (RETRACTABLE)	305-0467	1	OPTION AR-REGIONAL	10
		1	OPTION AR-REGIONAL	10
		1	OPTION AR-REGIONAL	11
OPERATOR STATION				
BLADE AS-WIPER (275-MM) (LOWER)	4I-5021	1	WIPER & WASHER GP-WINDOW	1189
BLADE AS-WIPER (600-MM)	161-3670	1	WIPER GP-WINDOW	1192
CAP AS-FILLER (WINDOW WASHER)	178-5431	1	WASHER GP-WINDOW	1174
DRYER AS-REFRIGERANT (RECEIVER)	176-1902	1	LINES GP-AIR CONDITIONER	1094
FILTER AS-AIR (AIR CONDITIONER)	293-1137	1	AIR CONDITIONER GP	936
		1	AIR CONDITIONER GP	939
FILTER ELEMENT-CAB AIR	245-7823	1	AIR CONDITIONER GP	936
		1	AIR CONDITIONER GP	939
	293-1184	1	DUCT GP-CAB AIR	1054
LAMP (24-VOLT, 10-WATT)	201-4417	1	CAB GP	991
		1	CAB GP	994
		1	CAB GP	997
LAMP (24-VOLT, 10-WATT) (DOME)	201-4417	1	CAB GP	955
		1	CAB GP	959
		1	CAB GP	963
		1	CAB GP	967
LAMP AS-DOME	176-1986	1	CAB GP	955
		1	CAB GP	959
		1	CAB GP	963
		1	CAB GP	967
		1	CAB GP	991
		1	CAB GP	994
		1	CAB GP	997
SEAT BELT GP (RETRACTABLE, 51-MM (2-IN))	258-4095	1	SEAT BELT GP	1153
	327-6541	1	SEAT BELT GP	1152
		1	SEAT BELT GP	1154
SEAT BELT GP (RETRACTABLE, 76-MM (3-IN))	235-9020	1	SEAT BELT GP	1146
	258-4096	1	SEAT BELT GP	1150
	327-6540	1	SEAT BELT GP	1149

MAINTENANCE PARTS

DESCRIPTION	PART NUMBER	QTY	WHERE USED	PAGE
		1	SEAT BELT GP	1151
V-BELT (REFRIGERANT COMPRESSOR)	255-3016	1	COMPRESSOR GP-REFRIGERANT	1005
		1	COMPRESSOR GP-REFRIGERANT	1006
POWER TRAIN				
KEY	165-5828	2	MOTOR GP-TRAVEL	332
		2	MOTOR GP-TRAVEL	334

INDEX

NAME PAGE

A

ACCUMULATOR GP-HYDRAULIC–CHARGED. . . 460
461
462
463
465
466
467
ACCUMULATOR GP-HYDRAULIC–UNCHARGED 464
ADAPTER GP-REMOTE OIL FILTER–ENGINE . . . 47
ADJUSTER GP-BUCKET 888
ADJUSTER GP-SEAT 1172
ADJUSTER GP-SEAT (UPPER SLIDE) 1167
ADJUSTER GP-SEAT–LOWER SLIDE 930
ADJUSTER GP-SEAT–UPPER SLIDE 929
AIR CLEANER & MOUNTING GP 78
AIR CLEANER GP 80
81
AIR CLEANER GP–WITH PRECLEANER 79
AIR CONDITIONER & MOUNTING GP 931
933
AIR CONDITIONER AR 935
AIR CONDITIONER GP 936
939
ALARM GP 155
ALARM GP-TRAVEL–BACKUP 156
ALTERNATOR GP-CHARGING 157
ARM AS-WIPER 1189
ARM GP-WINDOW WIPER 1192
ARMREST GP–LH 942
ARMREST GP–RH 941

B

BATTERY (12-VOLT, MAINTENANCE FREE) . . . 179
BATTERY & WIRING GP 159
165
171
BATTERY GP (12-VOLT, 750-CCA) 159
165
171
BATTERY GP–COLD WEATHER 179
BELT-SERPENTINE 42
BLADE & MOUNTING GP 889
890
BLADE AS-WIPER (275-MM) (LOWER) 1189
BLADE AS-WIPER (600-MM) 1192
BLADE GP-STRAIGHT 892
893
BLOCK GP-JUNCTION 180
BOOM AR-1 PIECE LONG–AUXILIARY, HEAVY-DUTY 867
BOOM AR-1 PIECE LONG–HEAVY-DUTY 867
BOOM GP 868
870
872
BOX & MTG GP-STORAGE 338
BOX GP-STORAGE 339

NAME PAGE

BRACKET GP-MIRROR 943
BRACKET GP-MOUNTING–SUSPENSION SEAT 944
BREATHER (CRANKCASE) 48
BREATHER (HYDRAULIC TANK) 788
791
BREATHER (SWING DRIVE) 521
525
BREATHER AS 521
BREATHER AS (SWING DRIVE) 525
BREATHER GP–CRANKCASE 48
BUCKET & ADJUSTER GP 895
898
BUCKET & ADJUSTER GP–312-FAMILY 894
BUCKET & ADJUSTER GP–GENERAL PURPOSE 896
897
BUCKET & ADJUSTER GP–HEAVY-DUTY ROCK 894
BUCKET AR-GENERAL PURPOSE 899
900
BUCKET AR-HEAVY DUTY ROCK 901
BUCKET AR-SEVERE SERVICE ROCK 901
BUCKET AR–312-FAMILY 898
BUCKET AS-GENERAL PURPOSE 902
903
904
BUCKET AS-HEAVY DUTY ROCK 905
906
BUCKET AS-HEAVY DUTY ROCK–312-FAMILY 907
908
BUCKET AS-SEVERE SERVICE ROCK 909
BUCKET GP-HOE 910
BUCKET GP-HOE–312-FAMILY 911
912
BUCKET GP-UTILITY 913
BUMPER GP–SIDE, RH, LH 341

C

CAB GP 945
947
974
976
978
980
982
984
986
989
CAB GP–EXTERIOR 955
959
963
967
991
994
997

INDEX

NAME PAGE

CAB GP–INTERIOR. 949
952
971
CAMERA & MOUNTING GP–WORK AREA VISUAL SYSTEM, REAR. 181
183
CAMERA & WIRING GP 184
CAMERA GP–WORK AREA VISUAL SYSTEM, REAR. 185
CAMSHAFT GP 16
CAP (ENGINE OIL FILLER) 17
CAP AS (COOLANT RECOVERY) 65
68
71
CAP AS-FILLER (7/8-9-THD) 159
165
171
179
CAP AS-FILLER (WINDOW WASHER) 1174
CAP AS-FUEL (LOCKABLE, VENTED) 140
142
144
146
148
150
152
CAP AS-RADIATOR 62
74
CAP GP-FUEL FILLER (EXTREME SERVICE, LOCKABLE) 132
134
136
138
CAP GP-FUEL FILLER–EXTREME SERVICE, LOCKABLE. 92
CAP-RADIATOR 76
CHASSIS AR. 1
CIRCUIT BREAKER AS (120-AMPERE) (HEATER). 224
228
CIRCUIT BREAKER AS (60-AMPERE) (ALTERNATOR) 221
224
228
CIRCUIT BREAKER AS (80-AMPERE) (MAIN). 221
224
228
COIL GP-EVAPORATOR 1000
1002
COMPRESSOR GP-REFRIGERANT. 1004
1005
1006
CONDENSER & MTG GP-REFRIGERANT. 1007
1009
1011
CONDENSER GP-REFRIGERANT 1012
CONSOLE GP-OPERATOR. 1013
1015
CONSOLE GP-OPERATOR–LH 1018
1019

NAME PAGE

CONSOLE GP-OPERATOR–RH. 1017
1021
CONTROL & MOUNTING GP–FOOT SWITCH, ON/OFF, LH 1023
CONTROL & MTG GP-COMMUNICATION–PRODUCT LINK CELLULAR 186
CONTROL & MTG GP-ENGINE ELEK 187
CONTROL & MTG GP-JOYSTICK 1027
CONTROL & MTG GP-JOYSTICK–3-BUTTON, TRIGGER SWITCH 1026
CONTROL & MTG GP-JOYSTICK–WITH MODULATION SWITCH 1025
CONTROL & MTG GP-MACHINE. 188
CONTROL & MTG GP-PEDAL 1028
CONTROL AR-AUXILIARY 469
CONTROL AR-AUXILIARY–AUX PUMP, MED PRESSURE VALVE. 470
CONTROL AR-AUXILIARY–FOOT SWITCH, ON/OFF, LH 469
CONTROL AR-AUXILIARY–JOYSTICK, 3-BUTTON, TRIGGER SWITCH 468
CONTROL AR-AUXILIARY–JOYSTICK, MODULATION SWITCH 468
CONTROL AR-AUXILIARY–MED PRESS AUXILIARY, 3RD PUMP 470
CONTROL AR-AUXILIARY–MEDIUM PRESSURE 469
470
CONTROL AR-AUXILIARY–SYSTEM 23, COMBINED FUNCTION 468
CONTROL AR-COMMUNICATION–PRODUCT LINK CELLULAR. 189
CONTROL AR-COUPLER 471
CONTROL GP-BLADE 1029
CONTROL GP-COMMUNICATION–PRODUCT LINK. 189
CONTROL GP-HANDLE–JOYSTICK, LH. 1030
1034
1036
CONTROL GP-HANDLE–JOYSTICK, RH 1032
1033
1035
CONTROL GP-HEAT & AIR COND–AIR INLET 1037
CONTROL GP-JOYSTICK–LH 1039
1041
1043
CONTROL GP-JOYSTICK–RH 1038
1040
1042
CONTROL GP-PEDAL (ELECTRIC) 1028
CONTROL GP-PEDAL–ELECTRIC 1044
CONTROL GP-PILOT OPERATED HYD–TRAVEL 1045
CONTROL GP-UNPROGRAMMED 188
CONTROL GP-UNPROGRAMMED (ENGINE) . . . 187
CONTROL GP-UNPROGRAMMED–PRODUCT LINK 522. 190
CONVERTER-POWER (24-VOLT TO 12-VOLT) 300
COOLER GP-ENGINE OIL 55

INDEX

NAME PAGE

COOLING AR-HIGH AMBIENT TEMP 56
CORE AS-AFTERCOOLER 76
CORE AS-ENGINE OIL COOLER 55
CORE AS-HEATER 936
939
CORE AS-OIL COOLER 62
CORE AS-OIL COOLER (HYDRAULIC) 74
76
CORE AS-RADIATOR 62
74
76
COUNTERWEIGHT & MOUNTING GP 342
343
COUNTERWEIGHT AR 344
COUNTERWEIGHT GP 345
346
347
348
349
350
351
352
353
354
356
357
COUPLER AR-QUICK 914
COUPLER AR-QUICK–WITH COUPLER PIN 914
COUPLER AR-QUICK–WITHOUT COUPLER PIN 914
COUPLER GP-QUICK 915
916
918
920
COUPLING GP-FLEXIBLE 472
473
COUPLING GP-PUMP 474
475
COVER AS-ACCESS–FUEL, HYDRAULIC TANKS 359
360
COVER GP-ACCESS–ENGINE OIL DIPSTICK 361
COVER GP-ACCESS–MAIN CONTROL VALVE 362
363
364
COVER GP-CAB–REAR 1046
COVER GP-STORAGE 1047
COVER GP-VALVE MECHANISM 17
CRANKSHAFT GP 19
CYLINDER & LINES GP-BLADE–LH 476
477
CYLINDER & LINES GP-BLADE–RH 476
477
CYLINDER & LINES GP-BOOM 478
CYLINDER & LINES GP-BOOM–LH 477
478
CYLINDER & LINES GP-BOOM–RH 477
478
CYLINDER & LINES GP-BUCKET 479
CYLINDER & LINES GP-STICK 479
CYLINDER & SEAL GP-BLADE–LH 480
482
484
CYLINDER & SEAL GP-BLADE–RH 481
483
486
CYLINDER & SEAL GP-BOOM 488
489
490
CYLINDER & SEAL GP-BUCKET 492
CYLINDER & SEAL GP-STICK 493
494
495
CYLINDER BLOCK GP 20
23
CYLINDER GP-BLADE–LH 497
501
CYLINDER GP-BLADE–RH 499
503
CYLINDER GP-BOOM 505
507
509
CYLINDER GP-BUCKET 511
CYLINDER GP-COUPLER 513
514
CYLINDER GP-COUPLER–312-LINKAGE 516
CYLINDER GP-STICK 517
519
CYLINDER HEAD AS 25
CYLINDER HEAD GP 26

D

DISTRIBUTION AR 1
2
3
DOOR & MTG GP-ACCESS–PUMP COMPARTMENT 365
366
367
368
DOOR & MTG GP-CAB 1048
1049
DOOR AS-ACCESS–PUMP COMPARTMENT . . . 369
370
371
DOOR GP-ACCESS–AIR CLEANER, BATTERY, RADIATOR 386
390
393
DOOR GP-ACCESS–AIR CLEANER, RADIATOR 376
377
378

INDEX

NAME PAGE

DOOR GP-ACCESS–PRECLEANER 373 374 375 382 391 394
DOOR GP-ACCESS–PUMP COMPARTMENT . . . 379 388 389
DOOR GP-ACCESS–RADIATOR 380 384
DOOR GP-CAB 1050 1052
DRAIN GP-MUFFLER 82
DRIVE GP-FINAL 330
DRIVE GP-FINAL–WITH MOTOR 317 320 321 324 331
DRIVE GP-FINAL–WITH MOTOR, SPROCKET 327 328 329
DRIVE GP-FINAL–WITHOUT MOTOR 318 322 325
DRIVE GP-SWING 521
DRIVE GP-SWING–WITH MOTOR 524 525 526
DRIVE GP-SWING–WITHOUT MOTOR 522 527
DRYER AS-REFRIGERANT (RECEIVER) 1094
DUCT GP-CAB AIR 1054

E

ELECTRONICS GP-ENGINE RATINGS 12 13
ELECTRONICS GP-MACHINE 191
ELECTRONICS GP-MONITOR 191
ELEMENT (OIL FILTER) 538
ENCLOSURE GP-ENGINE 396
ENGINE AR 12 13
ENGINE AR-COMPLETE 14 15

F

FAN GP-SUCTION 57
FASTENER GP-SWING & FINAL DR 529
FASTENER GP-WIRING HARNESS 195
FASTENER GP-WIRING HARNESS–BLADE 196
FASTENER GP-WIRING HARNESS–FOOT SWITCH 193
FASTENER GP-WIRING HARNESS–JOYSTICK 194
FASTENER GP-WIRING HARNESS–PEDAL CONTROL 192
FENDER & COVER GP 399
FENDER & COVER GP–WITH STEP 398
FILM GP 1208 1209
FILM GP–CONTROL PATTERN CHANGE, 2-WAY 1201
FILM GP–CONTROL PATTERN, QUICK CHANGE 1199
FILM GP–COUNTERWEIGHT REMOVAL 1206
FILM GP–FUEL TRANSFER PUMP 1204
FILM GP–HAMMER CONTROL, FOOT SWITCH 1198
FILM GP–OPERATOR CONTROLS, NOTICE 1194 1196 1197
FILM GP–QUICK COUPLER 1202 1203
FILM GP–WORK AREA VISUAL SYSTEM, REAR 1207
FILM-CERTIFICATION (OPS GUARD, READ OMM) 1066
FILM-CERTIFICATION (OPS, READ OMM) 1064 1068
FILM-IDENTIFICATION (BATTERY CIRCUIT BREAKER) 1211 1216 1221
FILM-IDENTIFICATION (CAT) 190 1211 1216 1221
FILM-IDENTIFICATION (CATERPILLAR) 1211 1216
FILM-IDENTIFICATION (ELECTRICAL CIRCUIT BREAKER) 1211 1216 1221
FILM-IDENTIFICATION (HYDRAULIC ACCUMULATOR) 464
FILM-IDENTIFICATION (HYDRAULIC OIL) 1208 1211 1216
FILM-IDENTIFICATION (LIFT EYE LOCATION) 1206 1211 1216 1221
FILM-IDENTIFICATION (ROUND RED REFLECTIVE) 1211 1216 1221
FILM-IDENTIFICATION (TIE-DOWN) 1211 1216 1221
FILM-INFORMATION (24-VOLT) 1211 1216 1221

INDEX

NAME	PAGE
FILM-INFORMATION (AIR CLEANER)	1211, 1216, 1221
FILM-INFORMATION (CAT POWER, ACERT TECHNOLOGY)	1211
FILM-INFORMATION (DO NOT LIFT)	348, 351, 1211, 1216, 1221
FILM-INFORMATION (EXTENDED LIFE COOLANT)	1211, 1216, 1221
FILM-INFORMATION (OPERATOR CONTROLS, READ OMM)	1194
FILM-INFORMATION (PRODUCT LINK, READ OMM)	186
FILM-INFORMATION (READ OMM)	120
FILM-INSTRUCTION (ALTERNATE EXIT)	1211, 1216, 1221
FILM-INSTRUCTION (COLD WEATHER)	179
FILM-INSTRUCTION (COUPLER OPERATION)	916, 918, 1202, 1203
FILM-INSTRUCTION (ENGINE SHUTOFF)	1211, 1216, 1221
FILM-INSTRUCTION (FUEL, READ OMM)	1216, 1221
FILM-INSTRUCTION (HAMMER CONTROL)	1198
FILM-INSTRUCTION (HYDRAULIC OIL CHECK)	1211, 1216, 1221
FILM-INSTRUCTION (MACHINE SECURITY, CONSOLE)	199, 239, 241, 243, 245
FILM-INSTRUCTION (NO STEP)	1211, 1216, 1221
FILM-INSTRUCTION (OIL FILTER REMOVAL, HYD TANK)	536, 538
FILM-INSTRUCTION (OPERATOR CONTROLS, READ OMM)	1197
FILM-INSTRUCTION (OPERATOR CONTROLS)	1211, 1216, 1221
FILM-INSTRUCTION (PULL RING, ALTERNATE EXIT)	1211, 1216, 1221
FILM-INSTRUCTION (SERVICE CHART)	1208, 1209, 1216, 1221
FILM-INSTRUCTION (WINDOW CLEANING, READ OMM)	1211, 1216, 1221
FILM-NOTICE (HAMMER, READ OMM)	1194, 1196, 1197, 1198
FILM-WARNING (ACCUMULATOR PRESSURE)	1211, 1216, 1221
FILM-WARNING (CRUSH HAZARD, READ OMM, INTL)	1201, 1202, 1203, 1211, 1216, 1221
FILM-WARNING (CRUSH HAZARD, READ OMM, U.S.)	1201, 1202
FILM-WARNING (CRUSH HAZARD, STAY BACK, INTL)	1211, 1216, 1221
FILM-WARNING (CRUSH HAZARD, STAY BACK)	916, 918
FILM-WARNING (CUTTING HAZARD HAND, STAY BACK)	1208, 1211, 1216, 1221
FILM-WARNING (ELEC HAZARD, READ OMM, INTL)	1211, 1216, 1221
FILM-WARNING (FRONT WINDOW, READ OMM, INTL)	1211, 1216, 1221
FILM-WARNING (HIGH PRESSURE CYLINDER)	462
FILM-WARNING (HOT FLUID UNDER PRESS)	1211, 1216, 1221
FILM-WARNING (JUMP START, READ OMM, INTL)	1211, 1216, 1221
FILM-WARNING (MACHINE SWING, CRUSHING, INTL)	1211, 1216, 1221

NAME PAGE

FILM-WARNING (NO ETHER SPRAY/AIR INTK, INTL) . . . 1211, 1216, 1221
FILM-WARNING (NO WELD, NO DRILL, READ OMM) . . . 1064, 1066, 1068, 1086, 1091
FILM-WARNING (PRODUCT LINK RADIO, INTL) . . . 186
FILM-WARNING (READ OMM) . . . 916, 918, 920
FILM-WARNING (SEAT BELT, INTERNATIONAL) . . . 1211, 1216, 1221
FILM-WARNING (UNIVERSAL, READ OMM) . . . 1211, 1216, 1221
FILTER & MTG GP-ENGINE OIL . . . 49, 51
FILTER & VALVE GP-PILOT–HYDRAULIC OIL . . . 530
FILTER AR-HYDRAULIC–HAMMER . . . 531
FILTER AS-AIR (AIR CONDITIONER) . . . 936, 939
FILTER AS-ENGINE OIL (STANDARD EFFICIENCY) . . . 49, 51
FILTER AS-WATER SEP & FUEL (PRIMARY) . . . 102
FILTER AS-WATER SEP & FUEL (ULTRA HIGH EFFICIENCY) . . . 107
FILTER ELEMENT AS-AIR (PRIMARY) . . . 80
FILTER ELEMENT AS-AIR (SECONDARY) . . . 80
FILTER ELEMENT AS-OIL (HYDRAULIC) . . . 533, 534
FILTER ELEMENT AS-OIL (HYDRAULIC) (MAIN RETURN) . . . 536
FILTER ELEMENT-AIR (PRIMARY) . . . 81
FILTER ELEMENT-AIR (SECONDARY) . . . 81
FILTER ELEMENT-CAB AIR . . . 936, 939, 1054
FILTER ELEMENT-FUEL . . . 96
FILTER ELEMENT-OIL–FLUSHING . . . 532
FILTER GP-FUEL . . . 93, 96, 97, 101
FILTER GP-OIL–HYDRAULIC . . . 533, 534
FILTER GP-OIL–HYDRAULIC, CASE DRAIN . . . 537
FILTER GP-OIL–HYDRAULIC, MAIN RETURN . . . 535, 536, 538
FILTER GP-WATER SEP & FUEL . . . 102
FILTER-FUEL . . . 97
FILTER-FUEL (ADVANCED EFFICIENCY) . . . 93
FILTER-OIL (ADVANCED EFFICIENCY) (HYDRAULIC, CASE DRAIN) . . . 537
FILTER-OIL (ADVANCED EFFICIENCY) (HYDRAULIC, PILOT) . . . 530
FITTING GP-HYDRAULIC . . . 539
FITTING GP-HYDRAULIC (TEE) . . . 622, 626, 630, 632
FLOOR MAT . . . 2, 3, 1055, 1056, 1057
FLYWHEEL GP . . . 27
FRAME AR-UNDERCARRIAGE . . . 437
FRAME AS-UNDERCARRIAGE . . . 440
FRAME AS-UNDERCARRIAGE–HEAVY DUTY . . . 441, 442
FRAME AS-UNDERCARRIAGE–HEAVY-DUTY . . . 438, 439
FRAME GP-UPPER . . . 400, 402, 404
FUSE (10-AMPERE) . . . 269, 276
FUSE (15-AMPERE) . . . 269, 276
FUSE (20-AMPERE) . . . 269, 276
FUSE (25-AMPERE) . . . 269, 276
FUSE (30-AMPERE) . . . 269, 276
FUSE (5-AMPERE) . . . 224, 228, 269, 276

G

GASKET (FUEL PRIMING PUMP) . . . 93, 97
GASKET (VALVE COVER) . . . 17
GASKET (WATER TEMPERATURE REGULATOR) . . . 58
GAUGE GP-SIGHT–HYDRAULIC OIL LEVEL . . . 540, 541
GAUGE-OIL LEVEL (DIPSTICK, SWING DRIVE) . . . 521, 525
GAUGE-OIL LEVEL (DIPSTICK) (ENGINE) . . . 36

INDEX

NAME PAGE

GEAR & BEARING GP-SWING 406 408 410 412 414 415 416 418
GEAR GP-FRONT 28
GENERAL AR 4
GUARD AR-OVERHEAD–FALLING OBJECTS GUARD SYSTEM 1058
GUARD AR-VANDALISM 1058
GUARD GP-BOTTOM 419
GUARD GP-BOTTOM–HEAVY DUTY 420 421
GUARD GP-CYLINDER–BLADE 874 875
GUARD GP-FRONT WINDOW 1059 1061 1064
GUARD GP-FRONT WINDOW–LOWER 1063
GUARD GP-OVERHEAD 1066 1068
GUARD GP-SWIVEL 422
GUARD GP-TRACK GUIDE 443
GUARD GP-TRAVEL MOTOR 444
GUARD GP-TRAVEL MOTOR–DEMOLITION 445
GUARD GP-VANDALISM–CAB 1070 1071

H

HANDRAIL GP–FRONT, RH 423
HARNESS AS-AUXILIARY (WORK AREA VISUAL SYSTEM, REAR) 284
HARNESS AS-CAB 269 276
HARNESS AS-CHASSIS 159 165 171
HARNESS AS-CONSOLE 233 235 239 241 243 293 296
HARNESS AS-CONTROL 287
HARNESS AS-CONTROL (ENGINE START, PUMP CONTROL) 309
HARNESS AS-CONTROL (PRODUCT LINK) 291
HARNESS AS-CONTROL–PRODUCT LINK 197
HARNESS AS-ENGINE 303 306
HARNESS AS-ENGINE (FUEL INJECTORS) 303 306
HARNESS AS-HEATER 1078
HARNESS AS-HEATER & AIR COND 936 939
HARNESS AS-HEATER & AIR COND (CONTROL PANEL SWITCHES) 931 933 1078
HARNESS AS-HEATER & AIR COND (LOW SIDE) 931 933
HARNESS AS-LIGHTING 201 214
HARNESS AS-LIGHTING (BOOM, LH) 213
HARNESS AS-LIGHTING (CAB FLOODLIGHT) 206 209 215
HARNESS AS-LIGHTING (CAB FLOODLIGHTS, FRONT) 208 211
HARNESS AS-OPERATOR CONTROLS 1023
HARNESS AS-PANEL 197
HARNESS AS-PLATFORM 313
HARNESS AS-PUMP 104 198 308 310
HARNESS AS-RADIO 1084 1135
HARNESS AS-SENSOR 253
HARNESS AS-SOLENOID (QUICK COUPLER) 316
HARNESS AS-SWITCH (SECONDARY SHUTDOWN) 313
HARNESS AS-VALVE 298 311 312
HARNESS AS-WIRING 308
HARNESS AS-WIRING (HORN) 1082
HARNESS AS-WIRING (QUICK COUPLER SWITCH) 266
HARNESS AS-WIRING (WORK AREA VISUAL SYSTEM, REAR) 284
HATCH GP-ROOF 1072 1073 1074
HEAD GP-PUMP 542
HEADREST AS-SEAT–CLOTH 1075 1077
HEADREST AS-SEAT–VINYL 1076
HEATER & MTG GP-CAB 1078
HEATER AR-CAB 1080
HOOD & GUARD GP 424
HOOD AS-ENGINE 425
HOOD GP-ENGINE 426
HORN GP-ELECTRIC 1081 1082
HOSE-RADIATOR 65
HOSE-RADIATOR (LOWER RADIATOR) 65
HOSE-RADIATOR (LOWER) 68 71
HOSE-RADIATOR (UPPER) 68 71
HOUSING & REGULATOR GP 58

INDEX

NAME PAGE

HOUSING GP-FLYWHEEL 29
HOUSING GP-FRONT 30
HYDRAULIC AR 545

I

IDLER GP-FRONT 446
449
IDLER GP-FRONT–LH 448
IDLER GP-FRONT–RH 447
INDICATOR AS-AIR FILTER CHANGE (AIR RESTRICTION) 80
81
INDICATOR-FUEL FILTER CHANGE 107
INJECTOR GP-FUEL 103
INSTALLATION AR 1083
INSTALLATION AR-BLADE 5
6
INSTALLATION AR-ENGINE 15
INSTALLATION GP-RADIO 1084
INSTALLATION GP-SECURITY 199

K

KEY 332
334
752
754
KEY (BATTERY DISCONNECT) 257
KIT-FUEL PRIMING PUMP 104
KIT-GUARD–SWIVEL 428
KIT-LIGHTING 201
KIT-MIRROR 1086
KIT-OVERHEAD GUARD–FALLING OBJECT . . . 1086
KIT-SEAT SUPPORT 1089
1090
KIT-SEAT TILT 1091
KIT-SEAT–CLOTH, LOW BACK 1087
KIT-SEAT–LOW BACK, VINYL 1088
KIT-WINDOW GUARD 1091

L

LAMP (24-VOLT, 10-WATT) 991
994
997
LAMP (24-VOLT, 10-WATT) (DOME) 955
959
963
967
LAMP AS-DOME 955
959
963
967
991
994
997

NAME PAGE

LAMP AS-INDICATOR (24-VOLT, 3-WATT) 233
235
LAMP AS-INDICATOR (24-VOLT, 3-WATT) (OPERATOR CONSOLE) 237
LAMP GP-FLOOD 202
203
204
205
LAMP GP-FLOOD (24-VOLT) 201
208
211
LAMP-HALOGEN (24-VOLT, 70-WATT) 201
202
203
204
205
208
211
LATCH GP-WINDOW 1092
LEVER GP-CAB DOOR 1093
LEVER GP-CONTROL–HYDRAULIC LOCKOUT 546
LIGHTING GP-FLOOD–BOOM, LH 213
LIGHTING GP-FLOOD–BOOM, RH 214
LIGHTING GP-FLOOD–CAB 206
209
215
LIGHTING GP-FLOOD–CAB GUARD 208
211
LIGHTING GP-FLOOD–CHASSIS 217
LINES AR-AUXILIARY HYDRAULIC–BOOM, HIGH PRESSURE 547
LINES AR-AUXILIARY HYDRAULIC–BOOM, MEDIUM PRESSURE 547
LINES AR-AUXILIARY HYDRAULIC–MEDIUM PRESSURE, REACH BOOM 548
LINES AR-QUICK COUPLER 548
LINES AR-QUICK COUPLER–REACH BOOM . . . 548
LINES GP-AIR CONDITIONER 1094
LINES GP-AIR–AFTERCOOLER TO TURBOCHARGER 83
LINES GP-AIR–AIR CLEANER TO TURBOCHARGER 84
LINES GP-AUXILIARY HYDRAULIC–BOOM, HIGH PRESSURE 549
LINES GP-AUXILIARY HYDRAULIC–BOOM, MEDIUM PRESSURE 551
LINES GP-AUXILIARY HYDRAULIC–MEDIUM PRESSURE, REACH BOOM 559
LINES GP-AUXILIARY HYDRAULIC–REACH BOOM, HIGH PRESSURE 557
LINES GP-AUXILIARY HYDRAULIC–STICK, HIGH PRESSURE 553
LINES GP-AUXILIARY HYDRAULIC–STICK, MEDIUM PRESSURE 555
LINES GP-BLADE 561
LINES GP-BLADE CYLINDER 565
LINES GP-BLADE CYLINDER–LH 563
567
LINES GP-BLADE CYLINDER–RH 564
568

INDEX

NAME PAGE

LINES GP-BOOM. 571
LINES GP-BOOM CYLINDER. 573
LINES GP-BOOM CYLINDER–LH 576
578
579
LINES GP-BOOM CYLINDER–RH. 577
580
581
LINES GP-BOOM–WITHOUT AUXILIARY 569
LINES GP-BUCKET CYLINDER. 582
LINES GP-COUPLER 583
586
588
592
596
LINES GP-COUPLER–REACH BOOM 584
594
LINES GP-COUPLER–STICK 590
LINES GP-ENGINE OIL 53
LINES GP-FRONT 598
LINES GP-FRONT–HAMMER, RETURN 620
LINES GP-FRONT–MEDIUM PRESSURE. 603
618
LINES GP-FRONT–QUICK COUPLER 600
622
626
LINES GP-FRONT–SYSTEM 23, COMBINED FUNCTION. 605
607
609
612
615
LINES GP-FUEL. 105
107
LINES GP-FUEL INJECTION 109
LINES GP-GREASE–BOOM 876
LINES GP-HEATER. 1098
LINES GP-HYDRAULIC 630
632
LINES GP-HYDRAULIC OIL COOLER. 637
LINES GP-HYDRAULIC OIL COOLER–REAR . . . 635
LINES GP-PILOT–2-WAY. 724
726
728
LINES GP-PILOT–4-WAY. 730
LINES GP-PILOT–BLADE 732
LINES GP-PILOT–JOYSTICK, MAIN CONTROL VALVE. 648
651
LINES GP-PILOT–JOYSTICK, PEDALS. 640
644
LINES GP-PILOT–MAIN CONTROL VALVE, MANIFOLD. 654
662
670
LINES GP-PILOT–MEDIUM PRESSURE. 714
716
718
720
LINES GP-PILOT–PUMP 678
681

NAME PAGE

LINES GP-PILOT–PUMP CONTROL, SHUTTLE VALVE. 638
LINES GP-PILOT–SUPPLY 722
LINES GP-PILOT–SYSTEM 23, COMBINED FUNCTION. 684
690
696
702
708
LINES GP-PUMP–BLADE 736
LINES GP-PUMP–MEDIUM PRESSURE, WITH BLADE. 739
LINES GP-PUMP–PUMP SUPPLY 734
LINES GP-STICK. 742
LINES GP-STICK CYLINDER. 743
744
LINES GP-TRAVEL MOTOR. 745
LINES GP-TURBOCHARGER OIL. 54
LINK AS-TRACK. 450
LINKAGE AR-BUCKET–WITH LIFTING EYE 877
LINKAGE AR-BUCKET–WITHOUT LIFTING EYE 877
LINKAGE GP-BUCKET. 882
LINKAGE GP-BUCKET–COUPLER 880
LINKAGE GP-BUCKET–WITH LIFTING EYE 878
LITERATURE GP. 1101

M

MANIFOLD GP-CONTROL–PILOT OIL SUPPLY 747
748
749
MANIFOLD GP-EXHAUST. 85
MANIFOLD GP-INLET. 86
MIRROR GP 967
997
1086
1102
1113
1116
MIRROR GP (FUEL TANK) 1105
MIRROR GP (SIDE VIEW) 1107
MIRROR GP-DOWN VIEW 1103
MIRROR GP-DOWN VIEW–FUEL TANK, RH 1103
1104
1105
1106
1107

INDEX

NAME PAGE

MIRROR GP-REAR VIEW 1104 1108 1109 1110 1111 1112 1113 1114 1115 1116 1117
MIRROR GP-SIDE VIEW 1106
MODULE GP-INTERFACE (KEY) 199
MONITOR & MTG GP-OPERATOR 1118 1119
MONITOR GP-OPERATOR 1120 1121
MOTOR AS-WINDOW WIPER 1192
MOTOR GP-SWING 750
MOTOR GP-TRAVEL 332 334 752 754
MOUNTING GP-ALTERNATOR 32
MOUNTING GP-ANTENNA–PRODUCT LINK . . . 1122
MOUNTING GP-ELECTRONIC CONTROL 218
MOUNTING GP-ENGINE 33
MOUNTING GP-MAIN CONTROL VALVE 757
MOUNTING GP-MIRROR 1124 1125
MOUNTING GP-PLATFORM 1126
MOUNTING GP-STARTING MOTOR 35
MUFFLER GP 87

O

OPERATOR AR 1128 1129
OPTION AR-CAB 6 7
OPTION AR-GUARD 7 8
OPTION AR-HYDRAULIC 8
OPTION AR-LIGHTING 9
OPTION AR-REGIONAL 9 10 11
OPTION AR-WORK TOOL 11

P

PADLOCK GP 128 129
PADLOCK GP (FUEL TANK FILL CAP) 124 125
PAN GP-OIL 36
PANEL & MTG GP-CIRCUIT BREAKER 219 220
PANEL GP-CIRCUIT BREAKER 221 224 228 232
PANEL GP-SWITCH–ENGINE SPEED, START 233 235 237 239 241 243 245
PANEL-SWITCH 949 952 971
PARTS GP-DOOR 1130
PEDAL AR-AUXILIARY–HIGH PRESSURE, LH 1132
PIN GP-COUPLER 923
PISTON & ROD GP 38
PLATE & FILM GP 1211 1216 1221
PLATE & FILM GP–BLADE 1210
PLATFORM GP-OPERATOR 1133
PLUG (DRAIN, ENGINE OIL) 36
PLUG GP-CONNECTOR (64-PIN) 173
PLUG-DRAIN (HYDRAULIC TANK) 788 791
POWER TRAIN AR 336
PRECLEANER AR 89
PULLER-FUSE 269 276
PULLEY AS-IDLER 40
PULLEY GP-FAN & ALT DRIVE 42
PULLEY GP-FAN & ALT DRIVE–WITH IDLER PULLEY 41
PULLEY GP-IDLER 43 44
PUMP & MTG GP-AUXILIARY 759
PUMP & MTG GP-AUXILIARY–MEDIUM PRESSURE 758
PUMP & MTG GP-FUEL INJECTION 111 112
PUMP & MTG GP-MAIN HYDRAULIC 760
PUMP AR-FUEL TRANSFER 113
PUMP GP-FUEL INJECTION 114 115
PUMP GP-FUEL PRIMING 97 117
PUMP GP-FUEL PRIMING (MANUAL) 93
PUMP GP-FUEL TRANSFER 114 115 118 120 122
PUMP GP-GEAR 758 761
PUMP GP-GEAR (BLADE) 762
PUMP GP-MAIN HYDRAULIC 762
PUMP GP-WATER 60

NAME PAGE

PUMP-FUEL. 122

R

RADIATOR & HYD OIL COOLER GP. 62
65
68
71
74
76
RADIO GP–AM/FM 1134
1135
1137
REGULATOR (COOLANT TEMPERATURE). 58
REGULATOR AS-VOLTAGE 157
RELAY (24-VOLT) (BOOM FLOODLIGHT) 269
276
RELAY (24-VOLT) (CAB FLOODLIGHT) 269
276
RELAY (24-VOLT) (CHASSIS LIGHT) 269
276
RELAY (24-VOLT) (GPS). 287
RELAY (24-VOLT) (HORN) 269
276
RELAY (24-VOLT) (NEUTRAL START) 269
276
RELAY (24-VOLT) (TRAVEL ALARM) 269
276
RELAY (BLOWER). 1037
RELAY (COMPRESSOR CLUTCH). 1037
RELAY AS (WIPER) 1192
ROLLER AR-TRACK & CARRIER. 451
ROLLER GP-TRACK CARRIER. 452
ROLLER GP-TRACK-SINGLE FLANGE. 453

S

SCREEN AS (HYDRAULIC TANK) 767
SCREEN AS (OIL COOLER) 62
74
SCREEN AS (OIL COOLER) 76
SCREEN AS (RADIATOR) 62
74
SCREEN AS (RADIATOR) 76
SCREEN GP-HYDRAULIC–TANK 767
SCREEN GP-SUN 1138
SEAT & MOUNTING GP–HIGH BACK, TILT. . . 1139
1140
SEAT & MOUNTING GP–HIGH BACK, WITH HEATER 1141
1142
SEAT & MOUNTING GP–LOW BACK, TILT . . . 1143
1144
SEAT BELT GP (RETRACTABLE, 51-MM (2-IN)) 1152
1153
1154
SEAT BELT GP (RETRACTABLE, 76-MM (3-IN)) 1
6
9
10
1146
1149
1150
1151
SEAT BELT GP (RETRACTABLE) 10
11
SEAT BELT GP–RETRACTABLE 1147
1149
1150
1151
1152
1153
1154
SEAT BELT GP–RETRACTABLE, 76-MM (3-IN) 1145
1146
1148
SEAT GP-SUSPENSION–HIGH BACK, TILT . . . 1161
1162
SEAT GP-SUSPENSION–HIGH BACK, WITH HEATER 1163
SEAT GP-SUSPENSION–LOW BACK, TILT. . . . 1164
1165
SEAT GP–HIGH BACK, TILT 1155
1156
SEAT GP–HIGH BACK, WITH HEATER. 1157
SEAT GP–LOW BACK, TILT 1158
1159
1160
SENDER AS-FUEL LEVEL 132
134
136
138
140
142
144
146
148
150
152
SENDER AS-TEMPERATURE (HYDRAULIC OIL) 788
791
SENSOR AS-LIQUID LEVEL (WATER SEPARATOR) 249
SENSOR AS-PRESSURE (AUXILIARY HYDRAULIC) 605
SENSOR AS-PRESSURE (BOOM CYLINDER) 253
SENSOR AS-PRESSURE (PUMP CONTROL) . . 678
681
SENSOR AS-TEMPERATURE (AIR). 1037
SENSOR AS-TEMPERATURE (AMBIENT AIR TEMP) 936
939

INDEX

NAME PAGE

SENSOR AS-TEMPERATURE (COOLANT) 936
939
SENSOR GP-ENGINE 12
13
247
SENSOR GP-LIQUID LEVEL (WATER IN FUEL) 251
SENSOR GP-LIQUID LEVEL (WATER SEPARATOR) 7
SENSOR GP-LIQUID LEVEL (WATER SEPARATOR) 250
SENSOR GP-LIQUID LEVEL–WATER IN FUEL 249
250
251
252
SENSOR GP-PRESSURE 253
SENSOR GP-PRESSURE (AIR INLET MANIFOLD) 247
SENSOR GP-PRESSURE (AUXILIARY HYDRAULIC) 607
SENSOR GP-PRESSURE (ENGINE OIL) 247
SENSOR GP-PRESSURE (FUEL MANIFOLD) . . 247
SENSOR GP-PRESSURE (FUEL) 247
SENSOR GP-SPEED 115
SENSOR GP-SPEED (ENGINE) 247
SENSOR GP-SPEED (FUEL PUMP) 114
SENSOR GP-TEMPERATURE (AIR INLET) 247
SENSOR GP-TEMPERATURE (ENGINE COOLANT) 247
SENSOR GP-TEMPERATURE (FUEL) 247
SENSOR-TEMPERATURE (AMBIENT AIR) 931
933
1078
SHAFT GP-MOTOR 255
SHEET AS-SOUND SUPPRESSION 429
430
431
SIDECUTTER GP 924
925
SOFTWARE GP-ELECTRONIC 190
SOFTWARE GP-MONITOR 191
SPOOL GP-CONTROL VALVE–BOOM 1 776
SPOOL GP-CONTROL VALVE–BOOM I 782
SPOOL GP-CONTROL VALVE–BOOM II 777
781
SPOOL GP-CONTROL VALVE–BUCKET 770
SPOOL GP-CONTROL VALVE–COMBINED FLOW 772
SPOOL GP-CONTROL VALVE–STICK I 769
780
SPOOL GP-CONTROL VALVE–STICK II 778
SPOOL GP-CONTROL VALVE–STICK REGENERATION 771
SPOOL GP-CONTROL VALVE–SWING BOOM 775
SPOOL GP-CONTROL VALVE–SWING PRIORITY 773
SPOOL GP-CONTROL VALVE–TRAVEL, RH, LH 774
779

NAME PAGE

SPOOL GP-CONTROL VALVE–WORK TOOL . . . 768
SPRING AS-GAS (FRONT WINDOW GUARD) 1059
1061
1064
1091
SPRING AS-GAS (HATCH) 1072
1074
SPRING-GAS (ENGINE HOOD) 426
SPROCKET GP 337
STARTING AR-COLD WEATHER 254
STARTING MOTOR GP-ELECTRIC 255
STEP GP 432
433
434
STICK AR-HOE 884
STICK AR-HOE–HEAVY-DUTY 884
STICK AR-HOE–REACH, HEAVY-DUTY, AUXILIARY 884
STICK GP-HOE–HEAVY-DUTY 885
STICK GP-HOE–HEAVY-DUTY, REACH 887
STICK GP-HOE–WITHOUT AUXILIARY 886
STORAGE GP-VANDALISM GUARD 435
STRAINER 53
STRAINER (REFUELING) 120
STRAINER AS-FUEL (FLOAT GAUGE) 132
134
136
138
140
142
144
146
148
150
152
SUPPORT AS-ENCLOSURE 436
SUPPORT GP-LINES 783
784
SUPPORT GP-SEAT 1166
SUSPENSION GP-SEAT–AIR 1171
SUSPENSION GP-SEAT–MECHANICAL 1167
1168
1169
1170
1172
SWITCH (WINDOW LOWER LIMIT) 1177
SWITCH AS (HYDRAULIC FILTER BYPASS) . . . 533
534
SWITCH AS-FOOT PEDAL (WORK TOOL) 1023
SWITCH AS-LIMIT (HYDRAULIC LOCKOUT) . . . 546
SWITCH AS-LIQUID LEVEL (ENGINE OIL) 36
SWITCH AS-LIQUID LEVEL (FUEL TANK SHUTOFF) 118
120
SWITCH AS-LIQUID LEVEL (HYDRAULIC OIL) 788
791
SWITCH AS-MAGNETIC (24-VOLT) (HEATER RELAY) 221

INDEX

NAME PAGE

SWITCH AS-MAGNETIC (24-VOLT) (MAIN RELAY) . . . 269, 276
SWITCH AS-PRESSURE (ACTION INPUT, BOOM UP) . . . 732
SWITCH AS-PRESSURE (HYDRAULIC OIL) 788, 791
SWITCH AS-PRESSURE (IMPLEMENT, SWING) . . . 638, 648, 651, 724, 726, 728
SWITCH AS-PRESSURE (PILOT, BOOM LOWER) . . . 655, 663, 671
SWITCH AS-PRESSURE (PILOT, BOOM UP) . . 684, 691, 696, 702, 708
SWITCH AS-PRESSURE (REFRIGERANT) 1094
SWITCH AS-PRESSURE (TRAVEL) . . . 648, 651
SWITCH AS-PUSH BUTTON (HORN) . . . 1030
SWITCH AS-PUSH BUTTON (MANUAL LOW IDLE) . . . 1032
SWITCH AS-ROCKER (FINE SWING) . . . 269, 276
SWITCH AS-ROCKER (HEATED SEAT) . . . 1141, 1142
SWITCH AS-ROCKER (LEVELING) . . . 270, 278
SWITCH AS-ROCKER (RADIO MUTE) . . . 1084
SWITCH AS-ROCKER (WASHER, LOWER) 268
SWITCH AS-ROCKER (WIPER, LOWER) . . . 268
SWITCH AS-ROLLER (LOWER WASHER/WIPER, DISABLE) . . . 1189
SWITCH AS-TOGGLE (AUTO/MANUAL ENG SPEED CONTROL) . . . 296
SWITCH AS-TOGGLE (MANUAL ENGINE SPEED CONTROL) . . . 296
SWITCH AS-TOGGLE (QUICK COUPLER LOCK) . . . 266
SWITCH GP-DISCONNECT–BATTERY . . . 257
SWITCH GP-MAGNETIC . . . 258
SWITCH GP-MAGNETIC (24-VOLT) . . . 260
SWITCH GP-MAGNETIC (24-VOLT) (START RELAY) . . . 228
SWITCH GP-MAGNETIC–AIR INLET HEATER . . . 259
SWITCH GP-MAGNETIC–AIR INLET HEATER RELAY . . . 260
SWITCH GP-MAGNETIC–START RELAY . . . 261
SWITCH GP-PEDAL . . . 1023
SWITCH GP-ROTARY–THROTTLE POSITION . . . 262, 263
SWITCH GP-START (ENGINE, KEY) . . . 233, 239, 241
SWITCH GP-START–ENGINE, KEY . . . 264, 265
SWITCH GP-TOGGLE–QUICK COUPLER . . . 266
SWITCH GP-TOGGLE–QUICK COUPLER LOCK . . . 267
SWITCH GP-WIPER–LOWER . . . 268
SWITCH-MAGNETIC (24-VOLT) (START RELAY) . . . 269, 276
SWITCH-TOGGLE (SECONDARY SHUTDOWN) . . . 313
SWIVEL GP . . . 785, 786

T

TANK & FILTER GP-HYDRAULIC . . . 788, 791
TANK & MTG AR-FUEL . . . 123
TANK & MTG GP-FUEL . . . 124, 125, 126, 127, 128, 129, 130, 131
TANK & MTG GP-HYDRAULIC . . . 794
TANK GP-FUEL . . . 132, 134, 136, 138, 140, 142, 144, 146, 148, 150, 152
TIP GP-LONG (J-250) . . . 898, 899, 900
TIP GP-LONG–J-250 . . . 926
TIP GP-LONG–J-300, HEAVY-DUTY . . . 927
TIP GP-PENETRATION PLUS–J-300 . . . 928
TRACK ADJUSTER & RECOIL GP . . . 456, 457
TRACK ADJUSTER & RECOIL GP–LH . . . 455
TRACK ADJUSTER & RECOIL GP–RH . . . 454
TRACK GP–2-REQUIRED . . . 458, 459
TURBOCHARGER GP . . . 90, 91

NAME PAGE

V

V-BELT (REFRIGERANT COMPRESSOR) 1005
1006
VALVE (PRESSURE RELIEF) 53
VALVE & MTG GP-AUXILIARY 795
VALVE & MTG GP-CONTROL. 796
797
VALVE AR-ALT PATTERN CONTROL–2-WAY. 798
VALVE AR–4-WAY PATTERN 798
VALVE AS-RELIEF (FUEL RAIL) 109
VALVE AS-RELIEF (LINE, MEDIUM PRESSURE) 799
VALVE GP-BANK–MEDIUM PRESSURE. 799
800
VALVE GP-CHECK (HYD CYLINDER, QUICK COUPLER). 513
VALVE GP-CHECK–COOLER BYPASS. 801
VALVE GP-CONTROL 802
804
805
VALVE GP-COUNTERBALANCE 863
VALVE GP-FLOW CONTROL (MEDIUM PRESSURE) 802
VALVE GP-FUEL SHUTOFF. 154
VALVE GP-MAIN CONTROL 807
813
819
VALVE GP-MANUAL–AUXILIARY, SHUTOFF . . . 825
VALVE GP-PILOT 826
VALVE GP-PILOT (ALT PATTERN CONTROL, 2-WAY) 724
726
728
VALVE GP-PILOT RELIEF (HYDRAULIC FILTER). 530
VALVE GP-PILOT–JOYSTICK. 830
832
VALVE GP-PILOT–TRAVEL. 828
VALVE GP-PILOT–WITHOUT SHUTTLE 834
VALVE GP-PRESSURE REDUCING–BOOM, SWING PRIORITY. 836
837
VALVE GP-RELIEF 839
840
842
VALVE GP-RELIEF (AUXILIARY PUMP). 799
VALVE GP-RELIEF–LINE. 841
VALVE GP-SELECTOR–CONTROL PATTERN CHANGE. 843
VALVE GP-SHUTTLE 845
846
847
848
849
VALVE GP-SOLENOID 851
853
854
855
856

NAME PAGE

VALVE GP-SOLENOID (24-VOLT) (QUICK COUPLER). 858
VALVE GP-SOLENOID (HEAVY LIFT). 684
690
696
702
708
VALVE GP-SOLENOID (HYDRAULIC LOCKOUT). 748
749
VALVE GP-SOLENOID (NEG FLOW CONT, PROPN RED VALVE). 686
692
698
704
VALVE GP-SOLENOID (NEGATIVE FLOW CONTROL). 710
VALVE GP-SOLENOID (PRESSURE REDUCING). 684
690
696
702
708
853
854
855
857
859
VALVE GP-SOLENOID (PRESSURE REDUCING) (PILOT LINES) 718
720
VALVE GP-SOLENOID (PRESSURE REDUCING) (PRESSURE REDUCING) 762
VALVE GP-SOLENOID (SWING BRAKE RELEASE) 748
749
VALVE GP-SOLENOID (TRAVEL SPEED) 748
749
VALVE GP-SOLENOID & MANIFOLD 858
VALVE GP-SOLENOID & MANIFOLD (QUICK COUPLER). 600
622
626
VALVE GP-SOLENOID & PRESS REDC 655
663
671
859
VALVE GP-SOLENOID & RELIEF 860
861
862
VALVE GP-SOLENOID & RELIEF (AUXILIARY, COMBINED FN, LH) 605
607
VALVE GP-SOLENOID & RELIEF (AUXILIARY, COMBINED FN, RH). 605
607
VALVE GP-SOLENOID–HEAVY LIFT 852
VALVE GP-SOLENOID–NEGATIVE FLOW CONTROL 857
VALVE GP-SOLENOID–PRESSURE REDUCING 850

NAME PAGE

VALVE GP-TRAVEL COUNTERBALANCE 863
865
VALVE MECHANISM GP. 45
VISOR GP-CAB–SUN 1173

W

WASHER GP-WINDOW 1174
WASHER GP-WINDOW–LOWER. 1175
WINDOW GP-CAB–FRONT, LOWER 1180
1183
WINDOW GP-CAB–FRONT, UPPER 1177
1181
1185
WINDOW GP-CAB–SIDE, REAR 1186
WINDOW GP-DOOR. 1187
WIPER & WASHER GP-WINDOW–LOWER. . . . 1189
WIPER AR-WINDOW 1191
WIPER GP-WINDOW–FRONT, UPPER 1192
WIRING GP-CAB 269
276
WIRING GP-CAB–WORK AREA VISUAL SYSTEM, REAR. 284
WIRING GP-CAMERA–WORK AREA VISUAL SYSTEM, REAR. 285
WIRING GP-COMMUNICATION. 287
WIRING GP-COMMUNICATION–PRODUCT LINK. 291
WIRING GP-COMMUNICATION–PRODUCT LINK 522. 289
WIRING GP-CONSOLE 295
WIRING GP-CONSOLE–LH. 293
WIRING GP-CONSOLE–RH 296
WIRING GP-CONTROL–AUXILIARY, COMBINED FUNCTION. 298
WIRING GP-CONVERTER. 300
302
WIRING GP-ELECTRONIC CONTROL 303
306
WIRING GP-FUEL PUMP–REFUELING PUMP 308
WIRING GP-HEATER 309
WIRING GP-HYDRAULIC CONTROL–RETURN, FILTER 310
WIRING GP-MEDIUM PRESSURE 311
312
WIRING GP-PLATFORM 313
WIRING GP-QUICK COUPLER 316

MEMORANDA

MACHINE ARRANGEMENT

301-2680 CHASSIS AR

S/N: DLP1-UP

PART OF 301-2679 GENERAL AR

SMCS-7000 **i05355498**

NOTE	PART NUMBER	QTY	PART NAME 1 2 3 4 5 6 (PRODUCT LEVEL)	SEE PAGE
Y	*275-7050*	1	BATTERY & WIRING GP	159
Y	*244-8039*	1	BOX & MTG GP-STORAGE	338
Y	*278-3591*	1	COUNTERWEIGHT & MOUNTING GP	342
Y	*244-8041*	1	FENDER & COVER GP (WITH STEP)	398
Y	*278-9259*	1	FRAME GP-UPPER	400
Y	*278-3747*	1	GUARD GP-BOTTOM	419
Y	*170-2602*	1	HANDRAIL GP (FRONT, RH)	423
Y	*273-8101*	1	HOOD & GUARD GP	424
Y	*275-6874*	1	HORN GP-ELECTRIC	1081
Y	*4I-5409*	1	LIGHTING GP-FLOOD (CHASSIS)	217
Y	*273-5350*	1	LINES GP-AIR CONDITIONER	1094
Y	*278-3749*	1	LINES GP-FUEL	105
			S/N: DLP1-631	
Y	*375-8632*	1	LINES GP-FUEL	107
			S/N: DLP632-UP	
Y	*7Y-0059*	1	LITERATURE GP	1101
Y	*142-3836*	1	MIRROR GP-REAR VIEW	1108
Y	*245-7811*	1	MOUNTING GP-PLATFORM	1126
Y	*273-5363*	1	OPERATOR AR	1128
			S/N: DLP1-389	
Y	*340-6773*	1	OPERATOR AR	1128
			S/N: DLP390-UP	
Y	*301-2682*	1	PLATE & FILM GP	1211
Y	*278-3750*	1	TANK & MTG GP-FUEL	124
Y	*319-1398*	1	WIRING GP-HEATER	309
			S/N: DLP1-389	

Y - SEPARATE ILLUSTRATION

<END>

336-3345 DISTRIBUTION AR

S/N: DLP1-UP

AN ATTACHMENT

SMCS-7000 **i03903262**

NOTE	PART NUMBER	QTY	PART NAME 1 2 3 4 5 6 (PRODUCT LEVEL)	SEE PAGE
Y	*251-0542*	1	PANEL GP-SWITCH (ENGINE SPEED, START)	233
Y	*305-0466*	1	SEAT BELT GP (RETRACTABLE, 76-MM (3-IN))	1149
Y	*275-6883*	1	WIRING GP-CONVERTER (12-VOLT, 7-AMPERE)	300

Y - SEPARATE ILLUSTRATION

<END>

359-2474 DISTRIBUTION AR

S/N: DLP1-UP

AN ATTACHMENT

SMCS-7000 **i04324055**

NOTE	PART NUMBER	QTY	PART NAME 1 2 3 4 5 6 (PRODUCT LEVEL)	SEE PAGE
Y	*310-0078*	1	CONTROL & MTG GP-JOYSTICK	1027
Y	*336-3353*	1	OPTION AR-CAB (COMFORT)	7
Y	*359-2483*	1	OPTION AR-REGIONAL	10
Y	*176-4863*	2	TRACK GP	458
Y	*229-9070*	1	WASHER GP-WINDOW	1174
	284-4376	1	FLOOR MAT	

Y - SEPARATE ILLUSTRATION

<END>

367-8776 DISTRIBUTION AR

S/N: DLP1-UP

AN ATTACHMENT

SMCS-7000 **i04324256**

NOTE	PART NUMBER	QTY	PART NAME 1 2 3 4 5 6 (PRODUCT LEVEL)	SEE PAGE
Y	*310-0078*	1	CONTROL & MTG GP-JOYSTICK	1027
Y	*336-3353*	1	OPTION AR-CAB (COMFORT)	7
Y	*359-2483*	1	OPTION AR-REGIONAL	10
Y	*176-4863*	2	TRACK GP	458
Y	*229-9070*	1	WASHER GP-WINDOW	1174
	284-4376	1	FLOOR MAT	

Y - SEPARATE ILLUSTRATION

<END>

367-8790 DISTRIBUTION AR

S/N: DLP1-UP

AN ATTACHMENT

SMCS-7000 **i04508030**

NOTE	PART NUMBER	QTY	PART NAME 1 2 3 4 5 6 (PRODUCT LEVEL)	SEE PAGE
Y	*310-0078*	1	CONTROL & MTG GP-JOYSTICK	1027
Y	*314-3848*	1	FILM GP (CHART) (CHINA)	1208
Y	*336-3353*	1	OPTION AR-CAB	7
Y	*367-8791*	1	OPTION AR-REGIONAL	10
Y	**176-4863**	2	TRACK GP (2-REQUIRED)	458
Y	*229-9070*	1	WASHER GP-WINDOW (LOWER)	1174
	284-4376	1	FLOOR MAT	

Y - SEPARATE ILLUSTRATION

<END>

367-8792 DISTRIBUTION AR

S/N: DLP1-UP

AN ATTACHMENT

SMCS-7000 **i04508130**

NOTE	PART NUMBER	QTY	PART NAME 1 2 3 4 5 6 (PRODUCT LEVEL)	SEE PAGE
Y	*310-0078*	1	CONTROL & MTG GP-JOYSTICK	1027
Y	*314-3848*	1	FILM GP (CHART) (CHINA)	1208
Y	*336-3353*	1	OPTION AR-CAB	7
Y	*367-8791*	1	OPTION AR-REGIONAL	10
Y	**176-4863**	2	TRACK GP (2-REQUIRED)	458
Y	*229-9070*	1	WASHER GP-WINDOW (LOWER)	1174
	284-4376	1	FLOOR MAT	

Y - SEPARATE ILLUSTRATION

<END>

379-7089 DISTRIBUTION AR

S/N: DLP1-UP

AN ATTACHMENT

SMCS-7000 **i04508398**

NOTE	PART NUMBER	QTY	PART NAME 1 2 3 4 5 6 (PRODUCT LEVEL)	SEE PAGE
Y	*310-0078*	1	CONTROL & MTG GP-JOYSTICK	1027
Y	*314-3848*	1	FILM GP (CHART)	1208
Y	*336-3353*	1	OPTION AR-CAB	7
Y	*379-7090*	1	OPTION AR-REGIONAL	11
Y	**176-4863**	2	TRACK GP (2-REQUIRED)	458
Y	*229-9070*	1	WASHER GP-WINDOW	1174
	284-4376	1	FLOOR MAT	

Y - SEPARATE ILLUSTRATION

<END>

379-7091 DISTRIBUTION AR

S/N: DLP1-UP

AN ATTACHMENT

SMCS-7000 **i04508575**

NOTE	PART NUMBER	QTY	PART NAME 1 2 3 4 5 6 (PRODUCT LEVEL)	SEE PAGE
Y	*310-0078*	1	CONTROL & MTG GP-JOYSTICK	1027
Y	*314-3848*	1	FILM GP (CHART) (CHINA)	1208
Y	*336-3353*	1	OPTION AR-CAB	7
Y	*379-7090*	1	OPTION AR-REGIONAL	11
Y	**176-4863**	2	TRACK GP (2-REQUIRED)	458
Y	*229-9070*	1	WASHER GP-WINDOW (LOWER)	1174
	284-4376	1	FLOOR MAT	

Y - SEPARATE ILLUSTRATION

<END>

MACHINE ARRANGEMENT

301-2679 GENERAL AR

S/N: DLP1-UP

SMCS-7000 **i04786189**

NOTE	PART NUMBER	QTY	PART NAME 1 2 3 4 5 6 (PRODUCT LEVEL)	SEE PAGE
Y	*301-2680*	1	CHASSIS AR	1
Y	**279-7527**	1	ELECTRONICS GP-MACHINE (ECM)	191
Y	**221-8861**	1	ELECTRONICS GP-MONITOR	191
Y	**279-7810**	1	ENGINE AR-COMPLETE	14
			S/N: DLP1-389	
Y	**324-4022**	1	ENGINE AR-COMPLETE	14
			S/N: DLP390-UP	
Y	*301-2681*	1	FRAME AR-UNDERCARRIAGE	437
Y	*270-5864*	1	HYDRAULIC AR	545
Y	*279-7794*	1	INSTALLATION AR-ENGINE	15
			S/N: DLP1-622	
Y	*379-4447*	1	INSTALLATION AR-ENGINE	15
			S/N: DLP623-UP	
Y	*267-6804*	1	POWER TRAIN AR	336

Y - SEPARATE ILLUSTRATION

<END>

301-2691 INSTALLATION AR-BLADE

S/N: DLP1-UP
CANNOT BE USED WITH 270-6119—PAGE: 470
PART OF 336-3380, 336-3381 OPTION AR-WORK TOOL
AN ATTACHMENT

SMCS-6060 **i06285966**

NOTE	PART NUMBER	QTY	PART NAME 1 2 3 4 5 6 (PRODUCT LEVEL)	SEE PAGE
Y	*316-8851*	1	CONTROL GP-BLADE	1029
Y	*274-2678*	1	CYLINDER & LINES GP-BLADE (LH)	476
			—OR—	
Y	*326-4443*	1	CYLINDER & LINES GP-BLADE (LH)	476
Y	*274-2679*	1	CYLINDER & LINES GP-BLADE (RH)	476
			—OR—	
Y	*326-4449*	1	CYLINDER & LINES GP-BLADE (RH)	476
Y	*291-7764*	1	FASTENER GP-WIRING HARNESS (BLADE)	196
Y	**278-9352**	1	FRAME AS-UNDERCARRIAGE	440
			—OR—	
Y	**350-6526**	1	FRAME AS-UNDERCARRIAGE	441
Y	*199-4573*	1	GEAR & BEARING GP-SWING	410
			—OR—	
Y	*378-9597*	1	GEAR & BEARING GP-SWING	416
Y	*289-7814*	1	GUARD GP-CYLINDER (BLADE)	874
			—OR—	
Y	*326-4440*	1	GUARD GP-CYLINDER (BLADE)	875
Y	*278-6730*	1	LINES GP-BLADE	561
Y	*278-6728*	1	LINES GP-BLADE CYLINDER	565
Y	*317-4815*	1	LINES GP-PILOT (BLADE)	732
Y	*278-6731*	1	LINES GP-PUMP (BLADE)	736
Y	*194-8936*	1	PLATE & FILM GP (BLADE)	1210
Y	*259-0917*	1	PUMP & MTG GP-AUXILIARY (MEDIUM PRESSURE)	758

Y - SEPARATE ILLUSTRATION

<END>

385-4069 INSTALLATION AR-BLADE

S/N: DLP1-UP

AN ATTACHMENT

SMCS-6060 **i05983475**

NOTE	PART NUMBER	QTY	PART NAME 1 2 3 4 5 6 (PRODUCT LEVEL)	SEE PAGE
Y	*316-8851*	1	CONTROL GP-BLADE	1029
Y	*385-2838*	1	CYLINDER & LINES GP-BLADE (LH)	477
Y	*385-2840*	1	CYLINDER & LINES GP-BLADE (RH)	477
Y	*291-7764*	1	FASTENER GP-WIRING HARNESS (BLADE)	196
Y	**278-9352**	1	FRAME AS-UNDERCARRIAGE	440
			—OR—	
Y	**350-6526**	1	FRAME AS-UNDERCARRIAGE	441
Y	*378-9597*	1	GEAR & BEARING GP-SWING	416
Y	*326-4440*	1	GUARD GP-CYLINDER (BLADE)	875
Y	*278-6730*	1	LINES GP-BLADE	561
Y	*278-6728*	1	LINES GP-BLADE CYLINDER	565
Y	*317-4815*	1	LINES GP-PILOT (BLADE)	732
Y	*387-3697*	1	LINES GP-PUMP (MEDIUM PRESSURE, WITH BLADE)	739
Y	*194-8936*	1	PLATE & FILM GP (BLADE)	1210
Y	*342-1891*	1	PUMP & MTG GP-AUXILIARY (MEDIUM PRESSURE)	759

Y - SEPARATE ILLUSTRATION

<END>

336-3346 OPTION AR-CAB

S/N: DLP1-UP

AN ATTACHMENT

SMCS-7000 **i03516560**

NOTE	PART NUMBER	QTY	PART NAME 1 2 3 4 5 6 (PRODUCT LEVEL)	SEE PAGE
Y	*301-2543*	1	BOOM AR-1 PIECE LONG (HEAVY-DUTY)	867
Y	**316-8814**	1	CAB GP	974
			—OR—	
Y	**229-9108**	1	CAB GP	945
Y	*260-7067*	1	LINKAGE AR-BUCKET (WITH LIFTING EYE)	877
Y	*251-0542*	1	PANEL GP-SWITCH (ENGINE SPEED, START)	233
Y	*305-0466*	1	SEAT BELT GP (RETRACTABLE, 76-MM (3-IN))	1149
Y	*301-2544*	1	STICK AR-HOE (HEAVY-DUTY)	884
Y	*283-2761*	1	WIRING GP-COMMUNICATION (GLOBAL POSITIONING SYSTEM)	287
Y	*275-6883*	1	WIRING GP-CONVERTER (12-VOLT, 7-AMPERE)	300

Y - SEPARATE ILLUSTRATION

<END>

336-3352 OPTION AR-CAB

S/N: DLP1-UP

AN ATTACHMENT

SMCS-7000 **i03977193**

NOTE	PART NUMBER	QTY	PART NAME 1 2 3 4 5 6 (PRODUCT LEVEL)	SEE PAGE
Y	*284-4573*	1	HEATER AR-CAB	1080
Y	*327-6501*	1	SEAT & MOUNTING GP (HIGH BACK, TILT)	1140
Y	*279-7796*	1	SENSOR GP-LIQUID LEVEL (WATER SEPARATOR)	250

Y - SEPARATE ILLUSTRATION

<END>

336-3353 OPTION AR-CAB

S/N: DLP1-UP

PART OF 359-2474, 367-8776, 367-8790, 367-8792, 379-7089, 379-7091 DISTRIBUTION AR

AN ATTACHMENT

SMCS-7000 **i05214278**

NOTE	PART NUMBER	QTY	PART NAME 1 2 3 4 5 6 (PRODUCT LEVEL)	SEE PAGE
Y	*235-9003*	1	AIR CONDITIONER AR	935
Y	*327-6501*	1	SEAT & MOUNTING GP (HIGH BACK, TILT)	1140
Y	*279-7796*	1	SENSOR GP-LIQUID LEVEL (WATER SEPARATOR)	250

Y - SEPARATE ILLUSTRATION

<END>

336-3354 OPTION AR-CAB

S/N: DLP1-UP

AN ATTACHMENT

SMCS-7000 **i03977196**

NOTE	PART NUMBER	QTY	PART NAME 1 2 3 4 5 6 (PRODUCT LEVEL)	SEE PAGE
Y	*235-9003*	1	AIR CONDITIONER AR	935
Y	**234-6500**	1	COVER GP-STORAGE (CAB, REAR)	1047
Y	*245-7881*	1	SCREEN GP-SUN	1138
Y	*327-6503*	1	SEAT & MOUNTING GP (HIGH BACK, WITH HEATER)	1141
Y	*279-7796*	1	SENSOR GP-LIQUID LEVEL (WATER SEPARATOR)	250

Y - SEPARATE ILLUSTRATION

<END>

336-3371 OPTION AR-GUARD

S/N: DLP1-UP

AN ATTACHMENT

SMCS-7000 **i03977204**

NOTE	PART NUMBER	QTY	PART NAME 1 2 3 4 5 6 (PRODUCT LEVEL)	SEE PAGE
Y	*278-3748*	1	GUARD GP-BOTTOM	420
Y	*137-2813*	1	GUARD GP-SWIVEL	422

Y - SEPARATE ILLUSTRATION

<END>

336-3372 OPTION AR-GUARD

S/N: DLP1-UP

AN ATTACHMENT

SMCS-7000 **i03977205**

NOTE	PART NUMBER	QTY	PART NAME 1 2 3 4 5 6 (PRODUCT LEVEL)	SEE PAGE
Y	*260-7115*	1	GUARD AR-VANDALISM	1058
Y	*278-3748*	1	GUARD GP-BOTTOM	420
Y	*137-2813*	1	GUARD GP-SWIVEL	422

Y - SEPARATE ILLUSTRATION

<END>

336-3356 OPTION AR-HYDRAULIC

S/N: DLP1-UP

FOR USE WITH 284-4377—PAGE: 1056

AN ATTACHMENT

SMCS-7000 **i05185410**

NOTE	PART NUMBER	QTY	PART NAME 1 2 3 4 5 6 (PRODUCT LEVEL)	SEE PAGE
Y	*255-5843*	1	CONTROL AR-AUXILIARY (JOYSTICK, MODULATION SWITCH)	468
Y	*270-5843*	1	CONTROL AR-AUXILIARY (SYSTEM 23, COMBINED FUNCTION)	468
Y	*270-5846*	1	CONTROL AR-AUXILIARY	469
Y	*278-6714*	1	LINES GP-PILOT (SUPPLY)	722

Y - SEPARATE ILLUSTRATION

<END>

336-3382 OPTION AR-HYDRAULIC

S/N: DLP1-UP

AN ATTACHMENT

SMCS-7000 **i05185599**

NOTE	PART NUMBER	QTY	PART NAME 1 2 3 4 5 6 (PRODUCT LEVEL)	SEE PAGE
Y	*255-5843*	1	CONTROL AR-AUXILIARY (JOYSTICK, MODULATION SWITCH)	468
Y	*270-5843*	1	CONTROL AR-AUXILIARY (SYSTEM 23, COMBINED FUNCTION)	468
Y	*270-5859*	1	CONTROL AR-AUXILIARY	469
Y	*270-5846*	1	CONTROL AR-AUXILIARY	469
Y	*278-6714*	1	LINES GP-PILOT (SUPPLY)	722

Y - SEPARATE ILLUSTRATION

<END>

336-3393 OPTION AR-HYDRAULIC

S/N: DLP1-UP

AN ATTACHMENT

SMCS-7000 **i05185601**

NOTE	PART NUMBER	QTY	PART NAME 1 2 3 4 5 6 (PRODUCT LEVEL)	SEE PAGE
Y	*310-0078*	1	CONTROL & MTG GP-JOYSTICK	1027
Y	*270-5846*	1	CONTROL AR-AUXILIARY	469
Y	*278-6714*	1	LINES GP-PILOT (SUPPLY)	722

Y - SEPARATE ILLUSTRATION

<END>

336-3370 OPTION AR-LIGHTING

S/N: DLP1-UP
AN ATTACHMENT

SMCS-7000 **i03977201**

NOTE	PART NUMBER	QTY	PART NAME 1 2 3 4 5 6 (PRODUCT LEVEL)	SEE PAGE
Y	*238-1627*	1	LIGHTING GP-FLOOD (CAB)	209
Y	*291-7762*	1	LIGHTING GP-FLOOD (BOOM, RH)	214

Y - SEPARATE ILLUSTRATION

<END>

336-3389 OPTION AR-LIGHTING

S/N: DLP1-UP
AN ATTACHMENT

SMCS-7000 **i03977211**

NOTE	PART NUMBER	QTY	PART NAME 1 2 3 4 5 6 (PRODUCT LEVEL)	SEE PAGE
Y	*178-5549*	1	GUARD AR-OVERHEAD (FALLING OBJECTS GUARD SYSTEM)	1058
Y	*238-1628*	1	LIGHTING GP-FLOOD (CAB GUARD)	211
Y	*291-7762*	1	LIGHTING GP-FLOOD (BOOM, RH)	214

Y - SEPARATE ILLUSTRATION

<END>

379-7190 OPTION AR-LIGHTING

S/N: DLP1-UP
AN ATTACHMENT

SMCS-7000 **i04715450**

NOTE	PART NUMBER	QTY	PART NAME 1 2 3 4 5 6 (PRODUCT LEVEL)	SEE PAGE
Y	*291-7762*	1	LIGHTING GP-FLOOD (BOOM, RH)	214
Y	*366-9342*	1	LIGHTING GP-FLOOD (CAB)	215

Y - SEPARATE ILLUSTRATION

<END>

351-9714 OPTION AR-REGIONAL

S/N: DLP1-UP
AN ATTACHMENT

SMCS-7000 **i03998395**

NOTE	PART NUMBER	QTY	PART NAME 1 2 3 4 5 6 (PRODUCT LEVEL)	SEE PAGE
Y	*301-2543*	1	BOOM AR-1 PIECE LONG (HEAVY-DUTY)	867
Y	*346-8039*	1	CAB GP	980
Y	*260-7067*	1	LINKAGE AR-BUCKET (WITH LIFTING EYE)	877
Y	*251-0542*	1	PANEL GP-SWITCH (ENGINE SPEED, START)	233
Y	*305-0466*	1	SEAT BELT GP (RETRACTABLE, 76-MM (3-IN))	1149
Y	*301-2544*	1	STICK AR-HOE (HEAVY-DUTY)	884
Y	*283-2761*	1	WIRING GP-COMMUNICATION (GLOBAL POSITIONING SYSTEM)	287
Y	*275-6883*	1	WIRING GP-CONVERTER (12-VOLT, 7-AMPERE)	300

Y - SEPARATE ILLUSTRATION

<END>

359-2252 OPTION AR-REGIONAL

S/N: DLP1-UP

AN ATTACHMENT

SMCS-7000 **i03998396**

NOTE	PART NUMBER	QTY	PART NAME 1 2 3 4 5 6 (PRODUCT LEVEL)	SEE PAGE
Y	*301-2543*	1	BOOM AR-1 PIECE LONG (HEAVY-DUTY)	867
Y	*346-8039*	1	CAB GP	980
Y	*260-7067*	1	LINKAGE AR-BUCKET (WITH LIFTING EYE)	877
Y	*251-0542*	1	PANEL GP-SWITCH (ENGINE SPEED, START)	233
Y	*305-0466*	1	SEAT BELT GP (RETRACTABLE, 76-MM (3-IN))	1149
Y	*301-2544*	1	STICK AR-HOE (HEAVY-DUTY)	884
Y	*283-2761*	1	WIRING GP-COMMUNICATION (GLOBAL POSITIONING SYSTEM)	287
Y	*350-8254*	1	WIRING GP-CONVERTER (12-VOLT, 10-AMPERE)	302

Y - SEPARATE ILLUSTRATION

<END>

359-2483 OPTION AR-REGIONAL

S/N: DLP1-UP

PART OF 359-2474, 367-8776 DISTRIBUTION AR

AN ATTACHMENT

SMCS-7000 **i04317832**

NOTE	PART NUMBER	QTY	PART NAME 1 2 3 4 5 6 (PRODUCT LEVEL)	SEE PAGE
Y	*301-2543*	1	BOOM AR-1 PIECE LONG (HEAVY-DUTY)	867
Y	*346-8037*	1	CAB GP	978
Y	*260-7067*	1	LINKAGE AR-BUCKET (WITH LIFTING EYE)	877
Y	*251-0542*	1	PANEL GP-SWITCH (ENGINE SPEED, START)	233
Y	*305-0467*	1	SEAT BELT GP (RETRACTABLE)	1152
Y	*301-2544*	1	STICK AR-HOE (HEAVY-DUTY)	884
Y	*369-0033*	1	WIRING GP-COMMUNICATION (PRODUCT LINK)	291

Y - SEPARATE ILLUSTRATION

<END>

367-8791 OPTION AR-REGIONAL

S/N: DLP1-UP

PART OF 367-8790, 367-8792 DISTRIBUTION AR

AN ATTACHMENT

SMCS-7000 **i05227545**

NOTE	PART NUMBER	QTY	PART NAME 1 2 3 4 5 6 (PRODUCT LEVEL)	SEE PAGE
Y	*301-2543*	1	BOOM AR-1 PIECE LONG (HEAVY-DUTY)	867
Y	*346-8037*	1	CAB GP	978
Y	*367-8780*	1	CONTROL AR-COMMUNICATION (PRODUCT LINK CELLULAR)	189
Y	*379-7295*	1	LINKAGE AR-BUCKET (WITHOUT LIFTING EYE)	877
Y	*251-0542*	1	PANEL GP-SWITCH (ENGINE SPEED, START)	233
Y	*305-0467*	1	SEAT BELT GP (RETRACTABLE)	1152
Y	*301-2544*	1	STICK AR-HOE (HEAVY-DUTY)	884

Y - SEPARATE ILLUSTRATION

<END>

379-7090 OPTION AR-REGIONAL

S/N: DLP1-UP
PART OF 379-7089, 379-7091 DISTRIBUTION AR
AN ATTACHMENT

SMCS-7000 **i04633971**

NOTE	PART NUMBER	QTY	PART NAME 1 2 3 4 5 6 (PRODUCT LEVEL)	SEE PAGE
Y	*301-2543*	1	BOOM AR-1 PIECE LONG (HEAVY-DUTY)	867
Y	*346-8037*	1	CAB GP	978
Y	*379-7295*	1	LINKAGE AR-BUCKET (WITHOUT LIFTING EYE)	877
Y	*251-0542*	1	PANEL GP-SWITCH (ENGINE SPEED, START)	233
Y	*305-0467*	1	SEAT BELT GP (RETRACTABLE)	1152
Y	*301-2544*	1	STICK AR-HOE (HEAVY-DUTY)	884
Y	*369-0033*	1	WIRING GP-COMMUNICATION (PRODUCT LINK)	291

Y - SEPARATE ILLUSTRATION

<END>

336-3380 OPTION AR-WORK TOOL

S/N: DLP1-UP
AN ATTACHMENT

SMCS-6700, 7000 **i03998401**

NOTE	PART NUMBER	QTY	PART NAME 1 2 3 4 5 6 (PRODUCT LEVEL)	SEE PAGE
Y	*282-4576*	1	BLADE & MOUNTING GP (2490-MM)	889
Y	*301-2691*	1	INSTALLATION AR-BLADE	5

Y - SEPARATE ILLUSTRATION

<END>

336-3381 OPTION AR-WORK TOOL

S/N: DLP1-UP
AN ATTACHMENT

SMCS-6700, 7000 **i03998399**

NOTE	PART NUMBER	QTY	PART NAME 1 2 3 4 5 6 (PRODUCT LEVEL)	SEE PAGE
Y	*282-4579*	1	BLADE & MOUNTING GP	890
Y	*301-2691*	1	INSTALLATION AR-BLADE	5

Y - SEPARATE ILLUSTRATION

<END>

279-7814 ENGINE AR

S/N: JKH1-UP

PART OF 279-7810, 279-7811, 324-4022, 324-4023 ENGINE AR-COMPLETE

ALSO AN ATTACHMENT

SMCS-1000 **i03698363**

NOTE	PART NUMBER	QTY	PART NAME 1 2 3 4 5 6 (PRODUCT LEVEL)	SEE PAGE
Y	*296-4792*	1	ADAPTER GP-REMOTE OIL FILTER	47
Y	*310-9546*	1	BREATHER GP (CRANKCASE)	48
Y	*305-4955*	1	CAMSHAFT GP	16
Y	*296-4800*	1	CONTROL & MTG GP-ENGINE ELEK	187
Y	*296-4782*	1	COOLER GP-ENGINE OIL	55
Y	*296-4786*	1	COVER GP-VALVE MECHANISM	17
Y	*296-4789*	1	CRANKSHAFT GP	19
Y	*296-4787*	1	CYLINDER BLOCK GP	23
Y	*296-4784*	1	CYLINDER HEAD GP	26
Y	*310-9549*	1	FAN GP-SUCTION	57
Y	*296-4794*	1	FILTER GP-FUEL	93
Y	*296-4783*	1	FLYWHEEL GP	27
Y	*296-4651*	1	GEAR GP-FRONT	28
Y	*296-4795*	1	HOUSING & REGULATOR GP	58
Y	*296-4803*	1	HOUSING GP-FLYWHEEL	29
Y	*296-4788*	1	HOUSING GP-FRONT	30
Y	*310-9609*	1	INJECTOR GP-FUEL	103
Y	*296-4781*	1	LINES GP-ENGINE OIL	53
Y	*296-4793*	1	LINES GP-FUEL INJECTION	109
Y	*296-4777*	1	LINES GP-TURBOCHARGER OIL	54
Y	*296-4791*	1	MANIFOLD GP-EXHAUST	85
Y	*296-4790*	1	MANIFOLD GP-INLET	86
Y	*296-4798*	1	MOUNTING GP-ALTERNATOR	32
Y	*296-4637*	1	MOUNTING GP-STARTING MOTOR	35
Y	*310-9551*	1	MUFFLER GP	87
Y	*296-4780*	1	PAN GP-OIL	36
Y	*296-4796*	1	PISTON & ROD GP	38
Y	*305-4680*	1	PUMP & MTG GP-FUEL INJECTION	111
Y	*296-4655*	1	PUMP GP-WATER	60
Y	*296-4802*	1	SENSOR GP-ENGINE	247
Y	*310-9620*	1	TURBOCHARGER GP	91
Y	*305-4954*	1	VALVE MECHANISM GP	45
Y	*296-4801*	1	WIRING GP-ELECTRONIC CONTROL	303
			—OR—	
Y	*324-4202*	1	WIRING GP-ELECTRONIC CONTROL	306
	315-2759	1	ELECTRONICS GP-ENGINE RATINGS	

Y - SEPARATE ILLUSTRATION

<END>

420-2179 ENGINE AR

S/N: JKH1-UP
PART OF 420-2168 ENGINE AR-COMPLETE
AN ATTACHMENT

SMCS-1000 **i05447532**

NOTE	PART NUMBER	QTY	PART NAME 1 2 3 4 5 6 (PRODUCT LEVEL)	SEE PAGE
Y	*296-4792*	1	ADAPTER GP-REMOTE OIL FILTER	47
Y	*310-9546*	1	BREATHER GP (CRANKCASE)	48
Y	*305-4955*	1	CAMSHAFT GP	16
Y	*296-4800*	1	CONTROL & MTG GP-ENGINE ELEK	187
Y	*296-4782*	1	COOLER GP-ENGINE OIL	55
Y	*296-4786*	1	COVER GP-VALVE MECHANISM	17
Y	*296-4789*	1	CRANKSHAFT GP	19
Y	*296-4787*	1	CYLINDER BLOCK GP	23
Y	*296-4784*	1	CYLINDER HEAD GP	26
Y	*310-9549*	1	FAN GP-SUCTION	57
Y	*420-0099*	1	FILTER GP-FUEL	97
Y	*296-4783*	1	FLYWHEEL GP	27
Y	*296-4651*	1	GEAR GP-FRONT	28
Y	*296-4795*	1	HOUSING & REGULATOR GP	58
Y	*296-4803*	1	HOUSING GP-FLYWHEEL	29
Y	*296-4788*	1	HOUSING GP-FRONT	30
Y	*310-9609*	1	INJECTOR GP-FUEL	103
Y	*296-4781*	1	LINES GP-ENGINE OIL	53
Y	*296-4793*	1	LINES GP-FUEL INJECTION	109
Y	*296-4777*	1	LINES GP-TURBOCHARGER OIL	54
Y	*296-4791*	1	MANIFOLD GP-EXHAUST	85
Y	*296-4790*	1	MANIFOLD GP-INLET	86
Y	*296-4798*	1	MOUNTING GP-ALTERNATOR	32
Y	*296-4637*	1	MOUNTING GP-STARTING MOTOR	35
Y	*310-9551*	1	MUFFLER GP	87
Y	*296-4780*	1	PAN GP-OIL	36
Y	*296-4796*	1	PISTON & ROD GP	38
Y	*305-4680*	1	PUMP & MTG GP-FUEL INJECTION	111
Y	*296-4655*	1	PUMP GP-WATER	60
Y	*296-4802*	1	SENSOR GP-ENGINE	247
Y	*310-9620*	1	TURBOCHARGER GP	91
Y	*305-4954*	1	VALVE MECHANISM GP	45
Y	*324-4202*	1	WIRING GP-ELECTRONIC CONTROL	306
	315-2759	1	ELECTRONICS GP-ENGINE RATINGS	

Y - SEPARATE ILLUSTRATION

<END>

279-7810 ENGINE AR-COMPLETE

S/N: DLP1-389

PART OF 301-2679 GENERAL AR

SMCS-1000 **i02883899**

NOTE	PART NUMBER	QTY	PART NAME 1 2 3 4 5 6 (PRODUCT LEVEL)	SEE PAGE
Y	*279-7814*	1	ENGINE AR	12
Y	*305-4944*	1	PULLEY GP-FAN & ALT DRIVE	42

Y - SEPARATE ILLUSTRATION

<END>

279-7811 ENGINE AR-COMPLETE

S/N: DLP1-UP

PART OF 283-8818 COOLING AR-HIGH AMBIENT TEMP

AN ATTACHMENT

SMCS-1000 **i02883901**

NOTE	PART NUMBER	QTY	PART NAME 1 2 3 4 5 6 (PRODUCT LEVEL)	SEE PAGE
Y	*279-7814*	1	ENGINE AR	12
Y	*279-7779*	1	PULLEY GP-FAN & ALT DRIVE (WITH IDLER PULLEY)	41

Y - SEPARATE ILLUSTRATION

<END>

324-4022 ENGINE AR-COMPLETE

S/N: DLP390-UP

PART OF 301-2679 GENERAL AR

SMCS-1000 **i03900892**

NOTE	PART NUMBER	QTY	PART NAME 1 2 3 4 5 6 (PRODUCT LEVEL)	SEE PAGE
Y	*279-7814*	1	ENGINE AR	12
Y	*305-4944*	1	PULLEY GP-FAN & ALT DRIVE	42

Y - SEPARATE ILLUSTRATION

<END>

324-4023 ENGINE AR-COMPLETE

S/N: DLP1-UP

PART OF 283-8818 COOLING AR-HIGH AMBIENT TEMP

AN ATTACHMENT

SMCS-1000 **i04021750**

NOTE	PART NUMBER	QTY	PART NAME 1 2 3 4 5 6 (PRODUCT LEVEL)	SEE PAGE
Y	*279-7814*	1	ENGINE AR	12
Y	*279-7779*	1	PULLEY GP-FAN & ALT DRIVE (WITH IDLER PULLEY)	41

Y - SEPARATE ILLUSTRATION

<END>

420-2168 ENGINE AR-COMPLETE

S/N: DLP1-UP
PART OF 283-8818 COOLING AR-HIGH AMBIENT TEMP
AN ATTACHMENT

SMCS-1000 **i05988847**

NOTE	PART NUMBER	QTY	PART NAME 1 2 3 4 5 6 (PRODUCT LEVEL)	SEE PAGE
Y	*420-2179*	1	ENGINE AR	13
Y	*279-7779*	1	PULLEY GP-FAN & ALT DRIVE (WITH IDLER PULLEY)	41

Y - SEPARATE ILLUSTRATION

<END>

279-7794 INSTALLATION AR-ENGINE

S/N: DLP1-622
PART OF 301-2679 GENERAL AR

SMCS-1000 **i03733684**

NOTE	PART NUMBER	QTY	PART NAME 1 2 3 4 5 6 (PRODUCT LEVEL)	SEE PAGE
Y	*118-9881*	1	AIR CLEANER & MOUNTING GP	78
Y	*310-9499*	1	COMPRESSOR GP-REFRIGERANT	1005
Y	*273-5349*	1	CONDENSER & MTG GP-REFRIGERANT	1007
Y	*279-7727*	1	DRAIN GP-MUFFLER	82
Y	*310-9560*	1	FILTER & MTG GP-ENGINE OIL	49
Y	*279-7726*	1	LINES GP-AIR (AIR CLEANER TO TURBOCHARGER)	84
Y	*265-3609*	1	LINES GP-AIR (AFTERCOOLER TO TURBOCHARGER)	83
Y	*279-7840*	1	MOUNTING GP-ELECTRONIC CONTROL	218
Y	*255-3035*	1	MOUNTING GP-ENGINE	33
Y	*305-7594*	1	RADIATOR & HYD OIL COOLER GP	65

Y - SEPARATE ILLUSTRATION

<END>

379-4447 INSTALLATION AR-ENGINE

S/N: DLP623-UP
PART OF 301-2679 GENERAL AR

SMCS-1000 **i04657330**

NOTE	PART NUMBER	QTY	PART NAME 1 2 3 4 5 6 (PRODUCT LEVEL)	SEE PAGE
Y	*118-9881*	1	AIR CLEANER & MOUNTING GP	78
Y	*310-9499*	1	COMPRESSOR GP-REFRIGERANT	1005
Y	*293-1248*	1	CONDENSER & MTG GP-REFRIGERANT	1011
Y	*279-7727*	1	DRAIN GP-MUFFLER	82
Y	*379-4449*	1	FILTER & MTG GP-ENGINE OIL	51
Y	*265-3609*	1	LINES GP-AIR (AFTERCOOLER TO TURBOCHARGER)	83
Y	*279-7726*	1	LINES GP-AIR (AIR CLEANER TO TURBOCHARGER)	84
Y	*279-7840*	1	MOUNTING GP-ELECTRONIC CONTROL	218
Y	*255-3035*	1	MOUNTING GP-ENGINE	33
Y	*305-7594*	1	RADIATOR & HYD OIL COOLER GP	65

Y - SEPARATE ILLUSTRATION

<END>

305-4955 CAMSHAFT GP

S/N: JKH1-UP
PART OF 279-7814, 420-2179 ENGINE AR
ALSO AN ATTACHMENT

SMCS-1210 **i03489145**

NOTE	REF NO	GRAPHIC REF	PART NUMBER	QTY	PART NAME 1 2 3 4 5 6 (PRODUCT LEVEL)	SEE PAGE
	1	1	**305-4758**	1	CAMSHAFT	
	2	1	**324-4060**	8	TAPPET	
	3	1	**294-1716**	8	PUSHROD	
	4	1	**094-4628**	1	KEY	
	5	1	**5I-7650**	1	PLATE	
M	6	1	**6V-5215**	2	BOLT (M8X1.25X16-MM)	

M - METRIC PART

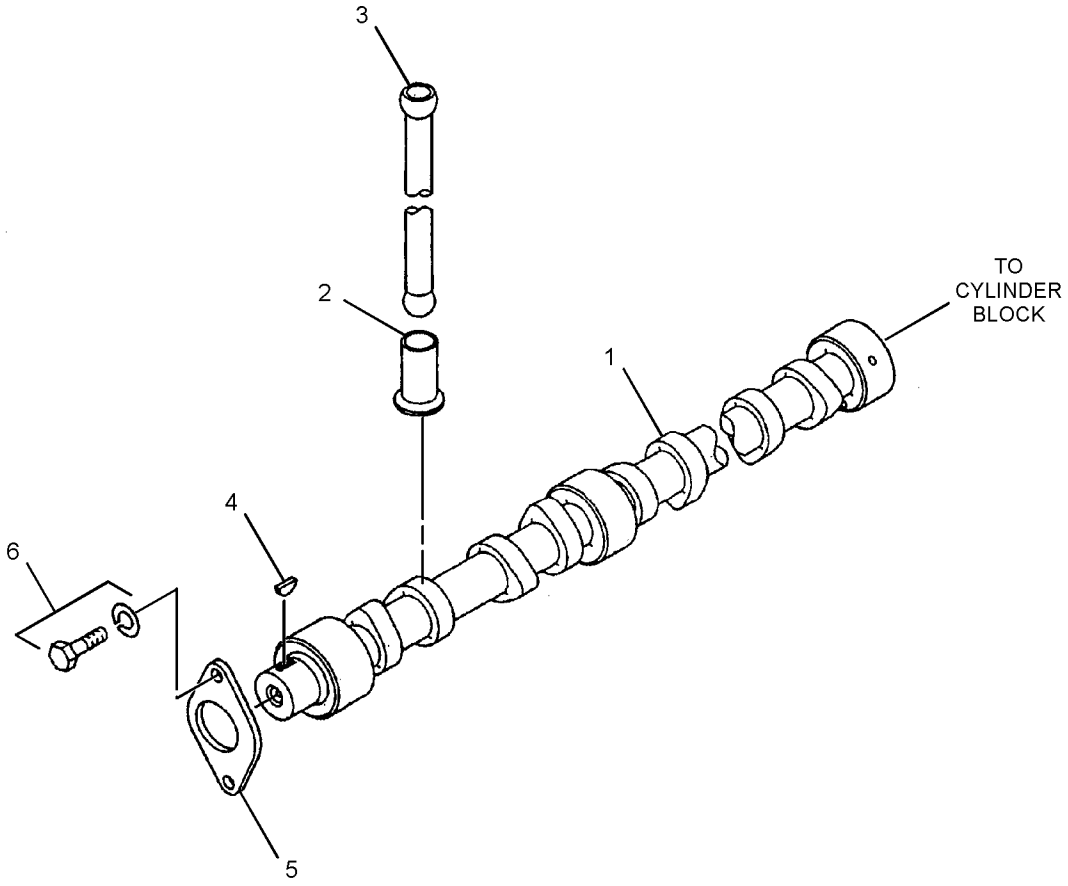

GRAPHIC #1 <END> g01405446

296-4786 COVER GP-VALVE MECHANISM

S/N: JKH1-UP
PART OF 279-7814, 420-2179 ENGINE AR
ALSO AN ATTACHMENT

SMCS-1107 **i03743618**

NOTE	REF NO	GRAPHIC REF	PART NUMBER	QTY	PART NAME 1 2 3 4 5 6 (PRODUCT LEVEL)	SEE PAGE
	1	1	**305-4767**	1	BASE-ROCKER ARM	
	2	1	**324-4228**	1	COVER-ROCKER	
	3	1	**305-4768**	1	GASKET	
	4	1	**296-4694**	1	GASKET (VALVE COVER)	
	5	1	**324-4229**	1	COVER	
	6	1	**294-1708**	1	CAP (ENGINE OIL FILLER)	
	7	1	**296-4696**	1	BRACKET	
	8	1	**294-1710**	6	BOLT (M6X1X16.2-MM)	
	9	1	**294-1711**	12	WASHER	
	10	1	**096-8569**	2	BOLT (140-MM LG)	
	11	1	**294-1712**	1	SEAL	
	12	1	**8T-4224**	7	WASHER-HARD (8.8X16X2-MM THK)	
	13	1	**294-1713**	12	BOLT (M8X1.25X38.3-MM)	
	14	1	**294-1700**	12	BOLT (M8X1.25X108.3-MM)	
	15	1	**095-8799**	5	BOLT (M8X1.25X30.5-MM)	
	16	1	**294-1821**	2	BOLT (M8X1.25X35.5-MM)	
	17	1	**294-1714**	2	STUD	
	18	1	**287-8359**	1	PLATE-IDENTIFICATION (CAT C4.2 ACERT)	

296-4786 **COVER GP-VALVE MECHANISM (**contd.**)** **i03743618**

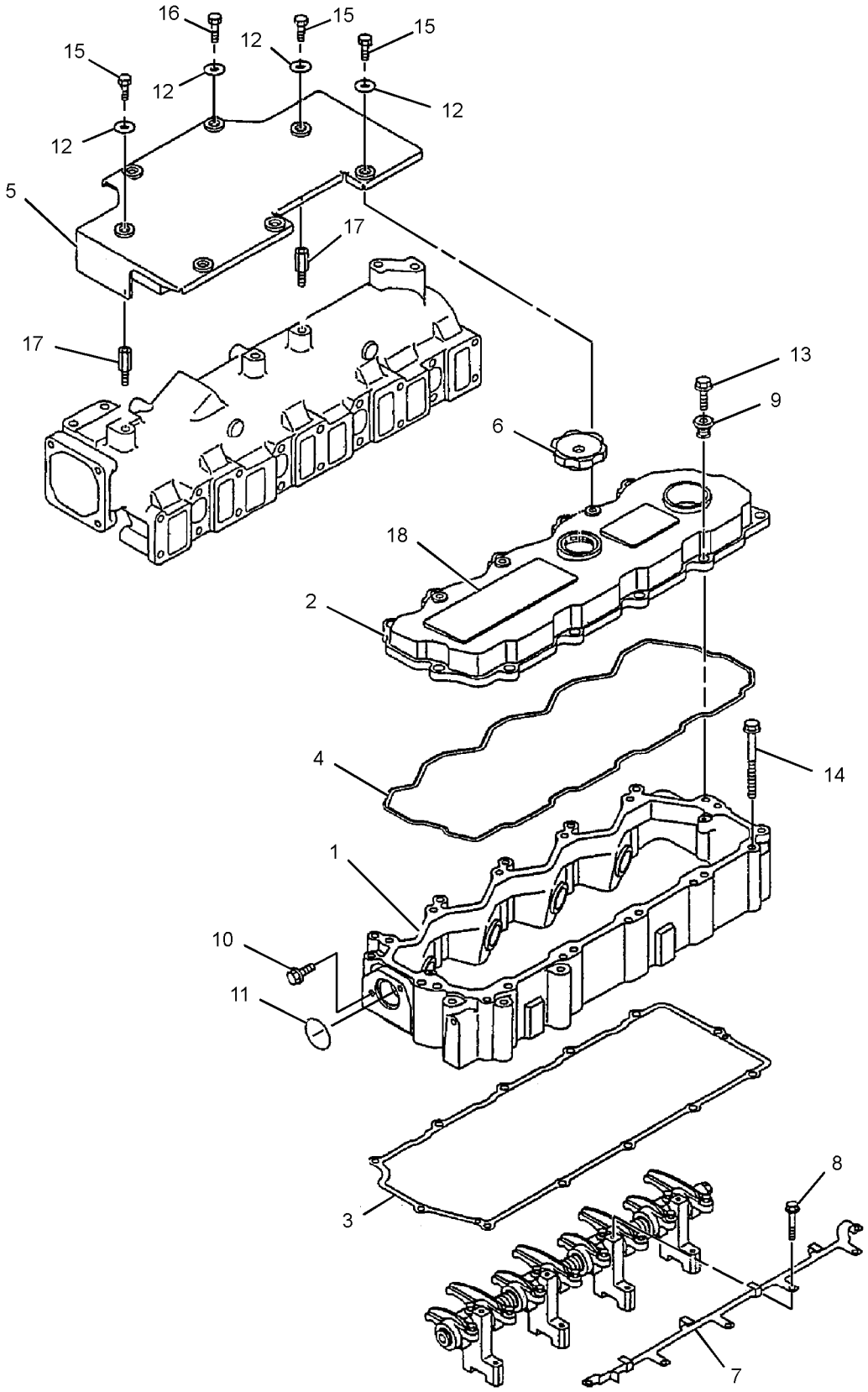

GRAPHIC #1 <END> g01913416

296-4789 CRANKSHAFT GP

S/N: JKH1-UP
PART OF 279-7814, 420-2179 ENGINE AR
ALSO AN ATTACHMENT

SMCS-1202 **i02710559**

NOTE	REF NO	GRAPHIC REF	PART NUMBER	QTY	PART NAME 1 2 3 4 5 6 (PRODUCT LEVEL)	SEE PAGE
	1	1	**296-4710**	1	CRANKSHAFT AS	
	1A	1	**294-1751**	1	GEAR (31-TEETH)	
	1B	1	**130-7596**	1	NUT	
	1C	1	**085-9513**	2	PIN	
	1D	1	**094-4628**	2	KEY	
	2	1	**233-1277**	1	PLATE	

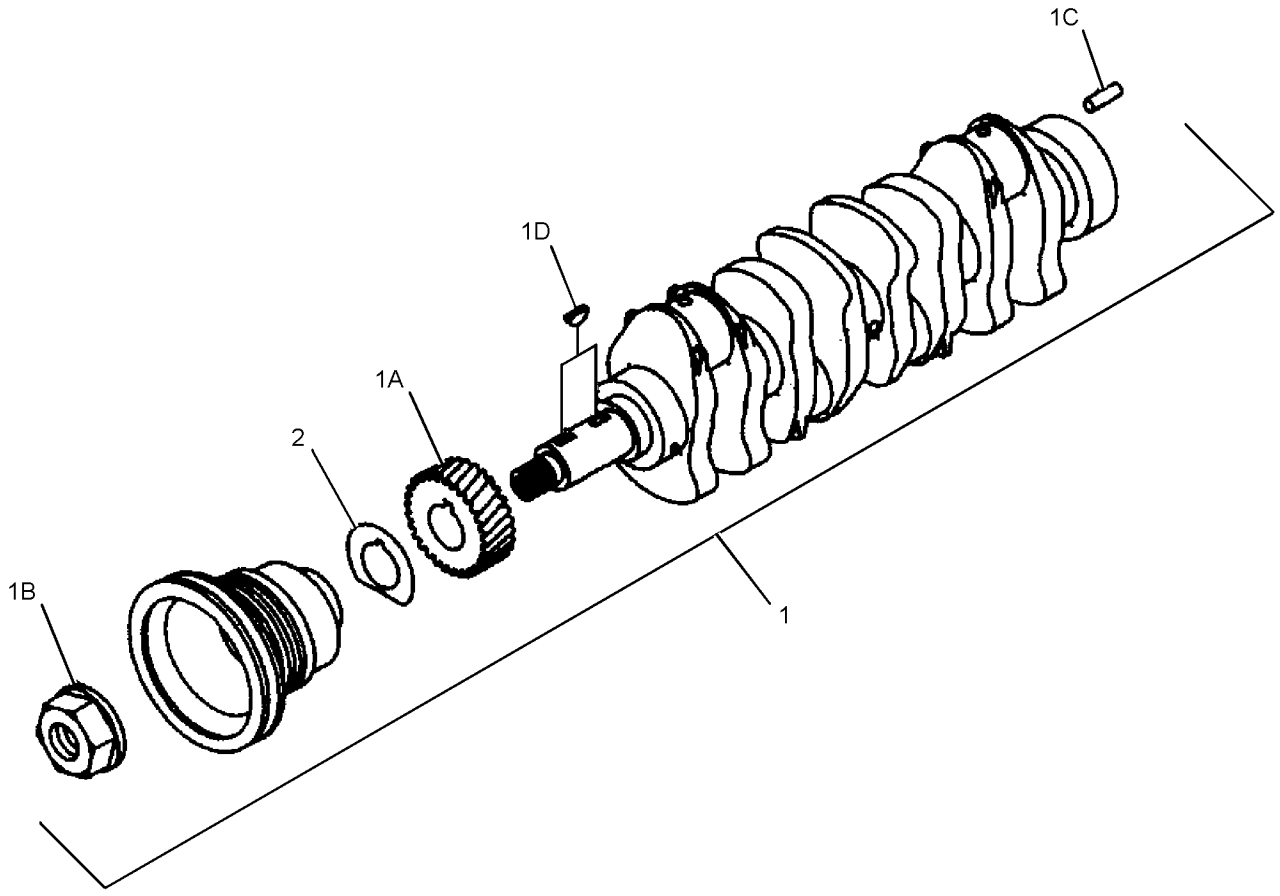

GRAPHIC #1 <END> g01403342

296-4699 CYLINDER BLOCK GP

S/N: JKH1-UP

PART OF 296-4787 CYLINDER BLOCK GP

ALSO AN ATTACHMENT

SMCS-1201 **i03460361**

NOTE	REF NO	GRAPHIC REF	PART NUMBER	QTY	PART NAME 1 2 3 4 5 6 (PRODUCT LEVEL)	SEE PAGE
	1	2	**4I-9664**	2	PIN	
	5	2	**5I-8009**	1	BUSHING	
	6	1	**5I-7528**	1	BUSHING	
	7	1	**5I-7529**	1	BUSHING	
	8	1	**3P-1896**	10	PLUG-CUP	
M	9	2	**094-7741**	10	BOLT-BEARING CAP (M14X2X120-MM)	
	10	2	**095-2005**	2	CAP	
	11	1	**096-3741**	7	CAP	
	12	1	**294-1720**	2	SEAL	
	13	2	**294-1722**	4	JET	
	14	1	**5I-7525**	1	PLUG	
	15	1	**5I-7505**	8	PLUG	
	16	2	**294-1721**	1	SHAFT	
	17	2	**5I-7724**	2	PIN	
	18	2	**095-2039**	1	WASHER-SPECIAL	
M	19	2	**8T-4191**	1	BOLT (M10X1.5X16-MM)	
	20	2	**099-4420**	2	PIN	
	21	1	**296-4672**	6	PIN	
	22	2	**139-7814**	4	VALVE	
	23	2	**094-9424**	8	GASKET	
	24	1	**5I-7523**	4	SLEEVE	

M - METRIC PART

296-4699 **CYLINDER BLOCK GP** (contd.) **i03460361**

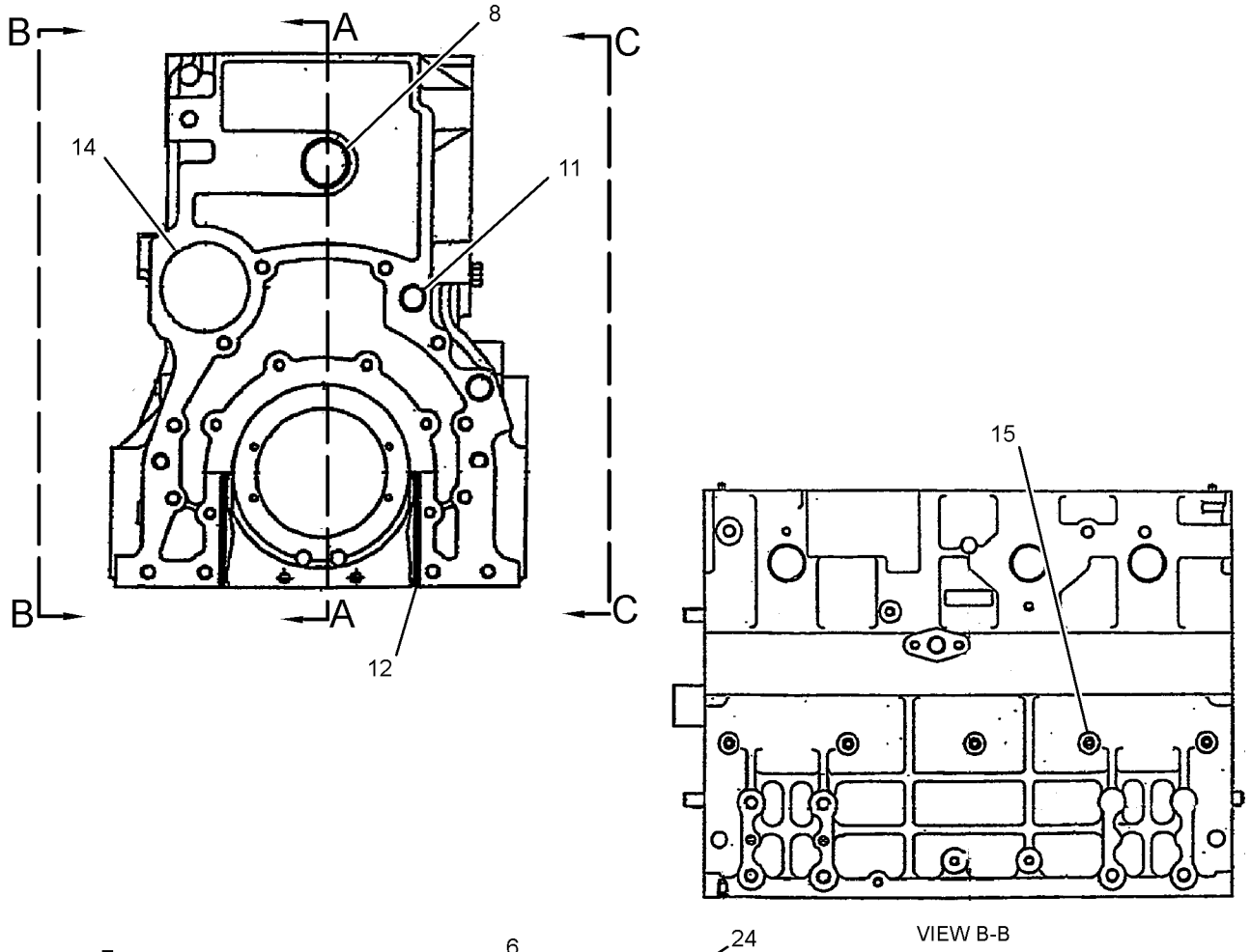

GRAPHIC #1 g01803354

296-4699 **CYLINDER BLOCK GP** (contd.) **i03460361**

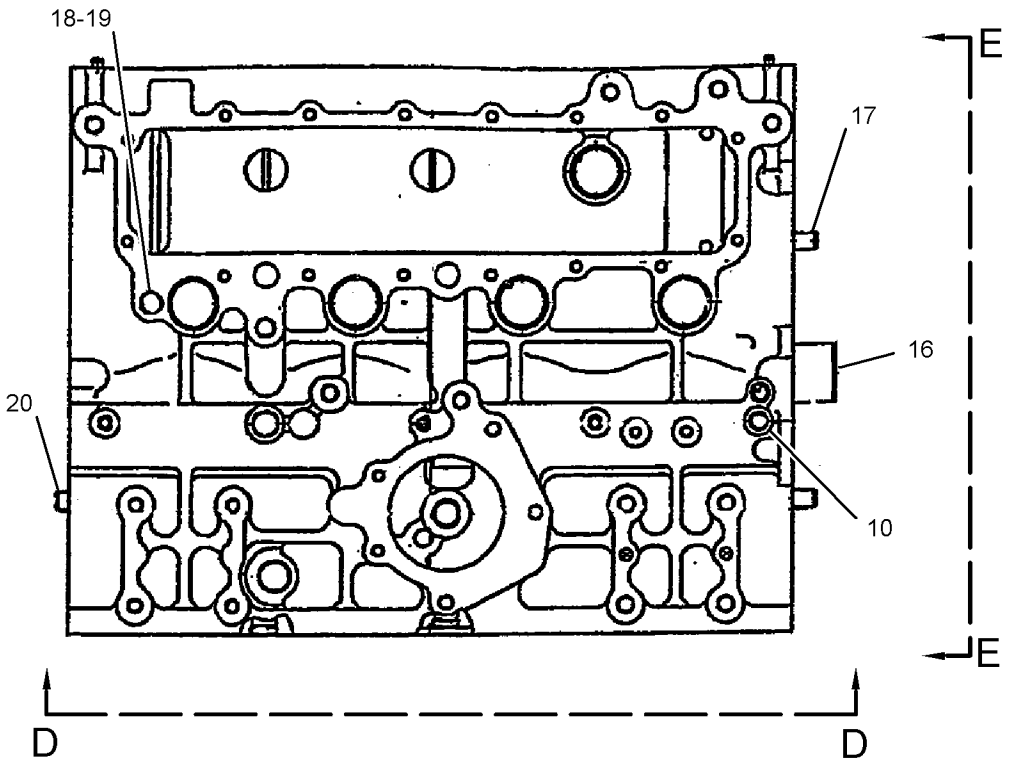

VIEW C-C

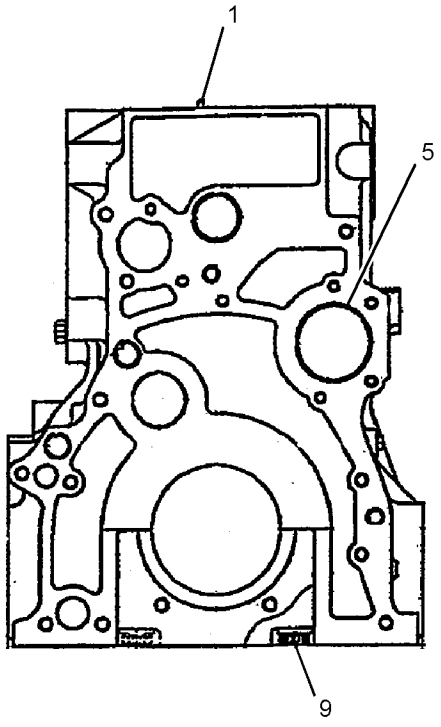

VIEW E-E

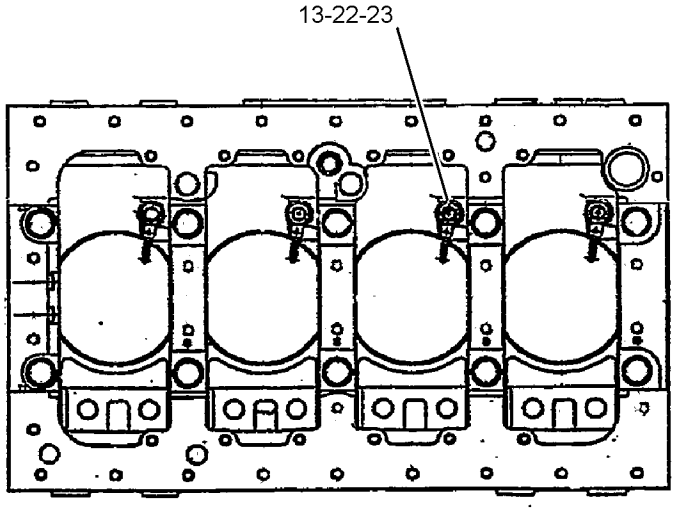

VIEW D-D

GRAPHIC #2 <END> g01378474

296-4787 CYLINDER BLOCK GP

S/N: JKH1-UP
PART OF 279-7814, 420-2179 ENGINE AR
ALSO AN ATTACHMENT

SMCS-1201 **i03808513**

NOTE	REF NO	GRAPHIC REF	PART NUMBER	QTY	PART NAME 1 2 3 4 5 6 (PRODUCT LEVEL)	SEE PAGE
	1	1	**324-4175**	1	EYE	
	2	1	**294-1724**	1	EYE	
	3	1	**5I-5181**	2	BOLT	
M	4	1	**099-4483**	2	BOLT (M12X1.25X30-MM)	
	5	1	**096-2501**	4	LOCKWASHER	
M	6	1	**8T-4191**	1	BOLT (M10X1.5X16-MM)	
	7	1	**095-2039**	1	WASHER-SPECIAL	
	8	1	**5I-7654**	3	PLATE (STANDARD)	
AB		1	**5I-7787**		PLATE (0.15-MM OS)	
AB		1	**5I-7788**		PLATE (0.3-MM OS)	
AB		1	**5I-7789**		PLATE (0.45-MM OS)	
	9	1	**5I-7588**	5	SET-BEARING (STANDARD)	
AB		1	**5I-7784**		SET-BEARING (0.25-MM US)	
AB		1	**5I-7785**		SET-BEARING (0.5-MM US)	
AB		1	**5I-7786**		SET-BEARING (0.75-MM US)	
Y	10	1	**296-4699**	1	CYLINDER BLOCK GP (WITH BEARINGS)	20

A - NOT PART OF THIS GROUP
B - USE AS REQUIRED
M - METRIC PART
Y - SEPARATE ILLUSTRATION

296-4787 **CYLINDER BLOCK GP** (contd.) **i03808513**

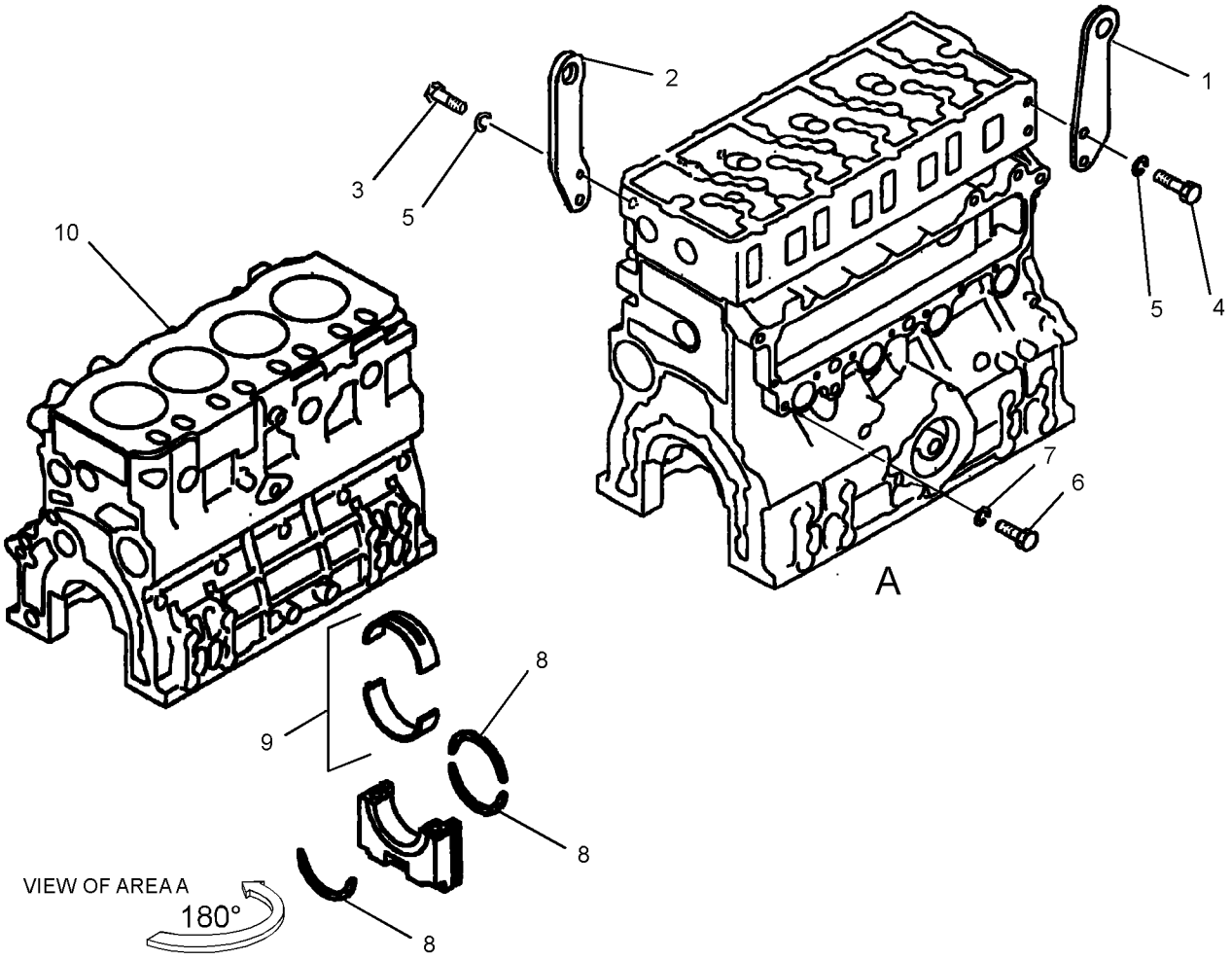

GRAPHIC #1 <END> g01949775

305-4766 CYLINDER HEAD AS

S/N: JKH1-UP
PART OF 296-4784 CYLINDER HEAD GP
ALSO AN ATTACHMENT

SMCS-1100 **i03853590**

NOTE	REF NO	GRAPHIC REF	PART NUMBER	QTY	PART NAME 1 2 3 4 5 6 (PRODUCT LEVEL)	SEE PAGE
	1	1	**305-4883**	8	SEAT	
	2	1	**305-4884**	8	SEAT	
	3	1	**305-4885**	16	GUIDE	
	4	1	**212-8475**	8	CAP	
	5	1	**5I-4915**	7	CAP	
	6	1	**4I-9664**	2	PIN	

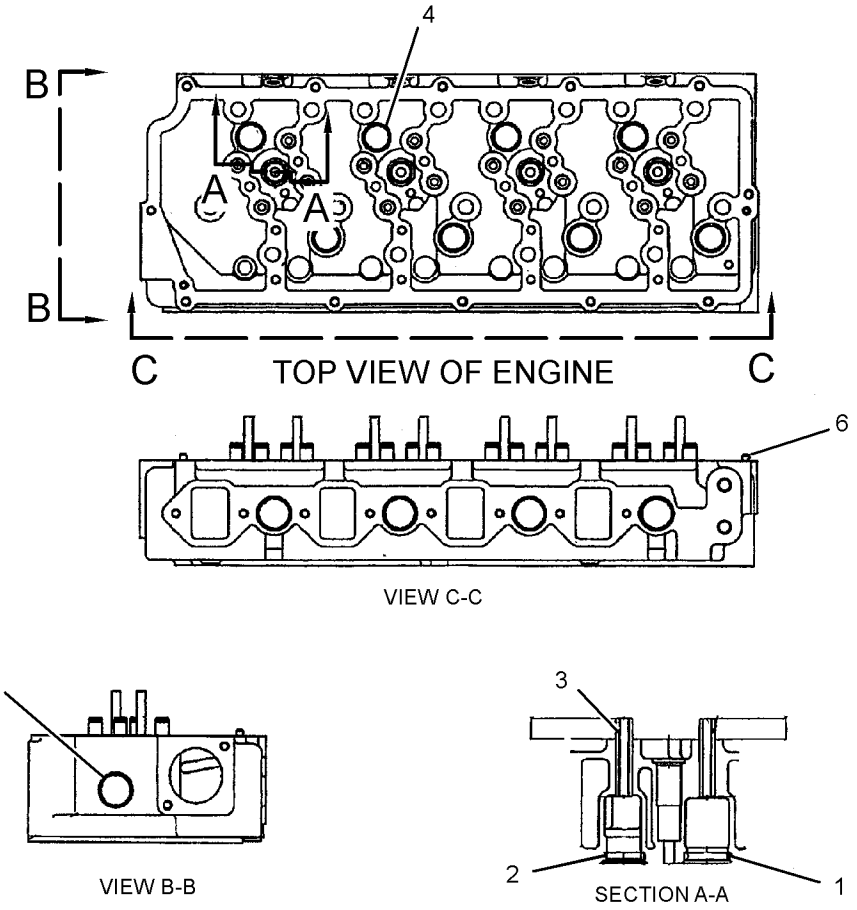

GRAPHIC #1 <END> g01520316

296-4784 CYLINDER HEAD GP

S/N: JKH1-UP
PART OF 279-7814, 420-2179 ENGINE AR
ALSO AN ATTACHMENT

SMCS-1100 **i02981660**

NOTE	REF NO	GRAPHIC REF	PART NUMBER	QTY	PART NAME 1 2 3 4 5 6 (PRODUCT LEVEL)	SEE PAGE
Y	1	1	**305-4766**	1	CYLINDER HEAD AS	25
	2	1	**296-4689**	1	GASKET	
	3	1	**294-1683**	17	BOLT	
	4	1	**4I-9664**	2	PIN	
	5	1	**310-9532**	8	GUIDE	

Y - SEPARATE ILLUSTRATION

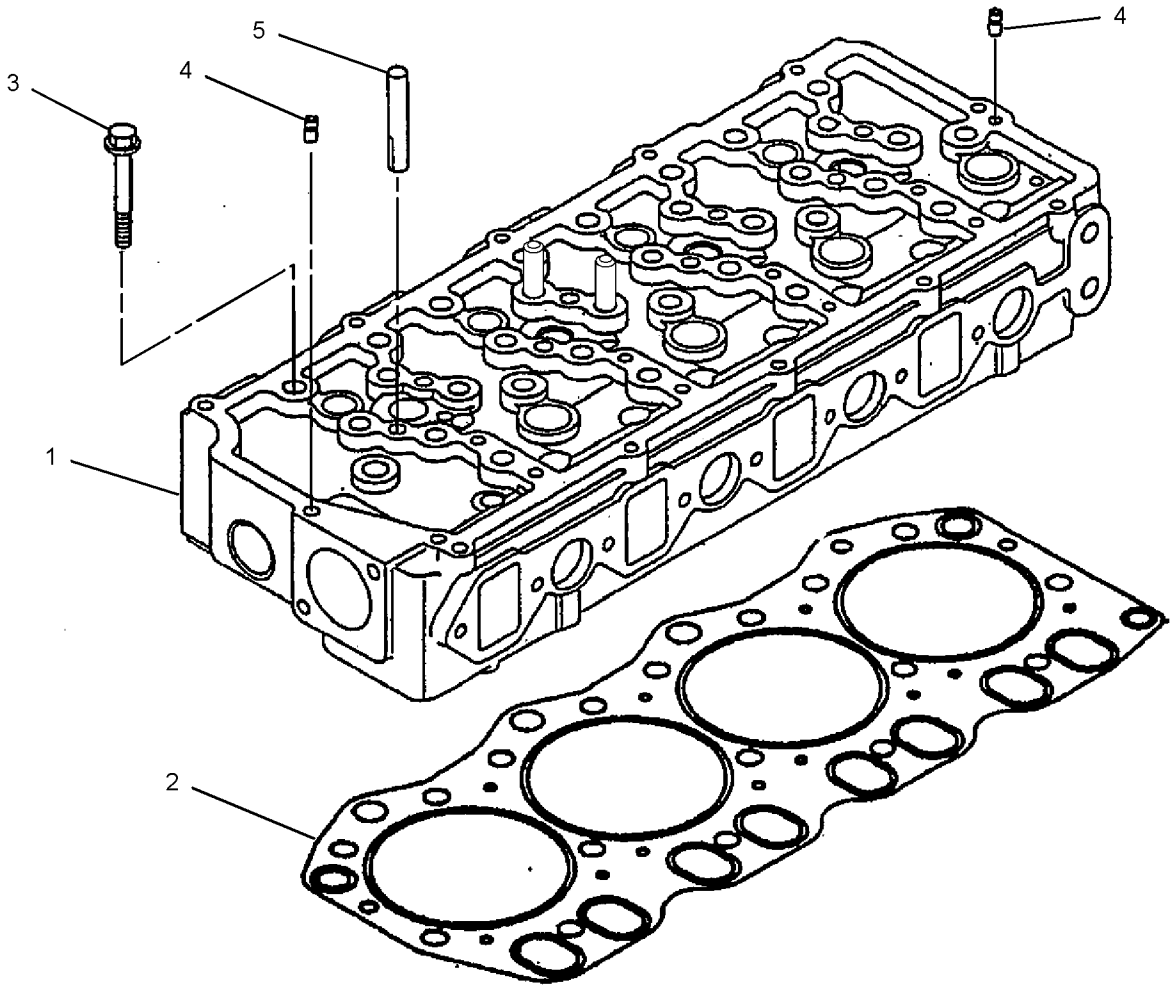

GRAPHIC #1 <END> g01366148

296-4783 FLYWHEEL GP

S/N: JKH1-UP
PART OF 279-7814, 420-2179 ENGINE AR
ALSO AN ATTACHMENT

SMCS-1156 **i02710560**

NOTE	REF NO	GRAPHIC REF	PART NUMBER	QTY	PART NAME 1 2 3 4 5 6 (PRODUCT LEVEL)	SEE PAGE
	1	1	**296-4713**	1	FLYWHEEL AS	
	1A	1	**205-6788**	1	GEAR (127-TEETH)	
	2	1	**5I-5005**	6	BOLT (M12X1.25X35-MM)	
	3	1	**096-2501**	6	LOCKWASHER	

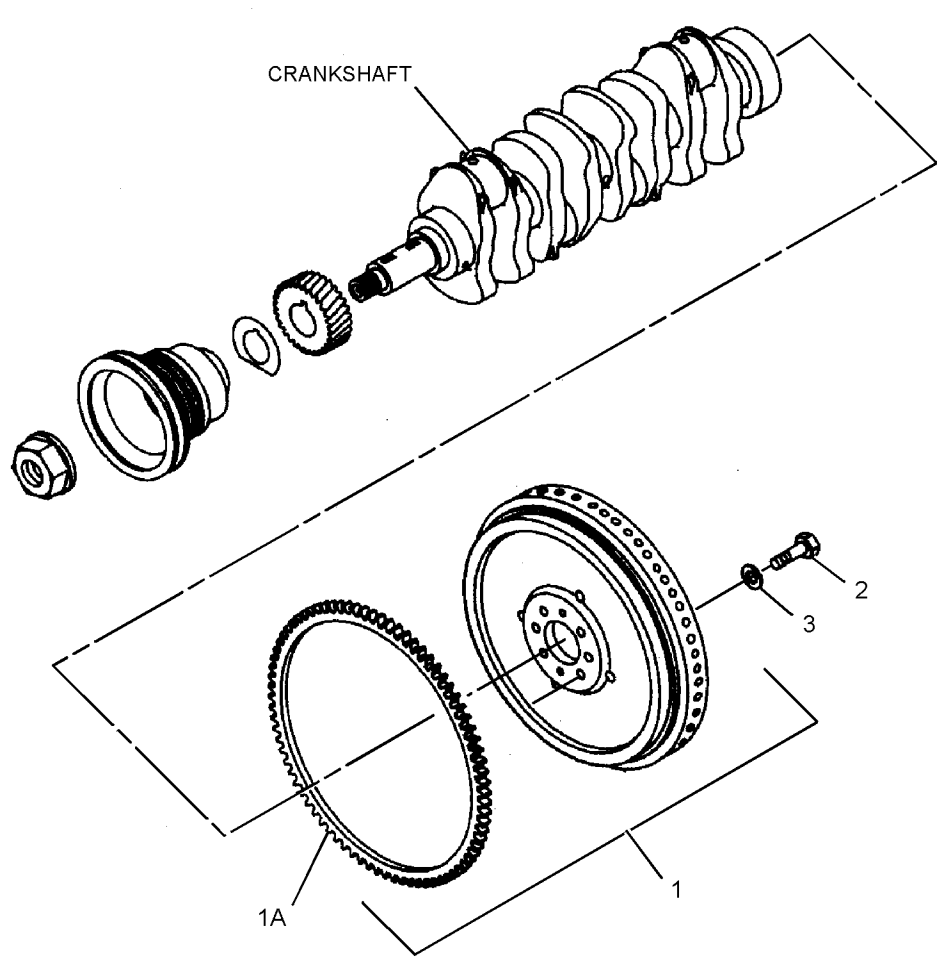

GRAPHIC #1 <END> g01403322

296-4651 GEAR GP-FRONT

S/N: JKH1-UP
PART OF 279-7814, 420-2179 ENGINE AR
ALSO AN ATTACHMENT

SMCS-1151, 1162, 1206

i02981450

NOTE	REF NO	GRAPHIC REF	PART NUMBER	QTY	PART NAME 1 2 3 4 5 6 (PRODUCT LEVEL)	SEE PAGE
	1	1	*294-1753*	1	GEAR AS-IDLER (69-TEETH)	
	1A	1	**296-4673**	1	BUSHING	
	2	1	**294-1754**	1	GEAR (62-TEETH)	
	3	1	**294-1755**	1	GEAR (62-TEETH)	
	4	1	**294-1756**	1	PLATE	
	5	1	**294-1757**	1	BOLT	

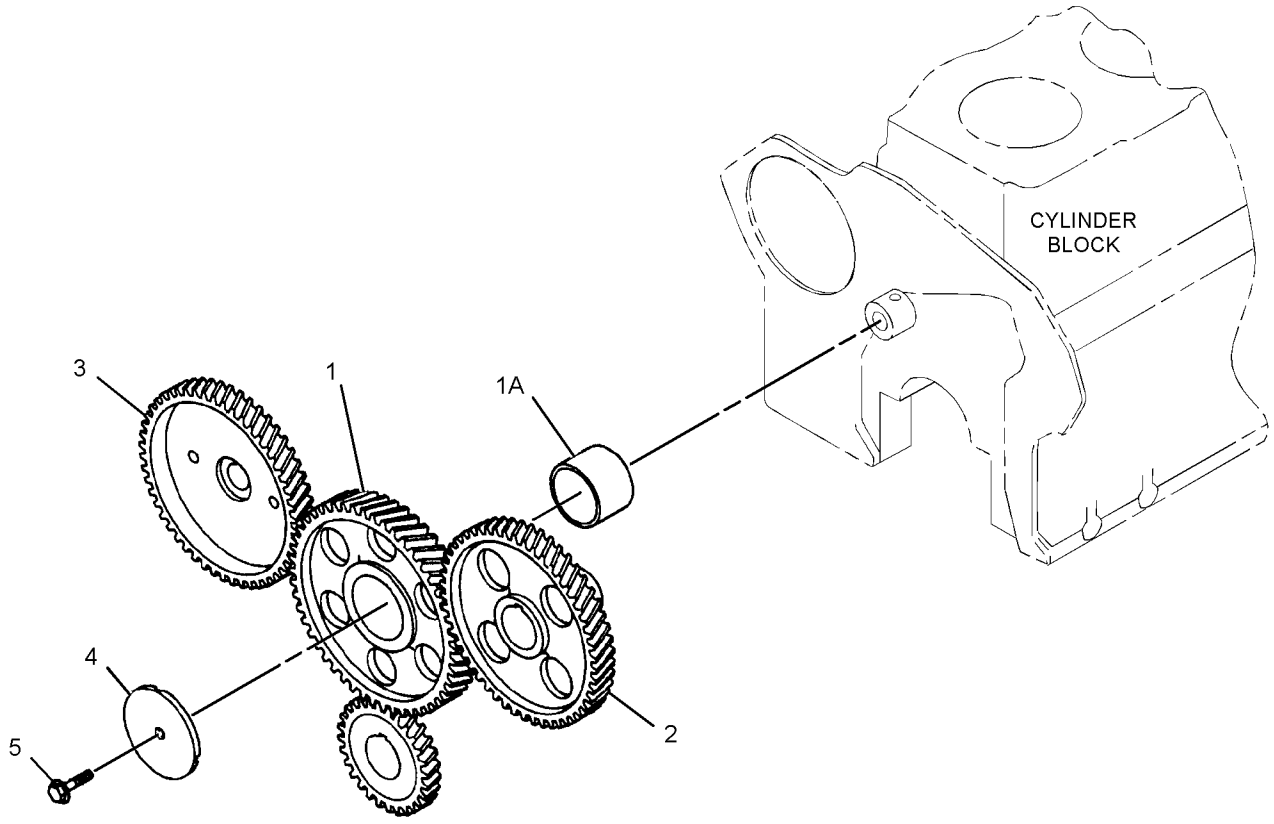

GRAPHIC #1 <END> g01317830

296-4803 HOUSING GP-FLYWHEEL

S/N: JKH1-UP
PART OF 279-7814, 420-2179 ENGINE AR
ALSO AN ATTACHMENT

SMCS-1157 **i04662455**

NOTE	REF NO	GRAPHIC REF	PART NUMBER	QTY	PART NAME 1 2 3 4 5 6 (PRODUCT LEVEL)	SEE PAGE
	1	1	**296-4701**	1	HOUSING	
	2	1	**5I-7660**	1	SEAL AS	
M	3	1	**294-7251**	1	BOLT AS	
	4	1	**5I-4983**	2	STUD	
	5	1	**5I-7607**	1	PLUG	
	6	1	**294-1737**	8	BOLT (M8X1.25X35.5-MM)	
	7	1	**294-1738**	2	BOLT (M10X1.5X32-MM)	
M	8	1	**294-1726**	10	BOLT (M10X1.5X37-MM)	
	9	1	**379-4433**	1	GASKET	

M - METRIC PART

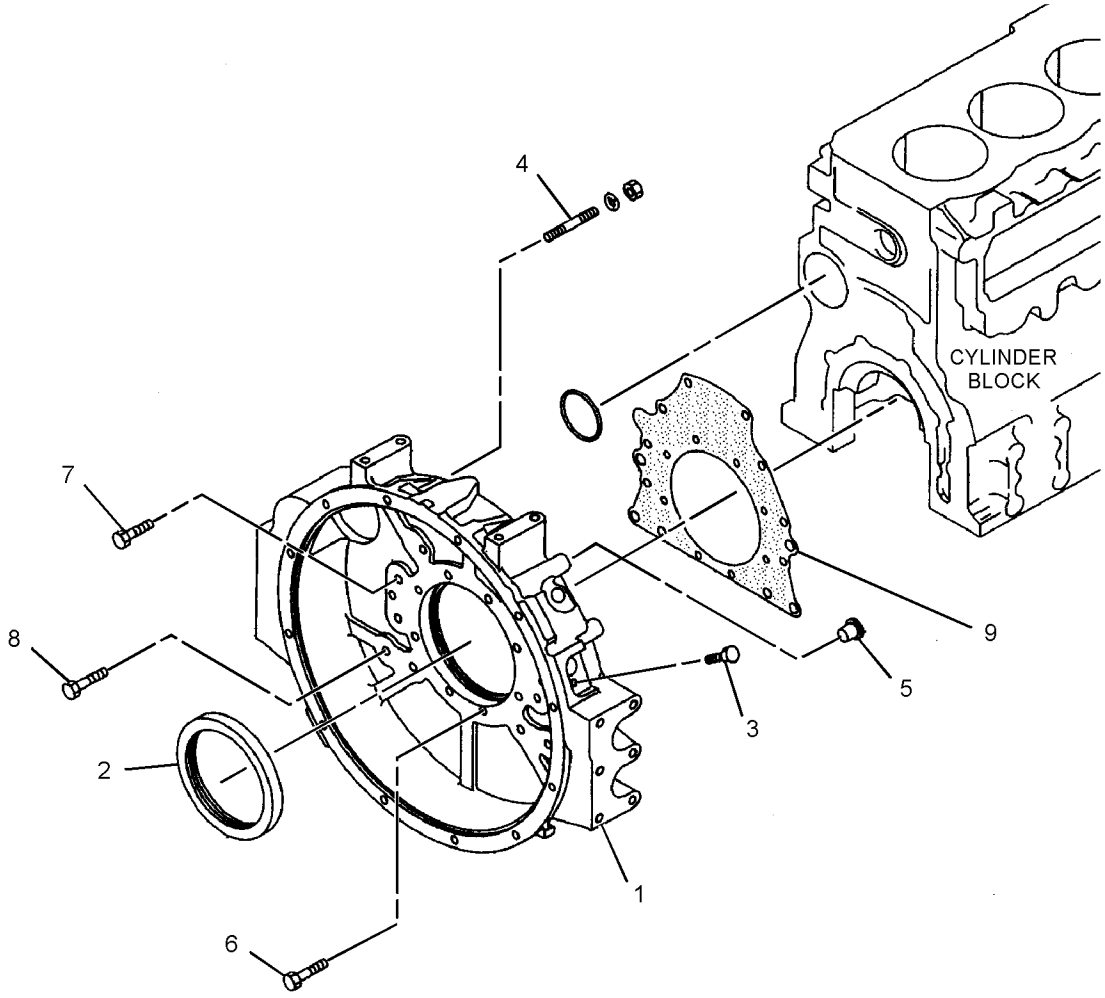

GRAPHIC #1 <END> g02793324

296-4788 HOUSING GP-FRONT

S/N: JKH1-UP
PART OF 279-7814, 420-2179 ENGINE AR
ALSO AN ATTACHMENT

SMCS-1151, 1162, 1206 **i02830615**

NOTE	REF NO	GRAPHIC REF	PART NUMBER	QTY	PART NAME 1 2 3 4 5 6 (PRODUCT LEVEL)	SEE PAGE
	1	1	**222-8292**	1	POINTER	
	2	1	**294-1731**	1	BOLT (M8X1.25X19.5-MM)	
	3	1	**6V-8236**	1	PIN-SPRING	
	4	1	**294-1732**	1	PLATE	
M	5	1	**6V-5215**	2	BOLT (M8X1.25X16-MM)	
	6	1	**297-7646**	2	BOLT (M8X1.25X95.5-MM)	
	7	1	**178-6538**	1	COVER AS	
M	8	1	**8T-4137**	6	BOLT (M10X1.5X20-MM)	
M	9	1	**5I-7610**	1	BOLT (M10X1.5X20-MM)	
	10	1	**297-7647**	6	BOLT (M10X1.5X77-MM)	
M	11	1	**8T-4172**	2	BOLT (M10X1.5X80-MM)	
	12	1	**5I-7896**	4	BOLT (M8X1.25X95-MM)	
	13	1	**7X-0796**	6	LOCKWASHER (10.2X18.4X2.5-MM THK)	
	14	1	**294-1733**	1	GASKET	
	15	1	**294-1734**	1	GASKET	
	16	1	**212-8571**	1	COVER	
	17	1	**212-8572**	1	GASKET	
	18	1	**196-8366**	1	BOLT	
	19	1	**294-1735**	5	BOLT (M8X1.25X90.5-MM)	
M	20	1	**294-7251**	6	BOLT AS	
M	21	1	**294-1726**	3	BOLT (M10X1.5X37-MM)	
	22	1	**096-9435**	1	PLUG	
	23	1	**096-9532**	1	WASHER (15.8X22.5X2-MM THK)	
	24	1	**096-9528**	1	SEAL-O-RING	
	25	1	**6F-7556**	2	COVER	
	26	1	**5I-7632**	1	PIPE	
	27	1	**296-4700**	1	BODY AS	
	27A	1	**294-1728**	1	GEAR	
	27B	1	**125-2950**	1	GEAR AS (9-TEETH)	
	27C	1	**195-8225**	1	CAP (MAIN BEARING)	
	30	1	**294-1729**	1	GEAR AS	
	31	1	**5I-7656**	1	SEAL	
	32	1	**6F-7557**	2	GASKET	
	33	1	**5I-7683**	1	SPINDLE	
	34	1	**178-6537**	1	GASKET	
	35	1	**5I-7558**	1	GEAR AS (9-TEETH)	
	36	1	**096-1024**	1	BOLT AS	
	37	1	**195-8212**	1	PLUG	

M - METRIC PART

296-4788 **HOUSING GP-FRONT (**contd.**)** **i02830615**

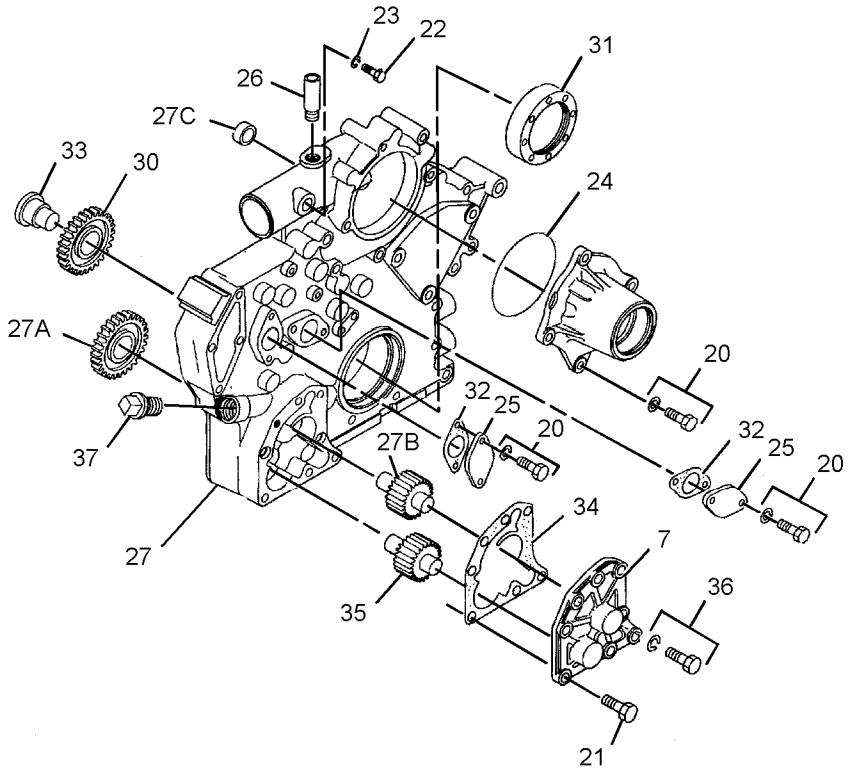

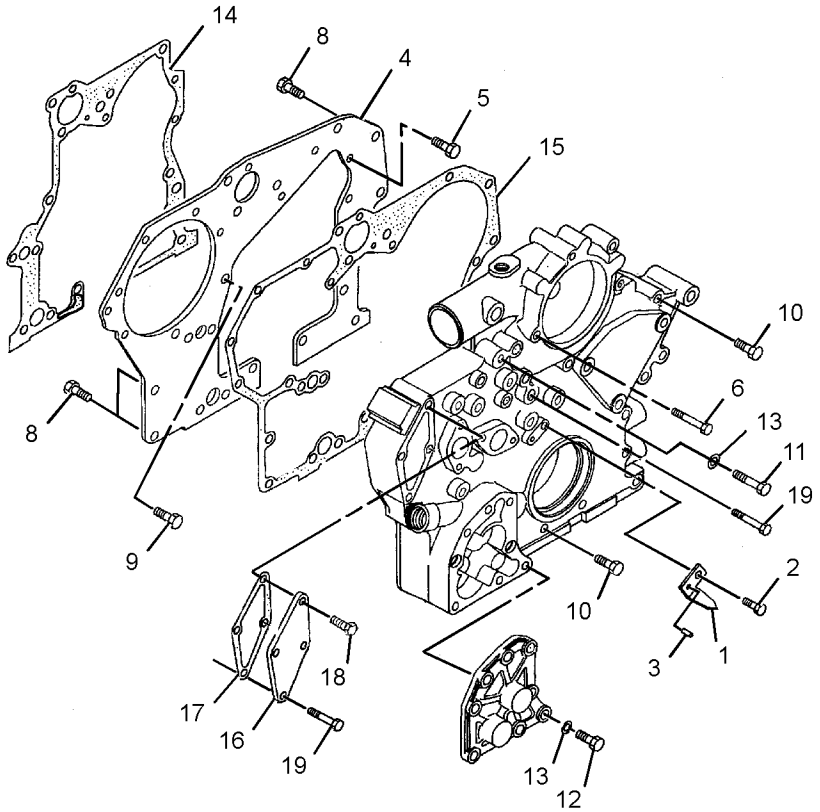

GRAPHIC #1 <END> g01413014

296-4798 MOUNTING GP-ALTERNATOR

S/N: JKH1-UP
PART OF 279-7814, 420-2179 ENGINE AR
ALSO AN ATTACHMENT

SMCS-1405 **i02944511**

NOTE	REF NO	GRAPHIC REF	PART NUMBER	QTY	PART NAME 1 2 3 4 5 6 (PRODUCT LEVEL)	SEE PAGE
	1	1	**178-6600**	1	PULLER	
	2	1	**296-4758**	1	PLATE	
	3	1	**5I-7750**	2	WASHER (12.5X25X8-MM THK)	
	4	1	**294-1860**	1	BOLT	
M	5	1	**8T-4137**	1	BOLT (M10X1.5X20-MM)	
M	6	1	**294-1861**	2	BOLT (M12X1.75X30-MM)	
	7	1	**8T-4223**	1	WASHER-HARD (13.5X25.5X3-MM THK)	
	8	1	**296-4759**	1	BOLT	
	9	1	**178-6599**	1	WASHER	
	10	1	**178-6601**	1	RING	
YR	11	1	**125-2994**	1	ALTERNATOR GP-CHARGING	157

M - METRIC PART
R - REMANUFACTURED PART MAY BE AVAILABLE
Y - SEPARATE ILLUSTRATION

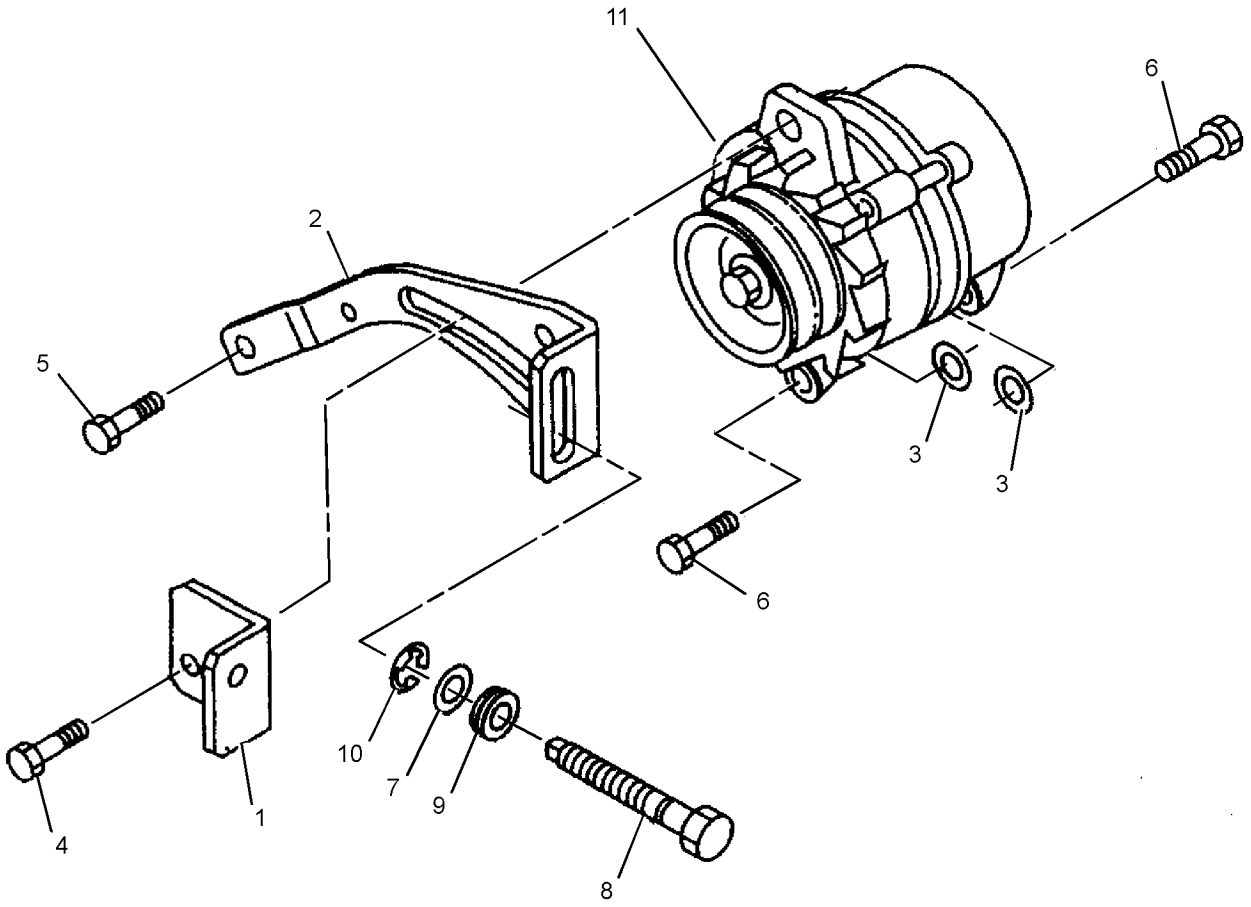

GRAPHIC #1 <END> g01459034

255-3035 MOUNTING GP-ENGINE

S/N: DLP1-UP

PART OF 279-7794, 379-4447 INSTALLATION AR-ENGINE

SMCS-1152 **i05803513**

NOTE	REF NO	GRAPHIC REF	PART NUMBER	QTY	PART NAME 1 2 3 4 5 6 (PRODUCT LEVEL)	SEE PAGE
	1	1	**099-4707**	4	WASHER (16.5X90X9-MM THK)	
	2	1	**118-9941**	4	SUPPORT AS	
	3	1	**266-6203**	1	BRACKET-FRONT (RH)	
	4	1	**266-6204**	1	BRACKET-FRONT (LH)	
	5	1	**266-6205**	1	BRACKET-REAR (RH)	
	6	1	**266-6206**	1	BRACKET-REAR (LH)	
	7	1	**266-6258**	2	MOUNT-RUBBER	
	8	1	**266-6259**	2	MOUNT-RUBBER	
	9	1	**266-6303**	2	MOUNT-RUBBER	
	10	1	**266-6304**	2	MOUNT-RUBBER	
M	11	1	**447-1703**	4	BOLT (M16X2X120-MM)	
	12	1	**451-2182**	16	WASHER-HARD (13.5X25.5X3-MM THK)	
M	13	1	**453-3446**	16	BOLT (M12X1.75X35-MM)	
	14	1	**451-2175**	8	WASHER-HARD (17.5X30X3.5-MM THK)	

M - METRIC PART

255-3035 **MOUNTING GP-ENGINE (**contd.**)** **i05803513**

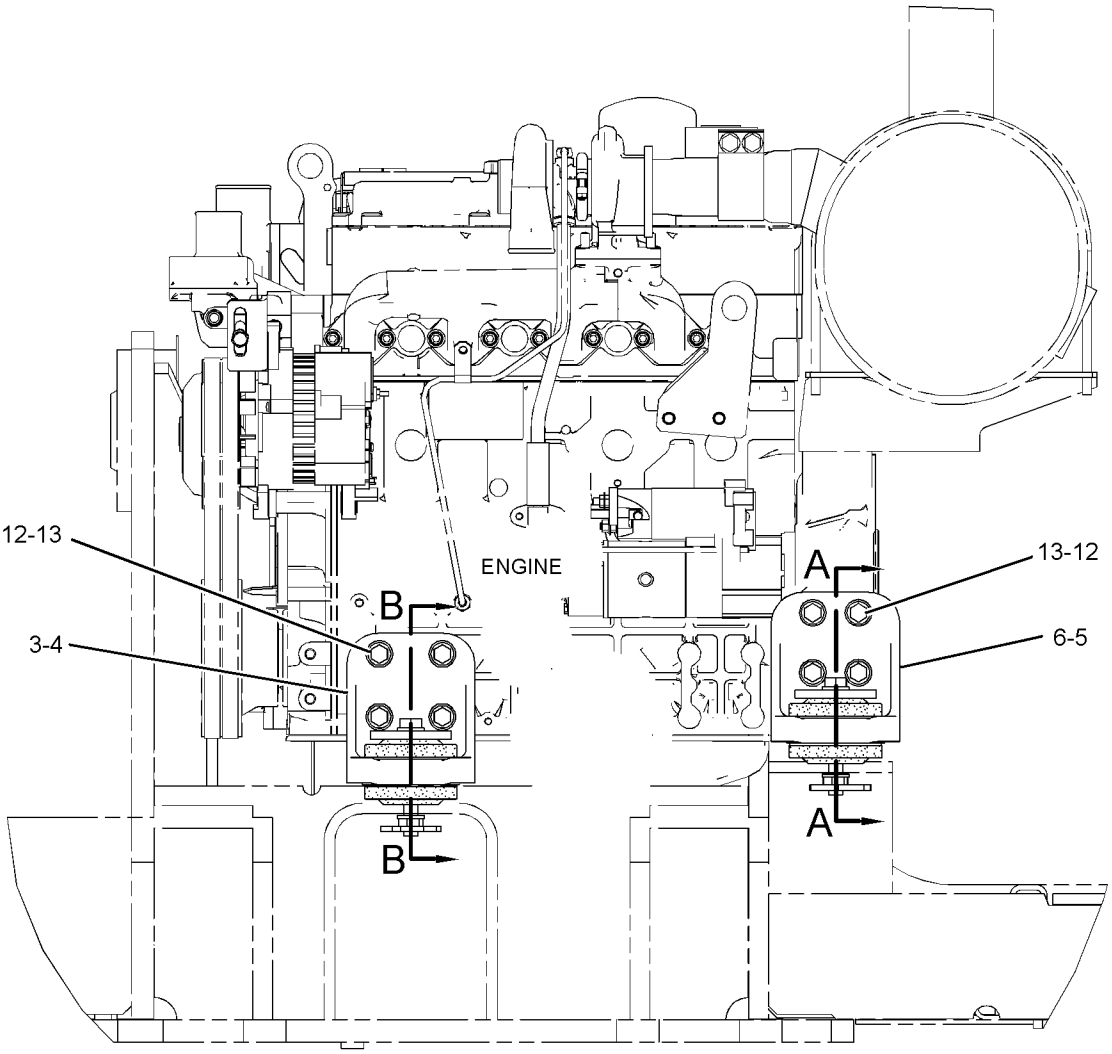

REAR VIEW

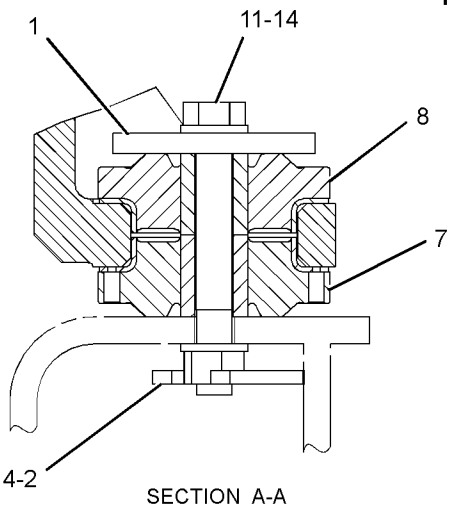

SECTION A-A

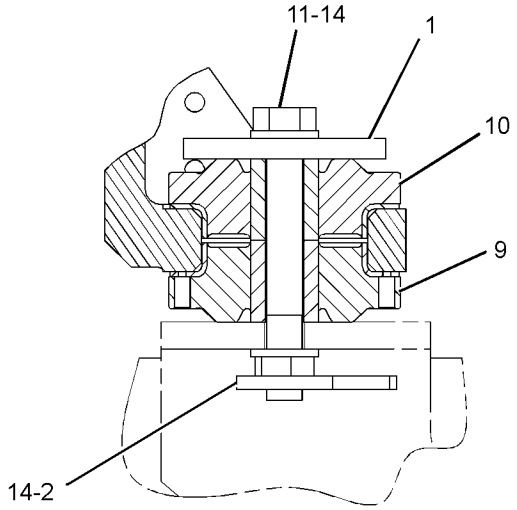

SECTION B-B

GRAPHIC #1 <END> g01683554

296-4637 MOUNTING GP-STARTING MOTOR

S/N: JKH1-UP
PART OF 279-7814, 420-2179 ENGINE AR
ALSO AN ATTACHMENT

SMCS-1453 **i05274250**

NOTE	REF NO	GRAPHIC REF	PART NUMBER	QTY	PART NAME 1 2 3 4 5 6 (PRODUCT LEVEL)	SEE PAGE
	1	1	**5I-7599**	1	SEAL-O-RING	
	2	1	**135-2369**	1	COVER	
M	3	1	**135-2370**	1	BOLT (M5X0.8X25-MM)	
	4	1	**294-1850**	1	WASHER	
	5	1	**294-1851**	1	WASHER	
YR	6	1	**272-4774**	1	STARTING MOTOR GP-ELECTRIC	255
M	7	1	**6V-8231**	2	NUT (M10X1.25-THD)	
	8	1	**7X-0796**	2	LOCKWASHER (10.2X18.4X2.5-MM THK)	

M - METRIC PART
R - REMANUFACTURED PART MAY BE AVAILABLE
Y - SEPARATE ILLUSTRATION

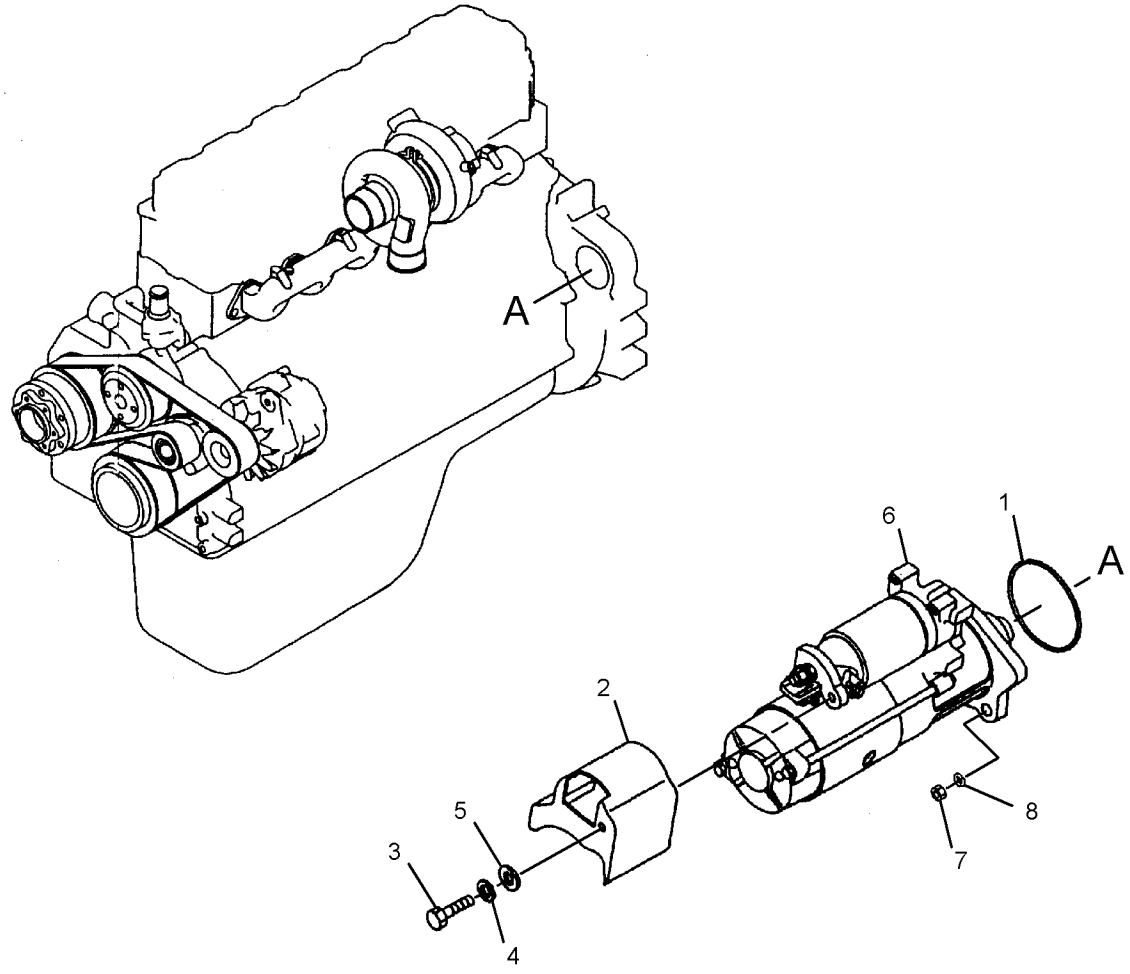

GRAPHIC #1 <END> g01456158

296-4780 PAN GP-OIL

S/N: JKH1-UP
PART OF 279-7814, 420-2179 ENGINE AR
ALSO AN ATTACHMENT

SMCS-1302 **i04390535**

NOTE	REF NO	GRAPHIC REF	PART NUMBER	QTY	PART NAME 1 2 3 4 5 6 (PRODUCT LEVEL)	SEE PAGE
	1	1	**296-4702**	1	GUIDE	
	2	1	**296-4703**	16	BOLT	
	3	1	**5I-7663**	12	BOLT (M8X1.25X16-MM)	
	4	1	**7X-0796**	1	LOCKWASHER (10.2X18.4X2.5-MM THK)	
M	5	1	**6V-8231**	1	NUT (M10X1.25-THD)	
	6	1	**296-4704**	1	PAN AS	
	7	1	**183-8176**	1	VALVE	
	8	1	**5I-8067**	1	WASHER-SEALING	
	9	1	**135-8432**	1	PLUG (DRAIN, ENGINE OIL)	
	10	1	**095-2040**	1	WASHER	
	11	1	**296-4706**	1	GAUGE-OIL LEVEL (DIPSTICK) (ENGINE)	
	12	1	**5I-7842**	1	GASKET	
	13	1	**213-0677**	1	SWITCH AS-LIQUID LEVEL (ENGINE OIL)	
		1	**102-8802**	1	KIT-RECEPTACLE (2-PIN)	
					(INCLUDES RECEPTACLE AS & WEDGE)	
		1	**9X-3401**	2	PIN-CONNECTOR (16-GA TO 18-GA)	
					—OR—	
		1	**126-1767**	2	PIN-CONNECTOR (14-GA TO 16-GA)	
	14	1	**125-2968**	1	SEAL	
	15	1	**5I-4993**	1	SEAL	
	16	1	**5I-8110**	1	ELBOW	

M - METRIC PART

296-4780 **PAN GP-OIL (**contd.**)** **i04390535**

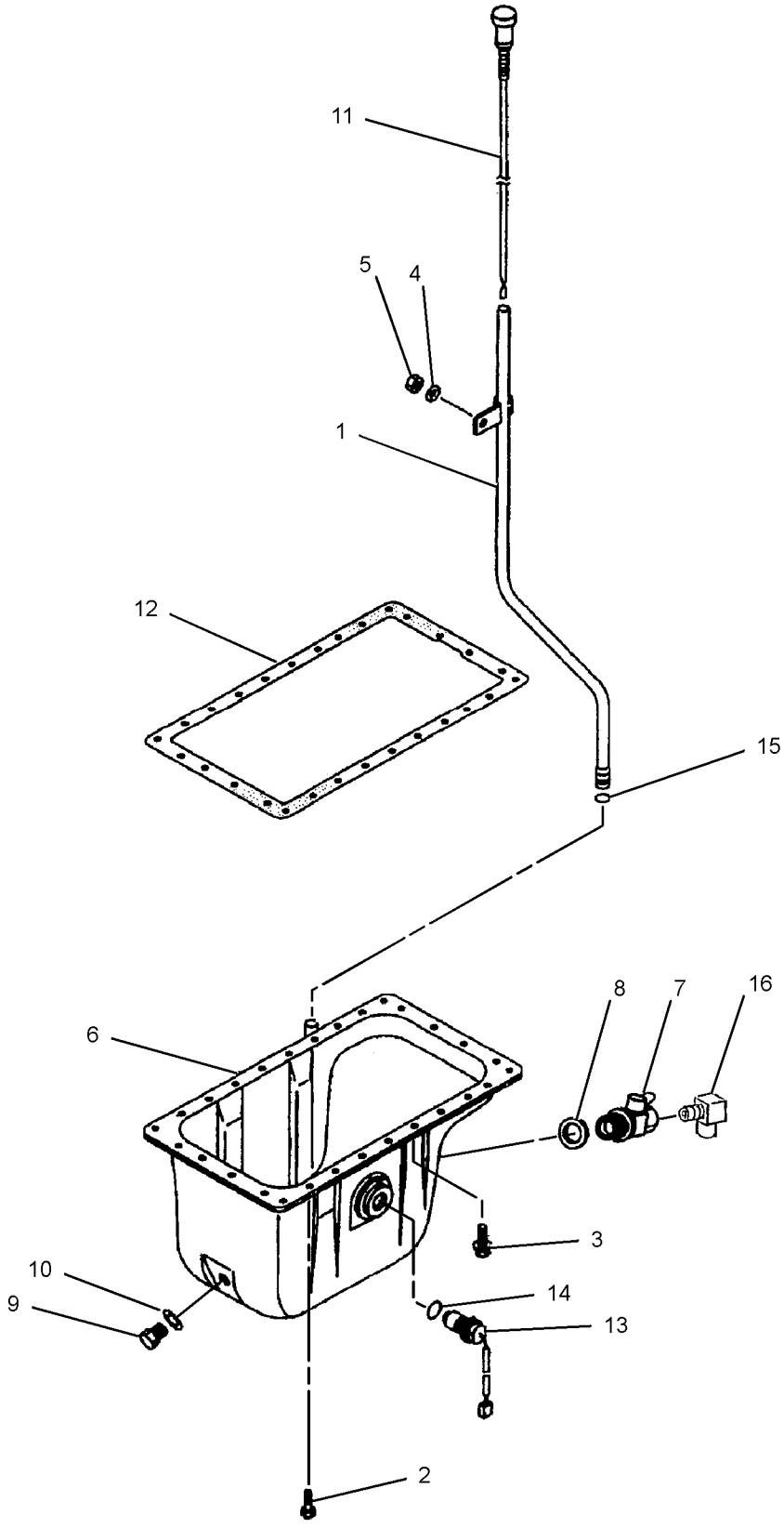

GRAPHIC #1 <END> g01404257

296-4796 PISTON & ROD GP

S/N: JKH1-UP
PART OF 279-7814, 420-2179 ENGINE AR
ALSO AN ATTACHMENT

SMCS-1225 **i05372914**

NOTE	REF NO	GRAPHIC REF	PART NUMBER	QTY	PART NAME 1 2 3 4 5 6 (PRODUCT LEVEL)	SEE PAGE
	1	1	**324-4238**	4	PISTON (STANDARD)	
AB		1	**324-4239**		PISTON (0.25-MM OS)	
AB		1	**324-4240**		PISTON (0.5-MM OS)	
	2	1	**094-7134**	4	PIN	
	3	1	**5I-7667**	8	RING	
J	4	1	**178-6543**	4	SET-PISTON RING (STANDARD)	
ABJ		1	**178-6544**		SET-PISTON RING (0.25-MM OS)	
ABJ		1	**178-6545**		SET-PISTON RING (0.5-MM OS)	
	5	1	**294-1747**	4	ROD AS	
					(EACH INCLUDES)	
	5A	1	**094-7154**	2	BOLT (M12X1.25X85-MM)	
	5B	1	**094-7516**	2	NUT (M12X1.25-THD)	
	5C	1	**296-4663**	1	BUSHING	
	6	1	**294-1748**	8	BEARING	
AB		1	**297-7648**		BEARING (0.25-MM US)	
AB		1	**297-7649**		BEARING (0.50-MM US)	
AB		1	**297-7650**		BEARING (0.75-MM US)	

A - NOT PART OF THIS GROUP
B - USE AS REQUIRED
J - INCLUDES COMPLETE SET OF RINGS FOR ONE PISTON

296-4796 **PISTON & ROD GP** (contd.) **i05372914**

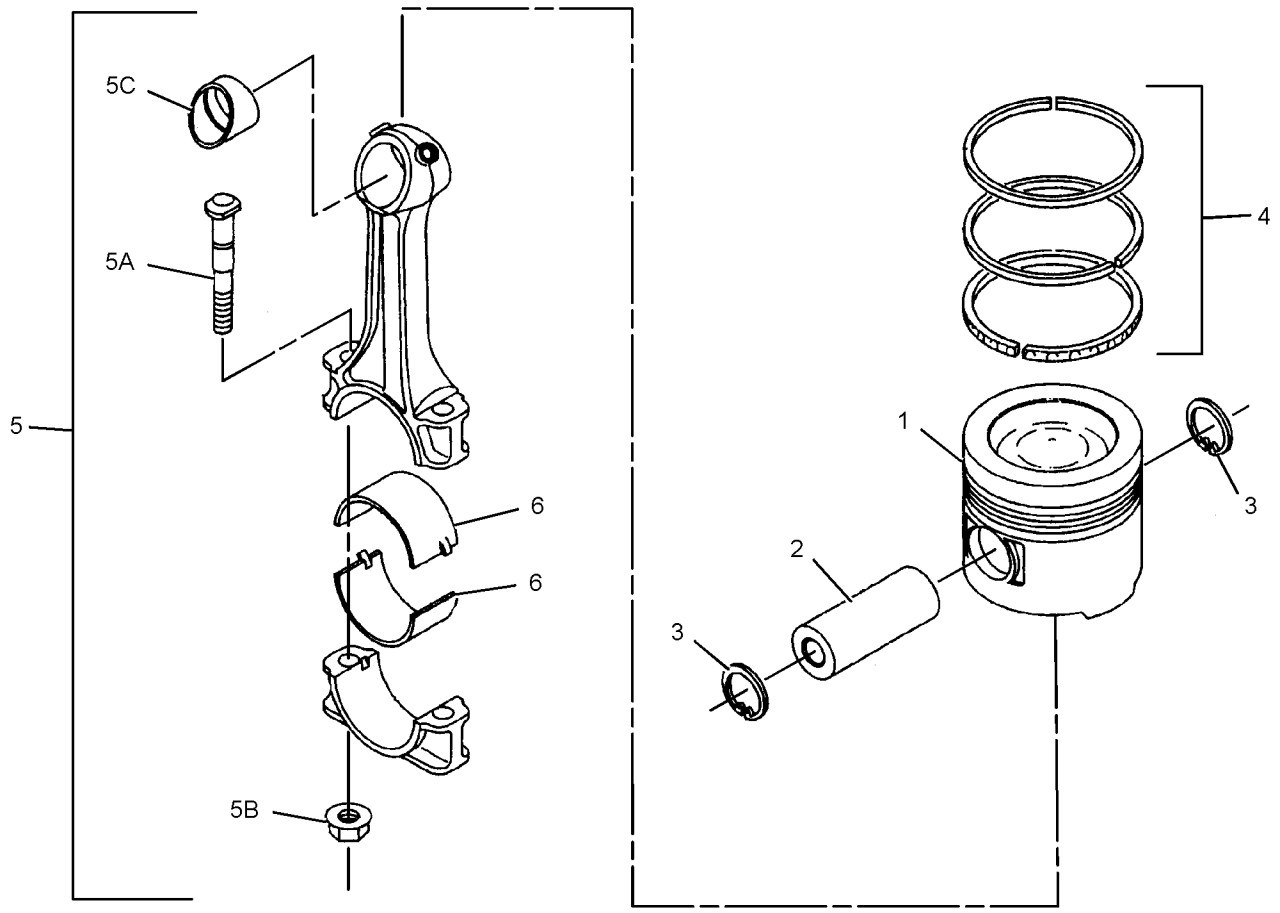

GRAPHIC #1 <END> g01403170

296-4738 PULLEY AS-IDLER

S/N: DLP1-UP

PART OF 279-7779 PULLEY GP-FAN & ALT DRIVE

AN ATTACHMENT

SMCS-1358 **i02719552**

NOTE	REF NO	GRAPHIC REF	PART NUMBER	QTY	PART NAME 1 2 3 4 5 6 (PRODUCT LEVEL)	SEE PAGE
	1	1	**296-4739**	1	BRACKET	
	2	1	**294-1784**	1	PULLEY	
	3	1	**294-1785**	2	BEARING	
	4	1	**294-1786**	1	RING	
	5	1	**8T-9598**	2	RING-RETAINING	

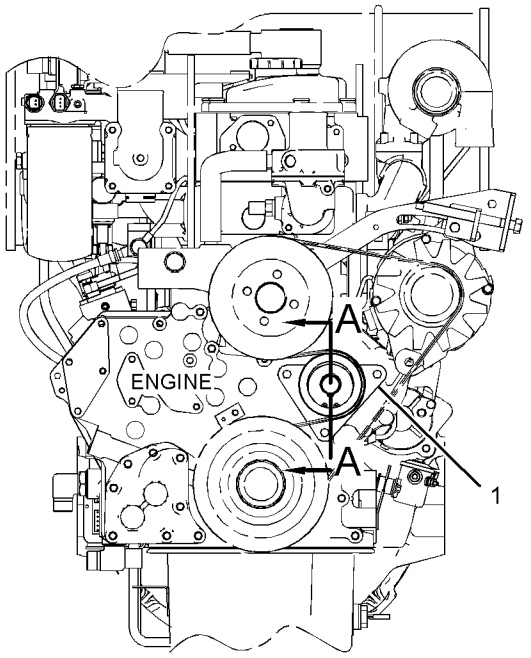

LEFT SIDE VIEW

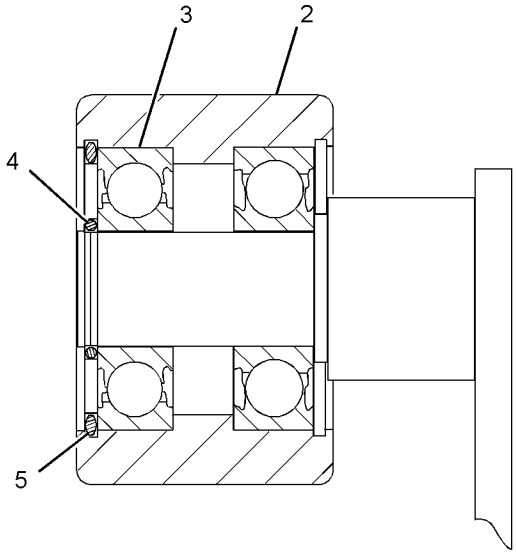

SECTION A-A

GRAPHIC #1 <END> g01367875

279-7779 PULLEY GP-FAN & ALT DRIVE—WITH IDLER PULLEY

S/N: DLP1-UP

PART OF 279-7811, 324-4023, 420-2168 ENGINE AR-COMPLETE

AN ATTACHMENT

SMCS-1359 **i07177478**

NOTE	REF NO	GRAPHIC REF	PART NUMBER	QTY	PART NAME 1 2 3 4 5 6 (PRODUCT LEVEL)	SEE PAGE
	1	1	**294-1738**	3	BOLT (M10X1.5X32-MM)	
Y	2	1	**296-4738**	1	PULLEY AS-IDLER	40
	3	1	**310-9538**	1	PULLEY AS	
		1	**5I-7540**	1	SLEEVE	
	4	1	**310-9591**	1	PULLEY	
	5	1	**519-8020**	1	BELT	

Y - SEPARATE ILLUSTRATION

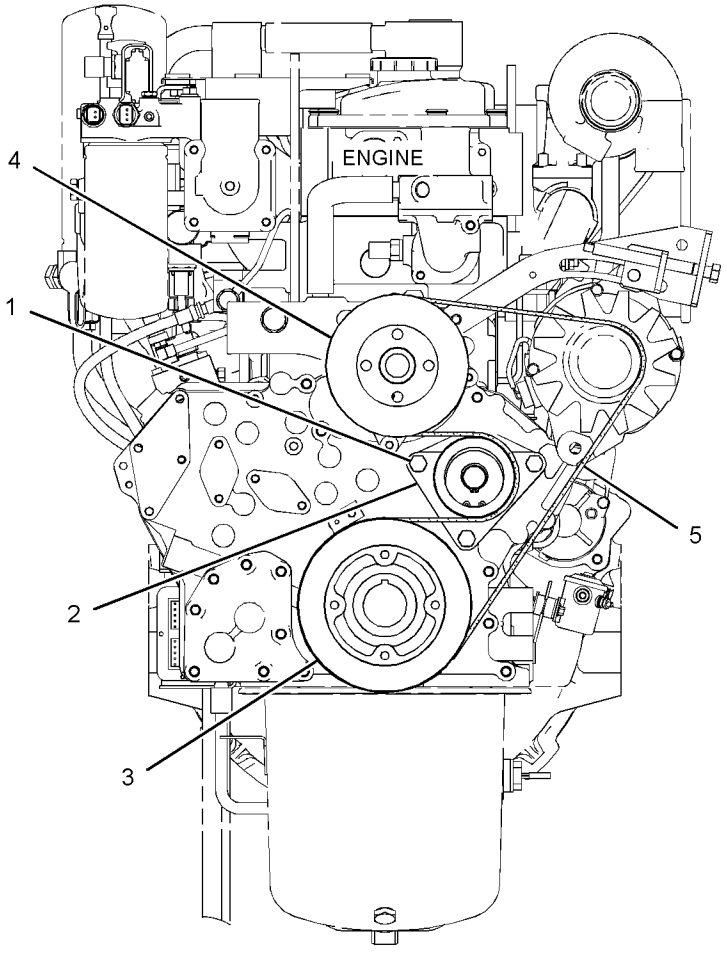

LEFT SIDE VIEW

GRAPHIC #1 <END> g01440271

305-4944 PULLEY GP-FAN & ALT DRIVE

S/N: DLP1-UP

PART OF 279-7810, 324-4022 ENGINE AR-COMPLETE

SMCS-1359 **i02901060**

NOTE	REF NO	GRAPHIC REF	PART NUMBER	QTY	PART NAME 1 2 3 4 5 6 (PRODUCT LEVEL)	SEE PAGE
	1	1	**310-9538**	1	PULLEY AS	
		1	**5I-7540**	1	SLEEVE	
	2	1	**310-9541**	1	PULLEY	
	3	1	**310-9543**	1	BELT-SERPENTINE	

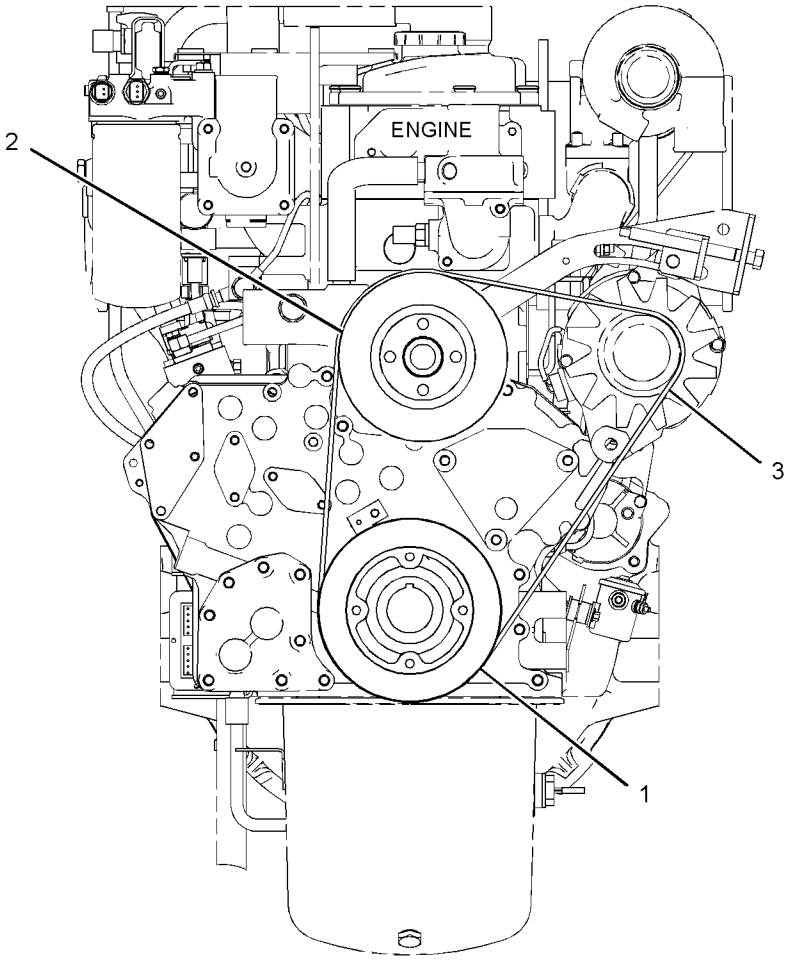

LEFT SIDE VIEW

GRAPHIC #1 <END> g01442345

255-3018 PULLEY GP-IDLER

S/N: DLP1-390

PART OF 310-9499 COMPRESSOR GP-REFRIGERANT

SMCS-1358 **i02674719**

NOTE	REF NO	GRAPHIC REF	PART NUMBER	QTY	PART NAME 1 2 3 4 5 6 (PRODUCT LEVEL)	SEE PAGE
M	1	1	**255-3022**	1	NUT (M10X1.25-THD)	
	2	1	**239-6626**	1	PULLEY-IDLER	
M	3	1	**239-6627**	1	BOLT (M8X1.25X110-MM)	
	4	1	**239-6632**	1	RING-SNAP	
	5	1	**255-3020**	1	SHAFT	
	6	1	**255-3021**	1	WASHER	
	7	1	**239-6630**	1	COLLAR	
	8	1	**239-6631**	1	BEARING AS-BALL	

M - METRIC PART

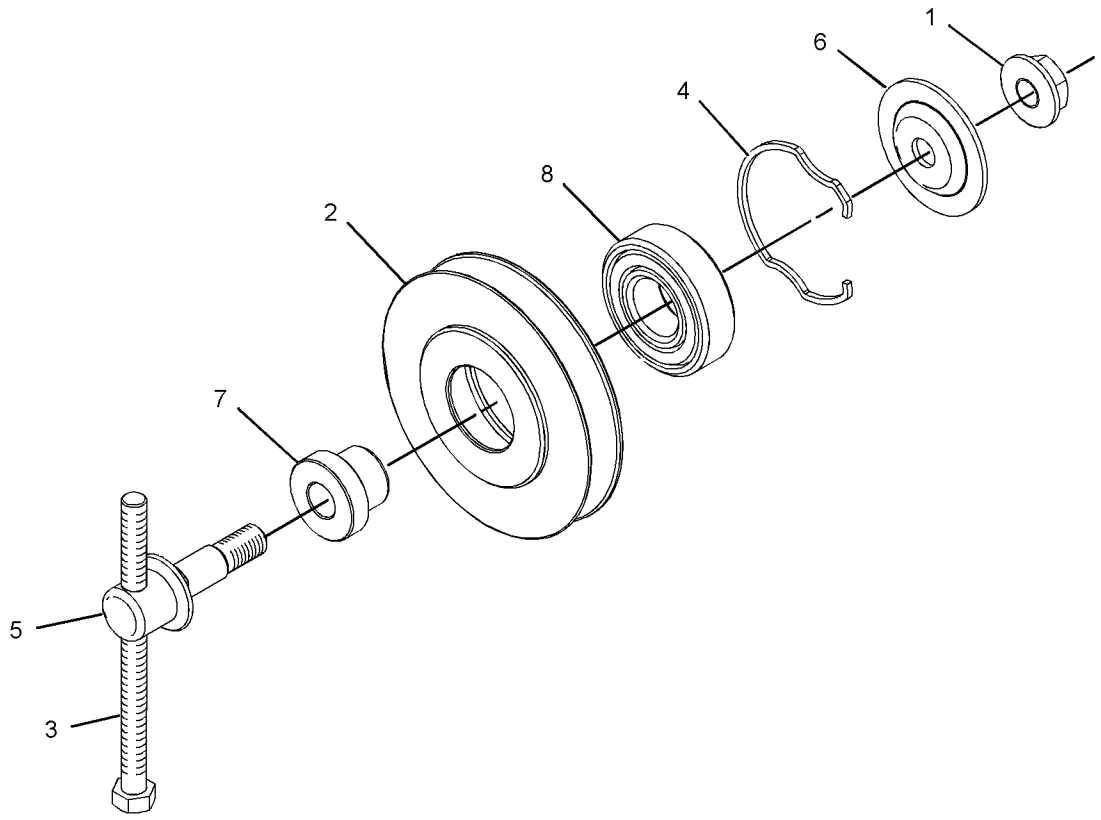

GRAPHIC #1 <END> g01277313

327-7193 PULLEY GP-IDLER

S/N: DLP391-UP

PART OF 310-9499 COMPRESSOR GP-REFRIGERANT

SMCS-1358 **i03897271**

NOTE	REF NO	GRAPHIC REF	PART NUMBER	QTY	PART NAME 1 2 3 4 5 6 (PRODUCT LEVEL)	SEE PAGE
M	1	1	**255-3022**	1	NUT (M10X1.25-THD)	
	2	1	**239-6626**	1	PULLEY-IDLER	
M	3	1	**239-6627**	1	BOLT (M8X1.25X110-MM)	
	4	1	**255-3020**	1	SHAFT	
	5	1	**324-4249**	1	WASHER	
	6	1	**239-6630**	1	COLLAR	
	7	1	**324-4248**	1	BEARING AS-BALL	
	8	1	**239-6632**	1	RING-SNAP	

M - METRIC PART

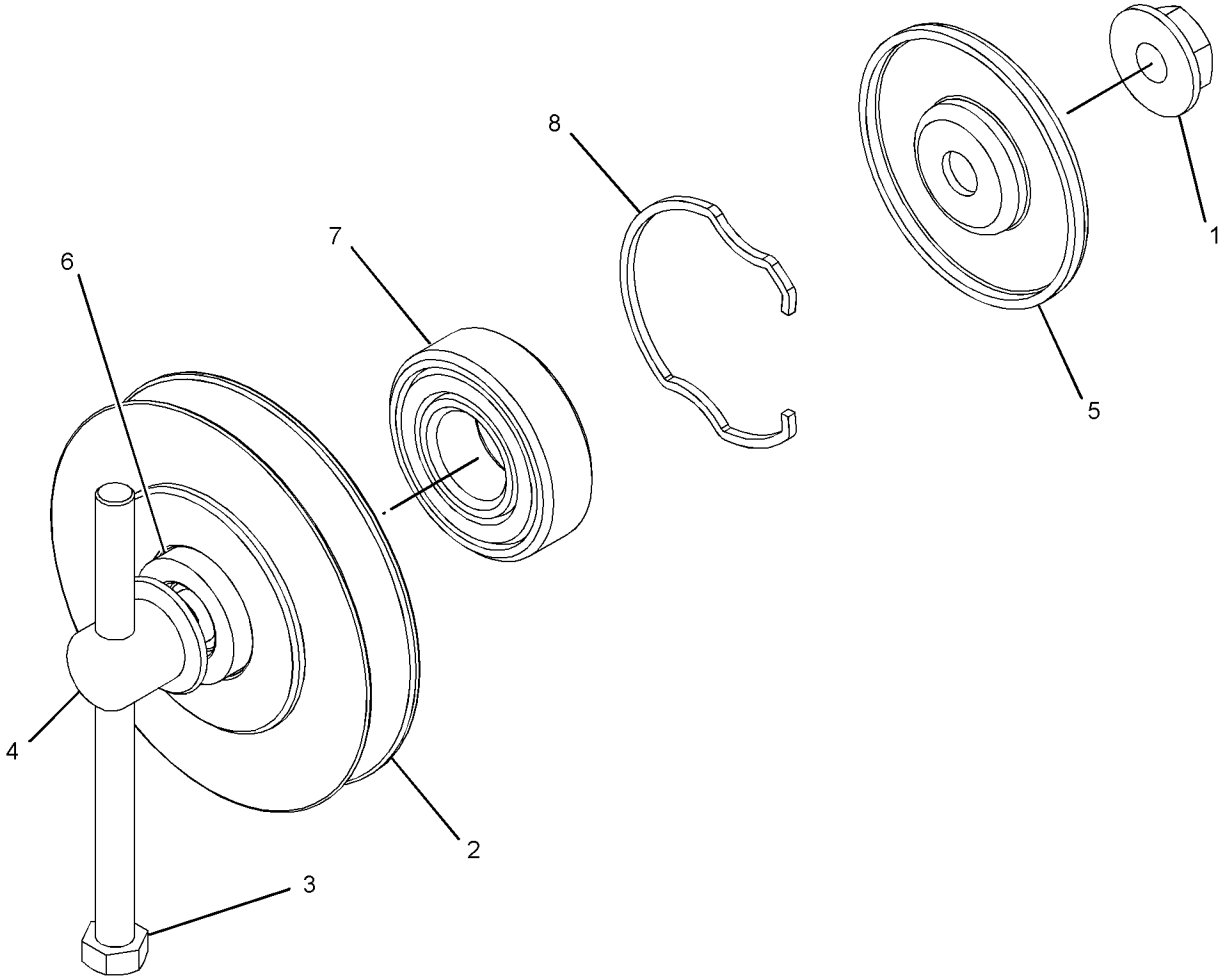

GRAPHIC #1 <END> g02131273

305-4954 VALVE MECHANISM GP

S/N: JKH1-UP
PART OF 279-7814, 420-2179 ENGINE AR
ALSO AN ATTACHMENT

SMCS-1209 **i03808514**

NOTE	REF NO	GRAPHIC REF	PART NUMBER	QTY	PART NAME 1 2 3 4 5 6 (PRODUCT LEVEL)	SEE PAGE
	1	1	**294-1684**	8	VALVE-INLET	
	2	1	**294-1685**	8	VALVE-EXHAUST	
	3	1	**294-1686**	4	BASE-ROCKER ARM	
	4	1	**294-1687**	4	BRIDGE-EXHAUST	
	5	1	**5I-7630**	8	CAP	
	6	1	**294-1688**	16	SPRING	
	7	1	**294-1689**	8	SCREW	
M	8	1	**8T-7964**	8	NUT (M6X1-THD)	
	9	1	**199-2188**	32	PIN-COTTER	
	10	1	**199-2189**	16	SEAL-VALVE STEM	
	11	1	**199-2187**	16	RETAINER	
	12	1	**305-4750**	4	BRACKET	
	13	1	**305-4751**	3	SPRING	
	14	1	**294-1693**	1	PIPE	
	15	1	**305-4931**	1	SHAFT AS-ROCKER ARM	
		1	**096-3741**	1	CAP	
	16	1	**305-4929**	4	ROCKER ARM AS	
					(EACH INCLUDES)	
M		1	**091-3474**	1	NUT (M8X1.25-THD)	
		1	**094-9525**	1	SCREW	
	17	1	**305-4927**	4	ROCKER ARM AS	
					(EACH INCLUDES)	
M		1	**091-3474**	1	NUT (M8X1.25-THD)	
		1	**094-9525**	1	SCREW	
	18	1	**294-1698**	2	WASHER	
	19	1	**294-1699**	4	BOLT	
	20	1	**305-4746**	4	BOLT	
	21	1	**294-1786**	2	RING	
	22	1	**294-1702**	1	BOLT	
	23	1	**3B-4505**	4	LOCKWASHER (5/16)	
	24	1	**305-4747**	4	WASHER	

M - METRIC PART

305-4954 **VALVE MECHANISM GP** (contd.) **i03808514**

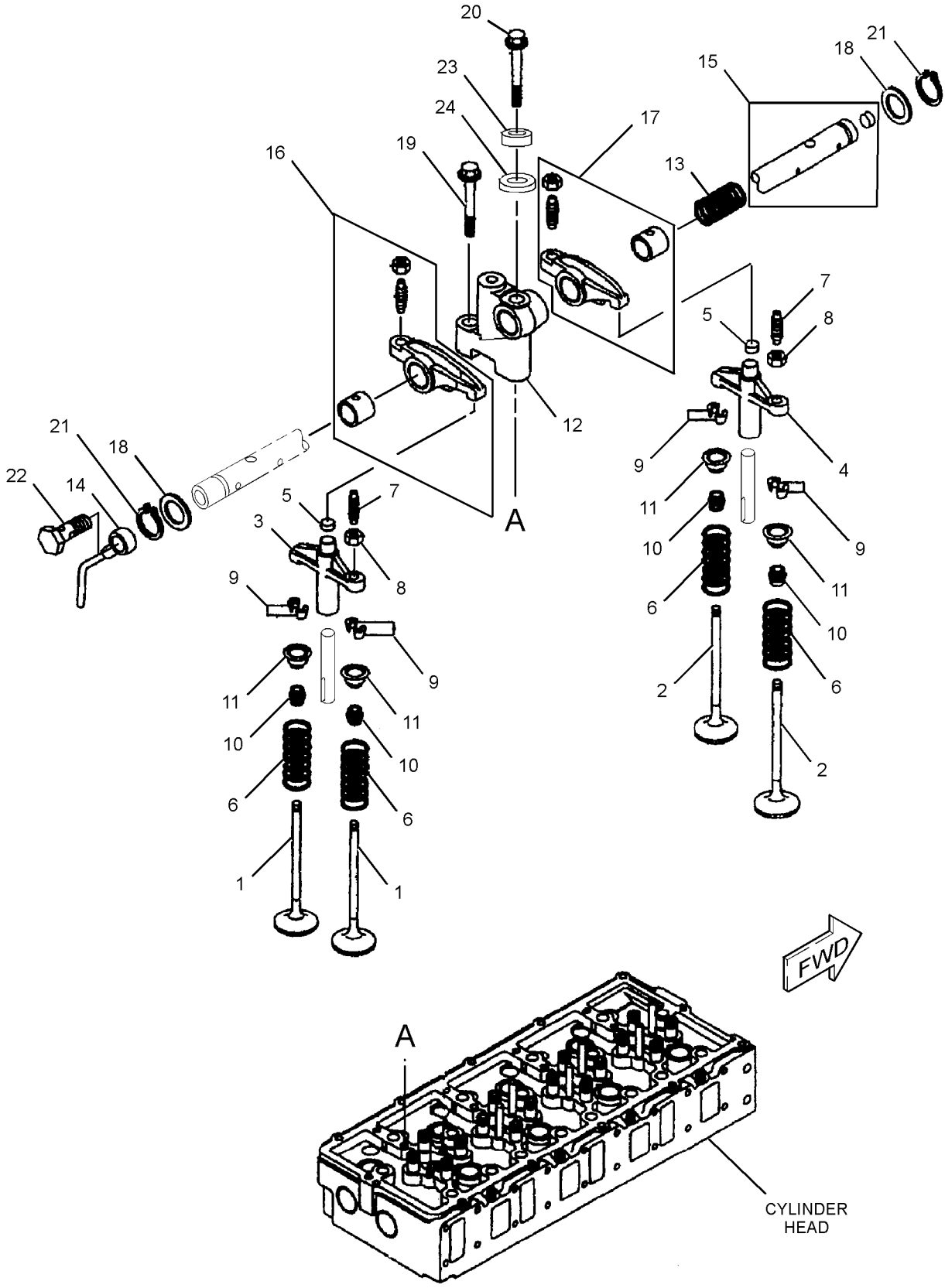

GRAPHIC #1 <END> g01406102

296-4792 ADAPTER GP-REMOTE OIL FILTER–ENGINE

S/N: JKH1-UP
PART OF 279-7814, 420-2179 ENGINE AR
ALSO AN ATTACHMENT

SMCS-1308 **i03021634**

NOTE	REF NO	GRAPHIC REF	PART NUMBER	QTY	PART NAME 1 2 3 4 5 6 (PRODUCT LEVEL)	SEE PAGE
	1	1	**5I-7864**	1	GASKET	
	2	1	**296-4728**	1	COVER AS	
	2A	1	**185-2793**	2	ELBOW	
	2B	1	**296-4729**	1	COVER	
	2C	1	**305-4892**	2	SEAL-O-RING	
	3	1	**5B-5947**	1	GASKET	
	4	1	**5I-8066**	1	VALVE AS-RELIEF (ENGINE OIL PRESSURE)	
M	5	1	**294-1726**	3	BOLT (M10X1.5X37-MM)	
	6	1	**095-8575**	2	BOLT AS	

M - METRIC PART

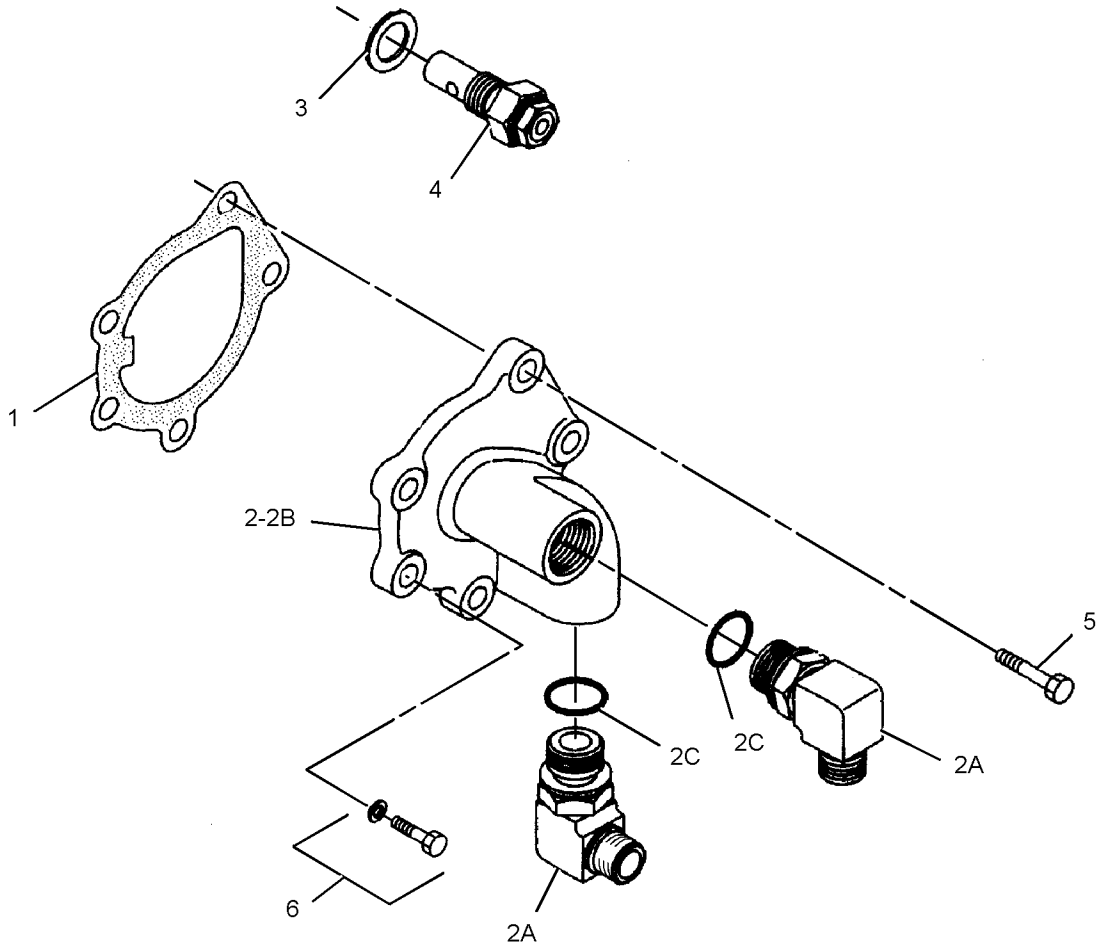

GRAPHIC #1 <END> g01403262

310-9546 BREATHER GP–CRANKCASE

S/N: JKH1-UP
PART OF 279-7814, 420-2179 ENGINE AR
ALSO AN ATTACHMENT

SMCS-1317 **i04291290**

NOTE	REF NO	GRAPHIC REF	PART NUMBER	QTY	PART NAME 1 2 3 4 5 6 (PRODUCT LEVEL)	SEE PAGE
	1	1	**310-9540**	1	HOSE	
	2	1	**294-1774**	1	SEAL-O-RING	
	3	1	**5I-7725**	1	BREATHER (CRANKCASE)	
	4	1	**151-5332**	3	CLAMP	
	5	1	**5I-7645**	1	PIPE	
	6	1	**294-1775**	2	BOLT (M10X1.5X23-MM)	
	7	1	**5I-4940**	1	TUBE (FUMES DISPOSAL)	
	8	1	**305-4771**	1	CLIP	

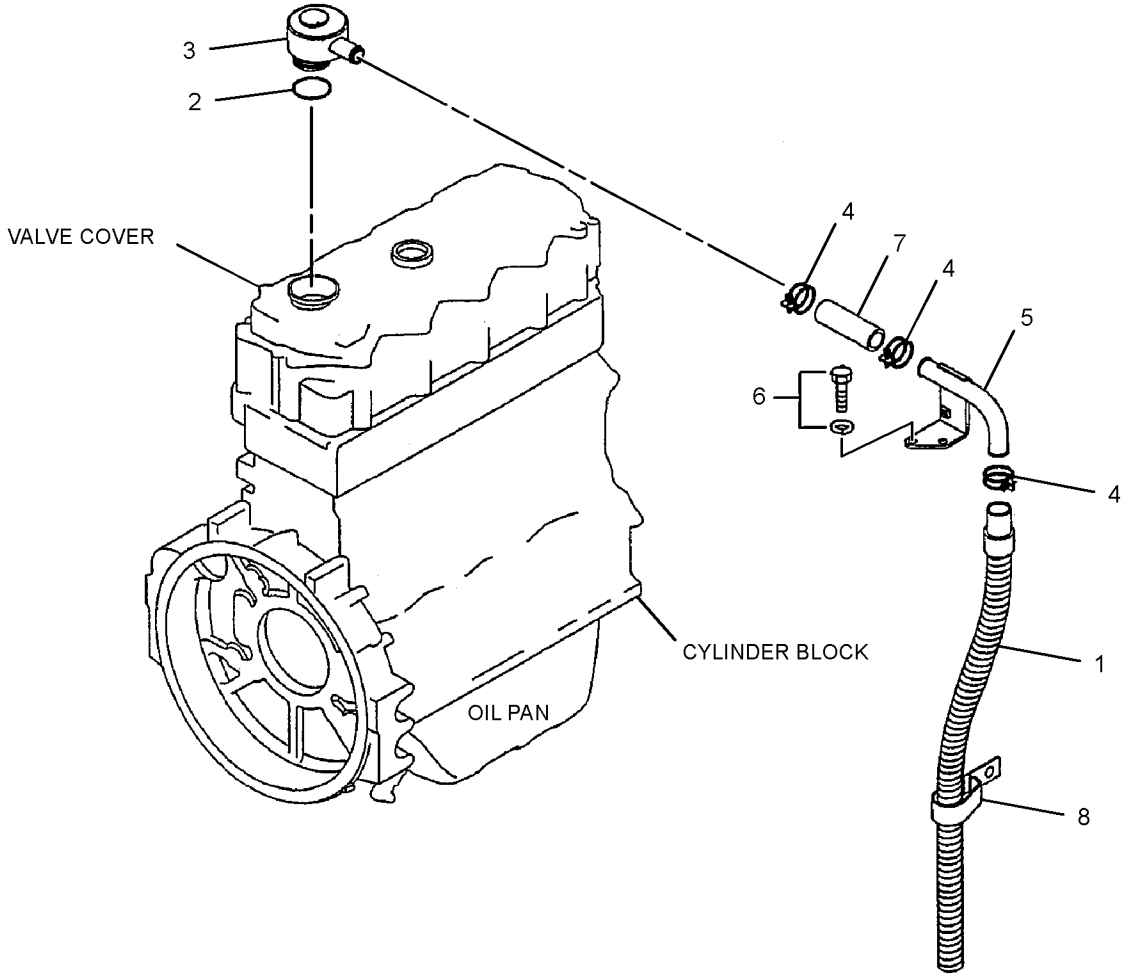

GRAPHIC #1 <END> g01442596

310-9560 FILTER & MTG GP-ENGINE OIL

S/N: DLP1-622

PART OF 279-7794 INSTALLATION AR-ENGINE

SMCS-1306, 1308 **i02854162**

NOTE	REF NO	GRAPHIC REF	PART NUMBER	QTY	PART NAME 1 2 3 4 5 6 (PRODUCT LEVEL)	SEE PAGE
	1	1	**7C-1493**	1	VALVE AS-BYPASS	
	2	1	**7W-9028**	1	BASE AS-OIL FILTER	
		1	**2P-2537**	1	STUD-HOLLOW	
	3	1	**8C-3445**	1	CAP-DUST	
	4	1	**9L-9188**	1	SPRING-VALVE	
	5	1	**121-0307**	1	BASE	
	6	1	**152-2938**	3	SEAL-O-RING	
	7	1	**152-2939**	1	SEAL-O-RING	
	8	1	**296-4804**	1	SUPPORT AS	
	9	1	**310-9561**	1	HOSE AS	
	10	1	**310-9562**	1	HOSE AS	
	11	1	**033-5853**	1	SEAL-O-RING	
	12	1	**033-6038**	1	SEAL-O-RING	
	13	1	**153-4906**	1	SEAL-O-RING	
	14	1	**189-9377**	1	SEAL-O-RING	
	15	1	**1R-0739**	1	FILTER AS-ENGINE OIL (STANDARD EFFICIENCY)	
	16	1	**228-7092**	3	SEAL-O-RING	
	17	1	**2T-2991**	1	CONNECTOR	
M	18	1	**5P-8196**	1	PLUG	
	19	1	**6D-1641**	4	CLIP (LOOP)	
	20	1	**6V-1903**	1	SEAL-O-RING	
	21	1	**6V-5266**	3	SEAL-O-RING	
	22	1	**6V-8943**	1	REDUCER	
	23	1	**6V-9007**	1	ELBOW	
	24	1	**6V-9853**	1	ELBOW	
	25	1	**8C-3446**	1	VALVE-SAMPLING	
	26	1	**8C-6712**	1	ELBOW	
	27	1	**8T-4121**	9	WASHER-HARD (11X21X2.5-MM THK)	
M	28	1	**8T-4136**	4	BOLT (M10X1.5X25-MM)	
M	29	1	**8T-4137**	2	BOLT (M10X1.5X20-MM)	
M	30	1	**8T-4196**	3	BOLT (M10X1.5X35-MM)	
M	31	1	**8T-4197**	3	BOLT (M8X1.25X40-MM)	
	32	1	**8T-4224**	5	WASHER-HARD (8.8X16X2-MM THK)	
M	33	1	**8T-7547**	2	BOLT (M8X1.25X30-MM)	
	34	1	**9S-4188**	1	PLUG	

M - METRIC PART

310-9560 **FILTER & MTG GP-ENGINE OIL (**contd.**)** **i02854162**

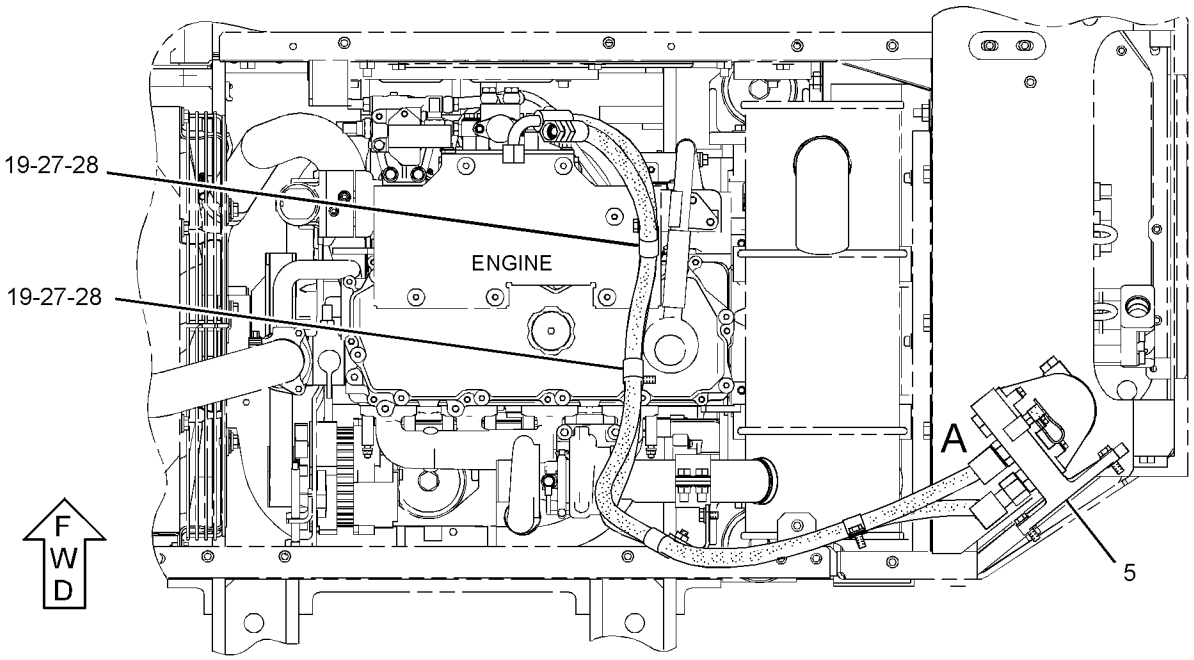

TOP VIEW

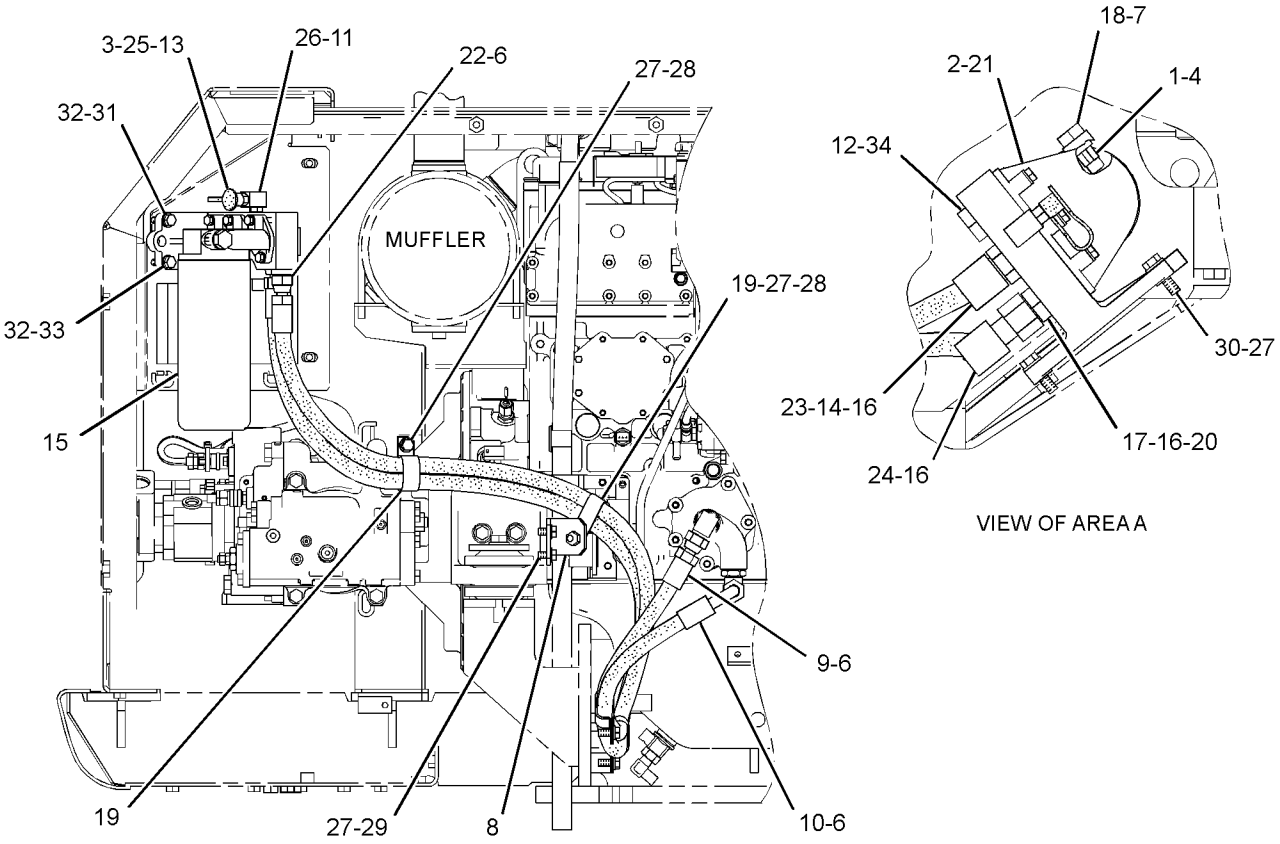

VIEW OF AREA A

FRONT VIEW

GRAPHIC #1 <END> g01441785

379-4449 FILTER & MTG GP-ENGINE OIL

S/N: DLP623-UP

PART OF 379-4447 INSTALLATION AR-ENGINE

SMCS-1306, 1308 **i04657413**

NOTE	REF NO	GRAPHIC REF	PART NUMBER	QTY	PART NAME 1 2 3 4 5 6 (PRODUCT LEVEL)	SEE PAGE
	1	1	**7C-1493**	1	VALVE AS-BYPASS (OIL COOLER)	
	2	1	**7W-9028**	1	BASE AS-OIL FILTER	
		1	**2P-2537**	1	STUD-HOLLOW	
	3	1	**9L-9188**	1	SPRING-VALVE (OIL COOLER BYPASS)	
	4	1	**121-0307**	1	BASE	
	5	1	**152-2938**	3	SEAL-O-RING	
	6	1	**152-2939**	1	SEAL-O-RING	
	7	1	**296-4804**	1	SUPPORT AS	
M		1	**8T-3490**	1	NUT-WELD (M10X1.5-THD)	
	8	1	**310-9561**	1	HOSE AS	
	9	1	**310-9562**	1	HOSE AS	
	10	1	**033-6038**	1	SEAL-O-RING	
	11	1	**189-9377**	1	SEAL-O-RING	
	12	1	**1R-0739**	1	FILTER AS-ENGINE OIL (STANDARD EFFICIENCY)	
	13	1	**228-7092**	3	SEAL-O-RING	
	14	1	*244-3712*	1	PLUG AS	
		1	**9S-4191**	1	PLUG (9/16-18-THD)	
		1	**214-7568**	1	SEAL-O-RING	
	15	1	**2T-2991**	1	CONNECTOR	
M	16	1	**5P-8196**	1	PLUG	
	17	1	**6D-1641**	4	CLIP (LOOP)	
	18	1	**6V-1903**	1	SEAL-O-RING	
	19	1	**6V-5266**	3	SEAL-O-RING	
	20	1	**6V-8943**	1	REDUCER	
	21	1	**6V-9007**	1	ELBOW	
	22	1	**6V-9853**	1	ELBOW	
	23	1	**8T-4121**	9	WASHER-HARD (11X21X2.5-MM THK)	
M	24	1	**8T-4136**	4	BOLT (M10X1.5X25-MM)	
M	25	1	**8T-4137**	2	BOLT (M10X1.5X20-MM)	
M	26	1	**8T-4196**	3	BOLT (M10X1.5X35-MM)	
M	27	1	**099-3649**	3	BOLT (M8X1.25X40-MM)	
	28	1	**8T-4224**	5	WASHER-HARD (8.8X16X2-MM THK)	
M	29	1	**8T-7547**	2	BOLT (M8X1.25X30-MM)	
	30	1	**9S-4188**	1	PLUG	

M - METRIC PART

379-4449 **FILTER & MTG GP-ENGINE OIL** (contd.) **i04657413**

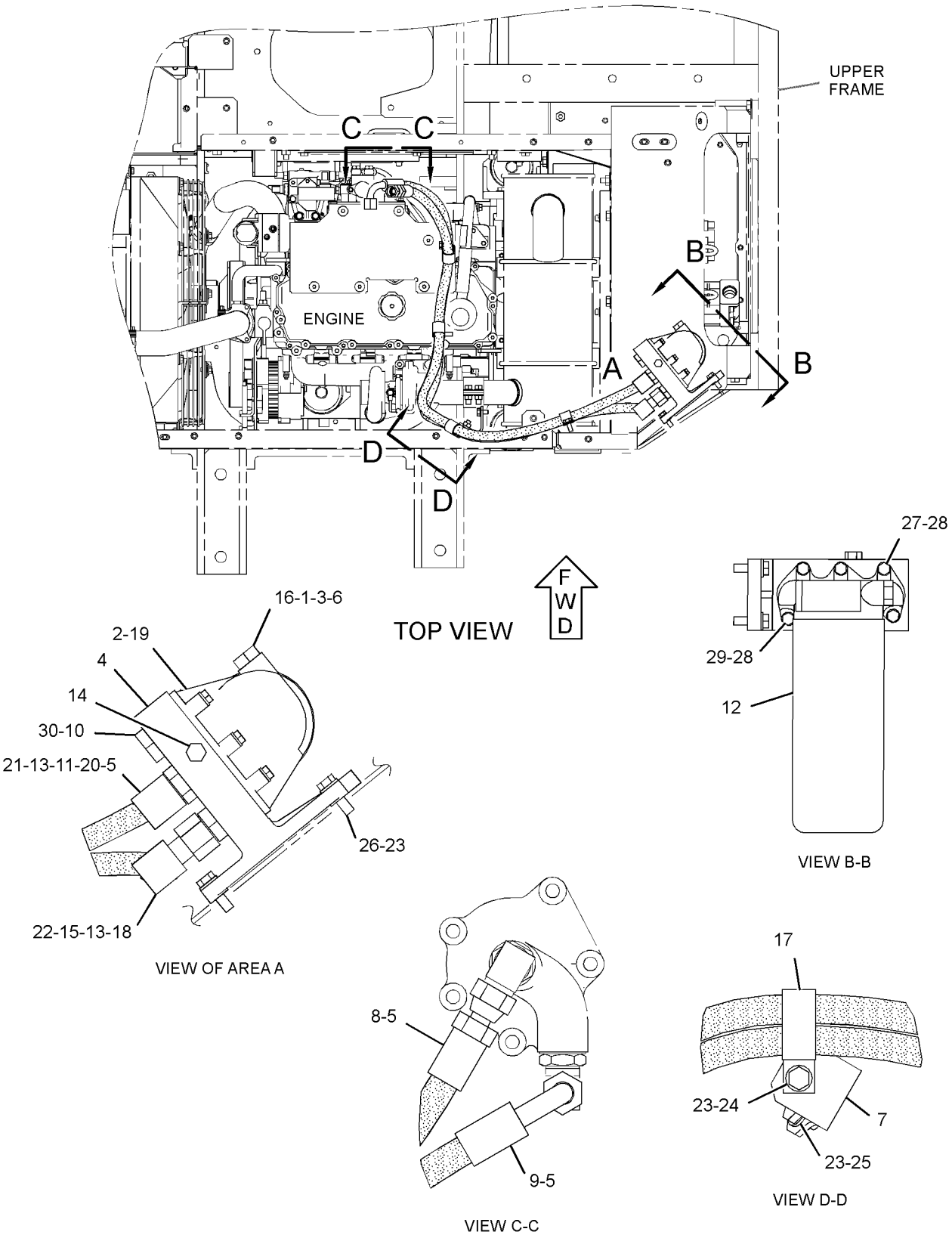

GRAPHIC #1 <END> g02794067

296-4781 LINES GP-ENGINE OIL

S/N: JKH1-UP
PART OF 279-7814, 420-2179 ENGINE AR
ALSO AN ATTACHMENT

SMCS-1307 **i02710578**

NOTE	REF NO	GRAPHIC REF	PART NUMBER	QTY	PART NAME 1 2 3 4 5 6 (PRODUCT LEVEL)	SEE PAGE
	1	1	**294-1767**	1	VALVE (PRESSURE RELIEF)	
	2	1	**196-8019**	1	STRAINER	
	3	1	**5I-7642**	1	PLATE	
M	5	1	**195-8351**	1	BOLT AS	
	6	1	**294-1768**	2	BOLT	
	7	1	**5I-5038**	1	SEAL-O-RING	
	8	1	**234-4796**	1	GASKET	

M - METRIC PART

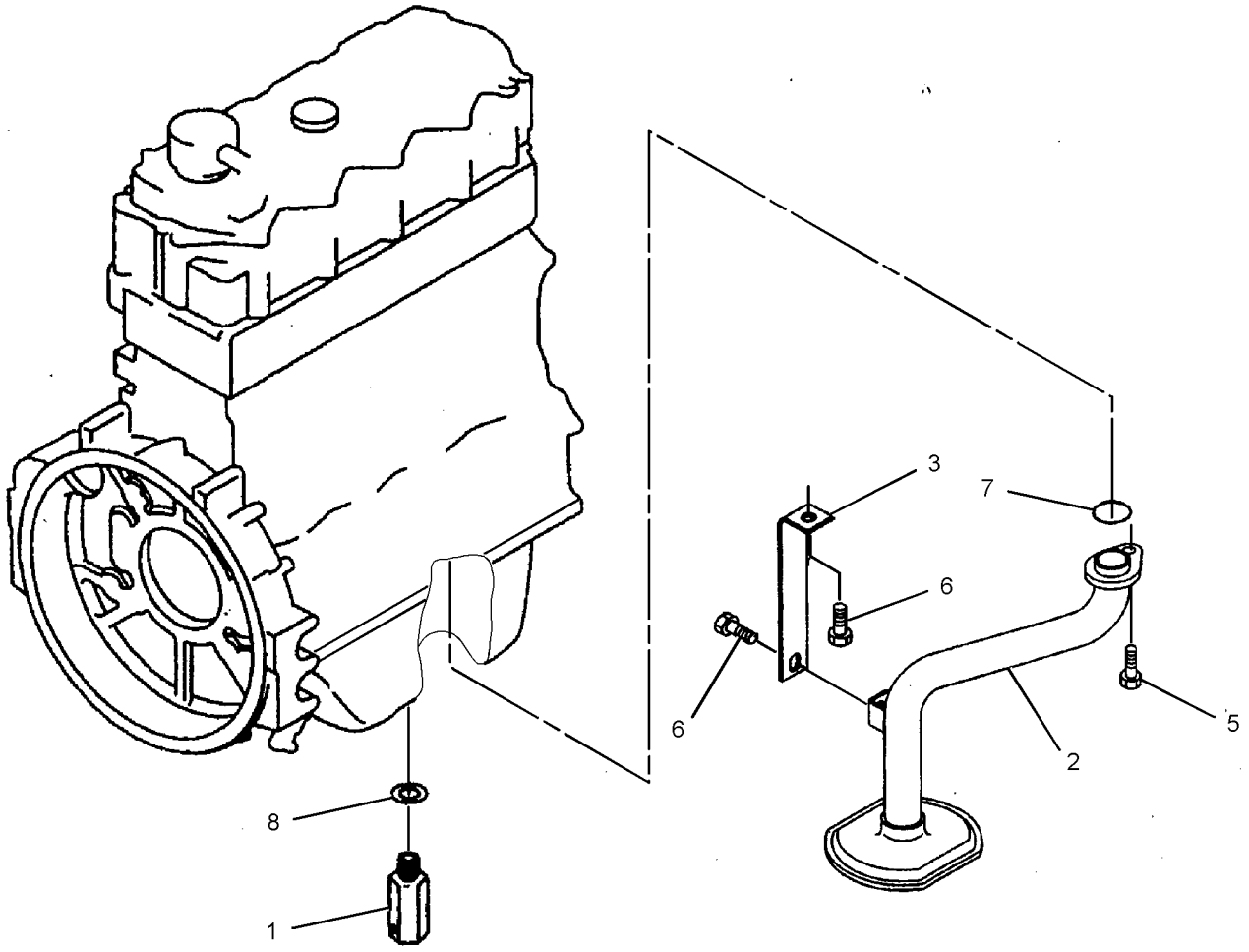

GRAPHIC #1 <END> g01366117

296-4777 LINES GP-TURBOCHARGER OIL

S/N: JKH1-UP
PART OF 279-7814, 420-2179 ENGINE AR
ALSO AN ATTACHMENT

SMCS-1052 **i03254760**

NOTE	REF NO	GRAPHIC REF	PART NUMBER	QTY	PART NAME 1 2 3 4 5 6 (PRODUCT LEVEL)	SEE PAGE
	1	1	**296-4725**	1	PIPE	
	2	1	**296-4726**	1	PIPE	
	3	1	**294-1766**	1	GASKET	
	4	1	**195-8322**	2	BOLT (M6X1X16-MM)	
	5	1	**2A-5222**	2	WASHER (10.3X15.9X1-MM THK)	
	6	1	**5I-7623**	1	BOLT (M10X1.25X20-MM)	
	7	1	**5I-8058**	1	CONNECTOR	
	8	1	**5I-7561**	1	GASKET	
	9	1	**196-8366**	2	BOLT	

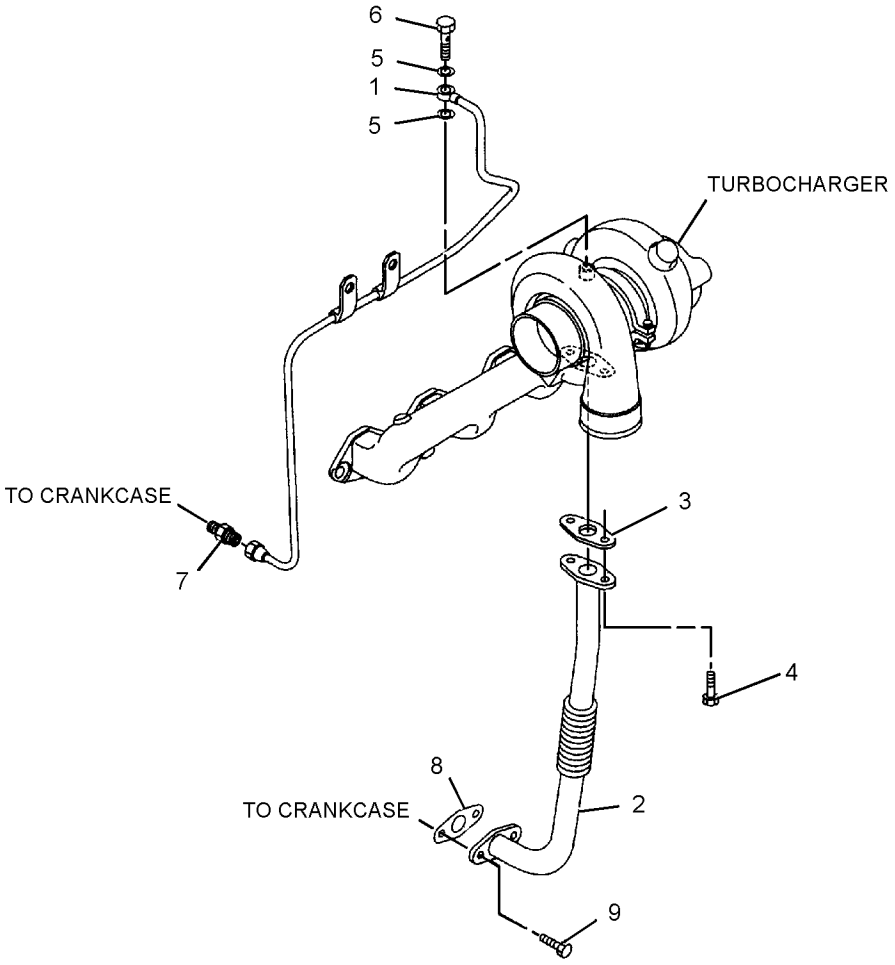

GRAPHIC #1 <END> g01403341

296-4782 COOLER GP-ENGINE OIL

S/N: JKH1-UP
PART OF 279-7814, 420-2179 ENGINE AR
ALSO AN ATTACHMENT

SMCS-1378 **i03021637**

NOTE	REF NO	GRAPHIC REF	PART NUMBER	QTY	PART NAME 1 2 3 4 5 6 (PRODUCT LEVEL)	SEE PAGE
	1	1	**196-8366**	3	BOLT	
M	2	1	**8T-4908**	9	BOLT (M8X1.25X25-MM)	
	3	1	**296-4727**	1	COVER AS	
	3A	1	**178-6572**	2	PLUG	
R	4	1	**135-2403**	1	CORE AS-ENGINE OIL COOLER	
M	5	1	**5C-7261**	4	NUT (M8X1.25-THD)	
	6	1	**3B-4505**	4	LOCKWASHER (5/16)	
	7	1	**5I-7862**	1	GASKET	
	8	1	**5I-7691**	2	GASKET	
	9	1	**222-8238**	1	COVER	
	10	1	**217-5589**	1	GASKET	
	11	1	**094-9267**	4	BOLT (M8X1.25X60.5-MM)	
	12	1	**294-1738**	4	BOLT (M10X1.5X32-MM)	

M - METRIC PART
R - REMANUFACTURED PART MAY BE AVAILABLE

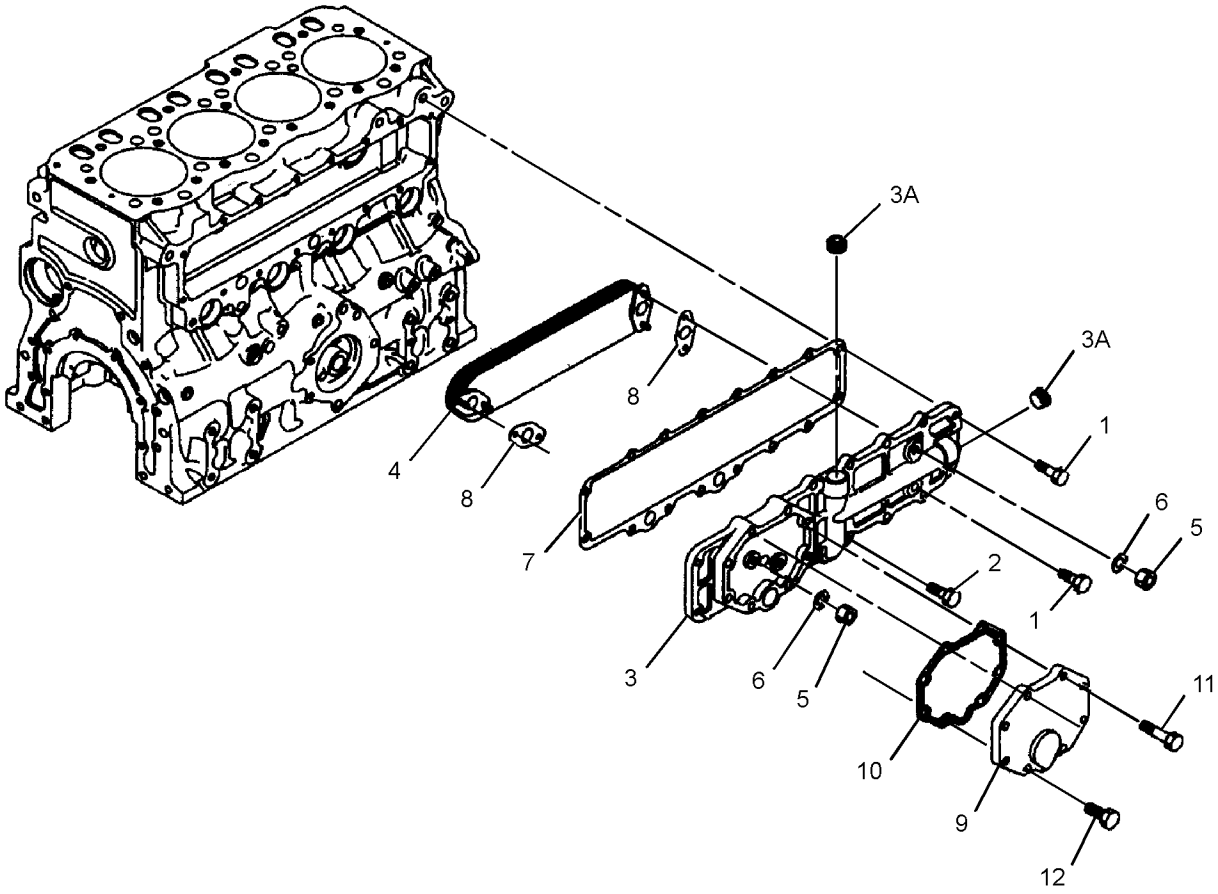

GRAPHIC #1 <END> g01403263

283-8818 COOLING AR-HIGH AMBIENT TEMP

S/N: DLP1-UP
CHINA MARKET
AN ATTACHMENT

SMCS-1350 **i05988846**

NOTE	PART NUMBER	QTY	PART NAME 1 2 3 4 5 6 (PRODUCT LEVEL)	SEE PAGE
Y	**279-7811**	1	ENGINE AR-COMPLETE	14
			—OR—	
Y	**324-4023**	1	ENGINE AR-COMPLETE	14
			—OR—	
Y	**420-2168**	1	ENGINE AR-COMPLETE	15

Y - SEPARATE ILLUSTRATION

<END>

310-9549 FAN GP-SUSCTION

S/N: JKH1-UP
PART OF 279-7814, 420-2179 ENGINE AR
ALSO AN ATTACHMENT

SMCS-1356 **i04967692**

NOTE	REF NO	GRAPHIC REF	PART NUMBER	QTY	PART NAME 1 2 3 4 5 6 (PRODUCT LEVEL)	SEE PAGE
	1	1	**135-2407**	1	FAN (10-BLADE)	
	2	1	**185-8977**	1	SPACER	
M	3	1	**8T-4195**	4	BOLT (M10X1.5X30-MM)	
	4	1	**8T-4121**	4	WASHER-HARD (11X21X2.5-MM THK)	
	5	1	**7X-0796**	8	LOCKWASHER (10.2X18.4X2.5-MM THK)	
M	6	1	**266-6231**	4	BOLT (M10X1.5X120-MM)	
	7	1	**297-7839**	1	SPACER	

M - METRIC PART

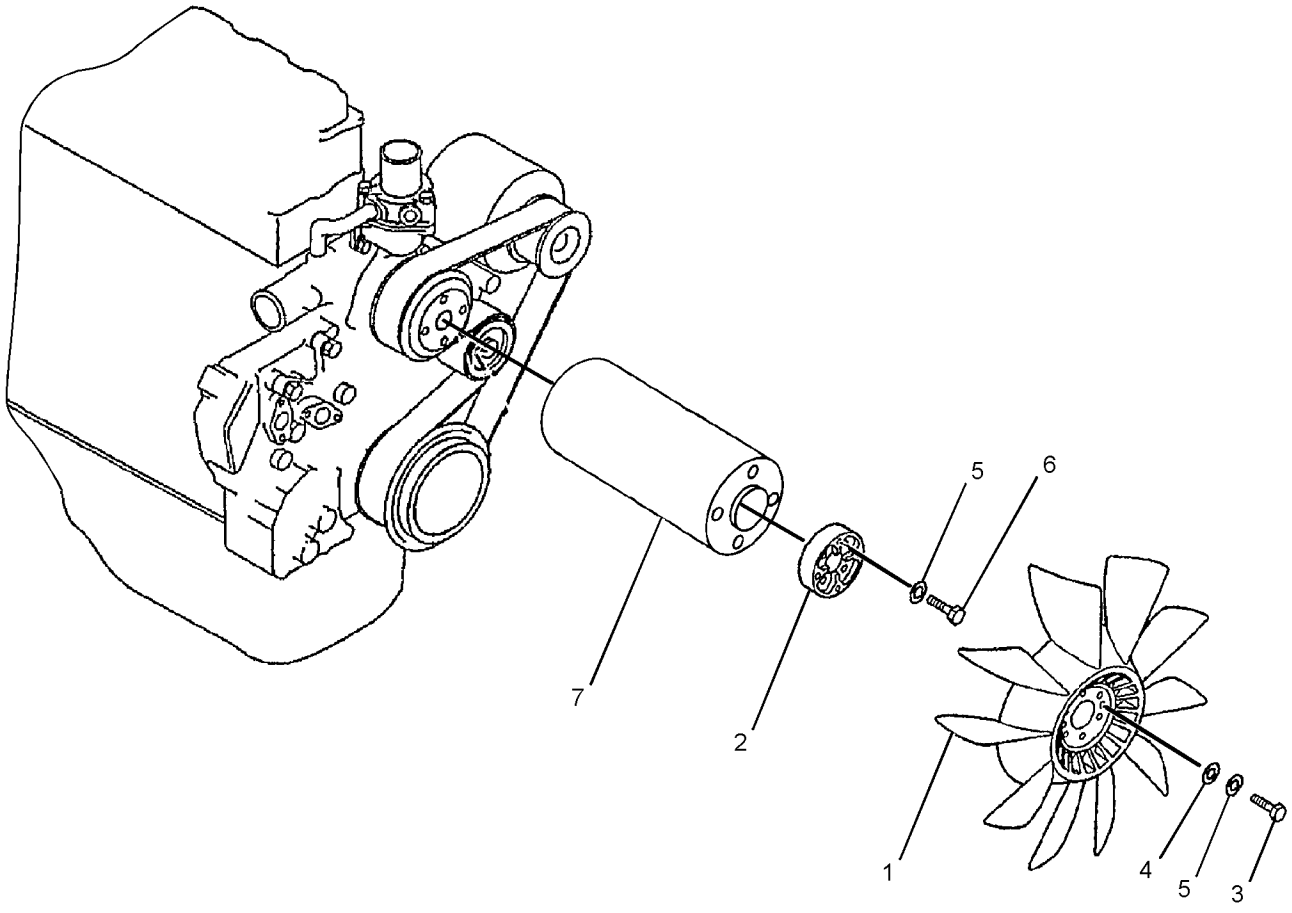

GRAPHIC #1 <END> g01442603

296-4795 HOUSING & REGULATOR GP

S/N: JKH1-UP
PART OF 279-7814, 420-2179 ENGINE AR
ALSO AN ATTACHMENT

SMCS-1355, 1393

i04391275

NOTE	REF NO	GRAPHIC REF	PART NUMBER	QTY	PART NAME 1 2 3 4 5 6 (PRODUCT LEVEL)	SEE PAGE
	1	1	**5I-7867**	1	COVER AS	
	2	1	**154-9024**	1	VALVE-SAMPLING (ENGINE COOLANT)	
	3	1	**157-0670**	1	CAP-DUST	
	4	1	**5I-7646**	1	ELBOW	
	5	1	**294-1777**	2	GASKET (WATER TEMPERATURE REGULATOR)	
	6	1	**5I-8056**	2	PLUG	
	7	1	**096-9532**	2	WASHER (15.8X22.5X2-MM THK)	
	8	1	*270-6338*	1	BOLT AS	
M		1	**8T-6870**	1	BOLT (M8X1.25X70-MM)	
		1	**3B-4505**	1	LOCKWASHER (5/16)	
	9	1	**294-1778**	1	HOSE	
	10	1	**324-4128**	1	REGULATOR (COOLANT TEMPERATURE)	
	11	1	**5I-7735**	1	GASKET (WATER TEMPERATURE REGULATOR)	
	12	1	**096-8619**	3	BOLT	
	13	1	**297-7655**	1	BOLT	
	14	1	**3B-4505**	1	LOCKWASHER (5/16)	
	15	1	**2S-3440**	2	CLAMP-HOSE	
	16	1	**294-1780**	1	GASKET (WATER TEMPERATURE REGULATOR)	
	17	1	**296-4733**	1	SPACER	

M - METRIC PART

296-4795 **HOUSING & REGULATOR GP (**contd.**)** **i04391275**

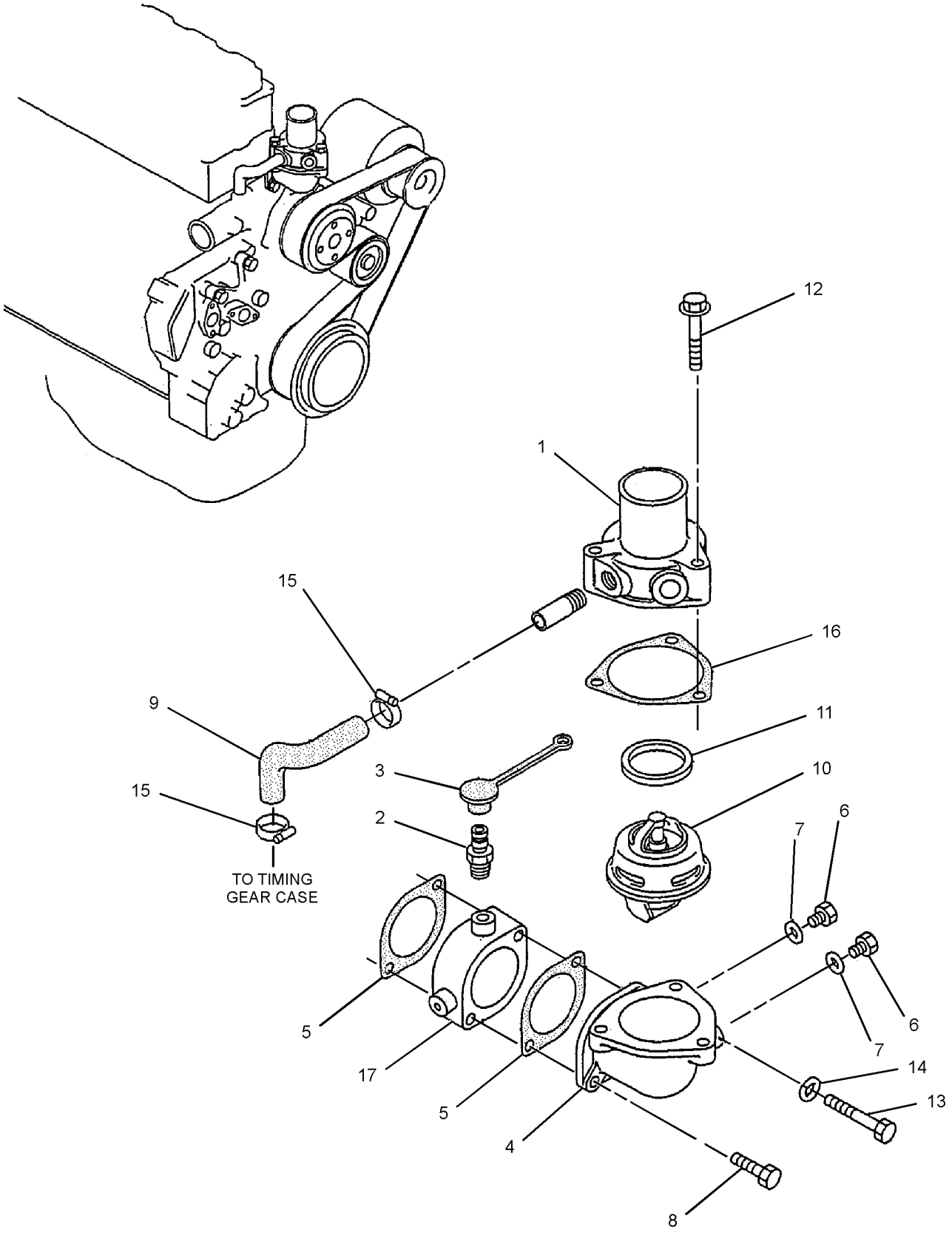

GRAPHIC #1 <END> g01415123

296-4655 PUMP GP-WATER

S/N: JKH1-UP
PART OF 279-7814, 420-2179 ENGINE AR
ALSO AN ATTACHMENT

SMCS-1361 **i02618456**

NOTE	REF NO	GRAPHIC REF	PART NUMBER	QTY	PART NAME 1 2 3 4 5 6 (PRODUCT LEVEL)	SEE PAGE
R	1	1	**178-6633**	1	PUMP GP-WATER	
	1A	1	**5I-7696**	1	FLANGE	
	1B	1	**178-6635**	1	SHAFT	
	1C	1	**8T-9598**	1	RING-RETAINING	
	1D	1	**5L-6326**	1	BALL BEARING (62-MM OD)	
	1E	1	**178-6634**	1	IMPELLER	
	1F	1	**5I-7697**	1	SPACER (28-MM)	
	1G	1	**2H-3814**	1	BALL BEARING (52-MM OD)	
	1H	1	**125-2947**	1	WASHER (1-MM THK)	
	1J	1	**178-6636**	1	SEAL	
	2	1	**294-1738**	7	BOLT (M10X1.5X32-MM)	
	3	1	**8T-4121**	4	WASHER-HARD (11X21X2.5-MM THK)	

R - REMANUFACTURED PART MAY BE AVAILABLE

296-4655 **PUMP GP-WATER (**contd.**)** **i02618456**

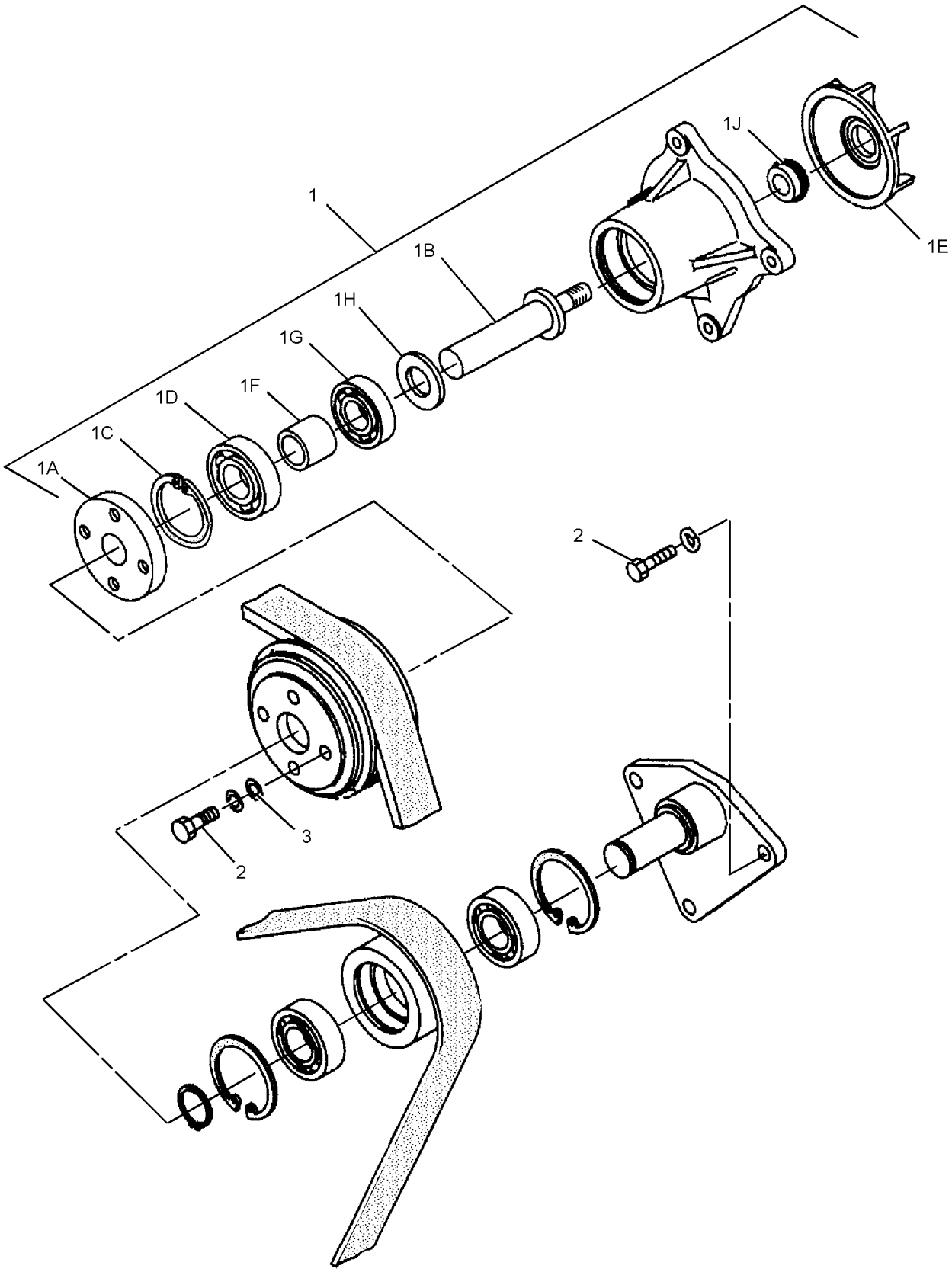

GRAPHIC #1 <END> g01316735

265-3608 RADIATOR & HYD OIL COOLER GP

S/N: DLP1-216

PART OF 305-7594 RADIATOR & HYD OIL COOLER GP

SMCS-1351, 1374 **i02909057**

NOTE	REF NO	GRAPHIC REF	PART NUMBER	QTY	PART NAME 1 2 3 4 5 6 (PRODUCT LEVEL)	SEE PAGE
	1	1	**5D-8159**	4	PIN AS	
M	2	1	**093-5432**	1	VALVE AS-DRAIN (COOLANT)	
	3	2	**095-1543**	2	SEAL-O-RING	
	4	1	**096-4035**	2	CLIP	
	5	2	**183-8111**	1	SEAL	
	6	2	**183-8112**	1	SEAL	
	7	2	**193-2812**	2	SEAL	
	8	1	**196-8037**	2	SEAL	
	9	1	**245-9212**	1	CAP AS-RADIATOR	
	10	2	**245-9216**	2	BOSS	
	11	2	**245-9217**	2	CUSHION-RUBBER	
	12	2	**245-9218**	2	CUSHION-RUBBER	
	13	1	**265-3630**	2	SEAL	
	14	1	**281-3533**	1	SHEET-RUBBER	
	15	1	**281-3625**	1	CORE AS-RADIATOR	
	16	1	**281-3626**	1	CORE AS-OIL COOLER	
	17	1	**281-3627**	1	AFTERCOOLER AS	
	18	1	**281-3628**	1	FRAME AS	
	19	2	**281-3629**	2	SEAL	
	20	1	**281-3630**	2	SEAL	
	21	1	**281-3631**	1	SHROUD AS	
	22	1	**281-3632**	1	SCREEN AS (OIL COOLER)	
	23	1	**281-3633**	1	SCREEN AS (RADIATOR)	
	24	1,2	**8T-4121**	6	WASHER-HARD (11X21X2.5-MM THK)	
M	25	1	**8T-4189**	13	BOLT (M8X1.25X20-MM)	
M	26	1,2	**8T-4195**	6	BOLT (M10X1.5X30-MM)	
	27	1	**8T-4224**	13	WASHER-HARD (8.8X16X2-MM THK)	
E	28	1	**7Y-1976**		HOSE-WATER (150-CM)	
E	28A	1	**7Y-1976**		HOSE-WATER (8-CM)	

E - ORDER BY THE CENTIMETER
M - METRIC PART

265-3608 **RADIATOR & HYD OIL COOLER GP (**contd.**)** **i02909057**

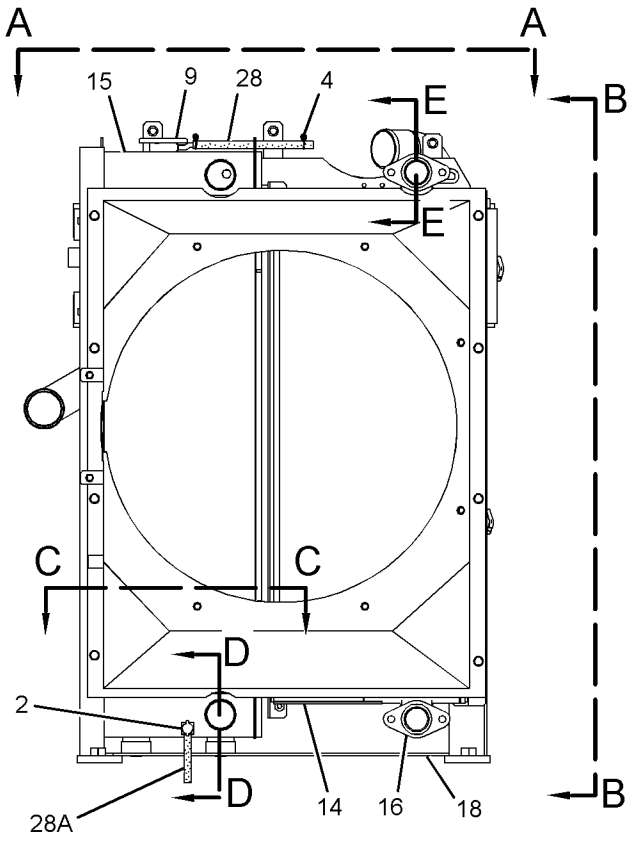

RIGHT SIDE VIEW

REFER TO ALL ILLUSTRATIONS OF THIS GROUP FOR AUXILIARY VIEWS

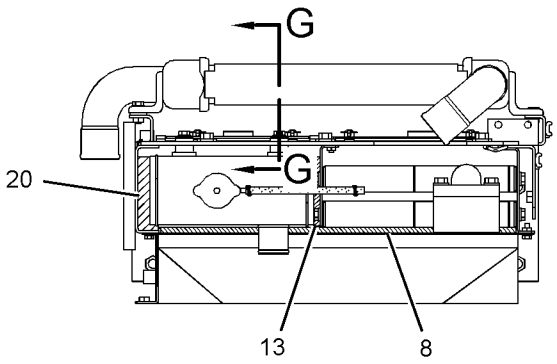

VIEW A-A

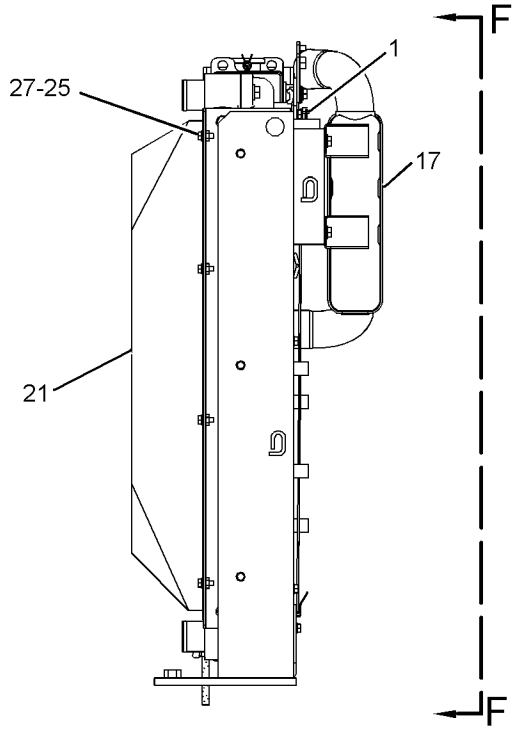

VIEW B-B

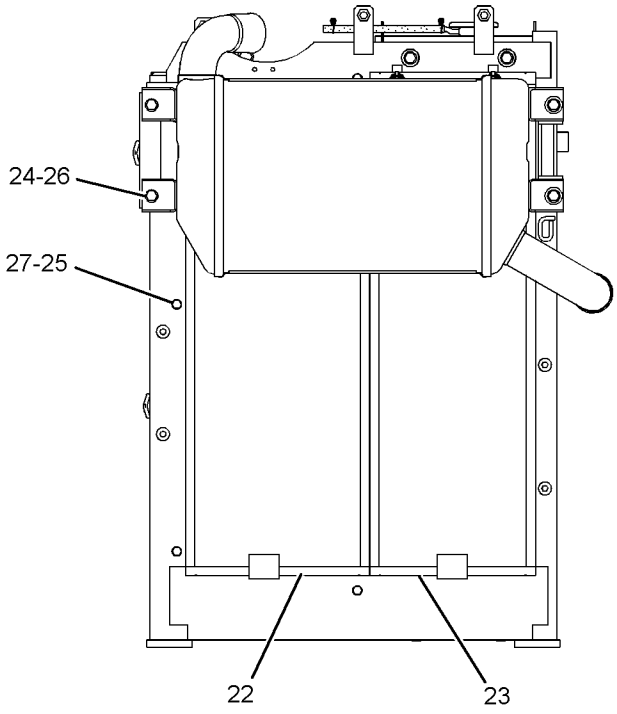

VIEW F-F

GRAPHIC #1 g01400902

265-3608 **RADIATOR & HYD OIL COOLER GP (**contd.**)** **i02909057**

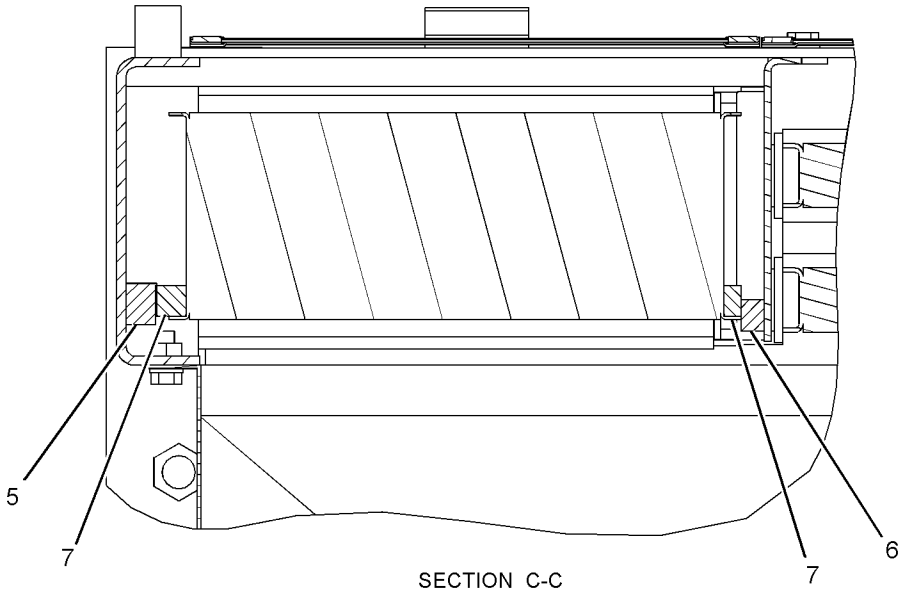

SECTION C-C

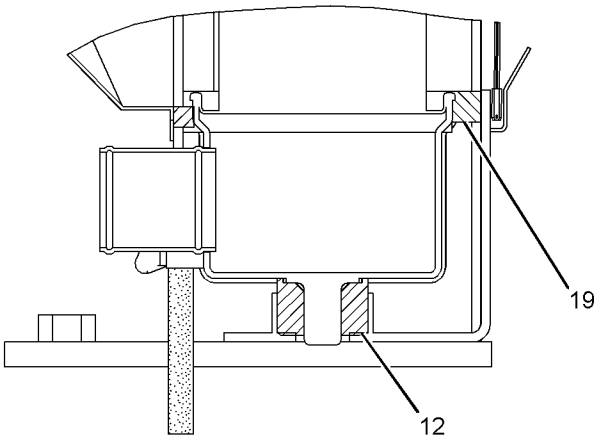

SECTION D-D

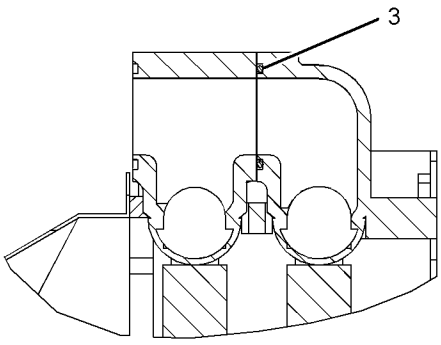

SECTION E-E

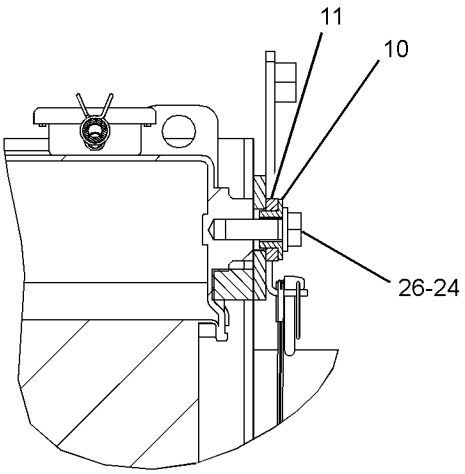

SECTION G-G

GRAPHIC #2 <END> g01400904

305-7594 RADIATOR & HYD OIL COOLER GP

S/N: DLP1-216

PART OF 279-7794 INSTALLATION AR-ENGINE

SMCS-1351, 1374 **i03044840**

NOTE	REF NO	GRAPHIC REF	PART NUMBER	QTY	PART NAME 1 2 3 4 5 6 (PRODUCT LEVEL)	SEE PAGE
	1	1,2	**3S-2093**	3	STRAP-CABLE	
	2	1	**8T-4984**	1	CLAMP-HOSE	
	3	1	**8T-6703**	5	CLAMP-HOSE	
	4	2	**096-4035**	1	CLIP	
	5	2	**171-9077**	1	BAND	
	6	2	**178-6450**	4	SPACER (17X35X30-MM THK)	
	7	2	**245-9205**	1	TANK AS-COOLANT (RECOVERY)	
		2	**171-3369**	1	CAP AS (COOLANT RECOVERY)	
	8	1	**265-3545**	1	SEAL	
Y	9	1	**265-3608**	1	RADIATOR & HYD OIL COOLER GP	62
	10	1	**265-3654**	1	HOSE-RADIATOR	
	11	1	**265-3655**	1	HOSE-RADIATOR	
	12	2	**265-3656**	1	BRACKET AS	
	13	1	**305-7591**	1	HOSE-RADIATOR (LOWER RADIATOR)	
	14	1	**305-7592**	1	TUBE AS	
	15	1	**305-7595**	1	GUARD AS (UPPER, LH)	
	16	1	**305-7596**	1	GUARD AS (UPPER, RH)	
M	17	2	**7X-2554**	4	BOLT (M16X2X70-MM)	
	18	1,2	**7X-7729**	9	WASHER (11X25X3-MM THK)	
	19	1	**8T-4121**	2	WASHER-HARD (11X21X2.5-MM THK)	
M	20	1,2	**8T-4136**	4	BOLT (M10X1.5X25-MM)	
M	21	1	**8T-4137**	7	BOLT (M10X1.5X20-MM)	
M	22	2	**8T-4200**	2	BOLT (M8X1.25X16-MM)	
	23	2	**8T-4224**	2	WASHER-HARD (8.8X16X2-MM THK)	
E	24	2	**7Y-1976**		HOSE-WATER (40-CM)	
E	25	2	**5P-5649**		SEAL-BULK (0.1-M)	
E	26	2	**5P-9909**		SEAL (0.6-M)	

E - ORDER BY THE CENTIMETER
M - METRIC PART
Y - SEPARATE ILLUSTRATION

305-7594 **RADIATOR & HYD OIL COOLER GP (**contd.**)** **i03044840**

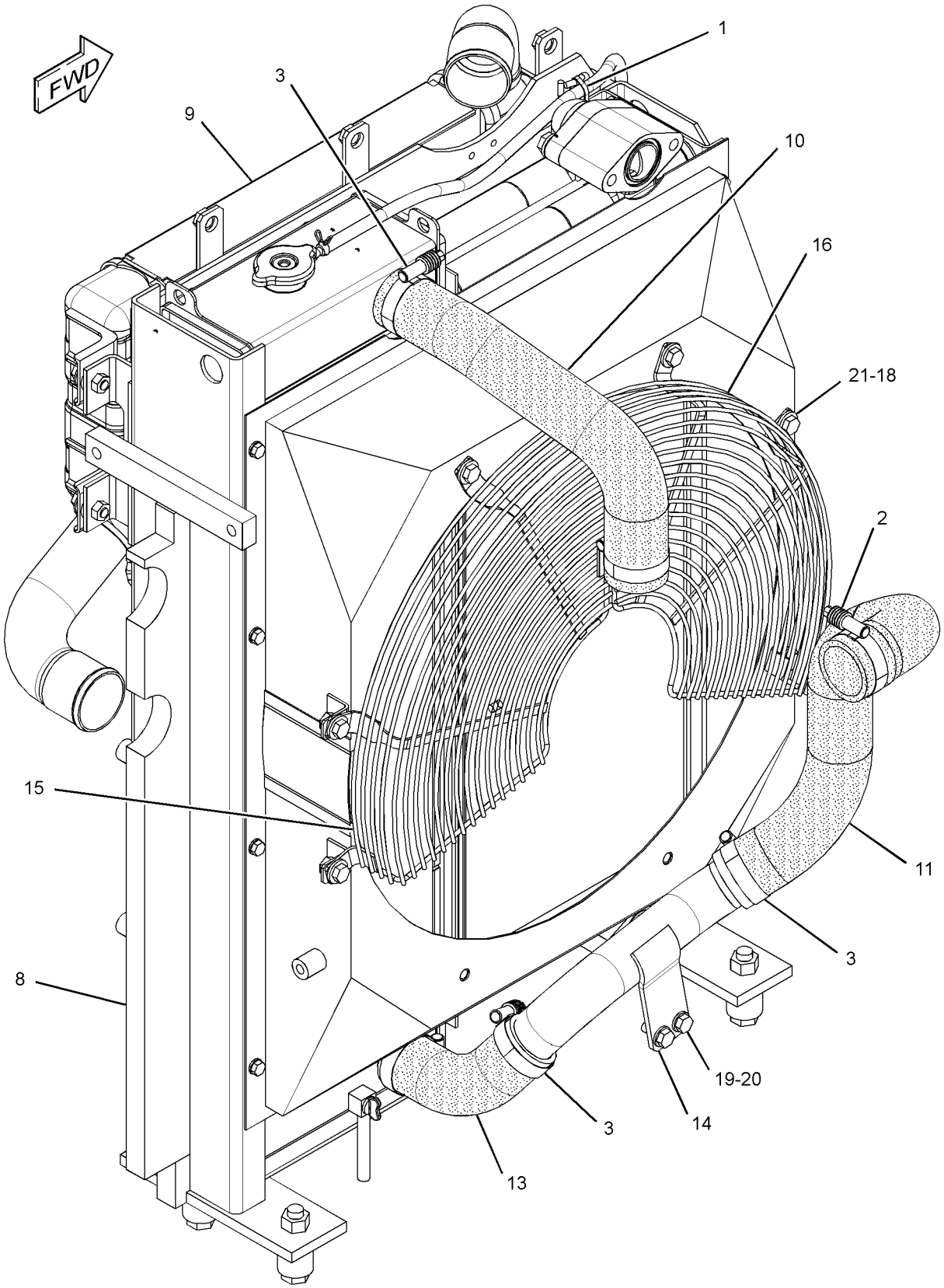

GRAPHIC #1 g01434547

305-7594 **RADIATOR & HYD OIL COOLER GP (**contd.**)** **i03044840**

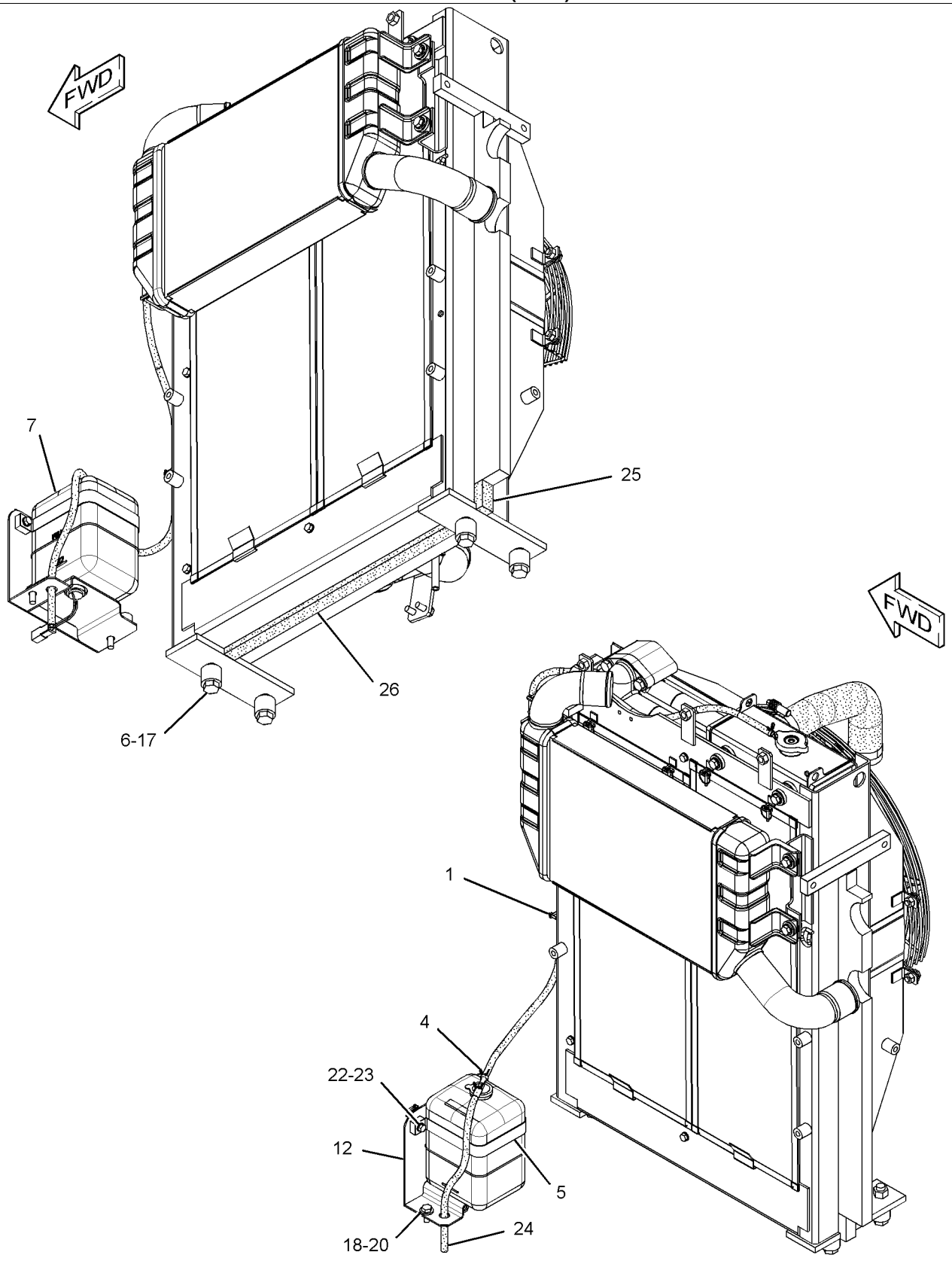

GRAPHIC #2 <END> g01434564

305-7594 RADIATOR & HYD OIL COOLER GP

S/N: DLP217-386

PART OF 279-7794 INSTALLATION AR-ENGINE

SMCS-1351, 1374 **i03640108**

NOTE	REF NO	GRAPHIC REF	PART NUMBER	QTY	PART NAME 1 2 3 4 5 6 (PRODUCT LEVEL)	SEE PAGE
	1	1,2	**3S-2093**	3	STRAP-CABLE	
	2	1	**8T-4984**	1	CLAMP-HOSE	
	3	1	**8T-6703**	5	CLAMP-HOSE	
	4	2	**096-4035**	1	CLIP	
	5	2	**171-9077**	1	BAND	
	6	2	**178-6450**	4	SPACER (17X35X30-MM THK)	
	7	2	**245-9205**	1	TANK AS-COOLANT (RECOVERY)	
		2	**171-3369**	1	CAP AS (COOLANT RECOVERY)	
	8	1	**265-3545**	1	SEAL	
CY	9	1	**326-3864**	1	RADIATOR & HYD OIL COOLER GP	74
	10	1	**265-3654**	1	HOSE-RADIATOR (UPPER)	
	11	1	**265-3655**	1	HOSE-RADIATOR (LOWER)	
	12	2	**265-3656**	1	BRACKET AS	
	13	1	**305-7591**	1	HOSE-RADIATOR (LOWER)	
	14	1	**305-7592**	1	TUBE AS	
	15	1	**305-7595**	1	GUARD AS (UPPER, LH)	
	16	1	**305-7596**	1	GUARD AS (UPPER, RH)	
M	17	2	**7X-2554**	4	BOLT (M16X2X70-MM)	
	18	1,2	**7X-7729**	9	WASHER (11X25X3-MM THK)	
	19	1	**8T-4121**	2	WASHER-HARD (11X21X2.5-MM THK)	
M	20	1,2	**8T-4136**	4	BOLT (M10X1.5X25-MM)	
M	21	1	**8T-4137**	7	BOLT (M10X1.5X20-MM)	
M	22	2	**8T-4200**	2	BOLT (M8X1.25X16-MM)	
	23	2	**8T-4224**	2	WASHER-HARD (8.8X16X2-MM THK)	
E	24	2	**7Y-1976**		HOSE-WATER (40-CM)	
E	25	2	**5P-5649**		SEAL-BULK (0.1-M)	
E	26	2	**5P-9909**		SEAL (0.6-M)	

C - CHANGE FROM PREVIOUS TYPE
E - ORDER BY THE CENTIMETER
M - METRIC PART
Y - SEPARATE ILLUSTRATION

305-7594 **RADIATOR & HYD OIL COOLER GP (**contd.**)** **i03640108**

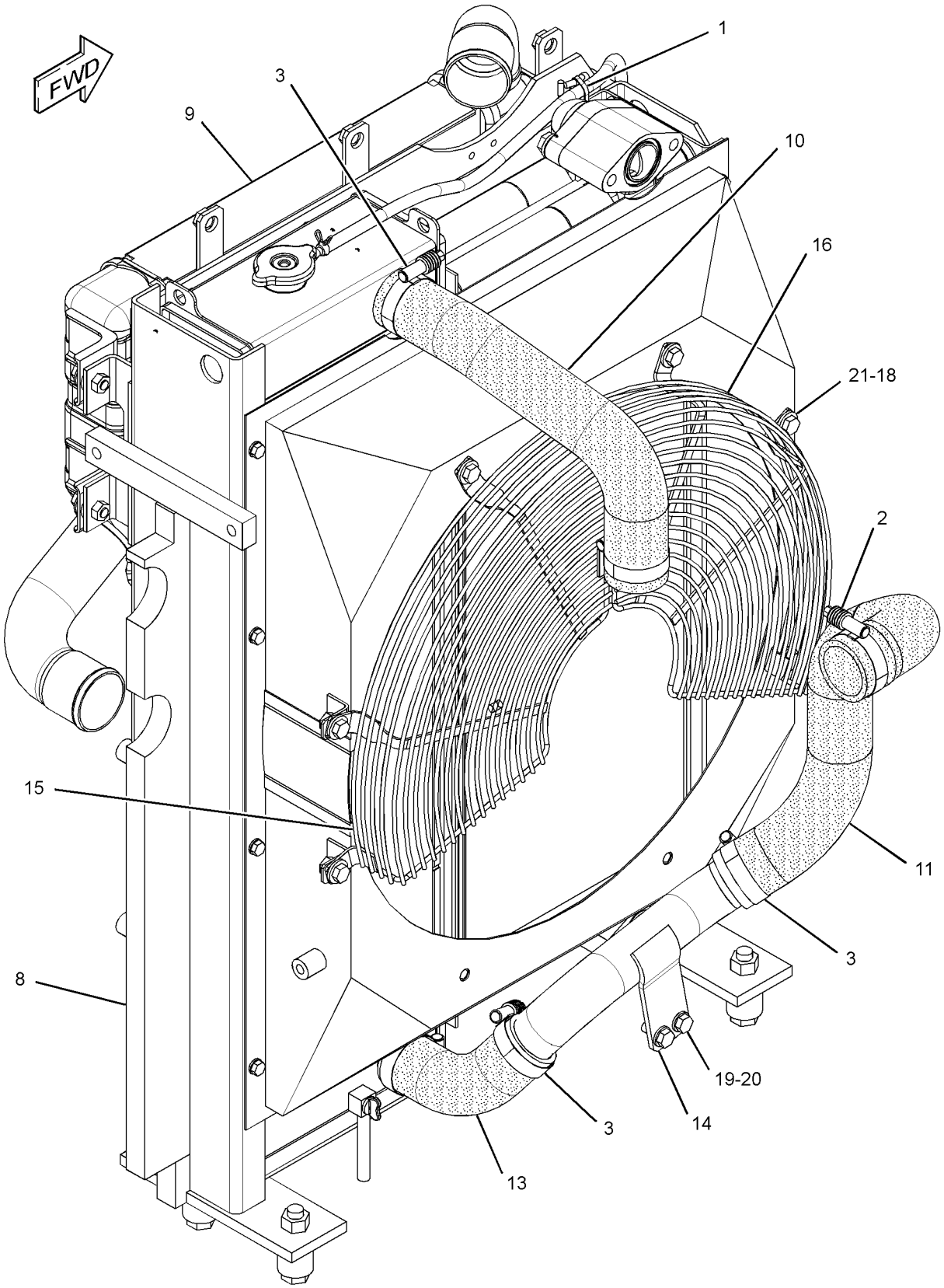

GRAPHIC #1 g01434547

305-7594 **RADIATOR & HYD OIL COOLER GP (**contd.**)** **i03640108**

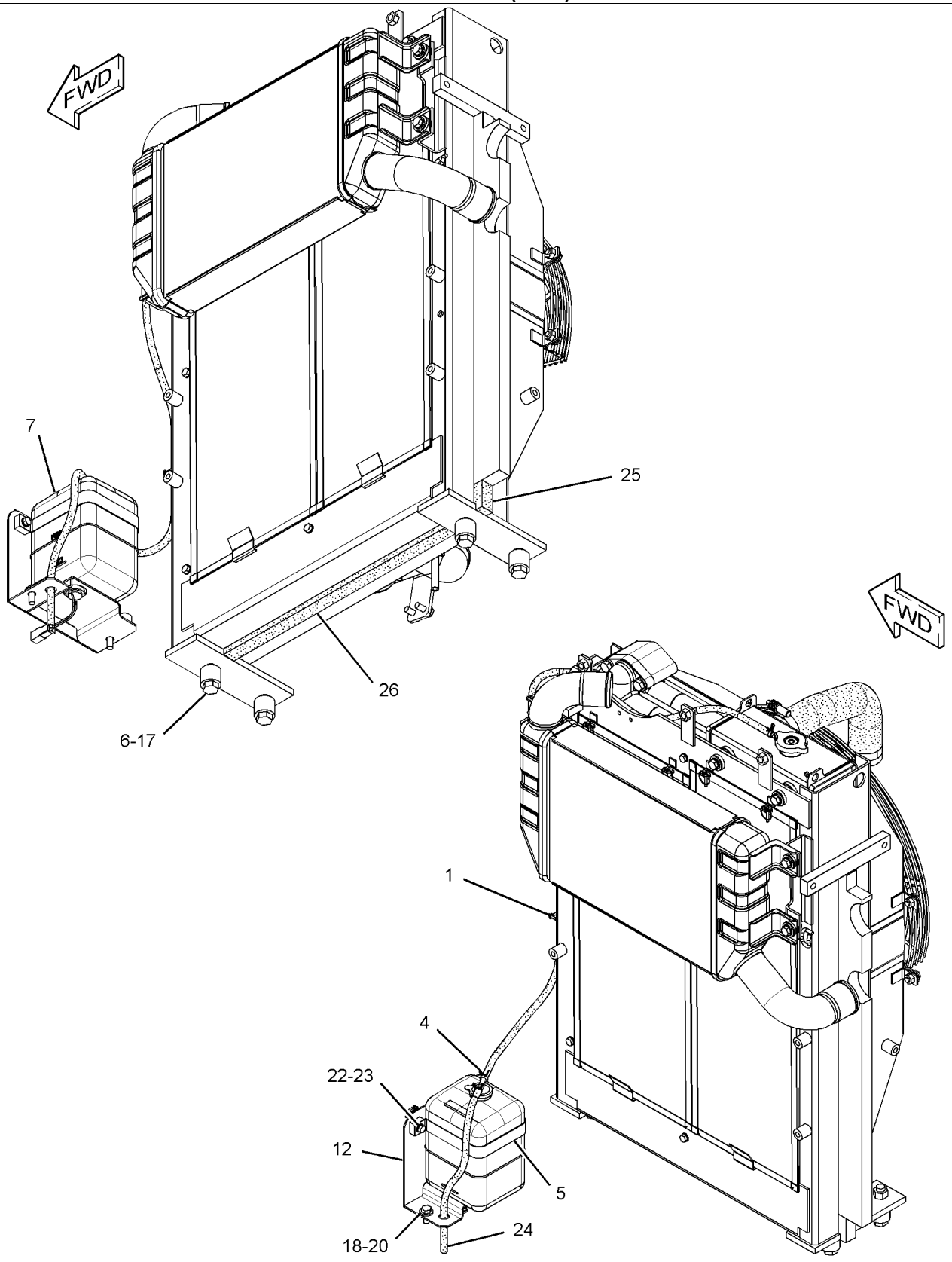

GRAPHIC #2 <END> g01434564

305-7594 RADIATOR & HYD OIL COOLER GP

S/N: DLP387-UP

PART OF 279-7794, 379-4447 INSTALLATION AR-ENGINE

SMCS-1351, 1374 **i05806166**

NOTE	REF NO	GRAPHIC REF	PART NUMBER	QTY	PART NAME 1 2 3 4 5 6 (PRODUCT LEVEL)	SEE PAGE
	1	1,2	**3S-2093**	3	STRAP-CABLE	
	2	1	**8T-4984**	1	CLAMP-HOSE	
	3	1	**8T-6703**	5	CLAMP-HOSE	
	4	2	**096-4035**	1	CLIP	
	5	2	**171-9077**	1	BAND	
	6	2	**178-6450**	4	SPACER (17X35X30-MM THK)	
	7	2	**245-9205**	1	TANK AS-COOLANT (RECOVERY)	
		2	**171-3369**	1	CAP AS (COOLANT RECOVERY)	
	8	1	**265-3545**	1	SEAL	
CY	9	1	**355-1351**	1	RADIATOR & HYD OIL COOLER GP	76
	10	1	**265-3654**	1	HOSE-RADIATOR (UPPER)	
	11	1	**265-3655**	1	HOSE-RADIATOR (LOWER)	
	12	2	**265-3656**	1	BRACKET AS	
	13	1	**305-7591**	1	HOSE-RADIATOR (LOWER)	
	14	1	**305-7592**	1	TUBE AS	
	15	1	**305-7595**	1	GUARD AS (UPPER, LH)	
	16	1	**305-7596**	1	GUARD AS (UPPER, RH)	
M	17	2	**453-2838**	4	BOLT (M16X2X70-MM)	
	18	1,2	**7X-7729**	9	WASHER (11X25X3-MM THK)	
	19	1	**8T-4121**	2	WASHER-HARD (11X21X2.5-MM THK)	
M	20	1,2	**8T-4136**	4	BOLT (M10X1.5X25-MM)	
M	21	1	**8T-4137**	7	BOLT (M10X1.5X20-MM)	
M	22	2	**8T-4200**	2	BOLT (M8X1.25X16-MM)	
	23	2	**8T-4224**	2	WASHER-HARD (8.8X16X2-MM THK)	
E	24	2	**7Y-1976**		HOSE-WATER (40-CM)	
E	25	2	**5P-5649**		SEAL-BULK (0.1-M)	
E	26	2	**5P-9909**		SEAL (0.6-M)	

C - CHANGE FROM PREVIOUS TYPE
E - ORDER BY THE CENTIMETER
M - METRIC PART
Y - SEPARATE ILLUSTRATION

305-7594 **RADIATOR & HYD OIL COOLER GP (**contd.**)** **i05806166**

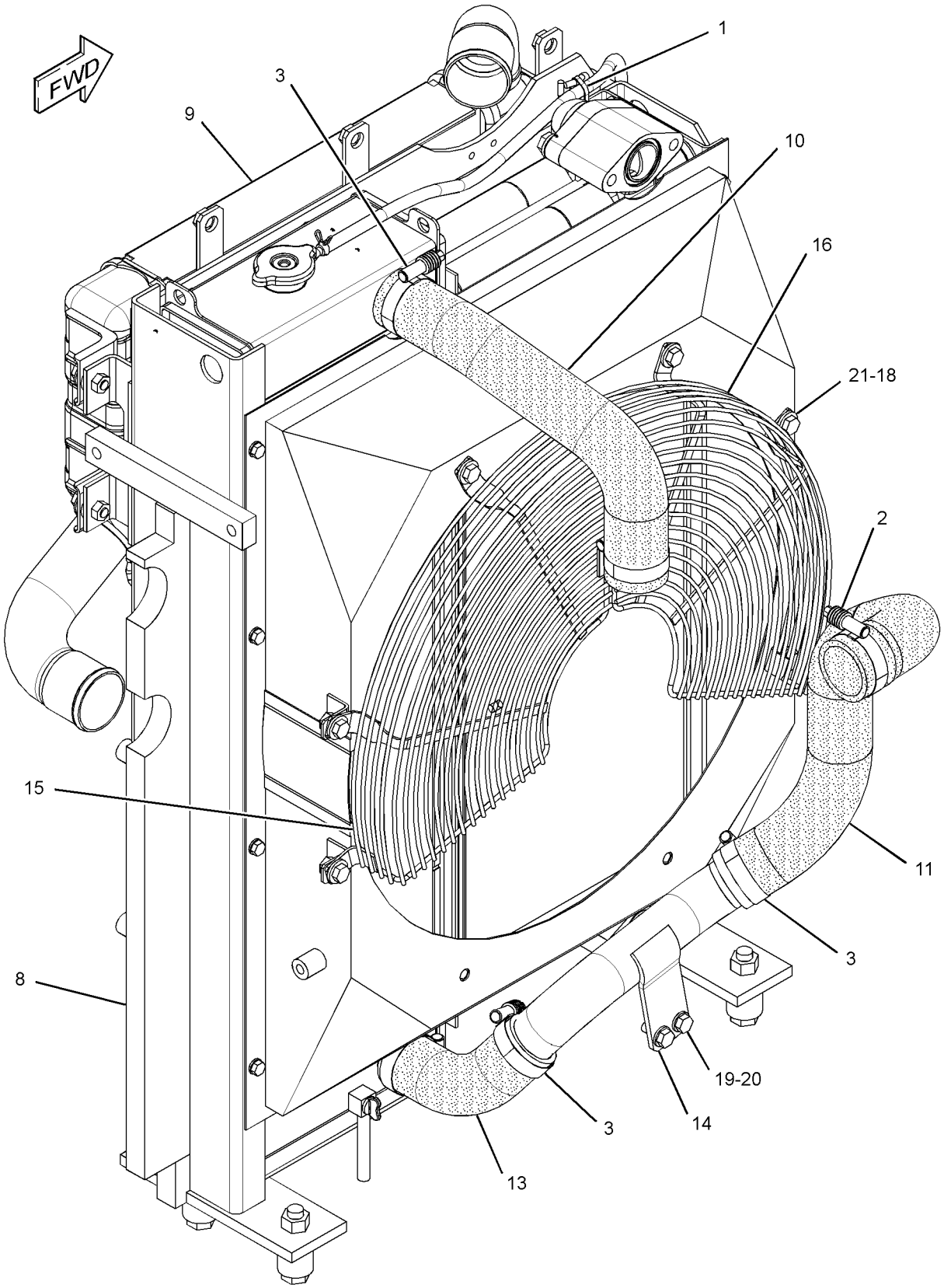

GRAPHIC #1 g01434547

305-7594 **RADIATOR & HYD OIL COOLER GP (**contd.**)** **i05806166**

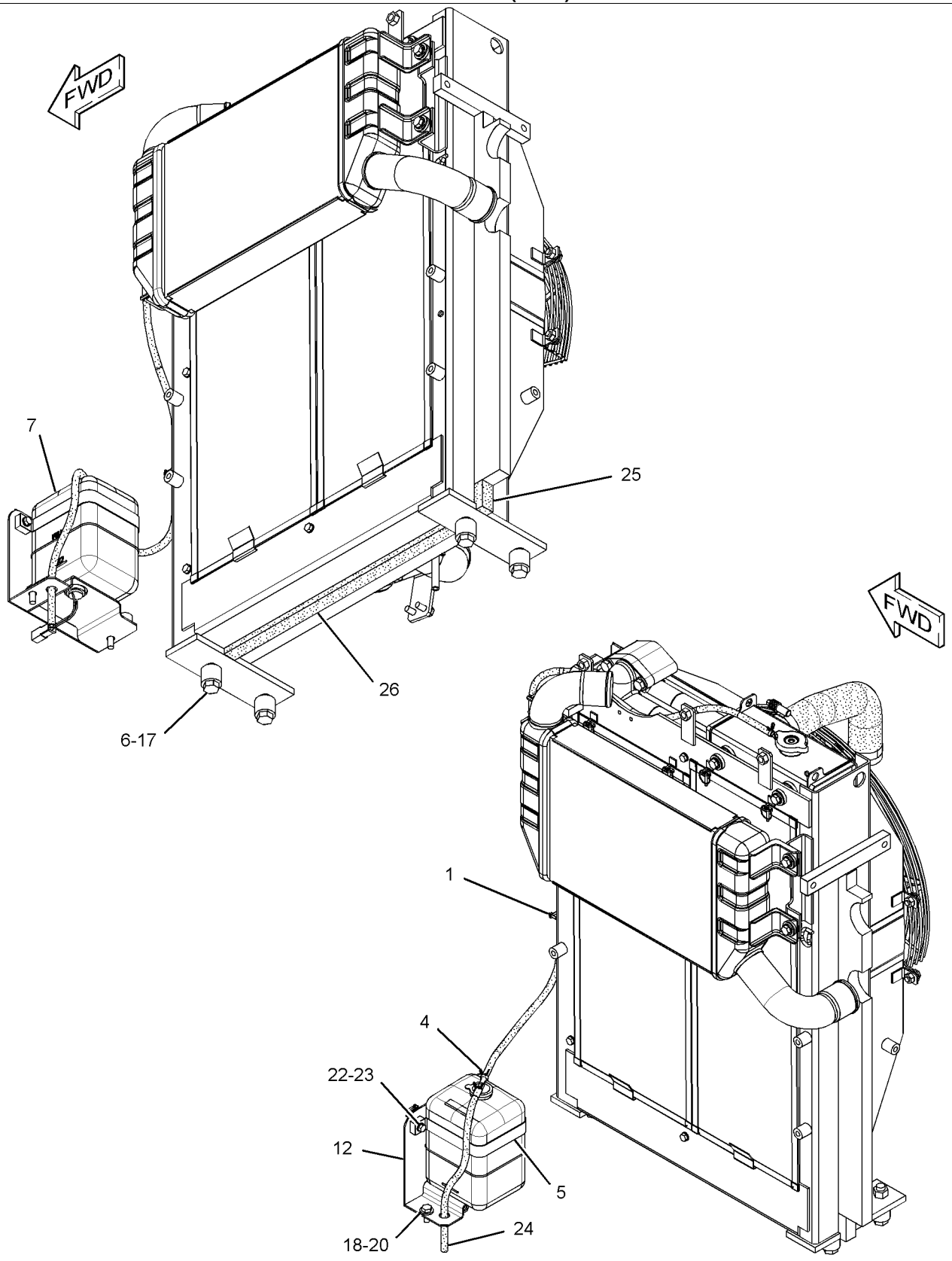

GRAPHIC #2 <END> g01434564

326-3864 RADIATOR & HYD OIL COOLER GP

S/N: DLP217-386

PART OF 305-7594 RADIATOR & HYD OIL COOLER GP

SMCS-1351, 1374 **i03250682**

NOTE	REF NO	GRAPHIC REF	PART NUMBER	QTY	PART NAME 1 2 3 4 5 6 (PRODUCT LEVEL)	SEE PAGE
	1	1	**5D-8159**	4	PIN AS	
M	2	1	**093-5432**	1	VALVE AS-DRAIN (COOLANT)	
	3	1	**095-1543**	2	SEAL-O-RING	
	4	1	**096-4035**	2	CLIP	
	5	1	**183-8111**	1	SEAL	
	6	1	**183-8112**	1	SEAL	
	7	1	**193-2812**	2	SEAL	
	8	1	**196-8037**	2	SEAL	
	9	1	**245-9212**	1	CAP AS-RADIATOR	
	10	1	**245-9216**	2	BOSS	
	11	1	**245-9217**	2	CUSHION-RUBBER	
	12	1	**245-9218**	2	CUSHION-RUBBER	
	13	1	**265-3630**	2	SEAL	
	14	1	**281-3533**	1	SHEET-RUBBER	
	15	1	**281-3626**	1	CORE AS-OIL COOLER (HYDRAULIC)	
	16	1	**281-3627**	1	AFTERCOOLER AS	
	17	1	**281-3628**	1	FRAME AS	
	18	1	**281-3629**	2	SEAL	
	19	1	**281-3630**	2	SEAL	
	20	1	**281-3631**	1	SHROUD AS	
	21	1	**281-3632**	1	SCREEN AS (OIL COOLER)	
	22	1	**281-3633**	1	SCREEN AS (RADIATOR)	
	23	1	**326-3865**	1	CORE AS-RADIATOR	
	24	1	**8T-4121**	6	WASHER-HARD (11X21X2.5-MM THK)	
M	25	1	**8T-4189**	13	BOLT (M8X1.25X20-MM)	
M	26	1	**8T-4195**	6	BOLT (M10X1.5X30-MM)	
	27	1	**8T-4224**	13	WASHER-HARD (8.8X16X2-MM THK)	
E	28	1	**7Y-1976**		HOSE-WATER (150-CM)	
E	28A	1	**7Y-1976**		HOSE-WATER (8-CM)	

E - ORDER BY THE CENTIMETER
M - METRIC PART

326-3864 **RADIATOR & HYD OIL COOLER GP (**contd.**)** **i03250682**

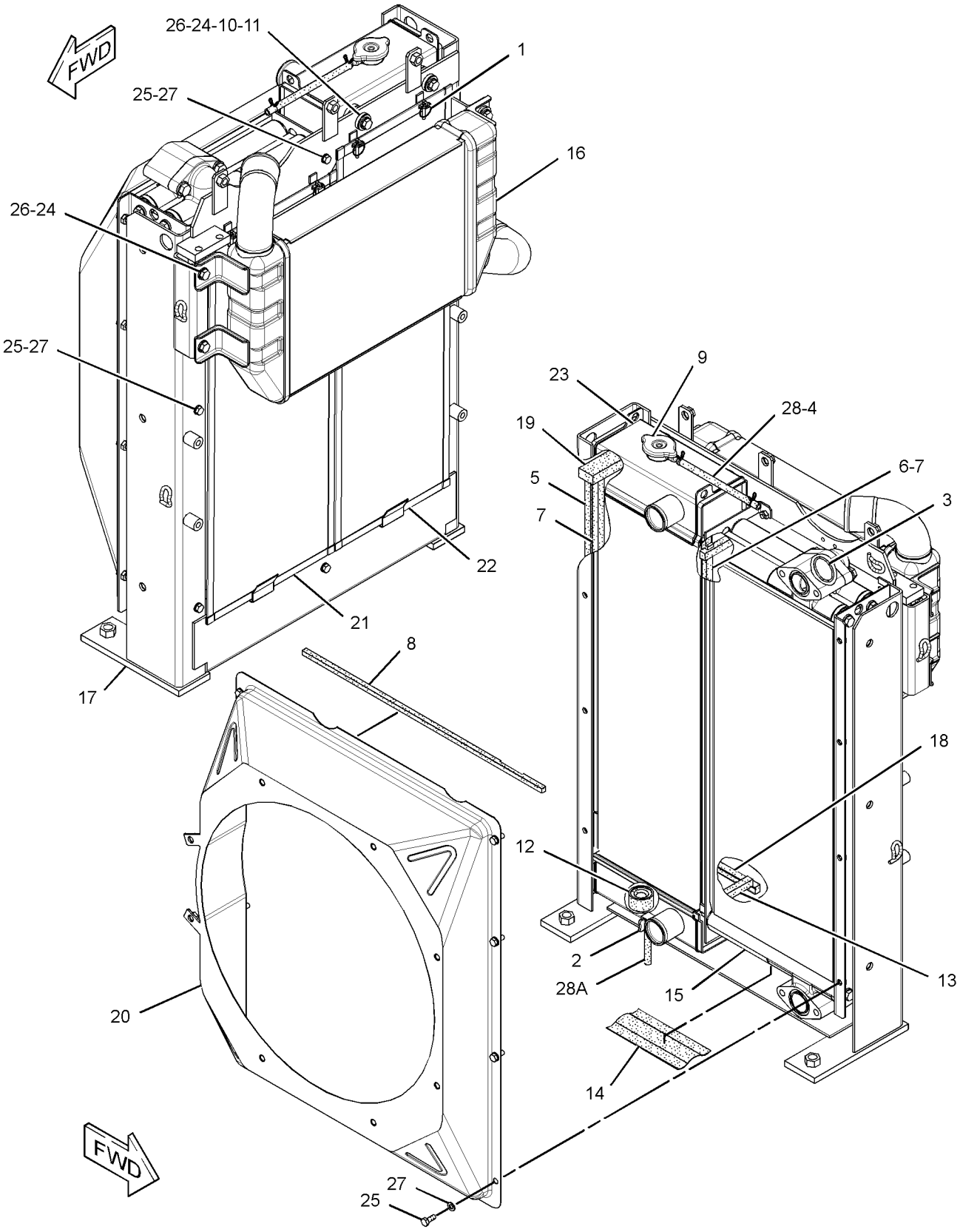

GRAPHIC #1 <END> g01681474

355-1351 RADIATOR & HYD OIL COOLER GP

S/N: DLP387-UP

PART OF 305-7594 RADIATOR & HYD OIL COOLER GP

SMCS-1351, 1374 **i04644071**

NOTE	REF NO	GRAPHIC REF	PART NUMBER	QTY	PART NAME 1 2 3 4 5 6 (PRODUCT LEVEL)	SEE PAGE
	1	1	**5D-8159**	4	PIN AS	
	2	1	**096-4035**	3	CLIP	
	3	1	**313-3762**	2	CUSHION-RUBBER	
	4	1	**313-3766**	2	SLEEVE	
	5	1	**313-3769**	2	CUSHION-RUBBER	
	6	1	**314-6506**	2	CUSHION-RUBBER	
	7	1	**314-6509**	2	WASHER (11X34X3-MM THK)	
	8	1	**314-6510**	2	PIN	
	9	1	**332-4191**	1	PLUG	
	10	1	**360-9274**	1	CAP-RADIATOR	
	11	1	**353-5545**	4	MOUNT-RUBBER	
	12	1	**355-1352**	1	CORE AS-OIL COOLER (HYDRAULIC)	
	13	1	**355-1353**	1	CORE AS-AFTERCOOLER	
	14	1	**355-1354**	1	CORE AS-RADIATOR	
	15	1	**355-1355**	1	FRAME AS	
	16	1	**355-1356**	1	SHROUD AS	
	17	1	**355-1357**	2	SEAL	
	18	1	**355-1358**	1	SCREEN AS (OIL COOLER)	
	19	1	**355-1359**	1	SCREEN AS (RADIATOR)	
	20	1	**355-1361**	2	SEAL	
	21	1	**355-1362**	1	SEAL	
	22	1	**355-1363**	2	SEAL	
	23	1	**355-1364**	2	SEAL	
	24	1	**355-1365**	1	SEAL	
	25	1	**355-1366**	2	SEAL	
	26	1	**357-1942**	2	SEAL	
	27	1	**357-1950**	2	SEAL	
	28	1	**8T-4121**	14	WASHER-HARD (11X21X2.5-MM THK)	
M	29	1	**8T-4136**	10	BOLT (M10X1.5X25-MM)	
M	30	1	**8T-4185**	2	BOLT (M10X1.5X50-MM)	
M	31	1	**8T-4189**	8	BOLT (M8X1.25X20-MM)	
M	32	1	**8T-4196**	2	BOLT (M10X1.5X35-MM)	
	33	1	**8T-4224**	8	WASHER-HARD (8.8X16X2-MM THK)	
E	35	1	**7Y-1976**		HOSE-WATER (150-CM)	
E	35A	1	**7Y-1976**		HOSE-WATER (8-CM)	

E - ORDER BY THE CENTIMETER
M - METRIC PART

355-1351 **RADIATOR & HYD OIL COOLER GP (**contd.**)** **i04644071**

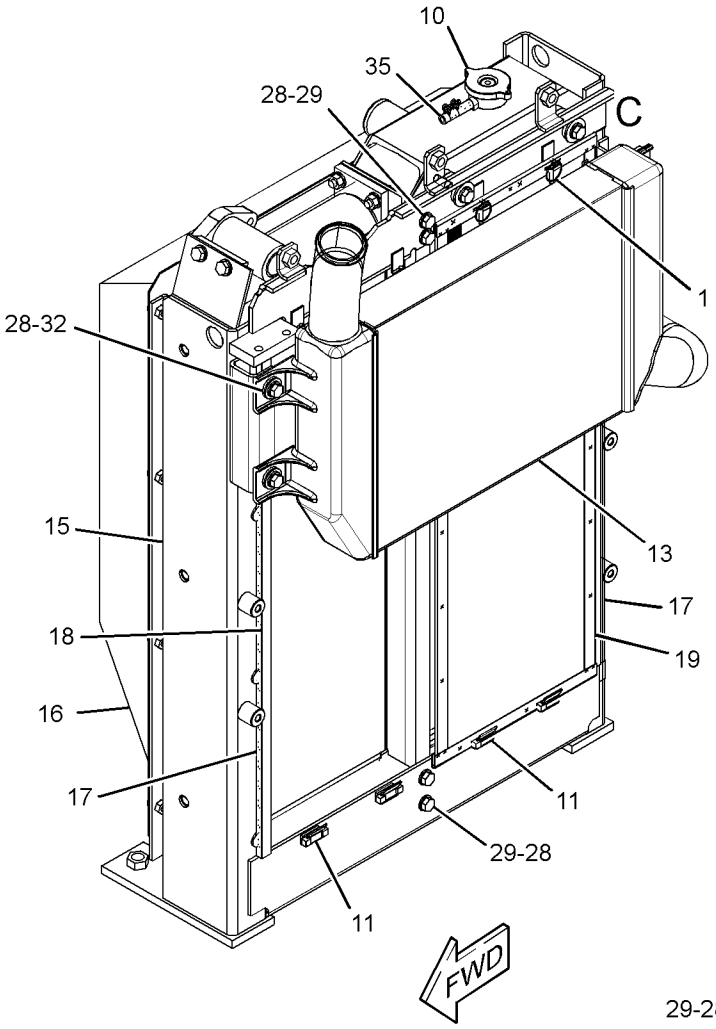

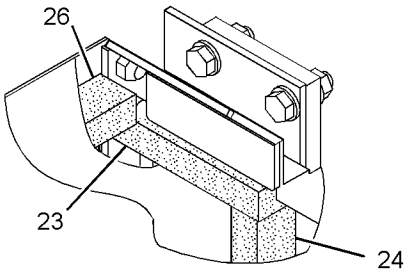

VIEW OF AREA B

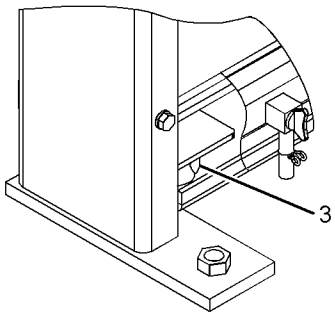

VIEW OF AREA A

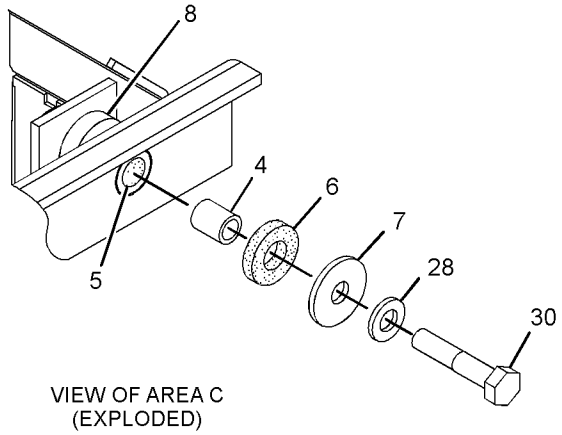

VIEW OF AREA C
(EXPLODED)

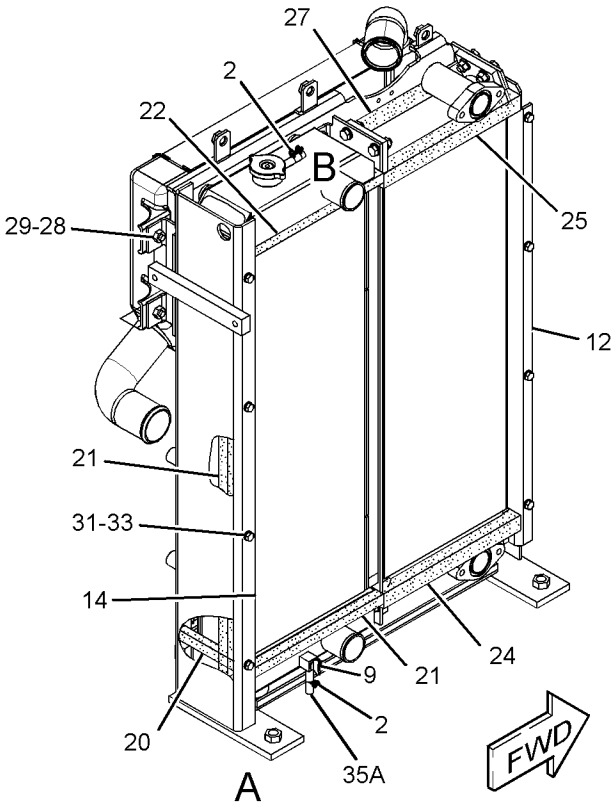

(SHROUD REMOVED FOR CLARITY)

GRAPHIC #1 <END> g02797685

118-9881 AIR CLEANER & MOUNTING GP

S/N: DLP1-UP

PART OF 279-7794, 379-4447 INSTALLATION AR-ENGINE

SMCS-1051, 1054, 7452

i03637530

NOTE	REF NO	GRAPHIC REF	PART NUMBER	QTY	PART NAME 1 2 3 4 5 6 (PRODUCT LEVEL)	SEE PAGE
M	1	1	**8T-4200**	4	BOLT (M8X1.25X16-MM)	
	2	1	**8T-4224**	4	WASHER-HARD (8.8X16X2-MM THK)	
	3	1	**8T-6726**	1	CLAMP-HOSE	
	4	1	**131-8915**	1	CAP (AIR CLEANER)	
Y	5	1	**310-9662**	1	AIR CLEANER GP	80

M - METRIC PART
Y - SEPARATE ILLUSTRATION

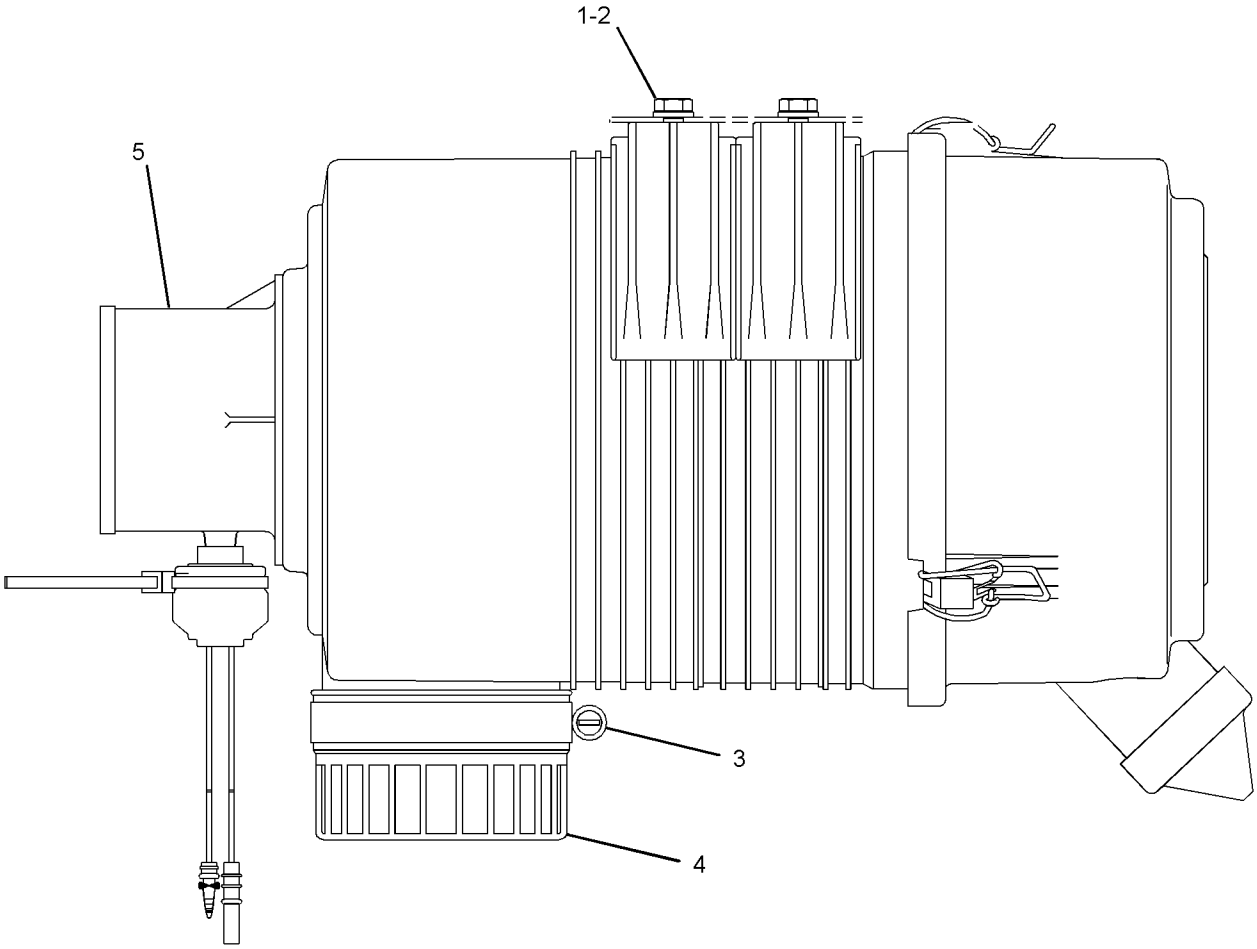

GRAPHIC #1 <END> g01952894

279-7730 AIR CLEANER GP—WITH PRECLEANER

S/N: DLP1-UP
PART OF 260-7122 PRECLEANER AR
AN ATTACHMENT

SMCS-1051, 1054

i03017498

NOTE	REF NO	GRAPHIC REF	PART NUMBER	QTY	PART NAME 1 2 3 4 5 6 (PRODUCT LEVEL)	SEE PAGE
	1	1	**8T-4985**	1	CLAMP-HOSE	
	2	1	**118-6948**	1	PRECLEANER GP	
		1	**1M-7250**	1	BOWL	
		1	**9M-7959**	1	CLAMP-HOSE	
		1	**9M-9439**	1	COVER AS	
	3	1	**193-2888**	2	BAND AS	
	4	1	**193-2889**	1	CLAMP AS	
Y	5	1	*310-9674*	1	AIR CLEANER GP	81
	6	1	**297-7725**	1	HOSE-AIR	
	7	1	**297-7726**	1	PLATE AS	
	8	1	**297-7727**	1	PLATE AS	
	9	1	**5P-1076**	4	WASHER-HARD (13.5X30X4-MM THK)	
	10	1	**7X-7729**	4	WASHER (11X25X3-MM THK)	
M	11	1	**8T-4137**	4	BOLT (M10X1.5X20-MM)	
M	12	1	**8T-4192**	4	BOLT (M12X1.75X25-MM)	

M - METRIC PART
Y - SEPARATE ILLUSTRATION

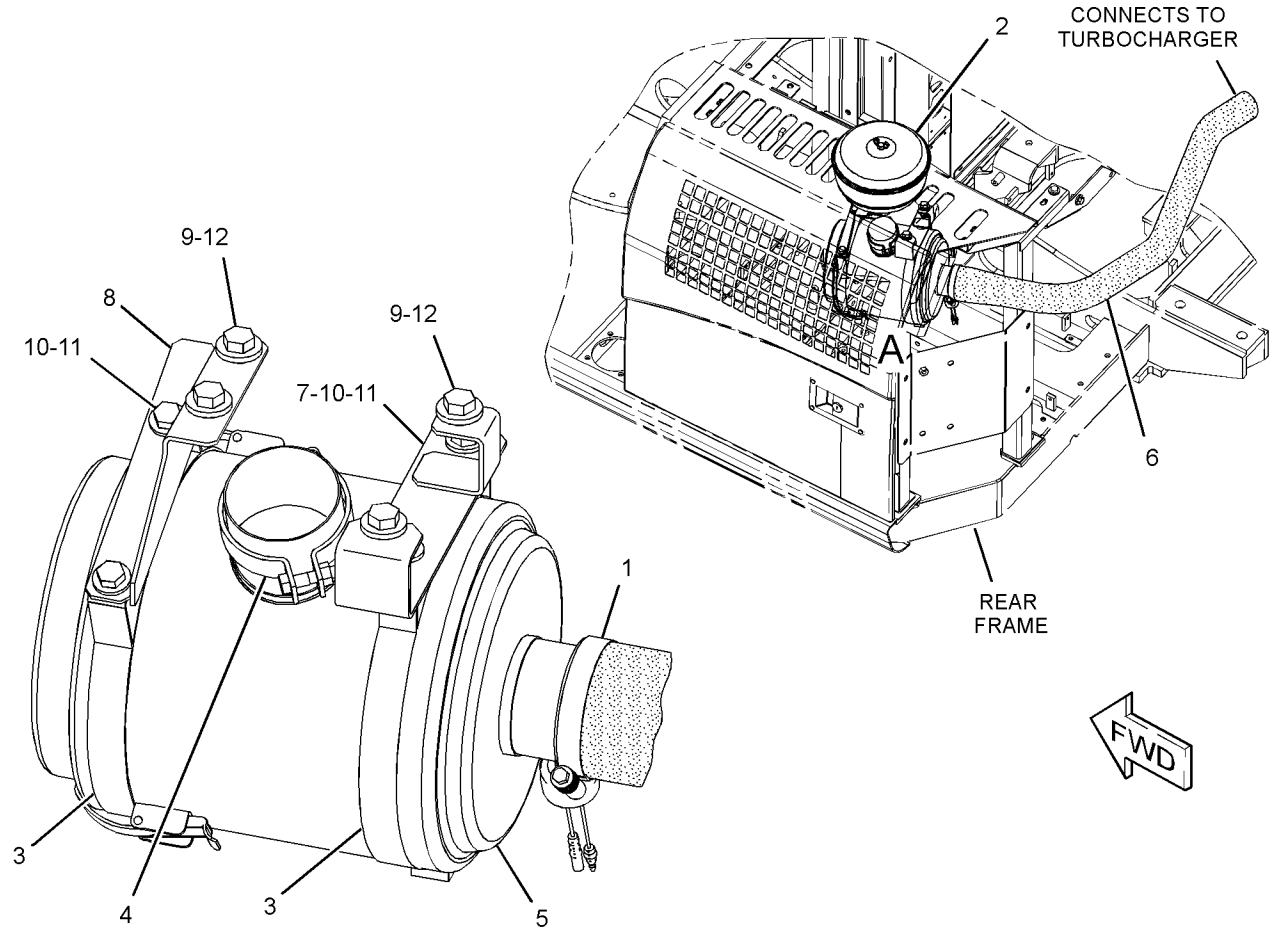

VIEW OF AREA A

GRAPHIC #1 <END> g01409382

310-9662 AIR CLEANER GP

S/N: DLP1-UP

PART OF 118-9881 AIR CLEANER & MOUNTING GP

SMCS-1051, 1054

i03637531

NOTE	REF NO	GRAPHIC REF	PART NUMBER	QTY	PART NAME 1 2 3 4 5 6 (PRODUCT LEVEL)	SEE PAGE
	1	1	**310-9621**	1	COVER AS-AIR CLEANER	
		1	**162-6172**	3	LATCH	
	2	1	**131-8901**	1	VALVE-DUST (AIR CLEANER)	
	3	1	**131-8902**	1	FILTER ELEMENT AS-AIR (PRIMARY)	
	4	1	**131-8903**	1	FILTER ELEMENT AS-AIR (SECONDARY)	
	5	1	**255-2966**	1	INDICATOR AS-AIR FILTER CHANGE (AIR RESTRICTION)	
	6	1	**310-9622**	1	SEAL	
	7	1	**7I-2673**	1	STRAP-CABLE	

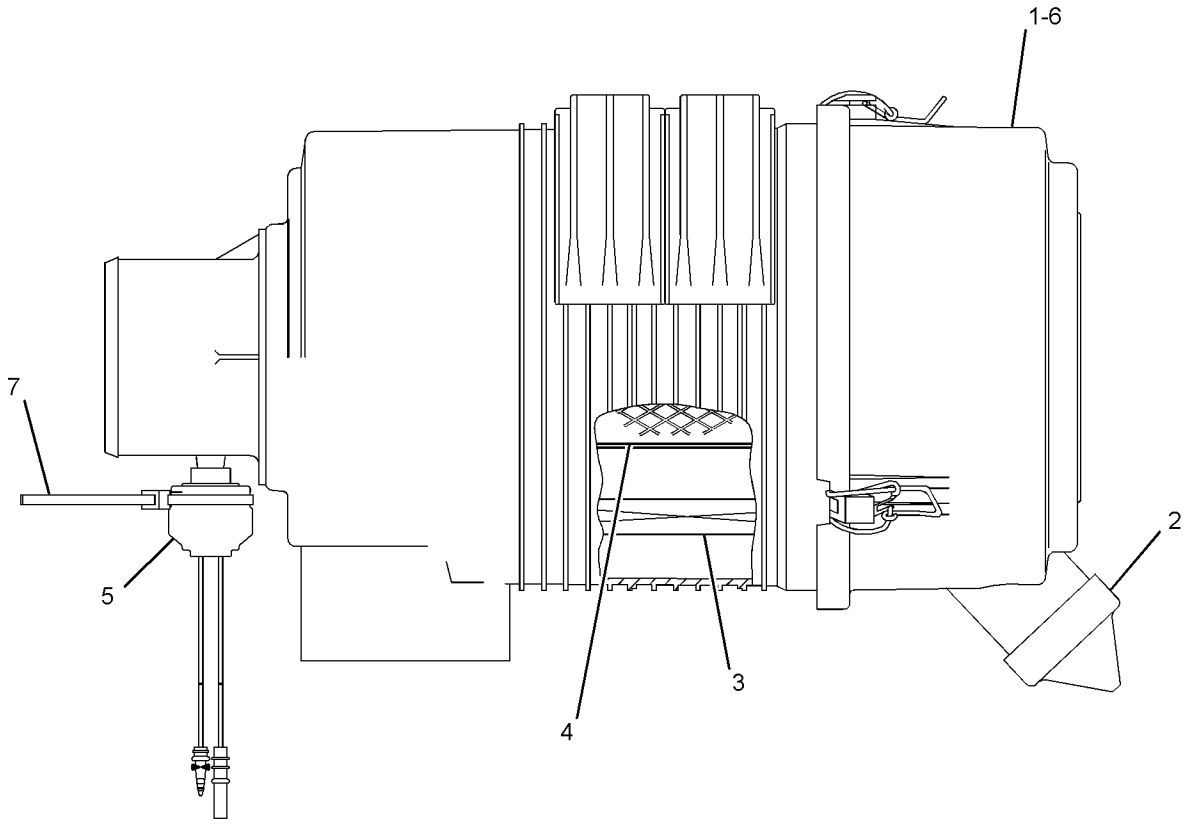

GRAPHIC #1 <END> g01952888

310-9674 AIR CLEANER GP

S/N: DLP1-UP
PART OF 279-7730 AIR CLEANER GP
AN ATTACHMENT

SMCS-1051, 1054

i03017497

NOTE	REF NO	GRAPHIC REF	PART NUMBER	QTY	PART NAME 1 2 3 4 5 6 (PRODUCT LEVEL)	SEE PAGE
	1	1	**5L-3233**	1	FITTING-CONNECTOR	
	2	1	**6I-1449**	1	COVER AS	
		1	**1J-2890**	1	SEAL-O-RING	
	3	1	**7I-2673**	1	STRAP-CABLE	
	4	1	**108-0671**	1	FILTER ELEMENT-AIR (PRIMARY)	
	5	1	**108-0672**	1	FILTER ELEMENT-AIR (SECONDARY)	
	6	1	**255-2966**	1	INDICATOR AS-AIR FILTER CHANGE (AIR RESTRICTION)	

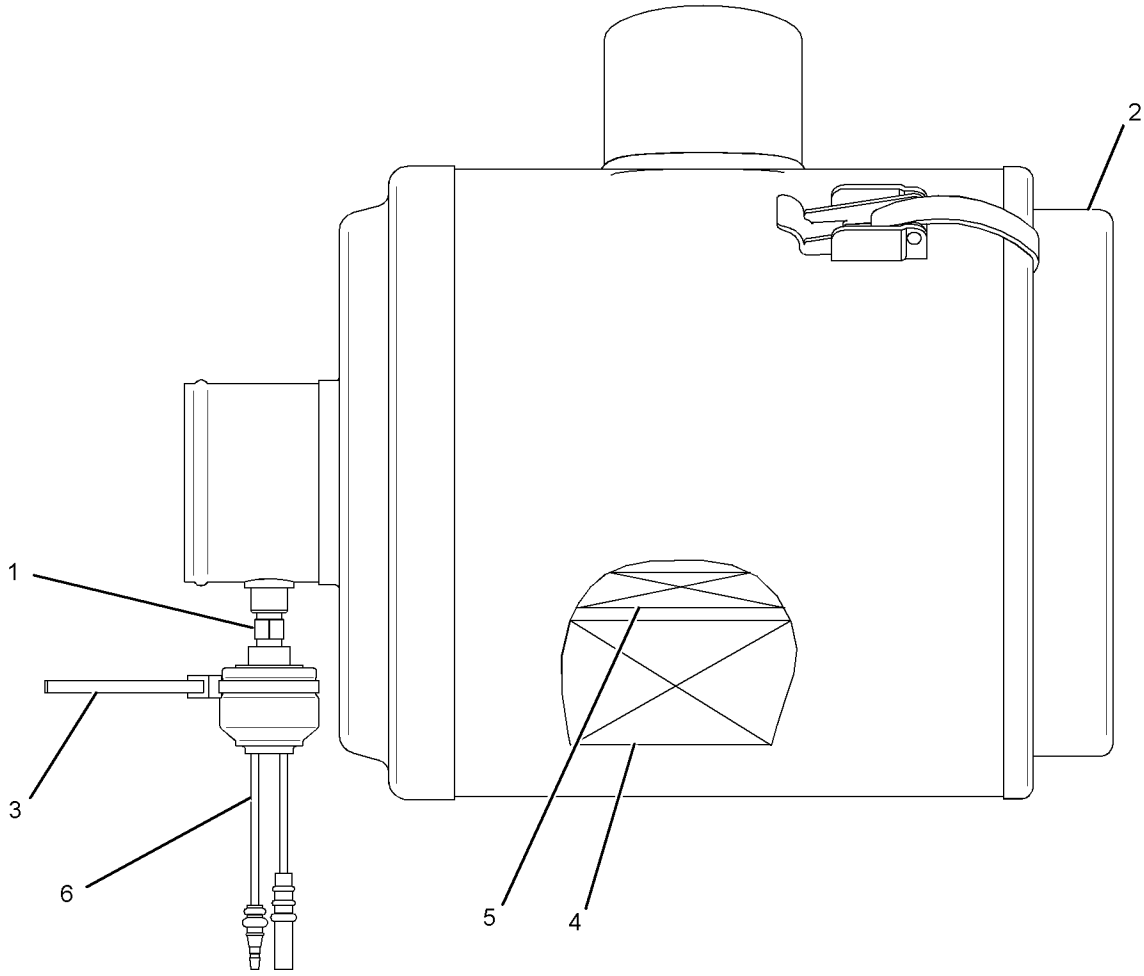

GRAPHIC #1 <END> g01529603

279-7727 DRAIN GP-MUFFLER

S/N: DLP1-UP

PART OF 279-7794, 379-4447 INSTALLATION AR-ENGINE

SMCS-1062 **i02859863**

NOTE	REF NO	GRAPHIC REF	PART NUMBER	QTY	PART NAME 1 2 3 4 5 6 (PRODUCT LEVEL)	SEE PAGE
	1	1	**3S-2093**	3	STRAP-CABLE	
	2	1	**279-7852**	1	TUBE AS	
		1	**287-0118**	1	ADAPTER AS	
	3	1	**171-9073**	1	CLIP	
	4	1	**5P-4961**	1	CLAMP-HOSE	
	5	1	**8T-4121**	1	WASHER-HARD (11X21X2.5-MM THK)	
M	6	1	**8T-4191**	1	BOLT (M10X1.5X16-MM)	
E	7	1	**5P-1442**		HOSE (47-CM)	

E - ORDER BY THE CENTIMETER
M - METRIC PART

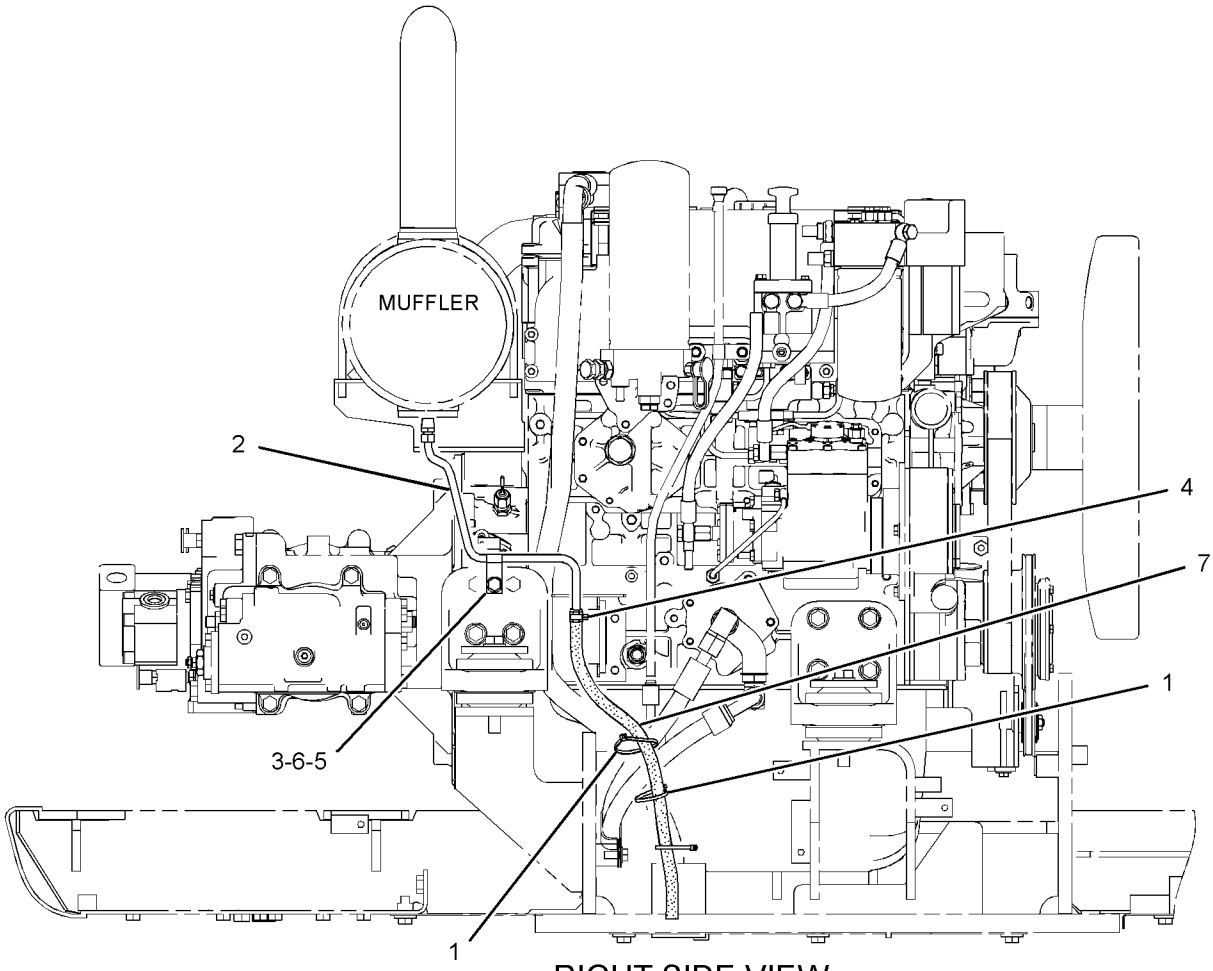

RIGHT SIDE VIEW

GRAPHIC #1 <END> g01427487

265-3609 LINES GP-AIR—AFTERCOOLER TO TURBOCHARGER

S/N: DLP1-UP

PART OF 279-7794, 379-4447 INSTALLATION AR-ENGINE

SMCS-1071 **i03875973**

NOTE	REF NO	GRAPHIC REF	PART NUMBER	QTY	PART NAME 1 2 3 4 5 6 (PRODUCT LEVEL)	SEE PAGE
	1	1	**8T-4984**	5	CLAMP-HOSE	
	2	1	**8T-6703**	1	CLAMP-HOSE	
	3	1	**265-3659**	1	TUBE AS	
	4	1	**265-3661**	1	HOSE	
	5	1	**265-3662**	1	HOSE	
	6	1	**350-6856**	1	PLATE AS	
	7	1	**305-7597**	1	HOSE	
	8	1	**8T-4121**	4	WASHER-HARD (11X21X2.5-MM THK)	
M	9	1	**8T-4136**	4	BOLT (M10X1.5X25-MM)	

M - METRIC PART

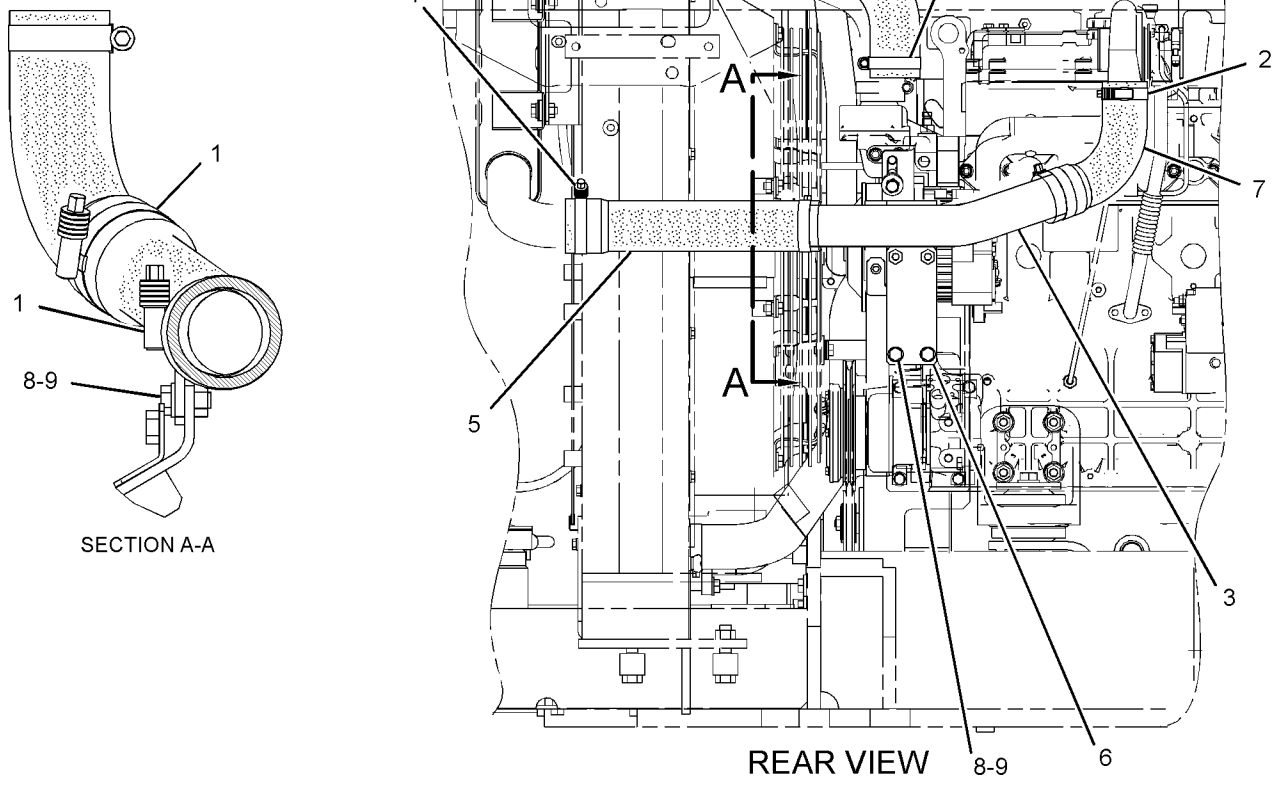

GRAPHIC #1 <END> g02122444

279-7726 LINES GP-AIR—AIR CLEANER TO TURBOCHARGER

S/N: DLP1-UP

PART OF 279-7794, 379-4447 INSTALLATION AR-ENGINE

SMCS-1071 **i02801922**

NOTE	REF NO	GRAPHIC REF	PART NUMBER	QTY	PART NAME 1 2 3 4 5 6 (PRODUCT LEVEL)	SEE PAGE
	1	1	**8T-4984**	1	CLAMP-HOSE	
	2	1	**9X-2201**	1	CLAMP-HOSE	
	3	1	**296-4809**	1	HOSE-AIR	
	4	1	**6V-5386**	1	CLIP	
	5	1	**8T-4121**	1	WASHER-HARD (11X21X2.5-MM THK)	
M	6	1	**8T-4136**	1	BOLT (M10X1.5X25-MM)	

M - METRIC PART

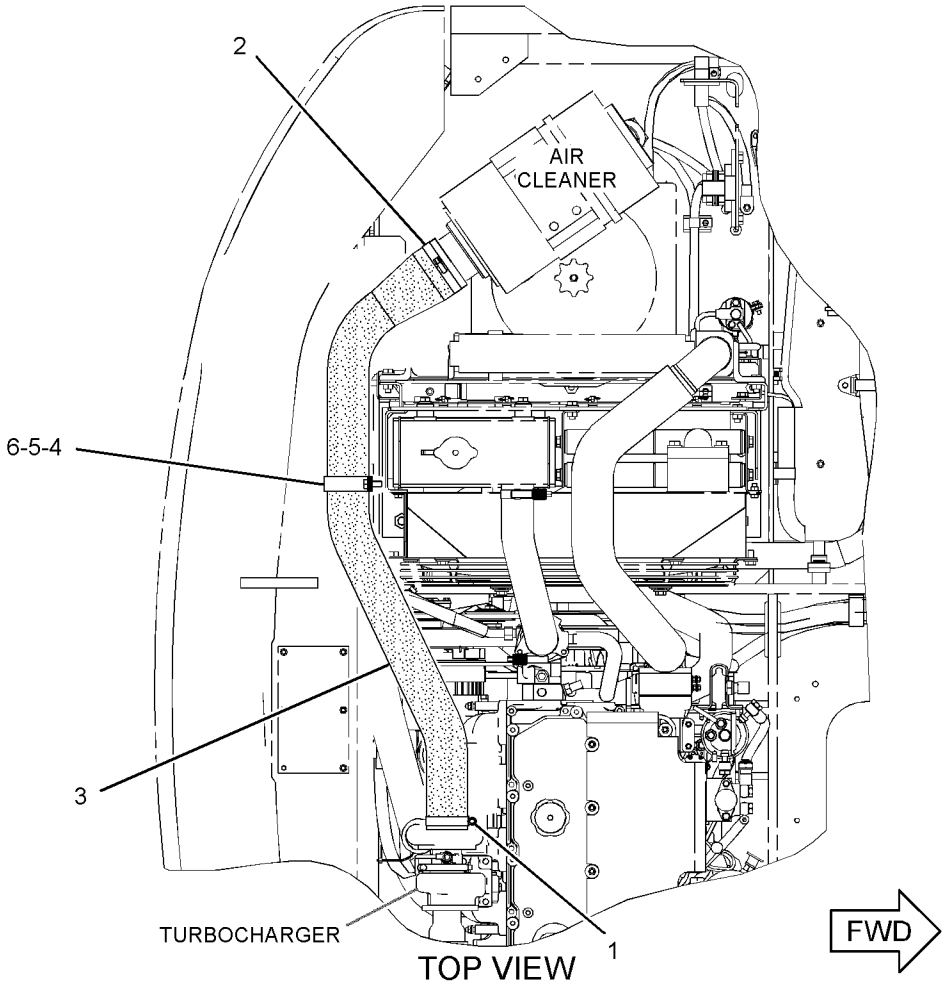

GRAPHIC #1 <END> g01401699

296-4791 MANIFOLD GP-EXHAUST

S/N: JKH1-UP
PART OF 279-7814, 420-2179 ENGINE AR
ALSO AN ATTACHMENT

SMCS-1059 **i02944497**

NOTE	REF NO	GRAPHIC REF	PART NUMBER	QTY	PART NAME 1 2 3 4 5 6 (PRODUCT LEVEL)	SEE PAGE
	1	1	**279-7787**	1	MANIFOLD-EXHAUST	
	2	1	**296-4716**	2	GASKET	
M	3	1	**178-6554**	4	STUD (M10X1.5X15-MM, M10X1.25X20-MM)	
	6	1	**5I-7549**	8	STUD (M8X1.25X86-MM)	
	7	1	**5I-7550**	7	SPACER	
	8	1	**239-6604**	8	WASHER	
	9	1	**212-8489**	8	NUT	
	10	1	**095-8638**	1	WASHER-SPRING	
	11	1	**5I-7601**	1	SPACER	
M	12	1	**091-3474**	1	NUT (M8X1.25-THD)	
	13	1	**5I-5087**	1	PLUG	

M - METRIC PART

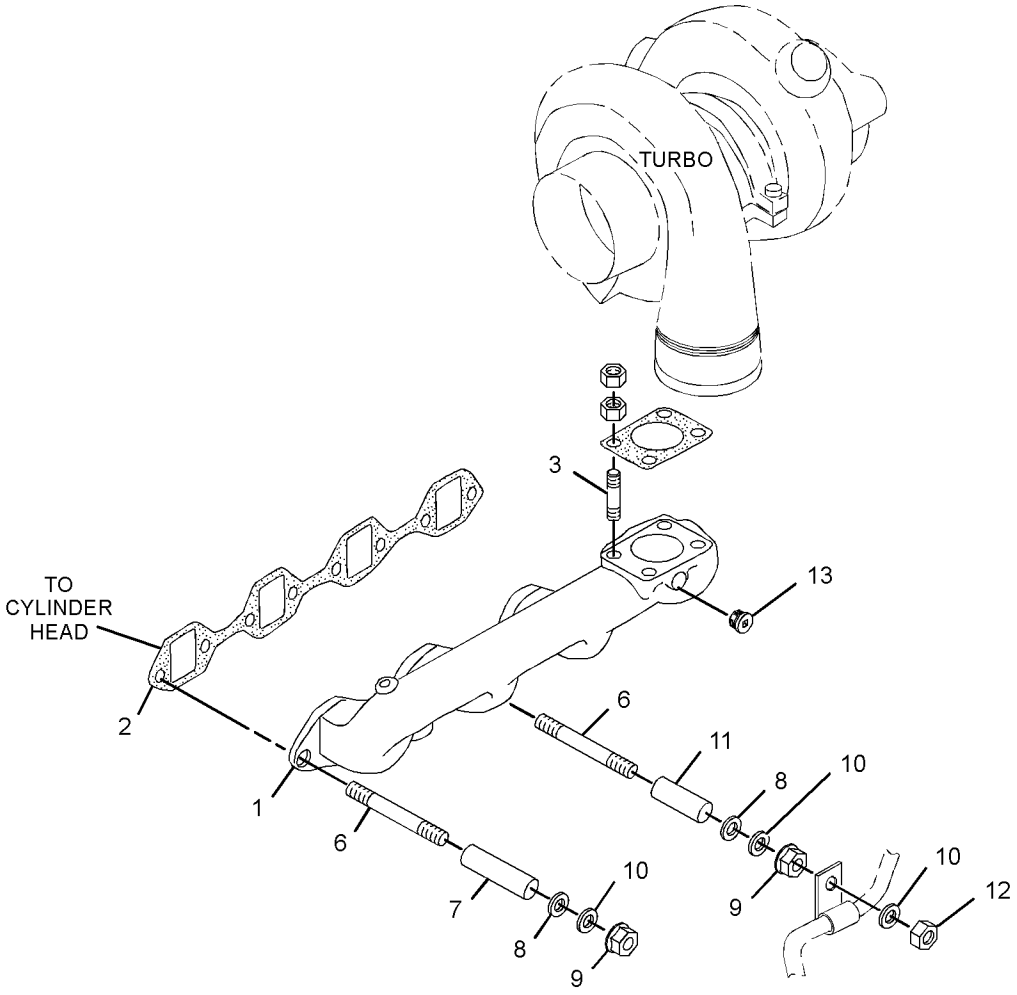

GRAPHIC #1 <END> g01459018

296-4790 MANIFOLD GP-INLET

S/N: JKH1-UP
PART OF 279-7814, 420-2179 ENGINE AR
ALSO AN ATTACHMENT

SMCS-1058, 1090

i03514900

NOTE	REF NO	GRAPHIC REF	PART NUMBER	QTY	PART NAME 1 2 3 4 5 6 (PRODUCT LEVEL)	SEE PAGE
	1	1	**296-4714**	1	GASKET	
	2	1	**096-8490**	7	BOLT (M8X1.25X70-MM)	
	3	1	**294-1700**	11	BOLT (M8X1.25X108.3-MM)	
	4	1	**5I-8021**	1	ELBOW AS	
		1	**5I-8023**	1	PLUG	
	5	1	**5I-7678**	1	GASKET	
	6	1	**303-6261**	4	BOLT	
	7	1	**310-9528**	1	MANIFOLD	
	8	1	**5I-7677**	1	GASKET	
	9	1	**324-4119**	1	HEATER (24-VOLT)	

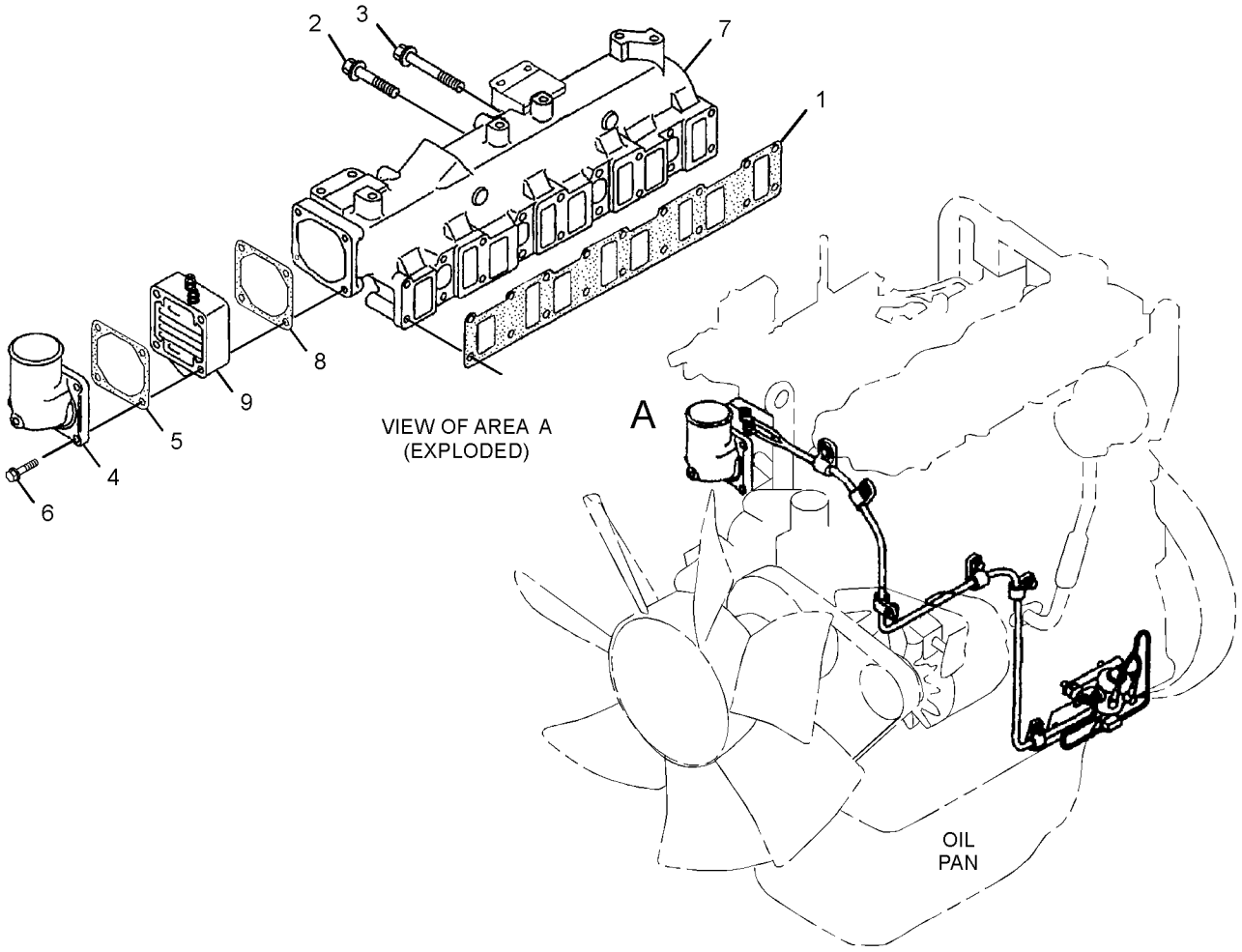

GRAPHIC #1

<END>

g01414473

310-9551 MUFFLER GP

S/N: JKH1-UP
PART OF 279-7814, 420-2179 ENGINE AR
ALSO AN ATTACHMENT

SMCS-1062 **i02896392**

NOTE	REF NO	GRAPHIC REF	PART NUMBER	QTY	PART NAME 1 2 3 4 5 6 (PRODUCT LEVEL)	SEE PAGE
	1	1	**212-8491**	1	MUFFLER	
	2	1	**5I-7848**	2	U-BOLT	
	3	1	**196-8014**	1	BRACKET	
	4	1	**196-8012**	1	BRACKET	
	5	1	**5I-5597**	4	BOLT (M10X1.5-THD)	
M	6	1	**6V-8231**	8	NUT (M10X1.25-THD)	
	7	1	**196-8013**	1	PIPE	
	8	1	**5I-7937**	1	GASKET	
	9	1	**196-8015**	3	STUD	
	10	1	**5I-7633**	6	NUT (M10X1.25-THD)	
	11	1	**5I-7639**	1	CLAMP AS	
	12	1	**8T-4121**	8	WASHER-HARD (11X21X2.5-MM THK)	

M - METRIC PART

310-9551 **MUFFLER GP** (contd.) **i02896392**

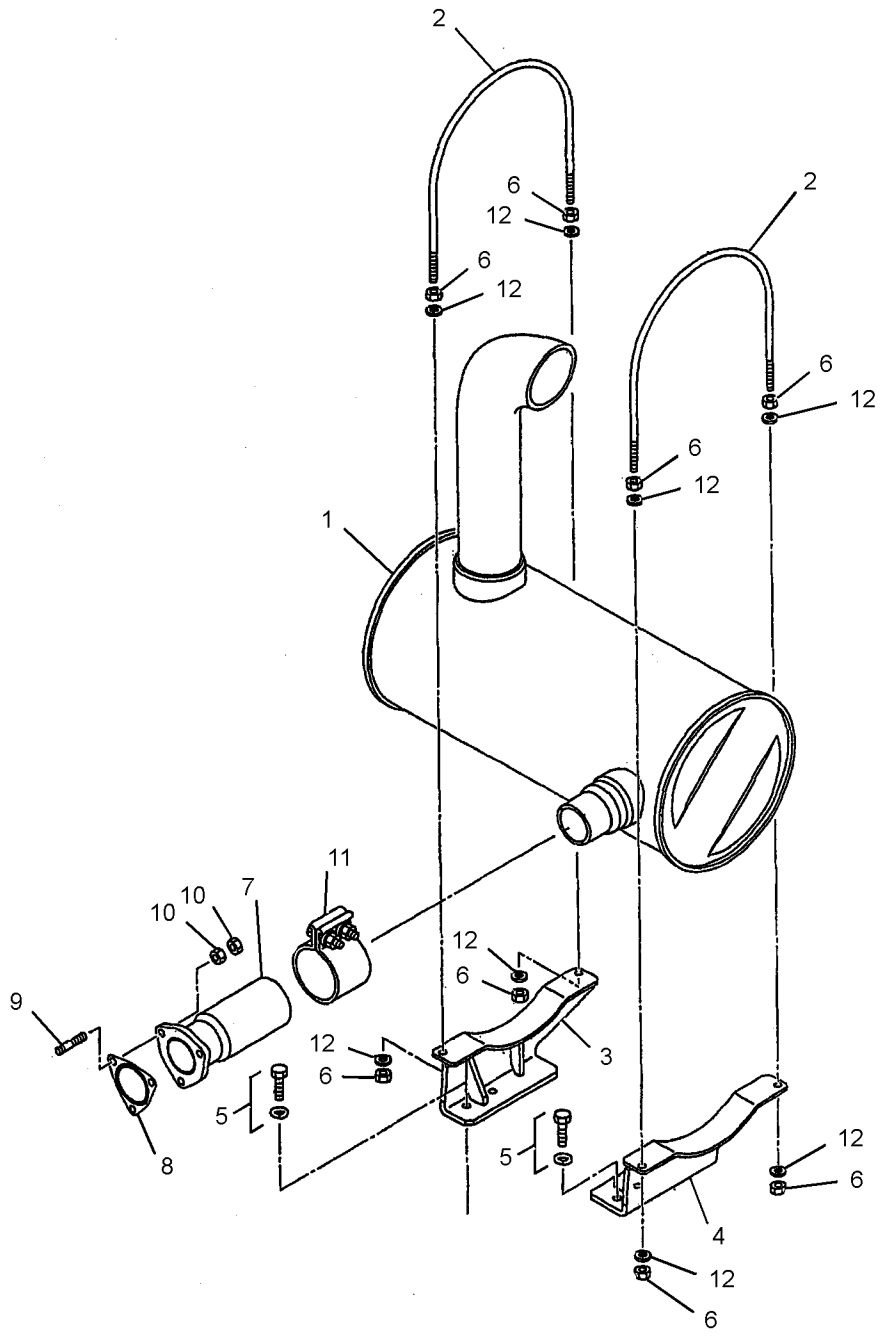

GRAPHIC #1 <END> g01442610

260-7122 PRECLEANER AR

S/N: DLP1-UP

AN ATTACHMENT

SMCS-1055 **i02808559**

NOTE	PART NUMBER	QTY	PART NAME 1 2 3 4 5 6 (PRODUCT LEVEL)	SEE PAGE
Y	*279-7730*	1	AIR CLEANER GP (WITH PRECLEANER)	79
Y	*273-8104*	1	DOOR GP-ACCESS (PRECLEANER)	373

Y - SEPARATE ILLUSTRATION

<END>

305-4922 TURBOCHARGER GP

S/N: JKH1-UP
PART OF 310-9620 TURBOCHARGER GP
ALSO AN ATTACHMENT

SMCS-1052, 1053

i02896744

NOTE	REF NO	GRAPHIC REF	PART NUMBER	QTY	PART NAME 1 2 3 4 5 6 (PRODUCT LEVEL)	SEE PAGE
	1	1	**305-4769**	1	CARTRIDGE AS	
	2	1	**5I-7941**	1	RING	
	3	1	**5I-8124**	1	SEAL	
	5	1	**305-4965**	1	COVER	
	6	1	**310-9539**	1	HOUSING	
	7	1	**5I-7942**	1	COUPLING AS	

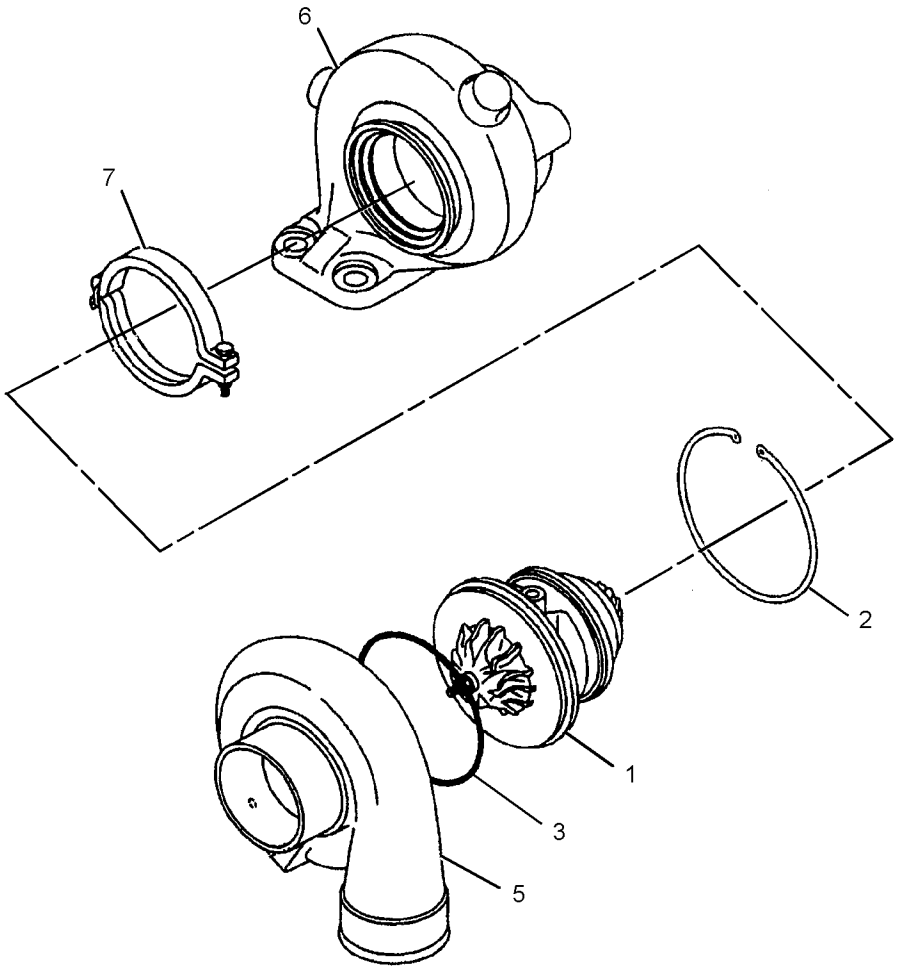

GRAPHIC #1 <END> g01442572

310-9620 TURBOCHARGER GP

S/N: JKH1-UP
PART OF 279-7814, 420-2179 ENGINE AR
ALSO AN ATTACHMENT

SMCS-1052, 1053

i02896385

NOTE	REF NO	GRAPHIC REF	PART NUMBER	QTY	PART NAME 1 2 3 4 5 6 (PRODUCT LEVEL)	SEE PAGE
Y	1	1	**305-4922**	1	TURBOCHARGER GP	90
	2	1	**5I-7933**	1	GASKET	
	3	1	**5I-7633**	8	NUT (M10X1.25-THD)	

Y - SEPARATE ILLUSTRATION

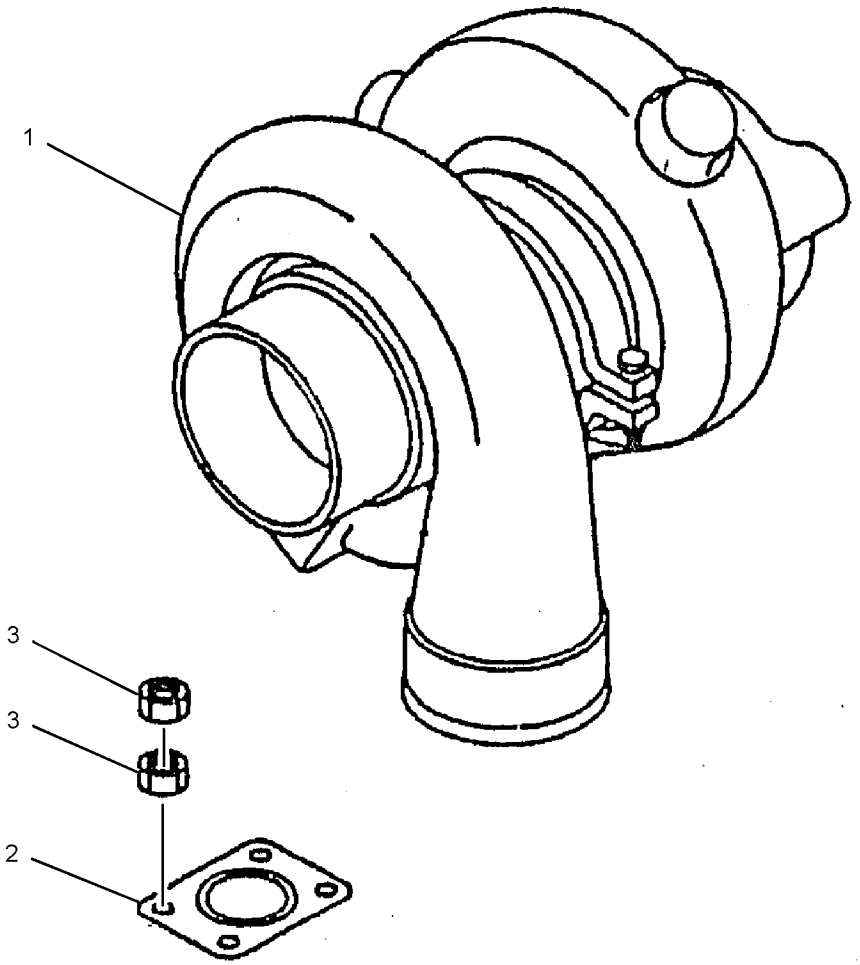

GRAPHIC #1 <END> g01442580

164-4858 CAP GP-FUEL FILLER–EXTREME SERVICE, LOCKABLE

S/N: DLP1-UP

PART OF 278-3751, 278-3753, 327-3211, 327-3218 TANK GP-FUEL

ALSO AN ATTACHMENT

SMCS-1273 **i05270544**

NOTE	REF NO	GRAPHIC REF	PART NUMBER	QTY	PART NAME 1 2 3 4 5 6 (PRODUCT LEVEL)	SEE PAGE
	1	1	9X-8600	1	SEAL-O-RING	
	2	1	190-9775	1	COVER AS-FILTER	

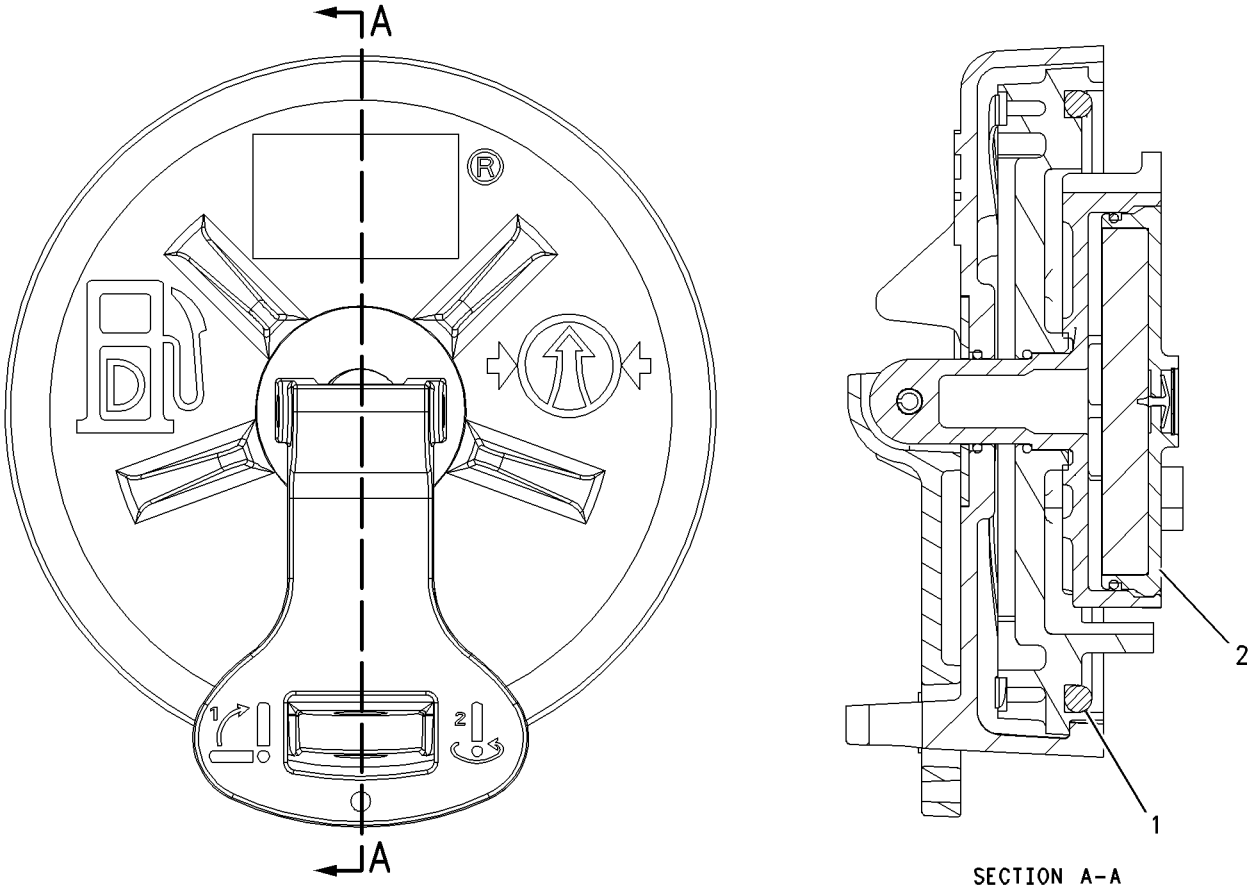

GRAPHIC #1 <END> g00849812

296-4794 FILTER GP-FUEL

S/N: JKH1-UP
PART OF 279-7814 ENGINE AR
ALSO AN ATTACHMENT

SMCS-1261 **i05189053**

NOTE	REF NO	GRAPHIC REF	PART NUMBER	QTY	PART NAME 1 2 3 4 5 6 (PRODUCT LEVEL)	SEE PAGE
	1	1,2	**099-4437**	19	GASKET	
	2	1,2	**099-5041**	8	BOLT (M14X1.5X27-MM)	
	3	2	**294-1811**	2	WASHER (13.5-MM OD)	
	4	1	**296-4749**	1	HOSE	
	5	1	**137-5541**	1	PUMP GP-FUEL PRIMING (MANUAL)	
		1	**061-7539**	1	SEAL-O-RING	
		1	**229-3218**	2	VALVE AS (FUEL PRIMING PUMP)	
	6	1	**294-1820**	1	GASKET (FUEL PRIMING PUMP)	
	7	1	**199-2241**	1	BOLT	
	8	1	**294-1821**	1	BOLT (M8X1.25X35.5-MM)	
	9	1	**294-1822**	1	BASE	
	10	1	**296-4750**	4	BOLT (M10X1.25-THD)	
	11	1	**1R-0751**	2	FILTER-FUEL (ADVANCED EFFICIENCY)	
	12	1	**305-4886**	1	HOSE	
	13	1	**296-4752**	1	BRACKET	
	14	1	**296-4753**	2	BOLT (M10X1.5-THD)	
	15	1	**8T-4121**	2	WASHER-HARD (11X21X2.5-MM THK)	
	17	1	**294-1819**	1	HOSE	
	18	1	**296-4754**	1	TUBE	
	19	1	**190-5830**	1	TUBE	
	20	1	**094-9725**	2	PLUG	
	21	1	**310-9529**	1	BRACKET	
	22	1	**310-9530**	1	HOSE	
	23	1	**095-2038**	2	WASHER (7.8X13.5X2-MM THK)	
M	24	1	**213-9433**	2	BOLT (M10X1.5X45-MM)	
	25	2	**294-1838**	1	BRACKET	
	26	1	**294-1831**	3	CLAMP	
	27	1	**310-9531**	1	CLAMP	
	28	1	**297-7706**	2	BOLT (M6X1X64-MM)	
B	29	1	**3B-4504**	2	LOCKWASHER	
BM	30	1	**5C-2890**	2	NUT (M6X1-THD)	
	33	2	**294-1809**	1	BOLT	
	34	2	**294-1844**	1	BOLT (M12X1.75X28-MM)	
	35	2	**294-1845**	1	BOLT (M12X1.25X38-MM)	
	37	1	**297-7660**	1	NUT (M8-THD)	
	38	2	**5I-8058**	1	CONNECTOR	
	39	1	**310-9534**	1	CONNECTOR	
	40	2	**310-9533**	2	ADAPTER	
M	41	2	**6V-5215**	2	BOLT (M8X1.25X16-MM)	
	43	2	**294-1837**	1	BRACKET	
	44	2	**305-4901**	1	SEAL-O-RING	
	45	2	**305-4902**	1	CONNECTOR	
	46	2	**305-4900**	1	PIPE	
	48	2	**125-2983**	1	FITTING	
	49	1,2	**294-1804**	3	SEAL-O-RING	

B - USE AS REQUIRED
M - METRIC PART

296-4794 **FILTER GP-FUEL** (contd.) **i05189053**

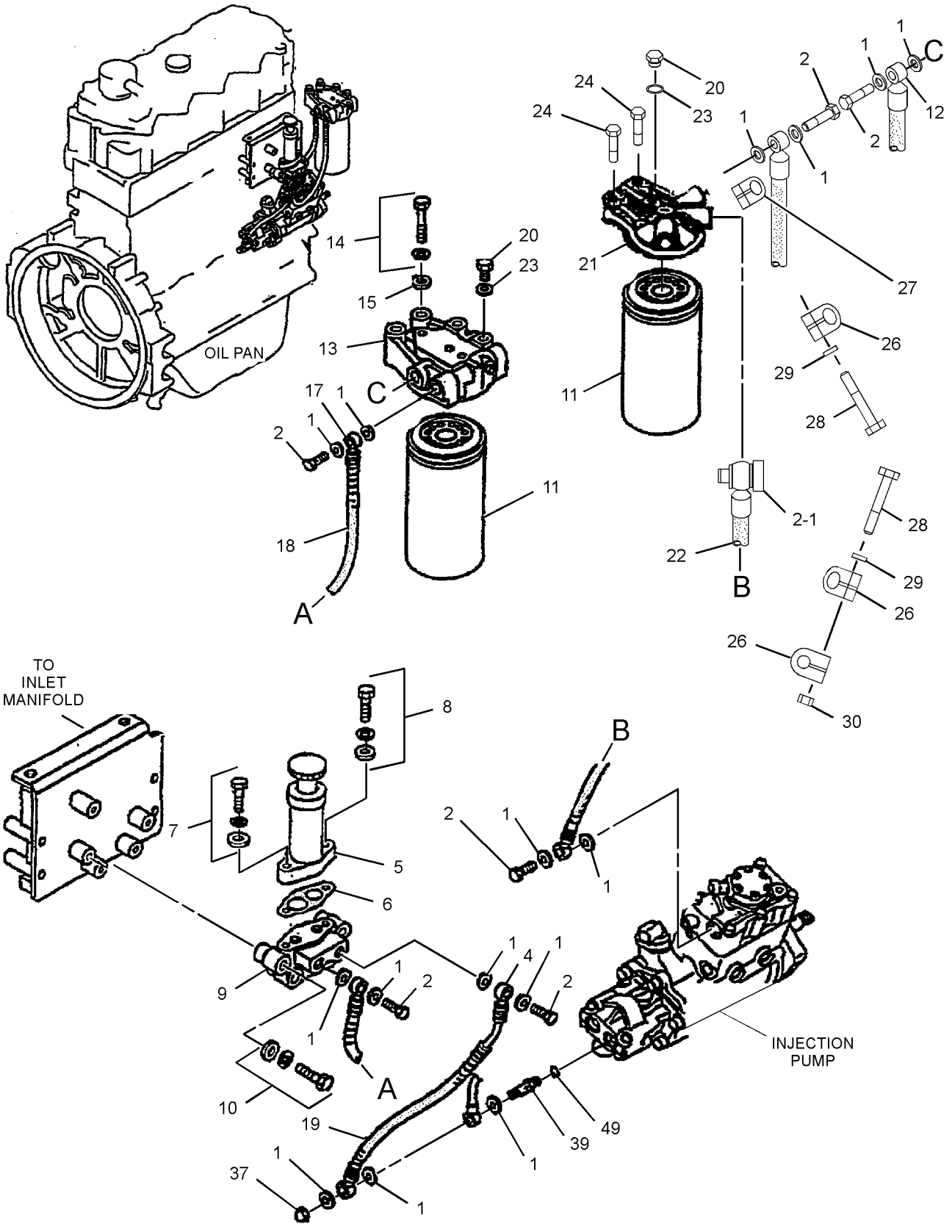

GRAPHIC #1 g02182093

296-4794 **FILTER GP-FUEL** (contd.) **i05189053**

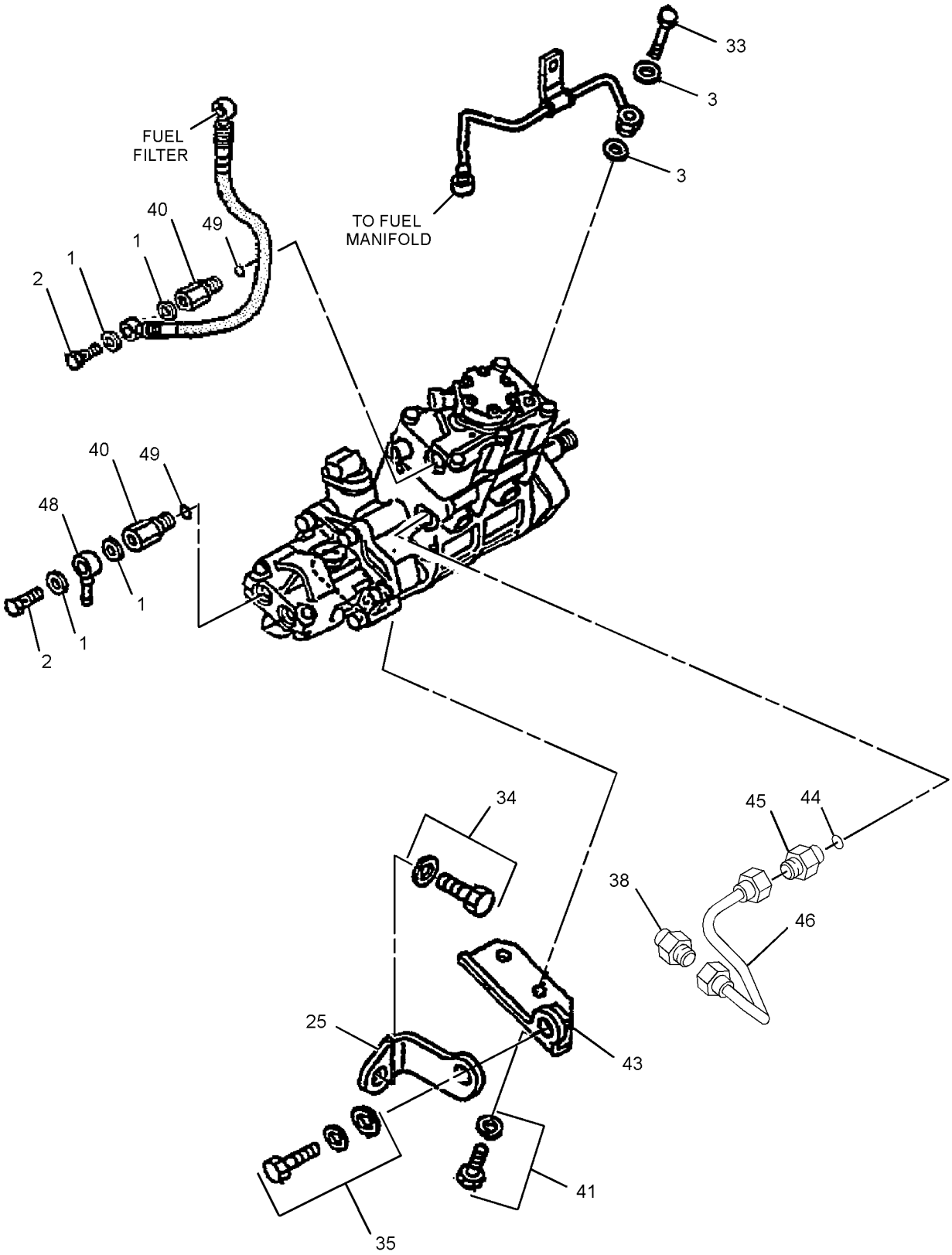

GRAPHIC #2 <END> g02685837

360-8958 FILTER GP-FUEL

S/N: JKH1-UP
PART OF 426-0877 FILTER GP-FUEL
AN ATTACHMENT

SMCS-1261 **i06791537**

NOTE	REF NO	GRAPHIC REF	PART NUMBER	QTY	PART NAME 1 2 3 4 5 6 (PRODUCT LEVEL)	SEE PAGE
	1	1	**360-8960**	1	FILTER ELEMENT-FUEL	
					AVAILABLE REPAIR KIT(S):	
			362-5412	1	KIT-DRAIN (FUEL FILTER)	
					(INCLUDES DRAIN, KNOB, & SEALS)	
			370-8376	1	KIT-FUEL SYSTEM PARTS	

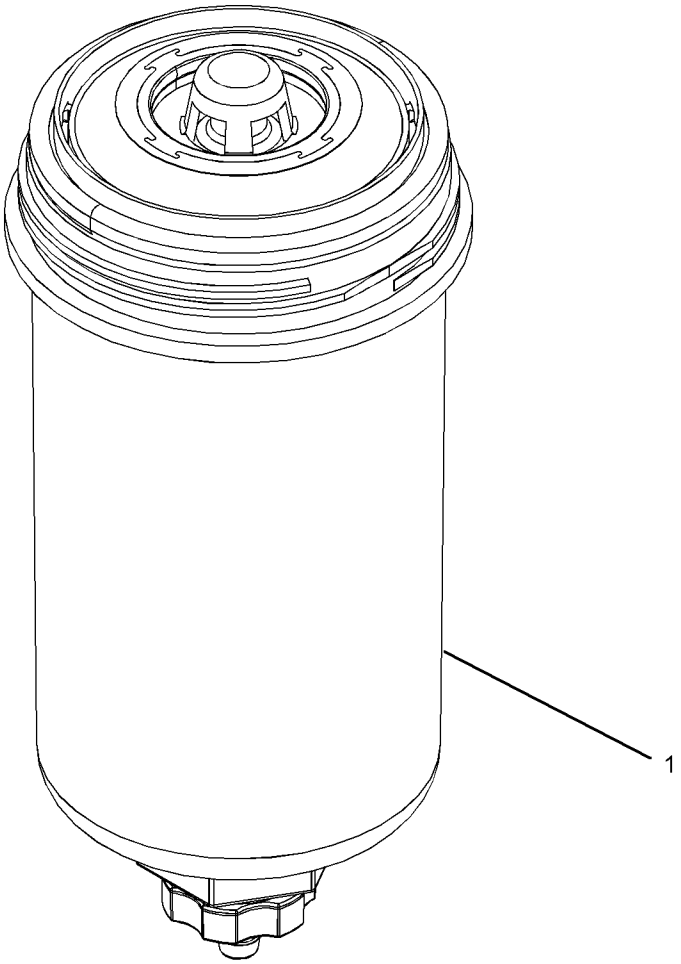

GRAPHIC #1 <END> g03173178

420-0099 FILTER GP-FUEL

S/N: JKH1-UP
PART OF 420-2179 ENGINE AR
AN ATTACHMENT

SMCS-1261 **i05448555**

NOTE	REF NO	GRAPHIC REF	PART NUMBER	QTY	PART NAME 1 2 3 4 5 6 (PRODUCT LEVEL)	SEE PAGE
	1	1,2	**099-4437**	19	GASKET	
	2	1,2	**099-5041**	8	BOLT (M14X1.5X27-MM)	
	3	1	**294-1811**	2	WASHER (13.5-MM OD)	
	4	1	**296-4749**	1	HOSE	
	5	1	**137-5541**	1	PUMP GP-FUEL PRIMING	
		1	**229-3218**	2	VALVE AS	
	6	1	**294-1820**	1	GASKET (FUEL PRIMING PUMP)	
	7	1	**199-2241**	1	BOLT	
	8	1	**294-1821**	1	BOLT (M8X1.25X35.5-MM)	
	9	1	**294-1822**	1	BASE	
	10	1	**296-4750**	4	BOLT (M10X1.25-THD)	
	11	1	**364-5287**	1	FILTER-FUEL	
	12	2	**305-4887**	1	HOSE	
	13	1	**296-4752**	1	BRACKET	
	14	1	**296-4753**	2	BOLT (M10X1.5-THD)	
	15	1	**294-1819**	1	HOSE	
	16	1	**296-4754**	1	TUBE	
	17	1	**190-5830**	1	TUBE	
	18	1	**094-9725**	1	PLUG	
Y	19	2	**426-0877**	1	FILTER GP-FUEL	101
	20	2	**094-9025**	1	HOSE AS	
	21	1	**095-2038**	1	WASHER (7.8X13.5X2-MM THK)	
	22	2	**294-1833**	1	CLAMP	
	23	1	**294-1838**	1	BRACKET	
	24	1,2	**294-1831**	3	CLAMP	
	25	2	**310-9531**	1	CLAMP	
	26	1	**294-1809**	1	BOLT	
	27	1	**294-1844**	1	BOLT (M12X1.75X28-MM)	
	28	1	**294-1845**	1	BOLT (M12X1.25X38-MM)	
	29	1	**297-7660**	1	NUT (M8-THD)	
	30	1	**5I-8058**	1	CONNECTOR	
	31	1	**310-9534**	1	CONNECTOR	
	32	1,2	**310-9533**	4	ADAPTER	
	33	1	**294-1837**	1	BRACKET	
	34	1	**305-4901**	1	SEAL-O-RING	
	35	1	**305-4902**	1	CONNECTOR	
	36	1	**305-4900**	1	PIPE	
	37	1	**125-2983**	1	FITTING	
	38	1,2	**294-1804**	5	SEAL-O-RING	
M	39	2	**8T-4195**	2	BOLT (M10X1.5X30-MM)	
	40	1,2	**8T-4121**	6	WASHER-HARD (11X21X2.5-MM THK)	
	41	2	**394-7676**	1	PLATE AS	
M		2	**8T-3490**	2	NUT-WELD (M10X1.5-THD)	
M	42	1,2	**7X-2535**	2	BOLT (M6X1X60-MM)	
M	43	1	**6V-5215**	2	BOLT (M8X1.25X16-MM)	
M	44	2	**8C-8451**	1	BOLT (M6X1X40-MM)	
M	45	2	**8T-4136**	2	BOLT (M10X1.5X25-MM)	

420-0099 **FILTER GP-FUEL (**contd.**)** **i05448555**

NOTE	REF NO	GRAPHIC REF	PART NUMBER	QTY	PART NAME 1 2 3 4 5 6 (PRODUCT LEVEL)	SEE PAGE
	46	1,2	**9X-8256**	3	WASHER (6.6X12X2-MM THK)	
	47	1,2	**3B-4504**	3	LOCKWASHER	
M	48	1,2	**5C-2890**	3	NUT (M6X1-THD)	

M - METRIC PART
Y - SEPARATE ILLUSTRATION

420-0099 **FILTER GP-FUEL (**contd.**)** **i05448555**

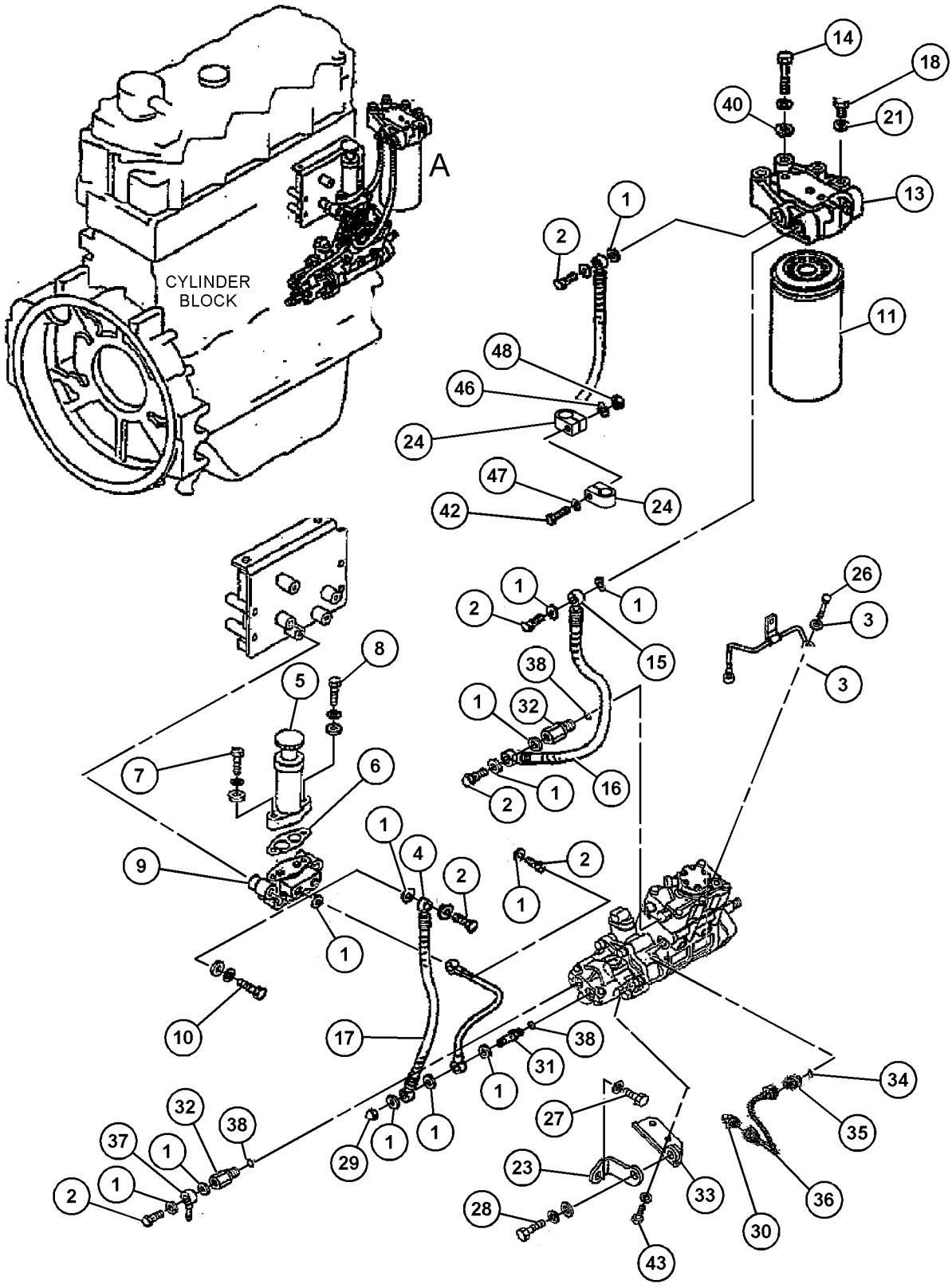

VIEW OF AREA A

GRAPHIC #1 g03452356

420-0099 **FILTER GP-FUEL (**contd.**)** **i05448555**

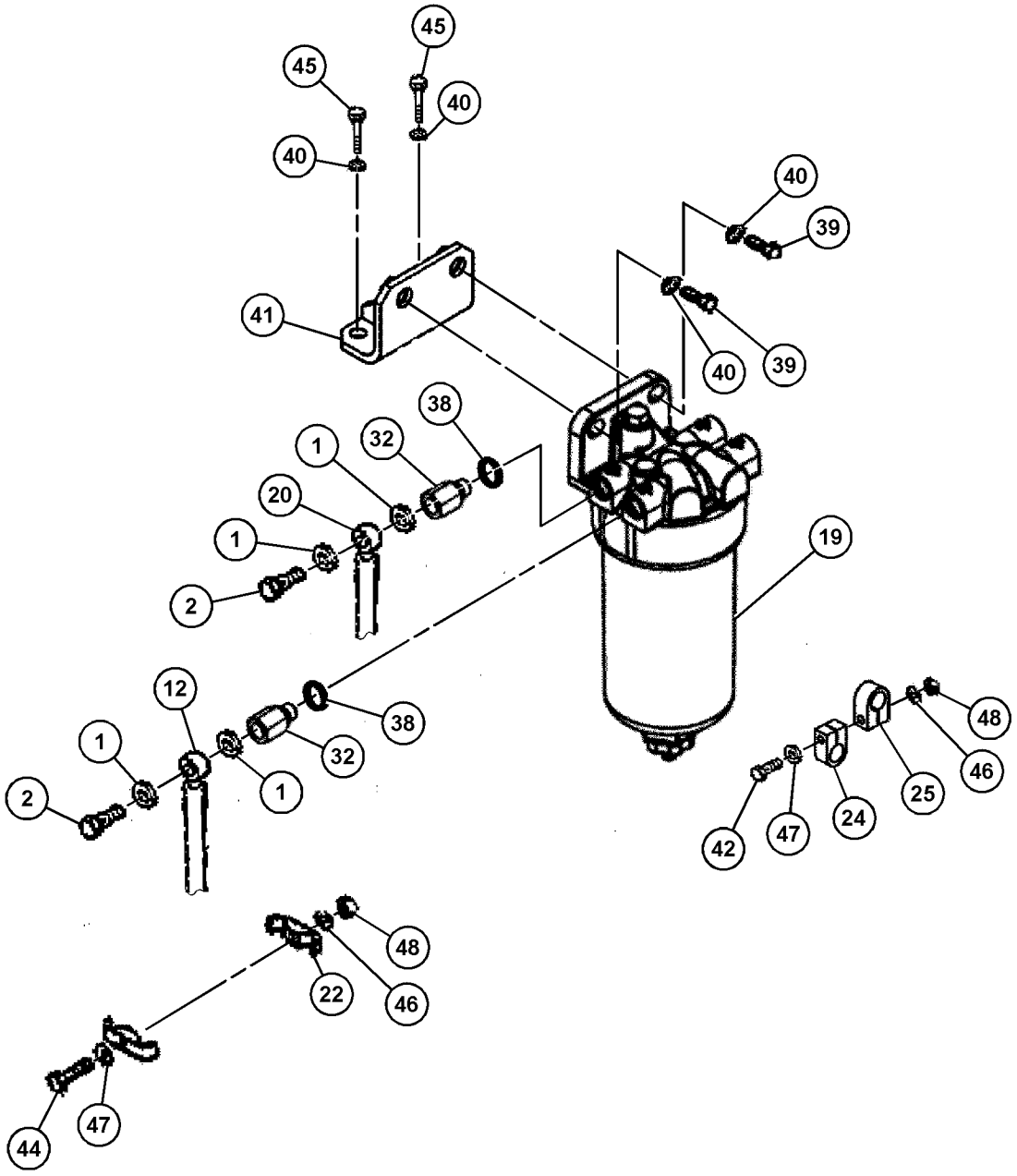

GRAPHIC #2 <END> g03452336

426-0877 FILTER GP-FUEL

S/N: JKH1-UP
PART OF 420-0099 FILTER GP-FUEL
AN ATTACHMENT

SMCS-1261 **i06890399**

NOTE	REF NO	GRAPHIC REF	PART NUMBER	QTY	PART NAME 1 2 3 4 5 6 (PRODUCT LEVEL)	SEE PAGE
Y	1	1	**360-8958**	1	FILTER GP-FUEL	96
	2	1	**362-9689**	1	SCREW-SPECIAL	
					AVAILABLE REPAIR KIT(S):	
			362-5412	1	KIT-DRAIN (FUEL FILTER)	
					(INCLUDES DRAIN, KNOB, & SEAL)	

Y - SEPARATE ILLUSTRATION

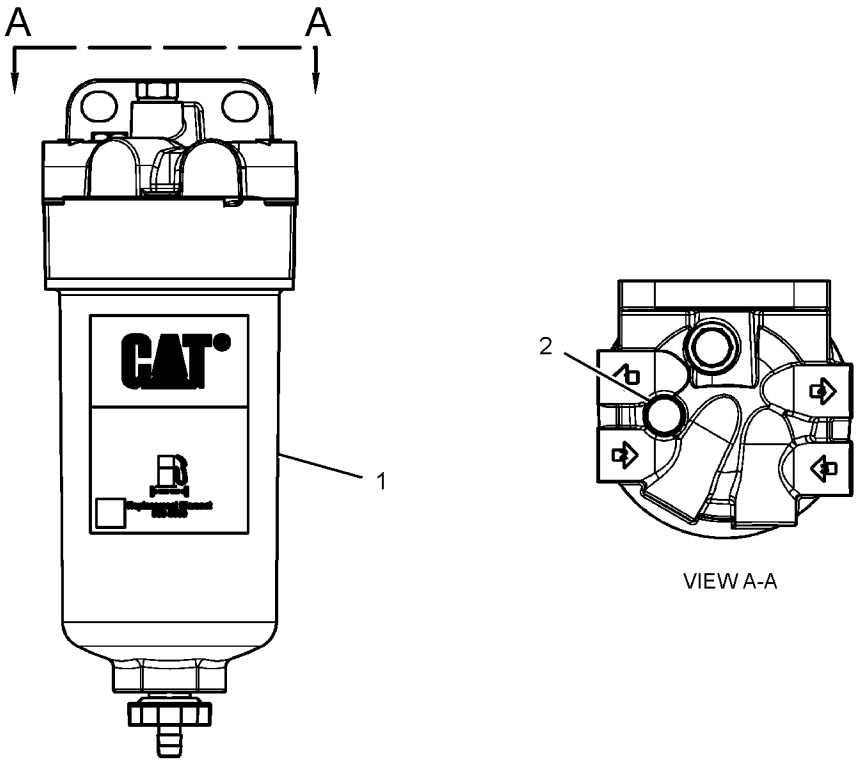

GRAPHIC #1 <END> g03401785

174-9570 FILTER GP-WATER SEP & FUEL

S/N: DLP1-631

PART OF 278-3749 LINES GP-FUEL

SMCS-1261, 1263 **i06692125**

NOTE	REF NO	GRAPHIC REF	PART NUMBER	QTY	PART NAME 1 2 3 4 5 6 (PRODUCT LEVEL)	SEE PAGE
	1	1	**326-1644**	1	FILTER AS-WATER SEP & FUEL (PRIMARY)	
	1A	1	**220-8678**	1	SEAL-RING (FUEL, WATER SEPARATOR)	
	2	1	**343-5527**	1	BOWL AS	
	2A	1	**5F-9144**	1	SEAL-O-RING	
	2B	1	**8F-7219**	1	SEAL-O-RING	

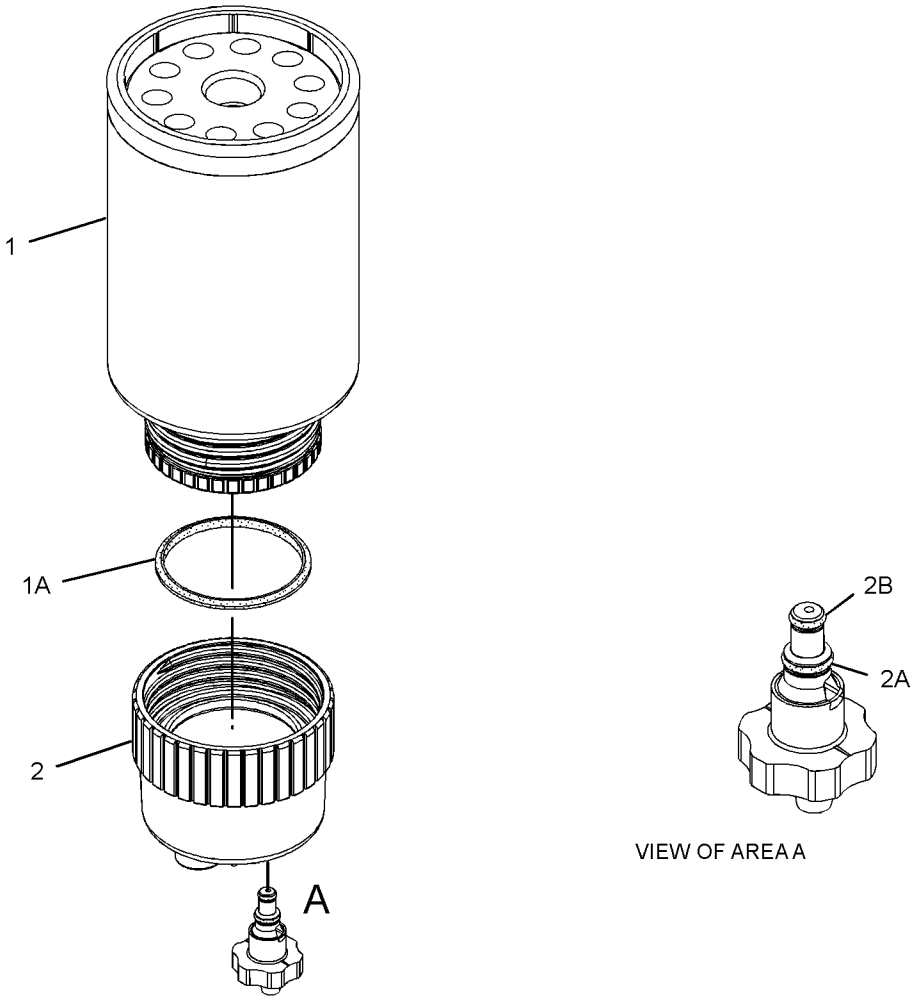

GRAPHIC #1 <END> g06078297

310-9609 INJECTOR GP-FUEL

S/N: JKH1-UP
PART OF 279-7814, 420-2179 ENGINE AR
ALSO AN ATTACHMENT

SMCS-1251, 1254, 1290, 1713 **i03470001**

NOTE	REF NO	GRAPHIC REF	PART NUMBER	QTY	PART NAME 1 2 3 4 5 6 (PRODUCT LEVEL)	SEE PAGE
R	1	1	**326-4756**	4	INJECTOR GP-FUEL	
	2	1	**294-1796**	4	WASHER-SPECIAL	
	3	1	**294-1800**	4	SUPPORT	
	4	1	**294-1803**	4	SEAL-O-RING	
	5	1	**1R-6573**	4	GASKET	
M	6	1	**294-1805**	4	BOLT (M8X1.25X43-MM)	

M - METRIC PART
R - REMANUFACTURED PART MAY BE AVAILABLE

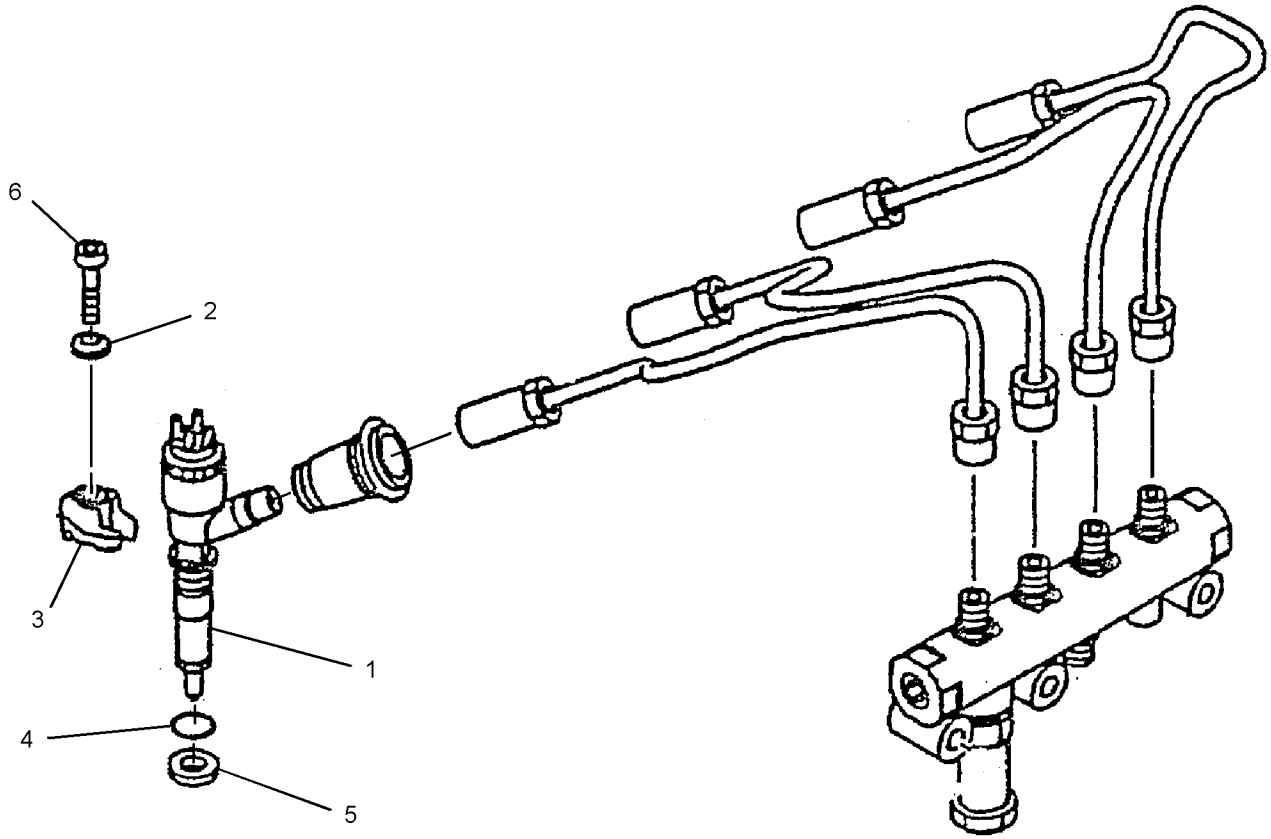

GRAPHIC #1 <END> g01442576

420-3860 KIT-FUEL PRIMING PUMP

S/N: DLP1-UP

FIELD INSTALLATION

SMCS-1258 **i06299427**

NOTE	PART NUMBER	QTY	PART NAME 1 2 3 4 5 6 (PRODUCT LEVEL)	SEE PAGE
Y	**416-1814**	1	HARNESS AS-PUMP	198
Y	**390-4679**	1	PUMP GP-FUEL PRIMING	117
	420-5784	1	SUPPORT AS	
	7T-1099	4	LINK	
M	**8T-3490**	3	NUT-WELD (M10X1.5-THD)	

M - METRIC PART
Y - SEPARATE ILLUSTRATION

<END>

278-3749 LINES GP-FUEL

S/N: DLP1-631

PART OF 301-2680 CHASSIS AR

SMCS-1274 **i03925072**

NOTE	REF NO	GRAPHIC REF	PART NUMBER	QTY	PART NAME 1 2 3 4 5 6 (PRODUCT LEVEL)	SEE PAGE
	1	1	**4I-0379**	1	VALVE-MANUAL (DRAIN, FUEL TANK)	
	2	1	**4I-5399**	1	GROMMET	
	3	1	**4I-5426**	1	GROMMET	
	4	1	**003-7764**	2	END-HOSE	
	5	1	**095-1386**	9	CLAMP-HOSE	
	6	1	**135-8575**	4	BOLT AS	
	7	1	*150-3024*	1	ELBOW AS	
		1	**3J-1907**	1	SEAL-O-RING	
		1	**5P-4924**	1	ELBOW	
Y	8	1	*174-9570*	1	FILTER GP-WATER SEP & FUEL	102
	9	1	**177-9778**	1	BASE AS	
		1	**9S-4167**	1	STUD-HOLLOW (1-14X1.47-IN)	
	10	1	**273-7765**	1	HOSE	
	11	1	**278-4027**	1	SUPPORT AS	
	12	1	**096-5863**	1	GROMMET	
	13	1	**6D-4636**	2	CLIP (LOOP)	
	14	1	**2R-1498**	2	GROMMET	
	15	1	**3J-1907**	5	SEAL-O-RING	
	16	1	**5P-7175**	1	FITTING-STRAIGHT	
	17	1	**5K-8451**	7	CLIP	
	18	1	**6K-8178**	1	CLIP (LOOP)	
	19	1	**8T-4121**	22	WASHER-HARD (11X21X2.5-MM THK)	
M	20	1	**8T-4133**	1	NUT (M10X1.5-THD)	
M	21	1	**8T-4136**	5	BOLT (M10X1.5X25-MM)	
M	22	1	**8T-4137**	12	BOLT (M10X1.5X20-MM)	
M	23	1	**8T-4195**	4	BOLT (M10X1.5X30-MM)	
	24	1	**9M-8406**	6	CLIP (LOOP)	
	25	1	**9S-8004**	5	PLUG (9/16-18-THD)	
E	26	1	**5P-1442**		HOSE (118-CM)	
E	26A	1	**5P-1442**		HOSE (30-CM)	
	27	1	**307-7926**	1	HOSE AS	
	28	1	**307-7927**	1	HOSE AS	
	29	1	**307-7928**	1	HOSE AS	
	30	1	**304-0041**	1	BRACKET AS	
Y	31	1	**298-3147**	1	VALVE GP-FUEL SHUTOFF	154

E - ORDER BY THE CENTIMETER
M - METRIC PART
Y - SEPARATE ILLUSTRATION

278-3749 **LINES GP-FUEL (**contd.**)** **i03925072**

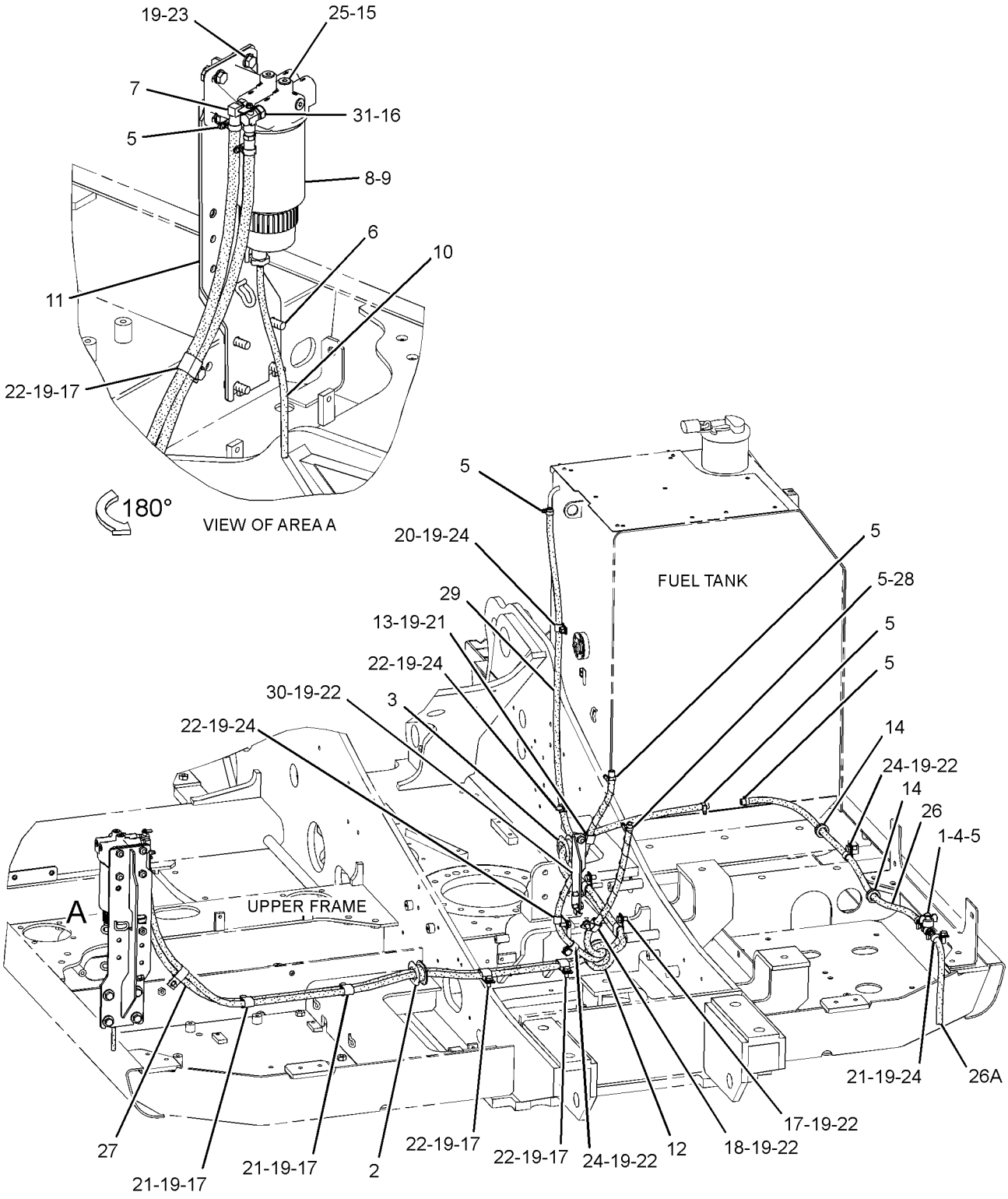

REAR VIEW
(UPPER LEFT)

GRAPHIC #1 <END> g01530694

375-8632 LINES GP-FUEL

S/N: DLP623-UP

PART OF 301-2680 CHASSIS AR

SMCS-1274 **i04982131**

NOTE	REF NO	GRAPHIC REF	PART NUMBER	QTY	PART NAME 1 2 3 4 5 6 (PRODUCT LEVEL)	SEE PAGE
	1	1	**4I-0379**	1	VALVE-MANUAL (FUEL SHUTOFF)	
	1A	1	**4I-0379**	1	VALVE-MANUAL (DRAIN, FUEL TANK)	
	2	1	**4I-5399**	1	GROMMET	
	3	1	**4I-5426**	1	GROMMET	
	4	1	**003-7764**	3	END-HOSE	
	5	1	**095-1386**	9	CLAMP-HOSE	
	6	1	**135-8575**	4	BOLT AS	
	7	1	*150-3024*	1	ELBOW AS	
		1	**3J-1907**	1	SEAL-O-RING	
		1	**5P-4924**	1	ELBOW	
	8	1	**304-0041**	1	BRACKET AS	
	9	1	**307-7928**	1	HOSE AS	
	10	1	**366-6465**	1	HOSE AS	
	11	1	**375-8740**	1	SUPPORT AS	
	12	1	**375-8752**	1	HOSE AS	
	13	1	**381-9061**	1	BASE AS-FUEL FILTER	
	14	1	**381-9064**	1	INDICATOR-FUEL FILTER CHANGE	
	15	1	**382-0664**	1	FILTER AS-WATER SEP & FUEL (ULTRA HIGH EFFICIENCY)	
	16	1	*385-8667*	1	ELBOW AS	
		1	**6I-6547**	1	ELBOW	
		1	**6V-6609**	1	SEAL-O-RING	
	17	1	**004-6683**	1	FITTING	
	18	1	**096-5863**	1	GROMMET	
	19	1	*148-8313*	1	ADAPTER AS	
		1	**3K-0360**	1	SEAL-O-RING	
		1	**5P-6944**	1	ADAPTER	
	20	1	**2R-1498**	2	GROMMET	
	21	1	**3K-0360**	1	SEAL-O-RING	
	22	1	**5K-8451**	7	CLIP	
	23	1	**6D-4636**	2	CLIP (LOOP)	
	24	1	**6K-8178**	1	CLIP (LOOP)	
	25	1	**8L-2786**	3	SEAL-O-RING	
	26	1	**8T-1715**	1	ADAPTER	
	27	1	**8T-4121**	20	WASHER-HARD (11X21X2.5-MM THK)	
M	28	1	**8T-4133**	1	NUT (M10X1.5-THD)	
M	29	1	**8T-4136**	5	BOLT (M10X1.5X25-MM)	
M	30	1	**8T-4137**	12	BOLT (M10X1.5X20-MM)	
M	31	1	**8T-4196**	2	BOLT (M10X1.5X35-MM)	
	32	1	**9M-8406**	6	CLIP (LOOP)	
	33	1	**9S-4185**	3	PLUG (3/4-16-THD)	
E	34	1	**5P-1442**		HOSE (118-CM)	
E	34A	1	**5P-1442**		HOSE (30-CM)	

E - ORDER BY THE CENTIMETER
M - METRIC PART

375-8632 **LINES GP-FUEL (**contd.**)** **i04982131**

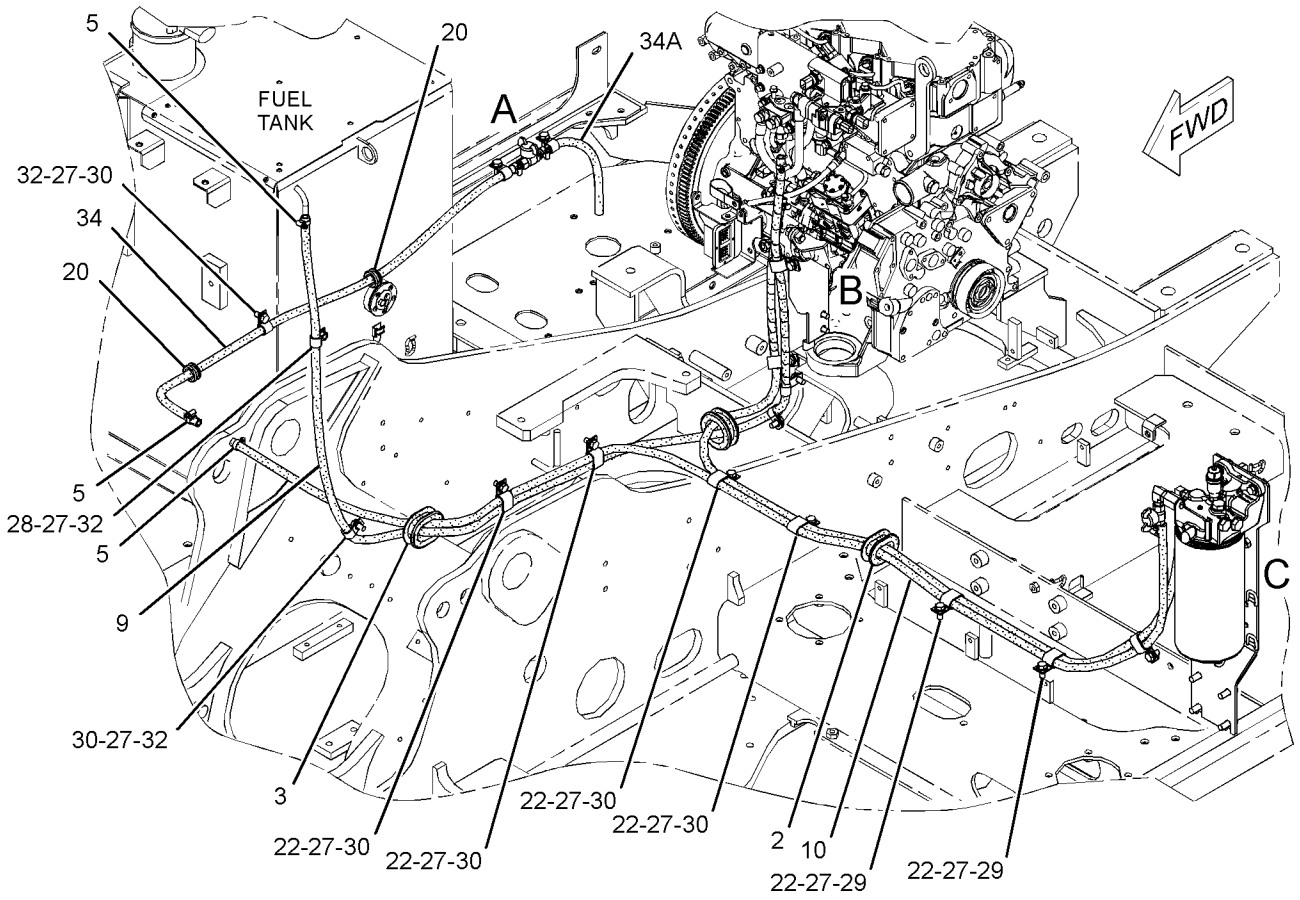

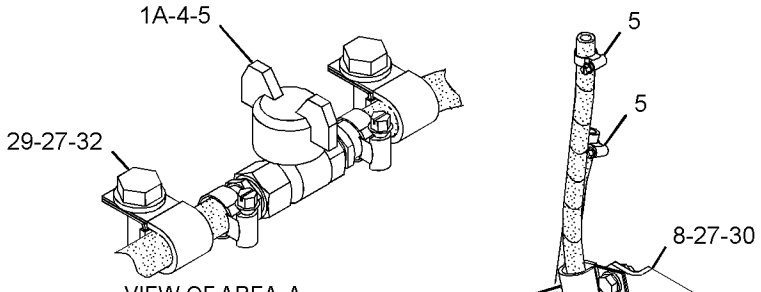

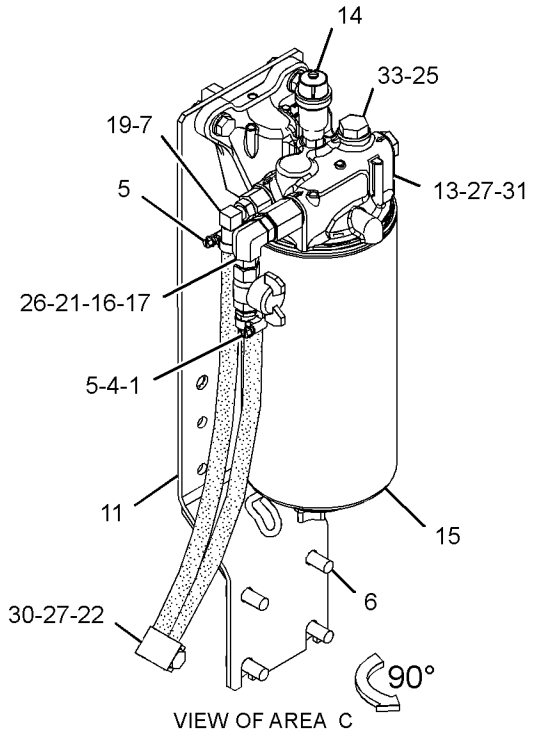

GRAPHIC #1 <END> g03166277

296-4793 LINES GP-FUEL INJECTION

S/N: JKH1-UP
PART OF 279-7814, 420-2179 ENGINE AR
ALSO AN ATTACHMENT

SMCS-1252, 1254

i06810545

NOTE	REF NO	GRAPHIC REF	PART NUMBER	QTY	PART NAME 1 2 3 4 5 6 (PRODUCT LEVEL)	SEE PAGE
	1	1	**294-1788**	4	SEAL	
	2	1	**096-9260**	4	BOLT AS	
	3	1	**296-4740**	1	PIPE	
	4	1	**438-3414**	1	RAIL AS-FUEL	
		1	**416-7101**	1	VALVE AS-RELIEF (FUEL RAIL)	
		1	**228-7102**	1	SEAL-O-RING	
	5	1	**296-4741**	1	PIPE	
	6	1	**296-4742**	1	PIPE	
	7	1	**296-4743**	1	PIPE	
	8	1	**296-4744**	1	PIPE	
	10	1	**305-4772**	1	PIPE	
	11	1	**297-7657**	1	HOSE	
	12	1	**297-7658**	1	BLOCK	
	14	1	**294-1802**	2	CLAMP	
	16	1	**095-2039**	8	WASHER-SPECIAL	
	18	1	**296-4812**	4	BOLT	
	20	1	**195-8256**	5	BOLT (M8X1.25X45-MM)	
M	21	1	**5C-2890**	2	NUT (M6X1-THD)	
	22	1	**9X-8256**	2	WASHER (6.6X12X2-MM THK)	
	23	1	**099-4437**	4	GASKET	
	24	1	**099-5041**	3	BOLT (M14X1.5X27-MM)	
	25	1	**294-1808**	2	BOLT AS	
	26	1	**294-1812**	2	WASHER	
	27	1	**310-9537**	1	VALVE AS	
	28	1	**296-4747**	1	PIPE	
	29	1	**296-4748**	1	BRACKET	

M - METRIC PART

296-4793 **LINES GP-FUEL INJECTION** (contd.) **i06810545**

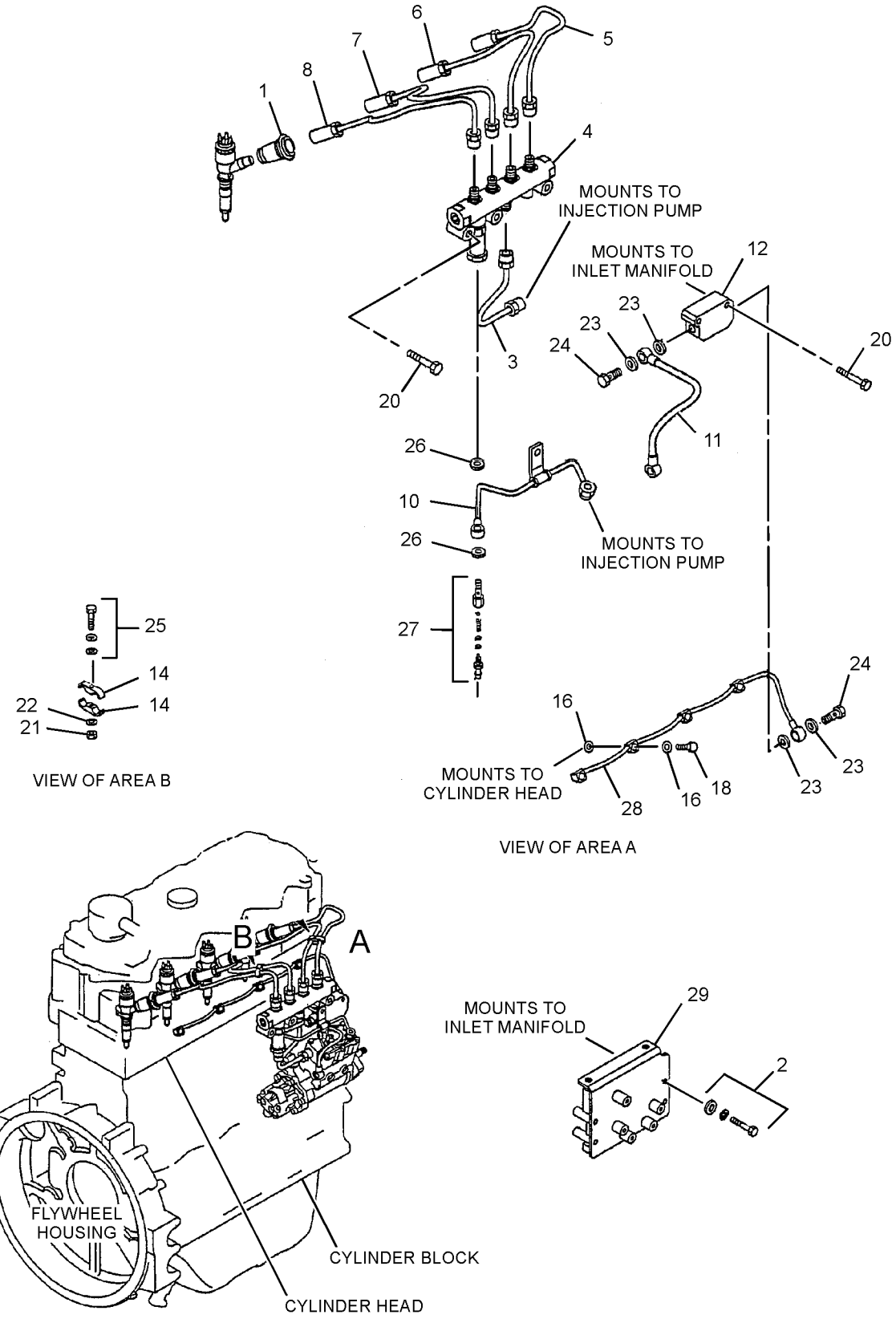

GRAPHIC #1 <END> g06124401

305-4680 PUMP & MTG GP-FUEL INJECTION

S/N: JKH1-UP
PART OF 279-7814 ENGINE AR
ALSO AN ATTACHMENT
TYPE 1

SMCS-1251 **i04007911**

NOTE	REF NO	GRAPHIC REF	PART NUMBER	QTY	PART NAME 1 2 3 4 5 6 (PRODUCT LEVEL)	SEE PAGE
Y	1	1	**358-9085**	1	PUMP GP-FUEL INJECTION	115
	2	1	**294-1834**	1	NUT	
	3	1	**294-1836**	1	KEY-WOODRUFF	
	4	1	**294-1839**	1	FLANGE	
	5	1	**294-1841**	1	GASKET	
	6	1	**294-1842**	1	SEAL-O-RING	
	7	1	**095-8799**	4	BOLT (M8X1.25X30.5-MM)	
	8	1	**294-1843**	1	BOLT (M10X1.5X47-MM)	
	9	1	**294-1846**	1	SEAL-O-RING	

Y - SEPARATE ILLUSTRATION

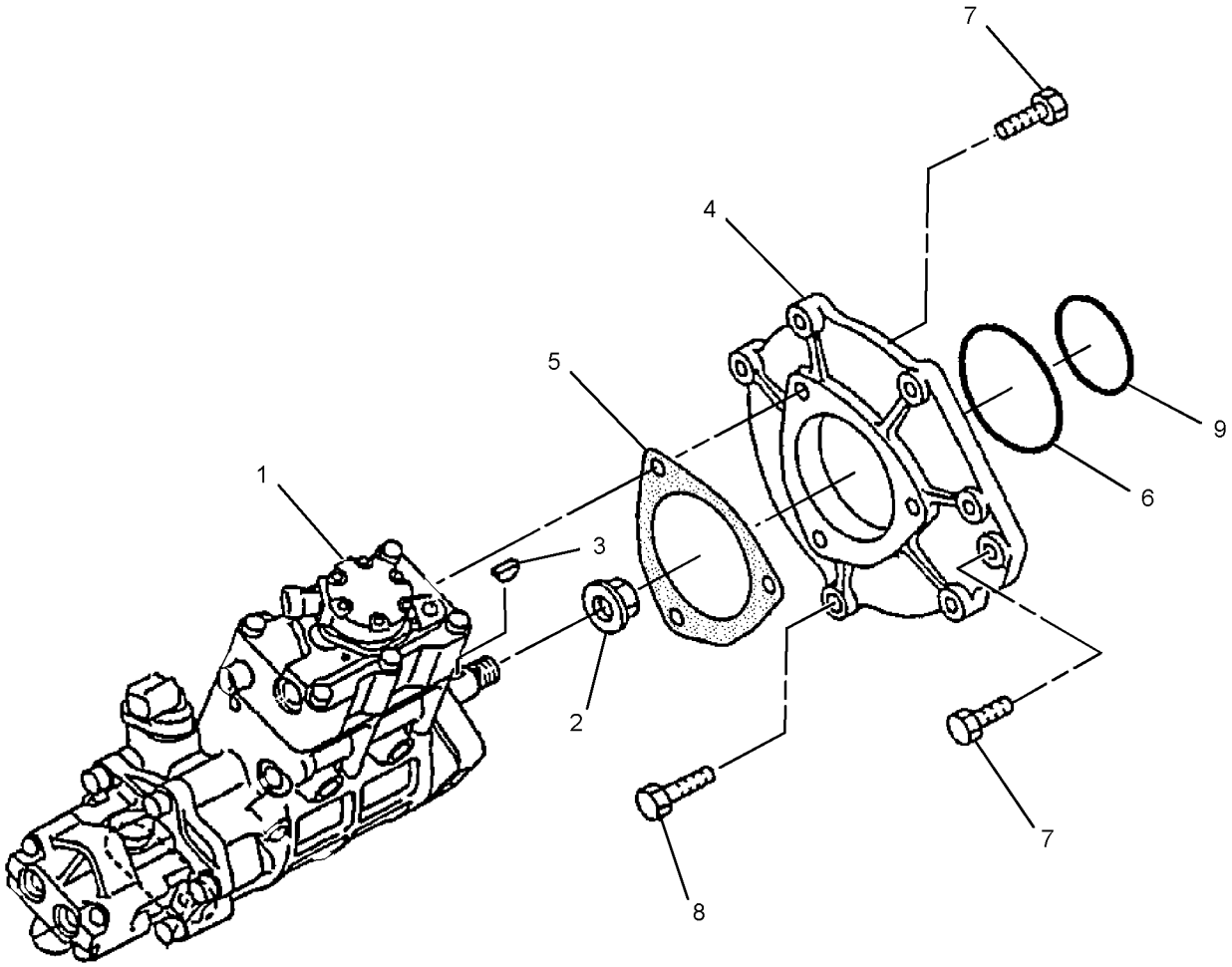

GRAPHIC #1 <END> g01961317

305-4680 PUMP & MTG GP-FUEL INJECTION

S/N: JKH1-UP
PART OF 279-7814, 420-2179 ENGINE AR
ALSO AN ATTACHMENT
TYPE 2

SMCS-1251 **i07193886**

NOTE	REF NO	GRAPHIC REF	PART NUMBER	QTY	PART NAME 1 2 3 4 5 6 (PRODUCT LEVEL)	SEE PAGE
CYR	1	1	**326-4634**	1	PUMP GP-FUEL INJECTION	114
	2	1	**294-1834**	1	NUT	
	3	1	**294-1836**	1	KEY-WOODRUFF	
	4	1	**294-1839**	1	FLANGE	
	5	1	**294-1841**	1	GASKET	
	6	1	**294-1842**	1	SEAL-O-RING	
	7	1	**095-8799**	4	BOLT (M8X1.25X30.5-MM)	
	8	1	**294-1843**	1	BOLT (M10X1.5X47-MM)	
	9	1	**294-1846**	1	SEAL-O-RING	

C - CHANGE FROM PREVIOUS TYPE
R - REMANUFACTURED PART MAY BE AVAILABLE
Y - SEPARATE ILLUSTRATION

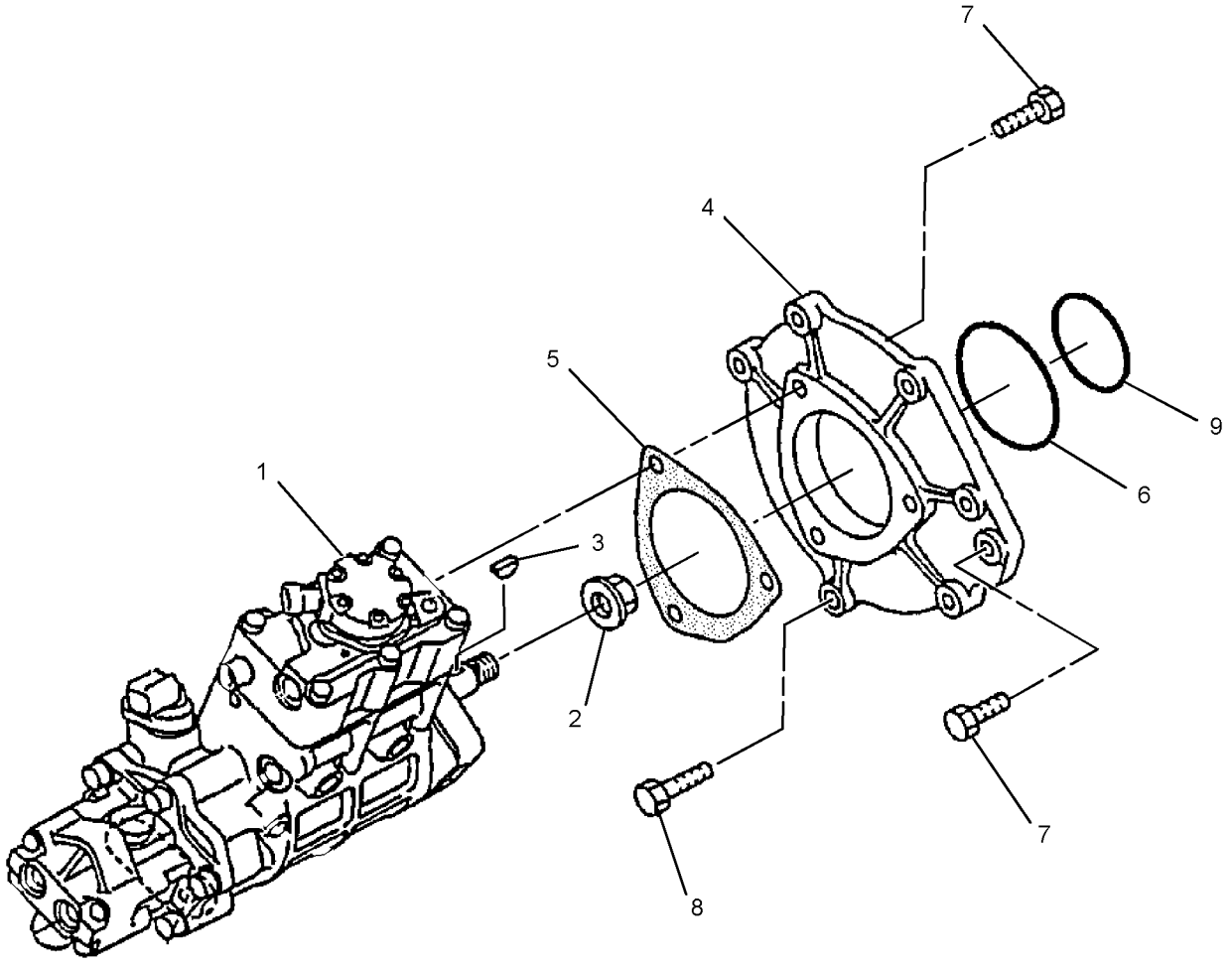

GRAPHIC #1 <END> g01961317

260-7131 PUMP AR-FUEL TRANSFER

S/N: DLP1-UP
CANNOT BE USED WITH 330-8748—PAGE: 1083
AN ATTACHMENT

SMCS-1256 **i02894393**

NOTE	PART NUMBER	QTY	PART NAME 1 2 3 4 5 6 (PRODUCT LEVEL)	SEE PAGE
Y	*301-2573*	1	FILM GP (FUEL TRANSFER PUMP)	1204
Y	*260-7094*	1	PUMP GP-FUEL TRANSFER	118
Y	*278-3752*	1	TANK & MTG GP-FUEL	126
Y	*259-5175*	1	WIRING GP-FUEL PUMP	308

Y - SEPARATE ILLUSTRATION

<END>

330-8781 PUMP AR-FUEL TRANSFER

S/N: DLP1-UP
AN ATTACHMENT

SMCS-1256 **i03146465**

NOTE	PART NUMBER	QTY	PART NAME 1 2 3 4 5 6 (PRODUCT LEVEL)	SEE PAGE
Y	*301-2573*	1	FILM GP (FUEL TRANSFER PUMP)	1204
Y	*260-7094*	1	PUMP GP-FUEL TRANSFER	118
Y	*327-3217*	1	TANK & MTG GP-FUEL	130
Y	*259-5175*	1	WIRING GP-FUEL PUMP	308

Y - SEPARATE ILLUSTRATION

<END>

326-4634 PUMP GP-FUEL INJECTION*R

S/N: JKH1-UP

PART OF 305-4680 PUMP & MTG GP-FUEL INJECTION

ALSO AN ATTACHMENT

SMCS-1251, 1290

i06671449

NOTE	REF NO	GRAPHIC REF	PART NUMBER	QTY	PART NAME 1 2 3 4 5 6 (PRODUCT LEVEL)	SEE PAGE
	1	1	**238-0120**	1	SENSOR GP-SPEED (FUEL PUMP)	
	2	1	**247-6019**	1	SEAL-O-RING	
	3	1	**257-2381**	2	PIN	
	4	1	**257-2382**	2	PLUG	
	5	1	**258-8149**	2	SPRING	
	6	1	**292-3751**	1	PUMP GP-FUEL TRANSFER	
	7	1	**294-3031**	1	BOLT-SPECIAL	
	8	1	**294-3032**	1	WASHER-SPECIAL	
	9	1	**117-1385**	1	SEAL-O-RING	
	10	1	**334-2932**	1	SEAL-O-RING	
M	11	1	**5A-3604**	5	BOLT-SOCKET HEAD (M8X1.25X25-MM)	
	12	1	**8L-2779**	1	SEAL-O-RING	
M	13	1	**8T-4200**	1	BOLT (M8X1.25X16-MM)	
M	14	1	**295-4801**	1	NUT (M14X1.5-THD)	
	15	1	**3B-4509**	1	LOCKWASHER	

M - METRIC PART

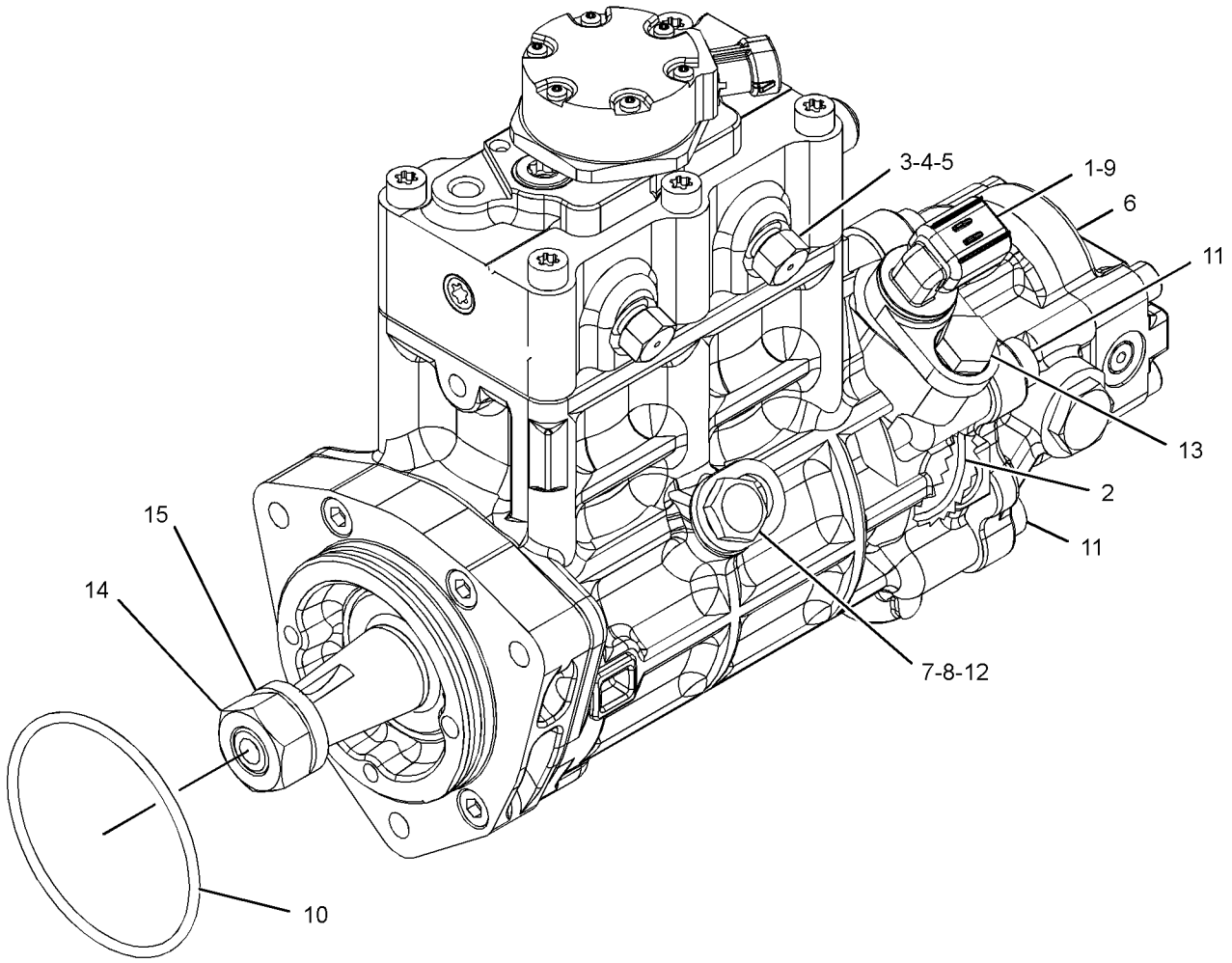

GRAPHIC #1 <END> g03411505

358-9085 PUMP GP-FUEL INJECTION

S/N: JKH1-UP

PART OF 305-4680 PUMP & MTG GP-FUEL INJECTION

ALSO AN ATTACHMENT

SMCS-1251, 1290

i04008333

NOTE	REF NO	GRAPHIC REF	PART NUMBER	QTY	PART NAME 1 2 3 4 5 6 (PRODUCT LEVEL)	SEE PAGE
M	1	1	**8T-4200**	1	BOLT (M8X1.25X16-MM)	
	2	1	**238-0120**	1	SENSOR GP-SPEED	
	3	1	**247-6019**	1	SEAL-O-RING	
	4	1	**257-2381**	2	PIN	
	5	1	**257-2382**	2	PLUG	
	6	1	**258-8149**	2	SPRING	
	7	1	**292-3751**	1	PUMP GP-FUEL TRANSFER	
	8	1	**294-3031**	1	BOLT-SPECIAL	
	9	1	**294-3032**	1	WASHER-SPECIAL	
	10	1	**117-1385**	1	SEAL-O-RING	
	11	1	**334-2932**	1	SEAL-O-RING	
M	12	1	**5A-3604**	5	BOLT-SOCKET HEAD (M8X1.25X25-MM)	
	13	1	**8L-2779**	4	SEAL-O-RING	

M - METRIC PART

358-9085 **PUMP GP-FUEL INJECTION (**contd.**)** **i04008333**

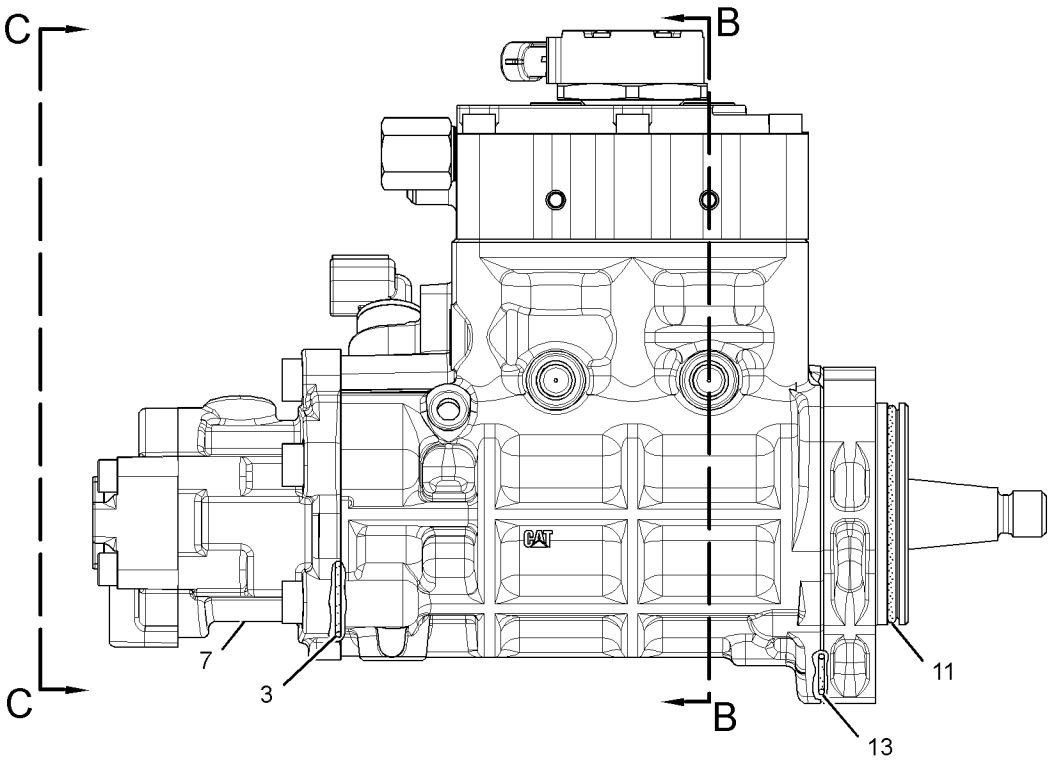

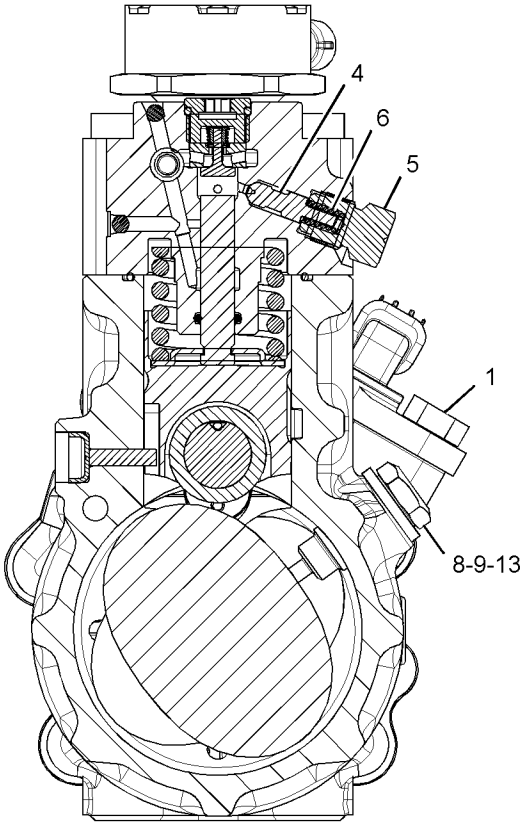

SECTION B-B

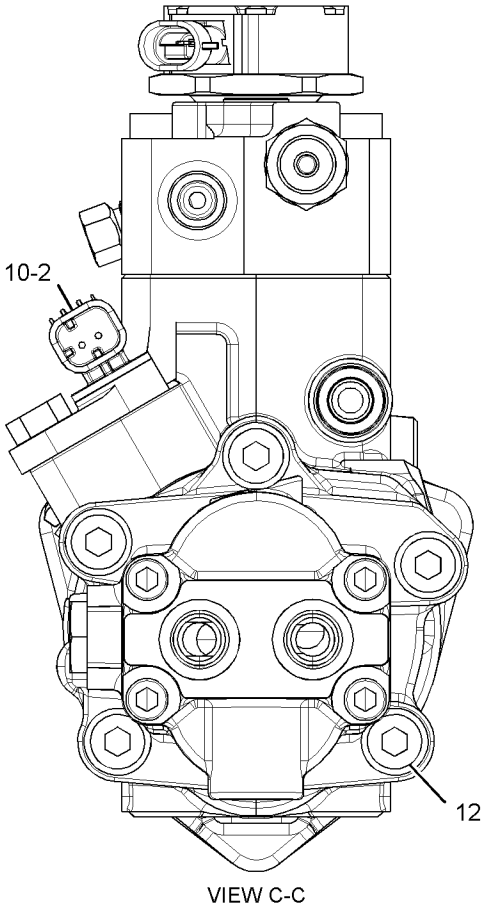

VIEW C-C

GRAPHIC #1 <END> g02187336

390-4679 PUMP GP-FUEL PRIMING

S/N: DLP1-UP

PART OF 420-3860 KIT-FUEL PRIMING PUMP

SMCS-1258 **i06268469**

NOTE	REF NO	GRAPHIC REF	PART NUMBER	QTY	PART NAME 1 2 3 4 5 6 (PRODUCT LEVEL)	SEE PAGE
	1	1	**436-8983**	2	VALVE-CHECK	
	2	1	**162-2222**	2	SPRING	
	3	1	**9X-8267**	3	WASHER (6.6X12X2-MM THK)	
	4	1	**9S-8002**	1	PLUG (7/16-20-THD)	
M	5	1	**8T-4138**	3	BOLT (M6X1X20-MM)	
	6	1	**447-7206**	1	SEAL-O-RING	
	7	1	**6D-5801**	2	LOCKNUT (8-32-THD)	
	8	1	**236-6717**	2	SEAL-O-RING	
	9	1	**188-7541**	1	SEAL	
	10	1	**188-7536**	1	SEAL	
	11	1	**173-1016**	2	RING-BACKUP	
	12	1	**179-7400**	2	SEAL	

PARTS SHOWN IN GRAPHIC(S) WITHOUT A REFERENCE NUMBER ARE NOT SERVICED SEPARATELY

M - METRIC PART

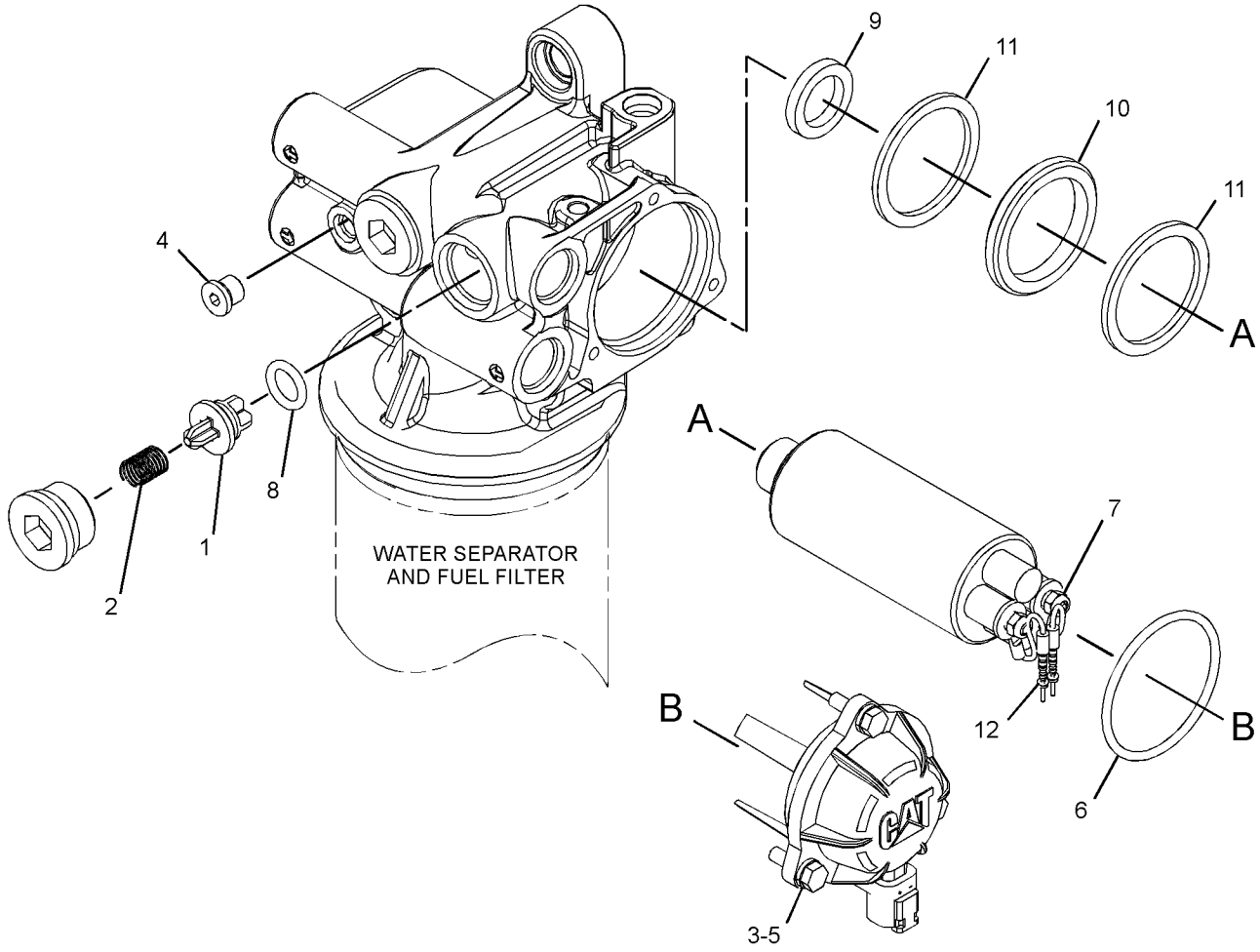

GRAPHIC #1 <END> g03878100

260-7094 PUMP GP-FUEL TRANSFER

S/N: DLP1-UP
PART OF 260-7131, 330-8781 PUMP AR-FUEL TRANSFER
AN ATTACHMENT
TYPE 1

SMCS-1256 **i05941884**

NOTE	REF NO	GRAPHIC REF	PART NUMBER	QTY	PART NAME 1 2 3 4 5 6 (PRODUCT LEVEL)	SEE PAGE
	1	1	**2S-3440**	4	CLAMP-HOSE	
C	2	1	**312-2645**	1	SWITCH AS-LIQUID LEVEL (FUEL TANK SHUTOFF)	
		1	**2S-4078**	1	SEAL-O-RING	
		1	**186-3735**	2	PIN-CONNECTOR (16-GA TO 18-GA)	
		1	**243-4505**	1	RECEPTACLE AS-CONNECTOR (2-PIN)	
	3	1	**7K-1181**	1	STRAP-CABLE	
	4	1	**105-6701**	1	CONNECTOR-HOSE	
C	5	1	**324-5761**	1	COVER AS	
	6	1	**135-8572**	2	BOLT AS	
	7	1	**190-5283**	1	VALVE AS (FOOT)	
	8	1	**283-8927**	1	SUPPORT AS	
	9	1	**283-8931**	1	PLATE	
YR	10	1	**271-2158**	1	PUMP GP-FUEL TRANSFER	122
	11	1	**5P-1076**	2	WASHER-HARD (13.5X30X4-MM THK)	
	12	1	**8T-4121**	2	WASHER-HARD (11X21X2.5-MM THK)	
M	13	1	**8T-4184**	2	BOLT (M12X1.75X45-MM)	
M	14	1	**8T-4195**	2	BOLT (M10X1.5X30-MM)	
E	15	1	**234-3344**		HOSE (75-CM)	
E	15A	1	**234-3344**		HOSE (312-CM)	

C - CHANGE FROM PREVIOUS TYPE
E - ORDER BY THE CENTIMETER
M - METRIC PART
R - REMANUFACTURED PART MAY BE AVAILABLE
Y - SEPARATE ILLUSTRATION

260-7094 **PUMP GP-FUEL TRANSFER (**contd.**)** **i05941884**

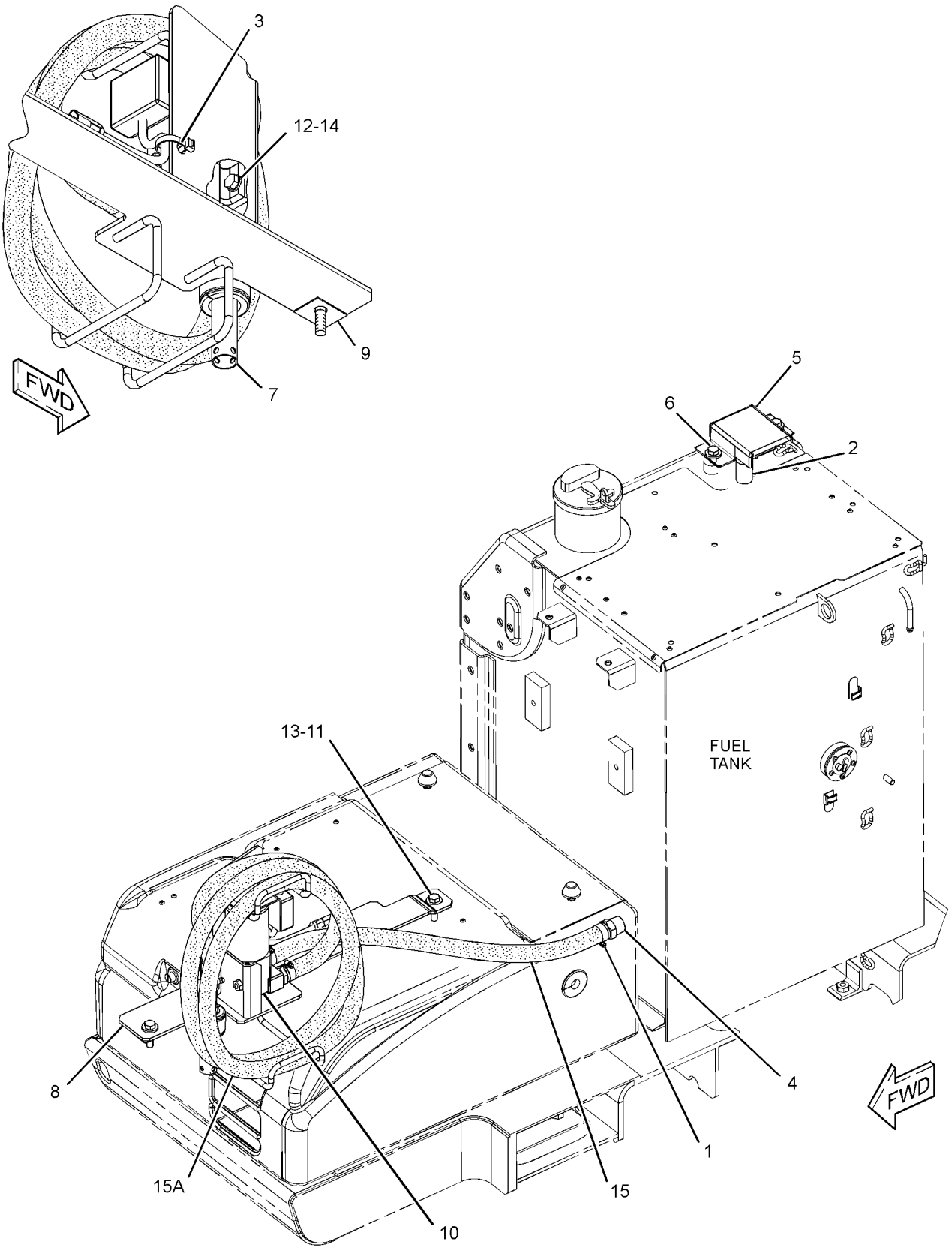

GRAPHIC #1 <END> g01620072

260-7094 PUMP GP-FUEL TRANSFER

S/N: DLP1-UP
PART OF 260-7131, 330-8781 PUMP AR-FUEL TRANSFER
AN ATTACHMENT
TYPE 2

SMCS-1256 **i06041170**

NOTE	REF NO	GRAPHIC REF	PART NUMBER	QTY	PART NAME 1 2 3 4 5 6 (PRODUCT LEVEL)	SEE PAGE
	1	1	**2S-3440**	4	CLAMP-HOSE	
	2	1	**312-2645**	1	SWITCH AS-LIQUID LEVEL (FUEL TANK SHUTOFF)	
		1	**2S-4078**	1	SEAL-O-RING	
		1	**186-3735**	2	PIN-CONNECTOR (16-GA TO 18-GA)	
		1	**243-4505**	1	RECEPTACLE AS-CONNECTOR (2-PIN)	
	3	1	**7K-1181**	1	STRAP-CABLE	
	4	1	**105-6701**	1	CONNECTOR-HOSE	
	5	1	**324-5761**	1	COVER AS	
	6	1	**135-8572**	2	BOLT AS	
J	7	1	**442-3946**	1	VALVE AS (FOOT)	
		1	**451-6724**	1	STRAINER (REFUELING)	
		1	**451-6726**	1	SPRING (STRAINER)	
		1	**451-6728**	1	SPRING	
	8	1	**443-7115**	1	SUPPORT AS	
	9	1	**283-8931**	1	PLATE	
YR	10	1	**271-2158**	1	PUMP GP-FUEL TRANSFER	122
	11	1	**5P-1076**	2	WASHER-HARD (13.5X30X4-MM THK)	
	12	1	**8T-4121**	2	WASHER-HARD (11X21X2.5-MM THK)	
M	13	1	**8T-4184**	2	BOLT (M12X1.75X45-MM)	
M	14	1	**8T-4195**	2	BOLT (M10X1.5X30-MM)	
E	15	1	**457-1156**		HOSE (75-CM)	
E	15A	1	**457-1156**		HOSE (312-CM)	
	16	1	**309-9690**	1	FILM-INFORMATION (READ OMM)	
					AVAILABLE REPAIR KIT(S):	
J			**450-7126**	1	KIT-VALVE (FOOT)	
					(INCLUDES CAP & SEAL)	

E - ORDER BY THE CENTIMETER
J - KIT MARKED J SERVICES PART(S) MARKED J
M - METRIC PART
R - REMANUFACTURED PART MAY BE AVAILABLE
Y - SEPARATE ILLUSTRATION

260-7094 **PUMP GP-FUEL TRANSFER (**contd.**)** **i06041170**

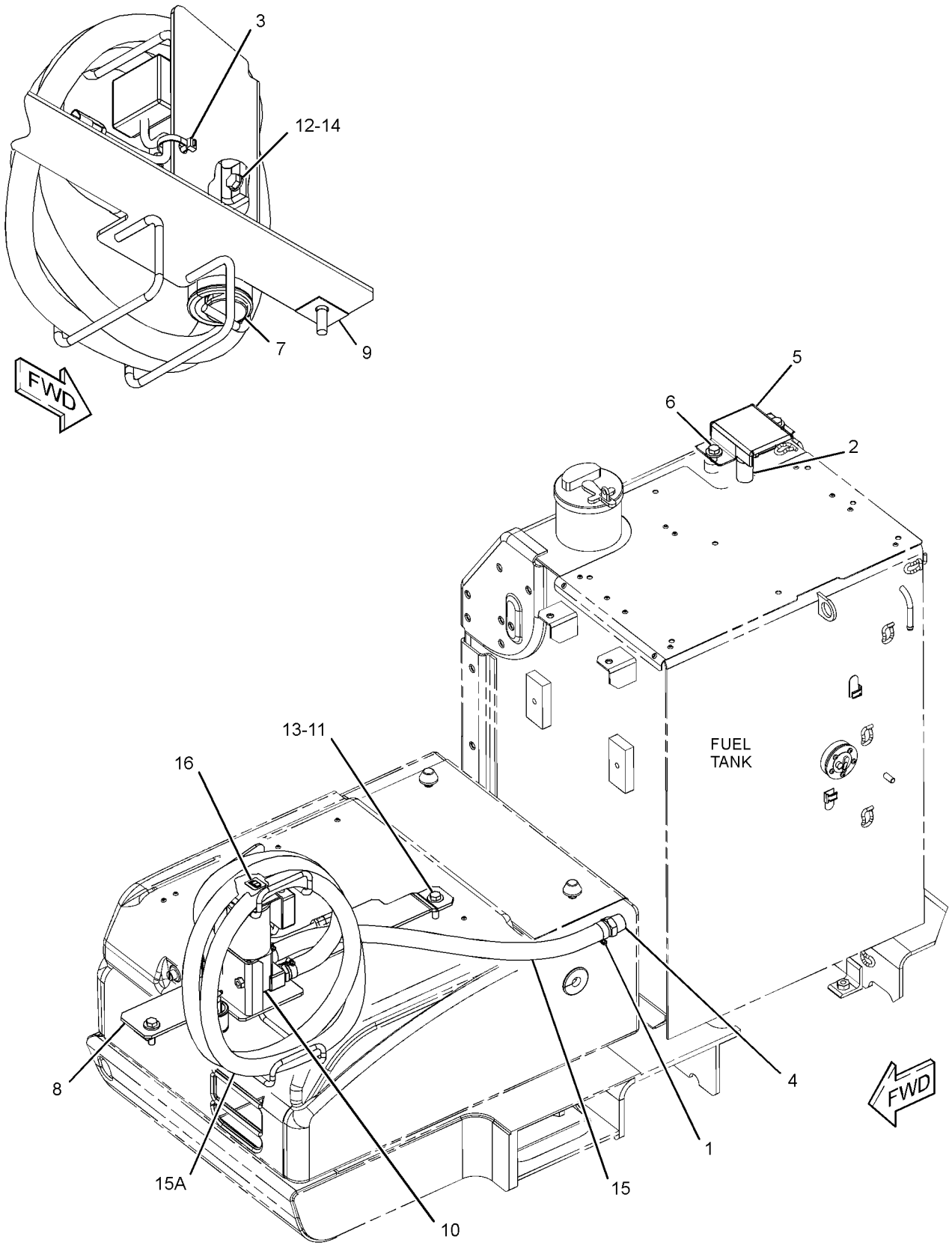

GRAPHIC #1 <END> g03504857

271-2158 PUMP GP-FUEL TRANSFER*R

S/N: DLP1-UP

PART OF 260-7094 PUMP GP-FUEL TRANSFER

AN ATTACHMENT

SMCS-1256 **i05635450**

NOTE	REF NO	GRAPHIC REF	PART NUMBER	QTY	PART NAME 1 2 3 4 5 6 (PRODUCT LEVEL)	SEE PAGE
	1	1	**9W-0852**	3	PIN-CONNECTOR (14-GA TO 16-GA)	
	2	1	**243-4506**	1	RECEPTACLE AS-CONNECTOR (3-PIN)	
	3	1	**272-0709**	1	PUMP-FUEL	
	4	1	**272-0710**	1	CONTROL-REFUELING PUMP	
	5	1	**7Y-3963**	2	TERMINAL-BULLET (FEMALE)	
	6	1	**7Y-3962**	2	TERMINAL-BULLET (MALE)	
	7	1	**7Y-3964**	2	TUBE (CONNECTOR TERMINAL)	
	8	1	**7Y-3965**	2	TUBE (RECEPTACLE TERMINAL)	
E	9	1	**125-7876**		TUBE-HEAT SHRINK (17.78-MM DIA) (7-CM)	
					AVAILABLE REPAIR KIT(S):	
			450-1784	1	KIT-PUMP (FUEL TRANSFER)	
					(INCLUDES HOSE TAIL & WASHER)	
			450-1785	1	KIT-PUMP (FUEL TRANSFER)	
					(INCLUDES VANE)	
			450-1786	1	KIT-PUMP (FUEL TRANSFER)	
					(INCLUDES ROTOR, PLATE, & SEAL)	

E - ORDER BY THE CENTIMETER

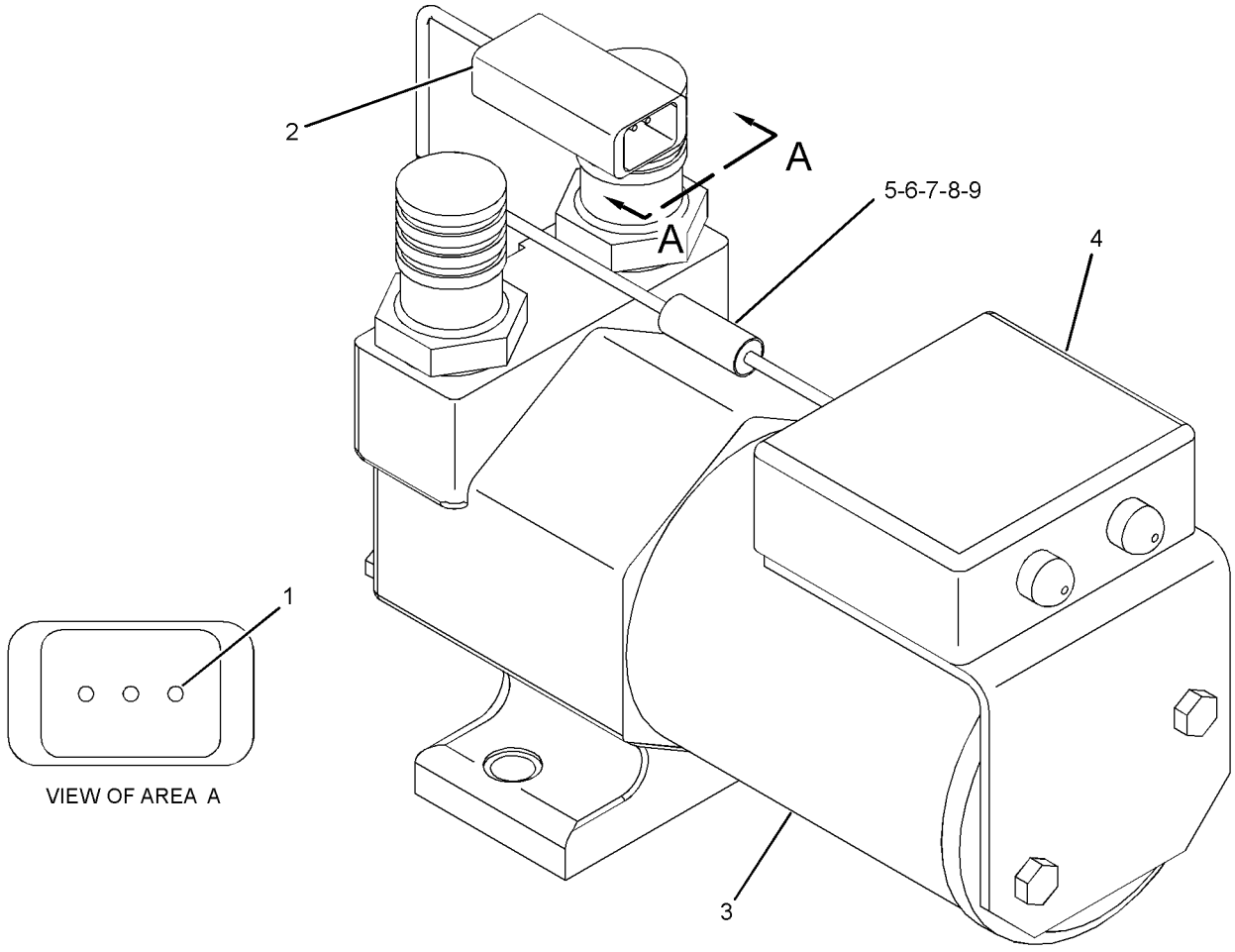

GRAPHIC #1 <END> g01364000

330-1323 TANK & MTG AR-FUEL

S/N: DLP1-UP

PART OF 330-8748 INSTALLATION AR

AN ATTACHMENT

SMCS-1273 **i03148001**

NOTE	PART NUMBER	QTY	PART NAME 1 2 3 4 5 6 (PRODUCT LEVEL)	SEE PAGE
Y	*330-1163*	1	FENDER & COVER GP	399
Y	*330-1162*	1	MIRROR GP-DOWN VIEW (FUEL TANK, RH)	1103
Y	*327-3210*	1	TANK & MTG GP-FUEL	128

Y - SEPARATE ILLUSTRATION

<END>

278-3750 TANK & MTG GP-FUEL

S/N: DLP1-617

PART OF 301-2680 CHASSIS AR

SMCS-1273 **i02901216**

NOTE	REF NO	GRAPHIC REF	PART NUMBER	QTY	PART NAME 1 2 3 4 5 6 (PRODUCT LEVEL)	SEE PAGE
	1	1	**246-2641**	1	PADLOCK GP (FUEL TANK FILL CAP)	
		1	**5P-8500**	1	KEY	
	2	1	**085-9310**	4	SPACER (16.6X32X26-MM THK)	
M	3	1	**8T-4140**	4	BOLT (M16X2X60-MM)	
Y	4	1	**278-3751**	1	TANK GP-FUEL	132

M - METRIC PART
Y - SEPARATE ILLUSTRATION

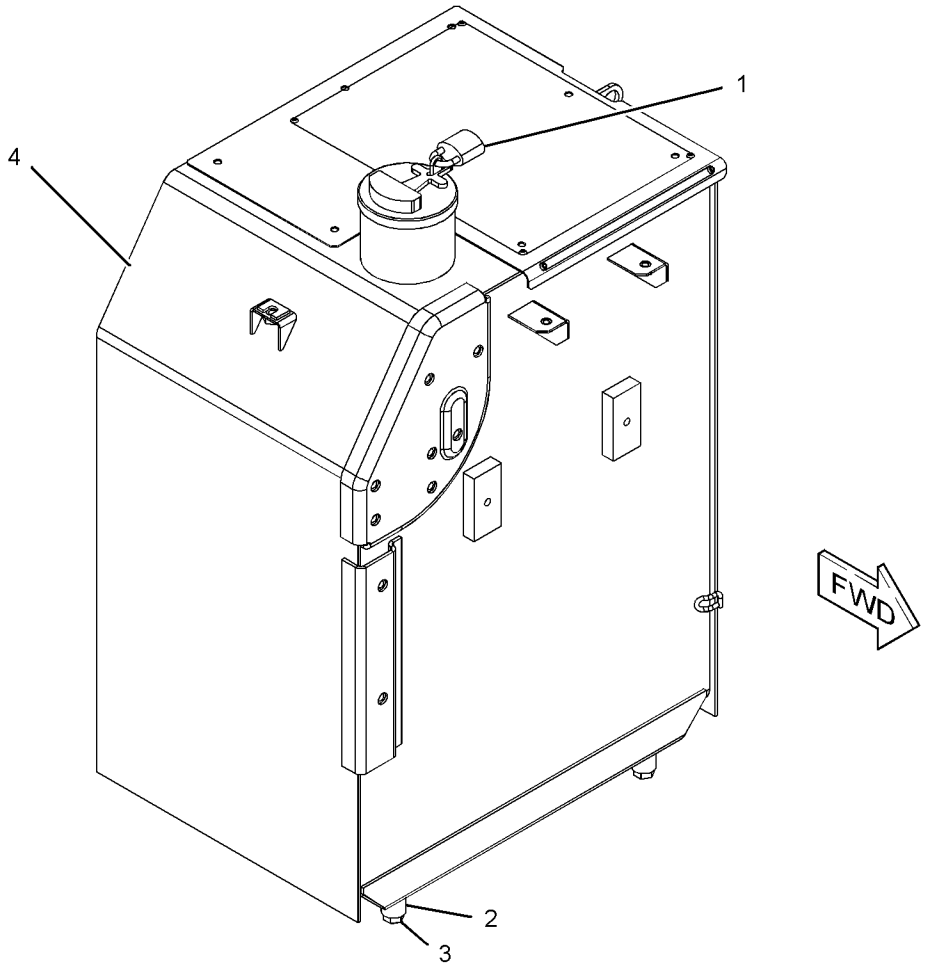

GRAPHIC #1 <END> g01401091

278-3750 TANK & MTG GP-FUEL

S/N: DLP618-UP

PART OF 301-2680 CHASSIS AR

SMCS-1273 **i05916225**

NOTE	REF NO	GRAPHIC REF	PART NUMBER	QTY	PART NAME 1 2 3 4 5 6 (PRODUCT LEVEL)	SEE PAGE
	1	1	**246-2641**	1	PADLOCK GP (FUEL TANK FILL CAP)	
		1	**5P-8500**	1	KEY	
	2	1	**085-9310**	4	SPACER (16.6X32X26-MM THK)	
M	3	1	**447-1707**	4	BOLT (M16X2X60-MM)	
CY	4	1	**375-8574**	1	TANK GP-FUEL	140

C - CHANGE FROM PREVIOUS TYPE
M - METRIC PART
Y - SEPARATE ILLUSTRATION

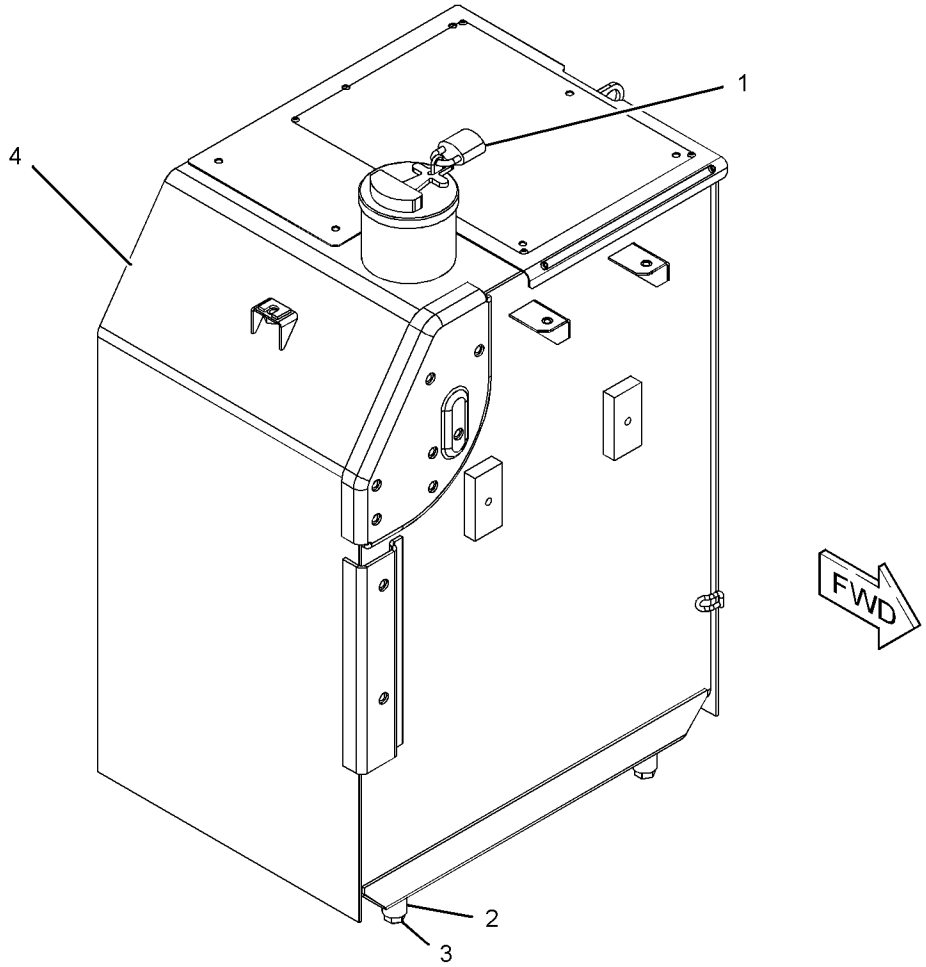

GRAPHIC #1 <END> g01401091

278-3752 TANK & MTG GP-FUEL

S/N: DLP1-UP
PART OF 260-7131 PUMP AR-FUEL TRANSFER
AN ATTACHMENT
TYPE 1

SMCS-1273 **i02827554**

NOTE	REF NO	GRAPHIC REF	PART NUMBER	QTY	PART NAME 1 2 3 4 5 6 (PRODUCT LEVEL)	SEE PAGE
Y	1	1	**278-3753**	1	TANK GP-FUEL	134

Y - SEPARATE ILLUSTRATION

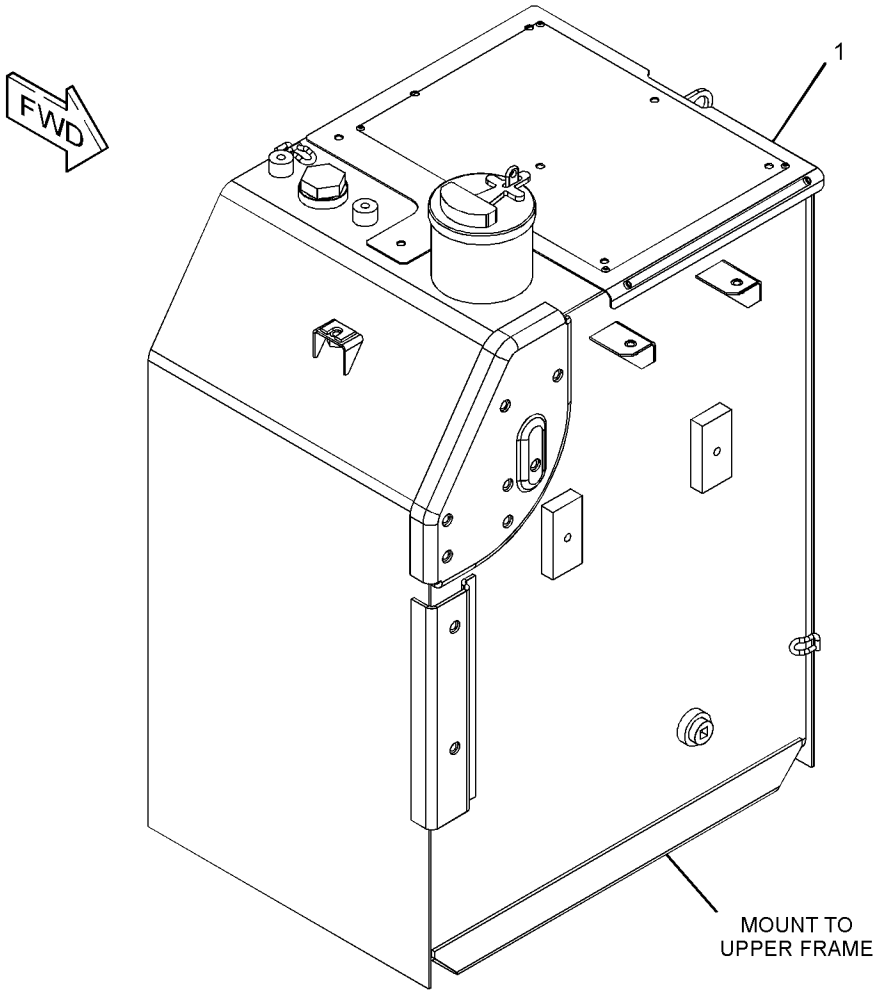

GRAPHIC #1 <END> g01413560

278-3752 TANK & MTG GP-FUEL

S/N: DLP1-UP
PART OF 260-7131 PUMP AR-FUEL TRANSFER
AN ATTACHMENT
TYPE 2

SMCS-1273 **i04693576**

NOTE	REF NO	GRAPHIC REF	PART NUMBER	QTY	PART NAME 1 2 3 4 5 6 (PRODUCT LEVEL)	SEE PAGE
CY	1	1	**375-8686**	1	TANK GP-FUEL	150

C - CHANGE FROM PREVIOUS TYPE
Y - SEPARATE ILLUSTRATION

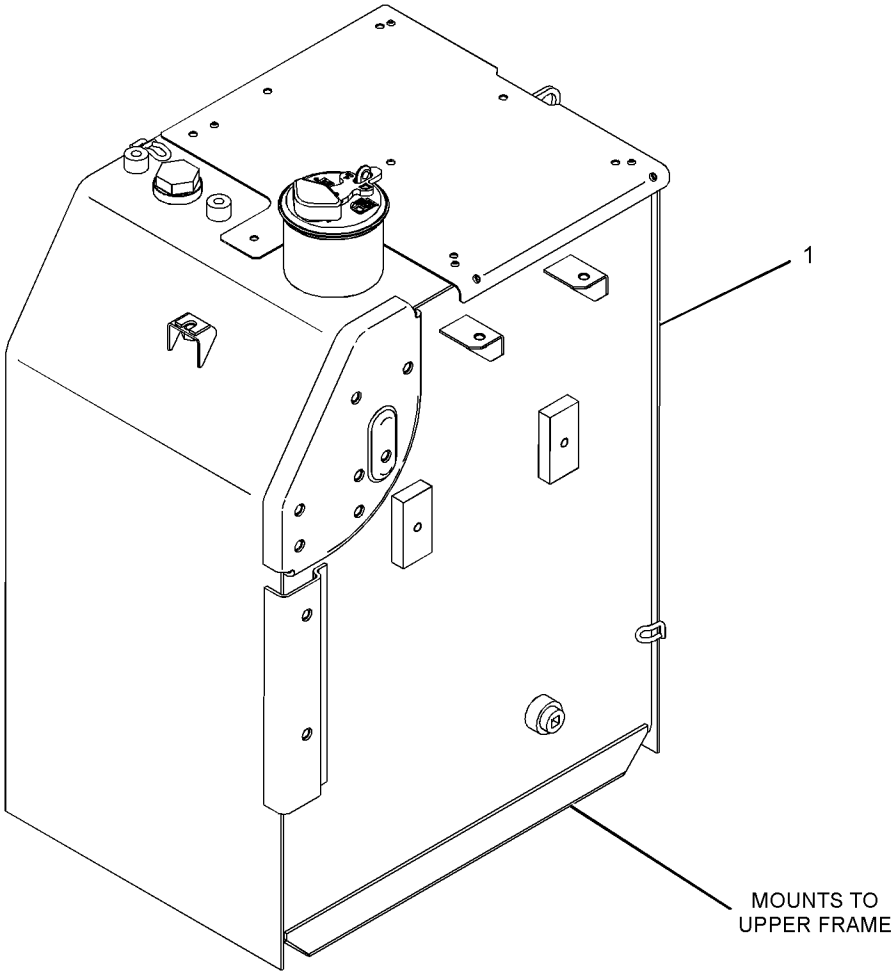

GRAPHIC #1 <END> g02814236

327-3210 TANK & MTG GP-FUEL

S/N: DLP1-UP
PART OF 330-1323 TANK & MTG AR-FUEL
AN ATTACHMENT
TYPE 1

SMCS-1273 **i03147989**

NOTE	REF NO	GRAPHIC REF	PART NUMBER	QTY	PART NAME 1 2 3 4 5 6 (PRODUCT LEVEL)	SEE PAGE
	1	1	**246-2641**	1	PADLOCK GP	
		1	**5P-8500**	1	KEY	
Y	2	1	**327-3211**	1	TANK GP-FUEL	136
	3	1	**085-9310**	4	SPACER (16.6X32X26-MM THK)	
M	4	1	**8T-4140**	4	BOLT (M16X2X60-MM)	

M - METRIC PART
Y - SEPARATE ILLUSTRATION

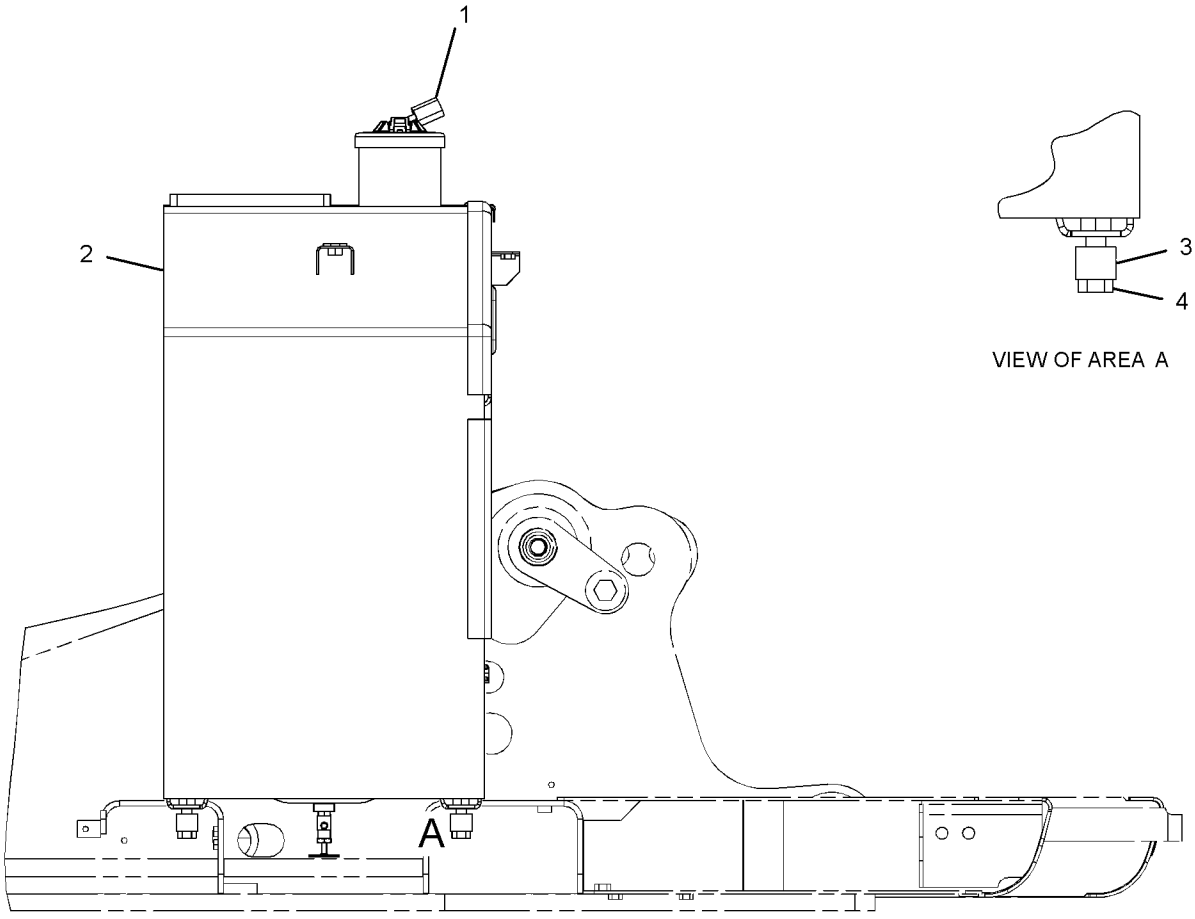

RIGHT SIDE VIEW

GRAPHIC #1 <END> g01620431

327-3210 TANK & MTG GP-FUEL

S/N: DLP1-UP
PART OF 330-1323 TANK & MTG AR-FUEL
AN ATTACHMENT
TYPE 2

SMCS-1273 **i05799339**

NOTE	REF NO	GRAPHIC REF	PART NUMBER	QTY	PART NAME 1 2 3 4 5 6 (PRODUCT LEVEL)	SEE PAGE
	1	1	**246-2641**	1	PADLOCK GP	
		1	**5P-8500**	1	KEY	
CY	2	1	**375-8577**	1	TANK GP-FUEL	142
	3	1	**085-9310**	4	SPACER (16.6X32X26-MM THK)	
M	4	1	**447-1707**	4	BOLT (M16X2X60-MM)	

C - CHANGE FROM PREVIOUS TYPE
M - METRIC PART
Y - SEPARATE ILLUSTRATION

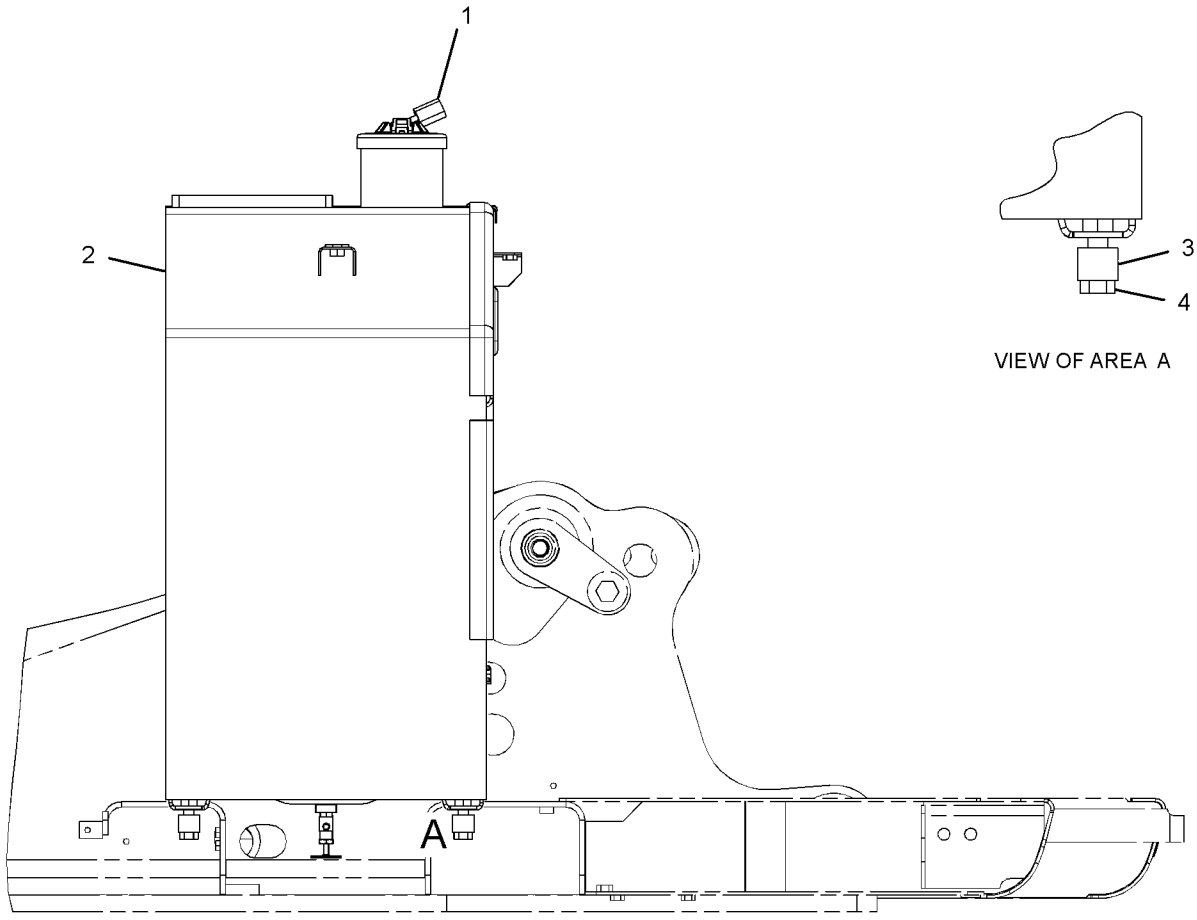

RIGHT SIDE VIEW

GRAPHIC #1 <END> g01620431

327-3217 TANK & MTG GP-FUEL

S/N: DLP1-UP
PART OF 330-8781 PUMP AR-FUEL TRANSFER
AN ATTACHMENT
TYPE 1

SMCS-1273 **i03146472**

NOTE	REF NO	GRAPHIC REF	PART NUMBER	QTY	PART NAME 1 2 3 4 5 6 (PRODUCT LEVEL)	SEE PAGE
Y	1	1	**327-3218**	1	TANK GP-FUEL	138

Y - SEPARATE ILLUSTRATION

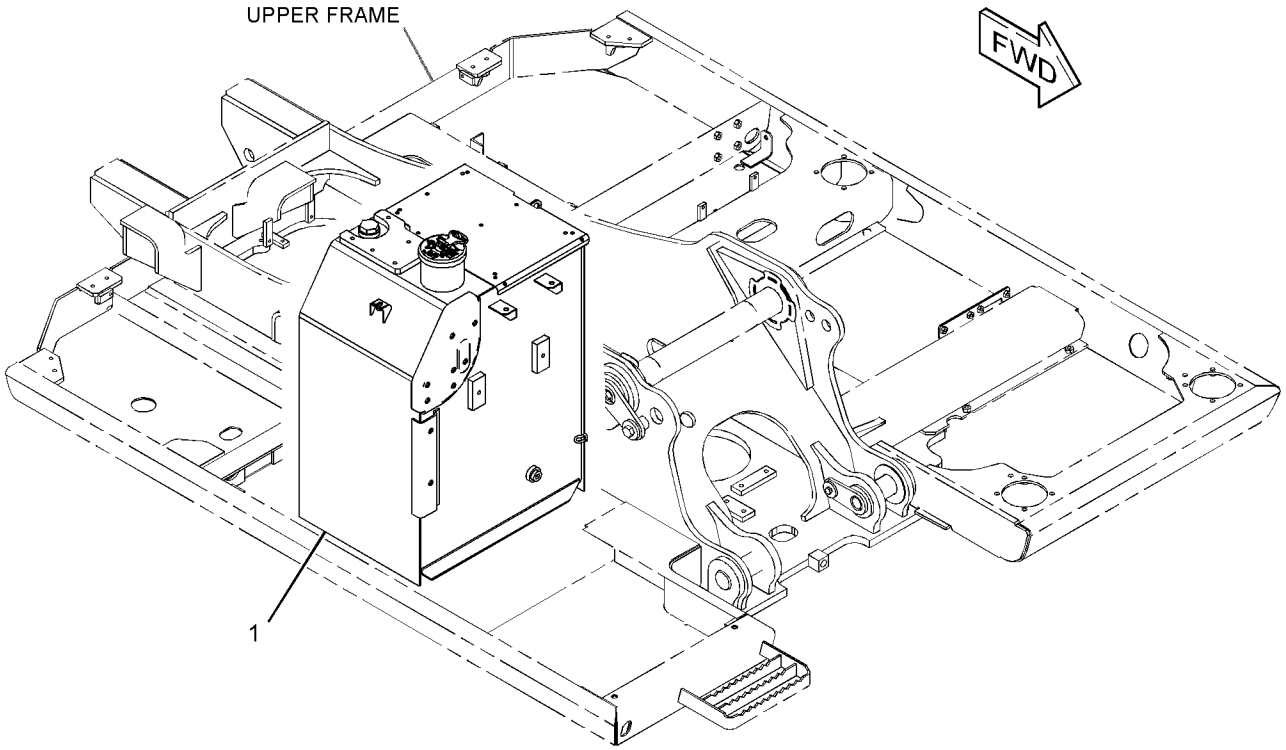

GRAPHIC #1 <END> g01622313

327-3217 TANK & MTG GP-FUEL

S/N: DLP1-UP
PART OF 330-8781 PUMP AR-FUEL TRANSFER
AN ATTACHMENT
TYPE 2

SMCS-1273 **i04811903**

NOTE	REF NO	GRAPHIC REF	PART NUMBER	QTY	PART NAME 1 2 3 4 5 6 (PRODUCT LEVEL)	SEE PAGE
CY	1	1	**375-8580**	1	TANK GP-FUEL	144

C - CHANGE FROM PREVIOUS TYPE
Y - SEPARATE ILLUSTRATION

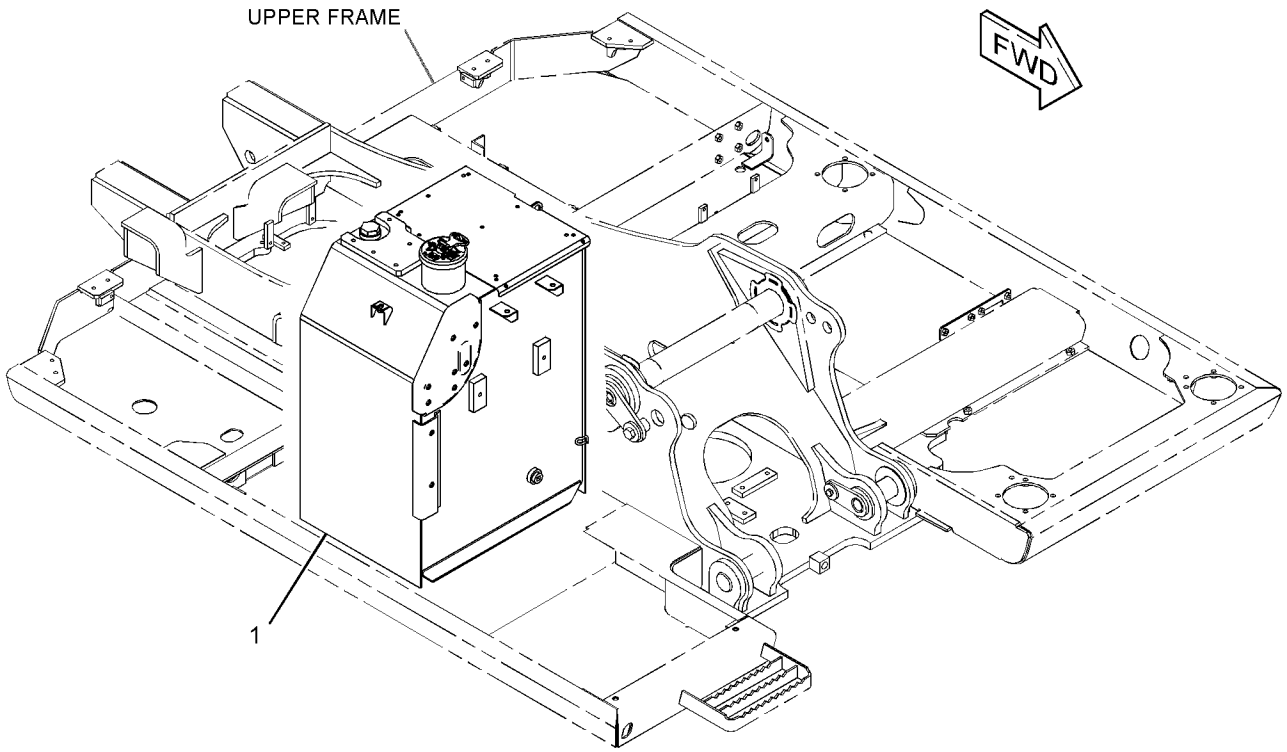

GRAPHIC #1 <END> g01622313

278-3751 TANK GP-FUEL

S/N: DLP1-617
250-L (66-US GAL)
PART OF 278-3750 TANK & MTG GP-FUEL

SMCS-1273 **i03991280**

NOTE	REF NO	GRAPHIC REF	PART NUMBER	QTY	PART NAME 1 2 3 4 5 6 (PRODUCT LEVEL)	SEE PAGE
	1	1	**4I-0378**	1	GASKET-RUBBER	
	2	1	**5P-4924**	1	ELBOW	
Y	3	1	**164-4858**	1	CAP GP-FUEL FILLER (EXTREME SERVICE, LOCKABLE)	92
	4	1	**003-7764**	1	END-HOSE	
	5	1	**128-4411**	1	VALVE AS (FUEL SHUTOFF)	
	6	1	**341-1842**	1	SENDER AS-FUEL LEVEL	
		1	**186-3735**	2	PIN-CONNECTOR (16-GA TO 18-GA)	
		1	**102-8802**	1	KIT-RECEPTACLE (2-PIN)	
					(INCLUDES RECEPTACLE AS & WEDGE)	
J	7	1	**303-9933**	1	STRAINER AS-FUEL (FLOAT GAUGE)	
M	8	1	**095-0736**	5	SCREW-MACHINE (M5X0.8X10-MM)	
	9	1	**3J-1907**	1	SEAL-O-RING	
	10	1	**8T-0328**	5	WASHER-HARD (5.5X10X1-MM THK)	
					AVAILABLE REPAIR KIT(S):	
J			**303-9937**	1	KIT-GAUGE (FUEL STRAINER)	
					(INCLUDES STOPPER & GAUGE)	

J - KIT MARKED J SERVICES PART(S) MARKED J
M - METRIC PART
Y - SEPARATE ILLUSTRATION

278-3751 **TANK GP-FUEL (**contd.**)** **i03991280**

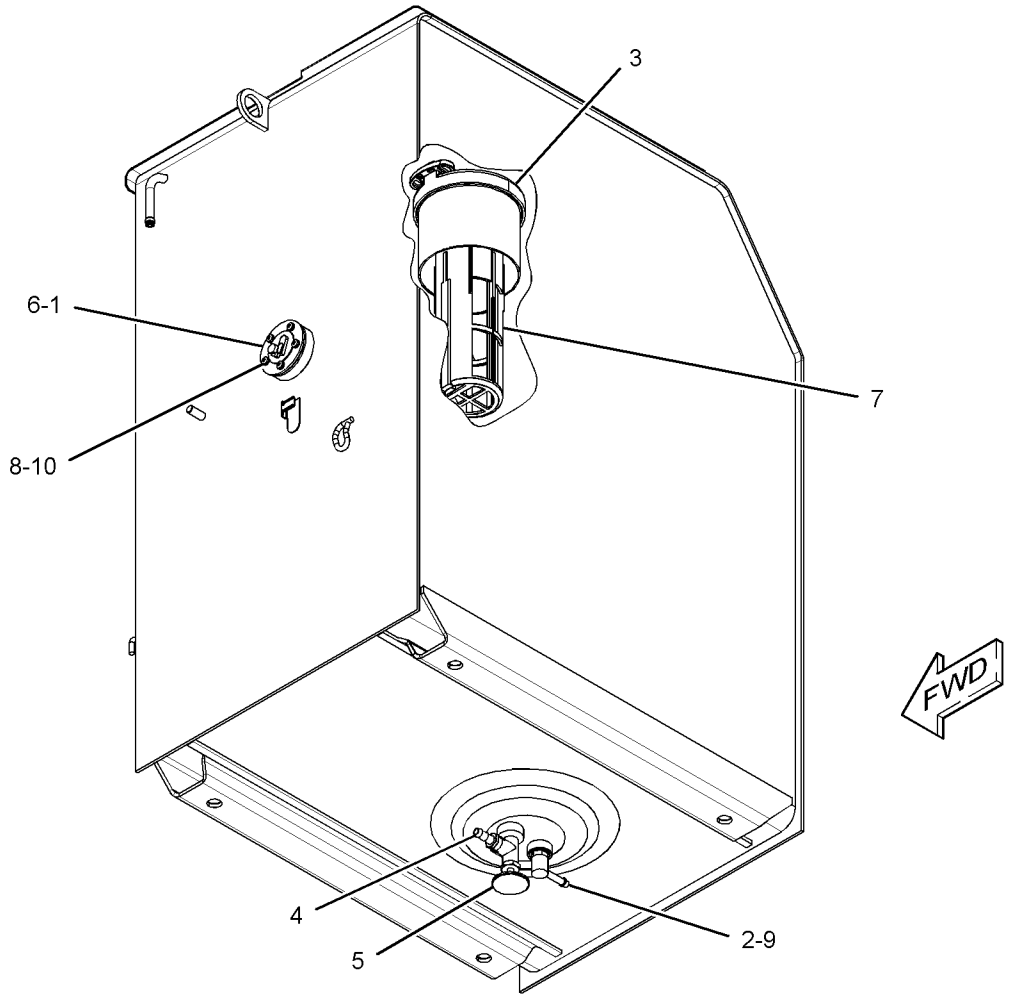

GRAPHIC #1 <END> g01439797

278-3753 TANK GP-FUEL

S/N: DLP1-UP
250-L (66-US GAL)
PART OF 278-3752 TANK & MTG GP-FUEL
AN ATTACHMENT

SMCS-1273 **i03991279**

NOTE	REF NO	GRAPHIC REF	PART NUMBER	QTY	PART NAME 1 2 3 4 5 6 (PRODUCT LEVEL)	SEE PAGE
	1	1	**4I-0378**	1	GASKET-RUBBER	
	2	1	**5P-4924**	1	ELBOW	
	3	1	**003-7764**	1	END-HOSE	
	4	1	**128-4411**	1	VALVE AS (FUEL SHUTOFF)	
	5	1	**341-1842**	1	SENDER AS-FUEL LEVEL	
		1	**186-3735**	2	PIN-CONNECTOR (16-GA TO 18-GA)	
		1	**102-8802**	1	KIT-RECEPTACLE (2-PIN)	
					(INCLUDES RECEPTACLE AS & WEDGE)	
Y	6	1	**164-4858**	1	CAP GP-FUEL FILLER (EXTREME SERVICE, LOCKABLE)	92
J	7	1	**303-9933**	1	STRAINER AS-FUEL (FLOAT GAUGE)	
M	9	1	**095-0736**	5	SCREW-MACHINE (M5X0.8X10-MM)	
	10	1	**2S-4078**	1	SEAL-O-RING	
	11	1	**3B-0551**	1	PLUG-PIPE	
	12	1	**3J-1907**	1	SEAL-O-RING	
	13	1	**8T-0328**	5	WASHER-HARD (5.5X10X1-MM THK)	
	14	1	**9S-6130**	1	PLUG	
					AVAILABLE REPAIR KIT(S):	
J			**303-9937**	1	KIT-GAUGE (FUEL STRAINER)	
					(INCLUDES STOPPER & FLOAT GAUGE)	

J - KIT MARKED J SERVICES PART(S) MARKED J
M - METRIC PART
Y - SEPARATE ILLUSTRATION

278-3753 **TANK GP-FUEL (**contd.**)** **i03991279**

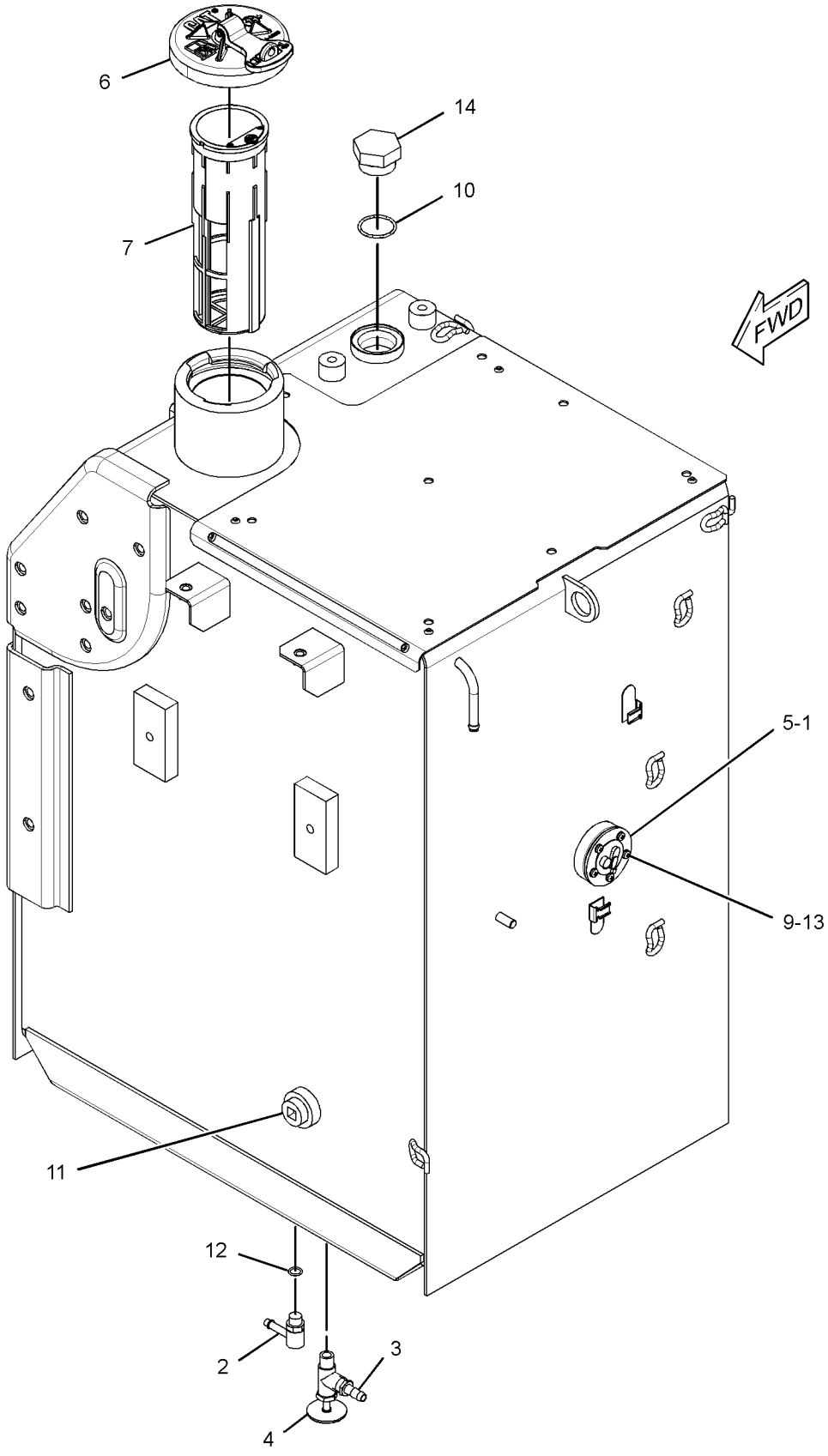

GRAPHIC #1 <END> g01438874

327-3211 TANK GP-FUEL

S/N: DLP1-UP
250-L (66-US GAL)
PART OF 327-3210 TANK & MTG GP-FUEL
AN ATTACHMENT

SMCS-1273 **i03991278**

NOTE	REF NO	GRAPHIC REF	PART NUMBER	QTY	PART NAME 1 2 3 4 5 6 (PRODUCT LEVEL)	SEE PAGE
	1	1	**4I-0378**	1	GASKET-RUBBER	
	2	1	**5P-4924**	1	ELBOW	
	3	1	**003-7764**	1	END-HOSE	
	4	1	**128-4411**	1	VALVE AS (FUEL SHUTOFF)	
	5	1	**341-1842**	1	SENDER AS-FUEL LEVEL	
		1	**186-3735**	2	PIN-CONNECTOR (16-GA TO 18-GA)	
		1	**102-8802**	1	KIT-RECEPTACLE (2-PIN)	
					(INCLUDES RECEPTACLE AS & WEDGE)	
Y	6	1	**164-4858**	1	CAP GP-FUEL FILLER (EXTREME SERVICE, LOCKABLE)	92
J	7	1	**303-9933**	1	STRAINER AS-FUEL (FLOAT GAUGE)	
	8	1	**135-8579**	2	BOLT AS	
M	9	1	**095-0736**	5	SCREW-MACHINE (M5X0.8X10-MM)	
	10	1	**3J-1907**	1	SEAL-O-RING	
	11	1	**8T-0328**	5	WASHER-HARD (5.5X10X1-MM THK)	
					AVAILABLE REPAIR KIT(S):	
J			**303-9937**	1	KIT-GAUGE (FUEL STRAINER)	
					(INCLUDES STOPPER & GAUGE)	

J - KIT MARKED J SERVICES PART(S) MARKED J
M - METRIC PART
Y - SEPARATE ILLUSTRATION

327-3211 **TANK GP-FUEL (**contd.**)** **i03991278**

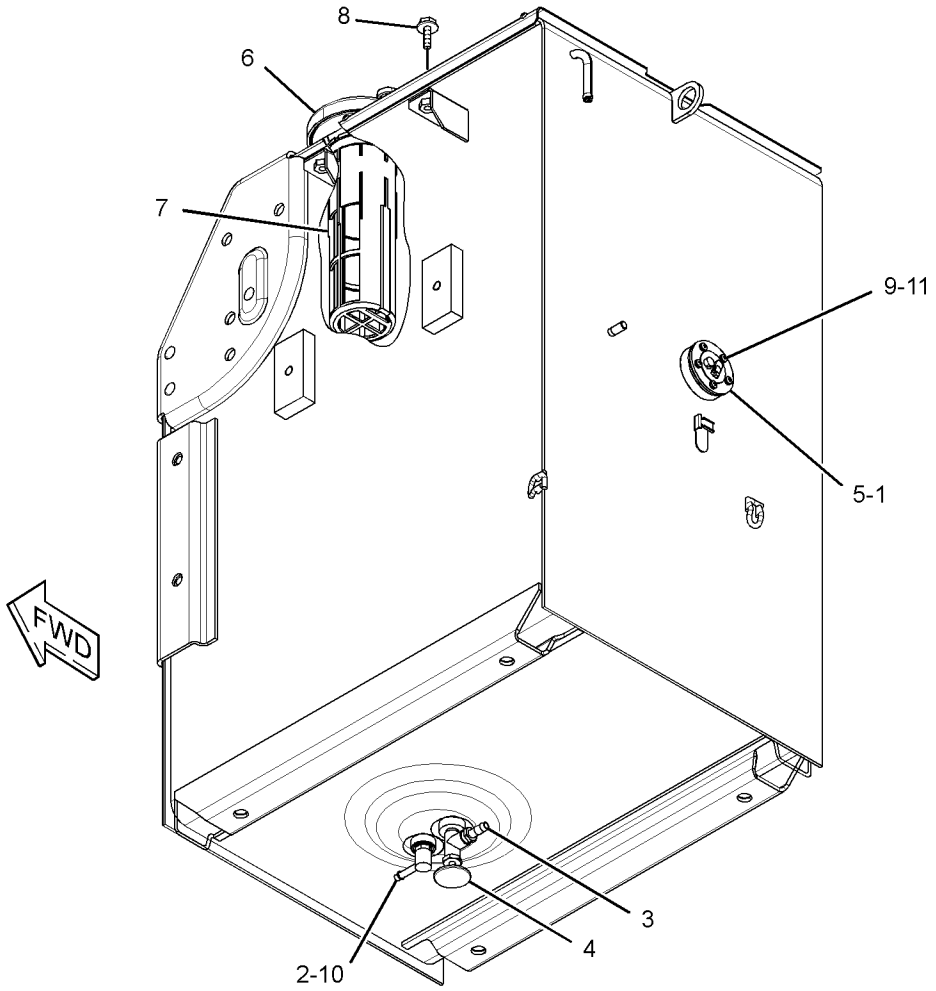

GRAPHIC #1 <END> g01789675

327-3218 TANK GP-FUEL

S/N: DLP1-UP
250-L (66-US GAL)
PART OF 327-3217 TANK & MTG GP-FUEL
AN ATTACHMENT

SMCS-1273 **i03991277**

NOTE	REF NO	GRAPHIC REF	PART NUMBER	QTY	PART NAME 1 2 3 4 5 6 (PRODUCT LEVEL)	SEE PAGE
	1	1	**4I-0378**	1	GASKET-RUBBER	
	2	1	**5P-4924**	1	ELBOW	
	3	1	**003-7764**	1	END-HOSE	
	4	1	**128-4411**	1	VALVE AS (FUEL SHUTOFF)	
	5	1	**341-1842**	1	SENDER AS-FUEL LEVEL	
		1	**102-8802**	1	KIT-RECEPTACLE (2-PIN)	
					(INCLUDES RECEPTACLE AS & WEDGE)	
		1	**186-3735**	2	PIN-CONNECTOR (16-GA TO 18-GA)	
Y	6	1	**164-4858**	1	CAP GP-FUEL FILLER (EXTREME SERVICE, LOCKABLE)	92
J	7	1	**303-9933**	1	STRAINER AS-FUEL (FLOAT GAUGE)	
	9	1	**9S-6130**	1	PLUG	
M	10	1	**095-0736**	5	SCREW-MACHINE (M5X0.8X10-MM)	
	11	1	**2S-4078**	1	SEAL-O-RING	
	12	1	**3B-0551**	1	PLUG-PIPE	
	13	1	**3J-1907**	1	SEAL-O-RING	
	14	1	**8T-0328**	5	WASHER-HARD (5.5X10X1-MM THK)	
	15	1	**135-8579**	3	BOLT AS	
					AVAILABLE REPAIR KIT(S):	
J			**303-9937**	1	KIT-GAUGE (FUEL STRAINER)	
					(INCLUDES STOPPER & GAUGE)	

J - KIT MARKED J SERVICES PART(S) MARKED J
M - METRIC PART
Y - SEPARATE ILLUSTRATION

327-3218 **TANK GP-FUEL (**contd.**)** **i03991277**

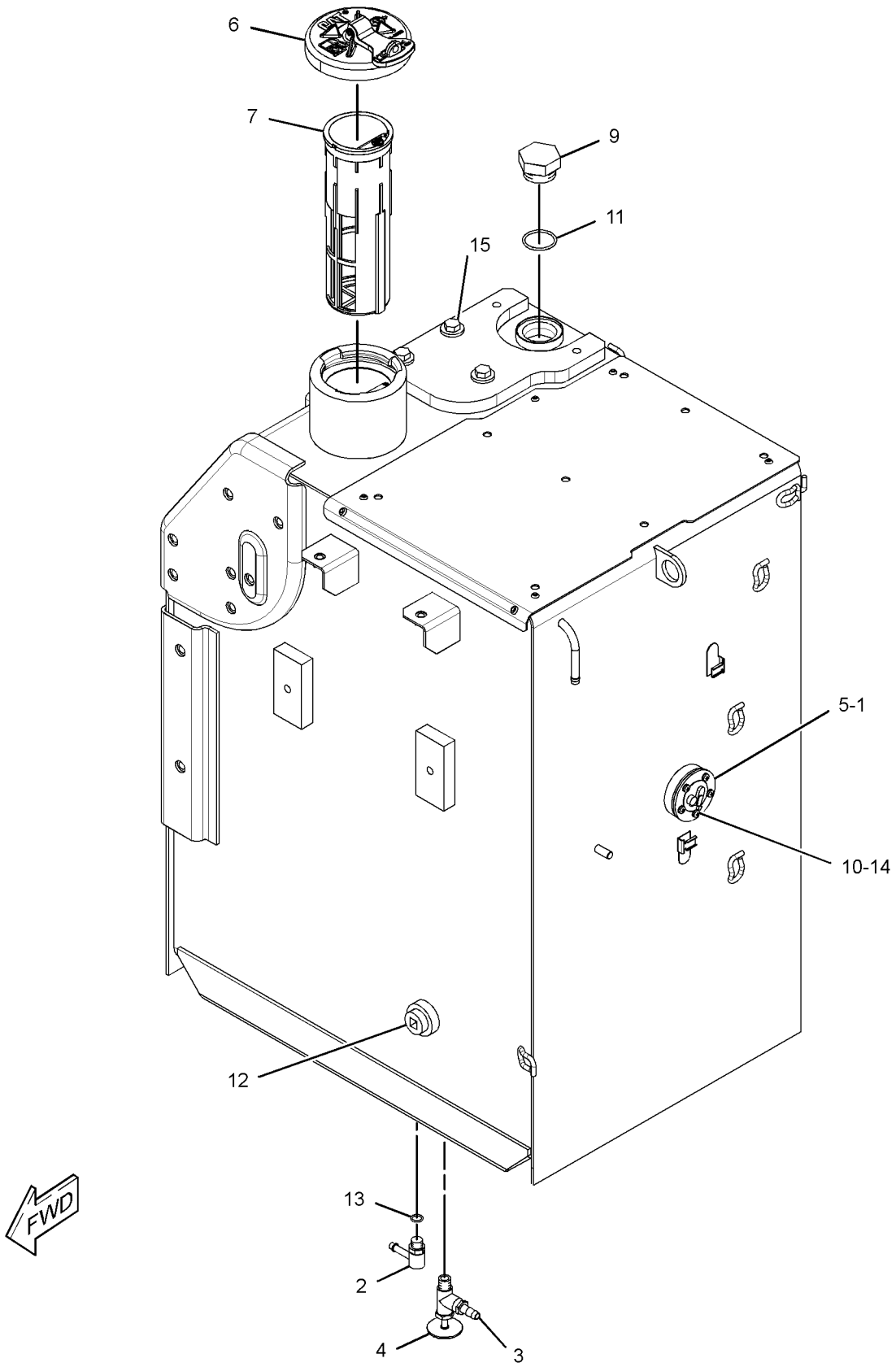

GRAPHIC #1 <END> g01750033

375-8574 TANK GP-FUEL

S/N: DLP618-UP
250-L (66-US GAL)
PART OF 278-3750 TANK & MTG GP-FUEL

SMCS-1273 **i06273527**

NOTE	REF NO	GRAPHIC REF	PART NUMBER	QTY	PART NAME 1 2 3 4 5 6 (PRODUCT LEVEL)	SEE PAGE
	1	1	**4I-0378**	1	GASKET-RUBBER	
	2	1	*150-3024*	2	ELBOW AS	
					(EACH INCLUDES)	
		1	**3J-1907**	1	SEAL-O-RING	
		1	**5P-4924**	1	ELBOW	
H	3	1	**349-7059**	1	CAP AS-FUEL (LOCKABLE, VENTED)	
		1	**7D-7111**	1	SEAL-O-RING	
M	4	1	**095-0736**	5	SCREW-MACHINE (M5X0.8X10-MM)	
	5	1	**8T-0328**	5	WASHER-HARD (5.5X10X1-MM THK)	
	6	1	**341-1842**	1	SENDER AS-FUEL LEVEL	
		1	**8T-8729**	2	PIN-CONNECTOR (16-GA TO 18-GA)	
		1	**102-8802**	1	KIT-RECEPTACLE (2-PIN)	
					(INCLUDES RECEPTACLE AS & WEDGE)	
J	7	1	**303-9933**	1	STRAINER AS-FUEL (FLOAT GAUGE)	
					AVAILABLE REPAIR KIT(S):	
J			**303-9937**	1	KIT-GAUGE (FUEL STRAINER)	
					(INCLUDES STOPPER & GAUGE)	
H			**350-7735**	1	KIT-CAP FILTER (FUEL TANK)	
					(INCLUDES BODY,GASKET,SCREWS & WASHERS)	

H - KIT MARKED H SERVICES PART(S) MARKED H
J - KIT MARKED J SERVICES PART(S) MARKED J
M - METRIC PART

375-8574 **TANK GP-FUEL (**contd.**)** **i06273527**

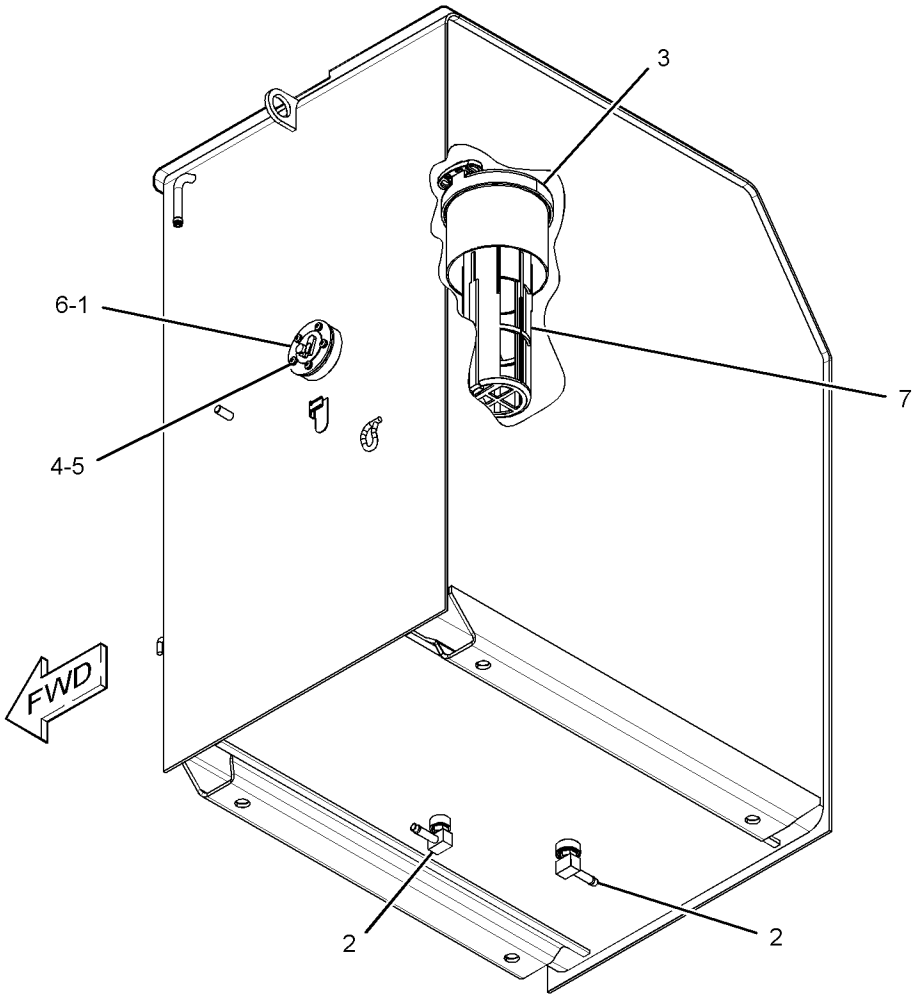

GRAPHIC #1 <END> g03326060

375-8577 TANK GP-FUEL

S/N: DLP1-UP
250-L (66-US GAL)
PART OF 327-3210 TANK & MTG GP-FUEL
AN ATTACHMENT

SMCS-1273 **i06273462**

NOTE	REF NO	GRAPHIC REF	PART NUMBER	QTY	PART NAME 1 2 3 4 5 6 (PRODUCT LEVEL)	SEE PAGE
	1	1	**4I-0378**	1	GASKET-RUBBER	
	2	1	*150-3024*	1	ELBOW AS	
		1	**3J-1907**	1	SEAL-O-RING	
		1	**5P-4924**	1	ELBOW	
	3	1	**003-7764**	1	END-HOSE	
	4	1	**9N-3666**	1	VALVE-MANUAL	
	5	1	**341-1842**	1	SENDER AS-FUEL LEVEL	
		1	**8T-8729**	2	PIN-CONNECTOR (16-GA TO 18-GA)	
		1	**102-8802**	1	KIT-RECEPTACLE (2-PIN)	
					(INCLUDES RECEPTACLE AS & WEDGE)	
	6	1	**349-7059**	1	CAP AS-FUEL (LOCKABLE, VENTED)	
		1	**7D-7111**	1	SEAL-O-RING	
		1	**350-7735**	1	KIT-CAP FILTER (FUEL TANK)	
					(INCLUDES BODY, GASKET, SCREWS & WASHERS)	
J	7	1	**303-9933**	1	STRAINER AS-FUEL (FLOAT GAUGE)	
	8	1	**135-8579**	2	BOLT AS	
M	9	1	**095-0736**	5	SCREW-MACHINE (M5X0.8X10-MM)	
	10	1	**8T-0328**	5	WASHER-HARD (5.5X10X1-MM THK)	
					PARTS SHOWN IN GRAPHIC(S) WITHOUT A REFERENCE NUMBER ARE NOT SERVICED SEPARATELY	
					AVAILABLE REPAIR KIT(S):	
J			**303-9937**	1	KIT-GAUGE (FUEL STRAINER)	
					(INCLUDES STOPPER & GAUGE)	

J - KIT MARKED J SERVICES PART(S) MARKED J
M - METRIC PART

375-8577 **TANK GP-FUEL (**contd.**)** **i06273462**

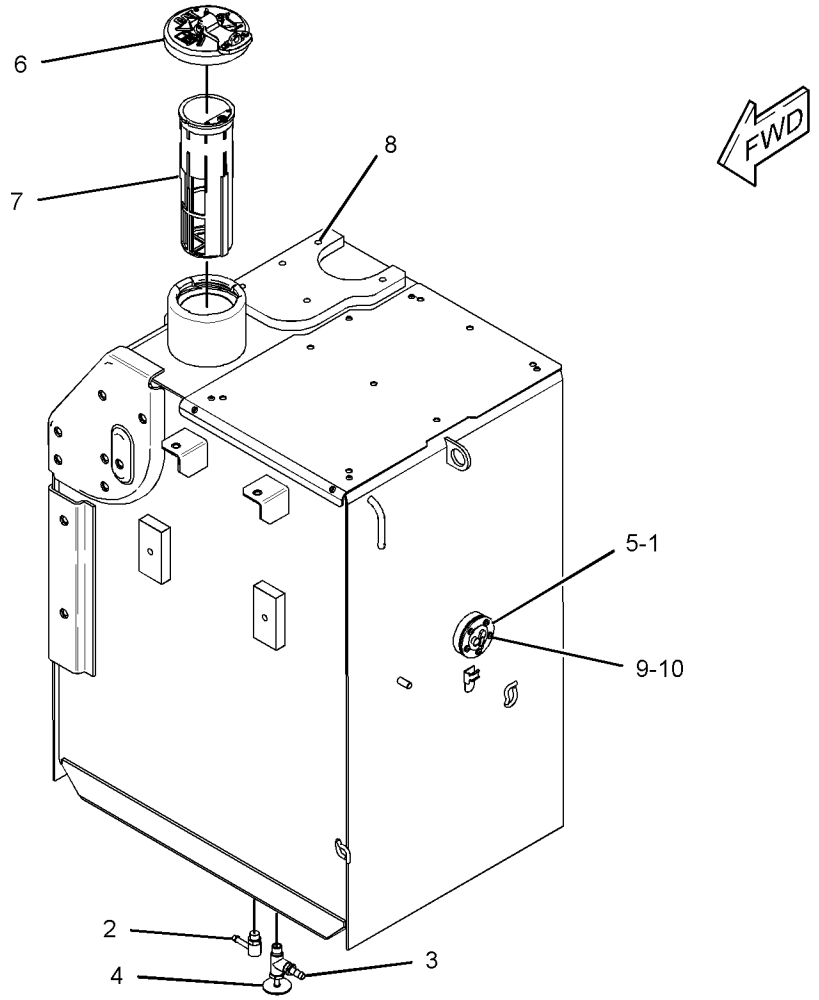

GRAPHIC #1 <END> g02950019

375-8580 TANK GP-FUEL

S/N: DLP1-UP
250-L (66-US GAL)
PART OF 327-3217 TANK & MTG GP-FUEL
AN ATTACHMENT
TYPE 1

SMCS-1273 **i05539209**

NOTE	REF NO	GRAPHIC REF	PART NUMBER	QTY	PART NAME 1 2 3 4 5 6 (PRODUCT LEVEL)	SEE PAGE
	1	1	**4I-0378**	1	GASKET-RUBBER	
	2	1	**9N-3666**	1	VALVE-MANUAL (FUEL SHUTOFF)	
	3	1	**003-7764**	1	END-HOSE	
	4	1	**135-8579**	3	BOLT AS	
	5	1	**341-1842**	1	SENDER AS-FUEL LEVEL	
		1	**102-8802**	1	KIT-RECEPTACLE (2-PIN)	
					(INCLUDES RECEPTACLE AS & WEDGE)	
		1	**9X-3401**	2	PIN-CONNECTOR (16-GA TO 18-GA)	
J	6	1	**303-9933**	1	STRAINER AS-FUEL (FLOAT GAUGE)	
L	8	1	**349-7059**	1	CAP AS-FUEL (LOCKABLE, VENTED)	
		1	**9X-8600**	1	SEAL-O-RING	
M	9	1	**095-0736**	5	SCREW-MACHINE (M5X0.8X10-MM)	
	10	1	*150-3024*	1	ELBOW AS	
		1	**3J-1907**	1	SEAL-O-RING	
		1	**5P-4924**	1	ELBOW	
	11	1	**2S-4078**	1	SEAL-O-RING	
	12	1	**3B-0551**	1	PLUG-PIPE	
	13	1	**8T-0328**	5	WASHER-HARD (5.5X10X1-MM THK)	
	14	1	**9S-6130**	1	PLUG	
					AVAILABLE REPAIR KIT(S):	
J			**303-9937**	1	KIT-GAUGE (FUEL STRAINER)	
					(INCLUDES STOPPER & GAUGE)	
L			**350-7735**	1	KIT-CAP FILTER (FUEL TANK)	
					(INCLUDES BREATHER BODY, BREATHER GASKET, SCREWS & WASHERS)	

J - KIT MARKED J SERVICES PART(S) MARKED J
L - KIT MARKED L SERVICES PART(S) MARKED L
M - METRIC PART

375-8580 **TANK GP-FUEL (**contd.**)** **i05539209**

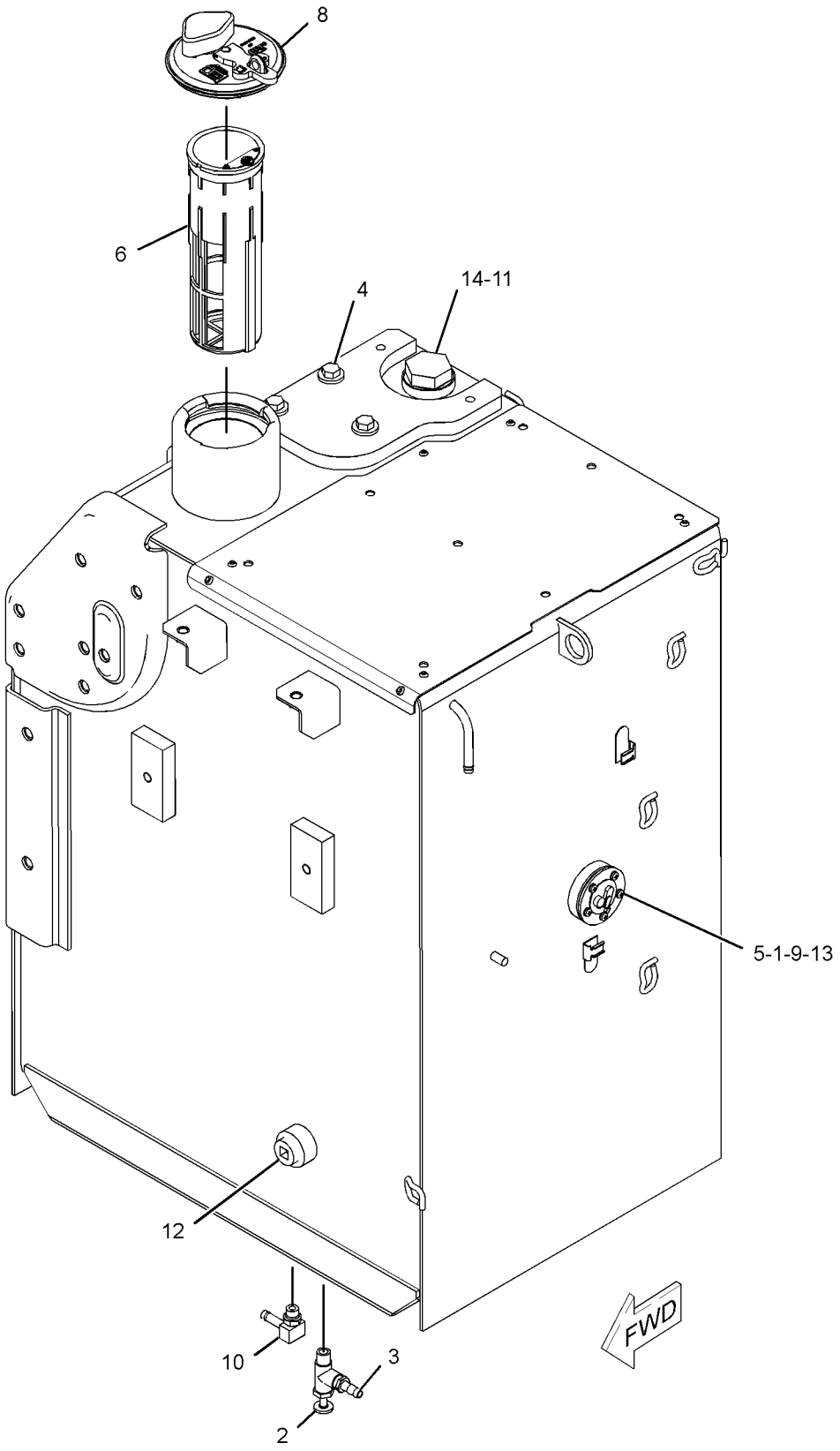

GRAPHIC #1 <END> g02957678

375-8580 TANK GP-FUEL

S/N: DLP1-UP
250-L (66-US GAL)
PART OF 327-3217 TANK & MTG GP-FUEL
AN ATTACHMENT
TYPE 2

SMCS-1273 **i06273460**

NOTE	REF NO	GRAPHIC REF	PART NUMBER	QTY	PART NAME 1 2 3 4 5 6 (PRODUCT LEVEL)	SEE PAGE
	1	1	**4I-0378**	1	GASKET-RUBBER	
	4	1	**135-8579**	3	BOLT AS	
	5	1	**341-1842**	1	SENDER AS-FUEL LEVEL	
		1	**102-8802**	1	KIT-RECEPTACLE (2-PIN)	
					(INCLUDES RECEPTACLE AS & WEDGE)	
		1	**9X-3401**	2	PIN-CONNECTOR (16-GA TO 18-GA)	
J	6	1	**303-9933**	1	STRAINER AS-FUEL (FLOAT GAUGE)	
L	8	1	**349-7059**	1	CAP AS-FUEL (LOCKABLE, VENTED)	
		1	**7D-7111**	1	SEAL-O-RING	
M	9	1	**095-0736**	5	SCREW-MACHINE (M5X0.8X10-MM)	
C	10	1	*150-3024*	2	ELBOW AS	
					(EACH INCLUDES)	
		1	**3J-1907**	1	SEAL-O-RING	
		1	**5P-4924**	1	ELBOW	
	11	1	**2S-4078**	1	SEAL-O-RING	
	12	1	**3B-0551**	1	PLUG-PIPE	
	13	1	**8T-0328**	5	WASHER-HARD (5.5X10X1-MM THK)	
	14	1	**9S-6130**	1	PLUG	
					AVAILABLE REPAIR KIT(S):	
J			**303-9937**	1	KIT-GAUGE (FUEL STRAINER)	
					(INCLUDES STOPPER & GAUGE)	
L			**350-7735**	1	KIT-CAP FILTER (FUEL TANK)	
					(INCLUDES BREATHER BODY, BREATHER GASKET, SCREWS & WASHERS)	

C - CHANGE FROM PREVIOUS TYPE
J - KIT MARKED J SERVICES PART(S) MARKED J
L - KIT MARKED L SERVICES PART(S) MARKED L
M - METRIC PART

375-8580 **TANK GP-FUEL (**contd.**)** **i06273460**

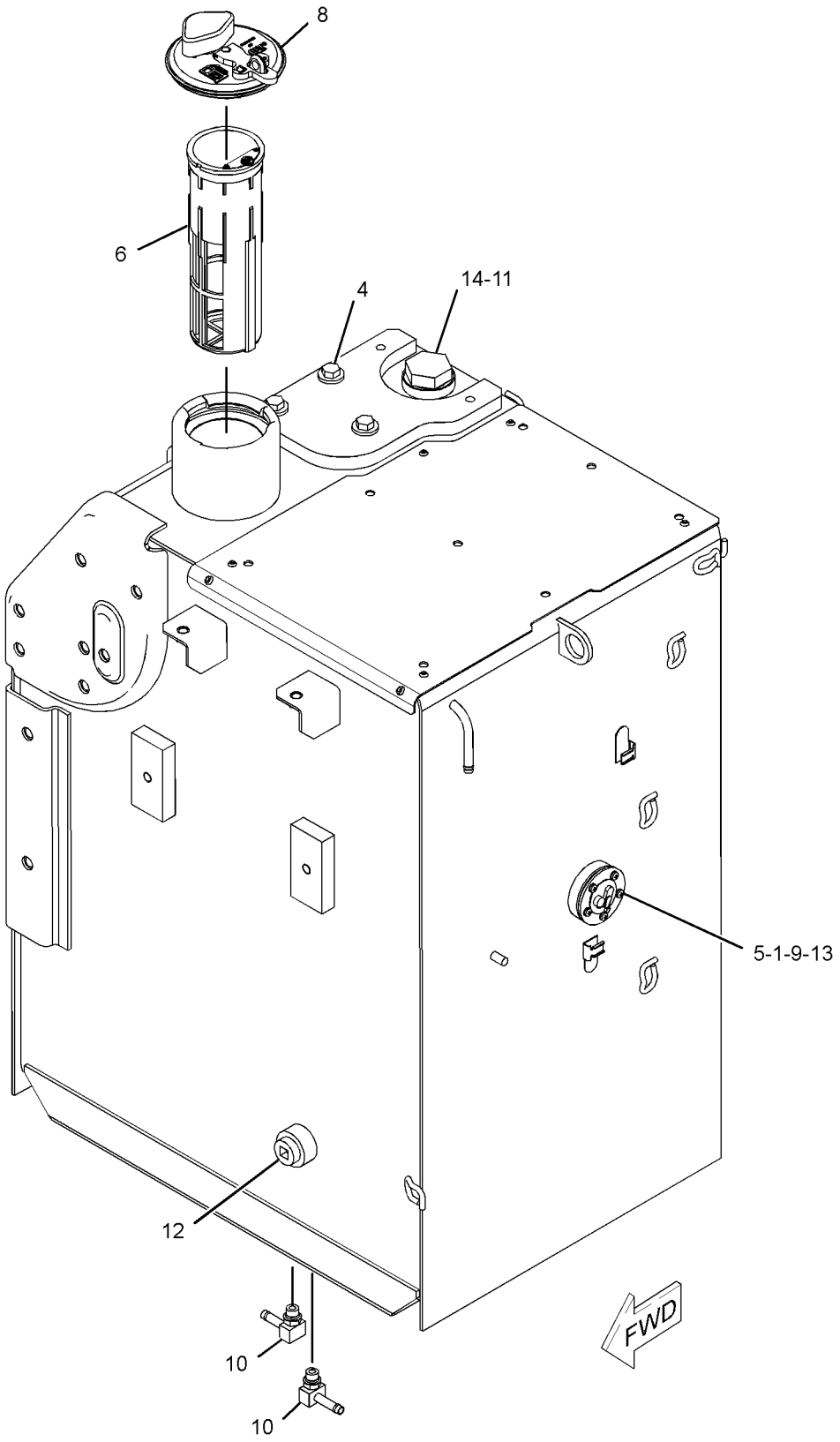

GRAPHIC #1 <END> g03528858

375-8580 TANK GP-FUEL

S/N: DLP1-UP
250-L (66-US GAL)
PART OF 327-3217 TANK & MTG GP-FUEL
AN ATTACHMENT
TYPE 3

SMCS-1273 **i05985645**

NOTE	REF NO	GRAPHIC REF	PART NUMBER	QTY	PART NAME 1 2 3 4 5 6 (PRODUCT LEVEL)	SEE PAGE
	1	1	**4I-0378**	1	GASKET-RUBBER	
	4	1	**135-8579**	3	BOLT AS	
	5	1	**341-1842**	1	SENDER AS-FUEL LEVEL	
		1	**102-8802**	1	KIT-RECEPTACLE (2-PIN)	
					(INCLUDES RECEPTACLE AS & WEDGE)	
		1	**9X-3401**	2	PIN-CONNECTOR (16-GA TO 18-GA)	
J	6	1	**303-9933**	1	STRAINER AS-FUEL (FLOAT GAUGE)	
L	8	1	**349-7059**	1	CAP AS-FUEL (LOCKABLE, VENTED)	
		1	**9X-8600**	1	SEAL-O-RING	
M	9	1	**095-0736**	5	SCREW-MACHINE (M5X0.8X10-MM)	
C	10	1	*150-3024*	1	ELBOW AS	
		1	**3J-1907**	1	SEAL-O-RING	
		1	**5P-4924**	1	ELBOW	
	11	1	**2S-4078**	1	SEAL-O-RING	
	12	1	**3B-0551**	1	PLUG-PIPE	
	13	1	**8T-0328**	5	WASHER-HARD (5.5X10X1-MM THK)	
	14	1	**9S-6130**	1	PLUG	
C	15	1	*217-8185*	1	ELBOW AS	
		1	**3K-0360**	1	SEAL-O-RING	
		1	**9X-3982**	1	ELBOW	
					AVAILABLE REPAIR KIT(S):	
J			**303-9937**	1	KIT-GAUGE (FUEL STRAINER)	
					(INCLUDES STOPPER & GAUGE)	
L			**350-7735**	1	KIT-CAP FILTER (FUEL TANK)	
					(INCLUDES BREATHER BODY, BREATHER GASKET, SCREWS & WASHERS)	

C - CHANGE FROM PREVIOUS TYPE
J - KIT MARKED J SERVICES PART(S) MARKED J
L - KIT MARKED L SERVICES PART(S) MARKED L
M - METRIC PART

375-8580 **TANK GP-FUEL (**contd.**)** **i05985645**

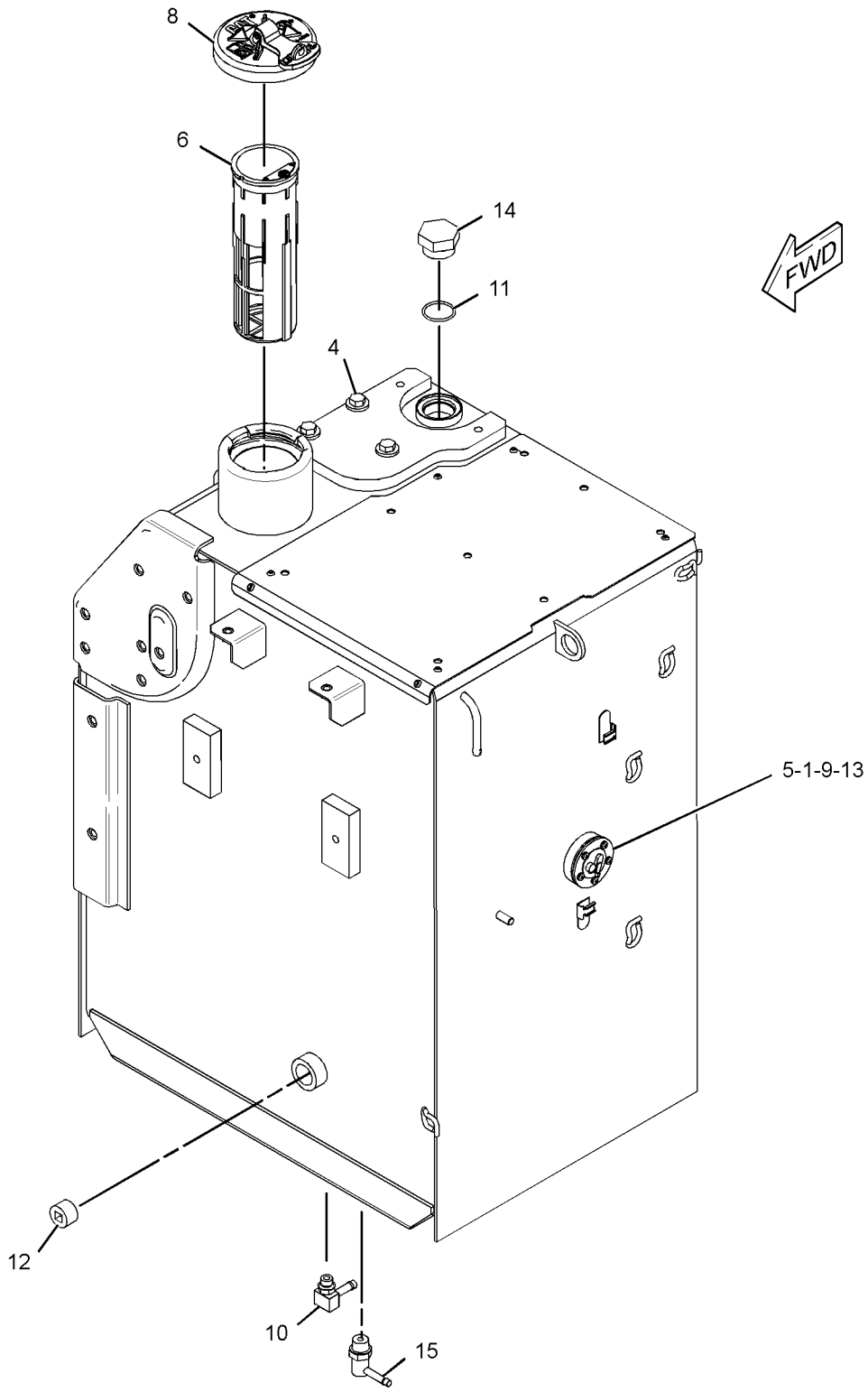

GRAPHIC #1 <END> g03884865

375-8686 TANK GP-FUEL

S/N: DLP1-UP
250-L (66-US GAL)
PART OF 278-3752 TANK & MTG GP-FUEL
AN ATTACHMENT
TYPE 1

SMCS-1273 **i04693634**

NOTE	REF NO	GRAPHIC REF	PART NUMBER	QTY	PART NAME 1 2 3 4 5 6 (PRODUCT LEVEL)	SEE PAGE
	1	1	**4I-0378**	1	GASKET-RUBBER	
	2	1	*150-3024*	1	ELBOW AS	
		1	**3J-1907**		SEAL-O-RING	
		1	**5P-4924**		ELBOW	
	3	1	**003-7764**	1	END-HOSE	
	4	1	**9N-3666**	1	VALVE-MANUAL (FUEL SHUTOFF)	
	5	1	**341-1842**	1	SENDER AS-FUEL LEVEL	
		1	**186-3735**	2	PIN-CONNECTOR (16-GA TO 18-GA)	
		1	**102-8802**	1	KIT-RECEPTACLE (2-PIN)	
					(INCLUDES RECEPTACLE AS & WEDGE)	
	6	1	**349-7059**	1	CAP AS-FUEL (LOCKABLE, VENTED)	
		1	**350-7735**	1	KIT-CAP FILTER (FUEL TANK)	
					(INCLUDES BREATHER BODY, BREATHER GASKET, MOUNTING SCREWS & NYLON WASHERS)	
		1	**9X-8600**	1	SEAL-O-RING	
J	7	1	**303-9933**	1	STRAINER AS-FUEL (FLOAT GAUGE)	
	8	1	**9S-6130**	1	PLUG	
M	9	1	**095-0736**	5	SCREW-MACHINE (M5X0.8X10-MM)	
	10	1	**2S-4078**	1	SEAL-O-RING	
	11	1	**3B-0551**	1	PLUG-PIPE	
	12	1	**8T-0328**	5	WASHER-HARD (5.5X10X1-MM THK)	
					AVAILABLE REPAIR KIT(S):	
J			**303-9937**	1	KIT-GAUGE (FUEL STRAINER)	
					(INCLUDES STOPPER & FLOAT GAUGE)	

J - KIT MARKED J SERVICES PART(S) MARKED J
M - METRIC PART

375-8686 **TANK GP-FUEL (**contd.**)** **i04693634**

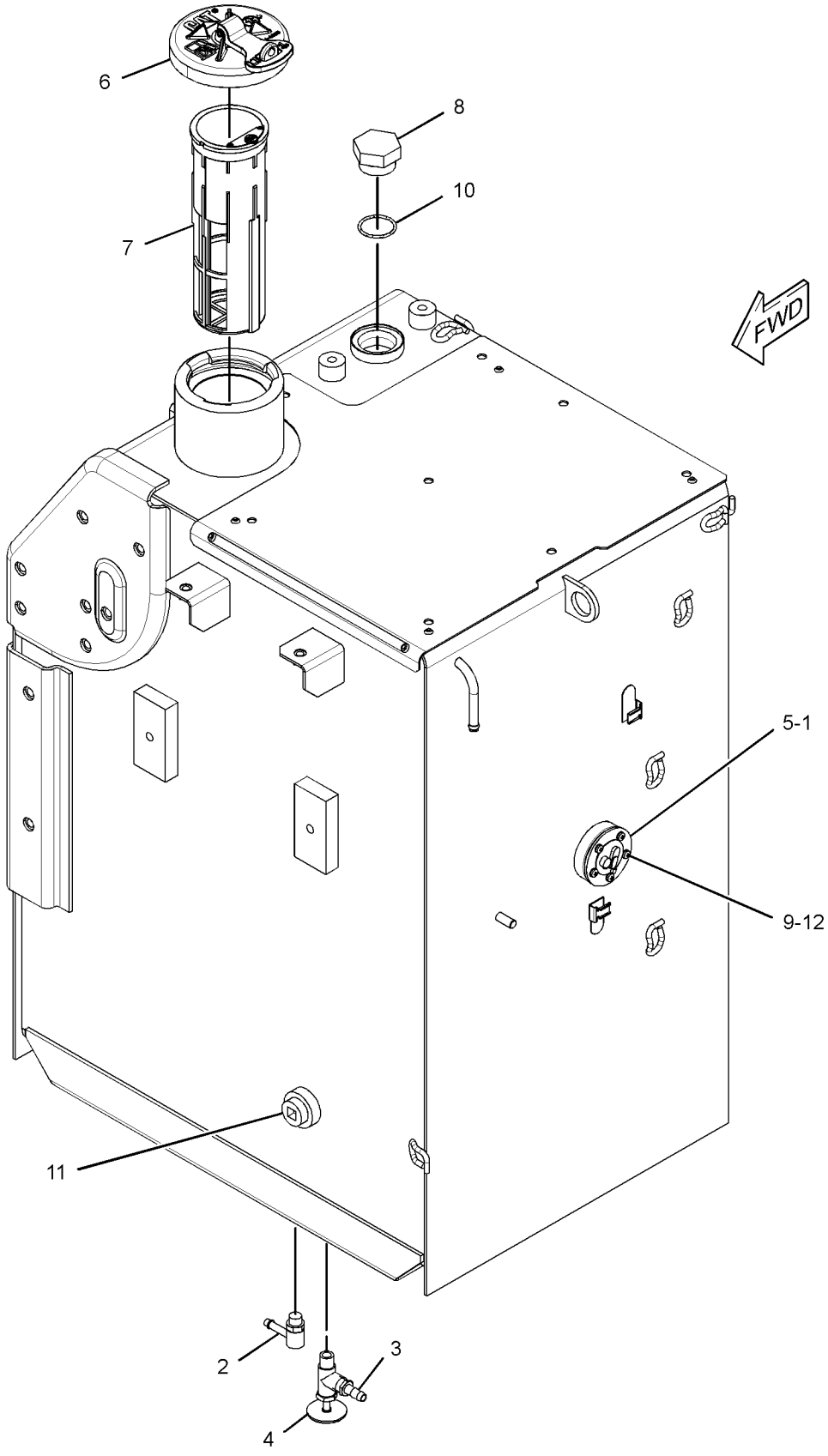

GRAPHIC #1 <END> g02814556

375-8686 TANK GP-FUEL

S/N: DLP1-UP
250-L (66-US GAL)
PART OF 278-3752 TANK & MTG GP-FUEL
AN ATTACHMENT
TYPE 2

SMCS-1273 **i06225411**

NOTE	REF NO	GRAPHIC REF	PART NUMBER	QTY	PART NAME 1 2 3 4 5 6 (PRODUCT LEVEL)	SEE PAGE
	1	1	**4I-0378**	1	GASKET-RUBBER	
	2	1	*150-3024*	1	ELBOW AS	
		1	**3J-1907**		SEAL-O-RING	
		1	**5P-4924**		ELBOW	
	3	1	**3B-0551**	1	PLUG-PIPE	
	4	1	**8T-0328**	5	WASHER-HARD (5.5X10X1-MM THK)	
	5	1	**341-1842**	1	SENDER AS-FUEL LEVEL	
		1	**9X-3401**	2	PIN-CONNECTOR (16-GA TO 18-GA)	
		1	**102-8802**	1	KIT-RECEPTACLE (2-PIN)	
					(INCLUDES RECEPTACLE AS & WEDGE)	
H	6	1	**349-7059**	1	CAP AS-FUEL (LOCKABLE, VENTED)	
		1	**9X-8600**	1	SEAL-O-RING	
J	7	1	**303-9933**	1	STRAINER AS-FUEL (FLOAT GAUGE)	
	8	1	**9S-6130**	1	PLUG	
M	9	1	**095-0736**	5	SCREW-MACHINE (M5X0.8X10-MM)	
	10	1	**2S-4078**	1	SEAL-O-RING	
	11	1	*217-8185*	1	ELBOW AS	
		1	**3K-0360**	1	SEAL-O-RING	
		1	**9X-3982**	1	ELBOW	
					AVAILABLE REPAIR KIT(S):	
H			**350-7735**	1	KIT-CAP FILTER (FUEL TANK)	
					(INCLUDES BREATHER BODY, BREATHER GASKET, MOUNTING SCREWS & NYLON WASHERS)	
J			**303-9937**	1	KIT-GAUGE (FUEL STRAINER)	
					(INCLUDES STOPPER & FLOAT GAUGE)	

H - KIT MARKED H SERVICES PART(S) MARKED H
J - KIT MARKED J SERVICES PART(S) MARKED J
M - METRIC PART

375-8686 **TANK GP-FUEL (**contd.**)** **i06225411**

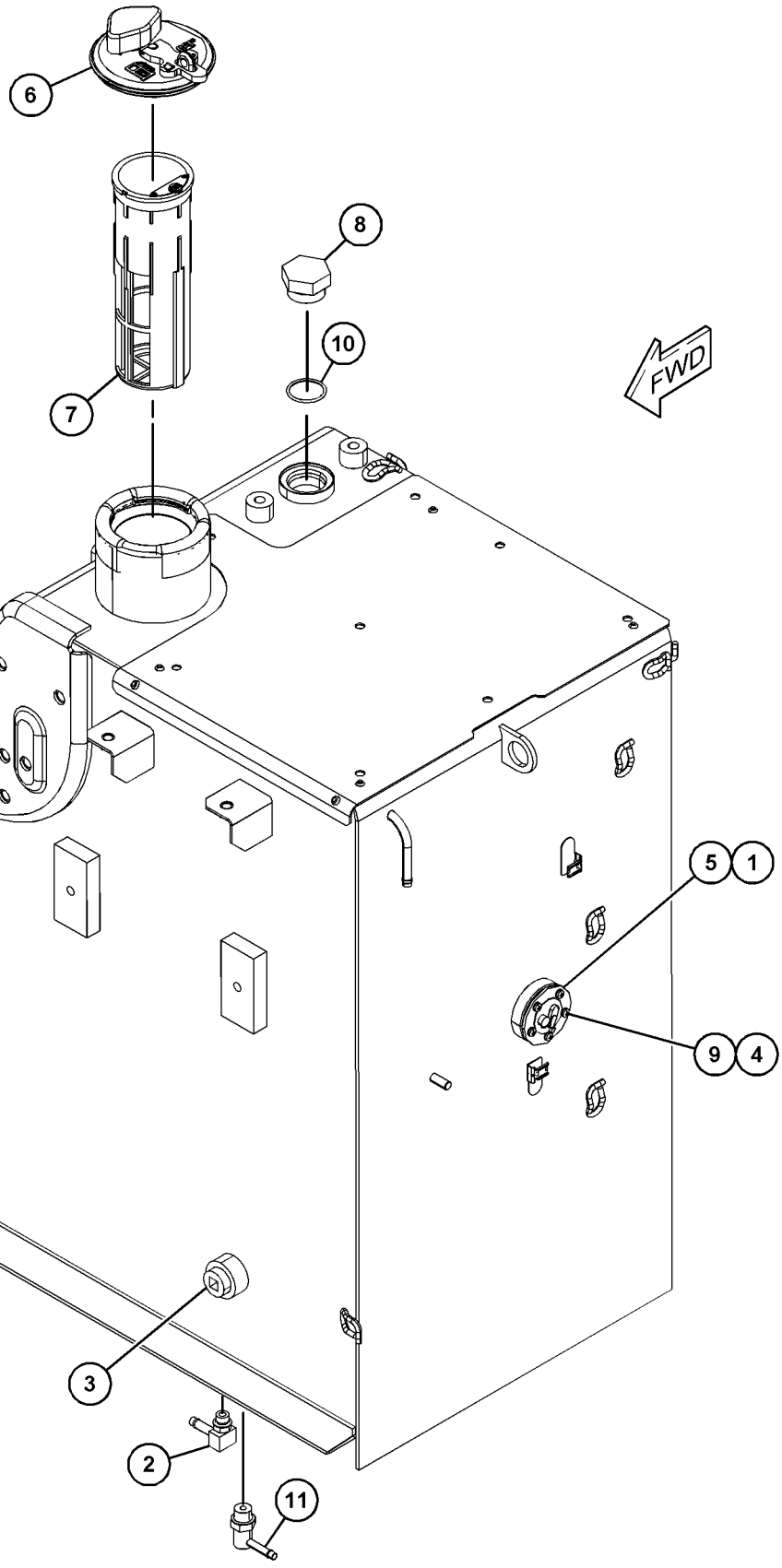

GRAPHIC #1 <END> g06002957

298-3147 VALVE GP-FUEL SHUTOFF

S/N: DLP1-631

PART OF 278-3749 LINES GP-FUEL

SMCS-1273 **i02750485**

NOTE	REF NO	GRAPHIC REF	PART NUMBER	QTY	PART NAME 1 2 3 4 5 6 (PRODUCT LEVEL)	SEE PAGE
	1	1	**298-3257**	1	STOP	
	2	1	**298-3258**	1	LEVER	
M	3	1	**260-6692**	1	NUT (M5X0.8-THD)	
	4	1	**3J-1907**	1	SEAL-O-RING	
	5	1	**8T-0328**	1	WASHER-HARD (5.5X10X1-MM THK)	
					PARTS SHOWN IN GRAPHIC(S) WITHOUT A REFERENCE NUMBER ARE NOT SERVICED SEPARATELY	

M - METRIC PART

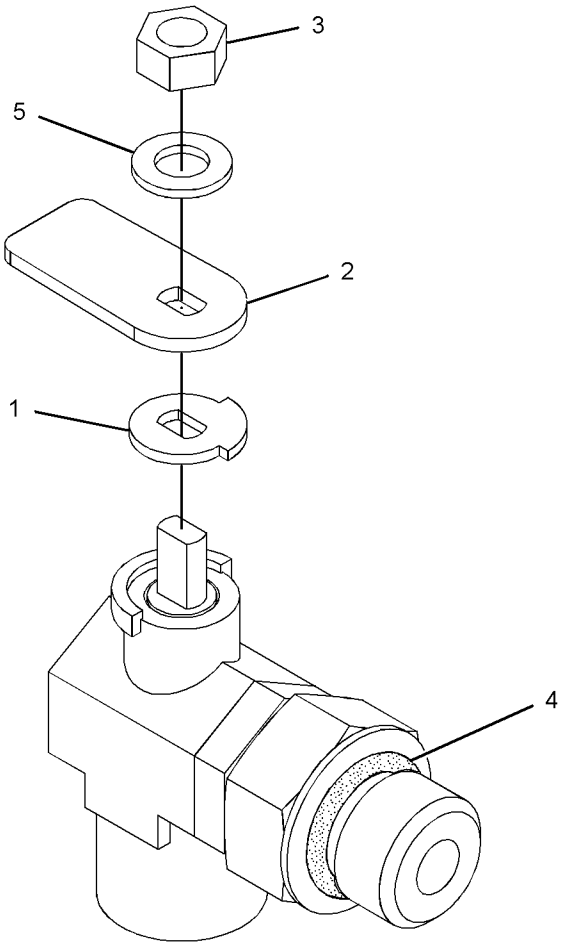

GRAPHIC #1 <END> g01377343

132-1829 ALARM GP

S/N: DLP1-UP
24-VOLT
PART OF 259-5161 WIRING GP-CAB

SMCS-7400, 7402, 7407

i05270543

NOTE	REF NO	GRAPHIC REF	PART NUMBER	QTY	PART NAME 1 2 3 4 5 6 (PRODUCT LEVEL)	SEE PAGE
	1	1	**102-8802**	1	KIT-RECEPTACLE (2-PIN)	
					(INCLUDES RECEPTACLE AS & WEDGE)	
	2	1	**186-3735**	2	PIN-CONNECTOR (16-GA TO 18-GA)	

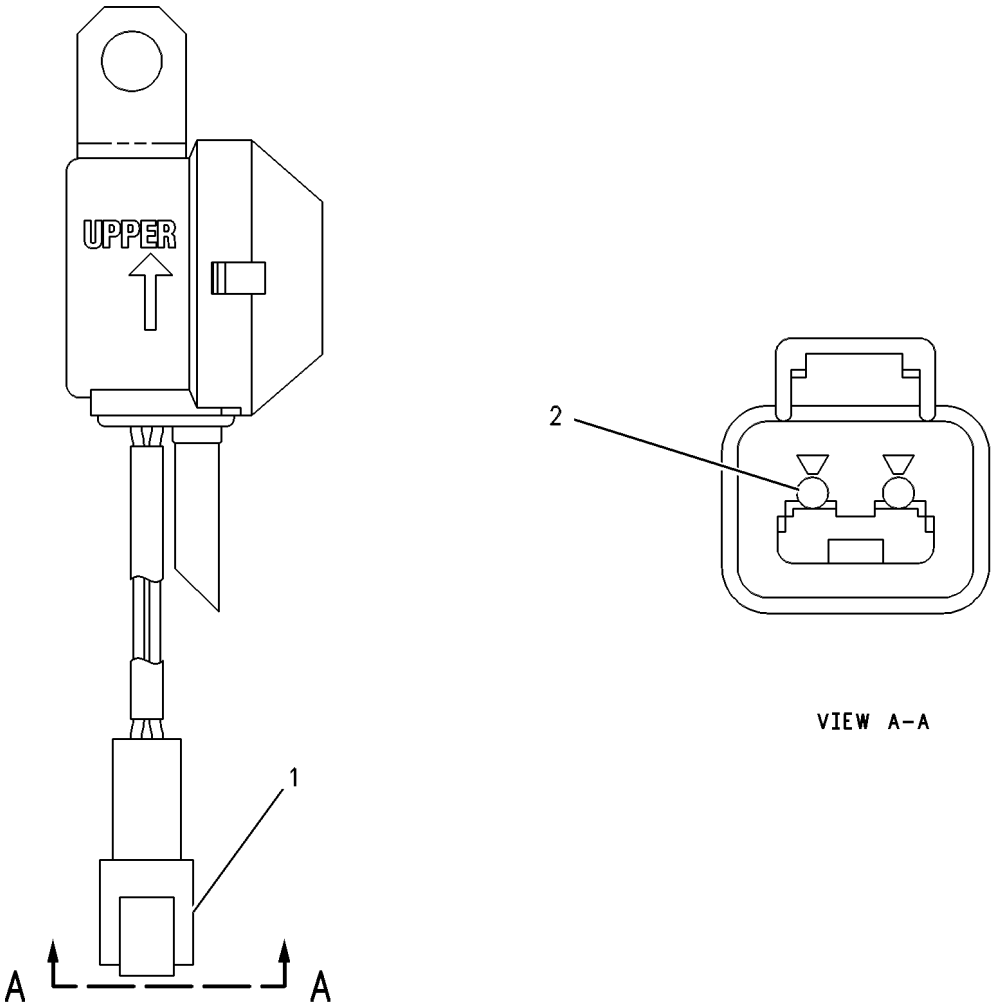

GRAPHIC #1

<END>

g00272185

231-1771 ALARM GP-TRAVEL–BACKUP

S/N: DLP1-UP

AN ATTACHMENT

SMCS-7429 **i06981977**

NOTE	REF NO	GRAPHIC REF	PART NUMBER	QTY	PART NAME 1 2 3 4 5 6 (PRODUCT LEVEL)	SEE PAGE
	1	1	**213-9100**	1	ALARM AS (BACKUP)	
		1	**102-8802**	1	KIT-RECEPTACLE (2-PIN)	
					(INCLUDES RECEPTACLE AS & WEDGE)	
		1	**8T-8729**	2	PIN-CONNECTOR (16-GA TO 18-GA)	
E	1A	1	**9X-1813**		SLEEVE (29-CM)	
M	2	1	**8T-4189**	2	BOLT (M8X1.25X20-MM)	
	3	1	**5P-4116**	2	WASHER-HARD (8.8X20.5X2-MM THK)	

E - ORDER BY THE CENTIMETER
M - METRIC PART

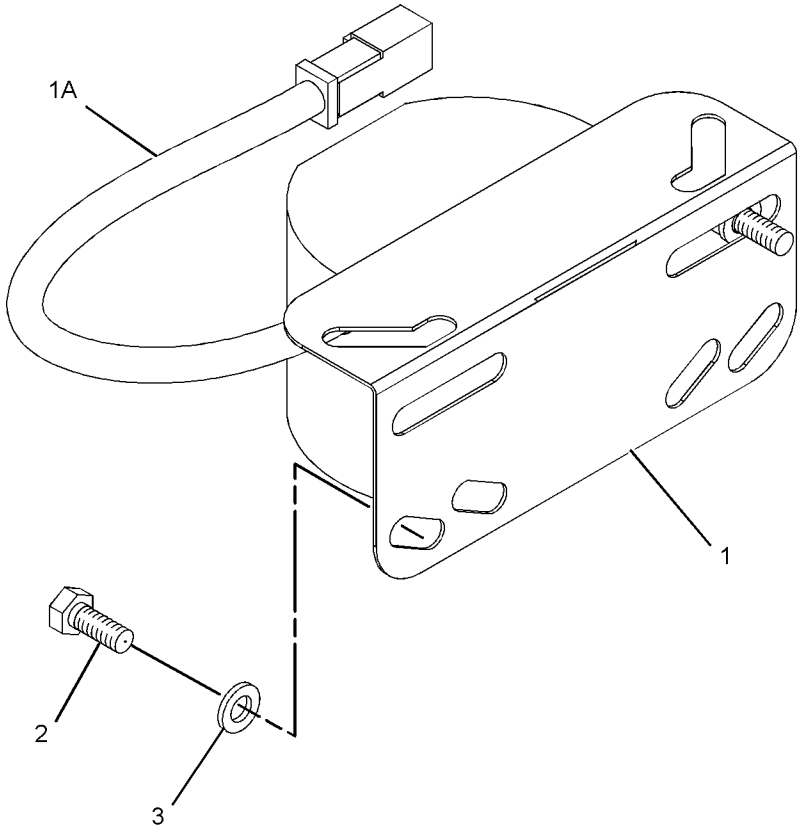

GRAPHIC #1 <END> g01682735

125-2994 ALTERNATOR GP-CHARGING*R

S/N: JKH1-UP

PART OF 296-4798 MOUNTING GP-ALTERNATOR

ALSO AN ATTACHMENT

SMCS-1405 **i04801603**

NOTE	REF NO	GRAPHIC REF	PART NUMBER	QTY	PART NAME 1 2 3 4 5 6 (PRODUCT LEVEL)	SEE PAGE
	1	1	**135-2382**	1	NUT SET	
	2	1	**5I-7984**	1	PULLEY AS	
	3	1	**5I-7985**	1	SETSCREW	
	4	1	**5I-8086**	1	BRACKET AS	
	5	1	**5I-7987**	1	SETSCREW	
	6	1	**5I-8087**	1	BEARING	
	7	1	**5I-8088**	1	ROTOR AS	
	8	1	**5I-8089**	1	BEARING	
	9	1	**5I-8098**	1	COIL AS	
	10	1	**5I-8090**	1	STATOR	
	11	1	**135-2381**	1	PLATE	
	12	1	**239-6681**	1	REGULATOR AS-VOLTAGE	
	13	1	**5I-8095**	1	RECTIFIER AS	
	14	1	**212-8521**	1	BRACKET	
	15	1	**085-9429**	1	NUT SET	
	16	1	**5I-8080**	1	CONNECTOR AS	
	17	1	**5I-8094**	1	BOLT	
	18	1	**5I-8097**	1	SETSCREW	
	19	1	**5I-7997**	1	SETSCREW	
F		1	**5I-8091**	1	BRACKET AS	

F - NOT SHOWN

125-2994 **ALTERNATOR GP-CHARGING (**contd.**)** **i04801603**

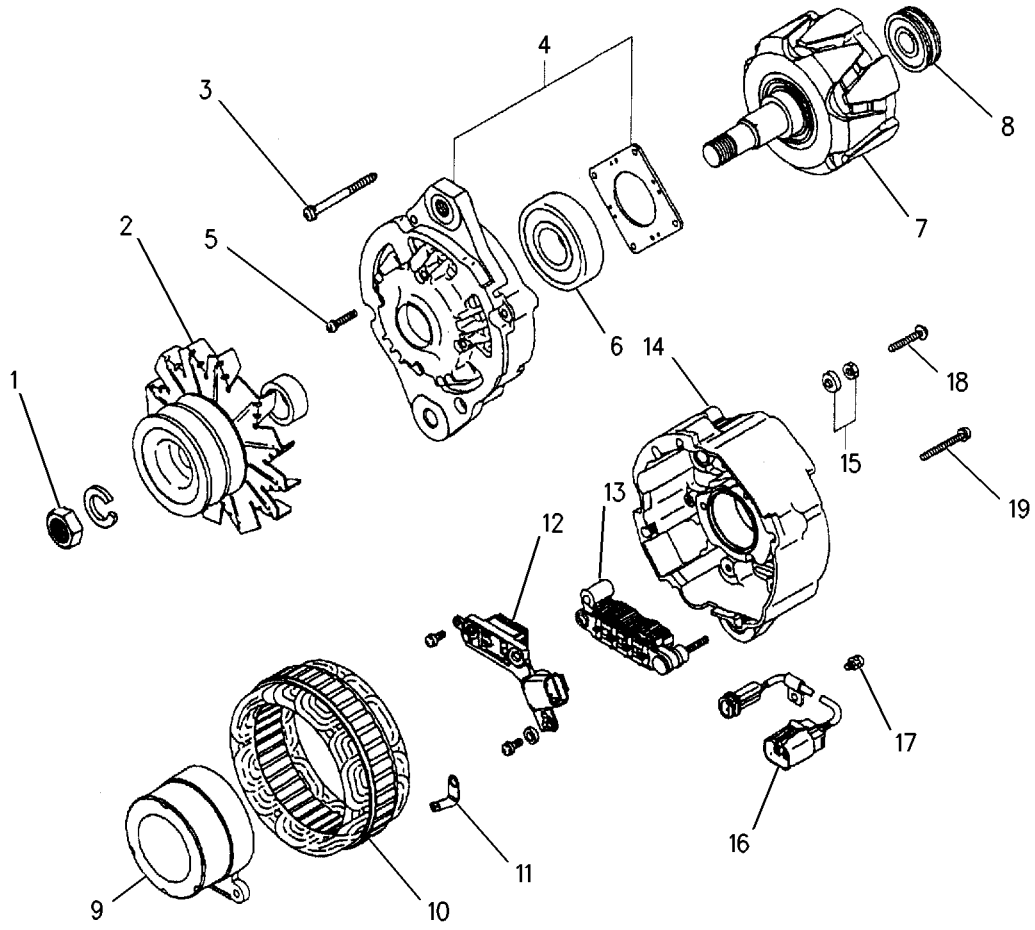

GRAPHIC #1 <END> g00859563

275-7050 BATTERY & WIRING GP

S/N: DLP1-219

PART OF 301-2680 CHASSIS AR

SMCS-1401, 1402, 1408 **i05189691**

NOTE	REF NO	GRAPHIC REF	PART NUMBER	QTY	PART NAME 1 2 3 4 5 6 (PRODUCT LEVEL)	SEE PAGE
	1	1,2,3,4	**3S-2093**	36	STRAP-CABLE	
	2	3	**3T-5760**	2	BATTERY GP (12-VOLT, 750-CCA)	
					(EACH INCLUDES)	
		3	**123-1373**	6	CAP AS-FILLER (7/8-9-THD)	
	3	2,3	**4I-5399**	2	GROMMET	
	4	3	**4I-5479**	2	CLAMP	
	5	3	**4I-5480**	3	WASHER (11X72X3-MM THK)	
	6	2	**5I-4365**	1	GROMMET	
	7	3	**5I-8270**	1	COVER-BATTERY	
	8	3	**5I-9368**	1	SPACER (9.24X13.72X20.5-MM THK)	
	9	3	**6W-6005**	1	HOLD-DOWN-BATTERY	
	10	3	**7I-2673**	1	STRAP-CABLE	
	11	1,2,3,4	**7K-1181**	25	STRAP-CABLE	
	12	1	**7Y-5456**	2	GROMMET	
	13	2	**093-2068**	1	GROMMET	
	14	1,2,3,4	**111-4836**	13	CLIP	
	15	1,2,3	**111-4837**	7	CLIP	
	16	1,2,3	**111-4838**	12	CLIP	
	17	1,2,3	**111-4839**	12	STRAP	
	18	2,3,4	**116-0118**	11	CLIP	
	19	1	**121-1076**	1	GROMMET	
	20	2,4	**132-1805**	2	STRAP AS-GROUND	
	21	3	**170-6929**	1	CABLE AS	
E		3	**5P-0761**		CABLE (00-GA, RED) (31-CM)	
		3	**9G-0002**	1	COVER AS-TERMINAL (RED)	
		3	**9G-0005**	1	COVER AS-TERMINAL (BLACK)	
					(EACH TERMINAL COVER INCLUDES)	
		3	**8L-8413**	1	STRAP-CABLE (WHITE)	
		3	**8C-5918**	1	TERMINAL AS-BATTERY (NEGATIVE)	
		3	**8T-9756**	1	TERMINAL AS-BATTERY (POSITIVE)	
	22	3	**238-2501**	1	KNOB	
	23	3	**238-2528**	1	ROD	
	24	4	**259-5303**	1	BRACKET AS	
	25	3	**267-7683**	1	BRACKET AS	
	26	1	**267-7689**	1	BRACKET AS	
	27	2	**306-8678**	1	HARNESS AS-CHASSIS	
	28	3	**275-7131**	1	CABLE AS	
		3	**1S-7252**	1	TERMINAL-CABLE (00-GA, 3/8-IN SCREW)	
E		3	**5P-0761**		CABLE (00-GA, RED) (279-CM)	
		3	**8N-0869**	1	COVER-TERMINAL (RED) (STARTING MOTOR)	
		3	**8N-1725**	1	COVER AS-TERMINAL (RED) (BATTERY POSITIVE)	
		3	**8L-8413**	1	STRAP-CABLE (WHITE)	
		3	**3S-6049**		TERMINAL AS-BATTERY (POSITIVE)	
		3	**1M-6119**	1	BOLT (5/16-18X1.375-IN)	
		3	**1M-6120**	1	NUT (5/16-18-THD)	
	29	2	**275-7132**	1	CABLE AS	
		2	**1S-7252**	1	TERMINAL-CABLE (00-GA, 3/8-IN SCREW)	
E		2	**5P-0747**		CABLE (00-GA, BLACK) (101-CM)	

275-7050 **BATTERY & WIRING GP (**contd.**)** **i05189691**

NOTE	REF NO	GRAPHIC REF	PART NUMBER	QTY	PART NAME 1 2 3 4 5 6 (PRODUCT LEVEL)	SEE PAGE
		2	**7N-5274**	1	COVER AS-TERMINAL (BLACK) (BATTERY NEGATIVE)	
		2	**8L-8413**	1	STRAP-CABLE (WHITE)	
		2	**9G-8909**	1	COVER-TERMINAL (BLACK) (DISCONNECT SWITCH)	
		2	**3S-6050**	1	TERMINAL AS-BATTERY (NEGATIVE)	
		2	**1M-6119**	1	BOLT (5/16-18X1.375-IN)	
		2	**1M-6120**	1	NUT (5/16-18-THD)	
	30	3	**283-2662**	1	BRACKET AS	
	31	2	**291-7760**	1	BRACKET AS	
	32	2	**299-2901**	1	GROMMET	
	33	4	**306-8531**	1	BRACKET AS	
	34	4	**091-9035**	2	SPACER (11X25X20-MM THK)	
	35	2	**132-5789**	2	CLIP (LADDER)	
	36	3	**1R-6072**	1	GROMMET	
	37	2,3	**4K-8864**	4	CLIP (LOOP)	
	38	2,3,4	**4P-7581**	10	CLIP (LADDER)	
	39	4	**4P-8134**	1	CLIP (LADDER)	
M	40	3	**5C-7261**	1	NUT (M8X1.25-THD)	
M	41	2	**5C-7883**	4	BOLT-SOCKET HEAD (M6X1X16-MM)	
	42	2,3	**6D-4246**	4	CLIP (LOOP)	
	43	2,3	**6G-2263**	3	SPACER (10.5X19X28.5-MM THK)	
M	44	3	**7X-2619**	1	BOLT (M6X1X10-MM)	
M	45	2,4	**7X-2621**	5	BOLT (M10X1.5X12-MM)	
M	46	3	**7Y-5226**	1	NUT (M5X0.8-THD)	
M	47	3	**8C-8451**	1	BOLT (M6X1X40-MM)	
	48	3	**8J-1256**	1	CLIP	
	50	3	**8T-0328**	1	WASHER-HARD (5.5X10X1-MM THK)	
	51	1,2,3,4	**8T-4121**	68	WASHER-HARD (11X21X2.5-MM THK)	
M	52	3	**8T-4133**	1	NUT (M10X1.5-THD)	
M	53	1,2,3	**8T-4136**	5	BOLT (M10X1.5X25-MM)	
M	54	1,2,3,4	**8T-4137**	51	BOLT (M10X1.5X20-MM)	
M	55	4	**8T-4179**	2	BOLT (M12X1.75X20-MM)	
M	56	2,3	**8T-4185**	3	BOLT (M10X1.5X50-MM)	
M	57	4	**8T-4186**	2	BOLT (M10X1.5X40-MM)	
M	58	4	**8T-4191**	3	BOLT (M10X1.5X16-MM)	
	59	4	**8T-4223**	2	WASHER-HARD (13.5X25.5X3-MM THK)	
	61	3	**8T-4226**	1	WASHER-PLATED (10.5X45X3-MM THK)	
	62	2,3	**9X-8256**	6	WASHER (6.6X12X2-MM THK)	
E	63	1	**107-1678**		GUARD (9-CM)	
M	64	2	**8T-5005**	1	BOLT (M10X1.5X70-MM)	
	65	2	**4I-7889**	1	SPACER (11X25X45-MM THK)	
	66	4	**4P-7428**	1	CLIP (LADDER)	
B	67	4	**135-8573**	1	BOLT AS	
E	68	2	**102-1173**		GUARD (8-CM)	

B - USE AS REQUIRED
E - ORDER BY THE CENTIMETER
M - METRIC PART

275-7050 **BATTERY & WIRING GP (**contd.**)** **i05189691**

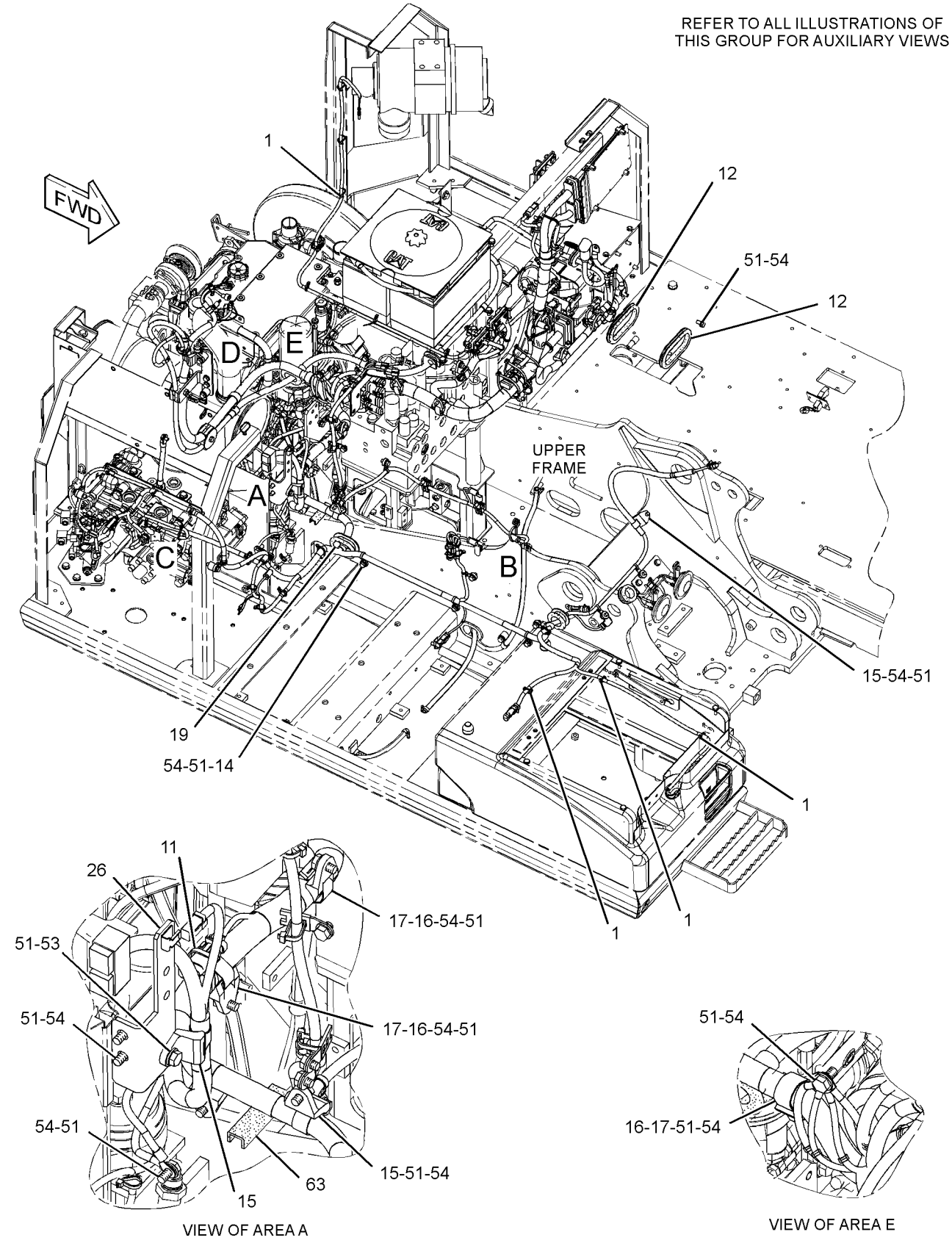

GRAPHIC #1 g01528474

275-7050 **BATTERY & WIRING GP (**contd.**)** **i05189691**

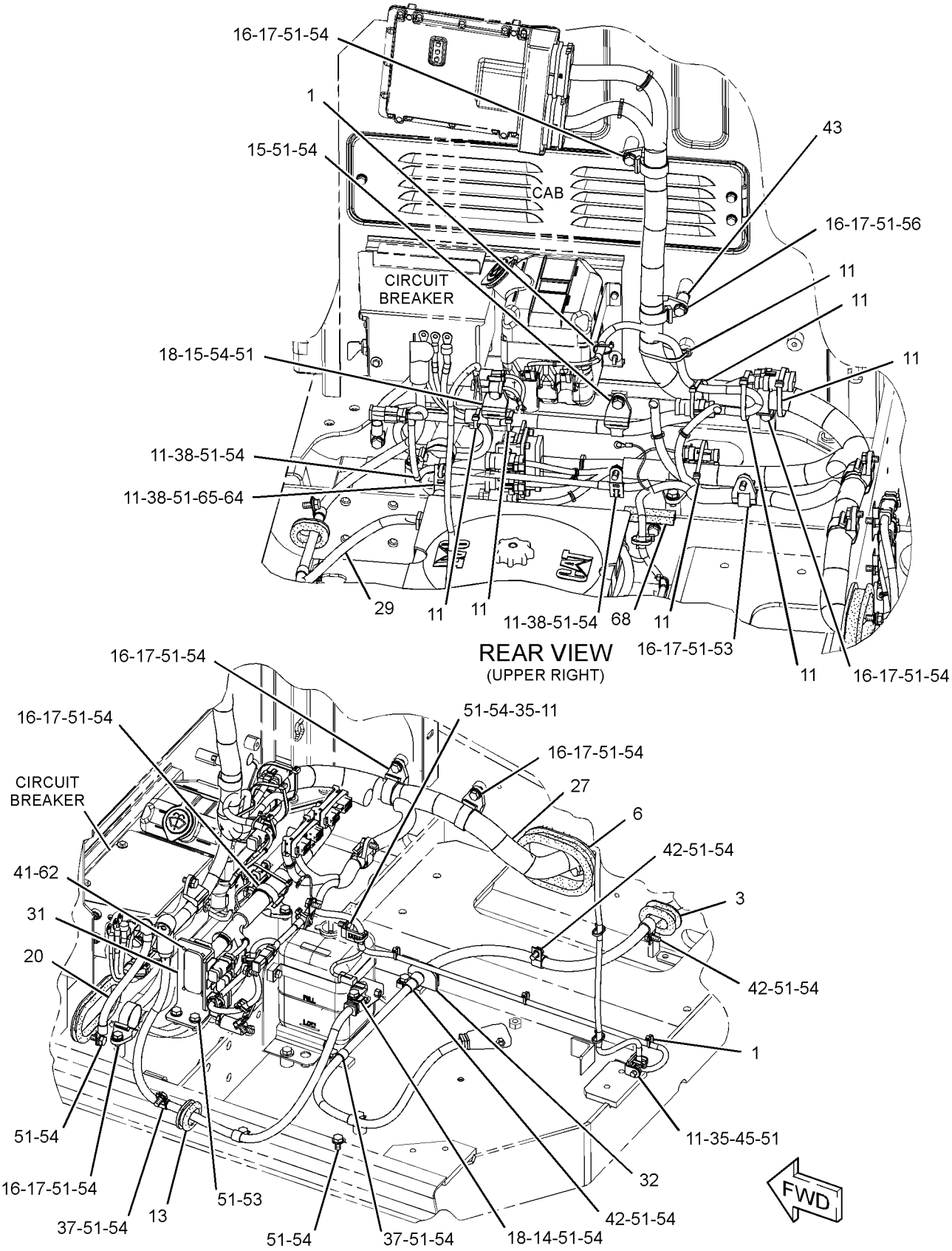

GRAPHIC #2 g01528439

275-7050 **BATTERY & WIRING GP (**contd.**)** **i05189691**

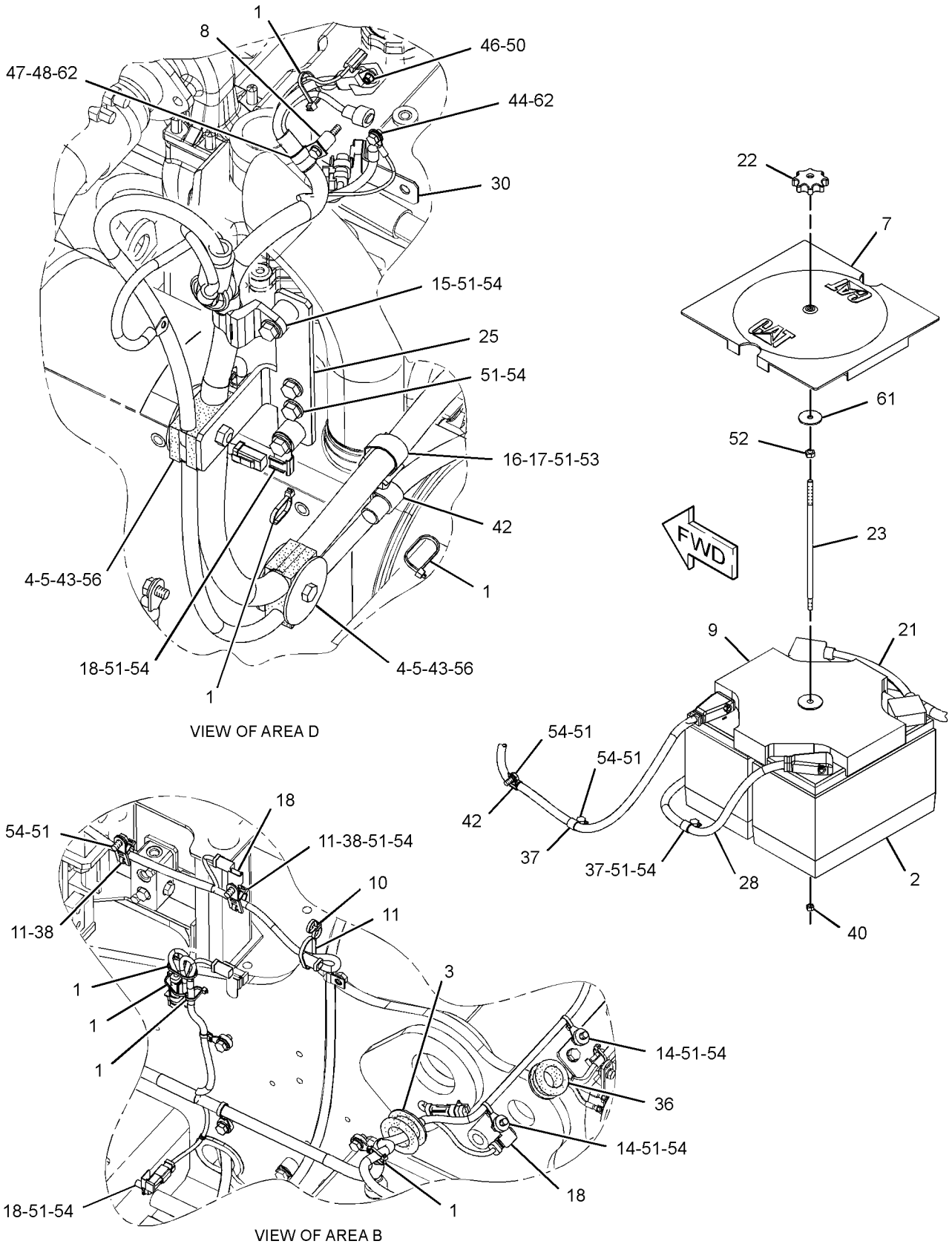

GRAPHIC #3 g01528440

275-7050 **BATTERY & WIRING GP (**contd.**)** **i05189691**

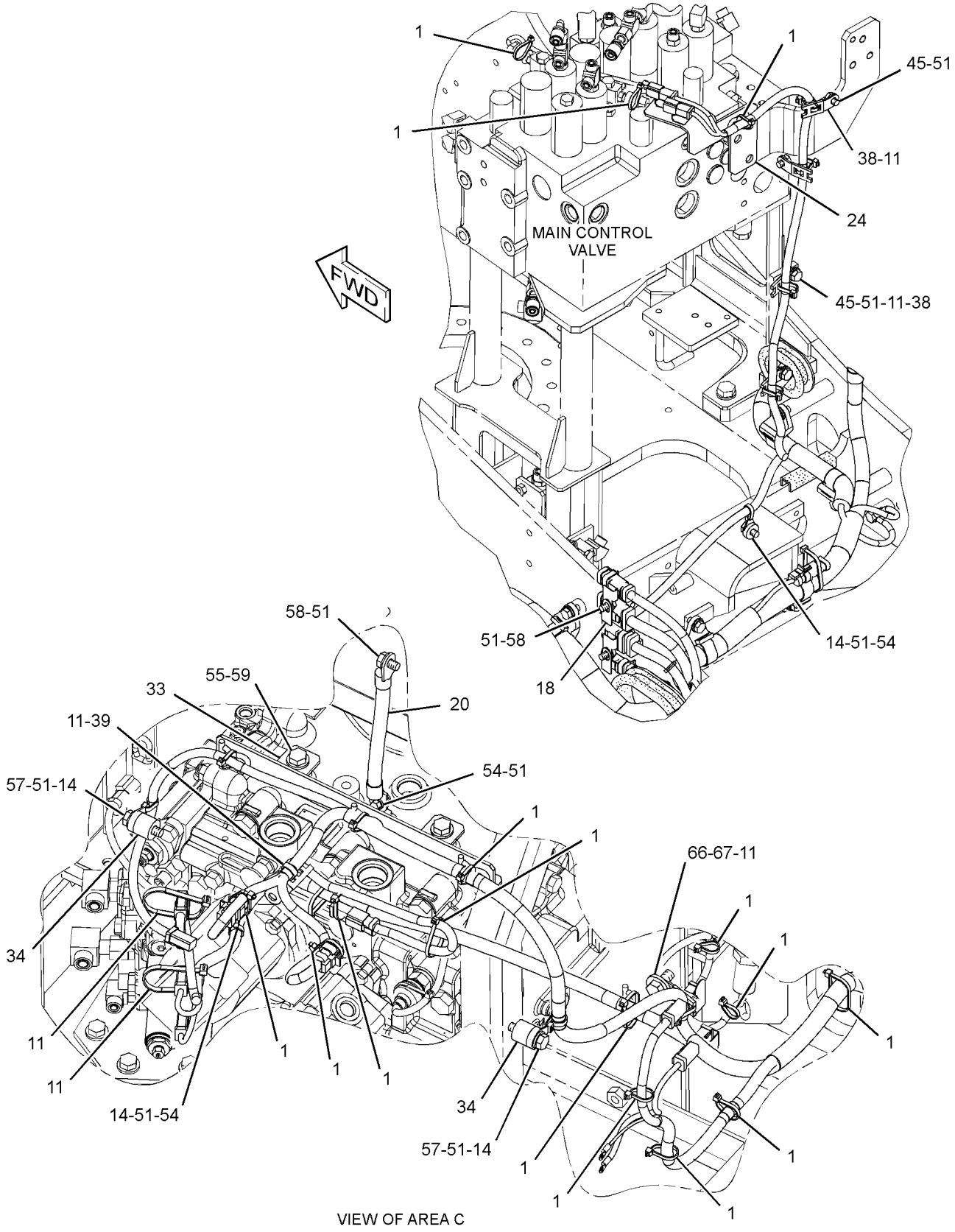

VIEW OF AREA C

GRAPHIC #4 <END> g01528478

275-7050 BATTERY & WIRING GP

S/N: DLP220-308

PART OF 301-2680 CHASSIS AR

SMCS-1401, 1402, 1408 **i05189690**

NOTE	REF NO	GRAPHIC REF	PART NUMBER	QTY	PART NAME 1 2 3 4 5 6 (PRODUCT LEVEL)	SEE PAGE
	1	1,2,3,4	**3S-2093**	36	STRAP-CABLE	
	2	3	**3T-5760**	2	BATTERY GP (12-VOLT, 750-CCA)	
					(EACH INCLUDES)	
		3	**123-1373**	6	CAP AS-FILLER (7/8-9-THD)	
	3	2,3	**4I-5399**	2	GROMMET	
	4	3	**4I-5479**	2	CLAMP	
	5	3	**4I-5480**	3	WASHER (11X72X3-MM THK)	
	6	2	**5I-4365**	1	GROMMET	
	7	3	**5I-8270**	1	COVER-BATTERY	
	8	3	**5I-9368**	1	SPACER (9.24X13.72X20.5-MM THK)	
	9	3	**6W-6005**	1	HOLD-DOWN-BATTERY	
	10	3	**7I-2673**	1	STRAP-CABLE	
	11	1,2,3,4	**7K-1181**	25	STRAP-CABLE	
	12	1,2	**7Y-5456**	2	GROMMET	
C	13	2	**7Y-3195**	1	GROMMET	
	14	1,2,3,4	**111-4836**	13	CLIP	
	15	1,2,3	**111-4837**	7	CLIP	
	16	1,2,3	**111-4838**	12	CLIP	
	17	1,2,3	**111-4839**	12	STRAP	
	18	2,3,4	**116-0118**	11	CLIP	
	19	1	**121-1076**	1	GROMMET	
C	20	4	**132-1805**	1	STRAP AS-GROUND	
	21	3	**170-6929**	1	CABLE AS	
E		3	**5P-0761**		CABLE (00-GA, RED) (31-CM)	
		3	**9G-0002**	1	COVER AS-TERMINAL (RED)	
		3	**9G-0005**	1	COVER AS-TERMINAL (BLACK)	
					(EACH TERMINAL COVER INCLUDES)	
		3	**8L-8413**	1	STRAP-CABLE (WHITE)	
		3	**8C-5918**	1	TERMINAL AS-BATTERY (NEGATIVE)	
		3	**8T-9756**	1	TERMINAL AS-BATTERY (POSITIVE)	
	22	3	**238-2501**	1	KNOB	
	23	3	**238-2528**	1	ROD	
	24	4	**259-5303**	1	BRACKET AS	
	25	3	**267-7683**	1	BRACKET AS	
	26	1	**267-7689**	1	BRACKET AS	
	27	2	**306-8678**	1	HARNESS AS-CHASSIS	
	28	3	**275-7131**	1	CABLE AS	
		3	**1S-7252**	1	TERMINAL-CABLE (00-GA, 3/8-IN SCREW)	
E		3	**5P-0761**		CABLE (00-GA, RED) (279-CM)	
		3	**8N-0869**	1	COVER-TERMINAL (RED) (STARTING MOTOR)	
		3	**8N-1725**	1	COVER AS-TERMINAL (RED) (BATTERY POSITIVE)	
		3	**8L-8413**	1	STRAP-CABLE (WHITE)	
		3	**3S-6049**		TERMINAL AS-BATTERY (POSITIVE)	
		3	**1M-6119**	1	BOLT (5/16-18X1.375-IN)	
		3	**1M-6120**	1	NUT (5/16-18-THD)	
C	29	2	**328-0179**	1	CABLE AS	
		2	**1S-7252**	1	TERMINAL-CABLE (00-GA, 3/8-IN SCREW)	
E		2	**5P-0747**		CABLE (00-GA, BLACK) (96-CM)	

275-7050 **BATTERY & WIRING GP (**contd.**)** **i05189690**

NOTE	REF NO	GRAPHIC REF	PART NUMBER	QTY	PART NAME 1 2 3 4 5 6 (PRODUCT LEVEL)	SEE PAGE
		2	**7N-5274**	1	COVER AS-TERMINAL (BLACK) (BATTERY NEGATIVE)	
		2	**8L-8413**	1	STRAP-CABLE (WHITE)	
		2	**9G-8909**	1	COVER-TERMINAL (BLACK) (DISCONNECT SWITCH)	
		2	**3S-6050**	1	TERMINAL AS-BATTERY (NEGATIVE)	
		2	**1M-6119**	1	BOLT (5/16-18X1.375-IN)	
		2	**1M-6120**	1	NUT (5/16-18-THD)	
	30	3	**283-2662**	1	BRACKET AS	
	31	2	**291-7760**	1	BRACKET AS	
	32	2	**299-2901**	1	GROMMET	
	33	4	**306-8531**	1	BRACKET AS	
	34	4	**091-9035**	2	SPACER (11X25X20-MM THK)	
	35	2	**132-5789**	2	CLIP (LADDER)	
	36	3	**1R-6072**	1	GROMMET	
C	37	2,3	**4K-8864**	3	CLIP (LOOP)	
	38	2,3,4	**4P-7581**	10	CLIP (LADDER)	
	39	4	**4P-8134**	1	CLIP (LADDER)	
M	40	3	**5C-7261**	1	NUT (M8X1.25-THD)	
M	41	2	**5C-7883**	4	BOLT-SOCKET HEAD (M6X1X16-MM)	
	42	2,3	**6D-4246**	4	CLIP (LOOP)	
C	43	2,3	**6G-2263**	4	SPACER (10.5X19X28.5-MM THK)	
M	44	3	**7X-2619**	1	BOLT (M6X1X10-MM)	
M	45	2,4	**7X-2621**	5	BOLT (M10X1.5X12-MM)	
M	46	3	**7Y-5226**	1	NUT (M5X0.8-THD)	
M	47	3	**8C-8451**	1	BOLT (M6X1X40-MM)	
	48	3	**8J-1256**	1	CLIP	
C	49	2	**2G-8767**	2	WASHER (10.5X60X3-MM THK)	
	50	3	**8T-0328**	1	WASHER-HARD (5.5X10X1-MM THK)	
C	51	1,2,3,4	**8T-4121**	67	WASHER-HARD (11X21X2.5-MM THK)	
M	52	3	**8T-4133**	1	NUT (M10X1.5-THD)	
M	53	1,2,3	**8T-4136**	5	BOLT (M10X1.5X25-MM)	
CM	54	1,2,3,4	**8T-4137**	50	BOLT (M10X1.5X20-MM)	
M	55	4	**8T-4179**	2	BOLT (M12X1.75X20-MM)	
CM	56	2,3	**8T-4185**	4	BOLT (M10X1.5X50-MM)	
M	57	4	**8T-4186**	2	BOLT (M10X1.5X40-MM)	
M	58	4	**8T-4191**	3	BOLT (M10X1.5X16-MM)	
	59	4	**8T-4223**	2	WASHER-HARD (13.5X25.5X3-MM THK)	
C	60	2	**6G-2256**	1	CLAMP	
	61	3	**8T-4226**	1	WASHER-PLATED (10.5X45X3-MM THK)	
	62	2,3	**9X-8256**	6	WASHER (6.6X12X2-MM THK)	
E	63	1	**107-1678**		GUARD (9-CM)	
M	64	2	**8T-5005**	1	BOLT (M10X1.5X70-MM)	
	65	2	**4I-7889**	1	SPACER (11X25X45-MM THK)	
	66	4	**4P-7428**	1	CLIP (LADDER)	
B	67	4	**135-8573**	1	BOLT AS	
E	68	2	**102-1173**		GUARD (8-CM)	
C	69	2	**328-0181**	1	STRAP AS-GROUND	

B - USE AS REQUIRED
C - CHANGE FROM PREVIOUS TYPE
E - ORDER BY THE CENTIMETER
M - METRIC PART

275-7050 **BATTERY & WIRING GP (**contd.**)** **i05189690**

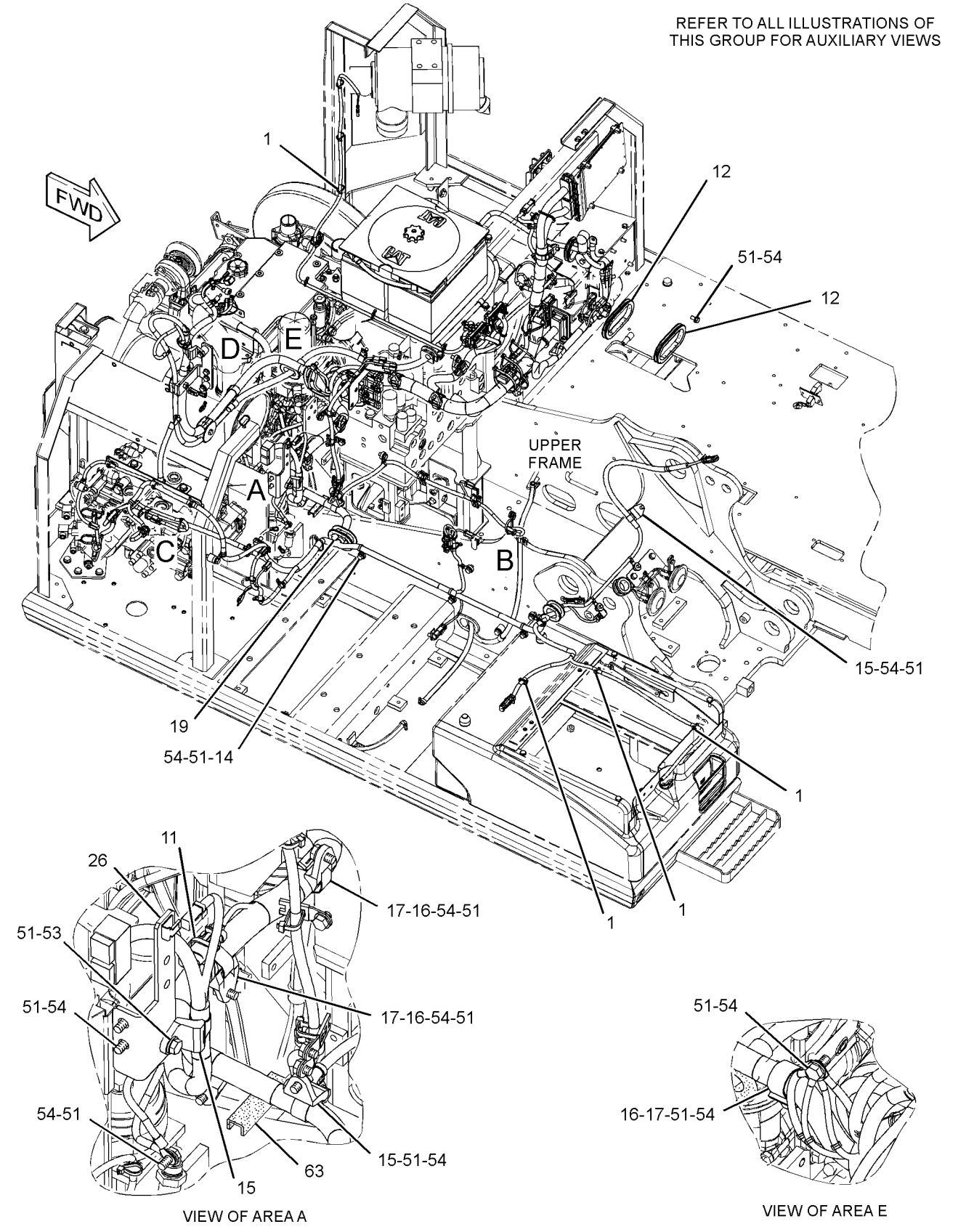

GRAPHIC #1 g01644693

275-7050 **BATTERY & WIRING GP (**contd.**)** **i05189690**

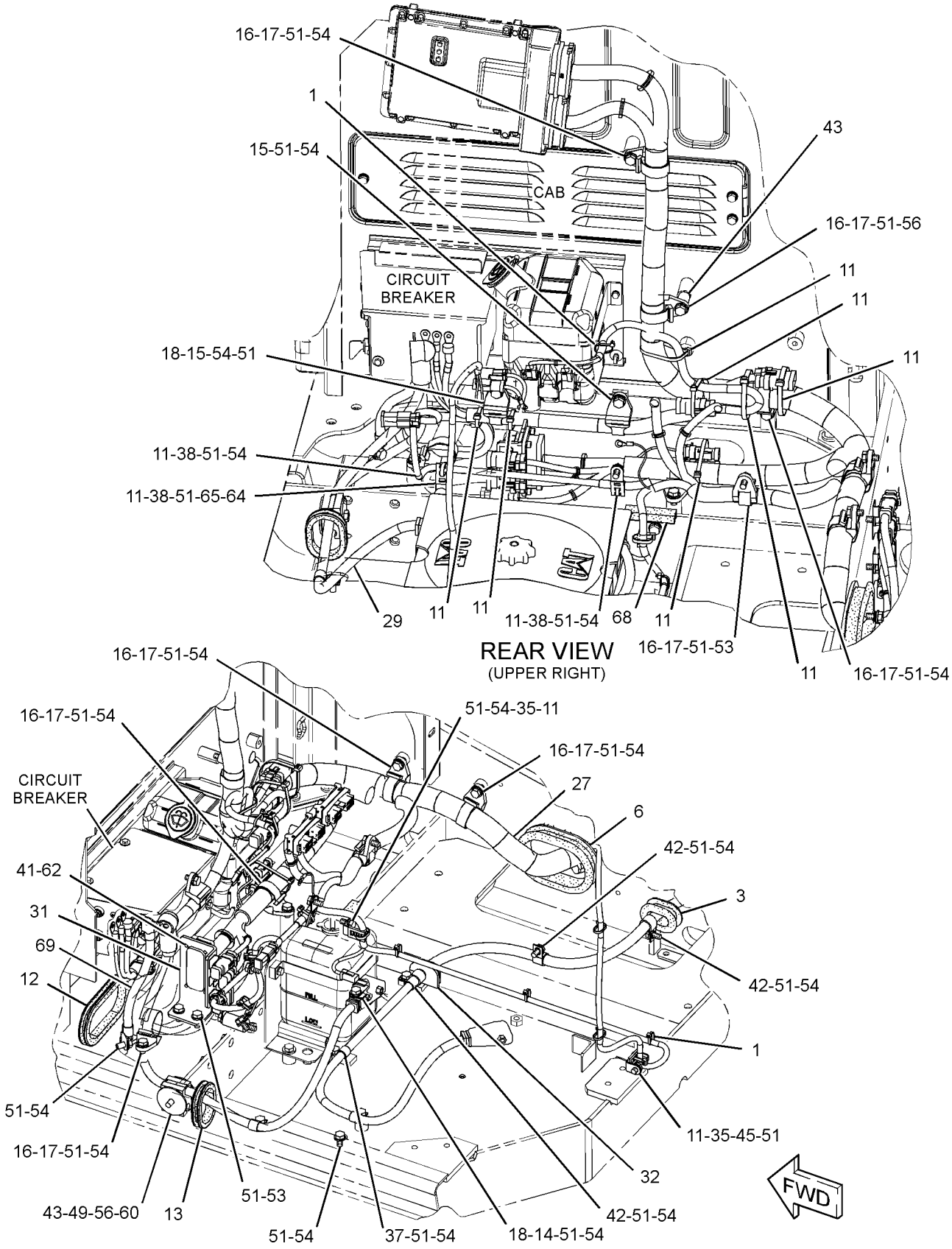

GRAPHIC #2 g01644133

275-7050 **BATTERY & WIRING GP (**contd.**)** **i05189690**

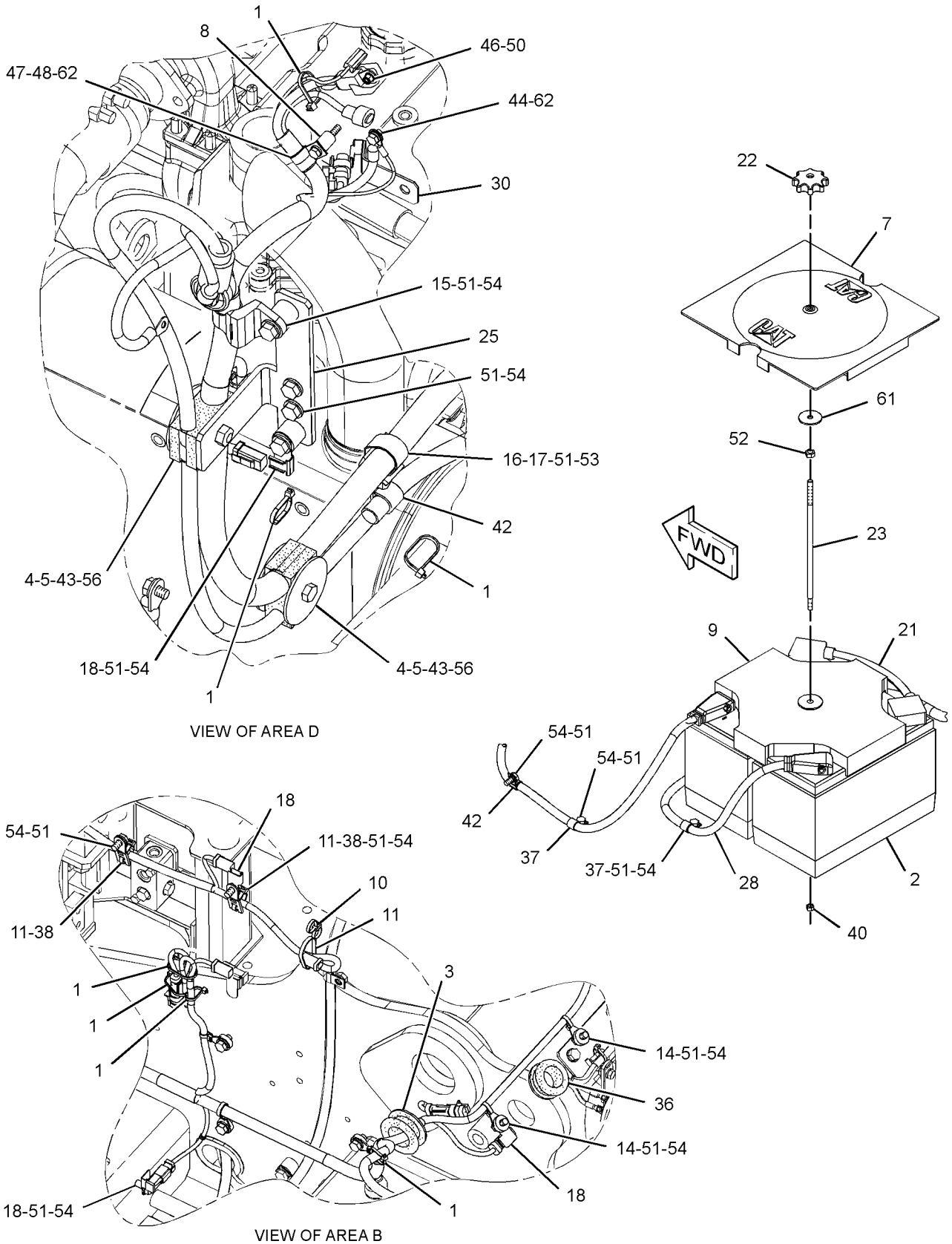

GRAPHIC #3 g01528440

275-7050 **BATTERY & WIRING GP (**contd.**)** **i05189690**

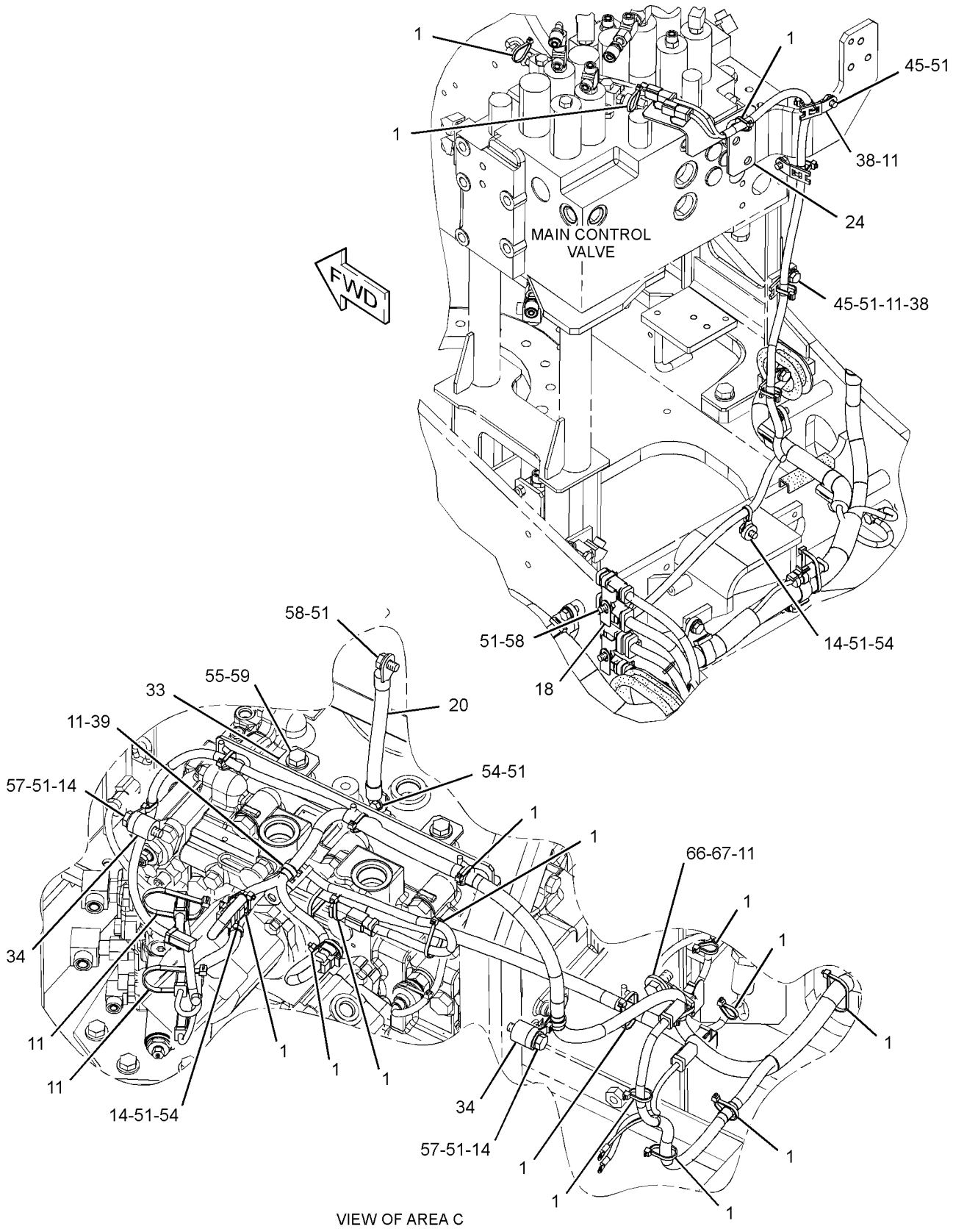

VIEW OF AREA C

GRAPHIC #4 <END> g01528478

275-7050 BATTERY & WIRING GP

S/N: DLP309-UP

PART OF 301-2680 CHASSIS AR

SMCS-1401, 1402, 1408 **i05189689**

NOTE	REF NO	GRAPHIC REF	PART NUMBER	QTY	PART NAME 1 2 3 4 5 6 (PRODUCT LEVEL)	SEE PAGE
	1	2	**2G-8767**	2	WASHER (10.5X60X3-MM THK)	
	2	1,2,3,4	**3S-2093**	36	STRAP-CABLE	
	3	3	**3T-5760**	2	BATTERY GP (12-VOLT, 750-CCA)	
					(EACH INCLUDES)	
		3	**123-1373**	6	CAP AS-FILLER (7/8-9-THD)	
	4	2,4	**4I-5399**	2	GROMMET	
	5	3	**4I-5479**	2	CLAMP	
	6	3	**4I-5480**	3	WASHER (11X72X3-MM THK)	
	7	2	**5I-4365**	1	GROMMET	
	8	3	**5I-8270**	1	COVER-BATTERY	
	9	3	**5I-9368**	1	SPACER (9.24X13.72X20.5-MM THK)	
	10	2	**6G-2256**	1	CLAMP	
	11	2,3	**6G-2263**	4	SPACER (10.5X19X28.5-MM THK)	
	12	3	**6W-6005**	1	HOLD-DOWN-BATTERY	
	13	1,2,3,4	**7K-1181**	26	STRAP-CABLE	
	14	2	**7Y-3195**	1	GROMMET	
	15	1,2	**7Y-5456**	2	GROMMET	
	16	1,2,4	**111-4836**	13	CLIP	
	17	1,2,3,4	**111-4837**	7	CLIP	
	18	2,3,4	**111-4838**	12	CLIP	
	19	2,3,4	**111-4839**	12	STRAP	
	20	1,2,4	**116-0118**	11	CLIP	
	21	4	**121-1076**	1	GROMMET	
	22	3	**132-1805**	1	STRAP AS-GROUND	
BJ	23	1	**135-8573**	1	BOLT AS	
	24	1	**170-6929**	1	CABLE AS	
E		1	**5P-0761**		CABLE (00-GA, RED) (31-CM)	
		1	**9G-0002**	1	COVER AS-TERMINAL (RED)	
		1	**9G-0005**	1	COVER AS-TERMINAL (BLACK)	
					(EACH TERMINAL COVER INCLUDES)	
		1	**8L-8413**	1	STRAP-CABLE (WHITE)	
		1	**8C-5918**	1	TERMINAL AS-BATTERY (NEGATIVE)	
		1	**8T-9756**	1	TERMINAL AS-BATTERY (POSITIVE)	
C	25	2,3	**204-1673**	3	STRAP-CABLE	
	26	3	**238-2501**	1	KNOB	
	27	3	**238-2528**	1	ROD	
	28	4	**259-5303**	1	BRACKET AS	
	29	3	**267-7683**	1	BRACKET AS	
	30	1	**267-7689**	1	BRACKET AS	
C	31	3	**275-7137**	1	BRACKET AS	
	32	3	**283-2662**	1	BRACKET AS	
	33	3	**291-7760**	1	BRACKET AS	
	34	2	**299-2901**	1	GROMMET	
C	35	2	**306-8526**	1	GROMMET	
	36	1	**306-8531**	1	BRACKET AS	
C	37	2	**319-1253**	1	BRACKET AS	
C	38	2	**328-0176**	1	HARNESS AS-CHASSIS	
		2	**102-8802**	4	KIT-RECEPTACLE (2-PIN)	

275-7050 **BATTERY & WIRING GP (**contd.**)** **i05189689**

NOTE	REF NO	GRAPHIC REF	PART NUMBER	QTY	PART NAME 1 2 3 4 5 6 (PRODUCT LEVEL)	SEE PAGE
		2	**102-8803**	2	KIT-RECEPTACLE (3-PIN)	
		2	**102-8804**	1	KIT-RECEPTACLE (4-PIN)	
					(EACH RECEPTACLE KIT INCLUDES RECEPTACLE AS & WEDGE)	
		2	**8T-8729**	16	PIN-CONNECTOR (16-GA TO 18-GA)	
		2	**8T-8730**	39	SOCKET-CONNECTOR (16-GA TO 18-GA)	
		2	**3S-2093**	21	STRAP-CABLE	
		2	**2L-8050**	1	TERMINAL-RING (6-GA, 1/4-IN SCREW)	
					—OR—	
		2	**2L-8058**	1	TERMINAL-RING (8-GA, 1/4-IN SCREW)	
		2	**9X-0196**	2	TERMINAL AS (16-GA)	
		2	**7Y-3820**	1	HOUSING-RECEPTACLE	
		2	**7Y-3821**	2	SOCKET-CONNECTOR	
		2	**7Y-3962**	1	TERMINAL-BULLET (MALE)	
		2	**7Y-3964**	1	TUBE (CONNECTOR TERMINAL)	
		2	**7Y-3963**	1	TERMINAL-BULLET (FEMALE)	
		2	**7Y-3965**	1	TUBE (RECEPTACLE TERMINAL)	
		2	**7Y-3995**	1	CONNECTOR-PLUG	
		2	**7Y-3996**	1	TERMINAL-BLADE (14-GA TO 20-GA) (FEMALE)	
		2	**8N-1549**	1	SOCKET-CONNECTOR (4-GA)	
		2	**8T-8737**	80	PLUG-SEAL	
		2	**8T-8799**	1	BOOT (RED)	
E		2	**103-2529**		HOSE (65-CM)	
		2	**9W-0852**	15	PIN-CONNECTOR (14-GA TO 16-GA)	
		2	**9W-0844**	9	SOCKET-CONNECTOR (14-GA TO 16-GA)	
E		2	**119-3662**		TUBE-HEAT SHRINK (10.85-MM DIA) (33-CM)	
E		2	**125-7874**		TUBE-HEAT SHRINK (5.72-MM DIA) (115-CM)	
E		2	**125-7875**		TUBE-HEAT SHRINK (7.44-MM DIA) (40-CM)	
		2	**9X-3402**	164	SOCKET-CONNECTOR (16-GA TO 18-GA)	
					—OR—	
		2	**126-1768**	164	SOCKET-CONNECTOR (14-GA TO 16-GA)	
		2	**126-1768**	4	SOCKET-CONNECTOR (14-GA TO 16-GA)	
		2	**127-5483**	1	PLUG AS-CONNECTOR (1-PIN)	
		2	**9G-4343**	1	TERMINAL-RING (4-GA, 1/4-IN SCREW)	
		2	**2L-8050**	4	TERMINAL-RING (6-GA, 1/4-IN SCREW)	
					—OR—	
		2	**2L-8058**	4	TERMINAL-RING (8-GA, 1/4-IN SCREW)	
		2	**2L-8052**	1	TERMINAL-RING (6-GA, 3/8-IN SCREW)	
					—OR—	
		2	**2L-8060**	1	TERMINAL-RING (8-GA, 3/8-IN SCREW)	
		2	**2L-8069**	5	TERMINAL-RING (2-GA TO 10-GA, 3/8-IN SCREW)	
		2	**2L-8075**	4	TERMINAL-RING (14-GA TO 16-GA, NO. 8 SCREW)	
		2	**2L-8077**	1	TERMINAL-RING (14-GA TO 16-GA, 1/4-IN SCREW)	
		2	**2L-8078**	1	TERMINAL-RING (14-GA TO 16-GA, 5/16-IN SCREW)	
		2	**176-9299**	2	KIT-RECEPTACLE (3-PIN)	
					(EACH INCLUDES RECEPTACLE AS & WEDGE)	
		2	**9X-3401**	58	PIN-CONNECTOR (16-GA TO 18-GA)	
		2	**153-2620**	1	PLUG AS-CONNECTOR (54-PIN, BLACK)	
		2	**163-6759**	1	SEAL	
		2	**153-2630**	1	PLUG AS-CONNECTOR (54-PIN, BROWN)	
		2	**163-6759**	1	SEAL	
		2	**155-2270**	15	KIT-CONNECTING PLUG (2-PIN)	

275-7050 **BATTERY & WIRING GP (**contd.**)** **i05189689**

NOTE	REF NO	GRAPHIC REF	PART NUMBER	QTY	PART NAME 1 2 3 4 5 6 (PRODUCT LEVEL)	SEE PAGE
		2	**155-2271**	1	KIT-CONNECTING PLUG (4-PIN)	
					(EACH PLUG KIT INCLUDES PLUG AS, WEDGE, & INTERFACE SEAL)	
		2	**163-6637**	1	RECEPTACLE AS-CONNECTOR (54-PIN, BLACK)	
		2	**174-3016**	2	PLUG AS-CONNECTOR (3-PIN)	
		2	**230-4009**	4	PLUG AS-CONNECTOR (12-PIN)	
					(EACH INCLUDES)	
		2	**264-7034**	1	SEAL-CONNECTOR	
		2	**230-4011**	7	PLUG AS-CONNECTOR (2-PIN)	
					(EACH INCLUDES)	
		2	**264-7029**	1	SEAL-CONNECTOR	
		2	**230-4013**	5	PLUG AS-CONNECTOR (3-PIN)	
					(EACH INCLUDES)	
		2	**264-7030**	1	SEAL-CONNECTOR	
		2	**230-5010**	3	PLUG AS-CONNECTOR (6-PIN)	
					(EACH INCLUDES)	
		2	**264-7032**	1	SEAL-CONNECTOR	
		2	**243-4505**	3	RECEPTACLE AS-CONNECTOR (2-PIN)	
		2	**243-4508**	1	RECEPTACLE AS-CONNECTOR (6-PIN)	
		2	**243-4510**	2	RECEPTACLE AS-CONNECTOR (12-PIN)	
		2	**245-1042**	1	PLUG AS-CONNECTOR (64-PIN)	
M		2	**267-7207**	1	BOLT-SPECIAL (M6X1-THD)	
		2	**245-1043**	1	PLUG GP-CONNECTOR (64-PIN)	
M		2	**267-7207**	1	BOLT-SPECIAL (M6X1-THD)	
		2	**245-1044**	4	LOCK-CONNECTOR	
		2	**245-1045**	1	COVER	
		2	**267-9572**	50	SOCKET-CONNECTION (18-GA)	
		2	**245-1048**	78	PLUG-CONNECTOR (1-PIN)	
		2	**245-8023**	1	PLUG AS-CONNECTOR (40-PIN)	
		2	**342-2972**	2	CAP-CONNECTOR (2-PIN)	
		2	**342-2973**	3	CAP-CONNECTOR (3-PIN)	
		2	**342-2974**	2	CAP-CONNECTOR (6-PIN)	
		2	**342-2976**	2	CAP-CONNECTOR (12-PIN)	
C	39	2	**328-0177**	1	CABLE AS	
		2	**1S-7251**	1	TERMINAL-CABLE (00-GA, 1/2-IN SCREW)	
		2	**8N-0869**	1	COVER-TERMINAL (RED) (JUNCTION BLOCK)	
		2	**030-1706**	1	TERMINAL-RING (00-GA, 1/4-IN SCREW)	
E		2	**159-8049**		CABLE (00-GA, RED) (98-CM)	
		2	**301-0091**	1	COVER-TERMINAL (RED) (DISCONNECT SWITCH)	
C	40	2	**328-0178**	1	CABLE AS	
		2	**1S-7251**	1	TERMINAL-CABLE (00-GA, 1/2-IN SCREW)	
		2	**1S-7252**	1	TERMINAL-CABLE (00-GA, 3/8-IN SCREW)	
		2	**8N-0869**	1	COVER-TERMINAL (RED)	
E		2	**159-8049**		CABLE (00-GA, RED) (241-CM)	
	41	2	**328-0181**	1	STRAP AS-GROUND	
C	42	3	**328-0323**	1	CABLE AS	
		3	**1S-7251**	1	TERMINAL-CABLE (00-GA, 1/2-IN SCREW)	
		3	**8N-1725**	1	COVER AS-TERMINAL (RED) (BATTERY POSITIVE)	
		3	**8L-8413**	1	STRAP-CABLE (WHITE)	
		3	**3S-6049**	1	TERMINAL AS-BATTERY (POSITIVE)	
		3	**1M-6119**	1	BOLT (5/16-18X1.375-IN)	
		3	**1M-6120**	1	NUT (5/16-18-THD)	

275-7050 **BATTERY & WIRING GP (**contd.**)** **i05189689**

NOTE	REF NO	GRAPHIC REF	PART NUMBER	QTY	PART NAME 1 2 3 4 5 6 (PRODUCT LEVEL)	SEE PAGE
E		3	**159-8049**		CABLE (00-GA, RED) (67-CM)	
		3	**301-0091**	1	COVER-TERMINAL (RED) (JUNCTION BLOCK)	
C	43	2	**328-0399**	1	CABLE AS	
		2	**1S-7252**	1	TERMINAL-CABLE (00-GA, 3/8-IN SCREW)	
E		2	**159-8050**		CABLE (00-GA, BLACK) (96-CM)	
		2	**7N-5274**	1	COVER AS-TERMINAL (BLACK) (BATTERY NEGATIVE)	
		2	**8L-8413**	1	STRAP-CABLE (WHITE)	
		2	**9G-8909**	1	COVER-TERMINAL (BLACK) (DISCONNECT SWITCH)	
		2	**3S-6050**	1	TERMINAL AS-BATTERY (NEGATIVE)	
		2	**1M-6119**	1	BOLT (5/16-18X1.375-IN)	
		2	**1M-6120**	1	NUT (5/16-18-THD)	
	44	1	**091-9035**	2	SPACER (11X25X20-MM THK)	
CY	45	3	*124-5814*	1	BLOCK GP-JUNCTION (BATTERY)	180
	46	2	**132-5789**	2	CLIP (LADDER)	
	47	1	**1R-6072**	1	GROMMET	
C	48	2,3	**4I-7889**	2	SPACER (11X25X45-MM THK)	
	49	1	**4P-7428**	1	CLIP (LADDER)	
	50	2,3,4	**4P-7581**	10	CLIP (LADDER)	
	51	1	**4P-8134**	1	CLIP (LADDER)	
M	52	3	**5C-7261**	1	NUT (M8X1.25-THD)	
M	53	3	**5C-7883**	4	BOLT-SOCKET HEAD (M6X1X16-MM)	
C	54	2,3	**6D-3479**	4	CLIP (LOOP)	
	55	2,3	**6D-4246**	4	CLIP (LOOP)	
M	56	3	**7X-2619**	1	BOLT (M6X1X10-MM)	
M	57	2,4	**7X-2621**	5	BOLT (M10X1.5X12-MM)	
M	58	3	**5C-2874**	1	NUT (M5X0.8-THD)	
M	59	3	**8C-8451**	1	BOLT (M6X1X40-MM)	
	60	3	**8J-1256**	1	CLIP	
	61	3	**8T-0328**	1	WASHER-HARD (5.5X10X1-MM THK)	
C	62	2	**8T-1889**	1	CLIP (SLOT)	
C	63	2	**8T-1890**	1	CLIP (TAB)	
C	64	1,2,3,4	**8T-4121**	72	WASHER-HARD (11X21X2.5-MM THK)	
M	65	3	**8T-4133**	1	NUT (M10X1.5-THD)	
CM	66	1,2,3	**8T-4136**	11	BOLT (M10X1.5X25-MM)	
CM	67	1,2,3,4	**8T-4137**	48	BOLT (M10X1.5X20-MM)	
M	68	1	**8T-4179**	2	BOLT (M12X1.75X20-MM)	
M	69	2,3	**8T-4185**	4	BOLT (M10X1.5X50-MM)	
M	70	1	**8T-4186**	2	BOLT (M10X1.5X40-MM)	
M	71	2,3	**8T-4191**	3	BOLT (M10X1.5X16-MM)	
	72	1	**8T-4223**	2	WASHER-HARD (13.5X25.5X3-MM THK)	
	73	3	**8T-4226**	1	WASHER-PLATED (10.5X45X3-MM THK)	
M	74	3	**8T-5005**	1	BOLT (M10X1.5X70-MM)	
CM	75	2	**8T-6466**	1	BOLT (M10X1.5X60-MM)	
	76	3	**9X-8256**	6	WASHER (6.6X12X2-MM THK)	
E	77	2	**102-1173**		GUARD (8-CM)	
E	78	4	**107-1678**		GUARD (9-CM)	

B - USE AS REQUIRED
C - CHANGE FROM PREVIOUS TYPE
E - ORDER BY THE CENTIMETER
J - FOR USE ON 312D
M - METRIC PART
Y - SEPARATE ILLUSTRATION

275-7050 **BATTERY & WIRING GP (**contd.**)** **i05189689**

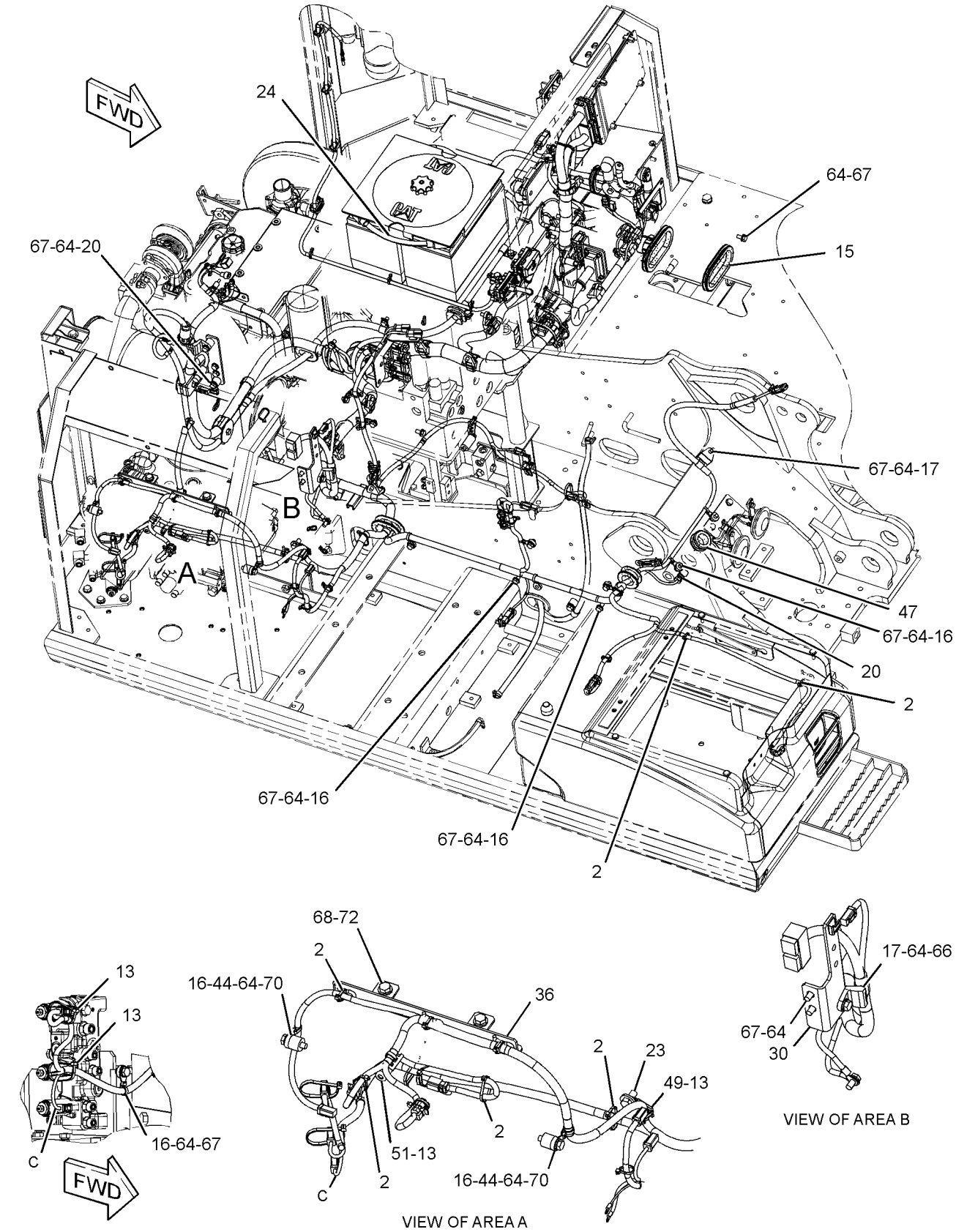

GRAPHIC #1

g02189553

275-7050 **BATTERY & WIRING GP (**contd.**)** **i05189689**

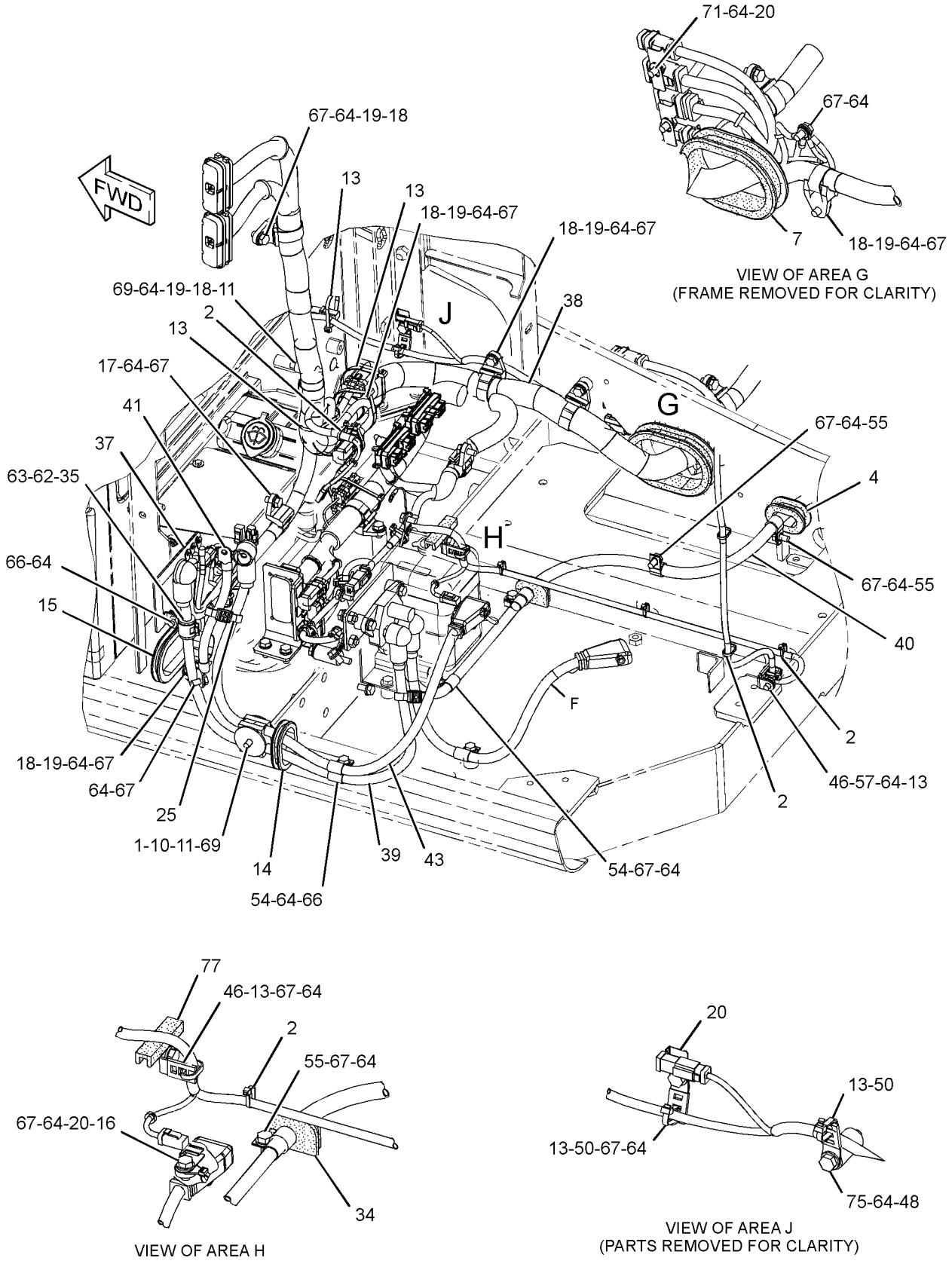

GRAPHIC #2 g02904957

275-7050 **BATTERY & WIRING GP (**contd.**)** **i05189689**

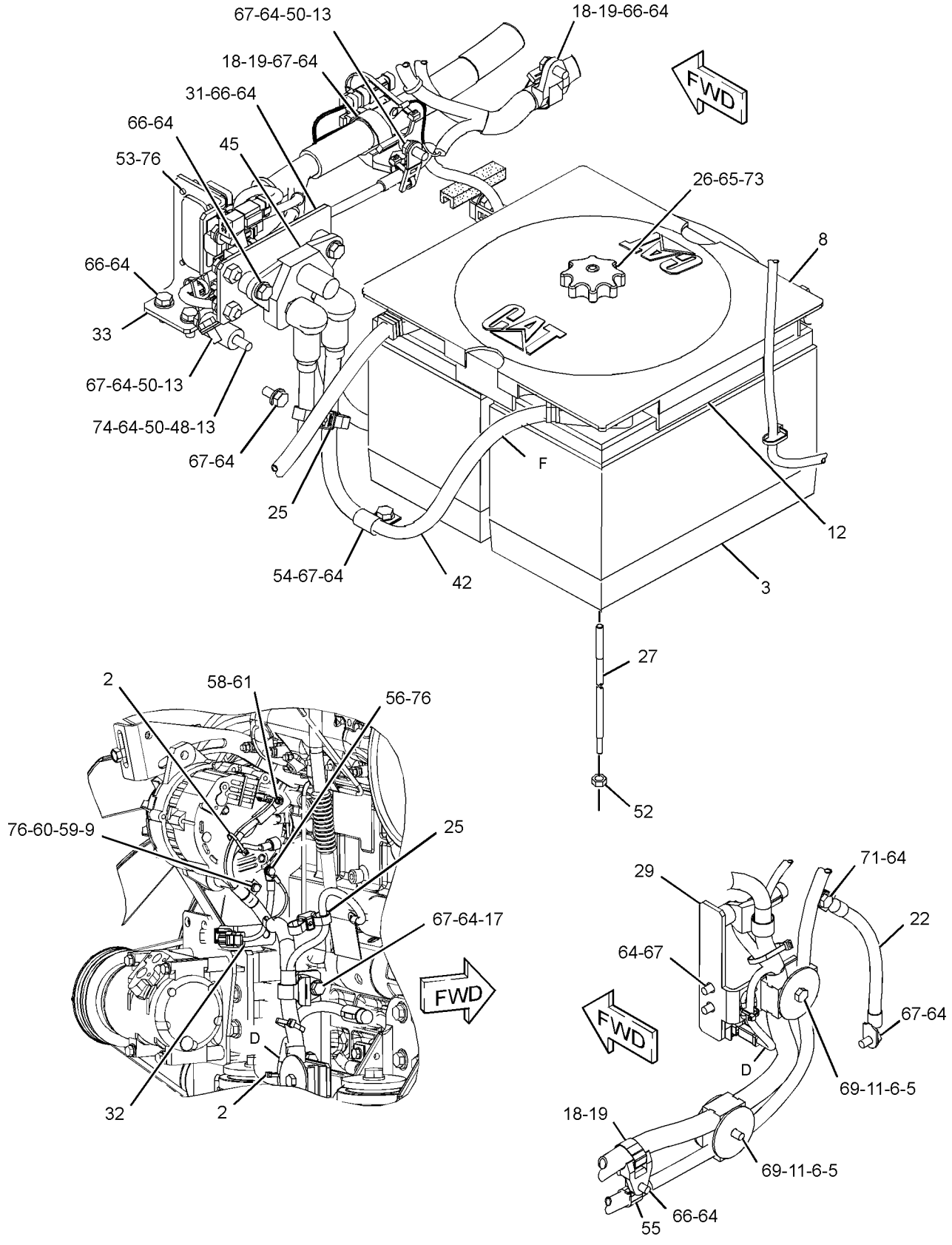

GRAPHIC #3 g02904958

275-7050 **BATTERY & WIRING GP (**contd.**)** **i05189689**

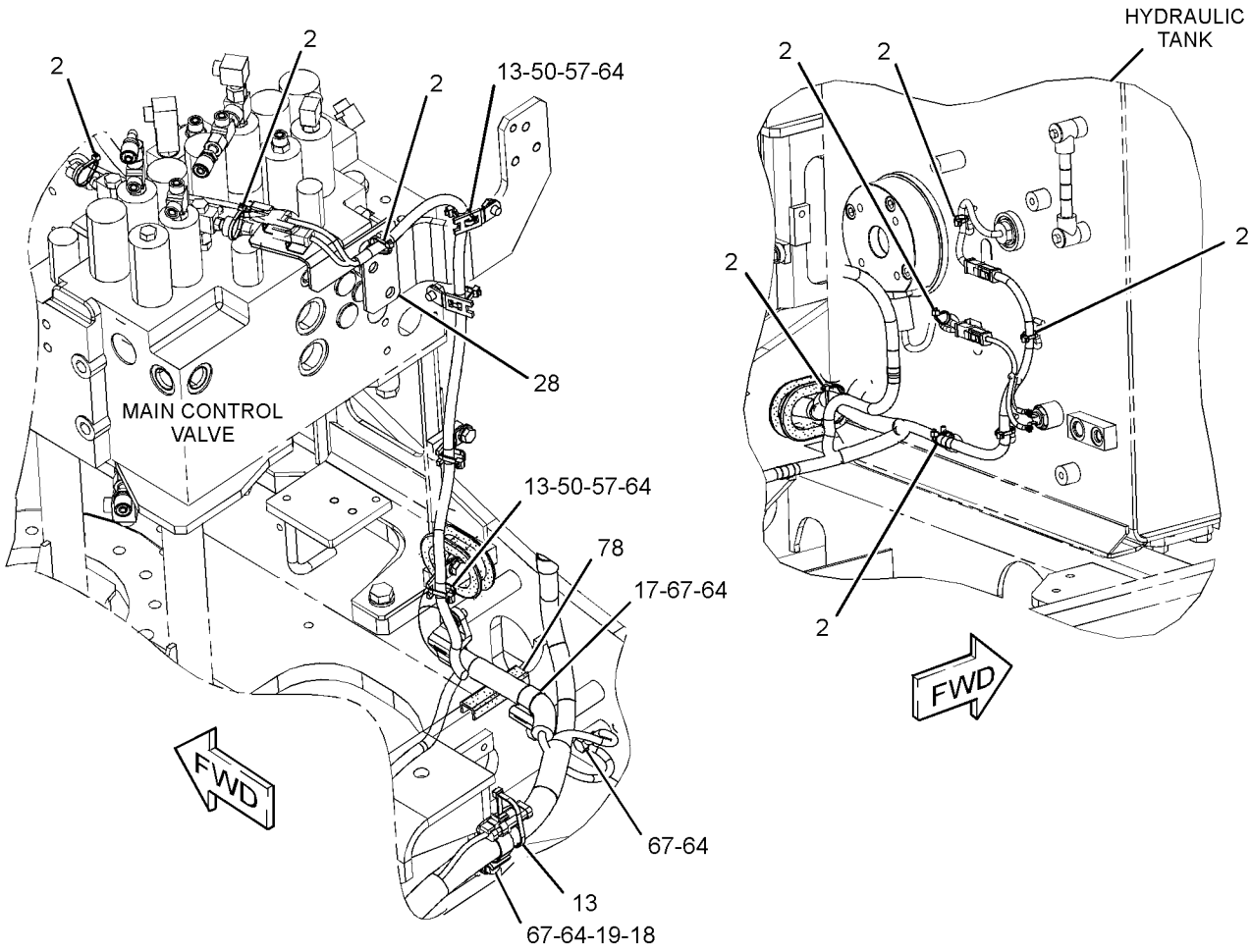

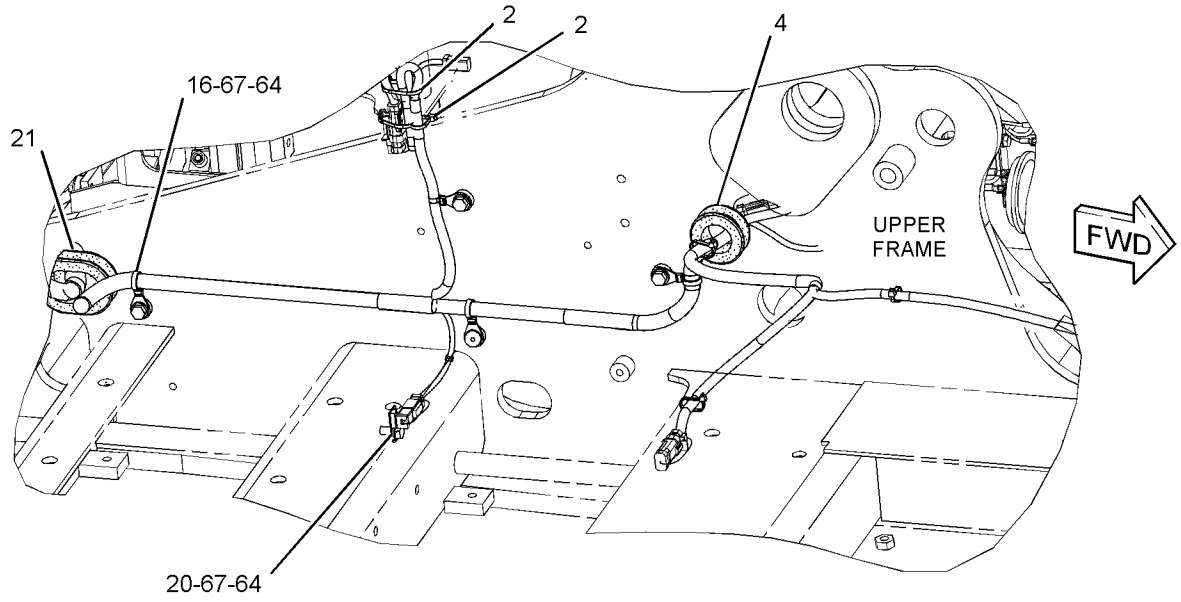

GRAPHIC #4 <END> g02189557

259-5050 BATTERY GP–COLD WEATHER

S/N: DLP1-UP
900-CCA
PART OF 298-4105 STARTING AR-COLD WEATHER
AN ATTACHMENT

SMCS-1401 **i06674312**

NOTE	REF NO	GRAPHIC REF	PART NUMBER	QTY	PART NAME 1 2 3 4 5 6 (PRODUCT LEVEL)	SEE PAGE
	1	1	**102-5420**	1	FILM-INSTRUCTION (COLD WEATHER)	
	2	1	**263-9574**	2	BATTERY (12-VOLT, MAINTENANCE FREE)	
					(EACH INCLUDES)	
		1	**123-1373**	6	CAP AS-FILLER (7/8-9-THD)	

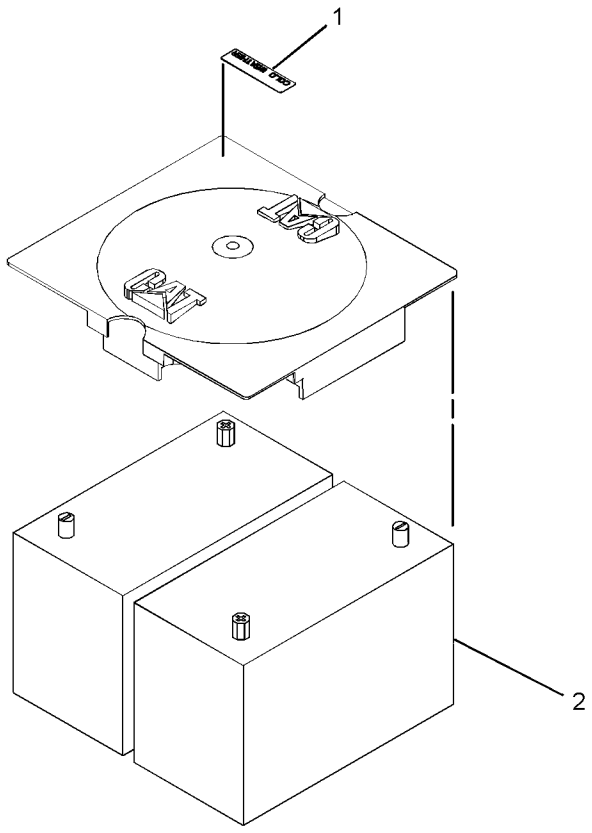

GRAPHIC #1 <END> g01226775

124-5814 BLOCK GP-JUNCTION

S/N: DLP309-UP

PART OF 275-7050 BATTERY & WIRING GP

SMCS-7426 **i05944302**

NOTE	REF NO	GRAPHIC REF	PART NUMBER	QTY	PART NAME 1 2 3 4 5 6 (PRODUCT LEVEL)	SEE PAGE
	1	1	**435-2848**	1	COVER-TERMINAL	
	2	1	**8C-6358**	1	BLOCK AS-JUNCTION (BATTERY)	
	2A	1	**8T-3518**	6	NUT-FULL (1/2-13-THD)	
	2B	1	**7F-0560**	6	WASHER (0.516X0.938X0.101-IN THK)	

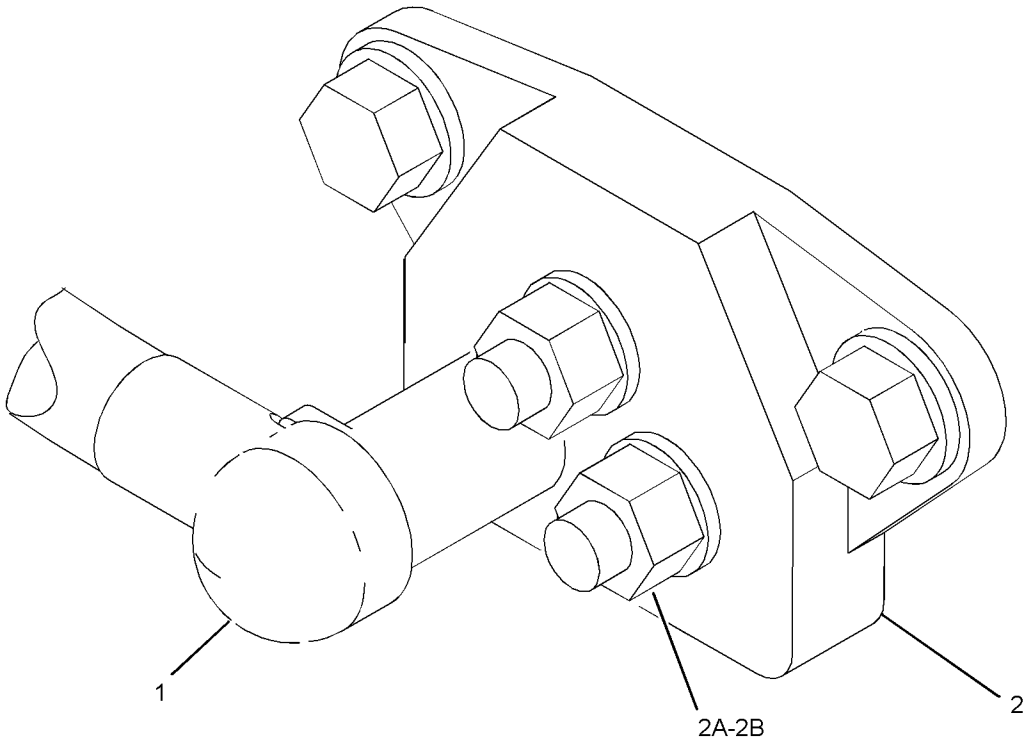

GRAPHIC #1 <END> g03732641

313-7833 CAMERA & MOUNTING GP—WORK AREA VISUAL SYSTEM, REAR

S/N: DLP1-UP

PART OF 327-3329 CAMERA & MOUNTING GP

AN ATTACHMENT

SMCS-7348 **i04097729**

NOTE	REF NO	GRAPHIC REF	PART NUMBER	QTY	PART NAME 1 2 3 4 5 6 (PRODUCT LEVEL)	SEE PAGE
	1	1	**3S-2093**	1	STRAP-CABLE	
Y	2	1	**336-6684**	1	CAMERA GP (12-VOLT, 24-VOLT) (WORK AREA VISUAL SYSTEM, REAR)	185
	3	1	**320-5392**	1	BRACKET AS	
M	4	1	**5C-9553**	2	BOLT (M6X1X16-MM)	
	5	1	**9X-8256**	2	WASHER (6.6X12X2-MM THK)	

M - METRIC PART
Y - SEPARATE ILLUSTRATION

313-7833 **CAMERA & MOUNTING GP (**contd.**)** **i04097729**

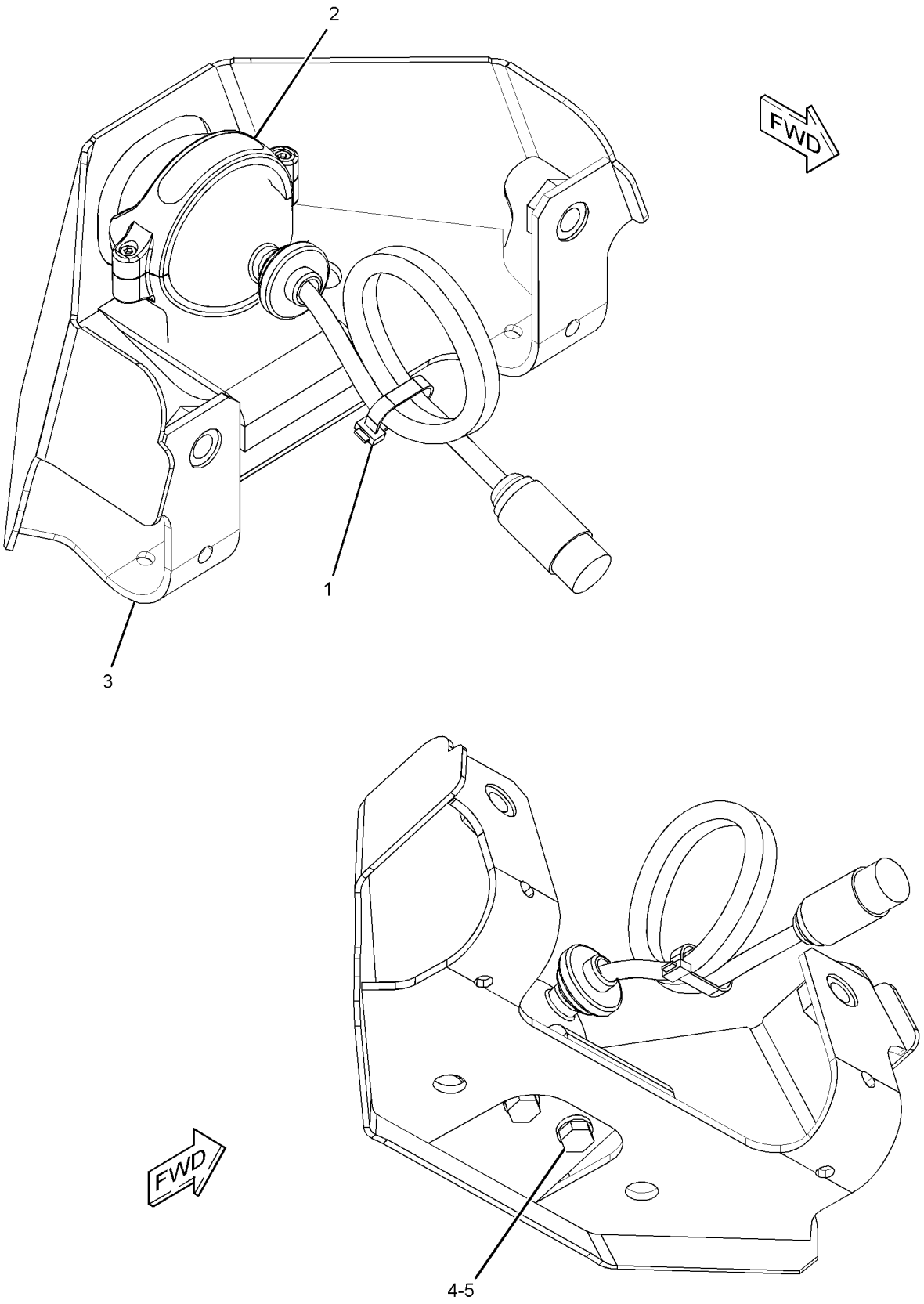

GRAPHIC #1 <END> g02034396

327-3329 CAMERA & MOUNTING GP—WORK AREA VISUAL SYSTEM, REAR

S/N: DLP1-UP

PART OF 330-8749 CAMERA & WIRING GP

AN ATTACHMENT

SMCS-7348 **i05457529**

NOTE	REF NO	GRAPHIC REF	PART NUMBER	QTY	PART NAME 1 2 3 4 5 6 (PRODUCT LEVEL)	SEE PAGE
Y	1	1	*313-7833*	1	CAMERA & MOUNTING GP (WORK AREA VISUAL SYSTEM, REAR)	181
	2	1	**320-5396**	1	COVER	
	3	1	**8T-4121**	4	WASHER-HARD (11X21X2.5-MM THK)	
M	4	1	**8T-4137**	4	BOLT (M10X1.5X20-MM)	

M - METRIC PART
Y - SEPARATE ILLUSTRATION

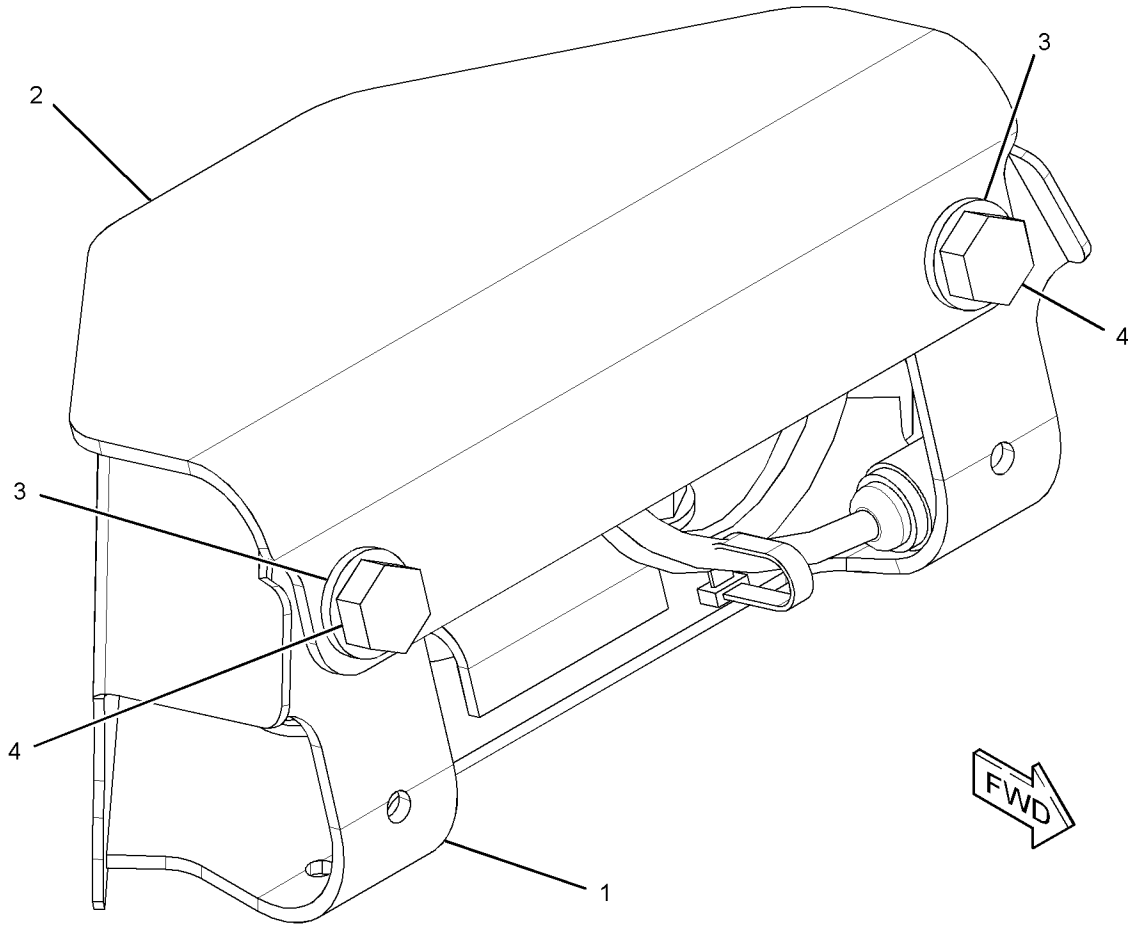

GRAPHIC #1 <END> g01609019

330-8749 CAMERA & WIRING GP

S/N: DLP1-UP

PART OF 330-8748 INSTALLATION AR

AN ATTACHMENT

SMCS-7348 **i03148028**

NOTE	PART NUMBER	QTY	PART NAME 1 2 3 4 5 6 (PRODUCT LEVEL)	SEE PAGE
Y	*327-3329*	1	CAMERA & MOUNTING GP (WORK AREA VISUAL SYSTEM, REAR)	183
Y	*303-2787*	1	FILM GP (WORK AREA VISUAL SYSTEM, REAR)	1207
Y	*328-0079*	1	WIRING GP-CAMERA	285
Y	*328-0048*	1	WIRING GP-CAB (WORK AREA VISUAL SYSTEM, REAR)	284

Y - SEPARATE ILLUSTRATION

<END>

336-6684 CAMERA GP—WORK AREA VISUAL SYSTEM, REAR

S/N: DLP1-UP
12-VOLT, 24-VOLT
PART OF 313-7833 CAMERA & MOUNTING GP
AN ATTACHMENT

SMCS-7348 **i05448410**

NOTE	REF NO	GRAPHIC REF	PART NUMBER	QTY	PART NAME 1 2 3 4 5 6 (PRODUCT LEVEL)	SEE PAGE
					AVAILABLE REPAIR KIT(S):	
			251-4162	1	KIT-BRACKET (CAMERA)	
					(INCLUDES BRACKET, BOLTS, LOCK NUTS, GASKET & ALLEN KEY)	

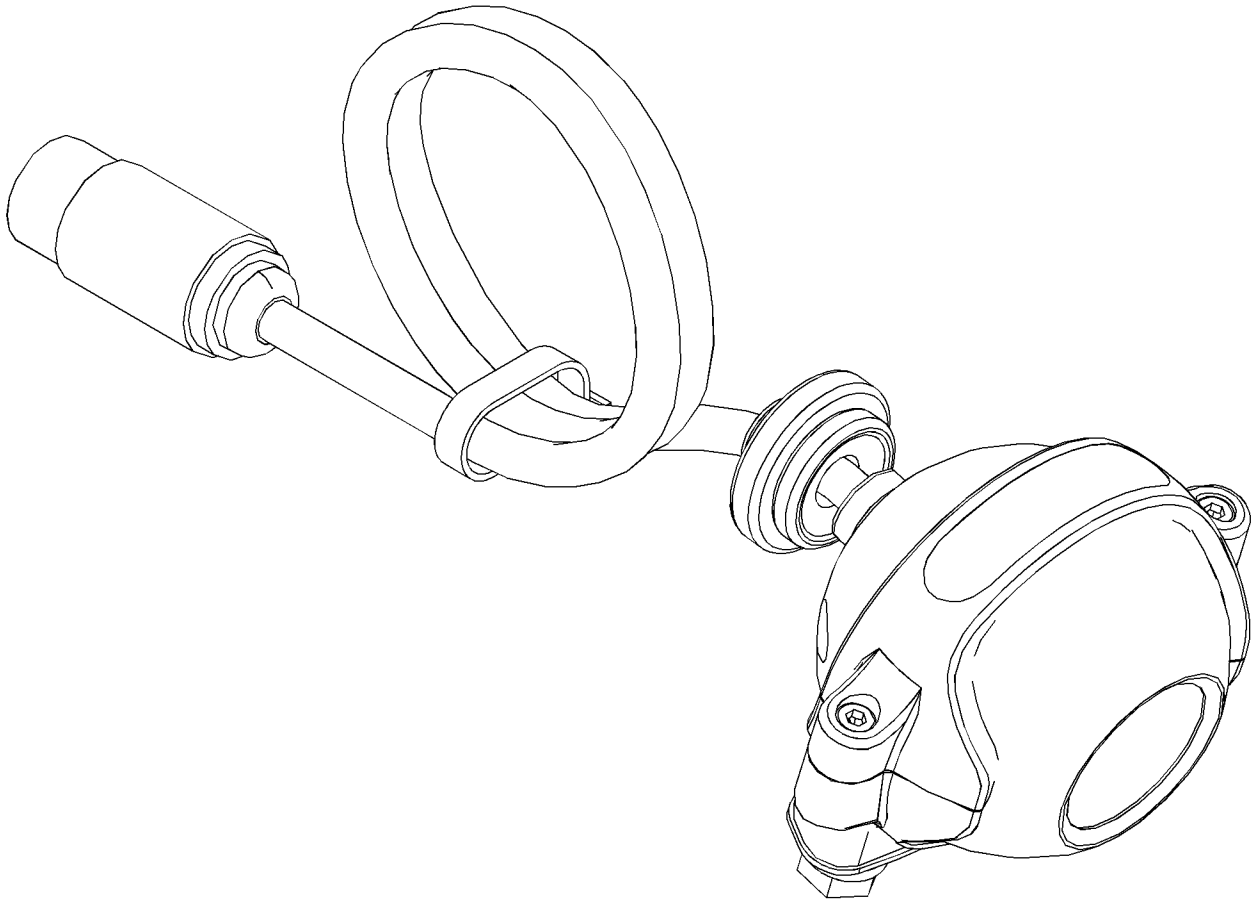

GRAPHIC #1 <END> g02034339

366-9353 CONTROL & MTG GP-COMMUNICATION–PRODUCT LINK

CELLULAR

S/N: DLP1-UP

PART OF 367-8780 CONTROL AR-COMMUNICATION

AN ATTACHMENT

SMCS-7606 **i04507950**

NOTE	REF NO	GRAPHIC REF	PART NUMBER	QTY	PART NAME 1 2 3 4 5 6 (PRODUCT LEVEL)	SEE PAGE
	1	1	**8C-5608**	4	SPACER (6.5X9.5X25.4-MM THK)	
	2	1	**9X-9896**	8	MOUNT (ISOLATION)	
	3	1	**373-8962**	1	BRACKET AS	
Y	4	1	*376-4616*	1	CONTROL GP-COMMUNICATION (PRODUCT LINK CELLULAR, CHINA)	189
M	5	1	**8C-8451**	4	BOLT (M6X1X40-MM)	
	6	1	**9X-6165**	4	WASHER (6.5X22X2.5-MM THK)	
	7	1	**230-1341**	1	FILM-WARNING (PRODUCT LINK RADIO, INTL)	
	8	1	**307-0047**	1	FILM-INFORMATION (PRODUCT LINK, READ OMM)	

M - METRIC PART
Y - SEPARATE ILLUSTRATION

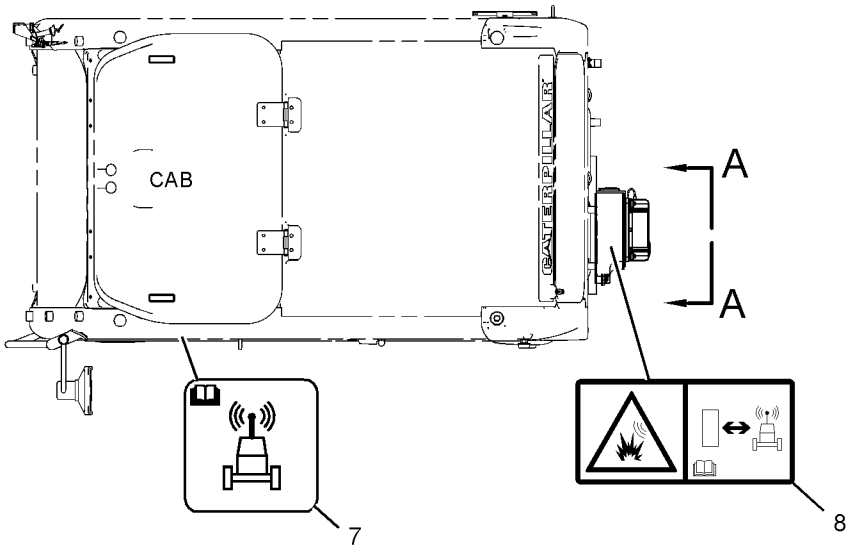

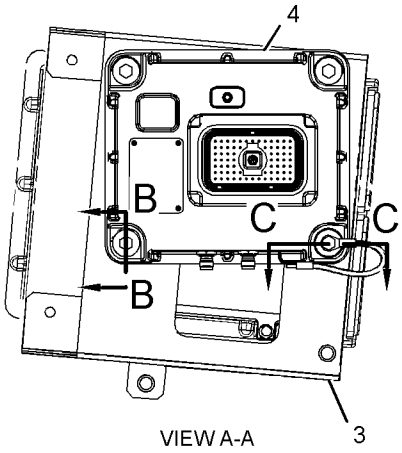

VIEW A-A

FWD TOP VIEW

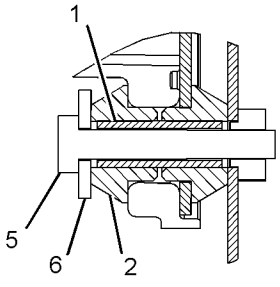

SECTION B-B

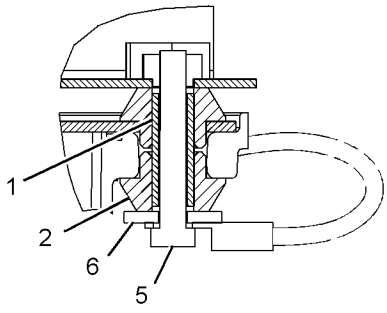

SECTION C-C

GRAPHIC #1 <END> g02683703

296-4800 CONTROL & MTG GP-ENGINE ELEK

S/N: JKH1-UP
PART OF 279-7814, 420-2179 ENGINE AR
ALSO AN ATTACHMENT

SMCS-1901 **i04426550**

NOTE	REF NO	GRAPHIC REF	PART NUMBER	QTY	PART NAME 1 2 3 4 5 6 (PRODUCT LEVEL)	SEE PAGE
	1	1	**296-4761**	1	BRACKET	
M	2	1	**296-4762**	3	BOLT (M4X0.7X16-MM)	
	3	1	**294-1775**	2	BOLT (M10X1.5X23-MM)	
R	4	1	**331-7539**	1	CONTROL GP-UNPROGRAMMED (ENGINE)	
	5	1	**270-6259**	4	BOLT (M8X1.25X40-MM)	
	6	1	**8T-4224**	4	WASHER-HARD (8.8X16X2-MM THK)	
	7	1	**155-0576**	8	MOUNT-ISOLATION	
	8	1	**6I-1418**	4	SPACER (8.2X12.7X28.7-MM THK)	

M - METRIC PART
R - REMANUFACTURED PART MAY BE AVAILABLE

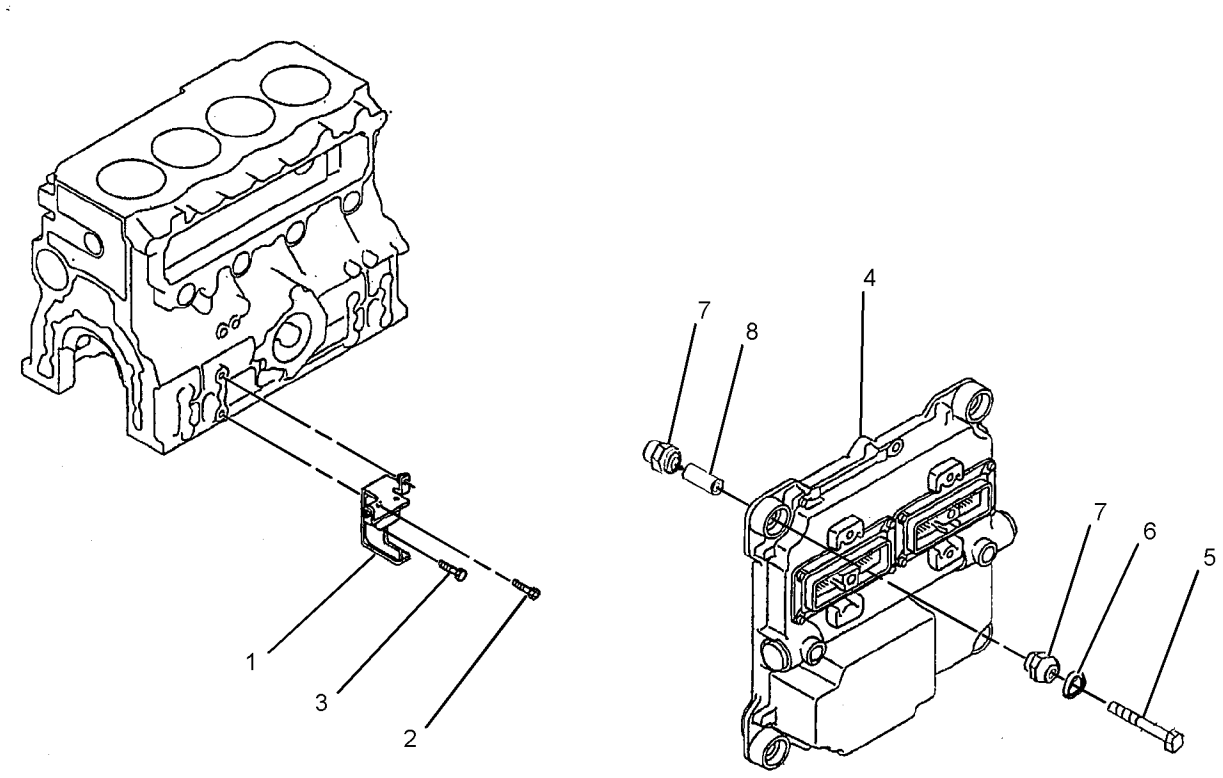

GRAPHIC #1 <END> g01402501

221-8872 CONTROL & MTG GP-MACHINE

S/N: DLP1-UP

PART OF 273-5363, 340-6773, 383-5596 OPERATOR AR

SMCS-1931, 7600

i04991732

NOTE	REF NO	GRAPHIC REF	PART NUMBER	QTY	PART NAME 1 2 3 4 5 6 (PRODUCT LEVEL)	SEE PAGE
R	1	1	**366-8821**	1	CONTROL GP-UNPROGRAMMED	
M	2	1	**7X-2534**	4	BOLT (M6X1X50-MM)	
	3	1	**9X-8256**	4	WASHER (6.6X12X2-MM THK)	

M - METRIC PART
R - REMANUFACTURED PART MAY BE AVAILABLE

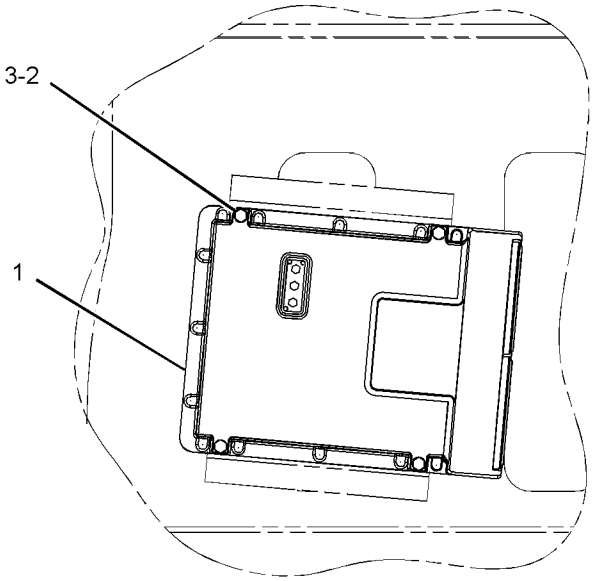

VIEW A-A

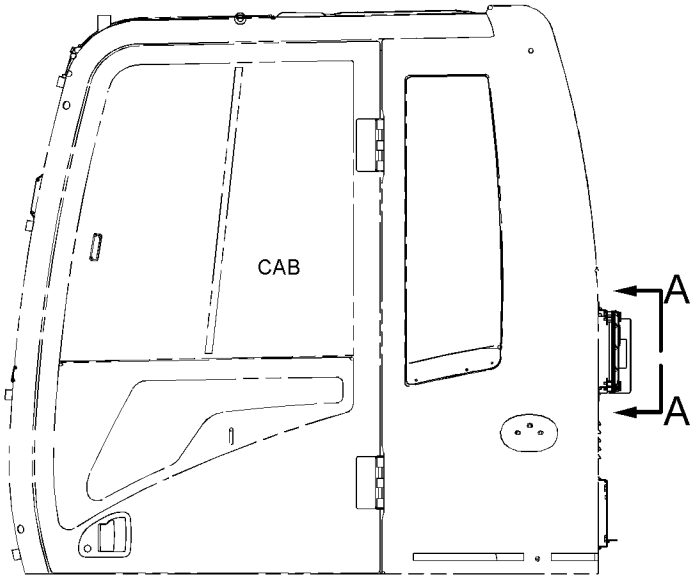

LEFT SIDE VIEW

GRAPHIC #1 <END> g01150750

367-8780 CONTROL AR-COMMUNICATION—PRODUCT LINK CELLULAR

S/N: DLP1-UP

PART OF 367-8791 OPTION AR-REGIONAL

AN ATTACHMENT

SMCS-1400, 7600

i05197190

NOTE	PART NUMBER	QTY	PART NAME 1 2 3 4 5 6 (PRODUCT LEVEL)	SEE PAGE
Y	*366-9353*	1	CONTROL & MTG GP-COMMUNICATION (PRODUCT LINK CELLULAR)	186
Y	*366-9355*	1	MOUNTING GP-ANTENNA (PRODUCT LINK)	1122
Y	*366-9348*	1	WIRING GP-COMMUNICATION (PRODUCT LINK 522)	289

Y - SEPARATE ILLUSTRATION

<END>

376-4616 CONTROL GP-COMMUNICATION—PRODUCT LINK

S/N: DLP1-UP

PART OF 366-9353 CONTROL & MTG GP-COMMUNICATION

AN ATTACHMENT

SMCS-7606, 7610, 7620

i06258774

NOTE	PART NUMBER	QTY	PART NAME 1 2 3 4 5 6 (PRODUCT LEVEL)	SEE PAGE
Y	**372-4531**	1	CONTROL GP-UNPROGRAMMED (PRODUCT LINK 522, CHINA)	190
	458-6572	1	SOFTWARE GP-MONITOR (PRODUCT LINK 522)	

Y - SEPARATE ILLUSTRATION

<END>

372-4531 CONTROL GP-UNPROGRAMMED–PRODUCT LINK 522

S/N: DLP1-UP
PART OF 376-4616 CONTROL GP-COMMUNICATION
AN ATTACHMENT

SMCS-7610 **i04886190**

NOTE	REF NO	GRAPHIC REF	PART NUMBER	QTY	PART NAME 1 2 3 4 5 6 (PRODUCT LEVEL)	SEE PAGE
	1	1	**346-7763**	1	COVER AS	
	2	1	**372-4532**	1	CARD-MEMORY (SUBSCRIBER IDENTITY MODULE)	
	3	1	**7X-6315**	1	STRAP AS-GROUND	
M	4	1	**342-9022**	4	SCREW-PAN HEAD (M2.5X0.45X8-MM)	
M	5	1	**342-9290**	1	SCREW-PAN HEAD (M4X0.7X10-MM)	
	6	1	**134-4126**	1	WASHER (4.52X8.28X0.76-MM THK)	
	7	1	**276-4053**	1	FILM-IDENTIFICATION (CAT)	
F			**376-7248**	1	SOFTWARE GP-ELECTRONIC	

F - NOT SHOWN
M - METRIC PART

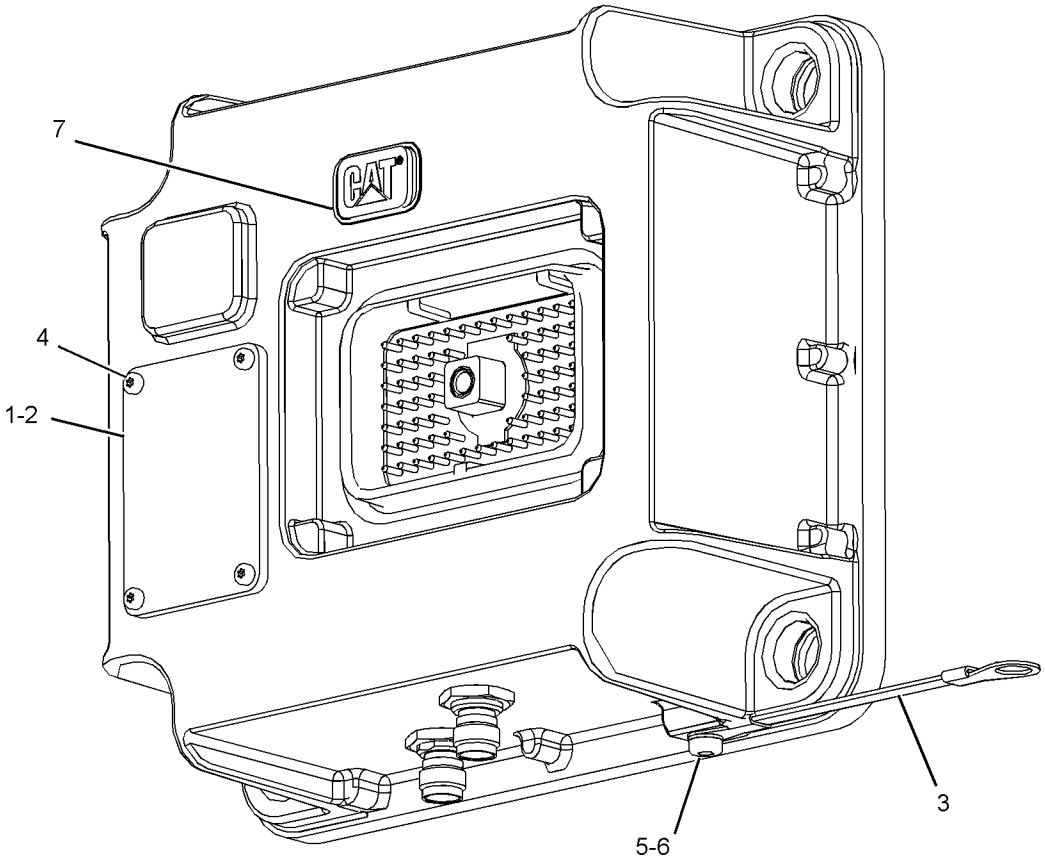

GRAPHIC #1 <END> g03009457

279-7527 ELECTRONICS GP-MACHINE

S/N: DLP1-UP

PART OF 301-2679 GENERAL AR

SMCS-7610, 7620

i05650175

NOTE	PART NUMBER	QTY	PART NAME 1 2 3 4 5 6 (PRODUCT LEVEL)	SEE PAGE
	445-8160	1	SOFTWARE GP-MACHINE	
			<END>	

221-8861 ELECTRONICS GP-MONITOR

S/N: DLP1-UP

PART OF 301-2679 GENERAL AR

SMCS-7490, 7601, 7610, 7620

i05537226

NOTE	PART NUMBER	QTY	PART NAME 1 2 3 4 5 6 (PRODUCT LEVEL)	SEE PAGE
	450-0712	1	SOFTWARE GP-MONITOR	
			—OR—	
	450-0714	1	MONITOR GP-OPERATOR	
			(OPTIONAL SERVICE REPLACEMENT)(INCLUDES MONITOR GP & SOFTWARE)	
			<END>	

259-5293 FASTENER GP-WIRING HARNESS–PEDAL CONTROL

S/N: DLP1-UP
PART OF 255-5845 PEDAL AR-AUXILIARY
AN ATTACHMENT

SMCS-1408, 7553

i02527277

NOTE	REF NO	GRAPHIC REF	PART NUMBER	QTY	PART NAME 1 2 3 4 5 6 (PRODUCT LEVEL)	SEE PAGE
	1	1	**116-0118**	1	CLIP	
M	2	1	**7X-2621**	1	BOLT (M10X1.5X12-MM)	
	3	1	**8T-4121**	1	WASHER-HARD (11X21X2.5-MM THK)	

M - METRIC PART

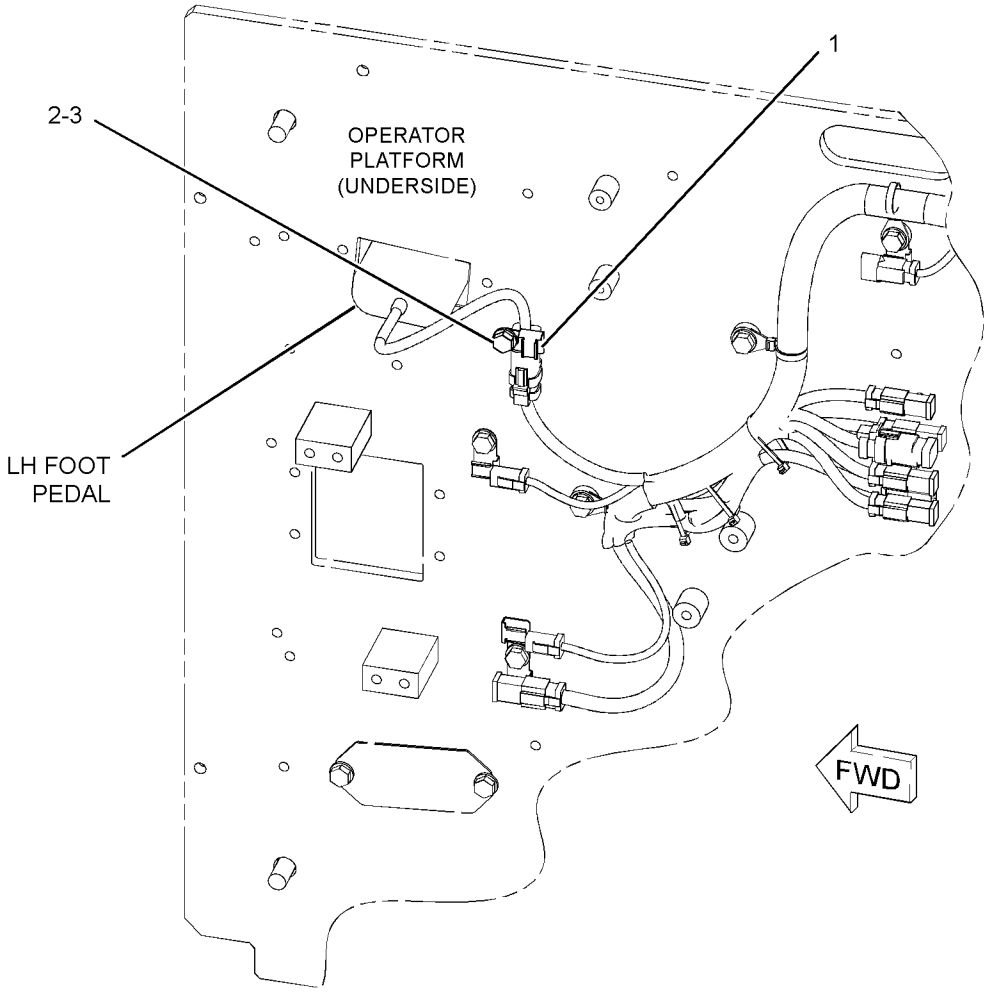

GRAPHIC #1 <END> g01264273

259-5294 FASTENER GP-WIRING HARNESS–FOOT SWITCH

S/N: DLP1-UP
PART OF 270-6106 CONTROL AR-AUXILIARY
AN ATTACHMENT

SMCS-1408, 7553

i03670700

NOTE	REF NO	GRAPHIC REF	PART NUMBER	QTY	PART NAME 1 2 3 4 5 6 (PRODUCT LEVEL)	SEE PAGE
	1	1	**116-0118**	1	CLIP	
M	2	1	**7X-2621**	1	BOLT (M10X1.5X12-MM)	
	3	1	**8T-4121**	1	WASHER-HARD (11X21X2.5-MM THK)	

M - METRIC PART

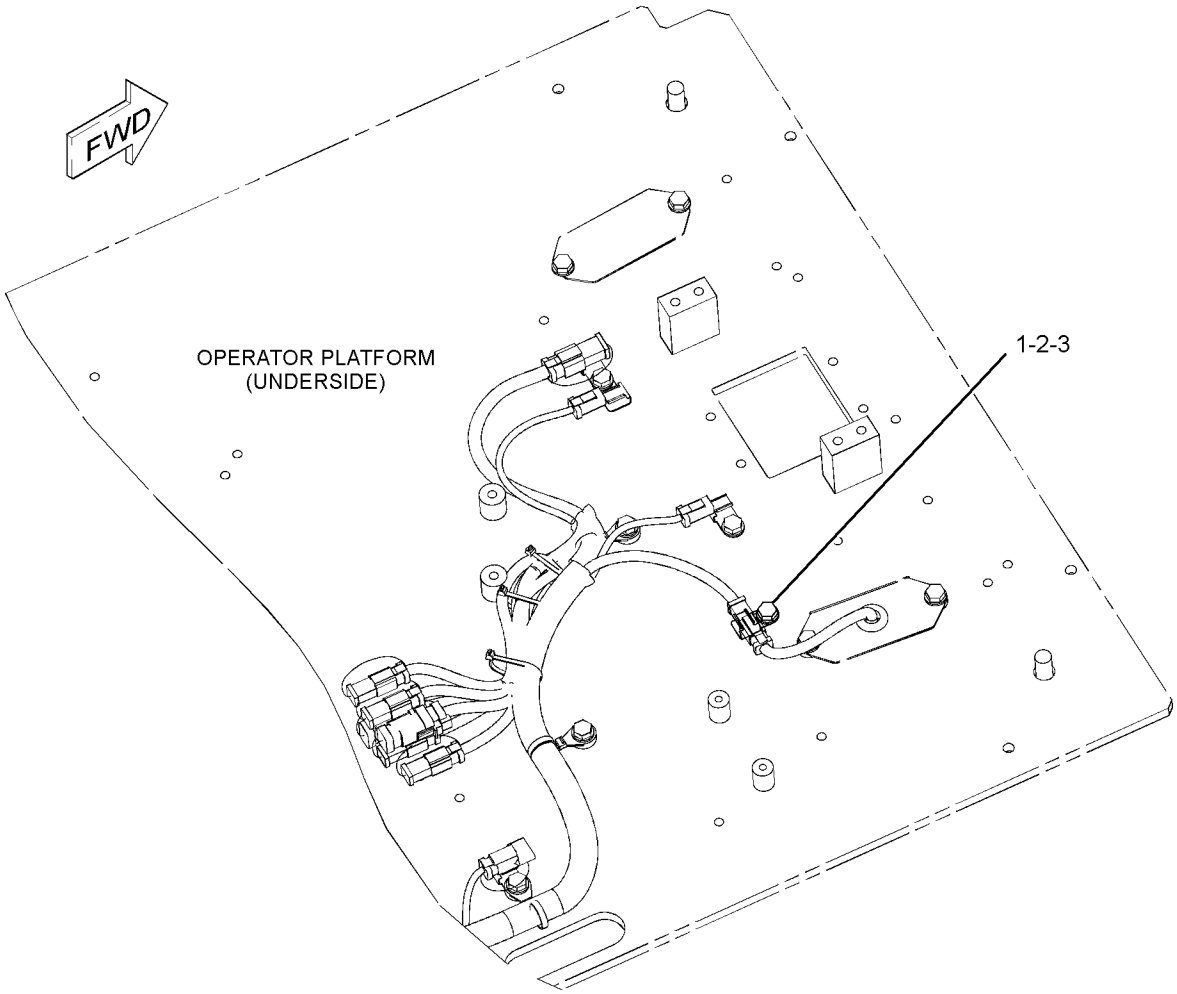

GRAPHIC #1

<END>

g01970833

259-5295 FASTENER GP-WIRING HARNESS–JOYSTICK

S/N: DLP1-UP

PART OF 255-5843, 255-5844 CONTROL AR-AUXILIARY

AN ATTACHMENT

SMCS-1408, 7553

i04007681

NOTE	REF NO	GRAPHIC REF	PART NUMBER	QTY	PART NAME 1 2 3 4 5 6 (PRODUCT LEVEL)	SEE PAGE
	1	1	**3S-2093**	2	STRAP - CABLE	

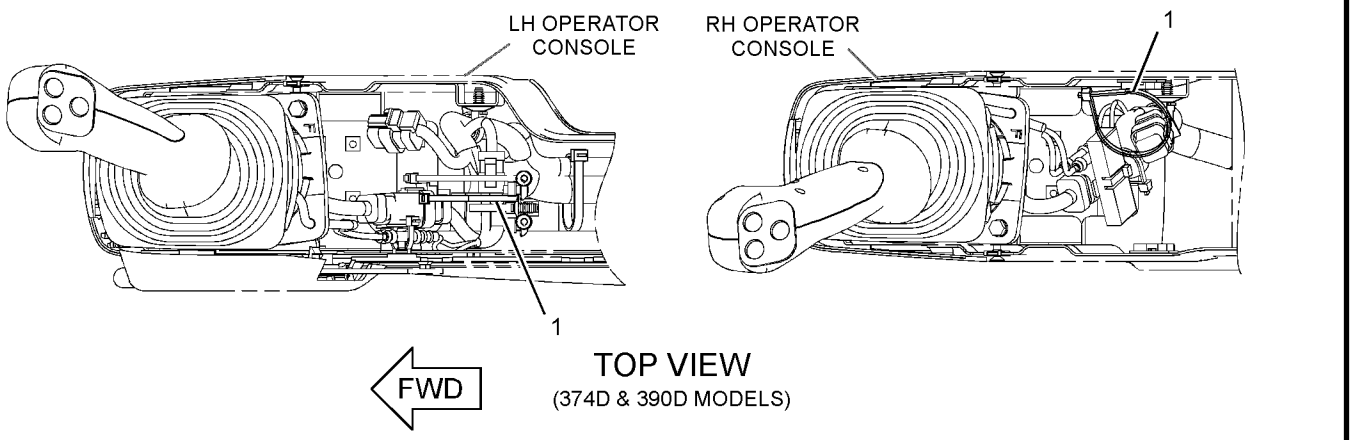

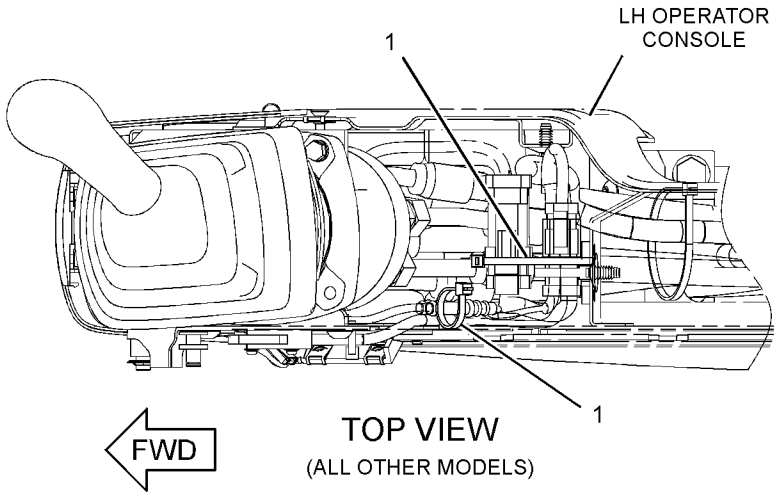

GRAPHIC #1 <END> g02181157

275-7063 FASTENER GP-WIRING HARNESS

S/N: DLP1-UP

PART OF 270-5869 VALVE AR-ALT PATTERN CONTROL AN ATTACHMENT

SMCS-1408, 7553

i02809113

NOTE	REF NO	GRAPHIC REF	PART NUMBER	QTY	PART NAME 1 2 3 4 5 6 (PRODUCT LEVEL)	SEE PAGE
	1	1	**3S-2093**	1	STRAP-CABLE	
	2	1	**116-0118**	1	CLIP	
	3	1	**8T-4121**	1	WASHER-HARD (11X21X2.5-MM THK)	
M	4	1	**8T-4191**	1	BOLT (M10X1.5X16-MM)	

M - METRIC PART

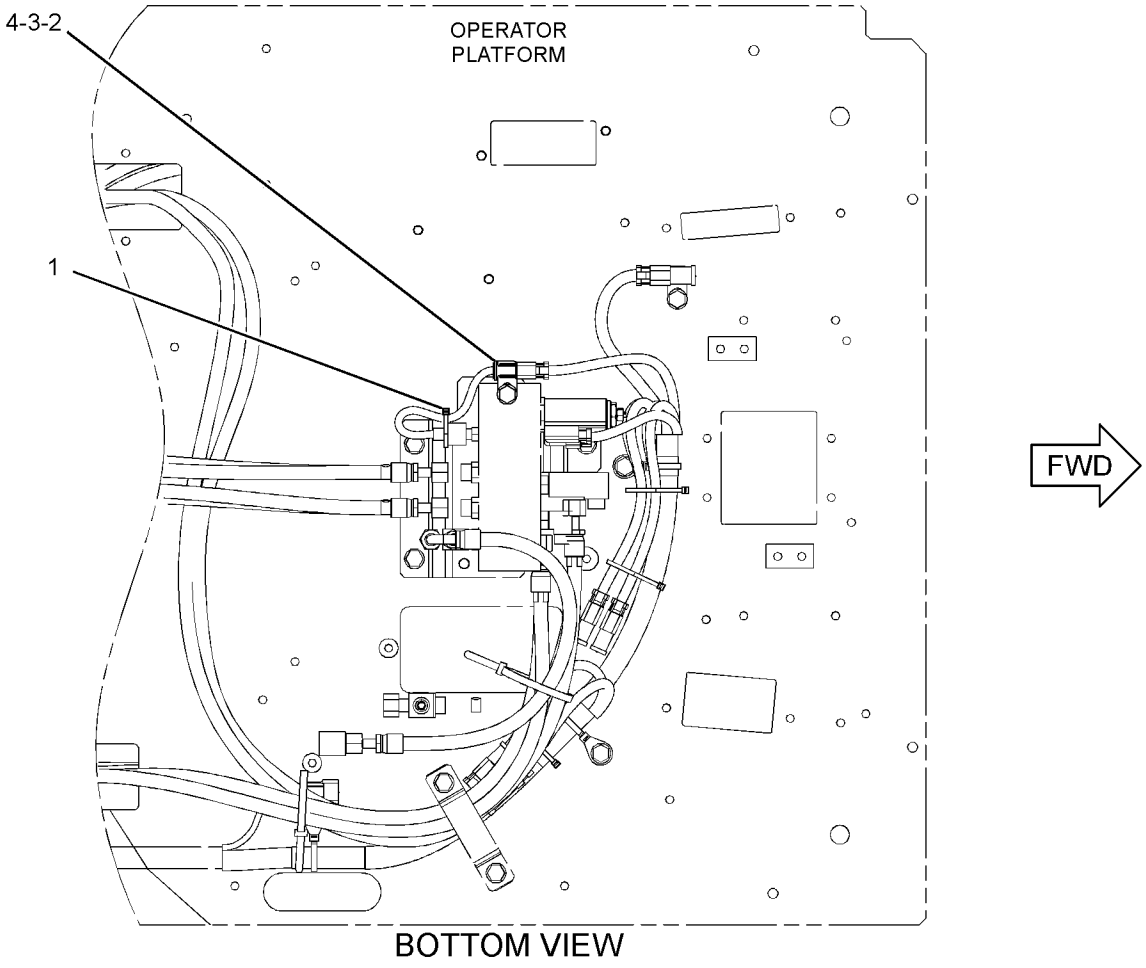

BOTTOM VIEW

GRAPHIC #1 <END> g01402066

291-7764 FASTENER GP-WIRING HARNESS–BLADE

S/N: DLP1-UP
PART OF 301-2691, 385-4069 INSTALLATION AR-BLADE
AN ATTACHMENT

SMCS-1408, 7553

i02910130

NOTE	REF NO	GRAPHIC REF	PART NUMBER	QTY	PART NAME 1 2 3 4 5 6 (PRODUCT LEVEL)	SEE PAGE
	1	1	**3S-2093**	5	STRAP-CABLE	
	2	1	**116-0118**	1	CLIP	
M	3	1	**7X-2621**	1	BOLT (M10X1.5X12-MM)	
	4	1	**8T-4121**	1	WASHER-HARD (11X21X2.5-MM THK)	

M - METRIC PART

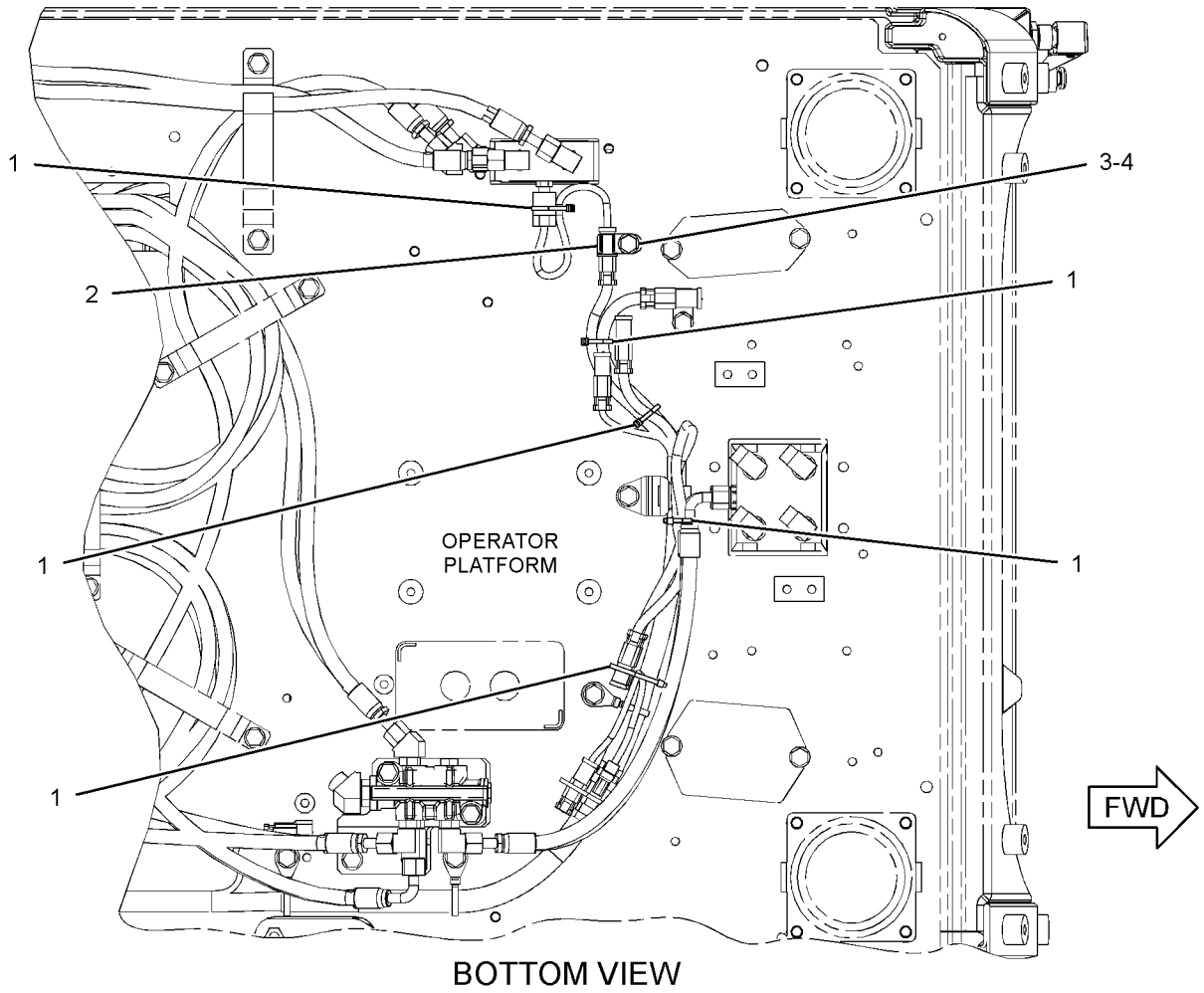

BOTTOM VIEW

GRAPHIC #1 <END> g01451484

373-8965 HARNESS AS-CONTROL—PRODUCT LINK

S/N: DLP1-UP
PART OF 366-9348 WIRING GP-COMMUNICATION
AN ATTACHMENT

SMCS-1408 **i05229011**

NOTE	PART NUMBER	QTY	PART NAME 1 2 3 4 5 6 (PRODUCT LEVEL)	SEE PAGE
	126-1774	1	COVER-CONNECTOR	
	8T-8729	1	PIN-CONNECTOR (16-GA TO 18-GA)	
	9W-0852	1	PIN-CONNECTOR (14-GA TO 16-GA)	
	9X-3401	4	PIN-CONNECTOR (16-GA TO 18-GA)	
	160-7690	1	PLUG AS-CONNECTOR (70-PIN)	
	159-9322	1	SEAL-O-RING	
	8T-8737	64	PLUG-SEAL	
	243-4508	1	RECEPTACLE AS-CONNECTOR (6-PIN)	
	9X-3402	6	SOCKET-CONNECTOR (16-GA TO 18-GA)	
	3S-2093	1	STRAP-CABLE	
	2L-8077	1	TERMINAL-RING (14-GA TO 16-GA, 1/4-IN SCREW)	
E	**125-7874**		TUBE-HEAT SHRINK (5.72-MM DIA) (5-CM)	

E - ORDER BY THE CENTIMETER

<END>

495-9718 HARNESS AS-PANEL

S/N: DLP1-UP
PART OF 251-0542, 251-0544 PANEL GP-SWITCH
AN ATTACHMENT

SMCS-1408, 7451 **i06858553**

NOTE	PART NUMBER	QTY	PART NAME 1 2 3 4 5 6 (PRODUCT LEVEL)	SEE PAGE
	3S-2093	4	STRAP-CABLE	
	102-8802	1	KIT-RECEPTACLE (2-PIN)	
			(INCLUDES RECEPTACLE AS & WEDGE)	
	7Y-3951	2	TERMINAL-BLADE (14-GA)	
	7Y-3952	1	PLUG-CONNECTOR (2-PIN)	
	8T-8737	3	PLUG-SEAL	
	121-1168	1	CONNECTOR-RECEPTACLE	
	121-1173	14	TERMINAL (MALE)	
	9X-3402	7	SOCKET-CONNECTOR (16-GA TO 18-GA)	
			—OR—	
	126-1768	7	SOCKET-CONNECTOR (14-GA TO 16-GA)	
	2L-8075	4	TERMINAL-RING (14-GA TO 16-GA, NO. 8 SCREW)	
	155-2270	1	KIT-CONNECTING PLUG (2-PIN)	
			(INCLUDES PLUG AS, WEDGE & INTERFACE SEAL)	
	230-5010	1	PLUG AS-CONNECTOR (6-PIN)	
	455-0707	1	SEAL-CONNECTOR	
	238-2366	7	TERMINAL (MALE)	

<END>

416-1814 HARNESS AS-PUMP

S/N: DLP1-UP

PART OF 420-3860 KIT-FUEL PRIMING PUMP

SMCS-1408 **i05261443**

NOTE	REF NO	GRAPHIC REF	PART NUMBER	QTY	PART NAME 1 2 3 4 5 6 (PRODUCT LEVEL)	SEE PAGE
	1	1	**8T-8730**	2	SOCKET-CONNECTOR (16-GA TO 18-GA)	
	2	1	**3S-2093**	9	STRAP-CABLE	
	3	1	**7Y-3962**	2	TERMINAL-BULLET (MALE)	
	4	1	**2L-8079**	1	TERMINAL-RING (14-GA TO 16-GA, 3/8-IN SCREW)	
	5	1	**149-5051**	1	CONNECTOR-RECEPTACLE	
	6	1	**149-5069**	1	TERMINAL-BLADE (14-GA TO 20-GA)	
	7	1	**149-5070**	2	TERMINAL-BLADE (16-GA TO 20-GA)	
	8	1	**149-5071**	1	TERMINAL-BLADE (12-GA TO 14-GA)	
	9	1	**155-2270**	1	KIT-CONNECTING PLUG (2-PIN)	
					(INCLUDES PLUG AS, WEDGE & INTERFACE SEAL	

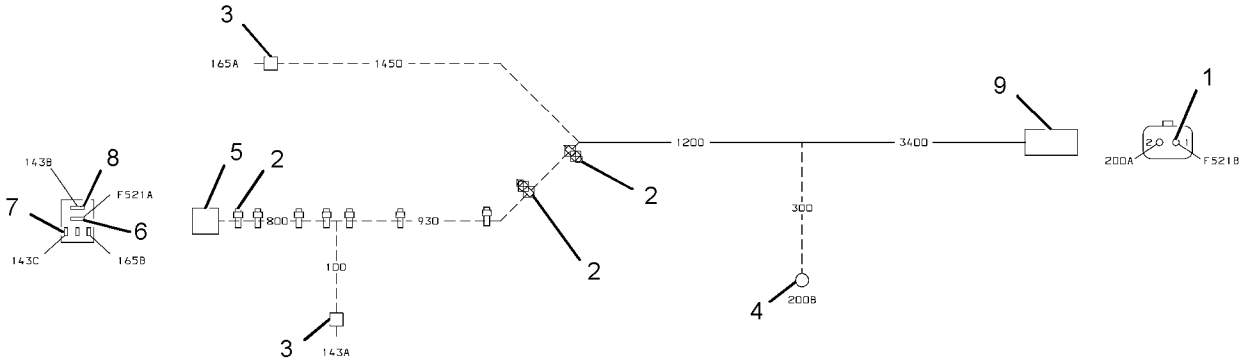

GRAPHIC #1 <END> g03352267

227-7581 INSTALLATION GP-SECURITY

S/N: DLP1-UP

CANNOT BE USED WITH 251-0542—PAGE: 233

AN ATTACHMENT

SMCS-7631 **i05238912**

NOTE	REF NO	GRAPHIC REF	PART NUMBER	QTY	PART NAME 1 2 3 4 5 6 (PRODUCT LEVEL)	SEE PAGE
	1	1	**8C-5607**	4	MOUNT-ISOLATION	
	2	1	**8C-5608**	2	SPACER (6.5X9.5X25.4-MM THK)	
	3	1	**285-3231**	2	KEY AS-ELECTRONIC (SECURITY) (YELLOW)	
					—OR—	
		1	**285-3232**	2	KEY AS-ELECTRONIC (SECURITY) (GREY)	
	4	1	**218-0404**	1	MODULE GP-INTERFACE (KEY)	
	4A	1	**6V-6715**	1	SCREW-PAN HEAD (4-20X0.25-IN)	
	4B	1	**8C-3095**	1	SEAL-O-RING	
	5	1	**219-6314**	2	KEY RING (IDENTIFICATION)	
Y	6	1	*251-0544*	1	PANEL GP-SWITCH (ENGINE SPEED, START)	239
M	7	1	**7X-2533**	2	BOLT (M6X1X35-MM)	
	8	1	**9X-6165**	2	WASHER (6.5X22X2.5-MM THK)	
	9	1	**205-0826**	1	FILM-INSTRUCTION (MACHINE SECURITY, CONSOLE)	

M - METRIC PART
Y - SEPARATE ILLUSTRATION

227-7581 **INSTALLATION GP-SECURITY (**contd.**)** **i05238912**

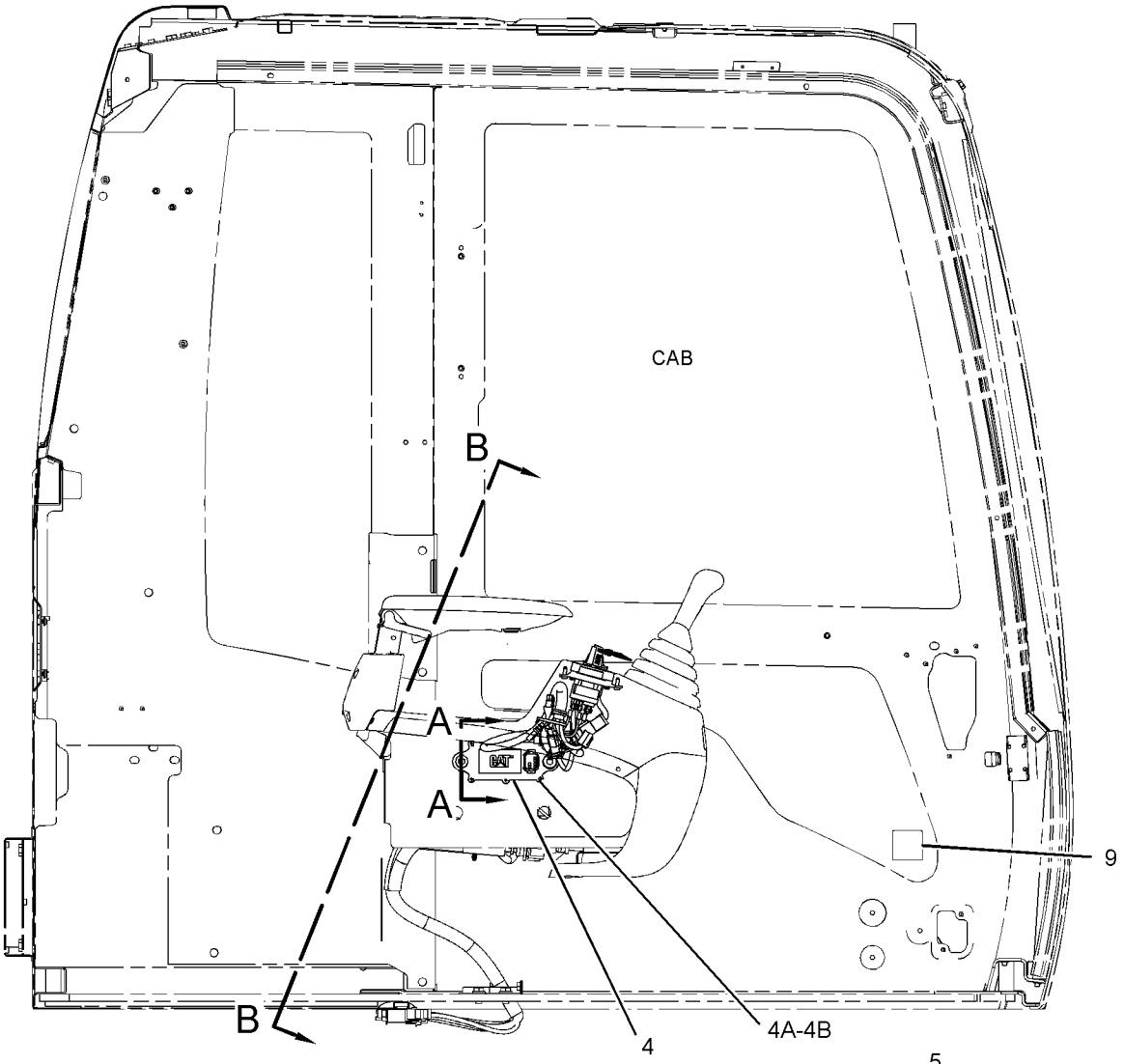

RIGHT SIDE VIEW

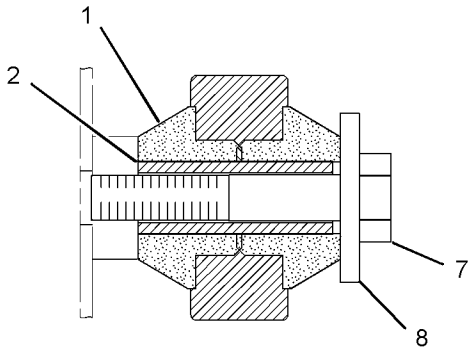

SECTION A-A

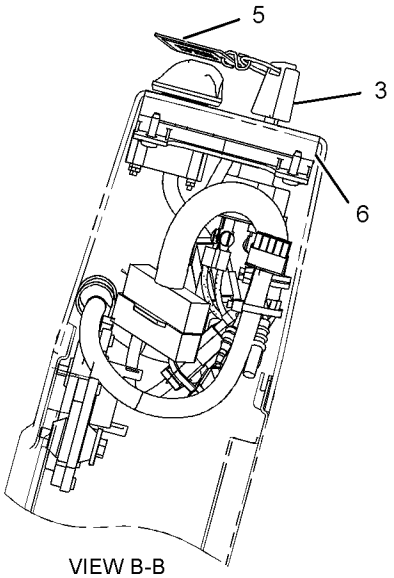

VIEW B-B

GRAPHIC #1 <END> g02156940

489-5118 KIT-LIGHTING

S/N: DLP1-UP

FIELD INSTALLATION

SMCS-1429, 1431, 1434

i06538661

NOTE	PART NUMBER	QTY	PART NAME 1 2 3 4 5 6 (PRODUCT LEVEL)	SEE PAGE
M	**8T-4137**	2	BOLT (M10X1.5X20-MM)	
	170-9295	2	HARNESS AS-LIGHTING	
	7Y-3962	2	TERMINAL-BULLET (MALE)	
	7Y-3964	2	TUBE (CONNECTOR TERMINAL)	
	7Y-3963	2	TERMINAL-BULLET (FEMALE)	
	7Y-3965	2	TUBE (RECEPTACLE TERMINAL)	
	183-1035	2	LAMP GP-FLOOD (24-VOLT)	
	9X-3463	1	LAMP-HALOGEN (24-VOLT, 70-WATT)	
M	**8T-4133**	2	NUT (M10X1.5-THD)	
	163-6795	2	STRAP-CABLE	
	8T-4121	4	WASHER-HARD (11X21X2.5-MM THK)	

M - METRIC PART

<END>

153-2521 LAMP GP-FLOOD

S/N: DLP1-UP
24-VOLT
PART OF 275-7052, 291-7762 LIGHTING GP-FLOOD
AN ATTACHMENT

SMCS-1434 **i06540095**

NOTE	REF NO	GRAPHIC REF	PART NUMBER	QTY	PART NAME 1 2 3 4 5 6 (PRODUCT LEVEL)	SEE PAGE
M	1	1	**6V-5210**	2	SCREW-MACHINE (M4X0.7X10-MM)	
	2	1	**3B-4501**	2	LOCKWASHER	
	3	1	**351-9918**	1	LAMP-HALOGEN (24-VOLT, 70-WATT)	
	4	1	**8T-4223**	1	WASHER-HARD (13.5X25.5X3-MM THK)	
M	5	1	**8T-4244**	1	NUT (M12X1.75-THD)	
M	6	1	**174-7791**	1	SCREW-TAPPING	
	7	1	**9B-0453**	1	LOCKWASHER	
	8	1	**170-6993**	1	COVER	
M	9	1	**180-3861**	4	SCREW-TAPPING	
	10	1	**170-9417**	1	LENS AS	
	11	1	**170-9418**	1	BAND	

M - METRIC PART

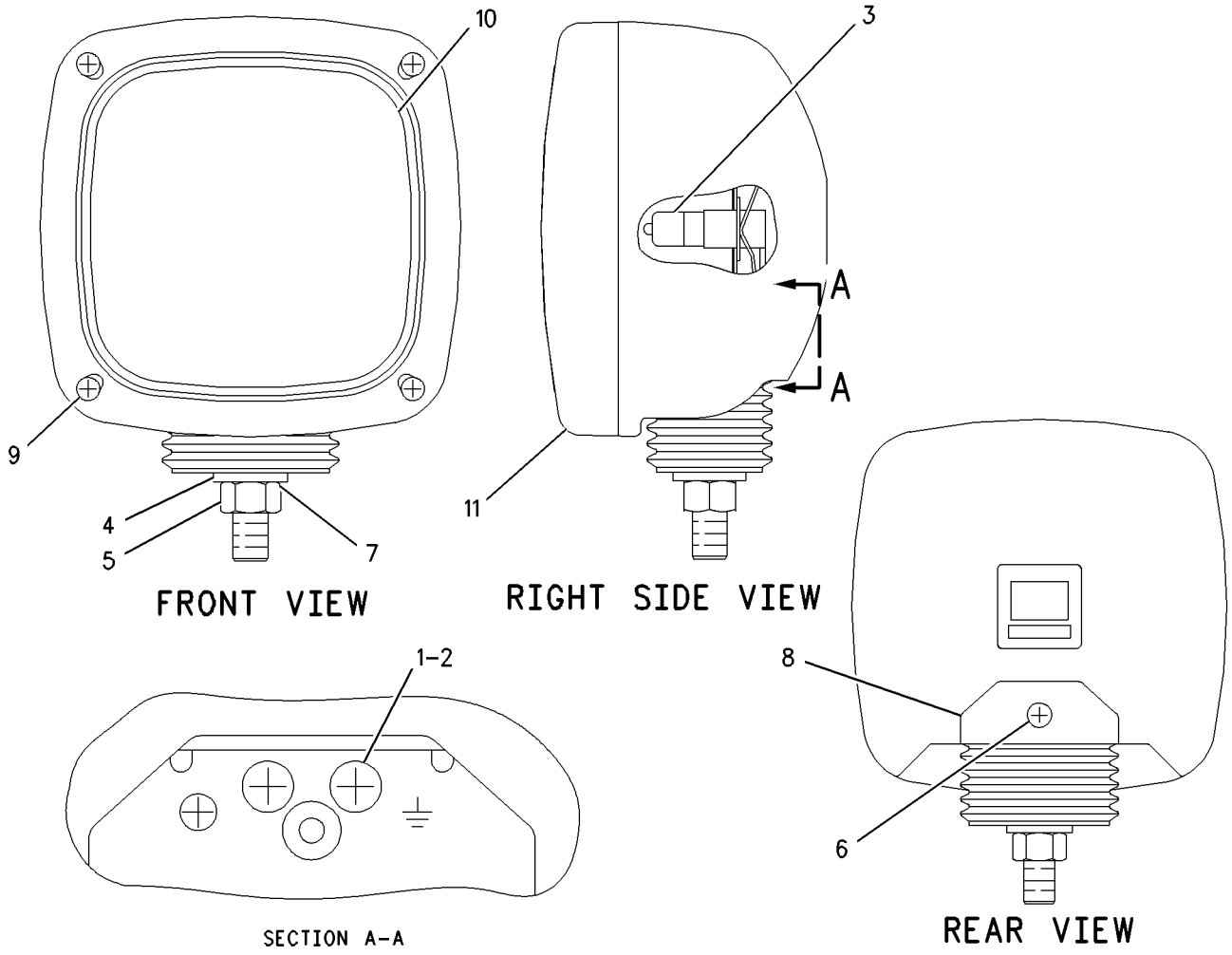

GRAPHIC #1 <END> g00645948

153-2522 LAMP GP-FLOOD

S/N: DLP1-UP
24-VOLT

SMCS-1434 **i06576345**

NOTE	REF NO	GRAPHIC REF	PART NUMBER	QTY	PART NAME 1 2 3 4 5 6 (PRODUCT LEVEL)	SEE PAGE
M	1	1	**6V-5210**	2	SCREW-MACHINE (M4X0.7X10-MM)	
	2	1	**3B-4501**	2	LOCKWASHER	
	3	1	**351-9918**	1	LAMP-HALOGEN (24-VOLT, 70-WATT)	
	4	1	**8T-4223**	1	WASHER-HARD (13.5X25.5X3-MM THK)	
M	5	1	**8T-4244**	1	NUT (M12X1.75-THD)	
M	6	1	**174-7791**	1	SCREW-TAPPING	
	7	1	**9B-0453**	1	LOCKWASHER	
	8	1	**170-6993**	1	COVER	
M	9	1	**180-3861**	4	SCREW-TAPPING	
	10	1	**170-9417**	1	LENS AS (FLOODLIGHT)	
	11	1	**170-9418**	1	BAND	

M - METRIC PART

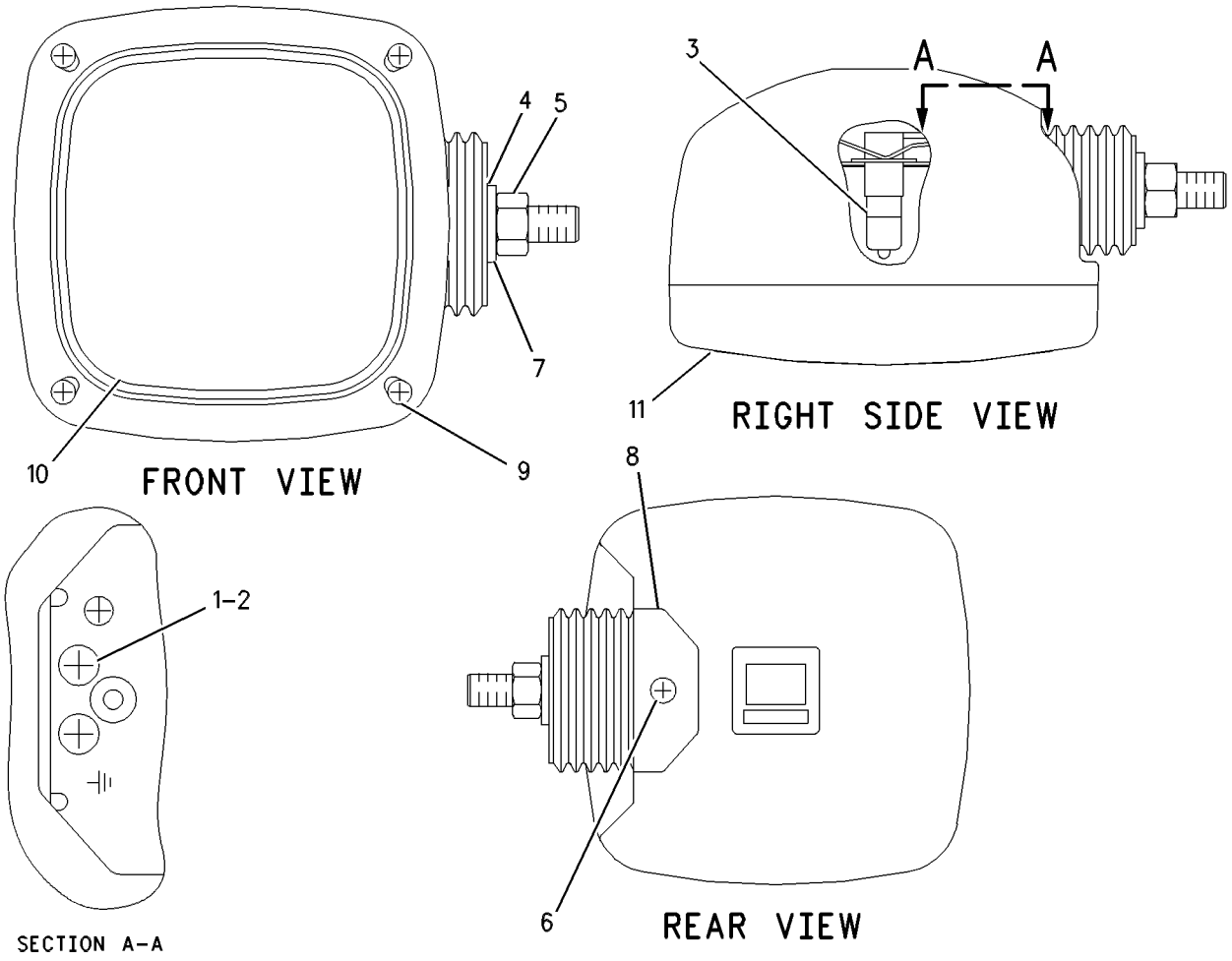

GRAPHIC #1 <END> g00653681

153-2523 LAMP GP-FLOOD

S/N: DLP1-UP
24-VOLT
PART OF 4I-5409 LIGHTING GP-FLOOD

SMCS-1434 **i06538336**

NOTE	REF NO	GRAPHIC REF	PART NUMBER	QTY	PART NAME 1 2 3 4 5 6 (PRODUCT LEVEL)	SEE PAGE
M	1	1	**6V-5210**	2	SCREW-MACHINE (M4X0.7X10-MM)	
	2	1	**3B-4501**	2	LOCKWASHER	
	3	1	**351-9918**	1	LAMP-HALOGEN (24-VOLT, 70-WATT)	
	4	1	**8T-4223**	1	WASHER-HARD (13.5X25.5X3-MM THK)	
M	5	1	**8T-4244**	1	NUT (M12X1.75-THD)	
M	6	1	**174-7791**	1	SCREW-TAPPING	
	7	1	**9B-0453**	1	LOCKWASHER	
	8	1	**170-6993**	1	COVER	
	9	1	**170-9417**	1	LENS AS (FLOOD)	
M	10	1	**180-3861**	4	SCREW-TAPPING	
	11	1	**170-9418**	1	BAND	

M - METRIC PART

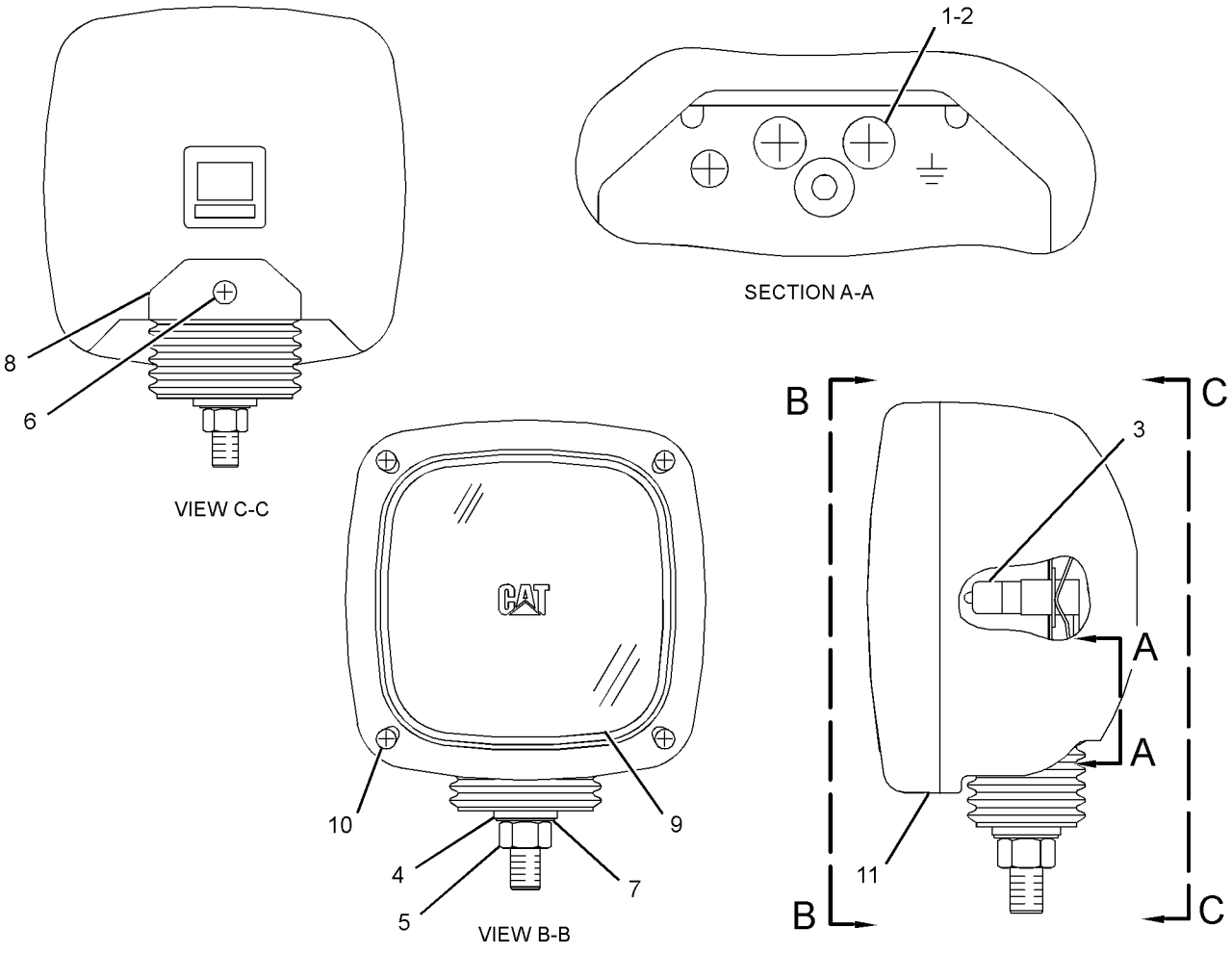

GRAPHIC #1 <END> g01528558

167-3441 LAMP GP-FLOOD

S/N: DLP1-UP
24-VOLT
PART OF 163-6772, 238-1627, 366-9342 LIGHTING GP-FLOOD
AN ATTACHMENT

SMCS-1434 **i01823005**

NOTE	REF NO	GRAPHIC REF	PART NUMBER	QTY	PART NAME 1 2 3 4 5 6 (PRODUCT LEVEL)	SEE PAGE
	1	1	**9X-3463**	1	LAMP-HALOGEN (24-VOLT, 70-WATT)	

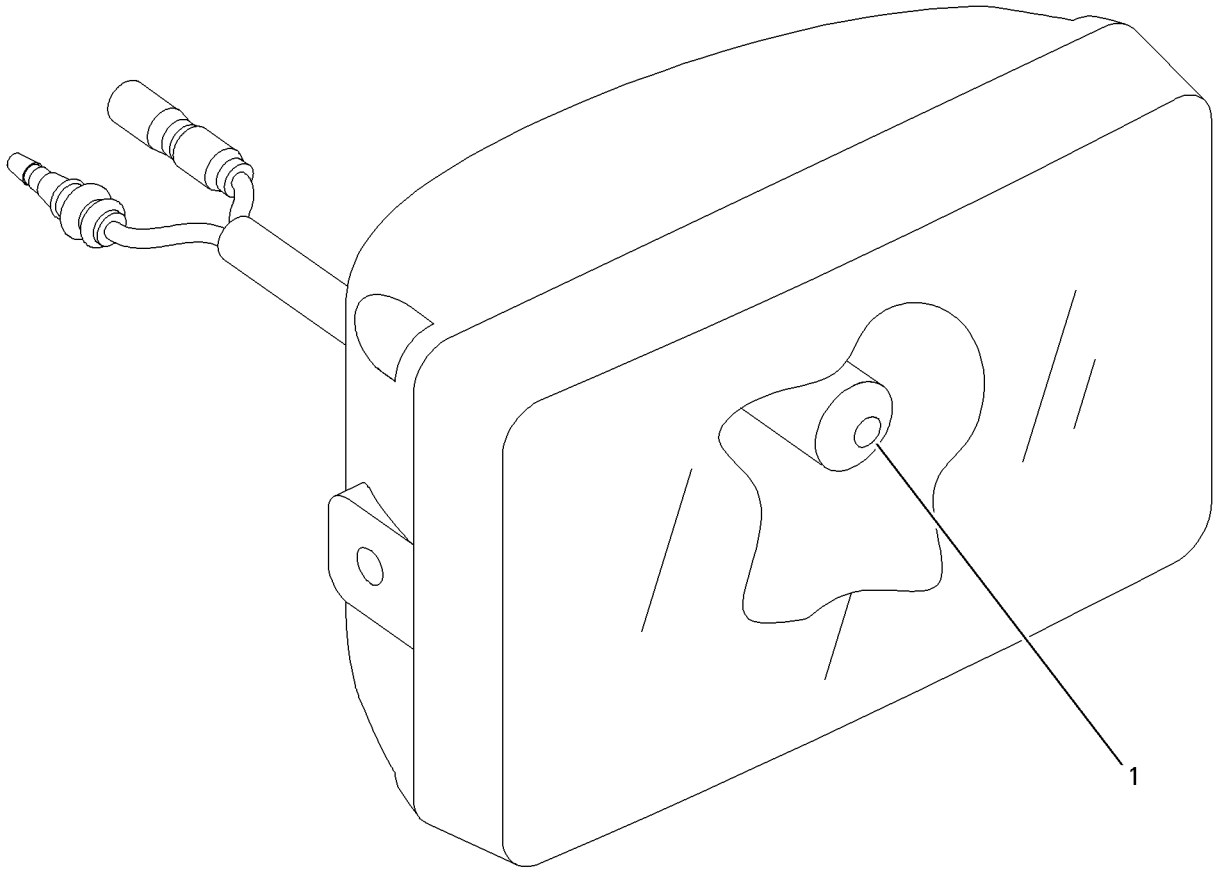

GRAPHIC #1 <END> g00692317

163-6772 LIGHTING GP-FLOOD–CAB

S/N: DLP1-UP

AN ATTACHMENT

SMCS-1434 **i03296219**

NOTE	REF NO	GRAPHIC REF	PART NUMBER	QTY	PART NAME 1 2 3 4 5 6 (PRODUCT LEVEL)	SEE PAGE
	1	1	**163-6814**	1	COVER (RH)	
	2	1	**163-6813**	1	COVER (LH)	
M	3	1	**8T-4970**	4	BOLT (M6X1X14-MM)	
	4	1	**9X-8256**	12	WASHER (6.6X12X2-MM THK)	
Y	5	1	**167-3441**	2	LAMP GP-FLOOD (24-VOLT)	205
	6	1	**163-6795**	2	STRAP-CABLE	
B	7	1	**9X-8256**	4	WASHER (6.6X12X2-MM THK)	
	8	1	**167-3437**	1	BRACKET AS (LH)	
M	9	1	**8T-6411**	6	SCREW-MACHINE (M6X1X12-MM)	
M	10	1	**8T-4200**	2	BOLT (M8X1.25X16-MM)	
	11	1	**8T-4224**	2	WASHER-HARD (8.8X16X2-MM THK)	
	12	1	**167-3456**	2	HARNESS AS-LIGHTING (CAB FLOODLIGHT)	
					(EACH INCLUDES)	
		1	**7Y-3962**	1	TERMINAL-BULLET (MALE)	
		1	**7Y-3964**	1	TUBE (CONNECTOR TERMINAL)	
		1	**7Y-3963**	1	TERMINAL-BULLET (FEMALE)	
		1	**7Y-3965**	1	TUBE (RECEPTACLE TERMINAL)	
	13	1	**167-3438**	1	BRACKET AS (RH)	
M	14	1	**8T-6412**	2	SCREW-MACHINE (M6X1X20-MM)	

B - USE AS REQUIRED
M - METRIC PART
Y - SEPARATE ILLUSTRATION

163-6772 **LIGHTING GP-FLOOD (**contd.**)** **i03296219**

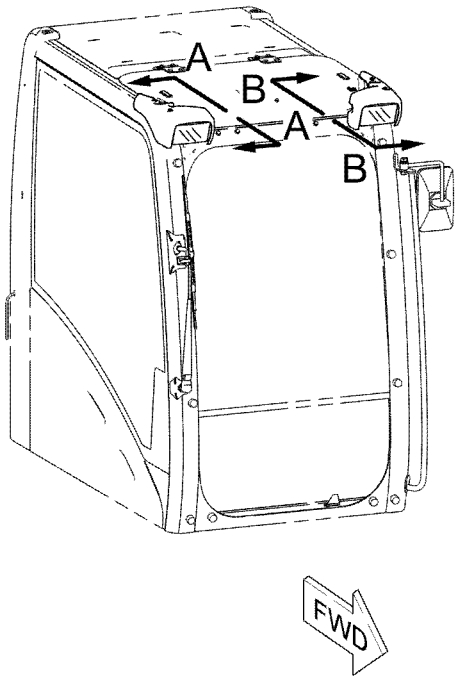

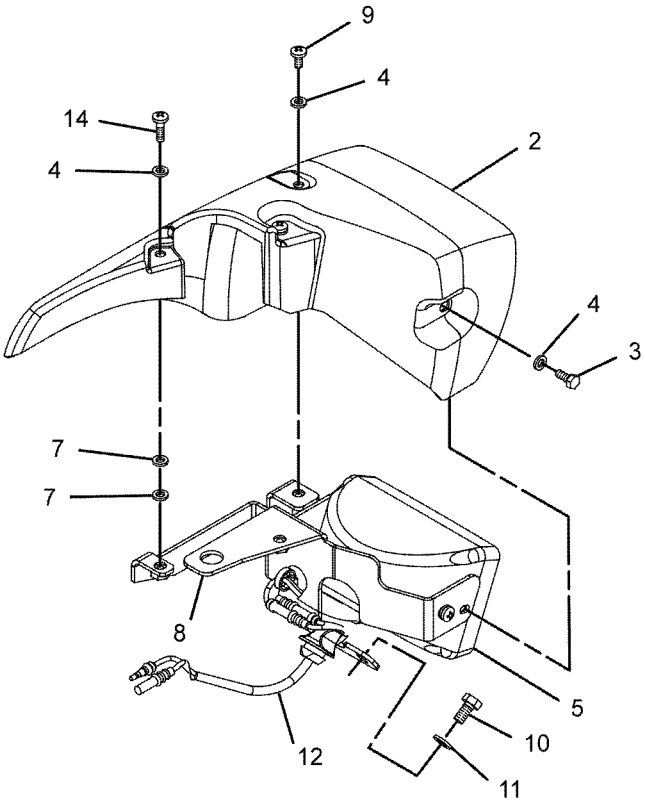

VIEW B-B
(EXPLODED)

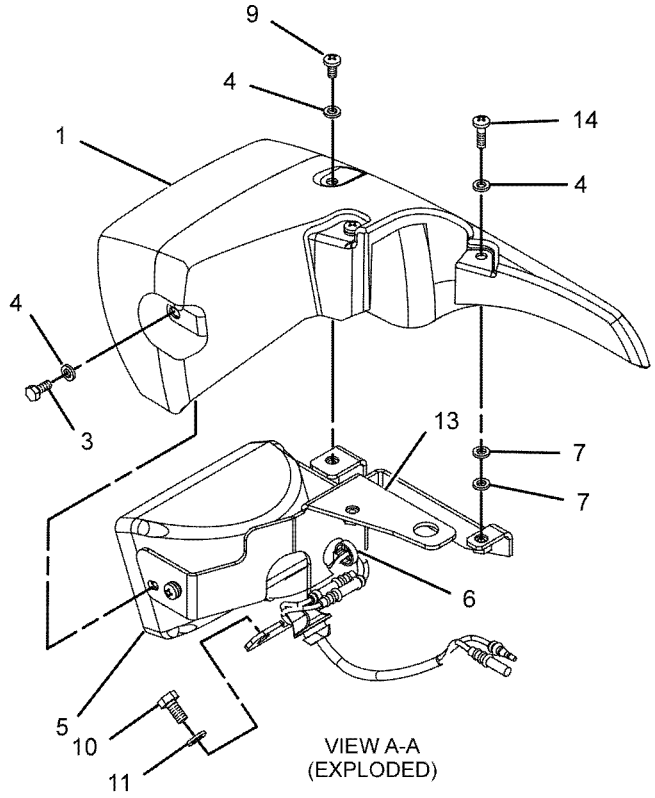

VIEW A-A
(EXPLODED)

GRAPHIC #1 <END> g01062205

170-9294 LIGHTING GP-FLOOD–CAB GUARD

S/N: DLP1-UP

AN ATTACHMENT

SMCS-1434 **i05134329**

NOTE	REF NO	GRAPHIC REF	PART NUMBER	QTY	PART NAME 1 2 3 4 5 6 (PRODUCT LEVEL)	SEE PAGE
	1	1	**183-1035**	2	LAMP GP-FLOOD (24-VOLT)	
					(EACH INCLUDES)	
		1	**9X-3463**	1	LAMP-HALOGEN (24-VOLT, 70-WATT)	
	2	1	**163-6795**	2	STRAP-CABLE	
M	3	1	**8T-4133**	2	NUT (M10X1.5-THD)	
	4	1	**8T-4121**	4	WASHER-HARD (11X21X2.5-MM THK)	
M	5	1	**8T-4137**	2	BOLT (M10X1.5X20-MM)	
	6	1	**170-9295**	2	HARNESS AS-LIGHTING (CAB FLOODLIGHTS, FRONT)	
					(EACH INCLUDES)	
		1	**7Y-3962**	2	TERMINAL-BULLET (MALE)	
		1	**7Y-3964**	2	TUBE (CONNECTOR TERMINAL)	
		1	**7Y-3963**	2	TERMINAL-BULLET (FEMALE)	
		1	**7Y-3965**	2	TUBE (RECEPTACLE TERMINAL)	

M - METRIC PART

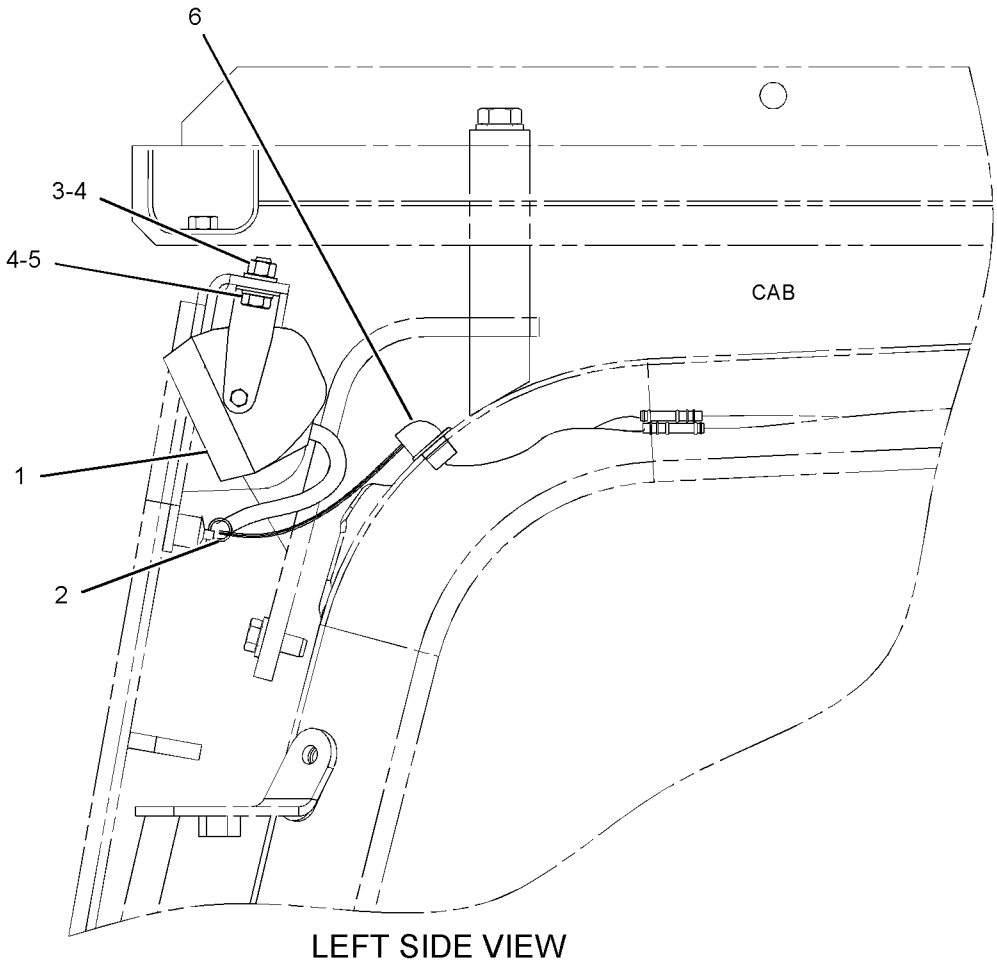

LEFT SIDE VIEW

GRAPHIC #1 <END> g01134805

238-1627 LIGHTING GP-FLOOD—CAB

S/N: DLP1-UP
PART OF 336-3370 OPTION AR-LIGHTING
AN ATTACHMENT

SMCS-1434 **i02602026**

NOTE	REF NO	GRAPHIC REF	PART NUMBER	QTY	PART NAME 1 2 3 4 5 6 (PRODUCT LEVEL)	SEE PAGE
	1	1	**3S-2093**	1	STRAP-CABLE	
	2	1	**163-6704**	1	TIMER AS (TIME DELAY LIGHTING) (TIME DELAY LIGHTING)	
		1	**102-8802**	1	KIT-RECEPTACLE (2-PIN)	
		1	**102-8803**	1	KIT-RECEPTACLE (3-PIN)	
					(EACH RECEPTACLE KIT INCLUDES RECEPTACLE AS & WEDGE)	
		1	**186-3735**	5	PIN-CONNECTOR (16-GA TO 18-GA)	
	3	1	**163-6795**	2	STRAP-CABLE	
	4	1	**163-6813**	1	COVER (LH)	
	5	1	**163-6814**	1	COVER (RH)	
	6	1	**167-3437**	1	BRACKET AS (LH)	
	7	1	**167-3438**	1	BRACKET AS (RH)	
Y	8	1	**167-3441**	2	LAMP GP-FLOOD (24-VOLT) (CAB)	205
	9	1	**167-3456**	2	HARNESS AS-LIGHTING (CAB FLOODLIGHT)	
	10	1	**238-2326**	1	PLATE AS	
M	11	1	**8T-4200**	2	BOLT (M8X1.25X16-MM)	
	12	1	**8T-4224**	2	WASHER-HARD (8.8X16X2-MM THK)	
M	13	1	**8T-4970**	4	BOLT (M6X1X14-MM)	
M	14	1	**8T-6411**	3	SCREW-MACHINE (M6X1X12-MM)	
M	15	1	**8T-6412**	1	SCREW-MACHINE (M6X1X20-MM)	
M	16	1	**9X-2042**	2	SCREW-TRUSS HEAD (M6X1X12-MM)	
M	17	1	**9X-2043**	2	SCREW-TRUSS HEAD (M6X1X14-MM)	
	18	1	**9X-8256**	8	WASHER (6.6X12X2-MM THK)	
B	19	1	**9X-8256**	4	WASHER (6.6X12X2-MM THK)	

B - USE AS REQUIRED
M - METRIC PART
Y - SEPARATE ILLUSTRATION

238-1627 **LIGHTING GP-FLOOD (**contd.**)** **i02602026**

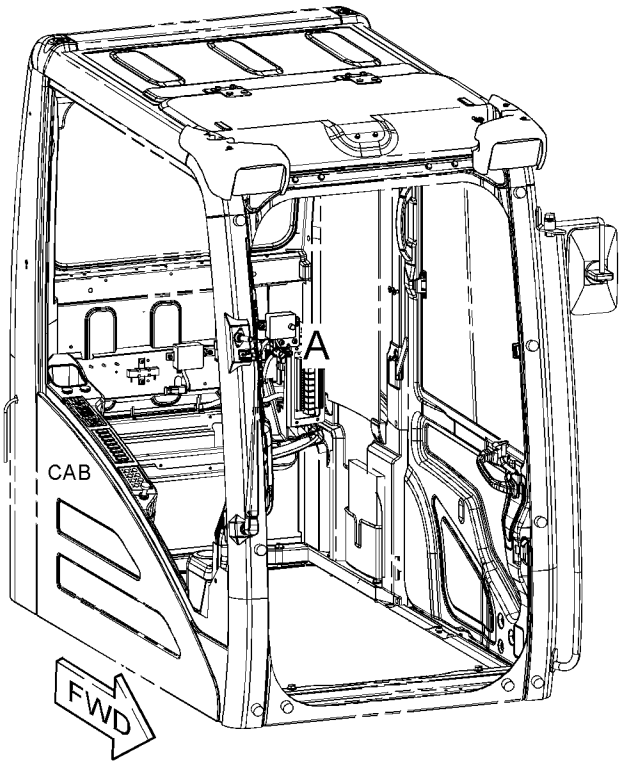

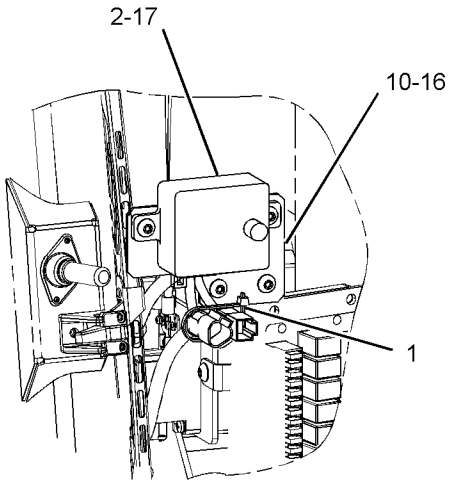

VIEW OF AREA A

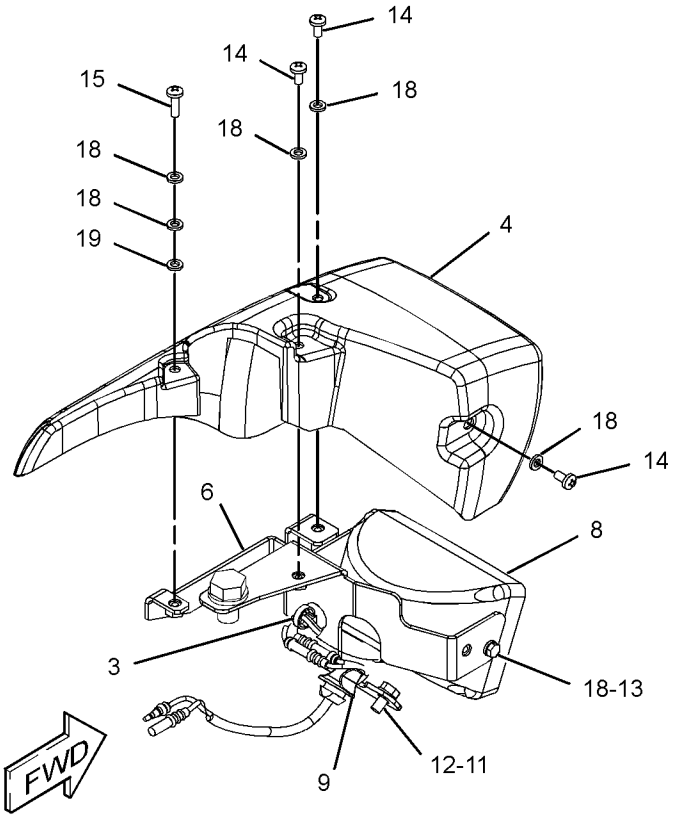

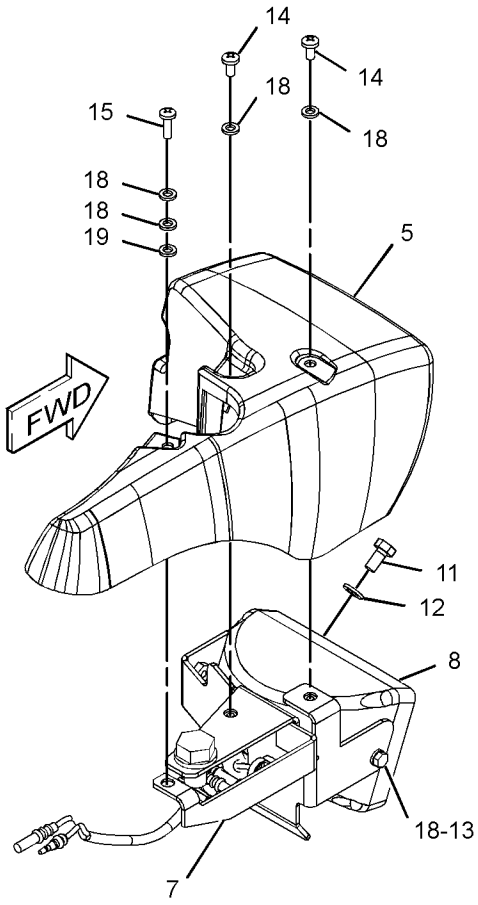

GRAPHIC #1 <END> g01310977

238-1628 LIGHTING GP-FLOOD—CAB GUARD

S/N: DLP1-UP

PART OF 336-3389 OPTION AR-LIGHTING

AN ATTACHMENT

SMCS-1434 **i03296221**

NOTE	REF NO	GRAPHIC REF	PART NUMBER	QTY	PART NAME 1 2 3 4 5 6 (PRODUCT LEVEL)	SEE PAGE
	1	1	**3S-2093**	1	STRAP-CABLE	
	2	1	**163-6704**	1	TIMER AS (TIME DELAY LIGHTING) (TIME DELAY LIGHTING)	
		1	**186-3735**	5	PIN-CONNECTOR (16-GA TO 18-GA)	
		1	**102-8802**	1	KIT-RECEPTACLE (2-PIN)	
		1	**102-8803**	1	KIT-RECEPTACLE (3-PIN)	
					(EACH RECEPTACLE KIT INCLUDES RECEPTACLE AS & WEDGE)	
	3	1	**163-6795**	2	STRAP-CABLE	
	4	1	**170-9295**	2	HARNESS AS-LIGHTING (CAB FLOODLIGHTS, FRONT)	
					(EACH INCLUDES)	
		1	**7Y-3962**	1	TERMINAL-BULLET (MALE)	
		1	**7Y-3964**	1	TUBE (CONNECTOR TERMINAL)	
		1	**7Y-3963**	1	TERMINAL-BULLET (FEMALE)	
		1	**7Y-3965**	1	TUBE (RECEPTACLE TERMINAL)	
	5	1	**183-1035**	2	LAMP GP-FLOOD (24-VOLT)	
					(EACH INCLUDES)	
		1	**9X-3463**	1	LAMP-HALOGEN (24-VOLT, 70-WATT)	
	6	1	**238-2326**	1	PLATE AS	
	7	1	**8T-4121**	4	WASHER-HARD (11X21X2.5-MM THK)	
M	8	1	**8T-4133**	2	NUT (M10X1.5-THD)	
M	9	1	**8T-4137**	2	BOLT (M10X1.5X20-MM)	
M	10	1	**9X-2042**	2	SCREW-TRUSS HEAD (M6X1X12-MM)	
M	11	1	**9X-2043**	2	SCREW-TRUSS HEAD (M6X1X14-MM)	

M - METRIC PART

238-1628 **LIGHTING GP-FLOOD (**contd.**)** **i03296221**

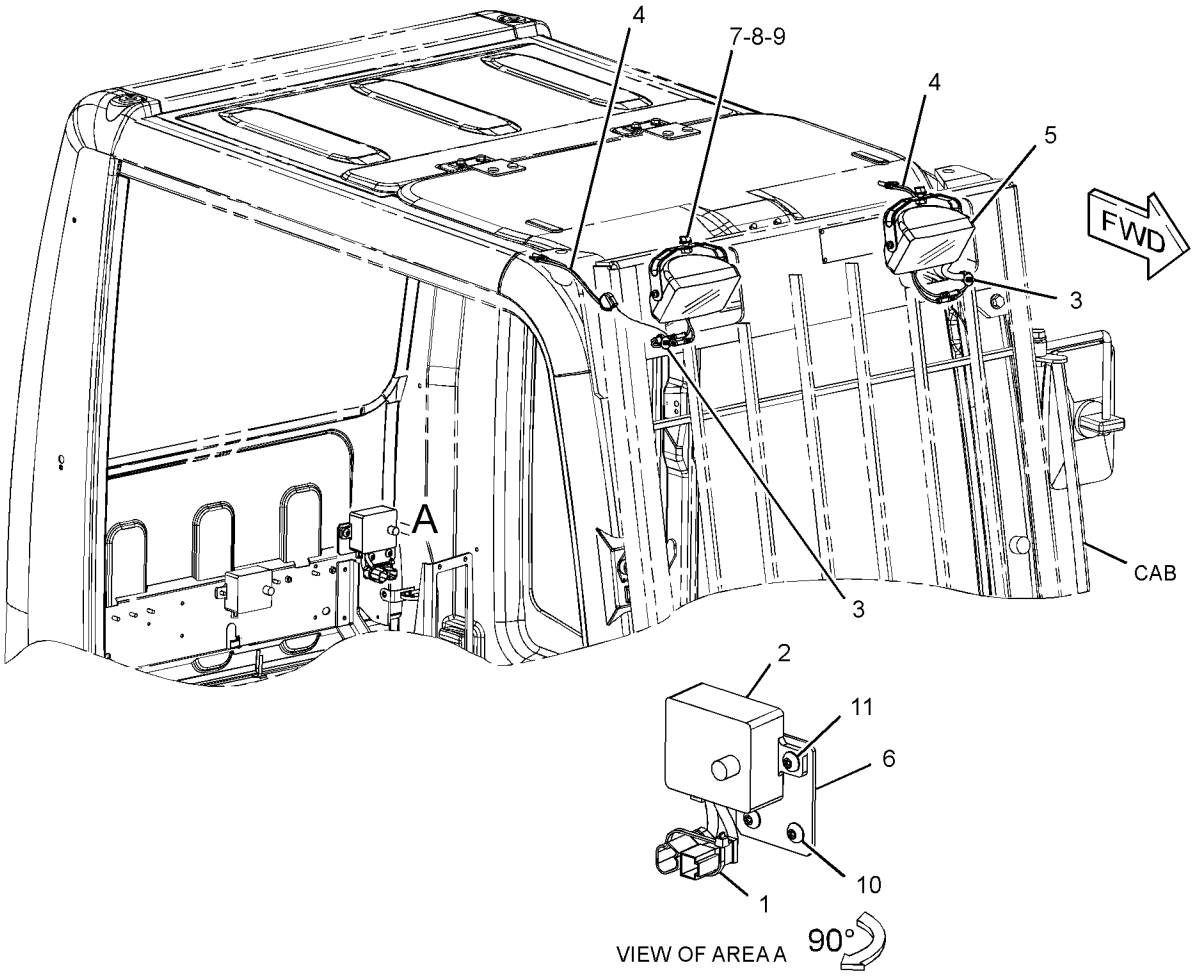

GRAPHIC #1 <END> g01620741

275-7052 LIGHTING GP-FLOOD—BOOM, LH

S/N: DLP1-UP

PART OF 301-2543, 385-4095 BOOM AR-1 PIECE LONG

AN ATTACHMENT

SMCS-1434 **i07278924**

NOTE	REF NO	GRAPHIC REF	PART NUMBER	QTY	PART NAME 1 2 3 4 5 6 (PRODUCT LEVEL)	SEE PAGE
	1	1	**7I-2673**	1	STRAP-CABLE	
	2	1	**111-4836**	5	CLIP	
	3	1	**116-0118**	1	CLIP	
	4	1	**134-3284**	1	BRACKET	
Y	5	1	**153-2521**	1	LAMP GP-FLOOD (24-VOLT)	202
	6	1	**275-7133**	1	HARNESS AS-LIGHTING (BOOM, LH)	
		1	**9W-0852**	2	PIN-CONNECTOR (14-GA TO 16-GA)	
		1	**2L-8075**	2	TERMINAL-RING (14-GA TO 16-GA, NO. 8 SCREW)	
		1	**243-4505**	1	RECEPTACLE AS-CONNECTOR (2-PIN)	
	7	1	**111-4837**	1	CLIP	
	8	1	**5P-9297**	2	CLIP (LOOP)	
	9	1	**8T-4121**	3	WASHER-HARD (11X21X2.5-MM THK)	
M	10	1	**8T-4133**	3	NUT (M10X1.5-THD)	
M	11	1	**453-2834**	1	BOLT (M16X2X30-MM)	
	12	1	**451-2175**	1	WASHER-HARD (17.5X30X3.5-MM THK)	
M	13	1	**175-7141**	6	NUT-HEX FLANGE (M10X1.5-THD)	
	14	1	**8T-4223**	3	WASHER-HARD (13.5X25.5X3-MM THK)	

M - METRIC PART
Y - SEPARATE ILLUSTRATION

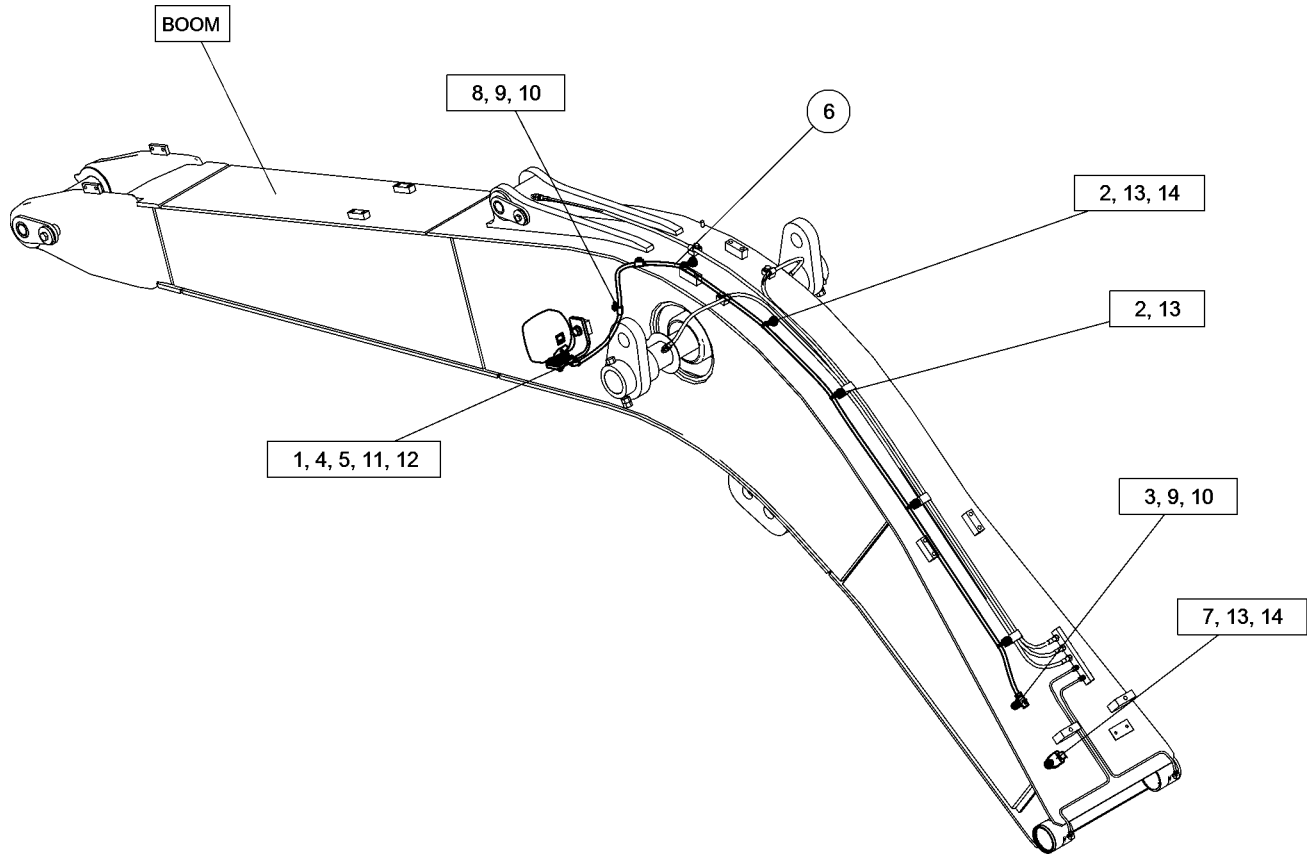

GRAPHIC #1 <END> g06272773

291-7762 LIGHTING GP-FLOOD—BOOM, RH

S/N: DLP1-UP
FOR USE WITH 275-7052—PAGE: 213
PART OF 336-3370, 336-3389, 379-7190 OPTION AR-LIGHTING
AN ATTACHMENT

SMCS-1434 **i07265151**

NOTE	REF NO	GRAPHIC REF	PART NUMBER	QTY	PART NAME 1 2 3 4 5 6 (PRODUCT LEVEL)	SEE PAGE
	1	1	**7I-2673**	2	STRAP-CABLE	
	2	1	**111-4836**	2	CLIP	
	3	1	**134-3284**	1	BRACKET	
Y	4	1	**153-2521**	1	LAMP GP-FLOOD (24-VOLT)	202
	5	1	**291-7763**	1	HARNESS AS-LIGHTING	
		1	**2L-8075**	4	TERMINAL-RING (14-GA TO 16-GA, NO. 8 SCREW)	
	6	1	**7N-3718**	2	CLIP	
	7	1	**8T-4223**	2	WASHER-HARD (13.5X25.5X3-MM THK)	
M	8	1	**175-7141**	2	NUT-HEX FLANGE (M10X1.5-THD)	
M	9	1	**453-2834**	1	BOLT (M16X2X30-MM)	
	10	1	**451-2175**	1	WASHER-HARD (17.5X30X3.5-MM THK)	

M - METRIC PART
Y - SEPARATE ILLUSTRATION

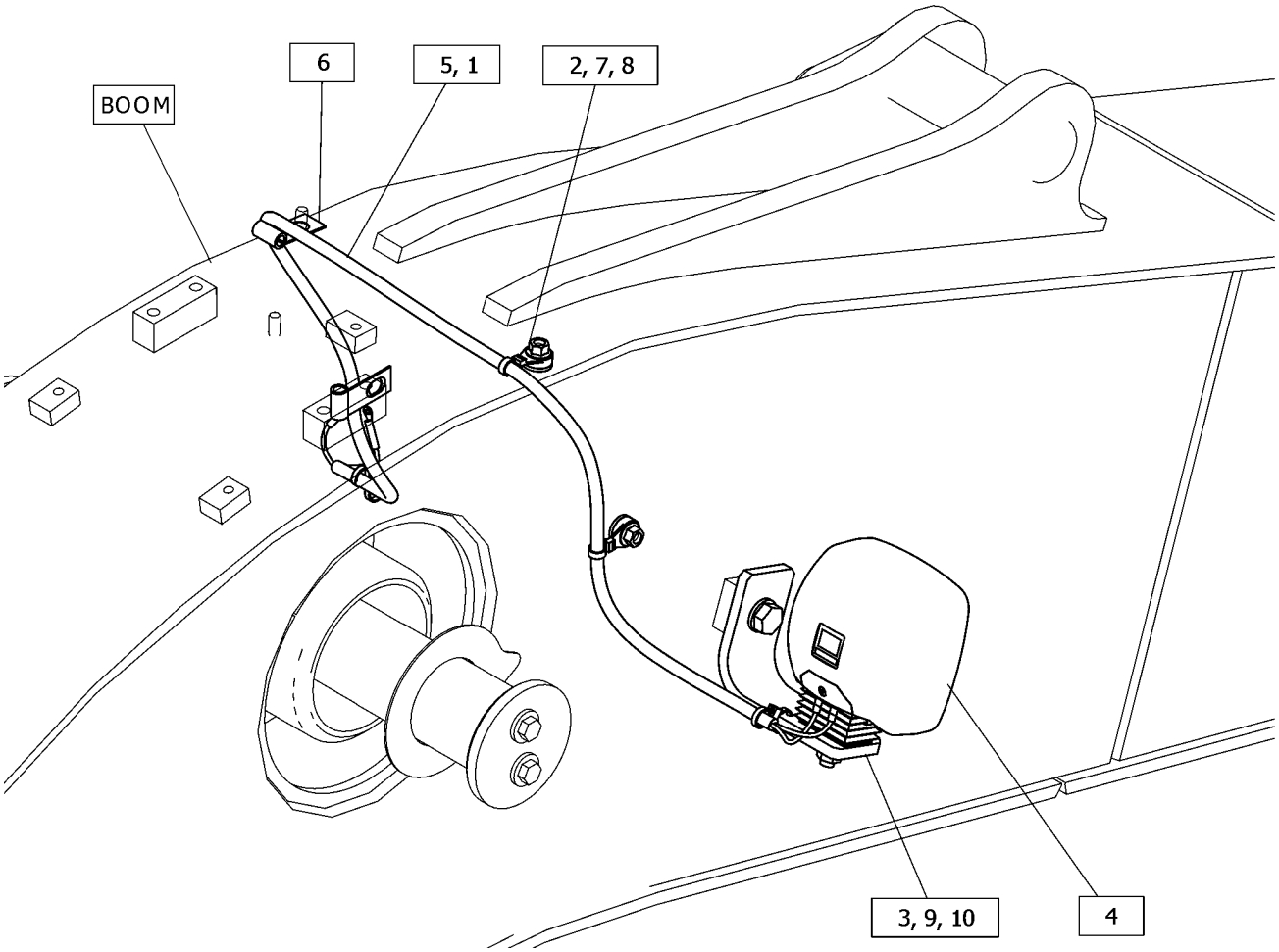

GRAPHIC #1 <END> g06273210

366-9342 LIGHTING GP-FLOOD—CAB

S/N: DLP1-UP
PART OF 379-7190 OPTION AR-LIGHTING
AN ATTACHMENT

SMCS-1434 **i05194844**

NOTE	REF NO	GRAPHIC REF	PART NUMBER	QTY	PART NAME 1 2 3 4 5 6 (PRODUCT LEVEL)	SEE PAGE
	1	1	**3S-2093**	1	STRAP-CABLE	
	2	1	**163-6704**	1	TIMER AS (TIME DELAY LIGHTING) (TIME DELAY LIGHTING)	
		1	**8T-8729**	5	PIN-CONNECTOR (16-GA TO 18-GA)	
		1	**102-8802**	1	KIT-RECEPTACLE (2-PIN)	
		1	**102-8803**	1	KIT-RECEPTACLE (3-PIN)	
					(EACH KIT INCLUDES RECEPTACLE AS & WEDGE)	
	3	1	**163-6795**	2	STRAP-CABLE	
Y	4	1	**167-3441**	2	LAMP GP-FLOOD (24-VOLT)	205
	5	1	**167-3456**	2	HARNESS AS-LIGHTING (CAB FLOODLIGHT)	
					(EACH INCLUDES)	
		1	**7Y-3962**	2	TERMINAL-BULLET (MALE)	
		1	**7Y-3964**	2	TUBE (CONNECTOR TERMINAL)	
		1	**7Y-3963**	2	TERMINAL-BULLET (FEMALE)	
		1	**7Y-3965**	2	TUBE (RECEPTACLE TERMINAL)	
	6	1	**238-2326**	1	PLATE AS	
	7	1	**366-9344**	1	BRACKET-LIGHT (CAB, LH)	
	8	1	**366-9345**	1	BRACKET-LIGHT (CAB, RH)	
M	9	1	**8T-4200**	2	BOLT (M8X1.25X16-MM)	
	10	1	**8T-4224**	2	WASHER-HARD (8.8X16X2-MM THK)	
M	11	1	**8T-4970**	4	BOLT (M6X1X14-MM)	
M	12	1	**9X-2042**	2	SCREW-TRUSS HEAD (M6X1X12-MM)	
M	13	1	**9X-2043**	2	SCREW-TRUSS HEAD (M6X1X14-MM)	
	14	1	**9X-8256**	4	WASHER (6.6X12X2-MM THK)	

M - METRIC PART
Y - SEPARATE ILLUSTRATION

366-9342 **LIGHTING GP-FLOOD (**contd.**)** **i05194844**

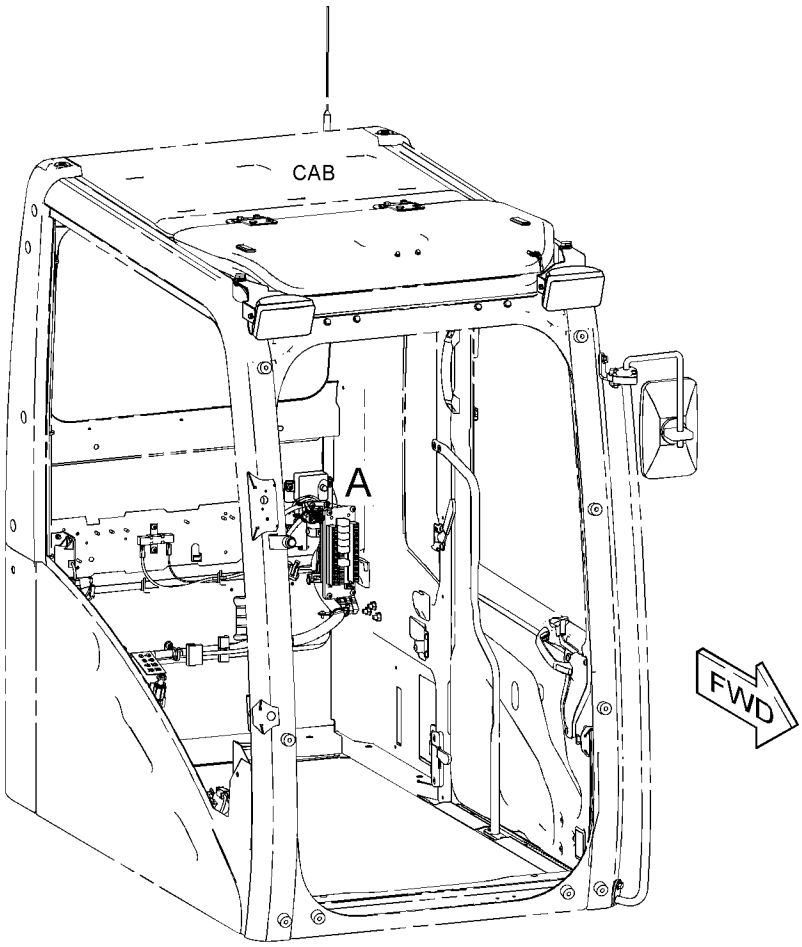

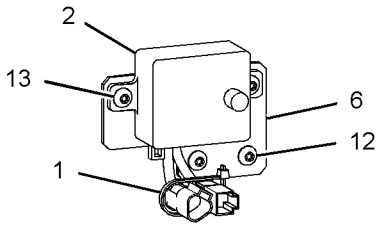

VIEW OF AREA A

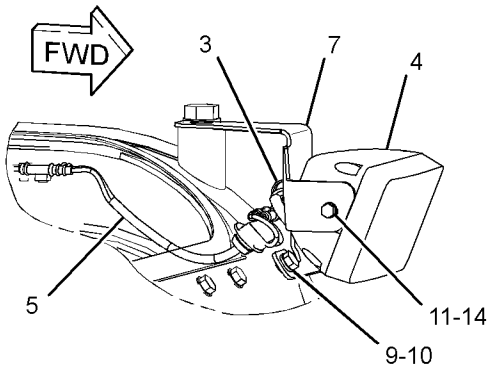

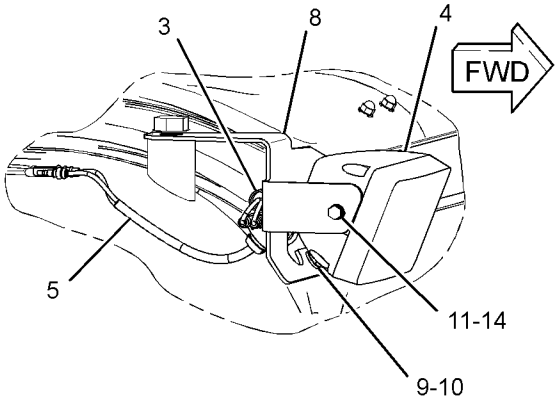

GRAPHIC #1 <END> g02798222

4I-5409 LIGHTING GP-FLOOD–CHASSIS

S/N: DLP1-UP

PART OF 301-2680 CHASSIS AR

SMCS-1434 **i05441302**

NOTE	REF NO	GRAPHIC REF	PART NUMBER	QTY	PART NAME 1 2 3 4 5 6 (PRODUCT LEVEL)	SEE PAGE
Y	1	1	**153-2523**	1	LAMP GP-FLOOD (24-VOLT)	204

Y - SEPARATE ILLUSTRATION

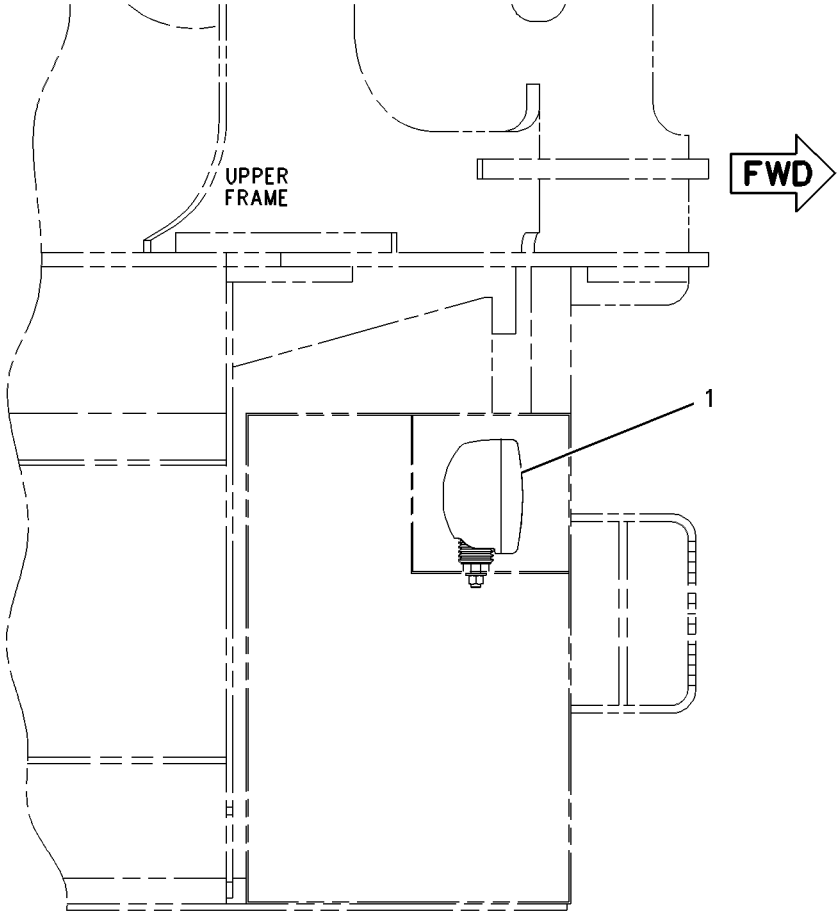

TOP VIEW

GRAPHIC #1 <END> g00588573

279-7840 MOUNTING GP-ELECTRONIC CONTROL

S/N: DLP1-UP

PART OF 279-7794, 379-4447 INSTALLATION AR-ENGINE

SMCS-1901 **i02801961**

NOTE	REF NO	GRAPHIC REF	PART NUMBER	QTY	PART NAME 1 2 3 4 5 6 (PRODUCT LEVEL)	SEE PAGE
	1	1	**279-7867**	1	PLATE AS	
M	2	1	**8T-4192**	4	BOLT (M12X1.75X25-MM)	
	3	1	**8T-4223**	4	WASHER-HARD (13.5X25.5X3-MM THK)	

M - METRIC PART

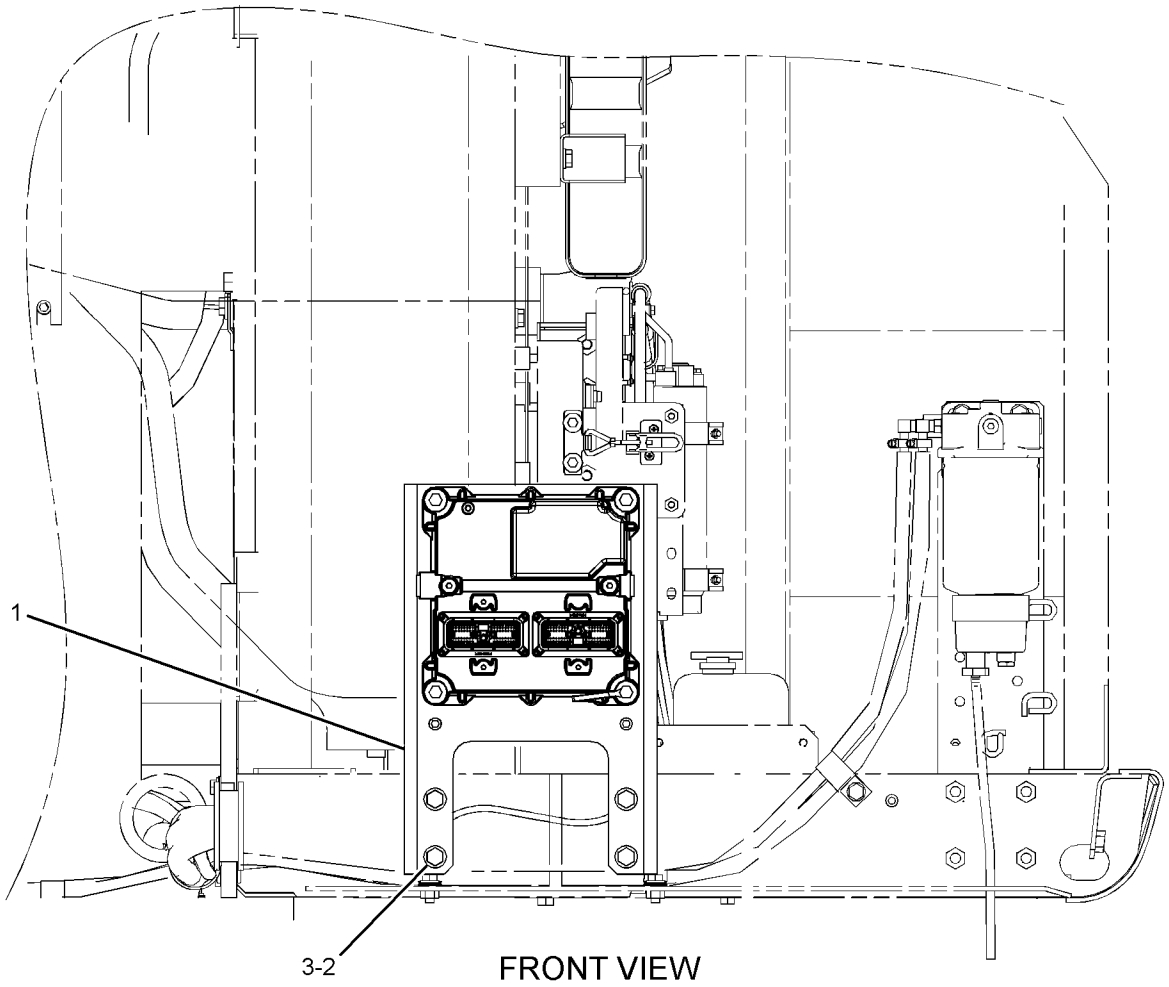

FRONT VIEW

GRAPHIC #1 <END> g01401221

275-6926 PANEL & MTG GP-CIRCUIT BREAKER

S/N: DLP1-389

PART OF 273-5363 OPERATOR AR

SMCS-1417, 1420 **i03016018**

NOTE	REF NO	GRAPHIC REF	PART NUMBER	QTY	PART NAME 1 2 3 4 5 6 (PRODUCT LEVEL)	SEE PAGE
CY	1	1	*319-1170*	1	PANEL GP-CIRCUIT BREAKER	221
	2	1	**8T-4121**	4	WASHER-HARD (11X21X2.5-MM THK)	
M	3	1	**8T-4137**	4	BOLT (M10X1.5X20-MM)	

C - CHANGE FROM PREVIOUS TYPE
M - METRIC PART
Y - SEPARATE ILLUSTRATION

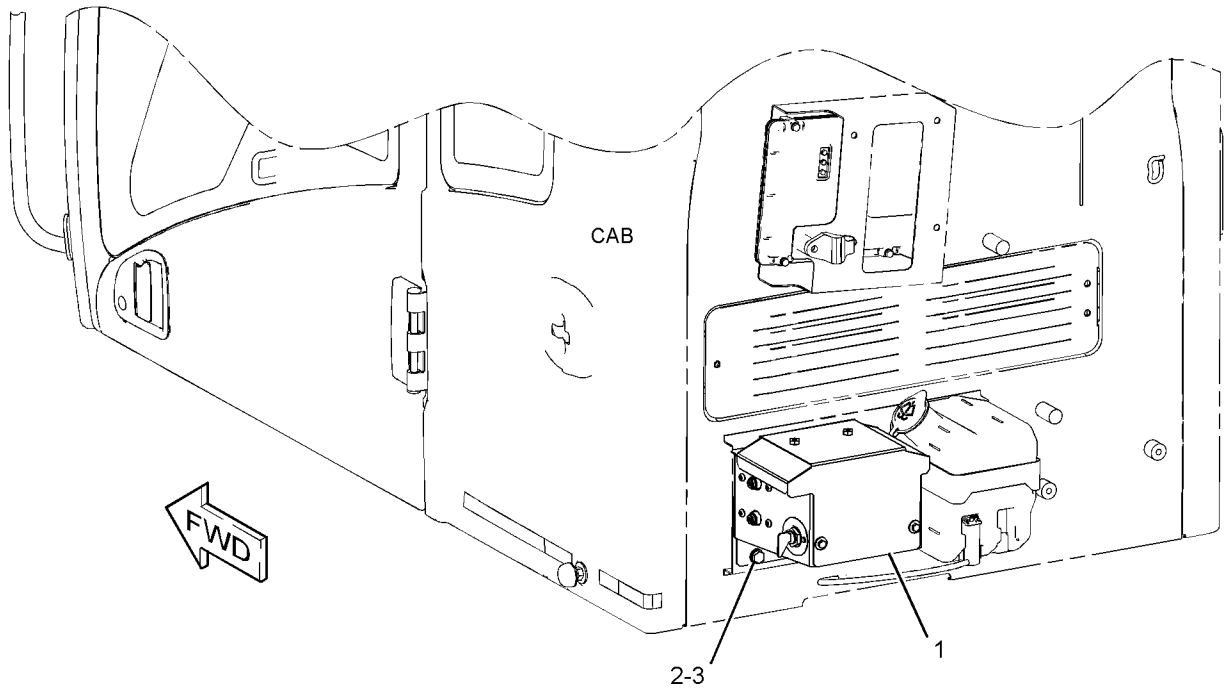

GRAPHIC #1 <END> g01526625

328-0118 PANEL & MTG GP-CIRCUIT BREAKER

S/N: DLP390-UP

PART OF 340-6773, 383-5596 OPERATOR AR

SMCS-1417, 1420

i05253835

NOTE	REF NO	GRAPHIC REF	PART NUMBER	QTY	PART NAME 1 2 3 4 5 6 (PRODUCT LEVEL)	SEE PAGE
Y	1	1	*381-7414*	1	PANEL GP-CIRCUIT BREAKER	232
	2	1	**8T-4121**	4	WASHER-HARD (11X21X2.5-MM THK)	
M	3	1	**8T-4137**	4	BOLT (M10X1.5X20-MM)	

M - METRIC PART
Y - SEPARATE ILLUSTRATION

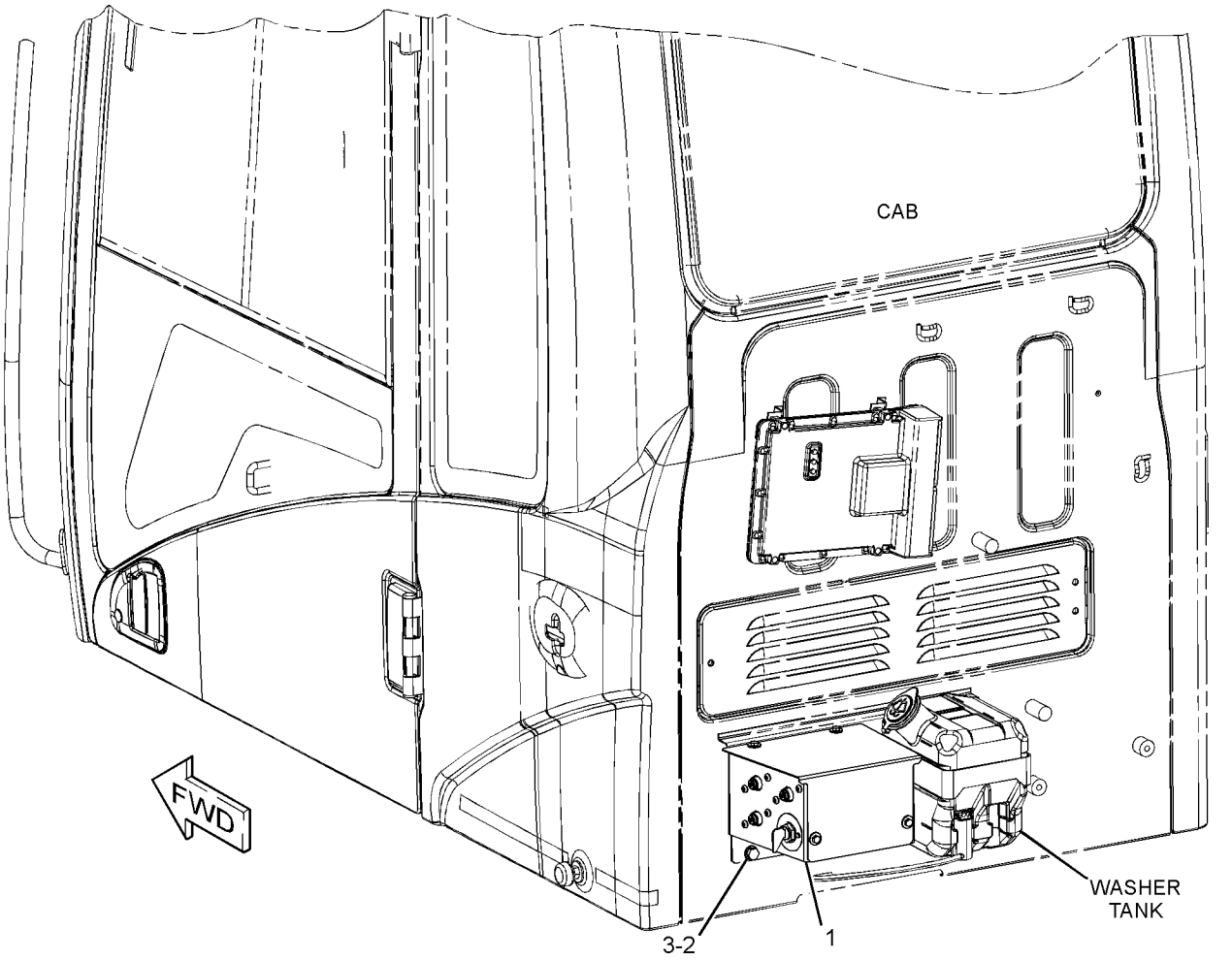

GRAPHIC #1 <END> g01806741

319-1170 PANEL GP-CIRCUIT BREAKER

S/N: DLP1-389

PART OF 275-6926 PANEL & MTG GP-CIRCUIT BREAKER

SMCS-1417 **i03991274**

NOTE	REF NO	GRAPHIC REF	PART NUMBER	QTY	PART NAME 1 2 3 4 5 6 (PRODUCT LEVEL)	SEE PAGE
	1	1	3E-8320	1	PLATE-INSTRUCTION (BATTERY)	
Y	2	1	7N-0718	1	SWITCH GP-DISCONNECT (BATTERY)	257
	3	1	116-0114	1	SWITCH AS-MAGNETIC (24-VOLT) (HEATER RELAY)	
		1	186-3735	1	PIN-CONNECTOR (16-GA TO 18-GA)	
		1	102-8802	1	KIT-RECEPTACLE (2-PIN)	
					(INCLUDES RECEPTACLE AS & WEDGE)	
	4	1	121-1023	1	BLOCK-TERMINAL	
	5	1	171-2208	1	CIRCUIT BREAKER AS (60-AMPERE) (ALTERNATOR)	
		1	6V-8187	2	NUT (1/4-28-THD)	
		1	8T-4205	2	WASHER-HARD (7.2X14.5X2-MM THK)	
		1	253-2111	2	LOCKWASHER	
	6	1	171-2210	1	CIRCUIT BREAKER AS (80-AMPERE) (MAIN)	
		1	6V-8187	2	NUT (1/4-28-THD)	
		1	8T-4205	2	WASHER-HARD (7.2X14.5X2-MM THK)	
		1	253-2111	2	LOCKWASHER	
	7	1	197-4330	1	CONTROLLER-AIR (HEATER)	
	8	1	224-2908	1	BRACKET AS	
	9	1	234-1034	1	CABLE AS	
D		1	6V-2369		CABLE (4-GA, BLACK) (0.2-M)	
		1	9G-4343	2	TERMINAL-RING (4-GA, 1/4-IN SCREW)	
E		1	125-7876		TUBE-HEAT SHRINK (17.78-MM DIA) (4-CM EACH)	
	10	1	234-1036	1	CABLE AS	
D		1	6V-2369		CABLE (4-GA, BLACK) (0.2-M)	
		1	9G-4343	2	TERMINAL-RING (4-GA, 1/4-IN SCREW)	
E		1	125-7876		TUBE-HEAT SHRINK (17.78-MM DIA) (4-CM EACH)	
	11	1	234-1037	1	WIRE AS	
	12	1	234-1038	1	WIRE AS	
	13	1	238-2280	1	WIRE AS	
	14	1	238-2392	1	BAR-BUS	
Y	15	1	259-5274	1	SWITCH GP-MAGNETIC (24-VOLT) (START RELAY)	261
	16	1	319-1344	1	BRACKET AS	
	17	1	319-1346	1	COVER AS	
	18	1	319-1354	1	CABLE AS	
D		1	6V-2369		CABLE (4-GA, BLACK) (0.2-M)	
		1	9G-4343	1	TERMINAL-RING (4-GA, 1/4-IN SCREW)	
E		1	125-7876		TUBE-HEAT SHRINK (17.78-MM DIA) (4-CM EACH)	
	19	1	319-1355	1	CABLE AS	
D		1	6V-2369		CABLE (4-GA, BLACK) (0.2-M)	
		1	9G-4343	1	TERMINAL-RING (4-GA, 1/4-IN SCREW)	
E		1	125-7876		TUBE-HEAT SHRINK (17.78-MM DIA) (4-CM EACH)	
M	20	1	5C-2890	2	NUT (M6X1-THD)	
M	21	1	5C-9553	5	BOLT (M6X1X16-MM)	
	22	1	5P-4115	4	WASHER-HARD (7.2X19X2-MM THK)	
	23	1	6V-5645	4	SCREW-MACHINE (10-32X0.87-IN)	
M	24	1	7X-2619	2	BOLT (M6X1X10-MM)	
	25	1	8T-0328	4	WASHER-HARD (5.5X10X1-MM THK)	
M	26	1	8T-4171	4	BOLT (M6X1X12-MM)	

319-1170 **PANEL GP-CIRCUIT BREAKER (**contd.**)** **i03991274**

NOTE	REF NO	GRAPHIC REF	PART NUMBER	QTY	PART NAME 1 2 3 4 5 6 (PRODUCT LEVEL)	SEE PAGE
M	27	1	**8T-4970**	6	BOLT (M6X1X14-MM)	
	28	1	**9X-8256**	15	WASHER (6.6X12X2-MM THK)	

D - ORDER BY THE METER
E - ORDER BY THE CENTIMETER
M - METRIC PART
Y - SEPARATE ILLUSTRATION

319-1170 **PANEL GP-CIRCUIT BREAKER (**contd.**)** **i03991274**

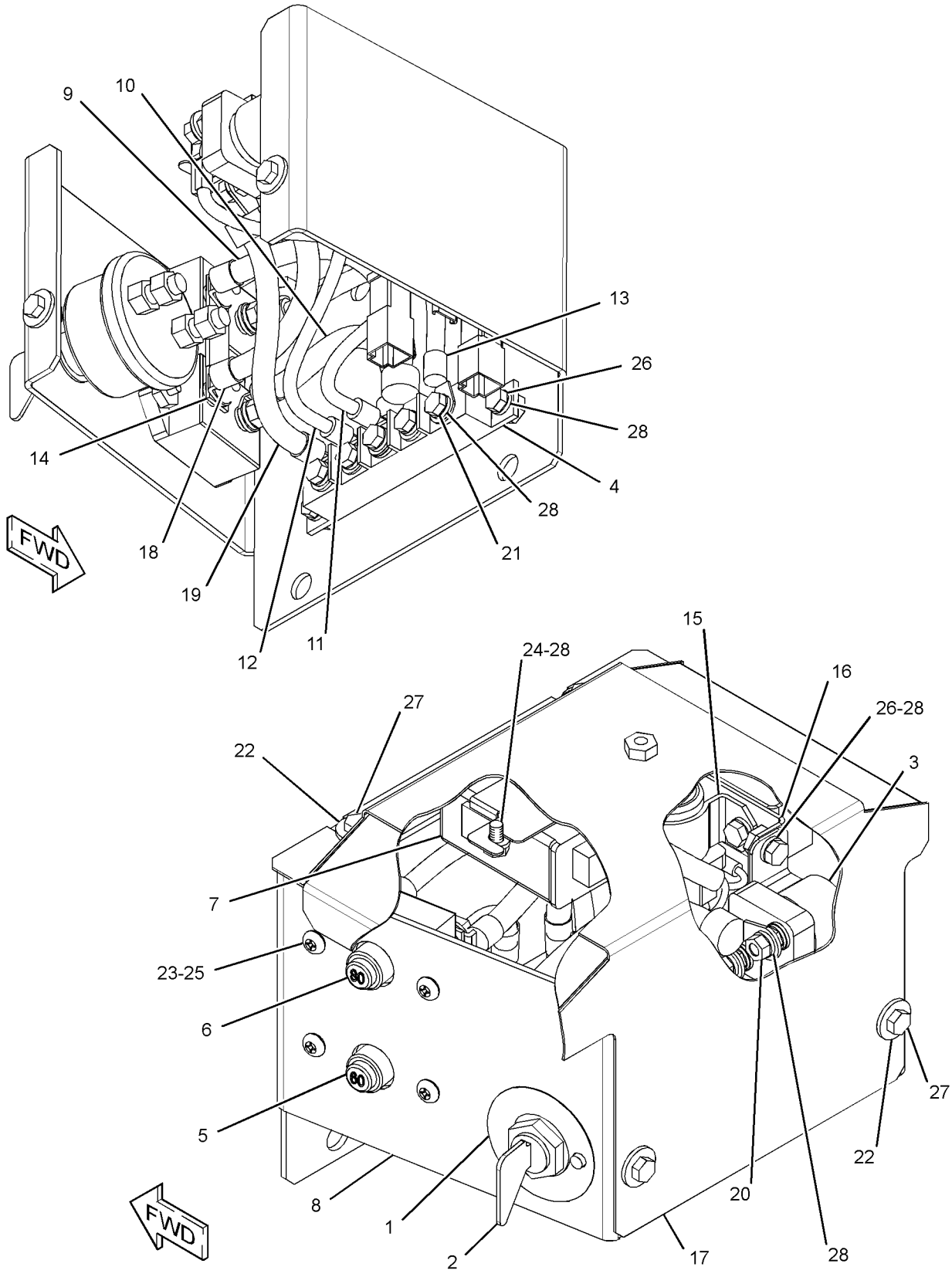

GRAPHIC #1 <END> g01526637

319-1255 PANEL GP-CIRCUIT BREAKER

S/N: DLP390-UP

PART OF 381-7414 PANEL GP-CIRCUIT BREAKER

SMCS-1417 **i04899520**

NOTE	REF NO	GRAPHIC REF	PART NUMBER	QTY	PART NAME 1 2 3 4 5 6 (PRODUCT LEVEL)	SEE PAGE
	1	2	**3E-8320**	1	PLATE-INSTRUCTION (BATTERY)	
	2	2	**3S-2093**	1	STRAP-CABLE	
Y	3	2	**7N-0718**	1	SWITCH GP-DISCONNECT (BATTERY)	257
	4	1	**7Y-5499**	1	BLOCK AS-TERMINAL	
	5	1	**9G-8451**	1	BLOCK AS	
		1	**1H-3244**	1	LOCKWASHER	
		1	**4B-4276**	2	WASHER (7X16X1.6-MM THK)	
		1	**4L-7124**	1	BOLT (1/4-20X1.25-IN)	
		1	**6V-8185**	2	NUT (1/4-20-THD)	
	6	2	**141-2759**	1	FUSE (5-AMPERE)	
	7	1	**171-2208**	1	CIRCUIT BREAKER AS (60-AMPERE) (ALTERNATOR)	
		1	**6V-8187**	2	NUT (1/4-28-THD)	
		1	**8T-4205**	2	WASHER-HARD (7.2X14.5X2-MM THK)	
		1	**253-2111**	2	LOCKWASHER	
	8	1	**171-2210**	1	CIRCUIT BREAKER AS (80-AMPERE) (MAIN)	
		1	**6V-8187**	2	NUT (1/4-28-THD)	
		1	**8T-4205**	2	WASHER-HARD (7.2X14.5X2-MM THK)	
		1	**253-2111**	2	LOCKWASHER	
Y	9	2	**209-5582**	1	SWITCH GP-MAGNETIC (24-VOLT) (HEATER RELAY)	259
	10	1	**216-4970**	1	CIRCUIT BREAKER AS (120-AMPERE) (HEATER)	
		1	**6V-8187**	2	NUT (1/4-28-THD)	
		1	**8T-4205**	2	WASHER-HARD (7.2X14.5X2-MM THK)	
		1	**253-2111**	2	LOCKWASHER	
	11	1	**238-1506**	1	COVER	
	12	2	**238-2279**	1	BAR-BUS	
	13	2	**238-2280**	1	WIRE AS	
	14	2	**251-0304**	1	CABLE AS	
D		2	**6V-2369**		CABLE (4-GA, BLACK) (0.2-M)	
		2	**9G-4343**	2	TERMINAL-RING (4-GA, 1/4-IN SCREW)	
Y	15	2	**259-5274**	1	SWITCH GP-MAGNETIC (24-VOLT) (START RELAY)	261
	16	2	**319-1256**	1	BRACKET AS	
	17	1	**319-1342**	1	CABLE AS	
D		1	**6V-2369**		CABLE (4-GA, BLACK) (0.2-M)	
		1	**9G-4343**	1	TERMINAL-RING (4-GA, 1/4-IN SCREW)	
		1	**5P-3454**	1	TERMINAL-RING (4-GA, 5/16-IN SCREW)	
	18	2	**319-1343**	1	CABLE AS	
D		2	**6V-2369**		CABLE (4-GA, BLACK) (0.2-M)	
		2	**9G-4343**	2	TERMINAL-RING (4-GA, 1/4-IN SCREW)	
	19	1	**324-5804**	1	WIRE AS	
	20	1	**324-5805**	1	WIRE AS	
	21	2	**324-5806**	1	CABLE AS	
D		2	**6V-2369**		CABLE (4-GA, BLACK) (0.2-M)	
		2	**9G-4343**	1	TERMINAL-RING (4-GA, 1/4-IN SCREW)	
		2	**5P-3454**	1	TERMINAL-RING (4-GA, 5/16-IN SCREW)	
	22	2	**324-5808**	1	HOLDER AS-FUSE	
		2	**8T-8737**	1	PLUG-SEAL	
		2	**9W-0852**	1	PIN-CONNECTOR (14-GA TO 16-GA)	

319-1255 **PANEL GP-CIRCUIT BREAKER (**contd.**)** **i04899520**

NOTE	REF NO	GRAPHIC REF	PART NUMBER	QTY	PART NAME 1 2 3 4 5 6 (PRODUCT LEVEL)	SEE PAGE
		2	**2L-8078**	1	TERMINAL-RING (14-GA TO 16-GA, 5/16-IN SCREW)	
		2	**243-4505**	1	RECEPTACLE AS-CONNECTOR (2-PIN)	
	23	2	**156-6175**	1	CLIP (LADDER)	
	24	1,2	**5P-4115**	4	WASHER-HARD (7.2X19X2-MM THK)	
	25	1	**6V-5645**	6	SCREW-MACHINE (10-32X0.87-IN)	
	26	1	**8T-0328**	6	WASHER-HARD (5.5X10X1-MM THK)	
M	27	1,2	**8T-4171**	5	BOLT (M6X1X12-MM)	
M	28	1,2	**8T-4970**	11	BOLT (M6X1X14-MM)	
	29	1,2	**9X-8256**	12	WASHER (6.6X12X2-MM THK)	

D - ORDER BY THE METER
M - METRIC PART
Y - SEPARATE ILLUSTRATION

319-1255 **PANEL GP-CIRCUIT BREAKER (**contd.**)** **i04899520**

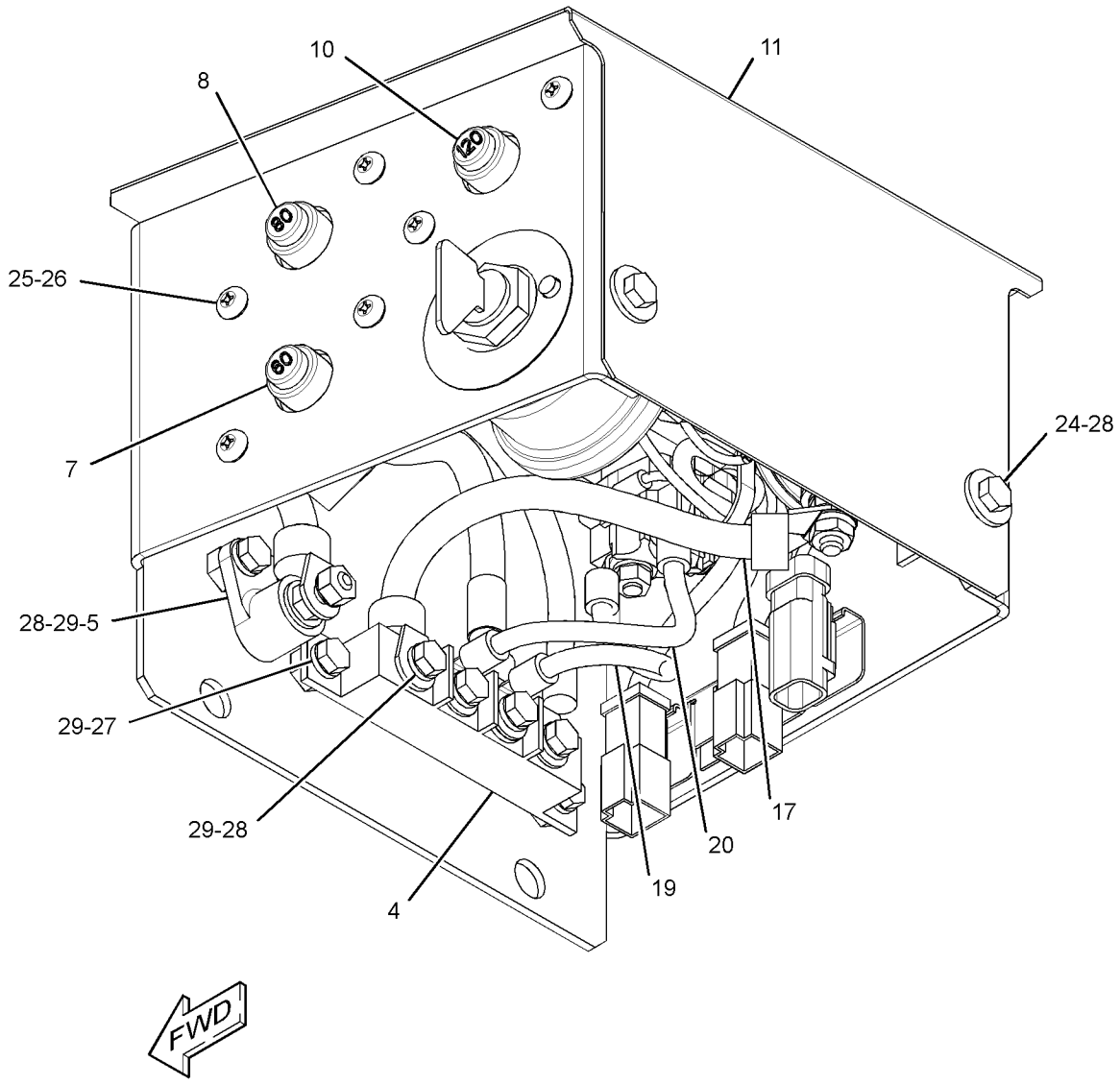

GRAPHIC #1 g01806933

319-1255 **PANEL GP-CIRCUIT BREAKER (**contd.**)** **i04899520**

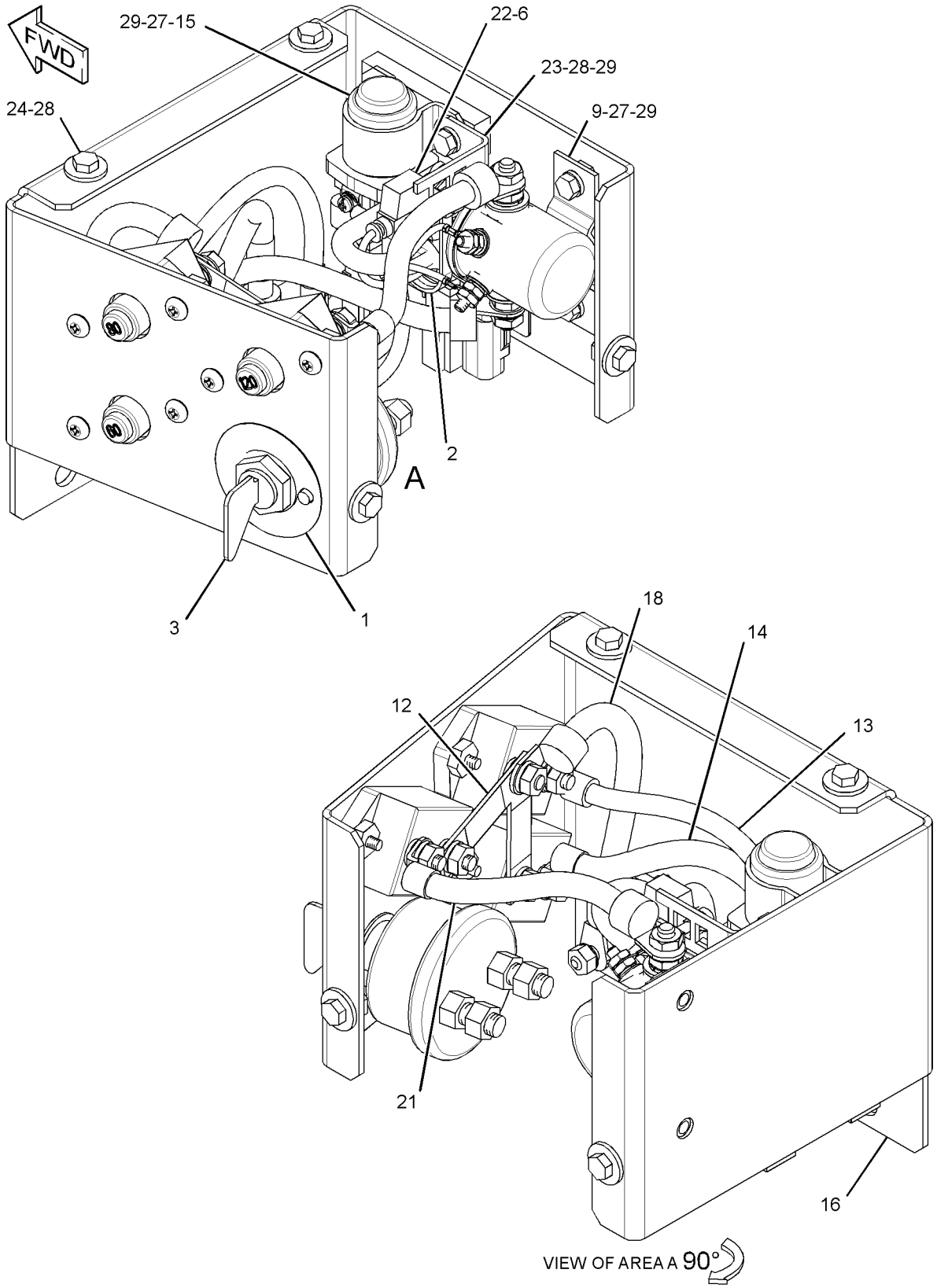

GRAPHIC #2 <END> g01806934

376-8745 PANEL GP-CIRCUIT BREAKER

S/N: DLP390-UP

PART OF 381-7414 PANEL GP-CIRCUIT BREAKER

SMCS-1417 **i05253868**

NOTE	REF NO	GRAPHIC REF	PART NUMBER	QTY	PART NAME 1 2 3 4 5 6 (PRODUCT LEVEL)	SEE PAGE
	1	2	**3E-8320**	1	PLATE-INSTRUCTION (BATTERY)	
	2	2	**3S-2093**	1	STRAP-CABLE	
Y	3	2	**7N-0718**	1	SWITCH GP-DISCONNECT (BATTERY)	257
	4	1	**7Y-5499**	1	BLOCK AS-TERMINAL	
	5	1	**9G-8451**	1	BLOCK AS	
		1	**1H-3244**	1	LOCKWASHER	
		1	**4B-4276**	2	WASHER (7X16X1.6-MM THK)	
		1	**4L-7124**	1	BOLT (1/4-20X1.25-IN)	
		1	**6V-8185**	2	NUT (1/4-20-THD)	
	6	2	**141-2759**	1	FUSE (5-AMPERE)	
	7	1	**171-2208**	1	CIRCUIT BREAKER AS (60-AMPERE) (ALTERNATOR)	
		1	**6V-8187**	2	NUT (1/4-28-THD)	
		1	**8T-4205**	2	WASHER-HARD (7.2X14.5X2-MM THK)	
		1	**253-2111**	2	LOCKWASHER	
	8	1	**171-2210**	1	CIRCUIT BREAKER AS (80-AMPERE) (MAIN)	
		1	**6V-8187**	2	NUT (1/4-28-THD)	
		1	**8T-4205**	2	WASHER-HARD (7.2X14.5X2-MM THK)	
		1	**253-2111**	2	LOCKWASHER	
Y	9	2	**209-5582**	1	SWITCH GP-MAGNETIC (24-VOLT) (HEATER RELAY)	259
	10	1	**216-4970**	1	CIRCUIT BREAKER AS (120-AMPERE) (HEATER)	
		1	**6V-8187**	2	NUT (1/4-28-THD)	
		1	**8T-4205**	2	WASHER-HARD (7.2X14.5X2-MM THK)	
		1	**253-2111**	2	LOCKWASHER	
	11	1	**238-1506**	1	COVER	
	12	2	**238-2279**	1	BAR-BUS	
	13	2	**238-2280**	1	WIRE AS	
	14	2	**251-0304**	1	CABLE AS	
D		2	**6V-2369**		CABLE (4-GA, BLACK) (0.2-M)	
		2	**9G-4343**	2	TERMINAL-RING (4-GA, 1/4-IN SCREW)	
Y	15	2	**125-1302**	1	SWITCH GP-MAGNETIC (24-VOLT) (START RELAY)	258
	16	2	**376-8744**	1	BRACKET AS	
	17	1	**319-1342**	1	CABLE AS	
D		1	**6V-2369**		CABLE (4-GA, BLACK) (0.2-M)	
		1	**9G-4343**	1	TERMINAL-RING (4-GA, 1/4-IN SCREW)	
		1	**5P-3454**	1	TERMINAL-RING (4-GA, 5/16-IN SCREW)	
	18	2	**319-1343**	1	CABLE AS	
D		2	**6V-2369**		CABLE (4-GA, BLACK) (0.2-M)	
		2	**9G-4343**	2	TERMINAL-RING (4-GA, 1/4-IN SCREW)	
	19	1	**324-5804**	1	WIRE AS	
	20	1	**324-5805**	1	WIRE AS	
	21	2	**324-5806**	1	CABLE AS	
D		2	**6V-2369**		CABLE (4-GA, BLACK) (0.2-M)	
		2	**9G-4343**	1	TERMINAL-RING (4-GA, 1/4-IN SCREW)	
		2	**5P-3454**	1	TERMINAL-RING (4-GA, 5/16-IN SCREW)	
	22	2	**324-5808**	1	HOLDER AS-FUSE	
		2	**8T-8737**	1	PLUG-SEAL	
		2	**9W-0852**	1	PIN-CONNECTOR (14-GA TO 16-GA)	

376-8745 **PANEL GP-CIRCUIT BREAKER (**contd.**)** **i05253868**

NOTE	REF NO	GRAPHIC REF	PART NUMBER	QTY	PART NAME 1 2 3 4 5 6 (PRODUCT LEVEL)	SEE PAGE
		2	**2L-8078**	1	TERMINAL-RING (14-GA TO 16-GA, 5/16-IN SCREW)	
		2	**243-4505**	1	RECEPTACLE AS-CONNECTOR (2-PIN)	
	23	2	**156-6175**	1	CLIP (LADDER)	
	24	1,2	**5P-4115**	4	WASHER-HARD (7.2X19X2-MM THK)	
	25	1	**6V-5645**	6	SCREW-MACHINE (10-32X0.87-IN)	
	26	1	**8T-0328**	6	WASHER-HARD (5.5X10X1-MM THK)	
M	27	1,2	**8T-4171**	5	BOLT (M6X1X12-MM)	
M	28	1,2	**8T-4970**	11	BOLT (M6X1X14-MM)	
	29	1,2	**9X-8256**	12	WASHER (6.6X12X2-MM THK)	

D - ORDER BY THE METER
M - METRIC PART
Y - SEPARATE ILLUSTRATION

376-8745 **PANEL GP-CIRCUIT BREAKER (**contd.**)** **i05253868**

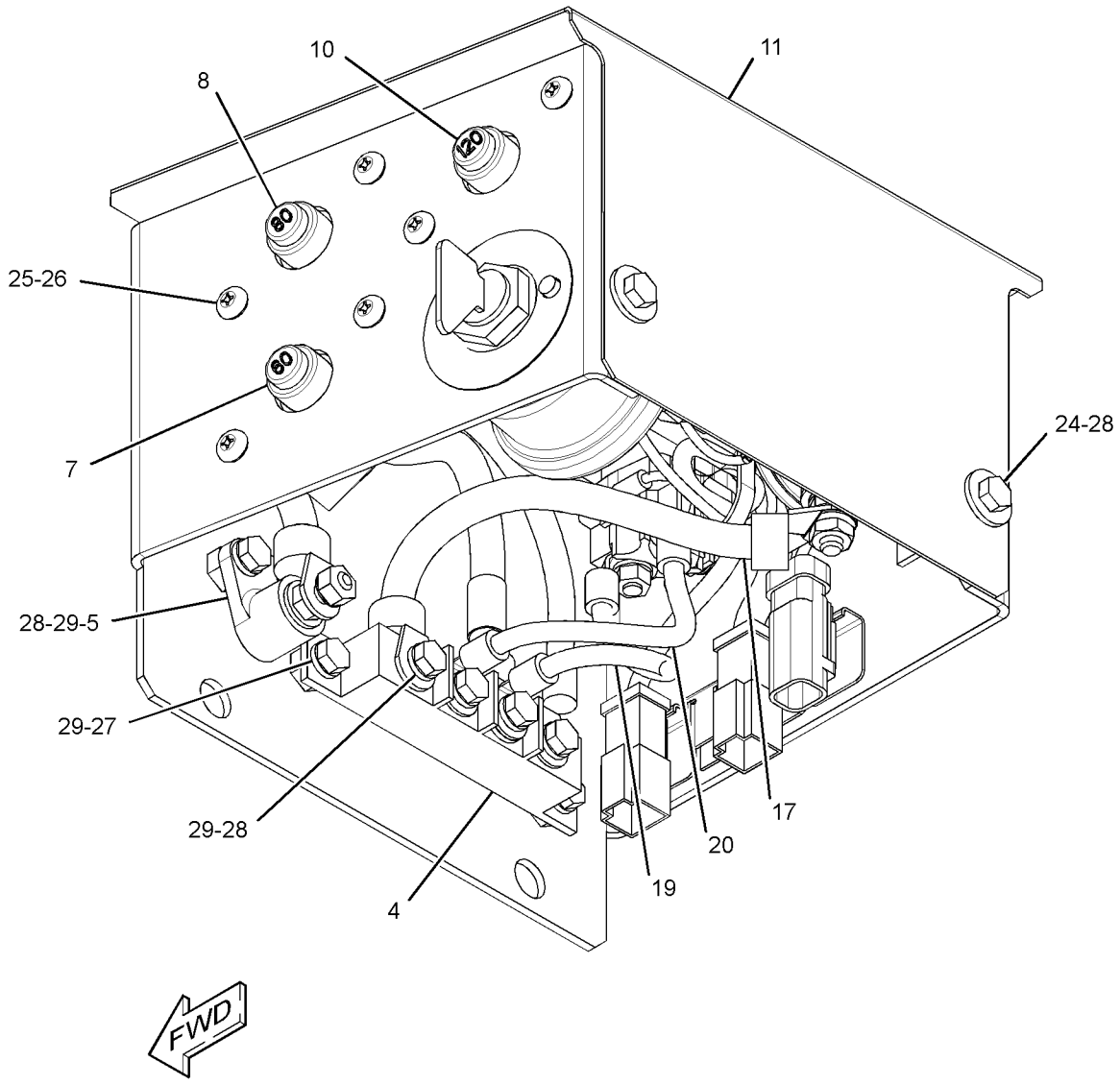

GRAPHIC #1 g01806933

376-8745 **PANEL GP-CIRCUIT BREAKER (**contd.**)** **i05253868**

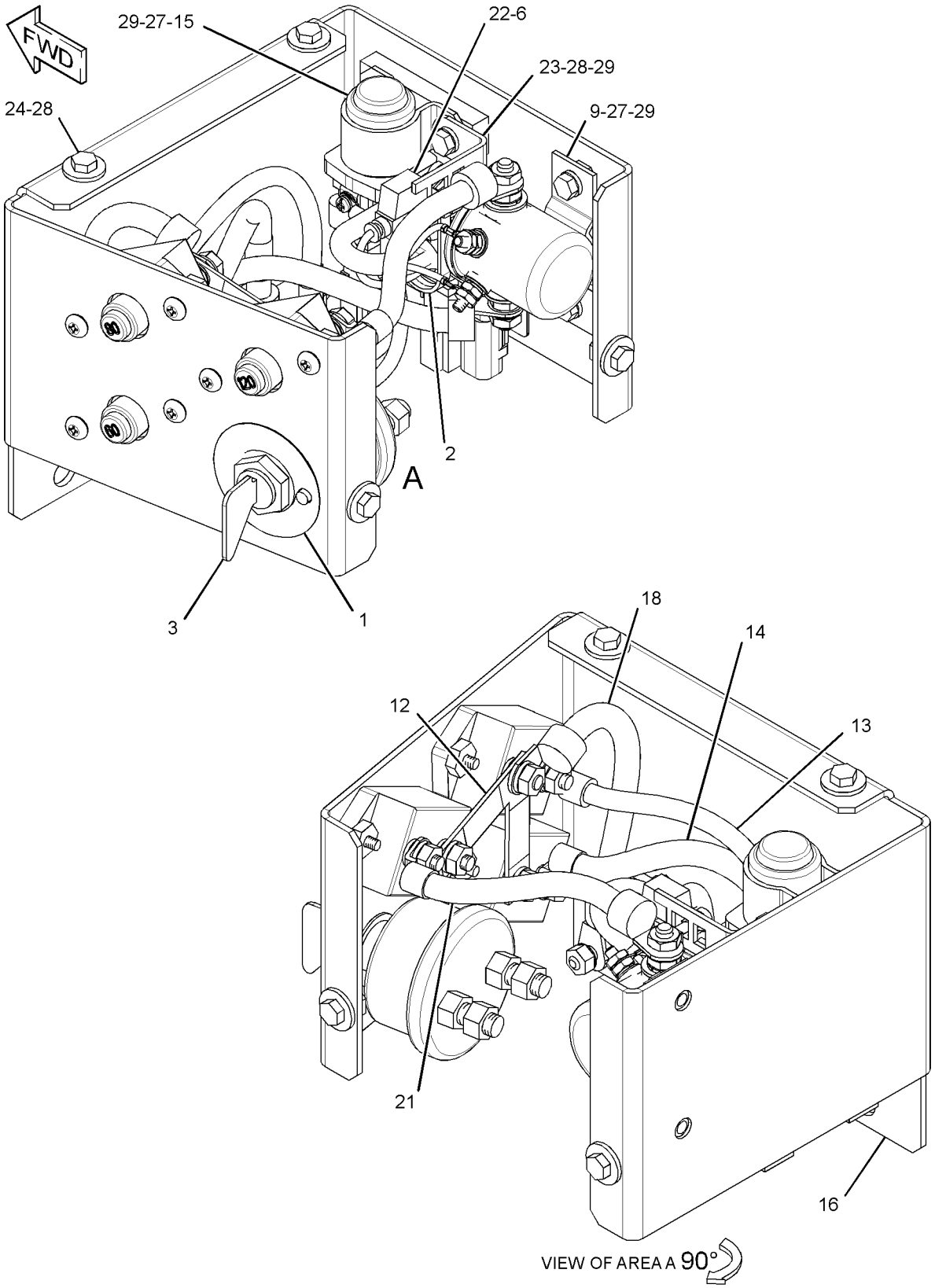

GRAPHIC #2 <END> g01806934

381-7414 PANEL GP-CIRCUIT BREAKER

S/N: DLP390-UP

PART OF 328-0118 PANEL & MTG GP-CIRCUIT BREAKER

SMCS-1417 **i05253862**

NOTE	PART NUMBER	QTY	PART NAME 1 2 3 4 5 6 (PRODUCT LEVEL)	SEE PAGE
Y	*319-1255*	1	PANEL GP-CIRCUIT BREAKER	224
			—OR—	
Y	*376-8745*	1	PANEL GP-CIRCUIT BREAKER	228

Y - SEPARATE ILLUSTRATION

<END>

251-0542 PANEL GP-SWITCH—ENGINE SPEED, START

S/N: DLP1-UP
CANNOT BE USED WITH 251-0544—PAGE: 239
PART OF 336-3345 DISTRIBUTION AR, 336-3346 OPTION AR-CAB, 351-9714, 359-2252, 359-2483 OPTION AR-REGIONAL
AN ATTACHMENT
TYPE 1

SMCS-1408, 1429, 7332, 7451 **i04894342**

NOTE	REF NO	GRAPHIC REF	PART NUMBER	QTY	PART NAME 1 2 3 4 5 6 (PRODUCT LEVEL)	SEE PAGE
	1	1	3S-2093	4	STRAP-CABLE	
Y	2	1	9G-7641	1	SWITCH GP-START (ENGINE, KEY)	265
CY	3	1	319-4420	1	SWITCH GP-ROTARY (THROTTLE POSITION)	263
	4	1	170-9324	1	LAMP AS-INDICATOR (24-VOLT, 3-WATT)	
	5	1	185-9208	1	KNOB AS (THROTTLE POSITION)	
	6	1	234-1156	1	COVER	
	7	1	234-1158	1	COVER	
	8	1	267-7976	1	PANEL	
C	9	1	328-0021	1	HARNESS AS-CONSOLE	
		1	102-8802	1	KIT-RECEPTACLE (2-PIN)	
					(INCLUDES RECPTACLE AS & WEDGE)	
		1	3S-2093	3	STRAP-CABLE	
		1	7Y-3951	2	TERMINAL-BLADE (14-GA)	
		1	7Y-3952	1	PLUG-CONNECTOR (2-PIN)	
		1	7Y-3962	1	TERMINAL-BULLET (MALE)	
		1	7Y-3964	1	TUBE (CONNECTOR TERMINAL)	
		1	7Y-3963	1	TERMINAL-BULLET (FEMALE)	
		1	7Y-3965	1	TUBE (RECEPTACLE TERMINAL)	
		1	8T-8737	3	PLUG-SEAL	
		1	121-1168	1	CONNECTOR-RECEPTACLE	
		1	121-1173	14	TERMINAL (MALE)	
		1	9X-3402	7	SOCKET-CONNECTOR (16-GA TO 18-GA)	
					—OR—	
		1	126-1768	7	SOCKET-CONNECTOR (14-GA TO 16-GA)	
		1	2L-8075	4	TERMINAL-RING (14-GA TO 16-GA, NO. 8 SCREW)	
		1	153-2540	10	TERMINAL (FEMALE)	
		1	153-2541	1	PLUG-CONNECTOR (10-PIN)	
		1	155-2270	1	KIT-CONNECTING PLUG (2-PIN)	
					(INCLUDES PLUG AS, WEDGE & INTERFACE SEAL)	
		1	230-5010	1	PLUG AS-CONNECTOR (6-PIN)	
		1	264-7032	1	SEAL-CONNECTOR	
		1	238-2366	7	TERMINAL (MALE)	
	10	1	096-6166	4	WASHER-HARD (4.5X9X1-MM THK)	
	11	1	119-5026	4	SCREW-PAN HEAD (10-16X0.63-IN)	
M	12	1	6V-9491	4	SCREW-MACHINE (M4X0.7X20-MM)	

C - CHANGE FROM PREVIOUS TYPE
M - METRIC PART
Y - SEPARATE ILLUSTRATION

251-0542 **PANEL GP-SWITCH (**contd.**)** **i04894342**

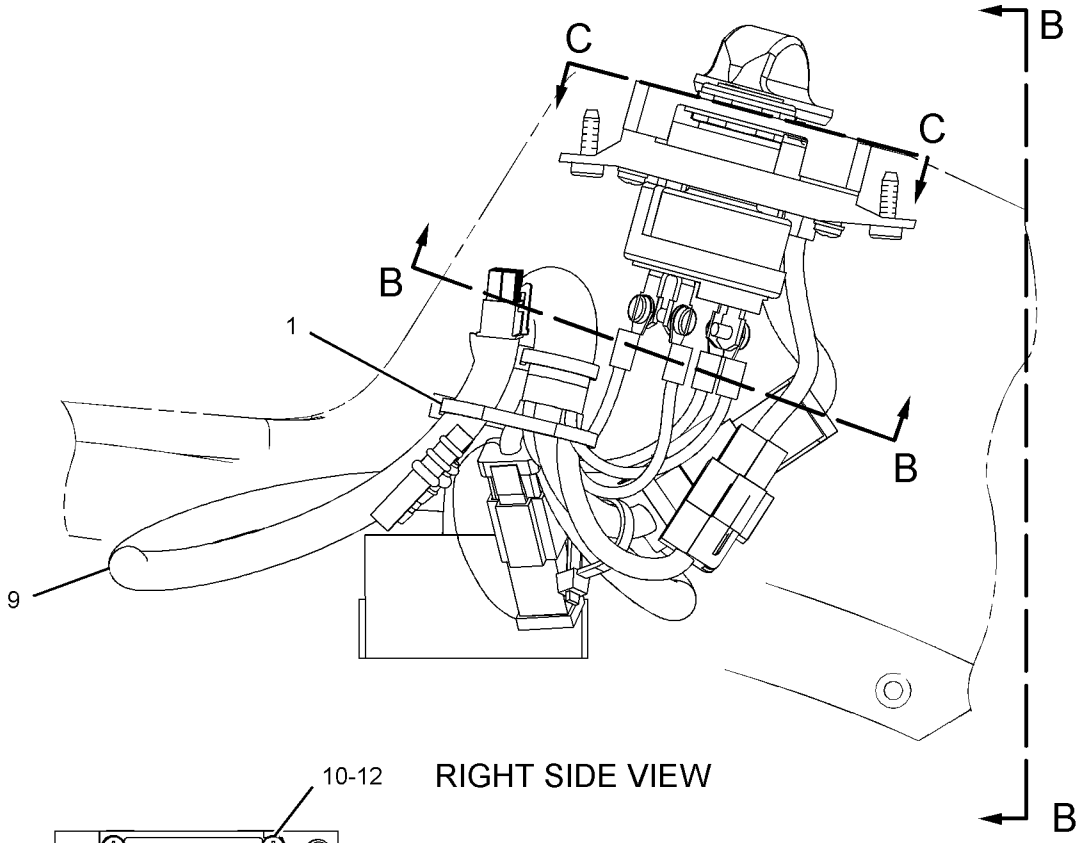

RIGHT SIDE VIEW

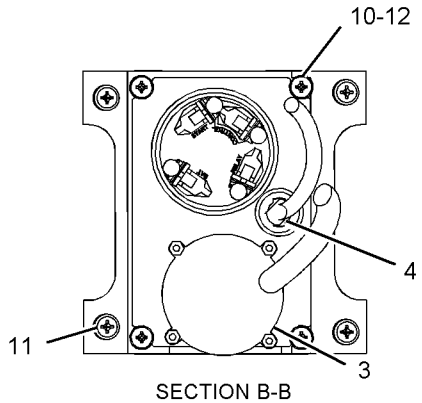

SECTION B-B

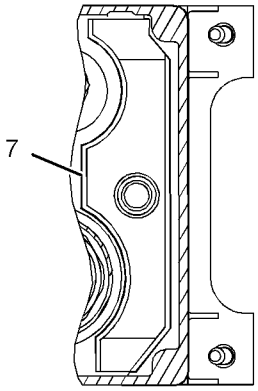

VIEW C-C

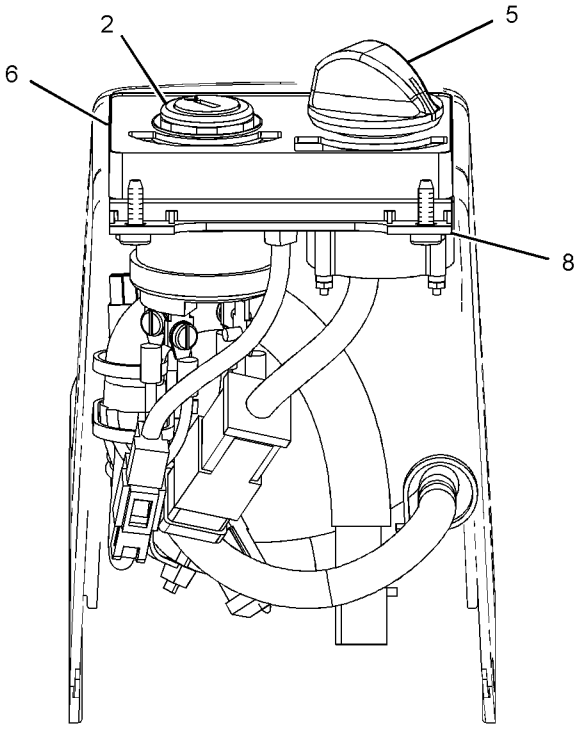

VIEW B-B

GRAPHIC #1 <END> g01112022

251-0542 PANEL GP-SWITCH—ENGINE SPEED, START

S/N: DLP1-UP
CANNOT BE USED WITH 251-0544—PAGE: 239
PART OF 336-3345 DISTRIBUTION AR, 336-3346 OPTION AR-CAB, 351-9714, 359-2252, 359-2483, 367-8791, 379-7090 OPTION AR-REGIONAL
AN ATTACHMENT
TYPE 2

SMCS-1408, 1429, 7332, 7451 **i06890424**

NOTE	REF NO	GRAPHIC REF	PART NUMBER	QTY	PART NAME 1 2 3 4 5 6 (PRODUCT LEVEL)	SEE PAGE
	1	1	**3S-2093**	4	STRAP-CABLE	
CY	2	1	**255-2751**	1	SWITCH GP-START (ENGINE, KEY)	264
Y	3	1	**319-4420**	1	SWITCH GP-ROTARY (THROTTLE POSITION)	263
	4	1	**170-9324**	1	LAMP AS-INDICATOR (24-VOLT, 3-WATT)	
	5	1	**185-9208**	1	KNOB AS (THROTTLE POSITION)	
	6	1	**234-1156**	1	COVER	
	7	1	**234-1158**	1	COVER	
	8	1	**267-7976**	1	PANEL	
	9	1	**328-0021**	1	HARNESS AS-CONSOLE	
		1	**3S-2093**	3	STRAP-CABLE	
		1	**102-8802**	1	KIT-RECEPTACLE (2-PIN)	
					(INCLUDES RECEPTACLE AS & WEDGE)	
		1	**7Y-3951**	2	TERMINAL-BLADE (14-GA)	
		1	**7Y-3952**	1	PLUG-CONNECTOR (2-PIN)	
		1	**7Y-3962**	1	TERMINAL-BULLET (MALE)	
		1	**7Y-3964**	1	TUBE (CONNECTOR TERMINAL)	
		1	**7Y-3963**	1	TERMINAL-BULLET (FEMALE)	
		1	**7Y-3965**	1	TUBE (RECEPTACLE TERMINAL)	
		1	**8T-8737**	3	PLUG-SEAL	
		1	**121-1168**	1	CONNECTOR-RECEPTACLE	
		1	**121-1173**	14	TERMINAL (MALE)	
		1	**9X-3402**	7	SOCKET-CONNECTOR (16-GA TO 18-GA)	
		1	**2L-8075**	4	TERMINAL-RING (14-GA TO 16-GA, NO. 8 SCREW)	
		1	**153-2540**	10	TERMINAL (FEMALE)	
		1	**153-2541**	1	PLUG-CONNECTOR (10-PIN)	
		1	**155-2270**	1	KIT-CONNECTING PLUG (2-PIN)	
					(INCLUDES PLUG AS, WEDGE & INTERFACE SEAL)	
		1	**230-5010**	1	PLUG AS-CONNECTOR (6-PIN)	
		1	**264-7032**	1	SEAL-CONNECTOR	
		1	**238-2366**	7	TERMINAL (MALE)	
	10	1	**096-6166**	4	WASHER-HARD (4.5X9X1-MM THK)	
	11	1	**119-5026**	4	SCREW-PAN HEAD (10-16X0.63-IN)	
M	12	1	**6V-9491**	4	SCREW-MACHINE (M4X0.7X20-MM)	

C - CHANGE FROM PREVIOUS TYPE
M - METRIC PART
Y - SEPARATE ILLUSTRATION

251-0542 **PANEL GP-SWITCH (**contd.**)** **i06890424**

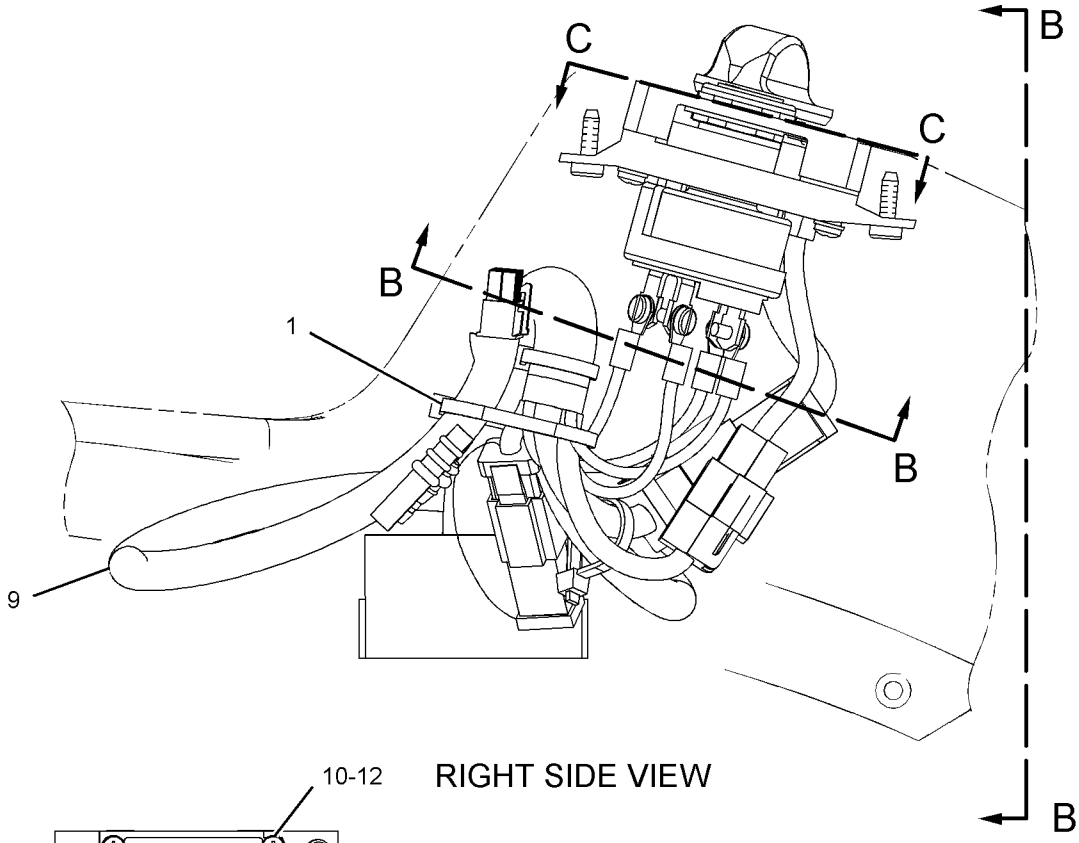

RIGHT SIDE VIEW

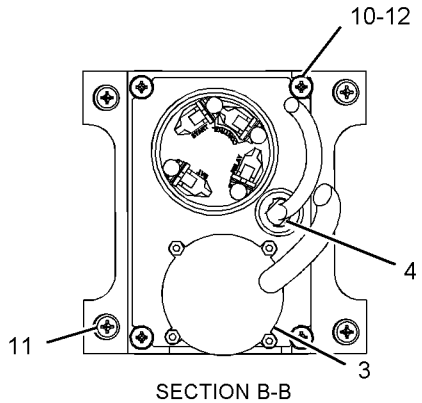

SECTION B-B

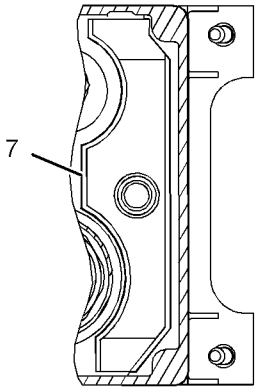

VIEW C-C

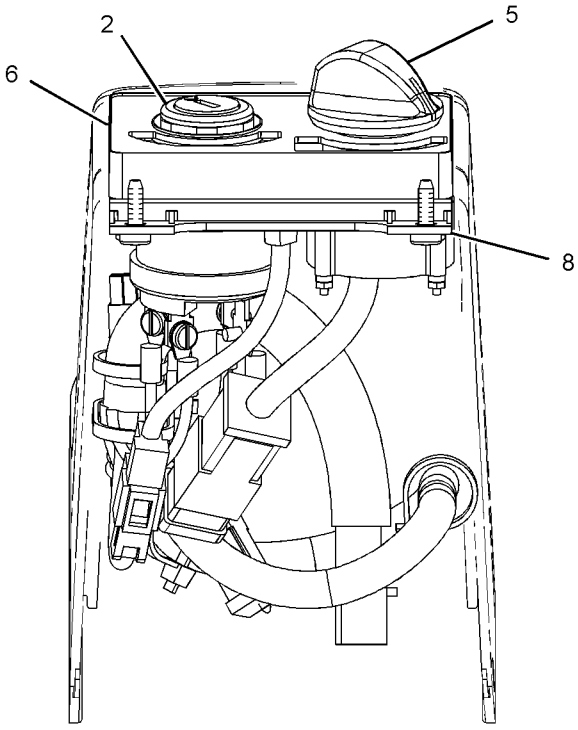

VIEW B-B

GRAPHIC #1 <END> g01112022

251-0542 PANEL GP-SWITCH—ENGINE SPEED, START

S/N: DLP1-UP

CANNOT BE USED WITH 251-0544—PAGE: 239

PART OF 336-3345 DISTRIBUTION AR, 336-3346 OPTION AR-CAB, 351-9714, 359-2252, 359-2483, 367-8791, 379-7090 OPTION AR-REGIONAL

AN ATTACHMENT

TYPE 3

SMCS-1408, 1429, 7332, 7451

i06890421

NOTE	REF NO	GRAPHIC REF	PART NUMBER	QTY	PART NAME 1 2 3 4 5 6 (PRODUCT LEVEL)	SEE PAGE
	1	1	**3S-2093**	4	STRAP-CABLE	
	2	1	**170-9324**	1	LAMP AS-INDICATOR (24-VOLT, 3-WATT) (OPERATOR CONSOLE)	
	3	1	**185-9208**	1	KNOB AS (THROTTLE POSITION)	
	4	1	**234-1156**	1	COVER	
	5	1	**234-1158**	1	COVER	
Y	6	1	**255-2751**	1	SWITCH GP-START (ENGINE, KEY)	264
	7	1	**267-7976**	1	PANEL	
Y	8	1	**319-4420**	1	SWITCH GP-ROTARY (THROTTLE POSITION)	263
CY	9	1	**495-9718**	1	HARNESS AS-PANEL	197
	10	1	**096-6166**	4	WASHER-HARD (4.5X9X1-MM THK)	
	11	1	**119-5026**	4	SCREW-PAN HEAD (10-16X0.63-IN)	
M	12	1	**123-0707**	4	SCREW-HEX SOCKET (M4X0.7X20-MM)	

C - CHANGE FROM PREVIOUS TYPE
M - METRIC PART
Y - SEPARATE ILLUSTRATION

251-0542 **PANEL GP-SWITCH (**contd.**)** **i06890421**

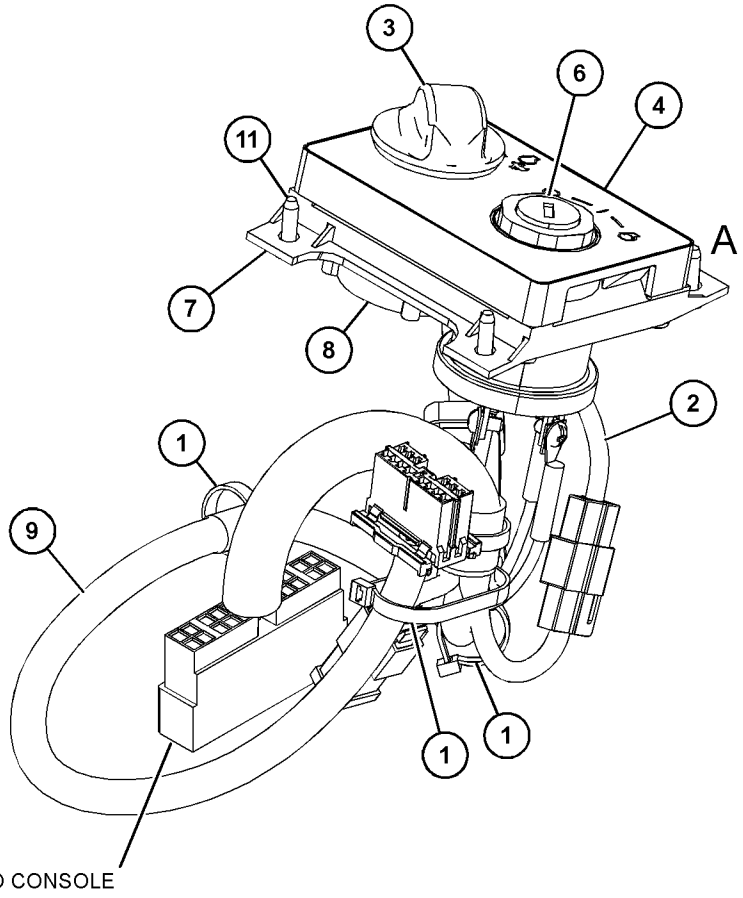

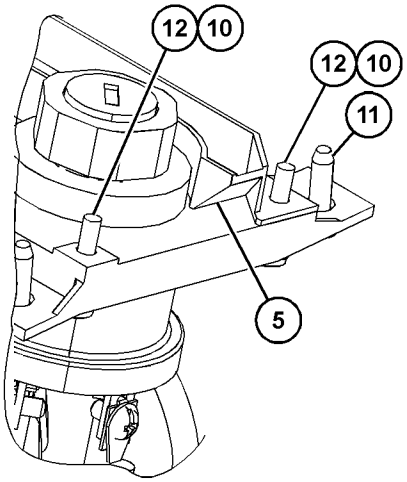

VIEW OF AREA A
(PARTS REMOVED FOR CLARITY)

GRAPHIC #1 <END> g06143680

251-0544 PANEL GP-SWITCH–ENGINE SPEED, START

S/N: DLP1-UP
PART OF 227-7581 INSTALLATION GP-SECURITY
AN ATTACHMENT
TYPE 1

SMCS-1408, 1429, 7332, 7451 **i04894376**

NOTE	REF NO	GRAPHIC REF	PART NUMBER	QTY	PART NAME 1 2 3 4 5 6 (PRODUCT LEVEL)	SEE PAGE
	1	1	**3S-2093**	5	STRAP-CABLE	
Y	2	1	**9G-7641**	1	SWITCH GP-START (ENGINE, KEY)	265
Y	3	1	**106-0107**	1	SWITCH GP-ROTARY (THROTTLE POSITION)	262
	4	1	**185-9208**	1	KNOB AS	
	5	1	**205-0826**	1	FILM-INSTRUCTION (MACHINE SECURITY, CONSOLE)	
	6	1	**205-8257**	1	COIL AS (EXCITER)	
		1	**186-3735**	2	PIN-CONNECTOR (16-GA TO 18-GA)	
	7	1	**234-1156**	1	COVER	
	8	1	**267-7977**	1	PANEL	
	9	1	**251-0543**	1	HARNESS AS-CONSOLE	
		1	**102-8802**	1	KIT-RECEPTACLE (2-PIN)	
					(INCLUDES RECEPTACLE AS & WEDGE)	
		1	**3S-2093**	3	STRAP-CABLE	
		1	**7Y-3951**	2	TERMINAL-BLADE (14-GA)	
		1	**7Y-3952**	1	PLUG-CONNECTOR (2-PIN)	
		1	**7Y-3962**	1	TERMINAL-BULLET (MALE)	
		1	**7Y-3964**	1	TUBE (CONNECTOR TERMINAL)	
		1	**7Y-3963**	1	TERMINAL-BULLET (FEMALE)	
		1	**7Y-3965**	1	TUBE (RECEPTACLE TERMINAL)	
		1	**8T-8737**	3	PLUG-SEAL	
		1	**121-1168**	1	CONNECTOR-RECEPTACLE	
		1	**126-1173**	14	PLATE	
		1	**9X-3402**	7	SOCKET-CONNECTOR (16-GA TO 18-GA)	
					–OR–	
		1	**126-1768**	7	SOCKET-CONNECTOR (14-GA TO 16-GA)	
		1	**2L-8075**	4	TERMINAL-RING (14-GA TO 16-GA, NO. 8 SCREW)	
		1	**153-2540**	10	TERMINAL (FEMALE)	
		1	**153-2541**	1	PLUG-CONNECTOR (10-PIN)	
		1	**155-2270**	1	KIT-CONNECTING PLUG (2-PIN)	
		1	**155-2274**	1	KIT-CONNECTING PLUG (6-PIN)	
					(EACH CONNECTING PLUG KIT INCLUDES PLUG AS, WEDGE & INTERFACE SEAL)	
		1	**238-2366**	7	TERMINAL (MALE)	
	10	1	**096-6166**	4	WASHER-HARD (4.5X9X1-MM THK)	
	11	1	**119-5026**	4	SCREW-PAN HEAD (10-16X0.63-IN)	
M	12	1	**6V-9491**	4	SCREW-MACHINE (M4X0.7X20-MM)	

M - METRIC PART
Y - SEPARATE ILLUSTRATION

251-0544 **PANEL GP-SWITCH (**contd.**)** **i04894376**

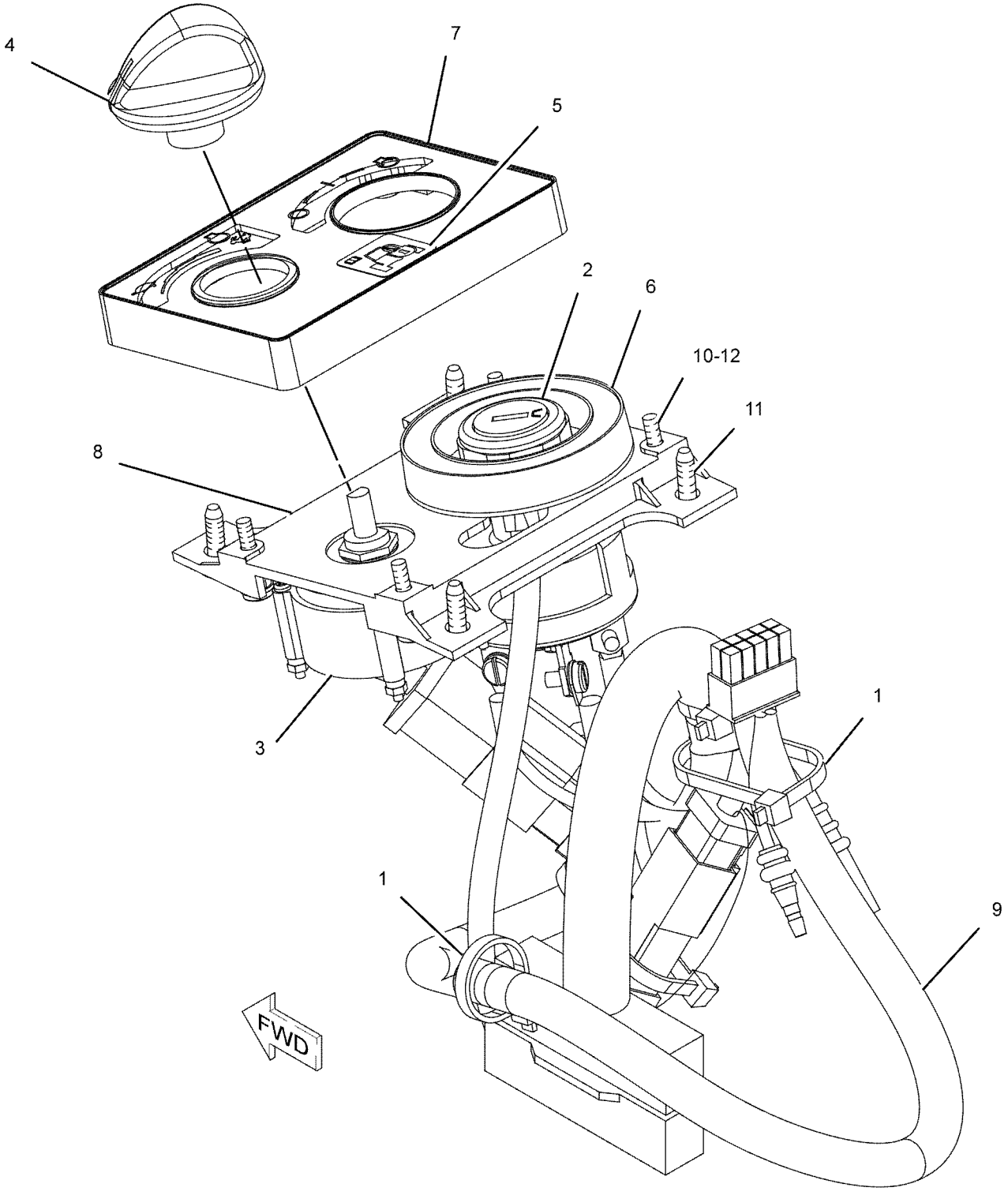

GRAPHIC #1 <END> g01123869

251-0544 PANEL GP-SWITCH–ENGINE SPEED, START

S/N: DLP1-UP
PART OF 227-7581 INSTALLATION GP-SECURITY
AN ATTACHMENT
TYPE 2

SMCS-1408, 1429, 7332, 7451 **i03751882**

NOTE	REF NO	GRAPHIC REF	PART NUMBER	QTY	PART NAME 1 2 3 4 5 6 (PRODUCT LEVEL)	SEE PAGE
	1	1	**3S-2093**	5	STRAP-CABLE	
Y	2	1	**9G-7641**	1	SWITCH GP-START (ENGINE, KEY)	265
CY	3	1	**319-4420**	1	SWITCH GP-ROTARY (THROTTLE POSITION)	263
	4	1	**185-9208**	1	KNOB AS	
	5	1	**205-0826**	1	FILM-INSTRUCTION (MACHINE SECURITY, CONSOLE)	
	6	1	**206-5208**	1	COIL AS (EXCITER)	
	7	1	**234-1156**	1	COVER	
	8	1	**267-7977**	1	PANEL	
C	9	1	**328-0021**	1	HARNESS AS-CONSOLE	
		1	**102-8802**	1	KIT-RECEPTACLE (2-PIN)	
					(INCLUDES RECEPTACLE AS & WEDGE)	
		1	**3S-2093**	3	STRAP-CABLE	
		1	**7Y-3951**	2	TERMINAL-BLADE (14-GA)	
		1	**7Y-3952**	1	PLUG-CONNECTOR (2-PIN)	
		1	**7Y-3962**	1	TERMINAL-BULLET (MALE)	
		1	**7Y-3963**	1	TERMINAL-BULLET (FEMALE)	
		1	**8T-8737**	3	PLUG-SEAL	
		1	**121-1168**	1	CONNECTOR-RECEPTACLE	
		1	**121-1173**	14	TERMINAL (MALE)	
		1	**9X-3402**	7	SOCKET-CONNECTOR (16-GA TO 18-GA)	
		1	**2L-8075**	4	TERMINAL-RING (14-GA TO 16-GA, NO. 8 SCREW)	
		1	**153-2540**	10	TERMINAL (FEMALE)	
		1	**153-2541**	1	PLUG-CONNECTOR (10-PIN)	
		1	**155-2270**	1	KIT-CONNECTING PLUG (2-PIN)	
					(INCLUDES PLUG AS, WEDGE & INTERFACE SEAL)	
		1	**230-5010**	1	PLUG AS-CONNECTOR (6-PIN)	
		1	**264-7032**	1	SEAL-CONNECTOR	
		1	**238-2366**	7	TERMINAL (MALE)	
	10	1	**096-6166**	4	WASHER-HARD (4.5X9X1-MM THK)	
	11	1	**119-5026**	4	SCREW-PAN HEAD (10-16X0.63-IN)	
M	12	1	**6V-9491**	4	SCREW-MACHINE (M4X0.7X20-MM)	

C - CHANGE FROM PREVIOUS TYPE
M - METRIC PART
Y - SEPARATE ILLUSTRATION

251-0544 **PANEL GP-SWITCH (**contd.**)** **i03751882**

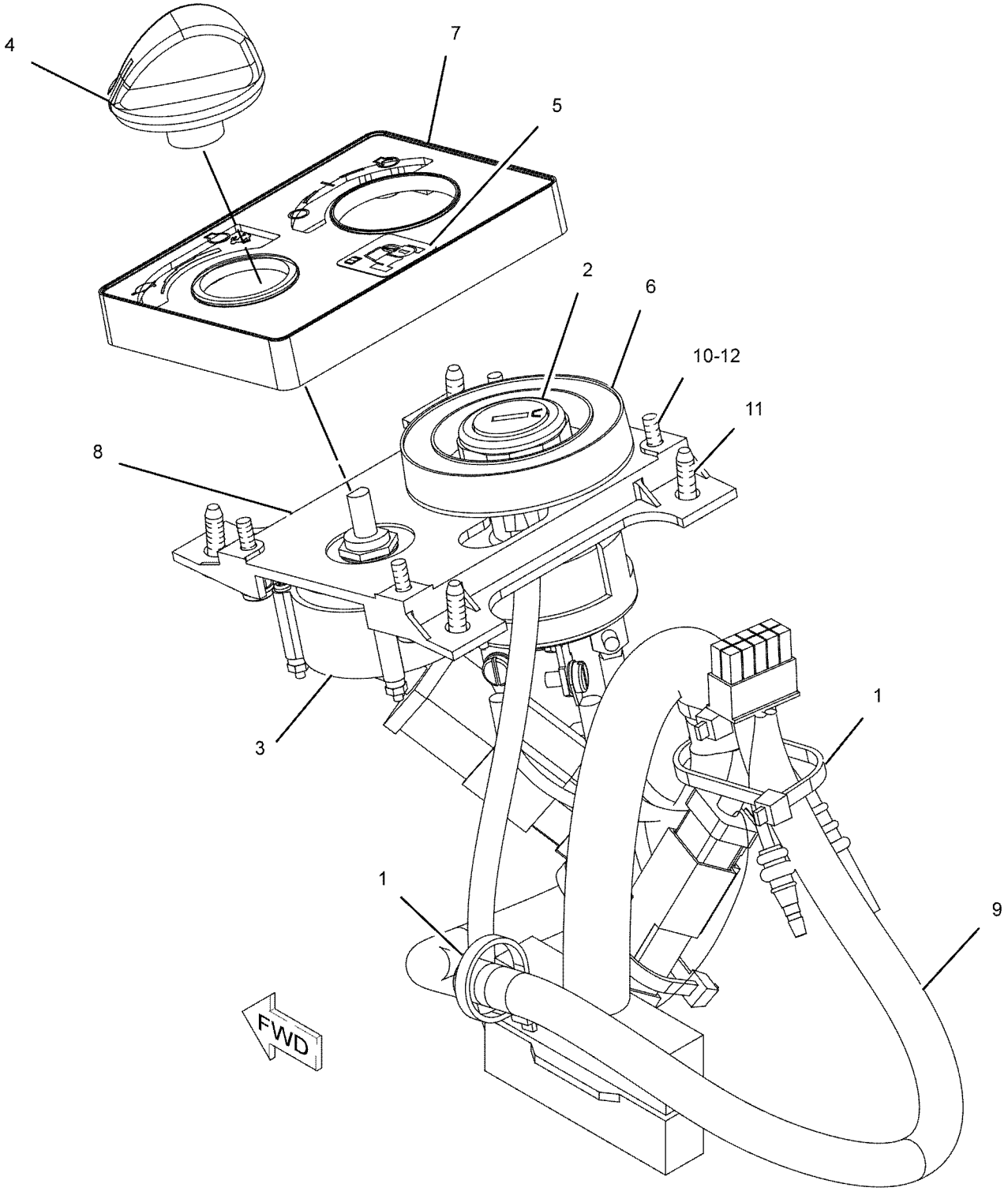

GRAPHIC #1 <END> g01123869

251-0544 PANEL GP-SWITCH–ENGINE SPEED, START

S/N: DLP1-UP
PART OF 227-7581 INSTALLATION GP-SECURITY
AN ATTACHMENT
TYPE 3

SMCS-1408, 1429, 7332, 7451 **i07189890**

NOTE	REF NO	GRAPHIC REF	PART NUMBER	QTY	PART NAME 1 2 3 4 5 6 (PRODUCT LEVEL)	SEE PAGE
	1	1	**3S-2093**	5	STRAP-CABLE	
CJY	2	1	**255-2751**	1	SWITCH GP-START (ENGINE, KEY)	264
Y	3	1	**319-4420**	1	SWITCH GP-ROTARY (THROTTLE POSITION)	263
	4	1	**185-9208**	1	KNOB AS	
	5	1	**205-0826**	1	FILM-INSTRUCTION (MACHINE SECURITY, CONSOLE)	
	6	1	**206-5208**	1	COIL AS (EXCITER)	
	7	1	**234-1156**	1	COVER	
	8	1	**267-7977**	1	PANEL	
	9	1	**328-0021**	1	HARNESS AS-CONSOLE	
		1	**102-8802**	1	KIT-RECEPTACLE (2-PIN)	
					(INCLUDES RECEPTACLE AS & WEDGE)	
		1	**3S-2093**	3	STRAP-CABLE	
		1	**7Y-3951**	2	TERMINAL-BLADE (14-GA)	
		1	**7Y-3952**	1	PLUG-CONNECTOR (2-PIN)	
		1	**7Y-3962**	1	TERMINAL-BULLET (MALE)	
		1	**7Y-3964**	1	TUBE (CONNECTOR TERMINAL)	
		1	**7Y-3963**	1	TERMINAL-BULLET (FEMALE)	
		1	**7Y-3965**	1	TUBE (RECEPTACLE TERMINAL)	
		1	**8T-8737**	3	PLUG-SEAL	
		1	**121-1168**	1	CONNECTOR-RECEPTACLE	
		1	**121-1173**	14	TERMINAL (MALE)	
		1	**9X-3402**	7	SOCKET-CONNECTOR (16-GA TO 18-GA)	
		1	**2L-8075**	4	TERMINAL-RING (14-GA TO 16-GA, NO. 8 SCREW)	
		1	**153-2540**	10	TERMINAL (FEMALE)	
		1	**153-2541**	1	PLUG-CONNECTOR (10-PIN)	
		1	**155-2270**	1	KIT-CONNECTING PLUG (2-PIN)	
					(INCLUDES PLUG AS, WEDGE & INTERFACE SEAL)	
		1	**230-5010**	1	PLUG AS-CONNECTOR (6-PIN)	
		1	**264-7032**	1	SEAL-CONNECTOR	
		1	**238-2366**	7	TERMINAL (MALE)	
	10	1	**096-6166**	4	WASHER-HARD (4.5X9X1-MM THK)	
	11	1	**119-5026**	4	SCREW-PAN HEAD (10-16X0.63-IN)	
M	12	1	**6V-9491**	4	SCREW-MACHINE (M4X0.7X20-MM)	

C - CHANGE FROM PREVIOUS TYPE
J - REQUIRES CORPORATE KEY
M - METRIC PART
Y - SEPARATE ILLUSTRATION

251-0544 **PANEL GP-SWITCH (**contd.**)** **i07189890**

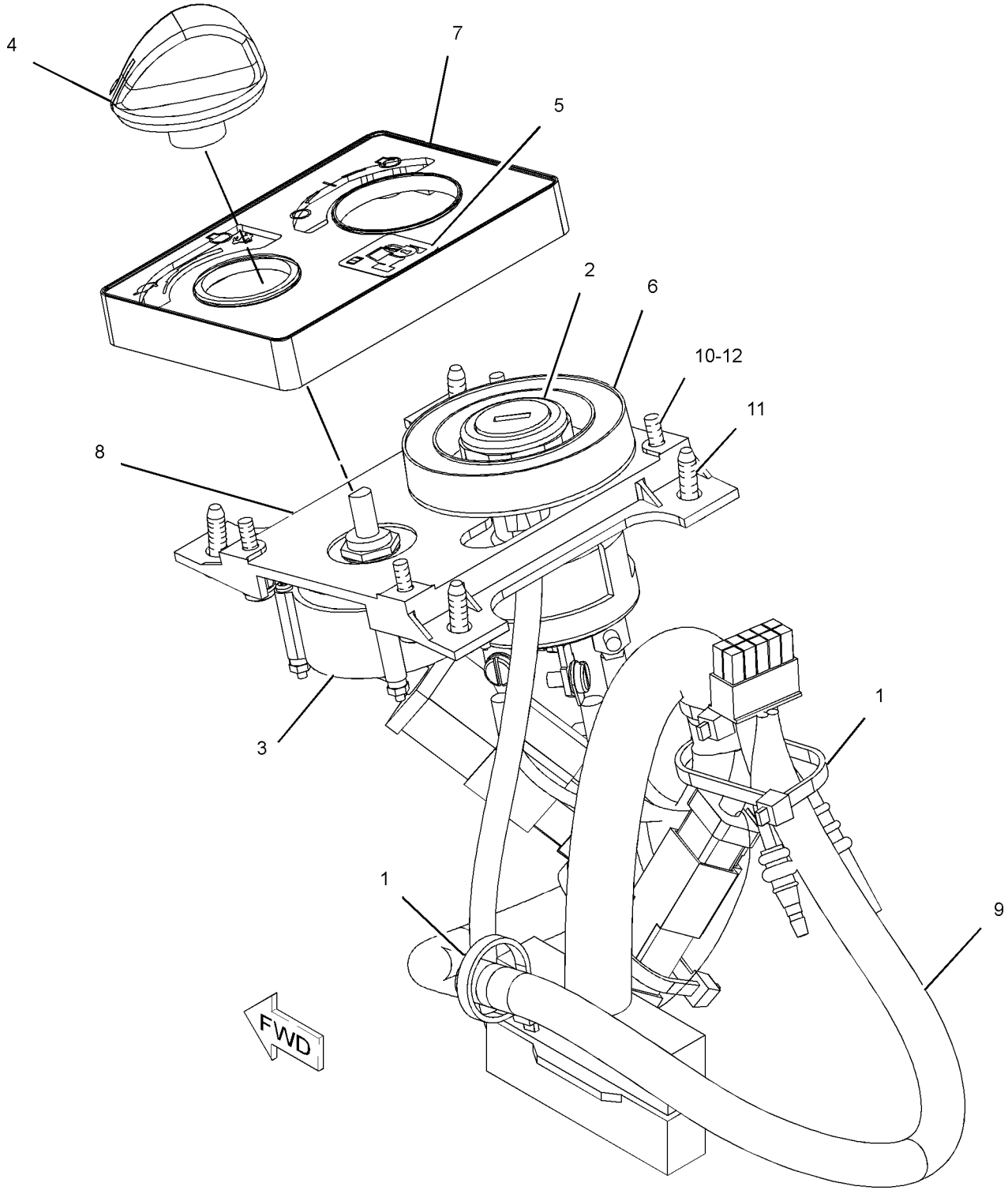

GRAPHIC #1 <END> g02609950

251-0544 PANEL GP-SWITCH–ENGINE SPEED, START

S/N: DLP1-UP
PART OF 227-7581 INSTALLATION GP-SECURITY
AN ATTACHMENT
TYPE 4

SMCS-1408, 1429, 7332, 7451 **i06858545**

NOTE	REF NO	GRAPHIC REF	PART NUMBER	QTY	PART NAME 1 2 3 4 5 6 (PRODUCT LEVEL)	SEE PAGE
	1	1	**3S-2093**	5	STRAP-CABLE	
JY	2	1	**255-2751**	1	SWITCH GP-START (ENGINE, KEY)	264
Y	3	1	**319-4420**	1	SWITCH GP-ROTARY (THROTTLE POSITION)	263
	4	1	**185-9208**	1	KNOB AS	
	5	1	**205-0826**	1	FILM-INSTRUCTION (MACHINE SECURITY, CONSOLE)	
	6	1	**206-5208**	1	COIL AS (EXCITER)	
	7	1	**234-1156**	1	COVER	
	8	1	**267-7977**	1	PANEL	
CY	9	1	**495-9718**	1	HARNESS AS-PANEL	197
	10	1	**096-6166**	4	WASHER-HARD (4.5X9X1-MM THK)	
	11	1	**119-5026**	4	SCREW-PAN HEAD (10-16X0.63-IN)	
M	12	1	**123-0707**	4	SCREW-HEX SOCKET (M4X0.7X20-MM)	

C - CHANGE FROM PREVIOUS TYPE
J - REQUIRES CORPORATE KEY
M - METRIC PART
Y - SEPARATE ILLUSTRATION

251-0544 **PANEL GP-SWITCH (**contd.**)** **i06858545**

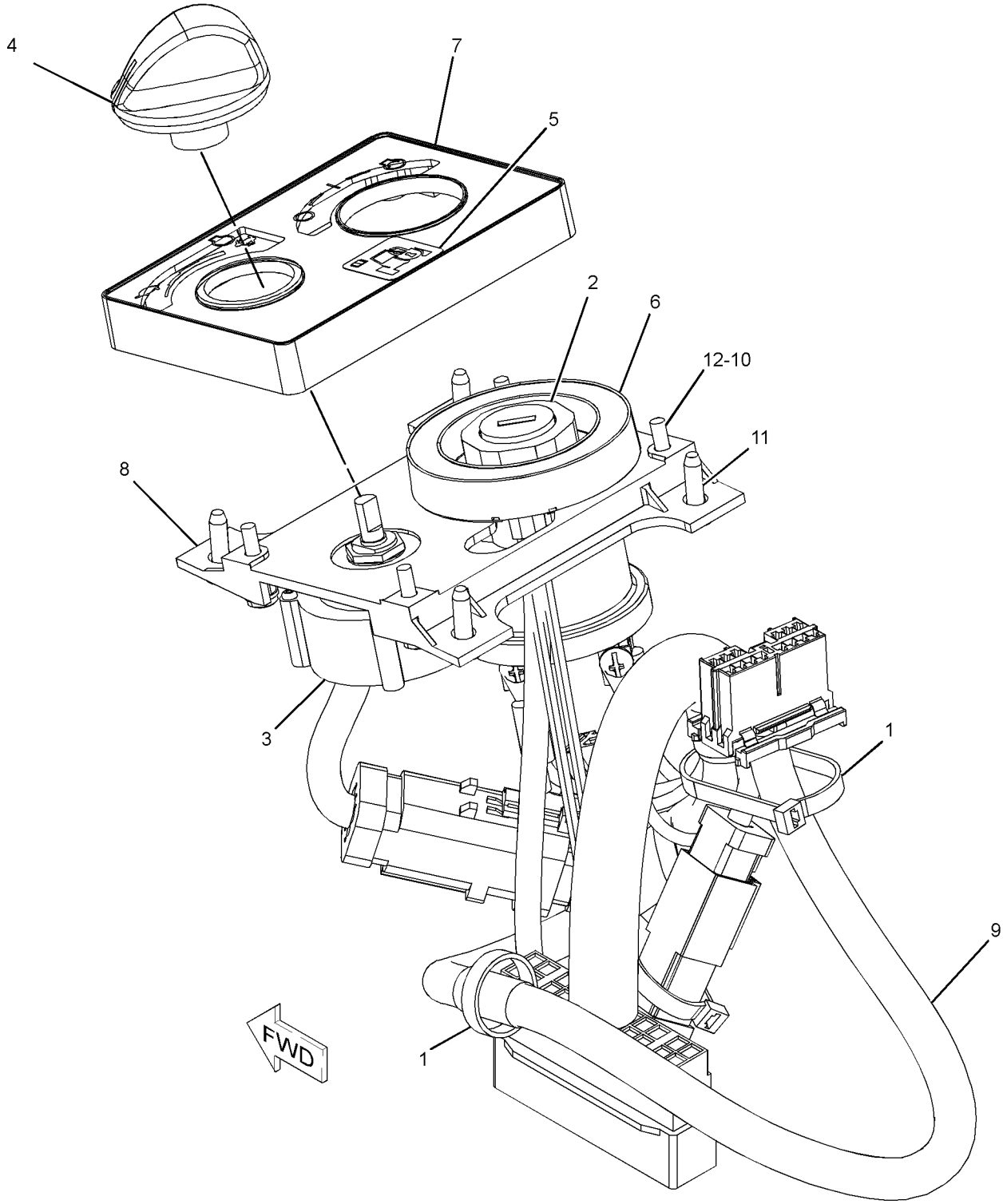

GRAPHIC #1 <END> g06169041

296-4802 SENSOR GP-ENGINE

S/N: JKH1-UP
PART OF 279-7814, 420-2179 ENGINE AR
ALSO AN ATTACHMENT

SMCS-1000, 1906, 1907, 1924, 7422 **i04940413**

NOTE	REF NO	GRAPHIC REF	PART NUMBER	QTY	PART NAME 1 2 3 4 5 6 (PRODUCT LEVEL)	SEE PAGE
	1	1	**238-0112**	1	SENSOR GP-TEMPERATURE (ENGINE COOLANT)	
	1A	1	**238-0112**	1	SENSOR GP-TEMPERATURE (AIR INLET)	
	1B	1	**238-0112**	1	SENSOR GP-TEMPERATURE (FUEL)	
	2	1	**238-0118**	1	SENSOR GP-PRESSURE (FUEL MANIFOLD)	
	3	1	**296-4631**	1	WASHER (6.06X9.5X1-MM THK)	
	4	1	**274-6720**	1	SENSOR GP-PRESSURE (AIR INLET MANIFOLD)	
	5	1	**274-6721**	1	SENSOR GP-PRESSURE (FUEL)	
	5A	1	**274-6721**	1	SENSOR GP-PRESSURE (ENGINE OIL)	
	6	1	**238-0120**	1	SENSOR GP-SPEED (ENGINE)	
	7	1	**324-4131**	1	SENSOR GP-SPEED (ENGINE)	
	8	1	**294-1804**	5	SEAL-O-RING	
	9	1	**296-4633**	1	SEAL-O-RING	
	10	1	**266-0136**	1	SENSOR GP-PRESSURE (FUEL)	
E		1	**9X-1813**		SLEEVE (8-CM)	
		1	**9X-3401**	3	PIN-CONNECTOR (16-GA TO 18-GA)	
		1	**237-0228**	1	RECEPTACLE AS-CONNECTOR	
	11	1	**296-4621**	2	BOLT (M8X1.25-THD)	

E - ORDER BY THE CENTIMETER

296-4802 **SENSOR GP-ENGINE (**contd.**)** **i04940413**

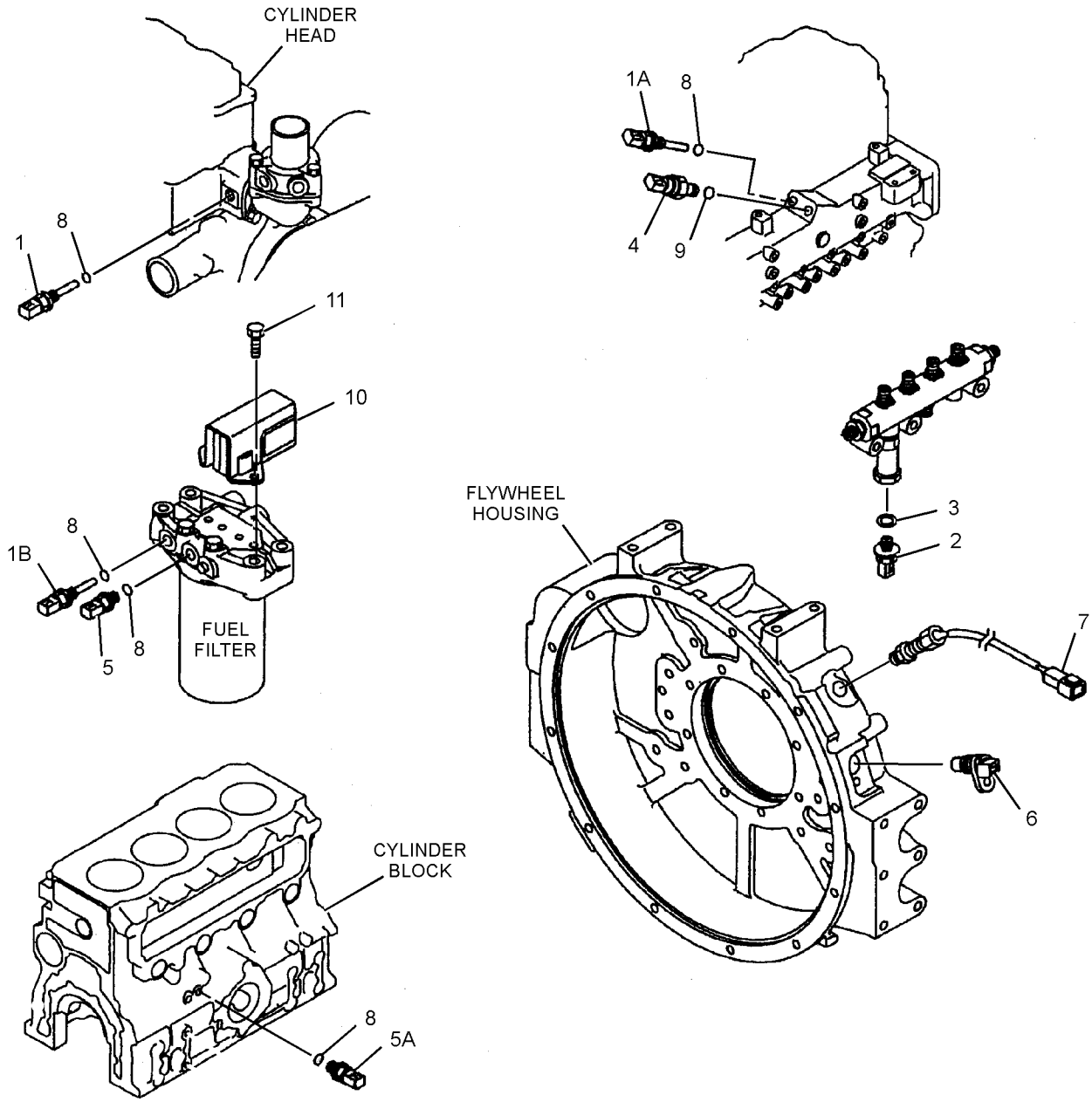

GRAPHIC #1 <END> g01403837

178-2345 SENSOR GP-LIQUID LEVEL—WATER IN FUEL

S/N: DLP1-UP

PART OF 279-7796 SENSOR GP-LIQUID LEVEL

AN ATTACHMENT

SMCS-7422 **i03696480**

NOTE	REF NO	GRAPHIC REF	PART NUMBER	QTY	PART NAME 1 2 3 4 5 6 (PRODUCT LEVEL)	SEE PAGE
	1	1	**178-2334**	1	PROBE AS-LIQUID LEVEL (WATER SEPARATOR)	
		1	**3J-1907**	1	SEAL-O-RING	
	2	1	**178-2335**	1	SENSOR AS-LIQUID LEVEL (WATER SEPARATOR)	
		1	**102-8804**	1	KIT-RECEPTACLE (4-PIN)	
					(INCLUDES RECEPTACLE AS & WEDGE)	
		1	**155-2270**	1	KIT-CONNECTING PLUG (2-PIN)	
					(INCLUDES PLUG AS, WEDGE, & INTERFACE SEAL)	
		1	**186-3735**	4	PIN-CONNECTOR (16-GA TO 18-GA)	
		1	**186-3736**	2	SOCKET-CONNECTOR (16-GA TO 18-GA)	
	3	1	**3J-1907**	1	SEAL-O-RING	

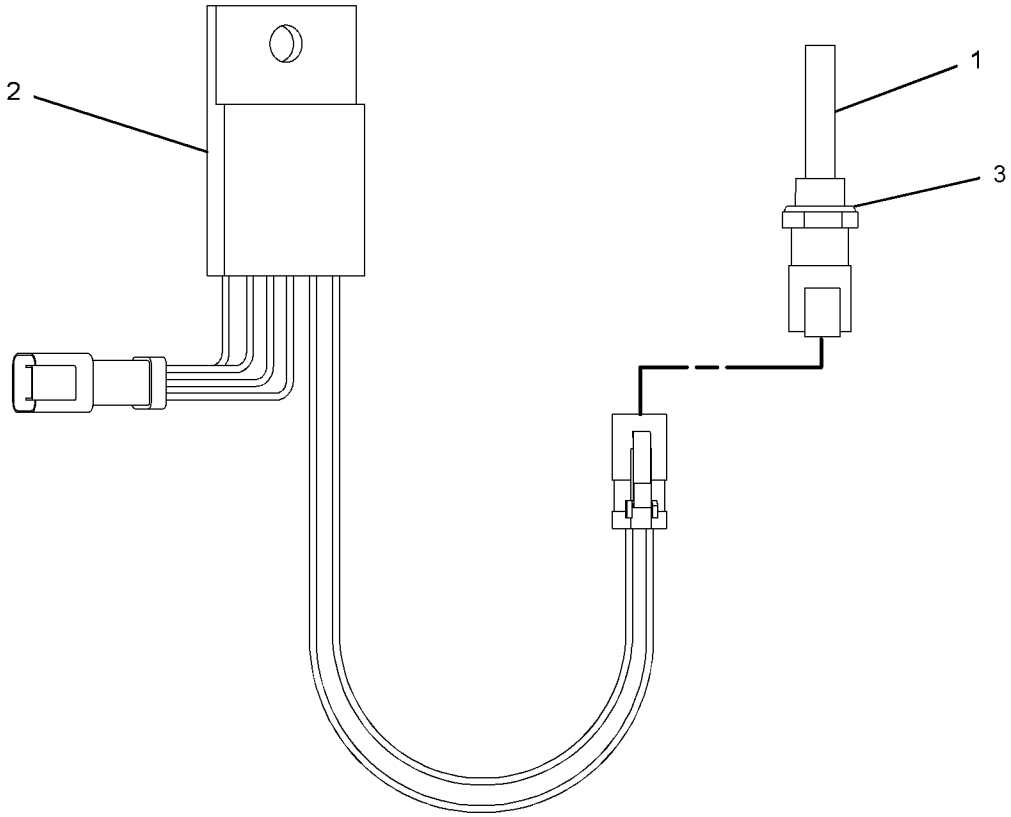

GRAPHIC #1 <END> g01988733

279-7796 SENSOR GP-LIQUID LEVEL—WATER IN FUEL

S/N: DLP1-UP
PART OF 336-3352, 336-3353, 336-3354 OPTION AR-CAB
AN ATTACHMENT
TYPE 1

SMCS-7422 **i02827648**

NOTE	REF NO	GRAPHIC REF	PART NUMBER	QTY	PART NAME 1 2 3 4 5 6 (PRODUCT LEVEL)	SEE PAGE
	1	1	**3S-2093**	3	STRAP-CABLE	
Y	2	1	**178-2345**	1	SENSOR GP-LIQUID LEVEL (WATER SEPARATOR)	249
	3	1	**6V-5049**	1	SEAL-O-RING	
	4	1	**8T-4121**	1	WASHER-HARD (11X21X2.5-MM THK)	
M	5	1	**8T-4136**	1	BOLT (M10X1.5X25-MM)	

M - METRIC PART
Y - SEPARATE ILLUSTRATION

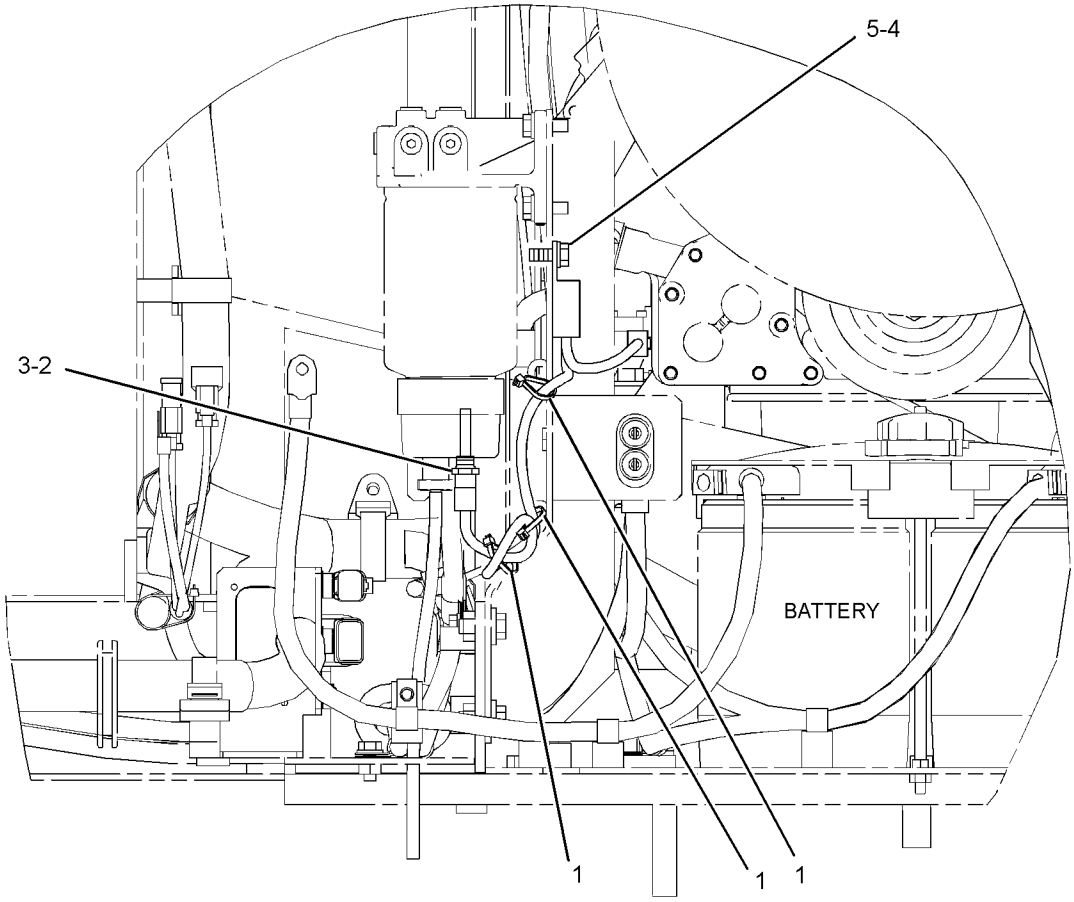

LEFT SIDE VIEW

GRAPHIC #1 <END> g01412385

279-7796 SENSOR GP-LIQUID LEVEL—WATER IN FUEL

S/N: DLP1-UP
PART OF 336-3352, 336-3353, 336-3354 OPTION AR-CAB
AN ATTACHMENT
TYPE 2

SMCS-7422 **i05338992**

NOTE	REF NO	GRAPHIC REF	PART NUMBER	QTY	PART NAME 1 2 3 4 5 6 (PRODUCT LEVEL)	SEE PAGE
C	1	1	**3S-2093**	4	STRAP-CABLE	
CY	2	1	**382-2001**	1	SENSOR GP-LIQUID LEVEL (WATER IN FUEL)	252

C - CHANGE FROM PREVIOUS TYPE
Y - SEPARATE ILLUSTRATION

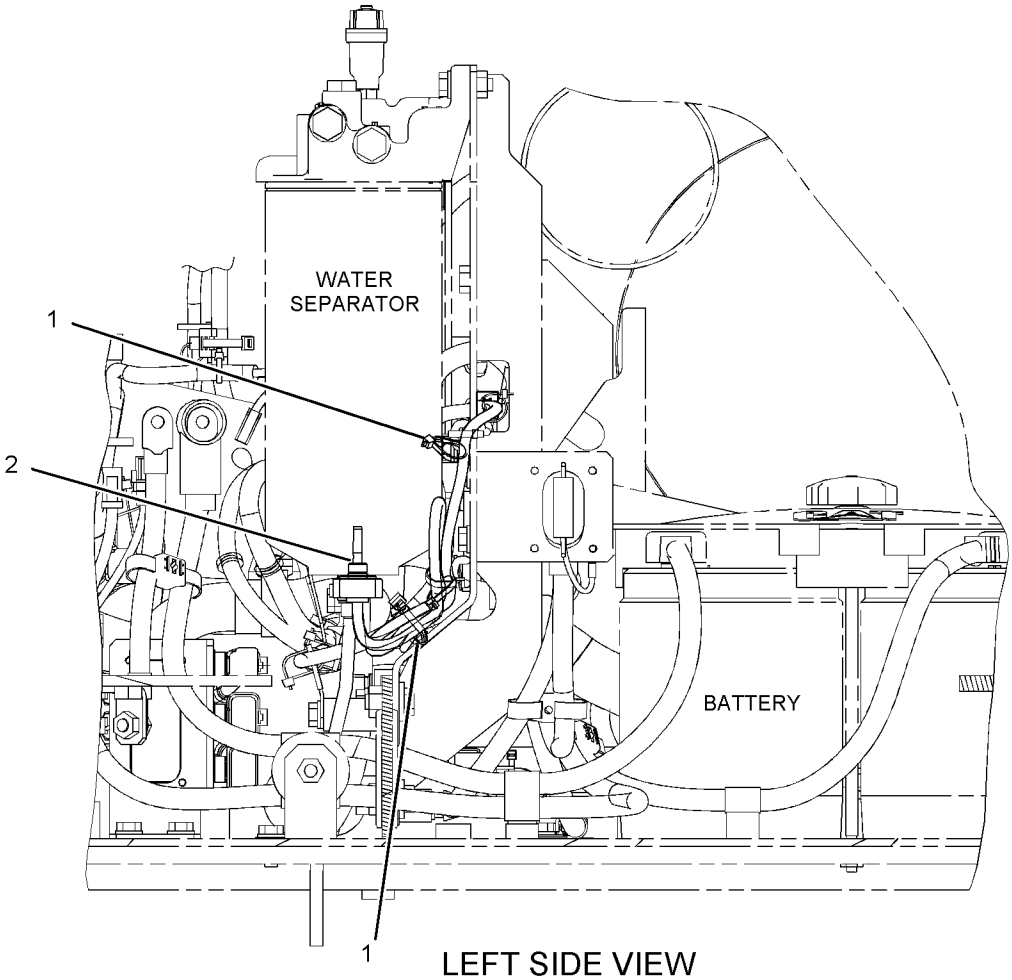

LEFT SIDE VIEW

GRAPHIC #1 <END> g03389464

382-2001 SENSOR GP-LIQUID LEVEL–WATER IN FUEL

S/N: DLP1-UP

PART OF 279-7796 SENSOR GP-LIQUID LEVEL

AN ATTACHMENT

SMCS-7422 **i04990429**

NOTE	REF NO	GRAPHIC REF	PART NUMBER	QTY	PART NAME 1 2 3 4 5 6 (PRODUCT LEVEL)	SEE PAGE
	1	1	**214-7568**	1	SEAL-O-RING	
	2	1	**102-8804**	1	KIT-RECEPTACLE (4-PIN)	
					(INCLUDES RECEPTACLE AS & WEDGE)	
	3	1	**9X-3401**	4	PIN-CONNECTOR (16-GA TO 18-GA)	

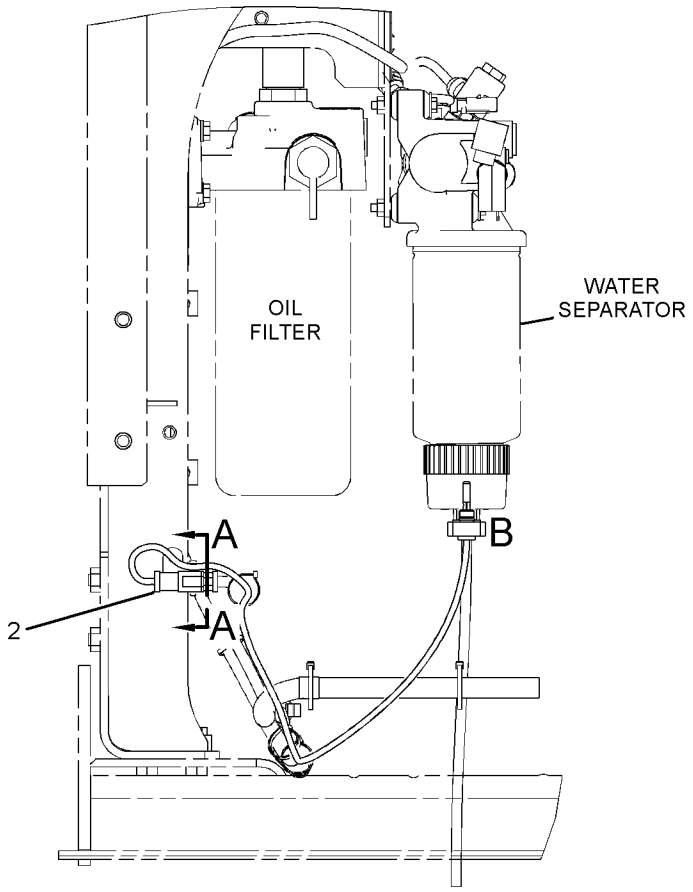

RIGHT SIDE VIEW

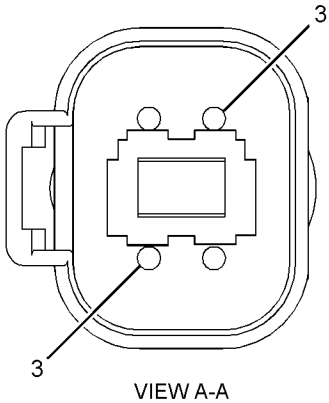

VIEW A-A

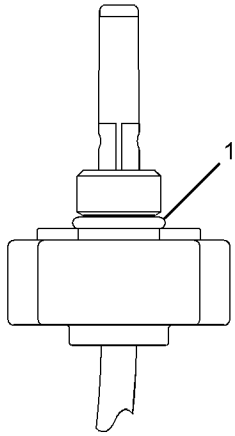

VIEW OF AREA B

GRAPHIC #1 <END> g03344389

434-8214 SENSOR GP-PRESSURE

S/N: DLP1-UP
PART OF 278-6697 LINES GP-FRONT
AN ATTACHMENT

SMCS-1439, 1916, 1917, 1923, 1924 **i05288200**

NOTE	REF NO	GRAPHIC REF	PART NUMBER	QTY	PART NAME 1 2 3 4 5 6 (PRODUCT LEVEL)	SEE PAGE
	1	1	**434-3436**	1	SENSOR AS-PRESSURE (BOOM CYLINDER)	
	1A	1	**3K-0360**	1	SEAL-O-RING	
	2	1	**366-9313**	1	HARNESS AS-SENSOR	
		1	**102-8803**	1	KIT-RECEPTACLE (3-PIN)	
					(INCLUDES RECEPTACLE AS & WEDGE)	
		1	**9X-3402**	3	SOCKET-CONNECTOR (16-GA TO 18-GA)	
					–OR–	
		1	**126-1768**	3	SOCKET-CONNECTOR (14-GA TO 16-GA)	
		1	**9X-3401**	3	PIN-CONNECTOR (16-GA TO 18-GA)	
					–OR–	
		1	**126-1767**	3	PIN-CONNECTOR (14-GA TO 16-GA)	
		1	**230-4013**	1	PLUG AS-CONNECTOR (3-PIN)	
		1	**264-7030**	1	SEAL-CONNECTOR	

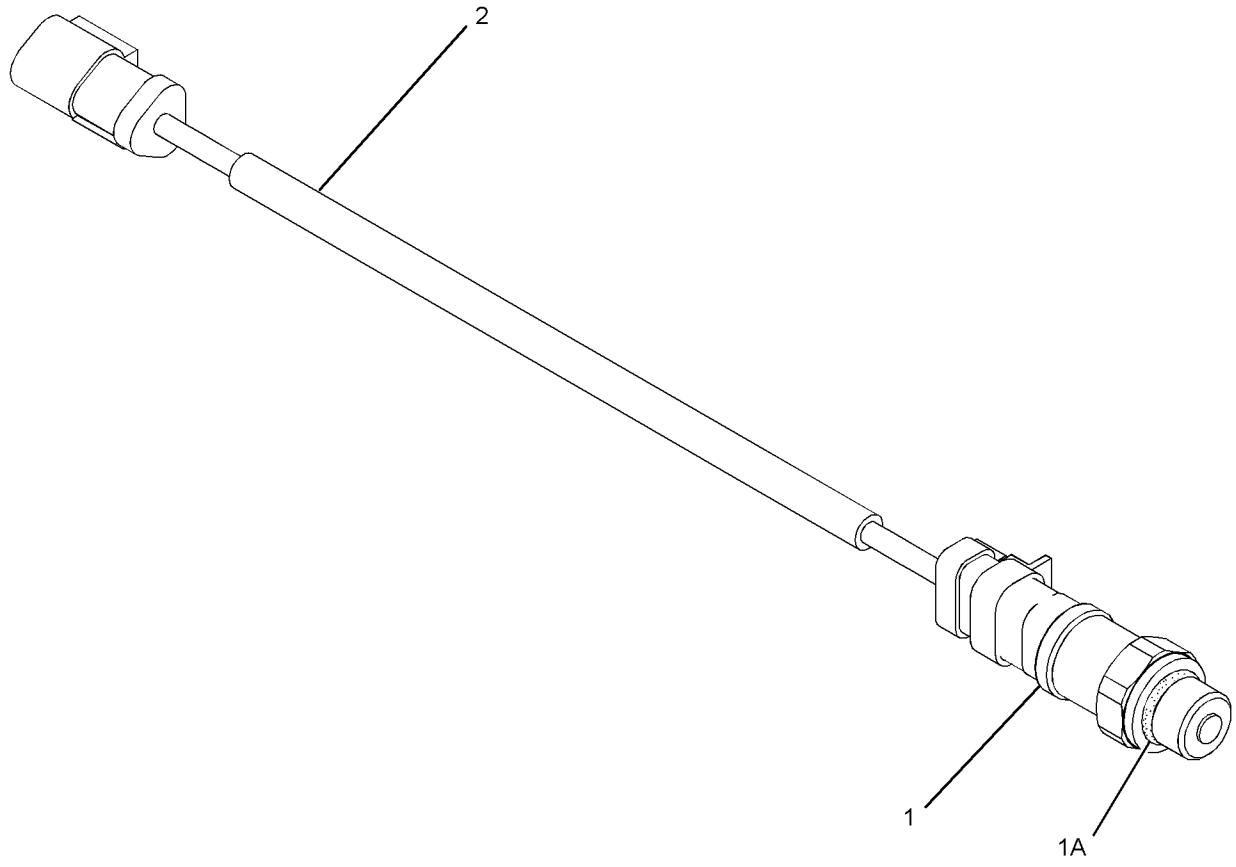

GRAPHIC #1 <END> g02571716

298-4105 STARTING AR-COLD WEATHER

S/N: DLP1-UP

AN ATTACHMENT

SMCS-1450 **i05190587**

NOTE	PART NUMBER	QTY	PART NAME 1 2 3 4 5 6 (PRODUCT LEVEL)	SEE PAGE
Y	*259-5050*	1	BATTERY GP (COLD WEATHER)	179
Y	*193-9776*	1	COVER GP-ACCESS (ENGINE OIL DIPSTICK)	361

Y - SEPARATE ILLUSTRATION

<END>

272-4774 STARTING MOTOR GP-ELECTRIC*R

S/N: JKH1-UP

PART OF 296-4637 MOUNTING GP-STARTING MOTOR

ALSO AN ATTACHMENT

SMCS-1453 **i03279225**

NOTE	REF NO	GRAPHIC REF	PART NUMBER	QTY	PART NAME 1 2 3 4 5 6 (PRODUCT LEVEL)	SEE PAGE
	1	1	**127-5947**	1	SETSCREW	
C	2	1	**294-1855**	1	BRACKET AS	
		1	**127-5937**	1	BEARING AS	
	3	1	**127-5944**	1	LEVER AS	
C	4	1	**294-1857**	1	SOLENOID AS-STARTING MOTOR (24-VOLT)	
	5	1	**127-5948**	1	BALL	
	6	1	**127-5949**	1	PACKING AS	
	7	1	**127-5950**	1	ARMATURE AS	
		1	**095-0410**	1	BEARING	
	8	1	**095-0085**	1	BOLT SET	
	9	1	**279-7750**	1	PINION SET	
		1	**094-9950**	1	STOP SET	
	10	1	**233-1279**	1	SHAFT GP-MOTOR	
		1	**127-5939**	1	SHAFT AS-GEAR	
		1	**127-5940**	1	WASHER AS	
		1	**127-5941**	1	GEAR AS-INTERNAL	
		1	**127-5943**	4	GEAR AS (55/138-TEETH)	
		1	**233-1280**	1	CLUTCH	
	11	1	**094-9980**	2	GASKET	
	12	1	**127-5952**	1	YOKE AS	
		1	**127-5953**	2	BRUSH	
C	13	1	**294-1858**	1	HOLDER AS	
	14	1	**135-2366**	1	BRACKET	

C - CHANGE FROM PREVIOUS TYPE

272-4774 **STARTING MOTOR GP-ELECTRIC (**contd.**)** **i03279225**

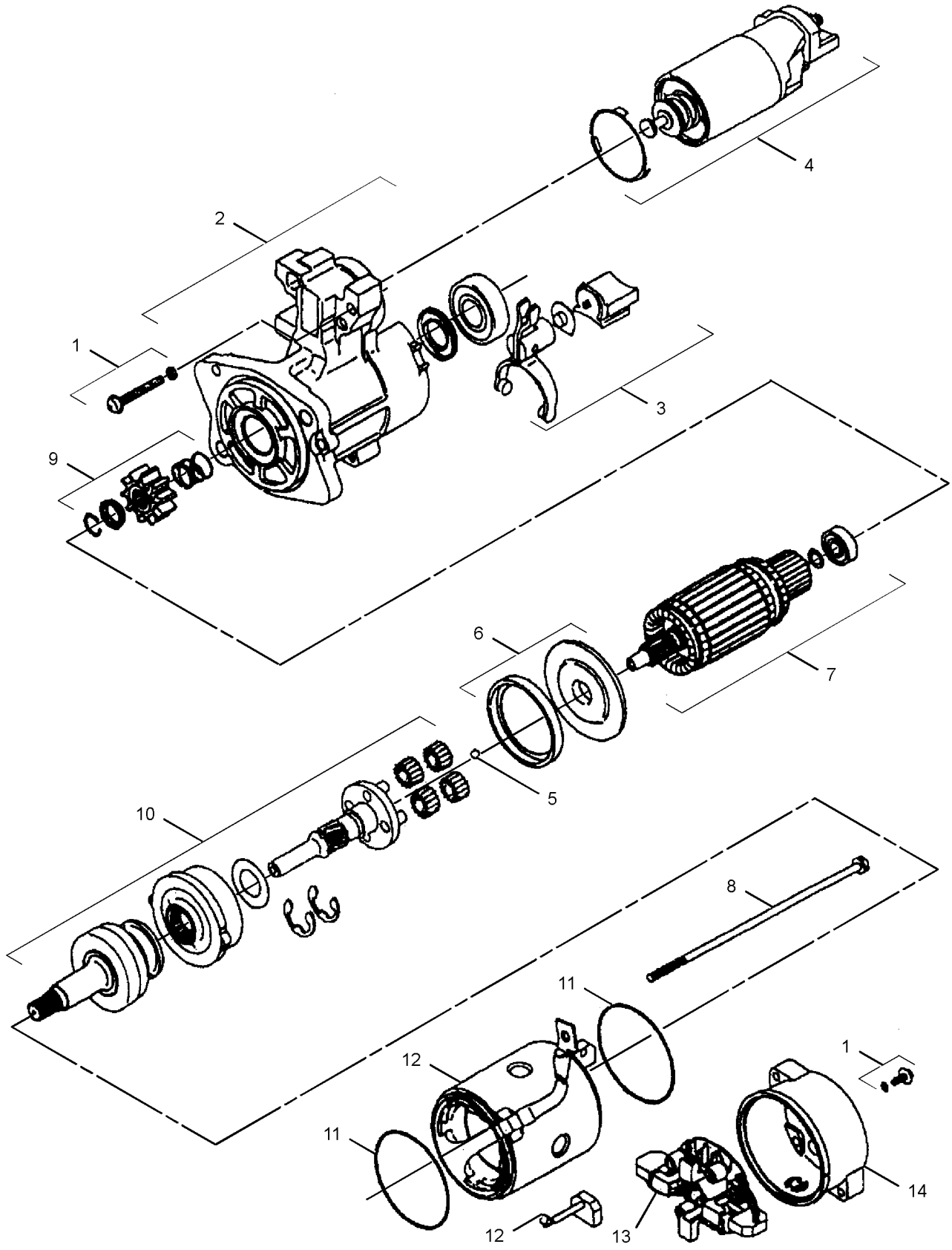

GRAPHIC #1 <END> g01219448

7N-0718 SWITCH GP-DISCONNECT–BATTERY

S/N: DLP1-UP

PART OF 319-1170, 319-1255, 376-8745 PANEL GP-CIRCUIT BREAKER

SMCS-1411 **i01213345**

NOTE	REF NO	GRAPHIC REF	PART NUMBER	QTY	PART NAME 1 2 3 4 5 6 (PRODUCT LEVEL)	SEE PAGE
	1	1	**2H-3922**	2	LOCKWASHER	
	2	1	**8H-5303**	1	NUT (3/4-16-THD)	
	3	1	**9F-5644**	2	LOCKWASHER	
	4	1	**6F-7045**	2	NUT-FULL (3/8-24-THD)	
	5	1	**8H-5306**	1	KEY (BATTERY DISCONNECT)	

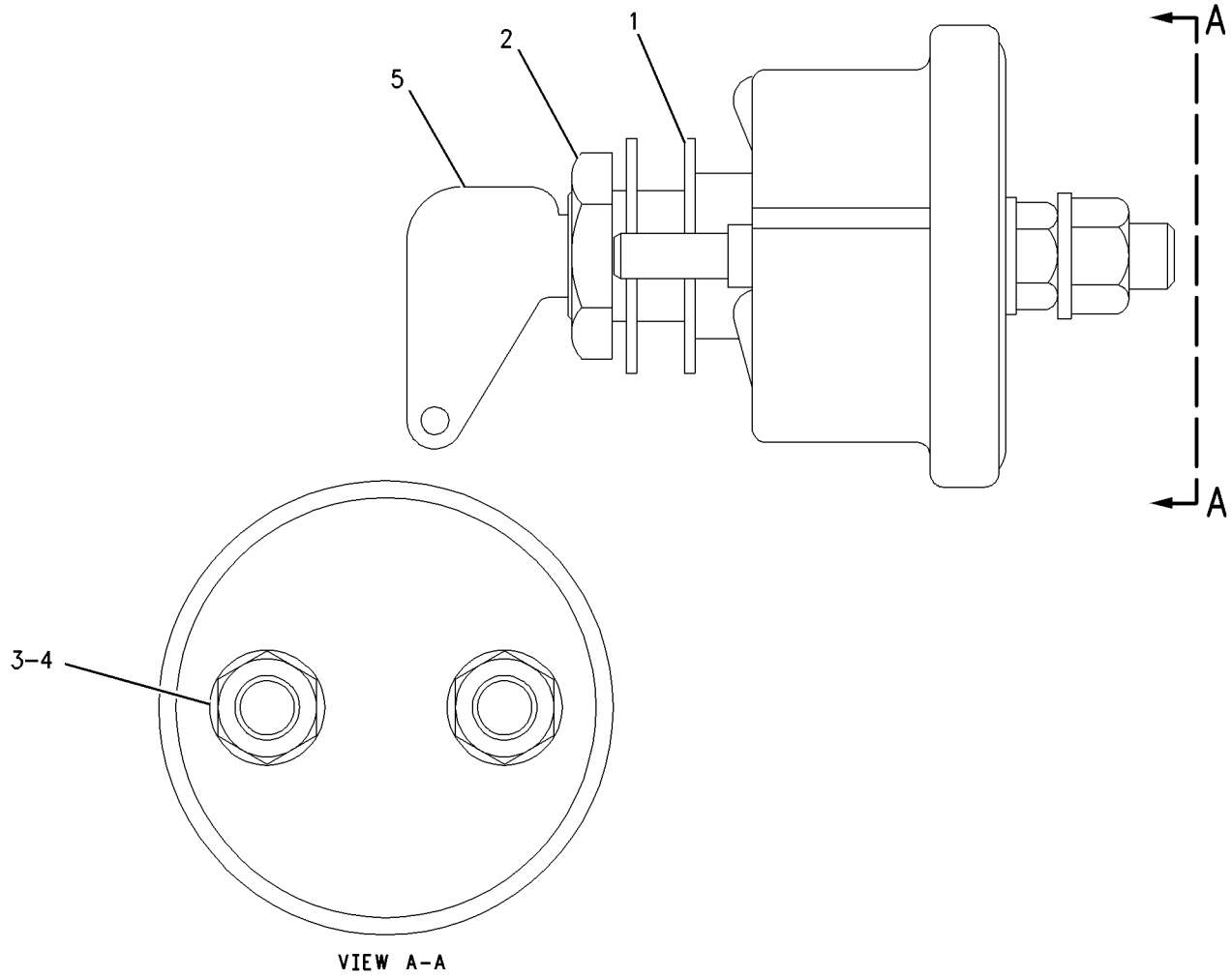

GRAPHIC #1 <END> g00664195

125-1302 SWITCH GP-MAGNETIC

S/N: DLP390-UP
24-VOLT
PART OF 376-8745 PANEL GP-CIRCUIT BREAKER

SMCS-7499 **i03597440**

NOTE	REF NO	GRAPHIC REF	PART NUMBER	QTY	PART NAME 1 2 3 4 5 6 (PRODUCT LEVEL)	SEE PAGE
	1	1	**102-8802**	1	KIT-RECEPTACLE (2-PIN)	
					(INCLUDES RECEPTACLE AS & WEDGE)	
	2	1	**186-3735**	2	PIN-CONNECTOR (16-GA TO 18-GA)	
	3	1	**1H-3338**	2	LOCKWASHER (EXTERNAL TOOTH)	
	4	1	**012-0380**	2	LOCKWASHER (6.5X12.5X1.6-MM THK)	
M	5	1	**5C-2890**	2	NUT (M6X1-THD)	
E	6	1	**9X-1813**		SLEEVE (16-CM)	

E - ORDER BY THE CENTIMETER
M - METRIC PART

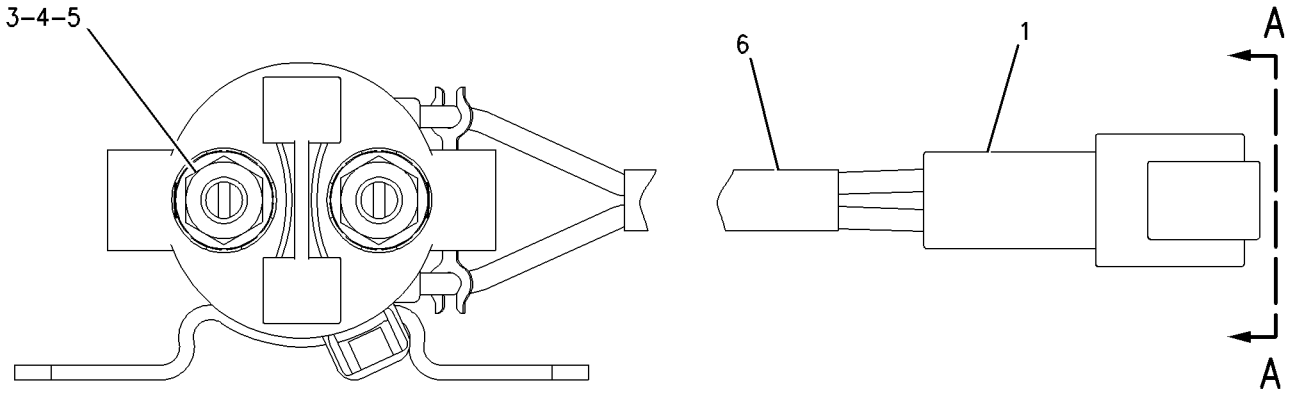

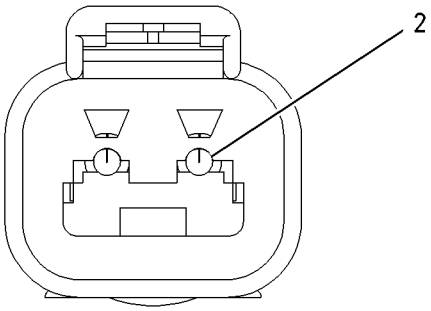

VIEW A-A

GRAPHIC #1 <END> g00988002

209-5582 SWITCH GP-MAGNETIC—AIR INLET HEATER

S/N: DLP390-UP
24-VOLT
PART OF 319-1255, 376-8745 PANEL GP-CIRCUIT BREAKER

SMCS-7499 **i05499602**

NOTE	REF NO	GRAPHIC REF	PART NUMBER	QTY	PART NAME 1 2 3 4 5 6 (PRODUCT LEVEL)	SEE PAGE
	1	1	**102-8802**	1	KIT-RECEPTACLE (2-PIN)	
					(INCLUDES RECEPTACLE AS & WEDGE)	
	2	1	**8T-8729**	2	PIN-CONNECTOR (16-GA TO 18-GA)	
	3	1	**3F-9556**	2	LOCKWASHER	
	4	1	**6V-8186**	2	NUT-FULL (5/16-24-THD)	
	5	1	**6V-8378**	2	NUT (10-32-THD)	
	6	1	**8F-1434**	2	LOCKWASHER	

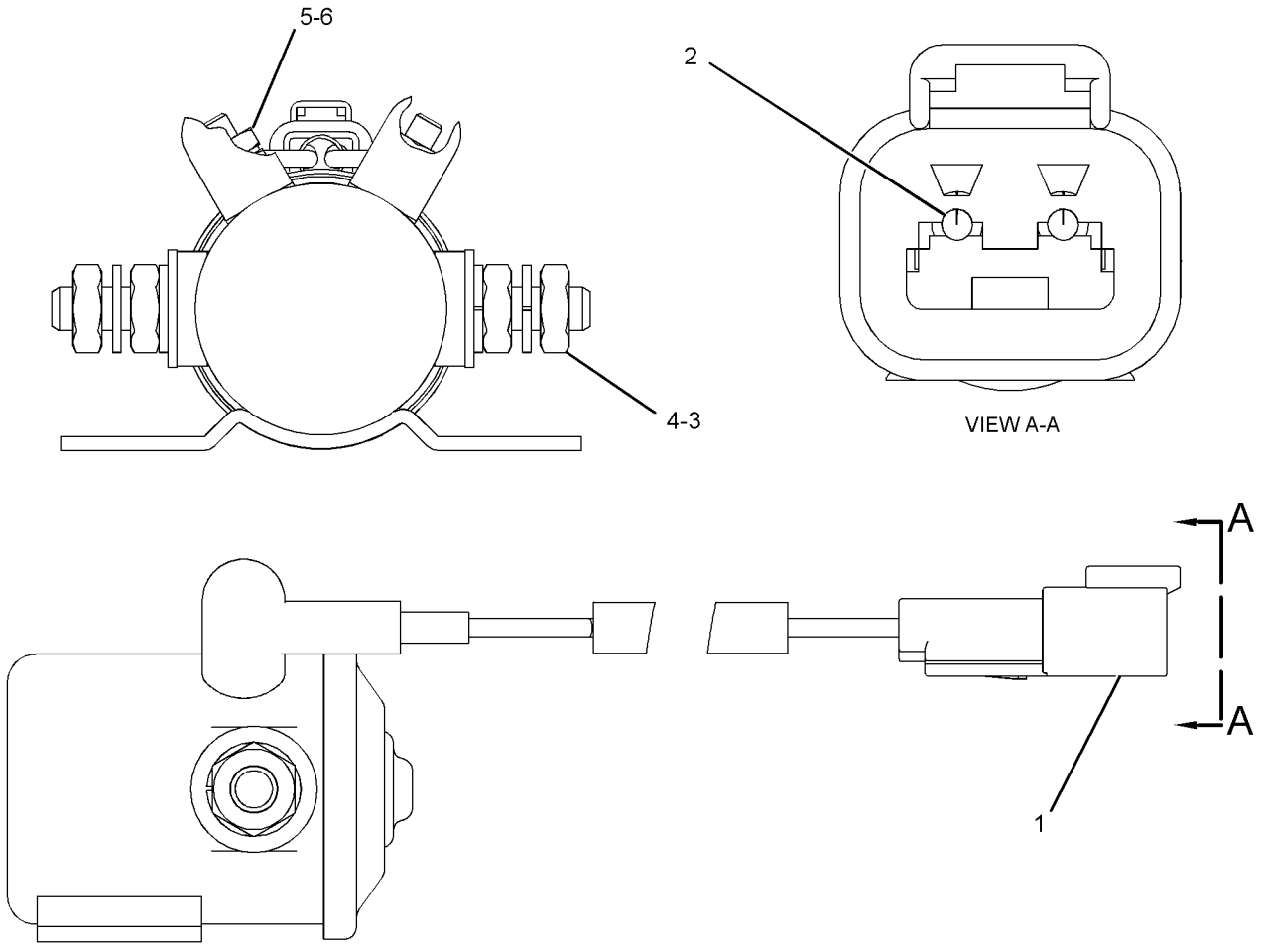

GRAPHIC #1 <END> g01279452

223-7577 SWITCH GP-MAGNETIC—AIR INLET HEATER RELAY

S/N: JKH1-UP
24 VOLT
PART OF 296-4801 WIRING GP-ELECTRONIC CONTROL
ALSO AN ATTACHMENT

SMCS-7499 **i05405023**

NOTE	REF NO	GRAPHIC REF	PART NUMBER	QTY	PART NAME 1 2 3 4 5 6 (PRODUCT LEVEL)	SEE PAGE
	1	1	**398-0940**	1	SWITCH GP-MAGNETIC (24-VOLT)	
	1A	1	**102-8802**	1	KIT-RECEPTACLE (2-PIN)	
					(INCLUDES RECEPTACLE AS & WEDGE)	
	1B	1	**8T-8729**	2	PIN-CONNECTOR (16-GA TO 18-GA)	
	1C	1	**3F-9556**	2	LOCKWASHER	
	1D	1	**6V-8186**	2	NUT-FULL (5/16-24-THD)	
	1E	1	**6V-8378**	2	NUT (10-32-THD)	
	1F	1	**8F-1434**	2	LOCKWASHER	

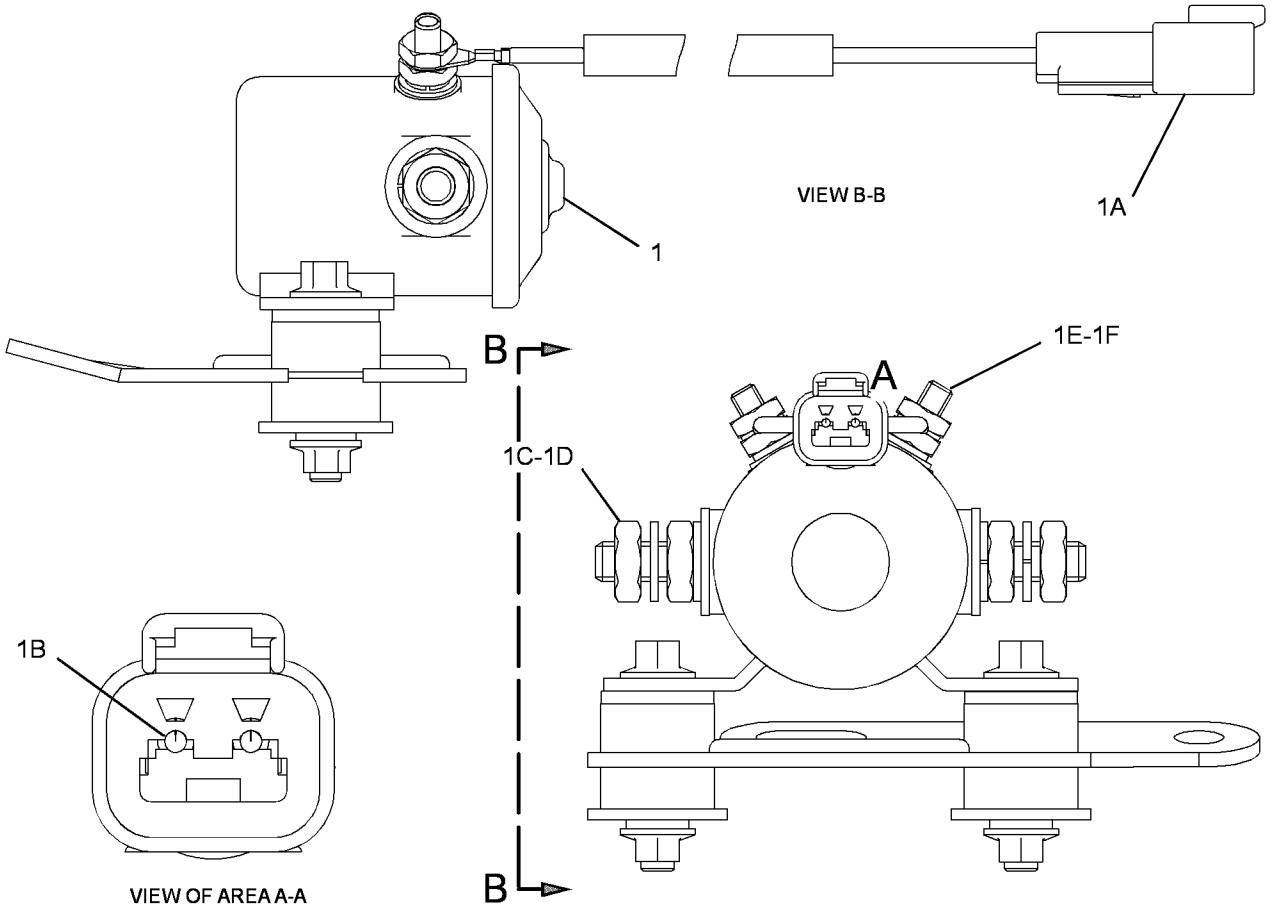

GRAPHIC #1 <END> g02153695

259-5274 SWITCH GP-MAGNETIC—START RELAY

S/N: DLP1-UP
24-VOLT
PART OF 319-1170, 319-1255 PANEL GP-CIRCUIT BREAKER

SMCS-7499 **i03671327**

NOTE	REF NO	GRAPHIC REF	PART NUMBER	QTY	PART NAME 1 2 3 4 5 6 (PRODUCT LEVEL)	SEE PAGE
	1	1	**102-8802**	1	KIT-RECEPTACLE (2-PIN)	
					(INCLUDES RECEPTACLE AS & WEDGE)	
	2	1	**186-3735**	2	PIN-CONNECTOR (16-GA TO 18-GA)	
	3	1	**1H-3338**	2	LOCKWASHER (EXTERNAL TOOTH)	
	4	1	**012-0380**	2	LOCKWASHER (6.5X12.5X1.6-MM THK) (SPLIT)	
M	5	1	**5C-2890**	2	NUT (M6X1-THD)	

M - METRIC PART

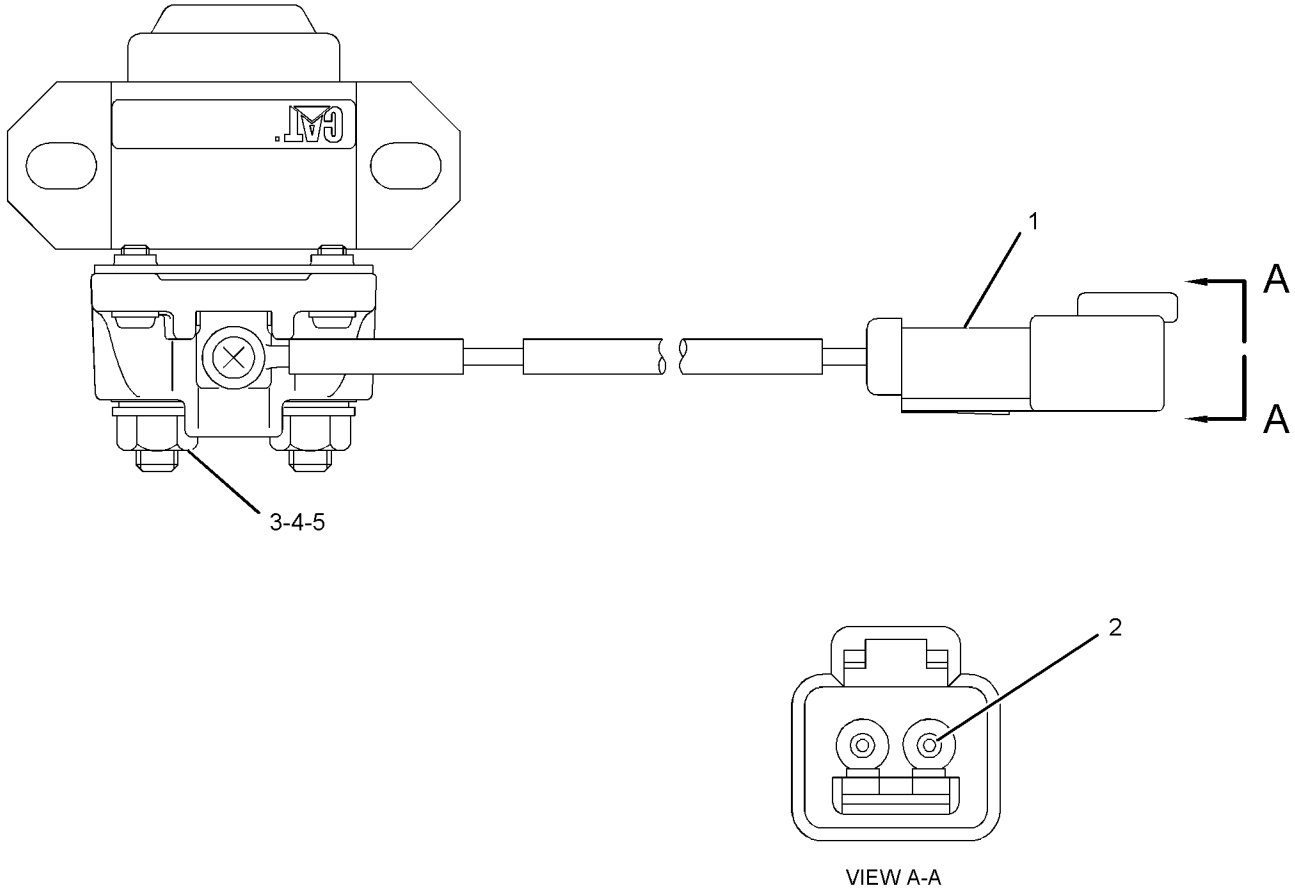

GRAPHIC #1 <END> g01196733

106-0107 SWITCH GP-ROTARY—THROTTLE POSITION

S/N: DLP1-UP
PART OF 251-0544 PANEL GP-SWITCH
AN ATTACHMENT

SMCS-7332 **i02164374**

NOTE	REF NO	GRAPHIC REF	PART NUMBER	QTY	PART NAME 1 2 3 4 5 6 (PRODUCT LEVEL)	SEE PAGE
	1	1	**102-8805**	1	KIT-RECEPTACLE (6-PIN)	
					(INCLUDES RECEPTACLE AS & WEDGE)	
	2	1	**3E-3383**	1	WEDGE-RECEPTACLE LOCK (6-PIN)	
	3	1	**8T-8737**	1	PLUG-SEAL	
	4	1	**144-1636**	5	PIN-CONNECTOR (14-GA TO 18-GA)	
M	5	1	**7Y-5458**	1	NUT (M12X1-THD)	
	6	1	**7Y-5464**	1	WASHER (12.2X15.4X0.5-MM THK)	
	7	1	**106-0210**	1	SEAL	

M - METRIC PART

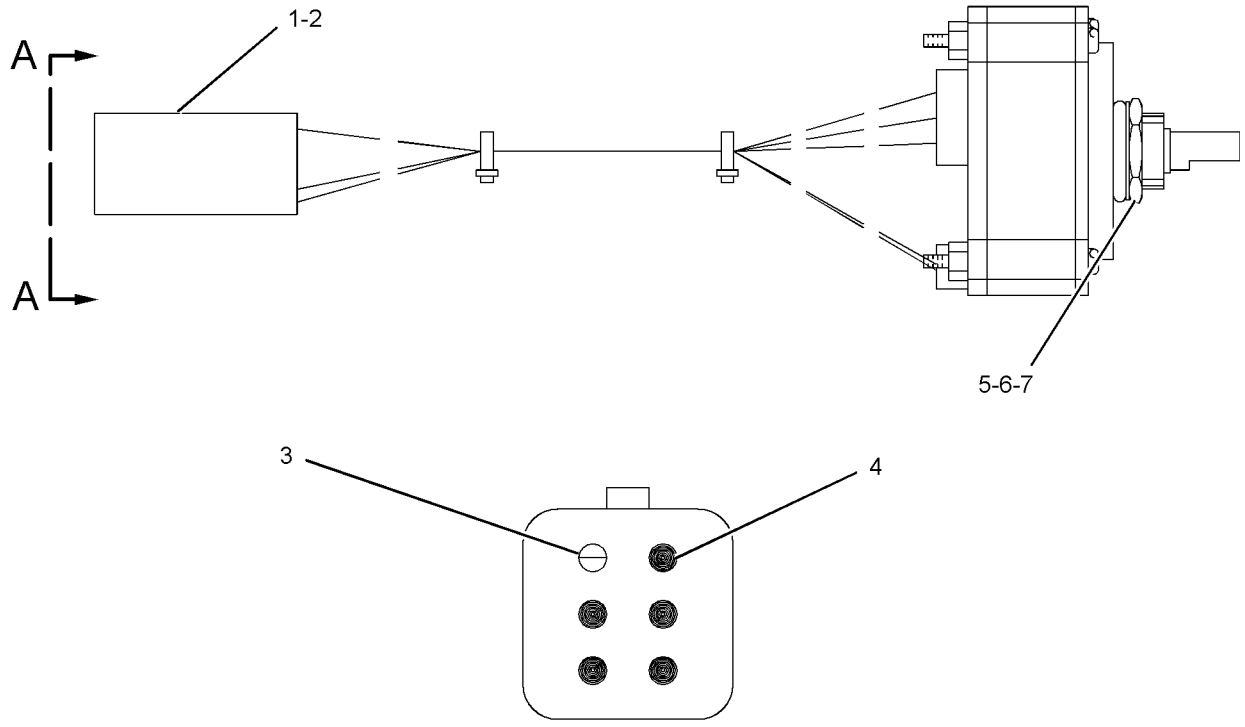

VIEW A-A

GRAPHIC #1 <END> g01098706

319-4420 SWITCH GP-ROTARY–THROTTLE POSITION

S/N: DLP1-UP

PART OF 251-0542, 251-0544 PANEL GP-SWITCH

AN ATTACHMENT

SMCS-7332 **i03105700**

NOTE	REF NO	GRAPHIC REF	PART NUMBER	QTY	PART NAME 1 2 3 4 5 6 (PRODUCT LEVEL)	SEE PAGE
	1	1	**243-4508**	1	RECEPTACLE AS-CONNECTOR (6-PIN)	
	2	1	**9X-3401**	5	PIN-CONNECTOR (16-GA TO 18-GA)	
					–OR–	
		1	**126-1767**	5	PIN-CONNECTOR (14-GA TO 16-GA)	
	3	1	**8T-8737**	1	PLUG-SEAL	
M	4	1	**7Y-5458**	1	NUT (M12X1-THD)	
	5	1	**7Y-5464**	1	WASHER (12.2X15.4X0.5-MM THK)	
	6	1	**106-0210**	1	SEAL	

M - METRIC PART

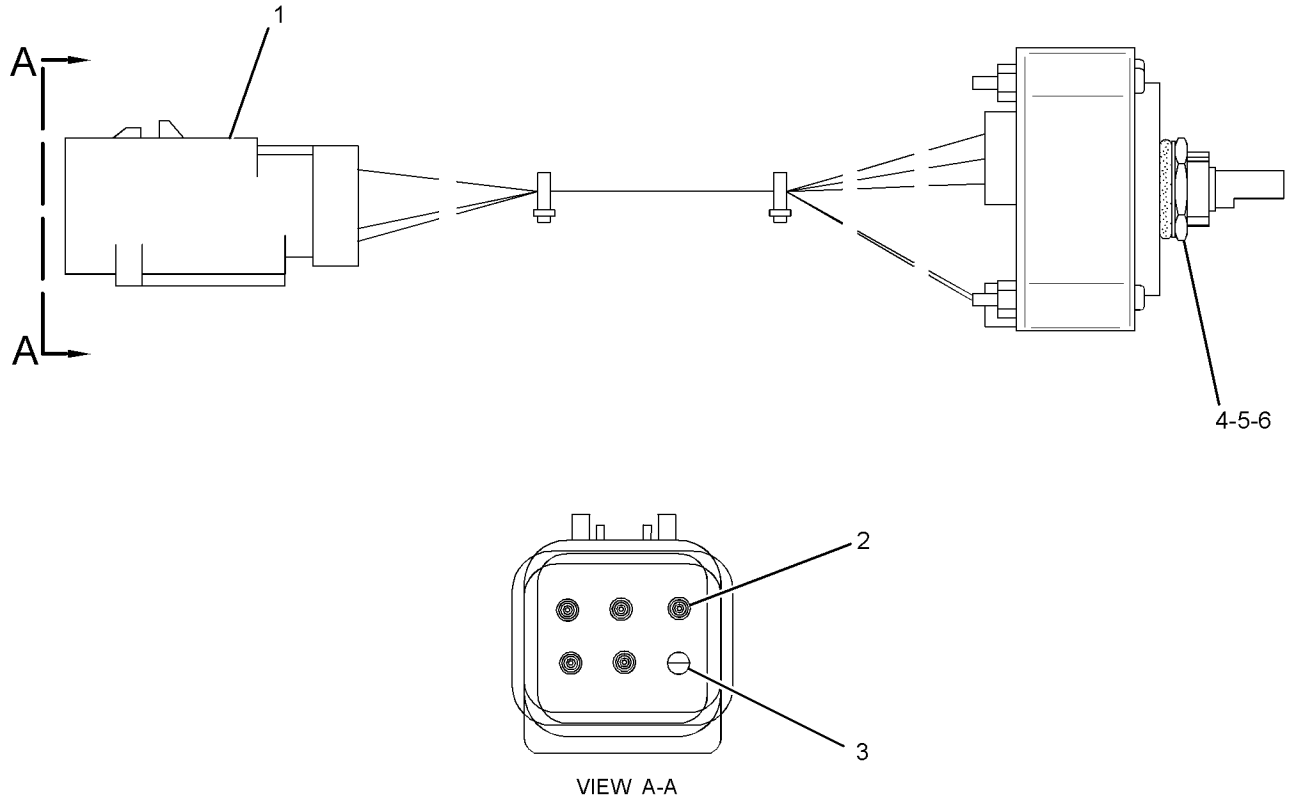

GRAPHIC #1 <END> g01588034

255-2751 SWITCH GP-START–ENGINE, KEY

S/N: DLP1-UP

PART OF 251-0542, 251-0544 PANEL GP-SWITCH

AN ATTACHMENT

SMCS-1416 **i05408935**

NOTE	REF NO	GRAPHIC REF	PART NUMBER	QTY	PART NAME 1 2 3 4 5 6 (PRODUCT LEVEL)	SEE PAGE
	1	1	**6V-8362**	4	SCREW-MACHINE (8-32X0.31-IN)	
	2	1	**9B-7233**	4	LOCKWASHER	
	3	1	**7T-6799**	1	NUT-MOUNTING (1-32-THD)	
AF			**5P-8500**	1	KEY	

A - NOT PART OF THIS GROUP
F - NOT SHOWN

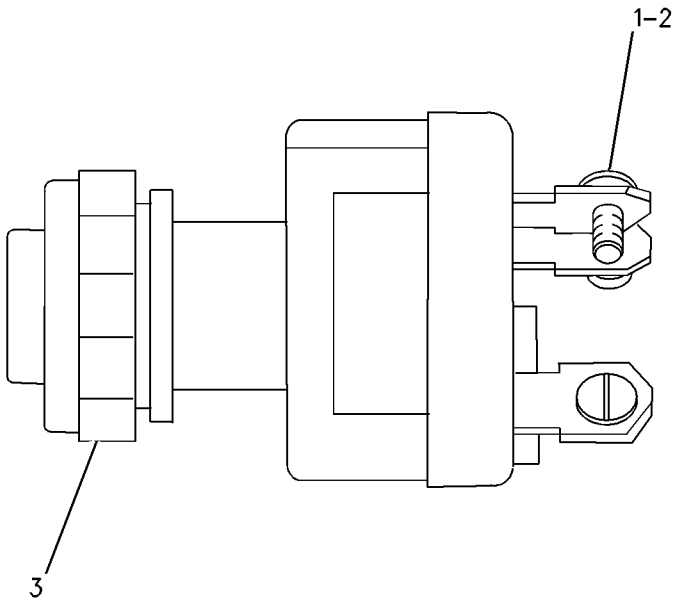

GRAPHIC #1 <END> g00699802

9G-7641 SWITCH GP-START–ENGINE, KEY

S/N: DLP1-UP

PART OF 251-0542, 251-0544 PANEL GP-SWITCH

AN ATTACHMENT

SMCS-1416 **i01101254**

NOTE	REF NO	GRAPHIC REF	PART NUMBER	QTY	PART NAME 1 2 3 4 5 6 (PRODUCT LEVEL)	SEE PAGE
	1	1	**6V-8362**	4	SCREW-MACHINE (8-32X0.31-IN)	
	2	1	**9B-7233**	4	LOCKWASHER	
	3	1	**7T-6799**	1	NUT-MOUNTING (1-32-THD)	

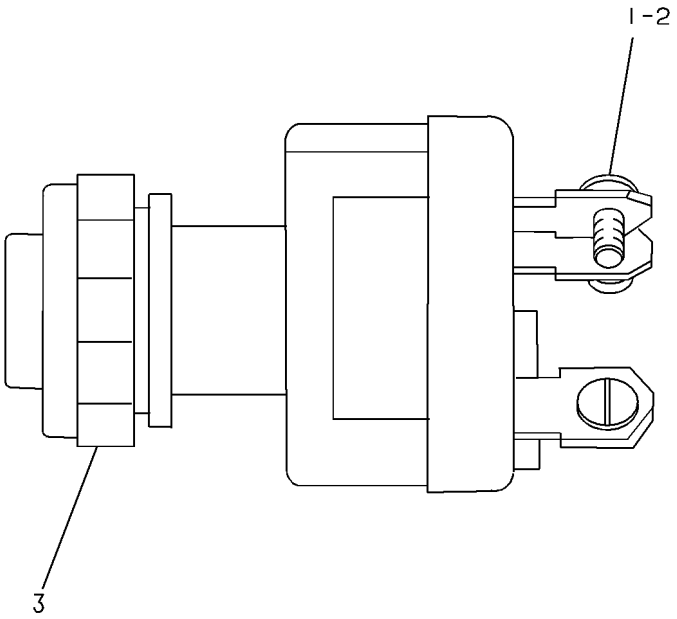

GRAPHIC #1 <END> g00081868

238-2478 SWITCH GP-TOGGLE—QUICK COUPLER

S/N: DLP1-UP
PART OF 238-2485 SWITCH GP-TOGGLE
AN ATTACHMENT

SMCS-7332 **i03750212**

NOTE	REF NO	GRAPHIC REF	PART NUMBER	QTY	PART NAME 1 2 3 4 5 6 (PRODUCT LEVEL)	SEE PAGE
	1	1	**7N-2353**	1	SWITCH AS-TOGGLE (QUICK COUPLER LOCK)	
	2	1	**238-2479**	1	HARNESS AS-WIRING (QUICK COUPLER SWITCH)	
		1	**7Y-3950**	2	TERMINAL-BLADE (14-GA TO 20-GA)	
		1	**7Y-3953**	1	CONNECTOR-RECEPTACLE	
		1	**3S-2093**	1	STRAP-CABLE	

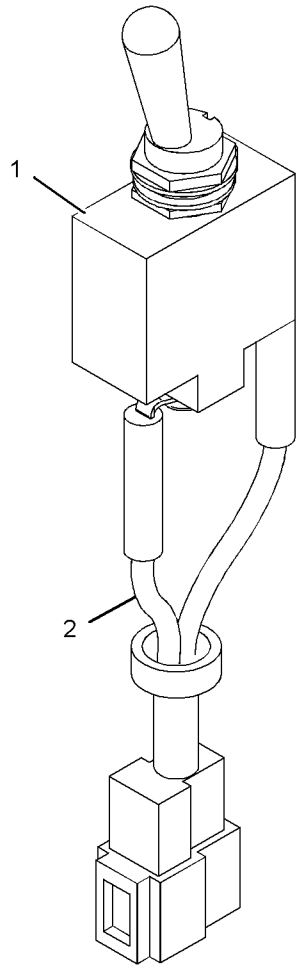

GRAPHIC #1 <END> g01125914

238-2485 SWITCH GP-TOGGLE–QUICK COUPLER LOCK

S/N: DLP1-UP

PART OF 277-1173, 344-4405 CONTROL AR-COUPLER

AN ATTACHMENT

SMCS-7332 **i03750252**

NOTE	REF NO	GRAPHIC REF	PART NUMBER	QTY	PART NAME 1 2 3 4 5 6 (PRODUCT LEVEL)	SEE PAGE
Y	1	1	*238-2478*	1	SWITCH GP-TOGGLE (QUICK COUPLER LOCK)	266
	2	1	**259-4884**	1	BRACKET AS	
	3	1	**259-7180**	1	COVER	
M	4	1	**9X-2042**	3	SCREW-TRUSS HEAD (M6X1X12-MM)	

M - METRIC PART
Y - SEPARATE ILLUSTRATION

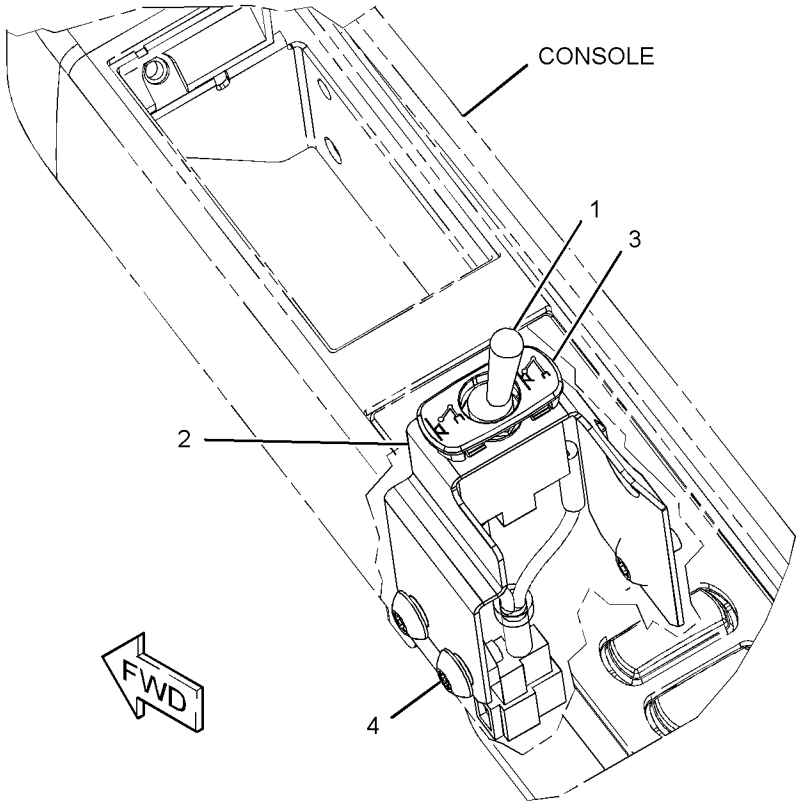

GRAPHIC #1 <END> g01259744

238-2208 SWITCH GP-WIPER–LOWER

S/N: DLP1-UP

PART OF 273-5388 WIPER AR-WINDOW

AN ATTACHMENT

SMCS-7305 **i06890400**

NOTE	REF NO	GRAPHIC REF	PART NUMBER	QTY	PART NAME 1 2 3 4 5 6 (PRODUCT LEVEL)	SEE PAGE
	1	1	**238-2209**	1	SWITCH AS-ROCKER (WIPER, LOWER)	
		1	**167-3542**	1	RECEPTACLE-CONNECTOR (5-PIN)	
		1	**167-3543**	5	TERMINAL (MALE)	
	2	1	**238-2210**	1	SWITCH AS-ROCKER (WASHER, LOWER)	
		1	**167-3542**	1	RECEPTACLE-CONNECTOR (5-PIN)	
		1	**167-3543**	4	TERMINAL (MALE)	

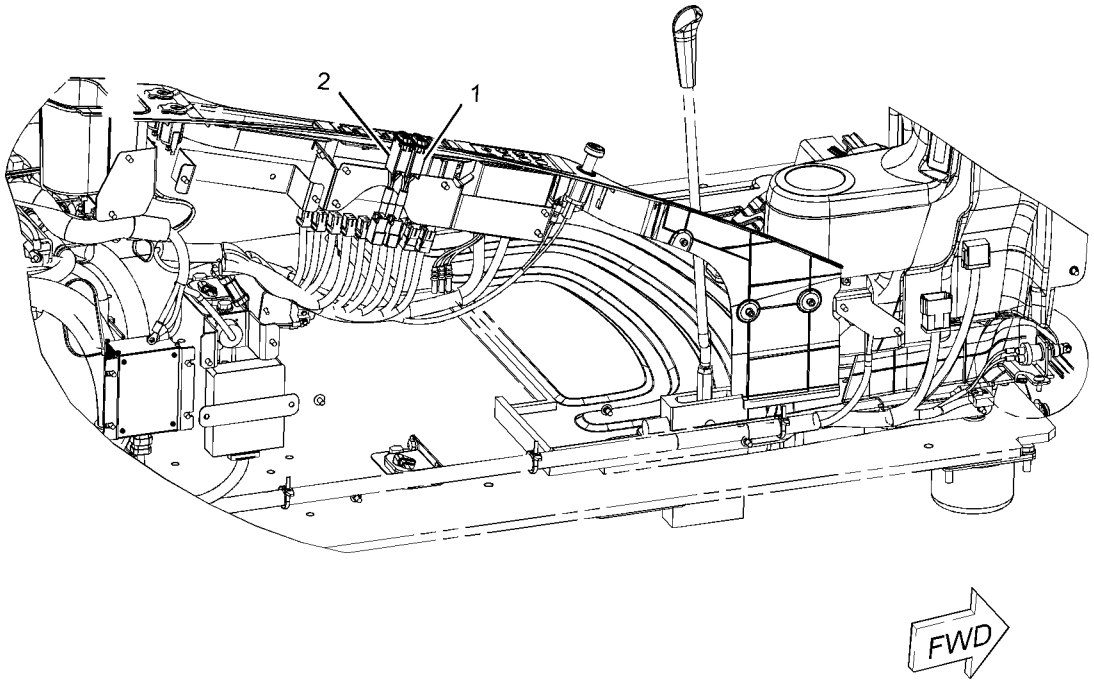

GRAPHIC #1 <END> g03039414

259-5161 WIRING GP-CAB

S/N: DLP1-440

PART OF 273-5363, 340-6773 OPERATOR AR

SMCS-1408, 7301

i03671336

NOTE	REF NO	GRAPHIC REF	PART NUMBER	QTY	PART NAME 1 2 3 4 5 6 (PRODUCT LEVEL)	SEE PAGE
	1	3,4	**3S-2093**	10	STRAP-CABLE	
	2	4	**7Y-5505**	2	SPEAKER AS	
					(EACH INCLUDES)	
		4	**7Y-3951**	2	TERMINAL-BLADE (14-GA)	
		4	**7Y-3954**	1	CONNECTOR-PLUG (3-PIN)	
	3	3	**9W-0335**	1	LIGHTER AS-CIGAR (24-VOLT)	
	4	3	**094-2080**	1	SWITCH-MAGNETIC (24-VOLT) (START RELAY)	
M	5	4	**099-7127**	8	SCREW-MACHINE (M4X0.7X12-MM)	
	6	1	**102-8016**	1	RESISTOR AS (BACKUP)	
	7	3	**113-8490**	20	FUSE (10-AMPERE)	
	8	3	**113-8491**	5	FUSE (15-AMPERE)	
	9	3	**113-8492**	3	FUSE (20-AMPERE)	
	10	3	**113-8493**	3	FUSE (25-AMPERE)	
	11	4	**116-0210**	4	BRACKET AS	
	12	3	**124-3548**	2	FUSE (30-AMPERE)	
Y	13	4	**132-1829**	1	ALARM GP (24-VOLT) (FAULT)	155
	14	3	**141-2759**	7	FUSE (5-AMPERE)	
	15	3	**161-3128**	1	RELAY (24-VOLT) (BOOM FLOODLIGHT)	
	15A	3	**161-3128**	1	RELAY (24-VOLT) (CHASSIS LIGHT)	
	15B	3	**161-3128**	1	RELAY (24-VOLT) (CAB FLOODLIGHT)	
	15C	3	**161-3128**	1	RELAY (24-VOLT) (HORN)	
	15D	3	**161-3128**	1	RELAY (24-VOLT) (NEUTRAL START)	
	15E	3	**161-3128**	1	RELAY (24-VOLT) (TRAVEL ALARM)	
	16	4	**268-1964**	1	KIT-SERVICE METER	
					(INCLUDES FILM & METER)	
	17	4	**163-6758**	1	WIRE AS	
	18	2,3,4	**163-6795**	15	STRAP-CABLE	
	19	3	**167-3593**	1	STRAP	
	20	3	**170-6888**	1	PULLER-FUSE	
	21	4	**213-0772**	1	SWITCH AS-MAGNETIC (24-VOLT) (MAIN RELAY)	
	22	3	**227-7575**	1	PANEL-CONTROL (SWITCH)	
	23	3	**234-1097**	1	BRACKET	
J	24	3	**238-2212**	1	SWITCH AS-ROCKER (FINE SWING)	
		3	**167-3542**	1	RECEPTACLE-CONNECTOR (5-PIN)	
		3	**167-3543**	5	TERMINAL (MALE)	
	26	4	**238-2390**	1	CABLE AS (RED)	
		4	**3T-4004**	1	TERMINAL-SOLDER	
BE		4	**125-7876**		TUBE-HEAT SHRINK (17.78-MM DIA)	
	27	4	**238-2391**	1	CABLE AS (PURPLE)	
		4	**9G-4343**	1	TERMINAL-RING (4-GA, 1/4-IN SCREW)	
BE		4	**125-7876**		TUBE-HEAT SHRINK (17.78-MM DIA)	
	28	2	**245-7760**	8	INSULATION	
	29	2	**251-0637**	1	INSULATION	
	30	2	**259-4883**	1	ANTENNA AS	
	31	3	**259-5290**	1	BRACKET AS	
	32	1	**259-5296**	1	HARNESS AS-CAB	
		1	**7Y-3952**	4	PLUG-CONNECTOR (2-PIN)	

259-5161 **WIRING GP-CAB (**contd.**)** **i03671336**

NOTE	REF NO	GRAPHIC REF	PART NUMBER	QTY	PART NAME 1 2 3 4 5 6 (PRODUCT LEVEL)	SEE PAGE
		1	**7Y-3958**	2	CONNECTOR-PLUG (6-PIN)	
		1	**102-7964**	2	PLUG-CONNECTOR (16-PIN)	
		1	**111-4816**	1	PLUG-CONNECTOR (13-PIN)	
		1	**163-6659**	1	CONNECTOR-PLUG (12-PIN)	
		1	**163-6699**	1	CONNECTOR-PLUG (18-PIN)	
		1	**163-6803**	9	PLUG-CONNECTOR (5-PIN)	
		1	**7Y-3955**	2	CONNECTOR-RECEPTACLE	
		1	**121-1168**	1	CONNECTOR-RECEPTACLE	
		1	**153-2602**	5	RECEPTACLE-CONNECTOR (1-PIN)	
		1	**9W-1951**	1	RECEPTACLE-CONNECTOR (9-PIN)	
		1	**8C-6354**	1	CAP-RECEPTACLE (ET CONNECTOR)	
		1	**5P-6271**	1	CONNECTOR AS	
		1	**134-3296**	1	HOUSING-PLUG	
		1	**134-3297**	1	SEAL	
		1	**3S-2093**	111	STRAP-CABLE	
		1	**121-1022**	3	DIODE	
		1	**238-2319**	1	BASE AS (FUSE, RELAY PANEL)	
		1	**9X-8256**	2	WASHER (6.6X12X2-MM THK)	
M		1	**095-0742**	2	SCREW-MACHINE (M6X1X16-MM)	
		1	**170-9394**	40	TERMINAL	
		1	**102-8803**	3	KIT-RECEPTACLE (3-PIN)	
					(INCLUDES RECEPTACLE AS & WEDGE)	
		1	**155-2260**	1	KIT-CONNECTING PLUG (3-PIN)	
		1	**155-2270**	2	KIT-CONNECTING PLUG (2-PIN)	
					(EACH PLUG KIT INCLUDES PLUG AS, WEDGE & INTERFACE SEAL)	
		1	**230-4011**	1	PLUG AS-CONNECTOR (2-PIN)	
		1	**264-7029**	1	SEAL-CONNECTOR	
		1	**230-4013**	1	PLUG AS-CONNECTOR (3-PIN)	
		1	**264-7030**	1	SEAL-CONNECTOR	
		1	**239-7356**	1	PLUG AS-CONNECTOR (12-PIN)	
		1	**230-4009**	1	PLUG AS-CONNECTOR (12-PIN)	
					(EACH PLUG AS INCLUDES)	
		1	**264-7034**	1	SEAL-CONNECTOR	
		1	**174-3016**	2	PLUG AS-CONNECTOR (3-PIN)	
		1	**243-4505**	2	RECEPTACLE AS-CONNECTOR (2-PIN)	
		1	**243-4506**	1	RECEPTACLE AS-CONNECTOR (3-PIN)	
J	33	3	**267-7639**	1	SWITCH AS-ROCKER (LEVELING)	
		3	**167-3542**	1	RECEPTACLE-CONNECTOR (5-PIN)	
		3	**167-3543**	5	TERMINAL (MALE)	
M	34	3	**095-0723**	3	SCREW-SPECIAL (M3X0.5X10-MM)	
	35	3	**096-5962**	3	WASHER-HARD (3.4X7X0.8-MM THK)	
	36	4	**096-6166**	2	WASHER-HARD (4.5X9X1-MM THK)	
	37	3,4	**132-5789**	7	CLIP (LADDER)	
	38	4	**4P-7581**	1	CLIP (LADDER)	
M	39	3	**5C-2890**	5	NUT (M6X1-THD)	
M	40	4	**6V-5210**	8	SCREW-MACHINE (M4X0.7X10-MM)	
M	41	4	**6V-9672**	2	SCREW-MACHINE (M4X0.7X16-MM)	
	42	4	**8T-0328**	3	WASHER-HARD (5.5X10X1-MM THK)	
M	43	4	**8T-4127**	2	SCREW-MACHINE (M5X0.8X20-MM)	
M	44	4	**8T-6693**	1	SCREW-MACHINE (M5X0.8X16-MM)	
M	45	1,3,4	**9X-2042**	13	SCREW-TRUSS HEAD (M6X1X12-MM)	

259-5161 **WIRING GP-CAB (**contd.**)** **i03671336**

NOTE	REF NO	GRAPHIC REF	PART NUMBER	QTY	PART NAME 1 2 3 4 5 6 (PRODUCT LEVEL)	SEE PAGE
M	46	3	**9X-2044**	5	SCREW-TRUSS HEAD (M6X1X16-MM)	
	47	3	**9X-8256**	5	WASHER (6.6X12X2-MM THK)	
E	48	2	**101-2846**		GUARD (9.5-CM)	
E	48A	4	**101-2846**		GUARD (9-CM EACH)	

B - USE AS REQUIRED
E - ORDER BY THE CENTIMETER
J - IF EQUIPPED-NOT USED ON ALL MODELS
M - METRIC PART
Y - SEPARATE ILLUSTRATION

259-5161 **WIRING GP-CAB (**contd.**)** **i03671336**

REFER TO ALL ILLUSTRATIONS OF
THIS GROUP FOR AUXILIARY VIEWS

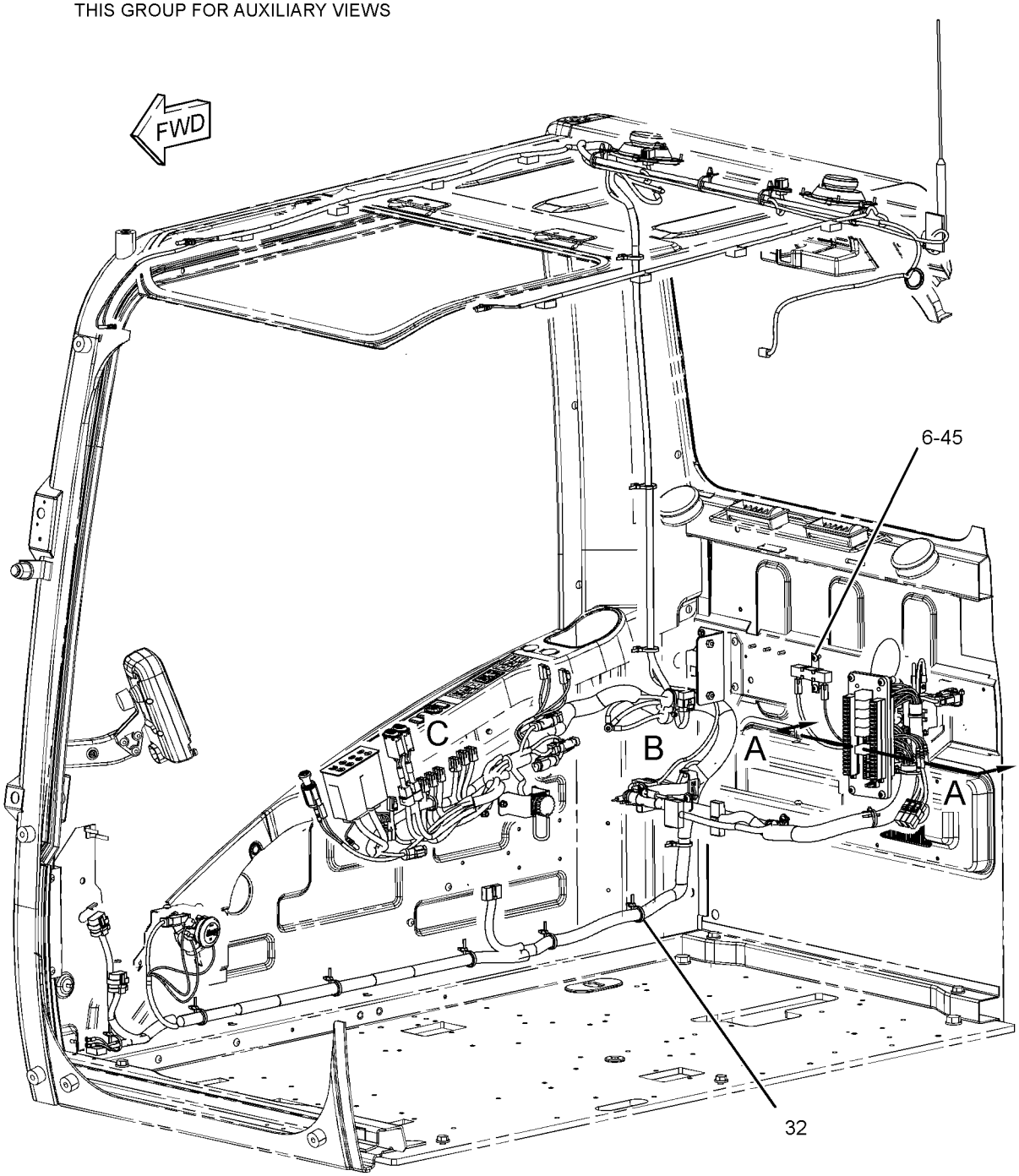

GRAPHIC #1 g01398279

259-5161 **WIRING GP-CAB (**contd.**)** **i03671336**

REFER TO ALL ILLUSTRATIONS OF
THIS GROUP FOR AUXILIARY VIEWS

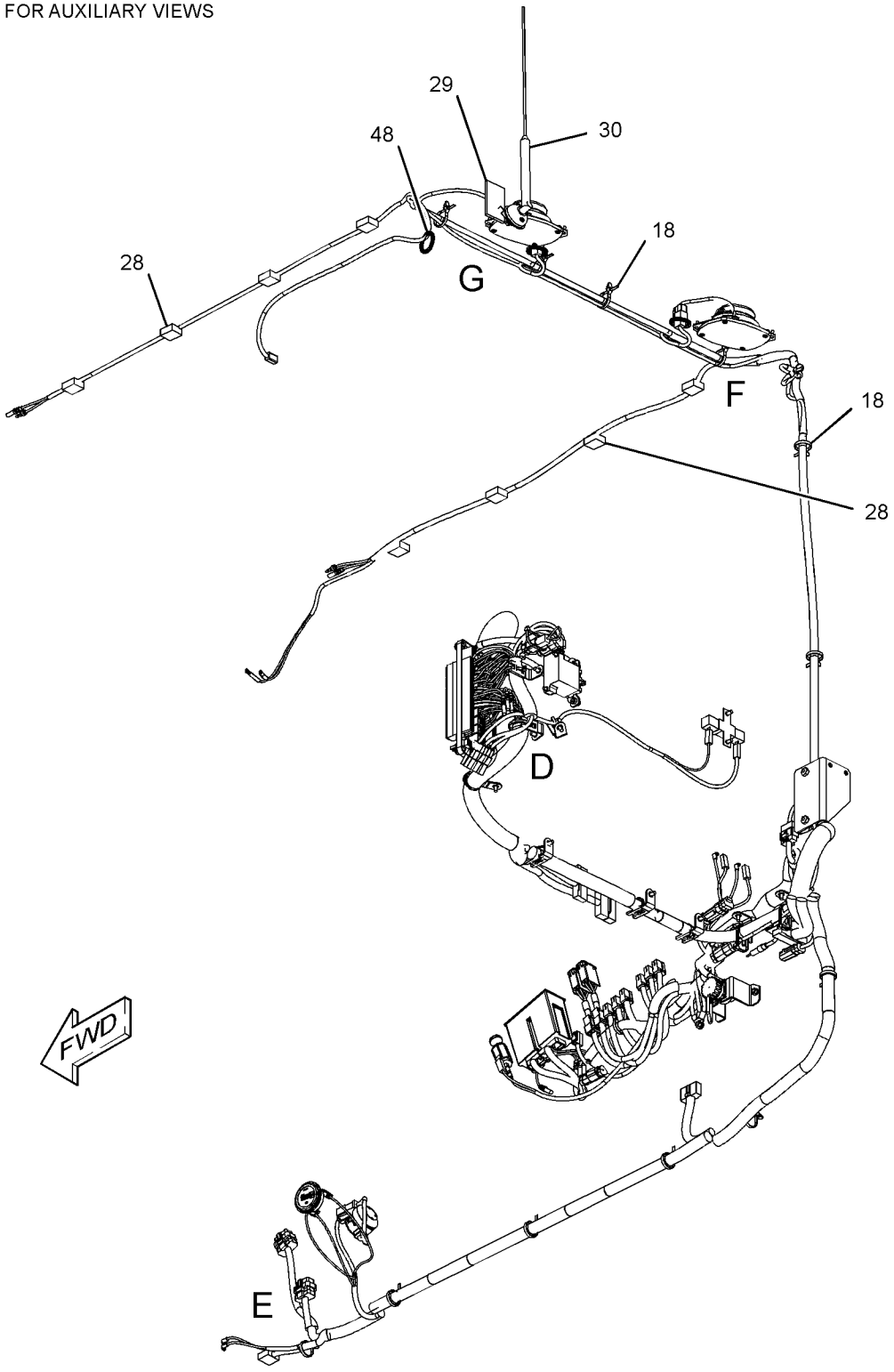

GRAPHIC #2 g01398365

259-5161 **WIRING GP-CAB (**contd.**)** **i03671336**

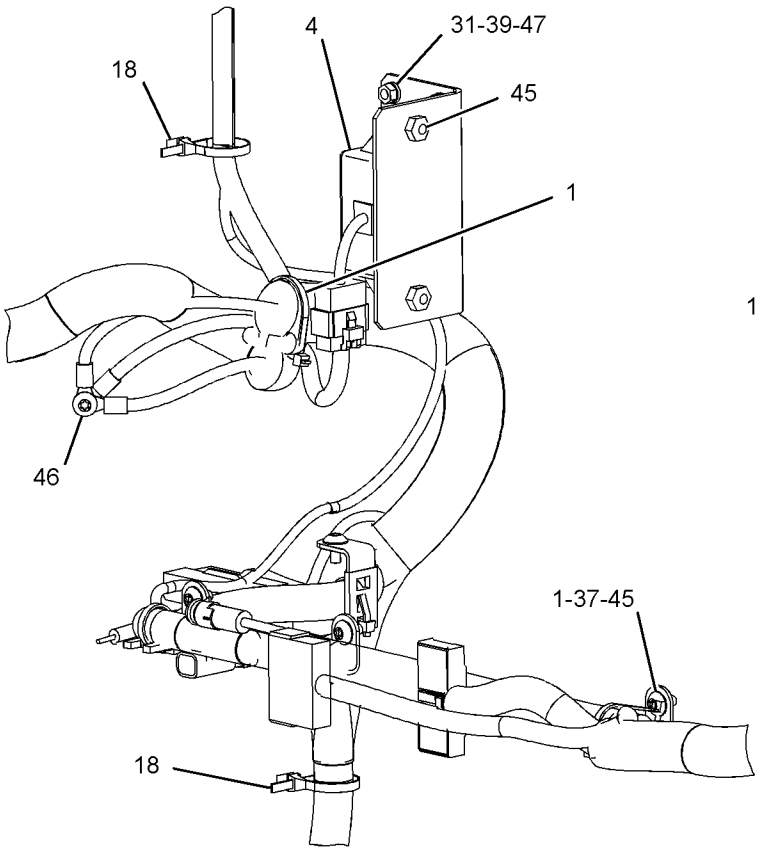

VIEW OF AREA B

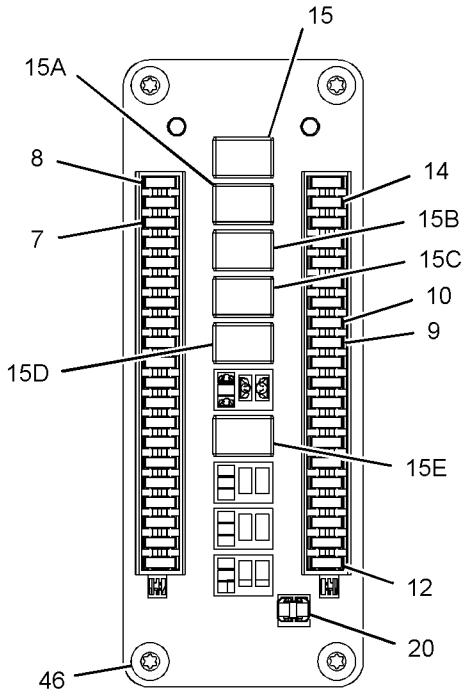

VIEW A-A

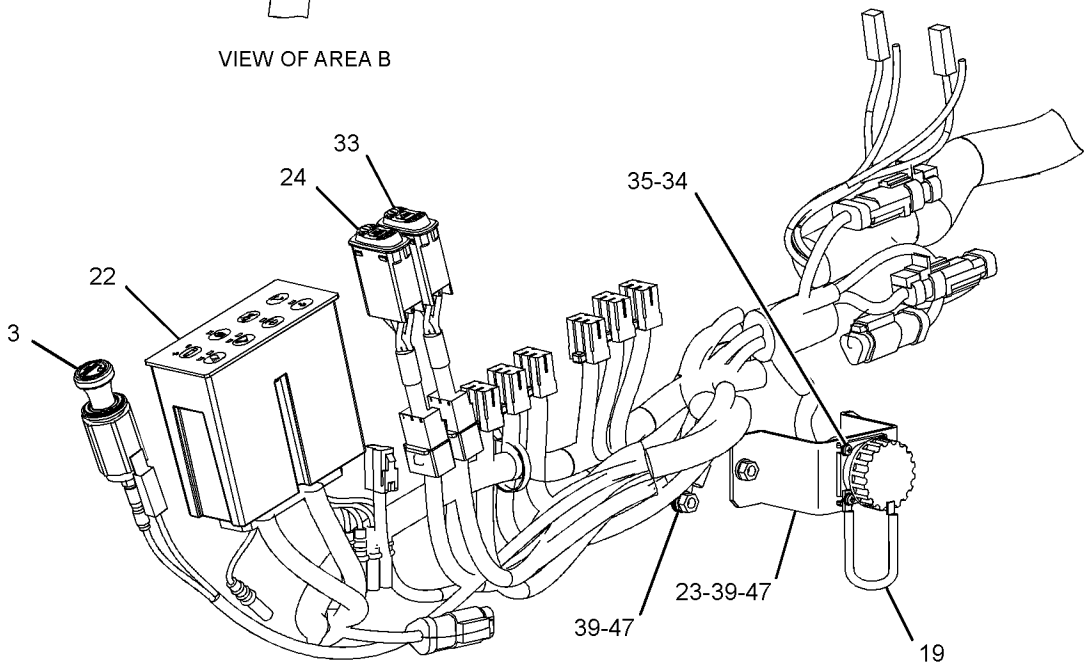

VIEW OF AREA C

GRAPHIC #3 g01398416

259-5161 **WIRING GP-CAB (**contd.**)** **i03671336**

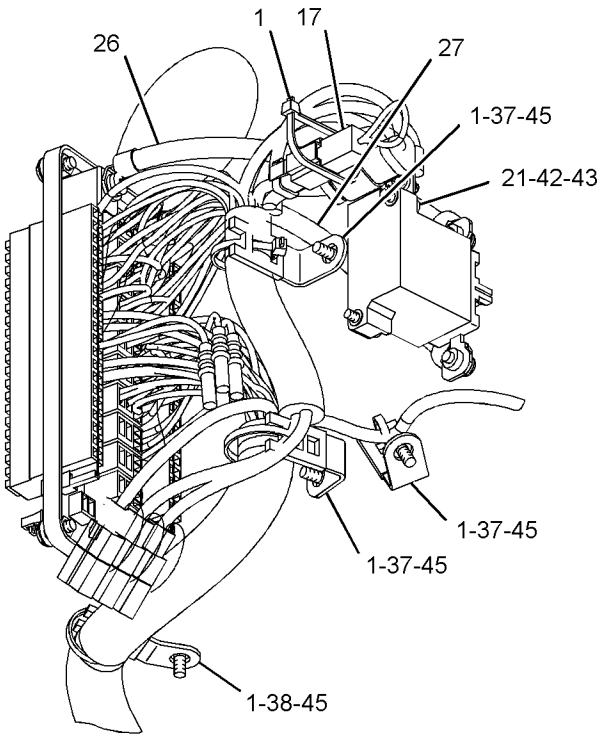

VIEW OF AREA D

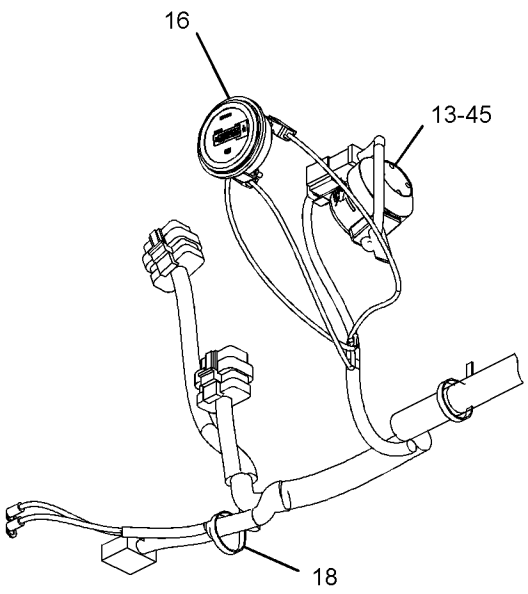

VIEW OF AREA E

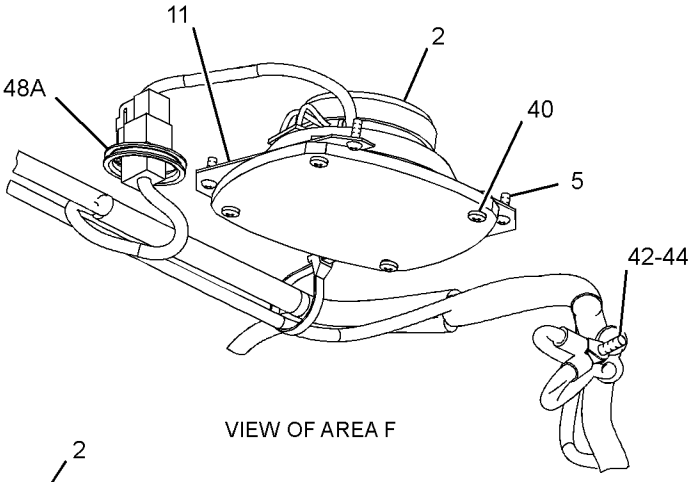

VIEW OF AREA F

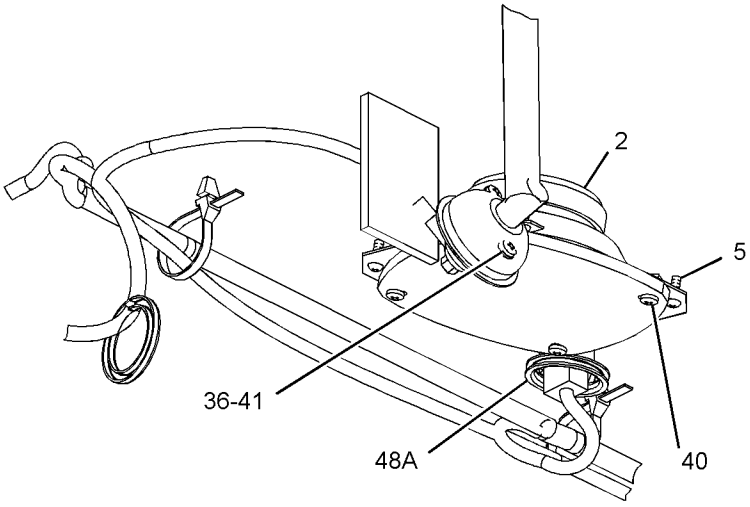

VIEW OF AREA G

GRAPHIC #4 <END> g01302137

259-5161 WIRING GP-CAB

S/N: DLP441-UP

PART OF 340-6773, 383-5596 OPERATOR AR

SMCS-1408, 7301

i05190547

NOTE	REF NO	GRAPHIC REF	PART NUMBER	QTY	PART NAME 1 2 3 4 5 6 (PRODUCT LEVEL)	SEE PAGE
C	1	3,4	**3S-2093**	2	STRAP-CABLE	
	2	4	**7Y-5505**	2	SPEAKER AS	
					(EACH INCLUDES)	
		4	**7Y-3951**	2	TERMINAL-BLADE (14-GA)	
		4	**7Y-3954**	1	CONNECTOR-PLUG (3-PIN)	
	3	3	**9W-0335**	1	LIGHTER AS-CIGAR (24-VOLT)	
	4	3	**094-2080**	1	SWITCH-MAGNETIC (24-VOLT) (START RELAY)	
M	5	4	**099-7127**	8	SCREW-MACHINE (M4X0.7X12-MM)	
	6	1	**102-8016**	1	RESISTOR AS (BACKUP)	
	7	3	**113-8490**	20	FUSE (10-AMPERE)	
	8	3	**113-8491**	5	FUSE (15-AMPERE)	
	9	3	**113-8492**	3	FUSE (20-AMPERE)	
	10	3	**113-8493**	3	FUSE (25-AMPERE)	
	11	4	**116-0210**	4	BRACKET AS	
	12	3	**124-3548**	2	FUSE (30-AMPERE)	
Y	13	2	**132-1829**	1	ALARM GP (24-VOLT) (FAULT)	155
	14	3	**141-2759**	7	FUSE (5-AMPERE)	
	15	3	**161-3128**	1	RELAY (24-VOLT) (BOOM FLOODLIGHT)	
	15A	3	**161-3128**	1	RELAY (24-VOLT) (CHASSIS LIGHT)	
	15B	3	**161-3128**	1	RELAY (24-VOLT) (CAB FLOODLIGHT)	
	15C	3	**161-3128**	1	RELAY (24-VOLT) (HORN)	
	15D	3	**161-3128**	1	RELAY (24-VOLT) (NEUTRAL START)	
	15E	3	**161-3128**	1	RELAY (24-VOLT) (TRAVEL ALARM)	
C	16	2	**366-4622**	1	KIT-SERVICE METER (32-VOLT DC)	
					(INCLUDES FILM & METER)	
	17	4	**163-6758**	1	WIRE AS	
	18	2,3	**163-6795**	15	STRAP-CABLE	
	19	3	**167-3593**	1	STRAP	
	20	3	**170-6888**	1	PULLER-FUSE	
	21	4	**213-0772**	1	SWITCH AS-MAGNETIC (24-VOLT) (MAIN RELAY)	
	22	3	**227-7575**	1	PANEL-CONTROL (SWITCH)	
	23	3	**234-1097**	1	BRACKET	
	24	3	**238-2212**	1	SWITCH AS-ROCKER (FINE SWING)	
		3	**167-3542**	1	RECEPTACLE-CONNECTOR (5-PIN)	
		3	**167-3543**	5	TERMINAL (MALE)	
	26	4	**238-2390**	1	CABLE AS (RED)	
		4	**3T-4004**	1	TERMINAL-SOLDER	
E		4	**125-7876**		TUBE-HEAT SHRINK (17.78-MM DIA) (4-CM)	
	27	4	**238-2391**	1	CABLE AS (PURPLE)	
		4	**9G-4343**	1	TERMINAL-RING (4-GA, 1/4-IN SCREW)	
E		4	**125-7876**		TUBE-HEAT SHRINK (17.78-MM DIA) (4-CM)	
	28	2	**245-7760**	8	INSULATION	
	29	2	**251-0637**	1	INSULATION	
	30	2	**259-4883**	1	ANTENNA AS	
	31	3	**259-5290**	1	BRACKET AS	
C	32	1	**350-8253**	1	HARNESS AS-CAB	
		1	**102-8803**	3	KIT-RECEPTACLE (3-PIN)	

259-5161 **WIRING GP-CAB (**contd.**)** **i05190547**

NOTE	REF NO	GRAPHIC REF	PART NUMBER	QTY	PART NAME 1 2 3 4 5 6 (PRODUCT LEVEL)	SEE PAGE
		1	**8T-8729**	3	PIN-CONNECTOR (16-GA TO 18-GA)	
		1	**8T-8730**	5	SOCKET-CONNECTOR (16-GA TO 18-GA)	
		1	**3S-2093**	113	STRAP-CABLE	
		1	**7Y-3950**	4	TERMINAL-BLADE (14-GA TO 20-GA)	
		1	**7Y-3951**	18	TERMINAL-BLADE (14-GA)	
		1	**7Y-3952**	4	PLUG-CONNECTOR (2-PIN)	
		1	**7Y-3955**	2	CONNECTOR-RECEPTACLE	
		1	**7Y-3958**	2	CONNECTOR-PLUG (6-PIN)	
		1	**7Y-3962**	2	TERMINAL-BULLET (MALE)	
		1	**7Y-3964**	2	TUBE (CONNECTOR TERMINAL)	
		1	**7Y-3963**	11	TERMINAL-BULLET (FEMALE)	
		1	**7Y-3965**	11	TUBE (RECEPTACLE TERMINAL)	
		1	**8C-6354**	1	CAP-RECEPTACLE (ET CONNECTOR)	
		1	**8T-8737**	22	PLUG-SEAL	
		1	**5P-6271**	1	CONNECTOR AS	
		1	**9W-1951**	1	RECEPTACLE-CONNECTOR (9-PIN)	
		1	**102-7964**	2	PLUG-CONNECTOR (16-PIN)	
		1	**102-7965**	80	TERMINAL (FEMALE)	
		1	**9W-0844**	4	SOCKET-CONNECTOR (14-GA TO 16-GA)	
		1	**111-4816**	1	PLUG-CONNECTOR (13-PIN)	
		1	**116-0255**	1	TERMINAL-BLADE (10-GA TO 20-GA)	
E		1	**119-3662**		TUBE-HEAT SHRINK (10.85-MM DIA) (33-CM)	
		1	**121-1022**	3	DIODE	
		1	**121-1168**	1	CONNECTOR-RECEPTACLE	
		1	**121-1173**	15	TERMINAL (MALE)	
		1	**125-4840**	1	WEDGE-PLUG LOCK (13-PIN)	
		1	**125-4841**	2	WEDGE-PLUG LOCK (21-PIN)	
E		1	**125-7874**		TUBE-HEAT SHRINK (5.72-MM DIA) (65-CM)	
E		1	**125-7875**		TUBE-HEAT SHRINK (7.44-MM DIA) (25-CM)	
		1	**9X-3402**	15	SOCKET-CONNECTOR (16-GA TO 18-GA)	
					—OR—	
		1	**126-1768**	15	SOCKET-CONNECTOR (14-GA TO 16-GA)	
		1	**2L-8065**	3	TERMINAL-RING (10-GA TO 12-GA, NO. 8 SCREW)	
		1	**2L-8066**	2	TERMINAL-RING (10-GA TO 12-GA, NO. 10 SCREW)	
		1	**2L-8067**	6	TERMINAL-RING (10-GA TO 12-GA, 1/4-IN SCREW)	
		1	**2L-8075**	3	TERMINAL-RING (14-GA TO 16-GA, NO. 8 SCREW)	
		1	**2L-8076**	2	TERMINAL-RING (14-GA TO 16-GA, NO. 10 SCREW)	
		1	**128-8950**	1	CONNECTOR-RECEPTACLE	
		1	**5P-2321**	1	TERMINAL-FORK (14-GA TO 16-GA, NO. 6 SCREW)	
		1	**176-9299**	2	KIT-RECEPTACLE (3-PIN)	
					(EACH INCLUDES RECEPTACLE AS & WEDGE)	
		1	**134-3296**	1	HOUSING-PLUG	
		1	**134-3297**	1	SEAL	
		1	**9X-3401**	12	PIN-CONNECTOR (16-GA TO 18-GA)	
					—OR—	
		1	**126-1767**	12	PIN-CONNECTOR (14-GA TO 16-GA)	
		1	**149-5069**	7	TERMINAL-BLADE (14-GA TO 20-GA)	
		1	**149-5070**	14	TERMINAL-BLADE (16-GA TO 20-GA)	
		1	**149-5071**	7	TERMINAL-BLADE (12-GA TO 14-GA)	
		1	**153-2602**	5	RECEPTACLE-CONNECTOR (1-PIN)	
		1	**153-2631**	5	TERMINAL (FEMALE)	

259-5161 **WIRING GP-CAB (**contd.**)** **i05190547**

NOTE	REF NO	GRAPHIC REF	PART NUMBER	QTY	PART NAME 1 2 3 4 5 6 (PRODUCT LEVEL)	SEE PAGE
		1	**155-2270**	2	KIT-CONNECTING PLUG (2-PIN)	
		1	**155-2260**	1	KIT-CONNECTING PLUG (3-PIN)	
					(EACH PLUG KIT INCLUDES PLUG AS, WEDGE & INTERFACE SEAL)	
		1	**163-6659**	1	CONNECTOR-PLUG (12-PIN)	
		1	**163-6699**	1	CONNECTOR-PLUG (18-PIN)	
		1	**163-6790**	23	TERMINAL (FEMALE)	
		1	**163-6803**	9	PLUG-CONNECTOR (5-PIN)	
		1	**167-3487**	9	WEDGE-PLUG LOCK (5-PIN)	
		1	**167-3630**	1	CONNECTOR-PLUG	
		1	**167-3631**	2	TERMINAL (FEMALE)	
		1	**170-6890**	6	TERMINAL-BLADE (14-GA)	
		1	**170-6891**	22	TERMINAL-BLADE (16-GA TO 18-GA)	
		1	**174-3016**	2	PLUG AS-CONNECTOR (3-PIN)	
		1	**230-4009**	1	PLUG AS-CONNECTOR (12-PIN)	
		1	**264-7034**	1	SEAL-CONNECTOR	
		1	**230-4011**	1	PLUG AS-CONNECTOR (2-PIN)	
		1	**264-7029**	1	SEAL-CONNECTOR	
		1	**230-4013**	1	PLUG AS-CONNECTOR (3-PIN)	
		1	**264-7030**	1	SEAL-CONNECTOR	
		1	**238-2319**	1	BASE AS (FUSE, RELAY PANEL)	
		1	**9X-8256**	2	WASHER (6.6X12X2-MM THK)	
M		1	**095-0742**	2	SCREW-MACHINE (M6X1X16-MM)	
		1	**170-9394**	40	TERMINAL	
		1	**238-2363**	6	TERMINAL (FEMALE)	
		1	**238-2366**	10	TERMINAL (MALE)	
		1	**239-7356**	1	PLUG AS-CONNECTOR (12-PIN)	
		1	**264-7034**	1	SEAL-CONNECTOR	
		1	**243-4505**	2	RECEPTACLE AS-CONNECTOR (2-PIN)	
		1	**243-4506**	1	RECEPTACLE AS-CONNECTOR (3-PIN)	
		1	**349-5084**	3	TERMINAL-BLADE	
		1	**349-5085**	3	RECEPTACLE AS-CONNECTOR	
	33	3	**267-7639**	1	SWITCH AS-ROCKER (LEVELING)	
		3	**167-3542**	1	RECEPTACLE-CONNECTOR (5-PIN)	
		3	**167-3543**	5	TERMINAL (MALE)	
M	34	3	**095-0723**	3	SCREW-SPECIAL (M3X0.5X10-MM)	
	35	3	**096-5962**	3	WASHER-HARD (3.4X7X0.8-MM THK)	
	36	4	**096-6166**	2	WASHER-HARD (4.5X9X1-MM THK)	
	37	3,4	**132-5789**	7	CLIP (LADDER)	
	38	4	**4P-7581**	1	CLIP (LADDER)	
M	39	3	**5C-2890**	5	NUT (M6X1-THD)	
M	40	4	**6V-5210**	8	SCREW-MACHINE (M4X0.7X10-MM)	
M	41	4	**6V-9672**	2	SCREW-MACHINE (M4X0.7X16-MM)	
	42	4	**8T-0328**	3	WASHER-HARD (5.5X10X1-MM THK)	
M	43	4	**8T-4127**	2	SCREW-MACHINE (M5X0.8X20-MM)	
M	44	4	**8T-6693**	1	SCREW-MACHINE (M5X0.8X16-MM)	
M	45	1,2,3,4	**9X-2042**	13	SCREW-TRUSS HEAD (M6X1X12-MM)	
M	46	3	**9X-2044**	5	SCREW-TRUSS HEAD (M6X1X16-MM)	
	47	3	**9X-8256**	5	WASHER (6.6X12X2-MM THK)	
E	48	2	**101-2846**		GUARD (9.5-CM)	

259-5161 **WIRING GP-CAB (**contd.**)** **i05190547**

NOTE	REF NO	GRAPHIC REF	PART NUMBER	QTY	PART NAME 1 2 3 4 5 6 (PRODUCT LEVEL)	SEE PAGE
E	48A	4	**101-2846**		GUARD (9-CM EACH)	
C	49	4	**7K-1181**	8	STRAP-CABLE	

C - CHANGE FROM PREVIOUS TYPE
E - ORDER BY THE CENTIMETER
M - METRIC PART
Y - SEPARATE ILLUSTRATION

259-5161 **WIRING GP-CAB (**contd.**)** **i05190547**

REFER TO ALL ILLUSTRATIONS OF
THIS GROUP FOR AUXILIARY VIEWS

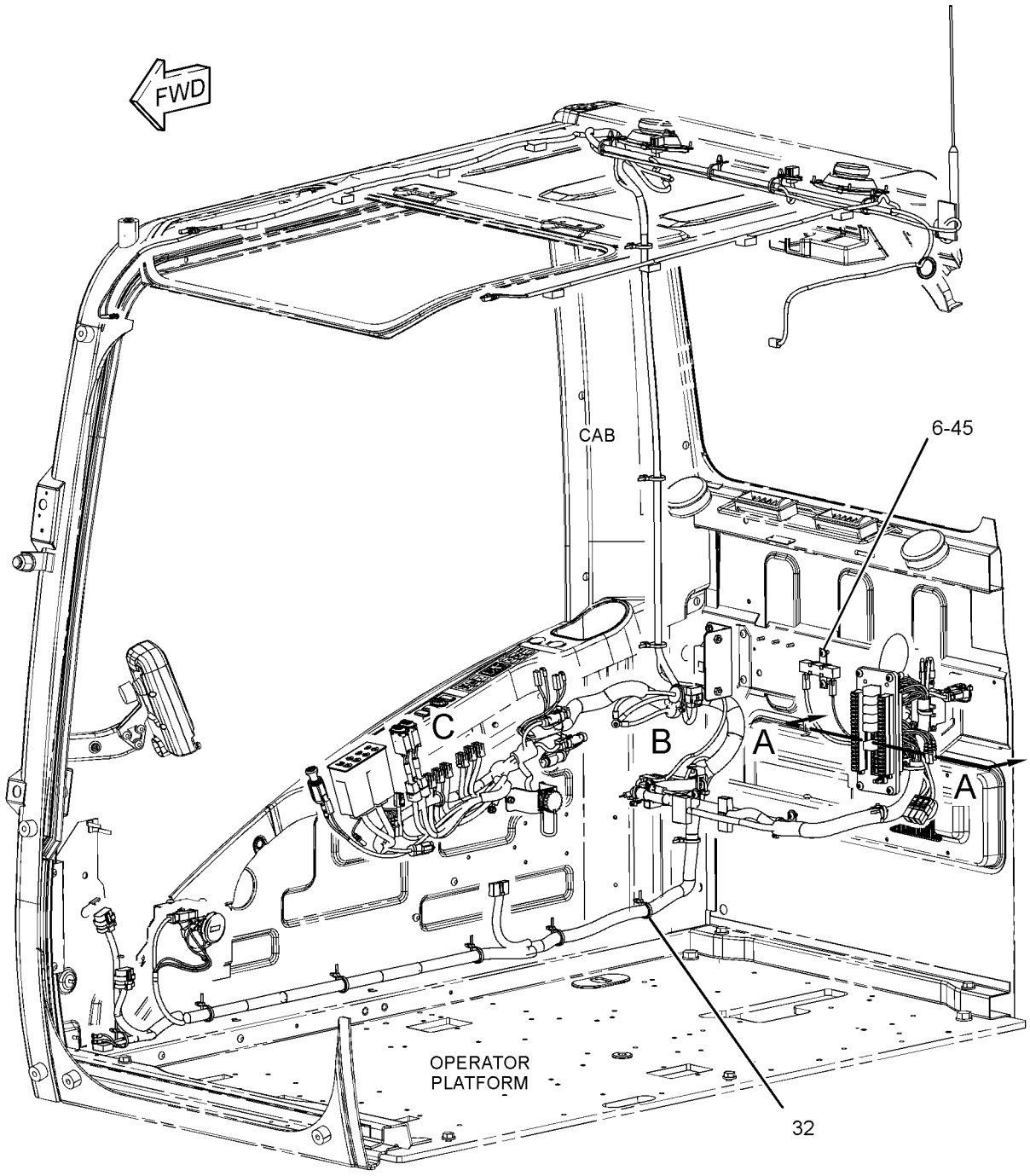

GRAPHIC #1 g02477289

259-5161 **WIRING GP-CAB (**contd.**)** **i05190547**

REFER TO ALL ILLUSTRATIONS OF
THIS GROUP FOR AUXILIARY VIEWS

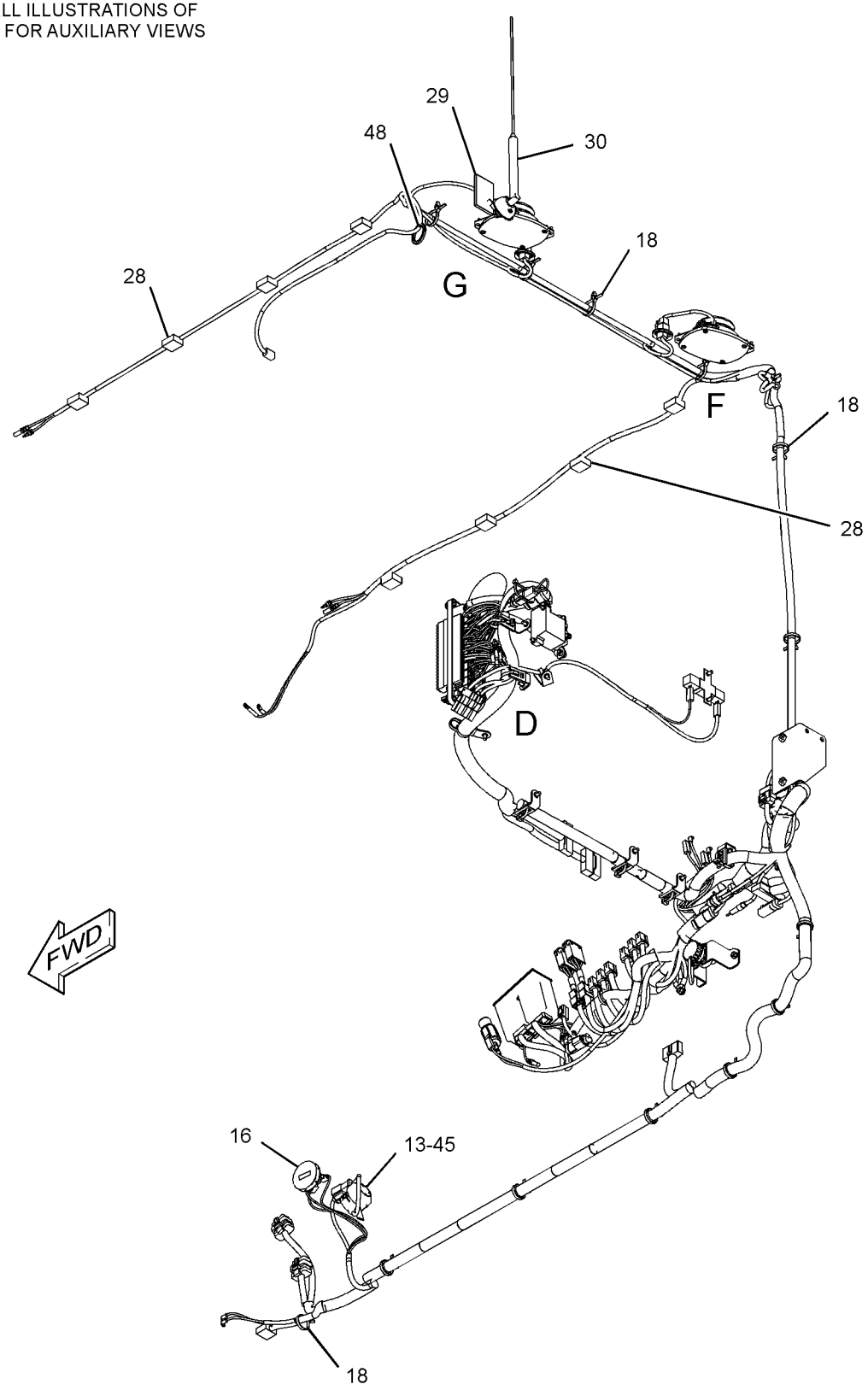

GRAPHIC #2 g02477315

259-5161 **WIRING GP-CAB (**contd.**)** **i05190547**

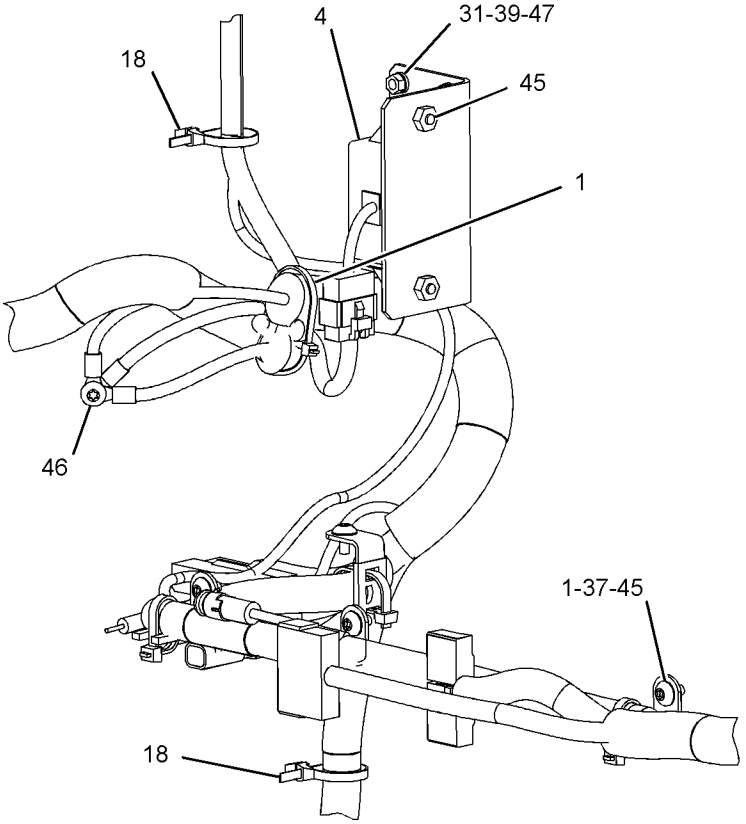

VIEW OF AREA B

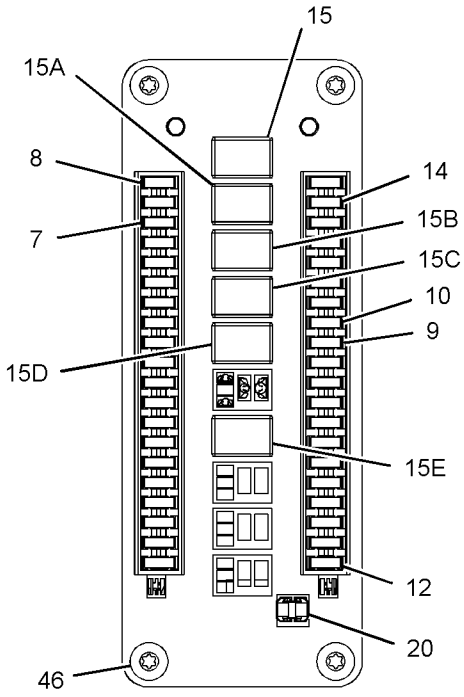

VIEW A-A

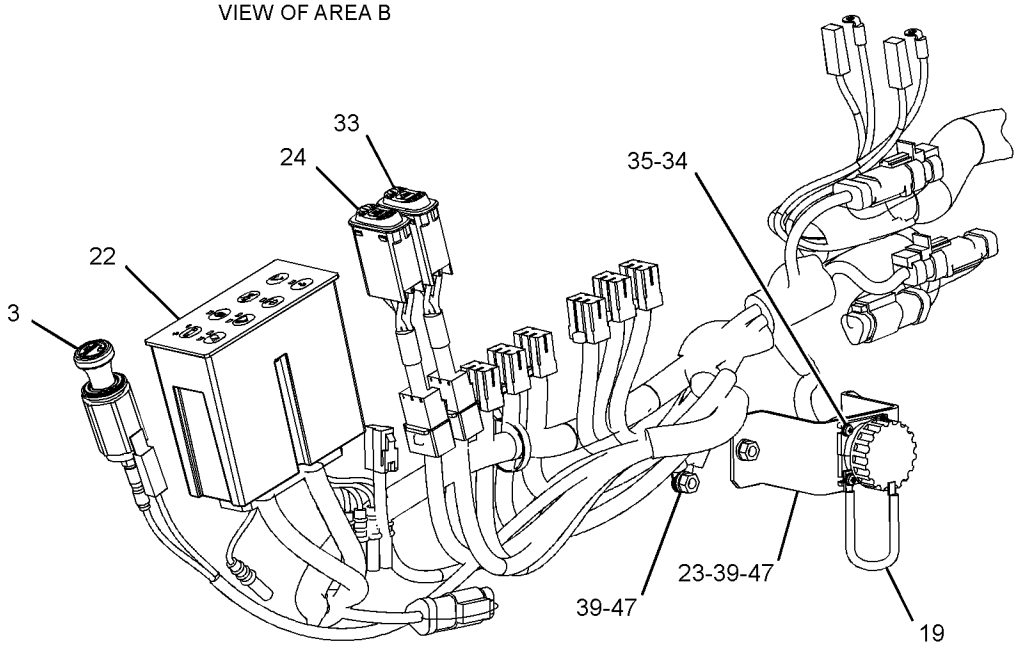

VIEW OF AREA C

GRAPHIC #3 g02477336

259-5161 **WIRING GP-CAB (**contd.**)** **i05190547**

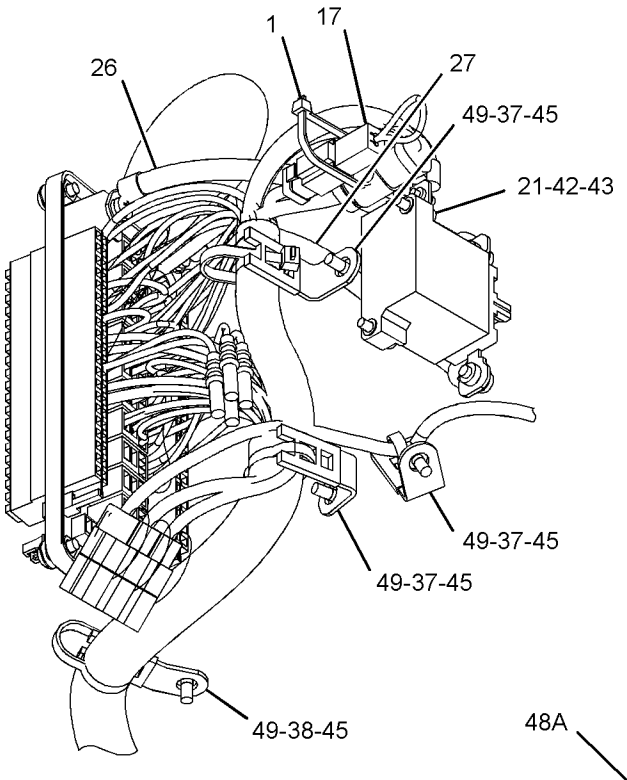

VIEW OF AREA D

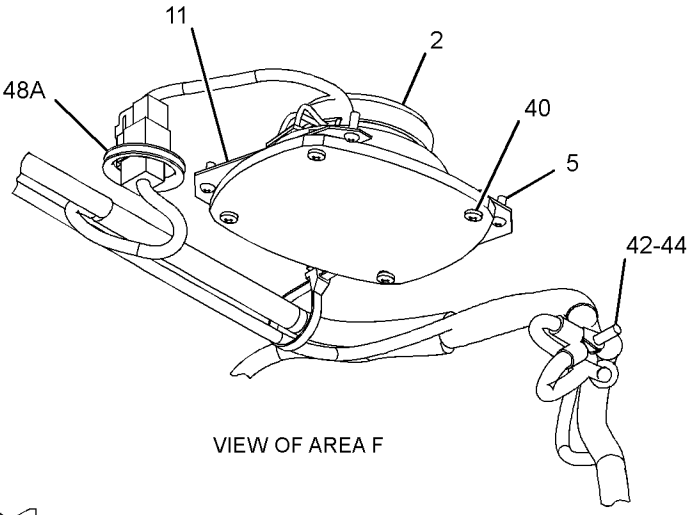

VIEW OF AREA F

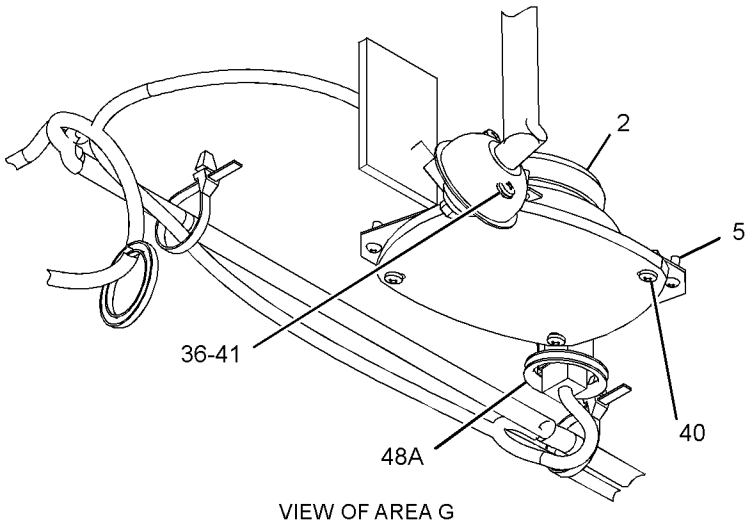

VIEW OF AREA G

GRAPHIC #4 <END> g02477352

328-0048 WIRING GP-CAB—WORK AREA VISUAL SYSTEM, REAR

S/N: DLP1-UP

PART OF 330-8749 CAMERA & WIRING GP

AN ATTACHMENT

SMCS-1408, 7301

i04934037

NOTE	REF NO	GRAPHIC REF	PART NUMBER	QTY	PART NAME 1 2 3 4 5 6 (PRODUCT LEVEL)	SEE PAGE
	1	1	**3S-2093**	13	STRAP-CABLE	
	2	1	**7K-1181**	16	STRAP-CABLE	
	3	1	**306-8590**	1	HARNESS AS-WIRING (WORK AREA VISUAL SYSTEM, REAR)	
	4	1	**327-9998**	1	HARNESS AS-AUXILIARY (WORK AREA VISUAL SYSTEM, REAR)	
		1	**3S-2093**	1	STRAP-CABLE	
		1	**7Y-3962**	1	TERMINAL-BULLET (MALE)	
		1	**7Y-3963**	2	TERMINAL-BULLET (FEMALE)	
BE		1	**125-7875**		TUBE-HEAT SHRINK (7.44-MM DIA)	

B - USE AS REQUIRED
E - ORDER BY THE CENTIMETER

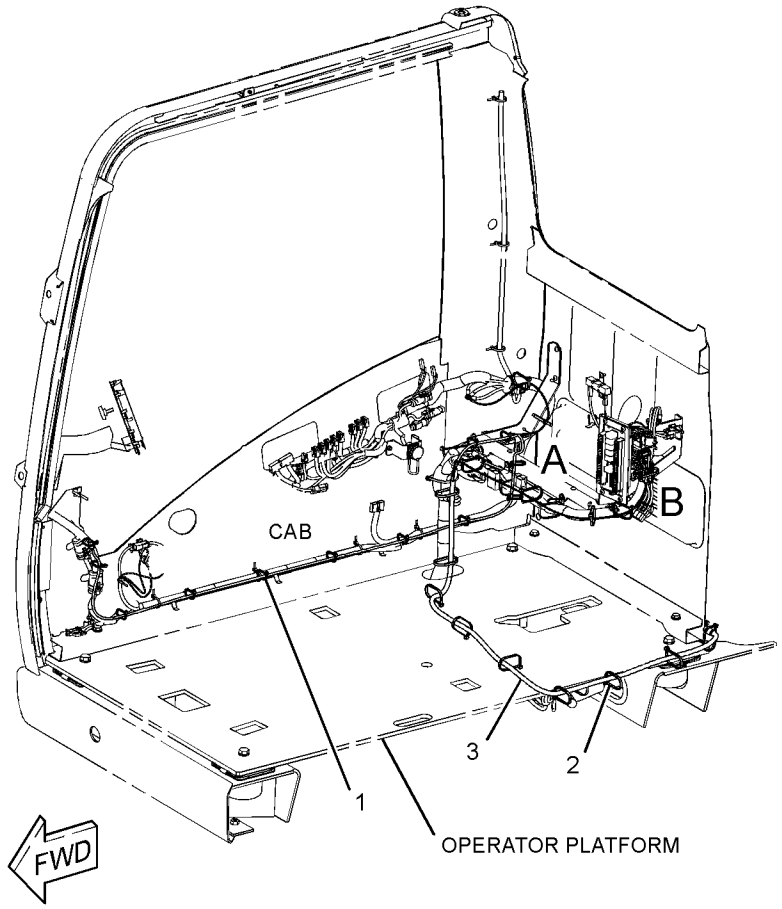

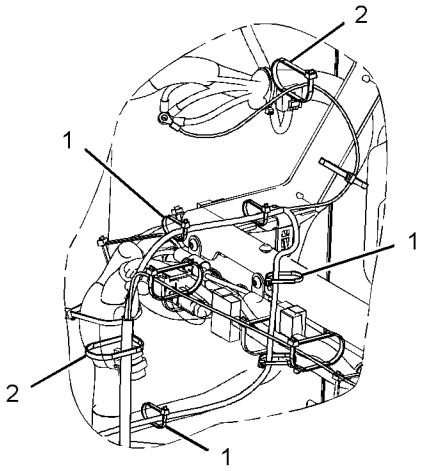

VIEW OF AREA A

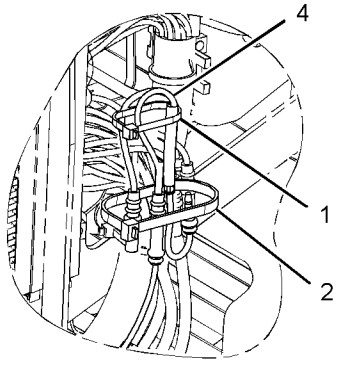

VIEW OF AREA B

GRAPHIC #1

<END>

g01609106

328-0079 WIRING GP-CAMERA—WORK AREA VISUAL SYSTEM, REAR

S/N: DLP1-UP

PART OF 330-8749 CAMERA & WIRING GP

AN ATTACHMENT

SMCS-1408, 7348

i05190734

NOTE	REF NO	GRAPHIC REF	PART NUMBER	QTY	PART NAME 1 2 3 4 5 6 (PRODUCT LEVEL)	SEE PAGE
	1	1	**3S-2093**	17	STRAP-CABLE	
	2	1	**7K-1181**	6	STRAP-CABLE	
	3	1	**093-2064**	1	GROMMET	
	4	1	**111-4836**	1	CLIP	
	5	1	**251-8248**	1	CABLE AS-COMMUNICATION	
	6	1	**8T-4121**	1	WASHER-HARD (11X21X2.5-MM THK)	
M	7	1	**8T-4137**	1	BOLT (M10X1.5X20-MM)	
E	8	1	**7I-8272**		GUARD (5-CM)	

E - ORDER BY THE CENTIMETER
M - METRIC PART

328-0079 **WIRING GP-CAMERA (**contd.**)** **i05190734**

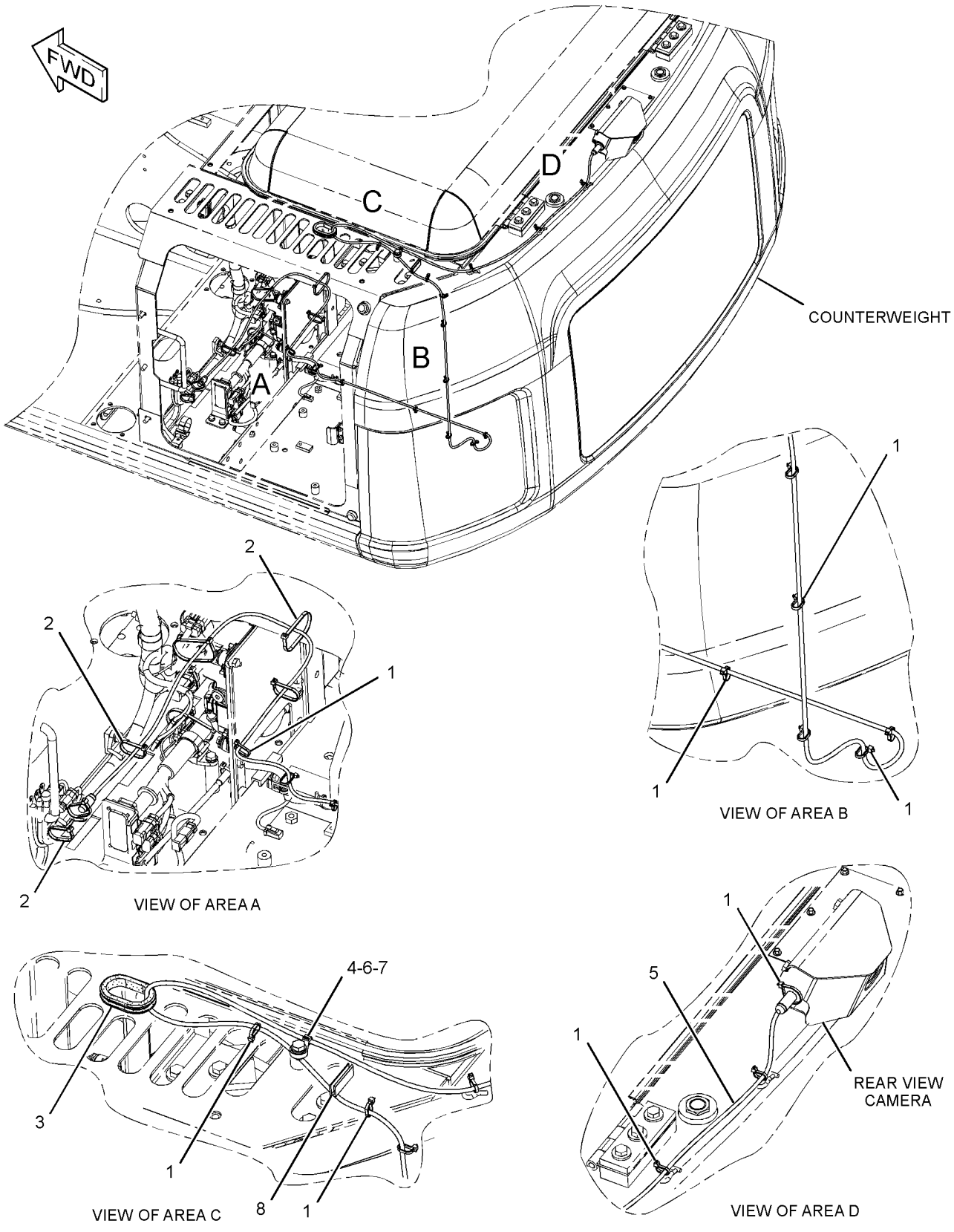

GRAPHIC #1 <END> g01621270

283-2761 WIRING GP-COMMUNICATION

S/N: DLP1-UP

PART OF 336-3346 OPTION AR-CAB, 351-9714, 359-2252 OPTION AR-REGIONAL AN ATTACHMENT

SMCS-1408 **i03939592**

NOTE	REF NO	GRAPHIC REF	PART NUMBER	QTY	PART NAME 1 2 3 4 5 6 (PRODUCT LEVEL)	SEE PAGE
	1	1	**3S-2093**	3	STRAP-CABLE	
	2	1	**4I-7889**	1	SPACER (11X25X45-MM THK)	
	3	1	**7K-1181**	10	STRAP-CABLE	
	4	1	**116-0118**	1	CLIP	
	5	1	**149-5050**	1	RELAY (24-VOLT) (GPS)	
	6	1	**283-2762**	1	HARNESS AS-CONTROL	
M	7	1	**5C-2890**	1	NUT (M6X1-THD)	
M	8	1	**8T-5005**	1	BOLT (M10X1.5X70-MM)	
	9	1	**9X-8256**	1	WASHER (6.6X12X2-MM THK)	

M - METRIC PART

283-2761 **WIRING GP-COMMUNICATION (**contd.**)** **i03939592**

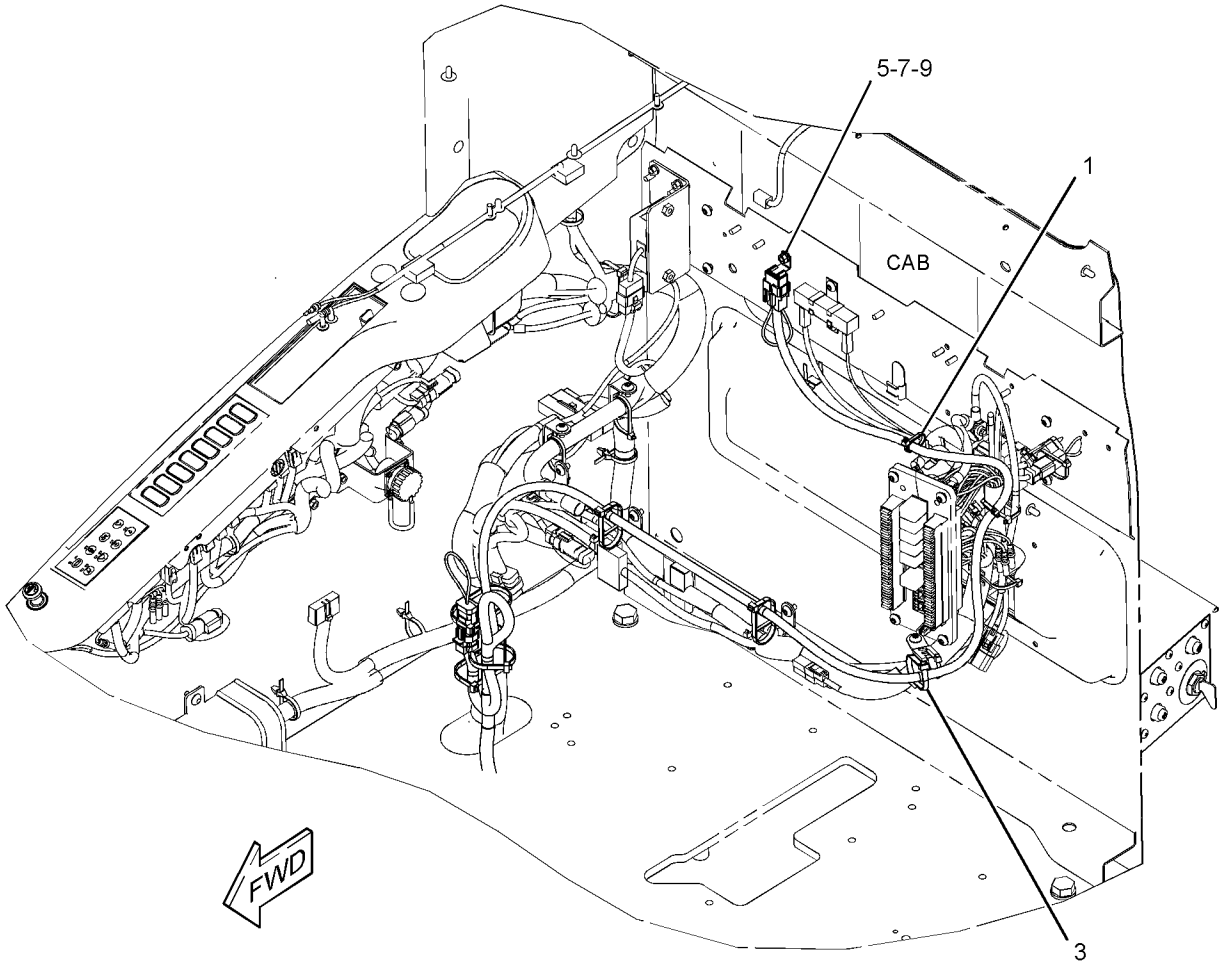

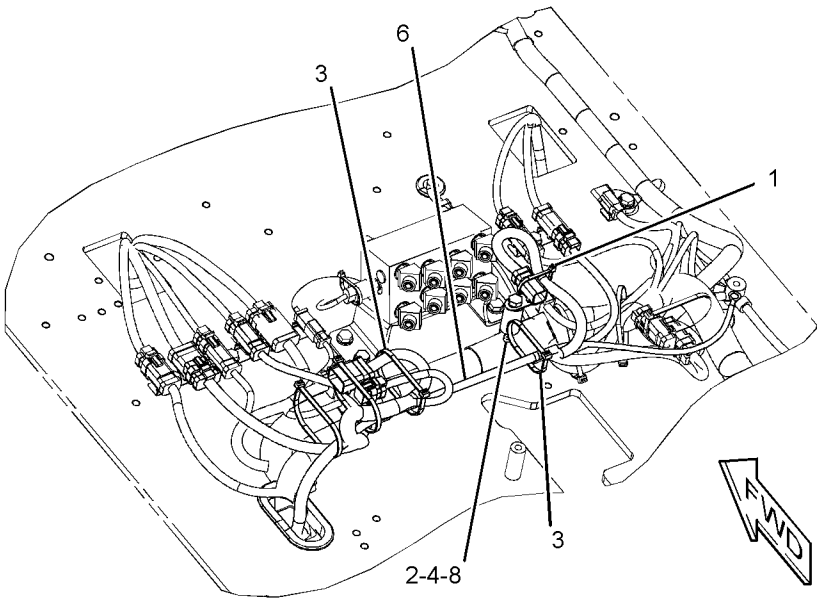

GRAPHIC #1 <END> g01571474

366-9348 WIRING GP-COMMUNICATION–PRODUCT LINK 522

S/N: DLP1-UP
CHINA
PART OF 367-8780 CONTROL AR-COMMUNICATION
AN ATTACHMENT

SMCS-1408 **i05229013**

NOTE	REF NO	GRAPHIC REF	PART NUMBER	QTY	PART NAME 1 2 3 4 5 6 (PRODUCT LEVEL)	SEE PAGE
	1	1	**4I-7889**	1	SPACER (11X25X45-MM THK)	
	2	1	**7K-1181**	1	STRAP-CABLE	
	3	1	**116-0118**	1	CLIP	
Y	4	1	**373-8965**	1	HARNESS AS-CONTROL (PRODUCT LINK)	197
	5	1	**111-4837**	1	CLIP	
	6	1	**132-5789**	1	CLIP (LADDER)	
	7	1	**8T-4121**	2	WASHER-HARD (11X21X2.5-MM THK)	
M	8	1	**8T-4136**	1	BOLT (M10X1.5X25-MM)	
M	9	1	**8T-4191**	1	BOLT (M10X1.5X16-MM)	
M	10	1	**8T-5005**	1	BOLT (M10X1.5X70-MM)	

M - METRIC PART
Y - SEPARATE ILLUSTRATION

366-9348 **WIRING GP-COMMUNICATION (**contd.**)** **i05229013**

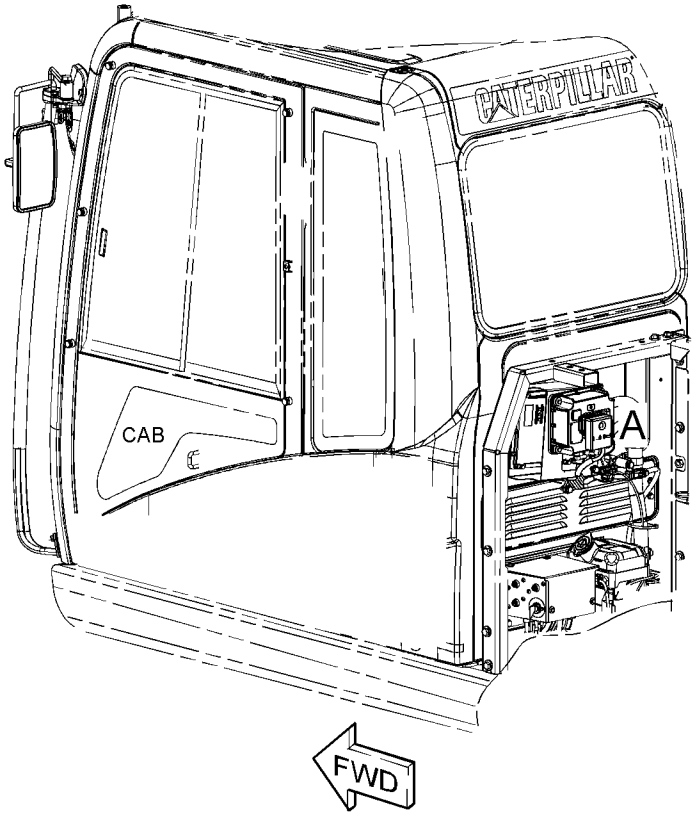

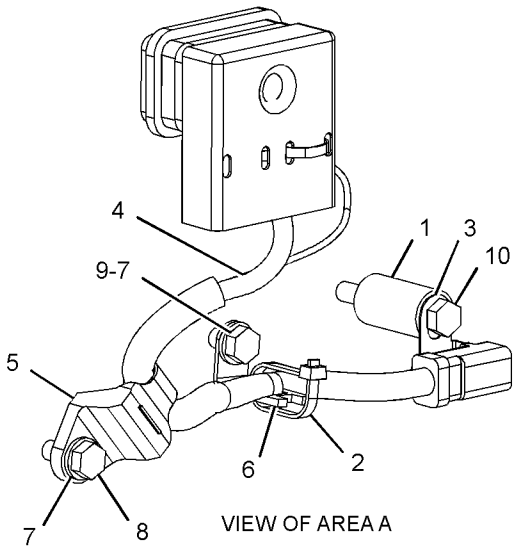

VIEW OF AREA A

GRAPHIC #1 <END> g02681736

369-0033 WIRING GP-COMMUNICATION–PRODUCT LINK

S/N: DLP1-UP

PART OF 359-2483, 379-7090 OPTION AR-REGIONAL

AN ATTACHMENT

SMCS-1408 **i04651167**

NOTE	REF NO	GRAPHIC REF	PART NUMBER	QTY	PART NAME 1 2 3 4 5 6 (PRODUCT LEVEL)	SEE PAGE
	1	1	**3S-2093**	11	STRAP-CABLE	
	2	1	**7K-1181**	14	STRAP-CABLE	
	3	1	**369-0032**	1	HARNESS AS-CONTROL (PRODUCT LINK)	
		1	**102-8802**	1	KIT-RECEPTACLE (2-PIN)	
		1	**102-8803**	1	KIT-RECEPTACLE (3-PIN)	
		1	**102-8801**	1	KIT-RECEPTACLE (12-PIN)	
					(EACH RECEPTACLE KIT INCLUDES RECEPTACLE AS & WEDGE)	
		1	**8T-8729**	2	PIN-CONNECTOR (16-GA TO 18-GA)	
		1	**3S-2093**	2	STRAP-CABLE	
		1	**8T-8737**	10	PLUG-SEAL	
		1	**9W-0852**	2	PIN-CONNECTOR (14-GA TO 16-GA)	
		1	**9W-0844**	2	SOCKET-CONNECTOR (14-GA TO 16-GA)	
E		1	**119-3662**		TUBE-HEAT SHRINK (10.85-MM DIA) (7-CM)	
E		1	**125-7874**		TUBE-HEAT SHRINK (5.72-MM DIA) (15-CM)	
E		1	**125-7875**		TUBE-HEAT SHRINK (7.44-MM DIA) (10-CM)	
		1	**9X-3402**	15	SOCKET-CONNECTOR (16-GA TO 18-GA)	
		1	**2L-8077**	1	TERMINAL-RING (14-GA TO 16-GA, 1/4-IN SCREW)	
		1	**176-9299**	1	KIT-RECEPTACLE (3-PIN)	
					(INCLUDES RECEPTACLE AS & WEDGE)	
		1	**9X-3401**	5	PIN-CONNECTOR (16-GA TO 18-GA)	
		1	**155-2255**	1	KIT-CONNECTING PLUG (12-PIN)	
		1	**155-2270**	2	KIT-CONNECTING PLUG (2-PIN)	
		1	**155-2271**	1	KIT-CONNECTING PLUG (4-PIN)	
		1	**174-0503**	1	KIT-CONNECTING PLUG (3-PIN)	
		1	**155-2260**	1	KIT-CONNECTING PLUG (3-PIN)	
					(EACH PLUG KIT INCLUDES PLUG AS, WEDGE & INTERFACE SEAL)	
		1	**174-3016**	1	PLUG AS-CONNECTOR (3-PIN)	
		1	**197-4385**	1	DIODE	
		1	**243-4508**	1	RECEPTACLE AS-CONNECTOR (6-PIN)	
		1	**155-2258**	1	WEDGE-PLUG LOCK (12-PIN)	

E - ORDER BY THE CENTIMETER

369-0033 **WIRING GP-COMMUNICATION (**contd.**)** **i04651167**

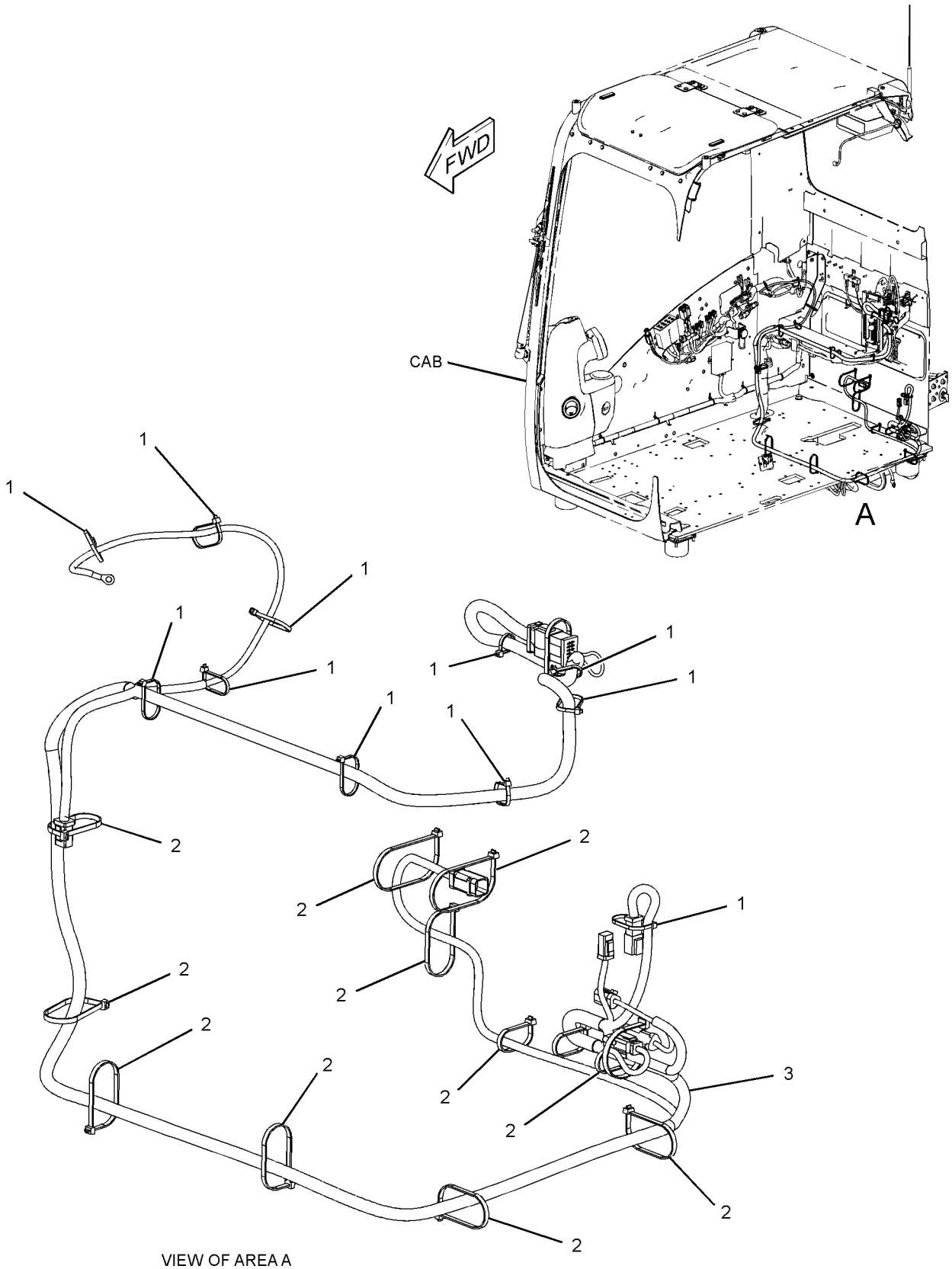

VIEW OF AREA A

GRAPHIC #1 <END> g02800830

231-1836 WIRING GP-CONSOLE—LH

S/N: DLP1-UP

PART OF 251-0433 WIRING GP-CONSOLE

SMCS-1408 **i04913377**

NOTE	REF NO	GRAPHIC REF	PART NUMBER	QTY	PART NAME 1 2 3 4 5 6 (PRODUCT LEVEL)	SEE PAGE
	1	1	**3S-2093**	2	STRAP-CABLE	
	2	1	**7K-1181**	1	STRAP-CABLE	
	3	1	**163-6795**	2	STRAP-CABLE	
	4	1	**251-0580**	1	HARNESS AS-CONSOLE	
		1	**8T-8729**	4	PIN-CONNECTOR (16-GA TO 18-GA)	
		1	**8T-8730**	3	SOCKET-CONNECTOR (16-GA TO 18-GA)	
		1	**3S-2093**	9	STRAP-CABLE	
D		1	**5P-5995**		TUBE (0.3-M)	
		1	**7Y-3963**	2	TERMINAL-BULLET (FEMALE)	
		1	**7Y-3965**	2	TUBE (RECEPTACLE TERMINAL)	
		1	**8T-8737**	9	PLUG-SEAL	
		1	**9W-0852**	2	PIN-CONNECTOR (14-GA TO 16-GA)	
		1	**9W-0844**	2	SOCKET-CONNECTOR (14-GA TO 16-GA)	
E		1	**125-7874**		TUBE-HEAT SHRINK (5.72-MM DIA) (5-CM)	
E		1	**125-7875**		TUBE-HEAT SHRINK (7.44-MM DIA) (5-CM)	
		1	**9X-3402**	11	SOCKET-CONNECTOR (16-GA TO 18-GA)	
					—OR—	
		1	**126-1768**	11	SOCKET-CONNECTOR (14-GA TO 16-GA)	
		1	**155-2260**	1	KIT-CONNECTING PLUG (3-PIN)	
					(INCLUDES PLUG AS, WEDGE & INTERFACE SEAL)	
		1	**230-4011**	1	PLUG AS-CONNECTOR (2-PIN)	
		1	**264-7029**	1	SEAL-CONNECTOR	
		1	**230-5010**	1	PLUG AS-CONNECTOR (6-PIN)	
		1	**264-7032**	1	SEAL-CONNECTOR	
		1	**239-7352**	1	PLUG AS-CONNECTOR (6-PIN)	
		1	**264-7032**	1	SEAL-CONNECTOR	
		1	**243-4505**	1	RECEPTACLE AS-CONNECTOR (2-PIN)	
		1	**243-4508**	1	RECEPTACLE AS-CONNECTOR (6-PIN)	
		1	**247-2693**	1	RECEPTACLE AS-CONNECTOR (6-PIN)	

D - ORDER BY THE METER
E - ORDER BY THE CENTIMETER

231-1836 **WIRING GP-CONSOLE (**contd.**)** **i04913377**

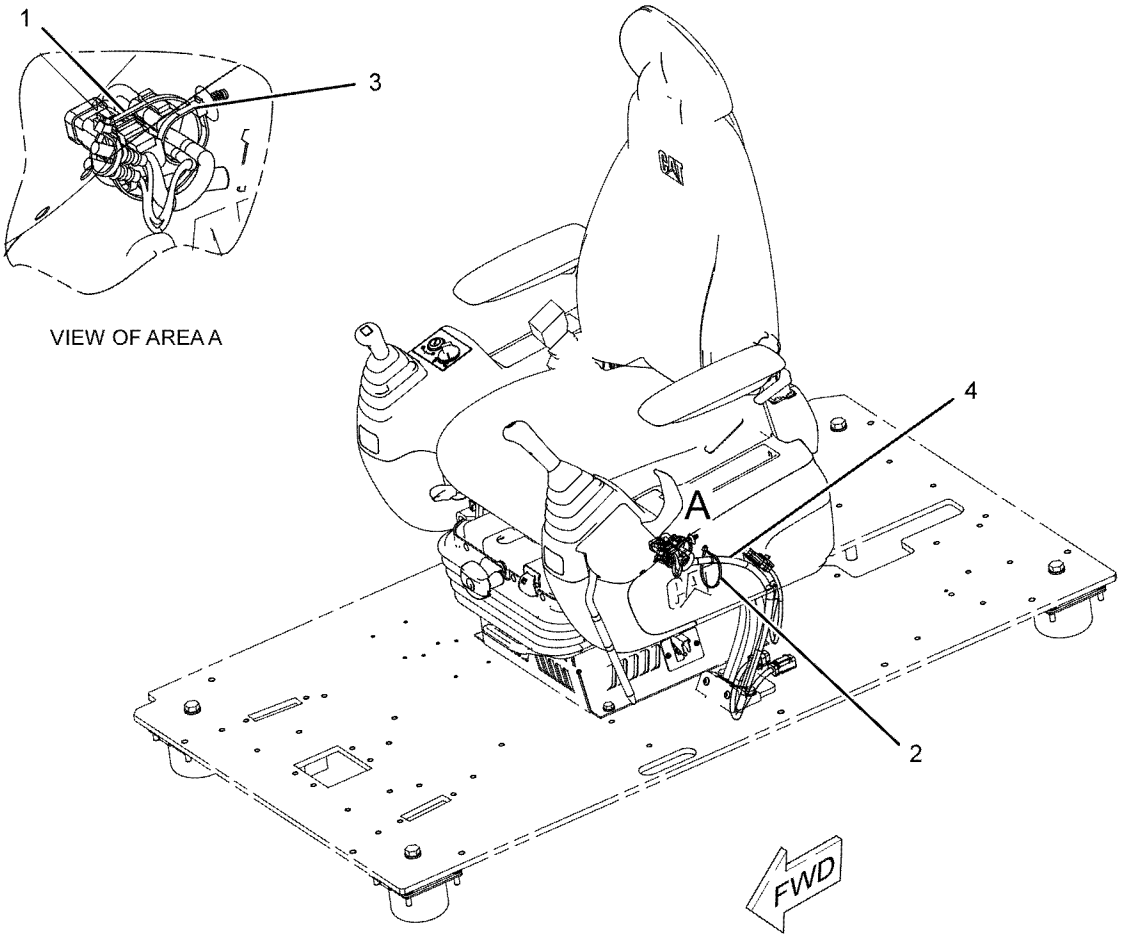

GRAPHIC #1 <END> g01150799

251-0433 WIRING GP-CONSOLE

S/N: DLP1-UP

PART OF 273-5363, 340-6773, 383-5596 OPERATOR AR

SMCS-1408 **i02706845**

NOTE	PART NUMBER	QTY	PART NAME 1 2 3 4 5 6 (PRODUCT LEVEL)	SEE PAGE
Y	*231-1836*	1	WIRING GP-CONSOLE (LH)	293
Y	*251-0435*	1	WIRING GP-CONSOLE (RH)	296

Y - SEPARATE ILLUSTRATION

<END>

251-0435 WIRING GP-CONSOLE—RH

S/N: DLP1-UP

PART OF 251-0433 WIRING GP-CONSOLE

SMCS-1408 **i03948425**

NOTE	REF NO	GRAPHIC REF	PART NUMBER	QTY	PART NAME 1 2 3 4 5 6 (PRODUCT LEVEL)	SEE PAGE
	1	1	**3S-2093**	5	STRAP-CABLE	
	2	1	**7K-1181**	2	STRAP-CABLE	
	3	1	**283-3074**	1	SWITCH AS-TOGGLE (AUTO/MANUAL ENG SPEED CONTROL)	
	4	1	**163-6711**	1	SWITCH AS-TOGGLE (MANUAL ENGINE SPEED CONTROL)	
	5	1	**163-6795**	2	STRAP-CABLE	
	6	1	**251-0602**	1	BRACKET	
	7	1	**259-4877**	1	HARNESS AS-CONSOLE	
		1	**102-8806**	1	KIT-RECEPTACLE (8-PIN)	
					(INCLUDES RECEPTACLE AS & WEDGE)	
		1	**3S-2093**	10	STRAP-CABLE	
		1	**7Y-3967**	2	TERMINAL AS	
					(EACH INCLUDES)	
		1	**7Y-3963**	1	TERMINAL-BULLET (FEMALE)	
		1	**7Y-3965**	1	TUBE (RECEPTACLE TERMINAL)	
		1	**102-7964**	1	PLUG-CONNECTOR (16-PIN)	
		1	**102-7965**	14	TERMINAL (FEMALE)	
E		1	**125-7874**		TUBE-HEAT SHRINK (5.72-MM DIA) (10-CM)	
E		1	**125-7875**		TUBE-HEAT SHRINK (7.44-MM DIA) (10-CM)	
		1	**155-2265**	1	KIT-CONNECTING PLUG (8-PIN)	
					(INCLUDES PLUG AS, WEDGE & INTERFACE SEAL)	
		1	**9X-3401**	2	PIN-CONNECTOR (16-GA TO 18-GA)	
					—OR—	
		1	**126-1767**	2	PIN-CONNECTOR (14-GA TO 16-GA)	
		1	**230-4009**	1	PLUG AS-CONNECTOR (12-PIN)	
		1	**264-7034**	1	SEAL-CONNECTOR	
		1	**230-4011**	1	PLUG AS-CONNECTOR (2-PIN)	
		1	**264-7029**	1	SEAL-CONNECTOR	
		1	**230-5008**	1	PLUG AS-CONNECTOR (4-PIN)	
		1	**264-7031**	1	SEAL-CONNECTOR	
		1	**230-5010**	1	PLUG AS-CONNECTOR (6-PIN)	
		1	**264-7032**	1	SEAL-CONNECTOR	
		1	**231-2295**	1	PLUG AS-CONNECTOR (8-PIN)	
		1	**264-7033**	1	SEAL-CONNECTOR	
		1	**239-7352**	1	PLUG AS-CONNECTOR (6-PIN)	
		1	**264-7032**	1	SEAL-CONNECTOR	
		1	**243-4505**	1	RECEPTACLE AS-CONNECTOR (2-PIN)	
		1	**243-4510**	1	RECEPTACLE AS-CONNECTOR (12-PIN)	
		1	**247-2693**	1	RECEPTACLE AS-CONNECTOR (6-PIN)	
M	8	1	**9X-2042**	3	SCREW-TRUSS HEAD (M6X1X12-MM)	
E	9	1	**8C-5063**		CONDUIT-FLEXIBLE (15.49-MM ID, SPLIT) (10-CM)	

E - ORDER BY THE CENTIMETER
M - METRIC PART

251-0435 **WIRING GP-CONSOLE (**contd.**)** **i03948425**

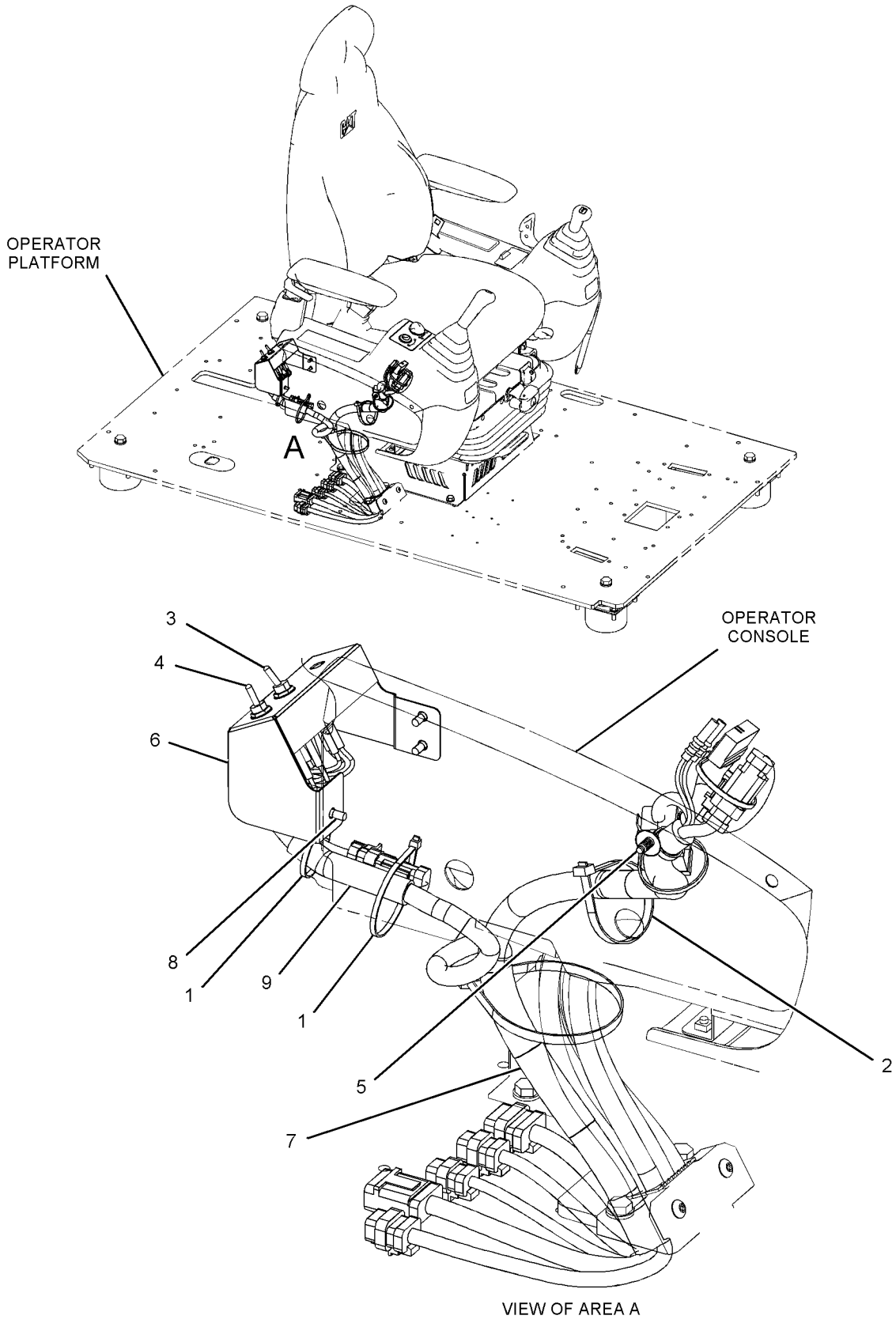

VIEW OF AREA A

GRAPHIC #1 <END> g02160266

275-7058 WIRING GP-CONTROL—AUXILIARY, COMBINED FUNCTION

S/N: DLP1-UP

PART OF 270-5846 CONTROL AR-AUXILIARY

AN ATTACHMENT

SMCS-1408 **i02865840**

NOTE	REF NO	GRAPHIC REF	PART NUMBER	QTY	PART NAME 1 2 3 4 5 6 (PRODUCT LEVEL)	SEE PAGE
	1	1,2	**3S-2093**	23	STRAP-CABLE	
	2	2	**7I-2673**	1	STRAP-CABLE	
	3	1,2	**7K-1181**	8	STRAP-CABLE	
	4	1	**111-4836**	3	CLIP	
	5	2	**116-0118**	2	CLIP	
	6	1	**283-2727**	1	HARNESS AS-VALVE	
	7	2	**4P-7428**	1	CLIP (LADDER)	
	8	1	**4P-7581**	1	CLIP (LADDER)	
M	9	2	**7X-2621**	1	BOLT (M10X1.5X12-MM)	
	10	1,2	**8T-4121**	5	WASHER-HARD (11X21X2.5-MM THK)	
M	11	1	**8T-4137**	4	BOLT (M10X1.5X20-MM)	

M - METRIC PART

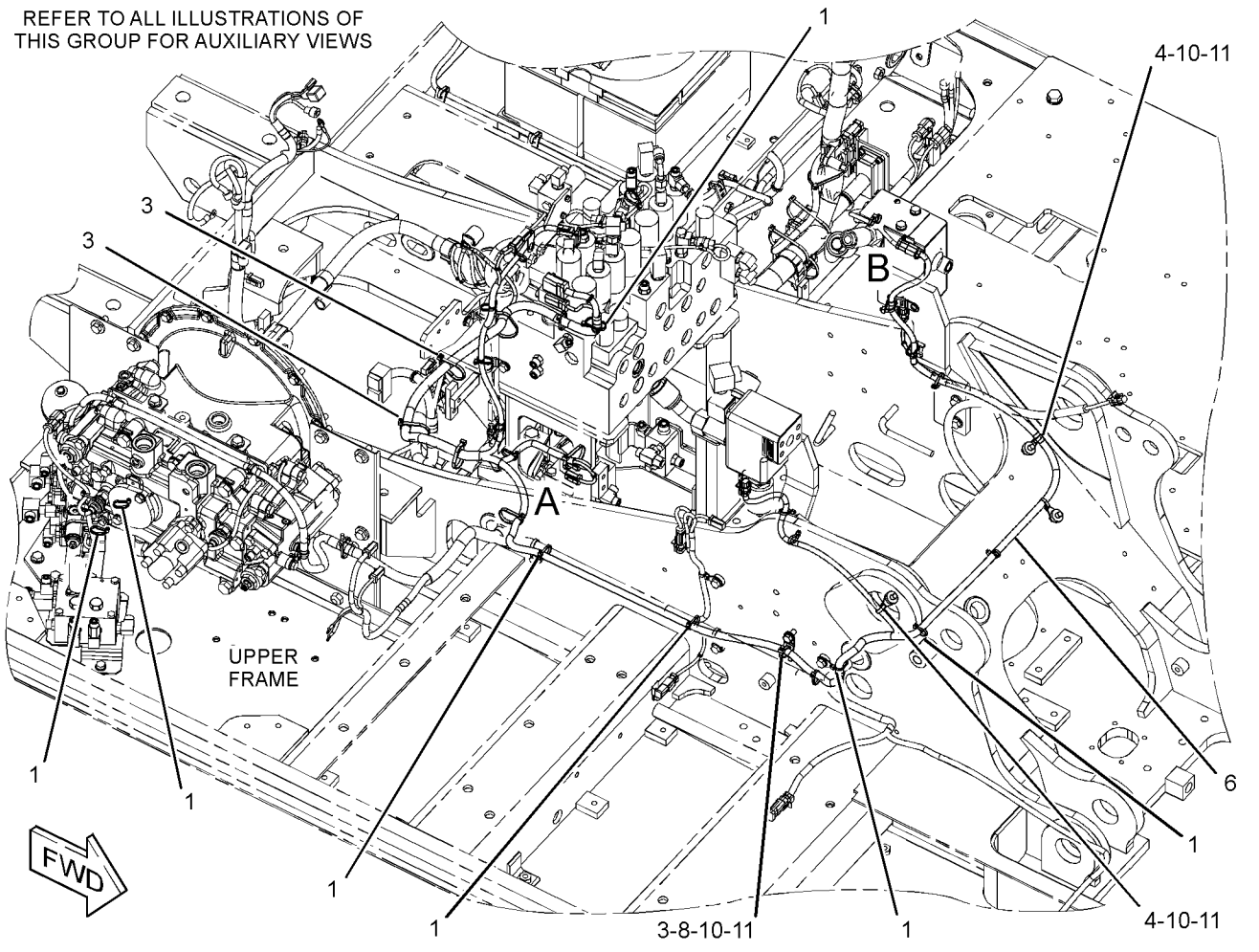

GRAPHIC #1 g01439134

275-7058 **WIRING GP-CONTROL (**contd.**)** **i02865840**

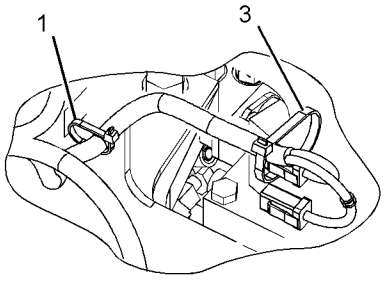

VIEW OF AREA A

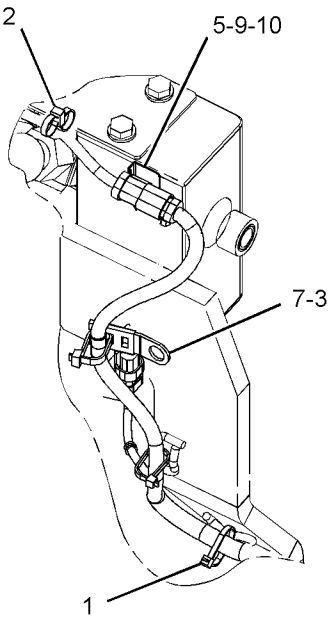

VIEW OF AREA B

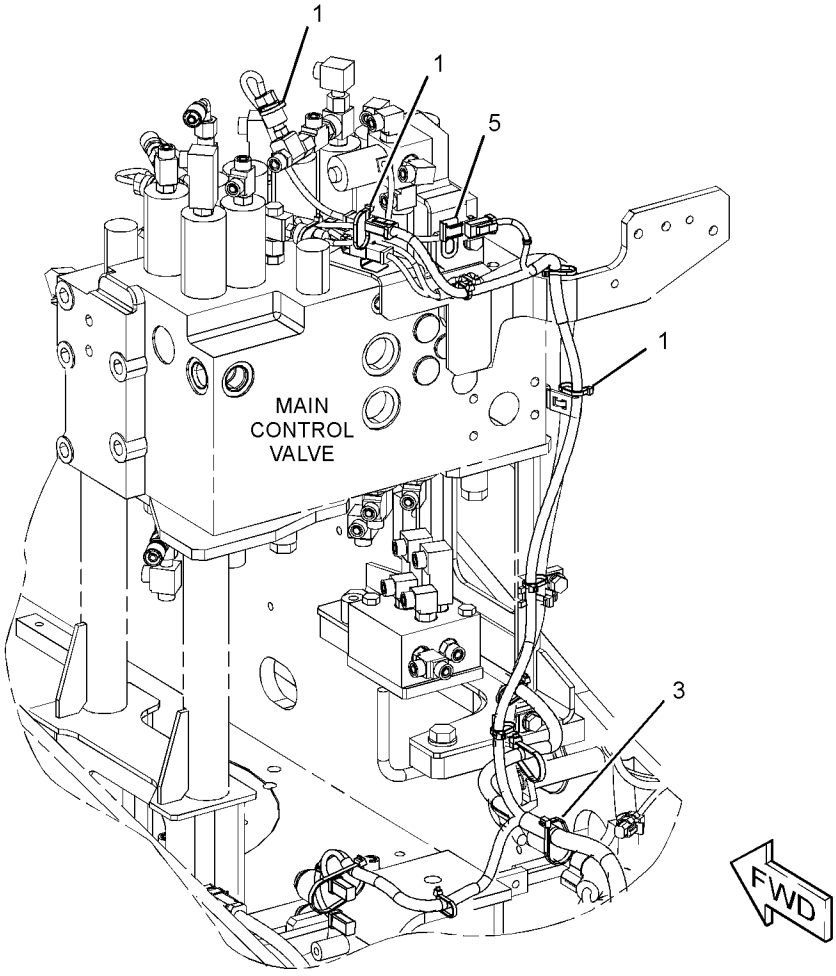

GRAPHIC #2 <END> g01439142

275-6883 WIRING GP-CONVERTER

S/N: DLP1-UP
12-VOLT, 7-AMPERE
PART OF 336-3345 DISTRIBUTION AR, 336-3346 OPTION AR-CAB, 351-9714 OPTION AR-REGIONAL
AN ATTACHMENT

SMCS-1421 **i03296372**

NOTE	REF NO	GRAPHIC REF	PART NUMBER	QTY	PART NAME 1 2 3 4 5 6 (PRODUCT LEVEL)	SEE PAGE
	1	1	**7K-1181**	2	STRAP-CABLE	
	2	1	**121-0987**	1	SOCKET-AUXILIARY POWER (12-VOLT, 7-AMPERE)	
	3	1	**275-7048**	1	BRACKET	
	4	1	**283-2783**	1	CONVERTER-POWER (24-VOLT TO 12-VOLT)	
	5	1	**8T-4121**	2	WASHER-HARD (11X21X2.5-MM THK)	
M	6	1	**8T-4136**	2	BOLT (M10X1.5X25-MM)	
M	7	1	**8T-4171**	4	BOLT (M6X1X12-MM)	
	8	1	**9X-8256**	4	WASHER (6.6X12X2-MM THK)	

M - METRIC PART

275-6883 **WIRING GP-CONVERTER (**contd.**)** **i03296372**

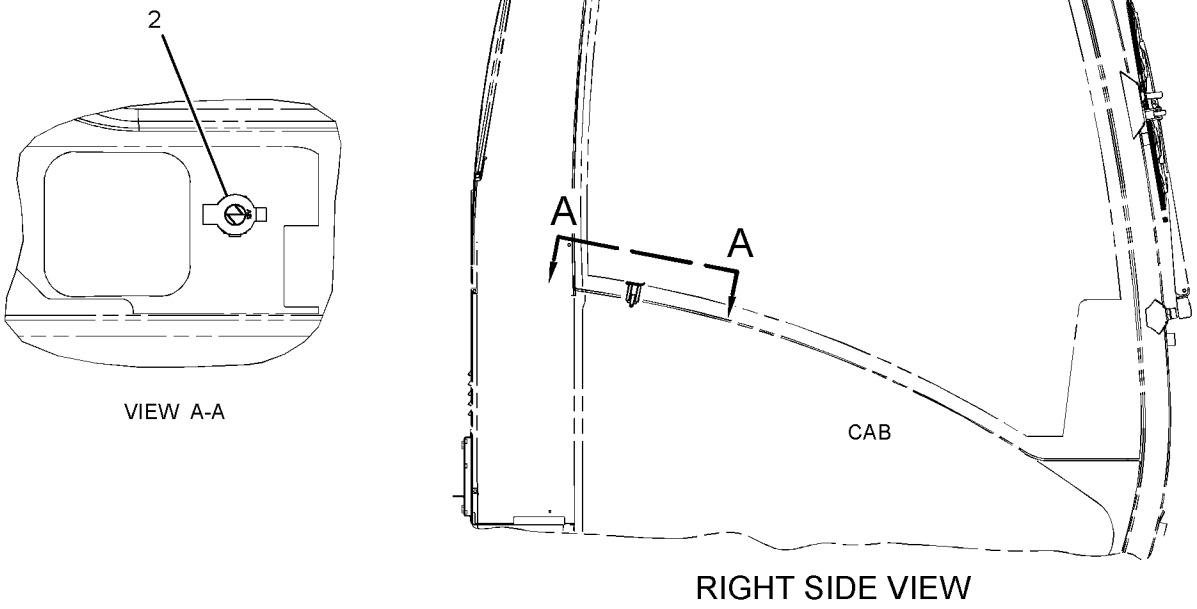

VIEW A-A

RIGHT SIDE VIEW

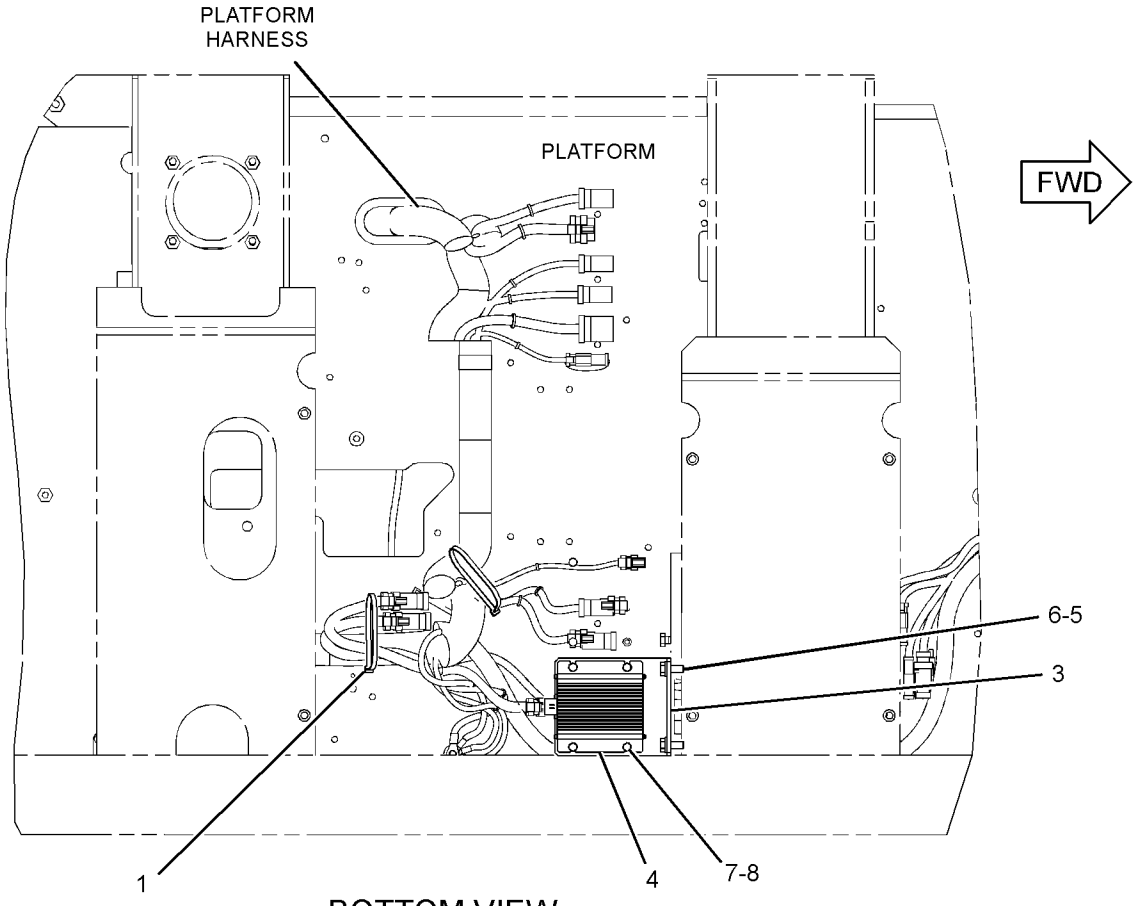

BOTTOM VIEW

GRAPHIC #1 <END> g01313257

350-8254 WIRING GP-CONVERTER

S/N: DLP1-UP
12-VOLT, 10-AMPERE
PART OF 359-2252 OPTION AR-REGIONAL
AN ATTACHMENT

SMCS-1421 **i06605041**

NOTE	REF NO	GRAPHIC REF	PART NUMBER	QTY	PART NAME 1 2 3 4 5 6 (PRODUCT LEVEL)	SEE PAGE
	1	1	**479-9396**	1	BRACKET	
	2	1	**475-2681**	1	CONVERTER-POWER (24-VOLT TO 12-VOLT)	
	3	1	**324-5771**	2	SOCKET-AUXILIARY POWER (12-VOLT)	
	4	1	**8T-4121**	2	WASHER-HARD (11X21X2.5-MM THK)	
M	5	1	**8T-4136**	2	BOLT (M10X1.5X25-MM)	
M	6	1	**8T-4138**	2	BOLT (M6X1X20-MM)	
	7	1	**9X-8256**	2	WASHER (6.6X12X2-MM THK)	

M - METRIC PART

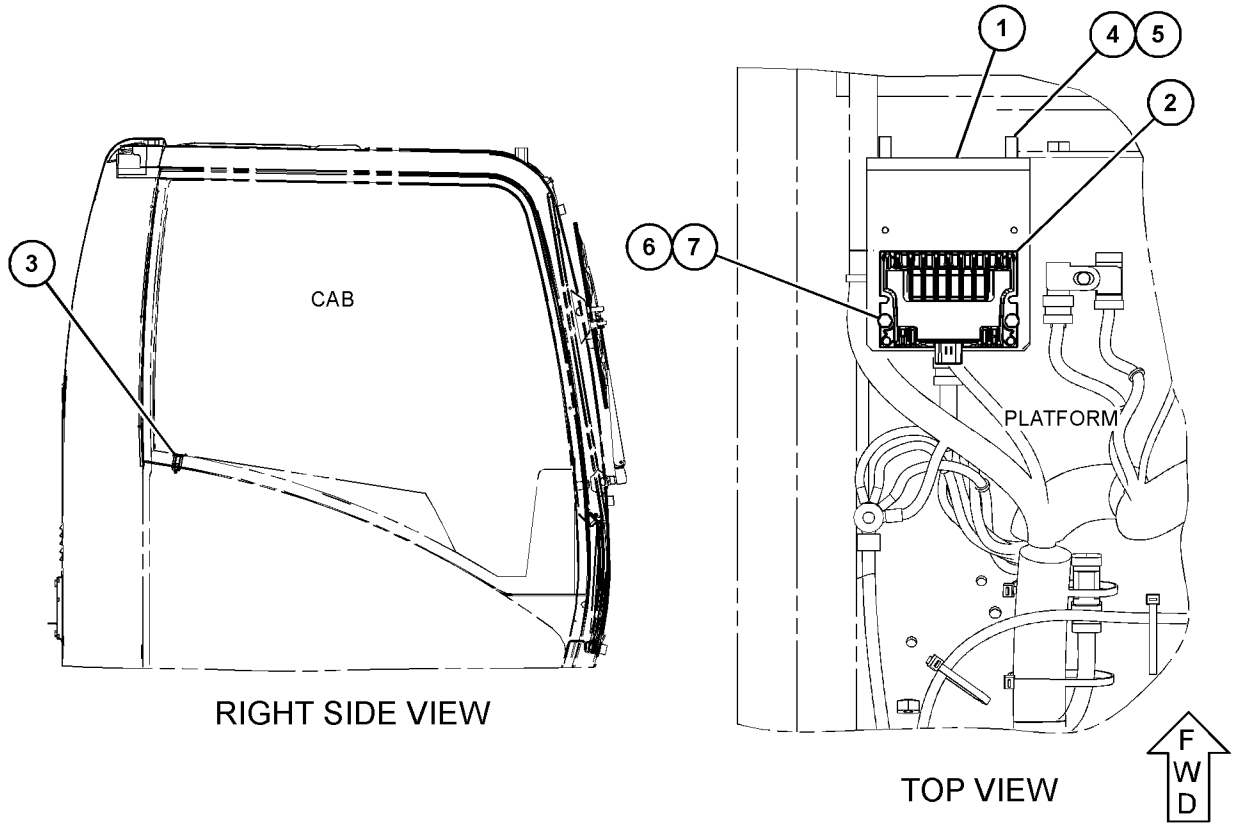

GRAPHIC #1 <END> g06104564

296-4801 WIRING GP-ELECTRONIC CONTROL

S/N: JKH1-UP
PART OF 279-7814 ENGINE AR
ALSO AN ATTACHMENT

SMCS-1408 **i03021485**

NOTE	REF NO	GRAPHIC REF	PART NUMBER	QTY	PART NAME 1 2 3 4 5 6 (PRODUCT LEVEL)	SEE PAGE
	1	1	**310-9688**	1	HARNESS AS-ENGINE	
	2	1	**296-4618**	1	SPACER	
	3	1	**296-4619**	1	CLIP	
	4	1	**099-4460**	1	BOLT	
	5	1	**096-2501**	1	LOCKWASHER	
	6	1	**8T-4223**	1	WASHER-HARD (13.5X25.5X3-MM THK)	
	7	1	**305-4891**	1	HARNESS AS-ENGINE (FUEL INJECTORS)	
	8	1,2	**305-4895**	15	STRAP-CABLE	
	9	1,2	**282-8567**	2	BOLT	
	10	1	**305-4898**	1	CLIP	
	11	1,2	**305-4896**	11	CLIP	
	12	1	**305-4897**	3	CLIP	
	13	1,2	**294-1768**	6	BOLT	
	14	1	**296-4766**	1	BRACKET	
Y	15	2	**223-7577**	1	SWITCH GP-MAGNETIC (AIR INLET HEATER RELAY)	260
	16	2	**296-4755**	1	CABLE	
	17	2	**296-4621**	2	BOLT (M8X1.25-THD)	

Y - SEPARATE ILLUSTRATION

296-4801 **WIRING GP-ELECTRONIC CONTROL (**contd.**)** **i03021485**

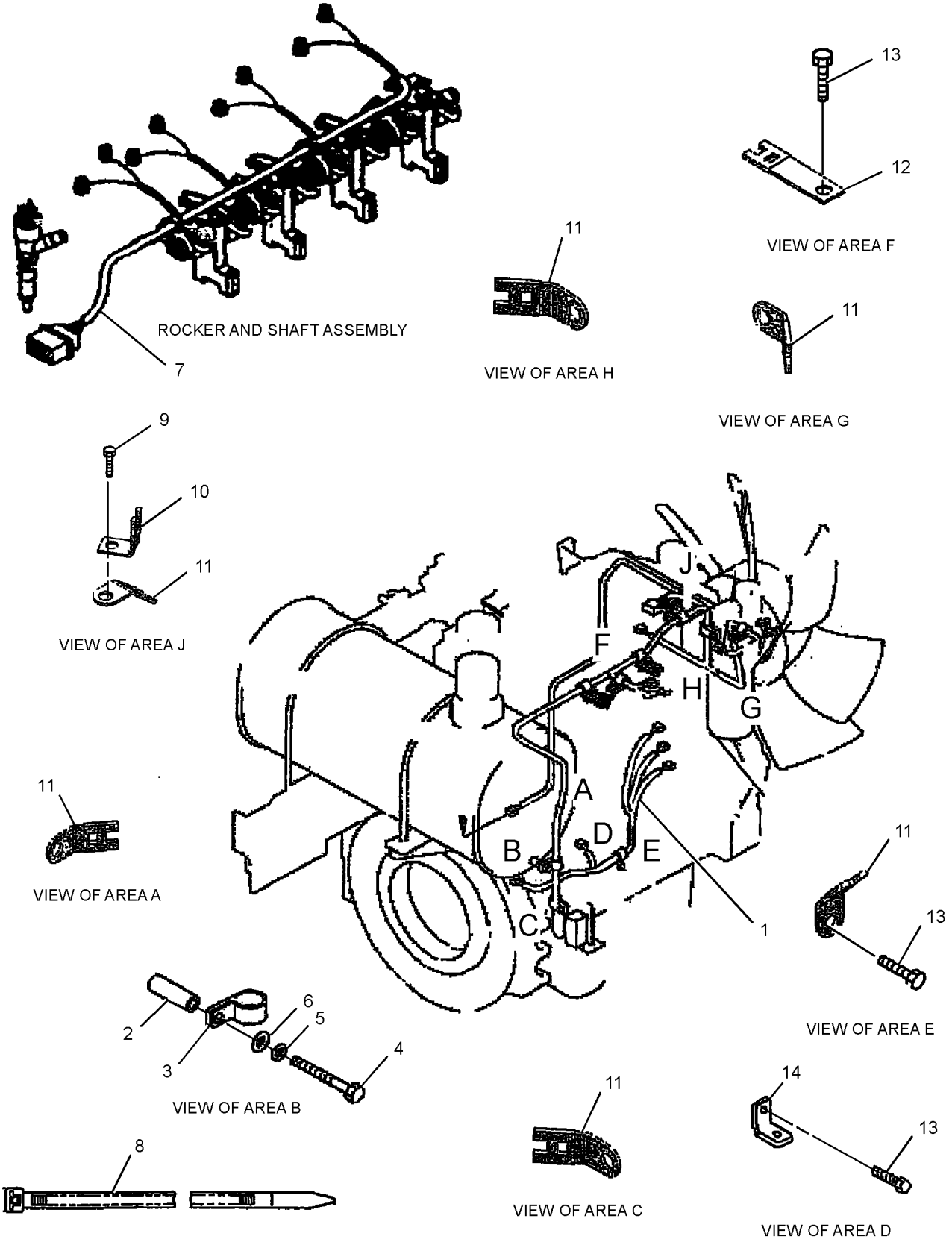

GRAPHIC #1 g01414753

296-4801 **WIRING GP-ELECTRONIC CONTROL (**contd.**)** **i03021485**

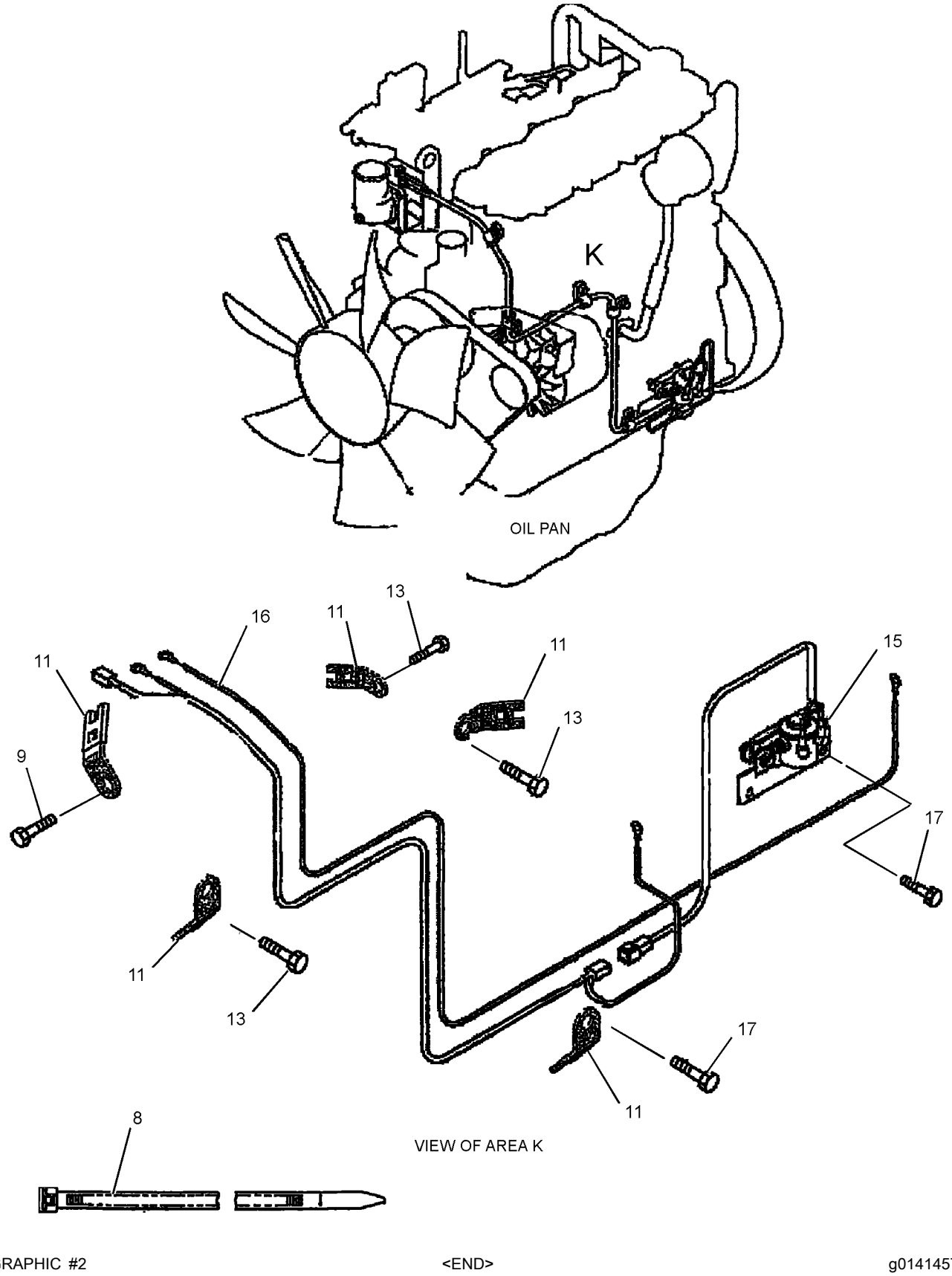

GRAPHIC #2 <END> g01414579

324-4202 WIRING GP-ELECTRONIC CONTROL

S/N: JKH1-UP
PART OF 279-7814, 420-2179 ENGINE AR
ALSO AN ATTACHMENT

SMCS-1408 **i03809510**

NOTE	REF NO	GRAPHIC REF	PART NUMBER	QTY	PART NAME 1 2 3 4 5 6 (PRODUCT LEVEL)	SEE PAGE
	1	1	**324-4203**	1	HARNESS AS-ENGINE	
	2	1	**296-4618**	1	SPACER	
	3	1	**296-4619**	1	CLIP	
	4	1	**099-4460**	1	BOLT	
	5	1	**096-2501**	1	LOCKWASHER	
	6	1	**8T-4223**	1	WASHER-HARD (13.5X25.5X3-MM THK)	
	7	1	**305-4891**	1	HARNESS AS-ENGINE (FUEL INJECTORS)	
	8	1	**305-4895**	15	STRAP-CABLE	
	9	1	**282-8567**	2	BOLT	
	10	1	**305-4898**	1	CLIP	
	11	1	**305-4896**	11	CLIP	
	12	1	**305-4897**	3	CLIP	
	13	1	**294-1768**	6	BOLT	
	14	1	**296-4766**	1	BRACKET	
	15	1	**324-4204**	1	BRACKET AS	
	16	1	**324-4205**	1	CABLE	
M	17	1	**7X-2536**	2	BOLT (M8X1.25X14-MM)	

M - METRIC PART

324-4202 **WIRING GP-ELECTRONIC CONTROL (**contd.**)** **i03809510**

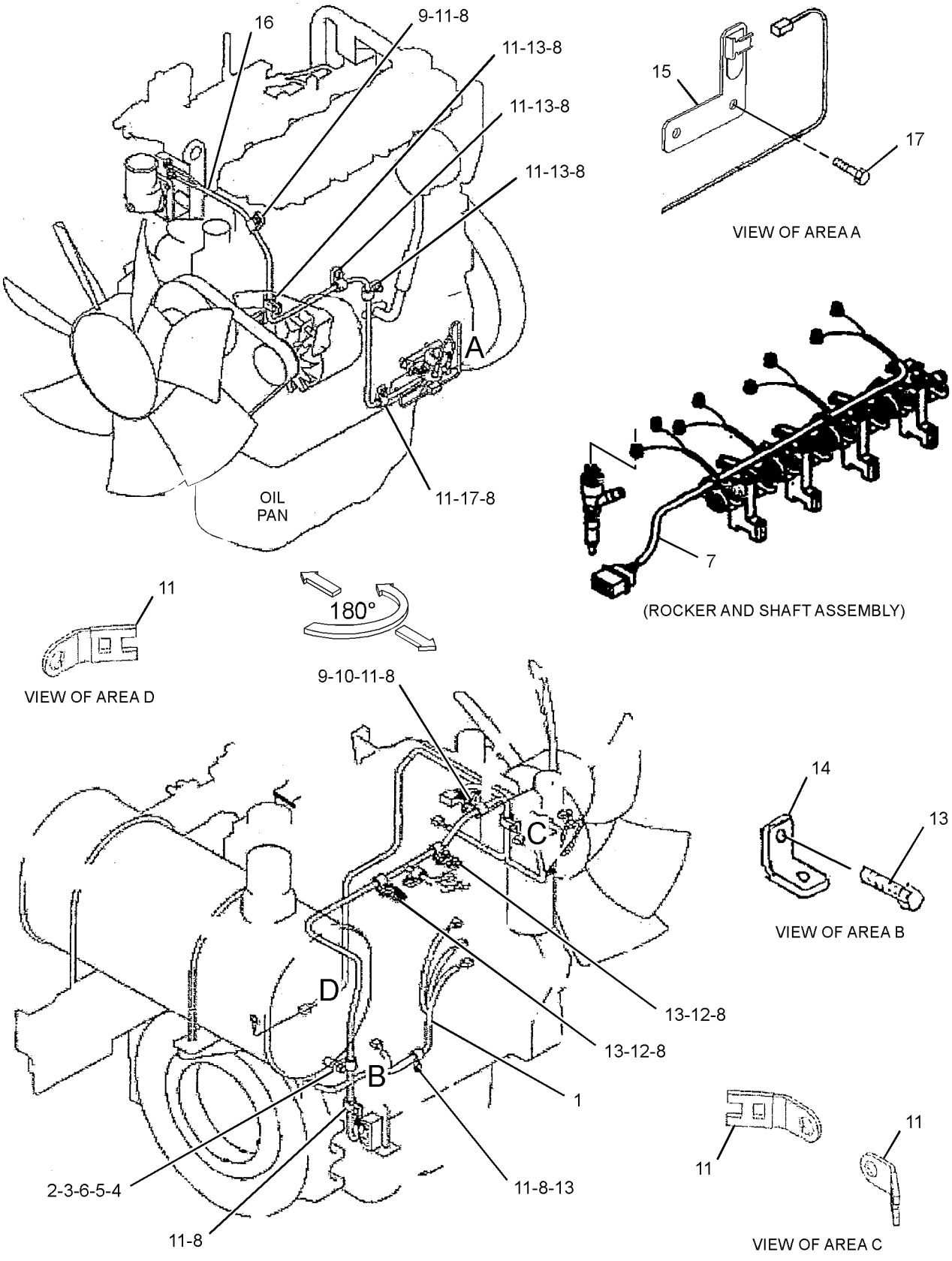

GRAPHIC #1 <END> g01994314

259-5175 WIRING GP-FUEL PUMP–REFUELING PUMP

S/N: DLP1-UP

PART OF 260-7131, 330-8781 PUMP AR-FUEL TRANSFER

AN ATTACHMENT

SMCS-1256, 1258, 1408 **i06750675**

NOTE	REF NO	GRAPHIC REF	PART NUMBER	QTY	PART NAME 1 2 3 4 5 6 (PRODUCT LEVEL)	SEE PAGE
	1	1	**3S-2093**	9	STRAP-CABLE	
C	2	1	**7K-1181**	14	STRAP-CABLE	
	3	1	**267-7707**	1	HARNESS AS-PUMP	
C	4	1	**319-1334**	1	HARNESS AS-WIRING	
	5	1	**4P-7428**	1	CLIP (LADDER)	

C - CHANGE FROM PREVIOUS TYPE

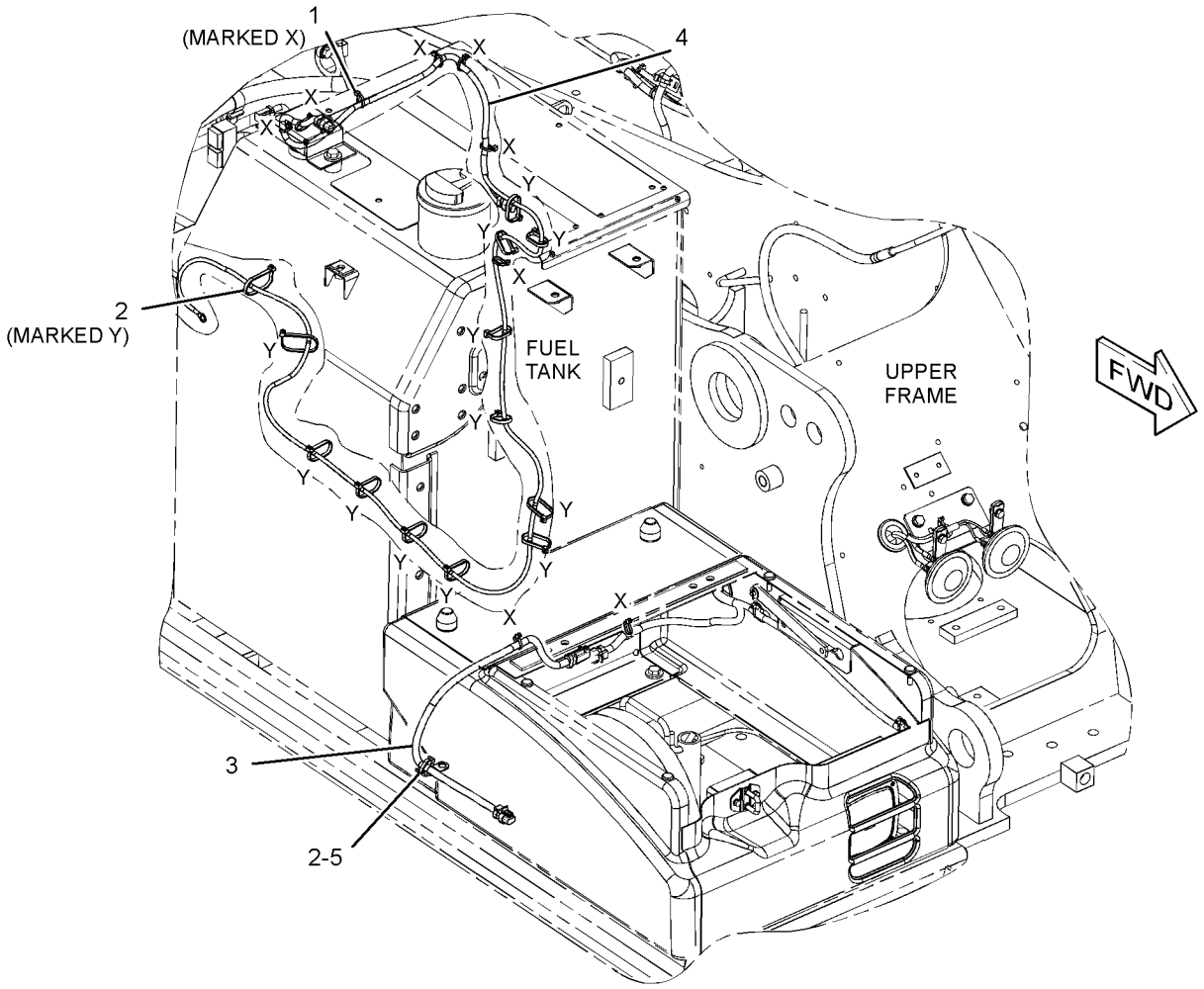

GRAPHIC #1 <END> g01621848

319-1398 WIRING GP-HEATER

S/N: DLP1-389

PART OF 301-2680 CHASSIS AR

SMCS-7304 **i02988385**

NOTE	REF NO	GRAPHIC REF	PART NUMBER	QTY	PART NAME 1 2 3 4 5 6 (PRODUCT LEVEL)	SEE PAGE
	1	1	**3S-2093**	4	STRAP-CABLE	
	2	1	**7K-1181**	20	STRAP-CABLE	
	3	1	**319-1348**	1	HARNESS AS-CONTROL (ENGINE START, PUMP CONTROL)	
	4	1	**319-1349**	1	CABLE AS	
D		1	**6V-2369**		CABLE (4-GA, BLACK) (2.9-M)	
		1	**8T-8799**	1	BOOT (RED)	
		1	**9G-4343**	1	TERMINAL-RING (4-GA, 1/4-IN SCREW)	
		1	**5P-3454**	1	TERMINAL-RING (4-GA, 5/16-IN SCREW)	

D - ORDER BY THE METER

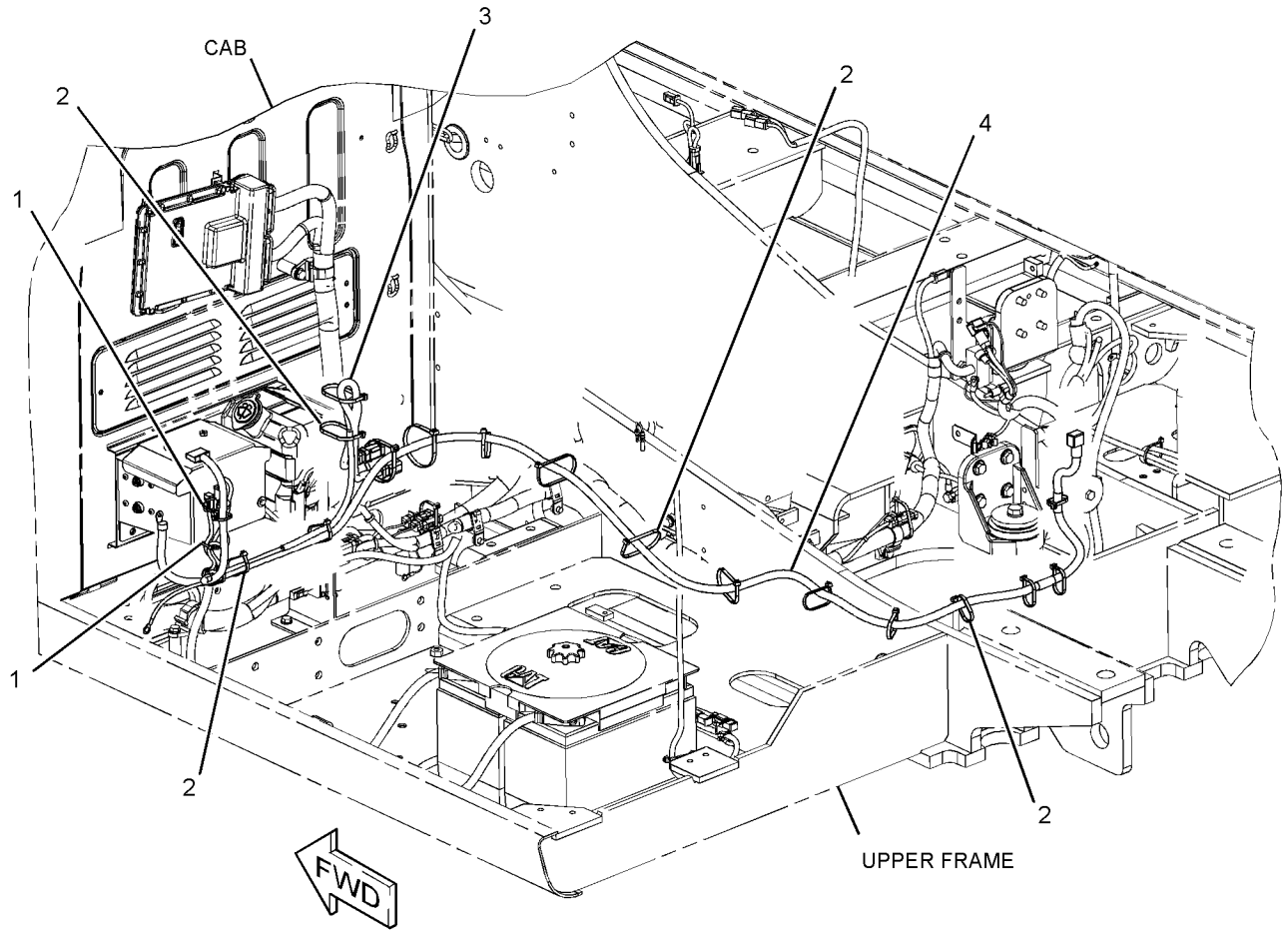

GRAPHIC #1 <END> g01560214

275-7062 WIRING GP-HYDRAULIC CONTROL–RETURN,FILTER

S/N: DLP1-UP
PART OF 260-7116 FILTER AR-HYDRAULIC
AN ATTACHMENT

SMCS-1408 **i02808530**

NOTE	REF NO	GRAPHIC REF	PART NUMBER	QTY	PART NAME 1 2 3 4 5 6 (PRODUCT LEVEL)	SEE PAGE
	1	1	**3S-2093**	3	STRAP-CABLE	
	2	1	**7K-1181**	7	STRAP-CABLE	
	3	1	**283-2730**	1	HARNESS AS-PUMP	
	4	1	**283-2739**	1	SHEET AS	

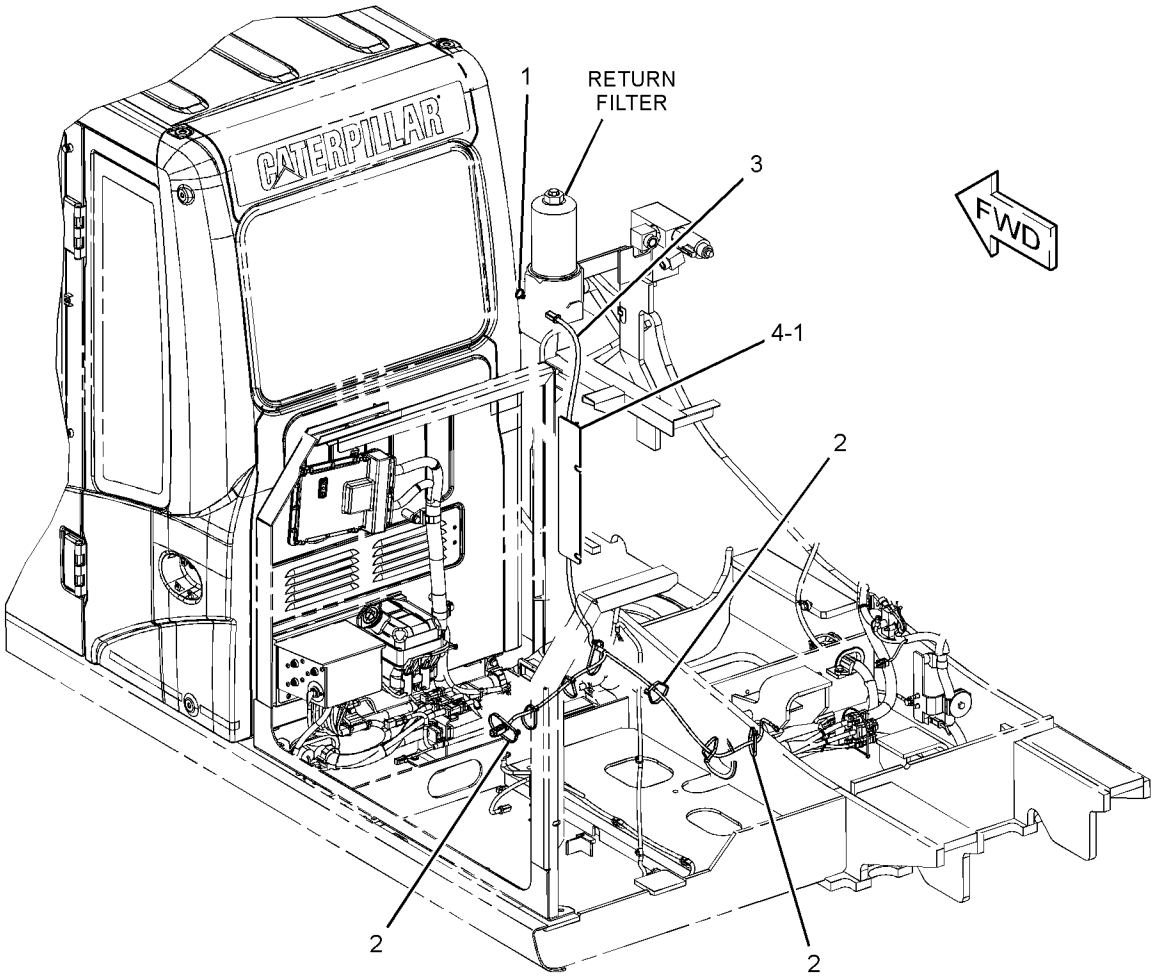

GRAPHIC #1 <END> g01409703

275-7060 WIRING GP-MEDIUM PRESSURE

S/N: DLP1-UP
PART OF 270-6119, 389-2433 CONTROL AR-AUXILIARY
AN ATTACHMENT

SMCS-1408 **i02944661**

NOTE	REF NO	GRAPHIC REF	PART NUMBER	QTY	PART NAME 1 2 3 4 5 6 (PRODUCT LEVEL)	SEE PAGE
	1	1	**3S-2093**	4	STRAP-CABLE	
	2	1	**7K-1181**	9	STRAP-CABLE	
	3	1	**116-0118**	2	CLIP	
	4	1	**283-2728**	1	HARNESS AS-VALVE	
	5	1	**132-5789**	2	CLIP (LADDER)	
	6	1	**6G-2263**	3	SPACER (10.5X19X28.5-MM THK)	
	7	1	**8T-4121**	4	WASHER-HARD (11X21X2.5-MM THK)	
M	8	1	**8T-4182**	2	BOLT (M10X1.5X45-MM)	
M	9	1	**8T-4186**	1	BOLT (M10X1.5X40-MM)	
	10	1	**4P-7581**	1	CLIP (LADDER)	
M	11	1	**8T-4137**	1	BOLT (M10X1.5X20-MM)	

M - METRIC PART

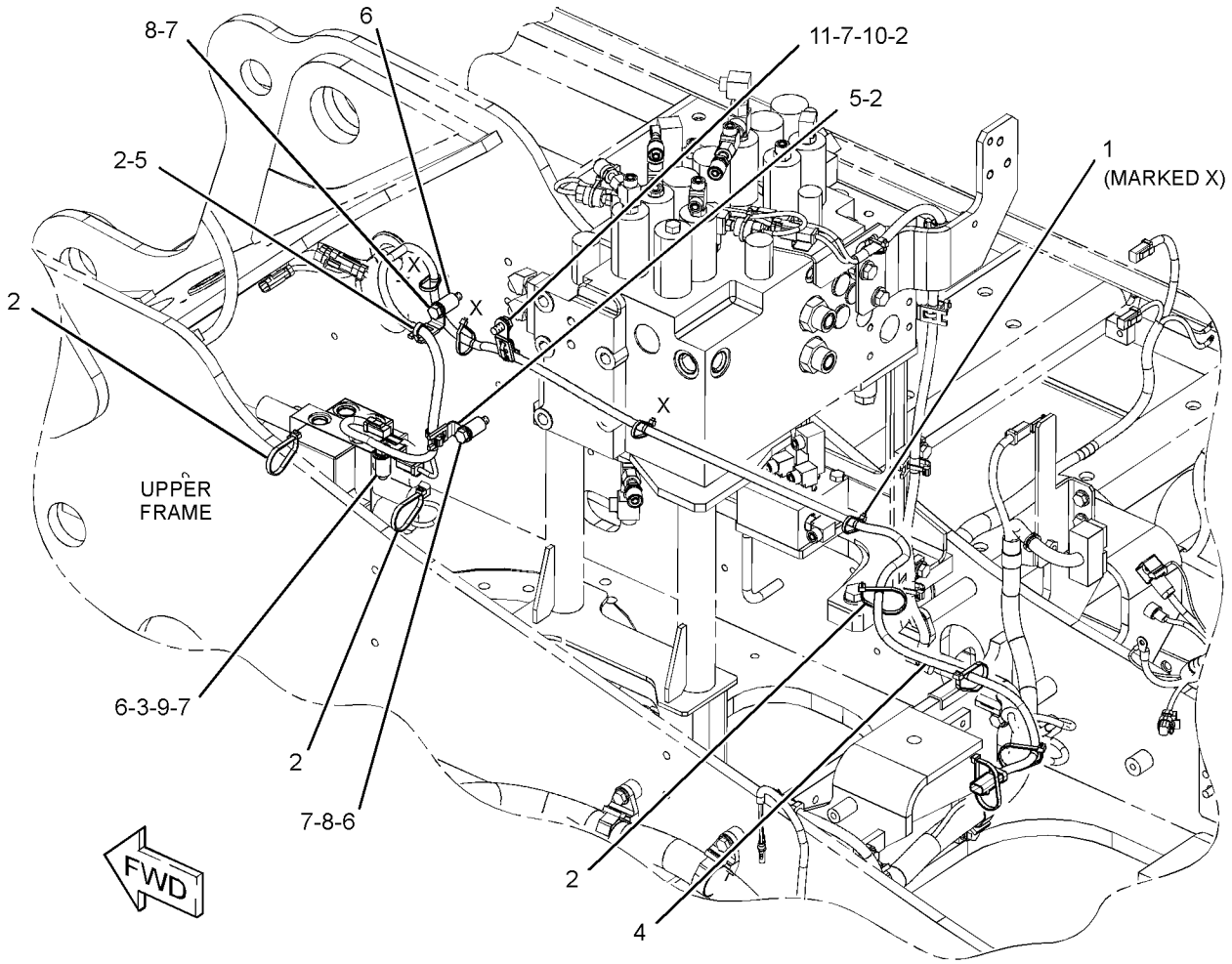

GRAPHIC #1 <END> g01519554

275-7061 WIRING GP-MEDIUM PRESSURE

S/N: DLP1-UP

PART OF 270-5859, 457-9316 CONTROL AR-AUXILIARY

AN ATTACHMENT

SMCS-1408 **i02844353**

NOTE	REF NO	GRAPHIC REF	PART NUMBER	QTY	PART NAME 1 2 3 4 5 6 (PRODUCT LEVEL)	SEE PAGE
	1	1	**7K-1181**	5	STRAP-CABLE	
	2	1	**283-2729**	1	HARNESS AS-VALVE	
	3	1	**132-5789**	1	CLIP (LADDER)	

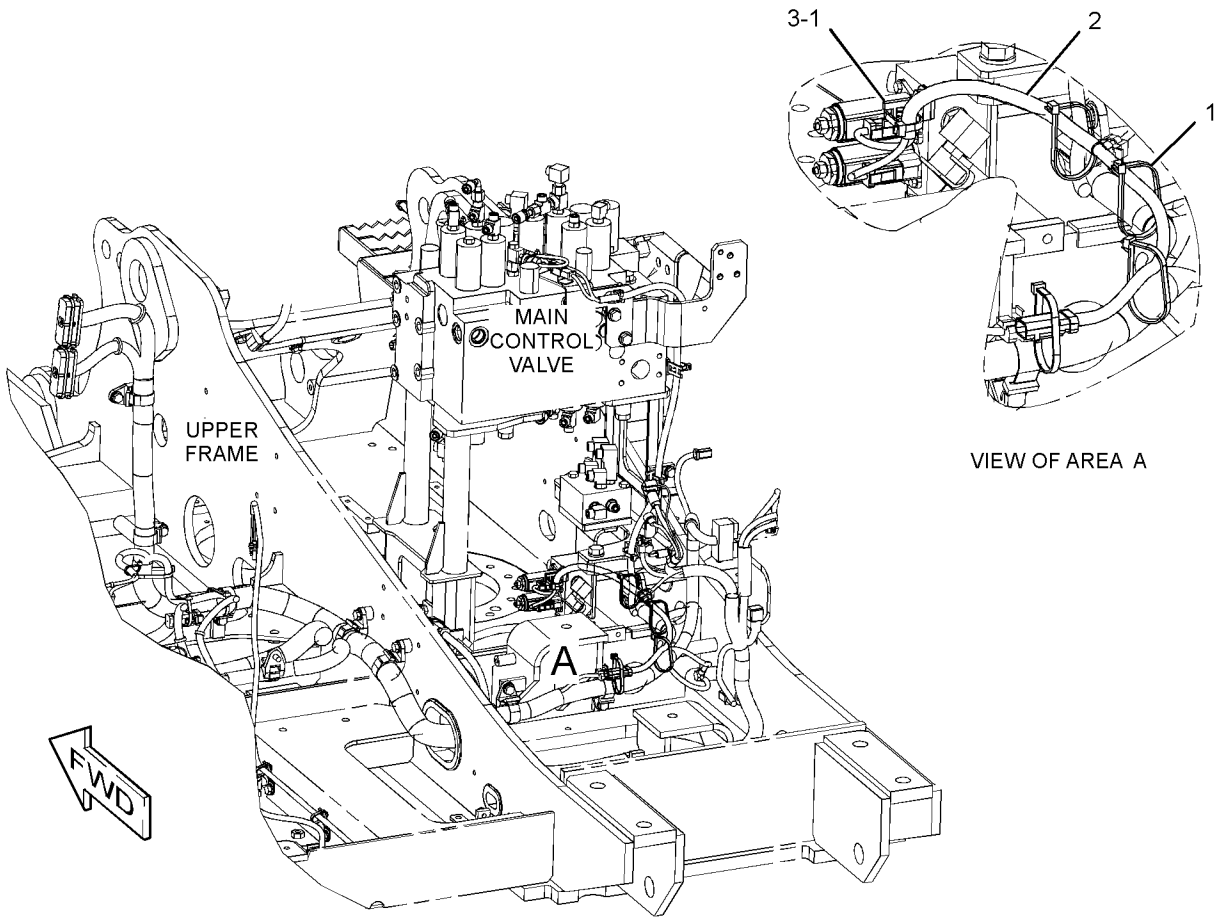

GRAPHIC #1 <END> g01440171

275-7051 WIRING GP-PLATFORM

S/N: DLP1-UP

PART OF 273-5363, 340-6773, 383-5596 OPERATOR AR

SMCS-1408 **i02864029**

NOTE	REF NO	GRAPHIC REF	PART NUMBER	QTY	PART NAME 1 2 3 4 5 6 (PRODUCT LEVEL)	SEE PAGE
	1	1	**3E-5169**	1	GUARD-SWITCH	
	2	1	**3S-2093**	3	STRAP-CABLE	
	3	1	**7G-1060**	1	STRAP AS-GROUND	
	4	1,2	**7K-1181**	12	STRAP-CABLE	
	5	1	**111-4836**	4	CLIP	
	6	1	**111-4837**	1	CLIP	
	7	1	**111-4838**	2	CLIP	
	8	1	**111-4839**	2	STRAP	
	9	1	**116-0118**	12	CLIP	
	10	1	**199-7854**	1	SPACER (11.8X20X45-MM THK)	
	11	1	**234-1122**	1	COVER	
	12	1	**251-0299**	1	HARNESS AS-SWITCH (SECONDARY SHUTDOWN)	
	13	2	**275-6810**	1	RECEPTACLE AS	
		2	**134-3297**	1	SEAL	
		2	**163-6773**	1	PLUG-SEAL	
	14	1	**275-7104**	1	HARNESS AS-PLATFORM	
M	15	1	**8T-0337**	2	SCREW-MACHINE (M4X0.7X12-MM)	
	16	1	**096-6166**	2	WASHER-HARD (4.5X9X1-MM THK)	
	17	1	**4D-1836**	1	SWITCH-TOGGLE (SECONDARY SHUTDOWN)	
M	18	1	**7X-2621**	4	BOLT (M10X1.5X12-MM)	
	19	1	**8T-4121**	13	WASHER-HARD (11X21X2.5-MM THK)	
M	20	1	**8T-4137**	7	BOLT (M10X1.5X20-MM)	
M	21	1	**8T-4195**	1	BOLT (M10X1.5X30-MM)	
M	22	1	**8T-6466**	1	BOLT (M10X1.5X60-MM)	

M - METRIC PART

275-7051 **WIRING GP-PLATFORM (**contd.**)** **i02864029**

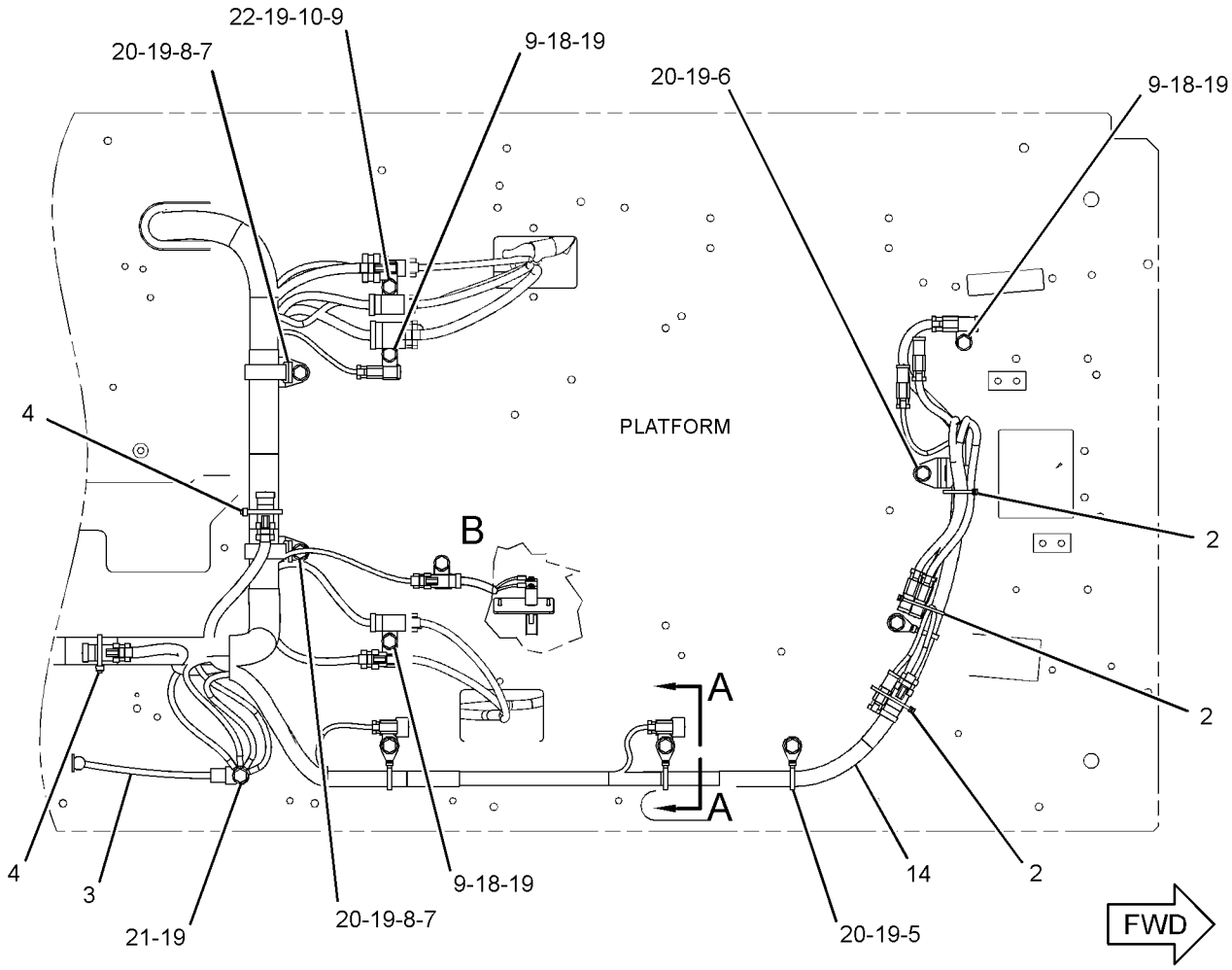

BOTTOM VIEW

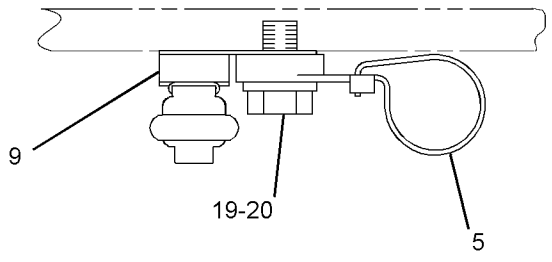

SECTION A-A

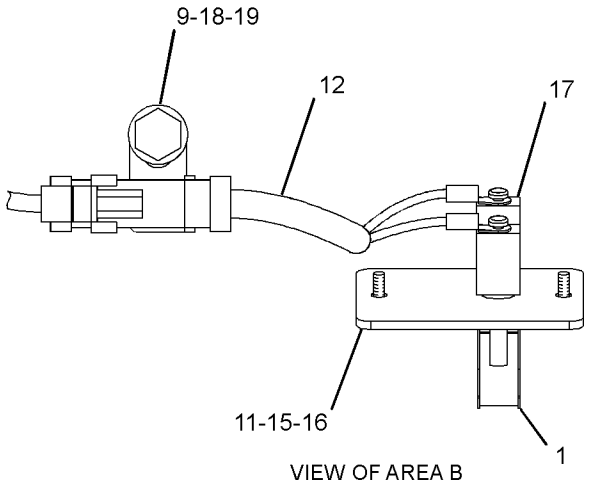

VIEW OF AREA B

GRAPHIC #1 g01427384

275-7051 **WIRING GP-PLATFORM (**contd.**)** **i02864029**

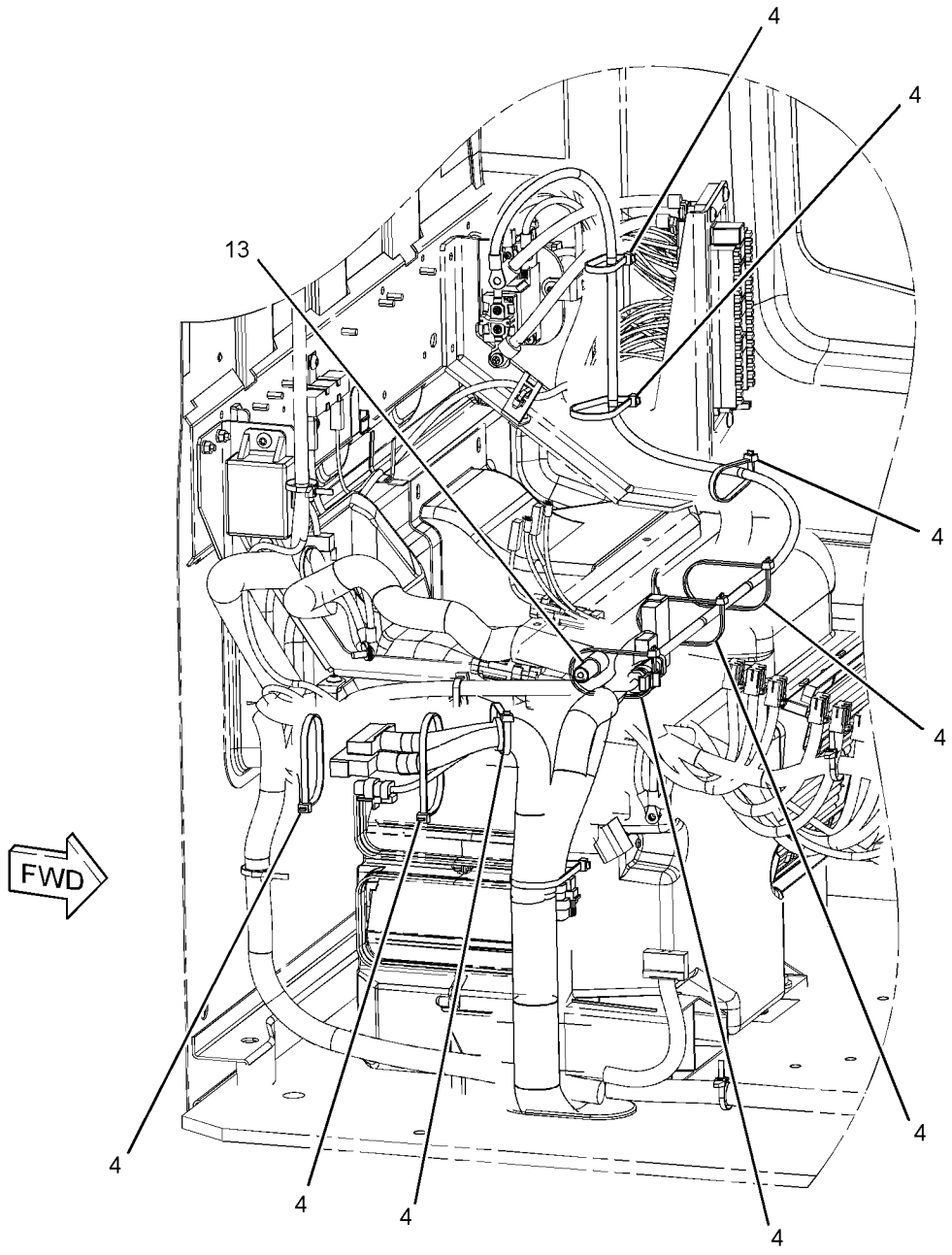

GRAPHIC #2 <END> g01427397

275-7053 WIRING GP-QUICK COUPLER

S/N: DLP1-UP
PART OF 277-1173, 344-4405 CONTROL AR-COUPLER
AN ATTACHMENT

SMCS-1408, 6129

i02809154

NOTE	REF NO	GRAPHIC REF	PART NUMBER	QTY	PART NAME 1 2 3 4 5 6 (PRODUCT LEVEL)	SEE PAGE
	1	1	**3S-2093**	7	STRAP-CABLE	
	2	1	**7K-1181**	9	STRAP-CABLE	
	3	1	**283-2733**	1	HARNESS AS-SOLENOID (QUICK COUPLER)	

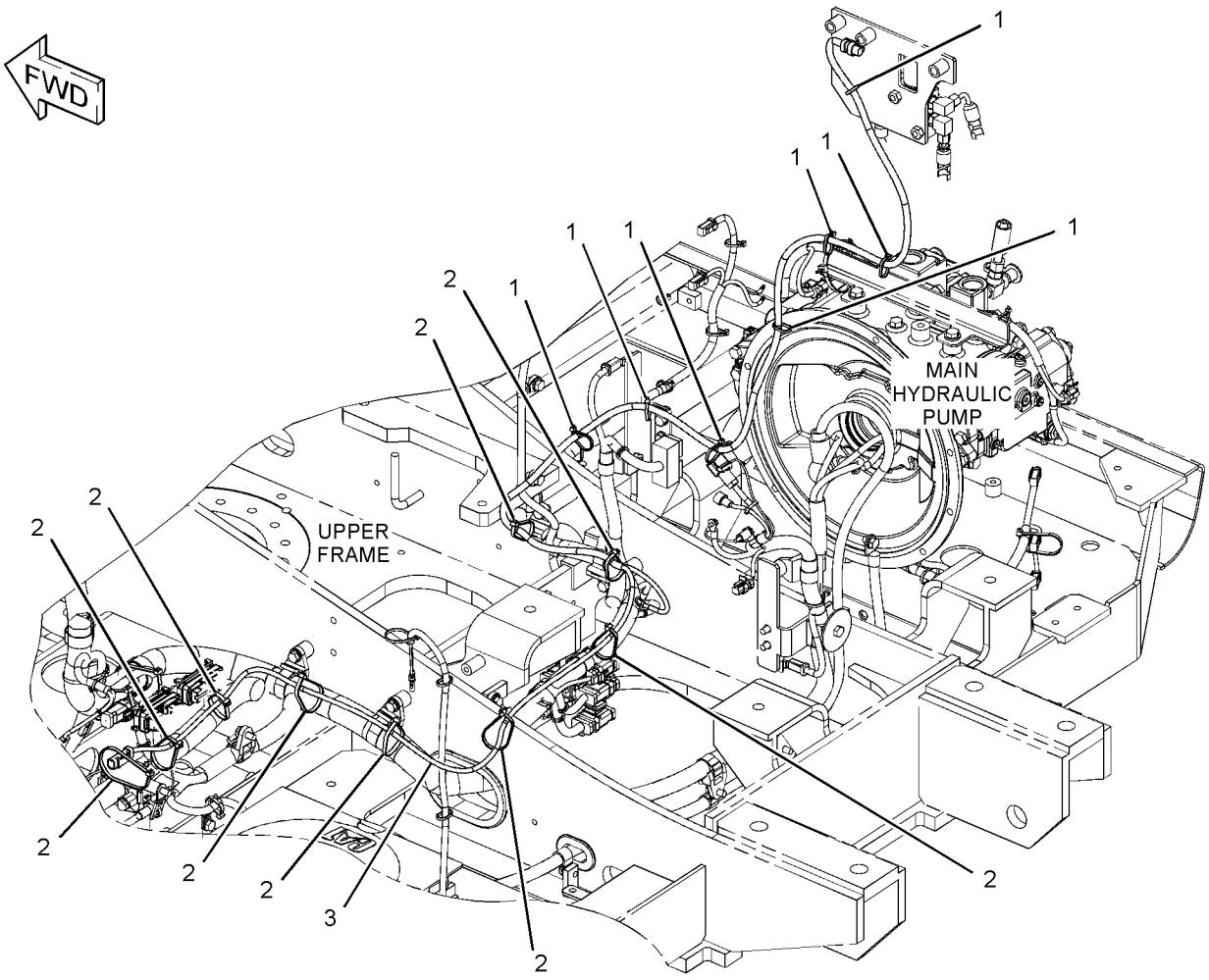

GRAPHIC #1 <END> g01402946

277-6695 DRIVE GP-FINAL–WITH MOTOR

S/N: DLP1-381
FIELD REPLACEMENT ORDER 332-7499–PAGE: 320
PART OF 267-6804 POWER TRAIN AR

SMCS-4050 **i02794290**

NOTE	REF NO	GRAPHIC REF	PART NUMBER	QTY	PART NAME 1 2 3 4 5 6 (PRODUCT LEVEL)	SEE PAGE
Y	1	1	*277-6697*	1	MOTOR GP-TRAVEL	752
Y	2	1	**278-6920**	1	DRIVE GP-FINAL	318

Y - SEPARATE ILLUSTRATION

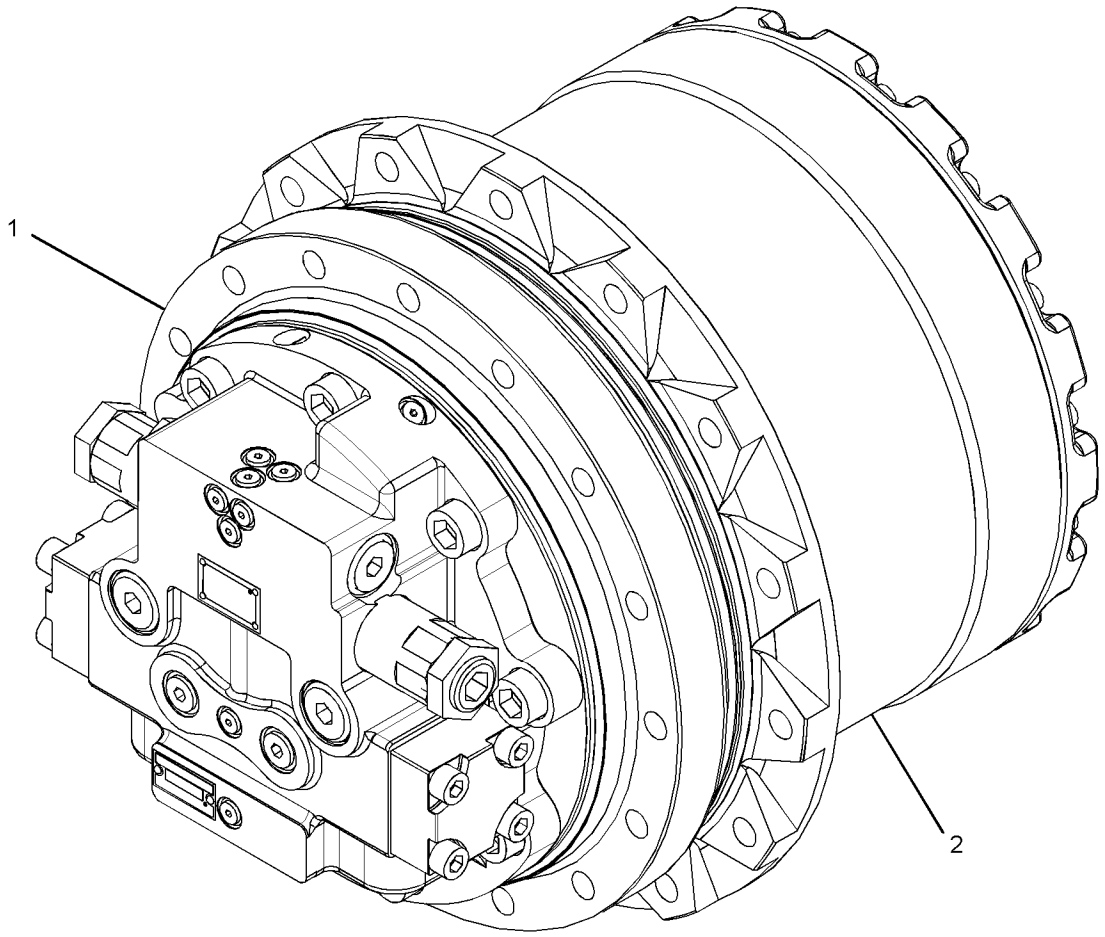

GRAPHIC #1 <END> g01417498

278-6920 DRIVE GP-FINAL—WITHOUT MOTOR

S/N: DLP1-381

PART OF 277-6695 DRIVE GP-FINAL

SMCS-4050 **i03637989**

NOTE	REF NO	GRAPHIC REF	PART NUMBER	QTY	PART NAME 1 2 3 4 5 6 (PRODUCT LEVEL)	SEE PAGE
	1	1	**094-0580**	1	PLATE (10-MM THK)	
M	2	1	**165-5854**	1	RING-LOCKING	
	3	1	**165-5855**	4	BEARING	
	4	1	**165-5856**	4	GEAR (37-TEETH)	
	5	1	**165-5857**	4	RACE	
	6	1	**165-5859**	3	RACE	
	7	1	**165-5860**	1	COVER	
	8	1	**307-9371**	1	CARRIER	
	9	1	**165-5864**	1	GEAR-SUN (17-TEETH)	
	10	1	**332-7486**	1	PLATE	
	11	1	**165-5866**	1	RING	
	12	1	**165-5867**	1	GEAR (19-TEETH)	
	13	1	**165-5868**	1	HOUSING	
	14	1	**332-7487**	1	PLATE	
	15	1	**191-0862**	1	PLATE-LOCK	
	16	1	**204-1086**	4	PLATE	
	17	1	**218-4246**	3	GEAR-PLANETARY (40-TEETH)	
	18	1	**218-4247**	2	BEARING	
	19	1	**310-4980**	1	SEAL GP-DUO-CONE	
	20	1	**278-1980**	3	BEARING-CAGED	
	21	1	**3E-2338**	2	PLUG-PIPE	
M	22	1	**6V-7726**	4	SCREW-HEX SOCKET (M10X1.5X25-MM)	
	23	1	**7M-8485**	2	SEAL-O-RING	
M	24	1	**8T-1158**	16	BOLT-SOCKET HEAD (M8X1.25X20-MM)	
M	25	1	**8T-4136**	1	BOLT (M10X1.5X25-MM)	
M	26	1	**8T-4185**	3	BOLT (M10X1.5X50-MM)	
B	27	1	**1U-8846**		SEALANT-GASKET	
	28	1	**9X-2027**	1	WASHER (11X18X2-MM THK)	

B - USE AS REQUIRED
M - METRIC PART

278-6920 **DRIVE GP-FINAL (**contd.**)** **i03637989**

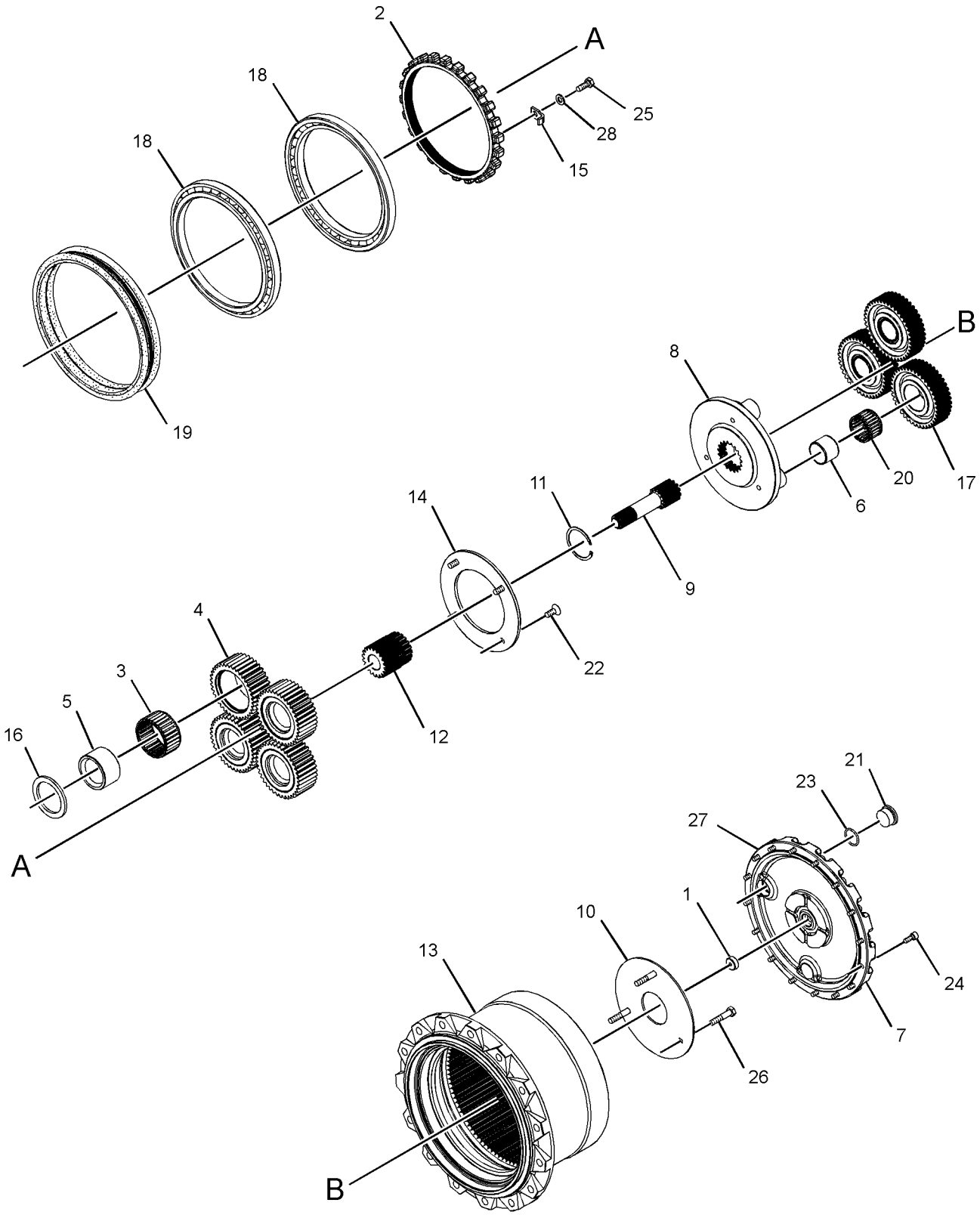

GRAPHIC #1 <END> g01960128

332-7499 DRIVE GP-FINAL—WITH MOTOR

S/N: DLP382-UP

ADDITIONAL FIELD REPLACEMENT PARTS LISTED (349-9520, 352-7197, 347-4171) REPLACE EXISTING TRAVEL COUNTERBALANCE VALVE, SPOOL & PISTON IN OPPOSITE TRAVEL MOTOR & MAIN CONTROL VALVE. REFER TO SEPD1376.

FIELD REPLACEMENT ORDER 374-5972—PAGE: 330, 349-9520—PAGE: 865, 352-7197—PAGE: 779, 2-374-4171 PISTON

FIELD REPLACEMENT FOR 277-6695—PAGE: 317

PART OF 353-0506 DRIVE GP-FINAL, 267-6804 POWER TRAIN AR

SMCS-4050 **i03653647**

NOTE	REF NO	GRAPHIC REF	PART NUMBER	QTY	PART NAME 1 2 3 4 5 6 (PRODUCT LEVEL)	SEE PAGE
Y	1	1	**277-6697**	1	MOTOR GP-TRAVEL (FINAL DRIVE)	752
Y	2	1	**332-7500**	1	DRIVE GP-FINAL (WITHOUT MOTOR)	322

Y - SEPARATE ILLUSTRATION

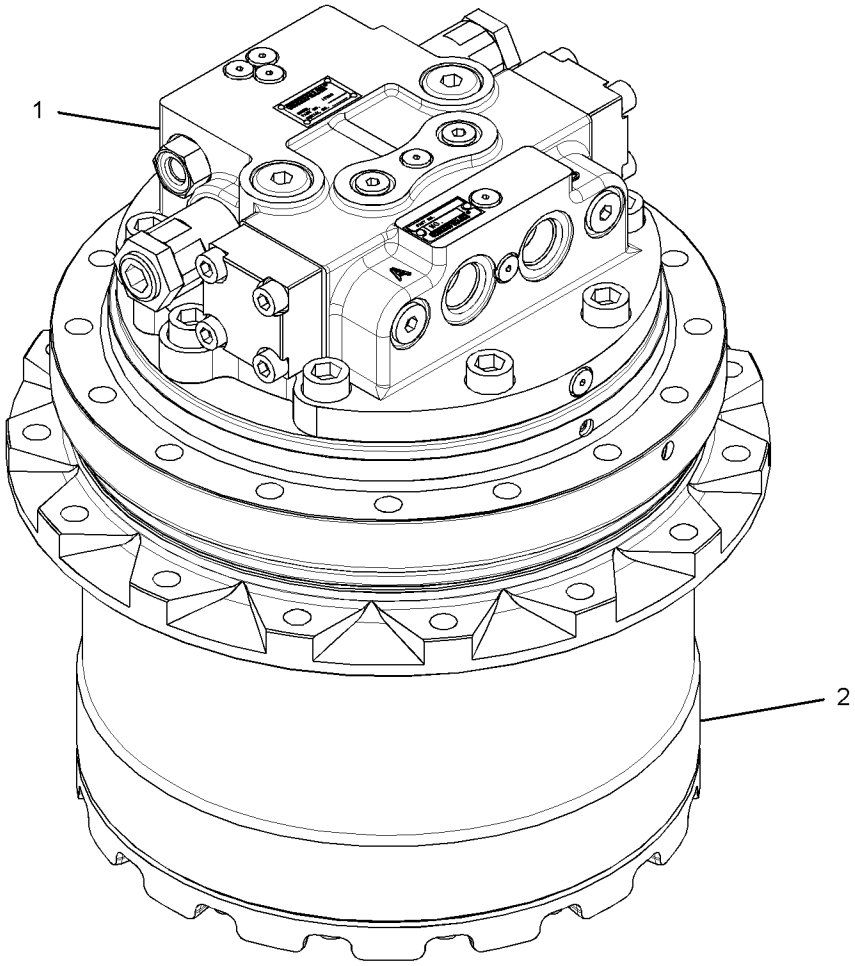

GRAPHIC #1 <END> g01950010

332-7499 DRIVE GP-FINAL—WITH MOTOR

S/N: DLP1-617

ADDITIONAL FIELD REPLACEMENT PARTS LISTED (349-9520, 352-7197, 347-4171) REPLACE EXISTING TRAVEL COUNTERBALANCE VALVE, SPOOL & PISTON IN OPPOSITE TRAVEL MOTOR & MAIN CONTROL VALVE. REFER TO SEPD1376.

FIELD REPLACEMENT ORDER 374-5972—PAGE: 330, 349-9520—PAGE: 865, 352-7197—PAGE: 779, 2-374-4171 PISTON

FIELD REPLACEMENT FOR 277-6695—PAGE: 317

PART OF 353-0506 DRIVE GP-FINAL

SMCS-4050 **i04254572**

NOTE	REF NO	GRAPHIC REF	PART NUMBER	QTY	PART NAME 1 2 3 4 5 6 (PRODUCT LEVEL)	SEE PAGE
Y	1	1	**277-6697**	1	MOTOR GP-TRAVEL (FINAL DRIVE)	752
CY	2	1	**352-8148**	1	DRIVE GP-FINAL (WITHOUT MOTOR)	325

C - CHANGE FROM PREVIOUS TYPE
Y - SEPARATE ILLUSTRATION

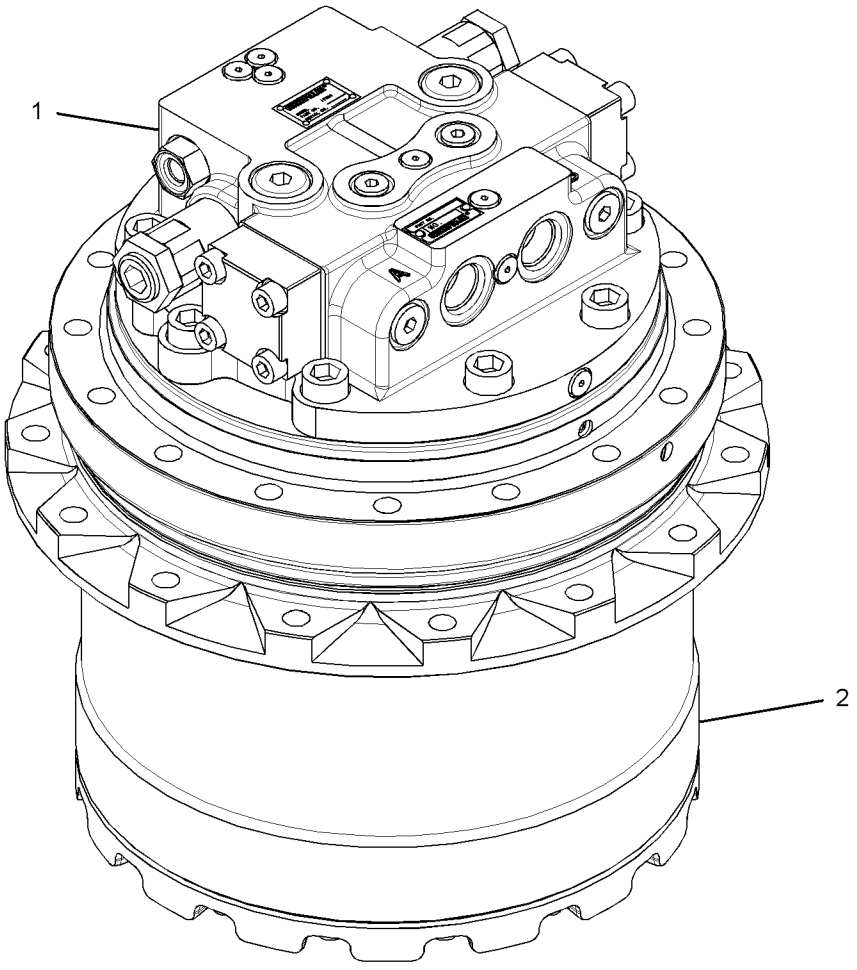

GRAPHIC #1 <END> g01950010

332-7500 DRIVE GP-FINAL—WITHOUT MOTOR

S/N: DLP382-UP

PART OF 332-7499 DRIVE GP-FINAL

SMCS-4050 **i03653650**

NOTE	REF NO	GRAPHIC REF	PART NUMBER	QTY	PART NAME 1 2 3 4 5 6 (PRODUCT LEVEL)	SEE PAGE
	1	1	**094-0580**	1	PLATE (10-MM THK)	
	2	1	**094-1528**	3	WASHER (53X84X1-MM THK)	
M	3	1	**165-5854**	1	RING-LOCKING	
	4	1	**165-5855**	4	BEARING	
	5	1	**165-5856**	4	GEAR (37-TEETH)	
	6	1	**165-5857**	4	RACE	
	7	1	**165-5859**	3	RACE	
	8	1	**165-5860**	1	COVER	
	9	1	**165-5864**	1	GEAR-SUN (17-TEETH)	
	10	1	**165-5866**	1	RING	
	11	1	**165-5867**	1	GEAR (19-TEETH)	
	12	1	**165-5868**	1	HOUSING	
	13	1	**191-0862**	1	PLATE-LOCK	
	14	1	**204-1086**	4	PLATE	
	15	1	**218-4247**	2	BEARING	
	16	1	**278-1980**	3	BEARING-CAGED	
	17	1	**310-4980**	1	SEAL GP-DUO-CONE	
	18	1	**332-7484**	1	CARRIER	
	19	1	**332-7485**	3	GEAR-PLANETARY (40-TEETH)	
	20	1	**332-7486**	1	PLATE	
	21	1	**332-7487**	1	PLATE	
	22	1	**3E-2338**	2	PLUG-PIPE (FINAL DRIVE, OIL DRAIN, FILL)	
M	23	1	**6V-7726**	4	SCREW-HEX SOCKET (M10X1.5X25-MM)	
	24	1	**7M-8485**	2	SEAL-O-RING	
M	25	1	**8T-1158**	16	BOLT-SOCKET HEAD (M8X1.25X20-MM)	
M	26	1	**8T-4136**	1	BOLT (M10X1.5X25-MM)	
M	27	1	**8T-4185**	3	BOLT (M10X1.5X50-MM)	
	28	1	**9X-2027**	1	WASHER (11X18X2-MM THK)	
B	29	1	**1U-8846**		SEALANT-GASKET	

B - USE AS REQUIRED
M - METRIC PART

332-7500 **DRIVE GP-FINAL (**contd.**)** **i03653650**

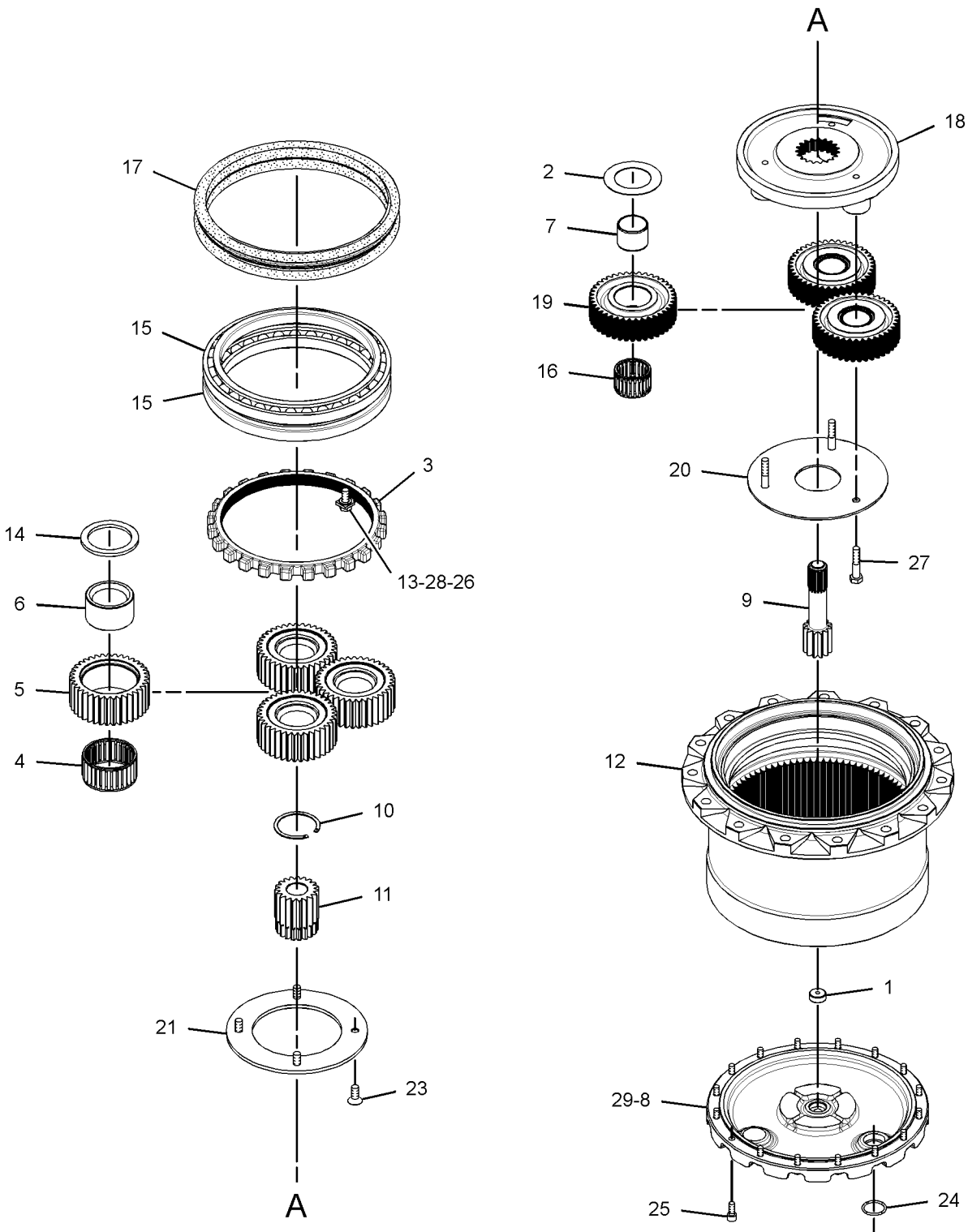

GRAPHIC #1 <END> g01961422

352-8147 DRIVE GP-FINAL—WITH MOTOR

S/N: DLP617-UP
FIELD REPLACEMENT ORDER 421-4381—PAGE: 331
FIELD REPLACEMENT FOR 374-5972—PAGE: 330
PART OF 353-0491 DRIVE GP-FINAL

SMCS-4050 **i05486034**

NOTE	REF NO	GRAPHIC REF	PART NUMBER	QTY	PART NAME 1 2 3 4 5 6 (PRODUCT LEVEL)	SEE PAGE
Y	1	1	**352-8148**	1	DRIVE GP-FINAL (WITHOUT MOTOR)	325
Y	2	1	**357-1821**	1	MOTOR GP-TRAVEL	332

Y - SEPARATE ILLUSTRATION

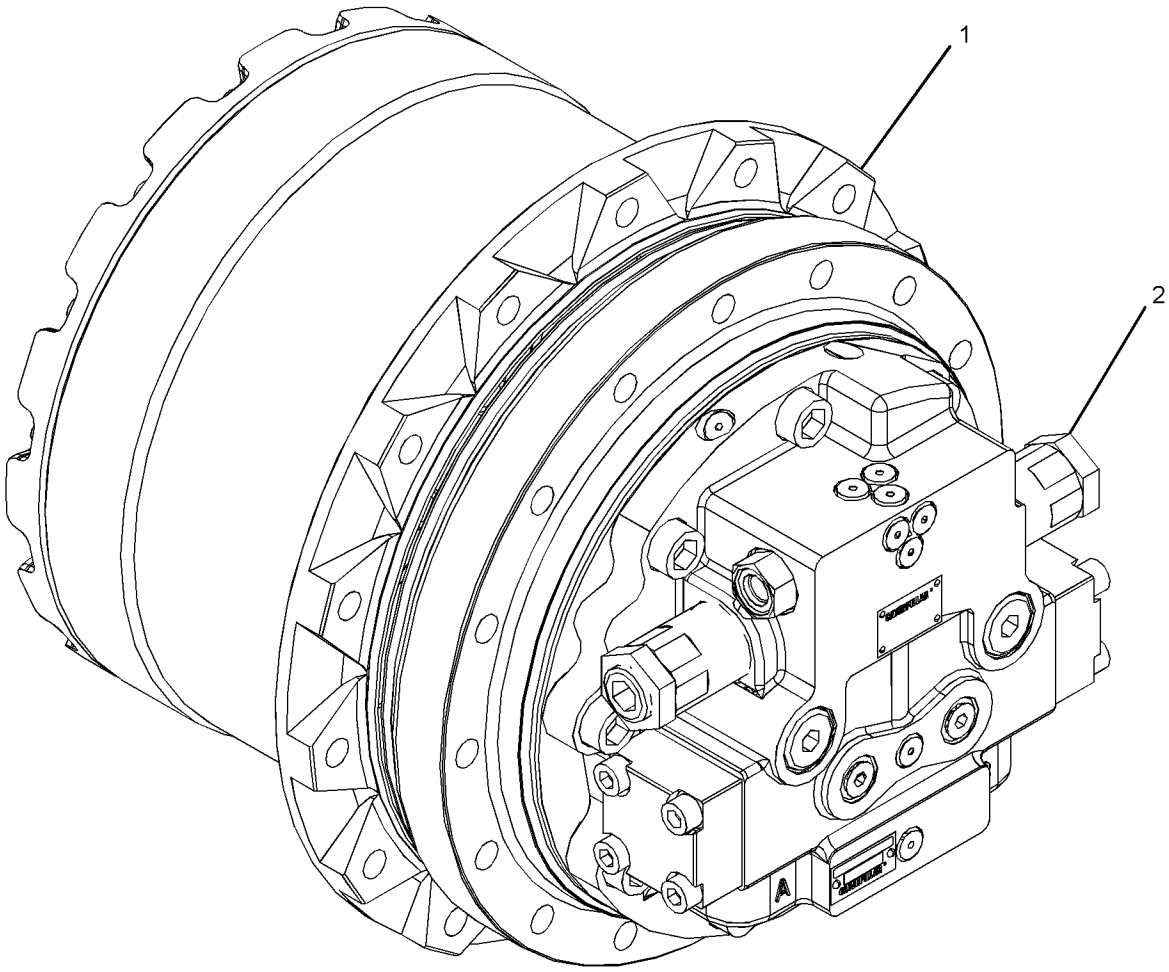

GRAPHIC #1 <END> g02721140

352-8148 DRIVE GP-FINAL—WITHOUT MOTOR

S/N: DLP1-UP

PART OF 332-7499, 352-8147, 374-5972, 421-4381 DRIVE GP-FINAL

SMCS-4050 **i07073972**

NOTE	REF NO	GRAPHIC REF	PART NUMBER	QTY	PART NAME 1 2 3 4 5 6 (PRODUCT LEVEL)	SEE PAGE
	1	1	**094-0580**	1	PLATE (10-MM THK)	
	2	1	**094-1528**	3	WASHER (53X84X1-MM THK)	
M	3	1	**165-5854**	1	RING-LOCKING	
	4	1	**357-1828**	4	BEARING	
	5	1	**165-5856**	4	GEAR (37-TEETH)	
	6	1	**357-1829**	4	RACE	
	7	1	**165-5859**	3	RACE	
	8	1	**165-5860**	1	COVER	
	9	1	**165-5864**	1	GEAR-SUN (17-TEETH)	
	10	1	**165-5866**	1	RING	
	11	1	**165-5867**	1	GEAR (19-TEETH)	
	12	1	**165-5868**	1	HOUSING	
	13	1	**191-0862**	1	PLATE-LOCK	
	14	1	**204-1086**	4	PLATE	
	15	1	**218-4247**	2	BEARING	
	16	1	**357-1827**	3	BEARING	
	17	1	**310-4980**	1	SEAL GP-DUO-CONE	
	18	1	**332-7484**	1	CARRIER	
	19	1	**332-7485**	3	GEAR-PLANETARY (40-TEETH)	
	20	1	**332-7486**	1	PLATE	
	21	1	**332-7487**	1	PLATE	
	22	1	**3E-2338**	2	PLUG-PIPE (FINAL DRIVE, OIL DRAIN, FILL)	
M	23	1	**6V-7726**	4	SCREW-HEX SOCKET (M10X1.5X25-MM)	
	24	1	**7M-8485**	2	SEAL-O-RING	
M	25	1	**8T-1158**	16	BOLT-SOCKET HEAD (M8X1.25X20-MM)	
M	26	1	**8T-4136**	1	BOLT (M10X1.5X25-MM)	
M	27	1	**8T-4185**	3	BOLT (M10X1.5X50-MM)	
	28	1	**9X-2027**	1	WASHER (11X18X2-MM THK)	
B	29	1	**1U-8846**		SEALANT-GASKET	

B - USE AS REQUIRED
M - METRIC PART

352-8148 **DRIVE GP-FINAL (**contd.**)** **i07073972**

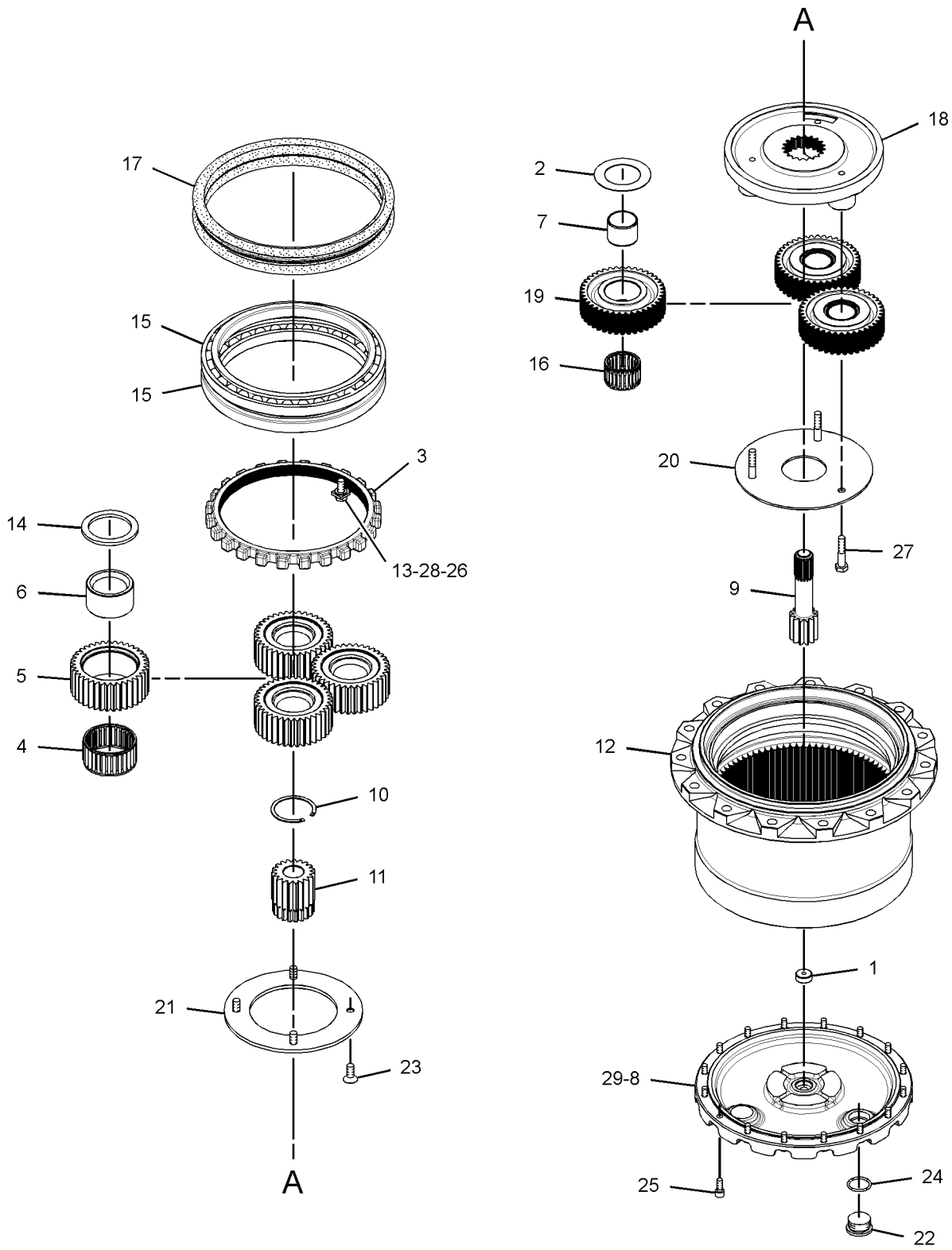

GRAPHIC #1 <END> g01961422

353-0491 DRIVE GP-FINAL—WITH MOTOR, SPROCKET

S/N: DLP617-UP

PART OF 267-6804 POWER TRAIN AR

SMCS-4050 **i04493253**

NOTE	REF NO	GRAPHIC REF	PART NUMBER	QTY	PART NAME 1 2 3 4 5 6 (PRODUCT LEVEL)	SEE PAGE
Y	1	1	*168-6728*	1	SPROCKET GP (NON-SEGMENTED)	337
Y	2	1	**352-8147**	1	DRIVE GP-FINAL (WITH MOTOR)	324

Y - SEPARATE ILLUSTRATION

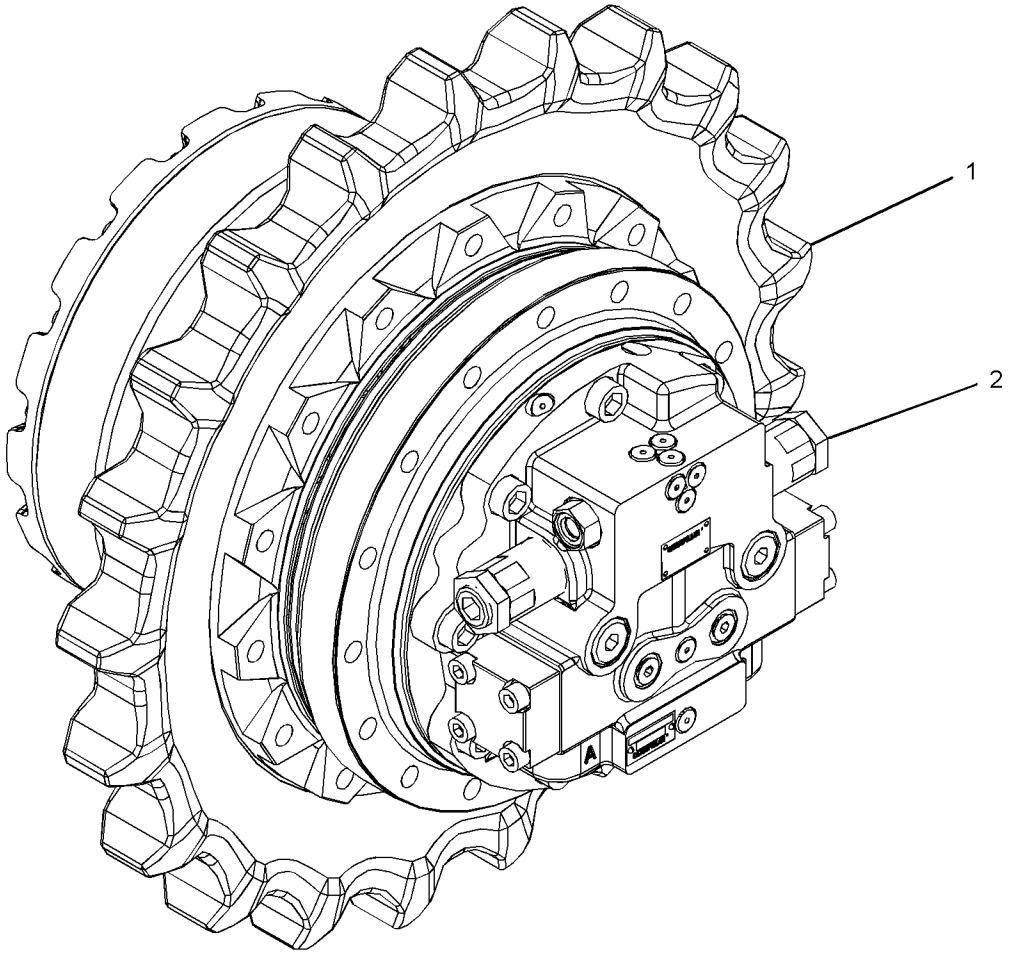

GRAPHIC #1 <END> g02721149

353-0506 DRIVE GP-FINAL—WITH MOTOR, SPROCKET

S/N: DLP435-616

PART OF 267-6804 POWER TRAIN AR

SMCS-4050 **i04047930**

NOTE	PART NUMBER	QTY	PART NAME 1 2 3 4 5 6 (PRODUCT LEVEL)	SEE PAGE
Y	**332-7499**	1	DRIVE GP-FINAL (WITH MOTOR)	320
Y	*168-6728*	1	SPROCKET GP (NON-SEGMENTED)	337

Y - SEPARATE ILLUSTRATION

<END>

367-8334 DRIVE GP-FINAL—WITH MOTOR, SPROCKET

S/N: DLP617

PART OF 267-6804 POWER TRAIN AR

SMCS-4050 **i04629660**

NOTE	REF NO	GRAPHIC REF	PART NUMBER	QTY	PART NAME 1 2 3 4 5 6 (PRODUCT LEVEL)	SEE PAGE
Y	1	1	*168-6728*	1	SPROCKET GP (NON-SEGMENTED)	337
Y	2	1	**374-5972**	1	DRIVE GP-FINAL (WITH MOTOR)	330

Y - SEPARATE ILLUSTRATION

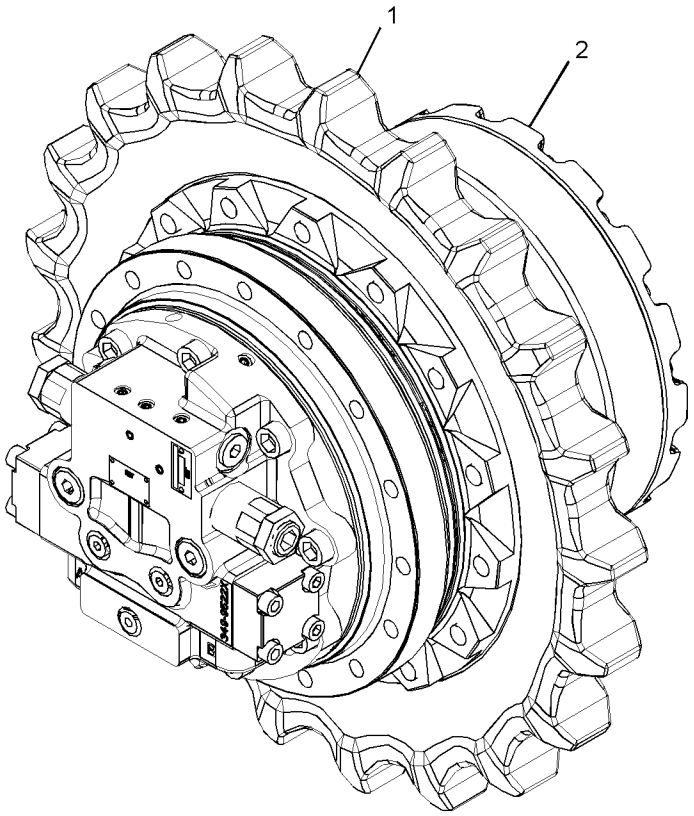

GRAPHIC #1 <END> g02796426

374-5972 DRIVE GP-FINAL

S/N: DLP617
REFER TO SEPD1376
FIELD REPLACEMENT ORDER 352-8147—PAGE: 324
FIELD REPLACEMENT FOR 332-7499—PAGE: 320
PART OF 367-8334 DRIVE GP-FINAL

SMCS-4050 **i04629702**

NOTE	REF NO	GRAPHIC REF	PART NUMBER	QTY	PART NAME 1 2 3 4 5 6 (PRODUCT LEVEL)	SEE PAGE
Y	1	1	**352-8148**	1	DRIVE GP-FINAL (WITHOUT MOTOR)	325
Y	2	1	**374-5964**	1	MOTOR GP-TRAVEL	754

Y - SEPARATE ILLUSTRATION

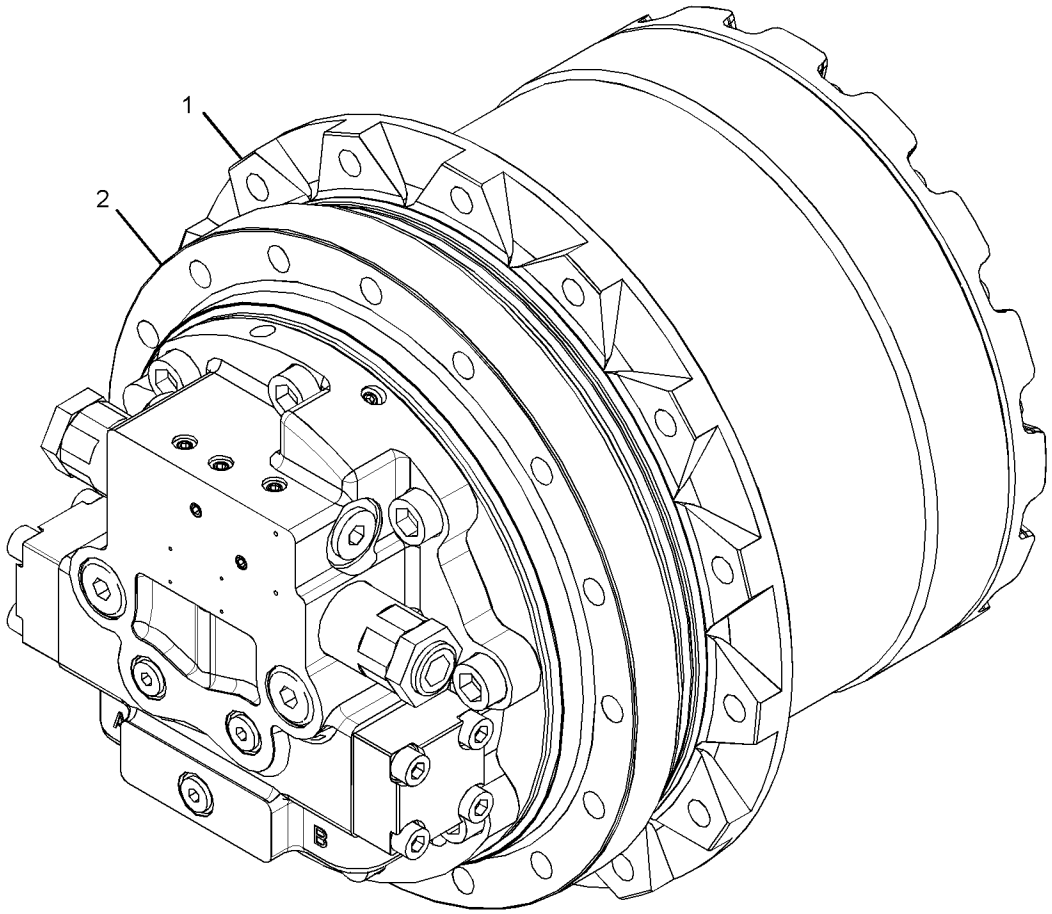

GRAPHIC #1 <END> g02793899

421-4381 DRIVE GP-FINAL—WITH MOTOR

S/N: DLP1-UP

FIELD REPLACEMENT FOR 352-8147—PAGE: 324

SMCS-4050 **i06652332**

NOTE	REF NO	GRAPHIC REF	PART NUMBER	QTY	PART NAME 1 2 3 4 5 6 (PRODUCT LEVEL)	SEE PAGE
Y	1	1	**352-8148**	1	DRIVE GP-FINAL (WITHOUT MOTOR)	325
Y	2	1	**421-4382**	1	MOTOR GP-TRAVEL	334

Y - SEPARATE ILLUSTRATION

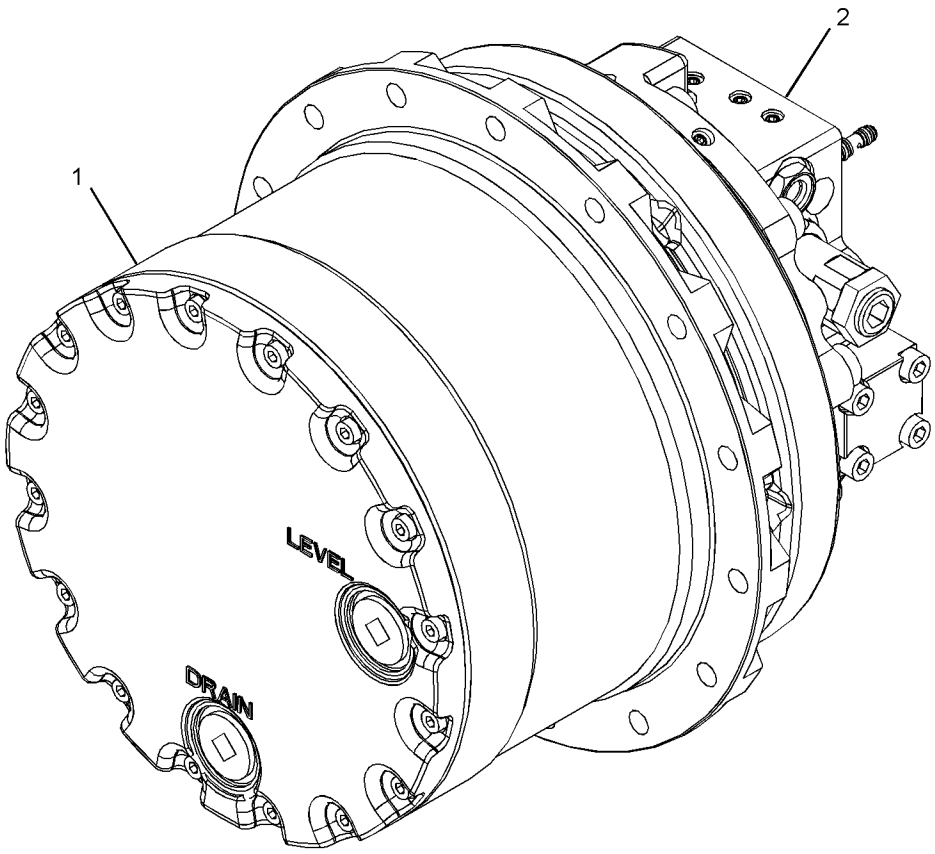

GRAPHIC #1 <END> g03333430

357-1821 MOTOR GP-TRAVEL

S/N: DLP617-UP
FIELD REPLACEMENT ORDER 421-4382—PAGE: 334
FIELD REPLACEMENT FOR 374-5964—PAGE: 754
PART OF 352-8147 DRIVE GP-FINAL

SMCS-4351 **i05488289**

NOTE	REF NO	GRAPHIC REF	PART NUMBER	QTY	PART NAME 1 2 3 4 5 6 (PRODUCT LEVEL)	SEE PAGE
	1	1	**1H-8278**	1	SEAL-O-RING	
	2	1	**7Y-4224**	1	ORIFICE	
	3	1	**085-9769**	4	PIN	
	4	1	**087-4742**	1	VALVE	
	5	1	**095-1585**	1	SEAL-O-RING	
	6	1	**095-7380**	1	SPRING	
	7	1	**095-7382**	1	RETAINER	
	8	1	**096-1519**	1	SEAT	
	9	1	**165-2799**	9	SPRING	
	10	1	**165-5803**	1	SHAFT	
	11	1	**165-5804**	1	BEARING-ROLLER	
	12	1	**165-5811**	1	BARREL AS	
	13	1	**165-5814**	4	PLATE-SEPARATOR	
	14	1	**165-5816**	1	GUIDE-PISTON	
	15	1	**165-5817**	1	PISTON-BRAKE	
	16	1	**165-5818**	8	SPRING	
	17	1	**165-5826**	1	SEAL-LIP TYPE	
	18	1	**165-5828**	2	KEY	
	19	1	**165-5831**	2	SPRING	
	20	1	**176-8131**	1	SPACER-SPECIAL	
	21	1	**378-3459**	1	BODY	
	22	1	**176-8573**	4	PLATE-FRICTION	
	23	1	**176-8579**	1	PLATE-CAM	
	24	1	**267-8084**	1	BEARING-NEEDLE	
Y	25	1	**349-9520**	1	VALVE GP-TRAVEL COUNTERBALANCE (TRACTION CONTROL)	865
	26	1	**353-5829**	1	GUIDE-BALL	
M	27	1	**8T-4944**	9	BOLT-SOCKET HEAD (M16X2X40-MM)	
	28	1	**357-1832**	1	PISTON AS	
	29	1	**374-4171**	2	PISTON	
	30	1	**094-1875**	1	DOWEL	
	31	1	**094-1882**	7	PLUG	
	32	1	**8T-4240**	1	RING-RETAINING	
	33	1	**165-5819**	1	SEAL-O-RING	
	34	1	**165-5820**	1	RING-BACKUP	
	35	1	**165-5821**	1	SEAL-O-RING	
	36	1	**165-5822**	1	RING-BACKUP	
	37	1	**165-5823**	1	SEAL-O-RING	
	38	1	**165-5824**	1	RING-BACKUP	

M - METRIC PART
Y - SEPARATE ILLUSTRATION

357-1821 **MOTOR GP-TRAVEL (**contd.**)** **i05488289**

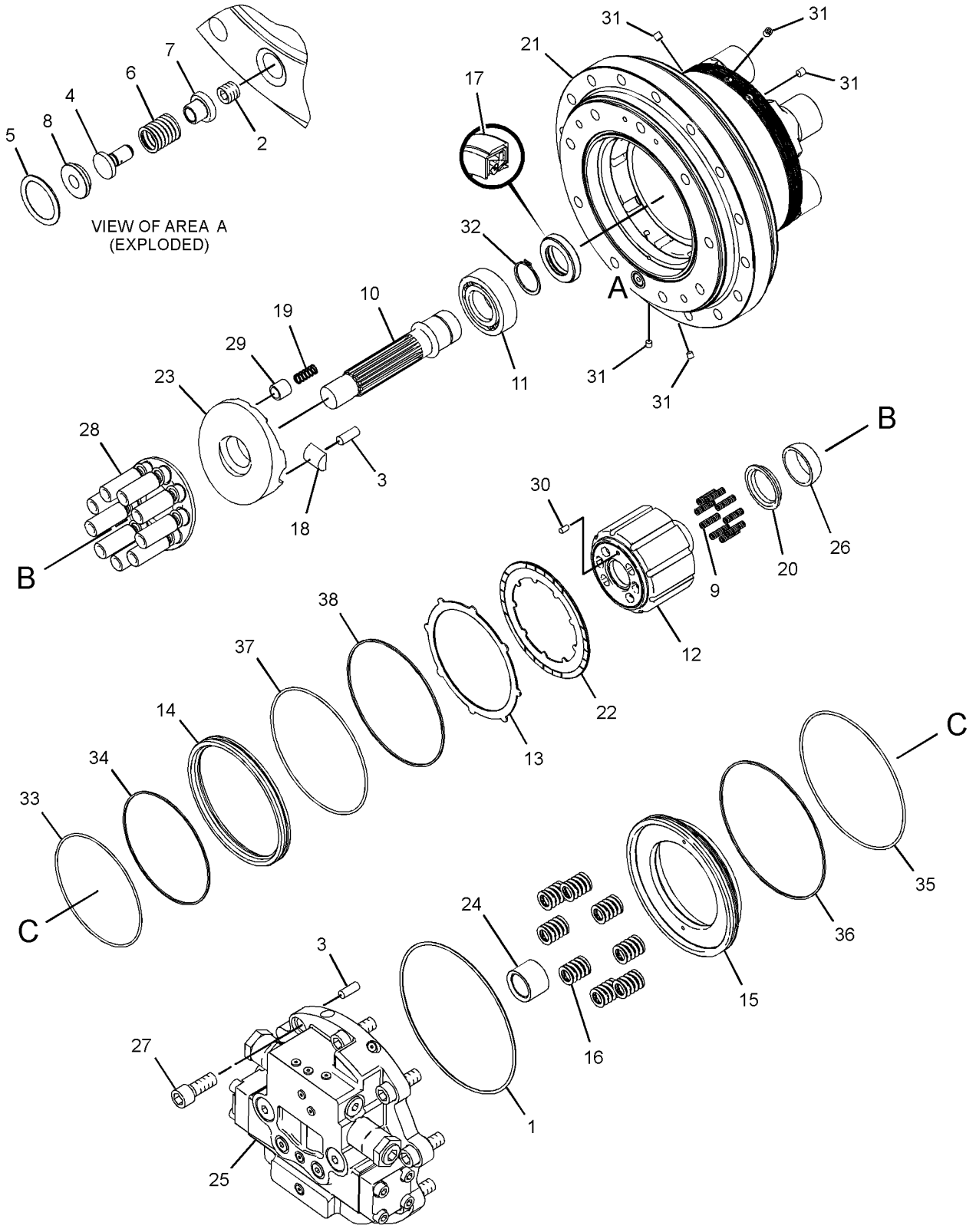

GRAPHIC #1 <END> g02721557

421-4382 MOTOR GP-TRAVEL

S/N: DLP1-UP

FIELD REPLACEMENT FOR 352-8147—PAGE: 324

PART OF 421-4381 DRIVE GP-FINAL

SMCS-4351 **i06226165**

NOTE	REF NO	GRAPHIC REF	PART NUMBER	QTY	PART NAME 1 2 3 4 5 6 (PRODUCT LEVEL)	SEE PAGE
	1	1	**087-4742**	1	VALVE	
	2	1	**095-7380**	1	SPRING	
	3	1	**095-7382**	1	RETAINER	
	4	1	**096-1519**	1	SEAT	
	5	1	**165-2799**	9	SPRING	
	6	1	**165-5803**	1	SHAFT	
	7	1	**165-5804**	1	BEARING-ROLLER	
	8	1	**165-5811**	1	BARREL AS	
	9	1	**165-5814**	4	PLATE-SEPARATOR	
	10	1	**165-5816**	1	GUIDE-PISTON	
	11	1	**165-5817**	1	PISTON-BRAKE	
	12	1	**165-5818**	8	SPRING	
	13	1	**165-5826**	1	SEAL-LIP TYPE	
	14	1	**165-5828**	2	KEY	
	15	1	**165-5831**	2	SPRING	
	16	1	**176-8131**	1	SPACER-SPECIAL	
	17	1	**176-8573**	4	PLATE-FRICTION	
	18	1	**176-8579**	1	PLATE-CAM	
	19	1	**267-8084**	1	BEARING-NEEDLE	
Y	20	1	**349-9520**	1	VALVE GP-TRAVEL COUNTERBALANCE	865
	21	1	**353-5829**	1	GUIDE-BALL	
	22	1	**451-7530**	1	PISTON AS	
	23	1	**374-4171**	2	PISTON	
	25	1	**421-4384**	1	BODY	
	26	1	**421-4385**	1	ORIFICE	
	27	1	**085-9769**	4	PIN	
	28	1	**094-1875**	1	DOWEL	
	29	1	**094-1882**	7	PLUG	
	30	1	**095-1585**	1	SEAL-O-RING	
	32	1	**165-5819**	1	SEAL-O-RING	
	33	1	**165-5820**	1	RING-BACKUP	
	34	1	**165-5821**	1	SEAL-O-RING	
	35	1	**165-5822**	1	RING-BACKUP	
	36	1	**165-5823**	1	SEAL-O-RING	
	37	1	**165-5824**	1	RING-BACKUP	
	38	1	**1H-8278**	1	SEAL-O-RING	
	39	1	**8T-4240**	1	RING-RETAINING	
M	40	1	**8T-4944**	9	BOLT-SOCKET HEAD (M16X2X40-MM)	

M - METRIC PART
Y - SEPARATE ILLUSTRATION

421-4382 **MOTOR GP-TRAVEL (**contd.**)** **i06226165**

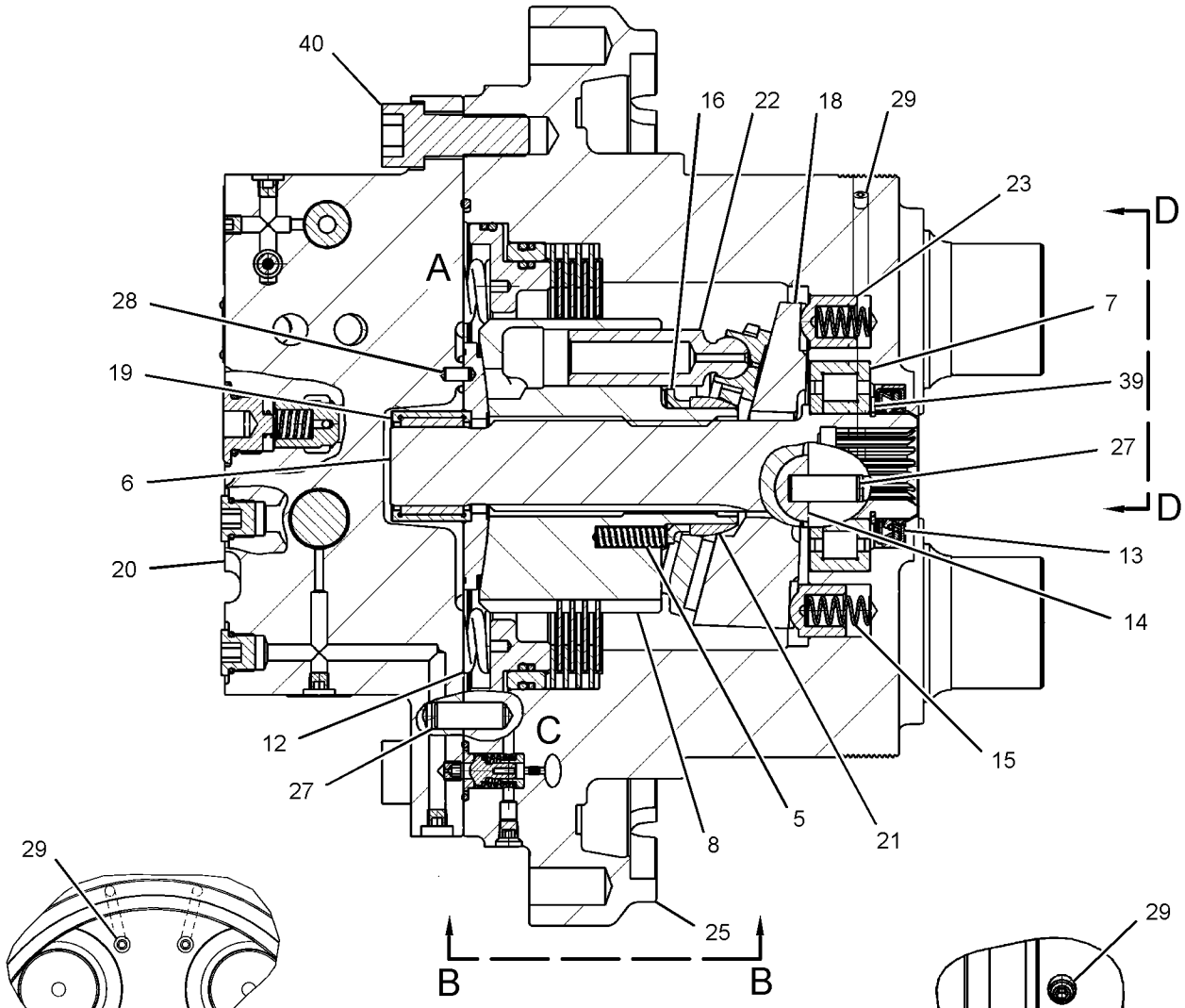

VIEW D-D

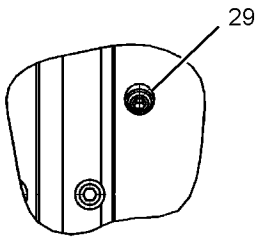

VIEW B-B

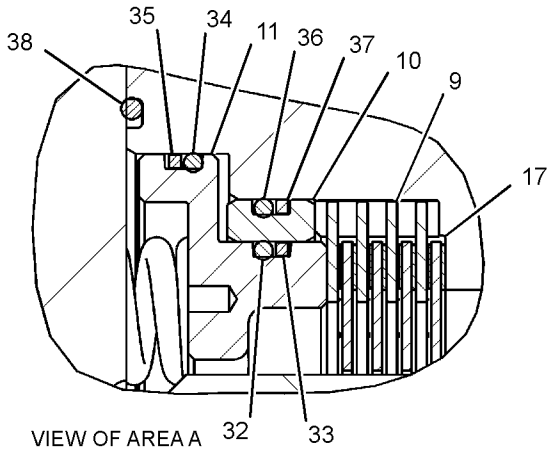

VIEW OF AREA A

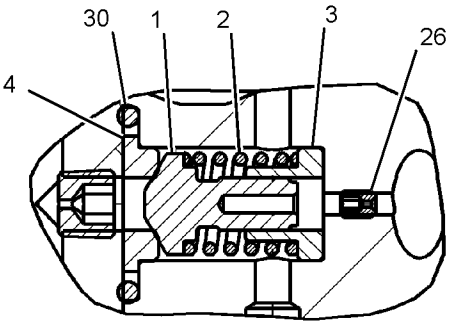

VIEW OF AREA C

GRAPHIC #1 <END> g03333582

267-6804 POWER TRAIN AR

S/N: DLP1-UP

PART OF 301-2679 GENERAL AR

SMCS-3000, 4000

i04891323

NOTE	PART NUMBER	QTY	PART NAME 1 2 3 4 5 6 (PRODUCT LEVEL)	SEE PAGE
Y	*277-6695*	2	DRIVE GP-FINAL (WITH MOTOR)	317
			S/N: DLP1-381	
Y	*332-7499*	2	DRIVE GP-FINAL (WITH MOTOR)	320
			S/N: DLP382-434	
Y	*353-0506*	2	DRIVE GP-FINAL (WITH MOTOR, SPROCKET)	328
			S/N: DLP435-617	
Y	*367-8334*	2	DRIVE GP-FINAL (WITH MOTOR, SPROCKET)	329
			S/N: DLP618-UP	
Y	*353-0491*	2	DRIVE GP-FINAL (WITH MOTOR, SPROCKET)	327
			S/N: DLP618-UP	
Y	*169-5546*	1	DRIVE GP-SWING	521
			S/N: DLP1-617	
Y	*333-3071*	1	DRIVE GP-SWING (WITH MOTOR)	525
			S/N: DLP618-UP	
Y	*296-6304*	1	FASTENER GP-SWING & FINAL DR	529
Y	*168-6728*	2	SPROCKET GP (NON-SEGMENTED)	337
			S/N: DLP1-170	

Y - SEPARATE ILLUSTRATION

<END>

168-6728 SPROCKET GP

S/N: DLP1-UP

PART OF 353-0491, 353-0506, 367-8334 DRIVE GP-FINAL, 267-6804 POWER TRAIN AR

SMCS-4164 **i07175110**

NOTE	REF NO	GRAPHIC REF	PART NUMBER	QTY	PART NAME 1 2 3 4 5 6 (PRODUCT LEVEL)	SEE PAGE
	1	1	**461-3871**	15	BOLT (M16X2X45-MM)	
	2	1	**4I-7472**	1	SPROCKET-TRACK (21-TEETH)	

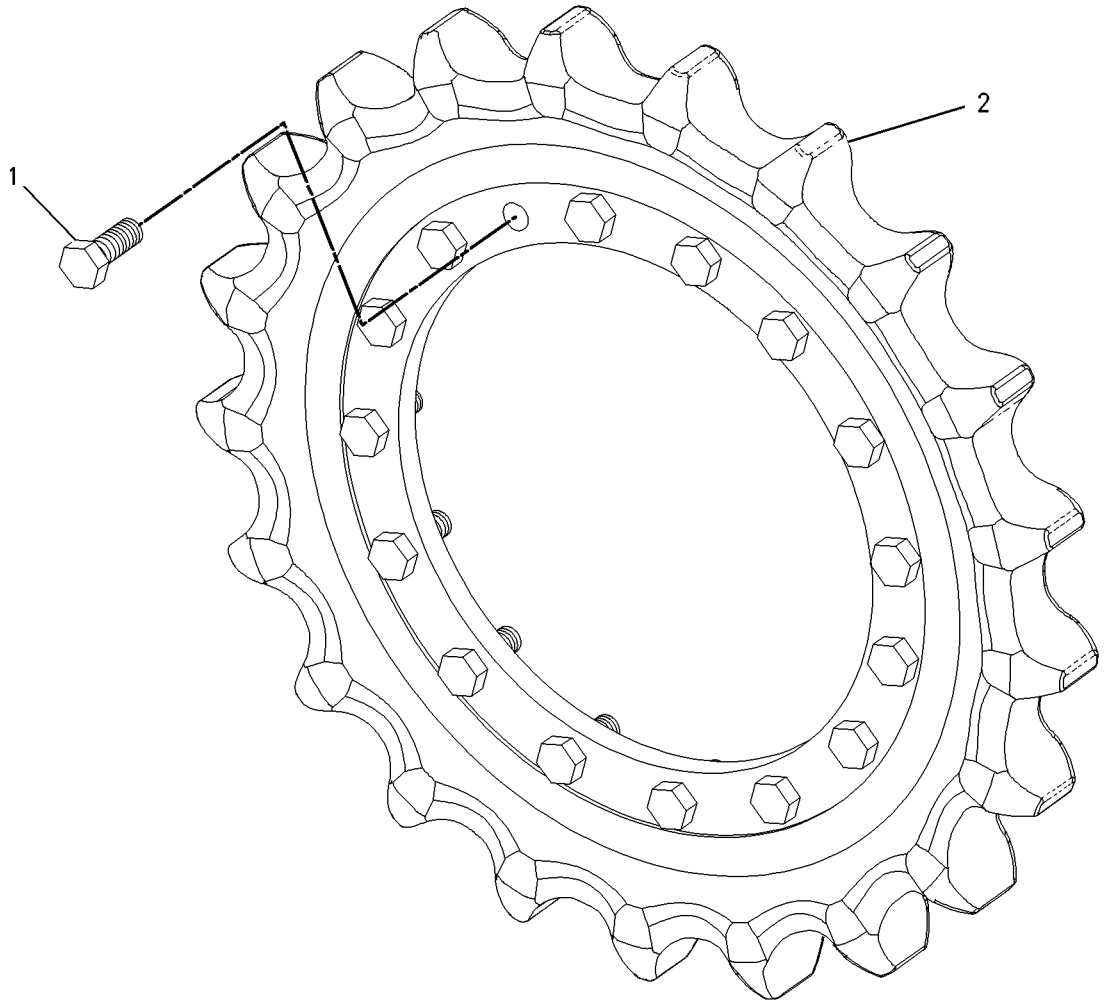

GRAPHIC #1 <END> g00735057

244-8039 BOX & MTG GP-STORAGE

S/N: DLP1-UP

PART OF 301-2680 CHASSIS AR

SMCS-7268 **i02599496**

NOTE	REF NO	GRAPHIC REF	PART NUMBER	QTY	PART NAME 1 2 3 4 5 6 (PRODUCT LEVEL)	SEE PAGE
Y	1	1	*244-8040*	1	BOX GP-STORAGE	339
	2	1	**135-8577**	4	BOLT AS	

Y - SEPARATE ILLUSTRATION

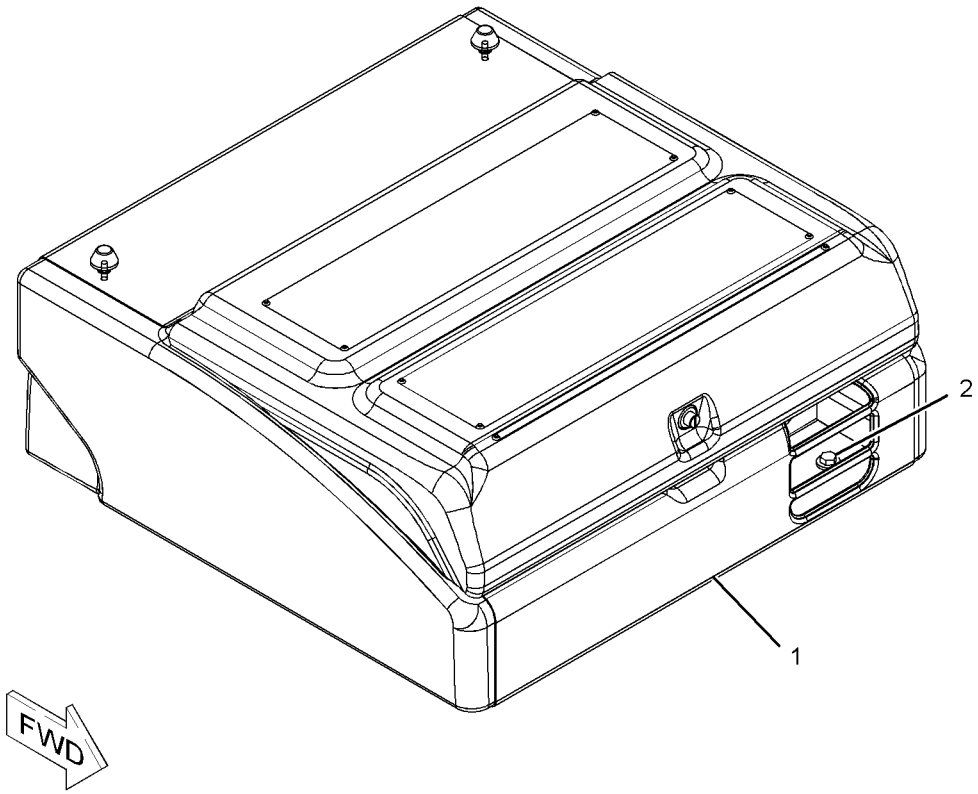

GRAPHIC #1 <END> g01150412

244-8040 BOX GP-STORAGE

S/N: DLP1-UP

PART OF 244-8039 BOX & MTG GP-STORAGE

SMCS-7268 **i04904425**

NOTE	REF NO	GRAPHIC REF	PART NUMBER	QTY	PART NAME 1 2 3 4 5 6 (PRODUCT LEVEL)	SEE PAGE
	1	1	**4I-2187**	1	SUPPORT AS	
J	2	1	**375-8597**	1	LOCK AS	
	3	1	**236-3670**	1	STRIKER AS	
	4	1	**236-3671**	1	SEAL	
	5	1	**236-9438**	1	PLUNGER AS	
	6	1	**236-9440**	1	SHEET	
	7	1	**259-3891**	1	BOX AS-STORAGE	
	8	1	**259-3893**	1	COVER AS	
	8A	1	**3D-9143**	2	HINGE-BUTT	
	9	1	**273-7964**	2	MOUNT	
	10	1	**278-3581**	4	CUSHION	
	11	1	**095-0843**	1	PIN-COTTER	
	12	1	**096-3780**	1	PIN-CLEVIS	
M	13	1	**105-3487**	4	BOLT-SOCKET HEAD (M6X1X20-MM)	
	14	1	**170-9360**	1	GROMMET	
M	15	1	**5C-9553**	3	BOLT (M6X1X16-MM)	
	16	1	**5P-1075**	4	WASHER-HARD (10.2X22.5X3-MM THK)	
	17	1	**5P-4116**	1	WASHER-HARD (8.8X20.5X2-MM THK)	
M	18	1	**8T-4133**	4	NUT (M10X1.5-THD)	
M	19	1	**8T-4200**	2	BOLT (M8X1.25X16-MM)	
B	20	1	**8T-4223**	2	WASHER-HARD (13.5X25.5X3-MM THK)	
	21	1	**8T-4224**	2	WASHER-HARD (8.8X16X2-MM THK)	
	22	1	**9X-8256**	7	WASHER (6.6X12X2-MM THK)	
E	23	1	**333-5219**		SEAL (30-CM)	

B - USE AS REQUIRED
E - ORDER BY THE CENTIMETER
J - REQUIRES CORPORATE KEY
M - METRIC PART

244-8040 **BOX GP-STORAGE (**contd.**)** **i04904425**

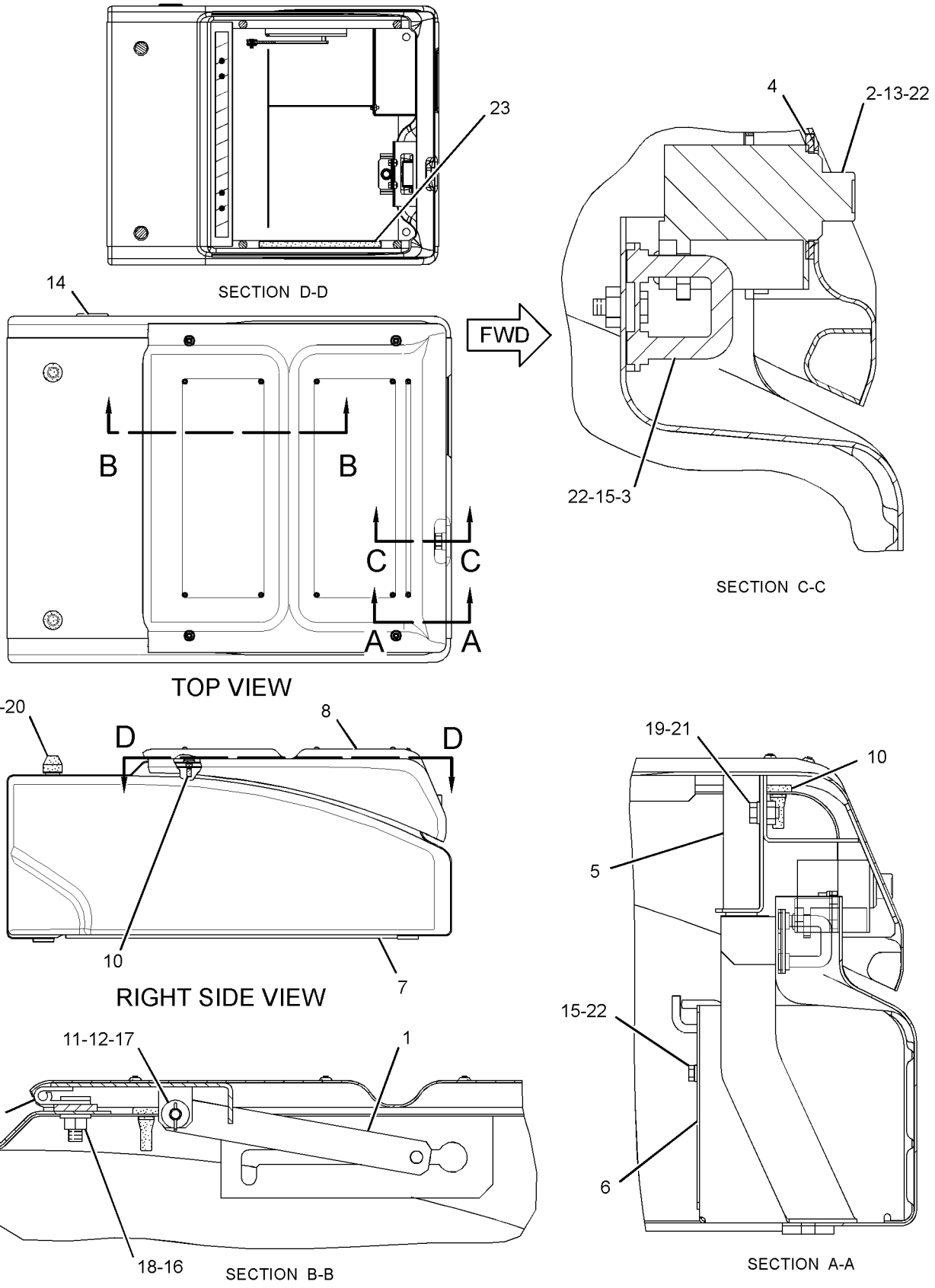

GRAPHIC #1 <END> g01959843

284-7315 BUMPER GP—SIDE, RH, LH

S/N: DLP1-UP

AN ATTACHMENT

SMCS-7156 **i02863391**

NOTE	REF NO	GRAPHIC REF	PART NUMBER	QTY	PART NAME 1 2 3 4 5 6 (PRODUCT LEVEL)	SEE PAGE
	1	1	**284-7077**	1	BUMPER AS	
	2	1	**294-1466**	1	BUMPER AS	

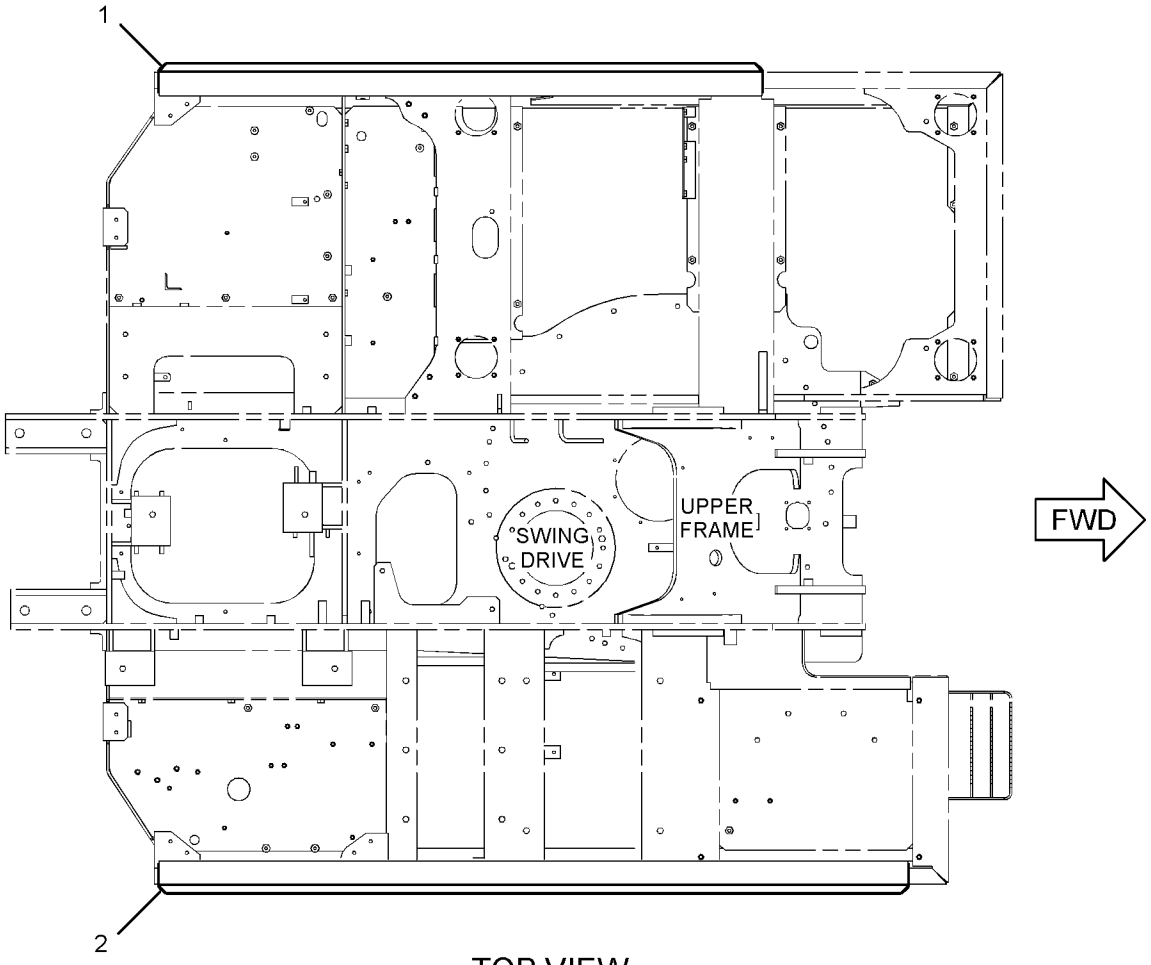

TOP VIEW

GRAPHIC #1 <END> g01439969

278-3591 COUNTERWEIGHT & MOUNTING GP

S/N: DLP1-214

PART OF 301-2680 CHASSIS AR

SMCS-7056 **i03044881**

NOTE	REF NO	GRAPHIC REF	PART NUMBER	QTY	PART NAME 1 2 3 4 5 6 (PRODUCT LEVEL)	SEE PAGE
	1	1	**177-5867**	4	SPACER (25.5X50X75-MM THK)	
Y	2	1	*278-3592*	1	COUNTERWEIGHT GP	345
M	3	1	**8C-3290**	4	BOLT (M24X3X150-MM)	
	4	1	**4I-0006**	2	CAP	

M - METRIC PART
Y - SEPARATE ILLUSTRATION

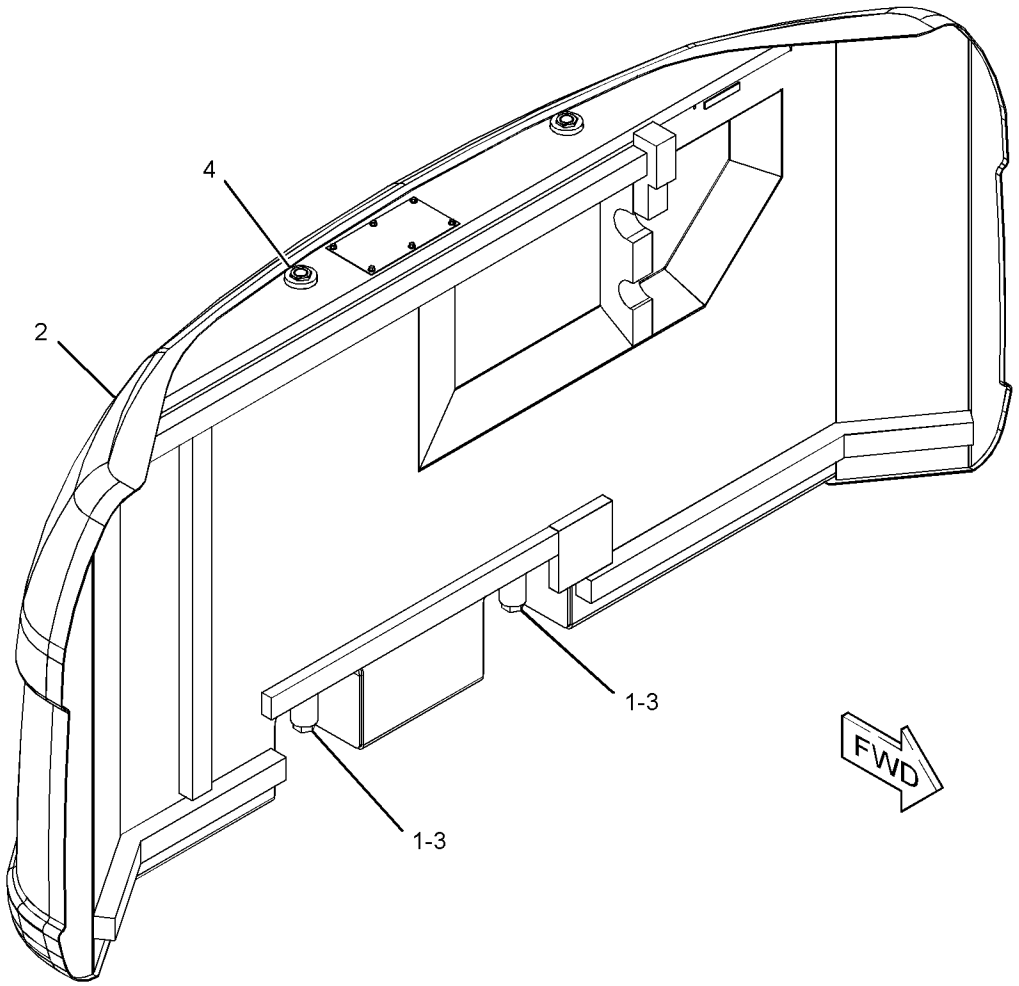

GRAPHIC #1 <END> g01437748

278-3591 COUNTERWEIGHT & MOUNTING GP

S/N: DLP215-UP

PART OF 301-2680 CHASSIS AR

SMCS-7056 **i05704351**

NOTE	REF NO	GRAPHIC REF	PART NUMBER	QTY	PART NAME 1 2 3 4 5 6 (PRODUCT LEVEL)	SEE PAGE
	1	1	**177-5867**	4	SPACER (25.5X50X75-MM THK)	
CY	2	1	*330-1213*	1	COUNTERWEIGHT GP	352
M	3	1	**447-1732**	4	BOLT (M24X3X150-MM)	
	4	1	**4I-0006**	2	CAP	

C - CHANGE FROM PREVIOUS TYPE
M - METRIC PART
Y - SEPARATE ILLUSTRATION

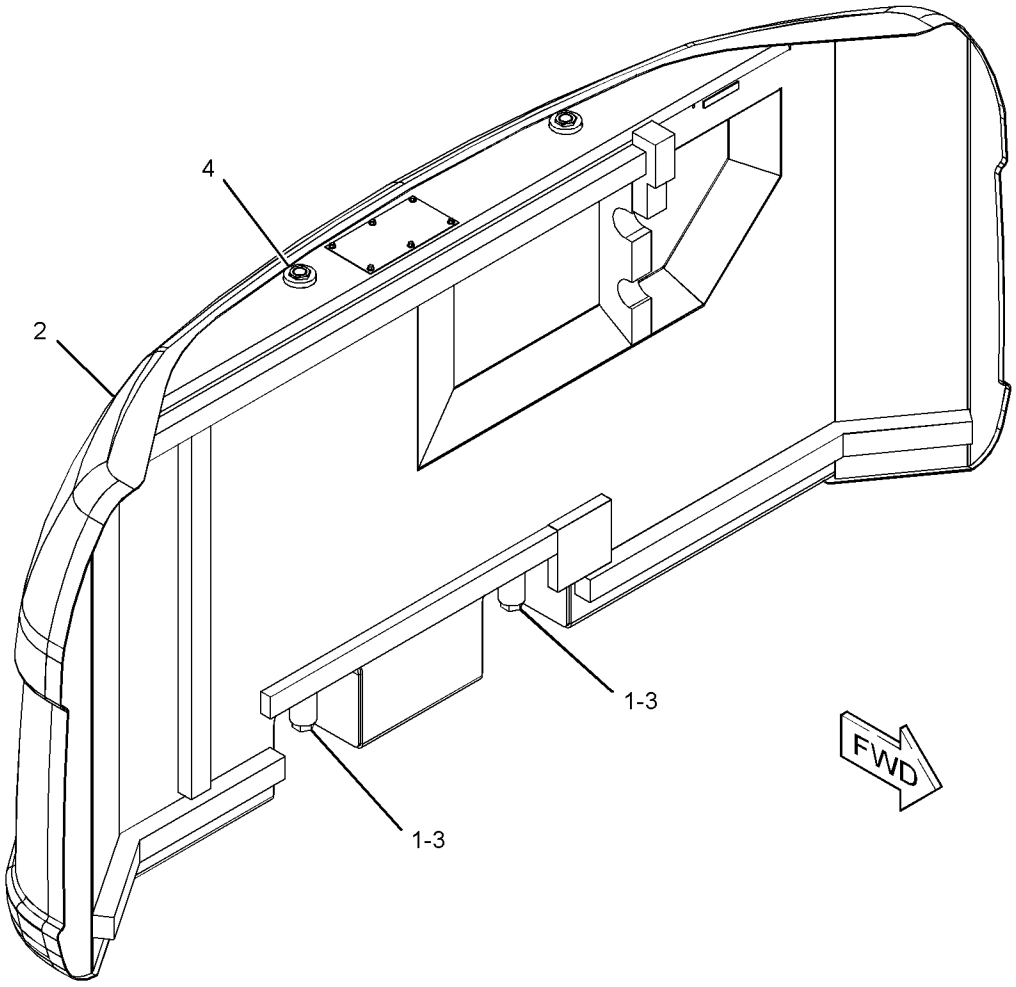

GRAPHIC #1 <END> g01437748

301-2664 COUNTERWEIGHT AR

S/N: DLP1-UP

AN ATTACHMENT

SMCS-7056 **i02988500**

NOTE	PART NUMBER	QTY	PART NAME 1 2 3 4 5 6 (PRODUCT LEVEL)	SEE PAGE
Y	*307-7798*	1	COUNTERWEIGHT GP	346
Y	*301-2596*	1	FILM GP (COUNTERWEIGHT REMOVAL)	1206

Y - SEPARATE ILLUSTRATION

<END>

278-3592 COUNTERWEIGHT GP

S/N: DLP1-214
2451-KG (5404-LB)
PART OF 278-3591 COUNTERWEIGHT & MOUNTING GP

SMCS-7056 **i02801860**

NOTE	REF NO	GRAPHIC REF	PART NUMBER	QTY	PART NAME 1 2 3 4 5 6 (PRODUCT LEVEL)	SEE PAGE
	1	1	**177-6048**	1	LINER	
	2	1	**177-6049**	1	LINER	
	3	1	**278-3593**	1	COUNTERWEIGHT AS	
	4	1	**278-3827**	1	LINER	
	5	1	**278-4013**	1	LINER	
	6	1	**283-3775**	1	LINER	
	7	1	**293-6734**	1	LINER	
	8	1	**293-6735**	1	LINER	
	9	1	**293-6788**	1	LINER	

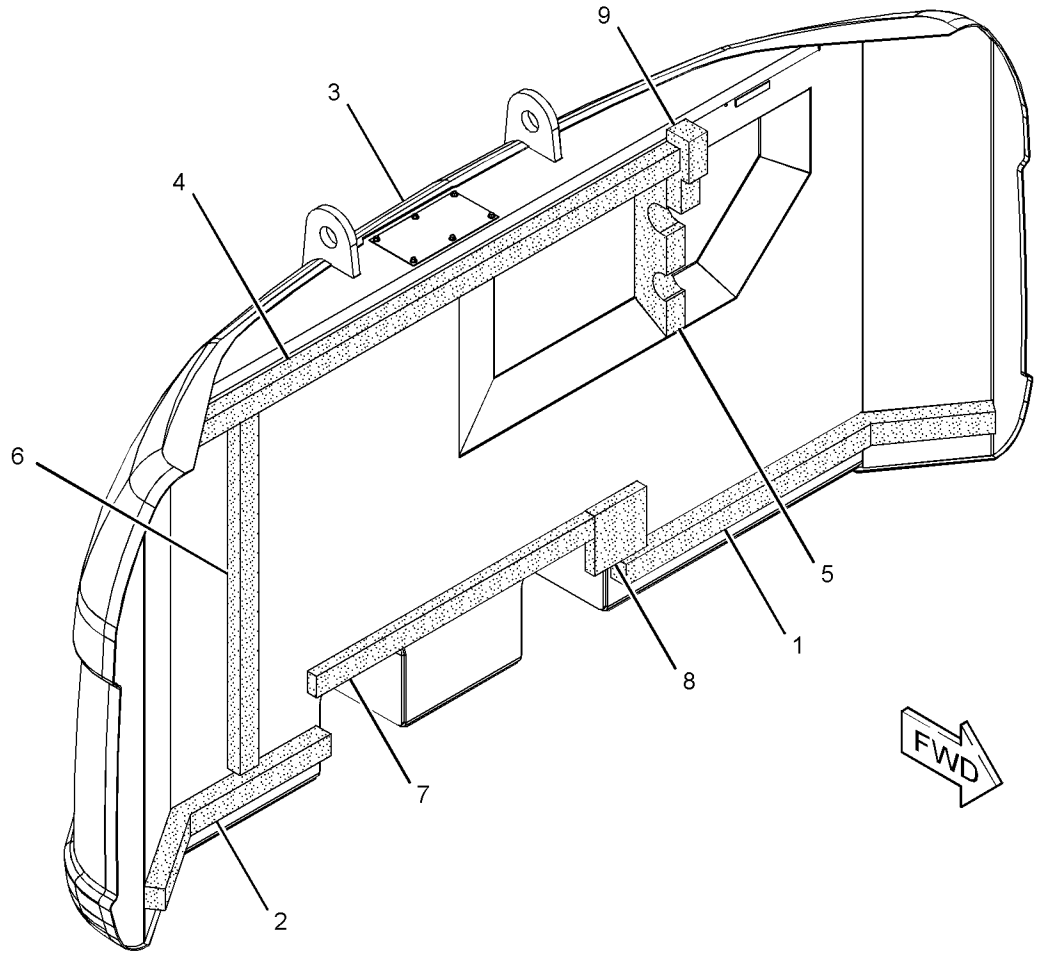

GRAPHIC #1 <END> g01401001

307-7798 COUNTERWEIGHT GP

S/N: DLP1-UP
PART OF 301-2664 COUNTERWEIGHT AR
AN ATTACHMENT
TYPE 1

SMCS-7056 **i02852120**

NOTE	REF NO	GRAPHIC REF	PART NUMBER	QTY	PART NAME 1 2 3 4 5 6 (PRODUCT LEVEL)	SEE PAGE
	1	1	**177-5867**	4	SPACER (25.5X50X75-MM THK)	
Y	2	1	*307-7799*	1	COUNTERWEIGHT GP	349
M	3	1	**8C-3290**	4	BOLT (M24X3X150-MM)	

M - METRIC PART
Y - SEPARATE ILLUSTRATION

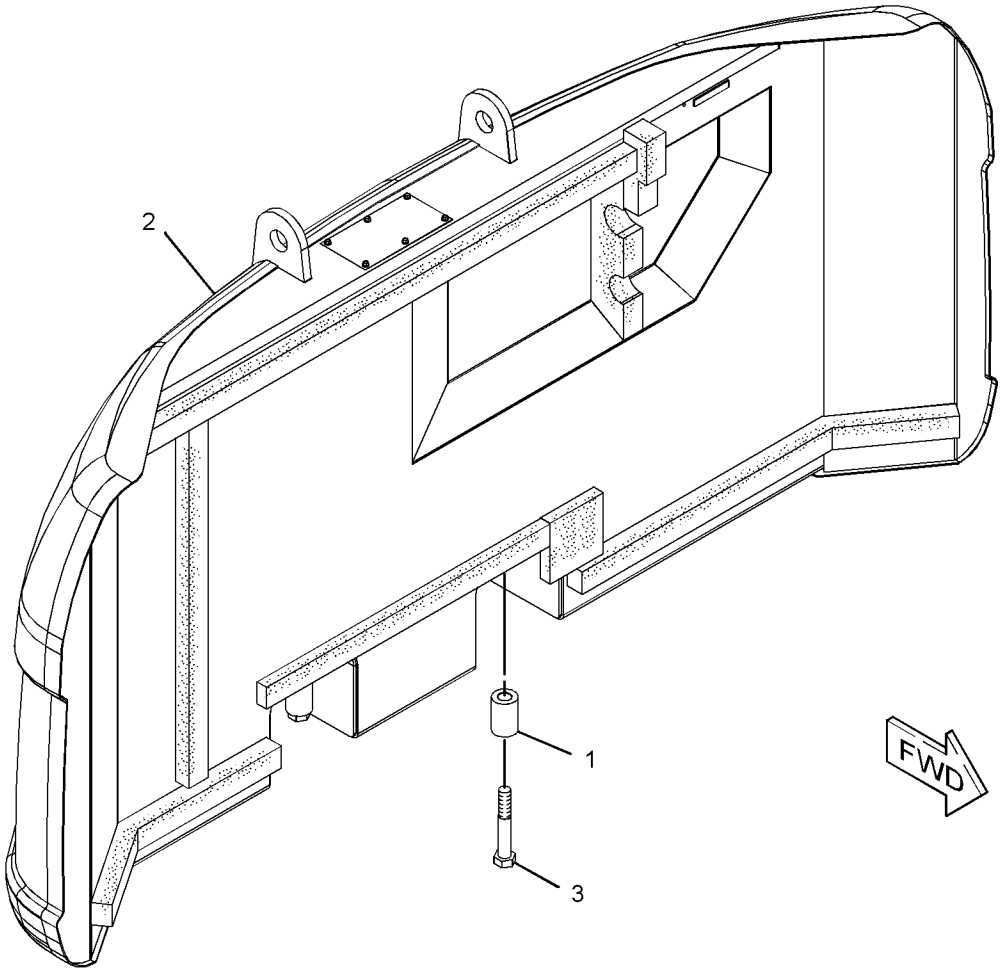

GRAPHIC #1 <END> g01438500

307-7798 COUNTERWEIGHT GP

S/N: DLP1-UP
PART OF 301-2664 COUNTERWEIGHT AR
AN ATTACHMENT
TYPE 2

SMCS-7056 **i03151085**

NOTE	REF NO	GRAPHIC REF	PART NUMBER	QTY	PART NAME 1 2 3 4 5 6 (PRODUCT LEVEL)	SEE PAGE
	1	1	**177-5867**	4	SPACER (25.5X50X75-MM THK)	
CY	2	1	*330-1219*	1	COUNTERWEIGHT GP	353
M	3	1	**8C-3290**	4	BOLT (M24X3X150-MM)	

C - CHANGE FROM PREVIOUS TYPE
M - METRIC PART
Y - SEPARATE ILLUSTRATION

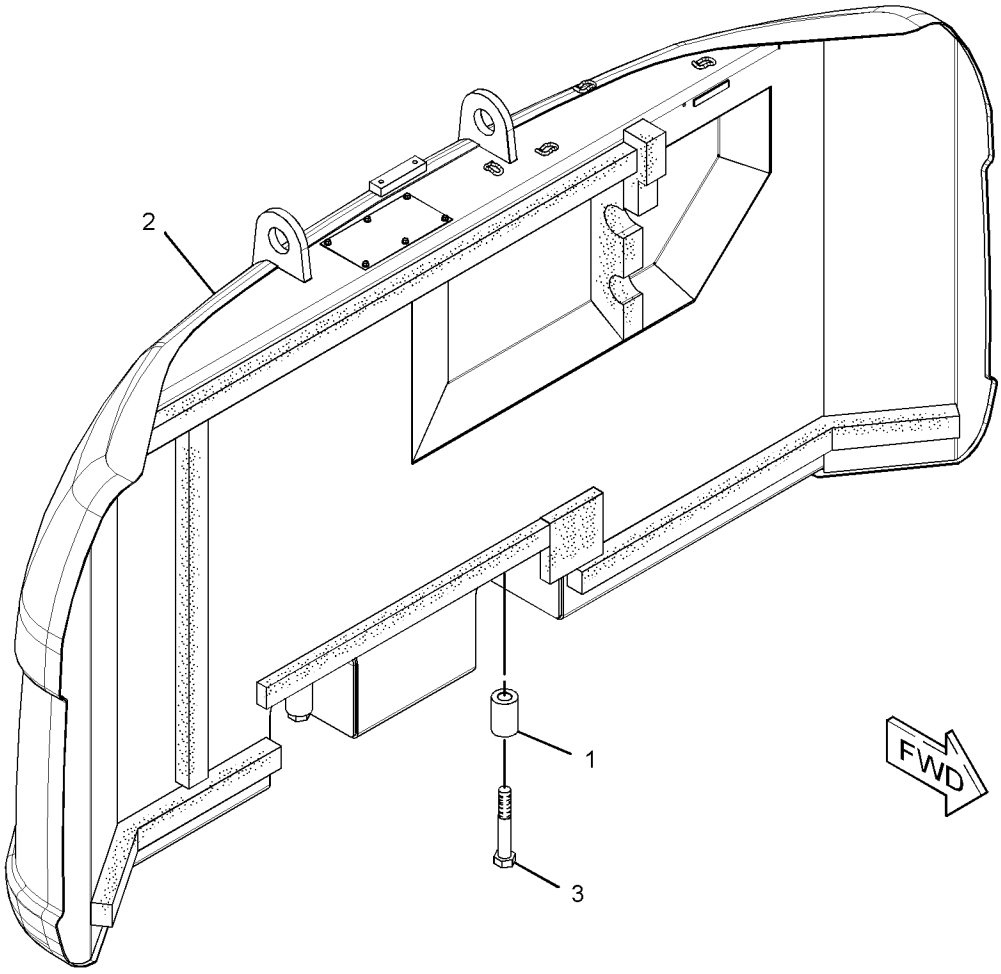

GRAPHIC #1 <END> g01622474

307-7798 COUNTERWEIGHT GP

S/N: DLP1-UP
PART OF 301-2664 COUNTERWEIGHT AR
AN ATTACHMENT

SMCS-7056 **i04142971**

NOTE	REF NO	GRAPHIC REF	PART NUMBER	QTY	PART NAME 1 2 3 4 5 6 (PRODUCT LEVEL)	SEE PAGE
	1	1	**4I-0006**	2	CAP	
	2	1	**7Y-0063**	2	FILM-INFORMATION (DO NOT LIFT)	
	3	1	**177-5867**	4	SPACER (25.5X50X75-MM THK)	
CY	4	1	*355-8169*	1	COUNTERWEIGHT GP	356
M	5	1	**8C-3290**	4	BOLT (M24X3X150-MM)	

C - CHANGE FROM PREVIOUS TYPE
M - METRIC PART
Y - SEPARATE ILLUSTRATION

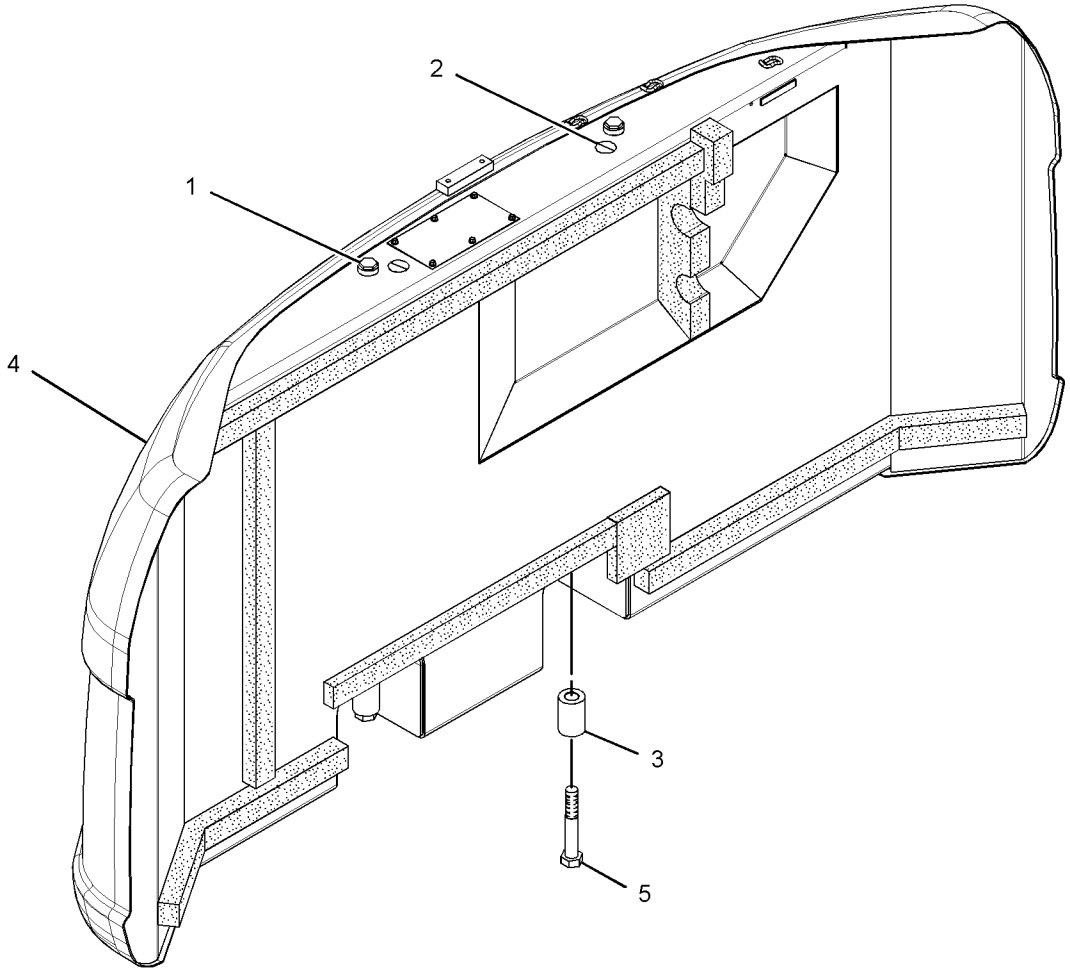

GRAPHIC #1 <END> g02514616

307-7799 COUNTERWEIGHT GP

S/N: DLP1-UP
2651-KG (5845-LB)
PART OF 307-7798 COUNTERWEIGHT GP
AN ATTACHMENT

SMCS-7056 **i02852121**

NOTE	REF NO	GRAPHIC REF	PART NUMBER	QTY	PART NAME 1 2 3 4 5 6 (PRODUCT LEVEL)	SEE PAGE
	1	1	**177-6048**	1	LINER	
	2	1	**177-6049**	1	LINER	
	3	1	**278-3827**	1	LINER	
	4	1	**278-4013**	1	LINER	
	5	1	**283-3775**	1	LINER	
	6	1	**293-6734**	1	LINER	
	7	1	**293-6735**	1	LINER	
	8	1	**293-6788**	1	LINER	
	9	1	**307-7800**	1	COUNTERWEIGHT AS	
M	9A	1	**192-3039**	6	SCREW-HEX FLANGE (6.3X1.8X19-MM)	

M - METRIC PART

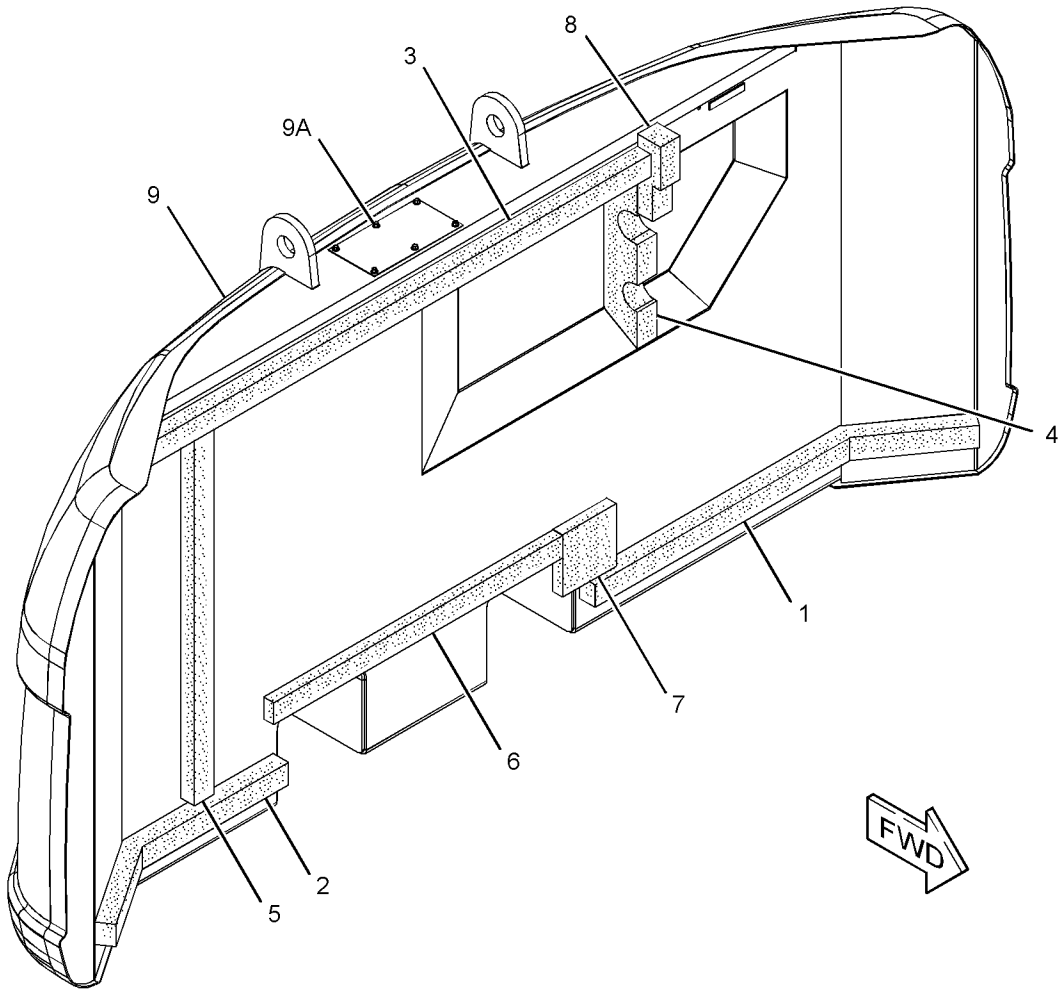

GRAPHIC #1 <END> g01438289

307-7924 COUNTERWEIGHT GP

S/N: DLP1-UP
AN ATTACHMENT
TYPE 1

SMCS-7056 **i03151103**

NOTE	REF NO	GRAPHIC REF	PART NUMBER	QTY	PART NAME 1 2 3 4 5 6 (PRODUCT LEVEL)	SEE PAGE
	1	1	**177-5867**	4	SPACER (25.5X50X75-MM THK)	
CY	2	1	*330-1329*	1	COUNTERWEIGHT GP	354
M	3	1	**8C-3290**	4	BOLT (M24X3X150-MM)	

C - CHANGE FROM PREVIOUS TYPE
M - METRIC PART
Y - SEPARATE ILLUSTRATION

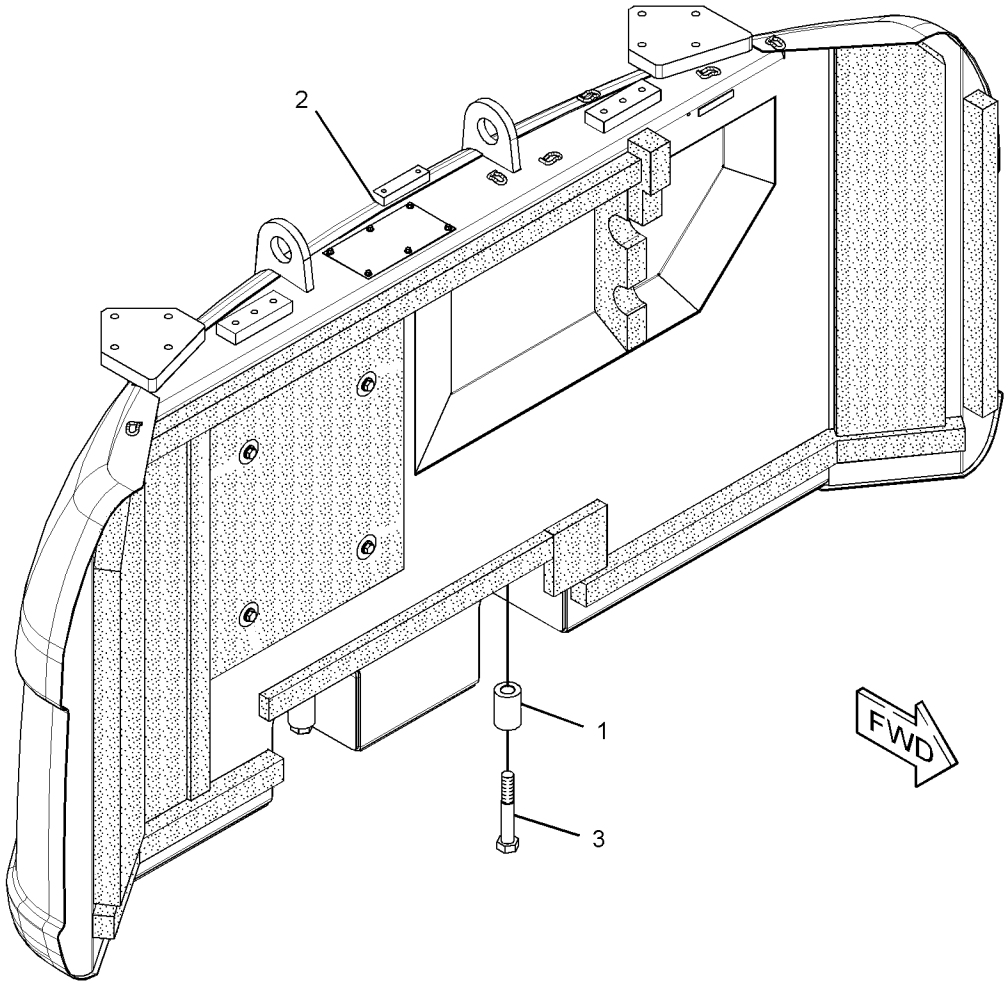

GRAPHIC #1 <END> g01628673

307-7924 COUNTERWEIGHT GP

S/N: DLP1-UP
AN ATTACHMENT
TYPE 2

SMCS-7056 **i05702910**

NOTE	REF NO	GRAPHIC REF	PART NUMBER	QTY	PART NAME 1 2 3 4 5 6 (PRODUCT LEVEL)	SEE PAGE
	1	1	**177-5867**	4	SPACER (25.5X50X75-MM THK)	
CY	2	1	*355-8173*	1	COUNTERWEIGHT GP	357
M	3	1	**447-1732**	4	BOLT (M24X3X150-MM)	
C	4	1	**7Y-0063**	2	FILM-INFORMATION (DO NOT LIFT)	
C	5	1	**4I-0006**	2	CAP	

C - CHANGE FROM PREVIOUS TYPE
M - METRIC PART
Y - SEPARATE ILLUSTRATION

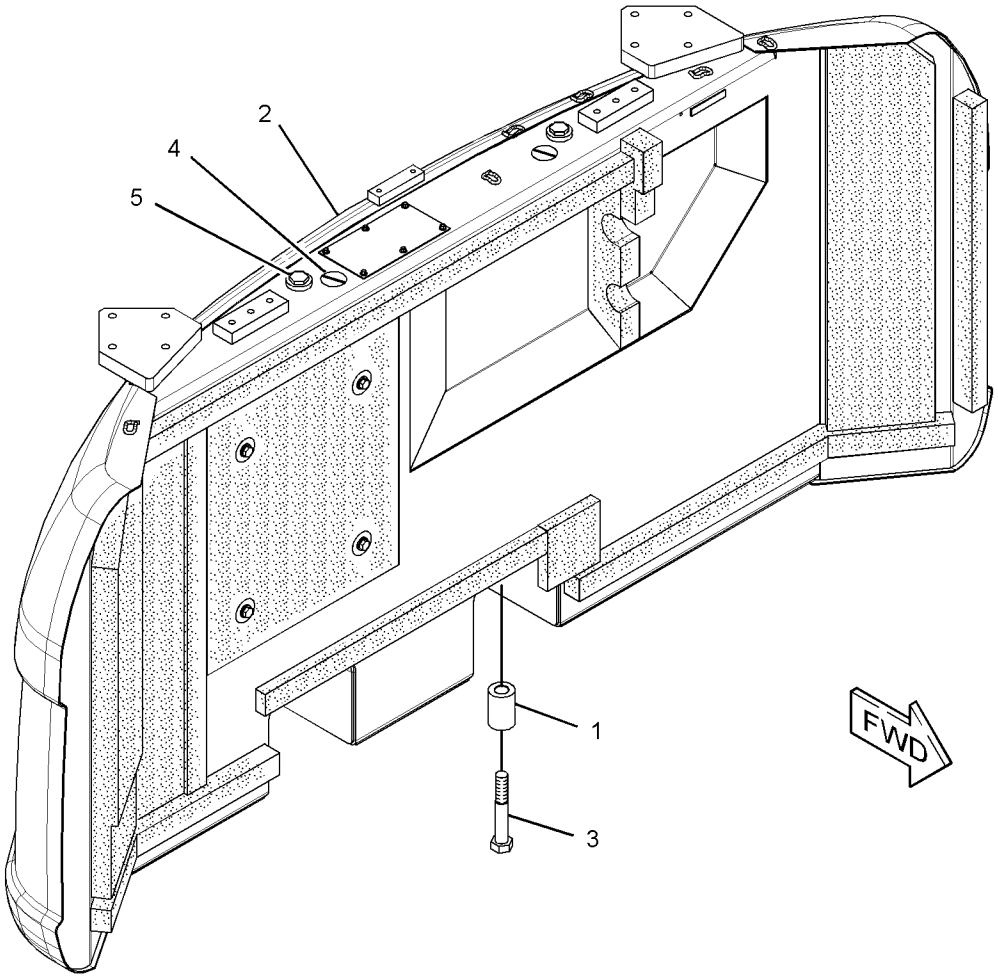

GRAPHIC #1 <END> g02492341

330-1213 COUNTERWEIGHT GP

S/N: DLP215-UP
2451-KG (5404-LB)
PART OF 278-3591 COUNTERWEIGHT & MOUNTING GP

SMCS-7056 **i03159020**

NOTE	REF NO	GRAPHIC REF	PART NUMBER	QTY	PART NAME 1 2 3 4 5 6 (PRODUCT LEVEL)	SEE PAGE
	1	1	**177-6048**	1	LINER	
	2	1	**177-6049**	1	LINER	
	3	1	**278-3827**	1	LINER	
	4	1	**278-4013**	1	LINER	
	5	1	**283-3775**	1	LINER	
	6	1	**293-6734**	1	LINER	
	7	1	**293-6735**	1	LINER	
	8	1	**293-6788**	1	LINER	
	9	1	**330-1214**	1	COUNTERWEIGHT AS	

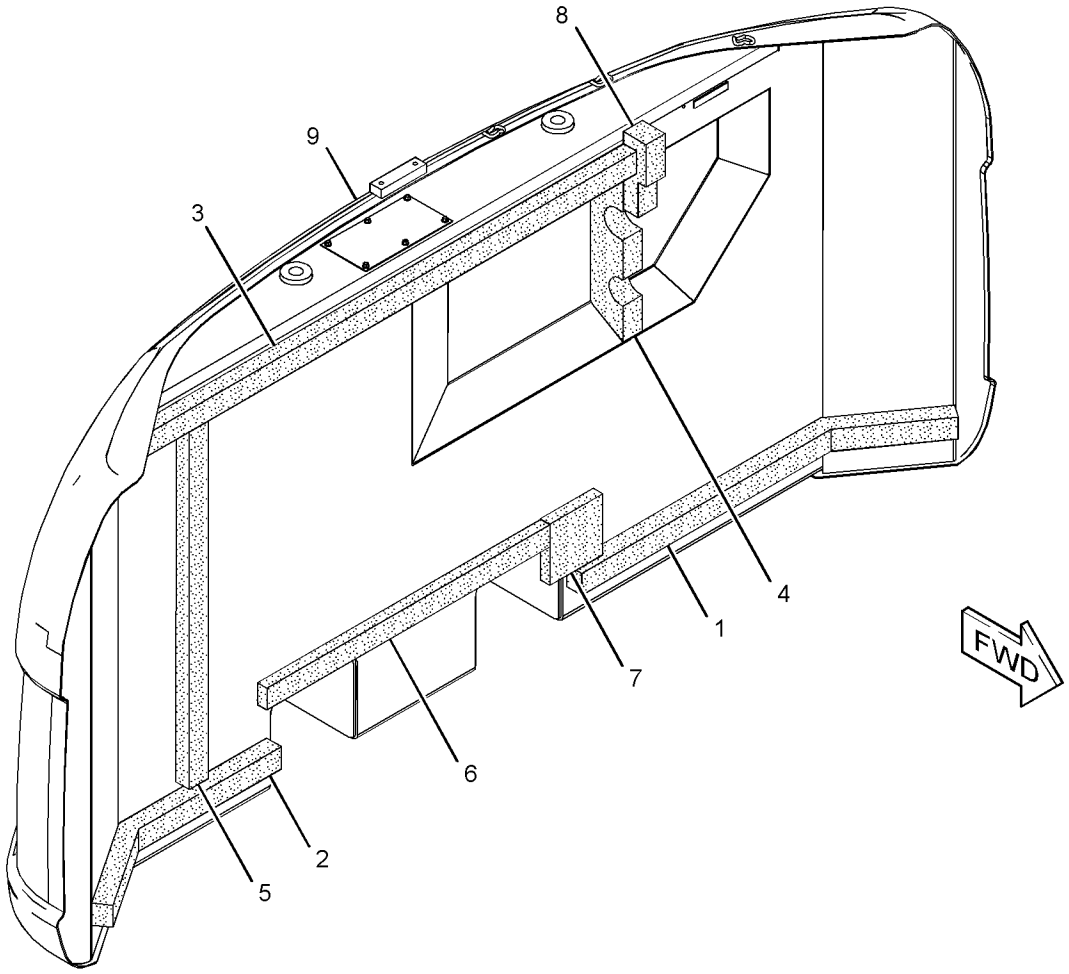

GRAPHIC #1 <END> g01660015

330-1219 COUNTERWEIGHT GP

S/N: DLP1-UP
2651-KG (5845-LBS)
PART OF 307-7798 COUNTERWEIGHT GP
AN ATTACHMENT

SMCS-7056 **i03151086**

NOTE	REF NO	GRAPHIC REF	PART NUMBER	QTY	PART NAME 1 2 3 4 5 6 (PRODUCT LEVEL)	SEE PAGE
	1	1	**177-6048**	1	LINER	
	2	1	**177-6049**	1	LINER	
	3	1	**278-3827**	1	LINER	
	4	1	**278-4013**	1	LINER	
	5	1	**283-3775**	1	LINER	
	6	1	**293-6734**	1	LINER	
	7	1	**293-6735**	1	LINER	
	8	1	**293-6788**	1	LINER	
	9	1	**330-1220**	1	COUNTERWEIGHT AS	

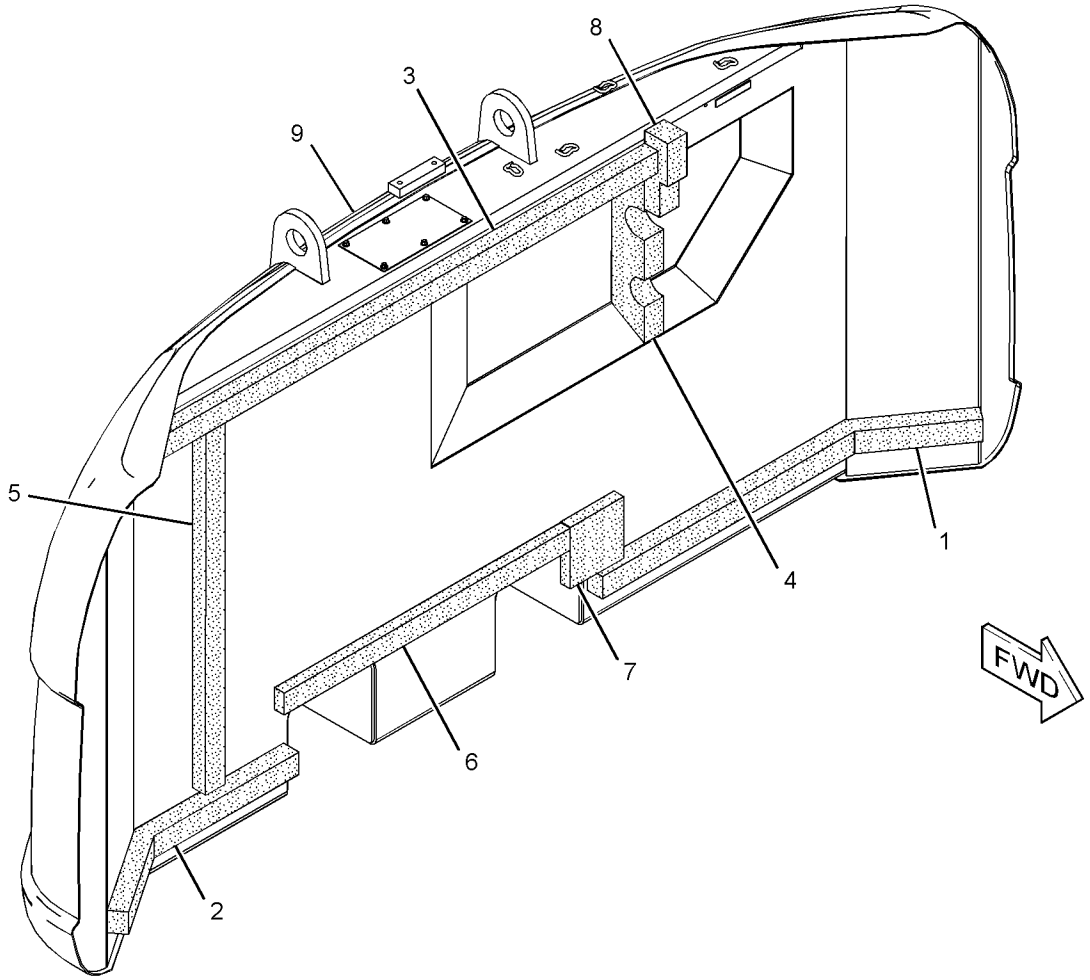

GRAPHIC #1 <END> g01622336

330-1329 COUNTERWEIGHT GP

S/N: DLP1-UP
2652-KG (5847-LB)
PART OF 307-7924 COUNTERWEIGHT GP
AN ATTACHMENT

SMCS-7056 **i04275009**

NOTE	REF NO	GRAPHIC REF	PART NUMBER	QTY	PART NAME 1 2 3 4 5 6 (PRODUCT LEVEL)	SEE PAGE
	1	1	**177-6048**	1	LINER	
	2	1	**177-6049**	1	LINER	
	3	1	**278-3827**	1	LINER	
	4	1	**278-4013**	1	LINER	
	5	1	**283-3775**	1	LINER	
	6	1	**289-6750**	1	LINER	
	7	1	**289-6751**	1	LINER	
	8	1	**289-6752**	1	LINER	
	9	1	**289-6753**	1	INSULATION	
	10	1	**293-6733**	1	LINER	
	11	1	**293-6734**	1	LINER	
	12	1	**293-6735**	1	LINER	
	13	1	**293-6788**	1	LINER	
	14	1	**330-1330**	1	COUNTERWEIGHT AS	
		1	**7T-1099**	6	LINK	
M		1	**192-3039**	6	SCREW-HEX FLANGE (6.3X1.8X19-MM)	
		1	**289-6570**	1	SHEET	
	15	1	**7Y-2292**	4	WASHER (13X50X2-MM THK)	
M	16	1	**8T-4179**	4	BOLT (M12X1.75X20-MM)	
	17	1	**8T-4223**	4	WASHER-HARD (13.5X25.5X3-MM THK)	

M - METRIC PART

330-1329 **COUNTERWEIGHT GP (**contd.**)** **i04275009**

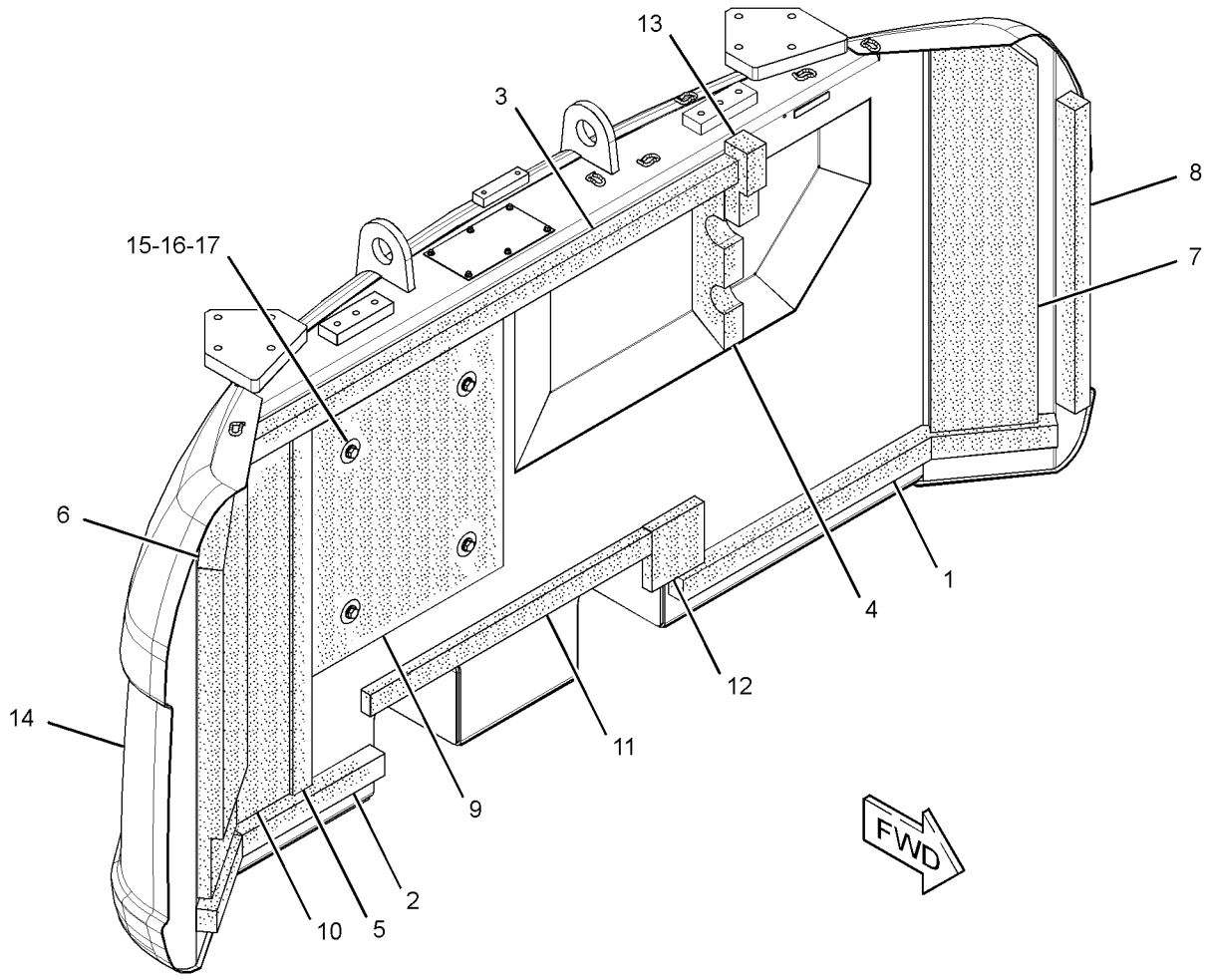

GRAPHIC #1 <END> g02492457

355-8169 COUNTERWEIGHT GP

S/N: DLP1-UP
2651-KG (5845-LBS)
PART OF 307-7798 COUNTERWEIGHT GP
AN ATTACHMENT

SMCS-7056 **i04142997**

NOTE	REF NO	GRAPHIC REF	PART NUMBER	QTY	PART NAME 1 2 3 4 5 6 (PRODUCT LEVEL)	SEE PAGE
	1	1	**177-6048**	1	LINER	
	2	1	**177-6049**	1	LINER	
	3	1	**278-3827**	1	LINER	
	4	1	**278-4013**	1	LINER	
	5	1	**283-3775**	1	LINER	
	6	1	**293-6734**	1	LINER	
	7	1	**293-6735**	1	LINER	
	8	1	**293-6788**	1	LINER	
	9	1	**355-8170**	1	COUNTERWEIGHT AS	

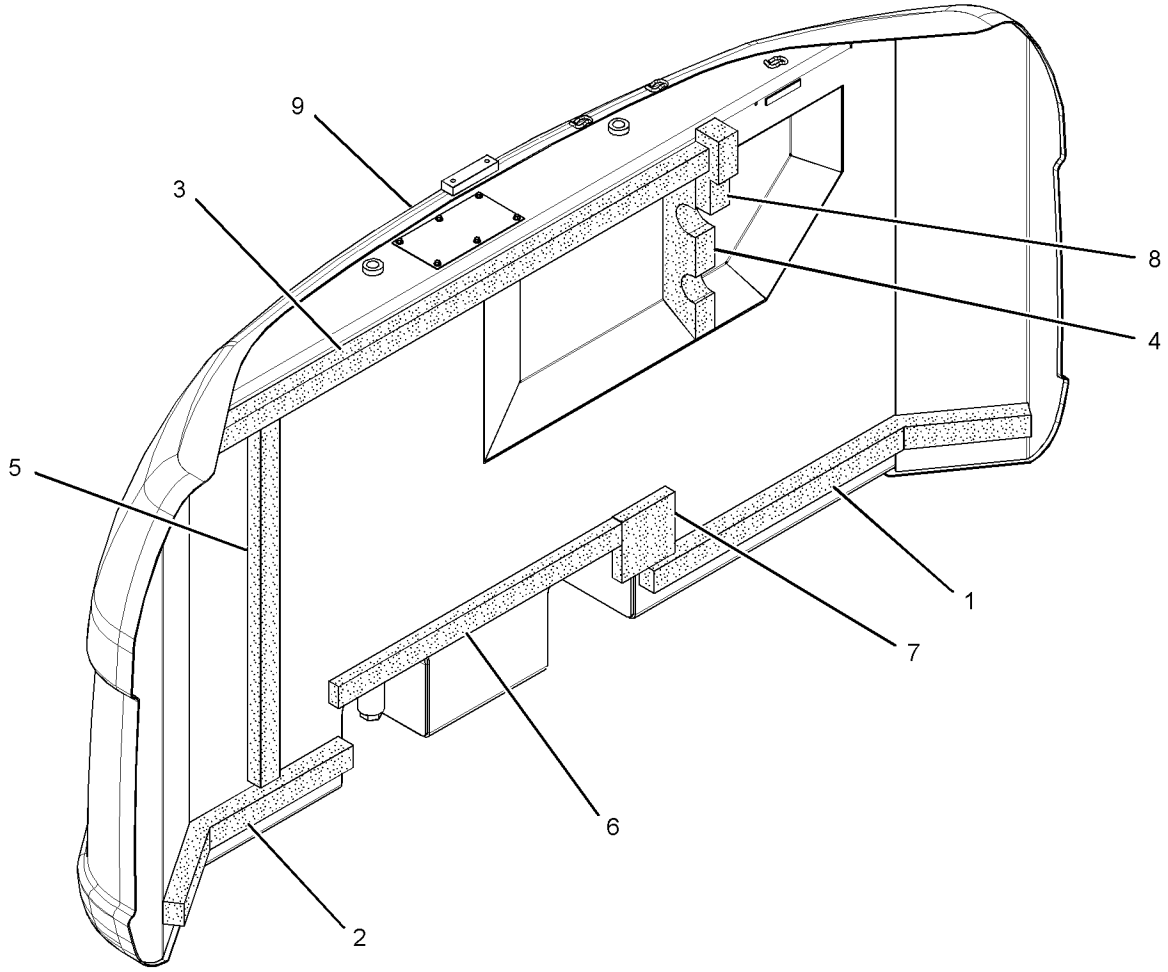

GRAPHIC #1 <END> g02514716

355-8173 COUNTERWEIGHT GP

S/N: DLP1-UP
2652-KG (5847-LB)
PART OF 307-7924 COUNTERWEIGHT GP
AN ATTACHMENT

SMCS-7056 **i04275030**

NOTE	REF NO	GRAPHIC REF	PART NUMBER	QTY	PART NAME 1 2 3 4 5 6 (PRODUCT LEVEL)	SEE PAGE
	1	1	**177-6048**	1	LINER	
	2	1	**177-6049**	1	LINER	
	3	1	**278-3827**	1	LINER	
	4	1	**278-4013**	1	LINER	
	5	1	**283-3775**	1	LINER	
	6	1	**289-6750**	1	LINER	
	7	1	**289-6751**	1	LINER	
	8	1	**289-6752**	1	LINER	
	9	1	**289-6753**	1	INSULATION	
	10	1	**293-6733**	1	LINER	
	11	1	**293-6734**	1	LINER	
	12	1	**293-6735**	1	LINER	
	13	1	**293-6788**	1	LINER	
	14	1	**355-8174**	1	COUNTERWEIGHT AS	
M		1	**192-3039**	6	SCREW-HEX FLANGE (6.3X1.8X19-MM)	
		1	**289-6570**	1	SHEET	
		1	**7T-1099**	6	LINK	
	15	1	**7Y-2292**	4	WASHER (13X50X2-MM THK)	
M	16	1	**8T-4179**	4	BOLT (M12X1.75X20-MM)	
	17	1	**8T-4223**	4	WASHER-HARD (13.5X25.5X3-MM THK)	

M - METRIC PART

355-8173 **COUNTERWEIGHT GP (**contd.**)** **i04275030**

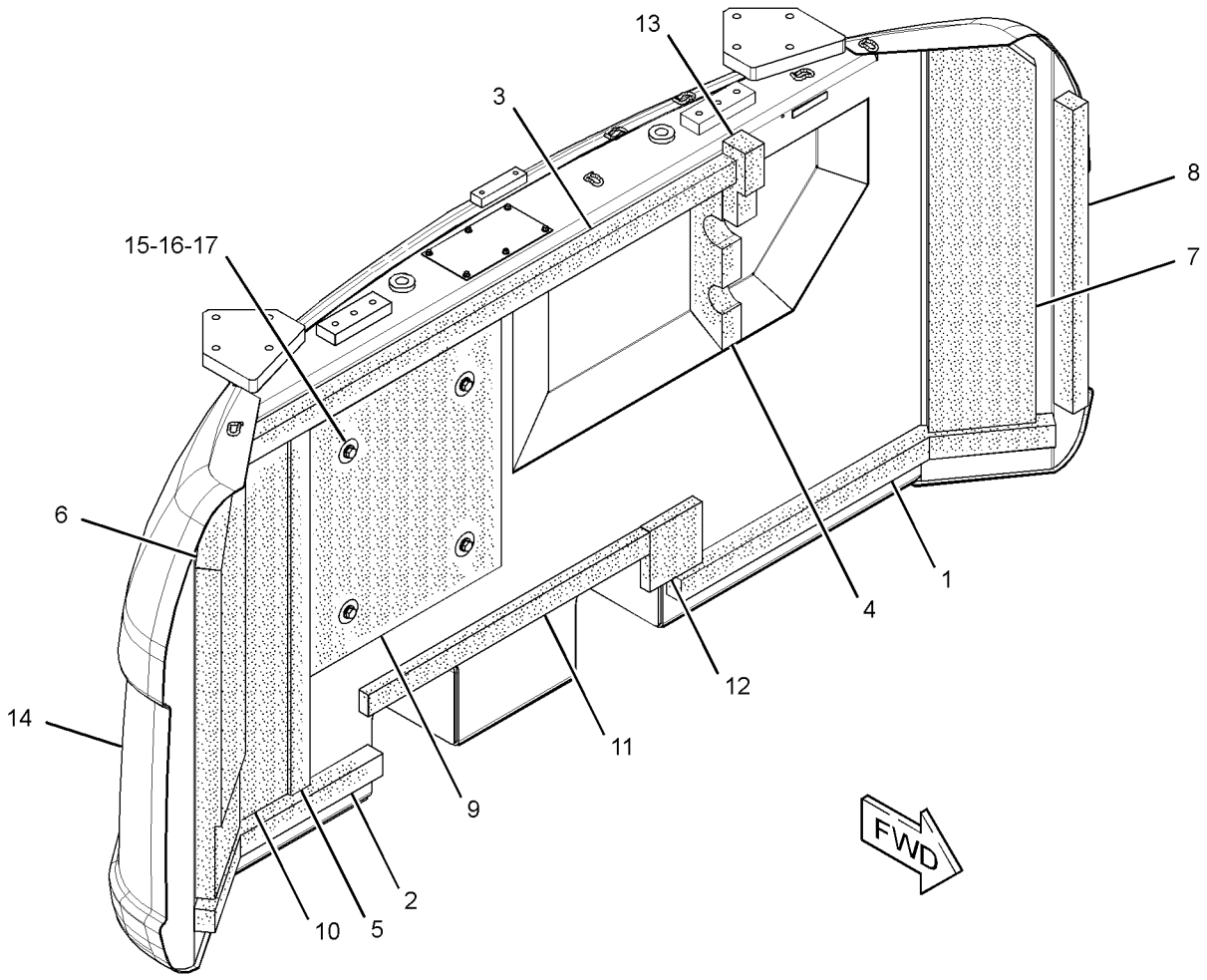

GRAPHIC #1 <END> g02492276

283-3610 COVER AS-ACCESS—FUEL, HYDRAULIC TANKS

S/N: DLP1-214

PART OF 283-3595 DOOR & MTG GP-ACCESS

SMCS-726A, 795C

i02801771

NOTE	REF NO	GRAPHIC REF	PART NUMBER	QTY	PART NAME 1 2 3 4 5 6 (PRODUCT LEVEL)	SEE PAGE
	1	1	**199-0126**	1	LINER	
	2	1	**236-9567**	2	SHEET-RUBBER	
	4	1	**283-3619**	1	LINER	
	5	1	**283-3620**	2	LINER	

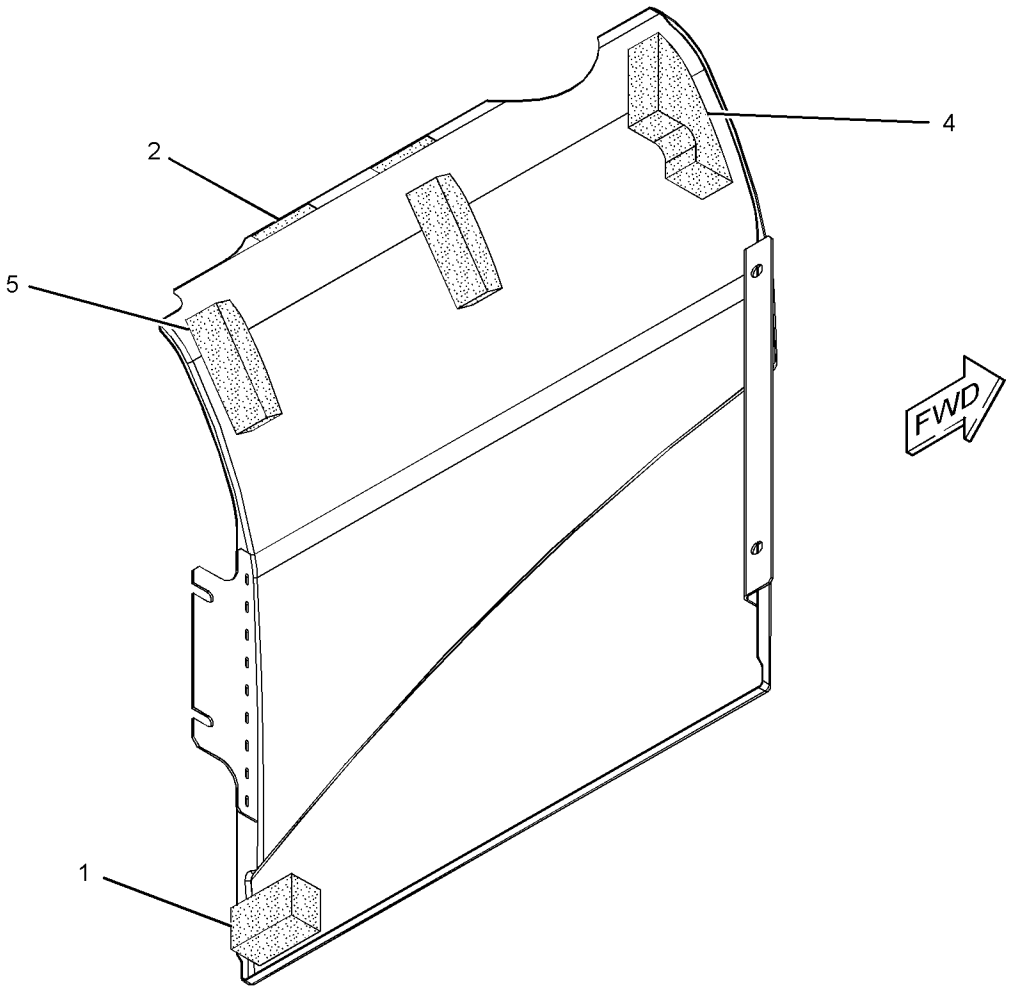

GRAPHIC #1

<END>

g01403545

330-1557 COVER AS-ACCESS—FUEL, HYDRAULIC TANKS

S/N: DLP215-UP

PART OF 283-3595 DOOR & MTG GP-ACCESS

SMCS-726A, 795C

i03158995

NOTE	REF NO	GRAPHIC REF	PART NUMBER	QTY	PART NAME 1 2 3 4 5 6 (PRODUCT LEVEL)	SEE PAGE
	1	1	**199-0126**	1	LINER	
	2	1	**236-9567**	2	SHEET-RUBBER	
	3	1	**283-3619**	1	LINER	
	4	1	**283-3620**	2	LINER	

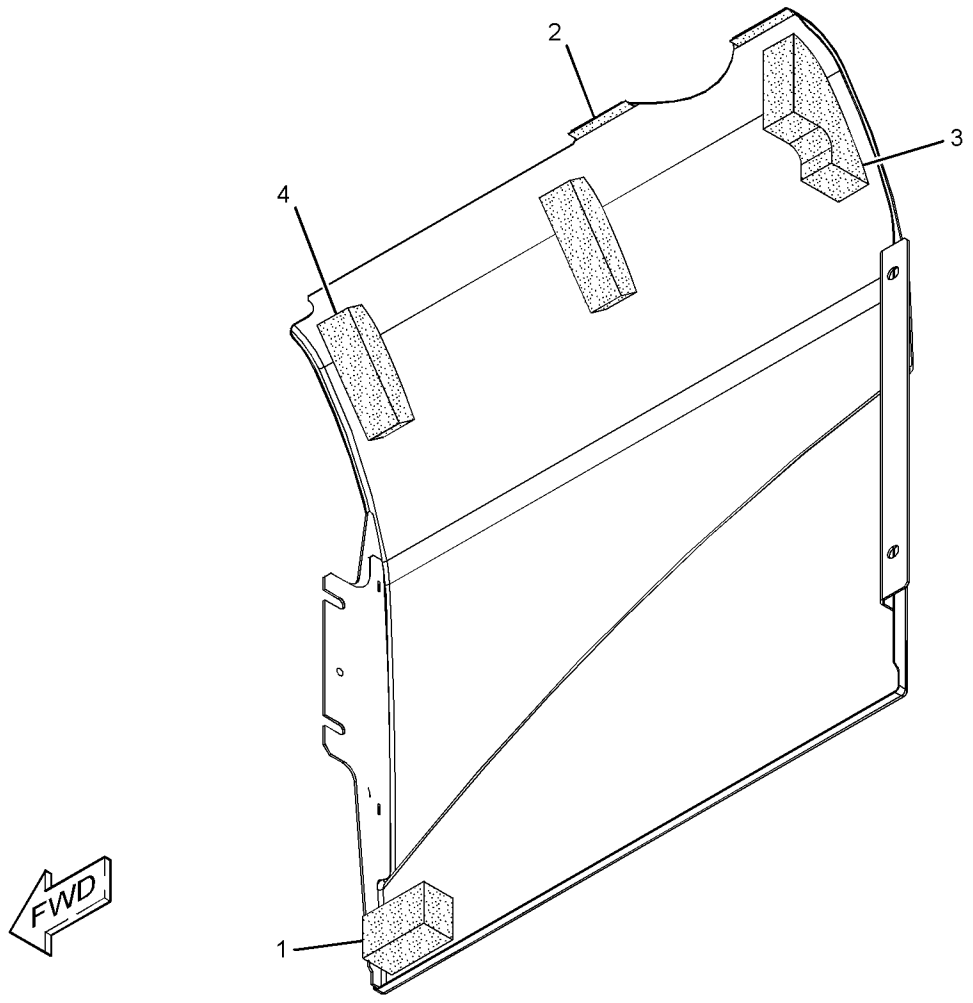

GRAPHIC #1

<END>

g01656714

193-9776 COVER GP-ACCESS—ENGINE OIL DIPSTICK

S/N: DLP1-UP
PART OF 298-4105 STARTING AR-COLD WEATHER
AN ATTACHMENT

SMCS-726A **i03063893**

NOTE	REF NO	GRAPHIC REF	PART NUMBER	QTY	PART NAME 1 2 3 4 5 6 (PRODUCT LEVEL)	SEE PAGE
	1	1	**1K-8850**	1	SPRING	
	2	1	**193-9793**	1	COVER AS	
	2A	1	**4K-8501**	1	CLIP	
M	2B	1	**8T-5413**	2	STUD-WELD (M10X1.5X25-MM)	
	2C	1	**9V-3659**	1	HINGE	
	3	1	**8T-4121**	2	WASHER-HARD (11X21X2.5-MM THK)	
M	4	1	**8T-4133**	2	NUT (M10X1.5-THD)	

M - METRIC PART

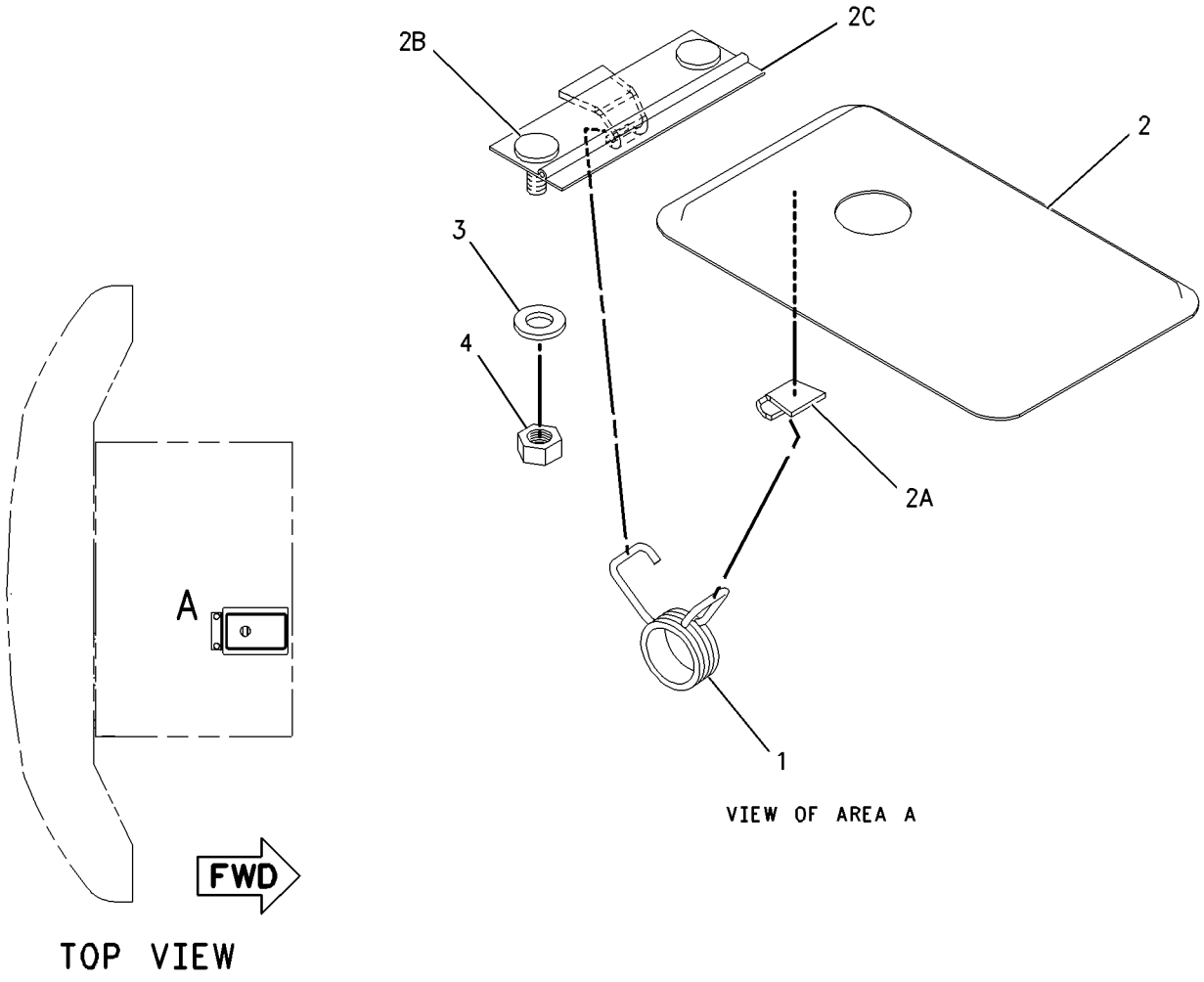

GRAPHIC #1 <END> g00791460

283-3597 COVER GP-ACCESS—MAIN CONTROL VALVE

S/N: DLP1-214

PART OF 273-8101 HOOD & GUARD GP

SMCS-726A **i02843700**

NOTE	REF NO	GRAPHIC REF	PART NUMBER	QTY	PART NAME 1 2 3 4 5 6 (PRODUCT LEVEL)	SEE PAGE
	1	1	**135-8575**	16	BOLT AS	
	2	1	**283-3600**	1	SHEET AS	
		1	**6I-6033**	1	STOP	
		1	**6P-2216**	2	CAP (PUSH ON)	
M		1	**9X-2045**	2	SCREW-TRUSS HEAD (M6X1X20-MM)	
		1	**283-3602**	1	LINER	
	3	1	**283-3603**	1	SHEET AS	
	4	1	**283-3604**	1	SHEET AS	
		1	**283-3606**	1	LINER	
	5	1	**283-3947**	1	SHEET AS	
	6	1	**313-7851**	1	SHEET AS-SOUND SUPPRESSION	
		1	**6P-2216**	2	CAP (PUSH ON)	
		1	**313-7853**	1	INSULATION	

M - METRIC PART

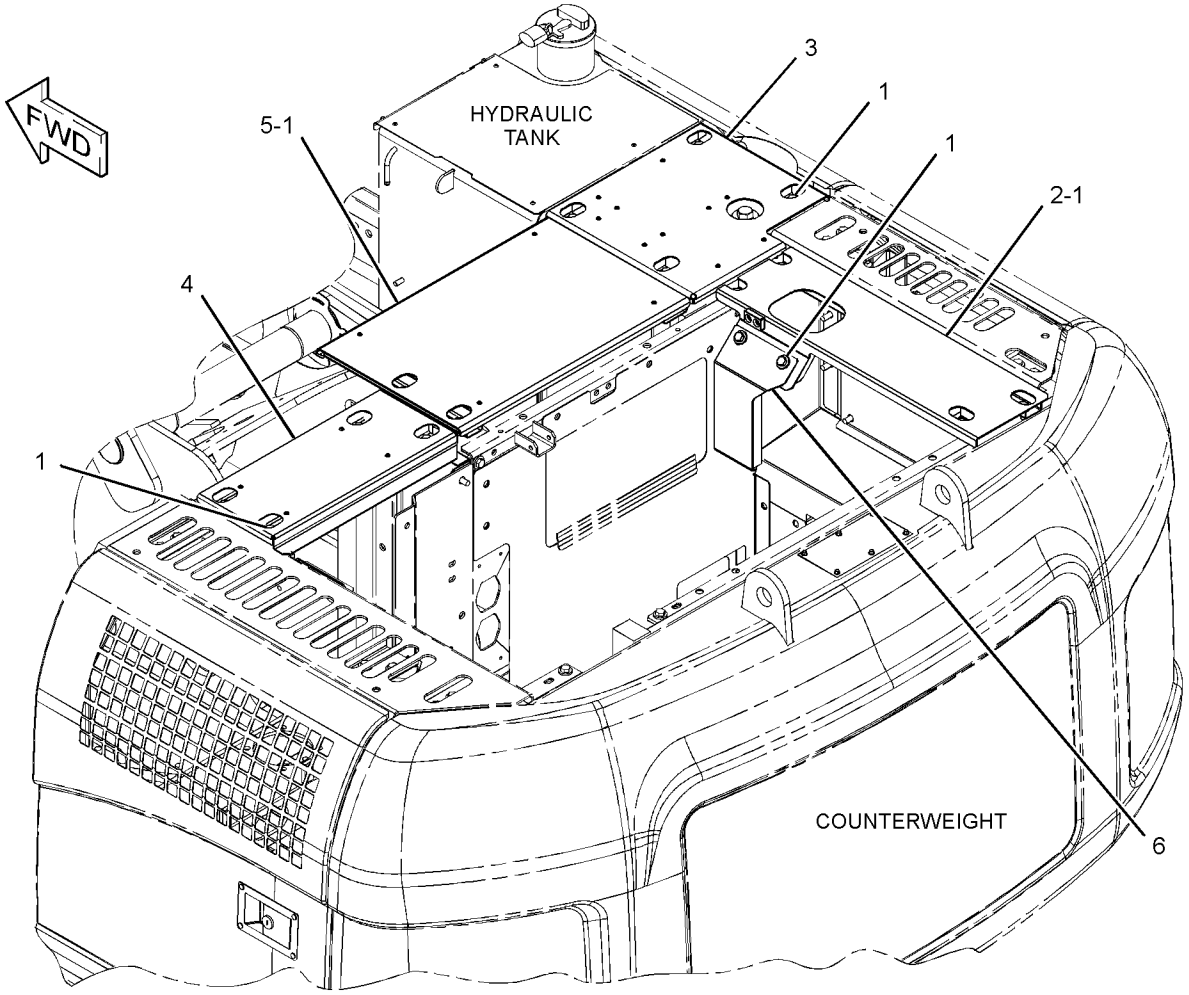

GRAPHIC #1 <END> g01437755

283-3597 COVER GP-ACCESS—MAIN CONTROL VALVE

S/N: DLP215-UP

PART OF 273-8101 HOOD & GUARD GP

SMCS-726A **i04465530**

NOTE	REF NO	GRAPHIC REF	PART NUMBER	QTY	PART NAME 1 2 3 4 5 6 (PRODUCT LEVEL)	SEE PAGE
	1	1	**135-8575**	16	BOLT AS	
	2	1	**372-7609**	1	SHEET AS-SOUND SUPPRESSION	
		1	**6I-6033**	1	STOP	
		1	**6P-2216**	2	CAP (PUSH ON)	
M		1	**9X-2045**	2	SCREW-TRUSS HEAD (M6X1X20-MM)	
		1	**283-3602**	1	LINER	
C	3	1	**330-1561**	1	SHEET AS	
	4	1	**372-7611**	1	SHEET AS-SOUND SUPPRESSION	
		1	**283-3606**	1	LINER	
	5	1	**351-2956**	1	SHEET AS	
	6	1	**313-7851**	1	SHEET AS-SOUND SUPPRESSION	
		1	**6P-2216**	2	CAP (PUSH ON)	
		1	**313-7853**	1	INSULATION	

C - CHANGE FROM PREVIOUS TYPE
M - METRIC PART

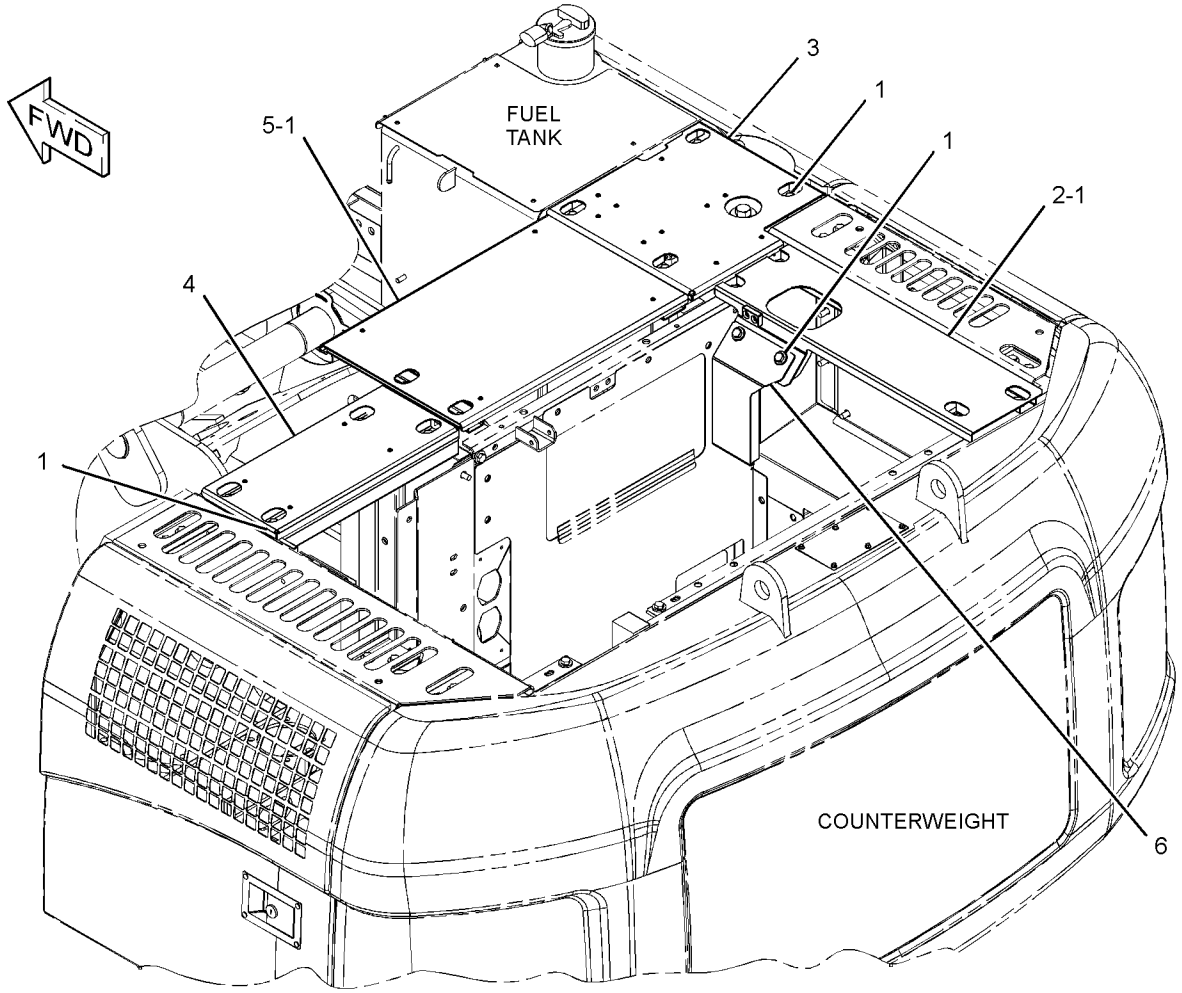

GRAPHIC #1 <END> g01656920

283-3599 COVER GP-ACCESS—MAIN CONTROL VALVE

S/N: DLP1-UP
PART OF 260-7116 FILTER AR-HYDRAULIC
AN ATTACHMENT

SMCS-726A **i04389168**

NOTE	REF NO	GRAPHIC REF	PART NUMBER	QTY	PART NAME 1 2 3 4 5 6 (PRODUCT LEVEL)	SEE PAGE
	1	1	**366-6423**	1	SHEET AS	

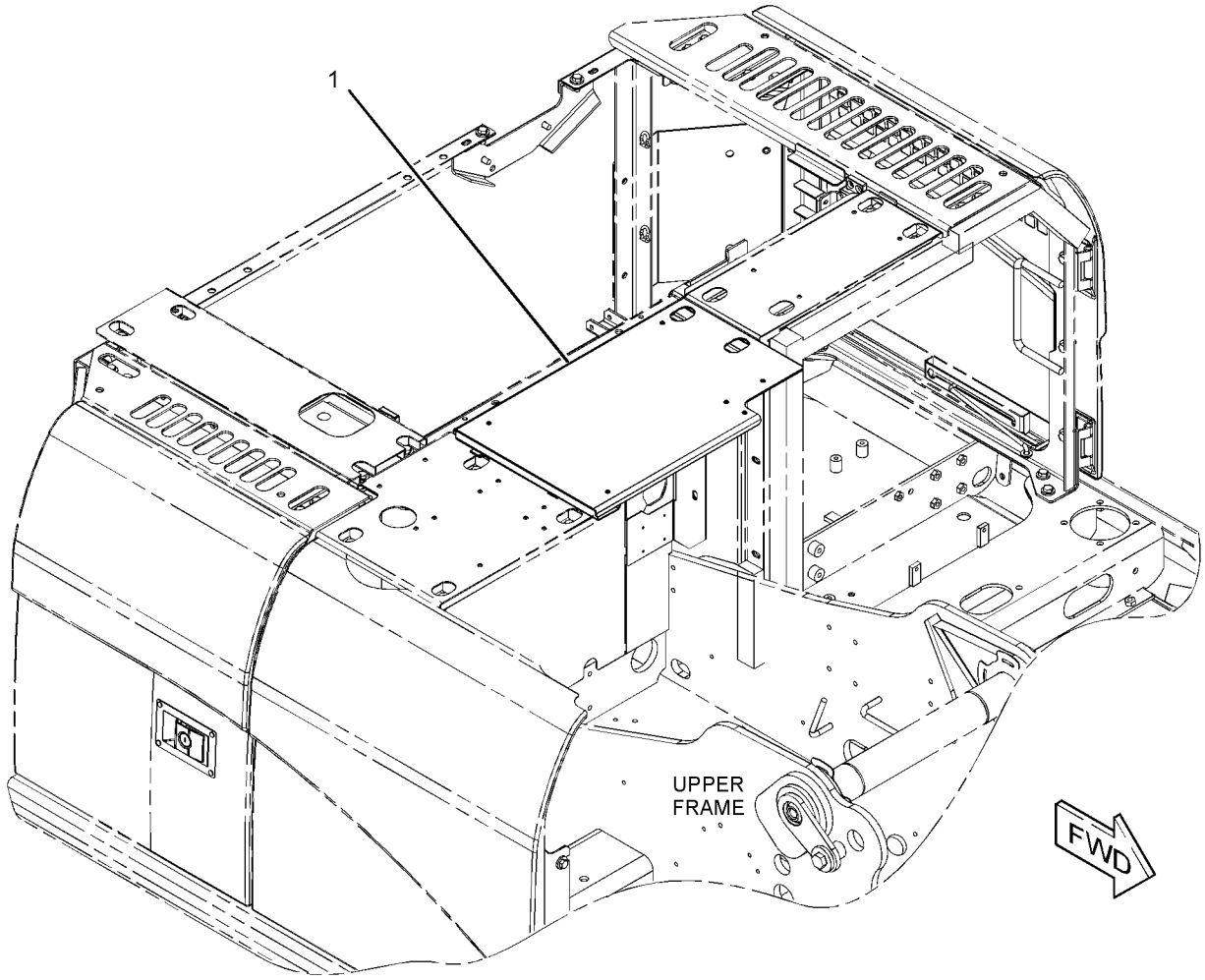

GRAPHIC #1 <END> g01409006

283-3595 DOOR & MTG GP-ACCESS—PUMP COMPARTMENT

S/N: DLP1-214

PART OF 273-8101 HOOD & GUARD GP

SMCS-7273 **i03991618**

NOTE	REF NO	GRAPHIC REF	PART NUMBER	QTY	PART NAME 1 2 3 4 5 6 (PRODUCT LEVEL)	SEE PAGE
	1	1	**135-8573**	4	BOLT AS	
	2	1	**135-8575**	13	BOLT AS	
Y	3	1	**283-3609**	1	DOOR GP-ACCESS (PUMP COMPARTMENT)	379
Y	4	1	**283-3610**	1	COVER AS-ACCESS (FUEL, HYDRAULIC TANKS)	359

Y - SEPARATE ILLUSTRATION

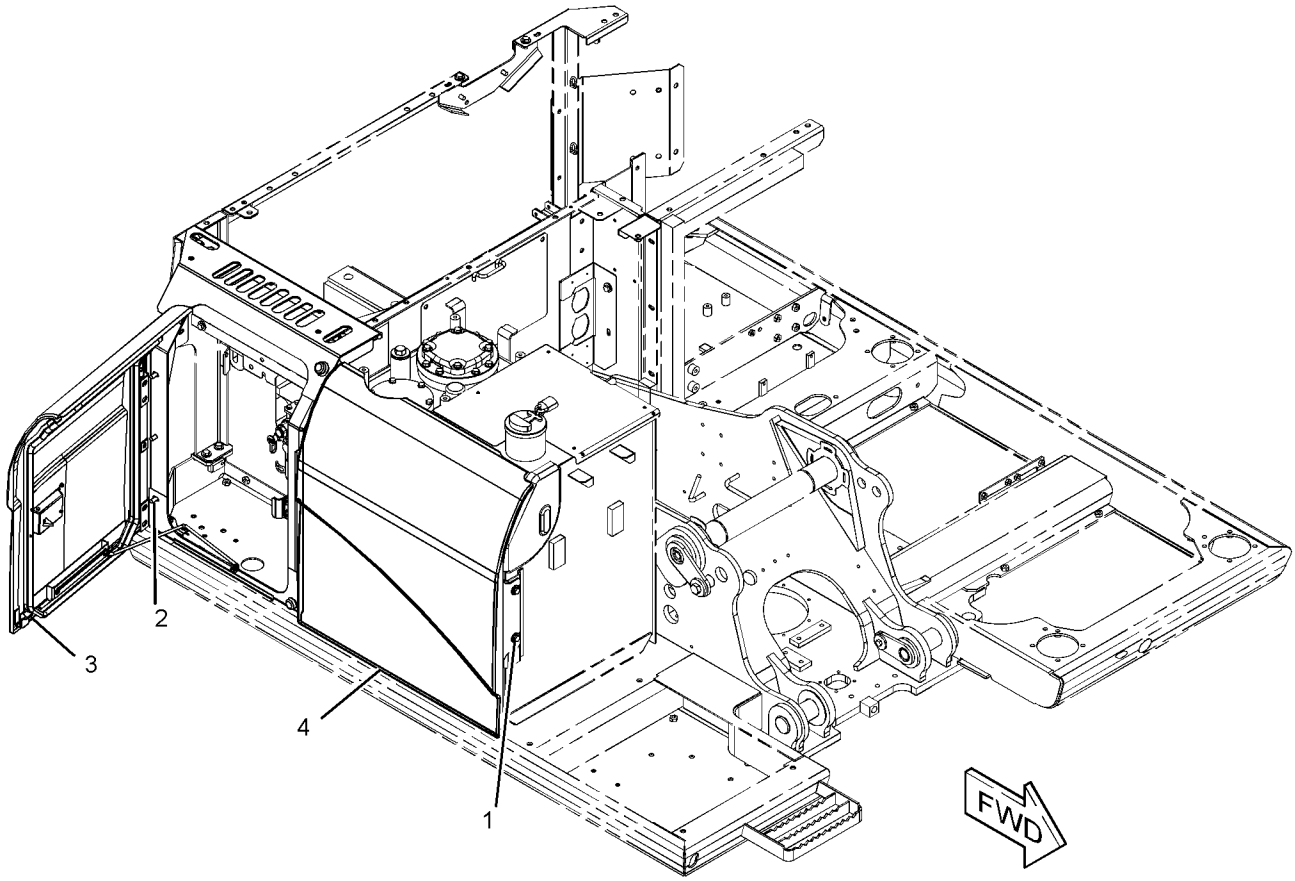

GRAPHIC #1 <END> g01403602

283-3595 DOOR & MTG GP-ACCESS—PUMP COMPARTMENT

S/N: DLP215-UP
PART OF 273-8101 HOOD & GUARD GP
TYPE 1

SMCS-7273 **i03991617**

NOTE	REF NO	GRAPHIC REF	PART NUMBER	QTY	PART NAME 1 2 3 4 5 6 (PRODUCT LEVEL)	SEE PAGE
	1	1	**135-8573**	4	BOLT AS	
	2	1	**135-8575**	13	BOLT AS	
Y	3	1	**283-3609**	1	DOOR GP-ACCESS (PUMP COMPARTMENT)	379
CY	4	1	**330-1557**	1	COVER AS-ACCESS (FUEL, HYDRAULIC TANKS) (FUEL, HYDRAULIC TANKS)	360

C - CHANGE FROM PREVIOUS TYPE
Y - SEPARATE ILLUSTRATION

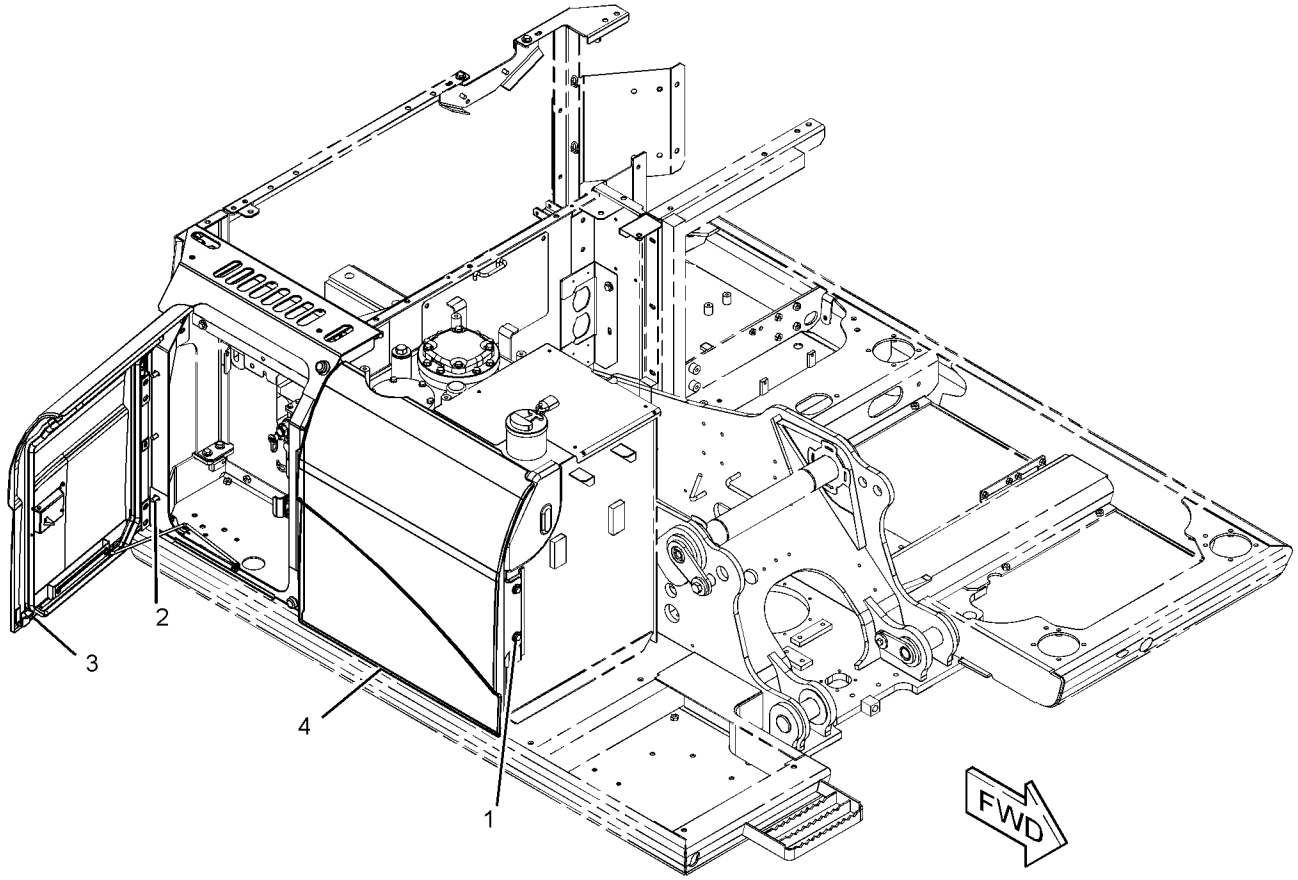

GRAPHIC #1 <END> g01403602

283-3595 DOOR & MTG GP-ACCESS—PUMP COMPARTMENT

S/N: DLP215-UP
PART OF 273-8101 HOOD & GUARD GP
TYPE 2

SMCS-7273 **i04040413**

NOTE	REF NO	GRAPHIC REF	PART NUMBER	QTY	PART NAME 1 2 3 4 5 6 (PRODUCT LEVEL)	SEE PAGE
	1	1	**135-8573**	4	BOLT AS	
	2	1	**135-8575**	13	BOLT AS	
CY	3	1	**355-8247**	1	DOOR GP-ACCESS (PUMP COMPARTMENT)	388
CY	4	1	**330-1557**	1	COVER AS-ACCESS (FUEL, HYDRAULIC TANKS)	360

C - CHANGE FROM PREVIOUS TYPE
Y - SEPARATE ILLUSTRATION

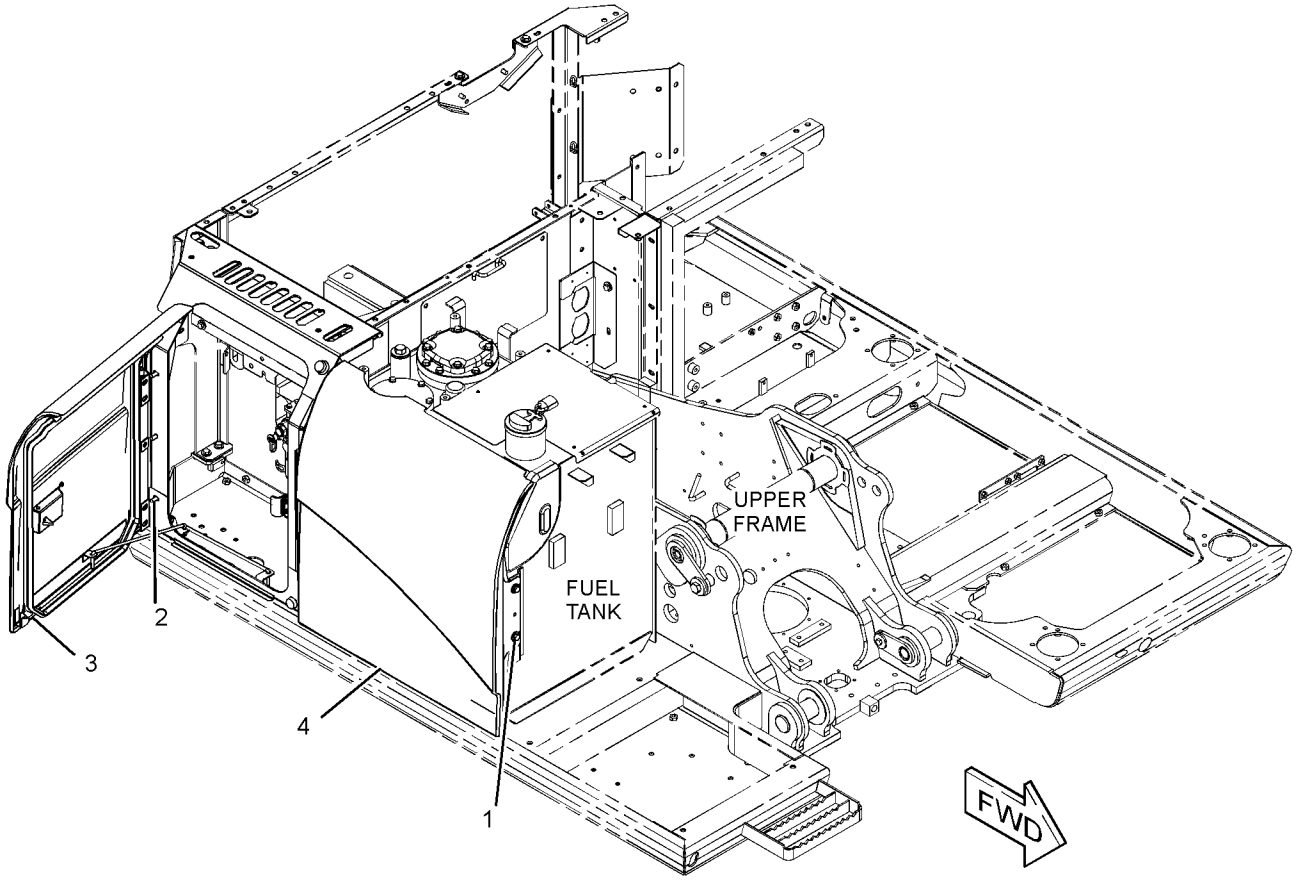

GRAPHIC #1 <END> g02294055

283-3595 DOOR & MTG GP-ACCESS—PUMP COMPARTMENT

S/N: DLP215-UP
PART OF 273-8101 HOOD & GUARD GP
TYPE 3

SMCS-7273 **i04813699**

NOTE	REF NO	GRAPHIC REF	PART NUMBER	QTY	PART NAME 1 2 3 4 5 6 (PRODUCT LEVEL)	SEE PAGE
	1	1	**135-8573**	4	BOLT AS	
	2	1	**135-8575**	13	BOLT AS	
CY	3	1	**374-4938**	1	DOOR GP-ACCESS (PUMP COMPARTMENT)	389
Y	4	1	**330-1557**	1	COVER AS-ACCESS (FUEL, HYDRAULIC TANKS)	360

C - CHANGE FROM PREVIOUS TYPE
Y - SEPARATE ILLUSTRATION

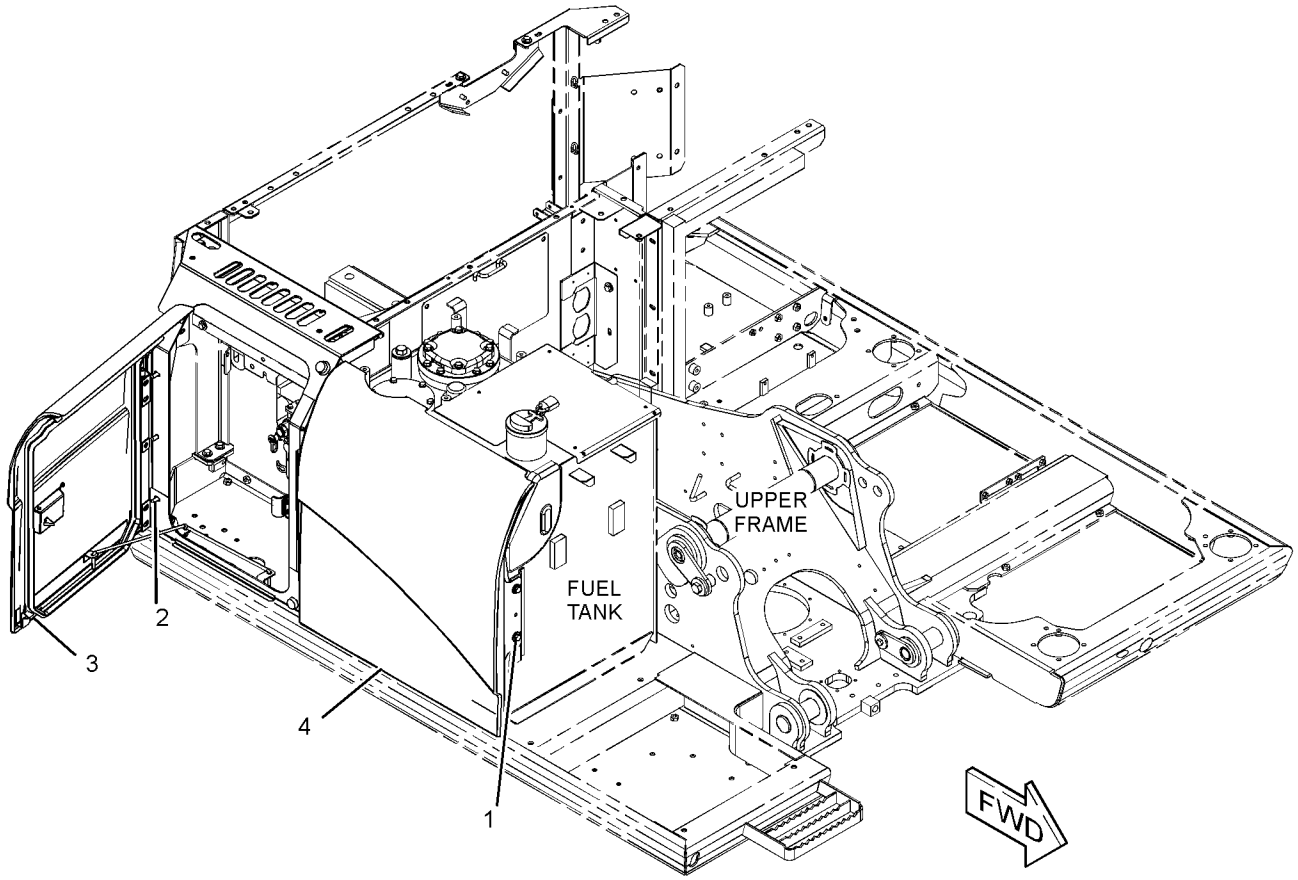

GRAPHIC #1 <END> g02294055

283-3613 DOOR AS-ACCESS—PUMP COMPARTMENT

S/N: DLP1-UP

PART OF 283-3609 DOOR GP-ACCESS

SMCS-7273 **i04805690**

NOTE	REF NO	GRAPHIC REF	PART NUMBER	QTY	PART NAME 1 2 3 4 5 6 (PRODUCT LEVEL)	SEE PAGE
M	1	1	**099-6418**	4	NUT (M6X1-THD)	
	2	1	**184-8862**	1	COVER	
	3	1	**184-8898**	2	HINGE	
	4	1	**298-2942**	1	LATCH AS	
J		1	**366-6478**	1	LOCK AS	
H	5	1	**348-5409**		SEAL (28-DM)	

H - ORDER BY THE DECIMETER
J - REQUIRES CORPORATE KEY
M - METRIC PART

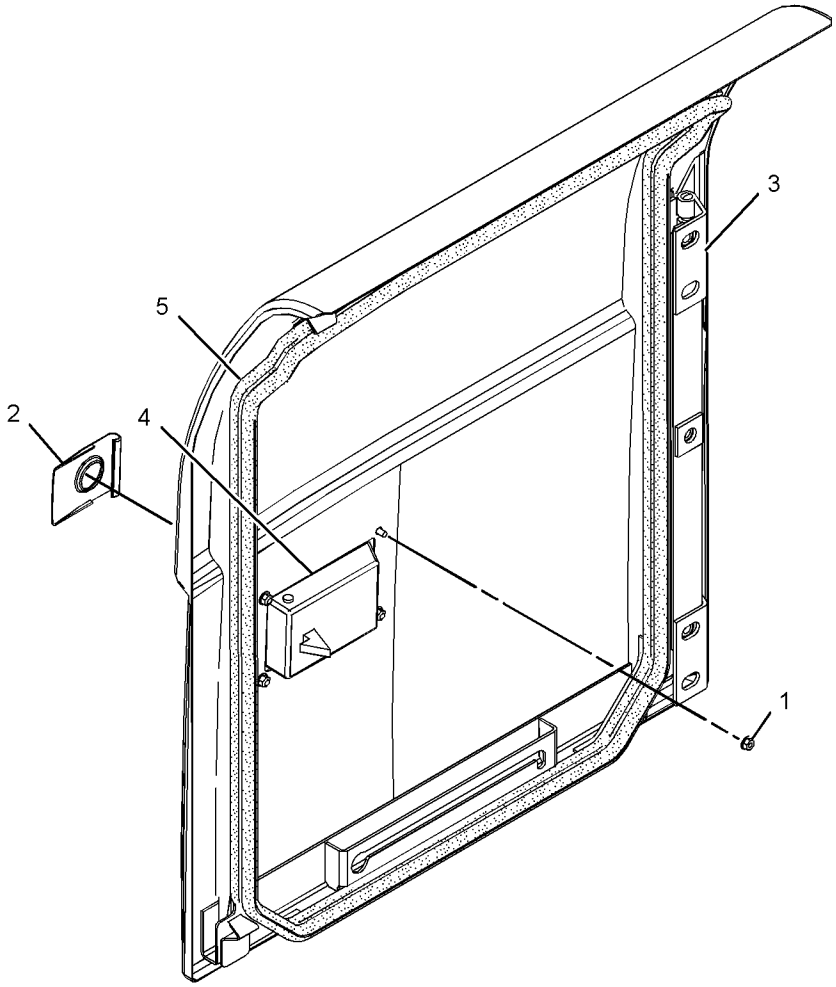

GRAPHIC #1 <END> g02934501

355-8249 DOOR AS-ACCESS—PUMP COMPARTMENT

S/N: DLP215-UP

PART OF 355-8247 DOOR GP-ACCESS

SMCS-7273 **i04086050**

NOTE	REF NO	GRAPHIC REF	PART NUMBER	QTY	PART NAME 1 2 3 4 5 6 (PRODUCT LEVEL)	SEE PAGE
M	1	1	**099-6418**	4	NUT (M6X1-THD)	
	2	1	**184-8862**	1	COVER	
	3	1	**298-2942**	1	LATCH AS	
	4	1	*355-8241*	1	DOOR AS-ACCESS (PUMP COMPARTMENT)	
	4A	1	**184-8898**	2	HINGE	
D	5	1	**5P-8309**	1	SEAL (2.8-M)	

D - ORDER BY THE METER
M - METRIC PART

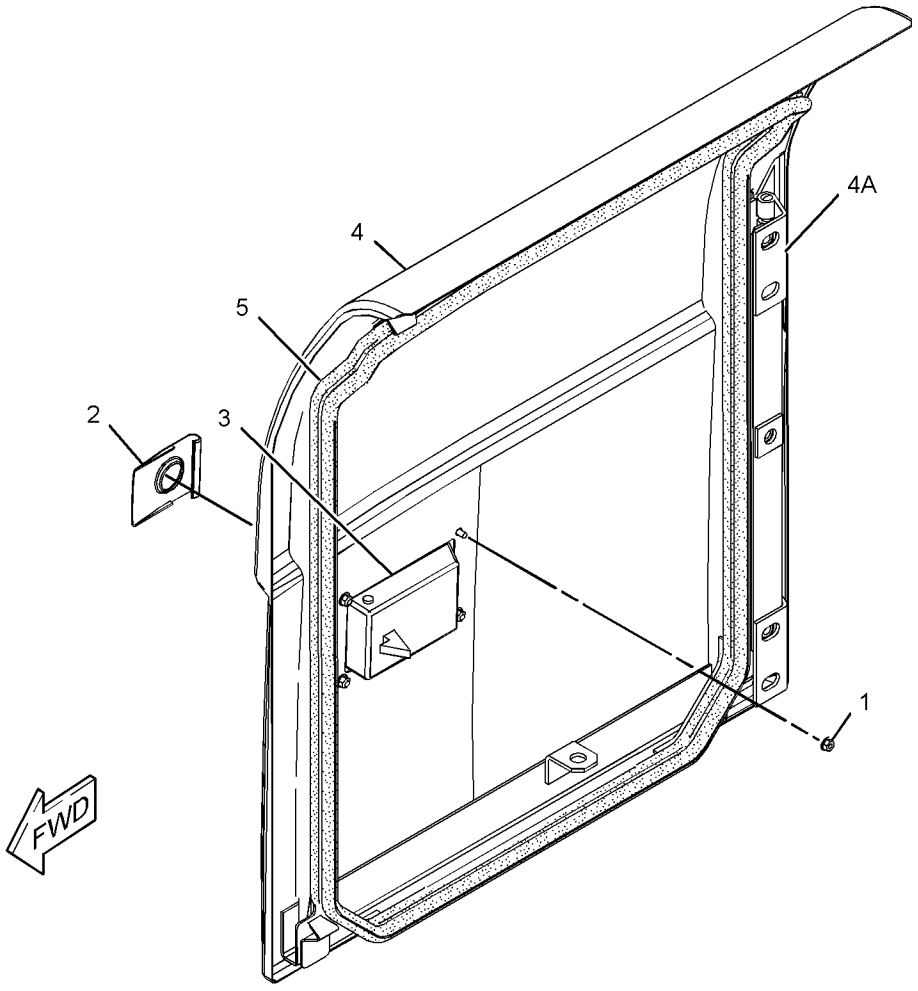

GRAPHIC #1 <END> g02579000

374-4940 DOOR AS-ACCESS—PUMP COMPARTMENT

S/N: DLP215-UP

PART OF 374-4938 DOOR GP-ACCESS

SMCS-7273 **i06265732**

NOTE	REF NO	GRAPHIC REF	PART NUMBER	QTY	PART NAME 1 2 3 4 5 6 (PRODUCT LEVEL)	SEE PAGE
M	1	1	**099-6418**	4	NUT (M6X1-THD)	
	2	1	**184-8862**	1	COVER	
	3	1	**298-2942**	1	LATCH AS	
J		1	**366-6478**	1	LOCK AS	
H	4	1	**348-5409**		SEAL (28-DM)	
	5	1	**184-8898**	2	HINGE	

H - ORDER BY THE DECIMETER
J - REQUIRES CORPORATE KEY
M - METRIC PART

374-4940 **DOOR AS-ACCESS (**contd.**)** **i06265732**

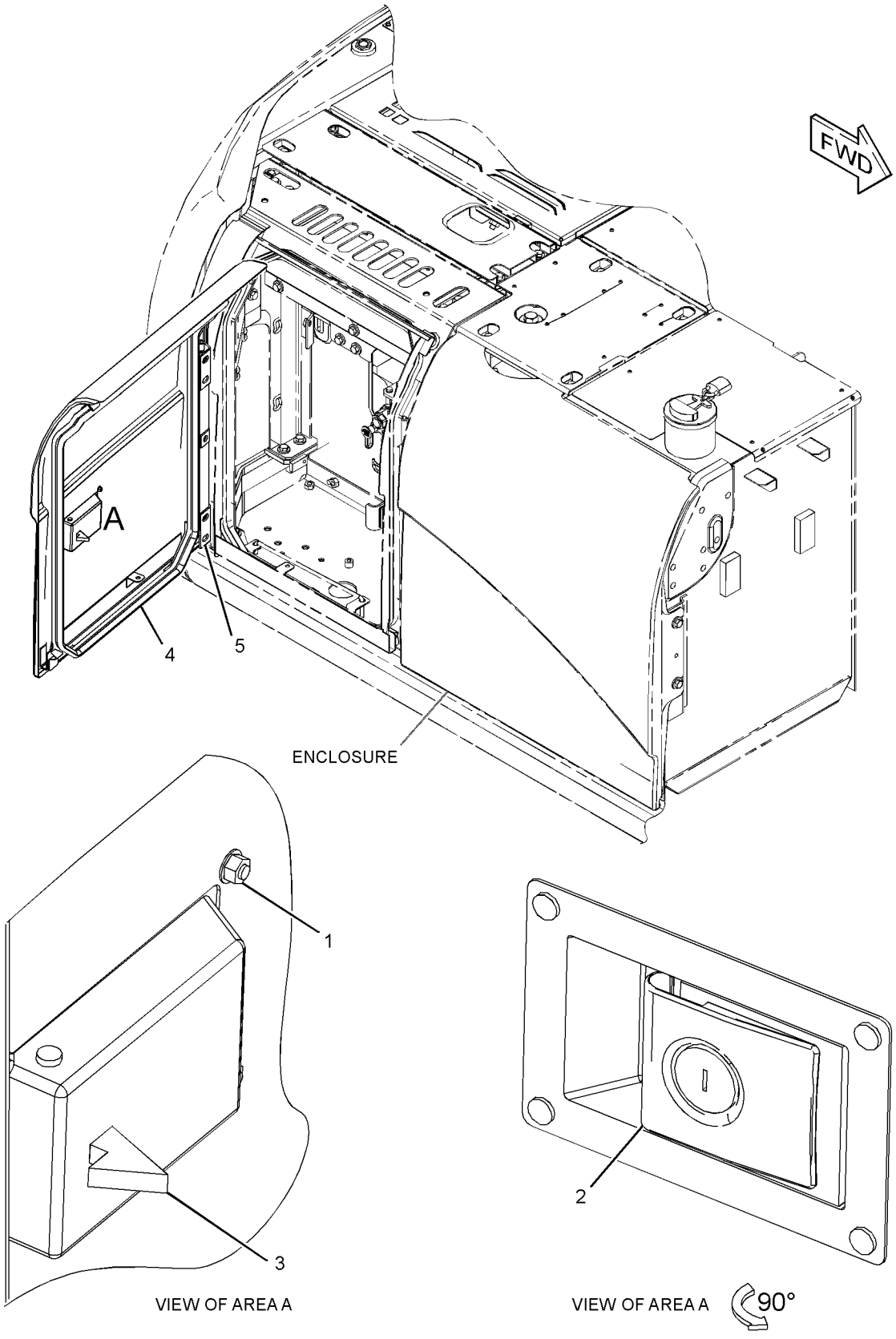

GRAPHIC #1 <END> g03883354

273-8104 DOOR GP-ACCESS–PRECLEANER

S/N: DLP1-UP
PART OF 260-7122 PRECLEANER AR
AN ATTACHMENT
TYPE 1

SMCS-7273 **i03991614**

NOTE	REF NO	GRAPHIC REF	PART NUMBER	QTY	PART NAME 1 2 3 4 5 6 (PRODUCT LEVEL)	SEE PAGE
Y	1	1	**293-7005**	1	DOOR GP-ACCESS (PRECLEANER)	382

Y - SEPARATE ILLUSTRATION

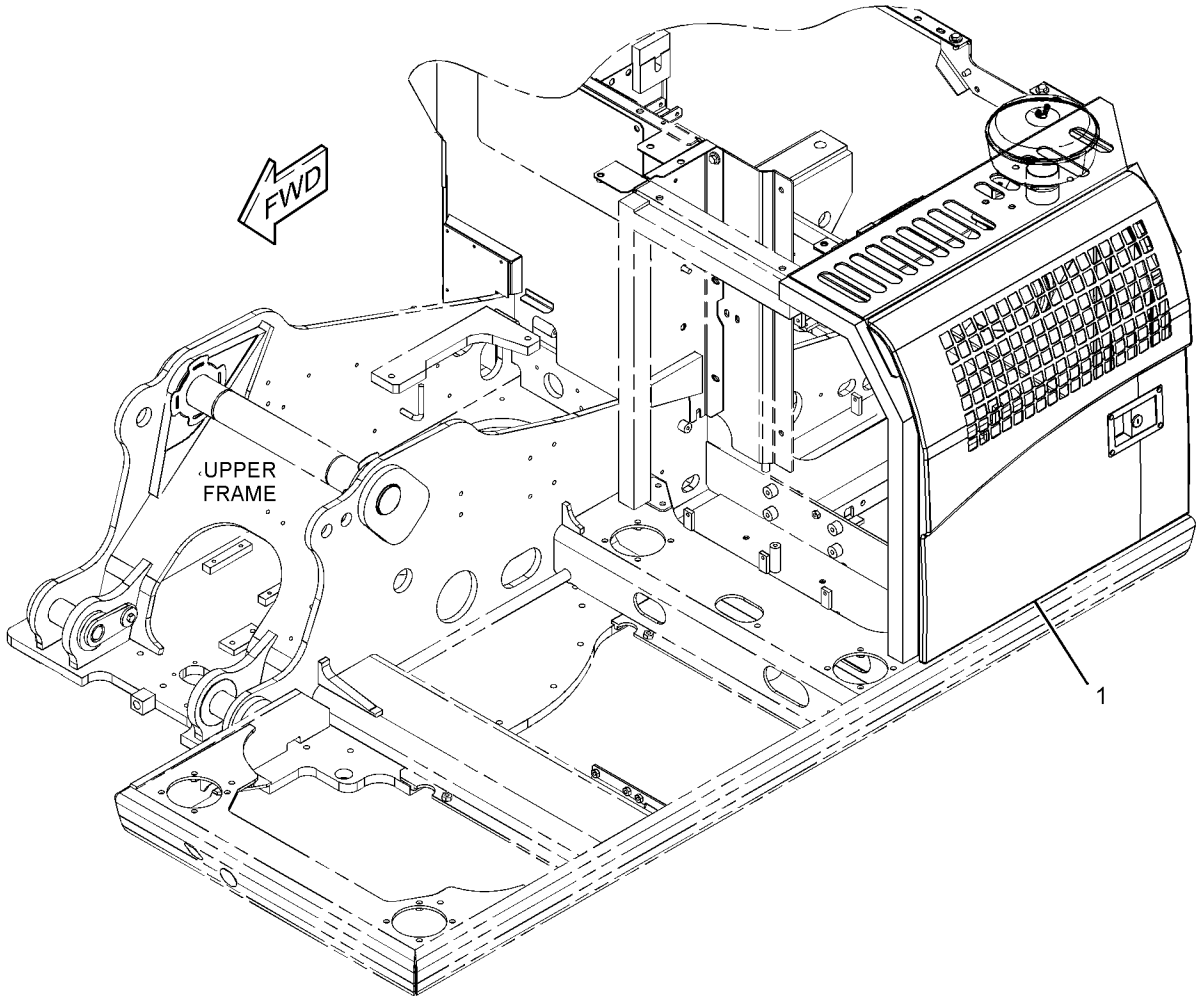

GRAPHIC #1 <END> g01408134

273-8104 DOOR GP-ACCESS—PRECLEANER

S/N: DLP1-UP
PART OF 260-7122 PRECLEANER AR
AN ATTACHMENT
TYPE 2

SMCS-7273 **i04827011**

NOTE	REF NO	GRAPHIC REF	PART NUMBER	QTY	PART NAME 1 2 3 4 5 6 (PRODUCT LEVEL)	SEE PAGE
CY	1	1	**374-4960**	1	DOOR GP-ACCESS (PRECLEANER)	391

C - CHANGE FROM PREVIOUS TYPE
Y - SEPARATE ILLUSTRATION

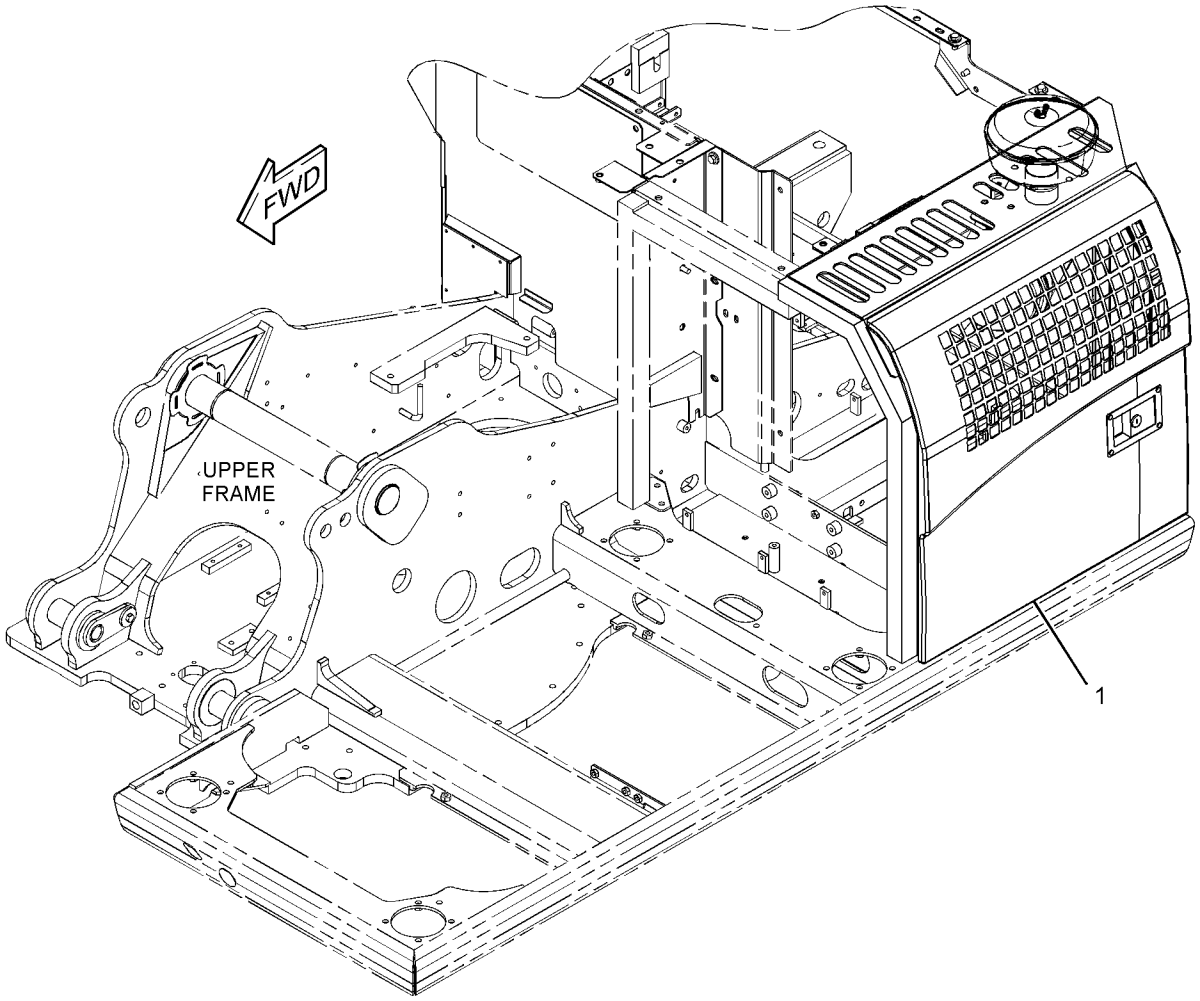

GRAPHIC #1 <END> g01408134

273-8104 DOOR GP-ACCESS–PRECLEANER

S/N: DLP1-UP
PART OF 260-7122 PRECLEANER AR
AN ATTACHMENT
TYPE 3

SMCS-7273 **i06599935**

NOTE	REF NO	GRAPHIC REF	PART NUMBER	QTY	PART NAME 1 2 3 4 5 6 (PRODUCT LEVEL)	SEE PAGE
CY	1	1	**421-3694**	1	DOOR GP-ACCESS (PRECLEANER)	394

C - CHANGE FROM PREVIOUS TYPE
Y - SEPARATE ILLUSTRATION

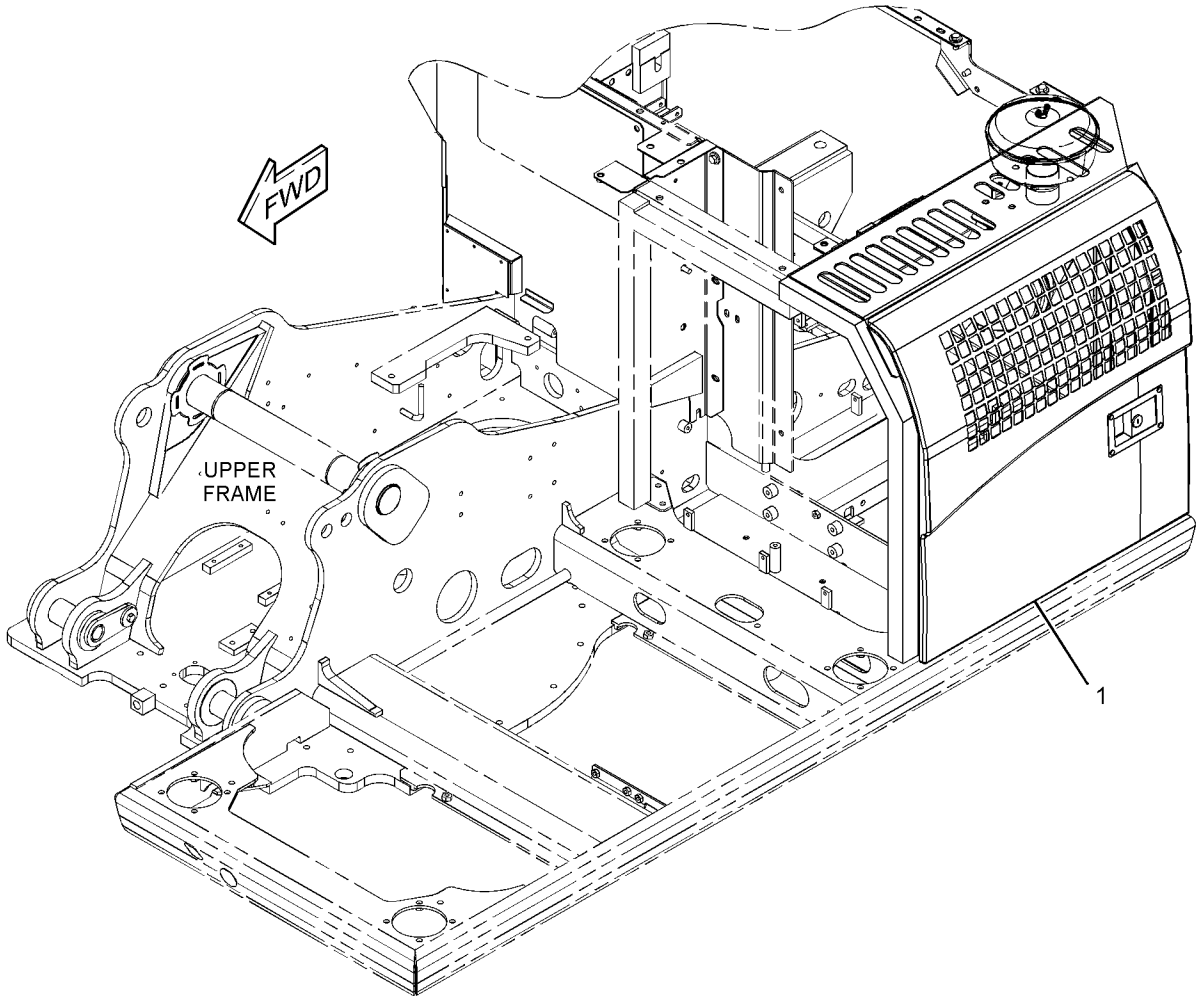

GRAPHIC #1 <END> g01408134

283-3594 DOOR GP-ACCESS—AIR CLEANER, RADIATOR

S/N: DLP1-214

PART OF 273-8101 HOOD & GUARD GP

SMCS-7273 **i02902076**

NOTE	REF NO	GRAPHIC REF	PART NUMBER	QTY	PART NAME 1 2 3 4 5 6 (PRODUCT LEVEL)	SEE PAGE
	1	1	**135-8573**	2	BOLT AS	
	2	1	**135-8575**	10	BOLT AS	
Y	3	1	**283-3625**	1	DOOR GP-ACCESS (RADIATOR)	380
	4	1	**283-3632**	1	SHEET AS	

Y - SEPARATE ILLUSTRATION

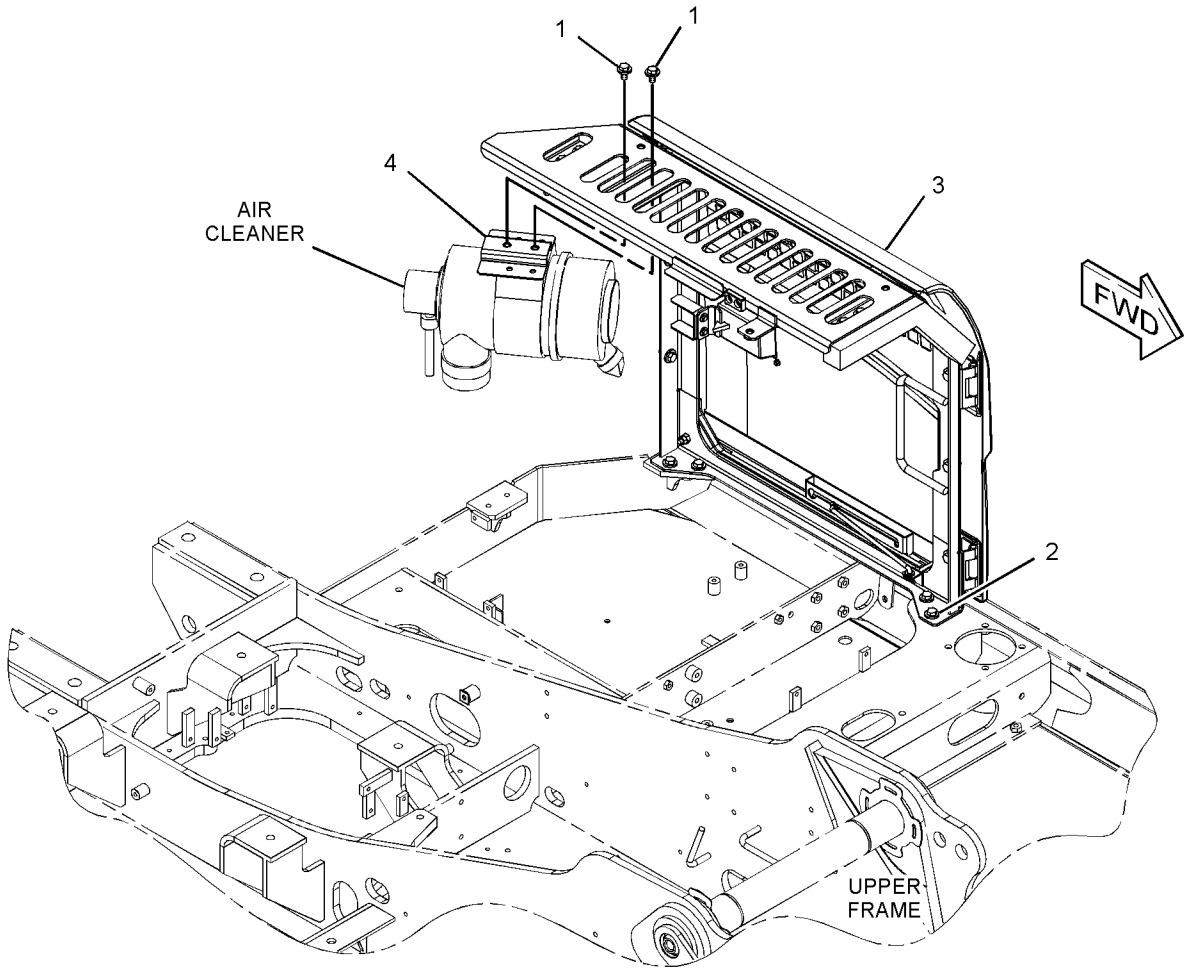

GRAPHIC #1 <END> g01413426

283-3594 DOOR GP-ACCESS—AIR CLEANER, RADIATOR

S/N: DLP215-UP

PART OF 273-8101 HOOD & GUARD GP

TYPE 1

SMCS-7273 **i03991615**

NOTE	REF NO	GRAPHIC REF	PART NUMBER	QTY	PART NAME 1 2 3 4 5 6 (PRODUCT LEVEL)	SEE PAGE
	1	1	**135-8573**	2	BOLT AS	
	2	1	**135-8575**	10	BOLT AS	
CY	3	1	**307-8082**	1	DOOR GP-ACCESS (RADIATOR)	384
	4	1	**283-3632**	1	SHEET AS	

C - CHANGE FROM PREVIOUS TYPE
Y - SEPARATE ILLUSTRATION

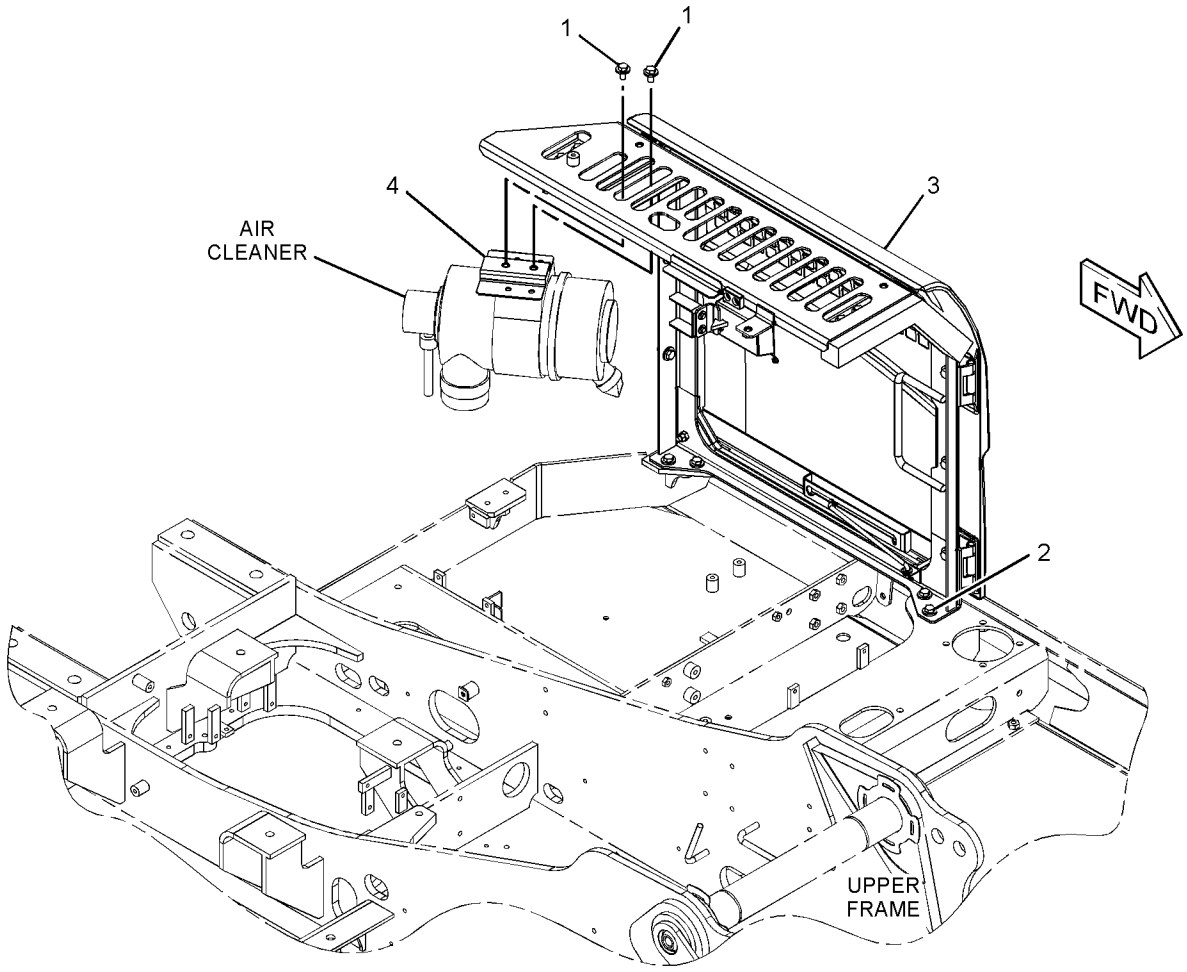

GRAPHIC #1 <END> g01670926

283-3594 DOOR GP-ACCESS—AIR CLEANER, RADIATOR

S/N: DLP215-UP
PART OF 273-8101 HOOD & GUARD GP
TYPE 2

SMCS-7273 **i04040290**

NOTE	REF NO	GRAPHIC REF	PART NUMBER	QTY	PART NAME 1 2 3 4 5 6 (PRODUCT LEVEL)	SEE PAGE
	1	1	**135-8573**	2	BOLT AS	
	2	1	**135-8575**	10	BOLT AS	
CY	3	1	**355-8242**	1	DOOR GP-ACCESS	386
	4	1	**283-3632**	1	SHEET AS	

C - CHANGE FROM PREVIOUS TYPE
Y - SEPARATE ILLUSTRATION

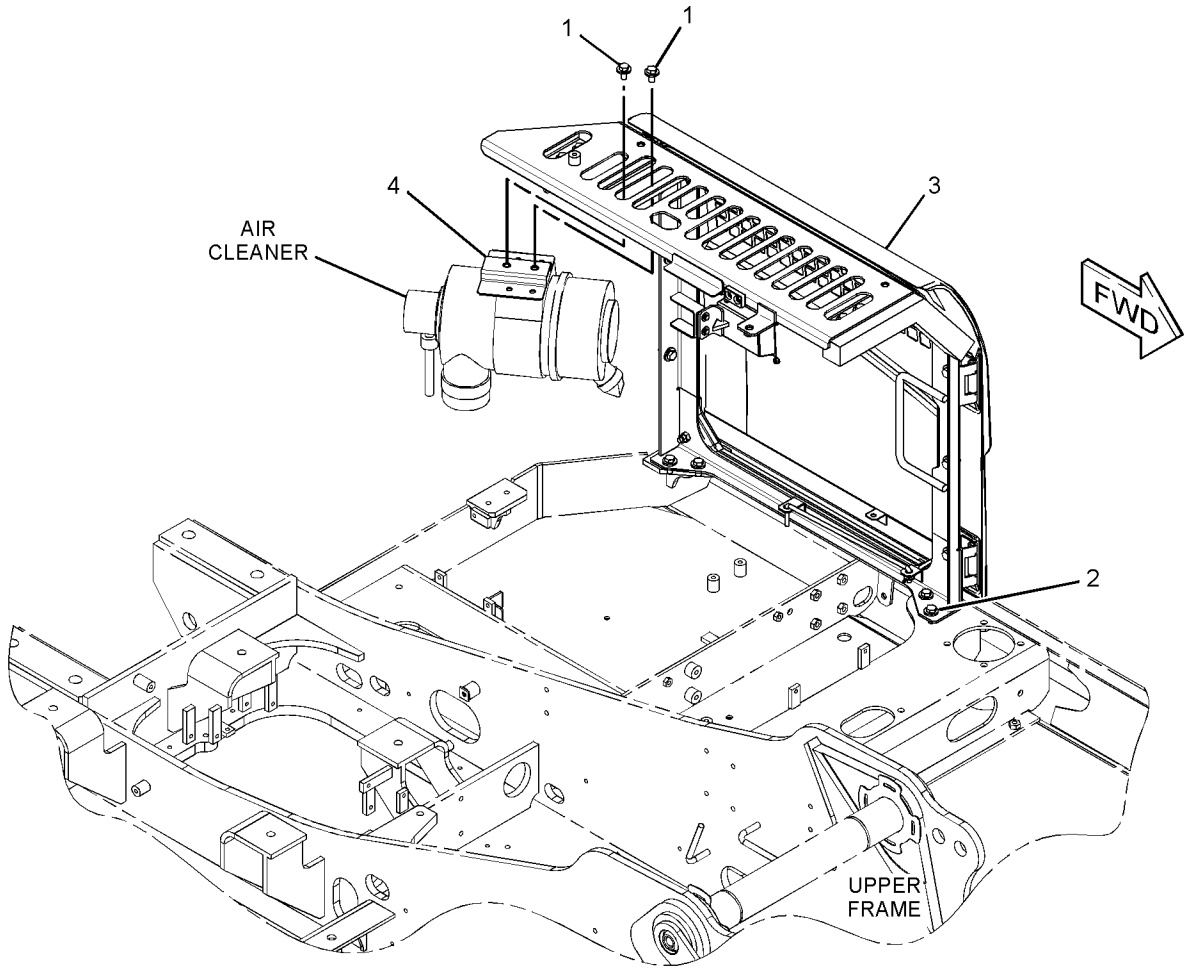

GRAPHIC #1 <END> g02270433

283-3609 DOOR GP-ACCESS—PUMP COMPARTMENT

S/N: DLP1-UP

PART OF 283-3595 DOOR & MTG GP-ACCESS

SMCS-7273 **i03167563**

NOTE	REF NO	GRAPHIC REF	PART NUMBER	QTY	PART NAME 1 2 3 4 5 6 (PRODUCT LEVEL)	SEE PAGE
	1	1	**4I-0232**	1	STRIKER	
B	2	1	**087-3908**	2	SHIM (1-MM THK)	
B	3	1	**087-3909**	2	SHIM (2-MM THK)	
	4	1	**135-8575**	3	BOLT AS	
Y	5	1	**283-3613**	1	DOOR AS-ACCESS (PUMP COMPARTMENT)	369
	6	1	**283-3615**	1	TUBE AS	
	7	1	**293-7007**	1	SUPPORT AS	
	8	1	**3B-4618**	1	PIN-COTTER	
	9	1	**4I-1205**	2	BUMPER	
	10	1	**5P-4115**	2	WASHER-HARD (7.2X19X2-MM THK)	
M	11	1	**6V-7357**	2	BOLT (M6X1X25-MM)	
	12	1	**8T-4121**	1	WASHER-HARD (11X21X2.5-MM THK)	
M	13	1	**8T-4133**	2	NUT (M10X1.5-THD)	

B - USE AS REQUIRED
M - METRIC PART
Y - SEPARATE ILLUSTRATION

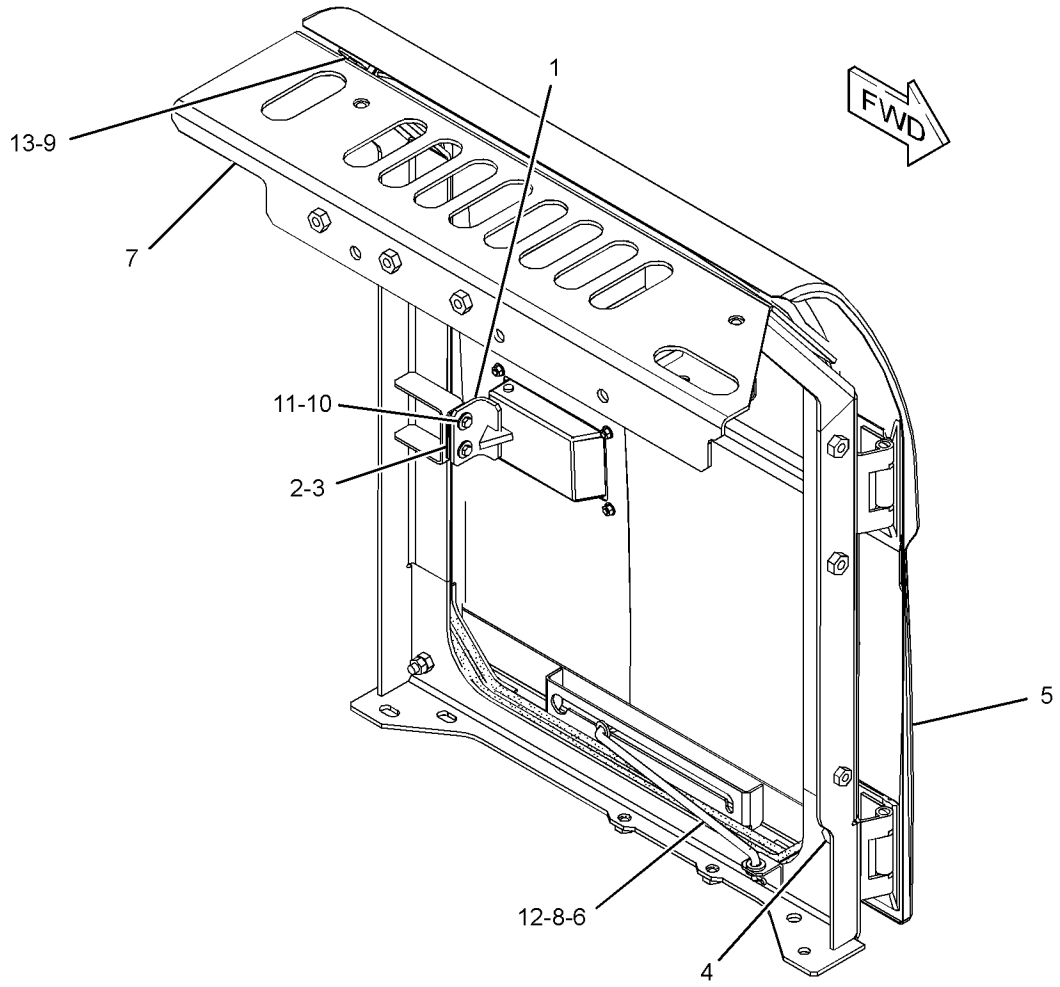

GRAPHIC #1 <END> g01656093

283-3625 DOOR GP-ACCESS–RADIATOR

S/N: DLP1-214

PART OF 283-3594 DOOR GP-ACCESS

SMCS-7273 **i02974082**

NOTE	REF NO	GRAPHIC REF	PART NUMBER	QTY	PART NAME 1 2 3 4 5 6 (PRODUCT LEVEL)	SEE PAGE
	1	1	**4I-0232**	1	STRIKER	
	2	1	**6I-6033**	1	STOP	
	3	1	**135-8575**	3	BOLT AS	
	4	1	**283-3615**	1	TUBE AS	
	5	1	**283-3628**	1	DOOR AS-ACCESS	
	5A	1	**184-8898**	2	HINGE	
J	5B	1	**298-2942**	1	LATCH AS	
D		1	**5P-8309**		SEAL (0.4-M)	
M		1	**099-6418**	4	NUT (M6X1-THD)	
	6	1	**303-9621**	1	SUPPORT AS	
	7	1	**3B-4618**	1	PIN-COTTER	
	8	1	**4I-1205**	2	BUMPER	
	9	1	**5P-4115**	2	WASHER-HARD (7.2X19X2-MM THK)	
M	10	1	**8T-4133**	2	NUT (M10X1.5-THD)	
M	11	1	**8T-4138**	2	BOLT (M6X1X20-MM)	
	12	1	**8T-4121**	1	WASHER-HARD (11X21X2.5-MM THK)	
M	13	1	**9X-2045**	2	SCREW-TRUSS HEAD (M6X1X20-MM)	

D - ORDER BY THE METER
J - REQUIRES CORPORATE KEY
M - METRIC PART

283-3625 **DOOR GP-ACCESS (**contd.**)** **i02974082**

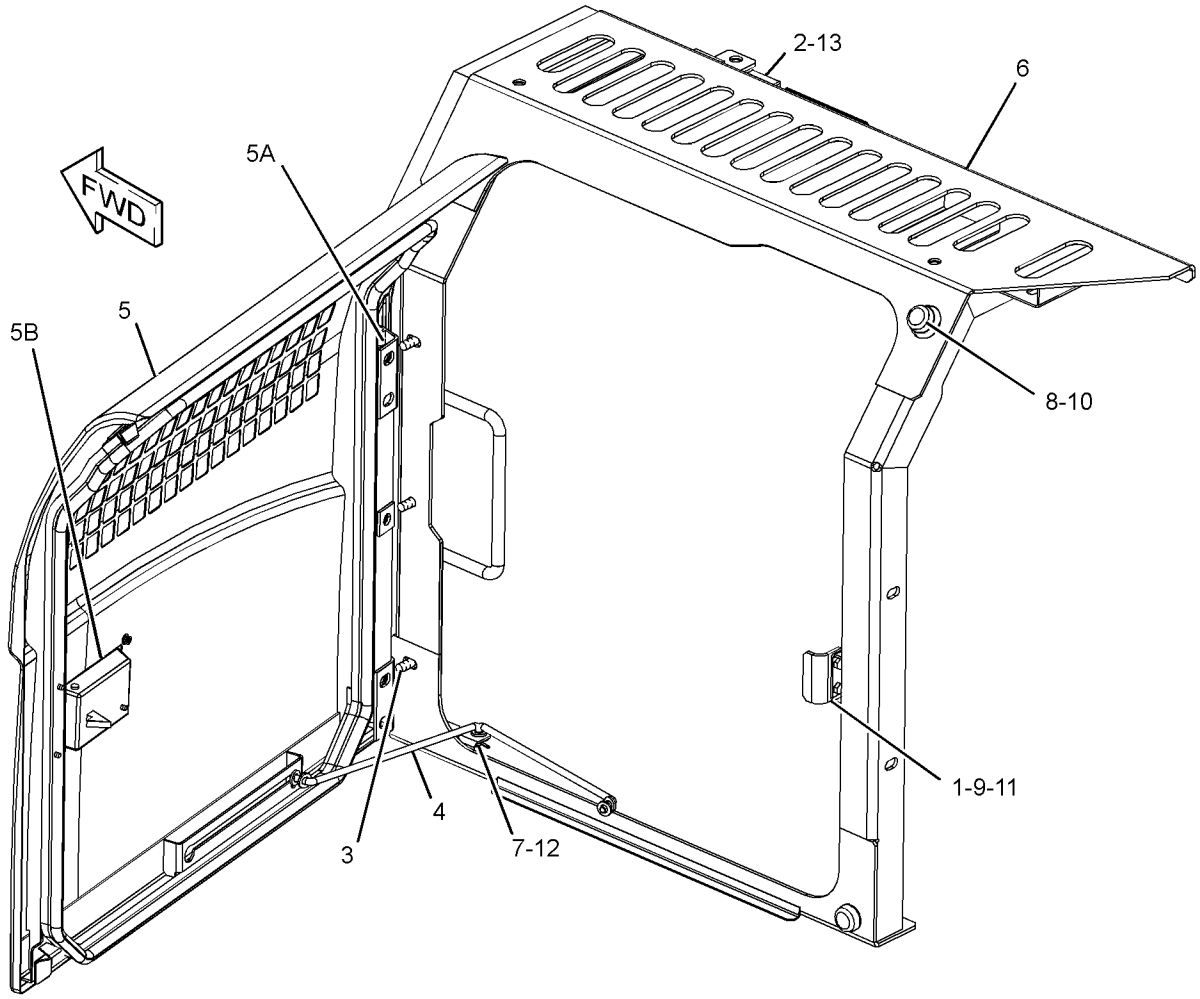

GRAPHIC #1 <END> g01403231

293-7005 DOOR GP-ACCESS—PRECLEANER

S/N: DLP1-UP

PART OF 273-8104 DOOR GP-ACCESS

AN ATTACHMENT

SMCS-7273 **i03164420**

NOTE	REF NO	GRAPHIC REF	PART NUMBER	QTY	PART NAME 1 2 3 4 5 6 (PRODUCT LEVEL)	SEE PAGE
	1	1	**4I-0232**	1	STRIKER	
	2	1	**6I-6033**	1	STOP	
	3	1	**135-8575**	3	BOLT AS	
	4	1	**283-3615**	1	TUBE AS	
	5	1	**283-3628**	1	DOOR AS-ACCESS	
M		1	**8T-3597**	3	NUT-WELD (M12X1.75-THD)	
D		1	**5P-8309**		SEAL (3.2-M)	
M		1	**099-6418**	4	NUT (M6X1-THD)	
		1	**184-8898**	2	HINGE	
J		1	**298-2942**	1	LATCH AS	
	6	1	**303-9622**	1	SUPPORT AS	
		1	**303-9623**	1	LINER	
	7	1	**3B-4618**	1	PIN-COTTER	
	8	1	**4I-1205**	2	BUMPER	
	9	1	**5P-4115**	2	WASHER-HARD (7.2X19X2-MM THK)	
M	10	1	**8T-4133**	2	NUT (M10X1.5-THD)	
M	11	1	**6V-7357**	2	BOLT (M6X1X25-MM)	
	12	1	**8T-4121**	1	WASHER-HARD (11X21X2.5-MM THK)	
M	13	1	**9X-2045**	2	SCREW-TRUSS HEAD (M6X1X20-MM)	
	14	1	**087-3908**	2	SHIM (1-MM THK)	
	15	1	**087-3909**	2	SHIM (2-MM THK)	

D - ORDER BY THE METER
J - REQUIRES CORPORATE KEY
M - METRIC PART

293-7005 **DOOR GP-ACCESS (**contd.**)** **i03164420**

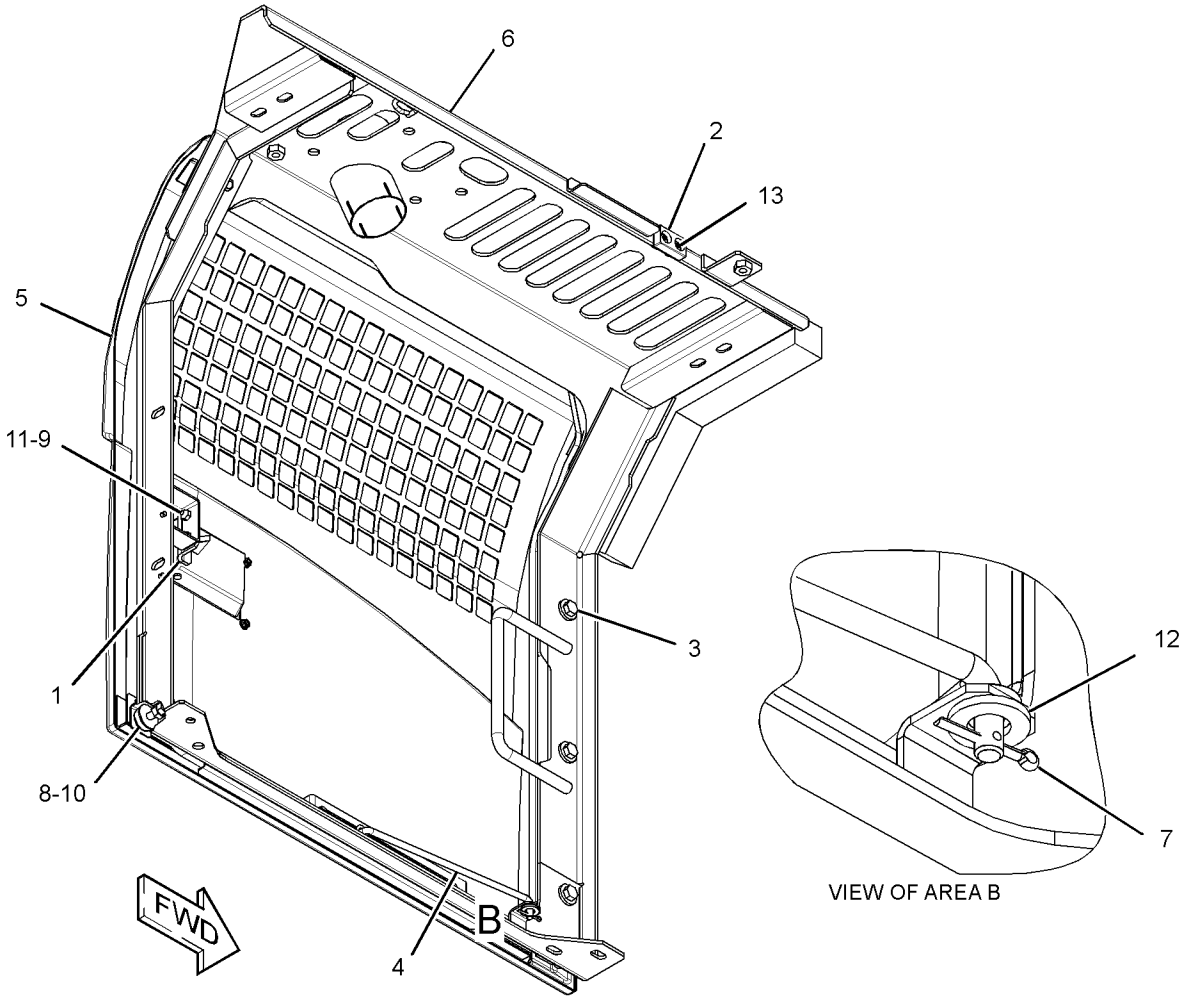

GRAPHIC #1 <END> g01456144

307-8082 DOOR GP-ACCESS–RADIATOR

S/N: DLP215-UP

PART OF 283-3594 DOOR GP-ACCESS

SMCS-7273 **i03167559**

NOTE	REF NO	GRAPHIC REF	PART NUMBER	QTY	PART NAME 1 2 3 4 5 6 (PRODUCT LEVEL)	SEE PAGE
	1	1	**4I-0232**	1	STRIKER	
	2	1	**6I-6033**	1	STOP	
B	3	1	**087-3908**	2	SHIM (1-MM THK)	
B	4	1	**087-3909**	2	SHIM (2-MM THK)	
	5	1	**135-8575**	3	BOLT AS	
	6	1	**283-3615**	1	TUBE AS	
	7	1	**283-3628**	1	DOOR AS-ACCESS	
D		1	**5P-8309**		SEAL (3.2-M)	
M		1	**099-6418**	4	NUT (M6X1-THD)	
M		1	**8T-3597**	3	NUT-WELD (M12X1.75-THD)	
		1	**184-8898**	2	HINGE	
J		1	**298-2942**	1	LATCH AS	
	8	1	**307-8083**	1	SUPPORT AS	
	9	1	**3B-4618**	1	PIN-COTTER	
	10	1	**4I-1205**	2	BUMPER	
	11	1	**5P-4115**	2	WASHER-HARD (7.2X19X2-MM THK)	
M	12	1	**6V-7357**	2	BOLT (M6X1X25-MM)	
	13	1	**8T-4121**	1	WASHER-HARD (11X21X2.5-MM THK)	
M	14	1	**8T-4133**	2	NUT (M10X1.5-THD)	
M	15	1	**9X-2045**	2	SCREW-TRUSS HEAD (M6X1X20-MM)	

B - USE AS REQUIRED
D - ORDER BY THE METER
J - REQUIRES CORPORATE KEY
M - METRIC PART

307-8082 **DOOR GP-ACCESS (**contd.**)** **i03167559**

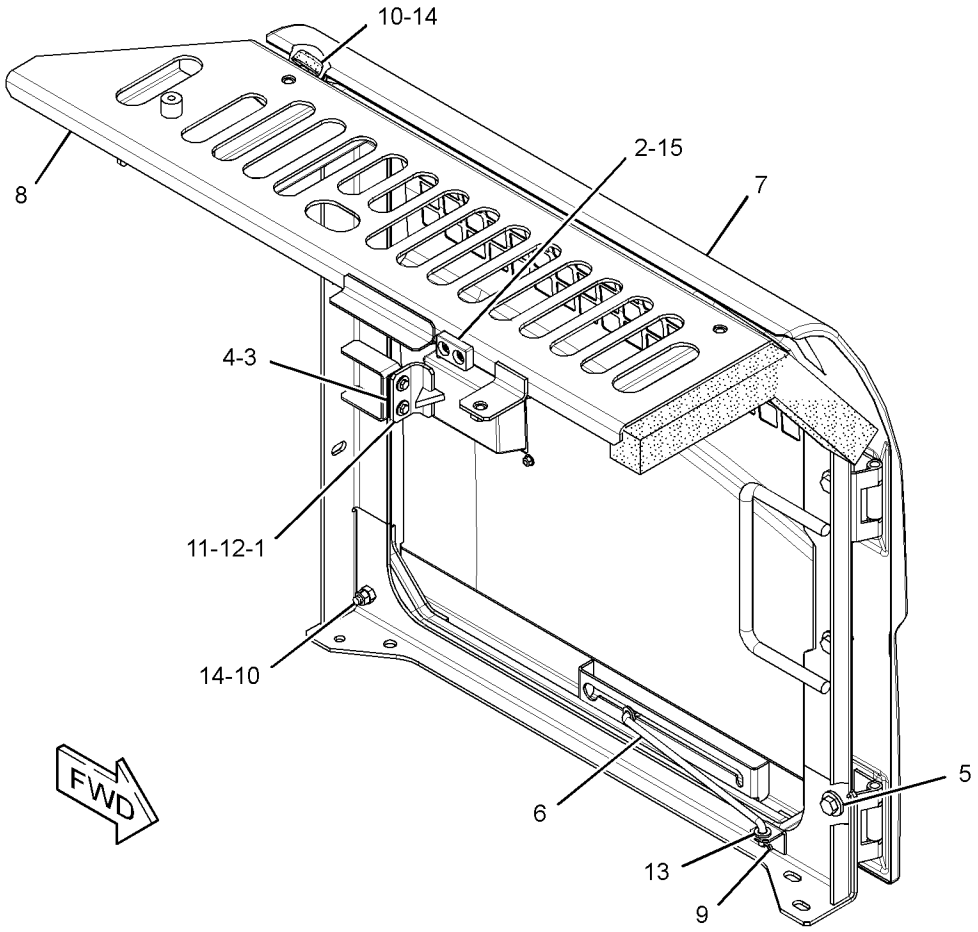

GRAPHIC #1 <END> g01765073

355-8242 DOOR GP-ACCESS—AIR CLEANER, BATTERY, RADIATOR

S/N: DLP215-UP

PART OF 283-3594 DOOR GP-ACCESS

SMCS-7273 **i05187510**

NOTE	REF NO	GRAPHIC REF	PART NUMBER	QTY	PART NAME 1 2 3 4 5 6 (PRODUCT LEVEL)	SEE PAGE
	1	1	**4I-0232**	1	STRIKER	
	2	1	**6I-6033**	2	STOP	
B	3	1	**087-3908**	2	SHIM (1-MM THK)	
B	4	1	**087-3909**	2	SHIM (2-MM THK)	
	5	1	**122-4120**	1	ROD	
	6	1	**135-8575**	3	BOLT AS	
	7	1	**355-8243**	1	SUPPORT AS	
		1	**303-9623**	1	LINER	
	8	1	**355-8245**	1	DOOR AS-ACCESS	
D		1	**5P-8309**		SEAL (3.2-M)	
M		1	**099-6418**	4	NUT (M6X1-THD)	
		1	**298-2942**	1	LATCH AS	
		1	**184-8898**	2	HINGE	
	9	1	**3B-4618**	1	PIN-COTTER	
	10	1	**4I-1205**	2	BUMPER	
	11	1	**5P-4115**	2	WASHER-HARD (7.2X19X2-MM THK)	
M	12	1	**6V-7357**	2	BOLT (M6X1X25-MM)	
	13	1	**8T-4121**	1	WASHER-HARD (11X21X2.5-MM THK)	
M	14	1	**8T-4133**	2	NUT (M10X1.5-THD)	
M	15	1	**9X-2045**	2	SCREW-TRUSS HEAD (M6X1X20-MM)	

B - USE AS REQUIRED
D - ORDER BY THE METER
M - METRIC PART

355-8242 **DOOR GP-ACCESS (**contd.**)** **i05187510**

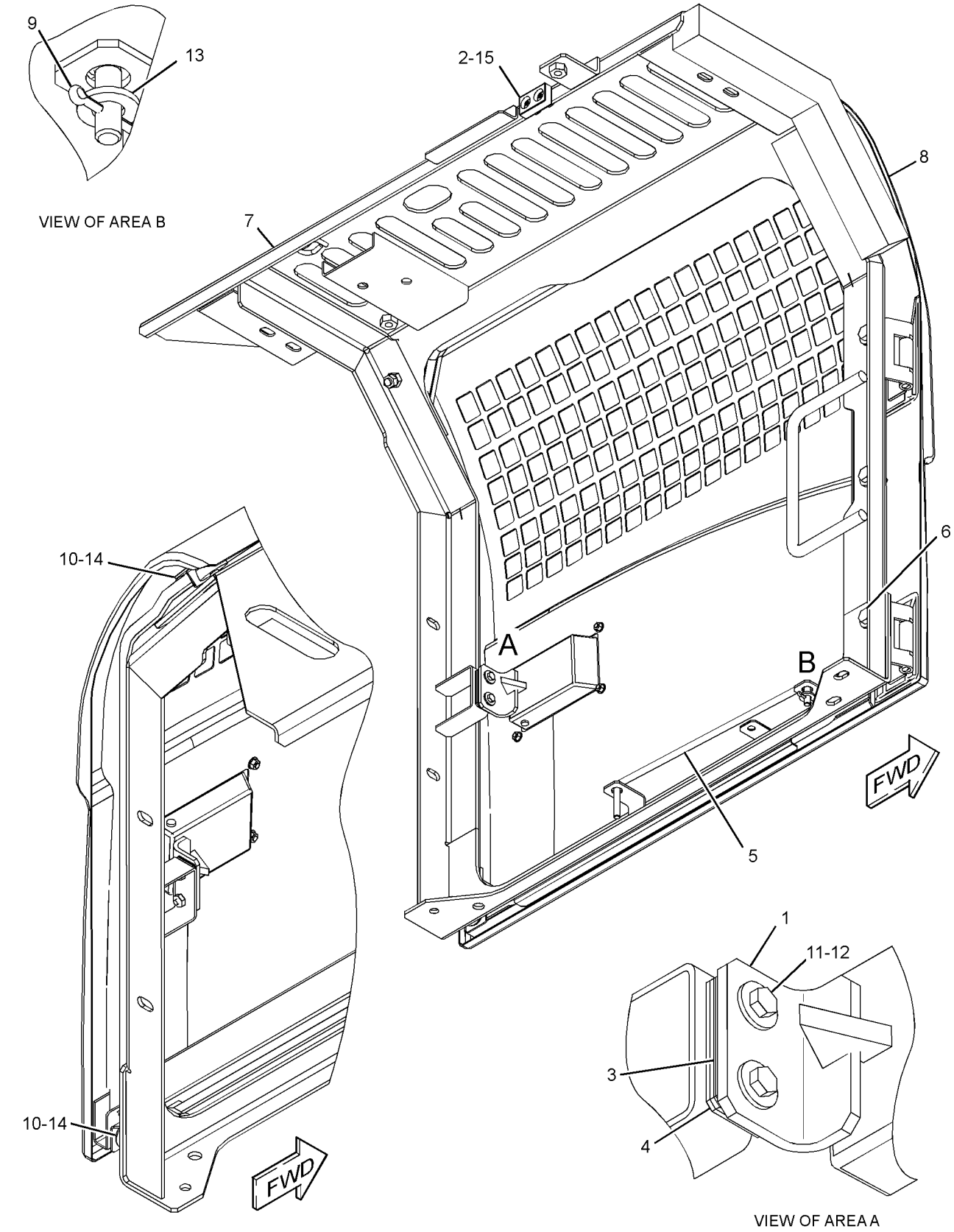

GRAPHIC #1 <END> g02345579

355-8247 DOOR GP-ACCESS—PUMP COMPARTMENT

S/N: DLP215-UP

PART OF 283-3595 DOOR & MTG GP-ACCESS

SMCS-7273 **i04040418**

NOTE	REF NO	GRAPHIC REF	PART NUMBER	QTY	PART NAME 1 2 3 4 5 6 (PRODUCT LEVEL)	SEE PAGE
	1	1	**4I-0232**	1	STRIKER	
B	2	1	**087-3908**	2	SHIM (1-MM THK)	
B	3	1	**087-3909**	2	SHIM (2-MM THK)	
	4	1	**122-4120**	1	ROD	
	5	1	**135-8575**	3	BOLT AS	
	6	1	**355-8248**	1	SUPPORT AS	
Y	7	1	**355-8249**	1	DOOR AS-ACCESS (PUMP COMPARTMENT)	370
	8	1	**3B-4618**	1	PIN-COTTER	
	9	1	**4I-1205**	2	BUMPER	
	10	1	**5P-4115**	2	WASHER-HARD (7.2X19X2-MM THK)	
M	11	1	**6V-7357**	2	BOLT (M6X1X25-MM)	
	12	1	**8T-4121**	1	WASHER-HARD (11X21X2.5-MM THK)	
M	13	1	**8T-4133**	2	NUT (M10X1.5-THD)	

B - USE AS REQUIRED
M - METRIC PART
Y - SEPARATE ILLUSTRATION

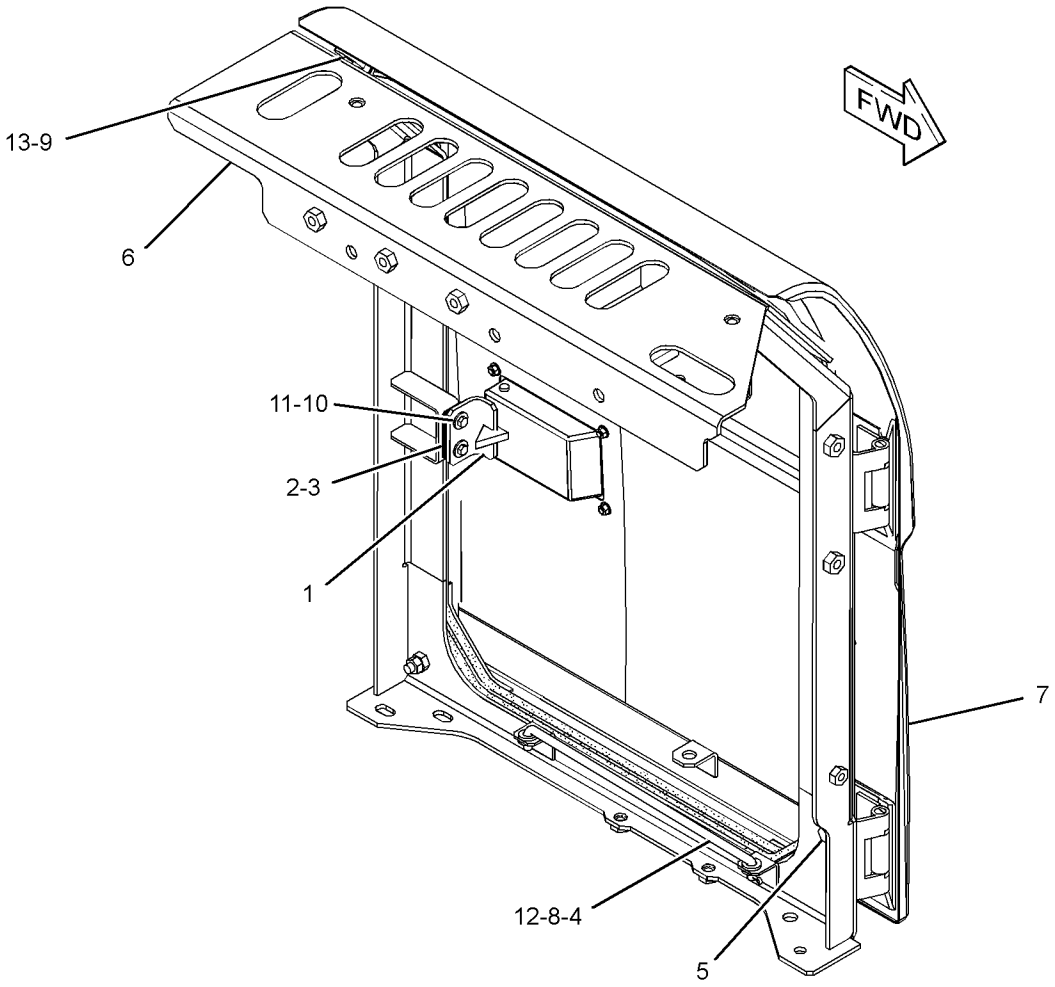

GRAPHIC #1 <END> g02478202

374-4938 DOOR GP-ACCESS—PUMP COMPARTMENT

S/N: DLP215-UP

PART OF 283-3595 DOOR & MTG GP-ACCESS

SMCS-7273 **i04813697**

NOTE	REF NO	GRAPHIC REF	PART NUMBER	QTY	PART NAME 1 2 3 4 5 6 (PRODUCT LEVEL)	SEE PAGE
	1	1	**4I-0232**	1	STRIKER	
B	2	1	**087-3908**	2	SHIM (1-MM THK)	
B	3	1	**087-3909**	2	SHIM (2-MM THK)	
	4	1	**122-4120**	1	ROD	
	5	1	**135-8575**	3	BOLT AS	
	6	1	**355-8248**	1	SUPPORT AS	
Y	7	1	**374-4940**	1	DOOR AS-ACCESS (PUMP COMPARTMENT)	371
	8	1	**3B-4618**	1	PIN-COTTER	
	9	1	**4I-1205**	2	BUMPER	
	10	1	**5P-4115**	2	WASHER-HARD (7.2X19X2-MM THK)	
M	11	1	**6V-7357**	2	BOLT (M6X1X25-MM)	
	12	1	**8T-4121**	1	WASHER-HARD (11X21X2.5-MM THK)	
M	13	1	**8T-4133**	2	NUT (M10X1.5-THD)	

B - USE AS REQUIRED
M - METRIC PART
Y - SEPARATE ILLUSTRATION

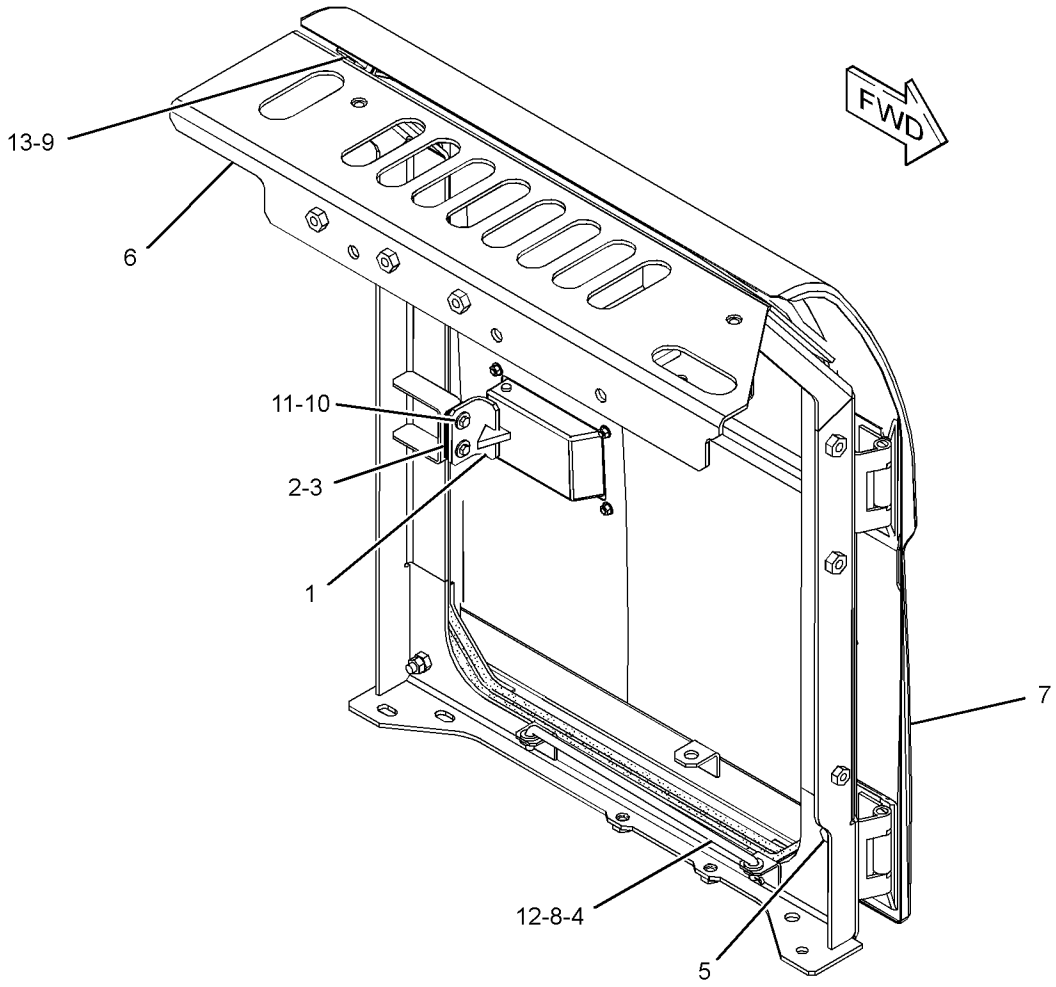

GRAPHIC #1 <END> g02478202

374-4943 DOOR GP-ACCESS—AIR CLEANER, BATTERY, RADIATOR

S/N: DLP1-UP

PART OF 374-4960 DOOR GP-ACCESS

AN ATTACHMENT

SMCS-7273 **i04729632**

NOTE	REF NO	GRAPHIC REF	PART NUMBER	QTY	PART NAME 1 2 3 4 5 6 (PRODUCT LEVEL)	SEE PAGE
	1	1	*374-4944*	1	DOOR AS-ACCESS	
	1A	1	**184-8898**	2	HINGE	
M		1	**8T-3597**	3	NUT-WELD (M12X1.75-THD)	
J	2	1	**298-2942**	1	LATCH AS	
M	3	1	**099-6418**	4	NUT (M6X1-THD)	
H	4	1	**348-5409**		SEAL (32-DM)	

H - ORDER BY THE DECIMETER
J - REQUIRES COPORATE KEY
M - METRIC PART

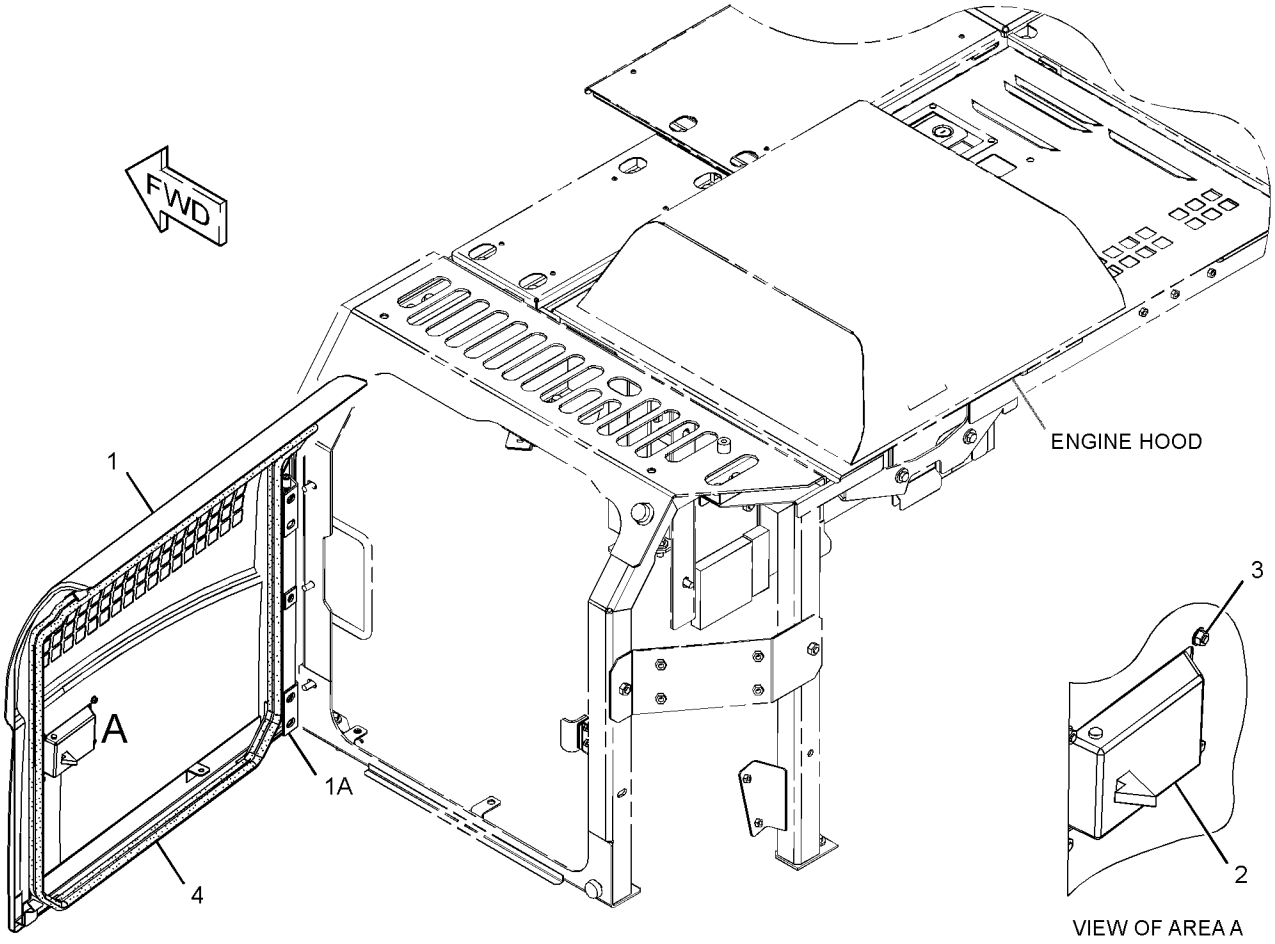

GRAPHIC #1 <END> g02955180

374-4960 DOOR GP-ACCESS–PRECLEANER

S/N: DLP1-UP
PART OF 273-8104 DOOR GP-ACCESS
AN ATTACHMENT

SMCS-7273 **i04827234**

NOTE	REF NO	GRAPHIC REF	PART NUMBER	QTY	PART NAME 1 2 3 4 5 6 (PRODUCT LEVEL)	SEE PAGE
	1	1	**4I-0232**	1	STRIKER	
	2	1	**6I-6033**	1	STOP	
B	3	1	**087-3908**	2	SHIM (1-MM THK)	
B	4	1	**087-3909**	2	SHIM (2-MM THK)	
	5	1	**122-4120**	1	ROD	
	6	1	**135-8575**	3	BOLT AS	
	7	1	**355-8258**	1	SUPPORT AS-SOUND SUPPRESSION	
	7A	1	**303-9623**	1	LINER	
	7B	1	**273-8084**	1	HANDLE	
Y	8	1	**374-4943**	1	DOOR GP-ACCESS (AIR CLEANER, BATTERY, RADIATOR)	390
	9	1	**3B-4618**	1	PIN-COTTER	
	10	1	**4I-1205**	2	BUMPER	
	11	1	**5P-4115**	2	WASHER-HARD (7.2X19X2-MM THK)	
M	12	1	**6V-7357**	2	BOLT (M6X1X25-MM)	
	13	1	**8T-4121**	1	WASHER-HARD (11X21X2.5-MM THK)	
M	14	1	**8T-4133**	2	NUT (M10X1.5-THD)	
M	15	1	**9X-2045**	2	SCREW-TRUSS HEAD (M6X1X20-MM)	

B - USE AS REQUIRED
M - METRIC PART
Y - SEPARATE ILLUSTRATION

374-4960 **DOOR GP-ACCESS (**contd.**)** **i04827234**

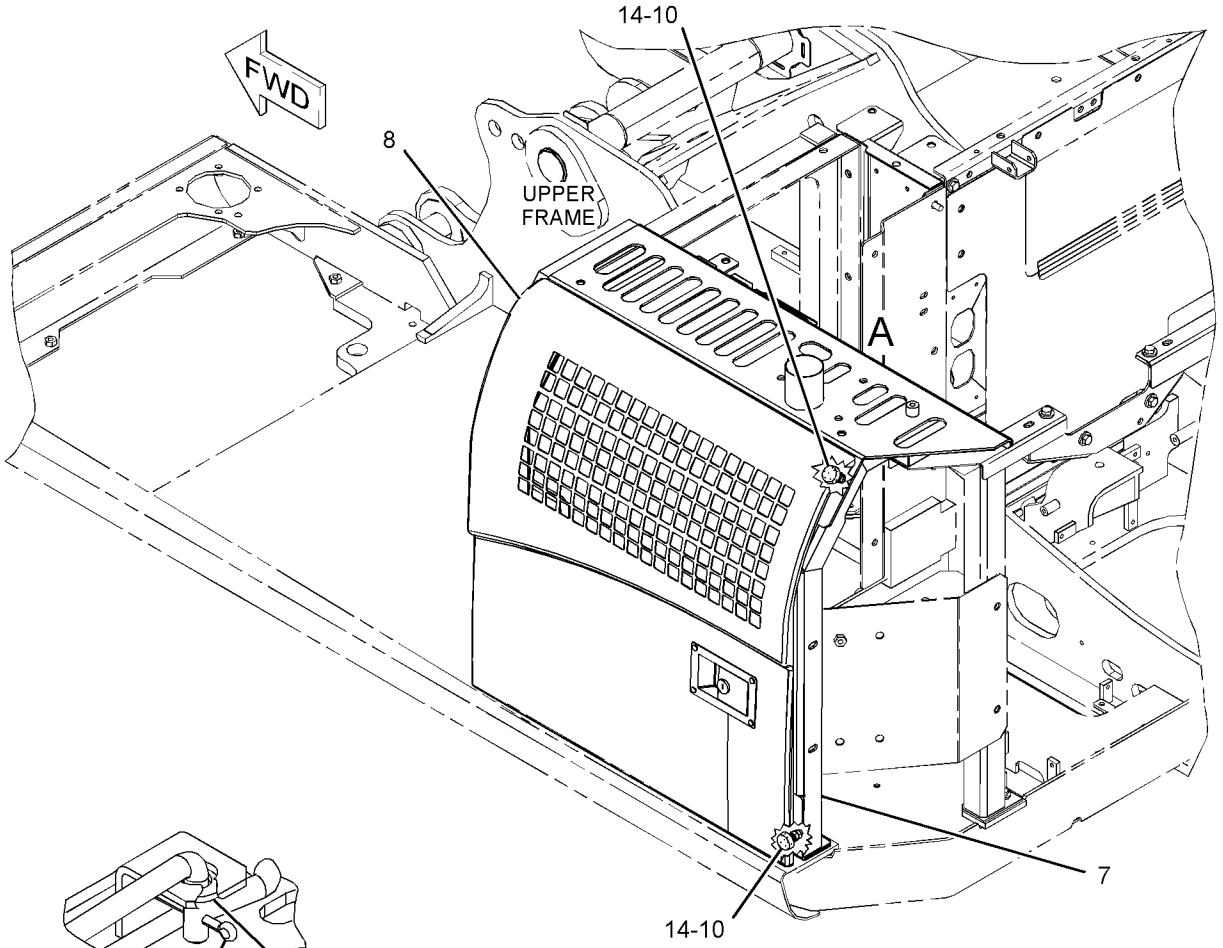

VIEW OF AREA B

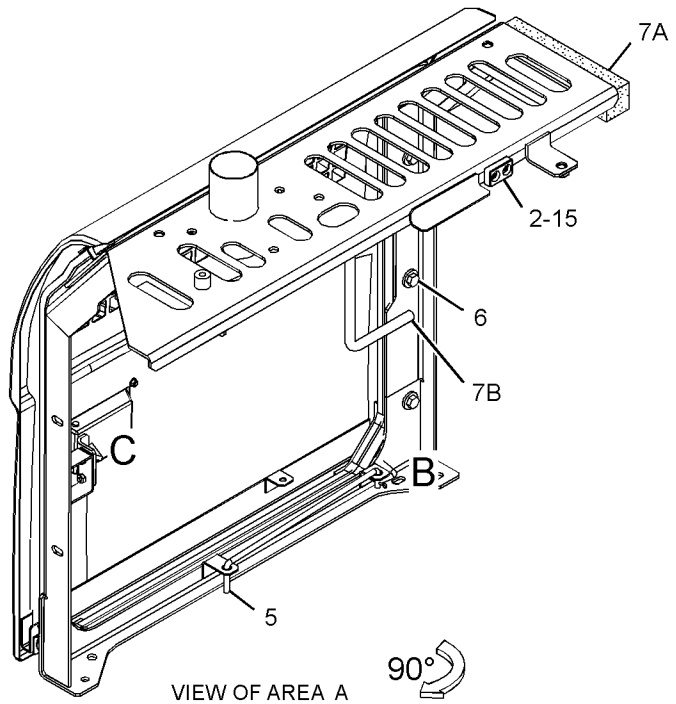

VIEW OF AREA A 90°

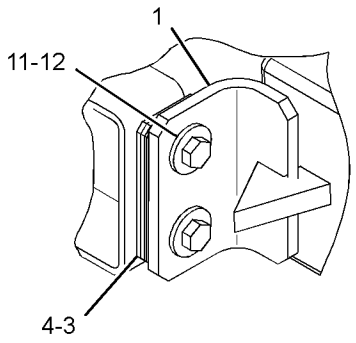

VIEW OF AREA C 90°

GRAPHIC #1 <END> g02973516

421-3682 DOOR GP-ACCESS—AIR CLEANER, BATTERY, RADIATOR

S/N: DLP1-UP

PART OF 421-3694 DOOR GP-ACCESS

AN ATTACHMENT

SMCS-7273 **i06889739**

NOTE	REF NO	GRAPHIC REF	PART NUMBER	QTY	PART NAME 1 2 3 4 5 6 (PRODUCT LEVEL)	SEE PAGE
	1	1	*374-4944*	1	DOOR AS-ACCESS	
M		1	**8T-3597**	3	NUT-WELD (M12X1.75-THD)	
	1A	1	**184-8898**	2	HINGE	
	2	1	**505-5963**	1	LATCH AS	
L		1	**385-3458**	1	LOCK AS	
M	3	1	**099-6418**	4	NUT (M6X1-THD)	
J	4	1	**348-5409**		SEAL (32-DM)	

J - ORDER BY THE DECIMETER
L - REQUIRES CORPORATE KEY
M - METRIC PART

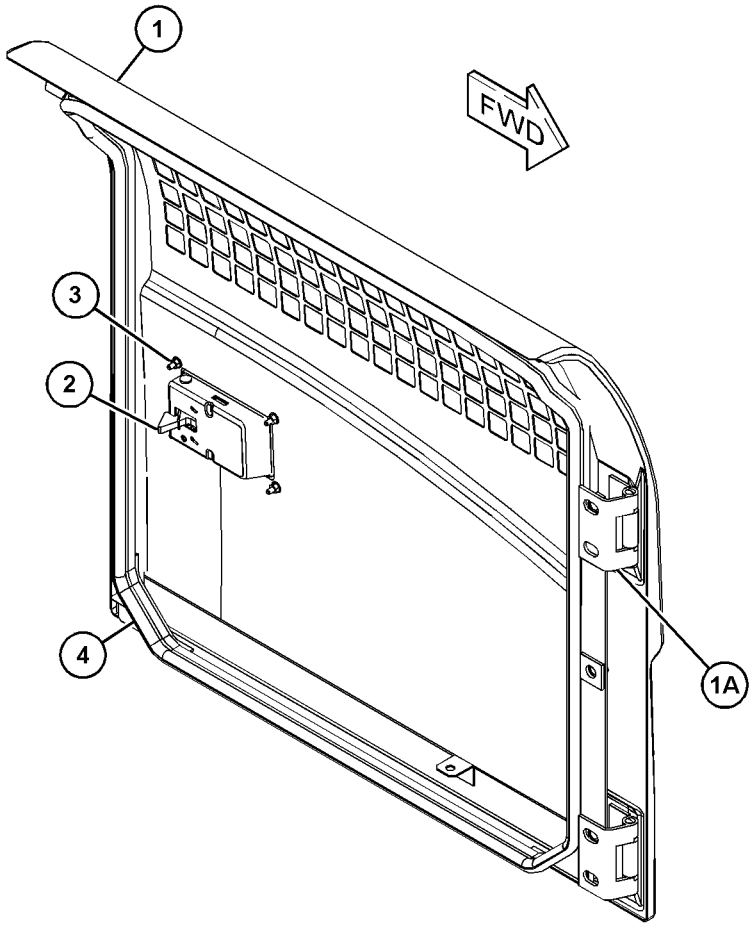

GRAPHIC #1 <END> g06141798

421-3694 DOOR GP-ACCESS—PRECLEANER

S/N: DLP1-UP

PART OF 273-8104 DOOR GP-ACCESS

AN ATTACHMENT

SMCS-7273 **i06599938**

NOTE	REF NO	GRAPHIC REF	PART NUMBER	QTY	PART NAME 1 2 3 4 5 6 (PRODUCT LEVEL)	SEE PAGE
	1	1	**4I-0232**	1	STRIKER	
	2	1	**6I-6033**	1	STOP	
B	3	1	**087-3908**	2	SHIM (1-MM THK)	
B	4	1	**087-3909**	2	SHIM (2-MM THK)	
	5	1	**122-4120**	1	ROD	
	6	1	**135-8575**	3	BOLT AS	
	7	1	**355-8258**	1	SUPPORT AS-SOUND SUPPRESSION	
		1	**303-9623**	1	LINER	
Y	8	1	**421-3682**	1	DOOR GP-ACCESS	393
	9	1	**3B-4618**	1	PIN-COTTER	
	10	1	**4I-1205**	2	BUMPER	
	11	1	**5P-4115**	2	WASHER-HARD (7.2X19X2-MM THK)	
M	12	1	**6V-7357**	2	BOLT (M6X1X25-MM)	
	13	1	**8T-4121**	1	WASHER-HARD (11X21X2.5-MM THK)	
M	14	1	**8T-4133**	2	NUT (M10X1.5-THD)	
M	15	1	**9X-2045**	2	SCREW-TRUSS HEAD (M6X1X20-MM)	

B - USE AS REQUIRED
M - METRIC PART
Y - SEPARATE ILLUSTRATION

421-3694 **DOOR GP-ACCESS (**contd.**)** **i06599938**

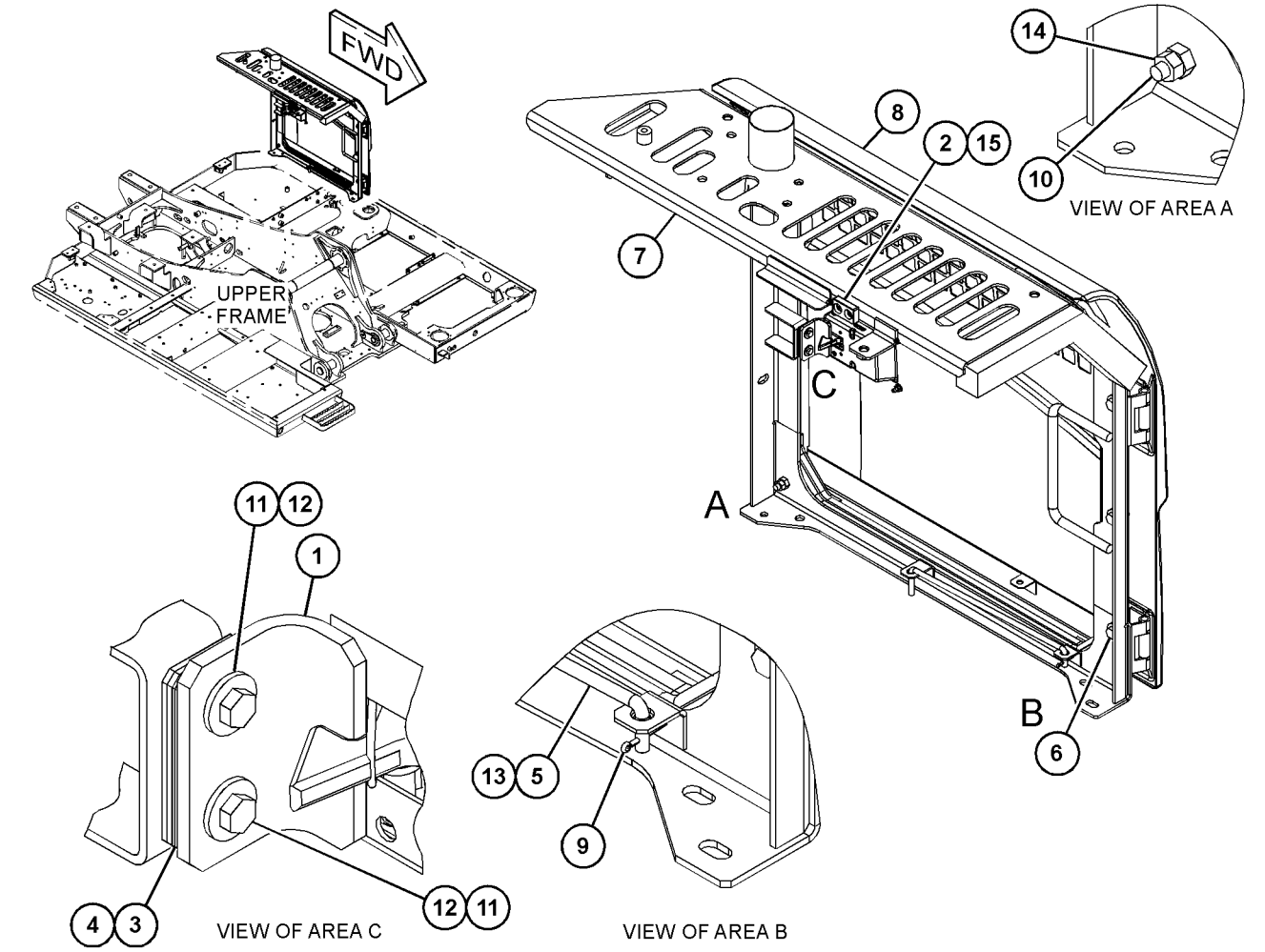

GRAPHIC #1

<END>

g06151439

283-3593 ENCLOSURE GP-ENGINE

S/N: DLP1-UP

PART OF 273-8101 HOOD & GUARD GP

SMCS-7263 **i03017469**

NOTE	REF NO	GRAPHIC REF	PART NUMBER	QTY	PART NAME 1 2 3 4 5 6 (PRODUCT LEVEL)	SEE PAGE
	1	1	**135-8573**	12	BOLT AS	
	2	1	**135-8575**	37	BOLT AS	
	3	1	**283-3634**	1	SHEET AS	
		1	**283-3636**	1	LINER	
Y	4	1	**283-3637**	1	SUPPORT AS-ENCLOSURE	436
	5	1	**283-3641**	1	SHEET AS	
		1	**283-3643**	1	LINER	
	6	1	**283-3644**	1	SUPPORT AS	
Y	7	1	**283-3928**	1	SHEET AS-SOUND SUPPRESSION	429
	8	1	**283-3935**	1	SUPPORT AS	
	9	1	**283-3941**	1	SHEET AS	
	10	1	**283-3942**	1	SUPPORT AS	
	11	1	**283-3943**	1	SUPPORT AS	
	12	1	**289-6817**	1	SHEET AS	
	13	1	**289-6818**	1	SHEET AS	
	14	1	**293-7010**	1	SHEET AS	
	15	1	**293-7011**	1	SHEET AS	
		1	**293-7013**	1	LINER	
	16	1	**293-7014**	1	SHEET AS	
		1	**293-7016**	1	LINER	
Y	17	1	**293-7017**	1	SHEET AS-SOUND SUPPRESSION	431
	18	1	**298-3024**	1	LINER	
	19	1	**307-7929**	1	SHEET AS	
	20	1	**135-8572**	4	BOLT AS	

Y - SEPARATE ILLUSTRATION

283-3593 **ENCLOSURE GP-ENGINE (**contd.**)** **i03017469**

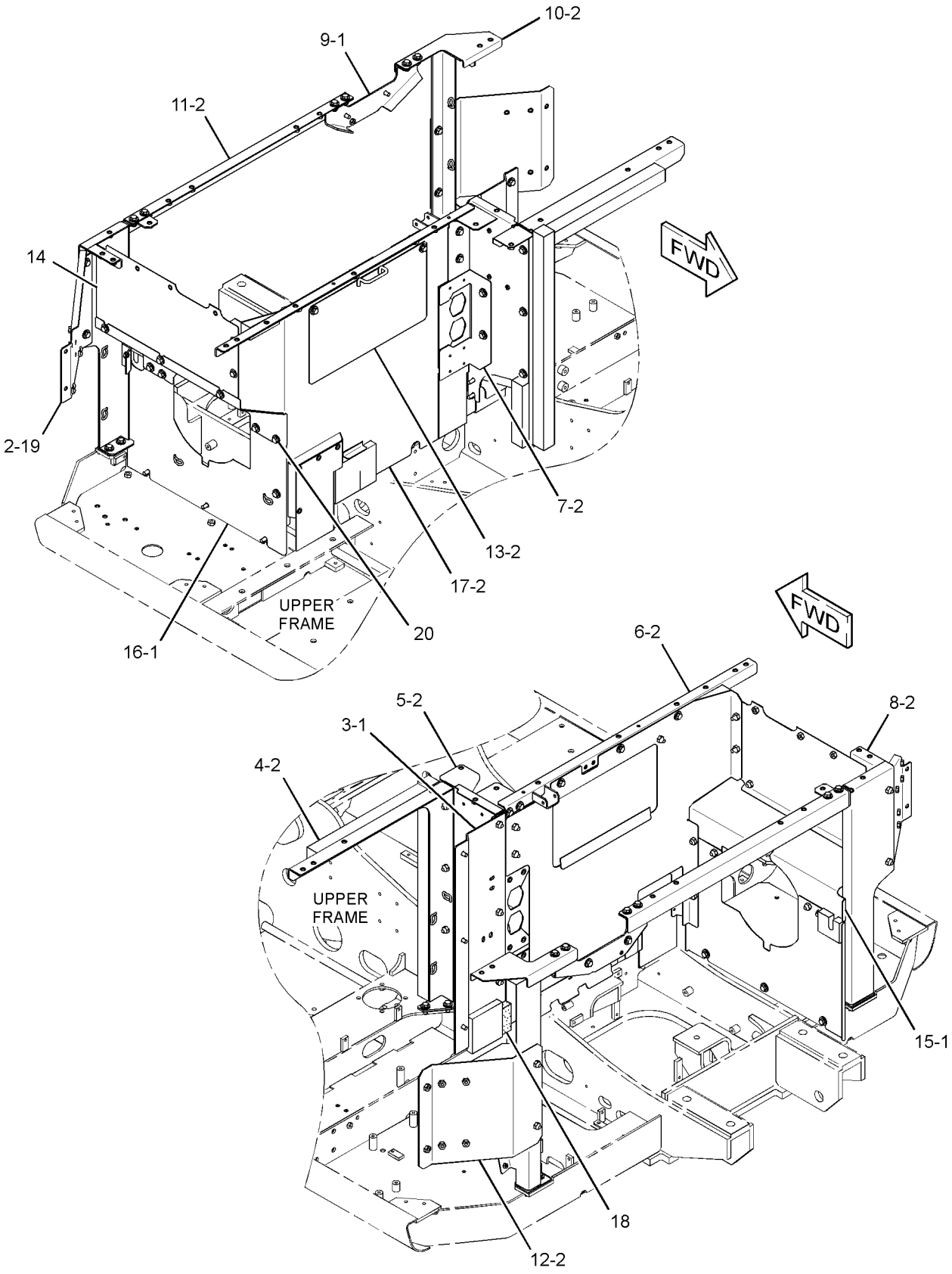

GRAPHIC #1 <END> g01530575

244-8041 FENDER & COVER GP–WITH STEP

S/N: DLP1-UP

PART OF 301-2680 CHASSIS AR

SMCS-7252 **i03296700**

NOTE	REF NO	GRAPHIC REF	PART NUMBER	QTY	PART NAME 1 2 3 4 5 6 (PRODUCT LEVEL)	SEE PAGE
	1	1	**135-8573**	2	BOLT AS	
	2	1	**236-3698**	1	STEP AS	
	3	1	**236-3702**	2	SPACER (15X35X11-MM THK)	
	4	1	**236-3703**	2	WASHER (25X35X4-MM THK)	
	5	1	**259-3903**	1	COVER AS	
		1	**278-3818**	1	LINER	
	6	1	**5P-1075**	2	WASHER-HARD (10.2X22.5X3-MM THK)	
M	7	1	**8T-4195**	2	BOLT (M10X1.5X30-MM)	

M - METRIC PART

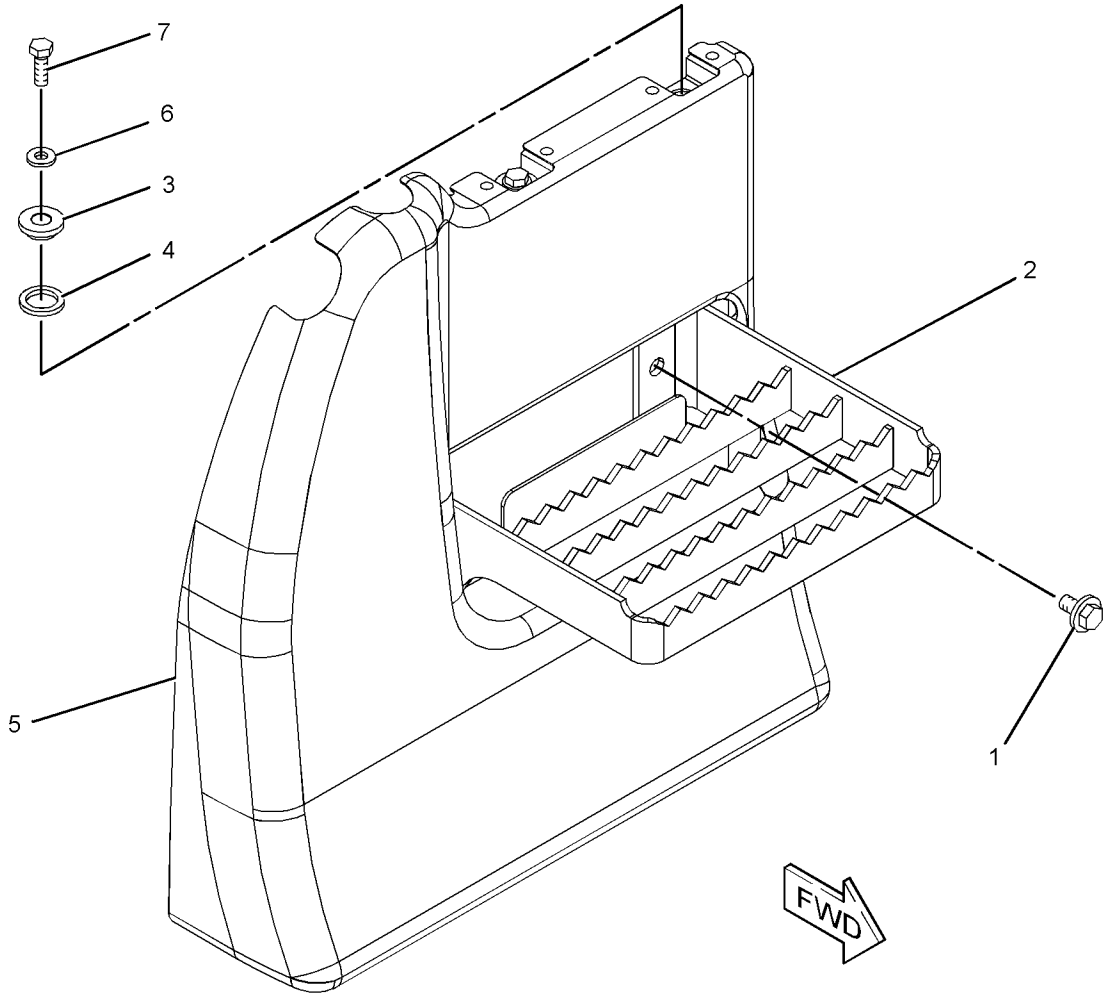

GRAPHIC #1 <END> g01223345

330-1163 FENDER & COVER GP

S/N: DLP1-UP
PART OF 330-1323 TANK & MTG AR-FUEL
AN ATTACHMENT

SMCS-7252 **i03296703**

NOTE	REF NO	GRAPHIC REF	PART NUMBER	QTY	PART NAME 1 2 3 4 5 6 (PRODUCT LEVEL)	SEE PAGE
	1	1	**330-1164**	1	COVER AS	
		1	**278-3818**	1	LINER	

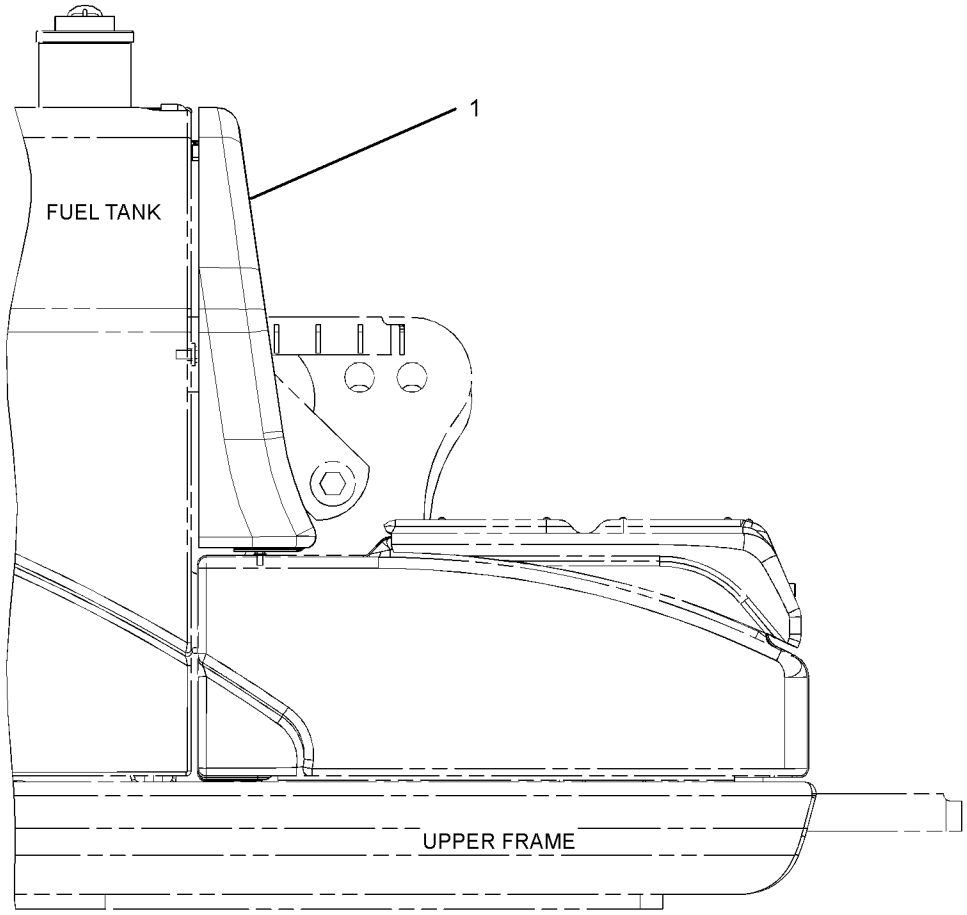

RIGHT SIDE VIEW

GRAPHIC #1 <END> g01621025

278-9259 FRAME GP-UPPER

S/N: DLP1-488

PART OF 301-2680 CHASSIS AR

SMCS-7051 **i03895939**

NOTE	REF NO	GRAPHIC REF	PART NUMBER	QTY	PART NAME 1 2 3 4 5 6 (PRODUCT LEVEL)	SEE PAGE
	1	1	**1R-6229**	2	PIN AS	
B	2	1	**093-0065**	2	SHIM (1-MM THK)	
B	3	1	**093-0083**	1	SHIM (1-MM THK)	
B	4	1	**093-0097**	2	SHIM (2-MM THK)	
B	5	1	**093-0115**	1	SHIM (2-MM THK)	
	6	1	**093-0357**	2	SPACER (63X100X9-MM THK)	
	7	1	**093-0363**	1	SPACER (83X120X12-MM THK)	
B	8	1	**133-2425**	2	SHIM (0.5-MM THK)	
B	9	1	**133-2717**	4	SHIM (0.5-MM THK)	
	10	1	**212-2837**	2	SHIM (2-MM THK)	
J	11	1	**245-7900**	1	CAP	
J	12	1	**245-7901**	1	CAP	
	13	1	**278-9260**	1	FRAME AS-UPPER	
	13A	1	**186-5639**	1	STEP AS	
	13B	1	**7Y-0633**	1	BOSS	
	14	1	**282-4464**	1	PIN AS	
	15	1	**086-0297**	2	WASHER (13X50X6-MM THK)	
	16	1	**086-0299**	1	WASHER (22X60X9-MM THK)	
M	17	1	**8T-4179**	2	BOLT (M12X1.75X20-MM)	
M	18	1	**8T-4780**	1	BOLT (M20X2.5X30-MM)	

B - USE AS REQUIRED
J - USE ONLY WITH MACHINES WITHOUT LOWER WIPER
M - METRIC PART

278-9259 **FRAME GP-UPPER (**contd.**)** **i03895939**

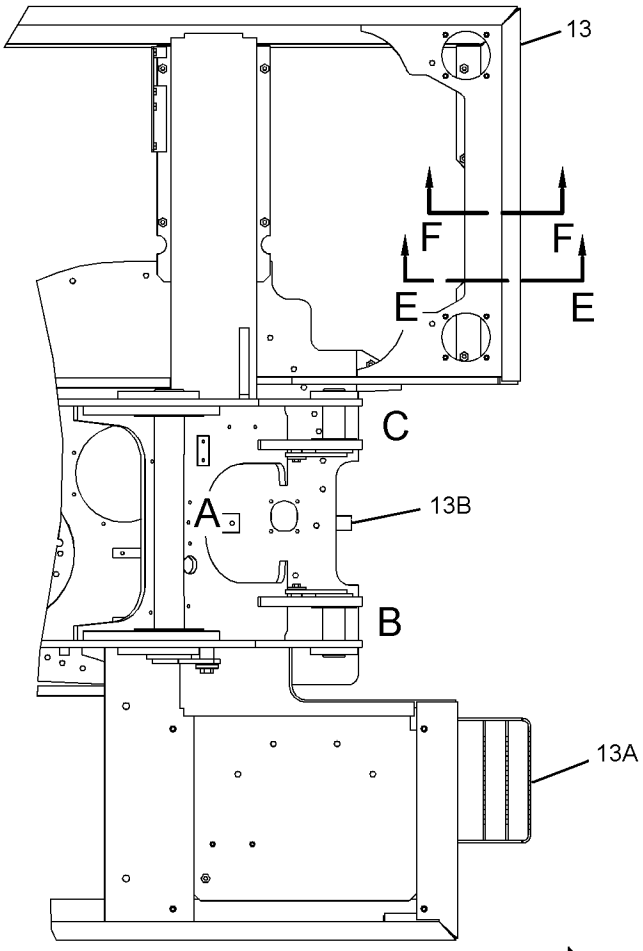

TOP VIEW

FWD

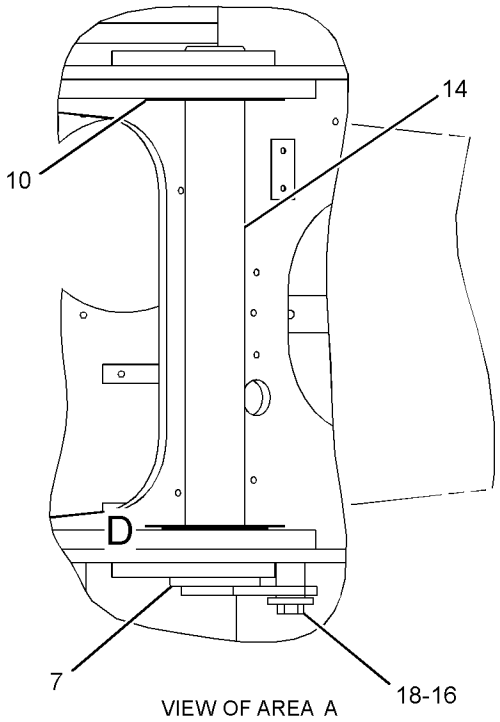

VIEW OF AREA A

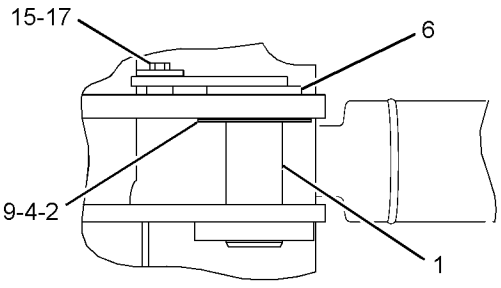

VIEW OF AREA B

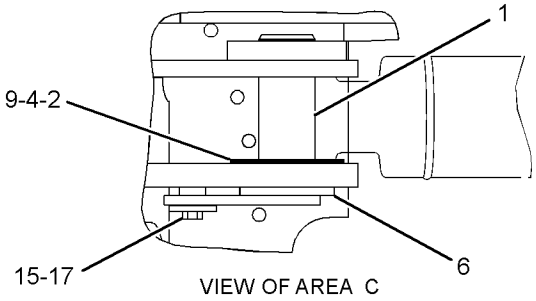

VIEW OF AREA C

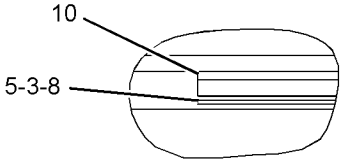

VIEW OF AREA D

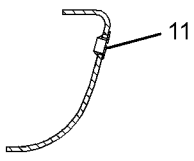

SECTION E-E

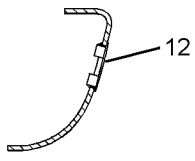

SECTION F-F

GRAPHIC #1 <END> g02139442

278-9259 FRAME GP-UPPER

S/N: DLP489-UP
PART OF 301-2680 CHASSIS AR
TYPE 1

SMCS-7051 **i04630104**

NOTE	REF NO	GRAPHIC REF	PART NUMBER	QTY	PART NAME 1 2 3 4 5 6 (PRODUCT LEVEL)	SEE PAGE
	1	1	**1R-6229**	2	PIN AS	
B	2	1	**093-0065**	2	SHIM (1-MM THK)	
B	3	1	**093-0083**	1	SHIM (1-MM THK)	
B	4	1	**093-0097**	2	SHIM (2-MM THK)	
B	5	1	**093-0115**	1	SHIM (2-MM THK)	
	6	1	**093-0357**	2	SPACER (63X100X9-MM THK)	
	7	1	**093-0363**	1	SPACER (83X120X12-MM THK)	
B	8	1	**133-2425**	2	SHIM (0.5-MM THK)	
B	9	1	**133-2717**	4	SHIM (0.5-MM THK)	
	10	1	**212-2837**	2	SHIM (2-MM THK)	
J	11	1	**245-7900**	1	CAP	
J	12	1	**245-7901**	1	CAP	
C	13	1	**352-9639**	1	FRAME AS-UPPER	
	13A	1	**186-5639**	1	STEP AS	
	13B	1	**7Y-0633**	1	BOSS	
	14	1	**282-4464**	1	PIN AS	
	15	1	**086-0297**	2	WASHER (13X50X6-MM THK)	
	16	1	**086-0299**	1	WASHER (22X60X9-MM THK)	
M	17	1	**8T-4179**	2	BOLT (M12X1.75X20-MM)	
M	18	1	**8T-4780**	1	BOLT (M20X2.5X30-MM)	
					THE FOLLOWING REPAIR PART IS AVAILABLE FOR REPAIR OF DAMAGED SKIRTS	
F			**180-7614**	1	PLATE-SKIRT (1100-MM)	

B - USE AS REQUIRED
C - CHANGE FROM PREVIOUS TYPE
F - NOT SHOWN
J - USE ONLY WITH MACHINES WITHOUT LOWER WIPER
M - METRIC PART

278-9259 **FRAME GP-UPPER (**contd.**)** **i04630104**

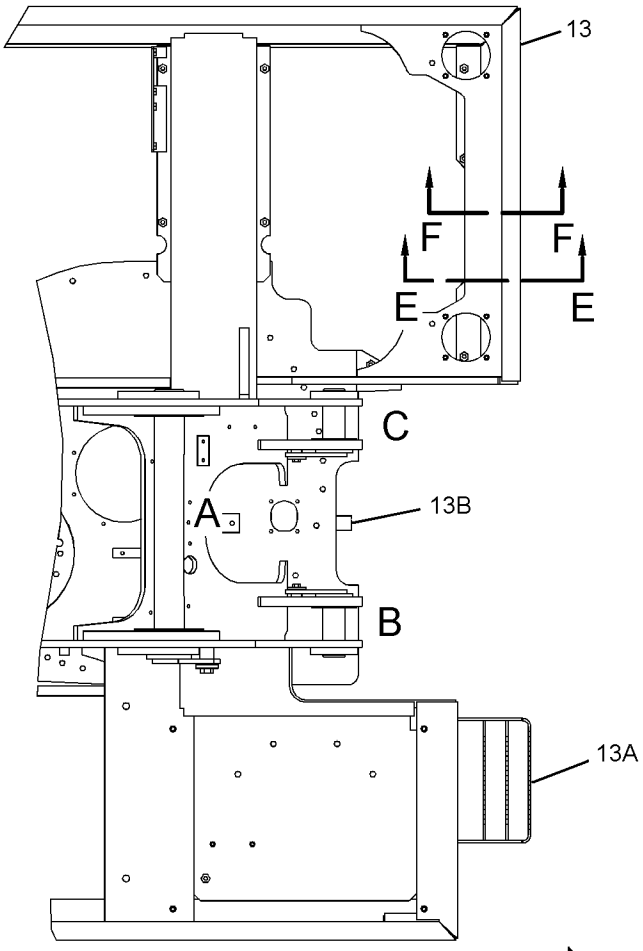

TOP VIEW

FWD

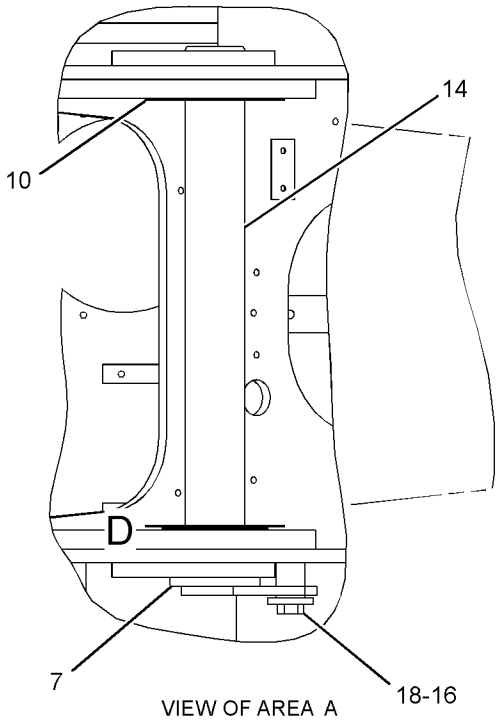

VIEW OF AREA A

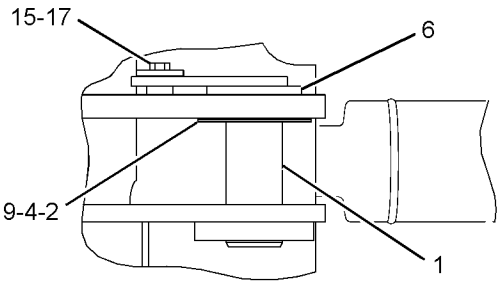

VIEW OF AREA B

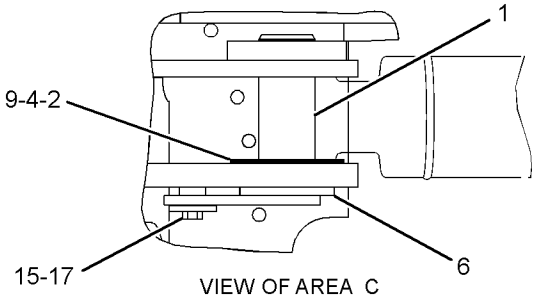

VIEW OF AREA C

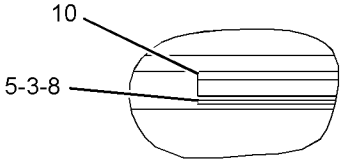

VIEW OF AREA D

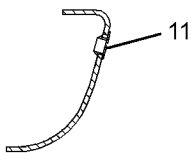

SECTION E-E

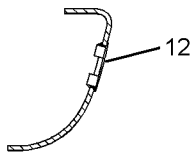

SECTION F-F

GRAPHIC #1 <END> g02139442

278-9259 FRAME GP-UPPER

S/N: DLP489-UP
PART OF 301-2680 CHASSIS AR
TYPE 2

SMCS-7051 **i04797632**

NOTE	REF NO	GRAPHIC REF	PART NUMBER	QTY	PART NAME 1 2 3 4 5 6 (PRODUCT LEVEL)	SEE PAGE
	1	1	**1R-6229**	2	PIN AS	
B	2	1	**093-0065**	2	SHIM (1-MM THK)	
B	3	1	**093-0083**	1	SHIM (1-MM THK)	
B	4	1	**093-0097**	2	SHIM (2-MM THK)	
B	5	1	**093-0115**	1	SHIM (2-MM THK)	
	6	1	**093-0357**	2	SPACER (63X100X9-MM THK)	
B	8	1	**133-2425**	2	SHIM (0.5-MM THK)	
B	9	1	**133-2717**	4	SHIM (0.5-MM THK)	
	10	1	**212-2837**	2	SHIM (2-MM THK)	
J	11	1	**245-7900**	1	CAP	
J	12	1	**245-7901**	1	CAP	
C	13	1	**385-3229**	1	FRAME AS-UPPER	
	13A	1	**186-5639**	1	STEP AS	
	13B	1	**7Y-0633**	1	BOSS	
C	14	1	**348-0629**	1	PIN AS	
	15	1	**086-0297**	2	WASHER (13X50X6-MM THK)	
	16	1	**086-0299**	1	WASHER (22X60X9-MM THK)	
M	17	1	**8T-4179**	2	BOLT (M12X1.75X20-MM)	
M	18	1	**8T-4780**	1	BOLT (M20X2.5X30-MM)	
					THE FOLLOWING REPAIR PART IS AVAILABLE FOR REPAIR OF DAMAGED SKIRTS	
F			**180-7614**	1	PLATE-SKIRT (1100-MM)	

B - USE AS REQUIRED
C - CHANGE FROM PREVIOUS TYPE
F - NOT SHOWN
J - USE ONLY WITH MACHINES WITHOUT LOWER WIPER
M - METRIC PART

278-9259 **FRAME GP-UPPER (**contd.**)** **i04797632**

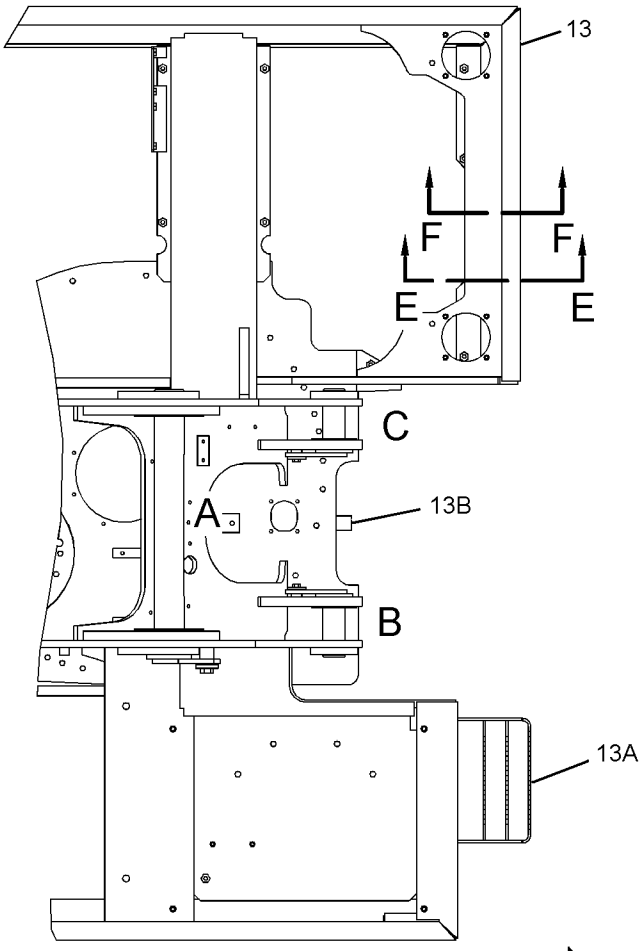

TOP VIEW

FWD

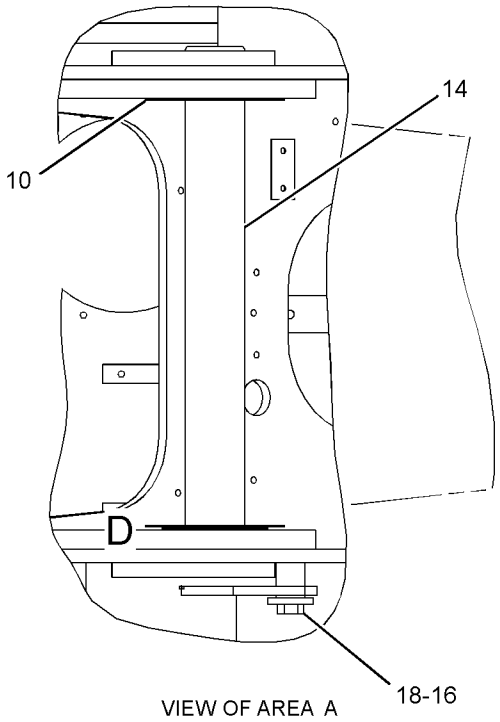

VIEW OF AREA A

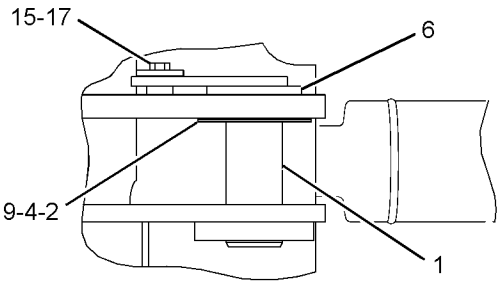

VIEW OF AREA B

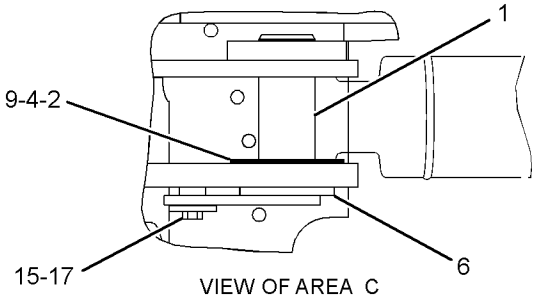

VIEW OF AREA C

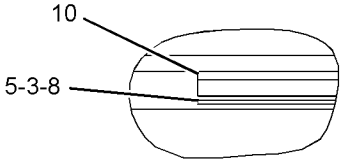

VIEW OF AREA D

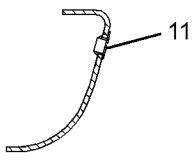

SECTION E-E

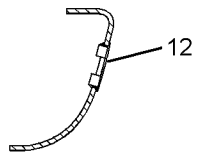

SECTION F-F

GRAPHIC #1 <END> g02922930

169-5567 GEAR & BEARING GP-SWING

S/N: DLP1-UP
PART OF 301-2681 FRAME AR-UNDERCARRIAGE
TYPE 1

SMCS-7063 **i05062411**

NOTE	REF NO	GRAPHIC REF	PART NUMBER	QTY	PART NAME 1 2 3 4 5 6 (PRODUCT LEVEL)	SEE PAGE
	1	1	**4I-7511**	1	RETAINER	
	2	1	**4I-7512**	1	CLAMP-HOSE	
	3	1	**4I-7444**	1	BOOT	
M	4	1	**8T-4136**	12	BOLT (M10X1.5X25-MM)	
	5	1	**8T-4121**	12	WASHER-HARD (11X21X2.5-MM THK)	
	6	1	**5K-9243**	2	ELBOW-FLARED	
M	7	1	**7X-2555**	34	BOLT (M16X2X80-MM)	
	8	1	**095-1299**	1	DOWEL	
M	9	1	**8T-4199**	2	BOLT (M8X1.25X12-MM)	
	10	1	**4N-9170**	2	CLIP	
	11	1	**3B-8489**	1	FITTING-GREASE (1/8-27 PTF)	
	12	1	**4I-7446**	1	GASKET	
	13	1	**4I-7326**	1	STRIP	
	14	1	**169-5568**	1	TUBE AS	
Y	15	1	**229-1077**	1	GEAR & BEARING GP-SWING (127-BEARING)	414
M	16	1	**8T-0357**	38	BOLT (M16X2X70-MM)	
	17	1	**085-9310**	38	SPACER (16.6X32X26-MM THK)	
B	18	1	**1U-8846**		SEALANT-GASKET	
	19	1	**191-2544**	34	WASHER (16.6X32X5-MM THK)	

B - USE AS REQUIRED
M - METRIC PART
Y - SEPARATE ILLUSTRATION

169-5567 **GEAR & BEARING GP-SWING** (contd.) **i05062411**

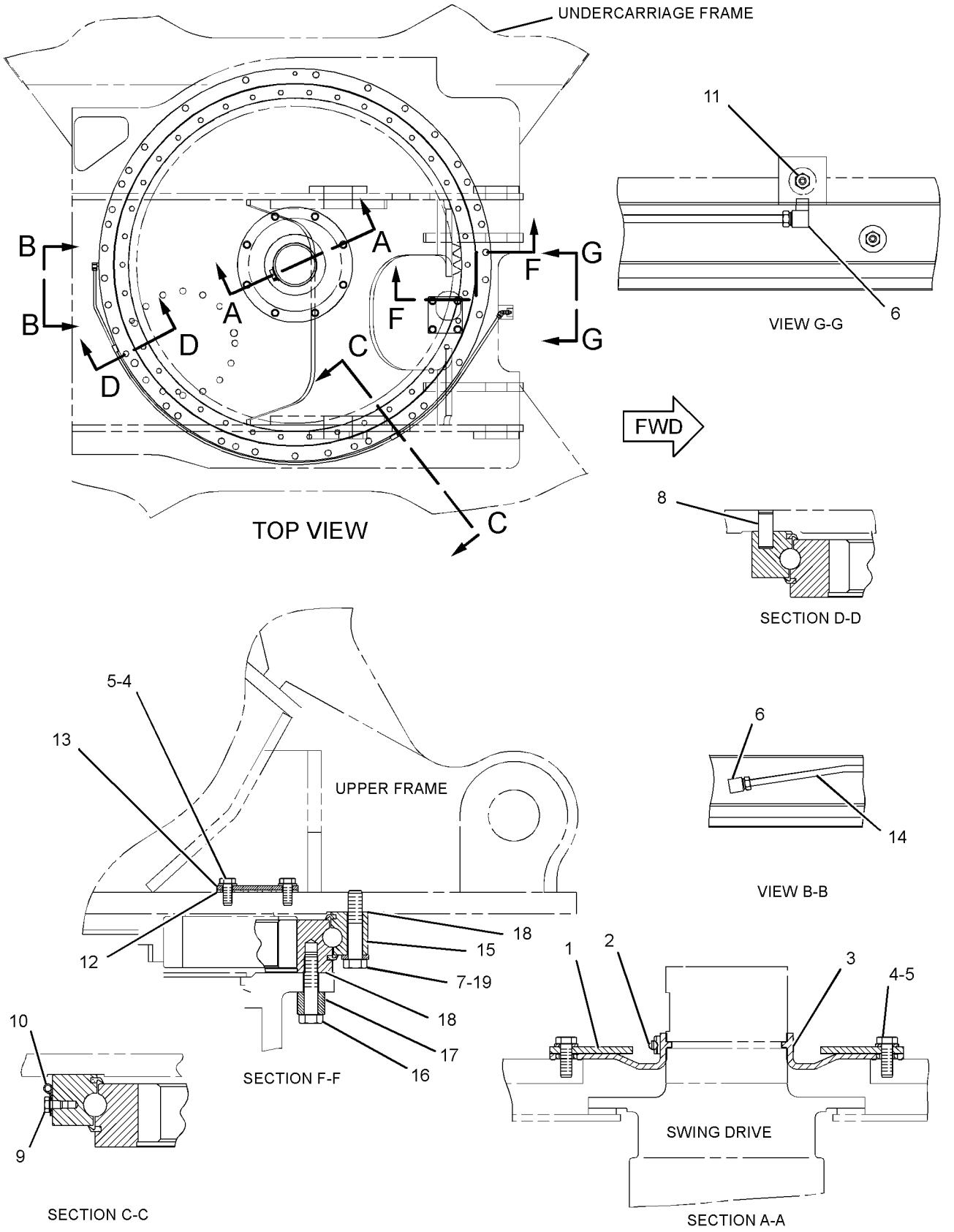

GRAPHIC #1 <END> g03229136

169-5567 GEAR & BEARING GP-SWING

S/N: DLP1-UP
PART OF 301-2681 FRAME AR-UNDERCARRIAGE
TYPE 2

SMCS-7063 **i05750753**

NOTE	REF NO	GRAPHIC REF	PART NUMBER	QTY	PART NAME 1 2 3 4 5 6 (PRODUCT LEVEL)	SEE PAGE
	1	1	**4I-7511**	1	RETAINER	
	2	1	**4I-7512**	1	CLAMP-HOSE	
	3	1	**4I-7444**	1	BOOT	
M	4	1	**8T-4136**	12	BOLT (M10X1.5X25-MM)	
	5	1	**8T-4121**	12	WASHER-HARD (11X21X2.5-MM THK)	
	6	1	**5K-9243**	2	ELBOW-FLARED	
M	7	1	**447-1708**	34	BOLT (M16X2X80-MM)	
	8	1	**095-1299**	1	DOWEL	
M	9	1	**8T-4199**	2	BOLT (M8X1.25X12-MM)	
	10	1	**4N-9170**	2	CLIP	
	11	1	**3B-8489**	1	FITTING-GREASE (1/8-27 PTF)	
	12	1	**4I-7446**	1	GASKET	
	13	1	**4I-7326**	1	STRIP	
	14	1	**169-5568**	1	TUBE AS	
CY	15	1	**378-9588**	1	GEAR & BEARING GP-SWING	415
M	16	1	**8T-0357**	38	BOLT (M16X2X70-MM)	
	17	1	**085-9310**	38	SPACER (16.6X32X26-MM THK)	
	18	1	**191-2544**	34	WASHER (16.6X32X5-MM THK)	
BF			**1U-8846**		SEALANT-GASKET	

B - USE AS REQUIRED
C - CHANGE FROM PREVIOUS TYPE
F - NOT SHOWN
M - METRIC PART
Y - SEPARATE ILLUSTRATION

169-5567 **GEAR & BEARING GP-SWING** (contd.) **i05750753**

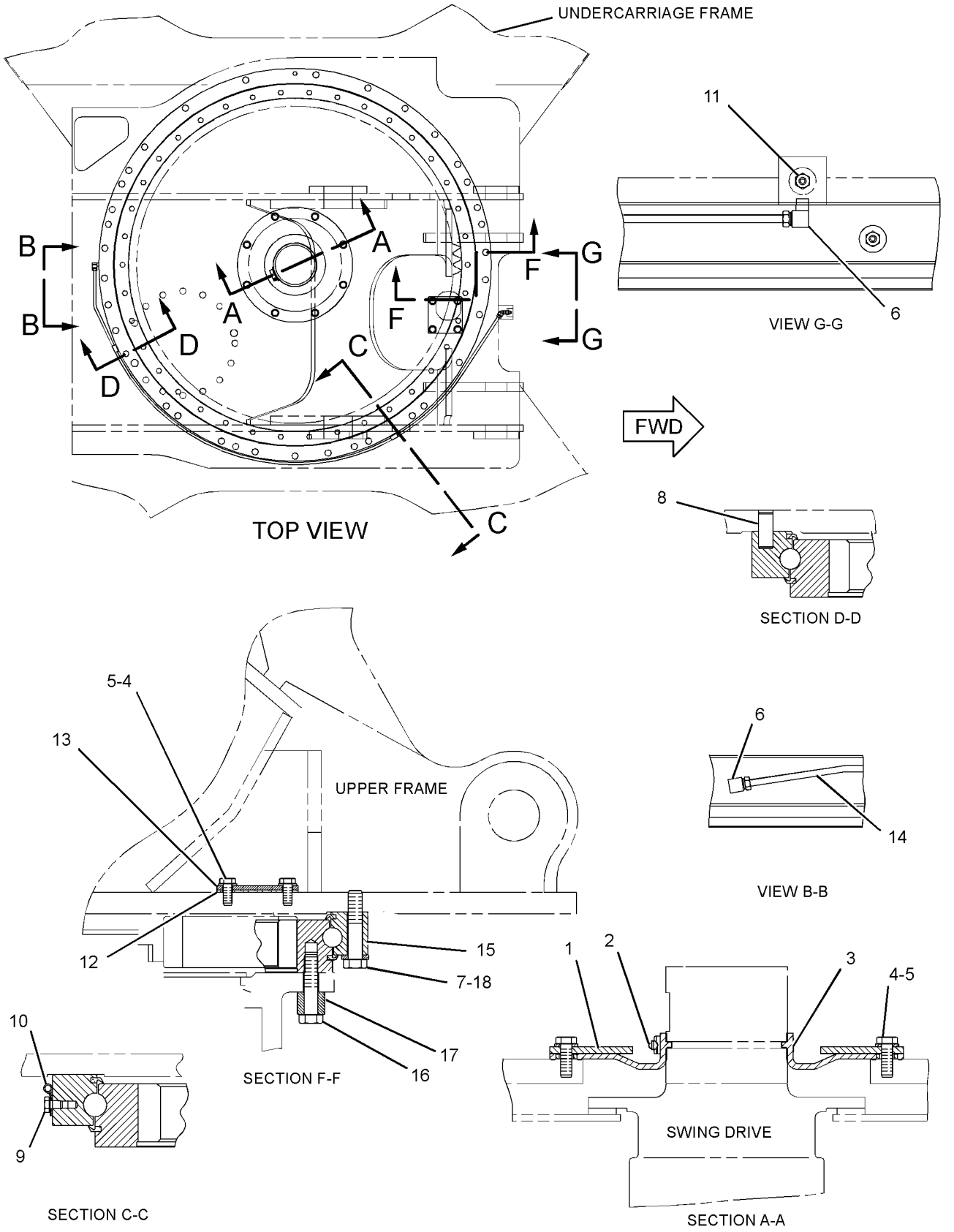

GRAPHIC #1 <END> g03666137

199-4573 GEAR & BEARING GP-SWING

S/N: DLP1-UP
PART OF 301-2691 INSTALLATION AR-BLADE
AN ATTACHMENT
TYPE 1

SMCS-7063 **i05335727**

NOTE	REF NO	GRAPHIC REF	PART NUMBER	QTY	PART NAME 1 2 3 4 5 6 (PRODUCT LEVEL)	SEE PAGE
	1	1	**121-5204**	1	RETAINER	
	2	1	**099-0913**	1	CLAMP-HOSE	
	3	1	**121-5203**	1	BOOT	
M	4	1	**8T-4136**	12	BOLT (M10X1.5X25-MM)	
	5	1	**8T-4121**	12	WASHER-HARD (11X21X2.5-MM THK)	
	6	1	**5K-9243**	2	ELBOW-FLARED	
M	7	1	**7X-2555**	34	BOLT (M16X2X80-MM)	
	8	1	**095-1299**	1	DOWEL	
M	9	1	**8T-4199**	2	BOLT (M8X1.25X12-MM)	
	10	1	**4N-9170**	2	CLIP	
	11	1	**3B-8489**	1	FITTING-GREASE (1/8-27 PTF)	
	12	1	**4I-7446**	1	GASKET	
	13	1	**4I-7326**	1	STRIP	
	14	1	**169-5568**	1	TUBE AS	
Y	15	1	**229-1077**	1	GEAR & BEARING GP-SWING (127-BEARING)	414
M	16	1	**8T-0357**	38	BOLT (M16X2X70-MM)	
	17	1	**085-9310**	38	SPACER (16.6X32X26-MM THK)	
B	18	1	**1U-8846**		SEALANT-GASKET	
	19	1	**191-2544**	34	WASHER (16.6X32X5-MM THK)	

B - USE AS REQUIRED
M - METRIC PART
Y - SEPARATE ILLUSTRATION

199-4573 **GEAR & BEARING GP-SWING** (contd.) **i05335727**

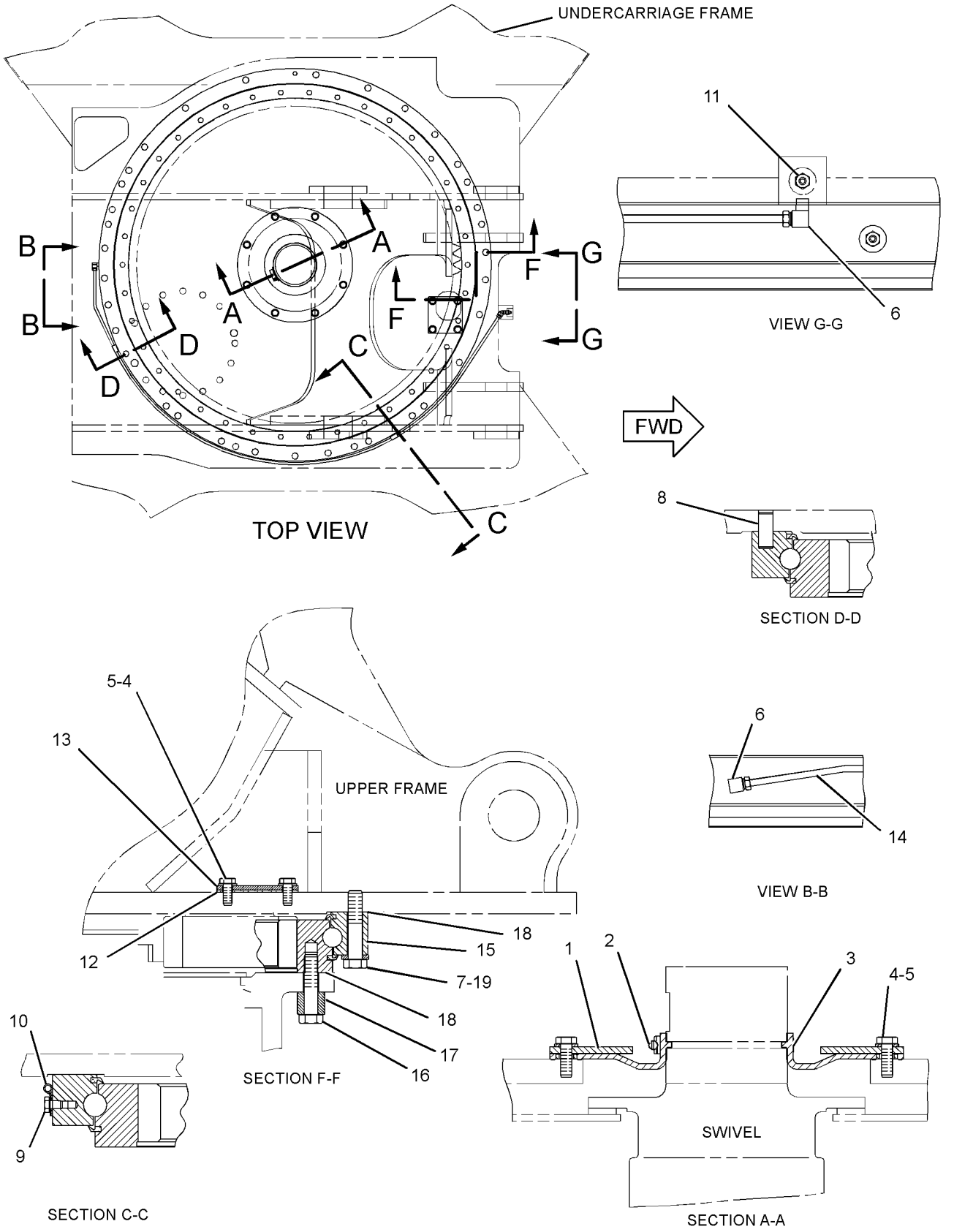

GRAPHIC #1 <END> g03380427

199-4573 GEAR & BEARING GP-SWING

S/N: DLP1-UP
PART OF 301-2691 INSTALLATION AR-BLADE
AN ATTACHMENT
TYPE 2

SMCS-7063 **i05763435**

NOTE	REF NO	GRAPHIC REF	PART NUMBER	QTY	PART NAME 1 2 3 4 5 6 (PRODUCT LEVEL)	SEE PAGE
	1	1	**121-5204**	1	RETAINER	
	2	1	**099-0913**	1	CLAMP-HOSE	
	3	1	**121-5203**	1	BOOT	
M	4	1	**8T-4136**	12	BOLT (M10X1.5X25-MM)	
	5	1	**8T-4121**	12	WASHER-HARD (11X21X2.5-MM THK)	
	6	1	**5K-9243**	2	ELBOW-FLARED	
M	7	1	**447-1708**	34	BOLT (M16X2X80-MM)	
	8	1	**095-1299**	1	DOWEL	
M	9	1	**8T-4199**	2	BOLT (M8X1.25X12-MM)	
	10	1	**4N-9170**	2	CLIP	
	11	1	**3B-8489**	1	FITTING-GREASE (1/8-27 PTF)	
	12	1	**4I-7446**	1	GASKET	
	13	1	**4I-7326**	1	STRIP	
	14	1	**169-5568**	1	TUBE AS	
CY	15	1	**378-9588**	1	GEAR & BEARING GP-SWING (127-BEARING)	415
M	16	1	**8T-0357**	38	BOLT (M16X2X70-MM)	
	17	1	**085-9310**	38	SPACER (16.6X32X26-MM THK)	
	18	1	**191-2544**	34	WASHER (16.6X32X5-MM THK)	
BF			**1U-8846**		SEALANT-GASKET	

B - USE AS REQUIRED
C - CHANGE FROM PREVIOUS TYPE
F - NOT SHOWN
M - METRIC PART
Y - SEPARATE ILLUSTRATION

199-4573 **GEAR & BEARING GP-SWING (**contd.**)** **i05763435**

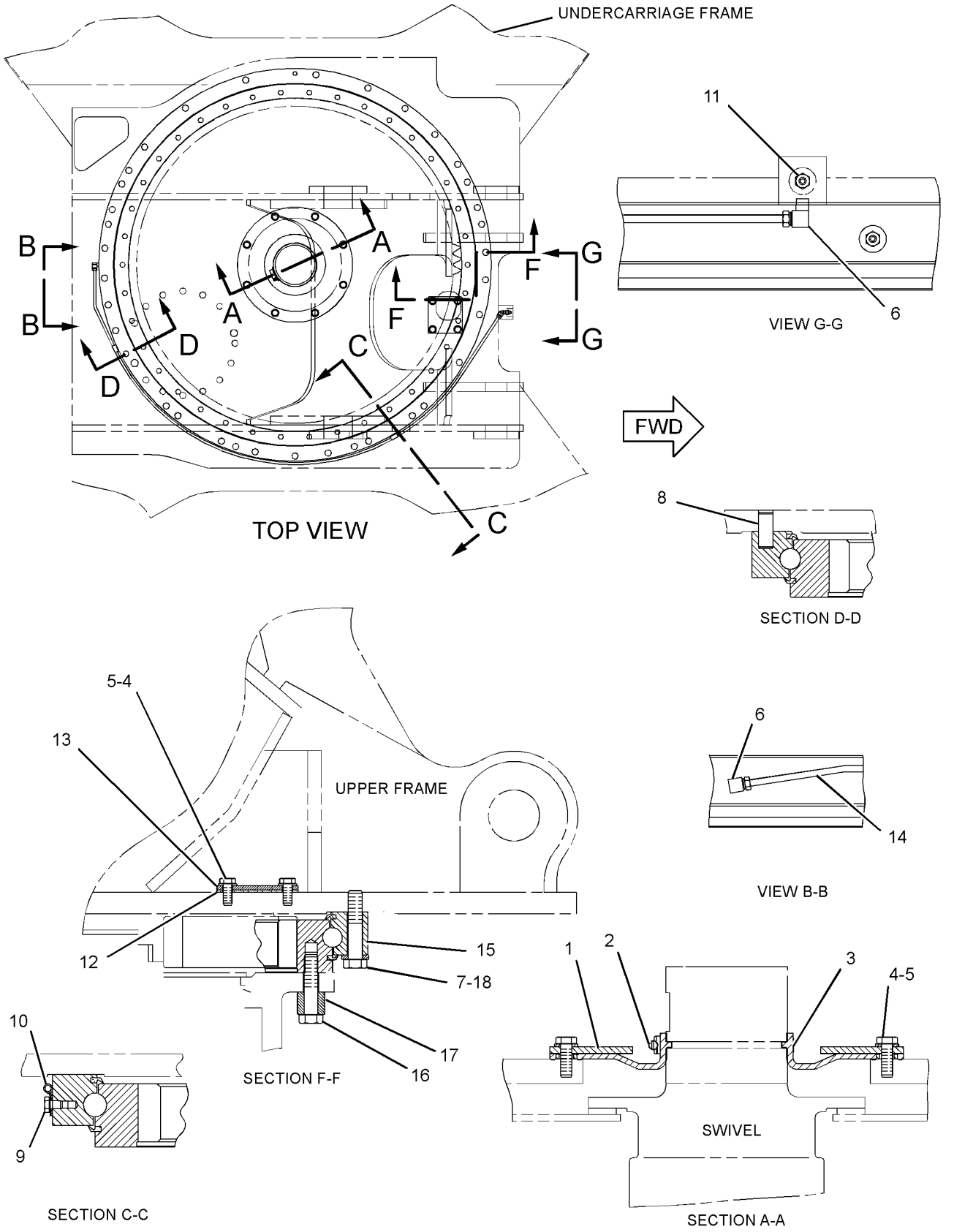

GRAPHIC #1 <END> g03666163

229-1077 GEAR & BEARING GP-SWING

S/N: DLP1-UP

PART OF 169-5567, 199-4573 GEAR & BEARING GP-SWING

ALSO AN ATTACHMENT

SMCS-7063 **i04862309**

NOTE	REF NO	GRAPHIC REF	PART NUMBER	QTY	PART NAME 1 2 3 4 5 6 (PRODUCT LEVEL)	SEE PAGE
	1	1	**3B-8489**	1	FITTING-GREASE (1/8-27 PTF)	
	2	1	**229-1078**	1	SEAL-DUST	
E	3	1	**148-4685**		SEAL ((309-CM))	

E - ORDER BY THE CENTIMETER

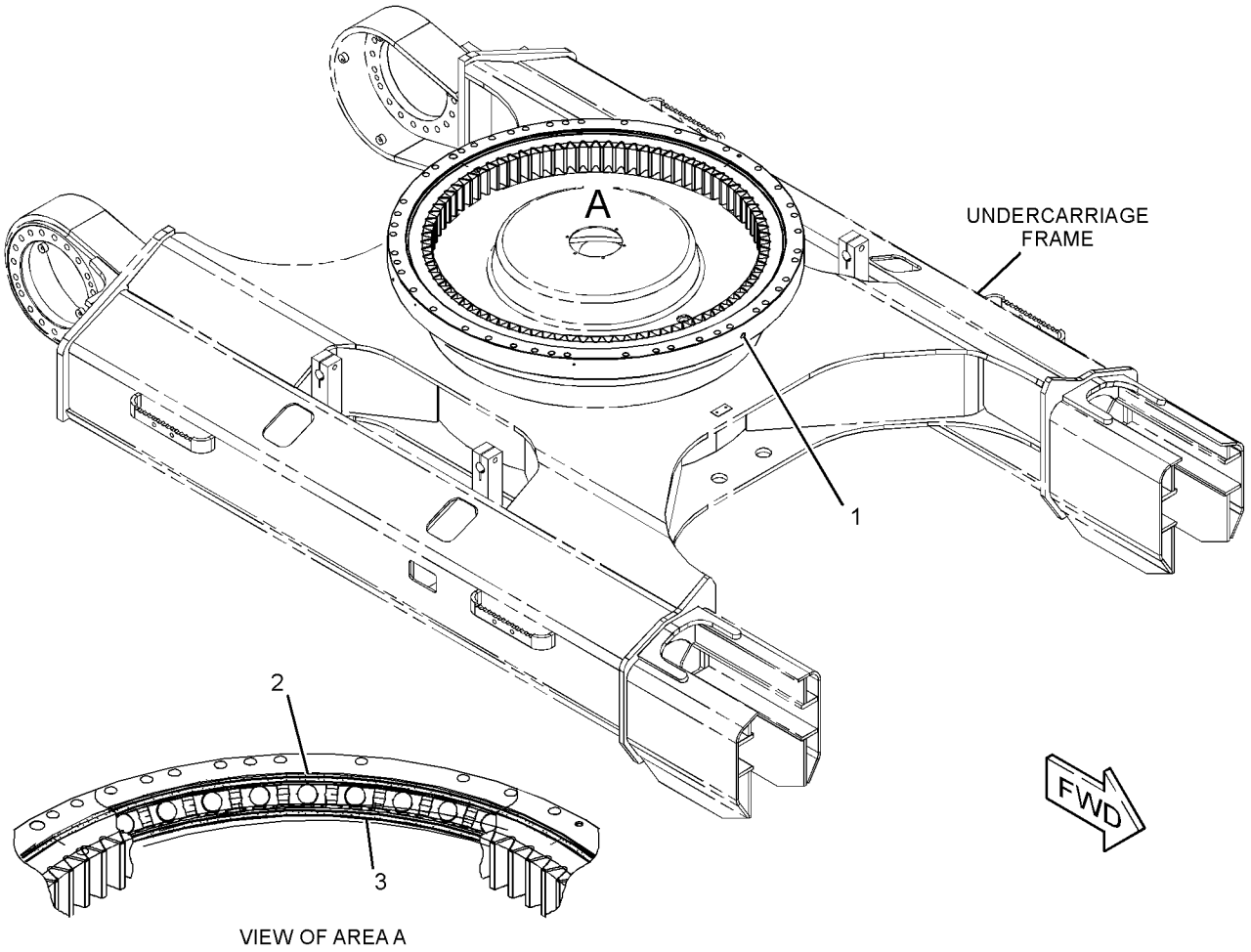

VIEW OF AREA A

GRAPHIC #1 <END> g01671618

378-9588 GEAR & BEARING GP-SWING

S/N: DLP1-UP

PART OF 169-5567, 199-4573 GEAR & BEARING GP-SWING

ALSO AN ATTACHMENT

SMCS-7063 **i06928347**

NOTE	REF NO	GRAPHIC REF	PART NUMBER	QTY	PART NAME 1 2 3 4 5 6 (PRODUCT LEVEL)	SEE PAGE
	1	1	**3B-8489**	1	FITTING-GREASE (1/8-27 PTF)	
	2	1	**229-1078**	1	SEAL-DUST	
E	3	1	**148-4685**		SEAL (309-CM)	

E - ORDER BY THE CENTIMETER

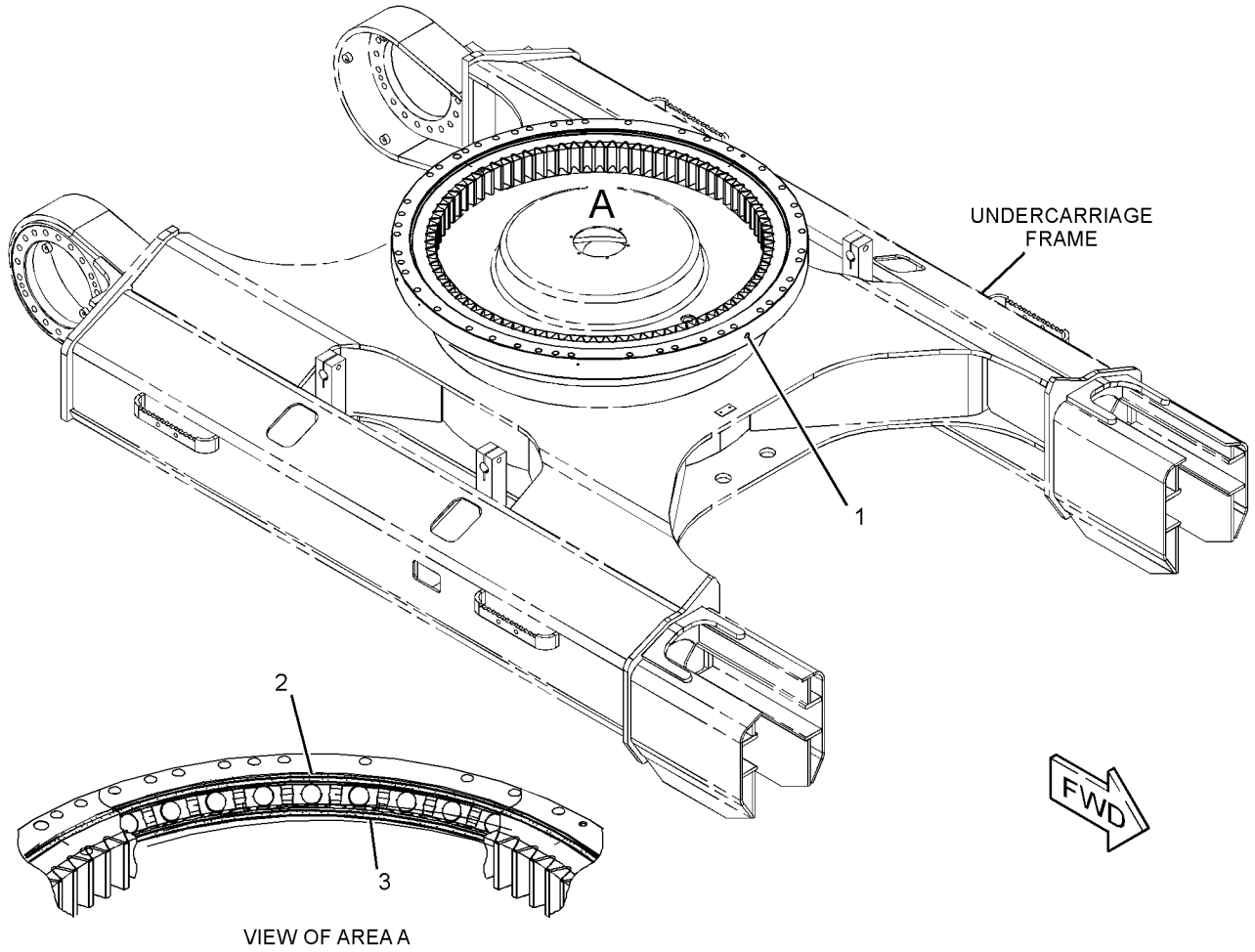

VIEW OF AREA A

GRAPHIC #1 <END> g01671618

378-9597 GEAR & BEARING GP-SWING

S/N: DLP1-UP
PART OF 301-2691, 385-4069 INSTALLATION AR-BLADE
AN ATTACHMENT

SMCS-7063 **i05697010**

NOTE	REF NO	GRAPHIC REF	PART NUMBER	QTY	PART NAME 1 2 3 4 5 6 (PRODUCT LEVEL)	SEE PAGE
	1	1	**4I-7446**	1	GASKET	
	2	1	**121-5203**	1	BOOT	
	3	1	**121-5204**	1	RETAINER	
	4	1	**191-2544**	34	WASHER (16.6X32X5-MM THK)	
Y	5	1	**378-9598**	1	GEAR & BEARING GP-SWING	418
	6	1	**227-6186**	38	SPACER (16.6X32X26-MM THK)	
	7	1	**095-1299**	1	DOWEL	
	8	1	**099-0913**	1	CLAMP-HOSE	
	9	1	**4I-7326**	1	STRIP	
M	10	1	**447-1708**	34	BOLT (M16X2X80-MM)	
M	11	1	**8T-0357**	38	BOLT (M16X2X70-MM)	
	12	1	**8T-4121**	12	WASHER-HARD (11X21X2.5-MM THK)	
M	13	1	**8T-4136**	12	BOLT (M10X1.5X25-MM)	
BF			**1U-8846**		SEALANT-GASKET	

B - USE AS REQUIRED
F - NOT SHOWN
M - METRIC PART
Y - SEPARATE ILLUSTRATION

378-9597 **GEAR & BEARING GP-SWING (**contd.**)** **i05697010**

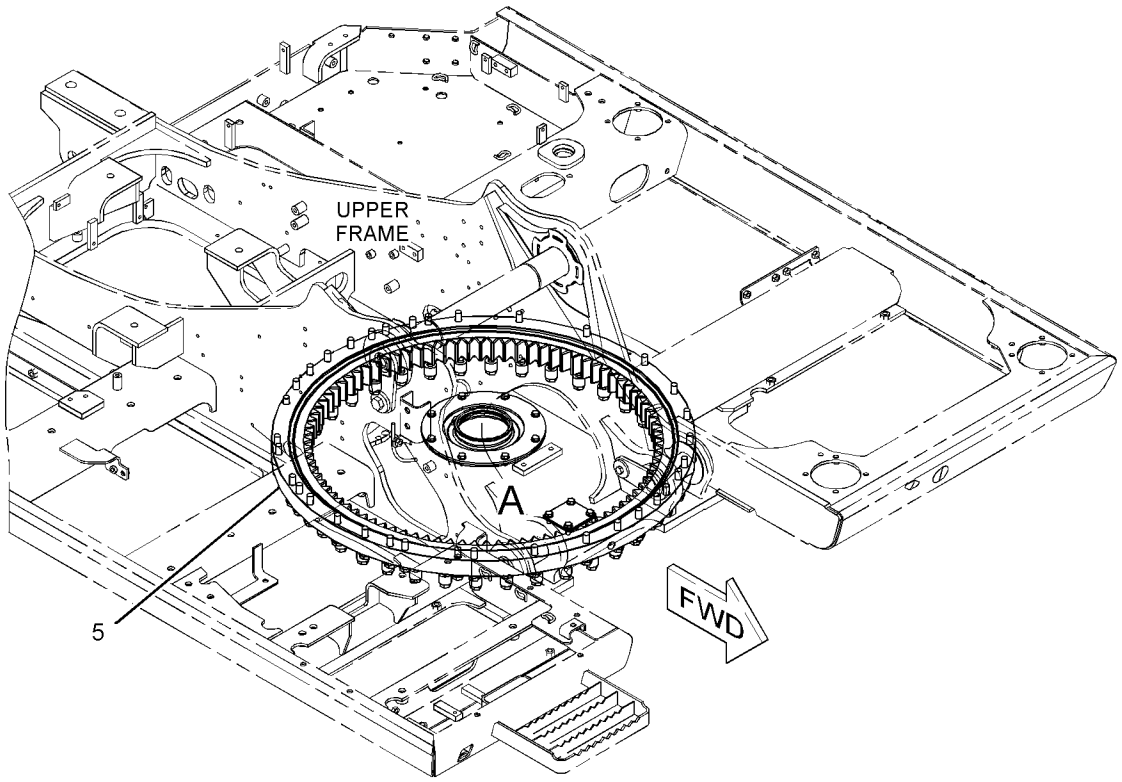

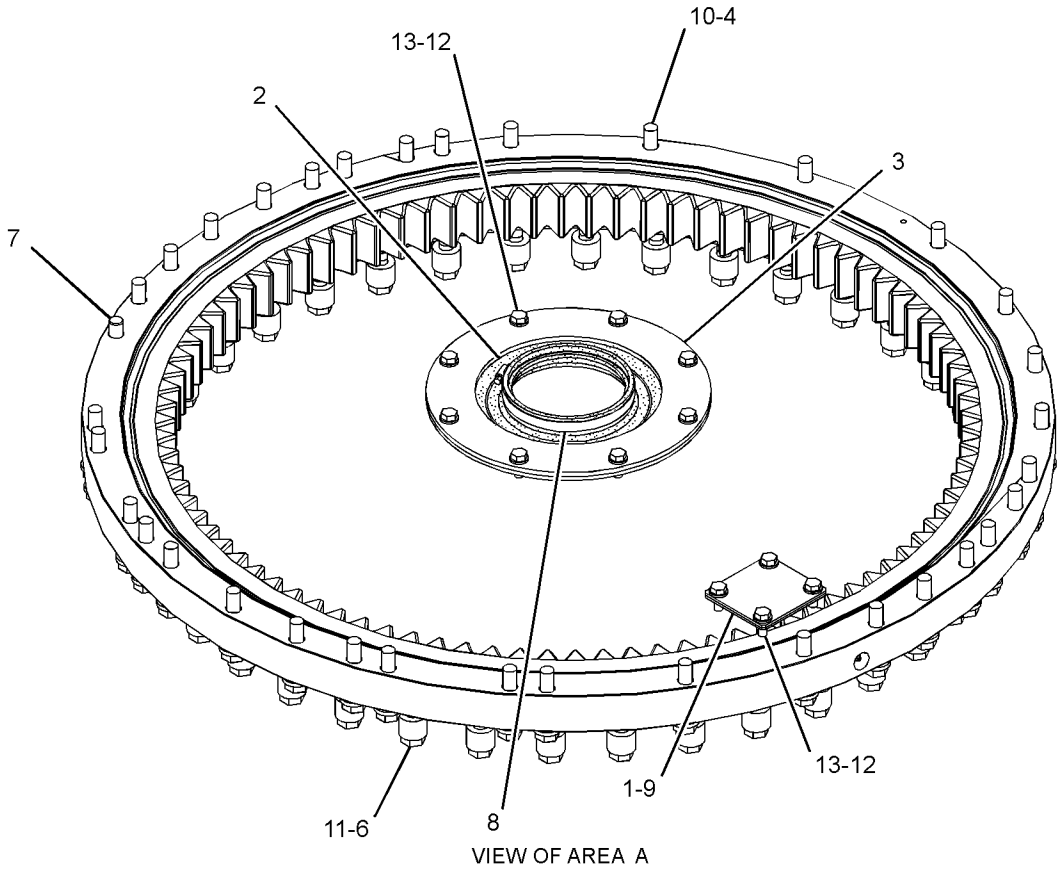

VIEW OF AREA A

GRAPHIC #1 <END> g03327597

378-9598 GEAR & BEARING GP-SWING

S/N: DLP1-UP

PART OF 378-9597 GEAR & BEARING GP-SWING

AN ATTACHMENT

SMCS-7063 **i06914632**

NOTE	REF NO	GRAPHIC REF	PART NUMBER	QTY	PART NAME 1 2 3 4 5 6 (PRODUCT LEVEL)	SEE PAGE
	1	1	**3B-8489**	2	FITTING-GREASE (1/8-27 PTF)	
	2	1	**229-1078**	1	SEAL-DUST	
E	3	1	**148-4685**		SEAL (309-CM)	

E - ORDER BY THE CENTIMETER

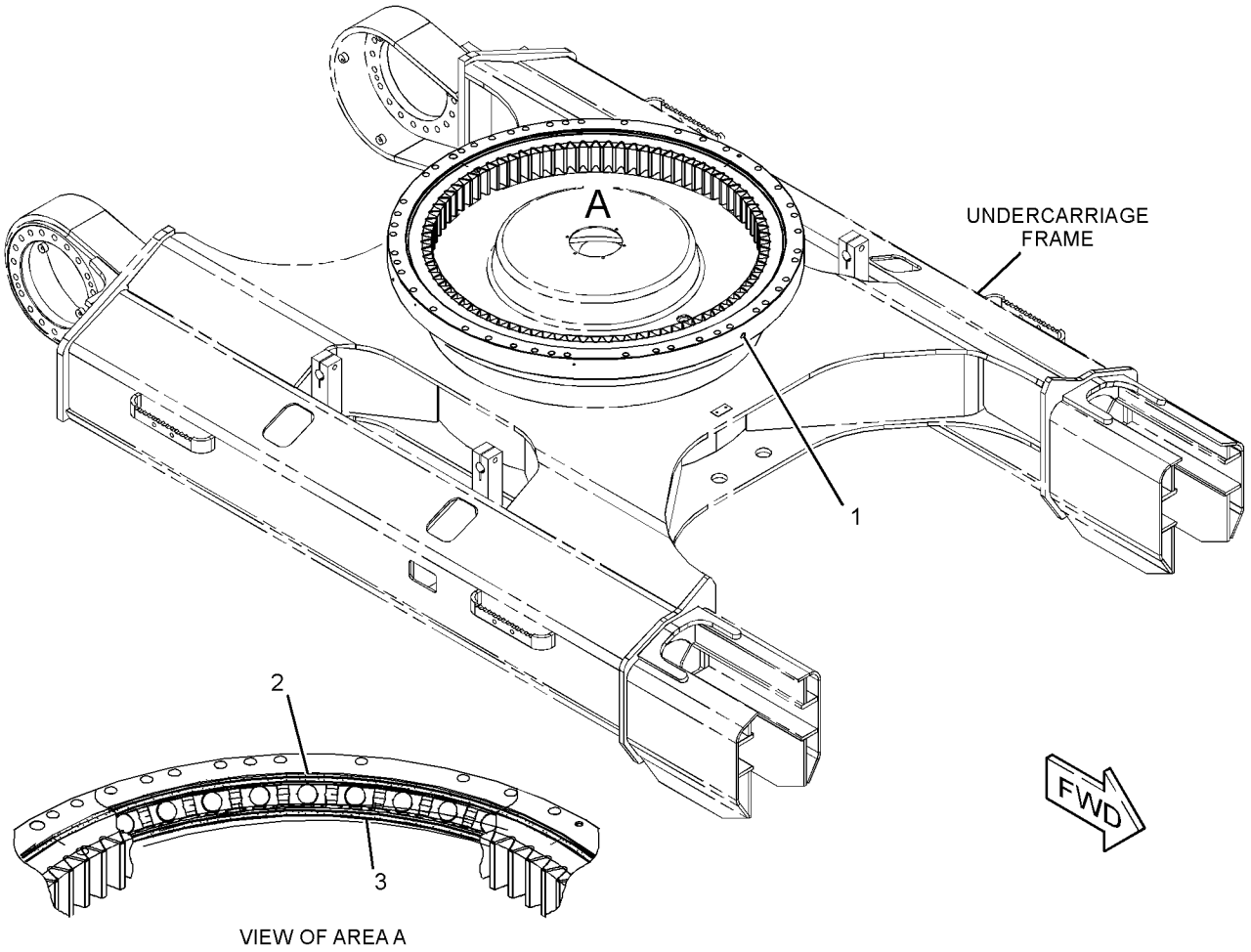

GRAPHIC #1 <END> g01671618

278-3747 GUARD GP-BOTTOM

S/N: DLP1-UP

PART OF 301-2680 CHASSIS AR

SMCS-7153 **i02865829**

NOTE	REF NO	GRAPHIC REF	PART NUMBER	QTY	PART NAME 1 2 3 4 5 6 (PRODUCT LEVEL)	SEE PAGE
	1	1	**135-8576**	28	BOLT AS-LOCKING	
	2	1	**278-4050**	1	SHEET	
	3	1	**278-4051**	1	SHEET	
	4	1	**278-4053**	1	SHEET	
	5	1	**278-4056**	1	SHEET	
	6	1	**313-8233**	1	SHEET	
	7	1	**283-3591**	1	Axle Housing (Parking Brake, Differential and Bevel Gear) -	

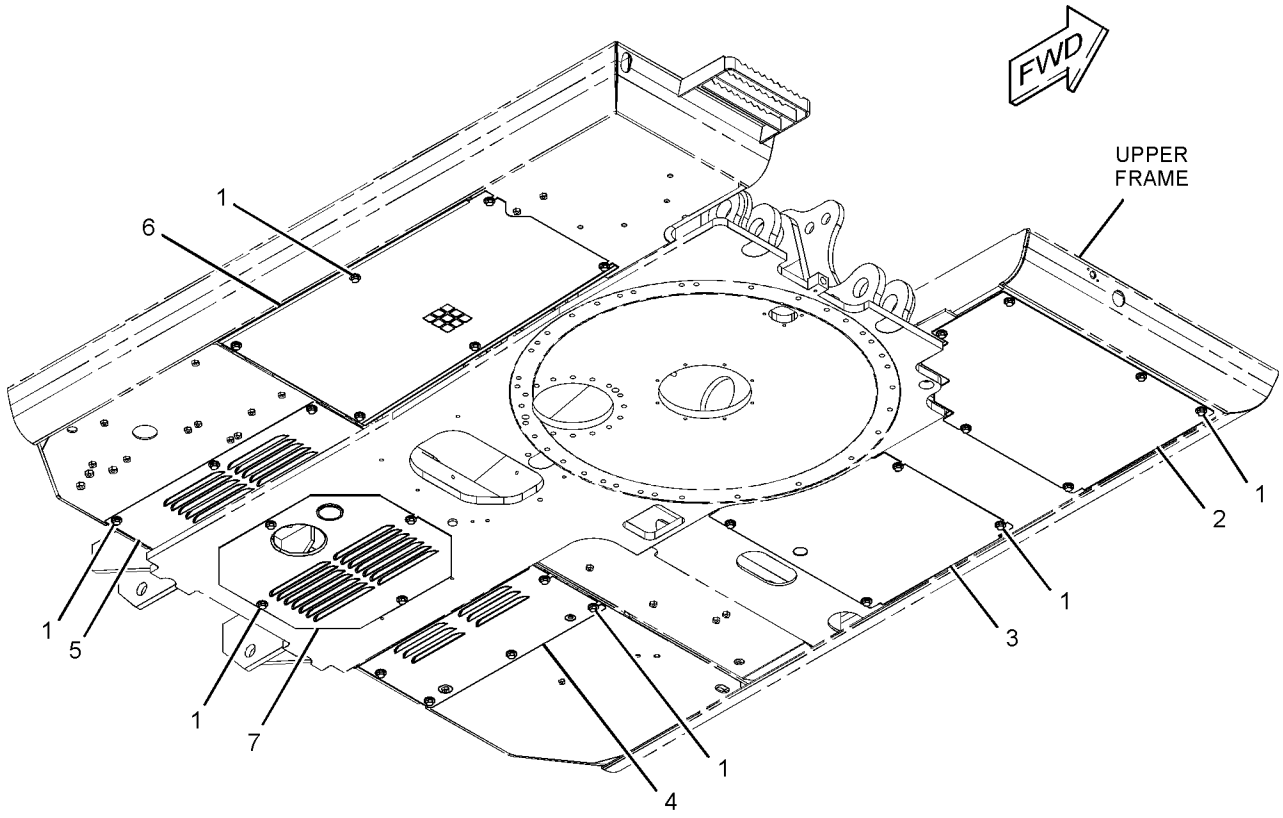

GRAPHIC #1 <END> g01441253

278-3748 GUARD GP-BOTTOM—HEAVY DUTY

S/N: DLP1-UP
PART OF 336-3371, 336-3372 OPTION AR-GUARD
AN ATTACHMENT
TYPE 1

SMCS-7153 **i02910175**

NOTE	REF NO	GRAPHIC REF	PART NUMBER	QTY	PART NAME 1 2 3 4 5 6 (PRODUCT LEVEL)	SEE PAGE
	1	1	**293-7132**	1	PLATE AS	
	2	1	**293-7134**	1	PLATE AS	
	3	1	**293-7137**	1	PLATE AS	
	4	1	**313-8275**	1	PLATE AS	
	5	1	**313-8234**	1	PLATE AS	
	6	1	**298-2866**	1	PLATE AS	
	7	1	**298-2868**	1	PLATE AS	
	8	1	**5P-1076**	2	WASHER-HARD (13.5X30X4-MM THK)	
M	9	1	**7X-7478**	2	BOLT-LOCKING (M12X1.75X35-MM)	

M - METRIC PART

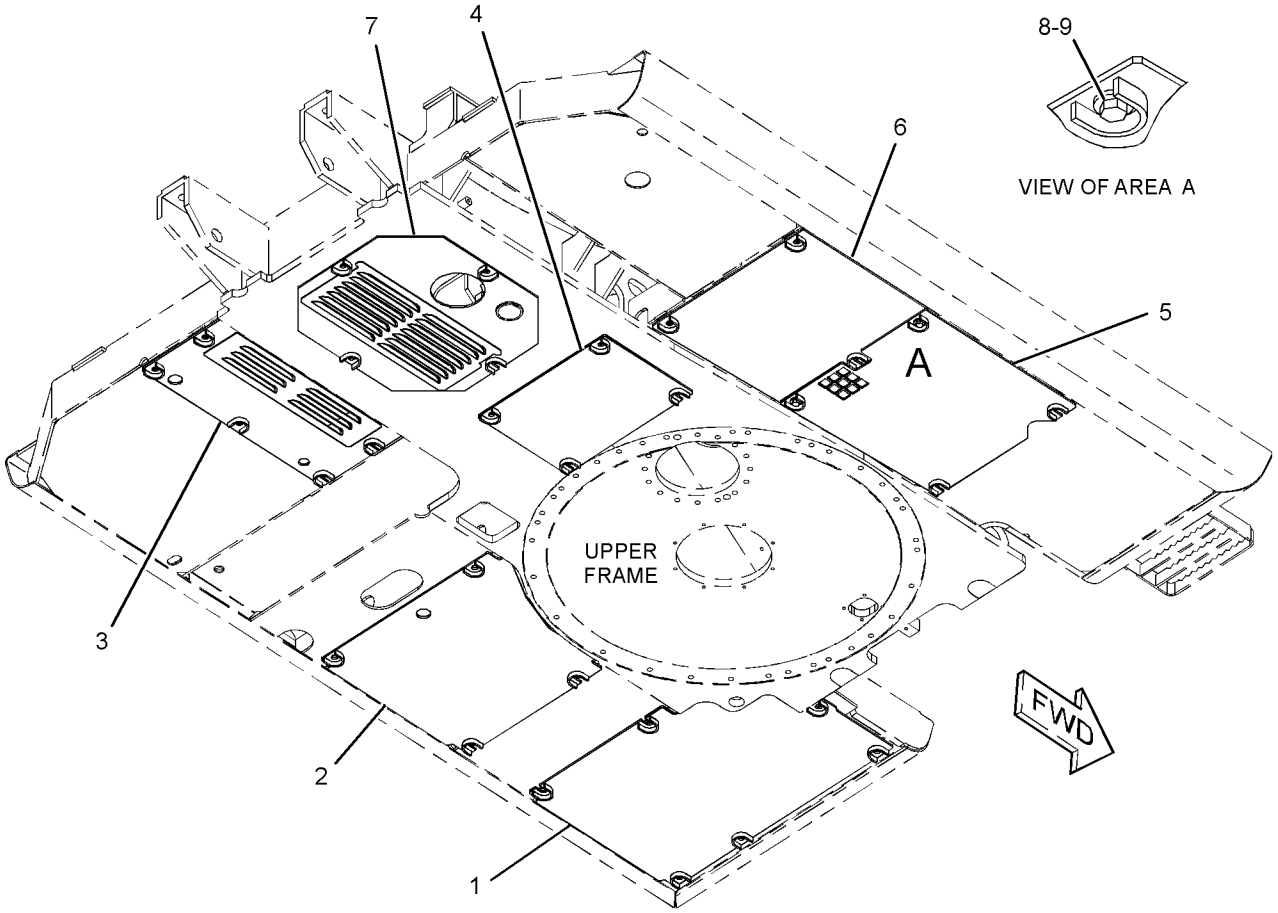

GRAPHIC #1 <END> g01414435

278-3748 GUARD GP-BOTTOM–HEAVY DUTY

S/N: DLP1-UP
PART OF 336-3371, 336-3372 OPTION AR-GUARD
AN ATTACHMENT
TYPE 2

SMCS-7153 **i04905353**

NOTE	REF NO	GRAPHIC REF	PART NUMBER	QTY	PART NAME 1 2 3 4 5 6 (PRODUCT LEVEL)	SEE PAGE
C	1	1	**358-9863**	1	PLATE AS	
C	2	1	**358-9865**	1	PLATE AS	
C	3	1	**358-9867**	1	PLATE AS	
C	4	1	**358-9869**	1	PLATE AS	
C	5	1	**358-9873**	1	PLATE AS	
C	6	1	**358-9875**	1	PLATE AS	
C	7	1	**358-9877**	1	PLATE AS	
	8	1	**5P-1076**	2	WASHER-HARD (13.5X30X4-MM THK)	
M	9	1	**7X-7478**	2	BOLT-LOCKING (M12X1.75X35-MM)	

C - CHANGE FROM PREVIOUS TYPE
M - METRIC PART

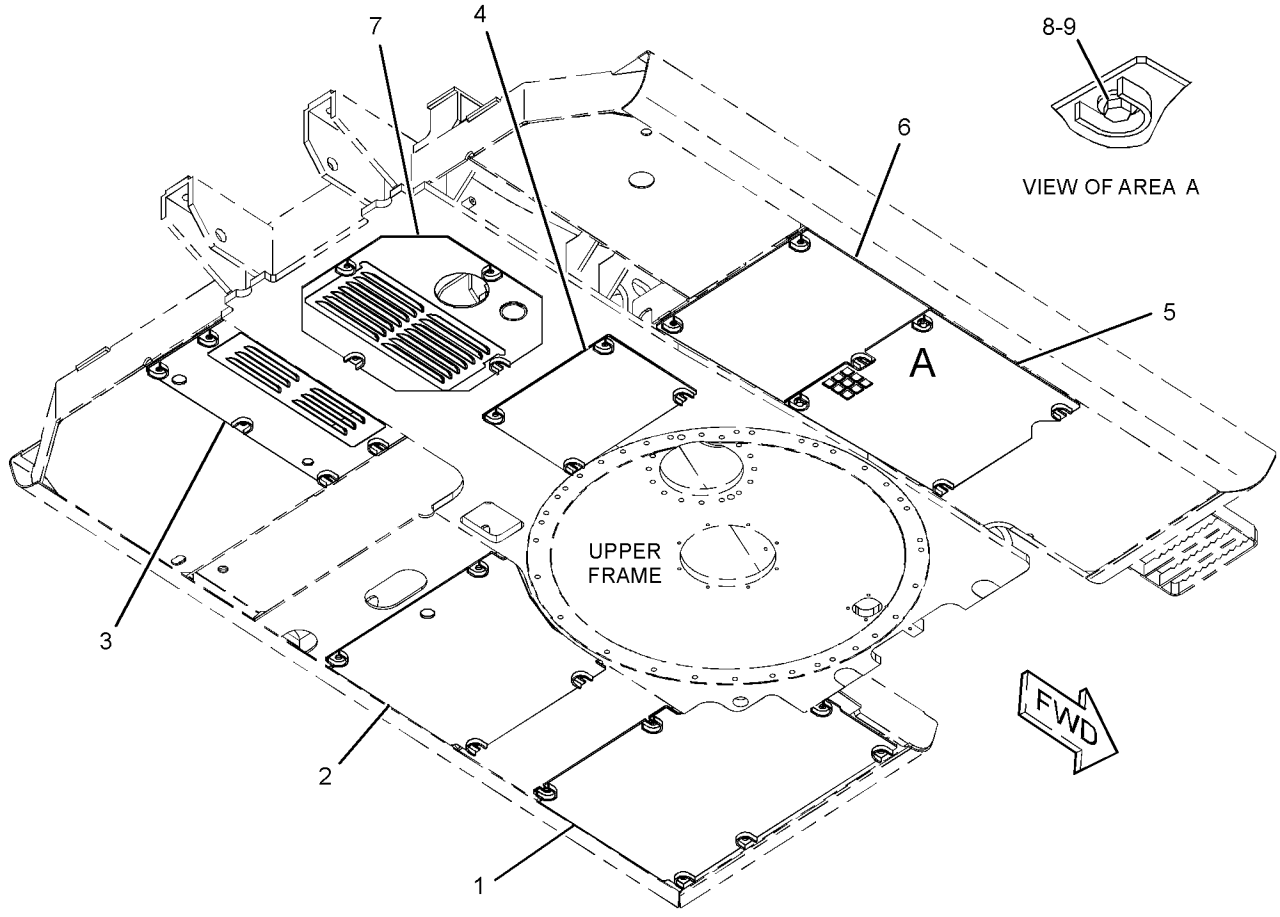

GRAPHIC #1 <END> g01414435

137-2813 GUARD GP-SWIVEL

S/N: DLP1-UP
PART OF 336-3371, 336-3372 OPTION AR-GUARD
AN ATTACHMENT

SMCS-7183 **i06716848**

NOTE	REF NO	GRAPHIC REF	PART NUMBER	QTY	PART NAME 1 2 3 4 5 6 (PRODUCT LEVEL)	SEE PAGE
	1	1	**137-2853**	1	PLATE AS	
	2	1	**137-2854**	1	PLATE AS	
M	3	1	**8C-8992**	4	BOLT-LOCKING (M12X1.75X30-MM)	
	4	1	**5P-1076**	4	WASHER-HARD (13.5X30X4-MM THK)	

M - METRIC PART

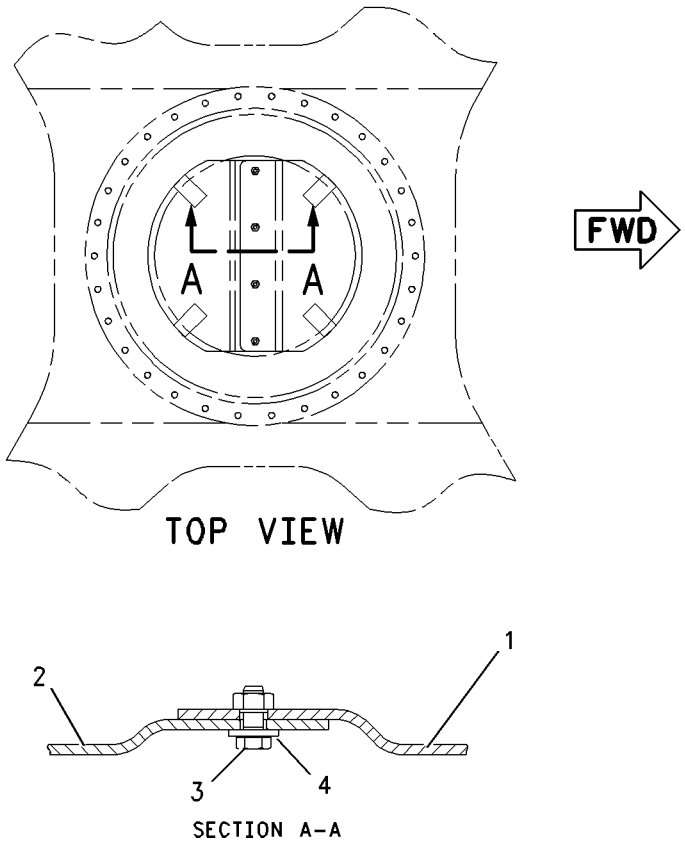

GRAPHIC #1 <END> g00780828

170-2602 HANDRAIL GP–FRONT, RH

S/N: DLP1-UP

PART OF 301-2680 CHASSIS AR

SMCS-7256 **i04133955**

NOTE	REF NO	GRAPHIC REF	PART NUMBER	QTY	PART NAME 1 2 3 4 5 6 (PRODUCT LEVEL)	SEE PAGE
	1	1	**193-9712**	1	HANDRAIL AS	
	2	1	**177-5880**	2	SLEEVE	
	3	1	**177-5879**	1	CLAMP	
	4	1	**135-8578**	3	BOLT AS	
	5	1	**135-8573**	2	BOLT AS	

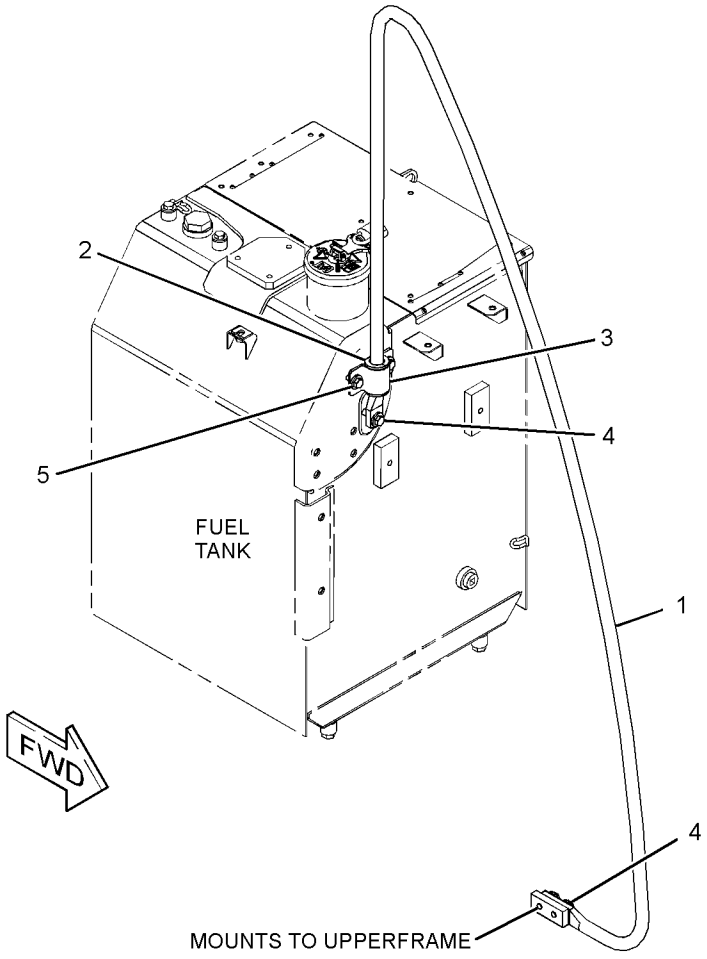

GRAPHIC #1 <END> g02351108

273-8101 HOOD & GUARD GP

S/N: DLP1-UP

PART OF 301-2680 CHASSIS AR

SMCS-7251, 7276 **i03148783**

NOTE	REF NO	GRAPHIC REF	PART NUMBER	QTY	PART NAME 1 2 3 4 5 6 (PRODUCT LEVEL)	SEE PAGE
Y	1	1	*283-3593*	1	ENCLOSURE GP-ENGINE	396
Y	2	1	*283-3594*	1	DOOR GP-ACCESS (AIR CLEANER, RADIATOR)	376
Y	3	1	*283-3595*	1	DOOR & MTG GP-ACCESS	365
Y	4	1	*283-3597*	1	COVER GP-ACCESS (MAIN CONTROL VALVE)	362
Y	5	1	*283-3598*	1	HOOD GP-ENGINE	426

Y - SEPARATE ILLUSTRATION

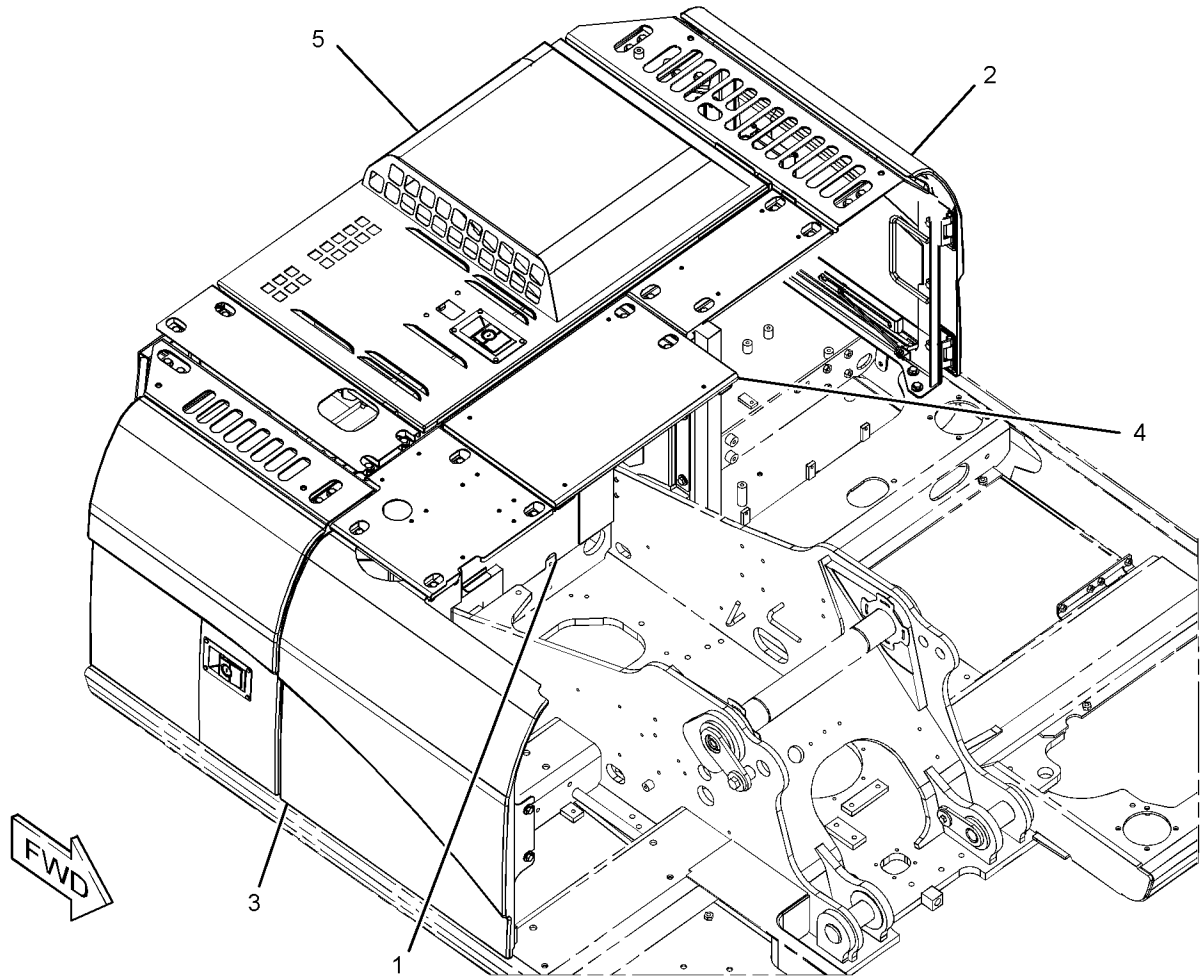

GRAPHIC #1 <END> g01622624

283-4079 HOOD AS-ENGINE

S/N: DLP1-UP

PART OF 283-3598 HOOD GP-ENGINE

SMCS-7251 **i02801749**

NOTE	REF NO	GRAPHIC REF	PART NUMBER	QTY	PART NAME 1 2 3 4 5 6 (PRODUCT LEVEL)	SEE PAGE
M	1	1	**099-6418**	4	NUT (M6X1-THD)	
	2	1	**177-6101**	1	GUARD	
	3	1	**184-8862**	1	COVER	
	4	1	**203-5005**	1	SHEET	
	5	1	*283-3608*	1	HOOD AS-ENGINE	
	5A	1	**4K-8501**	1	CLIP	
	5B	1	**203-5001**	2	HINGE	
	6	1	**289-6680**	1	LINER	
	7	1	**289-6681**	1	LINER	
	8	1	**289-6682**	1	LINER	
	9	1	**289-6683**	1	LINER	
J	10	1	**298-2942**	1	LATCH AS	

J - REQUIRES CORPORATE KEY
M - METRIC PART

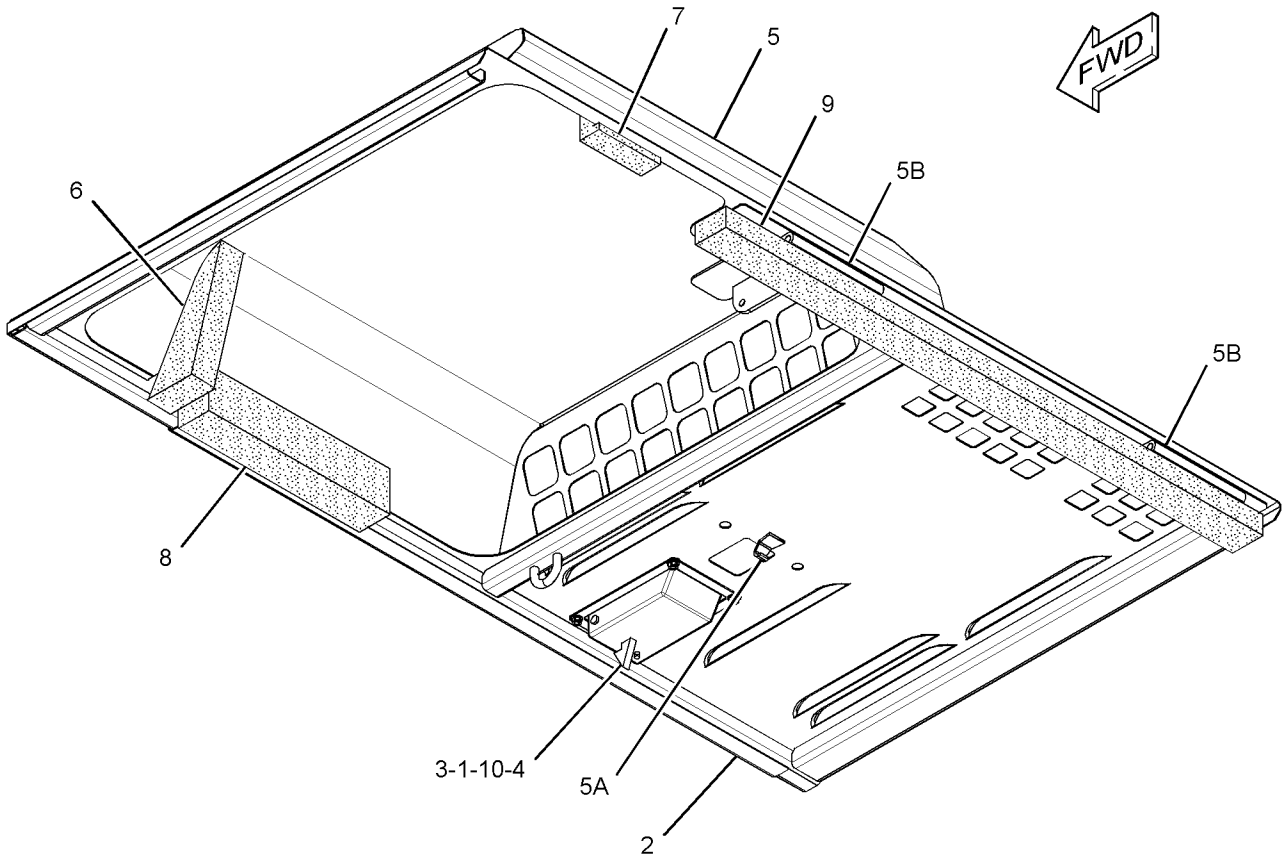

GRAPHIC #1 <END> g01402107

283-3598 HOOD GP-ENGINE

S/N: DLP1-UP

PART OF 273-8101 HOOD & GUARD GP

SMCS-7251 **i03819053**

NOTE	REF NO	GRAPHIC REF	PART NUMBER	QTY	PART NAME 1 2 3 4 5 6 (PRODUCT LEVEL)	SEE PAGE
	1	1	**135-8573**	7	BOLT AS	
	2	1	**170-3014**	2	BUMPER	
	3	1	**199-0377**	1	PLATE	
	4	1	**236-3404**	4	CLIP	
Y	5	1	**283-4079**	1	HOOD AS-ENGINE	425
	6	1	**293-6936**	1	SHEET-RUBBER	
Y	7	1	**293-6937**	1	SHEET AS-SOUND SUPPRESSION	430
	8	1	**298-2985**	1	SPRING-GAS (ENGINE HOOD)	
	9	1	**3B-4618**	1	PIN-COTTER	
M	10	1	**5C-7261**	1	NUT (M8X1.25-THD)	
	11	1	**7F-3708**	1	PIN	
	12	1	**8T-4121**	4	WASHER-HARD (11X21X2.5-MM THK)	
M	13	1	**8T-4136**	2	BOLT (M10X1.5X25-MM)	
	14	1	**8T-4224**	1	WASHER-HARD (8.8X16X2-MM THK)	
B	15	1	**190-6821**	3	SHIM (1-MM THK)	

B - USE AS REQUIRED
M - METRIC PART
Y - SEPARATE ILLUSTRATION

283-3598 **HOOD GP-ENGINE (**contd.**)** **i03819053**

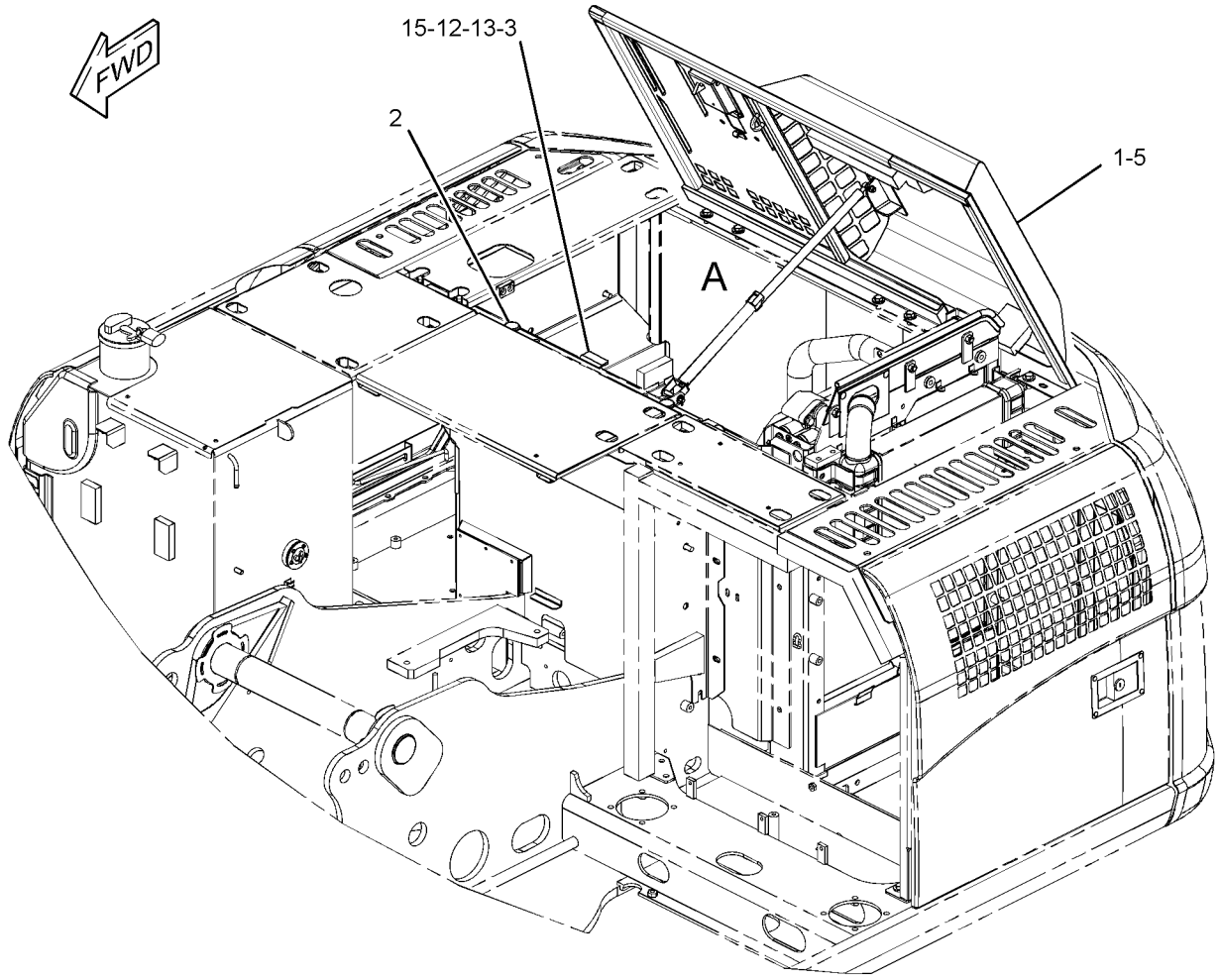

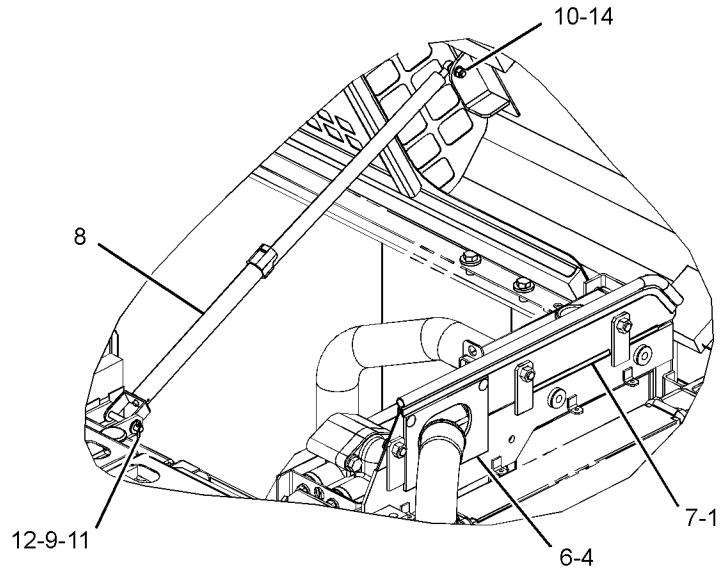

VIEW OF AREA A

GRAPHIC #1 <END> g02078573

471-1997 KIT-GUARD–SWIVEL

S/N: DLP1-UP
PROVIDES A STANDARD SWIVEL GUARD UPGRADE KIT
FOR USE WITH REHS8116
FIELD INSTALLATION

SMCS-7153 **i06721738**

NOTE	PART NUMBER	QTY	PART NAME 1 2 3 4 5 6 (PRODUCT LEVEL)	SEE PAGE
M	**8C-8992**	4	BOLT-LOCKING (M12X1.75X30-MM)	
	137-2853	1	PLATE AS	
M	**8T-3597**	4	NUT-WELD (M12X1.75-THD)	
	137-2854	1	PLATE AS	
	5P-1076	4	WASHER-HARD (13.5X30X4-MM THK)	

M - METRIC PART

<END>

283-3928 SHEET AS-SOUND SUPPRESSION

S/N: DLP1-UP

PART OF 283-3593 ENCLOSURE GP-ENGINE

SMCS-1801, 7076, 7251, 7267

i04966871

NOTE	REF NO	GRAPHIC REF	PART NUMBER	QTY	PART NAME 1 2 3 4 5 6 (PRODUCT LEVEL)	SEE PAGE
	1	1	**9M-5732**	6	RIVET-POP	
	2	1	**283-3933**	1	SHEET-RUBBER	
	3	1	**283-3934**	1	SHEET-RUBBER	
	4	1	**9M-2307**	6	WASHER (5.2X19X2-MM THK)	

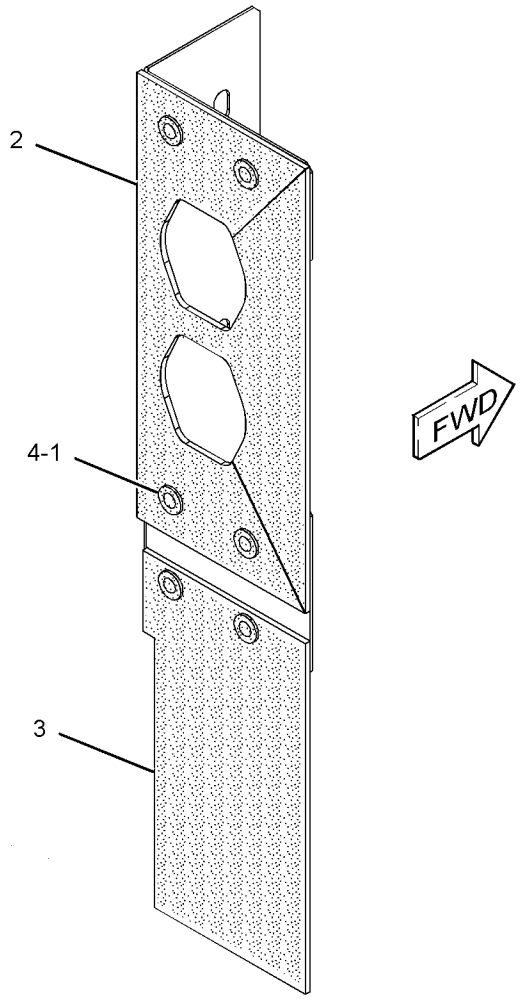

GRAPHIC #1

<END>

g03149898

293-6937 SHEET AS-SOUND SUPPRESSION

S/N: DLP1-UP

PART OF 283-3598 HOOD GP-ENGINE

SMCS-1801, 7076, 7251, 7267

i04476549

NOTE	REF NO	GRAPHIC REF	PART NUMBER	QTY	PART NAME 1 2 3 4 5 6 (PRODUCT LEVEL)	SEE PAGE
	1	1	**283-3930**	2	GUARD	
	2	1	**283-3931**	1	GUARD	
L	3	1	**348-5409**		SEAL (6-DM)	

L - ORDER BY THE DECIMETER

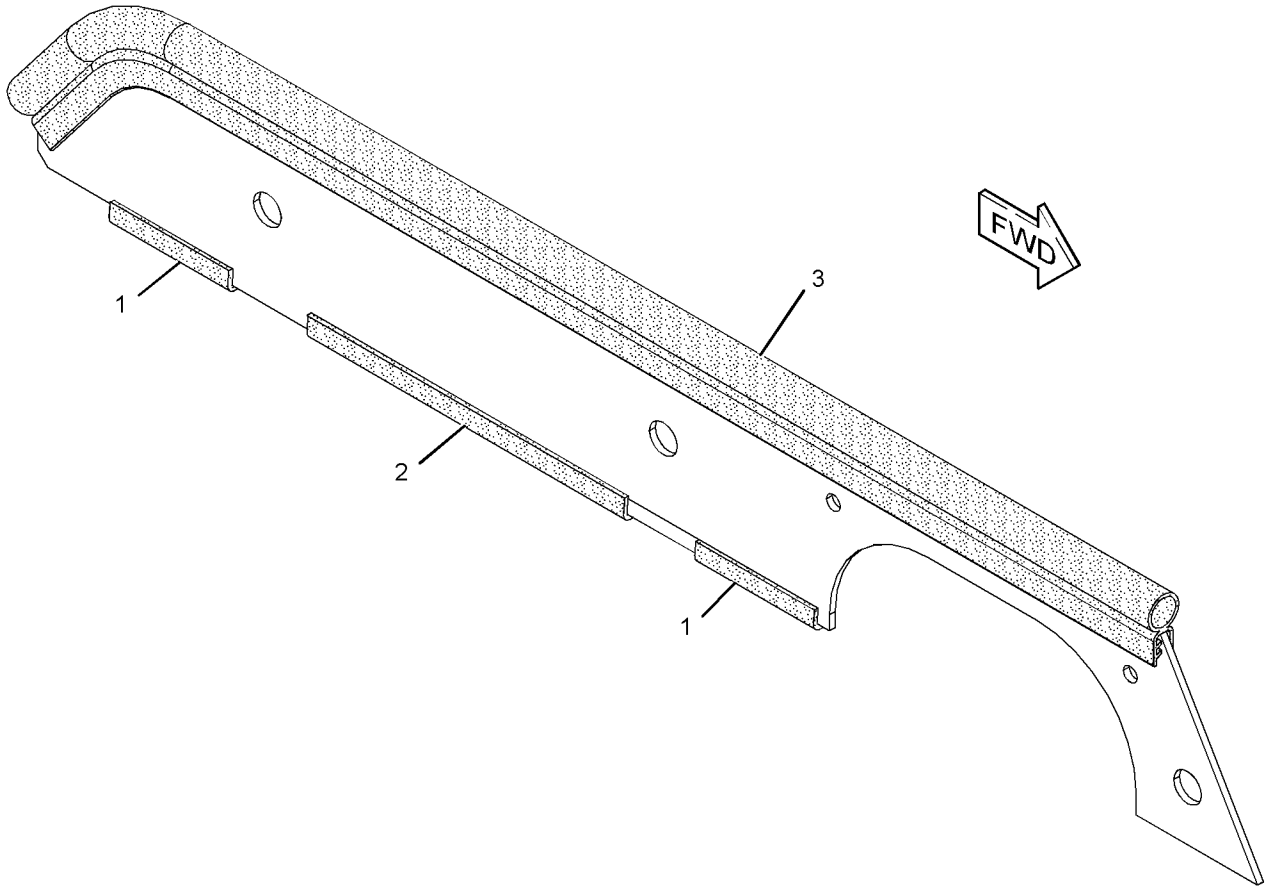

GRAPHIC #1 <END> g01417552

293-7017 SHEET AS-SOUND SUPPRESSION

S/N: DLP1-UP

PART OF 283-3593 ENCLOSURE GP-ENGINE

SMCS-1801, 7076, 7251, 7267

i02915144

NOTE	REF NO	GRAPHIC REF	PART NUMBER	QTY	PART NAME 1 2 3 4 5 6 (PRODUCT LEVEL)	SEE PAGE
	1	1	**9M-5732**	4	RIVET-POP	
	2	1	**283-3648**	1	LINER	
	3	1	**283-3649**	1	SHEET-RUBBER	
	4	1	**283-3946**	1	LINER	
	6	1	**9M-2307**	4	WASHER (5.2X19X2-MM THK)	

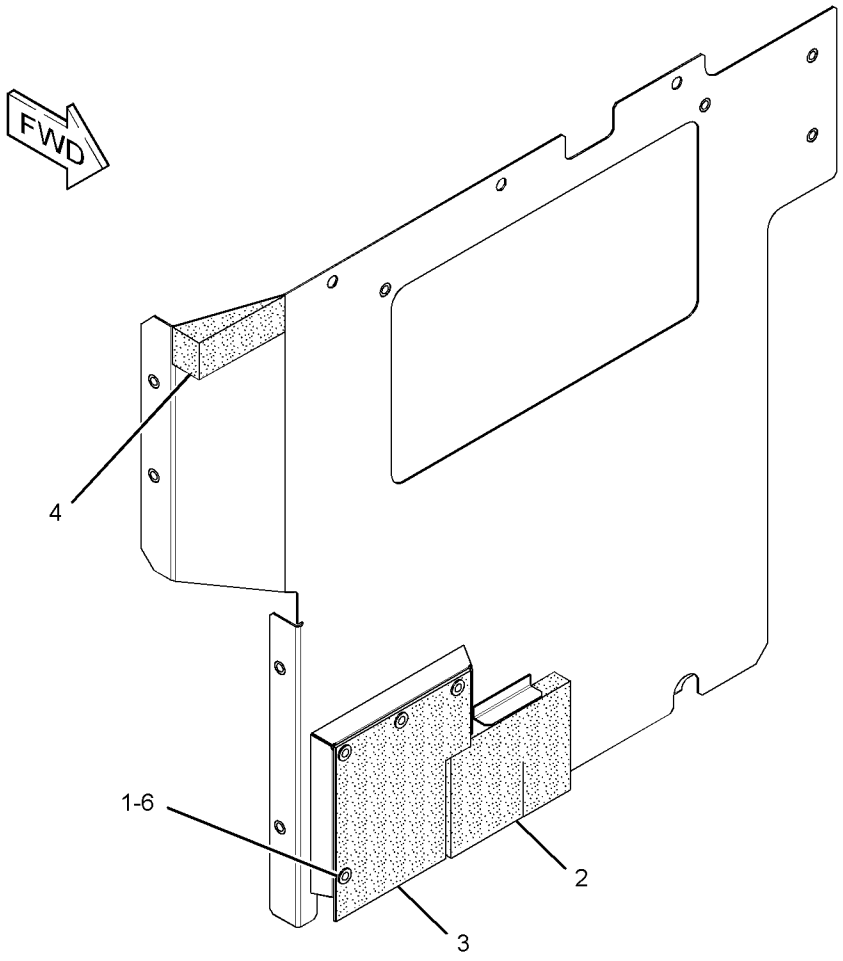

GRAPHIC #1 <END> g01481755

235-7764 STEP GP

S/N: DLP1-UP
FOR USE WITH TRACK SHOES UP TO 800-MM (32-IN) WIDE
PART OF 301-2684 TRACK GP
AN ATTACHMENT

SMCS-7254 **i05850571**

NOTE	REF NO	GRAPHIC REF	PART NUMBER	QTY	PART NAME 1 2 3 4 5 6 (PRODUCT LEVEL)	SEE PAGE
	1	1	**359-5808**	2	STEP	
M	2	1	**447-1709**	4	BOLT (M16X2X45-MM)	
	3	1	**451-2175**	4	WASHER-HARD (17.5X30X3.5-MM THK)	

M - METRIC PART

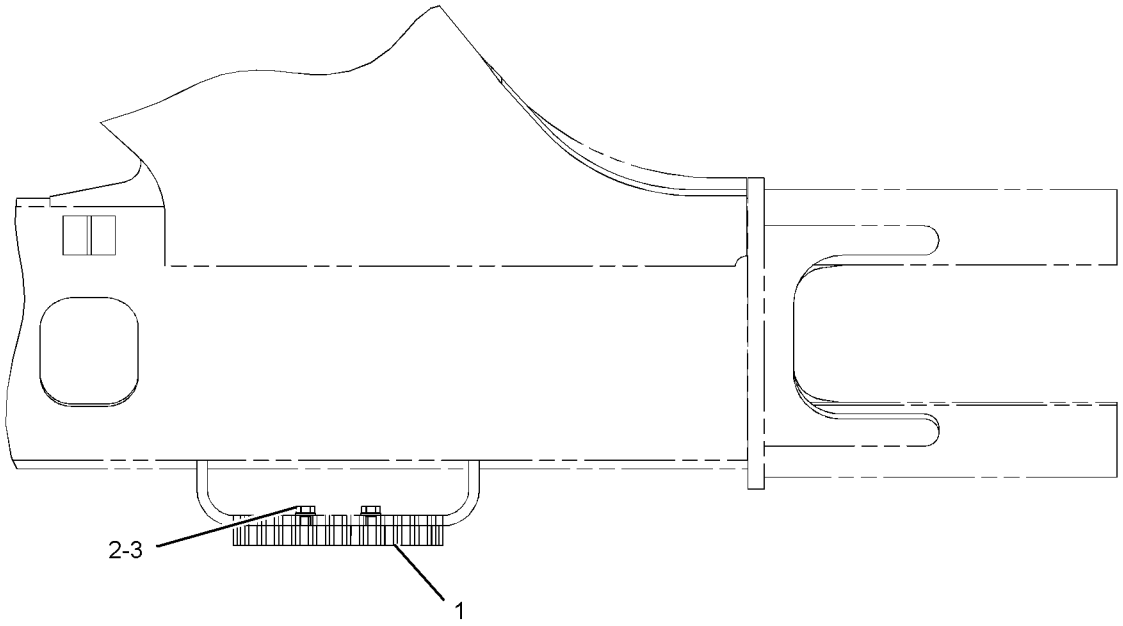

TOP VIEW

GRAPHIC #1 <END> g01150668

344-6901 STEP GP

S/N: DLP1-UP
PART OF 350-3298 TRACK GP
AN ATTACHMENT
TYPE 1

SMCS-7254 **i03697473**

NOTE	REF NO	GRAPHIC REF	PART NUMBER	QTY	PART NAME 1 2 3 4 5 6 (PRODUCT LEVEL)	SEE PAGE
	1	1	**344-6902**	2	STEP	
M	2	1	**8T-7338**	4	BOLT (M16X2X45-MM)	
	3	1	**9X-8257**	4	WASHER (17.5X30X3.5-MM THK)	

M - METRIC PART

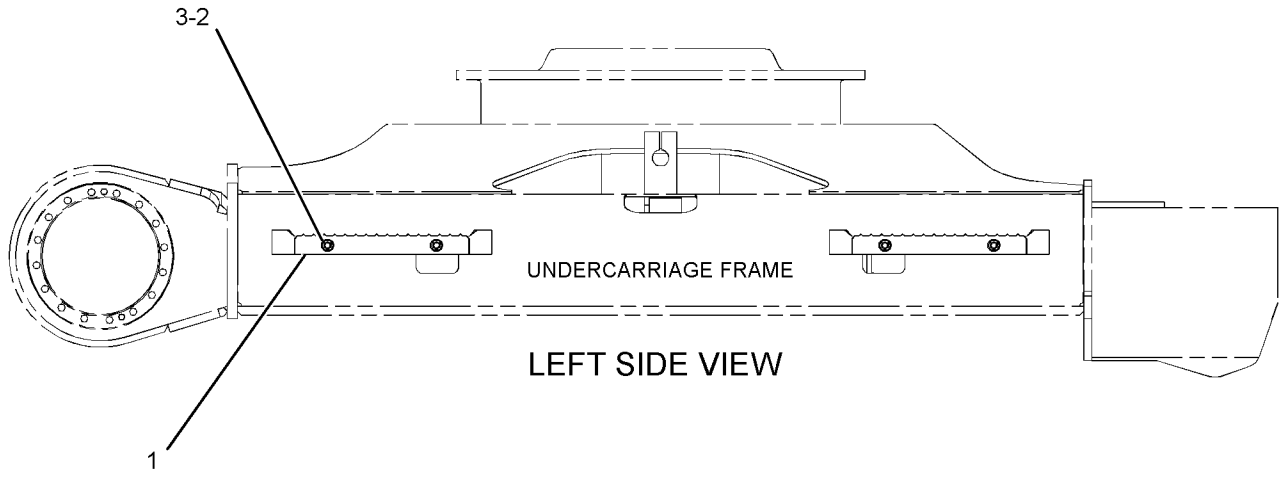

LEFT SIDE VIEW

GRAPHIC #1 <END> g01994393

344-6901 STEP GP

S/N: DLP1-UP
PART OF 350-3298 TRACK GP
AN ATTACHMENT
TYPE 2

SMCS-7254 **i05848824**

NOTE	REF NO	GRAPHIC REF	PART NUMBER	QTY	PART NAME 1 2 3 4 5 6 (PRODUCT LEVEL)	SEE PAGE
C	1	1	**359-5809**	2	STEP	
M	2	1	**447-1709**	4	BOLT (M16X2X45-MM)	
	3	1	**451-2175**	4	WASHER-HARD (17.5X30X3.5-MM THK)	

C - CHANGE FROM PREVIOUS TYPE
M - METRIC PART

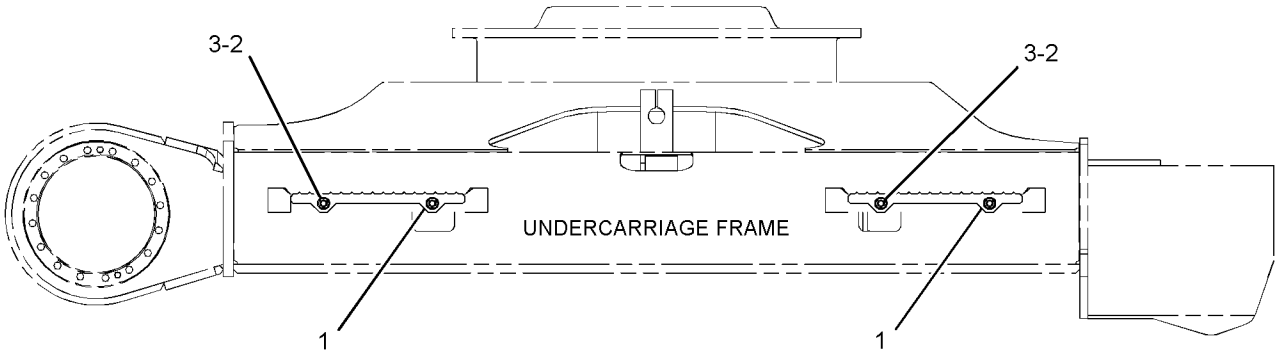

RIGHT SIDE VIEW

GRAPHIC #1 <END> g02931056

273-8105 STORAGE GP-VANDALISM GUARD

S/N: DLP1-UP
PART OF 260-7114, 260-7115 GUARD AR-VANDALISM
AN ATTACHMENT

SMCS-7315 **i02808463**

NOTE	REF NO	GRAPHIC REF	PART NUMBER	QTY	PART NAME 1 2 3 4 5 6 (PRODUCT LEVEL)	SEE PAGE
	1	1	**135-8575**	4	BOLT AS	
	2	1	**241-2311**	1	CABLE	
	3	1	**268-0727**	1	BOLT AS-SPECIAL	
	4	1	**273-8106**	1	SHEET AS	
	5	1	**5P-7958**	2	SLEEVE-CABLE SPLICE	

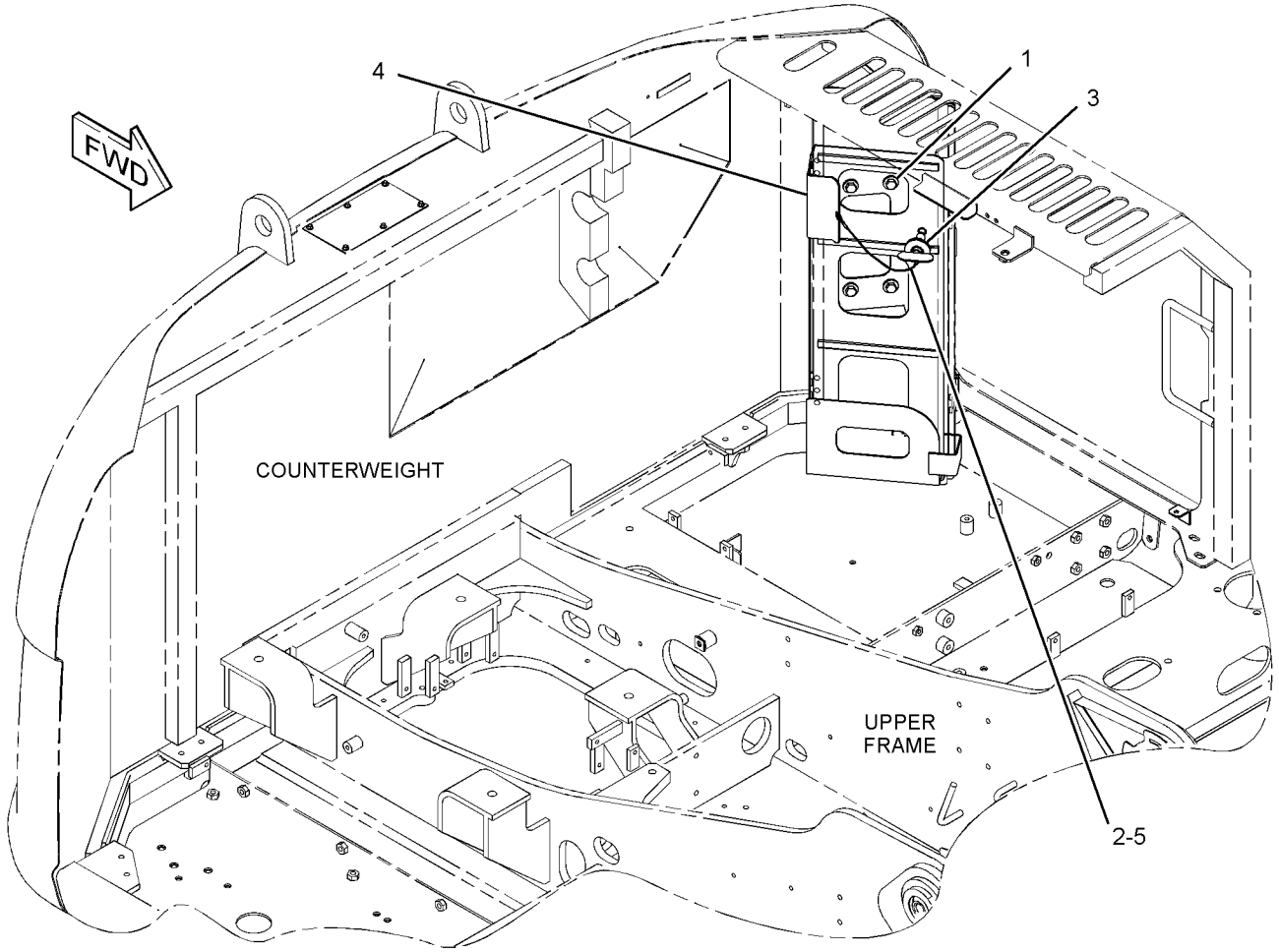

GRAPHIC #1 <END> g01409356

283-3637 SUPPORT AS-ENCLOSURE

S/N: DLP1-UP

PART OF 283-3593 ENCLOSURE GP-ENGINE

SMCS-0635, 1801, 7076, 7251, 7263, 7267, 7272, 7276 **i02801760**

NOTE	REF NO	GRAPHIC REF	PART NUMBER	QTY	PART NAME 1 2 3 4 5 6 (PRODUCT LEVEL)	SEE PAGE
	1	1	**283-4086**	1	LINER	
	2	1	**283-3639**	1	LINER	
	3	1	**283-4085**	1	LINER	

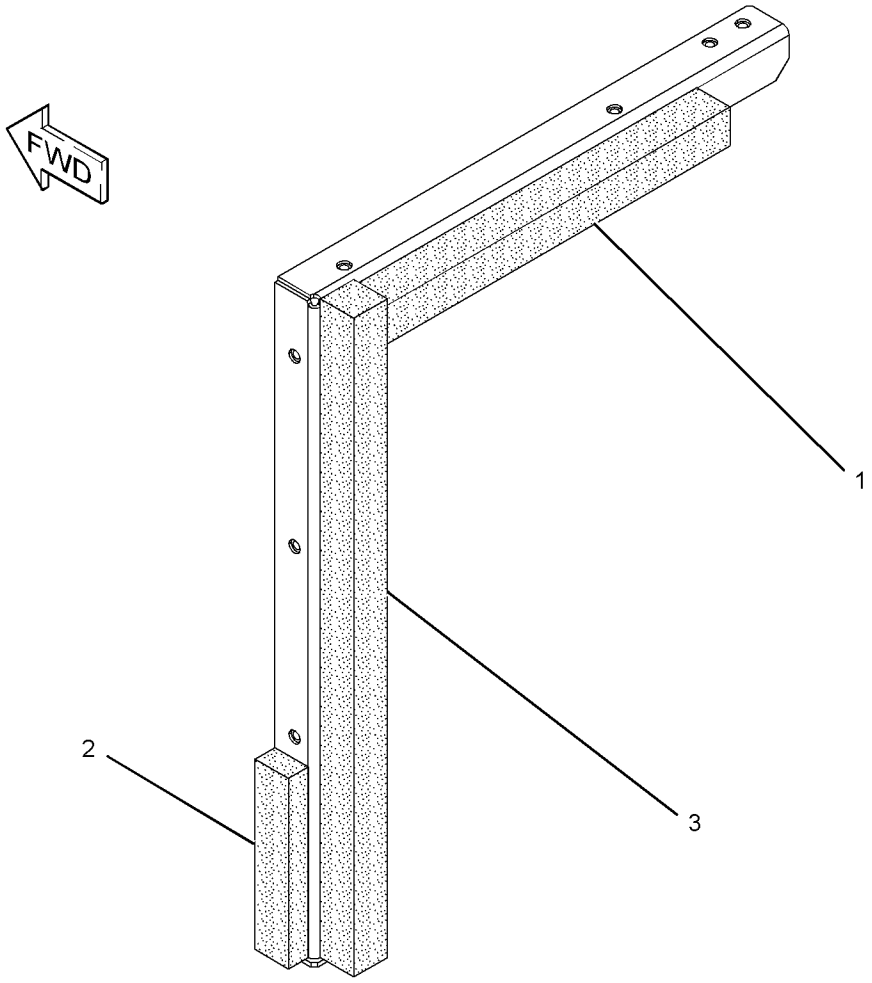

GRAPHIC #1 <END> g01403561

301-2681 FRAME AR-UNDERCARRIAGE

S/N: DLP1-UP

PART OF 301-2679 GENERAL AR

SMCS-4151 **i05303929**

NOTE	PART NUMBER	QTY	PART NAME 1 2 3 4 5 6 (PRODUCT LEVEL)	SEE PAGE
Y	**269-1653**	1	FRAME AS-UNDERCARRIAGE (HEAVY-DUTY)	438
Y	*169-5567*	1	GEAR & BEARING GP-SWING	406
Y	*169-7904*	1	GUARD GP-TRAVEL MOTOR	444
Y	*248-7184*	1	IDLER GP-FRONT	446
Y	*248-7268*	1	ROLLER AR-TRACK & CARRIER	451

Y - SEPARATE ILLUSTRATION

<END>

269-1653 FRAME AS-UNDERCARRIAGE–HEAVY-DUTY

S/N: DLP1-UP

PART OF 301-2681 FRAME AR-UNDERCARRIAGE, 278-9352 FRAME AS-UNDERCARRIAGE

ALSO AN ATTACHMENT

SMCS-4150, 7062 **i05228912**

NOTE	REF NO	GRAPHIC REF	PART NUMBER	QTY	PART NAME 1 2 3 4 5 6 (PRODUCT LEVEL)	SEE PAGE
	1	1	*385-3241*	1	FRAME AS-TRACK ROLLER (RH)	
	1A	1	**151-9751**	1	BRACKET	
	1B	1	**344-6840**	2	STEP	
	2	1	*385-3242*	1	FRAME AS-TRACK ROLLER (LH)	
	2A	1	**151-9751**	1	BRACKET	
	2B	1	**344-6840**	2	STEP	

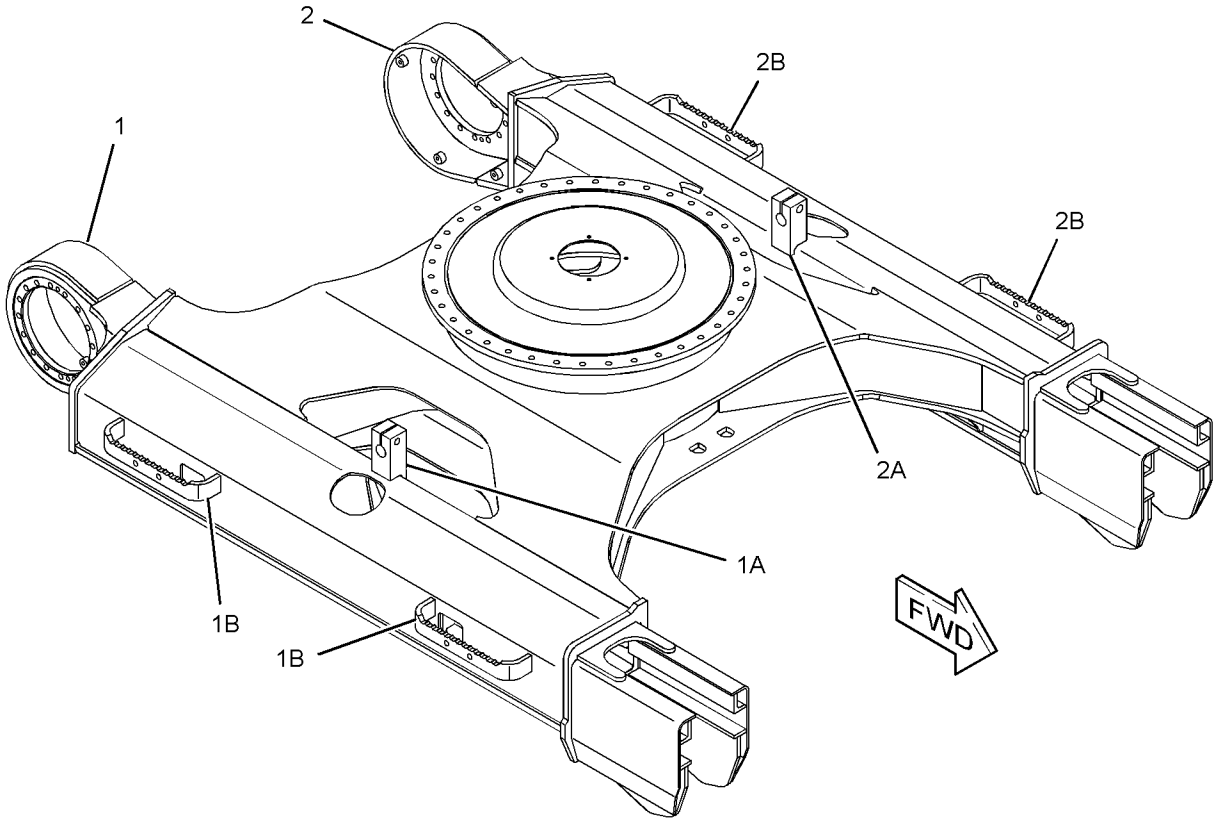

GRAPHIC #1 <END> g01416197

269-1653 FRAME AS-UNDERCARRIAGE–HEAVY-DUTY

S/N: DLP1-UP

PART OF 278-9352 FRAME AS-UNDERCARRIAGE

AN ATTACHMENT

SMCS-4150, 7062

i05293787

NOTE	REF NO	GRAPHIC REF	PART NUMBER	QTY	PART NAME 1 2 3 4 5 6 (PRODUCT LEVEL)	SEE PAGE
C	1	1	*350-6522*	1	FRAME AS-TRACK ROLLER (RH)	
	1A	1	**151-9751**	1	BRACKET	
	1B	1	**344-6840**	2	STEP	
C	2	1	*350-6523*	1	FRAME AS-TRACK ROLLER (LH)	
	2A	1	**151-9751**	1	BRACKET	
	2B	1	**344-6840**	2	STEP	

C - CHANGE FROM PREVIOUS TYPE

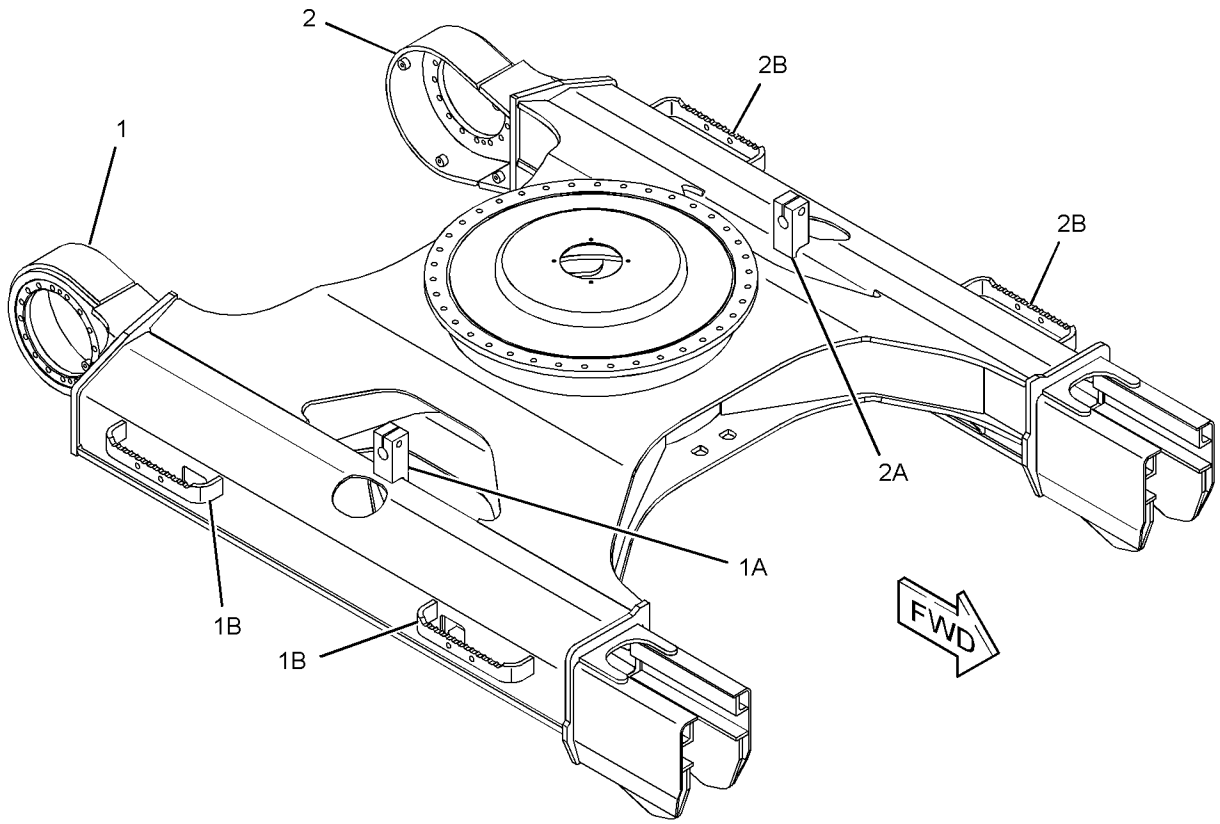

GRAPHIC #1 <END> g01416197

278-9352 FRAME AS-UNDERCARRIAGE

S/N: DLP1-UP
PART OF 301-2691, 385-4069 INSTALLATION AR-BLADE
AN ATTACHMENT

SMCS-4150, 7062

i02820462

NOTE	REF NO	GRAPHIC REF	PART NUMBER	QTY	PART NAME 1 2 3 4 5 6 (PRODUCT LEVEL)	SEE PAGE
Y	1	1	**269-1653**	1	FRAME AS-UNDERCARRIAGE (HEAVY-DUTY)	438

Y - SEPARATE ILLUSTRATION

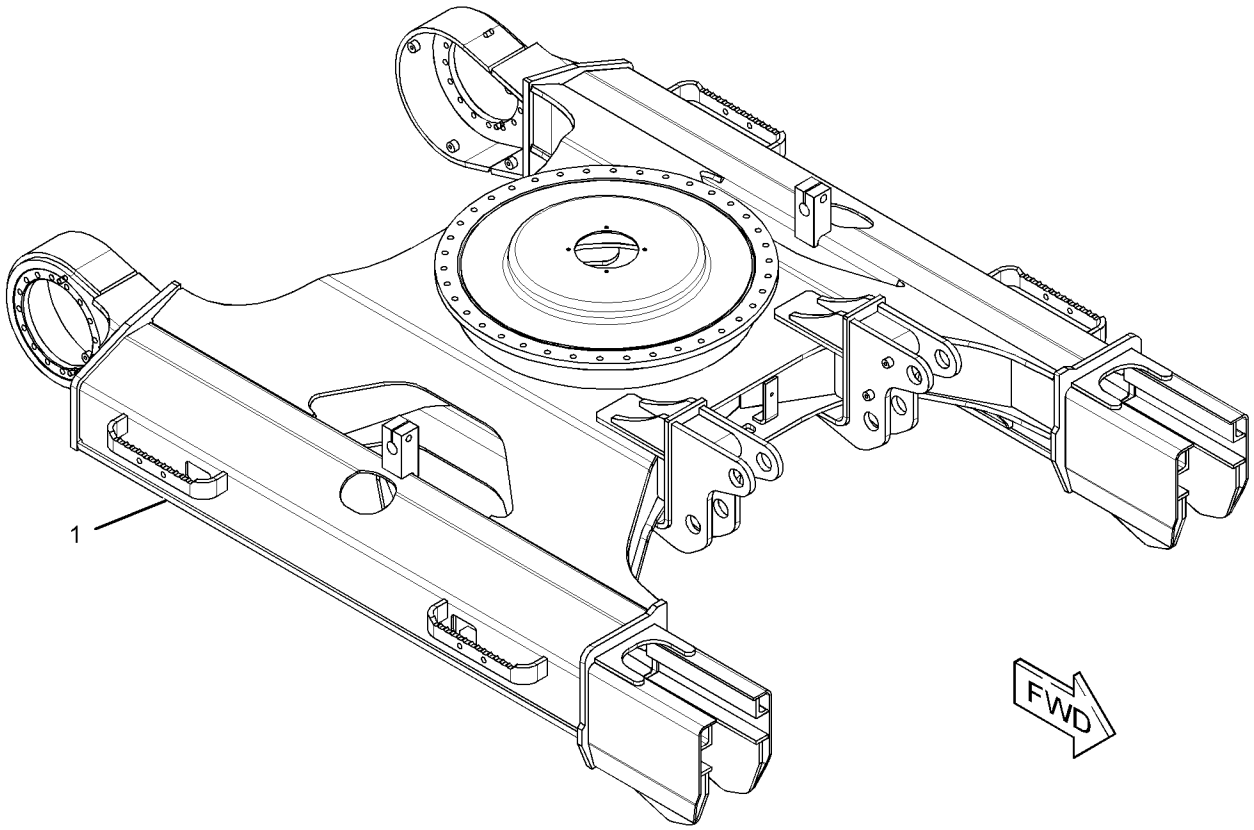

GRAPHIC #1 <END> g01421330

350-6526 FRAME AS-UNDERCARRIAGE—HEAVY DUTY

S/N: DLP1-UP
CANNOT BE USED WITH 350-6527—PAGE: 442
PART OF 301-2691, 385-4069 INSTALLATION AR-BLADE
AN ATTACHMENT

SMCS-4150, 7062 **i05059111**

NOTE	REF NO	GRAPHIC REF	PART NUMBER	QTY	PART NAME 1 2 3 4 5 6 (PRODUCT LEVEL)	SEE PAGE
Y	1	1	*350-6527*	1	FRAME AS-UNDERCARRIAGE (HEAVY-DUTY)	442

Y - SEPARATE ILLUSTRATION

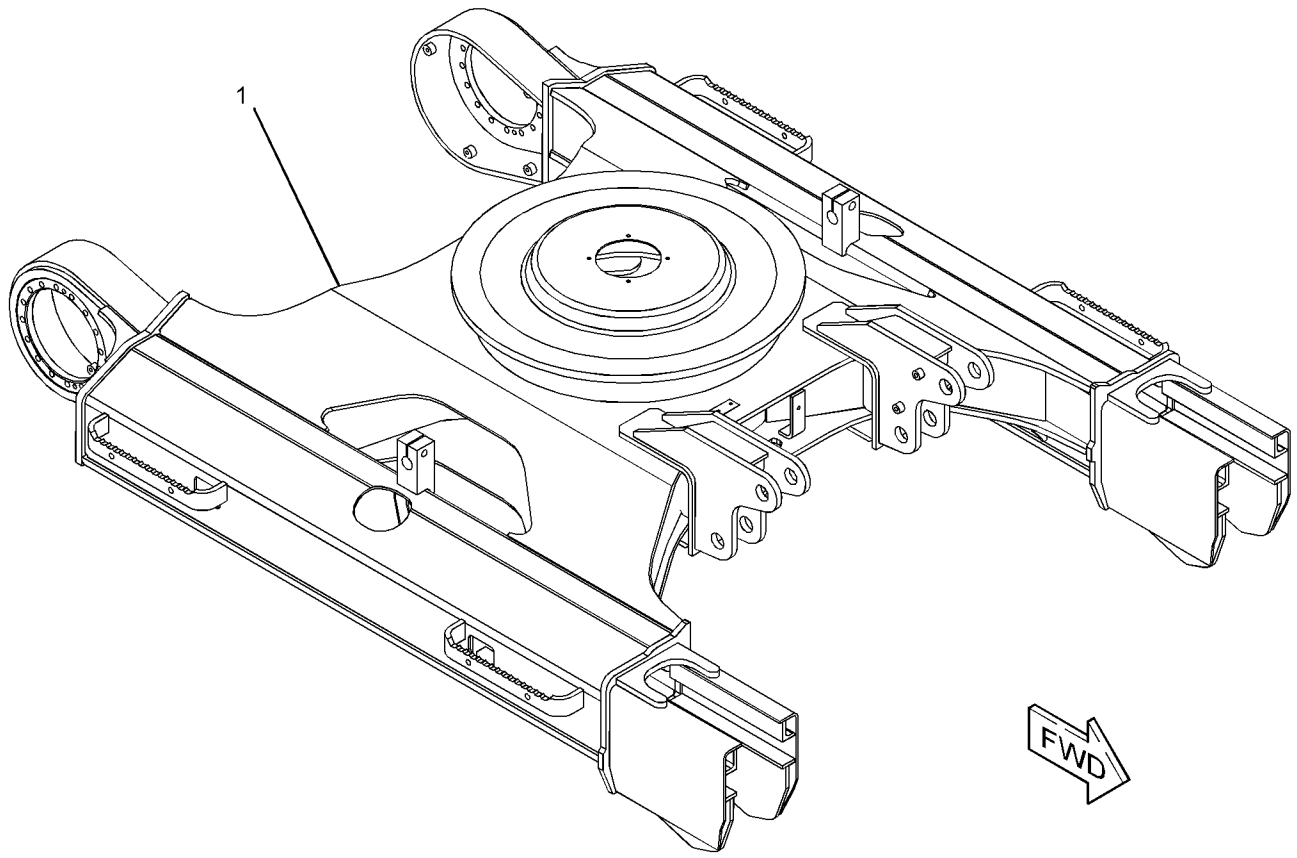

GRAPHIC #1 <END> g03242096

350-6527 FRAME AS-UNDERCARRIAGE—HEAVY DUTY

S/N: DLP1-UP
CANNOT BE USED WITH 350-6526—PAGE: 441
PART OF 350-6526 FRAME AS-UNDERCARRIAGE
AN ATTACHMENT

SMCS-4150, 7062 **i06552088**

NOTE	REF NO	GRAPHIC REF	PART NUMBER	QTY	PART NAME 1 2 3 4 5 6 (PRODUCT LEVEL)	SEE PAGE
	1	1	*350-6522*	1	FRAME AS-TRACK ROLLER (RH)	
	1A	1	**151-9751**	1	BRACKET	
	1B	1	**344-6840**	2	STEP	
	2	1	*350-6523*	1	FRAME AS-TRACK ROLLER (LH)	
	2A	1	**151-9751**	1	BRACKET	
	2B	1	**344-6840**	2	STEP	

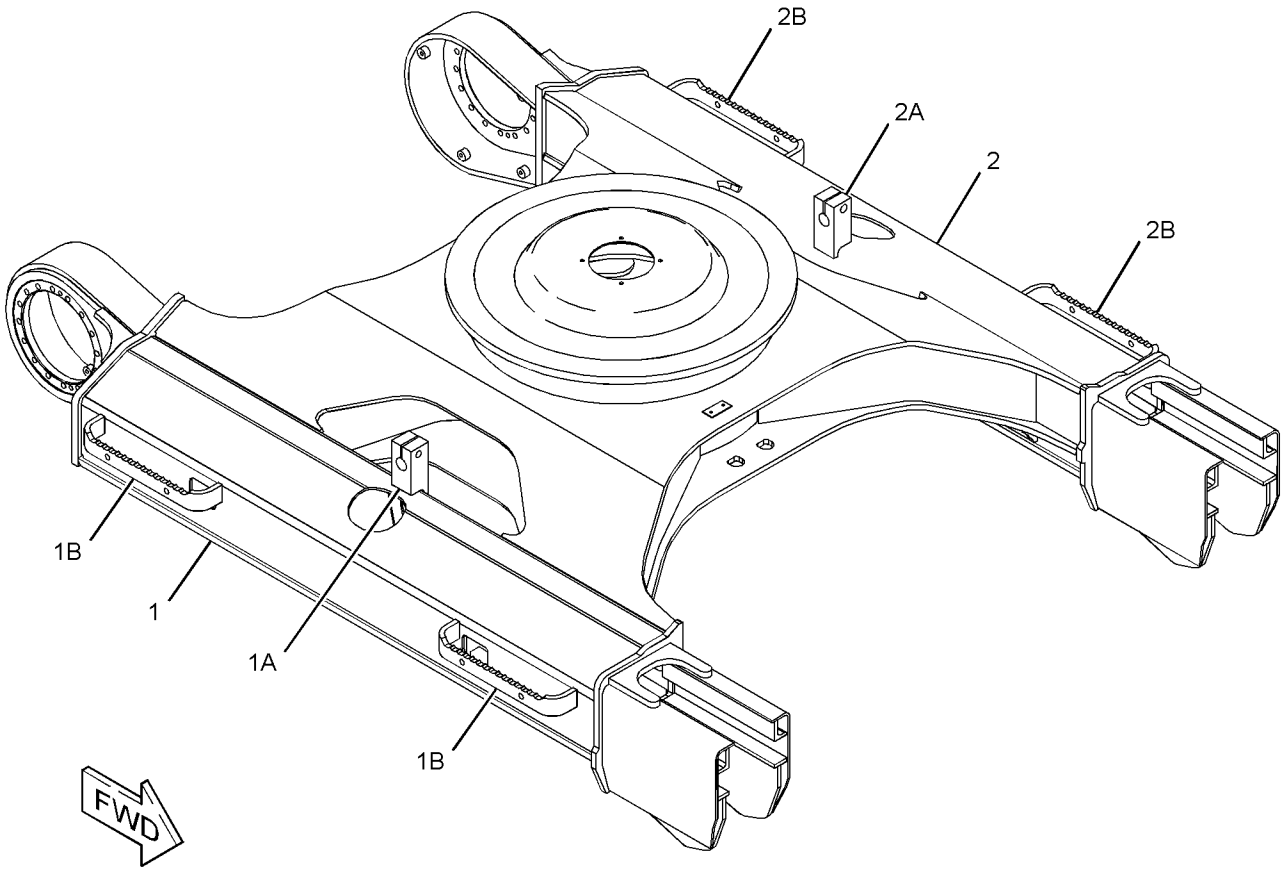

GRAPHIC #1 <END> g03242083

120-7199 GUARD GP-TRACK GUIDE

S/N: DLP1-UP

AN ATTACHMENT

SMCS-4177 **i06718235**

NOTE	REF NO	GRAPHIC REF	PART NUMBER	QTY	PART NAME 1 2 3 4 5 6 (PRODUCT LEVEL)	SEE PAGE
	1	1	**133-2554**	2	GUARD AS-TRACK GUIDE	
M	2	1	**451-2180**	8	BOLT (M16X2X35-MM)	
	3	1	**451-2175**	8	WASHER-HARD (17.5X30X3.5-MM THK)	
					QUANTITIES SHOWN ARE THOSE REQUIRED FOR BOTH LH & RH SIDES	

M - METRIC PART

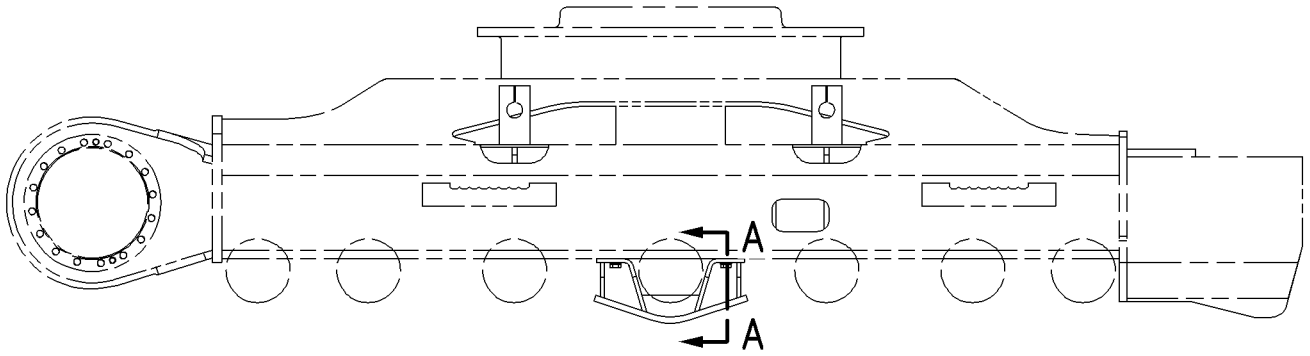

RIGHT SIDE VIEW

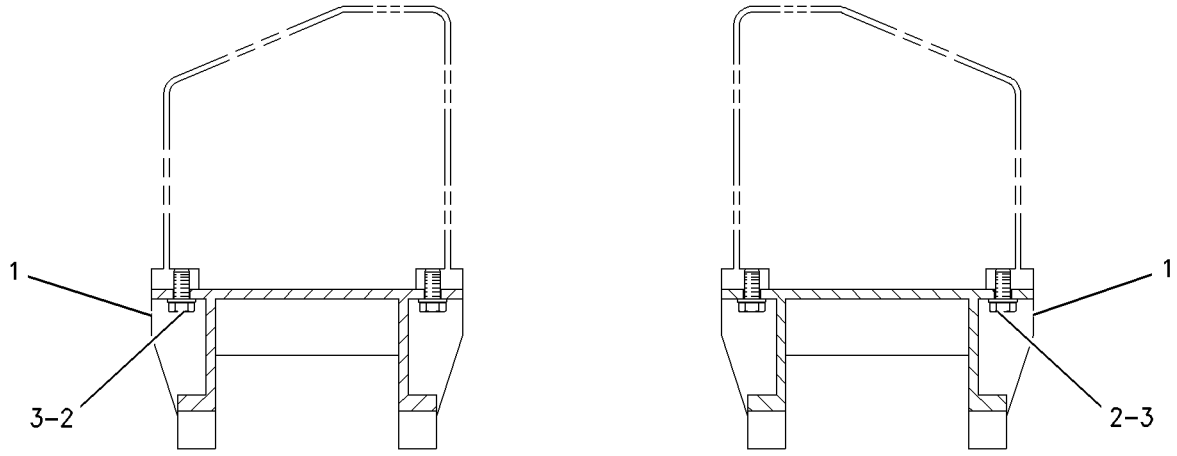

SECTION A-A

GRAPHIC #1 <END> g00755978

169-7904 GUARD GP-TRAVEL MOTOR

S/N: DLP1-UP

PART OF 301-2681 FRAME AR-UNDERCARRIAGE

SMCS-7163 **i05763186**

NOTE	REF NO	GRAPHIC REF	PART NUMBER	QTY	PART NAME 1 2 3 4 5 6 (PRODUCT LEVEL)	SEE PAGE
	1	1	**169-7905**	2	PLATE	
M	2	1	**453-8032**	8	BOLT (M12X1.75X30-MM, SELF LOCKING)	
	3	1	**453-8033**	8	WASHER-HARD (13.5X30X4-MM THK)	
					QUANTITIES SHOWN ARE THOSE REQUIRED FOR BOTH LH & RH SIDES	

M - METRIC PART

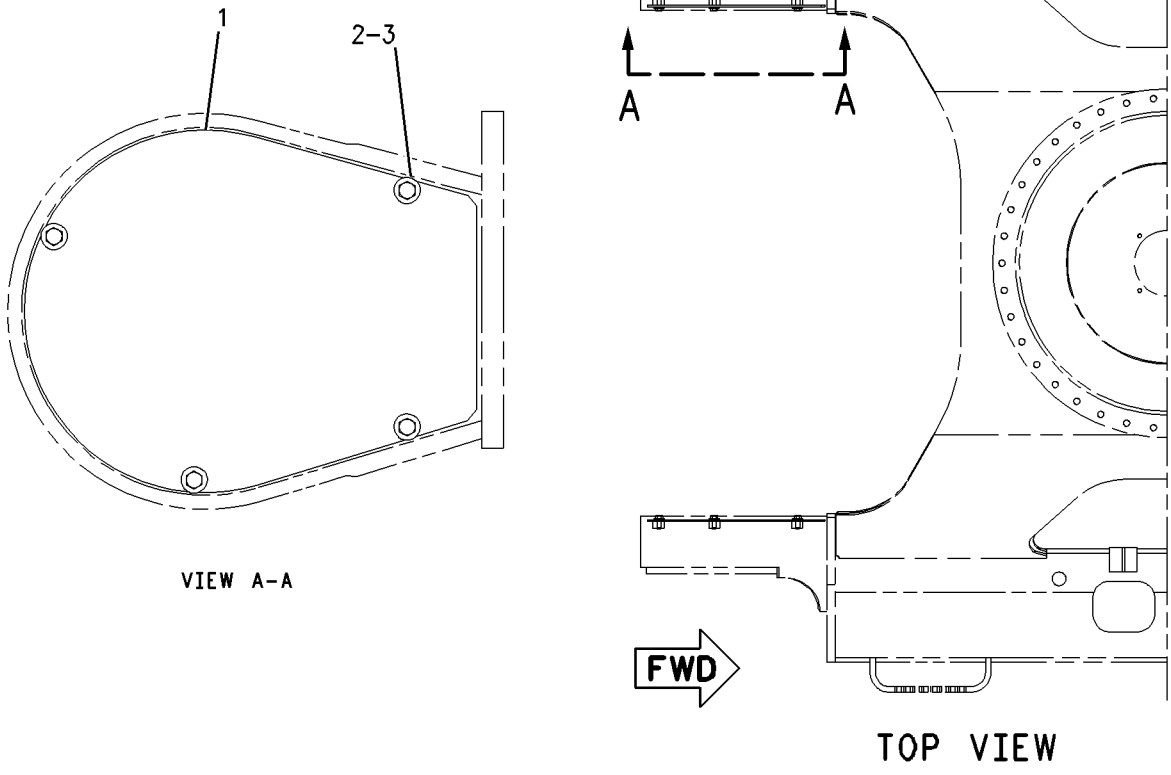

VIEW A–A

TOP VIEW

GRAPHIC #1 <END> g00858779

185-9123 GUARD GP-TRAVEL MOTOR–DEMOLITION

S/N: DLP1-UP
AN ATTACHMENT

SMCS-7163 **i05763191**

NOTE	REF NO	GRAPHIC REF	PART NUMBER	QTY	PART NAME 1 2 3 4 5 6 (PRODUCT LEVEL)	SEE PAGE
	1	1	**185-9124**	1	COVER AS-MOTOR (LH)	
	2	1	**185-9125**	1	COVER AS-MOTOR (RH)	
M	3	1	**453-8032**	8	BOLT (M12X1.75X30-MM, SELF LOCKING)	
	4	1	**453-8033**	8	WASHER-HARD (13.5X30X4-MM THK)	

M - METRIC PART

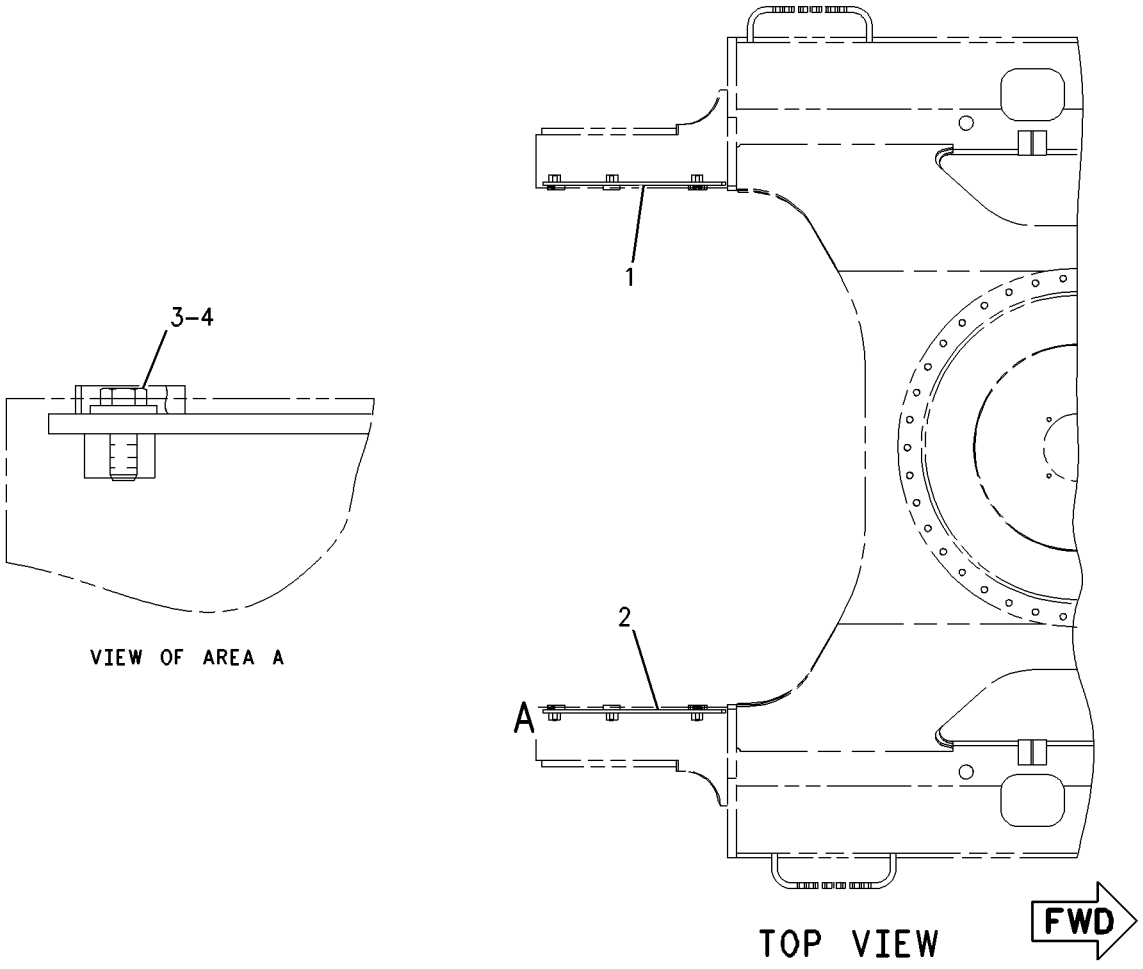

GRAPHIC #1 <END> g00900266

248-7184 IDLER GP-FRONT

S/N: DLP1-UP

PART OF 301-2681 FRAME AR-UNDERCARRIAGE

SMCS-4159 **i02845523**

NOTE	REF NO	GRAPHIC REF	PART NUMBER	QTY	PART NAME 1 2 3 4 5 6 (PRODUCT LEVEL)	SEE PAGE
Y	1	1	*297-9138*	1	IDLER GP-FRONT (RH)	447
Y	2	1	*297-9139*	1	IDLER GP-FRONT (LH)	448

Y - SEPARATE ILLUSTRATION

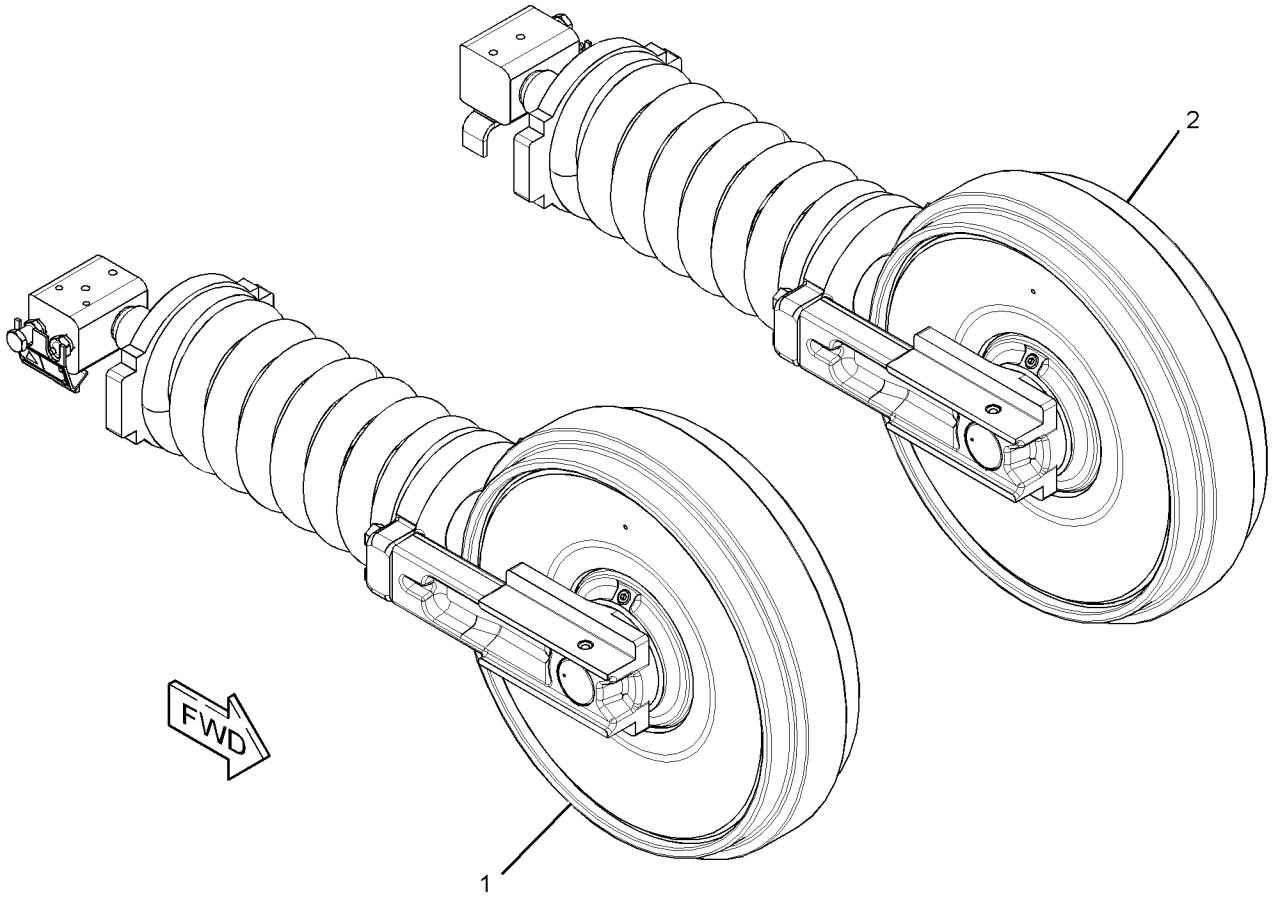

GRAPHIC #1 <END> g01410871

297-9138 IDLER GP-FRONT—RH

S/N: DLP1-UP

PART OF 248-7184 IDLER GP-FRONT

SMCS-4159 **i05825931**

NOTE	REF NO	GRAPHIC REF	PART NUMBER	QTY	PART NAME 1 2 3 4 5 6 (PRODUCT LEVEL)	SEE PAGE
Y	1	1	**4I-7337**	1	IDLER GP-FRONT	449
Y	2	1	*297-9140*	1	TRACK ADJUSTER & RECOIL GP	454
M	3	1	**447-1707**	4	BOLT (M16X2X60-MM)	

M - METRIC PART
Y - SEPARATE ILLUSTRATION

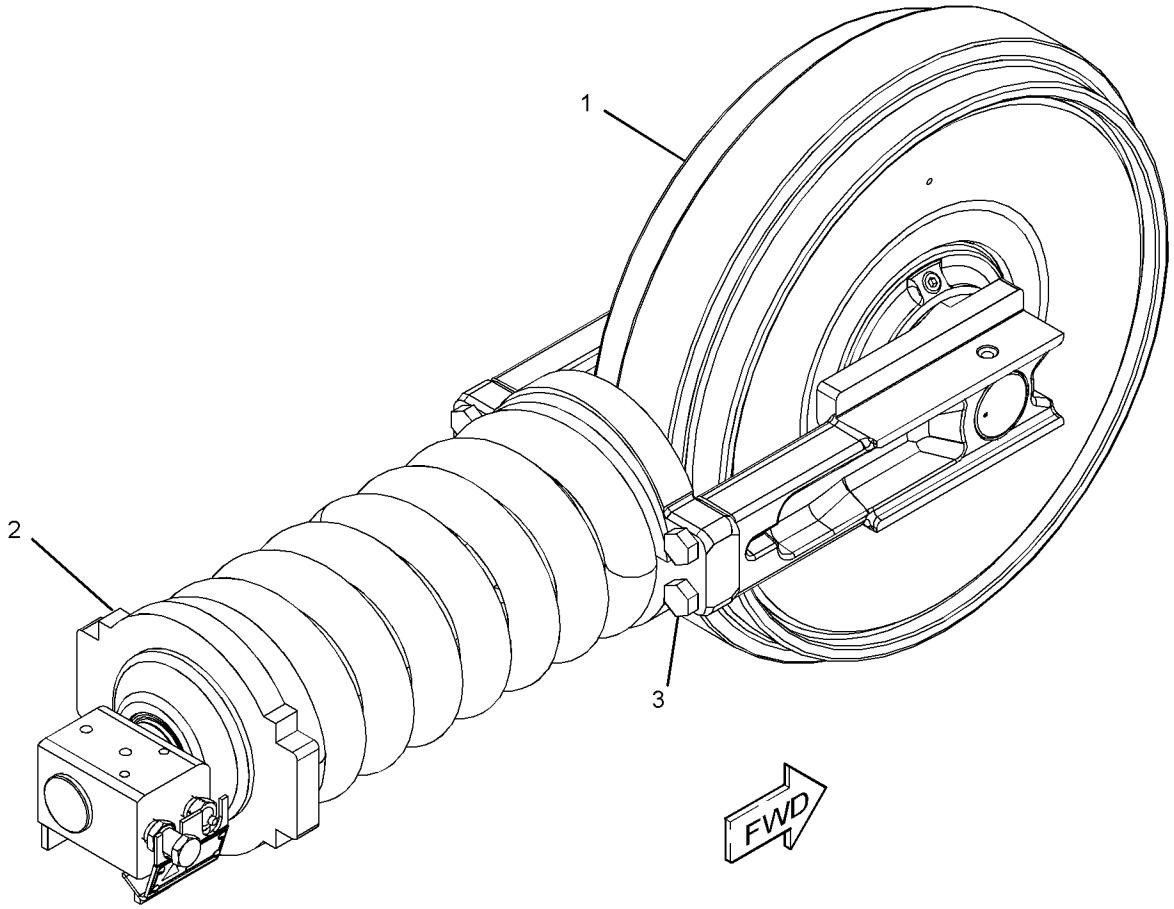

GRAPHIC #1 <END> g01424119

297-9139 IDLER GP-FRONT—LH

S/N: DLP1-UP

PART OF 248-7184 IDLER GP-FRONT

SMCS-4159 **i05825933**

NOTE	REF NO	GRAPHIC REF	PART NUMBER	QTY	PART NAME 1 2 3 4 5 6 (PRODUCT LEVEL)	SEE PAGE
Y	1	1	**4I-7337**	1	IDLER GP-FRONT	449
Y	2	1	*297-9141*	1	TRACK ADJUSTER & RECOIL GP	455
M	3	1	**447-1707**	4	BOLT (M16X2X60-MM)	

M - METRIC PART
Y - SEPARATE ILLUSTRATION

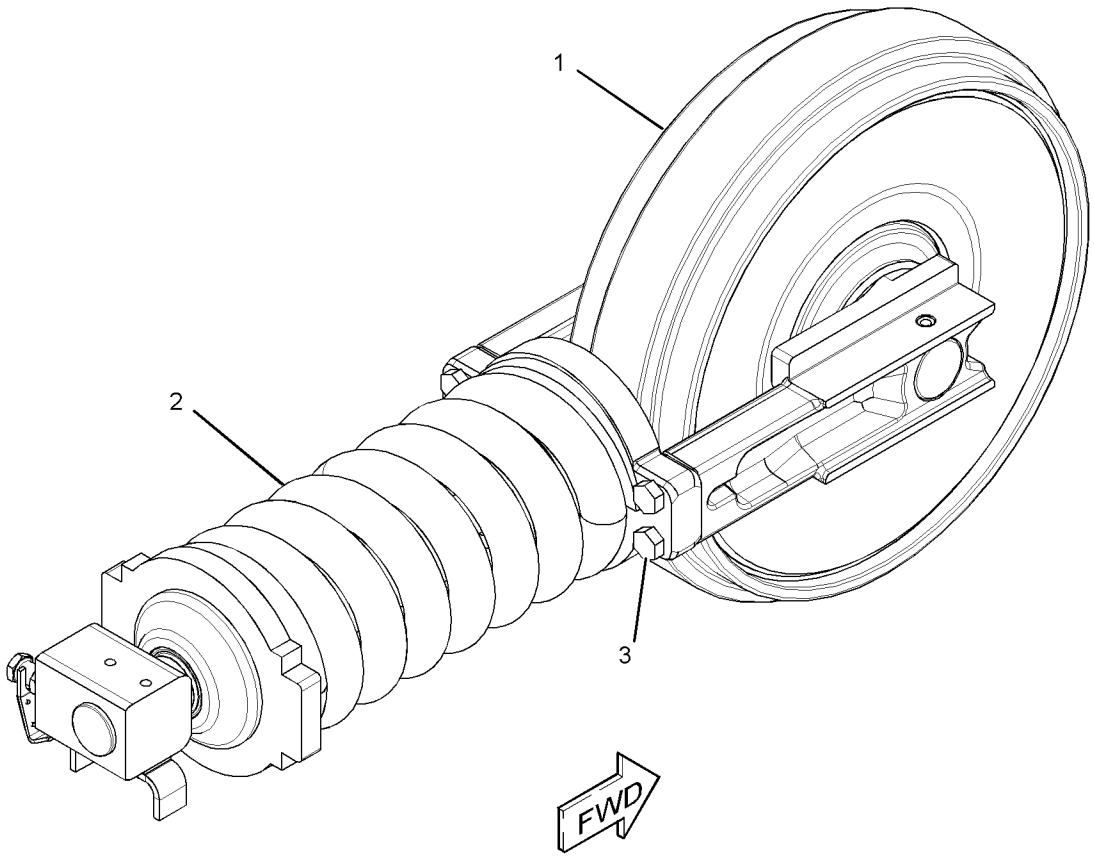

GRAPHIC #1 <END> g01424156

4I-7337 IDLER GP-FRONT

S/N: DLP1-UP

PART OF 297-9138, 297-9139 IDLER GP-FRONT

SMCS-4159 **i07285027**

NOTE	REF NO	GRAPHIC REF	PART NUMBER	QTY	PART NAME 1 2 3 4 5 6 (PRODUCT LEVEL)	SEE PAGE
	1	1	**6I-6590**	1	IDLER & BEARING AS	
	2	1	**099-0157**	2	BEARING-IDLER	
	3	1	**7H-3171**	1	PLUG-PIPE	
	4	1	**099-0159**	2	SEAL GP	
					(EACH INCLUDES)	
		1	**099-0160**	2	RING-SEALING	
	5	1	**095-1662**	2	SEAL-O-RING	
	6	1	**099-0163**	2	PIN	
	7	1	**6I-6477**	1	SHAFT-IDLER	
	8	1	**4I-7488**	2	BEARING-FRONT IDLER	

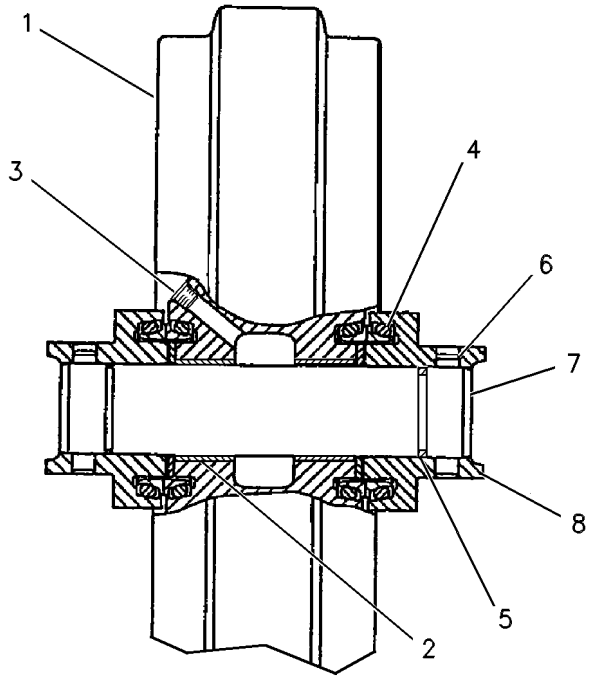

GRAPHIC #1 <END> g00237107

176-4870 LINK AS-TRACK

S/N: DLP1-UP
PART OF 176-4863, 176-4864 TRACK GP
AN ATTACHMENT

SMCS-4169, 4171

i05488281

NOTE	REF NO	GRAPHIC REF	PART NUMBER	QTY	PART NAME 1 2 3 4 5 6 (PRODUCT LEVEL)	SEE PAGE
	1	1	**4I-7475**	42	LINK-TRACK (RH)	
	2	1	**095-0863**	1	PIN-COTTER	
	3	1	**4I-7477**	1	LINK-MASTER (RH)	
	4	1	**162-4306**	1	TRACK MASTER	
	5	1	**4I-7478**	1	LINK-MASTER (LH)	
	6	1	**099-0653**	1	PIN-LINK MASTER	
	7	1	**176-4872**	2	SEAL-TRACK MASTER	
	8	1	**4I-7476**	42	LINK-TRACK (LH)	
	9	1	**162-4305**	42	PIN-TRACK	
	10	1	**162-4307**	84	SEAL-TRACK	
	11	1	**162-4304**	42	BUSHING-TRACK	

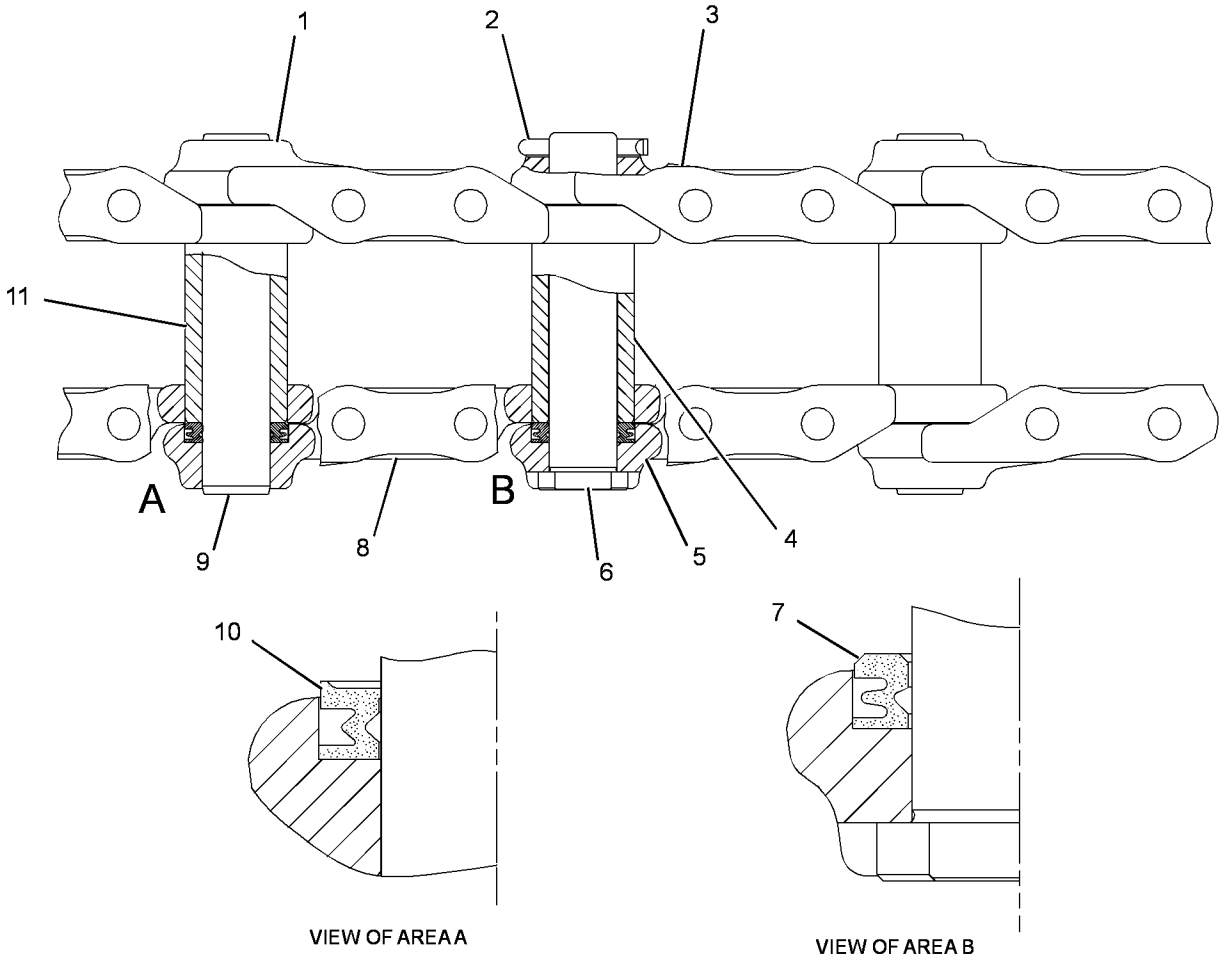

GRAPHIC #1

<END>

g01972653

248-7268 ROLLER AR-TRACK & CARRIER

S/N: DLP1-UP

PART OF 301-2681 FRAME AR-UNDERCARRIAGE

SMCS-4154, 4180 **i05848097**

NOTE	REF NO	GRAPHIC REF	PART NUMBER	QTY	PART NAME 1 2 3 4 5 6 (PRODUCT LEVEL)	SEE PAGE
Y	1	1	**4I-7345**	2	ROLLER GP-TRACK CARRIER	452
Y	2	1	**248-7259**	12	ROLLER GP-TRACK-SINGLE FLANGE	453
M	3	1	**447-1708**	48	BOLT (M16X2X80-MM)	
	4	1	**8T-4122**	48	WASHER-HARD (17X32X3.5-MM THK)	
M	5	1	**447-1725**	2	BOLT (M24X3X80-MM)	
					QUANTITIES SHOWN ARE THOSE REQUIRED FOR BOTH LH & RH SIDES	

M - METRIC PART
Y - SEPARATE ILLUSTRATION

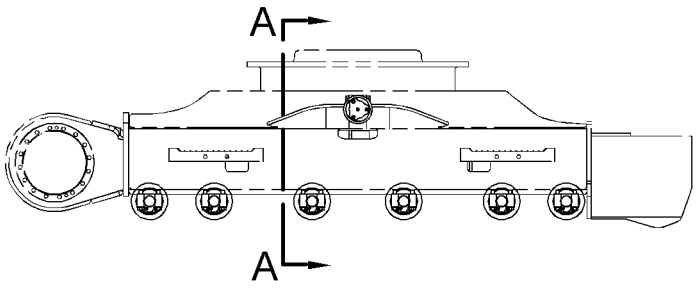

RIGHT SIDE VIEW

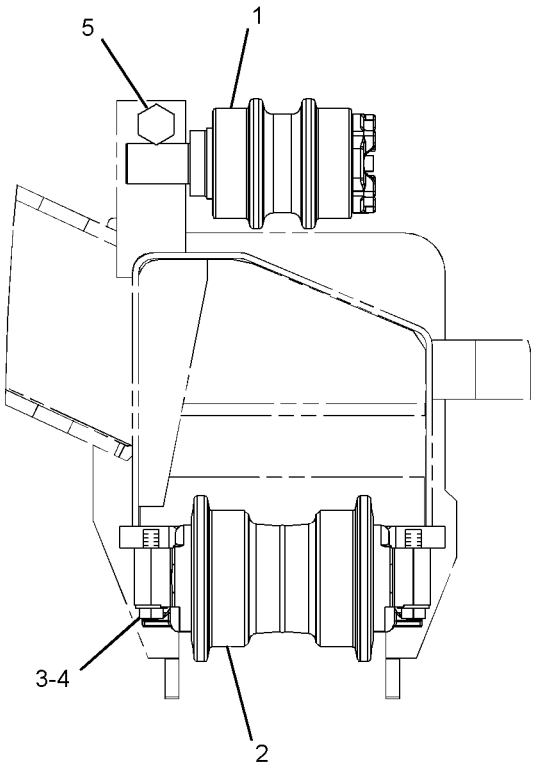

VIEW A-A

GRAPHIC #1 <END> g01406170

4I-7345 ROLLER GP-TRACK CARRIER

S/N: DLP1-UP

PART OF 248-7268 ROLLER AR-TRACK & CARRIER

SMCS-4154 **i01667856**

NOTE	REF NO	GRAPHIC REF	PART NUMBER	QTY	PART NAME 1 2 3 4 5 6 (PRODUCT LEVEL)	SEE PAGE
	1	1	**7Y-2159**	1	SHAFT AS-ROLLER	
	2	1	**099-0183**	1	SEAL GP	
		1	**099-4739**	2	RING-SEALING	
	3	1	**7Y-2155**	1	ROLLER & BEARING AS	
	4	1	**7Y-2162**	1	RETAINER	
	5	1	**6V-7658**	1	SEAL-O-RING	
M	6	1	**8T-1159**	5	BOLT-SOCKET HEAD (M10X1.5X25-MM)	
	7	1	**7Y-2158**	1	COVER-CARRIER ROLLER	
	8	1	**7H-3171**	1	PLUG-PIPE	

M - METRIC PART

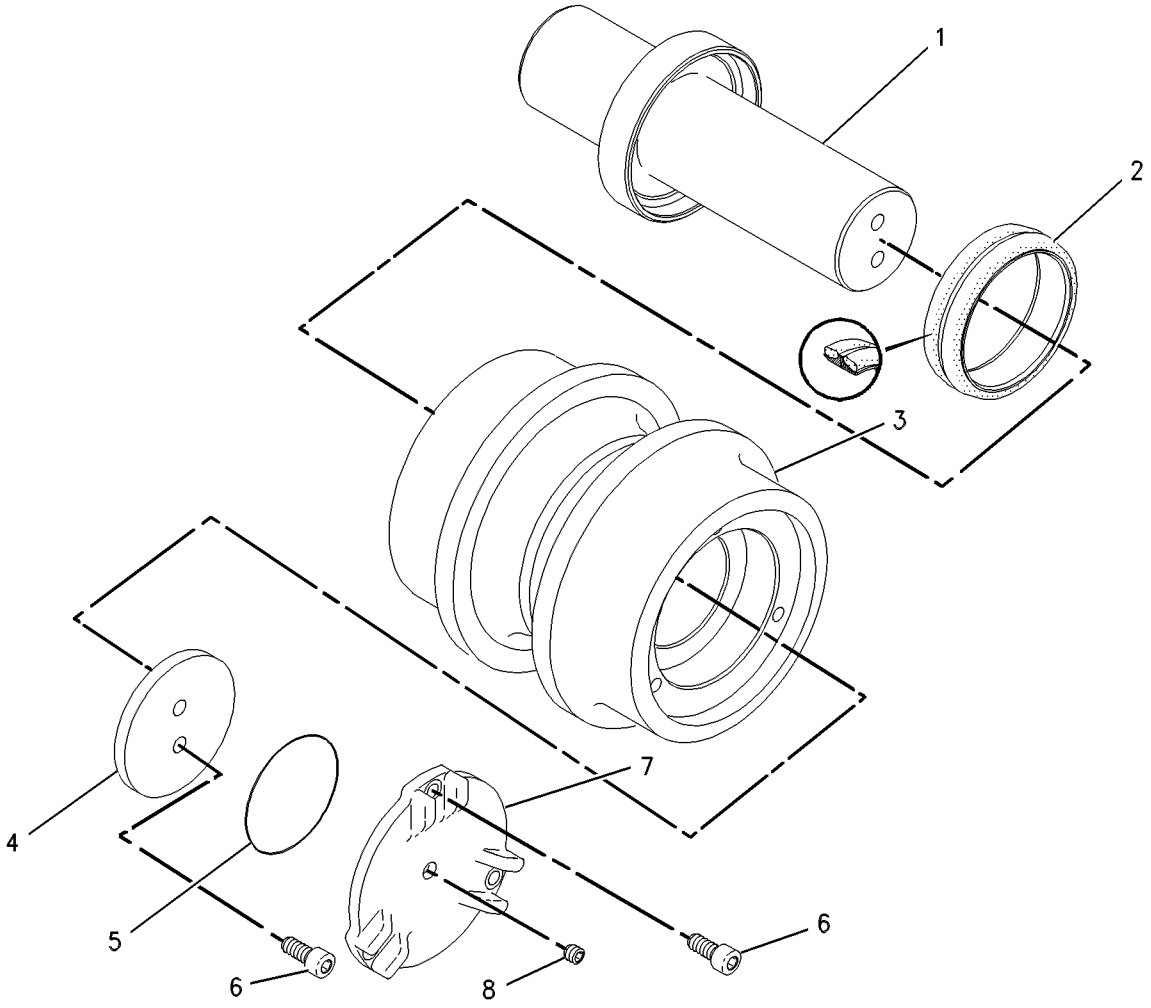

GRAPHIC #1 <END> g00661754

248-7259 ROLLER GP-TRACK-SINGLE FLANGE

S/N: DLP1-UP

PART OF 248-7268 ROLLER AR-TRACK & CARRIER

SMCS-4180 **i06693672**

NOTE	REF NO	GRAPHIC REF	PART NUMBER	QTY	PART NAME 1 2 3 4 5 6 (PRODUCT LEVEL)	SEE PAGE
	1	1	**6I-6451**	1	ROLLER & BEARING AS	
	1A	1	**099-0195**	2	BEARING-TRACK ROLLER	
	2	1	**6I-6549**	2	DOWEL	
	3	1	**340-8206**	2	SEAL GP-DUO-CONE	
					(EACH INCLUDES)	
		1	**099-0194**	2	RING-SEALING	
	4	1	**248-7260**	1	COLLAR-TRACK	
	5	1	**248-7261**	1	COLLAR-TRACK	
	6	1	**248-7262**	1	SHAFT-TRACK ROLLER	
	7	1	**3D-4603**	1	PLUG-PIPE	
	8	1	**6V-7660**	2	SEAL-O-RING	

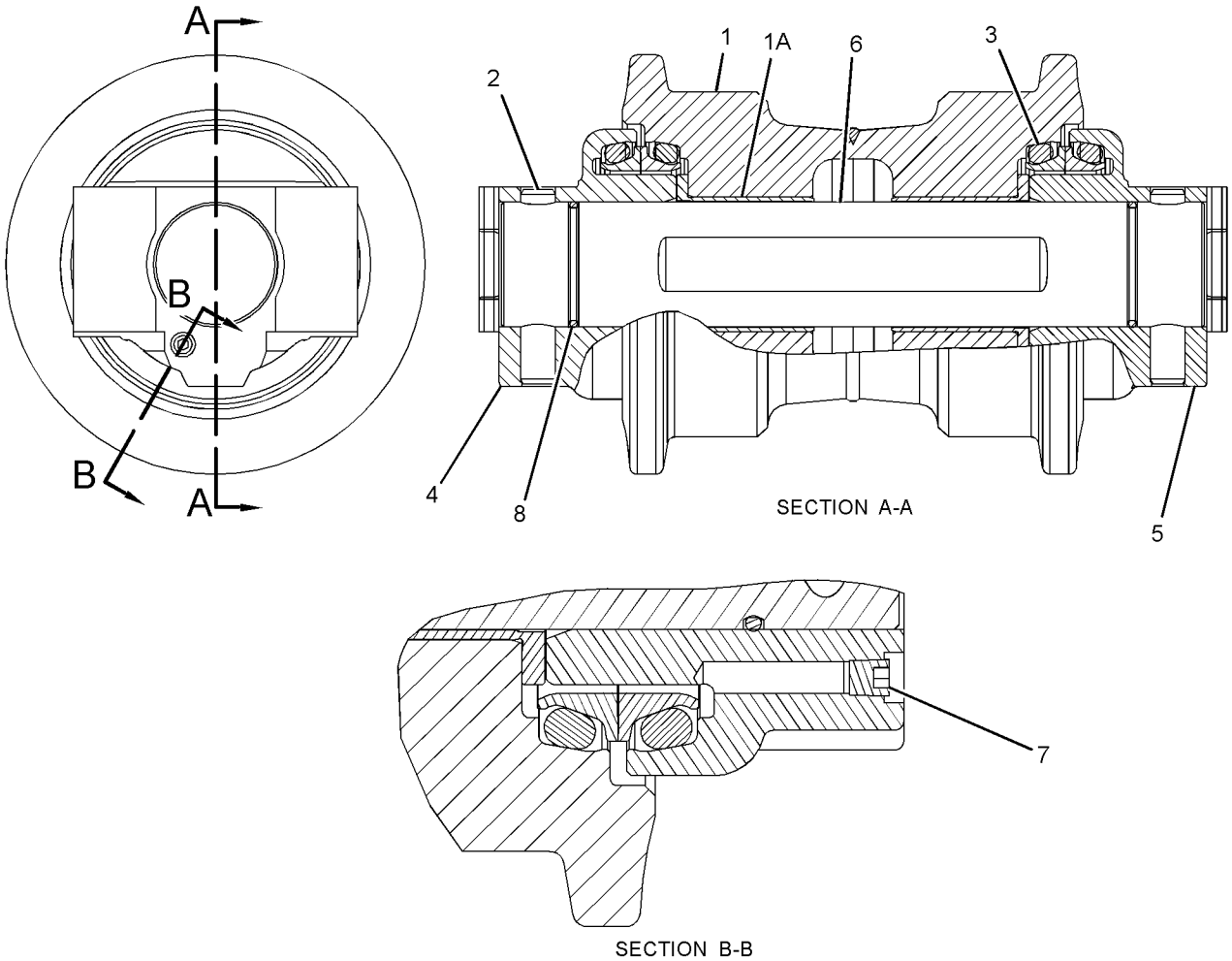

SECTION A-A

SECTION B-B

GRAPHIC #1 <END> g01400534

297-9140 TRACK ADJUSTER & RECOIL GP–RH

S/N: DLP1-UP

PART OF 297-9138 IDLER GP-FRONT

SMCS-4157, 4158

i06937196

NOTE	REF NO	GRAPHIC REF	PART NUMBER	QTY	PART NAME 1 2 3 4 5 6 (PRODUCT LEVEL)	SEE PAGE
	1	1	**248-7200**	1	PLATE AS	
		1	**4B-4158**	4	SCREW-DRIVE (NO 4X0.25-IN)	
		1	**253-1346**	1	PLATE-WARNING (HIGH PRESSURE CYLINDER)	
	2	1	**248-7203**	1	PLATE	
Y	3	1	*297-9142*	1	TRACK ADJUSTER & RECOIL GP	456
M	4	1	**8T-4137**	2	BOLT (M10X1.5X20-MM)	

M - METRIC PART
Y - SEPARATE ILLUSTRATION

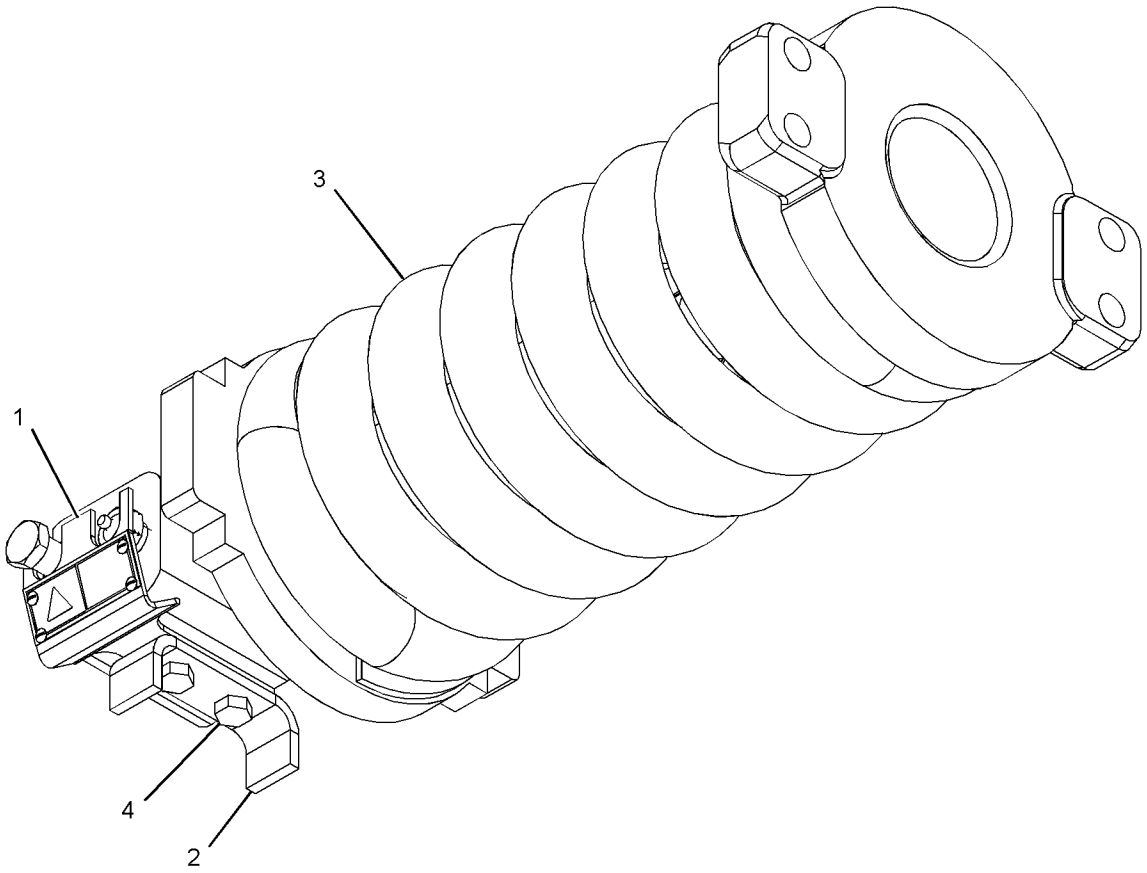

GRAPHIC #1 <END> g03433039

297-9141 TRACK ADJUSTER & RECOIL GP–LH

S/N: DLP1-UP

PART OF 297-9139 IDLER GP-FRONT

SMCS-4157, 4158 **i06937200**

NOTE	REF NO	GRAPHIC REF	PART NUMBER	QTY	PART NAME 1 2 3 4 5 6 (PRODUCT LEVEL)	SEE PAGE
	1	1	**248-7200**	1	PLATE AS	
		1	**4B-4158**	4	SCREW-DRIVE (NO 4X0.25-IN)	
		1	**253-1346**	1	PLATE-WARNING (HIGH PRESSURE CYLINDER)	
	2	1	**248-7203**	1	PLATE	
Y	3	1	*297-9142*	1	TRACK ADJUSTER & RECOIL GP	456
M	4	1	**8T-4137**	2	BOLT (M10X1.5X20-MM)	

M - METRIC PART
Y - SEPARATE ILLUSTRATION

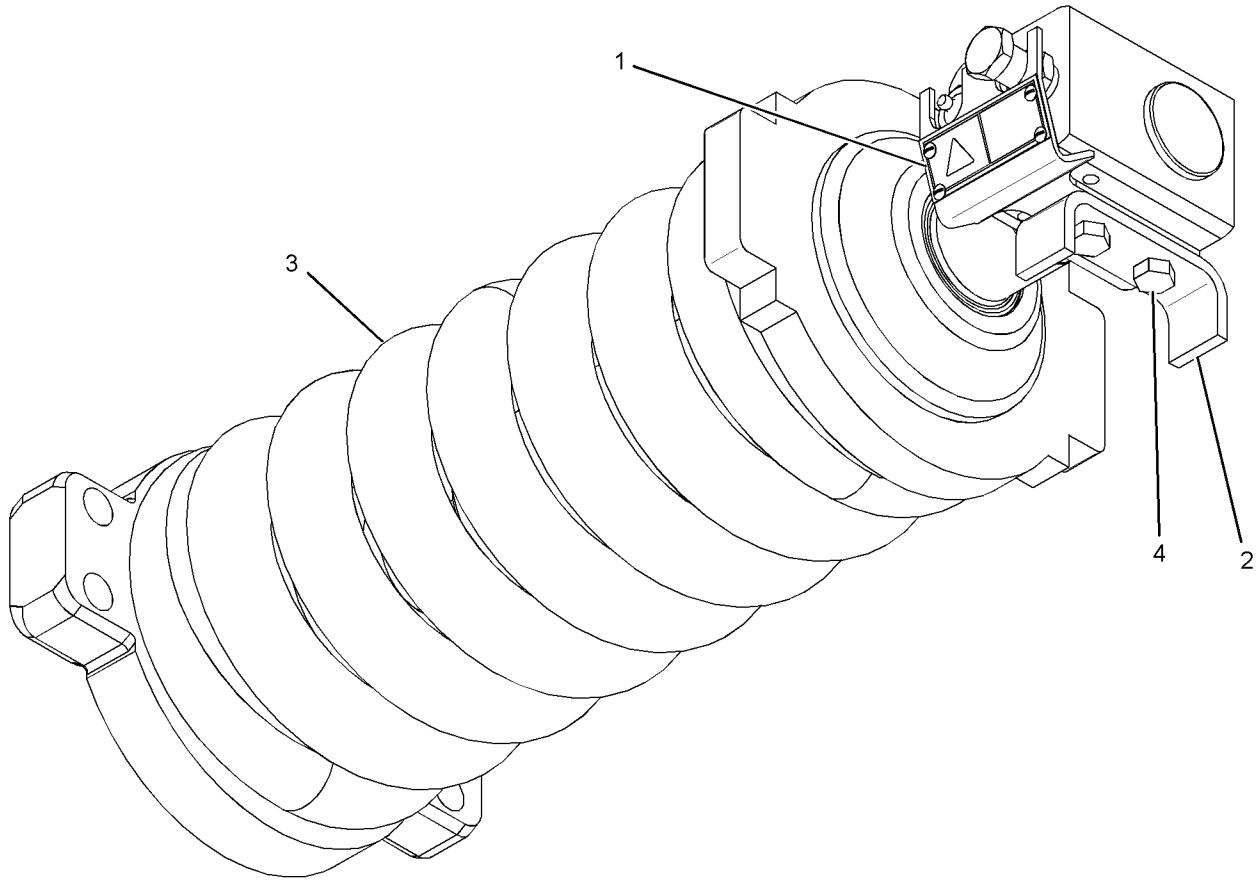

GRAPHIC #1 <END> g01424123

297-9142 TRACK ADJUSTER & RECOIL GP

S/N: DLP1-UP

PART OF 297-9140, 297-9141 TRACK ADJUSTER & RECOIL GP

SMCS-4157, 4158 **i02845521**

NOTE	REF NO	GRAPHIC REF	PART NUMBER	QTY	PART NAME 1 2 3 4 5 6 (PRODUCT LEVEL)	SEE PAGE
	1	1	**248-7191**	1	PLATE	
	2	1	**248-7194**	1	SPRING	
	3	1	**297-9137**	1	SUPPORT	
Y	4	1	*297-9143*	1	TRACK ADJUSTER & RECOIL GP	457
	5	1	**297-9161**	1	STRIP	
M	6	1	**096-4879**	1	NUT (M36X4-THD)	
	7	1	**179-5764**	1	WASHER (39X60X6-MM THK)	
M	8	1	**8T-4171**	2	BOLT (M6X1X12-MM)	

M - METRIC PART
Y - SEPARATE ILLUSTRATION

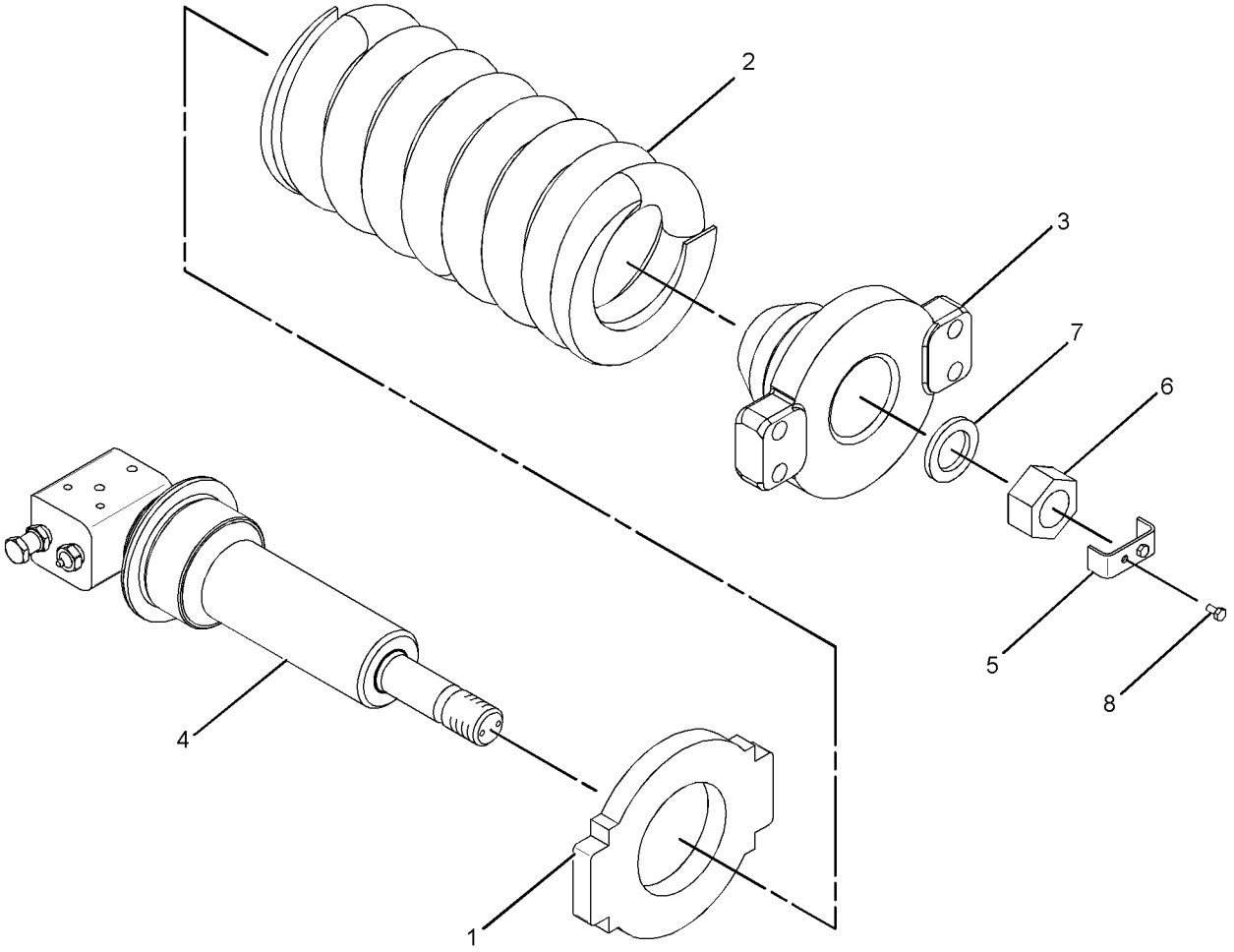

GRAPHIC #1 <END> g01424098

297-9143 TRACK ADJUSTER & RECOIL GP

S/N: DLP1-UP

PART OF 297-9142 TRACK ADJUSTER & RECOIL GP

SMCS-4157, 4158

i06937197

NOTE	REF NO	GRAPHIC REF	PART NUMBER	QTY	PART NAME 1 2 3 4 5 6 (PRODUCT LEVEL)	SEE PAGE
	1	1	**2S-5926**	1	VALVE-RELIEF	
	2	1	**357-7540**	1	VALVE-FILL	
	3	1	**095-7101**	1	SEAL-LIP TYPE	
	4	1	**248-7172**	2	SEAL-O-RING	
	5	1	**248-7197**	1	PISTON AS	
	6	1	**297-9133**	1	CYLINDER	
	7	1	**297-9134**	1	ROD	
	8	1	**095-1701**	1	SEAL-O-RING	
	9	1	**096-4276**	1	RING	
	10	1	**099-0172**	2	RING-BACKUP	
	11	1	**099-0173**	2	RING-BACKUP	

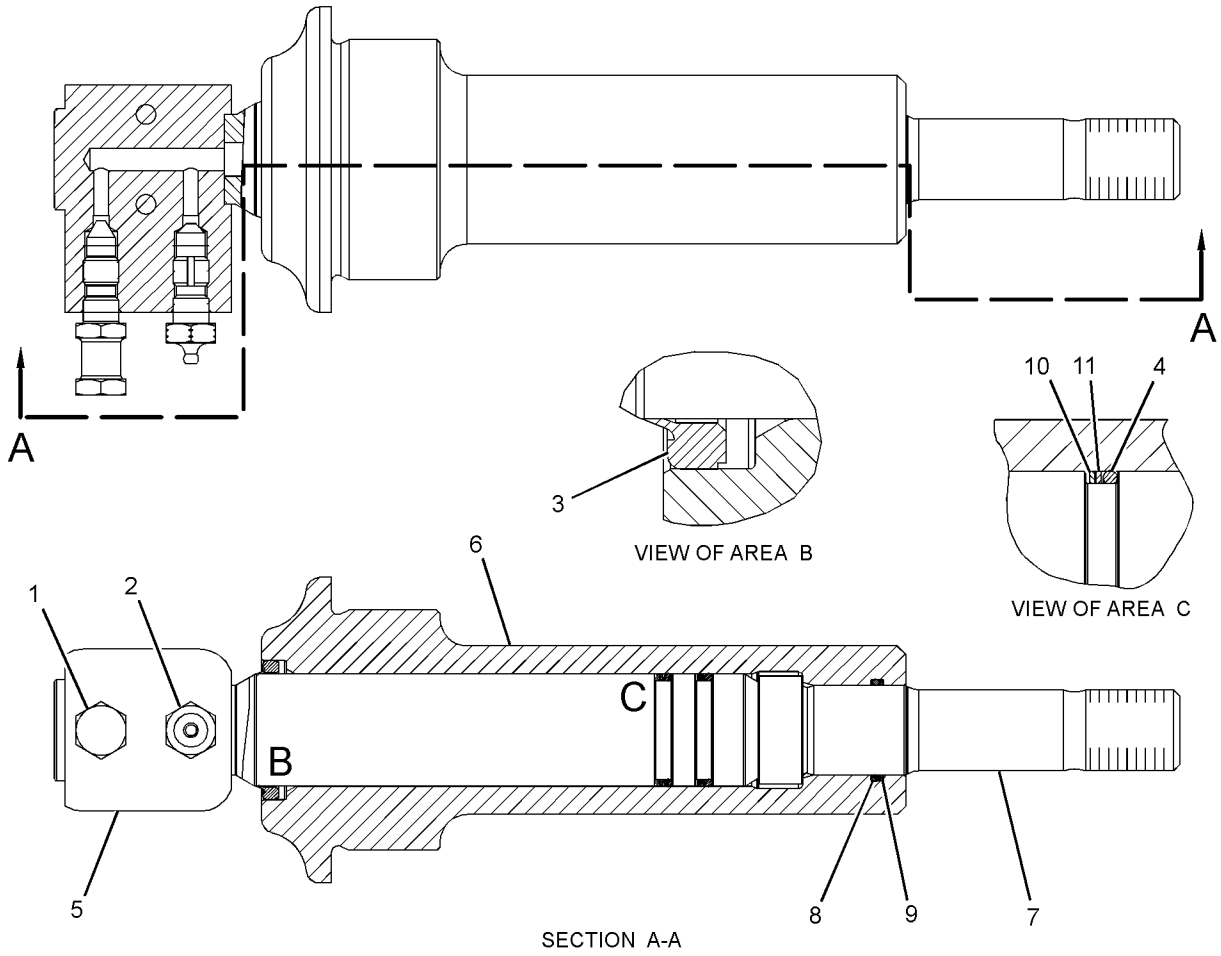

GRAPHIC #1

<END>

g01424029

176-4863 TRACK GP–2-REQUIRED

S/N: DLP1-UP
500-MM (19.7-IN) TRIPLE GROUSER SHOE
PART OF 359-2474, 367-8776, 367-8790, 367-8792, 379-7089, 379-7091 DISTRIBUTION AR
AN ATTACHMENT

SMCS-4170 **i05486813**

NOTE	PART NUMBER	QTY	PART NAME 1 2 3 4 5 6 (PRODUCT LEVEL)	SEE PAGE
Y	**176-4870**	1	LINK AS-TRACK	450
M	**4I-7538**	172	BOLT-TRACK (M16X1.5X46-MM)	
M	**5I-6125**	172	NUT-TRACK (M16X1.5-THD)	
	137-6114	43	SHOE-TRACK	

M - METRIC PART
Y - SEPARATE ILLUSTRATION

<END>

176-4864 TRACK GP–2-REQUIRED

S/N: DLP1-UP
600-MM (23.6-IN) TRIPLE GROUSER SHOE
PART OF 301-2684, 350-3298 TRACK GP
AN ATTACHMENT

SMCS-4170 **i05486827**

NOTE	PART NUMBER	QTY	PART NAME 1 2 3 4 5 6 (PRODUCT LEVEL)	SEE PAGE
Y	**176-4870**	1	LINK AS-TRACK	450
M	**4I-7538**	172	BOLT-TRACK (M16X1.5X46-MM)	
M	**5I-6125**	172	NUT-TRACK (M16X1.5-THD)	
	1R-6009	43	SHOE-TRACK	

M - METRIC PART
Y - SEPARATE ILLUSTRATION

<END>

301-2684 TRACK GP–2-REQUIRED

S/N: DLP1-UP
600-MM (23.6-IN) TRIPLE GROUSER SHOE. WITH STEP
AN ATTACHMENT

SMCS-4170 **i03017554**

NOTE	PART NUMBER	QTY	PART NAME 1 2 3 4 5 6 (PRODUCT LEVEL)	SEE PAGE
Y	*235-7764*	1	STEP GP	432
Y	*176-4864*	1	TRACK GP	458

Y - SEPARATE ILLUSTRATION

<END>

350-3298 TRACK GP—2-REQUIRED

S/N: DLP1-UP
600-MM (24-IN) TRIPLE GROUSER SHOE
AN ATTACHMENT

SMCS-4170 **i03998397**

NOTE	PART NUMBER	QTY	PART NAME 1 2 3 4 5 6 (PRODUCT LEVEL)	SEE PAGE
Y	*344-6901*	1	STEP GP	433
Y	*176-4864*	1	TRACK GP	458

Y - SEPARATE ILLUSTRATION

<END>

087-4454 ACCUMULATOR GP-HYDRAULIC—CHARGED

S/N: DLP1-UP

PART OF 5I-8416 ACCUMULATOR GP-HYDRAULIC

SMCS-5077 **i04099483**

NOTE	REF NO	GRAPHIC REF	PART NUMBER	QTY	PART NAME 1 2 3 4 5 6 (PRODUCT LEVEL)	SEE PAGE
	1	1	087-4577	1	SEAL	
	2	1	087-4576	1	CAP	
	3	1	087-4575	1	CORE	

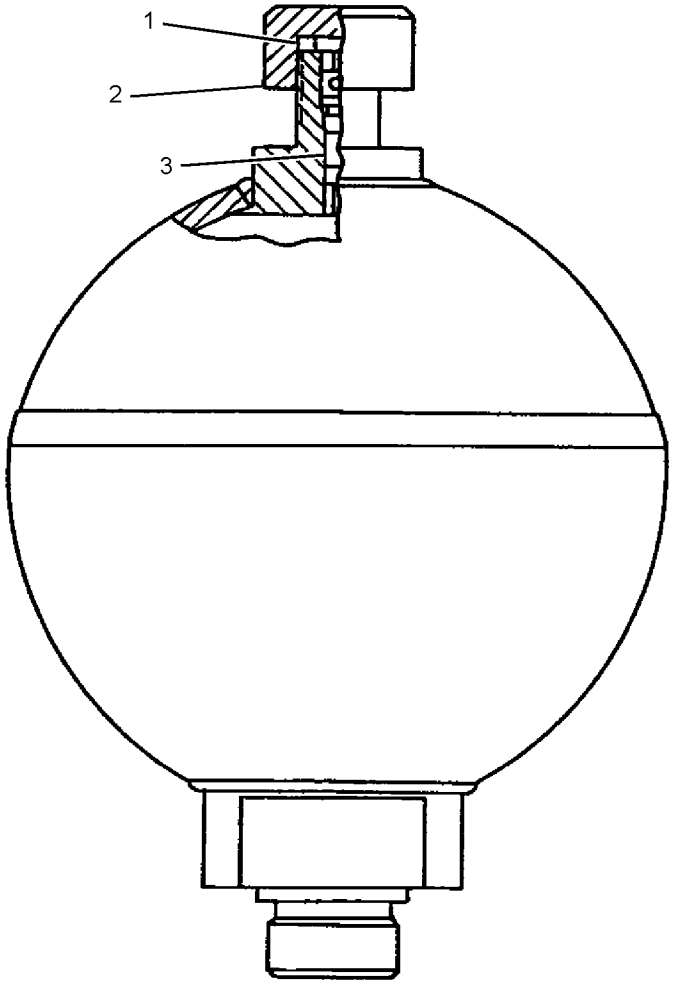

GRAPHIC #1 <END> g02304393

087-4456 ACCUMULATOR GP-HYDRAULIC—CHARGED

S/N: DLP1-UP

FIELD REPLACEMENT ORDER 227-8807—PAGE: 464

PART OF 164-6981 ACCUMULATOR GP-HYDRAULIC

SMCS-5077 **i07033511**

NOTE	PART NUMBER	QTY	PART NAME 1 2 3 4 5 6 (PRODUCT LEVEL)	SEE PAGE
Y	7Y-4444	1	ACCUMULATOR GP-HYDRAULIC (CHARGED) (JAPANESE MARKET ONLY)	467
			—OR—	
Y	4I-1536	1	ACCUMULATOR GP-HYDRAULIC (CHARGED)	465
			—OR—	
Y	5I-8416	1	ACCUMULATOR GP-HYDRAULIC (CHARGED)	466
			—OR—	
Y	145-5106	1	ACCUMULATOR GP-HYDRAULIC (CHARGED)	462

Y - SEPARATE ILLUSTRATION

<END>

145-5106 ACCUMULATOR GP-HYDRAULIC—CHARGED

S/N: DLP1-UP

FIELD REPLACEMENT ORDER 227-8807—PAGE: 464

PART OF 087-4456 ACCUMULATOR GP-HYDRAULIC

SMCS-5077 **i02464714**

NOTE	REF NO	GRAPHIC REF	PART NUMBER	QTY	PART NAME 1 2 3 4 5 6 (PRODUCT LEVEL)	SEE PAGE
	1	1	159-4700	1	FILM-WARNING (HIGH PRESSURE CYLINDER)	

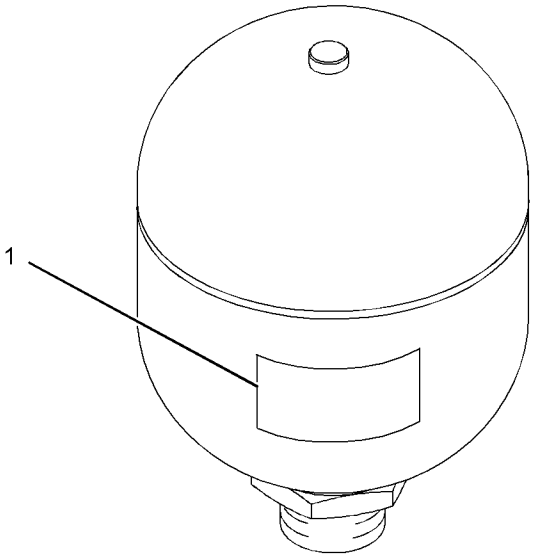

GRAPHIC #1 <END> g01229518

164-6981 ACCUMULATOR GP-HYDRAULIC—CHARGED

S/N: DLP1-UP

PART OF 278-6674 LINES GP-PILOT

SMCS-5077 **i01284579**

NOTE	PART NUMBER	QTY	PART NAME 1 2 3 4 5 6 (PRODUCT LEVEL)	SEE PAGE
Y	**087-4456**	1	ACCUMULATOR GP-HYDRAULIC (CHARGED)	461
	3K-0360	1	SEAL-O-RING	

Y - SEPARATE ILLUSTRATION

<END>

227-8807 ACCUMULATOR GP-HYDRAULIC—UNCHARGED

S/N: DLP1-UP

FIELD REPLACEMENT FOR 145-5106—PAGE: 462: FOR 087-4456—PAGE: 461

SMCS-5077 **i06873732**

NOTE	REF NO	GRAPHIC REF	PART NUMBER	QTY	PART NAME 1 2 3 4 5 6 (PRODUCT LEVEL)	SEE PAGE
	1	1	232-3317	1	FILM-IDENTIFICATION (HYDRAULIC ACCUMULATOR)	

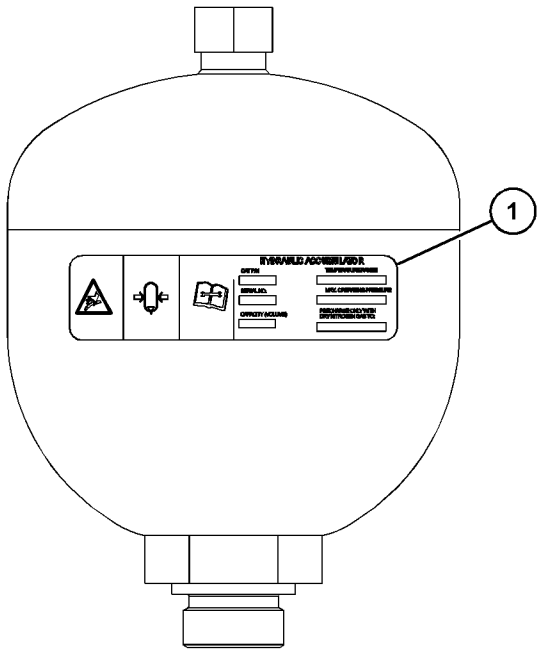

GRAPHIC #1 <END> g06048678

4I-1536 ACCUMULATOR GP-HYDRAULIC—CHARGED

S/N: DLP1-UP

PART OF 087-4456 ACCUMULATOR GP-HYDRAULIC

SMCS-5077 **i07114027**

NOTE	REF NO	GRAPHIC REF	PART NUMBER	QTY	PART NAME 1 2 3 4 5 6 (PRODUCT LEVEL)	SEE PAGE
	1	1	**4I-5862**	1	CAP	
	2	1	**4I-1539**	1	CORE	

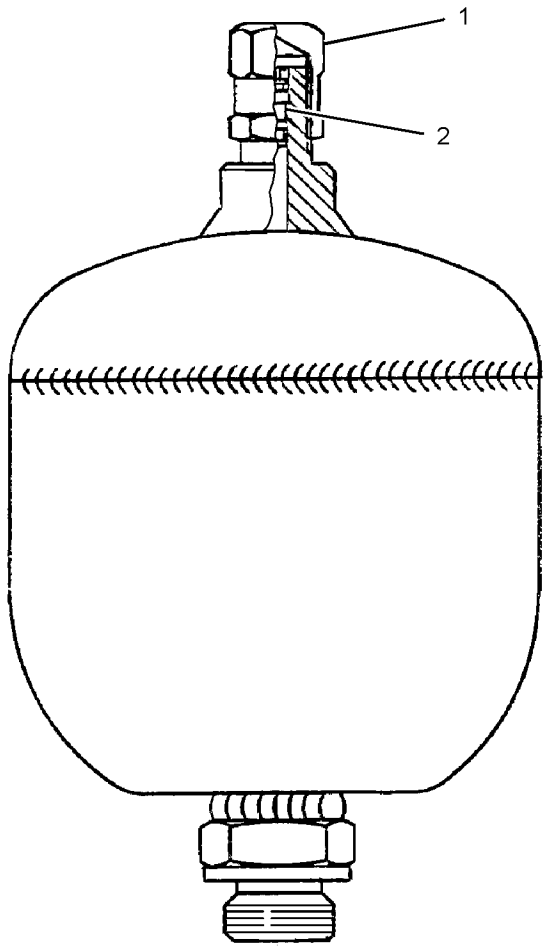

GRAPHIC #1 <END> g01769613

5I-8416 ACCUMULATOR GP-HYDRAULIC—CHARGED

S/N: DLP1-UP

PART OF 087-4456 ACCUMULATOR GP-HYDRAULIC

SMCS-5077 **i07114026**

NOTE	REF NO	GRAPHIC REF	PART NUMBER	QTY	PART NAME 1 2 3 4 5 6 (PRODUCT LEVEL)	SEE PAGE
	1	1	**4I-8267**	1	CAP (ACCUMULATOR)	
Y	2	1	*087-4454*	1	ACCUMULATOR GP-HYDRAULIC (CHARGED)	460

Y - SEPARATE ILLUSTRATION

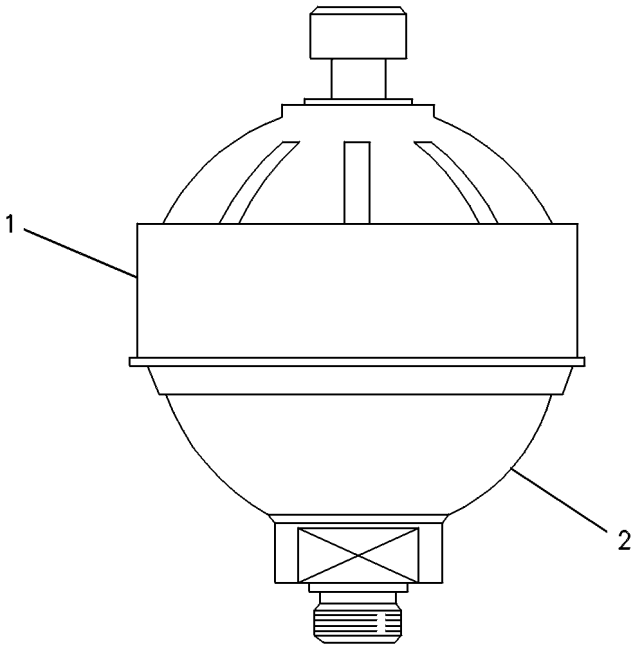

GRAPHIC #1 <END> g00237219

7Y-4444 ACCUMULATOR GP-HYDRAULIC—CHARGED

S/N: DLP1-UP

JAPANESE MARKET

PART OF 087-4456 ACCUMULATOR GP-HYDRAULIC

SMCS-5077 **i06991731**

NOTE	REF NO	GRAPHIC REF	PART NUMBER	QTY	PART NAME 1 2 3 4 5 6 (PRODUCT LEVEL)	SEE PAGE
					(NO SERVICED PARTS)	

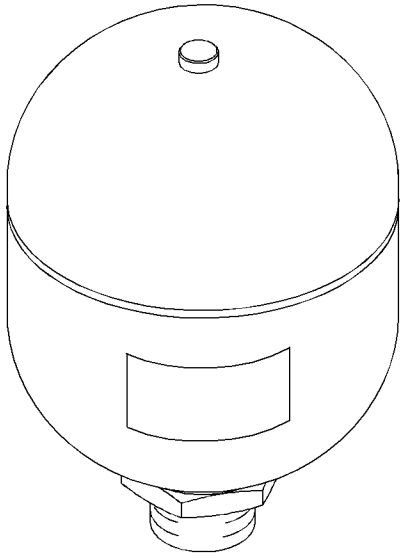

GRAPHIC #1 <END> g02639816

255-5843 CONTROL AR-AUXILIARY—JOYSTICK, MODULATION SWITCH

S/N: DLP1-UP

PART OF 336-3356, 336-3382 OPTION AR-HYDRAULIC

AN ATTACHMENT

SMCS-5051 **i06674261**

NOTE	PART NUMBER	QTY	PART NAME 1 2 3 4 5 6 (PRODUCT LEVEL)	SEE PAGE
Y	*259-7598*	1	CONTROL & MTG GP-JOYSTICK (WITH MODULATION SWITCH)	1025
Y	*259-5295*	1	FASTENER GP-WIRING HARNESS (JOYSTICK)	194
Y	*247-7410*	1	FILM GP (OPERATOR CONTROLS, NOTICE)	1194

Y - SEPARATE ILLUSTRATION

<END>

255-5844 CONTROL AR-AUXILIARY—JOYSTICK, 3-BUTTON, TRIGGER SWITCH

S/N: DLP1-UP

AN ATTACHMENT

SMCS-5051 **i04895962**

NOTE	PART NUMBER	QTY	PART NAME 1 2 3 4 5 6 (PRODUCT LEVEL)	SEE PAGE
Y	*259-7599*	1	CONTROL & MTG GP-JOYSTICK (3-BUTTON, TRIGGER SWITCH)	1026
Y	*259-5295*	1	FASTENER GP-WIRING HARNESS (JOYSTICK)	194
Y	*247-7411*	1	FILM GP (OPERATOR CONTROLS, NOTICE)	1196

Y - SEPARATE ILLUSTRATION

<END>

270-5843 CONTROL AR-AUXILIARY—SYSTEM 23, COMBINED FUNCTION

S/N: DLP1-UP

FOR USE WITH 255-5843—PAGE: 468, 255-5844—PAGE: 468, 255-5845—PAGE: 1132, 270-6106—PAGE: 469, 270-5846—PAGE: 469, 278-6714—PAGE: 722, 284-4376—PAGE: 1055, 284-4377—PAGE: 1056, 293-1222—PAGE: 1057

PART OF 336-3356, 336-3382 OPTION AR-HYDRAULIC

AN ATTACHMENT

SMCS-5051 **i06668540**

NOTE	PART NUMBER	QTY	PART NAME 1 2 3 4 5 6 (PRODUCT LEVEL)	SEE PAGE
Y	*278-6697*	1	LINES GP-FRONT	605

Y - SEPARATE ILLUSTRATION

<END>

270-5846 CONTROL AR-AUXILIARY

S/N: DLP1-UP

FOR USE WITH 255-5843—PAGE: 468, 255-5844—PAGE: 468, 255-5845—PAGE: 1132, 270-6106—PAGE: 469, 278-6714—PAGE: 722, 284-4376—PAGE: 1055, 284-4377—PAGE: 1056, 293-1222—PAGE: 1057

PART OF 336-3356, 336-3382, 336-3393 OPTION AR-HYDRAULIC

AN ATTACHMENT

SMCS-5051 **i02853683**

NOTE	PART NUMBER	QTY	PART NAME 1 2 3 4 5 6 (PRODUCT LEVEL)	SEE PAGE
Y	*278-6699*	1	LINES GP-FRONT (SYSTEM 23, COMBINED FUNCTION)	609
Y	*260-7891*	1	LINES GP-PILOT (PUMP CONTROL, SHUTTLE VALVE)	638
Y	*278-6701*	1	LINES GP-PILOT (AUXILIARY, COMBINED FUNCTION)	684
Y	*275-7058*	1	WIRING GP-CONTROL (AUXILIARY, COMBINED FUNCTION)	298

Y - SEPARATE ILLUSTRATION

<END>

270-5859 CONTROL AR-AUXILIARY—MEDIUM PRESSURE

S/N: DLP1-UP

FOR USE WITH 255-5843—PAGE: 468, 255-5844—PAGE: 468, 255-5845—PAGE: 1132, 270-6106—PAGE: 469, 278-6714—PAGE: 722, 284-4376—PAGE: 1055, 284-4377—PAGE: 1056, 293-1222—PAGE: 1057

PART OF 336-3382 OPTION AR-HYDRAULIC

AN ATTACHMENT

SMCS-5051 **i05347961**

NOTE	PART NUMBER	QTY	PART NAME 1 2 3 4 5 6 (PRODUCT LEVEL)	SEE PAGE
Y	*278-6691*	1	LINES GP-FRONT (MEDIUM PRESSURE)	603
Y	*278-6713*	1	LINES GP-PILOT (MEDIUM PRESSURE)	718
Y	**285-1750**	1	VALVE & MTG GP-CONTROL	796
			—OR—	
Y	**420-2242**	1	VALVE & MTG GP-CONTROL	797
Y	*275-7061*	1	WIRING GP-MEDIUM PRESSURE	312

Y - SEPARATE ILLUSTRATION

<END>

270-6106 CONTROL AR-AUXILIARY—FOOT SWITCH, ON/OFF, LH

S/N: DLP1-UP

AN ATTACHMENT

SMCS-5051 **i03669814**

NOTE	PART NUMBER	QTY	PART NAME 1 2 3 4 5 6 (PRODUCT LEVEL)	SEE PAGE
Y	*270-6107*	1	CONTROL & MOUNTING GP (FOOT SWITCH, ON/OFF, LH)	1023
Y	*259-5294*	1	FASTENER GP-WIRING HARNESS (FLOOR, SWITCH)	193
Y	*247-7465*	1	FILM GP (HAMMER CONTROL, FLOOR SWITCH)	1198

Y - SEPARATE ILLUSTRATION

<END>

270-6119 CONTROL AR-AUXILIARY—AUX PUMP, MED PRESSURE VALVE

S/N: DLP1-UP

FOR USE WITH 255-5843—PAGE: 468, 255-5844—PAGE: 468, 255-5845—PAGE: 1132, 270-6106—PAGE: 469, 278-6714—PAGE: 722, 284-4376—PAGE: 1055, 284-4377—PAGE: 1056, 293-1222—PAGE: 1057

CANNOT BE USED WITH 270-5843—PAGE: 468, 270-5846—PAGE: 469

AN ATTACHMENT

SMCS-5051 **i02883554**

NOTE	PART NUMBER	QTY	PART NAME 1 2 3 4 5 6 (PRODUCT LEVEL)	SEE PAGE
Y	*278-6704*	1	LINES GP-FRONT	618
Y	*278-6705*	1	LINES GP-PILOT (CONTROL VALVE, MEDIUM PRESSURE)	714
Y	*278-6731*	1	LINES GP-PUMP (BLADE)	736
Y	*259-0917*	1	PUMP & MTG GP-AUXILIARY (MEDIUM PRESSURE)	758
Y	*275-7060*	1	WIRING GP-MEDIUM PRESSURE	311

Y - SEPARATE ILLUSTRATION

<END>

389-2433 CONTROL AR-AUXILIARY—MED PRESS AUXILIARY, 3RD PUMP

S/N: DLP1-UP

AN ATTACHMENT

SMCS-5051 **i05351665**

NOTE	PART NUMBER	QTY	PART NAME 1 2 3 4 5 6 (PRODUCT LEVEL)	SEE PAGE
Y	*278-6704*	1	LINES GP-FRONT	618
Y	*278-6705*	1	LINES GP-PILOT (CONTROL VALVE, MEDIUM PRESSURE)	714
Y	*387-3697*	1	LINES GP-PUMP (MEDIUM PRESSURE, WITH BLADE)	739
Y	*342-1891*	1	PUMP & MTG GP-AUXILIARY (MEDIUM PRESSURE)	759
Y	*275-7060*	1	WIRING GP-MEDIUM PRESSURE	311

Y - SEPARATE ILLUSTRATION

<END>

457-9316 CONTROL AR-AUXILIARY—MEDIUM PRESSURE

S/N: DLP1-UP

AN ATTACHMENT

SMCS-5051 **i06530781**

NOTE	PART NUMBER	QTY	PART NAME 1 2 3 4 5 6 (PRODUCT LEVEL)	SEE PAGE
Y	*278-6691*	1	LINES GP-FRONT (MEDIUM PRESSURE)	603
Y	*278-6713*	1	LINES GP-PILOT (MEDIUM PRESSURE)	718
Y	*458-3309*	1	VALVE & MTG GP-AUXILIARY	795
Y	*275-7061*	1	WIRING GP-MEDIUM PRESSURE	312

Y - SEPARATE ILLUSTRATION

<END>

277-1173 CONTROL AR-COUPLER

S/N: DLP1-UP
AN ATTACHMENT

SMCS-6129 **i02809156**

NOTE	PART NUMBER	QTY	PART NAME 1 2 3 4 5 6 (PRODUCT LEVEL)	SEE PAGE
Y	*282-5705*	1	FILM GP (QUICK COUPLER)	1202
Y	*278-6683*	1	LINES GP-FRONT (QUICK COUPLER)	600
Y	*238-2485*	1	SWITCH GP-TOGGLE (QUICK COUPLER LOCK)	267
Y	*275-7053*	1	WIRING GP-QUICK COUPLER	316

Y - SEPARATE ILLUSTRATION

<END>

344-4405 CONTROL AR-COUPLER

S/N: DLP1-UP
AN ATTACHMENT

SMCS-6129 **i05214891**

NOTE	PART NUMBER	QTY	PART NAME 1 2 3 4 5 6 (PRODUCT LEVEL)	SEE PAGE
Y	*282-5705*	1	FILM GP (QUICK COUPLER)	1202
Y	*337-1272*	1	LINES GP-FRONT	622
Y	*238-2485*	1	SWITCH GP-TOGGLE (QUICK COUPLER LOCK)	267
Y	*275-7053*	1	WIRING GP-QUICK COUPLER	316

Y - SEPARATE ILLUSTRATION

<END>

266-6280 COUPLING GP-FLEXIBLE

S/N: DLP1-UP

PART OF 255-3027 COUPLING GP-PUMP

SMCS-3252 **i02747795**

NOTE	REF NO	GRAPHIC REF	PART NUMBER	QTY	PART NAME 1 2 3 4 5 6 (PRODUCT LEVEL)	SEE PAGE
	1	1	**7Y-1900**	4	INSERT-COUPLING	
	2	1	**7Y-1901**	1	ELEMENT-COUPLING	
	3	1	**7Y-1902**	4	INSERT-COUPLING	
M	4	1	**7Y-1904**	4	BOLT-SOCKET HEAD (M16X2X50-MM)	
	5	1	**248-7284**	1	HUB	
M	6	1	**7Y-0466**	2	SETSCREW-SOCKET (M16X2X22-MM)	
	7	1	**7Y-0468**	12	PIN-SPRING	

M - METRIC PART

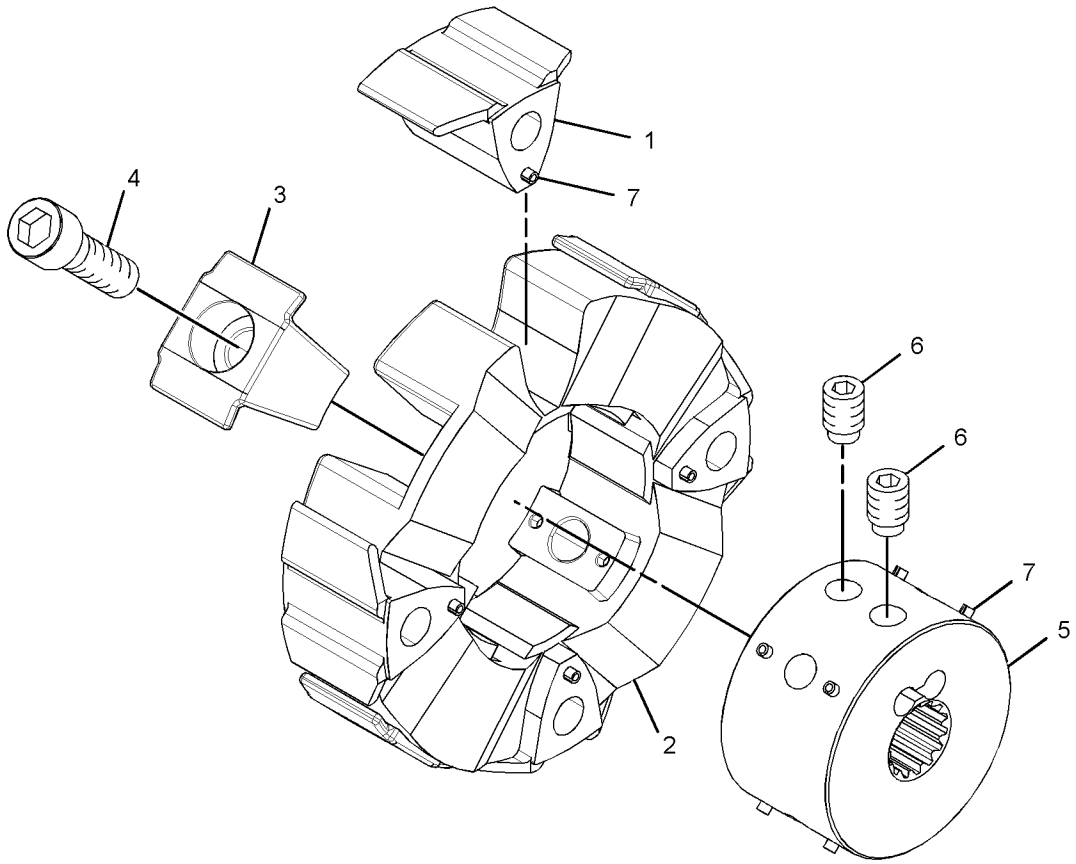

GRAPHIC #1 <END> g01379448

351-3869 COUPLING GP-FLEXIBLE

S/N: DLP1-UP

PART OF 255-3027 COUPLING GP-PUMP

SMCS-3252 **i05212656**

NOTE	REF NO	GRAPHIC REF	PART NUMBER	QTY	PART NAME 1 2 3 4 5 6 (PRODUCT LEVEL)	SEE PAGE
	1	1	**351-4126**	4	INSERT-COUPLING	
	2	1	**7Y-1901**	1	ELEMENT-COUPLING	
	3	1	**7Y-1902**	4	INSERT-COUPLING	
M	4	1	**7Y-1904**	4	BOLT-SOCKET HEAD (M16X2X50-MM)	
	5	1	**248-7284**	1	HUB	
M	6	1	**7Y-0466**	2	SETSCREW-SOCKET (M16X2X22-MM)	
	7	1	**7Y-0468**	8	PIN-SPRING	

M - METRIC PART

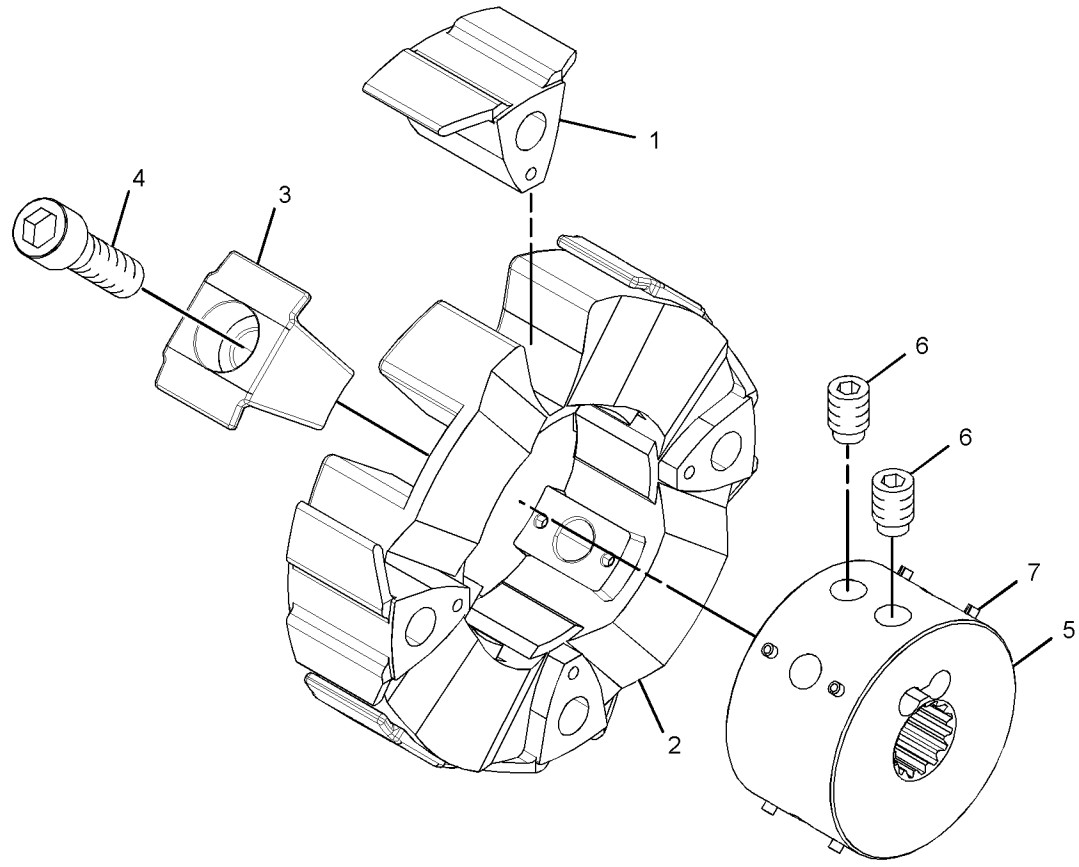

GRAPHIC #1 <END> g02620243

255-3027 COUPLING GP-PUMP

S/N: DLP1-UP

PART OF 279-7721 PUMP & MTG GP-MAIN HYDRAULIC

TYPE 1

SMCS-5062 **i03559804**

NOTE	REF NO	GRAPHIC REF	PART NUMBER	QTY	PART NAME 1 2 3 4 5 6 (PRODUCT LEVEL)	SEE PAGE
Y	1	1	**266-6280**	1	COUPLING GP-FLEXIBLE	472
M	2	1	**324-4118**	4	BOLT-SOCKET HEAD (M16X2X55-MM)	
	3	1	**7Y-0468**	4	PIN-SPRING	

M - METRIC PART
Y - SEPARATE ILLUSTRATION

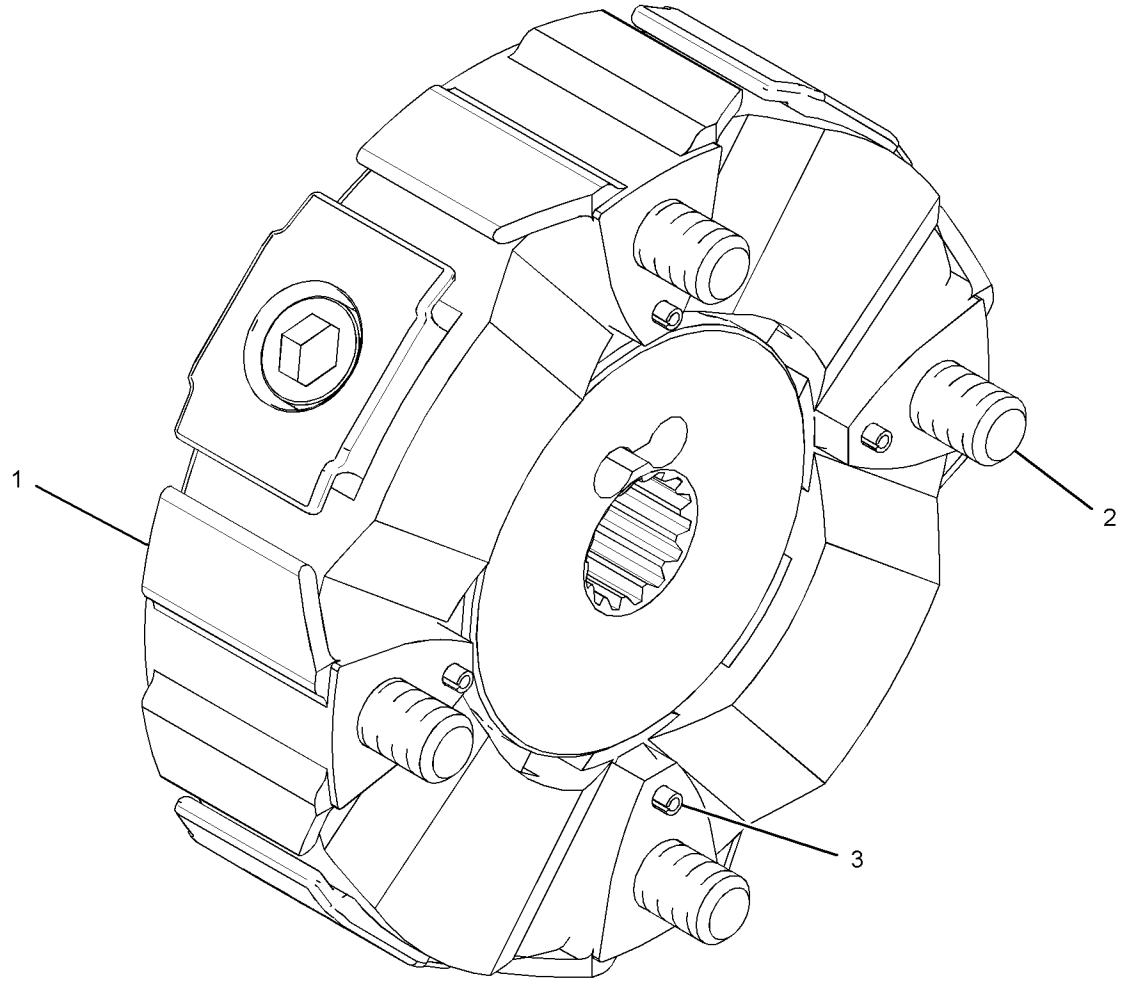

GRAPHIC #1 <END> g01891883

255-3027 COUPLING GP-PUMP

S/N: DLP1-UP
PART OF 279-7721 PUMP & MTG GP-MAIN HYDRAULIC
TYPE 2

SMCS-5062 **i04797536**

NOTE	REF NO	GRAPHIC REF	PART NUMBER	QTY	PART NAME 1 2 3 4 5 6 (PRODUCT LEVEL)	SEE PAGE
CY	1	1	**351-3869**	1	COUPLING GP-FLEXIBLE	473
M	2	1	**324-4118**	4	BOLT-SOCKET HEAD (M16X2X55-MM)	
	3	1	**7Y-0468**	4	PIN-SPRING	

C - CHANGE FROM PREVIOUS TYPE
M - METRIC PART
Y - SEPARATE ILLUSTRATION

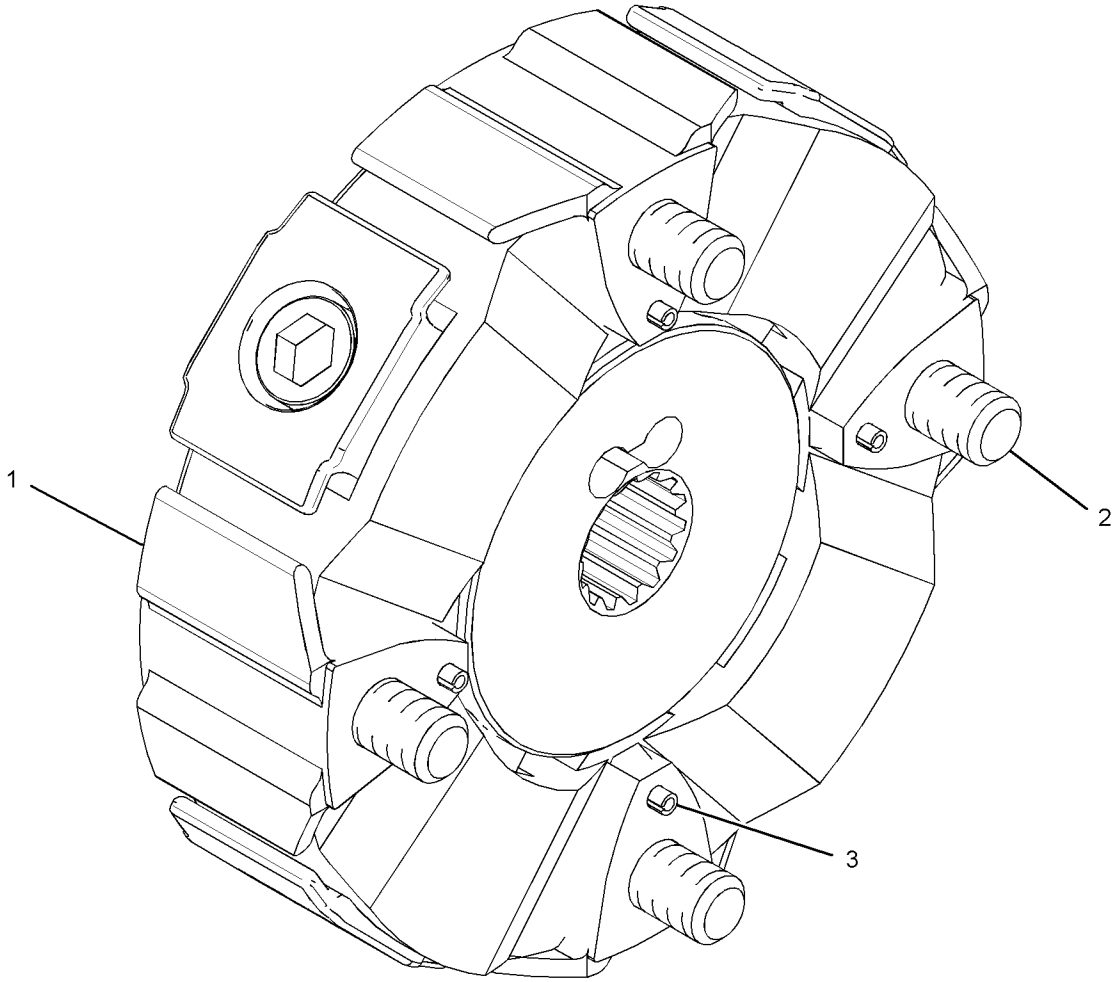

GRAPHIC #1 <END> g01891883

274-2678 CYLINDER & LINES GP-BLADE–LH

S/N: DLP1-UP
PART OF 301-2691 INSTALLATION AR-BLADE
AN ATTACHMENT

SMCS-5102 **i03255884**

NOTE	PART NUMBER	QTY	PART NAME 1 2 3 4 5 6 (PRODUCT LEVEL)	SEE PAGE
Y	*274-2680*	1	CYLINDER & SEAL GP-BLADE (LH)	480
Y	*179-7602*	1	LINES GP-BLADE CYLINDER (LH) (LH)	563

Y - SEPARATE ILLUSTRATION

<END>

274-2679 CYLINDER & LINES GP-BLADE–RH

S/N: DLP1-UP
PART OF 301-2691 INSTALLATION AR-BLADE
AN ATTACHMENT

SMCS-5102 **i03255885**

NOTE	PART NUMBER	QTY	PART NAME 1 2 3 4 5 6 (PRODUCT LEVEL)	SEE PAGE
Y	*274-2681*	1	CYLINDER & SEAL GP-BLADE (RH)	481
Y	*179-7604*	1	LINES GP-BLADE CYLINDER (RH) (RH)	564

Y - SEPARATE ILLUSTRATION

<END>

326-4443 CYLINDER & LINES GP-BLADE–LH

S/N: DLP1-UP
PART OF 301-2691 INSTALLATION AR-BLADE
AN ATTACHMENT

SMCS-5102 **i03331963**

NOTE	PART NUMBER	QTY	PART NAME 1 2 3 4 5 6 (PRODUCT LEVEL)	SEE PAGE
Y	*326-4444*	1	CYLINDER & SEAL GP-BLADE	482
Y	*179-7602*	1	LINES GP-BLADE CYLINDER (LH)	563

Y - SEPARATE ILLUSTRATION

<END>

326-4449 CYLINDER & LINES GP-BLADE–RH

S/N: DLP1-UP
PART OF 301-2691 INSTALLATION AR-BLADE
AN ATTACHMENT

SMCS-5102 **i03332001**

NOTE	PART NUMBER	QTY	PART NAME 1 2 3 4 5 6 (PRODUCT LEVEL)	SEE PAGE
Y	*326-4450*	1	CYLINDER & SEAL GP-BLADE	483
Y	*179-7604*	1	LINES GP-BLADE CYLINDER (RH)	564

Y - SEPARATE ILLUSTRATION

<END>

385-2838 CYLINDER & LINES GP-BLADE—LH

S/N: DLP1-UP
PART OF 385-4069 INSTALLATION AR-BLADE
AN ATTACHMENT

SMCS-5102 **i05200116**

NOTE	PART NUMBER	QTY	PART NAME 1 2 3 4 5 6 (PRODUCT LEVEL)	SEE PAGE
Y	*385-2886*	1	CYLINDER & SEAL GP-BLADE (LH)	484
Y	*385-2839*	1	LINES GP-BLADE CYLINDER (LH)	567

Y - SEPARATE ILLUSTRATION

<END>

385-2840 CYLINDER & LINES GP-BLADE—RH

S/N: DLP1-UP
PART OF 385-4069 INSTALLATION AR-BLADE
AN ATTACHMENT

SMCS-5102 **i05224999**

NOTE	PART NUMBER	QTY	PART NAME 1 2 3 4 5 6 (PRODUCT LEVEL)	SEE PAGE
Y	*385-2887*	1	CYLINDER & SEAL GP-BLADE (RH)	486
Y	*385-2841*	1	LINES GP-BLADE CYLINDER (RH)	568

Y - SEPARATE ILLUSTRATION

<END>

289-7704 CYLINDER & LINES GP-BOOM—LH

S/N: DLP1-UP
PART OF 301-2543 BOOM AR-1 PIECE LONG
AN ATTACHMENT

SMCS-5456, 7562 **i02807935**

NOTE	PART NUMBER	QTY	PART NAME 1 2 3 4 5 6 (PRODUCT LEVEL)	SEE PAGE
Y	*289-7706*	1	CYLINDER & SEAL GP-BOOM	488
Y	*278-6676*	1	LINES GP-BOOM CYLINDER (LH)	576

Y - SEPARATE ILLUSTRATION

<END>

289-7705 CYLINDER & LINES GP-BOOM—RH

S/N: DLP1-UP
PART OF 301-2543 BOOM AR-1 PIECE LONG
AN ATTACHMENT

SMCS-5456, 7562 **i02807937**

NOTE	PART NUMBER	QTY	PART NAME 1 2 3 4 5 6 (PRODUCT LEVEL)	SEE PAGE
Y	*289-7706*	1	CYLINDER & SEAL GP-BOOM	488
Y	*278-6677*	1	LINES GP-BOOM CYLINDER (RH)	577

Y - SEPARATE ILLUSTRATION

<END>

289-8067 CYLINDER & LINES GP-BOOM

S/N: DLP1-UP
PART OF 385-4095 BOOM AR-1 PIECE LONG
AN ATTACHMENT

SMCS-5456, 7562 **i02828775**

NOTE	PART NUMBER	QTY	PART NAME 1 2 3 4 5 6 (PRODUCT LEVEL)	SEE PAGE
Y	*289-8069*	1	CYLINDER & SEAL GP-BOOM	489
Y	*278-6676*	1	LINES GP-BOOM CYLINDER (LH)	576

Y - SEPARATE ILLUSTRATION

<END>

289-8068 CYLINDER & LINES GP-BOOM

S/N: DLP1-UP
PART OF 385-4095 BOOM AR-1 PIECE LONG
AN ATTACHMENT

SMCS-5456, 7562 **i02828777**

NOTE	PART NUMBER	QTY	PART NAME 1 2 3 4 5 6 (PRODUCT LEVEL)	SEE PAGE
Y	*289-8069*	1	CYLINDER & SEAL GP-BOOM	489
Y	*278-6677*	1	LINES GP-BOOM CYLINDER (RH)	577

Y - SEPARATE ILLUSTRATION

<END>

385-2825 CYLINDER & LINES GP-BOOM—LH

S/N: DLP1-UP
PART OF 385-4095 BOOM AR-1 PIECE LONG
AN ATTACHMENT

SMCS-5456, 7562 **i04915617**

NOTE	PART NUMBER	QTY	PART NAME 1 2 3 4 5 6 (PRODUCT LEVEL)	SEE PAGE
Y	*385-2828*	1	CYLINDER & SEAL GP-BOOM	490
Y	*385-2827*	1	LINES GP-BOOM CYLINDER (LH)	578

Y - SEPARATE ILLUSTRATION

<END>

385-2826 CYLINDER & LINES GP-BOOM—RH

S/N: DLP1-UP
PART OF 385-4095 BOOM AR-1 PIECE LONG
AN ATTACHMENT

SMCS-5456, 7562 **i05226222**

NOTE	PART NUMBER	QTY	PART NAME 1 2 3 4 5 6 (PRODUCT LEVEL)	SEE PAGE
Y	*385-2828*	1	CYLINDER & SEAL GP-BOOM	490
Y	*385-2835*	1	LINES GP-BOOM CYLINDER (RH)	580

Y - SEPARATE ILLUSTRATION

<END>

289-7697 CYLINDER & LINES GP-BUCKET

S/N: DLP1-UP

PART OF 282-5536, 282-5537 COUPLER AR-QUICK, 260-7067, 379-7295 LINKAGE AR-BUCKET

AN ATTACHMENT

SMCS-5457 **i02796335**

NOTE	PART NUMBER	QTY	PART NAME 1 2 3 4 5 6 (PRODUCT LEVEL)	SEE PAGE
Y	*289-7698*	1	CYLINDER & SEAL GP-BUCKET	492
Y	*179-7598*	1	LINES GP-BUCKET CYLINDER	582

Y - SEPARATE ILLUSTRATION

<END>

289-7711 CYLINDER & LINES GP-STICK

S/N: DLP1-UP

PART OF 301-2543 BOOM AR-1 PIECE LONG

AN ATTACHMENT

SMCS-5458 **i02807950**

NOTE	PART NUMBER	QTY	PART NAME 1 2 3 4 5 6 (PRODUCT LEVEL)	SEE PAGE
Y	*289-7712*	1	CYLINDER & SEAL GP-STICK	493
Y	*194-8989*	1	LINES GP-STICK CYLINDER	743

Y - SEPARATE ILLUSTRATION

<END>

289-8076 CYLINDER & LINES GP-STICK

S/N: DLP1-UP

PART OF 385-4095 BOOM AR-1 PIECE LONG

AN ATTACHMENT

SMCS-5458 **i02828762**

NOTE	PART NUMBER	QTY	PART NAME 1 2 3 4 5 6 (PRODUCT LEVEL)	SEE PAGE
Y	*289-8077*	1	CYLINDER & SEAL GP-STICK	494
Y	*194-8989*	1	LINES GP-STICK CYLINDER	743

Y - SEPARATE ILLUSTRATION

<END>

385-2829 CYLINDER & LINES GP-STICK

S/N: DLP1-UP

PART OF 385-4095 BOOM AR-1 PIECE LONG

AN ATTACHMENT

SMCS-5458 **i07091128**

NOTE	PART NUMBER	QTY	PART NAME 1 2 3 4 5 6 (PRODUCT LEVEL)	SEE PAGE
Y	*385-2831*	1	CYLINDER & SEAL GP-STICK	495
Y	*385-2830*	1	LINES GP-STICK CYLINDER	744

Y - SEPARATE ILLUSTRATION

<END>

274-2680 CYLINDER & SEAL GP-BLADE–LH

S/N: DLP1-UP

PART OF 274-2678 CYLINDER & LINES GP-BLADE

AN ATTACHMENT

SMCS-5102 **i02810009**

NOTE	REF NO	GRAPHIC REF	PART NUMBER	QTY	PART NAME 1 2 3 4 5 6 (PRODUCT LEVEL)	SEE PAGE
	1	1	**3B-8489**	2	FITTING-GREASE (1/8-27 PTF)	
	2	1	**166-1492**	4	SEAL-LIP TYPE	
Y	3	1	**274-2682**	1	CYLINDER GP-BLADE	497

Y - SEPARATE ILLUSTRATION

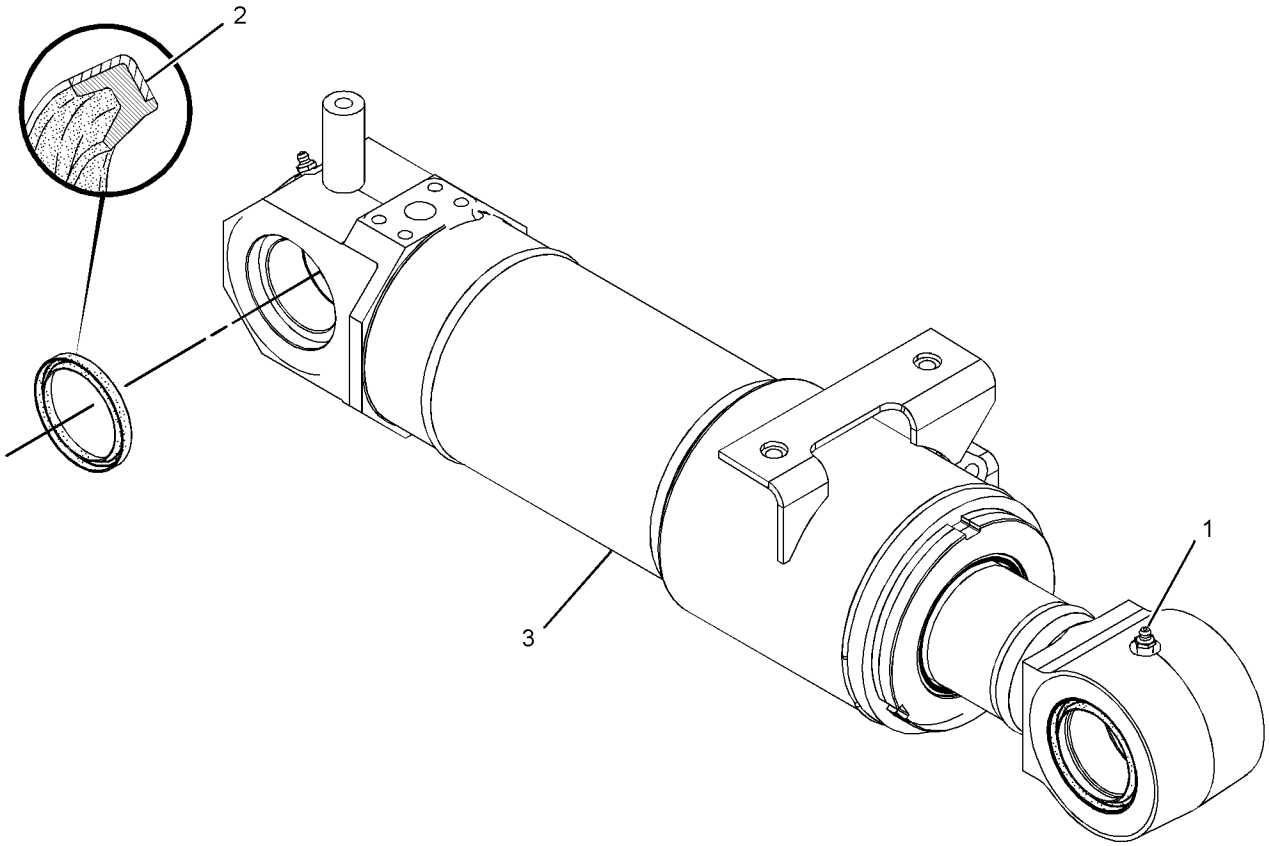

GRAPHIC #1 <END> g01406626

274-2681 CYLINDER & SEAL GP-BLADE–RH

S/N: DLP1-UP

PART OF 274-2679 CYLINDER & LINES GP-BLADE

AN ATTACHMENT

SMCS-5102 **i02810002**

NOTE	REF NO	GRAPHIC REF	PART NUMBER	QTY	PART NAME 1 2 3 4 5 6 (PRODUCT LEVEL)	SEE PAGE
	1	1	**3B-8489**	2	FITTING-GREASE (1/8-27 PTF)	
	2	1	**166-1492**	4	SEAL-LIP TYPE	
Y	3	1	**274-2683**	1	CYLINDER GP-BLADE	499

Y - SEPARATE ILLUSTRATION

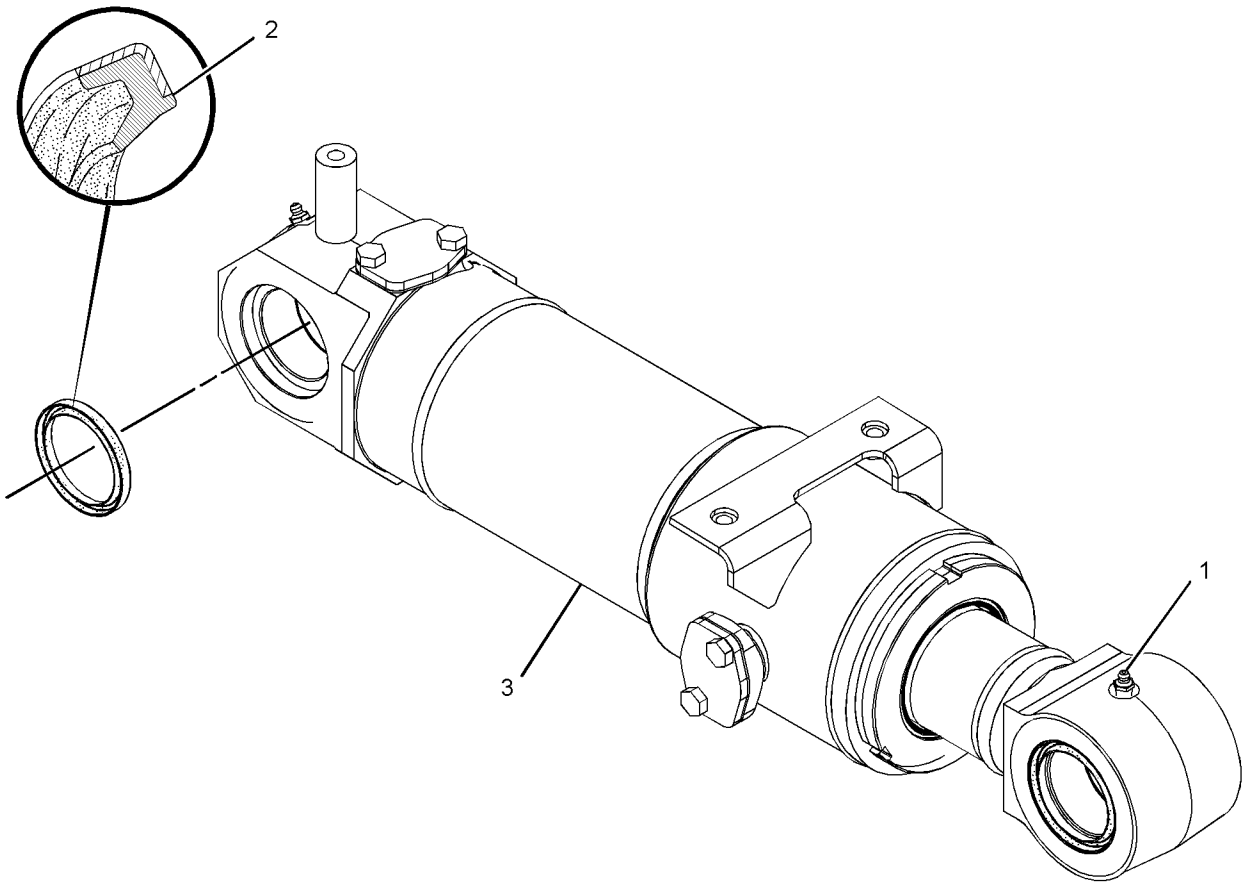

GRAPHIC #1 <END> g01406619

326-4444 CYLINDER & SEAL GP-BLADE–LH

S/N: DLP1-UP

PART OF 326-4443 CYLINDER & LINES GP-BLADE

AN ATTACHMENT

SMCS-5102 **i03331980**

NOTE	REF NO	GRAPHIC REF	PART NUMBER	QTY	PART NAME 1 2 3 4 5 6 (PRODUCT LEVEL)	SEE PAGE
	1	1	**3B-8489**	2	FITTING-GREASE (1/8-27 PTF)	
	2	1	**166-1492**	4	SEAL-LIP TYPE	
Y	3	1	**326-4445**	1	CYLINDER GP-BLADE	501

Y - SEPARATE ILLUSTRATION

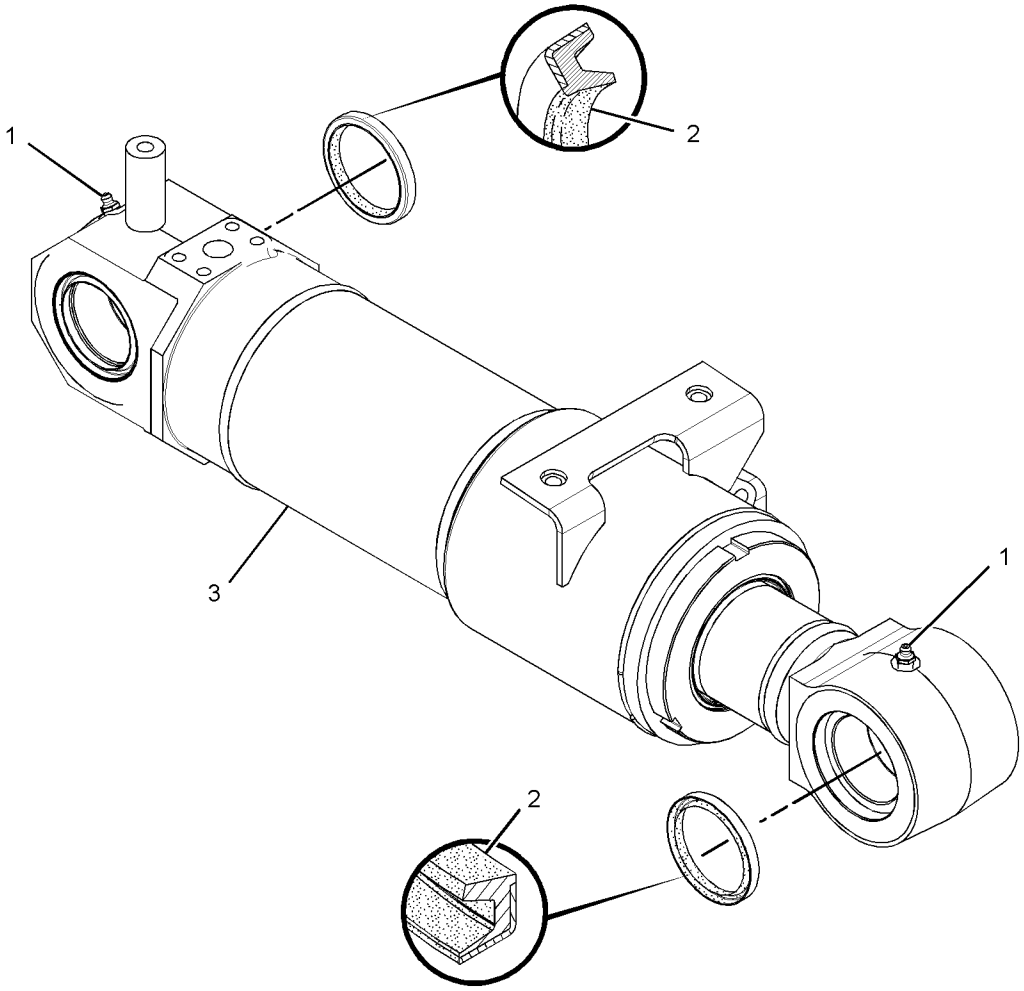

GRAPHIC #1 <END> g01747374

326-4450 CYLINDER & SEAL GP-BLADE–RH

S/N: DLP1-UP

PART OF 326-4449 CYLINDER & LINES GP-BLADE

AN ATTACHMENT

SMCS-5102 **i03332020**

NOTE	REF NO	GRAPHIC REF	PART NUMBER	QTY	PART NAME 1 2 3 4 5 6 (PRODUCT LEVEL)	SEE PAGE
	1	1	**3B-8489**	2	FITTING-GREASE (1/8-27 PTF)	
	2	1	**166-1492**	4	SEAL-LIP TYPE	
Y	3	1	**326-4451**	1	CYLINDER GP-BLADE	503

Y - SEPARATE ILLUSTRATION

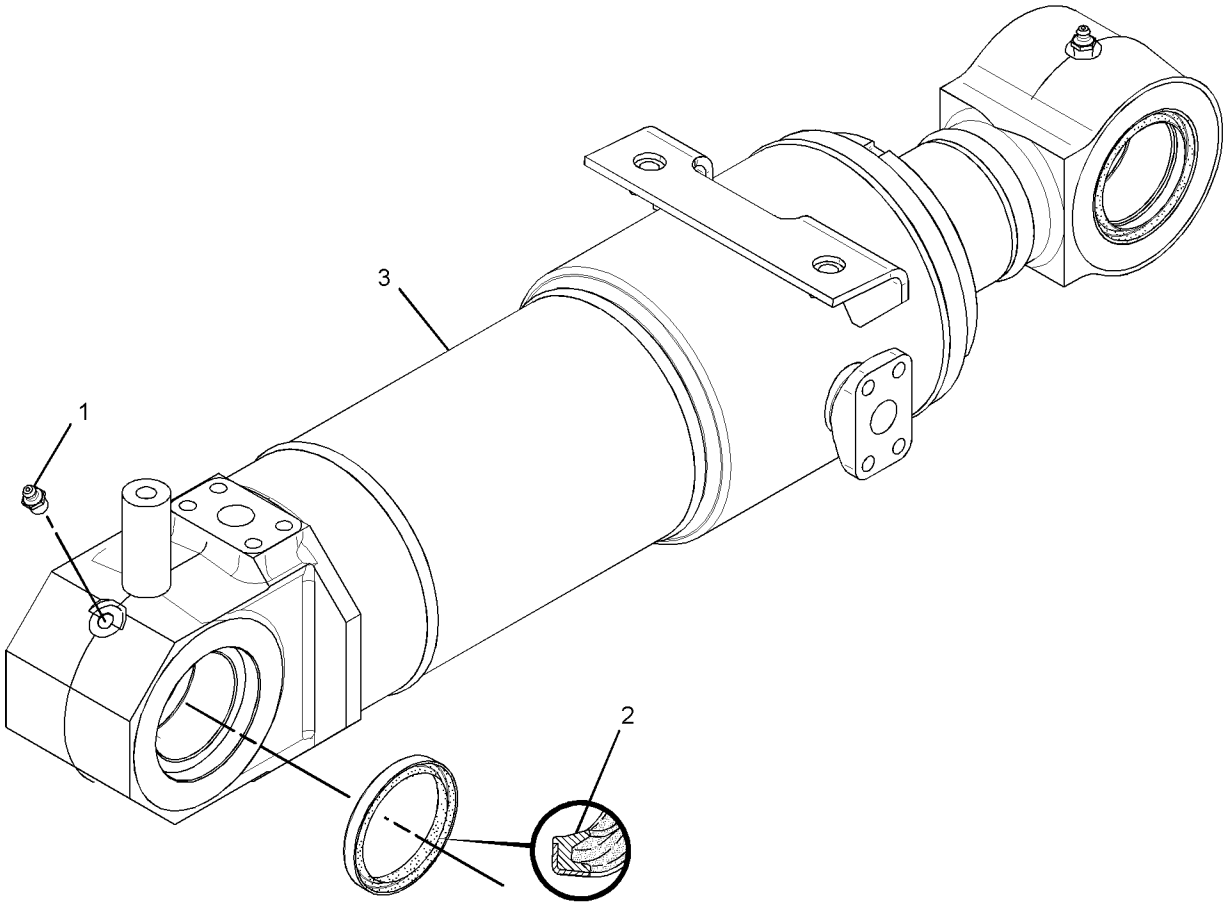

GRAPHIC #1 <END> g01750374

385-2886 CYLINDER & SEAL GP-BLADE–LH

S/N: DLP1-UP
120-MM (4.7-IN) BORE X 202-MM (8-IN) STROKE
PART OF 385-2838 CYLINDER & LINES GP-BLADE
AN ATTACHMENT

SMCS-5102 **i05423835**

NOTE	REF NO	GRAPHIC REF	PART NUMBER	QTY	PART NAME 1 2 3 4 5 6 (PRODUCT LEVEL)	SEE PAGE
	1	1	**393-7945**	1	CYLINDER AS	
	1A	1	**273-6945**	1	BUSHING	
	2	1	**393-7947**	1	ROD AS	
	2A	1	**273-6945**	1	BUSHING	
	3	1	**393-7875**	1	HEAD	
	4	1	**385-2900**	1	BUSHING	
	5	1	**385-2899**	1	RING-RETAINING	
	6	1	**385-2905**	1	RING-SNAP	
	7	1	**393-7879**	1	PISTON	
	8	1	**393-7882**	1	SETSCREW-SOCKET	
	9	1	**393-7881**	1	BALL	
	10	1	**166-1492**	4	SEAL-LIP TYPE	
	11	1	**3B-8489**	2	FITTING-GREASE (1/8-27 PTF)	
J	12	1	**416-1306**	1	SEAL-WIPER	
J	13	1	**416-1285**	1	SEAL-U-CUP	
J	14	1	**416-1287**	1	SEAL-BUFFER	
J	15	1	**416-1286**	1	RING-BACKUP	
J	16	1	**416-1288**	1	SEAL-O-RING	
J	17	1	**416-1307**	1	RING-BACKUP	
J	18	1	**416-1311**	1	SEAL-O-RING	
J	19	1	**416-1309**	1	SEAL AS-PISTON	
J	20	1	**416-1308**	2	RING-WEAR	
J	21	1	**416-1310**	2	RING-WEAR	
J	22	1	**422-9123**	1	SEAL-O-RING	
J	23	1	**422-9124**	2	RING-BACKUP	
					AVAILABLE REPAIR KIT(S):	
J			**393-7948**	1	KIT-SEAL (BLADE CYLINDER)	

J - KIT MARKED J SERVICES PART(S) MARKED J

385-2886 **CYLINDER & SEAL GP-BLADE** (contd.) **i05423835**

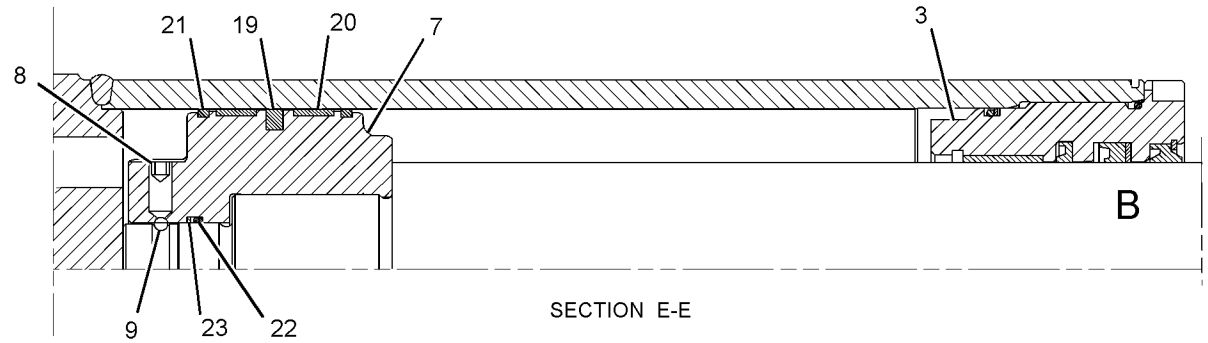

SECTION E-E

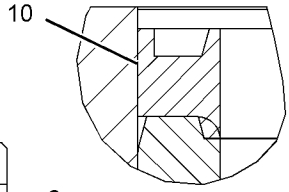

VIEW OF AREA C

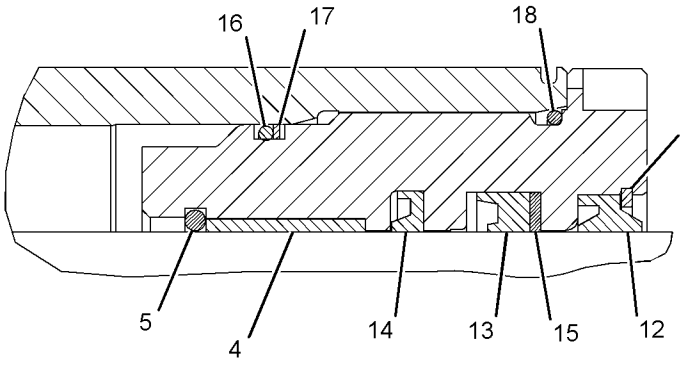

VIEW OF AREA B

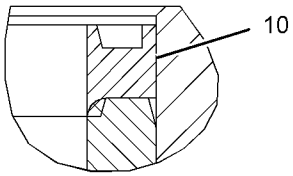

VIEW OF AREA D

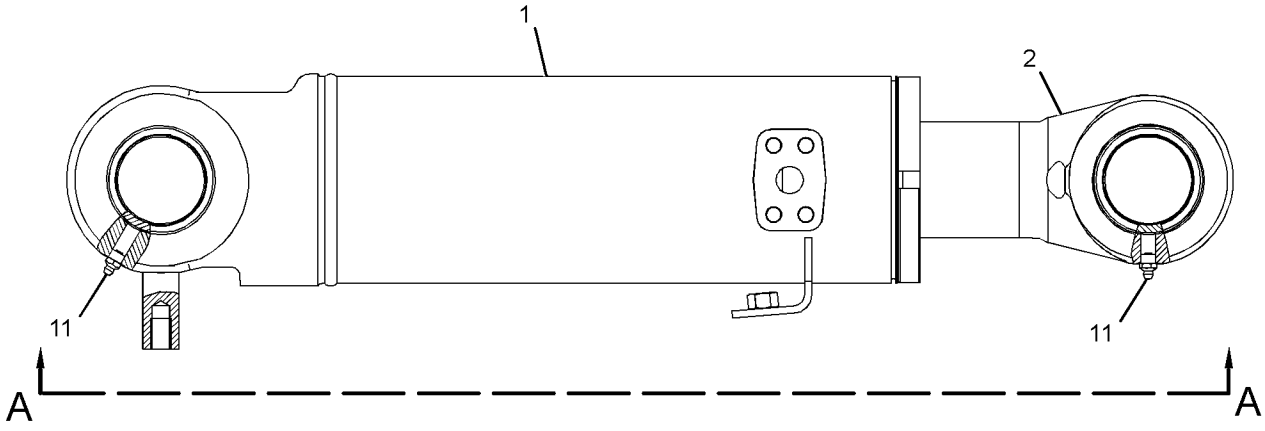

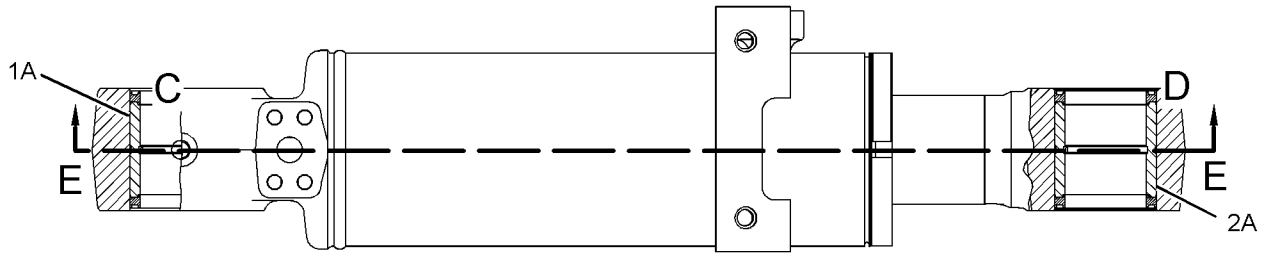

VIEW A-A

GRAPHIC #1 <END> g03408636

385-2887 CYLINDER & SEAL GP-BLADE–RH

S/N: DLP1-UP
120-MM (4.7-IN) BORE X 202-MM (8-IN) STROKE
PART OF 385-2840 CYLINDER & LINES GP-BLADE
AN ATTACHMENT

SMCS-5102 **i06603784**

NOTE	REF NO	GRAPHIC REF	PART NUMBER	QTY	PART NAME 1 2 3 4 5 6 (PRODUCT LEVEL)	SEE PAGE
	1	1	**393-7946**	1	CYLINDER AS	
	1A	1	**273-6945**	1	BUSHING	
	2	1	**393-7947**	1	ROD AS	
	2A	1	**273-6945**	1	BUSHING	
	3	1	**393-7875**	1	HEAD	
	4	1	**385-2900**	1	BUSHING	
	5	1	**385-2899**	1	RING-RETAINING	
	6	1	**385-2905**	1	RING-SNAP	
	7	1	**393-7879**	1	PISTON	
	8	1	**393-7882**	1	SETSCREW-SOCKET	
C	9	1	**393-7881**	1	BALL	
	10	1	**166-1492**	4	SEAL-LIP TYPE	
C	11	1	**3B-8489**	2	FITTING-GREASE (1/8-27 PTF)	
CJ	12	1	**416-1306**	1	SEAL-WIPER	
CJ	13	1	**416-1285**	1	SEAL-U-CUP	
CJ	14	1	**416-1287**	1	SEAL-BUFFER	
CJ	15	1	**416-1286**	1	RING-BACKUP	
CJ	16	1	**416-1288**	1	SEAL-O-RING	
CJ	17	1	**416-1307**	1	RING-BACKUP	
CJ	18	1	**416-1311**	1	SEAL-O-RING	
CJ	19	1	**416-1309**	1	SEAL AS-PISTON	
CJ	20	1	**416-1308**	2	RING-WEAR	
CJ	21	1	**416-1310**	2	RING-WEAR	
CJ	22	1	**422-9123**	1	SEAL-O-RING	
CJ	23	1	**422-9124**	2	RING-BACKUP	
					AVAILABLE REPAIR KIT(S):	
J			**393-7948**	1	KIT-SEAL (BLADE CYLINDER)	

C - CHANGE FROM PREVIOUS TYPE
J - KIT MARKED J SERVICES PART(S) MARKED J

385-2887 **CYLINDER & SEAL GP-BLADE (**contd.**)** **i06603784**

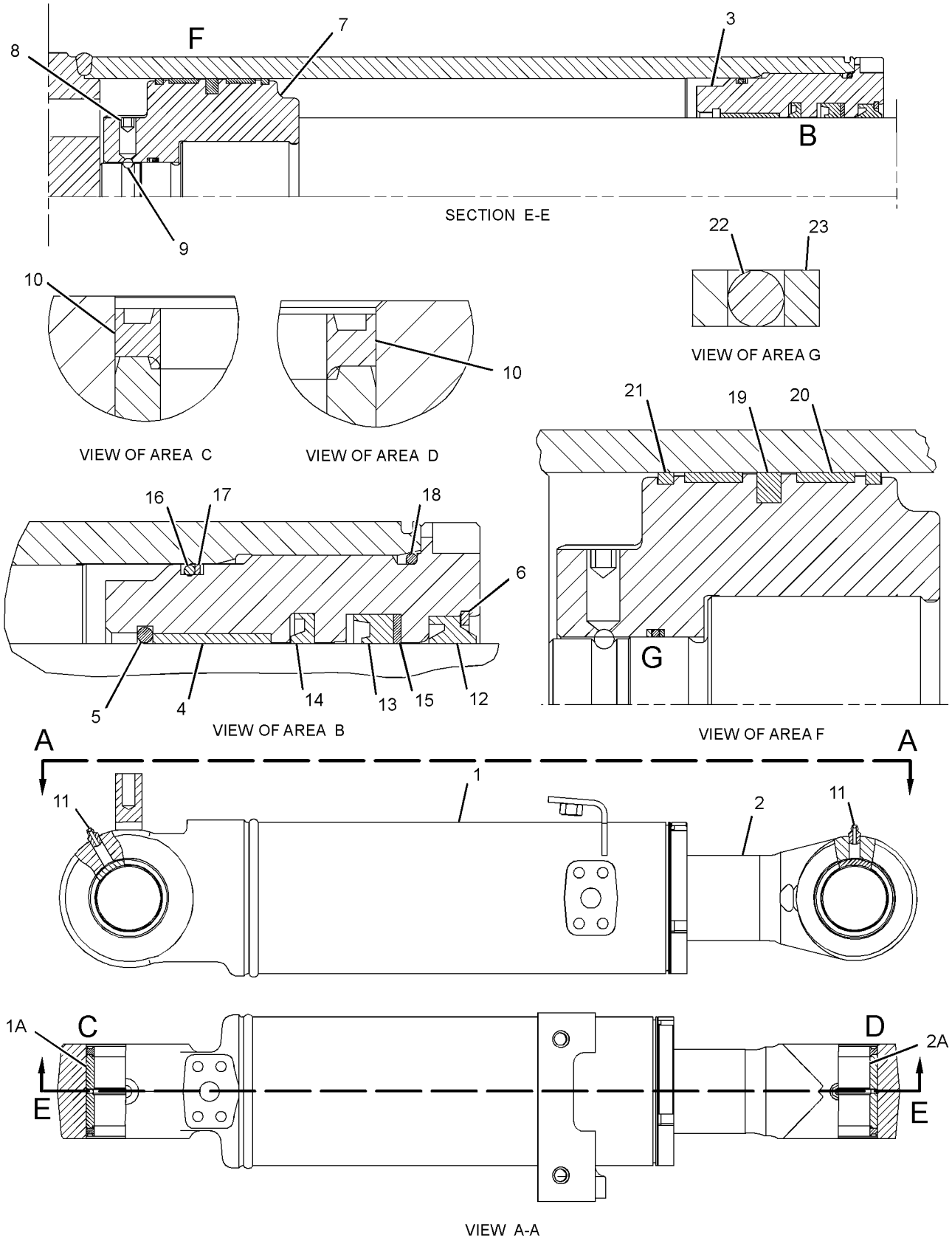

GRAPHIC #1 <END> g06041867

289-7706 CYLINDER & SEAL GP-BOOM

S/N: DLP1-UP

PART OF 289-7704, 289-7705 CYLINDER & LINES GP-BOOM

AN ATTACHMENT

SMCS-5456 **i02807947**

NOTE	REF NO	GRAPHIC REF	PART NUMBER	QTY	PART NAME 1 2 3 4 5 6 (PRODUCT LEVEL)	SEE PAGE
	1	1	**3B-8489**	1	FITTING-GREASE (1/8-27 PTF)	
	2	1	**166-1492**	2	SEAL-LIP TYPE	
Y	3	1	*289-7707*	1	CYLINDER GP-BOOM	505
	4	1	**166-1494**	2	SEAL-LIP TYPE	

Y - SEPARATE ILLUSTRATION

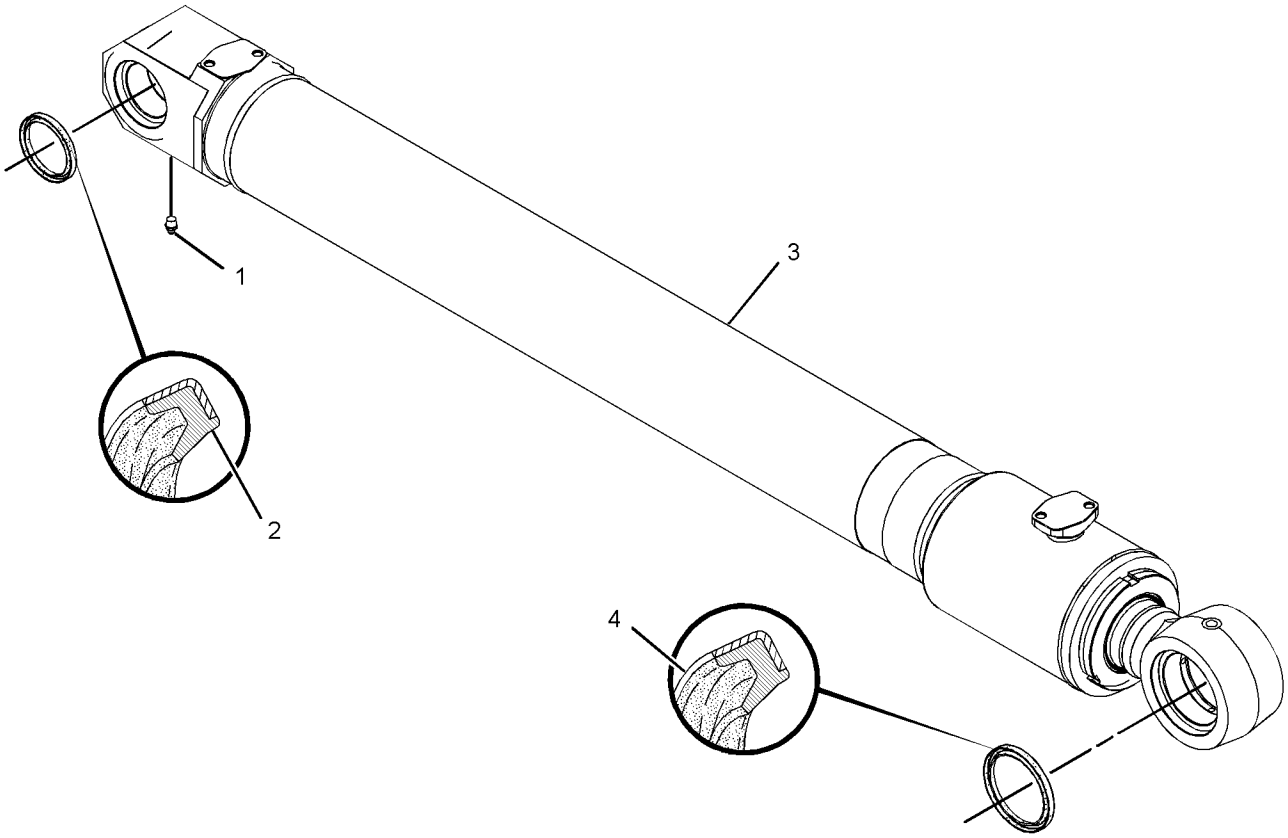

GRAPHIC #1 <END> g01413423

289-8069 CYLINDER & SEAL GP-BOOM

S/N: DLP1-UP

PART OF 289-8067, 289-8068 CYLINDER & LINES GP-BOOM

AN ATTACHMENT

SMCS-5456 **i02828771**

NOTE	REF NO	GRAPHIC REF	PART NUMBER	QTY	PART NAME 1 2 3 4 5 6 (PRODUCT LEVEL)	SEE PAGE
	1	1	**3B-8489**	1	FITTING-GREASE (1/8-27 PTF)	
	2	1	**166-1492**	2	SEAL-LIP TYPE	
Y	3	1	**289-8070**	1	CYLINDER GP-BOOM	507
	4	1	**166-1494**	2	SEAL-LIP TYPE	

Y - SEPARATE ILLUSTRATION

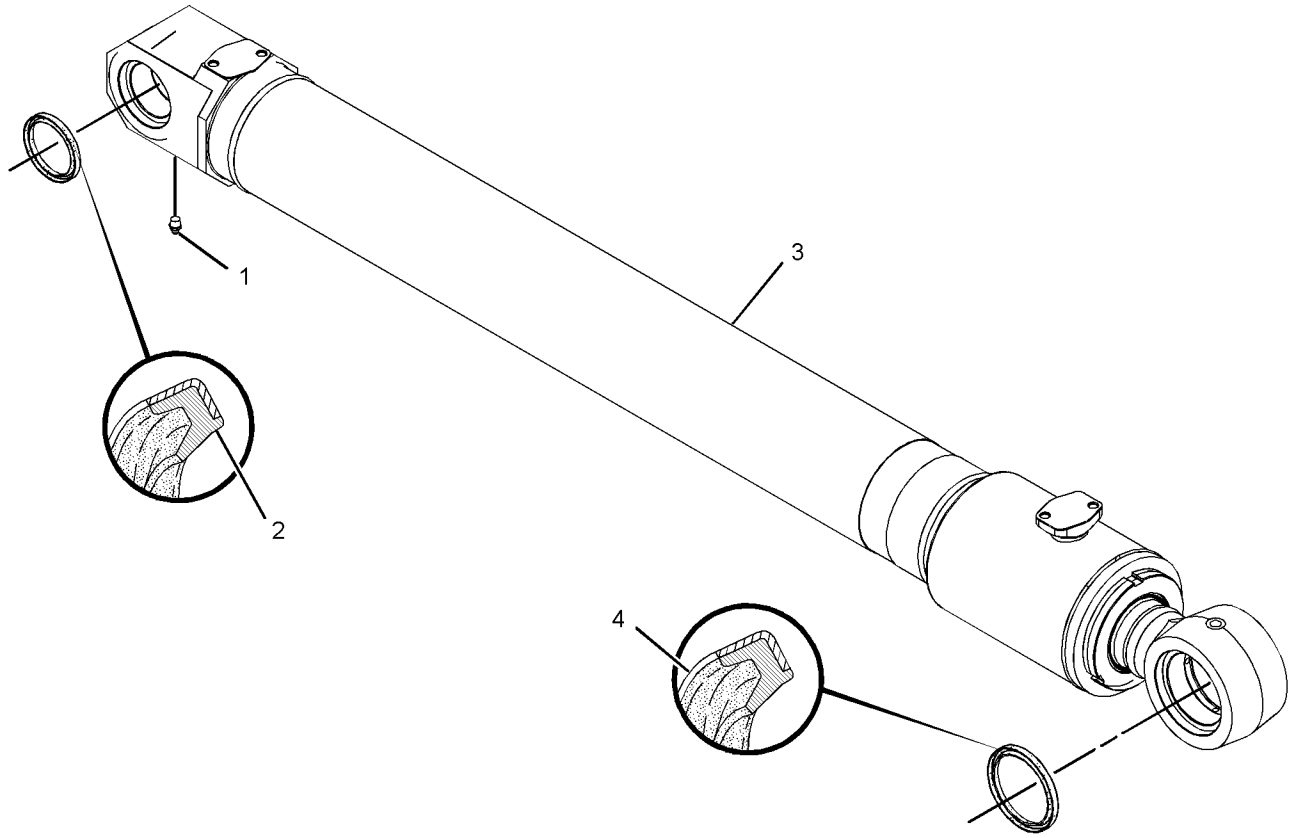

GRAPHIC #1 <END> g01413423

385-2828 CYLINDER & SEAL GP-BOOM

S/N: DLP1-UP
110-MM (4.3-IN) BORE X 1015-MM (40-IN) STROKE
PART OF 385-2825, 385-2826 CYLINDER & LINES GP-BOOM
AN ATTACHMENT

SMCS-5456 **i05222249**

NOTE	REF NO	GRAPHIC REF	PART NUMBER	QTY	PART NAME 1 2 3 4 5 6 (PRODUCT LEVEL)	SEE PAGE
	1	1	**390-4188**	1	CYLINDER AS-BOOM	
	1A	1	**273-6945**	1	BUSHING	
	2	1	**390-4189**	1	ROD AS	
	2A	1	**290-9178**	1	BUSHING	
	3	1	**390-4190**	1	HEAD	
	4	1	**393-7930**	1	RING-RETAINING	
	5	1	**393-7931**	1	BUSHING	
	6	1	**390-4193**	1	STOP	
	7	1	**390-4194**	1	PISTON	
	8	1	**393-7933**	1	RING-SNAP	
	9	1	**385-2890**	1	BALL	
M	10	1	**390-4197**	1	SETSCREW-SOCKET (M10X1.5X14-MM)	
M	11	1	**3E-6910**	15	BOLT-SOCKET HEAD (M12X1.75X70-MM)	
	12	1	**166-1494**	2	SEAL-LIP TYPE	
	13	1	**166-1492**	2	SEAL-LIP TYPE	
	14	1	**3B-8489**	1	FITTING-GREASE (1/8-27 PTF)	
J	15	1	**416-1273**	1	SEAL-WIPER	
J	16	1	**416-1274**	1	SEAL-U-CUP	
J	17	1	**416-1276**	1	SEAL-BUFFER	
J	18	1	**416-1275**	1	RING-BACKUP	
J	19	1	**416-1277**	1	SEAL-O-RING	
J	20	1	**416-1278**	1	RING-BACKUP	
J	21	1	**416-1280**	1	SEAL AS	
J	22	1	**416-1279**	2	RING-WEAR	
J	23	1	**416-1282**	2	RING-WEAR	
J	24	1	**416-1281**	1	SEAL-RING	
					AVAILABLE REPAIR KIT(S):	
J			**393-7887**	1	KIT-SEAL (BOOM CYLINDER)	

J - KIT MARKED J SERVICES PART(S) MARKED J
M - METRIC PART

385-2828 **CYLINDER & SEAL GP-BOOM (**contd.**)** **i05222249**

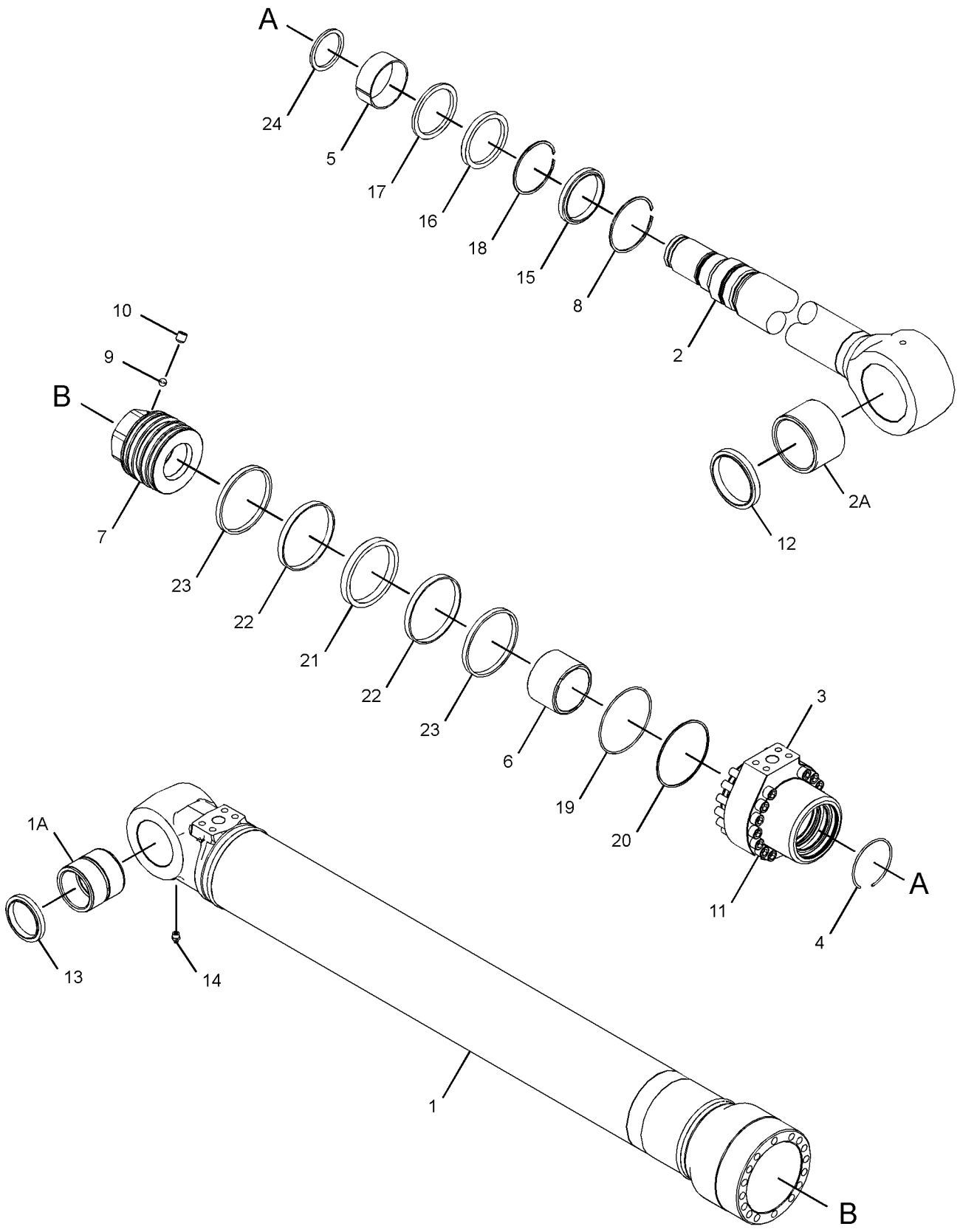

GRAPHIC #1 <END> g03342835

289-7698 CYLINDER & SEAL GP-BUCKET

S/N: DLP1-UP

PART OF 289-7697 CYLINDER & LINES GP-BUCKET

AN ATTACHMENT

SMCS-5457 **i02796336**

NOTE	REF NO	GRAPHIC REF	PART NUMBER	QTY	PART NAME 1 2 3 4 5 6 (PRODUCT LEVEL)	SEE PAGE
	1	1	**3B-8489**	2	FITTING-GREASE (1/8-27 PTF)	
	2	1	**166-1492**	2	SEAL-LIP TYPE	
	3	1	**235-7679**	2	SEAL-LIP TYPE	
Y	4	1	**289-7699**	1	CYLINDER GP-BUCKET	511

Y - SEPARATE ILLUSTRATION

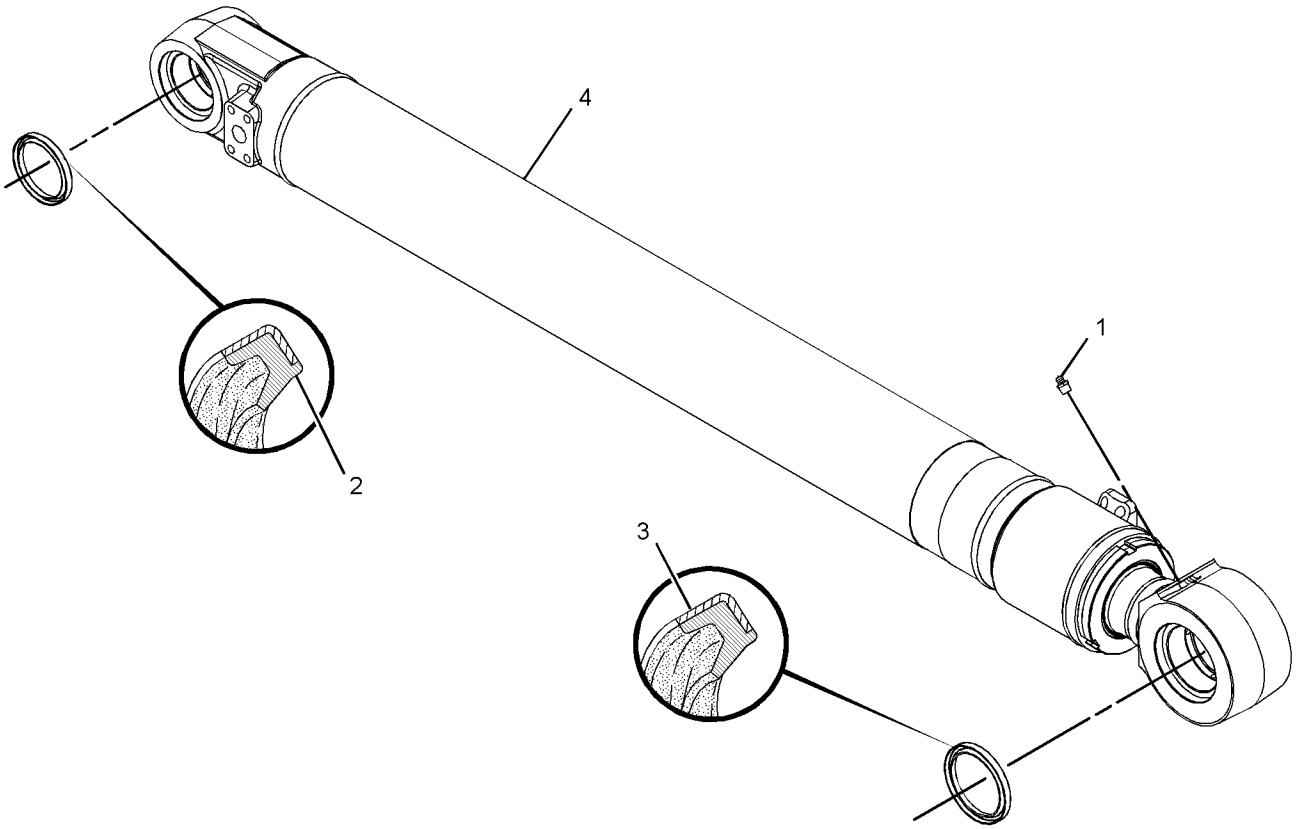

GRAPHIC #1 <END> g01400038

289-7712 CYLINDER & SEAL GP-STICK

S/N: DLP1-UP

PART OF 289-7711 CYLINDER & LINES GP-STICK

AN ATTACHMENT

SMCS-5458 **i02807946**

NOTE	REF NO	GRAPHIC REF	PART NUMBER	QTY	PART NAME 1 2 3 4 5 6 (PRODUCT LEVEL)	SEE PAGE
	1	1	**3B-8489**	1	FITTING-GREASE (1/8-27 PTF)	
	2	1	**166-1492**	4	SEAL-LIP TYPE	
Y	3	1	**289-7713**	1	CYLINDER GP-STICK	517
	4	1	**8T-6763**	1	PLUG-PIPE (1/4-18-THD)	

Y - SEPARATE ILLUSTRATION

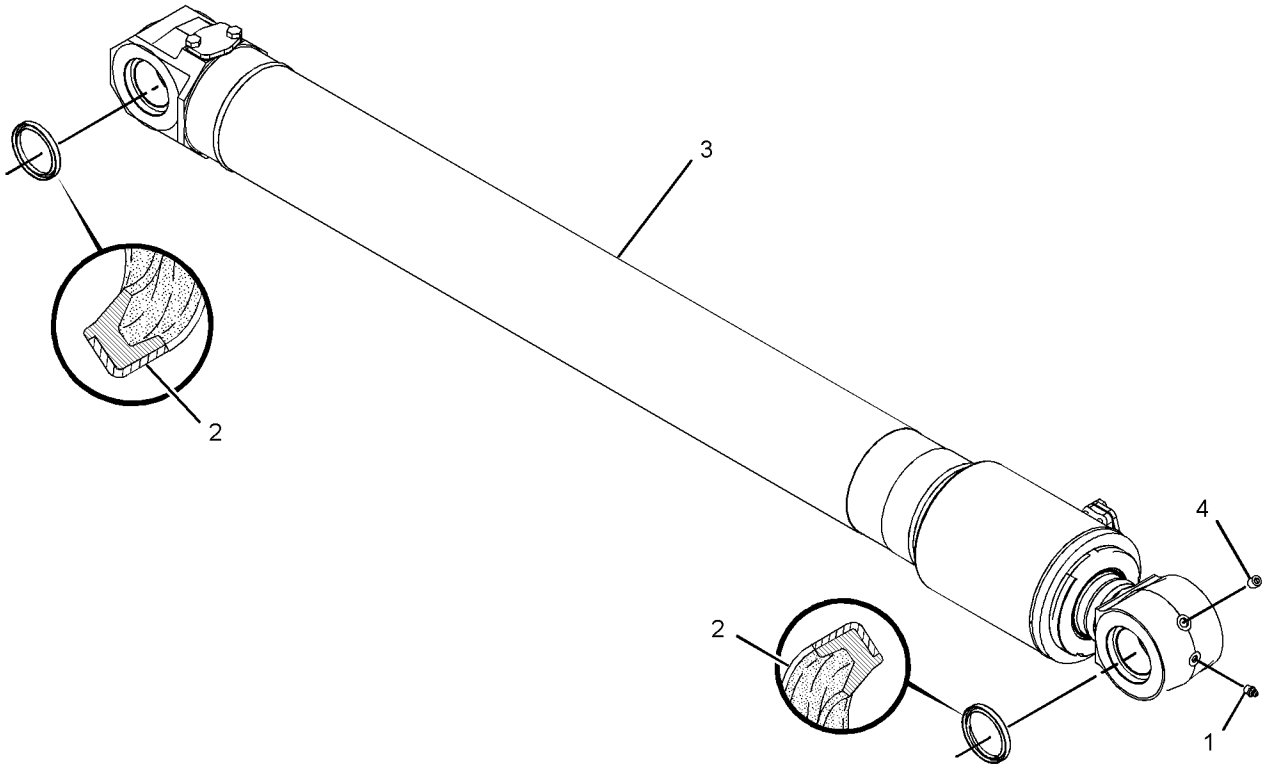

GRAPHIC #1 <END> g01403514

289-8077 CYLINDER & SEAL GP-STICK

S/N: DLP1-UP

PART OF 289-8076 CYLINDER & LINES GP-STICK

AN ATTACHMENT

SMCS-5458 **i02828763**

NOTE	REF NO	GRAPHIC REF	PART NUMBER	QTY	PART NAME 1 2 3 4 5 6 (PRODUCT LEVEL)	SEE PAGE
	1	1	**3B-8489**	1	FITTING-GREASE (1/8-27 PTF)	
	2	1	**166-1492**	4	SEAL-LIP TYPE	
Y	3	1	**289-8078**	1	CYLINDER GP-STICK	519
	4	1	**8T-6763**	1	PLUG-PIPE (1/4-18-THD)	

Y - SEPARATE ILLUSTRATION

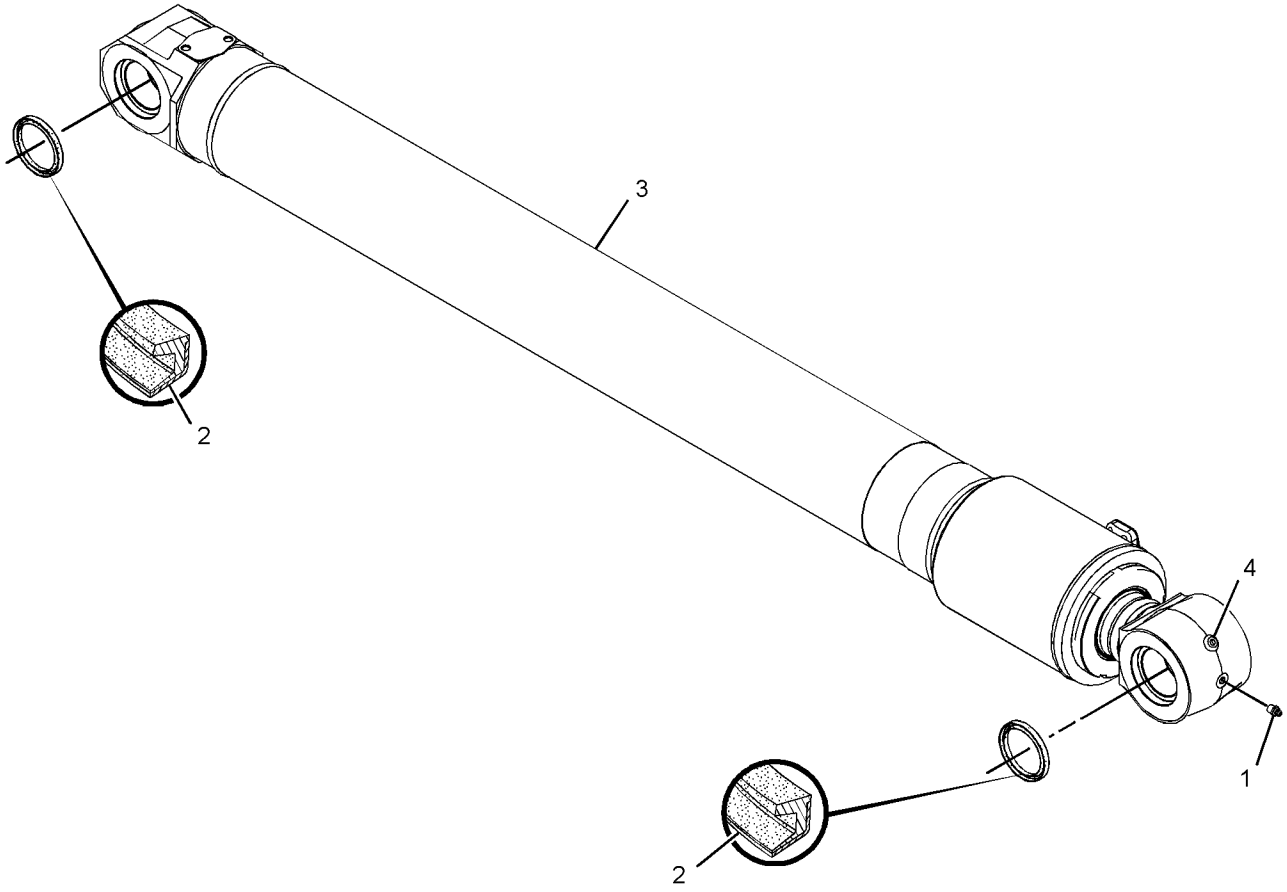

GRAPHIC #1 <END> g01416328

385-2831 CYLINDER & SEAL GP-STICK

S/N: DLP1-UP
120-MM (4.7-IN) BORE X 1197-MM (47.1-IN) STROKE
PART OF 385-2829 CYLINDER & LINES GP-STICK
AN ATTACHMENT

SMCS-5458 **i05222218**

NOTE	REF NO	GRAPHIC REF	PART NUMBER	QTY	PART NAME 1 2 3 4 5 6 (PRODUCT LEVEL)	SEE PAGE
	1	1	**390-4202**	1	CYLINDER AS-STICK	
	1A	1	**229-1093**	1	BUSHING	
	2	1	**390-4203**	1	ROD AS	
	2A	1	**229-1093**	1	BUSHING	
	3	1	**390-4204**	1	HEAD	
	4	1	**385-2900**	1	BUSHING	
	5	1	**385-2899**	1	RING-RETAINING	
	6	1	**390-4207**	1	STOP	
	7	1	**390-4208**	1	PISTON	
	8	1	**385-2905**	1	RING-SNAP	
	9	1	**385-2922**	1	BALL	
	10	1	**422-9120**	1	SETSCREW-HEX SOCKET	
	11	1	**385-2910**	1	RING-RETAINING	
	12	1	**385-2920**	1	RING-RETAINING	
	13	1	**390-4215**	1	STOP	
M	14	1	**095-0703**	12	BOLT-SOCKET HEAD (M16X2X75-MM)	
	15	1	**166-1492**	4	SEAL-LIP TYPE	
	16	1	**3B-8489**	1	FITTING-GREASE (1/8-27 PTF)	
	17	1	**8T-6763**	1	PLUG-PIPE (1/4-18-THD)	
J	18	1	**416-1284**	1	SEAL-WIPER	
J	19	1	**416-1285**	1	SEAL-U-CUP	
J	20	1	**416-1287**	1	SEAL-BUFFER	
J	21	1	**416-1286**	1	RING-BACKUP	
J	22	1	**416-1288**	1	SEAL-O-RING	
J	23	1	**416-1289**	1	RING-BACKUP	
J	24	1	**416-1291**	1	SEAL AS	
J	25	1	**416-1290**	2	RING-WEAR	
J	26	1	**416-1292**	2	RING-WEAR	
J	27	1	**416-1293**	1	RING-SEAL	
J	28	1	**416-1294**	1	RING-SEAL	
					AVAILABLE REPAIR KIT(S):	
J			**393-7949**		KIT-SEAL (STICK CYLINDER)	

J - KIT MARKED J SERVICES PART(S) MARKED J
M - METRIC PART

385-2831 **CYLINDER & SEAL GP-STICK (**contd.**)** **i05222218**

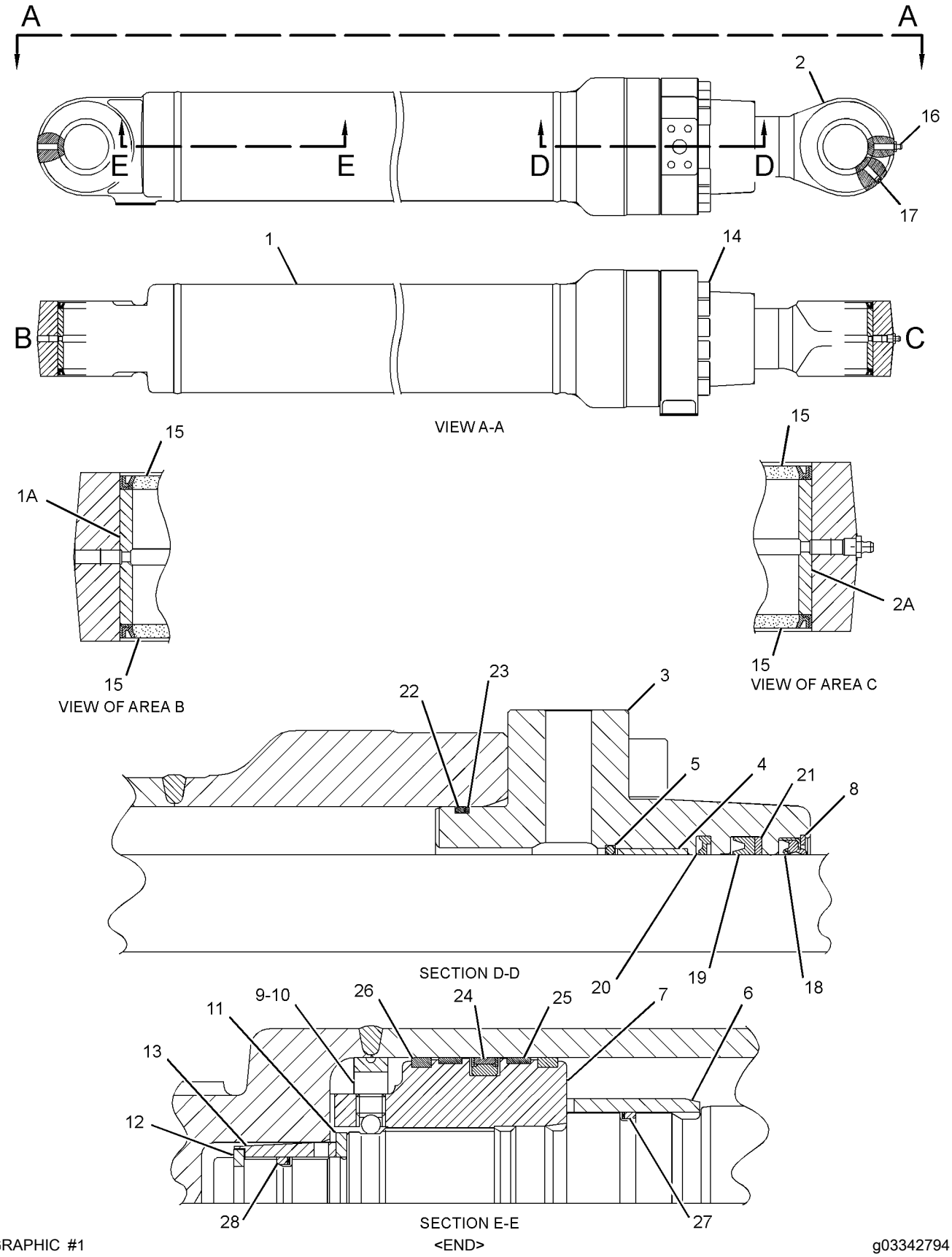

GRAPHIC #1

<END>

g03342794

274-2682 CYLINDER GP-BLADE–LH

S/N: DLP1-UP
120-MM (4.7-IN) BORE X 202-MM (7.9-IN) STROKE
PART OF 274-2680 CYLINDER & SEAL GP-BLADE
AN ATTACHMENT

SMCS-5102 **i02903872**

NOTE	REF NO	GRAPHIC REF	PART NUMBER	QTY	PART NAME 1 2 3 4 5 6 (PRODUCT LEVEL)	SEE PAGE
J	1	1	**9X-3592**	1	SEAL AS	
	2	1	**099-0695**	1	RING	
J	3	1	**119-5445**	1	RING	
	4	1	**123-9950**	1	HEAD	
	5	1	**125-1551**	1	PISTON	
J	6	1	**143-8027**	1	RING	
M	7	1	**143-8151**	1	LOCKNUT-SPECIAL	
	8	1	**283-6080**	1	CYLINDER AS	
	8A	1	**273-6945**	1	BUSHING	
	9	1	**283-6083**	1	ROD AS	
	9A	1	**273-6945**	1	BUSHING	
J	10	1	**096-1054**	1	RING-BACKUP	
	11	1	**096-8139**	1	RING-RETAINING	
J	12	1	**165-9285**	1	SEAL-LIP TYPE	
J	13	1	**170-9843**	1	SEAL-BUFFER	
J	14	1	**170-9859**	1	SEAL-U-CUP	
J	15	1	**095-1628**	1	SEAL-O-RING	
J	16	1	**095-1676**	1	SEAL-O-RING	
J	17	1	**099-0681**	1	RING-BACKUP	
	18	1	**114-0755**	1	BUSHING	
					AVAILABLE REPAIR KIT(S):	
J			**170-9946**	1	KIT-SEAL (BLADE CYLINDER)	

J - KIT MARKED J SERVICES PART(S) MARKED J
M - METRIC PART

274-2682 **CYLINDER GP-BLADE (**contd.**)** **i02903872**

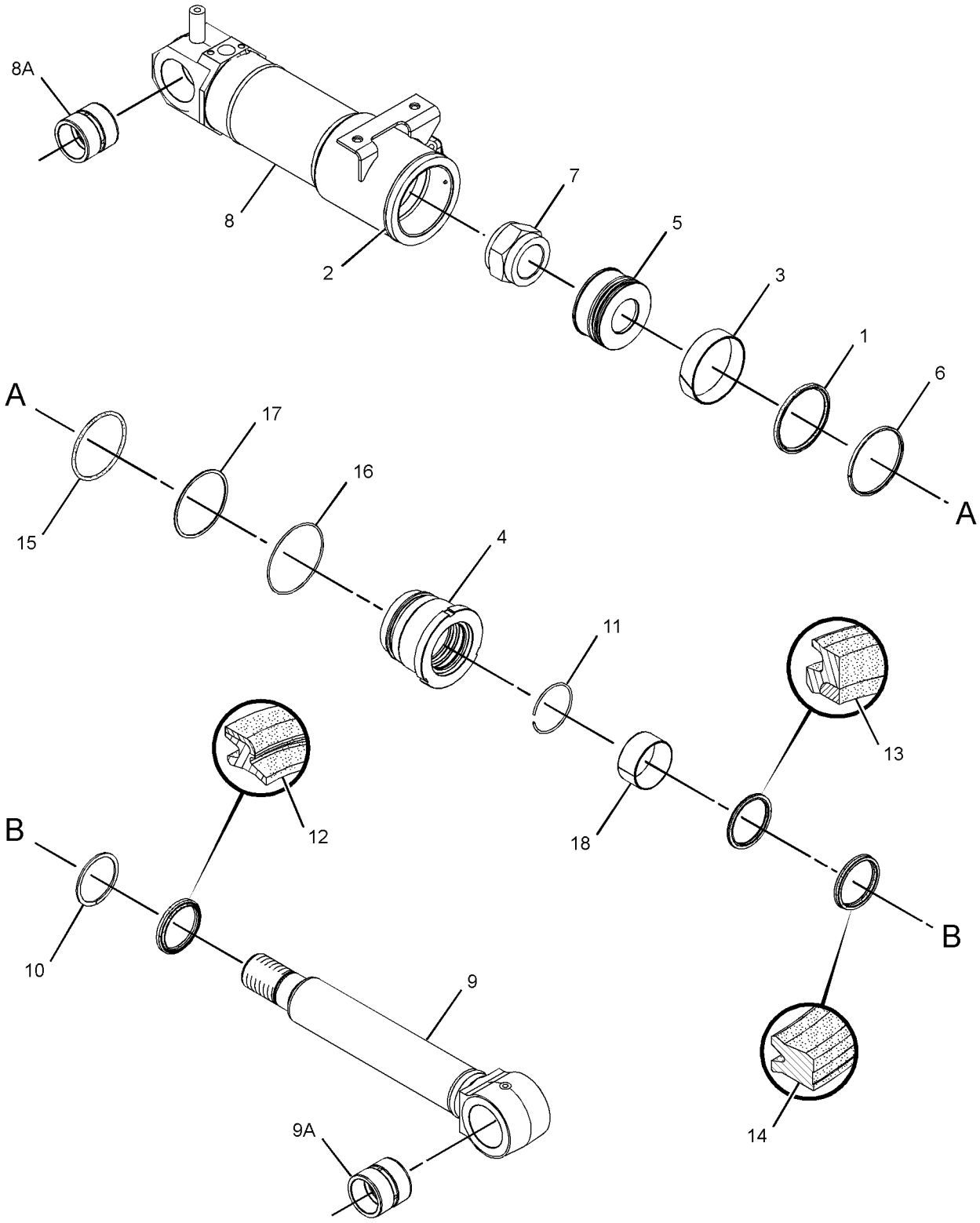

GRAPHIC #1 <END> g01453963

274-2683 CYLINDER GP-BLADE–RH

S/N: DLP1-UP
120-MM (4.7-IN) BORE X 202-MM (7.9-IN) STROKE
PART OF 274-2681 CYLINDER & SEAL GP-BLADE
AN ATTACHMENT

SMCS-5102 **i02903863**

NOTE	REF NO	GRAPHIC REF	PART NUMBER	QTY	PART NAME 1 2 3 4 5 6 (PRODUCT LEVEL)	SEE PAGE
J	1	1	**9X-3592**	1	SEAL AS	
	2	1	**099-0695**	1	RING	
J	3	1	**119-5445**	1	RING	
	4	1	**123-9950**	1	HEAD	
	5	1	**125-1551**	1	PISTON	
J	6	1	**143-8027**	1	RING	
M	7	1	**143-8151**	1	LOCKNUT-SPECIAL	
	8	1	**283-6081**	1	CYLINDER AS	
	8A	1	**273-6945**	1	BUSHING	
	9	1	**283-6083**	1	ROD AS	
	9A	1	**273-6945**	1	BUSHING	
J	10	1	**096-1054**	1	RING-BACKUP	
	11	1	**096-8139**	1	RING-RETAINING	
J	12	1	**165-9285**	1	SEAL-LIP TYPE	
J	13	1	**170-9843**	1	SEAL-BUFFER	
J	14	1	**170-9859**	1	SEAL-U-CUP	
J	15	1	**095-1628**	1	SEAL-O-RING	
J	16	1	**095-1676**	1	SEAL-O-RING	
J	17	1	**099-0681**	1	RING-BACKUP	
	18	1	**114-0755**	1	BUSHING	
					AVAILABLE REPAIR KIT(S):	
J			**170-9946**	1	KIT-SEAL (BLADE CYLINDER)	

J - KIT MARKED J SERVICES PART(S) MARKED J
M - METRIC PART

274-2683 **CYLINDER GP-BLADE (**contd.**)** **i02903863**

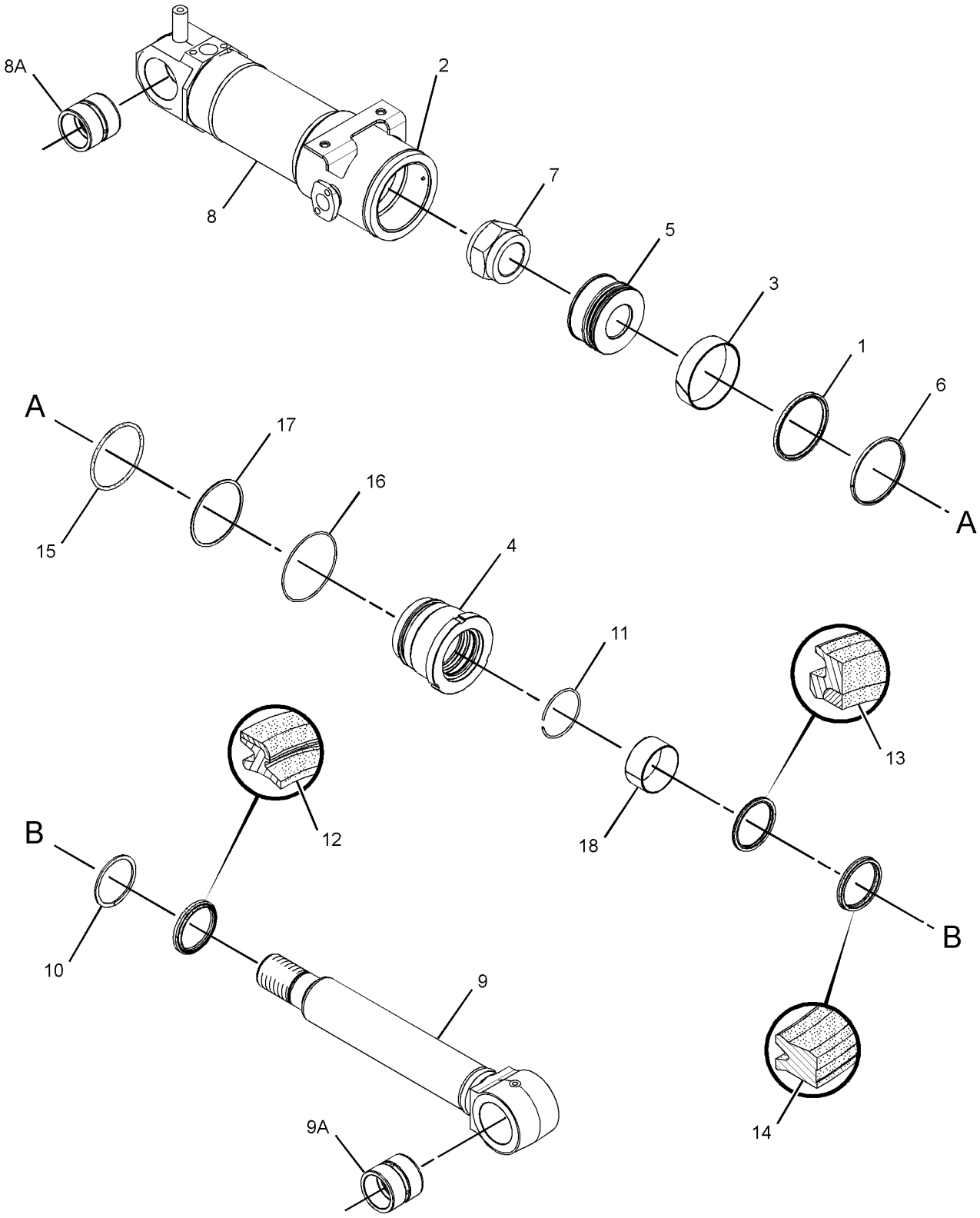

GRAPHIC #1 <END> g01453987

326-4445 CYLINDER GP-BLADE–LH

S/N: DLP1-UP
120-MM (4.7-IN) BORE X 202-MM (7.9-IN) STROKE
PART OF 326-4444 CYLINDER & SEAL GP-BLADE
AN ATTACHMENT

SMCS-5102 **i03331986**

NOTE	REF NO	GRAPHIC REF	PART NUMBER	QTY	PART NAME 1 2 3 4 5 6 (PRODUCT LEVEL)	SEE PAGE
J	1	1	**9X-3592**	1	SEAL AS	
	2	1	**099-0695**	1	RING	
J	3	1	**119-5445**	1	RING	
	4	1	**123-9950**	1	HEAD	
	5	1	**125-1551**	1	PISTON	
J	6	1	**143-8027**	1	RING	
M	7	1	**143-8151**	1	LOCKNUT-SPECIAL	
	8	1	**283-6083**	1	ROD AS	
	8A	1	**273-6945**	1	BUSHING	
	9	1	**326-4446**	1	CYLINDER AS-HYDRAULIC	
	9A	1	**273-6945**	1	BUSHING	
J	10	1	**096-1054**	1	RING-BACKUP	
	11	1	**096-8139**	1	RING-RETAINING	
J	12	1	**165-9285**	1	SEAL-LIP TYPE	
J	13	1	**170-9843**	1	SEAL-BUFFER	
J	14	1	**170-9859**	1	SEAL-U-CUP	
J	15	1	**095-1628**	1	SEAL-O-RING	
J	16	1	**095-1676**	1	SEAL-O-RING	
J	17	1	**099-0681**	1	RING-BACKUP	
	18	1	**114-0755**	1	BUSHING	
					AVAILABLE REPAIR KIT(S):	
J			**170-9946**	1	KIT-SEAL (BLADE CYLINDER)	

J - KIT MARKED J SERVICES PART(S) MARKED J
M - METRIC PART

326-4445 **CYLINDER GP-BLADE (**contd.**)** **i03331986**

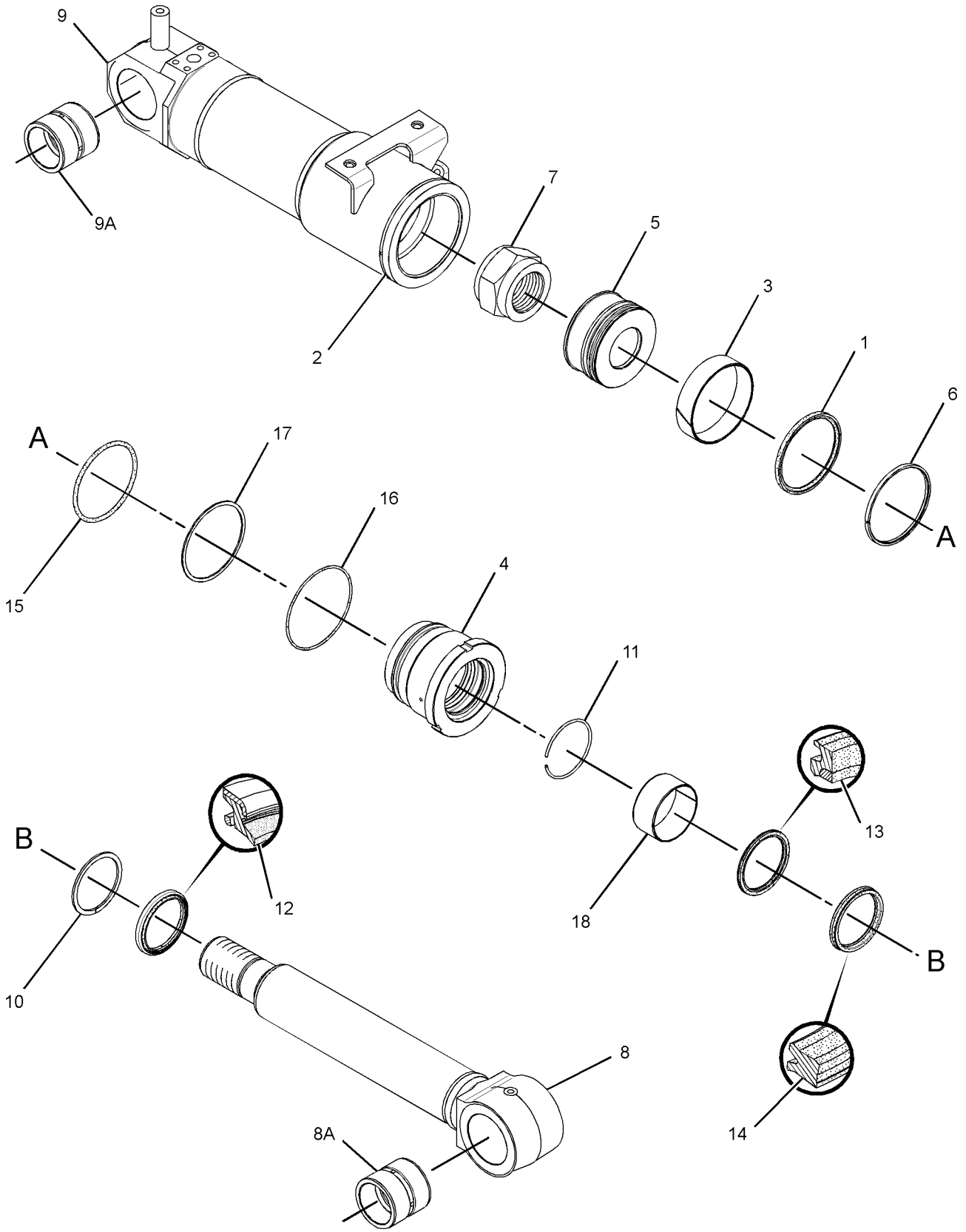

GRAPHIC #1 <END> g01751113

326-4451 CYLINDER GP-BLADE–RH

S/N: DLP1-UP
120-MM (4.7-IN) BORE X 202-MM (7.9-IN) STROKE
PART OF 326-4450 CYLINDER & SEAL GP-BLADE
AN ATTACHMENT

SMCS-5102 **i03332042**

NOTE	REF NO	GRAPHIC REF	PART NUMBER	QTY	PART NAME 1 2 3 4 5 6 (PRODUCT LEVEL)	SEE PAGE
J	1	1	**9X-3592**	1	SEAL AS	
	2	1	**099-0695**	1	RING	
J	3	1	**119-5445**	1	RING	
	4	1	**123-9950**	1	HEAD	
	5	1	**125-1551**	1	PISTON	
J	6	1	**143-8027**	1	RING	
M	7	1	**143-8151**	1	LOCKNUT-SPECIAL	
	8	1	**283-6083**	1	ROD AS	
	8A	1	**273-6945**	1	BUSHING	
	9	1	**326-4452**	1	CYLINDER AS-HYDRAULIC	
	9A	1	**273-6945**	1	BUSHING	
J	10	1	**096-1054**	1	RING-BACKUP	
	11	1	**096-8139**	1	RING-RETAINING	
J	12	1	**165-9285**	1	SEAL-LIP TYPE	
J	13	1	**170-9843**	1	SEAL-BUFFER	
J	14	1	**170-9859**	1	SEAL-U-CUP	
J	15	1	**095-1628**	1	SEAL-O-RING	
J	16	1	**095-1676**	1	SEAL-O-RING	
J	17	1	**099-0681**	1	RING-BACKUP	
	18	1	**114-0755**	1	BUSHING	
					AVAILABLE REPAIR KIT(S):	
J			**170-9946**	1	KIT-SEAL (BLADE CYLINDER)	

J - KIT MARKED J SERVICES PART(S) MARKED J
M - METRIC PART

326-4451 **CYLINDER GP-BLADE (**contd.**)** **i03332042**

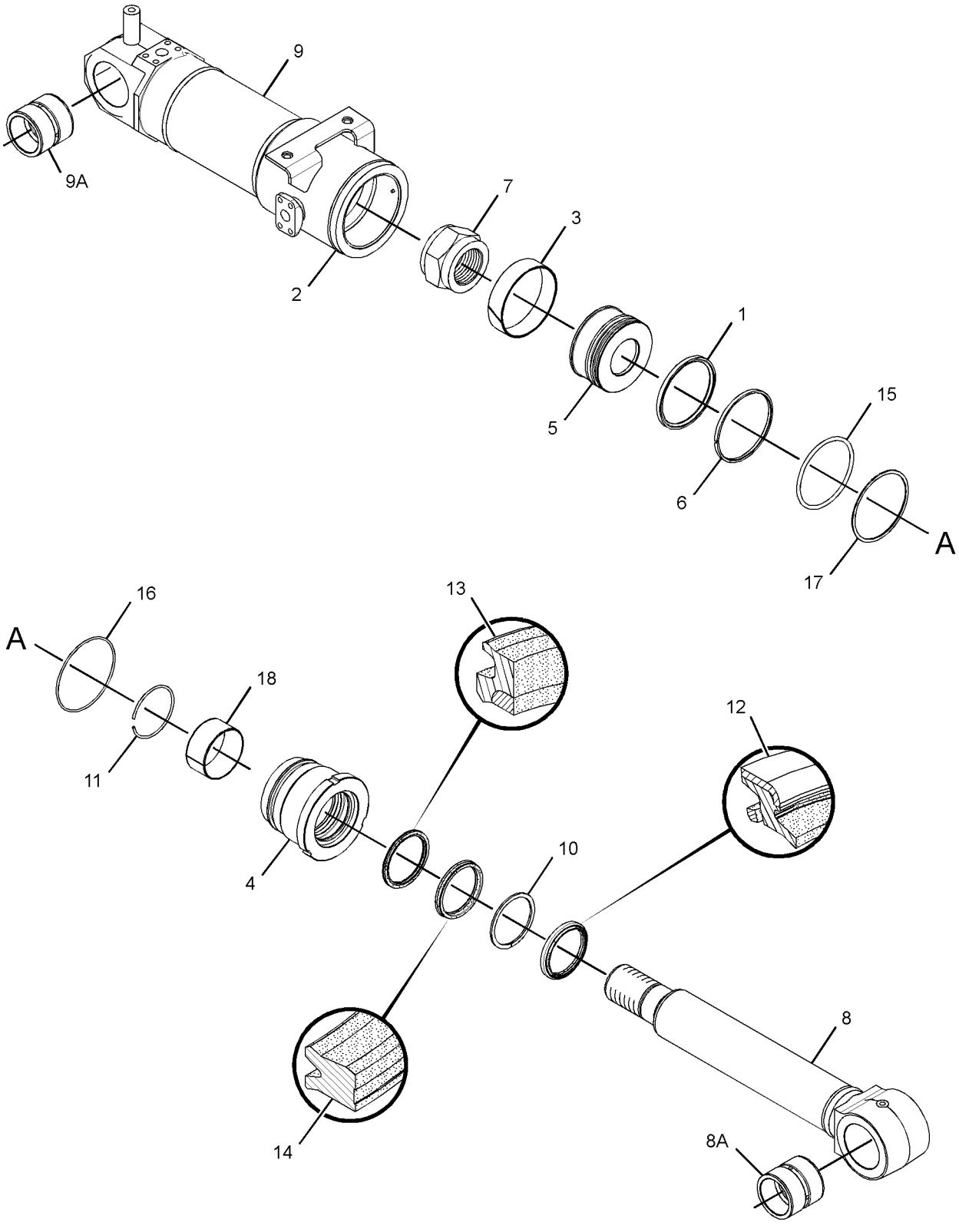

GRAPHIC #1 <END> g01745353

289-7707 CYLINDER GP-BOOM

S/N: DLP1-UP
110-MM (4.3-IN) BORE X 1015-MM (39.9-IN) STROKE
PART OF 289-7706 CYLINDER & SEAL GP-BOOM
AN ATTACHMENT

SMCS-5456 **i03706427**

NOTE	REF NO	GRAPHIC REF	PART NUMBER	QTY	PART NAME 1 2 3 4 5 6 (PRODUCT LEVEL)	SEE PAGE
J	1	1	**9X-7301**	1	SEAL AS	
	2	1	**099-0661**	1	RING-RETAINING	
	3	1	**099-0674**	1	RING	
J	4	1	**143-8031**	2	RING	
M	5	1	**143-8150**	1	LOCKNUT-SPECIAL	
J	6	1	**165-9284**	1	SEAL-LIP TYPE	
J	7	1	**170-9842**	1	SEAL-BUFFER	
J	8	1	**170-9858**	1	SEAL-U-CUP	
	9	1	**322-8724**	1	STOP	
	10	1	**173-3351**	1	HEAD	
	11	1	**283-5922**	1	ROD AS	
	11A	1	**343-9335**	1	BUSHING	
	12	1	**283-5926**	1	PISTON	
J	13	1	**283-5927**	2	RING	
J	14	1	**283-5971**	1	RING-SEAL	
	15	1	**289-7708**	1	CYLINDER AS	
	15A	1	**343-9326**	1	BUSHING	
J	16	1	**095-1627**	2	SEAL-O-RING	
J	17	1	**095-1674**	1	SEAL-O-RING	
J	18	1	**096-3467**	1	RING-BACKUP	
J	19	1	**099-0660**	3	RING-BACKUP	
	20	1	**114-0750**	1	BUSHING	
					AVAILABLE REPAIR KIT(S):	
J			**289-7733**	1	KIT-SEAL (BOOM CYLINDER)	

J - KIT MARKED J SERVICES PART(S) MARKED J
M - METRIC PART

289-7707 **CYLINDER GP-BOOM (**contd.**)** **i03706427**

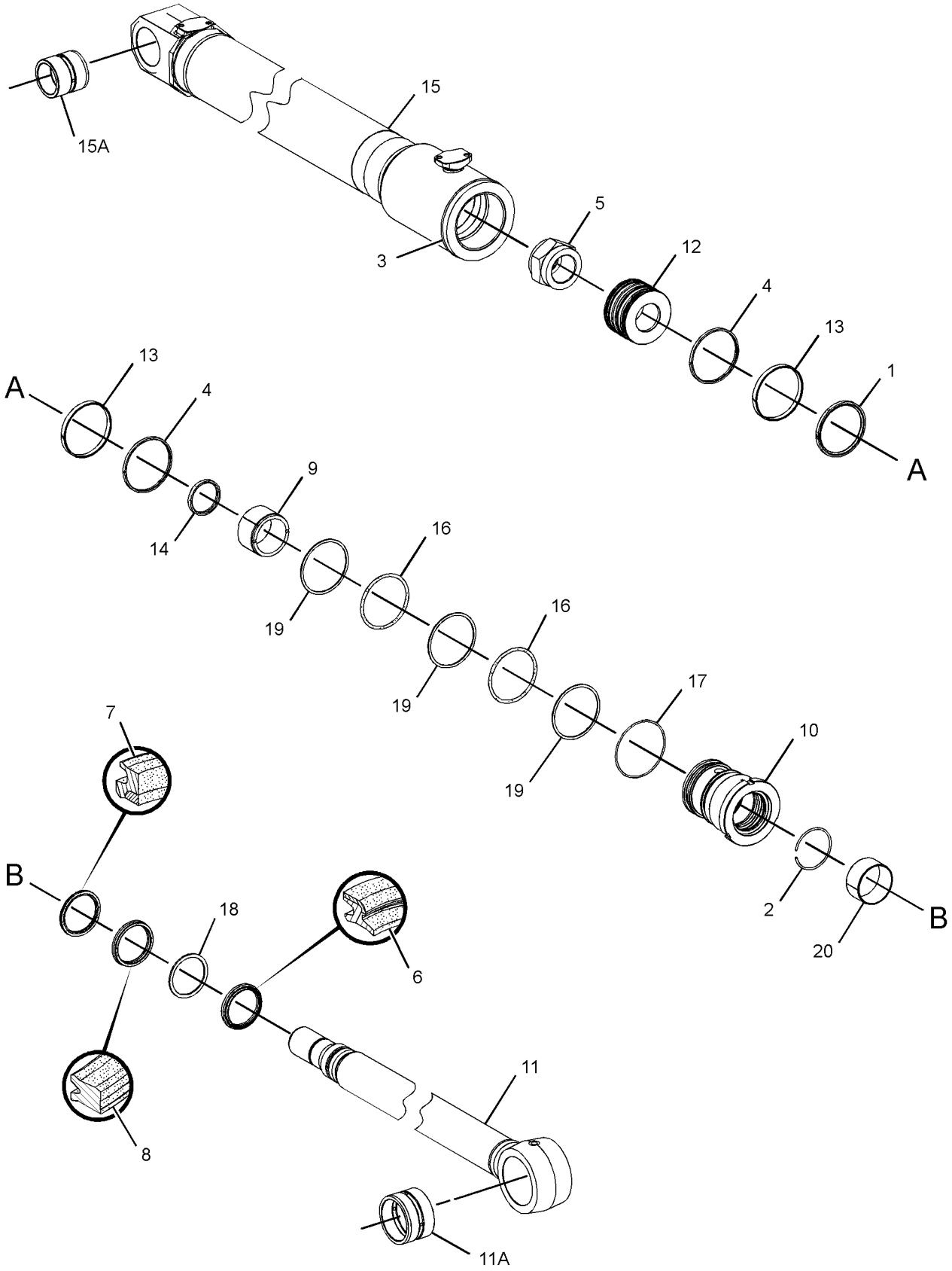

GRAPHIC #1 <END> g01415058

289-8070 CYLINDER GP-BOOM

S/N: DLP1-UP
110-MM (4.3-IN) BORE X 1015-MM (40-IN) STROKE
PART OF 289-8069 CYLINDER & SEAL GP-BOOM
AN ATTACHMENT

SMCS-5456 **i06060330**

NOTE	REF NO	GRAPHIC REF	PART NUMBER	QTY	PART NAME 1 2 3 4 5 6 (PRODUCT LEVEL)	SEE PAGE
J	1	1	**9X-7301**	1	SEAL AS	
	2	1	**099-0661**	1	RING-RETAINING	
	3	1	**099-0674**	1	RING	
J	4	1	**143-8031**	2	RING	
M	5	1	**143-8150**	1	LOCKNUT-SPECIAL	
J	6	1	**165-9284**	1	SEAL-LIP TYPE	
J	7	1	**170-9842**	1	SEAL-BUFFER	
J	8	1	**170-9858**	1	SEAL-U-CUP	
	9	1	**173-3350**	1	STOP	
	10	1	**173-3351**	1	HEAD	
	11	1	**289-8074**	1	ROD AS	
	11A	1	**273-6813**	1	BUSHING	
	12	1	**283-5926**	1	PISTON	
J	13	1	**283-5927**	2	RING	
J	14	1	**283-5971**	1	RING-SEAL	
	15	1	**289-7708**	1	CYLINDER AS	
	15A	1	**273-6811**	1	BUSHING	
J	16	1	**095-1627**	2	SEAL-O-RING	
J	17	1	**095-1674**	1	SEAL-O-RING	
J	18	1	**096-3467**	1	RING-BACKUP	
J	19	1	**099-0660**	3	RING-BACKUP	
	20	1	**114-0750**	1	BUSHING	
					AVAILABLE REPAIR KIT(S):	
J			**289-7733**	1	KIT-SEAL (BOOM CYLINDER)	

J - KIT MARKED J SERVICES PART(S) MARKED J
M - METRIC PART

289-8070 **CYLINDER GP-BOOM (**contd.**)** **i06060330**

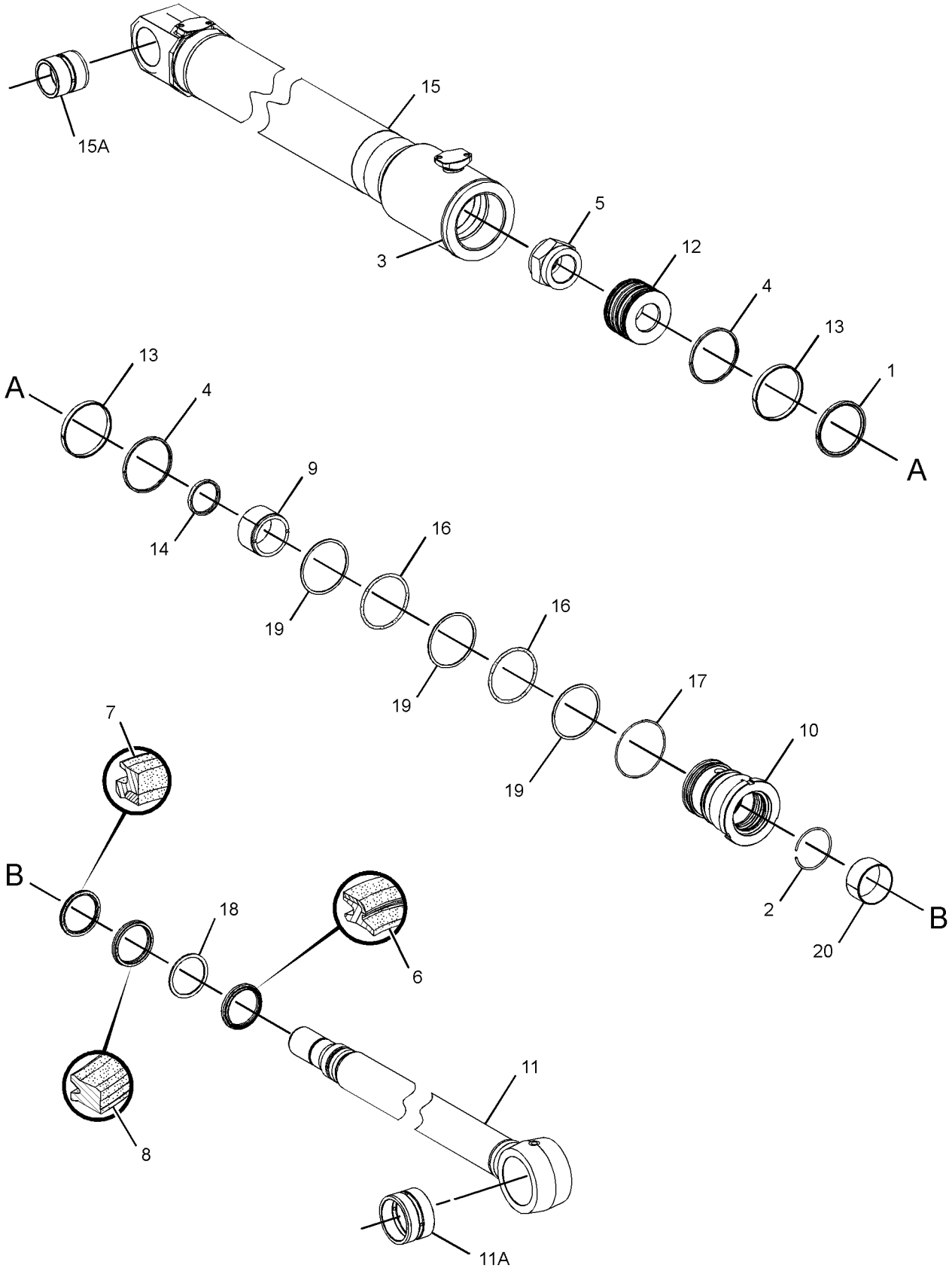

GRAPHIC #1 <END> g01415058

358-2096 CYLINDER GP-BOOM

S/N: DLP1-UP

110-MM (4.3-IN) BORE X 1015-MM (40-IN) STROKE

SMCS-5456 **i04886935**

NOTE	REF NO	GRAPHIC REF	PART NUMBER	QTY	PART NAME 1 2 3 4 5 6 (PRODUCT LEVEL)	SEE PAGE
	1	1	**358-2098**	1	CYLINDER AS	
	1A	1	**355-2208**	1	BUSHING	
	2	1	**358-2097**	1	ROD AS	
	2A	1	**355-2201**	1	BUSHING	
	3	1	**173-3351**	1	HEAD	
J	4	1	**095-1674**	1	SEAL-O-RING	
J	5	1	**099-0660**	3	RING-BACKUP	
J	6	1	**095-1627**	2	SEAL-O-RING	
	7	1	**114-0750**	1	BUSHING	
	8	1	**099-0661**	1	RING-RETAINING	
J	9	1	**349-4115**	1	SEAL-BUFFER	
J	10	1	**096-3467**	1	RING-BACKUP	
J	11	1	**349-4117**	1	SEAL-U-CUP	
J	12	1	**165-9284**	1	SEAL-LIP TYPE	
J	13	1	**283-5971**	1	RING-SEAL	
	14	1	**388-4928**	1	STOP	
	15	1	**283-5926**	1	PISTON	
M	16	1	**143-8150**	1	LOCKNUT-SPECIAL	
J	17	1	**143-8031**	2	RING	
J	18	1	**9X-7301**	1	SEAL AS	
J	19	1	**283-5927**	2	RING	
	20	1	**099-0674**	1	RING	
					AVAILABLE REPAIR KIT(S):	
J			**349-4119**	1	KIT-SEAL (BOOM CYLINDER)	

J - KIT MARKED J SERVICES PART(S) MARKED J
M - METRIC PART

358-2096 **CYLINDER GP-BOOM (**contd.**)** **i04886935**

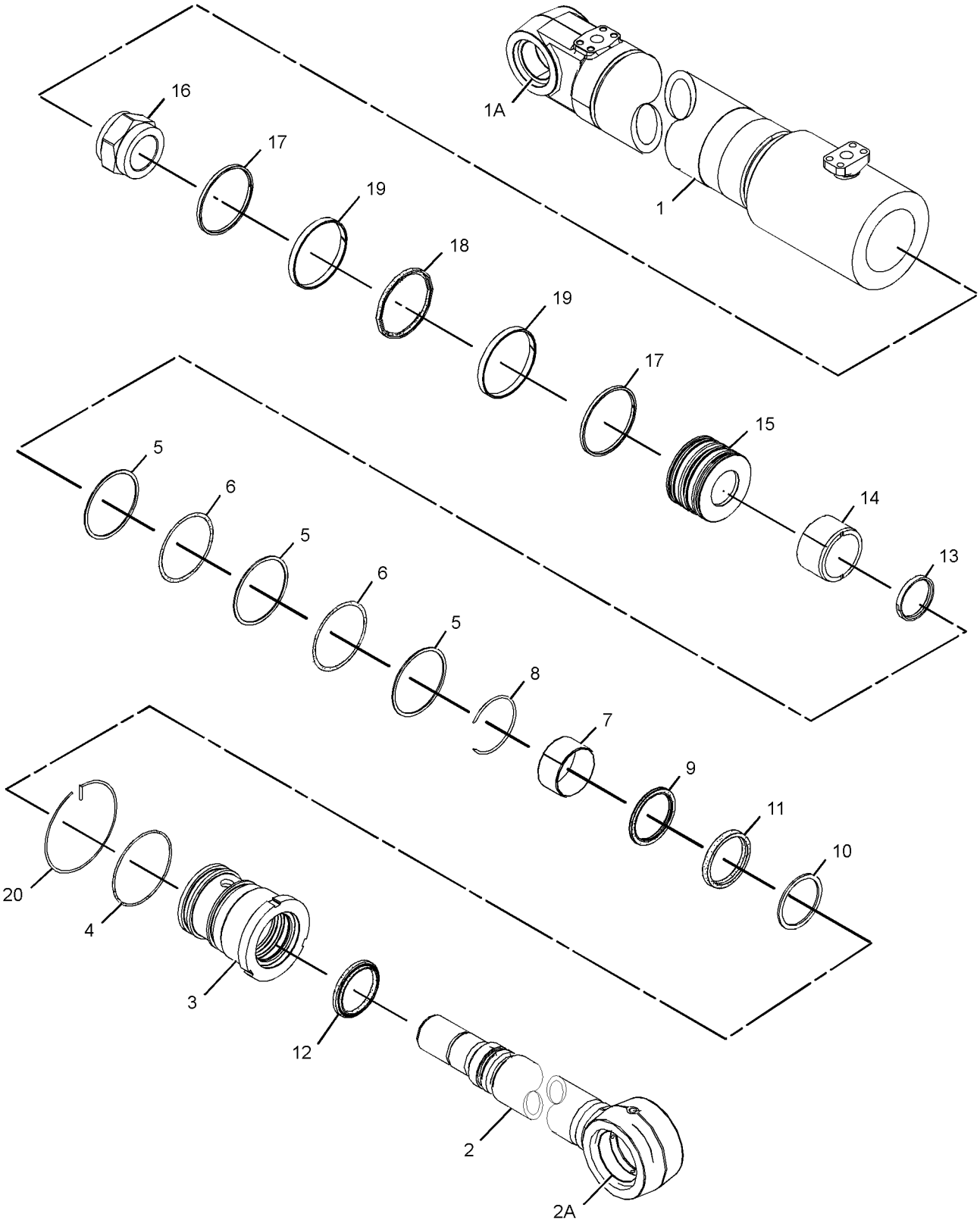

GRAPHIC #1 <END> g02720207

289-7699 CYLINDER GP-BUCKET

S/N: DLP1-UP
100-MM (3.9-IN) BORE X 939-MM (37-IN) STROKE
PART OF 289-7698 CYLINDER & SEAL GP-BUCKET
AN ATTACHMENT

SMCS-5457 **i03750863**

NOTE	REF NO	GRAPHIC REF	PART NUMBER	QTY	PART NAME 1 2 3 4 5 6 (PRODUCT LEVEL)	SEE PAGE
J	1	1	**9X-7298**	1	SEAL AS	
J	2	1	**093-1519**	1	RING-BACKUP	
	3	1	**099-0600**	1	RING	
	4	1	**099-5400**	1	RING-RETAINING	
M	5	1	**133-6686**	1	LOCKNUT-SPECIAL	
J	6	1	**143-8025**	2	RING	
J	7	1	**165-9283**	1	SEAL-LIP TYPE	
J	8	1	**170-9841**	1	SEAL-BUFFER	
J	9	1	**170-9857**	1	SEAL-U-CUP	
	10	1	**283-5952**	1	PISTON	
J	11	1	**283-5953**	2	RING	
	12	1	**289-7700**	1	CYLINDER AS	
	12A	1	**273-6810**	1	BUSHING	
	13	1	**289-7702**	1	HEAD	
	14	1	**289-7743**	1	ROD AS	
	14A	1	**248-7857**	1	BUSHING	
J	15	1	**095-1713**	1	SEAL-O-RING	
J	16	1	**099-5399**	1	RING-BACKUP	
	17	1	**114-0753**	1	BUSHING	
J	18	1	**6V-8467**	1	SEAL-O-RING	
					AVAILABLE REPAIR KIT(S):	
J			**283-6179**	1	KIT-SEAL (BUCKET CYLINDER)	

J - KIT MARKED J SERVICES PART(S) MARKED J
M - METRIC PART

289-7699 **CYLINDER GP-BUCKET (**contd.**)** **i03750863**

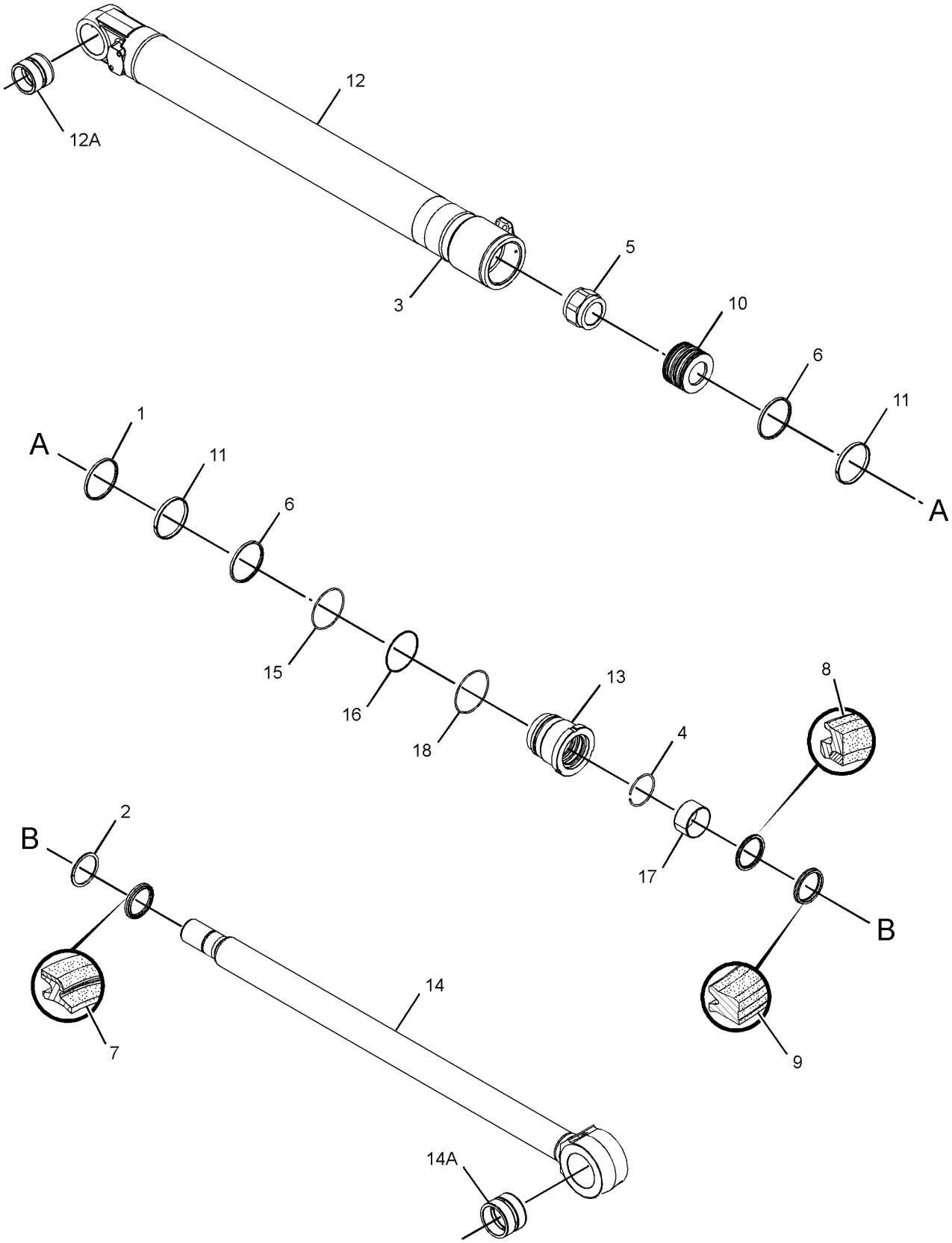

GRAPHIC #1 <END> g01400302

273-4147 CYLINDER GP-COUPLER

S/N: DLP1-UP
63-MM (2.5-IN) BORE X 105-MM (4.1-IN) STROKE
PART OF 236-4153 COUPLER GP-QUICK
AN ATTACHMENT

SMCS-5133 **i03647227**

NOTE	REF NO	GRAPHIC REF	PART NUMBER	QTY	PART NAME 1 2 3 4 5 6 (PRODUCT LEVEL)	SEE PAGE
	1	1	**091-5928**	2	FITTING-GREASE	
	2	1	**172-8406**	1	VALVE GP-CHECK (HYD CYLINDER, QUICK COUPLER)	
		1	**2U-5338**	1	SEAL-O-RING (15.6-MM ID)	
		1	**107-7640**	1	SEAL-O-RING (12.1-MM ID)	
		1	**9W-3340**	1	SEAL-O-RING (10.1-MM ID)	
					AVAILABLE REPAIR KIT(S):	
			326-5237	1	KIT-SEAL (COUPLER CYLINDER)	
					(INCLUDES 3 O-RING SEALS, BACK-UP RING, WEAR RING, WIPER SEAL, GLAND SEAL & PISTON SEAL)	

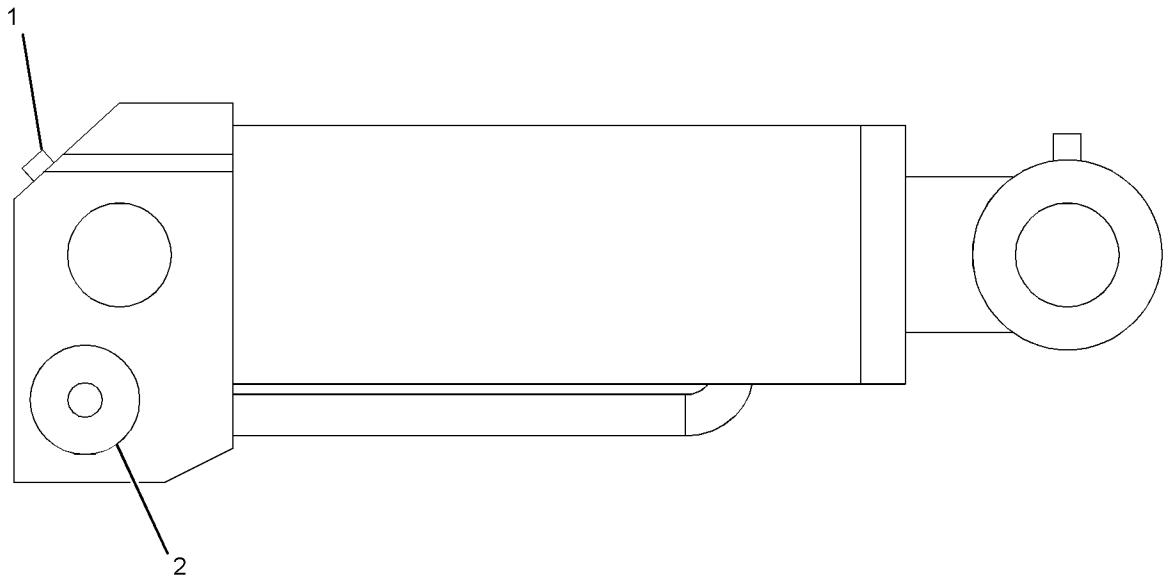

GRAPHIC #1 <END> g01203166

300-6024 CYLINDER GP-COUPLER

S/N: DLP1-UP
63.5-MM (2.5-IN) BORE X 137-MM (5.39-IN) STROKE
PART OF 292-4159 COUPLER GP-QUICK
AN ATTACHMENT

SMCS-5133 **i05167631**

NOTE	REF NO	GRAPHIC REF	PART NUMBER	QTY	PART NAME 1 2 3 4 5 6 (PRODUCT LEVEL)	SEE PAGE
	1	1	**3B-8489**	1	FITTING-GREASE (1/8-27 PTF)	
	2	1	**9F-2167**	1	SCREW-PURGE (3/8-24X1.164-IN)	
	3	1	**346-5585**	1	BEARING	
	4	1	**346-5586**	2	BEARING (TRUNNION)	
	5	1	**346-5587**	1	PISTON	
	6	1	**346-5588**	1	HEAD	
	7	1	**346-5589**	1	ROD AS	
	8	1	**346-5590**	1	TUBE AS	
J	9	1	**346-6711**	1	VALVE AS-COUNTERBALANCE	
	10	1	**010-2570**	3	SETSCREW (1/4-20X0.375-IN)	
	11	1	**2D-4534**	12	BOLT-SOCKET HEAD (3/8-16X1-IN)	
	12	1	**9S-8002**	3	PLUG (7/16-20-THD)	
	13	1	**9S-8004**	1	PLUG (9/16-18-THD)	
					AVAILABLE REPAIR KIT(S):	
			346-5584	1	KIT-SEAL (COUPLER CYLINDER)	
					(INCLUDES WIPER, DOUBLE LIP SEAL, WEAR RING, O-RING, BACK-UP RING, PISTON RING SET & PISTON RING)	
J			**161-1980**	1	KIT-SERVICE (COUNTERBALANCE VALVE)	

J - KIT MARKED J SERVICES PART(S) MARKED J

300-6024 **CYLINDER GP-COUPLER (**contd.**)** **i05167631**

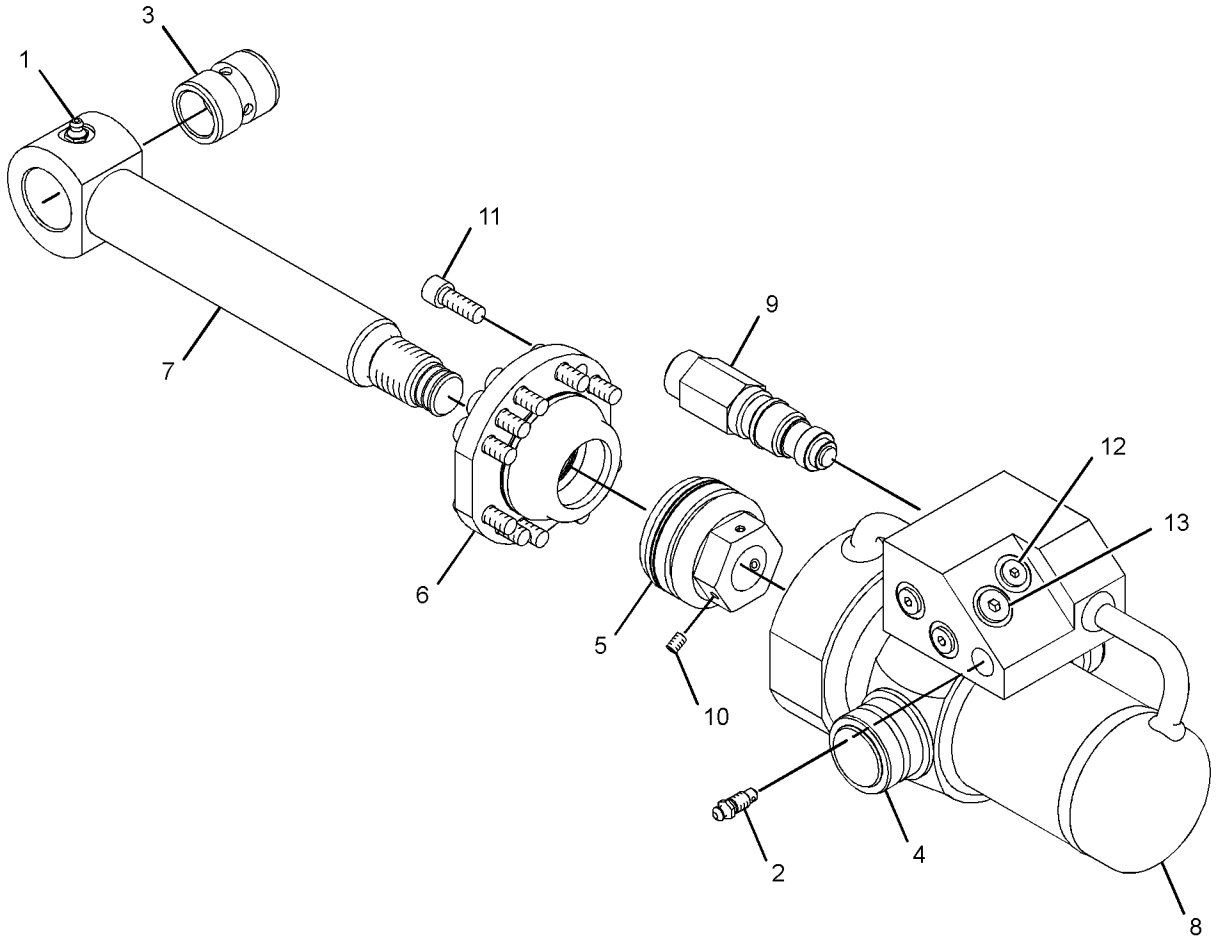

GRAPHIC #1 <END> g01990067

395-4045 CYLINDER GP-COUPLER–312-LINKAGE

S/N: DLP1-UP
44.5-MM (1.75-IN) BORE X 124.5-MM (4.9-IN) STROKE
PART OF 486-5362 COUPLER GP-QUICK
AN ATTACHMENT

SMCS-5133 **i06690214**

NOTE	REF NO	GRAPHIC REF	PART NUMBER	QTY	PART NAME 1 2 3 4 5 6 (PRODUCT LEVEL)	SEE PAGE
J	1	1	**237-0947**	1	VALVE GP-CHECK (PILOT OPERATED) (QUICK COUPLER)	
	2	1	**3J-1907**	1	SEAL-O-RING	
	3	1	**3J-7354**	1	SEAL-O-RING	
	4	1	**9S-8002**	1	PLUG (7/16-20-THD)	
	5	1	**9S-8004**	1	PLUG (9/16-18-THD)	
	6	1	**9F-2167**	1	SCREW-PURGE (3/8-24X1.164-IN)	
					AVAILABLE REPAIR KIT(S):	
			453-6525	1	KIT-PACKING (COUPLER CYLINDER)	
					(INCLUDES O-RINGS, BACK-UP RINGS, DUST SEAL, BP SEAL & POLYPAK SEAL)	
J			**213-8433**	1	KIT-SEAL (CHECK VALVE)	

J - KIT MARKED J SERVICES PART(S) MARKED J

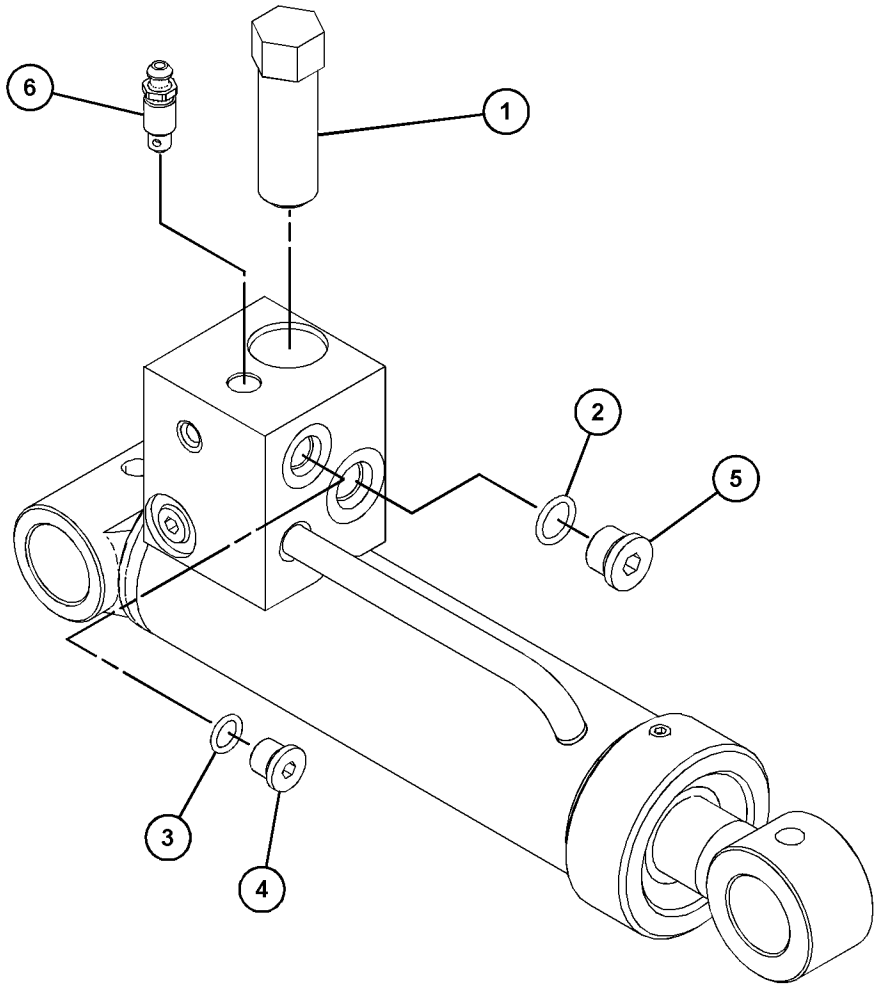

GRAPHIC #1 <END> g03705788

289-7713 CYLINDER GP-STICK

S/N: DLP1-UP
120-MM (4.7-IN) BORE X 1197-MM (47-IN) STROKE
PART OF 289-7712 CYLINDER & SEAL GP-STICK
AN ATTACHMENT

SMCS-5458 **i06088057**

NOTE	REF NO	GRAPHIC REF	PART NUMBER	QTY	PART NAME 1 2 3 4 5 6 (PRODUCT LEVEL)	SEE PAGE
	1	1	**322-8726**	1	STOP	
J	2	1	**9X-3592**	1	SEAL AS	
	3	1	**103-8441**	1	RING-RETAINING	
	4	1	**103-8442**	1	RING	
	5	1	**322-8725**	1	STOP	
	6	1	**123-2002**	1	RING	
J	7	1	**143-8027**	2	RING	
M	8	1	**143-8151**	1	LOCKNUT-SPECIAL	
	9	1	**173-3358**	1	HEAD	
	10	1	**358-2103**	1	ROD AS	
	10A	1	**229-1093**	1	BUSHING	
	11	1	**283-5939**	1	PISTON	
J	12	1	**283-5940**	2	RING	
J	13	1	**283-5972**	1	RING-SEAL	
	14	1	**289-7714**	1	CYLINDER AS	
	14A	1	**343-9327**	1	BUSHING	
J	15	1	**096-1054**	1	RING-BACKUP	
	16	1	**096-8139**	1	RING-RETAINING	
	17	1	**114-0755**	1	BUSHING	
J	18	1	**165-9285**	1	SEAL-LIP TYPE	
J	19	1	**170-9843**	1	SEAL-BUFFER	
J	20	1	**170-9859**	1	SEAL-U-CUP	
J	21	1	**095-1628**	2	SEAL-O-RING	
J	22	1	**095-1676**	1	SEAL-O-RING	
J	23	1	**099-0681**	3	RING-BACKUP	
	24	1	**8T-4241**	2	RING-RETAINING (EXTERNAL)	
					AVAILABLE REPAIR KIT(S):	
J			**289-7716**	1	KIT-SEAL (STICK CYLINDER)	

J - KIT MARKED J INCLUDES PART(S) MARKED J
M - METRIC PART

289-7713 **CYLINDER GP-STICK (**contd.**)** **i06088057**

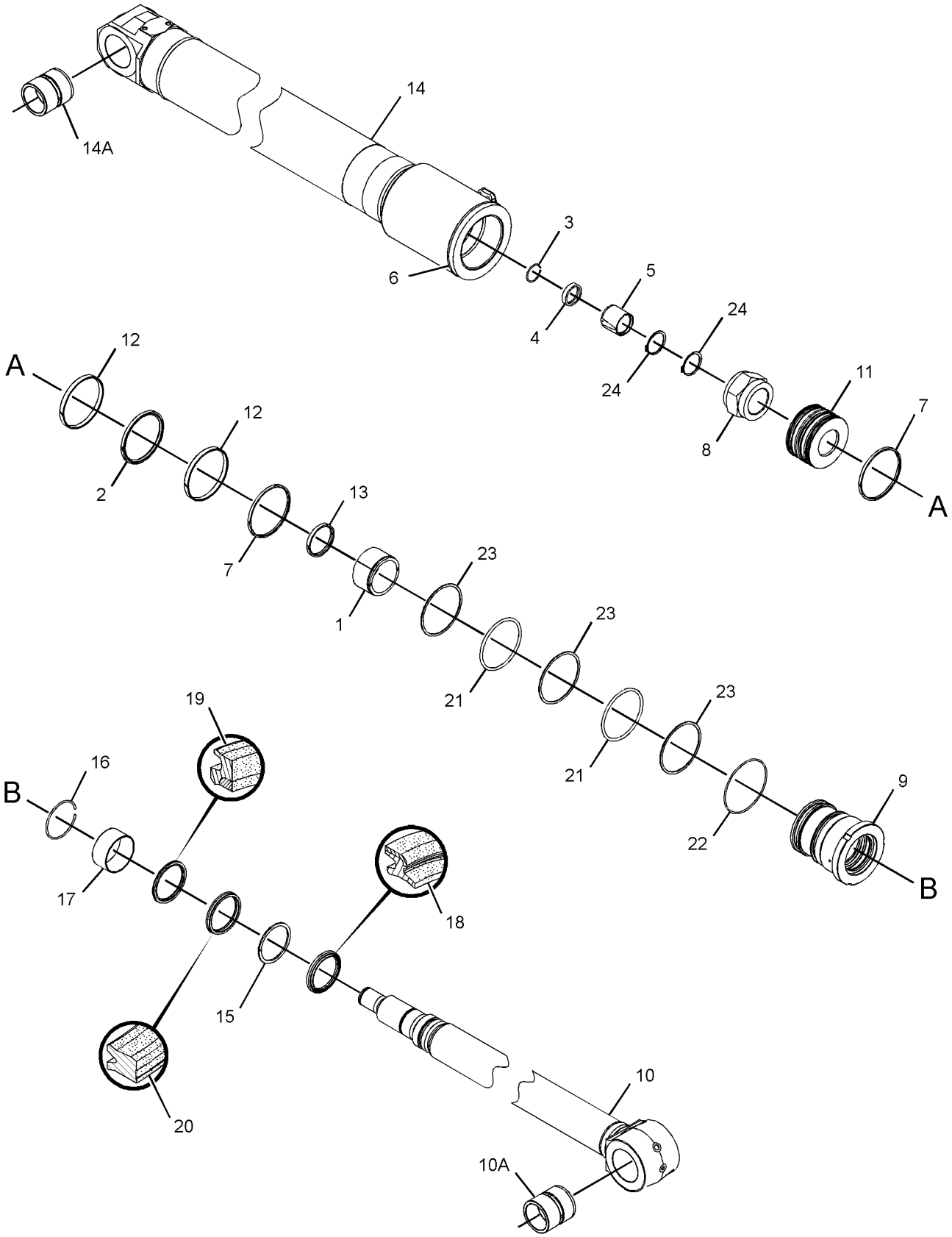

GRAPHIC #1 <END> g01405220

289-8078 CYLINDER GP-STICK

S/N: DLP1-UP
120-MM (4.7-IN) BORE X 1197-MM (47.1-IN) STROKE
PART OF 289-8077 CYLINDER & SEAL GP-STICK
AN ATTACHMENT

SMCS-5458 **i06060323**

NOTE	REF NO	GRAPHIC REF	PART NUMBER	QTY	PART NAME 1 2 3 4 5 6 (PRODUCT LEVEL)	SEE PAGE
	1	1	**5I-3046**	1	STOP	
J	2	1	**9X-3592**	1	SEAL AS	
	3	1	**103-8441**	1	RING-RETAINING	
	4	1	**103-8442**	1	RING	
	5	1	**105-7398**	1	STOP	
	6	1	**123-2002**	1	RING	
J	7	1	**143-8027**	2	RING	
M	8	1	**143-8151**	1	LOCKNUT-SPECIAL	
	9	1	**173-3358**	1	HEAD	
	10	1	**289-8082**	1	ROD AS	
	10A	1	**273-6812**	1	BUSHING	
	11	1	**283-5939**	1	PISTON	
J	12	1	**283-5940**	2	RING	
J	13	1	**283-5972**	1	RING-SEAL	
	14	1	**289-8079**	1	CYLINDER AS	
	14A	1	**273-6812**	1	BUSHING	
J	15	1	**096-1054**	1	RING-BACKUP	
	16	1	**096-8139**	1	RING-RETAINING	
	17	1	**114-0755**	1	BUSHING	
J	18	1	**165-9285**	1	SEAL-LIP TYPE	
J	19	1	**170-9843**	1	SEAL-BUFFER	
J	20	1	**170-9859**	1	SEAL-U-CUP	
J	21	1	**095-1628**	2	SEAL-O-RING	
J	22	1	**095-1676**	1	SEAL-O-RING	
J	23	1	**099-0681**	3	RING-BACKUP	
	24	1	**8T-4241**	2	RING-RETAINING (EXTERNAL)	
					AVAILABLE REPAIR KIT(S):	
J			**289-7716**	1	KIT-SEAL (STICK CYLINDER)	

J - KIT MARKED J SERVICES PART(S) MARKED J
M - METRIC PART

289-8078 **CYLINDER GP-STICK (**contd.**)** **i06060323**

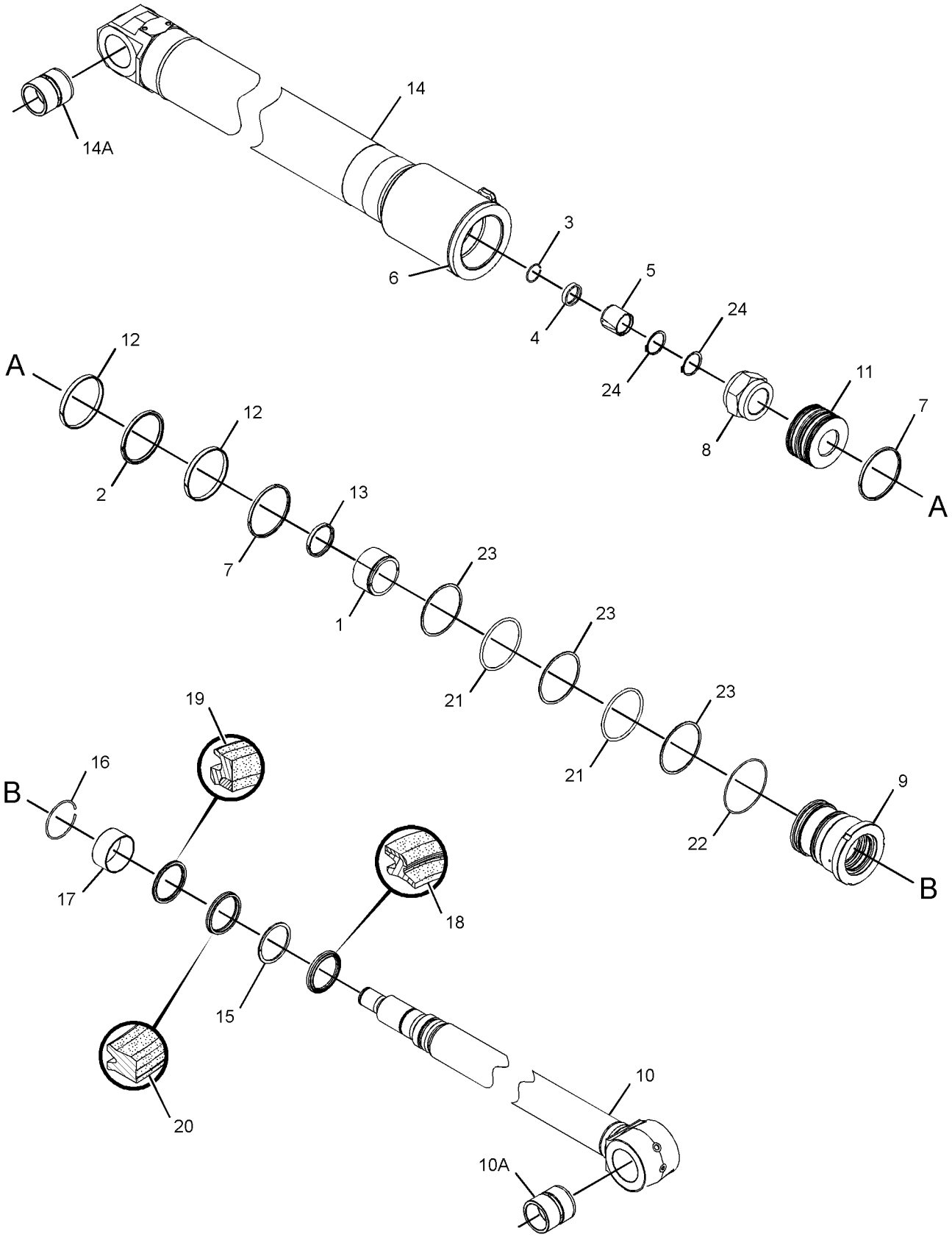

GRAPHIC #1 <END> g01405220

169-5546 DRIVE GP-SWING

S/N: DLP1-617

PART OF 267-6804 POWER TRAIN AR

SMCS-5459 **i03991371**

NOTE	REF NO	GRAPHIC REF	PART NUMBER	QTY	PART NAME 1 2 3 4 5 6 (PRODUCT LEVEL)	SEE PAGE
	1	1	**191-2656**	1	TUBE-GAUGE	
	2	1	**191-2657**	1	GAUGE-OIL LEVEL (DIPSTICK, SWING DRIVE)	
Y	3	1	*169-5569*	1	DRIVE GP-SWING	524
	4	1	**3K-0360**	2	SEAL-O-RING	
	5	1	**6V-7238**	1	VALVE-SHUTOFF	
C	6	1	**267-6744**	1	BREATHER AS	
		1	**4H-6112**	1	BREATHER (SWING DRIVE)	
		1	**227-6227**	1	BOSS	
		1	**267-6786**	1	FITTING	
	7	1	**099-3563**	1	CONNECTOR	

C - CHANGE FROM PREVIOUS TYPE
Y - SEPARATE ILLUSTRATION

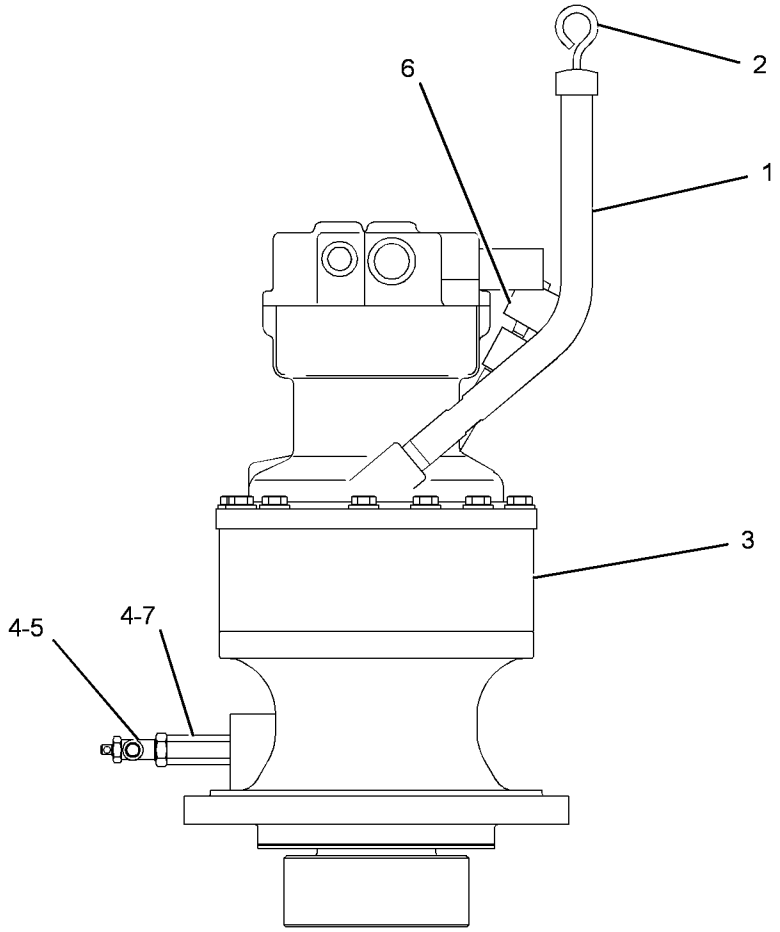

GRAPHIC #1 <END> g01240418

169-5549 DRIVE GP-SWING—WITHOUT MOTOR

S/N: DLP1-617

FIELD REPLACEMENT ORDER 333-3073—PAGE: 527

PART OF 169-5569 DRIVE GP-SWING

SMCS-5459 **i01485213**

NOTE	REF NO	GRAPHIC REF	PART NUMBER	QTY	PART NAME 1 2 3 4 5 6 (PRODUCT LEVEL)	SEE PAGE
	1	1	**191-2600**	3	GEAR-PLANETARY	
	2	1	**191-2599**	1	CARRIER-PLANETARY	
	3	1	**191-2604**	3	PIN-SPRING	
	4	1	**191-2603**	3	SHAFT-PLANETARY	
	5	1	**191-2609**	3	SHAFT-PLANETARY	
	6	1	**191-2605**	1	WASHER (30X75X3-MM THK)	
	7	1	**191-2611**	1	GEAR-SUN	
	8	1	**191-2612**	1	GEAR-SUN	
M	9	1	**114-8224**	1	BOLT (M20X1.5-THD)	
	10	1	**191-2613**	1	GEAR-RING	
	11	1	**093-6089**	2	DOWEL	
	12	1	**095-0893**	1	PIN-SPRING	
	13	1	**7I-7625**	1	BEARING AS-ROLLER	
	14	1	**191-2615**	1	HOUSING	
	15	1	**191-2614**	1	SHAFT-PINION	
B	16	1	**7I-7632**	1	SPACER (69.5-MM THK)	
B		1	**7I-7633**	1	SPACER (69.8-MM THK)	
B		1	**7I-7634**	1	SPACER (70.1-MM THK)	
B		1	**7I-7635**	1	SPACER (70.4-MM THK)	
B		1	**7I-7636**	1	SPACER (70.7-MM THK)	
	21	1	**7I-7626**	1	BEARING AS-ROLLER	
M	22	1	**8T-4195**	8	BOLT (M10X1.5X30-MM)	
	23	1	**8T-4121**	8	WASHER-HARD (11X21X2.5-MM THK)	
	24	1	**099-0233**	1	SEAL-LIP TYPE	
	25	1	**099-0235**	1	CAGE	
B	26	1	**7I-7638**	1	SPACER (10-MM THK)	
B		1	**7I-7639**	1	SPACER (10.03-MM THK)	
B		1	**7I-7640**	1	SPACER (10.05-MM THK)	
B		1	**7I-7641**	1	SPACER (10.08-MM THK)	
B		1	**7I-7642**	1	SPACER (10.1-MM THK)	
B		1	**7I-7643**	1	SPACER (10.12-MM THK)	
B		1	**7I-7644**	1	SPACER (10.15-MM THK)	
B		1	**7I-7645**	1	SPACER (10.18-MM THK)	
B		1	**7I-7646**	1	SPACER (10.2-MM THK)	
B		1	**7I-7647**	1	SPACER (10.23-MM THK)	
B		1	**7I-7648**	1	SPACER (10.25-MM THK)	
B		1	**7I-7649**	1	SPACER (10.28-MM THK)	
	38	1	**191-2607**	1	CARRIER-PLANETARY	
	39	1	**114-8223**	1	RETAINER	
	40	1	**191-2610**	3	PIN-SPRING	
	41	1	**191-2602**	12	WASHER (32X56X1.2-MM THK)	
	42	1	**191-2601**	9	BEARING	
	43	1	**191-2608**	3	GEAR-PLANETARY	
B	44	1	**1U-8846**		SEALANT-GASKET	

B - USE AS REQUIRED
M - METRIC PART

169-5549 **DRIVE GP-SWING** (contd.) **i01485213**

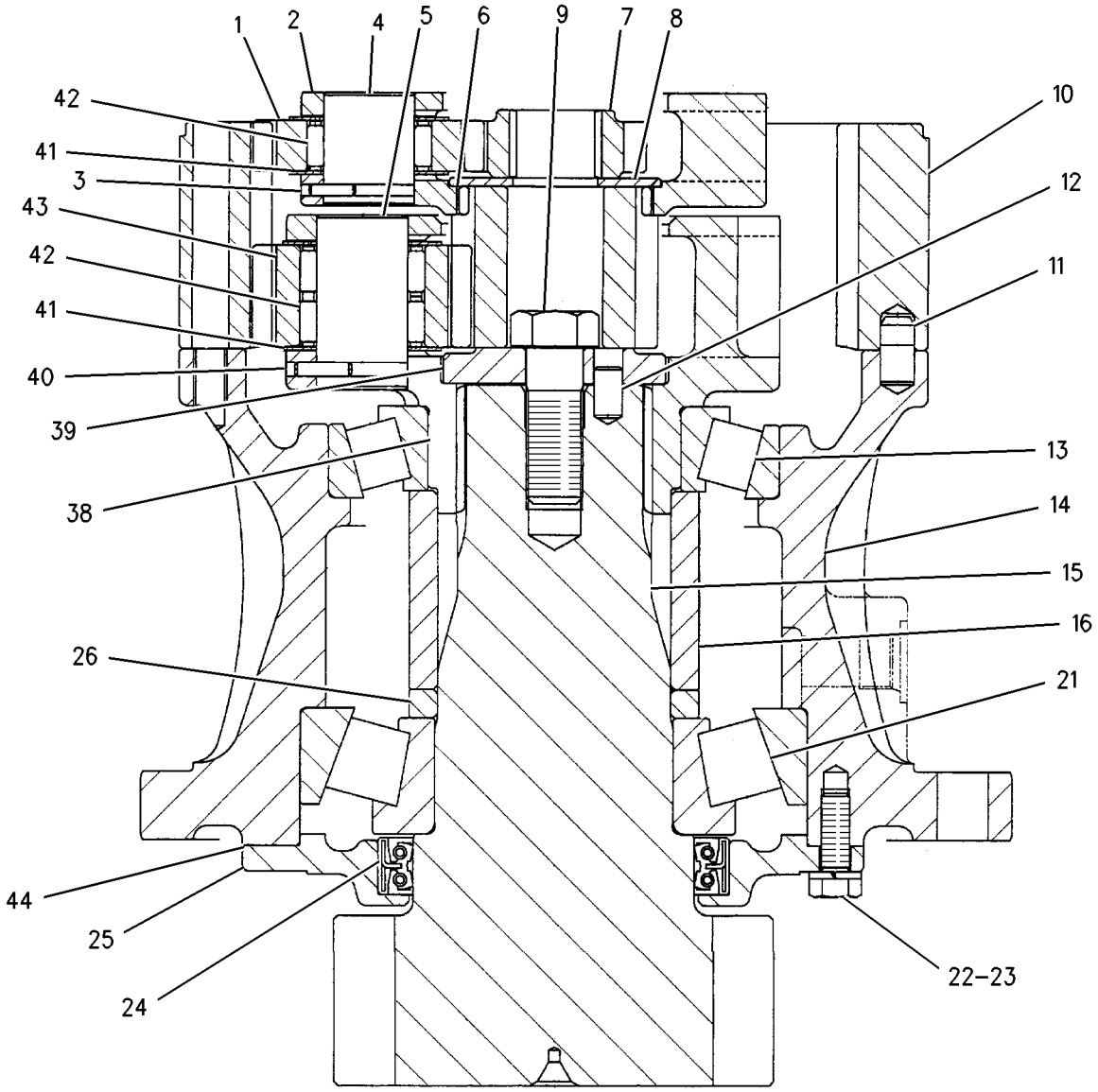

GRAPHIC #1 <END> g00772422

169-5569 DRIVE GP-SWING—WITH MOTOR

S/N: DLP1-617

PART OF 169-5546 DRIVE GP-SWING

SMCS-5459 **i06870049**

NOTE	REF NO	GRAPHIC REF	PART NUMBER	QTY	PART NAME 1 2 3 4 5 6 (PRODUCT LEVEL)	SEE PAGE
Y	1	1	**170-9893**	1	MOTOR GP-SWING	750
Y	2	1	**169-5549**	1	DRIVE GP-SWING (WITHOUT MOTOR)	522
M	3	1	**8T-5041**	12	BOLT (M12X1.75X120-MM)	
	4	1	**8T-4223**	12	WASHER-HARD (13.5X25.5X3-MM THK)	

M - METRIC PART
Y - SEPARATE ILLUSTRATION

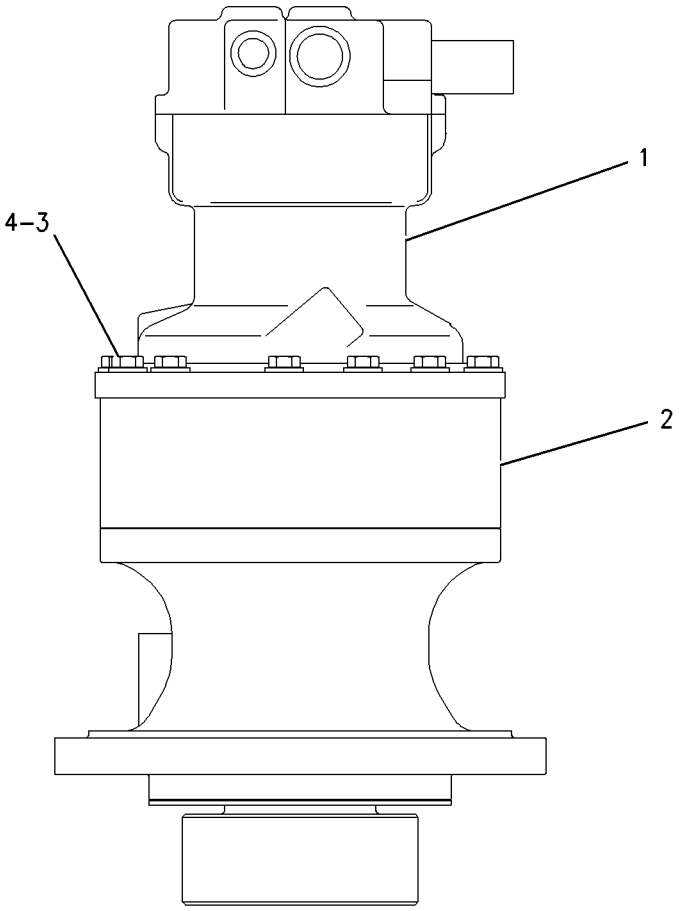

GRAPHIC #1 <END> g00756894

333-3071 DRIVE GP-SWING—WITH MOTOR

S/N: DLP617-UP

PART OF 267-6804 POWER TRAIN AR

SMCS-5459 **i07189715**

NOTE	REF NO	GRAPHIC REF	PART NUMBER	QTY	PART NAME 1 2 3 4 5 6 (PRODUCT LEVEL)	SEE PAGE
	1	1	**3K-0360**	2	SEAL-O-RING	
	2	1	**6V-7238**	1	VALVE-SHUTOFF (HYDRAULIC OIL)	
	3	1	**191-2656**	1	TUBE-GAUGE	
	4	1	**191-2657**	1	GAUGE-OIL LEVEL (DIPSTICK, SWING DRIVE)	
	5	1	**267-6744**	1	BREATHER AS (SWING DRIVE)	
		1	**4H-6112**	1	BREATHER (SWING DRIVE)	
		1	**227-6227**	1	BOSS	
		1	**267-6786**	1	FITTING	
Y	6	1	*333-3072*	1	DRIVE GP-SWING (WITH MOTOR)	526
	7	1	**099-3563**	1	CONNECTOR	

Y - SEPARATE ILLUSTRATION

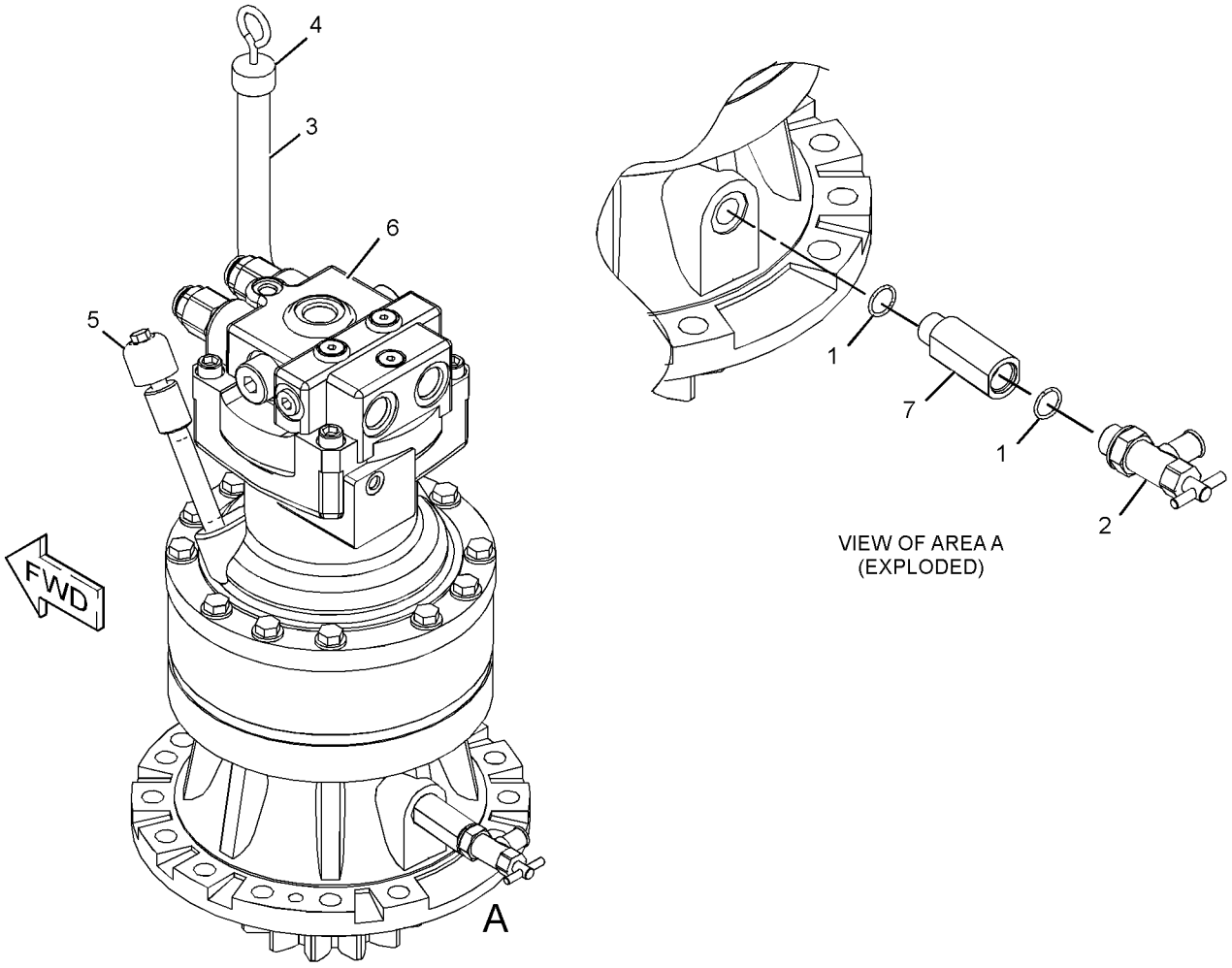

GRAPHIC #1 <END> g02718273

333-3072 DRIVE GP-SWING—WITH MOTOR

S/N: DLP618-UP

PART OF 333-3071 DRIVE GP-SWING

SMCS-5459 **i04506309**

NOTE	REF NO	GRAPHIC REF	PART NUMBER	QTY	PART NAME 1 2 3 4 5 6 (PRODUCT LEVEL)	SEE PAGE
Y	1	1	**170-9893**	1	MOTOR GP-SWING	750
Y	2	1	**333-3073**	1	DRIVE GP-SWING (WITHOUT MOTOR)	527
	3	1	**8T-4223**	12	WASHER-HARD (13.5X25.5X3-MM THK)	
M	4	1	**8T-5041**	12	BOLT (M12X1.75X120-MM)	

M - METRIC PART
Y - SEPARATE ILLUSTRATION

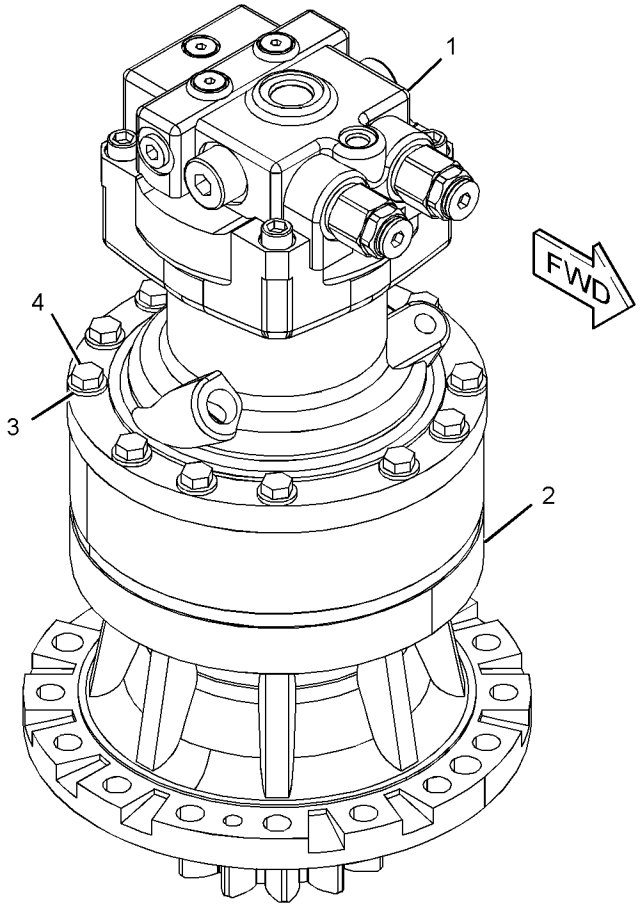

GRAPHIC #1 <END> g02719602

333-3073 DRIVE GP-SWING—WITHOUT MOTOR

S/N: DLP618-UP

FIELD REPLACEMENT FOR 169-5549—PAGE: 522

PART OF 333-3072 DRIVE GP-SWING

SMCS-5459 **i04506329**

NOTE	REF NO	GRAPHIC REF	PART NUMBER	QTY	PART NAME 1 2 3 4 5 6 (PRODUCT LEVEL)	SEE PAGE
	1	1	**093-6089**	2	DOWEL	
	2	1	**191-2602**	6	WASHER (32X56X1.2-MM THK)	
	3	1	**191-2605**	1	WASHER (30X75X3-MM THK)	
	4	1	**191-2608**	3	GEAR-PLANETARY	
	5	1	**191-2609**	3	SHAFT-PLANETARY	
	6	1	**191-2610**	3	PIN-SPRING	
	7	1	**191-2611**	1	GEAR-SUN	
	8	1	**191-2613**	1	GEAR-RING	
	9	1	**199-4627**	6	WASHER	
	10	1	**333-3048**	1	CARRIER	
	11	1	**333-3049**	3	GEAR-PLANETARY	
	12	1	**333-3050**	3	BEARING	
	13	1	**333-3051**	3	SHAFT	
	14	1	**095-0879**	3	PIN-SPRING	
	15	1	**333-3058**	3	WASHER-THRUST (30X47X2-MM THK)	
	16	1	**333-3059**	3	RING-RETAINING	
M	17	1	**7X-2619**	6	BOLT (M6X1X10-MM)	
	18	1	**353-0534**	1	BEARING	
	19	1	**353-0535**	1	BEARING	
	20	1	**353-0536**	1	CARRIER-PLANETARY	
	21	1	**353-0537**	6	BEARING	
	22	1	**353-0538**	1	GEAR-SUN	
	23	1	**353-0539**	1	SHAFT-PINION	
	24	1	**353-0540**	1	HOUSING	
	25	1	**353-0541**	1	SEAL-LIP TYPE	
	26	1	**353-0542**	1	SEAL	
	27	1	**353-0543**	2	PLATE	
	28	1	**095-0929**	1	RING-RETAINING (EXTERNAL)	

M - METRIC PART

333-3073 **DRIVE GP-SWING (**contd.**)** **i04506329**

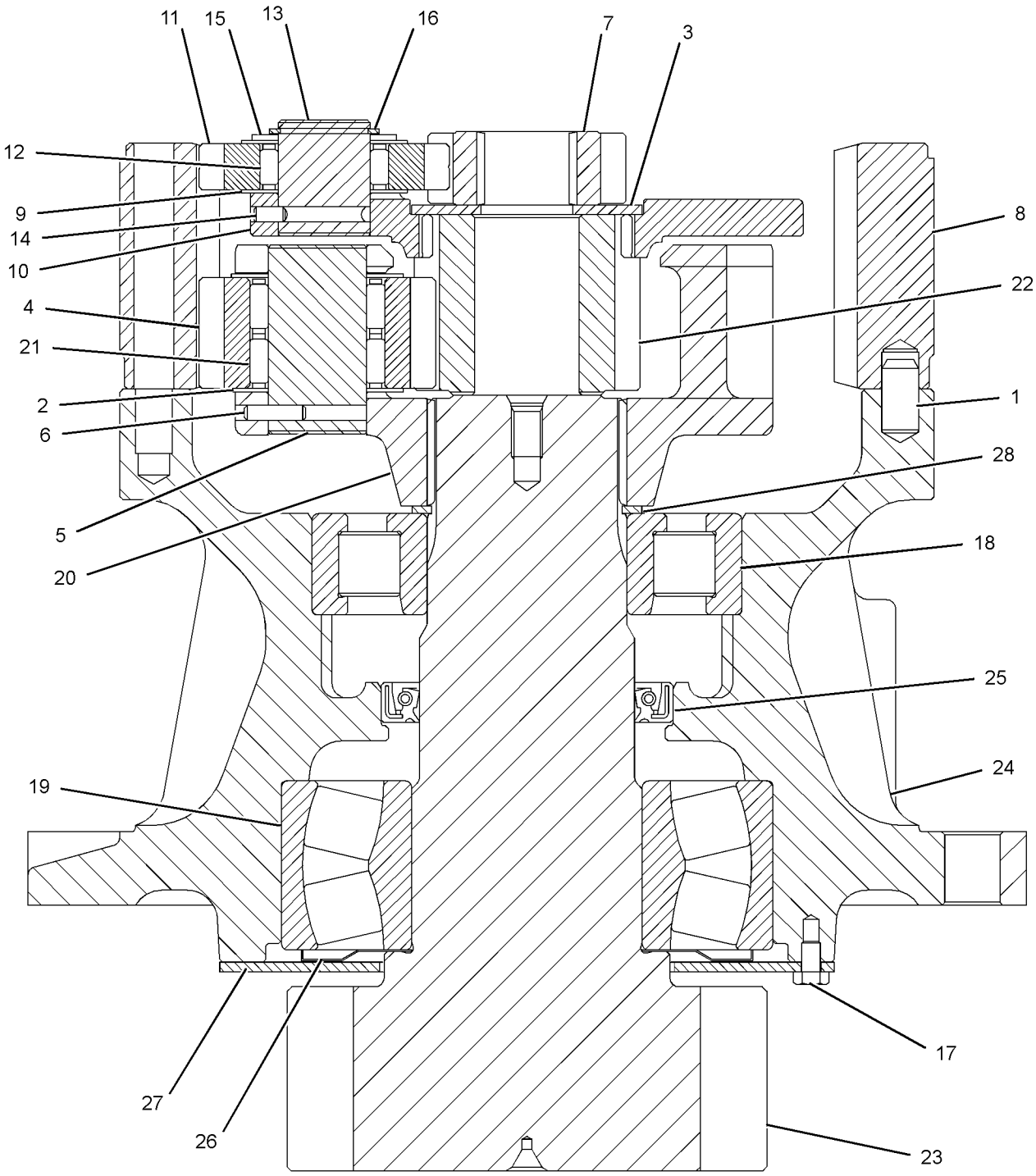

GRAPHIC #1 <END> g02721173

296-6304 FASTENER GP-SWING & FINAL DR

S/N: DLP1-UP

PART OF 267-6804 POWER TRAIN AR

SMCS-4050, 5459 **i06934613**

NOTE	REF NO	GRAPHIC REF	PART NUMBER	QTY	PART NAME 1 2 3 4 5 6 (PRODUCT LEVEL)	SEE PAGE
	1	1	**5D-1026**	1	CLAMP-BAND	
	2	1	**114-1374**	1	SUPPORT	
	3	1	**191-2543**	2	PIN	
	4	1	**8T-4121**	1	WASHER-HARD (11X21X2.5-MM THK)	
M	5	1	**8T-4191**	1	BOLT (M10X1.5X16-MM)	
M	6	1	**461-3872**	46	BOLT (M16X2X50-MM)	
	7	1	**481-3909**	14	WASHER-HARD (17.5X30X5-MM THK)	
	8	1	**9X-8268**	32	WASHER (17.5X30X3.5-MM THK)	
E	9	1	**5P-0767**		HOSE (62-CM)	
BF			**1U-8846**		SEALANT-GASKET	

B - USE AS REQUIRED
E - ORDER BY THE CENTIMETER
F - NOT SHOWN
M - METRIC PART

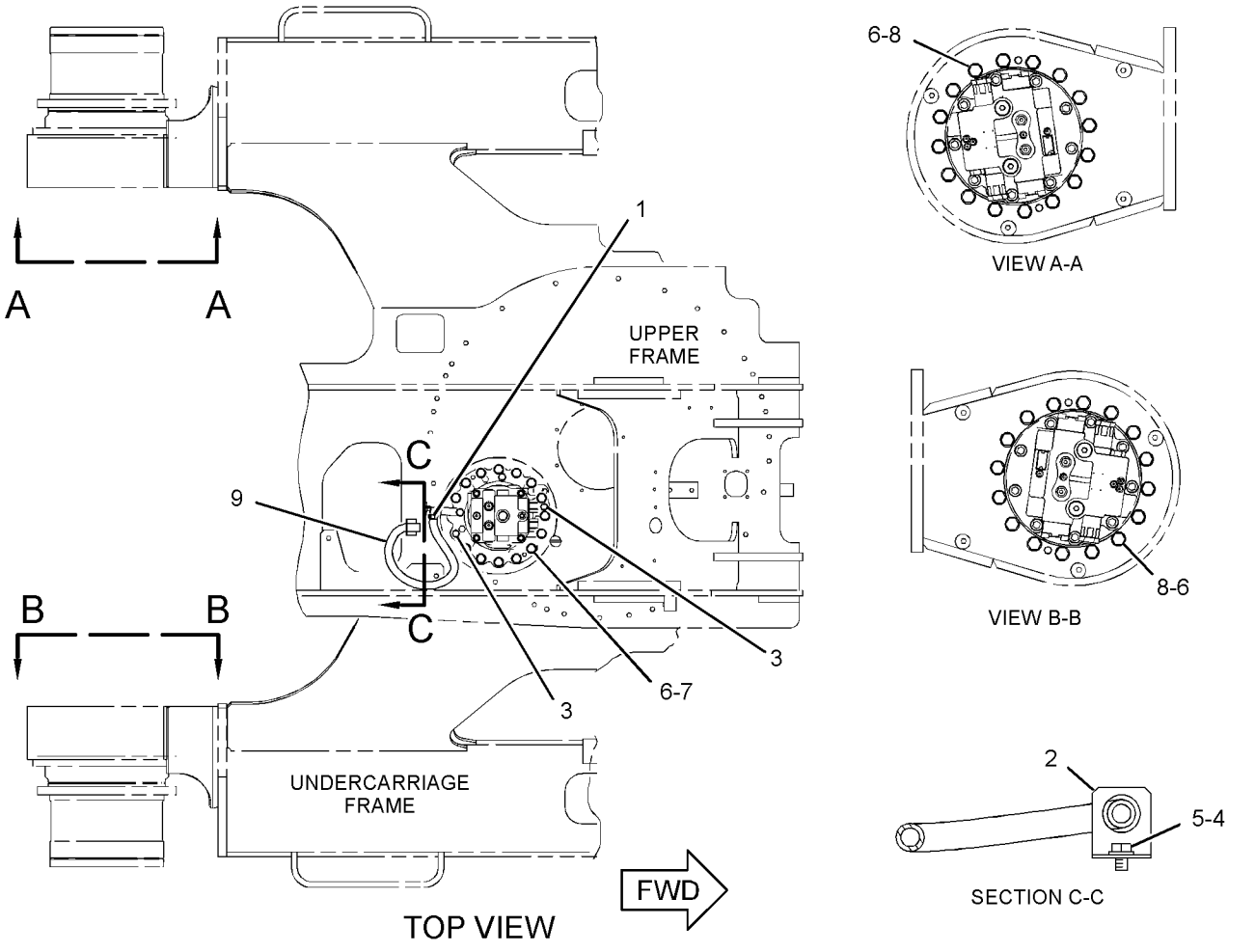

GRAPHIC #1 <END> g03883260

158-8987 FILTER & VALVE GP-PILOT–HYDRAULIC OIL

S/N: DLP1-UP

PART OF 278-6662 TANK & FILTER GP-HYDRAULIC

SMCS-5072, 5092 **i07273031**

NOTE	REF NO	GRAPHIC REF	PART NUMBER	QTY	PART NAME 1 2 3 4 5 6 (PRODUCT LEVEL)	SEE PAGE
	1	1	**5I-8670**	1	FILTER-OIL (ADVANCED EFFICIENCY) (HYDRAULIC, PILOT)	
	2	1	**215-4909**	1	VALVE GP-PILOT RELIEF (HYDRAULIC FILTER)	
	2A	1	**095-1584**	1	SEAL-O-RING	
	2B	1	**095-1590**	1	SEAL-O-RING	
	2C	1	**095-1596**	1	SEAL-O-RING	

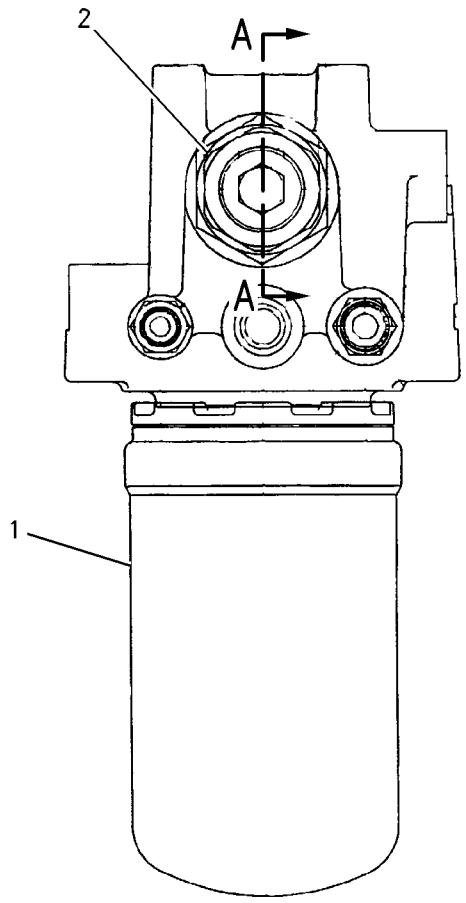

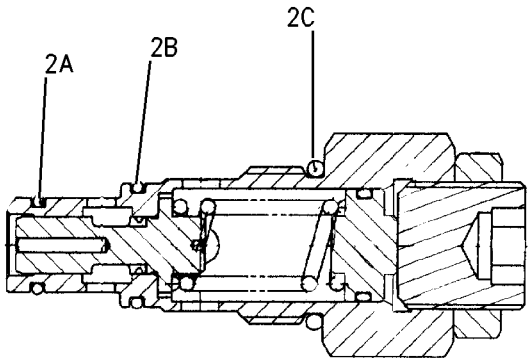

SECTION A–A

GRAPHIC #1 <END> g00842119

260-7116 FILTER AR-HYDRAULIC—HAMMER

S/N: DLP1-UP

AN ATTACHMENT

SMCS-5068 **i06668515**

NOTE	PART NUMBER	QTY	PART NAME 1 2 3 4 5 6 (PRODUCT LEVEL)	SEE PAGE
Y	*283-3599*	1	COVER GP-ACCESS (MAIN CONTROL VALVE)	364
Y	*278-6715*	1	LINES GP-FRONT (HAMMER, RETURN)	620
Y	*275-7062*	1	WIRING GP-HYDRAULIC CONTROL (RETURN, FILTER)	310

Y - SEPARATE ILLUSTRATION

<END>

416-8561 FILTER ELEMENT-OIL–FLUSHING

S/N: DLP1-UP

TO BE USED ONLY FOR FLUSHING HYDRAULIC SYSTEM

FIELD INSTALLATION

SMCS-5068 **i06942844**

NOTE	REF NO	GRAPHIC REF	PART NUMBER	QTY	PART NAME 1 2 3 4 5 6 (PRODUCT LEVEL)	SEE PAGE
					(NO SERVICED PARTS)	

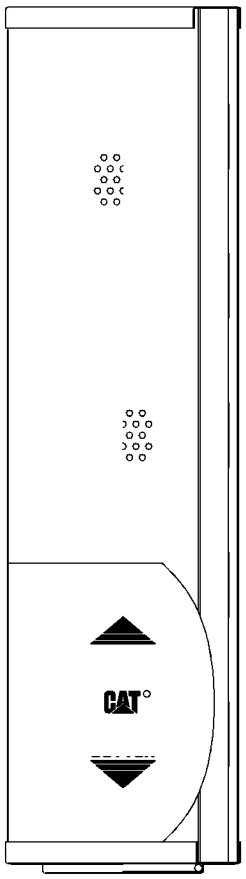

GRAPHIC #1 <END> g03432057

224-1687 FILTER GP-OIL–HYDRAULIC

S/N: DLP1-UP
PART OF 278-6715 LINES GP-FRONT
AN ATTACHMENT
TYPE 1

SMCS-3004, 4295, 431F, 5068, 5091, 5092 **i03298027**

NOTE	REF NO	GRAPHIC REF	PART NUMBER	QTY	PART NAME 1 2 3 4 5 6 (PRODUCT LEVEL)	SEE PAGE
	1	1	**224-1685**	1	SWITCH AS (HYDRAULIC FILTER BYPASS)	
	2	1	**096-6073**	1	PLUG	
	3	1	**095-1582**	1	SEAL-O-RING	
	4	1	**216-6678**	1	CASE	
	5	1	**216-6676**	1	FILTER ELEMENT AS-OIL (HYDRAULIC)	
	6	1	**216-6677**	1	HEAD AS	
	7	1	**095-1717**	1	SEAL-O-RING	

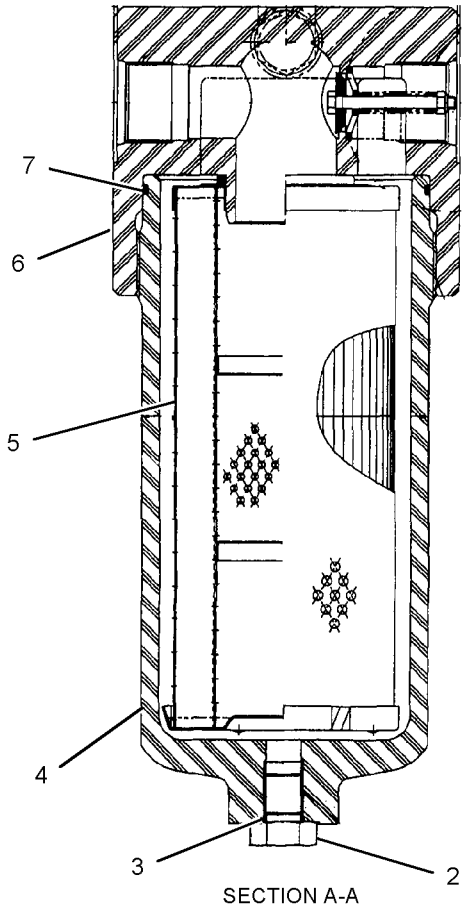

SECTION A-A

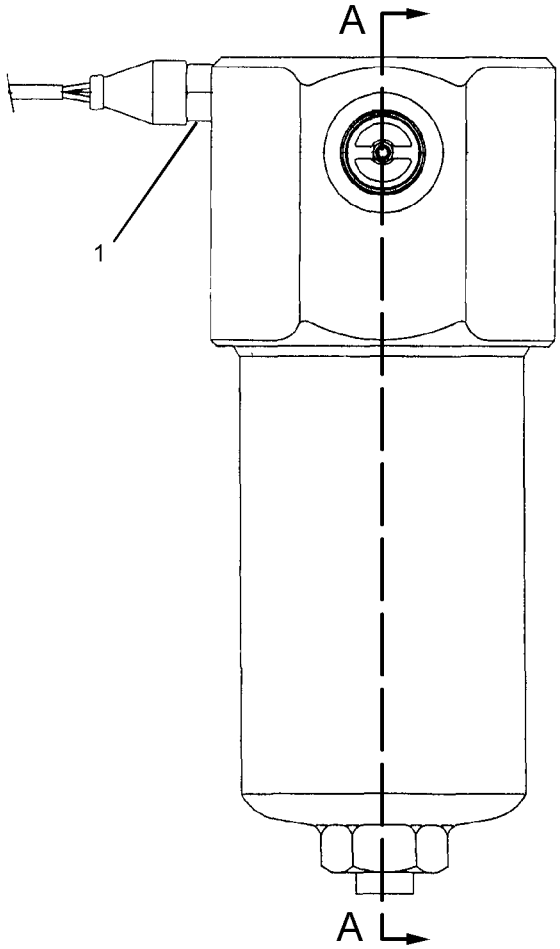

GRAPHIC #1 <END> g01029603

224-1687 FILTER GP-OIL–HYDRAULIC

S/N: DLP1-UP
PART OF 278-6715 LINES GP-FRONT
AN ATTACHMENT
TYPE 2

SMCS-3004, 4295, 431F, 5068, 5091, 5092 **i06970834**

NOTE	REF NO	GRAPHIC REF	PART NUMBER	QTY	PART NAME 1 2 3 4 5 6 (PRODUCT LEVEL)	SEE PAGE
	1	1	**224-1685**	1	SWITCH AS (HYDRAULIC FILTER BYPASS)	
	2	1	**096-6073**	1	PLUG	
	3	1	**095-1582**	1	SEAL-O-RING	
	4	1	**216-6678**	1	CASE	
		1	**095-1717**	1	SEAL-O-RING	
	5	1	**216-6676**	1	FILTER ELEMENT AS-OIL (HYDRAULIC)	
	6	1	**095-1717**	1	SEAL-O-RING	

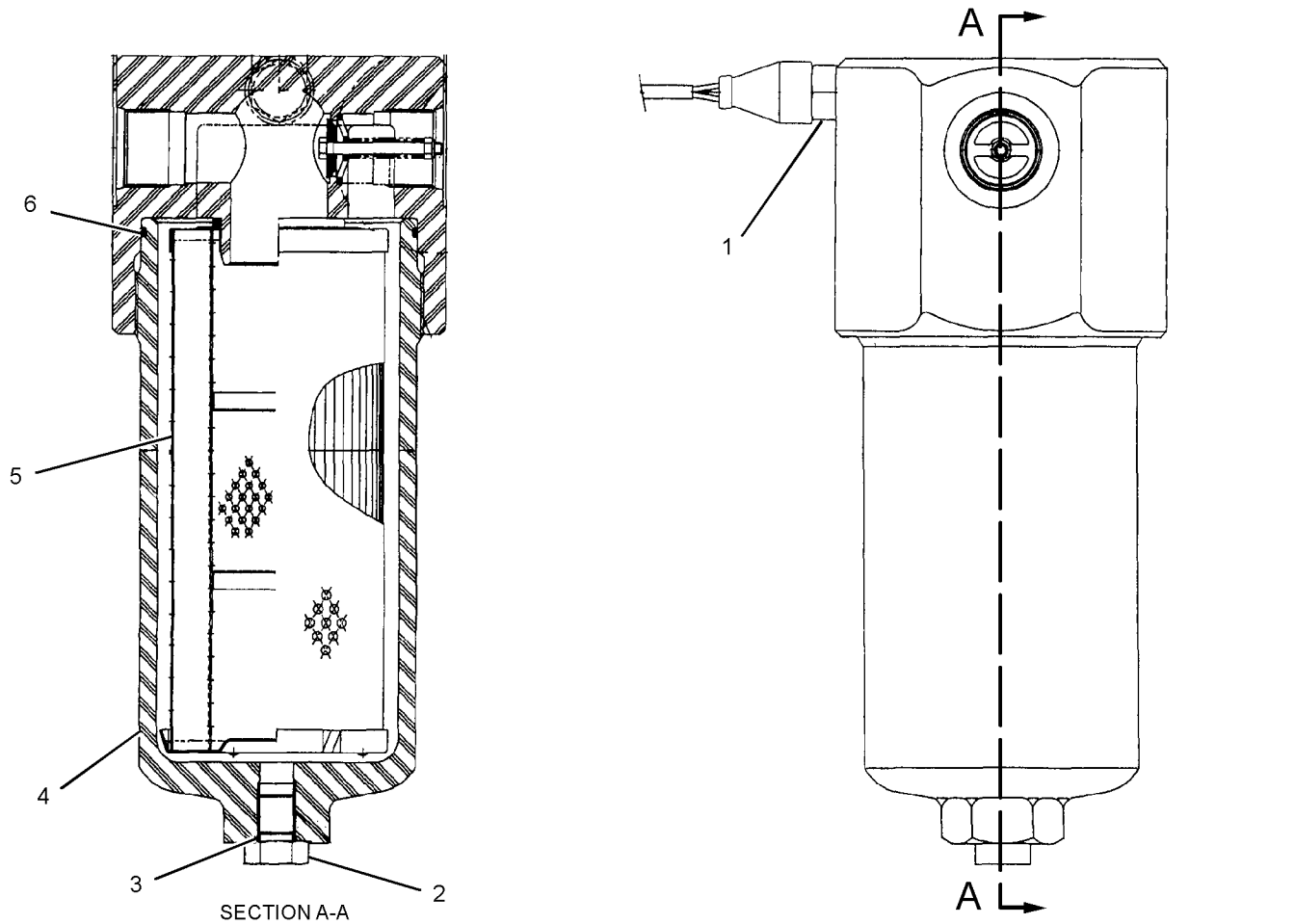

GRAPHIC #1 <END> g06185336

259-0869 FILTER GP-OIL—HYDRAULIC, MAIN RETURN

S/N: DLP1-UP

PART OF 278-6662 TANK & FILTER GP-HYDRAULIC

SMCS-3004, 4295, 431F, 5068, 5091, 5092

i03996165

NOTE	REF NO	GRAPHIC REF	PART NUMBER	QTY	PART NAME 1 2 3 4 5 6 (PRODUCT LEVEL)	SEE PAGE
	1	1	**283-6089**	1	SEAL-O-RING	
	2	1	**9S-5282**	4	WASHER-HARD (8.8X14.5X2-MM THK)	
M	3	1	**8T-4200**	4	BOLT (M8X1.25X16-MM)	
	4	1	**2S-8439**	1	SEAL-O-RING	
	5	1	**266-7800**	1	HOUSING GP-FILTER	
M	5A	1	**095-0757**	2	SCREW-MACHINE (M6X1X8.6-MM)	
	5B	1	**274-2709**	1	FLANGE AS	
	5C	1	**283-6090**	1	SEAL-O-RING	
	6	1	**266-7799**	1	BLOCK AS	
	7	1	**283-6090**	1	SEAL-O-RING	
	8	1	**266-7791**	1	COVER	
Y	9	1	**266-7792**	1	FILTER GP-OIL (HYDRAULIC, MAIN RETURN)	536
M	10	1	**8T-4184**	4	BOLT (M12X1.75X45-MM)	
	11	1	**8T-4223**	4	WASHER-HARD (13.5X25.5X3-MM THK)	

M - METRIC PART
Y - SEPARATE ILLUSTRATION

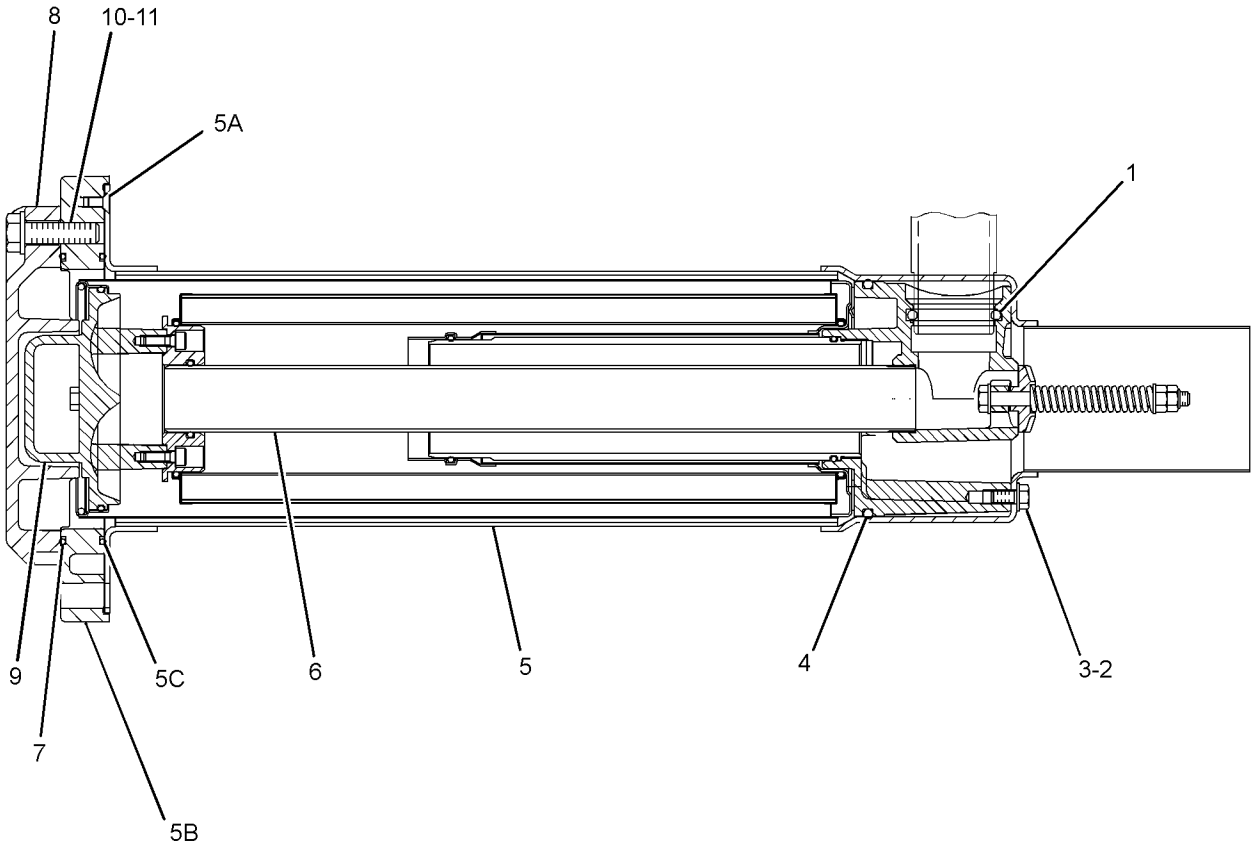

GRAPHIC #1 <END> g02173986

266-7792 FILTER GP-OIL—HYDRAULIC, MAIN RETURN

S/N: DLP1-UP

PART OF 259-0869 FILTER GP-OIL

SMCS-3004, 4295, 431F, 5068, 5091, 5092 **i04566337**

NOTE	REF NO	GRAPHIC REF	PART NUMBER	QTY	PART NAME 1 2 3 4 5 6 (PRODUCT LEVEL)	SEE PAGE
	1	1	**266-7797**	1	SHELL AS	
	2	1	**266-7796**	1	FILTER ELEMENT AS-OIL (HYDRAULIC) (MAIN RETURN)	
J	3	1	**8F-8882**	1	SEAL-O-RING	
J	4	1	**8C-3095**	1	SEAL-O-RING	
	5	1	**295-9573**	1	HANDLE AS	
	6	1	**266-7793**	1	RING-RETAINING	
J	7	1	**5F-3144**	1	SEAL-O-RING	
	8	1	**295-9618**	1	FILM-INSTRUCTION (OIL FILTER REMOVAL, HYD TANK)	
J	9	1	**095-1537**	1	SEAL-O-RING	
	10	1	**295-9617**	1	PLUG	
J	11	1	**4J-7533**	1	SEAL-O-RING	
					AVAILABLE REPAIR KIT(S):	
J			**295-9619**	1	KIT-SERVICE (OIL FILTER)	

J - KIT MARKED J SERVICES PART(S) MARKED J

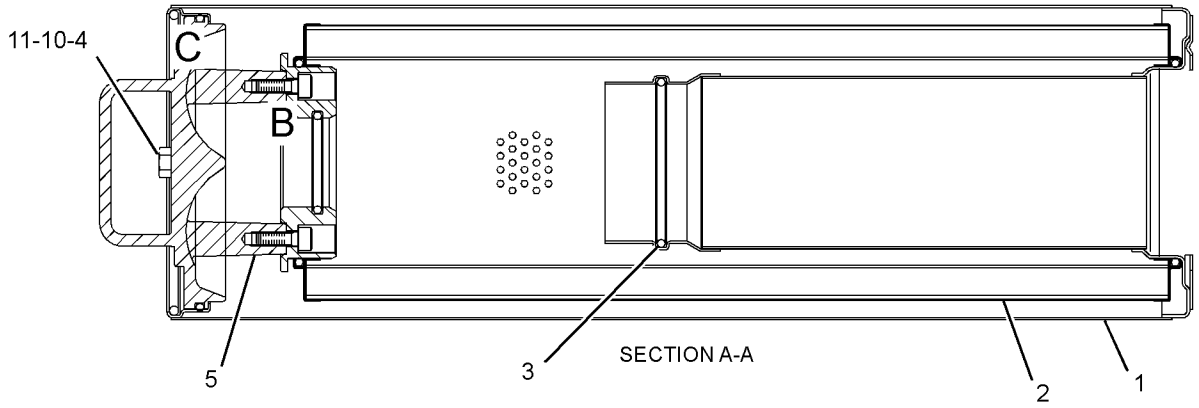

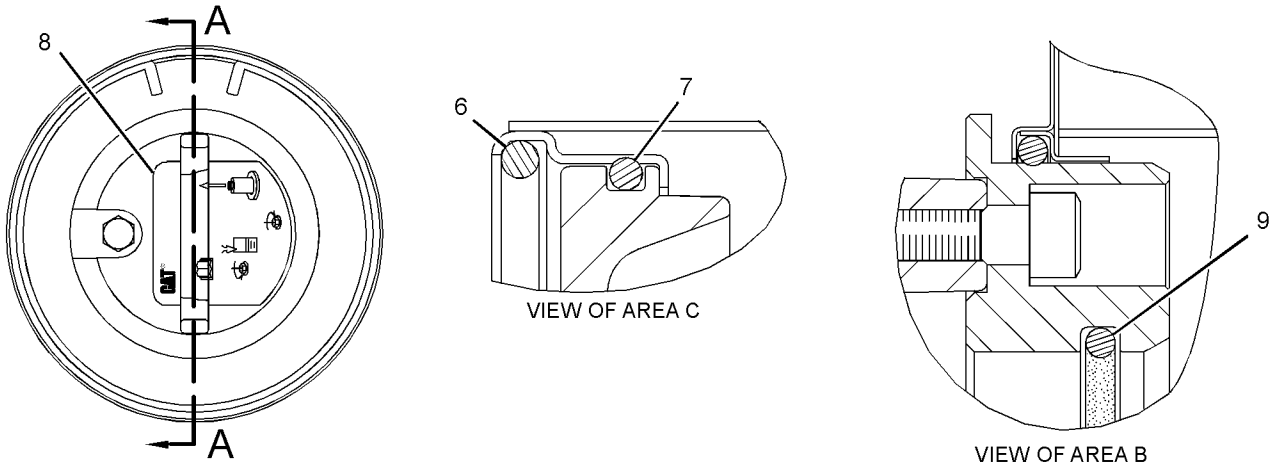

GRAPHIC #1

<END>

g01419534

289-8194 FILTER GP-OIL—HYDRAULIC, CASE DRAIN

S/N: DLP1-UP

PART OF 278-6662 TANK & FILTER GP-HYDRAULIC

SMCS-3004, 4295, 431F, 5068, 5091, 5092

i07197851

NOTE	REF NO	GRAPHIC REF	PART NUMBER	QTY	PART NAME 1 2 3 4 5 6 (PRODUCT LEVEL)	SEE PAGE
	1	1	**093-7521**	1	FILTER-OIL (ADVANCED EFFICIENCY) (HYDRAULIC, CASE DRAIN)	
	2	1	**289-8195**	1	HEAD AS-FILTER	

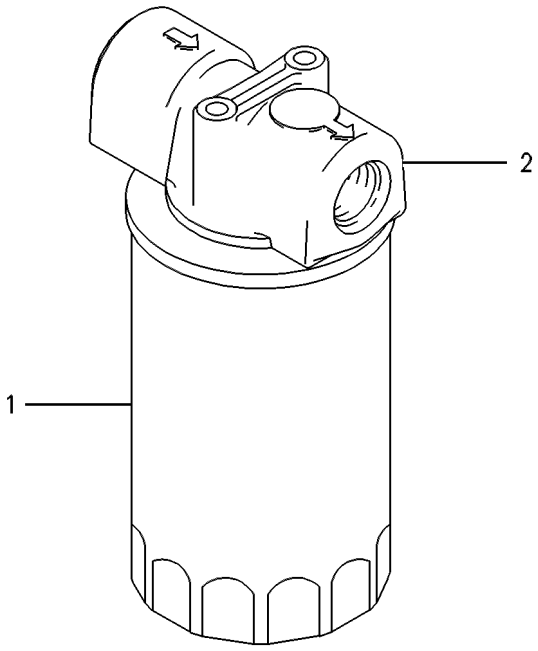

GRAPHIC #1 <END> g00258224

342-1822 FILTER GP-OIL—HYDRAULIC, MAIN RETURN

S/N: DLP1-UP

FIELD INSTALLATION

SMCS-3004, 4295, 431F, 5068, 5091, 5092 **i03965149**

NOTE	REF NO	GRAPHIC REF	PART NUMBER	QTY	PART NAME 1 2 3 4 5 6 (PRODUCT LEVEL)	SEE PAGE
	1	1	**266-7797**	1	SHELL AS	
	2	1	**342-1823**	1	ELEMENT (OIL FILTER)	
J	3	1	**8F-8882**	1	SEAL-O-RING	
	4	1	**295-9573**	1	HANDLE AS	
	5	1	**266-7793**	1	RING-RETAINING	
J	6	1	**5F-3144**	1	SEAL-O-RING	
	7	1	**295-9617**	1	PLUG	
J	8	1	**8C-3095**	1	SEAL-O-RING	
J	9	1	**4J-7533**	1	SEAL-O-RING	
J	10	1	**095-1537**	1	SEAL-O-RING	
	11	1	**342-1824**	1	FILM-INSTRUCTION (OIL FILTER REMOVAL, HYD TANK)	
					AVAILABLE REPAIR KIT(S):	
J			**295-9619**	1	KIT-SERVICE (OIL FILTER)	

J - KIT MARKED J INCLUDES PART(S) MARKED J

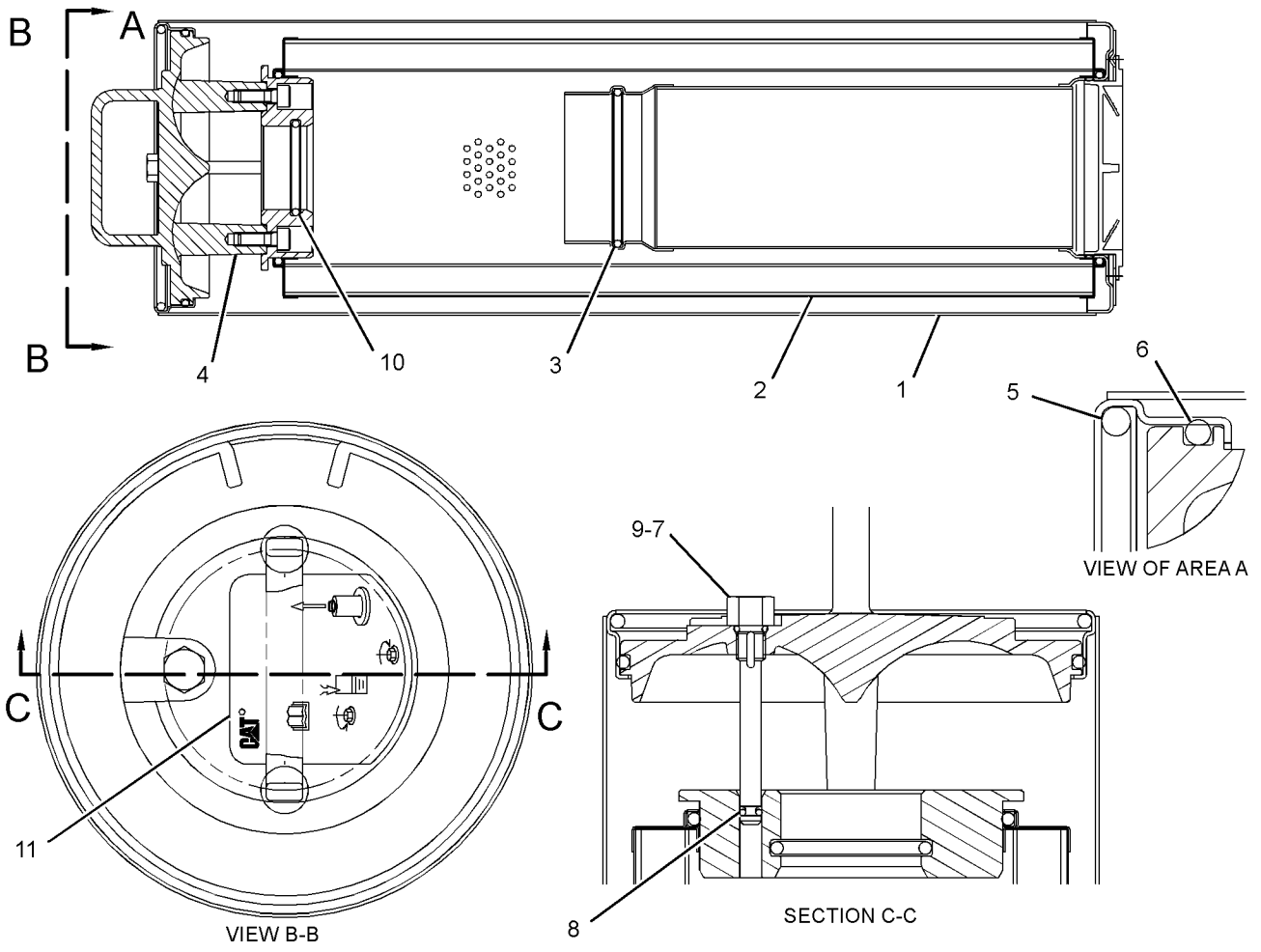

GRAPHIC #1 <END> g02163583

221-5069 FITTING GP-HYDRAULIC

S/N: DLP1-UP

PART OF 337-1272 LINES GP-FRONT, 278-6661 LINES GP-HYDRAULIC

ALSO AN ATTACHMENT

SMCS-5057, 7553

i04112515

NOTE	PART NUMBER	QTY	PART NAME 1 2 3 4 5 6 (PRODUCT LEVEL)	SEE PAGE
	221-5070	1	TEE AS (TEE,REDUCER & NUT)	
	9X-6580	1	NUT (1-3/16-12-THD)	
	6V-8398	1	SEAL-O-RING	
	6V-8942	1	REDUCER-O-RING	
	3D-2824	1	SEAL-O-RING	
	6V-8784	1	TEE-FACE SEAL	
	6V-9746	2	SEAL-O-RING	
			—OR—	
	221-5071	1	TEE AS (FABRICATED TEE)	
	3D-2824	1	SEAL-O-RING	
	6V-8398	1	SEAL-O-RING	
	6V-9746	1	SEAL-O-RING	

<END>

227-0620 GAUGE GP-SIGHT—HYDRAULIC OIL LEVEL

S/N: DLP1-UP

FIELD REPLACEMENT ORDER 347-6081—PAGE: 541

PART OF 278-6662 TANK & FILTER GP-HYDRAULIC

SMCS-7479 **i02220641**

NOTE	REF NO	GRAPHIC REF	PART NUMBER	QTY	PART NAME 1 2 3 4 5 6 (PRODUCT LEVEL)	SEE PAGE
	1	1	**236-3258**	2	BLOCK	
M	2	1	**236-3259**	2	BOLT-SPECIAL	
	3	1	**236-3257**	1	PIPE	
	4	1	**095-1519**	4	SEAL-O-RING	
	5	1	**6F-4855**	4	SEAL-O-RING	

M - METRIC PART

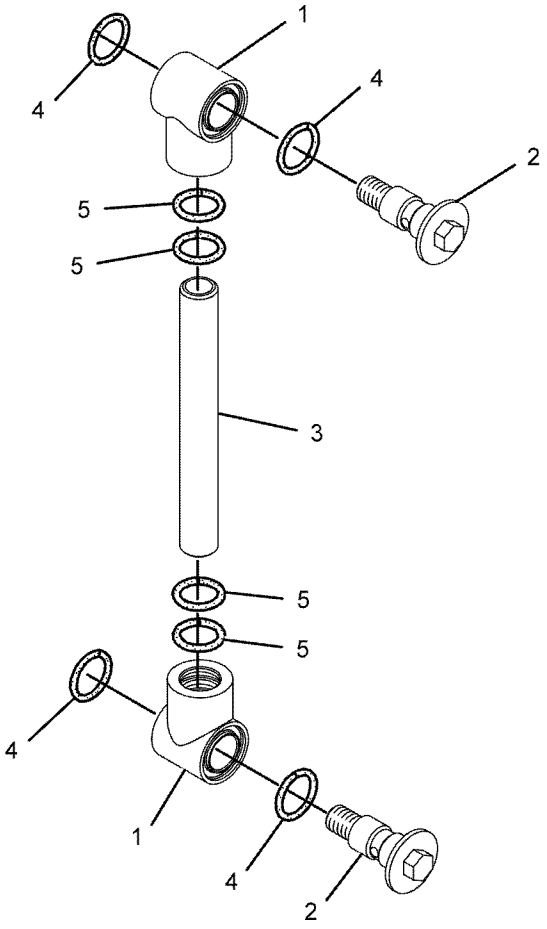

GRAPHIC #1 <END> g01091508

347-6081 GAUGE GP-SIGHT—HYDRAULIC OIL LEVEL

S/N: DLP1-UP

FIELD REPLACEMENT FOR 227-0620—PAGE: 540

PART OF 278-6662 TANK & FILTER GP-HYDRAULIC

SMCS-7479 **i04177752**

NOTE	REF NO	GRAPHIC REF	PART NUMBER	QTY	PART NAME 1 2 3 4 5 6 (PRODUCT LEVEL)	SEE PAGE
	1	1	**347-6082**	2	BLOCK	
M	2	1	**236-3259**	2	BOLT-SPECIAL	
	3	1	**236-3257**	1	PIPE	
	4	1	**6F-6672**	4	SEAL-O-RING	
	5	1	**6F-4855**	4	SEAL-O-RING	

M - METRIC PART

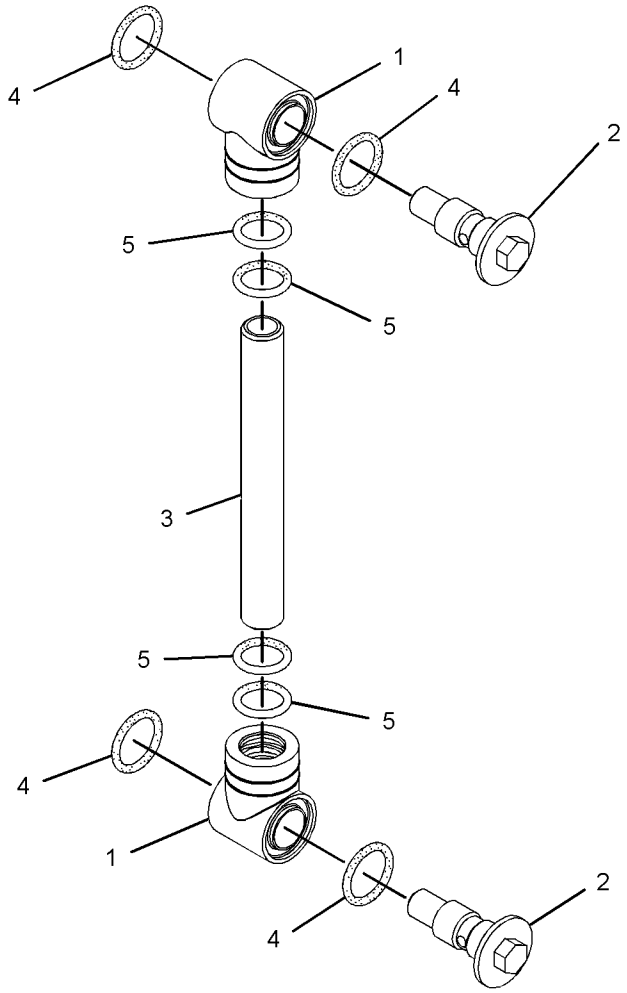

GRAPHIC #1 <END> g02270933

282-9155 HEAD GP-PUMP

S/N: DLP1-UP

PART OF 311-7404 PUMP GP-MAIN HYDRAULIC

SMCS-3222, 5070, 5086 **i02811433**

NOTE	REF NO	GRAPHIC REF	PART NUMBER	QTY	PART NAME 1 2 3 4 5 6 (PRODUCT LEVEL)	SEE PAGE
B	1	2	**099-3669**	2	SHIM (1-MM THK)	
B		2	**099-6109**	2	SHIM (1.05-MM THK)	
B		2	**099-6110**	2	SHIM (1.1-MM THK)	
B		2	**099-6111**	2	SHIM (1.15-MM THK)	
B		2	**099-6112**	2	SHIM (1.2-MM THK)	
B		2	**099-6113**	2	SHIM (1.25-MM THK)	
B		2	**099-6115**	2	SHIM (1.3-MM THK)	
	8	2	**173-1170**	1	SPRING	
	9	2	**173-3389**	2	STOPPER	
	10	2	**174-7220**	2	COVER	
	11	2	**174-7221**	1	COVER	
	12	2	**174-7222**	1	COVER	
	13	2	**192-2376**	1	PIN AS	
		2	**192-0573**	1	PIN-DOWEL	
	14	2	**200-3244**	1	SPRING	
M	15	2	**225-0224**	1	SETSCREW (M16X2X55-MM)	
M	16	2	**225-0225**	1	SETSCREW (M16X2X45-MM)	
	17	2	**267-1626**	1	SPOOL AS	
	18	2	**268-4201**	1	LEVER AS	
		2	**094-1875**	1	DOWEL	
	19	2	**268-4203**	1	PIN	
	20	2	**273-8316**	1	SEAL-O-RING	
	21	2	**273-8317**	1	SEAL-O-RING	
	22	2	**273-8318**	1	SEAL-O-RING	
	23	2	**281-6847**	1	PISTON	
	25	2	**301-6874**	1	RETAINER	
	26	2	**301-8294**	1	ADJUSTER	
	27	2	**094-1881**	1	PLATE-SLIDE	
	28	2	**095-1788**	2	RING-BACKUP	
	29	2	**099-3671**	1	SPRING	
	30	2	**185-0169**	1	GUIDE	
	31	2	**189-9763**	3	SEAL-O-RING	
	32	2	**190-7674**	2	SEAL-O-RING	
M	33	2	**200-3255**	1	NUT (M20X1.5-THD)	
	34	2	**283-4715**	1	SPRING	
	35	2	**2H-9247**	1	SEAL-O-RING	
	36	2	**3D-2891**	1	BALL	
	37	2	**3J-1907**	1	SEAL-O-RING	
	38	1	**4J-7533**	9	SEAL-O-RING	
	39	2	**6V-5391**	1	SEAL-O-RING	
M	40	2	**8T-4132**	2	NUT (M16X2-THD)	
M	41	2	**8T-4133**	1	NUT (M10X1.5-THD)	
M	42	1	**8T-4183**	8	BOLT (M12X1.75X40-MM)	
M	43	1	**8T-4192**	2	BOLT (M12X1.75X25-MM)	
	44	1	**9S-8001**	9	PLUG	

B - USE AS REQUIRED
M - METRIC PART

282-9155 **HEAD GP-PUMP** (contd.) **i02811433**

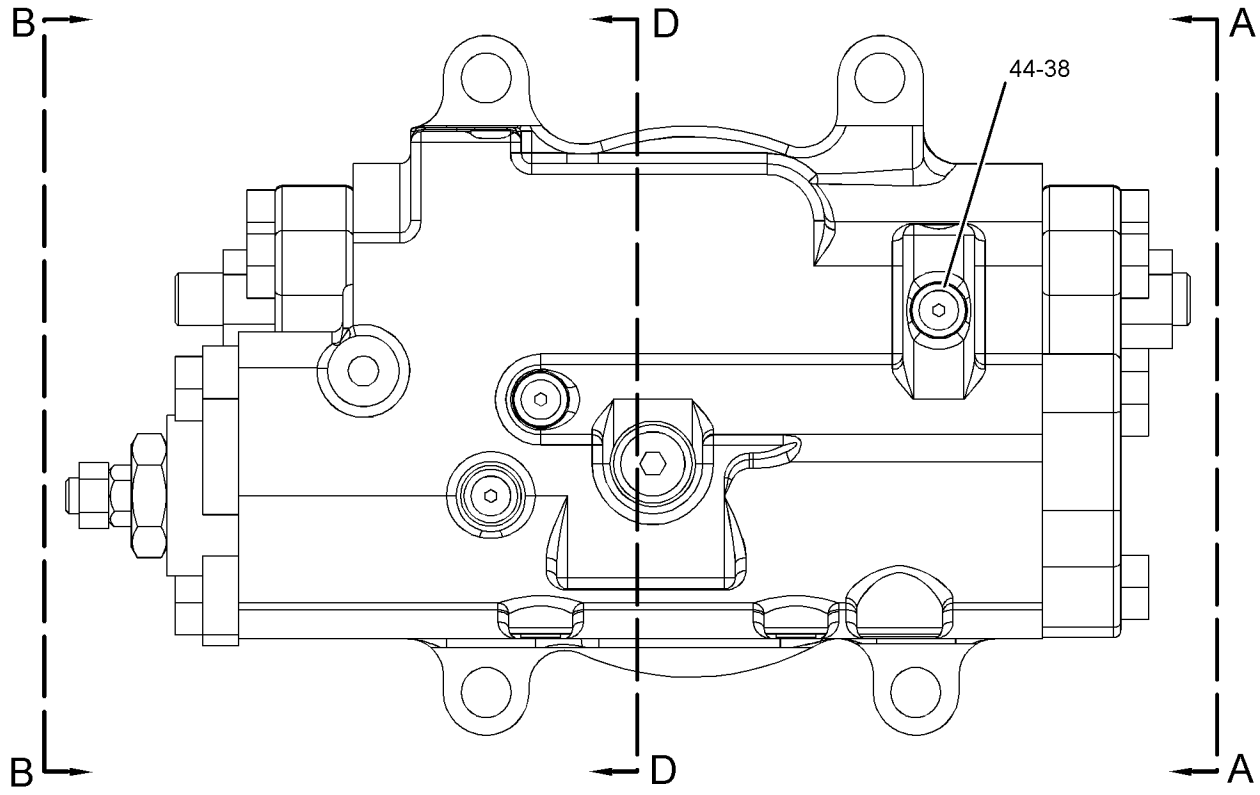

REFER TO ALL ILLUSTRATIONS OF
THIS GROUP FOR AUXILIARY VIEWS

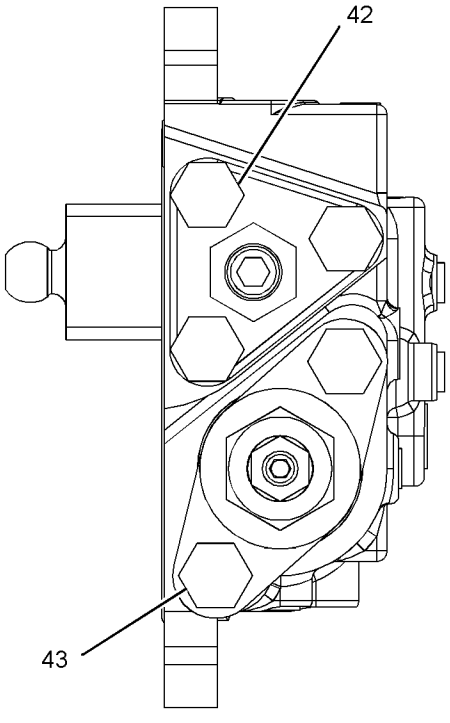

VIEW B-B

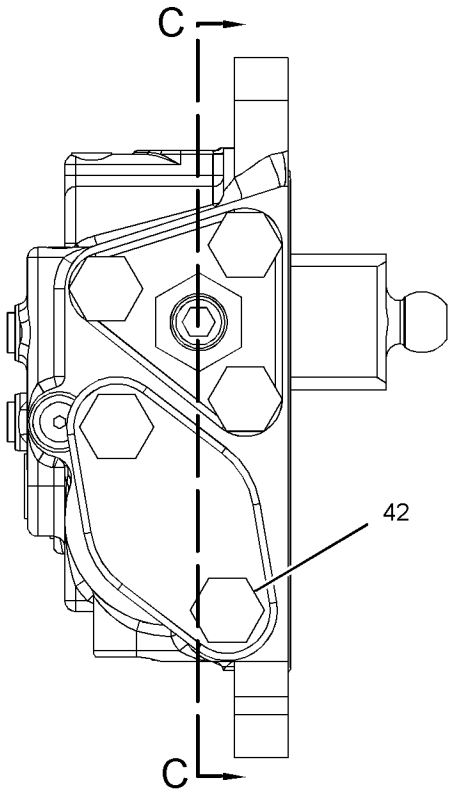

VIEW A-A

GRAPHIC #1

g01410322

282-9155 **HEAD GP-PUMP** (contd.) **i02811433**

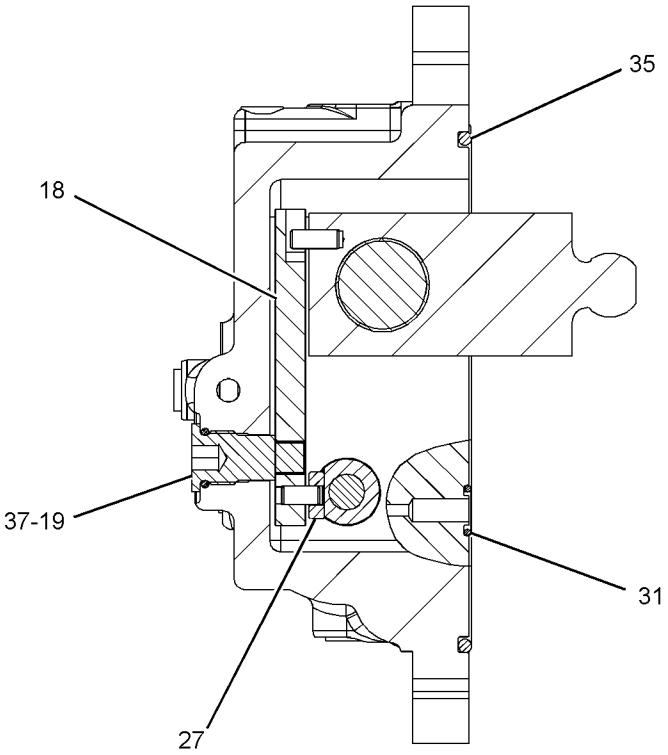

SECTION D-D

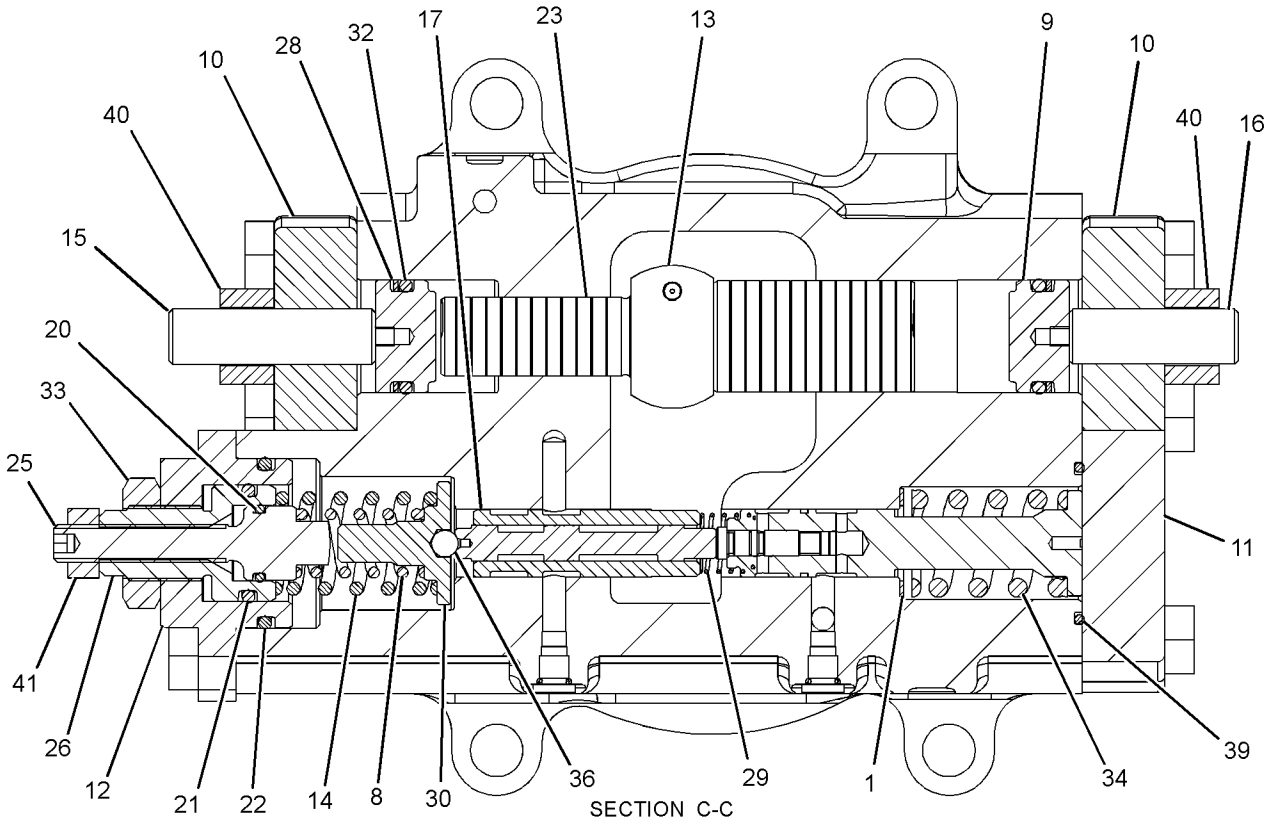

SECTION C-C

GRAPHIC #2 <END> g01410323

270-5864 HYDRAULIC AR

S/N: DLP1-UP

PART OF 301-2679 GENERAL AR

SMCS-5050 **i03044927**

NOTE	PART NUMBER	QTY	PART NAME 1 2 3 4 5 6 (PRODUCT LEVEL)	SEE PAGE
Y	*278-6666*	1	LINES GP-BOOM CYLINDER	573
Y	*278-6665*	1	LINES GP-FRONT	598
Y	*278-6667*	1	LINES GP-HYDRAULIC OIL COOLER (REAR)	635
Y	*278-6670*	1	LINES GP-HYDRAULIC OIL COOLER	637
Y	*278-6672*	1	LINES GP-PILOT (JOYSTICK, PEDALS)	640
Y	*278-6673*	1	LINES GP-PILOT (JOYSTICK, MAIN CONTROL VALVE)	648
Y	*278-6674*	1	LINES GP-PILOT (MAIN CONTROL VALVE, MANIFOLD)	654
Y	*278-6675*	1	LINES GP-PILOT (PUMP)	678
Y	*278-6671*	1	LINES GP-PUMP (PUMP SUPPLY)	734
Y	*278-6511*	1	LINES GP-TRAVEL MOTOR	745
Y	*278-6664*	1	MOUNTING GP-MAIN CONTROL VALVE	757
Y	*279-7721*	1	PUMP & MTG GP-MAIN HYDRAULIC	760
Y	*278-6660*	1	TANK & MTG GP-HYDRAULIC	794
Y	**270-5866**	1	VALVE GP-MAIN CONTROL	807

Y - SEPARATE ILLUSTRATION

<END>

234-6613 LEVER GP-CONTROL—HYDRAULIC LOCKOUT

S/N: DLP1-UP

PART OF 421-1434 CONSOLE GP-OPERATOR

SMCS-4805, 5063 **i07113708**

NOTE	REF NO	GRAPHIC REF	PART NUMBER	QTY	PART NAME 1 2 3 4 5 6 (PRODUCT LEVEL)	SEE PAGE
	1	1	**3S-2093**	1	STRAP-CABLE	
	2	1	**4I-3038**	2	WASHER (3.3X8X0.5-MM THK)	
	3	1	**111-4799**	1	SWITCH AS-LIMIT (HYDRAULIC LOCKOUT)	
		1	**102-8803**	1	KIT-RECEPTACLE (3-PIN)	
					(INCLUDES RECEPTACLE AS & WEDGE)	
		1	**8T-8729**	3	PIN-CONNECTOR (16-GA TO 18-GA)	
D		1	**5P-5998**		TUBE (0.3-M)	
M	4	1	**185-8286**	2	SCREW-MACHINE (M4X0.7X8-MM)	
	5	1	**234-6615**	1	KNOB	
	6	1	**087-4683**	2	LOCKWASHER	
M	7	1	**120-9027**	2	SCREW-PAN HEAD (M3X0.5X16-MM)	

D - ORDER BY THE METER
M - METRIC PART

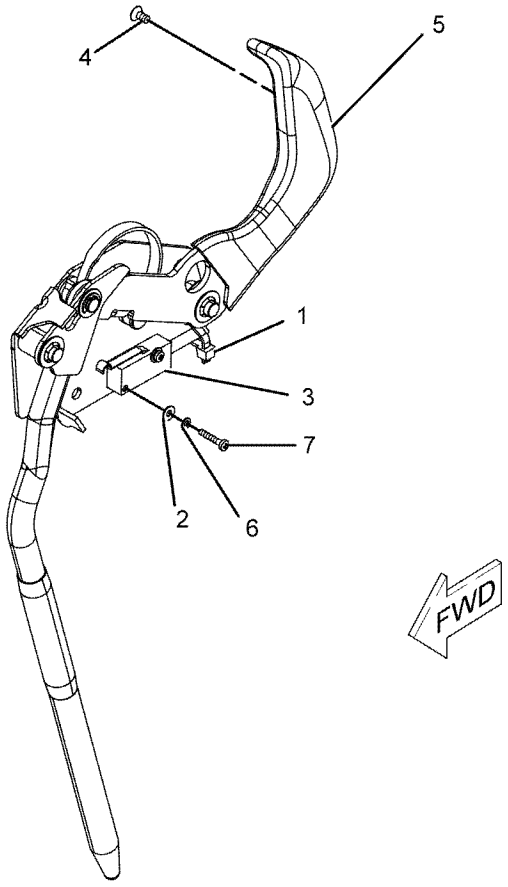

GRAPHIC #1 <END> g01096293

321-0344 LINES AR-AUXILIARY HYDRAULIC–BOOM, HIGH PRESSURE

S/N: DLP1-UP
AN ATTACHMENT

SMCS-5057 **i05214309**

NOTE	PART NUMBER	QTY	PART NAME 1 2 3 4 5 6 (PRODUCT LEVEL)	SEE PAGE
Y	*277-1164*	1	LINES GP-AUXILIARY HYDRAULIC (HIGH PRESSURE, REACH BOOM)	549
Y	*316-3791*	1	SUPPORT GP-LINES	783

Y - SEPARATE ILLUSTRATION

<END>

321-0345 LINES AR-AUXILIARY HYDRAULIC–BOOM, MEDIUM PRESSURE

S/N: DLP1-UP
AN ATTACHMENT

SMCS-5057 **i05214450**

NOTE	PART NUMBER	QTY	PART NAME 1 2 3 4 5 6 (PRODUCT LEVEL)	SEE PAGE
Y	*277-1165*	1	LINES GP-AUXILIARY HYDRAULIC (MEDIUM PRESSURE, REACH BOOM)	551
Y	*316-3791*	1	SUPPORT GP-LINES	783

Y - SEPARATE ILLUSTRATION

<END>

398-8994 LINES AR-AUXILIARY HYDRAULIC–BOOM, HIGH PRESSURE

S/N: DLP1-UP
AN ATTACHMENT

SMCS-5057 **i06587789**

NOTE	PART NUMBER	QTY	PART NAME 1 2 3 4 5 6 (PRODUCT LEVEL)	SEE PAGE
Y	*316-3791*	1	SUPPORT GP-LINES	783
			–OR–	
Y	*390-4281*	1	SUPPORT GP-LINES (AUXILIARY)	784
Y	*390-4278*	1	LINES GP-AUXILIARY HYDRAULIC (REACH BOOM, HIGH PRESSURE)	557

Y - SEPARATE ILLUSTRATION

<END>

398-8995 LINES AR-AUXILIARY HYDRAULIC—MEDIUM PRESSURE, REACH BOOM

S/N: DLP1-UP
AN ATTACHMENT

SMCS-5057 **i05188935**

NOTE	PART NUMBER	QTY	PART NAME 1 2 3 4 5 6 (PRODUCT LEVEL)	SEE PAGE
Y	*316-3791*	1	SUPPORT GP-LINES	783
			—OR—	
Y	*390-4281*	1	SUPPORT GP-LINES (AUXILIARY)	784
Y	*390-4279*	1	LINES GP-AUXILIARY HYDRAULIC (MEDIUM PRESSURE, REACH BOOM)	559

Y - SEPARATE ILLUSTRATION

<END>

321-0346 LINES AR-QUICK COUPLER

S/N: DLP1-UP
AN ATTACHMENT

SMCS-6129 **i05214583**

NOTE	PART NUMBER	QTY	PART NAME 1 2 3 4 5 6 (PRODUCT LEVEL)	SEE PAGE
Y	*277-1167*	1	LINES GP-COUPLER (REACH BOOM)	584
Y	*316-3791*	1	SUPPORT GP-LINES	783

Y - SEPARATE ILLUSTRATION

<END>

398-8996 LINES AR-QUICK COUPLER—REACH BOOM

S/N: DLP1-UP
AN ATTACHMENT

SMCS-6129 **i06582564**

NOTE	PART NUMBER	QTY	PART NAME 1 2 3 4 5 6 (PRODUCT LEVEL)	SEE PAGE
Y	*316-3791*	1	SUPPORT GP-LINES	783
			—OR—	
Y	*390-4281*	1	SUPPORT GP-LINES (AUXILIARY)	784
Y	*390-4280*	1	LINES GP-COUPLER (REACH BOOM)	594

Y - SEPARATE ILLUSTRATION

<END>

277-1164 LINES GP-AUXILIARY HYDRAULIC–BOOM, HIGH PRESSURE

S/N: DLP1-UP

PART OF 321-0344 LINES AR-AUXILIARY HYDRAULIC AN ATTACHMENT

SMCS-5057 **i04550002**

NOTE	REF NO	GRAPHIC REF	PART NUMBER	QTY	PART NAME 1 2 3 4 5 6 (PRODUCT LEVEL)	SEE PAGE
	1	1	**3B-8485**	2	ELBOW	
I	2	1	**321-0280**	1	HOSE AS	
	3	1	**253-6276**	2	PLATE	
I	4	1	**321-0276**	1	HOSE AS	
J	5	1	**277-1237**	1	TUBE GP-HYDRAULIC (BOOM)	
L	5A	1	**6V-9746**	1	SEAL-O-RING	
J	6	1	**321-0272**	1	TUBE GP-HYDRAULIC (BOOM)	
L	6A	1	**1P-3703**	1	SEAL-RECTANGULAR	
LM	6B	1	**8T-4139**	4	BOLT (M12X1.75X30-MM)	
	7	1	**1P-3703**	2	SEAL-RECTANGULAR	
	8	1	**6V-0400**	4	FLANGE-HALF	
	9	1	**6V-9746**	2	SEAL-O-RING	
M	10	1	**7X-2549**	4	BOLT (M12X1.75X100-MM)	
	11	1	**7Y-3732**	8	CLIP	
	12	1	**7Y-4868**	8	CLIP	
M	13	1	**8T-4184**	12	BOLT (M12X1.75X45-MM)	
	14	1	**8T-4223**	24	WASHER-HARD (13.5X25.5X3-MM THK)	
M	15	1	**8T-4956**	8	BOLT (M12X1.75X35-MM)	

I - REFER TO HYDRAULIC INFORMATION SYSTEM
J - TUBE MAY BE 1-PIECE OR 2-PIECE DESIGN (2-PIECE DESIGN SHOWN IN GRAPHIC)
L - PARTS REQUIRED ONLY WITH 2-PIECE TUBE DESIGN
M - METRIC PART

277-1164 **LINES GP-AUXILIARY HYDRAULIC (**contd.**)** **i04550002**

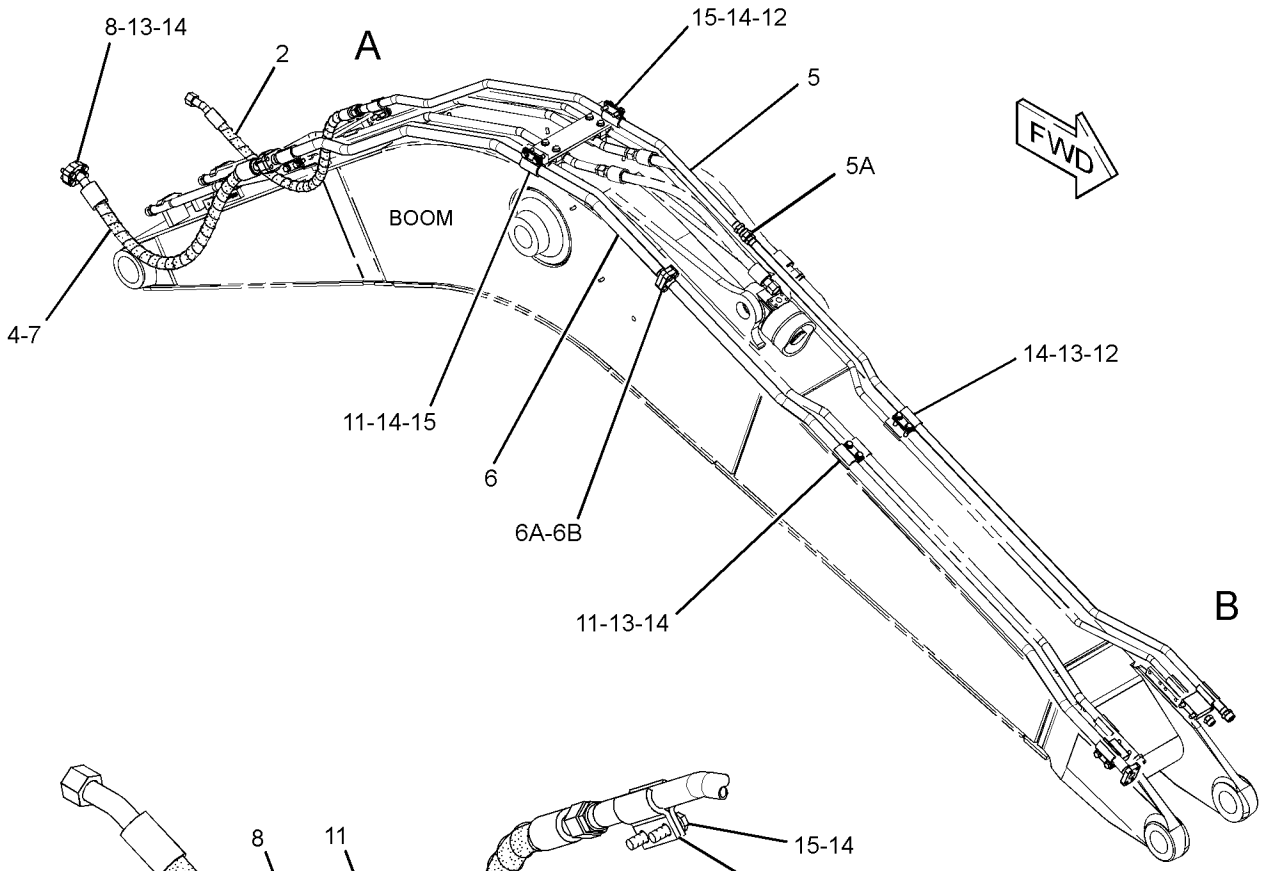

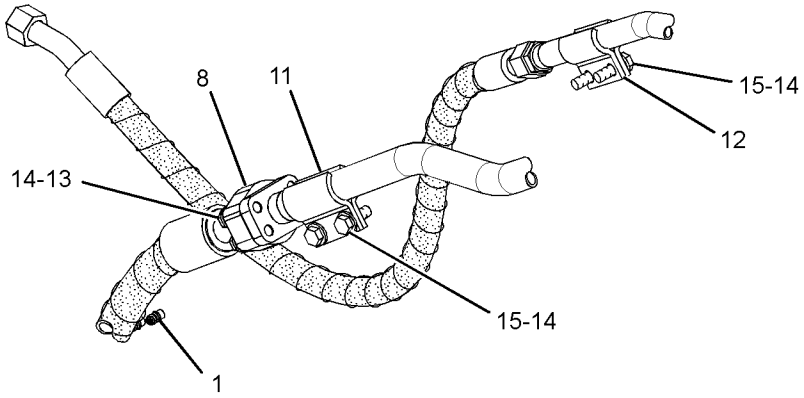

VIEW OF AREA A

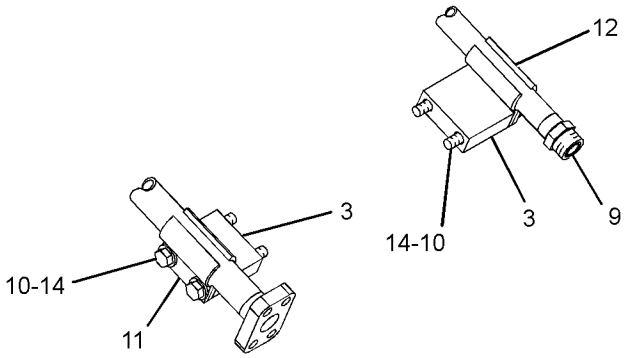

VIEW OF AREA B

GRAPHIC #1 <END> g02721645

277-1165 LINES GP-AUXILIARY HYDRAULIC–BOOM, MEDIUM PRESSURE

S/N: DLP1-UP

PART OF 321-0345 LINES AR-AUXILIARY HYDRAULIC

AN ATTACHMENT

SMCS-5057 **i02864036**

NOTE	REF NO	GRAPHIC REF	PART NUMBER	QTY	PART NAME 1 2 3 4 5 6 (PRODUCT LEVEL)	SEE PAGE
	1	1	**093-1295**	1	CLAMP	
	2	1	**149-1738**	5	CLIP	
	3	1	**153-8867**	4	CLIP	
	4	1	**193-6606**	2	PLATE	
	5	1	**268-6886**	1	CLIP AS	
	6	1	**282-5527**	2	SUPPORT AS	
	7	1	**282-5528**	1	CLIP AS	
	8	1	**282-5530**	1	TUBE AS	
	9	1	**316-3873**	1	TUBE AS	
	10	1	**294-6469**	1	TUBE AS	
	11	1	**316-3874**	1	TUBE AS	
	12	1	**093-1291**	2	CLAMP	
M	13	1	**096-9986**	1	BOLT (M12X1.75X55-MM)	
	14	1	**6V-8398**	4	SEAL-O-RING	
	15	1	**7J-9108**	2	SEAL-O-RING	
M	16	1	**7X-2549**	4	BOLT (M12X1.75X100-MM)	
	17	1	**7Y-4868**	1	CLIP	
	18	1	**8T-4121**	2	WASHER-HARD (11X21X2.5-MM THK)	
M	19	1	**8T-4133**	2	NUT (M10X1.5-THD)	
M	20	1	**8T-4139**	8	BOLT (M12X1.75X30-MM)	
M	21	1	**8T-4185**	2	BOLT (M10X1.5X50-MM)	
	22	1	**8T-4223**	17	WASHER-HARD (13.5X25.5X3-MM THK)	
M	23	1	**8T-4910**	4	BOLT (M12X1.75X60-MM)	

M - METRIC PART

277-1165 **LINES GP-AUXILIARY HYDRAULIC (**contd.**)** **i02864036**

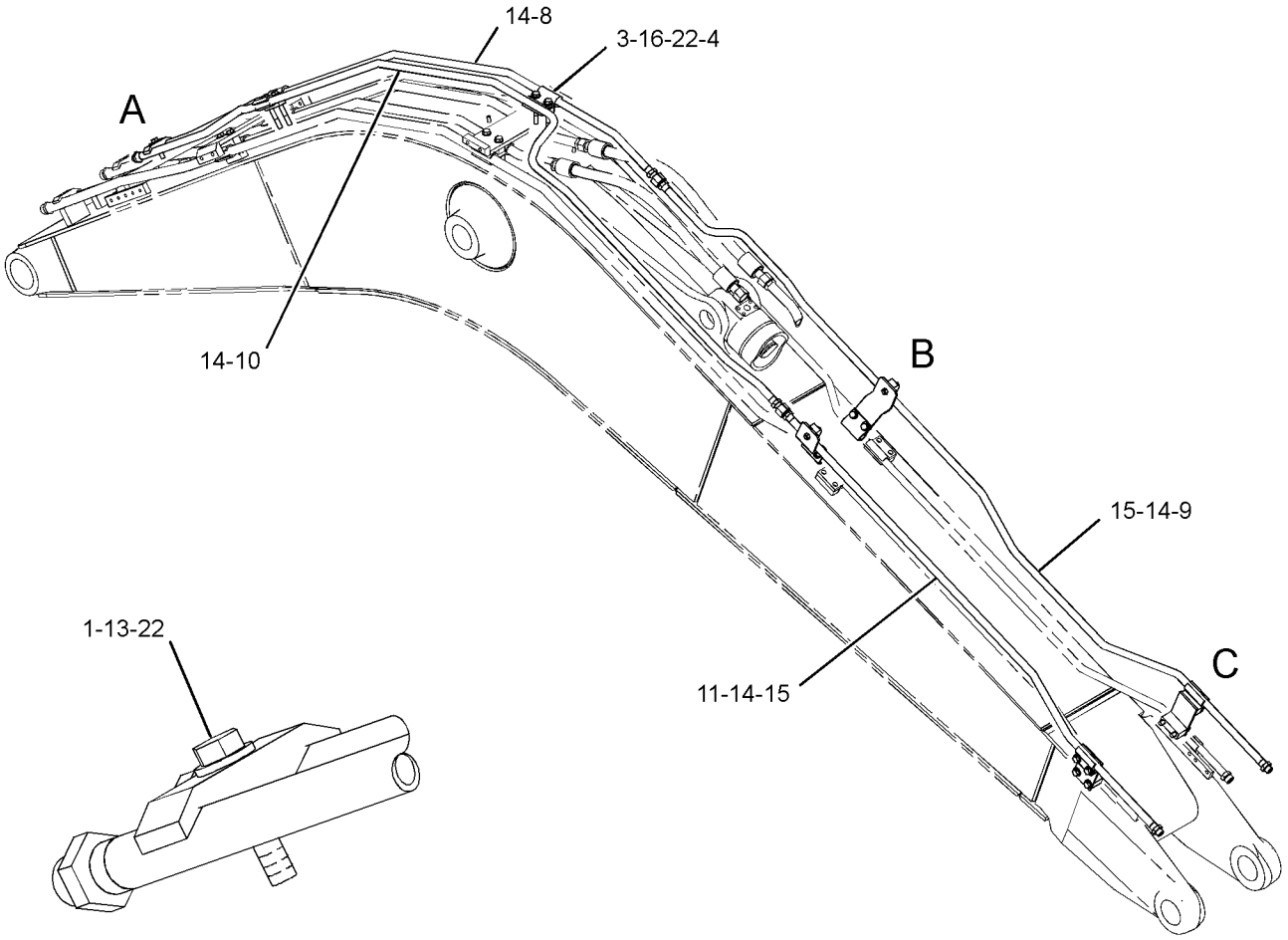

VIEW OF AREA A

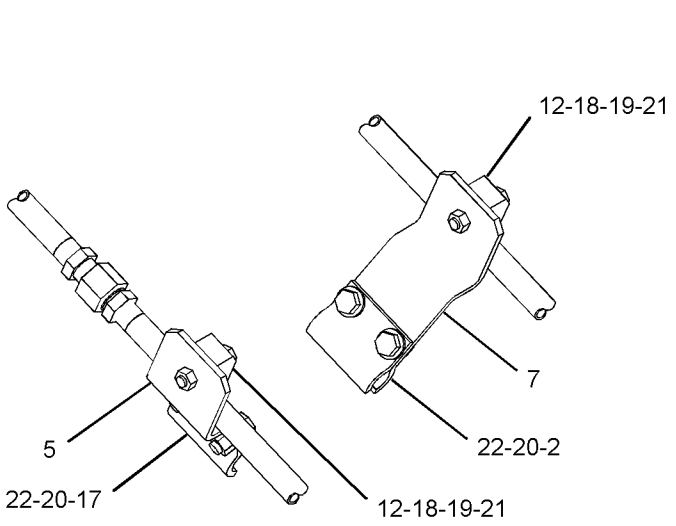

VIEW OF AREA B

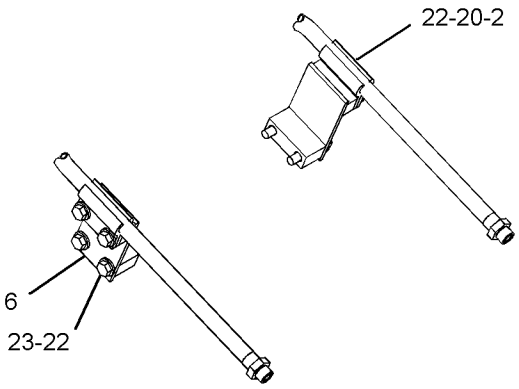

VIEW OF AREA C

GRAPHIC #1 <END> g01414734

288-7398 LINES GP-AUXILIARY HYDRAULIC—STICK, HIGH PRESSURE

S/N: DLP1-UP
FOR USE WITH 2.5-M (8.2-FT) STICK
AN ATTACHMENT

SMCS-5057 **i06750608**

NOTE	REF NO	GRAPHIC REF	PART NUMBER	QTY	PART NAME 1 2 3 4 5 6 (PRODUCT LEVEL)	SEE PAGE
M	1	1	**101-7403**	4	BOLT-SOCKET HEAD (M10X1.5X80-MM)	
I	2	1	**187-6692**	1	HOSE AS	
I	3	1	**253-6694**	1	HOSE AS	
Y	4	1	**282-5894**	2	VALVE GP-MANUAL (AUXILIARY, SHUTOFF)	825
	5	1	**288-7690**	2	CLIP AS	
	6	1	**288-7691**	2	CLIP AS	
	7	1	**288-7721**	1	TUBE AS	
	8	1	**294-6519**	1	TUBE AS	
	9	1	**1P-3703**	4	SEAL-RECTANGULAR	
	10	1	**6V-0400**	4	FLANGE-HALF	
	11	1	**6V-9746**	1	SEAL-O-RING	
	12	1	**7Y-3732**	2	CLIP	
	13	1	**7Y-4868**	2	CLIP	
M	14	1	**8T-4139**	4	BOLT (M12X1.75X30-MM)	
M	15	1	**8T-4184**	8	BOLT (M12X1.75X45-MM)	
M	16	1	**8T-4195**	4	BOLT (M10X1.5X30-MM)	
	17	1	**8T-4223**	16	WASHER-HARD (13.5X25.5X3-MM THK)	
	18	1	**8T-4896**	4	WASHER-HARD (10.2X18.5X2.5-MM THK)	
M	19	1	**8T-4910**	8	BOLT (M12X1.75X60-MM)	

I - REFER TO HYDRAULIC INFORMATION SYSTEM
M - METRIC PART
Y - SEPARATE ILLUSTRATION

288-7398 **LINES GP-AUXILIARY HYDRAULIC (**contd.**)** **i06750608**

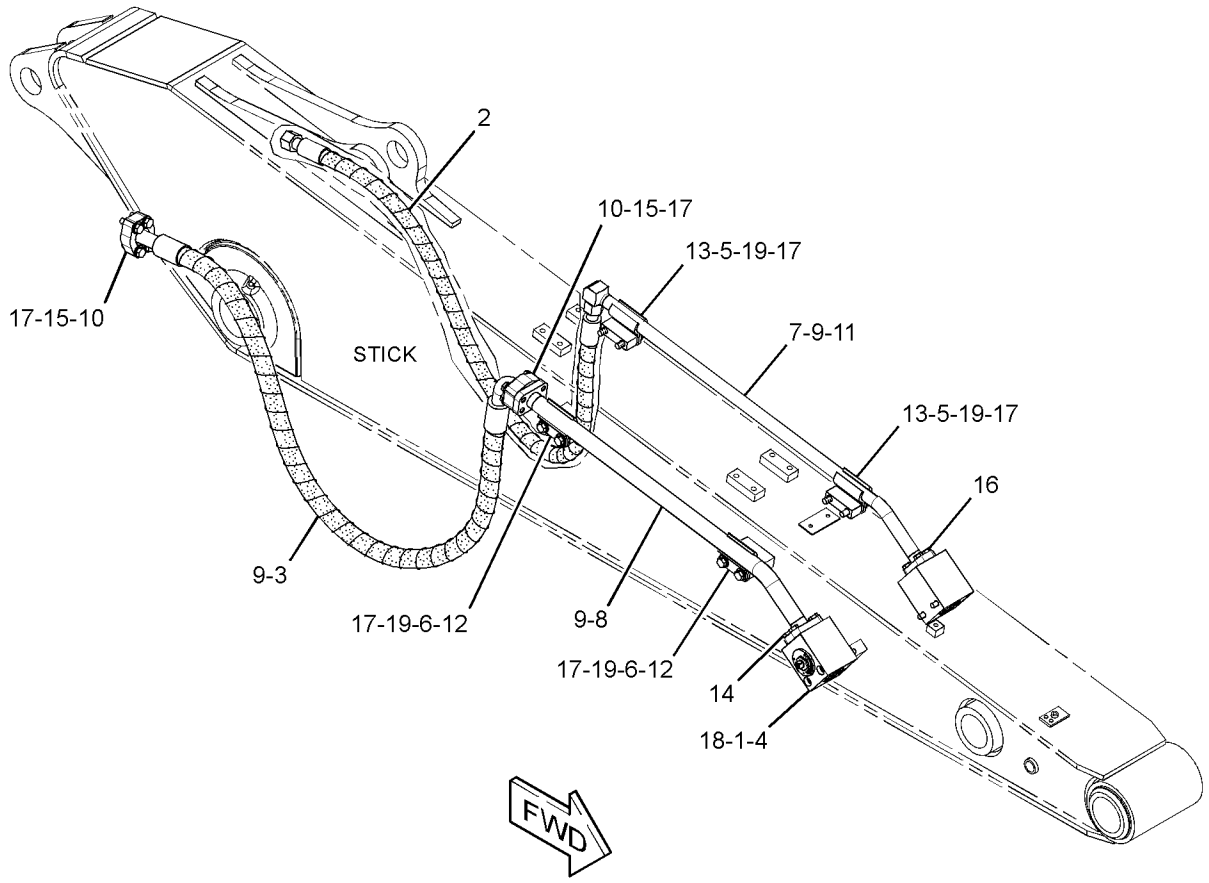

GRAPHIC #1 <END> g01411722

288-7399 LINES GP-AUXILIARY HYDRAULIC—STICK, MEDIUM PRESSURE

S/N: DLP1-UP
FOR USE WITH 2.5-M (8.2-FT) STICK
AN ATTACHMENT

SMCS-5057 **i05192731**

NOTE	REF NO	GRAPHIC REF	PART NUMBER	QTY	PART NAME 1 2 3 4 5 6 (PRODUCT LEVEL)	SEE PAGE
	1	1	**6C-6760**	2	MANIFOLD	
	2	1	**149-1738**	8	CLIP	
	3	1	*250-1440*	2	ADAPTER AS	
					(EACH INCLUDES)	
		1	**3K-0360**	1	SEAL-O-RING	
		1	**7X-3164**	1	ADAPTER-SWIVEL	
	4	1	**288-7693**	2	PLATE	
	5	1	**288-7694**	2	SUPPORT AS	
	6	1	**288-7696**	2	SUPPORT AS	
	7	1	**288-7722**	2	TUBE AS	
I	8	1	**288-7723**	2	HOSE AS	
	9	1	**6V-8398**	4	SEAL-O-RING	
	10	1	**8T-4121**	4	WASHER-HARD (11X21X2.5-MM THK)	
M	11	1	**8T-4136**	4	BOLT (M10X1.5X25-MM)	
M	12	1	**8T-4139**	8	BOLT (M12X1.75X30-MM)	
M	13	1	**8T-4185**	4	BOLT (M10X1.5X50-MM)	
M	14	1	**8T-4192**	8	BOLT (M12X1.75X25-MM)	
	15	1	**8T-4223**	16	WASHER-HARD (13.5X25.5X3-MM THK)	
JM	16	1	**105-3479**	4	BOLT-SOCKET HEAD (M10X1.5X90-MM)	
JM	17	1	**8T-4648**	8	BOLT (M12X1.75X70-MM)	
J	18	1	**8T-7971**	8	WASHER-HARD (13.5X25.5X5-MM THK)	

I - REFER TO HYDRAULIC INFORMATION SYSTEM
J - WHEN USED WITH AUXILIARY HYDRAULIC LINES GROUP (HIGH PRESSURE)
M - METRIC PART

288-7399 **LINES GP-AUXILIARY HYDRAULIC (**contd.**)** **i05192731**

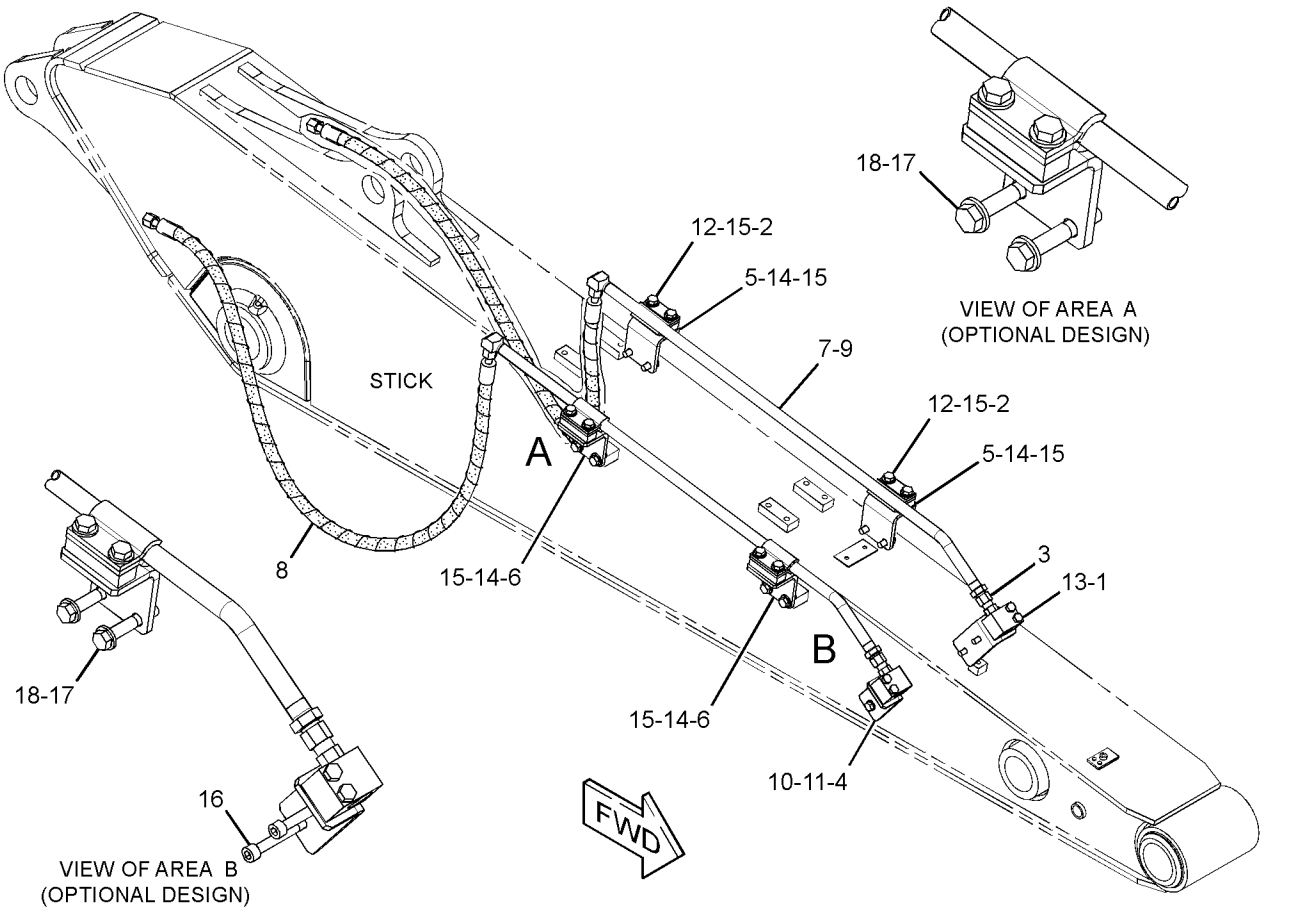

GRAPHIC #1 <END> g01438770

390-4278 LINES GP-AUXILIARY HYDRAULIC—REACH BOOM, HIGH PRESSURE

S/N: DLP1-UP

PART OF 398-8994 LINES AR-AUXILIARY HYDRAULIC

AN ATTACHMENT

SMCS-5057 **i05244366**

NOTE	REF NO	GRAPHIC REF	PART NUMBER	QTY	PART NAME 1 2 3 4 5 6 (PRODUCT LEVEL)	SEE PAGE
	1	1	**153-8798**	2	PLATE	
	2	1	**197-2150**	2	PLATE	
I	3	1	**321-0276**	1	HOSE AS	
I	4	1	**321-0280**	1	HOSE AS	
	5	1	**391-4237**	1	TUBE GP-HYDRAULIC (BOOM)	
	6	1	**391-4241**	1	TUBE GP-HYDRAULIC (BOOM)	
	7	1	**1P-3703**	2	SEAL-RECTANGULAR	
	8	1	**6V-0400**	4	FLANGE-HALF	
	9	1	**6V-9746**	2	SEAL-O-RING	
	10	1	**7Y-3732**	8	CLIP	
	11	1	**7Y-4868**	8	CLIP	
M	12	1	**8T-4184**	4	BOLT (M12X1.75X45-MM)	
M	13	1	**8T-4194**	8	BOLT (M12X1.75X50-MM)	
	14	1	**8T-4223**	28	WASHER-HARD (13.5X25.5X3-MM THK)	
M	15	1	**8T-4956**	12	BOLT (M12X1.75X35-MM)	
M	16	1	**8T-6868**	4	BOLT (M12X1.75X80-MM)	

I - REFER TO HYDRAULIC INFORMATION SYSTEM
M - METRIC PART

390-4278 **LINES GP-AUXILIARY HYDRAULIC (**contd.**)** **i05244366**

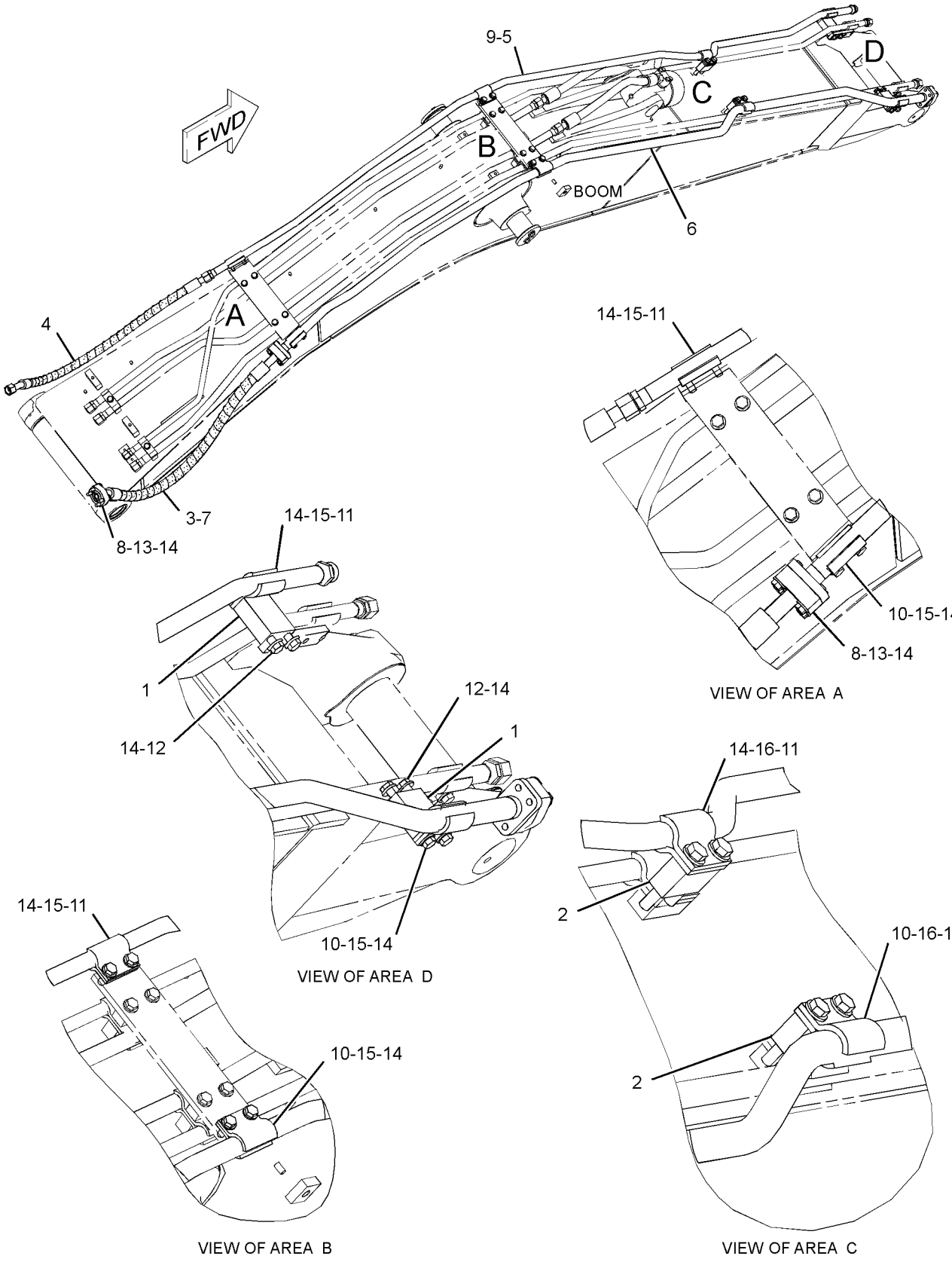

GRAPHIC #1 <END> g02985438

390-4279 LINES GP-AUXILIARY HYDRAULIC—MEDIUM PRESSURE, REACH BOOM

S/N: DLP1-UP

PART OF 398-8995 LINES AR-AUXILIARY HYDRAULIC AN ATTACHMENT

SMCS-5057 **i05849110**

NOTE	REF NO	GRAPHIC REF	PART NUMBER	QTY	PART NAME 1 2 3 4 5 6 (PRODUCT LEVEL)	SEE PAGE
	1	1	**093-1291**	2	CLAMP	
	2	1	**093-1295**	1	CLAMP	
	3	1	**149-1738**	5	CLIP	
	4	1	**193-6606**	2	PLATE	
	5	1	**247-9294**	2	SUPPORT AS	
	6	1	**282-5530**	1	TUBE AS	
	7	1	**372-9700**	1	TUBE AS	
	8	1	**434-1099**	1	TUBE AS	
	9	1	**434-1098**	1	TUBE AS	
	10	1	**390-4323**	1	CLIP AS	
	11	1	**390-5807**	1	CLIP AS	
M	12	1	**096-9986**	1	BOLT (M12X1.75X55-MM)	
	13	1	**153-8867**	4	CLIP	
	14	1	**6V-8398**	4	SEAL-O-RING	
	15	1	**7J-9108**	2	SEAL-O-RING	
M	16	1	**7X-2549**	4	BOLT (M12X1.75X100-MM)	
	17	1	**7Y-4868**	1	CLIP	
	18	1	**8T-4121**	2	WASHER-HARD (11X21X2.5-MM THK)	
M	19	1	**8T-4139**	8	BOLT (M12X1.75X30-MM)	
M	20	1	**8T-4185**	2	BOLT (M10X1.5X50-MM)	
	21	1	**8T-4223**	17	WASHER-HARD (13.5X25.5X3-MM THK)	
M	22	1	**8T-4184**	4	BOLT (M12X1.75X45-MM)	
M	23	1	**8T-4244**	4	NUT (M12X1.75-THD)	

M - METRIC PART

390-4279 **LINES GP-AUXILIARY HYDRAULIC (**contd.**)** **i05849110**

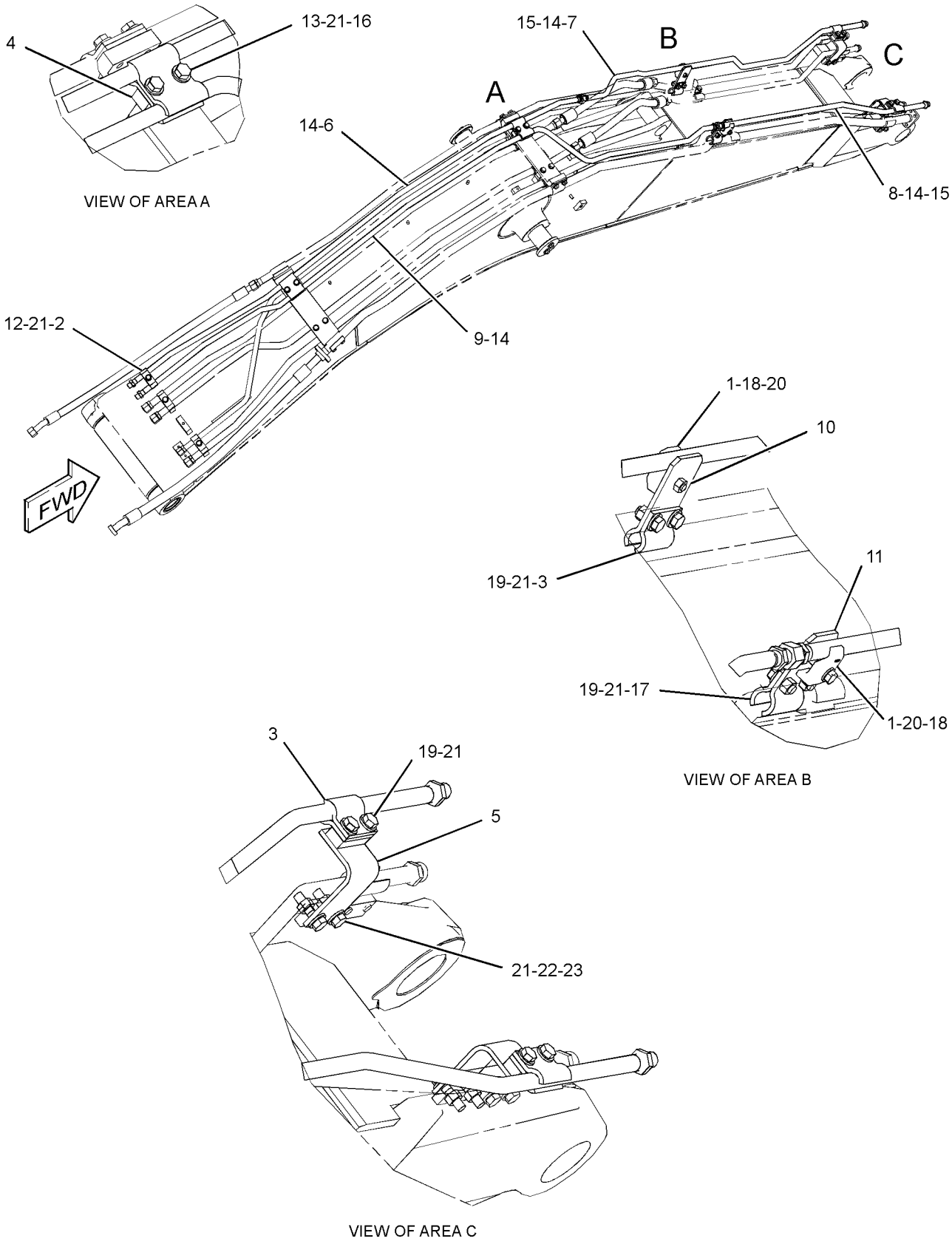

GRAPHIC #1 <END> g03698041

278-6730 LINES GP-BLADE

S/N: DLP1-UP
PART OF 301-2691, 385-4069 INSTALLATION AR-BLADE
AN ATTACHMENT

SMCS-5057 **i02911218**

NOTE	REF NO	GRAPHIC REF	PART NUMBER	QTY	PART NAME 1 2 3 4 5 6 (PRODUCT LEVEL)	SEE PAGE
I	1	1	**4I-1783**	1	HOSE AS	
	2	1	**4I-9524**	2	BAND-MARKER (BROWN, L4)	
	3	1	**4I-9527**	2	BAND-MARKER (GREEN, R3)	
	4	1	**4I-9528**	2	BAND-MARKER (PURPLE, R4)	
	5	1	**7K-1181**	1	STRAP-CABLE	
I	6	1	**317-4816**	1	HOSE AS	
I	7	1	**319-9920**	1	HOSE AS	
	8	1	**148-8336**	1	CONNECTOR AS	
		1	**3J-1907**	1	SEAL-O-RING	
		1	**6V-8397**	1	SEAL-O-RING	
		1	**6V-8636**	1	CONNECTOR	
	9	1	*148-8353*	1	ELBOW AS	
		1	**3J-1907**	1	SEAL-O-RING	
		1	**6V-8397**	1	SEAL-O-RING	
		1	**6V-9001**	1	ELBOW	
	10	1	*148-8367*	1	ELBOW AS	
		1	**6V-8397**	1	SEAL-O-RING	
		1	**6V-9850**	1	ELBOW	
	11	1	*148-8378*	1	ELBOW AS	
		1	**3J-1907**	1	SEAL-O-RING	
		1	**6V-8397**	1	SEAL-O-RING	
		1	**6V-8724**	1	ELBOW	

I - REFER TO HYDRAULIC INFORMATION SYSTEM

278-6730 **LINES GP-BLADE (**contd.**)** **i02911218**

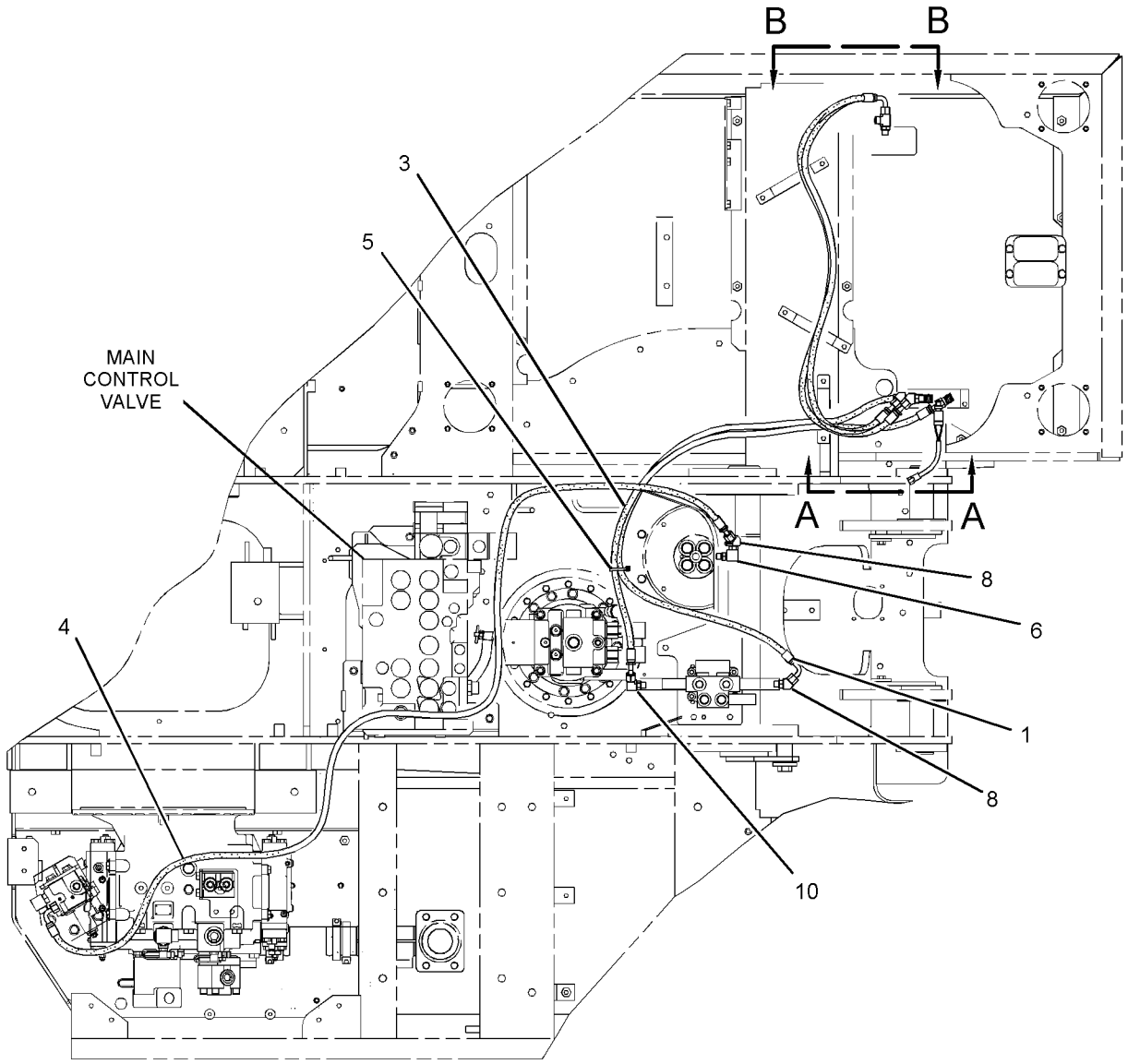

TOP VIEW FWD

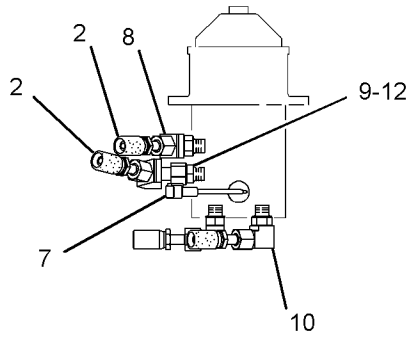

VIEW A-A

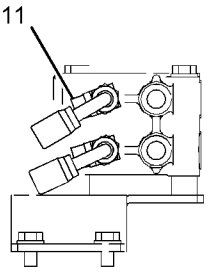

VIEW B-B

GRAPHIC #1 <END> g01408694

179-7602 LINES GP-BLADE CYLINDER–LH

S/N: DLP1-UP

PART OF 274-2678, 326-4443 CYLINDER & LINES GP-BLADE AN ATTACHMENT

SMCS-5102 **i01779825**

NOTE	REF NO	GRAPHIC REF	PART NUMBER	QTY	PART NAME 1 2 3 4 5 6 (PRODUCT LEVEL)	SEE PAGE
	1	1	**179-7603**	1	PIPE AS	
	2	1	**4J-5267**	2	SEAL-O-RING	
M	3	1	**8T-4182**	4	BOLT (M10X1.5X45-MM)	
M	4	1	**8T-4185**	4	BOLT (M10X1.5X50-MM)	
	5	1	**139-1773**	1	ELBOW	
	6	1	**7J-9108**	2	SEAL-O-RING	
	7	1	**093-1291**	1	CLAMP	
	8	1	**8T-4223**	1	WASHER-HARD (13.5X25.5X3-MM THK)	
M	9	1	**8T-4194**	1	BOLT (M12X1.75X50-MM)	
	10	1	**122-5420**	1	SUPPORT AS	
	11	1	**122-5500**	1	SUPPORT AS	
	12	1	**8T-4121**	2	WASHER-HARD (11X21X2.5-MM THK)	
M	13	1	**8T-4196**	2	BOLT (M10X1.5X35-MM)	

M - METRIC PART

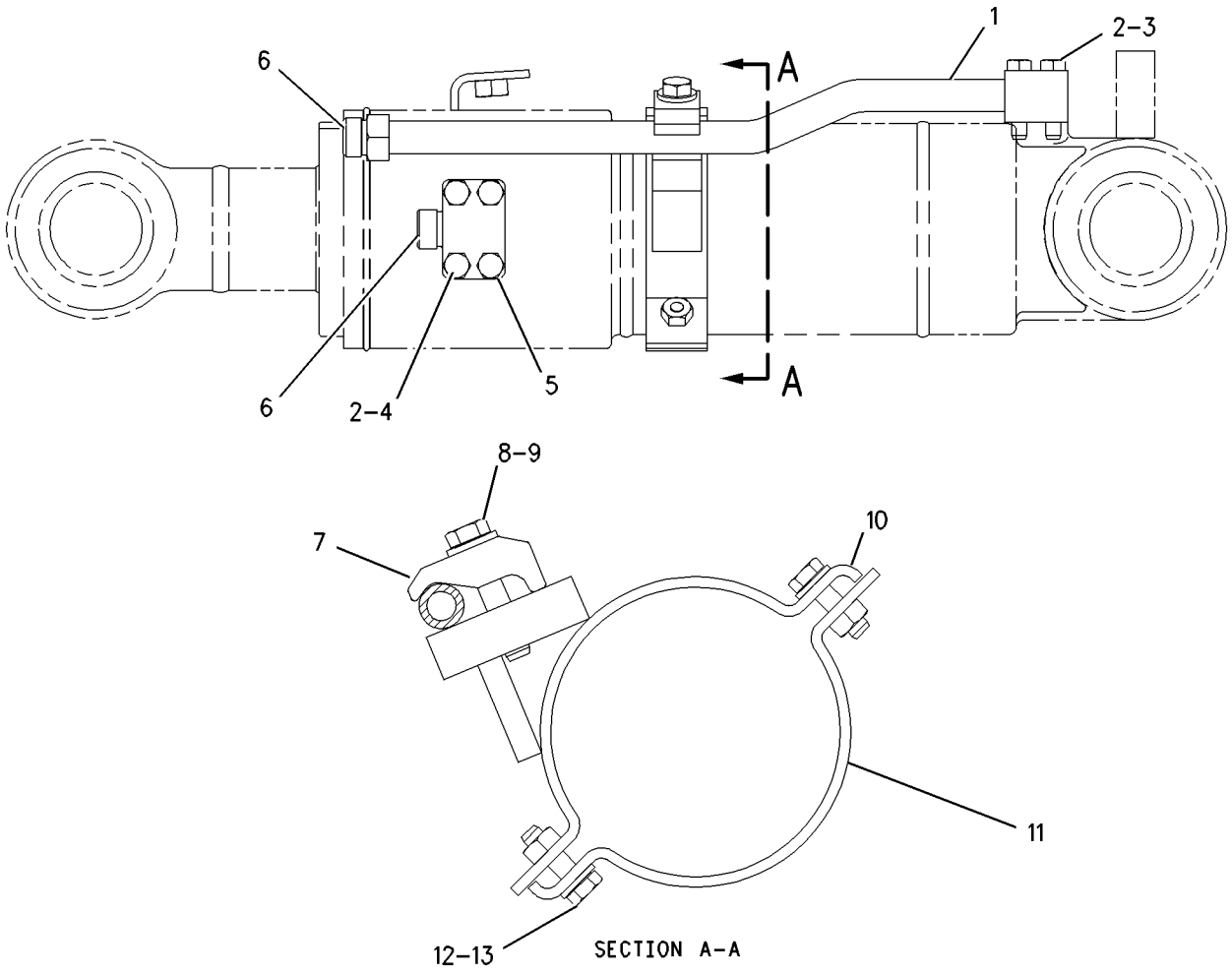

GRAPHIC #1 <END> g00748461

179-7604 LINES GP-BLADE CYLINDER–RH

S/N: DLP1-UP

PART OF 274-2679, 326-4449 CYLINDER & LINES GP-BLADE AN ATTACHMENT

SMCS-5102 **i01777943**

NOTE	REF NO	GRAPHIC REF	PART NUMBER	QTY	PART NAME 1 2 3 4 5 6 (PRODUCT LEVEL)	SEE PAGE
	1	1	**179-7605**	1	PIPE AS	
	2	1	**4J-5267**	2	SEAL-O-RING	
M	3	1	**8T-4182**	4	BOLT (M10X1.5X45-MM)	
M	4	1	**8T-4185**	4	BOLT (M10X1.5X50-MM)	
	5	1	**139-1773**	1	ELBOW	
	6	1	**7J-9108**	2	SEAL-O-RING	
	7	1	**093-1291**	1	CLAMP	
	8	1	**8T-4223**	1	WASHER-HARD (13.5X25.5X3-MM THK)	
M	9	1	**8T-4194**	1	BOLT (M12X1.75X50-MM)	
	10	1	**122-5500**	1	SUPPORT AS	
	11	1	**122-5420**	1	SUPPORT AS	
	12	1	**8T-4121**	2	WASHER-HARD (11X21X2.5-MM THK)	
M	13	1	**8T-4196**	2	BOLT (M10X1.5X35-MM)	

M - METRIC PART

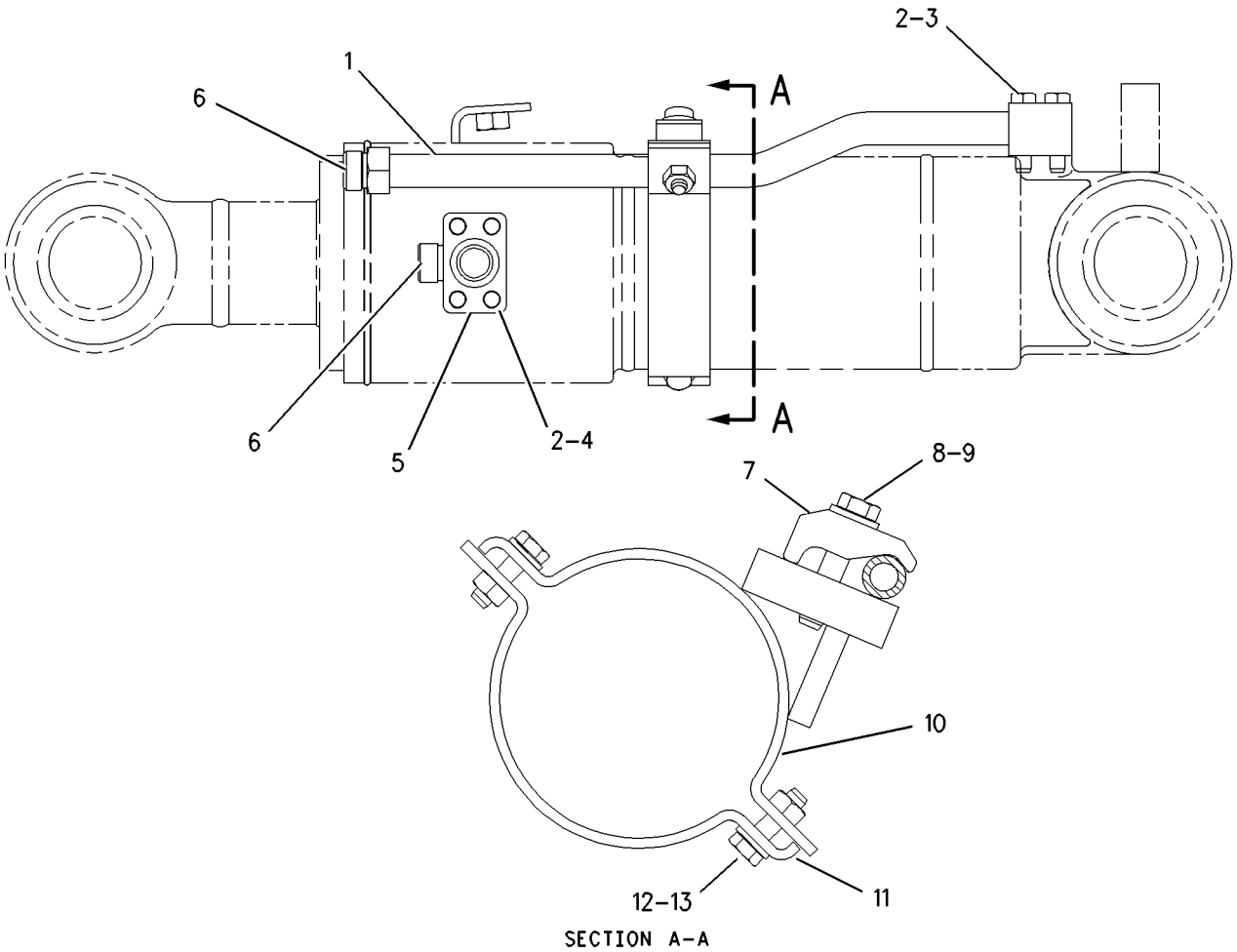

SECTION A–A

GRAPHIC #1 <END> g00748452

278-6728 LINES GP-BLADE CYLINDER

S/N: DLP1-UP
PART OF 301-2691, 385-4069 INSTALLATION AR-BLADE
AN ATTACHMENT

SMCS-5102 **i06589817**

NOTE	REF NO	GRAPHIC REF	PART NUMBER	QTY	PART NAME 1 2 3 4 5 6 (PRODUCT LEVEL)	SEE PAGE
	1	1	**093-1295**	2	CLAMP	
Y	2	1	**310-0234**	1	VALVE GP-CONTROL (BLADE)	804
I	3	1	**139-1762**	2	HOSE AS	
I	4	1	**139-1765**	2	HOSE AS	
Y	5	1	**162-4695**	1	SWIVEL GP	785
	6	1	**179-7874**	1	TUBE AS	
	7	1	**179-7875**	1	TUBE AS	
I	8	1	**187-5812**	1	HOSE AS	
I	9	1	**337-1324**	1	HOSE AS	
	10	1	**292-7641**	1	SUPPORT	
	11	1	*148-8341*	2	CONNECTOR AS	
					(EACH INCLUDES)	
		1	**3D-2824**	1	SEAL-O-RING	
		1	**6V-8713**	1	CONNECTOR	
		1	**7J-9108**	1	SEAL-O-RING	
	12	1	*150-3037*	1	ELBOW AS	
		1	**3K-0360**	1	SEAL-O-RING	
		1	**7J-9108**	1	SEAL-O-RING	
		1	**8T-2530**	1	ELBOW	
	13	1	*150-4048*	2	ELBOW AS	
					(EACH INCLUDES)	
		1	**3K-0360**	1	SEAL-O-RING	
		1	**6V-8722**	1	ELBOW	
		1	**7J-9108**	1	SEAL-O-RING	
	14	1	**7J-9108**	4	SEAL-O-RING	
	15	1	**8T-4121**	4	WASHER-HARD (11X21X2.5-MM THK)	
M	16	1	**8T-4136**	4	BOLT (M10X1.5X25-MM)	
M	17	1	**8T-4194**	2	BOLT (M12X1.75X50-MM)	
	18	1	**8T-4223**	2	WASHER-HARD (13.5X25.5X3-MM THK)	
	19	1	**8T-4224**	3	WASHER-HARD (8.8X16X2-MM THK)	
M	20	1	**8T-7547**	3	BOLT (M8X1.25X30-MM)	
I	21	1	**5I-8879**	1	HOSE AS	
I	22	1	**199-1820**	1	HOSE AS	
I	23	1	**292-7415**	2	HOSE AS	
	24	1	*148-8342*	1	CONNECTOR AS	
		1	**3K-0360**	1	SEAL-O-RING	
		1	**6V-8632**	1	CONNECTOR	
		1	**7J-9108**	1	SEAL-O-RING	
	25	1	**7K-1181**	1	STRAP-CABLE	

I - REFER TO HYDRAULIC INFORMATION SYSTEM
M - METRIC PART
Y - SEPARATE ILLUSTRATION

278-6728 **LINES GP-BLADE CYLINDER (**contd.**)** **i06589817**

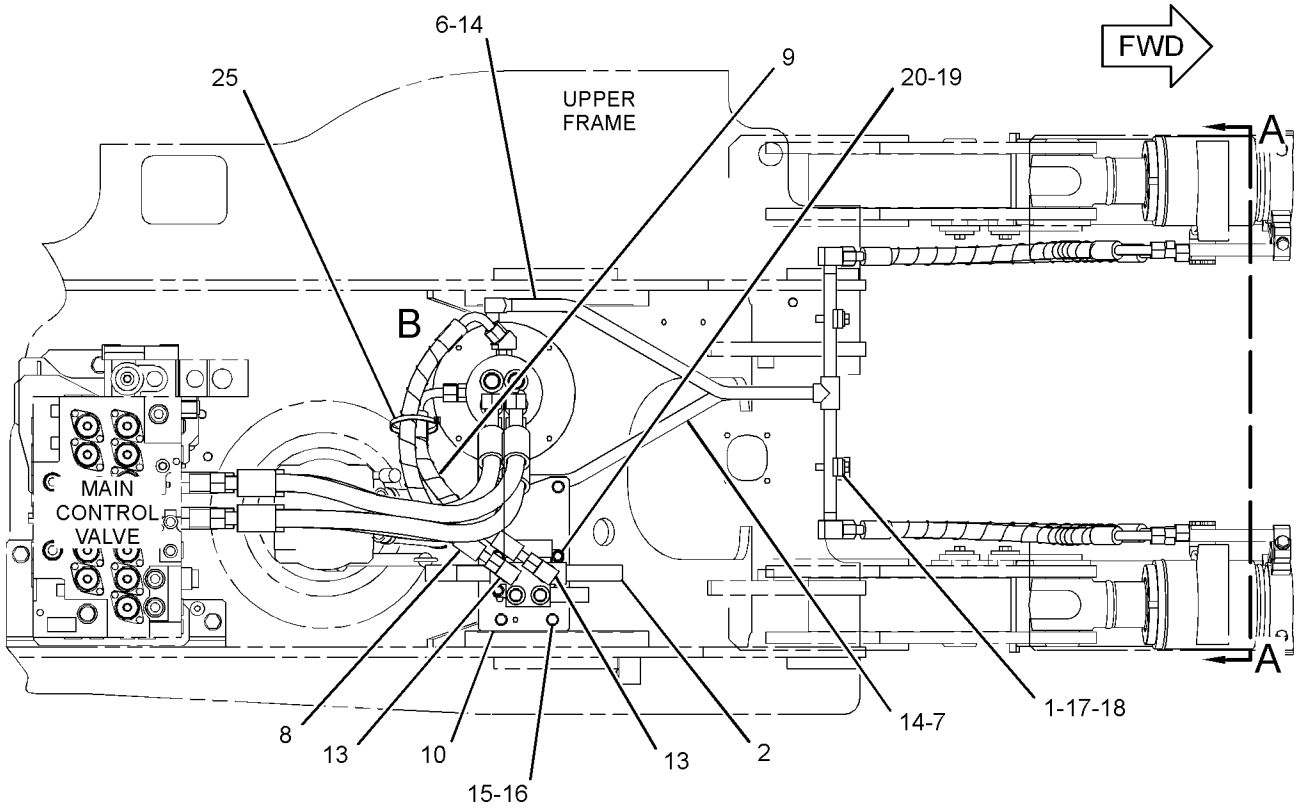

TOP VIEW

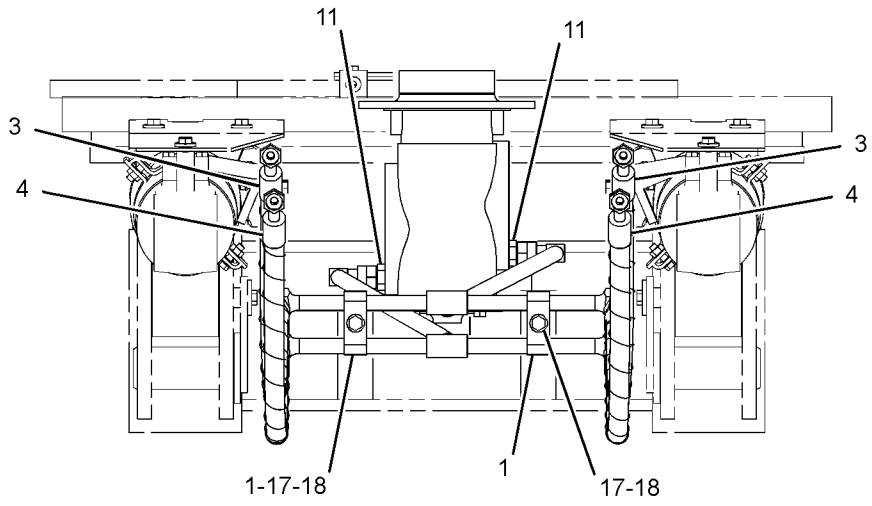

VIEW A-A

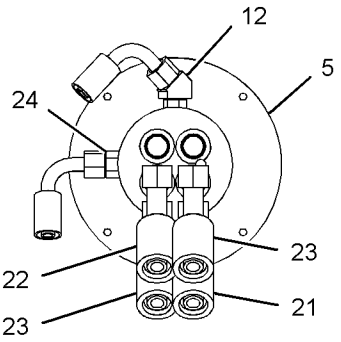

VIEW OF AREA B

GRAPHIC #1 <END> g03686002

385-2839 LINES GP-BLADE CYLINDER–LH

S/N: DLP1-UP
PART OF 385-2838 CYLINDER & LINES GP-BLADE
AN ATTACHMENT

SMCS-5102 **i05487118**

NOTE	REF NO	GRAPHIC REF	PART NUMBER	QTY	PART NAME 1 2 3 4 5 6 (PRODUCT LEVEL)	SEE PAGE
	1	1	**399-5124**	1	TUBE AS	
	2	1	**6V-0357**	2	SEAL-O-RING	
M	3	1	**101-7404**	4	BOLT-SOCKET HEAD (M10X1.5X30-MM)	
M	4	1	**8T-0341**	4	BOLT-SOCKET HEAD (M10X1.5X60-MM)	
	5	1	**399-5126**	1	FLANGE	
	6	1	**7J-9108**	2	SEAL-O-RING	
	7	1	**393-7870**	1	CLAMP	
	8	1	**7X-0796**	3	LOCKWASHER (10.2X18.4X2.5-MM THK)	
M	9	1	**6V-5843**	1	BOLT (M10X1.5X45-MM)	
	10	1	**6V-9831**	2	CAP (ORFS)	
	11	1	**422-9139**	1	SUPPORT AS	
		1	**424-8398**	2	NUT-WELD (M10X1.5-THD)	
M	12	1	**6V-5842**	2	BOLT (M10X1.5X40-MM)	

M - METRIC PART

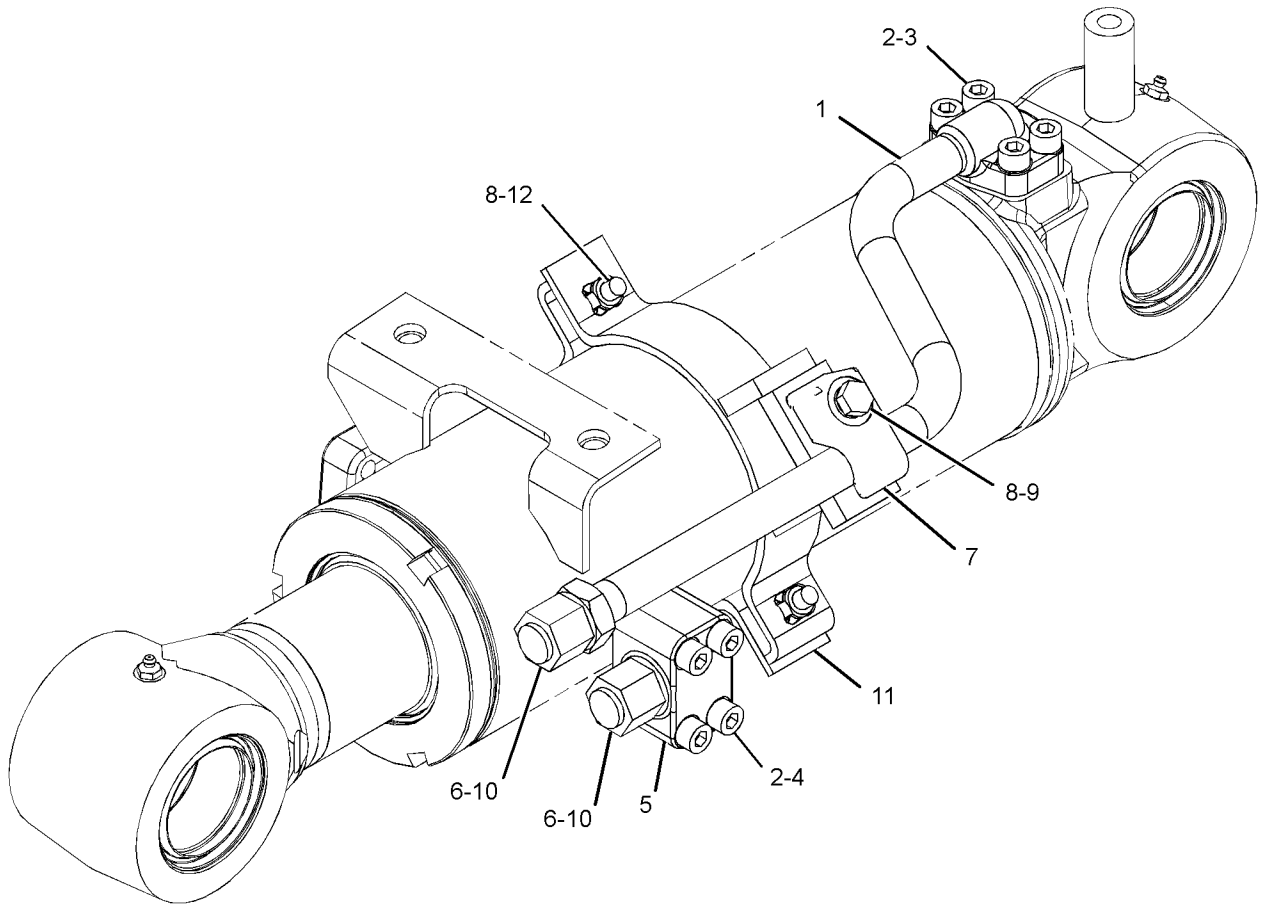

GRAPHIC #1 <END> g03408353

385-2841 LINES GP-BLADE CYLINDER–RH

S/N: DLP1-UP

PART OF 385-2840 CYLINDER & LINES GP-BLADE

AN ATTACHMENT

SMCS-5102 **i05348309**

NOTE	REF NO	GRAPHIC REF	PART NUMBER	QTY	PART NAME 1 2 3 4 5 6 (PRODUCT LEVEL)	SEE PAGE
	1	1	**399-5127**	1	TUBE AS	
	2	1	**6V-0357**	2	SEAL-O-RING	
M	3	1	**101-7404**	4	BOLT-SOCKET HEAD (M10X1.5X30-MM)	
M	4	1	**8T-0341**	4	BOLT-SOCKET HEAD (M10X1.5X60-MM)	
	5	1	**399-5126**	1	FLANGE	
	6	1	**7J-9108**	2	SEAL-O-RING	
	7	1	**393-7870**	1	CLAMP	
	8	1	**7X-0796**	3	LOCKWASHER (10.2X18.4X2.5-MM THK)	
M	9	1	**6V-5843**	1	BOLT (M10X1.5X45-MM)	
	10	1	**6V-9831**	2	CAP (ORFS)	
	11	1	**422-9139**	1	SUPPORT AS	
		1	**424-8398**	2	NUT-WELD (M10X1.5-THD)	
M	12	1	**6V-5842**	2	BOLT (M10X1.5X40-MM)	

M - METRIC PART

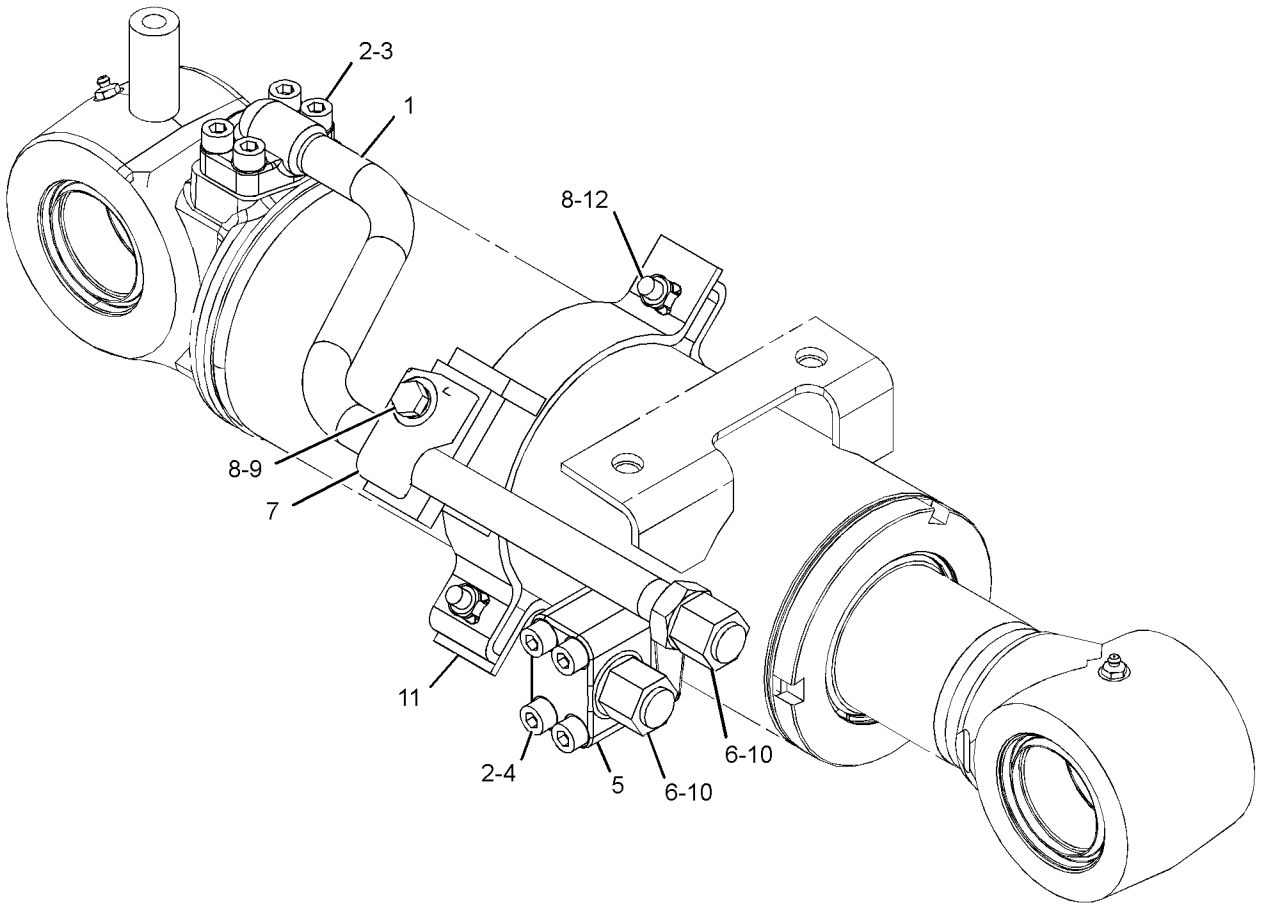

GRAPHIC #1 <END> g03408308

292-7442 LINES GP-BOOM—WITHOUT AUXILIARY

S/N: DLP1-UP
PART OF 301-2543 BOOM AR-1 PIECE LONG
AN ATTACHMENT

SMCS-5057 **i04048014**

NOTE	REF NO	GRAPHIC REF	PART NUMBER	QTY	PART NAME 1 2 3 4 5 6 (PRODUCT LEVEL)	SEE PAGE
I	1	1	**4I-1095**	2	HOSE AS	
	2	1	**4I-1674**	4	CLIP	
	3	1	**7Y-4868**	4	CLIP	
	4	1	**093-1295**	1	CLAMP	
	5	1	**099-5408**	1	CLAMP	
	6	1	**149-1738**	4	CLIP	
	7	1	**173-7895**	4	CLIP	
	8	1	**282-7074**	1	TUBE AS	
	9	1	**282-7075**	1	TUBE AS	
	10	1	**282-7076**	1	TUBE AS	
	11	1	**282-7077**	1	TUBE AS	
M	12	1	**8T-4910**	2	BOLT (M12X1.75X60-MM)	
	13	1	**286-6648**	1	TUBE AS	
	14	1	**6V-9746**	7	SEAL-O-RING	
	15	1	**7J-9108**	3	SEAL-O-RING	
M	16	1	**8T-4139**	16	BOLT (M12X1.75X30-MM)	
	17	1	**8T-4223**	18	WASHER-HARD (13.5X25.5X3-MM THK)	
	18	1	**286-6647**	1	TUBE AS	
	19	1	**7J-9108**	1	SEAL-O-RING	

I - REFER TO HYDRAULIC INFORMATION SYSTEM
M - METRIC PART

292-7442 **LINES GP-BOOM (**contd.**)** **i04048014**

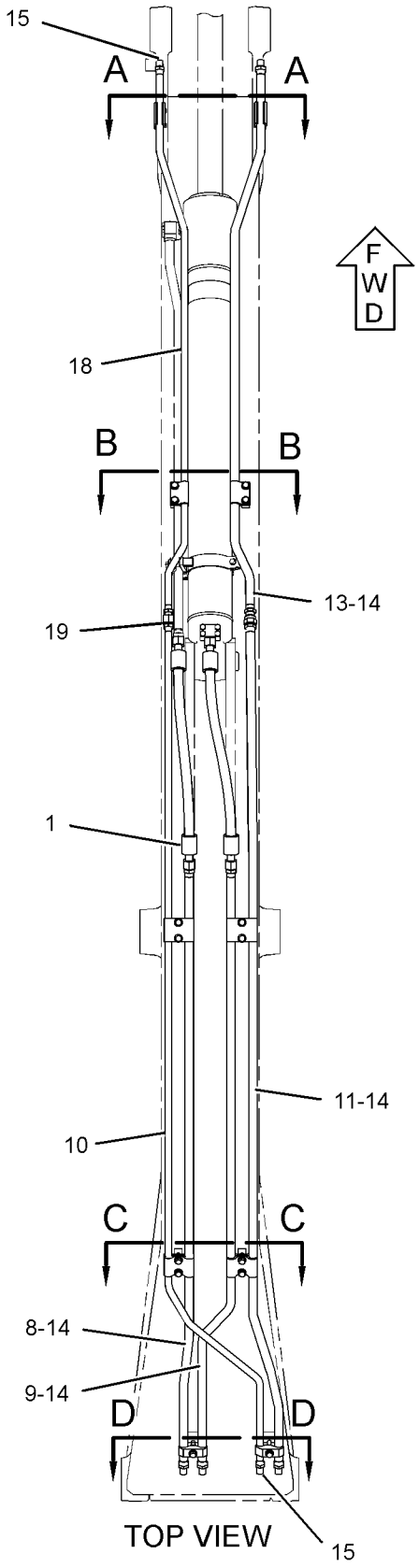

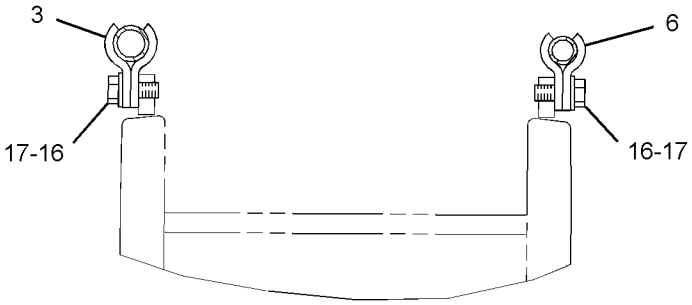

SECTION A-A

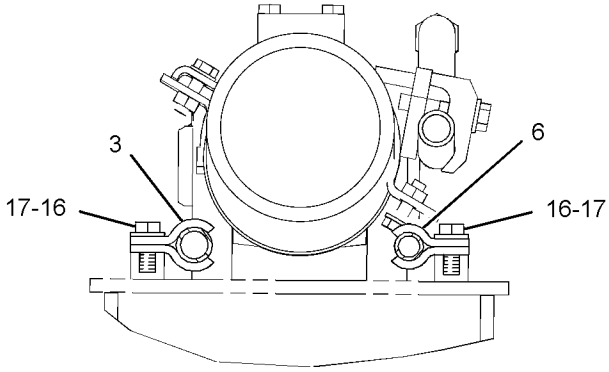

SECTION B-B

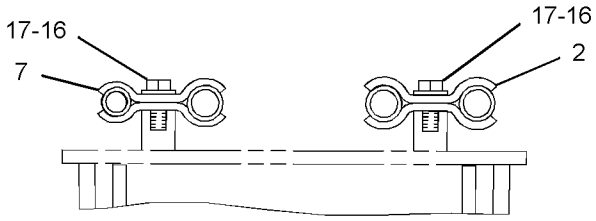

SECTION C-C

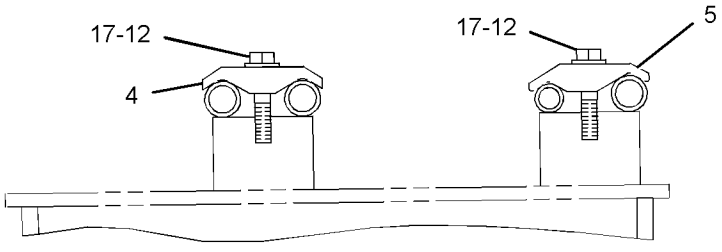

SECTION D-D

GRAPHIC #1 <END> g02263033

390-4277 LINES GP-BOOM

S/N: DLP1-UP

PART OF 301-2543, 385-4095 BOOM AR-1 PIECE LONG

AN ATTACHMENT

SMCS-5057 **i06215481**

NOTE	REF NO	GRAPHIC REF	PART NUMBER	QTY	PART NAME 1 2 3 4 5 6 (PRODUCT LEVEL)	SEE PAGE
I	1	1	**4I-1095**	2	HOSE AS	
	2	1	**4I-1674**	4	CLIP	
	3	1	**7Y-4868**	4	CLIP	
	4	1	**093-1295**	1	CLAMP	
	5	1	**099-5408**	1	CLAMP	
	6	1	**149-1738**	4	CLIP	
	7	1	**173-7895**	4	CLIP	
	8	1	**282-7074**	1	TUBE AS	
	9	1	**282-7075**	1	TUBE AS	
	10	1	**390-4298**	1	TUBE AS	
	11	1	**390-4299**	1	TUBE AS	
	12	1	**6V-9746**	8	SEAL-O-RING	
	13	1	**7J-9108**	2	SEAL-O-RING	
M	14	1	**8T-4139**	16	BOLT (M12X1.75X30-MM)	
	15	1	**8T-4223**	18	WASHER-HARD (13.5X25.5X3-MM THK)	
M	16	1	**8T-4910**	2	BOLT (M12X1.75X60-MM)	

I - REFER TO HYDRAULIC INFORMATION SYSTEM
M - METRIC PART

390-4277 **LINES GP-BOOM (**contd.**)** **i06215481**

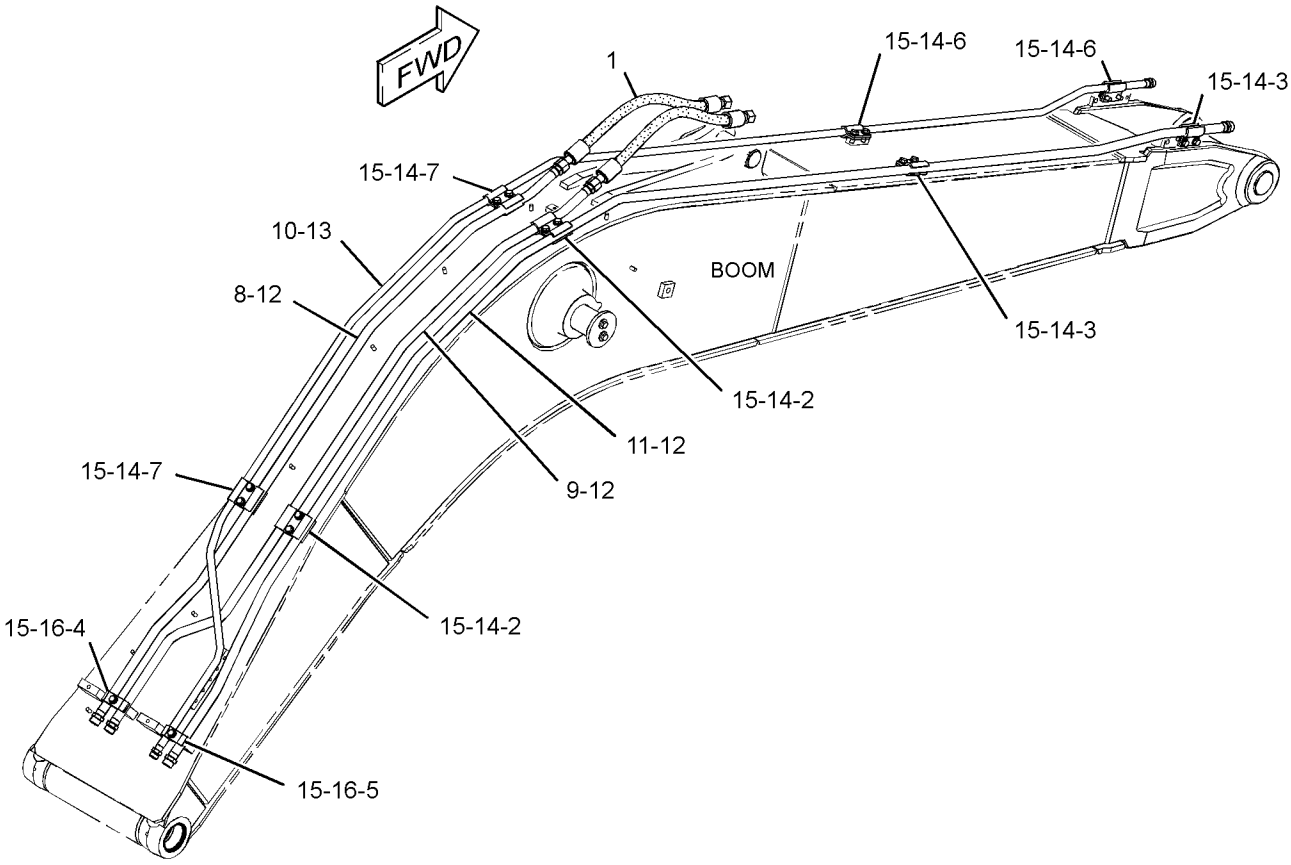

GRAPHIC #1 <END> g03000859

278-6666 LINES GP-BOOM CYLINDER

S/N: DLP1-UP

PART OF 270-5864 HYDRAULIC AR

SMCS-5057, 5456 **i06215487**

NOTE	REF NO	GRAPHIC REF	PART NUMBER	QTY	PART NAME 1 2 3 4 5 6 (PRODUCT LEVEL)	SEE PAGE
	1	1	**7K-1181**	1	STRAP-CABLE	
	2	1	**9F-2167**	1	SCREW-PURGE (3/8-24X1.164-IN)	
	3	1	**093-1296**	1	CLAMP	
	4	1	**099-5408**	1	CLAMP	
	5	1	*106-8715*	2	ELBOW AS	
					(EACH INCLUDES)	
		1	**3D-2824**	1	SEAL-O-RING	
		1	**6V-9746**	1	SEAL-O-RING	
		1	**8C-8400**	1	ELBOW	
I	6	1	**123-2636**	2	HOSE AS	
	7	1	*164-6874*	1	FITTING AS-ELBOW (QUICK DISCONNECT, MALE)	
		1	**3J-1907**	1	SEAL-O-RING	
		1	**085-7356**	1	FITTING	
	8	1	**337-1181**	1	TUBE AS	
	9	1	**168-9755**	1	TUBE AS	
I	10	1	**187-7173**	2	HOSE AS	
	11	1	**266-7940**	1	ROD AS	
		1	**225-4539**	1	WASHER-SPECIAL (17X30X6-MM THK)	
		1	**289-7909**	1	ROD	
	12	1	**266-7941**	1	BRACKET AS	
	13	1	*268-5145*	1	ELBOW AS	
		1	**3D-2824**	1	SEAL-O-RING	
		1	**6V-9746**	1	SEAL-O-RING	
		1	**194-9041**	1	ELBOW	
	14	1	**278-6799**	1	SUPPORT AS	
I	15	1	**314-8230**	1	HOSE AS	
	16	1	*148-8336*	1	CONNECTOR AS	
		1	**3J-1907**	1	SEAL-O-RING	
		1	**6V-8397**	1	SEAL-O-RING	
		1	**6V-8636**	1	CONNECTOR	
	17	1	*148-8341*	2	CONNECTOR AS	
					(EACH INCLUDES)	
		1	**3D-2824**	1	SEAL-O-RING	
		1	**6V-8713**	1	CONNECTOR	
		1	**7J-9108**	1	SEAL-O-RING	
	18	1	*148-8347*	1	ELBOW AS	
		1	**3D-2824**	1	SEAL-O-RING	
		1	**6V-9007**	1	ELBOW	
		1	**6V-9746**	1	SEAL-O-RING	
	19	1	*148-8361*	1	ELBOW AS (90-DEG)	
		1	**3J-7354**	1	SEAL-O-RING	
		1	**6V-8397**	1	SEAL-O-RING	
		1	**6V-9200**	1	ELBOW	
	20	1	*148-8428*	1	TEE AS	
		1	**3K-0360**	1	SEAL-O-RING	
		1	**6V-8398**	2	SEAL-O-RING	
		1	**6V-8782**	1	TEE	
	21	1	*164-5624*	1	ELBOW AS	

278-6666 **LINES GP-BOOM CYLINDER (**contd.**)** **i06215487**

NOTE	REF NO	GRAPHIC REF	PART NUMBER	QTY	PART NAME 1 2 3 4 5 6 (PRODUCT LEVEL)	SEE PAGE
		1	**3J-1907**	1	SEAL-O-RING	
		1	**6V-8398**	1	SEAL-O-RING	
		1	**9X-2085**	1	ELBOW	
	22	1	**7J-9108**	8	SEAL-O-RING	
M	23	1	**8T-4192**	4	BOLT (M12X1.75X25-MM)	
	24	1	**8T-4223**	6	WASHER-HARD (13.5X25.5X3-MM THK)	
M	25	1	**8T-4648**	1	BOLT (M12X1.75X70-MM)	
M	26	1	**8T-4910**	1	BOLT (M12X1.75X60-MM)	
	27	1	**6H-3615**	1	PLUG-PROTECTION	
	28	1	*241-6150*	1	ELBOW AS	
		1	**3D-2824**	1	SEAL-O-RING	
		1	**6V-9746**	1	SEAL-O-RING	
		1	**235-3611**	1	ELBOW	

I - REFER TO HYDRAULIC INFORMATION SYSTEM
M - METRIC PART

278-6666 **LINES GP-BOOM CYLINDER (**contd.**)** **i06215487**

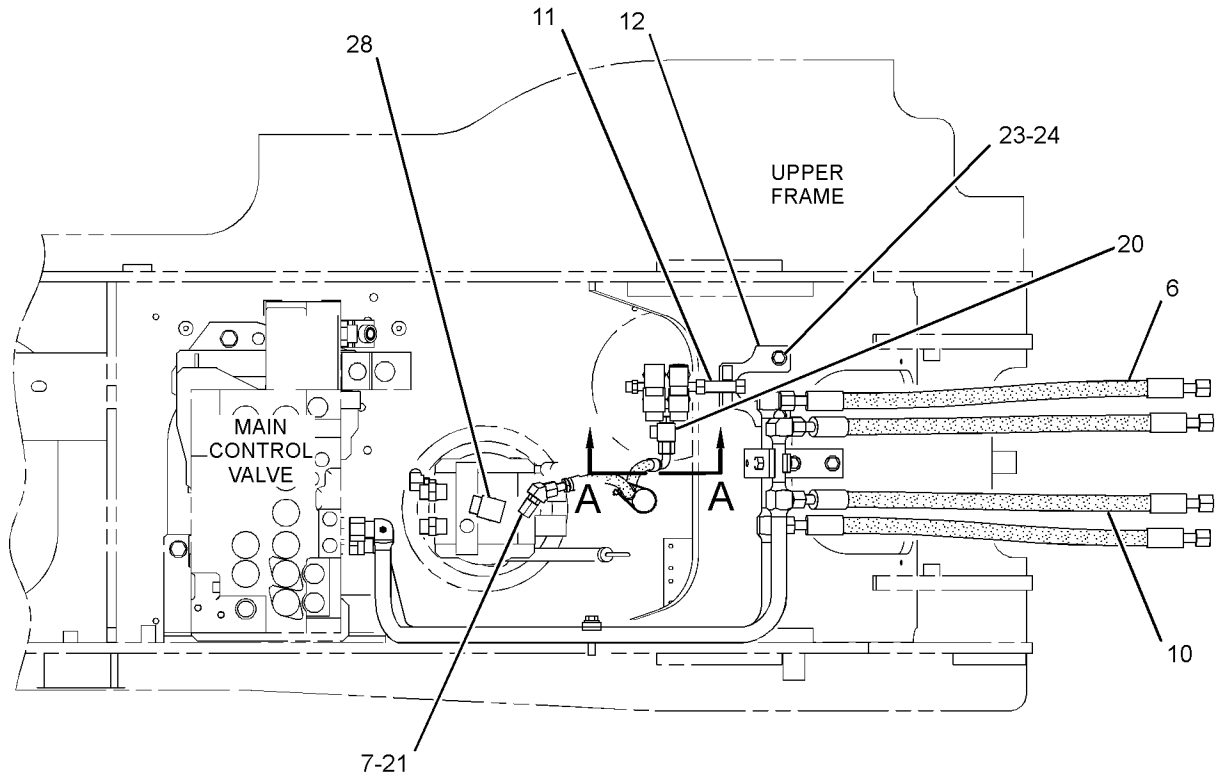

TOP VIEW FWD

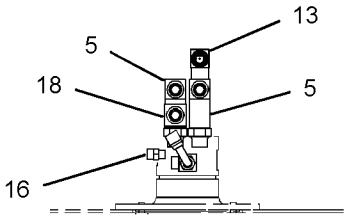

VIEW A-A

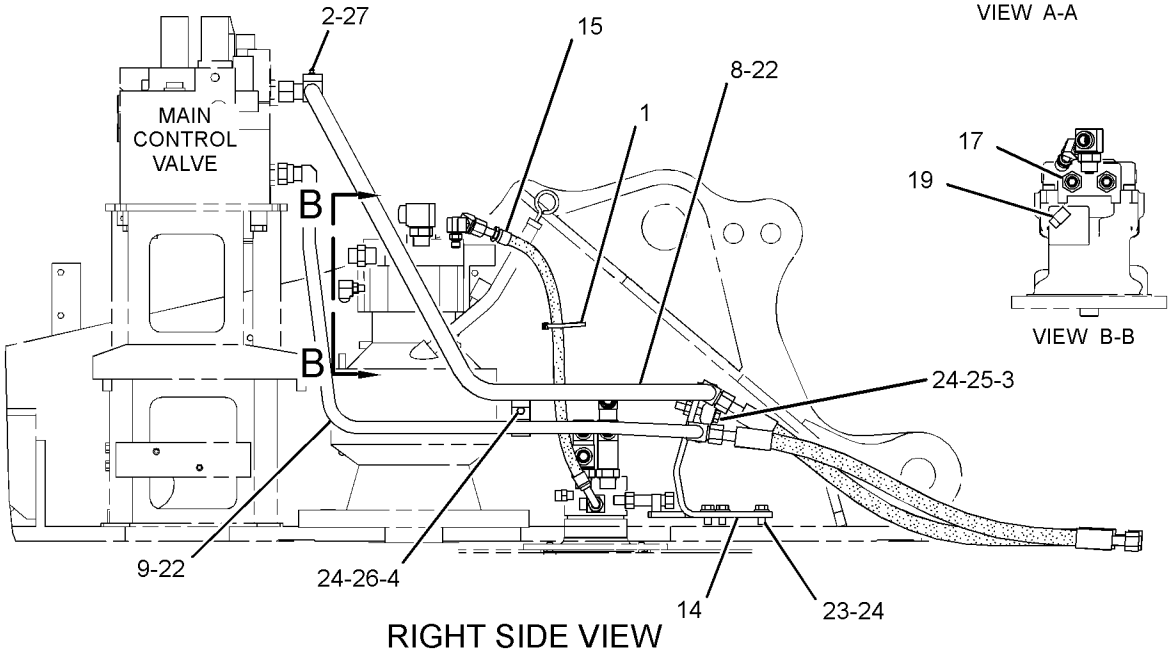

VIEW B-B

RIGHT SIDE VIEW

GRAPHIC #1 <END> g03407781

278-6676 LINES GP-BOOM CYLINDER–LH

S/N: DLP1-UP

PART OF 289-7704, 289-8067 CYLINDER & LINES GP-BOOM

AN ATTACHMENT

SMCS-5057, 5456

i04259670

NOTE	REF NO	GRAPHIC REF	PART NUMBER	QTY	PART NAME 1 2 3 4 5 6 (PRODUCT LEVEL)	SEE PAGE
	1	1	**121-6217**	1	SUPPORT AS	
	2	1	**370-8824**	1	SUPPORT AS	
	3	1	**296-7194**	1	TUBE AS	
	4	1	**296-7335**	1	TUBE AS	
	5	1	**096-5766**	1	CLAMP	
	6	1	**4J-5267**	2	SEAL-O-RING	
	7	1	**7J-9108**	2	SEAL-O-RING	
	8	1	**8T-4121**	3	WASHER-HARD (11X21X2.5-MM THK)	
M	9	1	**8T-4182**	8	BOLT (M10X1.5X45-MM)	
M	10	1	**8T-4185**	1	BOLT (M10X1.5X50-MM)	
M	11	1	**8T-4196**	2	BOLT (M10X1.5X35-MM)	

M - METRIC PART

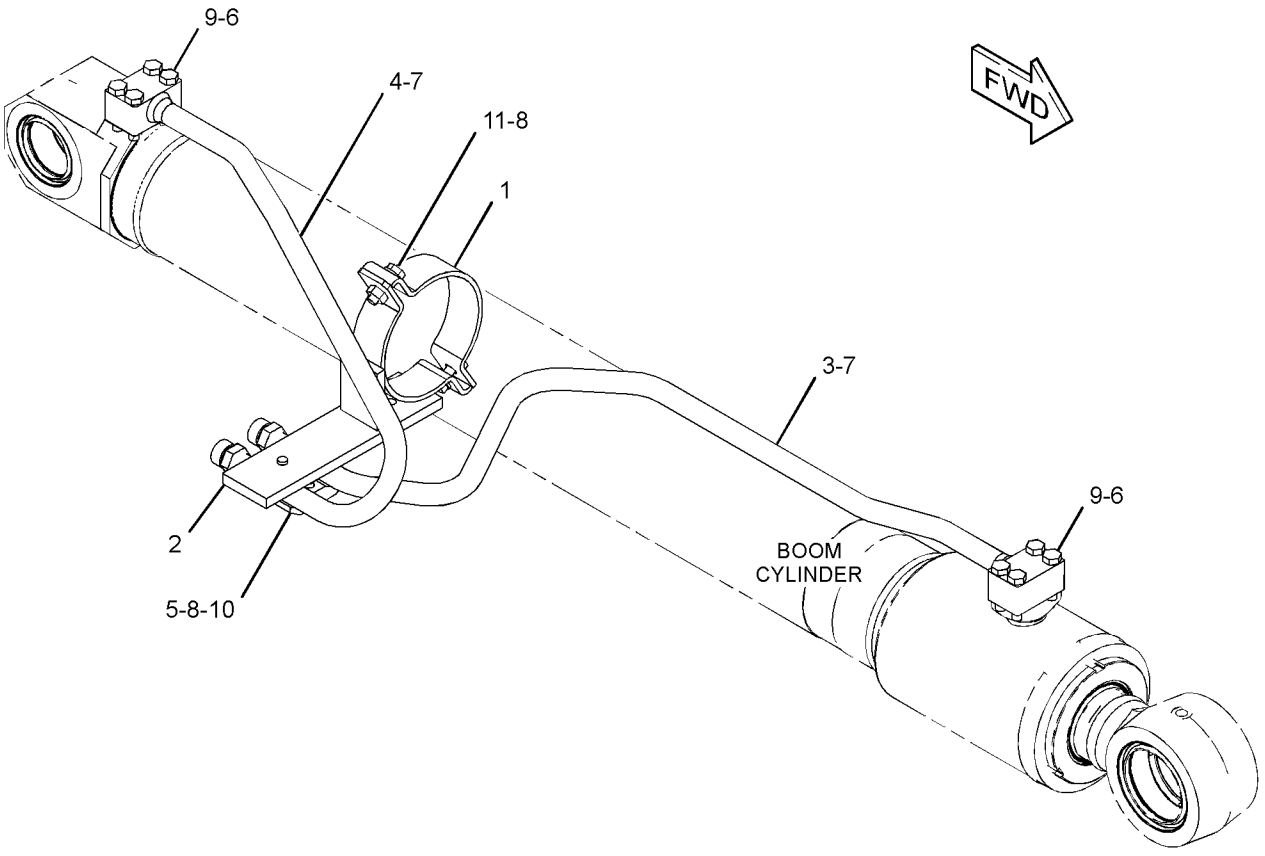

GRAPHIC #1 <END> g02445736

278-6677 LINES GP-BOOM CYLINDER—RH

S/N: DLP1-UP

PART OF 289-7705, 289-8068 CYLINDER & LINES GP-BOOM

AN ATTACHMENT

SMCS-5057, 5456

i04259684

NOTE	REF NO	GRAPHIC REF	PART NUMBER	QTY	PART NAME 1 2 3 4 5 6 (PRODUCT LEVEL)	SEE PAGE
	1	1	**121-6217**	1	SUPPORT AS	
	2	1	**370-8824**	1	SUPPORT AS	
	3	1	**296-7039**	1	TUBE AS	
	4	1	**296-7336**	1	TUBE AS	
	5	1	**096-5766**	1	CLAMP	
	6	1	**4J-5267**	2	SEAL-O-RING	
	7	1	**7J-9108**	2	SEAL-O-RING	
	8	1	**8T-4121**	3	WASHER-HARD (11X21X2.5-MM THK)	
M	9	1	**8T-4182**	8	BOLT (M10X1.5X45-MM)	
M	10	1	**8T-4185**	1	BOLT (M10X1.5X50-MM)	
M	11	1	**8T-4196**	2	BOLT (M10X1.5X35-MM)	

M - METRIC PART

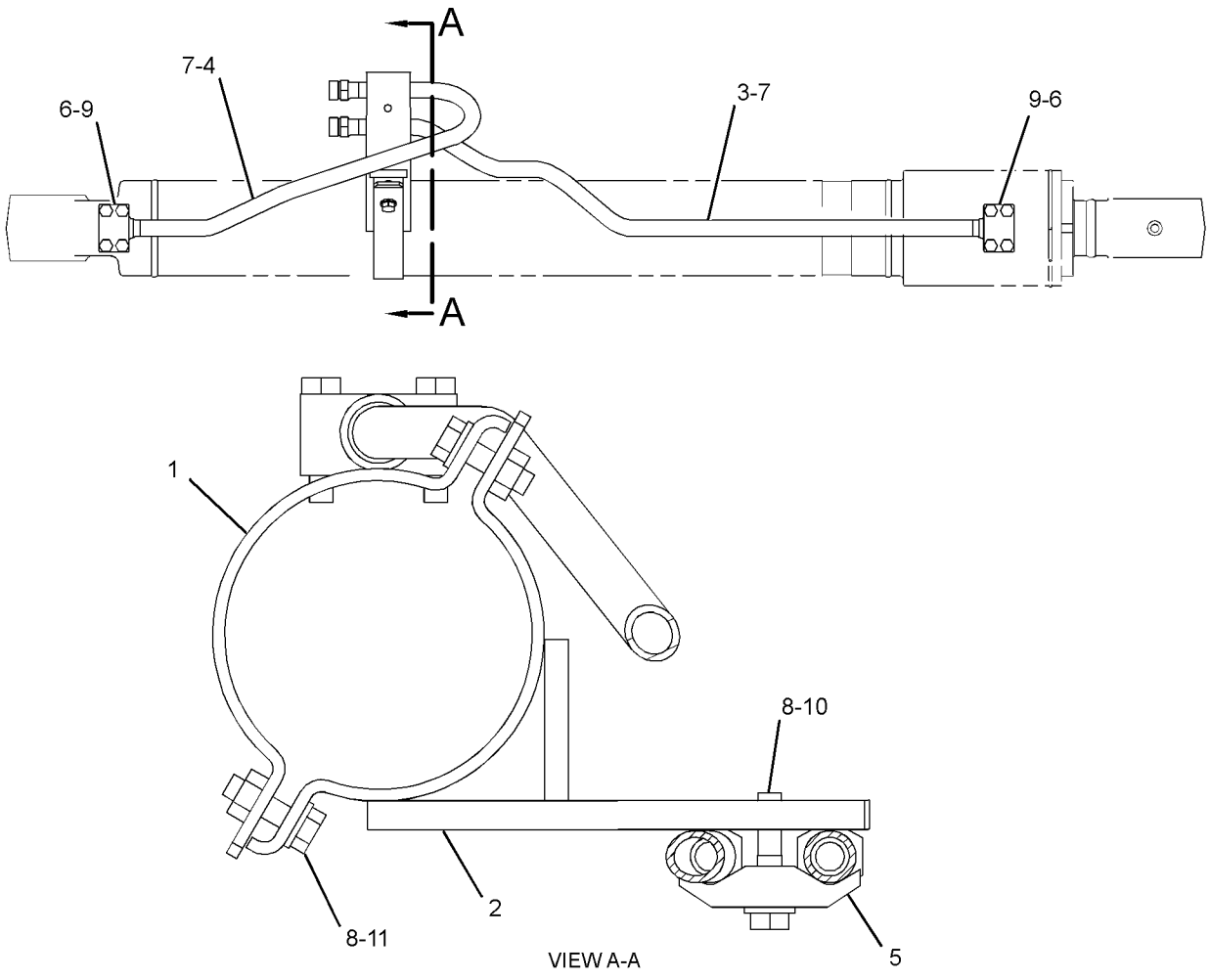

VIEW A-A

GRAPHIC #1

<END>

g02445656

385-2827 LINES GP-BOOM CYLINDER–LH

S/N: DLP1-UP
PART OF 385-2825 CYLINDER & LINES GP-BOOM
AN ATTACHMENT
TYPE 1

SMCS-5057, 5456 **i04931815**

NOTE	REF NO	GRAPHIC REF	PART NUMBER	QTY	PART NAME 1 2 3 4 5 6 (PRODUCT LEVEL)	SEE PAGE
	1	1	**390-4232**	1	TUBE AS	
	2	1	**390-4233**	1	TUBE AS	
	3	1	**6V-0357**	2	SEAL-O-RING	
M	4	1	**8T-0271**	8	BOLT-SOCKET HEAD (M10X1.5X35-MM)	
	5	1	**390-4236**	1	SUPPORT AS	
M	6	1	**8T-4133**	2	NUT (M10X1.5-THD)	
M	7	1	**6V-5842**	2	BOLT (M10X1.5X40-MM)	
	8	1	**7X-0796**	2	LOCKWASHER (10.2X18.4X2.5-MM THK)	
M	9	1	**269-5224**	1	BOLT (M14X2X80-MM)	
	10	1	**3B-4509**	1	LOCKWASHER	
	11	1	**390-4242**	2	CLAMP	
M	12	1	**096-4876**	1	NUT (M14X2-THD)	
	13	1	**6V-9831**	2	CAP (ORFS)	
	14	1	**7J-9108**	2	SEAL-O-RING	

M - METRIC PART

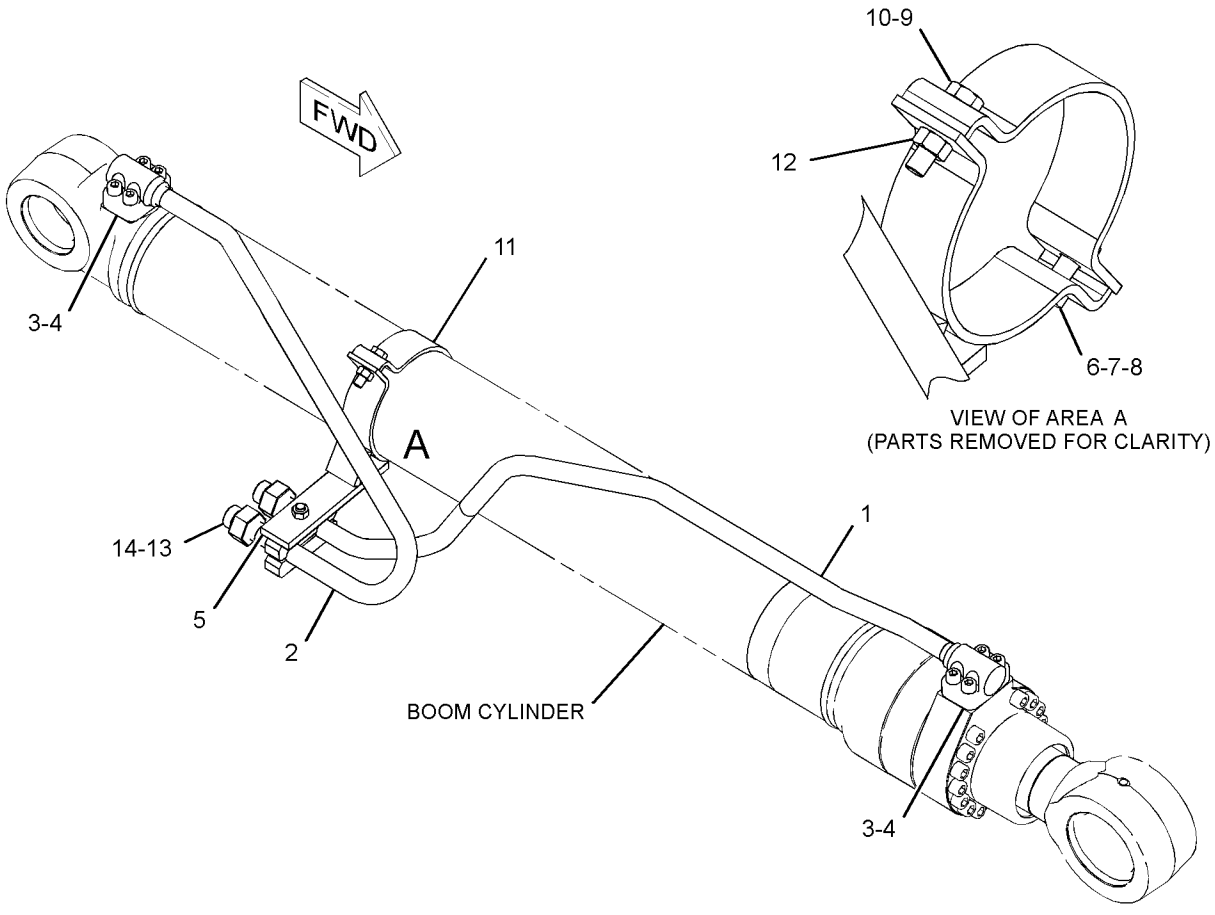

GRAPHIC #1 <END> g03114020

385-2827 LINES GP-BOOM CYLINDER–LH

S/N: DLP1-UP
PART OF 385-2825 CYLINDER & LINES GP-BOOM
AN ATTACHMENT
TYPE 2

SMCS-5057, 5456

i05904992

NOTE	REF NO	GRAPHIC REF	PART NUMBER	QTY	PART NAME 1 2 3 4 5 6 (PRODUCT LEVEL)	SEE PAGE
	1	1	**390-4232**	1	TUBE AS	
	2	1	**390-4233**	1	TUBE AS	
	3	1	**6V-0357**	2	SEAL-O-RING	
M	4	1	**8T-0271**	8	BOLT-SOCKET HEAD (M10X1.5X35-MM)	
	5	1	**422-9130**	1	SUPPORT AS	
	6	1	**7J-9108**	2	SEAL-O-RING	
M	7	1	**6V-5842**	2	BOLT (M10X1.5X40-MM)	
	8	1	**7X-0796**	2	LOCKWASHER (10.2X18.4X2.5-MM THK)	
M	9	1	**269-5224**	1	BOLT (M14X2X80-MM)	
	10	1	**3B-4509**	1	LOCKWASHER	
	11	1	**390-4242**	2	CLAMP	
	12	1	**6V-9831**	2	CAP (ORFS)	

M - METRIC PART

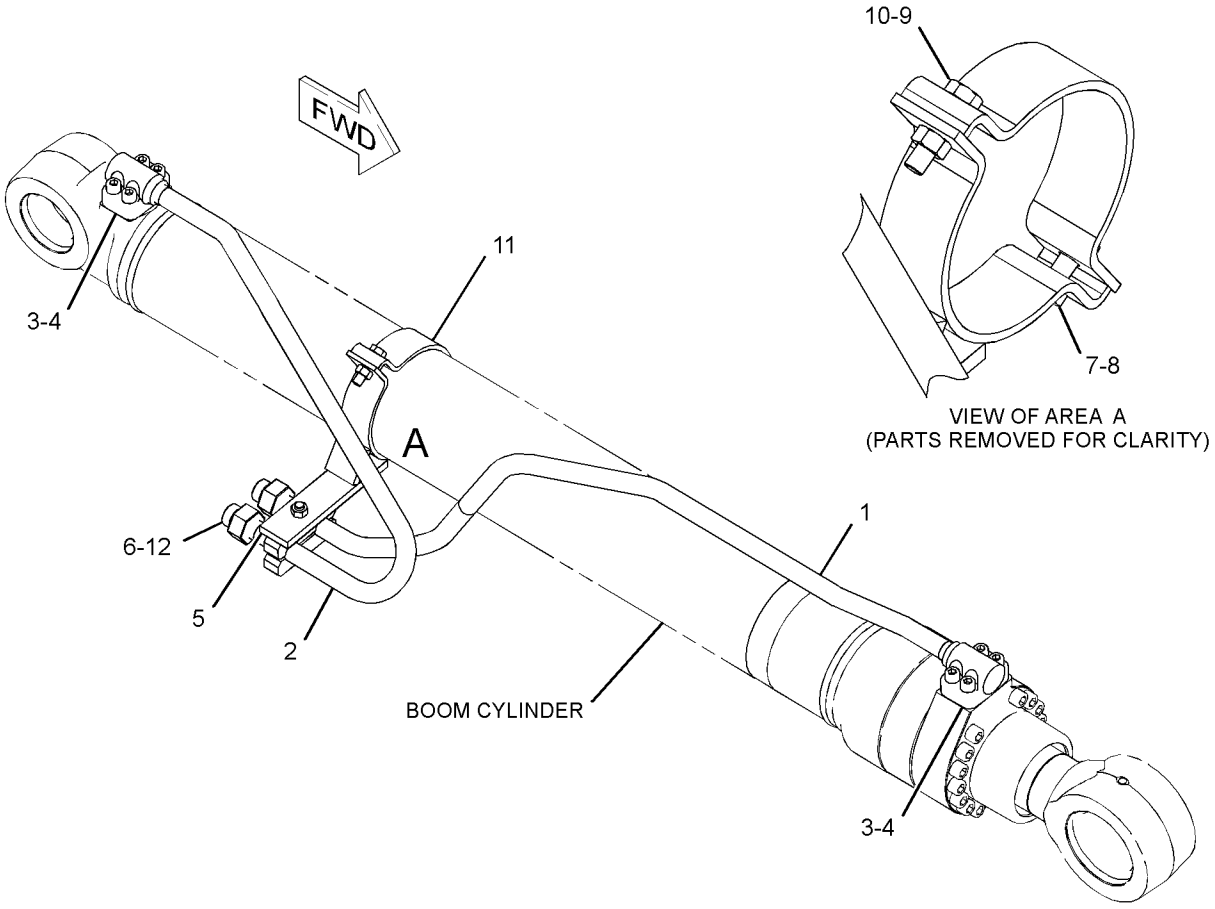

GRAPHIC #1

<END>

g03343622

385-2835 LINES GP-BOOM CYLINDER–RH

S/N: DLP1-UP
PART OF 385-2826 CYLINDER & LINES GP-BOOM
AN ATTACHMENT
TYPE 1

SMCS-5057, 5456

i05907260

NOTE	REF NO	GRAPHIC REF	PART NUMBER	QTY	PART NAME 1 2 3 4 5 6 (PRODUCT LEVEL)	SEE PAGE
	1	1	**6V-0357**	2	SEAL-O-RING	
M	2	1	**8T-0271**	8	BOLT-SOCKET HEAD (M10X1.5X35-MM)	
	3	1	**390-4248**	1	TUBE AS	
	4	1	**390-4249**	1	TUBE AS	
	5	1	**390-4242**	2	CLAMP	
M	6	1	**269-5224**	1	BOLT (M14X2X80-MM)	
	7	1	**3B-4509**	1	LOCKWASHER	
M	8	1	**6V-5842**	2	BOLT (M10X1.5X40-MM)	
	9	1	**7X-0796**	2	LOCKWASHER (10.2X18.4X2.5-MM THK)	
M	10	1	**8T-4133**	2	NUT (M10X1.5-THD)	
	11	1	**390-4236**	1	SUPPORT AS	
M	12	1	**096-4876**	1	NUT (M14X2-THD)	
	13	1	**6V-9831**	2	CAP (ORFS)	
	14	1	**7J-9108**	2	SEAL-O-RING	

M - METRIC PART

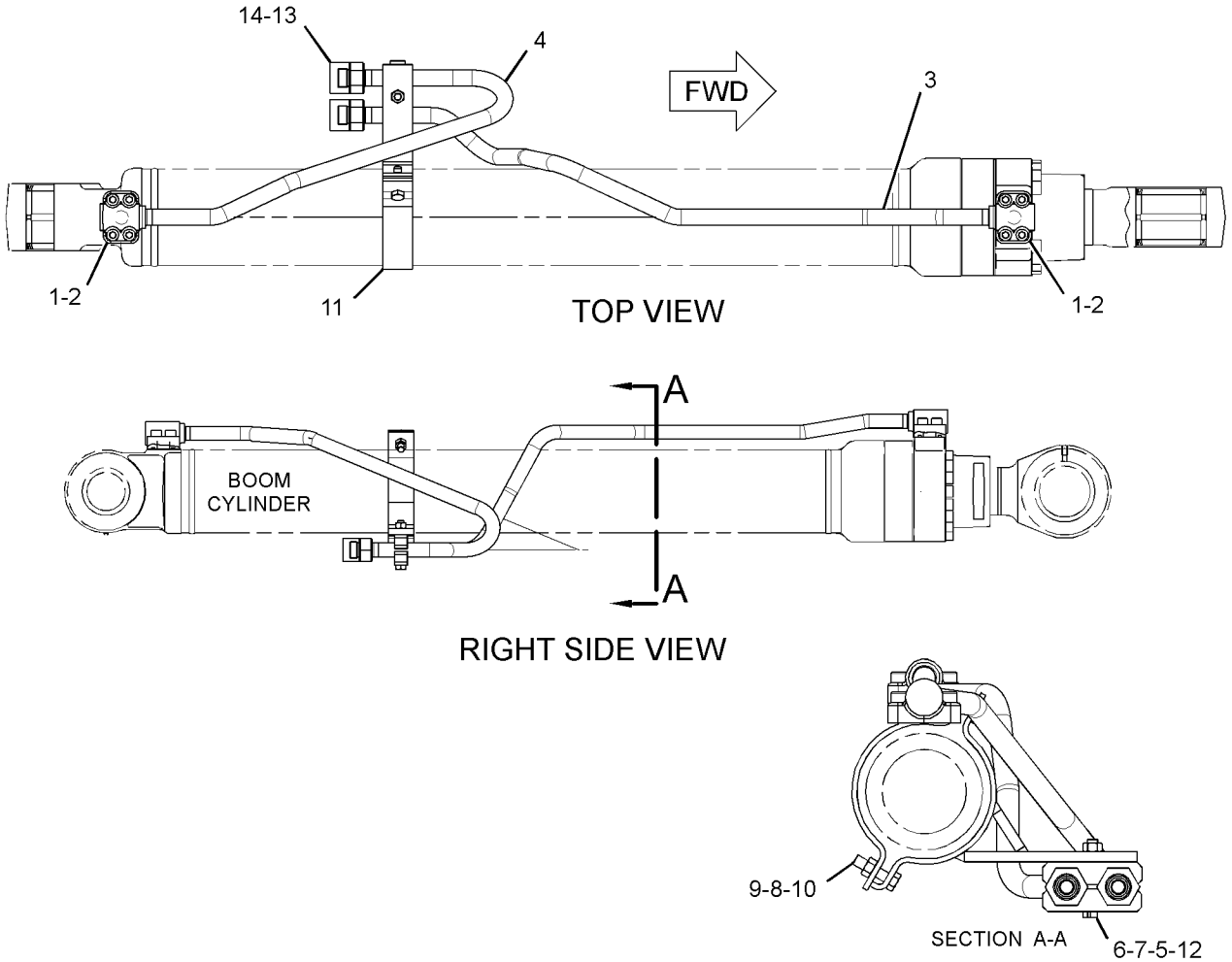

GRAPHIC #1

<END>

g03114037

385-2835 LINES GP-BOOM CYLINDER–RH

S/N: DLP1-UP
PART OF 385-2826 CYLINDER & LINES GP-BOOM
AN ATTACHMENT
TYPE 2

SMCS-5057, 5456

i06263517

NOTE	REF NO	GRAPHIC REF	PART NUMBER	QTY	PART NAME 1 2 3 4 5 6 (PRODUCT LEVEL)	SEE PAGE
	1	1	**6V-0357**	2	SEAL-O-RING	
M	2	1	**8T-0271**	8	BOLT-SOCKET HEAD (M10X1.5X35-MM)	
	3	1	**390-4248**	1	TUBE AS	
	4	1	**390-4249**	1	TUBE AS	
	5	1	**390-4242**	2	CLAMP	
M	6	1	**269-5224**	1	BOLT (M14X2X80-MM)	
	7	1	**3B-4509**	1	LOCKWASHER	
M	8	1	**6V-5842**	2	BOLT (M10X1.5X40-MM)	
	9	1	**7X-0796**	2	LOCKWASHER (10.2X18.4X2.5-MM THK)	
	10	1	**7J-9108**	2	SEAL-O-RING	
	11	1	**422-9130**	1	SUPPORT AS	
	12	1	**6V-9831**	2	CAP (ORFS)	

M - METRIC PART

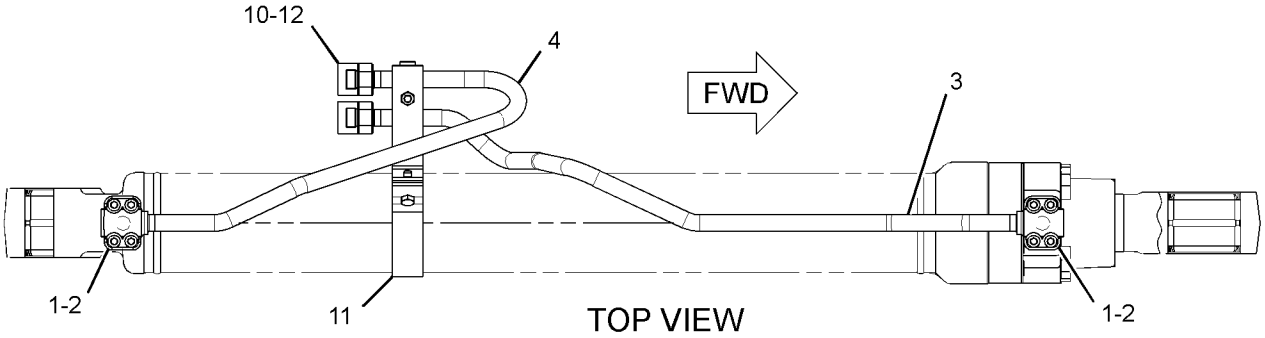

TOP VIEW

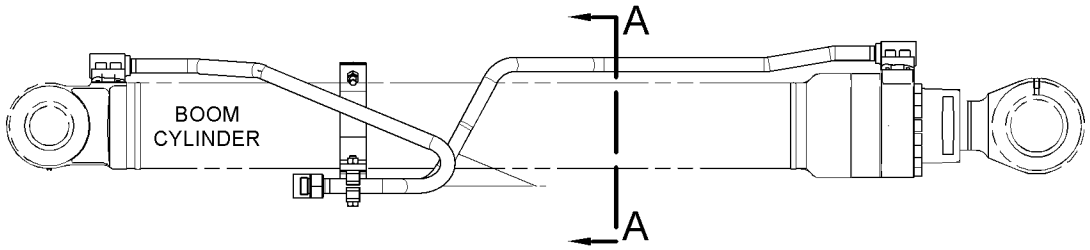

RIGHT SIDE VIEW

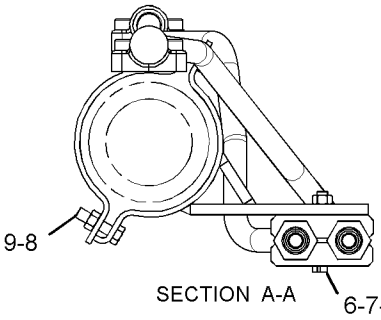

SECTION A-A

GRAPHIC #1

<END>

g03343380

179-7598 LINES GP-BUCKET CYLINDER

S/N: DLP1-UP

PART OF 289-7697 CYLINDER & LINES GP-BUCKET

AN ATTACHMENT

SMCS-5457 **i01423947**

NOTE	REF NO	GRAPHIC REF	PART NUMBER	QTY	PART NAME 1 2 3 4 5 6 (PRODUCT LEVEL)	SEE PAGE
	1	1	**179-7599**	1	TUBE AS	
	2	1	**4J-5267**	1	SEAL-O-RING	
M	3	1	**8T-4182**	4	BOLT (M10X1.5X45-MM)	
	4	1	**8T-4223**	1	WASHER-HARD (13.5X25.5X3-MM THK)	
M	5	1	**8T-4194**	1	BOLT (M12X1.75X50-MM)	
	6	1	**093-1291**	1	CLAMP	
	7	1	**121-6222**	1	SUPPORT AS	
M		1	**8T-3490**	1	NUT-WELD (M10X1.5-THD)	
	8	1	**8T-4121**	2	WASHER-HARD (11X21X2.5-MM THK)	
M	9	1	**8T-4196**	2	BOLT (M10X1.5X35-MM)	
	10	1	**121-6223**	1	SUPPORT AS	
M		1	**8T-3490**	1	NUT-WELD (M10X1.5-THD)	
	11	1	**7J-9108**	1	SEAL-O-RING	

M - METRIC PART

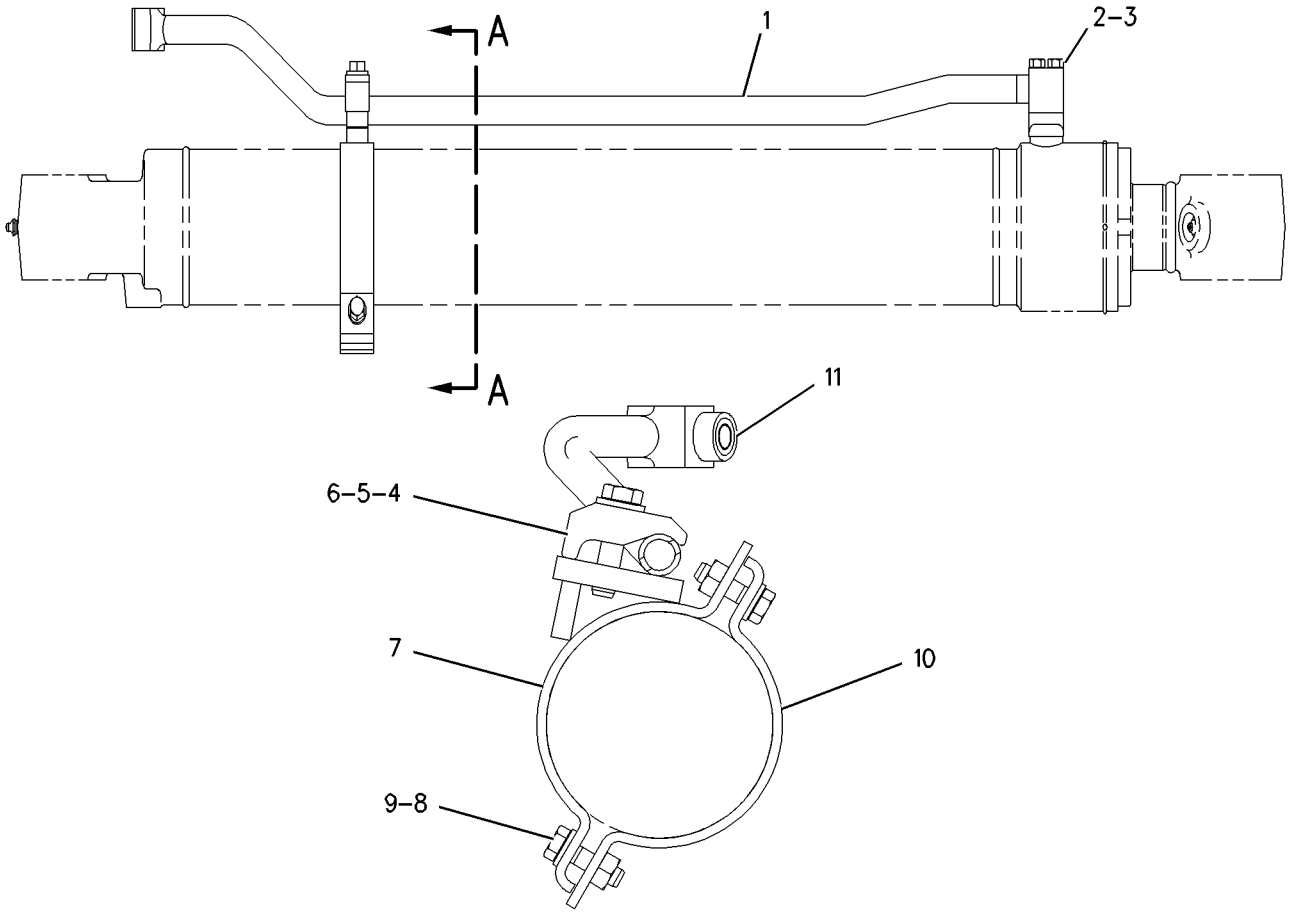

SECTION A-A

GRAPHIC #1 <END> g00747069

253-6396 LINES GP-COUPLER

S/N: DLP1-UP
PART OF 282-5536, 282-5537 COUPLER AR-QUICK
AN ATTACHMENT

SMCS-5057, 5133

i02909661

NOTE	REF NO	GRAPHIC REF	PART NUMBER	QTY	PART NAME 1 2 3 4 5 6 (PRODUCT LEVEL)	SEE PAGE
	1	1	**8C-6561**	1	BOLT (5/16-18X1.375-IN)	
	2	1	**6W-2464**	2	CLAMP	
Y	3	1	*236-4153*	1	COUPLER GP-QUICK	915
CI	4	1	**316-4076**	1	HOSE AS	
CI	5	1	**316-4077**	1	HOSE AS	
	6	1	**3V-0046**	1	PLATE	
	7	1	**3J-1907**	1	SEAL-O-RING	
	8	1	**3J-7354**	1	SEAL-O-RING	

C - CHANGE FROM PREVIOUS TYPE
I - REFER TO HYDRAULIC INFORMATION SYSTEM
Y - SEPARATE ILLUSTRATION

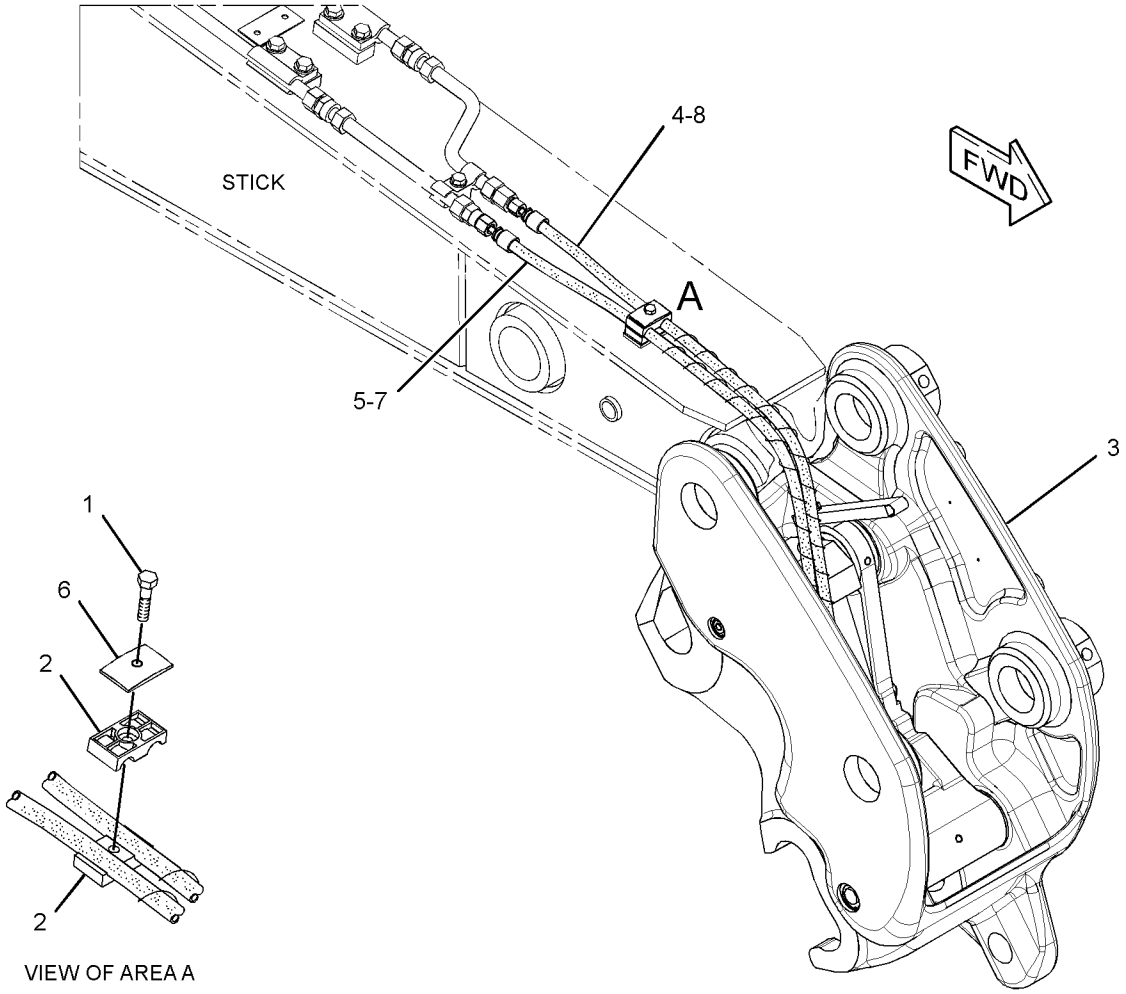

VIEW OF AREA A

GRAPHIC #1 <END> g01447120

277-1167 LINES GP-COUPLER—REACH BOOM

S/N: DLP1-UP
PART OF 321-0346 LINES AR-QUICK COUPLER
AN ATTACHMENT

SMCS-5057, 5133 **i05213204**

NOTE	REF NO	GRAPHIC REF	PART NUMBER	QTY	PART NAME 1 2 3 4 5 6 (PRODUCT LEVEL)	SEE PAGE
	1	1	**5Q-4213**	1	CLIP	
	2	1	**179-5030**	1	CLIP	
	3	1	**193-6606**	2	PLATE	
	4	1	**277-1002**	1	CLAMP	
	5	1	**282-5470**	1	TUBE AS	
	6	1	**282-5473**	1	TUBE AS	
	7	1	**282-5476**	1	TUBE AS	
	8	1	**282-5479**	1	TUBE AS	
	9	1	**282-5482**	2	SUPPORT AS	
	10	1	**135-3980**	4	CLIP	
	11	1	**5Q-4212**	4	CLIP	
	12	1	**6V-8398**	6	SEAL-O-RING	
M	13	1	**7X-2549**	4	BOLT (M12X1.75X100-MM)	
M	14	1	**8T-4139**	8	BOLT (M12X1.75X30-MM)	
M	15	1	**8T-4194**	1	BOLT (M12X1.75X50-MM)	
	16	1	**8T-4223**	17	WASHER-HARD (13.5X25.5X3-MM THK)	
	17	1	**352-6772**	1	CLIP AS	
M	18	1	**8T-4910**	4	BOLT (M12X1.75X60-MM)	
	19	1	**372-9711**	1	CLIP AS	

M - METRIC PART

277-1167 **LINES GP-COUPLER (**contd.**)** **i05213204**

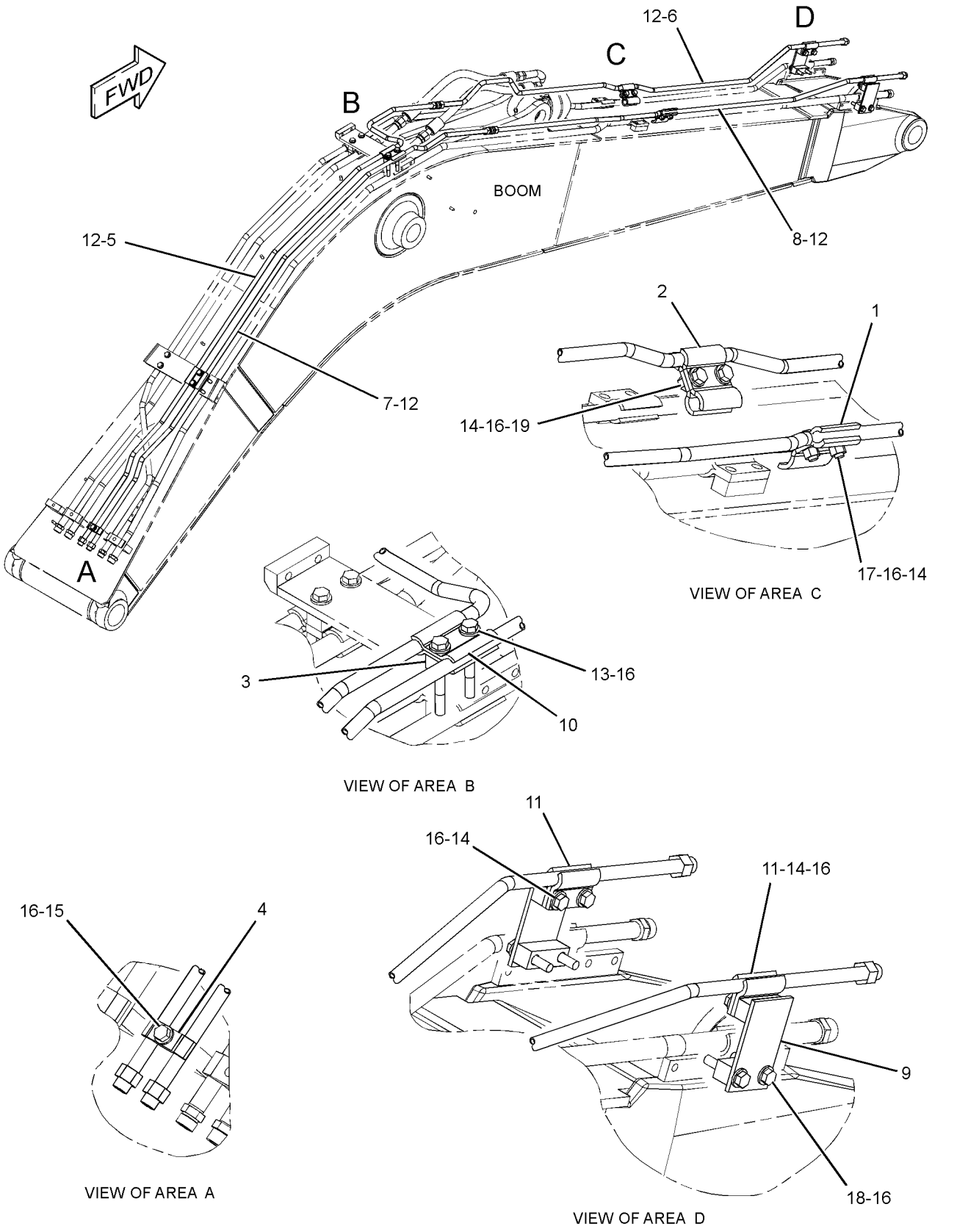

GRAPHIC #1 <END> g02729867

282-5633 LINES GP-COUPLER

S/N: DLP1-UP
FOR USE WITH 2.5 TO 2.6-M (8.2 TO 8.5-FT) STICK
AN ATTACHMENT

SMCS-5057, 5133 **i05189701**

NOTE	REF NO	GRAPHIC REF	PART NUMBER	QTY	PART NAME 1 2 3 4 5 6 (PRODUCT LEVEL)	SEE PAGE
	1	1	**198-0370**	2	CLIP	
I	2	1	**277-1251**	2	HOSE AS	
	3	1	**288-7727**	1	TUBE AS	
	4	1	**288-7730**	1	TUBE AS	
	5	1	*148-8415*	1	REDUCER AS	
		1	**6V-8397**	1	SEAL-O-RING	
		1	**6V-8936**	1	REDUCER	
	6	1	*148-8419*	1	REDUCER AS	
		1	**4J-5477**	1	SEAL-O-RING	
		1	**6V-8935**	1	REDUCER	
	7	1	**5Q-4212**	8	CLIP	
	8	1	**6V-8398**	4	SEAL-O-RING	
	9	1	**8T-4121**	1	WASHER-HARD (11X21X2.5-MM THK)	
M	10	1	**8T-4139**	8	BOLT (M12X1.75X30-MM)	
M	11	1	**8T-4195**	1	BOLT (M10X1.5X30-MM)	
	12	1	**8T-4223**	8	WASHER-HARD (13.5X25.5X3-MM THK)	
	13	1	**9X-6582**	1	NUT (13/16-16-THD)	

I - REFER TO HYDRAULIC INFORMATION SYSTEM
M - METRIC PART

282-5633 **LINES GP-COUPLER (**contd.**)** **i05189701**

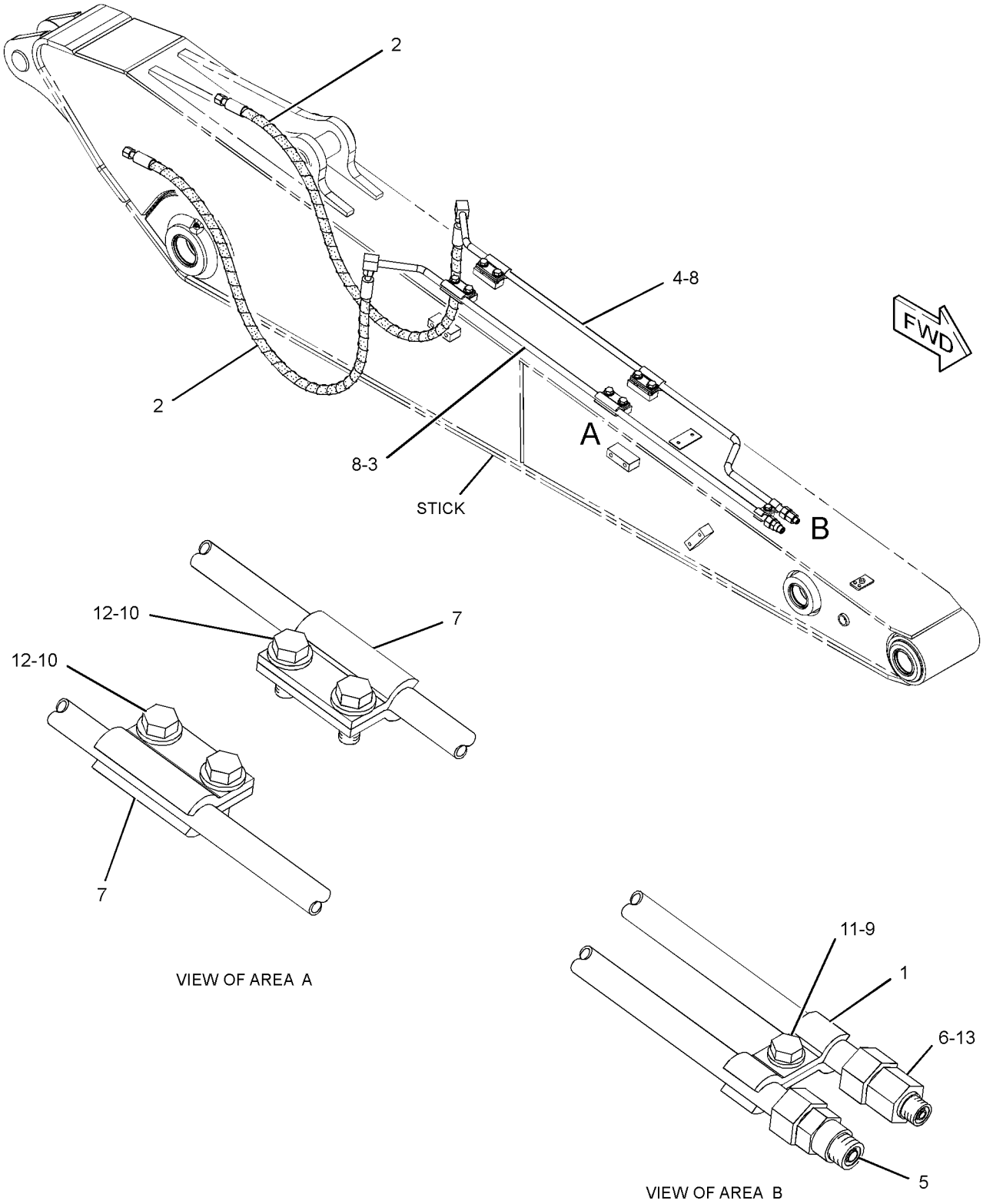

GRAPHIC #1 <END> g01442604

347-3726 LINES GP-COUPLER

S/N: DLP1-UP
FOR USE WITH 292-4159—PAGE: 916
PART OF 351-8749 COUPLER AR-QUICK
AN ATTACHMENT

SMCS-5057, 5133 **i05167093**

NOTE	REF NO	GRAPHIC REF	PART NUMBER	QTY	PART NAME 1 2 3 4 5 6 (PRODUCT LEVEL)	SEE PAGE
	1	1	**7K-1181**	4	STRAP-CABLE	
I	2	1	**347-3727**	1	HOSE AS	
I	3	1	**347-3728**	1	HOSE AS	
I	4	1	**359-2909**	1	HOSE AS	
I	5	1	**359-2911**	1	HOSE AS	
	6	1	**347-3895**	1	BRACKET	
	7	1	*148-8377*	1	ELBOW AS	
		1	**6V-8397**	2	SEAL-O-RING	
		1	**6V-8980**	1	ELBOW	
	8	1	*148-8384*	1	ELBOW AS	
		1	**4J-5477**	2	SEAL-O-RING	
		1	**6V-8979**	1	ELBOW	
	9	1	**2P-1279**	1	LOCKNUT (9/16-18-THD)	
	10	1	**3J-1907**	1	SEAL-O-RING	
	11	1	**3J-7354**	1	SEAL-O-RING	
	12	1	**6V-9168**	1	NUT (11/16-16-THD)	
	13	1	**8T-4121**	2	WASHER-HARD (11X21X2.5-MM THK)	
M	14	1	**8T-4137**	2	BOLT (M10X1.5X20-MM)	

I - REFER TO HYDRAULIC INFORMATION SYSTEM
M - METRIC PART

347-3726 **LINES GP-COUPLER (**contd.**)** **i05167093**

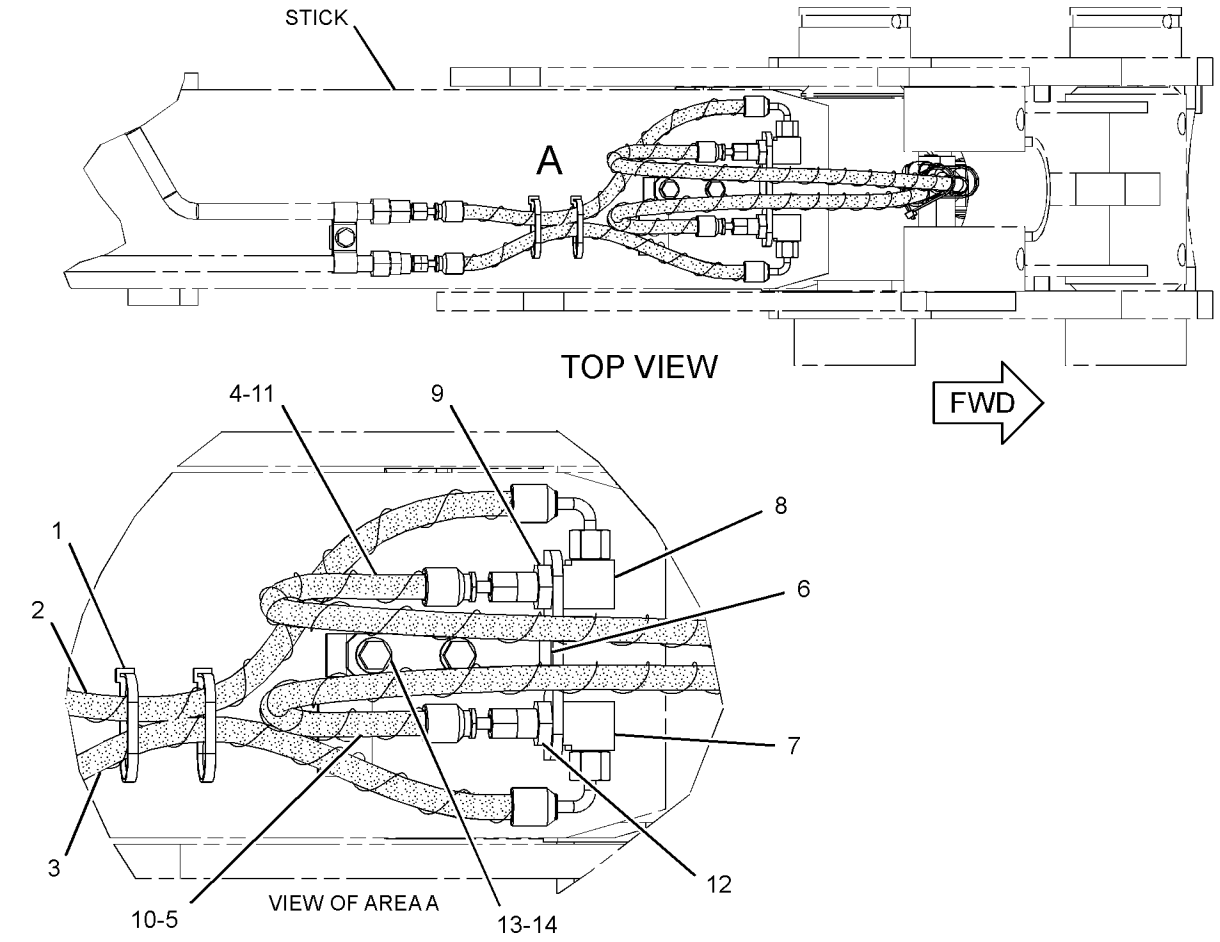

GRAPHIC #1 <END> g02040174

372-9770 LINES GP-COUPLER—STICK

S/N: DLP1-UP
FOR USE WITH 2.5-M (8.2-FT) STICK
AN ATTACHMENT

SMCS-5057, 5133 **i07084202**

NOTE	REF NO	GRAPHIC REF	PART NUMBER	QTY	PART NAME 1 2 3 4 5 6 (PRODUCT LEVEL)	SEE PAGE
	1	1	**198-0370**	2	CLIP	
I	2	1	**277-1251**	2	HOSE AS	
	3	1	**288-7727**	1	TUBE AS	
	4	1	**288-7730**	1	TUBE AS	
	5	1	*148-8415*	1	REDUCER AS	
		1	**6V-8397**	1	SEAL-O-RING	
		1	**6V-8936**	1	REDUCER	
	6	1	*148-8419*	1	REDUCER AS	
		1	**4J-5477**	1	SEAL-O-RING	
		1	**6V-8935**	1	REDUCER	
	7	1	**5Q-4212**	8	CLIP	
	8	1	**6V-8398**	4	SEAL-O-RING	
	9	1	**8T-4121**	1	WASHER-HARD (11X21X2.5-MM THK)	
M	10	1	**8T-4139**	8	BOLT (M12X1.75X30-MM)	
M	11	1	**8T-4195**	1	BOLT (M10X1.5X30-MM)	
	12	1	**8T-4223**	8	WASHER-HARD (13.5X25.5X3-MM THK)	
	13	1	**9X-6582**	1	NUT (13/16-16-THD)	

I - REFER TO HYDRAULIC INFORMATION SYSTEM
M - METRIC PART

372-9770 **LINES GP-COUPLER (**contd.**)** **i07084202**

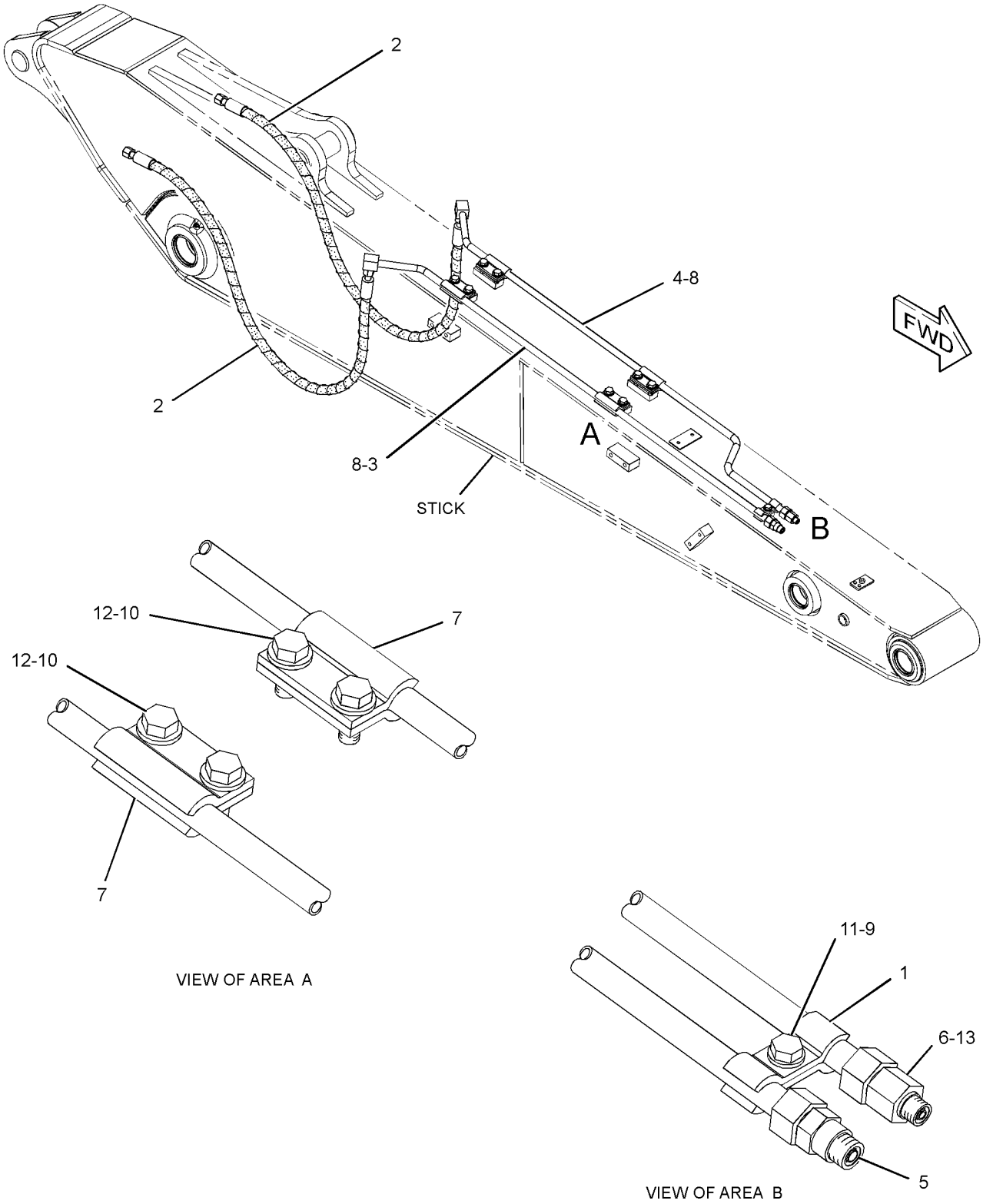

GRAPHIC #1 <END> g01442604

387-3755 LINES GP-COUPLER

S/N: DLP1-UP

FOR USE WITH 2.5 TO 2.6-M (8.2 TO 8.5-FT) STICK

AN ATTACHMENT

SMCS-5057, 5133

i05181203

NOTE	REF NO	GRAPHIC REF	PART NUMBER	QTY	PART NAME 1 2 3 4 5 6 (PRODUCT LEVEL)	SEE PAGE
	1	1	**198-0370**	2	CLIP	
I	2	1	**277-1251**	2	HOSE AS	
	3	1	**288-7727**	1	TUBE AS	
	4	1	**387-3756**	1	TUBE AS	
	5	1	*148-8415*	1	REDUCER AS	
		1	**6V-8397**	1	SEAL-O-RING	
		1	**6V-8936**	1	REDUCER	
	6	1	*148-8419*	1	REDUCER AS	
		1	**4J-5477**	1	SEAL-O-RING	
		1	**6V-8935**	1	REDUCER	
	7	1	**5Q-4212**	8	CLIP	
	8	1	**6V-8398**	4	SEAL-O-RING	
	9	1	**8T-4121**	1	WASHER-HARD (11X21X2.5-MM THK)	
M	10	1	**8T-4139**	8	BOLT (M12X1.75X30-MM)	
M	11	1	**8T-4195**	1	BOLT (M10X1.5X30-MM)	
	12	1	**8T-4223**	8	WASHER-HARD (13.5X25.5X3-MM THK)	
	13	1	**9X-6582**	1	NUT (13/16-16-THD)	

I - REFER TO HYDRAULIC INFORMATION SYSTEM
M - METRIC PART

387-3755 **LINES GP-COUPLER (**contd.**)** **i05181203**

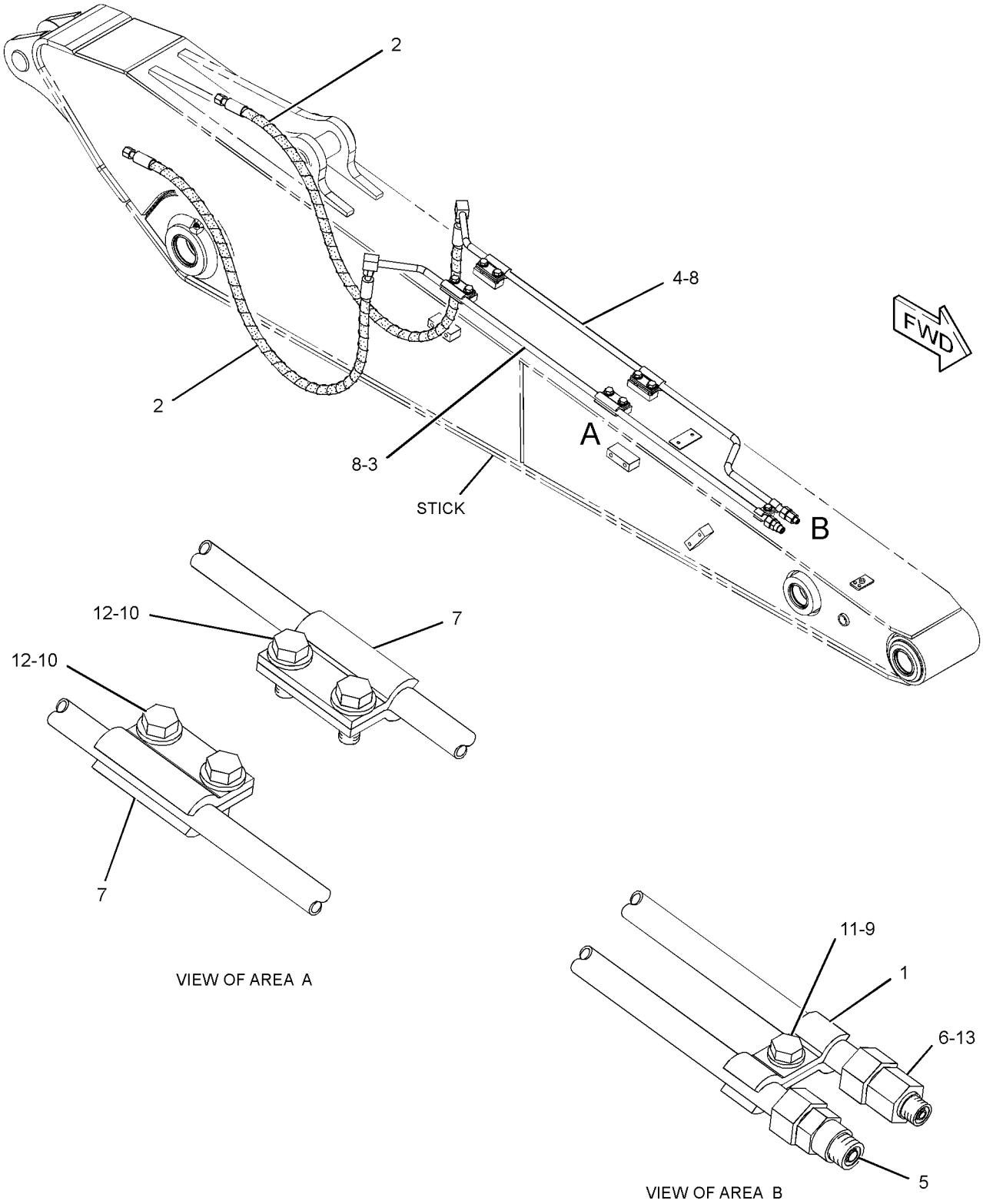

GRAPHIC #1 <END> g01442604

390-4280 LINES GP-COUPLER—REACH BOOM

S/N: DLP1-UP

PART OF 398-8996 LINES AR-QUICK COUPLER

AN ATTACHMENT

SMCS-5057, 5133

i07084204

NOTE	REF NO	GRAPHIC REF	PART NUMBER	QTY	PART NAME 1 2 3 4 5 6 (PRODUCT LEVEL)	SEE PAGE
	1	1	**193-6606**	2	PLATE	
	2	1	**277-1002**	1	CLAMP	
	3	1	**282-5470**	1	TUBE AS	
	4	1	**282-5476**	1	TUBE AS	
	5	1	**282-5482**	2	SUPPORT AS	
	6	1	**352-6772**	1	CLIP AS	
	7	1	**372-9711**	1	CLIP AS	
	8	1	**390-4315**	1	TUBE AS	
	9	1	**390-4319**	1	TUBE AS	
	10	1	**135-3980**	4	CLIP	
	11	1	**179-5030**	1	CLIP	
	12	1	**5Q-4212**	4	CLIP	
	13	1	**5Q-4213**	1	CLIP	
	14	1	**6V-8398**	6	SEAL-O-RING	
M	15	1	**7X-2549**	4	BOLT (M12X1.75X100-MM)	
M	16	1	**8T-4139**	8	BOLT (M12X1.75X30-MM)	
M	17	1	**8T-4194**	1	BOLT (M12X1.75X50-MM)	
	18	1	**8T-4223**	17	WASHER-HARD (13.5X25.5X3-MM THK)	
M	19	1	**8T-4910**	4	BOLT (M12X1.75X60-MM)	

M - METRIC PART

390-4280 **LINES GP-COUPLER (**contd.**)** **i07084204**

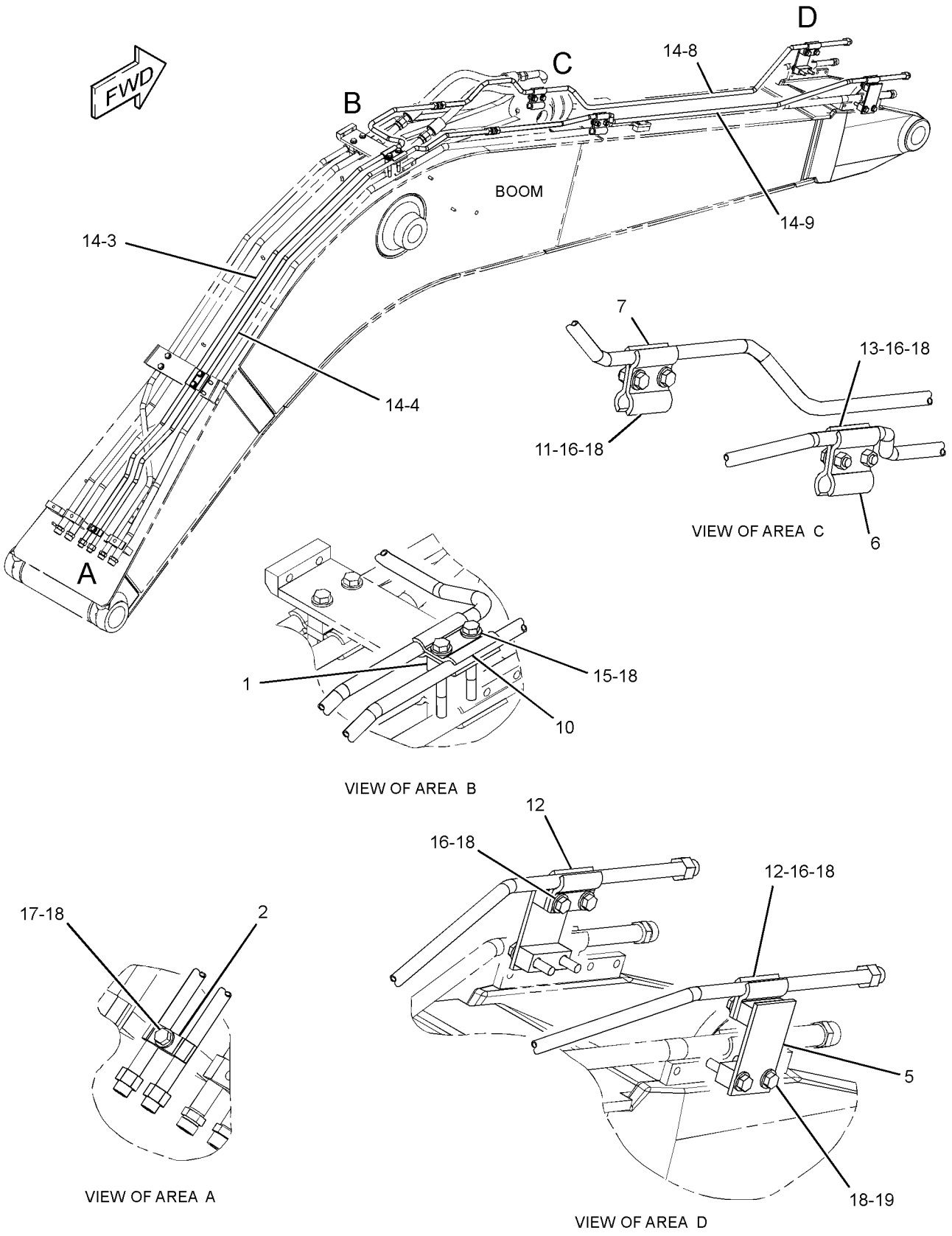

GRAPHIC #1 <END> g03026058

489-4662 LINES GP-COUPLER

S/N: DLP1-UP
FOR USE WITH 2.5-M (8.2-FT)STICK LINES
AN ATTACHMENT

SMCS-5057, 5133

i06294086

NOTE	REF NO	GRAPHIC REF	PART NUMBER	QTY	PART NAME 1 2 3 4 5 6 (PRODUCT LEVEL)	SEE PAGE
	1	1	**198-0370**	2	CLIP	
I	2	1	**277-1251**	2	HOSE AS	
	3	1	**288-7727**	1	TUBE AS	
	4	1	**288-7730**	1	TUBE AS	
	5	1	*148-8415*	1	REDUCER AS	
		1	**6V-8397**	1	SEAL-O-RING	
		1	**6V-8936**	1	REDUCER	
	6	1	*148-8419*	1	REDUCER AS	
		1	**4J-5477**	1	SEAL-O-RING	
		1	**6V-8935**	1	REDUCER	
	7	1	**5Q-4212**	8	CLIP	
	8	1	**6V-8398**	4	SEAL-O-RING	
	9	1	**8T-4121**	1	WASHER-HARD (11X21X2.5-MM THK)	
M	10	1	**8T-4139**	8	BOLT (M12X1.75X30-MM)	
M	11	1	**8T-4195**	1	BOLT (M10X1.5X30-MM)	
	12	1	**8T-4223**	8	WASHER-HARD (13.5X25.5X3-MM THK)	
	13	1	**9X-6582**	1	NUT (13/16-16-THD)	

I - REFER TO HYDRAULIC INFORMATION SYSTEM
M - METRIC PART

489-4662 **LINES GP-COUPLER (**contd.**)** **i06294086**

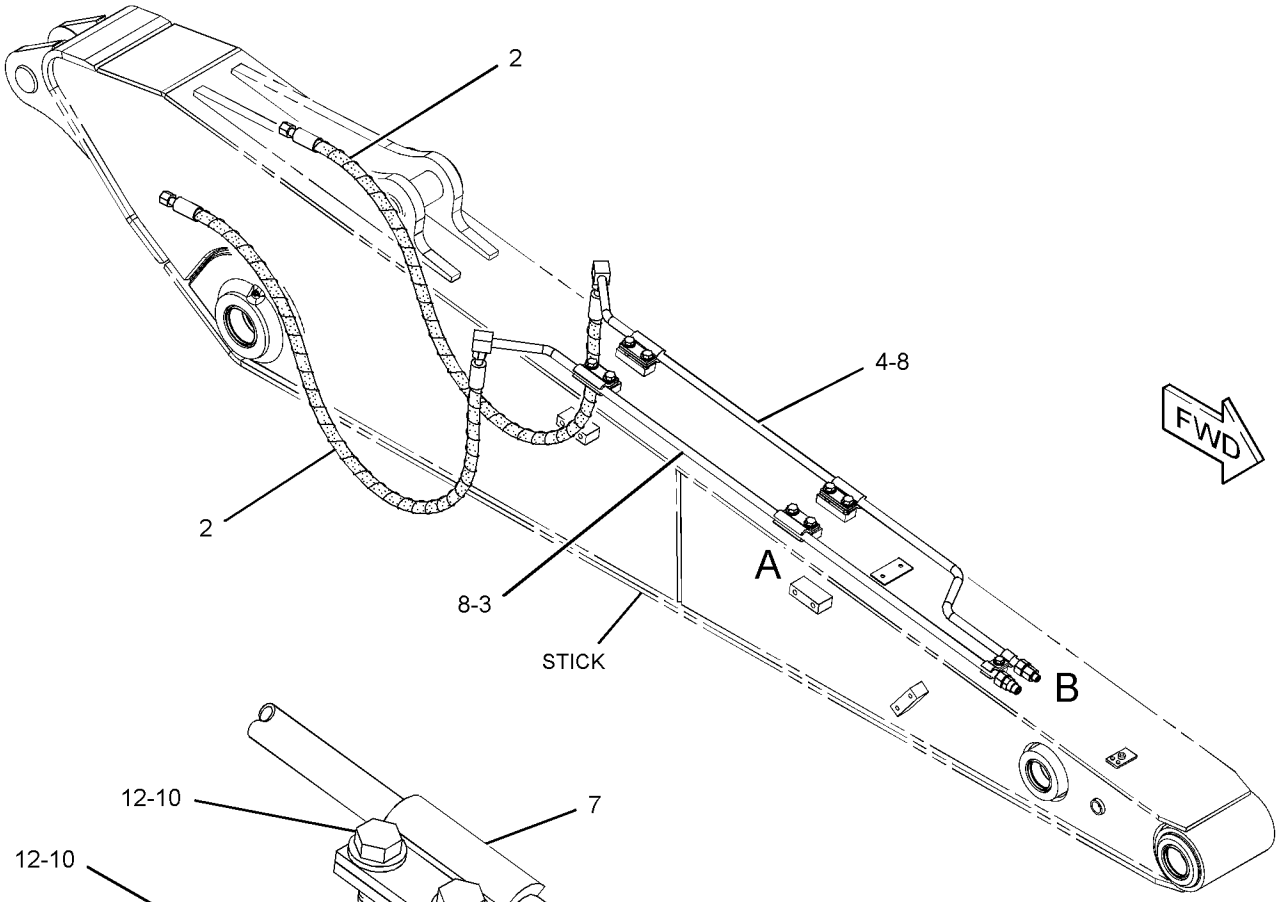

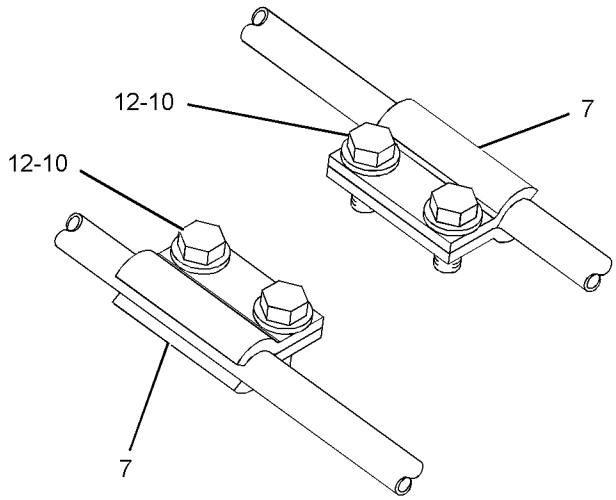

VIEW OF AREA A

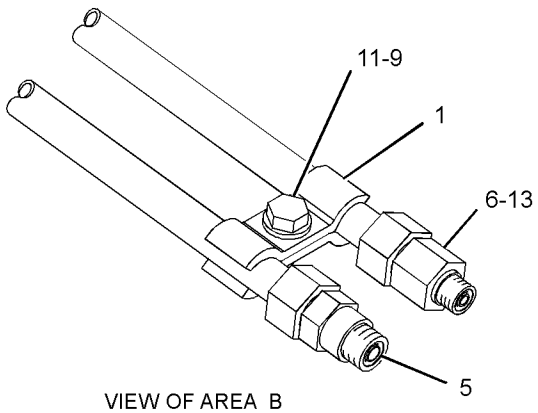

VIEW OF AREA B

GRAPHIC #1 <END> g01442604

278-6665 LINES GP-FRONT

S/N: DLP1-UP

PART OF 270-5864 HYDRAULIC AR

SMCS-5057 **i06111949**

NOTE	REF NO	GRAPHIC REF	PART NUMBER	QTY	PART NAME 1 2 3 4 5 6 (PRODUCT LEVEL)	SEE PAGE
I	1	1	**319-9966**	2	HOSE AS	
I	2	1	**131-9907**	1	HOSE AS	
I	3	1	**131-9869**	1	HOSE AS	
I	4	1	**179-7464**	1	HOSE AS	
I	5	1	**199-1689**	3	HOSE AS	
CI	6	1	**325-9030**	1	HOSE AS	
CI	7	1	**325-9033**	1	HOSE AS	
	8	1	*260-9174*	1	CONNECTOR AS	
		1	**3D-2824**	1	SEAL-O-RING	
		1	**7J-9108**	1	SEAL-O-RING	
		1	**109-5815**	1	CONNECTOR	
	9	1	*286-6499*	2	CONNECTOR AS	
					(EACH INCLUDES)	
		1	**6V-9746**	1	SEAL-O-RING	
		1	**7M-8485**	1	SEAL-O-RING	
		1	**184-9330**	1	CONNECTOR	
I	10	1	**292-7415**	1	HOSE AS	
	11	1	**115-8645**	1	GUARD	
	12	1	*148-8327*	1	CONNECTOR AS	
		1	**3D-2824**	1	SEAL-O-RING	
		1	**6V-8637**	1	CONNECTOR	
		1	**6V-9746**	1	SEAL-O-RING	
	13	1	*148-8339*	2	CONNECTOR AS	
					(EACH INCLUDES)	
		1	**6V-8716**	1	CONNECTOR (STRAIGHT)	
		1	**6V-9746**	1	SEAL-O-RING	
		1	**7M-8485**	1	SEAL-O-RING	
	14	1	*148-8341*	3	CONNECTOR AS	
					(EACH INCLUDES)	
		1	**3D-2824**	1	SEAL-O-RING	
		1	**6V-8713**	1	CONNECTOR	
		1	**7J-9108**	1	SEAL-O-RING	
	15	1	*148-8347*	1	ELBOW AS	
		1	**3D-2824**	1	SEAL-O-RING	
		1	**6V-9007**	1	ELBOW	
		1	**6V-9746**	1	SEAL-O-RING	
	16	1	*153-6242*	3	CONNECTOR AS	
					(EACH INCLUDES)	
		1	**6V-9746**	1	SEAL-O-RING	
		1	**7M-8485**	1	SEAL-O-RING	
		1	**8T-0197**	1	CONNECTOR	
	17	1	*164-4180*	2	PLUG AS	
					(EACH INCLUDES)	
		1	**7M-8485**	1	SEAL-O-RING	
		1	**9S-4181**	1	PLUG (1-5/16-12-THD)	
	18	1	**7K-1181**	2	STRAP-CABLE	

C - CHANGE FROM PREVIOUS TYPE
I - REFER TO HYDRAULIC INFORMATION SYSTEM

278-6665 **LINES GP-FRONT (**contd.**)** **i06111949**

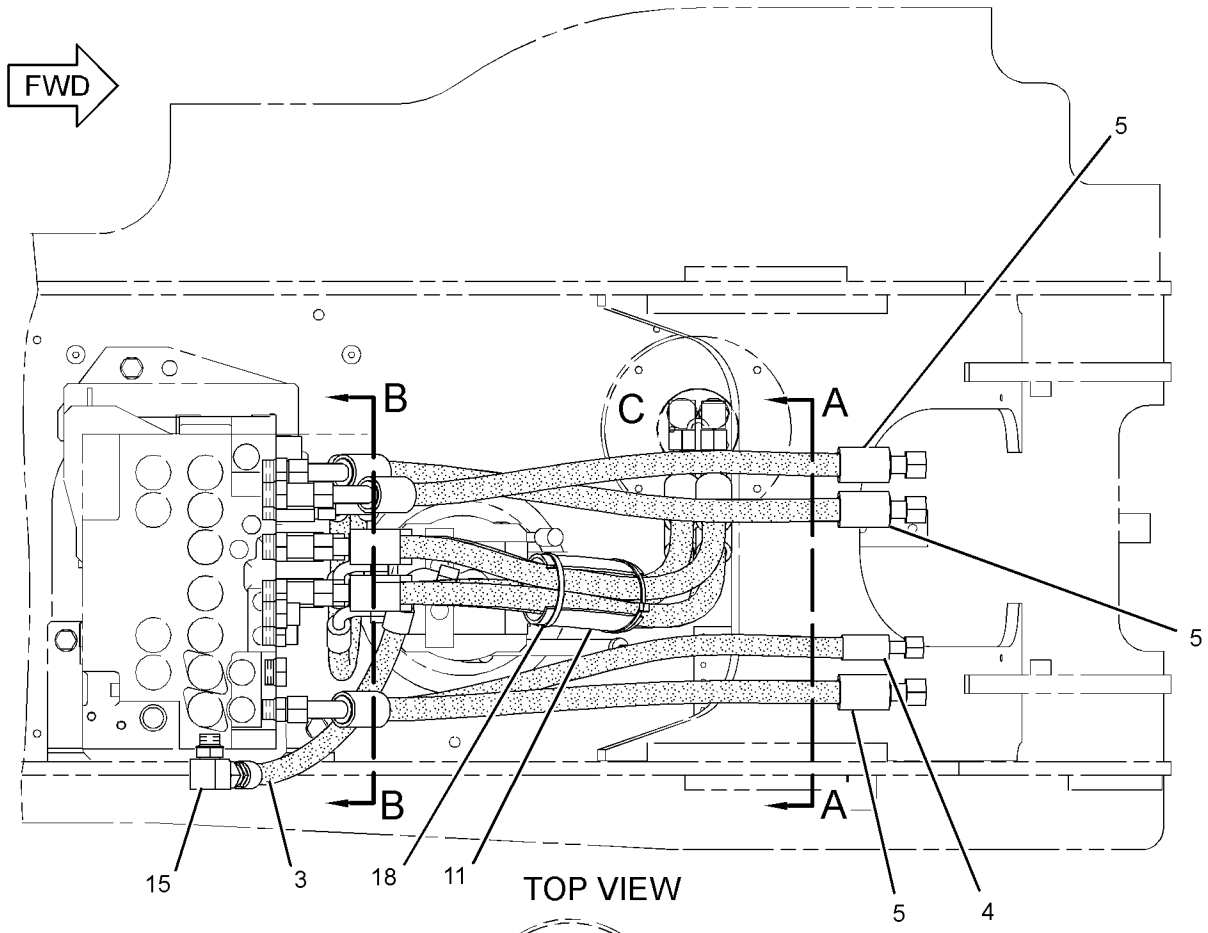

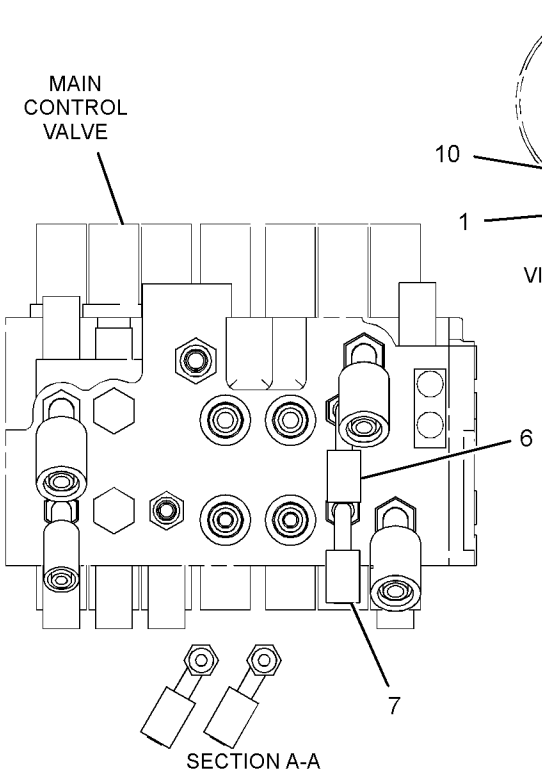

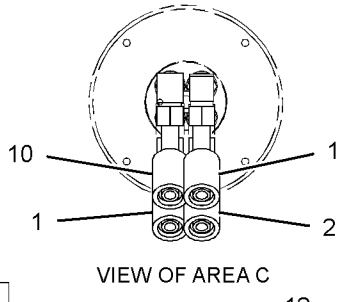

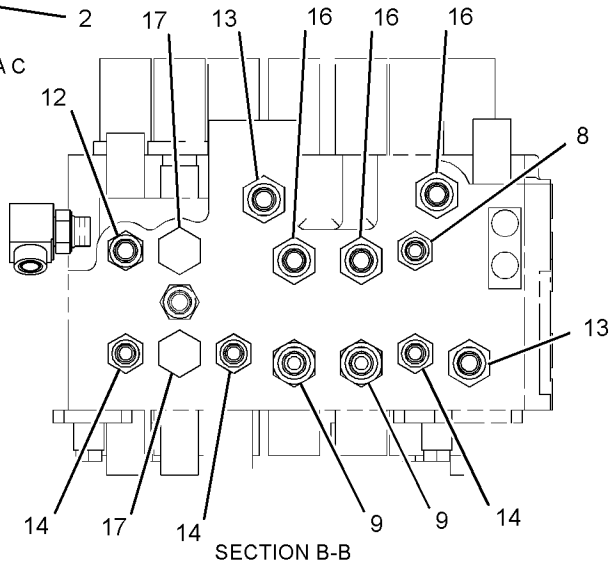

GRAPHIC #1 <END> g03814131

278-6683 LINES GP-FRONT—QUICK COUPLER

S/N: DLP1-UP
PART OF 277-1173 CONTROL AR-COUPLER
AN ATTACHMENT

SMCS-5057 **i03991377**

NOTE	REF NO	GRAPHIC REF	PART NUMBER	QTY	PART NAME 1 2 3 4 5 6 (PRODUCT LEVEL)	SEE PAGE
	1	2	**3S-2093**	1	STRAP-CABLE	
I	2	2	**4I-0797**	1	HOSE AS	
	3	1	**4I-9521**	4	BAND-MARKER (RED, L1)	
	4	1	**4I-9522**	4	BAND-MARKER (YELLOW, L2)	
	5	1,2	**7K-1181**	7	STRAP-CABLE	
	6	1	**9X-6582**	2	NUT (13/16-16-THD)	
	7	2	*150-4027*	1	TEE AS	
		2	**3E-2310**	1	TEE	
		2	**3J-1907**	1	SEAL-O-RING	
		2	**6V-8397**	1	SEAL-O-RING	
	8	2	*164-6874*	3	FITTING AS-ELBOW (QUICK DISCONNECT, MALE)	
					(EACH INCLUDES)	
		2	**3J-1907**	1	SEAL-O-RING	
		2	**085-7356**	1	FITTING	
	9	2	**236-3200**	1	SUPPORT AS	
CY	10	2	**328-2035**	1	VALVE GP-SOLENOID & MANIFOLD (QUICK COUPLER)	858
	11	2	**268-6910**	1	SPACER (14X25X45-MM THK)	
	12	1	**282-7106**	1	GROMMET	
	13	2	*285-2663*	2	FITTING AS (QUICK DISCONNECT, MALE)	
					(EACH INCLUDES)	
		2	**3J-1907**	1	SEAL-O-RING	
		2	**285-2664**	1	FITTING	
I	14	2	**314-8239**	1	HOSE AS	
I	15	1	**319-9848**	2	HOSE AS	
	16	2	*148-8325*	2	CONNECTOR AS	
					(EACH INCLUDES)	
		2	**3J-1907**	1	SEAL-O-RING	
		2	**4J-5477**	1	SEAL-O-RING	
		2	**6V-8641**	1	CONNECTOR	
	17	1	*148-8336*	1	CONNECTOR AS	
		1	**3J-1907**	1	SEAL-O-RING	
		1	**6V-8397**	1	SEAL-O-RING	
		1	**6V-8636**	1	CONNECTOR	
	18	2	*148-8353*	1	ELBOW AS	
		2	**3J-1907**	1	SEAL-O-RING	
		2	**6V-8397**	1	SEAL-O-RING	
		2	**6V-9001**	1	ELBOW	
	19	2	*148-8378*	1	ELBOW AS	
		2	**3J-1907**	1	SEAL-O-RING	
		2	**6V-8397**	1	SEAL-O-RING	
		2	**6V-8724**	1	ELBOW	
	20	1	*148-8419*	2	REDUCER AS	
					(EACH INCLUDES)	
		1	**4J-5477**	1	SEAL-O-RING	
		1	**6V-8935**	1	REDUCER	
	21	2	*164-5567*	1	COUPLER AS-QUICK DISCONNECT (MALE)	
		2	**3J-1907**	1	SEAL-O-RING	

278-6683 **LINES GP-FRONT (**contd.**)** **i03991377**

NOTE	REF NO	GRAPHIC REF	PART NUMBER	QTY	PART NAME 1 2 3 4 5 6 (PRODUCT LEVEL)	SEE PAGE
		2	**6V-3965**	1	FITTING (QUICK DISCONNECT)	
	22	1	**4D-7388**	1	CLIP	
	23	2	**4S-1936**	1	CLIP	
	24	2	**6V-0852**	1	CAP-DUST	
	25	1,2	**8T-4121**	3	WASHER-HARD (11X21X2.5-MM THK)	
M	26	1	**8T-4137**	1	BOLT (M10X1.5X20-MM)	
M	27	2	**8T-4185**	2	BOLT (M10X1.5X50-MM)	
	28	2	**8T-4223**	3	WASHER-HARD (13.5X25.5X3-MM THK)	
M	29	2	**8T-4648**	1	BOLT (M12X1.75X70-MM)	
M	30	2	**8T-4910**	2	BOLT (M12X1.75X60-MM)	

C - CHANGE FROM PREVIOUS TYPE
I - REFER TO HYDRAULIC INFORMATION SYSTEM
M - METRIC PART
Y - SEPARATE ILLUSTRATION

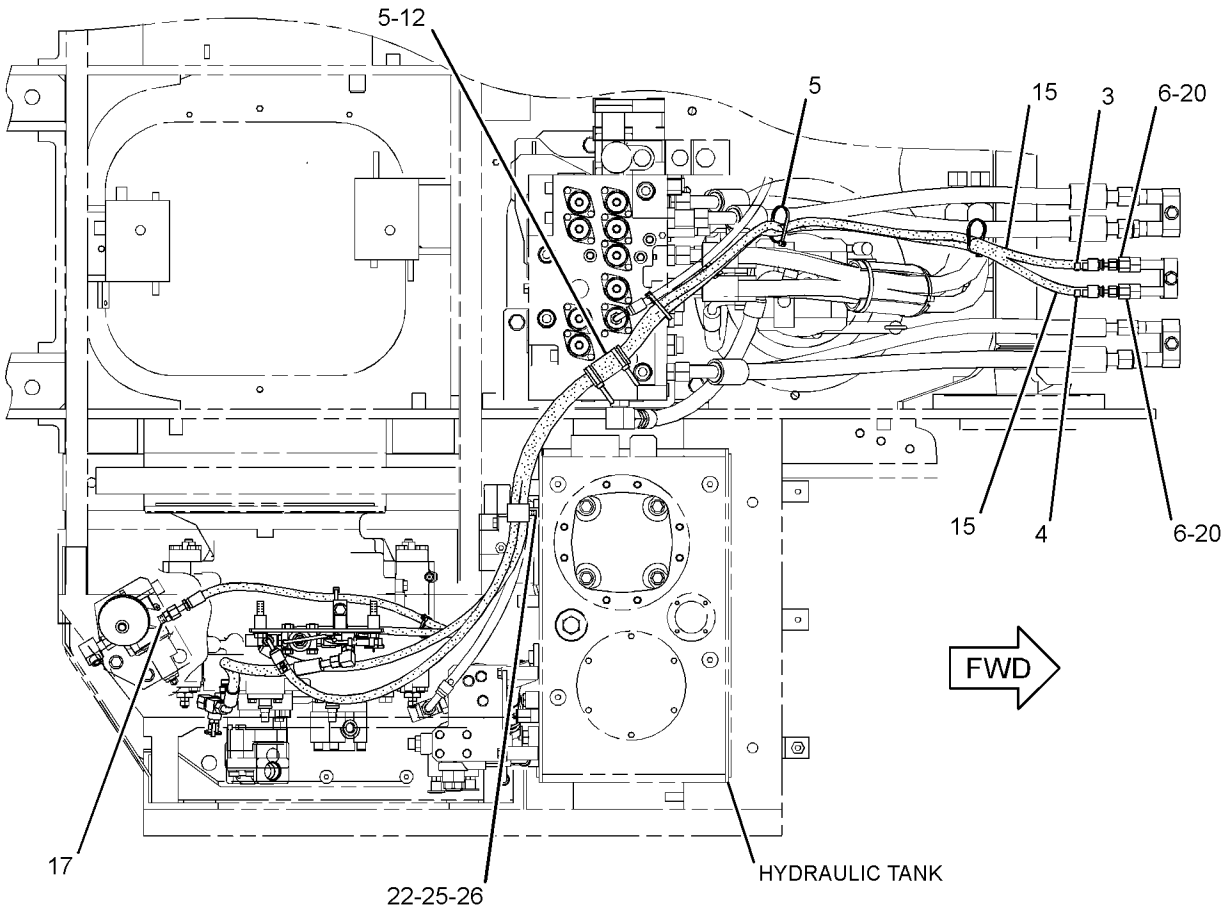

TOP VIEW

GRAPHIC #1 g01454167

278-6683 **LINES GP-FRONT (**contd.**)** **i03991377**

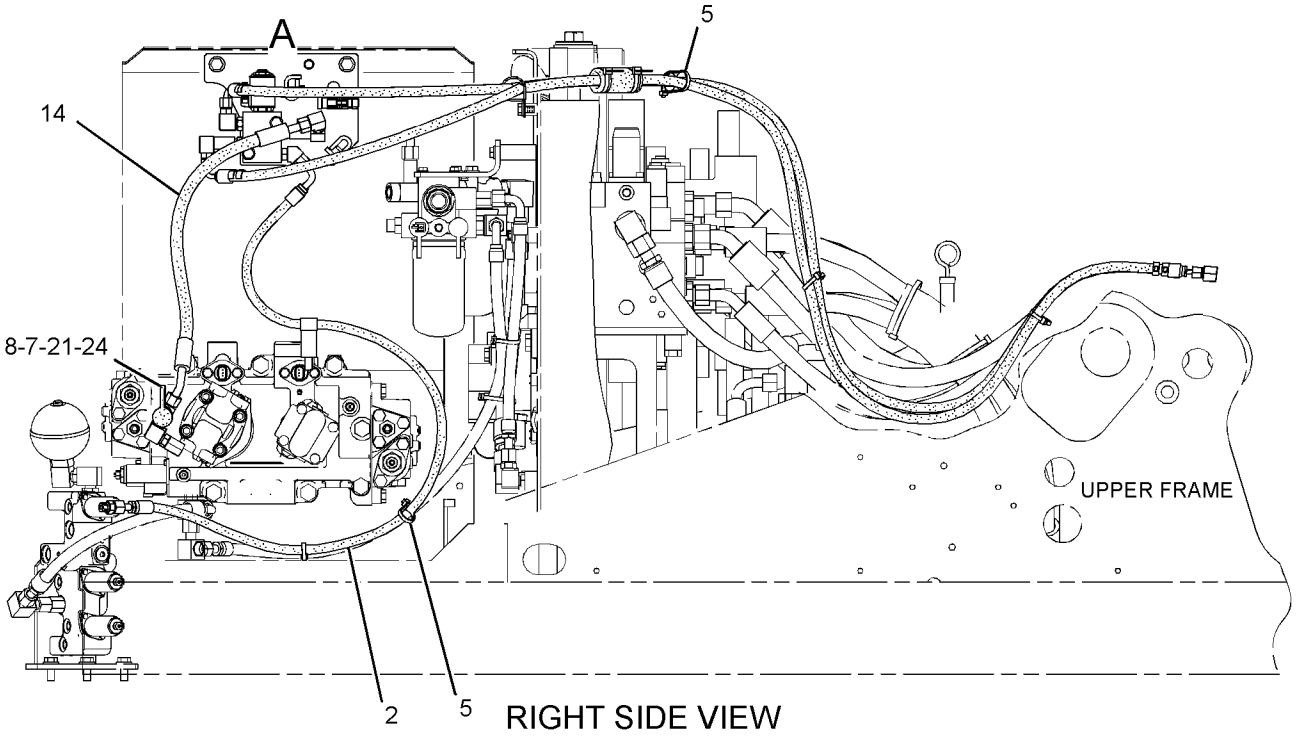

RIGHT SIDE VIEW

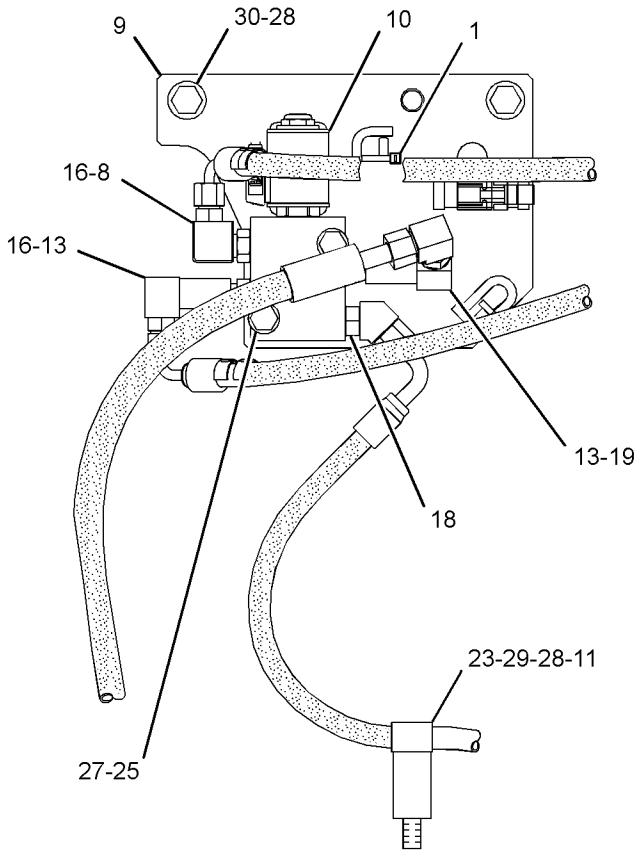

VIEW OF AREA A

GRAPHIC #2 <END> g01454168

278-6691 LINES GP-FRONT—MEDIUM PRESSURE

S/N: DLP1-UP
PART OF 270-5859, 457-9316 CONTROL AR-AUXILIARY
AN ATTACHMENT

SMCS-5057 **i02910178**

NOTE	REF NO	GRAPHIC REF	PART NUMBER	QTY	PART NAME 1 2 3 4 5 6 (PRODUCT LEVEL)	SEE PAGE
	1	1	**093-1295**	1	CLAMP	
I	2	1	**113-6758**	1	HOSE AS	
I	3	1	**187-5676**	1	HOSE AS	
I	4	1	**187-6900**	2	HOSE AS	
I	5	1	**194-0387**	1	HOSE AS	
	6	1	**194-0391**	2	TUBE AS	
I	7	1	**194-0392**	1	HOSE AS	
	8	1	**289-5547**	1	PLATE	
	9	1	*148-8328*	1	CONNECTOR AS	
		1	**3D-2824**	1	SEAL-O-RING	
		1	**6V-8398**	1	SEAL-O-RING	
		1	**6V-8633**	1	CONNECTOR	
	10	1	*148-8339*	1	CONNECTOR AS	
		1	**6V-8716**	1	CONNECTOR (STRAIGHT)	
		1	**6V-9746**	1	SEAL-O-RING	
		1	**7M-8485**	1	SEAL-O-RING	
	11	1	*148-8364*	2	ELBOW AS	
					(EACH INCLUDES)	
		1	**3K-0360**	1	SEAL-O-RING	
		1	**6V-8398**	1	SEAL-O-RING	
		1	**6V-8625**	1	ELBOW	
	12	1	*148-8418*	2	REDUCER AS	
					(EACH INCLUDES)	
		1	**6V-8398**	1	SEAL-O-RING	
		1	**6V-8942**	1	REDUCER-O-RING	
	13	1	*148-8444*	1	TEE AS-SWIVEL	
		1	**6V-8398**	2	SEAL-O-RING	
		1	**6V-9837**	1	TEE-SWIVEL	
	14	1	*153-6242*	1	CONNECTOR AS	
		1	**6V-9746**	1	SEAL-O-RING	
		1	**7M-8485**	1	SEAL-O-RING	
		1	**8T-0197**	1	CONNECTOR	
	15	1	**6V-8398**	4	SEAL-O-RING	
	16	1	**6V-8556**	2	NUT (1-3/16-12-THD)	
	17	1	**7K-1181**	1	STRAP-CABLE	
	18	1	**8T-4121**	2	WASHER-HARD (11X21X2.5-MM THK)	
M	19	1	**8T-4184**	1	BOLT (M12X1.75X45-MM)	
M	20	1	**8T-4196**	2	BOLT (M10X1.5X35-MM)	
	21	1	**8T-4223**	1	WASHER-HARD (13.5X25.5X3-MM THK)	

I - REFER TO HYDRAULIC INFORMATION SYSTEM
M - METRIC PART

278-6691 **LINES GP-FRONT (**contd.**)** **i02910178**

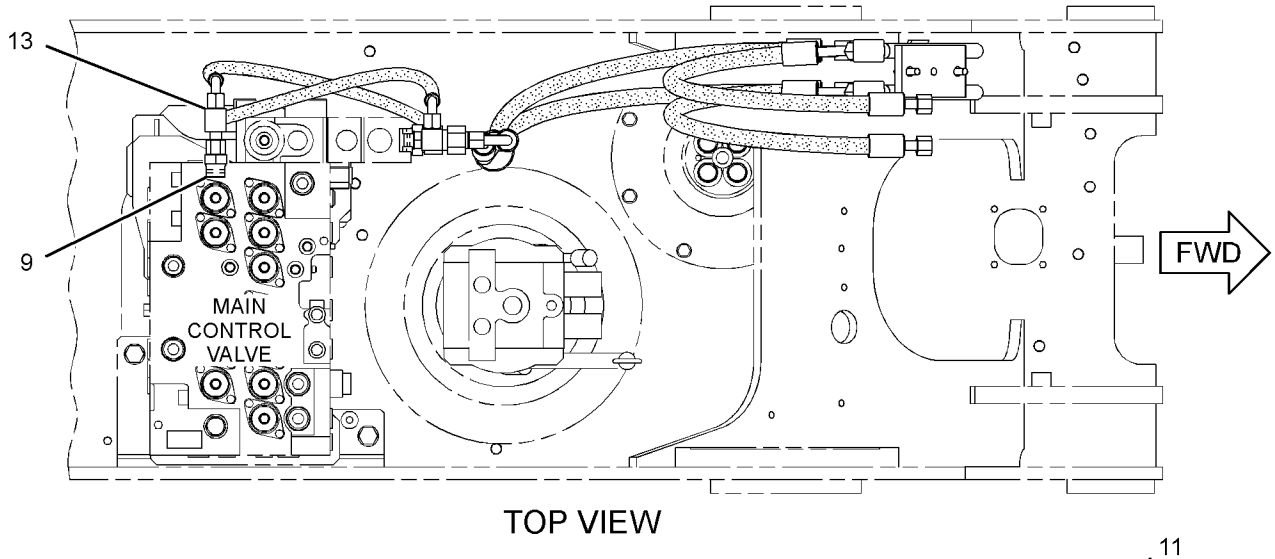

TOP VIEW

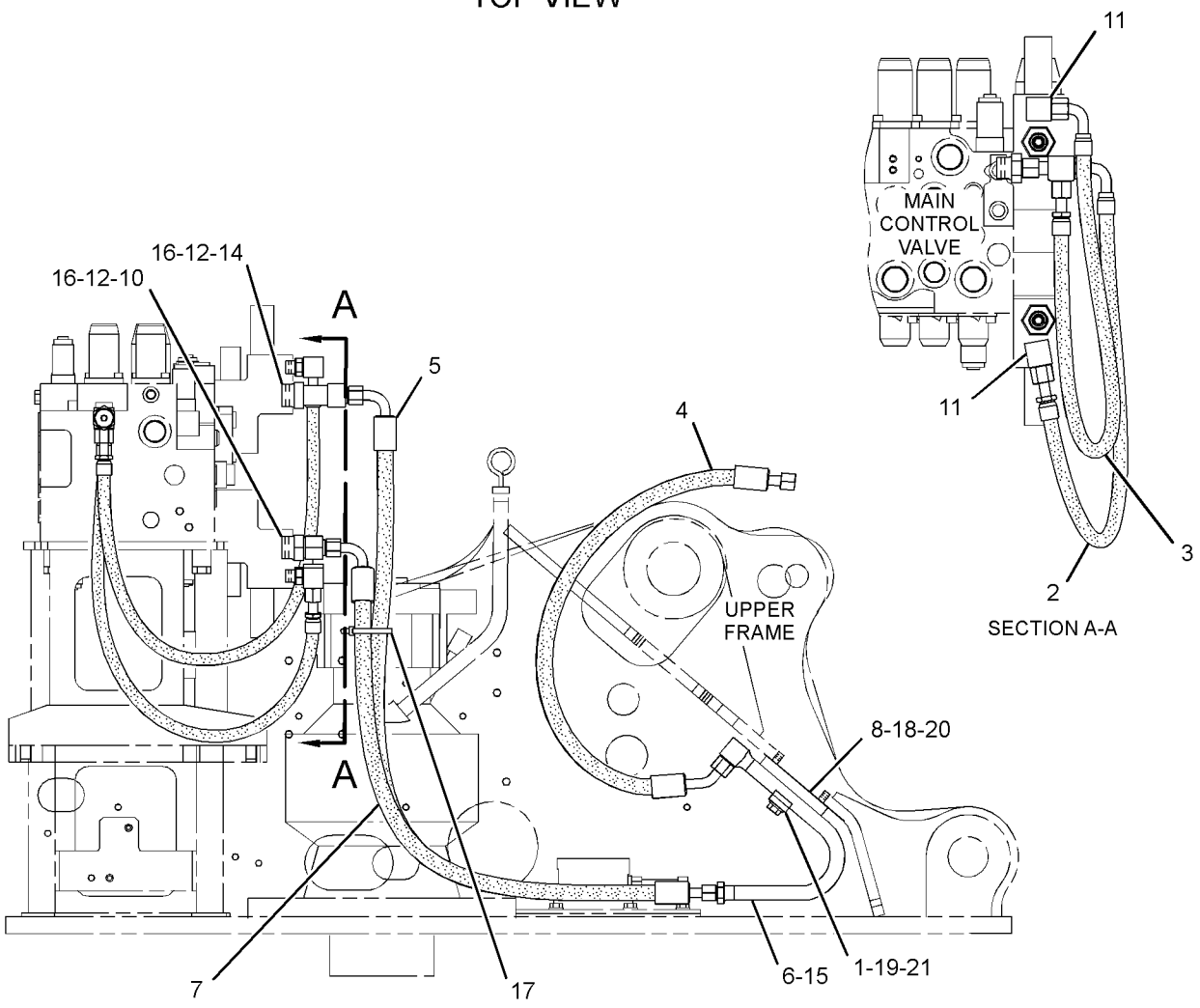

RIGHT SIDE VIEW

GRAPHIC #1 <END> g01453407

278-6697 LINES GP-FRONT—SYSTEM 23, COMBINED FUNCTION

S/N: DLP1-UP
PART OF 270-5843 CONTROL AR-AUXILIARY
AN ATTACHMENT
TYPE 1

SMCS-5057 **i03823219**

NOTE	REF NO	GRAPHIC REF	PART NUMBER	QTY	PART NAME 1 2 3 4 5 6 (PRODUCT LEVEL)	SEE PAGE
	1	1	**221-8859**	1	SENSOR AS-PRESSURE (AUXILIARY HYDRAULIC)	
		1	**3K-0360**	1	SEAL-O-RING	
		1	**9X-3401**	3	PIN-CONNECTOR (16-GA TO 18-GA)	
					—OR—	
		1	**126-1767**	3	PIN-CONNECTOR (14-GA TO 16-GA)	
		1	**171-0596**	1	RECEPTACLE AS-CONNECTOR (3-PIN)	
Y	2	1	**270-5672**	1	VALVE GP-SOLENOID & RELIEF (AUXILIARY, COMBINED FN, LH)	860
Y	3	1	**270-5757**	1	VALVE GP-SOLENOID & RELIEF (AUXILIARY, COMBINED FN, RH)	861
	4	1	**272-4164**	1	PLATE	
	5	1	*148-8327*	1	CONNECTOR AS	
		1	**3D-2824**	1	SEAL-O-RING	
		1	**6V-8637**	1	CONNECTOR	
		1	**6V-9746**	1	SEAL-O-RING	
	6	1	**8T-4121**	2	WASHER-HARD (11X21X2.5-MM THK)	
M	7	1	**8T-4137**	2	BOLT (M10X1.5X20-MM)	
M	8	1	**8T-4956**	4	BOLT (M12X1.75X35-MM)	

M - METRIC PART
Y - SEPARATE ILLUSTRATION

278-6697 **LINES GP-FRONT (**contd.**)** **i03823219**

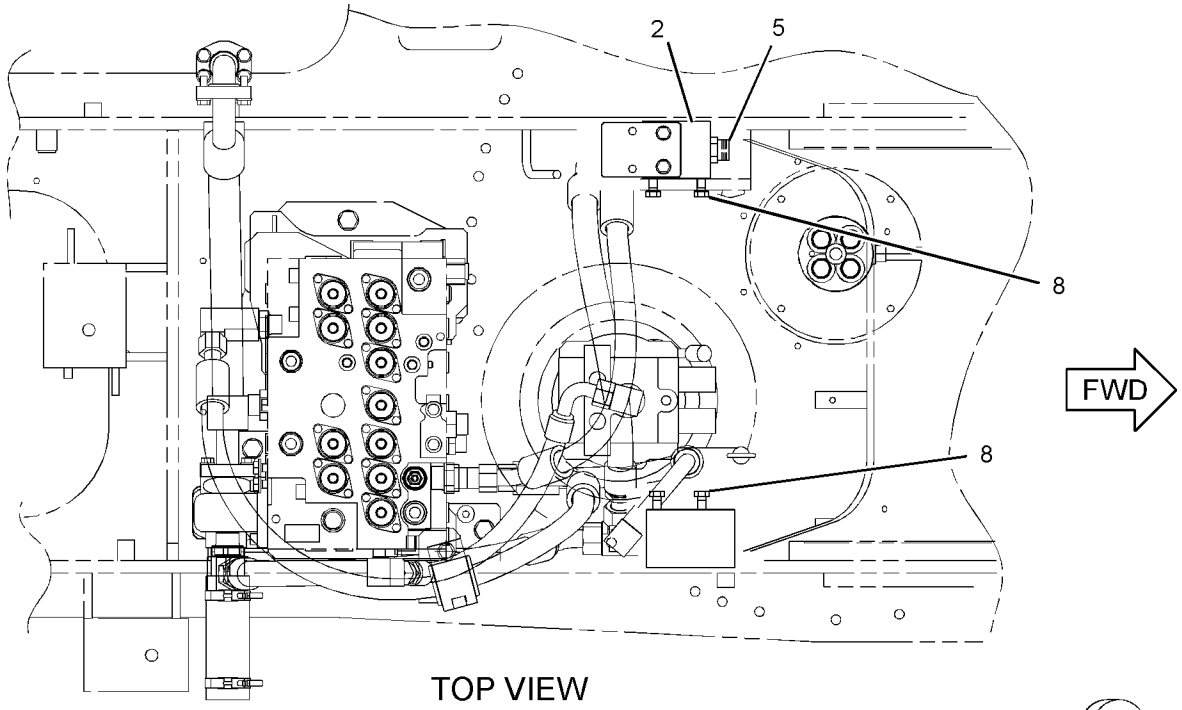

TOP VIEW

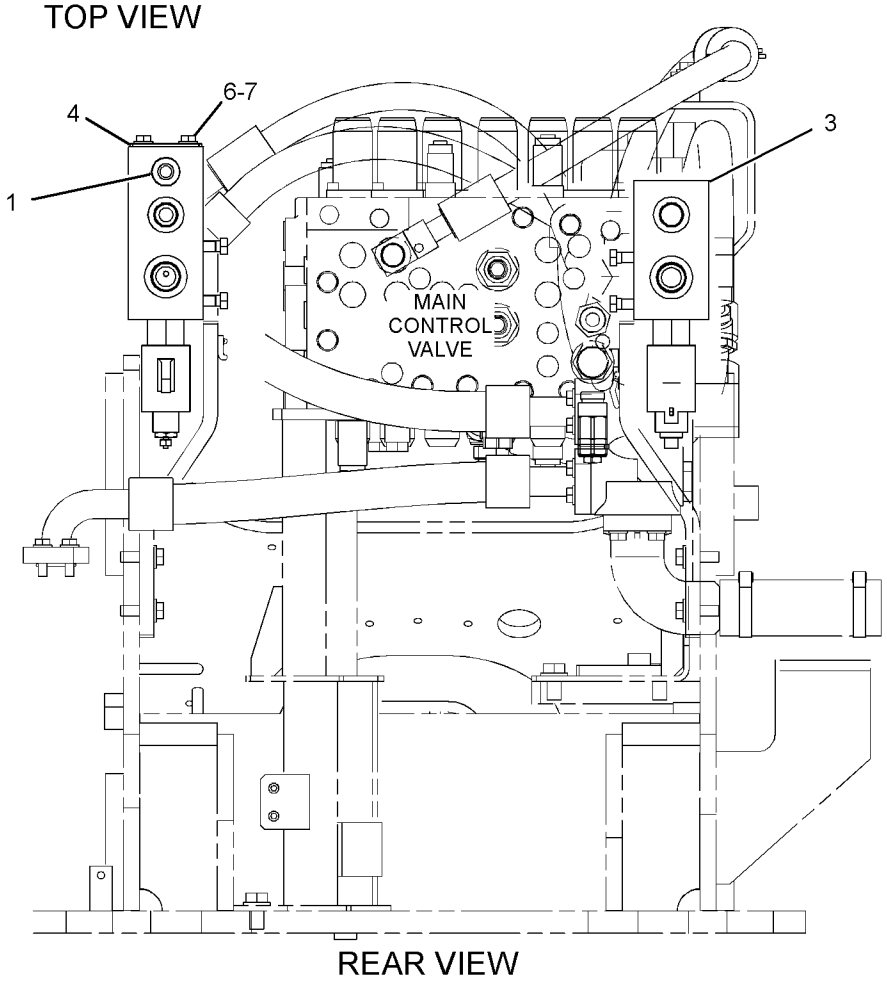

REAR VIEW

GRAPHIC #1 <END> g01949504

278-6697 LINES GP-FRONT—SYSTEM 23, COMBINED FUNCTION

S/N: DLP1-UP
PART OF 270-5843 CONTROL AR-AUXILIARY
AN ATTACHMENT
TYPE 2

SMCS-5057 **i05353390**

NOTE	REF NO	GRAPHIC REF	PART NUMBER	QTY	PART NAME 1 2 3 4 5 6 (PRODUCT LEVEL)	SEE PAGE
CY	1	1	*434-8214*	1	SENSOR GP-PRESSURE (AUXILIARY HYDRAULIC)	253
Y	2	1	**270-5672**	1	VALVE GP-SOLENOID & RELIEF (AUXILIARY, COMBINED FN, LH)	860
Y	3	1	**270-5757**	1	VALVE GP-SOLENOID & RELIEF (AUXILIARY, COMBINED FN, RH)	861
	4	1	**272-4164**	1	PLATE	
	5	1	*148-8327*	1	CONNECTOR AS	
		1	**3D-2824**	1	SEAL-O-RING	
		1	**6V-8637**	1	CONNECTOR	
		1	**6V-9746**	1	SEAL-O-RING	
	6	1	**8T-4121**	2	WASHER-HARD (11X21X2.5-MM THK)	
M	7	1	**8T-4137**	2	BOLT (M10X1.5X20-MM)	
M	8	1	**8T-4956**	4	BOLT (M12X1.75X35-MM)	
C	9	1	**7I-2673**	1	STRAP-CABLE	

C - CHANGE FROM PREVIOUS TYPE
M - METRIC PART
Y - SEPARATE ILLUSTRATION

278-6697 **LINES GP-FRONT (**contd.**)** **i05353390**

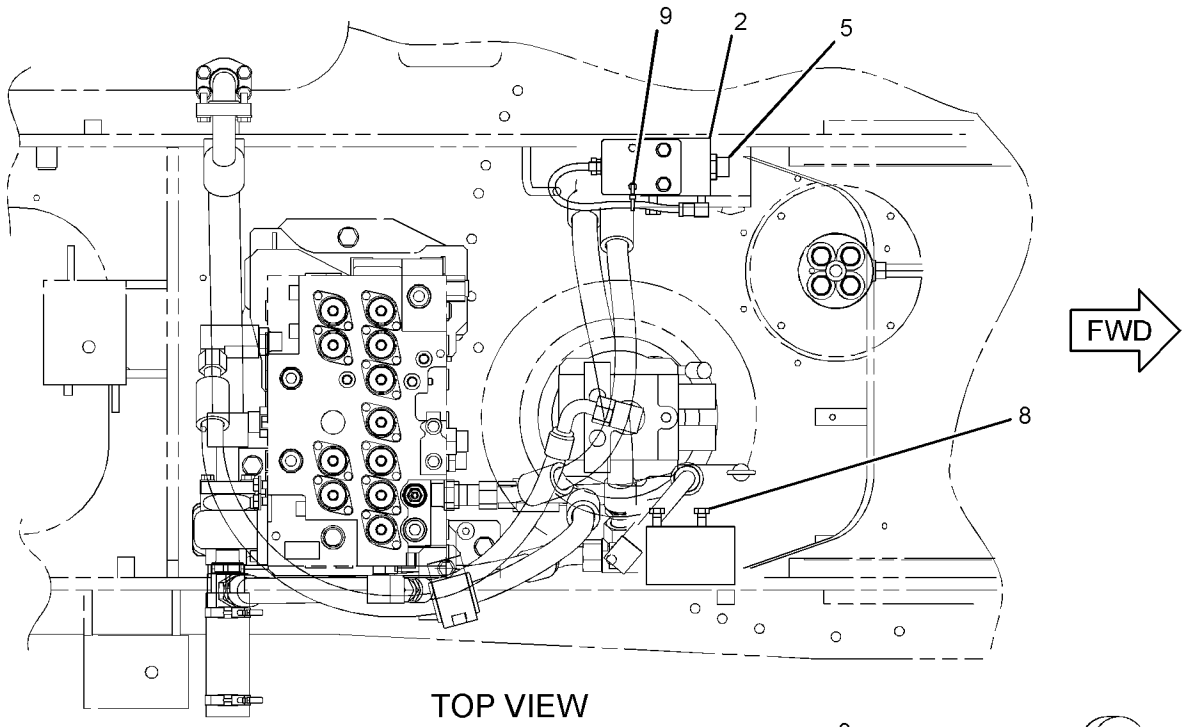

TOP VIEW

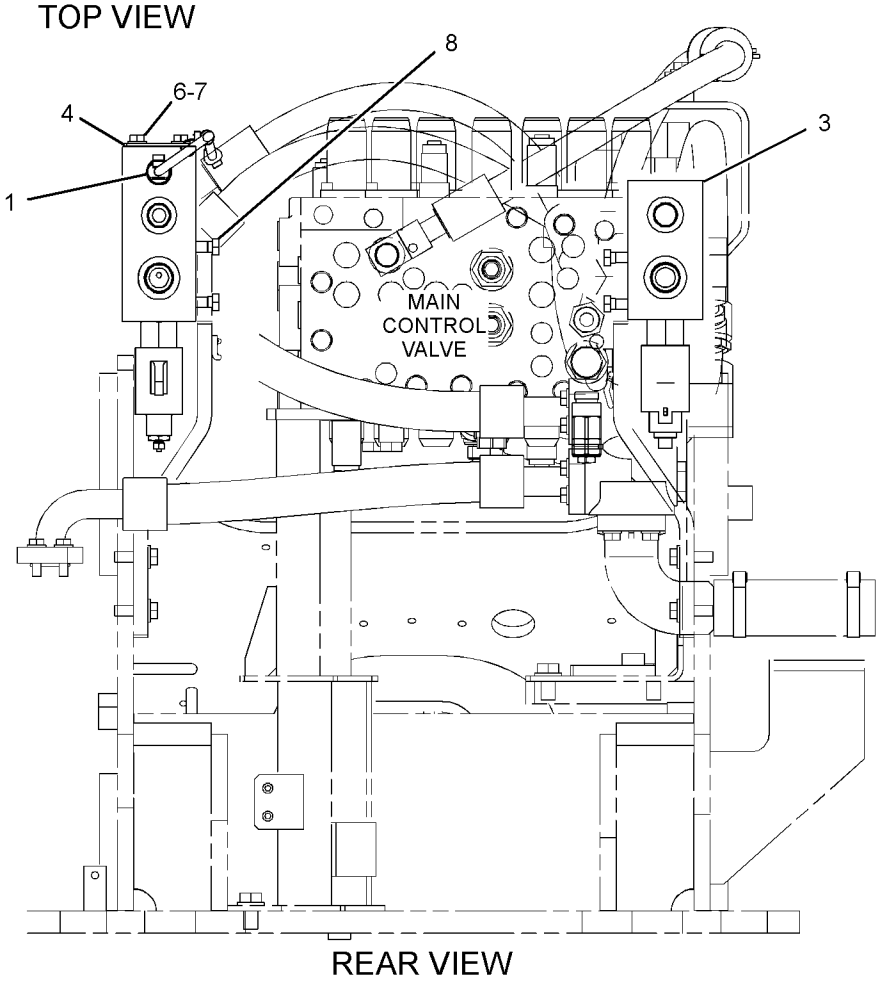

REAR VIEW

GRAPHIC #1 <END> g02712819

278-6699 LINES GP-FRONT—SYSTEM 23, COMBINED FUNCTION

S/N: DLP1-UP
PART OF 270-5846 CONTROL AR-AUXILIARY
AN ATTACHMENT
TYPE 1

SMCS-5057 **i03599582**

NOTE	REF NO	GRAPHIC REF	PART NUMBER	QTY	PART NAME 1 2 3 4 5 6 (PRODUCT LEVEL)	SEE PAGE
C	1	1	*337-1176*	1	ELBOW AS	
		1	**3D-2824**	1	SEAL-O-RING	
		1	**6V-9746**	1	SEAL-O-RING	
		1	**337-1177**	1	ELBOW	
I	2	1	**128-7471**	1	HOSE AS	
CI	3	1	**325-8776**	1	HOSE AS	
Y	4	1	**309-9973**	2	VALVE GP-RELIEF	841
	5	1	**270-6110**	1	CONNECTOR AS	
		1	**6V-9746**	1	SEAL-O-RING	
		1	**095-1592**	1	SEAL-O-RING	
CI	6	1	**325-8793**	1	HOSE AS	
	7	1	**278-6752**	1	BLOCK	
	8	1	**278-6753**	1	BLOCK	
	9	1	**282-7144**	1	SUPPORT AS	
	10	1	**282-7146**	1	SUPPORT AS	
	11	1	**282-7148**	1	SUPPORT AS	
I	12	1	**282-7150**	1	HOSE AS	
I	13	1	**113-6803**	1	HOSE AS	
	14	1	*202-9762*	1	CONNECTOR AS	
		1	**6V-9746**	1	SEAL-O-RING	
		1	**7M-8485**	1	SEAL-O-RING	
		1	**152-9254**	1	CONNECTOR	
	15	1	*148-8347*	1	ELBOW AS	
		1	**3D-2824**	1	SEAL-O-RING	
		1	**6V-9007**	1	ELBOW	
		1	**6V-9746**	1	SEAL-O-RING	
	16	1	*148-8357*	2	ELBOW AS	
					(EACH INCLUDES)	
		1	**5K-9090**	1	SEAL-O-RING	
		1	**6V-9008**	1	ELBOW	
		1	**7M-8485**	1	SEAL-O-RING	
	17	1	*148-8392*	1	ELBOW AS	
		1	**6V-9746**	1	SEAL-O-RING	
		1	**6V-9853**	1	ELBOW	
	18	1	*148-8431*	1	TEE AS	
		1	**5K-9090**	2	SEAL-O-RING	
		1	**6V-8785**	1	TEE	
		1	**7M-8485**	1	SEAL-O-RING	
	19	1	*153-6242*	1	CONNECTOR AS	
		1	**6V-9746**	1	SEAL-O-RING	
		1	**7M-8485**	1	SEAL-O-RING	
		1	**8T-0197**	1	CONNECTOR	
	20	1	**5P-7468**	1	CLIP (SLOT)	
	21	1	**5P-7469**	1	CLIP (TAB)	
	22	1	**6V-1874**	1	GROMMET (31-MM ID)	
M	23	1	**8T-4139**	2	BOLT (M12X1.75X30-MM)	

278-6699 **LINES GP-FRONT (**contd.**)** **i03599582**

NOTE	REF NO	GRAPHIC REF	PART NUMBER	QTY	PART NAME 1 2 3 4 5 6 (PRODUCT LEVEL)	SEE PAGE
M	24	1	**8T-4183**	4	BOLT (M12X1.75X40-MM)	
	25	1	**8T-4223**	11	WASHER-HARD (13.5X25.5X3-MM THK)	
M	26	1	**8T-4956**	5	BOLT (M12X1.75X35-MM)	
C	27	1	*177-1061*	1	ELBOW AS	
		1	**5K-9090**	1	SEAL-O-RING	
		1	**142-0038**	1	ELBOW	
C	28	1	*148-8327*	1	CONNECTOR AS	
		1	**3D-2824**	1	SEAL-O-RING	
		1	**6V-8637**	1	CONNECTOR	
		1	**6V-9746**	1	SEAL-O-RING	

C - CHANGE FROM PREVIOUS TYPE
I - REFER TO HYDRAULIC INFORMATION SYSTEM
M - METRIC PART
Y - SEPARATE ILLUSTRATION

278-6699 **LINES GP-FRONT (**contd.**)** **i03599582**

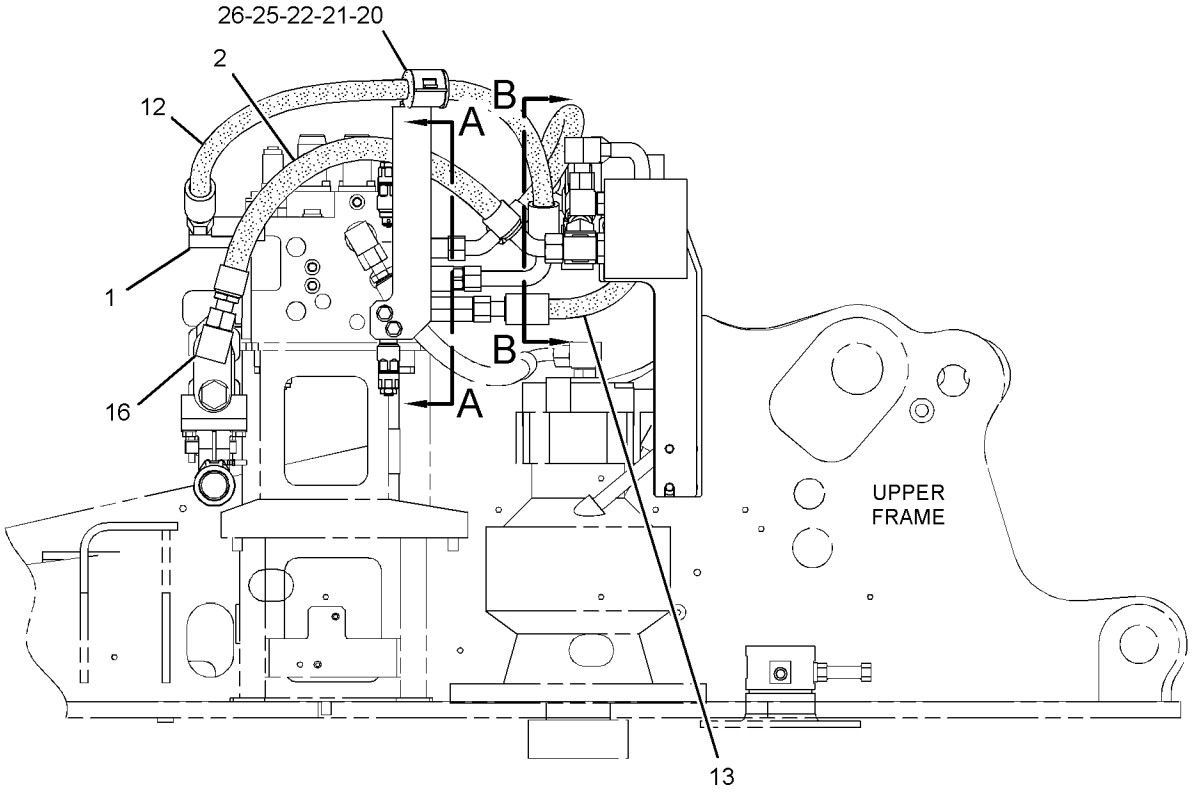

RIGHT SIDE VIEW

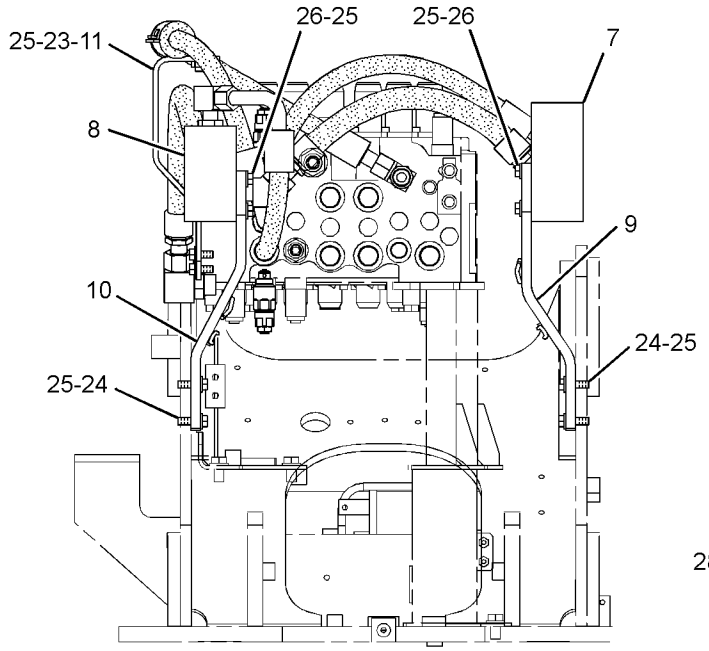

FRONT VIEW

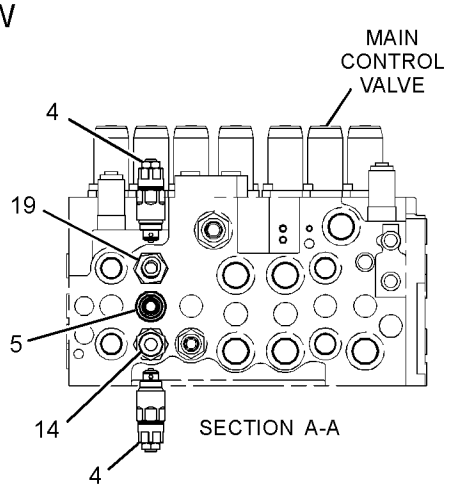

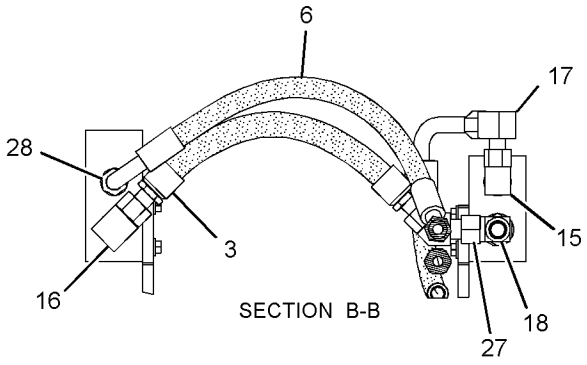

GRAPHIC #1 <END> g01529714

278-6699 LINES GP-FRONT—SYSTEM 23, COMBINED FUNCTION

S/N: DLP1-UP
PART OF 270-5846 CONTROL AR-AUXILIARY
AN ATTACHMENT
TYPE 2

SMCS-5057 **i03641032**

NOTE	REF NO	GRAPHIC REF	PART NUMBER	QTY	PART NAME 1 2 3 4 5 6 (PRODUCT LEVEL)	SEE PAGE
	1	1	*337-1176*	1	ELBOW AS	
		1	**3D-2824**	1	SEAL-O-RING	
		1	**6V-9746**	1	SEAL-O-RING	
		1	**337-1177**	1	ELBOW	
I	2	1	**128-7471**	1	HOSE AS	
I	3	1	**325-8776**	1	HOSE AS	
Y	4	1	**309-9973**	2	VALVE GP-RELIEF	841
	5	1	**270-6110**	1	CONNECTOR AS	
		1	**6V-9746**	1	SEAL-O-RING	
		1	**095-1592**	1	SEAL-O-RING	
I	6	1	**325-8793**	1	HOSE AS	
C	7	1	**337-1207**	1	SUPPORT AS	
C	8	1	**337-1211**	1	SUPPORT AS	
	9	1	**282-7144**	1	SUPPORT AS	
	10	1	**282-7146**	1	SUPPORT AS	
	11	1	**282-7148**	1	SUPPORT AS	
I	12	1	**282-7150**	1	HOSE AS	
I	13	1	**113-6803**	1	HOSE AS	
	14	1	*202-9762*	1	CONNECTOR AS	
		1	**6V-9746**	1	SEAL-O-RING	
		1	**7M-8485**	1	SEAL-O-RING	
		1	**152-9254**	1	CONNECTOR	
	15	1	*148-8347*	1	ELBOW AS	
		1	**3D-2824**	1	SEAL-O-RING	
		1	**6V-9007**	1	ELBOW	
		1	**6V-9746**	1	SEAL-O-RING	
	16	1	*148-8357*	2	ELBOW AS	
					(EACH INCLUDES)	
		1	**5K-9090**	1	SEAL-O-RING	
		1	**6V-9008**	1	ELBOW	
		1	**7M-8485**	1	SEAL-O-RING	
	17	1	*148-8392*	1	ELBOW AS	
		1	**6V-9746**	1	SEAL-O-RING	
		1	**6V-9853**	1	ELBOW	
	18	1	*148-8431*	1	TEE AS	
		1	**5K-9090**	2	SEAL-O-RING	
		1	**6V-8785**	1	TEE	
		1	**7M-8485**	1	SEAL-O-RING	
	19	1	*153-6242*	1	CONNECTOR AS	
		1	**6V-9746**	1	SEAL-O-RING	
		1	**7M-8485**	1	SEAL-O-RING	
		1	**8T-0197**	1	CONNECTOR	
	20	1	**5P-7468**	1	CLIP (SLOT)	
	21	1	**5P-7469**	1	CLIP (TAB)	
	22	1	**6V-1874**	1	GROMMET (31-MM ID)	
M	23	1	**8T-4139**	2	BOLT (M12X1.75X30-MM)	

278-6699 **LINES GP-FRONT (**contd.**)** **i03641032**

NOTE	REF NO	GRAPHIC REF	PART NUMBER	QTY	PART NAME 1 2 3 4 5 6 (PRODUCT LEVEL)	SEE PAGE
M	24	1	**8T-4183**	4	BOLT (M12X1.75X40-MM)	
	25	1	**8T-4223**	11	WASHER-HARD (13.5X25.5X3-MM THK)	
CM	26	1	**8T-4956**	1	BOLT (M12X1.75X35-MM)	
	27	1	*177-1061*	1	ELBOW AS	
		1	**5K-9090**	1	SEAL-O-RING	
		1	**142-0038**	1	ELBOW	
	28	1	*148-8327*	1	CONNECTOR AS	
		1	**3D-2824**	1	SEAL-O-RING	
		1	**6V-8637**	1	CONNECTOR	
		1	**6V-9746**	1	SEAL-O-RING	
CM	29	1	**8T-4184**	4	BOLT (M12X1.75X45-MM)	

C - CHANGE FROM PREVIOUS TYPE
I - REFER TO HYDRAULIC INFORMATION SYSTEM
M - METRIC PART
Y - SEPARATE ILLUSTRATION

278-6699 **LINES GP-FRONT (**contd.**)** **i03641032**

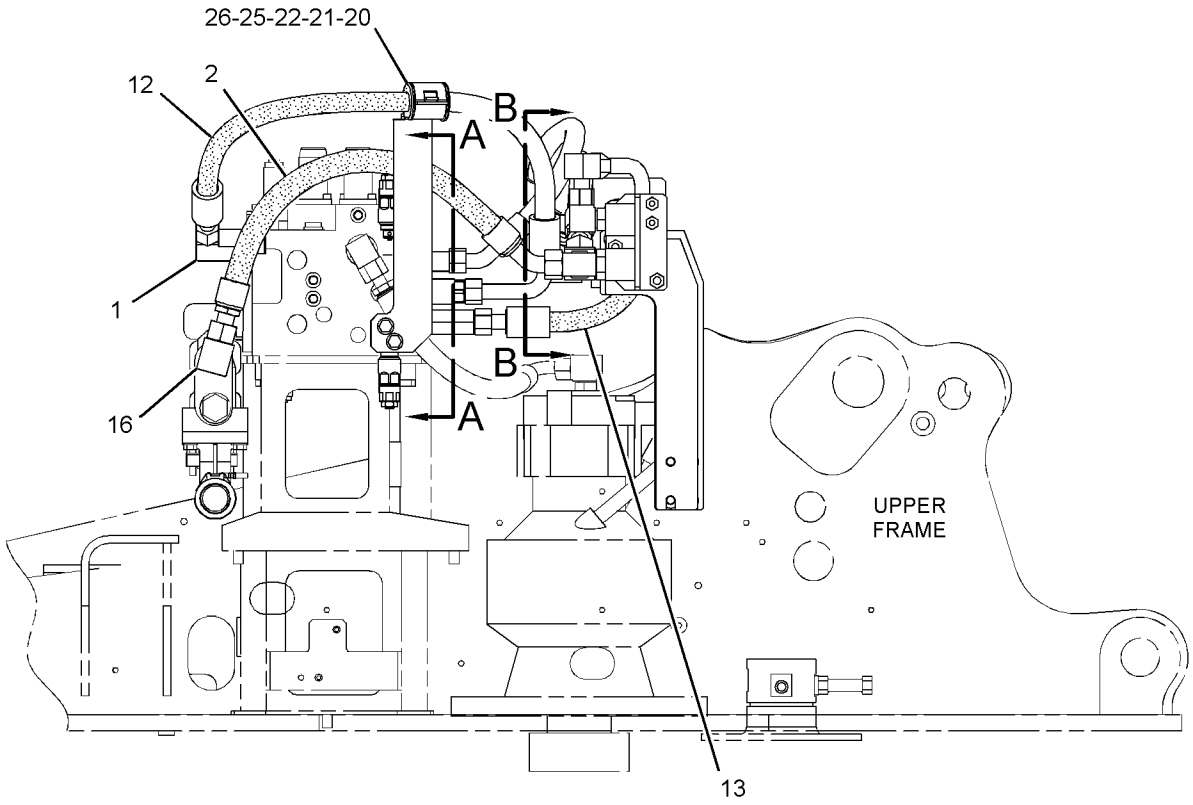

RIGHT SIDE VIEW

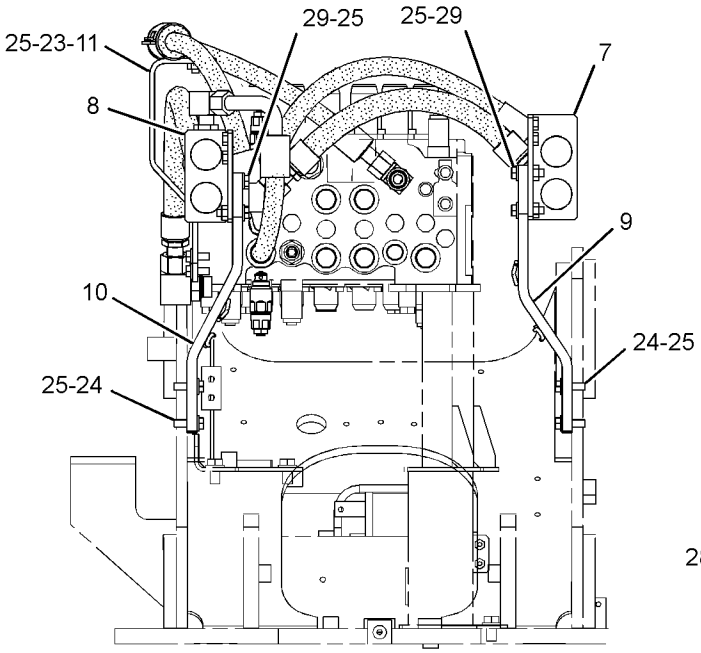

FRONT VIEW

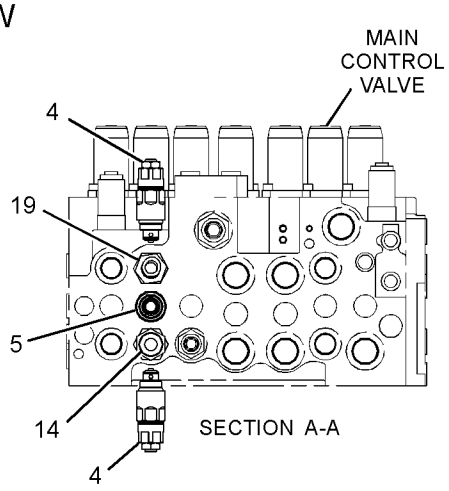

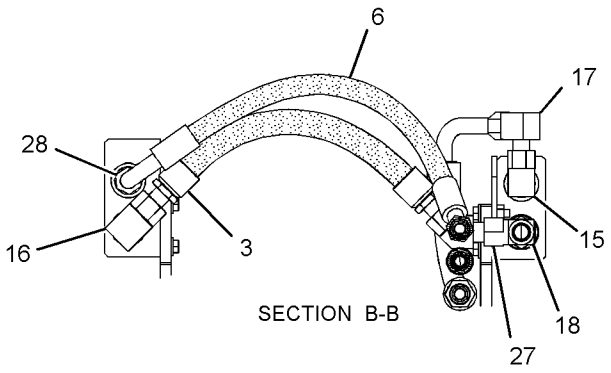

GRAPHIC #1 <END> g01999193

278-6699 LINES GP-FRONT—SYSTEM 23, COMBINED FUNCTION

S/N: DLP1-UP
PART OF 270-5846 CONTROL AR-AUXILIARY
AN ATTACHMENT
TYPE 3

SMCS-5057 **i06303634**

NOTE	REF NO	GRAPHIC REF	PART NUMBER	QTY	PART NAME 1 2 3 4 5 6 (PRODUCT LEVEL)	SEE PAGE
	1	1	*337-1176*	1	ELBOW AS	
		1	**3D-2824**	1	SEAL-O-RING	
		1	**6V-9746**	1	SEAL-O-RING	
		1	**337-1177**	1	ELBOW	
I	2	1	**128-7471**	1	HOSE AS	
I	3	1	**325-8776**	1	HOSE AS	
Y	4	1	**309-9973**	2	VALVE GP-RELIEF	841
	5	1	**270-6110**	1	CONNECTOR AS	
		1	**6V-9746**	1	SEAL-O-RING	
		1	**095-1592**	1	SEAL-O-RING	
I	6	1	**325-8793**	1	HOSE AS	
	7	1	**337-1207**	1	SUPPORT AS	
	8	1	**337-1211**	1	SUPPORT AS	
	9	1	**282-7144**	1	SUPPORT AS	
	10	1	**282-7146**	1	SUPPORT AS	
C	11	1	**466-3349**	1	SUPPORT AS	
I	12	1	**282-7150**	1	HOSE AS	
I	13	1	**113-6803**	1	HOSE AS	
	14	1	*202-9762*	1	CONNECTOR AS	
		1	**6V-9746**	1	SEAL-O-RING	
		1	**7M-8485**	1	SEAL-O-RING	
		1	**152-9254**	1	CONNECTOR	
	15	1	*148-8347*	1	ELBOW AS	
		1	**3D-2824**	1	SEAL-O-RING	
		1	**6V-9007**	1	ELBOW	
		1	**6V-9746**	1	SEAL-O-RING	
	16	1	*148-8357*	2	ELBOW AS	
					(EACH INCLUDES)	
		1	**5K-9090**	1	SEAL-O-RING	
		1	**6V-9008**	1	ELBOW	
		1	**7M-8485**	1	SEAL-O-RING	
	17	1	*148-8392*	1	ELBOW AS	
		1	**6V-9746**	1	SEAL-O-RING	
		1	**6V-9853**	1	ELBOW	
	18	1	*148-8431*	1	TEE AS	
		1	**5K-9090**	2	SEAL-O-RING	
		1	**6V-8785**	1	TEE	
		1	**7M-8485**	1	SEAL-O-RING	
	19	1	*153-6242*	1	CONNECTOR AS	
		1	**6V-9746**	1	SEAL-O-RING	
		1	**7M-8485**	1	SEAL-O-RING	
		1	**8T-0197**	1	CONNECTOR	
	20	1	**5P-7468**	1	CLIP (SLOT)	
	21	1	**5P-7469**	1	CLIP (TAB)	
	22	1	**6V-1874**	1	GROMMET (31-MM ID)	
M	23	1	**8T-4139**	2	BOLT (M12X1.75X30-MM)	

278-6699 **LINES GP-FRONT (**contd.**)** **i06303634**

NOTE	REF NO	GRAPHIC REF	PART NUMBER	QTY	PART NAME 1 2 3 4 5 6 (PRODUCT LEVEL)	SEE PAGE
M	24	1	**8T-4183**	4	BOLT (M12X1.75X40-MM)	
C	25	1	**8T-4223**	10	WASHER-HARD (13.5X25.5X3-MM THK)	
CM	26	1	**8T-4196**	1	BOLT (M10X1.5X35-MM)	
	27	1	*177-1061*	1	ELBOW AS	
		1	**5K-9090**	1	SEAL-O-RING	
		1	**142-0038**	1	ELBOW	
	28	1	*148-8327*	1	CONNECTOR AS	
		1	**3D-2824**	1	SEAL-O-RING	
		1	**6V-8637**	1	CONNECTOR	
		1	**6V-9746**	1	SEAL-O-RING	
M	29	1	**8T-4184**	4	BOLT (M12X1.75X45-MM)	
C	30	1	**8T-4121**	1	WASHER-HARD (11X21X2.5-MM THK)	

C - CHANGE FROM PREVIOUS TYPE
I - REFER TO HYDRAULIC INFORMATION SYSTEM
M - METRIC PART
Y - SEPARATE ILLUSTRATION

278-6699 **LINES GP-FRONT (**contd.**)** **i06303634**

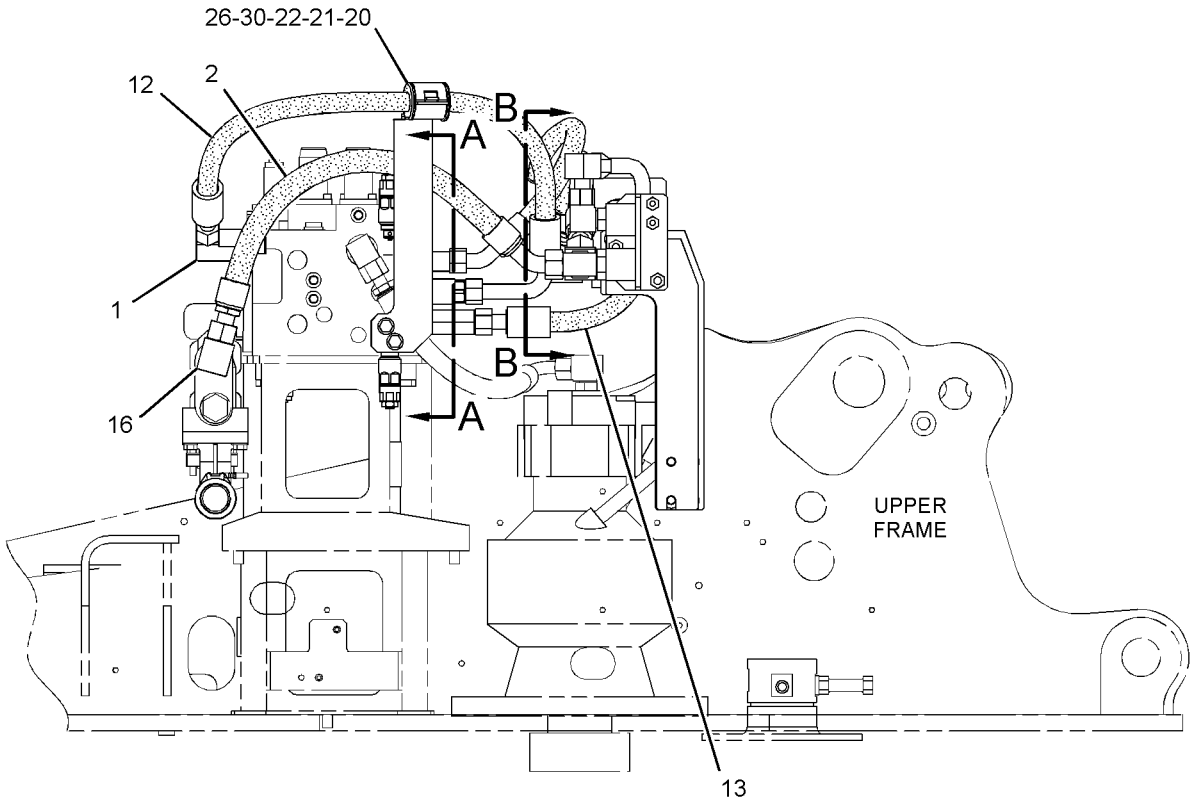

RIGHT SIDE VIEW

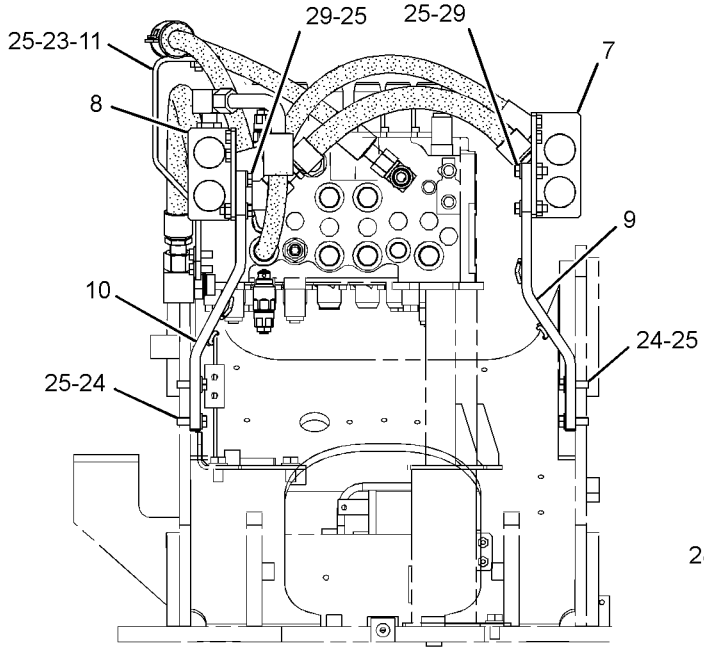

FRONT VIEW

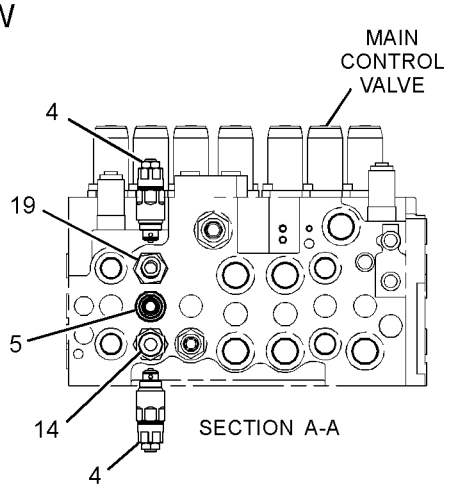

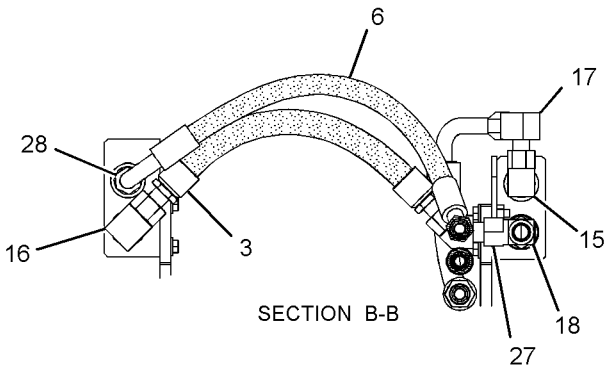

GRAPHIC #1 <END> g06050062

278-6704 LINES GP-FRONT—MEDIUM PRESSURE

S/N: DLP1-UP

PART OF 270-6119, 389-2433 CONTROL AR-AUXILIARY

AN ATTACHMENT

SMCS-5057 **i02889005**

NOTE	REF NO	GRAPHIC REF	PART NUMBER	QTY	PART NAME 1 2 3 4 5 6 (PRODUCT LEVEL)	SEE PAGE
	1	1	**093-1295**	1	CLAMP	
I	2	1	**319-9759**	1	HOSE AS	
I	3	1	**187-6900**	2	HOSE AS	
	4	1	**194-0391**	2	TUBE AS	
Y	5	1	**259-7545**	1	VALVE GP-BANK (MEDIUM PRESSURE)	799
I	6	1	**319-9762**	1	HOSE AS	
	7	1	**289-5547**	1	PLATE	
	8	1	**292-7641**	1	SUPPORT	
	9	1	*148-8370*	2	ELBOW AS	
					(EACH INCLUDES)	
		1	**6V-8398**	1	SEAL-O-RING	
		1	**6V-9851**	1	ELBOW	
	10	1	*297-7927*	1	CONNECTOR AS	
		1	**3K-0360**	1	SEAL-O-RING	
		1	**6V-8398**	1	SEAL-O-RING	
		1	**123-1904**	1	CONNECTOR	
M	11	1	**5I-4936**	4	BOLT (M10X1.25X20-MM)	
	12	1	**6V-8398**	4	SEAL-O-RING	
	13	1	**7X-7729**	4	WASHER (11X25X3-MM THK)	
	14	1	**8T-4121**	6	WASHER-HARD (11X21X2.5-MM THK)	
M	15	1	**8T-4136**	4	BOLT (M10X1.5X25-MM)	
M	16	1	**8T-4184**	1	BOLT (M12X1.75X45-MM)	
M	17	1	**8T-4196**	2	BOLT (M10X1.5X35-MM)	
	18	1	**8T-4223**	1	WASHER-HARD (13.5X25.5X3-MM THK)	
	19	1	*164-5608*	1	CONNECTOR AS	
		1	**3K-0360**	1	SEAL-O-RING	
		1	**6V-8398**	1	SEAL-O-RING	
		1	**8T-1687**	1	CONNECTOR	

I - REFER TO HYDRAULIC INFORMATION SYSTEM
M - METRIC PART
Y - SEPARATE ILLUSTRATION

278-6704 **LINES GP-FRONT (**contd.**)** **i02889005**

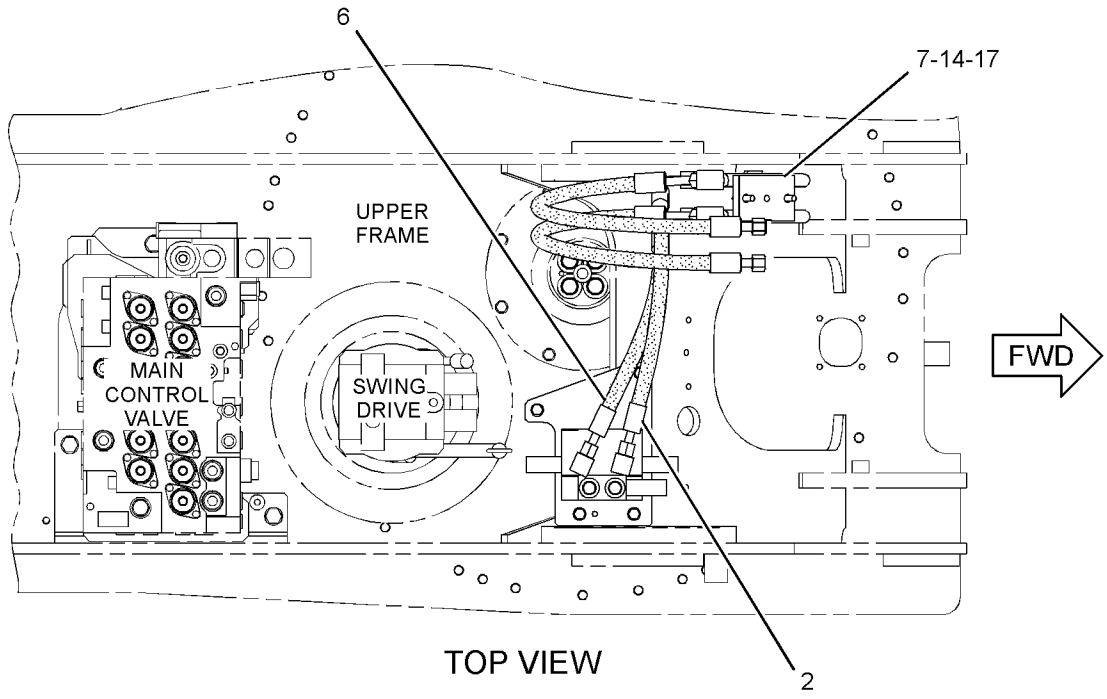

TOP VIEW

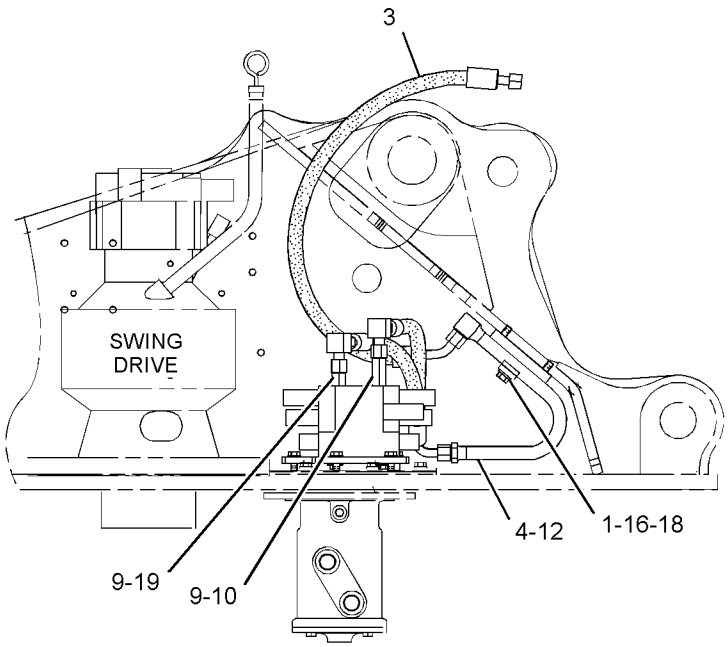

RIGHT SIDE VIEW

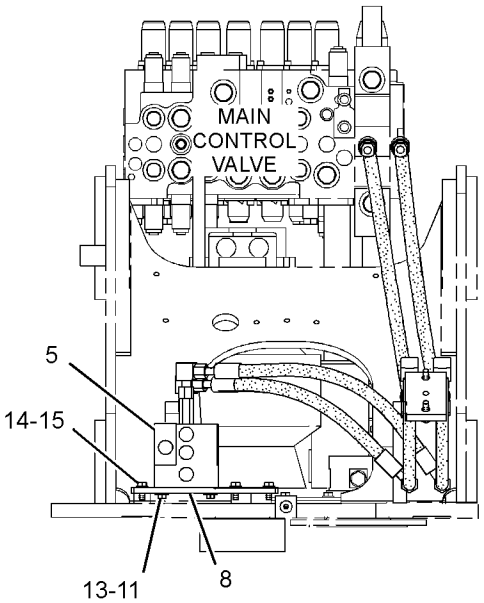

FRONT VIEW

GRAPHIC #1 <END> g01440572

278-6715 LINES GP-FRONT–HAMMER, RETURN

S/N: DLP1-UP
PART OF 260-7116 FILTER AR-HYDRAULIC
AN ATTACHMENT

SMCS-5057 **i06007775**

NOTE	REF NO	GRAPHIC REF	PART NUMBER	QTY	PART NAME 1 2 3 4 5 6 (PRODUCT LEVEL)	SEE PAGE
I	1	1	**193-9994**	1	HOSE AS	
Y	2	1	**224-1687**	1	FILTER GP-OIL (HYDRAULIC)	533
	3	1	**282-7575**	1	SUPPORT AS	
	4	1	**467-2159**	1	SUPPORT AS	
I	5	1	**285-2890**	1	HOSE AS	
	6	1	*148-8355*	1	ELBOW AS	
		1	**5K-9090**	1	SEAL-O-RING	
		1	**6V-9005**	1	ELBOW	
		1	**7M-8485**	1	SEAL-O-RING	
	7	1	*148-8357*	1	ELBOW AS	
		1	**5K-9090**	1	SEAL-O-RING	
		1	**6V-9008**	1	ELBOW	
		1	**7M-8485**	1	SEAL-O-RING	
	8	1	**5P-7468**	1	CLIP (SLOT)	
	9	1	**5P-7469**	1	CLIP (TAB)	
M	10	1	**8T-4139**	2	BOLT (M12X1.75X30-MM)	
M	11	1	**8T-4183**	4	BOLT (M12X1.75X40-MM)	
	12	1	**8T-4223**	11	WASHER-HARD (13.5X25.5X3-MM THK)	
M	13	1	**8T-4956**	5	BOLT (M12X1.75X35-MM)	
	14	1	**8T-7087**	1	GROMMET (34-MM ID)	

I - REFER TO HYDRAULIC INFORMATION SYSTEM
M - METRIC PART
Y - SEPARATE ILLUSTRATION

278-6715 **LINES GP-FRONT (**contd.**)** **i06007775**

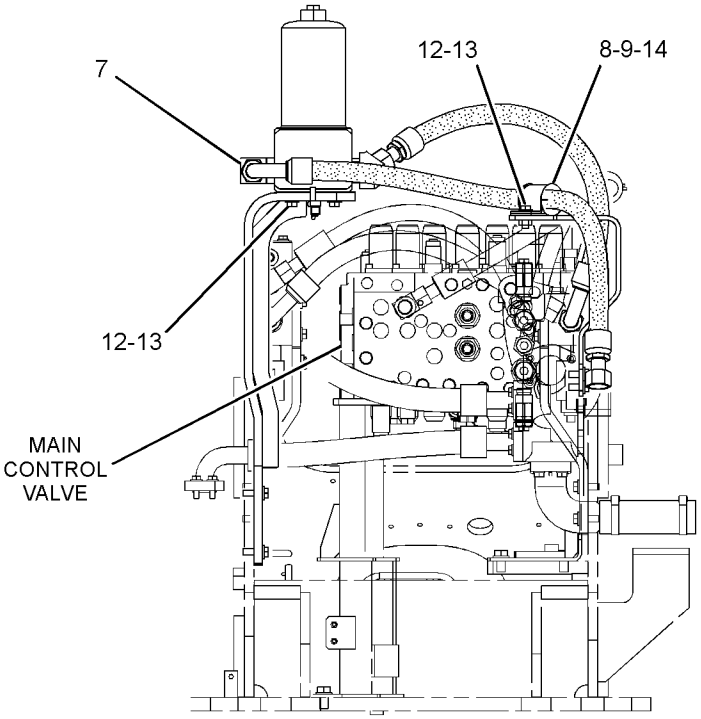

REAR VIEW

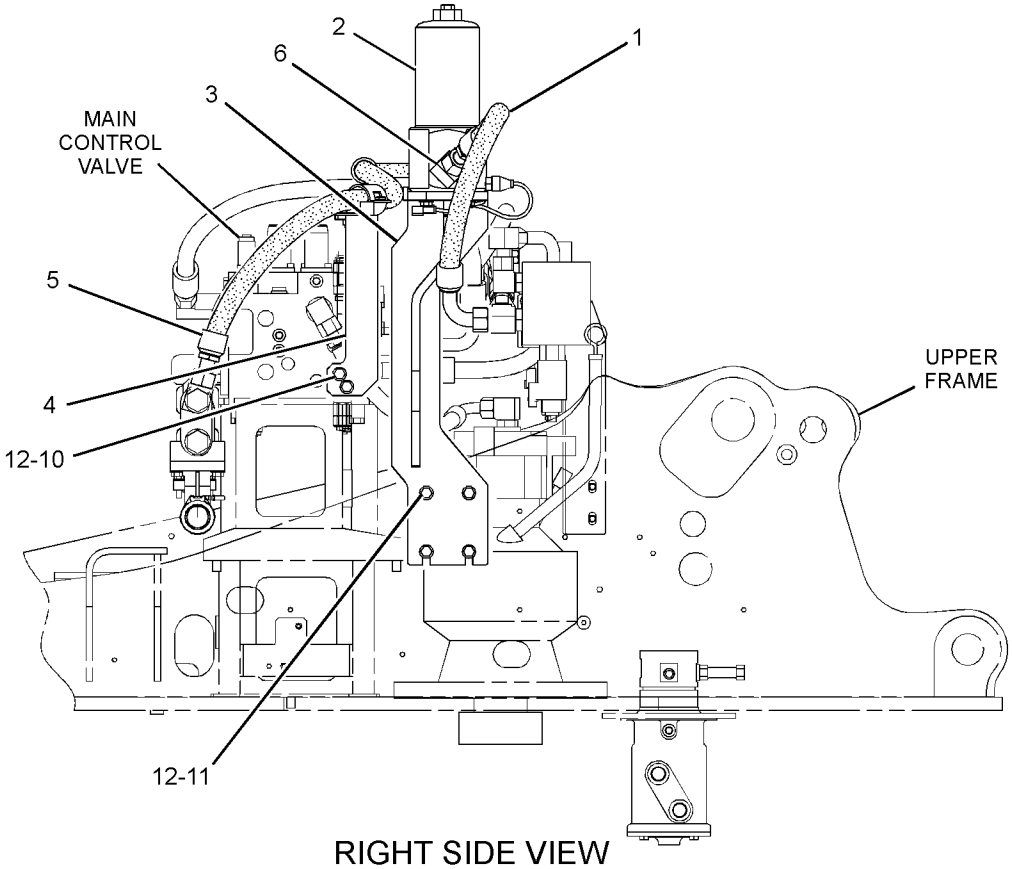

RIGHT SIDE VIEW

GRAPHIC #1 <END> g01408120

337-1272 LINES GP-FRONT—QUICK COUPLER

S/N: DLP1-UP
PART OF 344-4405 CONTROL AR-COUPLER
AN ATTACHMENT
TYPE 1

SMCS-5057 **i03895872**

NOTE	REF NO	GRAPHIC REF	PART NUMBER	QTY	PART NAME 1 2 3 4 5 6 (PRODUCT LEVEL)	SEE PAGE
	1	2	**4I-7889**	1	SPACER (11X25X45-MM THK)	
	2	1	**7K-1181**	4	STRAP-CABLE	
	3	1	**9X-6582**	2	NUT (13/16-16-THD)	
	4	1	*148-8430*	1	TEE AS	
		1	**6V-9746**	1	SEAL-O-RING	
		1	**7X-0873**	1	TEE	
	5	2	*164-6874*	1	FITTING AS-ELBOW (QUICK DISCONNECT, MALE)	
		2	**3J-1907**	1	SEAL-O-RING	
		2	**085-7356**	1	FITTING	
	6	1	*164-9640*	1	CONNECTOR AS	
		1	**3J-1907**	1	SEAL-O-RING	
		1	**4J-5477**	1	SEAL-O-RING	
		1	**145-2237**	1	CONNECTOR	
Y	7	1	**221-5069**	1	FITTING GP-HYDRAULIC (TEE)	539
	8	2	**236-3200**	1	SUPPORT AS	
	9	2	*267-4048*	1	ELBOW AS	
		2	**3J-1907**	1	SEAL-O-RING	
		2	**4J-5477**	1	SEAL-O-RING	
		2	**267-4047**	1	ELBOW	
	10	2	**275-1442**	2	CLIP (TAB)	
	11	2	**275-1443**	2	CLIP (SLOT)	
	12	2	**275-1444**	2	GROMMET	
	13	2	**282-7148**	1	SUPPORT AS	
	14	1	**289-5700**	1	GROMMET	
Y	15	2	**328-2035**	1	VALVE GP-SOLENOID & MANIFOLD (QUICK COUPLER)	858
I	16	1	**337-1279**	1	HOSE AS	
I	17	1	**337-1280**	2	HOSE AS	
I	18	1	**337-1283**	1	HOSE AS	
I	19	1	**337-1286**	1	HOSE AS	
	20	2	**337-1289**	1	SUPPORT AS	
	21	2	**129-3400**	1	GUARD	
	22	2	*148-8368*	1	ELBOW AS	
		2	**3J-1907**	1	SEAL-O-RING	
		2	**4J-5477**	1	SEAL-O-RING	
		2	**6V-8627**	1	ELBOW	
	23	1	*148-8378*	1	ELBOW AS	
		1	**3J-1907**	1	SEAL-O-RING	
		1	**6V-8397**	1	SEAL-O-RING	
		1	**6V-8724**	1	ELBOW	
	24	1	*148-8419*	2	REDUCER AS	
					(EACH INCLUDES)	
		1	**4J-5477**	1	SEAL-O-RING	
		1	**6V-8935**	1	REDUCER	
	25	2	*150-3033*	1	ELBOW AS	
		2	**3J-1907**	1	SEAL-O-RING	
		2	**4J-5477**	1	SEAL-O-RING	

337-1272 **LINES GP-FRONT (**contd.**)** **i03895872**

NOTE	REF NO	GRAPHIC REF	PART NUMBER	QTY	PART NAME 1 2 3 4 5 6 (PRODUCT LEVEL)	SEE PAGE
		2	**8T-0164**	1	ELBOW	
	26	2	*150-3036*	1	ELBOW AS	
		2	**3J-1907**	1	SEAL-O-RING	
		2	**6V-8397**	1	SEAL-O-RING	
		2	**8T-1905**	1	ELBOW	
	27	1	*153-6237*	1	ELBOW AS	
		1	**3D-2824**	1	SEAL-O-RING	
		1	**6V-9004**	1	ELBOW	
		1	**6V-9746**	1	SEAL-O-RING	
	28	1	*153-6241*	1	ELBOW AS	
		1	**6V-8398**	1	SEAL-O-RING	
		1	**8C-8989**	1	ELBOW	
	29	1	**4I-9521**	4	BAND-MARKER (RED, L1)	
	30	1	**4I-9522**	4	BAND-MARKER (YELLOW, L2)	
	31	2	**8M-2773**	1	CLIP (LOOP)	
	32	2	**8T-4121**	4	WASHER-HARD (11X21X2.5-MM THK)	
M	33	2	**8T-4137**	1	BOLT (M10X1.5X20-MM)	
M	34	2	**8T-4139**	2	BOLT (M12X1.75X30-MM)	
M	35	2	**8T-4185**	2	BOLT (M10X1.5X50-MM)	
	36	2	**8T-4223**	5	WASHER-HARD (13.5X25.5X3-MM THK)	
M	37	2	**8T-4910**	2	BOLT (M12X1.75X60-MM)	
M	38	2	**8T-5005**	1	BOLT (M10X1.5X70-MM)	
M	39	2	**8T-6868**	1	BOLT (M12X1.75X80-MM)	
J	40	2	**7K-1181**	5	STRAP-CABLE	
J	41	2	**282-7092**	2	GROMMET	
LM	42	2	**8T-4176**	1	BOLT (M12X1.75X90-MM)	

I - REFER TO HYDRAULIC INFORMATION SYSTEM
J - WHEN USED WITH LINES GP-PILOT(C)(SYSTEM 20)
L - WHEN USED WITH LINES GP-FRONT(CONFIG/SYSTEM)
M - METRIC PART
Y - SEPARATE ILLUSTRATION

337-1272 **LINES GP-FRONT (**contd.**)** **i03895872**

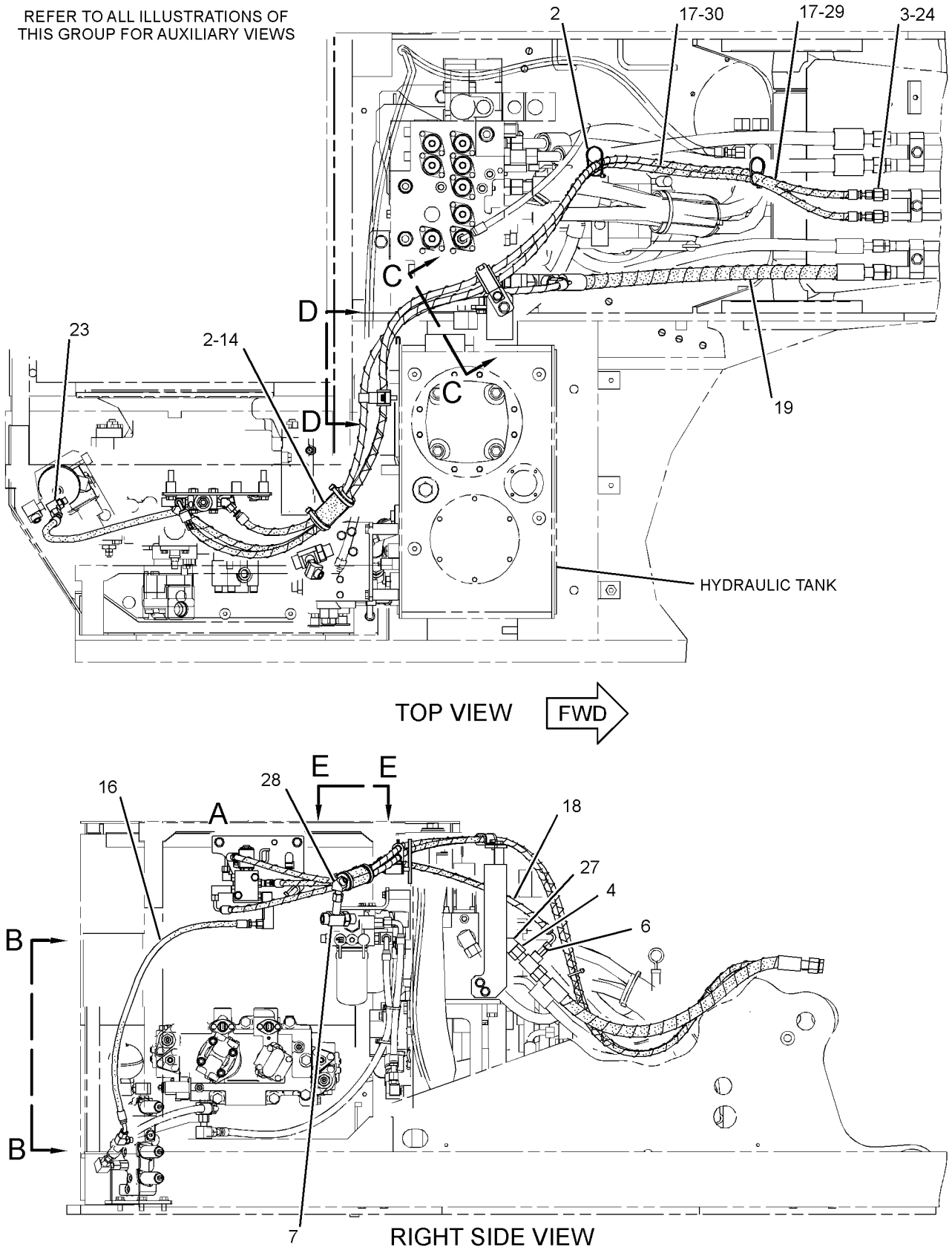

GRAPHIC #1 g02154454

337-1272 **LINES GP-FRONT (**contd.**)** **i03895872**

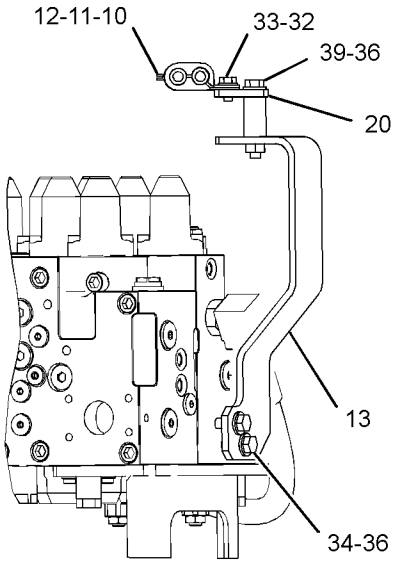

SECTION C-C

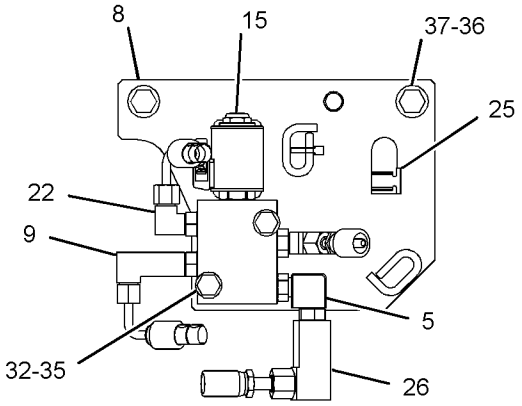

VIEW A-A

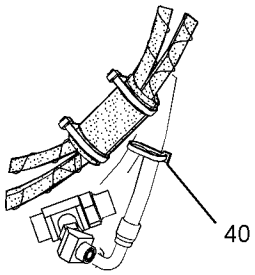

VIEW E-E
(OPTIONAL DESIGN)

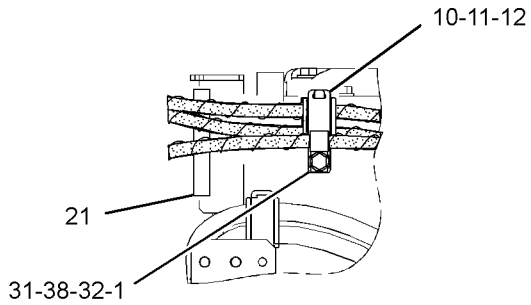

VIEW D-D

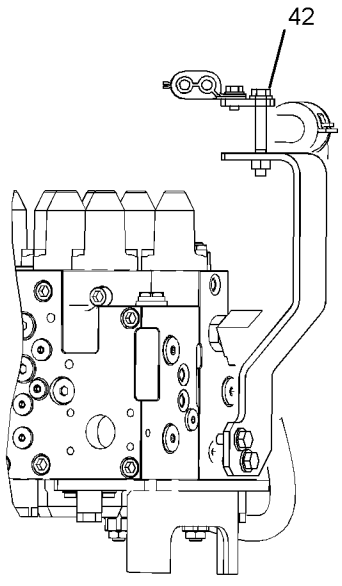

SECTION C-C
(OPTIONAL DESIGN)

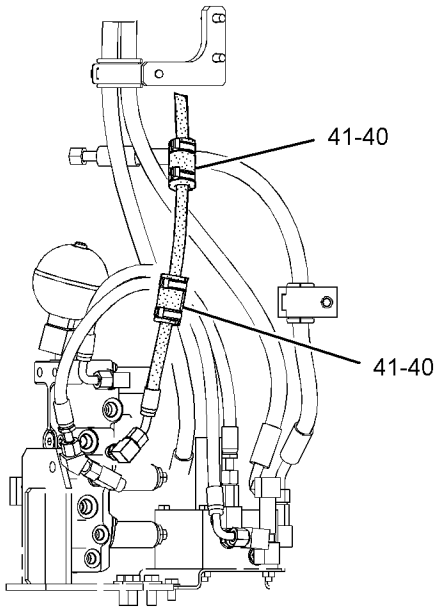

VIEW B-B
(OPTIONAL DESIGN)

GRAPHIC #2 <END> g02154603

337-1272 LINES GP-FRONT—QUICK COUPLER

S/N: DLP1-UP
PART OF 344-4405 CONTROL AR-COUPLER
AN ATTACHMENT
TYPE 2

SMCS-5057 **i05334664**

NOTE	REF NO	GRAPHIC REF	PART NUMBER	QTY	PART NAME 1 2 3 4 5 6 (PRODUCT LEVEL)	SEE PAGE
	1	2	**4I-7889**	1	SPACER (11X25X45-MM THK)	
	2	1	**7K-1181**	4	STRAP-CABLE	
	3	1	**9X-6582**	2	NUT (13/16-16-THD)	
	4	1	*148-8430*	1	TEE AS	
		1	**6V-9746**	1	SEAL-O-RING	
		1	**7X-0873**	1	TEE	
	5	2	*164-6874*	1	FITTING AS-ELBOW (QUICK DISCONNECT, MALE)	
		2	**3J-1907**	1	SEAL-O-RING	
		2	**085-7356**	1	FITTING	
	6	1	*164-9640*	1	CONNECTOR AS	
		1	**3J-1907**	1	SEAL-O-RING	
		1	**4J-5477**	1	SEAL-O-RING	
		1	**145-2237**	1	CONNECTOR	
Y	7	1	**221-5069**	1	FITTING GP-HYDRAULIC (TEE)	539
	8	2	**236-3200**	1	SUPPORT AS	
	9	2	*267-4048*	1	ELBOW AS	
		2	**3J-1907**	1	SEAL-O-RING	
		2	**4J-5477**	1	SEAL-O-RING	
		2	**267-4047**	1	ELBOW	
	10	2	**275-1442**	2	CLIP (TAB)	
	11	2	**275-1443**	2	CLIP (SLOT)	
	12	2	**275-1444**	2	GROMMET	
	13	2	**282-7148**	1	SUPPORT AS	
	14	1	**289-5700**	1	GROMMET	
Y	15	2	**328-2035**	1	VALVE GP-SOLENOID & MANIFOLD (QUICK COUPLER)	858
I	16	1	**337-1279**	1	HOSE AS	
I	17	1	**337-1280**	2	HOSE AS	
I	18	1	**337-1283**	1	HOSE AS	
I	19	1	**337-1286**	1	HOSE AS	
	20	2	**337-1289**	1	SUPPORT AS	
	21	2	**129-3400**	1	GUARD	
	22	2	*148-8368*	1	ELBOW AS	
		2	**3J-1907**	1	SEAL-O-RING	
		2	**4J-5477**	1	SEAL-O-RING	
		2	**6V-8627**	1	ELBOW	
	23	1	*148-8378*	1	ELBOW AS	
		1	**3J-1907**	1	SEAL-O-RING	
		1	**6V-8397**	1	SEAL-O-RING	
		1	**6V-8724**	1	ELBOW	
	24	1	*148-8419*	2	REDUCER AS	
					(EACH INCLUDES)	
		1	**4J-5477**	1	SEAL-O-RING	
		1	**6V-8935**	1	REDUCER	
	25	2	*150-3033*	1	ELBOW AS	
		2	**3J-1907**	1	SEAL-O-RING	
		2	**4J-5477**	1	SEAL-O-RING	

337-1272 **LINES GP-FRONT (**contd.**)** **i05334664**

NOTE	REF NO	GRAPHIC REF	PART NUMBER	QTY	PART NAME 1 2 3 4 5 6 (PRODUCT LEVEL)	SEE PAGE
		2	**8T-0164**	1	ELBOW	
	26	2	*150-3036*	1	ELBOW AS	
		2	**3J-1907**	1	SEAL-O-RING	
		2	**6V-8397**	1	SEAL-O-RING	
		2	**8T-1905**	1	ELBOW	
	27	1	*153-6237*	1	ELBOW AS	
		1	**3D-2824**	1	SEAL-O-RING	
		1	**6V-9004**	1	ELBOW	
		1	**6V-9746**	1	SEAL-O-RING	
C	28	1	*148-8444*	1	TEE AS-SWIVEL	
		1	**6V-8398**	2	SEAL-O-RING	
		1	**6V-9837**	1	TEE-SWIVEL	
	29	1	**4I-9521**	4	BAND-MARKER (RED, L1)	
	30	1	**4I-9522**	4	BAND-MARKER (YELLOW, L2)	
	31	2	**8M-2773**	1	CLIP (LOOP)	
	32	2	**8T-4121**	4	WASHER-HARD (11X21X2.5-MM THK)	
M	33	2	**8T-4137**	1	BOLT (M10X1.5X20-MM)	
M	34	2	**8T-4139**	2	BOLT (M12X1.75X30-MM)	
M	35	2	**8T-4185**	2	BOLT (M10X1.5X50-MM)	
	36	2	**8T-4223**	5	WASHER-HARD (13.5X25.5X3-MM THK)	
M	37	2	**8T-4910**	2	BOLT (M12X1.75X60-MM)	
M	38	2	**8T-5005**	1	BOLT (M10X1.5X70-MM)	
M	39	2	**8T-6868**	1	BOLT (M12X1.75X80-MM)	
J	40	2	**7K-1181**	5	STRAP-CABLE	
J	41	2	**282-7092**	2	GROMMET	
LM	42	2	**8T-4176**	1	BOLT (M12X1.75X90-MM)	

C - CHANGE FROM PREVIOUS TYPE
I - REFER TO HYDRAULIC INFORMATION SYSTEM
J - WHEN USED WITH LINES GP-PILOT(C)(SYSTEM 20)
L - WHEN USED WITH LINES GP-FRONT(CONFIG/SYSTEM)
M - METRIC PART
Y - SEPARATE ILLUSTRATION

337-1272 **LINES GP-FRONT (**contd.**)** **i05334664**

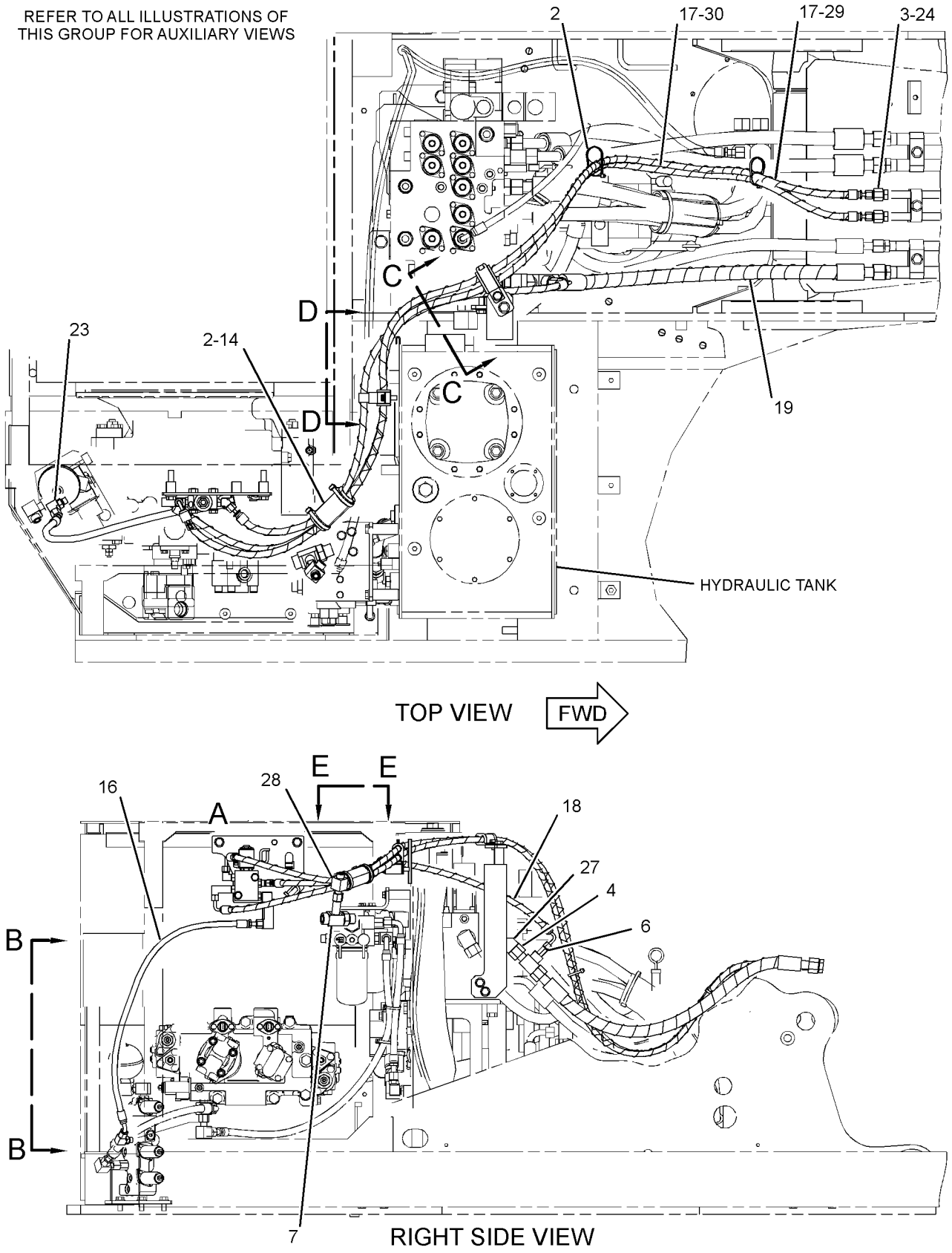

GRAPHIC #1 g03382140

337-1272 **LINES GP-FRONT (**contd.**)** **i05334664**

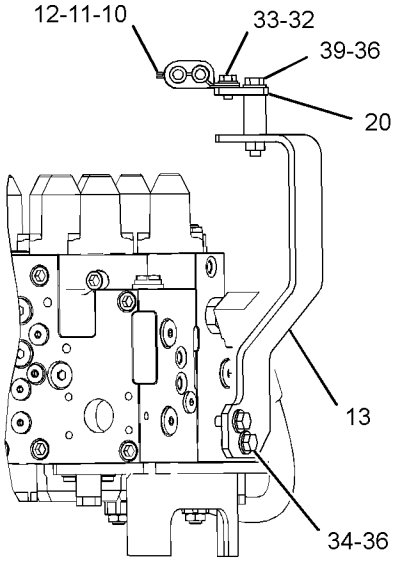

SECTION C-C

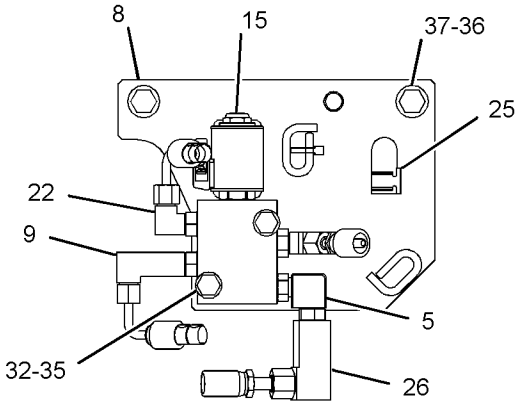

VIEW A-A

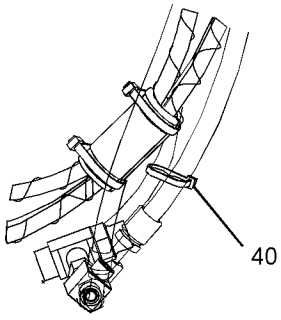

VIEW E-E
(OPTIONAL DESIGN)

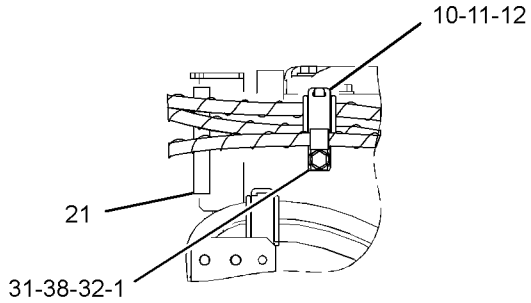

VIEW D-D

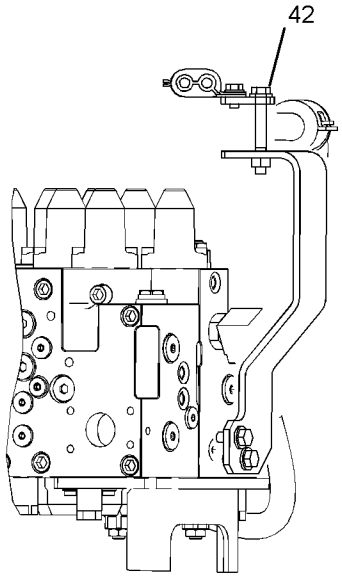

SECTION C-C
(OPTIONAL DESIGN)

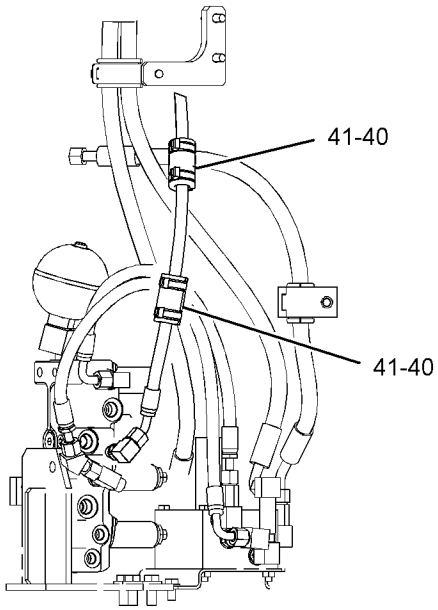

VIEW B-B
(OPTIONAL DESIGN)

GRAPHIC #2 <END> g03382141

278-6661 LINES GP-HYDRAULIC

S/N: DLP1-389

PART OF 278-6660 TANK & MTG GP-HYDRAULIC

SMCS-5057 **i03212411**

NOTE	REF NO	GRAPHIC REF	PART NUMBER	QTY	PART NAME 1 2 3 4 5 6 (PRODUCT LEVEL)	SEE PAGE
	1	1	**4I-9527**	2	BAND-MARKER (GREEN, R3)	
	2	1	**7K-1181**	5	STRAP-CABLE	
	3	1	*164-6874*	1	FITTING AS-ELBOW (QUICK DISCONNECT, MALE)	
		1	**3J-1907**	1	SEAL-O-RING	
		1	**085-7356**	1	FITTING	
Y	4	1	**221-5069**	1	FITTING GP-HYDRAULIC (TEE)	539
I	5	1	**269-9714**	1	HOSE AS	
I	6	1	**178-5908**	1	HOSE AS	
	7	1	**282-7374**	1	TUBE AS	
	8	1	**286-6461**	1	HOSE AS	
I	9	1	**320-0008**	1	HOSE AS	
	10	1	*148-8345*	1	CONNECTOR AS	
		1	**2M-9780**	1	SEAL-O-RING	
		1	**6V-8398**	1	SEAL-O-RING	
		1	**6V-8638**	1	CONNECTOR	
	11	1	*148-8347*	1	ELBOW AS	
		1	**3D-2824**	1	SEAL-O-RING	
		1	**6V-9007**	1	ELBOW	
		1	**6V-9746**	1	SEAL-O-RING	
	12	1	*148-8359*	1	ELBOW AS	
		1	**3K-0360**	1	SEAL-O-RING	
		1	**6V-9746**	1	SEAL-O-RING	
		1	**6V-9877**	1	ELBOW	
	13	1	*148-8372*	1	ELBOW AS	
		1	**2M-9780**	1	SEAL-O-RING	
		1	**6V-8398**	1	SEAL-O-RING	
		1	**6V-8721**	1	ELBOW	
	14	1	*148-8411*	2	PLUG AS	
					(EACH INCLUDES)	
		1	**3K-0360**	1	SEAL-O-RING	
		1	**9S-4185**	1	PLUG (3/4-16-THD)	
	15	1	*150-4043*	1	CONNECTOR AS	
		1	**3J-1907**	1	SEAL-O-RING	
		1	**6V-8398**	1	SEAL-O-RING	
		1	**6V-9873**	1	CONNECTOR	
	16	1	*164-5608*	1	CONNECTOR AS	
		1	**3K-0360**	1	SEAL-O-RING	
		1	**6V-8398**	1	SEAL-O-RING	
		1	**8T-1687**	1	CONNECTOR	
	17	1	**4J-0527**	1	SEAL-O-RING	
	18	1	**6D-4246**	1	CLIP (LOOP)	
	19	1	**8T-4121**	1	WASHER-HARD (11X21X2.5-MM THK)	
M	20	1	**8T-4137**	1	BOLT (M10X1.5X20-MM)	
M	21	1	**8T-4194**	4	BOLT (M12X1.75X50-MM)	
	22	1	**8T-4223**	4	WASHER-HARD (13.5X25.5X3-MM THK)	

I - REFER TO HYDRAULIC INFORMATION SYSTEM
M - METRIC PART
Y - SEPARATE ILLUSTRATION

278-6661 **LINES GP-HYDRAULIC (**contd.**)** **i03212411**

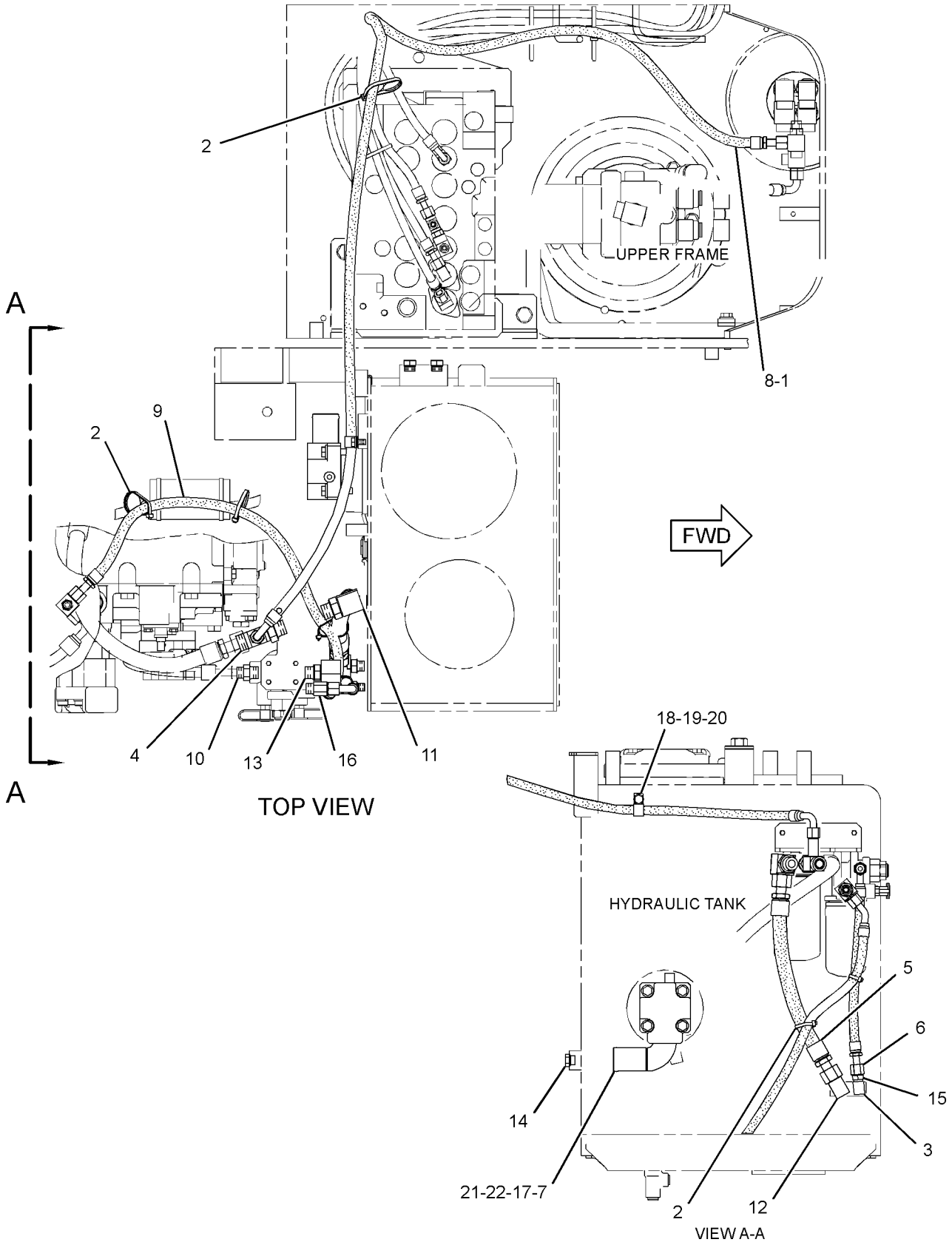

GRAPHIC #1 <END> g01529517

278-6661 LINES GP-HYDRAULIC

S/N: DLP390-UP

PART OF 278-6660 TANK & MTG GP-HYDRAULIC

SMCS-5057 **i05334762**

NOTE	REF NO	GRAPHIC REF	PART NUMBER	QTY	PART NAME 1 2 3 4 5 6 (PRODUCT LEVEL)	SEE PAGE
	1	1	**4I-9527**	2	BAND-MARKER (GREEN, R3)	
	2	1	**7K-1181**	8	STRAP-CABLE	
	3	1	*164-6874*	1	FITTING AS-ELBOW (QUICK DISCONNECT, MALE)	
		1	**3J-1907**	1	SEAL-O-RING	
		1	**085-7356**	1	FITTING	
Y	4	1	**221-5069**	1	FITTING GP-HYDRAULIC (TEE)	539
I	5	1	**269-9714**	1	HOSE AS	
CI	6	1	**255-1929**	1	HOSE AS	
	7	1	**282-7374**	1	TUBE AS	
	8	1	**286-6461**	1	HOSE AS	
	9	1	**1S-0994**	1	CLIP (LOOP)	
	10	1	*148-8345*	1	CONNECTOR AS	
		1	**2M-9780**	1	SEAL-O-RING	
		1	**6V-8398**	1	SEAL-O-RING	
		1	**6V-8638**	1	CONNECTOR	
	11	1	*148-8347*	1	ELBOW AS	
		1	**3D-2824**	1	SEAL-O-RING	
		1	**6V-9007**	1	ELBOW	
		1	**6V-9746**	1	SEAL-O-RING	
	12	1	*148-8359*	1	ELBOW AS	
		1	**3K-0360**	1	SEAL-O-RING	
		1	**6V-9746**	1	SEAL-O-RING	
		1	**6V-9877**	1	ELBOW	
	13	1	*148-8372*	1	ELBOW AS	
		1	**2M-9780**	1	SEAL-O-RING	
		1	**6V-8398**	1	SEAL-O-RING	
		1	**6V-8721**	1	ELBOW	
	14	1	*148-8411*	2	PLUG AS	
					(EACH INCLUDES)	
		1	**3K-0360**	1	SEAL-O-RING	
		1	**9S-4185**	1	PLUG (3/4-16-THD)	
	15	1	*150-4043*	1	CONNECTOR AS	
		1	**3J-1907**	1	SEAL-O-RING	
		1	**6V-8398**	1	SEAL-O-RING	
		1	**6V-9873**	1	CONNECTOR	
C	16	1	*148-8354*	1	ELBOW AS	
		1	**3K-0360**	1	SEAL-O-RING	
		1	**6V-8398**	1	SEAL-O-RING	
		1	**6V-9002**	1	ELBOW	
	17	1	**4J-0527**	1	SEAL-O-RING	
	18	1	**6D-4246**	1	CLIP (LOOP)	
	19	1	**8T-4121**	1	WASHER-HARD (11X21X2.5-MM THK)	
M	20	1	**8T-4137**	1	BOLT (M10X1.5X20-MM)	
M	21	1	**8T-4194**	4	BOLT (M12X1.75X50-MM)	
	22	1	**8T-4223**	4	WASHER-HARD (13.5X25.5X3-MM THK)	
	23	1	*148-8365*	1	ELBOW AS	
		1	**3J-1907**	1	SEAL-O-RING	
		1	**6V-8398**	1	SEAL-O-RING	

278-6661 **LINES GP-HYDRAULIC (**contd.**)** **i05334762**

NOTE	REF NO	GRAPHIC REF	PART NUMBER	QTY	PART NAME 1 2 3 4 5 6 (PRODUCT LEVEL)	SEE PAGE
		1	**8T-6876**	1	ELBOW	
	24	1	*148-8444*	1	TEE AS-SWIVEL	
		1	**6V-8398**	2	SEAL-O-RING	
		1	**6V-9837**	1	TEE-SWIVEL	
I	25	1	**437-0471**	1	HOSE AS	

C - CHANGE FROM PREVIOUS TYPE
I - REFER TO HYDRAULIC INFORMATION SYSTEM
M - METRIC PART
Y - SEPARATE ILLUSTRATION

278-6661 **LINES GP-HYDRAULIC (**contd.**)** **i05334762**

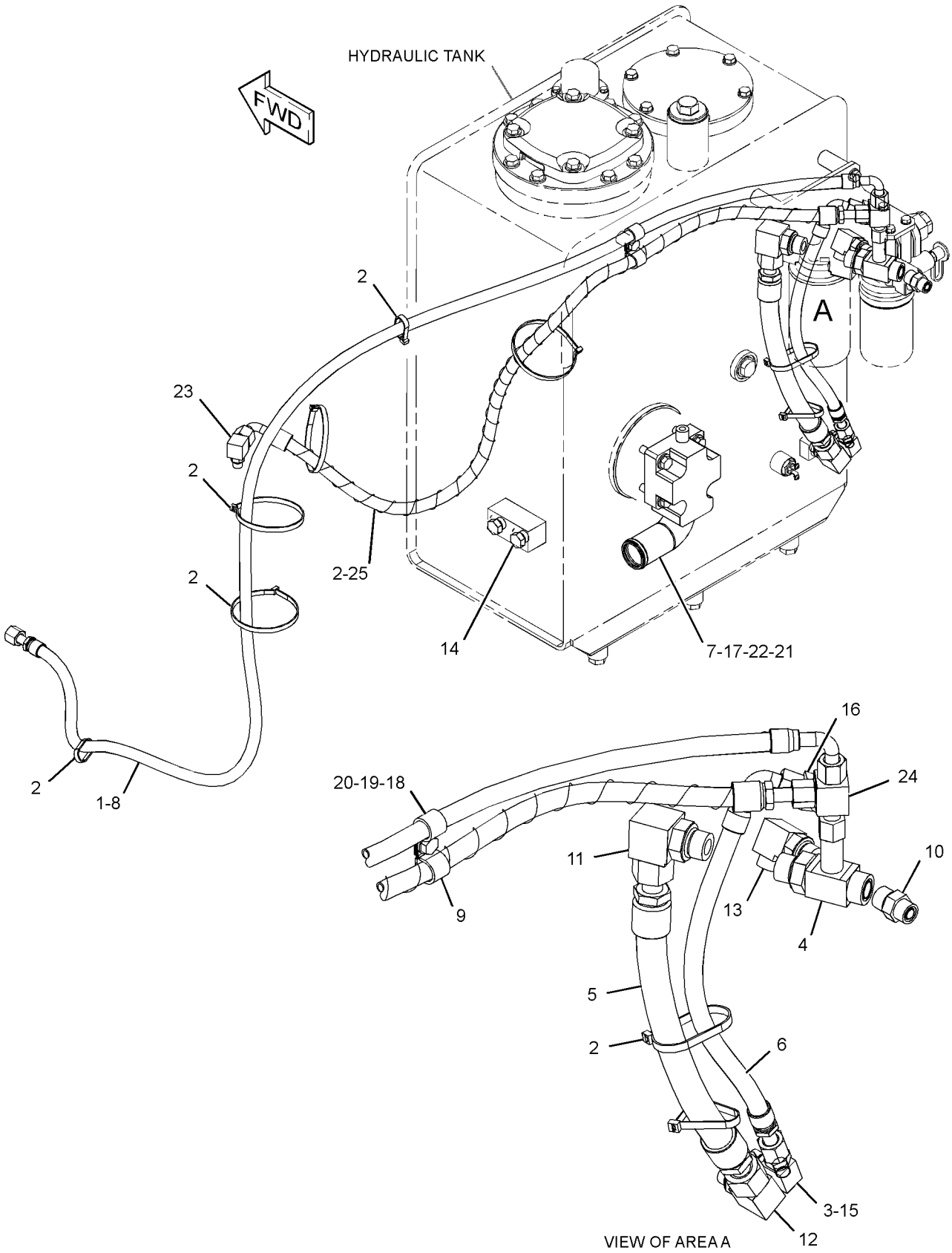

GRAPHIC #1 <END> g03382106

278-6667 LINES GP-HYDRAULIC OIL COOLER—REAR

S/N: DLP1-UP

PART OF 270-5864 HYDRAULIC AR

SMCS-1374 **i05052229**

NOTE	REF NO	GRAPHIC REF	PART NUMBER	QTY	PART NAME 1 2 3 4 5 6 (PRODUCT LEVEL)	SEE PAGE
I	1	1	**7I-1288**	1	HOSE AS	
	2	1	**8T-6703**	2	CLAMP-HOSE	
I	3	1	**391-6116**	1	HOSE AS	
Y	4	1	**171-0002**	1	VALVE GP-CHECK (OIL COOLER BYPASS)	801
	5	1	**239-1568**	1	HOSE	
	6	1	**282-7482**	1	SUPPORT	
I	7	1	**282-7484**	2	HOSE AS	
	8	1	**302-2872**	1	TUBE AS	
	9	1	*148-8339*	2	CONNECTOR AS	
					(EACH INCLUDES)	
		1	**6V-8716**	1	CONNECTOR (STRAIGHT)	
		1	**6V-9746**	1	SEAL-O-RING	
		1	**7M-8485**	1	SEAL-O-RING	
	10	1	*164-4180*	2	PLUG AS	
					(EACH INCLUDES)	
		1	**7M-8485**	1	SEAL-O-RING	
		1	**9S-4181**	1	PLUG (1-5/16-12-THD)	
	11	1	**1P-4578**	8	FLANGE-HALF	
	12	1	**4J-0522**	4	SEAL-O-RING	
	13	1	**4J-0527**	2	SEAL-O-RING	
	14	1	**6V-1876**	1	GROMMET	
	15	1	**7G-5984**	1	CLIP (TAB)	
	16	1	**7G-5985**	1	CLIP (SLOT)	
	17	1	**8T-4121**	20	WASHER-HARD (11X21X2.5-MM THK)	
M	18	1	**8T-4139**	2	BOLT (M12X1.75X30-MM)	
M	19	1	**8T-4183**	4	BOLT (M12X1.75X40-MM)	
M	20	1	**8T-4179**	2	BOLT (M12X1.75X20-MM)	
M	21	1	**8T-4196**	16	BOLT (M10X1.5X35-MM)	
	22	1	**8T-4223**	8	WASHER-HARD (13.5X25.5X3-MM THK)	
M	23	1	**101-7404**	4	BOLT-SOCKET HEAD (M10X1.5X30-MM)	

I - REFER TO HYDRAULIC INFORMATION SYSTEM
M - METRIC PART
Y - SEPARATE ILLUSTRATION

278-6667 **LINES GP-HYDRAULIC OIL COOLER (**contd.**)** **i05052229**

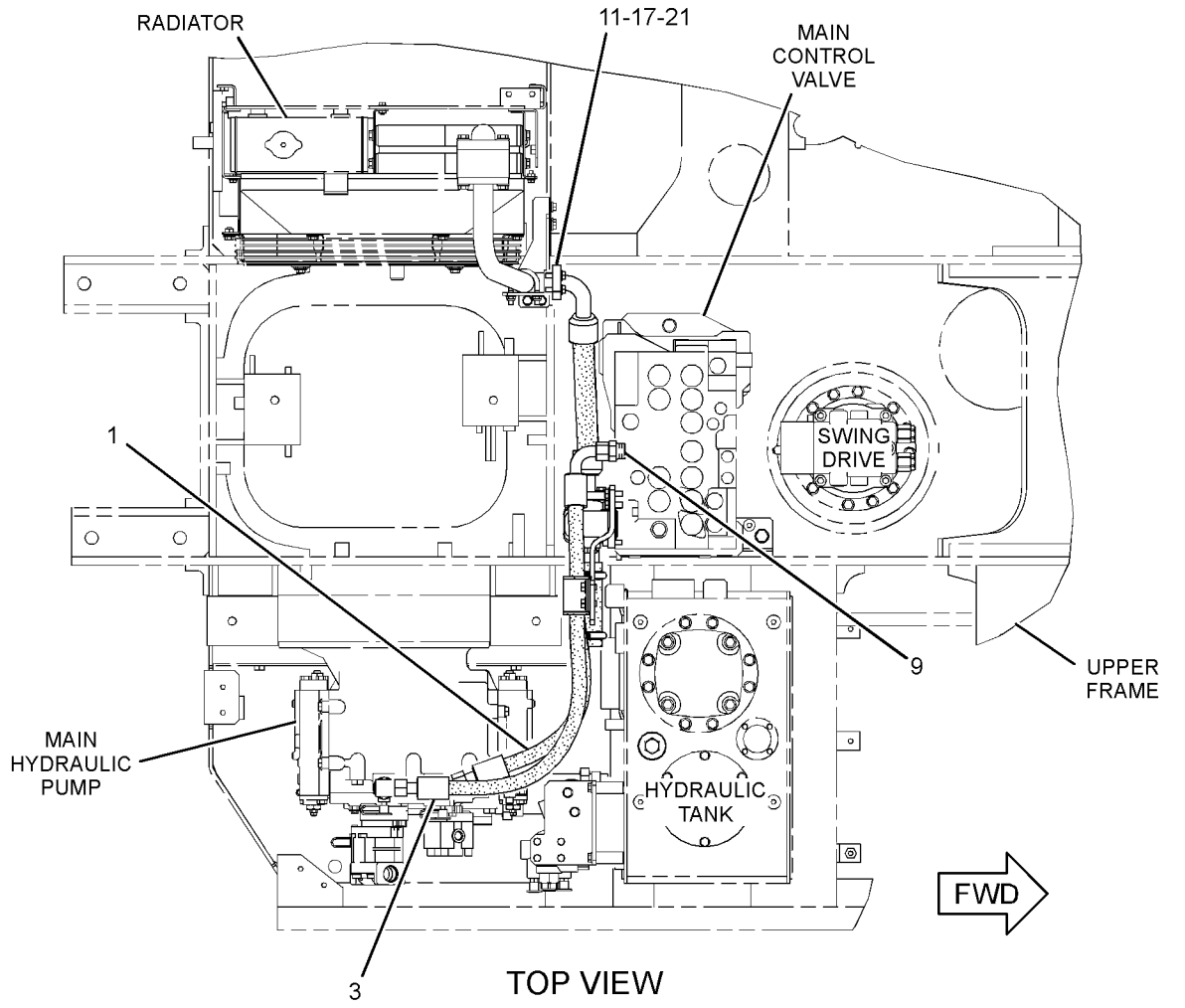

TOP VIEW

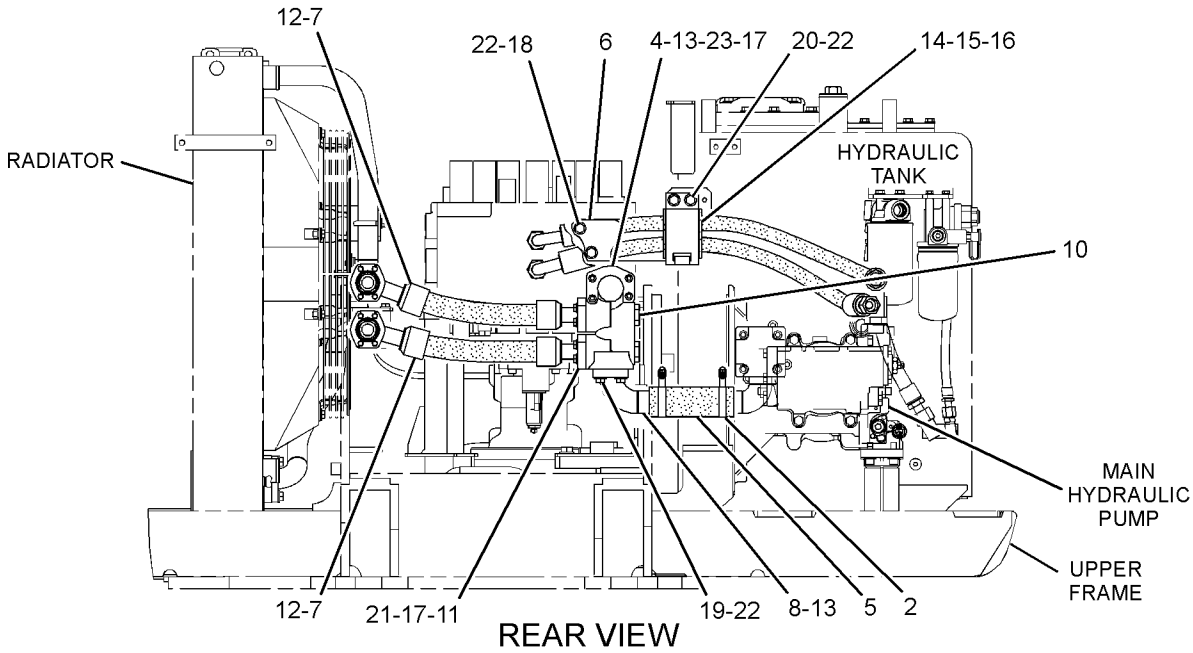

REAR VIEW

GRAPHIC #1

<END>

g01959854

278-6670 LINES GP-HYDRAULIC OIL COOLER

S/N: DLP1-UP

PART OF 270-5864 HYDRAULIC AR

SMCS-1374 **i03016761**

NOTE	REF NO	GRAPHIC REF	PART NUMBER	QTY	PART NAME 1 2 3 4 5 6 (PRODUCT LEVEL)	SEE PAGE
	1	1	**282-7490**	1	TUBE AS	
	2	1	**282-7493**	1	TUBE AS	
	3	1	**292-7643**	1	SUPPORT AS	
	4	1	**292-7645**	1	SUPPORT AS	
M	5	1	**096-4883**	2	LOCKNUT (M10X1.5-THD)	
	6	1	**4J-0523**	2	SEAL-O-RING	
	7	1	**7Y-5237**	1	U-BOLT	
	8	1	**8T-4121**	8	WASHER-HARD (11X21X2.5-MM THK)	
M	9	1	**8T-4136**	6	BOLT (M10X1.5X25-MM)	
	10	1	**8T-4223**	4	WASHER-HARD (13.5X25.5X3-MM THK)	
M	11	1	**8T-4956**	4	BOLT (M12X1.75X35-MM)	

M - METRIC PART

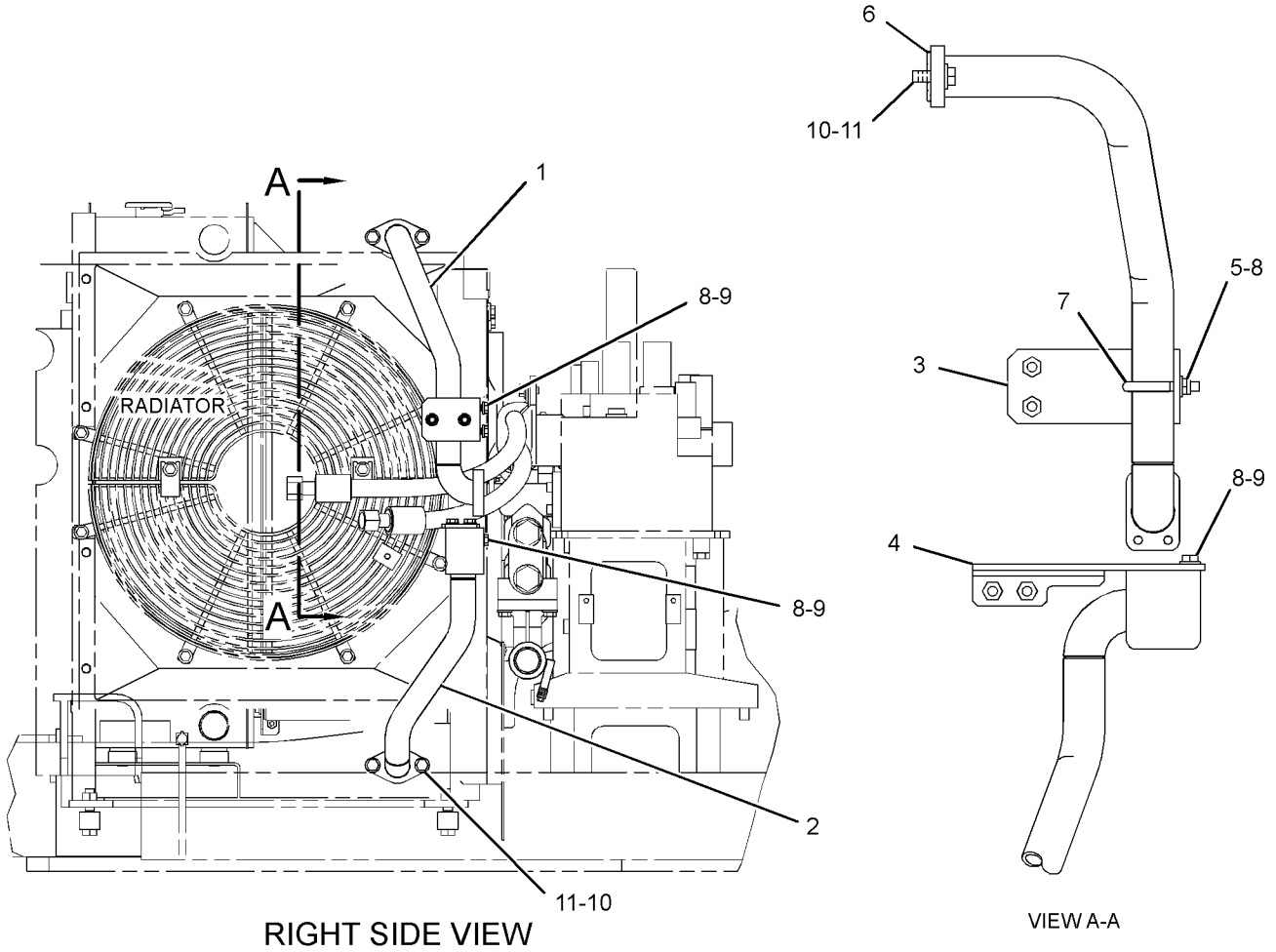

GRAPHIC #1 <END> g01408480

260-7891 LINES GP-PILOT—PUMP CONTROL, SHUTTLE VALVE

S/N: DLP1-UP
PART OF 270-5846 CONTROL AR-AUXILIARY
AN ATTACHMENT

SMCS-5057, 5059

i04829529

NOTE	REF NO	GRAPHIC REF	PART NUMBER	QTY	PART NAME 1 2 3 4 5 6 (PRODUCT LEVEL)	SEE PAGE
	1	1	**309-5769**	1	SWITCH AS-PRESSURE (IMPLEMENT, SWING)	
		1	**151-9272**	1	KIT-RECEPTACLE (2-PIN)	
					(INCLUDES RECEPTACLE AS & WEDGE)	
		1	**9X-3401**	2	PIN-CONNECTOR (16-GA TO 18-GA)	
					—OR—	
		1	**126-1767**	2	PIN-CONNECTOR (14-GA TO 16-GA)	
	2	1	**387-3699**	1	BRACKET	
Y	3	1	**185-0462**	1	VALVE GP-SHUTTLE (PILOT)	848
	4	1	*148-8336*	8	CONNECTOR AS	
					(EACH INCLUDES)	
		1	**3J-1907**	1	SEAL-O-RING	
		1	**6V-8397**	1	SEAL-O-RING	
		1	**6V-8636**	1	CONNECTOR	
	5	1	*148-8353*	8	ELBOW AS	
					(EACH INCLUDES)	
		1	**3J-1907**	1	SEAL-O-RING	
		1	**6V-8397**	1	SEAL-O-RING	
		1	**6V-9001**	1	ELBOW	
	6	1	**8T-4121**	7	WASHER-HARD (11X21X2.5-MM THK)	
M	7	1	**8T-4136**	3	BOLT (M10X1.5X25-MM)	
M	8	1	**8T-4191**	4	BOLT (M10X1.5X16-MM)	

M - METRIC PART
Y - SEPARATE ILLUSTRATION

260-7891 **LINES GP-PILOT (**contd.**)** **i04829529**

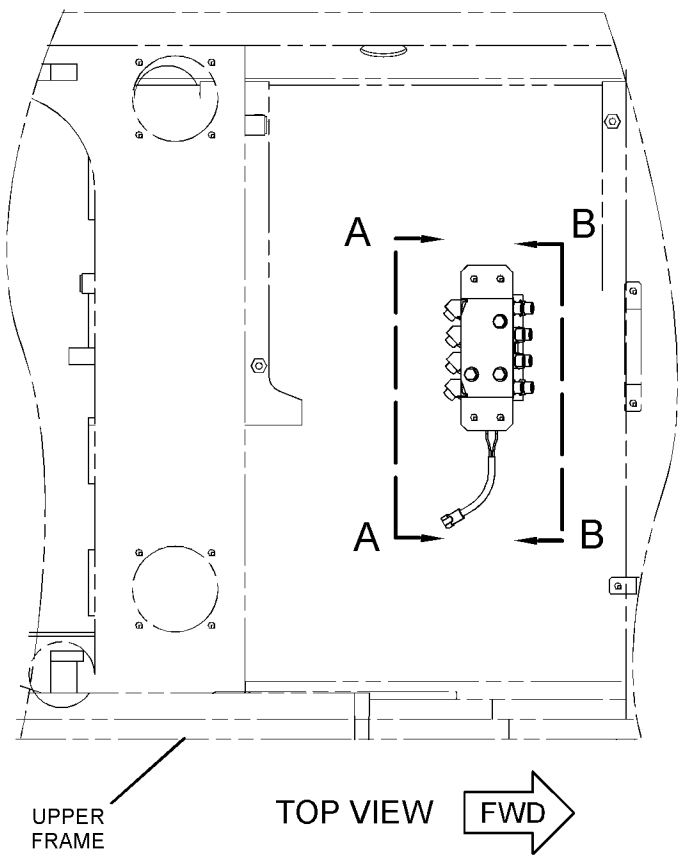

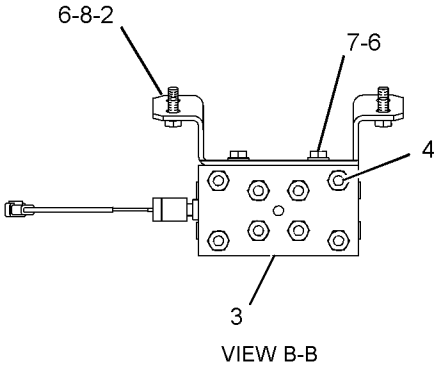

VIEW B-B

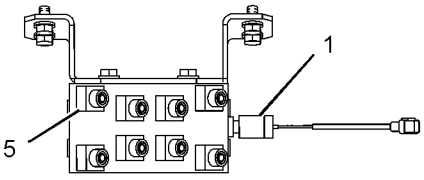

VIEW A-A

GRAPHIC #1 <END> g01151832

278-6672 LINES GP-PILOT—JOYSTICK, PEDALS

S/N: DLP1-185

PART OF 270-5864 HYDRAULIC AR

SMCS-5057, 5059 **i02910128**

NOTE	REF NO	GRAPHIC REF	PART NUMBER	QTY	PART NAME 1 2 3 4 5 6 (PRODUCT LEVEL)	SEE PAGE
	1	2	**4I-9521**	2	BAND-MARKER (RED, L1)	
	2	2	**4I-9522**	2	BAND-MARKER (YELLOW, L2)	
	3	2	**4I-9523**	2	BAND-MARKER (BLUE, L3)	
	4	2	**4I-9524**	2	BAND-MARKER (BROWN, L4)	
	5	2	**4I-9525**	2	BAND-MARKER (ORANGE, R1)	
	6	2	**4I-9526**	2	BAND-MARKER (WHITE, R2)	
	7	2	**4I-9527**	2	BAND-MARKER (GREEN, R3)	
	8	2	**4I-9528**	2	BAND-MARKER (PURPLE, R4)	
	9	1	**7K-1181**	2	STRAP-CABLE	
I	10	2	**087-4402**	2	HOSE AS	
	11	1	**133-5813**	4	BAND-MARKER (GRAY, P)	
Y	12	1	**270-5948**	1	VALVE GP-PILOT (TRAVEL)	828
	13	2	**168-9759**	1	BLOCK	
	14	2	**184-9336**	3	SUPPORT	
	15	1	**236-2838**	1	PLATE	
	16	2	**236-2843**	1	HOSE AS	
	17	2	**236-2844**	1	HOSE AS	
	18	1	**307-5248**	1	HOSE AS	
	19	2	**282-7171**	1	HOSE AS	
	20	2	**282-7206**	1	HOSE AS	
I	21	2	**292-7423**	1	HOSE AS	
I	22	2	**292-7424**	1	HOSE AS	
I	23	2	**292-7425**	1	HOSE AS	
I	24	2	**292-7427**	1	HOSE AS	
I	25	2	**292-7428**	1	HOSE AS	
I	26	2	**292-7429**	1	HOSE AS	
	27	2	**292-7431**	1	SUPPORT AS	
	28	2	**292-7513**	1	SUPPORT	
	29	1	*148-8336*	11	CONNECTOR AS	
					(EACH INCLUDES)	
		1	**3J-1907**	1	SEAL-O-RING	
		1	**6V-8397**	1	SEAL-O-RING	
		1	**6V-8636**	1	CONNECTOR	
	30	2	*164-5624*	2	ELBOW AS	
					(EACH INCLUDES)	
		2	**3J-1907**	1	SEAL-O-RING	
		2	**6V-8398**	1	SEAL-O-RING	
		2	**9X-2085**	1	ELBOW	
	31	2	*148-8363*	2	ELBOW AS	
					(EACH INCLUDES)	
		2	**3K-0360**	1	SEAL-O-RING	
		2	**6V-8397**	1	SEAL-O-RING	
		2	**6V-9876**	1	ELBOW	
	32	1	*148-8366*	8	ELBOW AS	
					(EACH INCLUDES)	
		1	**6V-8397**	2	SEAL-O-RING	
		1	**6V-8987**	1	ELBOW	
	33	2	*148-8378*	8	ELBOW AS	

278-6672 **LINES GP-PILOT (**contd.**)** **i02910128**

NOTE	REF NO	GRAPHIC REF	PART NUMBER	QTY	PART NAME 1 2 3 4 5 6 (PRODUCT LEVEL)	SEE PAGE
					(EACH INCLUDES)	
		2	**3J-1907**	1	SEAL-O-RING	
		2	**6V-8397**	1	SEAL-O-RING	
		2	**6V-8724**	1	ELBOW	
	34	2	*148-8407*	4	PLUG AS	
					(EACH INCLUDES)	
		2	**3J-1907**	1	SEAL-O-RING	
		2	**9S-4191**	1	PLUG (9/16-18-THD)	
	35	1	*164-5628*	3	CONNECTOR AS	
					(EACH INCLUDES)	
		1	**3J-1907**	1	SEAL-O-RING	
		1	**6V-8397**	1	SEAL-O-RING	
		1	**107-6631**	1	CONNECTOR-FILTER	
	36	1	**6V-9168**	8	NUT (11/16-16-THD)	
	37	1,2	**8T-4121**	18	WASHER-HARD (11X21X2.5-MM THK)	
M	38	1	**8T-4136**	4	BOLT (M10X1.5X25-MM)	
M	39	1,2	**8T-4137**	12	BOLT (M10X1.5X20-MM)	
M	40	2	**8T-4178**	2	BOLT (M10X1.5X90-MM)	
	41	1	**9X-8257**	8	WASHER (17.5X30X3.5-MM THK)	
	42	1	**272-4514**	1	HOSE AS	

I - REFER TO HYDRAULIC INFORMATION SYSTEM
M - METRIC PART
Y - SEPARATE ILLUSTRATION

278-6672 **LINES GP-PILOT (**contd.**)** **i02910128**

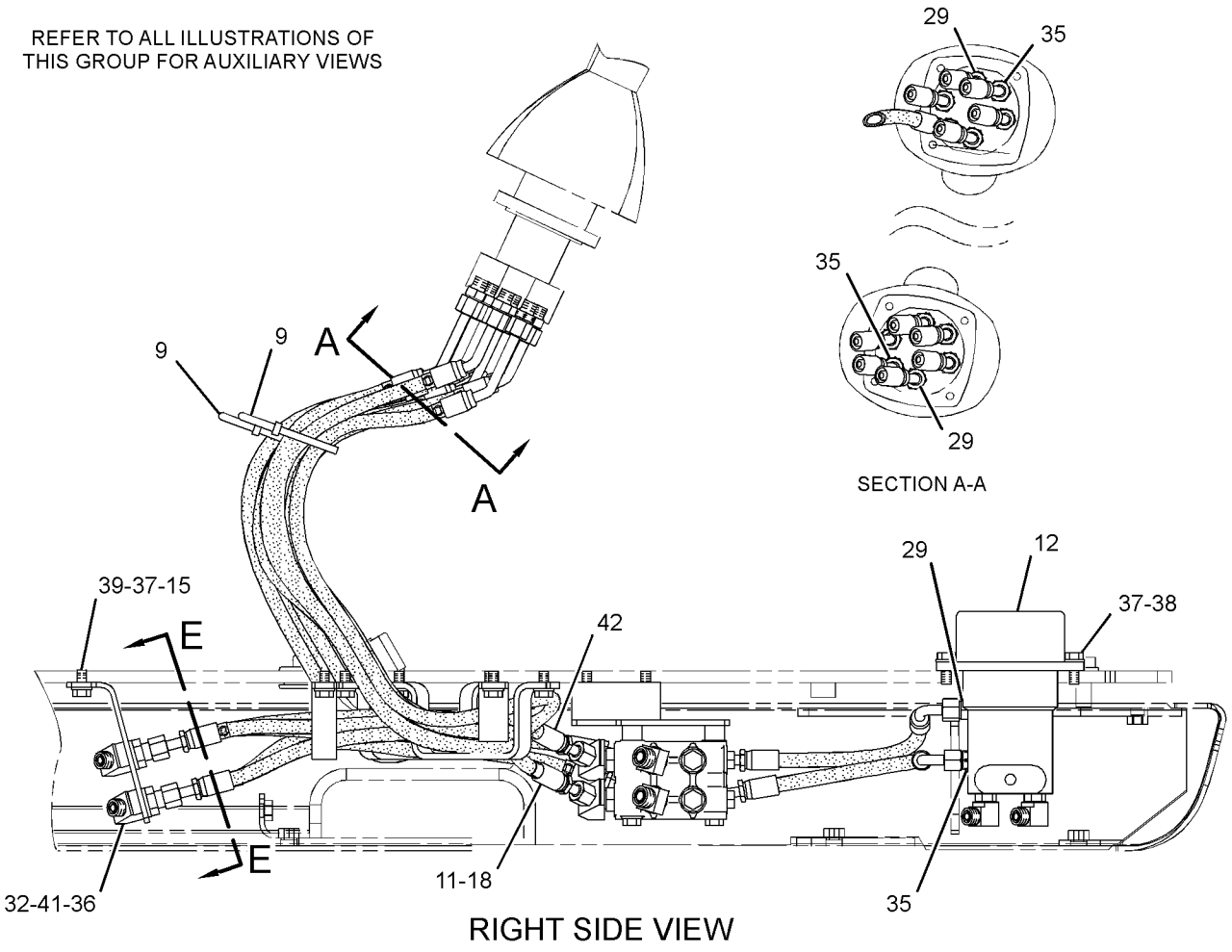

GRAPHIC #1 g01451504

278-6672 **LINES GP-PILOT (**contd.**)** **i02910128**

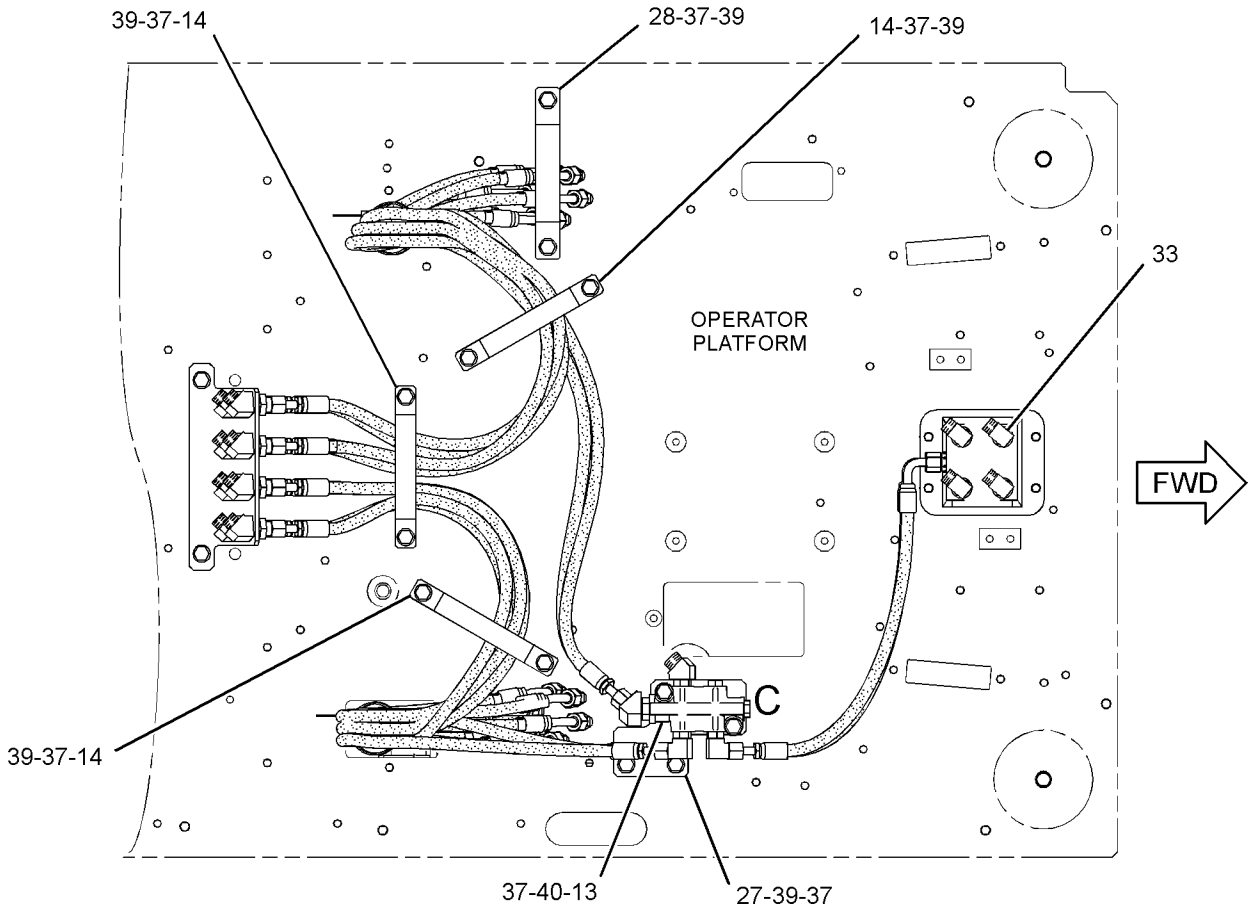

BOTTOM VIEW

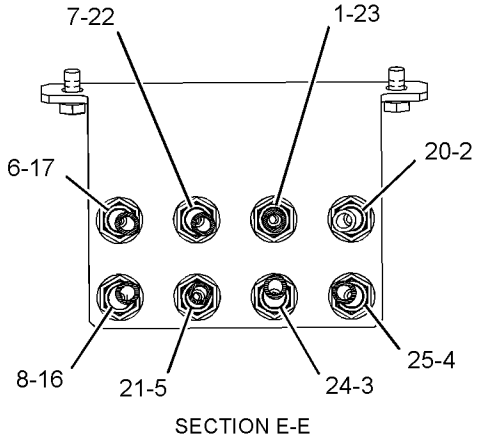

SECTION E-E

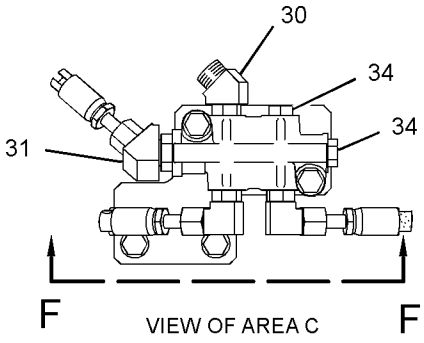

VIEW OF AREA C

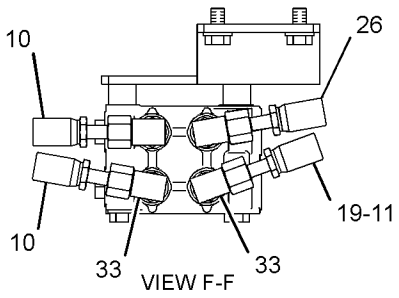

VIEW F-F

GRAPHIC #2 <END> g01451505

278-6672 LINES GP-PILOT—JOYSTICK, PEDALS

S/N: DLP186-UP

PART OF 270-5864 HYDRAULIC AR

SMCS-5057, 5059 **i04048013**

NOTE	REF NO	GRAPHIC REF	PART NUMBER	QTY	PART NAME 1 2 3 4 5 6 (PRODUCT LEVEL)	SEE PAGE
	1	2	**4I-9521**	2	BAND-MARKER (RED, L1)	
	2	2	**4I-9522**	2	BAND-MARKER (YELLOW, L2)	
	3	2	**4I-9523**	2	BAND-MARKER (BLUE, L3)	
	4	2	**4I-9524**	2	BAND-MARKER (BROWN, L4)	
	5	2	**4I-9525**	2	BAND-MARKER (ORANGE, R1)	
	6	2	**4I-9526**	2	BAND-MARKER (WHITE, R2)	
	7	2	**4I-9527**	2	BAND-MARKER (GREEN, R3)	
	8	2	**4I-9528**	2	BAND-MARKER (PURPLE, R4)	
	9	1	**7K-1181**	2	STRAP-CABLE	
I	10	2	**087-4402**	2	HOSE AS	
	11	1	**133-5813**	4	BAND-MARKER (GRAY, P)	
CY	12	1	**310-0415**	1	VALVE GP-PILOT (WITHOUT SHUTTLE)	834
	13	2	**168-9759**	1	BLOCK	
	14	2	**184-9336**	3	SUPPORT	
	15	1	**236-2838**	1	PLATE	
	16	2	**236-2843**	1	HOSE AS	
	17	2	**236-2844**	1	HOSE AS	
	18	1	**354-3834**	1	HOSE AS	
	19	2	**354-3825**	1	HOSE AS	
	20	2	**282-7206**	1	HOSE AS	
I	21	2	**292-7423**	1	HOSE AS	
I	22	2	**292-7424**	1	HOSE AS	
I	23	2	**292-7425**	1	HOSE AS	
I	24	2	**292-7427**	1	HOSE AS	
I	25	2	**292-7428**	1	HOSE AS	
	26	2	**354-3833**	1	HOSE AS	
	27	2	**292-7431**	1	SUPPORT AS	
	28	2	**292-7513**	1	SUPPORT	
	29	1	*148-8336*	11	CONNECTOR AS	
					(EACH INCLUDES)	
		1	**3J-1907**	1	SEAL-O-RING	
		1	**6V-8397**	1	SEAL-O-RING	
		1	**6V-8636**	1	CONNECTOR	
	30	2	*164-5624*	2	ELBOW AS	
					(EACH INCLUDES)	
		2	**3J-1907**	1	SEAL-O-RING	
		2	**6V-8398**	1	SEAL-O-RING	
		2	**9X-2085**	1	ELBOW	
	31	2	*148-8363*	2	ELBOW AS	
					(EACH INCLUDES)	
		2	**3K-0360**	1	SEAL-O-RING	
		2	**6V-8397**	1	SEAL-O-RING	
		2	**6V-9876**	1	ELBOW	
	32	1	*148-8366*	8	ELBOW AS	
					(EACH INCLUDES)	
		1	**6V-8397**	2	SEAL-O-RING	
		1	**6V-8987**	1	ELBOW	
	33	2	*148-8378*	8	ELBOW AS	

278-6672 **LINES GP-PILOT (**contd.**)** **i04048013**

NOTE	REF NO	GRAPHIC REF	PART NUMBER	QTY	PART NAME 1 2 3 4 5 6 (PRODUCT LEVEL)	SEE PAGE
					(EACH INCLUDES)	
		2	**3J-1907**	1	SEAL-O-RING	
		2	**6V-8397**	1	SEAL-O-RING	
		2	**6V-8724**	1	ELBOW	
	34	2	*148-8407*	4	PLUG AS	
					(EACH INCLUDES)	
		2	**3J-1907**	1	SEAL-O-RING	
		2	**9S-4191**	1	PLUG (9/16-18-THD)	
	35	1	*164-5628*	3	CONNECTOR AS	
					(EACH INCLUDES)	
		1	**3J-1907**	1	SEAL-O-RING	
		1	**6V-8397**	1	SEAL-O-RING	
		1	**107-6631**	1	CONNECTOR-FILTER	
	36	1	**6V-9168**	8	NUT (11/16-16-THD)	
	37	1,2	**8T-4121**	18	WASHER-HARD (11X21X2.5-MM THK)	
M	38	1	**8T-4136**	4	BOLT (M10X1.5X25-MM)	
M	39	1,2	**8T-4137**	12	BOLT (M10X1.5X20-MM)	
M	40	2	**8T-4178**	2	BOLT (M10X1.5X90-MM)	
	41	1	**9X-8257**	8	WASHER (17.5X30X3.5-MM THK)	
	42	1	**272-4514**	1	HOSE AS	

C - CHANGE FROM PREVIOUS TYPE
I - REFER TO HYDRAULIC INFORMATION SYSTEM
M - METRIC PART
Y - SEPARATE ILLUSTRATION

278-6672 **LINES GP-PILOT (**contd.**)** **i04048013**

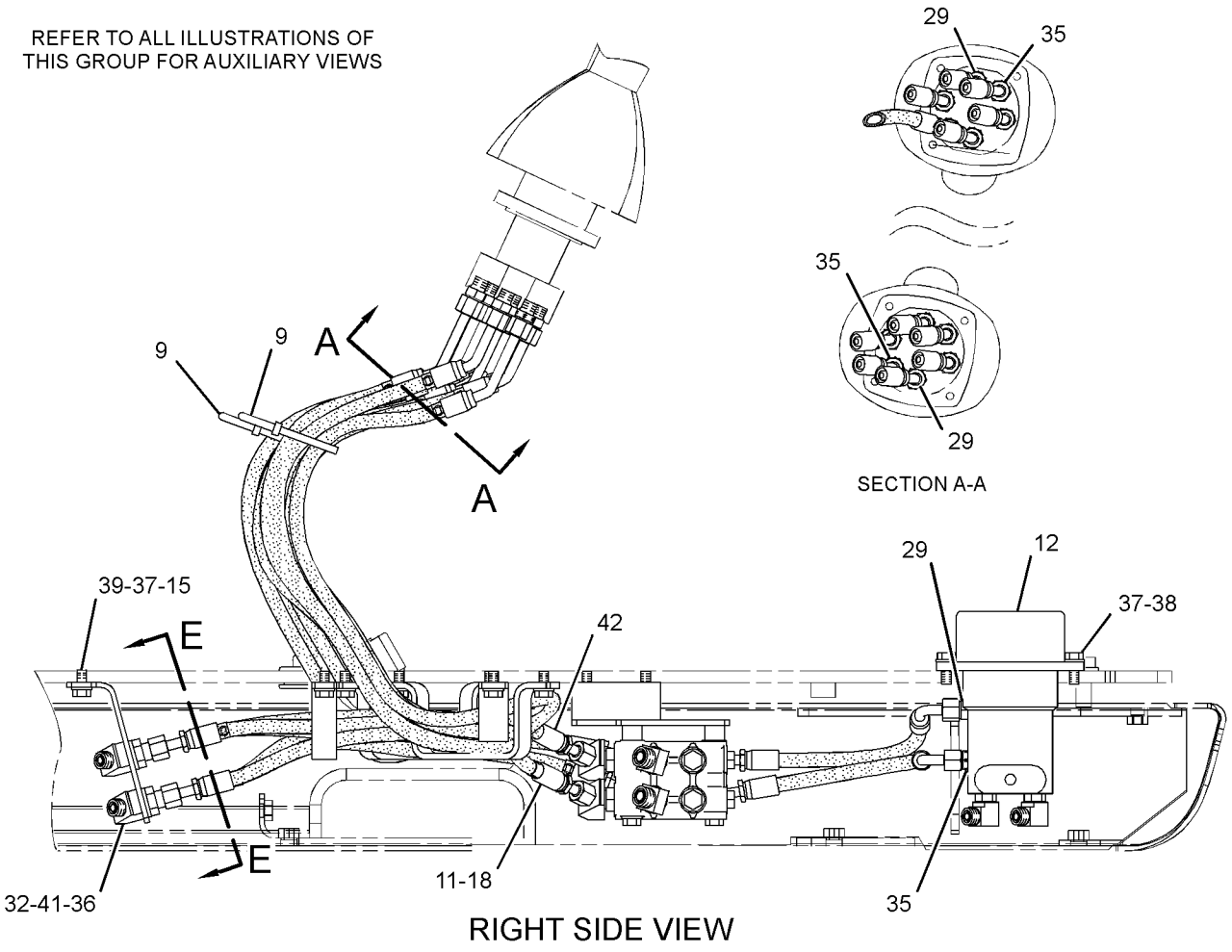

GRAPHIC #1 g01451504

278-6672 **LINES GP-PILOT (**contd.**)** **i04048013**

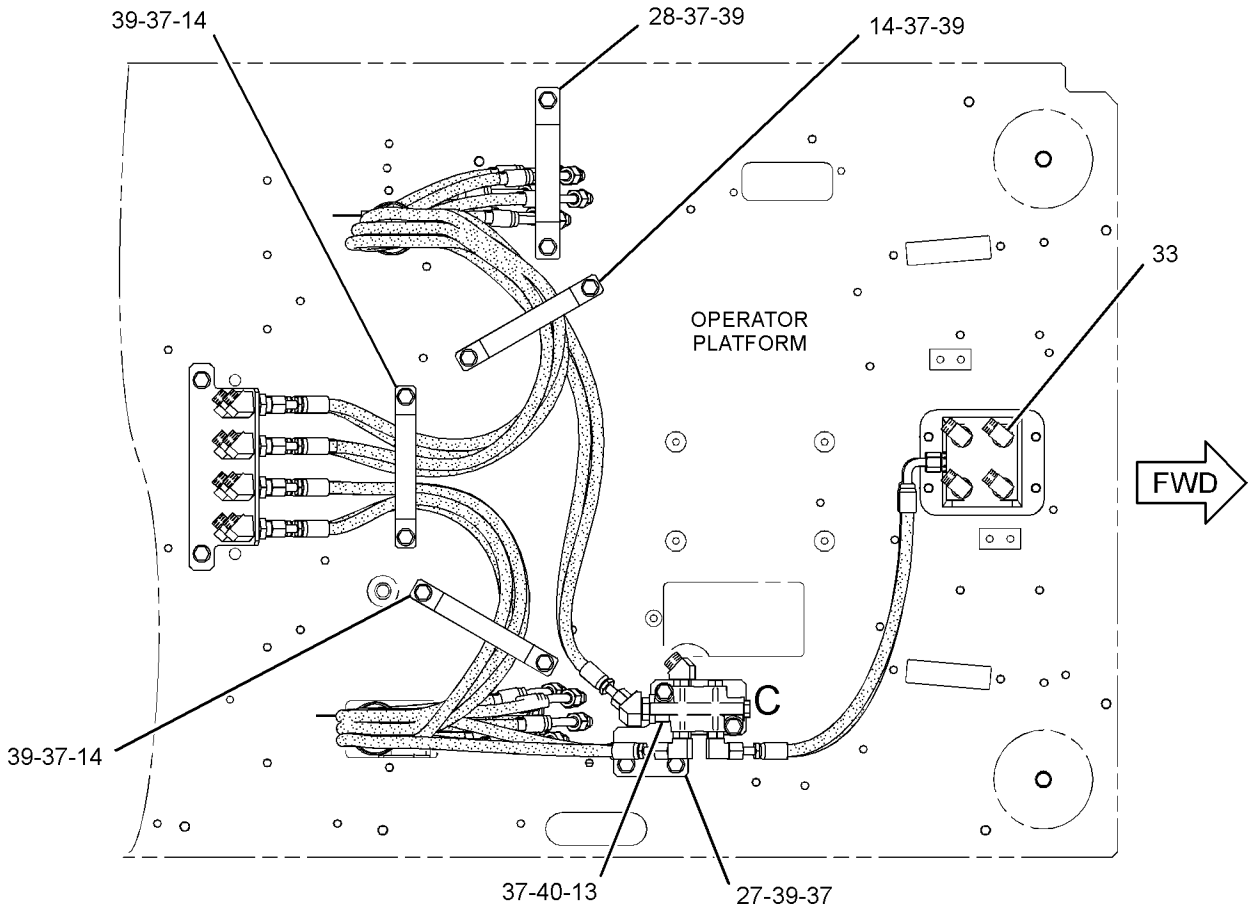

BOTTOM VIEW

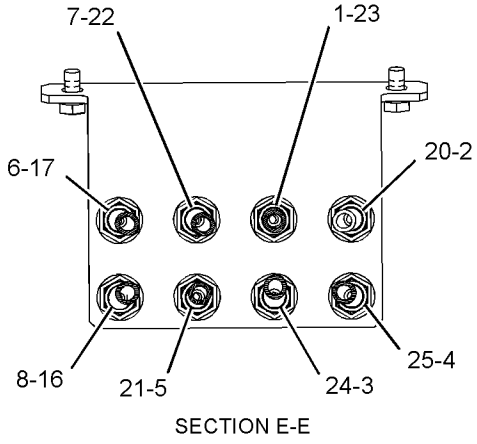

SECTION E-E

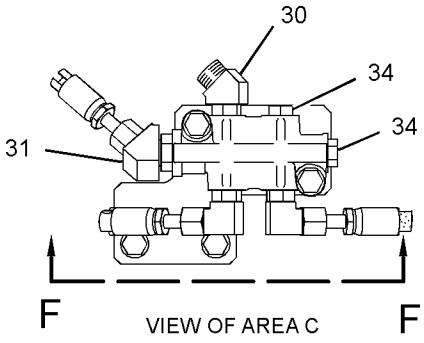

VIEW OF AREA C

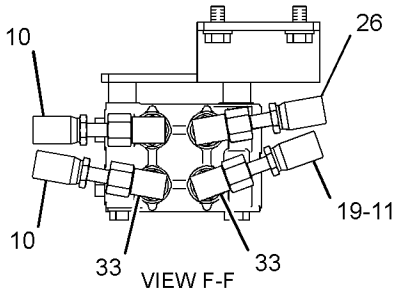

VIEW F-F

GRAPHIC #2 <END> g01451505

278-6673 LINES GP-PILOT—JOYSTICK, MAIN CONTROL VALVE

S/N: DLP1-516

PART OF 270-5864 HYDRAULIC AR

SMCS-5057, 5059 **i07098983**

NOTE	REF NO	GRAPHIC REF	PART NUMBER	QTY	PART NAME 1 2 3 4 5 6 (PRODUCT LEVEL)	SEE PAGE
I	1	1	**087-5777**	1	HOSE AS	
	2	1	**4I-3941**	2	FITTING AS	
I	3	1	**4I-3988**	3	HOSE AS	
I	4	1	**4I-5933**	1	HOSE AS	
	5	1	**4I-9521**	6	BAND-MARKER (RED, L1)	
	6	1	**4I-9522**	6	BAND-MARKER (YELLOW, L2)	
	7	1	**4I-9523**	2	BAND-MARKER (BLUE, L3)	
	8	1	**4I-9524**	2	BAND-MARKER (BROWN, L4)	
	9	1	**4I-9525**	6	BAND-MARKER (ORANGE, R1)	
	10	1	**4I-9526**	6	BAND-MARKER (WHITE, R2)	
	11	1	**4I-9527**	2	BAND-MARKER (GREEN, R3)	
	12	1	**4I-9528**	2	BAND-MARKER (PURPLE, R4)	
I	13	1	**7I-8252**	2	HOSE AS	
	14	1	**7K-1181**	17	STRAP-CABLE	
I	15	1	**7Y-4199**	2	HOSE AS	
I	16	1	**4I-1037**	1	HOSE AS	
I	17	1	**104-8973**	1	HOSE AS	
I	18	1	**108-7360**	1	HOSE AS	
I	19	1	**111-6752**	1	HOSE AS	
	20	1	**115-8645**	4	GUARD	
	21	1	**133-5813**	2	BAND-MARKER (GRAY, P)	
	22	1	**309-5768**	1	SWITCH AS-PRESSURE (TRAVEL)	
	22A	1	**309-5768**	1	SWITCH AS-PRESSURE (IMPLEMENT, SWING)	
					(EACH SWITCH AS. INCLUDES)	
		1	**9X-3402**	2	SOCKET-CONNECTOR (16-GA TO 18-GA)	
					—OR—	
		1	**126-1768**	2	SOCKET-CONNECTOR (14-GA TO 16-GA)	
		1	**155-2270**	1	KIT-CONNECTING PLUG (2-PIN)	
					(INLCUDES PLUG AS, WEDGE & INTERFACE SEAL)	
	24	1	**292-7180**	1	GROMMET	
	25	1	*148-8336*	1	CONNECTOR AS	
		1	**3J-1907**	1	SEAL-O-RING	
		1	**6V-8397**	1	SEAL-O-RING	
		1	**6V-8636**	1	CONNECTOR	
	26	1	*148-8353*	4	ELBOW AS	
					(EACH INCLUDES)	
		1	**3J-1907**	1	SEAL-O-RING	
		1	**6V-8397**	1	SEAL-O-RING	
		1	**6V-9001**	1	ELBOW	
	27	1	*148-8378*	3	ELBOW AS	
					(EACH INCLUDES)	
		1	**3J-1907**	1	SEAL-O-RING	
		1	**6V-8397**	1	SEAL-O-RING	
		1	**6V-8724**	1	ELBOW	
	28	1	*148-8407*	2	PLUG AS	
					(EACH INCLUDES)	
		1	**3J-1907**	1	SEAL-O-RING	
		1	**9S-4191**	1	PLUG (9/16-18-THD)	

278-6673 **LINES GP-PILOT (**contd.**)** **i07098983**

NOTE	REF NO	GRAPHIC REF	PART NUMBER	QTY	PART NAME 1 2 3 4 5 6 (PRODUCT LEVEL)	SEE PAGE
	29	1	*148-8435*	5	TEE AS	
					(EACH INCLUDES)	
		1	**3J-1907**	1	SEAL-O-RING	
		1	**6V-8397**	2	SEAL-O-RING	
		1	**6V-8781**	1	TEE	
	30	1	*150-3036*	1	ELBOW AS	
		1	**3J-1907**	1	SEAL-O-RING	
		1	**6V-8397**	1	SEAL-O-RING	
		1	**8T-1905**	1	ELBOW	
	31	1	*150-4027*	1	TEE AS	
		1	**3E-2310**	1	TEE	
		1	**3J-1907**	1	SEAL-O-RING	
		1	**6V-8397**	1	SEAL-O-RING	
	32	1	*148-8338*	1	CONNECTOR AS	
		1	**3J-1907**	1	SEAL-O-RING	
		1	**6V-8397**	1	SEAL-O-RING	
		1	**8T-0075**	1	CONNECTOR	

I - REFER TO HYDRAULIC INFORMATION SYSTEM

278-6673 **LINES GP-PILOT (**contd.**)** **i07098983**

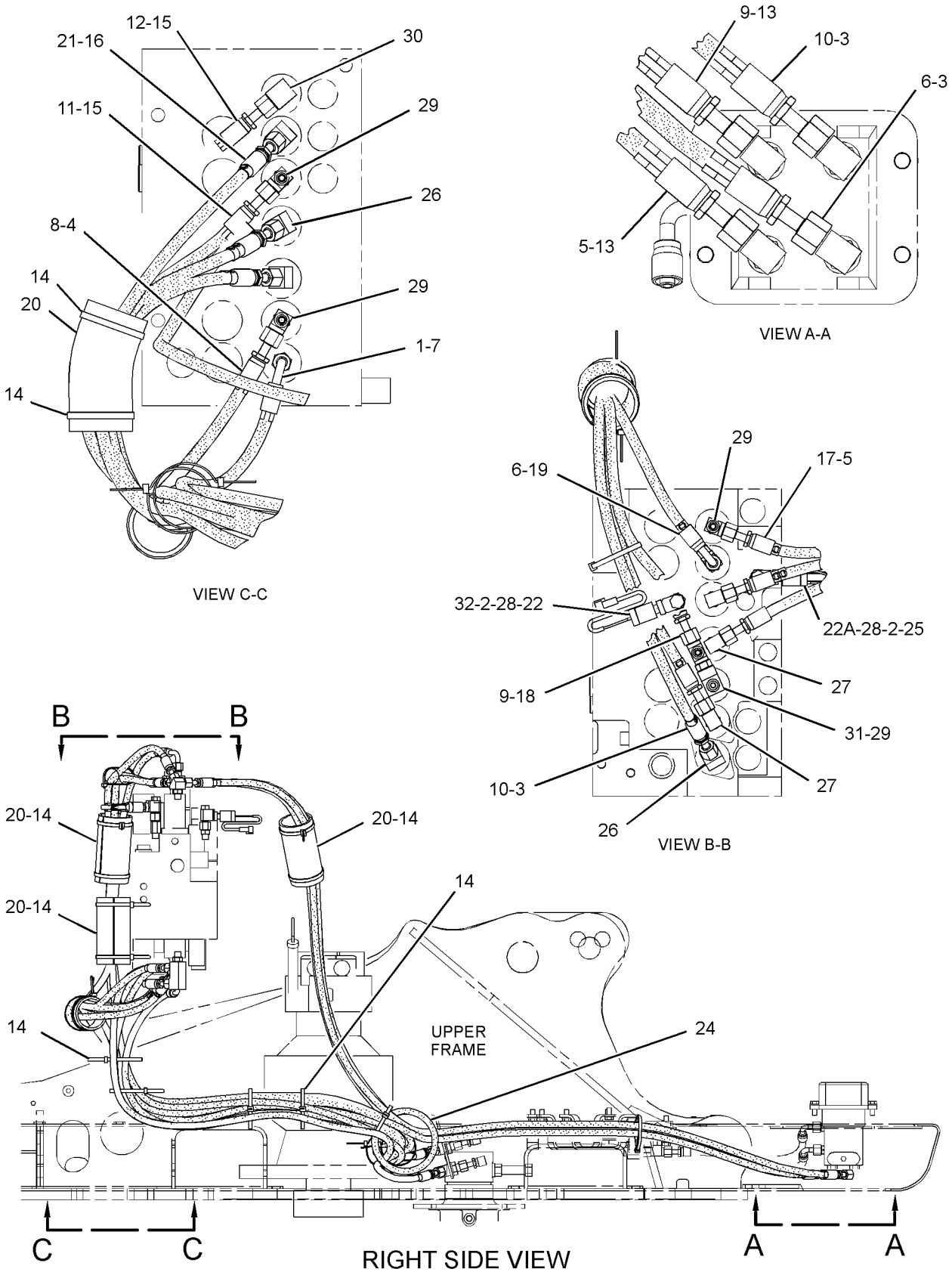

GRAPHIC #1 <END> g01737534

278-6673 LINES GP-PILOT—JOYSTICK, MAIN CONTROL VALVE

S/N: DLP517-UP

PART OF 270-5864 HYDRAULIC AR

SMCS-5057, 5059 **i04257391**

NOTE	REF NO	GRAPHIC REF	PART NUMBER	QTY	PART NAME 1 2 3 4 5 6 (PRODUCT LEVEL)	SEE PAGE
I	1	1	**087-5777**	1	HOSE AS	
	2	1	**4I-3941**	2	FITTING AS	
I	3	1	**4I-3988**	3	HOSE AS	
I	4	1	**4I-5933**	1	HOSE AS	
	5	1	**4I-9521**	6	BAND-MARKER (RED, L1)	
	6	1	**4I-9522**	6	BAND-MARKER (YELLOW, L2)	
	7	1	**4I-9523**	2	BAND-MARKER (BLUE, L3)	
	8	1	**4I-9524**	2	BAND-MARKER (BROWN, L4)	
	9	1	**4I-9525**	6	BAND-MARKER (ORANGE, R1)	
	10	1	**4I-9526**	6	BAND-MARKER (WHITE, R2)	
	11	1	**4I-9527**	2	BAND-MARKER (GREEN, R3)	
	12	1	**4I-9528**	2	BAND-MARKER (PURPLE, R4)	
I	13	1	**7I-8252**	2	HOSE AS	
	14	1	**7K-1181**	17	STRAP-CABLE	
I	15	1	**7Y-4199**	2	HOSE AS	
I	16	1	**4I-1037**	1	HOSE AS	
I	17	1	**104-8973**	1	HOSE AS	
I	18	1	**108-7360**	1	HOSE AS	
CI	19	1	**363-6187**	1	HOSE AS	
	20	1	**115-8645**	4	GUARD	
	21	1	**133-5813**	2	BAND-MARKER (GRAY, P)	
	22	1	**309-5768**	1	SWITCH AS-PRESSURE (TRAVEL)	
	22A	1	**309-5768**	1	SWITCH AS-PRESSURE (IMPLEMENT, SWING)	
					(EACH INCLUDES)	
		1	**9X-3402**	2	SOCKET-CONNECTOR (16-GA TO 18-GA)	
					—OR—	
		1	**126-1768**	2	SOCKET-CONNECTOR (14-GA TO 16-GA)	
		1	**331-4226**	1	KIT-CONNECTING PLUG (2-PIN)	
					(INCLUDES PLUG AS, WEDGE & INTERFACE SEAL)	
	24	1	**292-7180**	1	GROMMET	
	25	1	*148-8336*	1	CONNECTOR AS	
		1	**3J-1907**	1	SEAL-O-RING	
		1	**6V-8397**	1	SEAL-O-RING	
		1	**6V-8636**	1	CONNECTOR	
	26	1	*148-8353*	4	ELBOW AS	
					(EACH INCLUDES)	
		1	**3J-1907**	1	SEAL-O-RING	
		1	**6V-8397**	1	SEAL-O-RING	
		1	**6V-9001**	1	ELBOW	
	27	1	*148-8378*	3	ELBOW AS	
					(EACH INCLUDES)	
		1	**3J-1907**	1	SEAL-O-RING	
		1	**6V-8397**	1	SEAL-O-RING	
		1	**6V-8724**	1	ELBOW	
	28	1	*148-8407*	2	PLUG AS	
					(EACH INCLUDES)	
		1	**3J-1907**	1	SEAL-O-RING	
		1	**9S-4191**	1	PLUG (9/16-18-THD)	

278-6673 **LINES GP-PILOT (**contd.**)** **i04257391**

NOTE	REF NO	GRAPHIC REF	PART NUMBER	QTY	PART NAME 1 2 3 4 5 6 (PRODUCT LEVEL)	SEE PAGE
	29	1	*148-8435*	5	TEE AS	
					(EACH INCLUDES)	
		1	**3J-1907**	1	SEAL-O-RING	
		1	**6V-8397**	2	SEAL-O-RING	
		1	**6V-8781**	1	TEE	
	30	1	*150-3036*	1	ELBOW AS	
		1	**3J-1907**	1	SEAL-O-RING	
		1	**6V-8397**	1	SEAL-O-RING	
		1	**8T-1905**	1	ELBOW	
	31	1	*150-4027*	1	TEE AS	
		1	**3E-2310**	1	TEE	
		1	**3J-1907**	1	SEAL-O-RING	
		1	**6V-8397**	1	SEAL-O-RING	
	32	1	*148-8338*	1	CONNECTOR AS	
		1	**3J-1907**	1	SEAL-O-RING	
		1	**6V-8397**	1	SEAL-O-RING	
		1	**8T-0075**	1	CONNECTOR	

C - CHANGE FROM PREVIOUS TYPE
I - REFER TO HYDRAULIC INFORMATION SYSTEM

278-6673 **LINES GP-PILOT (**contd.**)** **i04257391**

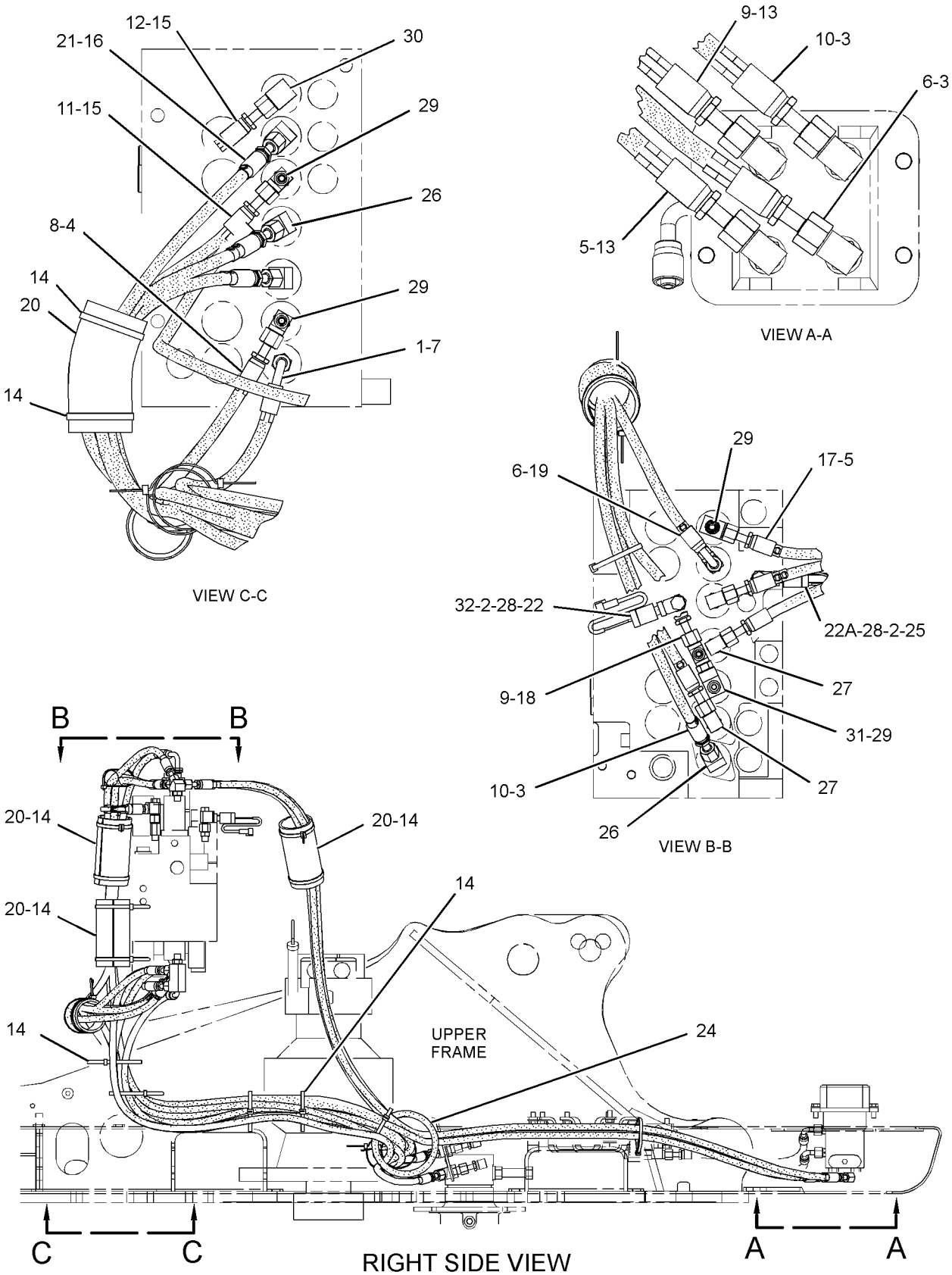

GRAPHIC #1

<END>

g02425437

278-6674 LINES GP-PILOT—MAIN CONTROL VALVE, MANIFOLD

S/N: DLP1-UP

PART OF 270-5864 HYDRAULIC AR

TYPE 1

SMCS-5057, 5059 **i03653637**

NOTE	REF NO	GRAPHIC REF	PART NUMBER	QTY	PART NAME 1 2 3 4 5 6 (PRODUCT LEVEL)	SEE PAGE
I	1	3	**4I-3994**	1	HOSE AS	
I	2	4	**4I-5795**	2	HOSE AS	
I	3	4	**4I-5900**	1	HOSE AS	
	4	2	**4I-6039**	1	GROMMET	
	5	1,3	**4I-9521**	4	BAND-MARKER (RED, L1)	
	6	3	**4I-9522**	4	BAND-MARKER (YELLOW, L2)	
	7	2,3,4	**4I-9523**	12	BAND-MARKER (BLUE, L3)	
	8	1,4	**4I-9524**	4	BAND-MARKER (BROWN, L4)	
	9	3,4	**4I-9525**	4	BAND-MARKER (ORANGE, R1)	
	10	1,2,4	**4I-9527**	8	BAND-MARKER (GREEN, R3)	
	11	1,2	**4I-9528**	4	BAND-MARKER (PURPLE, R4)	
I	12	4	**5I-4076**	1	HOSE AS	
I	13	4	**5I-8708**	1	HOSE AS	
I	14	1	**5I-8853**	1	HOSE AS	
	15	1,2,3,4	**7K-1181**	14	STRAP-CABLE	
I	16	2	**329-2730**	1	HOSE AS	
I	17	3	**7Y-5088**	1	HOSE AS	
I	18	3	**087-5767**	1	HOSE AS	
I	19	3	**087-5775**	1	HOSE AS	
I	20	3	**087-5777**	1	HOSE AS	
I	21	1	**320-0153**	1	HOSE AS	
I	22	2	**087-6585**	1	HOSE AS	
I	23	3	**108-7375**	1	HOSE AS	
	24	1,2,3	**115-8645**	4	GUARD	
Y	25	2	**123-2430**	1	VALVE GP-SHUTTLE	845
I	26	3	**129-5959**	1	HOSE AS	
	27	2	**133-5813**	2	BAND-MARKER (GRAY, P)	
	28	4	*148-8443*	1	TEE AS	
		4	**3J-1907**	1	SEAL-O-RING	
		4	**6V-8397**	1	SEAL-O-RING	
		4	**7X-2459**	1	ADAPTER-TEE	
	29	4	*150-4027*	1	TEE AS	
		4	**3E-2310**	1	TEE	
		4	**3J-1907**	1	SEAL-O-RING	
		4	**6V-8397**	1	SEAL-O-RING	
	30	4	*164-5546*	1	TEE AS	
		4	**3E-7410**	1	TEE	
		4	**3J-1907**	1	SEAL-O-RING	
	31	3	*164-5628*	1	CONNECTOR AS	
		3	**3J-1907**	1	SEAL-O-RING	
		3	**6V-8397**	1	SEAL-O-RING	
		3	**107-6631**	1	CONNECTOR-FILTER	
	32	4	*164-6874*	1	FITTING AS-ELBOW (QUICK DISCONNECT, MALE)	
		4	**3J-1907**	1	SEAL-O-RING	
		4	**085-7356**	1	FITTING	
Y	33	1	*164-6981*	1	ACCUMULATOR GP-HYDRAULIC (CHARGED)	463

278-6674 **LINES GP-PILOT (**contd.**)** **i03653637**

NOTE	REF NO	GRAPHIC REF	PART NUMBER	QTY	PART NAME 1 2 3 4 5 6 (PRODUCT LEVEL)	SEE PAGE
	34	3	**176-4791**	1	BLOCK	
I	35	4	**184-9420**	1	HOSE AS	
I	36	4	**187-5741**	1	HOSE AS	
	37	1	**187-7028**	1	SUPPORT AS	
I	38	4	**192-6775**	1	HOSE AS	
I	39	2	**199-1914**	1	HOSE AS	
I	40	2	**207-6418**	1	HOSE AS	
Y	41	1	**215-5037**	1	MANIFOLD GP-CONTROL (PILOT OIL SUPPLY)	747
I	42	1	**218-1183**	1	HOSE AS	
Y	43	4	**232-4102**	1	VALVE GP-PRESSURE REDUCING (BOOM, SWING PRIORITY)	836
Y	44	4	**238-0751**	1	VALVE GP-SOLENOID & PRESS REDC	859
I	45	1	**257-3023**	1	HOSE AS	
	46	2	**275-1442**	2	CLIP (TAB)	
	47	2	**275-1443**	2	CLIP (SLOT)	
	48	2	**275-1444**	2	GROMMET	
	49	4	**285-2663**	1	FITTING AS (QUICK DISCONNECT, MALE)	
		4	**3J-1907**	1	SEAL-O-RING	
I	50	2	**286-6769**	1	HOSE AS	
I	51	4	**292-7183**	1	HOSE AS	
I	52	2	**292-7446**	1	HOSE AS	
	53	1	*296-7059*	2	FITTING AS	
					(EACH INCLUDES)	
		1	**3K-0360**	1	SEAL-O-RING	
		1	**178-5883**	1	FITTING	
I	54	3	**320-0007**	1	HOSE AS	
	55	4	**307-4837**	1	PLATE	
I	56	2	**307-4969**	1	HOSE AS	
	57	4	**309-5769**	1	SWITCH AS-PRESSURE (PILOT, BOOM LOWER)	
		4	**102-8802**	1	KIT-RECEPTACLE (2-PIN)	
					(INCLUDES RECEPTACLE AS & WEDGE)	
		4	**9X-3401**	2	PIN-CONNECTOR (16-GA TO 18-GA)	
					—OR—	
		4	**126-1767**	2	PIN-CONNECTOR (14-GA TO 16-GA)	
	58	2	**317-4749**	1	SUPPORT AS	
I	59	1	**320-0156**	1	HOSE AS	
I	60	3	**317-4846**	1	HOSE AS	
	61	1,2,3,4	*148-8336*	8	CONNECTOR AS	
					(EACH INCLUDES)	
		1,2,3,4	**3J-1907**	1	SEAL-O-RING	
		1,2,3,4	**6V-8397**	1	SEAL-O-RING	
		1,2,3,4	**6V-8636**	1	CONNECTOR	
	62	2	*148-8338*	2	CONNECTOR AS	
					(EACH INCLUDES)	
		2	**3J-1907**	1	SEAL-O-RING	
		2	**6V-8397**	1	SEAL-O-RING	
		2	**8T-0075**	1	CONNECTOR	
	63	1	*148-8340*	3	CONNECTOR AS	
					(EACH INCLUDES)	
		1	**3K-0360**	1	SEAL-O-RING	
		1	**6V-8398**	1	SEAL-O-RING	
		1	**6V-8639**	1	CONNECTOR	

278-6674 **LINES GP-PILOT (**contd.**)** **i03653637**

NOTE	REF NO	GRAPHIC REF	PART NUMBER	QTY	PART NAME 1 2 3 4 5 6 (PRODUCT LEVEL)	SEE PAGE
	64	2,3,4	*148-8353*	5	ELBOW AS	
					(EACH INCLUDES)	
		2,3,4	**3J-1907**	1	SEAL-O-RING	
		2,3,4	**6V-8397**	1	SEAL-O-RING	
		2,3,4	**6V-9001**	1	ELBOW	
	65	3	*148-8365*	1	ELBOW AS	
		3	**3J-1907**	1	SEAL-O-RING	
		3	**6V-8398**	1	SEAL-O-RING	
		3	**8T-6876**	1	ELBOW	
	66	2	*148-8367*	1	ELBOW AS	
		2	**6V-8397**	1	SEAL-O-RING	
		2	**6V-9850**	1	ELBOW	
	67	1	*148-8370*	1	ELBOW AS	
		1	**6V-8398**	1	SEAL-O-RING	
		1	**6V-9851**	1	ELBOW	
	68	1,3,4	*148-8378*	10	ELBOW AS	
					(EACH INCLUDES)	
		1,3,4	**3J-1907**	1	SEAL-O-RING	
		1,3,4	**6V-8397**	1	SEAL-O-RING	
		1,3,4	**6V-8724**	1	ELBOW	
	69	1,3,4	*148-8407*	10	PLUG AS	
					(EACH INCLUDES)	
		1,3,4	**3J-1907**	1	SEAL-O-RING	
		1,3,4	**9S-4191**	1	PLUG (9/16-18-THD)	
	70	1	*148-8411*	1	PLUG AS	
		1	**3K-0360**	1	SEAL-O-RING	
		1	**9S-4185**	1	PLUG (3/4-16-THD)	
	71	1	*148-8428*	1	TEE AS	
		1	**3K-0360**	1	SEAL-O-RING	
		1	**6V-8398**	2	SEAL-O-RING	
		1	**6V-8782**	1	TEE	
	72	3	*148-8433*	1	TEE AS	
		3	**6V-8397**	2	SEAL-O-RING	
		3	**6V-9836**	1	TEE-SWIVEL	
	73	3,4	*148-8435*	4	TEE AS	
					(EACH INCLUDES)	
		3,4	**3J-1907**	1	SEAL-O-RING	
		3,4	**6V-8397**	2	SEAL-O-RING	
		3,4	**6V-8781**	1	TEE	
	74	4	*150-3036*	4	ELBOW AS	
					(EACH INCLUDES)	
		4	**3J-1907**	1	SEAL-O-RING	
		4	**6V-8397**	1	SEAL-O-RING	
		4	**8T-1905**	1	ELBOW	
	75	4	*164-5567*	1	COUPLER AS-QUICK DISCONNECT (MALE)	
		4	**3J-1907**	1	SEAL-O-RING	
		4	**6V-3965**	1	FITTING (QUICK DISCONNECT)	
	76	1	*164-5608*	1	CONNECTOR AS	
		1	**3K-0360**	1	SEAL-O-RING	
		1	**6V-8398**	1	SEAL-O-RING	
		1	**8T-1687**	1	CONNECTOR	

278-6674 **LINES GP-PILOT (**contd.**)** **i03653637**

NOTE	REF NO	GRAPHIC REF	PART NUMBER	QTY	PART NAME 1 2 3 4 5 6 (PRODUCT LEVEL)	SEE PAGE
	77	2	**5P-7462**	1	CLIP (SLOT)	
	78	2	**5P-7463**	1	CLIP (TAB)	
	79	2	**6V-0683**	1	GROMMET	
	80	4	**6V-0852**	1	CAP-DUST	
	81	2	**6V-8397**	2	SEAL-O-RING	
M	82	2	**7X-0818**	2	BOLT (M8X1.25X45-MM)	
	83	2,4	**8T-4121**	7	WASHER-HARD (11X21X2.5-MM THK)	
M	84	2	**8T-4136**	1	BOLT (M10X1.5X25-MM)	
M	85	2,4	**8T-4137**	6	BOLT (M10X1.5X20-MM)	
M	86	1	**8T-4139**	3	BOLT (M12X1.75X30-MM)	
M	87	1	**8T-4192**	2	BOLT (M12X1.75X25-MM)	
M	88	4	**8T-4200**	2	BOLT (M8X1.25X16-MM)	
	89	1	**8T-4223**	5	WASHER-HARD (13.5X25.5X3-MM THK)	
	90	4	**8T-4224**	2	WASHER-HARD (8.8X16X2-MM THK)	
M	91	4	**8T-5005**	2	BOLT (M10X1.5X70-MM)	
M	92	3	**8T-6869**	2	BOLT (M8X1.25X60-MM)	
	93	4	*164-5629*	1	FITTING AS	
		4	**3J-1907**	1	SEAL-O-RING	
		4	**108-7516**	1	FITTING	

I - REFER TO HYDRAULIC INFORMATION SYSTEM
M - METRIC PART
Y - SEPARATE ILLUSTRATION

278-6674 **LINES GP-PILOT (**contd.**)** **i03653637**

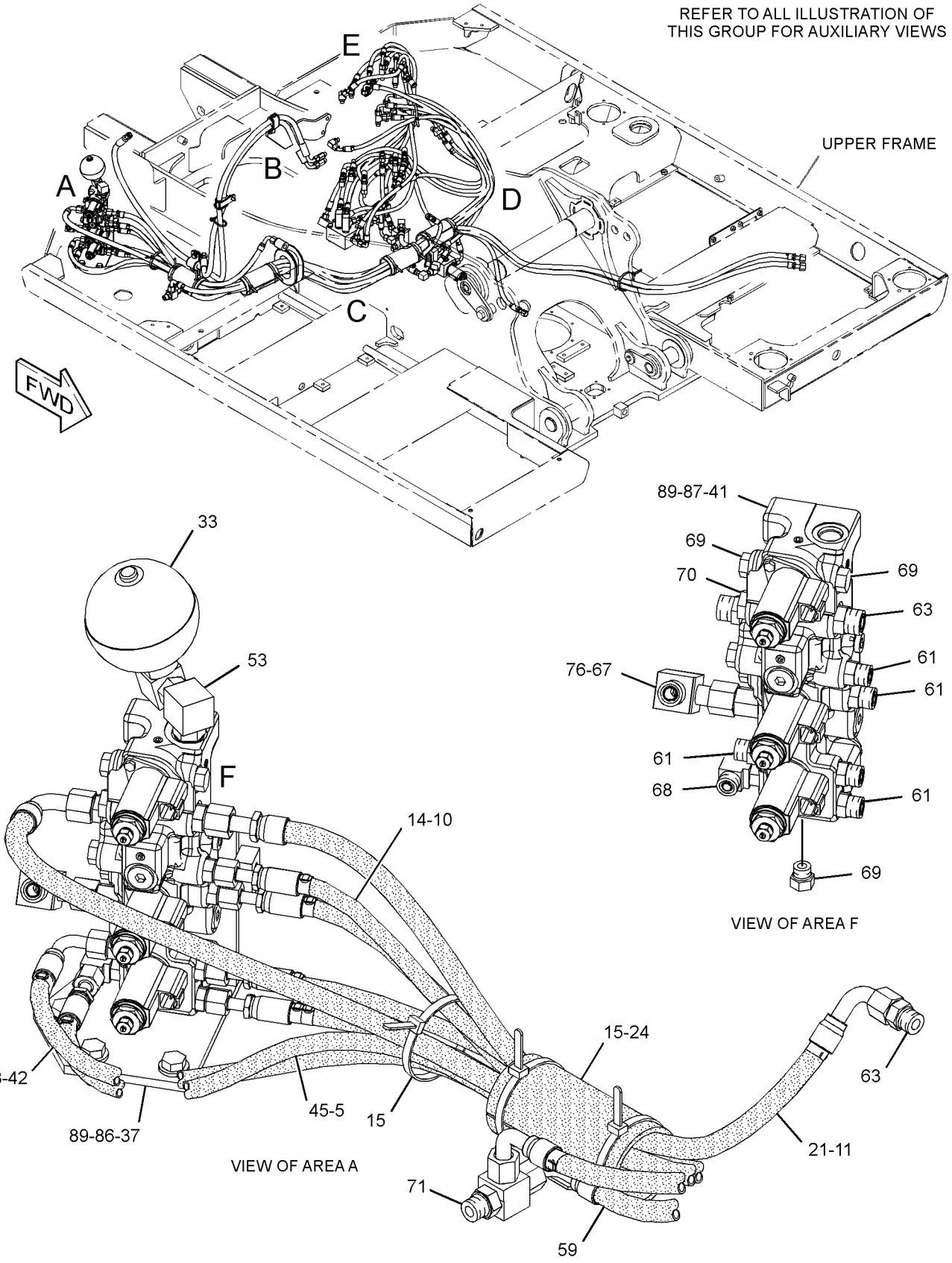

GRAPHIC #1 g01971437

278-6674 **LINES GP-PILOT (**contd.**)** **i03653637**

REFER TO ALL ILLUSTRATION OF
THIS GROUP FOR AUXILIARY VIEWS

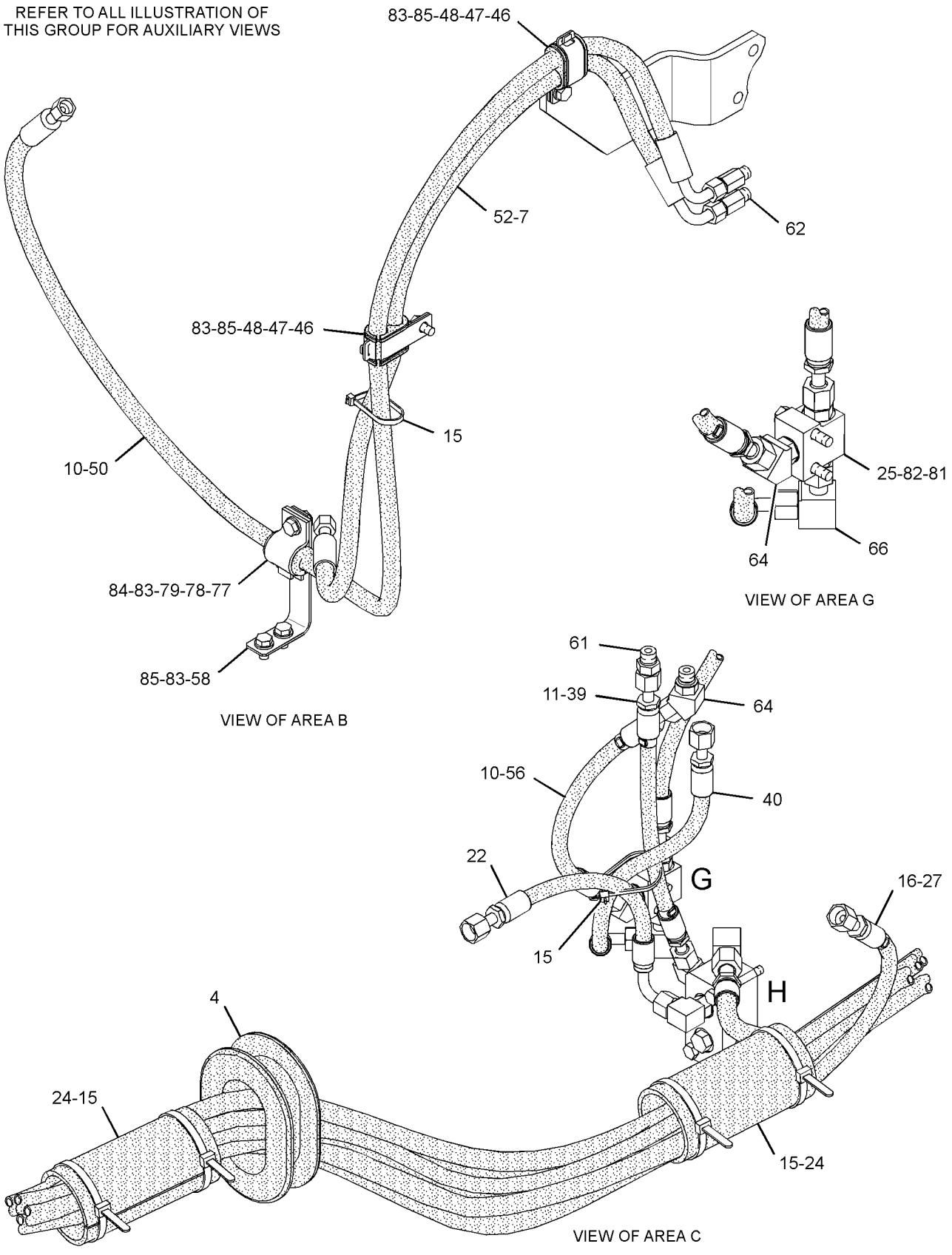

GRAPHIC #2

g01971438

278-6674 **LINES GP-PILOT (**contd.**)** **i03653637**

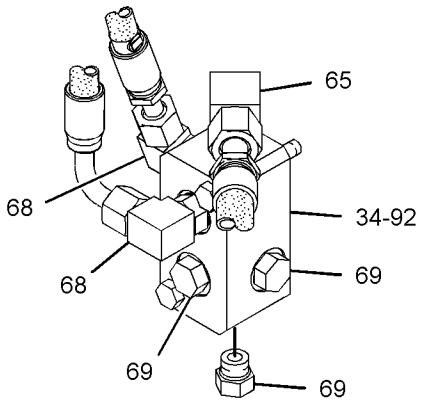

VIEW OF AREA H

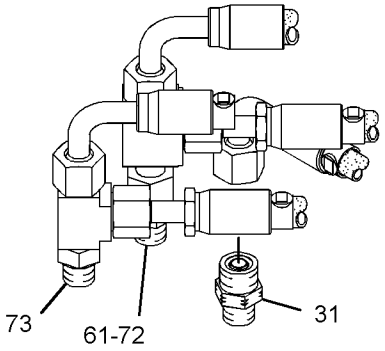

VIEW OF AREA J

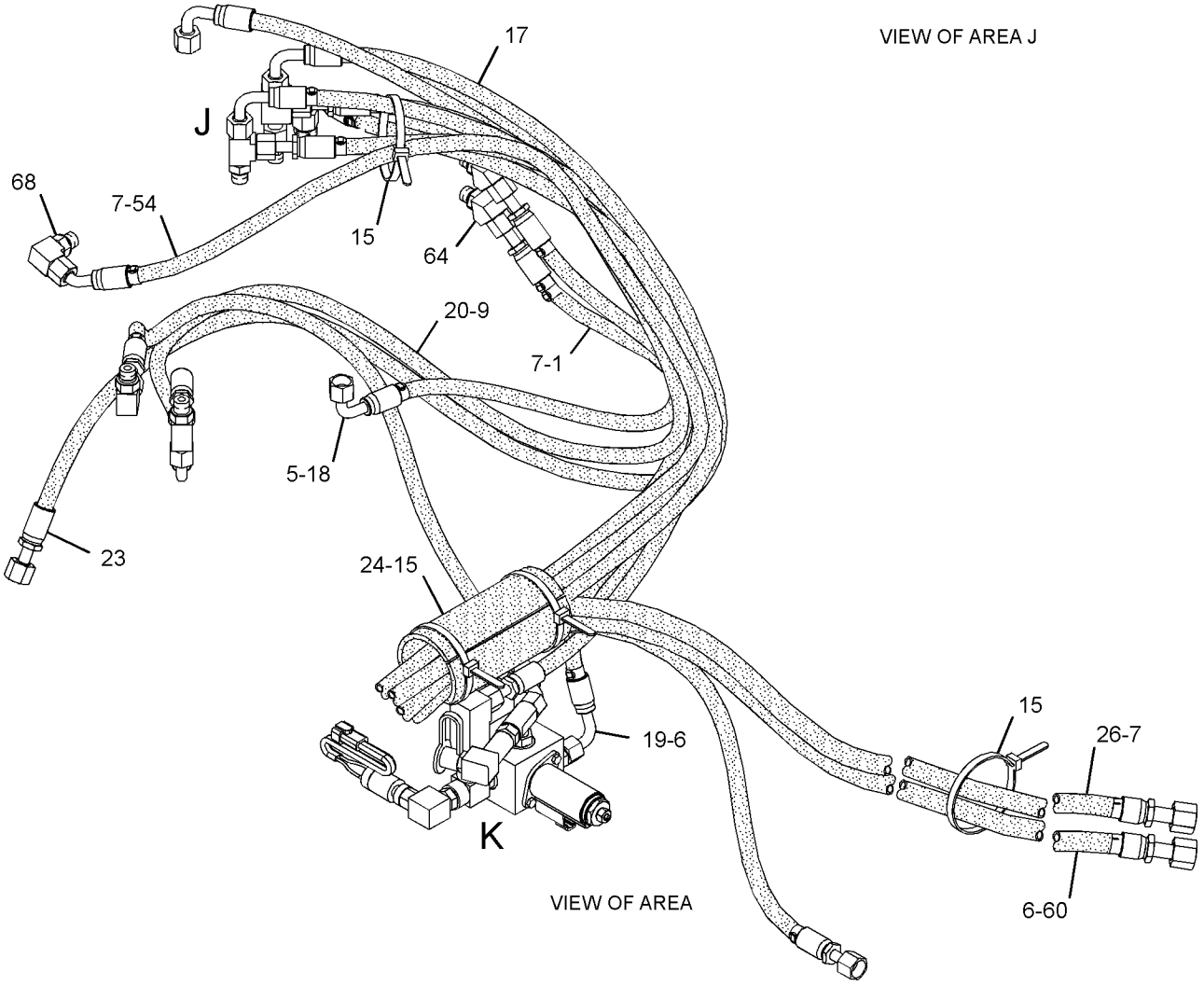

VIEW OF AREA

GRAPHIC #3 g01971439

278-6674 **LINES GP-PILOT (**contd.**)** **i03653637**

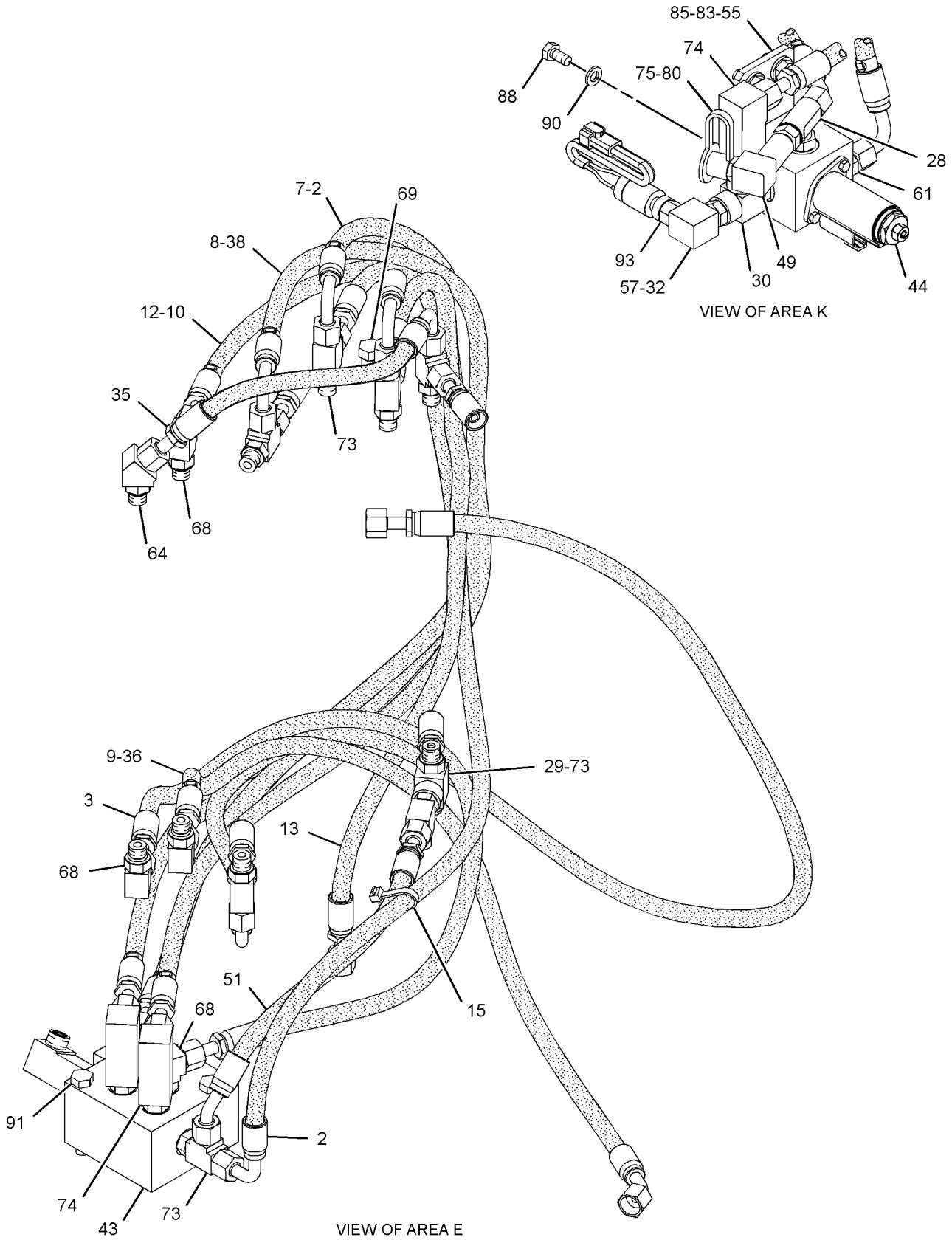

GRAPHIC #4 <END> g01971435

278-6674 LINES GP-PILOT—MAIN CONTROL VALVE, MANIFOLD

S/N: DLP1-UP
PART OF 270-5864 HYDRAULIC AR
TYPE 2

SMCS-5057, 5059 **i03757893**

NOTE	REF NO	GRAPHIC REF	PART NUMBER	QTY	PART NAME 1 2 3 4 5 6 (PRODUCT LEVEL)	SEE PAGE
I	1	3	**4I-3994**	1	HOSE AS	
I	2	4	**4I-5795**	2	HOSE AS	
I	3	4	**4I-5900**	1	HOSE AS	
	4	2	**4I-6039**	1	GROMMET	
	5	1,3	**4I-9521**	4	BAND-MARKER (RED, L1)	
	6	3	**4I-9522**	4	BAND-MARKER (YELLOW, L2)	
	7	2,3,4	**4I-9523**	12	BAND-MARKER (BLUE, L3)	
	8	1,4	**4I-9524**	4	BAND-MARKER (BROWN, L4)	
	9	3,4	**4I-9525**	4	BAND-MARKER (ORANGE, R1)	
	10	1,2,4	**4I-9527**	8	BAND-MARKER (GREEN, R3)	
	11	1,2	**4I-9528**	4	BAND-MARKER (PURPLE, R4)	
I	12	4	**5I-4076**	1	HOSE AS	
I	13	4	**5I-8708**	1	HOSE AS	
I	14	1	**5I-8853**	1	HOSE AS	
	15	1,2,3,4	**7K-1181**	14	STRAP-CABLE	
I	16	2	**329-2730**	1	HOSE AS	
I	17	3	**7Y-5088**	1	HOSE AS	
I	18	3	**087-5767**	1	HOSE AS	
I	19	3	**087-5775**	1	HOSE AS	
I	20	3	**087-5777**	1	HOSE AS	
I	21	1	**320-0153**	1	HOSE AS	
I	22	2	**087-6585**	1	HOSE AS	
I	23	3	**108-7375**	1	HOSE AS	
	24	1,2,3	**115-8645**	4	GUARD	
Y	25	2	**123-2430**	1	VALVE GP-SHUTTLE	845
I	26	3	**129-5959**	1	HOSE AS	
	27	2	**133-5813**	2	BAND-MARKER (GRAY, P)	
	28	4	*148-8443*	1	TEE AS	
		4	**3J-1907**	1	SEAL-O-RING	
		4	**6V-8397**	1	SEAL-O-RING	
		4	**7X-2459**	1	ADAPTER-TEE	
	29	4	*150-4027*	1	TEE AS	
		4	**3E-2310**	1	TEE	
		4	**3J-1907**	1	SEAL-O-RING	
		4	**6V-8397**	1	SEAL-O-RING	
	30	4	*164-5546*	1	TEE AS	
		4	**3E-7410**	1	TEE	
		4	**3J-1907**	1	SEAL-O-RING	
	31	3	*164-5628*	1	CONNECTOR AS	
		3	**3J-1907**	1	SEAL-O-RING	
		3	**6V-8397**	1	SEAL-O-RING	
		3	**107-6631**	1	CONNECTOR-FILTER	
	32	4	*164-6874*	1	FITTING AS-ELBOW (QUICK DISCONNECT, MALE)	
		4	**3J-1907**	1	SEAL-O-RING	
		4	**085-7356**	1	FITTING	
Y	33	1	*164-6981*	1	ACCUMULATOR GP-HYDRAULIC (CHARGED)	463

278-6674 **LINES GP-PILOT (**contd.**)** **i03757893**

NOTE	REF NO	GRAPHIC REF	PART NUMBER	QTY	PART NAME 1 2 3 4 5 6 (PRODUCT LEVEL)	SEE PAGE
	34	3	**176-4791**	1	BLOCK	
I	35	4	**184-9420**	1	HOSE AS	
I	36	4	**187-5741**	1	HOSE AS	
	37	1	**187-7028**	1	SUPPORT AS	
I	38	4	**192-6775**	1	HOSE AS	
I	39	2	**199-1914**	1	HOSE AS	
I	40	2	**207-6418**	1	HOSE AS	
Y	41	1	**215-5037**	1	MANIFOLD GP-CONTROL (PILOT OIL SUPPLY)	747
I	42	1	**218-1183**	1	HOSE AS	
CY	43	4	**310-0210**	1	VALVE GP-PRESSURE REDUCING (BOOM, SWING PRIORITY)	837
Y	44	4	**238-0751**	1	VALVE GP-SOLENOID & PRESS REDC	859
I	45	1	**257-3023**	1	HOSE AS	
	46	2	**275-1442**	2	CLIP (TAB)	
	47	2	**275-1443**	2	CLIP (SLOT)	
	48	2	**275-1444**	2	GROMMET	
	49	4	**285-2663**	1	FITTING AS (QUICK DISCONNECT, MALE)	
		4	**3J-1907**	1	SEAL-O-RING	
I	50	2	**286-6769**	1	HOSE AS	
I	51	4	**292-7183**	1	HOSE AS	
I	52	2	**292-7446**	1	HOSE AS	
	53	1	*296-7059*	2	FITTING AS	
					(EACH INCLUDES)	
		1	**3K-0360**	1	SEAL-O-RING	
		1	**178-5883**	1	FITTING	
I	54	3	**320-0007**	1	HOSE AS	
	55	4	**307-4837**	1	PLATE	
I	56	2	**307-4969**	1	HOSE AS	
	57	4	**309-5769**	1	SWITCH AS-PRESSURE (PILOT, BOOM LOWER)	
		4	**102-8802**	1	KIT-RECEPTACLE (2-PIN)	
					(INCLUDES RECEPTACLE AS & WEDGE)	
		4	**9X-3401**	2	PIN-CONNECTOR (16-GA TO 18-GA)	
					—OR—	
		4	**126-1767**	2	PIN-CONNECTOR (14-GA TO 16-GA)	
	58	2	**317-4749**	1	SUPPORT AS	
I	59	1	**320-0156**	1	HOSE AS	
I	60	3	**317-4846**	1	HOSE AS	
	61	1,2,3,4	*148-8336*	8	CONNECTOR AS	
					(EACH INCLUDES)	
		1,2,3,4	**3J-1907**	1	SEAL-O-RING	
		1,2,3,4	**6V-8397**	1	SEAL-O-RING	
		1,2,3,4	**6V-8636**	1	CONNECTOR	
	62	2	*148-8338*	2	CONNECTOR AS	
					(EACH INCLUDES)	
		2	**3J-1907**	1	SEAL-O-RING	
		2	**6V-8397**	1	SEAL-O-RING	
		2	**8T-0075**	1	CONNECTOR	
	63	1	*148-8340*	3	CONNECTOR AS	
					(EACH INCLUDES)	
		1	**3K-0360**	1	SEAL-O-RING	
		1	**6V-8398**	1	SEAL-O-RING	
		1	**6V-8639**	1	CONNECTOR	

278-6674 **LINES GP-PILOT (**contd.**)** **i03757893**

NOTE	REF NO	GRAPHIC REF	PART NUMBER	QTY	PART NAME 1 2 3 4 5 6 (PRODUCT LEVEL)	SEE PAGE
	64	2,3,4	*148-8353*	5	ELBOW AS	
					(EACH INCLUDES)	
		2,3,4	**3J-1907**	1	SEAL-O-RING	
		2,3,4	**6V-8397**	1	SEAL-O-RING	
		2,3,4	**6V-9001**	1	ELBOW	
	65	3	*148-8365*	1	ELBOW AS	
		3	**3J-1907**	1	SEAL-O-RING	
		3	**6V-8398**	1	SEAL-O-RING	
		3	**8T-6876**	1	ELBOW	
	66	2	*148-8367*	1	ELBOW AS	
		2	**6V-8397**	1	SEAL-O-RING	
		2	**6V-9850**	1	ELBOW	
	67	1	*148-8370*	1	ELBOW AS	
		1	**6V-8398**	1	SEAL-O-RING	
		1	**6V-9851**	1	ELBOW	
	68	1,3,4	*148-8378*	10	ELBOW AS	
					(EACH INCLUDES)	
		1,3,4	**3J-1907**	1	SEAL-O-RING	
		1,3,4	**6V-8397**	1	SEAL-O-RING	
		1,3,4	**6V-8724**	1	ELBOW	
	69	1,3,4	*148-8407*	10	PLUG AS	
					(EACH INCLUDES)	
		1,3,4	**3J-1907**	1	SEAL-O-RING	
		1,3,4	**9S-4191**	1	PLUG (9/16-18-THD)	
	70	1	*148-8411*	1	PLUG AS	
		1	**3K-0360**	1	SEAL-O-RING	
		1	**9S-4185**	1	PLUG (3/4-16-THD)	
	71	1	*148-8428*	1	TEE AS	
		1	**3K-0360**	1	SEAL-O-RING	
		1	**6V-8398**	2	SEAL-O-RING	
		1	**6V-8782**	1	TEE	
	72	3	*148-8433*	1	TEE AS	
		3	**6V-8397**	2	SEAL-O-RING	
		3	**6V-9836**	1	TEE-SWIVEL	
	73	3,4	*148-8435*	4	TEE AS	
					(EACH INCLUDES)	
		3,4	**3J-1907**	1	SEAL-O-RING	
		3,4	**6V-8397**	2	SEAL-O-RING	
		3,4	**6V-8781**	1	TEE	
	74	4	*150-3036*	4	ELBOW AS	
					(EACH INCLUDES)	
		4	**3J-1907**	1	SEAL-O-RING	
		4	**6V-8397**	1	SEAL-O-RING	
		4	**8T-1905**	1	ELBOW	
	75	4	*164-5567*	1	COUPLER AS-QUICK DISCONNECT (MALE)	
		4	**3J-1907**	1	SEAL-O-RING	
		4	**6V-3965**	1	FITTING (QUICK DISCONNECT)	
	76	1	*164-5608*	1	CONNECTOR AS	
		1	**3K-0360**	1	SEAL-O-RING	
		1	**6V-8398**	1	SEAL-O-RING	
		1	**8T-1687**	1	CONNECTOR	

278-6674 **LINES GP-PILOT (**contd.**)** **i03757893**

NOTE	REF NO	GRAPHIC REF	PART NUMBER	QTY	PART NAME 1 2 3 4 5 6 (PRODUCT LEVEL)	SEE PAGE
	77	2	**5P-7462**	1	CLIP (SLOT)	
	78	2	**5P-7463**	1	CLIP (TAB)	
	79	2	**6V-0683**	1	GROMMET	
	80	4	**6V-0852**	1	CAP-DUST	
	81	2	**6V-8397**	2	SEAL-O-RING	
M	82	2	**7X-0818**	2	BOLT (M8X1.25X45-MM)	
	83	2,4	**8T-4121**	7	WASHER-HARD (11X21X2.5-MM THK)	
M	84	2	**8T-4136**	1	BOLT (M10X1.5X25-MM)	
M	85	2,4	**8T-4137**	6	BOLT (M10X1.5X20-MM)	
M	86	1	**8T-4139**	3	BOLT (M12X1.75X30-MM)	
M	87	1	**8T-4192**	2	BOLT (M12X1.75X25-MM)	
M	88	4	**8T-4200**	2	BOLT (M8X1.25X16-MM)	
	89	1	**8T-4223**	5	WASHER-HARD (13.5X25.5X3-MM THK)	
	90	4	**8T-4224**	2	WASHER-HARD (8.8X16X2-MM THK)	
M	91	4	**8T-5005**	2	BOLT (M10X1.5X70-MM)	
M	92	3	**8T-6869**	2	BOLT (M8X1.25X60-MM)	
	93	4	*164-5629*	1	FITTING AS	
		4	**3J-1907**	1	SEAL-O-RING	
		4	**108-7516**	1	FITTING	

C - CHANGE FROM PREVIOUS TYPE
I - REFER TO HYDRAULIC INFORMATION SYSTEM
M - METRIC PART
Y - SEPARATE ILLUSTRATION

278-6674 **LINES GP-PILOT (**contd.**)** **i03757893**

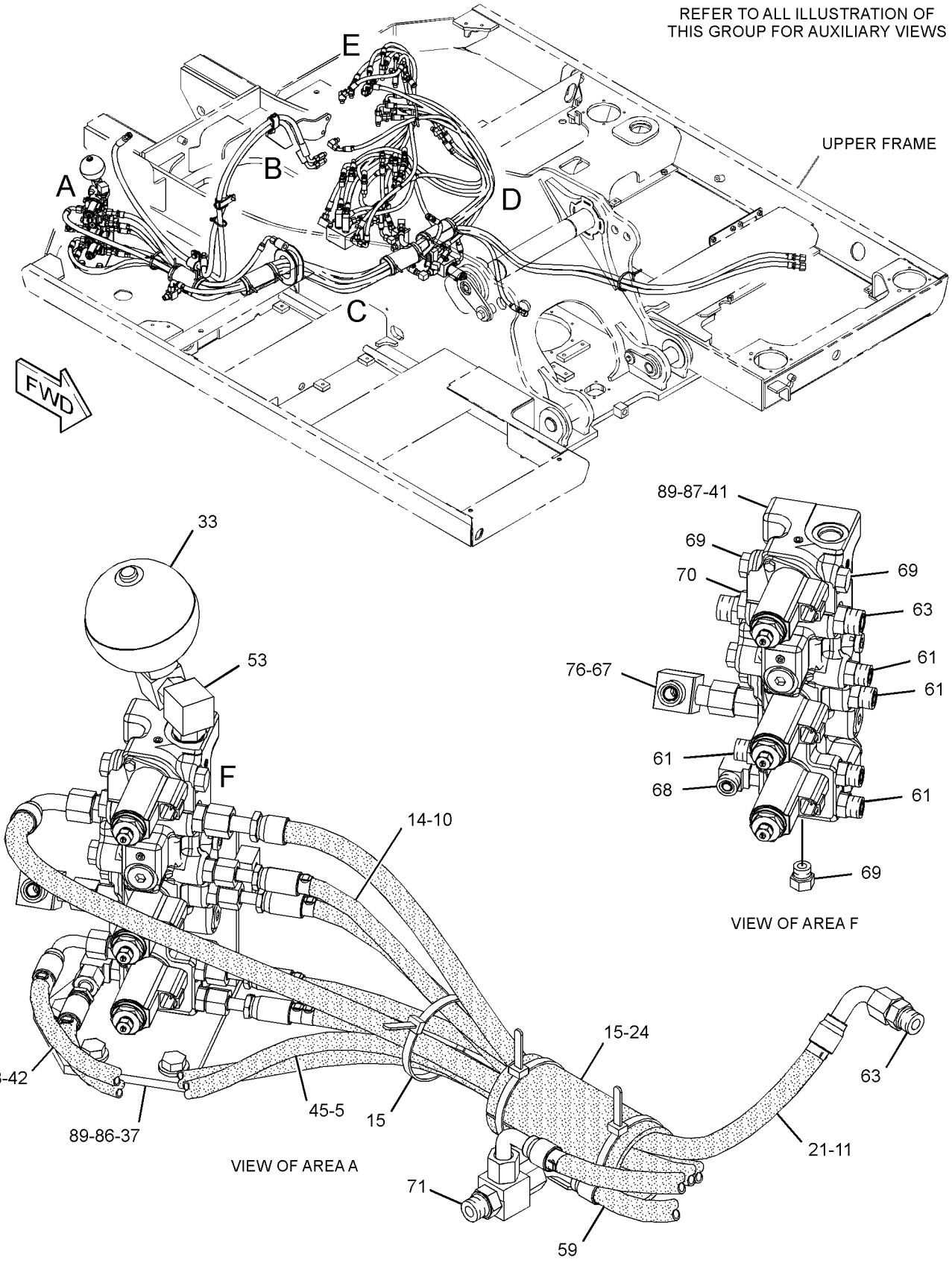

GRAPHIC #1 g01971437

278-6674 **LINES GP-PILOT (**contd.**)** **i03757893**

REFER TO ALL ILLUSTRATION OF
THIS GROUP FOR AUXILIARY VIEWS

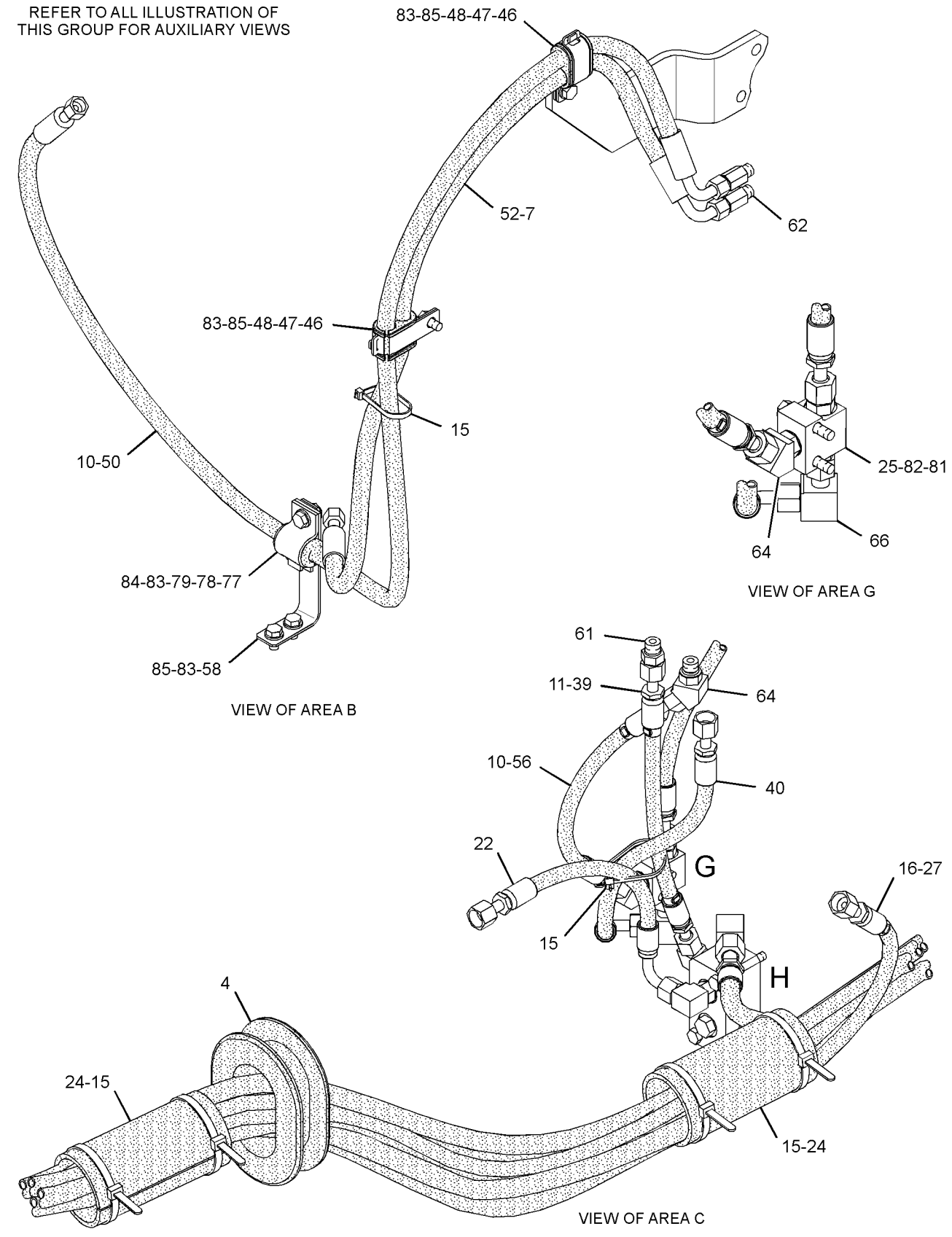

GRAPHIC #2

g01971438

278-6674 **LINES GP-PILOT (**contd.**)** **i03757893**

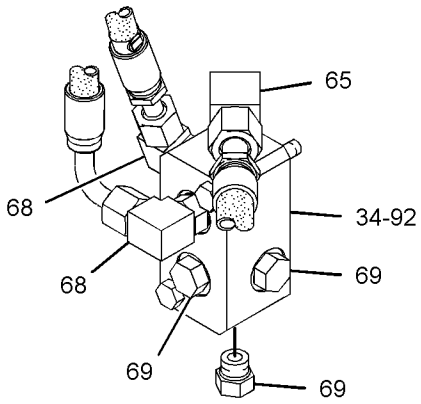

VIEW OF AREA H

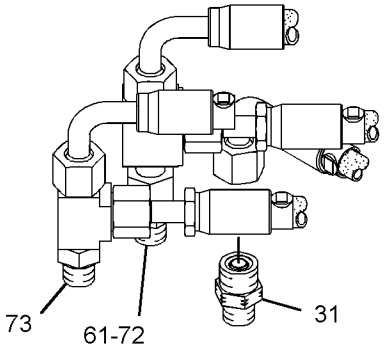

VIEW OF AREA J

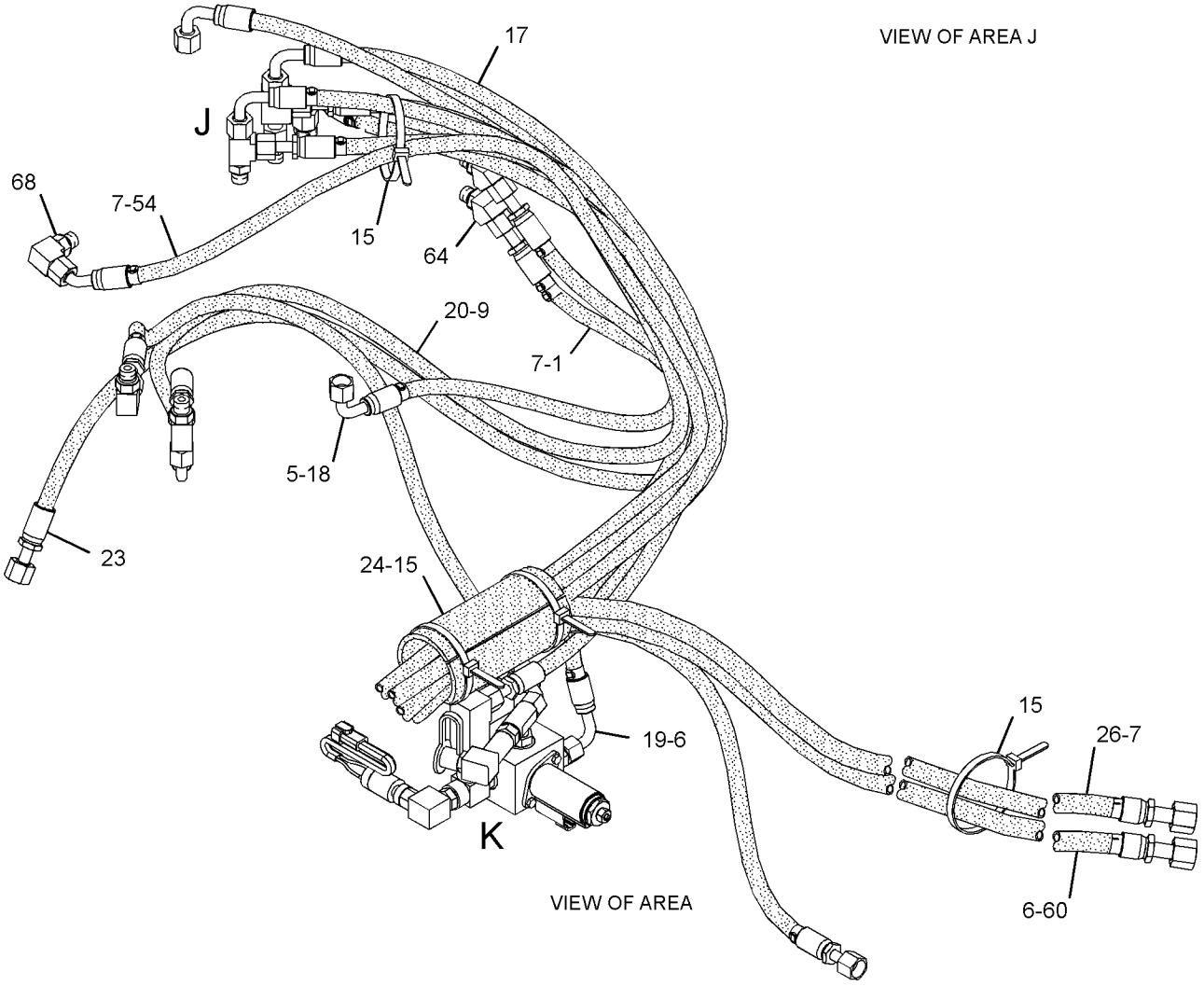

VIEW OF AREA

GRAPHIC #3 g01971439

278-6674 **LINES GP-PILOT (**contd.**)** **i03757893**

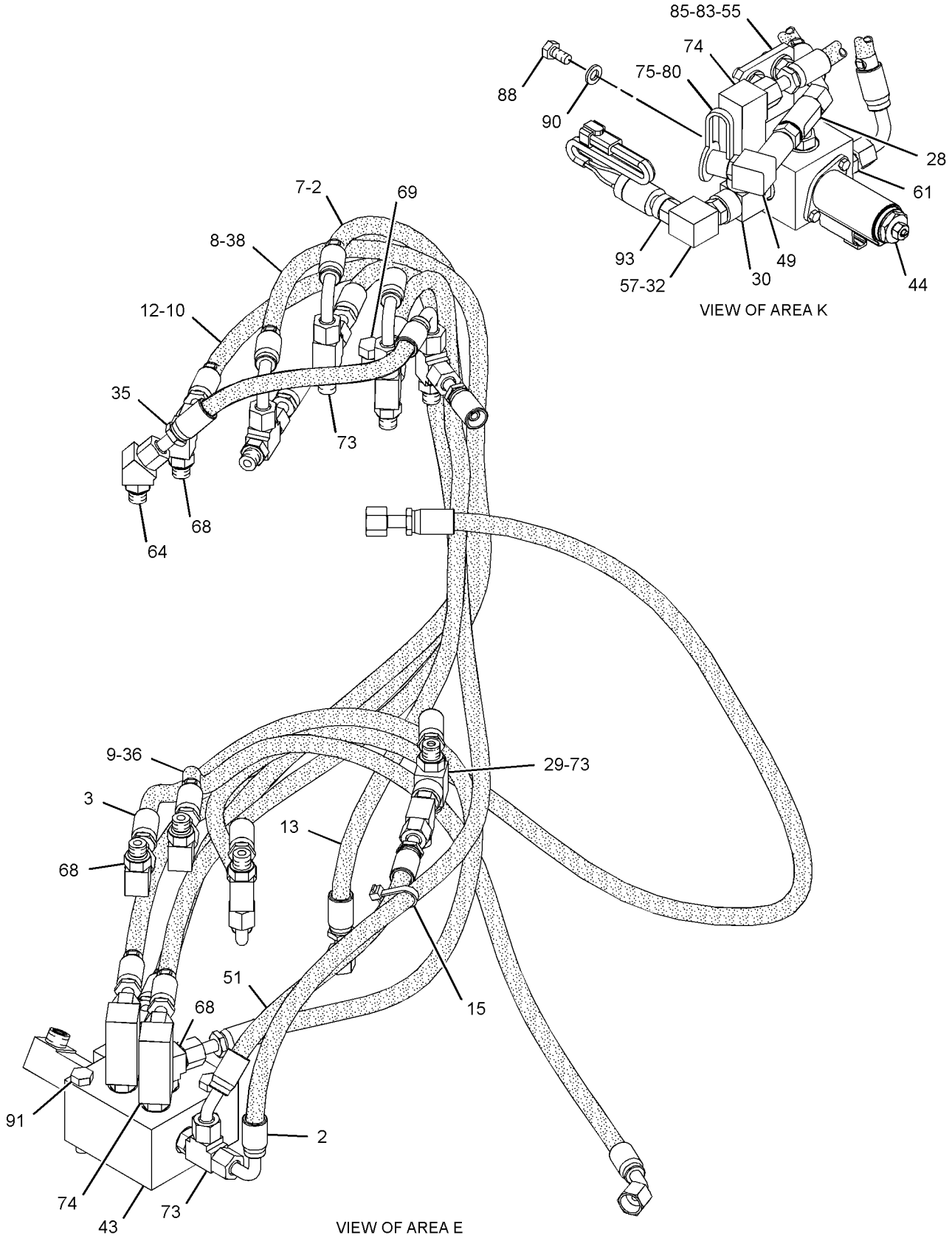

GRAPHIC #4 <END> g01971435

278-6674 LINES GP-PILOT—MAIN CONTROL VALVE, MANIFOLD

S/N: DLP1-UP
PART OF 270-5864 HYDRAULIC AR
TYPE 3

SMCS-5057, 5059 **i05339231**

NOTE	REF NO	GRAPHIC REF	PART NUMBER	QTY	PART NAME 1 2 3 4 5 6 (PRODUCT LEVEL)	SEE PAGE
I	1	3	**4I-3994**	1	HOSE AS	
I	2	4	**4I-5795**	2	HOSE AS	
I	3	4	**4I-5900**	1	HOSE AS	
	4	2	**4I-6039**	1	GROMMET	
	5	1,3	**4I-9521**	4	BAND-MARKER (RED, L1)	
	6	3	**4I-9522**	4	BAND-MARKER (YELLOW, L2)	
	7	2,3,4	**4I-9523**	12	BAND-MARKER (BLUE, L3)	
	8	1,4	**4I-9524**	4	BAND-MARKER (BROWN, L4)	
	9	3,4	**4I-9525**	4	BAND-MARKER (ORANGE, R1)	
	10	1,2,4	**4I-9527**	8	BAND-MARKER (GREEN, R3)	
	11	1,2	**4I-9528**	4	BAND-MARKER (PURPLE, R4)	
I	12	4	**5I-4076**	1	HOSE AS	
I	13	4	**5I-8708**	1	HOSE AS	
I	14	1	**5I-8853**	1	HOSE AS	
	15	1,2,3,4	**7K-1181**	14	STRAP-CABLE	
I	16	2	**329-2730**	1	HOSE AS	
I	17	3	**7Y-5088**	1	HOSE AS	
I	18	3	**087-5767**	1	HOSE AS	
I	19	3	**087-5775**	1	HOSE AS	
I	20	3	**087-5777**	1	HOSE AS	
I	21	1	**320-0153**	1	HOSE AS	
I	22	2	**4I-1671**	1	HOSE AS	
I	23	3	**108-7375**	1	HOSE AS	
	24	1,2,3	**115-8645**	4	GUARD	
CY	25	2	**164-6979**	1	VALVE GP-SHUTTLE	846
I	26	3	**129-5959**	1	HOSE AS	
	27	2	**133-5813**	2	BAND-MARKER (GRAY, P)	
	28	4	*148-8443*	1	TEE AS	
		4	**3J-1907**	1	SEAL-O-RING	
		4	**6V-8397**	1	SEAL-O-RING	
		4	**7X-2459**	1	ADAPTER-TEE	
	29	4	*150-4027*	1	TEE AS	
		4	**3E-2310**	1	TEE	
		4	**3J-1907**	1	SEAL-O-RING	
		4	**6V-8397**	1	SEAL-O-RING	
	30	4	*164-5546*	1	TEE AS	
		4	**3E-7410**	1	TEE	
		4	**3J-1907**	1	SEAL-O-RING	
	31	3	*164-5628*	1	CONNECTOR AS	
		3	**3J-1907**	1	SEAL-O-RING	
		3	**6V-8397**	1	SEAL-O-RING	
		3	**107-6631**	1	CONNECTOR-FILTER	
	32	4	*164-6874*	1	FITTING AS-ELBOW (QUICK DISCONNECT, MALE)	
		4	**3J-1907**	1	SEAL-O-RING	
		4	**085-7356**	1	FITTING	
Y	33	1	*164-6981*	1	ACCUMULATOR GP-HYDRAULIC (CHARGED)	463

278-6674 **LINES GP-PILOT (**contd.**)** **i05339231**

NOTE	REF NO	GRAPHIC REF	PART NUMBER	QTY	PART NAME 1 2 3 4 5 6 (PRODUCT LEVEL)	SEE PAGE
	34	3	**176-4791**	1	BLOCK	
I	35	4	**184-9420**	1	HOSE AS	
I	36	4	**187-5741**	1	HOSE AS	
	37	1	**187-7028**	1	SUPPORT AS	
I	38	4	**192-6775**	1	HOSE AS	
I	39	2	**199-1914**	1	HOSE AS	
I	40	2	**207-6418**	1	HOSE AS	
Y	41	1	**215-5037**	1	MANIFOLD GP-CONTROL (PILOT OIL SUPPLY)	747
I	42	1	**218-1183**	1	HOSE AS	
CY	43	4	**310-0210**	1	VALVE GP-PRESSURE REDUCING (BOOM, SWING PRIORITY)	837
Y	44	4	**238-0751**	1	VALVE GP-SOLENOID & PRESS REDC	859
I	45	1	**257-3023**	1	HOSE AS	
	46	2	**418-6282**	2	CLAMP GP-HYDRAULIC LINES	
					(EACH INCLUDES)	
		2	**275-1442**	1	CLIP (TAB)	
		2	**275-1443**	1	CLIP (SLOT)	
J		2	**275-1444**	1	GROMMET	
					—OR—	
		2	**275-1442**	1	CLIP (TAB)	
		2	**275-1443**	1	CLIP (SLOT)	
J		2	**333-4609**	1	GROMMET	
	49	4	*285-2663*	1	FITTING AS (QUICK DISCONNECT, MALE)	
		4	**3J-1907**	1	SEAL-O-RING	
		4	**285-2664**	1	FITTING	
I	50	2	**286-6769**	1	HOSE AS	
I	51	4	**292-7183**	1	HOSE AS	
I	52	2	**292-7446**	1	HOSE AS	
	53	1	*296-7059*	2	FITTING AS	
					(EACH INCLUDES)	
		1	**3K-0360**	1	SEAL-O-RING	
		1	**178-5883**	1	FITTING	
I	54	3	**320-0007**	1	HOSE AS	
	55	4	**307-4837**	1	PLATE	
I	56	2	**307-4969**	1	HOSE AS	
	57	4	**309-5769**	1	SWITCH AS-PRESSURE (PILOT, BOOM LOWER)	
		4	**102-8802**	1	KIT-RECEPTACLE (2-PIN)	
		4	**151-9272**	1	KIT-RECEPTACLE (2-PIN)	
					(EACH RECEPTACLE KIT INCLUDES RECEPTACLE AS & WEDGE)	
		4	**9X-3401**	2	PIN-CONNECTOR (16-GA TO 18-GA)	
					—OR—	
		4	**126-1767**	2	PIN-CONNECTOR (14-GA TO 16-GA)	
	58	2	**317-4749**	1	SUPPORT AS	
I	59	1	**320-0156**	1	HOSE AS	
I	60	3	**317-4846**	1	HOSE AS	
	61	1,2,3,4	*148-8336*	8	CONNECTOR AS	
					(EACH INCLUDES)	
		1,2,3,4	**3J-1907**	1	SEAL-O-RING	
		1,2,3,4	**6V-8397**	1	SEAL-O-RING	
		1,2,3,4	**6V-8636**	1	CONNECTOR	
	62	2	*148-8338*	2	CONNECTOR AS	
					(EACH INCLUDES)	

278-6674 **LINES GP-PILOT (**contd.**)** **i05339231**

NOTE	REF NO	GRAPHIC REF	PART NUMBER	QTY	PART NAME 1 2 3 4 5 6 (PRODUCT LEVEL)	SEE PAGE
		2	**3J-1907**	1	SEAL-O-RING	
		2	**6V-8397**	1	SEAL-O-RING	
		2	**8T-0075**	1	CONNECTOR	
	63	1	*148-8340*	3	CONNECTOR AS	
					(EACH INCLUDES)	
		1	**3K-0360**	1	SEAL-O-RING	
		1	**6V-8398**	1	SEAL-O-RING	
		1	**6V-8639**	1	CONNECTOR	
	64	2,3,4	*148-8353*	5	ELBOW AS	
					(EACH INCLUDES)	
		2,3,4	**3J-1907**	1	SEAL-O-RING	
		2,3,4	**6V-8397**	1	SEAL-O-RING	
		2,3,4	**6V-9001**	1	ELBOW	
	65	3	*148-8365*	1	ELBOW AS	
		3	**3J-1907**	1	SEAL-O-RING	
		3	**6V-8398**	1	SEAL-O-RING	
		3	**8T-6876**	1	ELBOW	
	66	2	*148-8367*	1	ELBOW AS	
		2	**6V-8397**	1	SEAL-O-RING	
		2	**6V-9850**	1	ELBOW	
	67	1	*148-8370*	1	ELBOW AS	
		1	**6V-8398**	1	SEAL-O-RING	
		1	**6V-9851**	1	ELBOW	
	68	1,3,4	*148-8378*	10	ELBOW AS	
					(EACH INCLUDES)	
		1,3,4	**3J-1907**	1	SEAL-O-RING	
		1,3,4	**6V-8397**	1	SEAL-O-RING	
		1,3,4	**6V-8724**	1	ELBOW	
	69	1,3,4	*148-8407*	10	PLUG AS	
					(EACH INCLUDES)	
		1,3,4	**3J-1907**	1	SEAL-O-RING	
		1,3,4	**9S-4191**	1	PLUG (9/16-18-THD)	
	70	1	*148-8411*	1	PLUG AS	
		1	**3K-0360**	1	SEAL-O-RING	
		1	**9S-4185**	1	PLUG (3/4-16-THD)	
	71	1	*148-8428*	1	TEE AS	
		1	**3K-0360**	1	SEAL-O-RING	
		1	**6V-8398**	2	SEAL-O-RING	
		1	**6V-8782**	1	TEE	
	72	3	*148-8433*	1	TEE AS	
		3	**6V-8397**	2	SEAL-O-RING	
		3	**6V-9836**	1	TEE-SWIVEL	
	73	3,4	*148-8435*	4	TEE AS	
					(EACH INCLUDES)	
		3,4	**3J-1907**	1	SEAL-O-RING	
		3,4	**6V-8397**	2	SEAL-O-RING	
		3,4	**6V-8781**	1	TEE	
	74	4	*150-3036*	4	ELBOW AS	
					(EACH INCLUDES)	
		4	**3J-1907**	1	SEAL-O-RING	
		4	**6V-8397**	1	SEAL-O-RING	
		4	**8T-1905**	1	ELBOW	

278-6674 **LINES GP-PILOT (**contd.**)** **i05339231**

NOTE	REF NO	GRAPHIC REF	PART NUMBER	QTY	PART NAME 1 2 3 4 5 6 (PRODUCT LEVEL)	SEE PAGE
	75	4	*164-5567*	1	COUPLER AS-QUICK DISCONNECT (MALE)	
		4	**214-7568**	1	SEAL-O-RING	
		4	**6V-3965**	1	FITTING (QUICK DISCONNECT)	
	76	1	*363-6137*	1	CONNECTOR AS	
		1	**3K-0360**	1	SEAL-O-RING	
		1	**6V-8398**	1	SEAL-O-RING	
		1	**363-6119**	1	ADAPTER-FILTER	
	77	2	**418-6286**	1	CLAMP GP-HYDRAULIC LINES	
		2	**5P-7462**	1	CLIP (SLOT)	
		2	**5P-7463**	1	CLIP (TAB)	
J		2	**6V-0683**	1	GROMMET	
					—OR—	
		2	**5P-7464**	1	CLIP (SLOT)	
		2	**5P-7465**	1	CLIP (TAB)	
J		2	**6V-1249**	1	GROMMET (22-MM ID)	
	80	4	**6V-0852**	1	CAP-DUST	
M	82	2	**7X-0818**	2	BOLT (M8X1.25X45-MM)	
	83	2,4	**8T-4121**	7	WASHER-HARD (11X21X2.5-MM THK)	
M	84	2	**8T-4136**	1	BOLT (M10X1.5X25-MM)	
M	85	2,4	**8T-4137**	6	BOLT (M10X1.5X20-MM)	
M	86	1	**8T-4139**	3	BOLT (M12X1.75X30-MM)	
M	87	1	**8T-4192**	2	BOLT (M12X1.75X25-MM)	
M	88	4	**8T-4200**	2	BOLT (M8X1.25X16-MM)	
	89	1	**8T-4223**	5	WASHER-HARD (13.5X25.5X3-MM THK)	
	90	4	**8T-4224**	2	WASHER-HARD (8.8X16X2-MM THK)	
M	91	4	**8T-5005**	2	BOLT (M10X1.5X70-MM)	
M	92	3	**8T-6869**	2	BOLT (M8X1.25X60-MM)	
	93	4	*164-5629*	1	FITTING AS	
		4	**3J-1907**	1	SEAL-O-RING	
		4	**108-7516**	1	FITTING	

C - CHANGE FROM PREVIOUS TYPE
I - REFER TO HYDRAULIC INFORMATION SYSTEM
J - SELECT CORRECT GROMMET SIZE TO FIT HOSE OD
M - METRIC PART
Y - SEPARATE ILLUSTRATION

278-6674 **LINES GP-PILOT (**contd.**)** **i05339231**

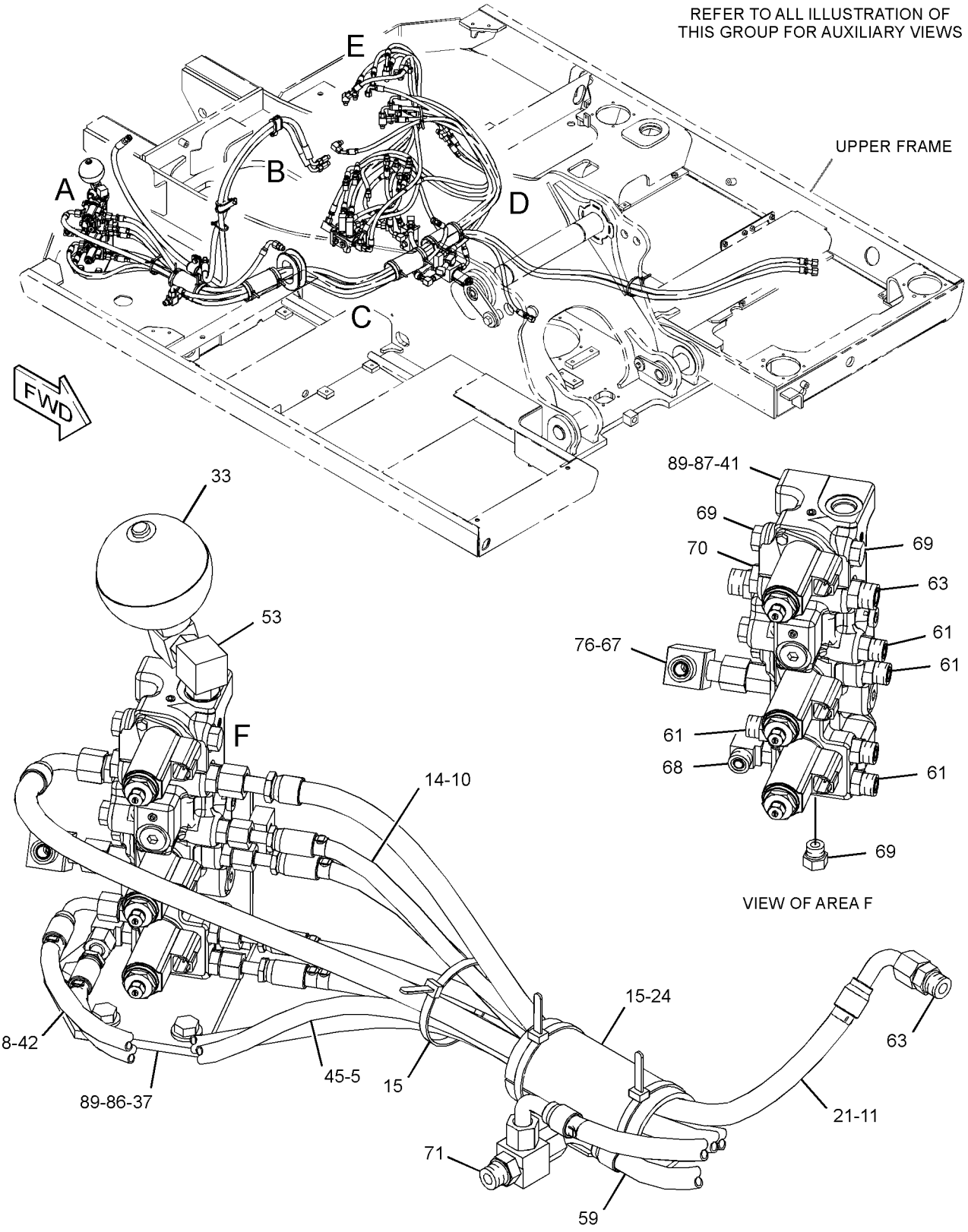

GRAPHIC #1 g03386580

278-6674 **LINES GP-PILOT (**contd.**)** **i05339231**

REFER TO ALL ILLUSTRATION OF
THIS GROUP FOR AUXILIARY VIEWS

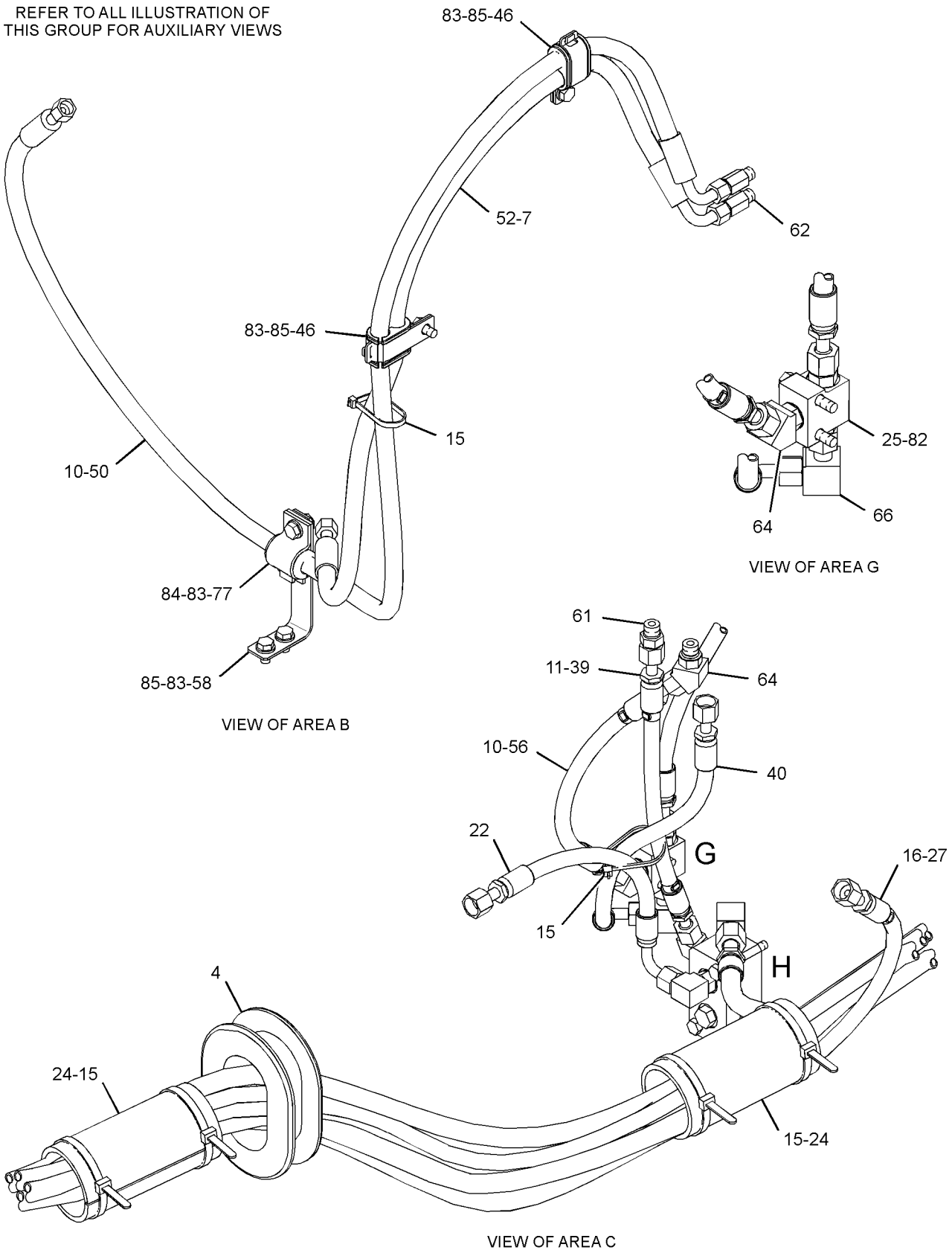

GRAPHIC #2 g03386581

278-6674 **LINES GP-PILOT (**contd.**)** **i05339231**

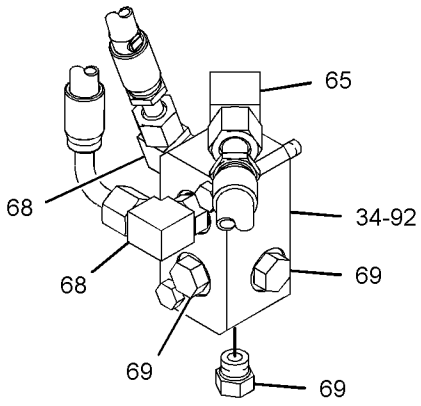

VIEW OF AREA H

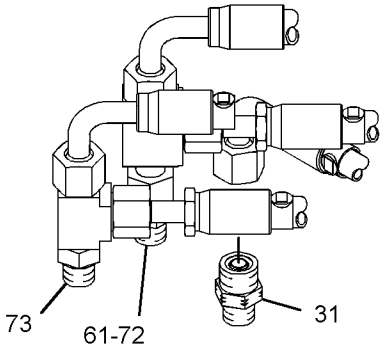

VIEW OF AREA J

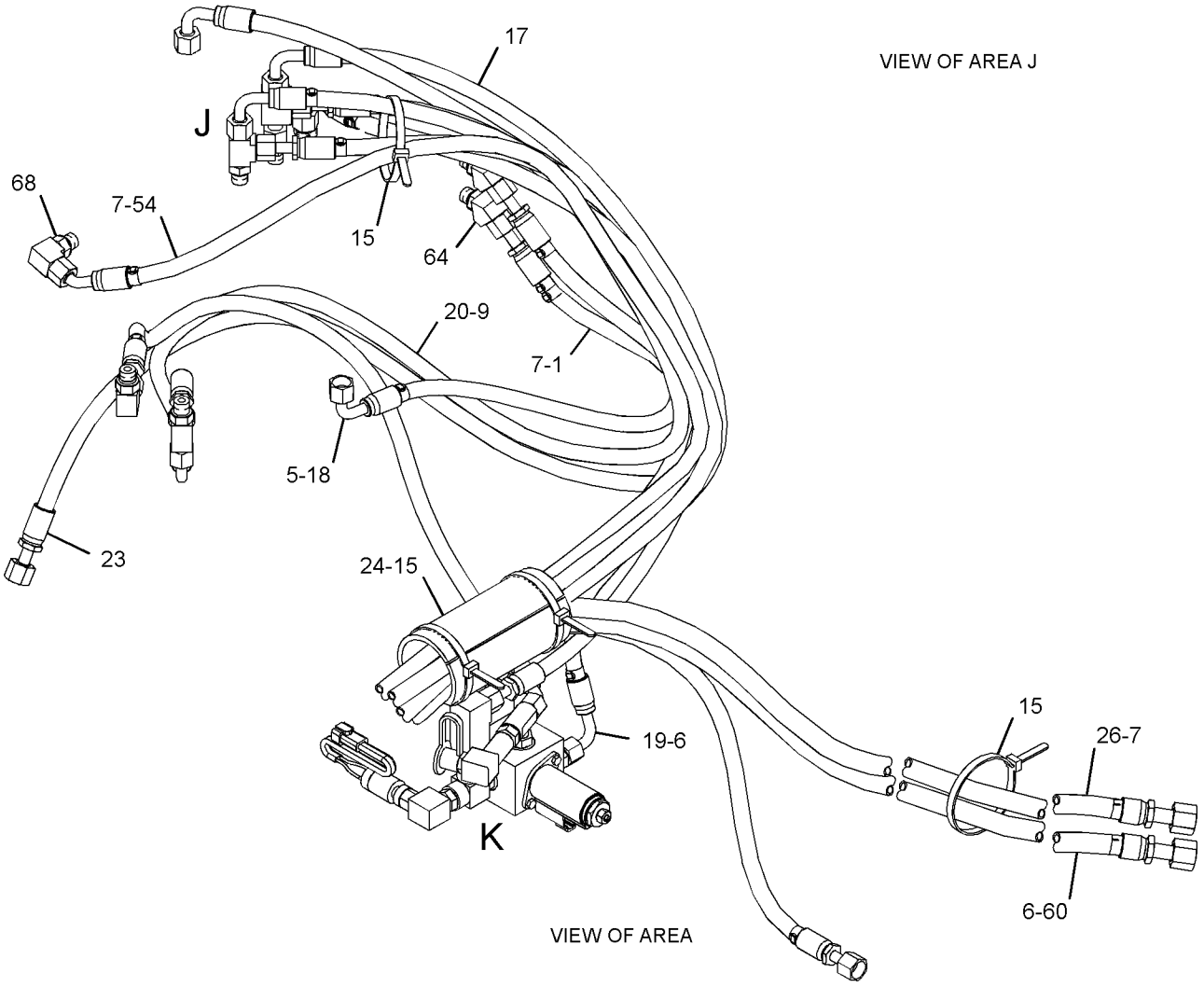

VIEW OF AREA

GRAPHIC #3 g03386582

278-6674 **LINES GP-PILOT (**contd.**)** **i05339231**

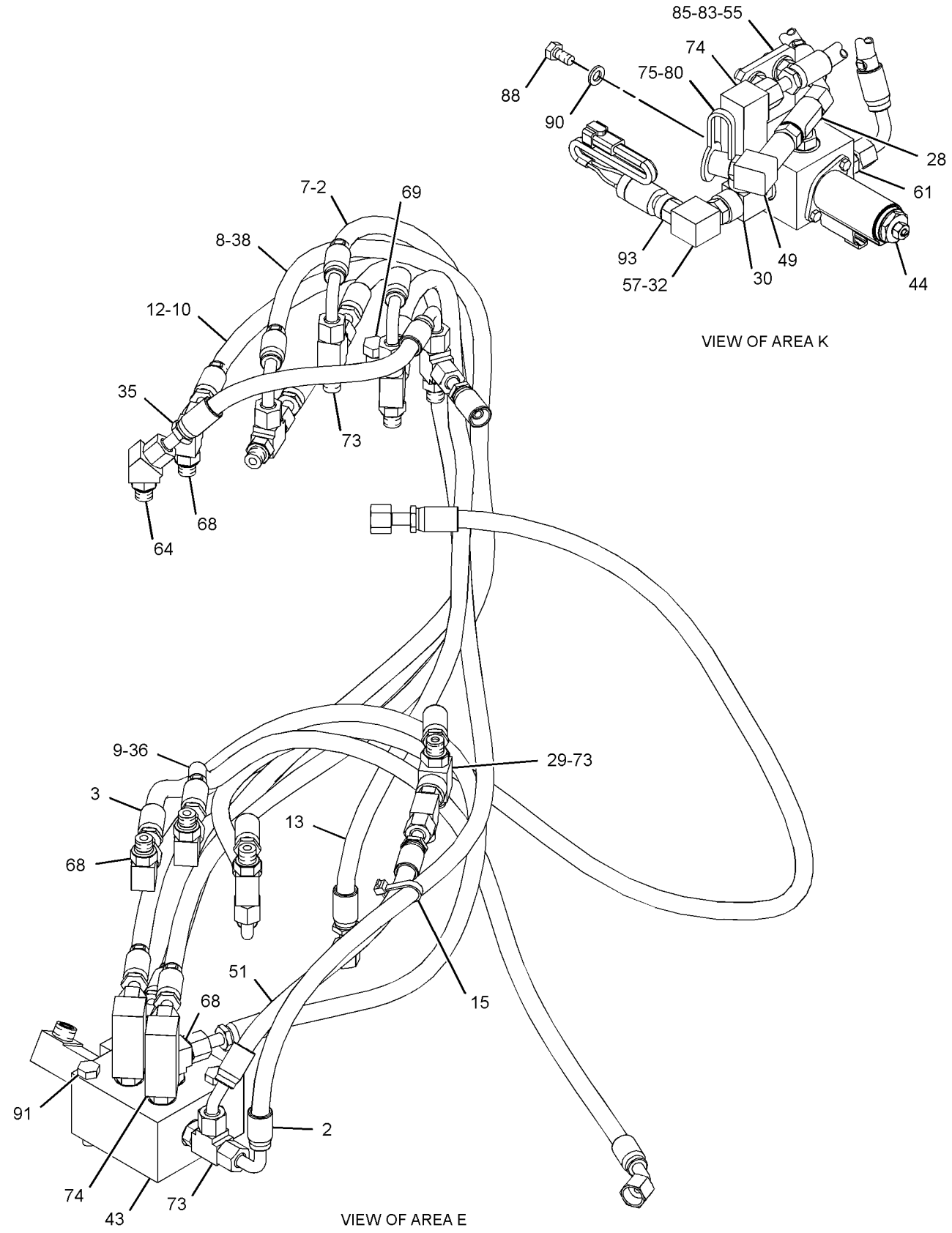

GRAPHIC #4 <END> g03386583

278-6675 LINES GP-PILOT–PUMP

S/N: DLP1-289

PART OF 270-5864 HYDRAULIC AR

SMCS-5057, 5059 **i02864035**

NOTE	REF NO	GRAPHIC REF	PART NUMBER	QTY	PART NAME 1 2 3 4 5 6 (PRODUCT LEVEL)	SEE PAGE
	1	1	**6V-0852**	4	CAP-DUST	
I	2	1	**131-9869**	1	HOSE AS	
	3	1	*164-6874*	1	FITTING AS-ELBOW (QUICK DISCONNECT, MALE)	
		1	**3J-1907**	1	SEAL-O-RING	
		1	**085-7356**	1	FITTING	
	4	1	*168-1968*	1	TEE AS	
		1	**3J-1907**	1	SEAL-O-RING	
		1	**6V-8397**	1	SEAL-O-RING	
		1	**126-6872**	1	TEE	
I	5	1	**178-5955**	1	HOSE AS	
	6	1	**221-8912**	2	FLANGE	
	7	1	**260-2180**	2	SENSOR AS-PRESSURE (PUMP CONTROL)	
					(EACH INCLUDES)	
		1	**095-1777**	1	RING-BACKUP	
		1	**260-2191**	1	SEAL-O-RING	
	8	1	*281-5898*	1	TEE AS	
		1	**3J-1907**	1	SEAL-O-RING	
		1	**6V-8398**	2	SEAL-O-RING	
		1	**153-6270**	1	TEE	
I	9	1	**292-7176**	1	HOSE AS	
I	10	1	**314-8236**	2	HOSE AS	
	11	1	*148-8327*	2	CONNECTOR AS	
					(EACH INCLUDES)	
		1	**3D-2824**	1	SEAL-O-RING	
		1	**6V-8637**	1	CONNECTOR	
		1	**6V-9746**	1	SEAL-O-RING	
	12	1	*148-8347*	1	ELBOW AS	
		1	**3D-2824**	1	SEAL-O-RING	
		1	**6V-9007**	1	ELBOW	
		1	**6V-9746**	1	SEAL-O-RING	
	13	1	*148-8367*	1	ELBOW AS	
		1	**6V-8397**	1	SEAL-O-RING	
		1	**6V-9850**	1	ELBOW	
	14	1	*148-8370*	1	ELBOW AS	
		1	**6V-8398**	1	SEAL-O-RING	
		1	**6V-9851**	1	ELBOW	
	15	1	*148-8378*	1	ELBOW AS	
		1	**3J-1907**	1	SEAL-O-RING	
		1	**6V-8397**	1	SEAL-O-RING	
		1	**6V-8724**	1	ELBOW	
	16	1	*150-3036*	2	ELBOW AS	
					(EACH INCLUDES)	
		1	**3J-1907**	1	SEAL-O-RING	
		1	**6V-8397**	1	SEAL-O-RING	
		1	**8T-1905**	1	ELBOW	
	17	1	*164-5567*	4	COUPLER AS-QUICK DISCONNECT (MALE)	
					(EACH INCLUDES)	
		1	**3J-1907**	1	SEAL-O-RING	

278-6675 **LINES GP-PILOT (**contd.**)** **i02864035**

NOTE	REF NO	GRAPHIC REF	PART NUMBER	QTY	PART NAME 1 2 3 4 5 6 (PRODUCT LEVEL)	SEE PAGE
		1	**6V-3965**	1	FITTING (QUICK DISCONNECT)	
	18	1	*164-8908*	1	CONNECTOR AS	
		1	**3K-0360**	1	SEAL-O-RING	
		1	**6V-8398**	1	SEAL-O-RING	
		1	**8T-0077**	1	CONNECTOR	
M	19	1	**8T-4189**	4	BOLT (M8X1.25X20-MM)	
	20	1	**8T-4224**	4	WASHER-HARD (8.8X16X2-MM THK)	

I - REFER TO HYDRAULIC INFORMATION SYSTEM
M - METRIC PART

278-6675 **LINES GP-PILOT (**contd.**)** **i02864035**

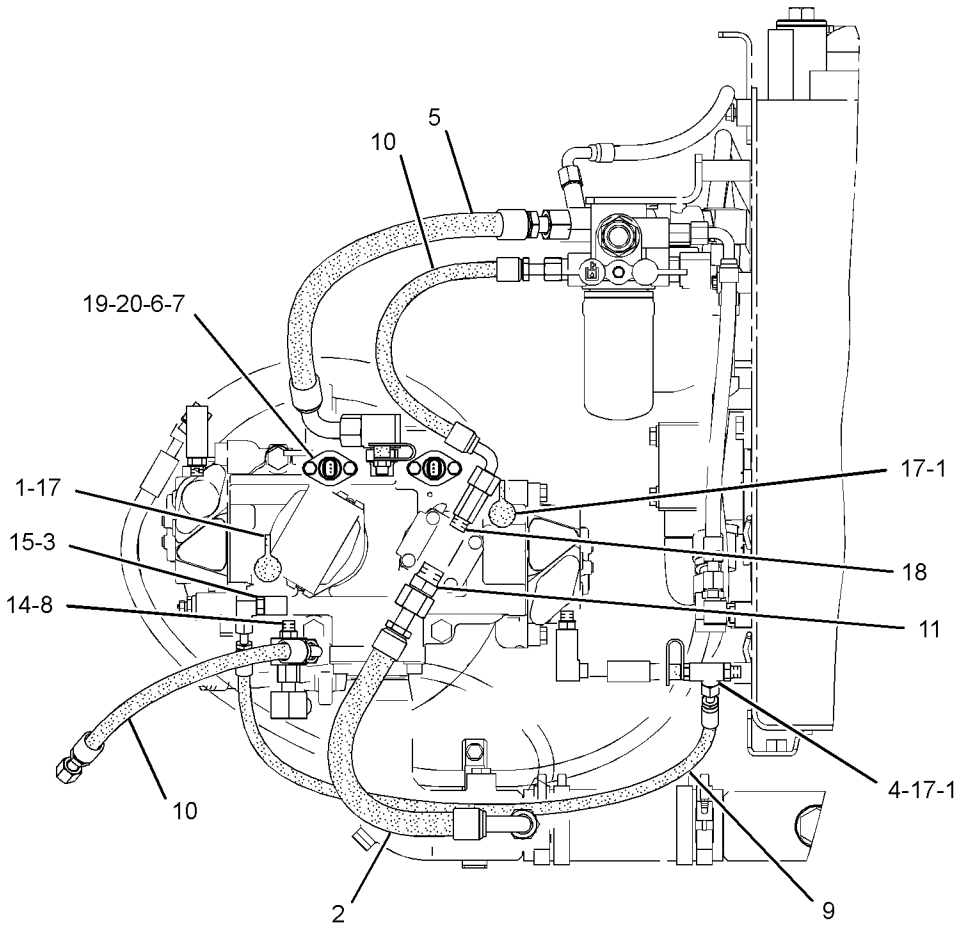

RIGHT SIDE VIEW

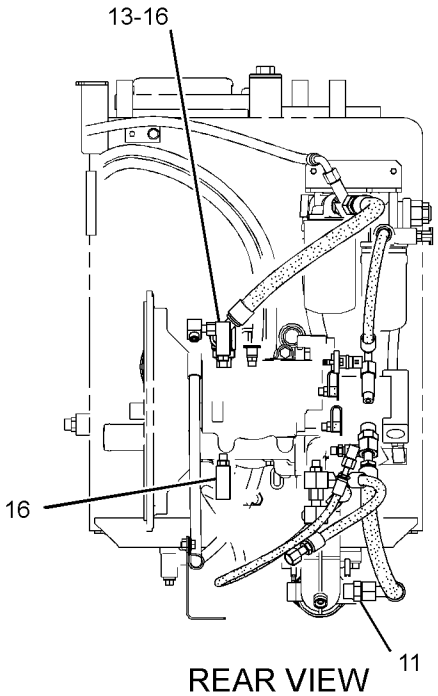

REAR VIEW

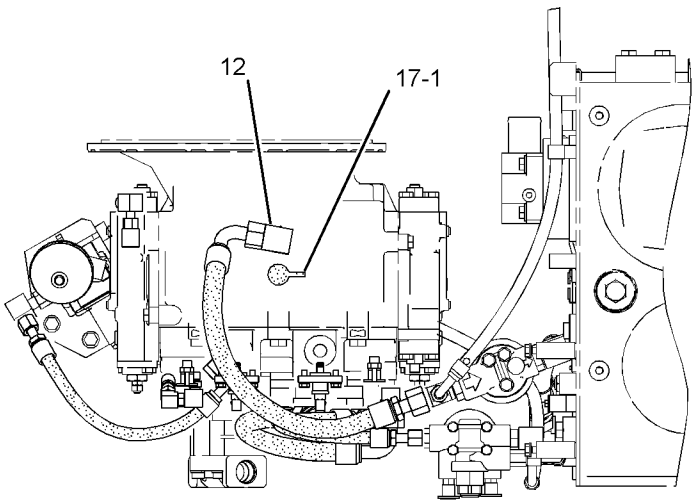

TOP VIEW

GRAPHIC #1 <END> g01441896

278-6675 LINES GP-PILOT–PUMP

S/N: DLP290-UP

PART OF 270-5864 HYDRAULIC AR

SMCS-5057, 5059 **i03639520**

NOTE	REF NO	GRAPHIC REF	PART NUMBER	QTY	PART NAME 1 2 3 4 5 6 (PRODUCT LEVEL)	SEE PAGE
	1	1	**6V-0852**	4	CAP-DUST	
I	2	1	**131-9869**	1	HOSE AS	
	3	1	*164-6874*	1	FITTING AS-ELBOW (QUICK DISCONNECT, MALE)	
		1	**3J-1907**	1	SEAL-O-RING	
		1	**085-7356**	1	FITTING	
	4	1	*168-1968*	1	TEE AS	
		1	**3J-1907**	1	SEAL-O-RING	
		1	**6V-8397**	1	SEAL-O-RING	
		1	**126-6872**	1	TEE	
I	5	1	**178-5955**	1	HOSE AS	
	6	1	**221-8912**	2	FLANGE	
	7	1	**260-2180**	2	SENSOR AS-PRESSURE (PUMP CONTROL)	
					(EACH INCLUDES)	
		1	**095-1777**	1	RING-BACKUP	
		1	**260-2191**	1	SEAL-O-RING	
	8	1	*281-5898*	1	TEE AS	
		1	**3J-1907**	1	SEAL-O-RING	
		1	**6V-8398**	2	SEAL-O-RING	
		1	**153-6270**	1	TEE	
I	9	1	**292-7176**	1	HOSE AS	
I	10	1	**314-8236**	2	HOSE AS	
	11	1	*148-8327*	2	CONNECTOR AS	
					(EACH INCLUDES)	
		1	**3D-2824**	1	SEAL-O-RING	
		1	**6V-8637**	1	CONNECTOR	
		1	**6V-9746**	1	SEAL-O-RING	
	12	1	*148-8347*	1	ELBOW AS	
		1	**3D-2824**	1	SEAL-O-RING	
		1	**6V-9007**	1	ELBOW	
		1	**6V-9746**	1	SEAL-O-RING	
	13	1	*148-8367*	1	ELBOW AS	
		1	**6V-8397**	1	SEAL-O-RING	
		1	**6V-9850**	1	ELBOW	
C	14	1	**7K-1181**	2	STRAP-CABLE	
	15	1	*148-8378*	1	ELBOW AS	
		1	**3J-1907**	1	SEAL-O-RING	
		1	**6V-8397**	1	SEAL-O-RING	
		1	**6V-8724**	1	ELBOW	
	16	1	*150-3036*	2	ELBOW AS	
					(EACH INCLUDES)	
		1	**3J-1907**	1	SEAL-O-RING	
		1	**6V-8397**	1	SEAL-O-RING	
		1	**8T-1905**	1	ELBOW	
	17	1	*164-5567*	4	COUPLER AS-QUICK DISCONNECT (MALE)	
					(EACH INCLUDES)	
		1	**214-7568**	1	SEAL-O-RING	
		1	**6V-3965**	1	FITTING (QUICK DISCONNECT)	
	18	1	*164-8908*	1	CONNECTOR AS	

278-6675 **LINES GP-PILOT (**contd.**)** **i03639520**

NOTE	REF NO	GRAPHIC REF	PART NUMBER	QTY	PART NAME 1 2 3 4 5 6 (PRODUCT LEVEL)	SEE PAGE
		1	**3K-0360**	1	SEAL-O-RING	
		1	**6V-8398**	1	SEAL-O-RING	
		1	**8T-0077**	1	CONNECTOR	
M	19	1	**8T-4189**	4	BOLT (M8X1.25X20-MM)	
	20	1	**8T-4224**	4	WASHER-HARD (8.8X16X2-MM THK)	
CI	21	1	**320-0008**	1	HOSE AS	

C - CHANGE FROM PREVIOUS TYPE
I - REFER TO HYDRAULIC INFORMATION SYSTEM
M - METRIC PART

278-6675 **LINES GP-PILOT (**contd.**)** **i03639520**

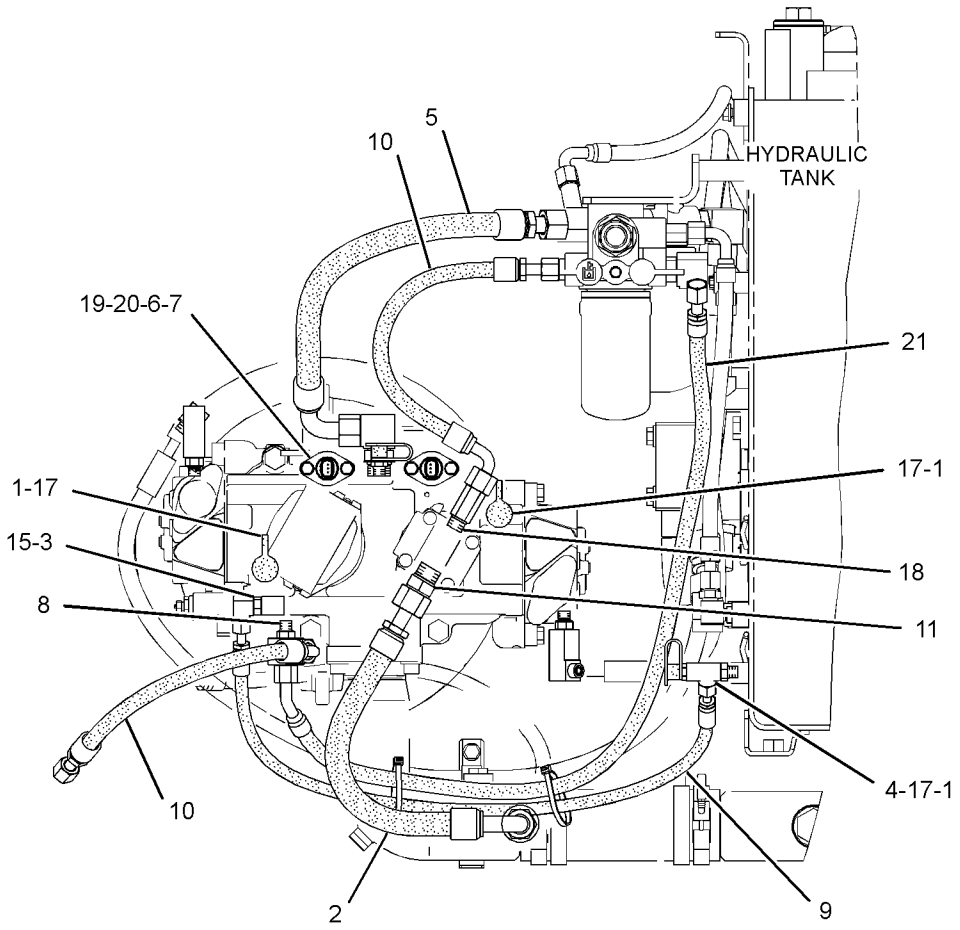

RIGHT SIDE VIEW

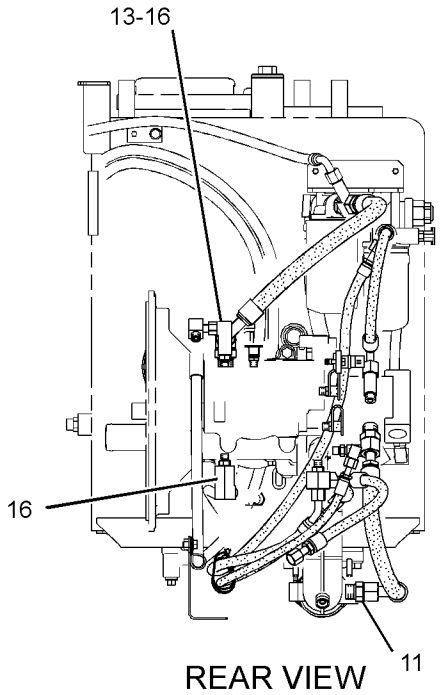

REAR VIEW

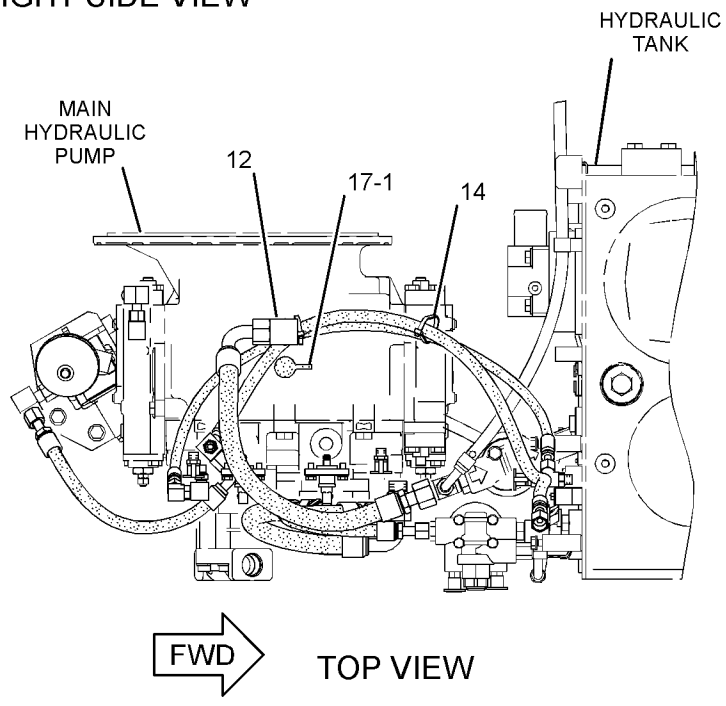

TOP VIEW

GRAPHIC #1 <END> g01976773

278-6701 LINES GP-PILOT—SYSTEM 23, COMBINED FUNCTION

S/N: DLP1-UP
PART OF 270-5846 CONTROL AR-AUXILIARY
AN ATTACHMENT
TYPE 1

SMCS-5057, 5059 **i03017503**

NOTE	REF NO	GRAPHIC REF	PART NUMBER	QTY	PART NAME 1 2 3 4 5 6 (PRODUCT LEVEL)	SEE PAGE
I	1	3	**4I-0800**	1	HOSE AS	
	2	1	**4I-3941**	1	FITTING AS	
	3	3	**4I-9521**	2	BAND-MARKER (RED, L1)	
	4	2	**4I-9522**	2	BAND-MARKER (YELLOW, L2)	
	5	2	**4I-9523**	4	BAND-MARKER (BLUE, L3)	
	6	3	**4I-9524**	4	BAND-MARKER (BROWN, L4)	
	7	1,2	**4I-9527**	4	BAND-MARKER (GREEN, R3)	
	8	1,2	**6V-0852**	4	CAP-DUST	
	9	1,2,3	**7K-1181**	8	STRAP-CABLE	
I	10	2	**087-6585**	1	HOSE AS	
Y	11	2	**121-6303**	1	VALVE GP-SOLENOID (HEAVY LIFT)	852
Y	12	2	**123-2430**	1	VALVE GP-SHUTTLE	845
	13	3	**133-5813**	2	BAND-MARKER (GRAY, P)	
C	14	1,2	*150-4027*	4	TEE AS	
					(EACH INCLUDES)	
		1,2	**3E-2310**	1	TEE	
		1,2	**3J-1907**	1	SEAL-O-RING	
		1,2	**6V-8397**	1	SEAL-O-RING	
	15	1,2	*164-6874*	6	FITTING AS-ELBOW (QUICK DISCONNECT, MALE)	
					(EACH INCLUDES)	
		1,2	**3J-1907**	1	SEAL-O-RING	
		1,2	**085-7356**	1	FITTING	
Y	16	2	**259-7430**	1	VALVE GP-SOLENOID (PRESSURE REDUCING)	854
I	17	2	**260-7900**	1	HOSE AS	
I	18	1	**269-9703**	1	HOSE AS	
C	19	3	**272-4186**	1	HOSE AS	
	20	2	**275-1442**	1	CLIP (TAB)	
	21	2	**275-1443**	1	CLIP (SLOT)	
	22	2	**275-1444**	1	GROMMET	
CI	23	2	**275-1487**	1	HOSE AS	
CI	24	2	**282-7566**	1	HOSE AS	
	25	2	**285-2578**	1	BRACKET AS	
	26	1,3	**285-2663**	3	FITTING AS (QUICK DISCONNECT, MALE)	
					(EACH INCLUDES)	
		1,3	**3J-1907**	1	SEAL-O-RING	
	27	1,2	*292-7426*	3	ELBOW AS	
					(EACH INCLUDES)	
		1,2	**292-7430**	1	ELBOW	
		1,2	**3J-1907**	1	SEAL-O-RING	
		1,2	**6V-8397**	1	SEAL-O-RING	
I	28	3	**296-6928**	1	HOSE AS	
CI	29	3	**296-7318**	1	HOSE AS	
	30	1	**309-5769**	1	SWITCH AS-PRESSURE (PILOT, BOOM UP)	
		1	**102-8802**	1	KIT-RECEPTACLE (2-PIN)	
					(INCLUDES RECEPTACLE AS & WEDGE)	
		1	**9X-3401**	2	PIN-CONNECTOR (16-GA TO 18-GA)	

278-6701 **LINES GP-PILOT (**contd.**)** **i03017503**

NOTE	REF NO	GRAPHIC REF	PART NUMBER	QTY	PART NAME 1 2 3 4 5 6 (PRODUCT LEVEL)	SEE PAGE
					—OR—	
		1	**126-1767**	2	PIN-CONNECTOR (14-GA TO 16-GA)	
	31	3	**314-8242**	1	SUPPORT	
I	32	2	**317-4793**	1	HOSE AS	
	33	1	**317-4796**	1	SUPPORT AS	
CI	34	3	**317-4816**	1	HOSE AS	
	35	3	**317-4841**	1	BRACKET AS	
I	36	2	**320-0006**	1	HOSE AS	
CI	37	3	**325-8976**	1	HOSE AS	
CI	38	2	**325-8979**	1	HOSE AS	
C	39	1,2	*148-8336*	3	CONNECTOR AS	
					(EACH INCLUDES)	
		1,2	**3J-1907**	1	SEAL-O-RING	
		1,2	**6V-8397**	1	SEAL-O-RING	
		1,2	**6V-8636**	1	CONNECTOR	
C	40	1	*148-8338*	3	CONNECTOR AS	
					(EACH INCLUDES)	
		1	**3J-1907**	1	SEAL-O-RING	
		1	**6V-8397**	1	SEAL-O-RING	
		1	**8T-0075**	1	CONNECTOR	
C	41	1,2	*148-8367*	2	ELBOW AS	
					(EACH INCLUDES)	
		1,2	**6V-8397**	1	SEAL-O-RING	
		1,2	**6V-9850**	1	ELBOW	
	42	1	*148-8371*	1	ELBOW AS	
		1	**6V-8397**	1	SEAL-O-RING	
		1	**8C-8988**	1	ELBOW	
C	43	1,2	*148-8378*	7	ELBOW AS	
					(EACH INCLUDES)	
		1,2	**3J-1907**	1	SEAL-O-RING	
		1,2	**6V-8397**	1	SEAL-O-RING	
		1,2	**6V-8724**	1	ELBOW	
C	44	2	**148-8407**	1	PLUG AS	
		2	**3J-1907**	1	SEAL-O-RING	
		2	**9S-4191**	1	PLUG (9/16-18-THD)	
	45	2,3	*148-8435*	2	TEE AS	
					(EACH INCLUDES)	
		2,3	**3J-1907**	1	SEAL-O-RING	
		2,3	**6V-8397**	2	SEAL-O-RING	
		2,3	**6V-8781**	1	TEE	
	46	1	*148-8439*	1	TEE AS	
		1	**3J-1907**	1	SEAL-O-RING	
		1	**6V-8397**	2	SEAL-O-RING	
		1	**6V-8774**	1	TEE	
C	47	2,3	*150-3036*	2	ELBOW AS	
					(EACH INCLUDES)	
		2,3	**3J-1907**	1	SEAL-O-RING	
		2,3	**6V-8397**	1	SEAL-O-RING	
		2,3	**8T-1905**	1	ELBOW	
	48	2	*164-5549*	1	COUPLING AS	
		2	**3J-1907**	1	SEAL-O-RING	
		2	**4I-6287**	1	COUPLING	

278-6701 **LINES GP-PILOT (**contd.**)** **i03017503**

NOTE	REF NO	GRAPHIC REF	PART NUMBER	QTY	PART NAME 1 2 3 4 5 6 (PRODUCT LEVEL)	SEE PAGE
	49	1,2	*164-5567*	4	COUPLER AS-QUICK DISCONNECT (MALE)	
					(EACH INCLUDES)	
		1,2	**3J-1907**	1	SEAL-O-RING	
		1,2	**6V-3965**	1	FITTING (QUICK DISCONNECT)	
Y	50	1	**171-0188**	1	VALVE GP-SOLENOID (NEG FLOW CONT, PROPN RED VALVE)	853
M	51	3	**5C-9553**	2	BOLT (M6X1X16-MM)	
	52	2	**5P-7462**	1	CLIP (SLOT)	
	53	2	**5P-7463**	1	CLIP (TAB)	
	54	2	**6V-0683**	1	GROMMET	
	55	2	**6V-8397**	2	SEAL-O-RING	
	56	1,2,3	**8T-4121**	7	WASHER-HARD (11X21X2.5-MM THK)	
M	57	2	**8T-4136**	1	BOLT (M10X1.5X25-MM)	
M	58	1,2	**8T-4137**	4	BOLT (M10X1.5X20-MM)	
M	59	1	**8T-4177**	4	BOLT (M8X1.25X90-MM)	
M	60	3	**8T-4192**	2	BOLT (M12X1.75X25-MM)	
M	61	2	**8T-4194**	3	BOLT (M12X1.75X50-MM)	
M	62	3	**8T-4195**	2	BOLT (M10X1.5X30-MM)	
	63	2,3	**8T-4223**	5	WASHER-HARD (13.5X25.5X3-MM THK)	
	64	2	**8T-4224**	2	WASHER-HARD (8.8X16X2-MM THK)	
M	65	2	**8T-6870**	2	BOLT (M8X1.25X70-MM)	
	66	3	**9X-8256**	2	WASHER (6.6X12X2-MM THK)	

C - CHANGE FROM PREVIOUS TYPE
I - REFER TO HYDRAULIC INFORMATION SYSTEM
M - METRIC PART
Y - SEPARATE ILLUSTRATION

278-6701 **LINES GP-PILOT (**contd.**)** **i03017503**

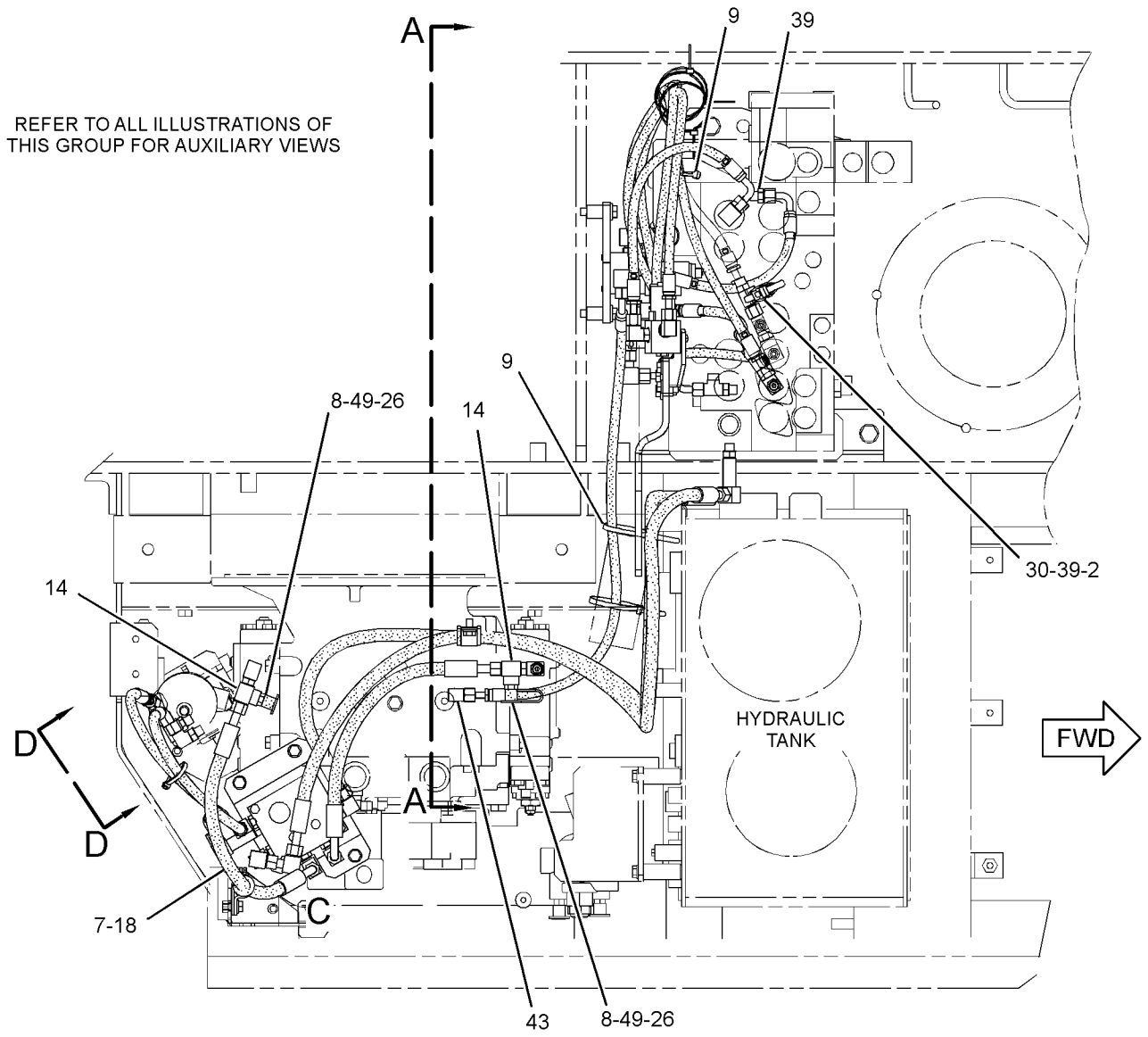

TOP VIEW

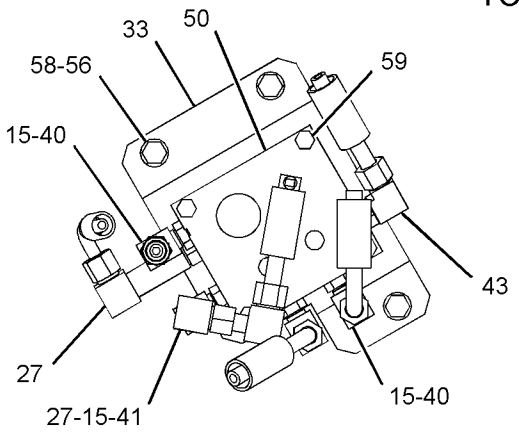

VIEW OF AREA C
(HOSES REMOVED)

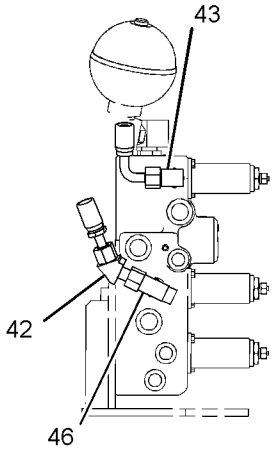

VIEW D-D

GRAPHIC #1

g01530873

278-6701 **LINES GP-PILOT (**contd.**)** **i03017503**

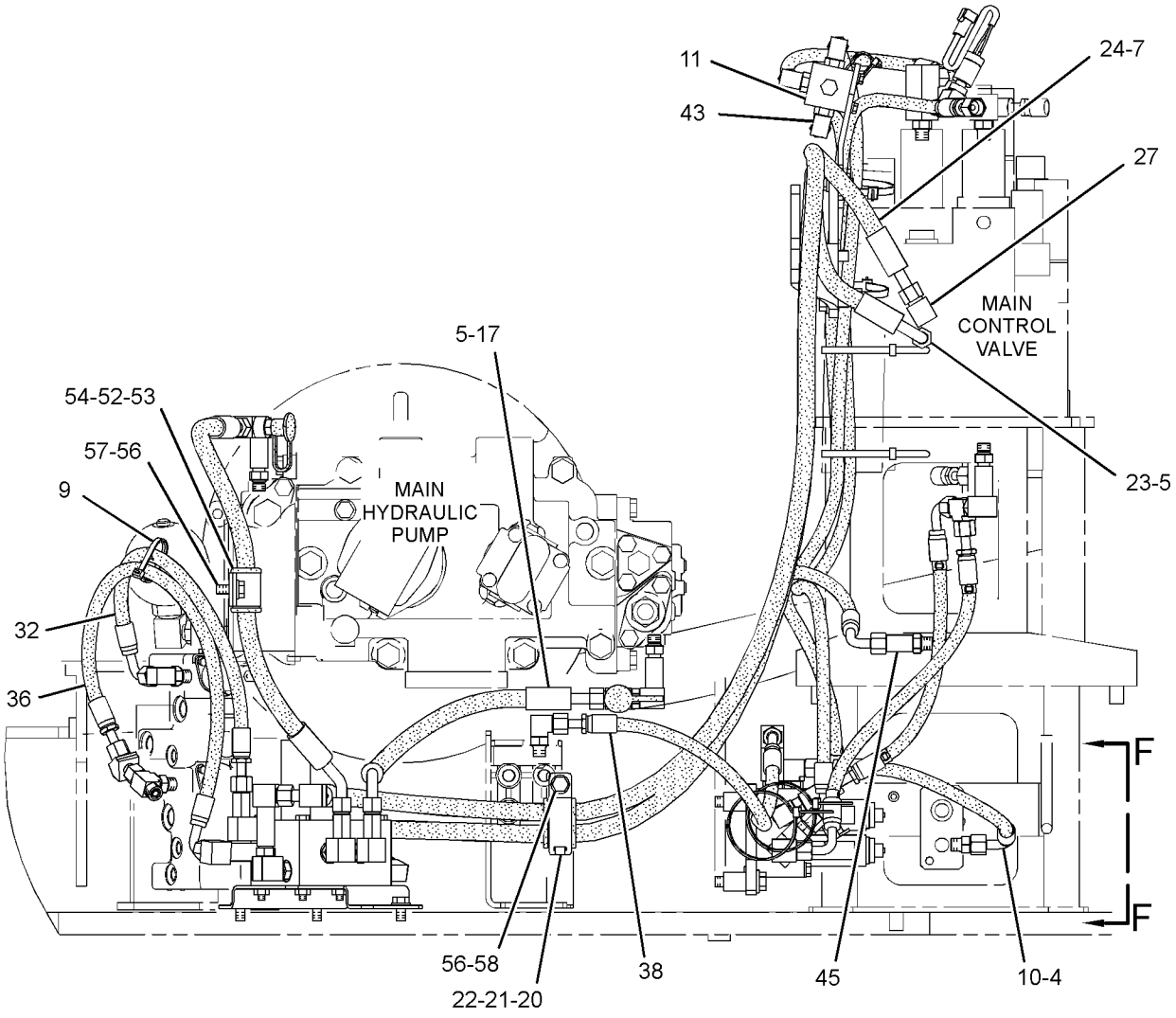

RIGHT SIDE VIEW

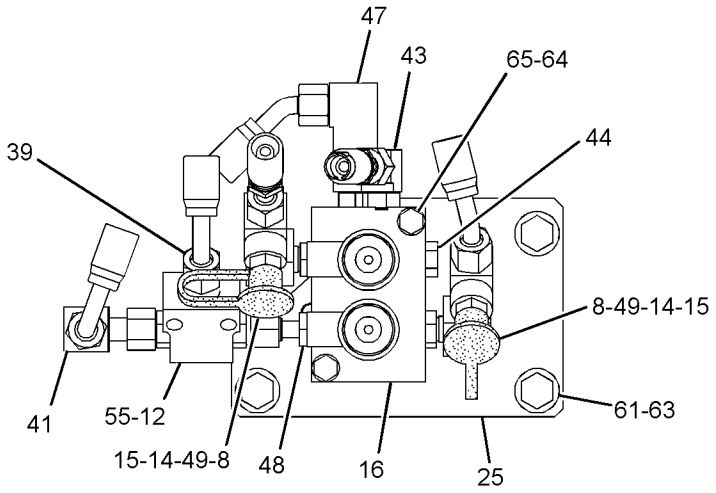

VIEW F-F

GRAPHIC #2 g01530874

278-6701 **LINES GP-PILOT (**contd.**)** **i03017503**

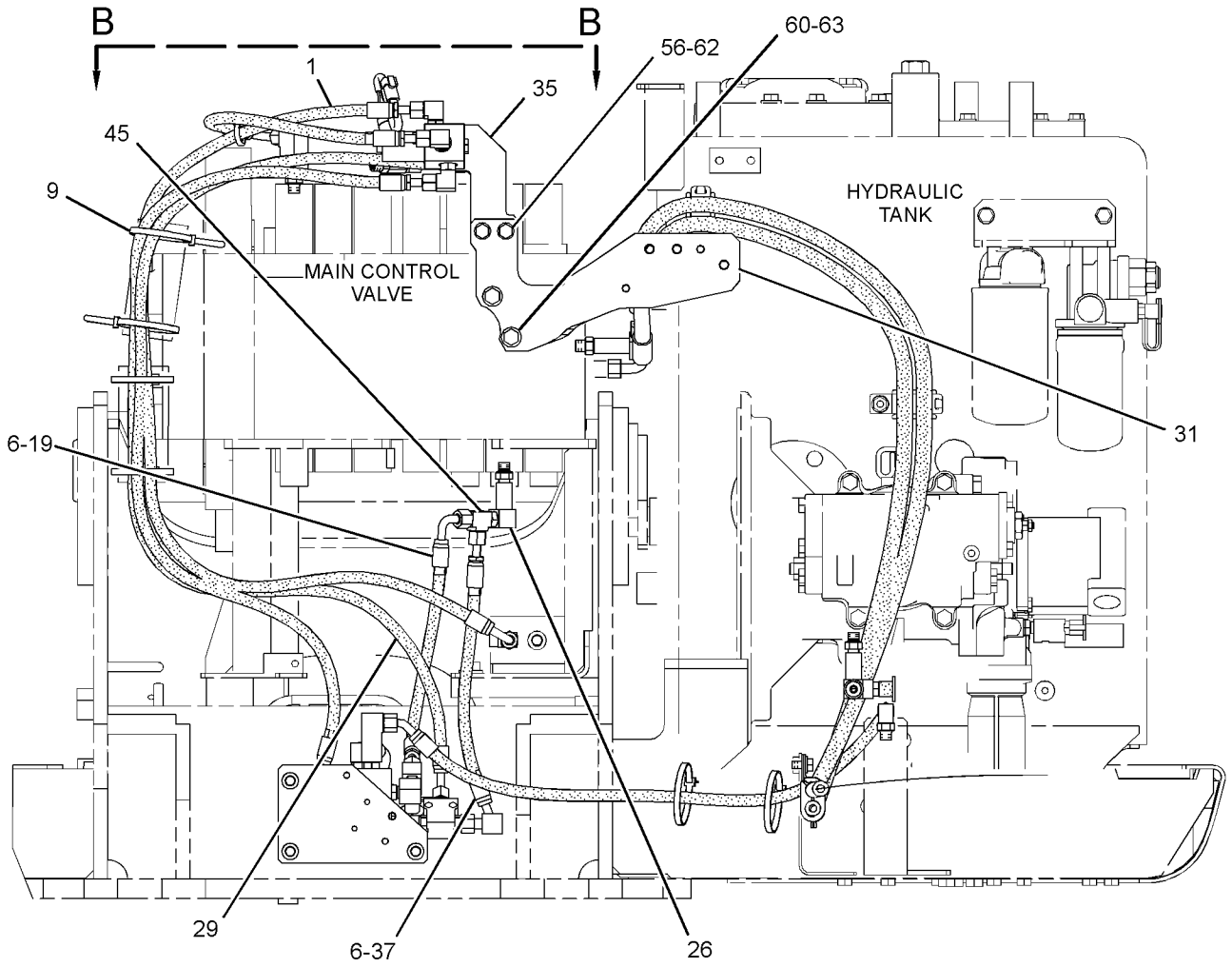

SECTION A-A

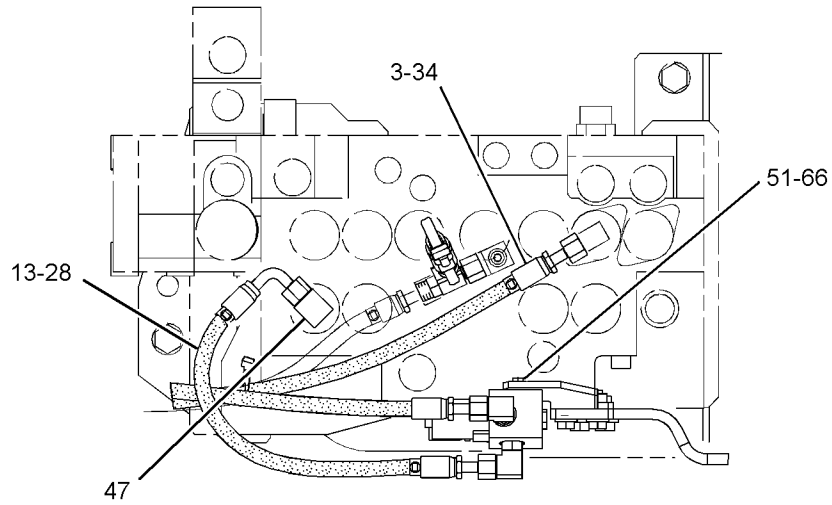

VIEW B-B

GRAPHIC #3 <END> g01530876

278-6701 LINES GP-PILOT—SYSTEM 23, COMBINED FUNCTION

S/N: DLP1-UP
PART OF 270-5846 CONTROL AR-AUXILIARY
AN ATTACHMENT
TYPE 2

SMCS-5057, 5059

i03636665

NOTE	REF NO	GRAPHIC REF	PART NUMBER	QTY	PART NAME 1 2 3 4 5 6 (PRODUCT LEVEL)	SEE PAGE
I	1	1	**4I-0800**	1	HOSE AS	
	2	3	**4I-3941**	1	FITTING AS	
	3	1	**4I-9521**	2	BAND-MARKER (RED, L1)	
	4	2	**4I-9522**	2	BAND-MARKER (YELLOW, L2)	
	5	2	**4I-9523**	4	BAND-MARKER (BLUE, L3)	
	6	1	**4I-9524**	4	BAND-MARKER (BROWN, L4)	
	7	2,3	**4I-9527**	4	BAND-MARKER (GREEN, R3)	
	8	2,3	**6V-0852**	4	CAP-DUST	
C	9	1,2,3	**7K-1181**	10	STRAP-CABLE	
I	10	2	**087-6585**	1	HOSE AS	
Y	11	2	**121-6303**	1	VALVE GP-SOLENOID (HEAVY LIFT)	852
CY	12	2	*164-6979*	1	VALVE GP-SHUTTLE	846
		2	**4B-9783**	1	BALL	
		2	**123-2431**	1	BODY-VALVE	
		2	*175-4430*	2	CONNECTOR AS	
					(EACH INCLUDES)	
		2	**3J-1907**	1	SEAL-O-RING	
		2	**6V-8397**	1	SEAL-O-RING	
		2	**123-2552**	1	CONNECTOR	
	13	1	**133-5813**	2	BAND-MARKER (GRAY, P)	
	14	2,3	*150-4027*	4	TEE AS	
					(EACH INCLUDES)	
		2,3	**3E-2310**	1	TEE	
		2,3	**3J-1907**	1	SEAL-O-RING	
		2,3	**6V-8397**	1	SEAL-O-RING	
	15	2,3	*164-6874*	6	FITTING AS-ELBOW (QUICK DISCONNECT, MALE)	
					(EACH INCLUDES)	
		2,3	**3J-1907**	1	SEAL-O-RING	
		2,3	**085-7356**	1	FITTING	
Y	16	2	**259-7430**	1	VALVE GP-SOLENOID (PRESSURE REDUCING)	854
I	17	2	**260-7900**	1	HOSE AS	
I	18	3	**269-9703**	1	HOSE AS	
	19	1	**272-4186**	1	HOSE AS	
	20	2	**275-1442**	1	CLIP (TAB)	
	21	2	**275-1443**	1	CLIP (SLOT)	
	22	2	**275-1444**	1	GROMMET	
I	23	2	**275-1487**	1	HOSE AS	
I	24	2	**282-7566**	1	HOSE AS	
	25	2	**285-2578**	1	BRACKET AS	
	26	1,3	**285-2663**	3	FITTING AS (QUICK DISCONNECT, MALE)	
					(EACH INCLUDES)	
		1,3	**3J-1907**	1	SEAL-O-RING	
	27	2,3	*292-7426*	3	ELBOW AS	
					(EACH INCLUDES)	
		2,3	**292-7430**	1	ELBOW	
		2,3	**3J-1907**	1	SEAL-O-RING	

278-6701 **LINES GP-PILOT (**contd.**)** **i03636665**

NOTE	REF NO	GRAPHIC REF	PART NUMBER	QTY	PART NAME 1 2 3 4 5 6 (PRODUCT LEVEL)	SEE PAGE
		2,3	**6V-8397**	1	SEAL-O-RING	
I	28	1	**296-6928**	1	HOSE AS	
CI	29	1	**4I-1037**	1	HOSE AS	
	30	3	**309-5769**	1	SWITCH AS-PRESSURE (PILOT, BOOM UP)	
		3	**102-8802**	1	KIT-RECEPTACLE (2-PIN)	
					(INCLUDES RECEPTACLE AS & WEDGE)	
		3	**9X-3401**	2	PIN-CONNECTOR (16-GA TO 18-GA)	
					—OR—	
		3	**126-1767**	2	PIN-CONNECTOR (14-GA TO 16-GA)	
	31	1	**314-8242**	1	SUPPORT	
I	32	2	**317-4793**	1	HOSE AS	
	33	3	**317-4796**	1	SUPPORT AS	
CI	34	1	**5I-4076**	1	HOSE AS	
	35	1	**317-4841**	1	BRACKET AS	
I	36	2	**320-0006**	1	HOSE AS	
I	37	1	**325-8976**	1	HOSE AS	
I	38	2	**325-8979**	1	HOSE AS	
C	39	3	*148-8336*	2	CONNECTOR AS	
					(EACH INCLUDES)	
		3	**3J-1907**	1	SEAL-O-RING	
		3	**6V-8397**	1	SEAL-O-RING	
		3	**6V-8636**	1	CONNECTOR	
	40	3	*148-8338*	3	CONNECTOR AS	
					(EACH INCLUDES)	
		3	**3J-1907**	1	SEAL-O-RING	
		3	**6V-8397**	1	SEAL-O-RING	
		3	**8T-0075**	1	CONNECTOR	
	41	2,3	*148-8367*	2	ELBOW AS	
					(EACH INCLUDES)	
		2,3	**6V-8397**	1	SEAL-O-RING	
		2,3	**6V-9850**	1	ELBOW	
	42	3	*148-8371*	1	ELBOW AS	
		3	**6V-8397**	1	SEAL-O-RING	
		3	**8C-8988**	1	ELBOW	
	43	2,3	*148-8378*	7	ELBOW AS	
					(EACH INCLUDES)	
		2,3	**3J-1907**	1	SEAL-O-RING	
		2,3	**6V-8397**	1	SEAL-O-RING	
		2,3	**6V-8724**	1	ELBOW	
	44	2	**148-8407**	1	PLUG AS	
		2	**3J-1907**	1	SEAL-O-RING	
		2	**9S-4191**	1	PLUG (9/16-18-THD)	
	45	1,2	*148-8435*	2	TEE AS	
					(EACH INCLUDES)	
		1,2	**3J-1907**	1	SEAL-O-RING	
		1,2	**6V-8397**	2	SEAL-O-RING	
		1,2	**6V-8781**	1	TEE	
	46	3	*148-8439*	1	TEE AS	
		3	**3J-1907**	1	SEAL-O-RING	
		3	**6V-8397**	2	SEAL-O-RING	
		3	**6V-8774**	1	TEE	
	47	1,2	*150-3036*	2	ELBOW AS	

278-6701 **LINES GP-PILOT (**contd.**)** **i03636665**

NOTE	REF NO	GRAPHIC REF	PART NUMBER	QTY	PART NAME 1 2 3 4 5 6 (PRODUCT LEVEL)	SEE PAGE
					(EACH INCLUDES)	
		1,2	**3J-1907**	1	SEAL-O-RING	
		1,2	**6V-8397**	1	SEAL-O-RING	
		1,2	**8T-1905**	1	ELBOW	
	48	2	*164-5549*	1	COUPLING AS	
		2	**3J-1907**	1	SEAL-O-RING	
		2	**4I-6287**	1	COUPLING	
	49	2,3	*164-5567*	4	COUPLER AS-QUICK DISCONNECT (MALE)	
					(EACH INCLUDES)	
		2,3	**214-7568**	1	SEAL-O-RING	
		2,3	**6V-3965**	1	FITTING (QUICK DISCONNECT)	
Y	50	3	**171-0188**	1	VALVE GP-SOLENOID (NEG FLOW CONT, PROPN RED VALVE)	853
M	51	1	**5C-9553**	2	BOLT (M6X1X16-MM)	
	52	2	**5P-7462**	1	CLIP (SLOT)	
	53	2	**5P-7463**	1	CLIP (TAB)	
	54	2	**6V-0683**	1	GROMMET	
	55	2	**6V-8397**	2	SEAL-O-RING	
	56	1,2,3	**8T-4121**	7	WASHER-HARD (11X21X2.5-MM THK)	
M	57	2	**8T-4136**	1	BOLT (M10X1.5X25-MM)	
M	58	2,3	**8T-4137**	4	BOLT (M10X1.5X20-MM)	
M	59	3	**8T-4177**	4	BOLT (M8X1.25X90-MM)	
M	60	1	**8T-4192**	2	BOLT (M12X1.75X25-MM)	
M	61	2	**8T-4194**	3	BOLT (M12X1.75X50-MM)	
M	62	1	**8T-4195**	2	BOLT (M10X1.5X30-MM)	
	63	1,2	**8T-4223**	5	WASHER-HARD (13.5X25.5X3-MM THK)	
	64	2	**8T-4224**	2	WASHER-HARD (8.8X16X2-MM THK)	
M	65	2	**8T-6870**	2	BOLT (M8X1.25X70-MM)	
	66	1	**9X-8256**	2	WASHER (6.6X12X2-MM THK)	
C	67	2	*148-8353*	1	ELBOW AS	
		2	**3J-1907**	1	SEAL-O-RING	
		2	**6V-8397**	1	SEAL-O-RING	
		2	**6V-9001**	1	ELBOW	

C - CHANGE FROM PREVIOUS TYPE
I - REFER TO HYDRAULIC INFORMATION SYSTEM
M - METRIC PART
Y - SEPARATE ILLUSTRATION

278-6701 **LINES GP-PILOT (**contd.**)** **i03636665**

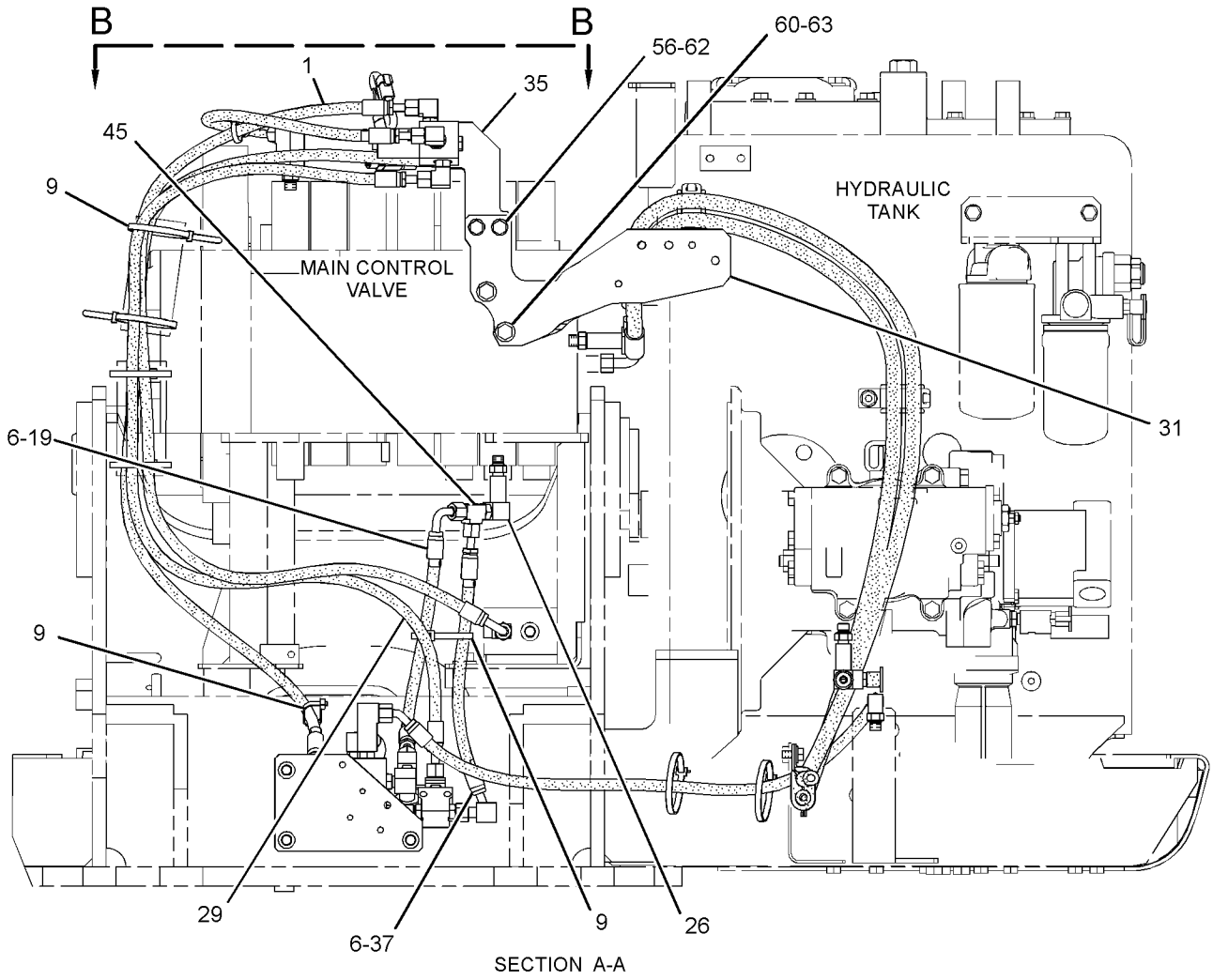

SECTION A-A

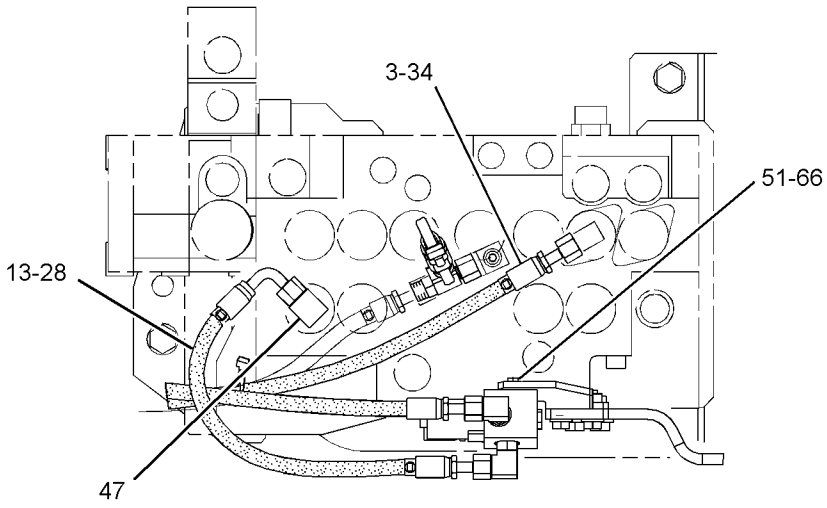

VIEW B-B

GRAPHIC #1 g01998038

278-6701 **LINES GP-PILOT (**contd.**)** **i03636665**

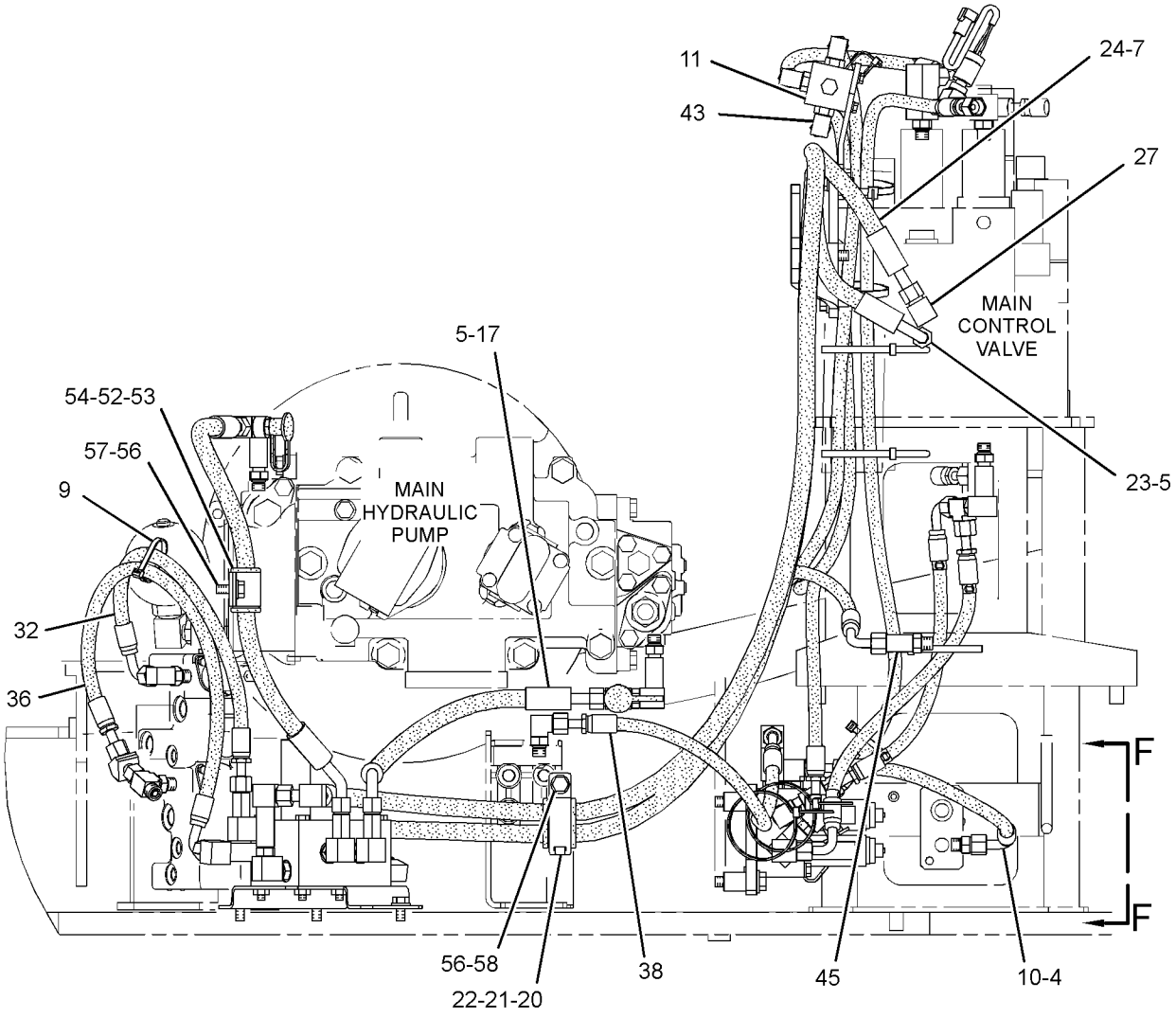

RIGHT SIDE VIEW

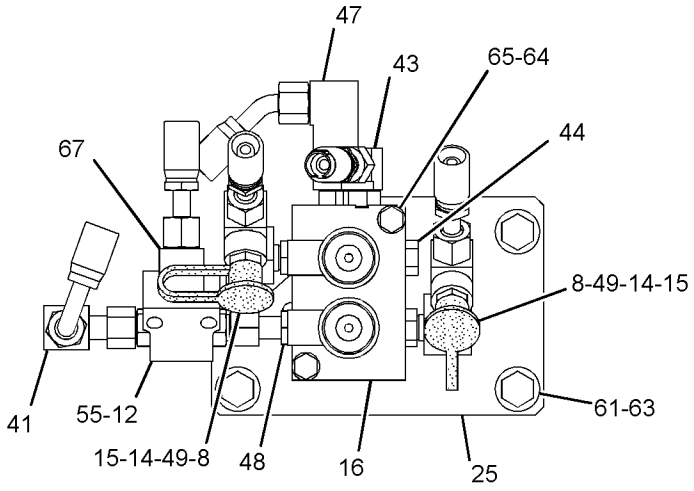

VIEW F-F

GRAPHIC #2 g01998040

278-6701 **LINES GP-PILOT (**contd.**)** **i03636665**

REFER TO ALL ILLUSTRATIONS OF
THIS GROUP FOR AUXILIARY VIEWS

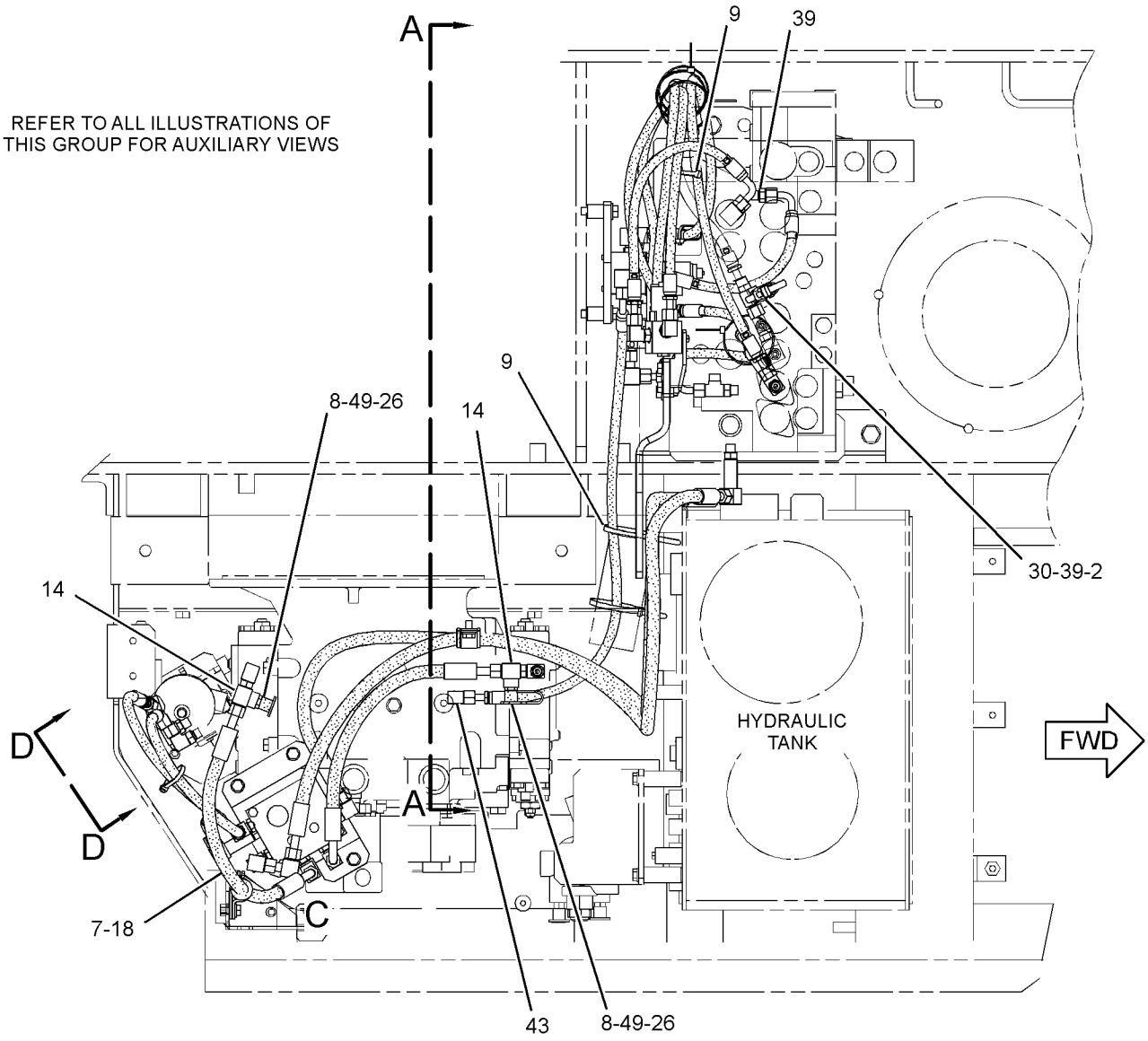

TOP VIEW

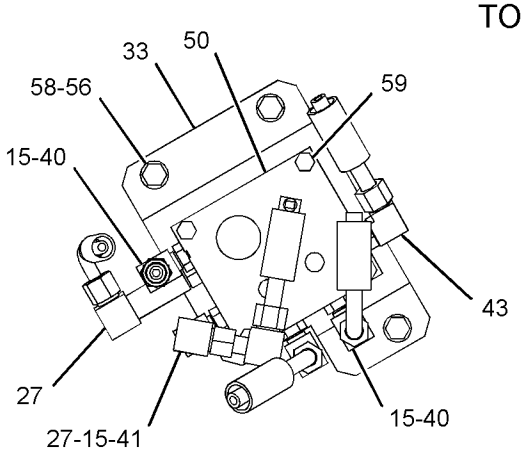

VIEW OF AREA C
(HOSES REMOVED)

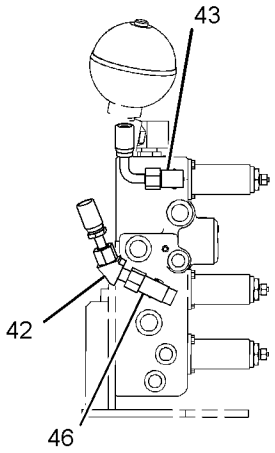

VIEW D-D

GRAPHIC #3 <END> g01999933

278-6701 LINES GP-PILOT—SYSTEM 23, COMBINED FUNCTION

S/N: DLP1-UP
PART OF 270-5846 CONTROL AR-AUXILIARY
AN ATTACHMENT
TYPE 3

SMCS-5057, 5059 **i04463125**

NOTE	REF NO	GRAPHIC REF	PART NUMBER	QTY	PART NAME 1 2 3 4 5 6 (PRODUCT LEVEL)	SEE PAGE
I	1	2	**4I-0800**	1	HOSE AS	
	2	1	**4I-3941**	1	FITTING AS	
	3	2	**4I-9521**	2	BAND-MARKER (RED, L1)	
	4	3	**4I-9522**	2	BAND-MARKER (YELLOW, L2)	
	5	3	**4I-9523**	4	BAND-MARKER (BLUE, L3)	
	6	2	**4I-9524**	4	BAND-MARKER (BROWN, L4)	
	7	1,3	**4I-9527**	4	BAND-MARKER (GREEN, R3)	
	8	1,3	**6V-0852**	4	CAP-DUST	
	9	1,2,3	**7K-1181**	10	STRAP-CABLE	
I	10	3	**087-6585**	1	HOSE AS	
Y	11	3	**121-6303**	1	VALVE GP-SOLENOID (HEAVY LIFT)	852
Y	12	3	**164-6979**	1	VALVE GP-SHUTTLE	846
	13	2	**133-5813**	2	BAND-MARKER (GRAY, P)	
	14	1,3	*150-4027*	4	TEE AS	
					(EACH INCLUDES)	
		1,3	**3E-2310**	1	TEE	
		1,3	**3J-1907**	1	SEAL-O-RING	
		1,3	**6V-8397**	1	SEAL-O-RING	
	15	1,3	*164-6874*	6	FITTING AS-ELBOW (QUICK DISCONNECT, MALE)	
					(EACH INCLUDES)	
		1,3	**3J-1907**	1	SEAL-O-RING	
		1,3	**085-7356**	1	FITTING	
Y	16	3	**259-7430**	1	VALVE GP-SOLENOID (PRESSURE REDUCING)	854
I	17	3	**260-7900**	1	HOSE AS	
I	18	1	**269-9703**	1	HOSE AS	
	19	2	**272-4186**	1	HOSE AS	
	20	3	**275-1442**	1	CLIP (TAB)	
	21	3	**275-1443**	1	CLIP (SLOT)	
	22	3	**275-1444**	1	GROMMET	
I	23	3	**275-1487**	1	HOSE AS	
I	24	3	**282-7566**	1	HOSE AS	
	25	3	**285-2578**	1	BRACKET AS	
	26	1,2	**285-2663**	3	FITTING AS (QUICK DISCONNECT, MALE)	
					(EACH INCLUDES)	
		1,2	**3J-1907**	1	SEAL-O-RING	
		1,2	**285-2664**	1	FITTING	
	27	1,3	*292-7426*	2	ELBOW AS	
					(EACH INCLUDES)	
		1,3	**292-7430**	1	ELBOW	
		1,3	**3J-1907**	1	SEAL-O-RING	
		1,3	**6V-8397**	1	SEAL-O-RING	
I	28	2	**296-6928**	1	HOSE AS	
I	29	2	**4I-1037**	1	HOSE AS	
	30	1	**309-5769**	1	SWITCH AS-PRESSURE (PILOT, BOOM UP)	
		1	**151-9272**	1	KIT-RECEPTACLE (2-PIN)	
					(INCLUDES RECEPTACLE AS & WEDGE)	

278-6701 **LINES GP-PILOT (**contd.**)** **i04463125**

NOTE	REF NO	GRAPHIC REF	PART NUMBER	QTY	PART NAME 1 2 3 4 5 6 (PRODUCT LEVEL)	SEE PAGE
		1	**9X-3401**	2	PIN-CONNECTOR (16-GA TO 18-GA)	
					—OR—	
		1	**126-1767**	2	PIN-CONNECTOR (14-GA TO 16-GA)	
	31	2	**314-8242**	1	SUPPORT	
I	32	3	**317-4793**	1	HOSE AS	
	33	1	**317-4796**	1	SUPPORT AS	
I	34	2	**5I-4076**	1	HOSE AS	
	35	2	**317-4841**	1	BRACKET AS	
I	36	3	**320-0006**	1	HOSE AS	
I	37	2	**325-8976**	1	HOSE AS	
I	38	3	**325-8979**	1	HOSE AS	
	39	1	*148-8336*	2	CONNECTOR AS	
					(EACH INCLUDES)	
		1	**3J-1907**	1	SEAL-O-RING	
		1	**6V-8397**	1	SEAL-O-RING	
		1	**6V-8636**	1	CONNECTOR	
	40	1	*148-8338*	3	CONNECTOR AS	
					(EACH INCLUDES)	
		1	**3J-1907**	1	SEAL-O-RING	
		1	**6V-8397**	1	SEAL-O-RING	
		1	**8T-0075**	1	CONNECTOR	
	41	1,3	*148-8367*	2	ELBOW AS	
					(EACH INCLUDES)	
		1,3	**6V-8397**	1	SEAL-O-RING	
		1,3	**6V-9850**	1	ELBOW	
	42	1	*148-8371*	1	ELBOW AS	
		1	**6V-8397**	1	SEAL-O-RING	
		1	**8C-8988**	1	ELBOW	
	43	1,3	*148-8378*	7	ELBOW AS	
					(EACH INCLUDES)	
		1,3	**3J-1907**	1	SEAL-O-RING	
		1,3	**6V-8397**	1	SEAL-O-RING	
		1,3	**6V-8724**	1	ELBOW	
	44	3	**148-8407**	1	PLUG AS	
		3	**3J-1907**	1	SEAL-O-RING	
		3	**9S-4191**	1	PLUG (9/16-18-THD)	
	45	2,3	*148-8435*	2	TEE AS	
					(EACH INCLUDES)	
		2,3	**3J-1907**	1	SEAL-O-RING	
		2,3	**6V-8397**	2	SEAL-O-RING	
		2,3	**6V-8781**	1	TEE	
	46	1	*148-8439*	1	TEE AS	
		1	**3J-1907**	1	SEAL-O-RING	
		1	**6V-8397**	2	SEAL-O-RING	
		1	**6V-8774**	1	TEE	
	47	2	*150-3036*	1	ELBOW AS	
		2	**3J-1907**	1	SEAL-O-RING	
		2	**6V-8397**	1	SEAL-O-RING	
		2	**8T-1905**	1	ELBOW	
	48	3	*164-5549*	1	COUPLING AS	
		3	**3J-1907**	1	SEAL-O-RING	
		3	**4I-6287**	1	COUPLING	

278-6701 **LINES GP-PILOT (**contd.**)** **i04463125**

NOTE	REF NO	GRAPHIC REF	PART NUMBER	QTY	PART NAME 1 2 3 4 5 6 (PRODUCT LEVEL)	SEE PAGE
	49	1,3	*164-5567*	4	COUPLER AS-QUICK DISCONNECT (MALE)	
					(EACH INCLUDES)	
		1,3	**214-7568**	1	SEAL-O-RING	
		1,3	**6V-3965**	1	FITTING (QUICK DISCONNECT)	
Y	50	1	**171-0188**	1	VALVE GP-SOLENOID (NEG FLOW CONT, PROPN RED VALVE)	853
M	51	2	**5C-9553**	2	BOLT (M6X1X16-MM)	
	52	3	**5P-7462**	1	CLIP (SLOT)	
	53	3	**5P-7463**	1	CLIP (TAB)	
	54	3	**6V-0683**	1	GROMMET	
	55	3	**6V-8397**	2	SEAL-O-RING	
	56	1,2,3	**8T-4121**	7	WASHER-HARD (11X21X2.5-MM THK)	
M	57	3	**8T-4136**	1	BOLT (M10X1.5X25-MM)	
M	58	1,3	**8T-4137**	4	BOLT (M10X1.5X20-MM)	
M	59	1	**8T-4177**	4	BOLT (M8X1.25X90-MM)	
M	60	2	**8T-4192**	2	BOLT (M12X1.75X25-MM)	
M	61	3	**8T-4194**	3	BOLT (M12X1.75X50-MM)	
M	62	2	**8T-4195**	2	BOLT (M10X1.5X30-MM)	
	63	2,3	**8T-4223**	5	WASHER-HARD (13.5X25.5X3-MM THK)	
	64	3	**8T-4224**	2	WASHER-HARD (8.8X16X2-MM THK)	
M	65	3	**8T-6870**	2	BOLT (M8X1.25X70-MM)	
	66	2	**9X-8256**	2	WASHER (6.6X12X2-MM THK)	
C	67	3	*164-9869*	1	CONNECTOR AS	
		3	**3J-1907**	1	SEAL-O-RING	
		3	**6V-8397**	1	SEAL-O-RING	
		3	**9X-2297**	1	CONNECTOR	
	68	1	*363-6138*	1	ELBOW AS	
		1	**3J-1907**	1	SEAL-O-RING	
		1	**6V-8397**	1	SEAL-O-RING	
		1	**363-6120**	1	ADAPTER-FILTER	
	69	3	*363-6134*	1	ADAPTER AS	
		3	**3J-1907**	1	SEAL-O-RING	
		3	**6V-8397**	1	SEAL-O-RING	
		3	**354-3864**	1	ADAPTER-FILTER	

C - CHANGE FROM PREVIOUS TYPE
I - REFER TO HYDRAULIC INFORMATION SYSTEM
M - METRIC PART
Y - SEPARATE ILLUSTRATION

278-6701 **LINES GP-PILOT (**contd.**)** **i04463125**

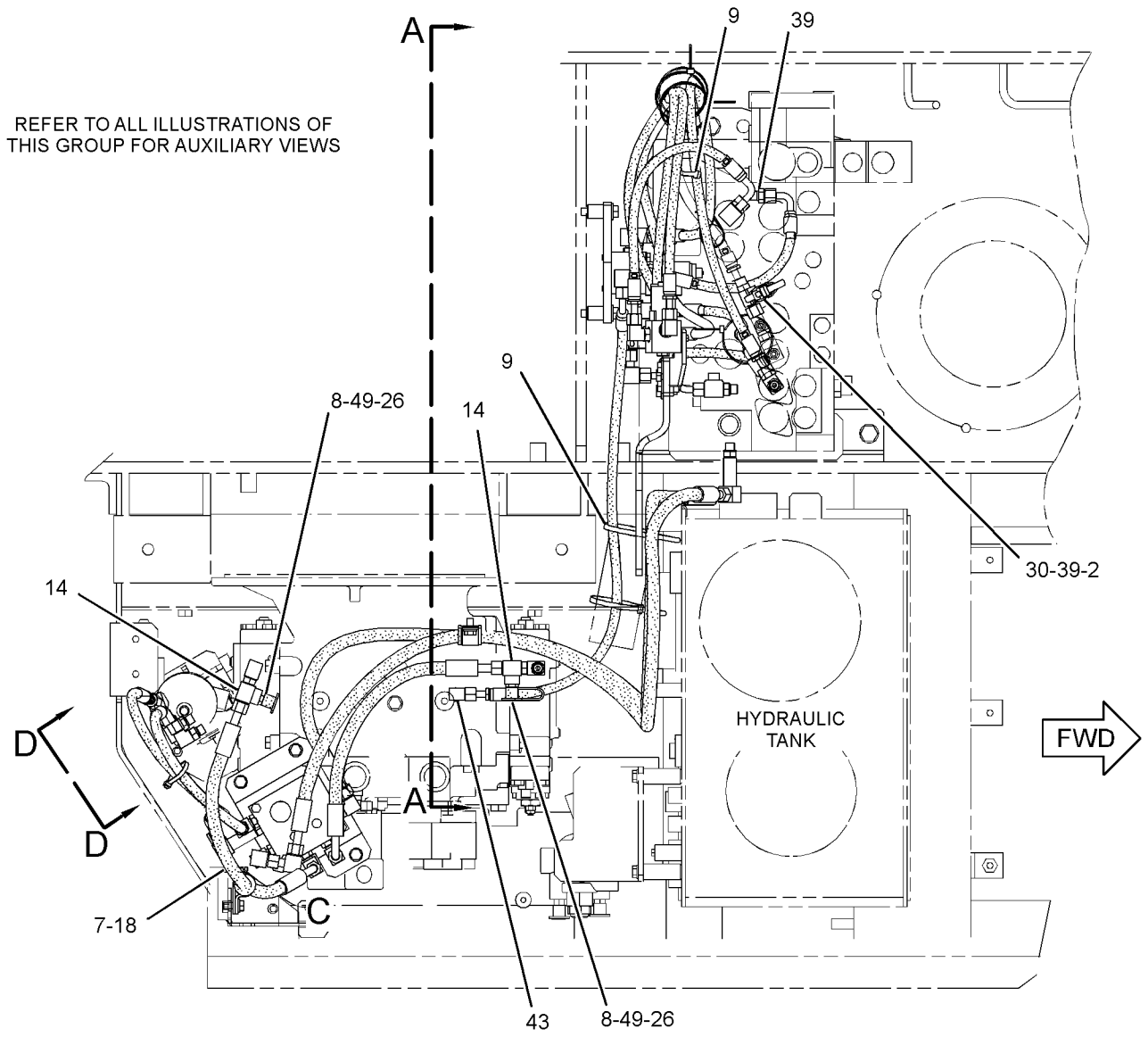

TOP VIEW

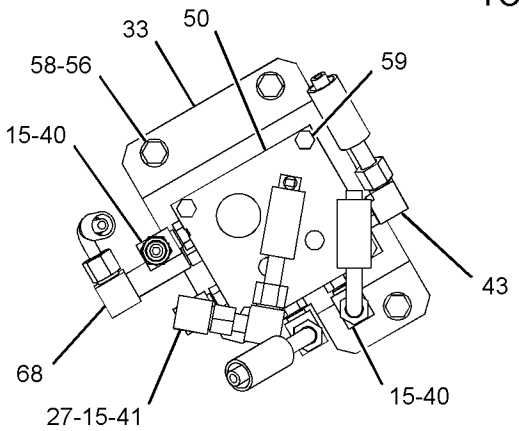

VIEW OF AREA C
(HOSES REMOVED)

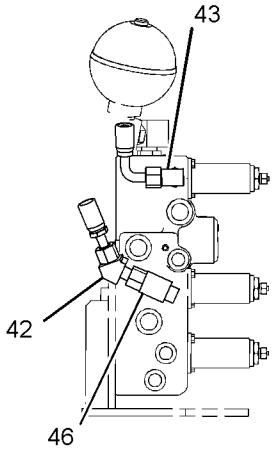

VIEW D-D

GRAPHIC #1

g02648138

278-6701 **LINES GP-PILOT (**contd.**)** **i04463125**

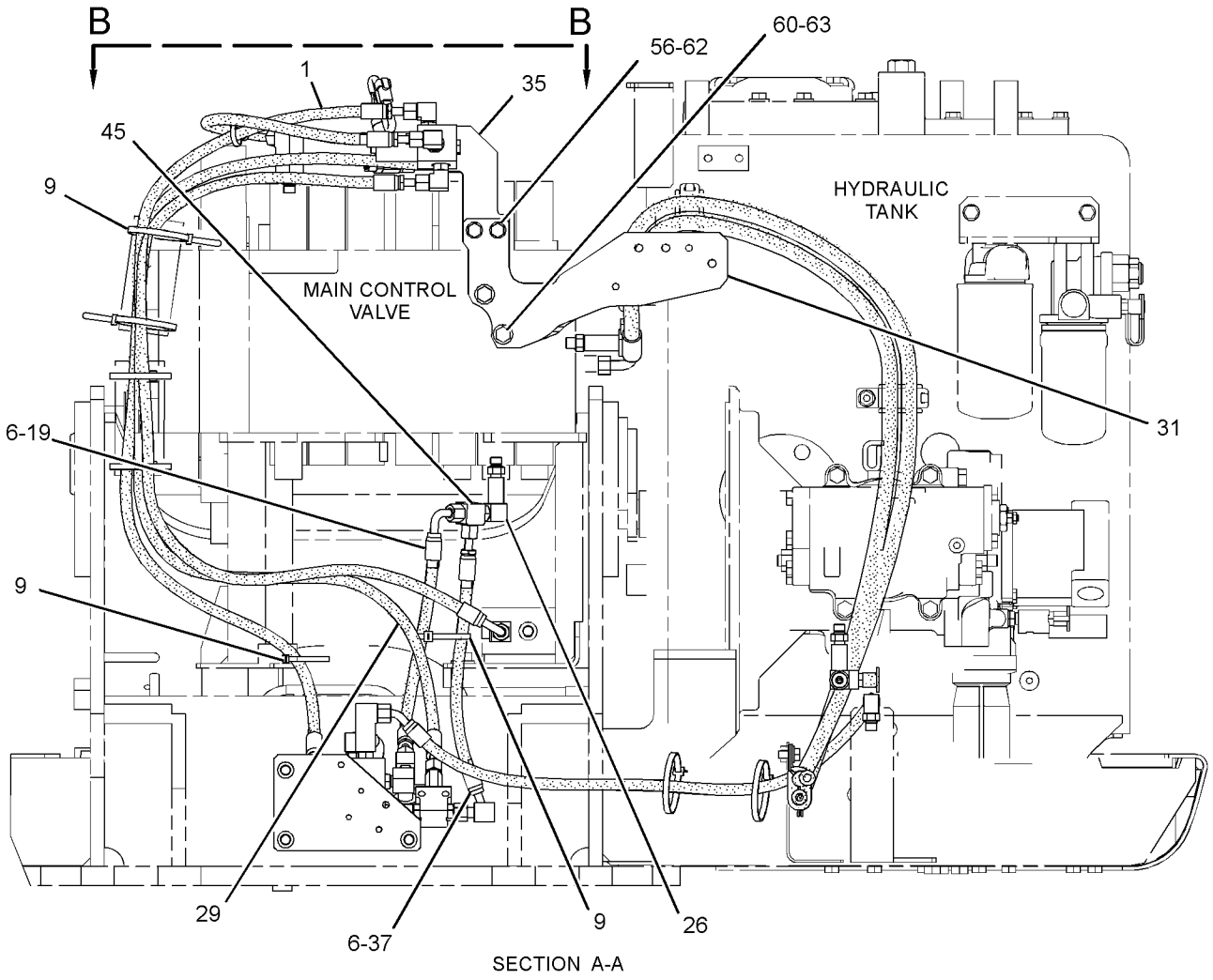

SECTION A-A

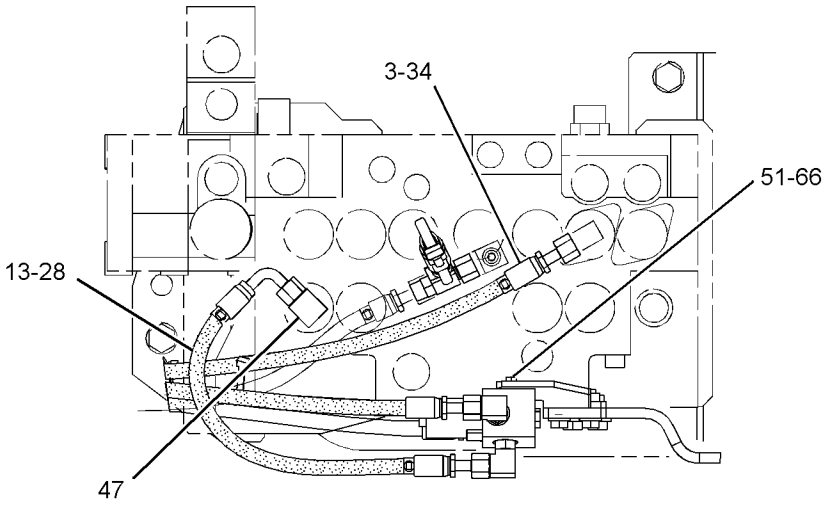

VIEW B-B

GRAPHIC #2 g02173796

278-6701 **LINES GP-PILOT (**contd.**)** **i04463125**

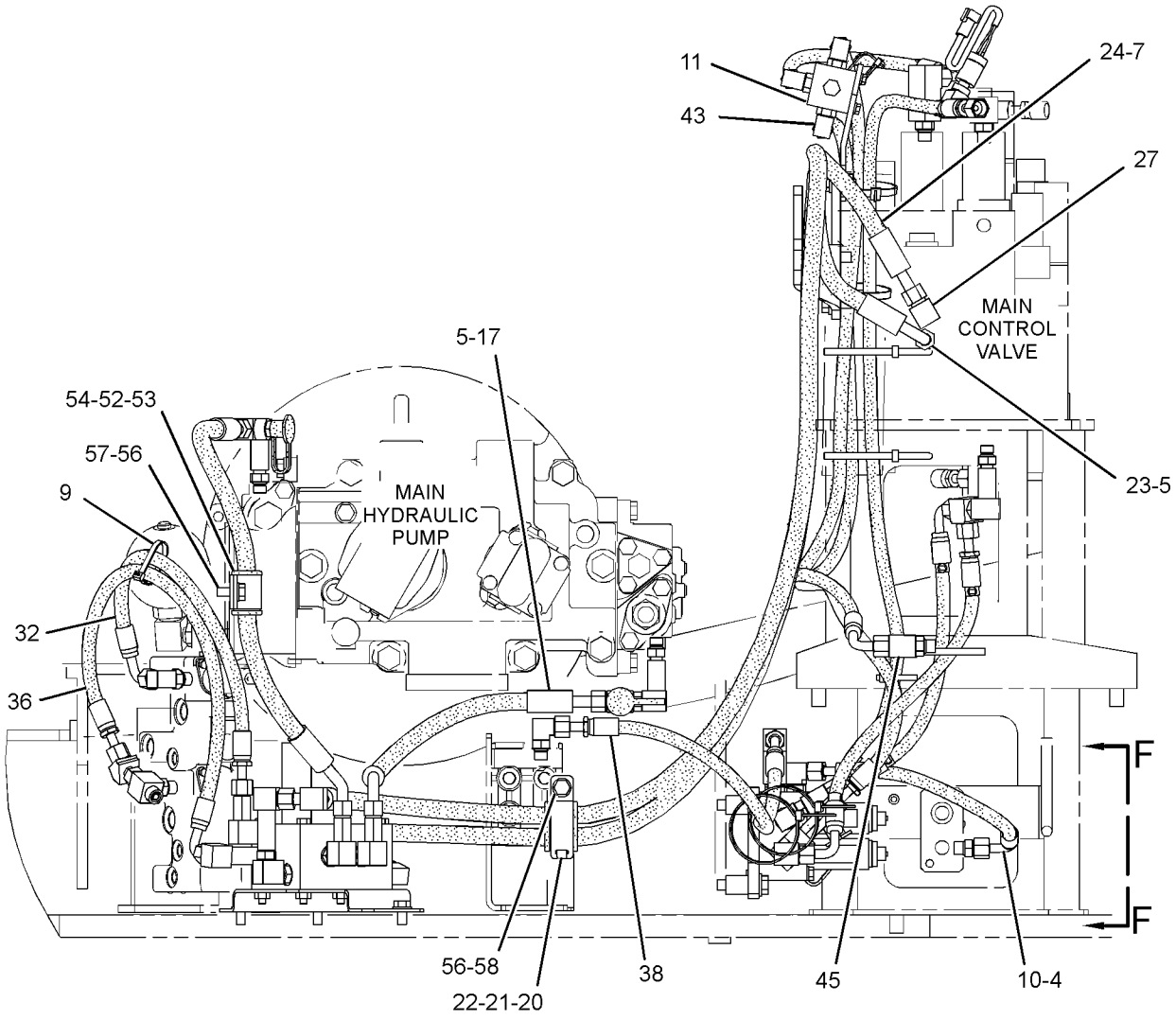

RIGHT SIDE VIEW

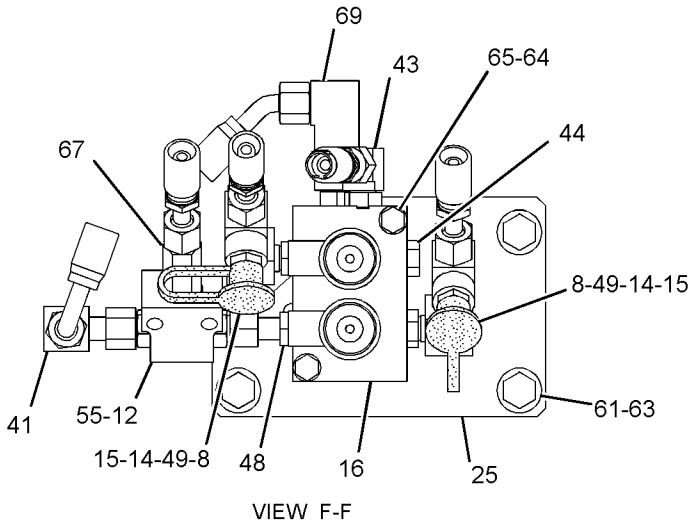

VIEW F-F

GRAPHIC #3 <END> g02648137

278-6701 LINES GP-PILOT—SYSTEM 23, COMBINED FUNCTION

S/N: DLP1-UP
PART OF 270-5846 CONTROL AR-AUXILIARY
AN ATTACHMENT
TYPE 4

SMCS-5057, 5059 **i04805708**

NOTE	REF NO	GRAPHIC REF	PART NUMBER	QTY	PART NAME 1 2 3 4 5 6 (PRODUCT LEVEL)	SEE PAGE
I	1	2	**4I-0800**	1	HOSE AS	
	2	1	**4I-3941**	1	FITTING AS	
	3	2	**4I-9521**	2	BAND-MARKER (RED, L1)	
	4	3	**4I-9522**	2	BAND-MARKER (YELLOW, L2)	
	5	3	**4I-9523**	4	BAND-MARKER (BLUE, L3)	
	6	2	**4I-9524**	4	BAND-MARKER (BROWN, L4)	
	7	1,3	**4I-9527**	4	BAND-MARKER (GREEN, R3)	
	8	1,3	**6V-0852**	4	CAP-DUST	
	9	1,2,3	**7K-1181**	10	STRAP-CABLE	
	10	3	**383-9558**	1	HOSE AS	
CY	11	3	**352-7176**	1	VALVE GP-SOLENOID (HEAVY LIFT)	856
Y	12	3	**164-6979**	1	VALVE GP-SHUTTLE	846
	13	2	**133-5813**	2	BAND-MARKER (GRAY, P)	
	14	1,3	*150-4027*	4	TEE AS	
					(EACH INCLUDES)	
		1,3	**3E-2310**	1	TEE	
		1,3	**3J-1907**	1	SEAL-O-RING	
		1,3	**6V-8397**	1	SEAL-O-RING	
	15	1,3	*164-6874*	6	FITTING AS-ELBOW (QUICK DISCONNECT, MALE)	
					(EACH INCLUDES)	
		1,3	**3J-1907**	1	SEAL-O-RING	
		1,3	**085-7356**	1	FITTING	
Y	16	3	**259-7430**	1	VALVE GP-SOLENOID (PRESSURE REDUCING)	854
I	17	3	**260-7900**	1	HOSE AS	
I	18	1	**269-9703**	1	HOSE AS	
	19	2	**272-4186**	1	HOSE AS	
	20	3	**275-1442**	1	CLIP (TAB)	
	21	3	**275-1443**	1	CLIP (SLOT)	
	22	3	**275-1444**	1	GROMMET	
I	23	3	**275-1487**	1	HOSE AS	
I	24	3	**282-7566**	1	HOSE AS	
	25	3	**285-2578**	1	BRACKET AS	
	26	1,2	**285-2663**	3	FITTING AS (QUICK DISCONNECT, MALE)	
					(EACH INCLUDES)	
		1,2	**3J-1907**	1	SEAL-O-RING	
		1,2	**285-2664**	1	FITTING	
	27	1,3	*292-7426*	2	ELBOW AS	
					(EACH INCLUDES)	
		1,3	**292-7430**	1	ELBOW	
		1,3	**3J-1907**	1	SEAL-O-RING	
		1,3	**6V-8397**	1	SEAL-O-RING	
I	28	2	**296-6928**	1	HOSE AS	
I	29	2	**4I-1037**	1	HOSE AS	
	30	1	**309-5769**	1	SWITCH AS-PRESSURE (PILOT, BOOM UP)	
		1	**151-9272**	1	KIT-RECEPTACLE (2-PIN)	
					(INCLUDES RECEPTACLE AS & WEDGE)	

278-6701 **LINES GP-PILOT (**contd.**)** **i04805708**

NOTE	REF NO	GRAPHIC REF	PART NUMBER	QTY	PART NAME 1 2 3 4 5 6 (PRODUCT LEVEL)	SEE PAGE
		1	**9X-3401**	2	PIN-CONNECTOR (16-GA TO 18-GA)	
					—OR—	
		1	**126-1767**	2	PIN-CONNECTOR (14-GA TO 16-GA)	
	31	2	**314-8242**	1	SUPPORT	
I	32	3	**317-4793**	1	HOSE AS	
	33	1	**317-4796**	1	SUPPORT AS	
I	34	2	**5I-4076**	1	HOSE AS	
	35	2	**317-4841**	1	BRACKET AS	
I	36	3	**320-0006**	1	HOSE AS	
I	37	2	**325-8976**	1	HOSE AS	
I	38	3	**325-8979**	1	HOSE AS	
	39	1	*148-8336*	2	CONNECTOR AS	
					(EACH INCLUDES)	
		1	**3J-1907**	1	SEAL-O-RING	
		1	**6V-8397**	1	SEAL-O-RING	
		1	**6V-8636**	1	CONNECTOR	
	40	1	*148-8338*	3	CONNECTOR AS	
					(EACH INCLUDES)	
		1	**3J-1907**	1	SEAL-O-RING	
		1	**6V-8397**	1	SEAL-O-RING	
		1	**8T-0075**	1	CONNECTOR	
	41	1,3	*148-8367*	2	ELBOW AS	
					(EACH INCLUDES)	
		1,3	**6V-8397**	1	SEAL-O-RING	
		1,3	**6V-9850**	1	ELBOW	
	42	1	*148-8371*	1	ELBOW AS	
		1	**6V-8397**	1	SEAL-O-RING	
		1	**8C-8988**	1	ELBOW	
	43	1,3	*148-8378*	7	ELBOW AS	
					(EACH INCLUDES)	
		1,3	**3J-1907**	1	SEAL-O-RING	
		1,3	**6V-8397**	1	SEAL-O-RING	
		1,3	**6V-8724**	1	ELBOW	
	44	3	**148-8407**	1	PLUG AS	
		3	**3J-1907**	1	SEAL-O-RING	
		3	**9S-4191**	1	PLUG (9/16-18-THD)	
	45	2,3	*148-8435*	2	TEE AS	
					(EACH INCLUDES)	
		2,3	**3J-1907**	1	SEAL-O-RING	
		2,3	**6V-8397**	2	SEAL-O-RING	
		2,3	**6V-8781**	1	TEE	
	46	1	*148-8439*	1	TEE AS	
		1	**3J-1907**	1	SEAL-O-RING	
		1	**6V-8397**	2	SEAL-O-RING	
		1	**6V-8774**	1	TEE	
	47	2	*150-3036*	1	ELBOW AS	
		2	**3J-1907**	1	SEAL-O-RING	
		2	**6V-8397**	1	SEAL-O-RING	
		2	**8T-1905**	1	ELBOW	
	48	3	*164-5549*	1	COUPLING AS	
		3	**3J-1907**	1	SEAL-O-RING	
		3	**4I-6287**	1	COUPLING	

278-6701 **LINES GP-PILOT (**contd.**)** **i04805708**

NOTE	REF NO	GRAPHIC REF	PART NUMBER	QTY	PART NAME 1 2 3 4 5 6 (PRODUCT LEVEL)	SEE PAGE
	49	1,3	*164-5567*	4	COUPLER AS-QUICK DISCONNECT (MALE)	
					(EACH INCLUDES)	
		1,3	**214-7568**	1	SEAL-O-RING	
		1,3	**6V-3965**	1	FITTING (QUICK DISCONNECT)	
Y	50	1	**171-0188**	1	VALVE GP-SOLENOID (NEG FLOW CONT, PROPN RED VALVE)	853
M	51	2	**5C-9553**	2	BOLT (M6X1X16-MM)	
	52	3	**5P-7462**	1	CLIP (SLOT)	
	53	3	**5P-7463**	1	CLIP (TAB)	
	54	3	**6V-0683**	1	GROMMET	
	55	3	**6V-8397**	2	SEAL-O-RING	
	56	1,2,3	**8T-4121**	7	WASHER-HARD (11X21X2.5-MM THK)	
M	57	3	**8T-4136**	1	BOLT (M10X1.5X25-MM)	
M	58	1,3	**8T-4137**	4	BOLT (M10X1.5X20-MM)	
M	59	1	**8T-4177**	4	BOLT (M8X1.25X90-MM)	
M	60	2	**8T-4192**	2	BOLT (M12X1.75X25-MM)	
M	61	3	**8T-4194**	3	BOLT (M12X1.75X50-MM)	
M	62	2	**8T-4195**	2	BOLT (M10X1.5X30-MM)	
	63	2,3	**8T-4223**	5	WASHER-HARD (13.5X25.5X3-MM THK)	
	64	3	**8T-4224**	2	WASHER-HARD (8.8X16X2-MM THK)	
M	65	3	**8T-6870**	2	BOLT (M8X1.25X70-MM)	
	66	2	**9X-8256**	2	WASHER (6.6X12X2-MM THK)	
C	67	3	*164-9869*	1	CONNECTOR AS	
		3	**3J-1907**	1	SEAL-O-RING	
		3	**6V-8397**	1	SEAL-O-RING	
		3	**9X-2297**	1	CONNECTOR	
	68	1	*363-6138*	1	ELBOW AS	
		1	**3J-1907**	1	SEAL-O-RING	
		1	**6V-8397**	1	SEAL-O-RING	
		1	**363-6120**	1	ADAPTER-FILTER	
	69	3	*363-6134*	1	ADAPTER AS	
		3	**3J-1907**	1	SEAL-O-RING	
		3	**6V-8397**	1	SEAL-O-RING	
		3	**354-3864**	1	ADAPTER-FILTER	

C - CHANGE FROM PREVIOUS TYPE
I - REFER TO HYDRAULIC INFORMATION SYSTEM
M - METRIC PART
Y - SEPARATE ILLUSTRATION

278-6701 **LINES GP-PILOT (**contd.**)** **i04805708**

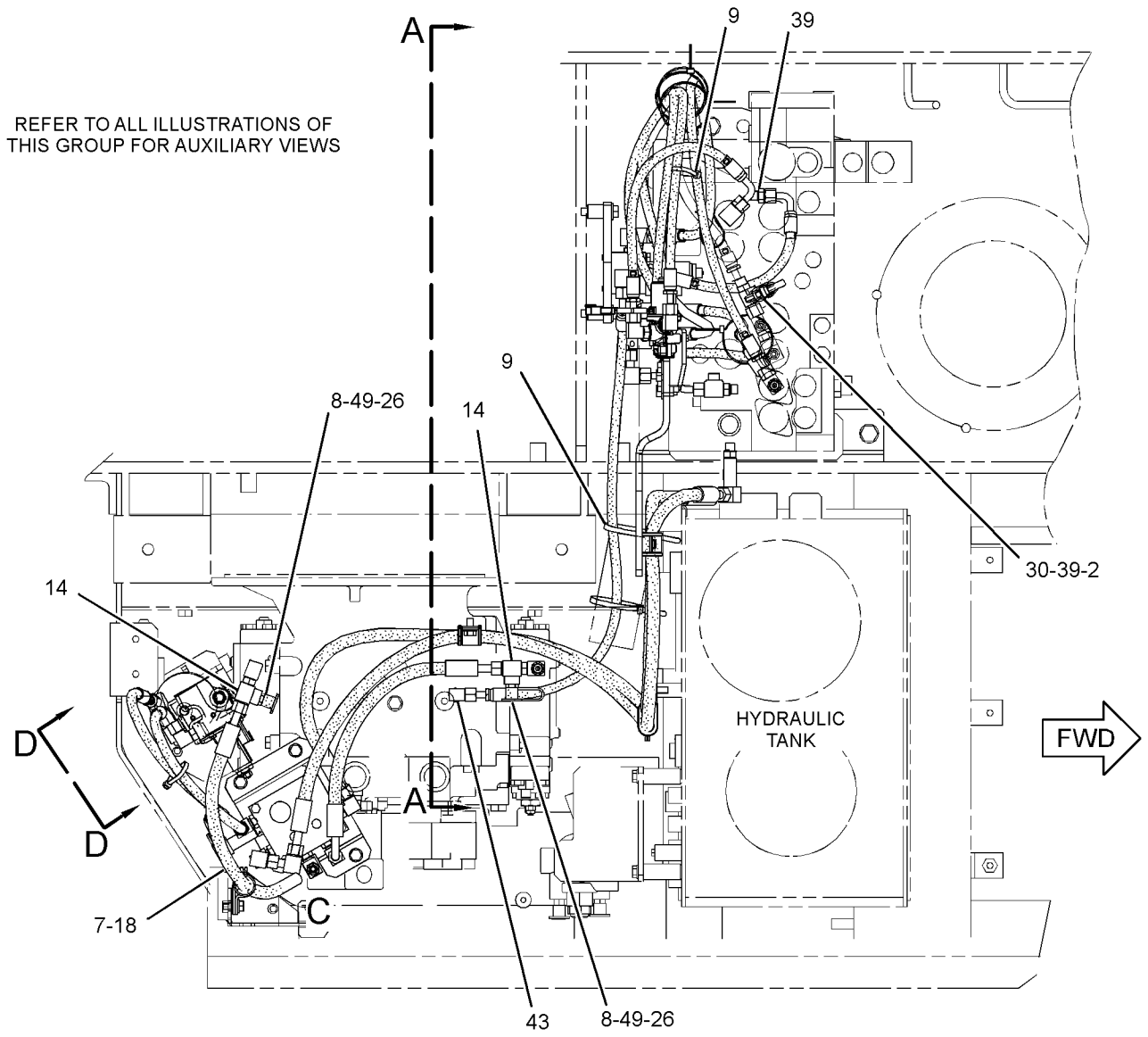

TOP VIEW

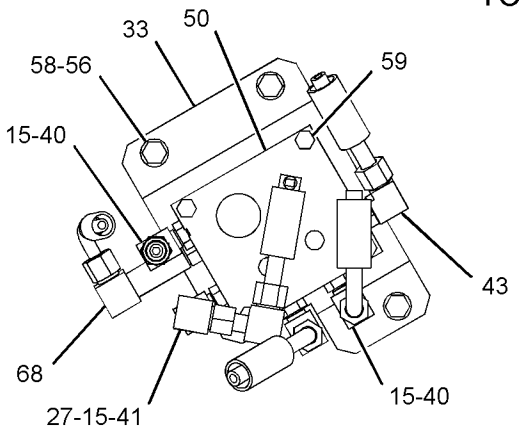

VIEW OF AREA C
(HOSES REMOVED)

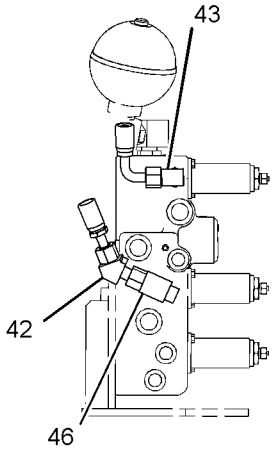

VIEW D-D

GRAPHIC #1

g02797863

278-6701 **LINES GP-PILOT (**contd.**)** **i04805708**

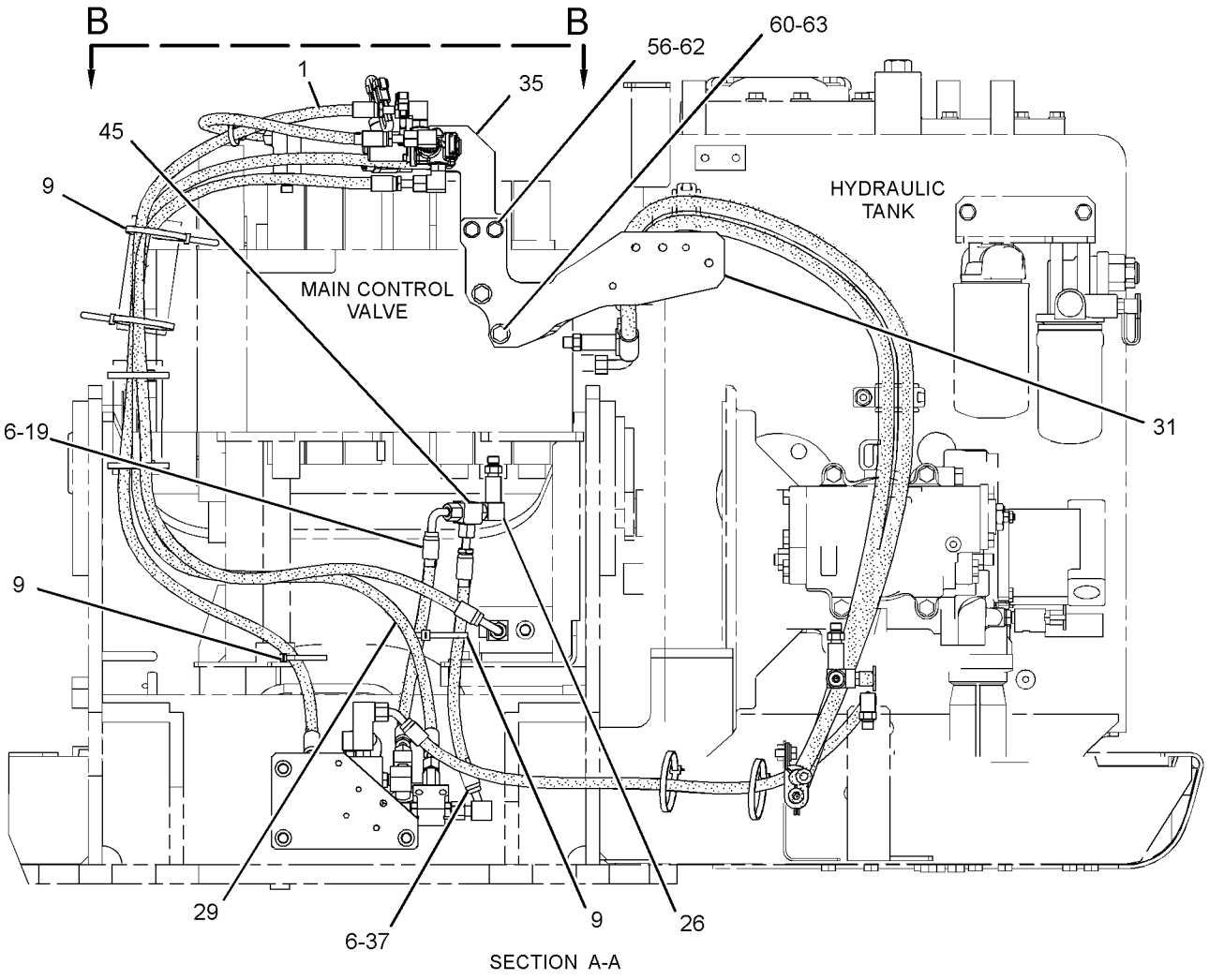

SECTION A-A

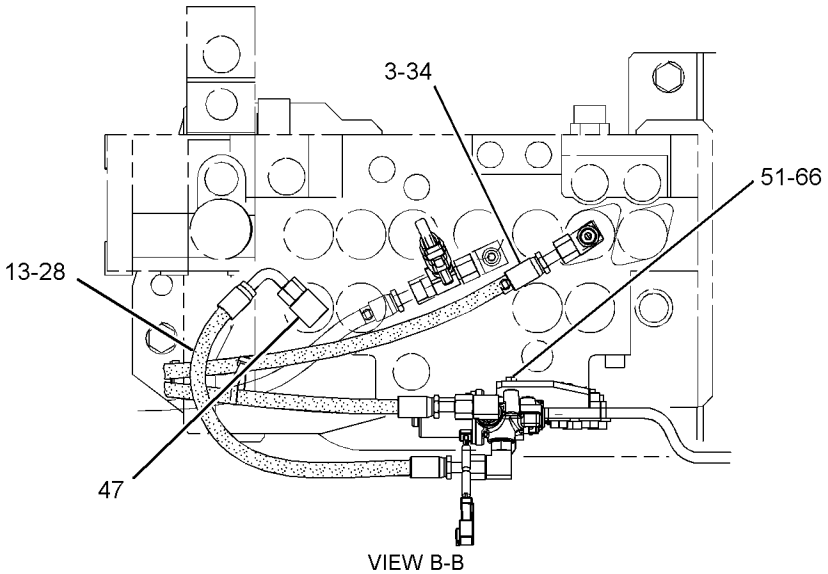

VIEW B-B

GRAPHIC #2 g02797864

278-6701 **LINES GP-PILOT (**contd.**)** **i04805708**

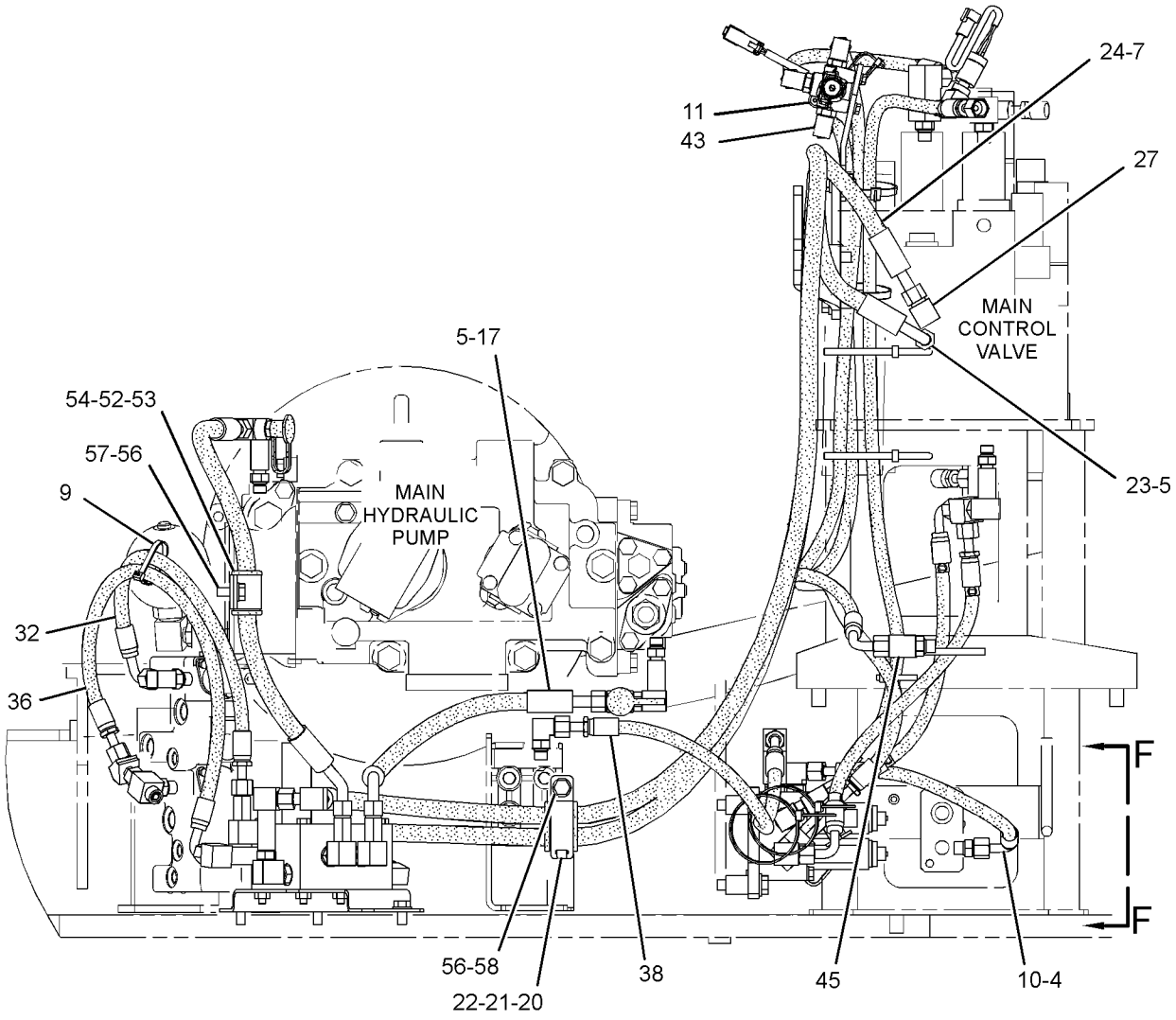

RIGHT SIDE VIEW

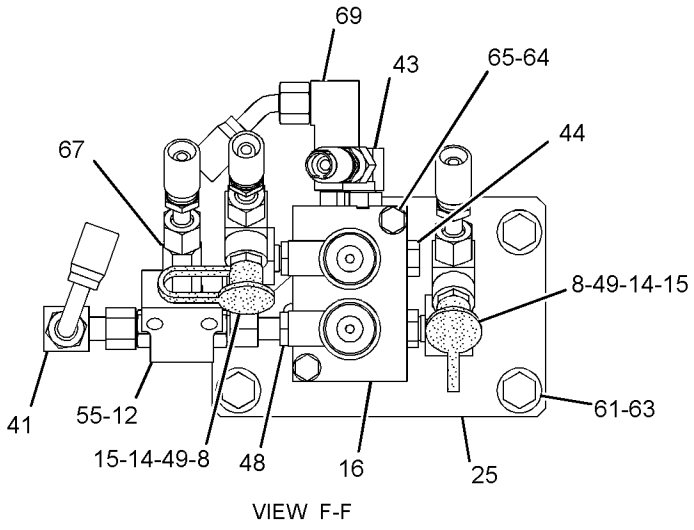

VIEW F-F

GRAPHIC #3 <END> g02797865

278-6701 LINES GP-PILOT—SYSTEM 23, COMBINED FUNCTION

S/N: DLP1-UP
PART OF 270-5846 CONTROL AR-AUXILIARY
AN ATTACHMENT
TYPE 5

SMCS-5057, 5059 **i05487390**

NOTE	REF NO	GRAPHIC REF	PART NUMBER	QTY	PART NAME 1 2 3 4 5 6 (PRODUCT LEVEL)	SEE PAGE
I	1	2	**4I-0800**	1	HOSE AS	
	2	1	**4I-3941**	1	FITTING AS	
	3	2	**4I-9521**	2	BAND-MARKER (RED, L1)	
	4	3	**4I-9522**	2	BAND-MARKER (YELLOW, L2)	
	5	3	**4I-9523**	4	BAND-MARKER (BLUE, L3)	
	6	2	**4I-9524**	4	BAND-MARKER (BROWN, L4)	
	7	1,3	**4I-9527**	4	BAND-MARKER (GREEN, R3)	
	8	1,3	**6V-0852**	4	CAP-DUST	
	9	1,2,3	**7K-1181**	10	STRAP-CABLE	
	10	3	**383-9558**	1	HOSE AS	
Y	11	3	**352-7176**	1	VALVE GP-SOLENOID (HEAVY LIFT)	856
Y	12	3	**164-6979**	1	VALVE GP-SHUTTLE	846
	13	2	**133-5813**	2	BAND-MARKER (GRAY, P)	
	14	1,3	*150-4027*	4	TEE AS	
					(EACH INCLUDES)	
		1,3	**3E-2310**	1	TEE	
		1,3	**3J-1907**	1	SEAL-O-RING	
		1,3	**6V-8397**	1	SEAL-O-RING	
	15	1,3	*164-6874*	6	FITTING AS-ELBOW (QUICK DISCONNECT, MALE)	
					(EACH INCLUDES)	
		1,3	**3J-1907**	1	SEAL-O-RING	
		1,3	**085-7356**	1	FITTING	
Y	16	3	**259-7430**	1	VALVE GP-SOLENOID (PRESSURE REDUCING)	854
I	17	3	**260-7900**	1	HOSE AS	
I	18	1	**269-9703**	1	HOSE AS	
	19	2	**272-4186**	1	HOSE AS	
	20	3	**275-1442**	1	CLIP (TAB)	
	21	3	**275-1443**	1	CLIP (SLOT)	
	22	3	**275-1444**	1	GROMMET	
I	23	3	**275-1487**	1	HOSE AS	
I	24	3	**282-7566**	1	HOSE AS	
	25	3	**285-2578**	1	BRACKET AS	
	26	1,2	**285-2663**	3	FITTING AS (QUICK DISCONNECT, MALE)	
					(EACH INCLUDES)	
		1,2	**3J-1907**	1	SEAL-O-RING	
		1,2	**285-2664**	1	FITTING	
	27	1,3	*292-7426*	2	ELBOW AS	
					(EACH INCLUDES)	
		1,3	**292-7430**	1	ELBOW	
		1,3	**3J-1907**	1	SEAL-O-RING	
		1,3	**6V-8397**	1	SEAL-O-RING	
I	28	2	**296-6928**	1	HOSE AS	
I	29	2	**4I-1037**	1	HOSE AS	
	30	1	**309-5769**	1	SWITCH AS-PRESSURE (PILOT, BOOM UP)	
		1	**151-9272**	1	KIT-RECEPTACLE (2-PIN)	
					(INCLUDES RECEPTACLE AS & WEDGE)	

278-6701 **LINES GP-PILOT (**contd.**)** **i05487390**

NOTE	REF NO	GRAPHIC REF	PART NUMBER	QTY	PART NAME 1 2 3 4 5 6 (PRODUCT LEVEL)	SEE PAGE
		1	**9X-3401**	2	PIN-CONNECTOR (16-GA TO 18-GA)	
					—OR—	
		1	**126-1767**	2	PIN-CONNECTOR (14-GA TO 16-GA)	
	31	2	**314-8242**	1	SUPPORT	
I	32	3	**317-4793**	1	HOSE AS	
	33	1	**317-4796**	1	SUPPORT AS	
I	34	2	**5I-4076**	1	HOSE AS	
	35	2	**317-4841**	1	BRACKET AS	
I	36	3	**320-0006**	1	HOSE AS	
I	37	2	**325-8976**	1	HOSE AS	
I	38	3	**325-8979**	1	HOSE AS	
	39	1	*148-8336*	2	CONNECTOR AS	
					(EACH INCLUDES)	
		1	**3J-1907**	1	SEAL-O-RING	
		1	**6V-8397**	1	SEAL-O-RING	
		1	**6V-8636**	1	CONNECTOR	
	40	1	*148-8338*	3	CONNECTOR AS	
					(EACH INCLUDES)	
		1	**3J-1907**	1	SEAL-O-RING	
		1	**6V-8397**	1	SEAL-O-RING	
		1	**8T-0075**	1	CONNECTOR	
	41	1,3	*148-8367*	2	ELBOW AS	
					(EACH INCLUDES)	
		1,3	**6V-8397**	1	SEAL-O-RING	
		1,3	**6V-9850**	1	ELBOW	
	42	1	*148-8371*	1	ELBOW AS	
		1	**6V-8397**	1	SEAL-O-RING	
		1	**8C-8988**	1	ELBOW	
	43	1,3	*148-8378*	7	ELBOW AS	
					(EACH INCLUDES)	
		1,3	**3J-1907**	1	SEAL-O-RING	
		1,3	**6V-8397**	1	SEAL-O-RING	
		1,3	**6V-8724**	1	ELBOW	
	44	3	**148-8407**	1	PLUG AS	
		3	**3J-1907**	1	SEAL-O-RING	
		3	**9S-4191**	1	PLUG (9/16-18-THD)	
	45	2,3	*148-8435*	2	TEE AS	
					(EACH INCLUDES)	
		2,3	**3J-1907**	1	SEAL-O-RING	
		2,3	**6V-8397**	2	SEAL-O-RING	
		2,3	**6V-8781**	1	TEE	
	46	1	*148-8439*	1	TEE AS	
		1	**3J-1907**	1	SEAL-O-RING	
		1	**6V-8397**	2	SEAL-O-RING	
		1	**6V-8774**	1	TEE	
	47	2	*150-3036*	1	ELBOW AS	
		2	**3J-1907**	1	SEAL-O-RING	
		2	**6V-8397**	1	SEAL-O-RING	
		2	**8T-1905**	1	ELBOW	
	48	3	*164-5549*	1	COUPLING AS	
		3	**3J-1907**	1	SEAL-O-RING	
		3	**4I-6287**	1	COUPLING	

278-6701 **LINES GP-PILOT (**contd.**)** **i05487390**

NOTE	REF NO	GRAPHIC REF	PART NUMBER	QTY	PART NAME 1 2 3 4 5 6 (PRODUCT LEVEL)	SEE PAGE
	49	1,3	*164-5567*	4	COUPLER AS-QUICK DISCONNECT (MALE)	
					(EACH INCLUDES)	
		1,3	**214-7568**	1	SEAL-O-RING	
		1,3	**6V-3965**	1	FITTING (QUICK DISCONNECT)	
CY	50	1	**398-2282**	1	VALVE GP-SOLENOID (NEGATIVE FLOW CONTROL)	857
M	51	2	**5C-9553**	2	BOLT (M6X1X16-MM)	
	52	3	**5P-7462**	1	CLIP (SLOT)	
	53	3	**5P-7463**	1	CLIP (TAB)	
	54	3	**6V-0683**	1	GROMMET	
	55	3	**6V-8397**	2	SEAL-O-RING	
	56	1,2,3	**8T-4121**	7	WASHER-HARD (11X21X2.5-MM THK)	
M	57	3	**8T-4136**	1	BOLT (M10X1.5X25-MM)	
M	58	1,3	**8T-4137**	4	BOLT (M10X1.5X20-MM)	
M	59	1	**8T-4177**	4	BOLT (M8X1.25X90-MM)	
M	60	2	**8T-4139**	2	BOLT (M12X1.75X30-MM)	
M	61	3	**8T-4194**	3	BOLT (M12X1.75X50-MM)	
M	62	2	**8T-4195**	2	BOLT (M10X1.5X30-MM)	
	63	2,3	**8T-4223**	5	WASHER-HARD (13.5X25.5X3-MM THK)	
	64	3	**8T-4224**	2	WASHER-HARD (8.8X16X2-MM THK)	
M	65	3	**8T-6870**	2	BOLT (M8X1.25X70-MM)	
	66	2	**9X-8256**	2	WASHER (6.6X12X2-MM THK)	
	67	3	*164-9869*	1	CONNECTOR AS	
		3	**3J-1907**	1	SEAL-O-RING	
		3	**6V-8397**	1	SEAL-O-RING	
		3	**9X-2297**	1	CONNECTOR	
	68	1	*363-6138*	1	ELBOW AS	
		1	**3J-1907**	1	SEAL-O-RING	
		1	**6V-8397**	1	SEAL-O-RING	
		1	**363-6120**	1	ADAPTER-FILTER	
	69	3	*363-6134*	1	ADAPTER AS	
		3	**3J-1907**	1	SEAL-O-RING	
		3	**6V-8397**	1	SEAL-O-RING	
		3	**354-3864**	1	ADAPTER-FILTER	

C - CHANGE FROM PREVIOUS TYPE
I - REFER TO HYDRAULIC INFORMATION SYSTEM
M - METRIC PART
Y - SEPARATE ILLUSTRATION

278-6701 **LINES GP-PILOT (**contd.**)** **i05487390**

REFER TO ALL ILLUSTRATIONS OF THIS GROUP FOR AUXILIARY VIEWS

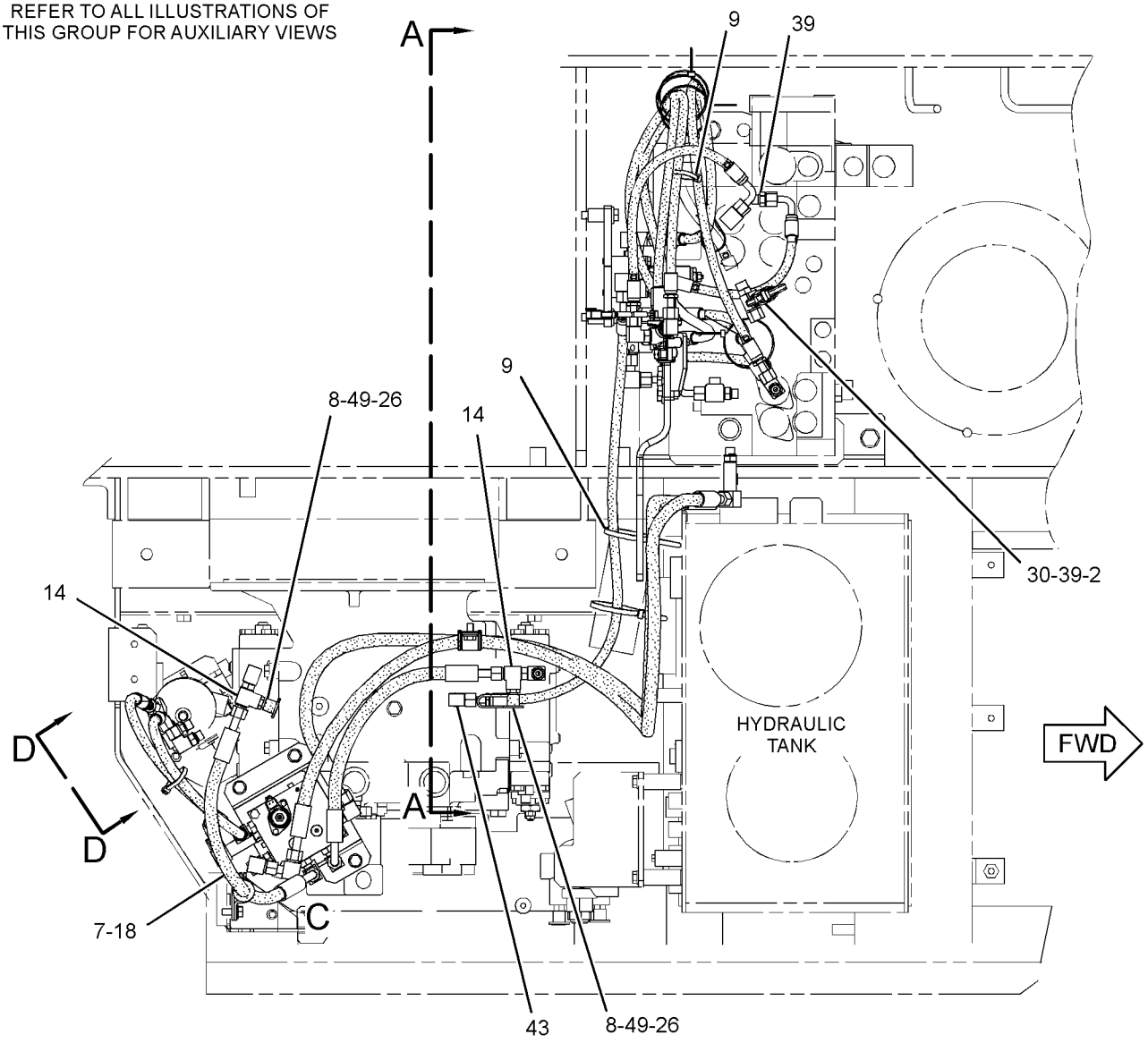

TOP VIEW

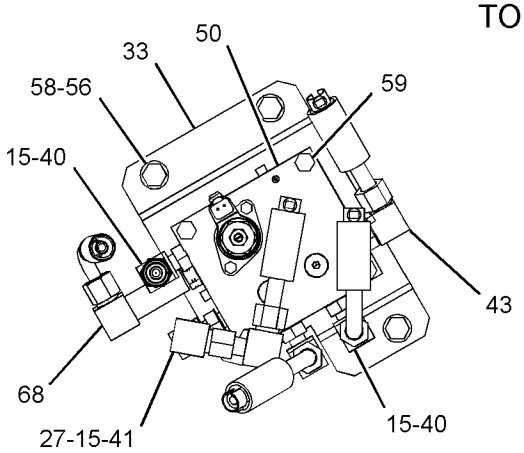

VIEW OF AREA C
(HOSES REMOVED)

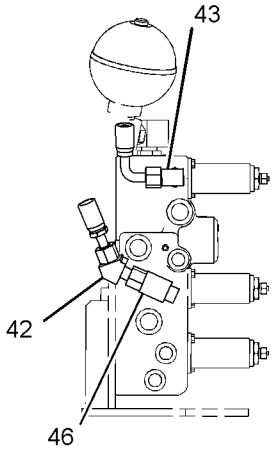

VIEW D-D

GRAPHIC #1

g03350569

278-6701 **LINES GP-PILOT (**contd.**)** **i05487390**

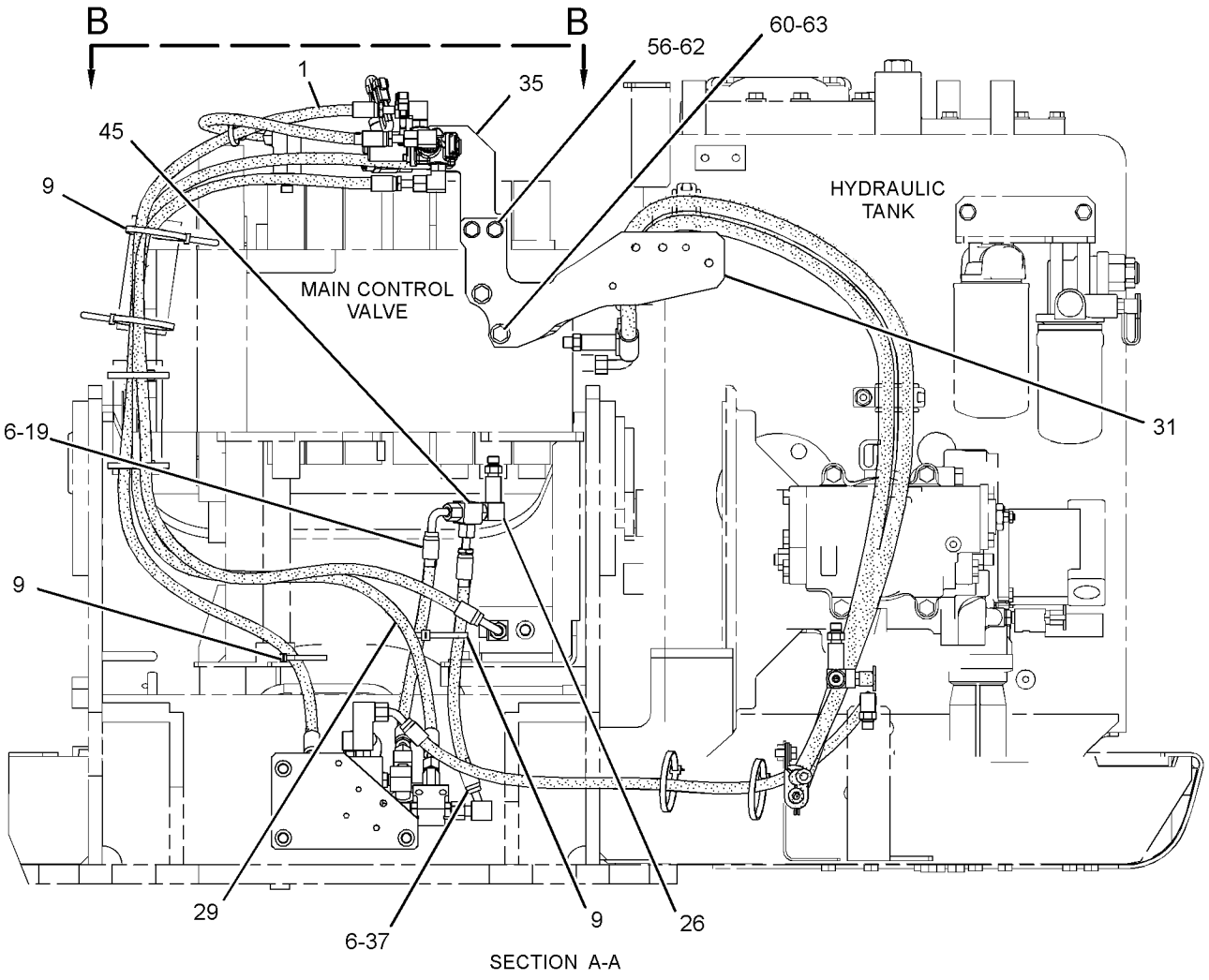

SECTION A-A

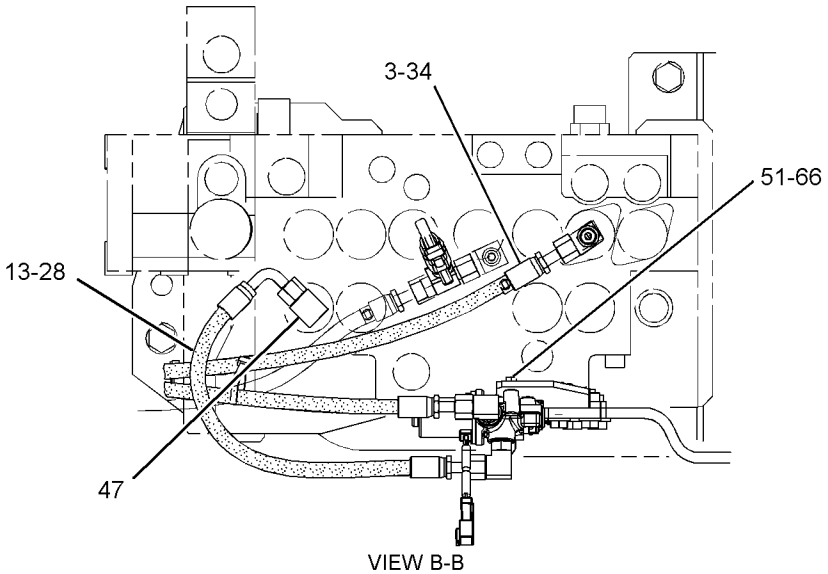

VIEW B-B

GRAPHIC #2 g02797864

278-6701 **LINES GP-PILOT (**contd.**)** **i05487390**

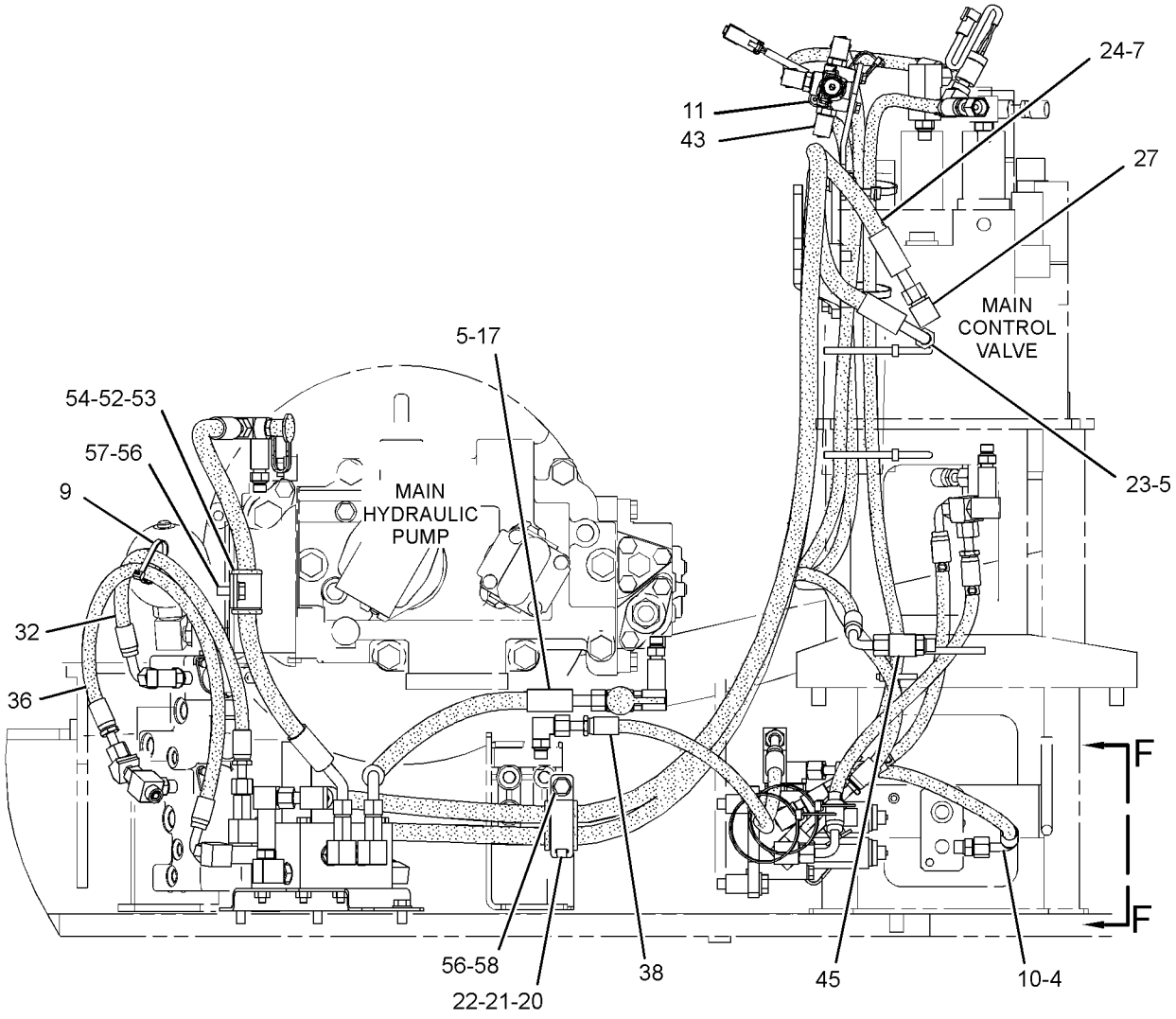

RIGHT SIDE VIEW

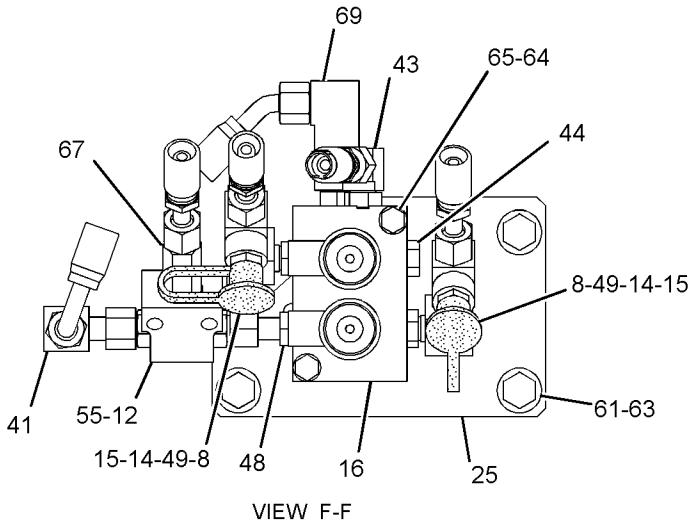

VIEW F-F

GRAPHIC #3 <END> g02797865

278-6705 LINES GP-PILOT—MEDIUM PRESSURE

S/N: DLP1-UP
PART OF 270-6119 CONTROL AR-AUXILIARY
AN ATTACHMENT
TYPE 1

SMCS-5057, 5059 **i02889004**

NOTE	REF NO	GRAPHIC REF	PART NUMBER	QTY	PART NAME 1 2 3 4 5 6 (PRODUCT LEVEL)	SEE PAGE
	1	1	**4I-9526**	2	BAND-MARKER (WHITE, R2)	
	2	1	**4I-9527**	2	BAND-MARKER (GREEN, R3)	
	3	1	**7K-1181**	4	STRAP-CABLE	
I	4	1	**087-4503**	1	HOSE AS	
	5	1	*164-6874*	1	FITTING AS-ELBOW (QUICK DISCONNECT, MALE)	
		1	**3J-1907**	1	SEAL-O-RING	
		1	**085-7356**	1	FITTING	
	6	1	*150-3036*	1	ELBOW AS	
		1	**3J-1907**	1	SEAL-O-RING	
		1	**6V-8397**	1	SEAL-O-RING	
		1	**8T-1905**	1	ELBOW	
	7	1	*148-8371*	1	ELBOW AS	
		1	**6V-8397**	1	SEAL-O-RING	
		1	**8C-8988**	1	ELBOW	
	8	1	*148-8378*	2	ELBOW AS	
					(EACH INCLUDES)	
		1	**3J-1907**	1	SEAL-O-RING	
		1	**6V-8397**	1	SEAL-O-RING	
		1	**6V-8724**	1	ELBOW	
	9	1	*153-6249*	1	CONNECTOR AS	
		1	**3J-1907**	1	SEAL-O-RING	
		1	**6V-8397**	1	SEAL-O-RING	
		1	**8T-8887**	1	CONNECTOR	
I	10	1	**319-9756**	1	HOSE AS	

I - REFER TO HYDRAULIC INFORMATION SYSTEM

278-6705 **LINES GP-PILOT (**contd.**)** **i02889004**

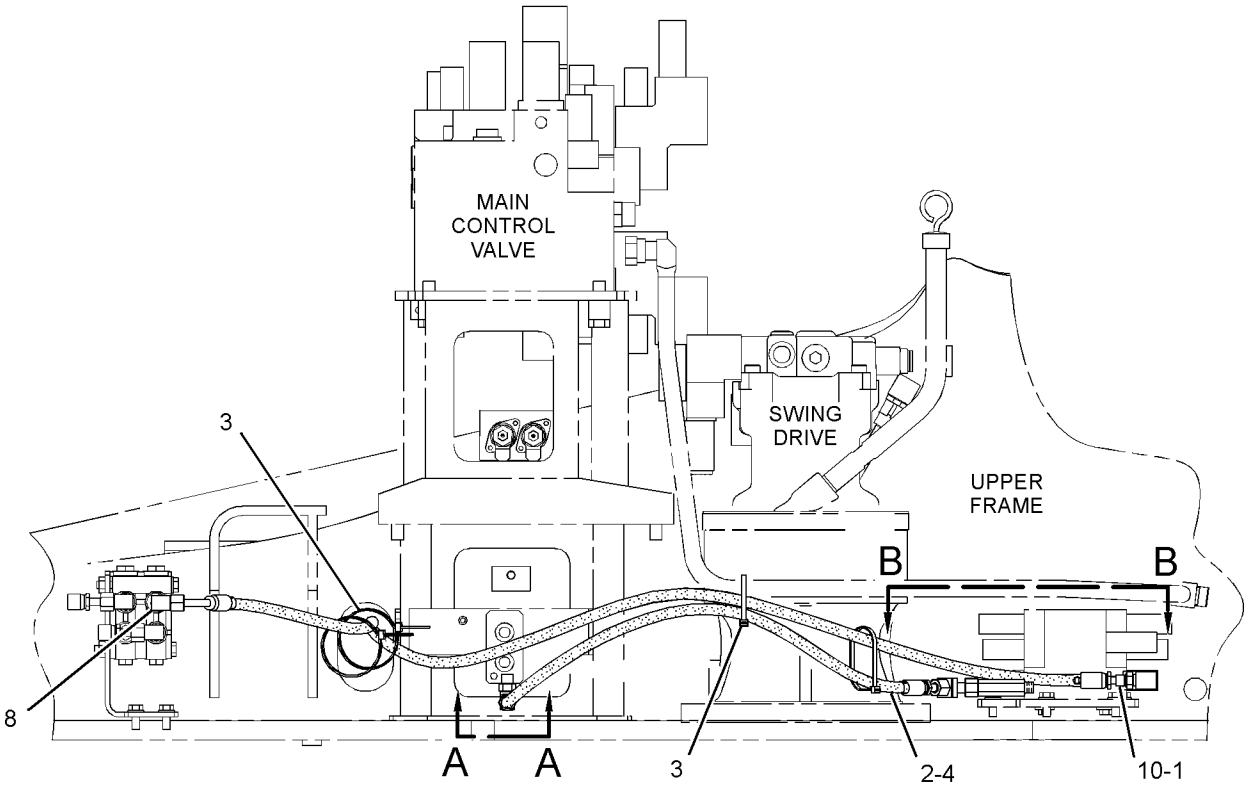

RIGHT SIDE VIEW

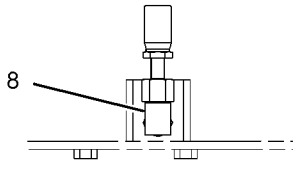

VIEW A-A

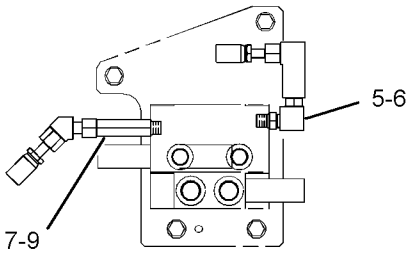

VIEW B-B

GRAPHIC #1 <END> g01443121

278-6705 LINES GP-PILOT—MEDIUM PRESSURE

S/N: DLP1-UP
PART OF 270-6119, 389-2433 CONTROL AR-AUXILIARY
AN ATTACHMENT
TYPE 2

SMCS-5057, 5059 **i04932096**

NOTE	REF NO	GRAPHIC REF	PART NUMBER	QTY	PART NAME 1 2 3 4 5 6 (PRODUCT LEVEL)	SEE PAGE
	1	1	**4I-9526**	2	BAND-MARKER (WHITE, R2)	
	2	1	**4I-9527**	2	BAND-MARKER (GREEN, R3)	
	3	1	**7K-1181**	4	STRAP-CABLE	
CI	4	1	**202-4010**	1	HOSE AS	
	5	1	*164-6874*	1	FITTING AS-ELBOW (QUICK DISCONNECT, MALE)	
		1	**3J-1907**	1	SEAL-O-RING	
		1	**085-7356**	1	FITTING	
	6	1	*150-3036*	1	ELBOW AS	
		1	**3J-1907**	1	SEAL-O-RING	
		1	**6V-8397**	1	SEAL-O-RING	
		1	**8T-1905**	1	ELBOW	
	7	1	*148-8371*	1	ELBOW AS	
		1	**6V-8397**	1	SEAL-O-RING	
		1	**8C-8988**	1	ELBOW	
	8	1	*148-8378*	2	ELBOW AS	
					(EACH INCLUDES)	
		1	**3J-1907**	1	SEAL-O-RING	
		1	**6V-8397**	1	SEAL-O-RING	
		1	**6V-8724**	1	ELBOW	
	9	1	*153-6249*	1	CONNECTOR AS	
		1	**3J-1907**	1	SEAL-O-RING	
		1	**6V-8397**	1	SEAL-O-RING	
		1	**8T-8887**	1	CONNECTOR	
I	10	1	**319-9756**	1	HOSE AS	

C - CHANGE FROM PREVIOUS TYPE
I - REFER TO HYDRAULIC INFORMATION SYSTEM

278-6705 **LINES GP-PILOT (**contd.**)** **i04932096**

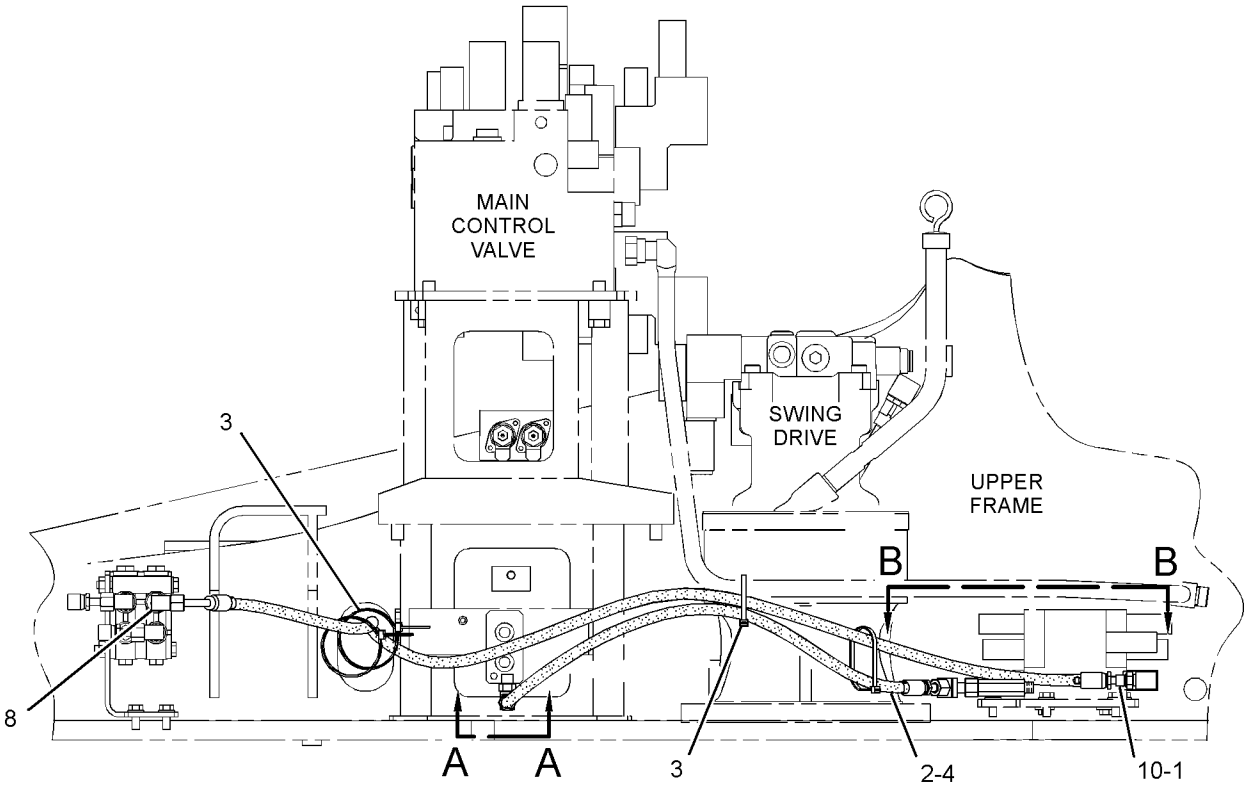

RIGHT SIDE VIEW

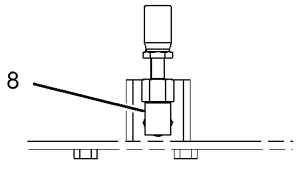

VIEW A-A

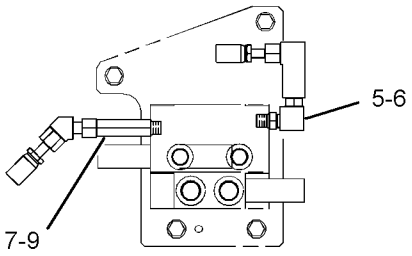

VIEW B-B

GRAPHIC #1 <END> g01443121

278-6713 LINES GP-PILOT—MEDIUM PRESSURE

S/N: DLP1-UP
PART OF 270-5859 CONTROL AR-AUXILIARY
AN ATTACHMENT
TYPE 1

SMCS-5057, 5059 **i04786584**

NOTE	REF NO	GRAPHIC REF	PART NUMBER	QTY	PART NAME 1 2 3 4 5 6 (PRODUCT LEVEL)	SEE PAGE
I	1	1	**5I-4076**	1	HOSE AS	
	2	1	**4I-9523**	2	BAND-MARKER (BLUE, L3)	
	3	1	**4I-9526**	2	BAND-MARKER (WHITE, R2)	
	4	1	**7K-1181**	1	STRAP-CABLE	
I	5	1	**7Y-4366**	1	HOSE AS	
	6	1	*164-6874*	2	FITTING AS-ELBOW (QUICK DISCONNECT, MALE)	
					(EACH INCLUDES)	
		1	**3J-1907**	1	SEAL-O-RING	
		1	**085-7356**	1	FITTING	
Y	7	1	**259-7430**	1	VALVE GP-SOLENOID (PRESSURE REDUCING) (PILOT LINES)	854
I	8	1	**307-4976**	1	HOSE AS	
I	9	1	**272-4142**	1	HOSE AS	
	10	1	**319-9708**	1	SUPPORT AS	
	11	1	*148-8336*	1	CONNECTOR AS	
		1	**3J-1907**	1	SEAL-O-RING	
		1	**6V-8397**	1	SEAL-O-RING	
		1	**6V-8636**	1	CONNECTOR	
	12	1	*148-8353*	3	ELBOW AS	
					(EACH INCLUDES)	
		1	**3J-1907**	1	SEAL-O-RING	
		1	**6V-8397**	1	SEAL-O-RING	
		1	**6V-9001**	1	ELBOW	
	13	1	*148-8378*	3	ELBOW AS	
					(EACH INCLUDES)	
		1	**3J-1907**	1	SEAL-O-RING	
		1	**6V-8397**	1	SEAL-O-RING	
		1	**6V-8724**	1	ELBOW	
	14	1	*363-6134*	1	ADAPTER AS	
		1	**3J-1907**	1	SEAL-O-RING	
		1	**6V-8397**	1	SEAL-O-RING	
		1	**354-3864**	1	ADAPTER-FILTER	
	15	1	*164-5567*	2	COUPLER AS-QUICK DISCONNECT (MALE)	
					(EACH INCLUDES)	
		1	**3J-1907**	1	SEAL-O-RING	
		1	**6V-3965**	1	FITTING (QUICK DISCONNECT)	
	16	1	**6V-0852**	2	CAP-DUST (SOLENOID VALVE)	
	17	1	**8T-4121**	2	WASHER-HARD (11X21X2.5-MM THK)	
M	18	1	**8T-4137**	2	BOLT (M10X1.5X20-MM)	
M	19	1	**8T-6870**	2	BOLT (M8X1.25X70-MM)	

I - REFER TO HYDRAULIC INFORMATION SYSTEM
M - METRIC PART
Y - SEPARATE ILLUSTRATION

278-6713 **LINES GP-PILOT (**contd.**)** **i04786584**

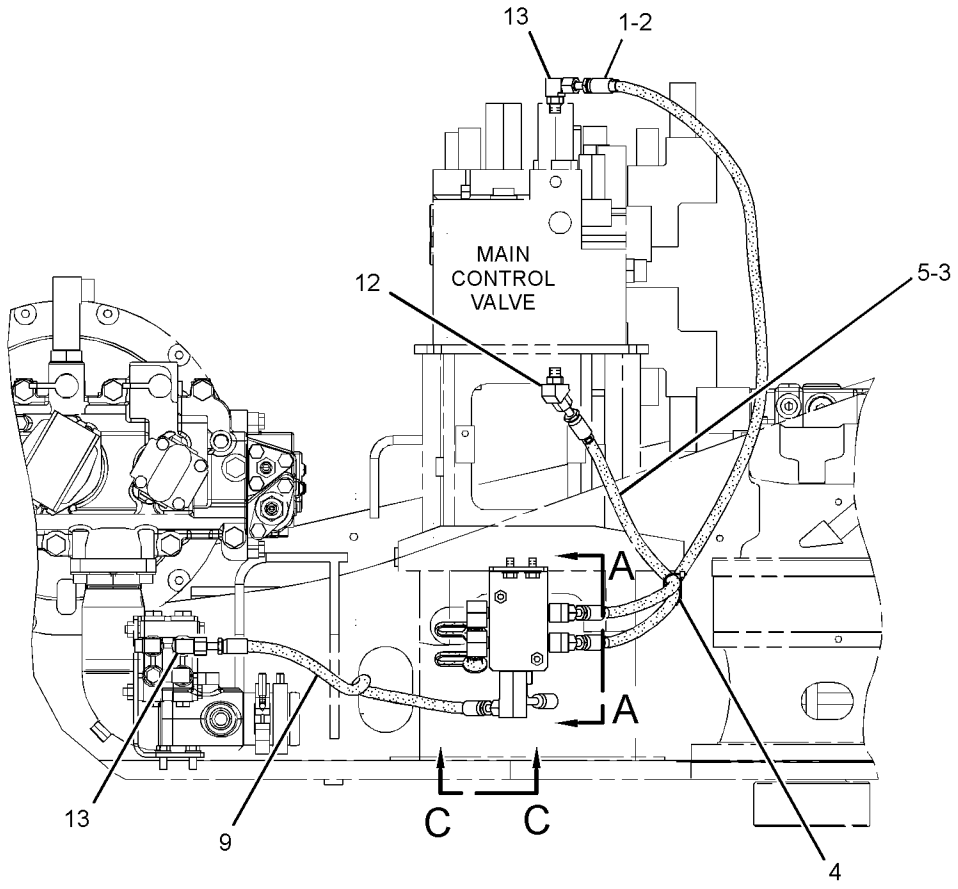

RIGHT SIDE VIEW

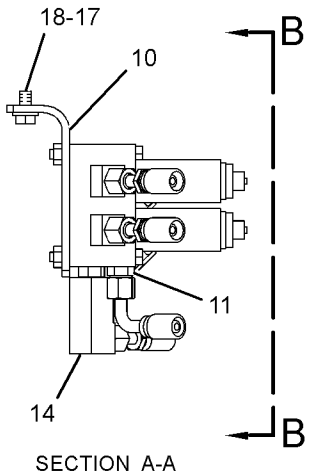

SECTION A-A

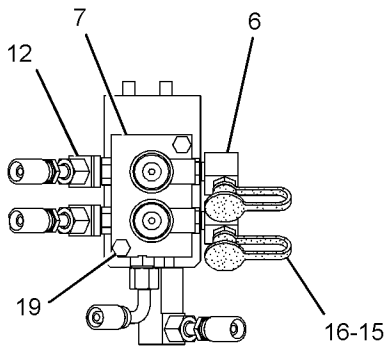

VIEW B-B

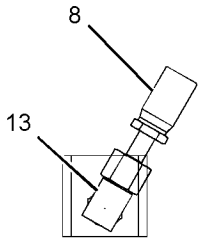

VIEW C-C

GRAPHIC #1 <END> g01774533

278-6713 LINES GP-PILOT—MEDIUM PRESSURE

S/N: DLP1-UP
PART OF 270-5859, 457-9316 CONTROL AR-AUXILIARY
AN ATTACHMENT
TYPE 2

SMCS-5057, 5059 **i04954330**

NOTE	REF NO	GRAPHIC REF	PART NUMBER	QTY	PART NAME 1 2 3 4 5 6 (PRODUCT LEVEL)	SEE PAGE
I	1	1	**5I-4076**	1	HOSE AS	
	2	1	**4I-9523**	2	BAND-MARKER (BLUE, L3)	
	3	1	**4I-9526**	2	BAND-MARKER (WHITE, R2)	
	4	1	**7K-1181**	1	STRAP-CABLE	
I	5	1	**7Y-4366**	1	HOSE AS	
	6	1	*164-6874*	1	FITTING AS-ELBOW (QUICK DISCONNECT, MALE)	
		1	**3J-1907**	1	SEAL-O-RING	
		1	**085-7356**	1	FITTING	
Y	7	1	**259-7430**	1	VALVE GP-SOLENOID (PRESSURE REDUCING) (PILOT LINES)	854
CI	8	1	**337-1373**	1	HOSE AS	
I	9	1	**272-4142**	1	HOSE AS	
	10	1	**319-9708**	1	SUPPORT AS	
	11	1	*148-8336*	1	CONNECTOR AS	
		1	**3J-1907**	1	SEAL-O-RING	
		1	**6V-8397**	1	SEAL-O-RING	
		1	**6V-8636**	1	CONNECTOR	
	12	1	*148-8353*	3	ELBOW AS	
					(EACH INCLUDES)	
		1	**3J-1907**	1	SEAL-O-RING	
		1	**6V-8397**	1	SEAL-O-RING	
		1	**6V-9001**	1	ELBOW	
	13	1	*148-8378*	3	ELBOW AS	
					(EACH INCLUDES)	
		1	**3J-1907**	1	SEAL-O-RING	
		1	**6V-8397**	1	SEAL-O-RING	
		1	**6V-8724**	1	ELBOW	
	14	1	*363-6134*	1	ADAPTER AS	
		1	**3J-1907**	1	SEAL-O-RING	
		1	**6V-8397**	1	SEAL-O-RING	
		1	**354-3864**	1	ADAPTER-FILTER	
	15	1	*164-5567*	2	COUPLER AS-QUICK DISCONNECT (MALE)	
					(EACH INCLUDES)	
		1	**3J-1907**	1	SEAL-O-RING	
		1	**6V-3965**	1	FITTING (QUICK DISCONNECT)	
	16	1	**6V-0852**	2	CAP-DUST (SOLENOID VALVE)	
	17	1	**8T-4121**	2	WASHER-HARD (11X21X2.5-MM THK)	
M	18	1	**8T-4137**	2	BOLT (M10X1.5X20-MM)	
M	19	1	**8T-6870**	2	BOLT (M8X1.25X70-MM)	

C - CHANGE FROM PREVIOUS TYPE
I - REFER TO HYDRAULIC INFORMATION SYSTEM
M - METRIC PART
Y - SEPARATE ILLUSTRATION

278-6713 **LINES GP-PILOT (**contd.**)** **i04954330**

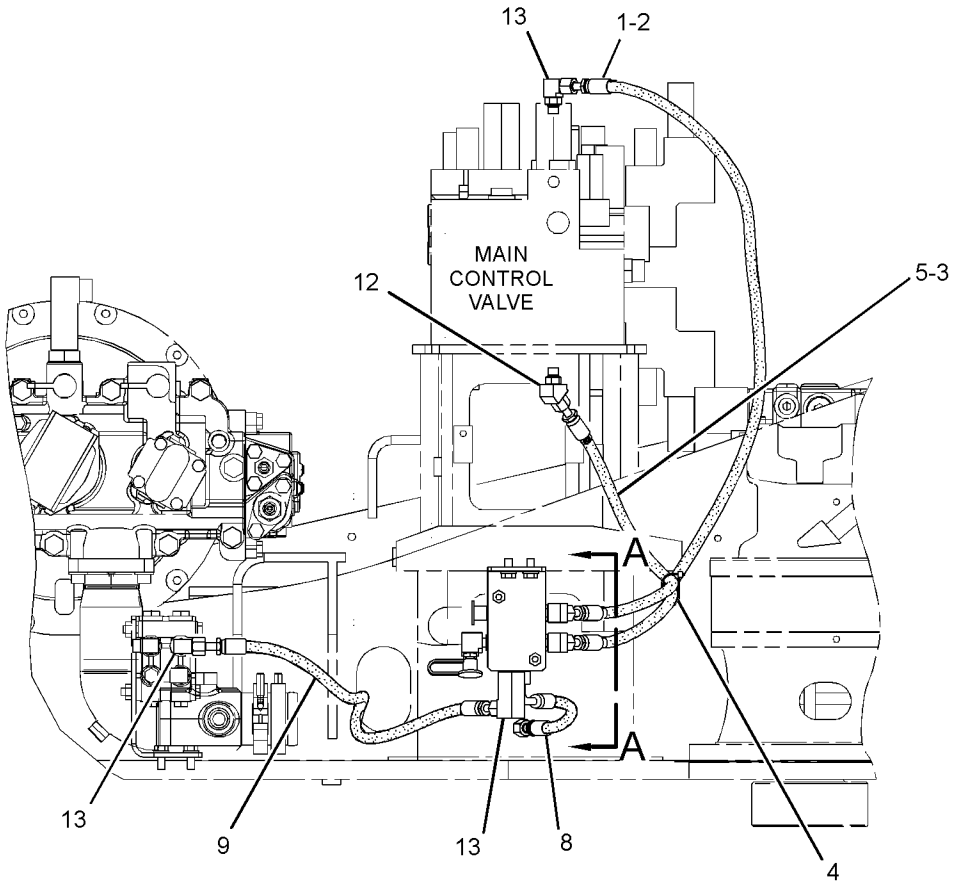

RIGHT SIDE VIEW

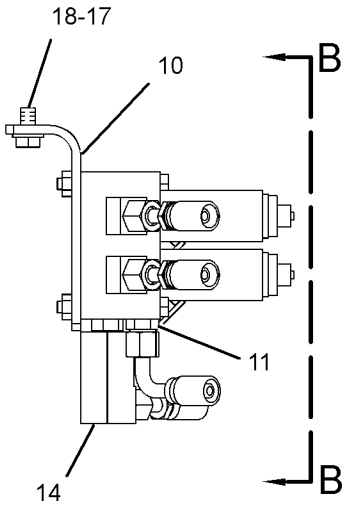

SECTION A-A

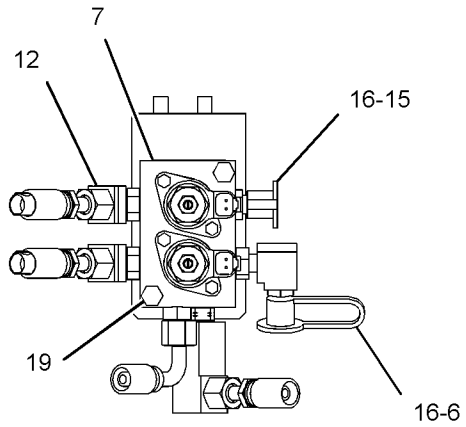

VIEW B-B

GRAPHIC #1 <END> g03147238

278-6714 LINES GP-PILOT–SUPPLY

S/N: DLP1-UP

PART OF 336-3356, 336-3382, 336-3393 OPTION AR-HYDRAULIC

AN ATTACHMENT

SMCS-5057, 5059

i06668477

NOTE	REF NO	GRAPHIC REF	PART NUMBER	QTY	PART NAME 1 2 3 4 5 6 (PRODUCT LEVEL)	SEE PAGE
	1	1	**168-9759**	1	BLOCK	
	2	1	**285-2576**	1	SUPPORT AS	
I	3	1	**296-6960**	1	HOSE AS	
	4	1	*148-8378*	2	ELBOW AS	
					(EACH INCLUDES)	
		1	**3J-1907**	1	SEAL-O-RING	
		1	**6V-8397**	1	SEAL-O-RING	
		1	**6V-8724**	1	ELBOW	
B	5	1	*148-8407*	9	PLUG AS	
					(EACH INCLUDES)	
		1	**3J-1907**	1	SEAL-O-RING	
		1	**9S-4191**	1	PLUG (9/16-18-THD)	
	6	1	*148-8411*	2	PLUG AS	
					(EACH INCLUDES)	
		1	**3K-0360**	1	SEAL-O-RING	
		1	**9S-4185**	1	PLUG (3/4-16-THD)	
	7	1	**8T-4121**	4	WASHER-HARD (11X21X2.5-MM THK)	
M	8	1	**8T-4136**	2	BOLT (M10X1.5X25-MM)	
M	9	1	**8T-4198**	2	BOLT (M10X1.5X100-MM)	

B - USE AS REQUIRED
I - REFER TO HYDRAULIC INFORMATION SYSTEM
M - METRIC PART

278-6714 **LINES GP-PILOT (**contd.**)** **i06668477**

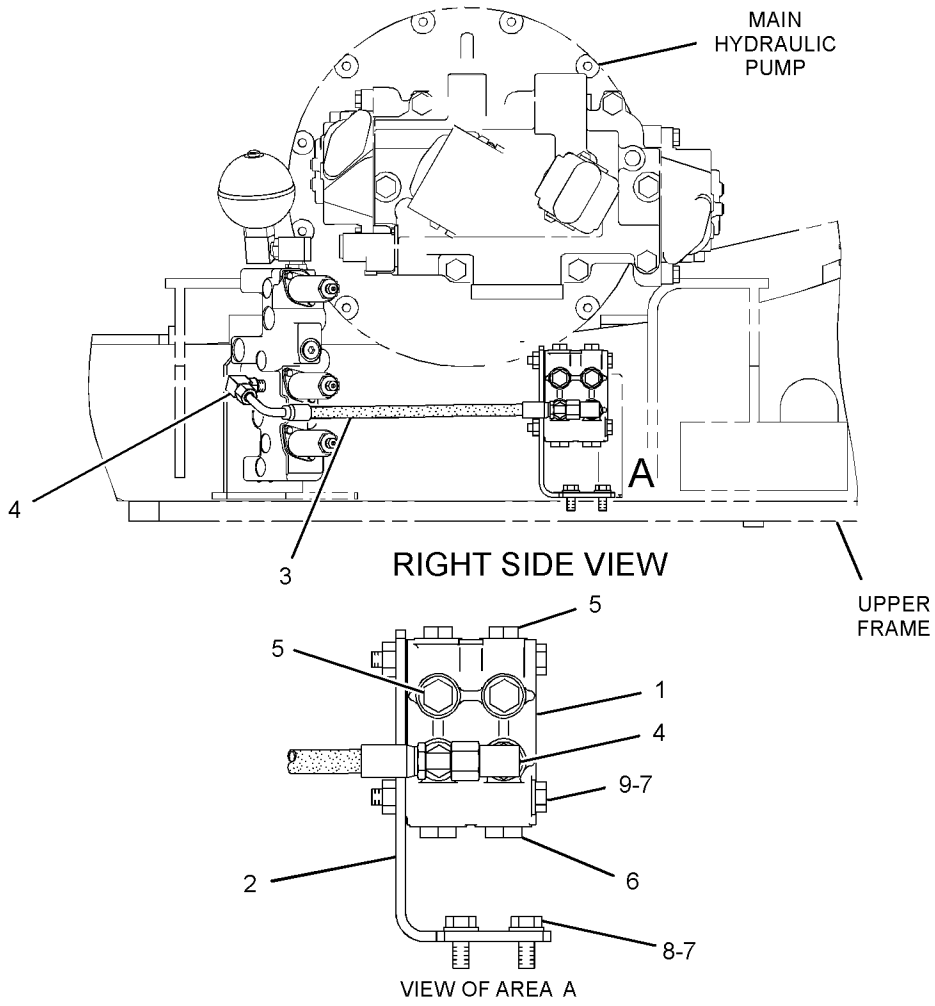

GRAPHIC #1

<END>

g01441427

278-6720 LINES GP-PILOT–2-WAY

S/N: DLP1-UP
PART OF 270-5869 VALVE AR-ALT PATTERN CONTROL
AN ATTACHMENT
TYPE 1

SMCS-5057, 5059 **i02867316**

NOTE	REF NO	GRAPHIC REF	PART NUMBER	QTY	PART NAME 1 2 3 4 5 6 (PRODUCT LEVEL)	SEE PAGE
	1	1	**4I-9521**	2	BAND-MARKER (RED, L1)	
	2	1	**4I-9523**	2	BAND-MARKER (BLUE, L3)	
	3	1	**4I-9525**	2	BAND-MARKER (ORANGE, R1)	
	4	1	**4I-9527**	2	BAND-MARKER (GREEN, R3)	
	5	1	**7K-1181**	1	STRAP-CABLE	
	6	1	**133-5813**	2	BAND-MARKER (GRAY, P)	
	7	1	*164-6874*	3	FITTING AS-ELBOW (QUICK DISCONNECT, MALE)	
					(EACH INCLUDES)	
		1	**3J-1907**	1	SEAL-O-RING	
		1	**085-7356**	1	FITTING	
	8	1	**309-5769**	1	SWITCH AS-PRESSURE (IMPLEMENT, SWING)	
		1	**9X-3401**	2	PIN-CONNECTOR (16-GA TO 18-GA)	
					–OR–	
		1	**126-1767**	2	PIN-CONNECTOR (14-GA TO 16-GA)	
		1	**102-8802**	1	KIT-RECEPTACLE (2-PIN)	
					(INCLUDES RECEPTACLE AS & WEDGE)	
I	9	1	**207-6418**	1	HOSE AS	
	10	1	**270-5664**	1	VALVE GP-PILOT (ALT PATTERN CONTROL, 2-WAY)	
I	11	1	**282-7095**	4	HOSE AS	
	12	1	**292-7555**	1	HOSE AS	
	13	1	**282-7317**	1	PLATE	
	14	1	*148-8336*	5	CONNECTOR AS	
					(EACH INCLUDES)	
		1	**3J-1907**	1	SEAL-O-RING	
		1	**6V-8397**	1	SEAL-O-RING	
		1	**6V-8636**	1	CONNECTOR	
	15	1	*148-8378*	2	ELBOW AS	
					(EACH INCLUDES)	
		1	**3J-1907**	1	SEAL-O-RING	
		1	**6V-8397**	1	SEAL-O-RING	
		1	**6V-8724**	1	ELBOW	
	16	1	*150-3036*	5	ELBOW AS	
					(EACH INCLUDES)	
		1	**3J-1907**	1	SEAL-O-RING	
		1	**6V-8397**	1	SEAL-O-RING	
		1	**8T-1905**	1	ELBOW	
	17	1	**5K-8451**	2	CLIP	
	18	1	**8T-4121**	8	WASHER-HARD (11X21X2.5-MM THK)	
M	19	1	**8T-4137**	6	BOLT (M10X1.5X20-MM)	
M	20	1	**8T-4191**	2	BOLT (M10X1.5X16-MM)	

I - REFER TO HYDRAULIC INFORMATION SYSTEM
M - METRIC PART

278-6720 **LINES GP-PILOT (**contd.**)** **i02867316**

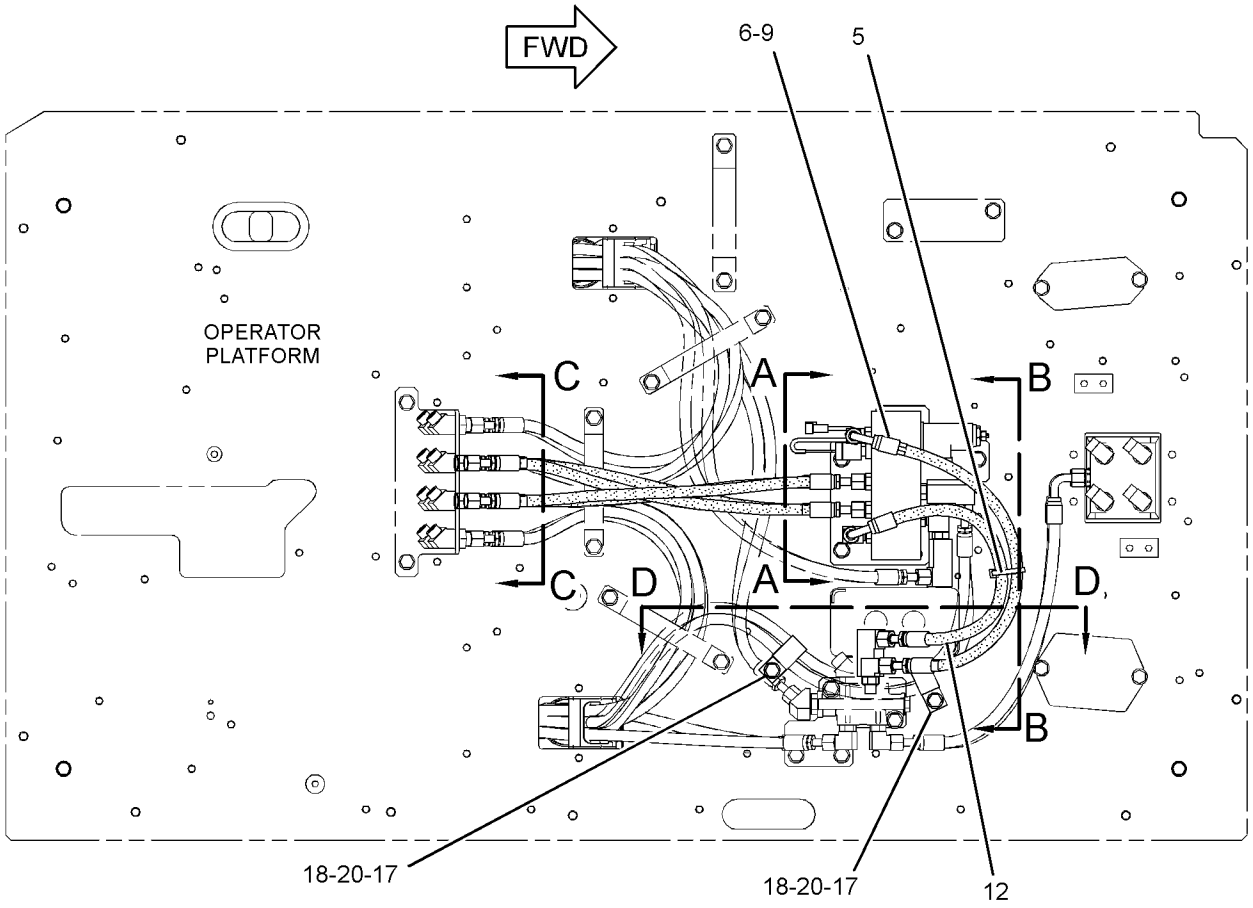

BOTTOM VIEW

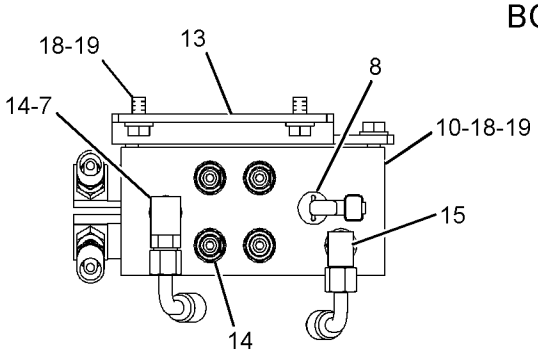

SECTION A-A

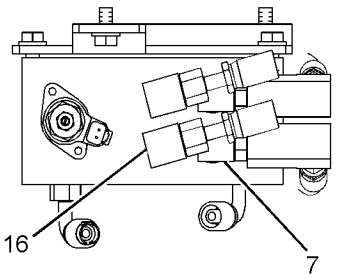

SECTION B-B

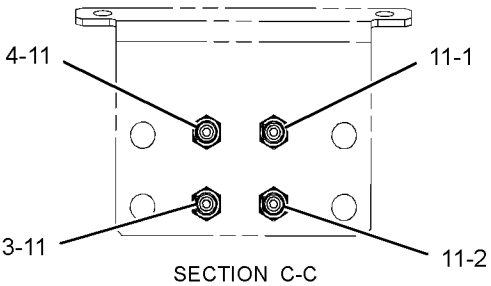

SECTION C-C

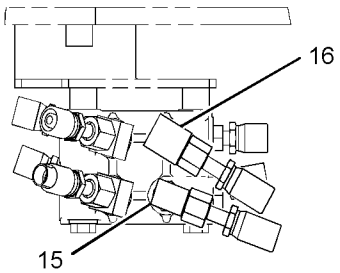

SECTION D-D

GRAPHIC #1 <END> g01441576

278-6720 LINES GP-PILOT–2-WAY

S/N: DLP1-UP
PART OF 270-5869 VALVE AR-ALT PATTERN CONTROL
AN ATTACHMENT
TYPE 2

SMCS-5057, 5059 **i03681681**

NOTE	REF NO	GRAPHIC REF	PART NUMBER	QTY	PART NAME 1 2 3 4 5 6 (PRODUCT LEVEL)	SEE PAGE
	1	1	**4I-9521**	2	BAND-MARKER (RED, L1)	
	2	1	**4I-9523**	2	BAND-MARKER (BLUE, L3)	
	3	1	**4I-9525**	2	BAND-MARKER (ORANGE, R1)	
C	4	1	**4I-9527**	4	BAND-MARKER (GREEN, R3)	
C	5	1	**7K-1181**	2	STRAP-CABLE	
	6	1	**133-5813**	2	BAND-MARKER (GRAY, P)	
C	7	1	*164-6874*	2	FITTING AS-ELBOW (QUICK DISCONNECT, MALE)	
					(EACH INCLUDES)	
		1	**3J-1907**	1	SEAL-O-RING	
		1	**085-7356**	1	FITTING	
I	8	1	**207-6418**	1	HOSE AS	
	9	1	**270-5664**	1	VALVE GP-PILOT (ALT PATTERN CONTROL, 2-WAY)	
I	10	1	**282-7095**	4	HOSE AS	
	11	1	**282-7317**	1	PLATE	
CI	12	1	**292-7425**	1	HOSE AS	
	13	1	**292-7555**	1	HOSE AS	
	14	1	**309-5769**	1	SWITCH AS-PRESSURE (IMPLEMENT, SWING)	
		1	**9X-3401**	2	PIN-CONNECTOR (16-GA TO 18-GA)	
					–OR–	
		1	**126-1767**	2	PIN-CONNECTOR (14-GA TO 16-GA)	
		1	**102-8802**	1	KIT-RECEPTACLE (2-PIN)	
					(INCLUDES RECEPTACLE AS & WEDGE)	
	15	1	*148-8336*	5	CONNECTOR AS	
					(EACH INCLUDES)	
		1	**3J-1907**	1	SEAL-O-RING	
		1	**6V-8397**	1	SEAL-O-RING	
		1	**6V-8636**	1	CONNECTOR	
C	16	1	*148-8378*	3	ELBOW AS	
					(EACH INCLUDES)	
		1	**3J-1907**	1	SEAL-O-RING	
		1	**6V-8397**	1	SEAL-O-RING	
		1	**6V-8724**	1	ELBOW	
C	17	1	*150-3036*	4	ELBOW AS	
					(EACH INCLUDES)	
		1	**3J-1907**	1	SEAL-O-RING	
		1	**6V-8397**	1	SEAL-O-RING	
		1	**8T-1905**	1	ELBOW	
	18	1	**5K-8451**	2	CLIP	
	19	1	**8T-4121**	8	WASHER-HARD (11X21X2.5-MM THK)	
M	20	1	**8T-4137**	6	BOLT (M10X1.5X20-MM)	
M	21	1	**8T-4191**	2	BOLT (M10X1.5X16-MM)	

C - CHANGE FROM PREVIOUS TYPE
I - REFER TO HYDRAULIC INFORMATION SYSTEM
M - METRIC PART

278-6720 **LINES GP-PILOT (**contd.**)** **i03681681**

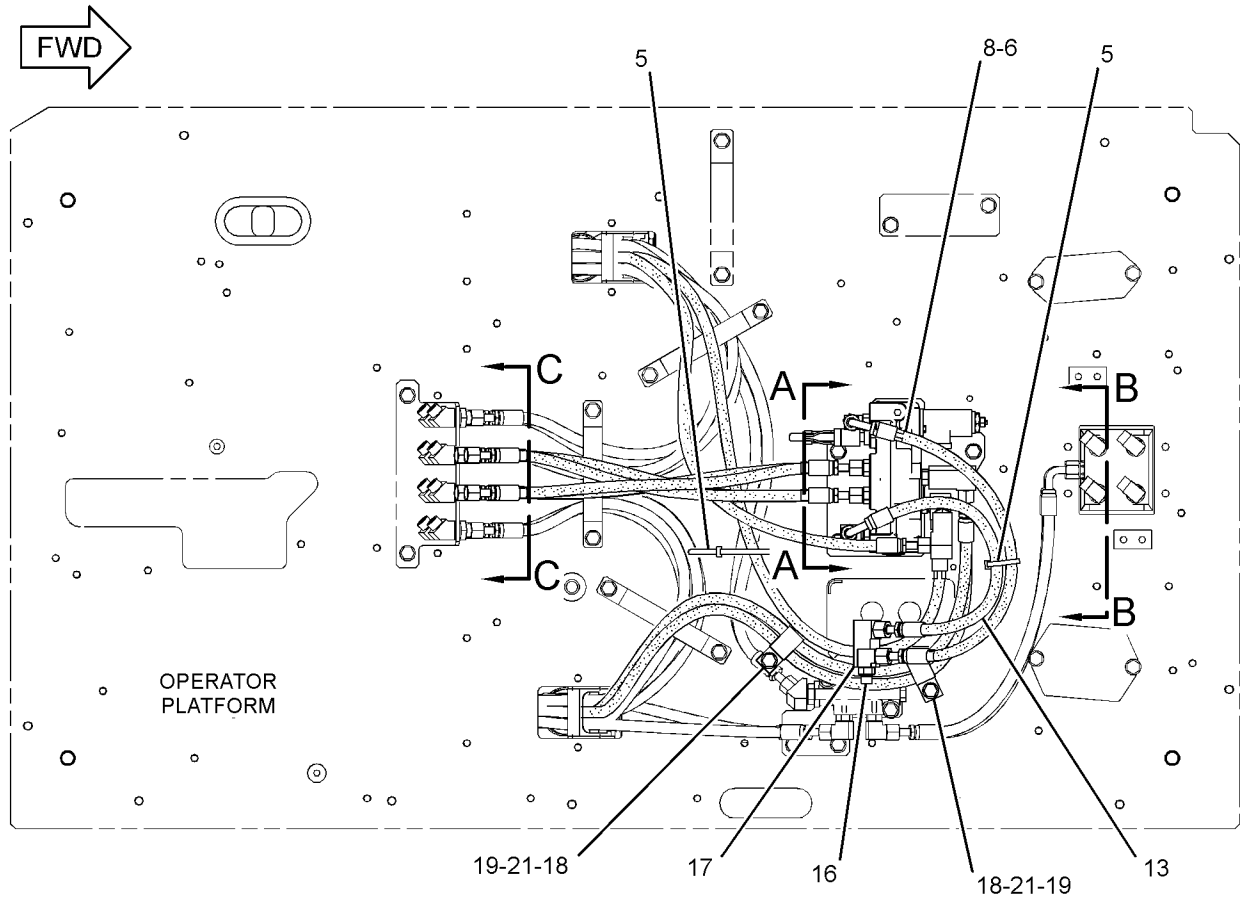

TOP VIEW

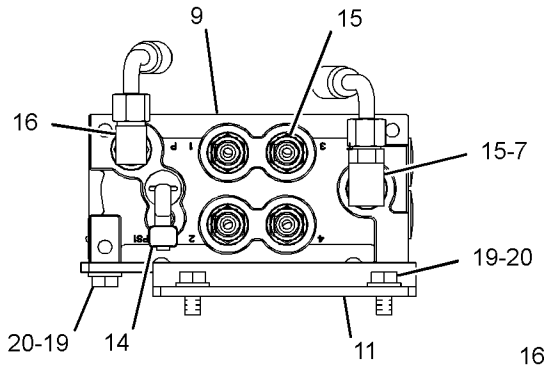

SECTION A-A

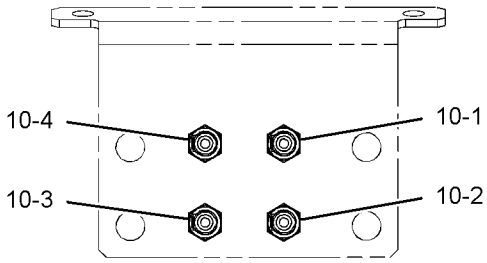

SECTION C-C

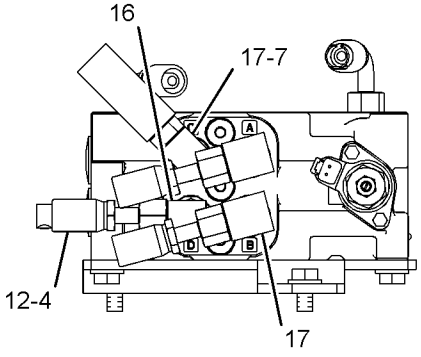

VIEW B-B

GRAPHIC #1

<END>

g01996813

278-6720 LINES GP-PILOT–2-WAY

S/N: DLP1-UP
PART OF 270-5869 VALVE AR-ALT PATTERN CONTROL
AN ATTACHMENT
TYPE 3

SMCS-5057, 5059 **i03978330**

NOTE	REF NO	GRAPHIC REF	PART NUMBER	QTY	PART NAME 1 2 3 4 5 6 (PRODUCT LEVEL)	SEE PAGE
	1	1	**4I-9521**	2	BAND-MARKER (RED, L1)	
	2	1	**4I-9523**	2	BAND-MARKER (BLUE, L3)	
	3	1	**4I-9525**	2	BAND-MARKER (ORANGE, R1)	
C	4	1	**4I-9527**	2	BAND-MARKER (GREEN, R3)	
C	5	1	**7K-1181**	1	STRAP-CABLE	
	6	1	**133-5813**	2	BAND-MARKER (GRAY, P)	
C	7	1	*164-6874*	1	FITTING AS-ELBOW (QUICK DISCONNECT, MALE)	
		1	**3J-1907**	1	SEAL-O-RING	
		1	**085-7356**	1	FITTING	
I	8	1	**207-6418**	1	HOSE AS	
	9	1	**270-5664**	1	VALVE GP-PILOT (ALT PATTERN CONTROL, 2-WAY)	
I	10	1	**282-7095**	4	HOSE AS	
	11	1	**282-7317**	1	PLATE	
C	12	1	*241-6215*	2	ELBOW AS	
					(EACH INCLUDES)	
		1	**3J-1907**	1	SEAL-O-RING	
		1	**6V-8076**	1	ELBOW	
	13	1	**292-7555**	1	HOSE AS	
	14	1	**309-5769**	1	SWITCH AS-PRESSURE (IMPLEMENT, SWING)	
		1	**9X-3401**	2	PIN-CONNECTOR (16-GA TO 18-GA)	
					–OR–	
		1	**126-1767**	2	PIN-CONNECTOR (14-GA TO 16-GA)	
		1	**102-8802**	1	KIT-RECEPTACLE (2-PIN)	
					(INCLUDES RECEPTACLE AS & WEDGE)	
	15	1	*148-8336*	5	CONNECTOR AS	
					(EACH INCLUDES)	
		1	**3J-1907**	1	SEAL-O-RING	
		1	**6V-8397**	1	SEAL-O-RING	
		1	**6V-8636**	1	CONNECTOR	
C	16	1	*148-8378*	2	ELBOW AS	
					(EACH INCLUDES)	
		1	**3J-1907**	1	SEAL-O-RING	
		1	**6V-8397**	1	SEAL-O-RING	
		1	**6V-8724**	1	ELBOW	
C	17	1	*150-3036*	5	ELBOW AS	
					(EACH INCLUDES)	
		1	**3J-1907**	1	SEAL-O-RING	
		1	**6V-8397**	1	SEAL-O-RING	
		1	**8T-1905**	1	ELBOW	
	18	1	**5K-8451**	2	CLIP	
	19	1	**8T-4121**	8	WASHER-HARD (11X21X2.5-MM THK)	
M	20	1	**8T-4137**	6	BOLT (M10X1.5X20-MM)	
M	21	1	**8T-4191**	2	BOLT (M10X1.5X16-MM)	

C - CHANGE FROM PREVIOUS TYPE
I - REFER TO HYDRAULIC INFORMATION SYSTEM
M - METRIC PART

278-6720 **LINES GP-PILOT (**contd.**)** **i03978330**

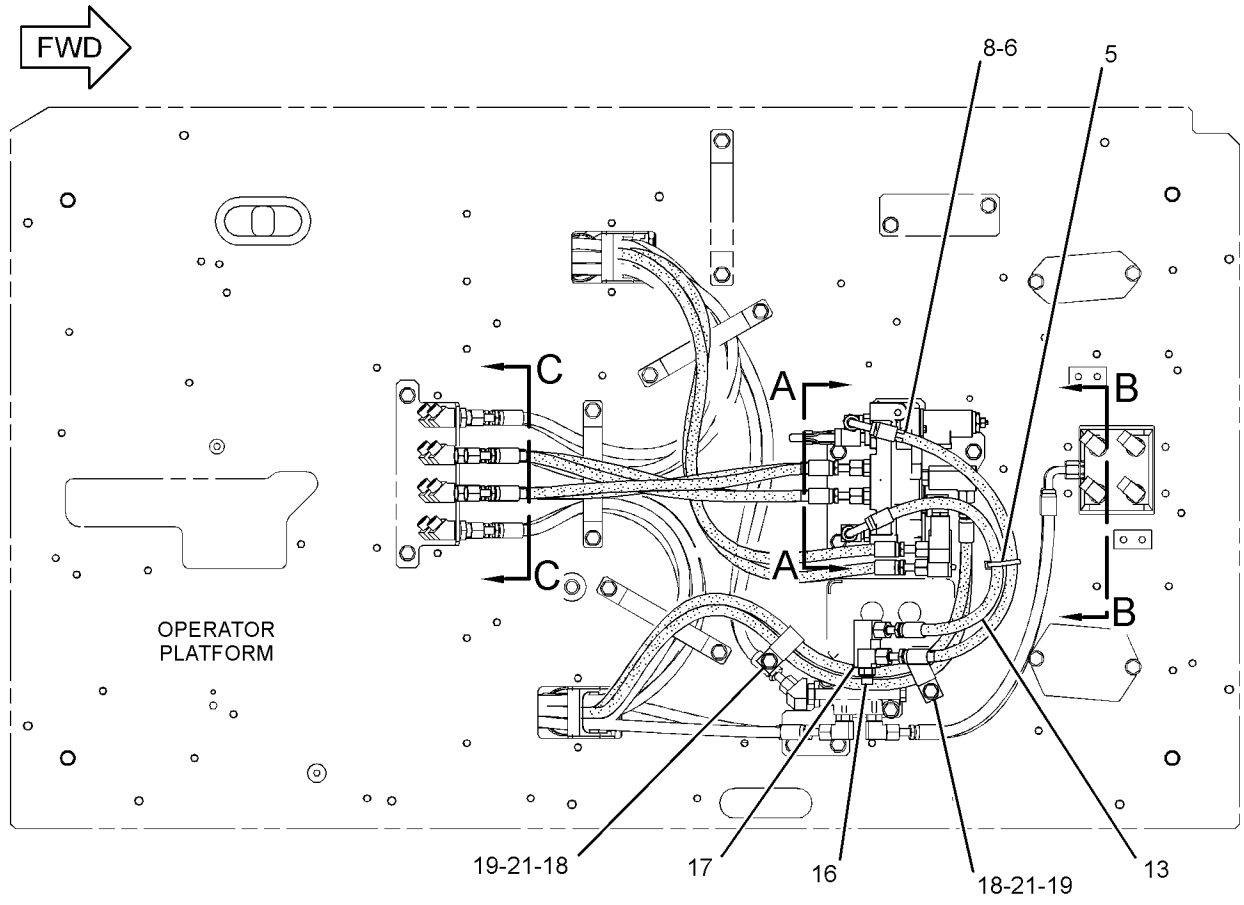

BOTTOM VIEW

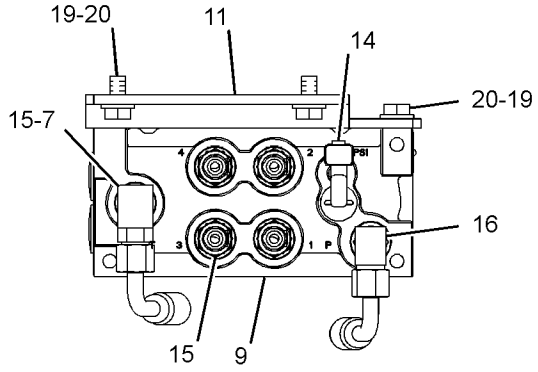

SECTION A-A

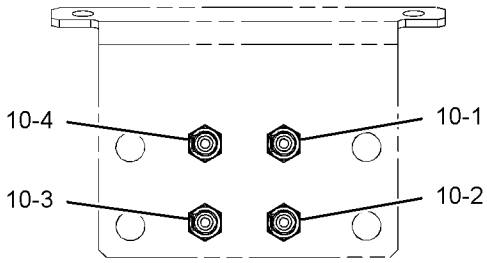

SECTION C-C

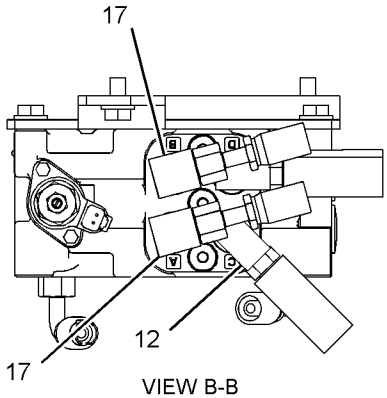

VIEW B-B

GRAPHIC #1

<END>

g02171471

278-6721 LINES GP-PILOT–4-WAY

S/N: DLP1-UP
PART OF 270-5871 VALVE AR
AN ATTACHMENT

SMCS-5057, 5059 **i03044963**

NOTE	REF NO	GRAPHIC REF	PART NUMBER	QTY	PART NAME 1 2 3 4 5 6 (PRODUCT LEVEL)	SEE PAGE
	1	1	**4I-9521**	2	BAND-MARKER (RED, L1)	
	2	1	**4I-9522**	2	BAND-MARKER (YELLOW, L2)	
	3	1	**4I-9523**	2	BAND-MARKER (BLUE, L3)	
	4	1	**4I-9524**	2	BAND-MARKER (BROWN, L4)	
	5	1	**4I-9525**	2	BAND-MARKER (ORANGE, R1)	
	6	1	**4I-9526**	2	BAND-MARKER (WHITE, R2)	
	7	1	**4I-9527**	2	BAND-MARKER (GREEN, R3)	
	8	1	**4I-9528**	2	BAND-MARKER (PURPLE, R4)	
	9	1	**7K-1181**	1	STRAP-CABLE	
Y	10	1	**171-0024**	1	VALVE GP-SELECTOR (CONTROL PATTERN CHANGE)	843
I	11	1	**275-1538**	8	HOSE AS	
	12	1	**307-5228**	1	SUPPORT AS	
	13	1	*148-8336*	8	CONNECTOR AS	
					(EACH INCLUDES)	
		1	**3J-1907**	1	SEAL-O-RING	
		1	**6V-8397**	1	SEAL-O-RING	
		1	**6V-8636**	1	CONNECTOR	
	14	1	*148-8378*	6	ELBOW AS	
					(EACH INCLUDES)	
		1	**3J-1907**	1	SEAL-O-RING	
		1	**6V-8397**	1	SEAL-O-RING	
		1	**6V-8724**	1	ELBOW	
	15	1	*150-3036*	2	ELBOW AS	
					(EACH INCLUDES)	
		1	**3J-1907**	1	SEAL-O-RING	
		1	**6V-8397**	1	SEAL-O-RING	
		1	**8T-1905**	1	ELBOW	
	16	1	**7D-7233**	2	CLIP	
	17	1	**8T-4121**	6	WASHER-HARD (11X21X2.5-MM THK)	
M	18	1	**8T-4179**	4	BOLT (M12X1.75X20-MM)	
M	19	1	**8T-4191**	2	BOLT (M10X1.5X16-MM)	
M	20	1	**8T-4195**	4	BOLT (M10X1.5X30-MM)	
	21	1	**8T-4223**	4	WASHER-HARD (13.5X25.5X3-MM THK)	

I - REFER TO HYDRAULIC INFORMATION SYSTEM
M - METRIC PART
Y - SEPARATE ILLUSTRATION

278-6721 **LINES GP-PILOT (**contd.**)** **i03044963**

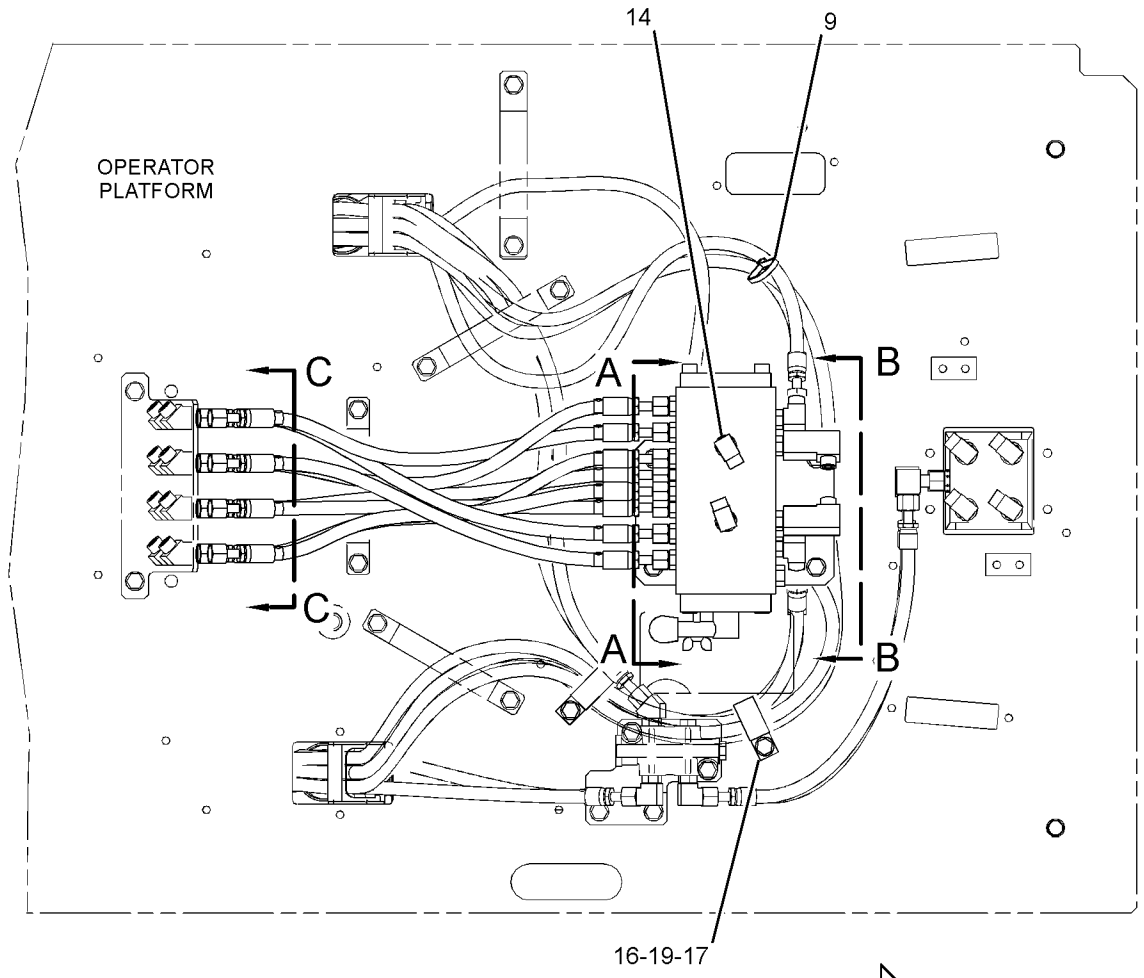

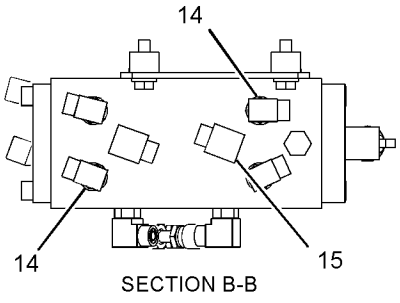

SECTION B-B

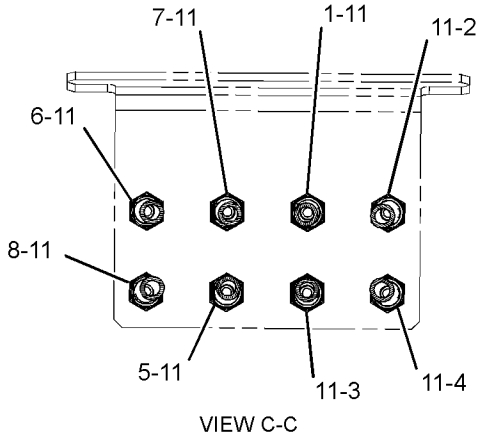

VIEW C-C

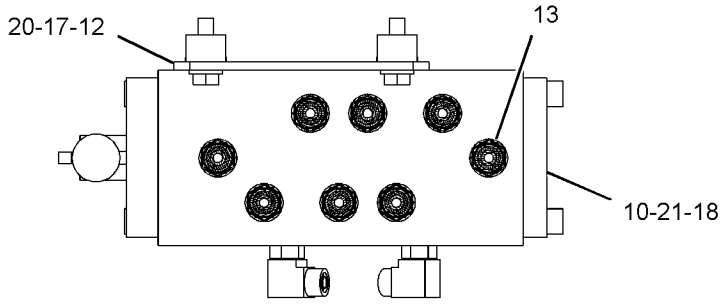

SECTION A-A

GRAPHIC #1 <END> g01402592

317-4815 LINES GP-PILOT–BLADE

S/N: DLP1-UP

PART OF 301-2691, 385-4069 INSTALLATION AR-BLADE

AN ATTACHMENT

SMCS-5057, 5059

i02944486

NOTE	REF NO	GRAPHIC REF	PART NUMBER	QTY	PART NAME 1 2 3 4 5 6 (PRODUCT LEVEL)	SEE PAGE
I	1	1	**4I-5795**	2	HOSE AS	
	2	1	*164-5628*	1	CONNECTOR AS	
		1	**3J-1907**	1	SEAL-O-RING	
		1	**6V-8397**	1	SEAL-O-RING	
		1	**107-6631**	1	CONNECTOR-FILTER	
	3	1	**309-5769**	1	SWITCH AS-PRESSURE (ACTION INPUT, BOOM UP)	
		1	**102-8802**	1	KIT-RECEPTACLE (2-PIN)	
					(INCLUDES RECEPTACLE AS & WEDGE)	
		1	**9X-3401**	2	PIN-CONNECTOR (16-GA TO 18-GA)	
					–OR–	
		1	**126-1767**	2	PIN-CONNECTOR (14-GA TO 16-GA)	
	4	1	*148-8353*	1	ELBOW AS	
		1	**3J-1907**	1	SEAL-O-RING	
		1	**6V-8397**	1	SEAL-O-RING	
		1	**6V-9001**	1	ELBOW	
	5	1	*148-8371*	1	ELBOW AS	
		1	**6V-8397**	1	SEAL-O-RING	
		1	**8C-8988**	1	ELBOW	
	6	1	*148-8378*	2	ELBOW AS	
					(EACH INCLUDES)	
		1	**3J-1907**	1	SEAL-O-RING	
		1	**6V-8397**	1	SEAL-O-RING	
		1	**6V-8724**	1	ELBOW	
	7	1	*148-8407*	2	PLUG AS	
					(EACH INCLUDES)	
		1	**3J-1907**	1	SEAL-O-RING	
		1	**9S-4191**	1	PLUG (9/16-18-THD)	
	8	1	*148-8435*	2	TEE AS	
					(EACH INCLUDES)	
		1	**3J-1907**	1	SEAL-O-RING	
		1	**6V-8397**	2	SEAL-O-RING	
		1	**6V-8781**	1	TEE	

I - REFER TO HYDRAULIC INFORMATION SYSTEM

317-4815 **LINES GP-PILOT (**contd.**)** **i02944486**

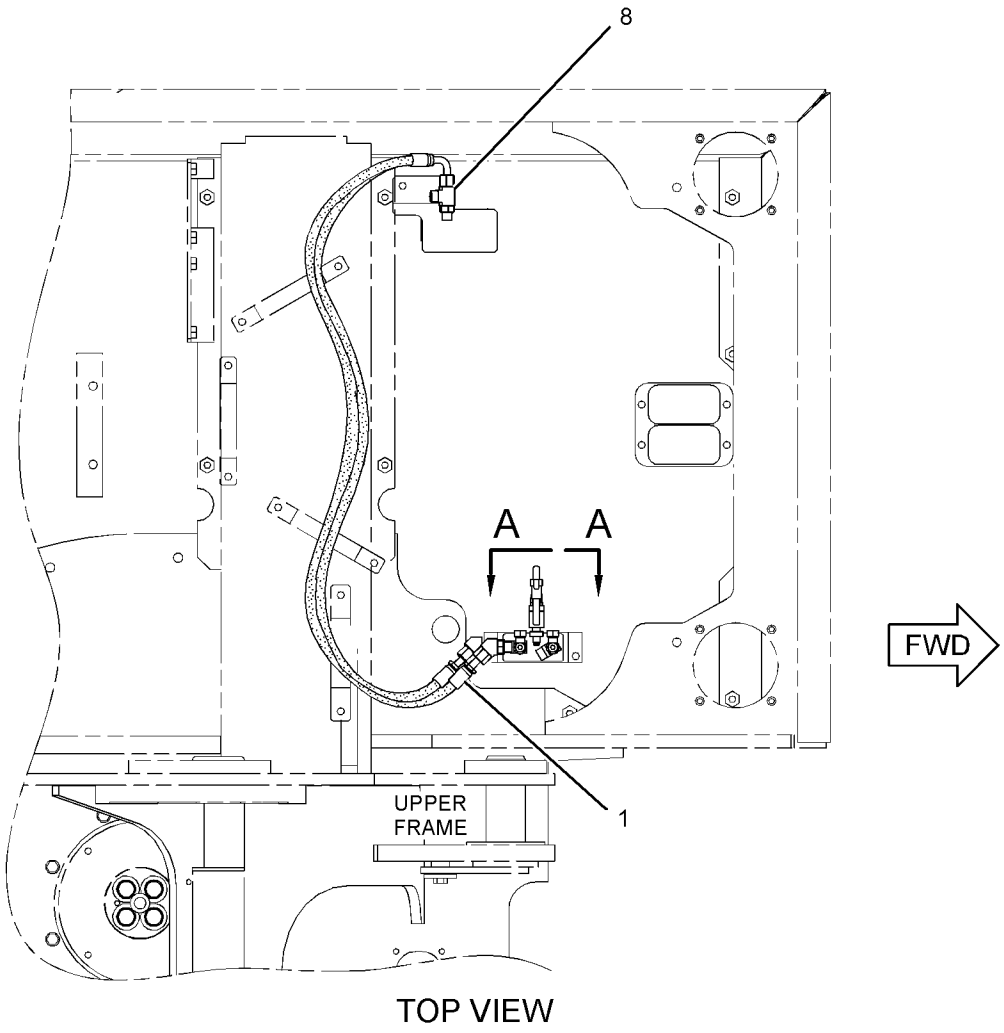

TOP VIEW

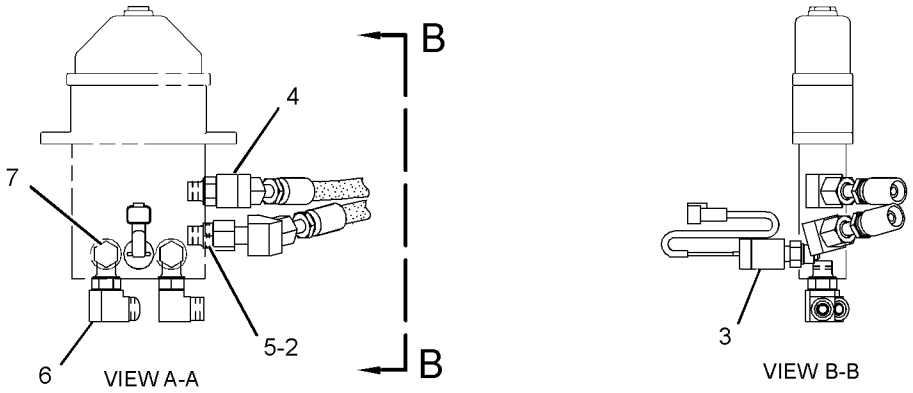

VIEW A-A VIEW B-B

GRAPHIC #1 <END> g01439787

278-6671 LINES GP-PUMP—PUMP SUPPLY

S/N: DLP1-UP

PART OF 270-5864 HYDRAULIC AR

SMCS-5057 **i02900889**

NOTE	REF NO	GRAPHIC REF	PART NUMBER	QTY	PART NAME 1 2 3 4 5 6 (PRODUCT LEVEL)	SEE PAGE
	1	1	**144-0367**	4	CLAMP-HOSE	
	2	1	**111-6716**	1	HOSE	
	3	1	**194-0097**	1	PIPE AS	
	4	1	**192-6840**	1	PIPE AS	
M	5	1	**108-1781**	4	BOLT-SOCKET HEAD (M12X1.75X35-MM)	
	6	1	*148-8360*	1	ELBOW AS	
		1	**6V-9182**	1	ELBOW	
		1	**6V-9746**	1	SEAL-O-RING	
		1	**7M-8485**	1	SEAL-O-RING	
	7	1	*148-8392*	1	ELBOW AS	
		1	**6V-9746**	1	SEAL-O-RING	
		1	**6V-9853**	1	ELBOW	
	8	1	*148-8411*	1	PLUG AS	
		1	**3K-0360**	1	SEAL-O-RING	
		1	**9S-4185**	1	PLUG (3/4-16-THD)	
	9	1	*153-6242*	1	CONNECTOR AS	
		1	**6V-9746**	1	SEAL-O-RING	
		1	**7M-8485**	1	SEAL-O-RING	
		1	**8T-0197**	1	CONNECTOR	
	10	1	*155-3624*	1	PLUG AS	
		1	**3J-7354**	1	SEAL-O-RING	
		1	**9S-4182**	1	PLUG (7/16-20-THD)	
	11	1	*164-4180*	1	PLUG AS	
		1	**7M-8485**	1	SEAL-O-RING	
		1	**9S-4181**	1	PLUG (1-5/16-12-THD)	
	12	1	**5H-8624**	1	SEAL-O-RING	
	13	1	**6J-2680**	1	SEAL-O-RING	
M	14	1	**8T-4193**	4	BOLT (M16X2X50-MM)	
	15	1	**8T-4223**	4	WASHER-HARD (13.5X25.5X3-MM THK)	
	16	1	**9X-8257**	4	WASHER (17.5X30X3.5-MM THK)	

M - METRIC PART

278-6671 **LINES GP-PUMP (**contd.**)** **i02900889**

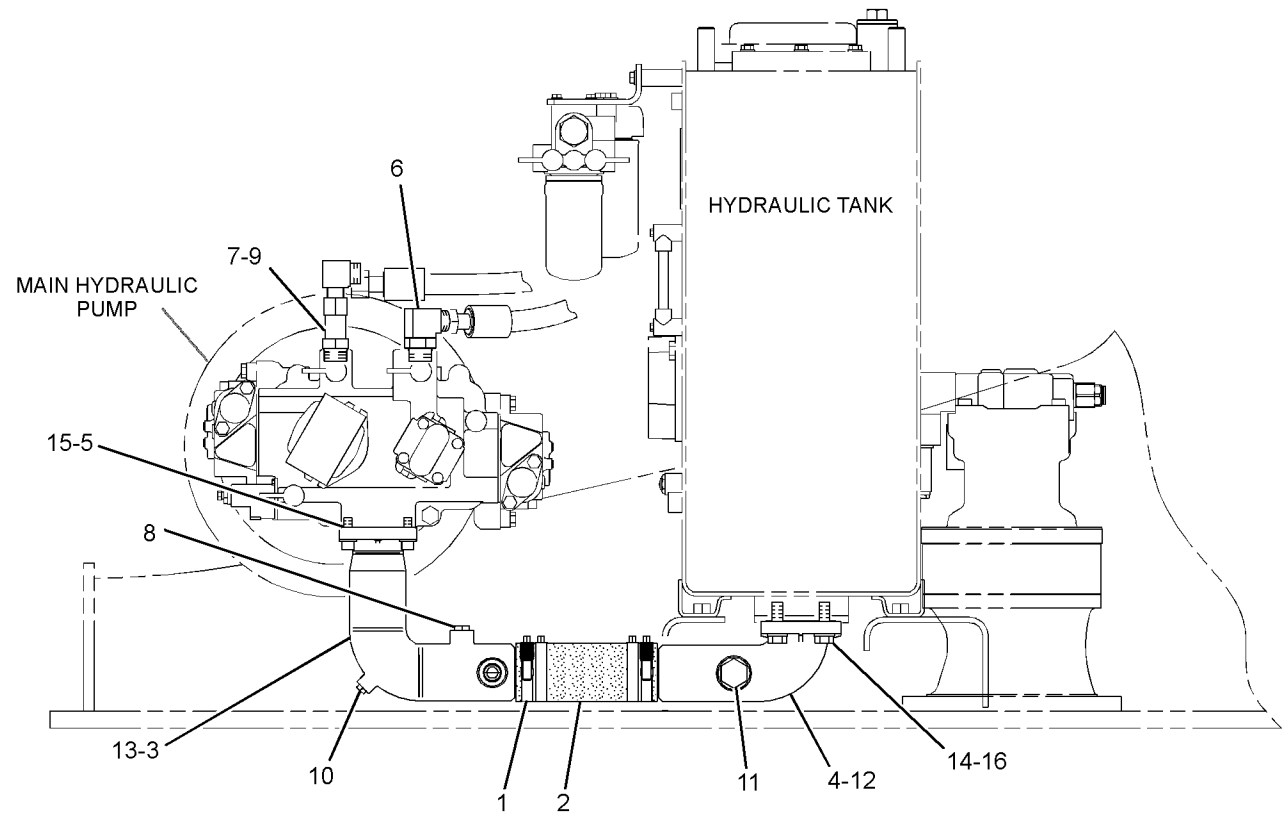

RIGHT SIDE VIEW

GRAPHIC #1 <END> g01437656

278-6731 LINES GP-PUMP–BLADE

S/N: DLP1-UP

PART OF 270-6119 CONTROL AR-AUXILIARY, 301-2691 INSTALLATION AR-BLADE AN ATTACHMENT

SMCS-5057 **i02911219**

NOTE	REF NO	GRAPHIC REF	PART NUMBER	QTY	PART NAME 1 2 3 4 5 6 (PRODUCT LEVEL)	SEE PAGE
	1	1	**6V-0852**	1	CAP-DUST	
	2	1	**7K-1181**	7	STRAP-CABLE	
	3	1	**134-6838**	1	GUARD	
I	4	1	**199-1657**	1	HOSE AS	
	5	1	**199-2046**	1	GUARD	
	6	1	*278-6424*	1	TEE AS	
		1	**3D-2824**	1	SEAL-O-RING	
		1	**7J-9108**	1	SEAL-O-RING	
		1	**278-6425**	1	TEE-ORP TO ORFS	
I	7	1	**285-2444**	1	HOSE AS	
I	8	1	**296-7242**	1	HOSE AS	
	9	1	*148-8315*	1	CONNECTOR AS	
		1	**2M-9780**	1	SEAL-O-RING	
		1	**6V-8642**	1	CONNECTOR	
		1	**7J-9108**	1	SEAL-O-RING	
	10	1	*148-8352*	1	ELBOW AS	
		1	**5K-9090**	1	SEAL-O-RING	
		1	**6V-9854**	1	ELBOW (SWIVEL)	
	11	1	*148-8357*	2	ELBOW AS	
					(EACH INCLUDES)	
		1	**5K-9090**	1	SEAL-O-RING	
		1	**6V-9008**	1	ELBOW	
		1	**7M-8485**	1	SEAL-O-RING	
	12	1	*148-8360*	1	ELBOW AS	
		1	**6V-9182**	1	ELBOW	
		1	**6V-9746**	1	SEAL-O-RING	
		1	**7M-8485**	1	SEAL-O-RING	
	13	1	*148-8392*	1	ELBOW AS	
		1	**6V-9746**	1	SEAL-O-RING	
		1	**6V-9853**	1	ELBOW	
	14	1	*148-8393*	1	ELBOW AS	
		1	**6V-9852**	1	ELBOW (SWIVEL)	
		1	**7J-9108**	1	SEAL-O-RING	
	15	1	*150-4041*	1	CONNECTOR AS	
		1	**2M-9780**	1	SEAL-O-RING	
		1	**3E-7420**	1	CONNECTOR	
		1	**6V-9746**	1	SEAL-O-RING	
	16	1	*153-6236*	1	REDUCER AS	
		1	**6V-8946**	1	REDUCER	
		1	**6V-9746**	1	SEAL-O-RING	
	17	1	*164-5567*	1	COUPLER AS-QUICK DISCONNECT (MALE)	
		1	**3J-1907**	1	SEAL-O-RING	
		1	**6V-3965**	1	FITTING (QUICK DISCONNECT)	
	18	1	*164-6858*	1	TEE AS	
		1	**5K-9090**	2	SEAL-O-RING	
		1	**6V-8778**	1	TEE-FACE SEAL	
		1	**7M-8485**	1	SEAL-O-RING	

278-6731 **LINES GP-PUMP (**contd.**)** **i02911219**

NOTE	REF NO	GRAPHIC REF	PART NUMBER	QTY	PART NAME 1 2 3 4 5 6 (PRODUCT LEVEL)	SEE PAGE
	19	1	**5P-7464**	1	CLIP (SLOT)	
	20	1	**5P-7465**	1	CLIP (TAB)	
	21	1	**7X-7729**	1	WASHER (11X25X3-MM THK)	
	22	1	**8T-2920**	1	GROMMET (27-MM ID)	
M	23	1	**8T-4136**	1	BOLT (M10X1.5X25-MM)	

I - REFER TO HYDRAULIC INFORMATION SYSTEM
M - METRIC PART

278-6731 **LINES GP-PUMP (**contd.**)** **i02911219**

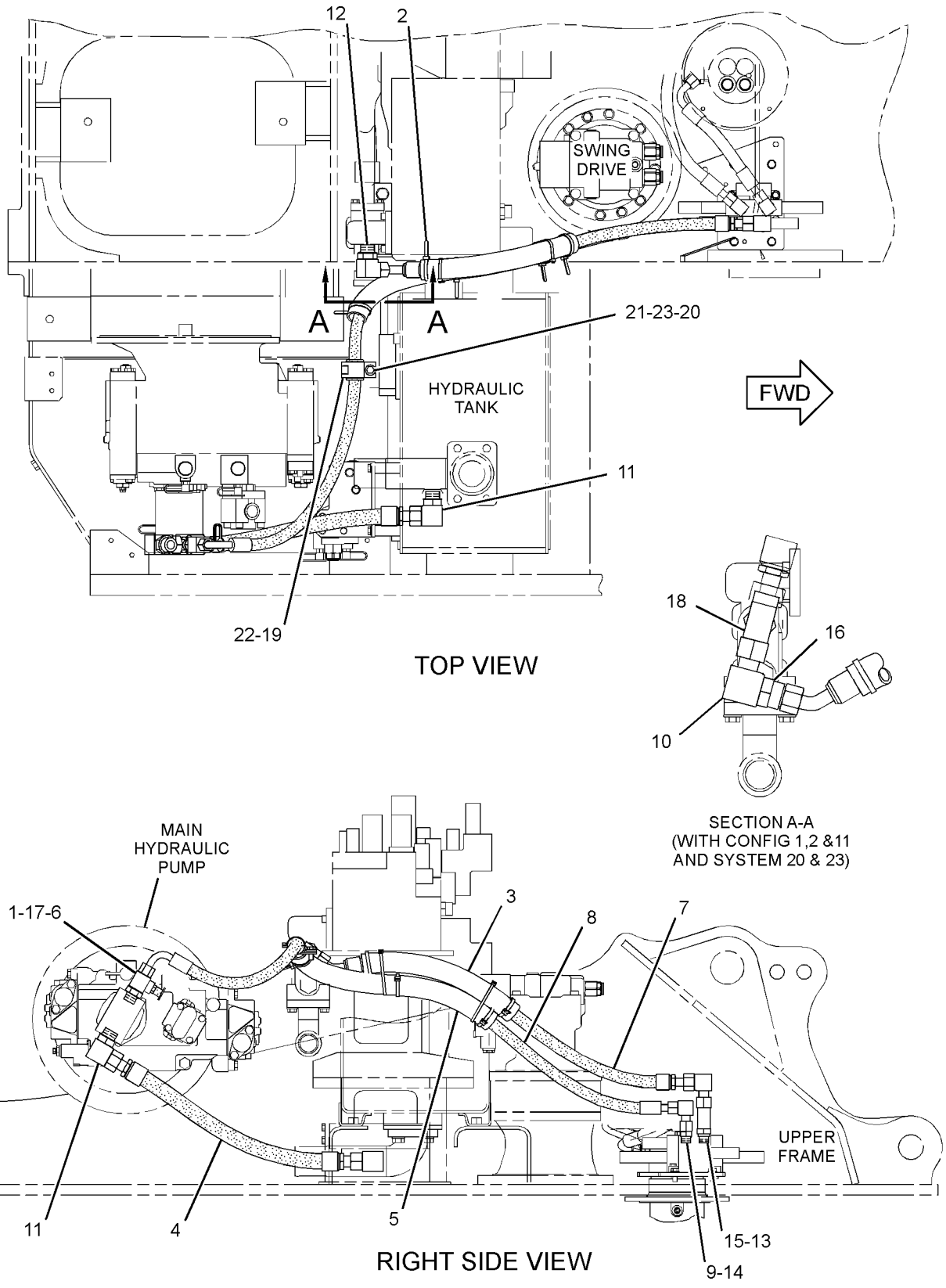

GRAPHIC #1 <END> g01486654

387-3697 LINES GP-PUMP—MEDIUM PRESSURE, WITH BLADE

S/N: DLP1-UP

PART OF 389-2433 CONTROL AR-AUXILIARY, 385-4069 INSTALLATION AR-BLADE AN ATTACHMENT

SMCS-5057 **i04892046**

NOTE	REF NO	GRAPHIC REF	PART NUMBER	QTY	PART NAME 1 2 3 4 5 6 (PRODUCT LEVEL)	SEE PAGE
	1	1	**6V-0852**	1	CAP-DUST	
	2	1	**7K-1181**	7	STRAP-CABLE	
	3	1	**134-6838**	1	GUARD	
I	4	1	**319-9775**	1	HOSE AS	
	5	1	**199-2046**	1	GUARD	
	6	1	*278-6424*	1	TEE AS	
		1	**3D-2824**	1	SEAL-O-RING	
		1	**7J-9108**	1	SEAL-O-RING	
		1	**278-6425**	1	TEE-ORP TO ORFS	
I	7	1	**285-2444**	1	HOSE AS	
I	8	1	**387-3666**	1	HOSE AS	
	9	1	*148-8315*	1	CONNECTOR AS	
		1	**2M-9780**	1	SEAL-O-RING	
		1	**6V-8642**	1	CONNECTOR	
		1	**7J-9108**	1	SEAL-O-RING	
	10	1	*148-8352*	1	ELBOW AS	
		1	**5K-9090**	1	SEAL-O-RING	
		1	**6V-9854**	1	ELBOW (SWIVEL)	
	11	1	*148-8357*	1	ELBOW AS	
					(EACH INCLUDES)	
		1	**5K-9090**	1	SEAL-O-RING	
		1	**6V-9008**	1	ELBOW	
		1	**7M-8485**	1	SEAL-O-RING	
	12	1	*148-8360*	1	ELBOW AS	
		1	**6V-9182**	1	ELBOW	
		1	**6V-9746**	1	SEAL-O-RING	
		1	**7M-8485**	1	SEAL-O-RING	
	13	1	*148-8392*	1	ELBOW AS	
		1	**6V-9746**	1	SEAL-O-RING	
		1	**6V-9853**	1	ELBOW	
	14	1	*148-8393*	1	ELBOW AS	
		1	**6V-9852**	1	ELBOW (SWIVEL)	
		1	**7J-9108**	1	SEAL-O-RING	
	15	1	*150-4041*	1	CONNECTOR AS	
		1	**2M-9780**	1	SEAL-O-RING	
		1	**3E-7420**	1	CONNECTOR	
		1	**6V-9746**	1	SEAL-O-RING	
	16	1	*153-6236*	1	REDUCER AS	
		1	**6V-8946**	1	REDUCER	
		1	**6V-9746**	1	SEAL-O-RING	
	17	1	*164-5567*	1	COUPLER AS-QUICK DISCONNECT (MALE)	
		1	**214-7568**	1	SEAL-O-RING	
		1	**6V-3965**	1	FITTING (QUICK DISCONNECT)	
	18	1	*164-6858*	1	TEE AS	
		1	**5K-9090**	2	SEAL-O-RING	
		1	**6V-8778**	1	TEE-FACE SEAL	
		1	**7M-8485**	1	SEAL-O-RING	

387-3697 **LINES GP-PUMP (**contd.**)** **i04892046**

NOTE	REF NO	GRAPHIC REF	PART NUMBER	QTY	PART NAME 1 2 3 4 5 6 (PRODUCT LEVEL)	SEE PAGE
	19	1	**5P-7464**	1	CLIP (SLOT)	
	20	1	**5P-7465**	1	CLIP (TAB)	
	21	1	**7X-7729**	1	WASHER (11X25X3-MM THK)	
	22	1	**8T-2920**	1	GROMMET (27-MM ID)	
M	23	1	**8T-4136**	1	BOLT (M10X1.5X25-MM)	
	24	1	*148-8335*	1	CONNECTOR AS	
		1	**5K-9090**	1	SEAL-O-RING	
		1	**6V-8635**	1	CONNECTOR	
		1	**7M-8485**		SEAL-O-RING	

I - REFER TO HYDRAULIC INFORMATION SYSTEM
M - METRIC PART

387-3697 **LINES GP-PUMP (**contd.**)** **i04892046**

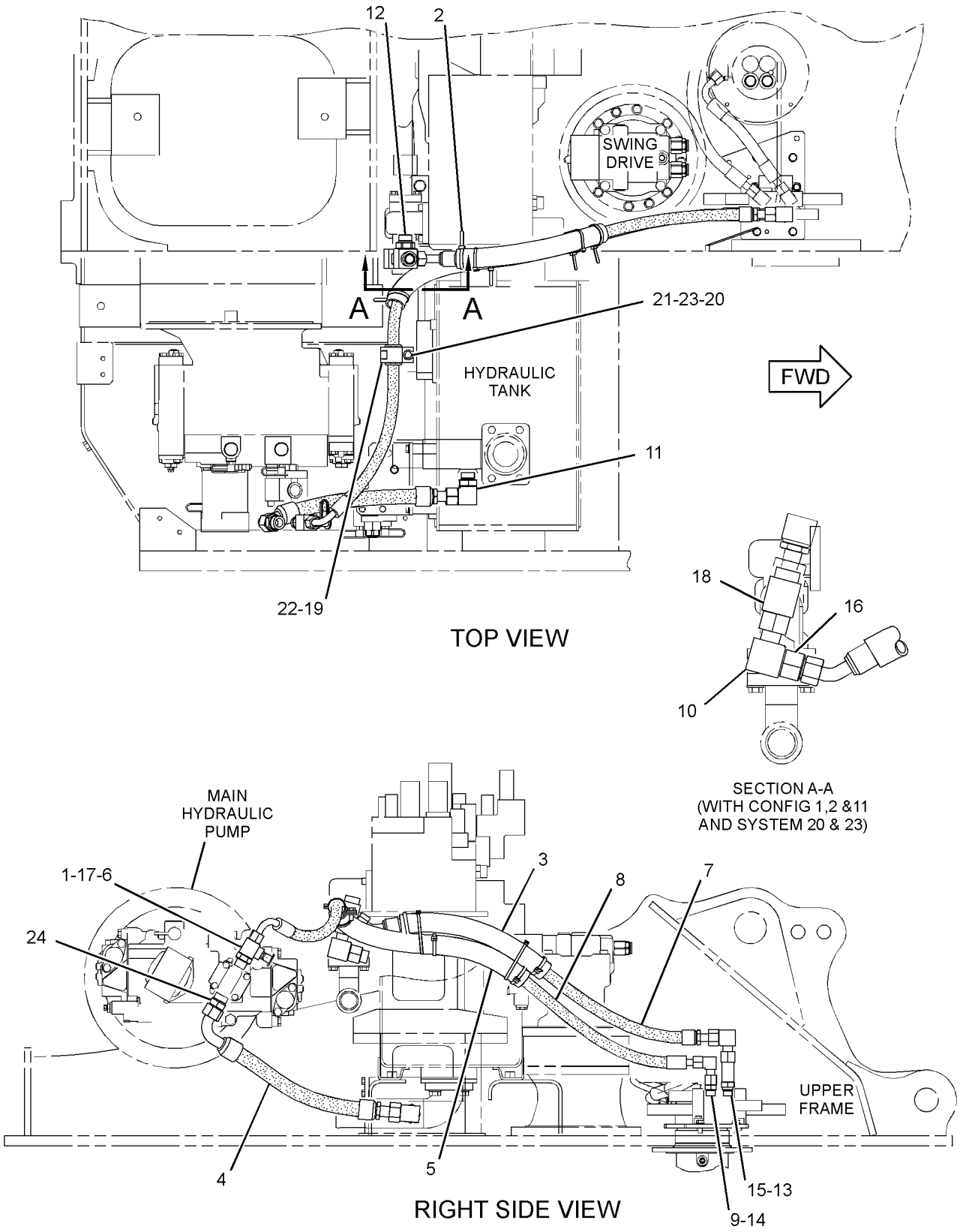

GRAPHIC #1 <END> g03050916

179-7601 LINES GP-STICK

S/N: DLP1-UP
FOR USE WITH 2.5-M (8.2-FT) STICK
PART OF 301-2544, 385-4096, 385-4097 STICK AR-HOE
AN ATTACHMENT

SMCS-5057, 5458 **i06243793**

NOTE	REF NO	GRAPHIC REF	PART NUMBER	QTY	PART NAME 1 2 3 4 5 6 (PRODUCT LEVEL)	SEE PAGE
I	1	1	**104-8999**	1	HOSE AS	
I	2	1	**124-0838**	1	HOSE AS	
	3	1	**8C-3205**	2	FLANGE-HALF	
	4	1	**4J-5267**	2	SEAL-O-RING	
	5	1	**131-9850**	1	BLOCK	
M	6	1	**8T-5005**	4	BOLT (M10X1.5X70-MM)	
	7	1	**8T-4121**	4	WASHER-HARD (11X21X2.5-MM THK)	
	8	1	**7J-9108**	1	SEAL-O-RING	

I - REFER TO HYDRAULIC INFORMATION SYSTEM
M - METRIC PART

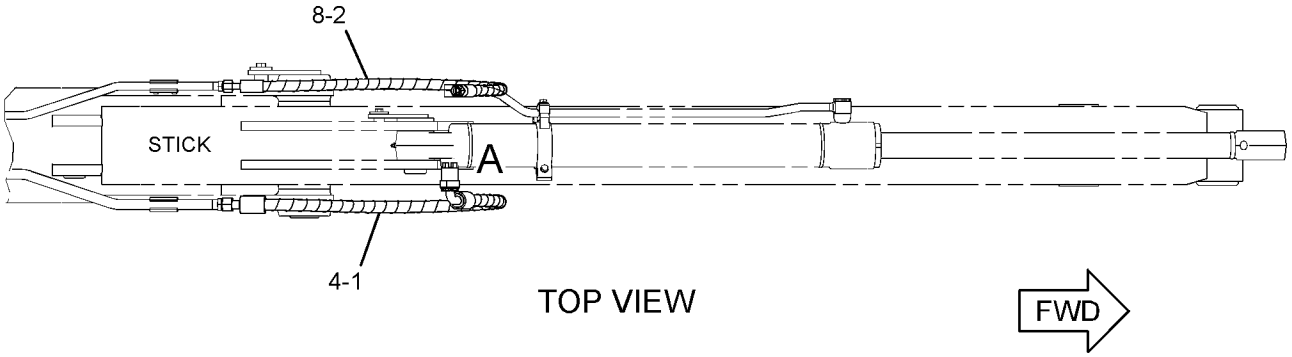

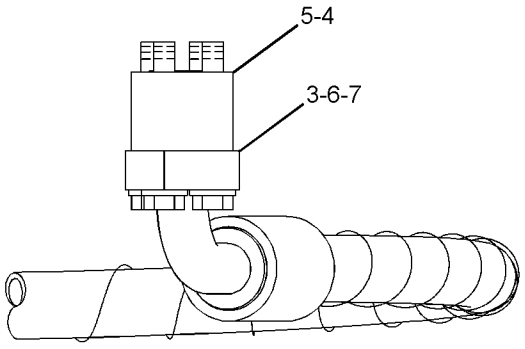

VIEW OF AREA A

GRAPHIC #1 <END> g03885640

194-8989 LINES GP-STICK CYLINDER

S/N: DLP1-UP
PART OF 289-7711, 289-8076 CYLINDER & LINES GP-STICK
AN ATTACHMENT

SMCS-5458 **i02890956**

NOTE	REF NO	GRAPHIC REF	PART NUMBER	QTY	PART NAME 1 2 3 4 5 6 (PRODUCT LEVEL)	SEE PAGE
	1	1	**6V-9746**	2	SEAL-O-RING	
	2	1	**4J-5267**	2	SEAL-O-RING	
	3	1	**109-5816**	1	ELBOW	
M	4	1	**8T-4185**	8	BOLT (M10X1.5X50-MM)	
	5	1	**194-9124**	1	TUBE AS	
M	6	1	**8T-4910**	1	BOLT (M12X1.75X60-MM)	
	7	1	**8T-4223**	1	WASHER-HARD (13.5X25.5X3-MM THK)	
	8	1	**093-1292**	1	CLAMP	
	9	1	**121-6219**	1	SUPPORT AS	
	10	1	**8T-4121**	2	WASHER-HARD (11X21X2.5-MM THK)	
M	11	1	**8T-4196**	2	BOLT (M10X1.5X35-MM)	
	12	1	**121-6220**	1	SUPPORT AS	

M - METRIC PART

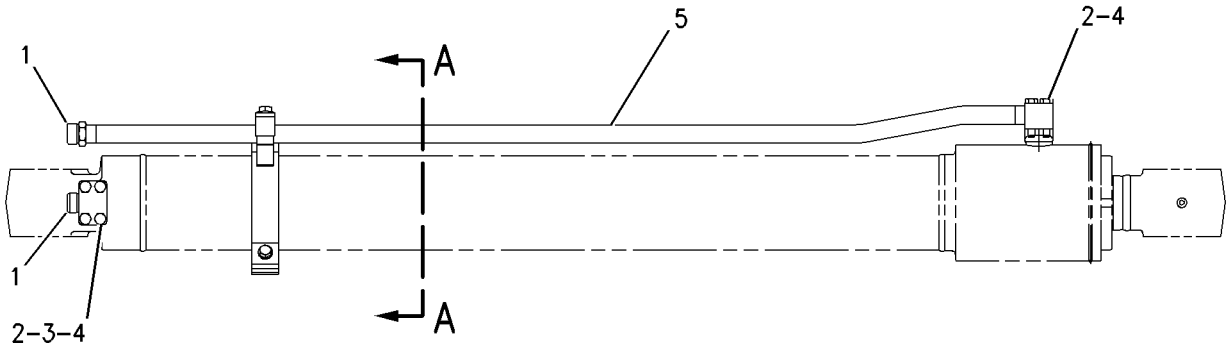

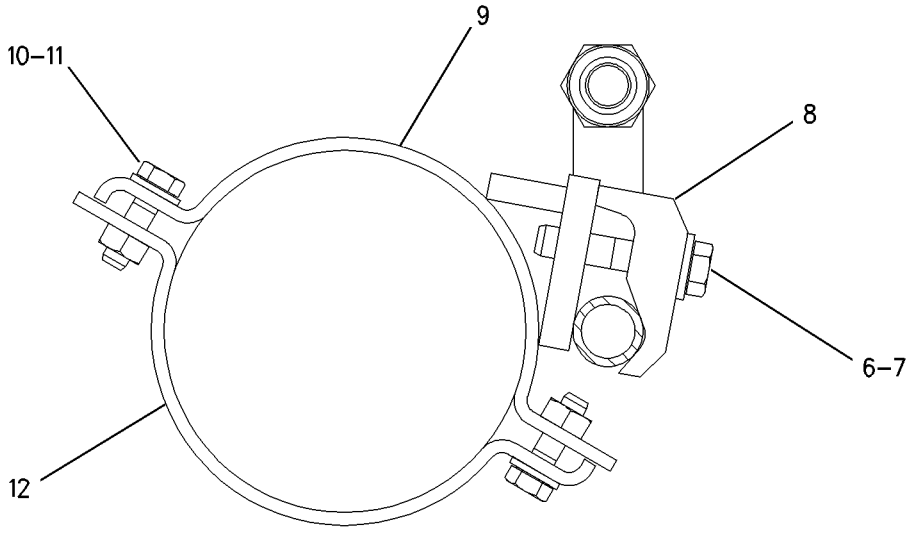

SECTION A-A

GRAPHIC #1 <END> g00856269

385-2830 LINES GP-STICK CYLINDER

S/N: DLP1-UP

PART OF 385-2829 CYLINDER & LINES GP-STICK

AN ATTACHMENT

SMCS-5458 **i05907271**

NOTE	REF NO	GRAPHIC REF	PART NUMBER	QTY	PART NAME 1 2 3 4 5 6 (PRODUCT LEVEL)	SEE PAGE
	1	1	**385-2967**	1	CLAMP	
	2	1	**422-9132**	1	SUPPORT AS	
M	3	1	**8T-0271**	4	BOLT-SOCKET HEAD (M10X1.5X35-MM)	
	4	1	**385-2970**	1	TUBE AS	
	5	1	**6V-0357**	2	SEAL-O-RING	
	6	1	**7X-0796**	3	LOCKWASHER (10.2X18.4X2.5-MM THK)	
M	7	1	**6V-5842**	2	BOLT (M10X1.5X40-MM)	
M	8	1	**6V-4249**	1	BOLT (M10X1.5X50-MM)	
	9	1	**6V-9832**	2	CAP	
	10	1	**393-7944**	1	FLANGE-ELBOW	
M	11	1	**8T-1160**	4	BOLT-SOCKET HEAD (M10X1.5X50-MM)	
	12	1	**6V-9746**	2	SEAL-O-RING	

M - METRIC PART

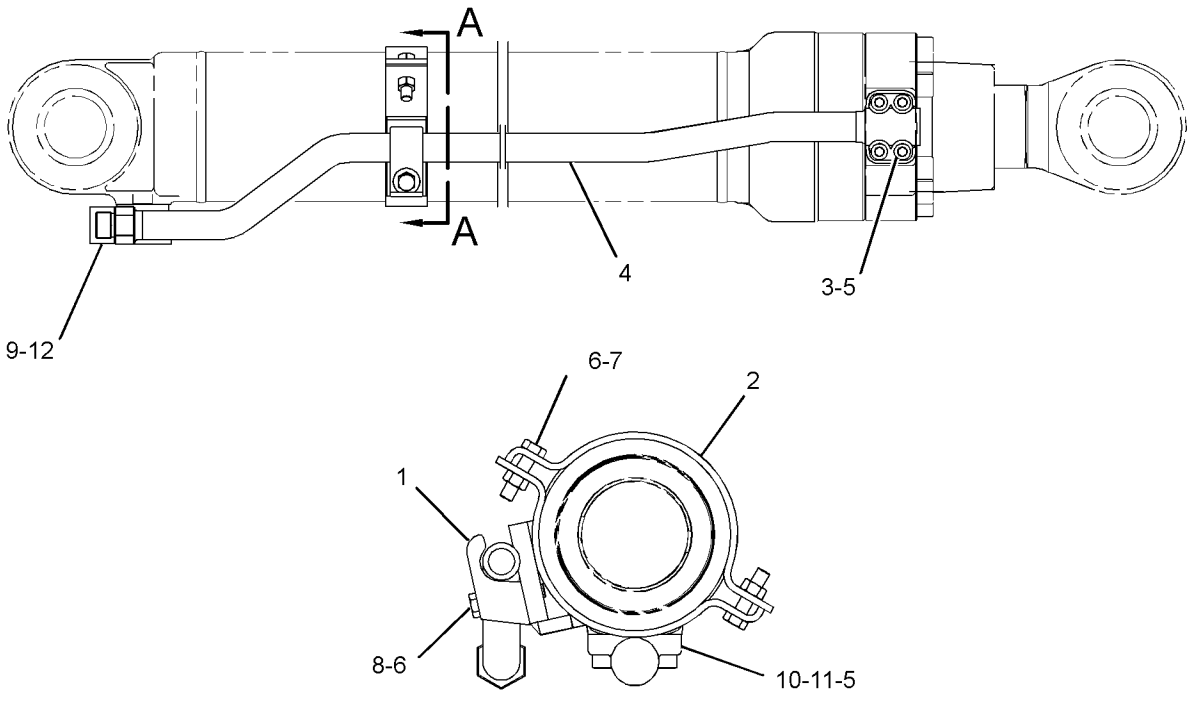

SECTION A-A

GRAPHIC #1 <END> g03343309

278-6511 LINES GP-TRAVEL MOTOR

S/N: DLP1-UP

PART OF 270-5864 HYDRAULIC AR

SMCS-5057, 5058 **i06788942**

NOTE	REF NO	GRAPHIC REF	PART NUMBER	QTY	PART NAME 1 2 3 4 5 6 (PRODUCT LEVEL)	SEE PAGE
	1	1	**5I-4365**	2	GROMMET	
	2	1	**4I-6039**	2	GROMMET	
I	3	1	**7I-1303**	4	HOSE AS	
Y	4	1	**162-4696**	1	SWIVEL GP	786
I	5	1	**307-5096**	2	HOSE AS	
I	6	1	**179-7771**	2	HOSE AS	
	7	1	*267-4063*	2	CONNECTOR AS	
					(EACH INCLUDES)	
		1	**3J-1907**	1	SEAL-O-RING	
		1	**4J-5477**	1	SEAL-O-RING	
		1	**156-8801**	1	CONNECTOR	
	8	1	*148-8325*	2	CONNECTOR AS	
					(EACH INCLUDES)	
		1	**3J-1907**	1	SEAL-O-RING	
		1	**4J-5477**	1	SEAL-O-RING	
		1	**6V-8641**	1	CONNECTOR	
	9	1	*148-8327*	8	CONNECTOR AS	
					(EACH INCLUDES)	
		1	**3D-2824**	1	SEAL-O-RING	
		1	**6V-8637**	1	CONNECTOR	
		1	**6V-9746**	1	SEAL-O-RING	
	10	1	*148-8340*	2	CONNECTOR AS	
					(EACH INCLUDES)	
		1	**3K-0360**	1	SEAL-O-RING	
		1	**6V-8398**	1	SEAL-O-RING	
		1	**6V-8639**	1	CONNECTOR	
	11	1	*148-8436*	1	TEE AS	
		1	**3K-0360**	1	SEAL-O-RING	
		1	**6V-8398**	2	SEAL-O-RING	
		1	**6V-8775**	1	TEE-FACE SEAL	
	12	1	**7K-1181**	4	STRAP-CABLE	
	13	1	**8T-4121**	4	WASHER-HARD (11X21X2.5-MM THK)	
M	14	1	**8T-4137**	4	BOLT (M10X1.5X20-MM)	
B	15	1	**1U-8846**		SEALANT-GASKET	

B - USE AS REQUIRED
I - REFER TO HYDRAULIC INFORMATION SYSTEM
M - METRIC PART
Y - SEPARATE ILLUSTRATION

278-6511 **LINES GP-TRAVEL MOTOR (**contd.**)** **i06788942**

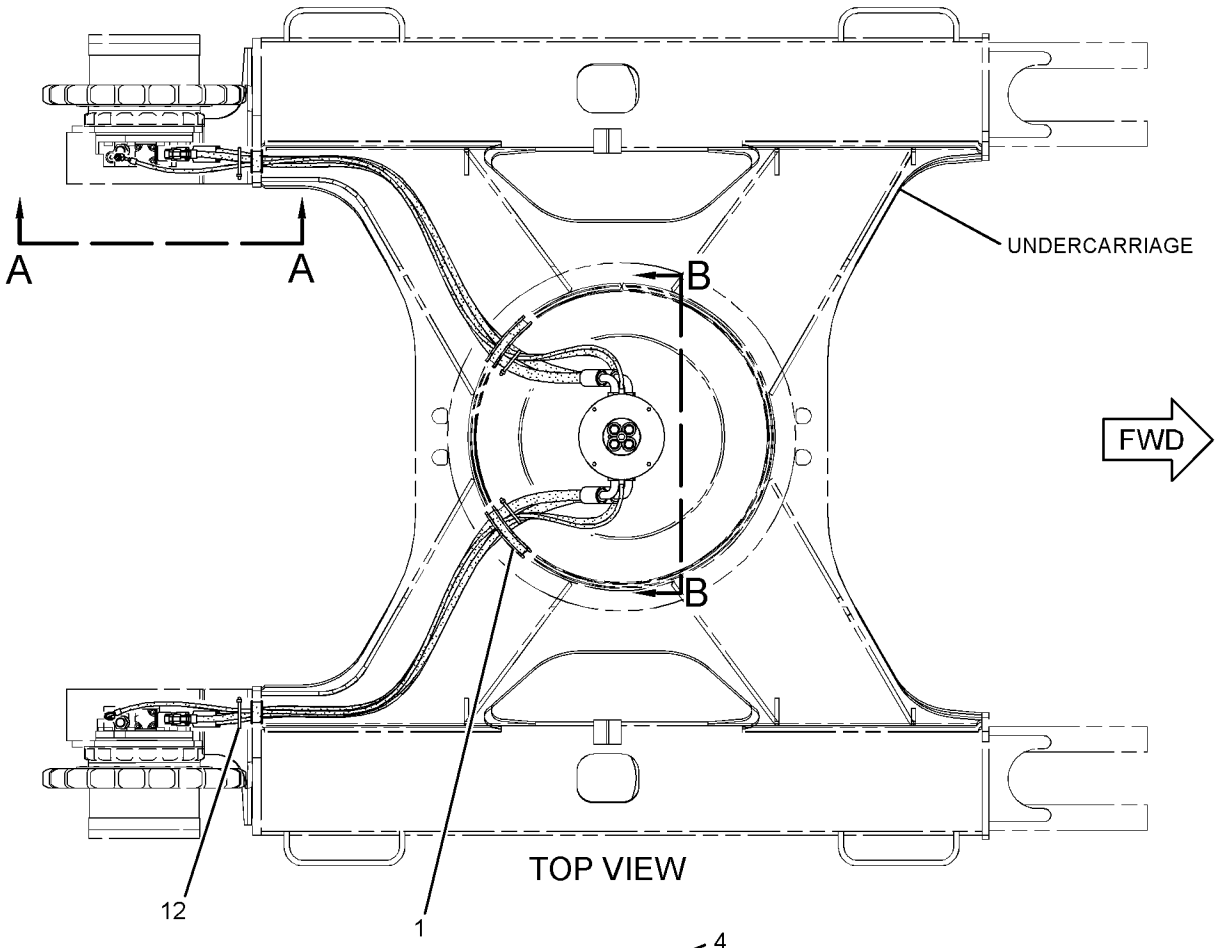

TOP VIEW

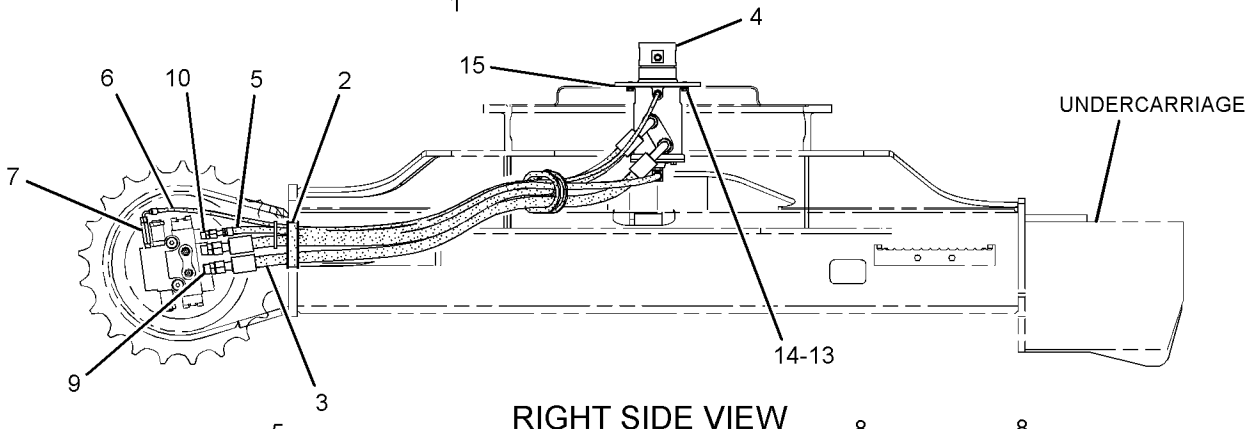

RIGHT SIDE VIEW

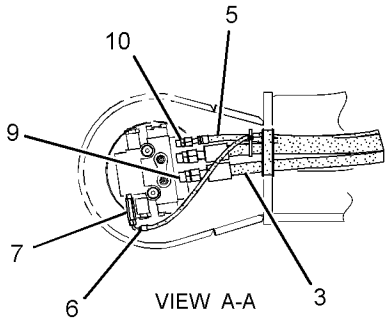

VIEW A-A

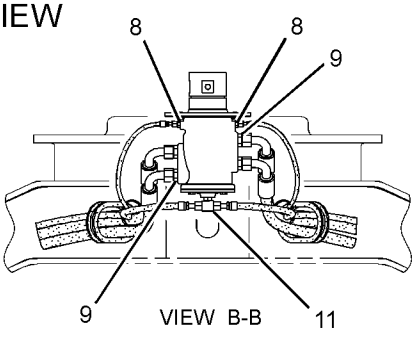

VIEW B-B

GRAPHIC #1 <END> g01400455

215-5037 MANIFOLD GP-CONTROL–PILOT OIL SUPPLY

S/N: DLP1-UP

PART OF 278-6674 LINES GP-PILOT

SMCS-5264 **i02092079**

NOTE	PART NUMBER	QTY	PART NAME 1 2 3 4 5 6 (PRODUCT LEVEL)	SEE PAGE
Y	*239-8998*	1	MANIFOLD GP-CONTROL (PILOT OIL SUPPLY) (STEEL BODY)	749
			–OR–	
Y	*239-8697*	1	MANIFOLD GP-CONTROL (PILOT OIL SUPPLY) (ALUMINUM BODY)	748
Y - SEPARATE ILLUSTRATION				

<END>

239-8697 MANIFOLD GP-CONTROL—PILOT OIL SUPPLY

S/N: DLP1-UP
ALUMINUM BODY
PART OF 215-5037 MANIFOLD GP-CONTROL

SMCS-5264 **i04132916**

NOTE	REF NO	GRAPHIC REF	PART NUMBER	QTY	PART NAME 1 2 3 4 5 6 (PRODUCT LEVEL)	SEE PAGE
Y	1	1	**121-1491**	1	VALVE GP-SOLENOID (SWING BRAKE RELEASE)	851
Y	1A	1	**121-1491**	1	VALVE GP-SOLENOID (HYDRAULIC LOCKOUT)	851
Y	1B	1	**121-1491**	1	VALVE GP-SOLENOID (TRAVEL SPEED)	851
	4	1	**197-0196**	1	VALVE-CHECK	
	5	1	**197-0199**	1	SPRING	
	6	1	**197-0273**	1	SPRING	
	7	1	**9S-8005**	4	PLUG (3/4-16-THD)	
	8	1	**3J-1907**	1	SEAL-O-RING	
	9	1	**3K-0360**	4	SEAL-O-RING	
M	11	1	**7I-2272**	6	BOLT (M5X0.8X12-MM)	
	12	1	*225-4818*	6	PLUG AS	
					(EACH INCLUDES)	
		1	**4J-7533**	1	SEAL-O-RING	
		1	**225-4804**	1	PLUG	
	13	1	**9S-8004**	1	PLUG (9/16-18-THD)	

M - METRIC PART
Y - SEPARATE ILLUSTRATION

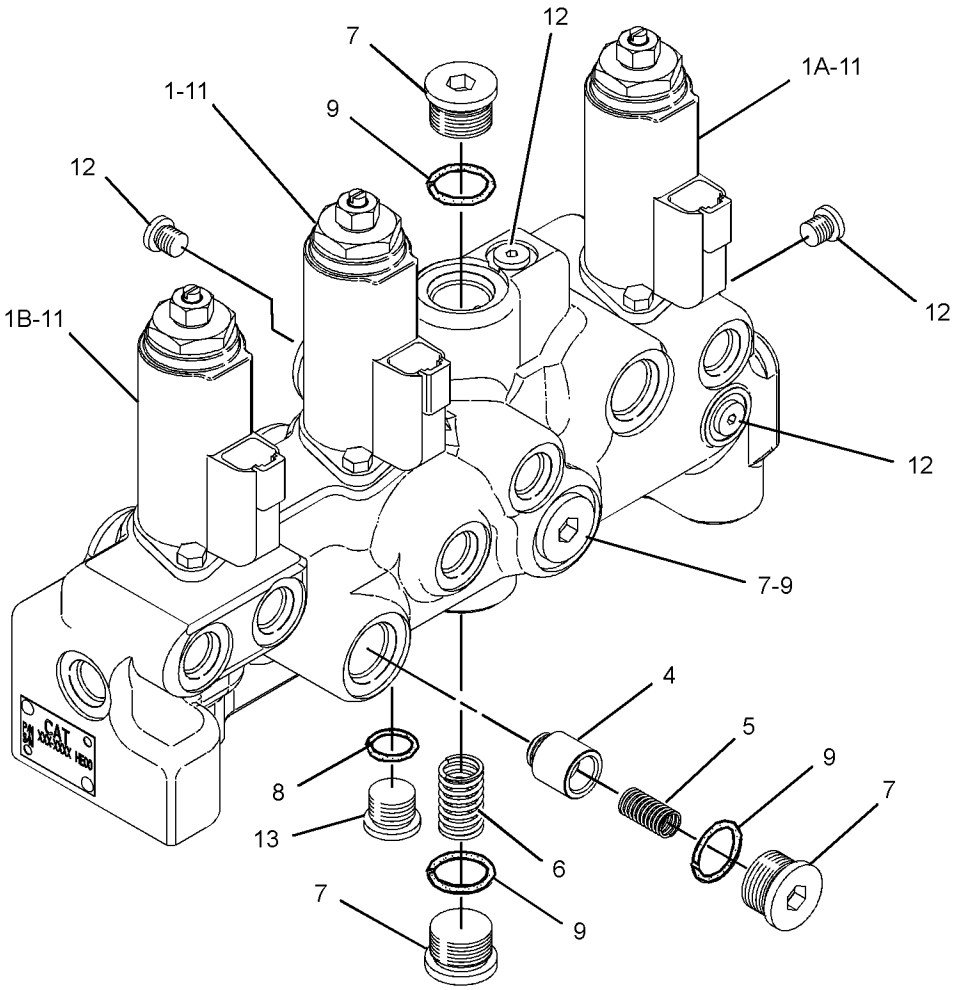

GRAPHIC #1 <END> g02345260

239-8998 MANIFOLD GP-CONTROL—PILOT OIL SUPPLY

S/N: DLP1-UP
STEEL BODY
PART OF 215-5037 MANIFOLD GP-CONTROL

SMCS-5264 **i04922918**

NOTE	REF NO	GRAPHIC REF	PART NUMBER	QTY	PART NAME 1 2 3 4 5 6 (PRODUCT LEVEL)	SEE PAGE
Y	1	1	**121-1491**	1	VALVE GP-SOLENOID (SWING BRAKE RELEASE)	851
Y	1A	1	**121-1491**	1	VALVE GP-SOLENOID (HYDRAULIC LOCKOUT)	851
Y	1B	1	**121-1491**	1	VALVE GP-SOLENOID (TRAVEL SPEED)	851
	2	1	**7M-7410**	2	PLUG-PIPE	
	3	1	**8T-6759**	6	PLUG-PIPE	
	4	1	**197-0196**	1	VALVE-CHECK	
	5	1	**9S-8005**	3	PLUG (3/4-16-THD)	
	6	1	**197-0199**	1	SPRING	
	7	1	**197-0273**	1	SPRING	
	8	1	**3K-0360**	3	SEAL-O-RING	
M	9	1	**7I-2272**	6	BOLT (M5X0.8X12-MM)	

M - METRIC PART
Y - SEPARATE ILLUSTRATION

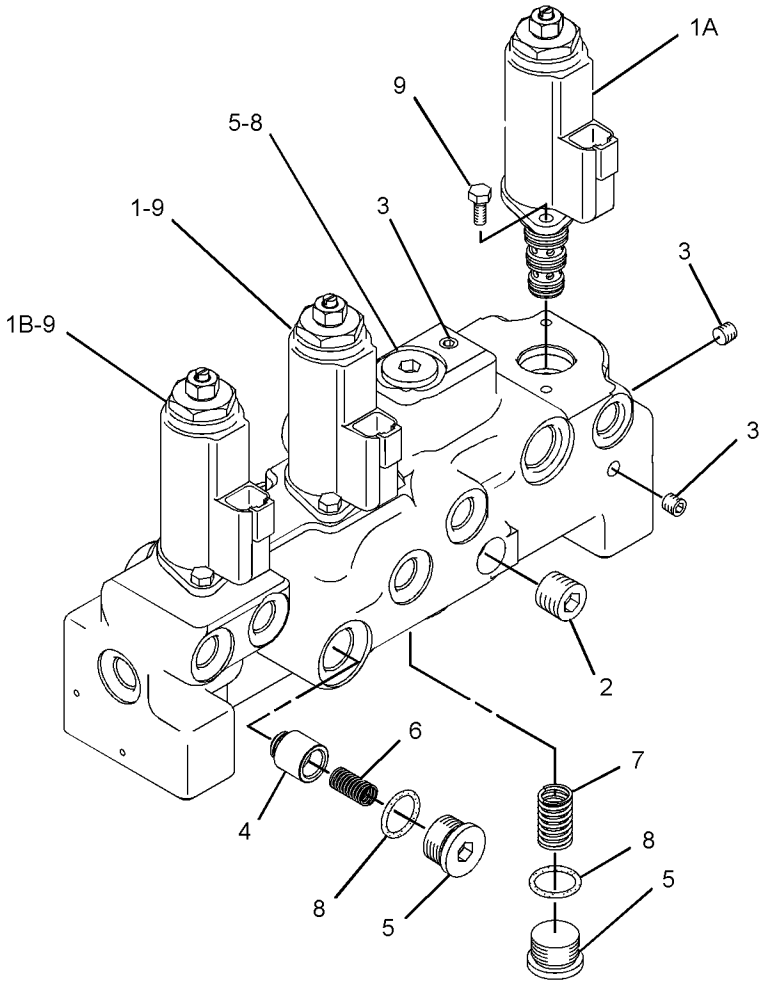

GRAPHIC #1 <END> g03089517

170-9893 MOTOR GP-SWING

S/N: DLP1-UP

PART OF 169-5569, 333-3072 DRIVE GP-SWING

SMCS-5058 **i05401316**

NOTE	REF NO	GRAPHIC REF	PART NUMBER	QTY	PART NAME 1 2 3 4 5 6 (PRODUCT LEVEL)	SEE PAGE
	1	1	**099-0320**	1	BUSHING	
J	2	1	**099-0321**	1	SEAL-LIP TYPE	
	3	1	**099-0322**	1	BEARING-ROLLER	
	4	1	**7I-0057**	1	SPRING	
	5	1	**099-4749**	1	PLATE-CAM	
	6	1	**7I-0058**	1	PLATE-RETAINER	
	7	1	**200-3335**	1	PISTON AS	
	8	1	**099-6530**	3	PLATE-FRICTION	
	9	1	**099-6531**	3	PLATE-SEPARATOR	
J	10	1	**099-6532**	1	SEAL-O-RING	
	11	1	**099-6535**	1	PISTON-BRAKE	
J	12	1	**6F-4718**	2	SEAL-O-RING	
	13	1	**099-0328**	16	SPRING	
	14	1	**099-0329**	2	PIN	
	15	1	**099-0330**	4	SPRING	
	16	1	**099-0331**	4	RING	
	17	1	**444-2033**	4	BUSHING	
	18	1	**099-0333**	1	PLATE-VALVE	
	19	1	**099-0334**	1	BEARING AS-NEEDLE	
	20	1	**099-0335**	1	RING-RETAINING	
	21	1	**123-2143**	1	BARREL AS	
	22	1	**194-8401**	1	HOUSING	
	24	1	**7I-0060**	2	PLUG	
J	25	1	**095-1784**	2	RING-BACKUP	
J	26	1	**095-1585**	2	SEAL-O-RING	
J	27	1	**095-1580**	2	SEAL-O-RING	
	28	1	**7I-0061**	2	VALVE (CROSSOVER RELIEF)	
	29	1	**7I-0062**	2	SPRING	
	30	1	**7I-0063**	2	SLEEVE AS	
	31	1	**194-8400**	1	HEAD	
J	32	1	**095-1594**	4	SEAL-O-RING	
J	33	1	**3J-1907**	2	SEAL-O-RING	
	34	1	**9S-4191**	2	PLUG (9/16-18-THD)	
	35	1	**229-0992**	2	VALVE GP-RELIEF (SWING)	
					(EACH INCLUDES)	
		1	**095-1594**	1	SEAL-O-RING	
M	36	1	**8T-0347**	4	BOLT-SOCKET HEAD (M14X1.5X45-MM)	
	37	1	**096-5933**	2	VALVE-CHECK (MAKEUP)	
J	38	1	**095-1789**	2	RING	
	39	1	**096-5934**	2	SPRING	
	40	1	**096-5932**	2	PLUG	
					AVAILABLE REPAIR KIT(S):	
J			**123-2145**	1	KIT-SEAL (SWING MOTOR)	

J - KIT MARKED J SERVICES PART(S) MARKED J
M - METRIC PART

170-9893 **MOTOR GP-SWING (**contd.**)** **i05401316**

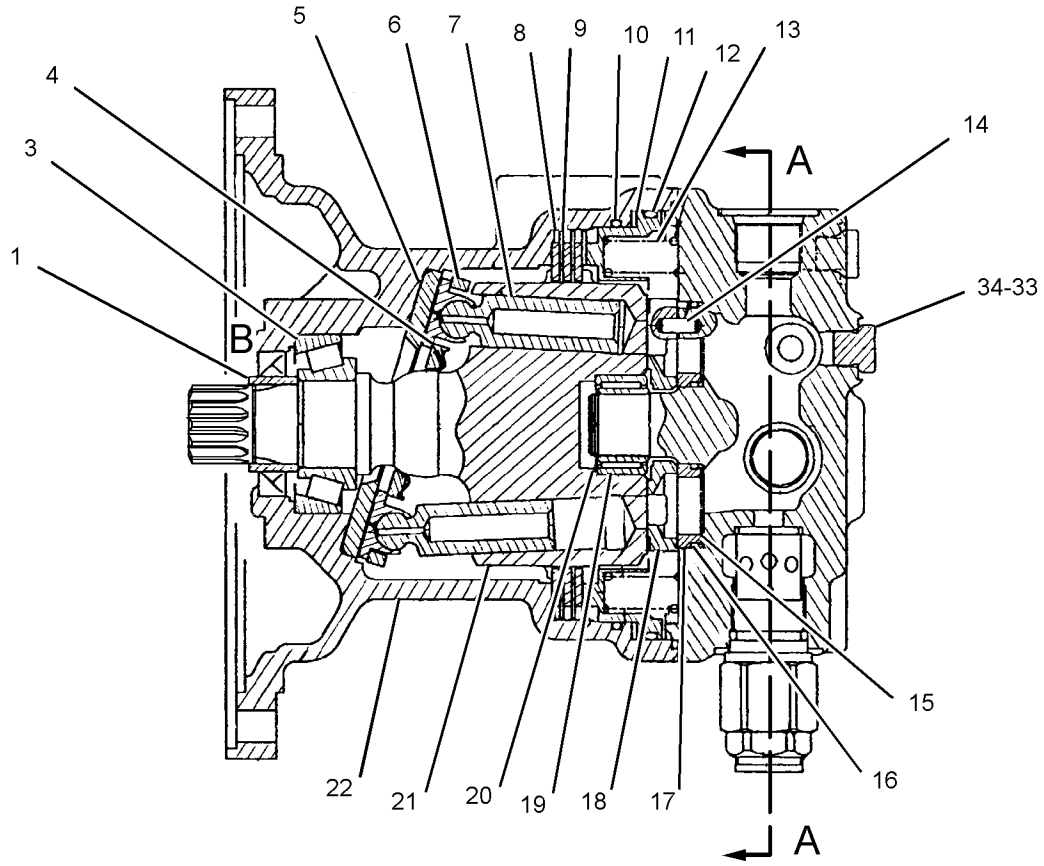

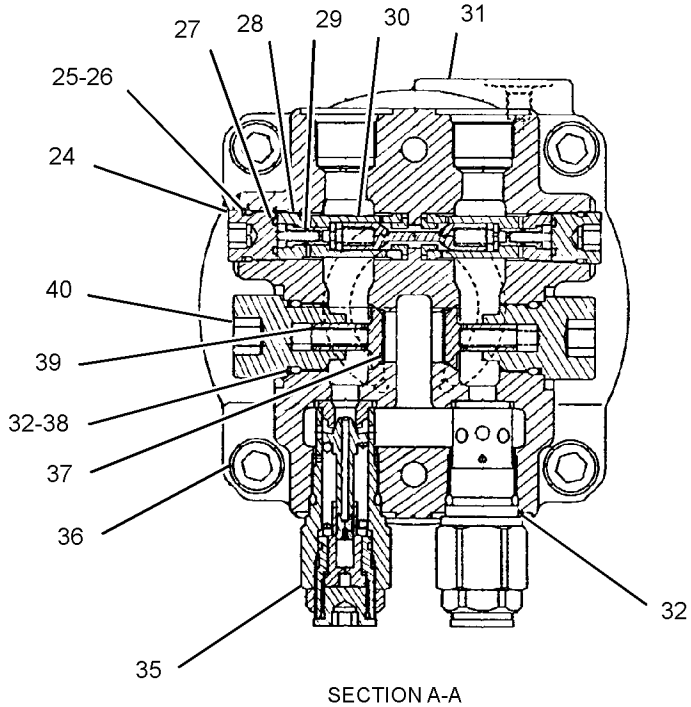

SECTION A-A

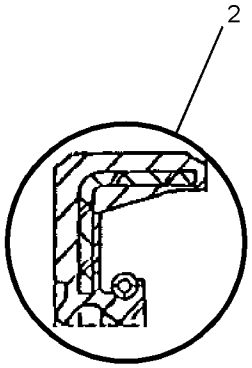

VIEW OF AREA B

GRAPHIC #1 <END> g03408266

277-6697 MOTOR GP-TRAVEL

S/N: DLP1-617

ADDITIONAL FIELD REPLACEMENT PARTS LISTED (349-9520, 352-7197, 374-4171) REPLACE EXISTING TRAVEL COUNTERBALANCE VALVE, SPOOL & PISTON IN OPPOSITE TRAVEL MOTOR & MAIN CONTROL VALVE. REFER TO SEPD1376.

FIELD REPLACEMENT ORDER 374-5964—PAGE: 754, 349-9520—PAGE: 865, 352-7197—PAGE: 779, 2-374-4171 PISTON

PART OF 277-6695, 332-7499 DRIVE GP-FINAL

SMCS-4351, 5058 **i04631471**

NOTE	REF NO	GRAPHIC REF	PART NUMBER	QTY	PART NAME 1 2 3 4 5 6 (PRODUCT LEVEL)	SEE PAGE
	1	1	1H-8278	1	SEAL-O-RING	
	2	1	7Y-4224	1	ORIFICE	
	3	1	085-9769	4	PIN	
	4	1	087-4742	1	VALVE	
	5	1	095-1585	1	SEAL-O-RING	
	6	1	095-7380	1	SPRING	
	7	1	095-7382	1	RETAINER	
	8	1	096-1519	1	SEAT	
	9	1	165-2793	1	RETAINER	
	10	1	165-2799	9	SPRING	
	11	1	165-5803	1	SHAFT	
	12	1	165-5804	1	BEARING-ROLLER	
	13	1	374-4171	2	PISTON	
	14	1	165-5809	9	PISTON AS	
	15	1	165-5811	1	BARREL AS	
	16	1	165-5814	4	PLATE-SEPARATOR	
	17	1	165-5816	1	GUIDE-PISTON	
	18	1	165-5817	1	PISTON-BRAKE	
	19	1	165-5818	8	SPRING	
	20	1	165-5826	1	SEAL-LIP TYPE	
	21	1	165-5828	2	KEY	
	22	1	165-5831	2	SPRING	
	23	1	176-8131	1	SPACER-SPECIAL	
	24	1	176-8571	1	BODY	
	25	1	176-8573	4	PLATE-FRICTION	
	26	1	176-8579	1	PLATE-CAM	
	27	1	267-8084	1	BEARING-NEEDLE	
	28	1	8T-4240	1	RING-RETAINING	
	29	1	298-5732	1	RETAINER-BALL	
Y	30	1	303-4484	1	VALVE GP-TRAVEL COUNTERBALANCE	863
	31	1	094-1875	1	DOWEL	
	32	1	094-1882	7	PLUG	
M	33	1	8T-4944	9	BOLT-SOCKET HEAD (M16X2X40-MM)	
	34	1	165-5819	1	SEAL-O-RING	
	35	1	165-5820	1	RING-BACKUP	
	36	1	165-5821	1	SEAL-O-RING	
	37	1	165-5822	1	RING-BACKUP	
	38	1	165-5823	1	SEAL-O-RING	
	39	1	165-5824	1	RING-BACKUP	

M - METRIC PART
Y - SEPARATE ILLUSTRATION

277-6697 **MOTOR GP-TRAVEL (**contd.**)** **i04631471**

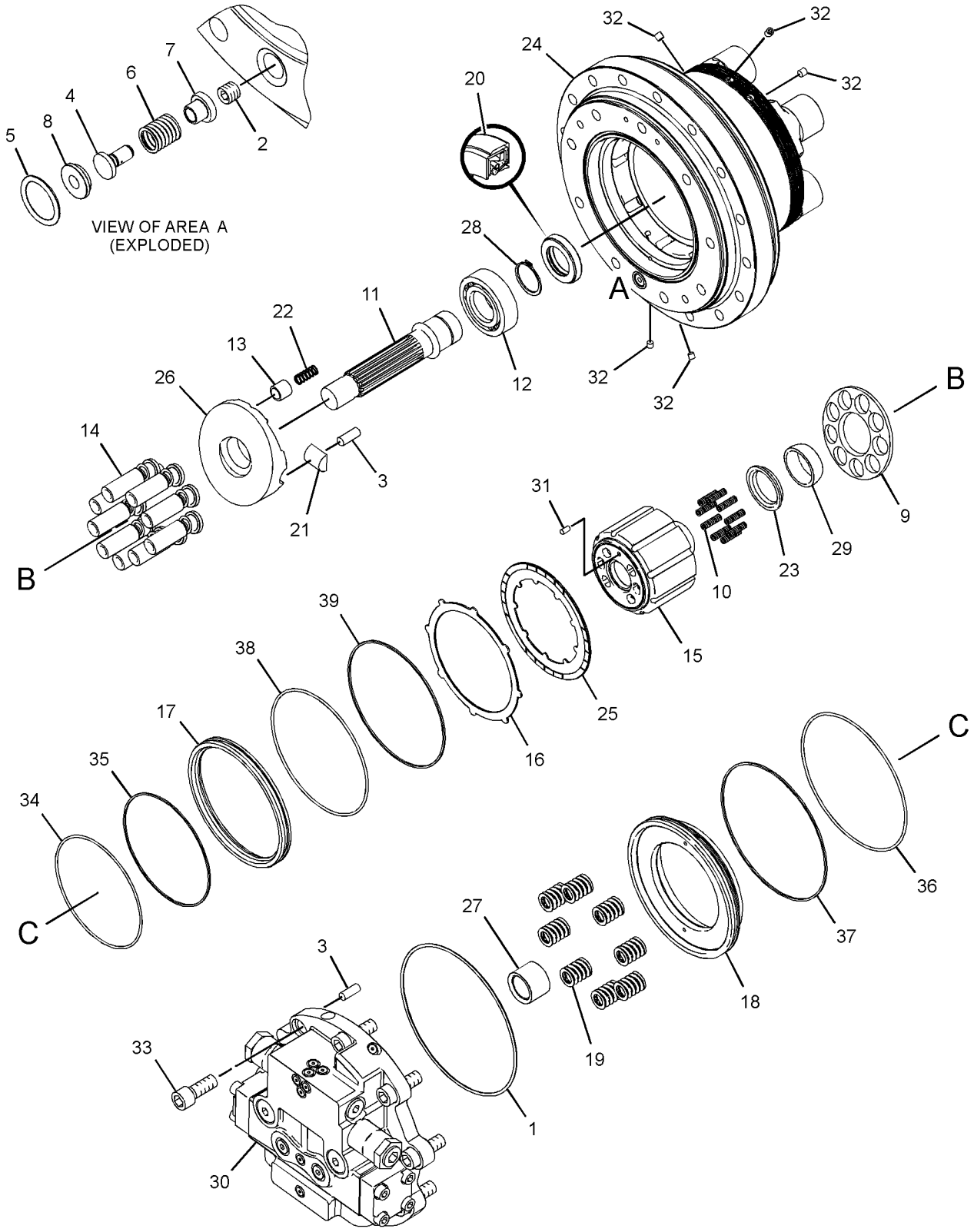

GRAPHIC #1 <END> g02232273

374-5964 MOTOR GP-TRAVEL

S/N: DLP617
REFER TO SEDP1376
FIELD REPLACEMENT ORDER 357-1821—PAGE: 332
FIELD REPLACEMENT FOR 277-6697—PAGE: 752
PART OF 374-5972 DRIVE GP-FINAL

SMCS-4351, 5058 **i04825668**

NOTE	REF NO	GRAPHIC REF	PART NUMBER	QTY	PART NAME 1 2 3 4 5 6 (PRODUCT LEVEL)	SEE PAGE
	1	2	**7Y-4224**	1	ORIFICE	
	2	1	**085-9769**	4	PIN	
	3	2	**087-4742**	1	VALVE	
	4	2	**095-1585**	1	SEAL-O-RING	
	5	2	**095-7380**	1	SPRING	
	6	2	**095-7382**	1	RETAINER	
	7	2	**096-1519**	1	SEAT	
	8	1	**165-2799**	9	SPRING	
	9	1	**165-5803**	1	SHAFT	
	10	1	**165-5804**	1	BEARING-ROLLER	
	11	1	**165-5811**	1	BARREL AS	
	12	2	**165-5814**	4	PLATE-SEPARATOR	
	13	2	**165-5816**	1	GUIDE-PISTON	
	14	2	**165-5817**	1	PISTON-BRAKE	
	15	1	**165-5818**	8	SPRING	
	16	1	**165-5826**	1	SEAL-LIP TYPE	
	17	1	**165-5828**	2	KEY	
	18	1	**165-5831**	2	SPRING	
	19	1	**176-8131**	1	SPACER-SPECIAL	
	20	1	**176-8571**	1	BODY	
	21	2	**176-8573**	4	PLATE-FRICTION	
	22	1	**176-8579**	1	PLATE-CAM	
	23	1	**267-8084**	1	BEARING-NEEDLE	
	24	1	**353-5829**	1	GUIDE-BALL	
Y	25	1	**349-9520**	1	VALVE GP-TRAVEL COUNTERBALANCE	865
	26	1	**374-4171**	2	PISTON	
	27	1	**8T-4240**	1	RING-RETAINING	
	28	1	**357-1832**	1	PISTON AS	
	29	1	**094-1875**	1	DOWEL	
	30	1,2	**094-1882**	7	PLUG	
M	31	1	**8T-4944**	9	BOLT-SOCKET HEAD (M16X2X40-MM)	
	32	2	**165-5819**	1	SEAL-O-RING	
	33	2	**165-5820**	1	RING-BACKUP	
	34	2	**165-5821**	1	SEAL-O-RING	
	35	2	**165-5822**	1	RING-BACKUP	
	36	2	**165-5823**	1	SEAL-O-RING	
	37	2	**165-5824**	1	RING-BACKUP	
	38	2	**1H-8278**	1	SEAL-O-RING	

M - METRIC PART
Y - SEPARATE ILLUSTRATION

374-5964 **MOTOR GP-TRAVEL (**contd.**)** **i04825668**

REFER TO ALL ILLUSTRATIONS OF
THIS GROUP FOR AUXILIARY VIEWS

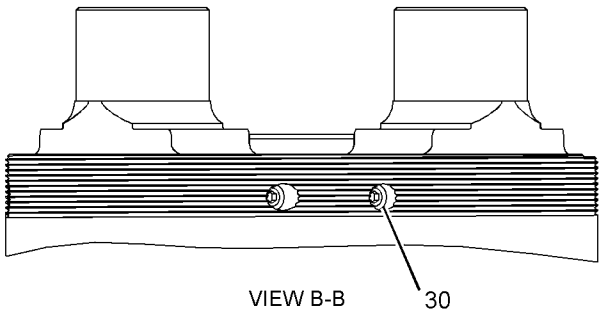

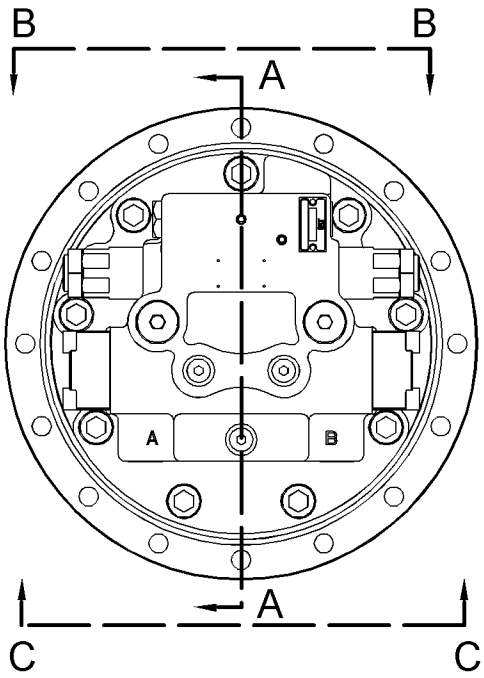

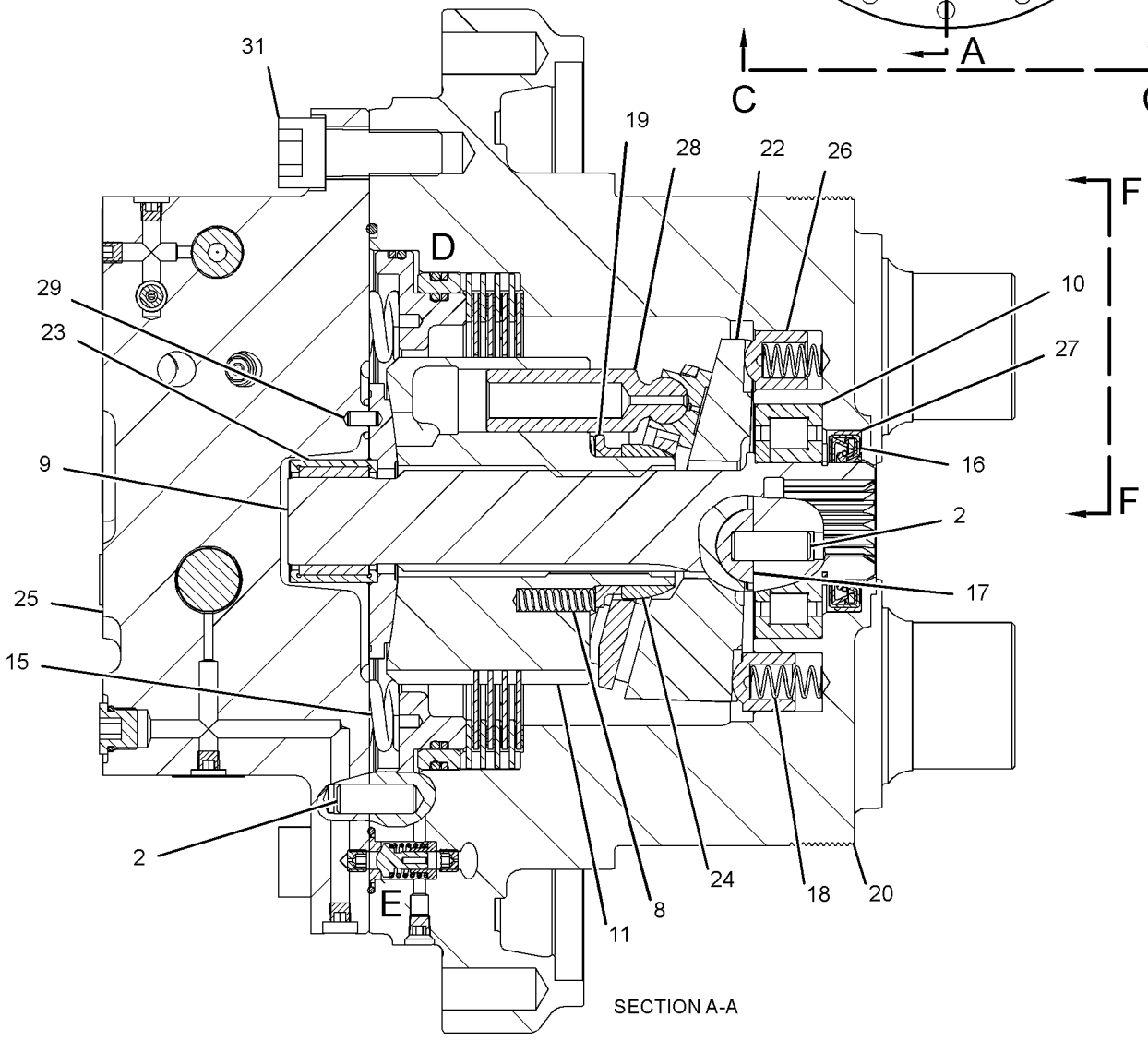

GRAPHIC #1 g02793585

374-5964 **MOTOR GP-TRAVEL (**contd.**)** **i04825668**

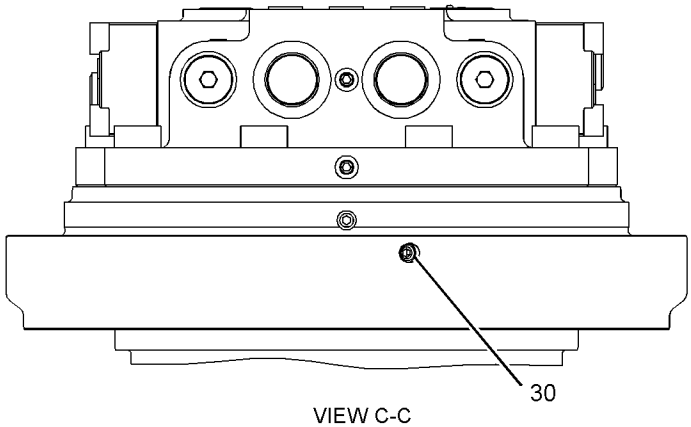

VIEW C-C

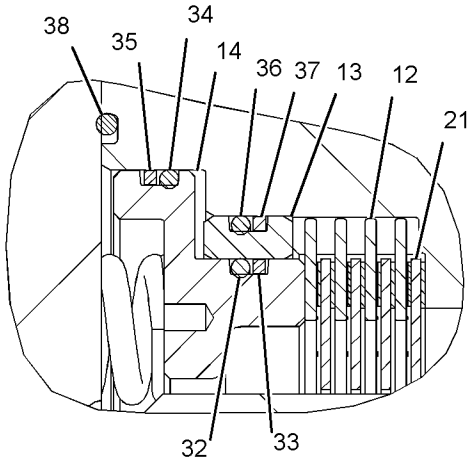

VIEW OF AREA D

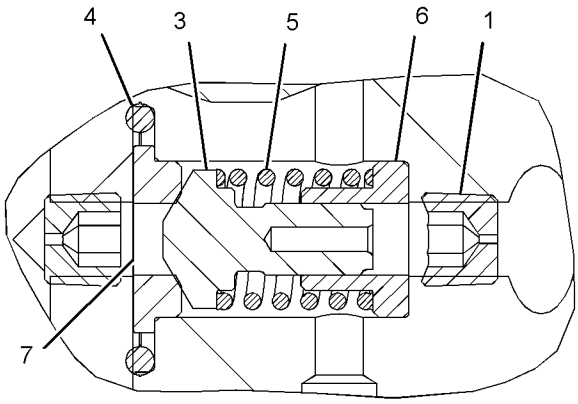

VIEW OF AREA E

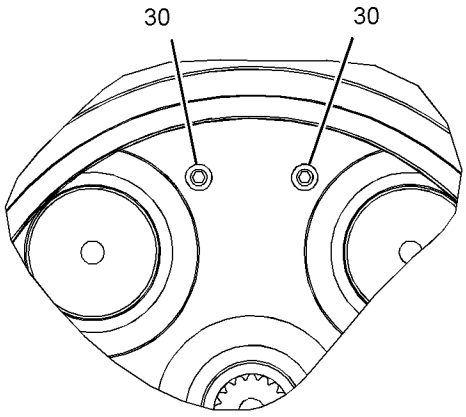

VIEW F-F

GRAPHIC #2 <END> g02793586

278-6664 MOUNTING GP-MAIN CONTROL VALVE

S/N: DLP1-UP

PART OF 270-5864 HYDRAULIC AR

SMCS-5051 **i02807824**

NOTE	REF NO	GRAPHIC REF	PART NUMBER	QTY	PART NAME 1 2 3 4 5 6 (PRODUCT LEVEL)	SEE PAGE
	1	1	**178-6450**	4	SPACER (17X35X30-MM THK)	
	2	1	**278-6573**	1	SUPPORT AS	
	3	1	**278-6810**	1	SUPPORT AS	
M	4	1	**7X-2552**	3	BOLT (M16X2X30-MM)	
M	5	1	**8T-4140**	4	BOLT (M16X2X60-MM)	
	6	1	**9X-8257**	3	WASHER (17.5X30X3.5-MM THK)	

M - METRIC PART

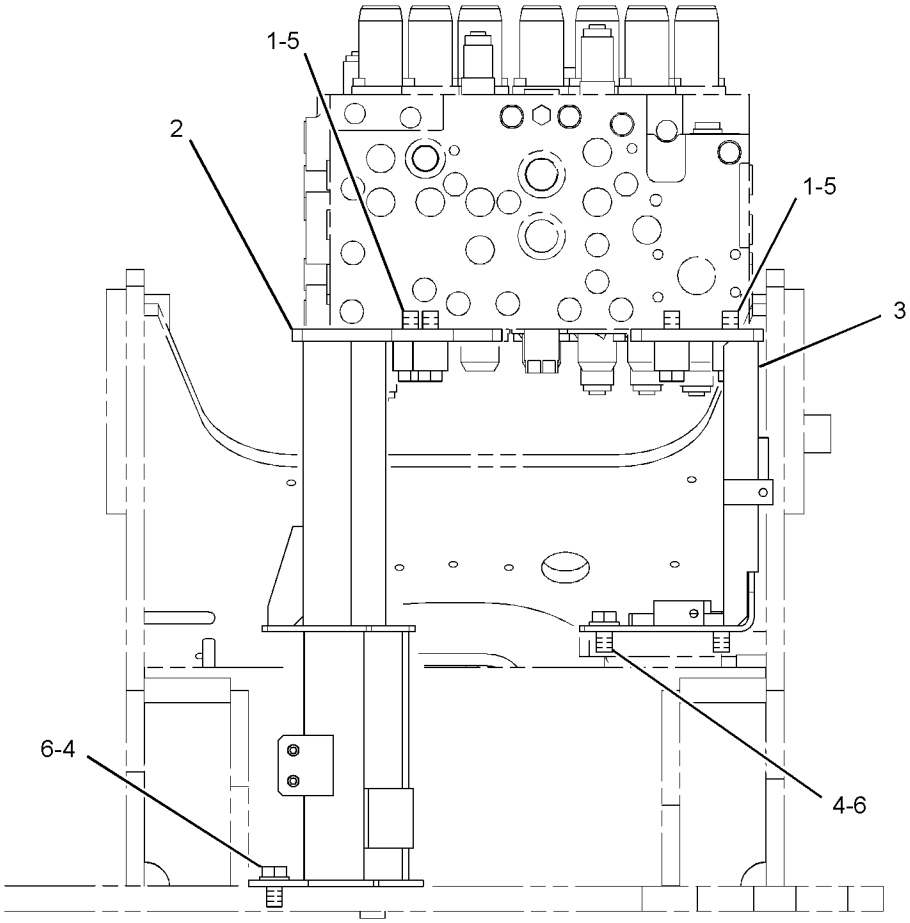

REAR VIEW

GRAPHIC #1 <END> g01402973

259-0917 PUMP & MTG GP-AUXILIARY—MEDIUM PRESSURE

S/N: DLP1-UP

PART OF 270-6119 CONTROL AR-AUXILIARY, 301-2691 INSTALLATION AR-BLADE AN ATTACHMENT

SMCS-5070, 5073 **i04112953**

NOTE	REF NO	GRAPHIC REF	PART NUMBER	QTY	PART NAME 1 2 3 4 5 6 (PRODUCT LEVEL)	SEE PAGE
	1	1	**170-6738**	1	SPACER	
J	2	1	**218-0557**	1	PUMP GP-GEAR	
	3	1	**222-2062**	1	COUPLING	
	4	1	**273-8315**	2	SEAL-O-RING	
	5	1	**8T-4121**	2	WASHER-HARD (11X21X2.5-MM THK)	
M	6	1	**8T-6466**	2	BOLT (M10X1.5X60-MM)	
					AVAILABLE REPAIR KIT(S):	
J			**353-5511**	1	KIT-SEAL (GEAR PUMP)	
					(INCLUDES GASKETS, LIPTYPE SEAL & RETAINING RINGS)	

J - KIT MARKED J SERVICES PART(S) MARKED J
M - METRIC PART

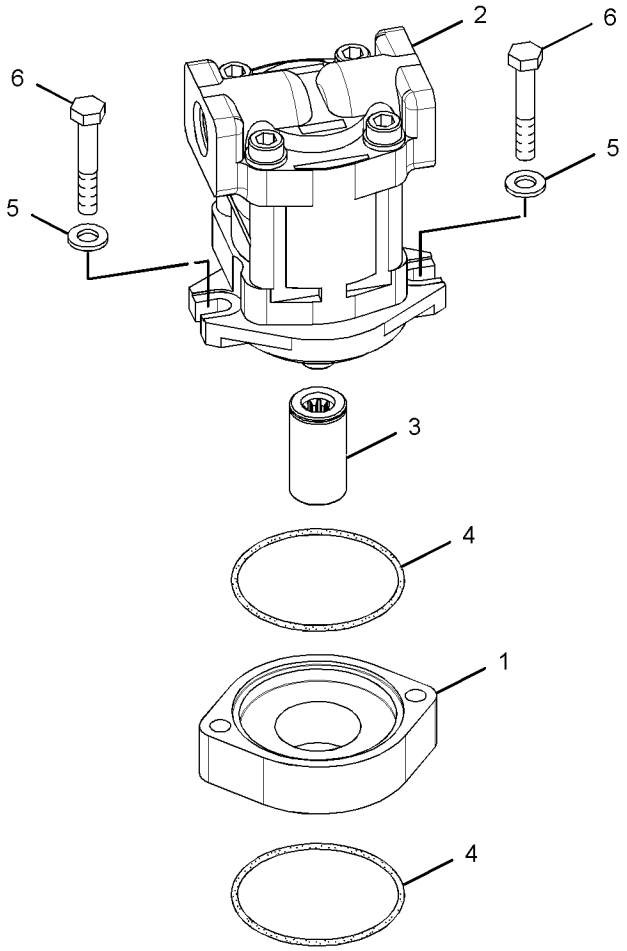

GRAPHIC #1 <END> g01379452

342-1891 PUMP & MTG GP-AUXILIARY

S/N: DLP1-UP

PART OF 389-2433 CONTROL AR-AUXILIARY, 385-4069 INSTALLATION AR-BLADE AN ATTACHMENT

SMCS-5070, 5073

i05487569

NOTE	REF NO	GRAPHIC REF	PART NUMBER	QTY	PART NAME 1 2 3 4 5 6 (PRODUCT LEVEL)	SEE PAGE
	1	1	**342-1905**	1	SPACER	
Y	2	1	**349-4069**	1	PUMP GP-GEAR (AUXILIARY)	761
	3	1	**222-2062**	1	COUPLING	
	4	1	**273-8315**	1	SEAL-O-RING	
	5	1	**8T-4121**	2	WASHER-HARD (11X21X2.5-MM THK)	
M	6	1	**8T-6466**	2	BOLT (M10X1.5X60-MM)	
	7	1	**095-1663**	1	SEAL-O-RING	

M - METRIC PART
Y - SEPARATE ILLUSTRATION

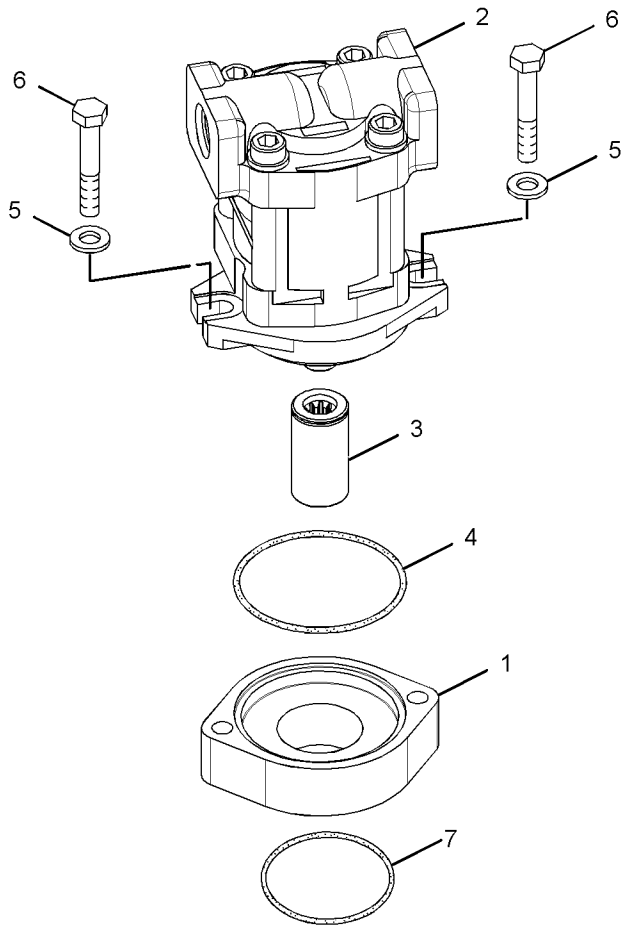

GRAPHIC #1 <END> g02655496

279-7721 PUMP & MTG GP-MAIN HYDRAULIC

S/N: DLP1-UP

PART OF 270-5864 HYDRAULIC AR

SMCS-5070 **i02809006**

NOTE	REF NO	GRAPHIC REF	PART NUMBER	QTY	PART NAME 1 2 3 4 5 6 (PRODUCT LEVEL)	SEE PAGE
Y	1	1	*255-3027*	1	COUPLING GP-PUMP	474
YR	2	1	**311-7404**	1	PUMP GP-MAIN HYDRAULIC	762
	3	1	**8T-4121**	12	WASHER-HARD (11X21X2.5-MM THK)	
M	4	1	**8T-4195**	12	BOLT (M10X1.5X30-MM)	

M - METRIC PART
R - REMANUFACTURED PART MAY BE AVAILABLE
Y - SEPARATE ILLUSTRATION

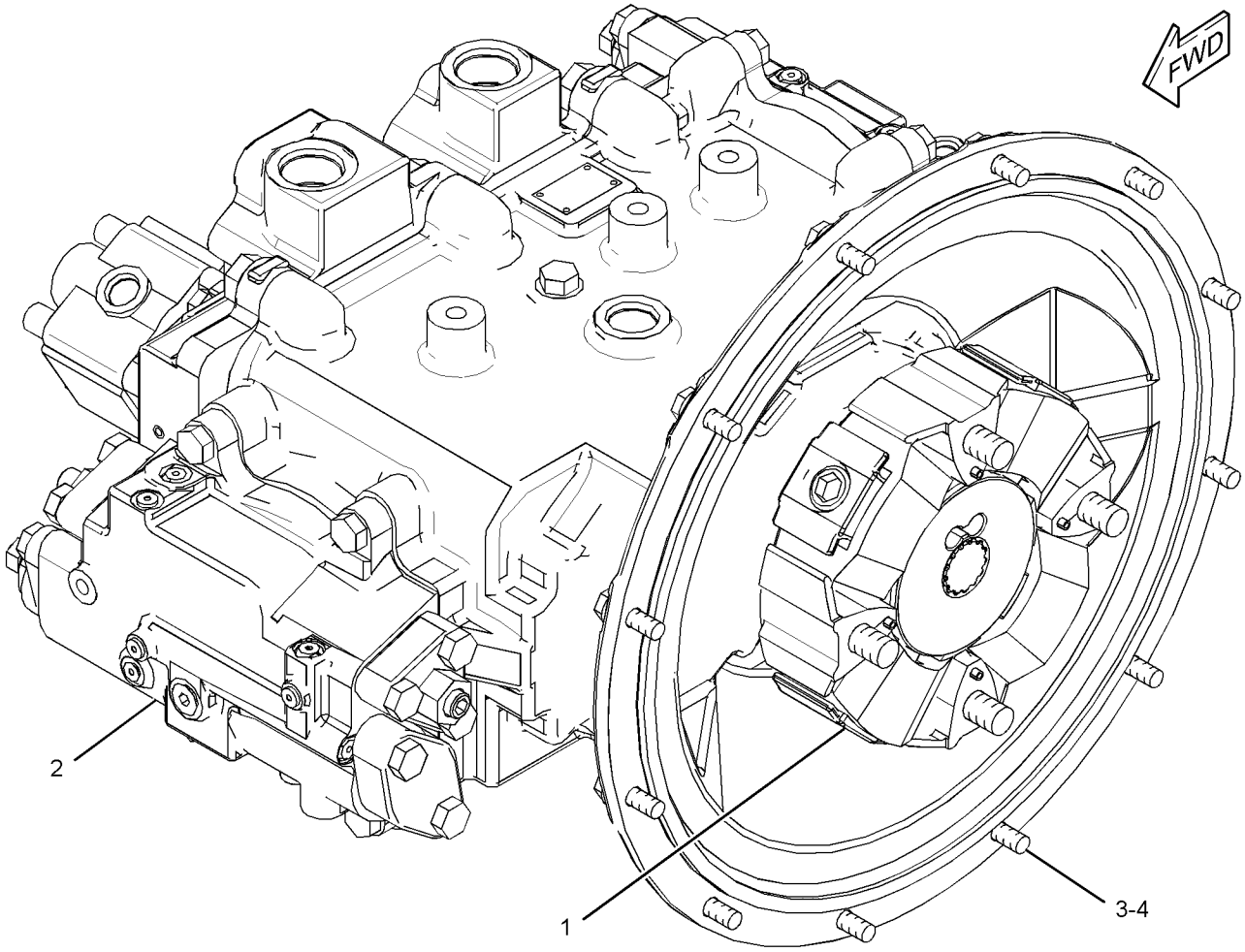

GRAPHIC #1 <END> g01405661

349-4069 PUMP GP-GEAR

S/N: DLP1-UP

PART OF 342-1891 PUMP & MTG GP-AUXILIARY

AN ATTACHMENT

SMCS-5073 **i04428247**

NOTE	PART NUMBER	QTY	PART NAME 1 2 3 4 5 6 (PRODUCT LEVEL)	SEE PAGE
			(NO BREAKDOWN OF SERVICEABLE PARTS AVAILABLE AT TIME OF PUBLICATION)	

<END>

311-7404 PUMP GP-MAIN HYDRAULIC*R

S/N: DLP1-UP

PART OF 279-7721 PUMP & MTG GP-MAIN HYDRAULIC

SMCS-5070 **i04233410**

NOTE	REF NO	GRAPHIC REF	PART NUMBER	QTY	PART NAME 1 2 3 4 5 6 (PRODUCT LEVEL)	SEE PAGE
Y	1	1	**111-9916**	1	VALVE GP-SOLENOID (PRESSURE REDUCING) (PRESSURE REDUCING)	850
	2	2,3	**165-2793**	2	RETAINER	
	3	2,3	**165-2801**	2	BEARING-ROLLER	
	4	3	**353-5837**	1	SEAL-LIP TYPE	
	5	1	**165-2804**	1	FLANGE	
	6	3	**165-2805**	2	BLOCK	
	7	2	**165-3838**	1	BARREL AS	
	8	3	**165-3839**	1	BARREL AS	
	9	2,3	**165-3847**	18	PISTON AS	
	10	3	**165-3853**	1	COVER	
	11	1	**173-1203**	1	PUMP GP-GEAR (BLADE)	
		1	**327-8740**	1	KIT-SEAL (GEAR PUMP) (GEAR PUMP) (INCLUDES RING, GASKET & SEALS)	
	12	2,3	**176-8131**	2	SPACER-SPECIAL	
	13	3	**176-8132**	2	BEARING	
	14	2	**190-4896**	2	PLUG	
	15	2	**192-0573**	4	PIN-DOWEL	
	16	1	**199-0518**	2	SEAL-O-RING	
	17	2	**207-2985**	2	ORIFICE	
	18	1	**225-6216**	1	GASKET	
	19	3	**267-1628**	1	SHAFT-DRIVE	
	20	2	**267-1629**	1	SHAFT-DRIVEN	
	21	2,3	**267-8084**	2	BEARING-NEEDLE	
	22	3	**268-6263**	2	CAM	
	23	3	**268-6265**	1	PLATE	
	24	2	**269-2433**	4	BEARING-CRADLE	
Y	25	1	**282-9155**	2	HEAD GP-PUMP	542
	26	1	**282-9192**	1	CASE-FLANGE	
	27	2,3	**298-5732**	2	RETAINER-BALL	
	28	1	**311-7407**	1	BLOCK-PORT	
	30	1,3	**094-1875**	6	DOWEL	
	31	1	**094-1882**	12	PLUG	
	32	2	**095-1663**	1	SEAL-O-RING	
	34	2,3	**165-2799**	12	SPRING	
	35	1	**189-9763**	4	SEAL-O-RING	
	36	3	**1H-7339**	1	SEAL-O-RING	
	37	2,3	**1J-6472**	2	RING-RETAINING	
	38	2	**273-8320**	1	SEAL-O-RING	
	39	1,3	**3J-1907**	3	SEAL-O-RING	
	40	2,3	**6V-8144**	2	RING-RETAINING	
M	41	1	**7I-2272**	2	BOLT (M5X0.8X12-MM)	
M	42	1	**7X-2553**	5	BOLT (M16X2X40-MM)	
M	43	1	**7X-2556**	1	BOLT (M16X2X100-MM)	
	44	3	**8C-3338**	4	DOWEL	
	45	1	**8T-4121**	2	WASHER-HARD (11X21X2.5-MM THK)	
M	46	1	**8T-4136**	2	BOLT (M10X1.5X25-MM)	
M	47	3	**8T-4137**	2	BOLT (M10X1.5X20-MM)	

311-7404 **PUMP GP-MAIN HYDRAULIC** (contd.) **i04233410**

NOTE	REF NO	GRAPHIC REF	PART NUMBER	QTY	PART NAME 1 2 3 4 5 6 (PRODUCT LEVEL)	SEE PAGE
M	48	1	**8T-4139**	8	BOLT (M12X1.75X30-MM)	
M	49	1	**8T-4140**	2	BOLT (M16X2X60-MM)	
M	50	3	**8T-4185**	4	BOLT (M10X1.5X50-MM)	
M	51	3	**8T-7547**	4	BOLT (M8X1.25X30-MM)	
	52	3	**8T-9599**	1	RING-RETAINING	
	53	1,3	**9S-4191**	3	PLUG (9/16-18-THD)	

M - METRIC PART
Y - SEPARATE ILLUSTRATION

311-7404 **PUMP GP-MAIN HYDRAULIC (**contd.**)** **i04233410**

REFER TO ALL ILLUSTRATIONS OF THIS GROUP FOR AUXILIARY VIEWS.

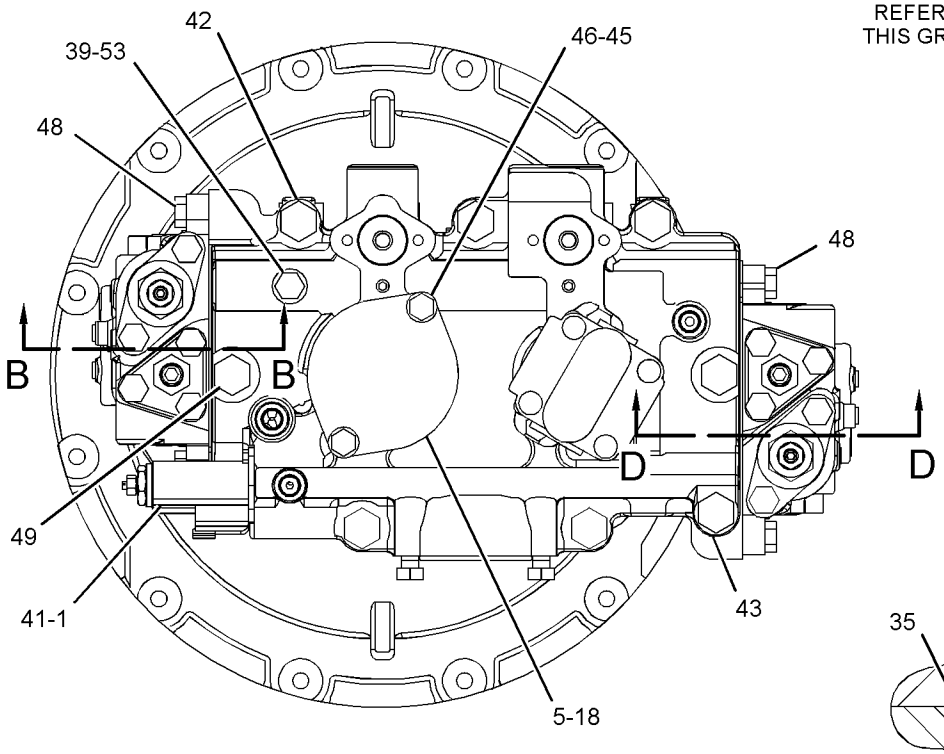

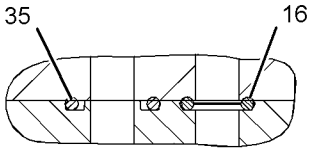

SECTION C-C

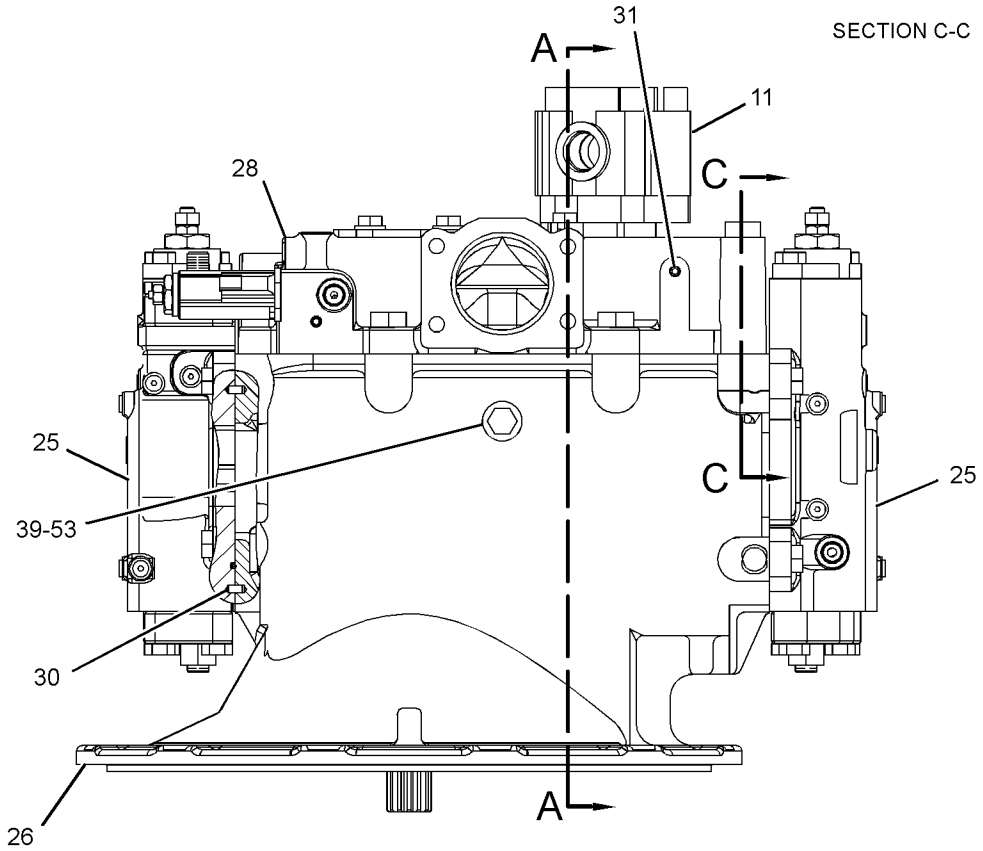

SECTION B-B

GRAPHIC #1 g01405467

311-7404 **PUMP GP-MAIN HYDRAULIC (**contd.**)** **i04233410**

REFER TO ALL ILLUSTRATIONS OF
THIS GROUP FOR AUXILIARY VIEWS.

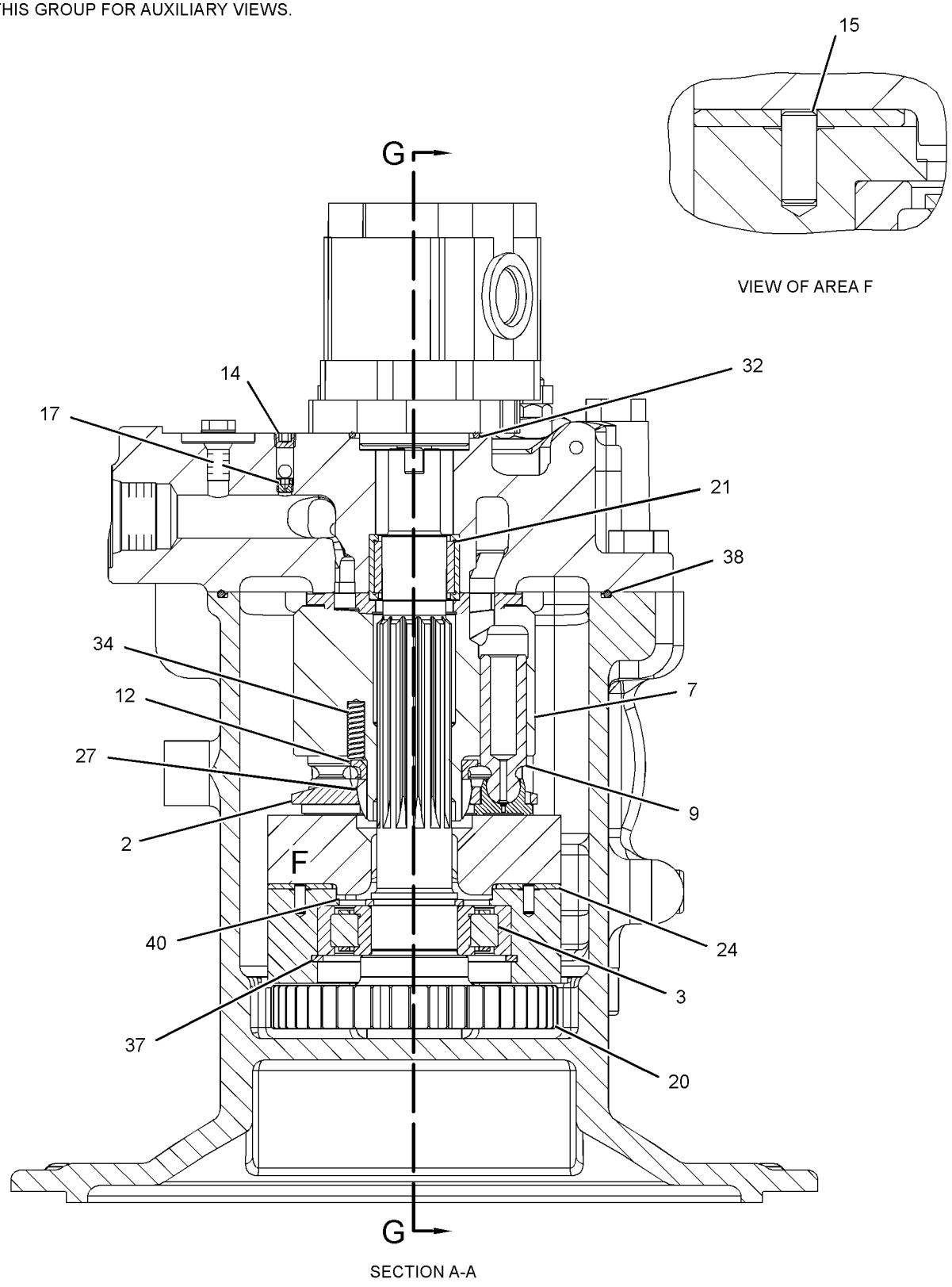

SECTION A-A

GRAPHIC #2 g01894796

311-7404 **PUMP GP-MAIN HYDRAULIC (**contd.**)** **i04233410**

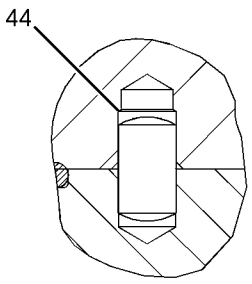

SECTION D-D

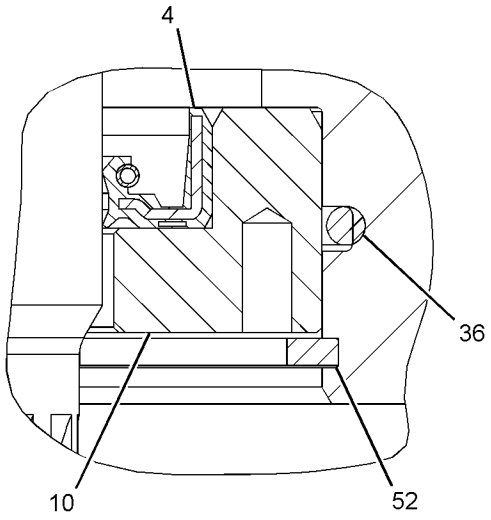

VIEW OF AREA E

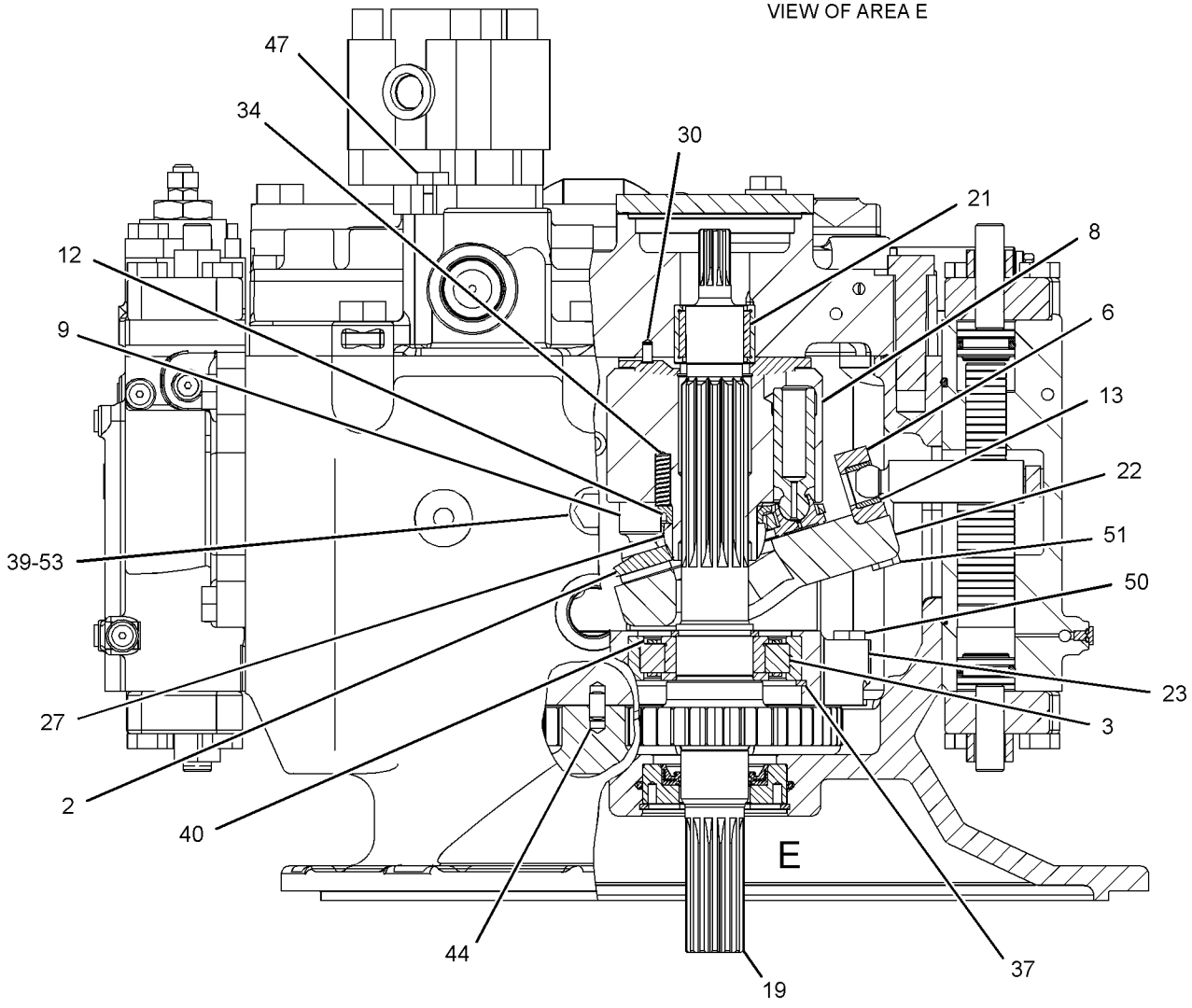

SECTION G-G

GRAPHIC #3 <END> g02510077

274-2726 SCREEN GP-HYDRAULIC–TANK

S/N: DLP1-UP

PART OF 278-6662 TANK & FILTER GP-HYDRAULIC

SMCS-5068 **i07021390**

NOTE	REF NO	GRAPHIC REF	PART NUMBER	QTY	PART NAME 1 2 3 4 5 6 (PRODUCT LEVEL)	SEE PAGE
	1	1	**087-5317**	1	ROD	
	2	1	**209-6002**	1	SCREEN AS (HYDRAULIC TANK)	
	3	1	**259-0918**	1	GUIDE	
	4	1	**095-1552**	1	SEAL-O-RING	
	5	1	**095-6639**	1	SPRING	
M	6	1	**8T-4133**	2	NUT (M10X1.5-THD)	

M - METRIC PART

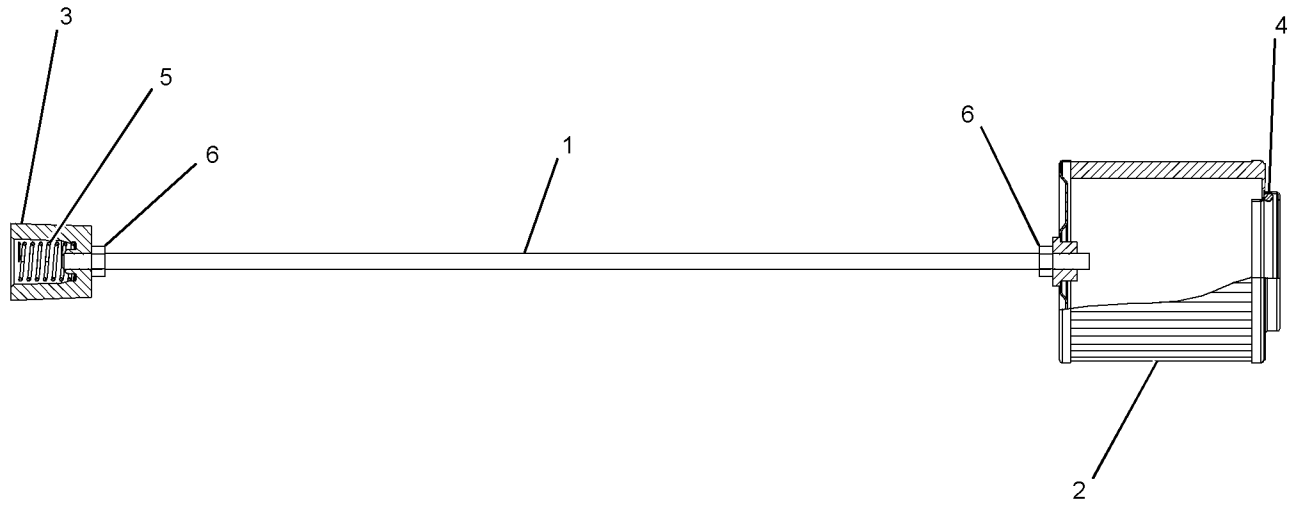

GRAPHIC #1 <END> g01311910

197-0173 SPOOL GP-CONTROL VALVE–WORK TOOL

S/N: DLP1-UP

PART OF 297-0374 VALVE GP-CONTROL, 270-5866, 420-2241 VALVE GP-MAIN CONTROL

ALSO AN ATTACHMENT

SMCS-5051, 5464

i05434383

NOTE	REF NO	GRAPHIC REF	PART NUMBER	QTY	PART NAME 1 2 3 4 5 6 (PRODUCT LEVEL)	SEE PAGE
	1	1	**197-0148**	1	BOLT-SPECIAL	
	2	1	**7I-7203**	2	SEAT	
	3	1	**197-0151**	1	SPRING	
	4	1	**197-0150**	1	SPRING	
	5	1	**197-0149**	1	STOP	
	6	1	**197-0156**	1	SPOOL	

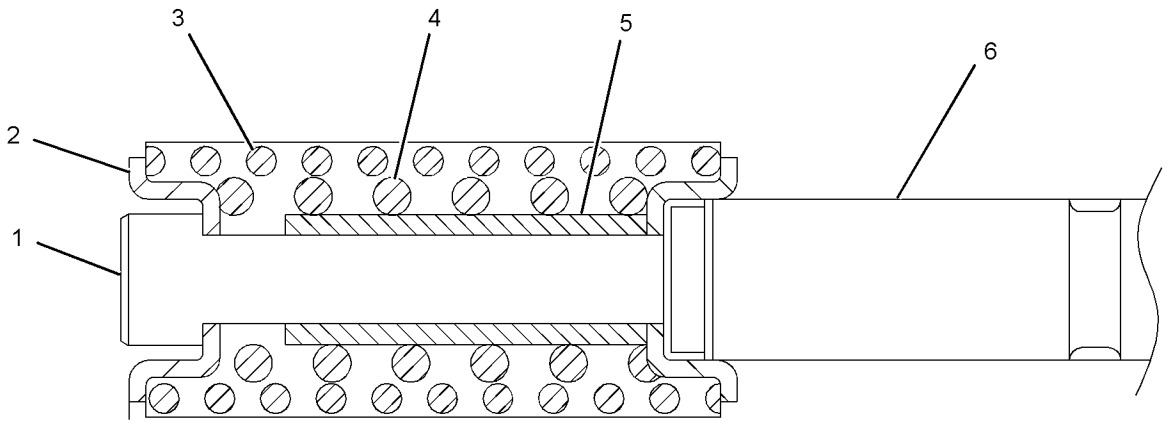

GRAPHIC #1 <END> g03429859

197-0211 SPOOL GP-CONTROL VALVE–STICK I

S/N: DLP1-UP
PART OF 270-5866 VALVE GP-MAIN CONTROL
ALSO AN ATTACHMENT

SMCS-5051, 5464

i01463949

NOTE	REF NO	GRAPHIC REF	PART NUMBER	QTY	PART NAME 1 2 3 4 5 6 (PRODUCT LEVEL)	SEE PAGE
	1	1	**197-0148**	1	BOLT-SPECIAL	
	2	1	**7I-7203**	2	SEAT	
	3	1	**197-0151**	1	SPRING	
	4	1	**197-0150**	1	SPRING	
	5	1	**197-0149**	1	STOP	
	6	1	**197-0212**	1	SPOOL	

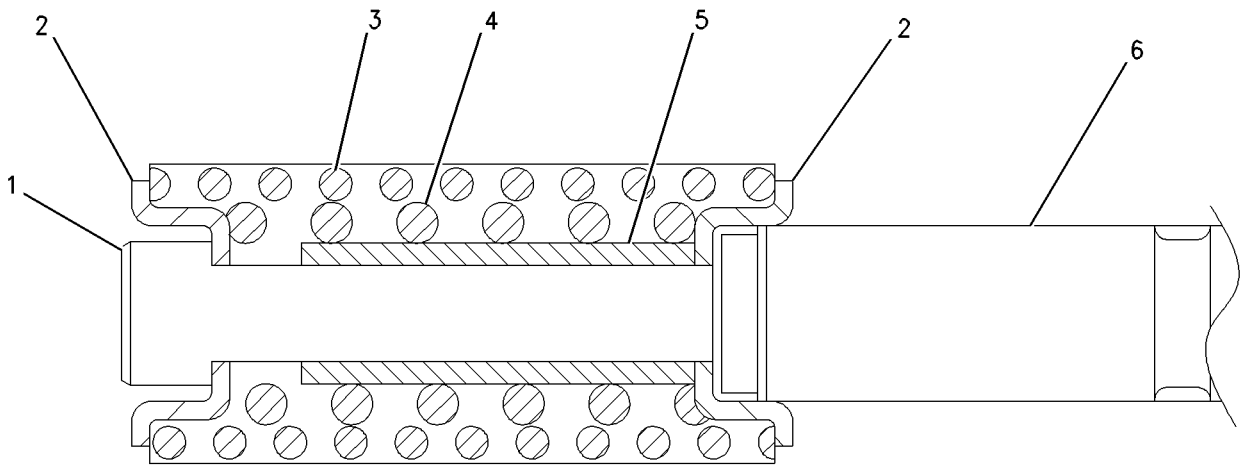

GRAPHIC #1 <END> g00766559

197-0213 SPOOL GP-CONTROL VALVE–BUCKET

S/N: DLP1-UP
PART OF 270-5866, 420-2241 VALVE GP-MAIN CONTROL
ALSO AN ATTACHMENT

SMCS-5051, 5464

i05434267

NOTE	REF NO	GRAPHIC REF	PART NUMBER	QTY	PART NAME 1 2 3 4 5 6 (PRODUCT LEVEL)	SEE PAGE
	1	1	**197-0148**	1	BOLT-SPECIAL	
	2	1	**7I-7203**	2	SEAT	
	3	1	**197-0152**	1	SPRING	
	4	1	**197-0150**	1	SPRING	
	5	1	**197-0149**	1	STOP	
	6	1	**197-0214**	1	SPOOL	

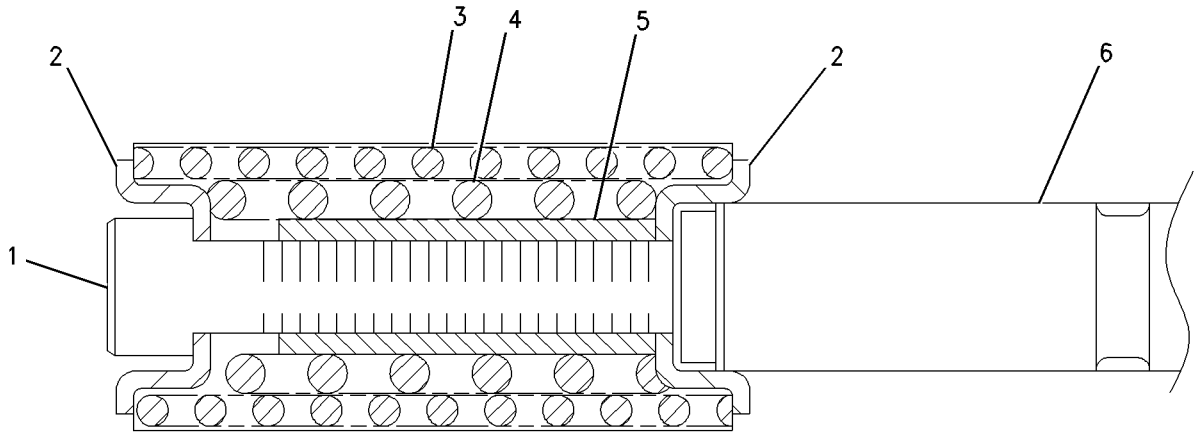

GRAPHIC #1 <END> g00767667

197-0217 SPOOL GP-CONTROL VALVE–STICK REGENERATION

S/N: DLP1-UP

PART OF 270-5866, 420-2241 VALVE GP-MAIN CONTROL

ALSO AN ATTACHMENT

SMCS-5051, 5464

i01481681

NOTE	REF NO	GRAPHIC REF	PART NUMBER	QTY	PART NAME 1 2 3 4 5 6 (PRODUCT LEVEL)	SEE PAGE
	1	1	**197-0148**	1	BOLT-SPECIAL	
	2	1	**7I-7203**	2	SEAT	
	3	1	**197-0151**	1	SPRING	
	4	1	**197-0150**	1	SPRING	
	5	1	**197-0149**	1	STOP	
	6	1	**197-0218**	1	SPOOL AS	

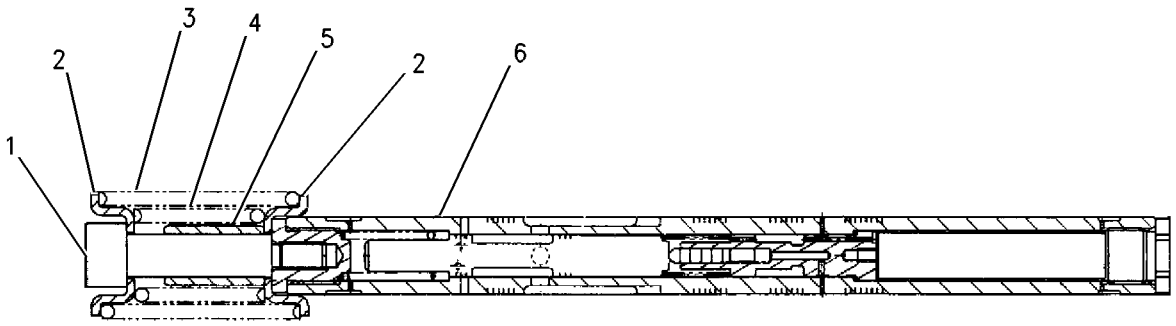

GRAPHIC #1 <END> g00790767

285-1504 SPOOL GP-CONTROL VALVE–COMBINED FLOW

S/N: DLP1-UP

PART OF 270-5866, 420-2241 VALVE GP-MAIN CONTROL

ALSO AN ATTACHMENT

SMCS-5051, 5464

i05434262

NOTE	REF NO	GRAPHIC REF	PART NUMBER	QTY	PART NAME 1 2 3 4 5 6 (PRODUCT LEVEL)	SEE PAGE
	1	1	**297-0366**	1	STOP	
	2	1	**197-0148**	1	BOLT-SPECIAL	
	3	1	**7I-7203**	2	SEAT	
	4	1	**197-0151**	1	SPRING	
	5	1	**197-0150**	1	SPRING	

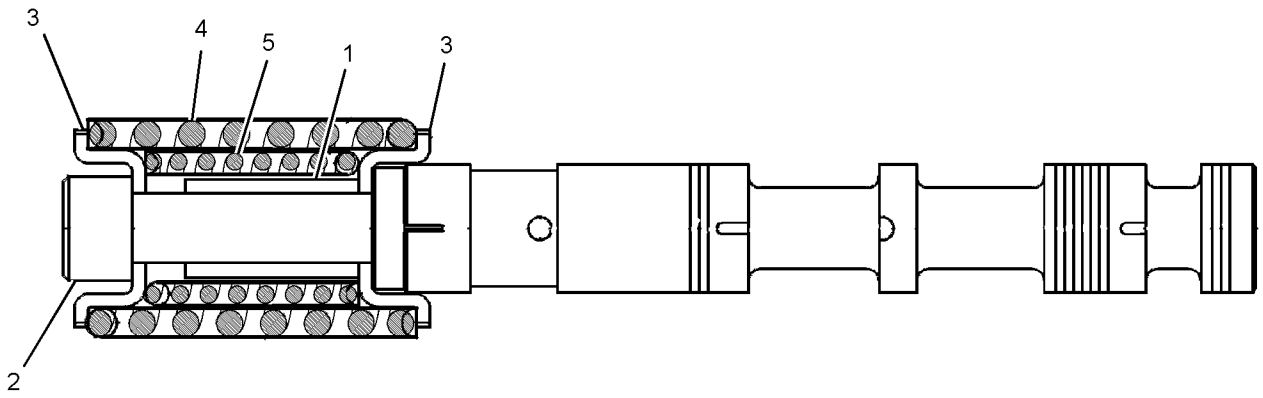

GRAPHIC #1 <END> g01424755

285-1505 SPOOL GP-CONTROL VALVE—SWING PRIORITY

S/N: DLP1-UP

PART OF 270-5866, 420-2241 VALVE GP-MAIN CONTROL

ALSO AN ATTACHMENT

SMCS-5051, 5464

i05434338

NOTE	REF NO	GRAPHIC REF	PART NUMBER	QTY	PART NAME 1 2 3 4 5 6 (PRODUCT LEVEL)	SEE PAGE
	1	1	**197-0149**	1	STOP	
	2	1	**197-0148**	1	BOLT-SPECIAL	
	3	1	**7I-7203**	2	SEAT	
	4	1	**197-0151**	1	SPRING	
	5	1	**197-0150**	1	SPRING	

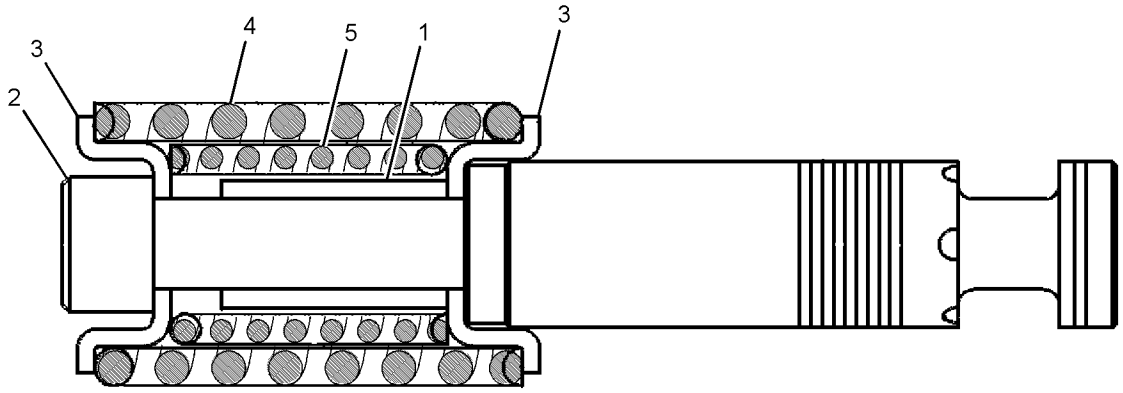

GRAPHIC #1 <END> g01682819

297-0235 SPOOL GP-CONTROL VALVE–TRAVEL, RH, LH

S/N: DLP1-UP

PART OF 270-5866 VALVE GP-MAIN CONTROL

ALSO AN ATTACHMENT

SMCS-5051, 5464

i02857728

NOTE	REF NO	GRAPHIC REF	PART NUMBER	QTY	PART NAME 1 2 3 4 5 6 (PRODUCT LEVEL)	SEE PAGE
	1	1	**197-0149**	1	STOP	
	2	1	**197-0148**	1	BOLT-SPECIAL	
	3	1	**7I-7203**	2	SEAT	
	4	1	**197-0151**	1	SPRING	
	5	1	**197-0150**	1	SPRING	

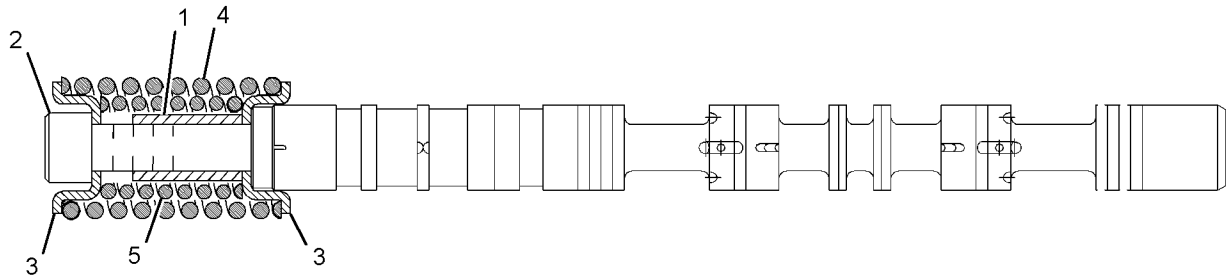

GRAPHIC #1 <END> g01424334

310-0065 SPOOL GP-CONTROL VALVE–SWING BOOM

S/N: DLP1-UP

PART OF 270-5866, 420-2241 VALVE GP-MAIN CONTROL

ALSO AN ATTACHMENT

SMCS-5051, 5464

i05434366

NOTE	REF NO	GRAPHIC REF	PART NUMBER	QTY	PART NAME 1 2 3 4 5 6 (PRODUCT LEVEL)	SEE PAGE
	1	1	**197-0149**	1	STOP	
	2	1	**197-0148**	1	BOLT-SPECIAL	
	3	1	**7I-7203**	2	SEAT	
	4	1	**197-0151**	1	SPRING	
	5	1	**197-0150**	1	SPRING	

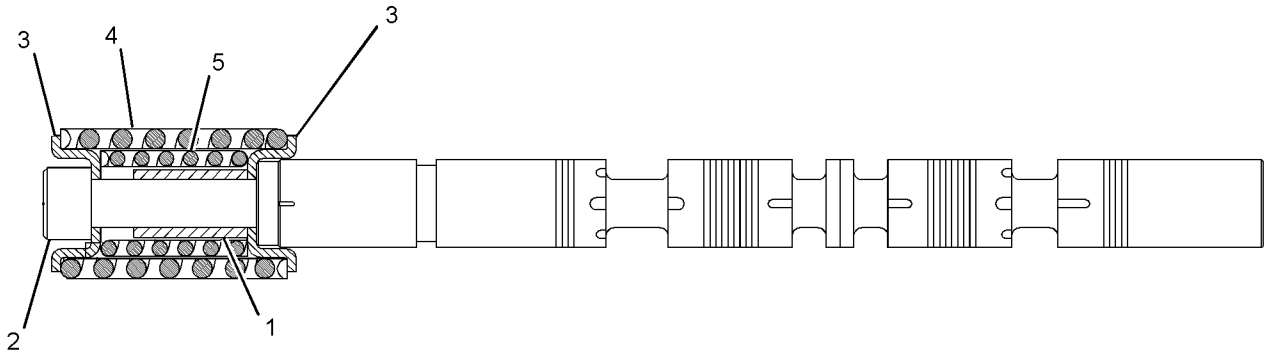

GRAPHIC #1 <END> g01442121

310-0115 SPOOL GP-CONTROL VALVE–BOOM 1

S/N: DLP1-UP
PART OF 270-5866 VALVE GP-MAIN CONTROL
ALSO AN ATTACHMENT

SMCS-5051, 5464

i02896463

NOTE	REF NO	GRAPHIC REF	PART NUMBER	QTY	PART NAME 1 2 3 4 5 6 (PRODUCT LEVEL)	SEE PAGE
	1	1	**197-0151**	1	SPRING	
	2	1	**7I-7203**	2	SEAT	
	3	1	**197-0148**	1	BOLT-SPECIAL	
	4	1	**197-0149**	1	STOP	
	5	1	**197-0150**	1	SPRING	

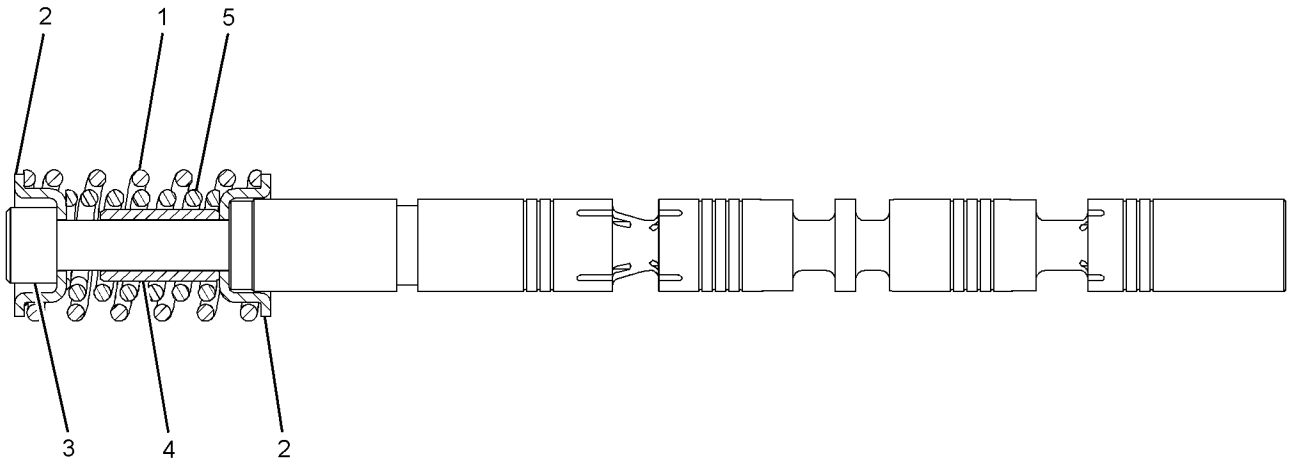

GRAPHIC #1 <END> g01434201

310-0117 SPOOL GP-CONTROL VALVE–BOOM II

S/N: DLP1-UP
PART OF 270-5866 VALVE GP-MAIN CONTROL
ALSO AN ATTACHMENT

SMCS-5051, 5464

i02896460

NOTE	REF NO	GRAPHIC REF	PART NUMBER	QTY	PART NAME 1 2 3 4 5 6 (PRODUCT LEVEL)	SEE PAGE
	1	1	**197-0149**	1	STOP	
	2	1	**197-0148**	1	BOLT-SPECIAL	
	3	1	**7I-7203**	2	SEAT	
	4	1	**197-0153**	1	SPRING	
	5	1	**197-0150**	1	SPRING	

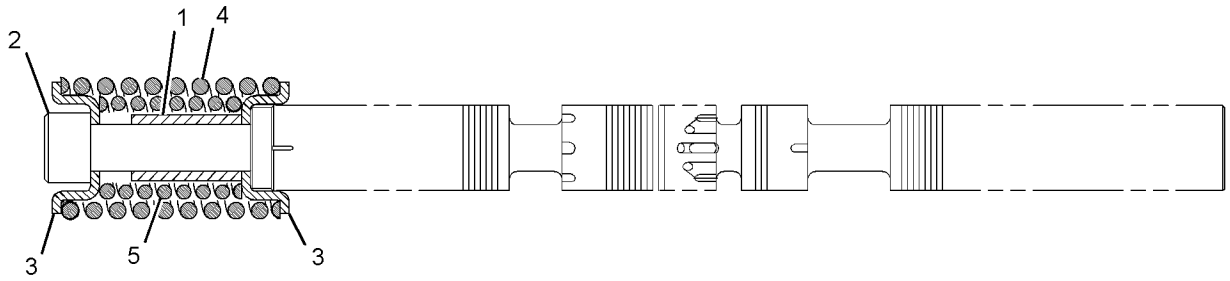

GRAPHIC #1 <END> g01424356

310-0357 SPOOL GP-CONTROL VALVE–STICK II

S/N: DLP1-UP

PART OF 270-5866, 420-2241 VALVE GP-MAIN CONTROL

ALSO AN ATTACHMENT

SMCS-5051, 5464

i05434269

NOTE	REF NO	GRAPHIC REF	PART NUMBER	QTY	PART NAME 1 2 3 4 5 6 (PRODUCT LEVEL)	SEE PAGE
	1	1	**197-0153**	1	SPRING	
	2	1	**7I-7203**	2	SEAT	
	3	1	**197-0148**	1	BOLT-SPECIAL	
	4	1	**197-0149**	1	STOP	
	5	1	**197-0150**	1	SPRING	

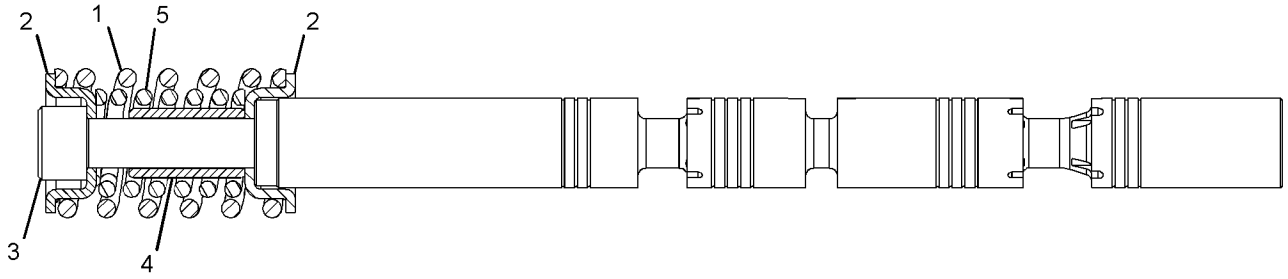

GRAPHIC #1 <END> g01448881

352-7197 SPOOL GP-CONTROL VALVE–TRAVEL, RH, LH

S/N: DLP555-UP

FIELD REPLACEMENT FOR 277-6697–PAGE: 752: FOR 332-7499–PAGE: 320

PART OF 270-5866, 420-2241 VALVE GP-MAIN CONTROL

ALSO AN ATTACHMENT

SMCS-5051, 5464

i05167154

NOTE	REF NO	GRAPHIC REF	PART NUMBER	QTY	PART NAME 1 2 3 4 5 6 (PRODUCT LEVEL)	SEE PAGE
	1	1	**197-0151**	1	SPRING	
	2	1	**7I-7203**	2	SEAT	
	3	1	**197-0148**	1	BOLT-SPECIAL	
	4	1	**197-0149**	1	STOP	
	5	1	**197-0150**	1	SPRING	

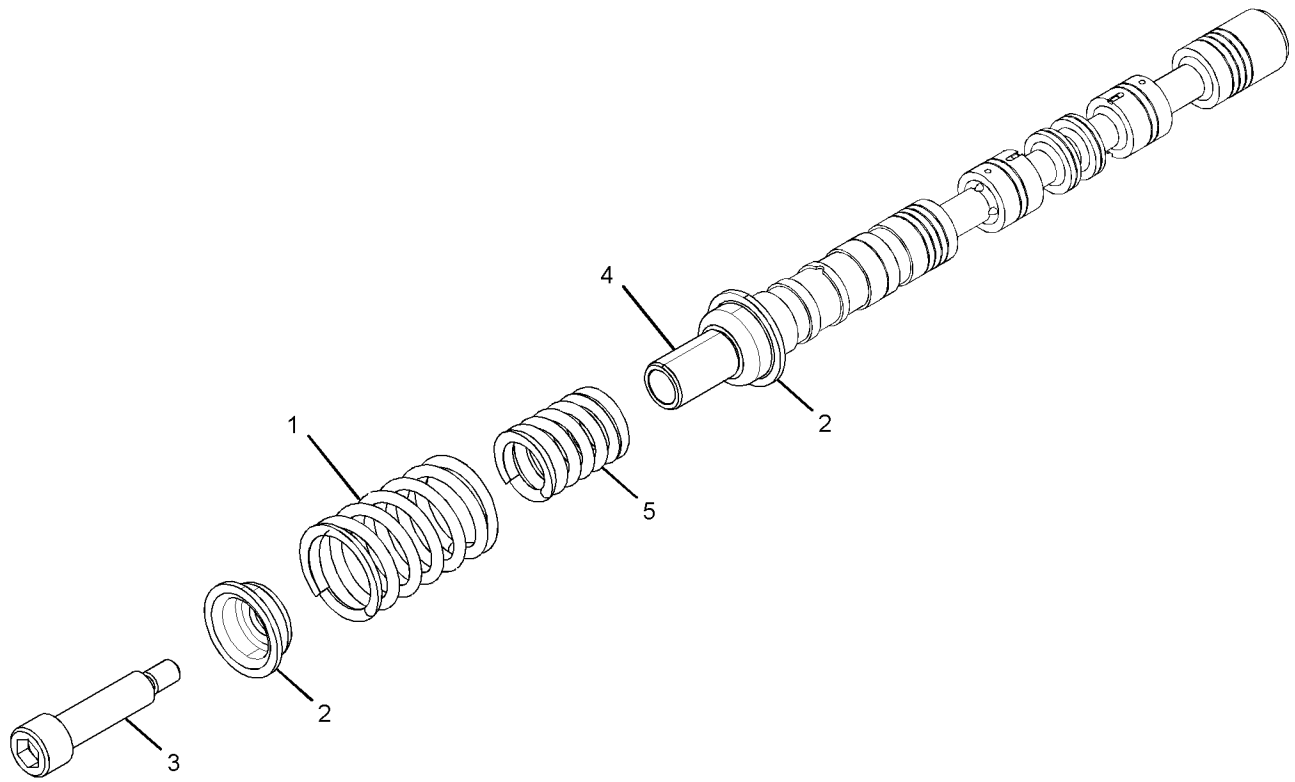

GRAPHIC #1 <END> g02432156

369-8394 SPOOL GP-CONTROL VALVE–STICK I

S/N: DLP1-UP

PART OF 420-2241 VALVE GP-MAIN CONTROL

AN ATTACHMENT

SMCS-5051, 5464 **i04517990**

NOTE	REF NO	GRAPHIC REF	PART NUMBER	QTY	PART NAME 1 2 3 4 5 6 (PRODUCT LEVEL)	SEE PAGE
	1	1	**7I-7203**	2	SEAT	
	2	1	**197-0148**	1	BOLT-SPECIAL	
	3	1	**197-0149**	1	STOP	
	4	1	**197-0150**	1	SPRING	
	5	1	**197-0151**	1	SPRING	
					PARTS SHOWN IN GRAPHIC(S) WITHOUT A REFERENCE NUMBER ARE NOT SERVICED SEPARATELY	

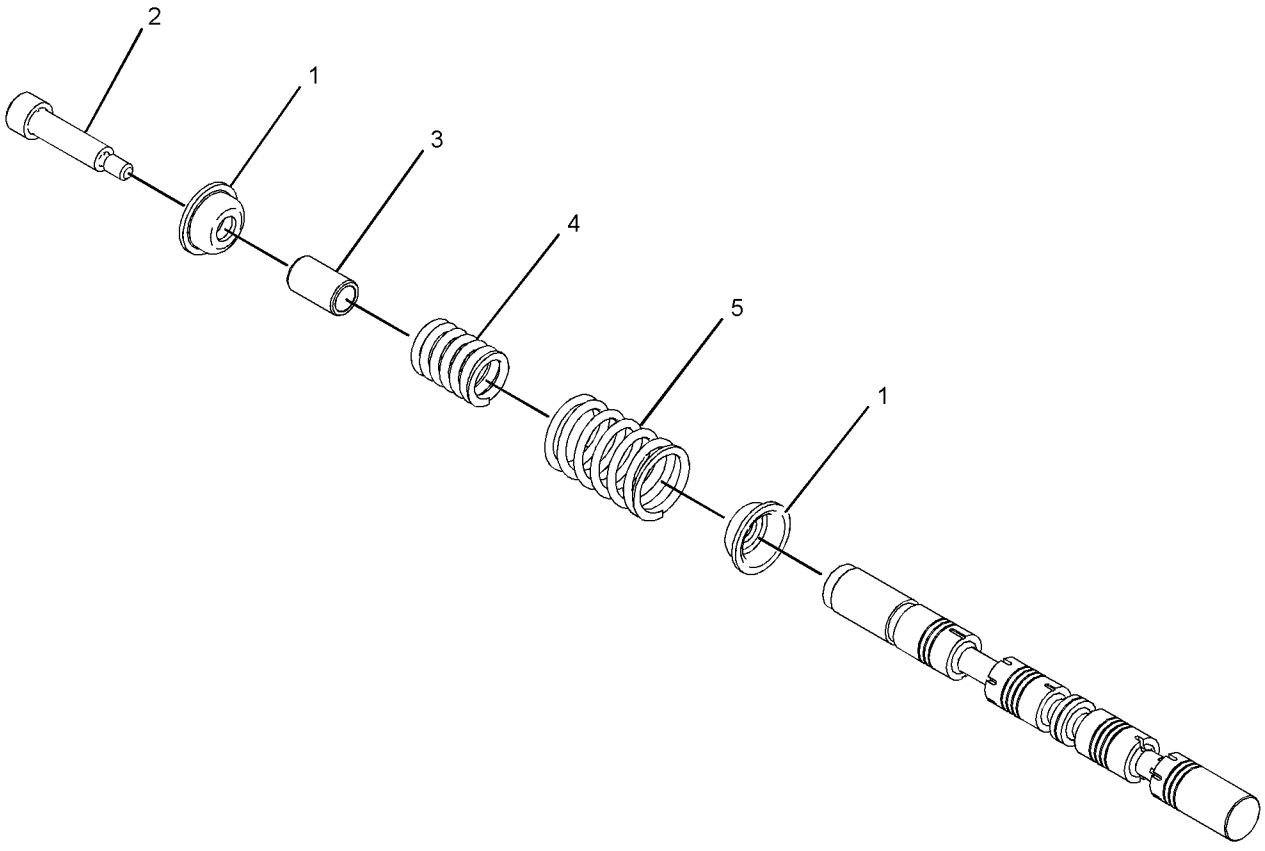

GRAPHIC #1 <END> g02719941

369-8395 SPOOL GP-CONTROL VALVE–BOOM II

S/N: DLP1-UP
PART OF 420-2241 VALVE GP-MAIN CONTROL
AN ATTACHMENT

SMCS-5051, 5464

i05907436

NOTE	REF NO	GRAPHIC REF	PART NUMBER	QTY	PART NAME 1 2 3 4 5 6 (PRODUCT LEVEL)	SEE PAGE
	1	1	**7I-7203**	2	SEAT	
	2	1	**197-0148**	1	BOLT-SPECIAL	
	3	1	**197-0149**	1	STOP	
	4	1	**197-0150**	1	SPRING	
	5	1	**197-0153**	1	SPRING	
					PARTS SHOWN IN GRAPHIC(S) WITHOUT A REFERENCE NUMBER ARE NOT SERVICED SEPARATELY	

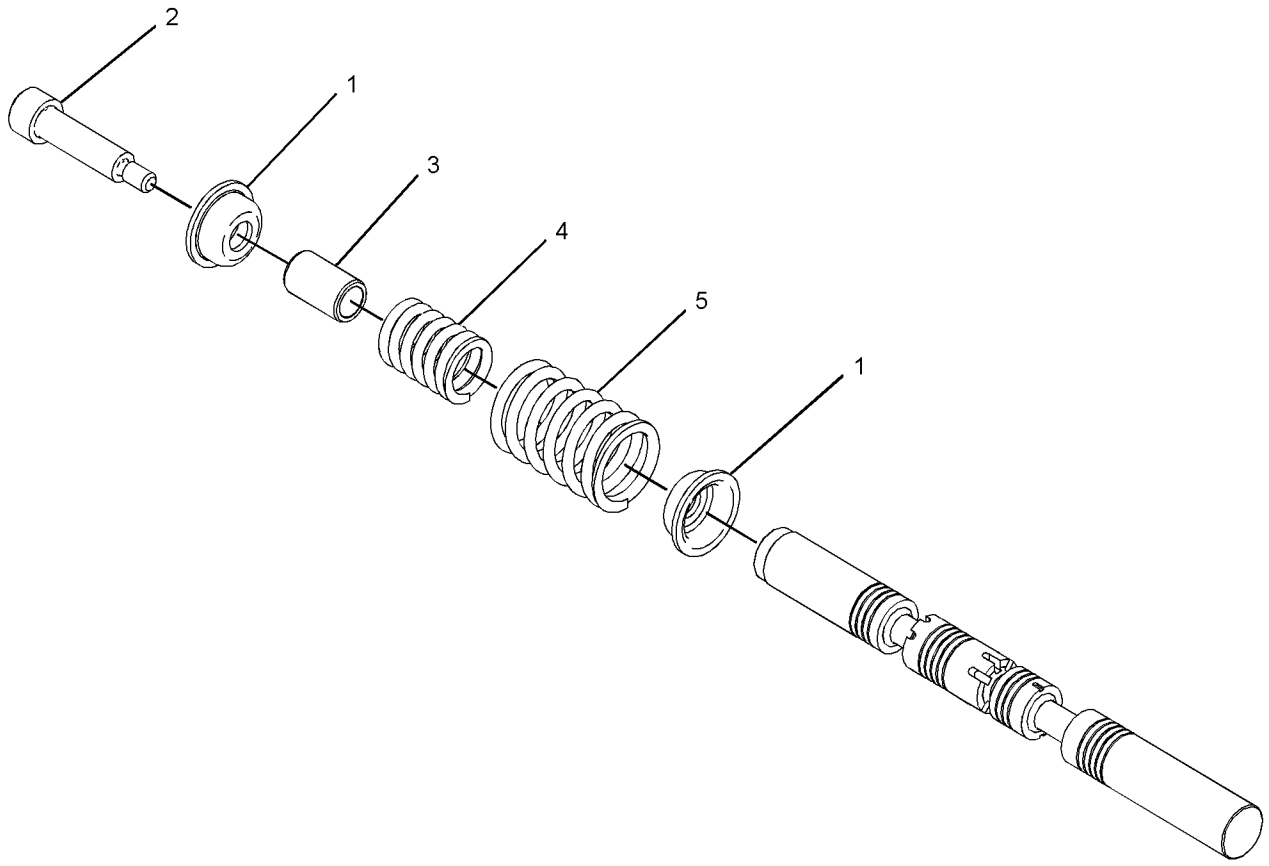

GRAPHIC #1 <END> g02717490

369-8434 SPOOL GP-CONTROL VALVE–BOOM I

S/N: DLP1-UP

PART OF 420-2241 VALVE GP-MAIN CONTROL

AN ATTACHMENT

SMCS-5051, 5464 **i05434275**

NOTE	REF NO	GRAPHIC REF	PART NUMBER	QTY	PART NAME 1 2 3 4 5 6 (PRODUCT LEVEL)	SEE PAGE
	1	1	**7I-7203**	2	SEAT	
	2	1	**197-0148**	1	BOLT-SPECIAL	
	3	1	**197-0149**	1	STOP	
	4	1	**197-0150**	1	SPRING	
	5	1	**197-0151**	1	SPRING	
					PARTS SHOWN IN GRAPHIC(S) WITHOUT A REFERENCE NUMBER ARE NOT SERVICED SEPARATELY	

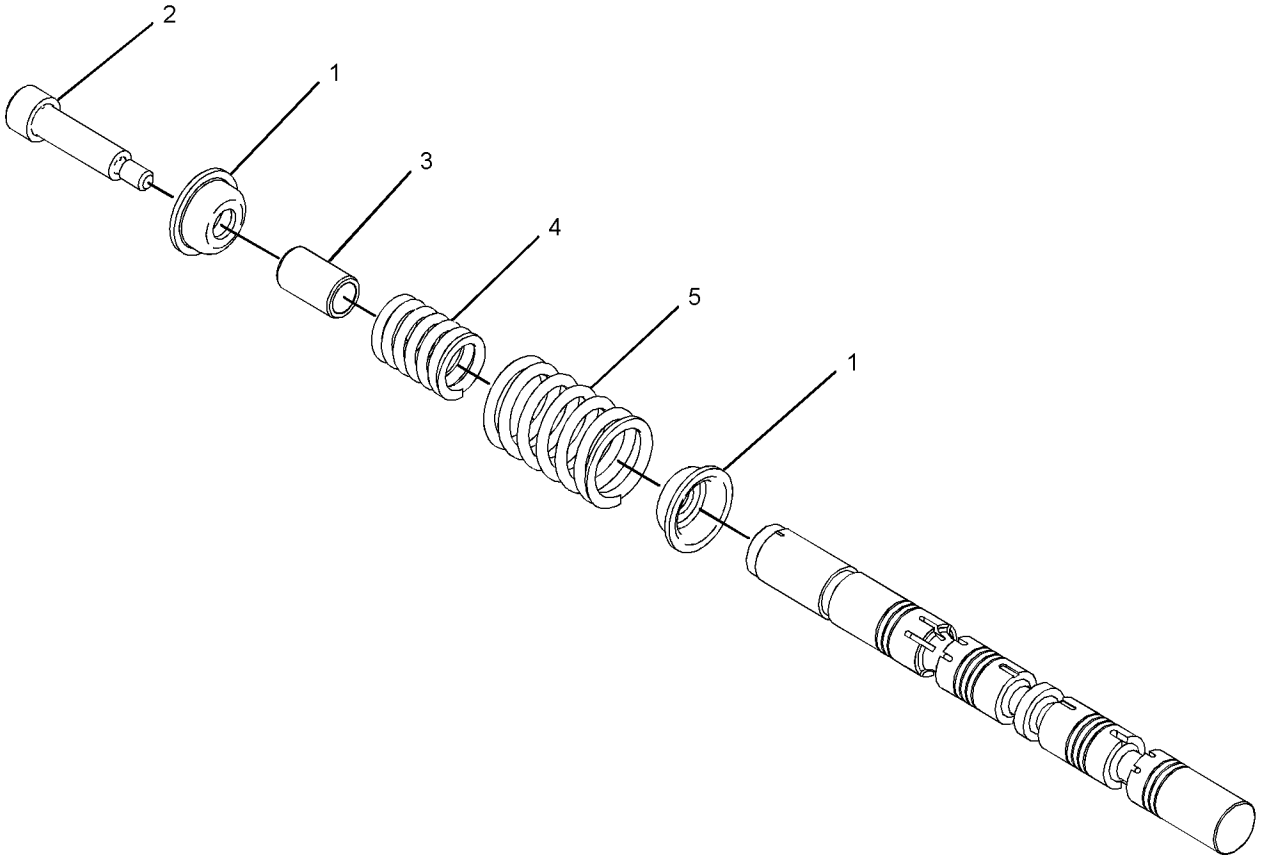

GRAPHIC #1 <END> g02717495

316-3791 SUPPORT GP-LINES

S/N: DLP1-UP
4.65-M (15.25-FT) REACH
PART OF 321-0344, 321-0345, 398-8994, 398-8995 LINES AR-AUXILIARY HYDRAULIC, 321-0346, 398-8996 LINES AR-QUICK COUPLER
AN ATTACHMENT

SMCS-5057 **i05213996**

NOTE	REF NO	GRAPHIC REF	PART NUMBER	QTY	PART NAME 1 2 3 4 5 6 (PRODUCT LEVEL)	SEE PAGE
	1	1	**153-8800**	4	PLATE	
	2	1	**277-1232**	1	SUPPORT AS	
	3	1	**277-1234**	1	SUPPORT AS	
	4	1	**8T-4223**	8	WASHER-HARD (13.5X25.5X3-MM THK)	
M	5	1	**8T-4648**	8	BOLT (M12X1.75X70-MM)	

M - METRIC PART

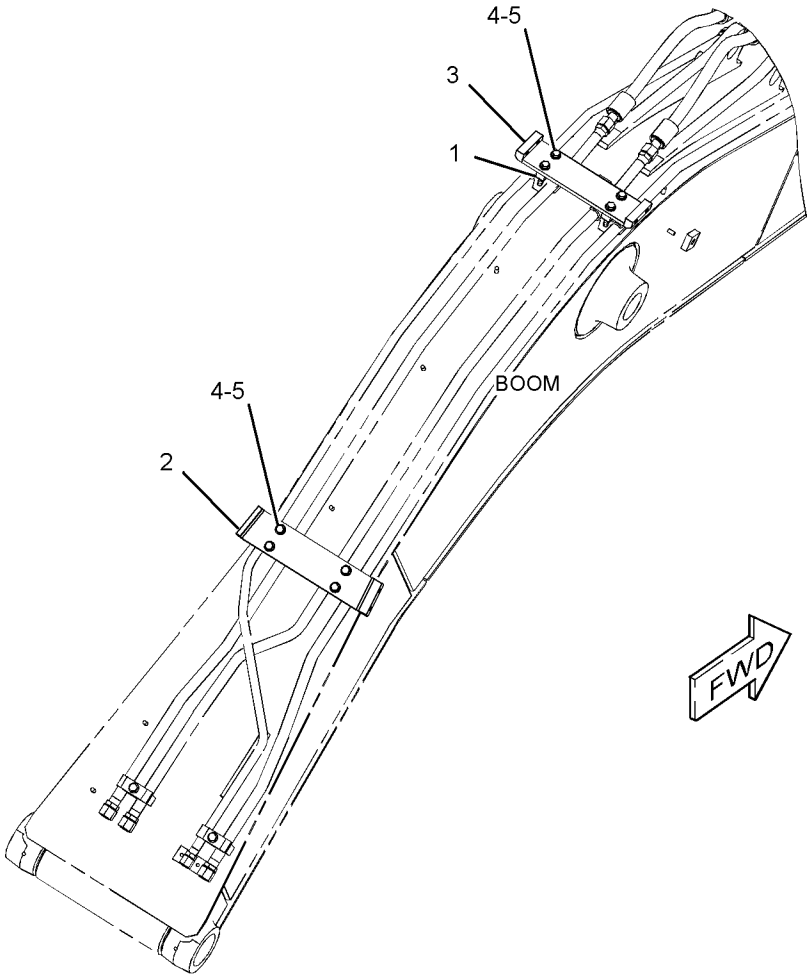

GRAPHIC #1 <END> g01450133

390-4281 SUPPORT GP-LINES

S/N: DLP1-UP
FOR USE WITH 4.65-M (15.25-FT) BOOM
PART OF 398-8994, 398-8995 LINES AR-AUXILIARY HYDRAULIC, 398-8996 LINES AR-QUICK COUPLER
AN ATTACHMENT

SMCS-5057 **i06729789**

NOTE	REF NO	GRAPHIC REF	PART NUMBER	QTY	PART NAME 1 2 3 4 5 6 (PRODUCT LEVEL)	SEE PAGE
	1	1	**153-8800**	4	PLATE	
	2	1	**277-1232**	1	SUPPORT AS	
	3	1	**390-4327**	1	PLATE	
	4	1	**8T-4223**	8	WASHER-HARD (13.5X25.5X3-MM THK)	
M	5	1	**8T-4648**	8	BOLT (M12X1.75X70-MM)	

M - METRIC PART

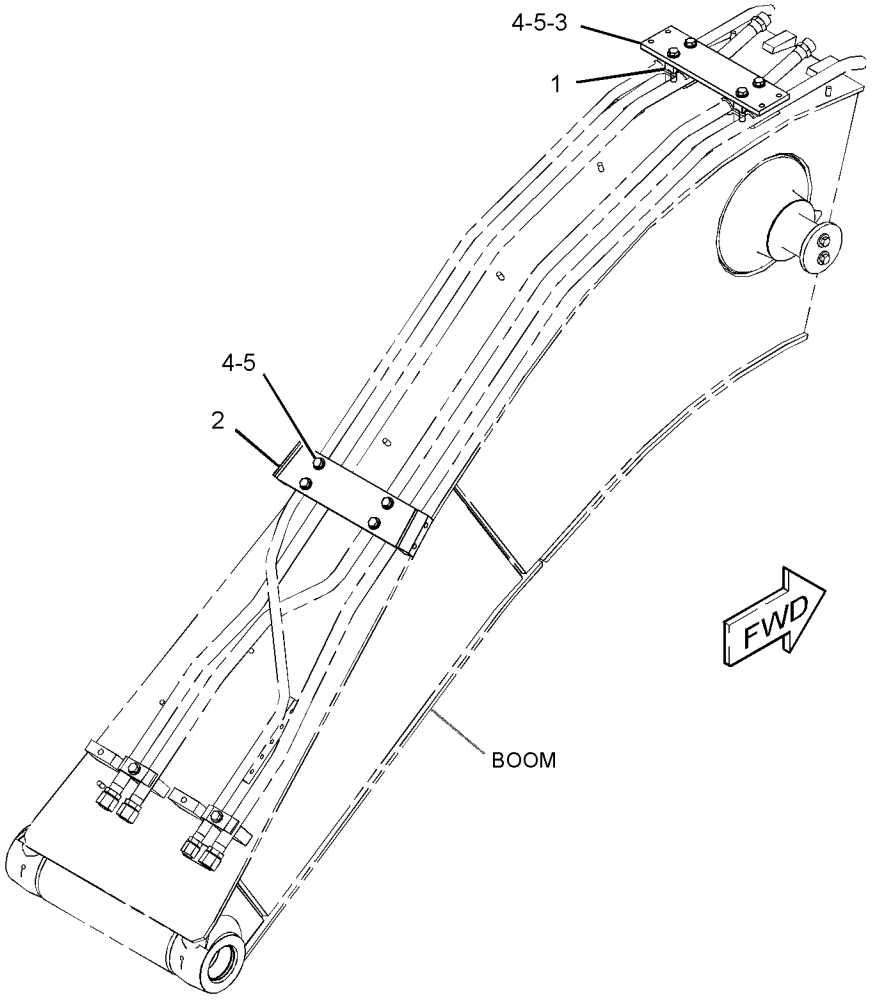

GRAPHIC #1 <END> g03317553

162-4695 SWIVEL GP

S/N: DLP1-UP
PART OF 278-6728 LINES GP-BLADE CYLINDER
AN ATTACHMENT

SMCS-5060 **i06589564**

NOTE	REF NO	GRAPHIC REF	PART NUMBER	QTY	PART NAME 1 2 3 4 5 6 (PRODUCT LEVEL)	SEE PAGE
M	1	1	**455-3798**	6	BOLT (M10X1.5X25-MM)	
	2	1	**453-3454**	2	WASHER-HARD (11X21X2.5-MM THK)	
	3	1	**5I-4363**	1	COVER	
	4	1	**095-1716**	1	SEAL-O-RING	
	5	1	**7I-7321**	1	RETAINER	
	6	1	**114-8249**	1	HOUSING	
	7	1	**159-7782**	7	SEAL	
	8	1	**095-1625**	3	SEAL-O-RING	
	9	1	**114-8250**	1	ROTOR	
	10	1	**8T-6759**	1	PLUG-PIPE	
	11	1	**3J-1907**	2	SEAL-O-RING	
	12	1	**9S-8004**	2	PLUG (9/16-18-THD)	

M - METRIC PART

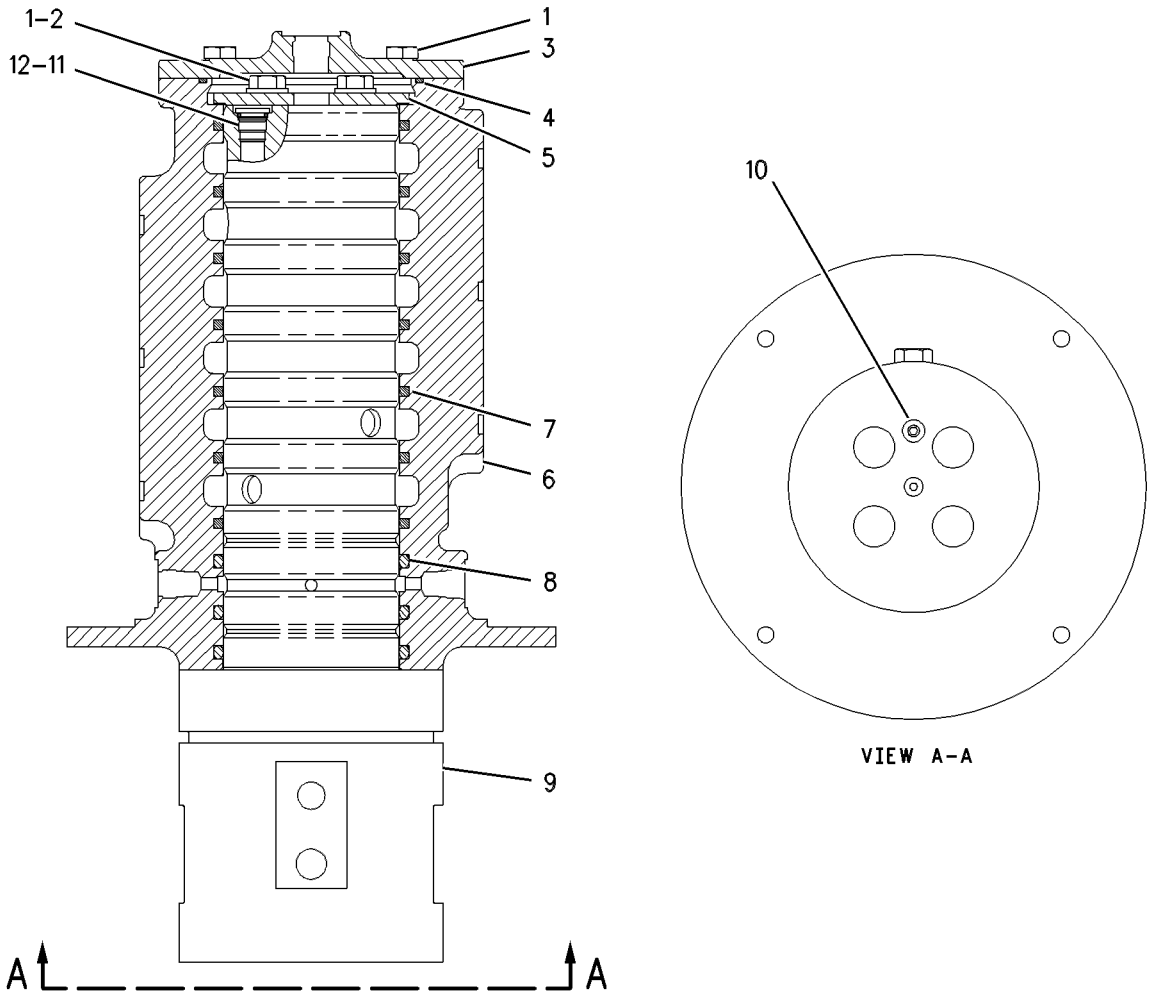

GRAPHIC #1 <END> g00548364

162-4696 SWIVEL GP

S/N: DLP1-UP

PART OF 278-6511 LINES GP-TRAVEL MOTOR

SMCS-5060 **i04974049**

NOTE	REF NO	GRAPHIC REF	PART NUMBER	QTY	PART NAME 1 2 3 4 5 6 (PRODUCT LEVEL)	SEE PAGE
M	1	1	**8T-4136**	6	BOLT (M10X1.5X25-MM)	
	2	1	**8T-4121**	2	WASHER-HARD (11X21X2.5-MM THK)	
	3	1	**5I-4363**	1	COVER	
	4	1	**095-1716**	1	SEAL-O-RING	
	5	1	**7I-7321**	1	RETAINER	
	6	1	**4I-7604**	1	HOUSING	
	7	1	**159-7782**	5	SEAL	
	8	1	**095-1625**	3	SEAL-O-RING	
	9	1	**4I-7605**	1	ROTOR	
	10	1	**8T-6759**	1	PLUG-PIPE	
	11	1	**3K-0360**	1	SEAL-O-RING	
	12	1	**9S-8005**	1	PLUG (3/4-16-THD)	

M - METRIC PART

162-4696 **SWIVEL GP (**contd.**)** **i04974049**

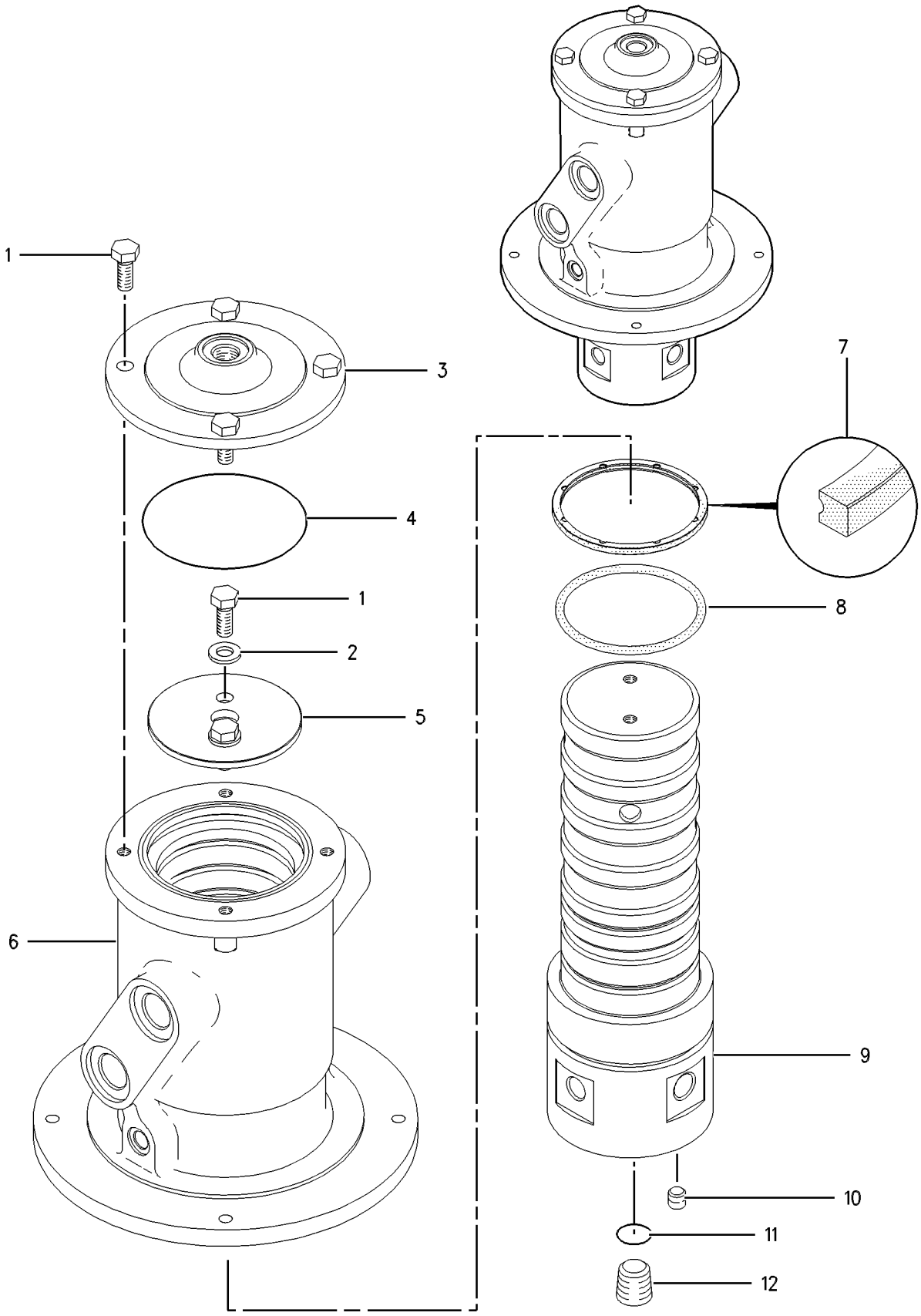

GRAPHIC #1 <END> g00590219

278-6662 TANK & FILTER GP-HYDRAULIC

S/N: DLP1-UP
150-L (39.6-US GAL)
PART OF 278-6660 TANK & MTG GP-HYDRAULIC
TYPE 1

SMCS-5056, 5068 **i03733981**

NOTE	REF NO	GRAPHIC REF	PART NUMBER	QTY	PART NAME 1 2 3 4 5 6 (PRODUCT LEVEL)	SEE PAGE
	1	1	**4B-7739**	1	PLUG-DRAIN (HYDRAULIC TANK)	
	2	1	**342-2924**	1	SENDER AS-TEMPERATURE (HYDRAULIC OIL)	
		1	**095-0826**	2	LOCKWASHER	
M		1	**095-7930**	2	SCREW-MACHINE (M4X0.7X6-MM)	
	3	1	**6V-0852**	1	CAP-DUST	
	4	1	**8H-9819**	1	ADAPTER-PLUG	
	5	1	**170-9419**	1	SWITCH AS-PRESSURE (HYDRAULIC OIL)	
		1	**2M-9780**	1	SEAL-O-RING	
		1	**4I-0754**	1	SEAL-O-RING	
		1	**102-8802**	1	KIT-RECEPTACLE (2-PIN)	
					(INCLUDES RECEPTACLE AS & WEDGE)	
		1	**186-3735**	2	PIN-CONNECTOR (16-GA TO 18-GA)	
	6	1	**179-7541**	1	PIPE AS	
	7	1	**213-0677**	1	SWITCH AS-LIQUID LEVEL (HYDRAULIC OIL)	
		1	**102-8802**	1	KIT-RECEPTACLE (2-PIN)	
					(INCLUDES RECEPTACLE AS & WEDGE)	
		1	**144-1636**	2	PIN-CONNECTOR (14-GA TO 18-GA)	
	8	1	**227-0590**	1	BREATHER (HYDRAULIC TANK)	
Y	9	1	**227-0620**	1	GAUGE GP-SIGHT (HYDRAULIC OIL LEVEL)	540
Y	10	1	**259-0869**	1	FILTER GP-OIL (HYDRAULIC, MAIN RETURN)	535
	11	1	**269-9853**	1	COVER AS	
	12	1	**269-9855**	1	FLANGE AS	
		1	**270-0034**	1	SEAL-O-RING	
	13	1	**269-9858**	1	PIPE	
Y	14	1	*274-2726*	1	SCREEN GP-HYDRAULIC (TANK)	767
	15	1	**9X-8256**	4	WASHER (6.6X12X2-MM THK)	
Y	16	1	**289-8194**	1	FILTER GP-OIL (HYDRAULIC, CASE DRAIN)	537
	17	1	**292-7461**	1	SUPPORT	
	18	1	**207-6403**	1	PLUG	
	19	1	**207-6404**	1	WASHER (49.5X60.5X1.5-MM THK)	
	20	1	**095-1608**	1	SEAL-O-RING	
	21	1	**095-1725**	1	SEAL-O-RING	
	22	1	**129-3400**	1	GUARD	
Y	23	1	**158-8987**	1	FILTER & VALVE GP-PILOT (HYDRAULIC OIL)	530
	24	1	*164-5567*	1	COUPLER AS-QUICK DISCONNECT (MALE)	
		1	**214-7568**	1	SEAL-O-RING	
		1	**6V-3965**	1	FITTING (QUICK DISCONNECT)	
	25	1	*164-5590*	1	VALVE AS-FLUID SAMPLING	
		1	**3J-7354**	1	SEAL-O-RING	
		1	**8C-3446**	1	VALVE-SAMPLING	
	26	1	**1J-2859**	1	SEAL-O-RING	
	27	1	**2B-0858**	1	PLUG-PIPE	
	28	1	**2H-3934**	1	SEAL-O-RING	
	29	1	**3D-2824**	1	SEAL-O-RING	
	30	1	**3K-0360**	1	SEAL-O-RING	
	31	1	**4J-0527**	1	SEAL-O-RING	

278-6662 **TANK & FILTER GP-HYDRAULIC (**contd.**)** **i03733981**

NOTE	REF NO	GRAPHIC REF	PART NUMBER	QTY	PART NAME 1 2 3 4 5 6 (PRODUCT LEVEL)	SEE PAGE
	32	1	**4J-5267**	1	SEAL-O-RING	
M	33	1	**5C-9553**	4	BOLT (M6X1X16-MM)	
	34	1	**8C-3451**	1	CAP-DUST (HYDRAULIC OIL)	
M	35	1	**191-8920**	2	BOLT-SOCKET HEAD (M6X1X12-MM)	
M	36	1	**170-8553**	4	BOLT-SOCKET HEAD (M12X1.75X40-MM)	
	37	1	**8T-4121**	13	WASHER-HARD (11X21X2.5-MM THK)	
M	38	1	**8T-4136**	7	BOLT (M10X1.5X25-MM)	
M	39	1	**8T-4137**	6	BOLT (M10X1.5X20-MM)	
M	40	1	**8T-4184**	8	BOLT (M12X1.75X45-MM)	
	41	1	**8T-4223**	8	WASHER-HARD (13.5X25.5X3-MM THK)	
	42	1	**8T-4224**	4	WASHER-HARD (8.8X16X2-MM THK)	
M	43	1	**8T-4908**	4	BOLT (M8X1.25X25-MM)	
	44	1	**9F-1399**	1	SEAL-O-RING	

M - METRIC PART
Y - SEPARATE ILLUSTRATION

278-6662 **TANK & FILTER GP-HYDRAULIC (**contd.**)** **i03733981**

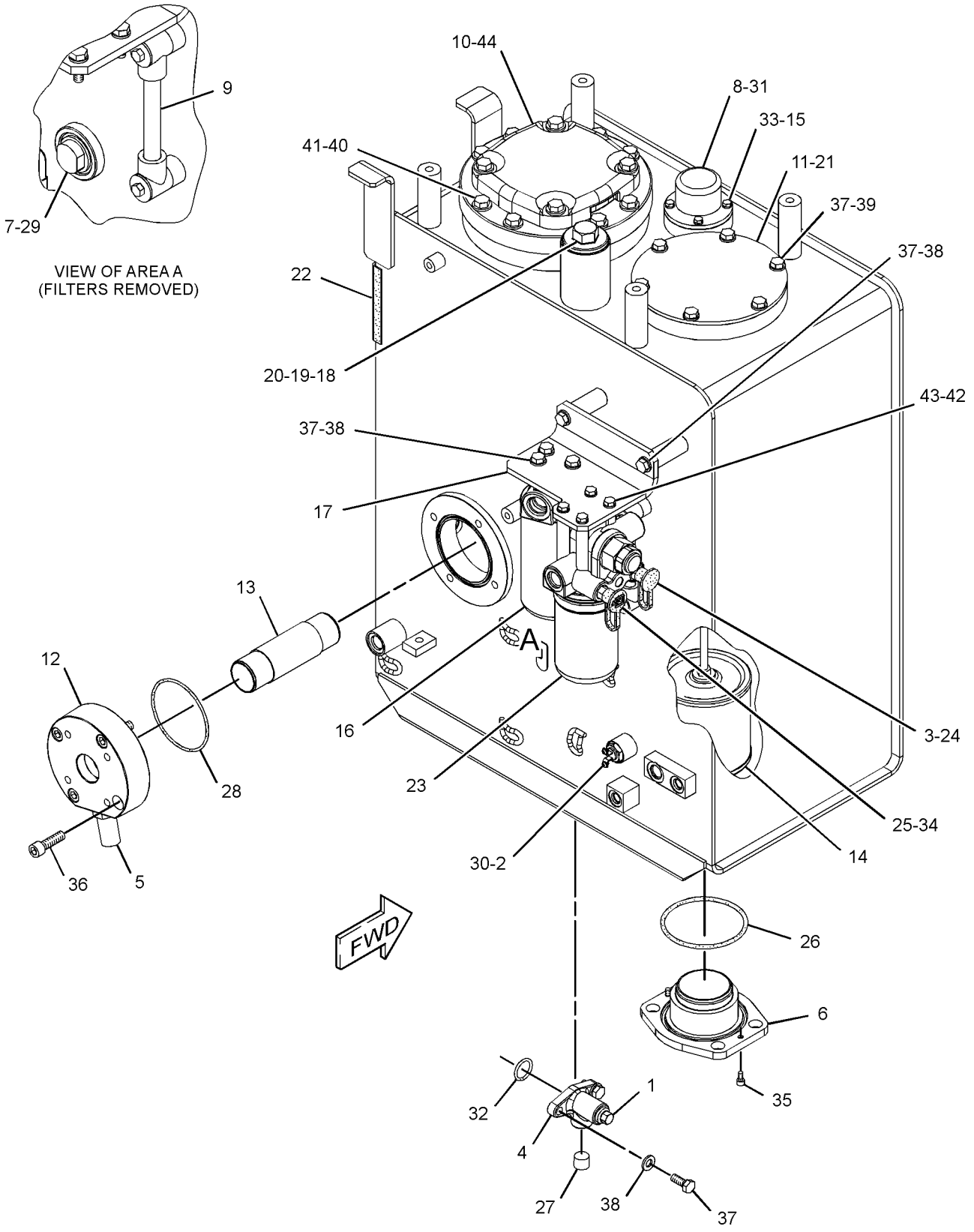

GRAPHIC #1 <END> g01437063

278-6662 TANK & FILTER GP-HYDRAULIC

S/N: DLP1-UP
150-L (39.6-US GAL)
PART OF 278-6660 TANK & MTG GP-HYDRAULIC
TYPE 2

SMCS-5056, 5068 **i04703471**

NOTE	REF NO	GRAPHIC REF	PART NUMBER	QTY	PART NAME 1 2 3 4 5 6 (PRODUCT LEVEL)	SEE PAGE
	1	1	**4B-7739**	1	PLUG-DRAIN (HYDRAULIC TANK)	
	2	1	**342-2924**	1	SENDER AS-TEMPERATURE (HYDRAULIC OIL)	
		1	**1H-4393**	2	LOCKWASHER	
M		1	**095-7930**	2	SCREW-MACHINE (M4X0.7X6-MM)	
	3	1	**6V-0852**	1	CAP-DUST	
	4	1	**8H-9819**	1	ADAPTER-PLUG	
	5	1	**170-9419**	1	SWITCH AS-PRESSURE (HYDRAULIC OIL)	
		1	**2M-9780**	1	SEAL-O-RING	
		1	**4I-0754**	1	SEAL-O-RING	
		1	**102-8802**	1	KIT-RECEPTACLE (2-PIN)	
					(INCLUDES RECEPTACLE AS & WEDGE)	
		1	**8T-8729**	2	PIN-CONNECTOR (16-GA TO 18-GA)	
	6	1	**179-7541**	1	PIPE AS	
	7	1	**213-0677**	1	SWITCH AS-LIQUID LEVEL (HYDRAULIC OIL)	
		1	**102-8802**	1	KIT-RECEPTACLE (2-PIN)	
					(INCLUDES RECEPTACLE AS & WEDGE)	
		1	**144-1636**	2	PIN-CONNECTOR (14-GA TO 18-GA)	
	8	1	**227-0590**	1	BREATHER (HYDRAULIC TANK)	
CY	9	1	**347-6081**	1	GAUGE GP-SIGHT (HYDRAULIC OIL LEVEL)	541
Y	10	1	**259-0869**	1	FILTER GP-OIL (HYDRAULIC, MAIN RETURN)	535
	11	1	**269-9853**	1	COVER AS	
	12	1	**269-9855**	1	FLANGE AS	
		1	**270-0034**	1	SEAL-O-RING	
	13	1	**269-9858**	1	PIPE	
Y	14	1	*274-2726*	1	SCREEN GP-HYDRAULIC (TANK)	767
	15	1	**9X-8256**	4	WASHER (6.6X12X2-MM THK)	
Y	16	1	**289-8194**	1	FILTER GP-OIL (HYDRAULIC, CASE DRAIN)	537
	17	1	**292-7461**	1	SUPPORT	
	18	1	**207-6403**	1	PLUG	
	19	1	**207-6404**	1	WASHER (49.5X60.5X1.5-MM THK)	
	20	1	**095-1608**	1	SEAL-O-RING	
	21	1	**095-1725**	1	SEAL-O-RING	
	22	1	**129-3400**	1	GUARD	
Y	23	1	**158-8987**	1	FILTER & VALVE GP-PILOT (HYDRAULIC OIL)	530
	24	1	*164-5567*	1	COUPLER AS-QUICK DISCONNECT (MALE)	
		1	**214-7568**	1	SEAL-O-RING	
		1	**6V-3965**	1	FITTING (QUICK DISCONNECT)	
	25	1	*164-5590*	1	VALVE AS-FLUID SAMPLING	
		1	**3J-7354**	1	SEAL-O-RING	
		1	**8C-3446**	1	VALVE-SAMPLING	
	26	1	**1J-2859**	1	SEAL-O-RING	
	27	1	**2B-0858**	1	PLUG-PIPE	
	28	1	**2H-3934**	1	SEAL-O-RING	
	29	1	**3D-2824**	1	SEAL-O-RING	
	30	1	**3K-0360**	1	SEAL-O-RING	
	31	1	**4J-0527**	1	SEAL-O-RING	

278-6662 **TANK & FILTER GP-HYDRAULIC (**contd.**)** **i04703471**

NOTE	REF NO	GRAPHIC REF	PART NUMBER	QTY	PART NAME 1 2 3 4 5 6 (PRODUCT LEVEL)	SEE PAGE
	32	1	**4J-5267**	1	SEAL-O-RING	
M	33	1	**5C-9553**	4	BOLT (M6X1X16-MM)	
	34	1	**8C-3451**	1	CAP-DUST (HYDRAULIC OIL)	
M	35	1	**191-8920**	2	BOLT-SOCKET HEAD (M6X1X12-MM)	
M	36	1	**170-8553**	4	BOLT-SOCKET HEAD (M12X1.75X40-MM)	
	37	1	**8T-4121**	13	WASHER-HARD (11X21X2.5-MM THK)	
M	38	1	**8T-4136**	7	BOLT (M10X1.5X25-MM)	
M	39	1	**8T-4137**	6	BOLT (M10X1.5X20-MM)	
M	40	1	**8T-4184**	8	BOLT (M12X1.75X45-MM)	
	41	1	**8T-4223**	8	WASHER-HARD (13.5X25.5X3-MM THK)	
	42	1	**8T-4224**	4	WASHER-HARD (8.8X16X2-MM THK)	
M	43	1	**8T-4908**	4	BOLT (M8X1.25X25-MM)	
	44	1	**9F-1399**	1	SEAL-O-RING	

C - CHANGE FROM PREVIOUS TYPE
M - METRIC PART
Y - SEPARATE ILLUSTRATION

278-6662 **TANK & FILTER GP-HYDRAULIC (**contd.**)** **i04703471**

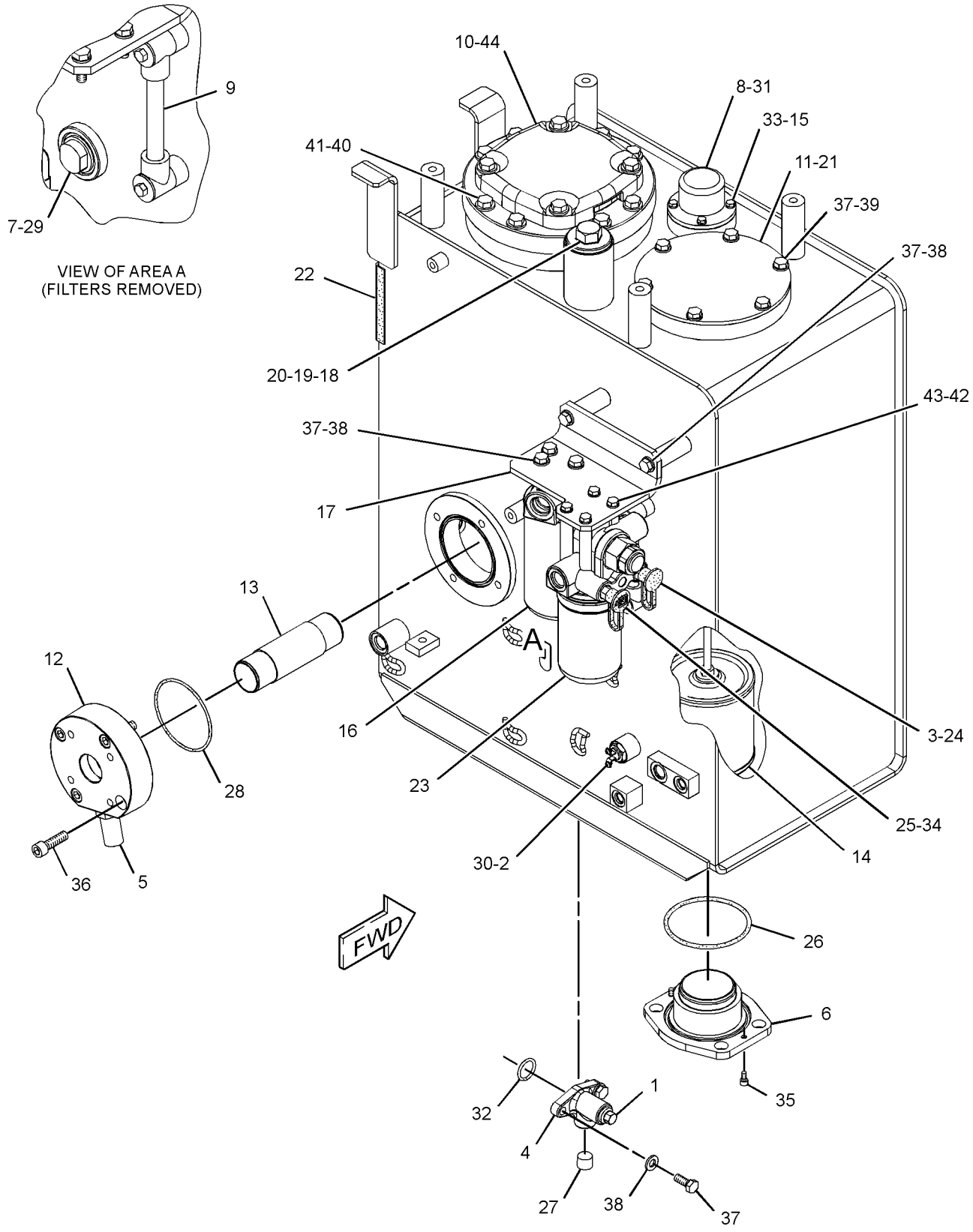

GRAPHIC #1 <END> g01437063

278-6660 TANK & MTG GP-HYDRAULIC

S/N: DLP1-UP

PART OF 270-5864 HYDRAULIC AR

SMCS-5056 **i02814323**

NOTE	REF NO	GRAPHIC REF	PART NUMBER	QTY	PART NAME 1 2 3 4 5 6 (PRODUCT LEVEL)	SEE PAGE
Y	1	1	*278-6661*	1	LINES GP-HYDRAULIC	630
Y	2	1	**278-6662**	1	TANK & FILTER GP-HYDRAULIC	788
	3	1	**085-9310**	6	SPACER (16.6X32X26-MM THK)	
M	4	1	**8T-4140**	6	BOLT (M16X2X60-MM)	

M - METRIC PART
Y - SEPARATE ILLUSTRATION

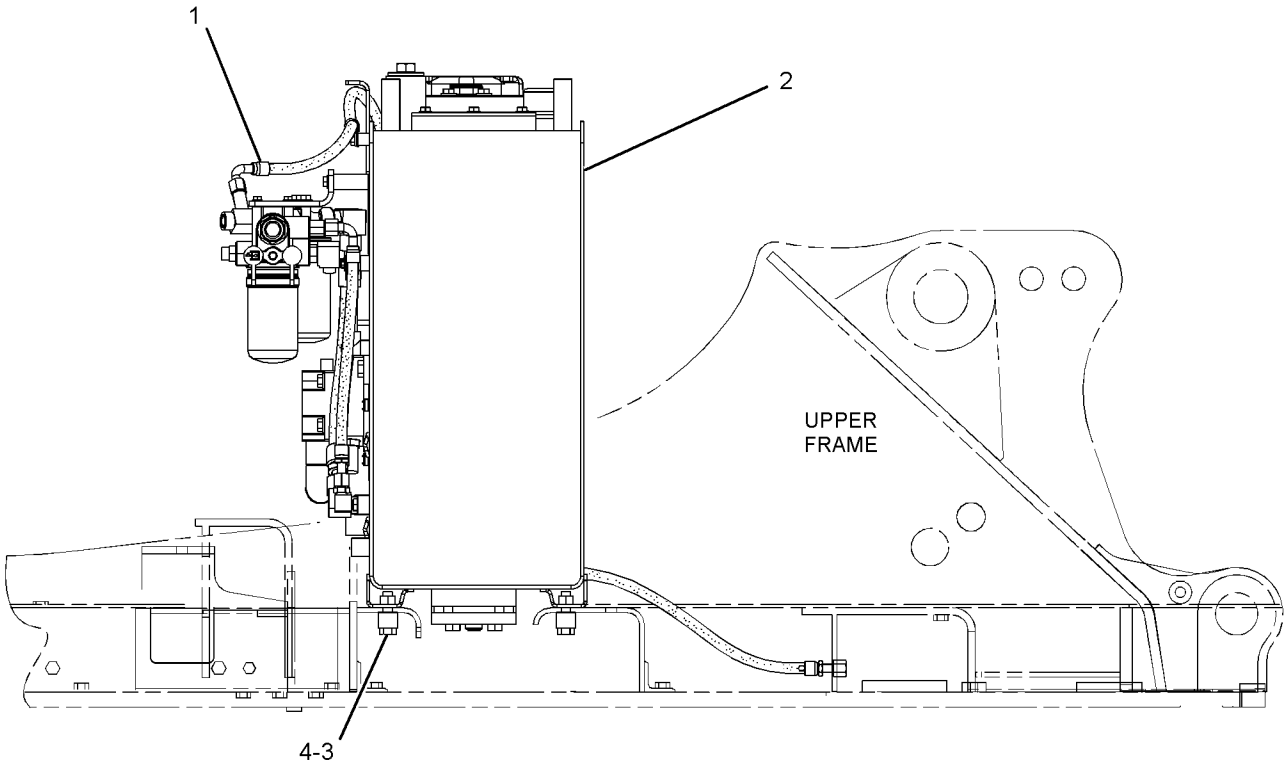

RIGHT SIDE VIEW

GRAPHIC #1 <END> g01407924

458-3309 VALVE & MTG GP-AUXILIARY

S/N: DLP1-UP
PART OF 457-9316 CONTROL AR-AUXILIARY
AN ATTACHMENT

SMCS-5051 **i06530758**

NOTE	PART NUMBER	QTY	PART NAME 1 2 3 4 5 6 (PRODUCT LEVEL)	SEE PAGE
Y	**297-0374**	1	VALVE GP-CONTROL	802
M	**330-2033**	5	BOLT (M14X2X105-MM)	

M - METRIC PART
Y - SEPARATE ILLUSTRATION

<END>

285-1750 VALVE & MTG GP-CONTROL

S/N: DLP1-UP
PART OF 270-5859 CONTROL AR-AUXILIARY
AN ATTACHMENT

SMCS-5051 **i06618869**

NOTE	REF NO	GRAPHIC REF	PART NUMBER	QTY	PART NAME 1 2 3 4 5 6 (PRODUCT LEVEL)	SEE PAGE
Y	1	1	**270-5866**	1	VALVE GP-MAIN CONTROL	807
Y	2	1	**297-0374**	1	VALVE GP-CONTROL	802
M	3	1	**330-2033**	5	BOLT (M14X2X105-MM)	

M - METRIC PART
Y - SEPARATE ILLUSTRATION

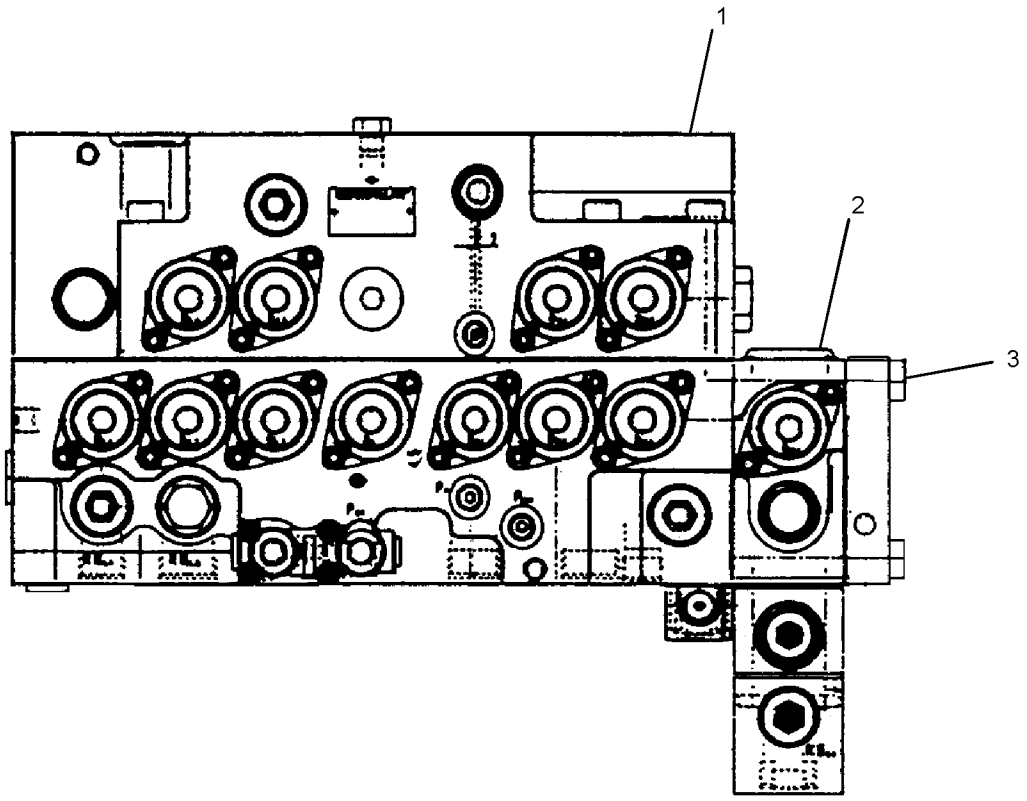

GRAPHIC #1 <END> g01440126

420-2242 VALVE & MTG GP-CONTROL

S/N: DLP1-UP
PART OF 270-5859 CONTROL AR-AUXILIARY
AN ATTACHMENT

SMCS-5051 **i05166244**

NOTE	REF NO	GRAPHIC REF	PART NUMBER	QTY	PART NAME 1 2 3 4 5 6 (PRODUCT LEVEL)	SEE PAGE
Y	1	1	**420-2241**	1	VALVE GP-MAIN CONTROL	819
Y	2	1	**297-0374**	1	VALVE GP-CONTROL	802
M	3	1	**330-2033**	5	BOLT (M14X2X105-MM)	

M - METRIC PART
Y - SEPARATE ILLUSTRATION

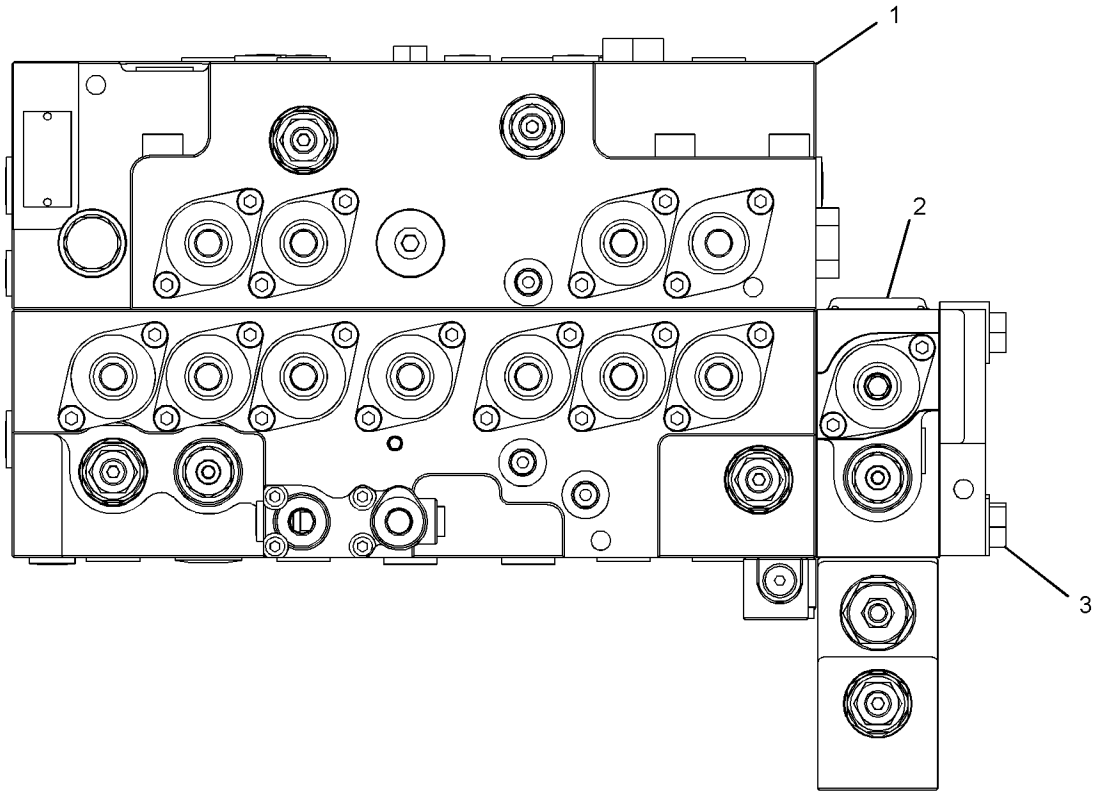

GRAPHIC #1 <END> g03401922

270-5871 VALVE AR–4-WAY PATTERN

S/N: DLP1-UP

AN ATTACHMENT

SMCS-5051 **i06668516**

NOTE	PART NUMBER	QTY	PART NAME 1 2 3 4 5 6 (PRODUCT LEVEL)	SEE PAGE
Y	*247-7494*	1	FILM GP (CONTROL PATTERN, QUICK CHANGE)	1199
Y	*278-6721*	1	LINES GP-PILOT (4-WAY)	730

Y - SEPARATE ILLUSTRATION

<END>

270-5869 VALVE AR-ALT PATTERN CONTROL–2-WAY

S/N: DLP1-UP

AN ATTACHMENT

SMCS-5065 **i05212122**

NOTE	PART NUMBER	QTY	PART NAME 1 2 3 4 5 6 (PRODUCT LEVEL)	SEE PAGE
Y	*275-7063*	1	FASTENER GP-WIRING HARNESS	195
Y	*260-7006*	1	FILM GP (CONTROL PATTERN CHANGE, 2-WAY)	1201
Y	*278-6720*	1	LINES GP-PILOT (2-WAY)	724

Y - SEPARATE ILLUSTRATION

<END>

259-7545 VALVE GP-BANK–MEDIUM PRESSURE

S/N: DLP1-UP
PART OF 278-6704 LINES GP-FRONT
AN ATTACHMENT
TYPE 1

SMCS-5051 **i04016109**

NOTE	REF NO	GRAPHIC REF	PART NUMBER	QTY	PART NAME 1 2 3 4 5 6 (PRODUCT LEVEL)	SEE PAGE
	1	1	**102-8802**	2	KIT-RECEPTACLE (2-PIN)	
					(EACH INCLUDES RECEPTACLE AS & WEDGE)	
	2	1	**186-3735**	4	PIN-CONNECTOR (16-GA TO 18-GA)	
	3	1	**252-6601**	1	BLOCK AS	
	4	1	**252-6602**	1	BLOCK AS	
	5	1	**252-6603**	1	BLOCK AS	
	6	1	**102-7024**	1	VALVE GP-RELIEF (AUXILIARY PUMP)	
		1	**093-3328**	1	SEAL-O-RING	
		1	**095-1578**	1	SEAL-O-RING	
	7	1	**150-6351**	2	VALVE AS-RELIEF (LINE, MEDIUM PRESSURE)	
M	8	1	**200-4856**	4	NUT (M8X1.25-THD)	
	9	1	**093-3094**	2	ROD	
M	10	1	**150-6348**	2	NUT (M10X1.25-THD)	
	11	1	**093-3093**	1	ROD	

M - METRIC PART

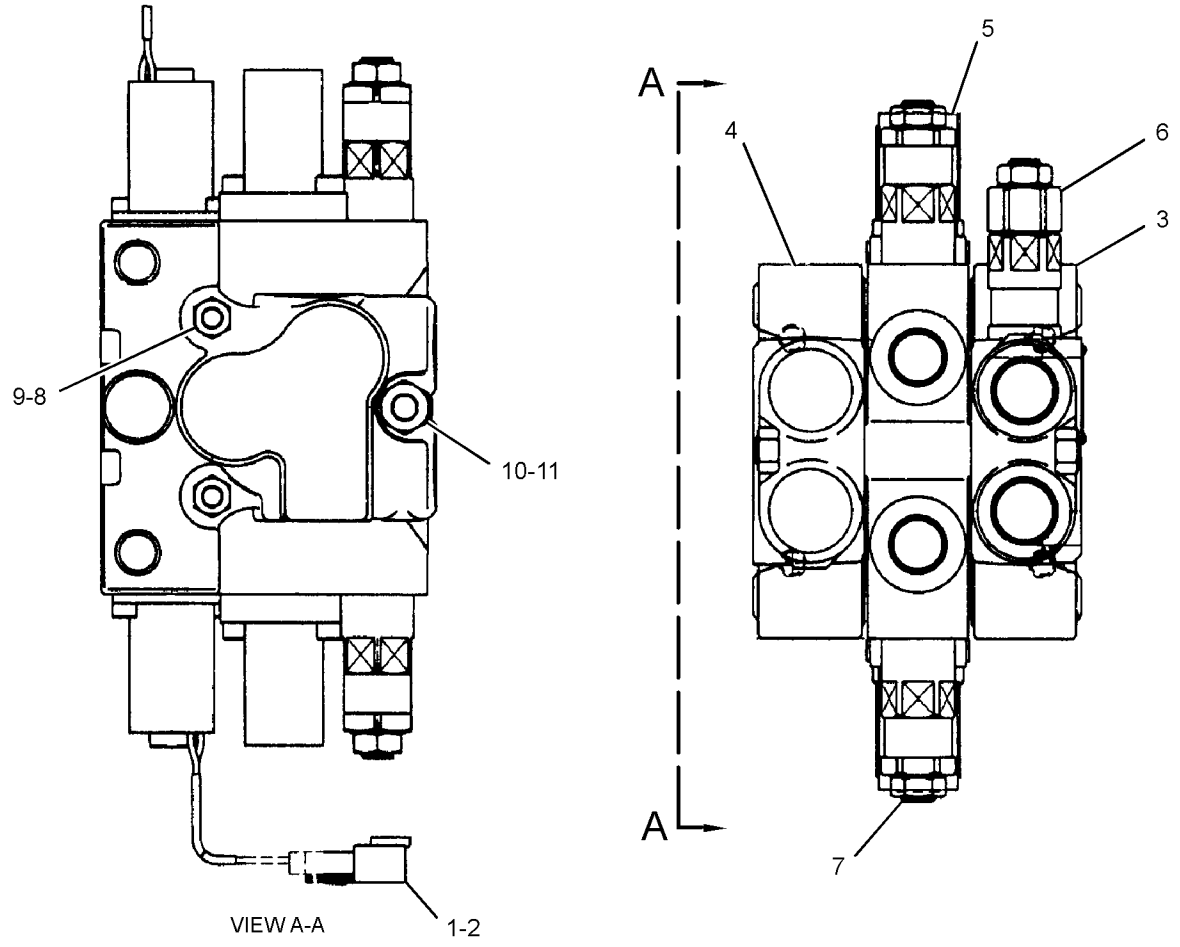

GRAPHIC #1 <END> g01381960

259-7545 VALVE GP-BANK—MEDIUM PRESSURE

S/N: DLP1-UP
PART OF 278-6704 LINES GP-FRONT
AN ATTACHMENT
TYPE 2

SMCS-5051 **i06609391**

NOTE	REF NO	GRAPHIC REF	PART NUMBER	QTY	PART NAME 1 2 3 4 5 6 (PRODUCT LEVEL)	SEE PAGE
	1	1	**102-8802**	2	KIT-RECEPTACLE (2-PIN)	
					(EACH INCLUDES RECEPTACLE AS & WEDGE)	
	2	1	**186-3735**	4	PIN-CONNECTOR (16-GA TO 18-GA)	
C	3	1	**252-6601**	1	BLOCK AS	
C	4	1	**252-6602**	1	BLOCK AS	
C	5	1	**093-3093**	1	ROD	
C	6	1	**125-7192**	1	VALVE GP-RELIEF (AUXILIARY PUMP)	
C	7	1	**125-7193**	2	VALVE GP-RELIEF (LINE, MEDIUM PRESSURE)	
					(EACH VALVE GP INCLUDES)	
		1	**2M-9780**	1	SEAL-O-RING	
M	8	1	**200-4856**	4	NUT (M8X1.25-THD)	
C	9	1	**093-3094**	2	ROD	
M	10	1	**150-6348**	2	NUT (M10X1.25-THD)	

C - CHANGE FROM PREVIOUS TYPE
M - METRIC PART

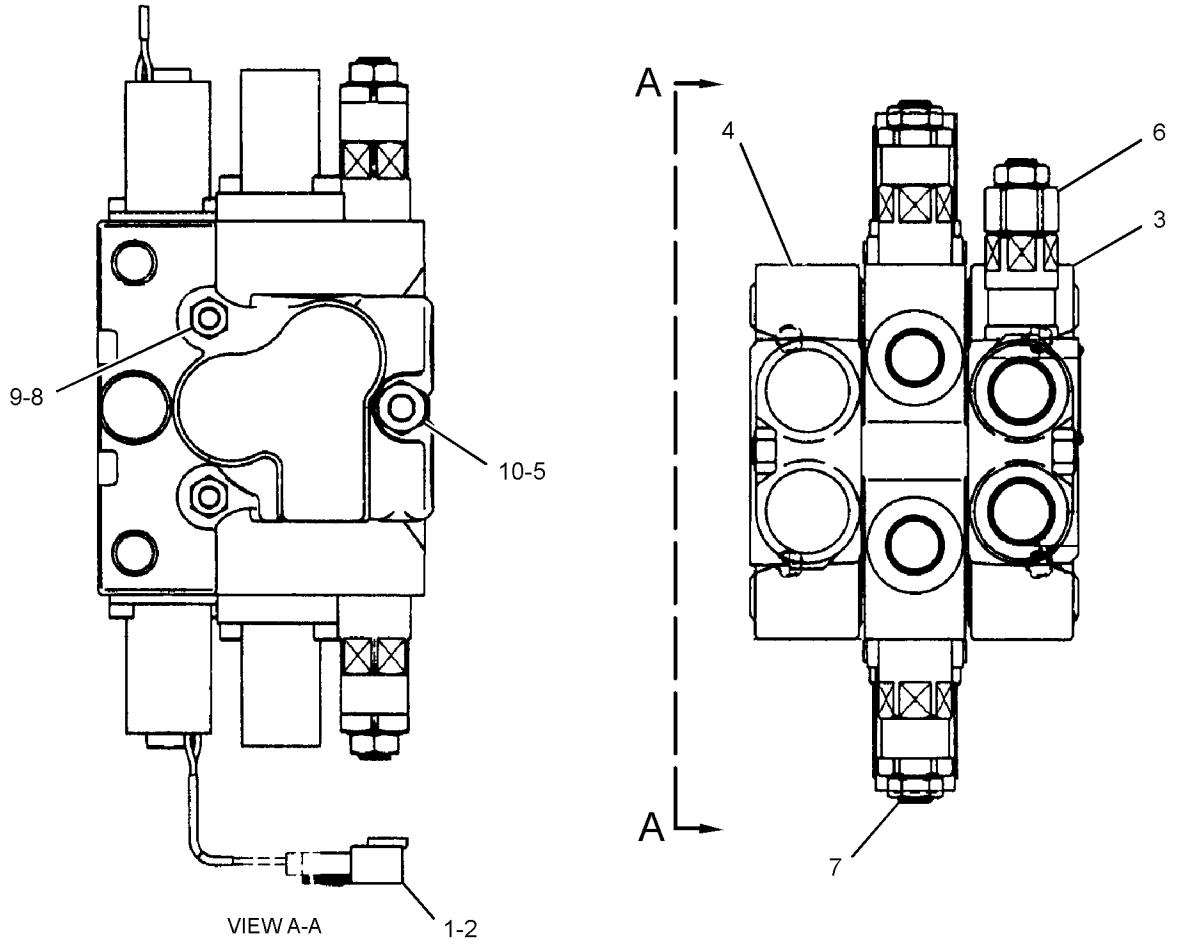

GRAPHIC #1 <END> g06120392

171-0002 VALVE GP-CHECK–COOLER BYPASS

S/N: DLP1-UP

PART OF 278-6667 LINES GP-HYDRAULIC OIL COOLER

SMCS-5067 **i04890834**

NOTE	REF NO	GRAPHIC REF	PART NUMBER	QTY	PART NAME 1 2 3 4 5 6 (PRODUCT LEVEL)	SEE PAGE
	1	1	177-2706	1	VALVE AS	
	2	1	190-7875	1	VALVE AS	
	3	1	184-3841	1	RING	

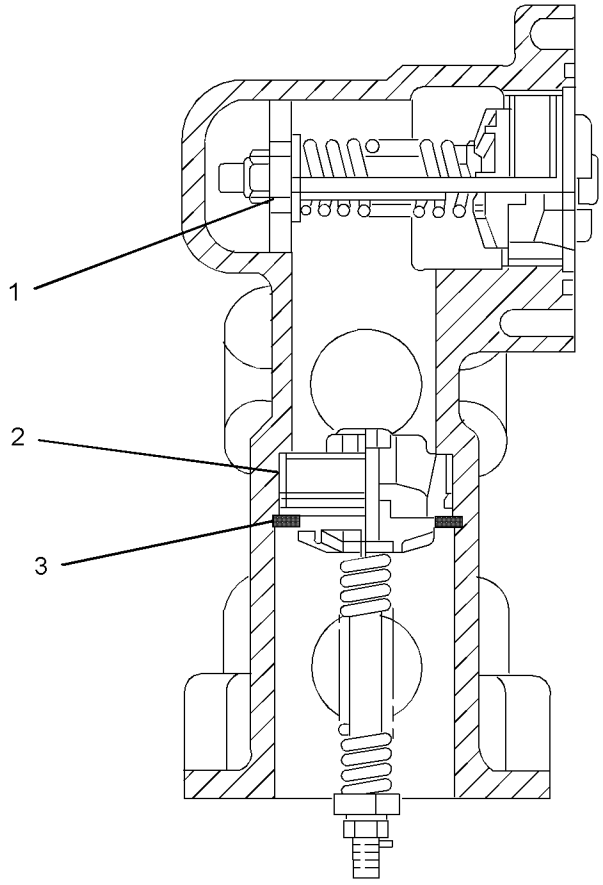

GRAPHIC #1 <END> g03023758

297-0374 VALVE GP-CONTROL

S/N: DLP1-UP

PART OF 458-3309 VALVE & MTG GP-AUXILIARY, 285-1750, 420-2242 VALVE & MTG GP-CONTROL AN ATTACHMENT

SMCS-5051 **i03298224**

NOTE	REF NO	GRAPHIC REF	PART NUMBER	QTY	PART NAME 1 2 3 4 5 6 (PRODUCT LEVEL)	SEE PAGE
M	1	1	**5A-3604**	2	BOLT-SOCKET HEAD (M8X1.25X25-MM)	
	2	1	**7I-7204**	1	SEAL	
	3	1	**7I-7206**	1	PLUG	
	4	1	**7I-7207**	1	SPRING	
	5	1	**7I-7208**	1	VALVE-LOAD CHECK	
J	6	1	**165-9497**	2	VALVE GP-FLOW CONTROL (MEDIUM PRESSURE)	
M	7	1	**197-0165**	2	BOLT (M8X1.25X20-MM)	
	8	1	**197-0168**	1	COVER	
	9	1	**197-0170**	1	COVER	
Y	10	1	**197-0173**	1	SPOOL GP-CONTROL VALVE (WORK TOOL)	768
	11	1	**197-0225**	2	PLUG AS	
Y	12	1	**310-0063**	2	VALVE GP-RELIEF (LINE)	842
	13	1	**095-1578**	3	SEAL-O-RING	
	14	1	**095-1586**	1	SEAL-O-RING	
	15	1	**095-1696**	2	SEAL-O-RING	
	16	1	**095-1698**	5	SEAL-O-RING	
	17	1	**095-1700**	1	SEAL-O-RING	
M	18	1	**197-0226**	8	BOLT-SOCKET HEAD (M10X1.5X75-MM)	
					AVAILABLE REPAIR KIT(S):	
J			**185-0400**	1	KIT-SEAL (CONTROL VALVE)	
					(INCLUDES O-RING SEALS & BACKUP RINGS)	

J - KIT MARKED J SERVICES PART(S) MARKED J
M - METRIC PART
Y - SEPARATE ILLUSTRATION

297-0374 **VALVE GP-CONTROL (**contd.**)** **i03298224**

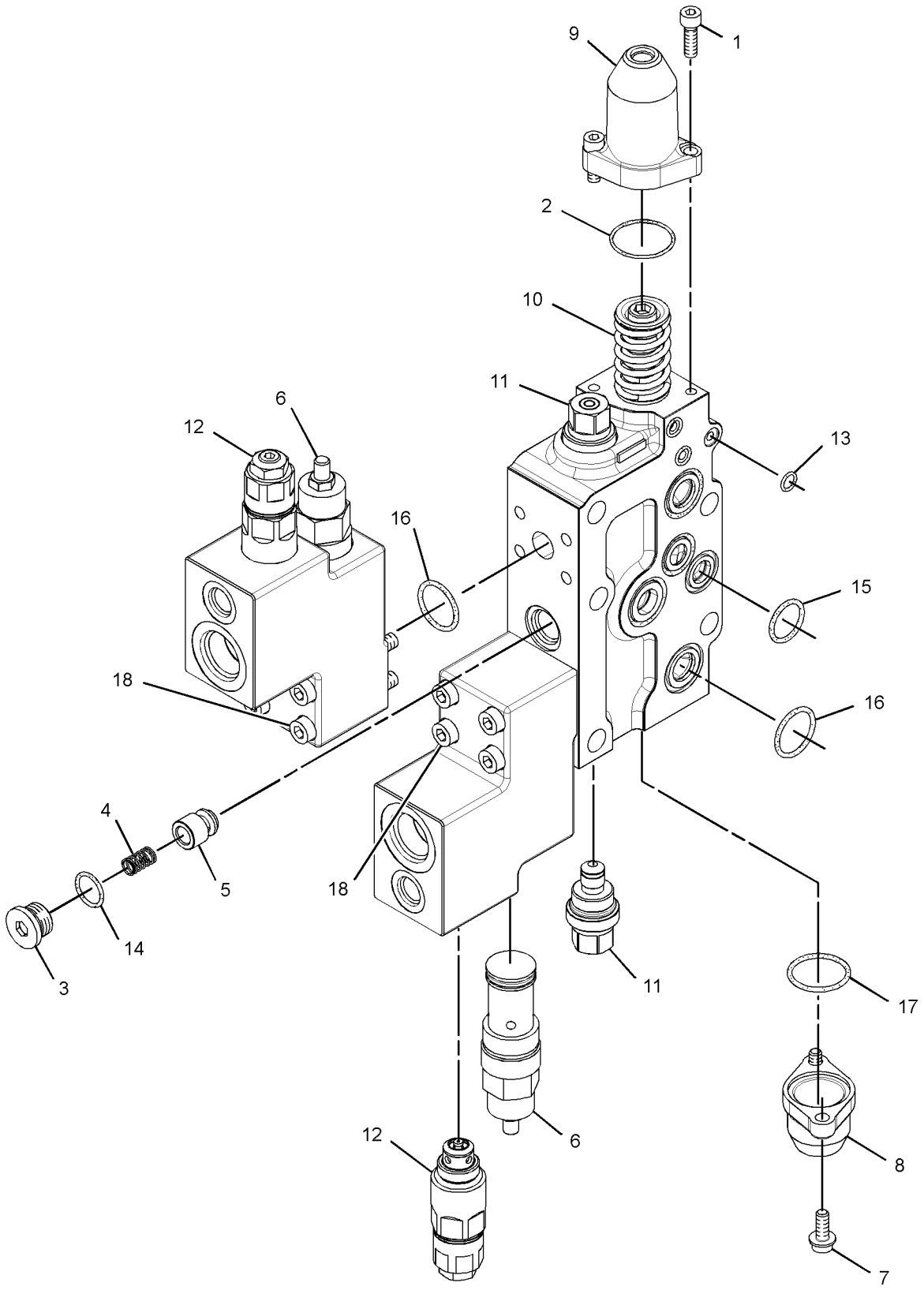

GRAPHIC #1 <END> g01439086

310-0234 VALVE GP-CONTROL

S/N: DLP1-UP
PART OF 278-6728 LINES GP-BLADE CYLINDER
AN ATTACHMENT
TYPE 1

SMCS-5051 **i05430651**

NOTE	REF NO	GRAPHIC REF	PART NUMBER	QTY	PART NAME 1 2 3 4 5 6 (PRODUCT LEVEL)	SEE PAGE
	1	1	**093-3093**	1	ROD	
	2	1	**093-3094**	2	ROD	
	3	1	**099-3990**	1	BODY	
	4	1	**122-5399**	1	BODY AS	
		1	**4J-0527**	1	SEAL-O-RING	
	5	1	**125-7192**	1	VALVE GP-RELIEF	
	6	1	**125-7193**	1	VALVE GP-RELIEF	
					(EACH VALVE GP INCLUDES)	
		1	**2M-9780**	1	SEAL-O-RING	
M	7	1	**232-3121**	2	NUT (M10X1.25-THD)	
M	8	1	**5P-7970**	4	NUT (M8X1.25-THD)	

M - METRIC PART

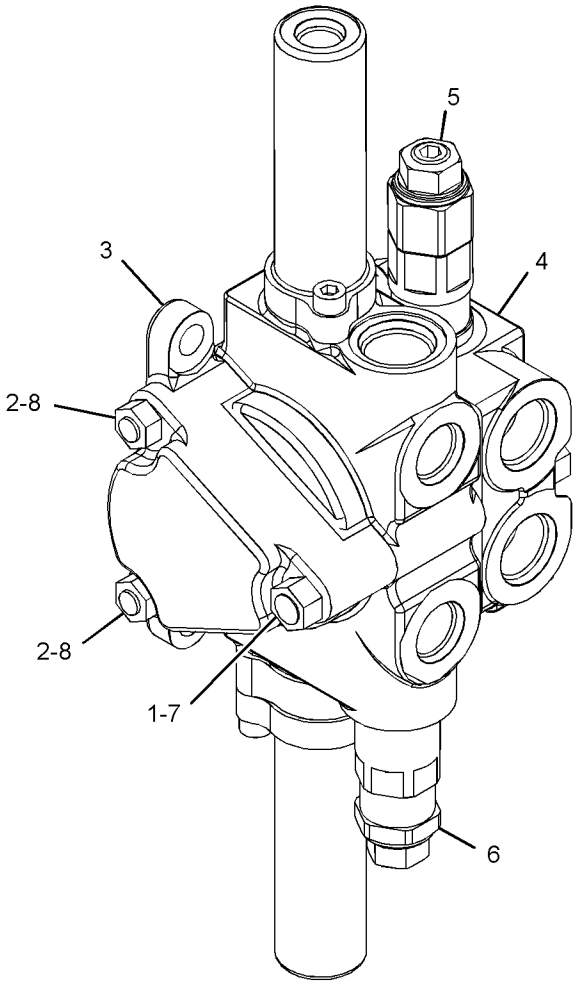

GRAPHIC #1 <END> g03437220

310-0234 VALVE GP-CONTROL

S/N: DLP1-UP
PART OF 278-6728 LINES GP-BLADE CYLINDER
AN ATTACHMENT
TYPE 2

SMCS-5051 **i06983837**

NOTE	REF NO	GRAPHIC REF	PART NUMBER	QTY	PART NAME 1 2 3 4 5 6 (PRODUCT LEVEL)	SEE PAGE
C	1	1	**093-3093**	1	ROD	
C	2	1	**093-3094**	2	ROD	
C	3	1	**099-3990**	1	BODY	
C	4	1	**122-5399**	1	BODY AS	
		1	**4J-0527**	1	SEAL-O-RING	
C	5	1	**095-6622**	1	VALVE (LOAD CHECK)	
C	6	1	**095-6623**	1	SPRING	
C	7	1	**096-2434**	1	ADAPTER	
CM	8	1	**111-5422**	2	BOLT (M6X1X18-MM)	
	9	1	**125-7192**	1	VALVE GP-RELIEF	
	10	1	**125-7193**	1	VALVE GP-RELIEF	
					(EACH VALVE GP INCLUDES)	
		1	**2M-9780**	1	SEAL-O-RING	
C	11	1	**131-5868**	1	SPRING	
C	12	1	**132-7599**	1	SEAT-SPRING	
C	13	1	**132-7600**	1	SPRING	
C	14	1	**132-7601**	1	SEAT-SPRING	
C	15	1	**132-7603**	2	CAP	
CM	16	1	**132-7705**	2	BOLT (M6X1X18-MM)	
C	17	1	**150-6339**	2	SEAL	
C	18	1	**150-6346**	1	SEAL	
CM	19	1	**150-6348**	2	NUT (M10X1.25-THD)	
CM	20	1	**200-4856**	4	NUT (M8X1.25-THD)	
C	21	1	**454-6399**	1	SEAL-O-RING	

C - CHANGE FROM PREVIOUS TYPE
M - METRIC PART

310-0234 **VALVE GP-CONTROL (**contd.**)** **i06983837**

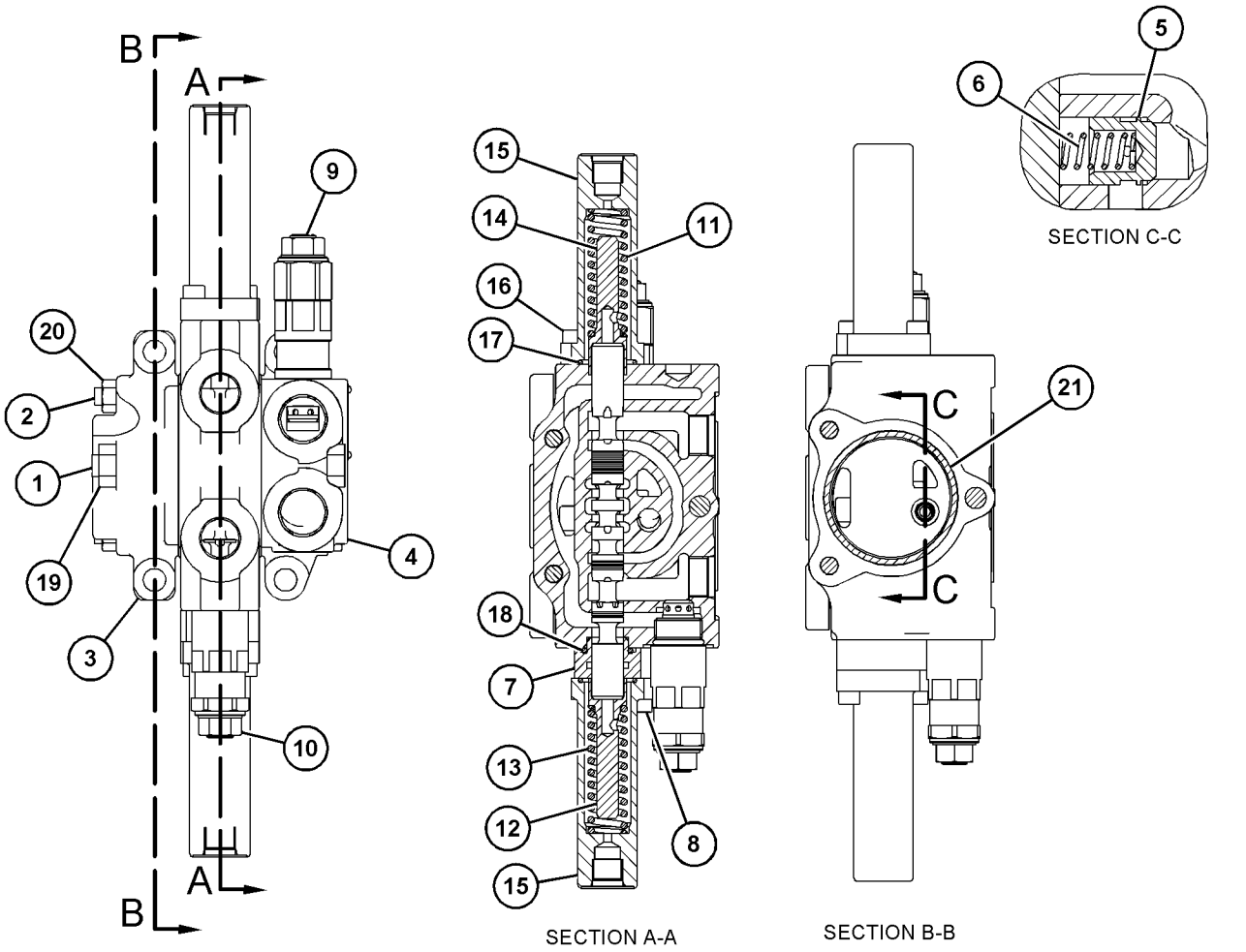

GRAPHIC #1

<END>

g06190265

270-5866 VALVE GP-MAIN CONTROL

S/N: DLP1-554

PART OF 270-5864 HYDRAULIC AR, 285-1750 VALVE & MTG GP-CONTROL

ALSO AN ATTACHMENT

SMCS-5051 **i02910161**

NOTE	REF NO	GRAPHIC REF	PART NUMBER	QTY	PART NAME 1 2 3 4 5 6 (PRODUCT LEVEL)	SEE PAGE
	1	3	**285-1507**	1	SPRING	
	2	3	**285-1506**	1	VALVE	
Y	3	4	**285-1504**	1	SPOOL GP-CONTROL VALVE (COMBINED FLOW)	772
	4	4	**285-1503**	2	COVER	
	5	3	**095-1579**	1	SEAL-O-RING	
M	6	1	**5A-3604**	24	BOLT-SOCKET HEAD (M8X1.25X25-MM)	
M	7	1	**197-0165**	20	BOLT (M8X1.25X20-MM)	
	8	2	**197-0167**	1	PLATE	
	9	2,3,4	**095-1578**	12	SEAL-O-RING	
	10	2,3,4	**095-1696**	8	SEAL-O-RING	
M	11	2	**085-9768**	5	BOLT (M14X2X40-MM)	
	12	2,3,4	**095-1698**	18	SEAL-O-RING	
	13	2,3,4	**197-0145**	13	PLUG	
	14	2,3,4	**095-1582**	13	SEAL-O-RING	
	15	2,4	**095-1585**	11	SEAL-O-RING	
	16	2,4	**197-0272**	8	PLUG	
M	17	2	**197-0143**	3	BOLT (M14X2X95-MM)	
	18	1,2	**3D-2824**	2	SEAL-O-RING	
	19	1,2	**9S-4183**	2	PLUG (1-1/16-12-THD)	
M	20	2	**197-0144**	13	BOLT (M14X2X130-MM)	
	21	2	**7I-7192**	2	PLUG	
	22	2	**215-4855**	2	VALVE AS-CHECK (MAKEUP)	
	23	2,3,4	**095-1700**	10	SEAL-O-RING	
	24	2,3,4	**197-0168**	10	COVER	
Y	25	1,2,3,4	**309-9973**	6	VALVE GP-RELIEF	841
	26	1,2,3,4	**7I-7208**	10	VALVE-LOAD CHECK	
	27	1,2,3,4	**7I-7207**	13	SPRING	
	28	1,2,3,4	**095-1586**	15	SEAL-O-RING	
	29	1,2,3,4	**7I-7206**	13	PLUG	
Y	30	2	**197-0213**	1	SPOOL GP-CONTROL VALVE (BUCKET)	770
	31	2,3,4	**7I-7204**	12	SEAL	
	32	2,3,4	**197-0170**	10	COVER	
Y	33	3	**310-0357**	1	SPOOL GP-CONTROL VALVE (STICK II)	778
	34	3	**197-0225**	2	PLUG AS	
Y	35	3	**197-0173**	1	SPOOL GP-CONTROL VALVE (WORK TOOL)	768
Y	36	3	**310-0117**	1	SPOOL GP-CONTROL VALVE (BOOM II)	777
	37	3,4	**131-5767**	2	PLUG	
	38	3,4	**105-7405**	2	SPRING	
	39	3,4	**131-5768**	2	VALVE-LOAD CHECK	
	40	1,3	**197-0169**	2	VALVE AS	
Y	41	3	**310-0115**	1	SPOOL GP-CONTROL VALVE (BOOM 1)	776
	42	3,4	**7I-7235**	2	PLUG	
	43	4	**3J-1907**	1	SEAL-O-RING	
	44	4	**9S-4191**	1	PLUG (9/16-18-THD)	
	45	4	**201-9271**	1	SPOOL AS	
	46	4	**103-8413**	1	ROD	

270-5866 **VALVE GP-MAIN CONTROL (**contd.**)** **i02910161**

NOTE	REF NO	GRAPHIC REF	PART NUMBER	QTY	PART NAME 1 2 3 4 5 6 (PRODUCT LEVEL)	SEE PAGE
	47	4	**103-8412**	1	SPRING	
	48	4	**103-8411**	1	SPRING	
	49	4	**197-0166**	1	PLUG	
	50	3,4	**7I-8084**	6	PLUG	
Y	51	4	**297-0235**	2	SPOOL GP-CONTROL VALVE (TRAVEL, RH, LH)	774
Y	52	4	**270-5978**	1	VALVE GP-RELIEF (MAIN)	839
	53	4	**095-0965**	2	PLUG	
	54	4	**7I-7241**	2	ORIFICE	
Y	55	4	**197-0217**	1	SPOOL GP-CONTROL VALVE (STICK REGENERATION)	771
Y	57	4	**285-1505**	1	SPOOL GP-CONTROL VALVE (SWING PRIORITY)	773
	58	4	**7I-7250**	1	VALVE-LOAD CHECK	
Y	59	4	**197-0211**	1	SPOOL GP-CONTROL VALVE (STICK I)	769
	60	3	**197-0146**	1	SPRING	
	61	3	**197-0147**	1	VALVE	
	63	3,4	**095-1592**	2	SEAL-O-RING	
	64	4	**215-4872**	2	VALVE	
	65	3	**170-9997**	1	PLUG	
Y	66	4	**310-0065**	1	SPOOL GP-CONTROL VALVE (SWING BOOM)	775

M - METRIC PART
Y - SEPARATE ILLUSTRATION

270-5866 **VALVE GP-MAIN CONTROL** (contd.) **i02910161**

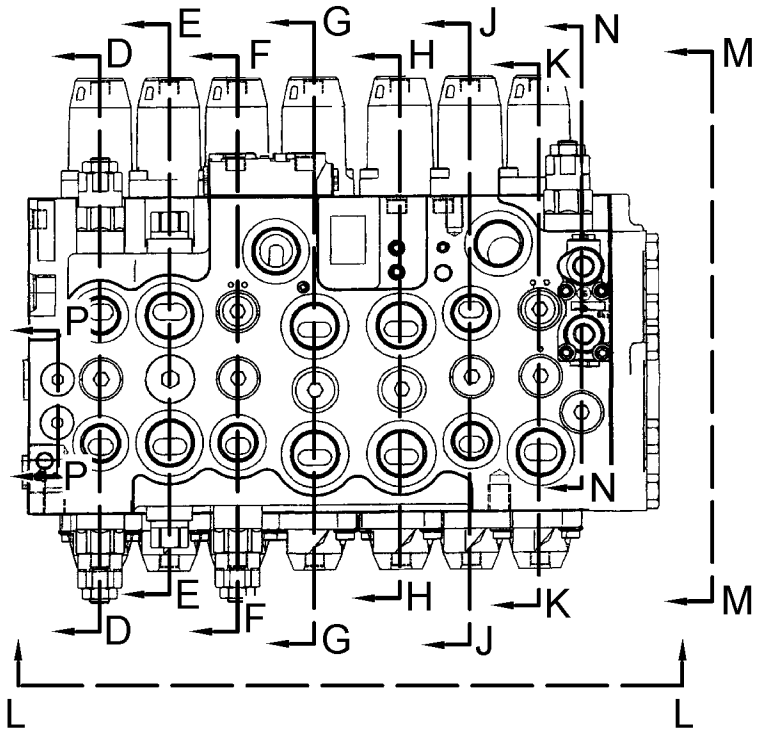

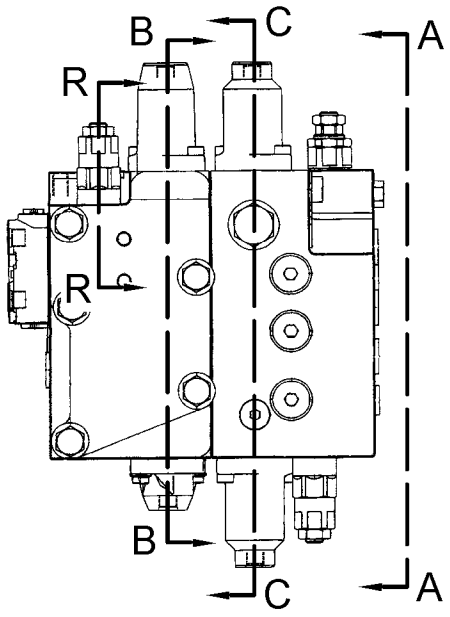

VIEW M-M

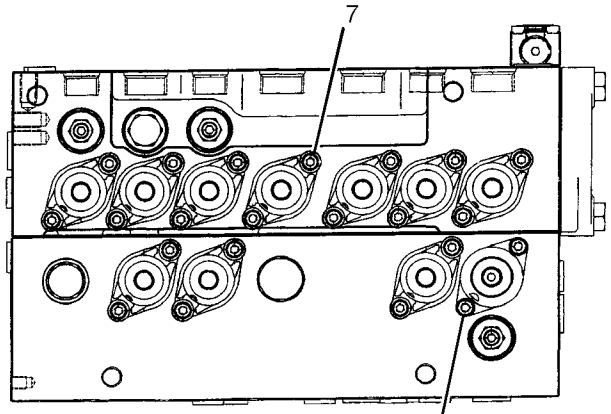

VIEW L-L

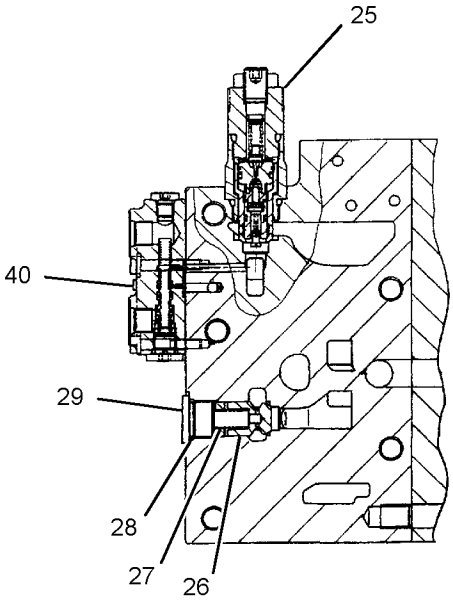

SECTION N-N

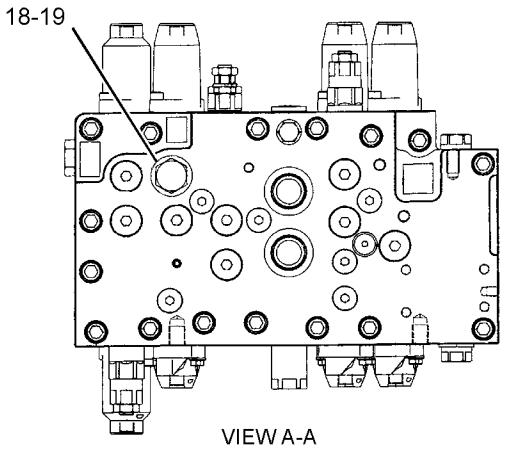

VIEW A-A

REFER TO ALL ILLUSTRATIONS OF THIS GROUP FOR AUXILIARY VIEWS

GRAPHIC #1

g01428833

270-5866 **VALVE GP-MAIN CONTROL (**contd.**)** **i02910161**

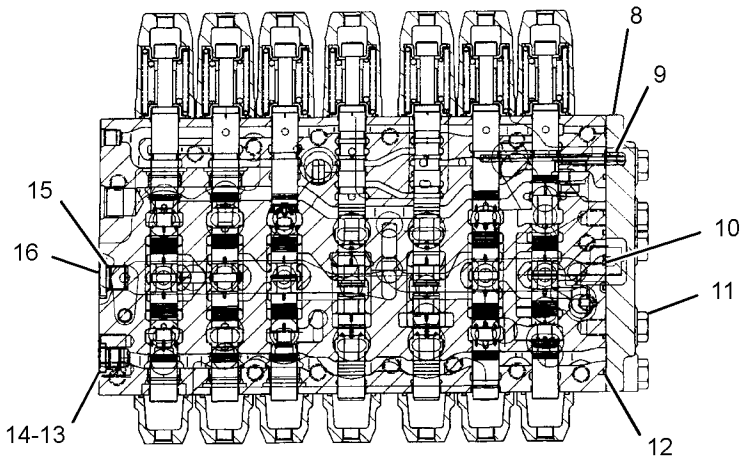

SECTION B-B

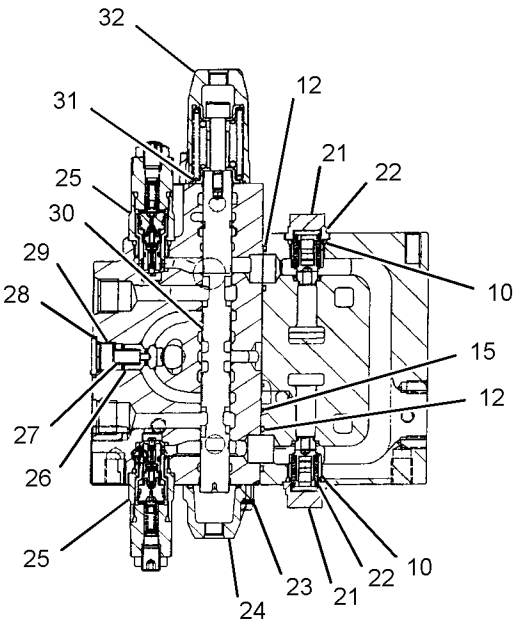

SECTION D-D

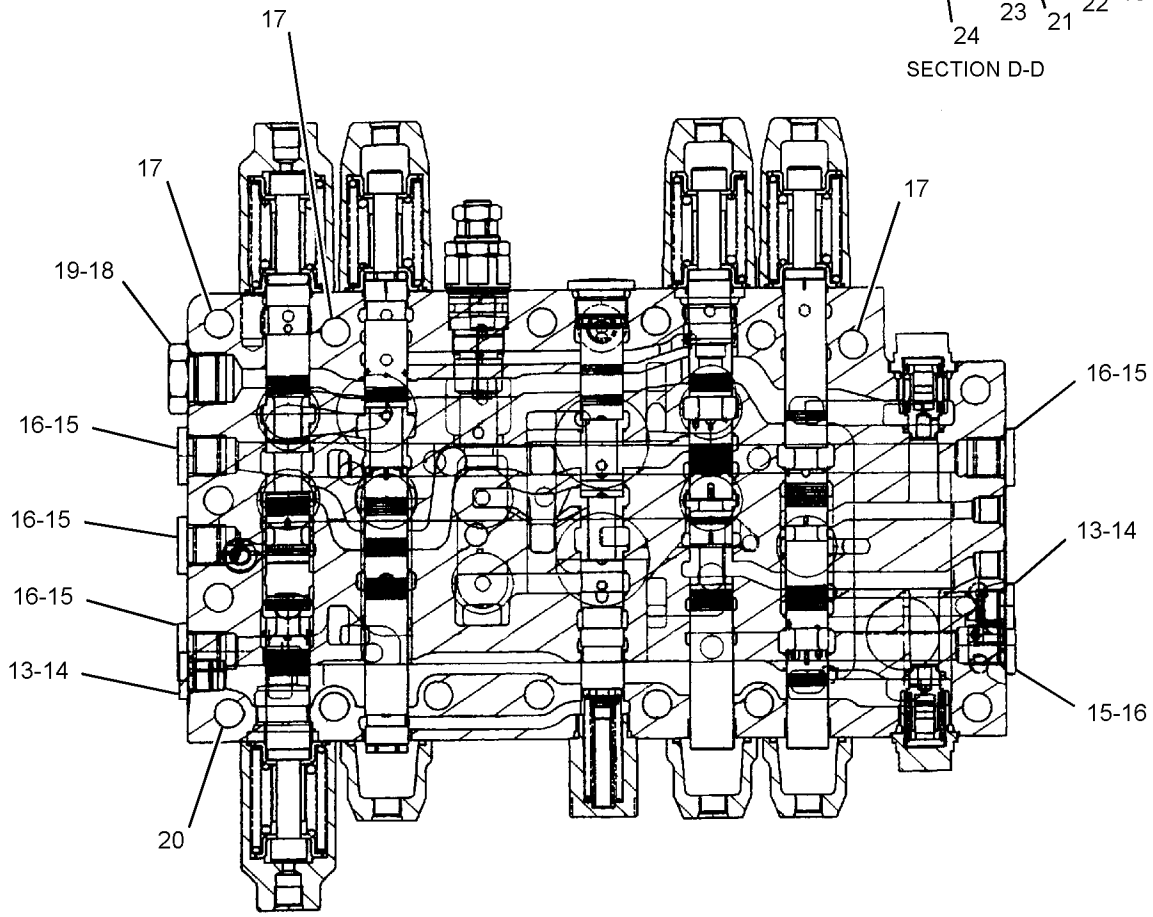

SECTION C-C

GRAPHIC #2 g01428835

270-5866 **VALVE GP-MAIN CONTROL** (contd.) **i02910161**

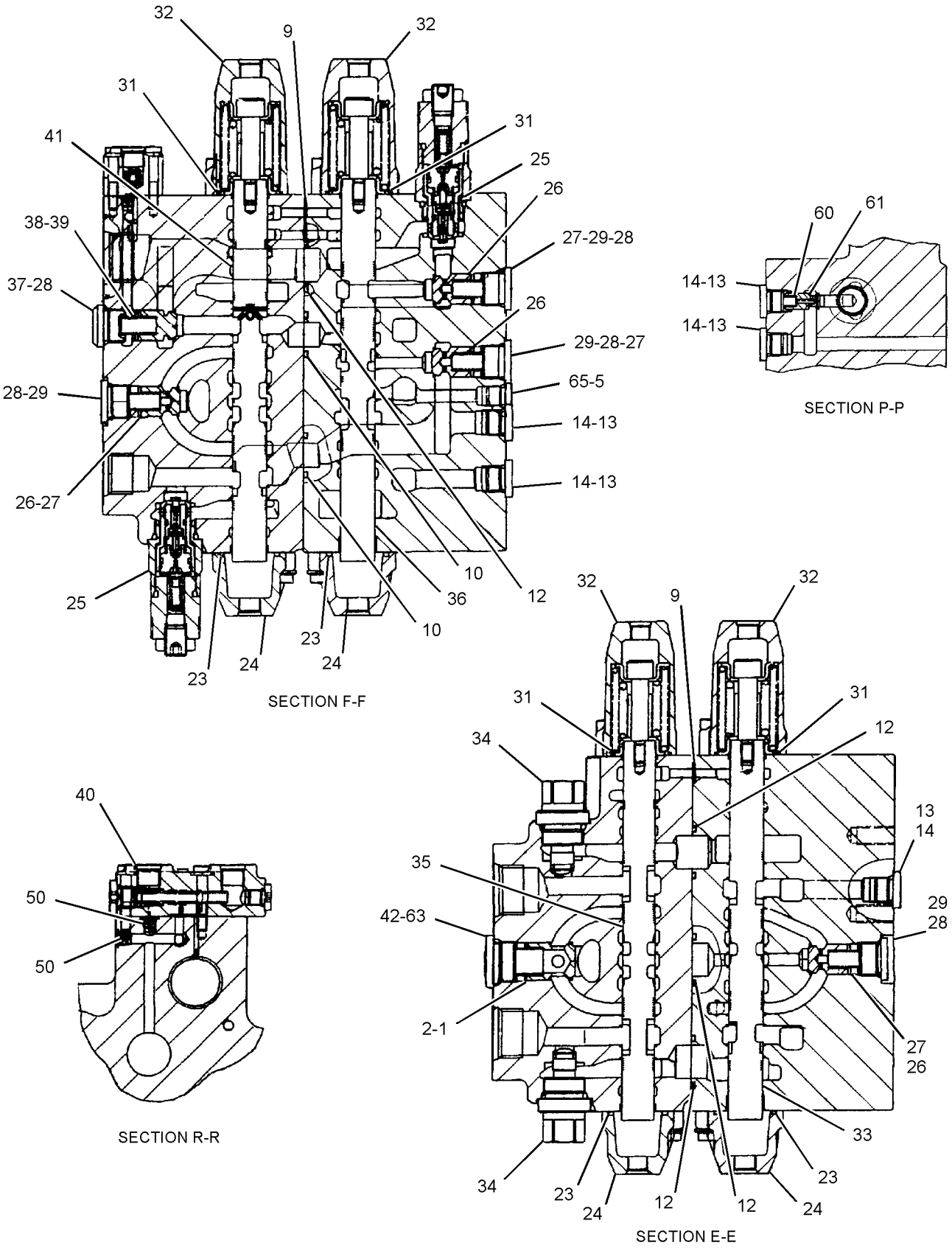

GRAPHIC #3

g01428838

270-5866 **VALVE GP-MAIN CONTROL (**contd.**)** **i02910161**

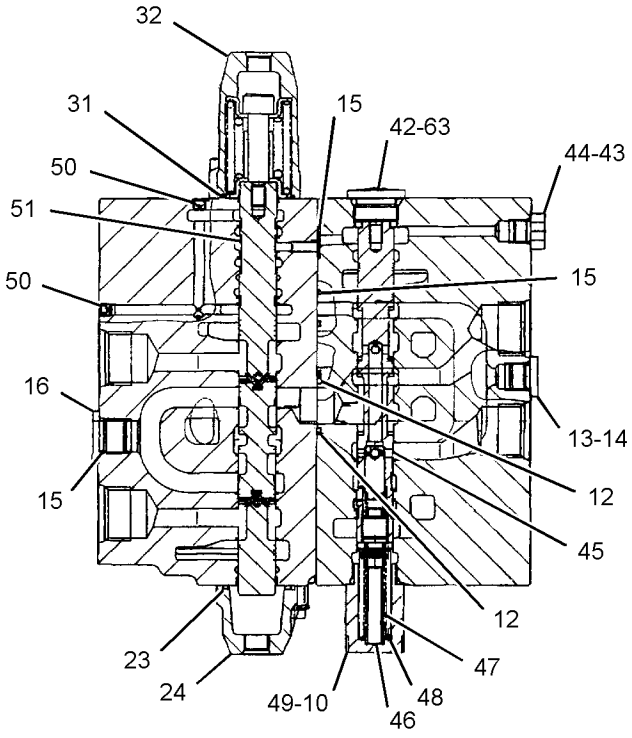

SECTION G-G

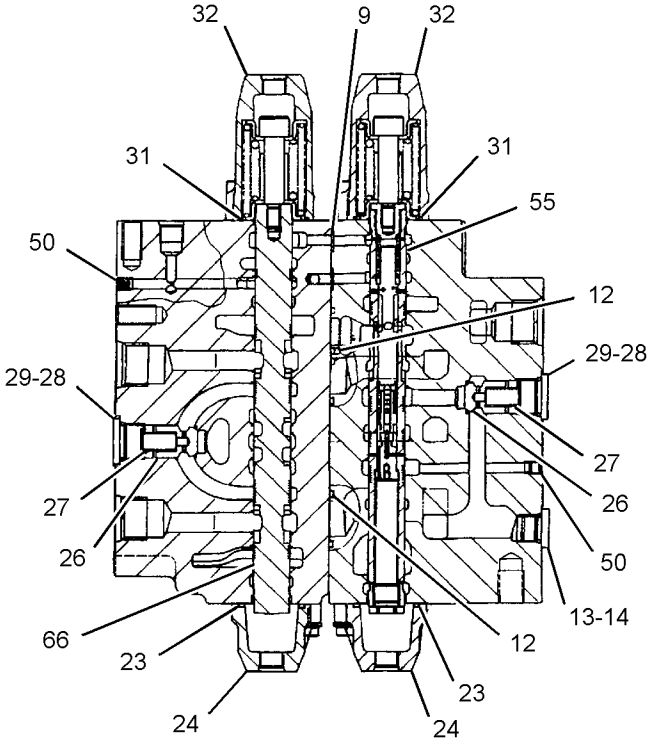

SECTION J-J

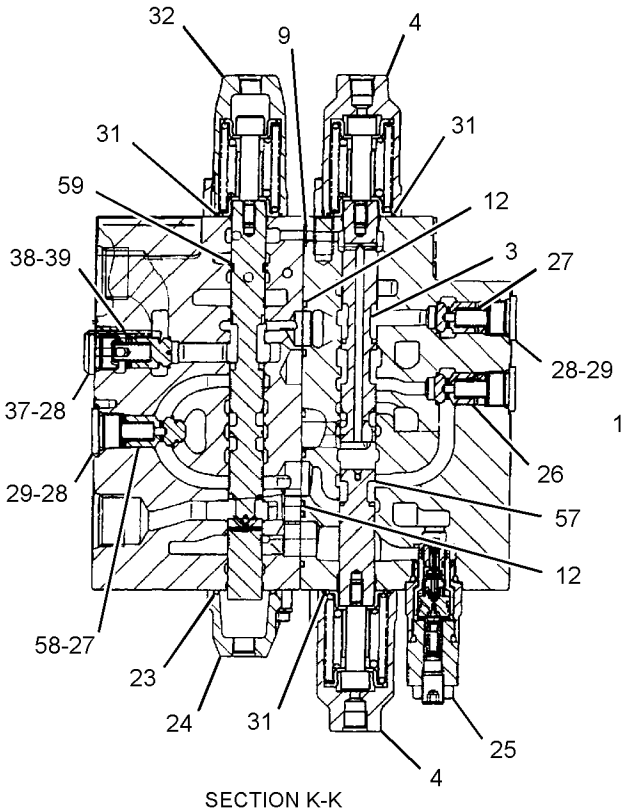

SECTION K-K

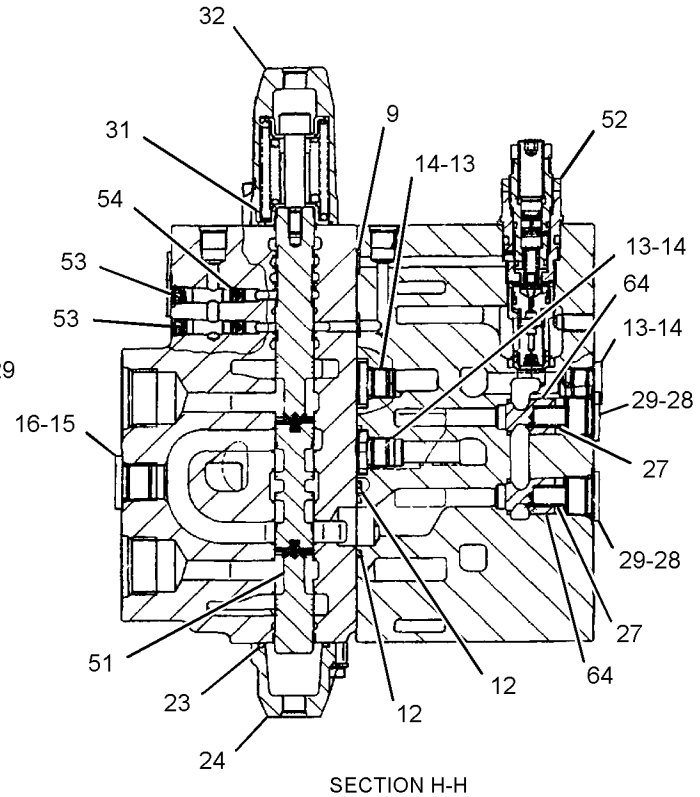

SECTION H-H

GRAPHIC #4 <END> g01442088

270-5866 VALVE GP-MAIN CONTROL

S/N: DLP554-UP

PART OF 270-5864 HYDRAULIC AR, 285-1750 VALVE & MTG GP-CONTROL

ALSO AN ATTACHMENT

SMCS-5051 **i04252151**

NOTE	REF NO	GRAPHIC REF	PART NUMBER	QTY	PART NAME 1 2 3 4 5 6 (PRODUCT LEVEL)	SEE PAGE
	1	3	**285-1507**	1	SPRING	
	2	3	**285-1506**	1	VALVE	
Y	3	4	**285-1504**	1	SPOOL GP-CONTROL VALVE (COMBINED FLOW)	772
	4	4	**285-1503**	2	COVER	
	5	3	**095-1579**	1	SEAL-O-RING	
M	6	1	**5A-3604**	24	BOLT-SOCKET HEAD (M8X1.25X25-MM)	
M	7	1	**197-0165**	20	BOLT (M8X1.25X20-MM)	
	8	2	**197-0167**	1	PLATE	
	9	2,3,4	**095-1578**	12	SEAL-O-RING	
	10	2,3,4	**095-1696**	8	SEAL-O-RING	
M	11	2	**085-9768**	5	BOLT (M14X2X40-MM)	
	12	2,3,4	**095-1698**	18	SEAL-O-RING	
	13	2,3,4	**197-0145**	13	PLUG	
	14	2,3,4	**095-1582**	13	SEAL-O-RING	
	15	2,4	**095-1585**	11	SEAL-O-RING	
	16	2,4	**197-0272**	8	PLUG	
M	17	2	**197-0143**	3	BOLT (M14X2X95-MM)	
	18	1,2	**3D-2824**	2	SEAL-O-RING	
	19	1,2	**9S-4183**	2	PLUG (1-1/16-12-THD)	
M	20	2	**197-0144**	13	BOLT (M14X2X130-MM)	
	21	2	**7I-7192**	2	PLUG	
	22	2	**215-4855**	2	VALVE AS-CHECK (MAKEUP)	
	23	2,3,4	**095-1700**	10	SEAL-O-RING	
	24	2,3,4	**197-0168**	10	COVER	
Y	25	1,2,3,4	**309-9973**	6	VALVE GP-RELIEF	841
	26	1,2,3,4	**7I-7208**	10	VALVE-LOAD CHECK	
	27	1,2,3,4	**7I-7207**	13	SPRING	
	28	1,2,3,4	**095-1586**	15	SEAL-O-RING	
	29	1,2,3,4	**7I-7206**	13	PLUG	
Y	30	2	**197-0213**	1	SPOOL GP-CONTROL VALVE (BUCKET)	770
	31	2,3,4	**7I-7204**	12	SEAL	
	32	2,3,4	**197-0170**	10	COVER	
Y	33	3	**310-0357**	1	SPOOL GP-CONTROL VALVE (STICK II)	778
	34	3	**197-0225**	2	PLUG AS	
Y	35	3	**197-0173**	1	SPOOL GP-CONTROL VALVE (WORK TOOL)	768
Y	36	3	**310-0117**	1	SPOOL GP-CONTROL VALVE (BOOM II)	777
	37	3,4	**131-5767**	2	PLUG	
	38	3,4	**105-7405**	2	SPRING	
	39	3,4	**131-5768**	2	VALVE-LOAD CHECK	
	40	1,3	**197-0169**	2	VALVE AS	
Y	41	3	**310-0115**	1	SPOOL GP-CONTROL VALVE (BOOM 1)	776
	42	3,4	**7I-7235**	2	PLUG	
	43	4	**3J-1907**	1	SEAL-O-RING	
	44	4	**9S-4191**	1	PLUG (9/16-18-THD)	
	45	4	**201-9271**	1	SPOOL AS	
	46	4	**103-8413**	1	ROD	

270-5866 **VALVE GP-MAIN CONTROL (**contd.**)** **i04252151**

NOTE	REF NO	GRAPHIC REF	PART NUMBER	QTY	PART NAME 1 2 3 4 5 6 (PRODUCT LEVEL)	SEE PAGE
	47	4	**103-8412**	1	SPRING	
	48	4	**103-8411**	1	SPRING	
	49	4	**197-0166**	1	PLUG	
	50	3,4	**7I-8084**	6	PLUG	
CY	51	4	**352-7197**	2	SPOOL GP-CONTROL VALVE (TRAVEL, RH, LH)	779
Y	52	4	**270-5978**	1	VALVE GP-RELIEF (MAIN)	839
	53	4	**095-0965**	2	PLUG	
	54	4	**7I-7241**	2	ORIFICE	
Y	55	4	**197-0217**	1	SPOOL GP-CONTROL VALVE (STICK REGENERATION)	771
Y	57	4	**285-1505**	1	SPOOL GP-CONTROL VALVE (SWING PRIORITY)	773
	58	4	**7I-7250**	1	VALVE-LOAD CHECK	
Y	59	4	**197-0211**	1	SPOOL GP-CONTROL VALVE (STICK I)	769
	60	3	**197-0146**	1	SPRING	
	61	3	**197-0147**	1	VALVE	
	63	3,4	**095-1592**	2	SEAL-O-RING	
	64	4	**215-4872**	2	VALVE	
	65	3	**170-9997**	1	PLUG	
Y	66	4	**310-0065**	1	SPOOL GP-CONTROL VALVE (SWING BOOM)	775

C - CHANGE FROM PREVIOUS TYPE
M - METRIC PART
Y - SEPARATE ILLUSTRATION

270-5866 **VALVE GP-MAIN CONTROL** (contd.) **i04252151**

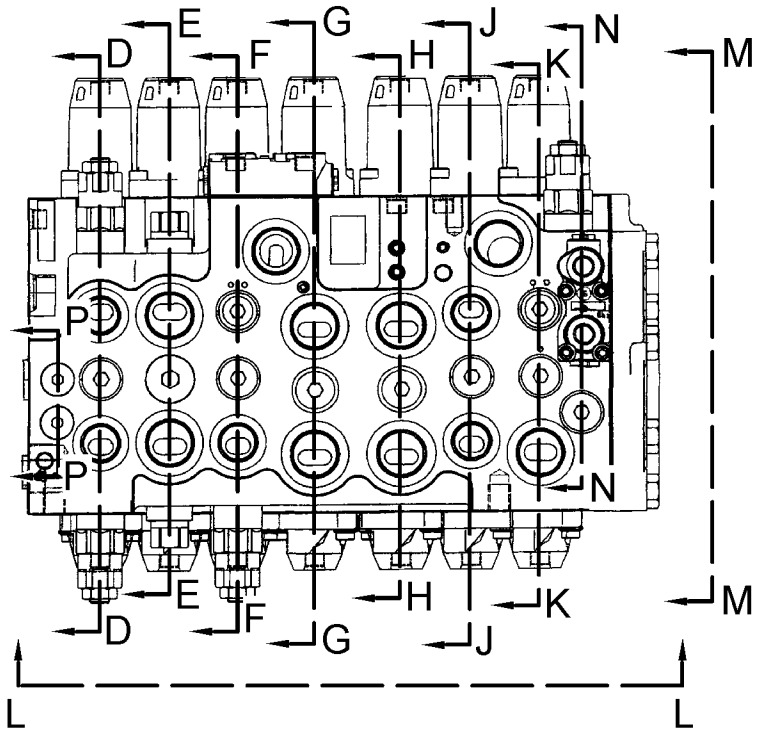

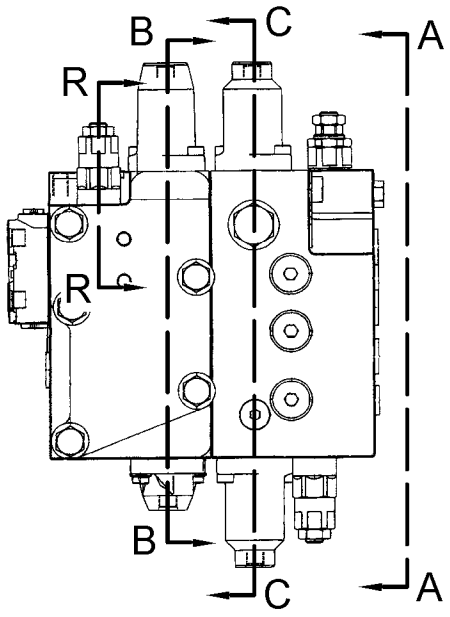

VIEW M-M

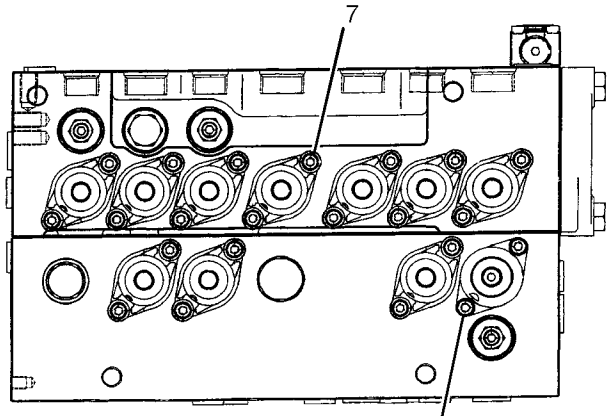

VIEW L-L

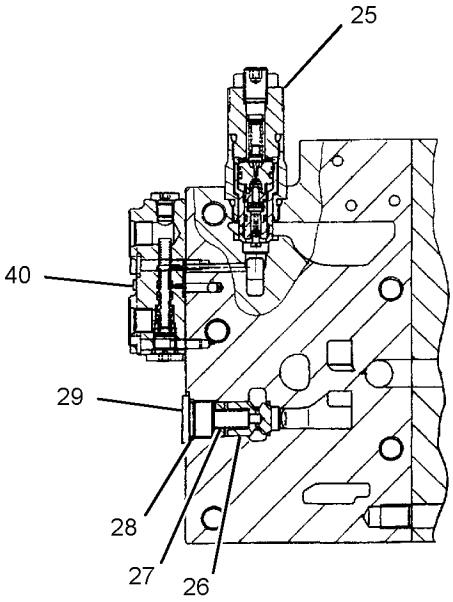

SECTION N-N

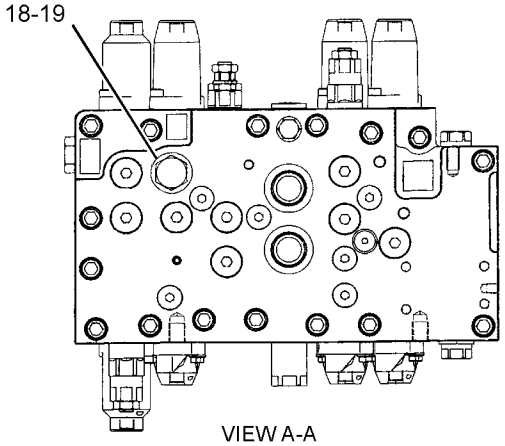

VIEW A-A

REFER TO ALL ILLUSTRATIONS OF THIS GROUP FOR AUXILIARY VIEWS

GRAPHIC #1

g01428833

270-5866 **VALVE GP-MAIN CONTROL (**contd.**)** **i04252151**

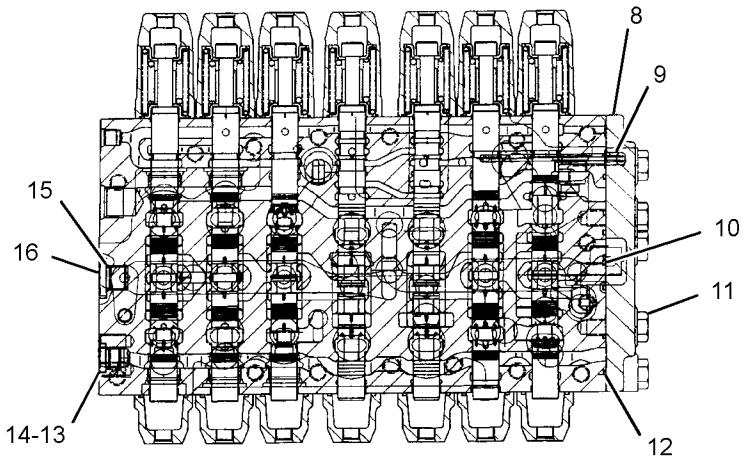

SECTION B-B

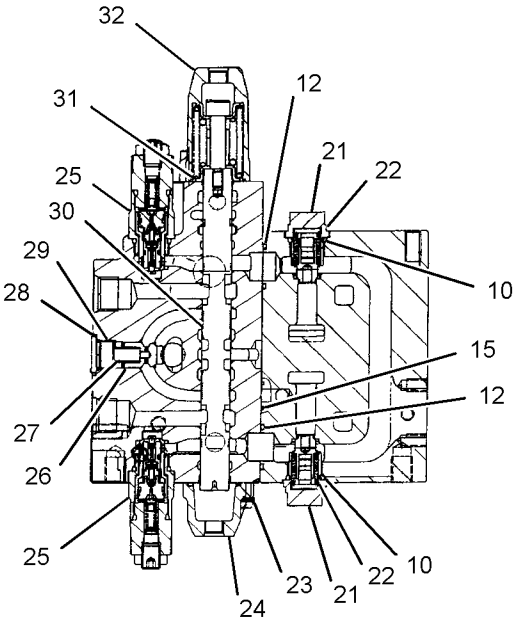

SECTION D-D

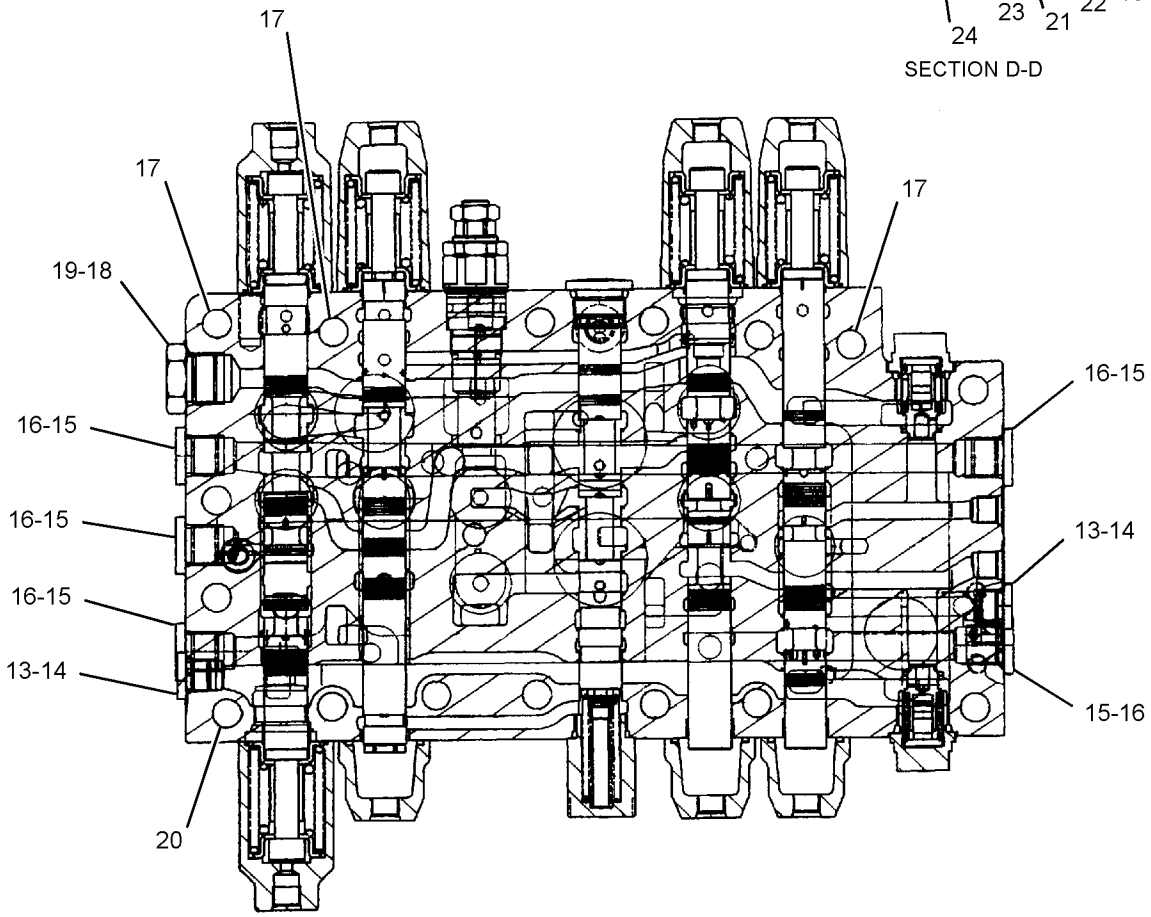

SECTION C-C

GRAPHIC #2 g01428835

270-5866 **VALVE GP-MAIN CONTROL** (contd.) **i04252151**

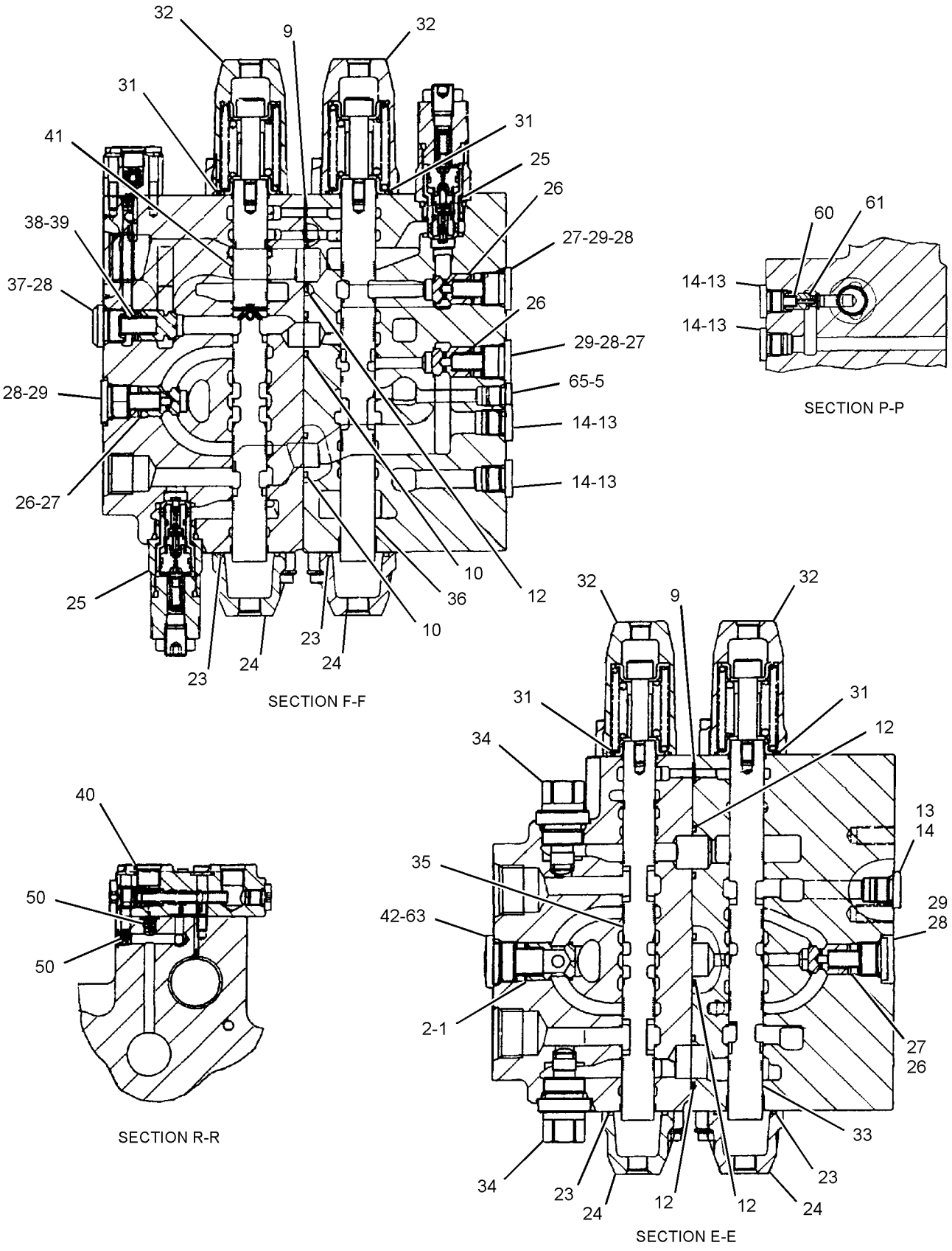

GRAPHIC #3

g01428838

270-5866 **VALVE GP-MAIN CONTROL (**contd.**)** **i04252151**

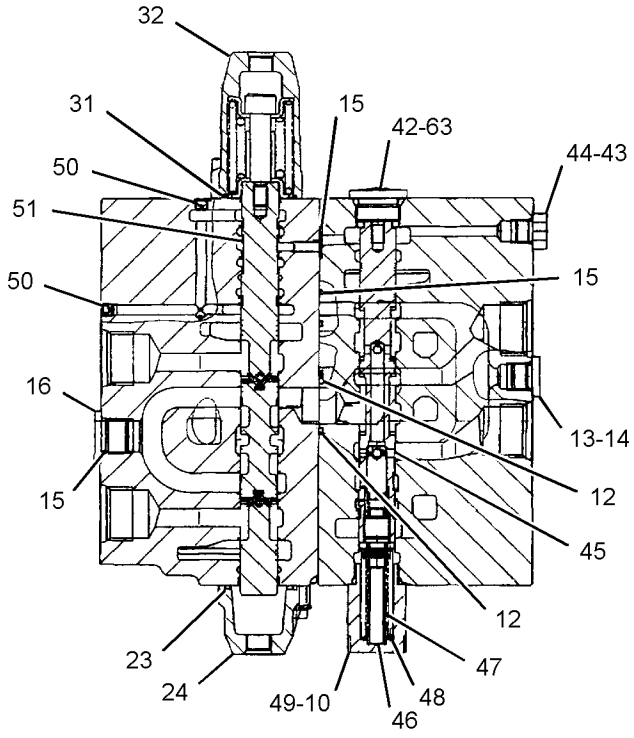

SECTION G-G

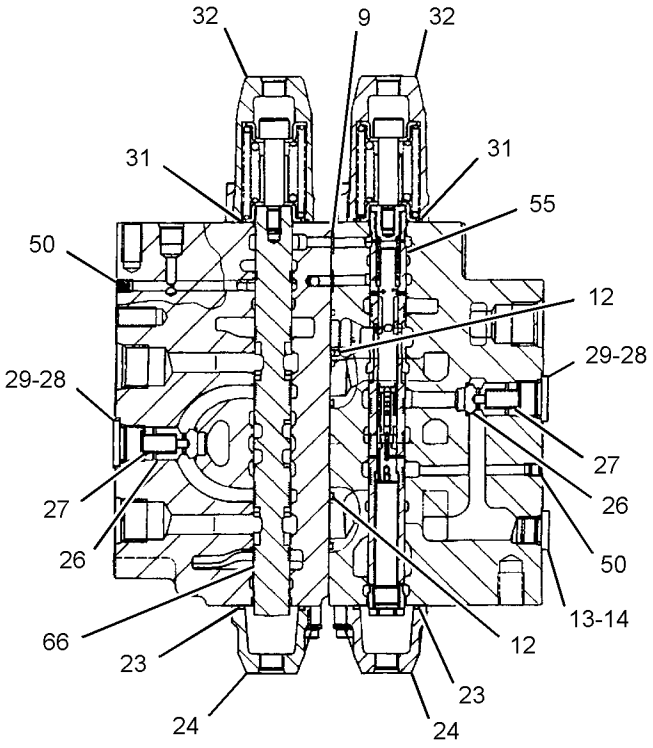

SECTION J-J

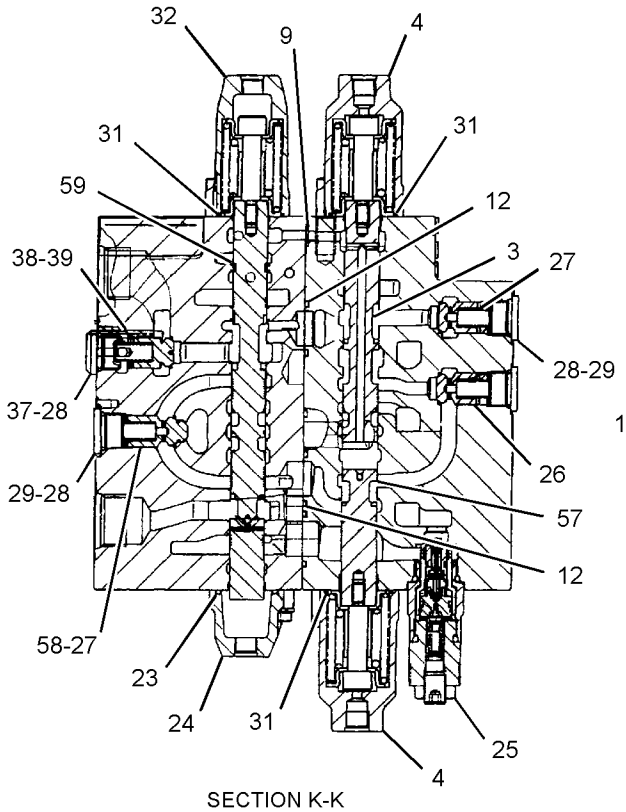

SECTION K-K

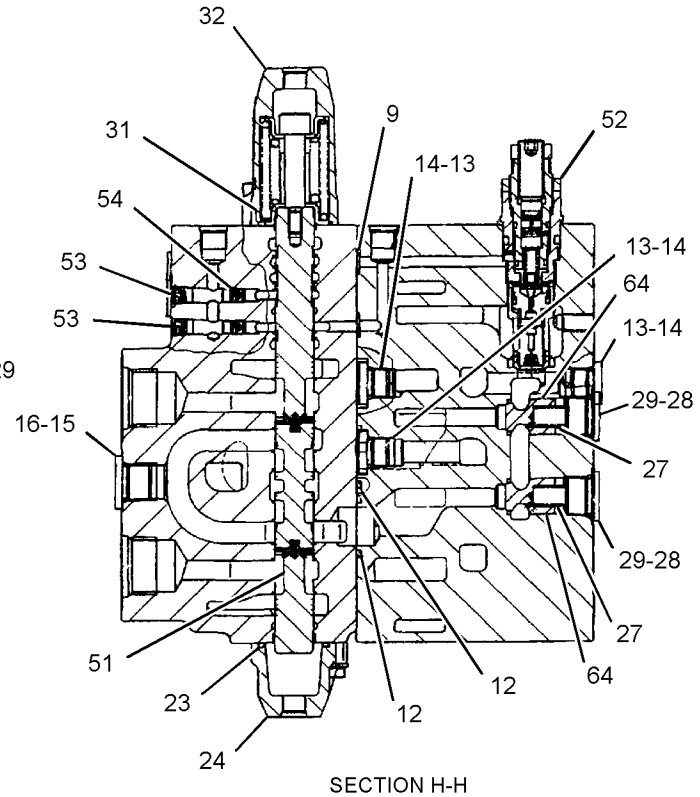

SECTION H-H

GRAPHIC #4 <END> g01442088

420-2241 VALVE GP-MAIN CONTROL

S/N: DLP1-UP

PART OF 420-2242 VALVE & MTG GP-CONTROL

AN ATTACHMENT

SMCS-5051 **i05907303**

NOTE	REF NO	GRAPHIC REF	PART NUMBER	QTY	PART NAME 1 2 3 4 5 6 (PRODUCT LEVEL)	SEE PAGE
	1	3	**285-1507**	1	SPRING	
	2	3	**285-1506**	1	VALVE	
Y	3	4	**285-1504**	1	SPOOL GP-CONTROL VALVE (COMBINED FLOW)	772
	4	4	**285-1503**	2	COVER	
	5	3	**095-1579**	1	SEAL-O-RING	
M	6	1	**5A-3604**	24	BOLT-SOCKET HEAD (M8X1.25X25-MM)	
M	7	1	**197-0165**	20	BOLT (M8X1.25X20-MM)	
	8	2	**197-0167**	1	PLATE	
	9	2,3,4	**095-1578**	12	SEAL-O-RING	
	10	2,3,4	**095-1696**	8	SEAL-O-RING	
M	11	2	**085-9768**	5	BOLT (M14X2X40-MM)	
	12	2,3,4	**095-1698**	18	SEAL-O-RING	
	13	2,3,4	**197-0145**	13	PLUG	
	14	2,3,4	**095-1582**	13	SEAL-O-RING	
	15	2,4	**095-1585**	11	SEAL-O-RING	
	16	2,4	**197-0272**	8	PLUG	
M	17	2	**197-0143**	3	BOLT (M14X2X95-MM)	
	18	1,2	**3D-2824**	2	SEAL-O-RING	
	19	1,2	**9S-4183**	2	PLUG (1-1/16-12-THD)	
M	20	2	**197-0144**	13	BOLT (M14X2X130-MM)	
	21	2	**7I-7192**	2	PLUG	
	22	2	**215-4855**	2	VALVE AS-CHECK (MAKEUP)	
	23	2,3,4	**095-1700**	10	SEAL-O-RING	
	24	2,3,4	**197-0168**	10	COVER	
Y	25	1,2,3,4	**309-9973**	6	VALVE GP-RELIEF	841
	26	1,2,3,4	**7I-7208**	10	VALVE-LOAD CHECK	
	27	1,2,3,4	**7I-7207**	13	SPRING	
	28	1,2,3,4	**095-1586**	15	SEAL-O-RING	
	29	1,2,3,4	**7I-7206**	13	PLUG	
Y	30	2	**197-0213**	1	SPOOL GP-CONTROL VALVE (BUCKET)	770
	31	2,3,4	**7I-7204**	12	SEAL	
	32	2,3,4	**197-0170**	10	COVER	
Y	33	3	**310-0357**	1	SPOOL GP-CONTROL VALVE (STICK II)	778
	34	3	**197-0225**	2	PLUG AS	
Y	35	3	**197-0173**	1	SPOOL GP-CONTROL VALVE (WORK TOOL)	768
Y	36	3	**369-8395**	1	SPOOL GP-CONTROL VALVE (BOOM II)	781
	37	3,4	**131-5767**	2	PLUG	
	38	3,4	**105-7405**	2	SPRING	
	39	3,4	**131-5768**	2	VALVE-LOAD CHECK	
	40	1,3	**197-0169**	2	VALVE AS	
Y	41	3	**369-8434**	1	SPOOL GP-CONTROL VALVE (BOOM I)	782
	42	3,4	**7I-7235**	2	PLUG	
	43	4	**3J-1907**	1	SEAL-O-RING	
	44	4	**9S-4191**	1	PLUG (9/16-18-THD)	
	45	4	**201-9271**	1	SPOOL AS	
	46	4	**103-8413**	1	ROD	

420-2241 **VALVE GP-MAIN CONTROL (**contd.**)** **i05907303**

NOTE	REF NO	GRAPHIC REF	PART NUMBER	QTY	PART NAME 1 2 3 4 5 6 (PRODUCT LEVEL)	SEE PAGE
	47	4	**103-8412**	1	SPRING	
	48	4	**103-8411**	1	SPRING	
	49	4	**197-0166**	1	PLUG	
	50	3,4	**7I-8084**	6	PLUG	
Y	51	4	**352-7197**	2	SPOOL GP-CONTROL VALVE (TRAVEL, RH, LH)	779
Y	52	4	**270-5978**	1	VALVE GP-RELIEF (MAIN)	839
	53	4	**095-0965**	2	PLUG	
	54	4	**7I-7241**	2	ORIFICE	
Y	55	4	**197-0217**	1	SPOOL GP-CONTROL VALVE (STICK REGENERATION)	771
Y	57	4	**285-1505**	1	SPOOL GP-CONTROL VALVE (SWING PRIORITY)	773
	58	4	**7I-7250**	1	VALVE-LOAD CHECK	
Y	59	4	**369-8394**	1	SPOOL GP-CONTROL VALVE (STICK I)	780
	60	3	**197-0146**	1	SPRING	
	61	3	**197-0147**	1	VALVE	
	63	3,4	**095-1592**	2	SEAL-O-RING	
	64	4	**215-4872**	2	VALVE	
	65	3	**170-9997**	1	PLUG	
Y	66	4	**310-0065**	1	SPOOL GP-CONTROL VALVE (SWING BOOM)	775

M - METRIC PART
Y - SEPARATE ILLUSTRATION

420-2241 **VALVE GP-MAIN CONTROL** (contd.) **i05907303**

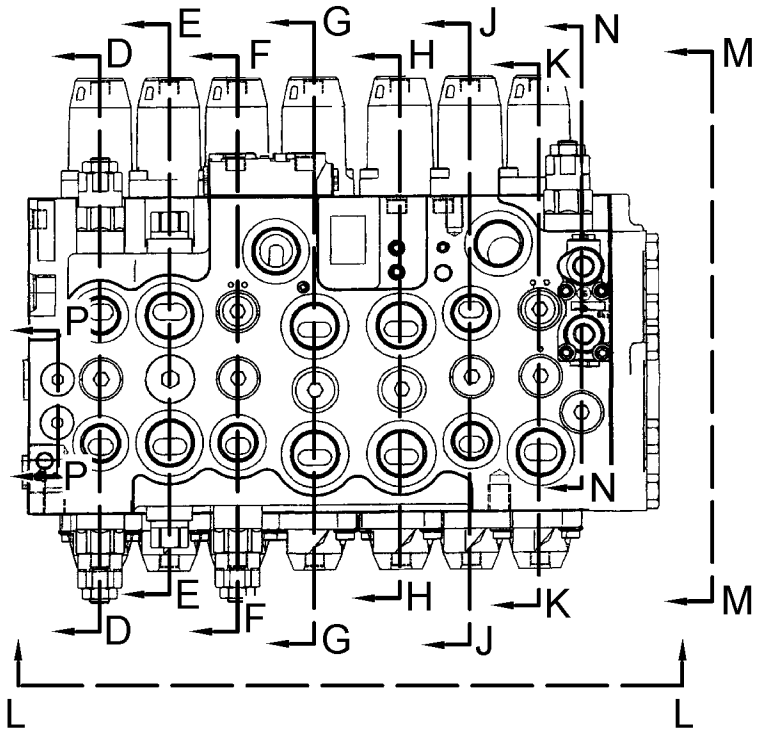

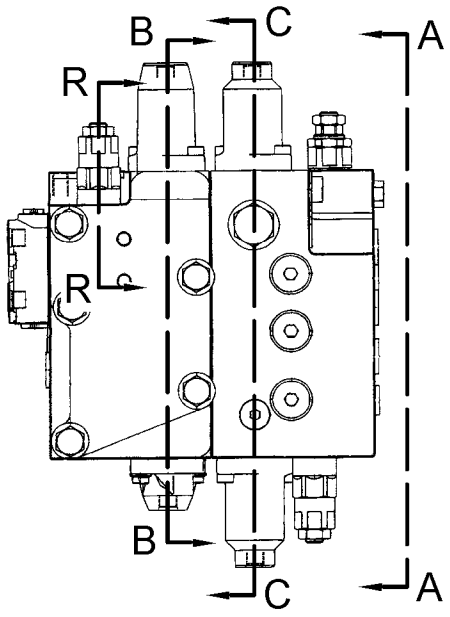

VIEW M-M

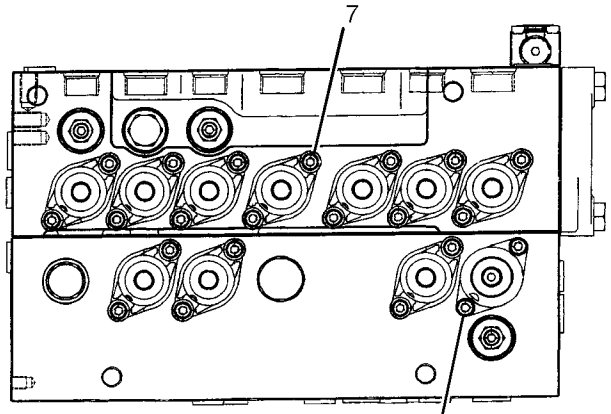

VIEW L-L

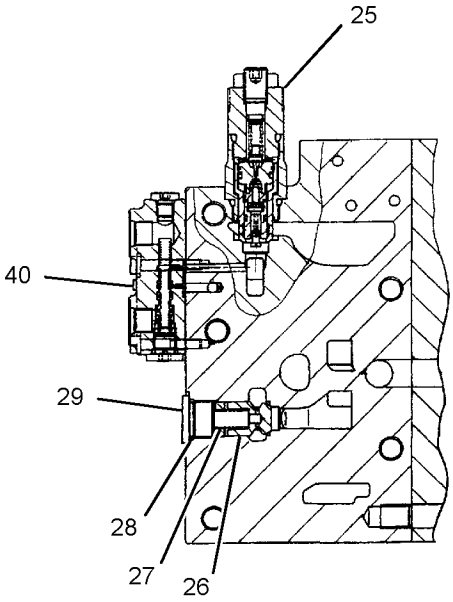

SECTION N-N

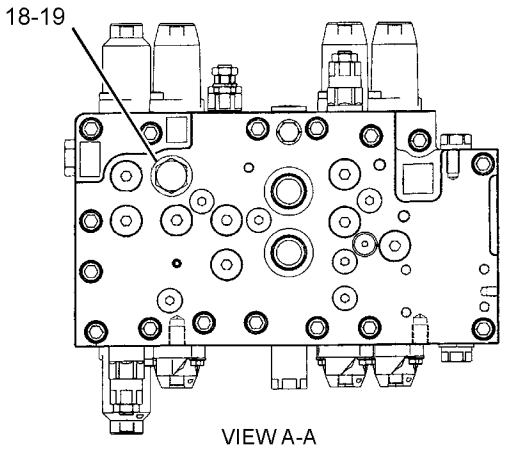

VIEW A-A

REFER TO ALL ILLUSTRATIONS OF THIS GROUP FOR AUXILIARY VIEWS

GRAPHIC #1

g01428833

420-2241 **VALVE GP-MAIN CONTROL (**contd.**)** **i05907303**

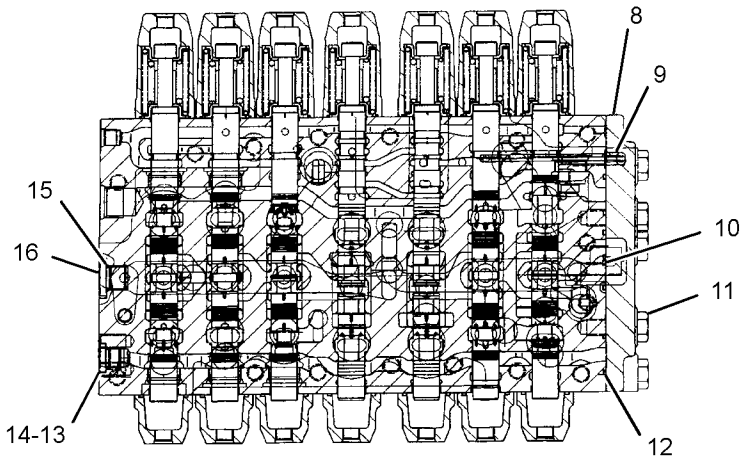

SECTION B-B

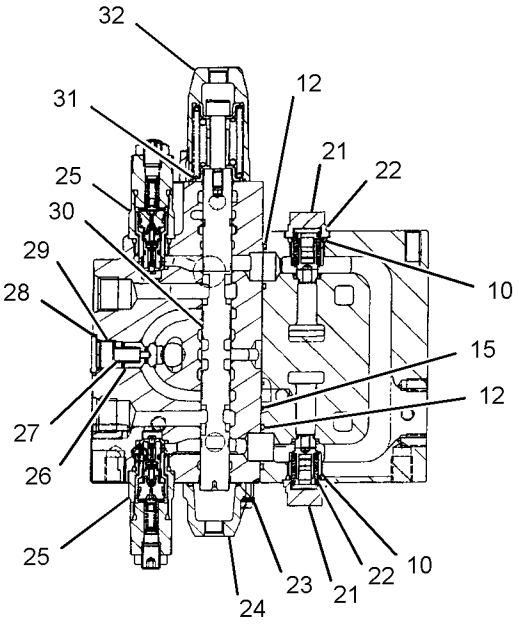

SECTION D-D

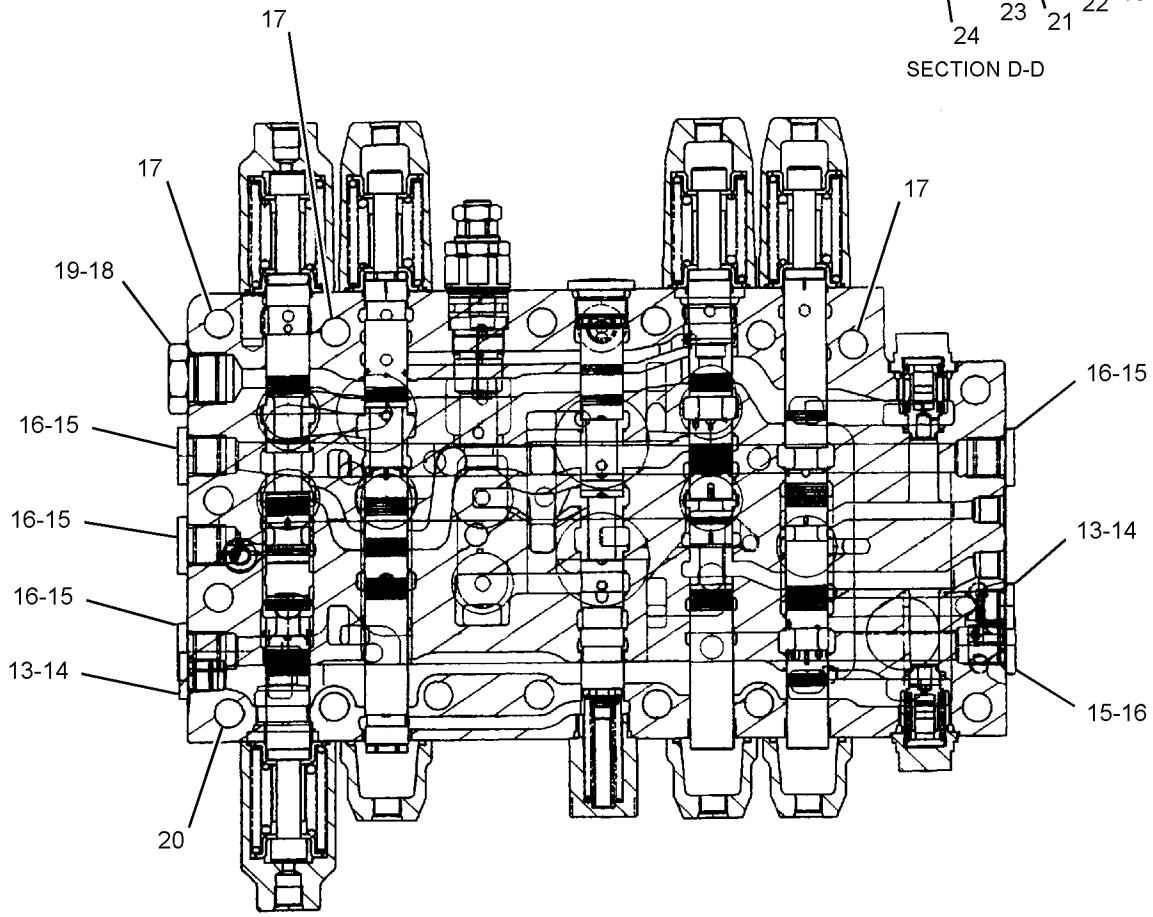

SECTION C-C

GRAPHIC #2 g01428835

420-2241 **VALVE GP-MAIN CONTROL (**contd.**)** **i05907303**

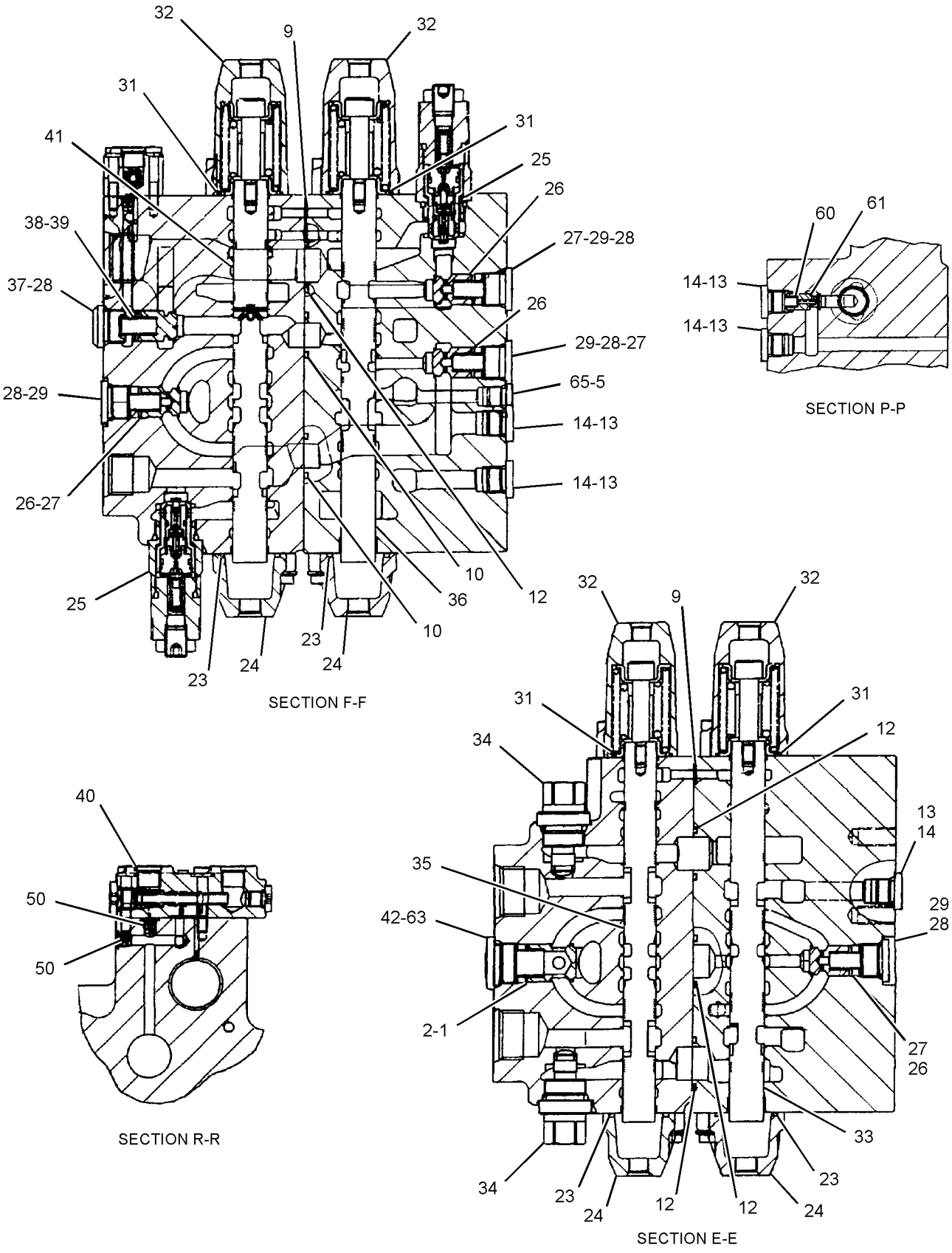

GRAPHIC #3

g01428838

420-2241 **VALVE GP-MAIN CONTROL (**contd.**)** **i05907303**

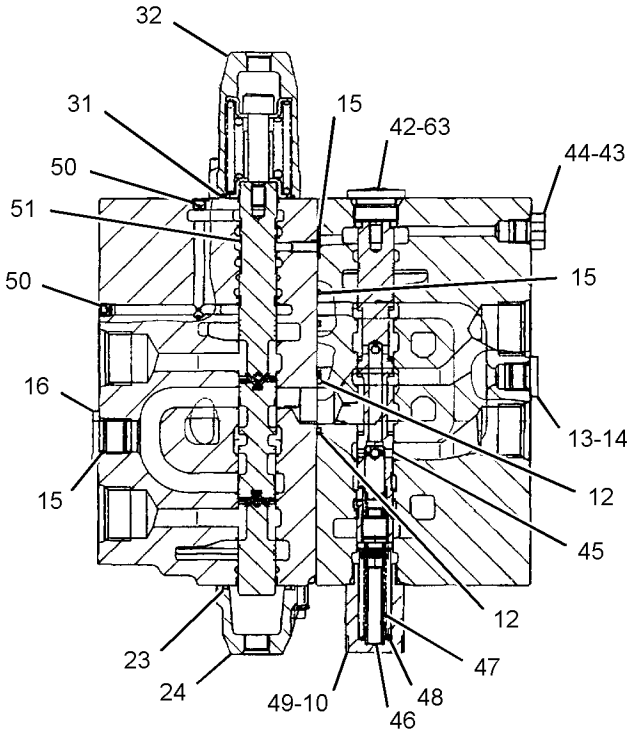

SECTION G-G

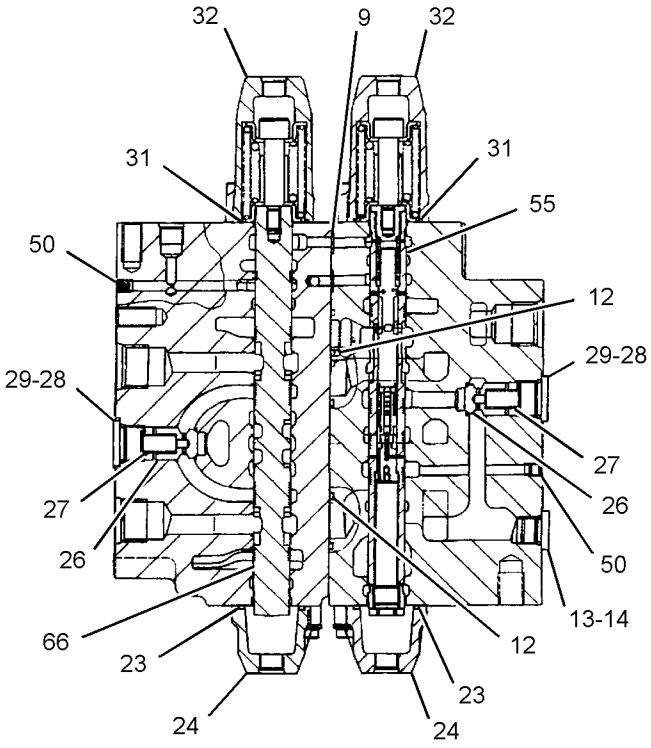

SECTION J-J

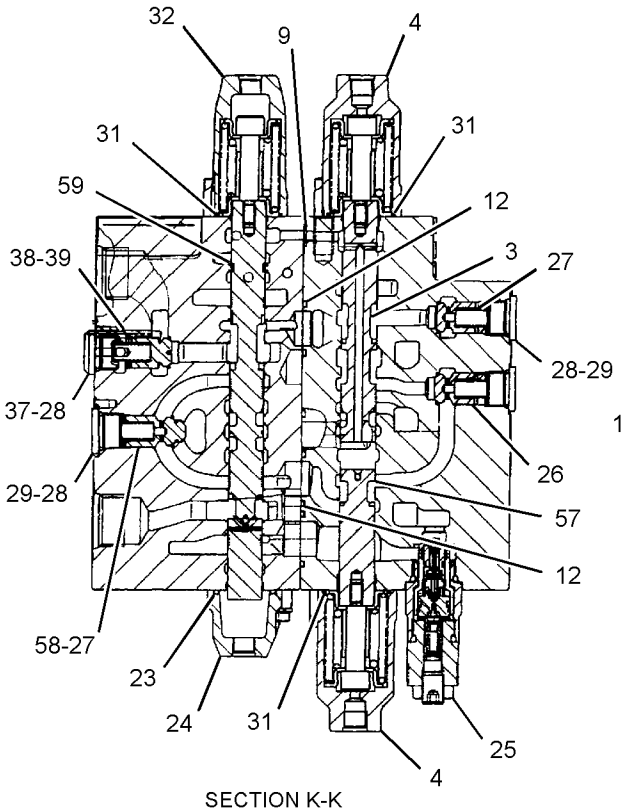

SECTION K-K

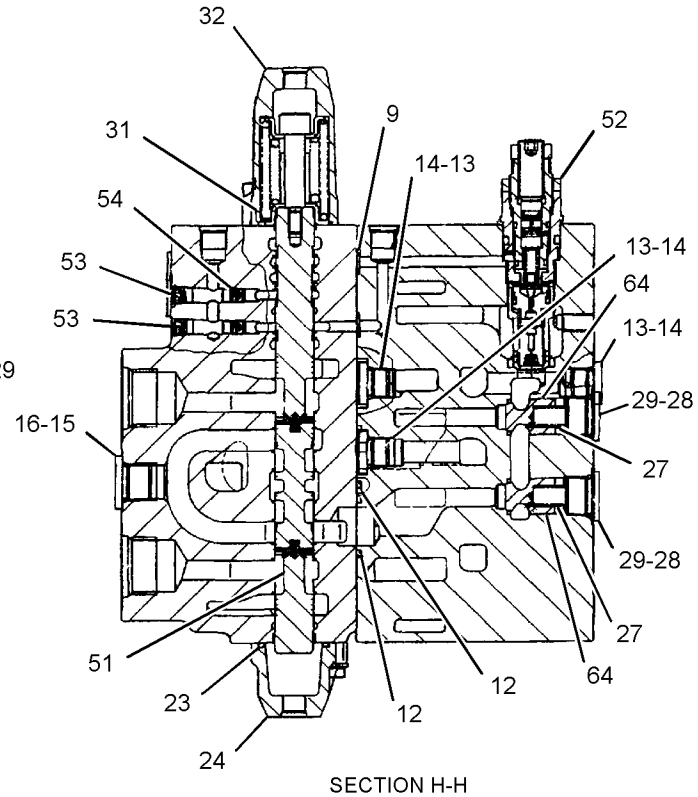

SECTION H-H

GRAPHIC #4 <END> g01442088

282-5894 VALVE GP-MANUAL–AUXILIARY, SHUTOFF

S/N: DLP1-UP

PART OF 288-7398 LINES GP-AUXILIARY HYDRAULIC

AN ATTACHMENT

SMCS-1329, 5001, 5130

i06581514

NOTE	REF NO	GRAPHIC REF	PART NUMBER	QTY	PART NAME 1 2 3 4 5 6 (PRODUCT LEVEL)	SEE PAGE
	1	1	**302-9466**	1	HANDLE	

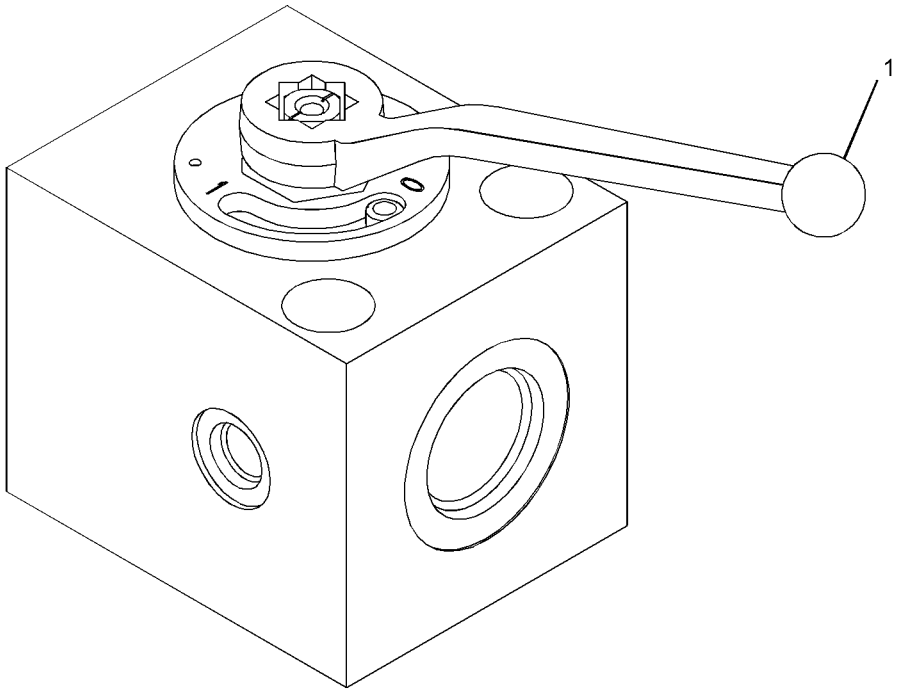

GRAPHIC #1 <END> g06033422

190-7695 VALVE GP-PILOT

S/N: DLP1-UP
PART OF 316-8851 CONTROL GP-BLADE
AN ATTACHMENT

SMCS-5059 **i02070449**

NOTE	REF NO	GRAPHIC REF	PART NUMBER	QTY	PART NAME 1 2 3 4 5 6 (PRODUCT LEVEL)	SEE PAGE
	1	1	**197-0758**	2	SCREW	
M	2	1	**9X-2537**	2	BOLT-SOCKET HEAD (M6X1X70-MM)	
	3	1	**198-8160**	1	COLLAR	
	4	1	**198-8165**	1	BOLT	
	5	1	**206-3290**	1	COVER AS	
	6	1	**198-8162**	2	HOLDER	
	7	1	**198-8168**	2	BALL	
	8	1	**206-3288**	1	PLATE	
M	9	1	**8T-1158**	2	BOLT-SOCKET HEAD (M8X1.25X20-MM)	
	10	1	**204-1974**	1	PIN	
	11	1	**204-1976**	1	LEVER AS	
M	12	1	**095-1260**	1	SETSCREW-SOCKET (M6X1X6-MM)	
	13	1	**198-8156**	1	BOOT	
	14	1	**198-7543**	2	GUIDE	
	15	1	**198-8167**	2	NUT	
	16	1	**198-8154**	2	SPRING	
	17	1	**198-8153**	2	SCREW	
	18	1	**198-8176**	2	ROD AS	
	19	1	**095-1578**	2	SEAL-O-RING	
	20	1	**198-8159**	2	SLEEVE	
	21	1	**095-1585**	2	SEAL-O-RING	
	22	1	**096-4535**	2	SLEEVE	
	23	1	**6I-6911**	2	SHIM	
	24	1	**6I-6912**	2	SHIM	
	25	1	**096-4543**	1	BOLT	
	26	1	**201-9394**	2	SPRING	
	27	1	**099-0361**	2	SHIM	
	28	1	**132-9046**	2	SHIM (0.1-MM THK)	
	29	1	**215-4893**	1	BODY AS	
	30	1	**198-8178**	1	BALL	
	31	1	**7I-2753**	1	SEAT	
	32	1	**102-0818**	3	PLUG	
	33	1	**3J-1907**	3	SEAL-O-RING	
	34	1	**198-8166**	2	WASHER	
	35	1	**198-8161**	2	SPRING	

M - METRIC PART

190-7695 **VALVE GP-PILOT** (contd.) **i02070449**

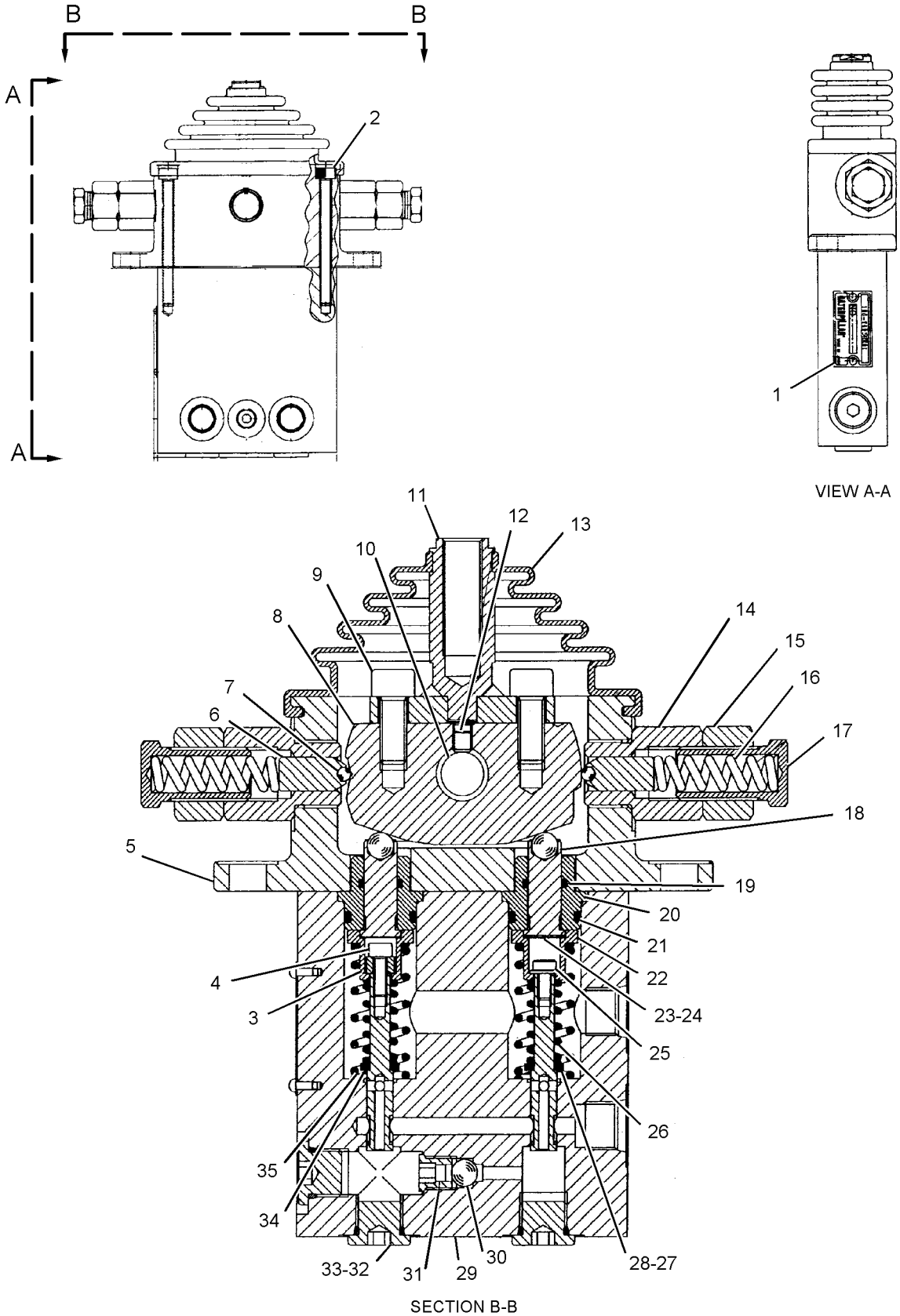

SECTION B-B
<END>

GRAPHIC #1 g01079515

270-5948 VALVE GP-PILOT–TRAVEL

S/N: DLP1-185

PART OF 278-6672 LINES GP-PILOT

SMCS-5059 **i02696671**

NOTE	REF NO	GRAPHIC REF	PART NUMBER	QTY	PART NAME 1 2 3 4 5 6 (PRODUCT LEVEL)	SEE PAGE
	1	1	**270-5950**	4	SPRING	
	2	1	**131-5818**	4	SPRING	
	3	1	**095-0936**	4	RING-RETAINING	
	4	1	**126-1865**	4	SPRING	
	5	1	**126-1866**	4	SPRING	
	6	1	**270-5949**	4	PISTON	
	7	1	**6V-8400**	4	SEAL-O-RING	
	8	1	**165-9463**	2	COVER	
	9	1	**165-9554**	4	PLUG	
	10	1	**119-5389**	4	PACKING	
	11	1	**165-9552**	4	PUSHROD	
M	12	1	**8T-4133**	4	NUT (M10X1.5-THD)	
M	13	1	**087-4710**	4	SETSCREW (M10X21-MM)	
	14	1	**147-4131**	2	BOOT-PROTECTION	
	15	1	**087-5708**	2	PEDAL	
M	16	1	**8T-0343**	2	BOLT-SOCKET HEAD (M12X1.75X55-MM)	
	17	1	**119-5388**	4	CAP	
	18	1	**165-9553**	1	COVER	
	19	1	**119-5391**	4	SEAT	
	20	1	**153-5223**	12	BALL	
	21	1	**119-5392**	4	BUSHING	
	22	1	**165-9551**	4	SEAT	
	24	1	**099-6137**	4	WASHER (6.1X9X0.2-MM THK)	
	25	1	**099-6141**	4	WASHER (6.1X11X1.5-MM THK)	
	26	1	**099-6145**	2	CAMSHAFT	
	27	1	**099-6144**	4	BUSHING-TERMINAL	
M	28	1	**095-1260**	2	SETSCREW-SOCKET (M6X1X6-MM)	
M	29	1	**8T-1158**	2	BOLT-SOCKET HEAD (M8X1.25X20-MM)	
	30	1	**8T-6759**	2	PLUG-PIPE	

M - METRIC PART

270-5948 **VALVE GP-PILOT (**contd.**)** **i02696671**

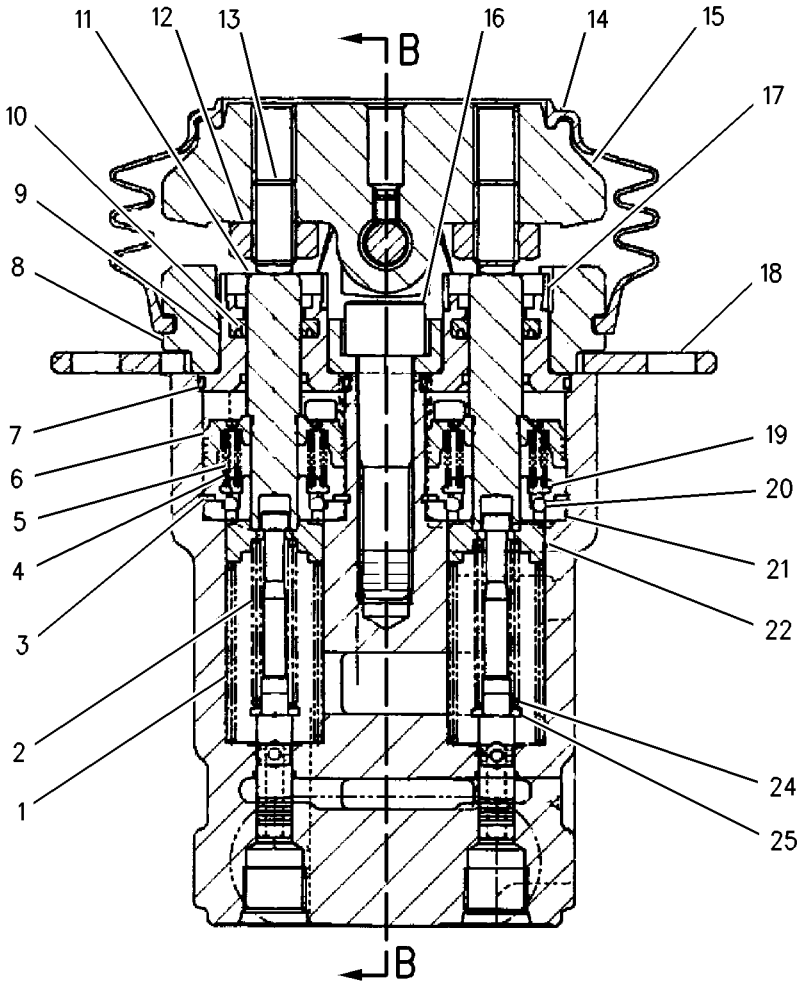

SECTION A-A

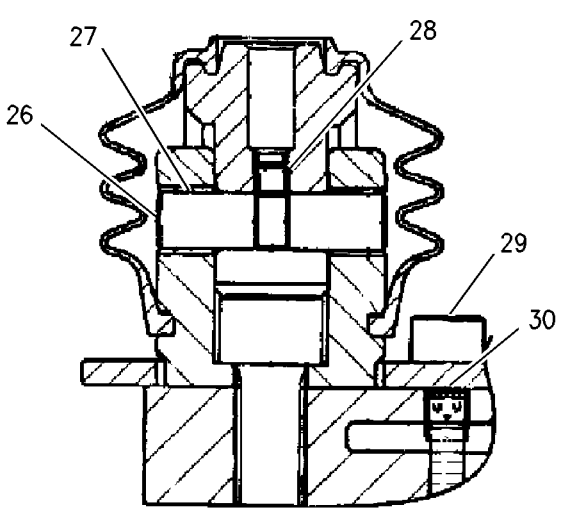

SECTION B-B

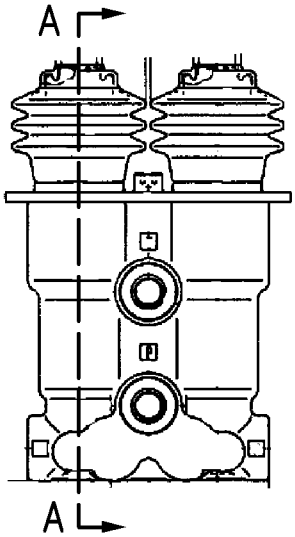

GRAPHIC #1 <END> g00857024

297-0529 VALVE GP-PILOT–JOYSTICK

S/N: DLP1-UP

PART OF 297-0532, 297-0533 CONTROL GP-JOYSTICK

AN ATTACHMENT

SMCS-5059 **i03017531**

NOTE	REF NO	GRAPHIC REF	PART NUMBER	QTY	PART NAME 1 2 3 4 5 6 (PRODUCT LEVEL)	SEE PAGE
	1	1	**270-5953**	4	SPRING	
	2	1	**095-1586**	4	SEAL-O-RING	
	3	1	**4I-6365**	1	JOINT	
	4	1	**094-0876**	4	SEAL	
	5	1	**096-1628**	4	PLUG	
B	6	1	**099-6137**	4	WASHER (6.1X9X0.2-MM THK)	
	7	1	**118-4086**	4	ROD	
	8	1	**118-4087**	4	SPRING	
M	9	1	**131-5915**	1	NUT-SPECIAL	
	10	1	**165-9431**	1	PLATE	
	11	1	**165-9435**	2	SEAT	
	12	1	**165-9436**	2	SEAT	
	13	1	**165-9438**	1	PLATE	
	14	1	**165-9442**	2	SPRING	
	15	1	**165-9443**	2	SEAT-SPRING	
	16	1	**165-9444**	2	SEAT-SPRING	
	17	1	**165-9460**	2	SPRING	
	18	1	**171-0087**	1	BELLOWS	

PARTS SHOWN IN GRAPHIC(S) WITHOUT A REFERENCE NUMBER ARE NOT SERVICED SEPARATELY

B - USE AS REQUIRED
M - METRIC PART

297-0529 **VALVE GP-PILOT (**contd.**)** **i03017531**

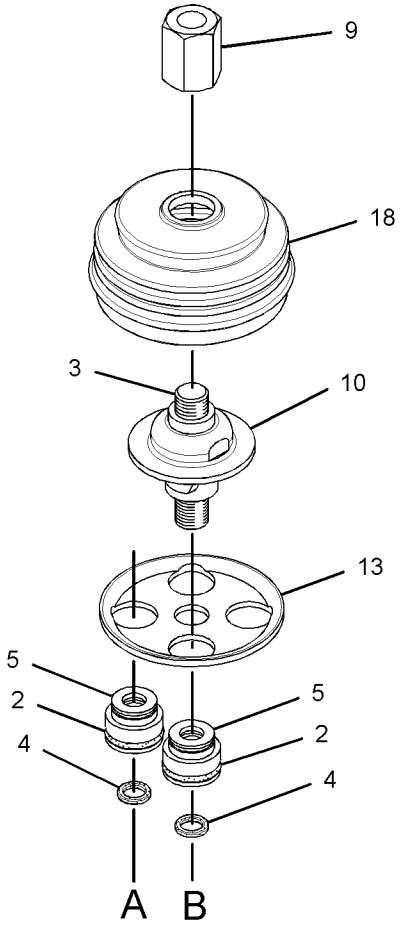

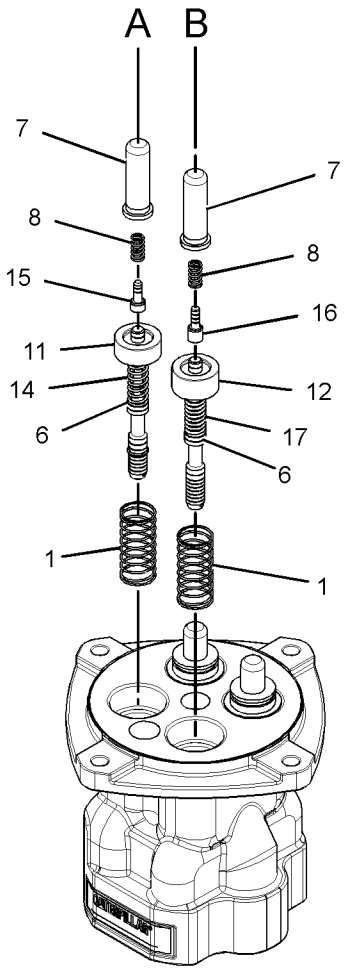

GRAPHIC #1 <END> g01528724

297-0589 VALVE GP-PILOT–JOYSTICK

S/N: DLP1-UP

PART OF 297-0534, 297-0535, 297-0536, 297-0537 CONTROL GP-JOYSTICK

AN ATTACHMENT

SMCS-5059 **i03135570**

NOTE	REF NO	GRAPHIC REF	PART NUMBER	QTY	PART NAME 1 2 3 4 5 6 (PRODUCT LEVEL)	SEE PAGE
	1	1	**095-1586**	4	SEAL-O-RING	
	2	1	**4I-6365**	1	JOINT	
	3	1	**094-0876**	4	SEAL	
	4	1	**096-1628**	4	PLUG	
B	5	1	**099-6137**	4	WASHER (6.1X9X0.2-MM THK)	
	6	1	**118-4086**	4	ROD	
	7	1	**118-4087**	4	SPRING	
M	8	1	**131-5915**	1	NUT-SPECIAL	
	9	1	**165-9431**	1	PLATE	
	10	1	**165-9435**	2	SEAT	
	11	1	**165-9436**	2	SEAT	
	12	1	**165-9438**	1	PLATE	
	13	1	**165-9442**	2	SPRING	
	14	1	**165-9443**	2	SEAT-SPRING	
	15	1	**165-9444**	2	SEAT-SPRING	
	16	1	**165-9460**	2	SPRING	
	17	1	**165-9461**	4	SPRING	
	18	1	**171-0087**	1	BELLOWS	

B - USE AS REQUIRED
M - METRIC PART

297-0589 **VALVE GP-PILOT (**contd.**)** **i03135570**

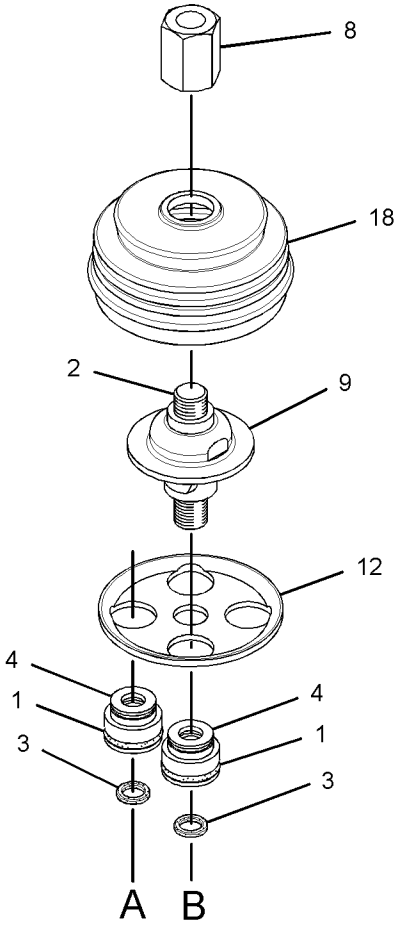

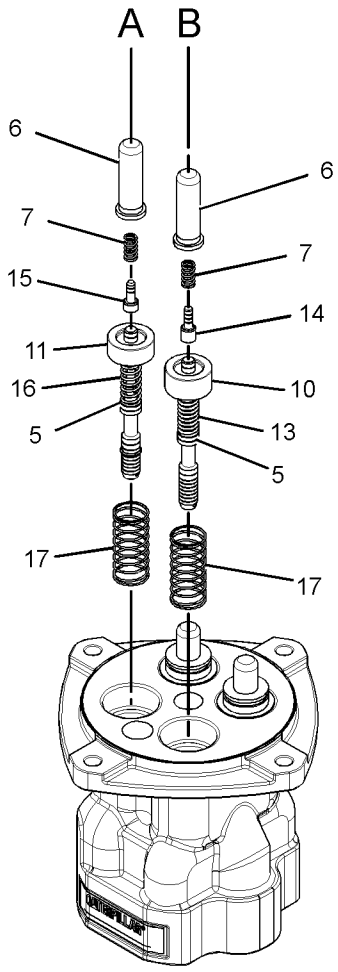

GRAPHIC #1 <END> g01528741

310-0415 VALVE GP-PILOT—WITHOUT SHUTTLE

S/N: DLP186-UP

PART OF 278-6672 LINES GP-PILOT

SMCS-5059 **i04905856**

NOTE	REF NO	GRAPHIC REF	PART NUMBER	QTY	PART NAME 1 2 3 4 5 6 (PRODUCT LEVEL)	SEE PAGE
	1	1	**087-5708**	2	PEDAL	
M	2	1	**095-0673**	2	BOLT-SOCKET HEAD (M12X1.75X60-MM)	
	3	1	**099-6137**	4	WASHER (6.1X9X0.2-MM THK)	
	4	1	**099-6141**	4	WASHER (6.1X11X1.5-MM THK)	
	5	1	**099-6144**	4	BUSHING-TERMINAL	
	6	1	**099-6145**	2	CAMSHAFT	
	7	1	**119-5388**	4	CAP	
	8	1	**119-5389**	4	PACKING	
	9	1	**119-5391**	4	SEAT	
	10	1	**126-1865**	4	SPRING	
	11	1	**126-1866**	4	SPRING	
	12	1	**131-5818**	4	SPRING	
	13	1	**147-4131**	2	BOOT-PROTECTION	
	14	1	**153-5223**	12	BALL	
	15	1	**165-9463**	2	COVER	
	16	1	**165-9552**	4	PUSHROD	
	17	1	**165-9553**	1	COVER	
	18	1	**165-9554**	4	PLUG	
	19	1	**270-5949**	4	PISTON	
	20	1	**270-5950**	4	SPRING	
	21	1	**310-0419**	4	SEAT	
	22	1	**310-0420**	4	SEAL-O-RING	
M	23	1	**087-4710**	4	SETSCREW (M10X21-MM)	
M	24	1	**095-1260**	2	SETSCREW-SOCKET (M6X1X6-MM)	
	25	1	**095-1575**	2	SEAL-O-RING	
	26	1	**6V-8400**	4	SEAL-O-RING	
M	27	1	**8C-6965**	2	BOLT-SOCKET HEAD (M6X1X45-MM)	
M	28	1	**8T-1158**	2	BOLT-SOCKET HEAD (M8X1.25X20-MM)	
M	29	1	**8T-4133**	4	NUT (M10X1.5-THD)	

M - METRIC PART

310-0415 **VALVE GP-PILOT (**contd.**)** **i04905856**

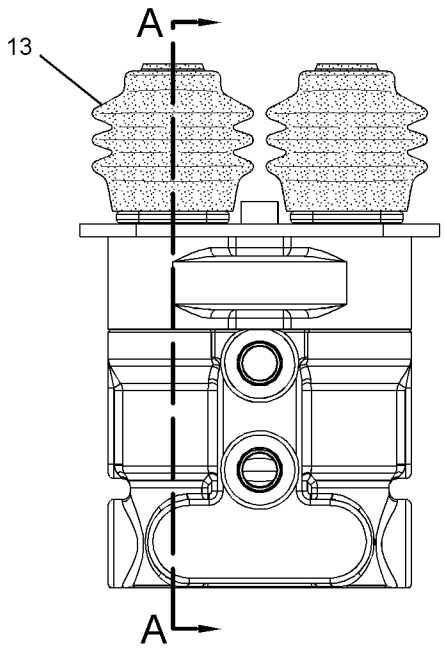

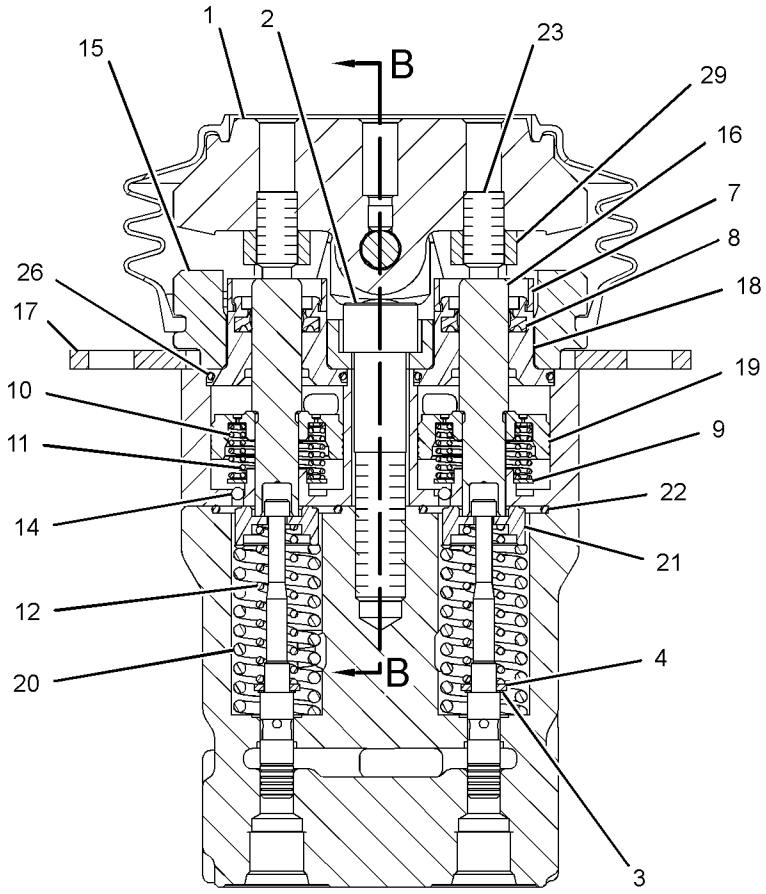

SECTION A-A

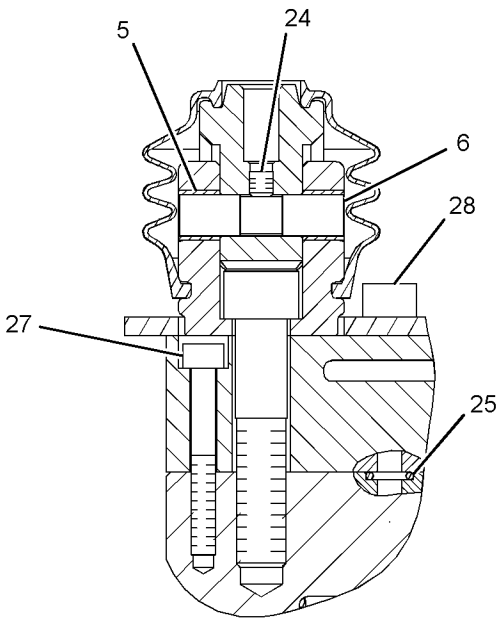

SECTION B-B

GRAPHIC #1 <END> g01620929

232-4102 VALVE GP-PRESSURE REDUCING—BOOM, SWING PRIORITY

S/N: DLP1-UP

PART OF 278-6674 LINES GP-PILOT

SMCS-5117 **i02160013**

NOTE	REF NO	GRAPHIC REF	PART NUMBER	QTY	PART NAME 1 2 3 4 5 6 (PRODUCT LEVEL)	SEE PAGE
	1	1	**111-9998**	2	PLUG	
	2	1	**095-1582**	2	SEAL-O-RING	
	3	1	**171-0127**	2	SEAT-SPRING	
	4	1	**185-0423**	2	STOP	
	5	1	**171-0126**	2	SEAT-SPRING	
	6	1	**171-0123**	2	PLUG	
M	7	1	**5C-7261**	2	NUT (M8X1.25-THD)	
M	8	1	**171-0124**	2	SETSCREW (M8X1.25X18-MM)	
	9	1	**095-1580**	2	SEAL-O-RING	
	10	1	**095-1590**	2	SEAL-O-RING	
	11	1	**171-0128**	2	SPRING	

M - METRIC PART

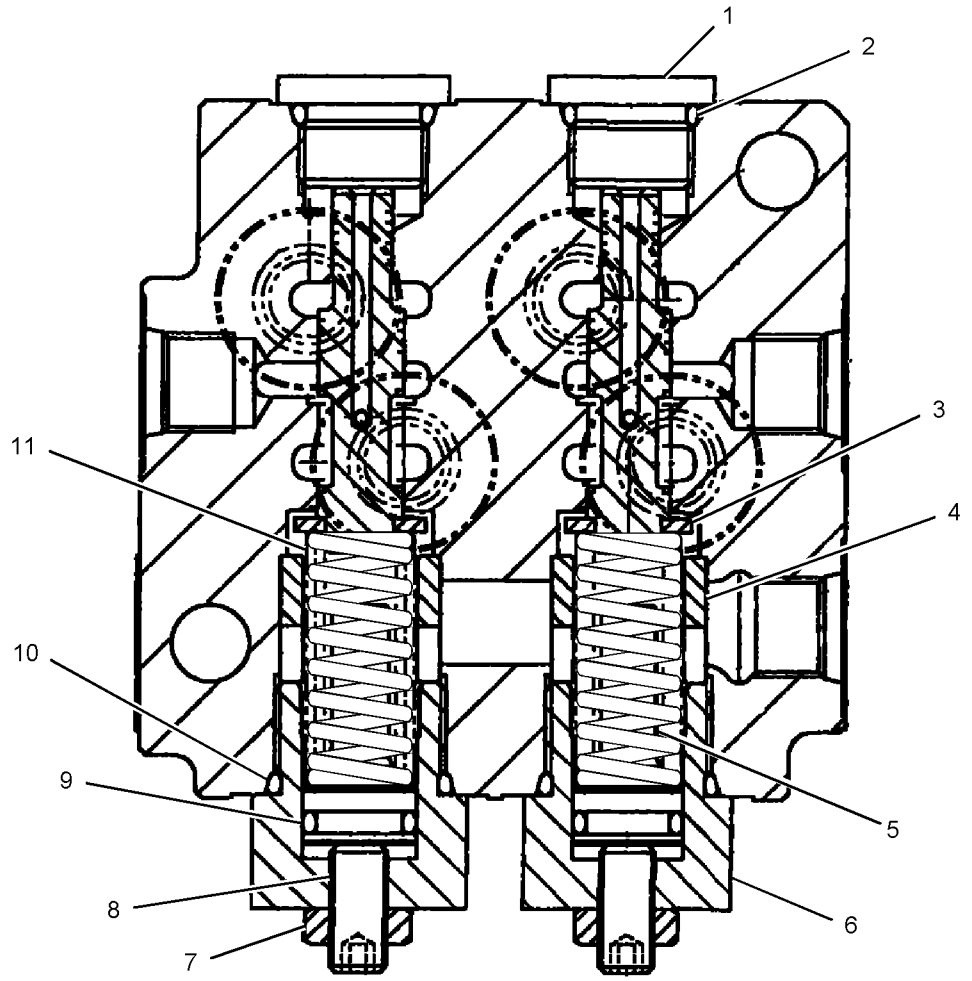

GRAPHIC #1 <END> g01095267

310-0210 VALVE GP-PRESSURE REDUCING–BOOM, SWING PRIORITY

S/N: DLP1-UP

PART OF 278-6674 LINES GP-PILOT

SMCS-5117 **i07194993**

NOTE	REF NO	GRAPHIC REF	PART NUMBER	QTY	PART NAME 1 2 3 4 5 6 (PRODUCT LEVEL)	SEE PAGE
	1	1	**111-9998**	2	PLUG	
	2	1	**171-0123**	2	PLUG	
M	3	1	**171-0124**	2	SETSCREW (M8X1.25X18-MM)	
	4	1	**171-0126**	2	SEAT-SPRING	
	5	1	**171-0127**	2	SEAT-SPRING	
	6	1	**171-0128**	2	SPRING	
	7	1	**185-0423**	2	STOP	
	8	1	**095-1580**	2	SEAL-O-RING	
	9	1	**095-1582**	2	SEAL-O-RING	
	10	1	**095-1590**	2	SEAL-O-RING	
M	11	1	**5C-7261**	2	NUT (M8X1.25-THD)	

M - METRIC PART

310-0210 **VALVE GP-PRESSURE REDUCING** (contd.) **i07194993**

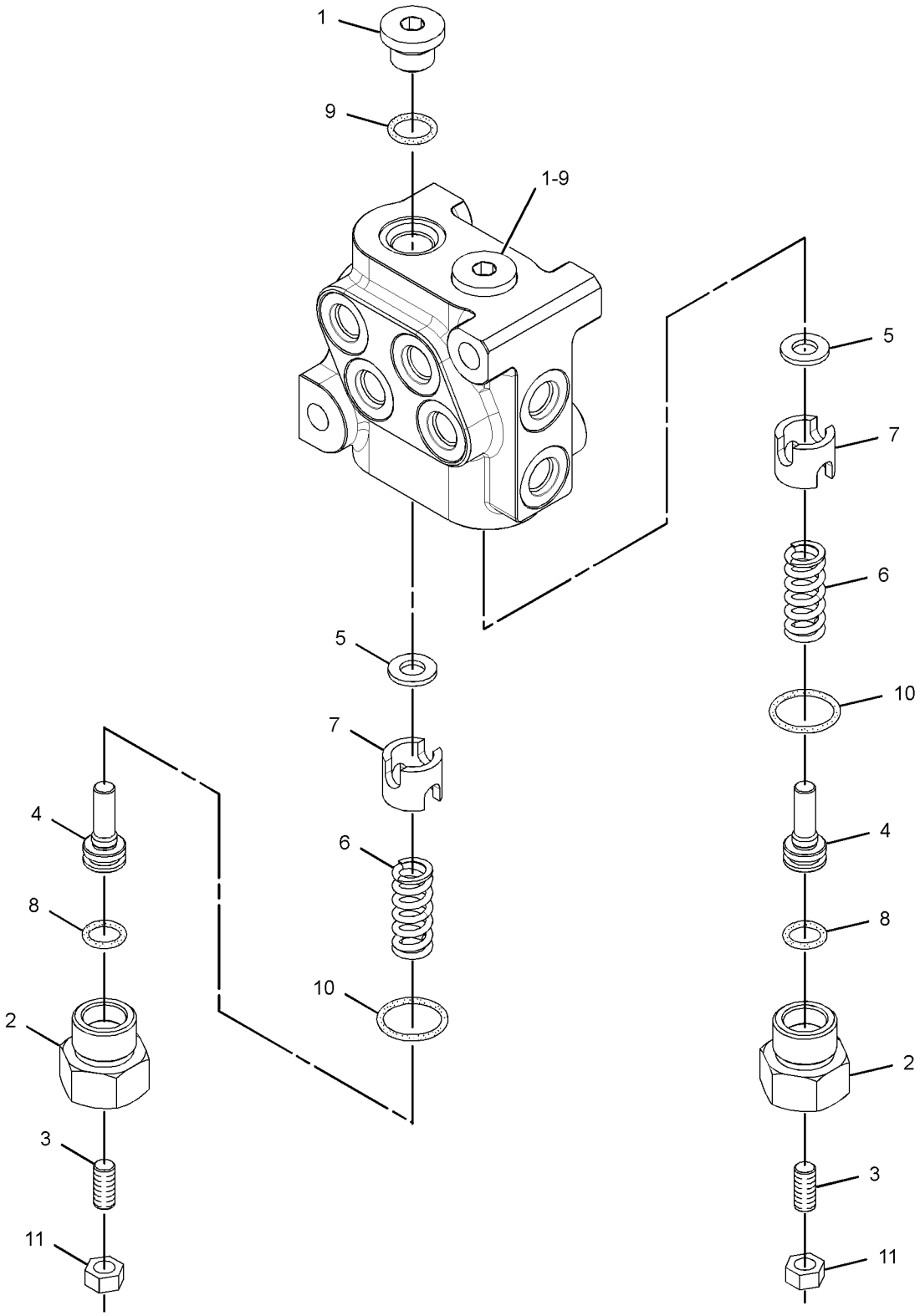

GRAPHIC #1 <END> g01506435

270-5978 VALVE GP-RELIEF

S/N: DLP1-UP

PART OF 270-5866, 420-2241 VALVE GP-MAIN CONTROL

ALSO AN ATTACHMENT

SMCS-5069, 5117

i03564036

NOTE	REF NO	GRAPHIC REF	PART NUMBER	QTY	PART NAME 1 2 3 4 5 6 (PRODUCT LEVEL)	SEE PAGE
	1	1	095-1519	1	SEAL-O-RING	
	2	1	095-1575	1	SEAL-O-RING	
	3	1	095-1582	1	SEAL-O-RING	
	4	1	095-1584	1	SEAL-O-RING	
	5	1	095-1593	1	SEAL-O-RING	
	6	1	095-1783	1	RING-BACKUP	

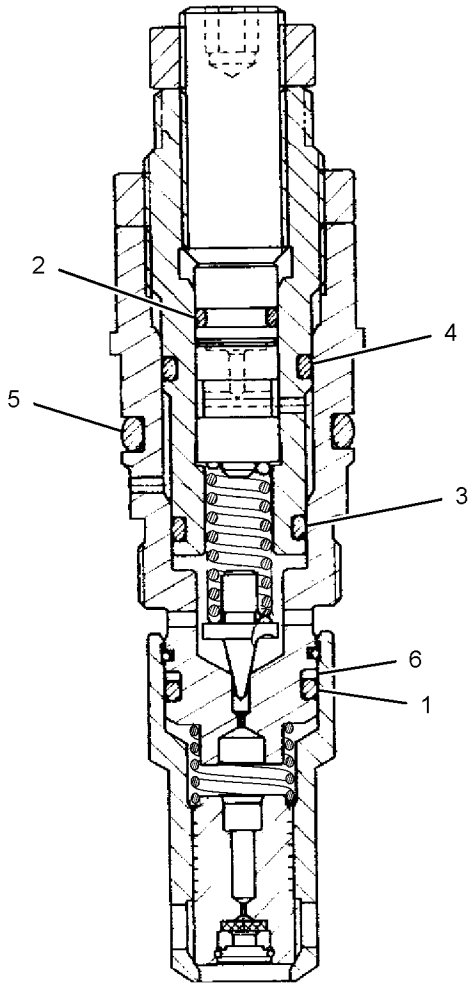

GRAPHIC #1

<END>

g01886574

304-3961 VALVE GP-RELIEF

S/N: DLP1-617

PART OF 303-4484, 349-9520 VALVE GP-TRAVEL COUNTERBALANCE

SMCS-5069, 5117

i05982488

NOTE	REF NO	GRAPHIC REF	PART NUMBER	QTY	PART NAME 1 2 3 4 5 6 (PRODUCT LEVEL)	SEE PAGE
M	1	1	**7Y-8436**	1	SETSCREW (M27X2X27-MM)	
	2	1	**114-0515**	1	SEAT	
	3	1	**114-0517**	1	PISTON	
	4	1	**165-5840**	1	STOP	
	6	1	**176-8590**	1	VALVE GP-RELIEF	
	7	1	**095-1586**	3	SEAL-O-RING	
	8	1	**7Y-4217**	3	RING-BACKUP	
	9	1	**121-1459**	2	RING-BACKUP	
	10	1	**165-5839**	1	SPRING	
	11	1	**4K-1388**	1	SEAL-O-RING	
M	12	1	**7Y-8437**	1	NUT (M27X2-THD)	

M - METRIC PART

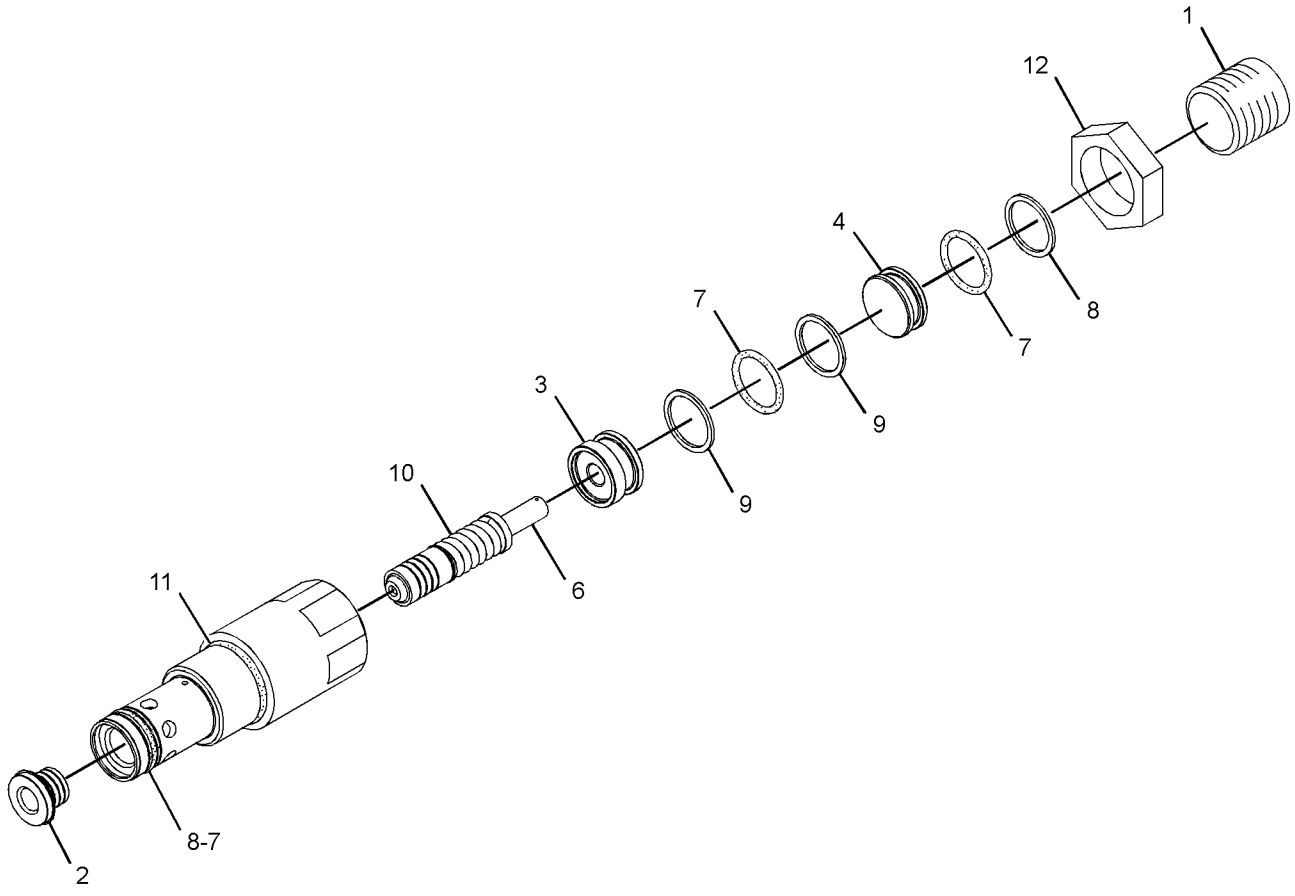

GRAPHIC #1 <END> g01413822

309-9973 VALVE GP-RELIEF–LINE

S/N: DLP1-UP

PART OF 278-6699 LINES GP-FRONT, 270-5866, 420-2241 VALVE GP-MAIN CONTROL

ALSO AN ATTACHMENT

SMCS-5069, 5117

i05434264

NOTE	REF NO	GRAPHIC REF	PART NUMBER	QTY	PART NAME 1 2 3 4 5 6 (PRODUCT LEVEL)	SEE PAGE
	1	1	095-1514	1	SEAL-O-RING	
	2	1	095-1519	1	SEAL-O-RING	
	3	1	095-1575	1	SEAL-O-RING	
	4	1	095-1591	1	SEAL-O-RING	
	5	1	095-1592	1	SEAL-O-RING	
	6	1	095-1783	1	RING-BACKUP	
	7	1	095-8024	1	RING-BACKUP	

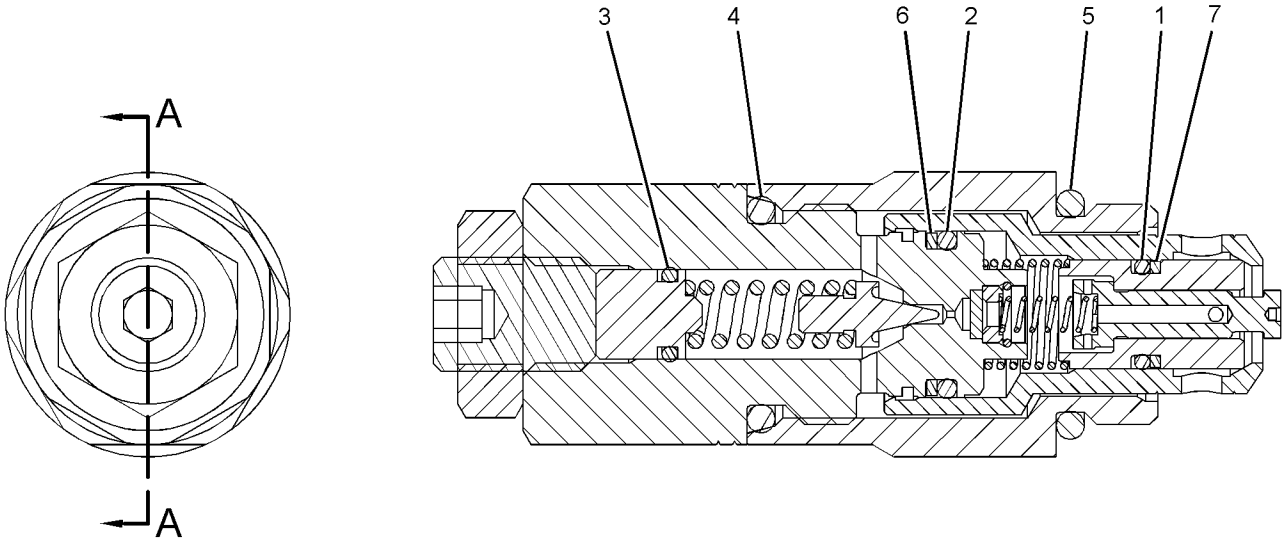

SECTION A-A

GRAPHIC #1

<END>

g01425186

310-0063 VALVE GP-RELIEF

S/N: DLP1-UP
PART OF 297-0374 VALVE GP-CONTROL
AN ATTACHMENT

SMCS-5069, 5117

i03303760

NOTE	REF NO	GRAPHIC REF	PART NUMBER	QTY	PART NAME 1 2 3 4 5 6 (PRODUCT LEVEL)	SEE PAGE
	1	1	**095-1514**	1	SEAL-O-RING	
	2	1	**095-1519**	1	SEAL-O-RING	
	3	1	**095-1575**	1	SEAL-O-RING	
	4	1	**095-1591**	1	SEAL-O-RING	
	5	1	**095-1592**	1	SEAL-O-RING	
	6	1	**095-1783**	1	RING-BACKUP	
	7	1	**095-8024**	1	RING-BACKUP	

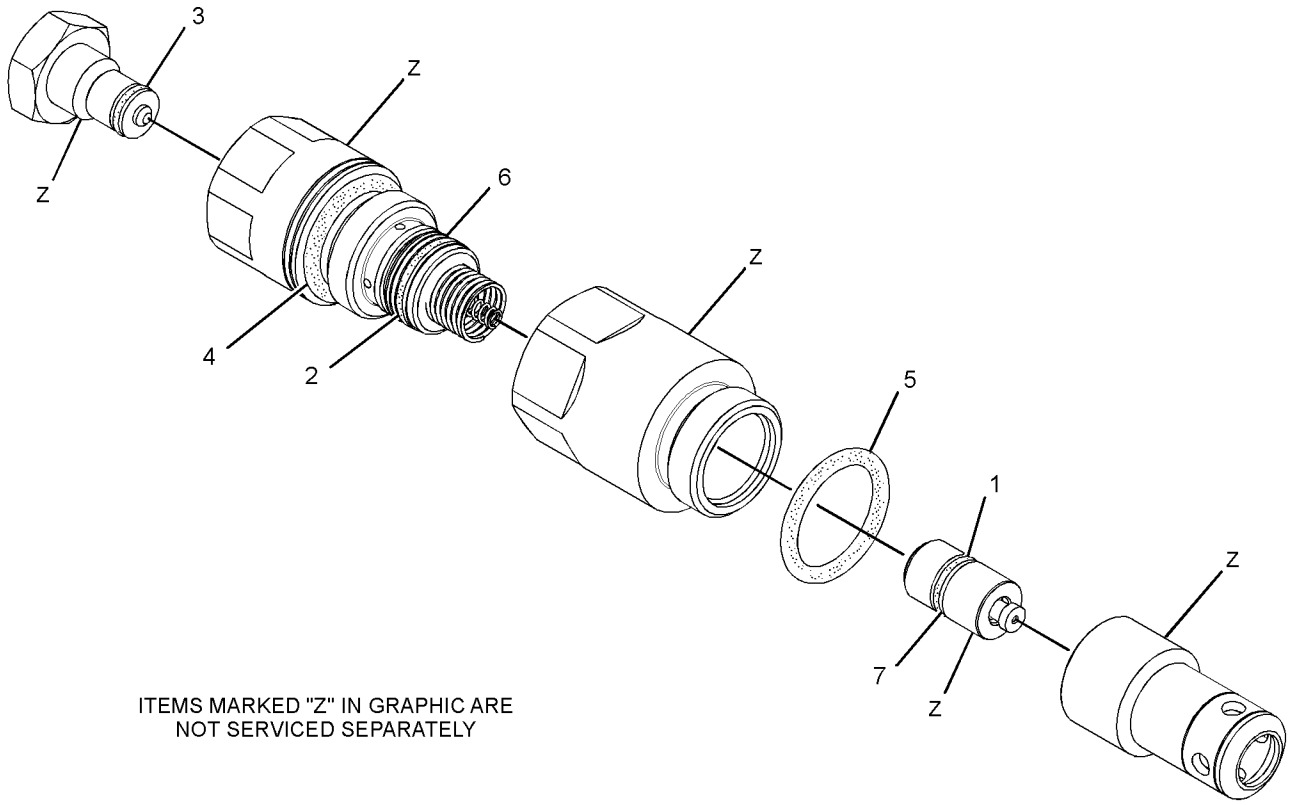

ITEMS MARKED "Z" IN GRAPHIC ARE
NOT SERVICED SEPARATELY

GRAPHIC #1 <END> g01687073

171-0024 VALVE GP-SELECTOR—CONTROL PATTERN CHANGE

S/N: DLP1-UP
PART OF 278-6721 LINES GP-PILOT
AN ATTACHMENT

SMCS-5065 **i02811435**

NOTE	REF NO	GRAPHIC REF	PART NUMBER	QTY	PART NAME 1 2 3 4 5 6 (PRODUCT LEVEL)	SEE PAGE
M	1	1	**8T-1159**	8	BOLT-SOCKET HEAD (M10X1.5X25-MM)	
	2	1	**085-7076**	1	COVER	
	3	1	**085-7079**	1	GRIP	
	4	1	**085-7080**	1	LEVER	
	5	1	**085-7084**	1	BOLT (M8X1.25X35-MM)	
	6	1	**095-1710**	2	SEAL-O-RING	
	7	1	**085-7075**	1	COVER	
	8	1	**095-1590**	1	SEAL-O-RING	
	9	1	**095-1787**	1	RING-BACKUP	
	10	1	**085-7083**	1	PIN-SPRING	
	11	1	**6I-6923**	1	SEAL	
	12	1	**085-7085**	1	BALL	
	13	1	**095-1582**	1	SEAL-O-RING	
	14	1	**085-7078**	1	SPRING	
	15	1	**085-7077**	1	PLUG	
	16	1	**085-7081**	4	NEEDLE	
	17	1	**085-7082**	14	PLUG	
	18	1	**169-1165**	1	PIN	
	19	1	**197-0758**	2	SCREW	

M - METRIC PART

171-0024 **VALVE GP-SELECTOR (**contd.**)** **i02811435**

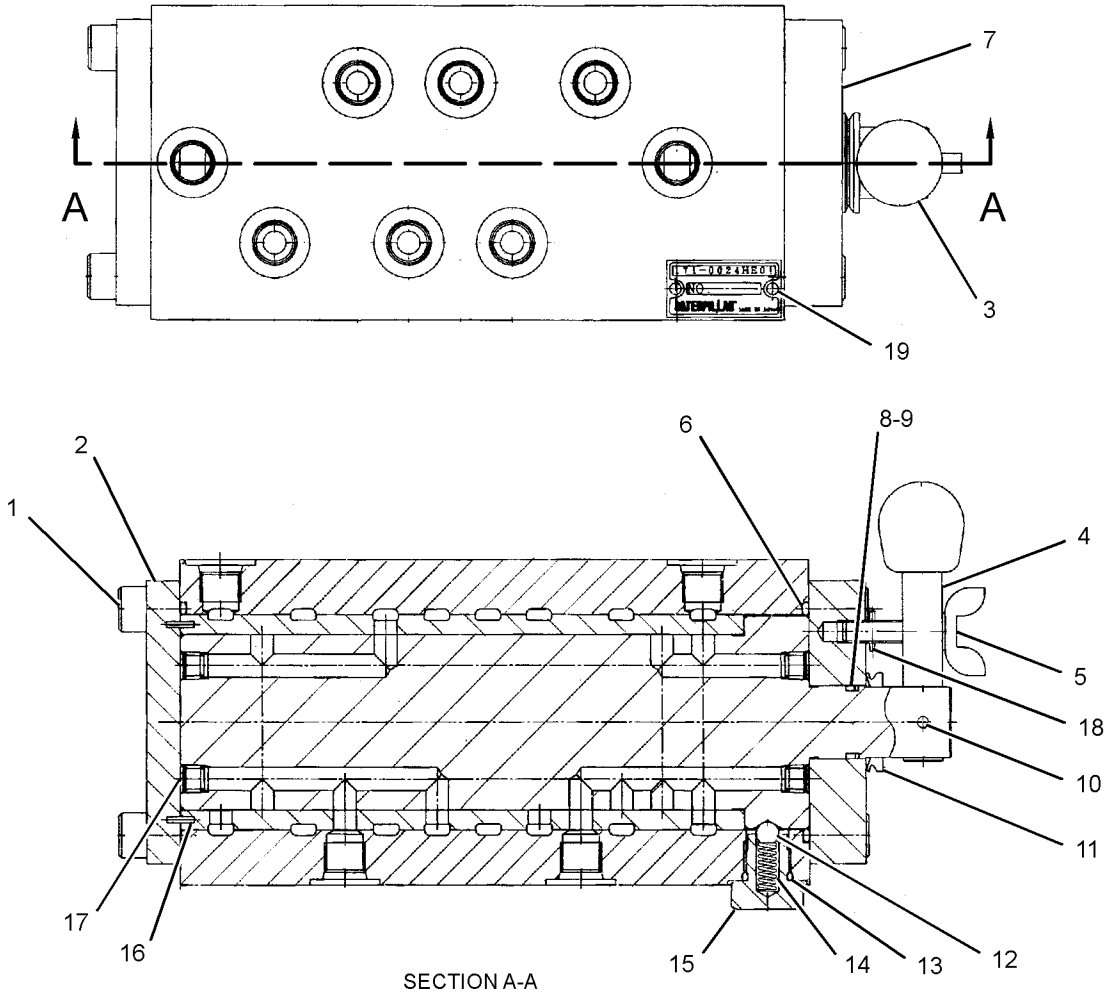

SECTION A-A

GRAPHIC #1 <END> g01411403

123-2430 VALVE GP-SHUTTLE

S/N: DLP1-UP
FIELD REPLACEMENT ORDER 164-6979—PAGE: 846
PART OF 278-6674, 278-6701 LINES GP-PILOT
ALSO AN ATTACHMENT

SMCS-5079 **i03991101**

NOTE	REF NO	GRAPHIC REF	PART NUMBER	QTY	PART NAME 1 2 3 4 5 6 (PRODUCT LEVEL)	SEE PAGE
	1	1	**352-6815**	1	BODY-VALVE	
	2	1	**4B-9783**	1	BALL	
	3	1	**3J-1907**	2	SEAL-O-RING	
	4	1	**123-2552**	2	CONNECTOR	

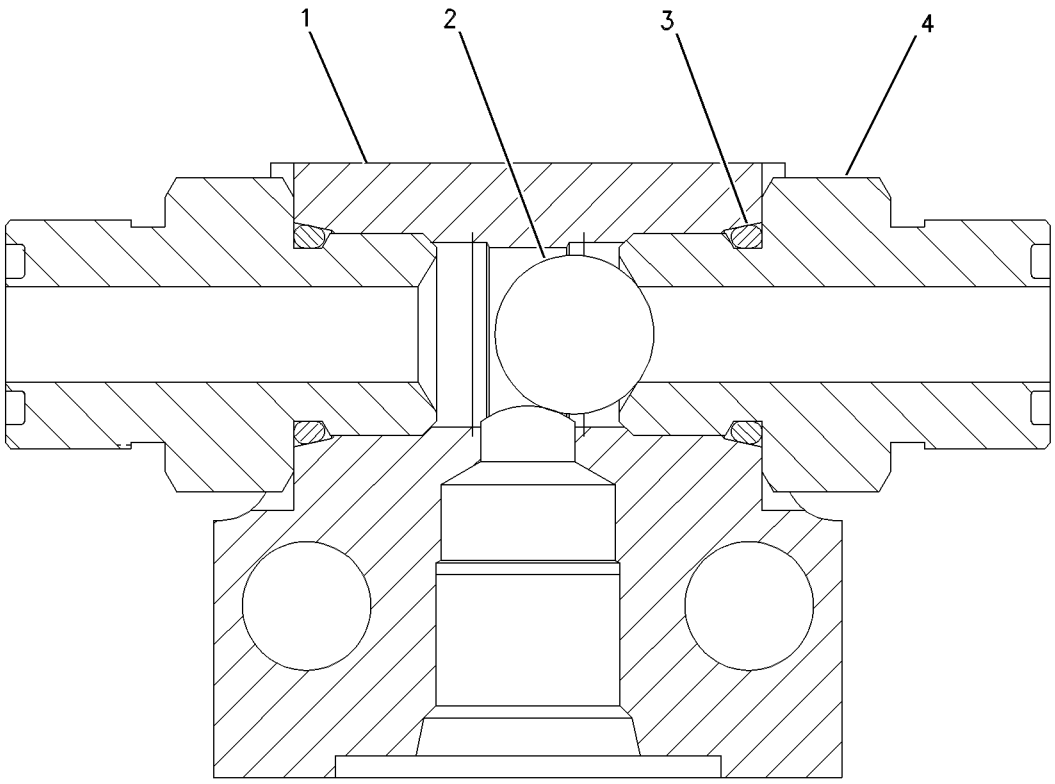

GRAPHIC #1 <END> g00652899

164-6979 VALVE GP-SHUTTLE

S/N: DLP1-UP
FIELD REPLACEMENT FOR 123-2430—PAGE: 845
PART OF 278-6674, 278-6701 LINES GP-PILOT
ALSO AN ATTACHMENT

SMCS-5079 **i05432604**

NOTE	REF NO	GRAPHIC REF	PART NUMBER	QTY	PART NAME 1 2 3 4 5 6 (PRODUCT LEVEL)	SEE PAGE
	1	1	*175-4430*	2	CONNECTOR AS	
					(EACH INCLUDES)	
		1	**3J-1907**	1	SEAL-O-RING	
		1	**6V-8397**	1	SEAL-O-RING	
		1	**123-2552**	1	CONNECTOR	
	2	1	**352-6815**	1	BODY-VALVE	
	3	1	**4B-9783**	1	BALL	

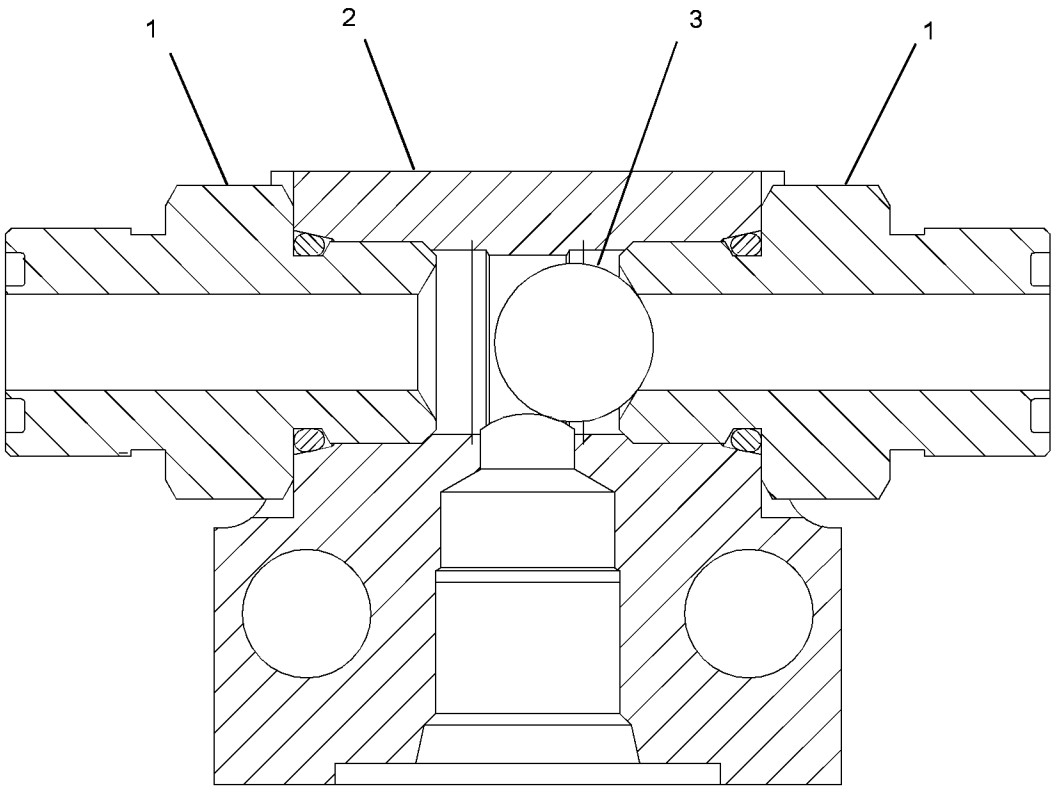

GRAPHIC #1 <END> g02203693

171-0198 VALVE GP-SHUTTLE

S/N: DLP1-UP

PART OF 171-0188 VALVE GP-SOLENOID

AN ATTACHMENT

SMCS-5079 **i04775658**

NOTE	REF NO	GRAPHIC REF	PART NUMBER	QTY	PART NAME 1 2 3 4 5 6 (PRODUCT LEVEL)	SEE PAGE
J	1	1	**095-1751**	1	SEAL-O-RING	
J	2	1	**6V-8399**	2	SEAL-O-RING	
					AVAILABLE REPAIR KIT(S):	
J			**185-0407**	1	KIT-SEAL (SHUTTLE VALVE)	
					(ALSO INCLUDES BACK-UP RINGS)	

J - KIT MARKED J SERVICES PART(S) MARKED J

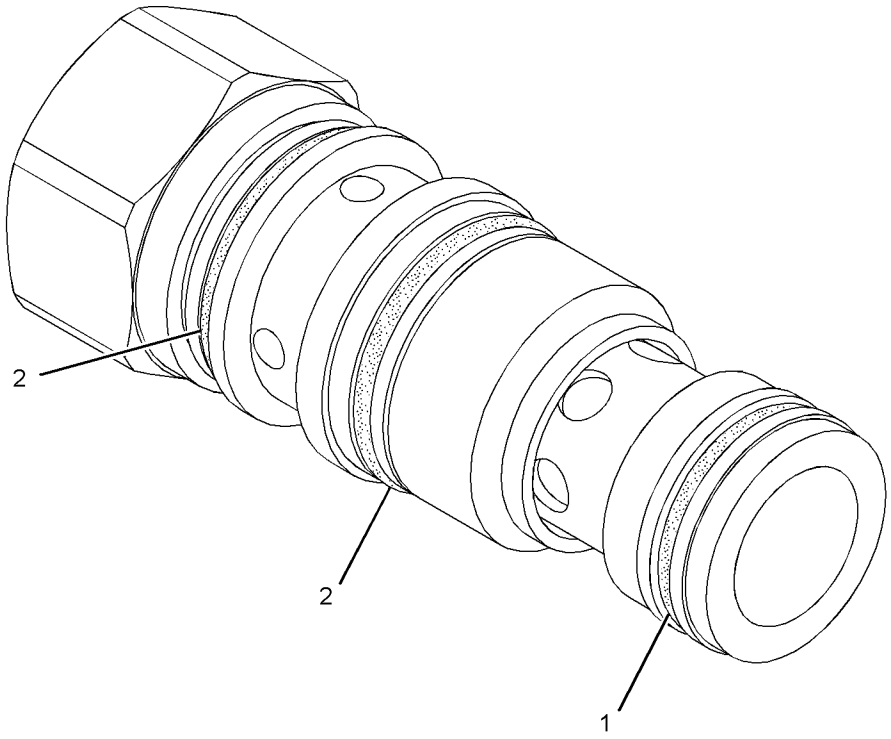

GRAPHIC #1 <END> g01951532

185-0462 VALVE GP-SHUTTLE

S/N: DLP1-UP
PART OF 260-7891 LINES GP-PILOT
AN ATTACHMENT

SMCS-5079 **i01612080**

NOTE	REF NO	GRAPHIC REF	PART NUMBER	QTY	PART NAME 1 2 3 4 5 6 (PRODUCT LEVEL)	SEE PAGE
	1	1	**7I-8084**	4	PLUG	
	2	1	**185-0463**	1	SEAT	
	3	1	**4B-9880**	7	BALL	
	4	1	**165-9464**	6	SEAT	
	5	1	**095-1578**	7	SEAL-O-RING	
	6	1	**107-6479**	7	PLUG	

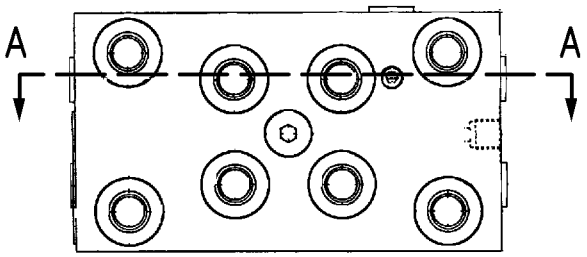

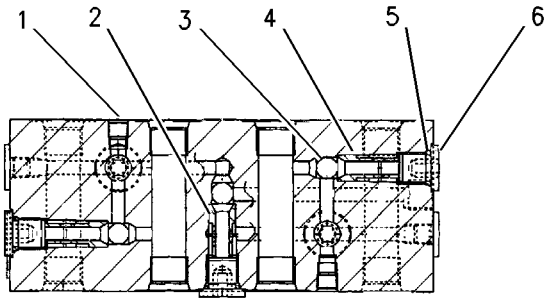

SECTION A-A

GRAPHIC #1 <END> g00699270

4T-1860 VALVE GP-SHUTTLE

S/N: DLP617-UP

PART OF 349-9520 VALVE GP-TRAVEL COUNTERBALANCE

SMCS-5079 **i06601696**

NOTE	REF NO	GRAPHIC REF	PART NUMBER	QTY	PART NAME 1 2 3 4 5 6 (PRODUCT LEVEL)	SEE PAGE
	1	1	**6V-5324**	1	SEAL-O-RING	
	2	1	**4T-0928**	1	VALVE	
	3	1	**147-6603**	1	SEAL-O-RING	
	4	1	**147-6604**	2	RING-BACKUP	
	5	1	**147-6605**	2	RING-BACKUP	
	6	1	**1M-6718**	1	BALL	
	7	1	**3J-1907**	1	SEAL-O-RING	

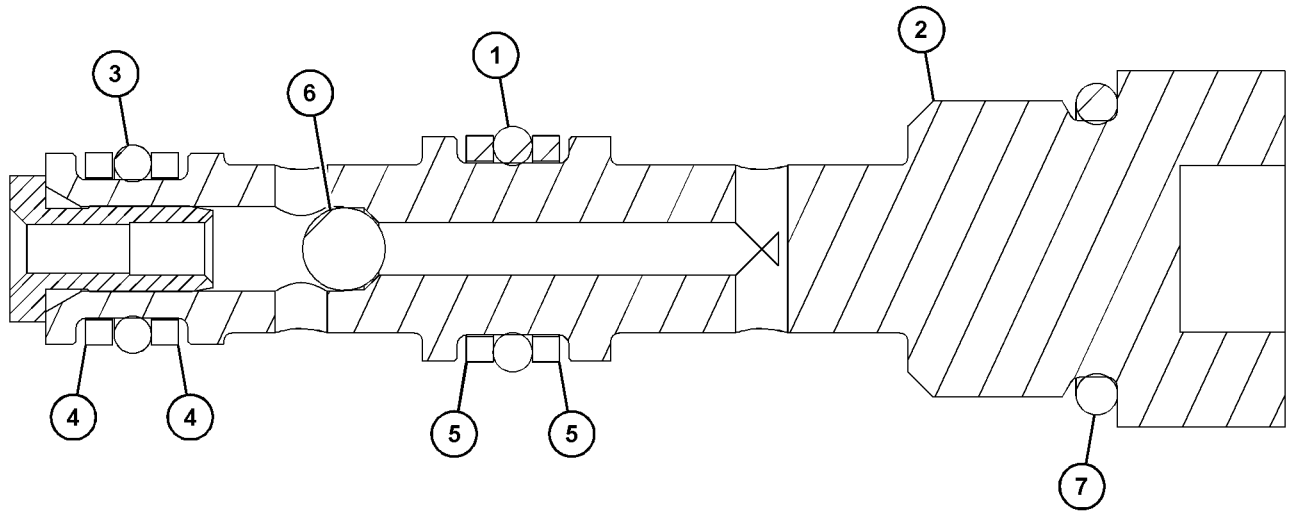

GRAPHIC #1 <END> g06040735

111-9916 VALVE GP-SOLENOID—PRESSURE REDUCING

S/N: DLP1-UP

PART OF 311-7404 PUMP GP-MAIN HYDRAULIC, 171-0188, 259-7430, 398-2282 VALVE GP-SOLENOID, 238-0751 VALVE GP-SOLENOID & PRESS REDC

ALSO AN ATTACHMENT

SMCS-5479 **i05606718**

NOTE	REF NO	GRAPHIC REF	PART NUMBER	QTY	PART NAME 1 2 3 4 5 6 (PRODUCT LEVEL)	SEE PAGE
	1	1	**095-1750**	1	SEAL-O-RING	
	2	1	**6V-8398**	1	SEAL-O-RING	
	3	1	**095-1751**	1	SEAL-O-RING	
	4	1	**095-1586**	1	SEAL-O-RING	
M	5	1	**114-0623**	1	NUT AS (M6X1-THD)	

M - METRIC PART

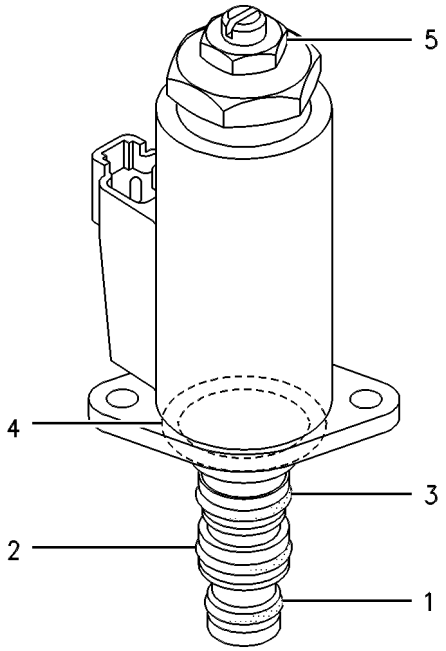

GRAPHIC #1 <END> g00258219

121-1491 VALVE GP-SOLENOID

S/N: DLP1-UP

PART OF 239-8697, 239-8998 MANIFOLD GP-CONTROL

SMCS-5479 **i05607143**

NOTE	REF NO	GRAPHIC REF	PART NUMBER	QTY	PART NAME 1 2 3 4 5 6 (PRODUCT LEVEL)	SEE PAGE
	1	1	**095-1750**	1	SEAL-O-RING	
	2	1	**6V-8398**	1	SEAL-O-RING	
	3	1	**095-1751**	1	SEAL-O-RING	
	4	1	**095-1586**	1	SEAL-O-RING	
M	5	1	**114-0623**	1	NUT AS (M6X1-THD)	

M - METRIC PART

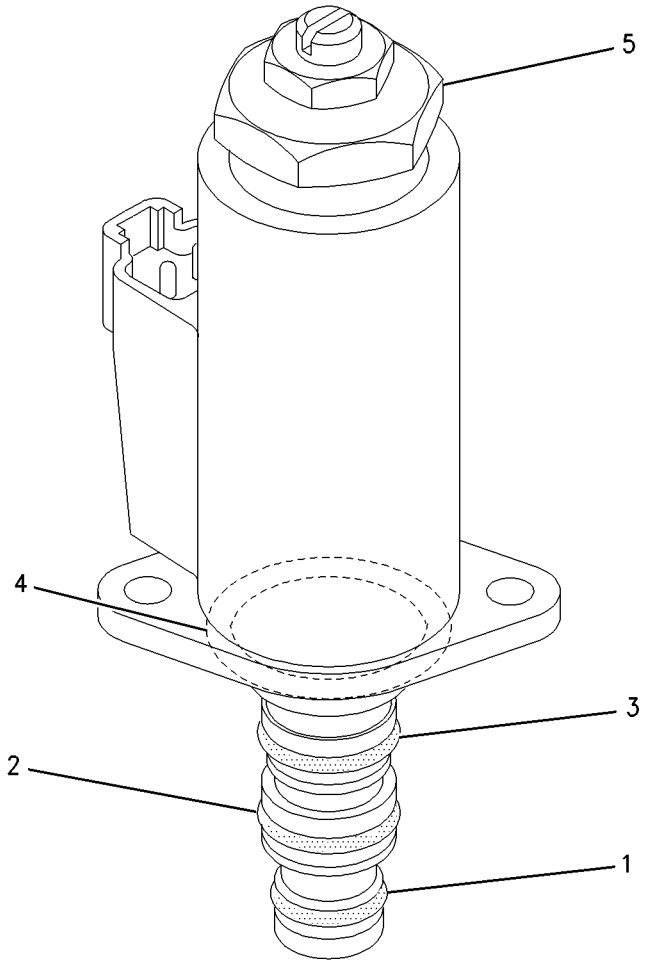

GRAPHIC #1 <END> g00928680

121-6303 VALVE GP-SOLENOID—HEAVY LIFT

S/N: DLP1-UP
PART OF 278-6701 LINES GP-PILOT
AN ATTACHMENT

SMCS-5479 **i01272110**

NOTE	REF NO	GRAPHIC REF	PART NUMBER	QTY	PART NAME 1 2 3 4 5 6 (PRODUCT LEVEL)	SEE PAGE
	1	1	**7I-8102**	1	VALVE AS	
	2	1	**121-6304**	1	COIL GP	
M	3	1	**099-0822**	2	BOLT-SOCKET HEAD (M5X0.8X10-MM)	
	4	1	**095-1519**	1	SEAL-O-RING	
	5	1	**7I-0986**	1	PLUG	
	6	1	**7I-7403**	1	SPRING	
	7	1	**095-1578**	1	SEAL-O-RING	

M - METRIC PART

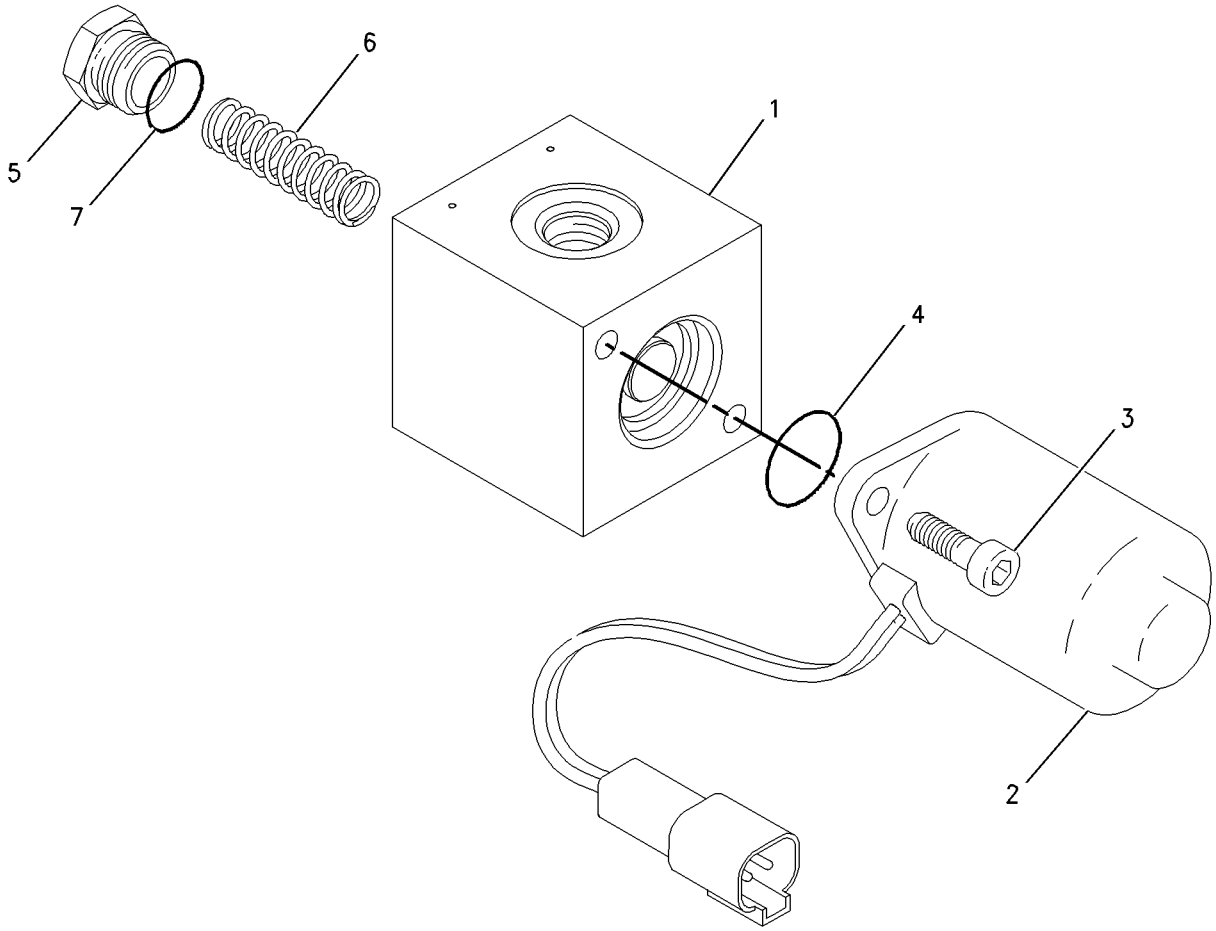

GRAPHIC #1 <END> g00685554

171-0188 VALVE GP-SOLENOID

S/N: DLP1-UP
PART OF 278-6701 LINES GP-PILOT
AN ATTACHMENT

SMCS-5479 **i04523327**

NOTE	REF NO	GRAPHIC REF	PART NUMBER	QTY	PART NAME 1 2 3 4 5 6 (PRODUCT LEVEL)	SEE PAGE
Y	1	1	**111-9916**	1	VALVE GP-SOLENOID (PRESSURE REDUCING)	850
M	2	1	**7I-2272**	2	BOLT (M5X0.8X12-MM)	
Y	3	1	**171-0198**	2	VALVE GP-SHUTTLE	847
	4	1	**7I-8084**	6	PLUG	

M - METRIC PART
Y - SEPARATE ILLUSTRATION

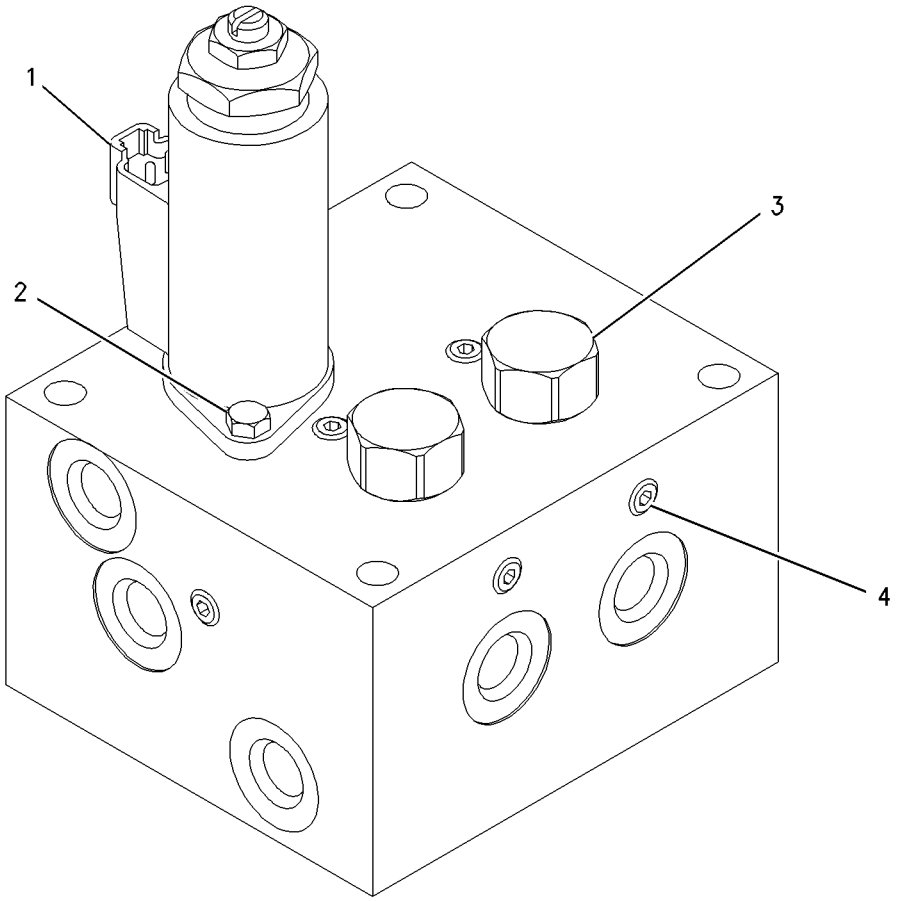

GRAPHIC #1 <END> g00681111

259-7430 VALVE GP-SOLENOID

S/N: DLP1-UP
PART OF 278-6701, 278-6713 LINES GP-PILOT
AN ATTACHMENT
TYPE 1

SMCS-5479 **i03786652**

NOTE	REF NO	GRAPHIC REF	PART NUMBER	QTY	PART NAME 1 2 3 4 5 6 (PRODUCT LEVEL)	SEE PAGE
M	1	1	**8T-0288**	4	BOLT (M5X0.8X12-MM)	
Y	2	1	**111-9916**	2	VALVE GP-SOLENOID (PRESSURE REDUCING)	850

M - METRIC PART
Y - SEPARATE ILLUSTRATION

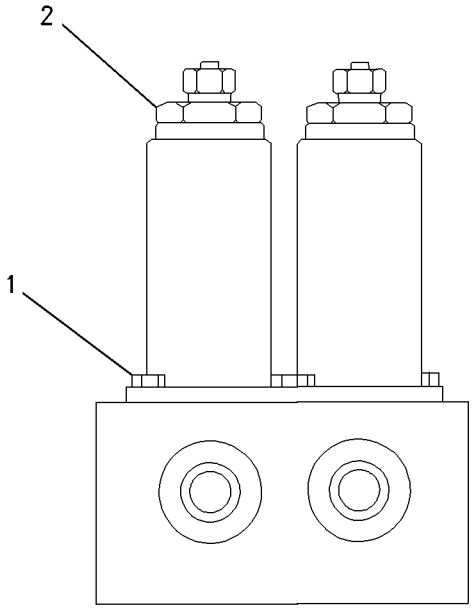

GRAPHIC #1 <END> g00785417

259-7430 VALVE GP-SOLENOID

S/N: DLP1-UP
PART OF 278-6701, 278-6713 LINES GP-PILOT
AN ATTACHMENT
TYPE 2

SMCS-5479 **i04523596**

NOTE	REF NO	GRAPHIC REF	PART NUMBER	QTY	PART NAME 1 2 3 4 5 6 (PRODUCT LEVEL)	SEE PAGE
CM	1	1	**7I-2272**	4	BOLT (M5X0.8X12-MM)	
Y	2	1	**111-9916**	2	VALVE GP-SOLENOID (PRESSURE REDUCING)	850

C - CHANGE FROM PREVIOUS TYPE
M - METRIC PART
Y - SEPARATE ILLUSTRATION

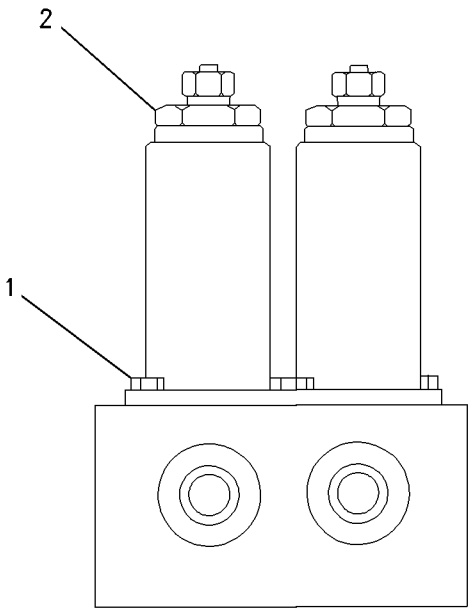

GRAPHIC #1 <END> g00785417

352-7176 VALVE GP-SOLENOID

S/N: DLP1-UP

PART OF 278-6701 LINES GP-PILOT

AN ATTACHMENT

SMCS-5479 **i04108974**

NOTE	REF NO	GRAPHIC REF	PART NUMBER	QTY	PART NAME 1 2 3 4 5 6 (PRODUCT LEVEL)	SEE PAGE
	1	1	**102-8802**	1	KIT-RECEPTACLE (2-PIN)	
					(INCLUDES RECEPTACLE AS & WEDGE)	
	2	1	**8T-8729**	2	PIN-CONNECTOR (16-GA TO 18-GA)	
	3	1	**095-1519**	1	SEAL-O-RING	
	4	1	**095-1579**	1	SEAL-O-RING	
					PARTS SHOWN IN GRAPHIC(S) WITHOUT A REFERENCE NUMBER ARE NOT SERVICED SEPARATELY	

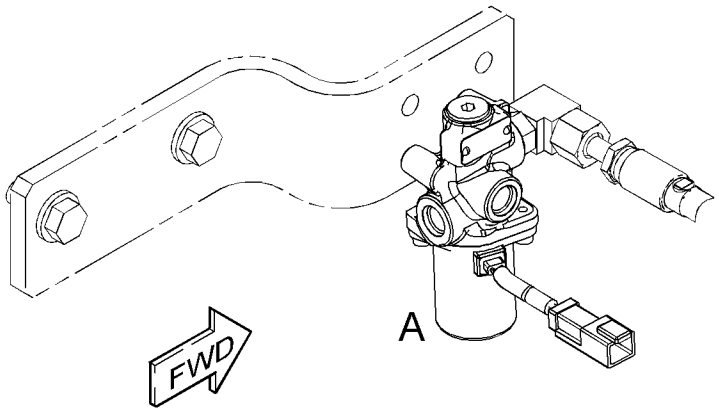

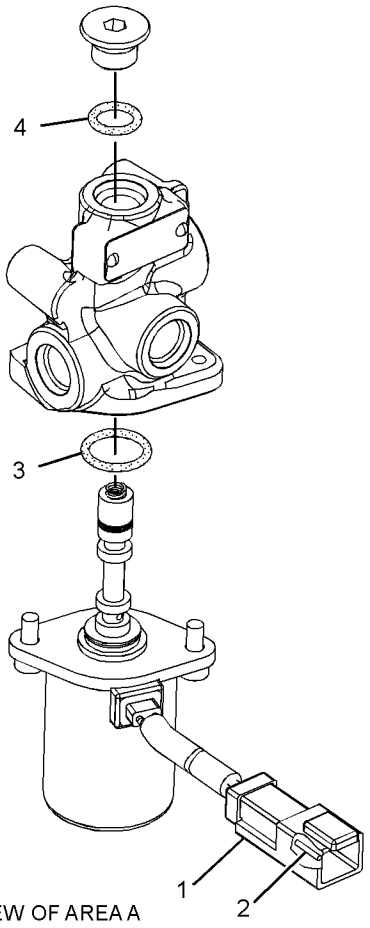

VIEW OF AREA A

GRAPHIC #1 <END> g02317033

398-2282 VALVE GP-SOLENOID—NEGATIVE FLOW CONTROL

S/N: DLP1-UP
PART OF 278-6701 LINES GP-PILOT
AN ATTACHMENT

SMCS-5479 **i05409516**

NOTE	REF NO	GRAPHIC REF	PART NUMBER	QTY	PART NAME 1 2 3 4 5 6 (PRODUCT LEVEL)	SEE PAGE
	1	1	**7I-8084**	3	PLUG	
	2	1	**107-6479**	2	PLUG	
Y	3	1	**111-9916**	1	VALVE GP-SOLENOID (PRESSURE REDUCING)	850
	4	1	**185-0463**	2	SEAT	
	5	1	**095-1578**	2	SEAL-O-RING	
M	6	1	**7I-2272**	2	BOLT (M5X0.8X12-MM)	
	7	1	**9M-5590**	2	BALL	

M - METRIC PART
Y - SEPARATE ILLUSTRATION

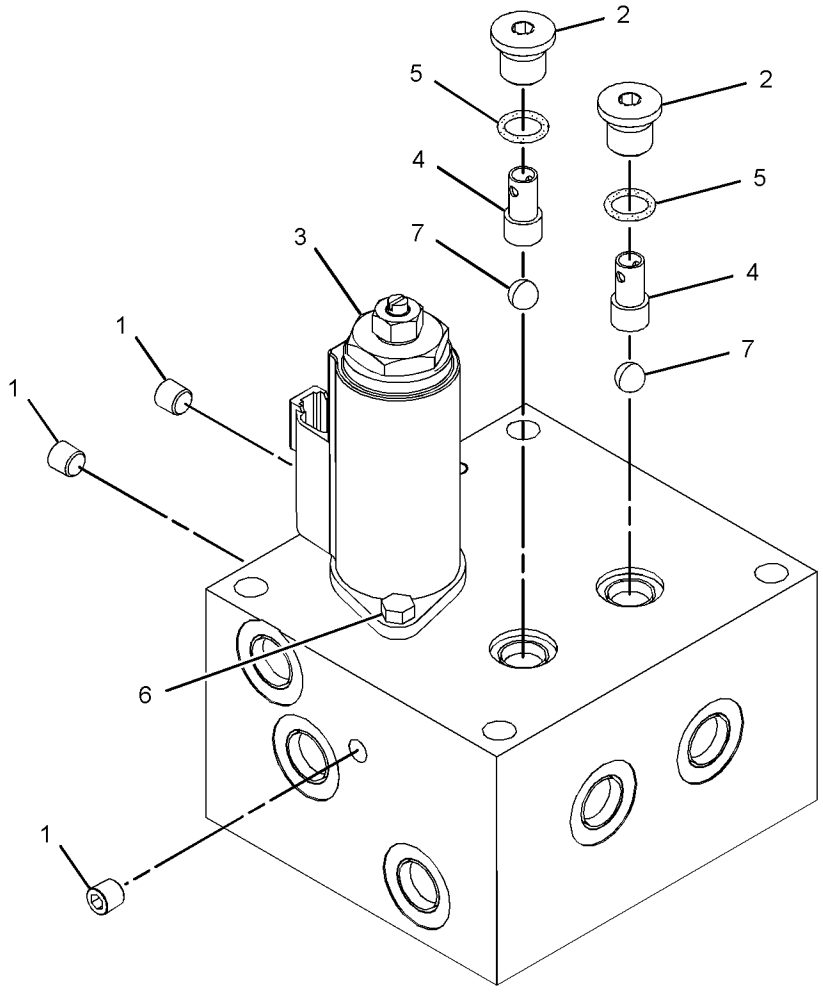

GRAPHIC #1 <END> g03149637

328-2035 VALVE GP-SOLENOID & MANIFOLD

S/N: DLP1-UP
24-VOLT
PART OF 278-6683, 337-1272 LINES GP-FRONT
AN ATTACHMENT

SMCS-5264, 5479 **i07187751**

NOTE	REF NO	GRAPHIC REF	PART NUMBER	QTY	PART NAME 1 2 3 4 5 6 (PRODUCT LEVEL)	SEE PAGE
J	1	1	**368-8651**	1	VALVE GP-SOLENOID (24-VOLT) (QUICK COUPLER)	
		1	**260-3883**	1	COIL AS-SOLENOID (24-VOLT)	
		1	**1S-9593**	2	STRAP-CABLE	
		1	**186-3735**	2	PIN-CONNECTOR (16-GA TO 18-GA)	
		1	**230-4012**	1	RECEPTACLE AS-CONNECTOR (2-PIN)	
	1A	1	**156-5970**	1	NUT (1/2-20-THD)	
					AVAILABLE REPAIR KIT(S):	
J			**268-8209**	1	KIT-SEAL (QUICK COUPLER SOLENOID)	
					(INCLUDES SEALS & RINGS)	

J - KIT MARKED J SERVICES PART(S) MARKED J

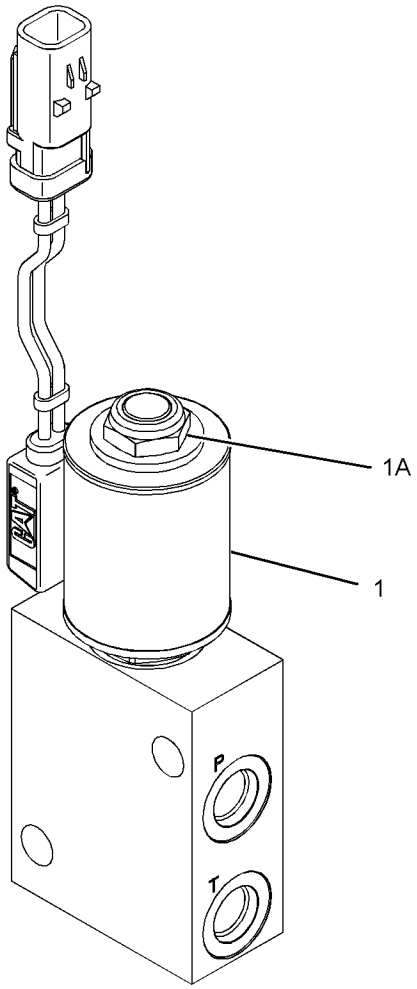

GRAPHIC #1 <END> g02452258

238-0751 VALVE GP-SOLENOID & PRESS REDC

S/N: DLP1-UP

PART OF 278-6674 LINES GP-PILOT

SMCS-5467, 5479

i06937488

NOTE	REF NO	GRAPHIC REF	PART NUMBER	QTY	PART NAME 1 2 3 4 5 6 (PRODUCT LEVEL)	SEE PAGE
Y	1	1	**111-9916**	1	VALVE GP-SOLENOID (PRESSURE REDUCING)	850
M	2	1	**7I-2272**	2	BOLT (M5X0.8X12-MM)	

M - METRIC PART
Y - SEPARATE ILLUSTRATION

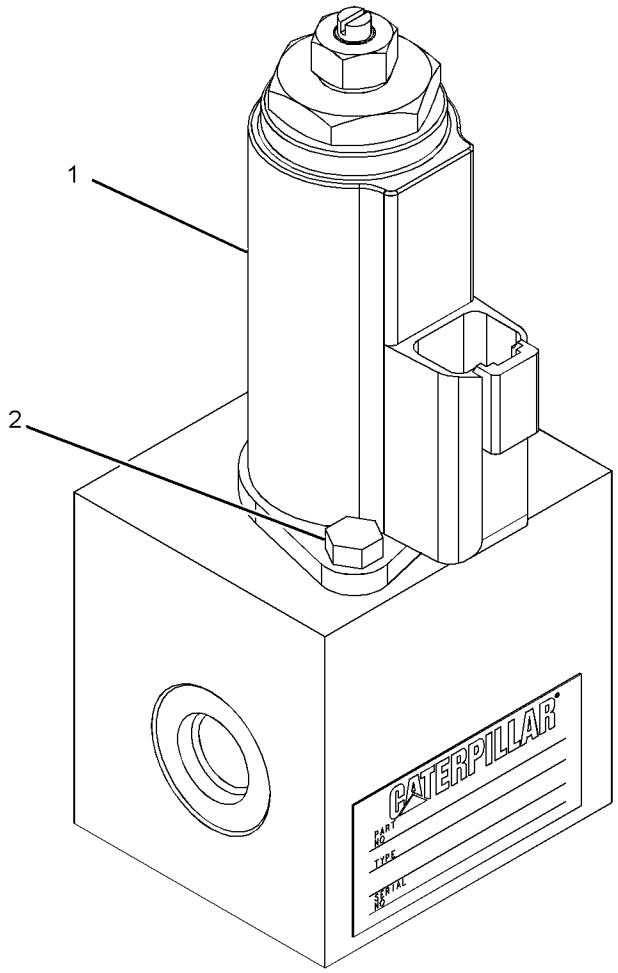

GRAPHIC #1 <END> g01380974

270-5672 VALVE GP-SOLENOID & RELIEF

S/N: DLP1-UP
PART OF 278-6697 LINES GP-FRONT
AN ATTACHMENT

SMCS-5571 **i07195769**

NOTE	REF NO	GRAPHIC REF	PART NUMBER	QTY	PART NAME 1 2 3 4 5 6 (PRODUCT LEVEL)	SEE PAGE
Y	1	1	**335-0158**	1	VALVE GP-SOLENOID & RELIEF	862

Y - SEPARATE ILLUSTRATION

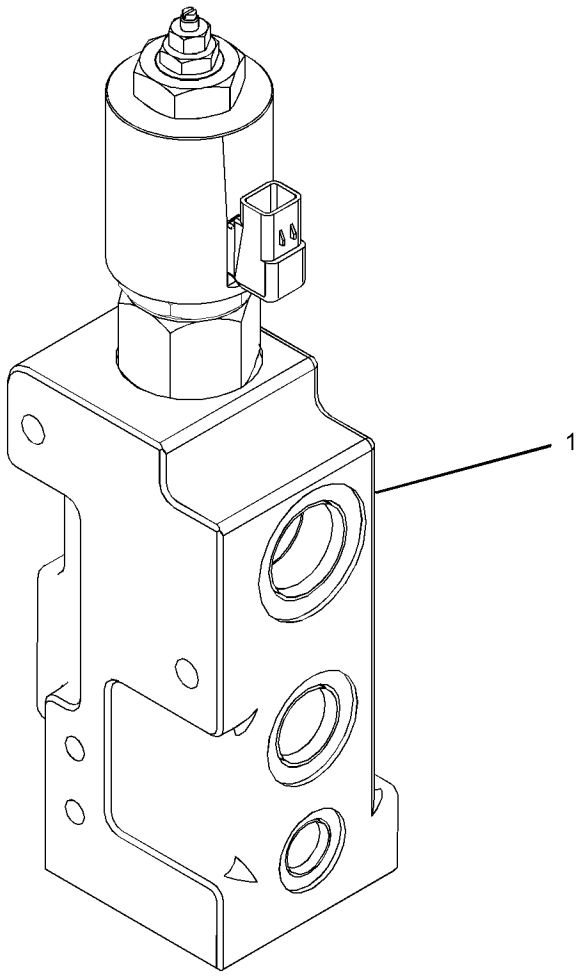

GRAPHIC #1 <END> g02662696

270-5757 VALVE GP-SOLENOID & RELIEF

S/N: DLP1-UP
PART OF 278-6697 LINES GP-FRONT
AN ATTACHMENT

SMCS-5571 **i07195768**

NOTE	REF NO	GRAPHIC REF	PART NUMBER	QTY	PART NAME 1 2 3 4 5 6 (PRODUCT LEVEL)	SEE PAGE
Y	1	1	**335-0158**	1	VALVE GP-SOLENOID & RELIEF	862

Y - SEPARATE ILLUSTRATION

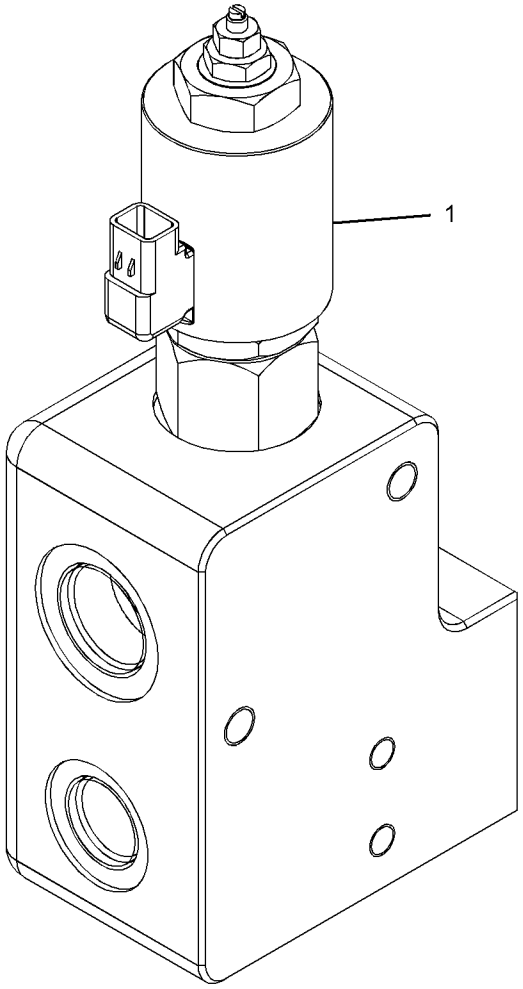

GRAPHIC #1 <END> g02107553

335-0158 VALVE GP-SOLENOID & RELIEF

S/N: DLP1-UP

PART OF 270-5672, 270-5757 VALVE GP-SOLENOID & RELIEF

AN ATTACHMENT

SMCS-5571 **i07142797**

NOTE	REF NO	GRAPHIC REF	PART NUMBER	QTY	PART NAME 1 2 3 4 5 6 (PRODUCT LEVEL)	SEE PAGE
	1	1	**095-1590**	1	SEAL-O-RING	
	2	1	**095-1787**	1	RING-BACKUP	
	3	1	**7M-8485**	1	SEAL-O-RING	
	4	1	**458-5907**	1	COIL AS	
		1	**095-1533**	2	SEAL-O-RING	

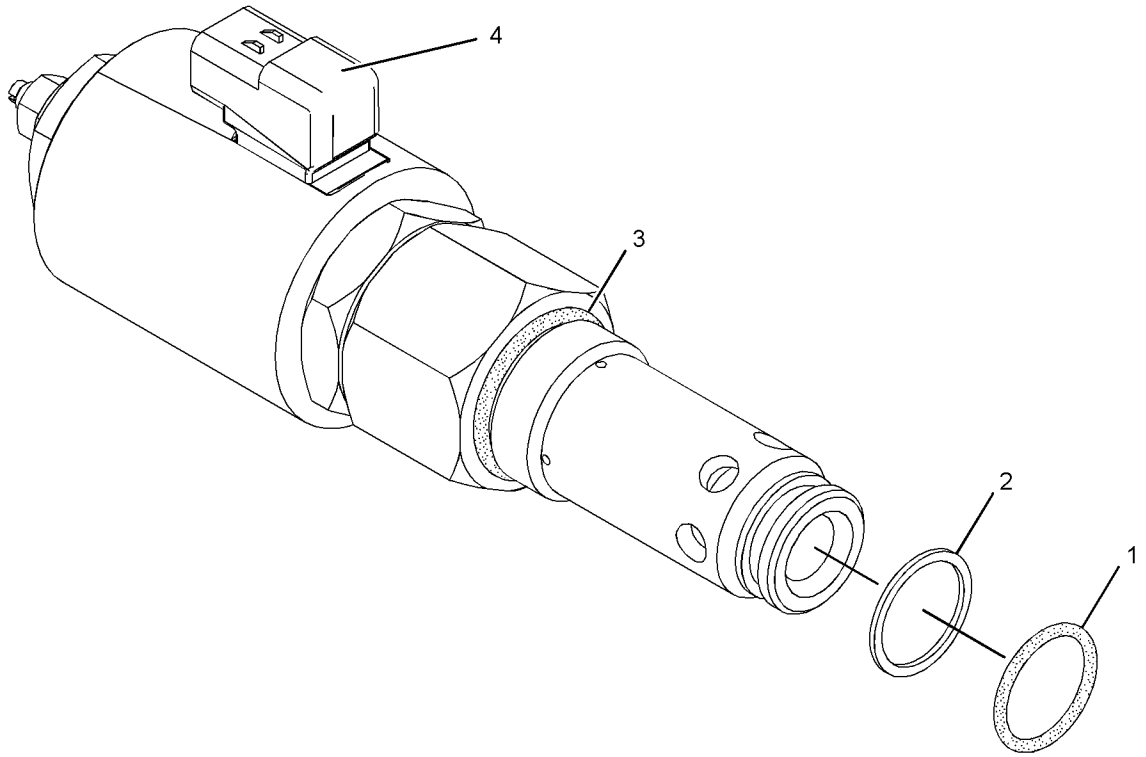

GRAPHIC #1 <END> g03785439

303-4484 VALVE GP-TRAVEL COUNTERBALANCE

S/N: DLP1-617

PART OF 277-6697 MOTOR GP-TRAVEL

SMCS-5811 **i04929492**

NOTE	REF NO	GRAPHIC REF	PART NUMBER	QTY	PART NAME 1 2 3 4 5 6 (PRODUCT LEVEL)	SEE PAGE
	1	1	**7Y-4224**	2	ORIFICE	
	2	1	**087-5631**	1	ORIFICE	
	3	1	**095-1585**	2	SEAL-O-RING	
	4	1	**119-5362**	2	SPRING	
	5	1	**119-5364**	2	PLUG	
	6	1	**129-7932**	2	GUIDE	
	7	1	**165-5837**	2	COVER	
	8	1	**165-5846**	2	VALVE	
	9	1	**165-5850**	1	SPRING	
	10	1	**337-6461**	1	SPOOL	
	11	1	**199-5152**	2	SPRING	
	12	1	**337-6459**	1	VALVE GP-COUNTERBALANCE	
	13	1	**4T-9905**	1	ADAPTER	
Y	15	1	**304-3961**	2	VALVE GP-RELIEF (TRACTION CONTROL)	840
	16	1	**095-1701**	2	SEAL-O-RING	
	17	1	**2M-9780**	4	SEAL-O-RING	
	18	1	**3J-1907**	2	SEAL-O-RING	
	19	1	**3K-0360**	2	SEAL-O-RING	
	20	1	**4J-7533**	12	SEAL-O-RING	
M	22	1	**8T-9515**	8	BOLT-SOCKET HEAD (M10X1.5X40-MM)	
	23	1	**225-4804**	12	PLUG	
	24	1	**9S-8004**	2	PLUG (9/16-18-THD)	
	25	1	**7Y-5010**	2	PLUG	
	26	1	**9S-8006**	1	PLUG (7/8-14-THD)	

M - METRIC PART
Y - SEPARATE ILLUSTRATION

303-4484 **VALVE GP-TRAVEL COUNTERBALANCE (**contd.**)** **i04929492**

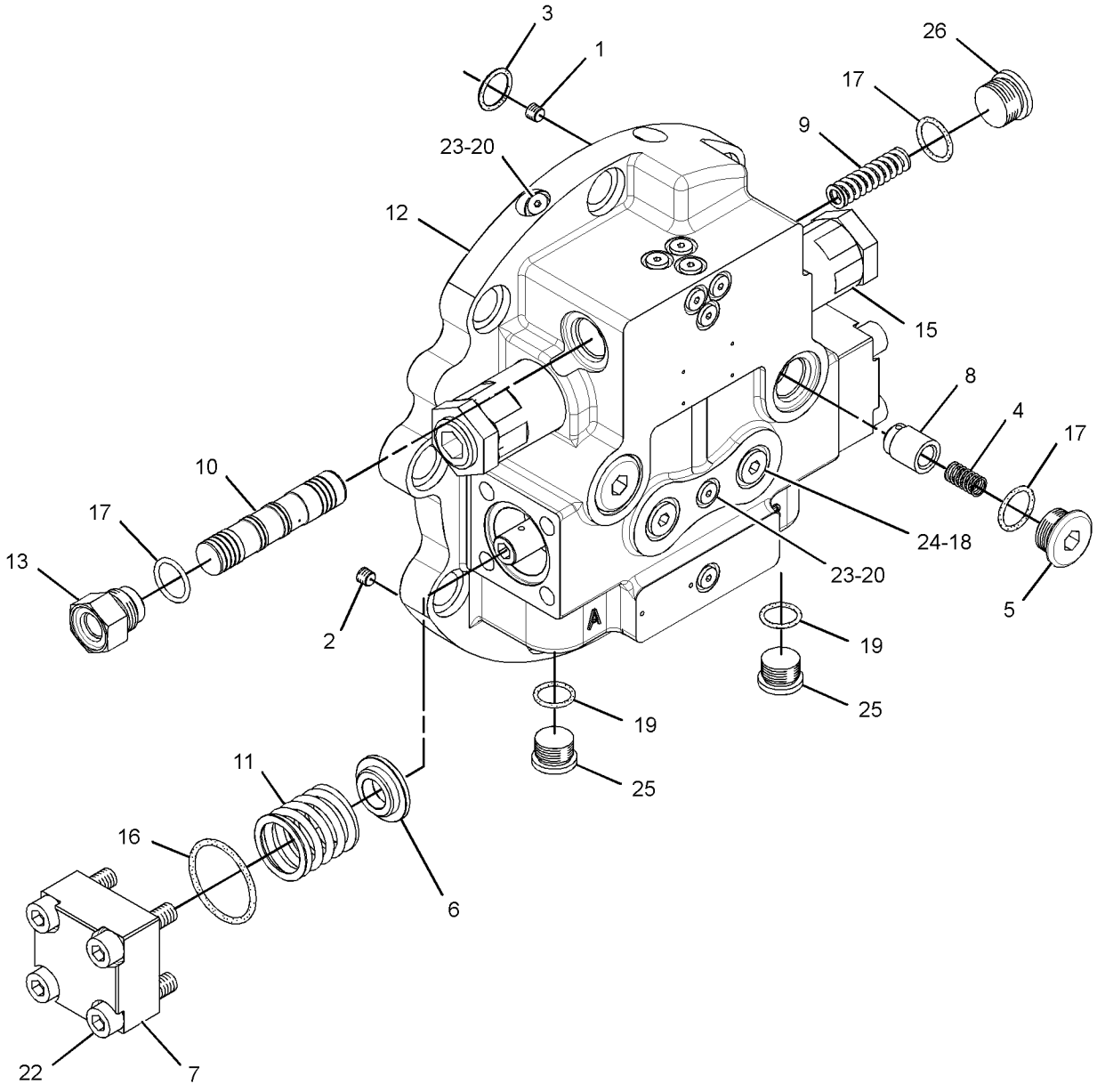

GRAPHIC #1 <END> g02491963

349-9520 VALVE GP-TRAVEL COUNTERBALANCE

S/N: DLP617-UP

FIELD REPLACEMENT FOR 277-6697—PAGE: 752, 332-7499—PAGE: 320

PART OF 357-1821, 374-5964, 421-4382 MOTOR GP-TRAVEL

SMCS-5811 **i05167209**

NOTE	REF NO	GRAPHIC REF	PART NUMBER	QTY	PART NAME 1 2 3 4 5 6 (PRODUCT LEVEL)	SEE PAGE
Y	1	1	**4T-1860**	1	VALVE GP-SHUTTLE (BALL RESOLVER)	849
	2	1	**7Y-4224**	2	ORIFICE	
	3	1	**7Y-5010**	2	PLUG	
	4	1	**087-4786**	1	ADAPTER	
	5	1	**087-5631**	1	ORIFICE	
	6	1	**095-1585**	2	SEAL-O-RING	
	7	1	**119-5362**	2	SPRING	
	8	1	**119-5364**	2	PLUG	
	9	1	**129-7932**	2	GUIDE	
	10	1	**165-5837**	2	COVER	
	11	1	**165-5846**	2	VALVE	
	12	1	**165-5850**	1	SPRING	
	13	1	**199-5152**	2	SPRING	
Y	14	1	**304-3961**	2	VALVE GP-RELIEF (TRACTION CONTROL)	840
	15	1	**337-6461**	1	SPOOL	
	16	1	**349-9521**	1	VALVE GP-CONTROL	
		1	**5H-1472**	2	BALL	
	17	1	**9S-8006**	1	PLUG (7/8-14-THD)	
	18	1	**094-1882**	11	PLUG	
	19	1	**095-1701**	2	SEAL-O-RING	
	20	1	**2M-9780**	4	SEAL-O-RING	
	21	1	**3J-1907**	3	SEAL-O-RING	
	22	1	**3K-0360**	2	SEAL-O-RING	
M	23	1	**8T-9515**	8	BOLT-SOCKET HEAD (M10X1.5X40-MM)	
	24	1	**9S-8004**	3	PLUG (9/16-18-THD)	

M - METRIC PART
Y - SEPARATE ILLUSTRATION

349-9520 **VALVE GP-TRAVEL COUNTERBALANCE (**contd.**)** **i05167209**

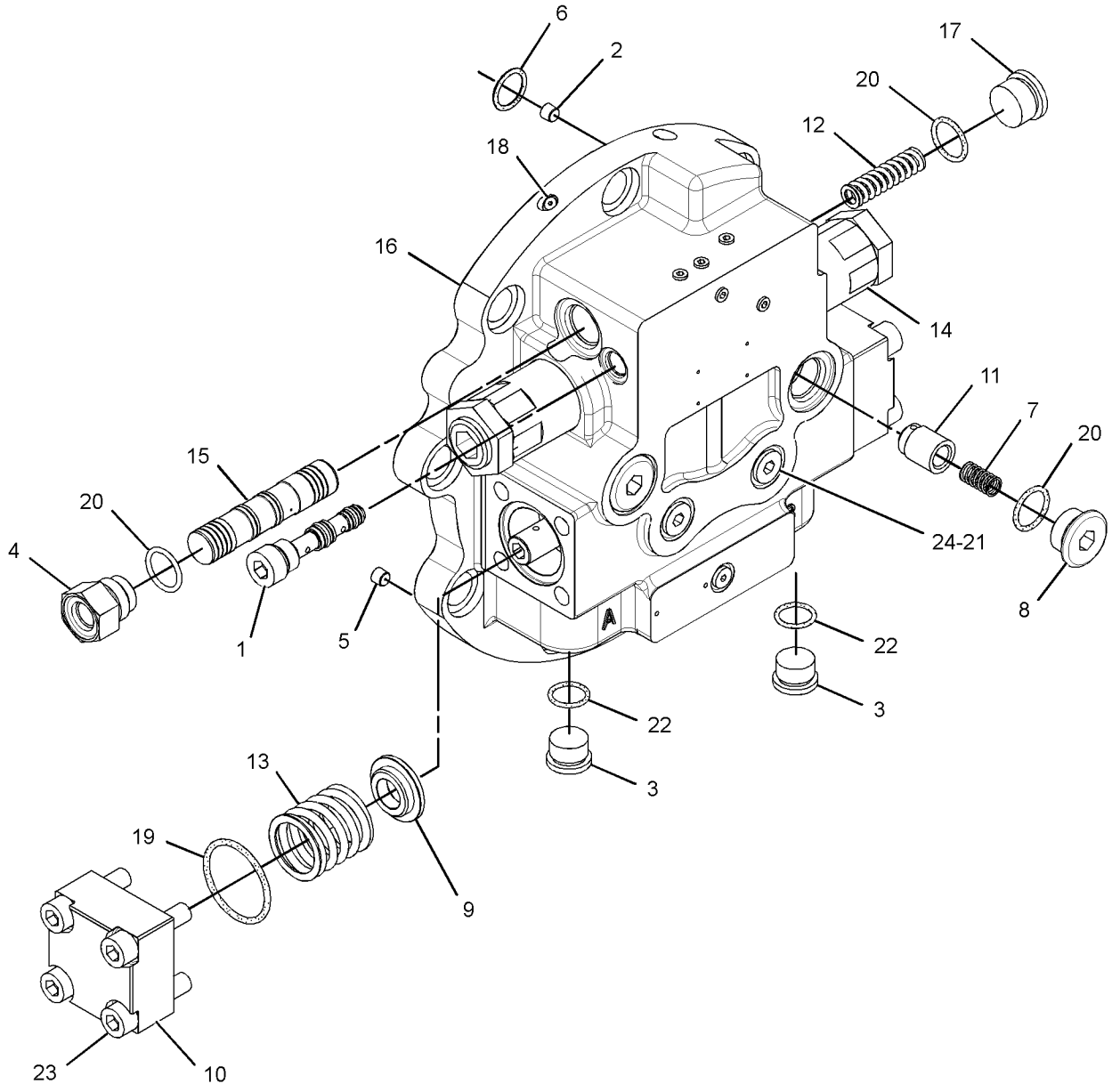

GRAPHIC #1 <END> g02721420

301-2543 BOOM AR-1 PIECE LONG—HEAVY-DUTY

S/N: DLP1-UP
PART OF 336-3346 OPTION AR-CAB, 351-9714, 359-2252, 359-2483, 367-8791, 379-7090 OPTION AR-REGIONAL
AN ATTACHMENT

SMCS-6501 **i05047353**

NOTE	PART NUMBER	QTY	PART NAME 1 2 3 4 5 6 (PRODUCT LEVEL)	SEE PAGE
Y	*303-9094*	1	BOOM GP	868
			—OR—	
Y	*392-0343*	1	BOOM GP	870
Y	*289-7704*	1	CYLINDER & LINES GP-BOOM (LH)	477
Y	*289-7705*	1	CYLINDER & LINES GP-BOOM (RH)	477
Y	*289-7711*	1	CYLINDER & LINES GP-STICK	479
Y	*275-7052*	1	LIGHTING GP-FLOOD (BOOM, LH)	213
Y	*292-7442*	1	LINES GP-BOOM (WITHOUT AUXILIARY)	569
			—OR—	
Y	*390-4277*	1	LINES GP-BOOM	571
Y	*315-1030*	1	LINES GP-GREASE (BOOM)	876

Y - SEPARATE ILLUSTRATION

<END>

385-4095 BOOM AR-1 PIECE LONG—AUXILIARY, HEAVY-DUTY

S/N: DLP1-UP
AN ATTACHMENT

SMCS-6501 **i05178149**

NOTE	PART NUMBER	QTY	PART NAME 1 2 3 4 5 6 (PRODUCT LEVEL)	SEE PAGE
Y	*392-0346*	1	BOOM GP	872
Y	*289-8067*	1	CYLINDER & LINES GP-BOOM (LH)	478
			—OR—	
Y	*385-2825*	1	CYLINDER & LINES GP-BOOM (LH)	478
Y	*289-8068*	1	CYLINDER & LINES GP-BOOM (RH)	478
			—OR—	
Y	*385-2826*	1	CYLINDER & LINES GP-BOOM (RH)	478
Y	*289-8076*	1	CYLINDER & LINES GP-STICK	479
			—OR—	
Y	*385-2829*	1	CYLINDER & LINES GP-STICK	479
Y	*275-7052*	1	LIGHTING GP-FLOOD (BOOM, LH)	213
Y	*390-4277*	1	LINES GP-BOOM	571
Y	*315-1030*	1	LINES GP-GREASE (BOOM)	876

Y - SEPARATE ILLUSTRATION

<END>

303-9094 BOOM GP

S/N: DLP1-UP
4.65-M (15.3-FT)
PART OF 301-2543 BOOM AR-1 PIECE LONG
AN ATTACHMENT

SMCS-6301, 6302, 6460, 6501, 6516, 6521, 6535, 6536 **i02884433**

NOTE	REF NO	GRAPHIC REF	PART NUMBER	QTY	PART NAME 1 2 3 4 5 6 (PRODUCT LEVEL)	SEE PAGE
	1	1	**1R-6225**	1	PIN AS	
	2	1	**1R-6226**	1	PIN AS	
	3	1	**4I-3309**	2	SPACER (82X110X3-MM THK)	
B	4	1	**093-0115**	1	SHIM (2-MM THK)	
	5	1	**093-0357**	1	SPACER (63X100X9-MM THK)	
B	6	1	**133-2425**	1	SHIM (0.5-MM THK)	
	7	1	**166-1486**	4	SHIM (2-MM THK)	
	8	1	**172-3080**	1	PIN	
	9	1	**303-9095**	1	BOOM & BEARING AS	
	9A	1	**273-6814**	2	BUSHING	
	10	1	**086-0297**	1	WASHER (13X50X6-MM THK)	
	11	1	**086-0298**	1	WASHER (19X60X9-MM THK)	
	12	1	**095-6824**	2	PLATE	
	13	1	**099-3600**	4	WASHER (12.7X30X4-MM THK)	
	14	1	**166-1494**	2	SEAL-LIP TYPE	
M	15	1	**7X-2552**	1	BOLT (M16X2X30-MM)	
M	16	1	**8T-4179**	1	BOLT (M12X1.75X20-MM)	
M	17	1	**8T-4192**	4	BOLT (M12X1.75X25-MM)	

B - USE AS REQUIRED
M - METRIC PART

303-9094 **BOOM GP (**contd.**)** **i02884433**

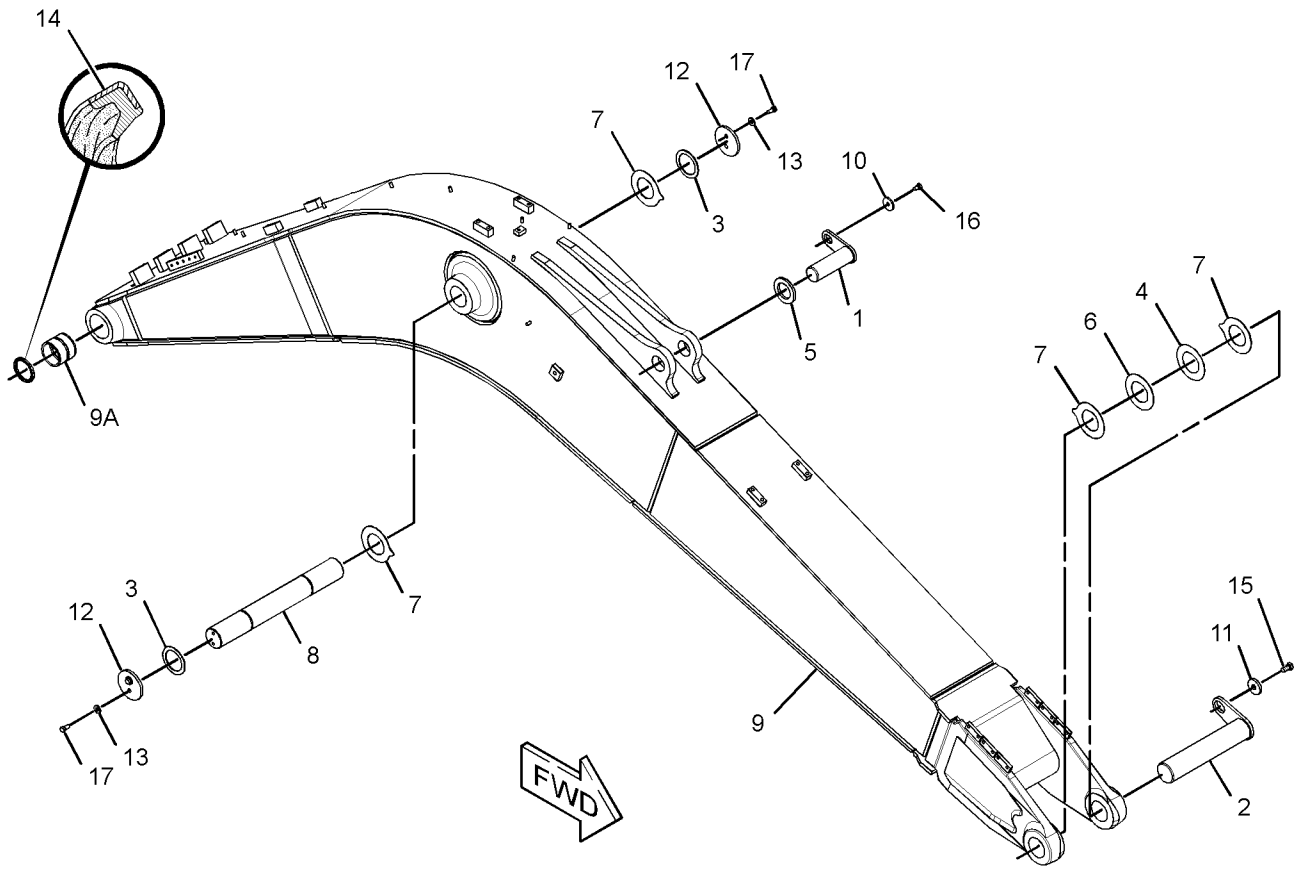

GRAPHIC #1 <END> g01439116

392-0343 BOOM GP

S/N: DLP1-UP
4.7-M (15.4-FT)
PART OF 301-2543 BOOM AR-1 PIECE LONG
AN ATTACHMENT

SMCS-6301, 6302, 6460, 6501, 6516, 6521, 6535, 6536 **i04901670**

NOTE	REF NO	GRAPHIC REF	PART NUMBER	QTY	PART NAME 1 2 3 4 5 6 (PRODUCT LEVEL)	SEE PAGE
	1	1	**1R-6225**	1	PIN AS	
	2	1	**1R-6226**	1	PIN AS	
	3	1	**4I-3309**	2	SPACER (82X110X3-MM THK)	
B	4	1	**093-0115**	1	SHIM (2-MM THK)	
	5	1	**093-0357**	1	SPACER (63X100X9-MM THK)	
B	6	1	**133-2425**	1	SHIM (0.5-MM THK)	
	7	1	**166-1486**	4	SHIM (2-MM THK)	
	8	1	**172-3080**	1	PIN	
	9	1	**392-0347**	1	BOOM & BEARING AS	
J	9A	1	**273-6814**	2	BUSHING (1000 SERVICE HOURS)	
					—OR—	
J		1	**240-2913**	2	BUSHING (500 SERVICE HOURS)	
					—OR—	
J		1	**357-5710**	2	BUSHING (500 SERVICE HOURS)	
	10	1	**086-0297**	1	WASHER (13X50X6-MM THK)	
	11	1	**086-0298**	1	WASHER (19X60X9-MM THK)	
	12	1	**095-6824**	2	PLATE	
	13	1	**099-3600**	4	WASHER (12.7X30X4-MM THK)	
	14	1	**166-1494**	2	SEAL-LIP TYPE	
M	15	1	**7X-2552**	1	BOLT (M16X2X30-MM)	
M	16	1	**8T-4179**	1	BOLT (M12X1.75X20-MM)	
M	17	1	**8T-4192**	4	BOLT (M12X1.75X25-MM)	

B - USE AS REQUIRED
J - PARTS MARKED J ARE INTERCHANGEABLE
M - METRIC PART

392-0343 **BOOM GP** (contd.) **i04901670**

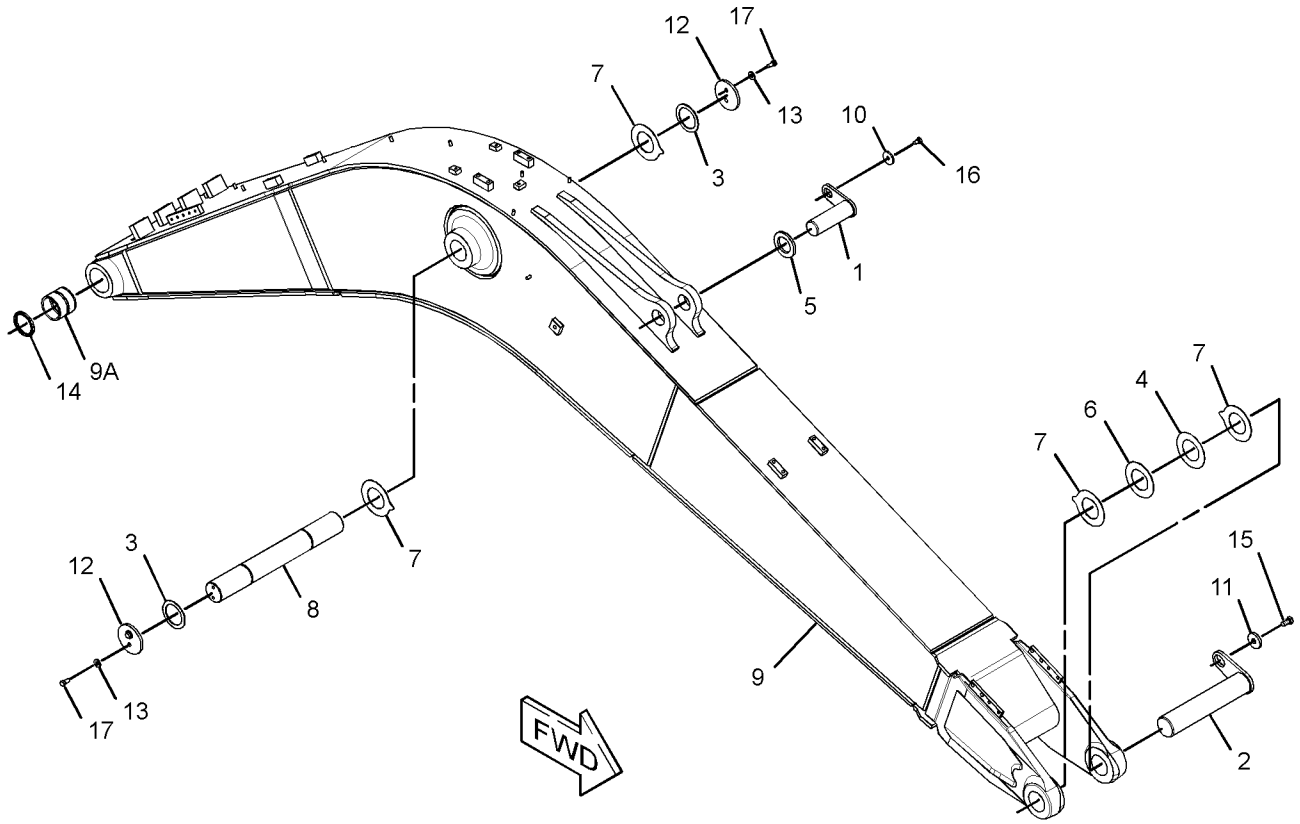

GRAPHIC #1 <END> g03058446

392-0346 BOOM GP

S/N: DLP1-UP
4.65-M (15.3-FT)
PART OF 385-4095 BOOM AR-1 PIECE LONG
AN ATTACHMENT

SMCS-6301, 6302, 6460, 6501, 6516, 6521, 6535, 6536 **i07103014**

NOTE	REF NO	GRAPHIC REF	PART NUMBER	QTY	PART NAME 1 2 3 4 5 6 (PRODUCT LEVEL)	SEE PAGE
	1	1	**1R-6225**	1	PIN AS	
	2	1	**1R-6226**	1	PIN AS	
	3	1	**4I-3309**	2	SPACER (82X110X3-MM THK)	
B	4	1	**093-0115**	1	SHIM (2-MM THK)	
	5	1	**093-0357**	1	SPACER (63X100X9-MM THK)	
B	6	1	**133-2425**	1	SHIM (0.5-MM THK)	
B	7	1	**166-1486**	4	SHIM (2-MM THK)	
	8	1	**172-3080**	1	PIN	
	9	1	**392-0347**	1	BOOM & BEARING AS	
J	9A	1	**273-6814**	2	BUSHING (1000 SERVICE HOURS)	
					—OR—	
J		1	**240-2913**	2	BUSHING (500 SERVICE HOURS)	
					—OR—	
J		1	**357-5710**	2	BUSHING (500 SERVICE HOURS)	
	10	1	**086-0297**	1	WASHER (13X50X6-MM THK)	
	11	1	**086-0298**	1	WASHER (19X60X9-MM THK)	
	12	1	**095-6824**	2	PLATE	
	13	1	**099-3600**	4	WASHER (12.7X30X4-MM THK)	
	14	1	**166-1494**	2	SEAL-LIP TYPE	
M	15	1	**453-2834**	1	BOLT (M16X2X30-MM)	
M	16	1	**8T-4179**	1	BOLT (M12X1.75X20-MM)	
M	17	1	**8T-4192**	4	BOLT (M12X1.75X25-MM)	

B - USE AS REQUIRED
J - PARTS MARKED J ARE INTERCHANGEABLE
M - METRIC PART

392-0346 **BOOM GP** (contd.) **i07103014**

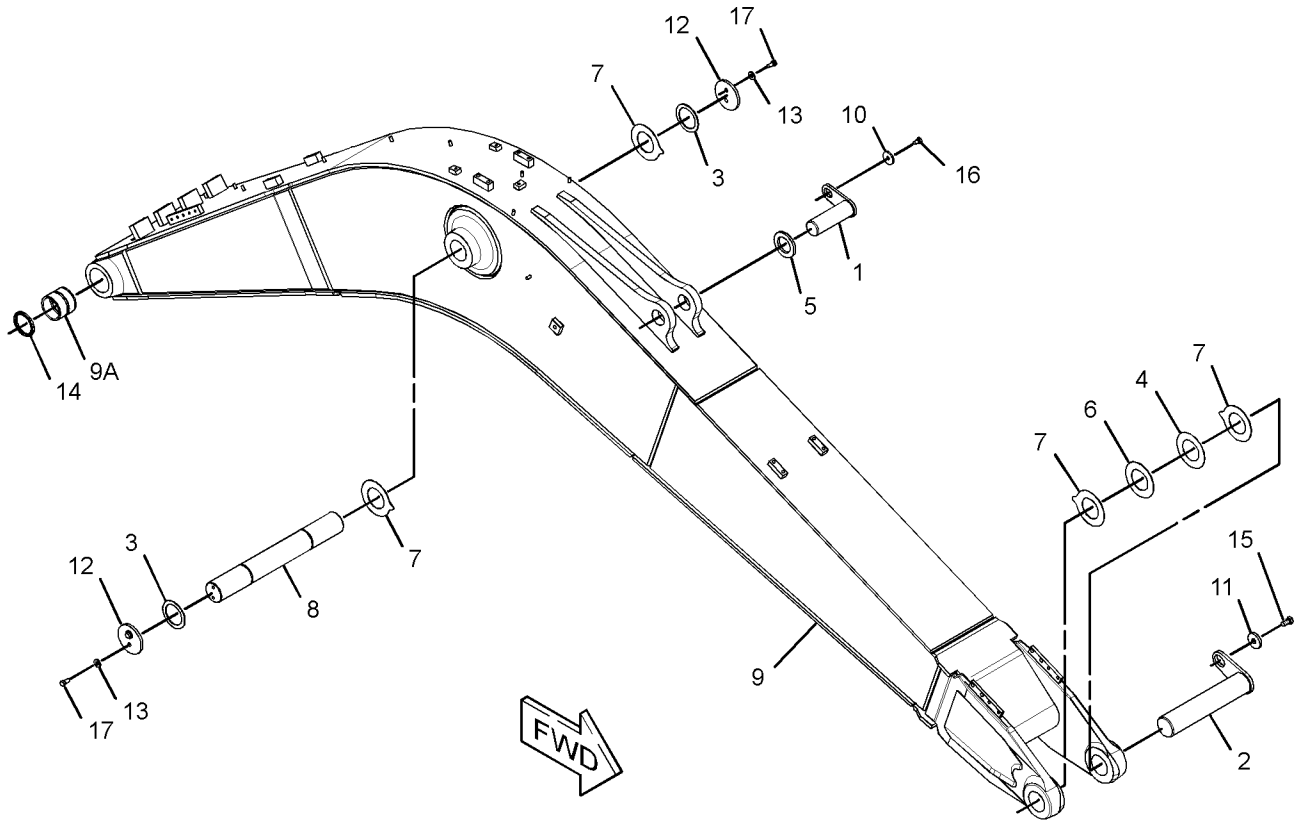

GRAPHIC #1 <END> g03058446

289-7814 GUARD GP-CYLINDER—BLADE

S/N: DLP1-UP

PART OF 301-2691 INSTALLATION AR-BLADE

AN ATTACHMENT

SMCS-7164 **i02811450**

NOTE	REF NO	GRAPHIC REF	PART NUMBER	QTY	PART NAME 1 2 3 4 5 6 (PRODUCT LEVEL)	SEE PAGE
	1	1	**289-7815**	1	COVER	
	2	1	**289-7816**	1	COVER	
	3	1	**5P-1076**	6	WASHER-HARD (13.5X30X4-MM THK)	
M	4	1	**8T-4192**	6	BOLT (M12X1.75X25-MM)	

M - METRIC PART

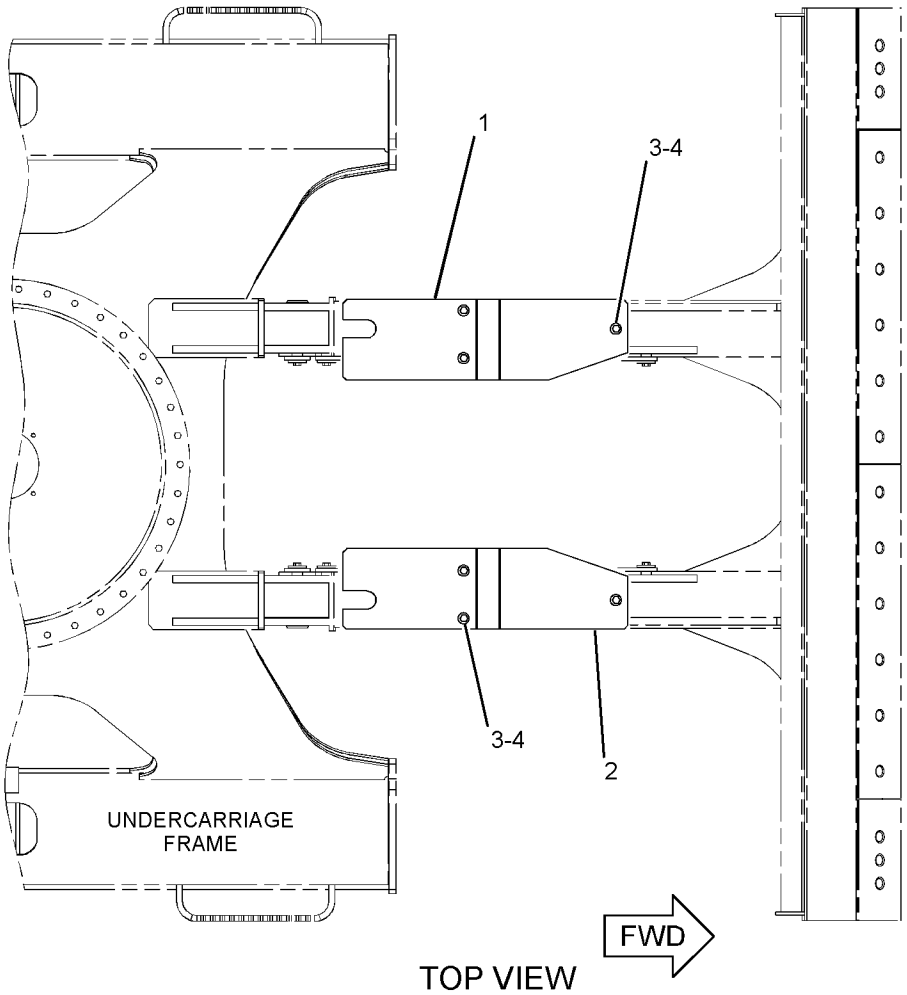

TOP VIEW

GRAPHIC #1 <END> g01403234

326-4440 GUARD GP-CYLINDER–BLADE

S/N: DLP1-UP
PART OF 301-2691, 385-4069 INSTALLATION AR-BLADE
AN ATTACHMENT

SMCS-7164 **i03331960**

NOTE	REF NO	GRAPHIC REF	PART NUMBER	QTY	PART NAME 1 2 3 4 5 6 (PRODUCT LEVEL)	SEE PAGE
	1	1	**326-4441**	1	COVER (LH)	
	2	1	**326-4442**	1	COVER (RH)	
	3	1	**5P-1076**	6	WASHER-HARD (13.5X30X4-MM THK)	
M	4	1	**8T-4192**	6	BOLT (M12X1.75X25-MM)	

M - METRIC PART

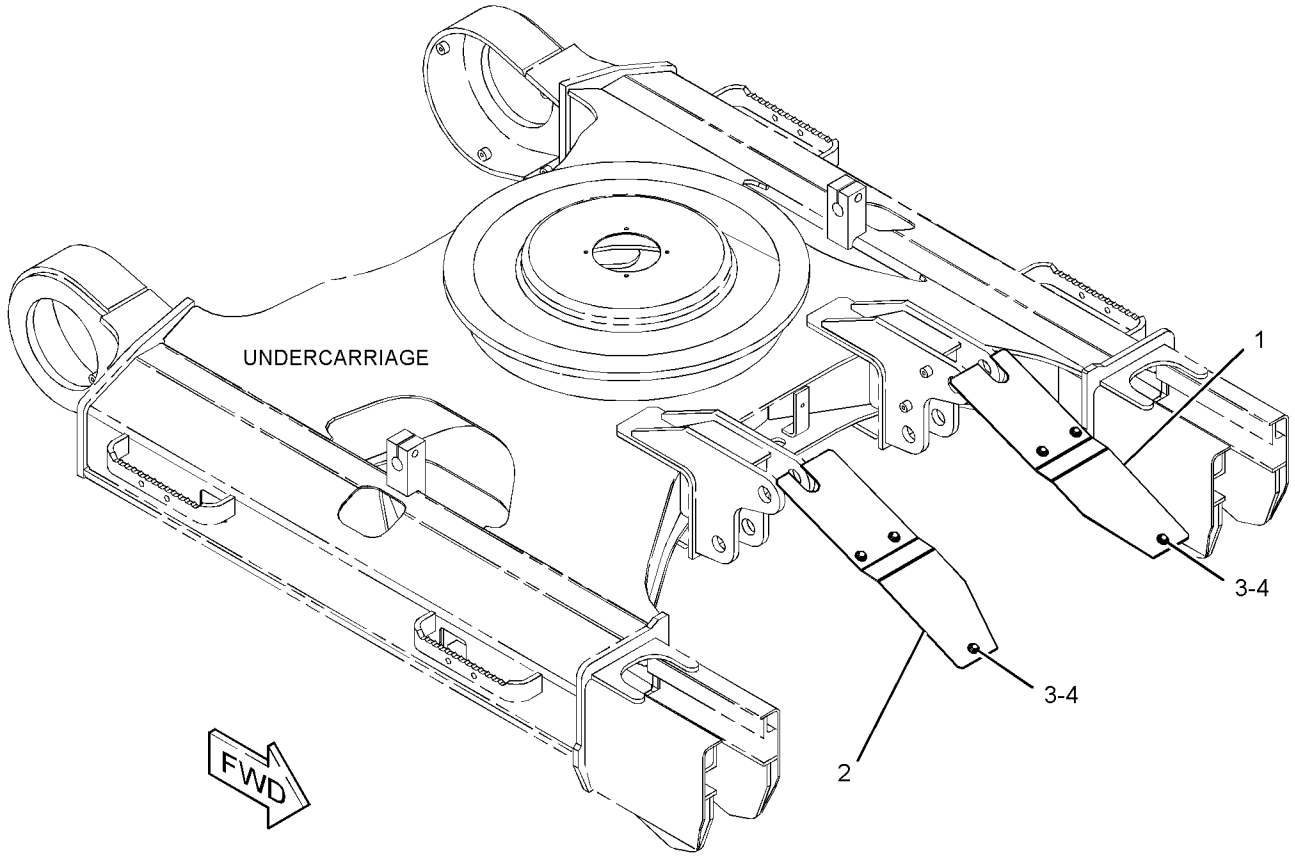

GRAPHIC #1 <END> g01751376

315-1030 LINES GP-GREASE–BOOM

S/N: DLP1-UP
PART OF 301-2543, 385-4095 BOOM AR-1 PIECE LONG
AN ATTACHMENT

SMCS-7510 **i05409640**

NOTE	REF NO	GRAPHIC REF	PART NUMBER	QTY	PART NAME 1 2 3 4 5 6 (PRODUCT LEVEL)	SEE PAGE
	1	1	**5K-9243**	2	ELBOW-FLARED	
	2	1	**7I-6896**	1	TUBE AS	
I	3	1	**121-8659**	1	HOSE AS	
I	4	1	**121-8662**	1	HOSE AS	
	5	1	**166-1579**	3	CLIP	
	6	1	**180-7758**	1	TUBE AS	
I	7	1	**203-7401**	1	HOSE AS	
		1	**105-6431**	1	CONNECTOR	
	8	1	**033-8248**	3	CLIP	
	9	1	**3B-8489**	5	FITTING-GREASE (1/8-27 PTF)	
	10	1	**6L-3616**	2	CONNECTOR	
	11	1	**8T-4121**	6	WASHER-HARD (11X21X2.5-MM THK)	
M	12	1	**8T-4133**	3	NUT (M10X1.5-THD)	
M	13	1	**8T-4191**	3	BOLT (M10X1.5X16-MM)	

I - REFER TO HYDRAULIC INFORMATION SYSTEM
M - METRIC PART

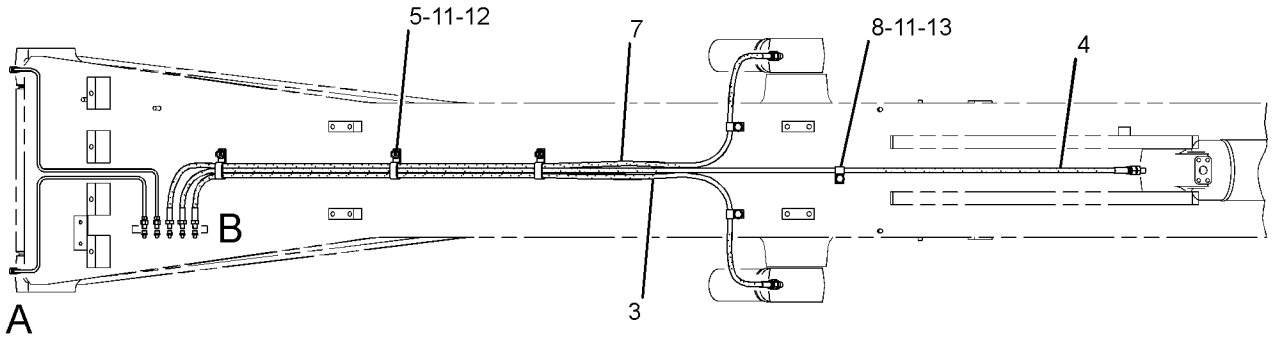

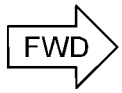

TOP VIEW

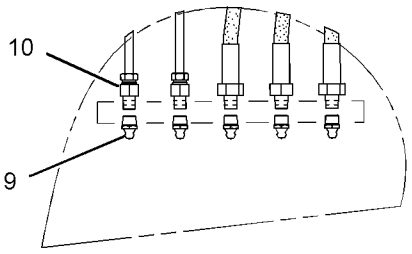

VIEW OF AREA B

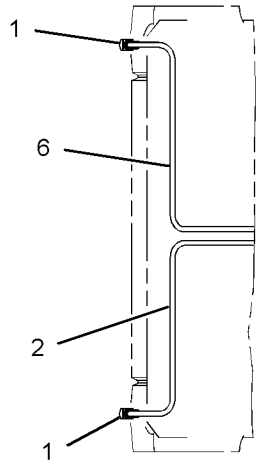

VIEW OF AREA A

GRAPHIC #1 <END> g01440220

260-7067 LINKAGE AR-BUCKET—WITH LIFTING EYE

S/N: DLP1-UP

PART OF 336-3346 OPTION AR-CAB, 351-9714, 359-2252, 359-2483 OPTION AR-REGIONAL

AN ATTACHMENT

SMCS-6513 **i05047352**

NOTE	PART NUMBER	QTY	PART NAME 1 2 3 4 5 6 (PRODUCT LEVEL)	SEE PAGE
Y	*289-7697*	1	CYLINDER & LINES GP-BUCKET	479
Y	*278-9293*	1	LINKAGE GP-BUCKET (WITH LIFTING EYE)	878

Y - SEPARATE ILLUSTRATION

<END>

379-7295 LINKAGE AR-BUCKET—WITHOUT LIFTING EYE

S/N: DLP1-UP

PART OF 367-8791, 379-7090 OPTION AR-REGIONAL

AN ATTACHMENT

SMCS-6513 **i04633709**

NOTE	PART NUMBER	QTY	PART NAME 1 2 3 4 5 6 (PRODUCT LEVEL)	SEE PAGE
Y	*289-7697*	1	CYLINDER & LINES GP-BUCKET	479
Y	*385-3232*	1	LINKAGE GP-BUCKET	882

Y - SEPARATE ILLUSTRATION

<END>

278-9293 LINKAGE GP-BUCKET—WITH LIFTING EYE

S/N: DLP1-UP

PART OF 260-7067 LINKAGE AR-BUCKET

AN ATTACHMENT

SMCS-6513 **i07110011**

NOTE	REF NO	GRAPHIC REF	PART NUMBER	QTY	PART NAME 1 2 3 4 5 6 (PRODUCT LEVEL)	SEE PAGE
	1	1	**3B-8489**	5	FITTING-GREASE (1/8-27 PTF)	
	2	1	**7I-6843**	1	PIN	
	3	1	**086-0523**	2	PIN	
M	4	1	**096-4876**	6	NUT (M14X2-THD)	
	5	1	**166-1482**	2	SHIM (2-MM THK)	
M	6	1	**236-6365**	1	BOLT (M16X2X150-MM)	
	7	1	**235-7679**	4	SEAL-LIP TYPE	
	8	1	**248-7820**	1	PIN	
	9	1	**248-7822**	1	LINK	
	10	1	**248-7823**	1	LINK AS	
	11	1	**248-7836**	2	SEAL-LIP TYPE	
	12	1	**282-4503**	1	LINK & BEARING AS	
	12A	1	**248-7835**	2	BUSHING	
	12B	1	**229-1092**	2	BUSHING	
	13	1	**367-8465**	4	SEAL-O-RING	
M	14	1	**099-0707**	1	BOLT (M14X2X115-MM)	
M	15	1	**099-0724**	2	BOLT (M14X2X145-MM)	
M	16	1	**451-2183**	2	NUT (M16X2-THD)	

M - METRIC PART

278-9293 **LINKAGE GP-BUCKET (**contd.**)** **i07110011**

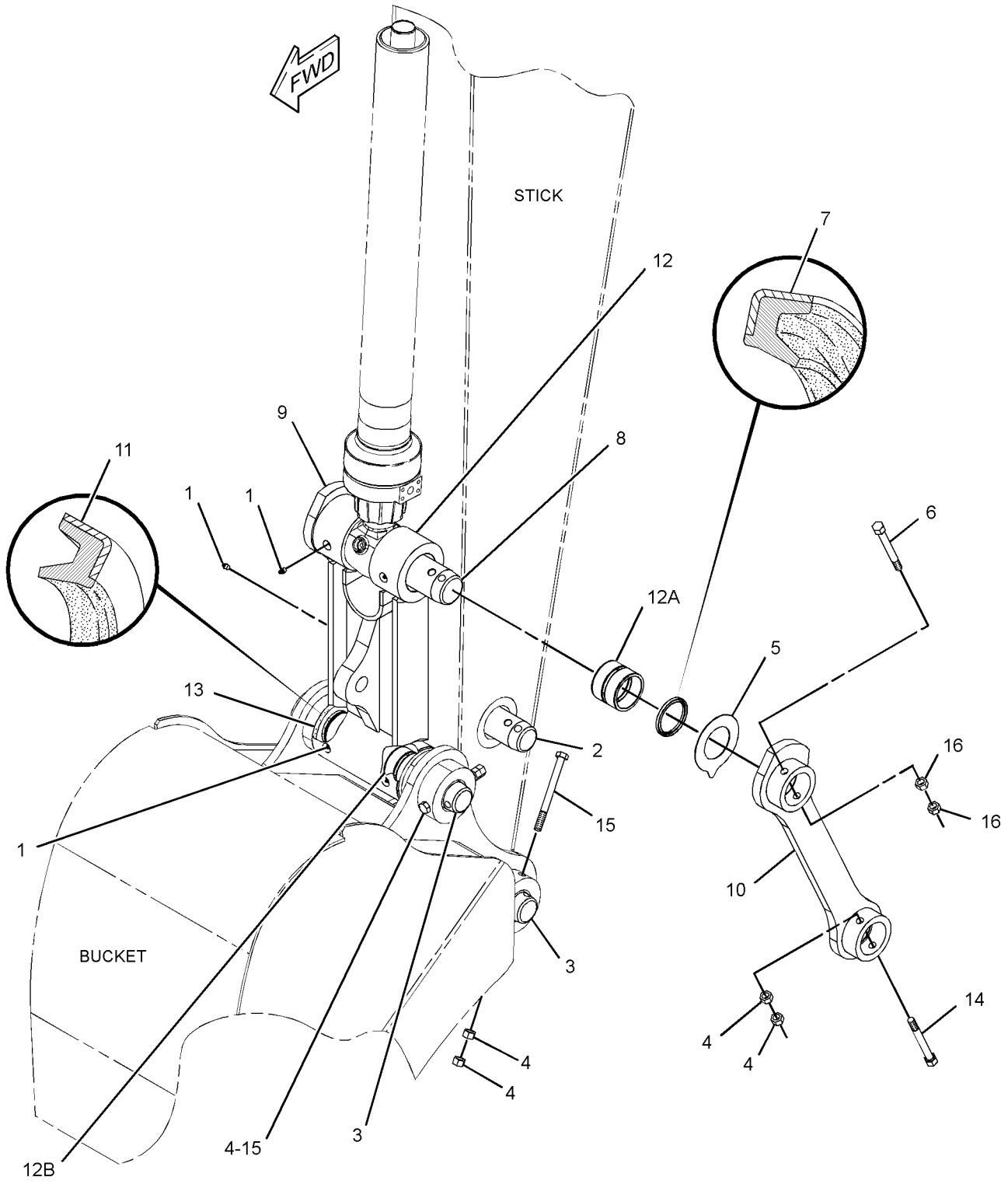

GRAPHIC #1 <END> g02444678

282-5540 LINKAGE GP-BUCKET—COUPLER

S/N: DLP1-UP

PART OF 282-5536, 282-5537 COUPLER AR-QUICK

AN ATTACHMENT

SMCS-6513 **i05799452**

NOTE	REF NO	GRAPHIC REF	PART NUMBER	QTY	PART NAME 1 2 3 4 5 6 (PRODUCT LEVEL)	SEE PAGE
	1	1	**3B-8489**	5	FITTING-GREASE (1/8-27 PTF)	
	2	1	**7I-6843**	1	PIN	
	3	1	**086-0523**	2	PIN	
M	4	1	**096-4876**	6	NUT (M14X2-THD)	
	5	1	**166-1482**	2	SHIM (2-MM THK)	
M	6	1	**236-6365**	1	BOLT (M16X2X150-MM)	
	7	1	**235-7679**	4	SEAL-LIP TYPE	
	8	1	**248-7820**	1	PIN	
	9	1	**248-7822**	1	LINK	
	10	1	**248-7823**	1	LINK AS	
	11	1	**248-7836**	2	SEAL-LIP TYPE	
	12	1	**282-4503**	1	LINK & BEARING AS	
	12A	1	**248-7835**	2	BUSHING	
	12B	1	**229-1092**	2	BUSHING	
	13	1	**367-8465**	4	SEAL-O-RING	
M	14	1	**099-0707**	1	BOLT (M14X2X115-MM)	
M	15	1	**248-5474**	2	BOLT (M14X2X160-MM)	
M	16	1	**451-2183**	2	NUT (M16X2-THD)	

M - METRIC PART

282-5540 **LINKAGE GP-BUCKET (**contd.**)** **i05799452**

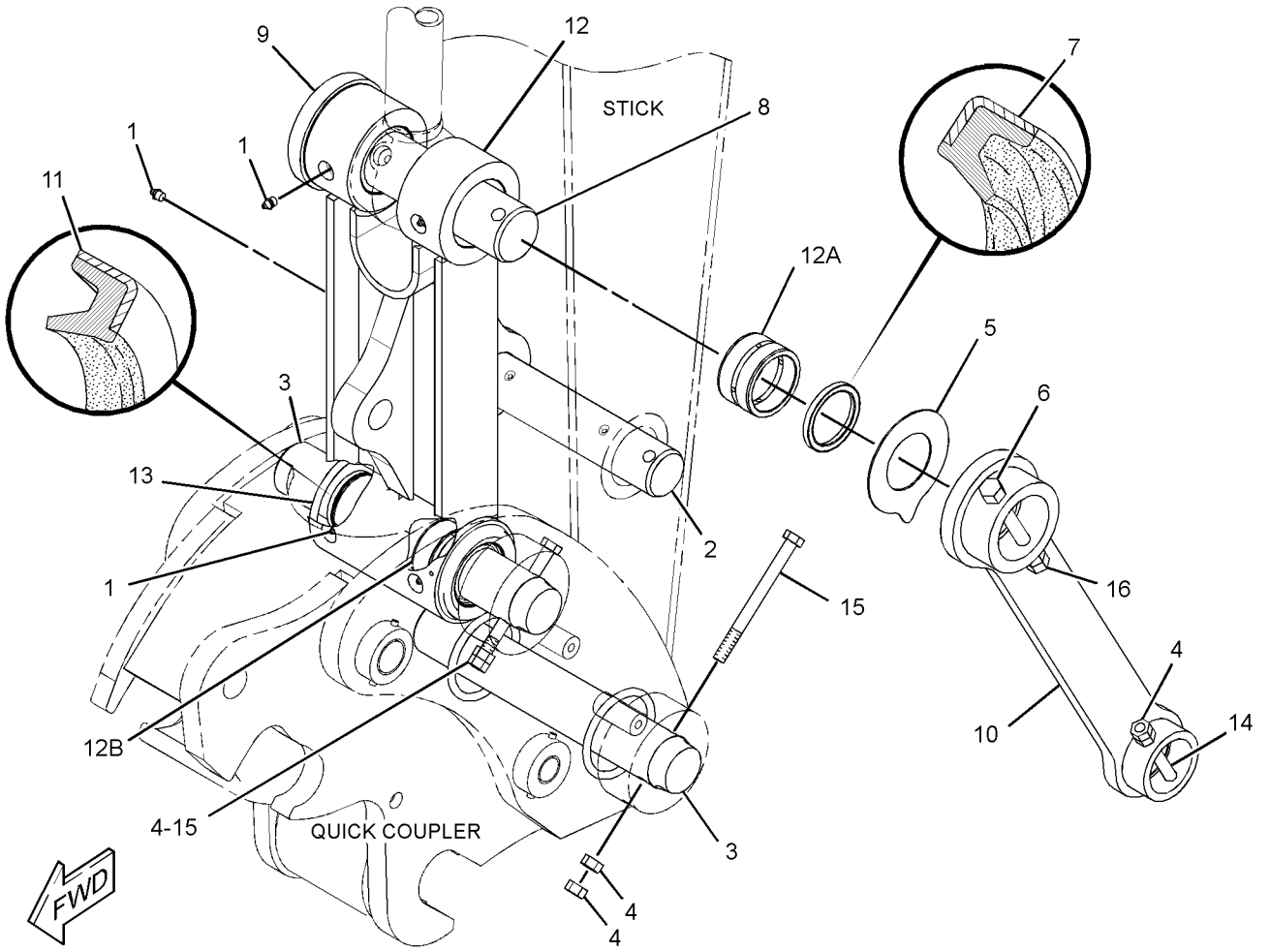

GRAPHIC #1 <END> g01446716

385-3232 LINKAGE GP-BUCKET

S/N: DLP1-UP

PART OF 379-7295 LINKAGE AR-BUCKET

AN ATTACHMENT

SMCS-6513 **i07103006**

NOTE	REF NO	GRAPHIC REF	PART NUMBER	QTY	PART NAME 1 2 3 4 5 6 (PRODUCT LEVEL)	SEE PAGE
	1	1	**7I-6843**	1	PIN	
	2	1	**086-0523**	2	PIN	
B	3	1	**166-1482**	2	SHIM (2-MM THK)	
M	4	1	**236-6365**	1	BOLT (M16X2X150-MM)	
	5	1	**235-7679**	4	SEAL-LIP TYPE	
	6	1	**248-7820**	1	PIN	
	7	1	**248-7822**	1	LINK	
	8	1	**248-7823**	1	LINK AS	
	9	1	**248-7824**	1	LINK & BEARING AS	
	9A	1	**229-1092**	2	BUSHING	
	9B	1	**248-7835**	2	BUSHING	
	10	1	**248-7836**	2	SEAL-LIP TYPE	
M	11	1	**096-4876**	6	NUT (M14X2-THD)	
M	12	1	**099-0707**	1	BOLT (M14X2X115-MM)	
M	13	1	**099-0724**	2	BOLT (M14X2X145-MM)	
	14	1	**367-8465**	4	SEAL-O-RING	
	15	1	**3B-8489**	5	FITTING-GREASE (1/8-27 PTF)	
M	16	1	**451-2183**	2	NUT (M16X2-THD)	

B - USE AS REQUIRED
M - METRIC PART

385-3232 **LINKAGE GP-BUCKET (**contd.**)** **i07103006**

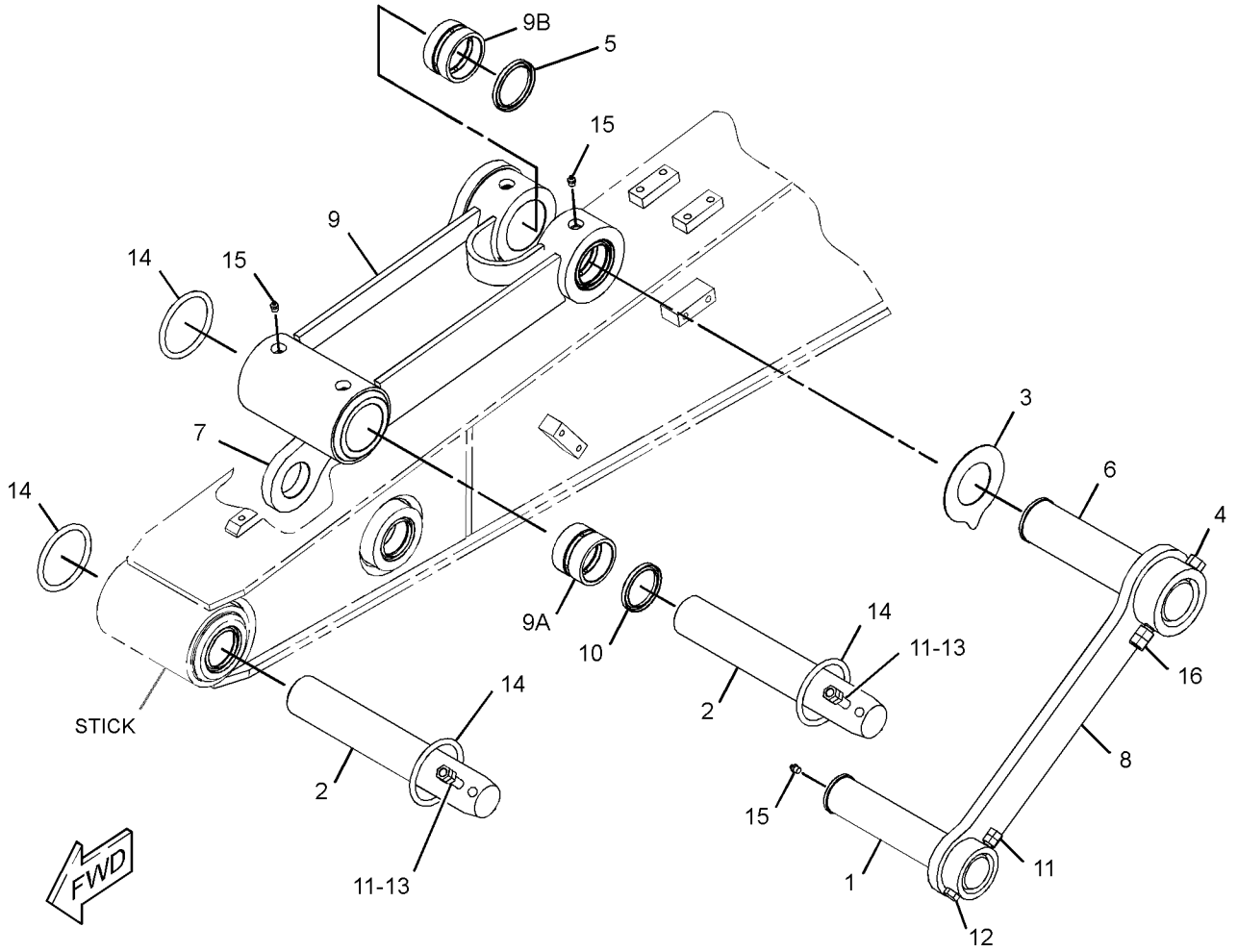

GRAPHIC #1 <END> g02794620

301-2544 STICK AR-HOE—HEAVY-DUTY

S/N: DLP1-UP
2.5-M (8.2-FT) REACH
PART OF 336-3346 OPTION AR-CAB, 351-9714, 359-2252, 359-2483, 367-8791, 379-7090 OPTION AR-REGIONAL
AN ATTACHMENT

SMCS-6502 **i05048499**

NOTE	PART NUMBER	QTY	PART NAME 1 2 3 4 5 6 (PRODUCT LEVEL)	SEE PAGE
Y	*179-7601*	1	LINES GP-STICK	742
Y	*308-8844*	1	STICK GP-HOE (HEAVY-DUTY)	885

Y - SEPARATE ILLUSTRATION

<END>

385-4096 STICK AR-HOE

S/N: DLP1-UP
AN ATTACHMENT

SMCS-6502 **i05220962**

NOTE	PART NUMBER	QTY	PART NAME 1 2 3 4 5 6 (PRODUCT LEVEL)	SEE PAGE
Y	*179-7601*	1	LINES GP-STICK	742
Y	*392-0362*	1	STICK GP-HOE (WITHOUT AUXILIARY)	886

Y - SEPARATE ILLUSTRATION

<END>

385-4097 STICK AR-HOE—REACH, HEAVY-DUTY, AUXILIARY

S/N: DLP1-UP
2.5-M (8.2-FT)
AN ATTACHMENT

SMCS-6502 **i05221518**

NOTE	PART NUMBER	QTY	PART NAME 1 2 3 4 5 6 (PRODUCT LEVEL)	SEE PAGE
Y	*179-7601*	1	LINES GP-STICK (REACH)	742
Y	*392-0367*	1	STICK GP-HOE (HEAVY-DUTY, REACH)	887

Y - SEPARATE ILLUSTRATION

<END>

308-8844 STICK GP-HOE—HEAVY-DUTY

S/N: DLP1-UP
2.5-M (8.2-FT)
PART OF 301-2544 STICK AR-HOE
AN ATTACHMENT

SMCS-6502 **i04363230**

NOTE	REF NO	GRAPHIC REF	PART NUMBER	QTY	PART NAME 1 2 3 4 5 6 (PRODUCT LEVEL)	SEE PAGE
	1	1	**1R-6225**	1	PIN AS	
	2	1	**093-0357**	2	SPACER (63X100X9-MM THK)	
	3	1	**127-3913**	1	PIN AS	
	4	1	**166-1481**	2	SHIM (2-MM THK)	
	5	1	**166-1492**	2	SEAL-LIP TYPE	
	6	1	**248-7836**	2	SEAL-LIP TYPE	
	7	1	**371-5461**	1	STICK & BEARING AS	
	7A	1	**229-1091**	2	BUSHING	
	7B	1	**229-1095**	2	BUSHING	
	7C	1	**273-6814**	2	BUSHING	
	8	1	**086-0297**	2	WASHER (13X50X6-MM THK)	
	9	1	**166-1494**	2	SEAL-LIP TYPE	
	10	1	**3B-8489**	3	FITTING-GREASE (1/8-27 PTF)	
M	11	1	**8T-4179**	2	BOLT (M12X1.75X20-MM)	

M - METRIC PART

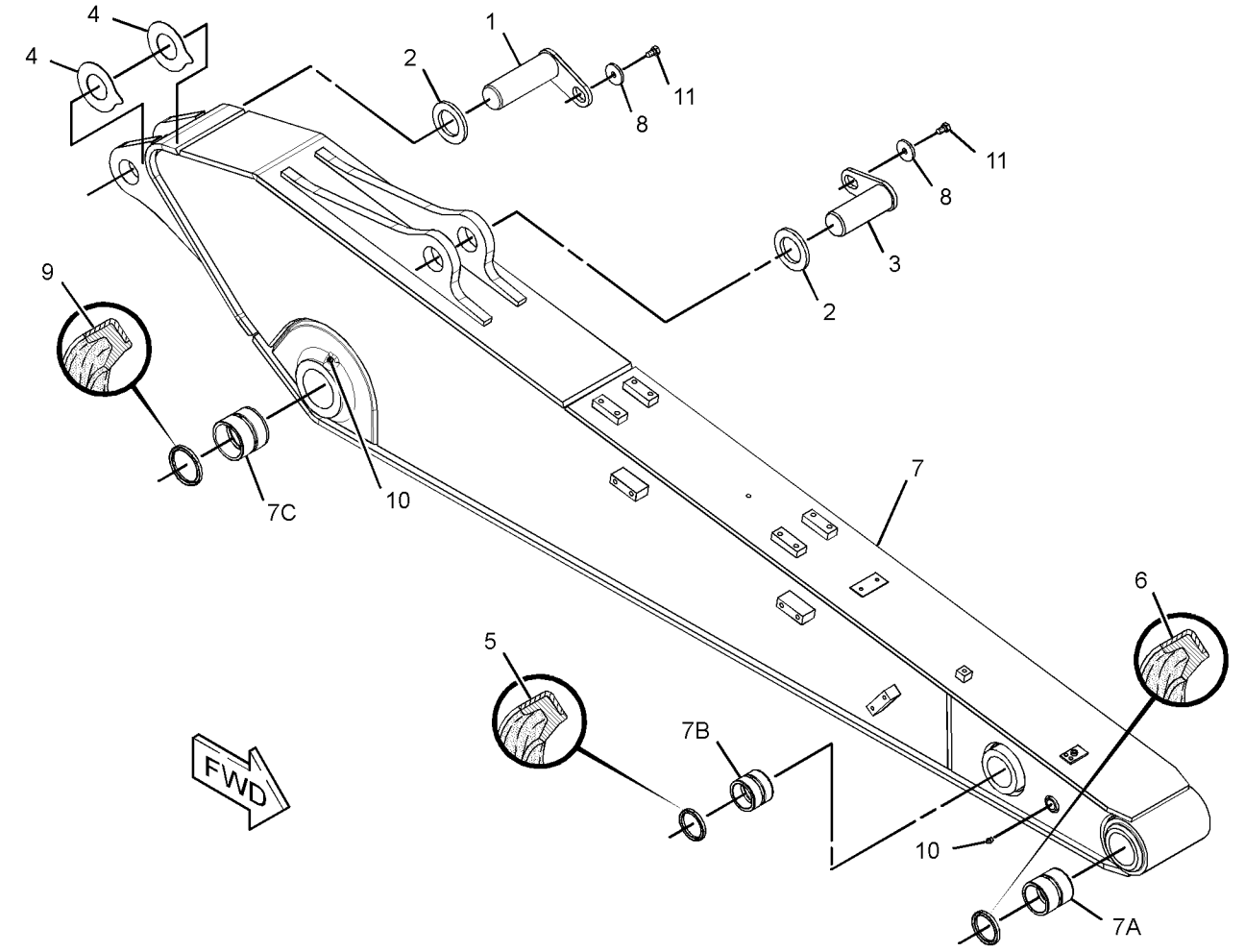

GRAPHIC #1 <END> g01439925

392-0362 STICK GP-HOE—WITHOUT AUXILIARY

S/N: DLP1-UP
2.5-M (8.2-FT)
PART OF 385-4096 STICK AR-HOE
AN ATTACHMENT

SMCS-6502 **i05086809**

NOTE	REF NO	GRAPHIC REF	PART NUMBER	QTY	PART NAME 1 2 3 4 5 6 (PRODUCT LEVEL)	SEE PAGE
	1	1	**1R-6225**	1	PIN AS	
	2	1	**093-0357**	2	SPACER (63X100X9-MM THK)	
	3	1	**127-3913**	1	PIN AS	
	4	1	**166-1481**	2	SHIM (2-MM THK)	
	5	1	**166-1492**	2	SEAL-LIP TYPE	
	6	1	**248-7836**	2	SEAL-LIP TYPE	
	7	1	**392-0363**	1	STICK & BEARING AS	
	7A	1	**229-1091**	2	BUSHING	
	7B	1	**229-1095**	2	BUSHING	
	7C	1	**273-6814**	2	BUSHING	
	8	1	**086-0297**	2	WASHER (13X50X6-MM THK)	
	9	1	**166-1494**	2	SEAL-LIP TYPE	
	10	1	**3B-8489**	3	FITTING-GREASE (1/8-27 PTF)	
M	11	1	**8T-4179**	2	BOLT (M12X1.75X20-MM)	

M - METRIC PART

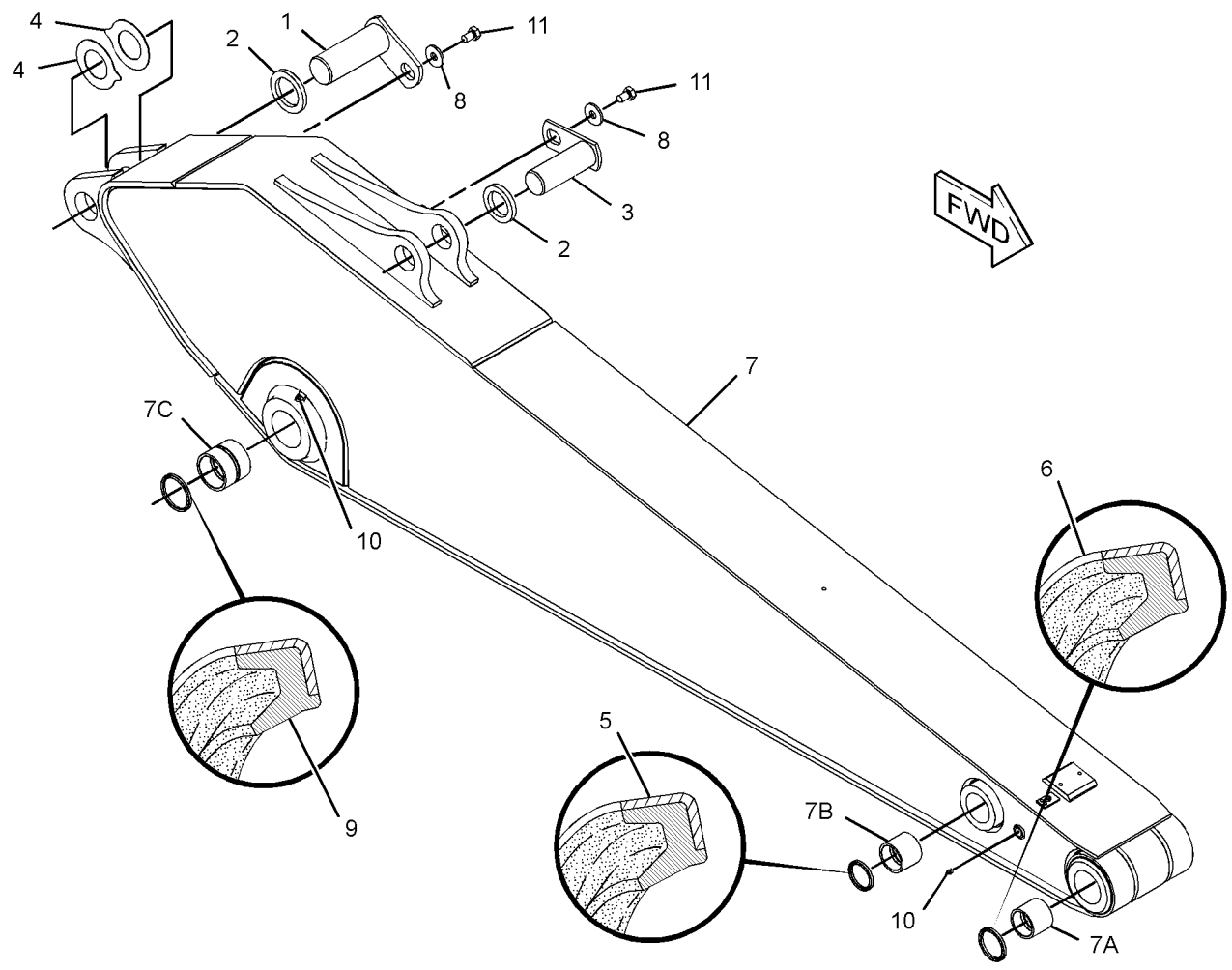

GRAPHIC #1 <END> g03253357

392-0367 STICK GP-HOE—HEAVY-DUTY, REACH

S/N: DLP1-UP
2.5-M (8.2-FT)
PART OF 385-4097 STICK AR-HOE
AN ATTACHMENT

SMCS-6502 **i05034099**

NOTE	REF NO	GRAPHIC REF	PART NUMBER	QTY	PART NAME 1 2 3 4 5 6 (PRODUCT LEVEL)	SEE PAGE
	1	1	**1R-6225**	1	PIN AS	
	2	1	**093-0357**	2	SPACER (63X100X9-MM THK)	
	3	1	**127-3913**	1	PIN AS	
	4	1	**166-1481**	2	SHIM (2-MM THK)	
	5	1	**166-1492**	2	SEAL-LIP TYPE	
	6	1	**248-7836**	2	SEAL-LIP TYPE	
	7	1	**392-0368**	1	STICK & BEARING AS	
	7A	1	**229-1091**	2	BUSHING	
	7B	1	**229-1095**	2	BUSHING	
	7C	1	**273-6814**	2	BUSHING	
	8	1	**086-0297**	2	WASHER (13X50X6-MM THK)	
	9	1	**166-1494**	2	SEAL-LIP TYPE	
	10	1	**3B-8489**	3	FITTING-GREASE (1/8-27 PTF)	
M	11	1	**8T-4179**	2	BOLT (M12X1.75X20-MM)	

M - METRIC PART

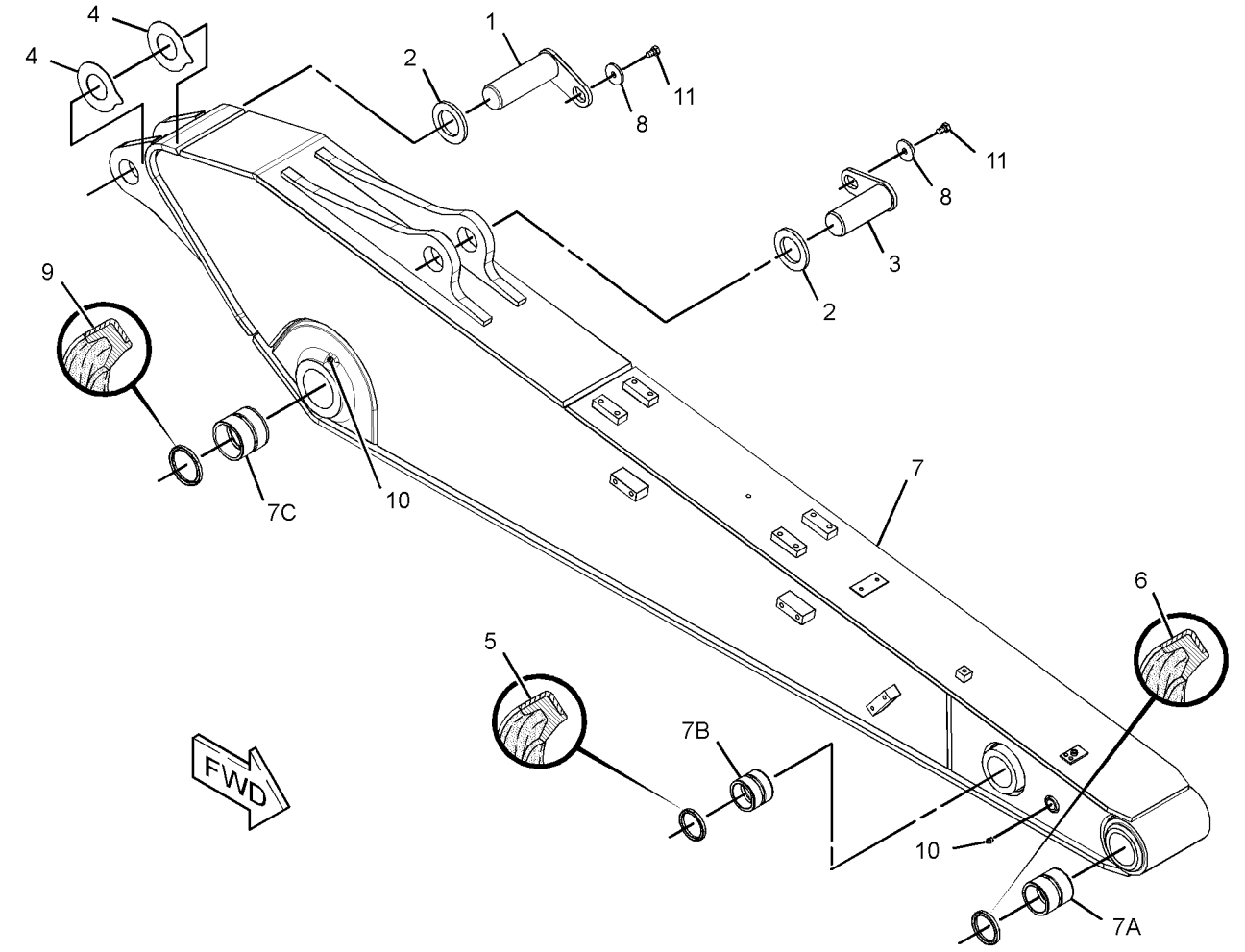

GRAPHIC #1 <END> g01439925

4I-6914 ADJUSTER GP-BUCKET

S/N: DLP1-UP

PART OF 305-1658, 305-1662, 305-1840, 305-1849, 354-5797, 358-8616, 358-8621, 358-8643 BUCKET & ADJUSTER GP

AN ATTACHMENT

SMCS-6513, 6700 **i01225392**

NOTE	REF NO	GRAPHIC REF	PART NUMBER	QTY	PART NAME 1 2 3 4 5 6 (PRODUCT LEVEL)	SEE PAGE
B	1	1	**086-0416**	6	SHIM (1-MM THK)	
B	2	1	**086-0415**	4	SHIM (0.5-MM THK)	
	3	1	**085-9769**	1	PIN	
	4	1	**085-8828**	1	PLATE	
M	5	1	**8T-4183**	4	BOLT (M12X1.75X40-MM)	
	6	1	**8T-4223**	4	WASHER-HARD (13.5X25.5X3-MM THK)	
	7	1	**086-0414**	1	FLANGE	

B - USE AS REQUIRED
M - METRIC PART

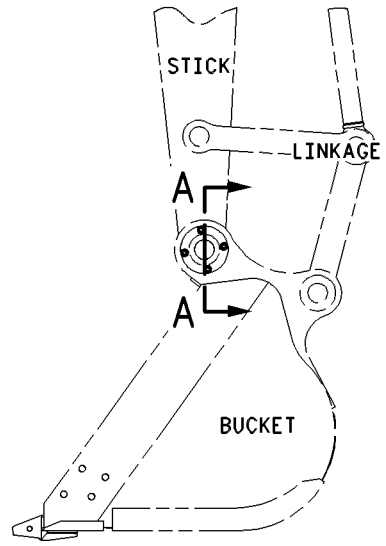

RIGHT SIDE VIEW

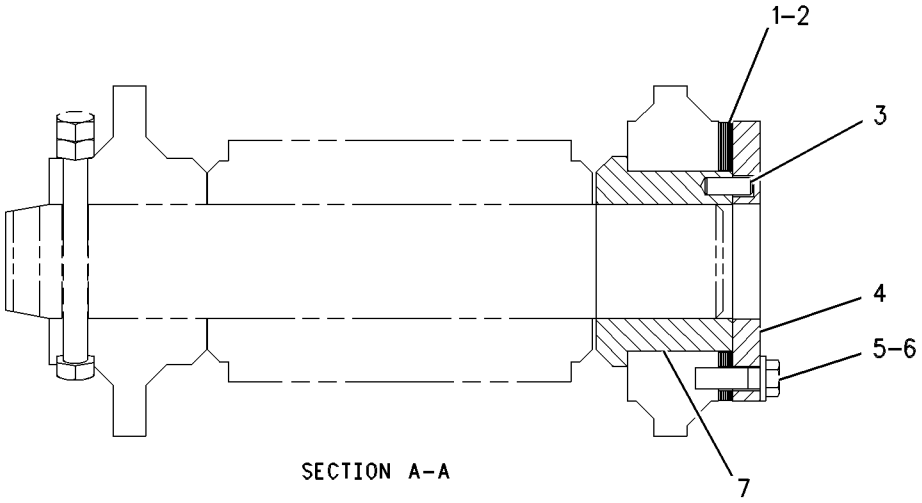

SECTION A–A

GRAPHIC #1 <END> g00658085

282-4576 BLADE & MOUNTING GP

S/N: DLP1-UP
2490-MM (98-IN) WIDE
CANNOT BE USED WITH 282-4579—PAGE: 890
PART OF 336-3380 OPTION AR-WORK TOOL
AN ATTACHMENT

SMCS-6060 **i05189808**

NOTE	REF NO	GRAPHIC REF	PART NUMBER	QTY	PART NAME 1 2 3 4 5 6 (PRODUCT LEVEL)	SEE PAGE
	1	1	**3J-7283**	2	FITTING-GREASE	
B	2	1	**093-0065**	12	SHIM (1-MM THK)	
B	3	1	**093-0097**	6	SHIM (2-MM THK)	
	4	1	**093-0357**	6	SPACER (63X100X9-MM THK)	
B	5	1	**099-7091**	6	SHIM (1.5-MM THK)	
	6	1	**127-3913**	6	PIN AS	
	7	1	**166-1492**	4	SEAL-LIP TYPE	
Y	8	1	**282-4577**	1	BLADE GP-STRAIGHT	892
	9	1	**086-0297**	6	WASHER (13X50X6-MM THK)	
M	10	1	**8T-4179**	6	BOLT (M12X1.75X20-MM)	

B - USE AS REQUIRED
M - METRIC PART
Y - SEPARATE ILLUSTRATION

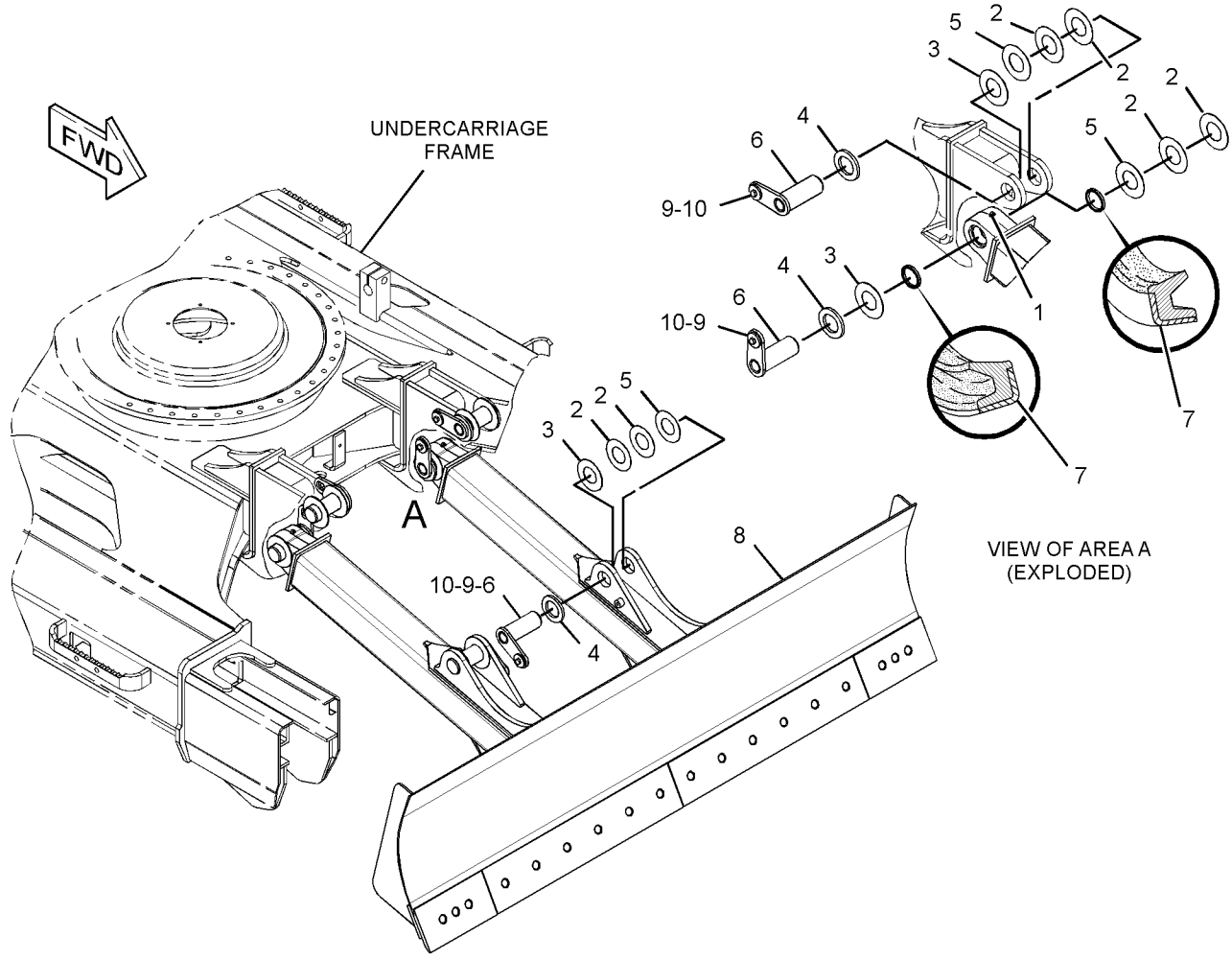

GRAPHIC #1 <END> g01411278

282-4579 BLADE & MOUNTING GP

S/N: DLP1-UP
2590-MM (102-IN) WIDE
CANNOT BE USED WITH 282-4576—PAGE: 889
PART OF 336-3381 OPTION AR-WORK TOOL
AN ATTACHMENT

SMCS-6060 **i05192566**

NOTE	REF NO	GRAPHIC REF	PART NUMBER	QTY	PART NAME 1 2 3 4 5 6 (PRODUCT LEVEL)	SEE PAGE
	1	1	**3J-7283**	2	FITTING-GREASE	
B	2	1	**093-0065**	12	SHIM (1-MM THK)	
B	3	1	**093-0097**	6	SHIM (2-MM THK)	
	4	1	**093-0357**	6	SPACER (63X100X9-MM THK)	
B	5	1	**099-7091**	6	SHIM (1.5-MM THK)	
	6	1	**127-3913**	1	PIN AS	
	7	1	**166-1492**	4	SEAL-LIP TYPE	
Y	8	1	*282-4580*	1	BLADE GP-STRAIGHT	893
	9	1	**086-0297**	6	WASHER (13X50X6-MM THK)	
M	10	1	**8T-4179**	6	BOLT (M12X1.75X20-MM)	

B - USE AS REQUIRED
M - METRIC PART
Y - SEPARATE ILLUSTRATION

282-4579 **BLADE & MOUNTING GP** (contd.) **i05192566**

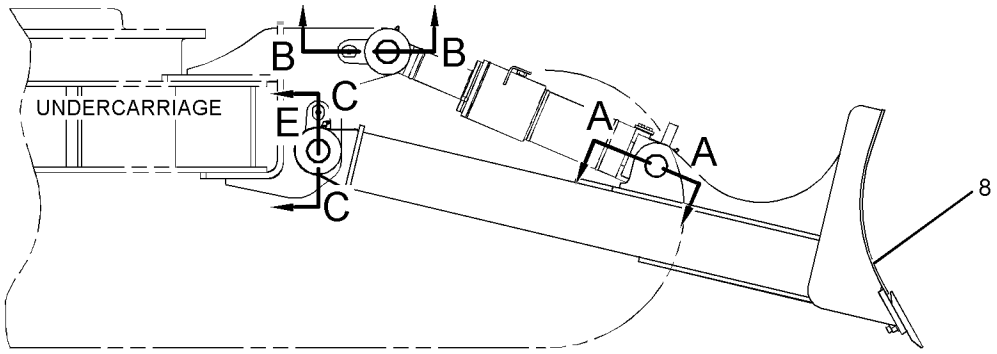

RIGHT SIDE VIEW

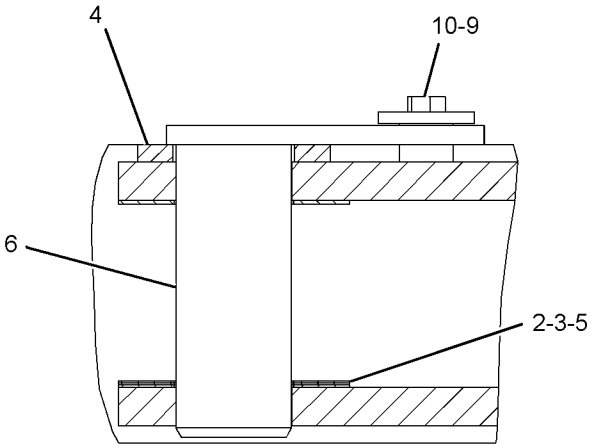

SECTION A-A

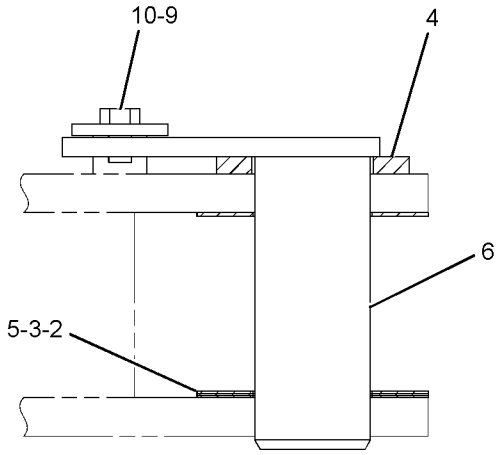

SECTION B-B

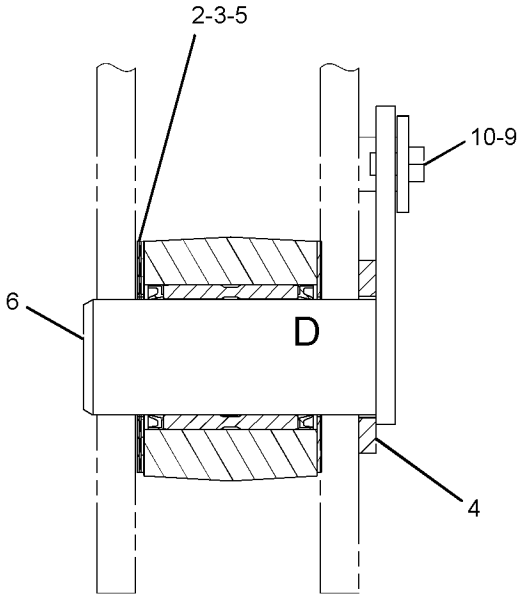

SECTION C-C

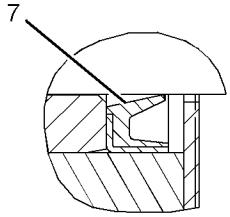

VIEW OF AREA D

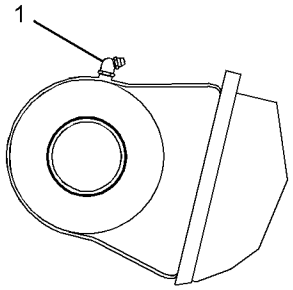

VIEW OF AREA E

GRAPHIC #1 <END> g01423523

282-4577 BLADE GP-STRAIGHT

S/N: DLP1-UP
2490-MM (98-IN) WIDE
PART OF 282-4576 BLADE & MOUNTING GP
AN ATTACHMENT

SMCS-6060 **i02818885**

NOTE	REF NO	GRAPHIC REF	PART NUMBER	QTY	PART NAME 1 2 3 4 5 6 (PRODUCT LEVEL)	SEE PAGE
	1	1	**4T-6229**	2	BIT-END	
	2	1	**3Q-2034**	2	EDGE-CUTTING	
	3	1	**282-4578**	1	BLADE & BEARING AS	
	3A	1	**273-6945**	2	BUSHING	
	4	1	**3F-5108**	18	BOLT-PLOW (5/8-11X2.25-IN)	
	5	1	**4K-0367**	18	NUT-FULL (5/8-11-THD)	
	6	1	**5P-8247**	18	WASHER-HARD (17X32X3.5-MM THK)	

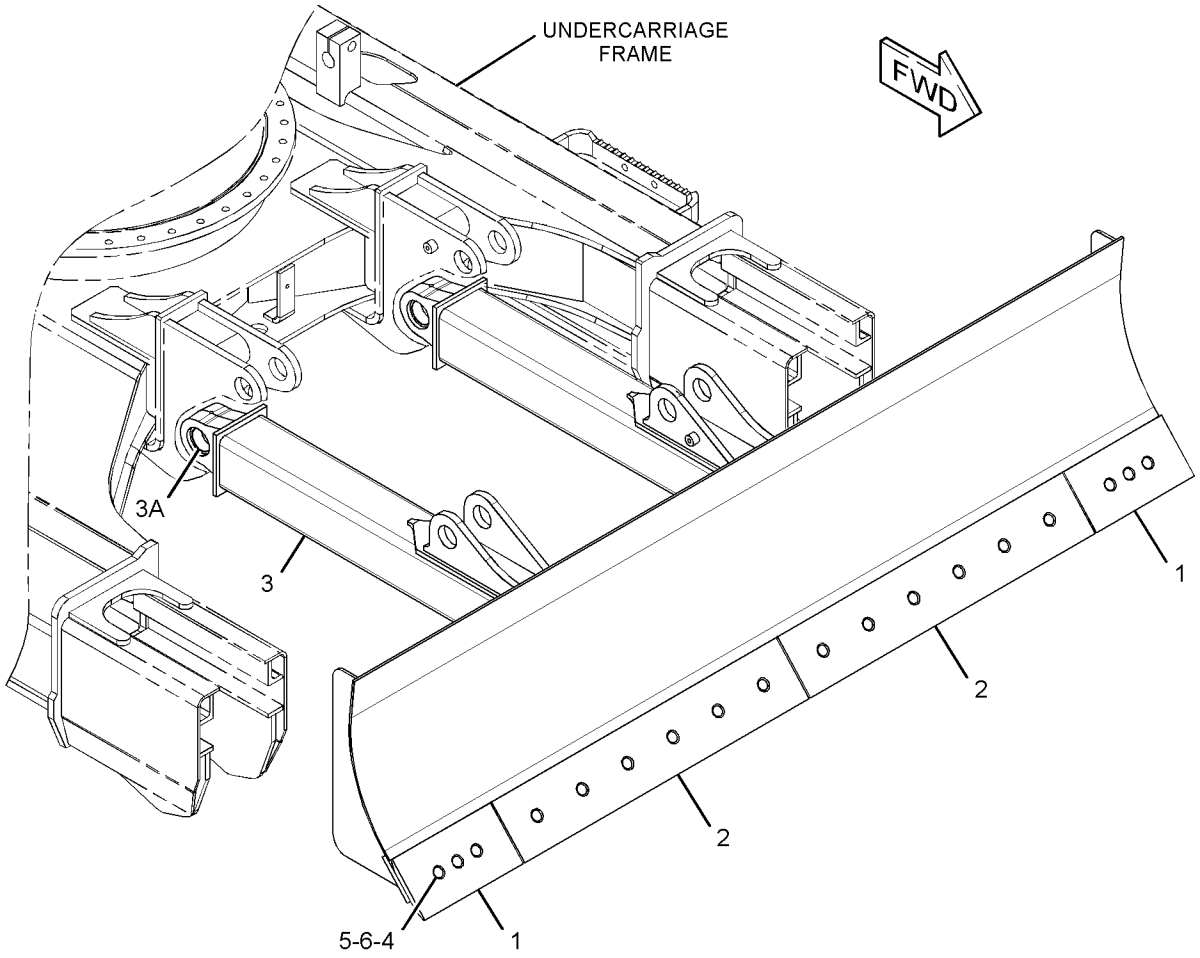

GRAPHIC #1 <END> g01411671

282-4580 BLADE GP-STRAIGHT

S/N: DLP1-UP
2590-MM (102-IN) WIDE
PART OF 282-4579 BLADE & MOUNTING GP
AN ATTACHMENT

SMCS-6060 **i02818887**

NOTE	REF NO	GRAPHIC REF	PART NUMBER	QTY	PART NAME 1 2 3 4 5 6 (PRODUCT LEVEL)	SEE PAGE
	1	1	**4T-6229**	2	BIT-END	
	2	1	**140-6836**	2	EDGE-CUTTING	
	3	1	**282-4581**	1	BLADE & BEARING AS	
	3A	1	**273-6945**	2	BUSHING	
	4	1	**3F-5108**	18	BOLT-PLOW (5/8-11X2.25-IN)	
	5	1	**4K-0367**	18	NUT-FULL (5/8-11-THD)	
	6	1	**5P-8247**	18	WASHER-HARD (17X32X3.5-MM THK)	

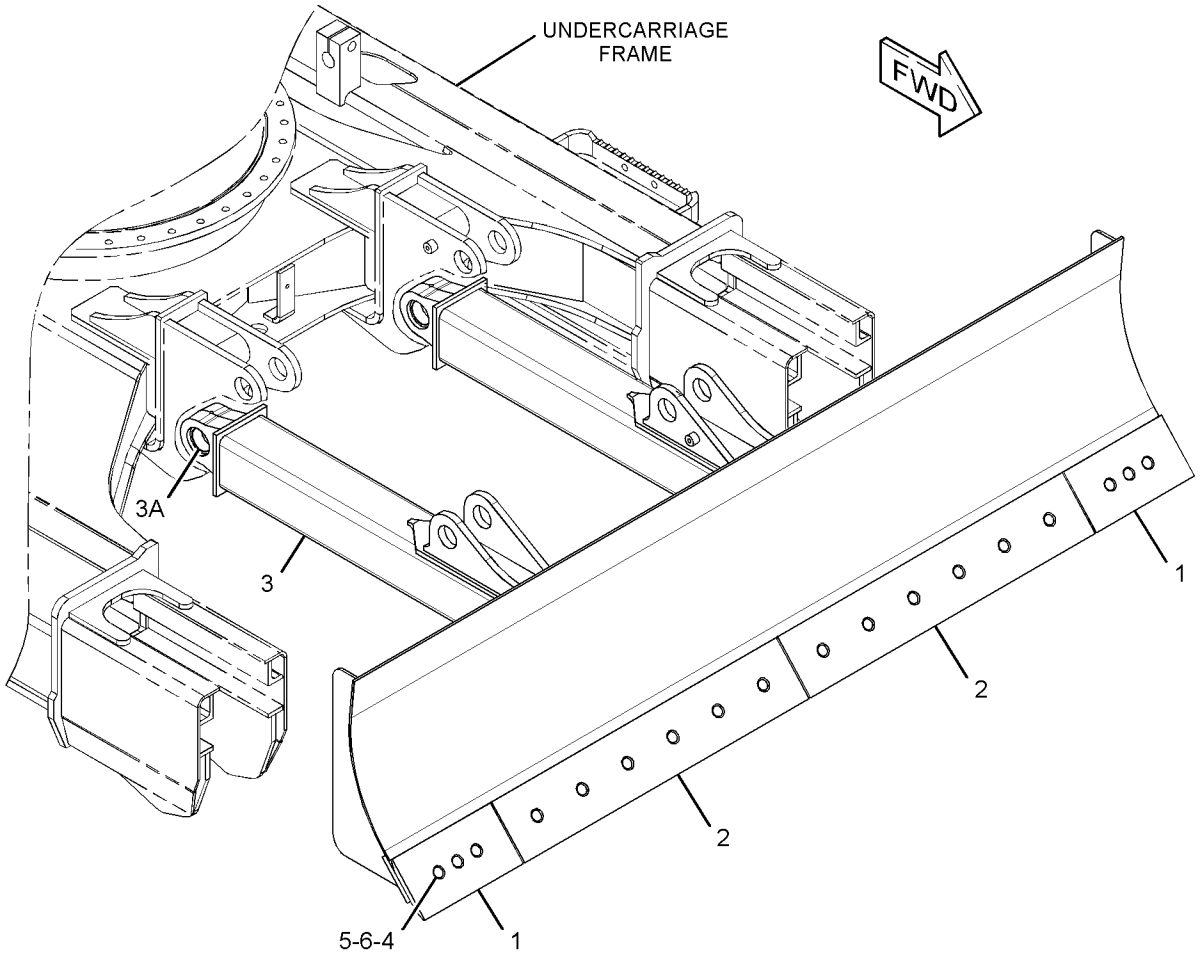

GRAPHIC #1 <END> g01411671

305-1658 BUCKET & ADJUSTER GP—HEAVY-DUTY ROCK

S/N: DLP1-UP
915-MM (36-IN) WIDE X 0.52-CU M (0.68-CU YD) CAPACITY. J-300 ADAPTERS, (5X)
AN ATTACHMENT

SMCS-6503, 6513 **i03017379**

NOTE	PART NUMBER	QTY	PART NAME 1 2 3 4 5 6 (PRODUCT LEVEL)	SEE PAGE
Y	**4I-6914**	1	ADJUSTER GP-BUCKET	888
Y	**305-1659**	1	BUCKET AS-HEAVY DUTY ROCK	905

Y - SEPARATE ILLUSTRATION

<END>

305-1662 BUCKET & ADJUSTER GP—HEAVY-DUTY ROCK

S/N: DLP1-UP
10067-MM (42-IN) WIDE X 0.63-CU M (0.82-CU YD) CAPACITY. J-300 ADAPTERS, (5X)
AN ATTACHMENT

SMCS-6503, 6513 **i02941523**

NOTE	PART NUMBER	QTY	PART NAME 1 2 3 4 5 6 (PRODUCT LEVEL)	SEE PAGE
Y	**4I-6914**	1	ADJUSTER GP-BUCKET	888
Y	**305-1663**	1	BUCKET AS-HEAVY DUTY ROCK	906

Y - SEPARATE ILLUSTRATION

<END>

305-1840 BUCKET & ADJUSTER GP—312-FAMILY

S/N: DLP1-UP
915-MM (36-IN) WIDE X 0.52-CU M (0.68-CU YD) CAPACITY. J-300 ADAPTERS, QTY OF 5
PART OF 358-4487 BUCKET AR-HEAVY DUTY ROCK
AN ATTACHMENT

SMCS-6503, 6513 **i05213211**

NOTE	PART NUMBER	QTY	PART NAME 1 2 3 4 5 6 (PRODUCT LEVEL)	SEE PAGE
Y	**4I-6914**	1	ADJUSTER GP-BUCKET	888
Y	**305-1841**	1	BUCKET AS-HEAVY DUTY ROCK (312-FAMILY)	907

Y - SEPARATE ILLUSTRATION

<END>

305-1849 BUCKET & ADJUSTER GP—312-FAMILY

S/N: DLP1-UP
1067-MM (42-IN) WIDE X 0.63-CU M (0.82-CU YD) CAPACITY. J-300 ADAPTERS, QTY OF 5
PART OF 358-4486 BUCKET AR-HEAVY DUTY ROCK
AN ATTACHMENT

SMCS-6503, 6513 **i03511372**

NOTE	PART NUMBER	QTY	PART NAME 1 2 3 4 5 6 (PRODUCT LEVEL)	SEE PAGE
Y	**4I-6914**	1	ADJUSTER GP-BUCKET	888
Y	**305-1850**	1	BUCKET AS-HEAVY DUTY ROCK (312-FAMILY)	908

Y - SEPARATE ILLUSTRATION

<END>

354-5797 BUCKET & ADJUSTER GP

S/N: DLP1-UP

1050-MM (42-IN) WIDE X 0.7-CU M (0.8-CU FT) CAPACITY. J-250 ADAPTERS, QTY OF 7

AN ATTACHMENT

SMCS-6503, 6513

i05218932

NOTE	REF NO	GRAPHIC REF	PART NUMBER	QTY	PART NAME 1 2 3 4 5 6 (PRODUCT LEVEL)	SEE PAGE
	1	1	**2C-9259**	1	PLATE-IDENTIFICATION (CAT)	
Y	2	1	**4I-6914**	1	ADJUSTER GP-BUCKET	888
	3	1	**312-5694**	1	SETSCREW (1/4-20X0.25-IN)	
Y	4	1	*354-5798*	1	BUCKET AS-GENERAL PURPOSE	902

Y - SEPARATE ILLUSTRATION

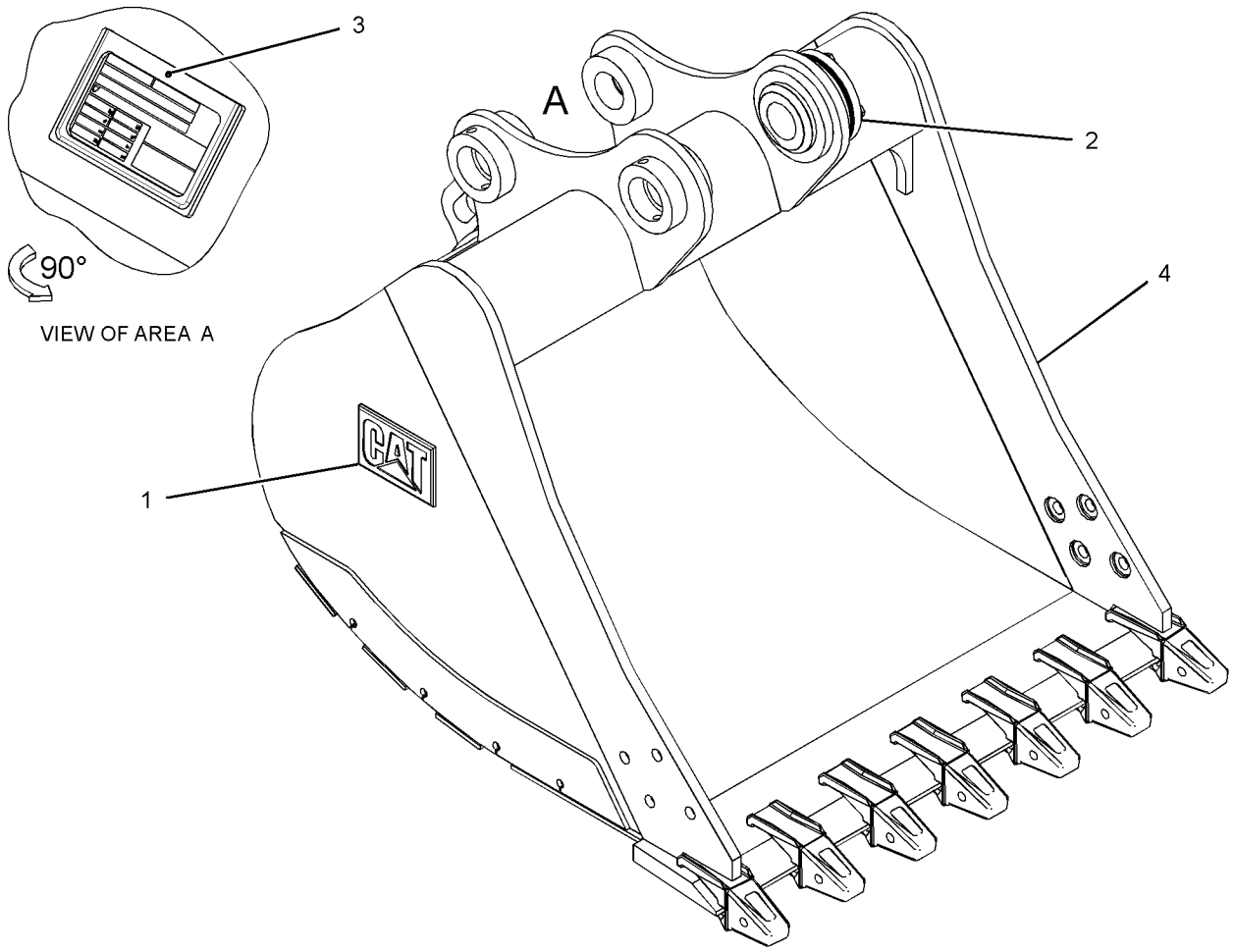

GRAPHIC #1 <END> g02743577

358-8616 BUCKET & ADJUSTER GP—GENERAL PURPOSE

S/N: DLP1-UP

900-MM (36-IN) WIDE X 0.5-CU M (0.7-CU YD) CAPACITY. J-250 ADAPTERS, QTY OF 6

AN ATTACHMENT

SMCS-6503, 6513

i07222456

NOTE	PART NUMBER	QTY	PART NAME 1 2 3 4 5 6 (PRODUCT LEVEL)	SEE PAGE
Y	*4I-6914*	1	ADJUSTER GP-BUCKET	888
Y	*358-8628*	1	BUCKET AS-GENERAL PURPOSE	903
	2C-9259	2	PLATE-IDENTIFICATION (CAT)	
			(ON LH SIDE OF BUCKET)	
	312-5694	1	SETSCREW (1/4-20X0.25-IN)	
			(USE TO MOUNT BUCKET INFORMATION PLATE)	

Y - SEPARATE ILLUSTRATION

<END>

358-8621 BUCKET & ADJUSTER GP—GENERAL PURPOSE

S/N: DLP1-UP

1200-MM (48-IN) WIDE X 0.8-CU M (1.0-CU YD) CAPACITY. J-250 ADAPTERS, QTY OF 7

AN ATTACHMENT

SMCS-6503, 6513

i05195193

NOTE	REF NO	GRAPHIC REF	PART NUMBER	QTY	PART NAME 1 2 3 4 5 6 (PRODUCT LEVEL)	SEE PAGE
	1	1	**2C-9259**	1	PLATE-IDENTIFICATION (CAT)	
Y	2	1	**4I-6914**	1	ADJUSTER GP-BUCKET	888
	3	1	**312-5694**	1	SETSCREW (1/4-20X0.25-IN)	
Y	4	1	*358-8633*	1	BUCKET AS-GENERAL PURPOSE	904

Y - SEPARATE ILLUSTRATION

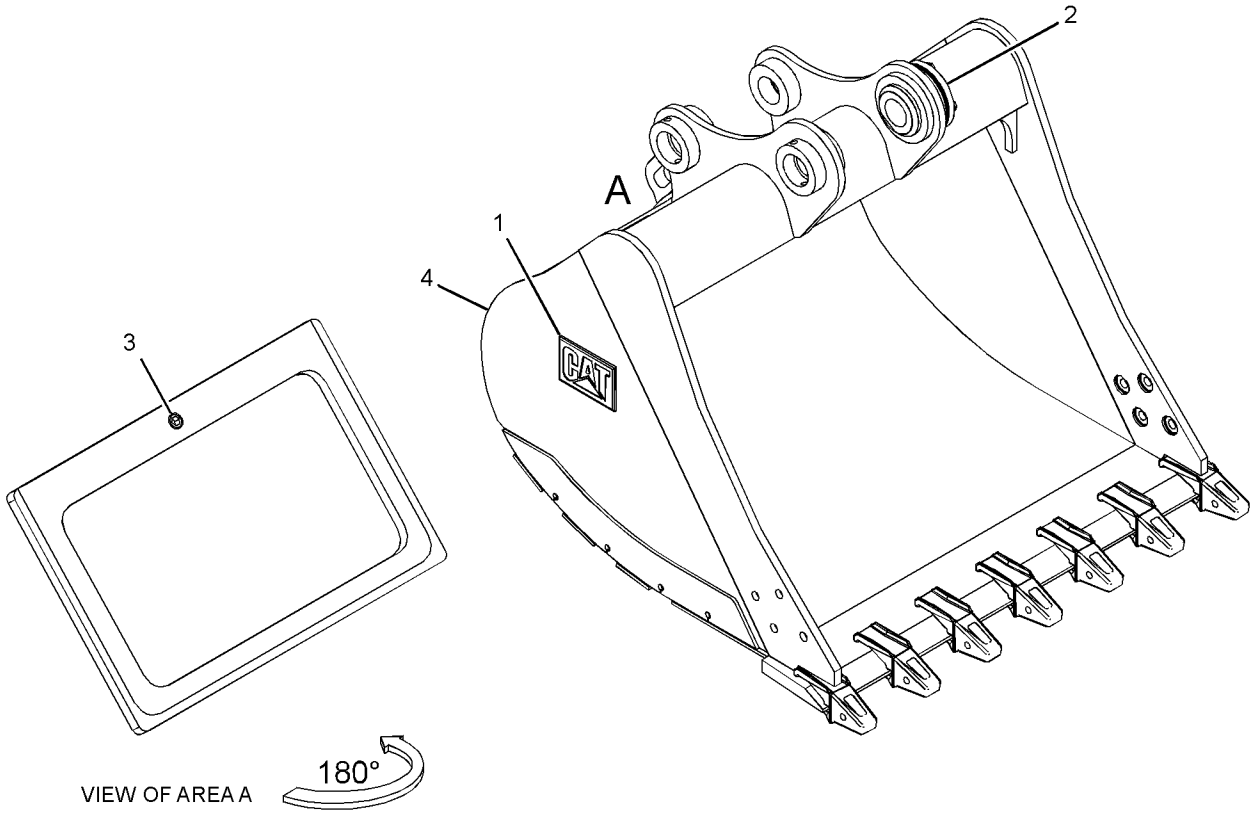

GRAPHIC #1 <END> g02750942

358-8643 BUCKET & ADJUSTER GP

S/N: DLP1-UP
1087-MM (43-IN) WIDE X 0.65-CU M (0.85-CU YD) CAPACITY. J-300 ADAPTERS, QTY OF 5
PART OF 396-8956 BUCKET AR-SEVERE SERVICE ROCK
AN ATTACHMENT

SMCS-6503, 6513 **i05278301**

NOTE	PART NUMBER	QTY	PART NAME 1 2 3 4 5 6 (PRODUCT LEVEL)	SEE PAGE
Y	**4I-6914**	1	ADJUSTER GP-BUCKET	888
Y	*358-8649*	1	BUCKET AS-SEVERE SERVICE ROCK	909
	2C-9259	1	PLATE-IDENTIFICATION (CAT)	
			(ON LH SIDE OF BUCKET)	
	312-5694	1	SETSCREW (1/4-20X0.25-IN)	
			(USE TO MOUNT BUCKET INFORMATION PLATE)	

Y - SEPARATE ILLUSTRATION

<END>

426-3618 BUCKET AR–312-FAMILY

S/N: DLP1-UP
600-MM (24-IN) WIDE X 0.31-CU M (0.40-CU YD) CAPACITY
AN ATTACHMENT

SMCS-6001 **i05982782**

NOTE	PART NUMBER	QTY	PART NAME 1 2 3 4 5 6 (PRODUCT LEVEL)	SEE PAGE
Y	**420-9206**	1	BUCKET GP-HOE (312-FAMILY)	911
Y	*380-1203*	1	SIDECUTTER GP	924
Y	*195-5139*	3	TIP GP-LONG (J-250)	926

Y - SEPARATE ILLUSTRATION

<END>

426-3619 BUCKET AR–312-FAMILY

S/N: DLP1-UP
1200-MM (48-IN) WIDE X 0.76-CU M (1.00-CU YD) CAPACITY
AN ATTACHMENT

SMCS-6001 **i05982783**

NOTE	PART NUMBER	QTY	PART NAME 1 2 3 4 5 6 (PRODUCT LEVEL)	SEE PAGE
Y	**420-9207**	1	BUCKET GP-HOE (312-FAMILY)	912
Y	*380-1203*	1	SIDECUTTER GP	924
Y	*195-5139*	6	TIP GP-LONG (J-250)	926

Y - SEPARATE ILLUSTRATION

<END>

394-1691 BUCKET AR-GENERAL PURPOSE

S/N: DLP1-UP

900-MM (36-IN) WIDE X 0.53-CU M (0.69-CU YD) CAPACITY

AN ATTACHMENT

SMCS-6101 **i05673753**

NOTE	REF NO	GRAPHIC REF	PART NUMBER	QTY	PART NAME 1 2 3 4 5 6 (PRODUCT LEVEL)	SEE PAGE
Y	1	1	*195-5139*	5	TIP GP-LONG (J-250)	926
Y	2	1	*380-1203*	1	SIDECUTTER GP	924
Y	3	1	**394-0306**	1	BUCKET GP-HOE	910

Y - SEPARATE ILLUSTRATION

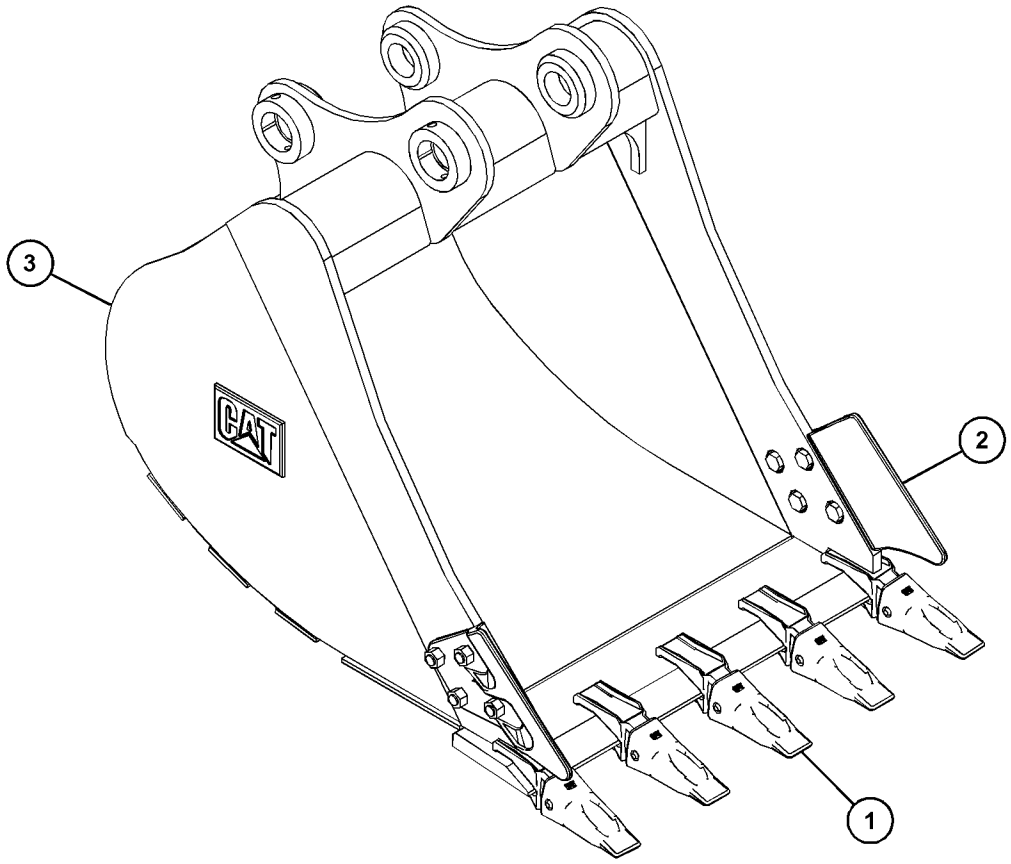

GRAPHIC #1 <END> g03604425

426-3617 BUCKET AR-GENERAL PURPOSE

S/N: DLP1-UP

450-MM (18-IN) WIDE X 0.20-CU M (0.26-CU YD) CAPACITY

AN ATTACHMENT

SMCS-6101 **i06232878**

NOTE	REF NO	GRAPHIC REF	PART NUMBER	QTY	PART NAME 1 2 3 4 5 6 (PRODUCT LEVEL)	SEE PAGE
Y	1	1	*195-5139*	3	TIP GP-LONG (J-250)	926
Y	2	1	*380-1203*	1	SIDECUTTER GP	924
Y	3	1	*420-9205*	1	BUCKET GP-UTILITY	913

Y - SEPARATE ILLUSTRATION

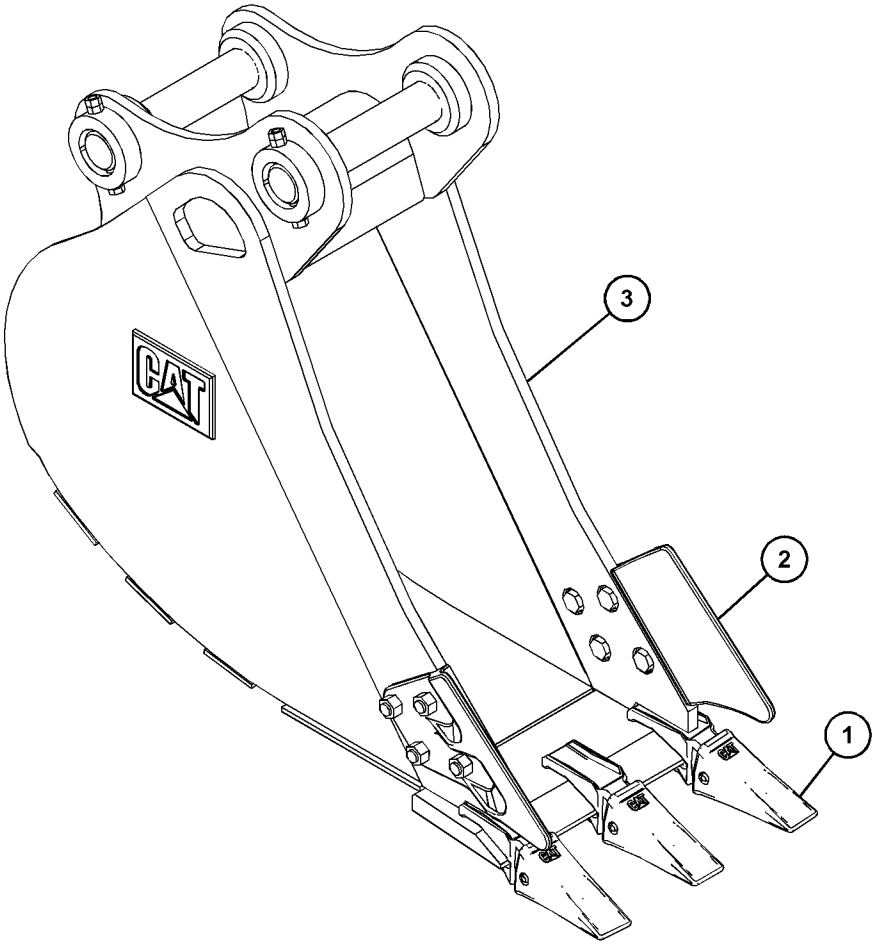

GRAPHIC #1 <END> g06077610

358-4486 BUCKET AR-HEAVY DUTY ROCK

S/N: DLP1-UP
1067-MM (42-IN) WIDE X 0.63-CU M (0.82-CU YD) CAPACITY. J-300 ADAPTERS, QTY OF 5
AN ATTACHMENT

SMCS-6102 **i04846825**

NOTE	PART NUMBER	QTY	PART NAME 1 2 3 4 5 6 (PRODUCT LEVEL)	SEE PAGE
Y	*305-1849*	1	BUCKET & ADJUSTER GP	894
Y	*4I-7343*	1	SIDECUTTER GP	925
			—OR—	
Y	*380-1203*	1	SIDECUTTER GP	924
Y	*8E-3751*	5	TIP GP-LONG	927

Y - SEPARATE ILLUSTRATION

<END>

358-4487 BUCKET AR-HEAVY DUTY ROCK

S/N: DLP1-UP
915-MM (36-IN) WIDE X 0.52-CU M (0.68-CU YD) CAPACITY. J-300 ADAPTERS, QTY OF 5
AN ATTACHMENT

SMCS-6102 **i03995795**

NOTE	PART NUMBER	QTY	PART NAME 1 2 3 4 5 6 (PRODUCT LEVEL)	SEE PAGE
Y	*305-1840*	1	BUCKET & ADJUSTER GP	894
Y	*4I-7343*	1	SIDECUTTER GP	925
Y	*8E-3751*	5	TIP GP-LONG	927

Y - SEPARATE ILLUSTRATION

<END>

396-8956 BUCKET AR-SEVERE SERVICE ROCK

S/N: DLP1-UP
1050-MM (42-IN) WIDE X 0.65-CU M (0.84-CU YD) CAPACITY
AN ATTACHMENT

SMCS-6102, 6529 **i05309529**

NOTE	PART NUMBER	QTY	PART NAME 1 2 3 4 5 6 (PRODUCT LEVEL)	SEE PAGE
Y	**358-8643**	1	BUCKET & ADJUSTER GP	898
Y	*380-1203*	1	SIDECUTTER GP	924
Y	*195-9180*	5	TIP GP-PENETRATION PLUS (J-300)	928

Y - SEPARATE ILLUSTRATION

<END>

354-5798 BUCKET AS-GENERAL PURPOSE

S/N: DLP1-UP
1050-MM (42-IN) WIDE X 0.7-CU M (0.8-CU YD) CAPACITY. J-250 ADAPTERS, QTY OF 7
PART OF 354-5797 BUCKET & ADJUSTER GP
AN ATTACHMENT

SMCS-6101 **i04579510**

NOTE	REF NO	GRAPHIC REF	PART NUMBER	QTY	PART NAME 1 2 3 4 5 6 (PRODUCT LEVEL)	SEE PAGE
	1	1	**354-5800**	1	EDGE AS	
	1A	1	**8P-9770**	1	PLATE	
	1B	1	**119-3253**	7	ADAPTER-TIP (J-250, 2-STRAP)	
	2	1	**354-5799**	1	PLATE AS-HINGE	
	3	1	**354-5807**	1	PLATE (LH)	
	4	1	**354-5811**	1	PLATE (RH)	
	5	1	**354-5813**	2	PLATE-WEAR	
	6	1	**354-5814**	1	PLATE-WEAR	
	7	1	**354-5816**	3	PLATE-WEAR	

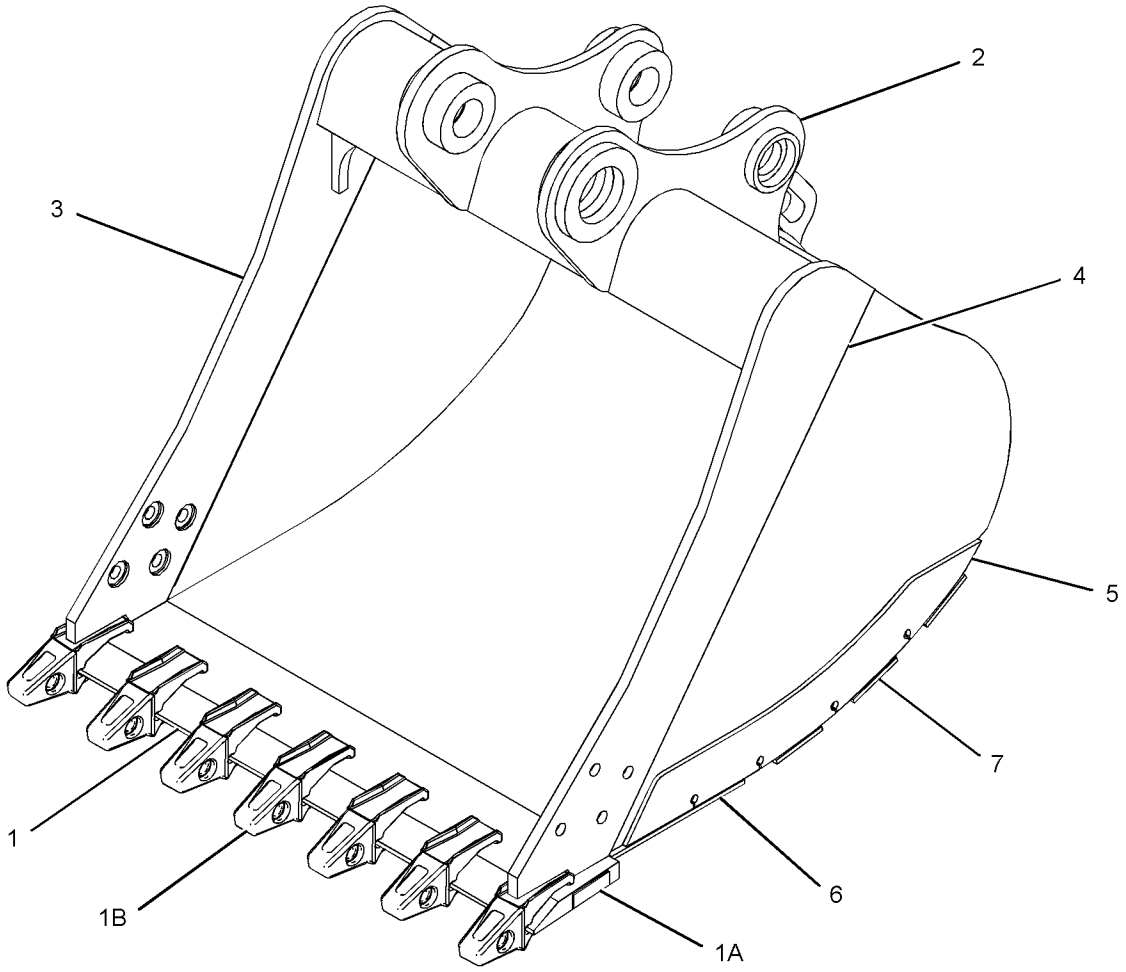

GRAPHIC #1 <END> g02743576

358-8628 BUCKET AS-GENERAL PURPOSE

S/N: DLP1-UP
900-MM (36-IN) WIDE X 0.5-CU M (0.7-CU YD) CAPACITY. J-250 ADAPTERS, QTY OF 6
PART OF 358-8616 BUCKET & ADJUSTER GP
AN ATTACHMENT

SMCS-6101 **i06885289**

NOTE	REF NO	GRAPHIC REF	PART NUMBER	QTY	PART NAME 1 2 3 4 5 6 (PRODUCT LEVEL)	SEE PAGE
	1	1	**354-5807**	1	PLATE (LH)	
	2	1	**354-5811**	1	PLATE (RH)	
	3	1	**354-5813**	2	PLATE-WEAR	
	4	1	**367-8567**	1	EDGE AS	
	4A	1	**8P-9770**	1	PLATE	
	4B	1	**119-3253**	6	ADAPTER-TIP (J-250, 2-STRAP)	
	5	1	**367-8569**	1	PLATE AS-HINGE	
	6	1	**368-3360**	1	PLATE-WEAR	
	7	1	**368-3361**	3	PLATE-WEAR	
	8	1	**285-3254**	1	PLATE (PROTECTOR)	

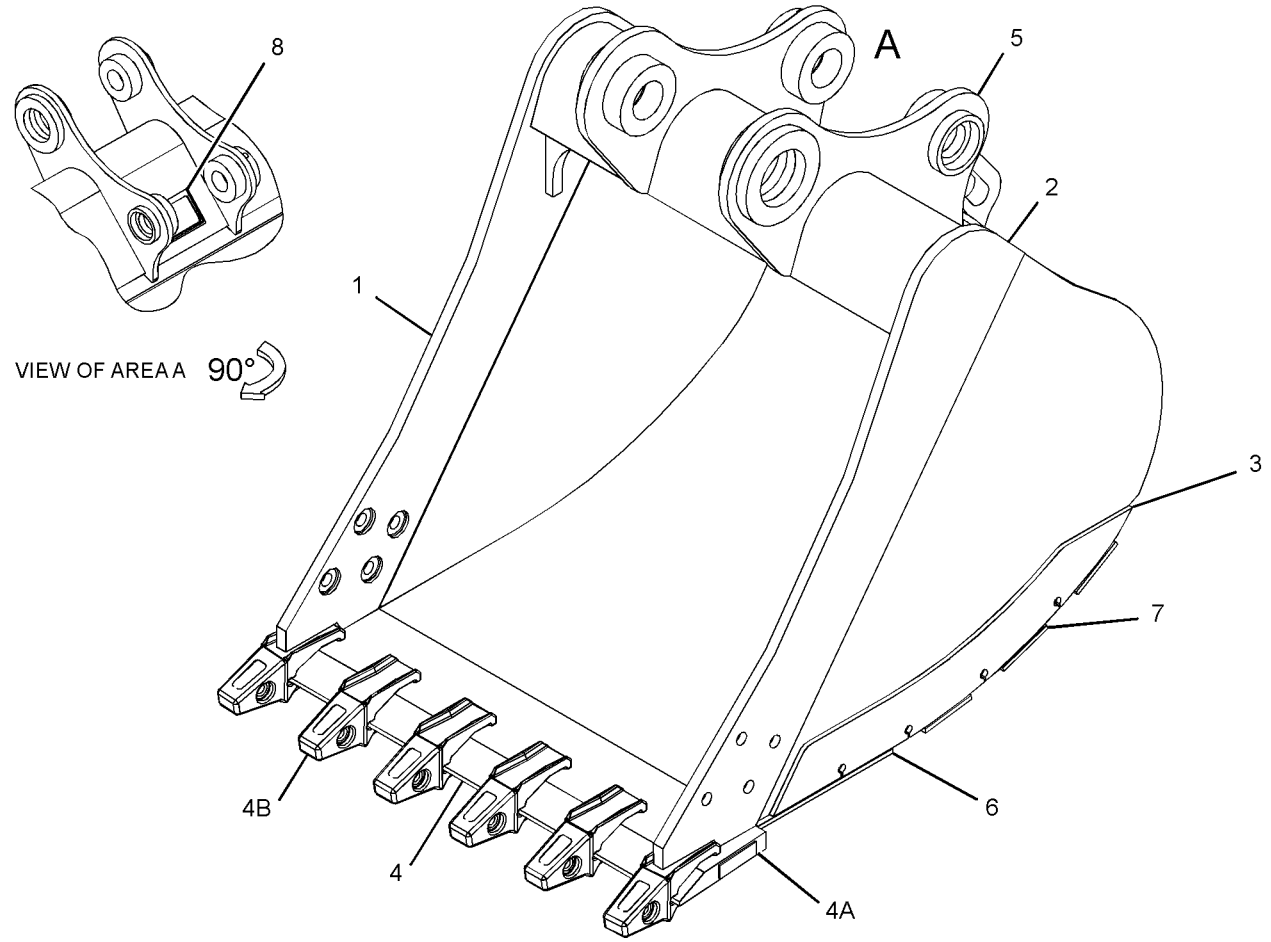

GRAPHIC #1 <END> g06152679

358-8633 BUCKET AS-GENERAL PURPOSE

S/N: DLP1-UP

1200-MM (48-IN) WIDE X 0.8-CU M (1.0-CU YD) CAPACITY. J-250 ADAPTERS, QTY OF 7

PART OF 358-8621 BUCKET & ADJUSTER GP

AN ATTACHMENT

SMCS-6101 **i05360238**

NOTE	REF NO	GRAPHIC REF	PART NUMBER	QTY	PART NAME 1 2 3 4 5 6 (PRODUCT LEVEL)	SEE PAGE
	1	1	**354-5807**	1	PLATE (LH)	
	2	1	**354-5811**	1	PLATE (RH)	
	3	1	**354-5813**	2	PLATE-WEAR	
	4	1	**370-4404**	1	EDGE AS	
	4A	1	**8P-9770**	1	PLATE	
	4B	1	**119-3253**	7	ADAPTER-TIP (J-250, 2-STRAP)	
	5	1	**370-4414**	1	PLATE-WEAR	
	6	1	**370-4420**	3	PLATE-WEAR	
	7	1	**370-4425**	1	PLATE AS-HINGE	

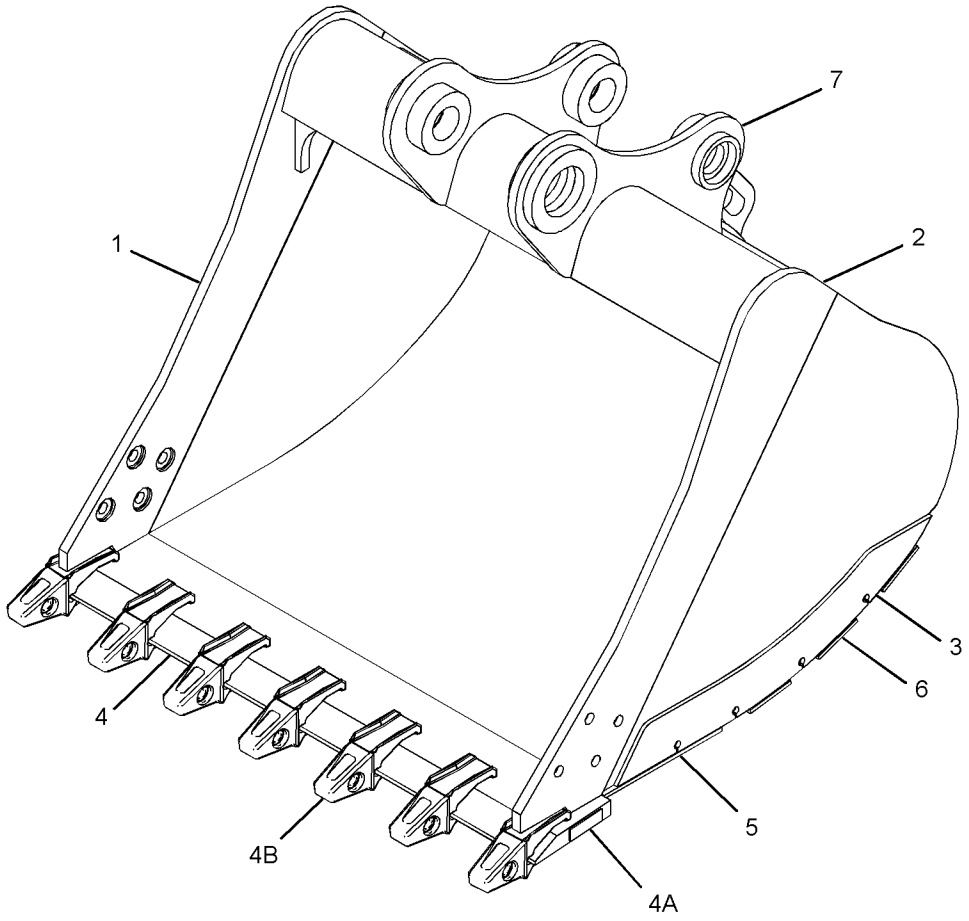

GRAPHIC #1 <END> g02751096

305-1659 BUCKET AS-HEAVY DUTY ROCK

S/N: DLP1-UP
915-MM (36-IN) WIDE X 0.52-CU M (0.68-CU YD) CAPACITY. J-300 ADAPTERS, (5X)
PART OF 305-1658 BUCKET & ADJUSTER GP
AN ATTACHMENT

SMCS-6102 **i03017382**

NOTE	REF NO	GRAPHIC REF	PART NUMBER	QTY	PART NAME 1 2 3 4 5 6 (PRODUCT LEVEL)	SEE PAGE
	1	1	**229-7568**	1	EDGE AS	
	1A	1	**8E-9490**	5	ADAPTER-TIP (J-300, 2-STRAP)	
	1B	1	**8P-9770**	1	PLATE	
	2	1	**229-7566**	1	PLATE-WEAR	
	3	1	**229-7567**	3	PLATE-WEAR	
	4	1	**229-7634**	1	PLATE-WEAR	
	5	1	**305-1661**	12	PLATE-WEAR	
	6	1	**229-7573**	2	PLATE-WEAR	
	7	1	**2C-9259**	1	PLATE-IDENTIFICATION (CAT)	

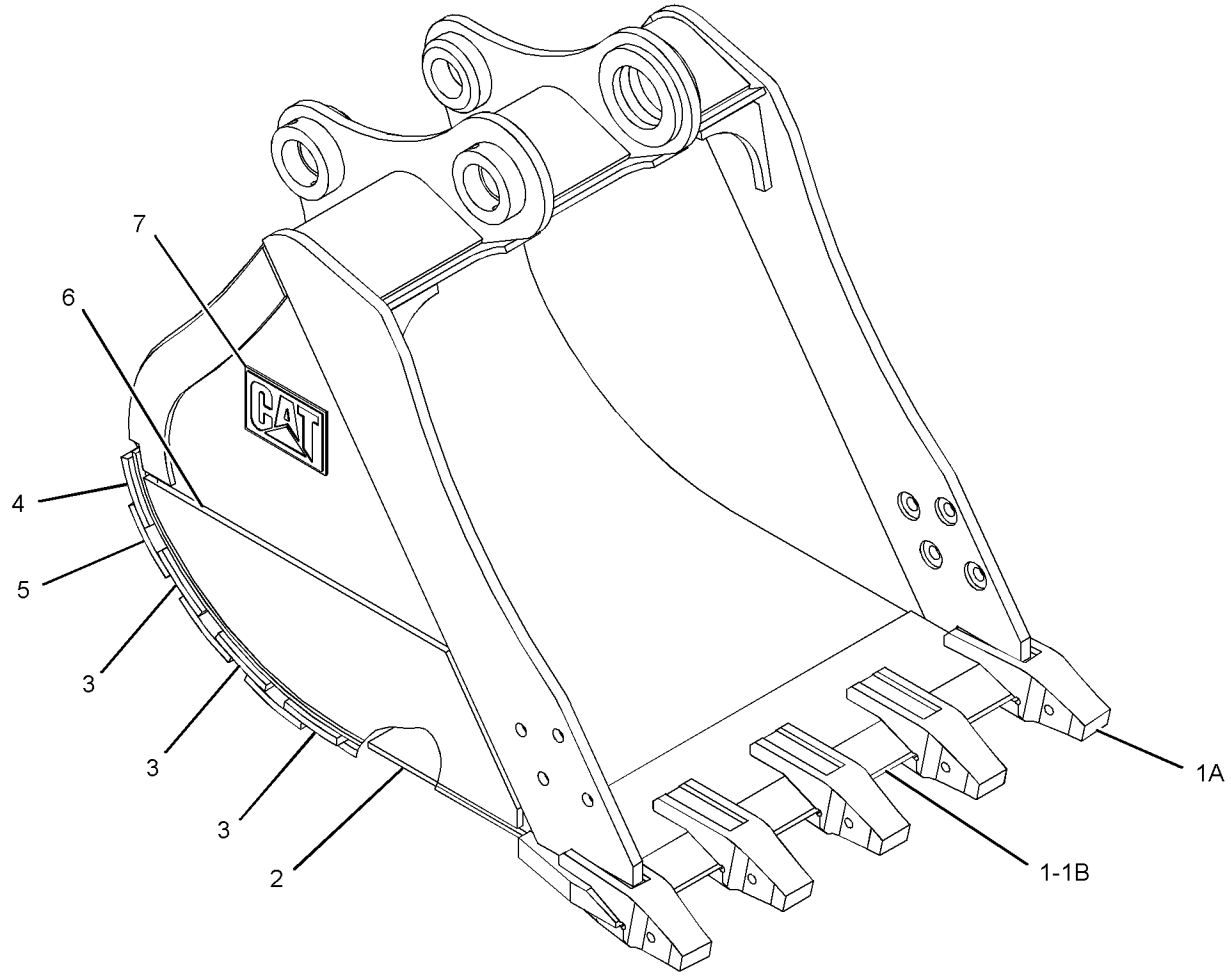

GRAPHIC #1 <END> g01529043

305-1663 BUCKET AS-HEAVY DUTY ROCK

S/N: DLP1-UP

1067-MM (42-IN) WIDE X 0.63-CU M (0.82-CU YD) CAPACITY. J-300 ADAPTERS, (5X)

PART OF 305-1662 BUCKET & ADJUSTER GP

AN ATTACHMENT

SMCS-6102 **i02941524**

NOTE	REF NO	GRAPHIC REF	PART NUMBER	QTY	PART NAME 1 2 3 4 5 6 (PRODUCT LEVEL)	SEE PAGE
	1	1	**229-7628**	1	EDGE AS	
	1A	1	**8E-9490**	5	ADAPTER-TIP (J-300, 2-STRAP)	
	1B	1	**8P-9770**	1	PLATE	
	2	1	**229-7637**	1	PLATE-WEAR	
	3	1	**2C-9259**	1	PLATE-IDENTIFICATION (CAT)	
	4	1	**229-7573**	2	PLATE-WEAR	
	5	1	**229-7626**	1	PLATE-WEAR	
	6	1	**229-7627**	3	PLATE-WEAR	
	7	1	**305-1664**	12	PLATE-WEAR	

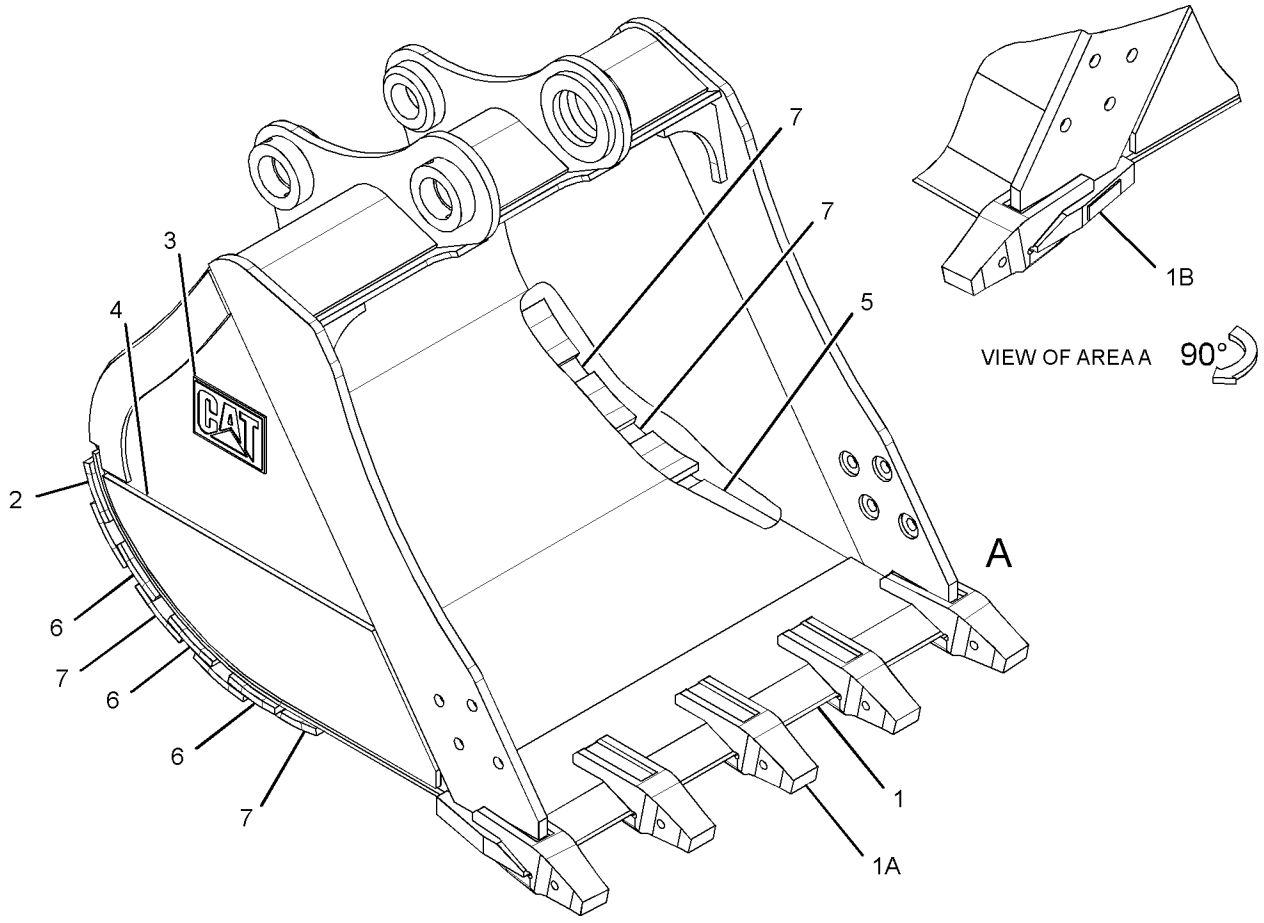

GRAPHIC #1 <END> g01527821

305-1841 BUCKET AS-HEAVY DUTY ROCK–312-FAMILY

S/N: DLP1-UP

915-MM (36-IN) WIDE X 0.52-CU M (0.68-CU YD) CAPACITY. J-300 ADAPTERS, QTY OF 5

PART OF 305-1840 BUCKET & ADJUSTER GP

AN ATTACHMENT

SMCS-6102 **i03511360**

NOTE	REF NO	GRAPHIC REF	PART NUMBER	QTY	PART NAME 1 2 3 4 5 6 (PRODUCT LEVEL)	SEE PAGE
	1	1	**229-7568**	1	EDGE AS	
	1A	1	**8E-9490**	5	ADAPTER-TIP (J-300, 2-STRAP)	
	1B	1	**8P-9770**	1	PLATE	
	2	1	**229-7566**	1	PLATE-WEAR	
	3	1	**229-7567**	3	PLATE-WEAR	
	4	1	**229-7634**	1	PLATE-WEAR	
	5	1	**229-7573**	2	PLATE-WEAR	
	6	1	**2C-9259**	1	PLATE-IDENTIFICATION (CAT)	
	7	1	**305-1661**	12	PLATE-WEAR	

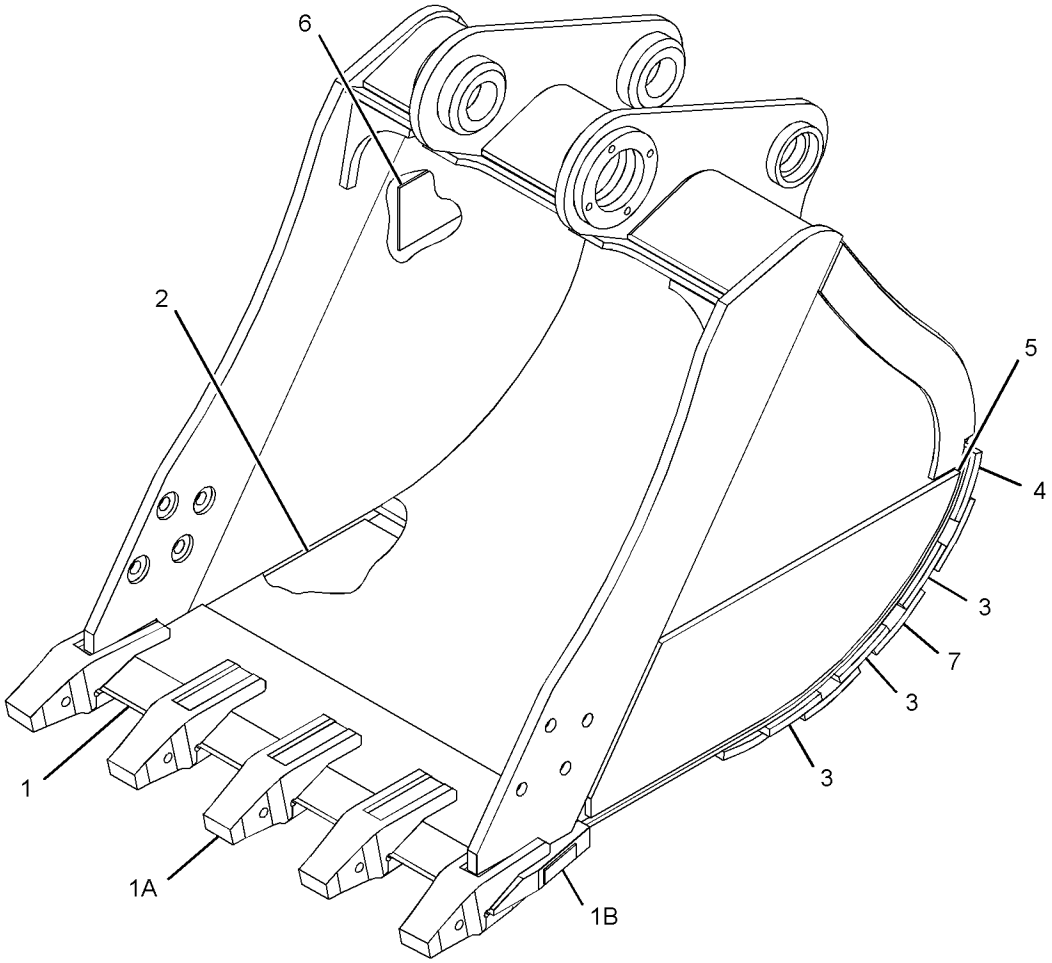

GRAPHIC #1 <END> g01859414

305-1850 BUCKET AS-HEAVY DUTY ROCK–312-FAMILY

S/N: DLP1-UP

1067-MM (42-IN) WIDE X 0.63-CU M (0.82-CU YD) CAPACITY. J-300 ADAPTERS, QTY OF 5

PART OF 305-1849 BUCKET & ADJUSTER GP

AN ATTACHMENT

SMCS-6102 **i03511398**

NOTE	REF NO	GRAPHIC REF	PART NUMBER	QTY	PART NAME 1 2 3 4 5 6 (PRODUCT LEVEL)	SEE PAGE
	1	1	**229-7628**	1	EDGE AS	
	1A	1	**8E-9490**	5	ADAPTER-TIP (J-300, 2-STRAP)	
	1B	1	**8P-9770**	1	PLATE	
	2	1	**229-7626**	1	PLATE-WEAR	
	3	1	**229-7627**	3	PLATE-WEAR	
	4	1	**305-1664**	12	PLATE-WEAR	
	5	1	**229-7637**	1	PLATE-WEAR	
	6	1	**229-7573**	2	PLATE-WEAR	
	7	1	**2C-9259**	1	PLATE-IDENTIFICATION (CAT)	

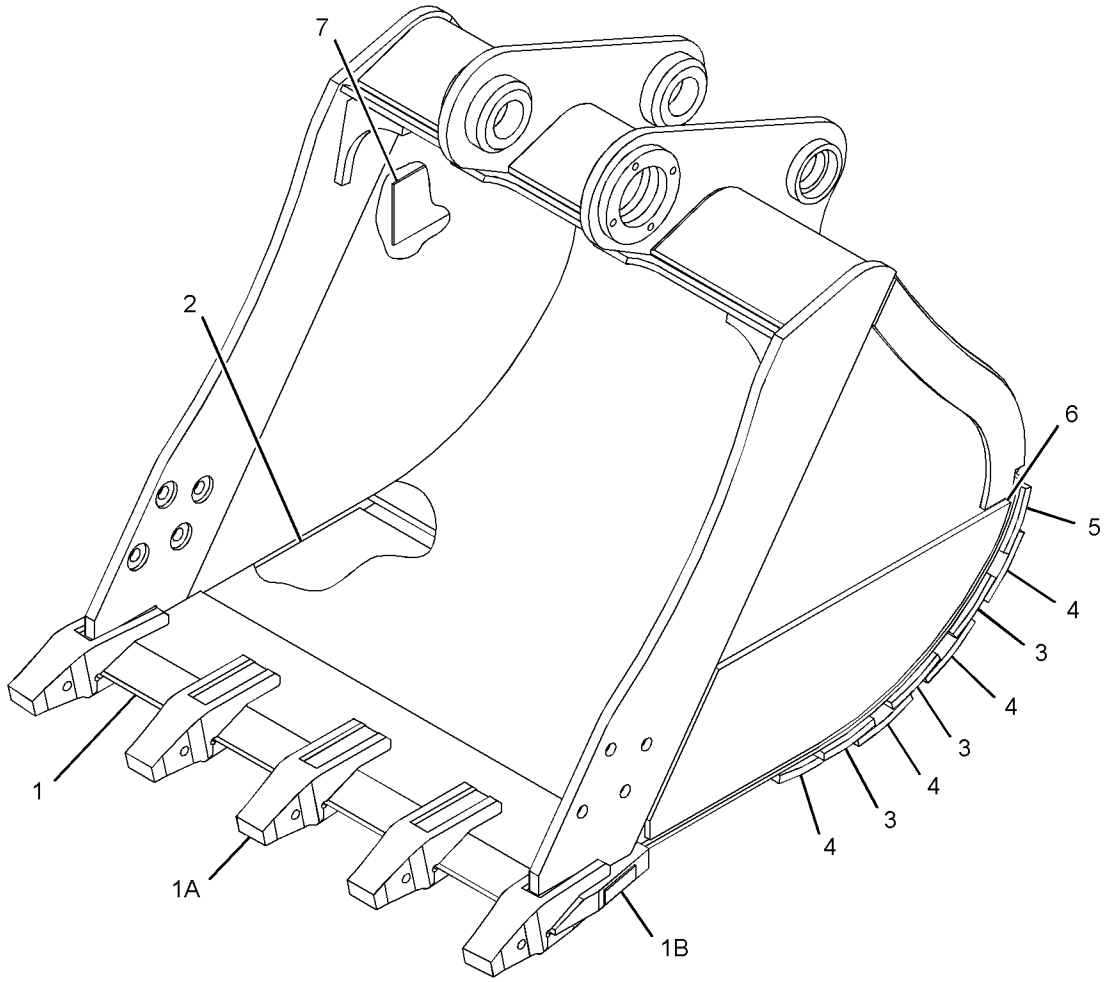

GRAPHIC #1 <END> g01859413

358-8649 BUCKET AS-SEVERE SERVICE ROCK

S/N: DLP1-UP
1087-MM (43-IN) WIDE X 0.65-CU M (0.85-C YD) CAPACITY. J-300 ADAPTERS, QTY OF 5
PART OF 358-8643 BUCKET & ADJUSTER GP
AN ATTACHMENT

SMCS-6001 **i05278311**

NOTE	REF NO	GRAPHIC REF	PART NUMBER	QTY	PART NAME 1 2 3 4 5 6 (PRODUCT LEVEL)	SEE PAGE
	1	1	**229-7628**	1	EDGE AS	
	1A	1	**8E-9490**	5	ADAPTER-TIP (J-300, 2-STRAP)	
	1B	1	**8P-9770**	1	PLATE	
	2	1	**371-3615**	1	PLATE (LH)	
	3	1	**371-3616**	1	PLATE (RH)	
	4	1	**371-3618**	2	PLATE-WEAR	
	5	1	**367-2006**	1	PLATE AS-HINGE	
	6	1	**371-3622**	1	PLATE-WEAR	
	7	1	**371-3626**	3	PLATE-WEAR	
	8	1	**371-4372**	1	PLATE-WEAR	

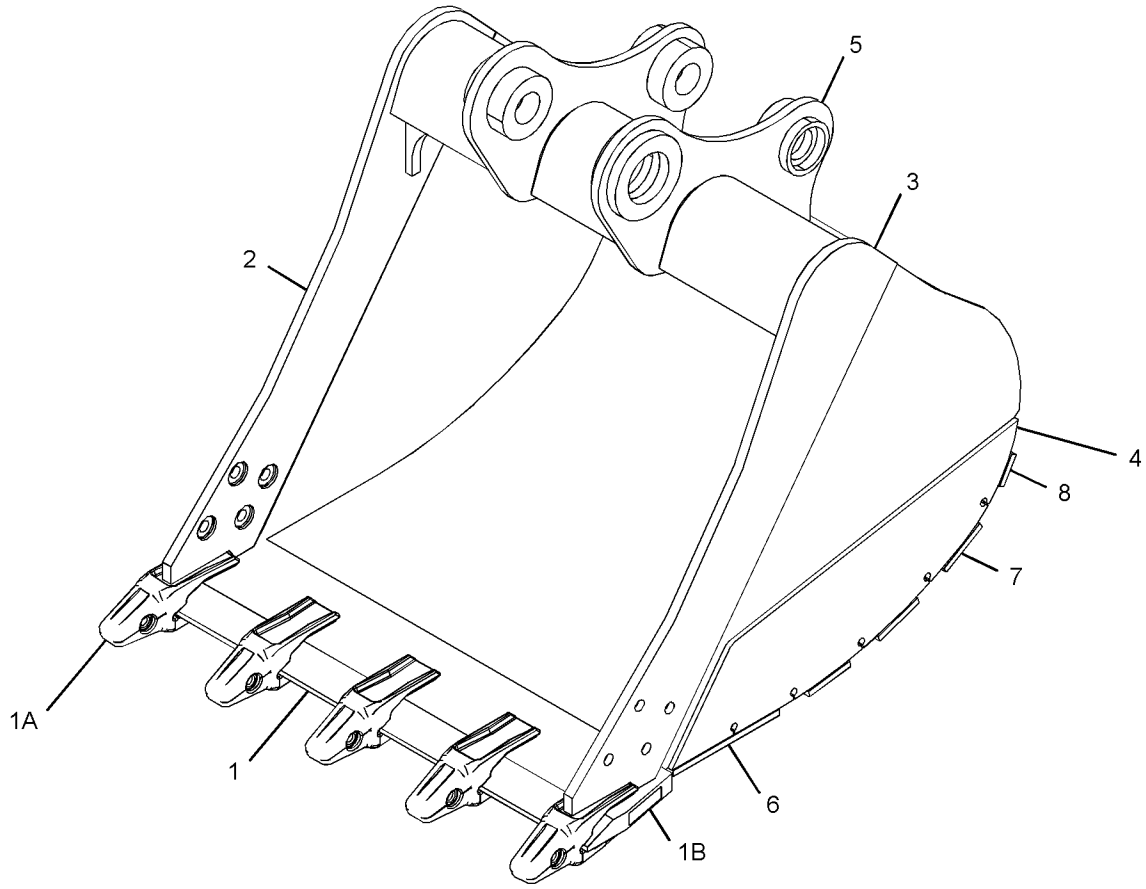

GRAPHIC #1 <END> g03370342

394-0306 BUCKET GP-HOE

S/N: DLP1-UP

900-MM (36-IN) WIDE X 0.53-CU M (0.69-CU YD) CAPACITY. J-250 ADAPTERS, QTY OF 5

PART OF 394-1691 BUCKET AR-GENERAL PURPOSE

AN ATTACHMENT

SMCS-6503 **i05673789**

NOTE	REF NO	GRAPHIC REF	PART NUMBER	QTY	PART NAME 1 2 3 4 5 6 (PRODUCT LEVEL)	SEE PAGE
	1	1	*394-0307*	1	BUCKET AS-GENERAL PURPOSE	
	2	1	**370-4401**	1	EDGE AS	
	2A	1	**119-3253**	5	ADAPTER-TIP (J-250, 2-STRAP)	
	2B	1	**8P-9770**	1	PLATE	
	3	1	**368-3360**	1	PLATE-WEAR	
	4	1	**394-0312**	3	PLATE-WEAR	
	5	1	**394-0311**	1	SIDECUTTER (LH)	
	6	1	**394-0317**	1	SIDECUTTER (RH)	
	7	1	**394-0310**	2	PLATE	
	8	1	**2C-9259**	1	PLATE-IDENTIFICATION (CAT)	
	9	1	**312-5694**	1	SETSCREW (1/4-20X0.25-IN)	

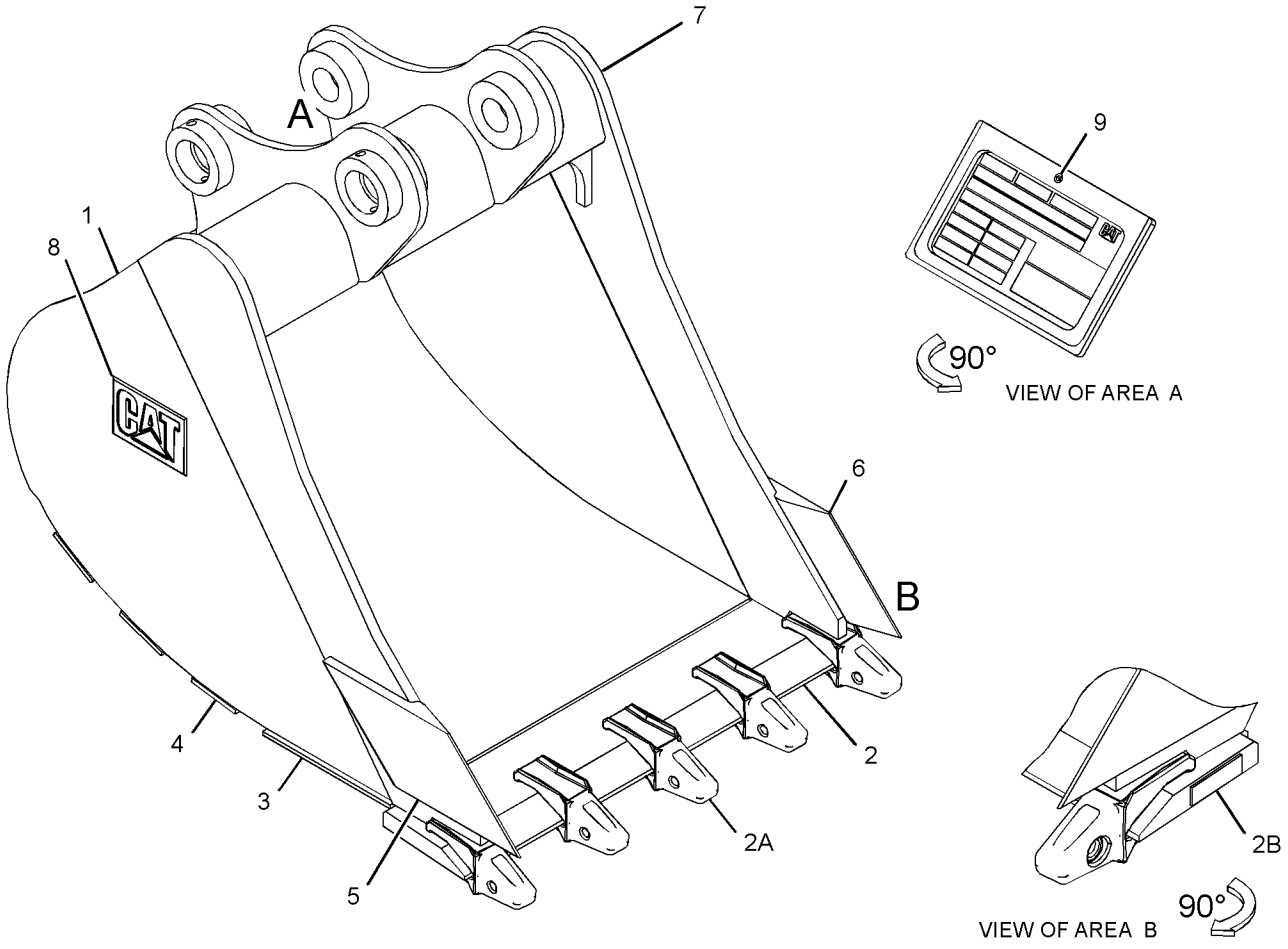

GRAPHIC #1 <END> g03153257

420-9206 BUCKET GP-HOE–312-FAMILY

S/N: DLP1-UP
600-MM (24-IN) WIDE X 0.31-CU M (0.40-CU YD) CAPACITY. J-250 ADAPTERS, QTY OF 3
PART OF 426-3618 BUCKET AR
AN ATTACHMENT

SMCS-6503 **i05198563**

NOTE	REF NO	GRAPHIC REF	PART NUMBER	QTY	PART NAME 1 2 3 4 5 6 (PRODUCT LEVEL)	SEE PAGE
	1	1	**2C-9259**	1	PLATE-IDENTIFICATION (CAT)	
	2	1	**312-5694**	1	SETSCREW (1/4-20X0.25-IN)	
	3	1	*420-9209*	1	BUCKET AS-HOE	
	4	1	**370-4397**	1	EDGE AS	
	4A	1	**119-3253**	3	ADAPTER-TIP (J-250, 2-STRAP)	
	4B	1	**8P-9770**	1	PLATE	
	5	1	**394-0310**	2	PLATE	
	6	1	**420-9255**	3	PLATE-WEAR	
	7	1	**370-4411**	1	PLATE-WEAR	
	8	1	**394-0311**	1	SIDECUTTER (LH)	
	9	1	**394-0317**	1	SIDECUTTER (RH)	

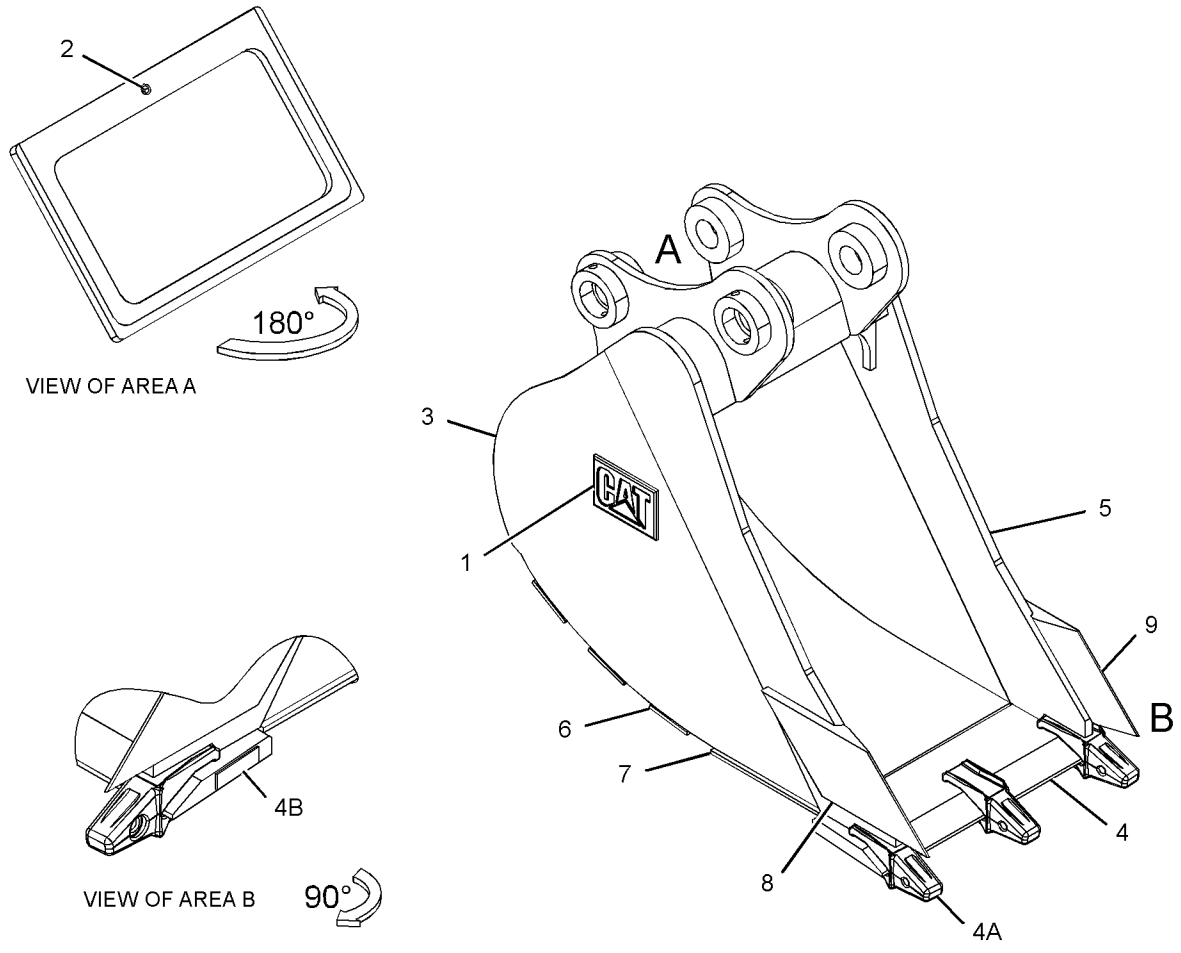

GRAPHIC #1 <END> g03345406

420-9207 BUCKET GP-HOE–312-FAMILY

S/N: DLP1-UP
1200-MM (48-IN) WIDE X 0.76-CU M (1.00-CU YD) CAPACITY. J-250 ADAPTERS, QTY OF 6
PART OF 426-3619 BUCKET AR
AN ATTACHMENT

SMCS-6503 **i05198677**

NOTE	REF NO	GRAPHIC REF	PART NUMBER	QTY	PART NAME 1 2 3 4 5 6 (PRODUCT LEVEL)	SEE PAGE
	1	1	**2C-9259**	1	PLATE-IDENTIFICATION (CAT)	
	2	1	**312-5694**	1	SETSCREW (1/4-20X0.25-IN)	
	3	1	*420-9210*	1	BUCKET AS	
	4	1	**370-4403**	1	EDGE AS	
	4A	1	**119-3253**	6	ADAPTER-TIP (J-250, 2-STRAP)	
	4B	1	**8P-9770**	1	PLATE	
	5	1	**394-0310**	2	PLATE	
	6	1	**370-4414**	1	PLATE-WEAR	
	7	1	**420-9257**	3	PLATE-WEAR	
	8	1	**394-0311**	1	SIDECUTTER (LH)	
	9	1	**394-0317**	1	SIDECUTTER (RH)	

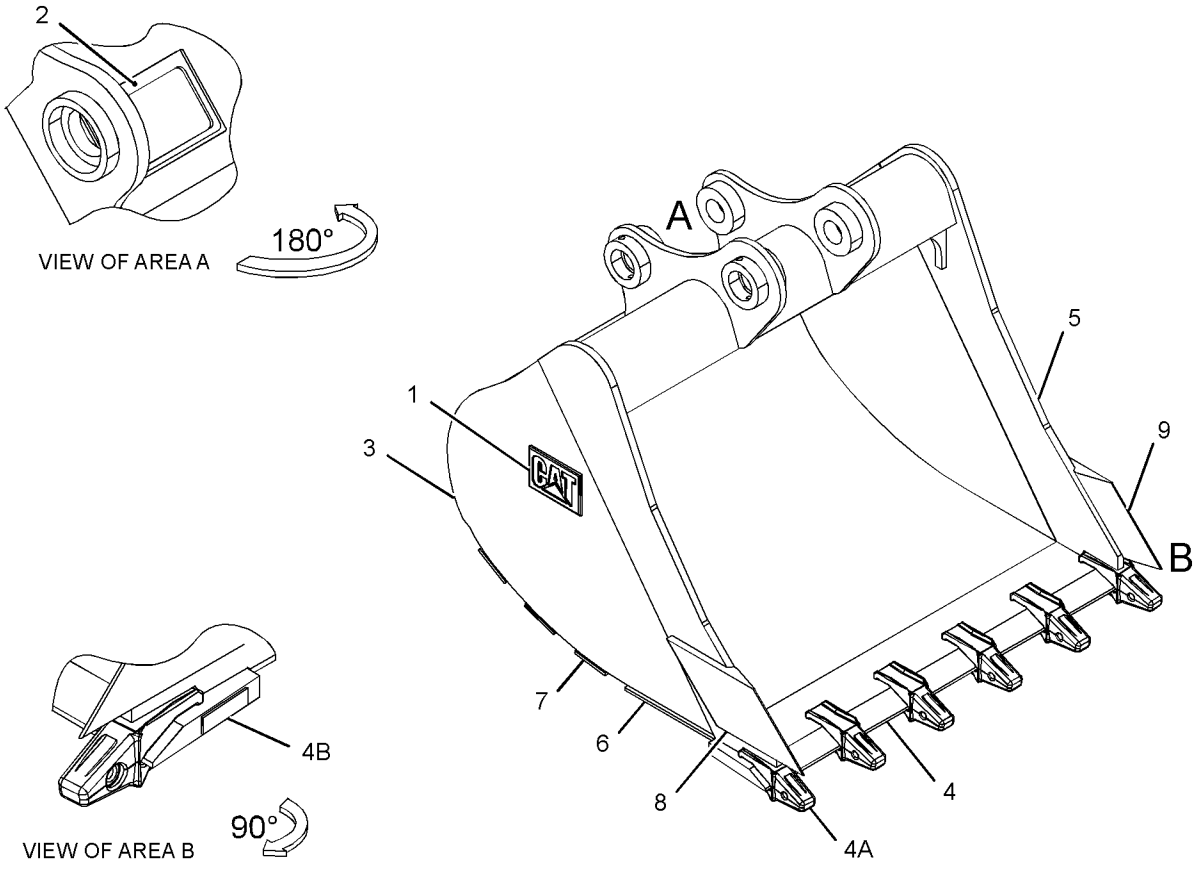

GRAPHIC #1 <END> g03346075

420-9205 BUCKET GP-UTILITY

S/N: DLP1-UP
450-MM (18-IN) WIDE X 0.2-CU M (0.3-CU YD) CAPACITY. J-250 ADAPTERS, QTY OF 3
PART OF 426-3617 BUCKET AR-GENERAL PURPOSE
AN ATTACHMENT

SMCS-6101 **i05173211**

NOTE	REF NO	GRAPHIC REF	PART NUMBER	QTY	PART NAME 1 2 3 4 5 6 (PRODUCT LEVEL)	SEE PAGE
	1	1	**2C-9259**	1	PLATE-IDENTIFICATION (CAT)	
	2	1	**312-5694**	1	SETSCREW (1/4-20X0.25-IN)	
	3	1	*420-9208*	1	BUCKET AS-UTILITY	
	4	1	**394-0311**	1	SIDECUTTER (LH)	
	5	1	**394-0317**	1	SIDECUTTER (RH)	
	6	1	**420-9253**	3	PLATE-WEAR	
	7	1	**370-4410**	1	PLATE-WEAR	
	8	1	**370-4396**	1	EDGE AS	
	8A	1	**119-3253**	3	ADAPTER-TIP (J-250, 2-STRAP)	
	8B	1	**8P-9770**	1	PLATE	

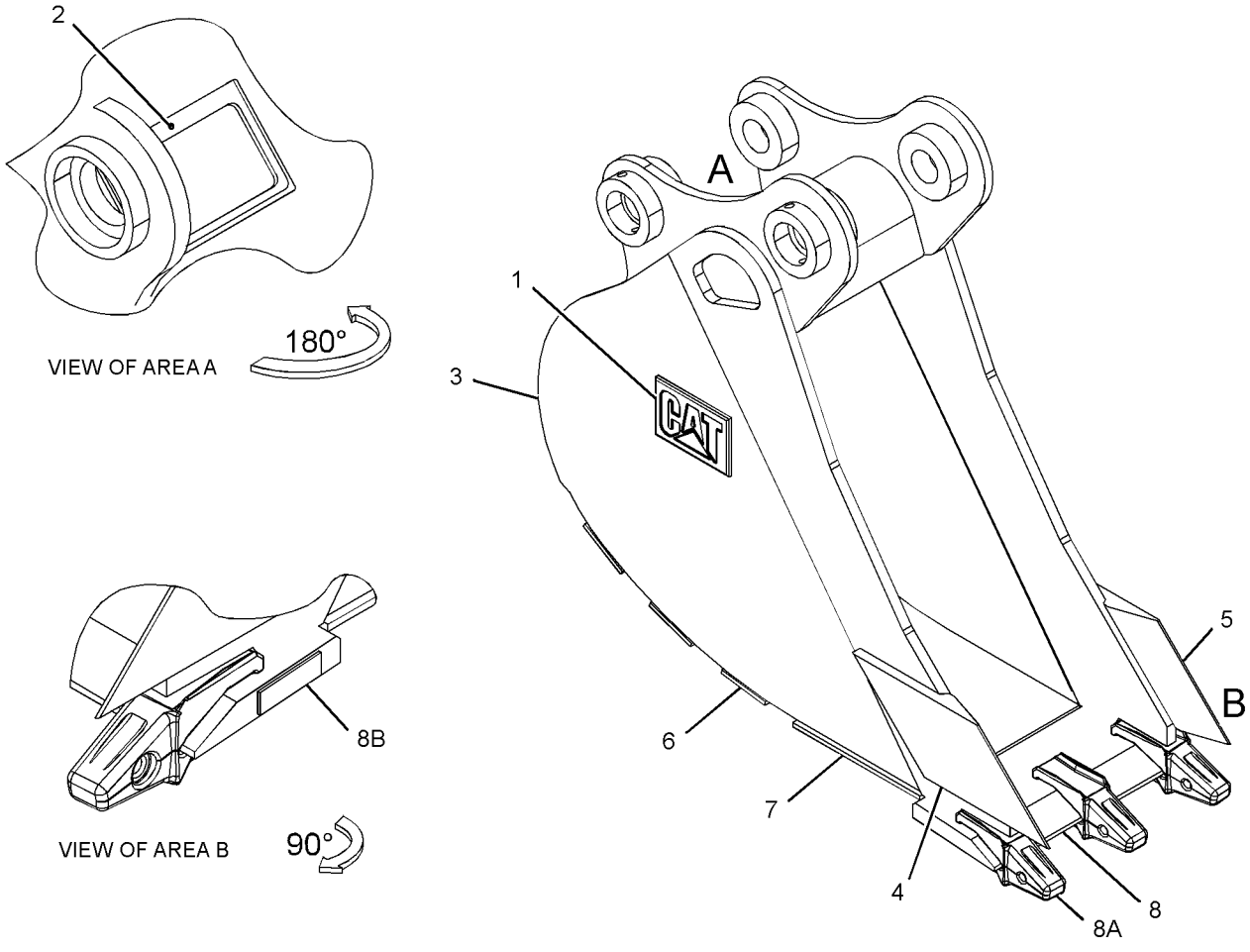

GRAPHIC #1 <END> g03346004

282-5536 COUPLER AR-QUICK—WITH COUPLER PIN

S/N: DLP1-UP
AN ATTACHMENT

SMCS-1408, 5057, 6129 **i02864051**

NOTE	PART NUMBER	QTY	PART NAME 1 2 3 4 5 6 (PRODUCT LEVEL)	SEE PAGE
Y	*289-7697*	1	CYLINDER & LINES GP-BUCKET	479
Y	*253-6396*	1	LINES GP-COUPLER	583
Y	*282-5540*	1	LINKAGE GP-BUCKET	880
Y	*253-6406*	1	PIN GP-COUPLER	923

Y - SEPARATE ILLUSTRATION

<END>

282-5537 COUPLER AR-QUICK—WITHOUT COUPLER PIN

S/N: DLP1-UP
AN ATTACHMENT

SMCS-1408, 5057, 6129 **i02864054**

NOTE	PART NUMBER	QTY	PART NAME 1 2 3 4 5 6 (PRODUCT LEVEL)	SEE PAGE
Y	*289-7697*	1	CYLINDER & LINES GP-BUCKET	479
Y	*253-6396*	1	LINES GP-COUPLER	583
Y	*282-5540*	1	LINKAGE GP-BUCKET	880

Y - SEPARATE ILLUSTRATION

<END>

350-4178 COUPLER AR-QUICK—WITH COUPLER PIN

S/N: DLP1-UP
AN ATTACHMENT

SMCS-1408, 5057, 6129 **i05215243**

NOTE	PART NUMBER	QTY	PART NAME 1 2 3 4 5 6 (PRODUCT LEVEL)	SEE PAGE
Y	*351-8749*	1	COUPLER AR-QUICK	914
Y	*253-6406*	1	PIN GP-COUPLER (BUCKET)	923

Y - SEPARATE ILLUSTRATION

<END>

351-8749 COUPLER AR-QUICK

S/N: DLP1-UP
PART OF 350-4178 COUPLER AR-QUICK
AN ATTACHMENT

SMCS-1408, 5057, 6129 **i05167303**

NOTE	PART NUMBER	QTY	PART NAME 1 2 3 4 5 6 (PRODUCT LEVEL)	SEE PAGE
Y	*292-4159*	1	COUPLER GP-QUICK	916
Y	*347-3726*	1	LINES GP-COUPLER	588
J	**172-8490**	2	SHIM (1-MM THK)	

J - APPLY TO STICK/COUPLER INTERFACE
Y - SEPARATE ILLUSTRATION

<END>

236-4153 COUPLER GP-QUICK

S/N: DLP1-UP
PART OF 253-6396 LINES GP-COUPLER
AN ATTACHMENT

SMCS-1408, 5057, 6129 **i02785034**

NOTE	REF NO	GRAPHIC REF	PART NUMBER	QTY	PART NAME 1 2 3 4 5 6 (PRODUCT LEVEL)	SEE PAGE
Y	1	1	**273-4147**	1	CYLINDER GP-COUPLER	513
	2	1	**256-9793**	1	HOOK	
	3	1	**256-9792**	1	PIN	
	4	1	**256-9790**	1	PIN	
	5	1	**256-9791**	1	PIN	
	6	1	**3B-8489**	4	FITTING-GREASE (1/8-27 PTF)	
	7	1	**201-3663**	1	SPRING	
	8	1	**184-7495**	1	BEARING	
	9	1	**256-9788**	1	BAR	
	10	1	**273-4148**	1	BAR	
	11	1	**256-9786**	2	CLIP	
	12	1	**256-9787**	4	CLIP	
	13	1	**273-4149**	1	PLATE-RETAINING	
M	14	1	**8C-6364**	2	BOLT-SOCKET HEAD (M5X0.8X14-MM)	
Z	15	1		1	COUPLER AS-QUICK	

M - METRIC PART
Y - SEPARATE ILLUSTRATION
Z - NOT SERVICED SEPARATELY

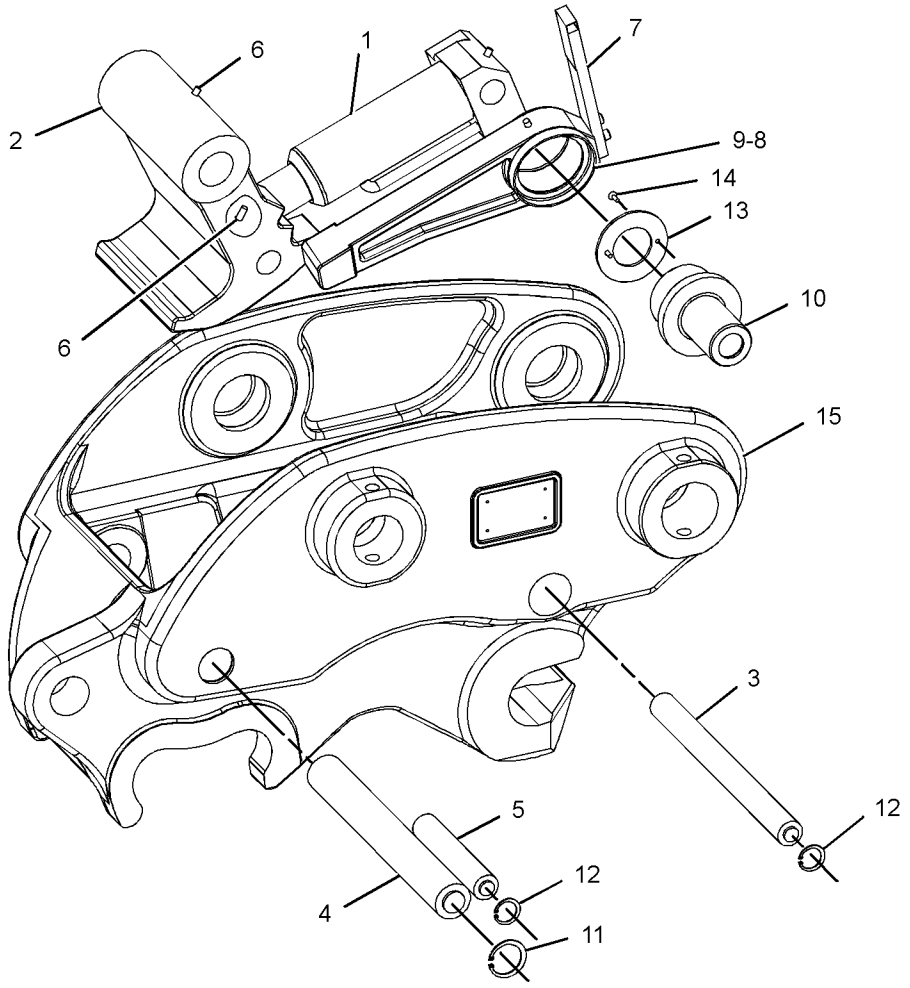

GRAPHIC #1 <END> g01203214

292-4159 COUPLER GP-QUICK

S/N: DLP1-UP
PART OF 351-8749 COUPLER AR-QUICK
AN ATTACHMENT
TYPE 1

SMCS-1408, 5057, 6129 **i04264182**

NOTE	REF NO	GRAPHIC REF	PART NUMBER	QTY	PART NAME 1 2 3 4 5 6 (PRODUCT LEVEL)	SEE PAGE
	1	1	**312-5694**	1	SETSCREW (1/4-20X0.25-IN)	
	2	1	**159-8035**	1	FILM-WARNING (CRUSH HAZARD, STAY BACK)	
	3	1	**159-8036**	1	FILM-WARNING (READ OMM)	
Y	4	1	**300-6024**	1	CYLINDER GP-COUPLER	514
	6	1	**304-7900**	1	HOOK AS (PRIMARY)	
	6A	1	**3B-8489**	2	FITTING-GREASE (1/8-27 PTF)	
	6B	1	**5I-9461**	2	BUSHING	
	7	1	**304-7906**	1	ROCKER ARM GP (LH)	
	7A	1	**3B-8489**	2	FITTING-GREASE (1/8-27 PTF)	
M	7B	1	**8T-8441**	2	BOLT-SOCKET HEAD (M12X1.75X25-MM)	
	7C	1	**331-3170**	1	BUSHING	
	8	1	**304-7908**	1	ROCKER ARM GP (RH)	
	8A	1	**3B-8489**	2	FITTING-GREASE (1/8-27 PTF)	
M	8B	1	**8T-8441**	2	BOLT-SOCKET HEAD (M12X1.75X25-MM)	
	8C	1	**331-3170**	1	BUSHING	
	9	1	**304-7914**	1	HOOK AS (SECONDARY)	
	9A	1	**3B-8485**	2	ELBOW	
	10	1	**304-7931**	1	PIN	
	11	1	**304-7935**	1	PIN	
	12	1	**304-7938**	2	PLATE	
	13	1	**304-7940**	1	BOSS	
	14	1	**346-3540**	1	PIN	
	15	1	**1J-5353**	2	PIN-SPRING	
	16	1	**2M-4287**	2	RING-SNAP	
	17	1	**3D-2975**	4	RING-RETAINING	
	18	1	**347-1466**	2	RING-RETAINING	
	19	1	**195-2852**	4	WASHER (15X22X0.5-MM THK)	
	20	1	**333-9323**	1	FILM-INSTRUCTION (COUPLER OPERATION)	
M	21	1	**096-4876**	4	NUT (M14X2-THD)	
M	22	1	**248-5474**	2	BOLT (M14X2X160-MM)	

M - METRIC PART
Y - SEPARATE ILLUSTRATION

292-4159 **COUPLER GP-QUICK (**contd.**)** **i04264182**

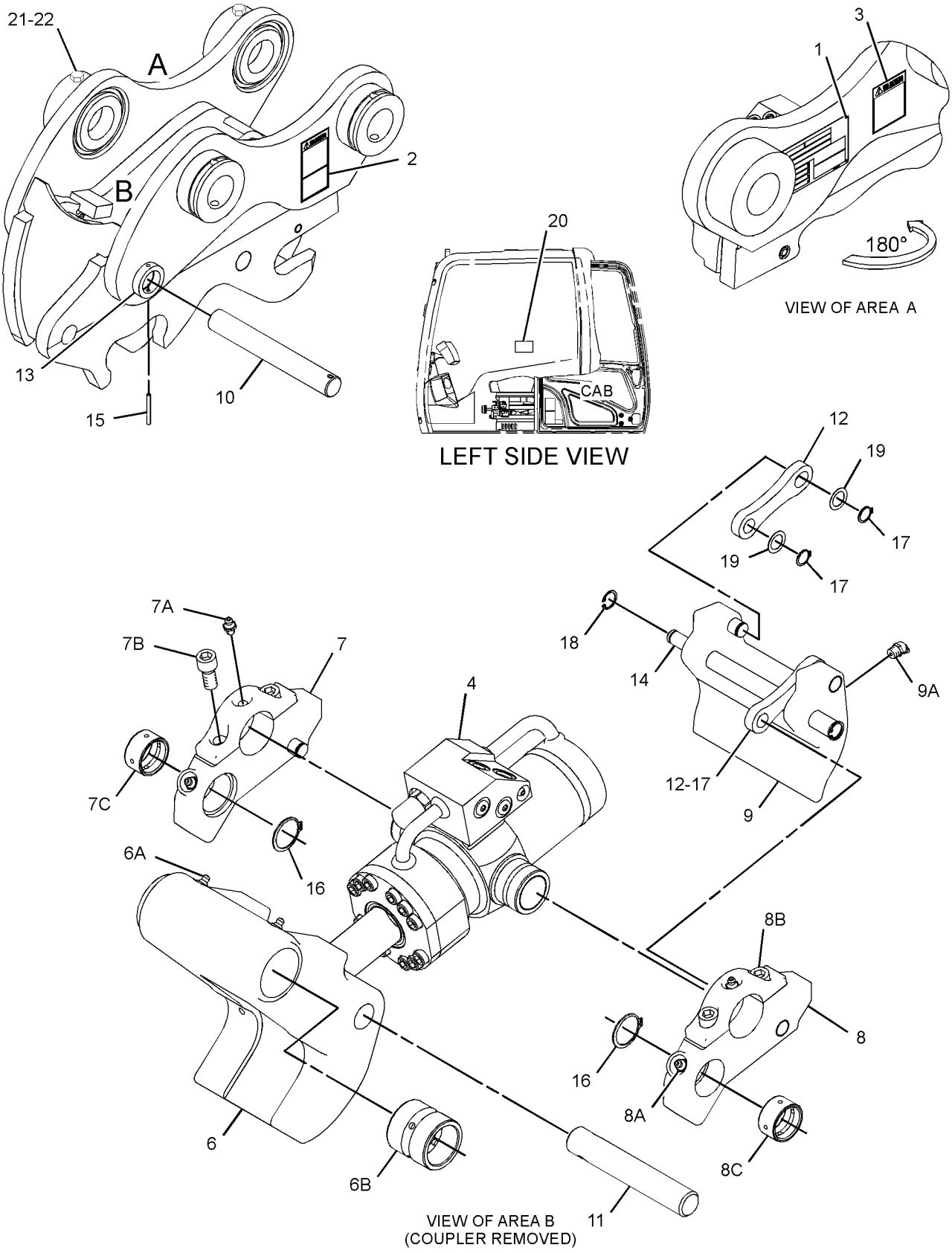

GRAPHIC #1 <END> g02491939

292-4159 COUPLER GP-QUICK

S/N: DLP1-UP
PART OF 351-8749 COUPLER AR-QUICK
AN ATTACHMENT
TYPE 2

SMCS-1408, 5057, 6129 **i05342652**

NOTE	REF NO	GRAPHIC REF	PART NUMBER	QTY	PART NAME 1 2 3 4 5 6 (PRODUCT LEVEL)	SEE PAGE
C	1	1	**4D-1322**	2	RING-RETAINING	
	2	1	**159-8035**	1	FILM-WARNING (CRUSH HAZARD, STAY BACK)	
	3	1	**159-8036**	1	FILM-WARNING (READ OMM)	
Y	4	1	**300-6024**	1	CYLINDER GP-COUPLER	514
	6	1	**304-7900**	1	HOOK AS (PRIMARY)	
	6A	1	**3B-8489**	2	FITTING-GREASE (1/8-27 PTF)	
	6B	1	**5I-9461**	2	BUSHING	
	7	1	**304-7906**	1	ROCKER ARM GP (LH)	
	7A	1	**3B-8489**	2	FITTING-GREASE (1/8-27 PTF)	
M	7B	1	**8T-8441**	2	BOLT-SOCKET HEAD (M12X1.75X25-MM)	
	7C	1	**331-3170**	1	BUSHING	
	8	1	**304-7908**	1	ROCKER ARM GP (RH)	
	8A	1	**3B-8489**	2	FITTING-GREASE (1/8-27 PTF)	
M	8B	1	**8T-8441**	2	BOLT-SOCKET HEAD (M12X1.75X25-MM)	
	8C	1	**331-3170**	1	BUSHING	
	9	1	**304-7914**	1	HOOK AS (SECONDARY)	
	9A	1	**3B-8485**	2	ELBOW	
C	10	1	**425-3904**	1	PIN	
C	11	1	**425-3903**	1	PIN	
	12	1	**304-7938**	2	PLATE	
C	13	1	**133-2901**	2	RING-RETAINING	
	14	1	**346-3540**	1	PIN	
	16	1	**2M-4287**	2	RING-SNAP	
	17	1	**3D-2975**	4	RING-RETAINING	
	18	1	**347-1466**	2	RING-RETAINING	
	19	1	**8U-5470**	4	WASHER	
M	21	1	**096-4876**	4	NUT (M14X2-THD)	
M	22	1	**248-5474**	2	BOLT (M14X2X160-MM)	
F			**268-4531**	1	FILM-INSTRUCTION (COUPLER OPERATION)	

C - CHANGE FROM PREVIOUS TYPE
F - NOT SHOWN
M - METRIC PART
Y - SEPARATE ILLUSTRATION

292-4159 **COUPLER GP-QUICK (**contd.**)** **i05342652**

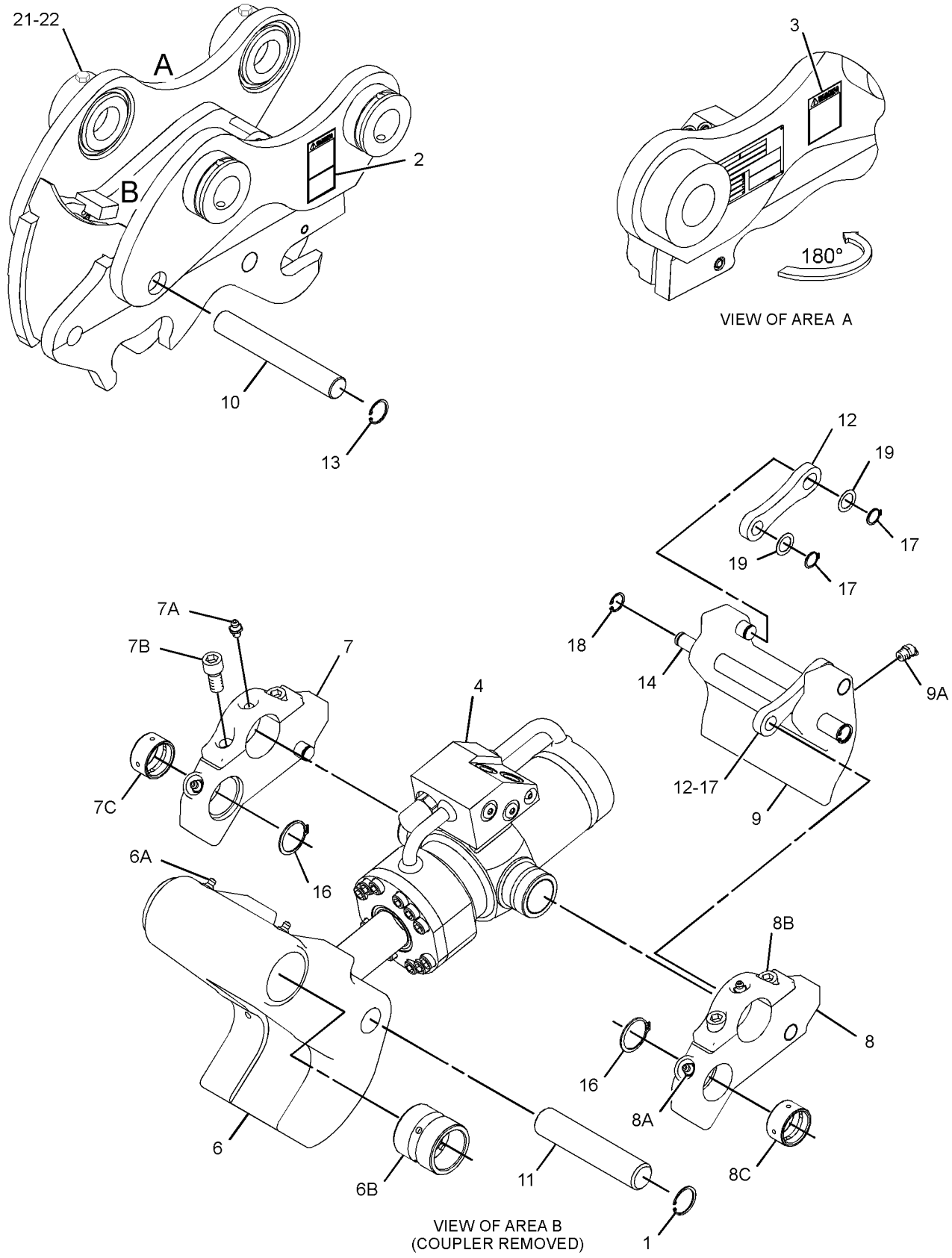

GRAPHIC #1 <END> g03410648

486-5362 COUPLER GP-QUICK

S/N: DLP1-UP

AN ATTACHMENT

SMCS-1408, 5057, 6129 **i06638884**

NOTE	REF NO	GRAPHIC REF	PART NUMBER	QTY	PART NAME 1 2 3 4 5 6 (PRODUCT LEVEL)	SEE PAGE
	1	1	**8L-5008**	1	ELBOW-PIPE	
	2	1	**4M-8973**	1	ELBOW	
	3	1	**5B-0935**	8	FITTING-GREASE	
	4	1	**9S-4185**	2	PLUG (3/4-16-THD)	
	5	1	**159-8036**	1	FILM-WARNING (READ OMM)	
	6	1	**355-5804**	2	PLUG	
I	7	1	**388-0105**	2	HOSE AS	
I	8	1	**388-0109**	1	HOSE AS	
I	9	1	**388-0110**	1	HOSE AS	
	10	1	**388-6177**	1	PIN	
	11	1	**388-6178**	1	PIN	
	12	1	**391-4597**	1	ROCKER ARM	
	13	1	**391-4598**	1	ROCKER ARM	
	14	1	**391-4599**	1	LATCH	
	15	1	**394-9469**	1	PIN	
Y	16	1	**395-4045**	1	CYLINDER GP-COUPLER	516
	17	1	**418-9163**	2	SPRING-SPACER	
	18	1	**418-9164**	2	SPRING-GUIDE	
	19	1	**424-6686**	2	SPRING	
I	20	1	**440-5314**	1	HOSE AS	
I	21	1	**440-5315**	1	HOSE AS	
	22	1	**449-2856**	1	WEDGE	
	23	1	**449-8112**	1	PIN	
M	24	1	**8T-4136**	5	BOLT (M10X1.5X25-MM)	
	25	1	**459-2215**	1	PLATE-COVER	
	26	1	**459-2216**	1	PIN	
	27	1	*486-5363*	1	COUPLER AS-QUICK	
		1	**475-0019**	12	PIN	
		1	**476-7093**	4	PIN	
	28	1	**095-0933**	2	RING-RETAINING	
	29	1	**2P-1279**	2	LOCKNUT (9/16-18-THD)	
	30	1	**2W-5975**	1	SCREW-BOLT (1/4-28X0.5-IN)	
	31	1	**3J-1907**	1	SEAL-O-RING	
	32	1	**3J-7354**	1	SEAL-O-RING	
	33	1	**4D-1322**	2	RING-RETAINING	
	34	1	**4D-7794**	1	CLIP	
	35	1	**4J-5477**	3	SEAL-O-RING	
	36	1	**6J-7836**	2	RING-SNAP	
M	37	1	**8T-4137**	1	BOLT (M10X1.5X20-MM)	
	38	1	**6V-8397**	3	SEAL-O-RING	
	39	1	**6V-8636**	1	CONNECTOR	
	40	1	**6V-8647**	1	CONNECTOR	
	41	1	**6V-8979**	1	ELBOW	
	42	1	**6V-8980**	1	ELBOW	
	43	1	**6V-9168**	2	NUT (11/16-16-THD)	
	44	1	**6V-9828**	1	CAP (ORFS)	
	45	1	**6V-9829**	1	CAP	

486-5362 **COUPLER GP-QUICK (**contd.**)** **i06638884**

NOTE	REF NO	GRAPHIC REF	PART NUMBER	QTY	PART NAME 1 2 3 4 5 6 (PRODUCT LEVEL)	SEE PAGE
	46	1	**8C-3312**	4	RING-RETAINING	
	47	1	**8T-4121**	6	WASHER-HARD (11X21X2.5-MM THK)	

I - REFER TO HYDRAULIC INFORMATION SYSTEM
M - METRIC PART
Y - SEPARATE ILLUSTRATION

486-5362 **COUPLER GP-QUICK (**contd.**)** **i06638884**

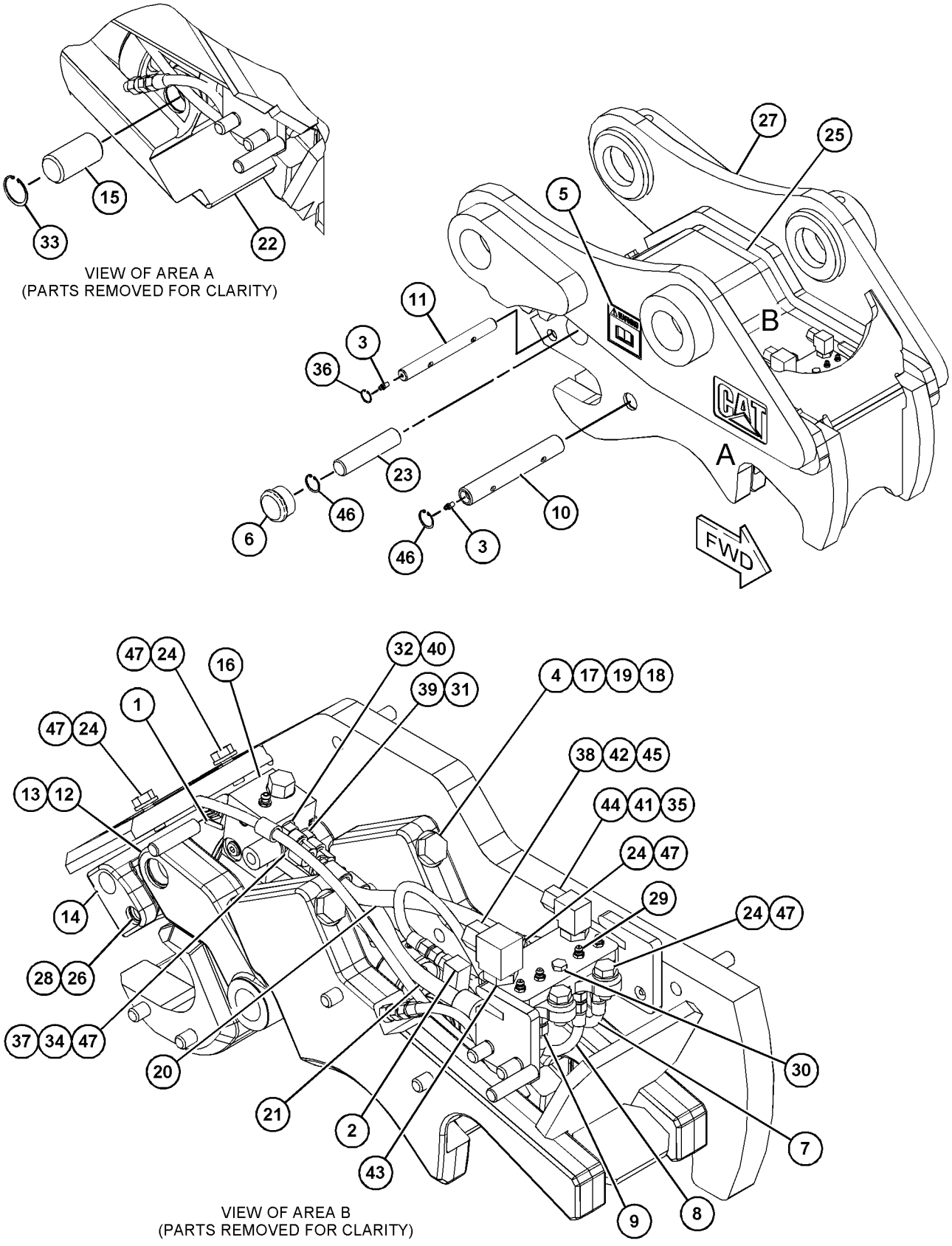

VIEW OF AREA A
(PARTS REMOVED FOR CLARITY)

VIEW OF AREA B
(PARTS REMOVED FOR CLARITY)

GRAPHIC #1 <END> g06002184

253-6406 PIN GP-COUPLER

S/N: DLP1-UP
PART OF 282-5536, 350-4178 COUPLER AR-QUICK
AN ATTACHMENT

SMCS-6129 **i02210463**

NOTE	REF NO	GRAPHIC REF	PART NUMBER	QTY	PART NAME 1 2 3 4 5 6 (PRODUCT LEVEL)	SEE PAGE
	1	1	**086-0523**	2	PIN	
M	2	1	**096-4876**	4	NUT (M14X2-THD)	
M	3	1	**099-0724**	2	BOLT (M14X2X145-MM)	

M - METRIC PART

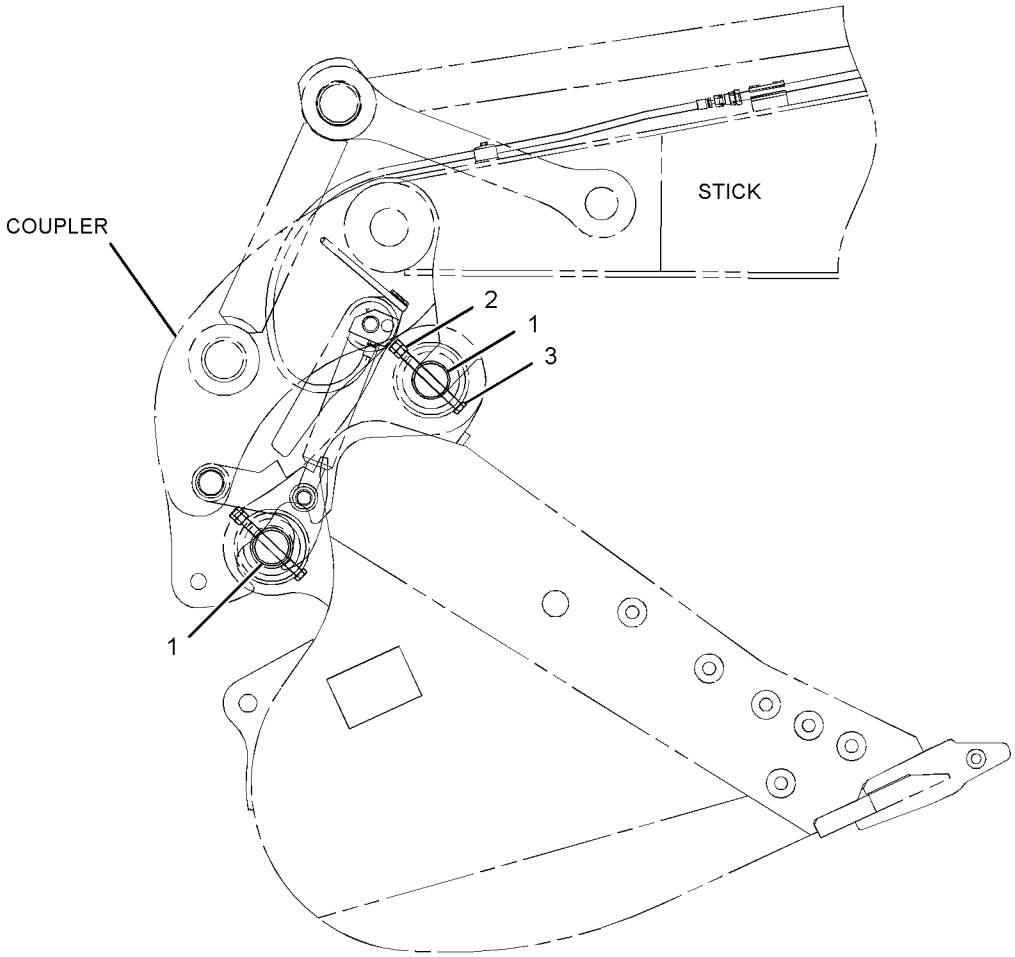

LEFT SIDE VIEW

GRAPHIC #1 <END> g01118540

380-1203 SIDECUTTER GP

S/N: DLP1-UP

PART OF 426-3618, 426-3619 BUCKET AR, 394-1691, 426-3617 BUCKET AR-GENERAL PURPOSE, 358-4486 BUCKET AR-HEAVY DUTY ROCK, 396-8956 BUCKET AR-SEVERE SERVICE ROCK AN ATTACHMENT

SMCS-6813 **i06716855**

NOTE	REF NO	GRAPHIC REF	PART NUMBER	QTY	PART NAME 1 2 3 4 5 6 (PRODUCT LEVEL)	SEE PAGE
	1	1	**380-1201**	1	SIDECUTTER (LH)	
	2	1	**380-1202**	1	SIDECUTTER (RH)	
M	3	1	**6V-3531**	8	BOLT (M20X2.5X50-MM)	
M	4	1	**8T-4131**	8	NUT (M20X2.5-THD)	

M - METRIC PART

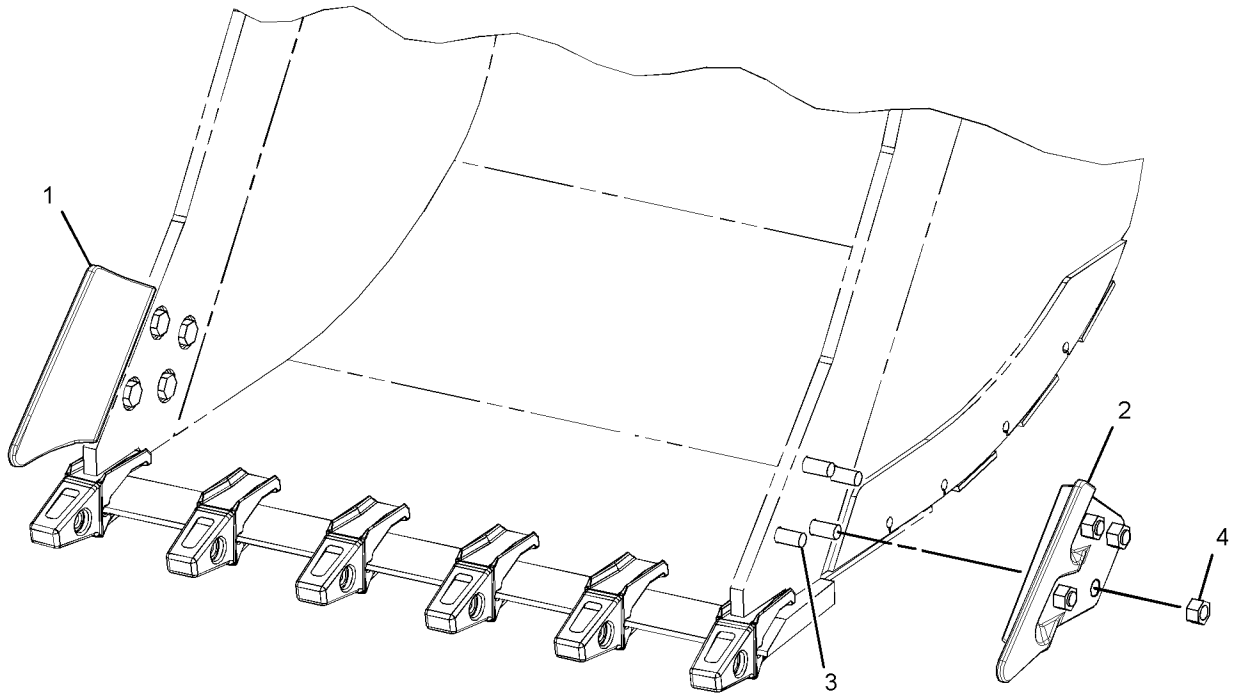

GRAPHIC #1 <END> g02724118

4I-7343 SIDECUTTER GP

S/N: DLP1-UP

PART OF 358-4486, 358-4487 BUCKET AR-HEAVY DUTY ROCK AN ATTACHMENT

SMCS-6813 **i01662690**

NOTE	REF NO	GRAPHIC REF	PART NUMBER	QTY	PART NAME 1 2 3 4 5 6 (PRODUCT LEVEL)	SEE PAGE
	1	1	**7Y-0204**	1	SIDECUTTER	
	2	1	**7Y-0203**	1	SIDECUTTER	
M	3	1	**096-7074**	8	BOLT (M20X2.5X50-MM)	
M	4	1	**093-7676**	8	NUT (M20X2.5-THD)	

M - METRIC PART

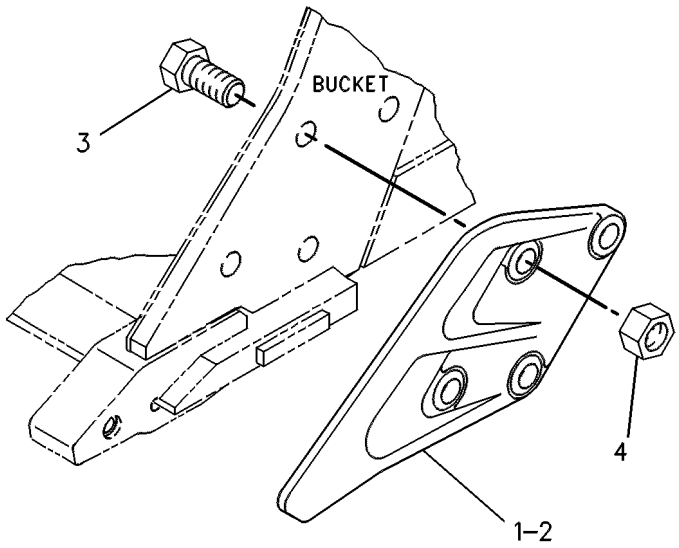

GRAPHIC #1 <END> g00245085

195-5139 TIP GP-LONG–J-250

S/N: DLP1-UP

PART OF 426-3618, 426-3619 BUCKET AR, 394-1691, 426-3617 BUCKET AR-GENERAL PURPOSE AN ATTACHMENT

SMCS-6805 **i06258167**

NOTE	PART NUMBER	QTY	PART NAME 1 2 3 4 5 6 (PRODUCT LEVEL)	SEE PAGE
	149-5733	1	RETAINER AS (G.E.T.)	
	449-2156	1	TIP-LONG (J-250) (LONG)	
	132-4763	1	PIN (G.E.T.)	

<END>

8E-3751 TIP GP-LONG—J-300, HEAVY-DUTY

S/N: DLP1-UP

PART OF 358-4486, 358-4487 BUCKET AR-HEAVY DUTY ROCK AN ATTACHMENT

SMCS-6805 **i01848840**

NOTE	REF NO	GRAPHIC REF	PART NUMBER	QTY	PART NAME 1 2 3 4 5 6 (PRODUCT LEVEL)	SEE PAGE
	1	1	**107-3308**	1	PIN	
	2	1	**8E-6259**	1	RETAINER AS	
	3	1	**9N-4302**	1	TIP-LONG	

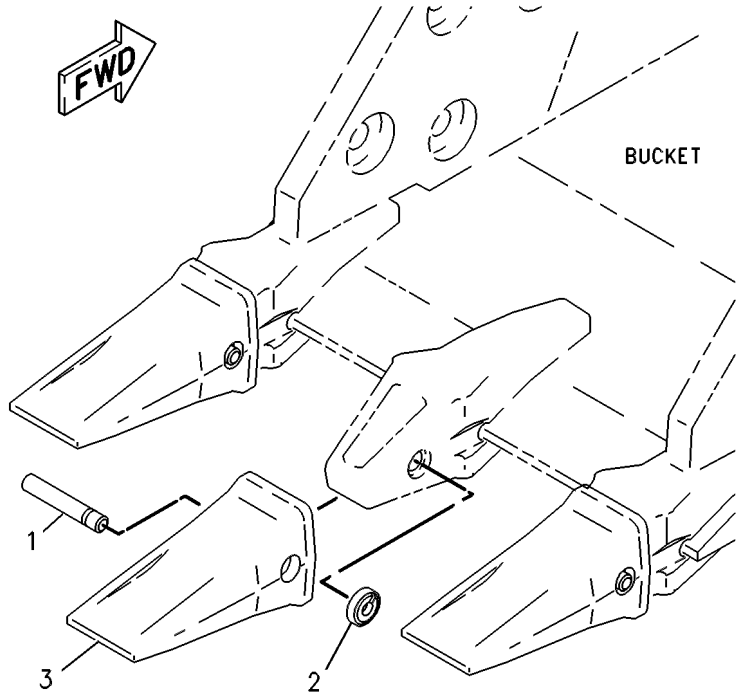

GRAPHIC #1 <END> g00117668

195-9180 TIP GP-PENETRATION PLUS—J-300

S/N: DLP1-UP

PART OF 396-8956 BUCKET AR-SEVERE SERVICE ROCK

AN ATTACHMENT

SMCS-6805 **i05167307**

NOTE	PART NUMBER	QTY	PART NAME 1 2 3 4 5 6 (PRODUCT LEVEL)	SEE PAGE
	107-3308	1	PIN	
	8E-6259	1	RETAINER AS	
	183-5300	1	TIP	

<END>

245-7889 ADJUSTER GP-SEAT—UPPER SLIDE

S/N: DLP1-UP

PART OF 229-9077, 340-6476 SUSPENSION GP-SEAT

AN ATTACHMENT

SMCS-7321 **i03420663**

NOTE	REF NO	GRAPHIC REF	PART NUMBER	QTY	PART NAME 1 2 3 4 5 6 (PRODUCT LEVEL)	SEE PAGE
	1	1	**245-7897**	8	PLATE	
M	2	1	**245-7899**	4	SCREW-BUTTON HEAD (M8X1.25X30-MM)	
M	3	1	**5C-7261**	8	NUT (M8X1.25-THD)	
	4	1	**8T-4224**	8	WASHER-HARD (8.8X16X2-MM THK)	

M - METRIC PART

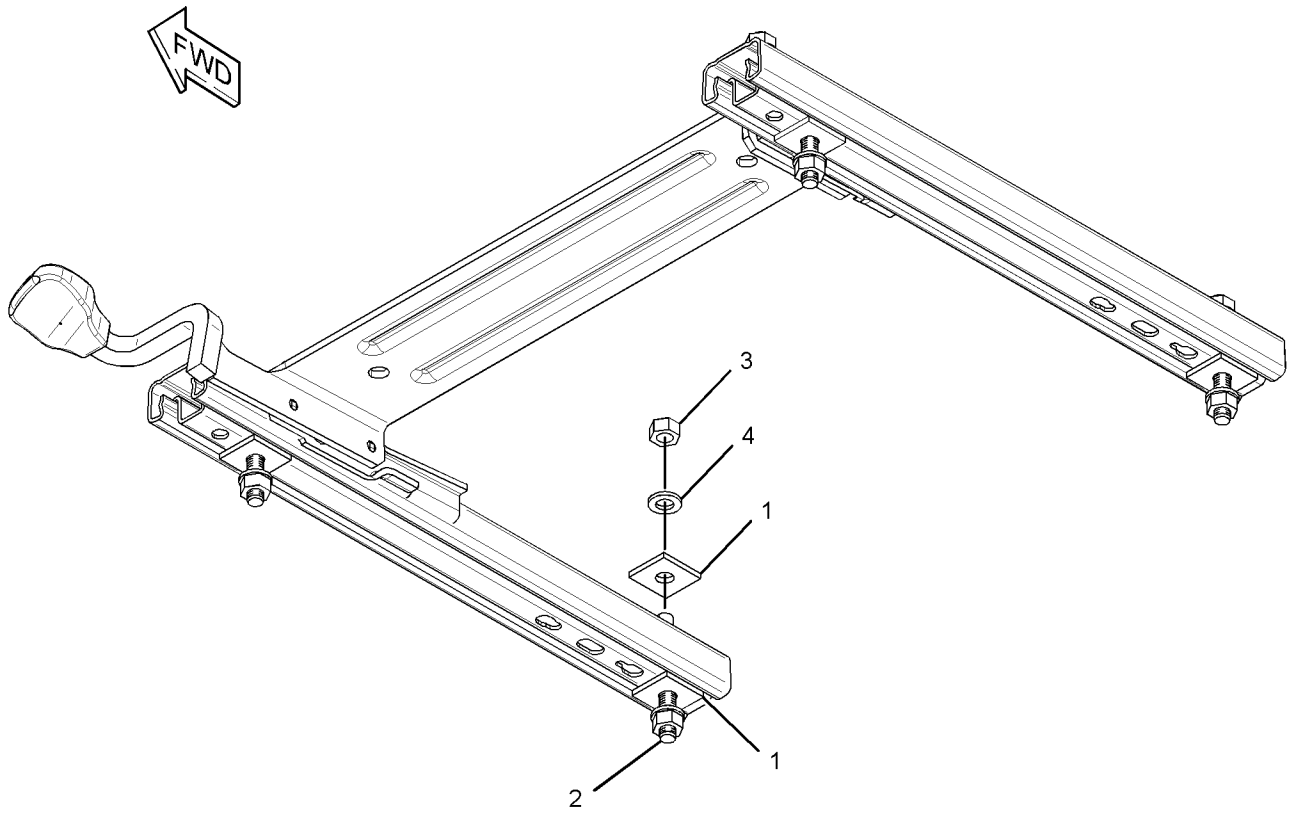

GRAPHIC #1 <END> g01777918

245-7896 ADJUSTER GP-SEAT—LOWER SLIDE

S/N: DLP1-UP

PART OF 229-9077, 340-6476 SUSPENSION GP-SEAT

AN ATTACHMENT

SMCS-7321 **i02178063**

NOTE	REF NO	GRAPHIC REF	PART NUMBER	QTY	PART NAME 1 2 3 4 5 6 (PRODUCT LEVEL)	SEE PAGE
M	1	1	**198-3899**	2	SCREW-BUTTON HEAD (M8X1.25X20-MM)	
	2	1	**245-7886**	2	PLATE	
	3	1	**245-7897**	4	PLATE	
M	4	1	**245-7898**	2	SCREW-BUTTON HEAD (M8X1.25X25-MM)	
M	5	1	**5C-7261**	4	NUT (M8X1.25-THD)	
	6	1	**8T-4224**	4	WASHER-HARD (8.8X16X2-MM THK)	

M - METRIC PART

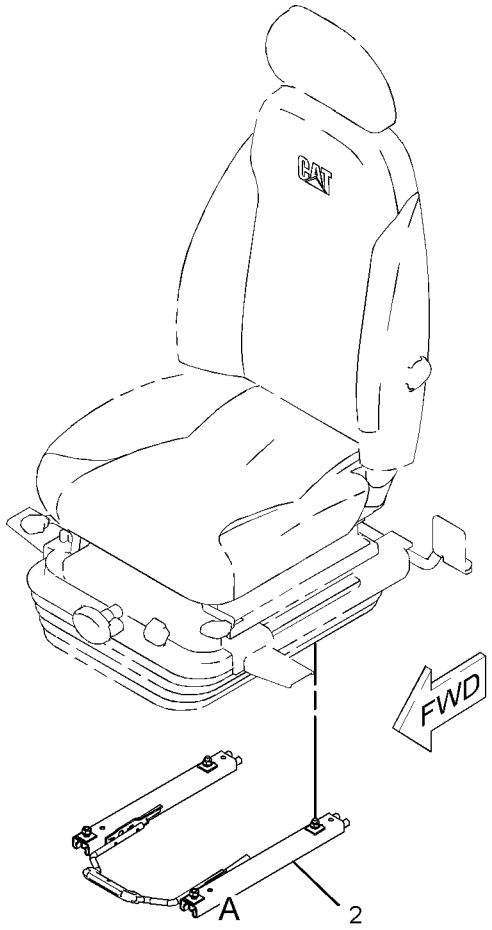

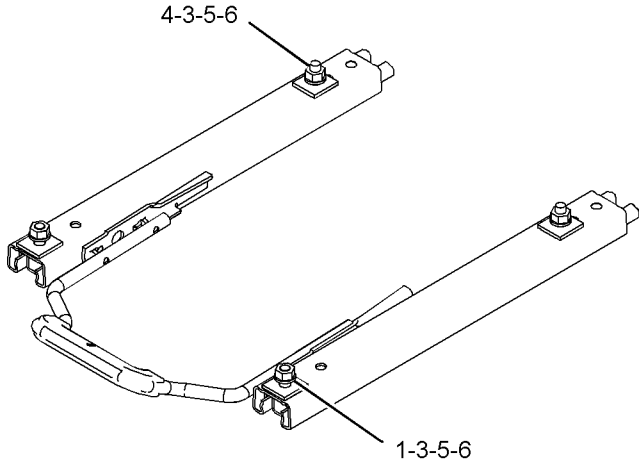

VIEW OF AREA A

GRAPHIC #1 <END> g01103189

235-9004 AIR CONDITIONER & MOUNTING GP

S/N: DLP1-UP
PART OF 235-9003 AIR CONDITIONER AR
AN ATTACHMENT
TYPE 1

SMCS-7320 **i03033088**

NOTE	REF NO	GRAPHIC REF	PART NUMBER	QTY	PART NAME 1 2 3 4 5 6 (PRODUCT LEVEL)	SEE PAGE
	1	1	**293-1136**	1	PANEL AS-CONTROL	
	2	1	**235-8873**	1	HARNESS AS-HEATER & AIR COND (CONTROL PANEL SWITCHES)	
	3	1	**235-8874**	1	SENSOR-TEMPERATURE (AMBIENT AIR)	
	4	1	**235-8875**	1	BRACKET	
	5	1	**235-9005**	1	HARNESS AS-HEATER & AIR COND (LOW SIDE)	
CY	6	1	**316-8811**	1	AIR CONDITIONER GP	936
	7	1	**9X-8256**	1	WASHER (6.6X12X2-MM THK)	
M	8	1	**099-2374**	2	BOLT-SOCKET HEAD (M5X0.8X12-MM)	
	9	1	**111-4836**	3	CLIP	
	10	1	**3S-2093**	2	STRAP-CABLE	
M	11	1	**5C-9553**	1	BOLT (M6X1X16-MM)	
	12	1	**7X-7729**	7	WASHER (11X25X3-MM THK)	
	13	1	**8T-0328**	2	WASHER-HARD (5.5X10X1-MM THK)	
	14	1	**8T-4121**	3	WASHER-HARD (11X21X2.5-MM THK)	
M	15	1	**8T-4136**	7	BOLT (M10X1.5X25-MM)	
M	16	1	**8T-4137**	3	BOLT (M10X1.5X20-MM)	

C - CHANGE FROM PREVIOUS TYPE
M - METRIC PART
Y - SEPARATE ILLUSTRATION

235-9004 **AIR CONDITIONER & MOUNTING GP** (contd.) **i03033088**

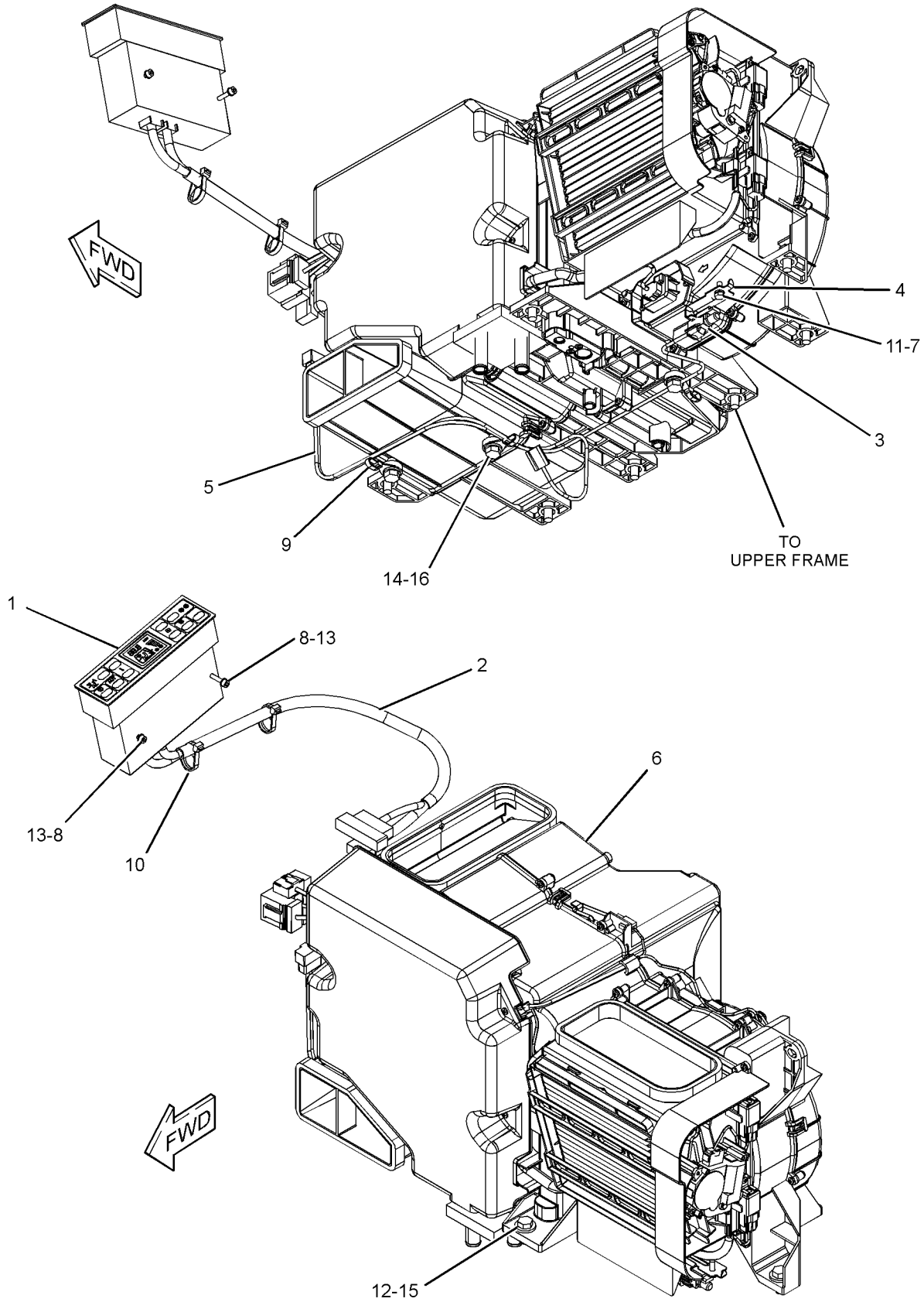

GRAPHIC #1 <END> g01397723

235-9004 AIR CONDITIONER & MOUNTING GP

S/N: DLP1-UP
PART OF 235-9003 AIR CONDITIONER AR
AN ATTACHMENT
TYPE 2

SMCS-7320 **i03296434**

NOTE	REF NO	GRAPHIC REF	PART NUMBER	QTY	PART NAME 1 2 3 4 5 6 (PRODUCT LEVEL)	SEE PAGE
	1	1	**293-1136**	1	PANEL AS-CONTROL	
	2	1	**235-8873**	1	HARNESS AS-HEATER & AIR COND (CONTROL PANEL SWITCHES)	
	3	1	**235-8874**	1	SENSOR-TEMPERATURE (AMBIENT AIR)	
	4	1	**235-8875**	1	BRACKET	
	5	1	**235-9005**	1	HARNESS AS-HEATER & AIR COND (LOW SIDE)	
CY	6	1	**316-8916**	1	AIR CONDITIONER GP	939
	7	1	**9X-8256**	1	WASHER (6.6X12X2-MM THK)	
M	8	1	**099-2374**	2	BOLT-SOCKET HEAD (M5X0.8X12-MM)	
	9	1	**111-4836**	3	CLIP	
	10	1	**3S-2093**	2	STRAP-CABLE	
M	11	1	**5C-9553**	1	BOLT (M6X1X16-MM)	
	12	1	**7X-7729**	7	WASHER (11X25X3-MM THK)	
	13	1	**8T-0328**	2	WASHER-HARD (5.5X10X1-MM THK)	
	14	1	**8T-4121**	3	WASHER-HARD (11X21X2.5-MM THK)	
M	15	1	**8T-4136**	7	BOLT (M10X1.5X25-MM)	
M	16	1	**8T-4137**	3	BOLT (M10X1.5X20-MM)	

C - CHANGE FROM PREVIOUS TYPE
M - METRIC PART
Y - SEPARATE ILLUSTRATION

235-9004 **AIR CONDITIONER & MOUNTING GP** (contd.) **i03296434**

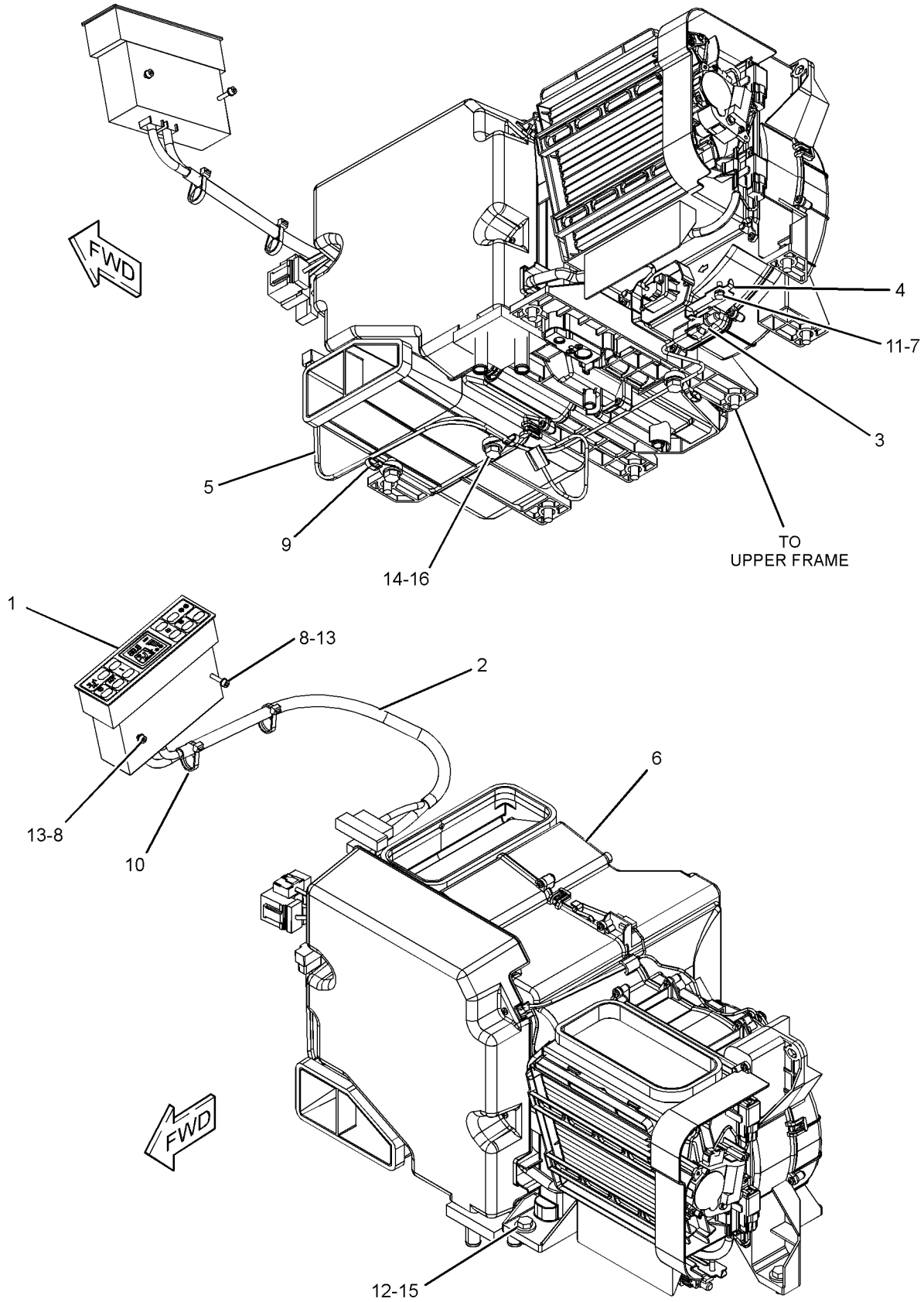

GRAPHIC #1 <END> g01397723

235-9003 AIR CONDITIONER AR

S/N: DLP1-UP

PART OF 336-3353, 336-3354 OPTION AR-CAB

AN ATTACHMENT

SMCS-7320 **i05195923**

NOTE	PART NUMBER	QTY	PART NAME 1 2 3 4 5 6 (PRODUCT LEVEL)	SEE PAGE
Y	*235-9004*	1	AIR CONDITIONER & MOUNTING GP	931
Y	*229-9082*	1	DUCT GP-CAB AIR	1054

Y - SEPARATE ILLUSTRATION

<END>

316-8811 AIR CONDITIONER GP

S/N: DLP1-UP
FIELD REPLACEMENT ORDER 316-8916—PAGE: 939
PART OF 235-9004 AIR CONDITIONER & MOUNTING GP
AN ATTACHMENT

SMCS-7320 **i03012140**

NOTE	REF NO	GRAPHIC REF	PART NUMBER	QTY	PART NAME 1 2 3 4 5 6 (PRODUCT LEVEL)	SEE PAGE
	1	1	**185-8300**	35	SCREW-TAPPING	
	2	2	**185-8302**	3	SCREW-TAPPING	
	3	1	**245-7817**	2	MOTOR AS	
	4	1	**245-7818**	3	CLIP	
	5	2	**245-7819**	2	CLIP	
	6	1	**245-7820**	1	COVER-FRONT	
	7	1	**245-7825**	1	INSULATOR	
	8	2	**245-7826**	1	INSULATOR	
	9	2	**245-7827**	1	INSULATOR	
	10	2	**245-7828**	1	INSULATOR	
	11	1	**245-7829**	1	PACKING	
	12	1	**245-7830**	1	CLIP	
	13	1	**245-7831**	1	SENSOR AS-TEMPERATURE (COOLANT)	
	14	1	**245-7832**	1	CONTROL AS	
	15	1	**245-7833**	1	CORE AS-HEATER	
	16	1	**245-7834**	1	DAMPER AS	
	17	2	**245-7835**	1	SENSOR AS-TEMPERATURE (AMBIENT AIR TEMP)	
Y	18	2	**245-7836**	1	COIL GP-EVAPORATOR	1000
	19	2	**245-7838**	1	PACKING	
	20	2	**245-7839**	1	MOTOR AS (WITH FAN)	
Y	21	1	**245-7846**	1	CONTROL GP-HEAT & AIR COND (AIR INLET)	1037
	22	1	**245-7847**	1	HARNESS AS-HEATER & AIR COND	
	23	2	**245-7856**	3	SCREW-TAPPING	
	24	1	**293-1137**	1	FILTER AS-AIR (AIR CONDITIONER)	
		1	**245-7823**	1	FILTER ELEMENT-CAB AIR	
		1	**245-7824**	1	PACKING	
	25	2	**316-8845**	1	PLATE	
	26	2	**316-8846**	1	PLATE	
	27	2	**316-8847**	2	ROD	
	28	2	**316-8848**	1	ROD	
	29	1	**316-8849**	1	ROD	
	30	2	**316-8850**	1	ROD	

Y - SEPARATE ILLUSTRATION

316-8811 **AIR CONDITIONER GP (**contd.**)** **i03012140**

REFER TO ALL ILLUSTRATIONS OF
THIS GROUP FOR AUXILIARY VIEWS

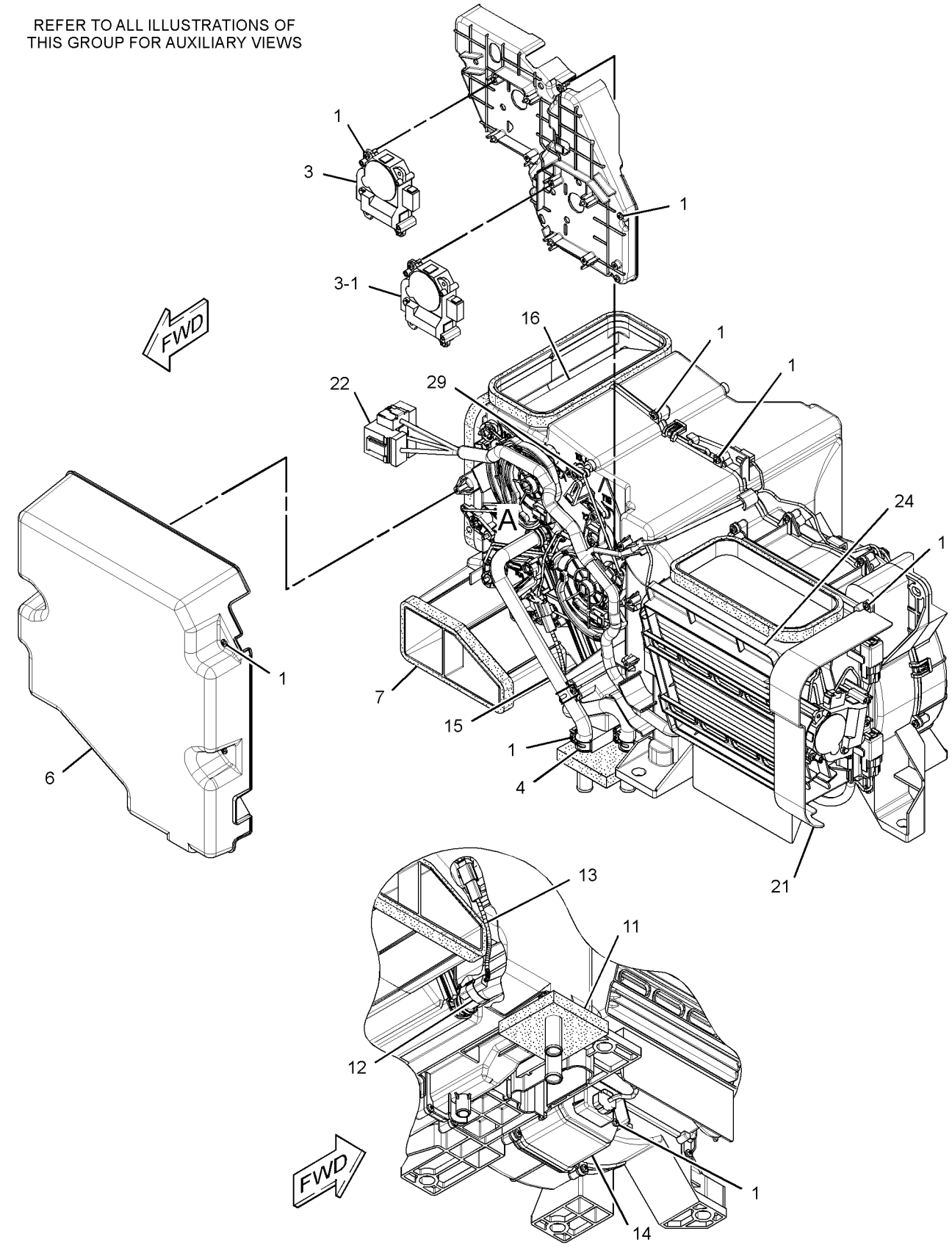

GRAPHIC #1 g01525866

316-8811 **AIR CONDITIONER GP (**contd.**)** **i03012140**

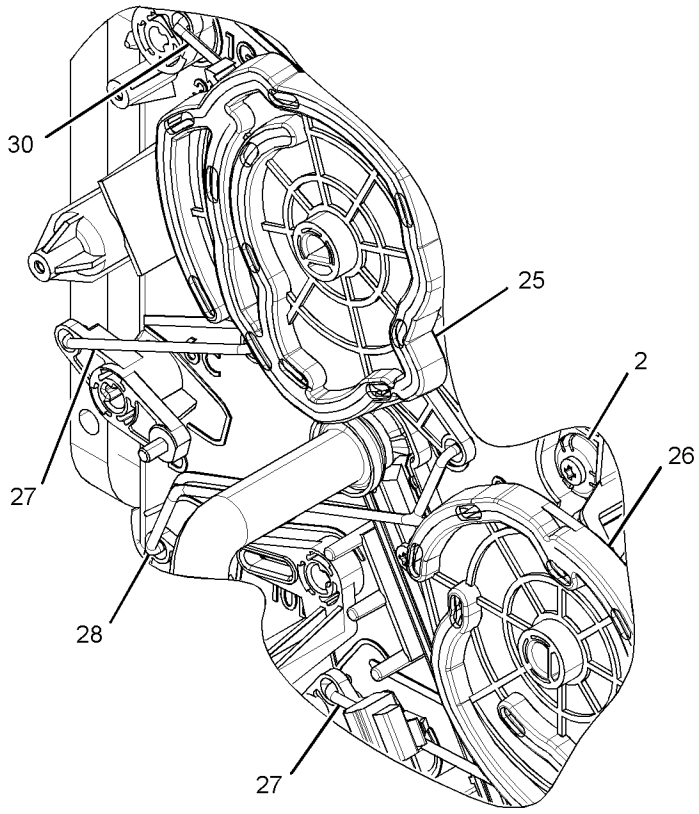

VIEW OF AREA A

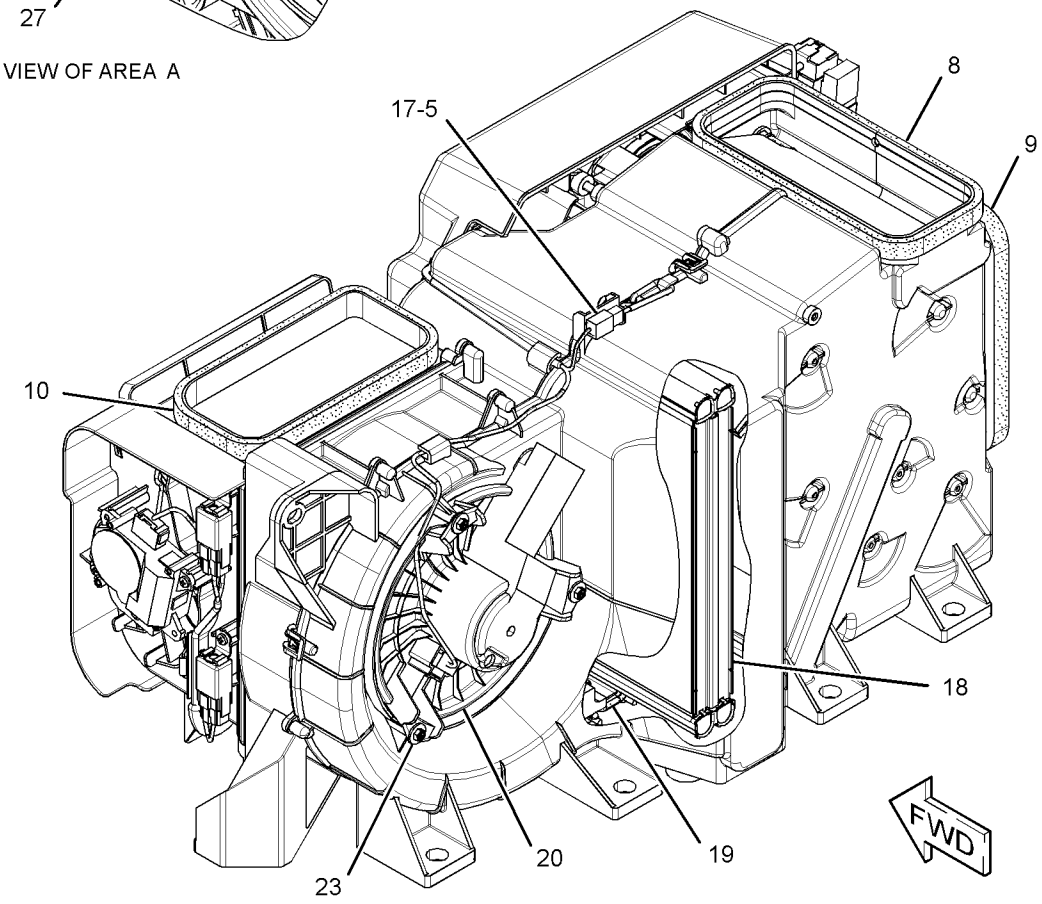

GRAPHIC #2 <END> g01526086

316-8916 AIR CONDITIONER GP

S/N: DLP1-UP

FIELD REPLACEMENT FOR 316-8811—PAGE: 936

PART OF 235-9004 AIR CONDITIONER & MOUNTING GP, 229-9084 HEATER & MTG GP-CAB

AN ATTACHMENT

SMCS-7320 **i03675524**

NOTE	REF NO	GRAPHIC REF	PART NUMBER	QTY	PART NAME 1 2 3 4 5 6 (PRODUCT LEVEL)	SEE PAGE
	1	1	**185-8300**	35	SCREW-TAPPING	
	2	1	**185-8302**	3	SCREW-TAPPING	
	3	1	**245-7817**	2	MOTOR AS	
	4	1	**245-7818**	3	CLIP	
	5	1	**245-7819**	2	CLIP	
	6	1	**245-7820**	1	COVER-FRONT	
	7	1	**245-7825**	1	INSULATOR	
	8	1	**245-7826**	1	INSULATOR	
	9	1	**245-7827**	1	INSULATOR	
	10	1	**245-7828**	1	INSULATOR	
	11	1	**245-7829**	1	PACKING	
	12	1	**245-7830**	1	CLIP	
	13	1	**245-7831**	1	SENSOR AS-TEMPERATURE (COOLANT)	
	14	1	**245-7832**	1	CONTROL AS	
	15	1	**245-7833**	1	CORE AS-HEATER	
	16	1	**245-7834**	1	DAMPER AS	
	17	1	**245-7835**	1	SENSOR AS-TEMPERATURE (AMBIENT AIR TEMP)	
Y	18	1	**245-7836**	1	COIL GP-EVAPORATOR	1000
	19	1	**245-7838**	1	PACKING	
	20	1	**245-7839**	1	MOTOR AS (WITH FAN)	
Y	21	1	**245-7846**	1	CONTROL GP-HEAT & AIR COND (AIR INLET)	1037
	22	1	**245-7847**	1	HARNESS AS-HEATER & AIR COND	
	23	1	**245-7856**	3	SCREW-TAPPING	
	24	1	**293-1137**	1	FILTER AS-AIR (AIR CONDITIONER)	
		1	**245-7823**	1	FILTER ELEMENT-CAB AIR	
		1	**245-7824**	1	PACKING	
	25	1	**316-8846**	1	PLATE	
	26	1	**316-8847**	2	ROD	
	27	1	**316-8849**	1	ROD	
	28	1	**316-8918**	1	PLATE	
	29	1	**316-8920**	1	ROD	
	30	1	**316-8921**	1	ROD	

Y - SEPARATE ILLUSTRATION

316-8916 **AIR CONDITIONER GP** (contd.) **i03675524**

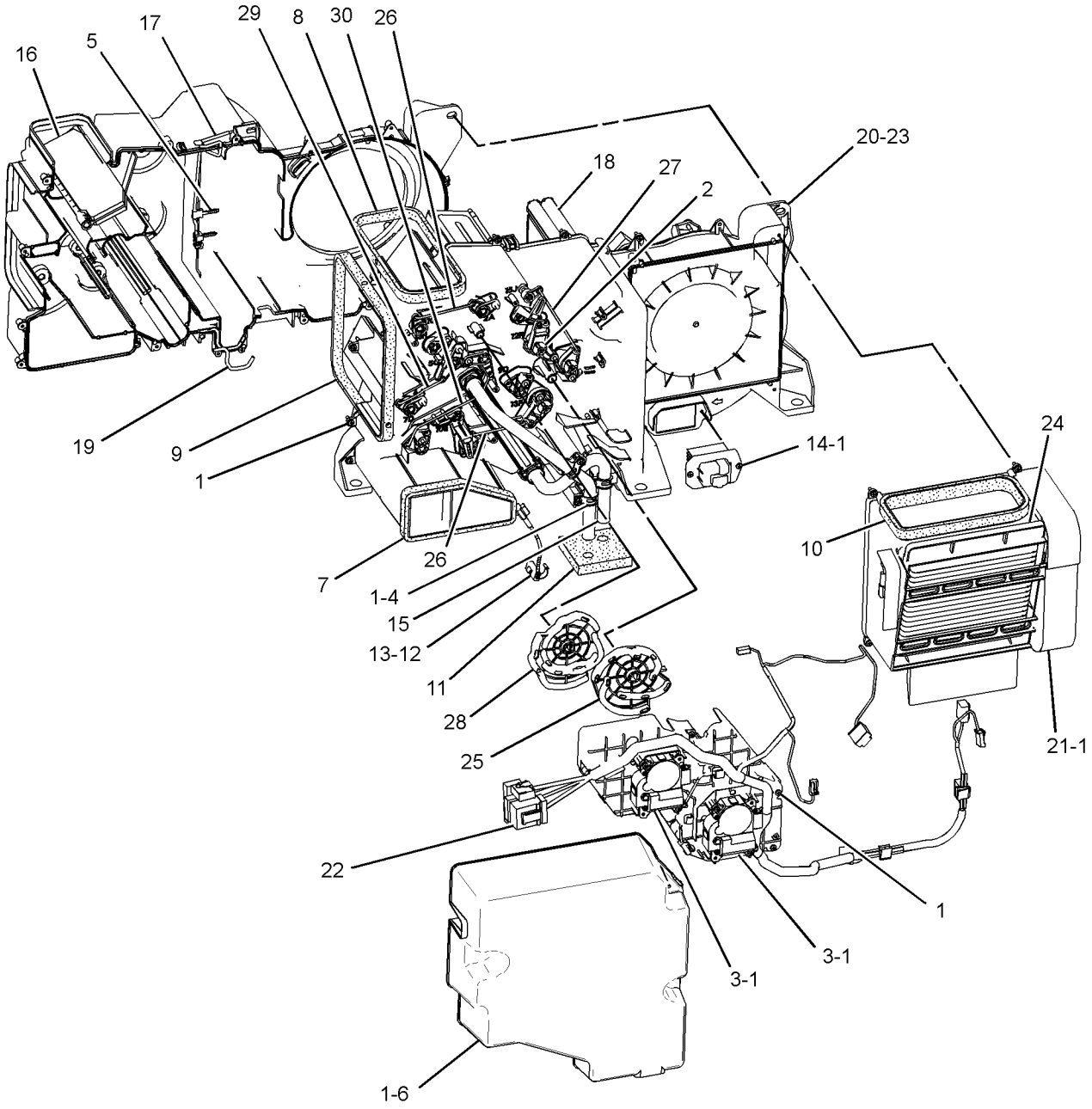

FRONT VIEW
(UPPER RIGHT)

GRAPHIC #1 <END> g01684274

259-7346 ARMREST GP–RH

S/N: DLP1-UP

PART OF 459-2731 CONSOLE GP-OPERATOR

SMCS-7307 **i05509640**

NOTE	REF NO	GRAPHIC REF	PART NUMBER	QTY	PART NAME 1 2 3 4 5 6 (PRODUCT LEVEL)	SEE PAGE
M	1	1	**171-7325**	3	SCREW-TAPPING (M5X0.8-THD)	
M	2	1	**185-8286**	2	SCREW-MACHINE (M4X0.7X8-MM)	
	3	1	**235-8951**	1	SUPPORT AS	
	4	1	**235-8996**	1	COVER	
	5	1	**235-8997**	1	KNOB	
	6	1	**259-7345**	1	CUSHION	

M - METRIC PART

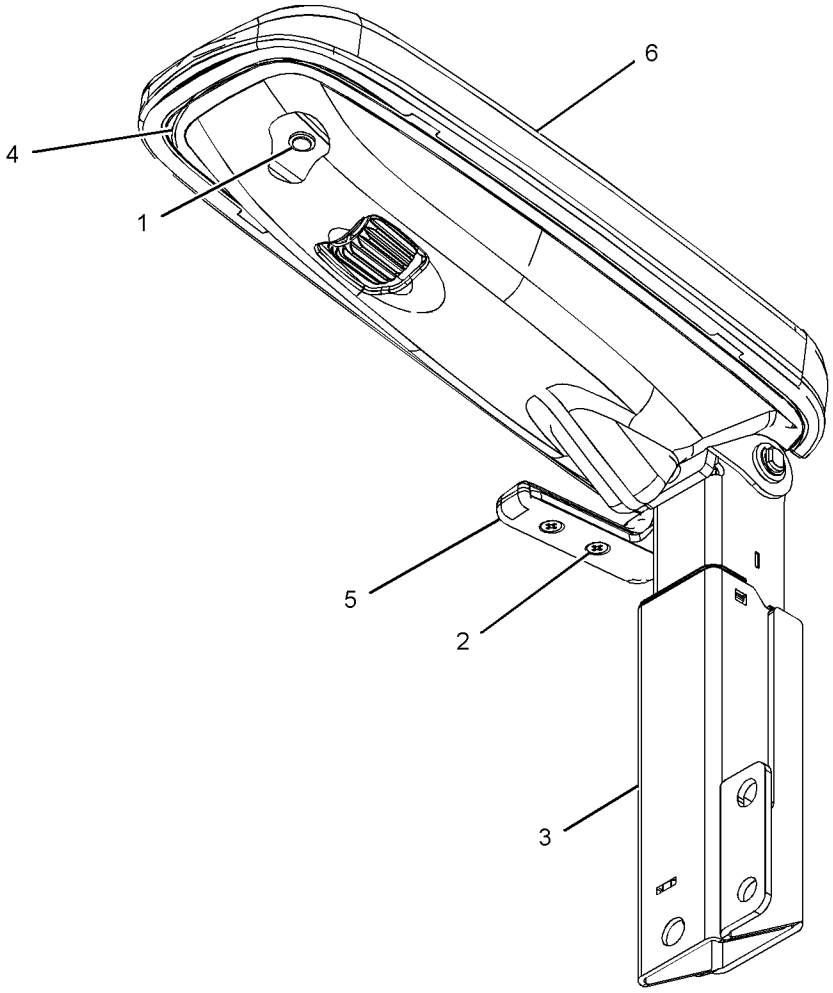

GRAPHIC #1 <END> g03482800

259-7347 ARMREST GP–LH

S/N: DLP1-UP

PART OF 421-1434 CONSOLE GP-OPERATOR

SMCS-7307 **i02488397**

NOTE	REF NO	GRAPHIC REF	PART NUMBER	QTY	PART NAME 1 2 3 4 5 6 (PRODUCT LEVEL)	SEE PAGE
M	1	1	**171-7325**	3	SCREW-TAPPING (M5X0.8-THD)	
M	2	1	**185-8286**	2	SCREW-MACHINE (M4X0.7X8-MM)	
	3	1	**235-8952**	1	SUPPORT AS	
	4	1	**235-8996**	1	COVER	
	5	1	**235-8998**	1	KNOB	
	6	1	**259-7345**	1	CUSHION	

M - METRIC PART

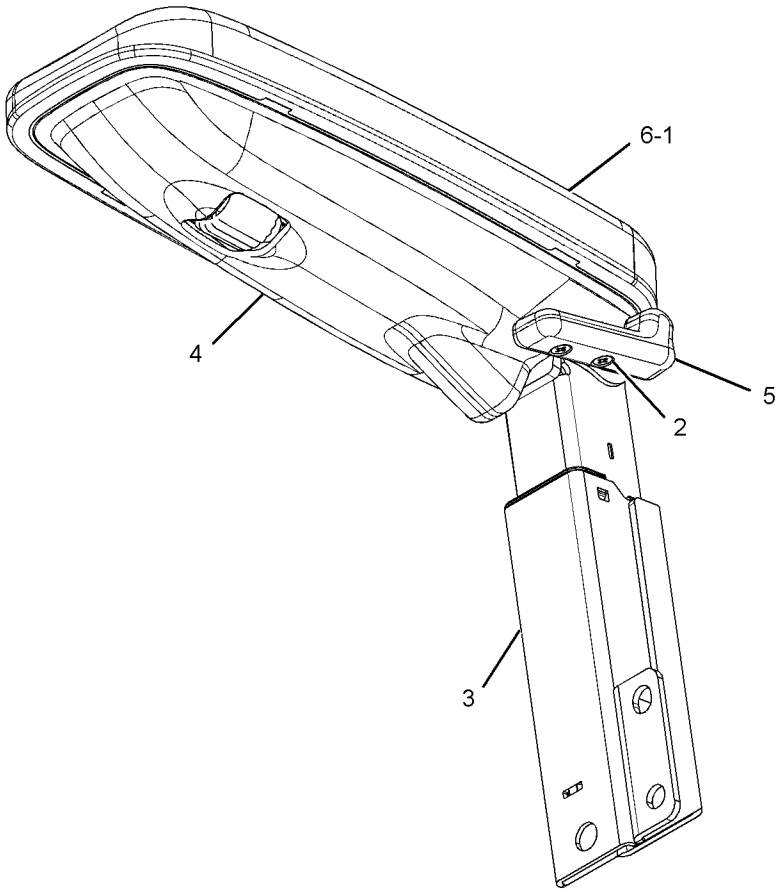

GRAPHIC #1 <END> g01210886

259-7295 BRACKET GP-MIRROR

S/N: DLP1-UP
PART OF 235-8910 CAB GP
AN ATTACHMENT

SMCS-7319 **i03599228**

NOTE	REF NO	GRAPHIC REF	PART NUMBER	QTY	PART NAME 1 2 3 4 5 6 (PRODUCT LEVEL)	SEE PAGE
	1	1	**2U-2552**	5	LOCKWASHER	
M	2	1	**6V-5683**	3	BOLT (M6X1X16-MM)	
M	3	1	**9X-6153**	2	BOLT (M6X1X10-MM)	

M - METRIC PART

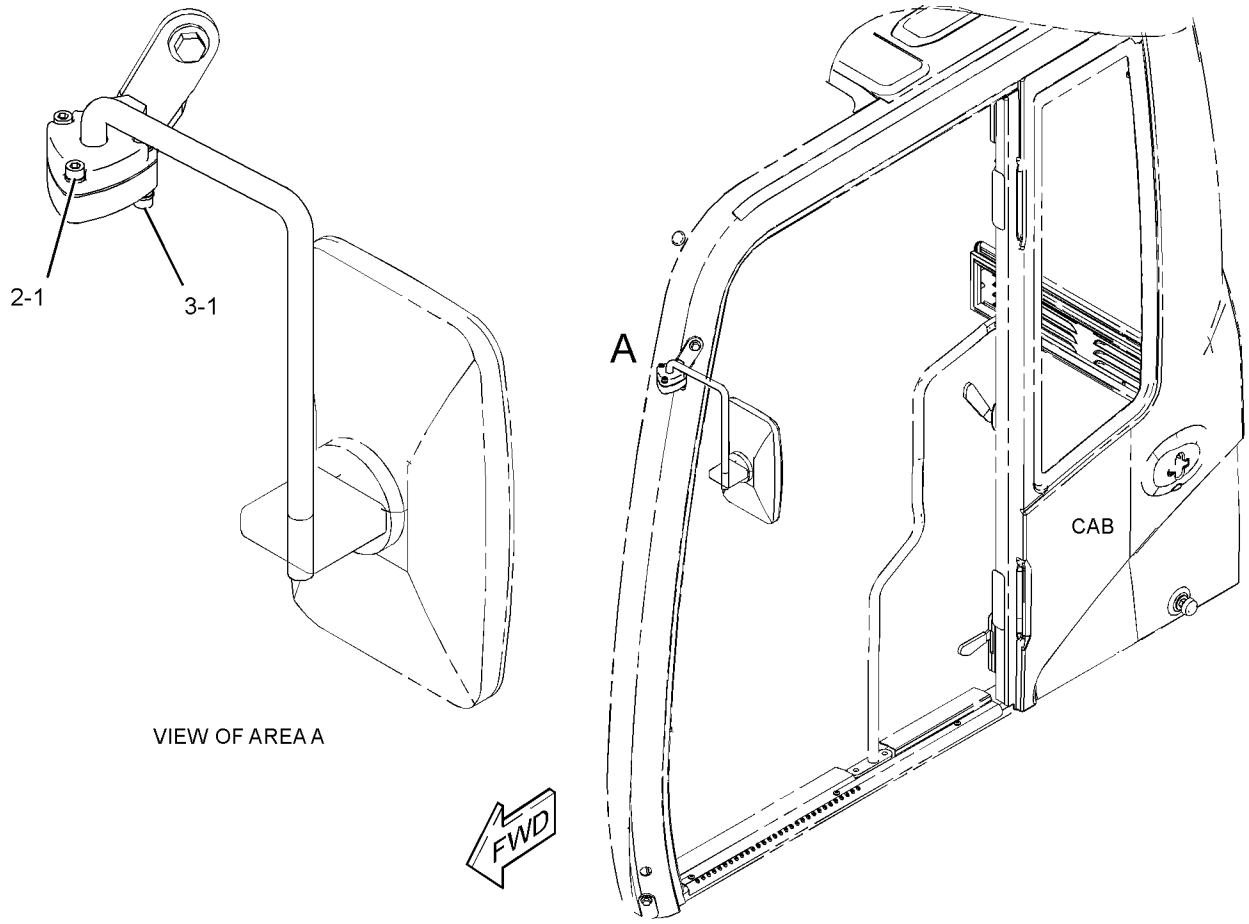

VIEW OF AREA A

GRAPHIC #1 <END> g01923993

245-7890 BRACKET GP-MOUNTING—SUSPENSION SEAT

S/N: DLP1-UP

PART OF 229-9077 SUSPENSION GP-SEAT

AN ATTACHMENT

SMCS-0635 **i02407041**

NOTE	REF NO	GRAPHIC REF	PART NUMBER	QTY	PART NAME 1 2 3 4 5 6 (PRODUCT LEVEL)	SEE PAGE
	1	1	**245-7897**	4	PLATE	
M	2	1	**245-7899**	4	SCREW-BUTTON HEAD (M8X1.25X30-MM)	
M	3	1	**5C-7261**	4	NUT (M8X1.25-THD)	
	4	1	**8T-4224**	4	WASHER-HARD (8.8X16X2-MM THK)	

M - METRIC PART

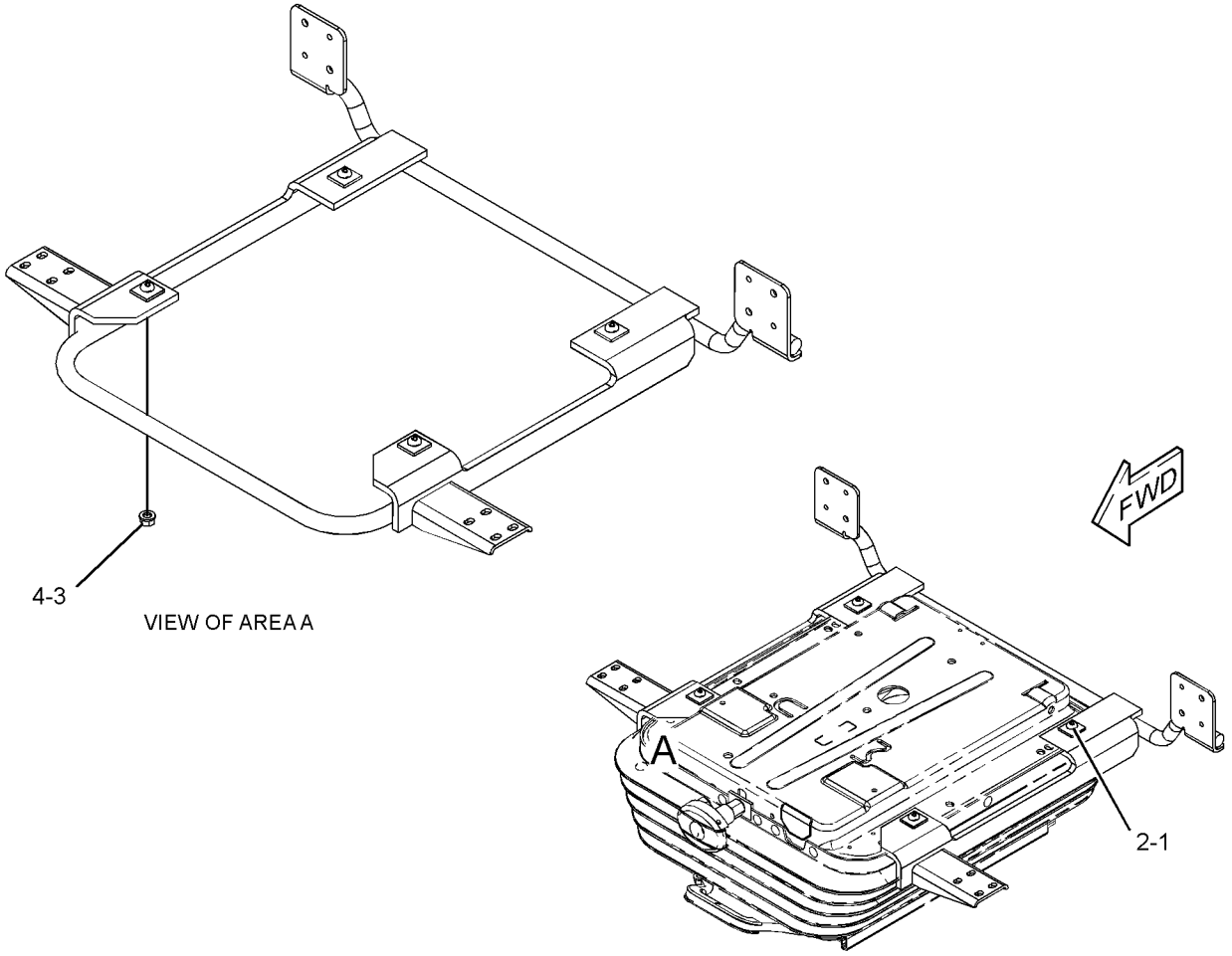

GRAPHIC #1 <END> g01231528

229-9108 CAB GP

S/N: DLP1-UP
PART OF 336-3346 OPTION AR-CAB
AN ATTACHMENT

SMCS-7301, 7325 **i02485105**

NOTE	REF NO	GRAPHIC REF	PART NUMBER	QTY	PART NAME 1 2 3 4 5 6 (PRODUCT LEVEL)	SEE PAGE
M	1	1	**128-2135**	5	SCREW-TRUSS HEAD (M6X1X13-MM)	
	2	1	**164-8474**	2	LOUVER AS-VENT	
Y	3	1	**229-9109**	1	CAB GP	947
Y	4	1	*234-6501*	1	COVER GP-CAB (REAR)	1046
	5	1	**235-9001**	1	SUPPORT	
M	6	1	**8T-4179**	5	BOLT (M12X1.75X20-MM)	
M	7	1	**8T-4190**	4	BOLT (M16X2X25-MM)	
	8	1	**8T-4223**	13	WASHER-HARD (13.5X25.5X3-MM THK)	
M	9	1	**8T-4910**	6	BOLT (M12X1.75X60-MM)	
M	10	1	**8T-6868**	2	BOLT (M12X1.75X80-MM)	
	11	1	**8Y-6967**	2	LOUVER AS-VENT	
	12	1	**9X-8257**	6	WASHER (17.5X30X3.5-MM THK)	

M - METRIC PART
Y - SEPARATE ILLUSTRATION

229-9108 **CAB GP** (contd.) **i02485105**

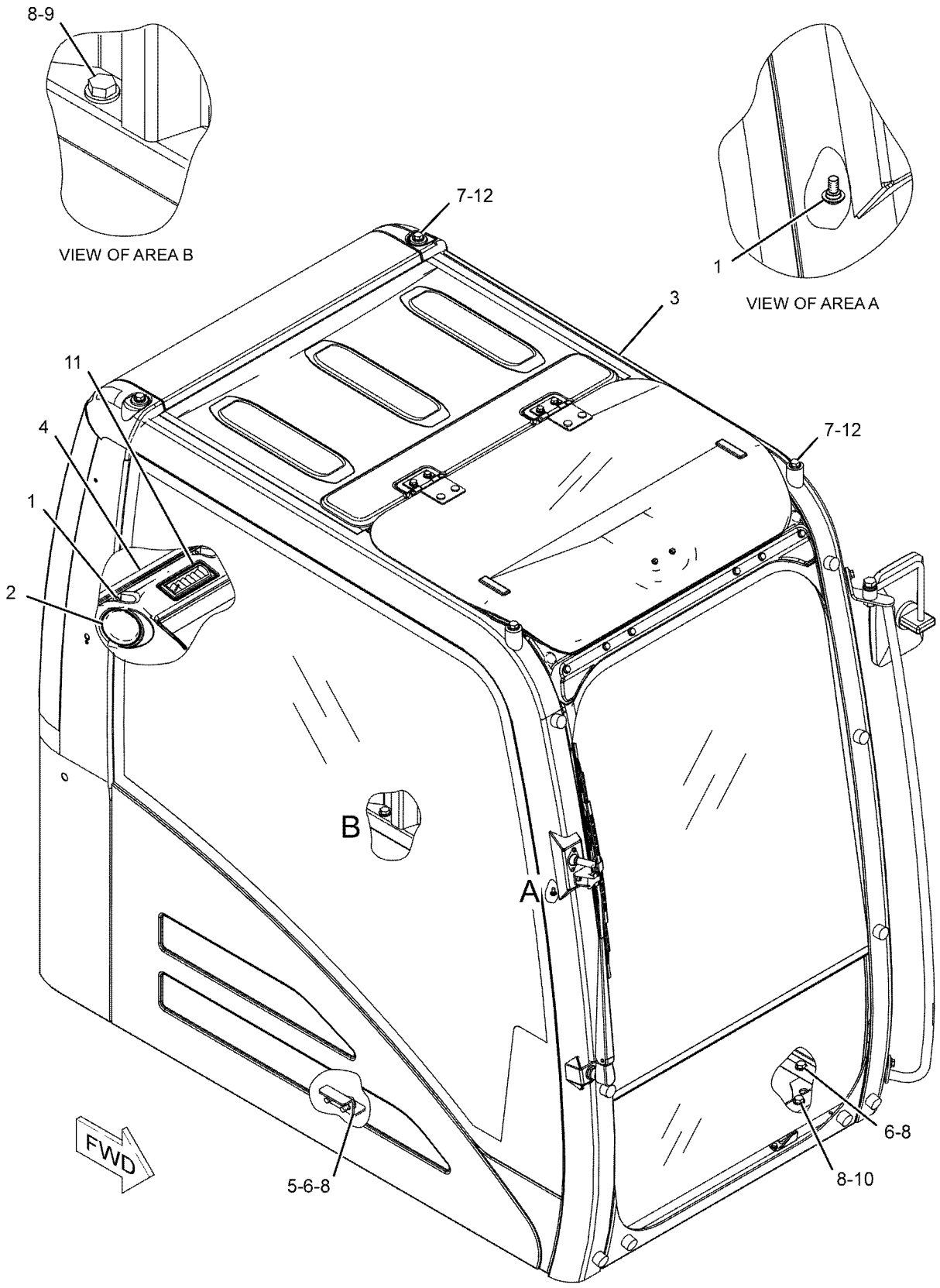

GRAPHIC #1 <END> g01119695

229-9109 CAB GP

S/N: DLP1-UP
PART OF 229-9108 CAB GP
AN ATTACHMENT

SMCS-7301, 7325 **i05880130**

NOTE	REF NO	GRAPHIC REF	PART NUMBER	QTY	PART NAME 1 2 3 4 5 6 (PRODUCT LEVEL)	SEE PAGE
	1	1	*234-6467*	1	CAB AS	
M		1	**9X-2041**	6	SCREW-TRUSS HEAD (M10X1.5X20-MM)	
		1	**436-1901**	2	HINGE	
M		1	**185-8182**	6	BOLT (M10X1.5X20-MM)	
		1	**185-8187**	6	WASHER (10.2X22X3.2-MM THK)	
Y	2	1	*235-8910*	1	CAB GP (EXTERIOR)	955
Y	3	1	*235-8917*	1	CAB GP (INTERIOR)	971
Y	4	1	*235-8909*	1	WINDOW GP-CAB (SIDE, REAR)	1186
Y	5	1	*234-6594*	1	WIPER GP-WINDOW (FRONT, UPPER)	1192
Y	6	1	*189-2768*	1	DOOR & MTG GP-CAB	1048
JY	7	1	*139-7101*	1	WINDOW GP-CAB (FRONT, UPPER)	1177
Y	8	1	*176-1958*	1	WINDOW GP-CAB (FRONT, LOWER)	1183
Y	9	1	*259-7350*	1	HATCH GP-ROOF	1074
FJY		1	**171-7503**	1	WINDOW GP-CAB (FRONT, UPPER)	1181
FJY		1	**207-0144**	1	WINDOW GP-CAB (FRONT, UPPER)	1185

F - NOT SHOWN
J - ITEMS MARKED J AVAILABLE FOR SERVICE REPAIR OF WINDOW GP MARKED J
M - METRIC PART
Y - SEPARATE ILLUSTRATION

229-9109 **CAB GP** (contd.) **i05880130**

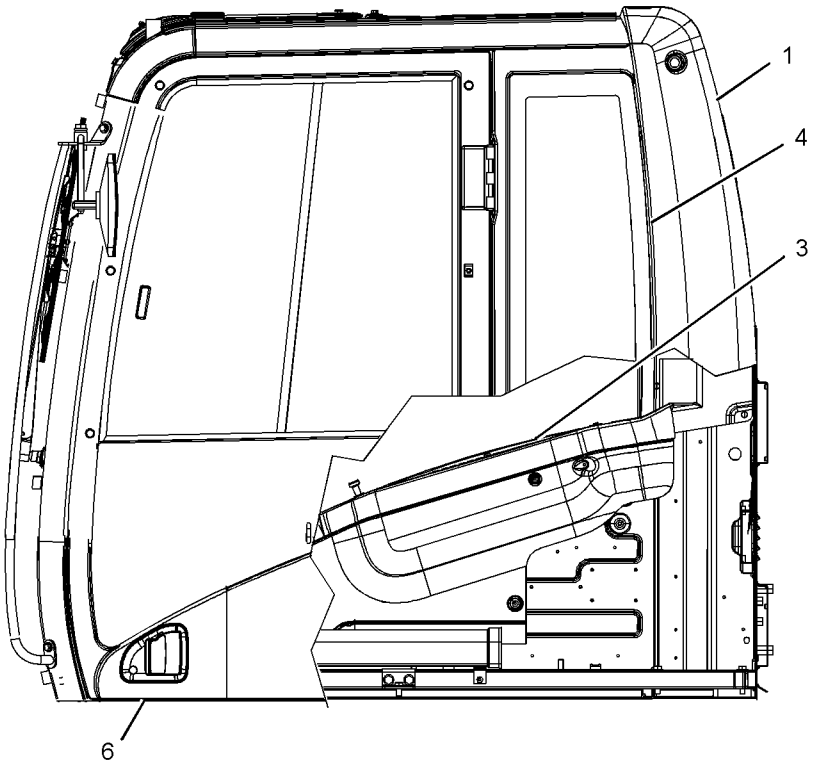

LEFT SIDE VIEW

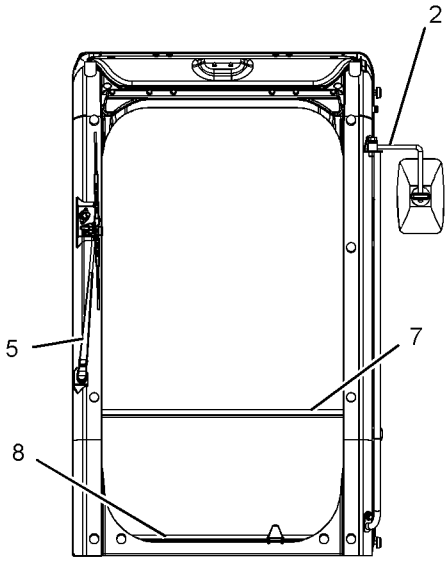

FRONT VIEW

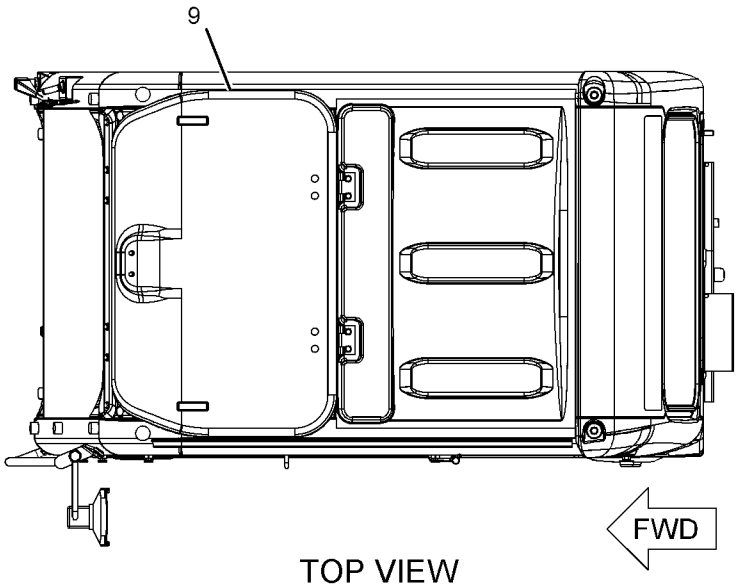

TOP VIEW

GRAPHIC #1 <END> g01125083

235-8908 CAB GP—INTERIOR

S/N: DLP1-UP
PART OF 346-8053 CAB GP
AN ATTACHMENT
TYPE 1

SMCS-7301, 7325 **i04894880**

NOTE	REF NO	GRAPHIC REF	PART NUMBER	QTY	PART NAME 1 2 3 4 5 6 (PRODUCT LEVEL)	SEE PAGE
	1	1	8Y-6352	1	LOUVER AS	
	2	1	156-6656	1	RAIL	
	3	1	156-6657	1	RAIL	
	4	1	164-0646	1	CUP	
	5	1	164-0655	1	PANEL-SWITCH	
	6	1	164-8474	2	LOUVER AS-VENT	
	7	1	170-9724	5	CLIP	
	8	1	171-7420	6	CLIP	
	9	1	176-1946	1	PLATE	
	10	1	176-1947	1	PLATE	
	11	1	176-1972	1	COVER	
	12	1	185-8214	1	BRACKET AS	
	13	1	189-2678	3	SPACER	
	14	1	234-6468	1	COVER AS	
	15	1	234-6470	1	COVER-MONITOR	
	16	1	234-6471	1	COVER-DUCT	
	17	1	234-6472	1	COVER	
	18	1	234-6473	1	COVER-FRONT (UPPER, RH)	
	19	1	234-6474	1	COVER-CONSOLE (UPPER, RH)	
	20	1	305-0330	1	COVER (LOWER, RH)	
	21	1	234-6476	1	DUCT	
	22	1	234-6477	1	BRACKET AS	
	23	1	305-0333	1	BRACKET	
	24	1	234-6480	1	BRACKET AS	
	25	1	234-6483	1	BRACKET AS	
	26	1	234-6485	1	BRACKET AS	
	27	1	234-6490	1	CUP	
	28	1	234-6491	1	COVER	
	29	1	234-6497	1	COVER	
	30	1	234-6498	3	RIVET	
	31	1	234-6521	1	COVER	
	32	1	234-6547	1	COVER	
	33	1	234-6548	1	COVER	
	34	1	234-6549	1	COVER	
	35	1	234-6550	1	COVER	
	36	1	234-6579	2	NUT-SPEED	
	37	1	235-8922	1	COVER	
	38	1	235-8923	2	CAP	
	39	1	383-5706	1	VISOR	
	40	1	235-8928	1	LINER	
	41	1	235-8929	2	HANDLE	
	42	1	185-8205	5	CLIP	
	43	1	235-8950	10	CLIP	
	44	1	245-7790	2	SCREW-TAPPING	
M	45	1	128-2135	13	SCREW-TRUSS HEAD (M6X1X13-MM)	
M	46	1	128-2136	1	SCREW-TRUSS HEAD (M6X1X16-MM)	

235-8908 **CAB GP** (contd.) **i04894880**

NOTE	REF NO	GRAPHIC REF	PART NUMBER	QTY	PART NAME 1 2 3 4 5 6 (PRODUCT LEVEL)	SEE PAGE
	47	1	**189-2855**	1	COVER	
	48	1	**234-6469**	1	COVER	
M	49	1	**9X-2042**	23	SCREW-TRUSS HEAD (M6X1X12-MM)	
M	50	1	**9X-2044**	6	SCREW-TRUSS HEAD (M6X1X16-MM)	

M - METRIC PART

235-8908 **CAB GP** (contd.) **i04894880**

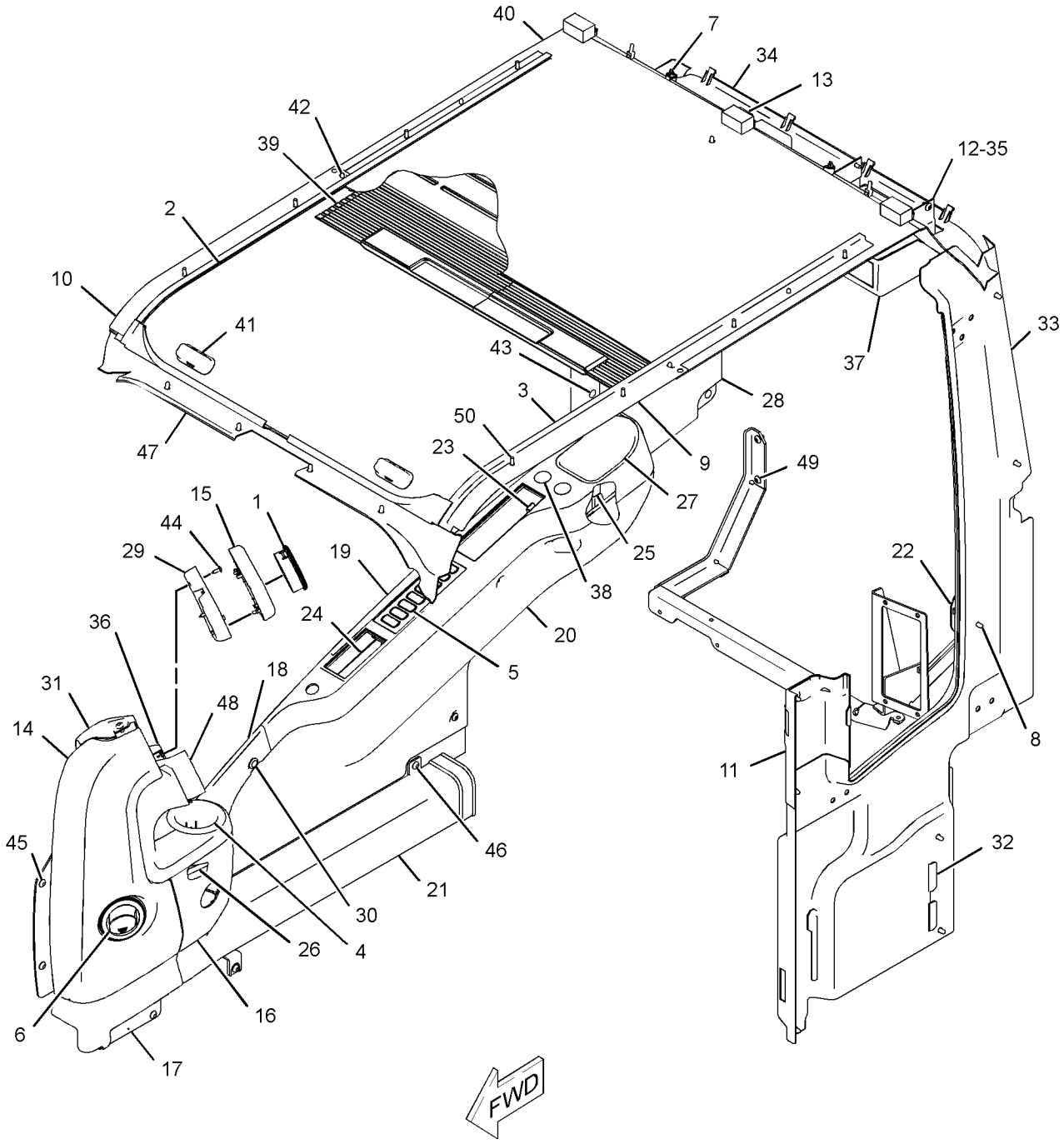

GRAPHIC #1 <END> g03044222

235-8908 CAB GP—INTERIOR

S/N: DLP1-UP
PART OF 346-8053 CAB GP
AN ATTACHMENT
TYPE 2

SMCS-7301, 7325 **i05950598**

NOTE	REF NO	GRAPHIC REF	PART NUMBER	QTY	PART NAME 1 2 3 4 5 6 (PRODUCT LEVEL)	SEE PAGE
	1	1	**8Y-6352**	1	LOUVER AS	
	2	1	**156-6656**	1	RAIL	
	3	1	**156-6657**	1	RAIL	
	4	1	**164-0646**	1	CUP	
	5	1	**164-0655**	1	PANEL-SWITCH	
	6	1	**164-8474**	2	LOUVER AS-VENT	
	7	1	**170-9724**	5	CLIP	
	8	1	**171-7420**	6	CLIP	
	9	1	**176-1946**	1	PLATE	
	10	1	**176-1947**	1	PLATE	
	11	1	**176-1972**	1	COVER	
	12	1	**185-8214**	1	BRACKET AS	
	13	1	**189-2678**	3	SPACER	
	14	1	**234-6468**	1	COVER AS	
	15	1	**234-6470**	1	COVER-MONITOR	
	16	1	**234-6471**	1	COVER-DUCT	
	17	1	**234-6472**	1	COVER	
	18	1	**234-6473**	1	COVER-FRONT (UPPER, RH)	
	19	1	**234-6474**	1	COVER-CONSOLE (UPPER, RH)	
	20	1	**305-0330**	1	COVER (LOWER, RH)	
	21	1	**234-6476**	1	DUCT	
	22	1	**234-6477**	1	BRACKET AS	
	23	1	**305-0333**	1	BRACKET	
	24	1	**234-6480**	1	BRACKET AS	
	25	1	**234-6483**	1	BRACKET AS	
	26	1	**234-6485**	1	BRACKET AS	
	27	1	**234-6490**	1	CUP	
	28	1	**234-6491**	1	COVER	
	29	1	**234-6497**	1	COVER	
	30	1	**234-6498**	3	RIVET	
	31	1	**234-6521**	1	COVER	
	32	1	**234-6547**	1	COVER	
	33	1	**234-6548**	1	COVER	
	34	1	**234-6549**	1	COVER	
	35	1	**234-6550**	1	COVER	
	36	1	**234-6579**	2	NUT-SPEED	
	37	1	**235-8922**	1	COVER	
	38	1	**235-8923**	2	CAP	
	39	1	**383-5706**	1	VISOR	
	40	1	**235-8928**	1	LINER	
	42	1	**185-8205**	5	CLIP	
	43	1	**235-8950**	10	CLIP	
	44	1	**245-7790**	2	SCREW-TAPPING	
M	45	1	**128-2135**	13	SCREW-TRUSS HEAD (M6X1X13-MM)	
M	46	1	**128-2136**	1	SCREW-TRUSS HEAD (M6X1X16-MM)	

235-8908 **CAB GP** (contd.) **i05950598**

NOTE	REF NO	GRAPHIC REF	PART NUMBER	QTY	PART NAME 1 2 3 4 5 6 (PRODUCT LEVEL)	SEE PAGE
	47	1	**189-2855**	1	COVER	
	48	1	**234-6469**	1	COVER	
M	49	1	**9X-2042**	23	SCREW-TRUSS HEAD (M6X1X12-MM)	
M	50	1	**9X-2044**	6	SCREW-TRUSS HEAD (M6X1X16-MM)	
	51	1	**8R-1803**	1	WASHER (10.5X18X1-MM THK)	

M - METRIC PART

235-8908 **CAB GP** (contd.) **i05950598**

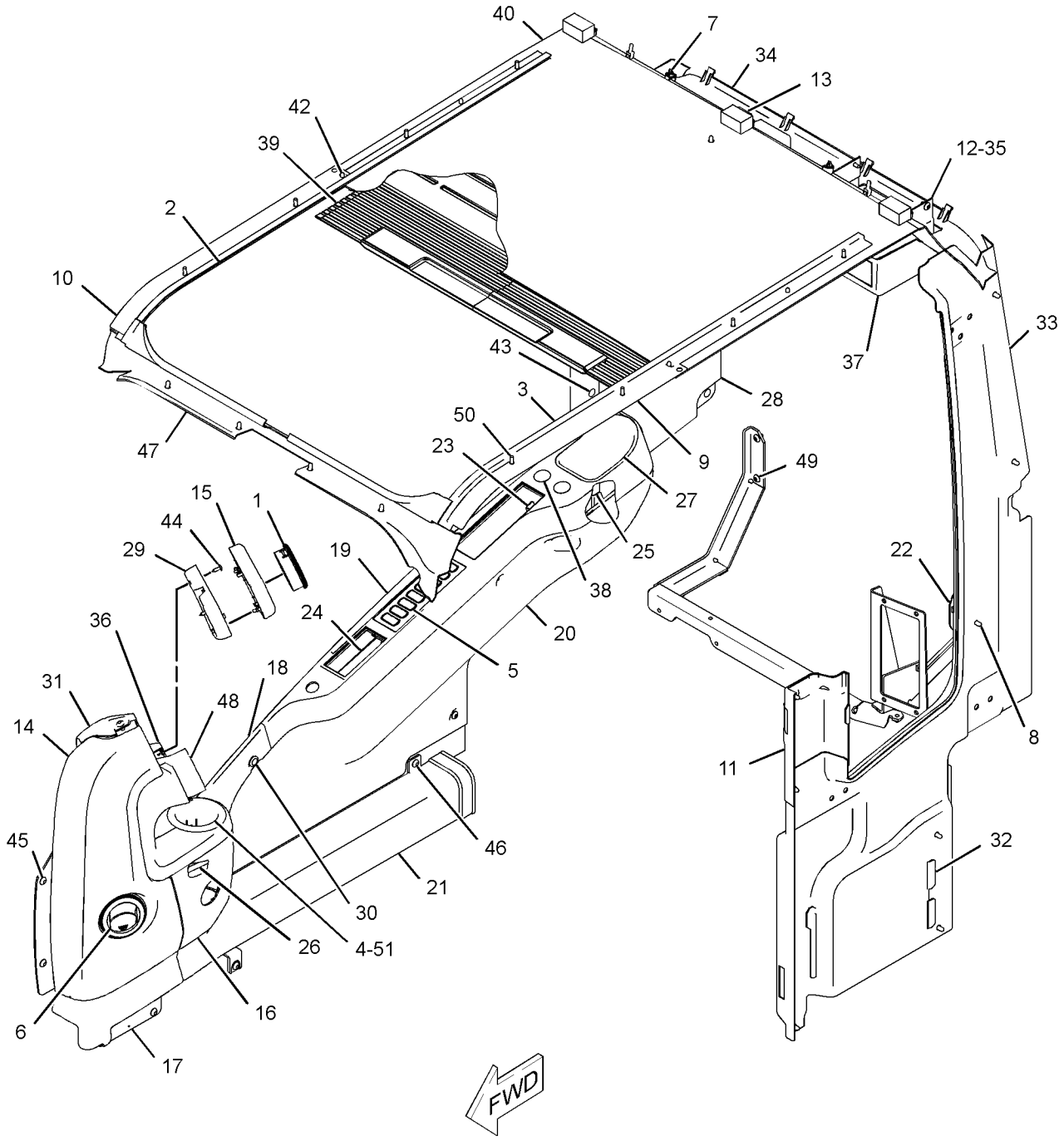

GRAPHIC #1 <END> g03884964

235-8910 CAB GP—EXTERIOR

S/N: DLP1-UP
PART OF 316-8815 CAB GP
AN ATTACHMENT
TYPE 1

SMCS-7301, 7325 **i02909131**

NOTE	REF NO	GRAPHIC REF	PART NUMBER	QTY	PART NAME 1 2 3 4 5 6 (PRODUCT LEVEL)	SEE PAGE
	1	2	**139-7126**	1	HOLDER	
	2	2	**139-7127**	1	HOLDER	
	3	1	**156-6599**	1	STRIKER	
	4	2	**161-3685**	1	ROD	
	5	1	**235-8933**	1	HANDLE AS	
	6	1	**161-3697**	1	GUARD	
	7	2	**164-0523**	1	LEVER AS	
	8	2	**164-0527**	1	ROD	
Y	9	2	*164-0528*	1	LEVER GP-CAB DOOR	1093
	10	1	**167-7018**	1	COVER AS	
	11	2	**167-7042**	2	SEAL	
	12	2	**171-7426**	1	CABLE AS	
	13	2	*176-1939*	1	LEVER AS	
M		2	**9X-2044**	1	SCREW-TRUSS HEAD (M6X1X16-MM)	
		2	**176-1937**	1	BRACKET AS	
		2	**176-1938**	1	LEVER	
	14	2	**176-1942**	1	COVER	
	15	1	**178-5570**	2	GROMMET	
	16	2	**185-8196**	1	GROMMET	
	17	2	**189-2704**	1	SEAL	
M	18	1,2	**189-3396**	5	NUT (M10X1.5-THD)	
	19	2	**189-3409**	3	WASHER	
	20	2	**201-4530**	1	BRACKET AS	
	21	2	**205-6295**	1	LATCH AS	
	22	1	**210-5808**	1	SEAL	
	23	1	**235-8912**	1	HANDLE AS	
M	24	1	**099-0823**	3	SCREW-MACHINE (M6X1X6-MM)	
M	25	1	**127-0580**	2	SCREW-FLAT HEAD (M8X1.25X20-MM)	
	26	2	**133-8016**	1	PACKING	
	27	1	**156-6617**	1	MIRROR	
CY	28	1	**259-7295**	1	BRACKET GP-MIRROR	943
	29	2	**176-1986**	1	LAMP AS-DOME	
		2	**201-4417**	1	LAMP (24-VOLT, 10-WATT) (DOME)	
	30	1	**1R-5998**	2	LOCKWASHER	
M	31	1	**284-4426**	1	BOLT-WING (M8X1.25X15-MM)	
M	32	2	**3E-8020**	6	SCREW-TRUSS HEAD (M6X1X25-MM)	
M	33	2	**3E-9874**	2	SCREW-OVAL HEAD	
	34	1	**4I-1205**	2	BUMPER	
	35	2	**4I-1206**	2	GUIDE	
	36	2	**4I-3063**	1	SPRING	
M	37	1	**4I-3123**	2	BOLT (M10X1.5X20-MM)	
	38	1	**4I-3144**	2	WASHER-HARD (10.2X22X3.2-MM THK)	
	39	2	**4I-4270**	1	HOLDER-GLASS	
	40	2	**4I-4392**	3	CLIP	
	41	2	**5C-7793**	1	HOOK-COAT	

235-8910 **CAB GP (**contd.**)** **i02909131**

NOTE	REF NO	GRAPHIC REF	PART NUMBER	QTY	PART NAME 1 2 3 4 5 6 (PRODUCT LEVEL)	SEE PAGE
	42	2	**6V-7636**	4	PIN AS-SPRING	
	43	1	**7X-0578**	2	WASHER-HARD (10.2X32X2.5-MM THK)	
					–OR–	
		1	**099-3607**	2	WASHER-HARD (10.2X30X3.2-MM THK)	
CM	44	1	**8T-4779**	1	BOLT (M16X2X35-MM)	
M	45	2	**9X-2041**	1	SCREW-TRUSS HEAD (M10X1.5X20-MM)	
M	46	2	**9X-2042**	5	SCREW-TRUSS HEAD (M6X1X12-MM)	
M	47	2	**9X-2044**	5	SCREW-TRUSS HEAD (M6X1X16-MM)	
M	48	2	**9X-2045**	2	SCREW-TRUSS HEAD (M6X1X20-MM)	
	49	1	**9X-8257**	1	WASHER (17.5X30X3.5-MM THK)	
E	50	2	**6I-5470**		SEAL (150-CM)	
	51	1	**085-6452**	2	WASHER	
	52	1	**105-2169**	2	BOLT AS	
M	53	1	**189-2864**	2	SCREW-FLAT HEAD (M8X1.25X30-MM)	
	54	1	**4I-3090**	4	SEAL	

C - CHANGE FROM PREVIOUS TYPE
E - ORDER BY THE CENTIMETER
M - METRIC PART
Y - SEPARATE ILLUSTRATION

235-8910 **CAB GP** (contd.) **i02909131**

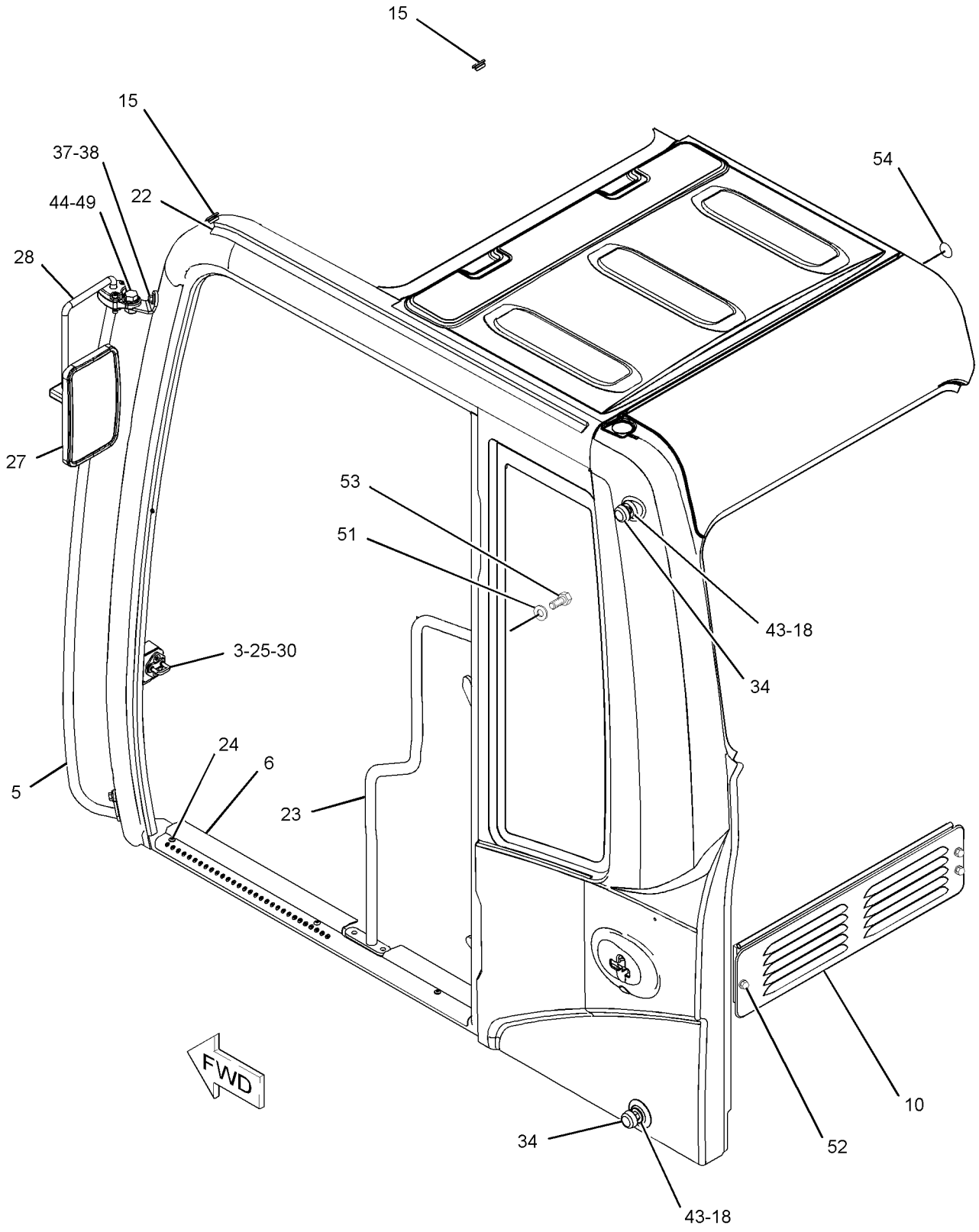

GRAPHIC #1 g01253581

235-8910 **CAB GP** (contd.) **i02909131**

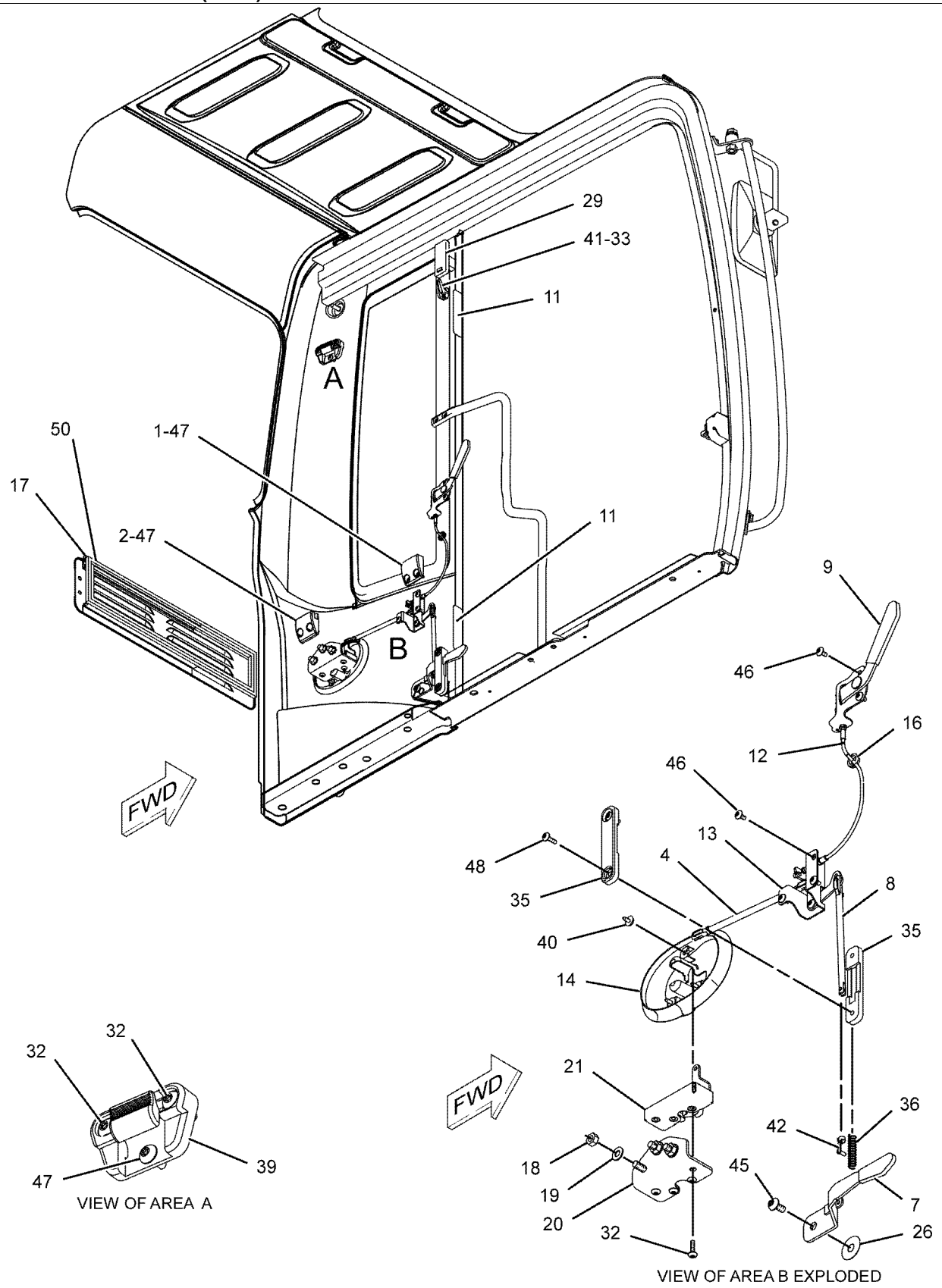

GRAPHIC #2 <END> g01098017

235-8910 CAB GP—EXTERIOR

S/N: DLP1-UP
PART OF 229-9109, 316-8815 CAB GP
AN ATTACHMENT
TYPE 2

SMCS-7301, 7325 **i05979353**

NOTE	REF NO	GRAPHIC REF	PART NUMBER	QTY	PART NAME 1 2 3 4 5 6 (PRODUCT LEVEL)	SEE PAGE
	1	2	**139-7126**	1	HOLDER	
	2	2	**139-7127**	1	HOLDER	
	3	1	**156-6599**	1	STRIKER	
	4	2	**161-3685**	1	ROD	
	5	1	**450-4908**	1	HANDLE AS	
	6	1	**161-3697**	1	GUARD	
	7	2	**164-0523**	1	LEVER AS	
	8	2	**164-0527**	1	ROD	
Y	9	2	*164-0528*	1	LEVER GP-CAB DOOR	1093
	10	1	**167-7018**	1	COVER AS	
	11	2	**167-7042**	2	SEAL	
	12	2	**171-7426**	1	CABLE AS	
	13	2	*176-1939*	1	LEVER AS	
M		2	**9X-2044**	1	SCREW-TRUSS HEAD (M6X1X16-MM)	
		2	**176-1937**	1	BRACKET AS	
		2	**176-1938**	1	LEVER	
	14	2	**176-1942**	1	COVER	
	15	1	**178-5570**	2	GROMMET	
	16	2	**185-8196**	1	GROMMET	
	17	2	**189-2704**	1	SEAL	
M	18	1,2	**8T-4133**	5	NUT (M10X1.5-THD)	
	19	2	**4B-4278**	3	WASHER (10.2X20.5X1.6-MM THK)	
	20	2	**201-4530**	1	BRACKET AS	
	21	2	**205-6295**	1	LATCH AS	
	22	1	**416-4309**	1	SEAL	
	23	1	**235-8912**	1	HANDLE AS	
M	24	1	**099-0823**	3	SCREW-MACHINE (M6X1X6-MM)	
M	25	1	**127-0580**	2	SCREW-FLAT HEAD (M8X1.25X20-MM)	
	26	2	**133-8016**	1	PACKING	
CY	27	1	**327-6550**	1	MIRROR GP-REAR VIEW	1110
Y	28	1	**346-7375**	1	MOUNTING GP-MIRROR	1124
	29	2	**176-1986**	1	LAMP AS-DOME	
		2	**201-4417**	1	LAMP (24-VOLT, 10-WATT) (DOME)	
	30	1	**1R-5998**	4	LOCKWASHER	
M	31	1	**284-4426**	1	BOLT-WING (M8X1.25X15-MM)	
M	32	2	**3E-8020**	6	SCREW-TRUSS HEAD (M6X1X25-MM)	
M	33	2	**3E-9874**	2	SCREW-OVAL HEAD	
	34	1	**4I-1205**	2	BUMPER	
	35	2	**4I-1206**	2	GUIDE	
	36	2	**4I-3063**	1	SPRING	
M	37	1	**4I-3123**	2	BOLT (M10X1.5X20-MM)	
	38	1	**4I-3144**	2	WASHER-HARD (10.2X22X3.2-MM THK)	
	39	2	**4I-4270**	1	HOLDER-GLASS	
	40	2	**4I-4392**	3	CLIP	
	41	2	**5C-7793**	1	HOOK-COAT	

235-8910 **CAB GP (**contd.**)** **i05979353**

NOTE	REF NO	GRAPHIC REF	PART NUMBER	QTY	PART NAME 1 2 3 4 5 6 (PRODUCT LEVEL)	SEE PAGE
	42	2	**6V-7636**	4	PIN AS-SPRING	
	43	1	**7X-0578**	2	WASHER-HARD (10.2X32X2.5-MM THK)	
M	44	1	**8T-4779**	1	BOLT (M16X2X35-MM)	
M	45	1,2	**9X-2041**	3	SCREW-TRUSS HEAD (M10X1.5X20-MM)	
M	46	2	**9X-2042**	5	SCREW-TRUSS HEAD (M6X1X12-MM)	
M	47	2	**9X-2044**	5	SCREW-TRUSS HEAD (M6X1X16-MM)	
M	48	2	**9X-2045**	2	SCREW-TRUSS HEAD (M6X1X20-MM)	
	49	1	**9X-8257**	1	WASHER (17.5X30X3.5-MM THK)	
E	50	2	**6I-5470**		SEAL (140-CM)	
	52	1	**105-2169**	2	BOLT AS	
M	53	1	**189-2864**	2	SCREW-FLAT HEAD (M8X1.25X30-MM)	
	54	1	**4I-3090**	4	SEAL	

C - CHANGE FROM PREVIOUS TYPE
E - ORDER BY THE CENTIMETER
M - METRIC PART
Y - SEPARATE ILLUSTRATION

235-8910 **CAB GP** (contd.) **i05979353**

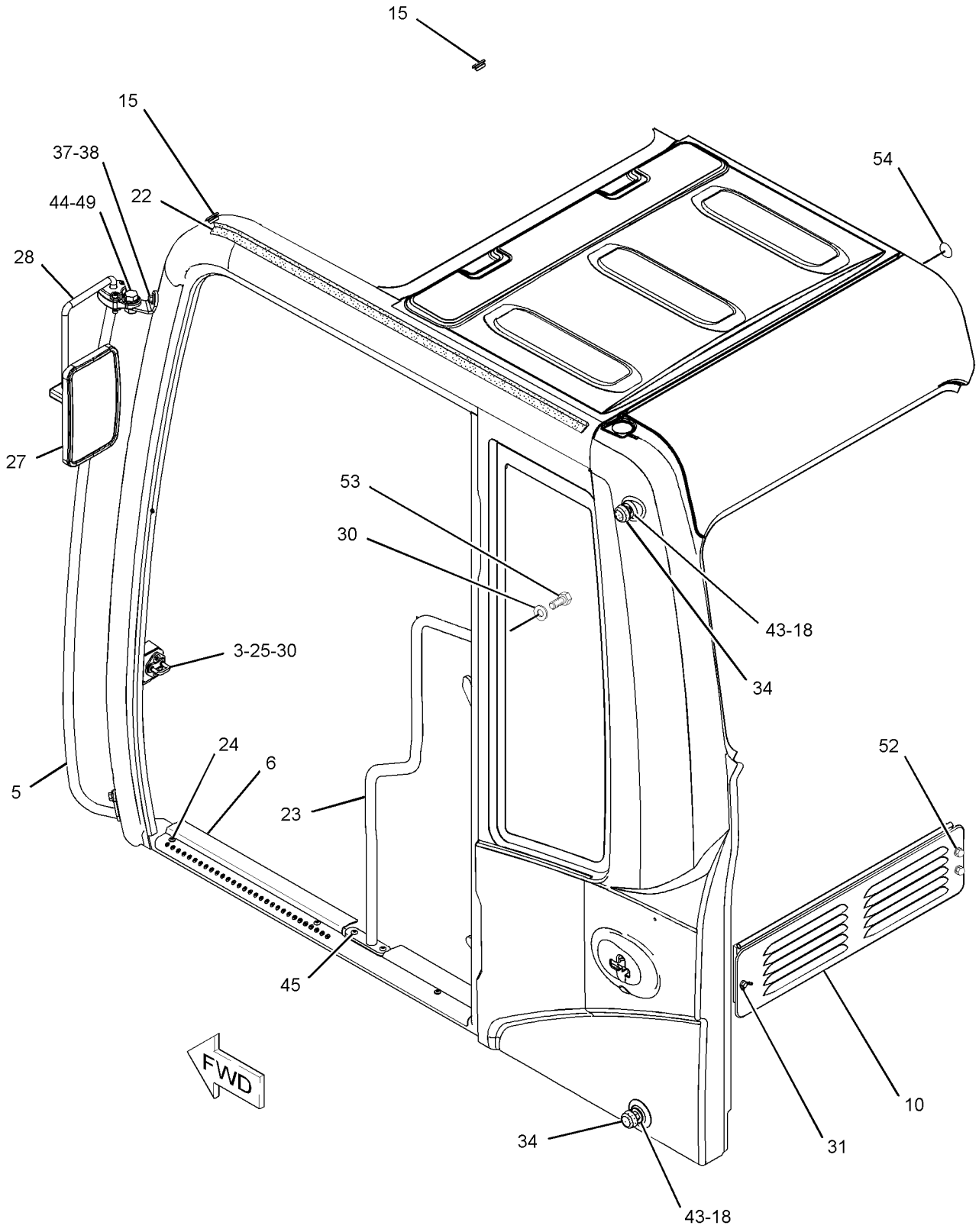

GRAPHIC #1 g02797704

235-8910 **CAB GP (**contd.**)** **i05979353**

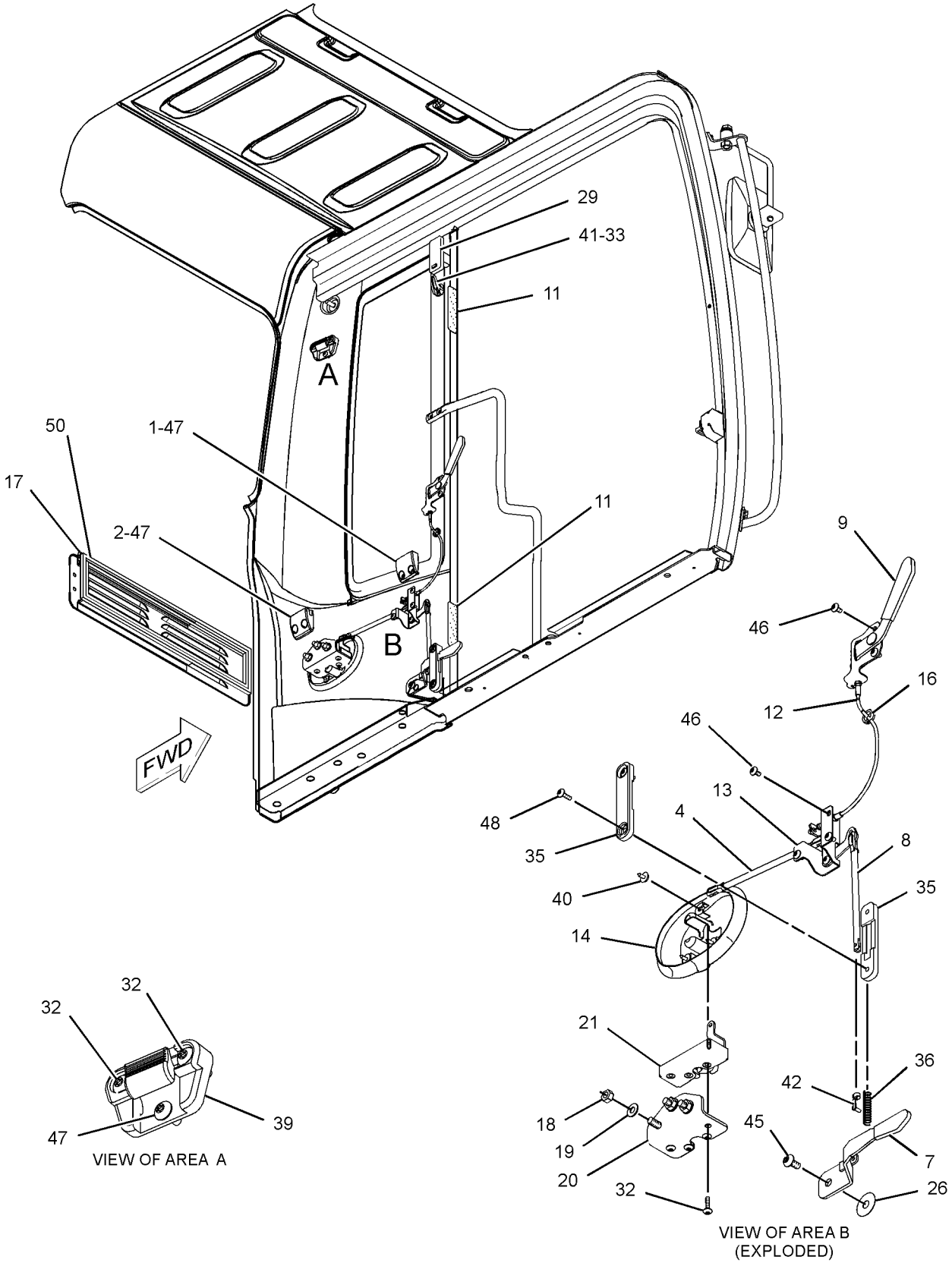

GRAPHIC #2 <END> g02797705

235-8910 CAB GP—EXTERIOR

S/N: DLP1-UP
PART OF 229-9109, 316-8815 CAB GP
AN ATTACHMENT
TYPE 3

SMCS-7301, 7325 **i06612770**

NOTE	REF NO	GRAPHIC REF	PART NUMBER	QTY	PART NAME 1 2 3 4 5 6 (PRODUCT LEVEL)	SEE PAGE
	1	2	**139-7126**	1	HOLDER	
	2	2	**139-7127**	1	HOLDER	
	3	1	**156-6599**	1	STRIKER	
	4	2	**161-3685**	1	ROD	
	5	1	**450-4908**	1	HANDLE AS	
	6	1	**161-3697**	1	GUARD	
	7	2	**164-0523**	1	LEVER AS	
	8	2	**164-0527**	1	ROD	
Y	9	2	*164-0528*	1	LEVER GP-CAB DOOR	1093
	10	1	**167-7018**	1	COVER AS	
	11	2	**167-7042**	2	SEAL	
	12	2	**171-7426**	1	CABLE AS	
	13	2	*176-1939*	1	LEVER AS	
M		2	**9X-2044**	1	SCREW-TRUSS HEAD (M6X1X16-MM)	
		2	**176-1937**	1	BRACKET AS	
		2	**176-1938**	1	LEVER	
	14	2	**176-1942**	1	COVER	
	15	1	**178-5570**	2	GROMMET	
	16	2	**185-8196**	1	GROMMET	
	17	2	**189-2704**	1	SEAL	
M	18	1,2	**8T-4133**	5	NUT (M10X1.5-THD)	
	19	2	**4B-4278**	3	WASHER (10.2X20.5X1.6-MM THK)	
	20	2	**201-4530**	1	BRACKET AS	
	21	2	**383-5666**	1	LATCH AS	
	22	1	**416-4309**	1	SEAL	
	23	1	**235-8912**	1	HANDLE AS	
M	24	1	**099-0823**	3	SCREW-MACHINE (M6X1X6-MM)	
M	25	1	**127-0580**	2	SCREW-FLAT HEAD (M8X1.25X20-MM)	
	26	2	**133-8016**	1	PACKING	
CY	27	1	**443-7858**	1	MIRROR GP-REAR VIEW	1117
Y	28	1	**346-7375**	1	MOUNTING GP-MIRROR	1124
	29	2	**176-1986**	1	LAMP AS-DOME	
		2	**201-4417**	1	LAMP (24-VOLT, 10-WATT) (DOME)	
	30	1	**1R-5998**	4	LOCKWASHER	
M	31	1	**284-4426**	1	BOLT-WING (M8X1.25X15-MM)	
M	32	2	**3E-8020**	6	SCREW-TRUSS HEAD (M6X1X25-MM)	
M	33	2	**3E-9874**	2	SCREW-OVAL HEAD	
	34	1	**4I-1205**	2	BUMPER	
	35	2	**4I-1206**	2	GUIDE	
	36	2	**4I-3063**	1	SPRING	
M	37	1	**4I-3123**	2	BOLT (M10X1.5X20-MM)	
C	38	1	**7X-7729**	2	WASHER (11X25X3-MM THK)	
	39	2	**4I-4270**	1	HOLDER-GLASS	
	40	2	**4I-4392**	3	CLIP	
	41	2	**5C-7793**	1	HOOK-COAT	

235-8910 **CAB GP (**contd.**)** **i06612770**

NOTE	REF NO	GRAPHIC REF	PART NUMBER	QTY	PART NAME 1 2 3 4 5 6 (PRODUCT LEVEL)	SEE PAGE
	42	2	**6V-7636**	4	PIN AS-SPRING	
	43	1	**7X-0578**	2	WASHER-HARD (10.2X32X2.5-MM THK)	
CM	44	1	**451-2180**	1	BOLT (M16X2X35-MM)	
M	45	1,2	**9X-2041**	3	SCREW-TRUSS HEAD (M10X1.5X20-MM)	
M	46	2	**9X-2042**	5	SCREW-TRUSS HEAD (M6X1X12-MM)	
M	47	2	**9X-2044**	5	SCREW-TRUSS HEAD (M6X1X16-MM)	
M	48	2	**9X-2045**	2	SCREW-TRUSS HEAD (M6X1X20-MM)	
C	49	1	**451-2175**	1	WASHER-HARD (17.5X30X3.5-MM THK)	
E	50	2	**6I-5470**		SEAL (140-CM)	
	52	1	**105-2169**	2	BOLT AS	
M	53	1	**189-2864**	2	SCREW-FLAT HEAD (M8X1.25X30-MM)	
	54	1	**4I-3090**	4	SEAL	

C - CHANGE FROM PREVIOUS TYPE
E - ORDER BY THE CENTIMETER
M - METRIC PART
Y - SEPARATE ILLUSTRATION

235-8910 **CAB GP** (contd.) **i06612770**

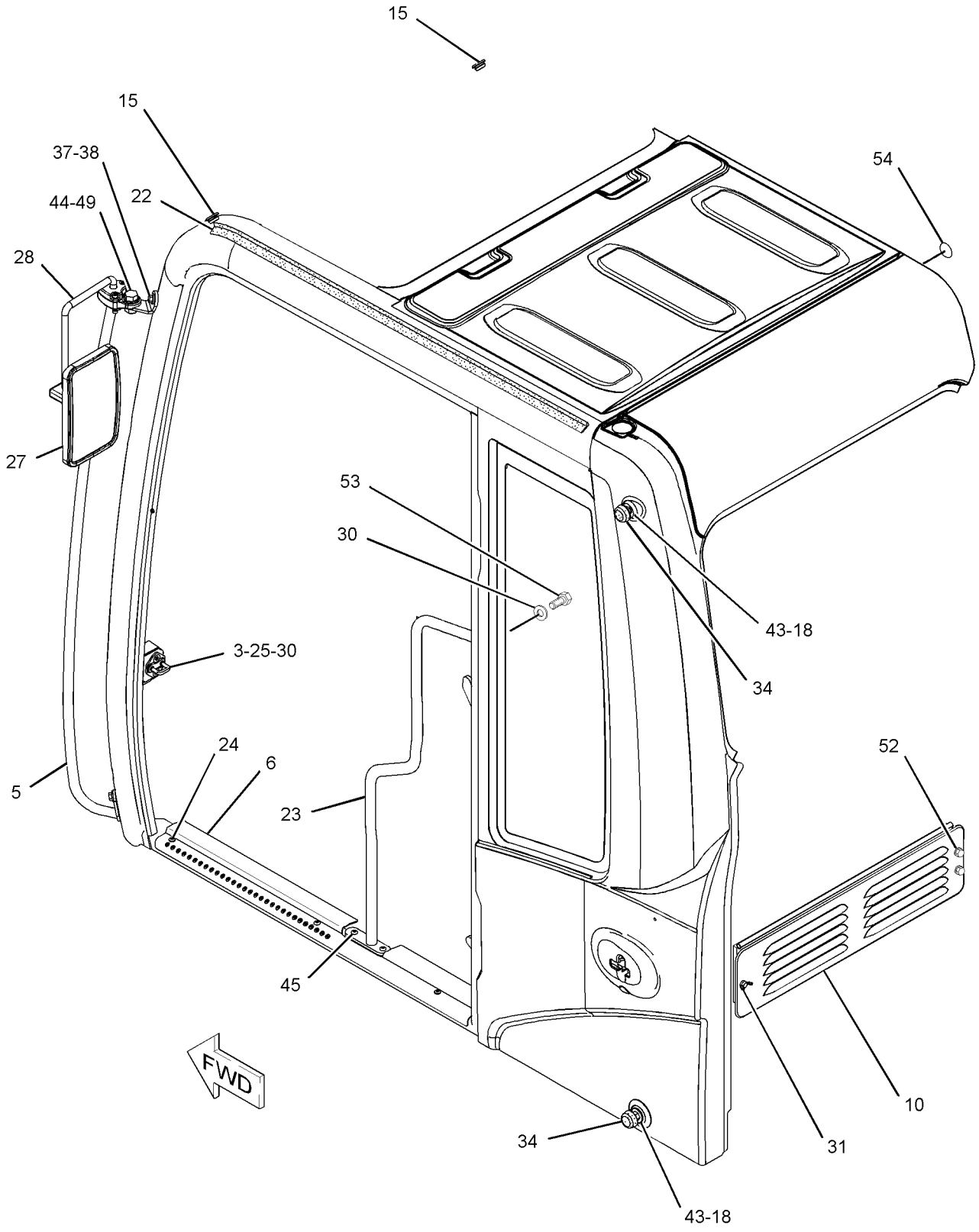

GRAPHIC #1 g02797704

235-8910 **CAB GP** (contd.) **i06612770**

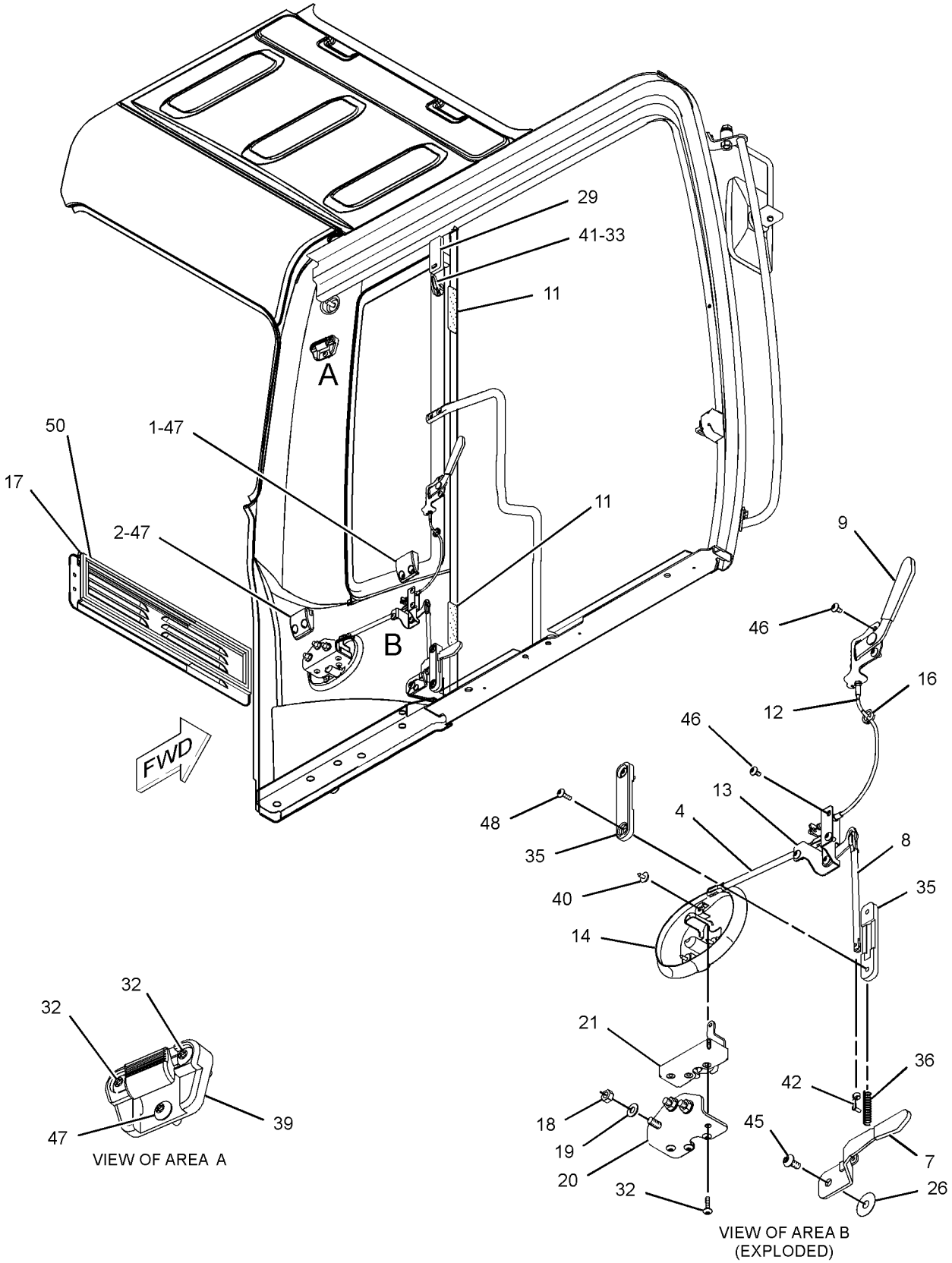

GRAPHIC #2 <END> g02797705

235-8910 CAB GP—EXTERIOR

S/N: DLP1-UP
PART OF 229-9109, 316-8815 CAB GP
AN ATTACHMENT
TYPE 4

SMCS-7301, 7325 **i06651198**

NOTE	REF NO	GRAPHIC REF	PART NUMBER	QTY	PART NAME 1 2 3 4 5 6 (PRODUCT LEVEL)	SEE PAGE
	1	2	**139-7126**	1	HOLDER	
	2	2	**139-7127**	1	HOLDER	
	3	1	**156-6599**	1	STRIKER	
	4	2	**161-3685**	1	ROD	
	5	1	**450-4908**	1	HANDLE AS	
	6	1	**161-3697**	1	GUARD	
	7	2	**164-0523**	1	LEVER AS	
	8	2	**164-0527**	1	ROD	
Y	9	2	*164-0528*	1	LEVER GP-CAB DOOR	1093
	10	1	**167-7018**	1	COVER AS	
	11	2	**167-7042**	2	SEAL	
	12	2	**171-7426**	1	CABLE AS	
	13	2	*176-1939*	1	LEVER AS	
M		2	**9X-2044**	1	SCREW-TRUSS HEAD (M6X1X16-MM)	
		2	**176-1937**	1	BRACKET AS	
		2	**176-1938**	1	LEVER	
	14	2	**176-1942**	1	COVER	
	15	1	**178-5570**	2	GROMMET	
	16	2	**185-8196**	1	GROMMET	
	17	2	**189-2704**	1	SEAL	
M	18	1,2	**8T-4133**	5	NUT (M10X1.5-THD)	
	19	2	**4B-4278**	3	WASHER (10.2X20.5X1.6-MM THK)	
	20	2	**201-4530**	1	BRACKET AS	
	21	2	**383-5666**	1	LATCH AS	
	22	1	**416-4309**	1	SEAL	
	23	1	**235-8912**	1	HANDLE AS	
M	24	1	**099-0823**	3	SCREW-MACHINE (M6X1X6-MM)	
M	25	1	**127-0580**	2	SCREW-FLAT HEAD (M8X1.25X20-MM)	
	26	2	**133-8016**	1	PACKING	
CY	27	1	**394-9460**	1	MIRROR GP	1102
Y	28	1	**346-7375**	1	MOUNTING GP-MIRROR	1124
	29	2	**176-1986**	1	LAMP AS-DOME	
		2	**201-4417**	1	LAMP (24-VOLT, 10-WATT) (DOME)	
	30	1	**1R-5998**	4	LOCKWASHER	
M	31	1	**284-4426**	1	BOLT-WING (M8X1.25X15-MM)	
M	32	2	**3E-8020**	6	SCREW-TRUSS HEAD (M6X1X25-MM)	
M	33	2	**3E-9874**	2	SCREW-OVAL HEAD	
	34	1	**4I-1205**	2	BUMPER	
	35	2	**4I-1206**	2	GUIDE	
	36	2	**4I-3063**	1	SPRING	
M	37	1	**4I-3123**	2	BOLT (M10X1.5X20-MM)	
	38	1	**7X-7729**	2	WASHER (11X25X3-MM THK)	
	39	2	**4I-4270**	1	HOLDER-GLASS	
	40	2	**4I-4392**	3	CLIP	
	41	2	**5C-7793**	1	HOOK-COAT	

235-8910 **CAB GP (**contd.**)** **i06651198**

NOTE	REF NO	GRAPHIC REF	PART NUMBER	QTY	PART NAME 1 2 3 4 5 6 (PRODUCT LEVEL)	SEE PAGE
	42	2	**6V-7636**	4	PIN AS-SPRING	
	43	1	**7X-0578**	2	WASHER-HARD (10.2X32X2.5-MM THK)	
M	44	1	**451-2180**	1	BOLT (M16X2X35-MM)	
M	45	1,2	**9X-2041**	3	SCREW-TRUSS HEAD (M10X1.5X20-MM)	
M	46	2	**9X-2042**	5	SCREW-TRUSS HEAD (M6X1X12-MM)	
M	47	2	**9X-2044**	5	SCREW-TRUSS HEAD (M6X1X16-MM)	
M	48	2	**9X-2045**	2	SCREW-TRUSS HEAD (M6X1X20-MM)	
	49	1	**451-2175**	1	WASHER-HARD (17.5X30X3.5-MM THK)	
E	50	2	**6I-5470**		SEAL (140-CM)	
	52	1	**105-2169**	2	BOLT AS	
M	53	1	**189-2864**	2	SCREW-FLAT HEAD (M8X1.25X30-MM)	
	54	1	**4I-3090**	4	SEAL	

C - CHANGE FROM PREVIOUS TYPE
E - ORDER BY THE CENTIMETER
M - METRIC PART
Y - SEPARATE ILLUSTRATION

235-8910 **CAB GP** (contd.) **i06651198**

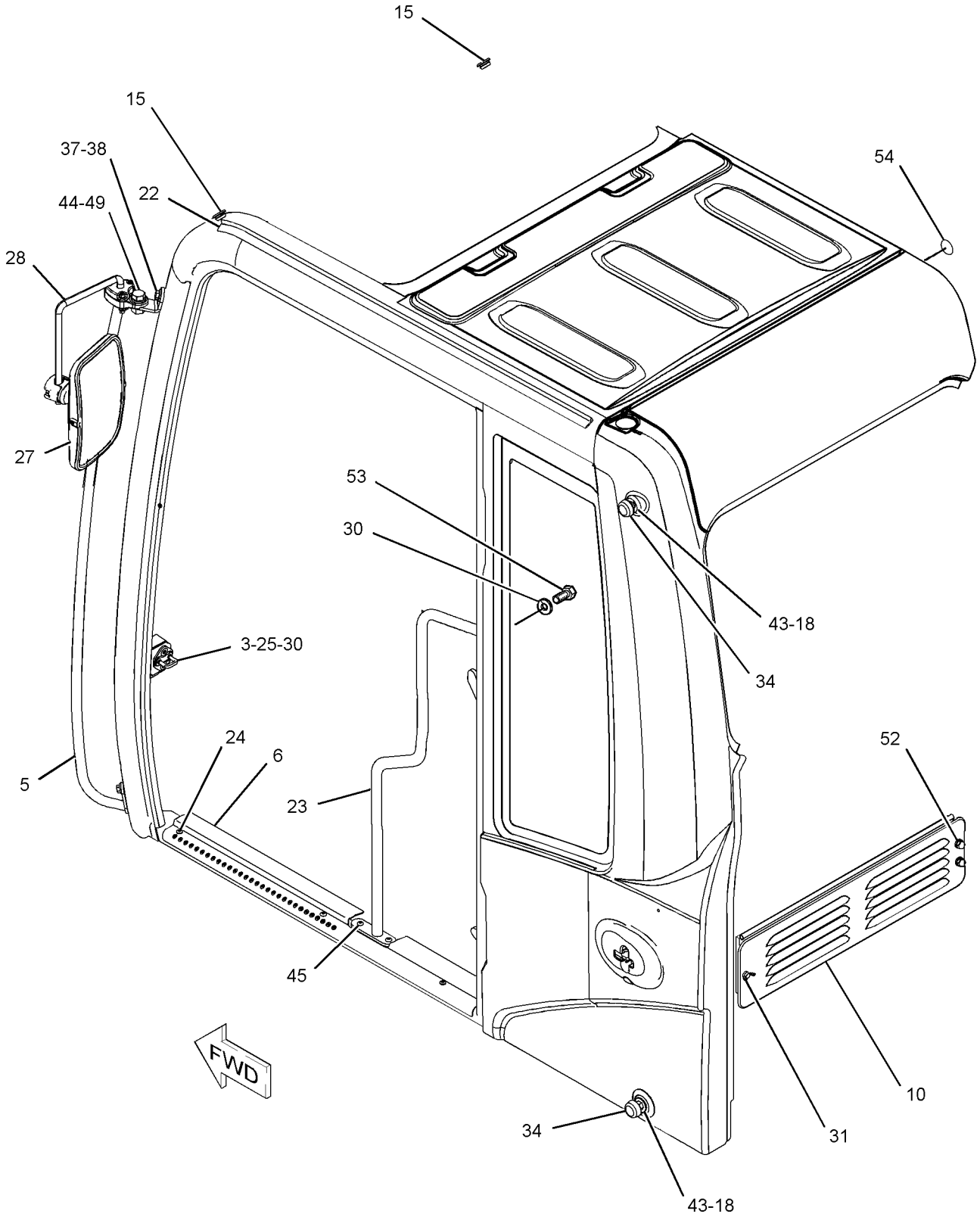

GRAPHIC #1 g06107544

235-8910 **CAB GP** (contd.) **i06651198**

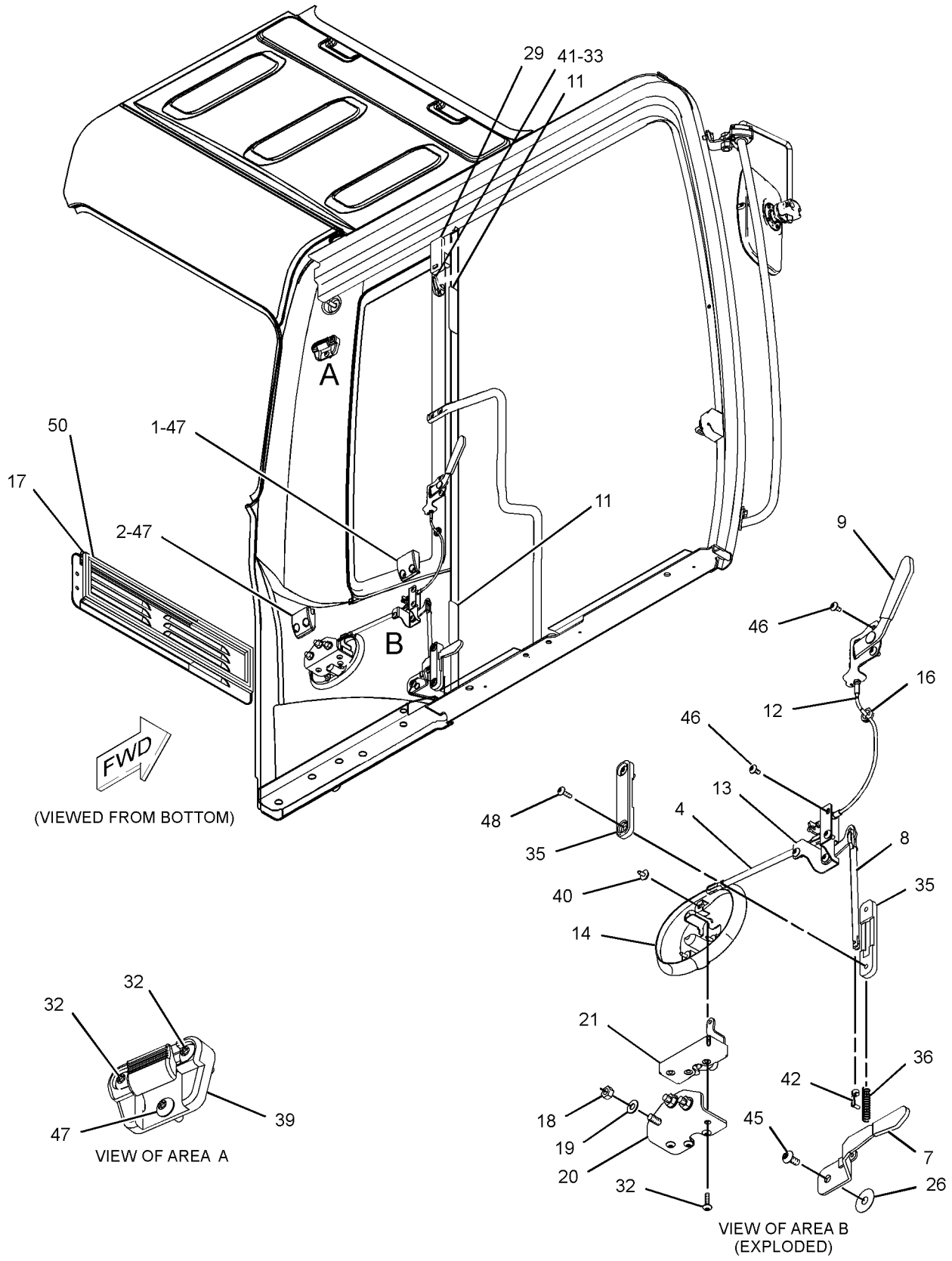

GRAPHIC #2 <END> g06107547

235-8917 CAB GP–INTERIOR

S/N: DLP1-UP
PART OF 229-9109, 316-8815, 346-8043, 346-8055 CAB GP
AN ATTACHMENT

SMCS-7301, 7325

i05946995

NOTE	REF NO	GRAPHIC REF	PART NUMBER	QTY	PART NAME 1 2 3 4 5 6 (PRODUCT LEVEL)	SEE PAGE
	1	1	**8Y-6352**	1	LOUVER AS	
	2	1	**164-0646**	1	CUP	
	3	1	**164-0655**	1	PANEL-SWITCH	
	4	1	**164-8474**	2	LOUVER AS-VENT	
	5	1	**170-9724**	5	CLIP	
	6	1	**171-7420**	10	CLIP	
	7	1	**176-1972**	1	COVER	
	8	1	**185-8205**	7	CLIP	
	9	1	**185-8214**	1	BRACKET AS	
	10	1	**189-2678**	3	SPACER	
	11	1	**189-2853**	1	COVER	
	12	1	**189-2854**	1	COVER	
	13	1	**234-6468**	1	COVER AS	
		1	**259-7353**	4	CLIP	
	14	1	**234-6470**	1	COVER-MONITOR	
	15	1	**234-6471**	1	COVER-DUCT	
	16	1	**234-6472**	1	COVER	
	17	1	**234-6473**	1	COVER-FRONT (UPPER, RH)	
	18	1	**234-6474**	1	COVER-CONSOLE (UPPER, RH)	
	20	1	**234-6476**	1	DUCT	
	21	1	**234-6477**	1	BRACKET AS	
	23	1	**234-6480**	1	BRACKET AS	
	24	1	**234-6483**	1	BRACKET AS	
	25	1	**234-6485**	1	BRACKET AS	
	26	1	**234-6490**	1	CUP	
	27	1	**234-6491**	1	COVER	
	28	1	**234-6497**	1	COVER	
	29	1	**234-6498**	3	RIVET	
	30	1	**234-6521**	1	COVER	
	31	1	**234-6547**	1	COVER	
	32	1	**234-6548**	1	COVER	
	33	1	**234-6549**	1	COVER	
	34	1	**234-6550**	1	COVER	
	35	1	**234-6579**	2	NUT-SPEED	
	36	1	**235-8922**	1	COVER	
	37	1	**235-8923**	2	CAP	
	38	1	**235-8930**	1	LINER	
C	39	1	**235-8950**	10	CLIP	
	40	1	**245-7790**	2	SCREW-TAPPING	
M	41	1	**128-2135**	13	SCREW-TRUSS HEAD (M6X1X13-MM)	
M	42	1	**128-2136**	1	SCREW-TRUSS HEAD (M6X1X16-MM)	
	43	1	**189-2855**	1	COVER	
	44	1	**234-6469**	1	COVER	
M	45	1	**9X-2042**	23	SCREW-TRUSS HEAD (M6X1X12-MM)	
C	46	1	**305-0333**	1	BRACKET	

235-8917 **CAB GP (**contd.**)** **i05946995**

NOTE	REF NO	GRAPHIC REF	PART NUMBER	QTY	PART NAME 1 2 3 4 5 6 (PRODUCT LEVEL)	SEE PAGE
C	47	1	**305-0330**	1	COVER (LOWER, RH)	
	48	1	**8R-1803**	1	WASHER (10.5X18X1-MM THK)	

C - CHANGE FROM PREVIOUS TYPE
M - METRIC PART

235-8917 **CAB GP** (contd.) **i05946995**

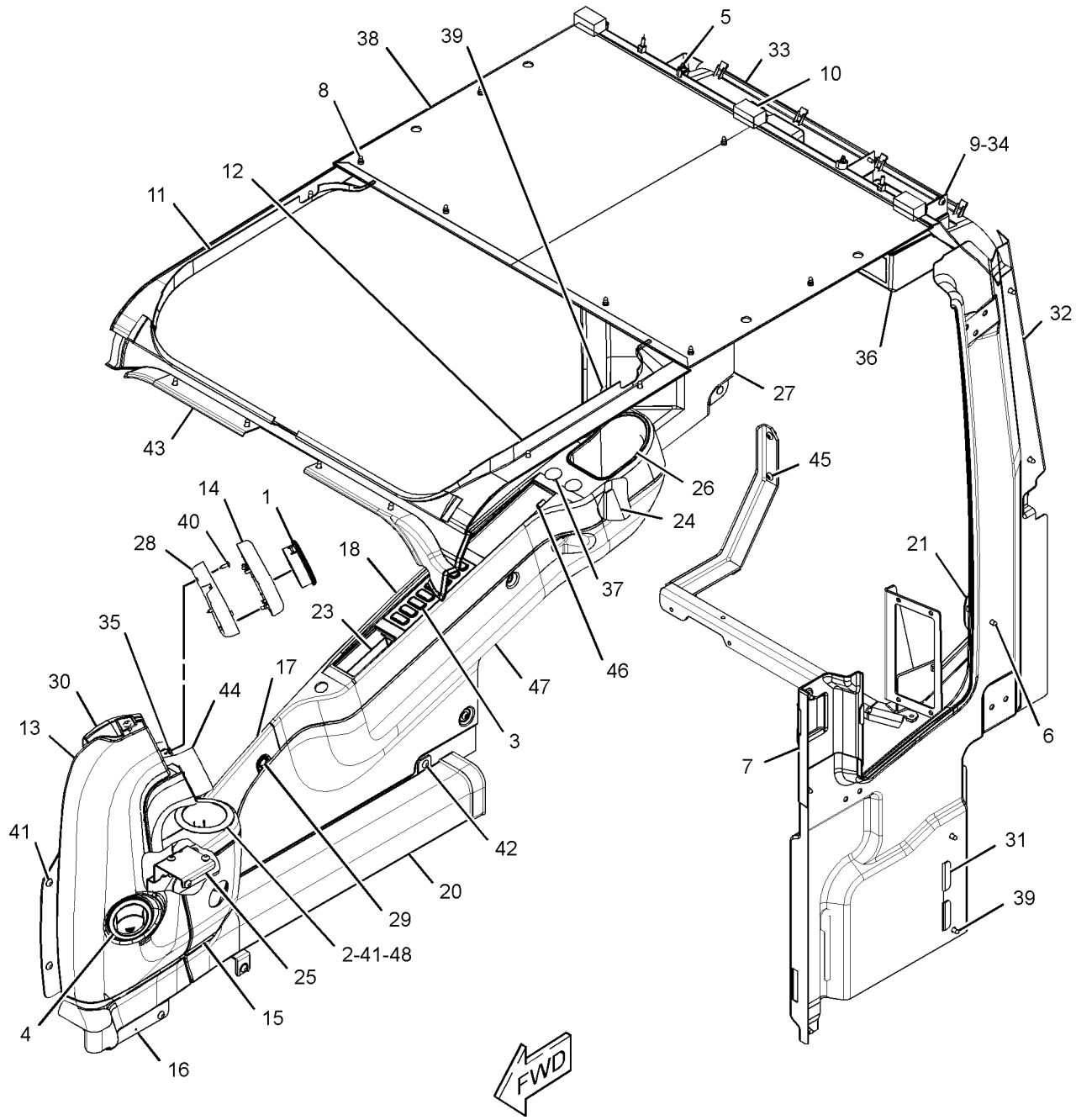

GRAPHIC #1 <END> g06015316

316-8814 CAB GP

S/N: DLP1-UP
PART OF 336-3346 OPTION AR-CAB
AN ATTACHMENT

SMCS-7301, 7325

i03358500

NOTE	REF NO	GRAPHIC REF	PART NUMBER	QTY	PART NAME 1 2 3 4 5 6 (PRODUCT LEVEL)	SEE PAGE
M	1	1	**128-2135**	5	SCREW-TRUSS HEAD (M6X1X13-MM)	
	2	1	**164-8474**	2	LOUVER AS-VENT	
Y	3	1	*316-8815*	1	CAB GP	976
Y	4	1	*234-6501*	1	COVER GP-CAB (REAR)	1046
	5	1	**235-9001**	1	SUPPORT	
M	6	1	**8T-4179**	5	BOLT (M12X1.75X20-MM)	
M	7	1	**8T-4190**	4	BOLT (M16X2X25-MM)	
	8	1	**8T-4223**	13	WASHER-HARD (13.5X25.5X3-MM THK)	
M	9	1	**8T-4910**	6	BOLT (M12X1.75X60-MM)	
M	10	1	**8T-6868**	2	BOLT (M12X1.75X80-MM)	
	11	1	**8Y-6967**	2	LOUVER AS-VENT	
	12	1	**9X-8257**	6	WASHER (17.5X30X3.5-MM THK)	

M - METRIC PART
Y - SEPARATE ILLUSTRATION

316-8814 **CAB GP** (contd.) **i03358500**

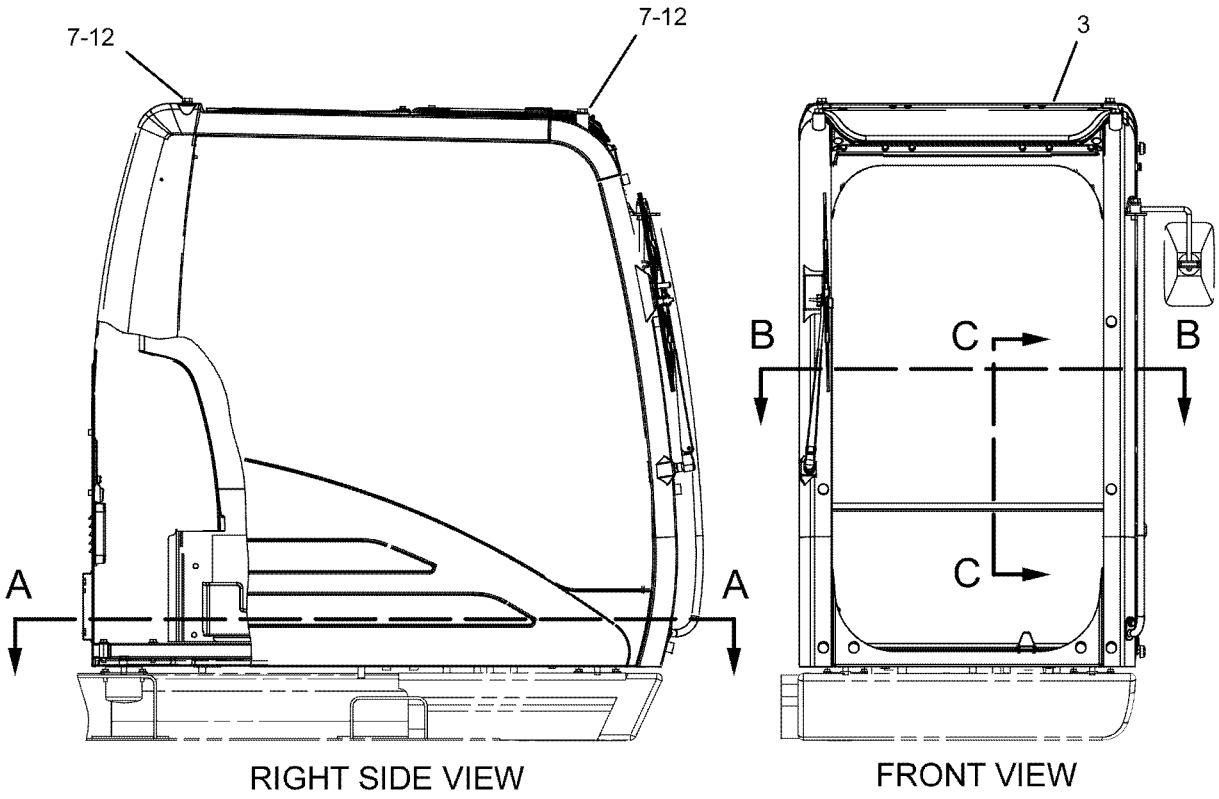

GRAPHIC #1 <END> g01125071

316-8815 CAB GP

S/N: DLP1-UP
PART OF 316-8814 CAB GP
AN ATTACHMENT

SMCS-7301, 7325

i02884427

NOTE	REF NO	GRAPHIC REF	PART NUMBER	QTY	PART NAME 1 2 3 4 5 6 (PRODUCT LEVEL)	SEE PAGE
	1	1	*235-8916*	1	CAB AS	
Y	2	1	*235-8910*	1	CAB GP (EXTERIOR)	955
Y	3	1	*235-8917*	1	CAB GP (INTERIOR)	971
Y	4	1	*235-8909*	1	WINDOW GP-CAB (SIDE, REAR)	1186
Y	5	1	*234-6594*	1	WIPER GP-WINDOW (FRONT, UPPER)	1192
Y	6	1	**189-2768**	1	DOOR & MTG GP-CAB	1048
JY	7	1	*139-7101*	1	WINDOW GP-CAB (FRONT, UPPER)	1177
Y	8	1	*176-1958*	1	WINDOW GP-CAB (FRONT, LOWER)	1183
Y	9	1	*139-7099*	1	HATCH GP-ROOF	1072
FJY		1	*171-7503*	1	WINDOW GP-CAB (FRONT, UPPER)	1181
FJY		1	*207-0144*	1	WINDOW GP-CAB (FRONT, UPPER)	1185

F - NOT SHOWN
J - ITEMS MARKED J AVAILABLE FOR SERVICE REPAIR OF WINDOW GP MARKED J
Y - SEPARATE ILLUSTRATION

316-8815 **CAB GP (**contd.**)** **i02884427**

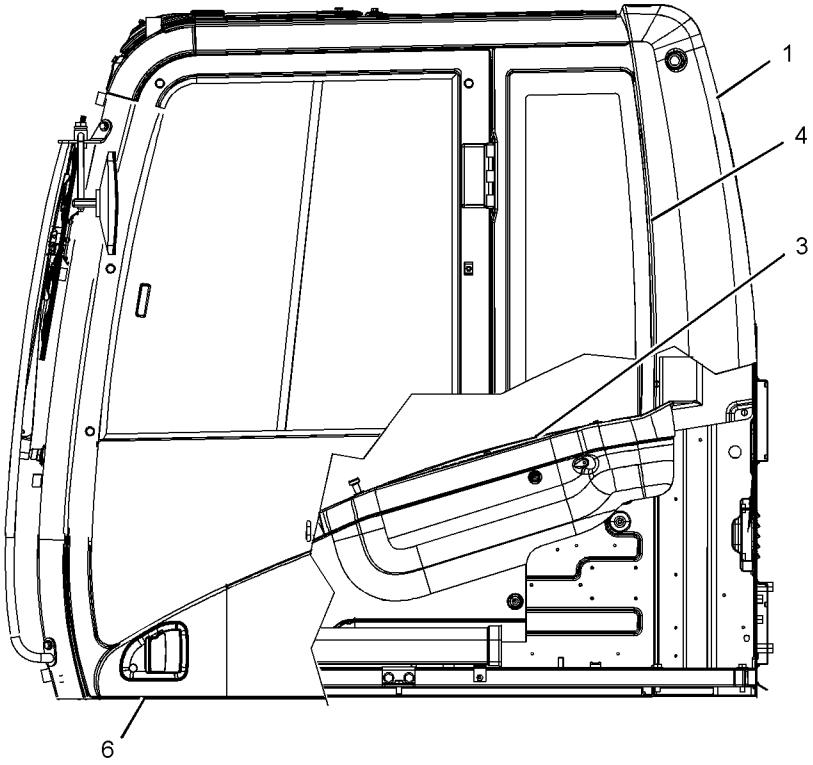

LEFT SIDE VIEW

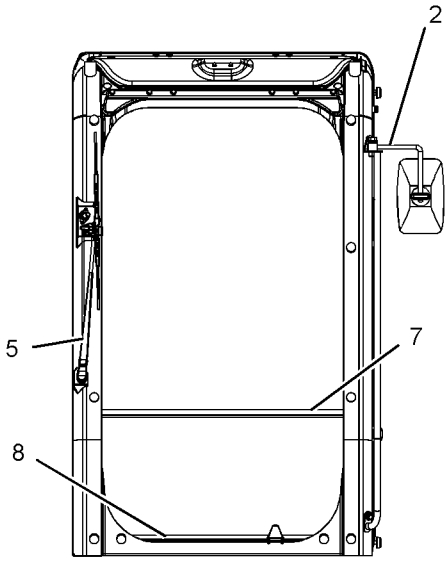

FRONT VIEW

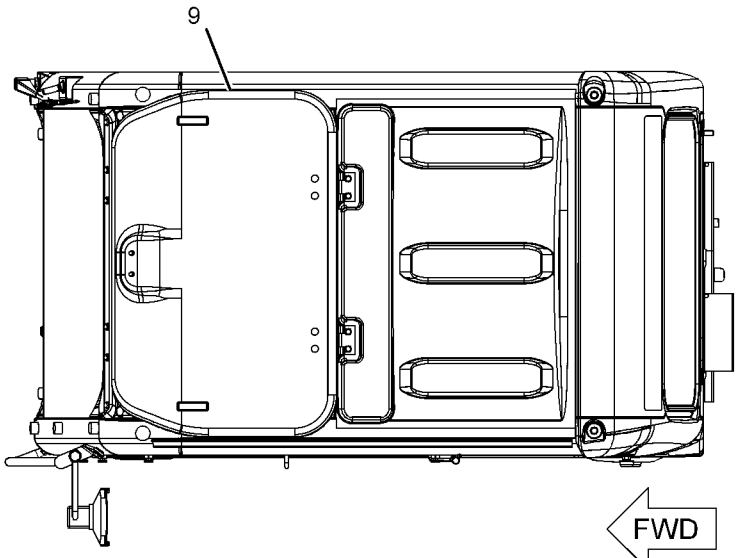

TOP VIEW

GRAPHIC #1 <END> g01125083

346-8037 CAB GP

S/N: DLP1-UP

PART OF 359-2483, 367-8791, 379-7090 OPTION AR-REGIONAL

AN ATTACHMENT

SMCS-7301, 7325

i04001981

NOTE	REF NO	GRAPHIC REF	PART NUMBER	QTY	PART NAME 1 2 3 4 5 6 (PRODUCT LEVEL)	SEE PAGE
M	1	1	**128-2135**	5	SCREW-TRUSS HEAD (M6X1X13-MM)	
	2	1	**164-8474**	2	LOUVER AS-VENT	
Y	3	1	**346-8053**	1	CAB GP	986
Y	4	1	**234-6501**	1	COVER GP-CAB (REAR)	1046
	5	1	**235-9001**	1	SUPPORT	
M	6	1	**8T-4179**	5	BOLT (M12X1.75X20-MM)	
M	7	1	**8T-4190**	4	BOLT (M16X2X25-MM)	
	8	1	**8T-4223**	13	WASHER-HARD (13.5X25.5X3-MM THK)	
M	9	1	**8T-4910**	6	BOLT (M12X1.75X60-MM)	
M	10	1	**8T-6868**	2	BOLT (M12X1.75X80-MM)	
	11	1	**8Y-6967**	2	LOUVER AS-VENT	
	12	1	**9X-8257**	6	WASHER (17.5X30X3.5-MM THK)	

M - METRIC PART
Y - SEPARATE ILLUSTRATION

346-8037 **CAB GP** (contd.) **i04001981**

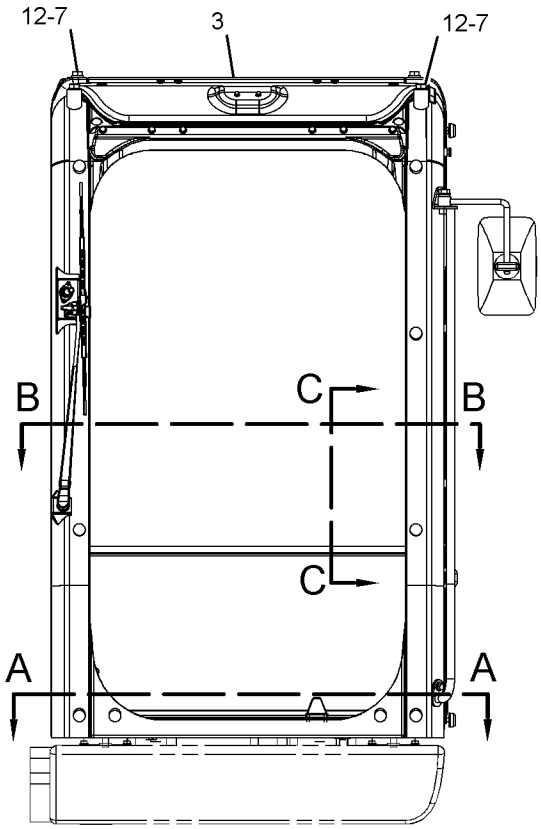

FRONT VIEW

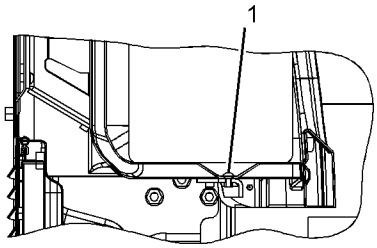

VIEW C-C

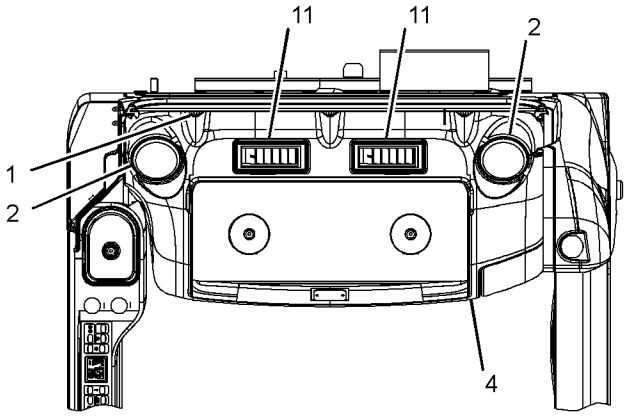

SECTION B-B

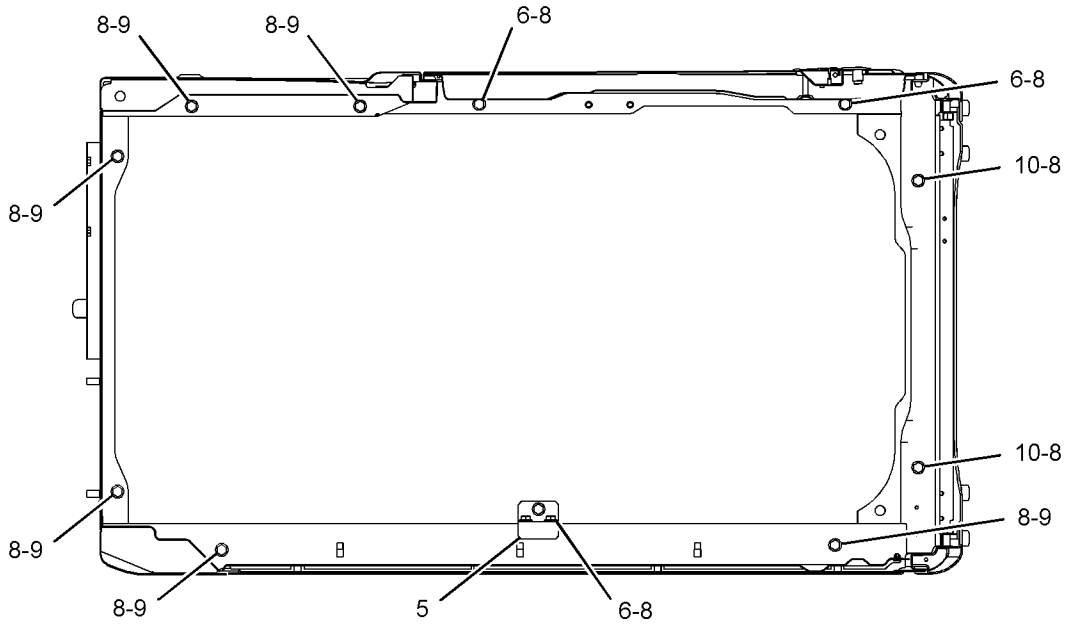

SECTION A-A
(ROTATED 90 DEGREES COUNTERCLOCKWISE)

GRAPHIC #1 <END> g02178010

346-8039 CAB GP

S/N: DLP1-UP
PART OF 351-9714, 359-2252 OPTION AR-REGIONAL
AN ATTACHMENT

SMCS-7301, 7325

i05202959

NOTE	REF NO	GRAPHIC REF	PART NUMBER	QTY	PART NAME 1 2 3 4 5 6 (PRODUCT LEVEL)	SEE PAGE
M	1	1	**128-2135**	5	SCREW-TRUSS HEAD (M6X1X13-MM)	
	2	1	**164-8474**	2	LOUVER AS-VENT	
Y	3	1	**346-8055**	1	CAB GP	989
Y	4	1	**234-6501**	1	COVER GP-CAB (REAR)	1046
	5	1	**235-9001**	1	SUPPORT	
M	6	1	**8T-4179**	5	BOLT (M12X1.75X20-MM)	
M	7	1	**8T-4190**	4	BOLT (M16X2X25-MM)	
	8	1	**8T-4223**	13	WASHER-HARD (13.5X25.5X3-MM THK)	
M	9	1	**8T-4910**	6	BOLT (M12X1.75X60-MM)	
M	10	1	**8T-6868**	2	BOLT (M12X1.75X80-MM)	
	11	1	**8Y-6967**	2	LOUVER AS-VENT	
	12	1	**9X-8257**	6	WASHER (17.5X30X3.5-MM THK)	

M - METRIC PART
Y - SEPARATE ILLUSTRATION

346-8039 **CAB GP (**contd.**)** **i05202959**

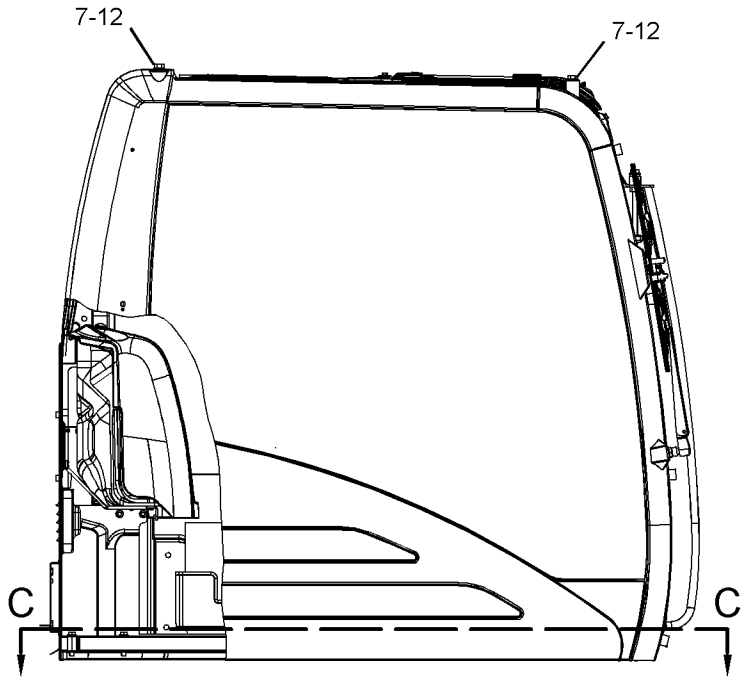

RIGHT SIDE VIEW

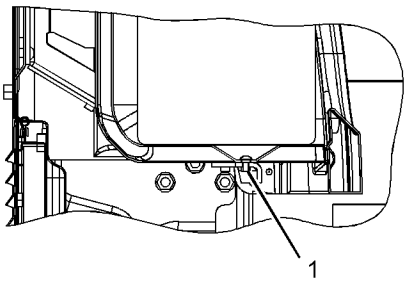

SECTION A-A

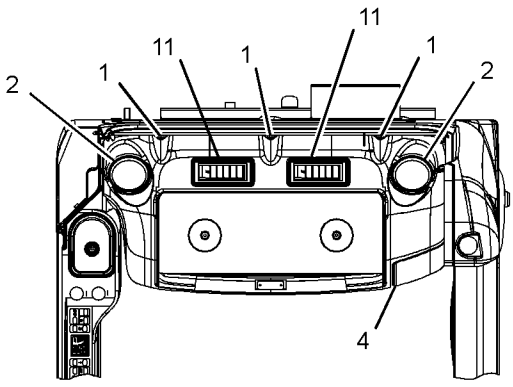

SECTION B-B

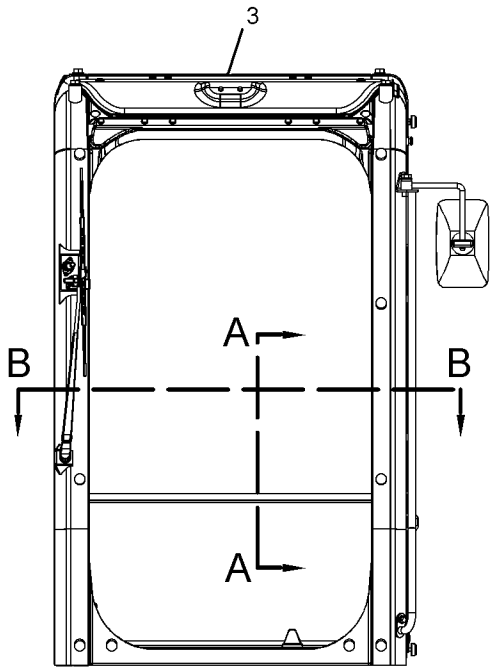

FRONT VIEW

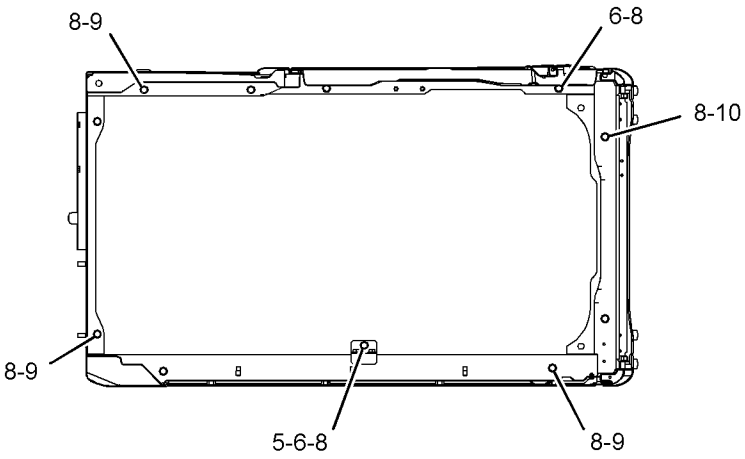

SECTION C-C

GRAPHIC #1 <END> g02139321

346-8042 CAB GP

S/N: DLP1-UP

AN ATTACHMENT

SMCS-7301, 7325 **i05142809**

NOTE	REF NO	GRAPHIC REF	PART NUMBER	QTY	PART NAME 1 2 3 4 5 6 (PRODUCT LEVEL)	SEE PAGE
M	1	1	**128-2135**	5	SCREW-TRUSS HEAD (M6X1X13-MM)	
	2	1	**164-8474**	2	LOUVER AS-VENT	
Y	3	1	**346-8043**	1	CAB GP	984
Y	4	1	**234-6501**	1	COVER GP-CAB (REAR)	1046
	5	1	**235-9001**	1	SUPPORT	
M	6	1	**8T-4179**	5	BOLT (M12X1.75X20-MM)	
M	7	1	**8T-4190**	4	BOLT (M16X2X25-MM)	
	8	1	**8T-4223**	13	WASHER-HARD (13.5X25.5X3-MM THK)	
M	9	1	**8T-4910**	6	BOLT (M12X1.75X60-MM)	
M	10	1	**8T-6868**	2	BOLT (M12X1.75X80-MM)	
	11	1	**8Y-6967**	2	LOUVER AS-VENT	
	12	1	**9X-8257**	6	WASHER (17.5X30X3.5-MM THK)	

M - METRIC PART
Y - SEPARATE ILLUSTRATION

346-8042 **CAB GP (**contd.**)** **i05142809**

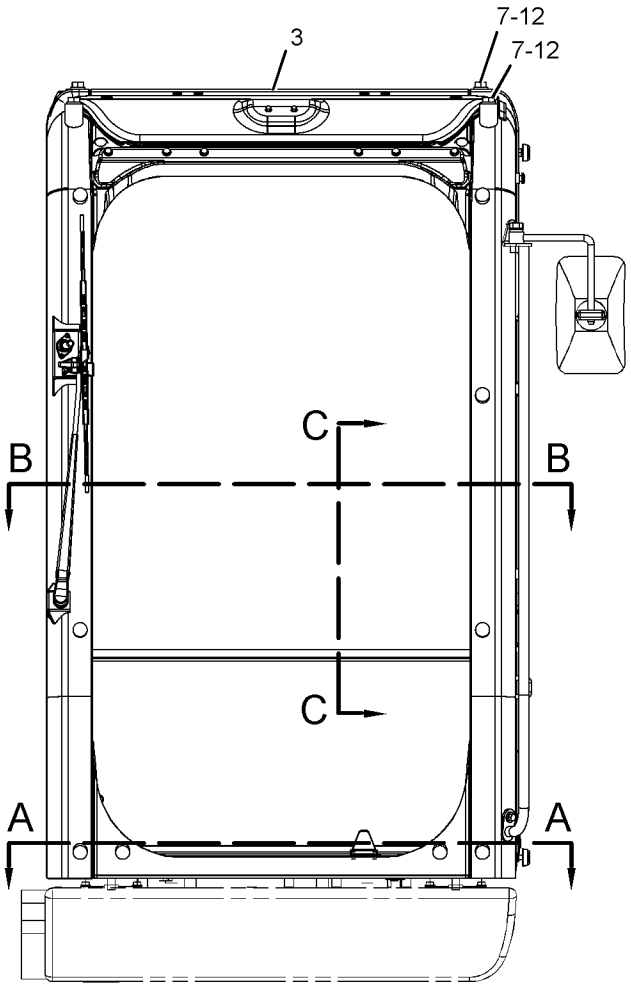

FRONT VIEW

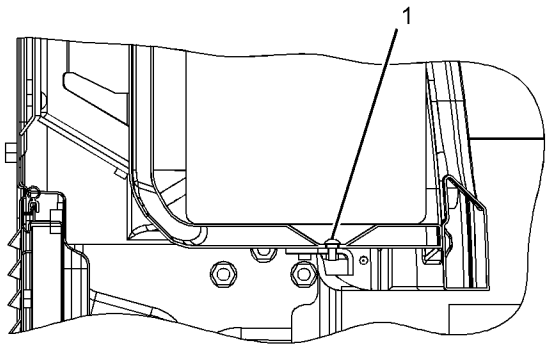

SECTION C-C

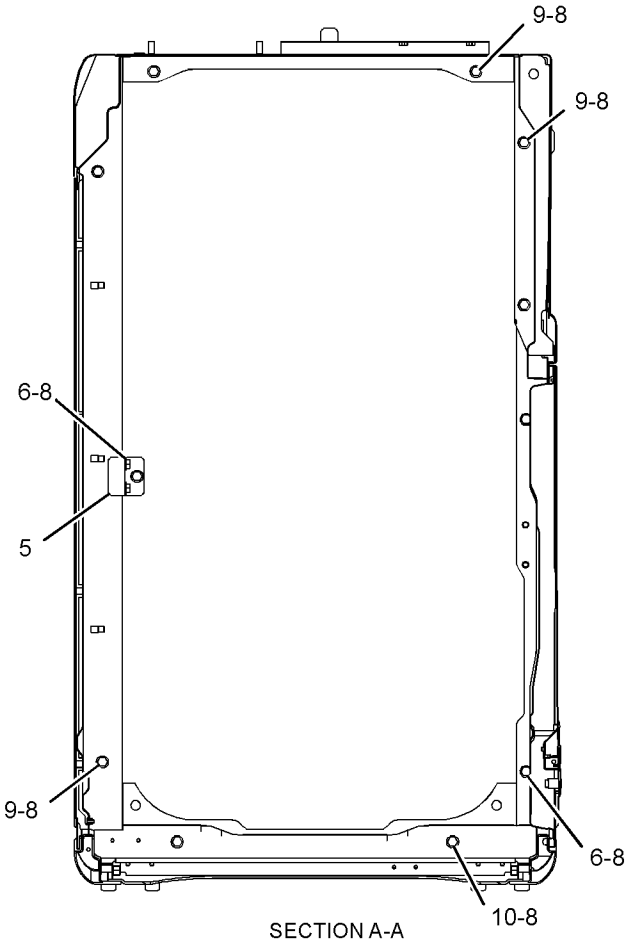

SECTION A-A

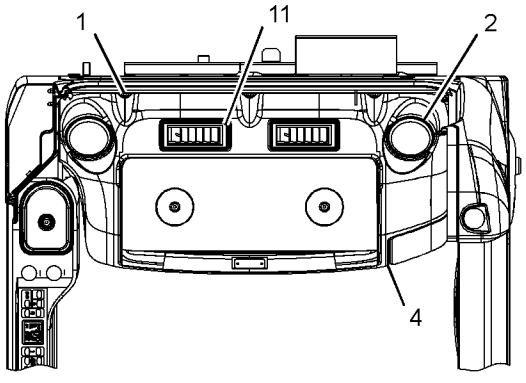

SECTION B-B

GRAPHIC #1 <END> g02162613

346-8043 CAB GP

S/N: DLP1-UP
PART OF 346-8042 CAB GP
AN ATTACHMENT

SMCS-7301, 7325 **i05917585**

NOTE	REF NO	GRAPHIC REF	PART NUMBER	QTY	PART NAME 1 2 3 4 5 6 (PRODUCT LEVEL)	SEE PAGE
	1	1	*235-8916*	1	CAB AS	
M		1	**185-8182**	6	BOLT (M10X1.5X20-MM)	
		1	**185-8187**	6	WASHER (10.2X22X3.2-MM THK)	
	1A	1	**151-6777**	2	HINGE	
M		1	**9X-2041**	6	SCREW-TRUSS HEAD (M10X1.5X20-MM)	
Y	2	1	*346-8058*	1	CAB GP (EXTERIOR)	991
Y	3	1	*235-8917*	1	CAB GP (INTERIOR)	971
Y	4	1	*235-8909*	1	WINDOW GP-CAB (SIDE, REAR)	1186
Y	5	1	*234-6594*	1	WIPER GP-WINDOW (FRONT, UPPER)	1192
Y	6	1	**316-6166**	1	DOOR & MTG GP-CAB	1049
JY	7	1	*139-7101*	1	WINDOW GP-CAB (FRONT, UPPER)	1177
Y	8	1	*176-1958*	1	WINDOW GP-CAB (FRONT, LOWER)	1183
Y	9	1	*259-7350*	1	HATCH GP-ROOF	1074
FJY			**171-7503**	1	WINDOW GP-CAB (FRONT, UPPER)	1181
FJY			**207-0144**	1	WINDOW GP-CAB (FRONT, UPPER)	1185

F - NOT SHOWN
J - PARTS MARKED J AVAILABLE FOR SERVICE REPAIR OF WINDOW GP MARKED J
M - METRIC PART
Y - SEPARATE ILLUSTRATION

346-8043 **CAB GP (**contd.**)** **i05917585**

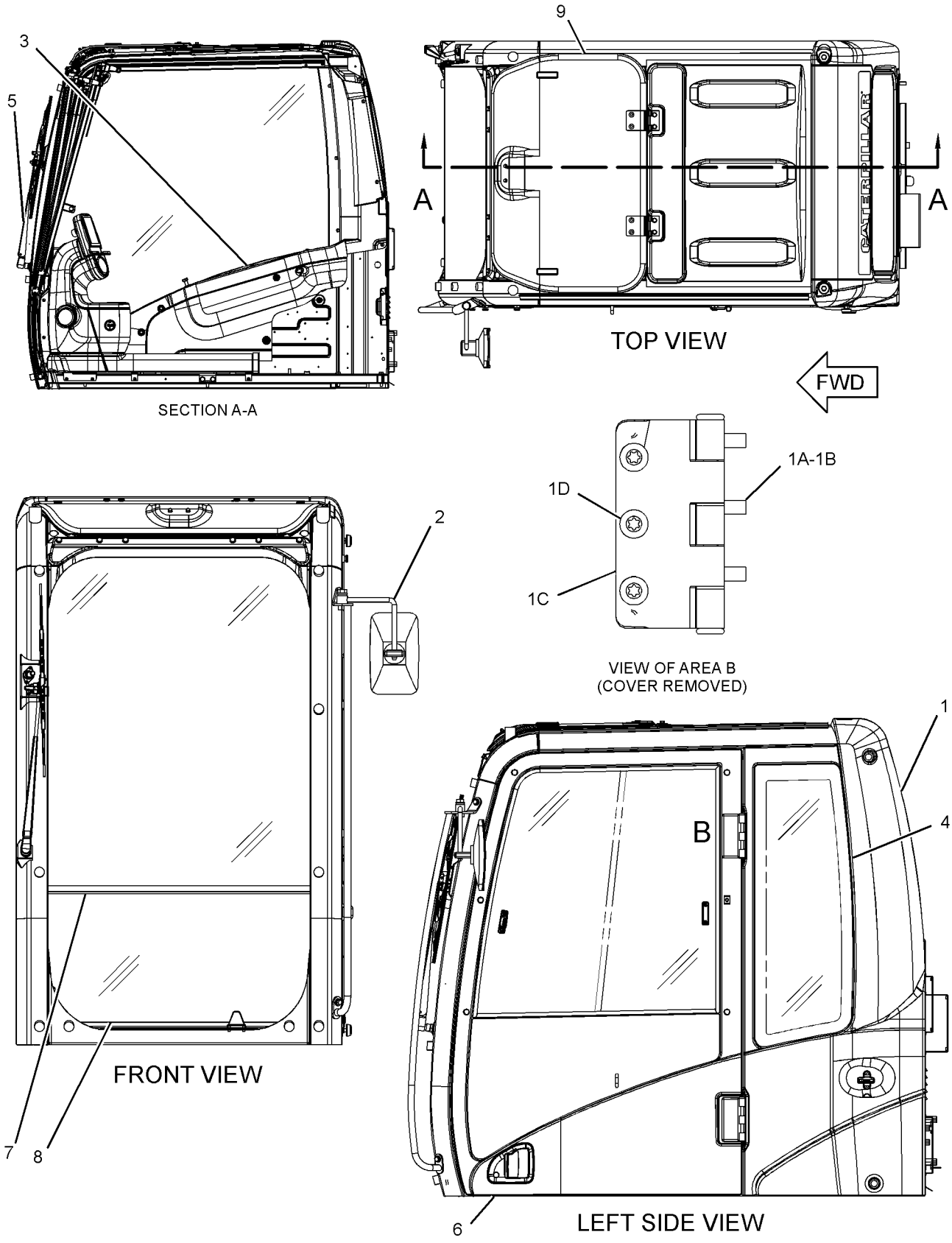

GRAPHIC #1

<END>

g03722230

346-8053 CAB GP

S/N: DLP1-UP
PART OF 346-8037 CAB GP
AN ATTACHMENT

SMCS-7301, 7325 **i05589878**

NOTE	REF NO	GRAPHIC REF	PART NUMBER	QTY	PART NAME 1 2 3 4 5 6 (PRODUCT LEVEL)	SEE PAGE
	1	1	*235-8916*	1	CAB AS	
M	1A	1	**185-8182**	6	BOLT (M10X1.5X20-MM)	
	1B	1	**185-8187**	6	WASHER (10.2X22X3.2-MM THK)	
	1C	1	**151-6777**	2	HINGE	
M	1D	1	**9X-2041**	6	SCREW-TRUSS HEAD (M10X1.5X20-MM)	
Y	2	2	*346-8058*	1	CAB GP (EXTERIOR)	991
Y	3	2	*235-8908*	1	CAB GP (INTERIOR)	949
Y	4	1	*235-8909*	1	WINDOW GP-CAB (SIDE, REAR)	1186
Y	5	2	*234-6594*	1	WIPER GP-WINDOW (FRONT, UPPER)	1192
Y	6	1	**316-6166**	1	DOOR & MTG GP-CAB	1049
JY	7	2	*139-7101*	1	WINDOW GP-CAB (FRONT, UPPER)	1177
Y	8	2	*176-1958*	1	WINDOW GP-CAB (FRONT, LOWER)	1183
Y	9	2	*139-7099*	1	HATCH GP-ROOF	1072
FJY			**171-7503**	1	WINDOW GP-CAB (FRONT, UPPER)	1181
FJY			**207-0144**	1	WINDOW GP-CAB (FRONT, UPPER)	1185

F - NOT SHOWN
J - ITEMS MARKED J AVAILABLE FOR SERVICE REPAIR OF WINDOW GP MARKED J
M - METRIC PART
Y - SEPARATE ILLUSTRATION

346-8053 **CAB GP** (contd.) **i05589878**

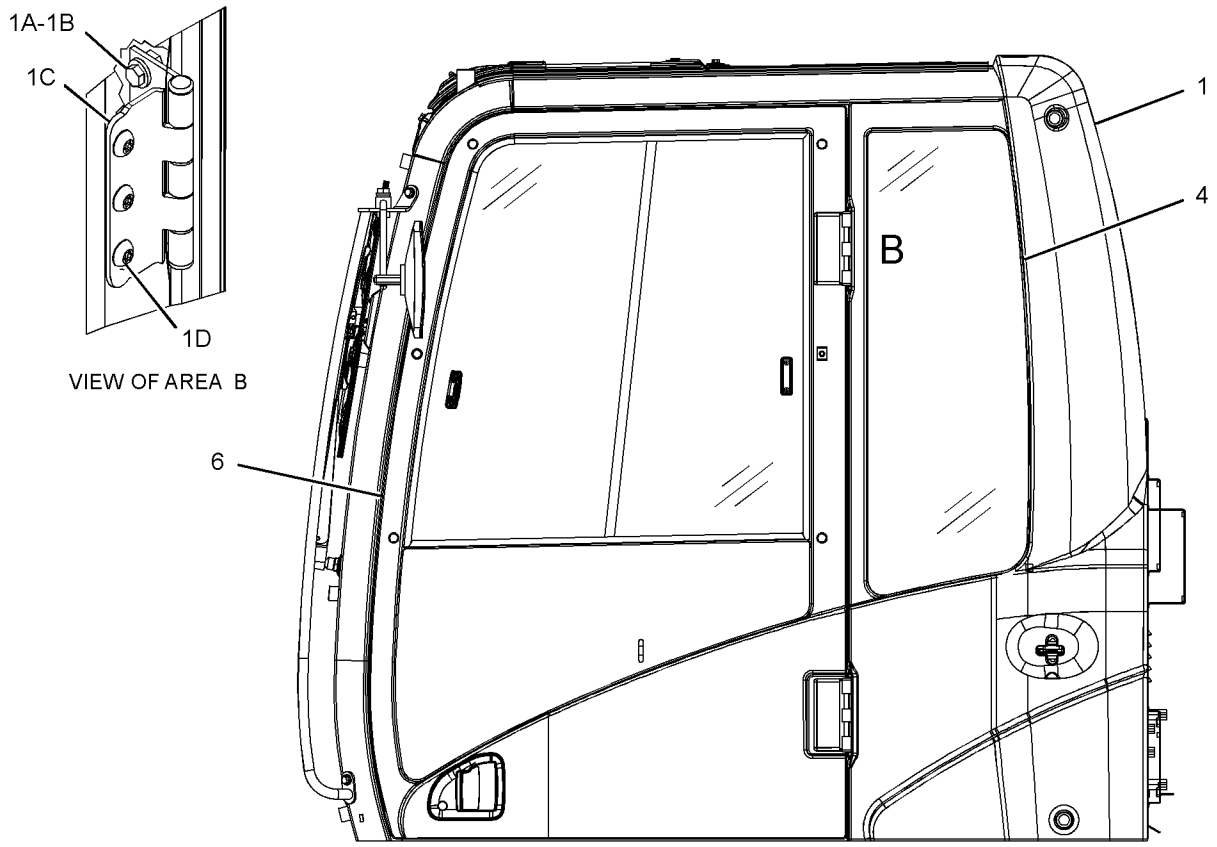

LEFT SIDE VIEW

GRAPHIC #1 g02827476

346-8053 **CAB GP** (contd.) **i05589878**

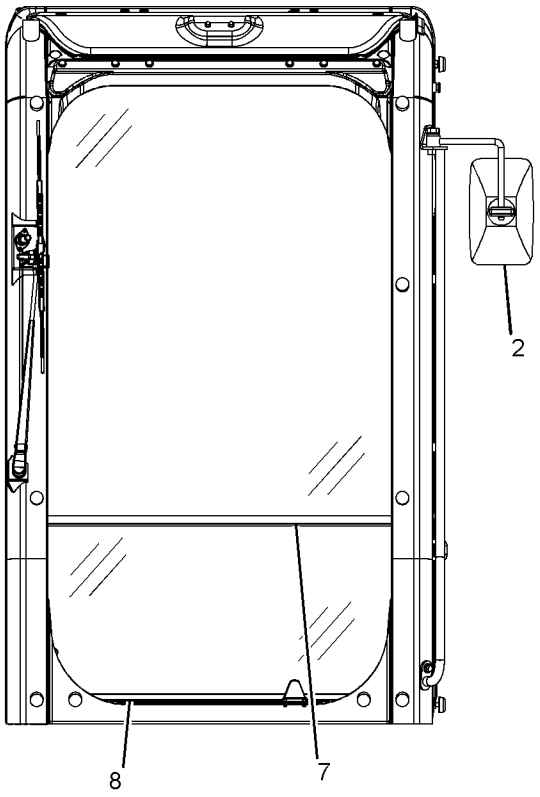

FRONT VIEW

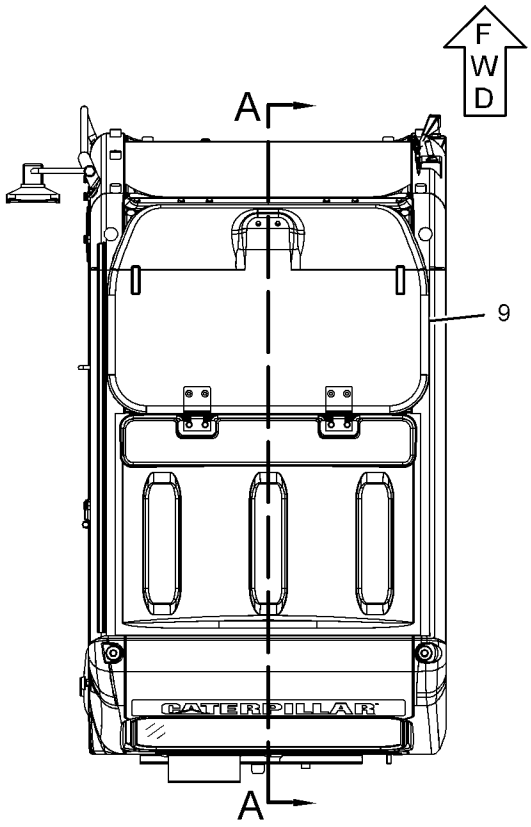

TOP VIEW

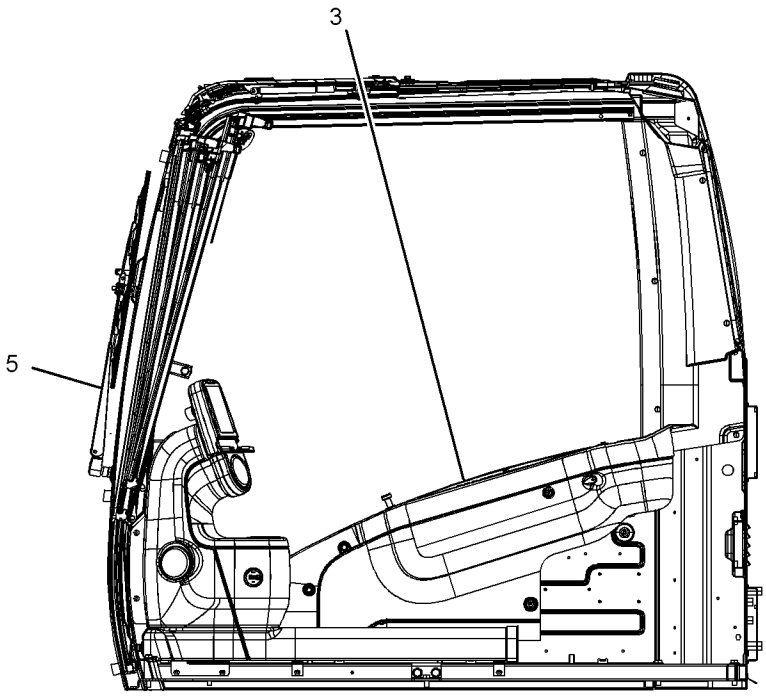

SECTION A-A

GRAPHIC #2 <END> g02131537

346-8055 CAB GP

S/N: DLP1-UP
PART OF 346-8039 CAB GP
AN ATTACHMENT

SMCS-7301, 7325 **i04707930**

NOTE	REF NO	GRAPHIC REF	PART NUMBER	QTY	PART NAME 1 2 3 4 5 6 (PRODUCT LEVEL)	SEE PAGE
	1	1	*234-6467*	1	CAB AS	
M	1A	1	**185-8182**	6	BOLT (M10X1.5X20-MM)	
	1B	1	**185-8187**	6	WASHER (10.2X22X3.2-MM THK)	
	1C	1	**151-6777**	2	HINGE	
M	1D	1	**9X-2041**	6	SCREW-TRUSS HEAD (M10X1.5X20-MM)	
Y	2	1	*346-8058*	1	CAB GP (EXTERIOR)	991
Y	3	1	*235-8917*	1	CAB GP (INTERIOR)	971
Y	4	1	*235-8909*	1	WINDOW GP-CAB (SIDE, REAR)	1186
Y	5	1	*234-6594*	1	WIPER GP-WINDOW (FRONT, UPPER)	1192
Y	6	1	**316-6166**	1	DOOR & MTG GP-CAB	1049
JY	7	1	*139-7101*	1	WINDOW GP-CAB (FRONT, UPPER)	1177
Y	8	1	*176-1958*	1	WINDOW GP-CAB (FRONT, LOWER)	1183
Y	9	1	*259-7350*	1	HATCH GP-ROOF	1074
FJY			**171-7503**	1	WINDOW GP-CAB (FRONT, UPPER)	1181
FJY			**207-0144**	1	WINDOW GP-CAB (FRONT, UPPER)	1185

F - NOT SHOWN
J - ITEMS MARKED J AVAILABLE FOR SERVICE REPAIR OF WINDOW GP MARKED J
M - METRIC PART
Y - SEPARATE ILLUSTRATION

346-8055 **CAB GP** (contd.) **i04707930**

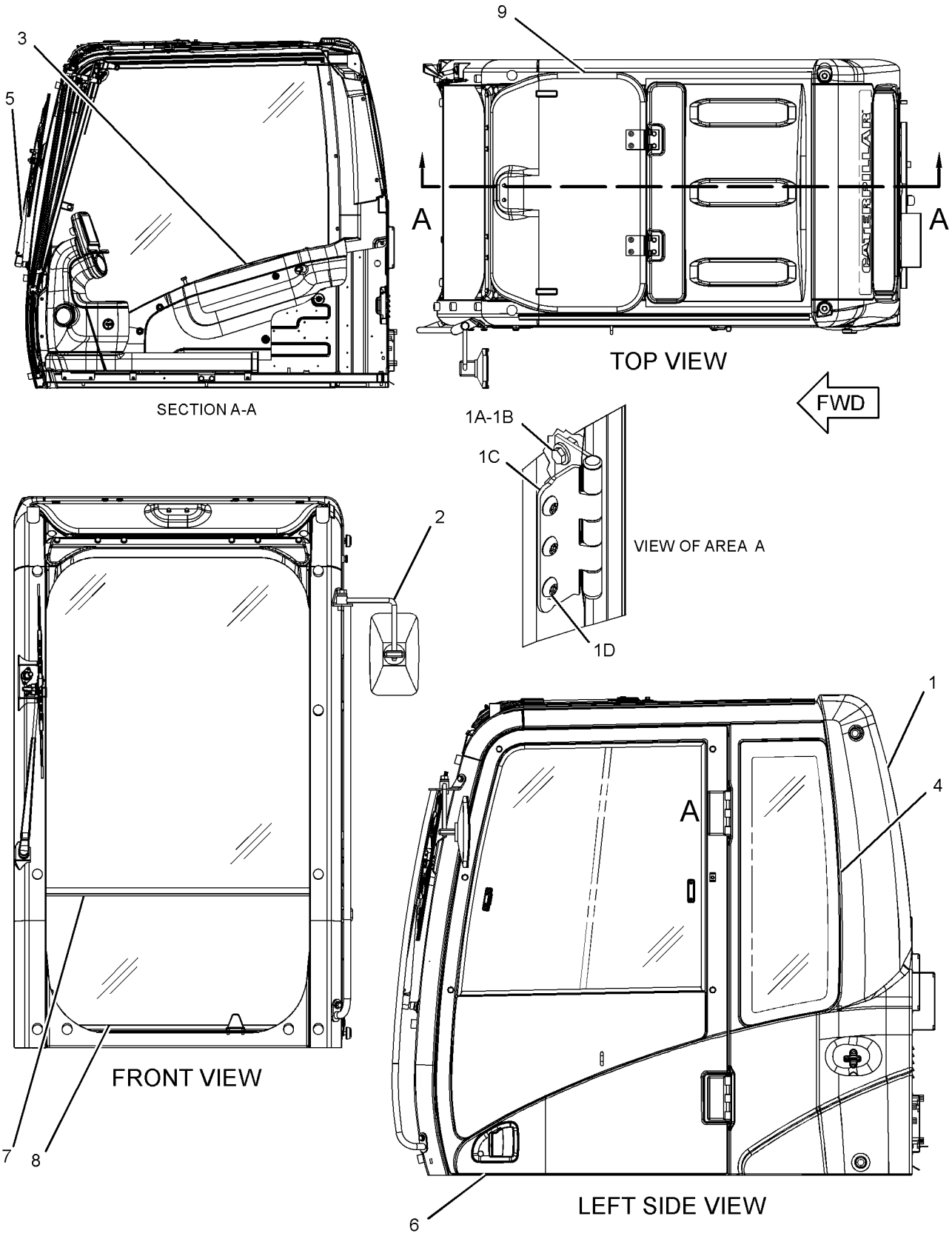

GRAPHIC #1 <END> g02810776

346-8058 CAB GP—EXTERIOR

S/N: DLP1-UP
PART OF 346-8043, 346-8053, 346-8055 CAB GP
AN ATTACHMENT
TYPE 1

SMCS-7301, 7325 **i06598987**

NOTE	REF NO	GRAPHIC REF	PART NUMBER	QTY	PART NAME 1 2 3 4 5 6 (PRODUCT LEVEL)	SEE PAGE
	1	1	**139-7126**	1	HOLDER	
	2	1	**139-7127**	1	HOLDER	
	3	1	**156-6599**	1	STRIKER	
	4	1	**161-3685**	1	ROD	
	5	1	**161-3697**	1	GUARD	
	6	1	**164-0523**	1	LEVER AS	
	7	1	**164-0527**	1	ROD	
Y	8	1	*164-0528*	1	LEVER GP-CAB DOOR	1093
	9	1	**167-7018**	1	COVER AS	
	10	1	**167-7042**	2	SEAL	
	11	1	**171-7426**	1	CABLE AS	
	12	1	*176-1939*	1	LEVER AS	
M		1	**9X-2044**	1	SCREW-TRUSS HEAD (M6X1X16-MM)	
		1	**176-1937**	1	BRACKET AS	
		1	**176-1938**	1	LEVER	
	13	1	**178-5570**	2	GROMMET	
	14	1	**185-8196**	1	GROMMET	
	15	1	**189-2704**	1	SEAL	
M	16	1	**189-2864**	2	SCREW-FLAT HEAD (M8X1.25X30-MM)	
	17	1	**4B-4278**	3	WASHER (10.2X20.5X1.6-MM THK)	
	18	1	**201-4530**	1	BRACKET AS	
	19	1	**205-6295**	1	LATCH AS	
	20	1	**416-4309**	1	SEAL	
	21	1	**235-8912**	1	HANDLE AS	
	22	1	**450-4908**	1	HANDLE AS	
M	23	1	**284-4426**	1	BOLT-WING (M8X1.25X15-MM)	
	24	1	**315-5313**	1	COVER	
Y	25	1	**327-6550**	1	MIRROR GP-REAR VIEW	1110
Y	26	1	**346-7375**	1	MOUNTING GP-MIRROR	1124
	27	1	**9X-8257**	1	WASHER (17.5X30X3.5-MM THK)	
M	28	1	**099-0823**	3	SCREW-MACHINE (M6X1X6-MM)	
	30	1	**105-2169**	2	BOLT AS	
M	31	1	**127-0580**	2	SCREW-FLAT HEAD (M8X1.25X20-MM)	
	32	1	**133-8016**	1	PACKING	
	33	1	**176-1986**	1	LAMP AS-DOME	
		1	**201-4417**	1	LAMP (24-VOLT, 10-WATT)	
	34	1	**1R-5998**	4	LOCKWASHER	
M	35	1	**3E-8020**	6	SCREW-TRUSS HEAD (M6X1X25-MM)	
M	36	1	**095-0755**	2	SCREW-MACHINE (M4X0.7X12-MM)	
	37	1	**4I-1205**	2	BUMPER	
	38	1	**4I-1206**	2	GUIDE	
	39	1	**4I-3063**	1	SPRING	
	40	1	**4I-3090**	4	SEAL	
M	41	1	**8T-4137**	2	BOLT (M10X1.5X20-MM)	
	42	1	**4I-3144**	2	WASHER-HARD (10.2X22X3.2-MM THK)	

346-8058 **CAB GP (**contd.**)** **i06598987**

NOTE	REF NO	GRAPHIC REF	PART NUMBER	QTY	PART NAME 1 2 3 4 5 6 (PRODUCT LEVEL)	SEE PAGE
	43	1	**4I-4270**	1	HOLDER-GLASS	
	44	1	**4I-4392**	3	CLIP	
	45	1	**5C-7793**	1	HOOK-COAT	
	46	1	**6V-7636**	4	PIN AS-SPRING	
	47	1	**7X-0578**	2	WASHER-HARD (10.2X32X2.5-MM THK)	
M	48	1	**8T-4133**	5	NUT (M10X1.5-THD)	
M	49	1	**8T-4779**	1	BOLT (M16X2X35-MM)	
M	50	1	**9X-2041**	3	SCREW-TRUSS HEAD (M10X1.5X20-MM)	
M	51	1	**9X-2042**	5	SCREW-TRUSS HEAD (M6X1X12-MM)	
M	52	1	**9X-2044**	5	SCREW-TRUSS HEAD (M6X1X16-MM)	
M	53	1	**9X-2045**	2	SCREW-TRUSS HEAD (M6X1X20-MM)	
E	54	1	**6I-5470**		SEAL (140-CM)	

E - ORDER BY THE CENTIMETER
M - METRIC PART
Y - SEPARATE ILLUSTRATION

346-8058 **CAB GP** (contd.) **i06598987**

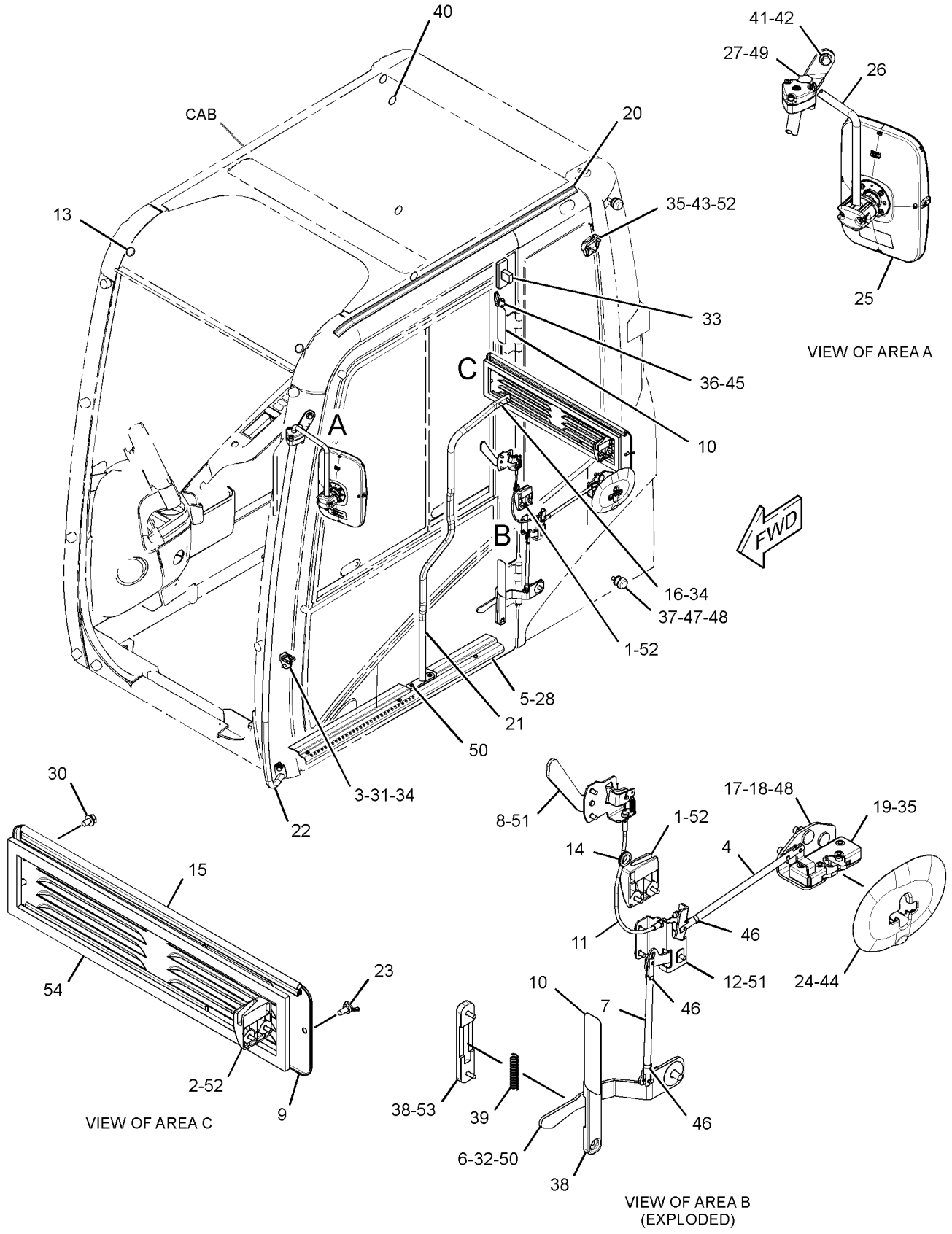

GRAPHIC #1 <END> g03696006

346-8058 CAB GP—EXTERIOR

S/N: DLP1-UP
PART OF 346-8043, 346-8053, 346-8055 CAB GP
AN ATTACHMENT
TYPE 2

SMCS-7301, 7325 **i06820976**

NOTE	REF NO	GRAPHIC REF	PART NUMBER	QTY	PART NAME 1 2 3 4 5 6 (PRODUCT LEVEL)	SEE PAGE
	1	1	**139-7126**	1	HOLDER (FRONT)	
	2	1	**139-7127**	1	HOLDER (REAR)	
	3	1	**156-6599**	1	STRIKER	
	4	1	**161-3685**	1	ROD	
	5	1	**161-3697**	1	GUARD	
	6	1	**164-0523**	1	LEVER AS (BOTTOM)	
	7	1	**164-0527**	1	ROD	
Y	8	1	*164-0528*	1	LEVER GP-CAB DOOR (TOP)	1093
	9	1	**167-7018**	1	COVER AS	
	10	1	**167-7042**	2	SEAL	
	11	1	**171-7426**	1	CABLE AS	
	12	1	*176-1939*	1	LEVER AS (MIDDLE)	
M		1	**9X-2044**	1	SCREW-TRUSS HEAD (M6X1X16-MM)	
		1	**176-1937**	1	BRACKET AS	
		1	**176-1938**	1	LEVER	
	13	1	**178-5570**	2	GROMMET	
	14	1	**185-8196**	1	GROMMET	
	15	1	**189-2704**	1	SEAL	
M	16	1	**189-2864**	2	SCREW-FLAT HEAD (M8X1.25X30-MM)	
	17	1	**4B-4278**	3	WASHER (10.2X20.5X1.6-MM THK)	
	18	1	**201-4530**	1	BRACKET AS	
	19	1	**383-5666**	1	LATCH AS	
	20	1	**416-4309**	1	SEAL	
	21	1	**235-8912**	1	HANDLE AS (SIDE)	
	22	1	**450-4908**	1	HANDLE AS (FRONT)	
M	23	1	**284-4426**	1	BOLT-WING (M8X1.25X15-MM)	
	24	1	**315-5313**	1	COVER	
CY	25	1	**443-7858**	1	MIRROR GP-REAR VIEW	1117
Y	26	1	**346-7375**	1	MOUNTING GP-MIRROR	1124
C	27	1	**451-2175**	1	WASHER-HARD (17.5X30X3.5-MM THK)	
M	28	1	**099-0823**	3	SCREW-MACHINE (M6X1X6-MM)	
	30	1	**105-2169**	2	BOLT AS	
M	31	1	**127-0580**	2	SCREW-FLAT HEAD (M8X1.25X20-MM)	
	32	1	**133-8016**	1	PACKING	
	33	1	**176-1986**	1	LAMP AS-DOME	
		1	**201-4417**	1	LAMP (24-VOLT, 10-WATT)	
	34	1	**1R-5998**	4	LOCKWASHER	
M	35	1	**3E-8020**	6	SCREW-TRUSS HEAD (M6X1X25-MM)	
M	36	1	**095-0755**	2	SCREW-MACHINE (M4X0.7X12-MM)	
	37	1	**4I-1205**	2	BUMPER	
	38	1	**4I-1206**	2	GUIDE	
	39	1	**4I-3063**	1	SPRING	
	40	1	**4I-3090**	4	SEAL	
M	41	1	**8T-4137**	2	BOLT (M10X1.5X20-MM)	
C	42	1	**7X-7729**	2	WASHER (11X25X3-MM THK)	

346-8058 **CAB GP (**contd.**)** **i06820976**

NOTE	REF NO	GRAPHIC REF	PART NUMBER	QTY	PART NAME 1 2 3 4 5 6 (PRODUCT LEVEL)	SEE PAGE
	43	1	**4I-4270**	1	HOLDER-GLASS	
	44	1	**4I-4392**	3	CLIP	
	45	1	**5C-7793**	1	HOOK-COAT	
	46	1	**6V-7636**	4	PIN AS-SPRING	
	47	1	**7X-0578**	2	WASHER-HARD (10.2X32X2.5-MM THK)	
M	48	1	**8T-4133**	5	NUT (M10X1.5-THD)	
CM	49	1	**451-2180**	1	BOLT (M16X2X35-MM)	
M	50	1	**9X-2041**	3	SCREW-TRUSS HEAD (M10X1.5X20-MM)	
M	51	1	**9X-2042**	5	SCREW-TRUSS HEAD (M6X1X12-MM)	
M	52	1	**9X-2044**	5	SCREW-TRUSS HEAD (M6X1X16-MM)	
M	53	1	**9X-2045**	2	SCREW-TRUSS HEAD (M6X1X20-MM)	
E	54	1	**6I-5470**		SEAL (140-CM)	

C - CHANGE FROM PREVIOUS TYPE
E - ORDER BY THE CENTIMETER
M - METRIC PART
Y - SEPARATE ILLUSTRATION

346-8058 **CAB GP** (contd.) **i06820976**

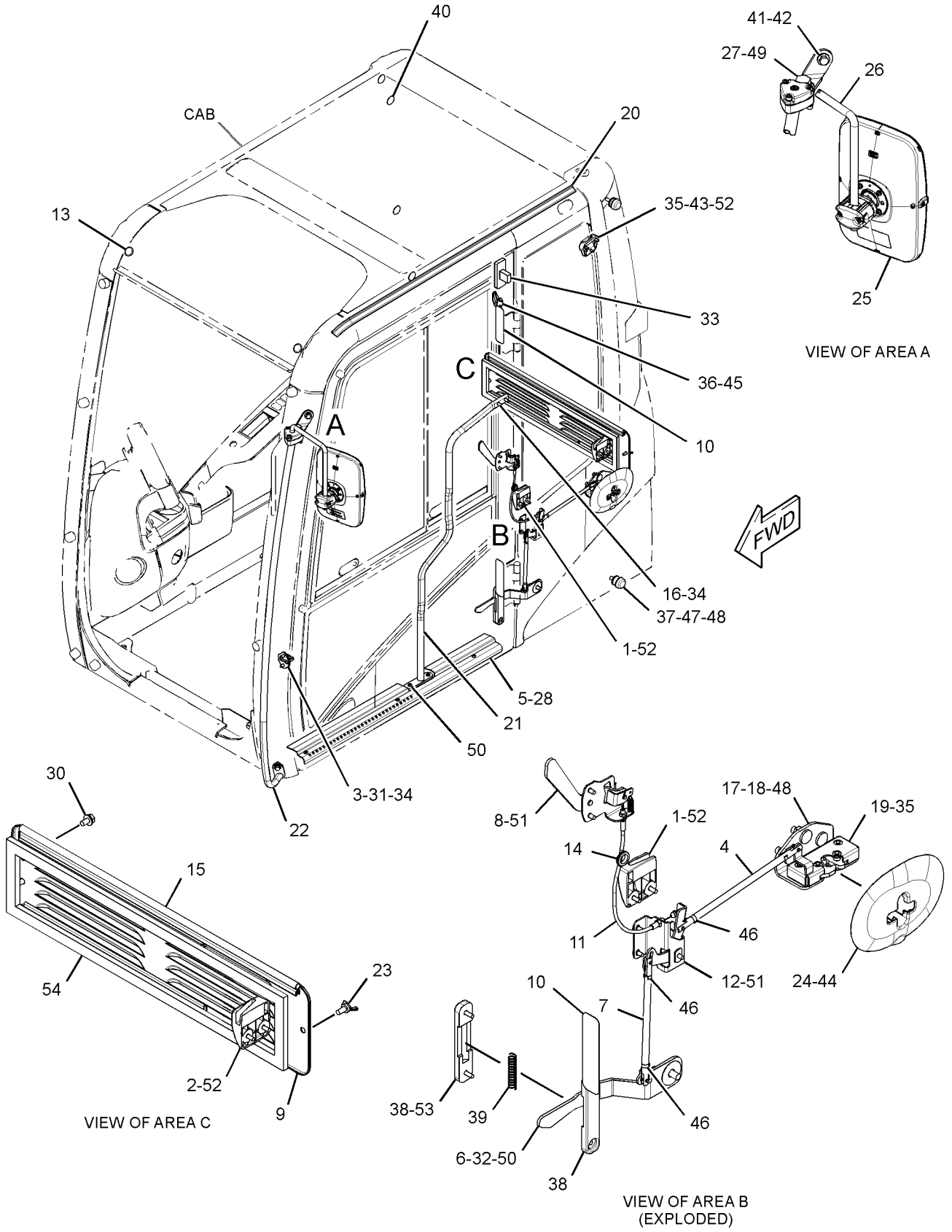

GRAPHIC #1 <END> g03696006

346-8058 CAB GP–EXTERIOR

S/N: DLP1-UP
PART OF 346-8043, 346-8053, 346-8055 CAB GP
AN ATTACHMENT
TYPE 3

SMCS-7301, 7325

i06668771

NOTE	REF NO	GRAPHIC REF	PART NUMBER	QTY	PART NAME 1 2 3 4 5 6 (PRODUCT LEVEL)	SEE PAGE
	1	1	**139-7126**	1	HOLDER (FRONT)	
	2	1	**139-7127**	1	HOLDER (REAR)	
	3	1	**156-6599**	1	STRIKER	
	4	1	**161-3685**	1	ROD	
	5	1	**161-3697**	1	GUARD	
	6	1	**164-0523**	1	LEVER AS (BOTTOM)	
	7	1	**164-0527**	1	ROD	
Y	8	1	*164-0528*	1	LEVER GP-CAB DOOR (TOP)	1093
	9	1	**167-7018**	1	COVER AS	
	10	1	**167-7042**	2	SEAL	
	11	1	**171-7426**	1	CABLE AS	
	12	1	*176-1939*	1	LEVER AS (MIDDLE)	
M		1	**9X-2044**	1	SCREW-TRUSS HEAD (M6X1X16-MM)	
		1	**176-1937**	1	BRACKET AS	
		1	**176-1938**	1	LEVER	
	13	1	**178-5570**	2	GROMMET	
	14	1	**185-8196**	1	GROMMET	
	15	1	**189-2704**	1	SEAL	
M	16	1	**189-2864**	2	SCREW-FLAT HEAD (M8X1.25X30-MM)	
	17	1	**4B-4278**	3	WASHER (10.2X20.5X1.6-MM THK)	
	18	1	**201-4530**	1	BRACKET AS	
	19	1	**205-6295**	1	LATCH AS	
	20	1	**416-4309**	1	SEAL	
	21	1	**235-8912**	1	HANDLE AS (SIDE)	
	22	1	**450-4908**	1	HANDLE AS (FRONT)	
M	23	1	**284-4426**	1	BOLT-WING (M8X1.25X15-MM)	
	24	1	**315-5313**	1	COVER	
CY	25	1	**394-9460**	1	MIRROR GP	1102
Y	26	1	**346-7375**	1	MOUNTING GP-MIRROR	1124
	27	1	**451-2175**	1	WASHER-HARD (17.5X30X3.5-MM THK)	
M	28	1	**099-0823**	3	SCREW-MACHINE (M6X1X6-MM)	
	30	1	**105-2169**	2	BOLT AS	
M	31	1	**127-0580**	2	SCREW-FLAT HEAD (M8X1.25X20-MM)	
	32	1	**133-8016**	1	PACKING	
	33	1	**176-1986**	1	LAMP AS-DOME	
		1	**201-4417**	1	LAMP (24-VOLT, 10-WATT)	
	34	1	**1R-5998**	4	LOCKWASHER	
M	35	1	**3E-8020**	6	SCREW-TRUSS HEAD (M6X1X25-MM)	
M	36	1	**095-0755**	2	SCREW-MACHINE (M4X0.7X12-MM)	
	37	1	**4I-1205**	2	BUMPER	
	38	1	**4I-1206**	2	GUIDE	
	39	1	**4I-3063**	1	SPRING	
	40	1	**4I-3090**	4	SEAL	
M	41	1	**8T-4137**	2	BOLT (M10X1.5X20-MM)	
	42	1	**7X-7729**	2	WASHER (11X25X3-MM THK)	

346-8058 **CAB GP (**contd.**)** **i06668771**

NOTE	REF NO	GRAPHIC REF	PART NUMBER	QTY	PART NAME 1 2 3 4 5 6 (PRODUCT LEVEL)	SEE PAGE
	43	1	**4I-4270**	1	HOLDER-GLASS	
	44	1	**4I-4392**	3	CLIP	
	45	1	**5C-7793**	1	HOOK-COAT	
	46	1	**6V-7636**	4	PIN AS-SPRING	
	47	1	**7X-0578**	2	WASHER-HARD (10.2X32X2.5-MM THK)	
M	48	1	**8T-4133**	5	NUT (M10X1.5-THD)	
M	49	1	**451-2180**	1	BOLT (M16X2X35-MM)	
M	50	1	**9X-2041**	3	SCREW-TRUSS HEAD (M10X1.5X20-MM)	
M	51	1	**9X-2042**	5	SCREW-TRUSS HEAD (M6X1X12-MM)	
M	52	1	**9X-2044**	5	SCREW-TRUSS HEAD (M6X1X16-MM)	
M	53	1	**9X-2045**	2	SCREW-TRUSS HEAD (M6X1X20-MM)	
E	54	1	**6I-5470**		SEAL (140-CM)	

C - CHANGE FROM PREVIOUS TYPE
E - ORDER BY THE CENTIMETER
M - METRIC PART
Y - SEPARATE ILLUSTRATION

346-8058 **CAB GP** (contd.) **i06668771**

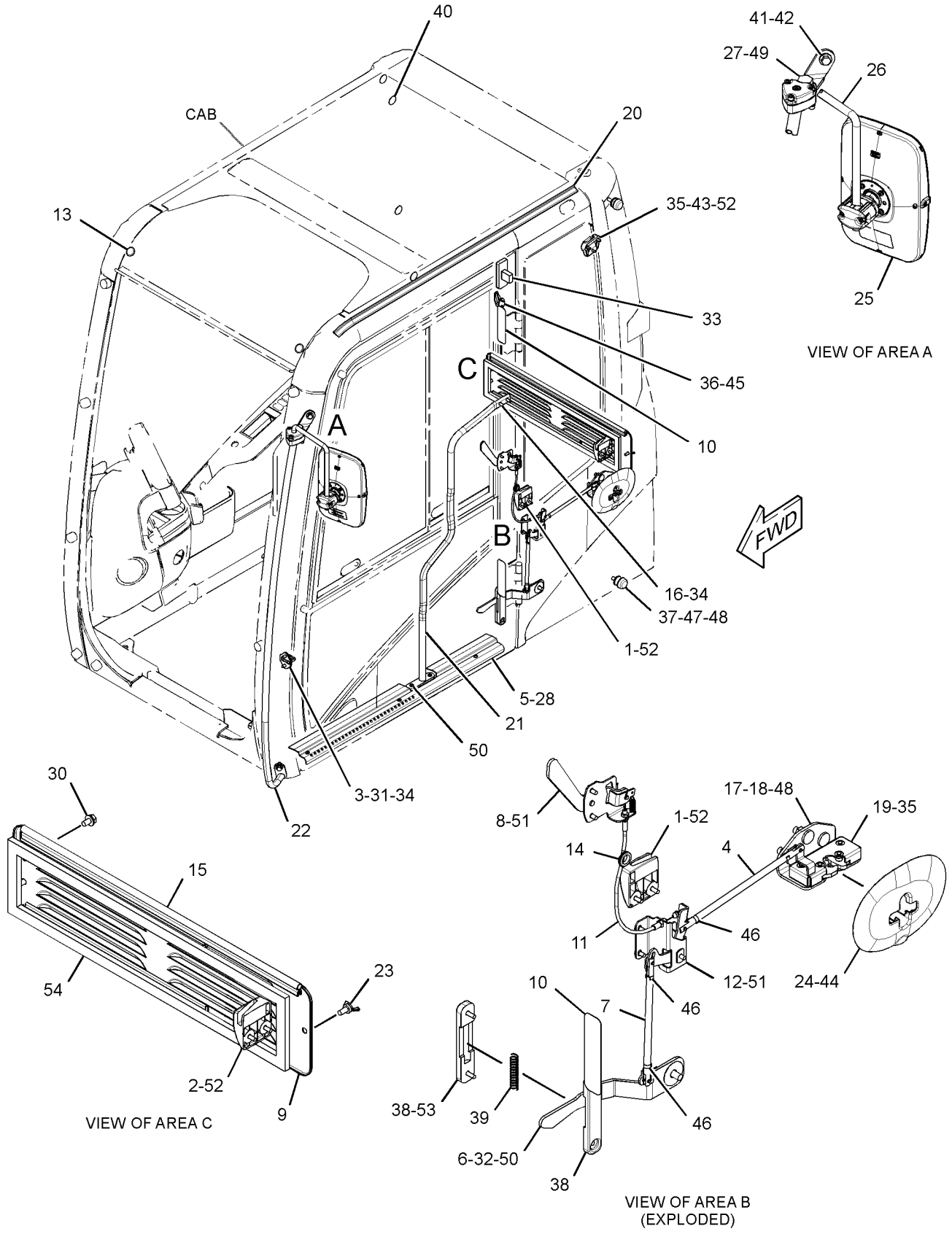

GRAPHIC #1 <END> g03696006

245-7836 COIL GP-EVAPORATOR

S/N: DLP1-UP
FIELD REPLACEMENT ORDER 353-2151—PAGE: 1002
PART OF 316-8811, 316-8916 AIR CONDITIONER GP
AN ATTACHMENT

SMCS-7343 **i04842775**

NOTE	REF NO	GRAPHIC REF	PART NUMBER	QTY	PART NAME 1 2 3 4 5 6 (PRODUCT LEVEL)	SEE PAGE
	1	1	**245-7837**	1	VALVE AS-EXPANSION	
	2	1	**245-7905**	1	INSULATOR	
M	3	1	**281-0791**	2	BOLT-SOCKET HEAD (M5X0.8X40-MM)	
	4	1	**121-7136**	1	SEAL-O-RING	
	5	1	**121-7137**	1	SEAL-O-RING	

M - METRIC PART

245-7836 **COIL GP-EVAPORATOR (**contd.**)** **i04842775**

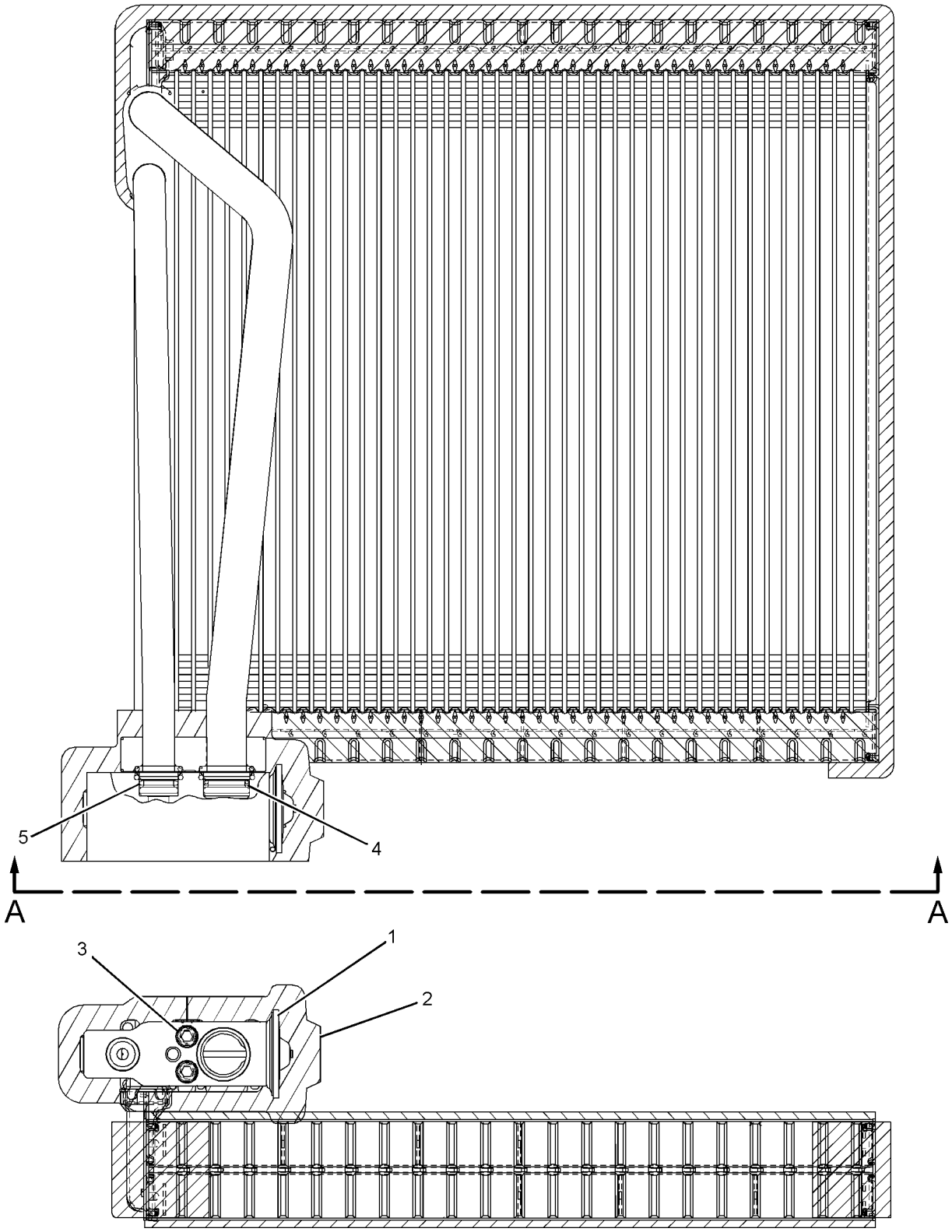

VIEW A-A

GRAPHIC #1 <END> g01134658

353-2151 COIL GP-EVAPORATOR

S/N: DLP1-UP

FIELD REPLACEMENT FOR 245-7836—PAGE: 1000

SMCS-7343 **i06759073**

NOTE	REF NO	GRAPHIC REF	PART NUMBER	QTY	PART NAME 1 2 3 4 5 6 (PRODUCT LEVEL)	SEE PAGE
	1	1	**245-7837**	1	VALVE AS-EXPANSION	
	2	1	**245-7905**	1	INSULATOR	
M	3	1	**281-0791**	2	BOLT-SOCKET HEAD (M5X0.8X40-MM)	
	4	1	**121-7136**	1	SEAL-O-RING	
	5	1	**121-7137**	1	SEAL-O-RING	

M - METRIC PART

353-2151 **COIL GP-EVAPORATOR (**contd.**)** **i06759073**

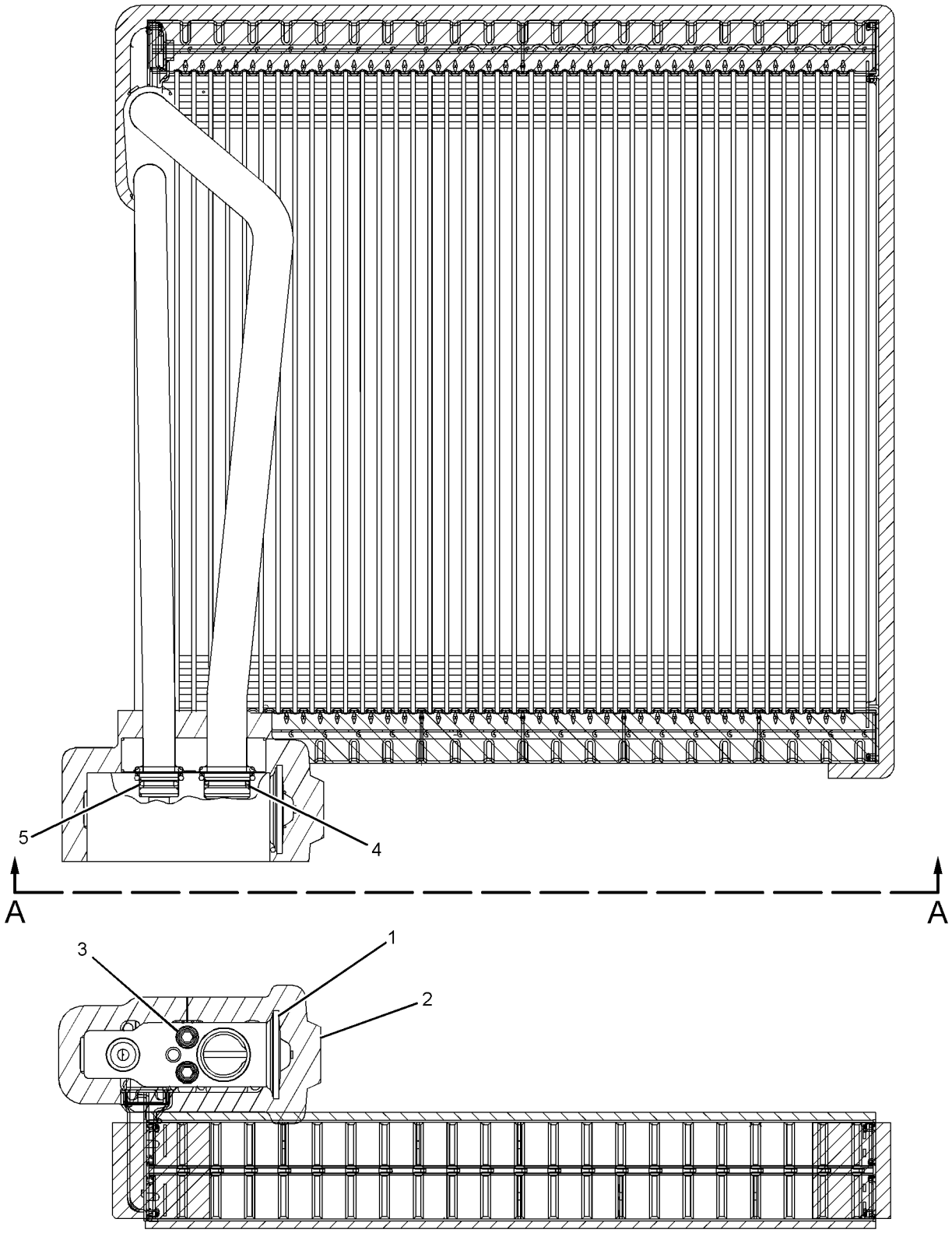

VIEW A-A

GRAPHIC #1 <END> g02150001

259-7244 COMPRESSOR GP-REFRIGERANT

S/N: DLP1-UP

PART OF 310-9499 COMPRESSOR GP-REFRIGERANT

SMCS-1802 **i04766011**

NOTE	REF NO	GRAPHIC REF	PART NUMBER	QTY	PART NAME 1 2 3 4 5 6 (PRODUCT LEVEL)	SEE PAGE
	1	1	**259-7286**	1	COIL AS (24-VOLT)	
		1	**8T-8729**	2	PIN-CONNECTOR (16-GA TO 18-GA)	
		1	**243-4505**	1	RECEPTACLE AS-CONNECTOR (2-PIN)	
B	2	1	**264-9982**	1	WASHER (6.2X12.2X0.1-MM THK)	
B	3	1	**264-9983**	1	WASHER (6.2X12.2X0.3-MM THK)	
B	4	1	**264-9984**	1	WASHER (6.2X12.2X0.5-MM THK)	

B - USE AS REQUIRED

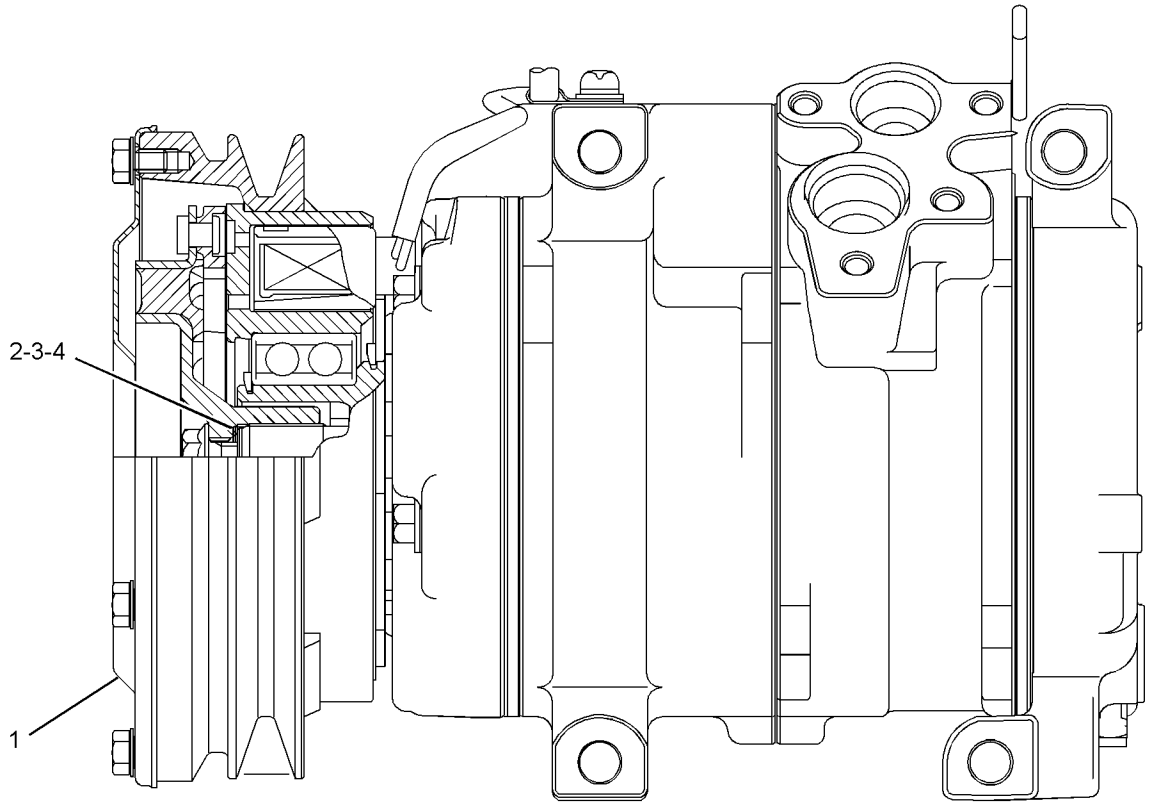

GRAPHIC #1 <END> g02862658

310-9499 COMPRESSOR GP-REFRIGERANT

S/N: DLP1-390

PART OF 279-7794 INSTALLATION AR-ENGINE

SMCS-1802 **i03636790**

NOTE	REF NO	GRAPHIC REF	PART NUMBER	QTY	PART NAME 1 2 3 4 5 6 (PRODUCT LEVEL)	SEE PAGE
	1	1	**118-9863**	1	PULLEY	
	2	1	**255-3016**	1	V-BELT (REFRIGERANT COMPRESSOR)	
Y	3	1	**255-3018**	1	PULLEY GP-IDLER	43
Y	4	1	**259-7244**	1	COMPRESSOR GP-REFRIGERANT	1004
	5	1	**324-4168**	1	BRACKET AS	
	6	1	**5P-4116**	1	WASHER-HARD (8.8X20.5X2-MM THK)	
M	7	1	**8T-3647**	4	BOLT (M8X1.25X80-MM)	
	8	1	**8T-4121**	7	WASHER-HARD (11X21X2.5-MM THK)	
M	9	1	**8T-4172**	3	BOLT (M10X1.5X80-MM)	
M	10	1	**8T-4182**	4	BOLT (M10X1.5X45-MM)	
	11	1	**8T-4223**	2	WASHER-HARD (13.5X25.5X3-MM THK)	
	12	1	**8T-4224**	4	WASHER-HARD (8.8X16X2-MM THK)	
M	13	1	**8T-4910**	2	BOLT (M12X1.75X60-MM)	

M - METRIC PART
Y - SEPARATE ILLUSTRATION

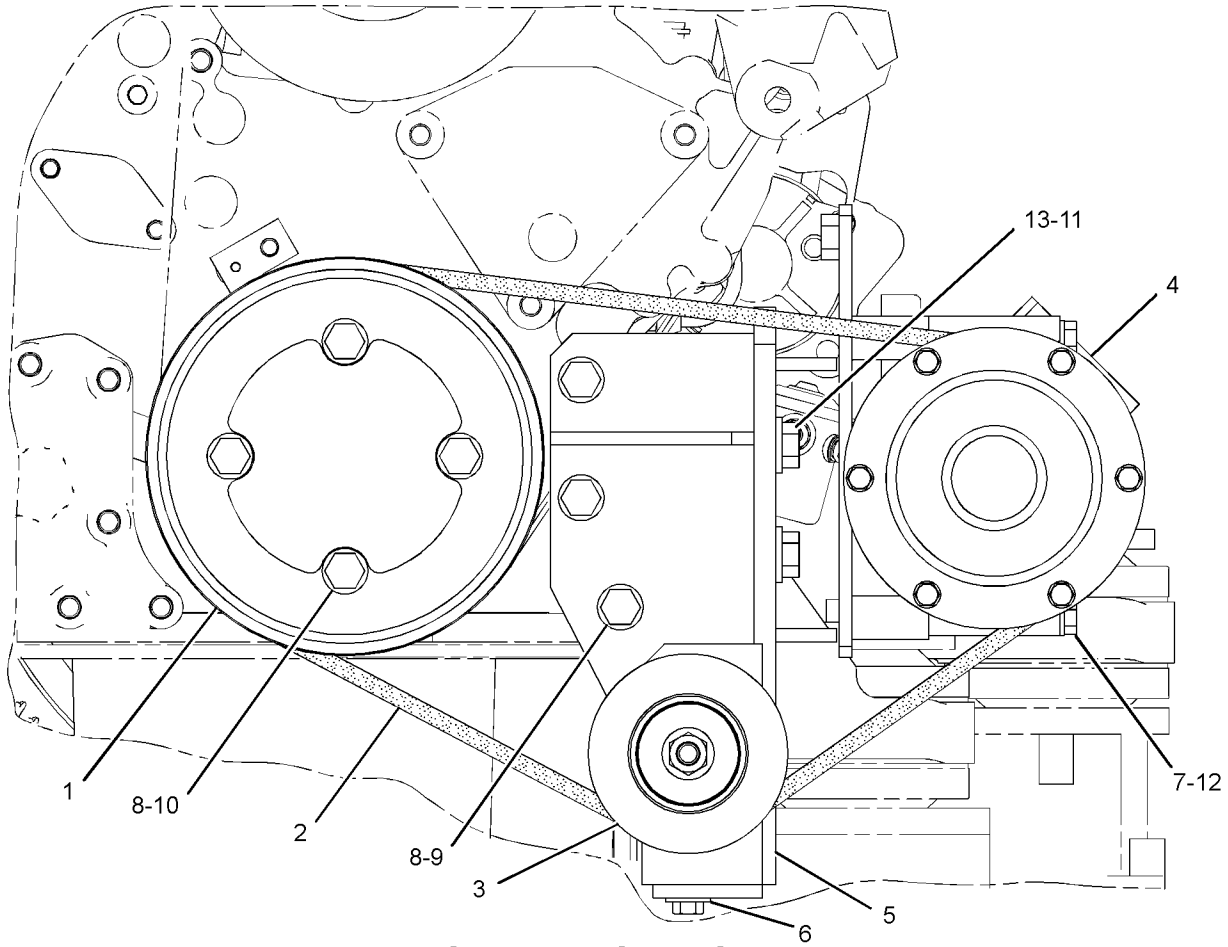

FRONT VIEW OF ENGINE

GRAPHIC #1 <END> g01410602

310-9499 COMPRESSOR GP-REFRIGERANT

S/N: DLP391-UP

PART OF 279-7794, 379-4447 INSTALLATION AR-ENGINE

SMCS-1802 **i03983071**

NOTE	REF NO	GRAPHIC REF	PART NUMBER	QTY	PART NAME 1 2 3 4 5 6 (PRODUCT LEVEL)	SEE PAGE
	1	1	**310-9694**	1	PULLEY	
	2	1	**255-3016**	1	V-BELT (REFRIGERANT COMPRESSOR)	
CY	3	1	**327-7193**	1	PULLEY GP-IDLER	44
Y	4	1	**259-7244**	1	COMPRESSOR GP-REFRIGERANT	1004
	5	1	**324-4168**	1	BRACKET AS	
	6	1	**5P-4116**	1	WASHER-HARD (8.8X20.5X2-MM THK)	
M	7	1	**8T-3647**	4	BOLT (M8X1.25X80-MM)	
	8	1	**8T-4121**	7	WASHER-HARD (11X21X2.5-MM THK)	
M	9	1	**8T-4172**	3	BOLT (M10X1.5X80-MM)	
M	10	1	**8T-4182**	4	BOLT (M10X1.5X45-MM)	
	11	1	**8T-4223**	2	WASHER-HARD (13.5X25.5X3-MM THK)	
	12	1	**8T-4224**	4	WASHER-HARD (8.8X16X2-MM THK)	
M	13	1	**8T-4910**	2	BOLT (M12X1.75X60-MM)	

C - CHANGE FROM PREVIOUS TYPE
M - METRIC PART
Y - SEPARATE ILLUSTRATION

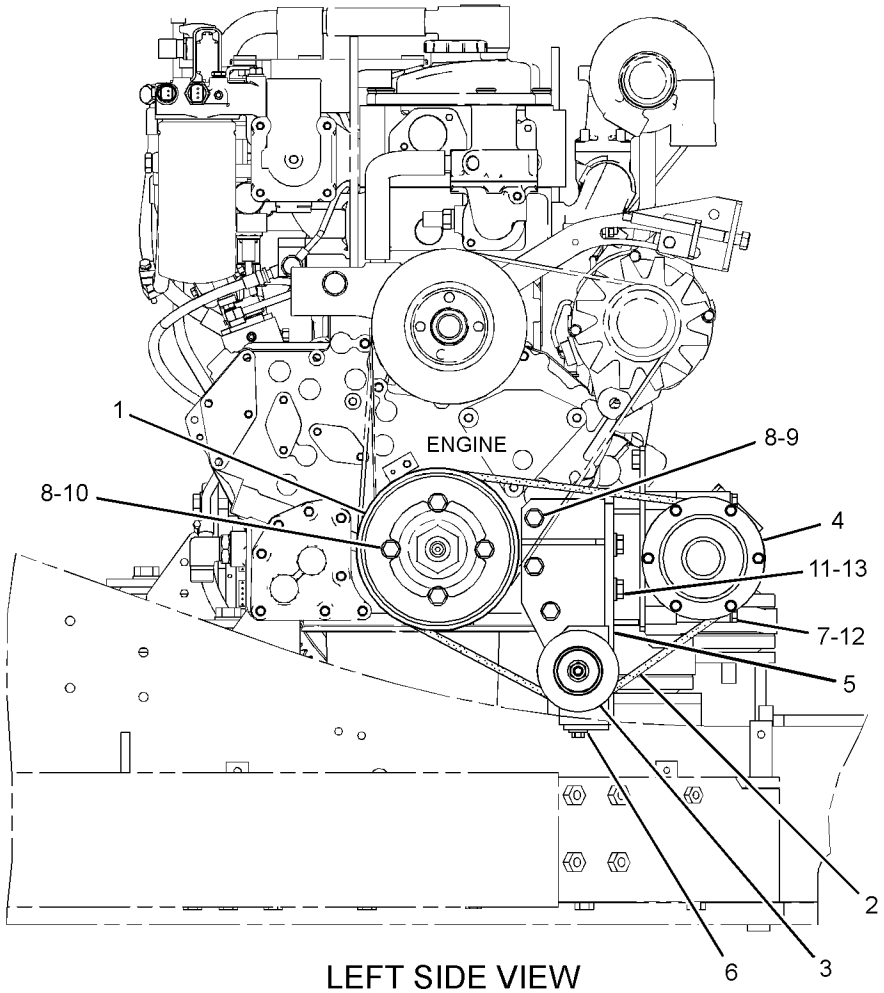

LEFT SIDE VIEW

GRAPHIC #1 <END> g01444644

273-5349 CONDENSER & MTG GP-REFRIGERANT

S/N: DLP1-UP

PART OF 279-7794 INSTALLATION AR-ENGINE

SMCS-1805 **i03297861**

NOTE	REF NO	GRAPHIC REF	PART NUMBER	QTY	PART NAME 1 2 3 4 5 6 (PRODUCT LEVEL)	SEE PAGE
	1	1	**7Y-8561**	1	BUMPER	
	2	1	**193-2764**	1	HANDLE AS	
Y	3	1	**245-7749**	1	CONDENSER GP-REFRIGERANT	1012
	4	1	**305-0433**	1	SUPPORT AS	
	5	1	**284-4411**	1	SUPPORT AS	
	6	1	**305-0435**	1	SUPPORT AS	
	7	1	**8T-4121**	7	WASHER-HARD (11X21X2.5-MM THK)	
M	8	1	**8T-4133**	1	NUT (M10X1.5-THD)	
M	9	1	**8T-4137**	6	BOLT (M10X1.5X20-MM)	
M	10	1	**8T-4192**	4	BOLT (M12X1.75X25-MM)	
	11	1	**8T-4223**	4	WASHER-HARD (13.5X25.5X3-MM THK)	
M	12	1	**8T-4971**	4	BOLT (M6X1X30-MM)	
	13	1	**117-8929**	4	WASHER (6.6X22X2-MM THK)	
	14	1	**305-0439**	2	SUPPORT AS	
M	15	1	**8T-4189**	4	BOLT (M8X1.25X20-MM)	
	16	1	**5P-4116**	4	WASHER-HARD (8.8X20.5X2-MM THK)	

M - METRIC PART
Y - SEPARATE ILLUSTRATION

273-5349 **CONDENSER & MTG GP-REFRIGERANT (**contd.**)** **i03297861**

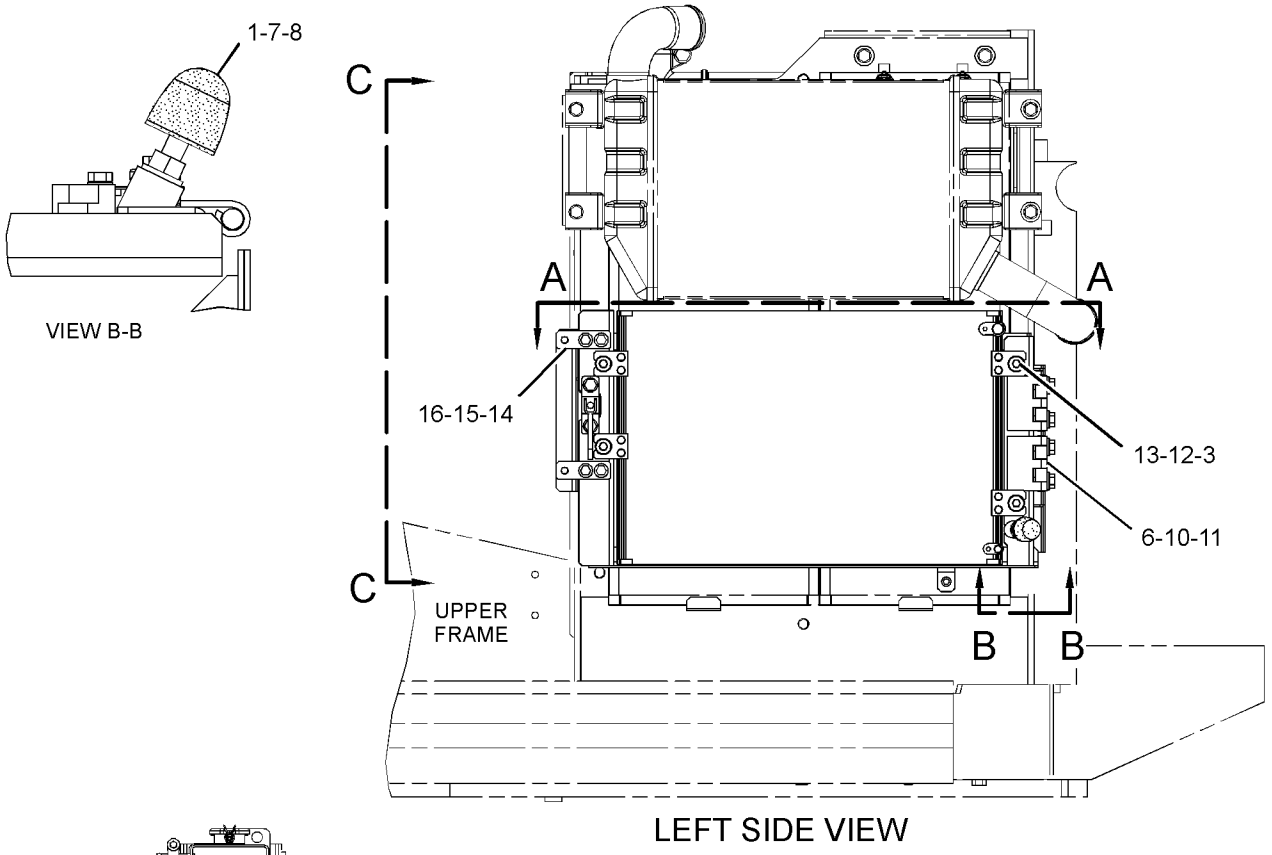

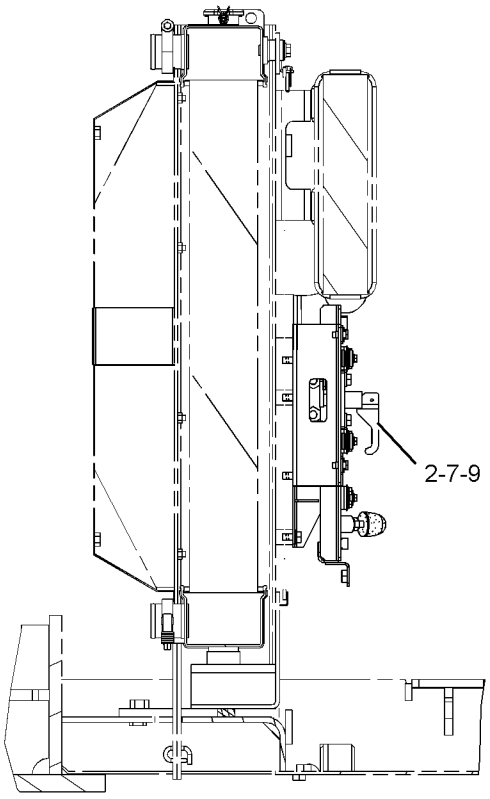

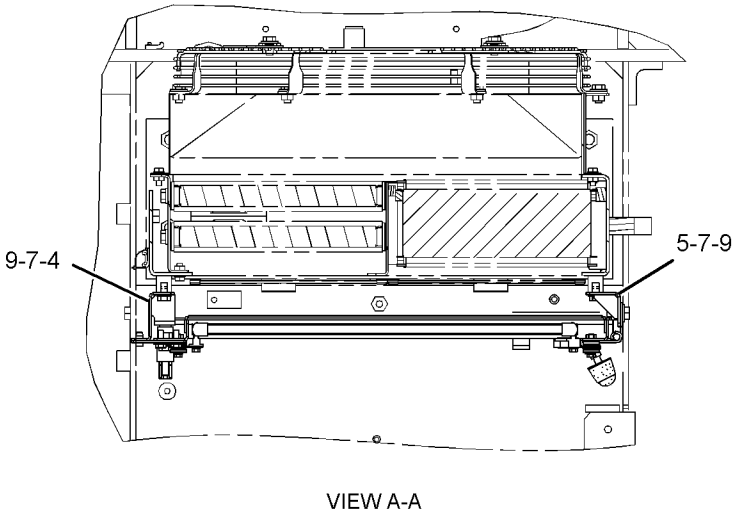

GRAPHIC #1 <END> g01439439

273-5349 CONDENSER & MTG GP-REFRIGERANT

S/N: DLP1-622

PART OF 279-7794 INSTALLATION AR-ENGINE

SMCS-1805 **i04259949**

NOTE	REF NO	GRAPHIC REF	PART NUMBER	QTY	PART NAME 1 2 3 4 5 6 (PRODUCT LEVEL)	SEE PAGE
	1	1	**7Y-8561**	1	BUMPER	
C	2	1	**357-4101**	1	HANDLE AS (COMPRESSION)	
Y	3	1	**245-7749**	1	CONDENSER GP-REFRIGERANT	1012
C	4	1	**363-9553**	1	SUPPORT AS	
	5	1	**284-4411**	1	SUPPORT AS	
C	6	1	**363-9555**	1	SUPPORT AS	
C	7	1	**8T-4121**	5	WASHER-HARD (11X21X2.5-MM THK)	
M	8	1	**8T-4133**	1	NUT (M10X1.5-THD)	
CM	9	1	**8T-4137**	4	BOLT (M10X1.5X20-MM)	
M	10	1	**8T-4192**	4	BOLT (M12X1.75X25-MM)	
	11	1	**8T-4223**	4	WASHER-HARD (13.5X25.5X3-MM THK)	
M	12	1	**8T-4971**	4	BOLT (M6X1X30-MM)	
	13	1	**117-8929**	4	WASHER (6.6X22X2-MM THK)	
	14	1	**305-0439**	2	SUPPORT AS	
M	15	1	**8T-4189**	4	BOLT (M8X1.25X20-MM)	
	16	1	**5P-4116**	4	WASHER-HARD (8.8X20.5X2-MM THK)	
C	17	1	**5P-8523**	1	GROMMET	

C - CHANGE FROM PREVIOUS TYPE
M - METRIC PART
Y - SEPARATE ILLUSTRATION

273-5349 **CONDENSER & MTG GP-REFRIGERANT (**contd.**)** **i04259949**

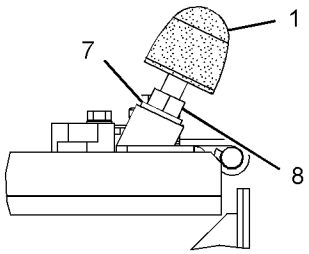

VIEW B-B

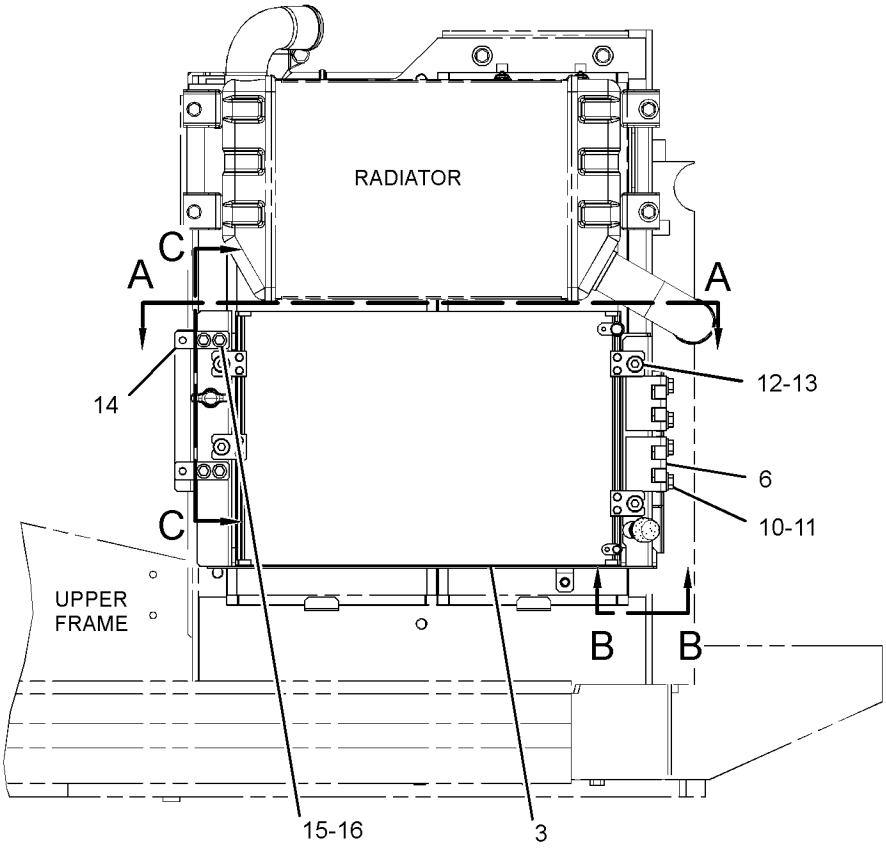

LEFT SIDE VIEW

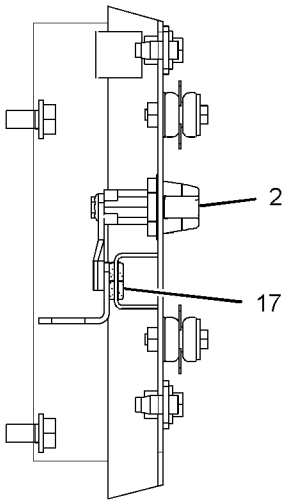

SECTION C-C

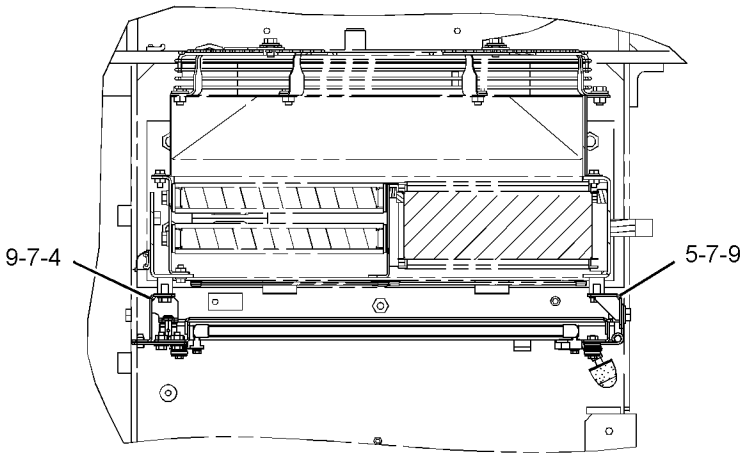

VIEW A-A

GRAPHIC #1 <END> g02510618

293-1248 CONDENSER & MTG GP-REFRIGERANT

S/N: DLP1-UP

PART OF 379-4447 INSTALLATION AR-ENGINE

SMCS-1805 **i03280395**

NOTE	REF NO	GRAPHIC REF	PART NUMBER	QTY	PART NAME 1 2 3 4 5 6 (PRODUCT LEVEL)	SEE PAGE
Y	1	1	**245-7749**	1	CONDENSER GP-REFRIGERANT	1012
	2	1	**293-1249**	1	SUPPORT AS	
	3	1	**305-0313**	1	SUPPORT AS	
	4	1	**8T-4121**	4	WASHER-HARD (11X21X2.5-MM THK)	
M	5	1	**8T-4137**	4	BOLT (M10X1.5X20-MM)	
M	6	1	**8T-4971**	4	BOLT (M6X1X30-MM)	
	7	1	**117-8929**	4	WASHER (6.6X22X2-MM THK)	

M - METRIC PART
Y - SEPARATE ILLUSTRATION

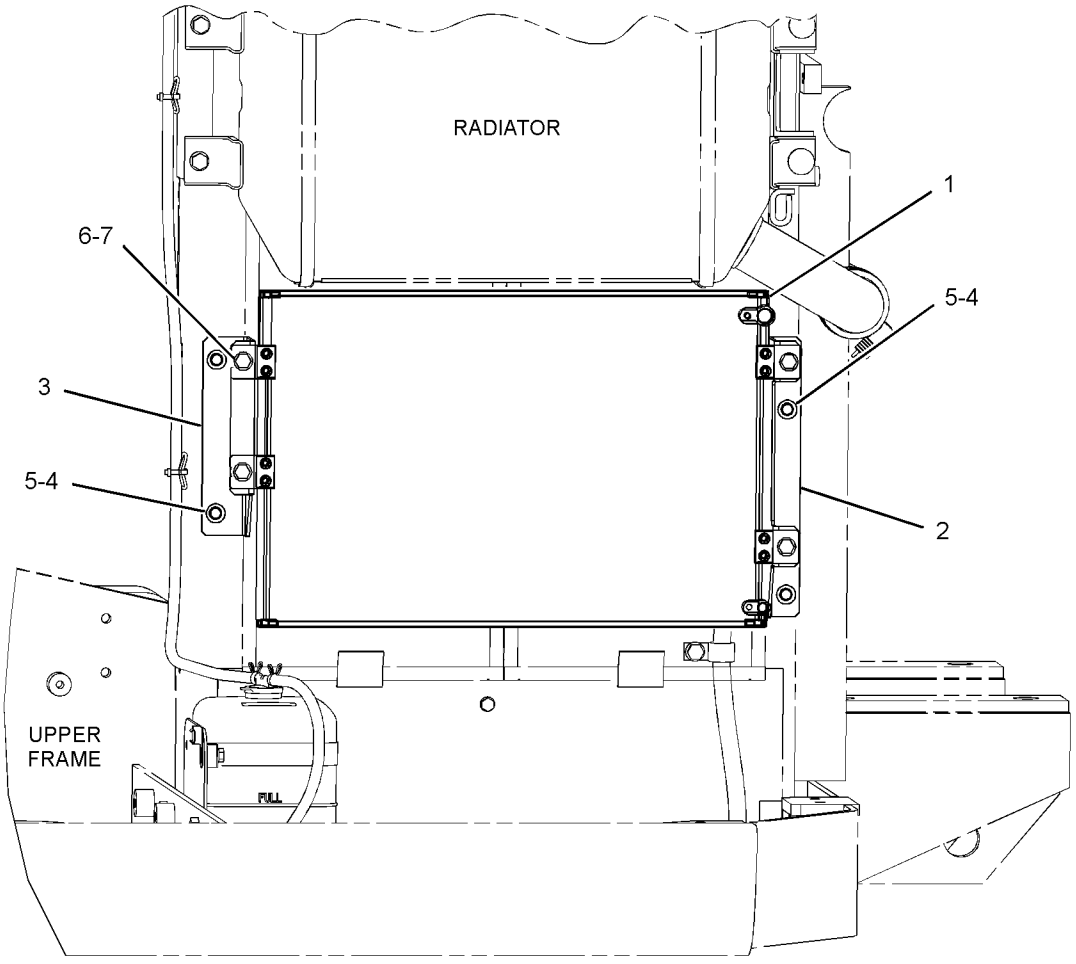

LEFT SIDE VIEW

GRAPHIC #1 <END> g01415305

245-7749 CONDENSER GP-REFRIGERANT

S/N: DLP1-UP

PART OF 273-5349, 293-1248 CONDENSER & MTG GP-REFRIGERANT

SMCS-1805 **i02416857**

NOTE	REF NO	GRAPHIC REF	PART NUMBER	QTY	PART NAME 1 2 3 4 5 6 (PRODUCT LEVEL)	SEE PAGE
	1	1	**235-8880**	1	CONDENSER AS	
	2	1	**245-7750**	4	BUSHING-RUBBER	
	3	1	**245-7751**	4	BRACKET	
	4	1	**095-0827**	8	LOCKWASHER	
M	5	1	**8T-4171**	8	BOLT (M6X1X12-MM)	
	6	1	**9X-8256**	8	WASHER (6.6X12X2-MM THK)	

M - METRIC PART

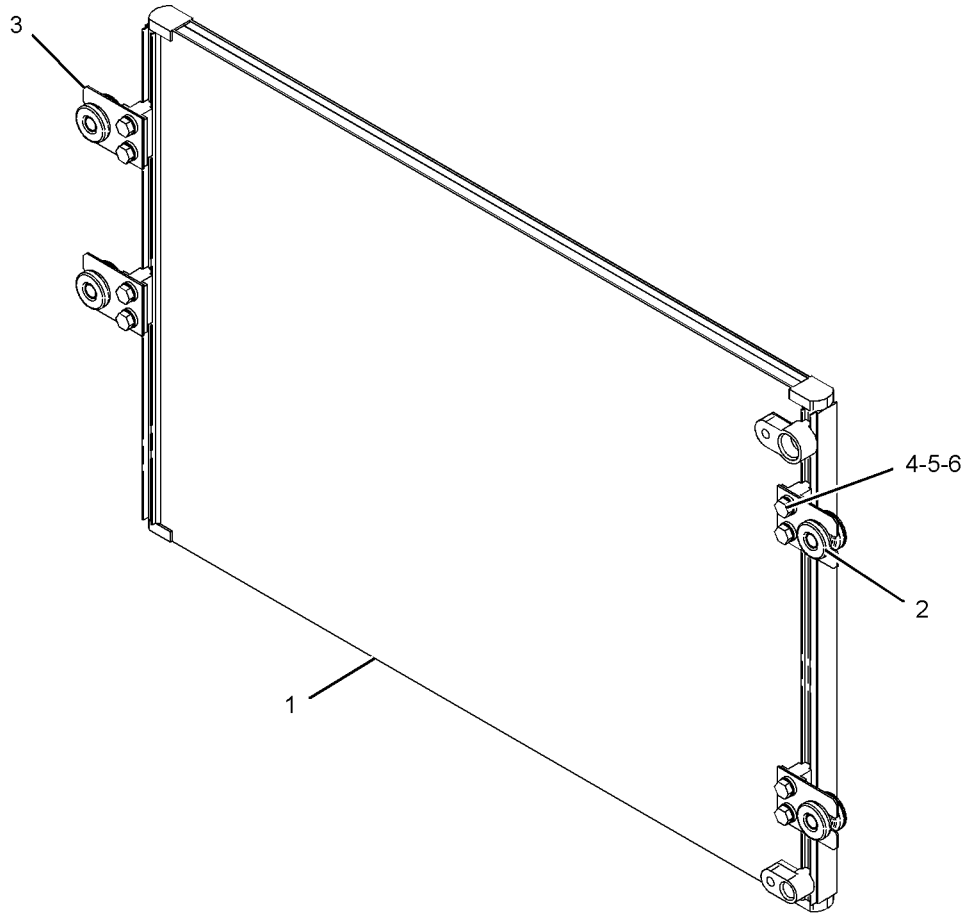

GRAPHIC #1 <END> g01086695

245-7922 CONSOLE GP-OPERATOR

S/N: DLP1-389

PART OF 273-5363 OPERATOR AR

SMCS-5258 **i03158925**

NOTE	REF NO	GRAPHIC REF	PART NUMBER	QTY	PART NAME 1 2 3 4 5 6 (PRODUCT LEVEL)	SEE PAGE
	1	1	**176-1916**	2	GROMMET	
	2	1	**178-5422**	2	GROMMET	
	3	1	**178-5423**	2	GROMMET	
	4	1	**185-8161**	2	INSULATOR	
	5	1	**235-8893**	2	SUPPORT	
	6	1	**235-8894**	2	SUPPORT	
Y	7	1	*259-7349*	1	CONSOLE GP-OPERATOR (LH)	1018
Y	8	1	*259-7348*	1	CONSOLE GP-OPERATOR (RH)	1017
	9	1	**8T-4121**	4	WASHER-HARD (11X21X2.5-MM THK)	
M	10	1	**8T-4195**	4	BOLT (M10X1.5X30-MM)	
CM	11	1	**9X-2046**	8	SCREW-TRUSS HEAD (M6X1X35-MM)	
CM	12	1	**9X-2045**	12	SCREW-TRUSS HEAD (M6X1X20-MM)	
	13	1	**7K-1181**	4	STRAP-CABLE	
	14	1	**122-9617**	2	GUARD	
C	15	1	**105-1766**	8	SPACER (6.6X11X6-MM THK)	

C - CHANGE FROM PREVIOUS TYPE
M - METRIC PART
Y - SEPARATE ILLUSTRATION

245-7922 **CONSOLE GP-OPERATOR** (contd.) **i03158925**

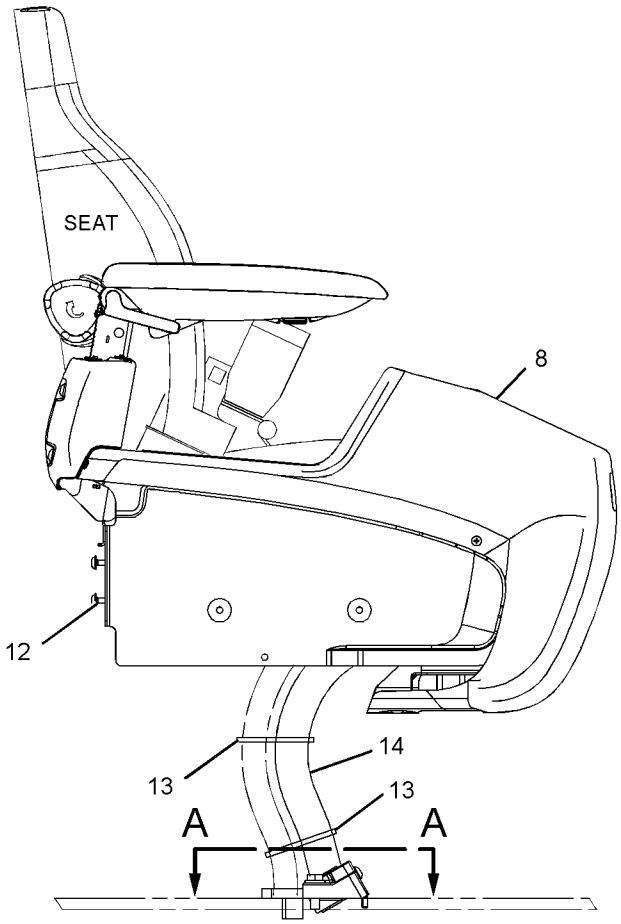

RIGHT SIDE VIEW

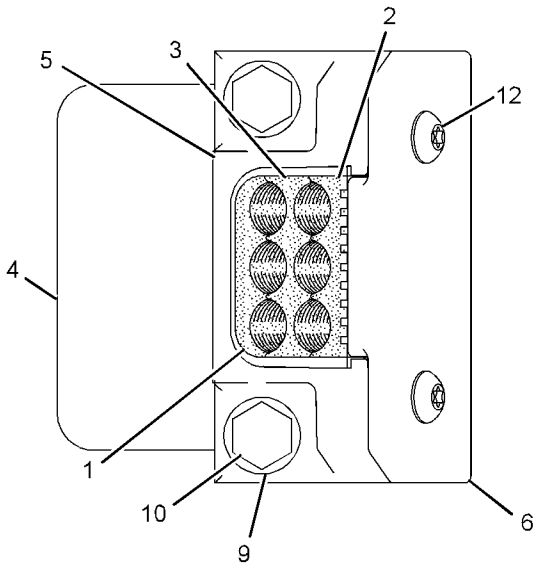

SECTION A-A

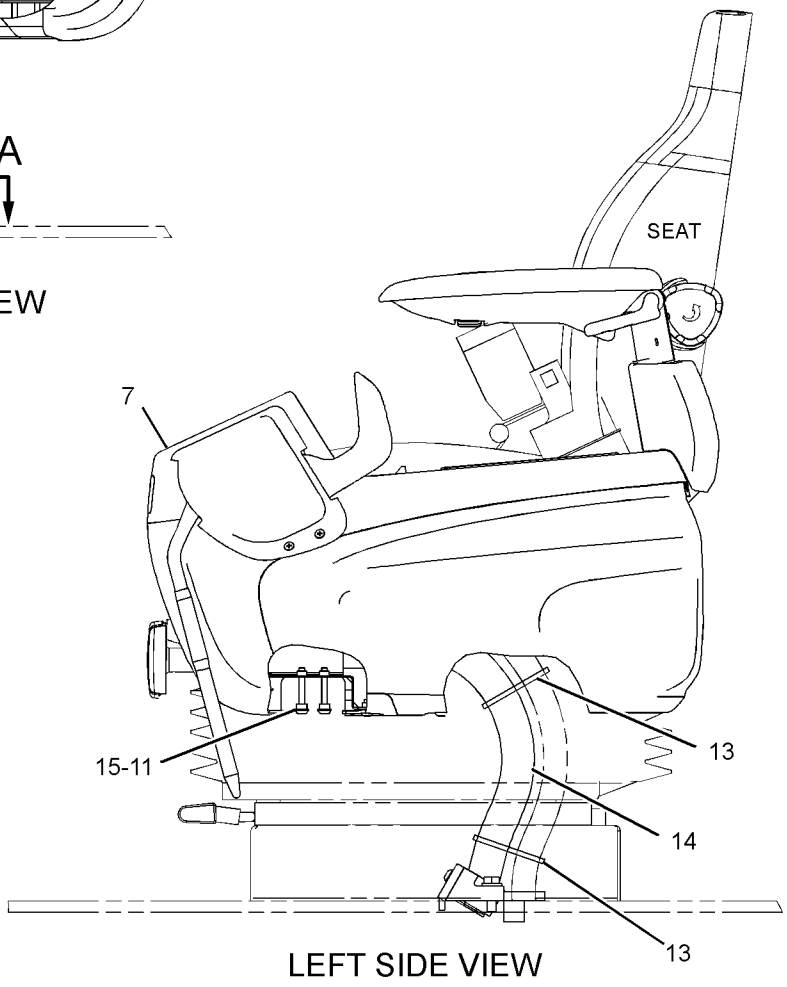

LEFT SIDE VIEW

GRAPHIC #1 <END> g01620582

245-7922 CONSOLE GP-OPERATOR

S/N: DLP390-UP

PART OF 340-6773, 383-5596 OPERATOR AR

SMCS-5258 **i06579637**

NOTE	REF NO	GRAPHIC REF	PART NUMBER	QTY	PART NAME 1 2 3 4 5 6 (PRODUCT LEVEL)	SEE PAGE
	1	1	**176-1916**	2	GROMMET	
	2	1	**178-5422**	2	GROMMET	
	3	1	**178-5423**	2	GROMMET	
	4	1	**185-8161**	2	INSULATOR	
	5	1	**235-8893**	2	SUPPORT	
	6	1	**235-8894**	2	SUPPORT	
Y	7	1	*259-7349*	1	CONSOLE GP-OPERATOR (LH)	1018
Y	8	1	*259-7348*	1	CONSOLE GP-OPERATOR (RH)	1017
	9	1	**8T-4121**	4	WASHER-HARD (11X21X2.5-MM THK)	
M	10	1	**8T-4195**	4	BOLT (M10X1.5X30-MM)	
M	11	1	**9X-2046**	8	SCREW-TRUSS HEAD (M6X1X35-MM)	
M	12	1	**9X-2045**	12	SCREW-TRUSS HEAD (M6X1X20-MM)	
	13	1	**7K-1181**	4	STRAP-CABLE	
	14	1	**122-9617**	2	GUARD	
	15	1	**475-4173**	2	INSULATOR	
D	16	1	**5P-5927**		SEAL (0.12-M EACH)	

D - ORDER BY THE METER
M - METRIC PART
Y - SEPARATE ILLUSTRATION

245-7922 **CONSOLE GP-OPERATOR (**contd.**)** **i06579637**

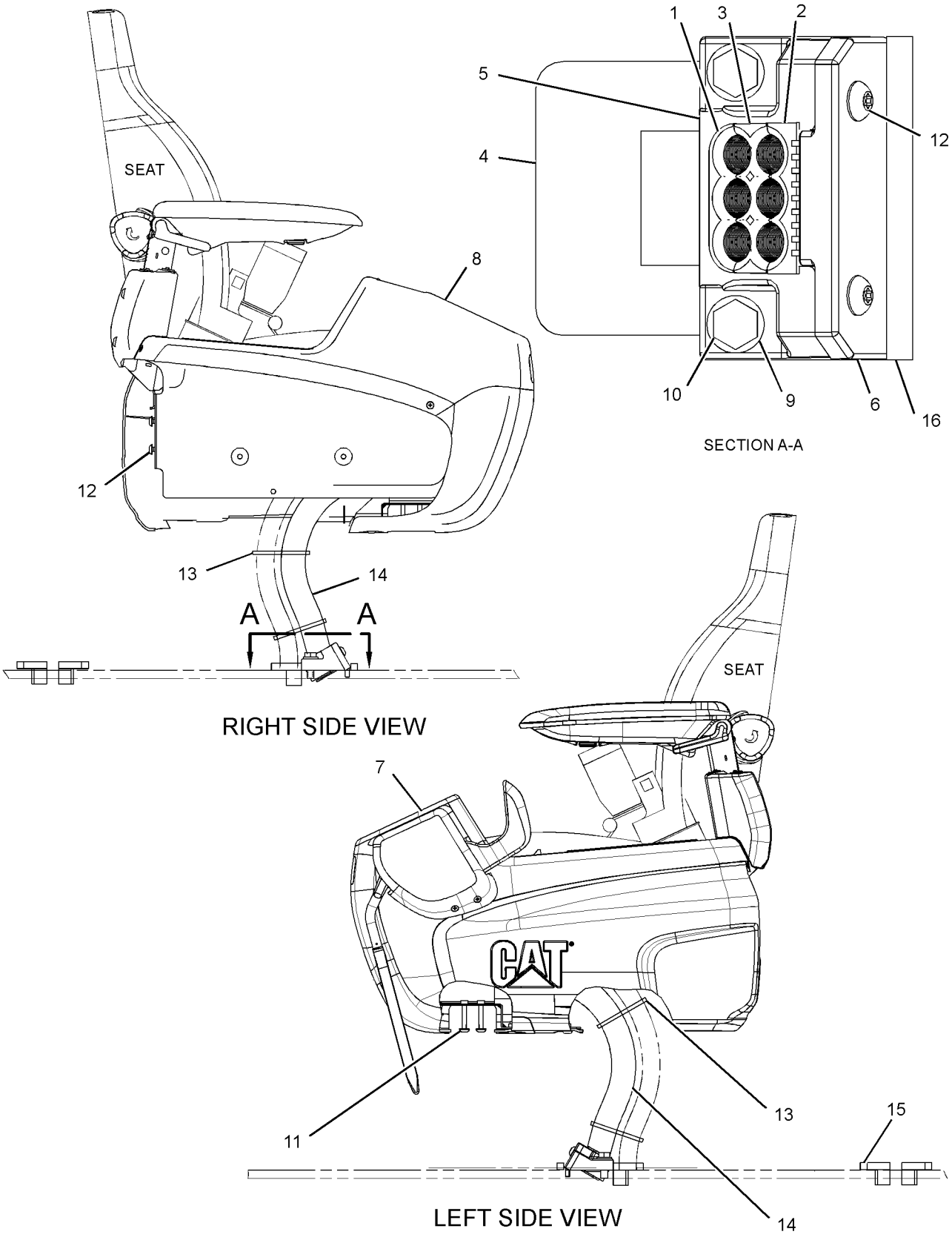

GRAPHIC #1 <END> g06032831

259-7348 CONSOLE GP-OPERATOR–RH

S/N: DLP1-UP

PART OF 245-7922 CONSOLE GP-OPERATOR

SMCS-5258 **i06165845**

NOTE	REF NO	GRAPHIC REF	PART NUMBER	QTY	PART NAME 1 2 3 4 5 6 (PRODUCT LEVEL)	SEE PAGE
Y	1	1	*459-2731*	1	CONSOLE GP-OPERATOR (RH)	1021
	2	1	**185-8284**	1	COVER	

Y - SEPARATE ILLUSTRATION

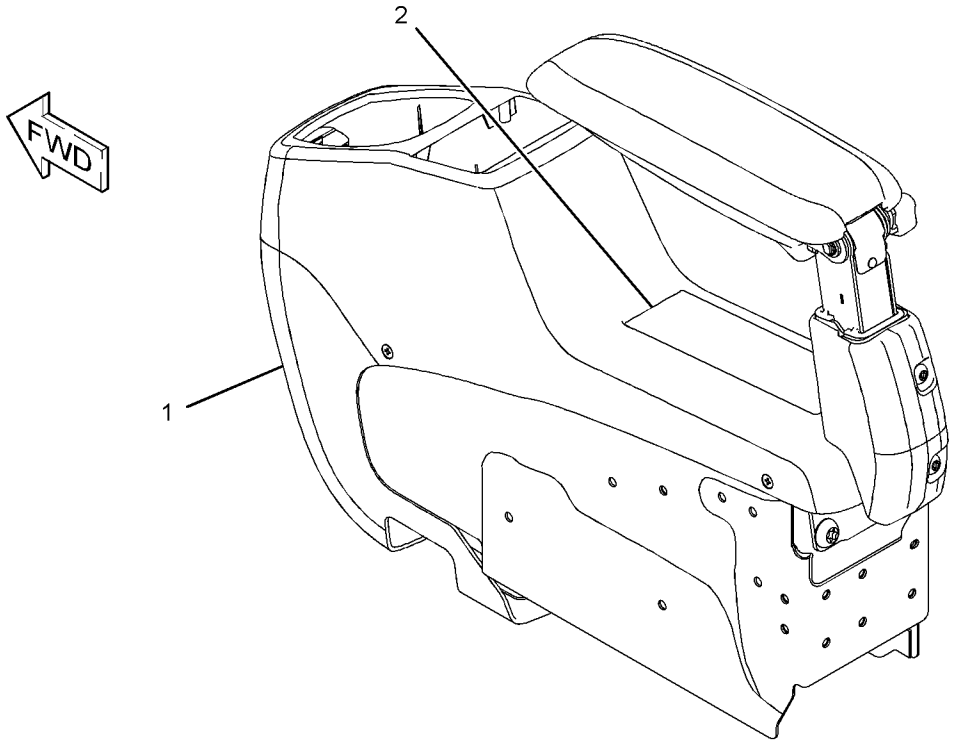

GRAPHIC #1 <END> g03837421

259-7349 CONSOLE GP-OPERATOR–LH

S/N: DLP1-UP

PART OF 245-7922 CONSOLE GP-OPERATOR

SMCS-5258 **i06620787**

NOTE	REF NO	GRAPHIC REF	PART NUMBER	QTY	PART NAME 1 2 3 4 5 6 (PRODUCT LEVEL)	SEE PAGE
	1	1	**234-6611**	1	CASE	
Y	2	1	*421-1434*	1	CONSOLE GP-OPERATOR (LH)	1019

Y - SEPARATE ILLUSTRATION

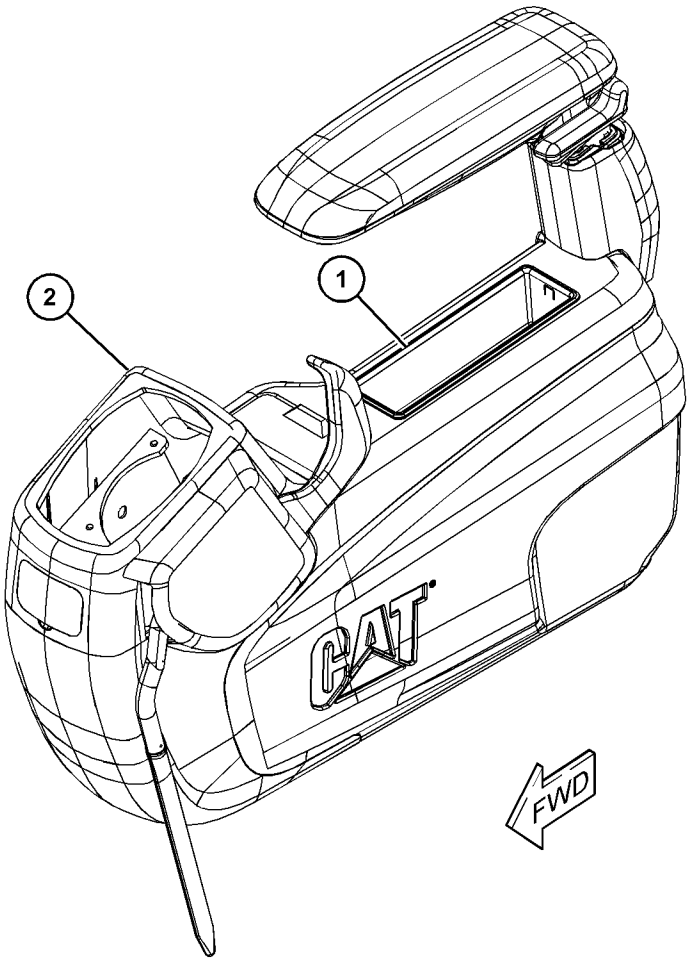

GRAPHIC #1 <END> g06098973

421-1434 CONSOLE GP-OPERATOR–LH

S/N: DLP1-UP

PART OF 259-7349 CONSOLE GP-OPERATOR

SMCS-5258 **i06703327**

NOTE	REF NO	GRAPHIC REF	PART NUMBER	QTY	PART NAME 1 2 3 4 5 6 (PRODUCT LEVEL)	SEE PAGE
M	1	1	**128-2135**	5	SCREW-TRUSS HEAD (M6X1X13-MM)	
M	2	1	**171-7325**	3	SCREW-TAPPING (M5X0.8-THD)	
	3	1	**234-6579**	6	NUT-SPEED	
	4	1	**234-6580**	4	CAP	
	5	1	**234-6603**	1	COVER	
	6	1	**234-6605**	1	COVER	
	7	1	**234-6608**	1	COVER	
	8	1	**234-6609**	1	COVER	
	9	1	**234-6610**	1	COVER	
	11	1	**234-6612**	1	COVER	
Y	12	1	**234-6613**	1	LEVER GP-CONTROL (HYDRAULIC LOCKOUT)	546
	13	1	**234-6614**	1	COVER	
	14	1	**235-8914**	4	NUT-SPEED	
	15	1	**235-8965**	1	GUARD	
	16	1	**245-7790**	3	SCREW-TAPPING	
	17	1	**245-7925**	1	SUPPORT AS	
	18	1	**245-7948**	7	SCREW-TAPPING	
	19	1	**259-7202**	1	ASHTRAY	
Y	20	1	**259-7347**	1	ARMREST GP (LH)	942
M	21	1	**9X-2041**	3	SCREW-TRUSS HEAD (M10X1.5X20-MM)	
M	22	1	**9X-2042**	2	SCREW-TRUSS HEAD (M6X1X12-MM)	

M - METRIC PART
Y - SEPARATE ILLUSTRATION

421-1434 **CONSOLE GP-OPERATOR (**contd.**)** **i06703327**

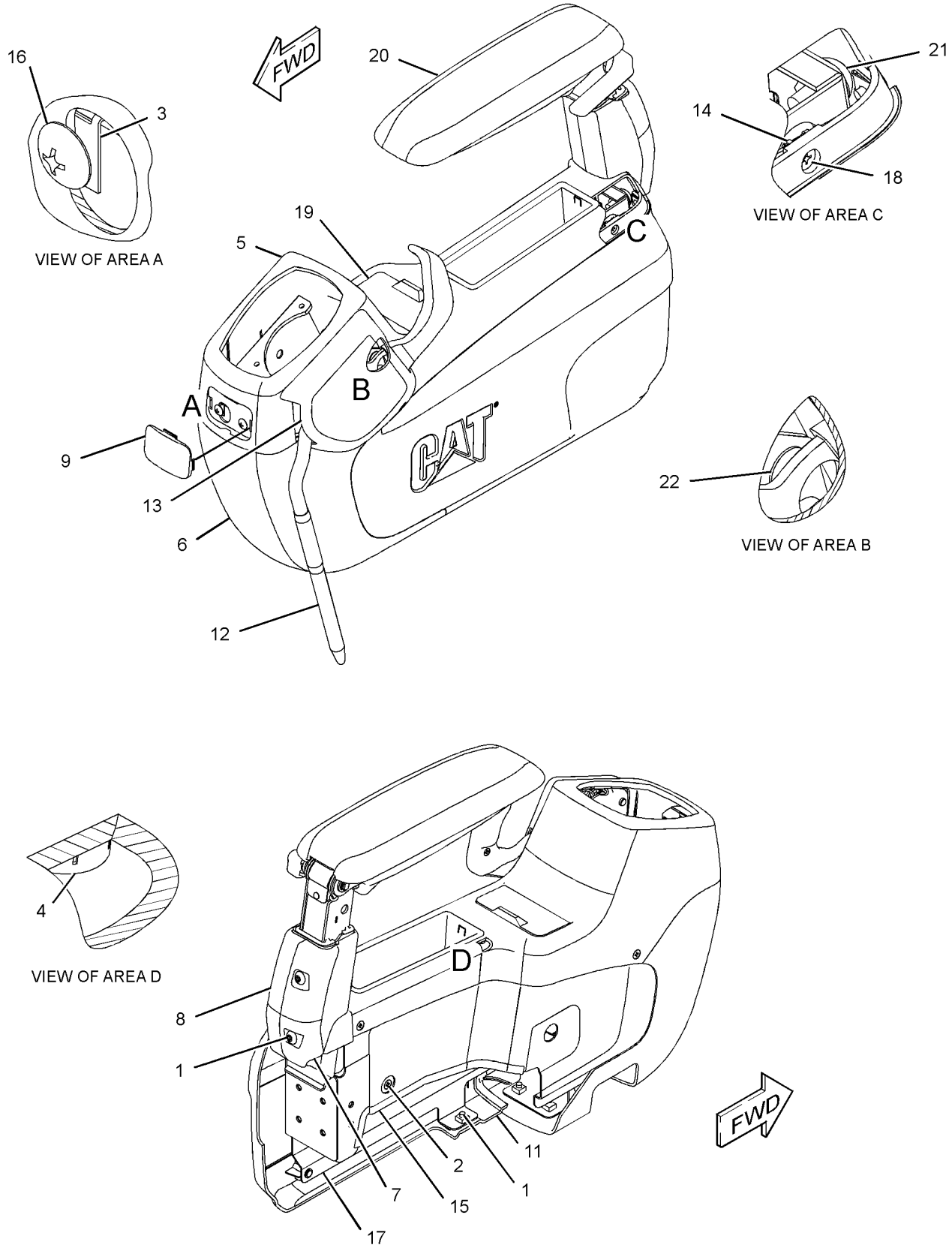

GRAPHIC #1 <END> g03401396

459-2731 CONSOLE GP-OPERATOR–RH

S/N: DLP1-UP

PART OF 259-7348 CONSOLE GP-OPERATOR

SMCS-5258 **i06165781**

NOTE	REF NO	GRAPHIC REF	PART NUMBER	QTY	PART NAME 1 2 3 4 5 6 (PRODUCT LEVEL)	SEE PAGE
M	1	1	**128-2135**	4	SCREW-TRUSS HEAD (M6X1X13-MM)	
	3	1	**234-6579**	2	NUT-SPEED	
	4	1	**234-6580**	2	CAP	
	5	1	**234-6602**	1	COVER	
	6	1	**234-6604**	1	COVER	
	7	1	**234-6608**	1	COVER	
	8	1	**234-6609**	1	COVER	
	9	1	**234-6610**	1	COVER	
	10	1	**235-8914**	4	NUT-SPEED	
	11	1	**235-8966**	2	BASE-MOUNTING	
	12	1	**245-7790**	2	SCREW-TAPPING	
	13	1	**245-7926**	1	SUPPORT AS	
	14	1	**245-7948**	4	SCREW-TAPPING	
Y	15	1	**259-7346**	1	ARMREST GP (RH)	941
M	16	1	**9X-2041**	3	SCREW-TRUSS HEAD (M10X1.5X20-MM)	

M - METRIC PART
Y - SEPARATE ILLUSTRATION

459-2731 **CONSOLE GP-OPERATOR (**contd.**)** **i06165781**

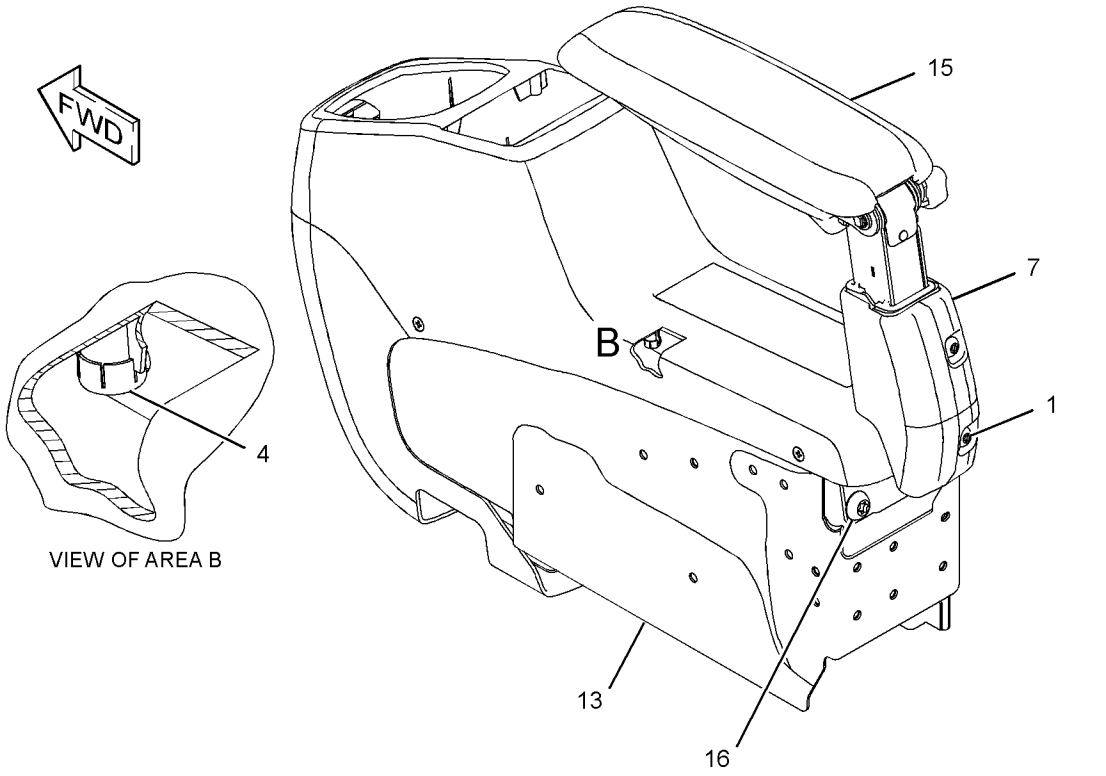

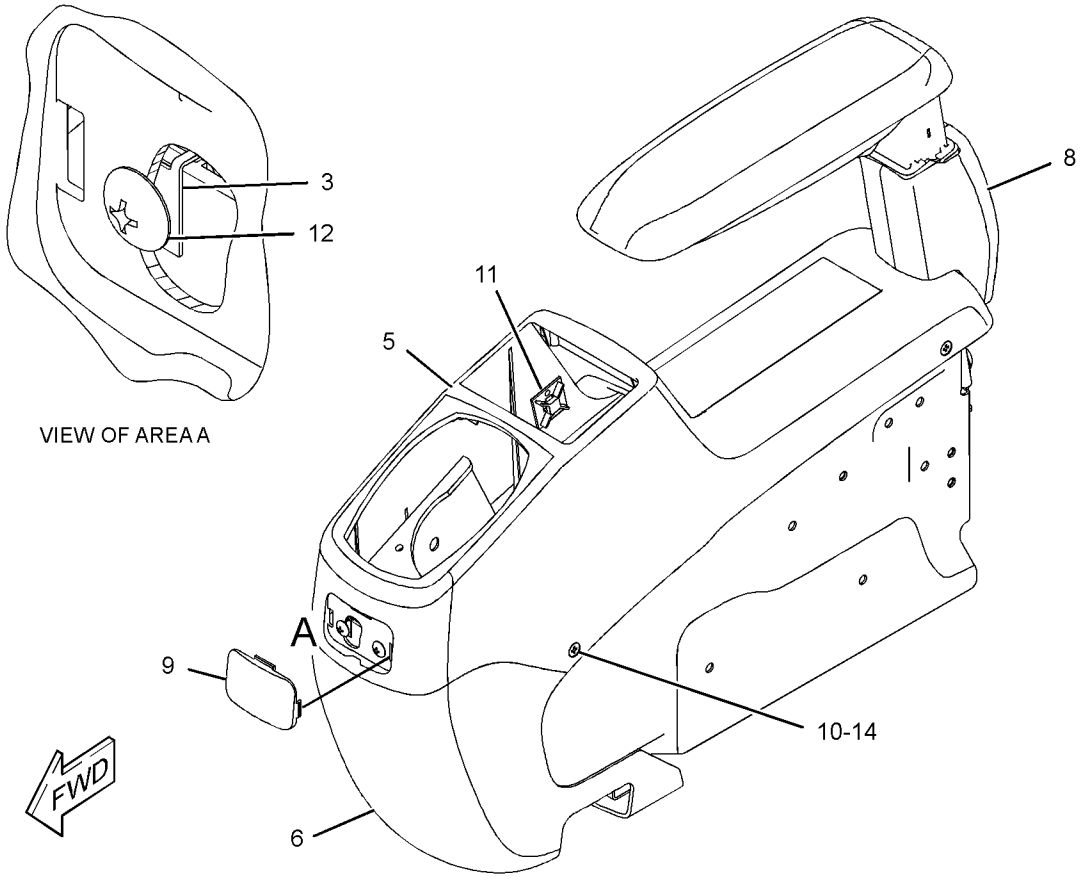

GRAPHIC #1 <END> g03837441

270-6107 CONTROL & MOUNTING GP—FOOT SWITCH, ON/OFF, LH

S/N: DLP1-UP

PART OF 270-6106 CONTROL AR-AUXILIARY

AN ATTACHMENT

SMCS-6700 **i04156284**

NOTE	REF NO	GRAPHIC REF	PART NUMBER	QTY	PART NAME 1 2 3 4 5 6 (PRODUCT LEVEL)	SEE PAGE
	1	1	**093-2069**	1	GROMMET	
	2	1	*205-1339*	1	SWITCH GP-PEDAL	
		1	**2Q-4703**	1	SWITCH AS-FOOT PEDAL (WORK TOOL)	
		1	**205-1340**	1	HARNESS AS-OPERATOR CONTROLS	
		1	**8T-8730**	2	SOCKET-CONNECTOR (16-GA TO 18-GA)	
		1	**2L-8075**	2	TERMINAL-RING (14-GA TO 16-GA, NO. 8 SCREW)	
		1	**155-2270**	1	KIT-CONNECTING PLUG (2-PIN)	
					(INCLUDES PLUG AS, WEDGE & INTERFACE SEAL)	
	3	1	**285-1332**	1	SUPPORT AS	
	4	1	**285-1333**	1	SUPPORT AS	
	5	1	**285-1337**	1	PLATE-STOP	
	6	1	**6V-7646**	1	WASHER-HARD (7.2X25X2-MM THK)	
M	7	1	**8C-8580**	2	BOLT-SOCKET HEAD (M5X0.8X16-MM)	
M	8	1	**8T-0269**	2	BOLT-SOCKET HEAD (M6X1X20-MM)	
	9	1	**8T-4121**	4	WASHER-HARD (11X21X2.5-MM THK)	
M	10	1	**8T-4137**	4	BOLT (M10X1.5X20-MM)	
	11	1	**9X-8256**	1	WASHER (6.6X12X2-MM THK)	
	12	1	**7K-1181**	1	STRAP-CABLE	

M - METRIC PART

270-6107 **CONTROL & MOUNTING GP (**contd.**)** **i04156284**

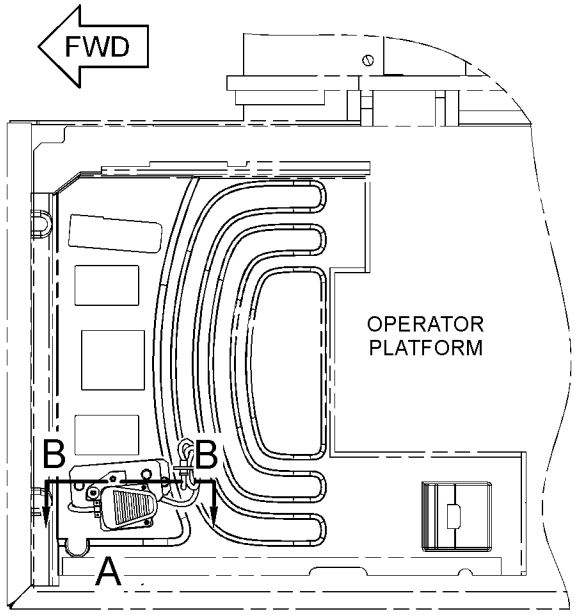

TOP VIEW

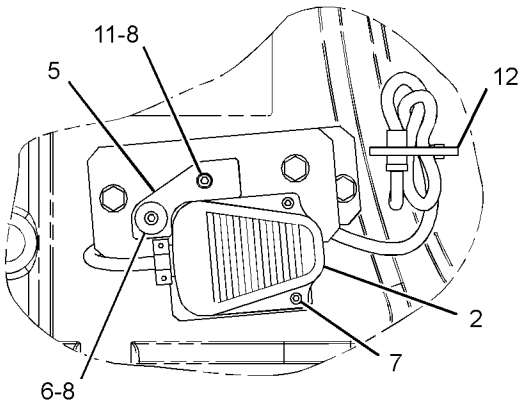

VIEW OF AREA A

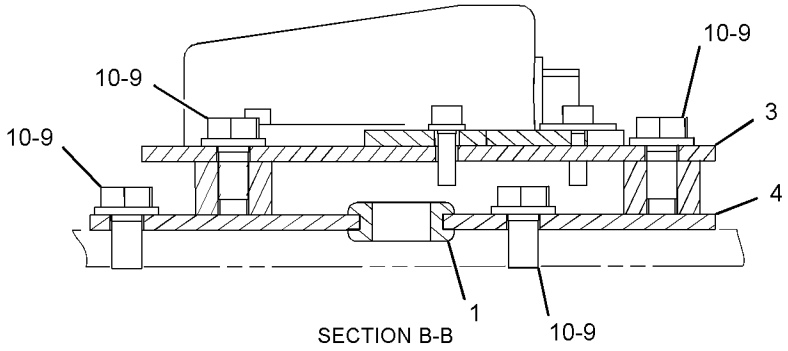

SECTION B-B

GRAPHIC #1 <END> g02387681

259-7598 CONTROL & MTG GP-JOYSTICK—WITH MODULATION SWITCH

S/N: DLP1-UP
PART OF 255-5843 CONTROL AR-AUXILIARY
AN ATTACHMENT

SMCS-5063, 5705

i03631324

NOTE	REF NO	GRAPHIC REF	PART NUMBER	QTY	PART NAME 1 2 3 4 5 6 (PRODUCT LEVEL)	SEE PAGE
CY	1	1	**297-0535**	1	CONTROL GP-JOYSTICK (LH)	1041
CY	2	1	**297-0534**	1	CONTROL GP-JOYSTICK (RH)	1040
M	3	1	**6V-7357**	6	BOLT (M6X1X25-MM)	
	4	1	**9X-8256**	6	WASHER (6.6X12X2-MM THK)	

C - CHANGE FROM PREVIOUS TYPE
M - METRIC PART
Y - SEPARATE ILLUSTRATION

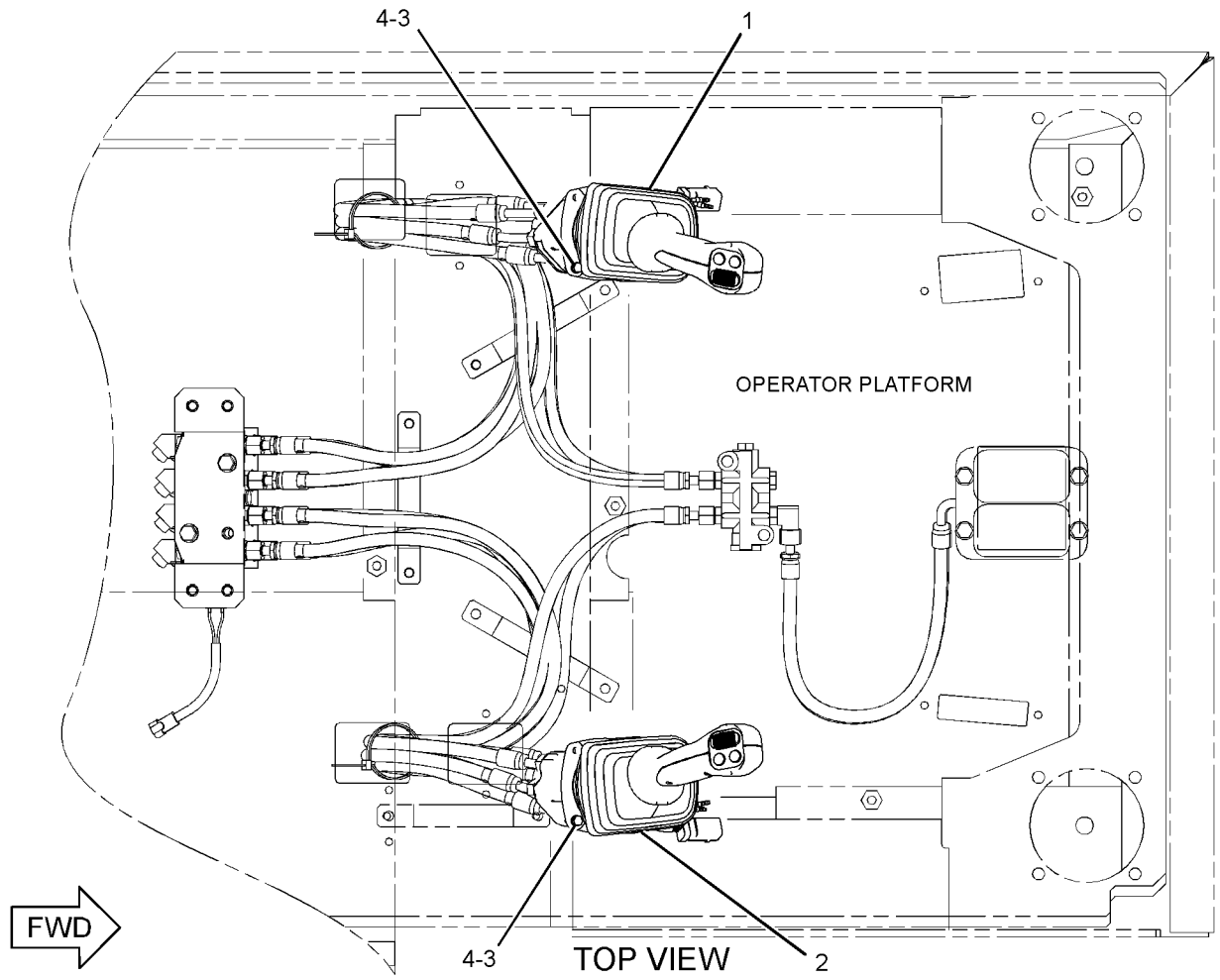

GRAPHIC #1

<END>

g01541355

259-7599 CONTROL & MTG GP-JOYSTICK–3-BUTTON, TRIGGER SWITCH

S/N: DLP1-UP
PART OF 255-5844 CONTROL AR-AUXILIARY
AN ATTACHMENT

SMCS-5063, 5705 **i04038616**

NOTE	REF NO	GRAPHIC REF	PART NUMBER	QTY	PART NAME 1 2 3 4 5 6 (PRODUCT LEVEL)	SEE PAGE
CY	1	1	**297-0536**	1	CONTROL GP-JOYSTICK (RH)	1042
CY	2	1	**297-0537**	1	CONTROL GP-JOYSTICK (LH)	1043
M	3	1	**6V-7357**	6	BOLT (M6X1X25-MM)	
	4	1	**9X-8256**	6	WASHER (6.6X12X2-MM THK)	

C - CHANGE FROM PREVIOUS TYPE
M - METRIC PART
Y - SEPARATE ILLUSTRATION

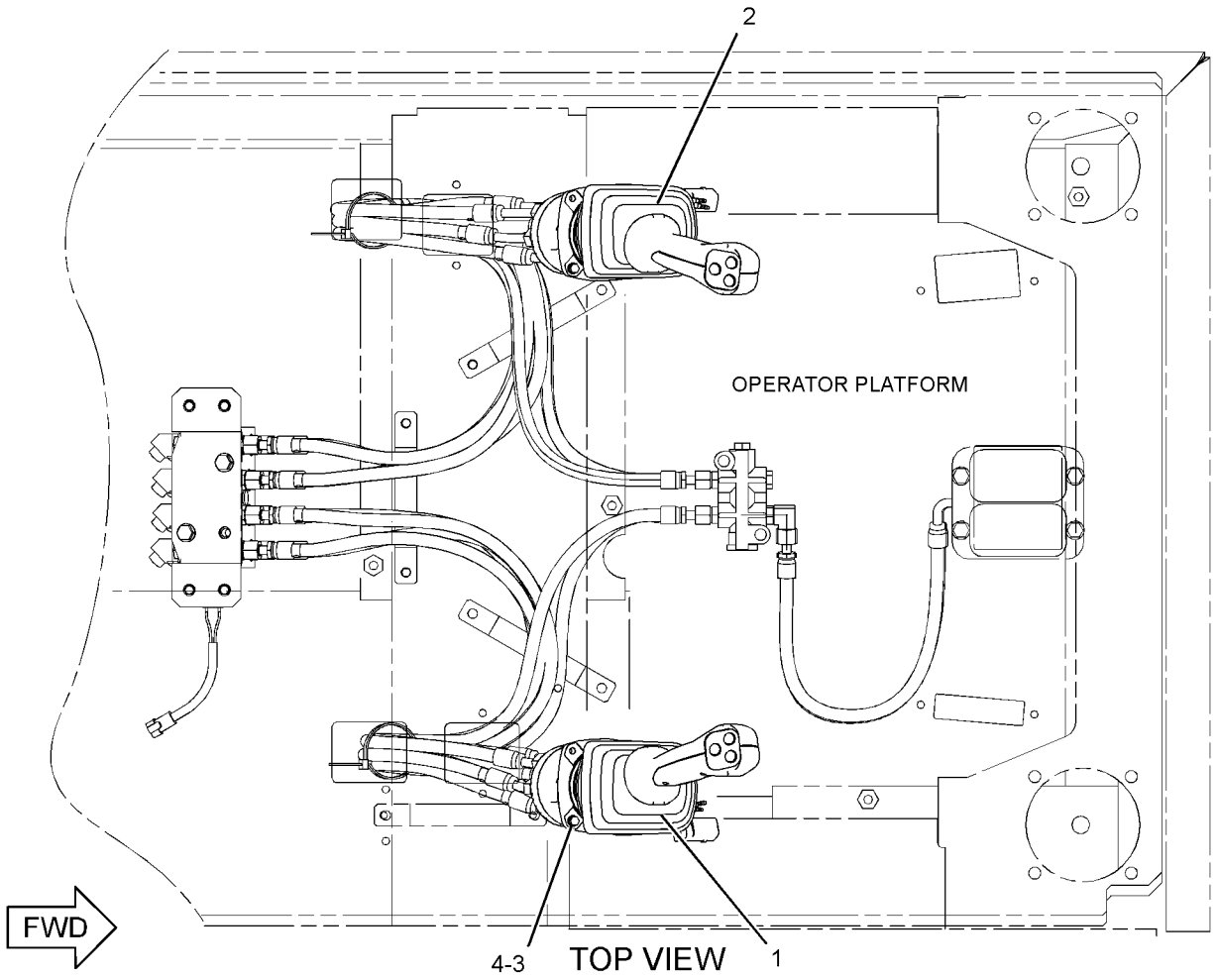

GRAPHIC #1 <END> g01263586

310-0078 CONTROL & MTG GP-JOYSTICK

S/N: DLP1-UP

PART OF 359-2474, 367-8776, 367-8790, 367-8792, 379-7089, 379-7091 DISTRIBUTION AR, 336-3393 OPTION AR-HYDRAULIC

AN ATTACHMENT

SMCS-5063, 5705 **i07157450**

NOTE	REF NO	GRAPHIC REF	PART NUMBER	QTY	PART NAME 1 2 3 4 5 6 (PRODUCT LEVEL)	SEE PAGE
Y	1	1	**297-0532**	1	CONTROL GP-JOYSTICK (RH)	1038
Y	2	1	**297-0533**	1	CONTROL GP-JOYSTICK (LH)	1039
M	3	1	**6V-7357**	6	BOLT (M6X1X25-MM)	
	4	1	**9X-8256**	6	WASHER (6.6X12X2-MM THK)	

M - METRIC PART
Y - SEPARATE ILLUSTRATION

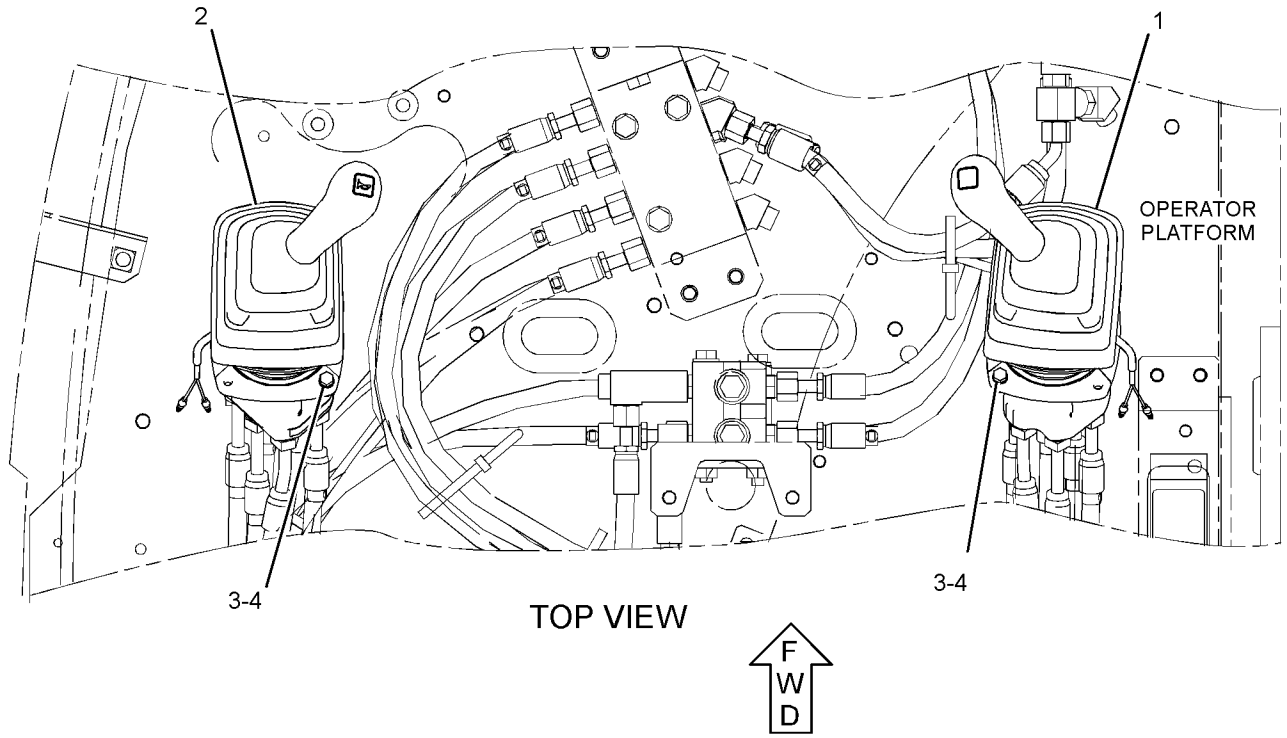

GRAPHIC #1 <END> g01442248

221-8884 CONTROL & MTG GP-PEDAL

S/N: DLP1-UP
PART OF 255-5845 PEDAL AR-AUXILIARY
AN ATTACHMENT

SMCS-5462 **i04017543**

NOTE	REF NO	GRAPHIC REF	PART NUMBER	QTY	PART NAME 1 2 3 4 5 6 (PRODUCT LEVEL)	SEE PAGE
	1	1	**233-5260**	1	LANYARD	
	2	1	**121-1865**	1	PEDAL-RUBBER (LH)	
	3	1	**128-2173**	1	PIN	
	4	1	**153-8723**	1	PEDAL AS	
CY	5	1	**309-5808**	1	CONTROL GP-PEDAL (ELECTRIC)	1044
	6	1	**227-7625**	1	SUPPORT AS	
M	7	1	**095-0735**	2	SCREW-MACHINE (M5X0.8X8-MM)	
M	8	1	**7X-2536**	2	BOLT (M8X1.25X14-MM)	
	9	1	**8T-0114**	1	PIN-SPRING	
	10	1	**8T-4121**	3	WASHER-HARD (11X21X2.5-MM THK)	
M	11	1	**8T-4136**	2	BOLT (M10X1.5X25-MM)	
M	12	1	**8T-4191**	1	BOLT (M10X1.5X16-MM)	
	13	1	**8T-4224**	2	WASHER-HARD (8.8X16X2-MM THK)	

C - CHANGE FROM PREVIOUS TYPE
M - METRIC PART
Y - SEPARATE ILLUSTRATION

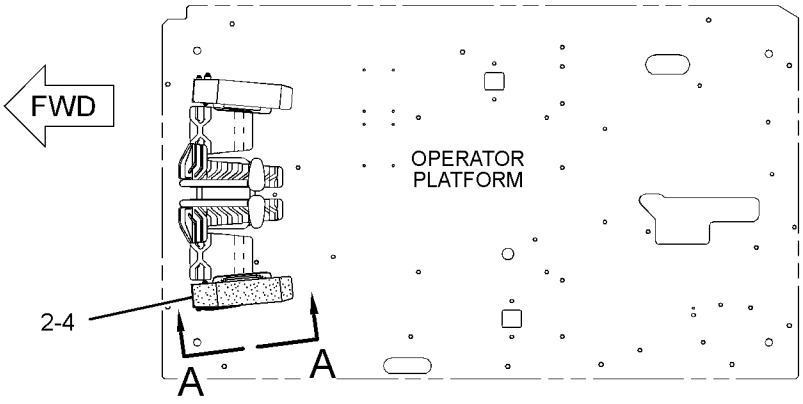

TOP VIEW

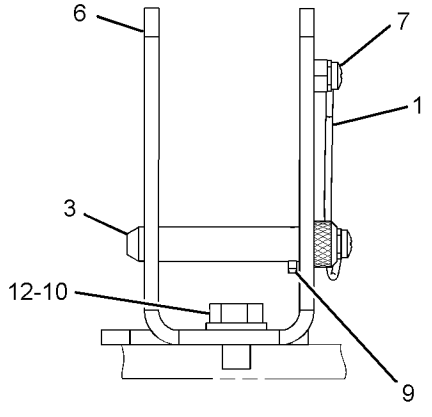

VIEW B-B

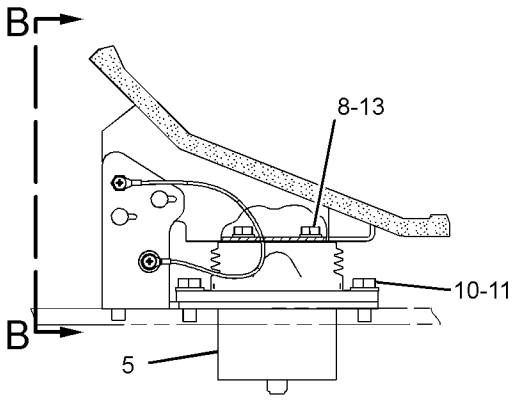

VIEW A-A

GRAPHIC #1 <END> g02155930

316-8851 CONTROL GP-BLADE

S/N: DLP1-UP
PART OF 301-2691, 385-4069 INSTALLATION AR-BLADE
AN ATTACHMENT

SMCS-5063 **i05906156**

NOTE	REF NO	GRAPHIC REF	PART NUMBER	QTY	PART NAME 1 2 3 4 5 6 (PRODUCT LEVEL)	SEE PAGE
	1	1	**178-5528**	1	KNOB	
Y	2	1	**190-7695**	1	VALVE GP-PILOT (BLADE)	826
	3	1	**273-5395**	1	LEVER AS	
	4	1	**8T-4121**	2	WASHER-HARD (11X21X2.5-MM THK)	
M	5	1	**8T-4137**	2	BOLT (M10X1.5X20-MM)	
M	6	1	**8T-4139**	1	BOLT (M12X1.75X30-MM)	
	7	1	**8T-4223**	1	WASHER-HARD (13.5X25.5X3-MM THK)	

M - METRIC PART
Y - SEPARATE ILLUSTRATION

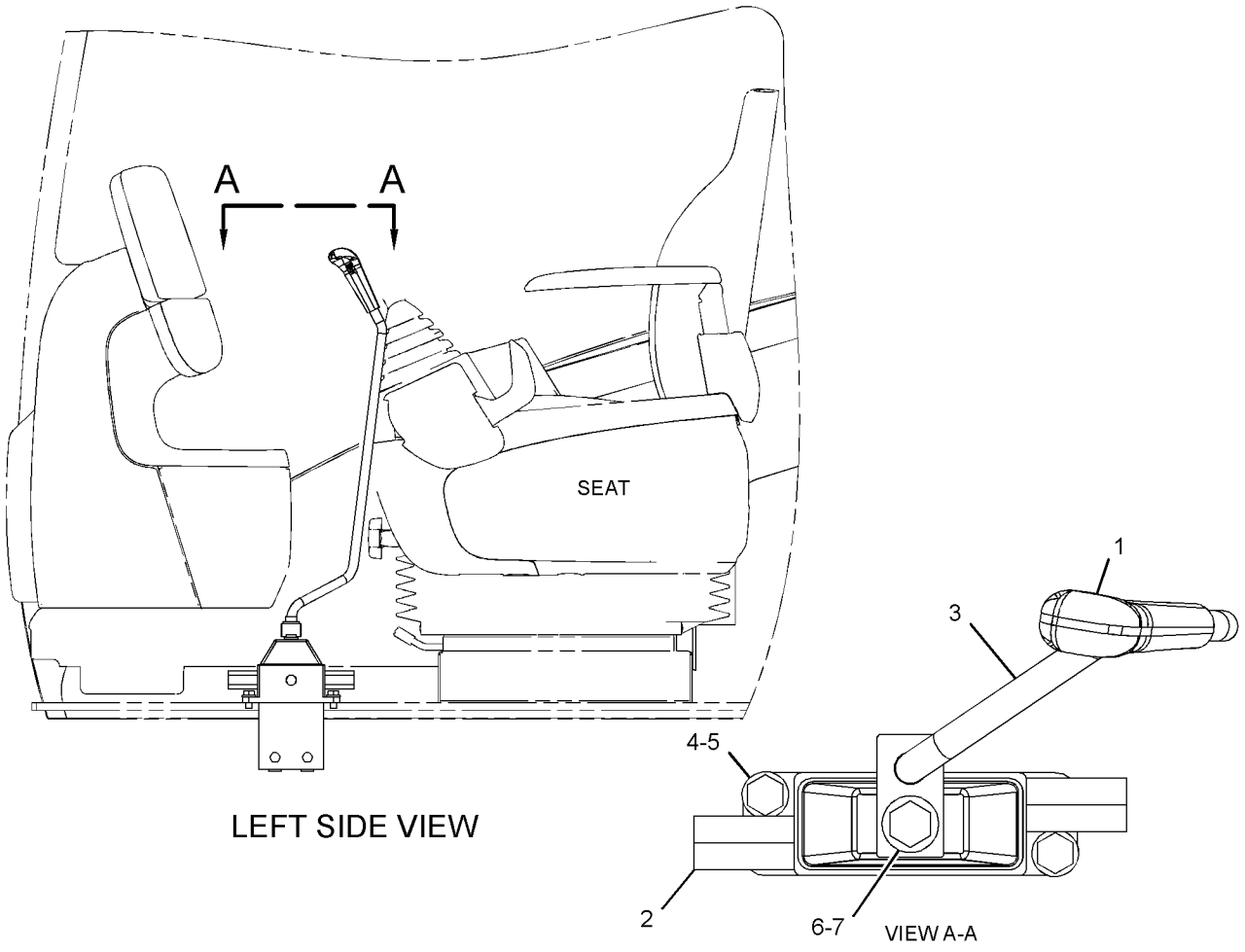

LEFT SIDE VIEW

GRAPHIC #1 <END> g01504394

235-8969 CONTROL GP-HANDLE—JOYSTICK, LH

S/N: DLP1-UP

PART OF 297-0533 CONTROL GP-JOYSTICK

AN ATTACHMENT

SMCS-5705 **i04528508**

NOTE	REF NO	GRAPHIC REF	PART NUMBER	QTY	PART NAME 1 2 3 4 5 6 (PRODUCT LEVEL)	SEE PAGE
	1	1	**124-4010**	1	LEVER	
	2	1	**353-2149**	1	BOOT	
	3	1	**245-7842**	1	KNOB AS	
M		1	**6I-5298**	1	SCREW-TAPPING	
		1	**124-4009**	1	SHAFT	
		1	**222-0225**	1	SWITCH AS-PUSH BUTTON (HORN)	
M	4	1	**095-0735**	2	SCREW-MACHINE (M5X0.8X8-MM)	

M - METRIC PART

235-8969 **CONTROL GP-HANDLE (**contd.**)** **i04528508**

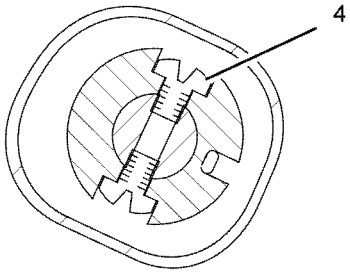

SECTION B-B

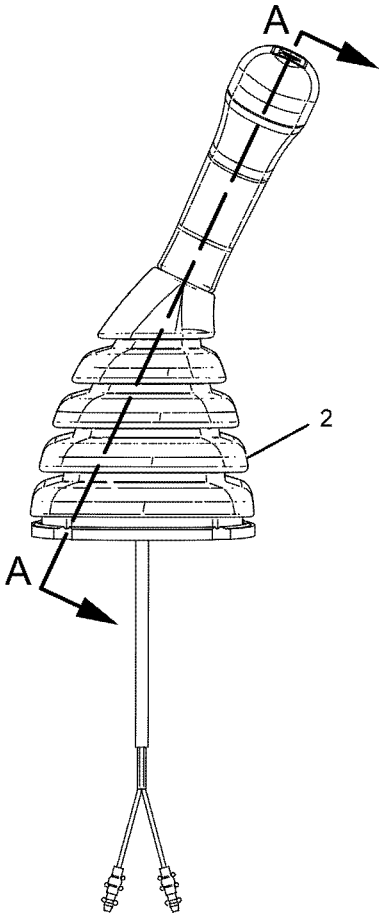

LEFT SIDE VIEW

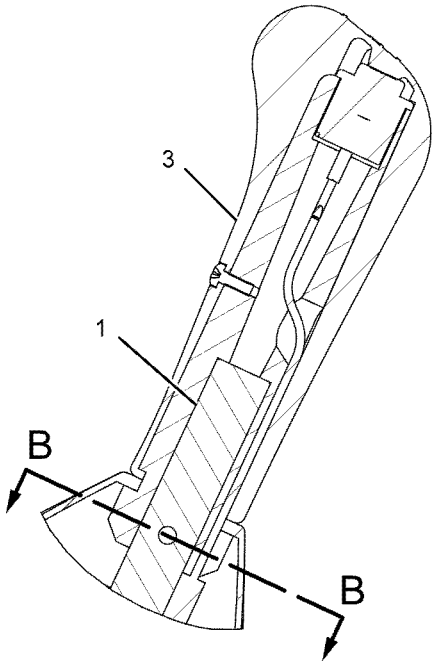

SECTION A-A

GRAPHIC #1 <END> g01082395

235-8970 CONTROL GP-HANDLE—JOYSTICK, RH

S/N: DLP1-UP
PART OF 297-0532 CONTROL GP-JOYSTICK
AN ATTACHMENT

SMCS-5705 **i04528520**

NOTE	REF NO	GRAPHIC REF	PART NUMBER	QTY	PART NAME 1 2 3 4 5 6 (PRODUCT LEVEL)	SEE PAGE
	1	1	**124-4010**	1	LEVER	
	2	1	**353-2150**	1	BOOT	
	3	1	**245-7844**	1	KNOB AS	
M		1	**6I-5298**	1	SCREW-TAPPING	
		1	**124-4009**	1	SHAFT	
		1	**222-0225**	1	SWITCH AS-PUSH BUTTON (MANUAL LOW IDLE)	
M	4	1	**095-0735**	2	SCREW-MACHINE (M5X0.8X8-MM)	

M - METRIC PART

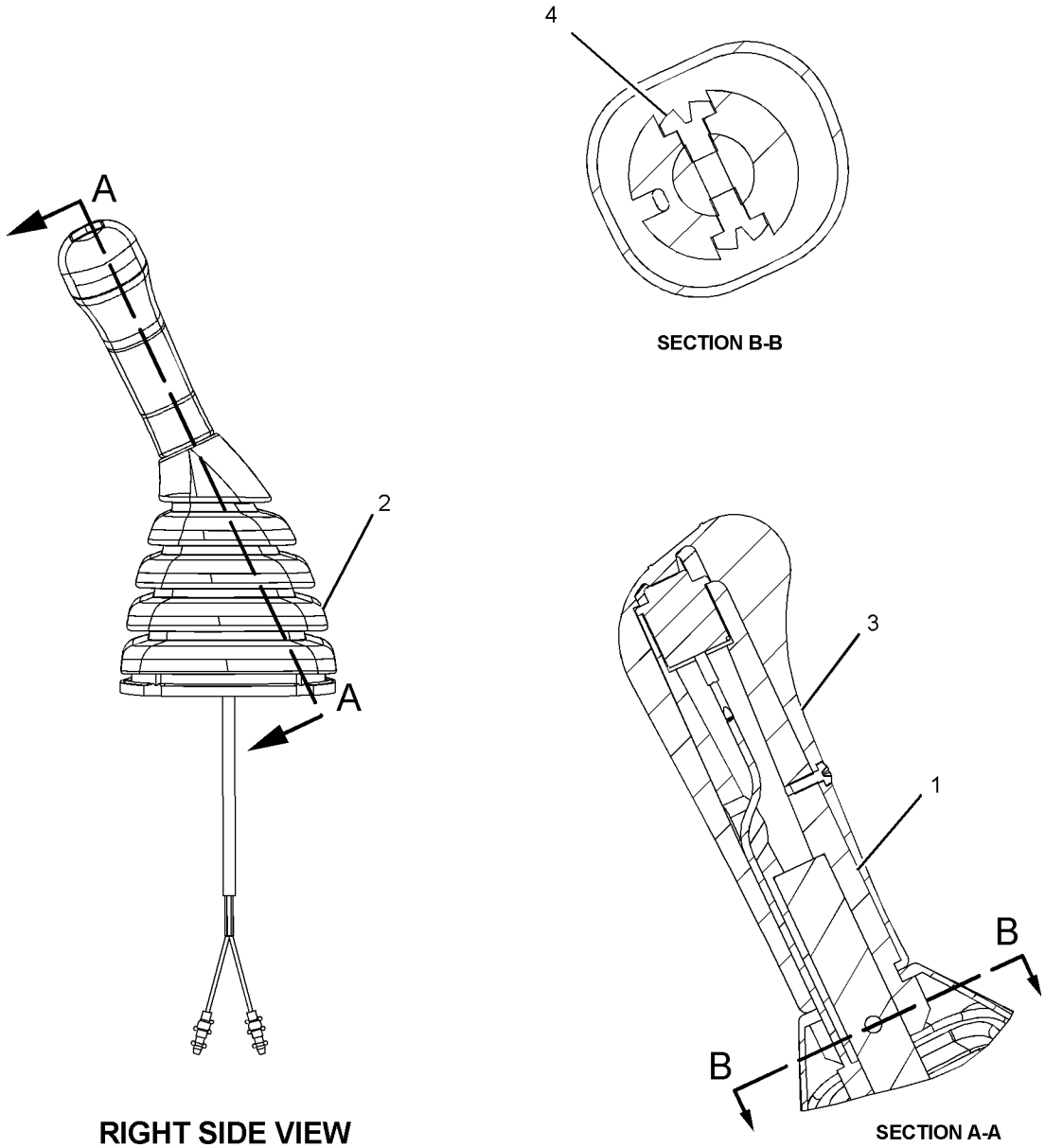

SECTION B-B

RIGHT SIDE VIEW

SECTION A-A

GRAPHIC #1 <END> g01082427

260-2109 CONTROL GP-HANDLE—JOYSTICK, RH

S/N: DLP1-UP
2-BUTTON, SLIDE, TRIGGER SW
PART OF 297-0534 CONTROL GP-JOYSTICK
AN ATTACHMENT

SMCS-5705 **i04902513**

NOTE	REF NO	GRAPHIC REF	PART NUMBER	QTY	PART NAME 1 2 3 4 5 6 (PRODUCT LEVEL)	SEE PAGE
M	1	1	**271-7843**	1	NUT (M14X2-THD)	
	2	1	**117-8683**	1	PIN-SPRING	
	3	1	**260-2111**	1	LEVER	
	4	1	**297-4589**	1	CONTROL GP-HANDLE (RH)	
		1	**247-2693**	1	RECEPTACLE AS-CONNECTOR (6-PIN)	
		1	**9X-3401**	6	PIN-CONNECTOR (16-GA TO 18-GA)	
					—OR—	
		1	**126-1767**	6	PIN-CONNECTOR (14-GA TO 16-GA)	
	5	1	**305-0332**	1	BOOT	

M - METRIC PART

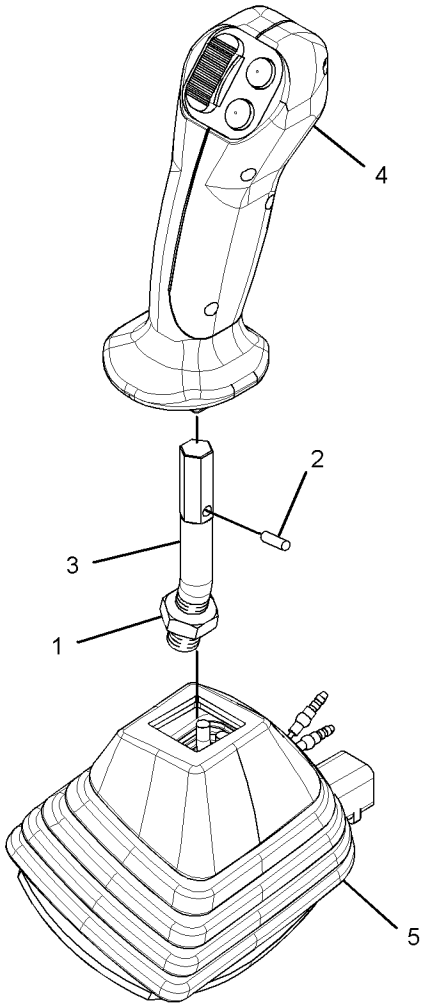

GRAPHIC #1 <END> g03057357

260-2110 CONTROL GP-HANDLE—JOYSTICK, LH

S/N: DLP1-UP
2-BUTTON, SLIDE, TRIGGER SW
PART OF 297-0535 CONTROL GP-JOYSTICK
AN ATTACHMENT

SMCS-5705 **i03779169**

NOTE	REF NO	GRAPHIC REF	PART NUMBER	QTY	PART NAME 1 2 3 4 5 6 (PRODUCT LEVEL)	SEE PAGE
M	1	1	**271-7843**	1	NUT (M14X2-THD)	
	2	1	**117-8683**	1	PIN-SPRING	
	3	1	**260-2111**	1	LEVER	
C	4	1	**297-4590**	1	CONTROL GP-HANDLE (LH)	
		1	**9X-3401**	6	PIN-CONNECTOR (16-GA TO 18-GA)	
					—OR—	
		1	**126-1767**	6	PIN-CONNECTOR (14-GA TO 16-GA)	
		1	**247-2693**	1	RECEPTACLE AS-CONNECTOR (6-PIN)	
	5	1	**305-0331**	1	BOOT	

C - CHANGE FROM PREVIOUS TYPE
M - METRIC PART

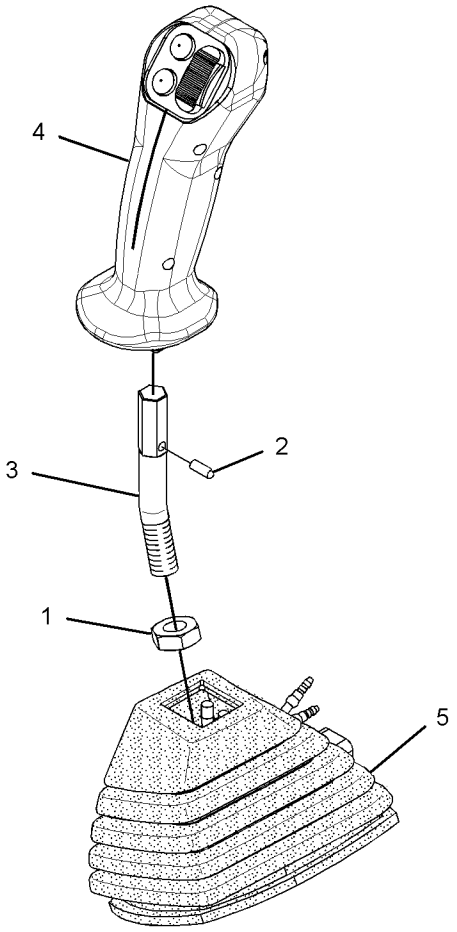

GRAPHIC #1 <END> g01428094

260-2127 CONTROL GP-HANDLE—JOYSTICK, RH

S/N: DLP1-UP
3-BUTTON, TRIGGER SWITCH
PART OF 297-0536 CONTROL GP-JOYSTICK
AN ATTACHMENT

SMCS-5705 **i04902688**

NOTE	REF NO	GRAPHIC REF	PART NUMBER	QTY	PART NAME 1 2 3 4 5 6 (PRODUCT LEVEL)	SEE PAGE
M	1	1	**271-7843**	1	NUT (M14X2-THD)	
	2	1	**117-8683**	1	PIN-SPRING	
	3	1	**260-2111**	1	LEVER	
	4	1	**297-4595**	1	CONTROL GP-HANDLE (RH)	
		1	**8T-8737**	2	PLUG-SEAL	
		1	**9X-3401**	4	PIN-CONNECTOR (16-GA TO 18-GA)	
					—OR—	
		1	**126-1767**	4	PIN-CONNECTOR (14-GA TO 16-GA)	
		1	**247-2693**	1	RECEPTACLE AS-CONNECTOR (6-PIN)	
	5	1	**305-0332**	1	BOOT	

M - METRIC PART

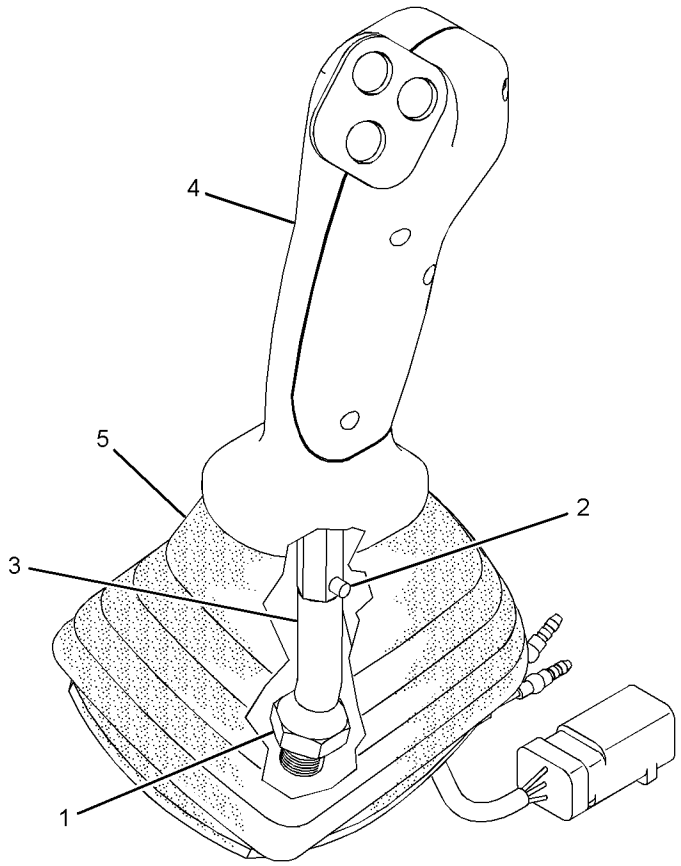

GRAPHIC #1 <END> g03057436

260-2128 CONTROL GP-HANDLE—JOYSTICK, LH

S/N: DLP1-UP
3-BUTTON, TRIGGER SWITCH
PART OF 297-0537 CONTROL GP-JOYSTICK
AN ATTACHMENT

SMCS-5705 **i04902882**

NOTE	REF NO	GRAPHIC REF	PART NUMBER	QTY	PART NAME 1 2 3 4 5 6 (PRODUCT LEVEL)	SEE PAGE
M	1	1	271-7843	1	NUT (M14X2-THD)	
	2	1	117-8683	1	PIN-SPRING	
	3	1	305-0331	1	BOOT	
	4	1	297-4595	1	CONTROL GP-HANDLE (LH)	
		1	8T-8737	2	PLUG-SEAL	
		1	9X-3401	4	PIN-CONNECTOR (16-GA TO 18-GA)	
					—OR—	
		1	126-1767	4	PIN-CONNECTOR (14-GA TO 16-GA)	
		1	247-2693	1	RECEPTACLE AS-CONNECTOR (6-PIN)	
	5	1	260-2111	1	LEVER	

M - METRIC PART

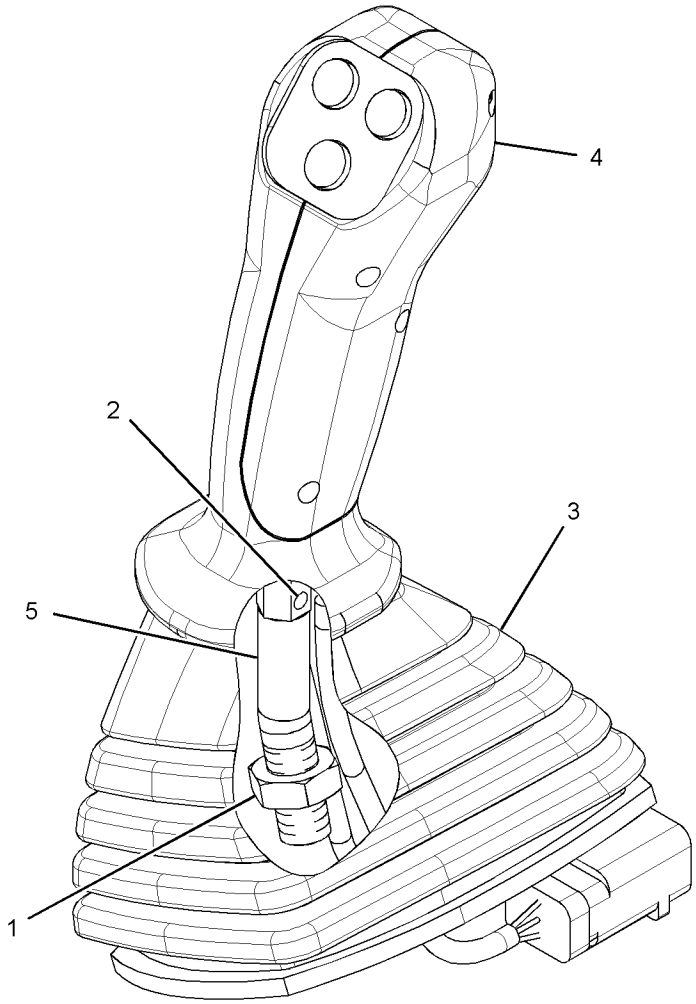

GRAPHIC #1 <END> g03057506

245-7846 CONTROL GP-HEAT & AIR COND–AIR INLET

S/N: DLP1-UP

PART OF 316-8811, 316-8916 AIR CONDITIONER GP

AN ATTACHMENT

SMCS-7309 **i05332895**

NOTE	REF NO	GRAPHIC REF	PART NUMBER	QTY	PART NAME 1 2 3 4 5 6 (PRODUCT LEVEL)	SEE PAGE
	1	1	**185-8300**	4	SCREW-TAPPING	
	2	1	**196-1666**	1	RELAY (COMPRESSOR CLUTCH)	
	2A	1	**196-1666**	1	RELAY (BLOWER)	
	3	1	**245-7813**	1	MOTOR AS	
	4	1	**245-7814**	1	BRACKET	
	5	1	**245-7815**	1	SENSOR AS-TEMPERATURE (AIR)	
	6	1	**245-7816**	1	DAMPER AS	

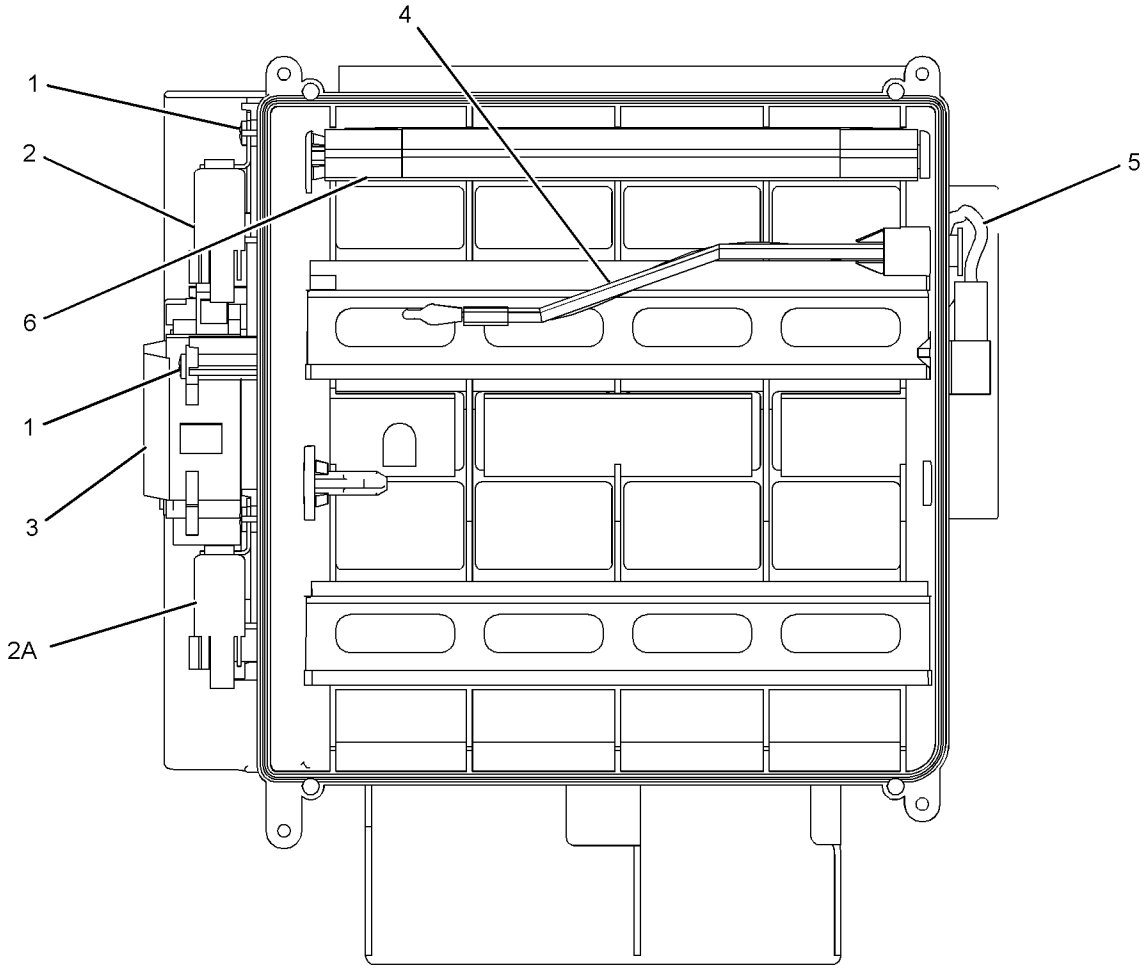

GRAPHIC #1 <END> g01245591

297-0532 CONTROL GP-JOYSTICK–RH

S/N: DLP1-UP

PART OF 310-0078 CONTROL & MTG GP-JOYSTICK

AN ATTACHMENT

SMCS-5705 **i04902988**

NOTE	REF NO	GRAPHIC REF	PART NUMBER	QTY	PART NAME 1 2 3 4 5 6 (PRODUCT LEVEL)	SEE PAGE
M	1	1	**271-7843**	1	NUT (M14X2-THD)	
Y	2	1	**235-8970**	1	CONTROL GP-HANDLE (JOYSTICK, RH)	1032
Y	3	1	**297-0529**	1	VALVE GP-PILOT (JOYSTICK)	830
	4	1	**6K-0806**	1	STRAP-CABLE	

M - METRIC PART
Y - SEPARATE ILLUSTRATION

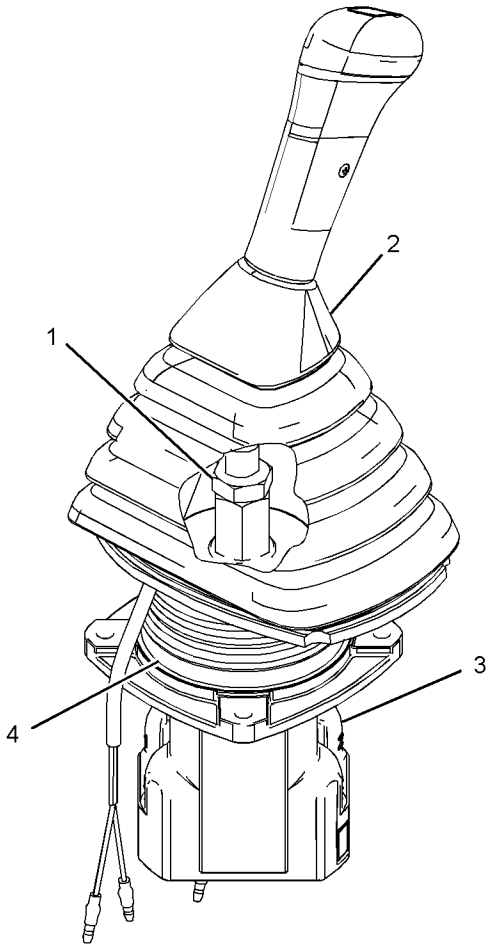

GRAPHIC #1 <END> g03057522

297-0533 CONTROL GP-JOYSTICK–LH

S/N: DLP1-UP
PART OF 310-0078 CONTROL & MTG GP-JOYSTICK
AN ATTACHMENT

SMCS-5705 **i04902992**

NOTE	REF NO	GRAPHIC REF	PART NUMBER	QTY	PART NAME 1 2 3 4 5 6 (PRODUCT LEVEL)	SEE PAGE
M	1	1	**271-7843**	1	NUT (M14X2-THD)	
Y	2	1	**235-8969**	1	CONTROL GP-HANDLE (JOYSTICK, LH)	1030
Y	3	1	**297-0529**	1	VALVE GP-PILOT (JOYSTICK)	830
	4	1	**6K-0806**	1	STRAP-CABLE	

M - METRIC PART
Y - SEPARATE ILLUSTRATION

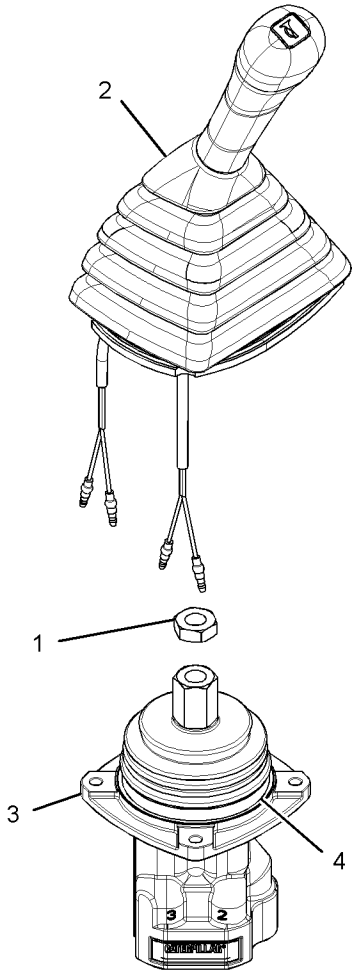

GRAPHIC #1 <END> g03057536

297-0534 CONTROL GP-JOYSTICK–RH

S/N: DLP1-UP

PART OF 259-7598 CONTROL & MTG GP-JOYSTICK

AN ATTACHMENT

SMCS-5705 **i06803675**

NOTE	REF NO	GRAPHIC REF	PART NUMBER	QTY	PART NAME 1 2 3 4 5 6 (PRODUCT LEVEL)	SEE PAGE
	1	1	**6K-0806**	1	STRAP-CABLE	
Y	2	1	*260-2109*	1	CONTROL GP-HANDLE (JOYSTICK, RH)	1033
Y	3	1	**297-0589**	1	VALVE GP-PILOT (JOYSTICK)	832

Y - SEPARATE ILLUSTRATION

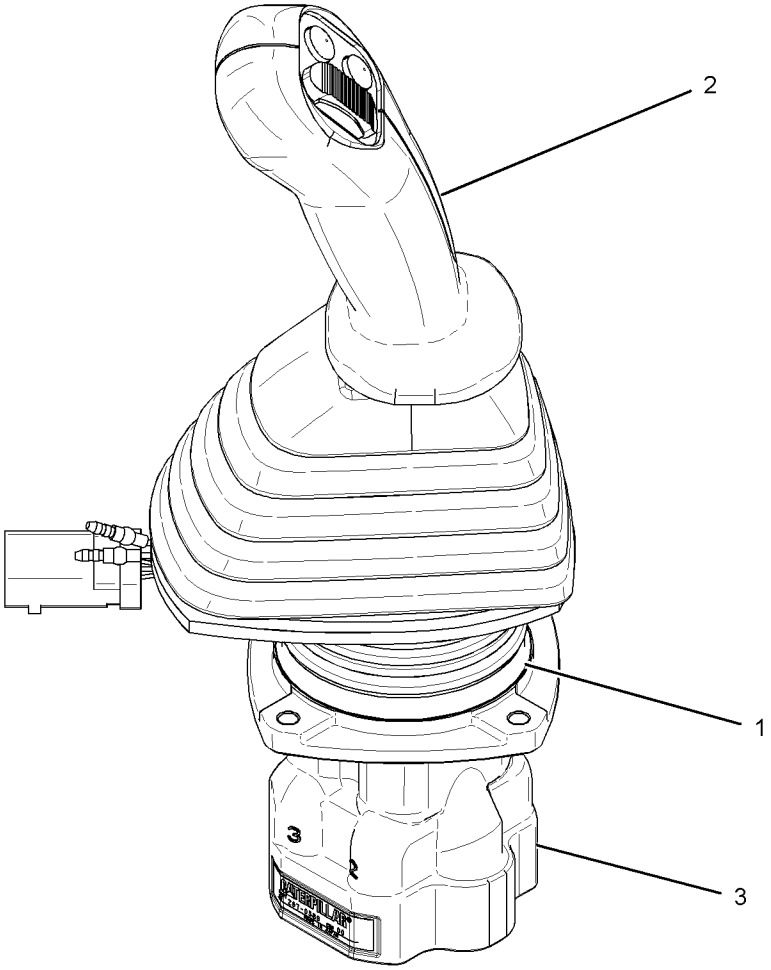

GRAPHIC #1 <END> g01539394

297-0535 CONTROL GP-JOYSTICK–LH

S/N: DLP1-UP
PART OF 259-7598 CONTROL & MTG GP-JOYSTICK
AN ATTACHMENT

SMCS-5705 **i06803686**

NOTE	REF NO	GRAPHIC REF	PART NUMBER	QTY	PART NAME 1 2 3 4 5 6 (PRODUCT LEVEL)	SEE PAGE
	1	1	**6K-0806**	1	STRAP-CABLE	
Y	2	1	*260-2110*	1	CONTROL GP-HANDLE (JOYSTICK, LH)	1034
Y	3	1	**297-0589**	1	VALVE GP-PILOT (JOYSTICK)	832

Y - SEPARATE ILLUSTRATION

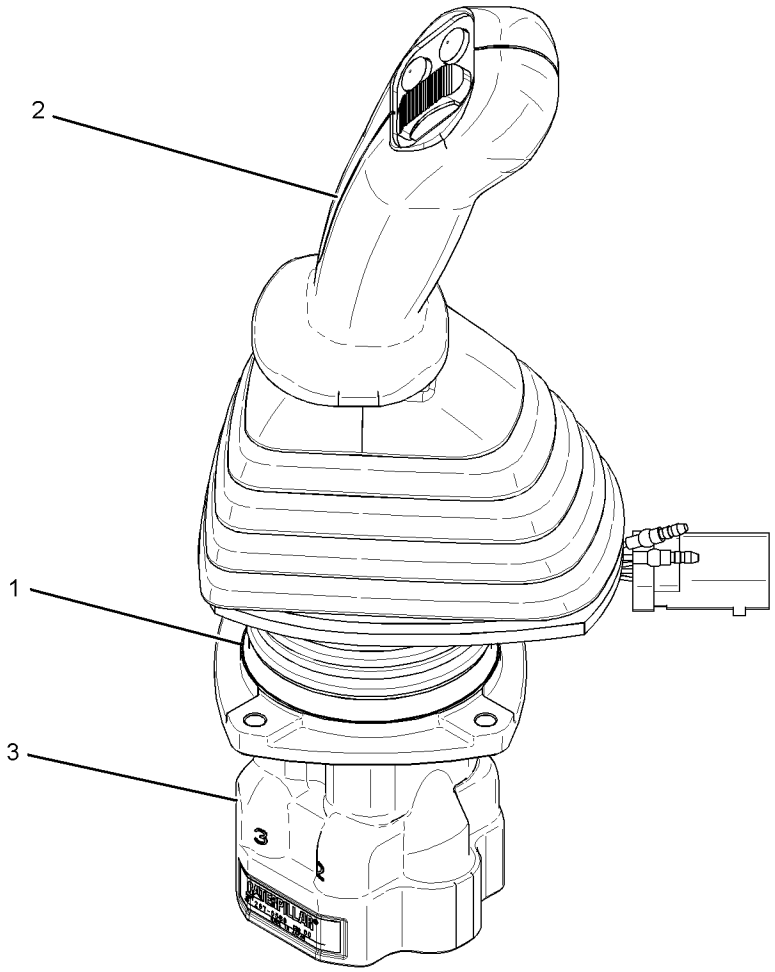

GRAPHIC #1 <END> g01541298

297-0536 CONTROL GP-JOYSTICK–RH

S/N: DLP1-UP

PART OF 259-7599 CONTROL & MTG GP-JOYSTICK

AN ATTACHMENT

SMCS-5705 **i03302490**

NOTE	REF NO	GRAPHIC REF	PART NUMBER	QTY	PART NAME 1 2 3 4 5 6 (PRODUCT LEVEL)	SEE PAGE
	1	1	**6K-0806**	1	STRAP-CABLE	
Y	2	1	**260-2127**	1	CONTROL GP-HANDLE (JOYSTICK, RH)	1035
Y	3	1	**297-0589**	1	VALVE GP-PILOT (JOYSTICK)	832

Y - SEPARATE ILLUSTRATION

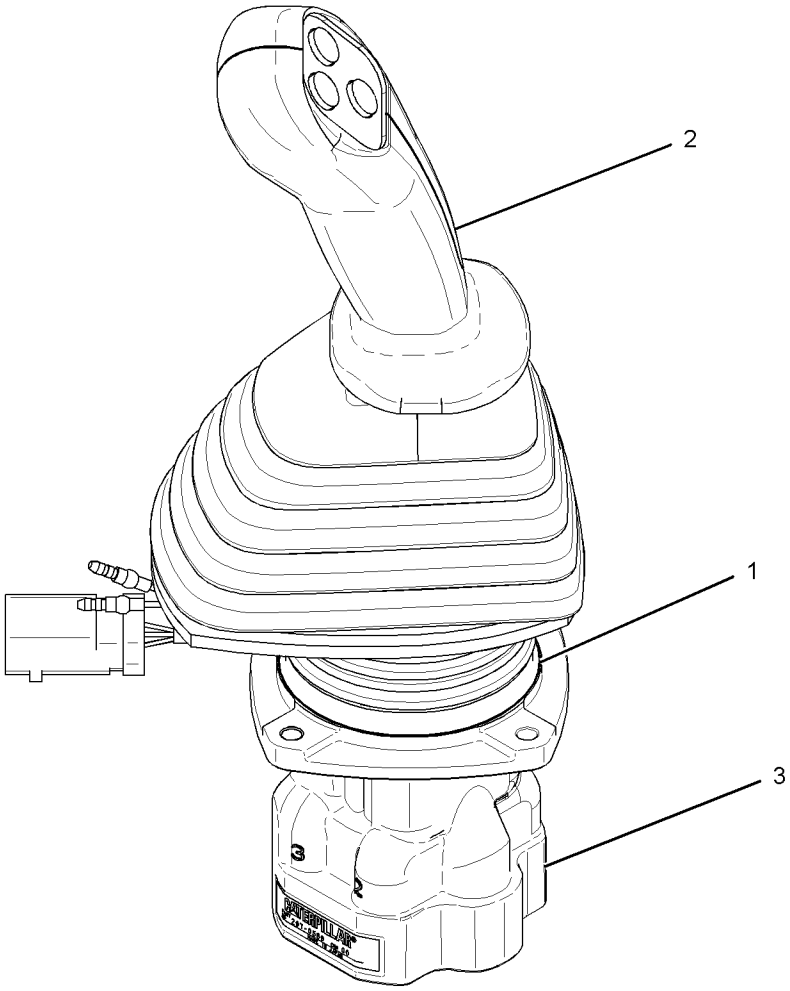

GRAPHIC #1 <END> g01529333

297-0537 CONTROL GP-JOYSTICK–LH

S/N: DLP1-UP
PART OF 259-7599 CONTROL & MTG GP-JOYSTICK
AN ATTACHMENT

SMCS-5705 **i03302492**

NOTE	REF NO	GRAPHIC REF	PART NUMBER	QTY	PART NAME 1 2 3 4 5 6 (PRODUCT LEVEL)	SEE PAGE
	1	1	**6K-0806**	1	STRAP-CABLE	
Y	2	1	**260-2128**	1	CONTROL GP-HANDLE (JOYSTICK, LH)	1036
Y	3	1	**297-0589**	1	VALVE GP-PILOT (JOYSTICK)	832

Y - SEPARATE ILLUSTRATION

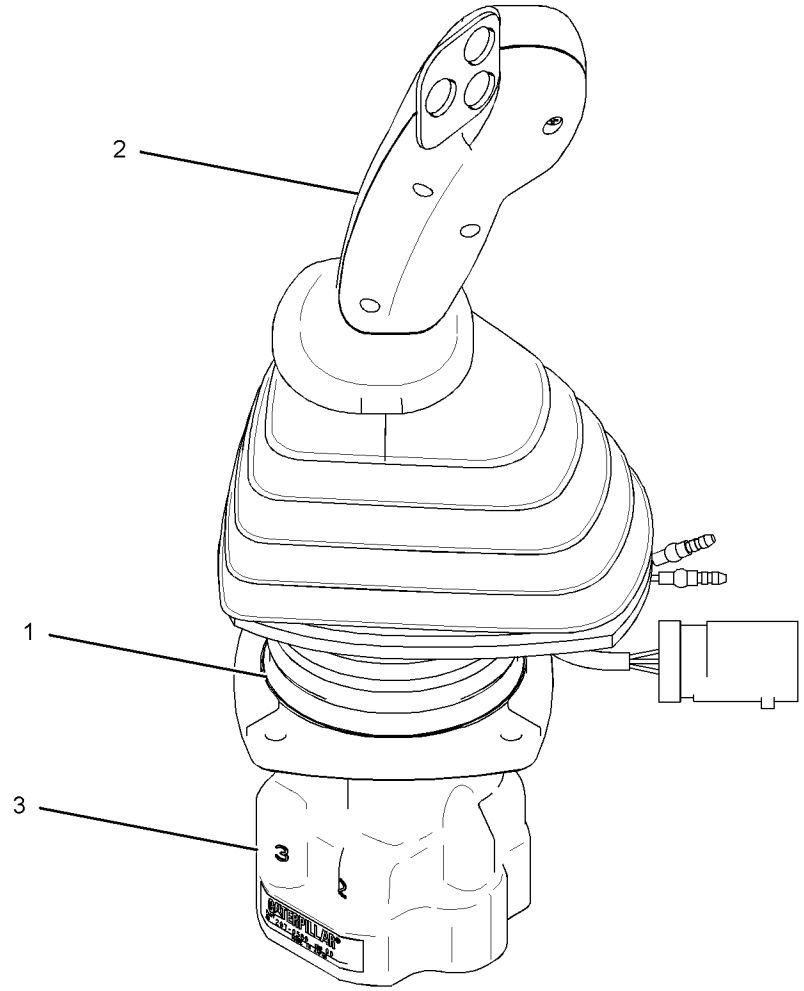

GRAPHIC #1 <END> g01528713

309-5808 CONTROL GP-PEDAL–ELECTRIC

S/N: DLP1-UP

PART OF 221-8884 CONTROL & MTG GP-PEDAL

AN ATTACHMENT

SMCS-1435, 5702

i02840265

NOTE	REF NO	GRAPHIC REF	PART NUMBER	QTY	PART NAME 1 2 3 4 5 6 (PRODUCT LEVEL)	SEE PAGE
	1	1	**8T-8737**	1	PLUG-SEAL	
	2	1	**9X-3401**	5	PIN-CONNECTOR (16-GA TO 18-GA)	
					–OR–	
		1	**126-1767**	5	PIN-CONNECTOR (14-GA TO 16-GA)	
	3	1	**247-2693**	1	RECEPTACLE AS-CONNECTOR (6-PIN)	
	4	1	**247-5112**	1	BOOT	

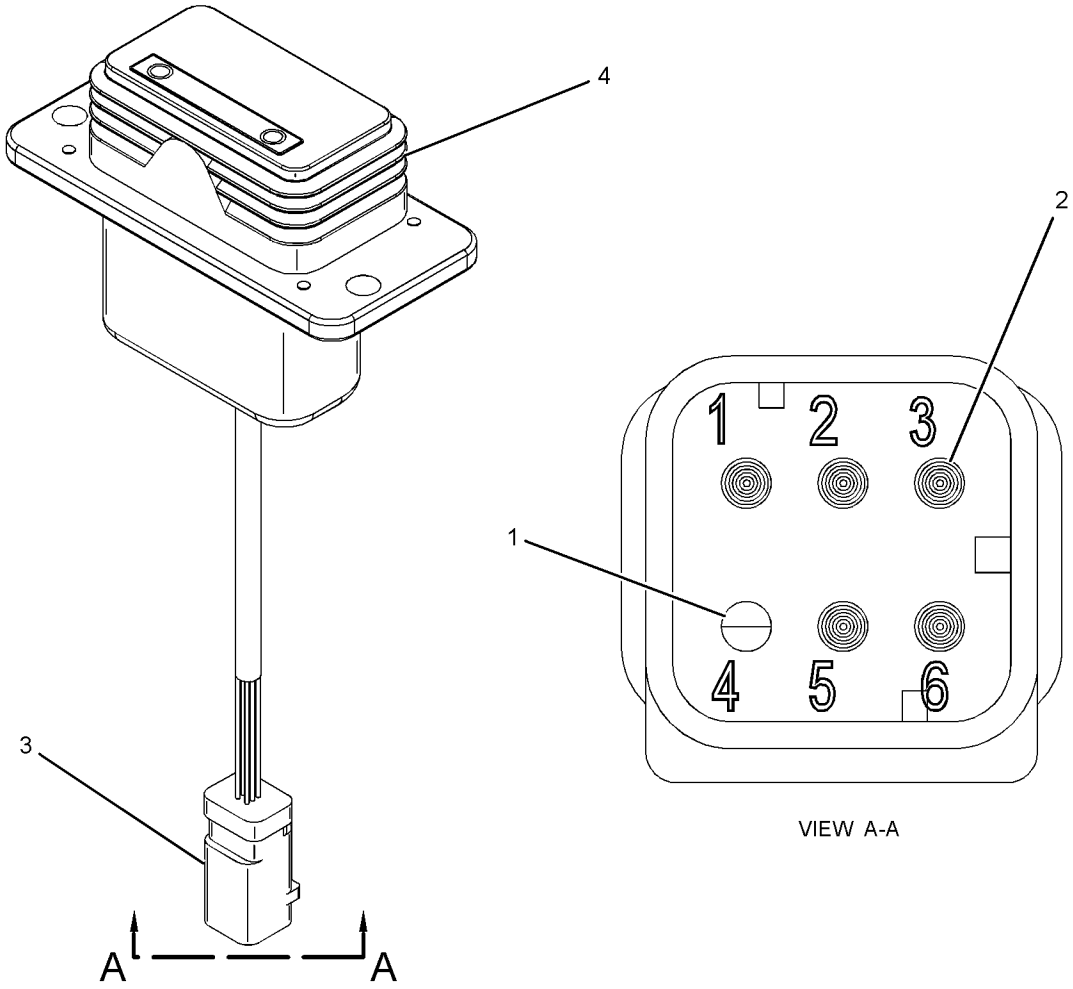

VIEW A-A

GRAPHIC #1

<END>

g01219365

170-9497 CONTROL GP-PILOT OPERATED HYD–TRAVEL

S/N: DLP1-UP

PART OF 273-5363, 340-6773, 383-5596 OPERATOR AR

SMCS-5059 **i03305845**

NOTE	REF NO	GRAPHIC REF	PART NUMBER	QTY	PART NAME 1 2 3 4 5 6 (PRODUCT LEVEL)	SEE PAGE
	1	1	**096-6166**	2	WASHER-HARD (4.5X9X1-MM THK)	
M	2	1	**095-0728**	2	SCREW-MACHINE (M4X0.7X12-MM)	
	3	1	**8T-4121**	12	WASHER-HARD (11X21X2.5-MM THK)	
M	4	1	**8T-4136**	4	BOLT (M10X1.5X25-MM)	
M	5	1	**8T-4191**	8	BOLT (M10X1.5X16-MM)	
	6	1	**142-5546**	2	KNOB	
	7	1	**117-6356**	2	STEP AS	
	8	1	**122-9610**	2	STEP	
	9	1	**170-9499**	1	LEVER AS (LH)	
	10	1	**170-9498**	1	LEVER AS (RH)	
	11	1	**122-9608**	1	PEDAL-RUBBER (RH)	
	12	1	**117-6350**	1	PEDAL AS (RH)	
	13	1	**122-9609**	1	PEDAL-RUBBER (LH)	
	14	1	**117-6349**	1	PEDAL AS (LH)	

M - METRIC PART

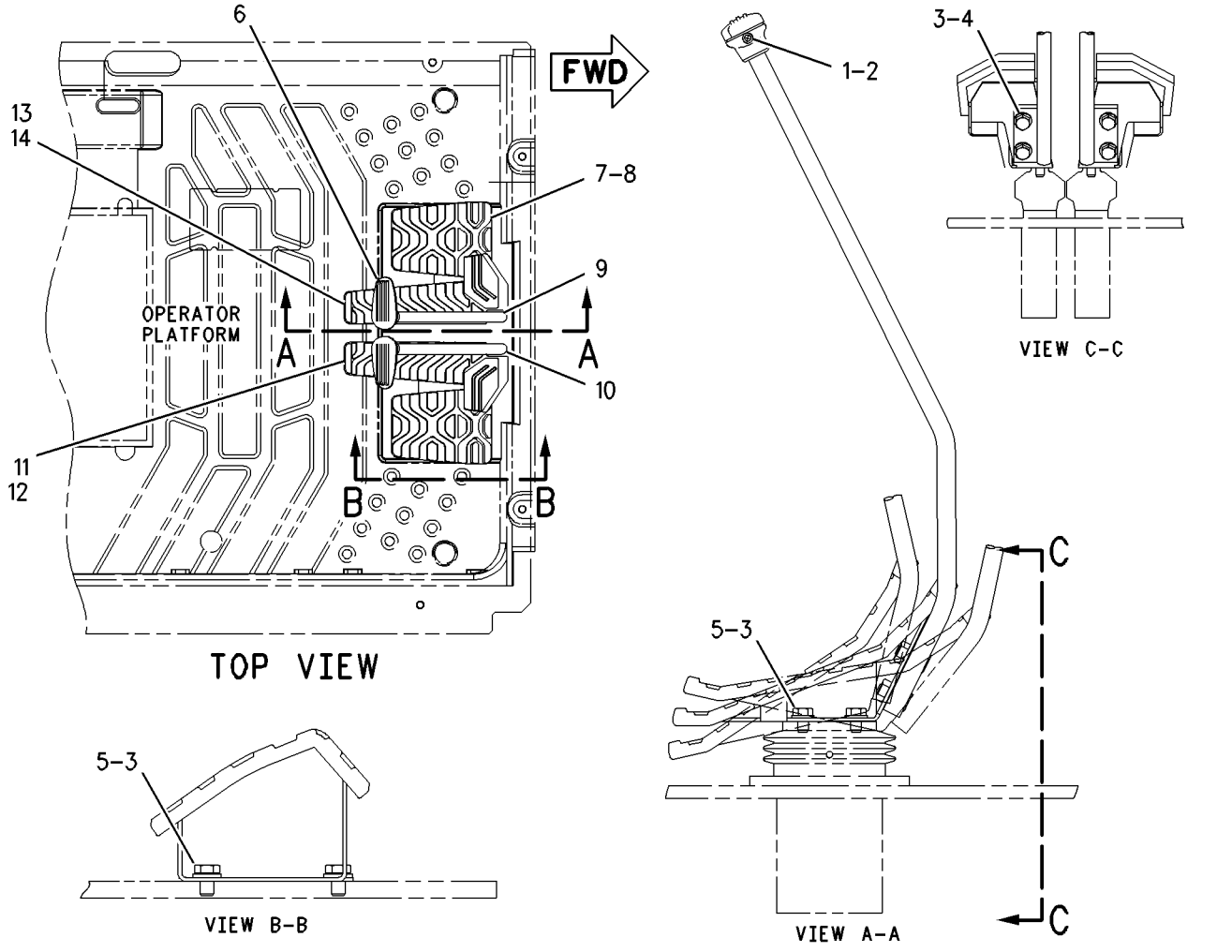

GRAPHIC #1 <END> g00672963

234-6501 COVER GP-CAB–REAR

S/N: DLP1-UP

PART OF 229-9108, 316-8814, 346-8037, 346-8039, 346-8042 CAB GP

AN ATTACHMENT

SMCS-7301, 7308

i05349686

NOTE	REF NO	GRAPHIC REF	PART NUMBER	QTY	PART NAME 1 2 3 4 5 6 (PRODUCT LEVEL)	SEE PAGE
	1	1	**234-6499**	1	COVER AS	
	2	1	**234-6502**	1	COVER-ACCESS (FUSE-REAR PANEL)	
	3	1	**234-6593**	2	FASTENER	
					USE WITH COVER WITH A 9-MM DIAMETER UPPER MOUNTING HOLE	
					–OR–	
		1	**245-7929**	2	CLIP	
					USE WITH COVER WITH A 7.6-MM DIAMETER UPPER MOUNTING HOLE	

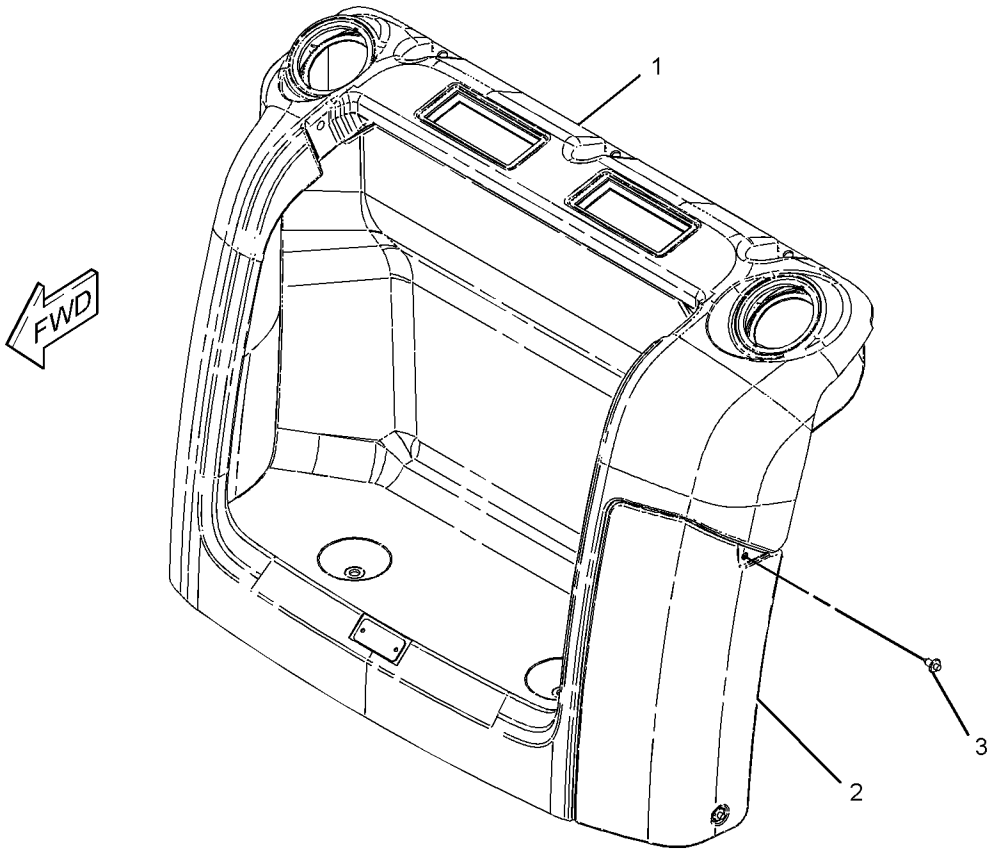

GRAPHIC #1 <END> g03389225

234-6500 COVER GP-STORAGE

S/N: DLP1-UP
USED ON STORAGE COMPARTMENT INSIDE CAB
PART OF 336-3354 OPTION AR-CAB
AN ATTACHMENT

SMCS-7268 **i05238918**

NOTE	REF NO	GRAPHIC REF	PART NUMBER	QTY	PART NAME 1 2 3 4 5 6 (PRODUCT LEVEL)	SEE PAGE
					(NO SERVICED PARTS)	

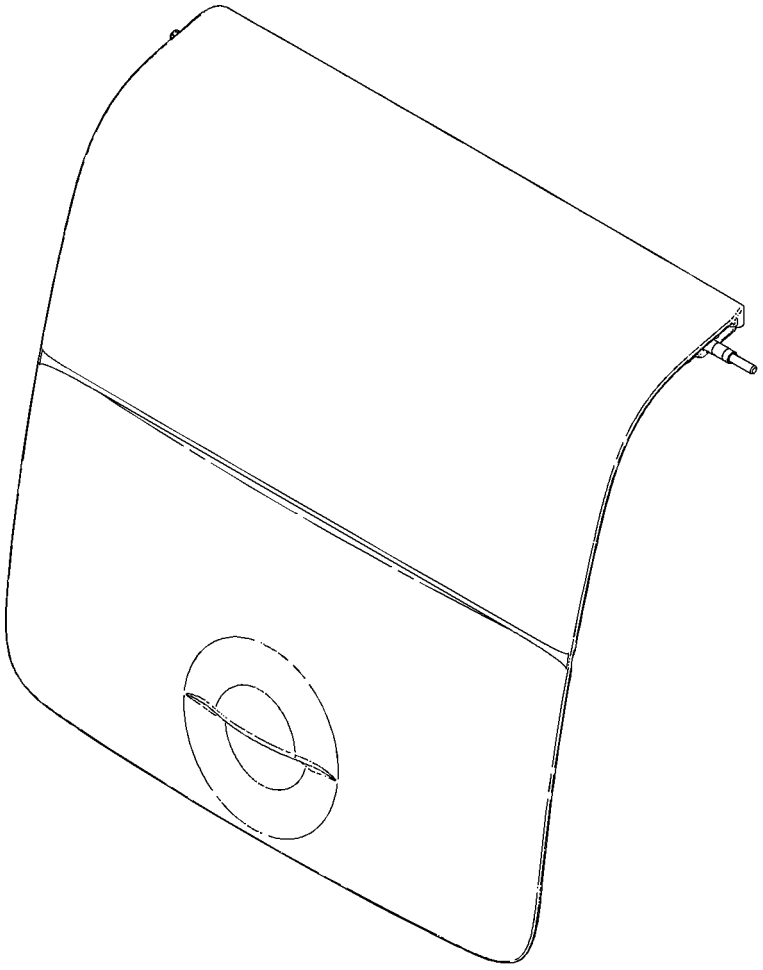

GRAPHIC #1 <END> g01092876

189-2768 DOOR & MTG GP-CAB

S/N: DLP1-UP
PART OF 229-9109, 316-8815 CAB GP
AN ATTACHMENT

SMCS-7308 **i03304163**

NOTE	REF NO	GRAPHIC REF	PART NUMBER	QTY	PART NAME 1 2 3 4 5 6 (PRODUCT LEVEL)	SEE PAGE
Y	1	1	*139-7100*	1	DOOR GP-CAB	1050
	2	1	*151-6767*	1	DOOR AS	
M	2A	1	**9X-2041**	6	SCREW-TRUSS HEAD (M10X1.5X20-MM)	
	2B	1	**151-6777**	2	HINGE	

M - METRIC PART
Y - SEPARATE ILLUSTRATION

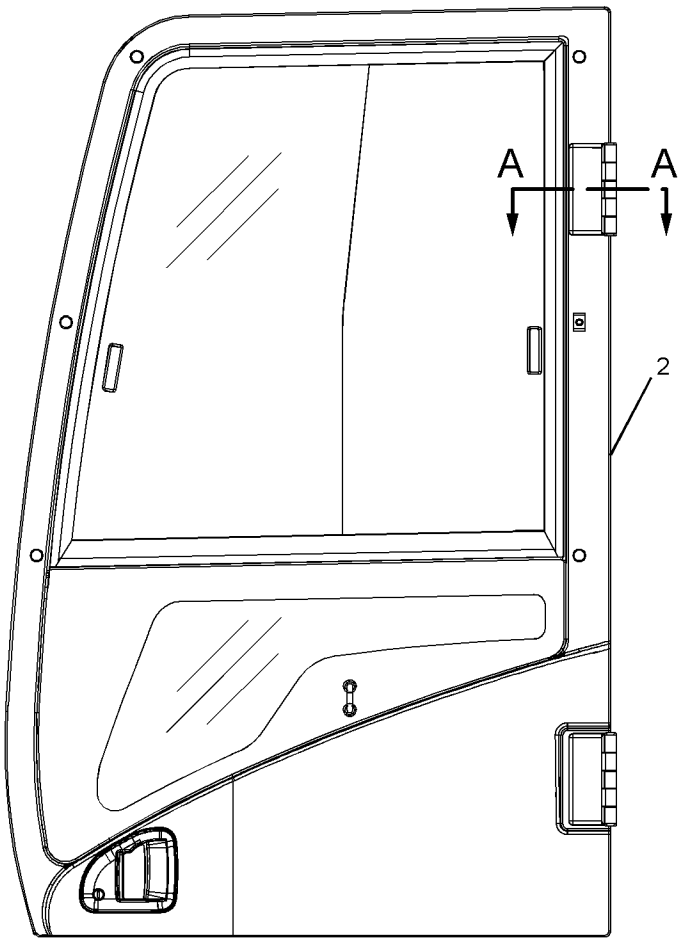

LEFT SIDE VIEW

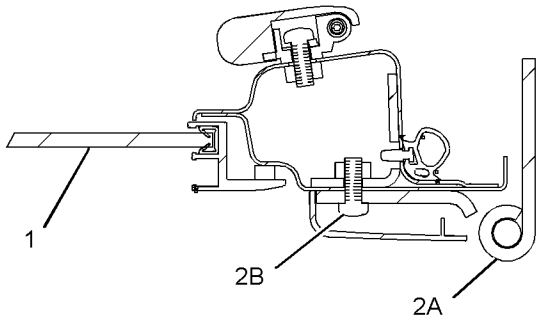

SECTION A-A

GRAPHIC #1 <END> g01687794

316-6166 DOOR & MTG GP-CAB

S/N: DLP1-UP

PART OF 346-8043, 346-8053, 346-8055 CAB GP

AN ATTACHMENT

SMCS-7308 **i05917581**

NOTE	REF NO	GRAPHIC REF	PART NUMBER	QTY	PART NAME 1 2 3 4 5 6 (PRODUCT LEVEL)	SEE PAGE
Y	1	1	*307-1818*	1	PARTS GP-DOOR	1130
	2	1	*151-6767*	1	DOOR AS	
	2A	1	**151-6777**	2	HINGE	
M		1	**9X-2041**	6	SCREW-TRUSS HEAD (M10X1.5X20-MM)	

M - METRIC PART
Y - SEPARATE ILLUSTRATION

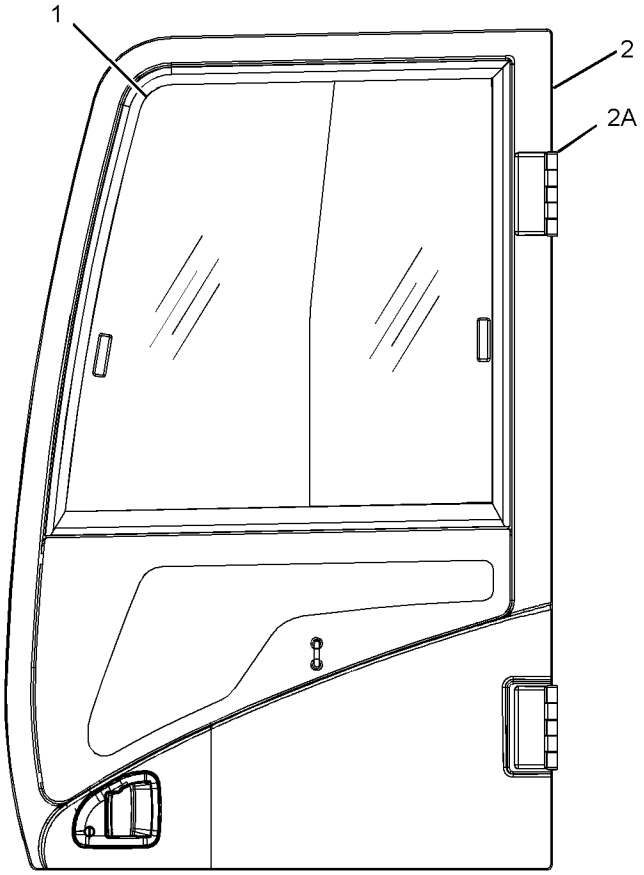

LEFT SIDE VIEW

GRAPHIC #1 <END> g03057538

139-7100 DOOR GP-CAB

S/N: DLP1-UP
PART OF 189-2768 DOOR & MTG GP-CAB
AN ATTACHMENT
TYPE 1

SMCS-7308 **i04002021**

NOTE	REF NO	GRAPHIC REF	PART NUMBER	QTY	PART NAME 1 2 3 4 5 6 (PRODUCT LEVEL)	SEE PAGE
	1	1	**151-6703**	1	HANDLE-PULL	
	2	1	**151-6704**	2	CAP	
Y	3	1	**151-6792**	1	WINDOW GP-DOOR	1187
	4	1	**156-6471**	1	GLASS	
	5	1	**156-6598**	1	HOOK	
	6	1	**156-6600**	1	LOCK AS	
		1	**164-0514**	1	CLIP	
	6A	1	**164-0519**	1	CLIP (13-MM)	
	7	1	**156-6643**	1	COVER	
	8	1	**156-6645**	1	HANDLE AS	
		1	**201-4391**	1	CLIP	
	9	1	**161-3639**	1	HANDLE AS	
	10	1	**161-3650**	1	COVER AS	
	11	1	**161-3663**	1	SEAL AS	
		1	**151-9497**	45	CLIP	
	12	1	**161-3665**	1	SEAL	
	13	1	**259-7354**	1	COVER	
	14	1	**164-0515**	1	JOINT	
	15	1	**167-7039**	1	GROMMET	
M	16	1	**185-8180**	3	SCREW (M6X1X16-MM)	
	17	1	**189-2711**	2	WASHER (8.5X16X2.3-MM THK)	
M	18	1	**096-2622**	2	SCREW-MACHINE (M4X0.7X8-MM)	
	19	1	**3B-4505**	1	LOCKWASHER (5/16)	
M	20	1	**101-8899**	2	SCREW AS (M6X1.0X16-MM)	
M	21	1	**101-8900**	2	SCREW AS (M6X1X20-MM)	
	22	1	**151-9461**	4	SPACER	
	23	1	**156-6644**	1	COVER	
	24	1	**178-5573**	4	SPACER	
	25	1	**178-5574**	2	SPACER	
	26	1	**189-2690**	1	HANDLE	
	27	1	**4I-4286**	1	KNOB	
M	28	1	**9X-2042**	8	SCREW-TRUSS HEAD (M6X1X12-MM)	

M - METRIC PART
Y - SEPARATE ILLUSTRATION

139-7100 **DOOR GP-CAB (**contd.**)** **i04002021**

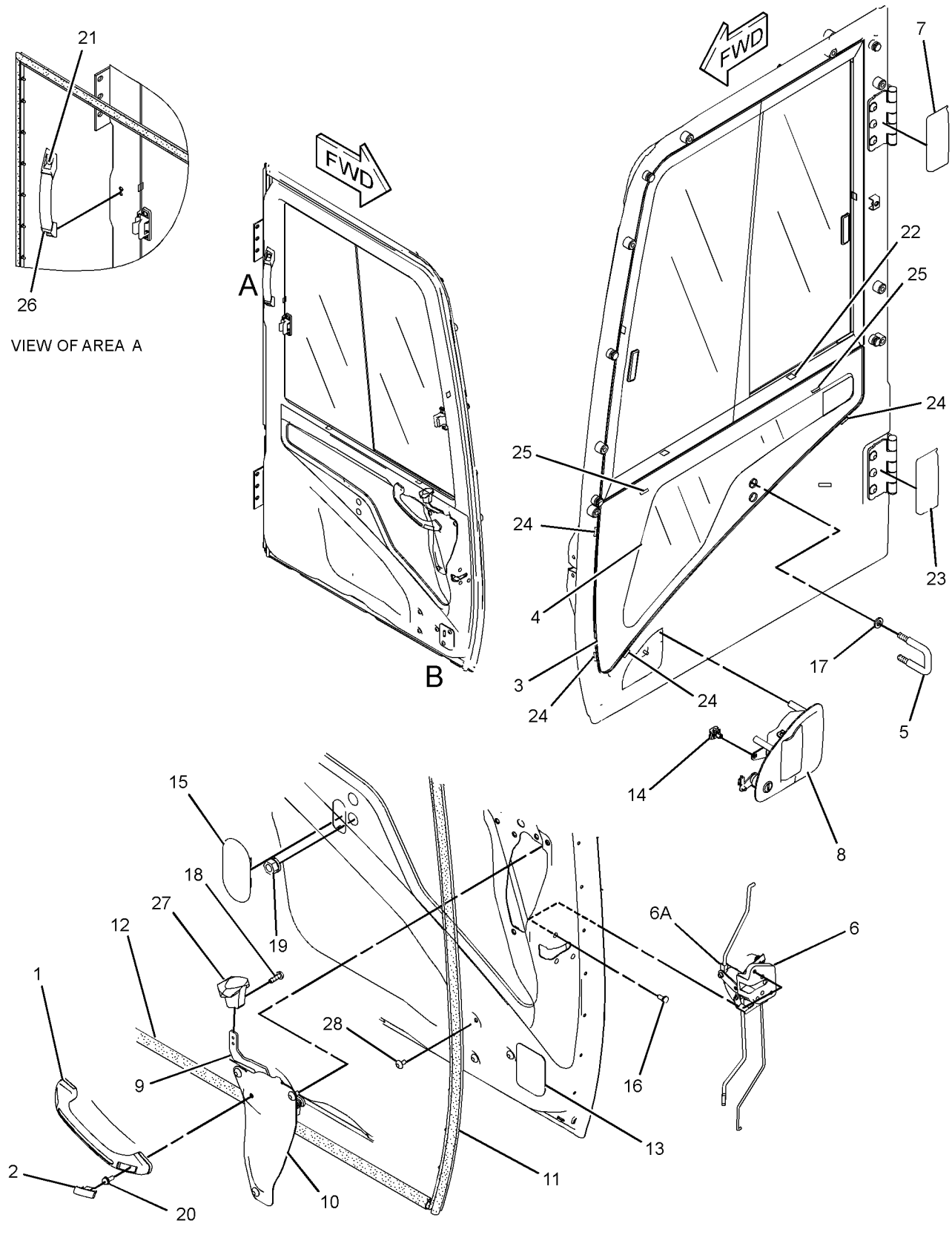

GRAPHIC #1 <END> g02178359

139-7100 DOOR GP-CAB

S/N: DLP1-UP
PART OF 189-2768 DOOR & MTG GP-CAB
AN ATTACHMENT
TYPE 2

SMCS-7308 **i03301782**

NOTE	REF NO	GRAPHIC REF	PART NUMBER	QTY	PART NAME 1 2 3 4 5 6 (PRODUCT LEVEL)	SEE PAGE
C	1	1	**327-6579**	1	HANDLE-PULL	
Y	3	1	**151-6792**	1	WINDOW GP-DOOR	1187
	4	1	**156-6471**	1	GLASS	
	5	1	**156-6598**	1	HOOK	
	6	1	**156-6600**	1	LOCK AS	
		1	**164-0514**	1	CLIP	
	6A	1	**164-0519**	1	CLIP (13-MM)	
	7	1	**156-6643**	1	COVER	
	8	1	**156-6645**	1	HANDLE AS	
		1	**201-4391**	1	CLIP	
	9	1	**161-3639**	1	HANDLE AS	
	10	1	**161-3650**	1	COVER AS	
	11	1	**161-3663**	1	SEAL AS	
		1	**151-9497**	45	CLIP	
	12	1	**161-3665**	1	SEAL	
	13	1	**259-7354**	1	COVER	
	14	1	**164-0515**	1	JOINT	
	15	1	**167-7039**	1	GROMMET	
M	16	1	**185-8180**	3	SCREW (M6X1X16-MM)	
	17	1	**189-2711**	2	WASHER (8.5X16X2.3-MM THK)	
M	18	1	**096-2622**	2	SCREW-MACHINE (M4X0.7X8-MM)	
M	19	1	**096-3884**	2	NUT-SPRING (M8X1.25-THD)	
M	20	1	**101-8899**	2	SCREW AS (M6X1.0X16-MM)	
M	21	1	**101-8900**	2	SCREW AS (M6X1X20-MM)	
	22	1	**151-9461**	4	SPACER	
	23	1	**156-6644**	1	COVER	
	24	1	**178-5573**	4	SPACER	
	25	1	**178-5574**	2	SPACER	
	26	1	**189-2690**	1	HANDLE	
	27	1	**4I-4286**	1	KNOB	
M	28	1	**9X-2042**	8	SCREW-TRUSS HEAD (M6X1X12-MM)	

C - CHANGE FROM PREVIOUS TYPE
M - METRIC PART
Y - SEPARATE ILLUSTRATION

139-7100 **DOOR GP-CAB (**contd.**)** **i03301782**

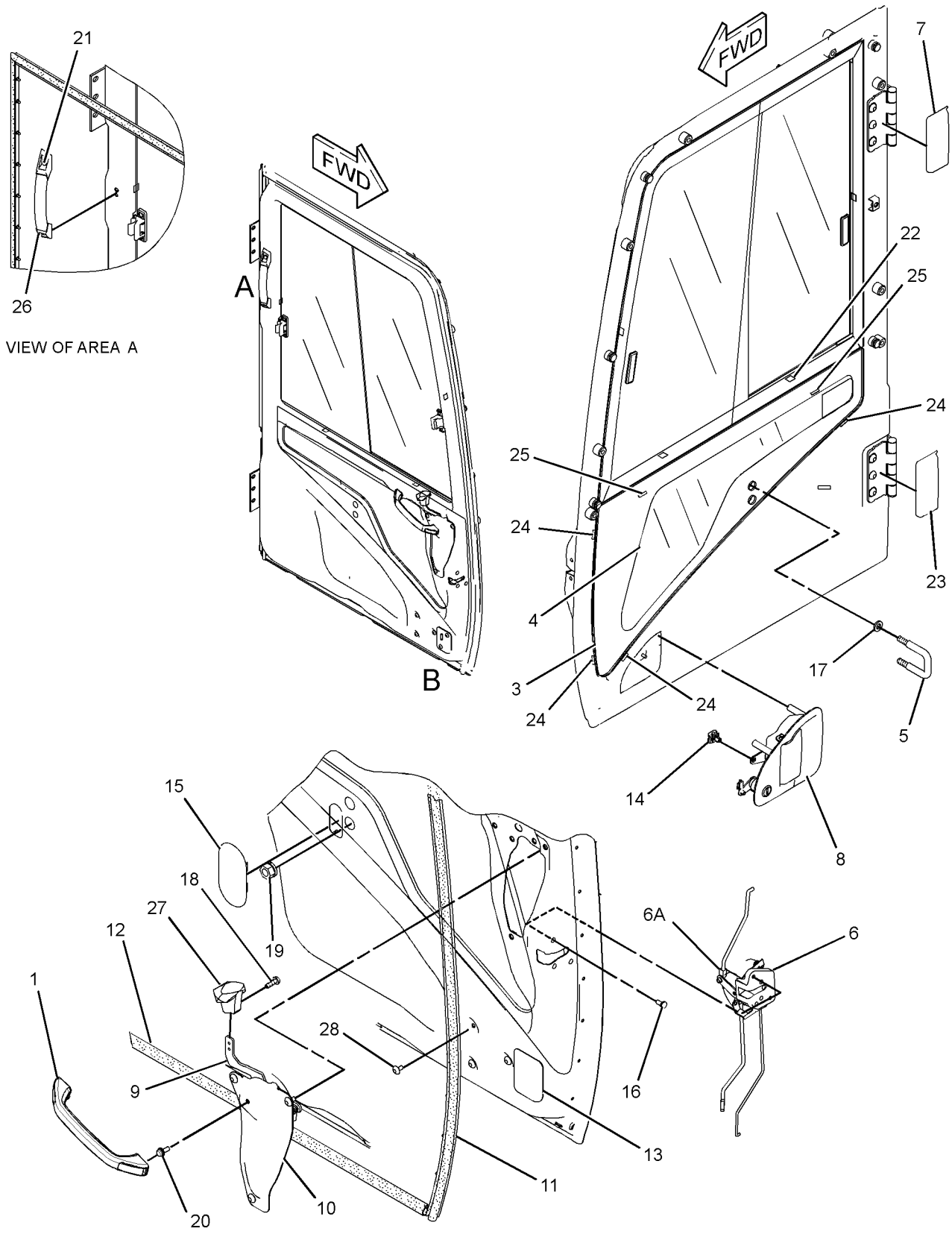

VIEW OF AREA B

GRAPHIC #1 <END> g01685016

229-9082 DUCT GP-CAB AIR

S/N: DLP1-UP

PART OF 235-9003 AIR CONDITIONER AR, 284-4573 HEATER AR-CAB

AN ATTACHMENT

SMCS-734D **i04564619**

NOTE	REF NO	GRAPHIC REF	PART NUMBER	QTY	PART NAME 1 2 3 4 5 6 (PRODUCT LEVEL)	SEE PAGE
	1	1	**293-1183**	1	FILTER GP-CAB AIR	
		1	**293-1184**	1	FILTER ELEMENT-CAB AIR	
	2	1	**235-8876**	1	DUCT AS (FRESH AIR, UPPER)	
		1	**245-7872**	1	INSULATOR	
	3	1	**235-8877**	1	DUCT AS (VENT, REAR)	
		1	**245-7792**	1	INSULATOR	
	4	1	**235-8878**	1	DUCT AS (VENT, FRONT)	
		1	**245-7793**	1	INSULATOR	
	5	1	**235-8879**	1	DUCT AS (FLOOR)	
		1	**245-7873**	1	INSULATOR	
	6	1	**240-5074**	1	DUCT AS (FRESH AIR, LOWER)	
		1	**245-7791**	1	INSULATOR	
M	7	1	**101-8899**	2	SCREW AS (M6X1.0X16-MM)	
	8	1	**176-1996**	5	CLIP	

M - METRIC PART

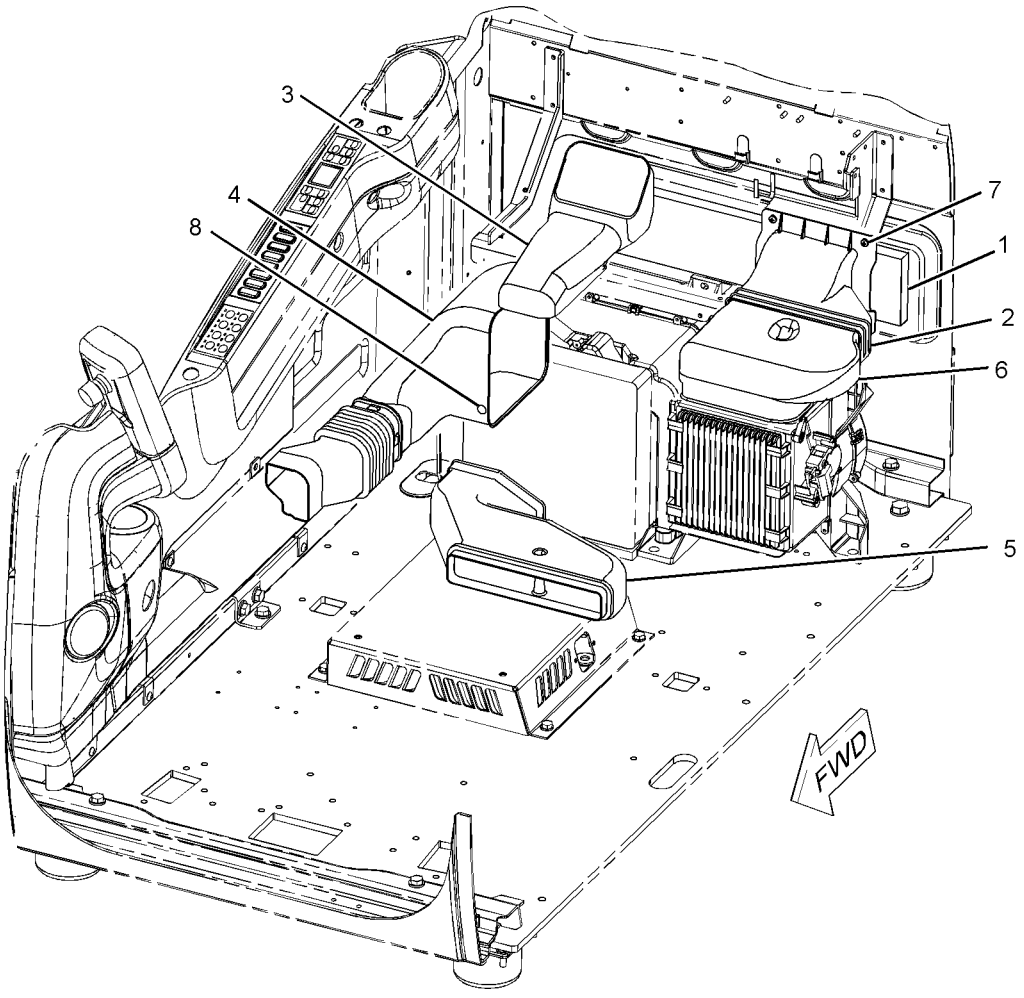

GRAPHIC #1 <END> g01126665

284-4376 FLOOR MAT

S/N: DLP1-UP

FIELD REPLACEMENT FOR 284-4377—PAGE: 1056: FOR 293-1222—PAGE: 1057

AN ATTACHMENT

SMCS-726M **i06716715**

NOTE	REF NO	GRAPHIC REF	PART NUMBER	QTY	PART NAME 1 2 3 4 5 6 (PRODUCT LEVEL)	SEE PAGE
			(NO SERVICED PARTS)			

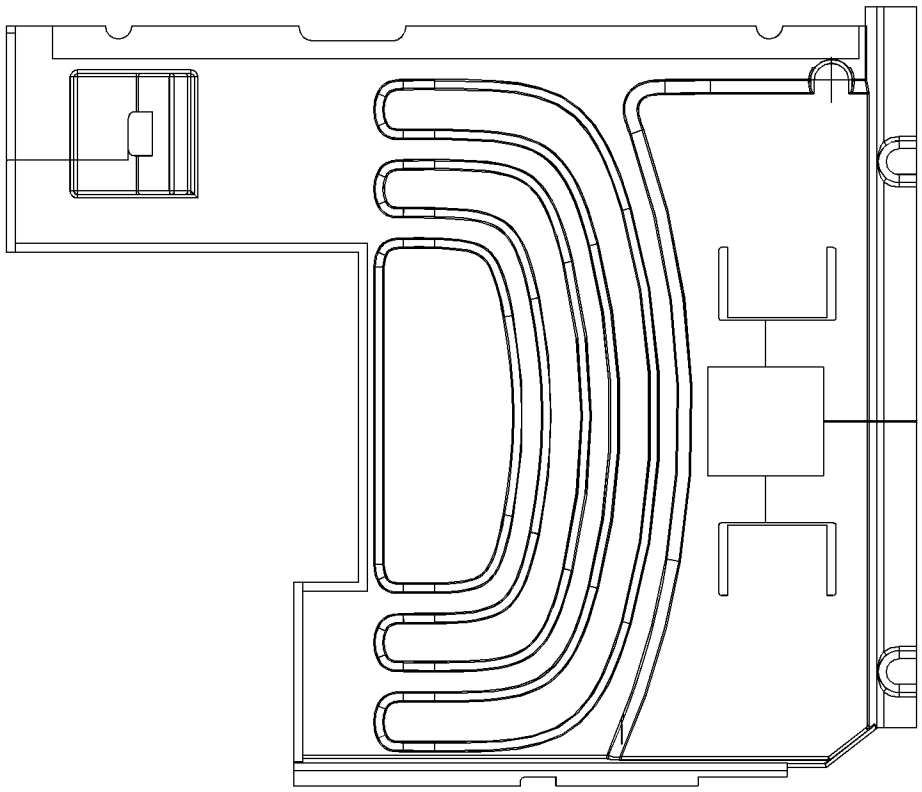

GRAPHIC #1 <END> g01420854

284-4377 FLOOR MAT

S/N: DLP1-UP

FIELD REPLACEMENT ORDER 284-4376–PAGE: 1055

AN ATTACHMENT

SMCS-726M **i02849538**

NOTE	REF NO	GRAPHIC REF	PART NUMBER	QTY	PART NAME 1 2 3 4 5 6 (PRODUCT LEVEL)	SEE PAGE

(NO SERVICED PARTS)

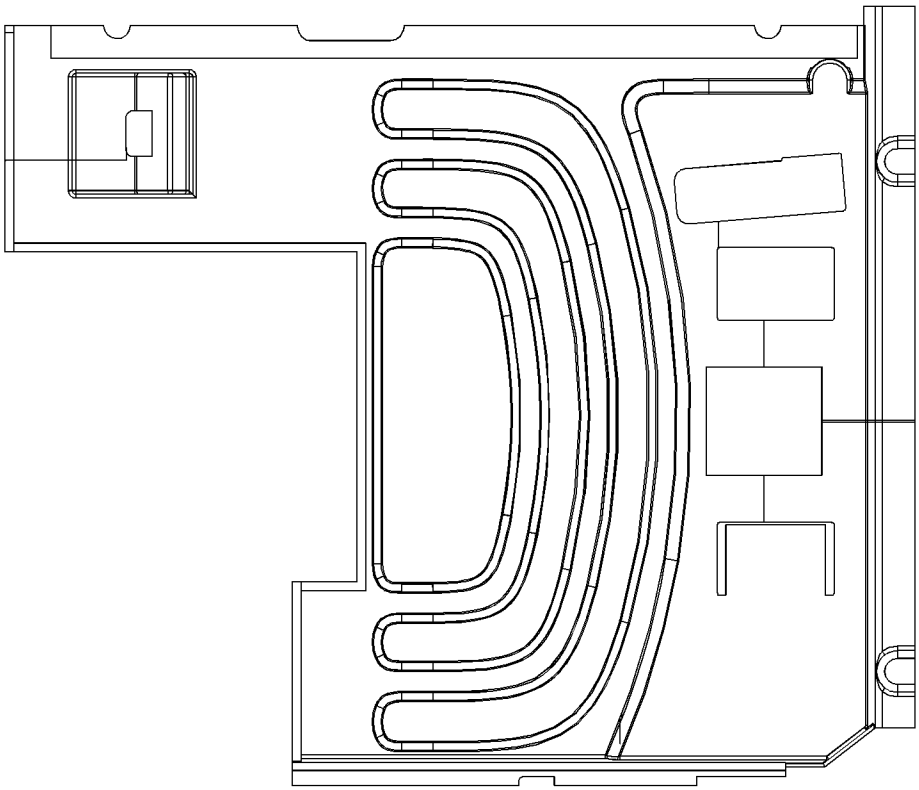

GRAPHIC #1 <END> g01420840

293-1222 FLOOR MAT

S/N: DLP1-UP
FIELD REPLACEMENT ORDER 284-4376—PAGE: 1055
AN ATTACHMENT

SMCS-726M **i02849545**

NOTE	REF NO	GRAPHIC REF	PART NUMBER	QTY	PART NAME 1 2 3 4 5 6 (PRODUCT LEVEL)	SEE PAGE
					(NO SERVICED PARTS)	

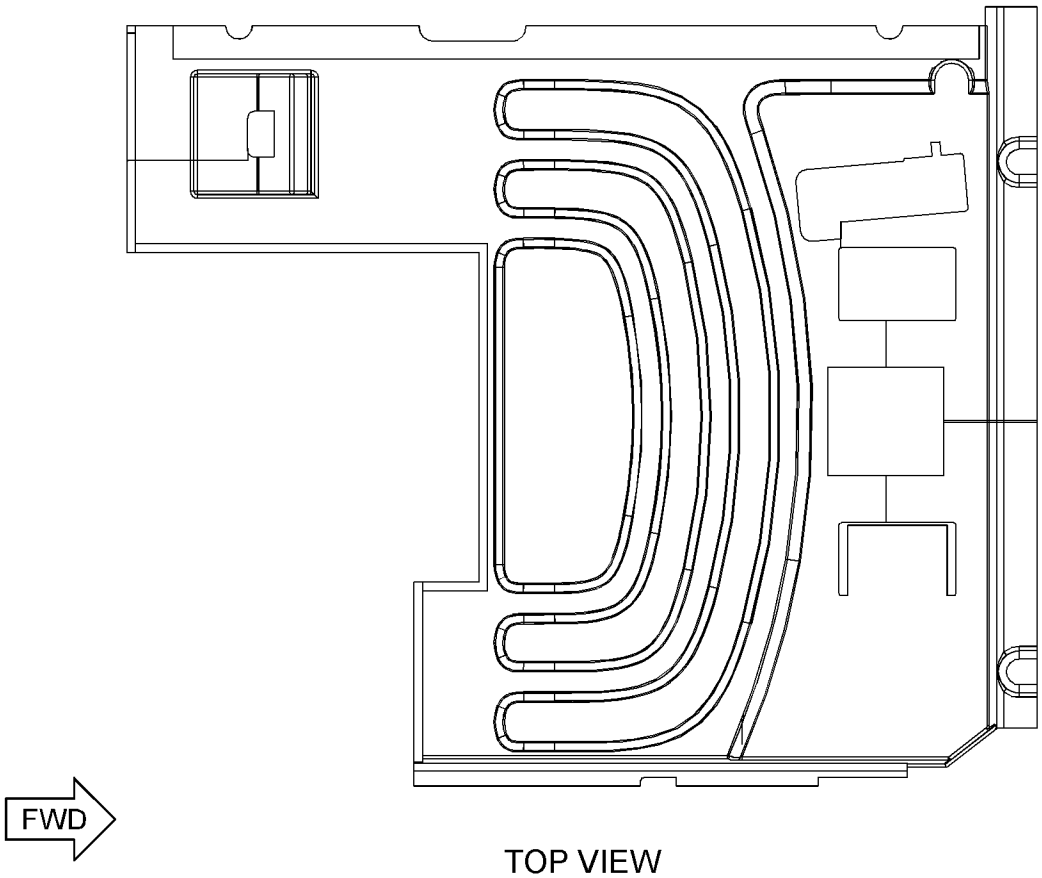

TOP VIEW

GRAPHIC #1 <END> g01421278

178-5549 GUARD AR-OVERHEAD—FALLING OBJECTS GUARD SYSTEM

S/N: DLP1-UP
CANNOT BE USED WITH VANDALISM GUARD, WINDOW GUARD
PART OF 336-3389 OPTION AR-LIGHTING
AN ATTACHMENT

SMCS-7159 **i05135193**

NOTE	PART NUMBER	QTY	PART NAME 1 2 3 4 5 6 (PRODUCT LEVEL)	SEE PAGE
Y	*171-7485*	1	GUARD GP-FRONT WINDOW	1064
Y	*164-0497*	1	GUARD GP-OVERHEAD	1066

Y - SEPARATE ILLUSTRATION

<END>

260-7114 GUARD AR-VANDALISM

S/N: DLP1-UP
AN ATTACHMENT

SMCS-7315 **i02808521**

NOTE	PART NUMBER	QTY	PART NAME 1 2 3 4 5 6 (PRODUCT LEVEL)	SEE PAGE
Y	*207-0159*	1	GUARD GP-VANDALISM (CAB)	1070
Y	*273-8105*	1	STORAGE GP-VANDALISM GUARD	435

Y - SEPARATE ILLUSTRATION

<END>

260-7115 GUARD AR-VANDALISM

S/N: DLP1-UP
PART OF 336-3372 OPTION AR-GUARD
AN ATTACHMENT

SMCS-7315 **i02808524**

NOTE	PART NUMBER	QTY	PART NAME 1 2 3 4 5 6 (PRODUCT LEVEL)	SEE PAGE
Y	*207-0160*	1	GUARD GP-VANDALISM (CAB)	1071
Y	*273-8105*	1	STORAGE GP-VANDALISM GUARD	435

Y - SEPARATE ILLUSTRATION

<END>

164-0534 GUARD GP-FRONT WINDOW

S/N: DLP1-UP
CANNOT BE USED WITH 164-0535—PAGE: 1063, 171-7485—PAGE: 1064
AN ATTACHMENT
TYPE 1

SMCS-7182, 7315

i05393441

NOTE	REF NO	GRAPHIC REF	PART NUMBER	QTY	PART NAME 1 2 3 4 5 6 (PRODUCT LEVEL)	SEE PAGE
	1	1	**2Y-5685**	4	RING-RETAINING	
	2	1	**6C-8382**	2	SPRING-LATCH	
	3	1	**176-1928**	2	BRACKET AS	
	4	1	**196-1569**	1	SUPPORT AS	
	5	1	**196-1571**	1	SUPPORT AS	
	6	1	**196-1572**	2	LATCH AS	
	7	1	**258-0330**	2	BRACKET AS	
	8	1	**196-1599**	1	FRAME AS	
M	9	1	**201-4534**	2	BOLT (M16X2X26-MM)	
	10	1	**201-4535**	2	PIN	
	11	1	**207-0216**	2	SPRING AS-GAS (FRONT WINDOW GUARD)	
M	12	1	**096-4882**	2	LOCKNUT (M8X1.25-THD)	
M	13	1	**7X-2553**	2	BOLT (M16X2X40-MM)	
M	14	1	**7Y-0623**	2	LOCKNUT (M16X2-THD)	
M	15	1	**8T-4139**	6	BOLT (M12X1.75X30-MM)	
M	16	1	**8T-4192**	2	BOLT (M12X1.75X25-MM)	
	17	1	**8T-4223**	8	WASHER-HARD (13.5X25.5X3-MM THK)	
	18	1	**8T-4224**	4	WASHER-HARD (8.8X16X2-MM THK)	
	19	1	**9X-8257**	4	WASHER (17.5X30X3.5-MM THK)	
M	20	1	**4I-6602**	8	BOSS (M12X1.75X20-MM)	

M - METRIC PART

164-0534 **GUARD GP-FRONT WINDOW (**contd.**)** **i05393441**

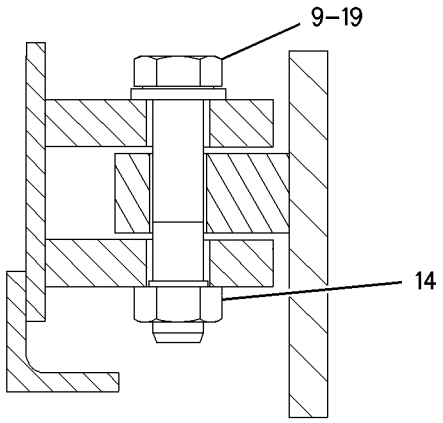

SECTION B-B

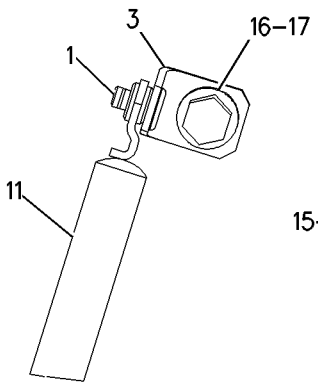

VIEW C-C

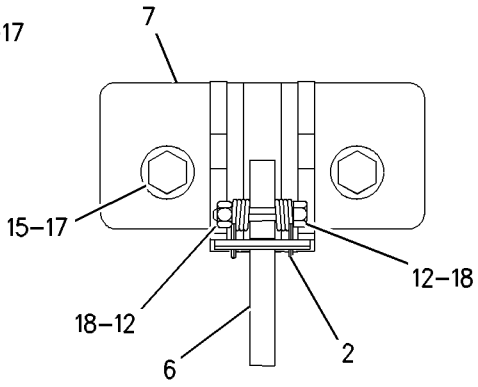

VIEW A-A

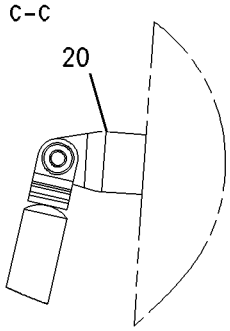

VIEW OF AREA D

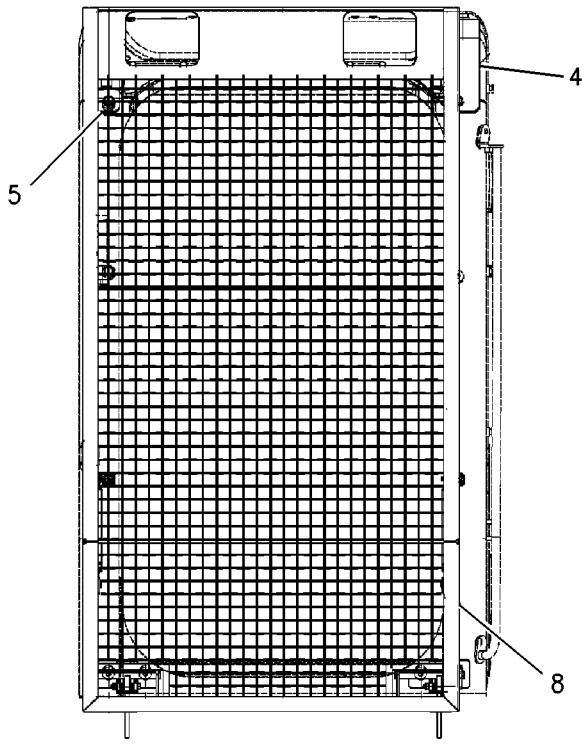

FRONT VIEW

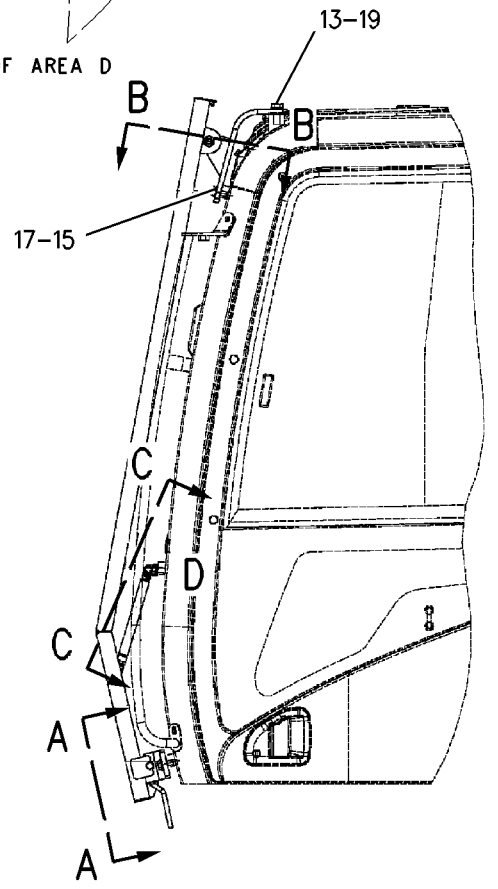

LEFT SIDE VIEW

GRAPHIC #1 <END> g00909397

164-0534 GUARD GP-FRONT WINDOW

S/N: DLP1-UP
CANNOT BE USED WITH 164-0535—PAGE: 1063, 171-7485—PAGE: 1064
AN ATTACHMENT
TYPE 2

SMCS-7182, 7315 **i07192726**

NOTE	REF NO	GRAPHIC REF	PART NUMBER	QTY	PART NAME 1 2 3 4 5 6 (PRODUCT LEVEL)	SEE PAGE
	1	1	**5D-4822**	4	RING-RETAINING	
	2	1	**6C-8382**	2	SPRING-LATCH	
	3	1	**176-1928**	2	BRACKET AS	
	4	1	**196-1569**	1	SUPPORT AS	
	5	1	**196-1571**	1	SUPPORT AS	
	6	1	**196-1572**	2	LATCH AS	
M	7	1	**201-4534**	2	BOLT (M16X2X26-MM)	
M	8	1	**285-9066**	2	BOLT (M8X1.25X65-MM)	
	9	1	**207-0216**	2	SPRING AS-GAS (FRONT WINDOW GUARD)	
	10	1	**258-0330**	2	BRACKET AS	
C	11	1	**327-6601**	1	FRAME AS	
M	12	1	**096-4882**	2	LOCKNUT (M8X1.25-THD)	
M	13	1	**4I-6602**	8	BOSS (M12X1.75X20-MM)	
M	14	1	**453-1259**	2	BOLT (M16X2X40-MM)	
M	15	1	**7Y-0623**	2	LOCKNUT (M16X2-THD)	
M	16	1	**8T-4139**	6	BOLT (M12X1.75X30-MM)	
M	17	1	**8T-4192**	2	BOLT (M12X1.75X25-MM)	
	18	1	**8T-4223**	4	WASHER-HARD (13.5X25.5X3-MM THK)	
	19	1	**8T-4224**	4	WASHER-HARD (8.8X16X2-MM THK)	
	20	1	**451-2175**	2	WASHER-HARD (17.5X30X3.5-MM THK)	
	21	1	**5P-1076**	4	WASHER-HARD (13.5X30X4-MM THK)	
	22	1	**099-7241**	2	WASHER-HARD (19X34X3-MM THK)	

C - CHANGE FROM PREVIOUS TYPE
M - METRIC PART

164-0534 **GUARD GP-FRONT WINDOW (**contd.**)** **i07192726**

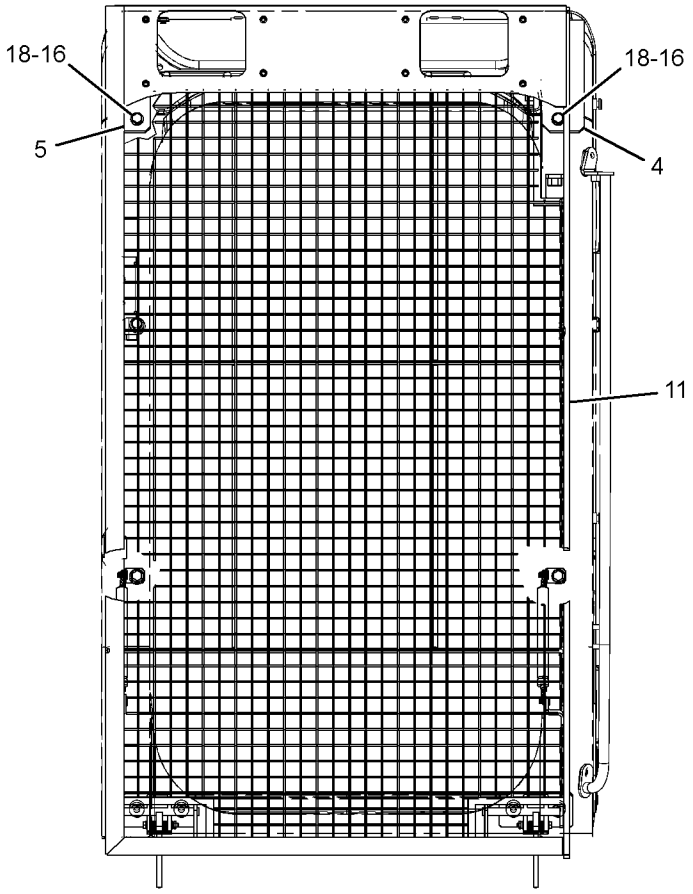

FRONT VIEW

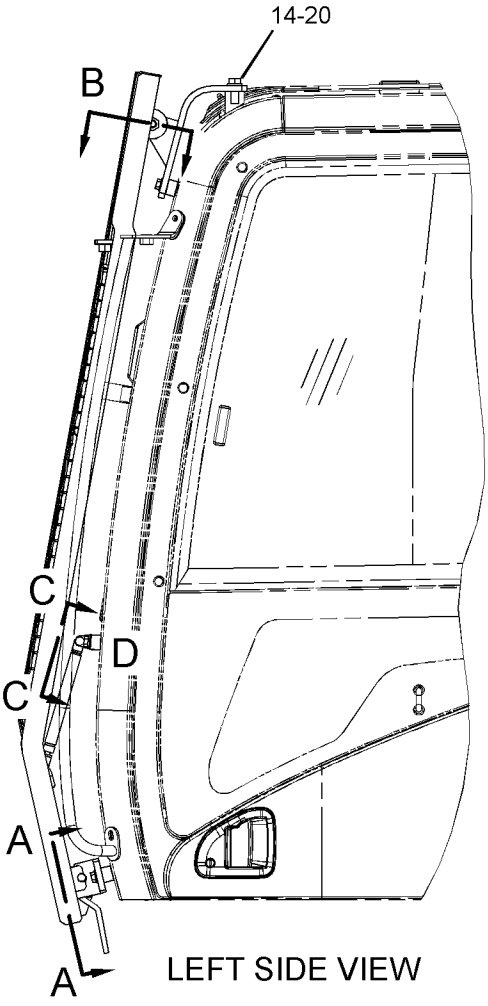

LEFT SIDE VIEW

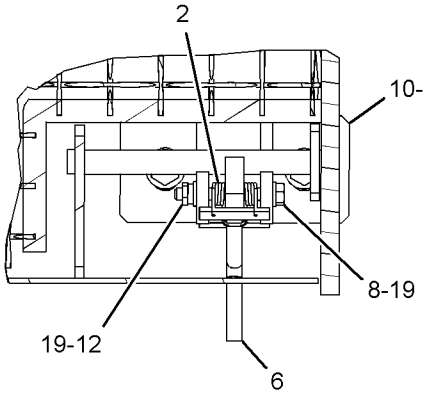

SECTION A-A

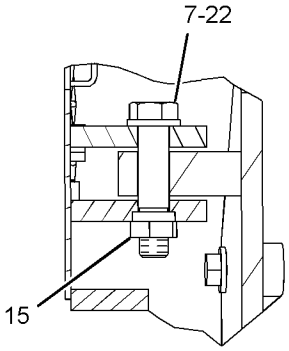

SECTION B

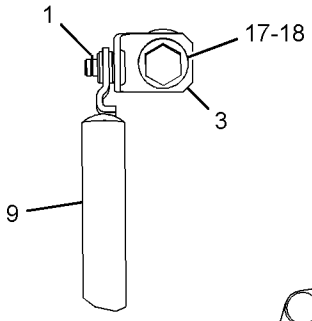

VIEW C-C

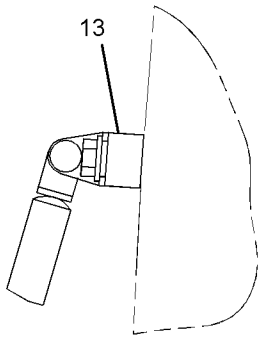

VIEW OF AREA D

GRAPHIC #1 <END> g06269869

164-0535 GUARD GP-FRONT WINDOW–LOWER

S/N: DLP1-UP

AN ATTACHMENT

SMCS-7182, 7315 **i05193591**

NOTE	REF NO	GRAPHIC REF	PART NUMBER	QTY	PART NAME 1 2 3 4 5 6 (PRODUCT LEVEL)	SEE PAGE
M	1	1	**8T-4192**	4	BOLT (M12X1.75X25-MM)	
	2	1	**8T-4223**	4	WASHER-HARD (13.5X25.5X3-MM THK)	
	3	1	**167-7055**	1	FRAME AS	
M	4	1	**4I-6602**	4	BOSS (M12X1.75X20-MM)	

M - METRIC PART

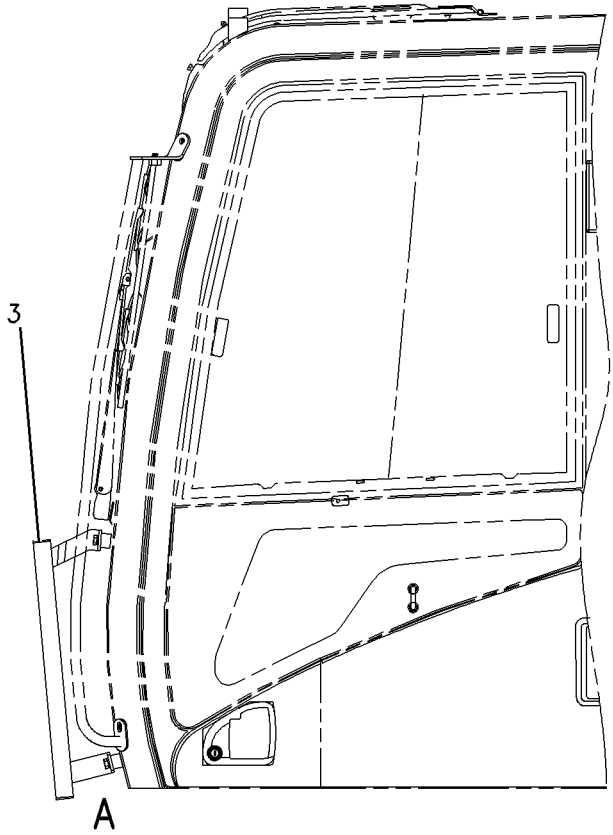

LEFT SIDE VIEW

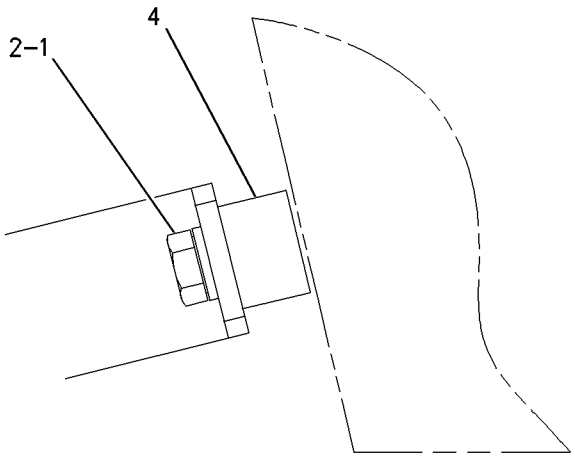

VIEW OF AREA A

GRAPHIC #1 <END> g00689592

171-7485 GUARD GP-FRONT WINDOW

S/N: DLP1-UP
CANNOT BE USED WITH 164-0534—PAGE: 1059, 164-0535—PAGE: 1063
PART OF 178-5549 GUARD AR-OVERHEAD
AN ATTACHMENT

SMCS-7182, 7315 **i07184298**

NOTE	REF NO	GRAPHIC REF	PART NUMBER	QTY	PART NAME 1 2 3 4 5 6 (PRODUCT LEVEL)	SEE PAGE
	1	1	**5D-4822**	4	RING-RETAINING	
	2	1	**6C-8382**	2	SPRING-LATCH	
	3	1	**099-7241**	2	WASHER-HARD (19X34X3-MM THK)	
	4	1	**316-8908**	1	GUARD AS-WINDOW	
	5	1	**176-1925**	2	SPRING AS-GAS (FRONT WINDOW GUARD)	
	6	1	**176-1928**	2	BRACKET AS	
	7	1	**196-1569**	1	SUPPORT AS	
	8	1	**196-1571**	1	SUPPORT AS	
	9	1	**196-1572**	2	LATCH AS	
	10	1	**258-0330**	2	BRACKET AS	
M	11	1	**201-4534**	2	BOLT (M16X2X26-MM)	
M	12	1	**285-9066**	2	BOLT (M8X1.25X65-MM)	
M	13	1	**096-4882**	2	LOCKNUT (M8X1.25-THD)	
BM	15	1	**4I-6602**	8	BOSS (M12X1.75X20-MM)	
M	16	1	**453-1259**	2	BOLT (M16X2X40-MM)	
M	17	1	**7Y-0623**	2	LOCKNUT (M16X2-THD)	
M	18	1	**8T-4139**	6	BOLT (M12X1.75X30-MM)	
M	19	1	**8T-4192**	2	BOLT (M12X1.75X25-MM)	
	20	1	**8T-4223**	4	WASHER-HARD (13.5X25.5X3-MM THK)	
	21	1	**8T-4224**	4	WASHER-HARD (8.8X16X2-MM THK)	
	22	1	**451-2175**	2	WASHER-HARD (17.5X30X3.5-MM THK)	
	23	1	**459-1731**	1	FILM-CERTIFICATION (OPS, READ OMM)	
	25	1	**219-0305**	1	FILM-WARNING (NO WELD, NO DRILL, READ OMM)	
	26	1	**5P-1076**	4	WASHER-HARD (13.5X30X4-MM THK)	

B - USE AS REQUIRED
M - METRIC PART

171-7485 **GUARD GP-FRONT WINDOW (**contd.**)** **i07184298**

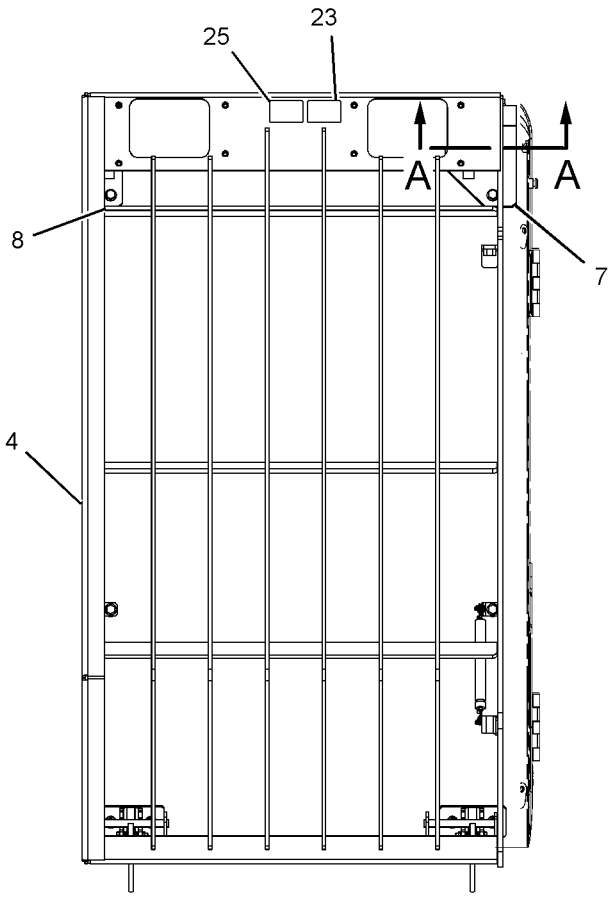

FRONT VIEW

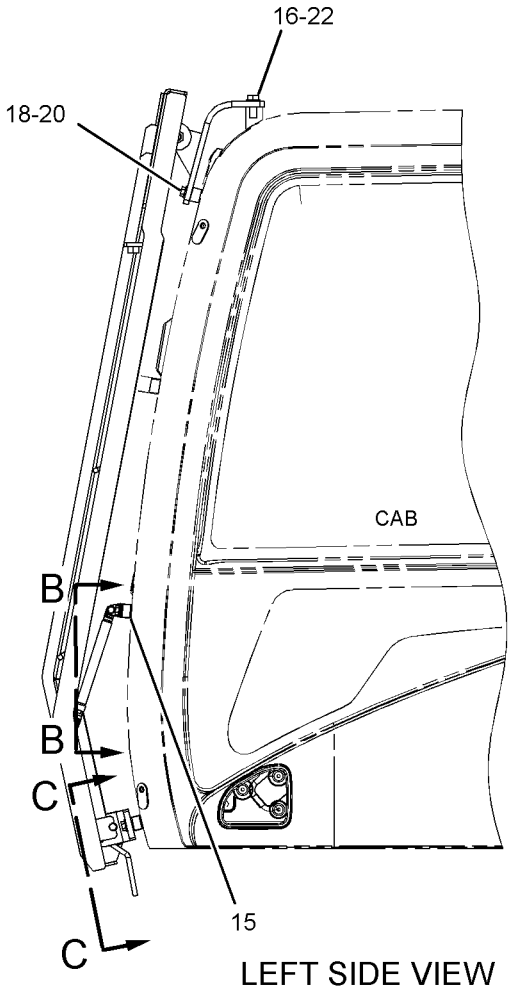

LEFT SIDE VIEW

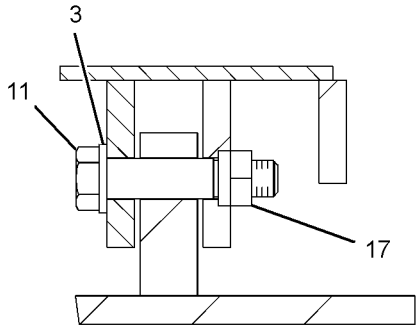

SECTION A-A

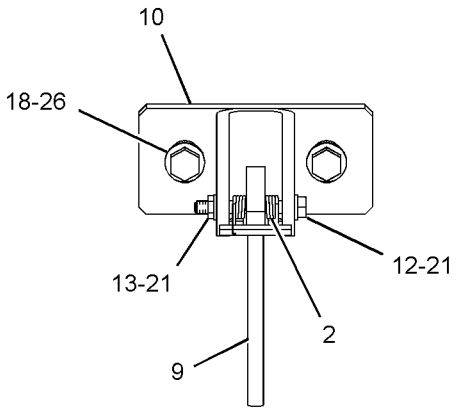

SECTION C-C

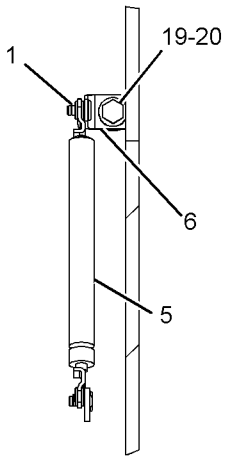

SECTION B-B

GRAPHIC #1 <END> g06249154

164-0497 GUARD GP-OVERHEAD

S/N: DLP1-UP
PART OF 178-5549 GUARD AR-OVERHEAD
AN ATTACHMENT
TYPE 1

SMCS-7159 **i05369523**

NOTE	REF NO	GRAPHIC REF	PART NUMBER	QTY	PART NAME 1 2 3 4 5 6 (PRODUCT LEVEL)	SEE PAGE
	1	1	**8V-1715**	2	SPACER (20.5X35X12-MM THK)	
	2	1	**167-7141**	1	GUARD AS	
	3	1	**219-0305**	1	FILM-WARNING (NO WELD, NO DRILL, READ OMM)	
	4	1	**298-4196**	1	FILM-CERTIFICATION (OPS GUARD, READ OMM)	
	5	1	**9X-8257**	4	WASHER (17.5X30X3.5-MM THK)	
	6	1	**090-8865**	2	SPACER (17X40X3-MM THK)	
					(WHEN EQUIPPED WITH CAB LIGHTS)	
					—OR—	
		1	**090-8865**	3	SPACER (17X40X3-MM THK)	
					(WHEN EQUIPPED WITH PRODUCT LINK)	
					—OR—	
		1	**090-8865**	1	SPACER (17X40X3-MM THK)	
					(WHEN EQUIPPED WITH CAB LIGHTS & PRODUCT LINK)	
M	7	1	**7X-2559**	2	BOLT (M16X2X160-MM)	
M	8	1	**8T-4174**	2	BOLT (M16X2X120-MM)	

M - METRIC PART

164-0497 **GUARD GP-OVERHEAD (**contd.**)** **i05369523**

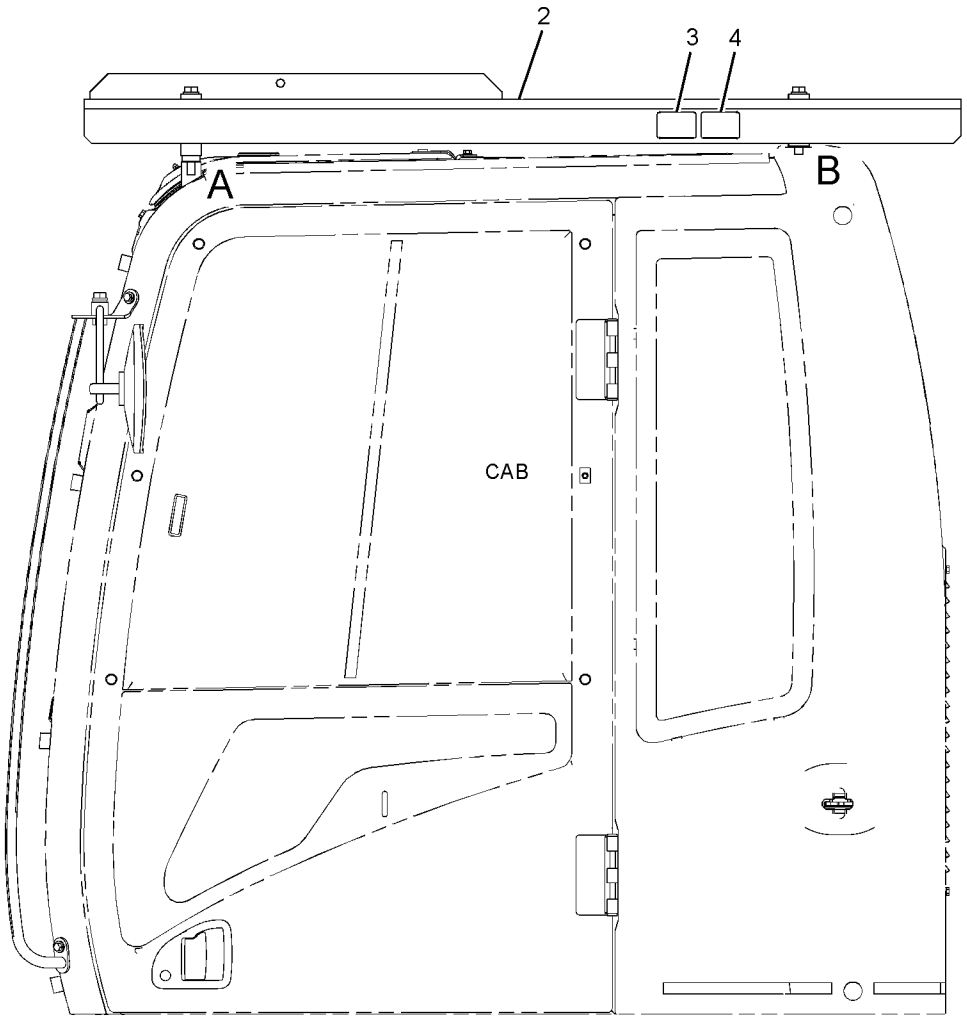

LEFT SIDE VIEW

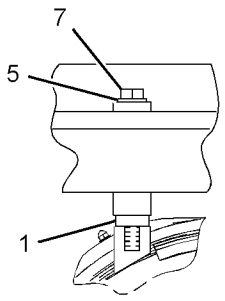

VIEW OF AREA A

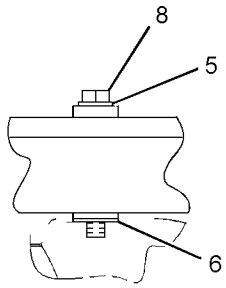

VIEW OF AREA B

GRAPHIC #1 <END> g03397855

164-0497 GUARD GP-OVERHEAD

S/N: DLP1-UP
PART OF 178-5549 GUARD AR-OVERHEAD
AN ATTACHMENT
TYPE 2

SMCS-7159 **i06668546**

NOTE	REF NO	GRAPHIC REF	PART NUMBER	QTY	PART NAME 1 2 3 4 5 6 (PRODUCT LEVEL)	SEE PAGE
	1	1	**8V-1715**	2	SPACER (20.5X35X12-MM THK)	
	2	1	**372-9565**	1	GUARD AS	
M		1	**8T-4132**	2	NUT (M16X2-THD)	
	3	1	**219-0305**	1	FILM-WARNING (NO WELD, NO DRILL, READ OMM)	
C	4	1	**459-1732**	1	FILM-CERTIFICATION (OPS, READ OMM)	
	5	1	**451-2175**	4	WASHER-HARD (17.5X30X3.5-MM THK)	
B	6	1	**090-8865**	1	SPACER (17X40X3-MM THK)	
M	7	1	**453-2840**	2	BOLT (M16X2X140-MM)	
M	8	1	**447-1703**	2	BOLT (M16X2X120-MM)	

B - USE AS REQUIRED
C - CHANGE FROM PREVIOUS TYPE
M - METRIC PART

164-0497 **GUARD GP-OVERHEAD (**contd.**)** **i06668546**

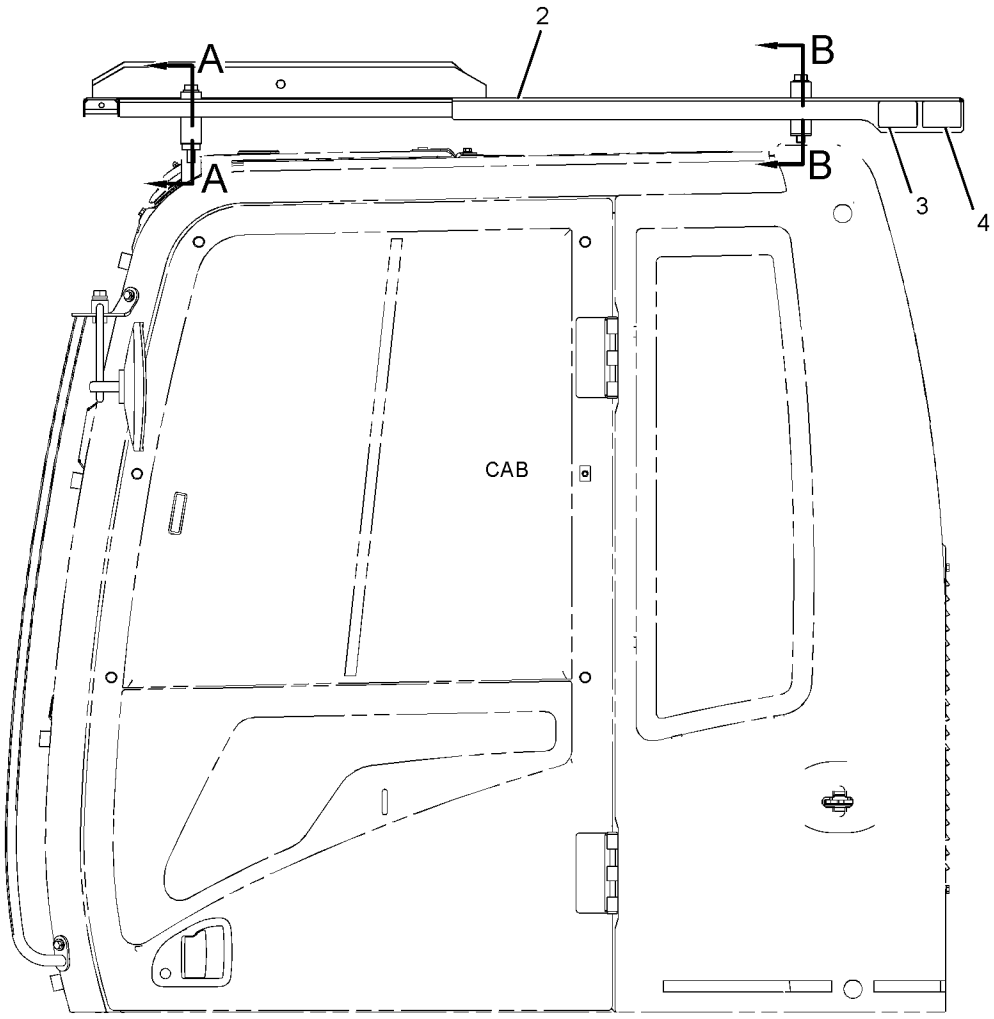

LEFT SIDE VIEW

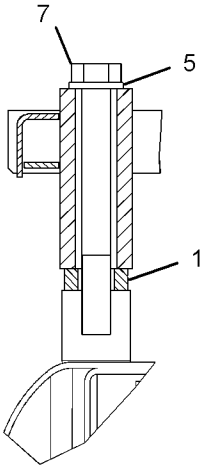

SECTION A-A

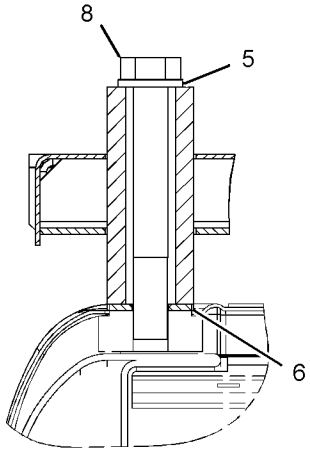

SECTION B-B

GRAPHIC #1 <END> g03400290

207-0159 GUARD GP-VANDALISM—CAB

S/N: DLP1-UP
PART OF 260-7114 GUARD AR-VANDALISM
AN ATTACHMENT

SMCS-7315 **i05344580**

NOTE	REF NO	GRAPHIC REF	PART NUMBER	QTY	PART NAME 1 2 3 4 5 6 (PRODUCT LEVEL)	SEE PAGE
	1	1	**7Y-8621**	6	PIN	
	2	1	**7Y-8622**	1	PIN	
	3	1	**207-0161**	1	GUARD AS	
	4	1	**207-0164**	1	GUARD AS	
	5	1	**207-0167**	1	GUARD AS	
	6	1	**207-0170**	1	GUARD AS	
	7	1	**207-0173**	1	GUARD AS	
					(EACH GUARD AS INCLUDES)	
		1	**8H-2282**	2	HINGE	
M	8	1	**8T-4200**	2	BOLT (M8X1.25X16-MM)	
	9	1	**8T-4224**	2	WASHER-HARD (8.8X16X2-MM THK)	

M - METRIC PART

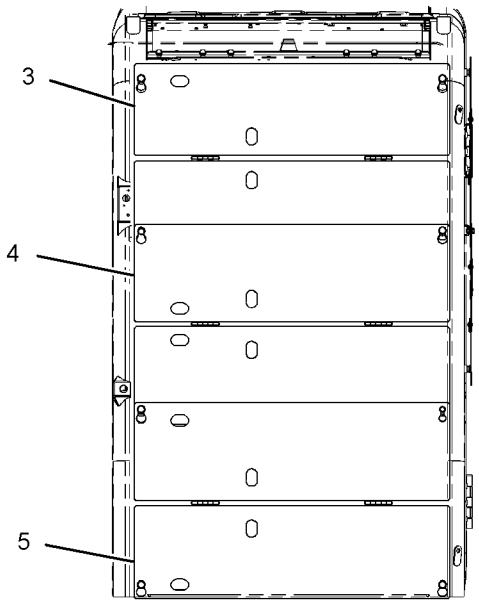

FRONT VIEW

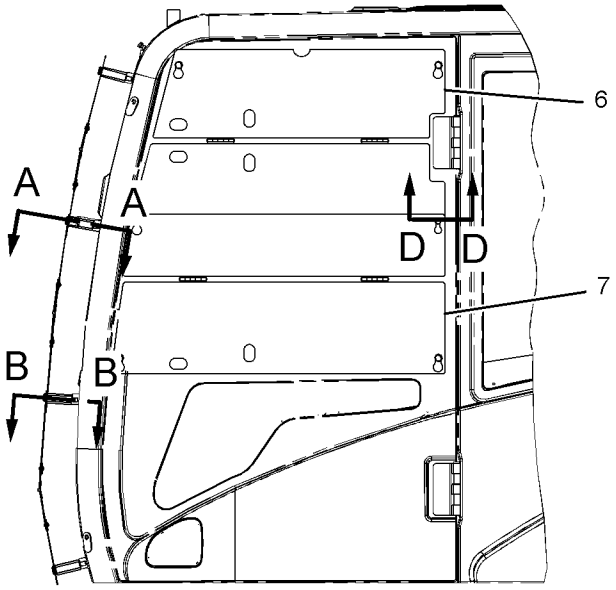

LEFT SIDE VIEW

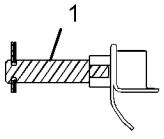

SECTION A-A

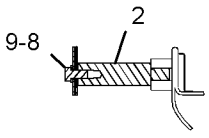

SECTION B-B

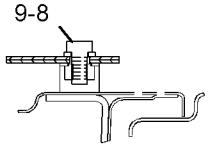

SECTION D-D

GRAPHIC #1

<END>

g01079377

207-0160 GUARD GP-VANDALISM—CAB

S/N: DLP1-UP
FOR USE WITH RAIN VISOR
PART OF 260-7115 GUARD AR-VANDALISM
AN ATTACHMENT

SMCS-7315 **i05344581**

NOTE	REF NO	GRAPHIC REF	PART NUMBER	QTY	PART NAME 1 2 3 4 5 6 (PRODUCT LEVEL)	SEE PAGE
	1	1	**7Y-8621**	4	PIN	
	2	1	**7Y-8622**	1	PIN	
	3	1	**164-0643**	1	BRACKET AS	
	4	1	**207-0164**	1	GUARD AS	
	5	1	**207-0167**	1	GUARD AS	
	6	1	**207-0170**	1	GUARD AS	
	7	1	**207-0173**	1	GUARD AS	
	8	1	**207-0176**	1	GUARD AS	
					(EACH GUARD AS INCLUDES)	
		1	**8H-2282**	2	HINGE	
M	9	1	**8T-4138**	4	BOLT (M6X1X20-MM)	
M	10	1	**8T-4200**	2	BOLT (M8X1.25X16-MM)	
	11	1	**8T-4224**	2	WASHER-HARD (8.8X16X2-MM THK)	

M - METRIC PART

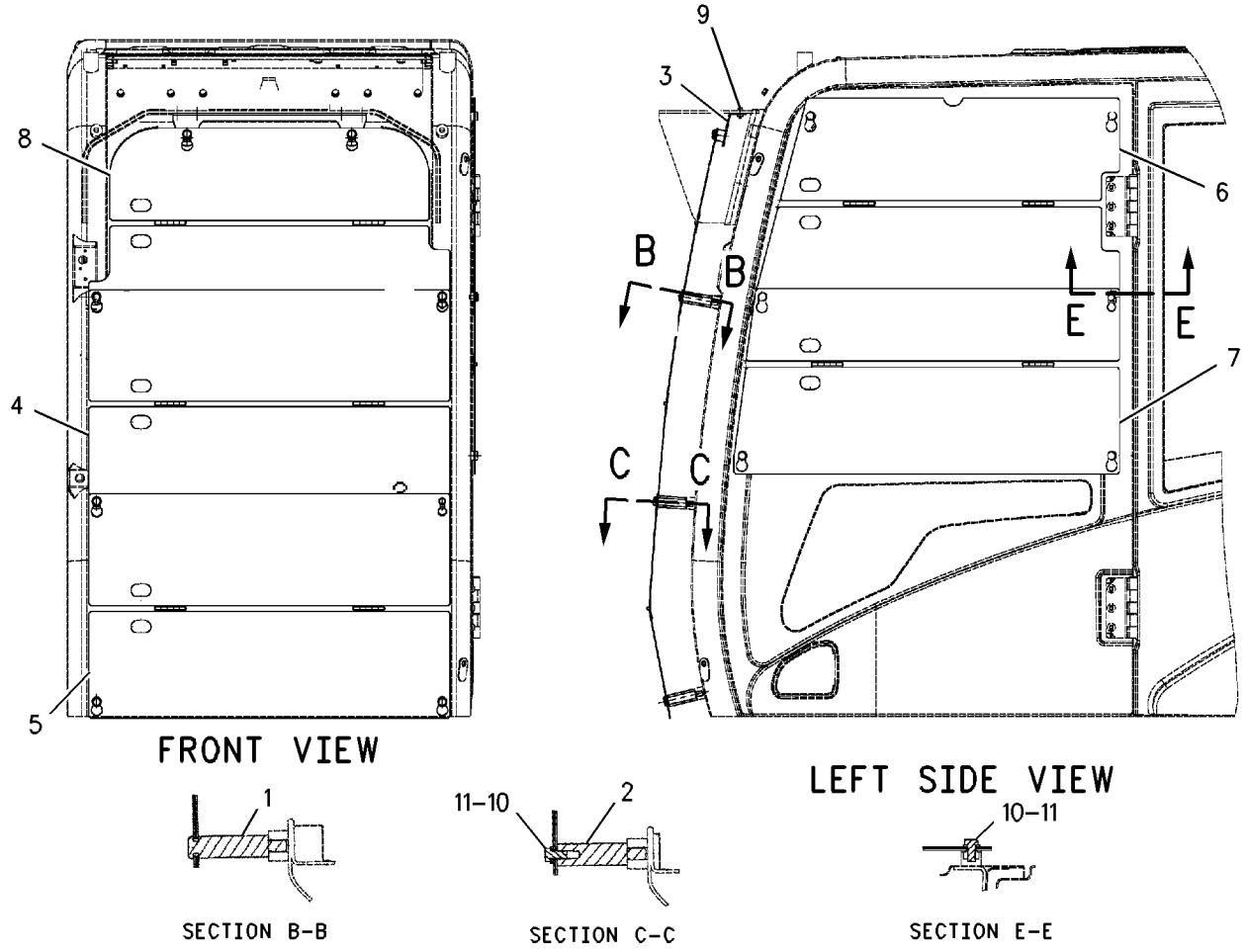

GRAPHIC #1 <END> g00880379

139-7099 HATCH GP-ROOF

S/N: DLP1-UP
PART OF 316-8815, 346-8053 CAB GP
AN ATTACHMENT

SMCS-7303 **i06681825**

NOTE	REF NO	GRAPHIC REF	PART NUMBER	QTY	PART NAME 1 2 3 4 5 6 (PRODUCT LEVEL)	SEE PAGE
	1	1	**5D-4822**	4	RING-RETAINING	
	2	1	**099-3506**	2	SPRING AS-GAS (HATCH)	
	3	1	**105-2169**	4	BOLT AS	
Y	4	1	**189-2849**	1	HATCH GP-ROOF	1073
	5	1	**189-2847**	1	SEAL	

Y - SEPARATE ILLUSTRATION

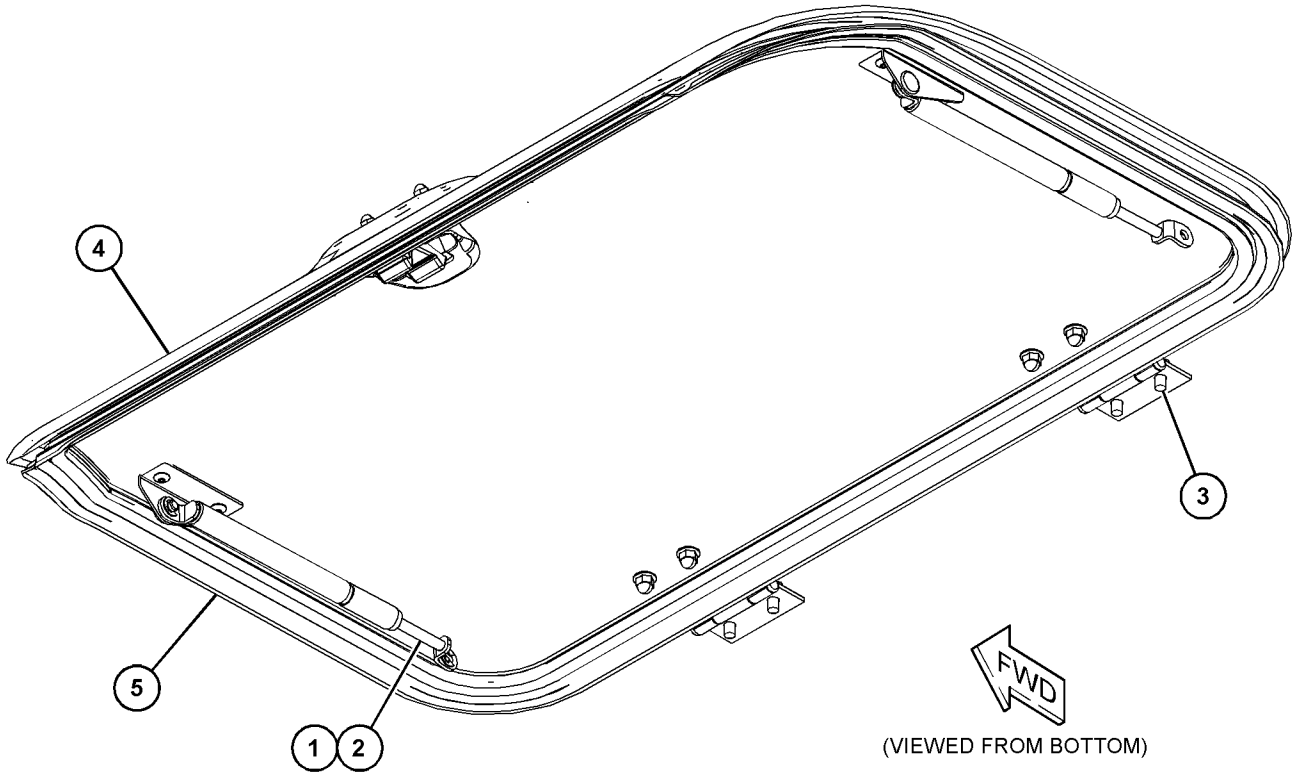

GRAPHIC #1 <END> g06065328

189-2849 HATCH GP-ROOF

S/N: DLP1-UP
PART OF 139-7099 HATCH GP-ROOF
AN ATTACHMENT

SMCS-7303 **i07353008**

NOTE	REF NO	GRAPHIC REF	PART NUMBER	QTY	PART NAME 1 2 3 4 5 6 (PRODUCT LEVEL)	SEE PAGE
	1	1	**161-3694**	1	CATCH	
	2	1	**189-2693**	1	BRACKET AS	
	3	1	**189-2694**	1	BRACKET AS	
	4	1	**189-2716**	2	HINGE AS	
	5	1	**189-2848**	1	COVER	
	6	1	**085-6449**	2	PACKING	
M	7	1	**100-2881**	4	SCREW-TRUSS HEAD (M5X0.8X10-MM)	
M	8	1	**171-7477**	2	NUT (M6X1-THD)	
	9	1	**4I-1260**	2	PACKING	
	10	1	**4I-4361**	2	RETAINER	
M	11	1	**6I-5342**	4	NUT (M8X1.25-THD)	
M	12	1	**9X-2045**	2	SCREW-TRUSS HEAD (M6X1X20-MM)	

M - METRIC PART

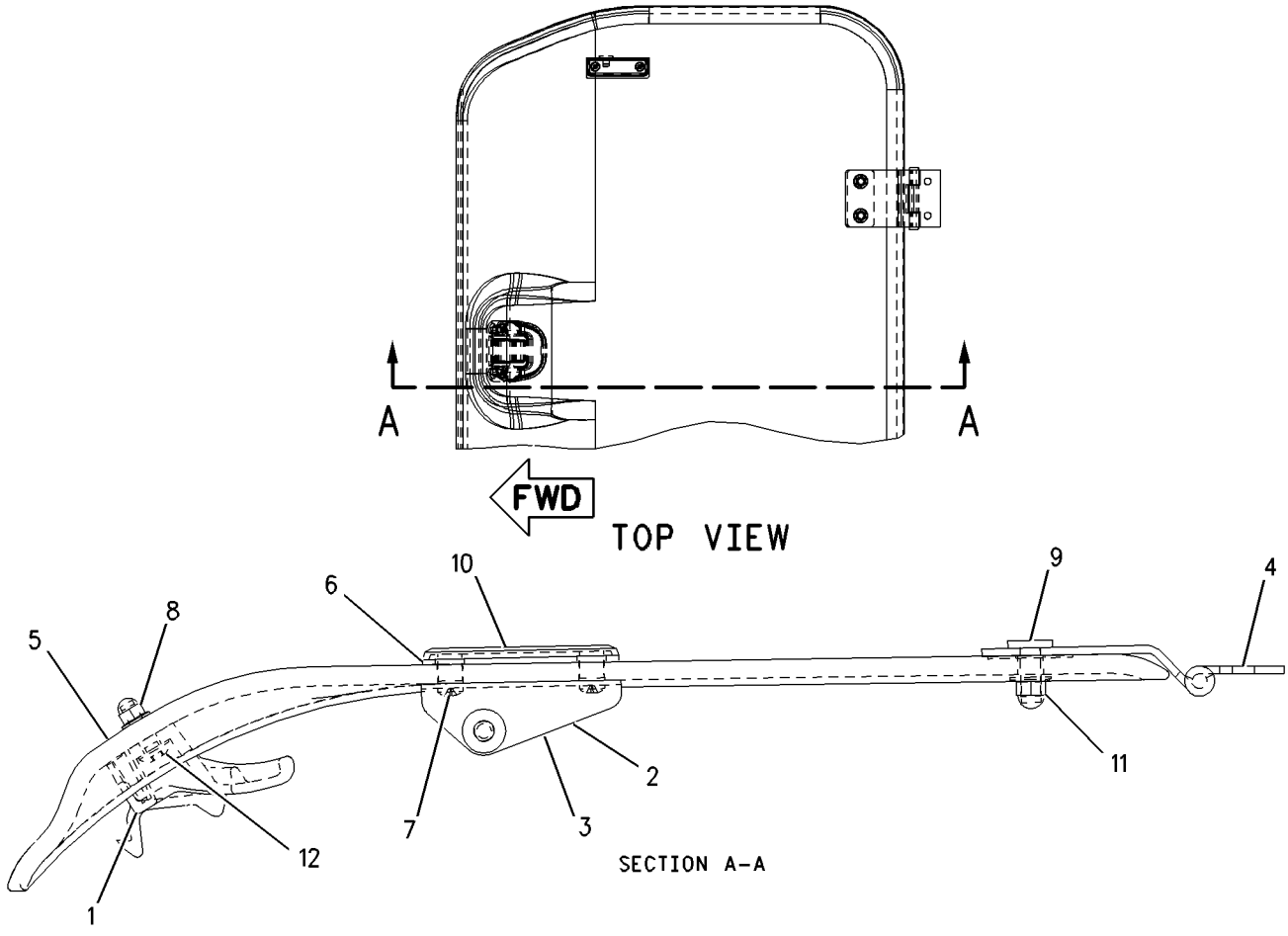

GRAPHIC #1 <END> g00770746

259-7350 HATCH GP-ROOF

S/N: DLP1-UP
PART OF 229-9109, 346-8043, 346-8055 CAB GP
AN ATTACHMENT

SMCS-7303 **i05404200**

NOTE	REF NO	GRAPHIC REF	PART NUMBER	QTY	PART NAME 1 2 3 4 5 6 (PRODUCT LEVEL)	SEE PAGE
	1	1	**259-7352**	1	CATCH	
	2	1	**189-2847**	1	SEAL	
	3	1	**259-7351**	1	HATCH AS	
	3A	1	**176-1949**	2	BRACKET AS	
	3B	1	**189-2717**	2	HINGE AS	
	4	1	**099-3506**	2	SPRING AS-GAS (HATCH)	
	5	1	**105-2169**	4	BOLT AS	
	6	1	**5D-4822**	4	RING-RETAINING	
M	7	1	**9X-2042**	2	SCREW-TRUSS HEAD (M6X1X12-MM)	

M - METRIC PART

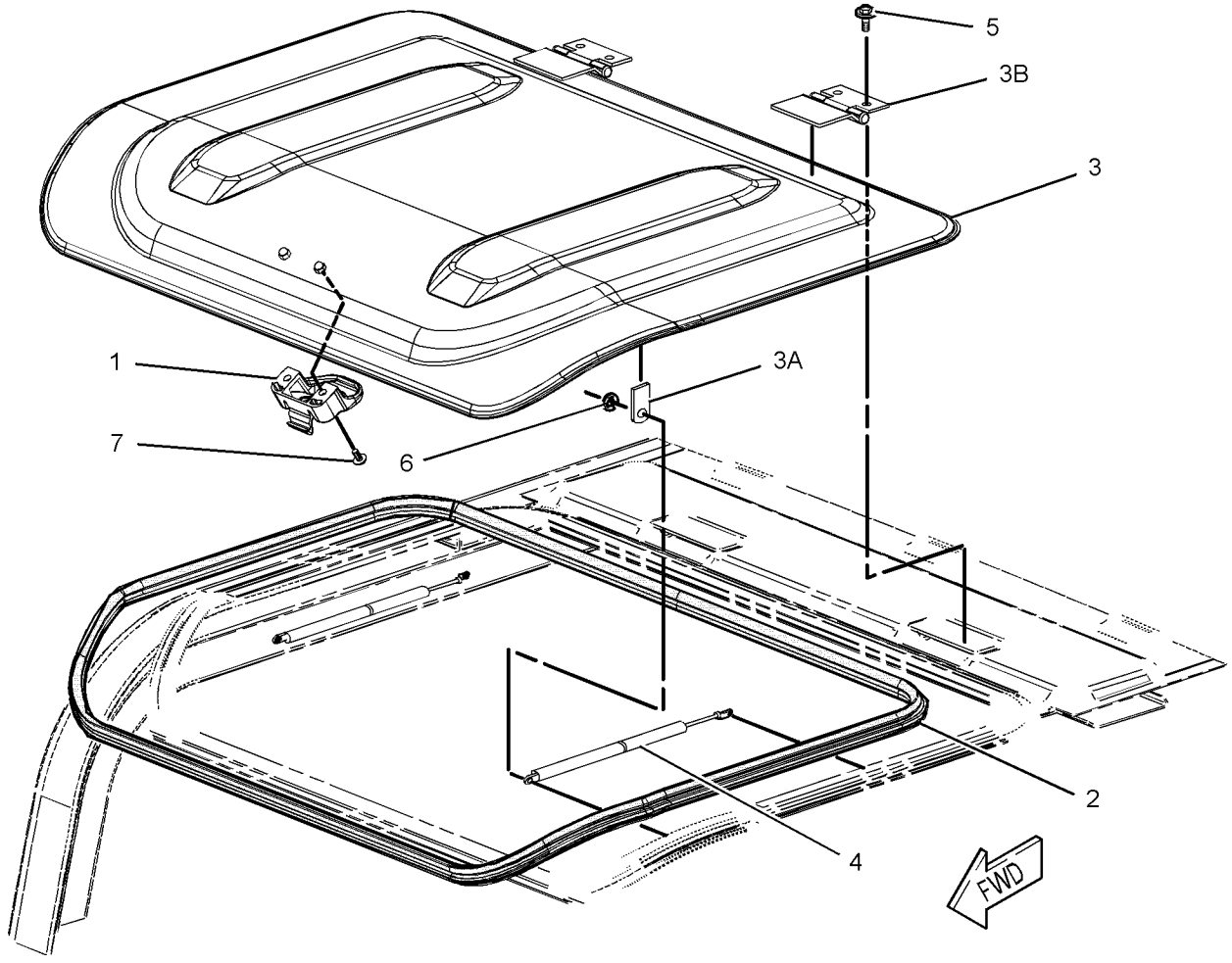

GRAPHIC #1 <END> g01242907

229-9094 HEADREST AS-SEAT–CLOTH

S/N: DLP1-UP

AN ATTACHMENT

SMCS-7312 **i02232852**

NOTE	REF NO	GRAPHIC REF	PART NUMBER	QTY	PART NAME 1 2 3 4 5 6 (PRODUCT LEVEL)	SEE PAGE

(NO SERVICED PARTS)

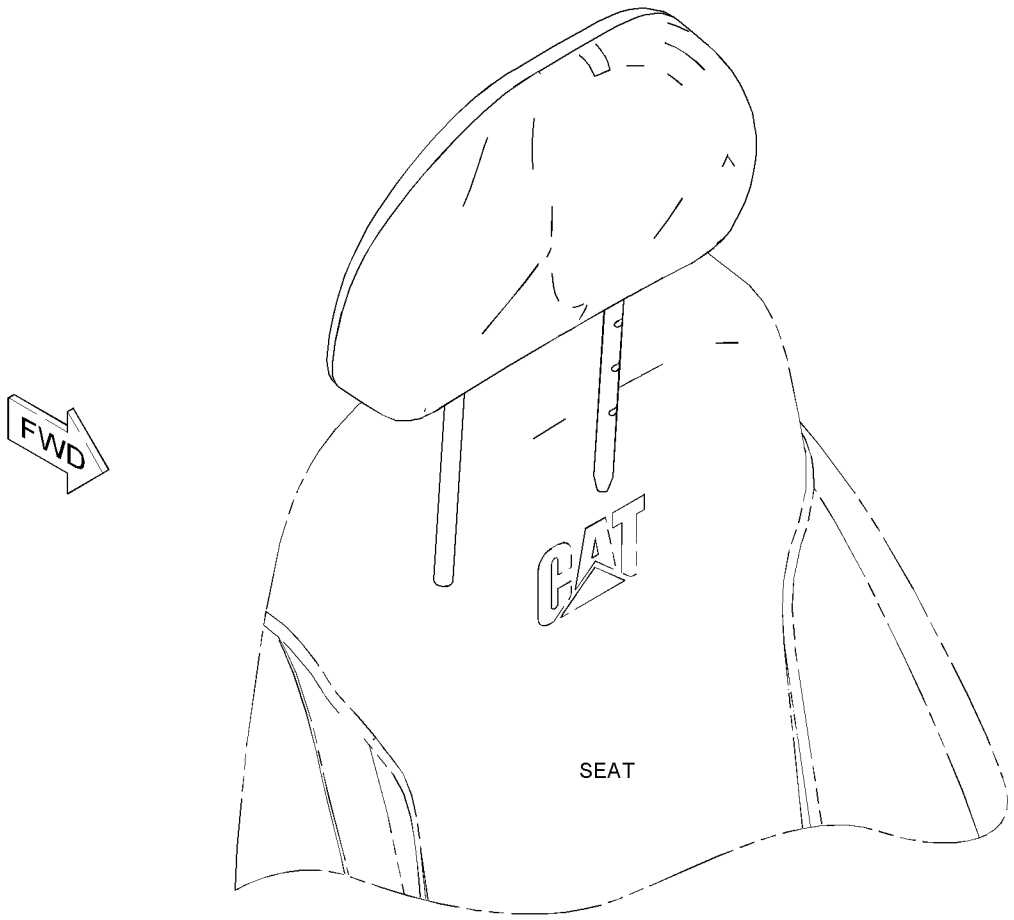

GRAPHIC #1 <END> g01126613

327-6514 HEADREST AS-SEAT–VINYL

S/N: DLP1-UP

AN ATTACHMENT

SMCS-7312 **i05167900**

NOTE	REF NO	GRAPHIC REF	PART NUMBER	QTY	PART NAME 1 2 3 4 5 6 (PRODUCT LEVEL)	SEE PAGE

(NO SERVICED PARTS)

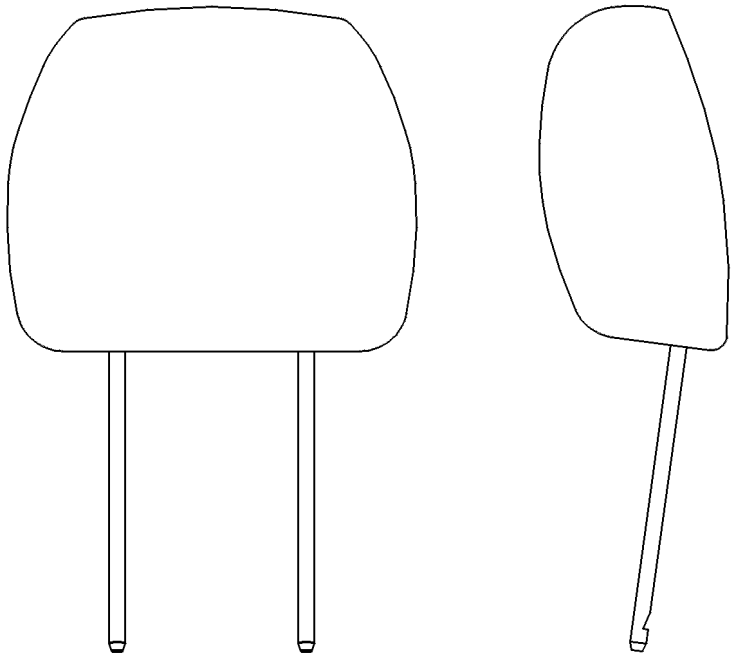

GRAPHIC #1 <END> g00242379

327-6515 HEADREST AS-SEAT–CLOTH

S/N: DLP1-UP

AN ATTACHMENT

SMCS-7312 **i03090223**

NOTE	REF NO	GRAPHIC REF	PART NUMBER	QTY	PART NAME 1 2 3 4 5 6 (PRODUCT LEVEL)	SEE PAGE

(NO SERVICED PARTS)

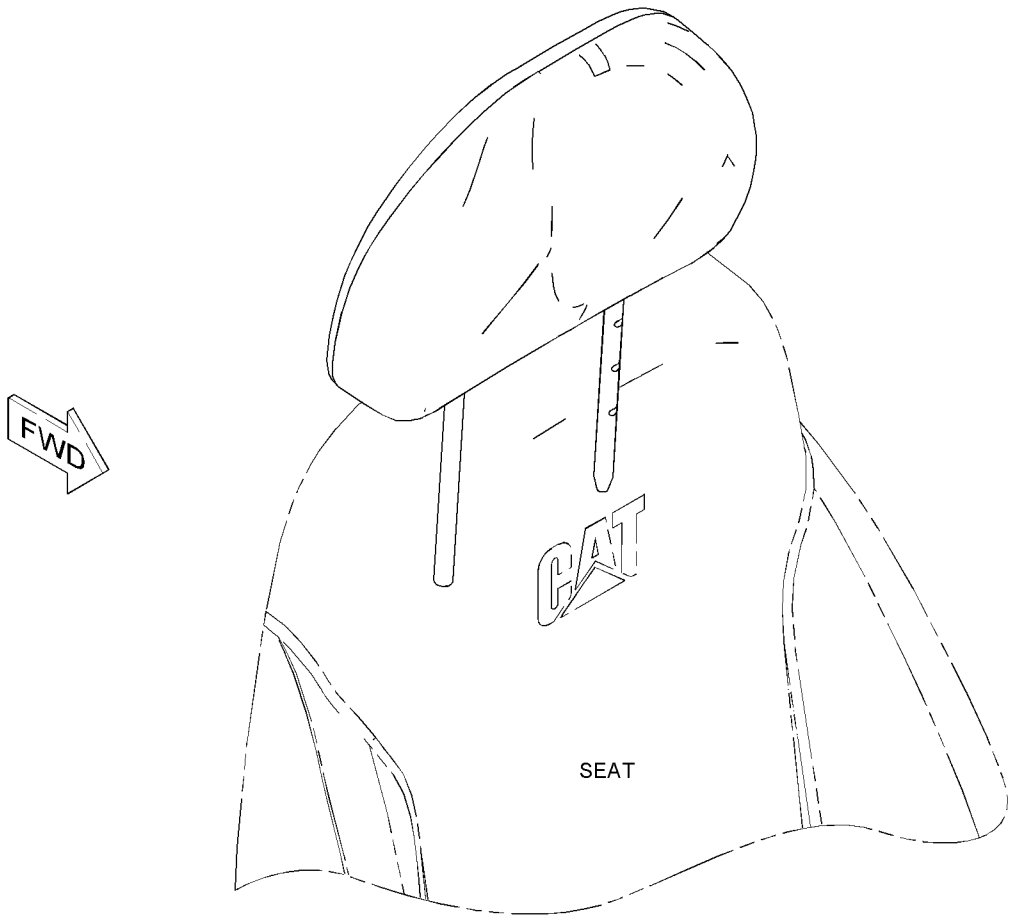

GRAPHIC #1 <END> g01126613

229-9084 HEATER & MTG GP-CAB

S/N: DLP1-UP

PART OF 284-4573 HEATER AR-CAB

AN ATTACHMENT

SMCS-7304 **i03296403**

NOTE	REF NO	GRAPHIC REF	PART NUMBER	QTY	PART NAME 1 2 3 4 5 6 (PRODUCT LEVEL)	SEE PAGE
	1	1	**235-8873**	1	HARNESS AS-HEATER & AIR COND (CONTROL PANEL SWITCHES)	
	2	1	**235-8874**	1	SENSOR-TEMPERATURE (AMBIENT AIR)	
	3	1	**235-8875**	1	BRACKET	
CY	4	1	**316-8916**	1	AIR CONDITIONER GP	939
	5	1	**293-1138**	1	PANEL AS-CONTROL	
	6	1	**245-7858**	1	HARNESS AS-HEATER	
M	8	1	**099-2374**	2	BOLT-SOCKET HEAD (M5X0.8X12-MM)	
	9	1	**111-4836**	3	CLIP	
	10	1	**3S-2093**	2	STRAP-CABLE	
M	11	1	**5C-9553**	1	BOLT (M6X1X16-MM)	
	12	1	**7X-7729**	7	WASHER (11X25X3-MM THK)	
	13	1	**8T-0328**	2	WASHER-HARD (5.5X10X1-MM THK)	
	14	1	**8T-4121**	3	WASHER-HARD (11X21X2.5-MM THK)	
M	15	1	**8T-4136**	7	BOLT (M10X1.5X25-MM)	
M	16	1	**8T-4137**	3	BOLT (M10X1.5X20-MM)	
	17	1	**9X-8256**	1	WASHER (6.6X12X2-MM THK)	

C - CHANGE FROM PREVIOUS TYPE
M - METRIC PART
Y - SEPARATE ILLUSTRATION

229-9084 **HEATER & MTG GP-CAB (**contd.**)** **i03296403**

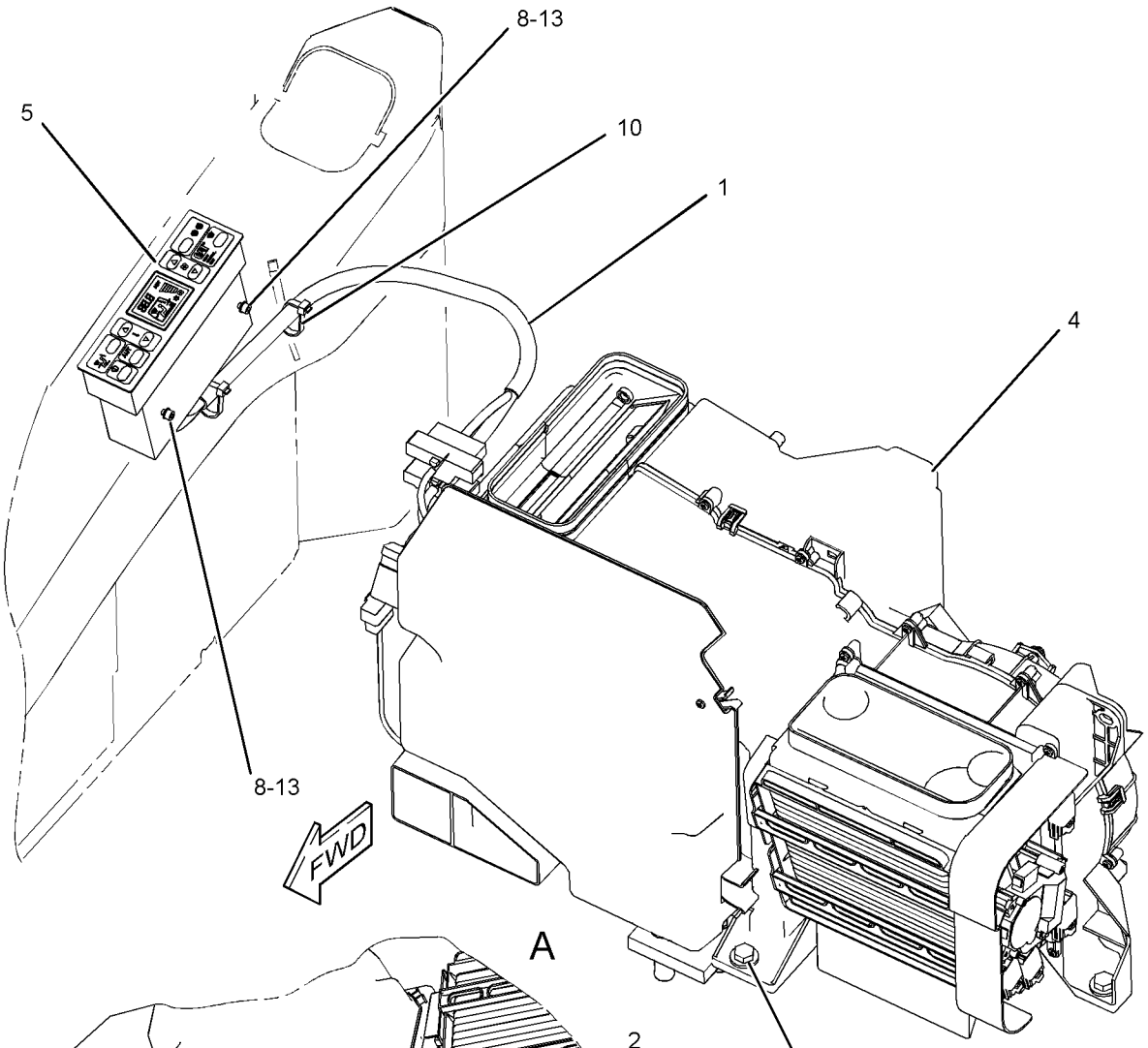

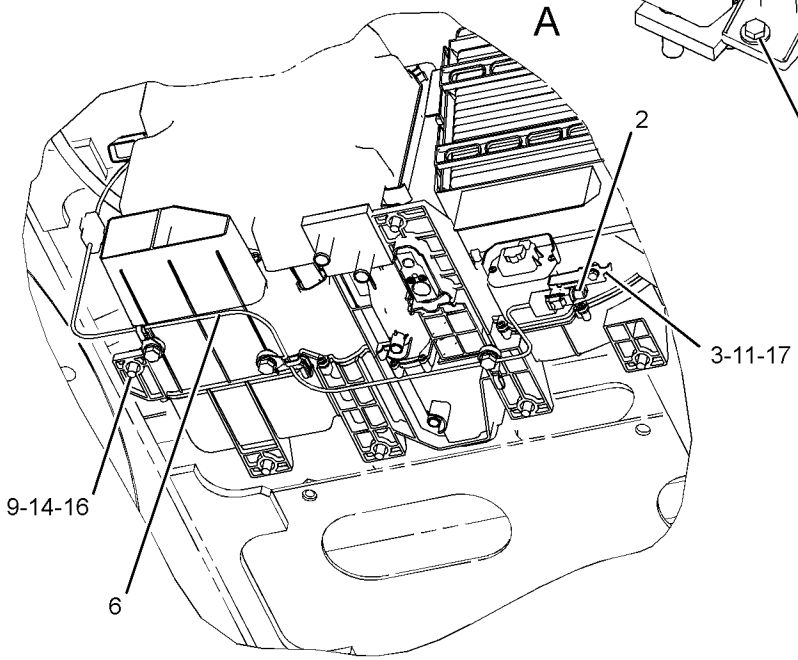

VIEW OF AREA A
(BOTTOM VIEW)

GRAPHIC #1 <END> g01405002

284-4573 HEATER AR-CAB

S/N: DLP1-UP
PART OF 336-3352 OPTION AR-CAB
AN ATTACHMENT

SMCS-7304 **i02811468**

NOTE	PART NUMBER	QTY	PART NAME 1 2 3 4 5 6 (PRODUCT LEVEL)	SEE PAGE
Y	*229-9082*	1	DUCT GP-CAB AIR	1054
Y	*229-9084*	1	HEATER & MTG GP-CAB	1078
Y	*284-4574*	1	LINES GP-HEATER	1098

Y - SEPARATE ILLUSTRATION

<END>

275-6874 HORN GP-ELECTRIC

S/N: DLP1-UP

PART OF 301-2680 CHASSIS AR

SMCS-7402 **i02599628**

NOTE	REF NO	GRAPHIC REF	PART NUMBER	QTY	PART NAME 1 2 3 4 5 6 (PRODUCT LEVEL)	SEE PAGE
Y	1	1	*275-6875*	1	HORN GP-ELECTRIC	1082
	2	1	**8T-4121**	2	WASHER-HARD (11X21X2.5-MM THK)	
M	3	1	**8T-4137**	2	BOLT (M10X1.5X20-MM)	

M - METRIC PART
Y - SEPARATE ILLUSTRATION

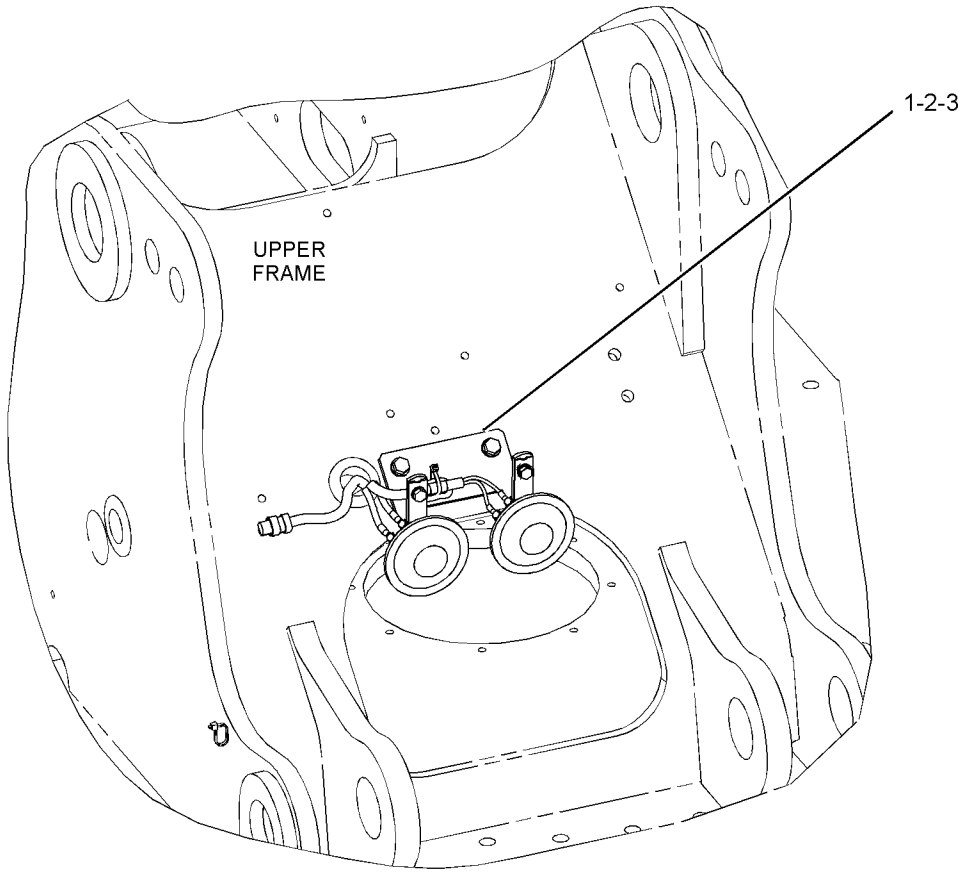

FRONT VIEW
(UPPER RIGHT)

GRAPHIC #1 <END> g01304388

275-6875 HORN GP-ELECTRIC

S/N: DLP1-UP

PART OF 275-6874 HORN GP-ELECTRIC

SMCS-7402 **i05906160**

NOTE	REF NO	GRAPHIC REF	PART NUMBER	QTY	PART NAME 1 2 3 4 5 6 (PRODUCT LEVEL)	SEE PAGE
	1	1	**3S-2093**	1	STRAP-CABLE	
	2	1	**7Y-3919**	1	HORN AS (24-VOLT, LOW TONE)	
		1	**095-0826**	2	LOCKWASHER	
M		1	**095-7930**	2	SCREW-MACHINE (M4X0.7X6-MM)	
	3	1	**7Y-3920**	1	HORN AS (24-VOLT, HIGH TONE)	
		1	**095-0826**	2	LOCKWASHER	
M		1	**095-7930**	2	SCREW-MACHINE (M4X0.7X6-MM)	
	4	1	**170-6941**	1	BRACKET AS	
	5	1	**275-6876**	1	HARNESS AS-WIRING (HORN)	
		1	**3S-2093**	2	STRAP-CABLE	
		1	**230-4011**	1	PLUG AS-CONNECTOR (2-PIN)	
M	6	1	**8T-4200**	2	BOLT (M8X1.25X16-MM)	
	7	1	**8T-4224**	2	WASHER-HARD (8.8X16X2-MM THK)	

M - METRIC PART

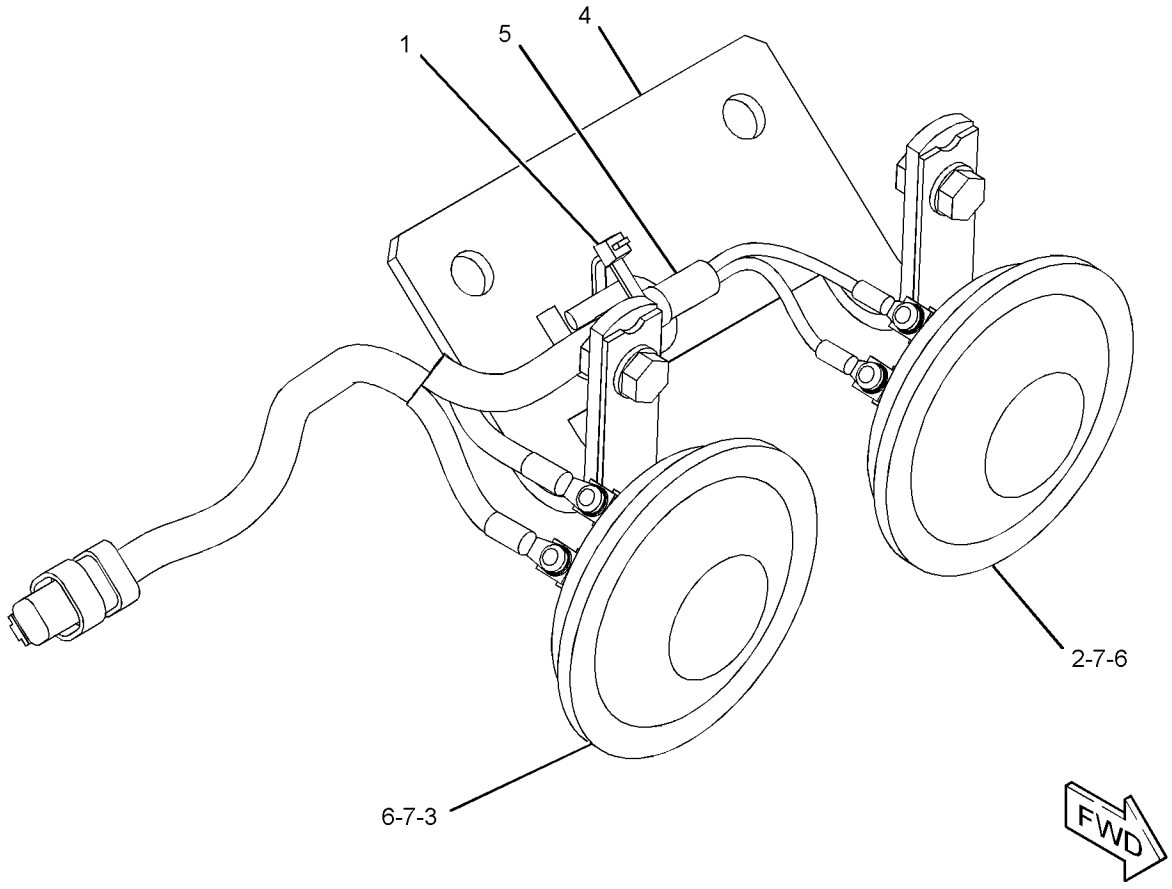

GRAPHIC #1 <END> g01304939

330-8748 INSTALLATION AR

S/N: DLP1-UP

FOR USE WITH 327-6553—PAGE: 1114, 327-6552—PAGE: 1111

AN ATTACHMENT

SMCS-1405, 1802, 1805, 1808, 7174, 7304, 7319, 7320, 7348, 734D

i03148000

NOTE	PART NUMBER	QTY	PART NAME 1 2 3 4 5 6 (PRODUCT LEVEL)	SEE PAGE
Y	*330-8749*	1	CAMERA & WIRING GP	184
Y	*330-1323*	1	TANK & MTG AR-FUEL	123

Y - SEPARATE ILLUSTRATION

<END>

275-6879 INSTALLATION GP-RADIO

S/N: DLP1-UP

AN ATTACHMENT

SMCS-7338 **i04804305**

NOTE	REF NO	GRAPHIC REF	PART NUMBER	QTY	PART NAME 1 2 3 4 5 6 (PRODUCT LEVEL)	SEE PAGE
	1	1	**3S-2093**	9	STRAP-CABLE	
	2	1	**7K-1181**	8	STRAP-CABLE	
	3	1	**185-8284**	1	COVER	
	4	1	**234-1124**	1	HARNESS AS-RADIO	
		1	**3S-2093**	15	STRAP-CABLE	
		1	**8T-8737**	10	PLUG-SEAL	
		1	**230-5010**	1	PLUG AS-CONNECTOR (6-PIN)	
		1	**264-7032**	1	SEAL-CONNECTOR	
		1	**231-2295**	2	PLUG AS-CONNECTOR (8-PIN)	
					(EACH INCLUDES)	
		1	**264-7033**	1	SEAL-CONNECTOR	
		1	**243-4505**	1	RECEPTACLE AS-CONNECTOR (2-PIN)	
		1	**243-4509**	1	RECEPTACLE AS-CONNECTOR (8-PIN)	
		1	**8T-8729**	2	PIN-CONNECTOR (16-GA TO 18-GA)	
		1	**8T-8730**	18	SOCKET-CONNECTOR (16-GA TO 18-GA)	
		1	**9W-0844**	2	SOCKET-CONNECTOR (14-GA TO 16-GA)	
	5	1	**238-1463**	1	RECEPTACLE GP-CONNECTOR (8-PIN)	
		1	**8T-8737**	8	PLUG-SEAL	
		1	**243-4509**	1	RECEPTACLE AS-CONNECTOR (8-PIN)	
	6	1	**238-2216**	1	SWITCH AS-ROCKER (RADIO MUTE)	
		1	**167-3542**	1	RECEPTACLE-CONNECTOR (5-PIN)	
		1	**167-3543**	5	TERMINAL (MALE)	
	7	1	**324-5770**	1	CONVERTER-POWER (24-VOLT TO 12-VOLT)	
M	8	1	**8T-4171**	4	BOLT (M6X1X12-MM)	
	9	1	**9X-8256**	4	WASHER (6.6X12X2-MM THK)	

M - METRIC PART

275-6879 **INSTALLATION GP-RADIO (**contd.**)** **i04804305**

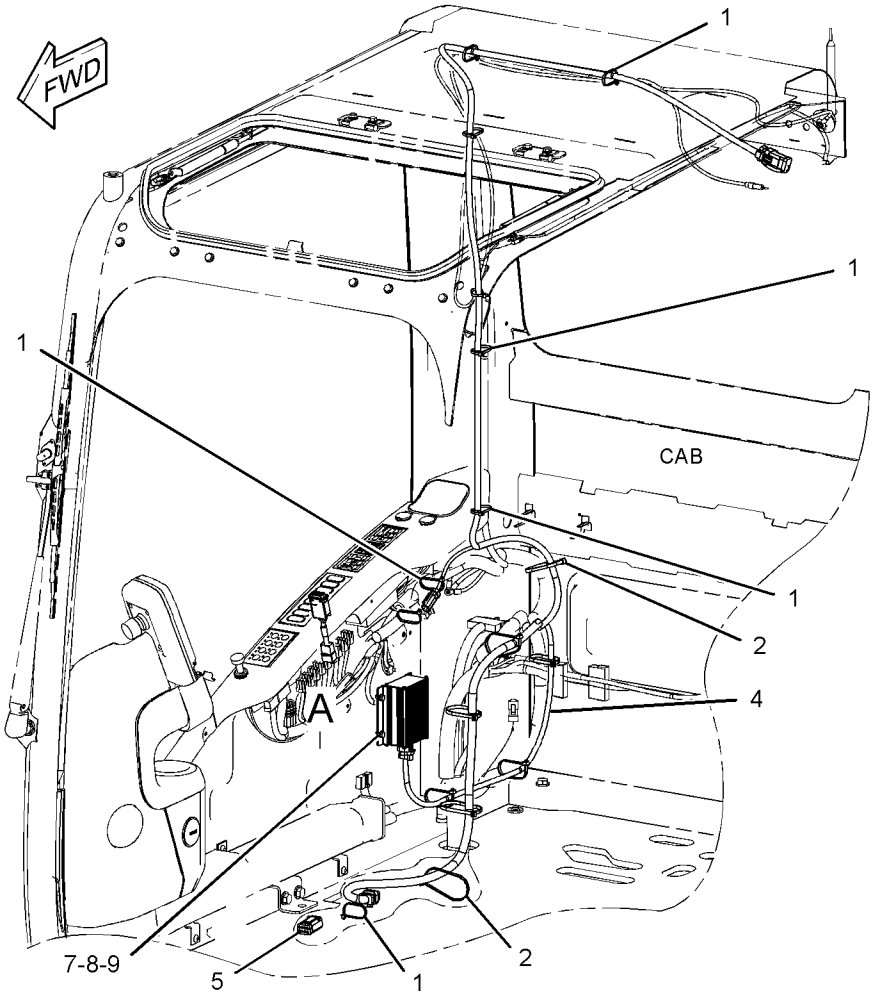

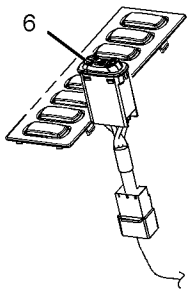

VIEW OF AREA A

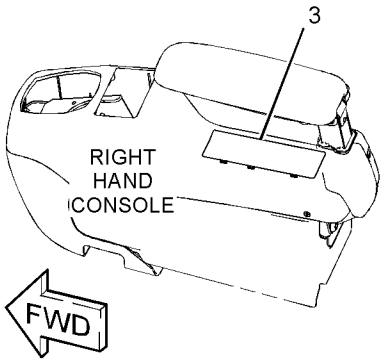

GRAPHIC #1 <END> g01325160

489-5117 KIT-MIRROR

S/N: DLP1-UP
FIELD INSTALLATION

SMCS-7319 **i06943645**

NOTE	PART NUMBER	QTY	PART NAME 1 2 3 4 5 6 (PRODUCT LEVEL)	SEE PAGE
Y	**394-9460**	1	MIRROR GP	1102
M	**447-1711**	1	BOLT (M16X2X50-MM)	
	316-8989	1	SUPPORT AS	
	451-2175	1	WASHER-HARD (17.5X30X3.5-MM THK)	
			(ABOVE PARTS ARE PART OF THE 327-6553 MIRROR GROUP.)	

M - METRIC PART
Y - SEPARATE ILLUSTRATION

<END>

489-5107 KIT-OVERHEAD GUARD—FALLING OBJECT

S/N: DLP1-UP
FIELD INSTALLATION

SMCS-7159 **i06522866**

NOTE	PART NUMBER	QTY	PART NAME 1 2 3 4 5 6 (PRODUCT LEVEL)	SEE PAGE
M	**447-1703**	2	BOLT (M16X2X120-MM)	
M	**453-2840**	2	BOLT (M16X2X140-MM)	
	219-0305	1	FILM-WARNING (NO WELD, NO DRILL, READ OMM)	
	372-9565	1	GUARD AS	
M	**451-2183**	2	NUT (M16X2-THD)	
	8V-1715	2	SPACER (20.5X35X12-MM THK)	
	090-8865	6	SPACER (17X40X3-MM THK)	
	451-2175	4	WASHER-HARD (17.5X30X3.5-MM THK)	

M - METRIC PART

<END>

327-6639 KIT-SEAT–CLOTH, LOW BACK

S/N: DLP1-UP
PART OF 340-6480 SEAT GP
AN ATTACHMENT

SMCS-7312, 7324

i05878754

NOTE	REF NO	GRAPHIC REF	PART NUMBER	QTY	PART NAME 1 2 3 4 5 6 (PRODUCT LEVEL)	SEE PAGE
	1	1	**440-5584**	1	LEVER	
	2	1	**383-5647**	1	SPRING	
	3	1	**440-5585**	1	PIN	
	4	1	**332-0195**	1	CLIP	

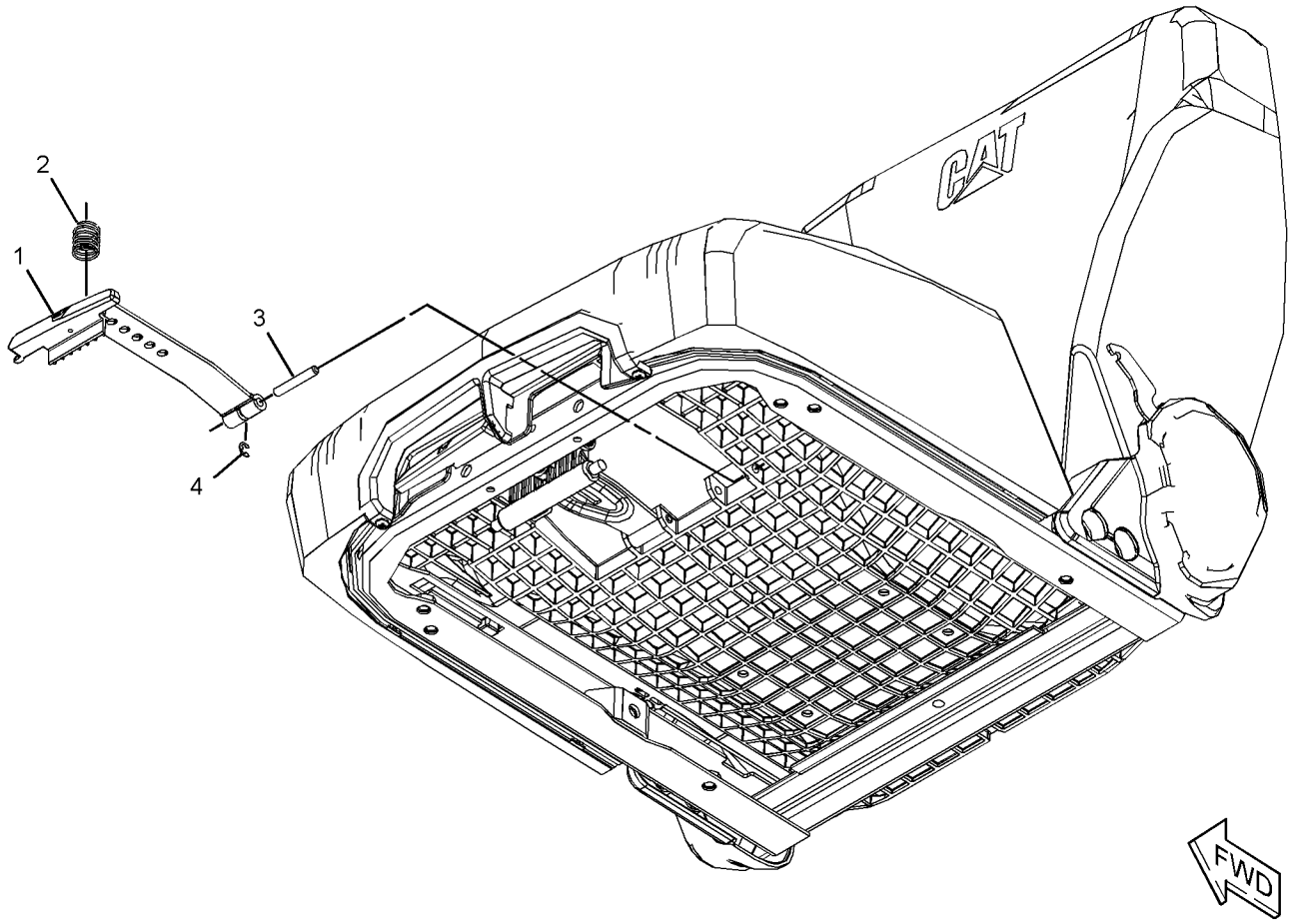

GRAPHIC #1 <END> g03742301

333-4172 KIT-SEAT—LOW BACK, VINYL

S/N: DLP1-UP
PART OF 340-6475 SEAT GP
AN ATTACHMENT

SMCS-7312, 7324

i04762702

NOTE	REF NO	GRAPHIC REF	PART NUMBER	QTY	PART NAME 1 2 3 4 5 6 (PRODUCT LEVEL)	SEE PAGE
	1	1	**327-6640**	1	KIT-HANDLE (RECLINER)	
	2	1	**333-4179**	2	BOLT-SPECIAL	
	3	1	**383-5646**	1	LEVER	
	4	1	**383-5647**	1	SPRING	
	5	1	**383-5648**	1	PIN	

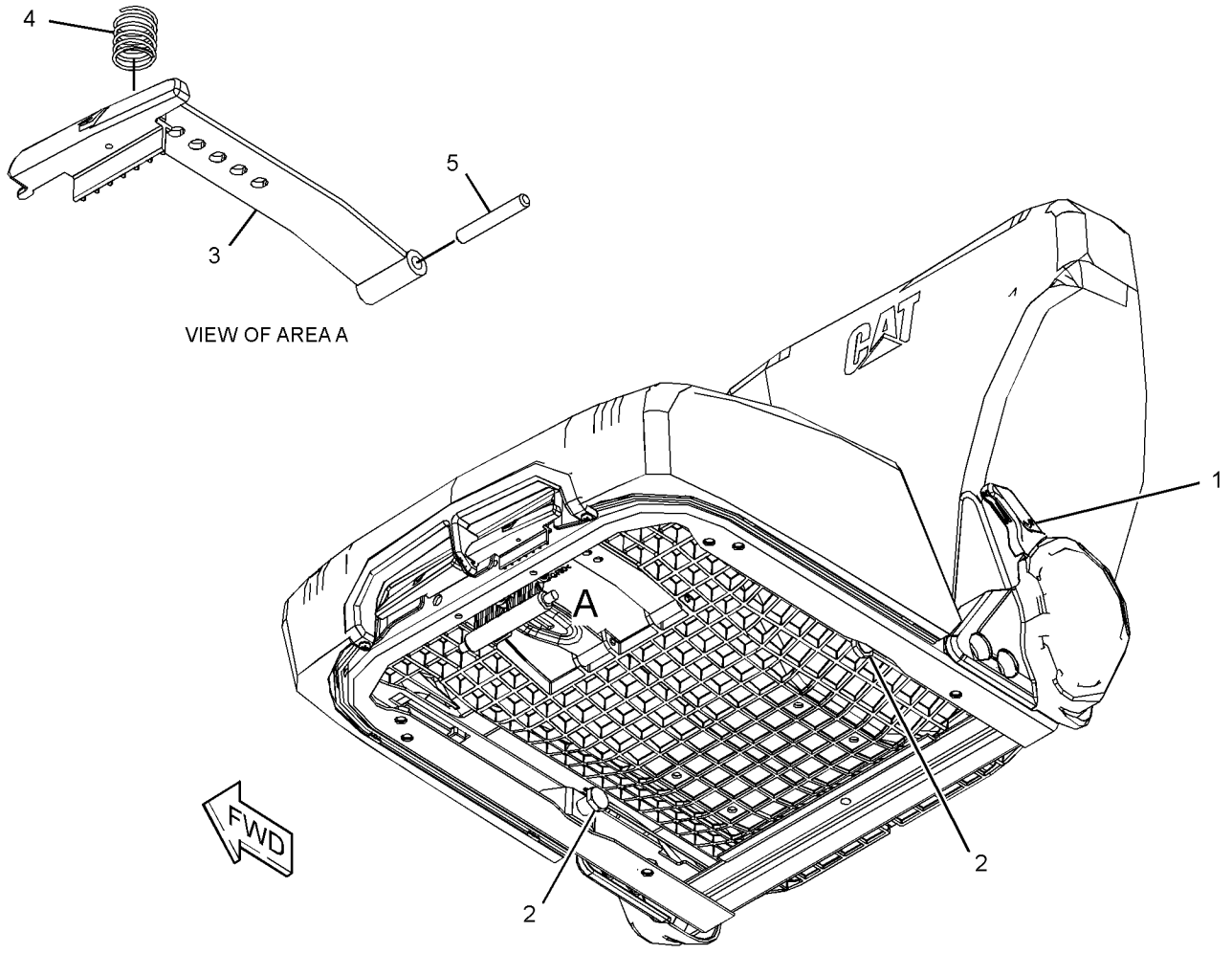

GRAPHIC #1 <END> g02866877

340-6477 KIT-SEAT SUPPORT

S/N: DLP1-UP
PART OF 340-6475, 340-6480 SEAT GP
AN ATTACHMENT

SMCS-7321 **i04002029**

NOTE	REF NO	GRAPHIC REF	PART NUMBER	QTY	PART NAME 1 2 3 4 5 6 (PRODUCT LEVEL)	SEE PAGE
	1	1	**333-4180**	4	SCREW-BUTTON HEAD (M8X1.25X20-MM)	

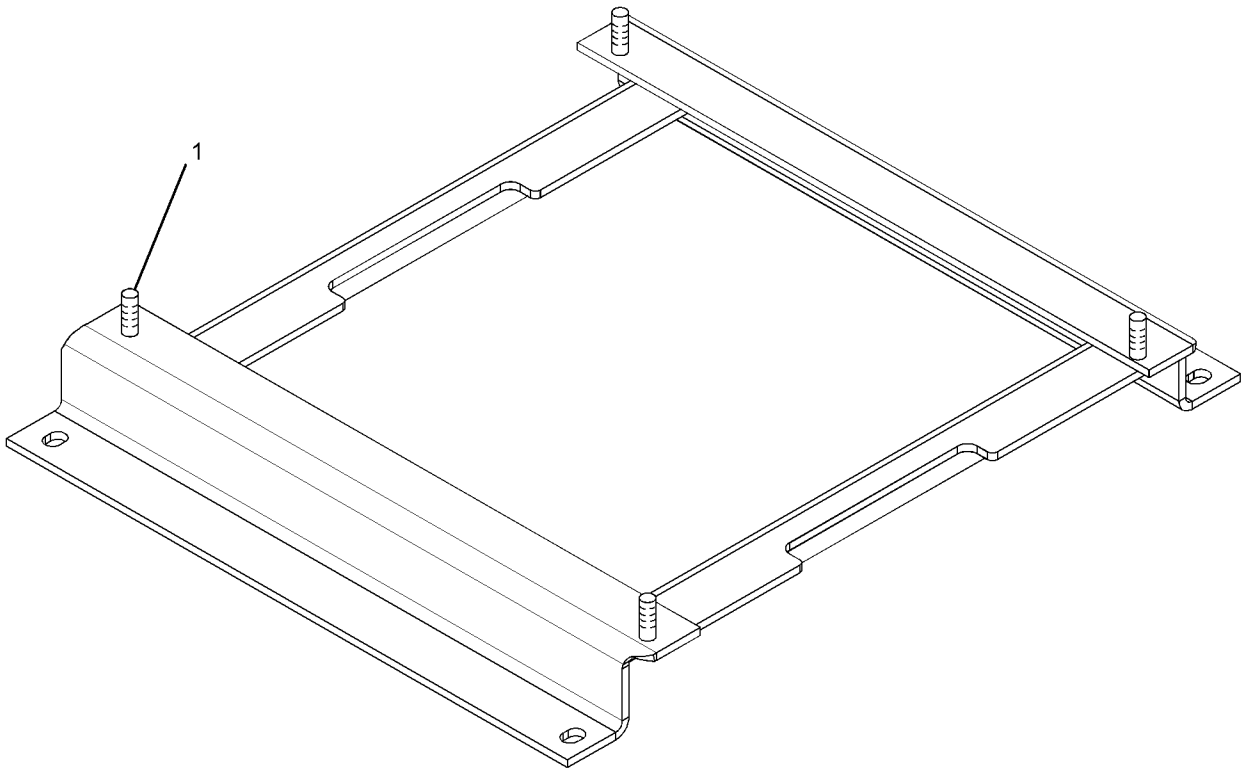

GRAPHIC #1 <END> g01956853

340-6481 KIT-SEAT SUPPORT

S/N: DLP1-UP

PART OF 340-6476 SUSPENSION GP-SEAT

AN ATTACHMENT

SMCS-7321 **i03638183**

NOTE	REF NO	GRAPHIC REF	PART NUMBER	QTY	PART NAME 1 2 3 4 5 6 (PRODUCT LEVEL)	SEE PAGE
	1	1	**245-7897**	4	PLATE	
M	2	1	**245-7899**	4	SCREW-BUTTON HEAD (M8X1.25X30-MM)	
M	3	1	**5C-7261**	4	NUT (M8X1.25-THD)	
	4	1	**8T-4224**	4	WASHER-HARD (8.8X16X2-MM THK)	

M - METRIC PART

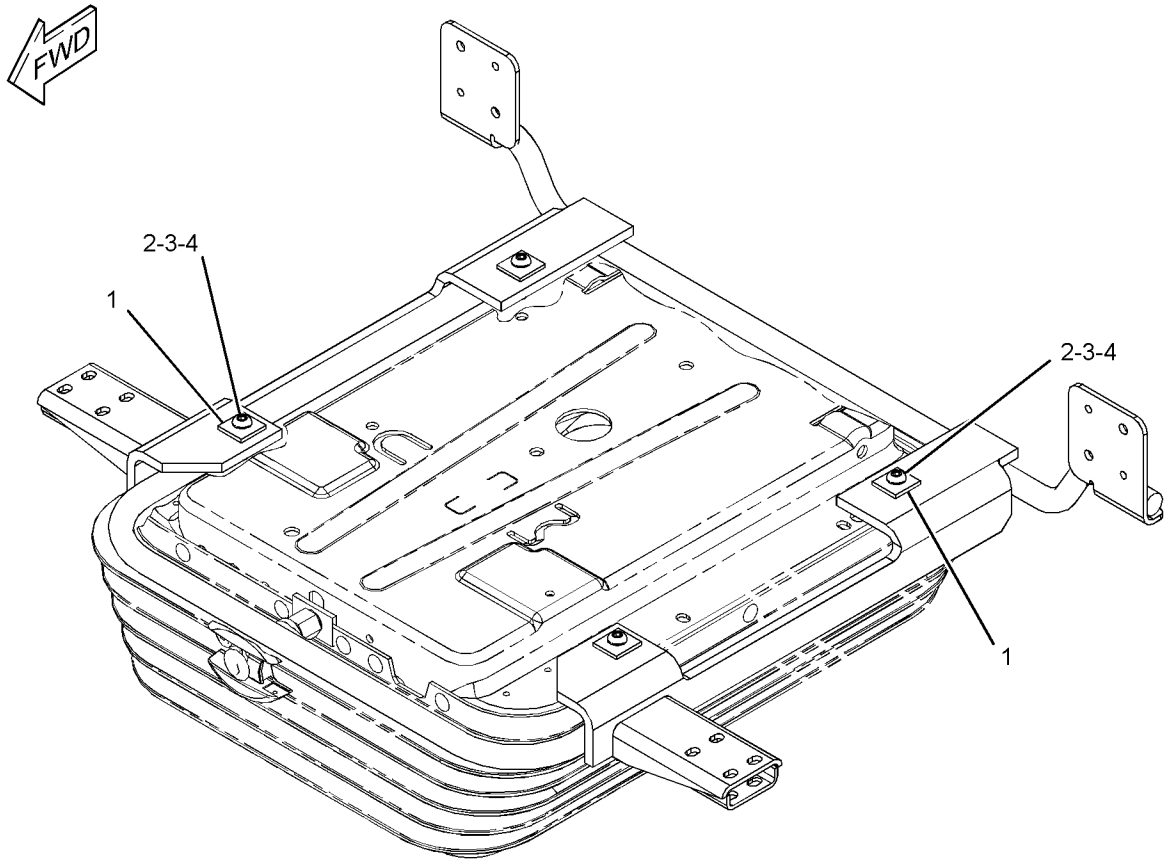

GRAPHIC #1 <END> g01956228

327-6642 KIT-SEAT TILT

S/N: DLP1-UP
PART OF 340-6480 SEAT GP
AN ATTACHMENT

SMCS-7312 **i05617700**

NOTE	PART NUMBER	QTY	PART NAME 1 2 3 4 5 6 (PRODUCT LEVEL)	SEE PAGE
			(NO SERVICED PARTS)	

<END>

489-5105 KIT-WINDOW GUARD

S/N: DLP1-UP
WINDOW GUARD ATTACHMENT KIT
FIELD INSTALLATION

SMCS-7150, 7159, 7310 **i06534611**

NOTE	PART NUMBER	QTY	PART NAME 1 2 3 4 5 6 (PRODUCT LEVEL)	SEE PAGE
M	**8T-4139**	6	BOLT (M12X1.75X30-MM)	
M	**8T-4192**	2	BOLT (M12X1.75X25-MM)	
M	**201-4534**	2	BOLT (M16X2X26-MM)	
M	**285-9066**	2	BOLT (M8X1.25X65-MM)	
M	**9R-3572**	8	BOSS (M12X1.75X20-MM)	
	176-1928	2	BRACKET AS	
	258-0330	2	BRACKET AS	
	219-0305	1	FILM-WARNING (NO WELD, NO DRILL, READ OMM)	
	316-8908	1	GUARD AS-WINDOW	
	7T-1099	2	LINK	
M	**8T-3490**	8	NUT-WELD (M10X1.5-THD)	
M	**451-2183**	1	NUT (M16X2-THD)	
	196-1572	2	LATCH AS	
M	**7Y-0623**	2	LOCKNUT (M16X2-THD)	
M	**096-4882**	2	LOCKNUT (M8X1.25-THD)	
	5D-4822	4	RING-RETAINING	
	176-1925	2	SPRING AS-GAS (FRONT WINDOW GUARD)	
	6C-8382	2	SPRING-LATCH	
	196-1569	1	SUPPORT AS	
	196-1571	1	SUPPORT AS	
	5P-1076	4	WASHER-HARD (13.5X30X4-MM THK)	
	8T-4223	4	WASHER-HARD (13.5X25.5X3-MM THK)	
	8T-4224	4	WASHER-HARD (8.8X16X2-MM THK)	
	451-2175	4	WASHER-HARD (17.5X30X3.5-MM THK)	

M - METRIC PART

<END>

085-6444 LATCH GP-WINDOW

S/N: DLP1-UP
PART OF 151-6792 WINDOW GP-DOOR
AN ATTACHMENT

SMCS-7310 **i03654671**

NOTE	REF NO	GRAPHIC REF	PART NUMBER	QTY	PART NAME 1 2 3 4 5 6 (PRODUCT LEVEL)	SEE PAGE
	1	1	**085-6445**	1	LOCK	
	2	1	**085-6446**	1	LOCK	
	3	1	**085-6447**	1	RETAINER	
M	4	1	**085-6448**	2	SCREW-TAPPING	
	5	1	**085-6449**	1	PACKING	

M - METRIC PART

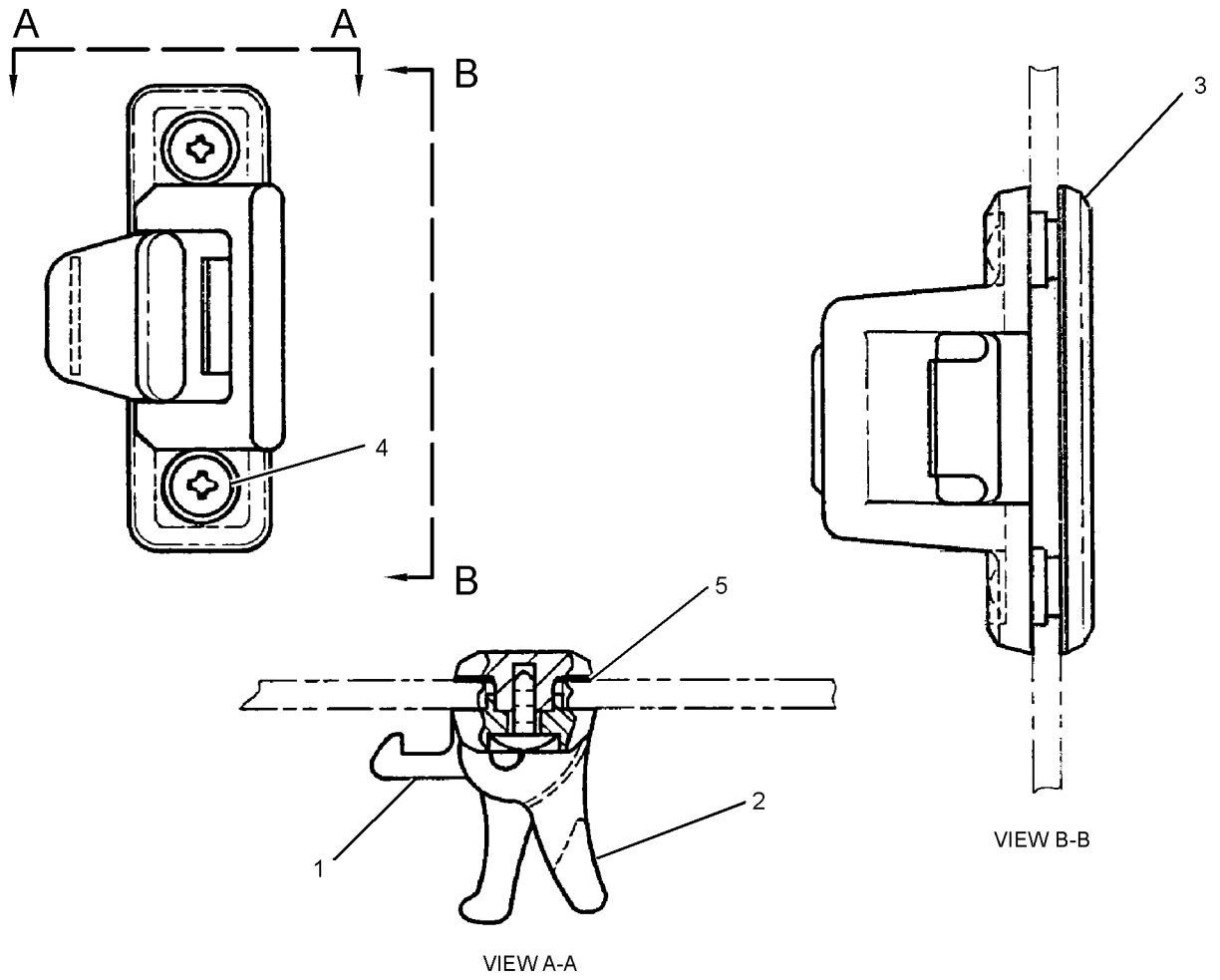

GRAPHIC #1 <END> g01164280

164-0528 LEVER GP-CAB DOOR

S/N: DLP1-UP
PART OF 235-8910, 346-8058 CAB GP
AN ATTACHMENT

SMCS-7308 **i02504626**

NOTE	REF NO	GRAPHIC REF	PART NUMBER	QTY	PART NAME 1 2 3 4 5 6 (PRODUCT LEVEL)	SEE PAGE
	1	1	**156-6642**	1	LEVER AS	
	2	1	**164-0664**	1	BRACKET	
	3	1	**176-1941**	1	PIN	
	4	1	**185-8280**	1	WASHER-WAVE (10.5X15X0.3-MM THK)	
	5	1	**185-8281**	1	SPRING	

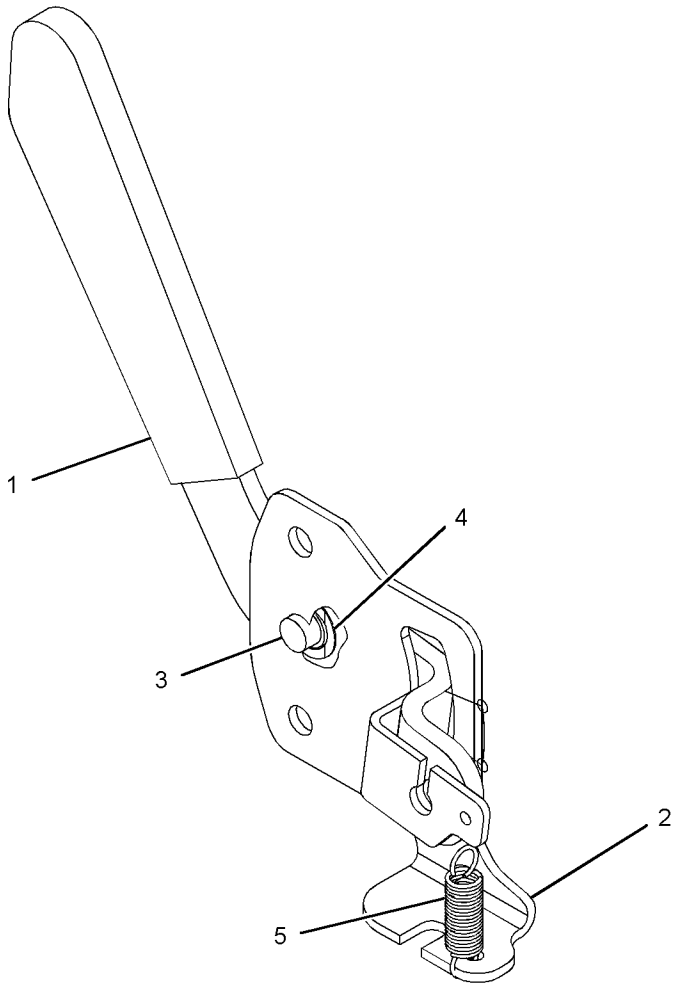

GRAPHIC #1 <END> g01217036

273-5350 LINES GP-AIR CONDITIONER

S/N: DLP1-UP

PART OF 301-2680 CHASSIS AR

SMCS-1808 **i02910126**

NOTE	REF NO	GRAPHIC REF	PART NUMBER	QTY	PART NAME 1 2 3 4 5 6 (PRODUCT LEVEL)	SEE PAGE
	1	2	**3S-2093**	2	STRAP-CABLE	
	2	2	**4I-4580**	1	FITTING	
	3	1	**6P-8855**	2	SPACER-TUBE	
					—OR—	
		1	**122-9605**	2	TUBE	
	4	2	**7I-0375**	1	ELBOW	
	5	1	**7K-1181**	1	STRAP-CABLE	
	6	2	**9S-3232**	1	CLIP	
	7	2	**099-1319**	1	GROMMET	
	9	1	**122-9657**	2	CLAMP	
	10	2	**132-4233**	1	SPACER (8.7X16X18-MM)	
	11	1	**149-6549**	1	GROMMET	
	12	2	**155-7024**	2	SPACER-SPECIAL	
	13	2	**176-1902**	1	DRYER AS-REFRIGERANT (RECEIVER)	
	14	1	**235-8891**	1	PLATE	
	15	1,2	**235-9014**	8	CLAMP-SPRING	
					—OR—	
		1,2	**5D-1026**	8	CLAMP-BAND	
	16	1	**235-9015**	2	HOSE	
	17	2	**273-5437**	1	HOSE AS	
		2	**121-7136**	2	SEAL-O-RING	
	18	2	**284-4387**	1	HOSE AS	
		2	**121-7137**	1	SEAL-O-RING	
		2	**245-7850**	1	CAP	
	19	2	**284-4388**	1	HOSE AS	
		2	**121-7136**	1	SEAL-O-RING	
		2	**245-7851**	1	CAP	
	20	1	**293-1238**	2	HOSE-DRAIN	
	21	2	**305-0303**	1	HOSE AS	
		2	**121-7138**	2	SEAL-O-RING	
	22	2	**305-0304**	1	HOSE AS	
		2	**121-7138**	2	SEAL-O-RING	
		2	**130-0270**	1	SWITCH AS-PRESSURE (REFRIGERANT)	
		2	**185-8293**	1	SEAL-O-RING	
	23	1	**305-0305**	1	HOSE AS	
		1	**121-7137**	2	SEAL-O-RING	
	24	2	**305-0359**	1	GROMMET	
	25	2	**095-0913**	1	CLIP	
	26	2	**100-4336**	1	CLIP (LOOP)	
	27	2	**121-7098**	1	BRACKET AS	
M		2	**8T-4138**	2	BOLT (M6X1X20-MM)	
		2	**9X-8256**	2	WASHER (6.6X12X2-MM THK)	
	28	1	**4P-8134**	1	CLIP (LADDER)	
	29	2	**4S-1962**	3	CLIP (LOOP)	
	31	2	**5K-3294**	1	CLIP	
	32	1	**5P-4325**	2	CLIP (LOOP)	
	33	1,2	**6D-3479**	2	CLIP (LOOP)	
	34	2	**6D-4244**	2	CLIP (LOOP)	

273-5350 **LINES GP-AIR CONDITIONER (**contd.**)** **i02910126**

NOTE	REF NO	GRAPHIC REF	PART NUMBER	QTY	PART NAME 1 2 3 4 5 6 (PRODUCT LEVEL)	SEE PAGE
	35	1,2	**6V-2235**	3	CLIP	
	36	1	**6V-3265**	1	CLIP	
M	37	1,2	**6V-7357**	5	BOLT (M6X1X25-MM)	
M	38	2	**7X-2538**	1	BOLT (M8X1.25X100-MM)	
	39	1	**7Y-8168**	1	GROMMET	
	40	1,2	**8T-4121**	15	WASHER-HARD (11X21X2.5-MM THK)	
M	41	1,2	**8T-4136**	2	BOLT (M10X1.5X25-MM)	
M	42	1,2	**8T-4137**	12	BOLT (M10X1.5X20-MM)	
M	43	1	**8T-4191**	1	BOLT (M10X1.5X16-MM)	
M	44	2	**8T-4199**	2	BOLT (M8X1.25X12-MM)	
	45	2	**8T-4224**	3	WASHER-HARD (8.8X16X2-MM THK)	
M	46	2	**8T-4971**	2	BOLT (M6X1X30-MM)	
	47	1,2	**9X-8256**	7	WASHER (6.6X12X2-MM THK)	
E	48	2	**225-5714**		GUARD (35-CM)	
E	48A	2	**225-5714**		GUARD (30-CM)	
E	49	2	**5P-0767**		HOSE (335-CM)	
E	49A	2	**5P-0767**		HOSE (200-CM)	
	50	2	**305-0441**	2	BAND-MARKER (HS)	
	51	2	**305-0442**	2	BAND-MARKER (HR)	
	52	2	**7I-2673**	1	STRAP-CABLE	
	53	2	**8M-2773**	1	CLIP (LOOP)	

E - ORDER BY THE CENTIMETER
M - METRIC PART

273-5350 **LINES GP-AIR CONDITIONER (**contd.**)** **i02910126**

REFER TO ALL ILLUSTRATIONS OF
THIS GROUP FOR AUXILIARY VIEWS

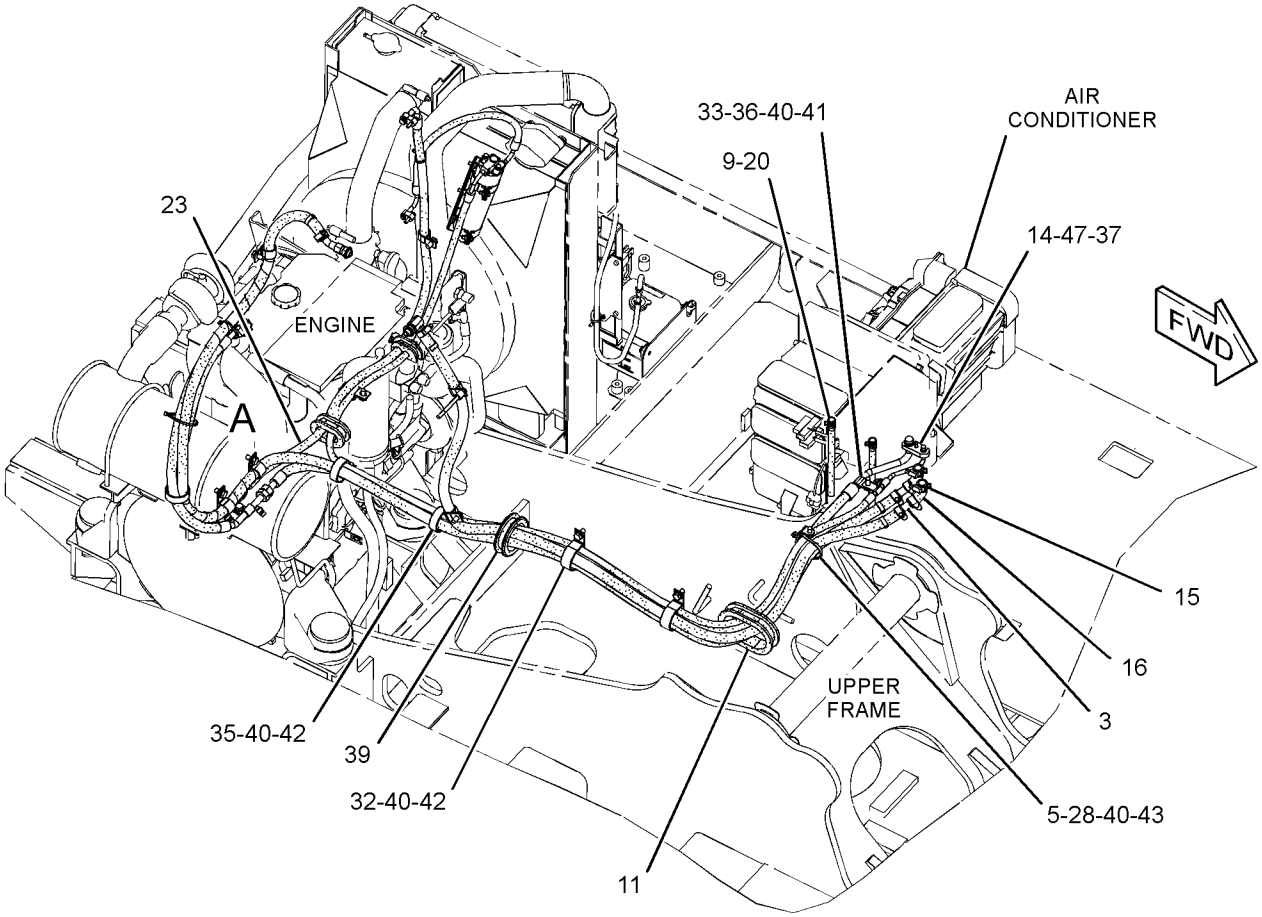

GRAPHIC #1 g01440669

273-5350 **LINES GP-AIR CONDITIONER (**contd.**)** **i02910126**

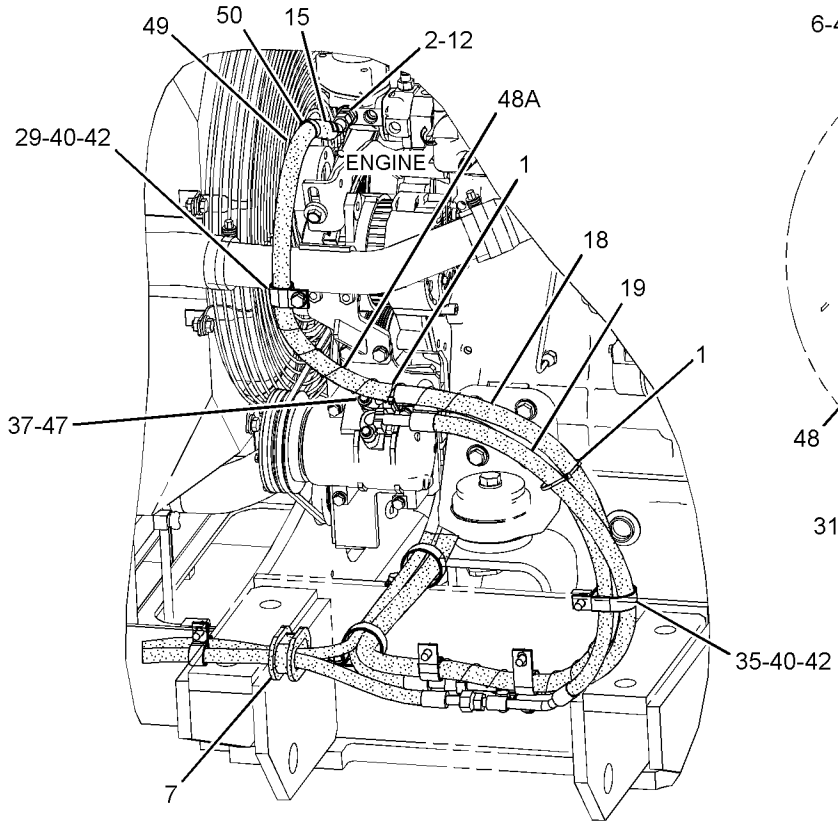

REAR VIEW
(UPPER RIGHT)

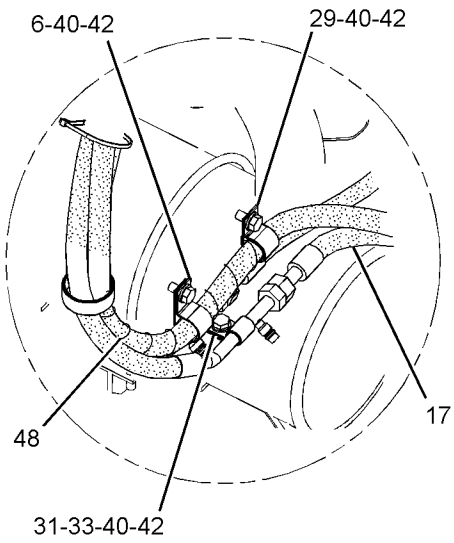

VIEW OF AREA A

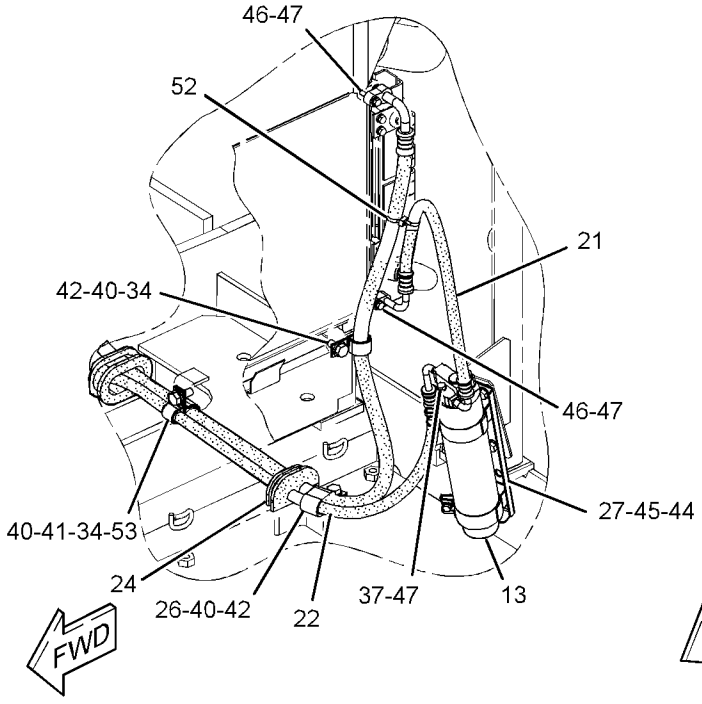

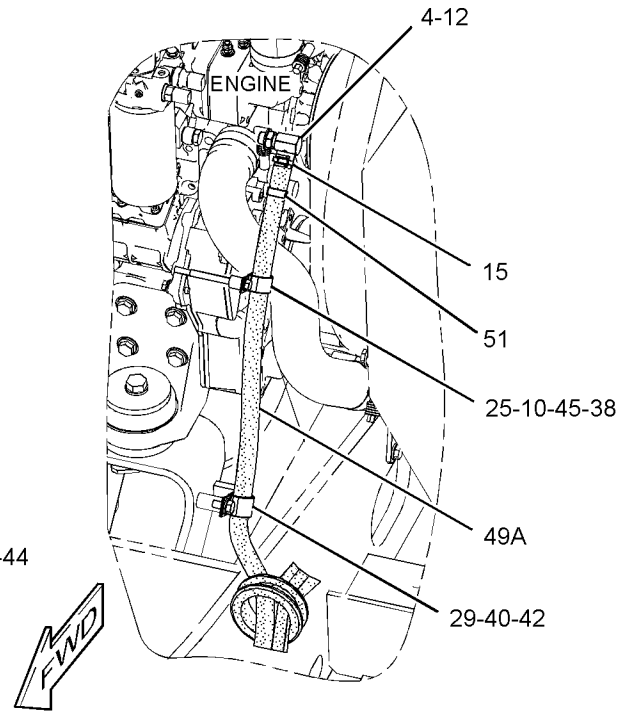

GRAPHIC #2 <END> g01451045

284-4574 LINES GP-HEATER

S/N: DLP1-UP
PART OF 284-4573 HEATER AR-CAB
AN ATTACHMENT

SMCS-1812, 7304 **i05293541**

NOTE	REF NO	GRAPHIC REF	PART NUMBER	QTY	PART NAME 1 2 3 4 5 6 (PRODUCT LEVEL)	SEE PAGE
	1	2	**4I-4580**	1	FITTING	
	2	1	**6P-8855**	2	SPACER-TUBE	
					—OR—	
F			**122-9605**	2	TUBE	
	3	2	**7I-0375**	1	ELBOW	
	4	1	**7K-1181**	1	STRAP-CABLE	
	6	2	**132-4233**	1	SPACER (8.7X16X18-MM)	
	7	1	**149-6549**	1	GROMMET	
	8	2	**155-7024**	2	SPACER-SPECIAL	
	9	1,2	**235-9014**	8	CLAMP-SPRING	
					—OR—	
F			**5D-1026**	8	CLAMP-BAND	
	10	1	**235-9015**	2	HOSE	
	11	2	**283-2893**	1	RECEPTACLE AS	
		2	**8T-8737**	2	PLUG-SEAL	
		2	**243-4505**	1	RECEPTACLE AS-CONNECTOR (2-PIN)	
	12	2	**324-4168**	1	BRACKET AS	
	13	2	**095-0913**	1	CLIP	
	14	1	**4P-8134**	1	CLIP (LADDER)	
	15	2	**4S-1962**	7	CLIP (LOOP)	
	17	1	**6D-1641**	2	CLIP (LOOP)	
M	18	2	**7X-2538**	1	BOLT (M8X1.25X100-MM)	
	19	1	**7Y-8168**	1	GROMMET	
	20	1,2	**8T-4121**	12	WASHER-HARD (11X21X2.5-MM THK)	
M	21	1,2	**8T-4137**	8	BOLT (M10X1.5X20-MM)	
M	22	2	**8T-4172**	3	BOLT (M10X1.5X80-MM)	
M	23	2	**8T-4189**	1	BOLT (M8X1.25X20-MM)	
M	24	1	**8T-4191**	1	BOLT (M10X1.5X16-MM)	
	25	2	**8T-4223**	2	WASHER-HARD (13.5X25.5X3-MM THK)	
	26	2	**8T-4224**	2	WASHER-HARD (8.8X16X2-MM THK)	
M	27	2	**8T-4910**	2	BOLT (M12X1.75X60-MM)	
E	28	2	**225-5714**		GUARD (25-CM)	
E	29	2	**5P-0767**		HOSE (330-CM)	
E	29A	2	**5P-0767**		HOSE (200-CM)	
	30	2	**305-0360**	1	GROMMET	
	31	1,2	**305-0441**	2	BAND-MARKER (HS)	
	32	1,2	**305-0442**	2	BAND-MARKER (HR)	

E - ORDER BY THE CENTIMETER
F - NOT SHOWN
M - METRIC PART

284-4574 **LINES GP-HEATER (**contd.**)** **i05293541**

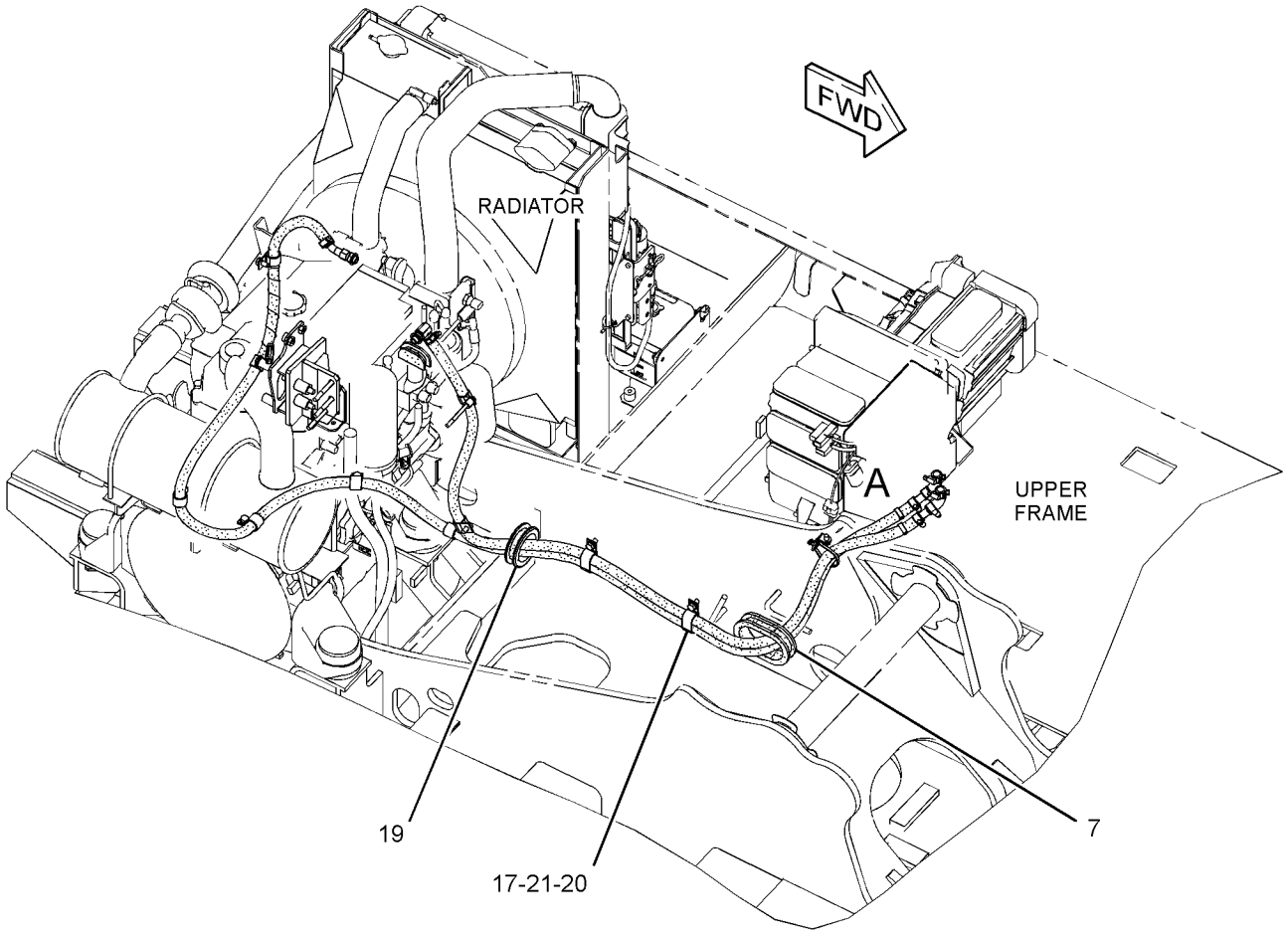

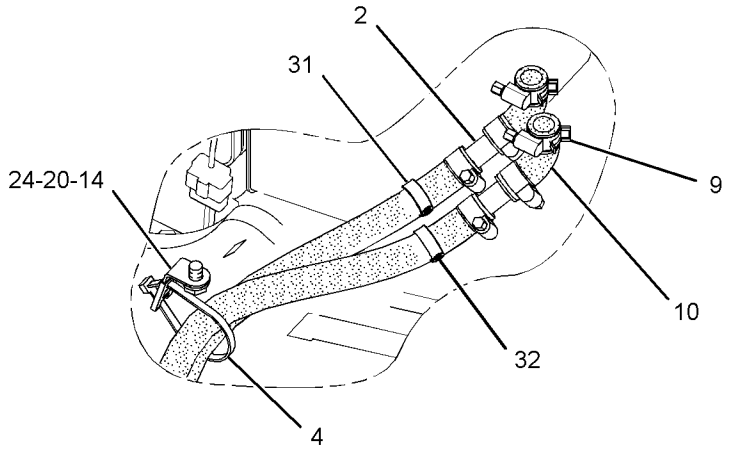

VIEW OF AREA A

GRAPHIC #1 g01440715

284-4574 **LINES GP-HEATER (**contd.**)** **i05293541**

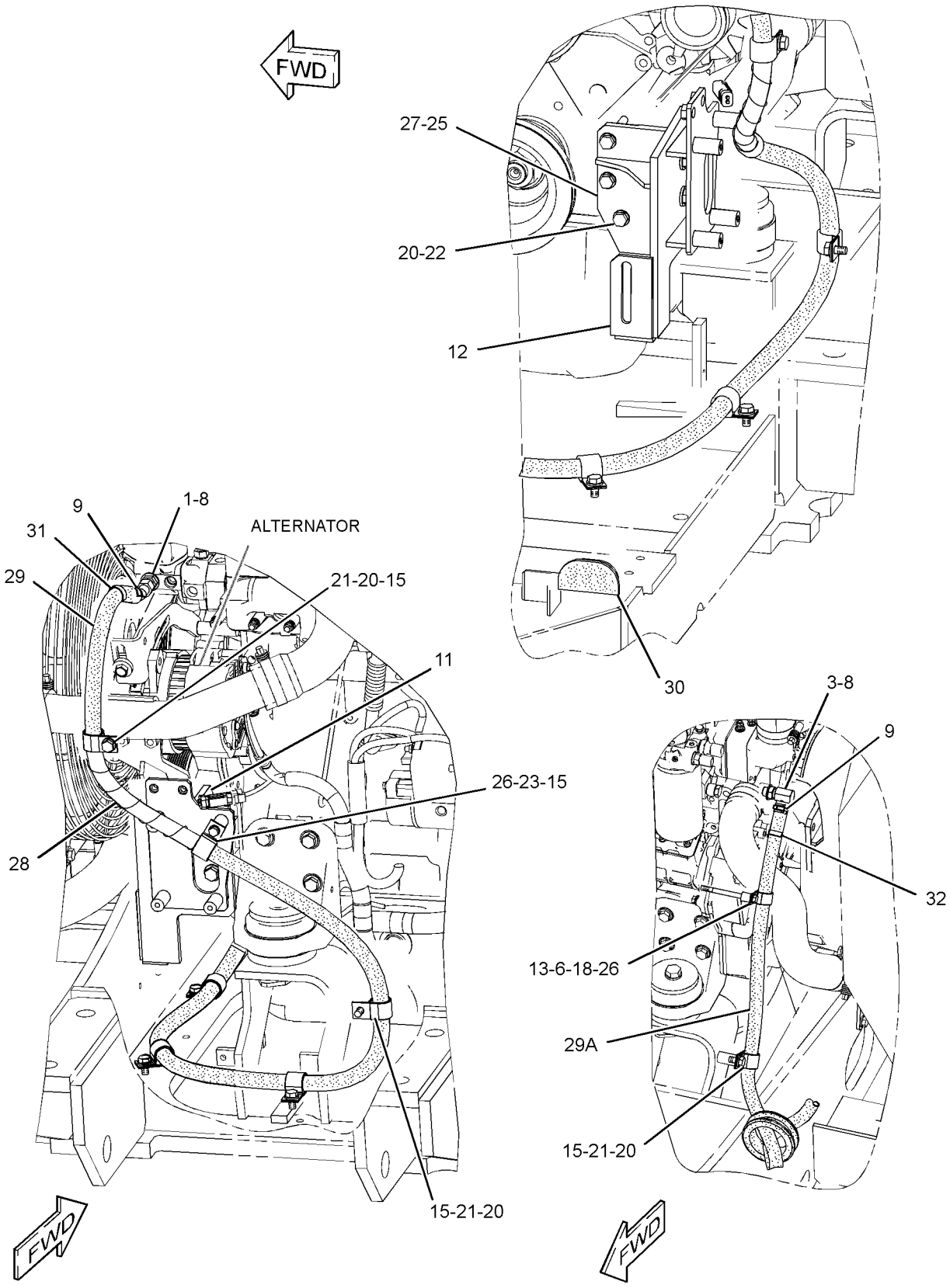

GRAPHIC #2 <END> g01440714

7Y-0059 LITERATURE GP

S/N: DLP1-UP

PART OF 301-2680 CHASSIS AR

SMCS-7300 **i06829146**

NOTE	PART NUMBER	QTY	PART NAME 1 2 3 4 5 6 (PRODUCT LEVEL)	SEE PAGE
	099-3645	1	CABLE-LANYARD	
	5P-8500	2	KEY	
	5P-7958	2	SLEEVE-CABLE SPLICE	
	364-8522	1	TAG-WARNING (TIPPING HAZARD, READ OMM)	
			(ATTACH TO JOYSTICK WHEN MACHINE IS TRANSPORTED WITHOUT FRONT (BOOM) STRUCTURE OR COUNTERWEIGHT)	
			<END>	

394-9460 MIRROR GP

S/N: DLP1-UP

PART OF 235-8910, 346-8058 CAB GP, 489-5117 KIT-MIRROR, 330-1162 MIRROR GP-DOWN VIEW, 327-6552, 327-6553 MIRROR GP-REAR VIEW

AN ATTACHMENT

SMCS-7319 **i06972768**

NOTE	REF NO	GRAPHIC REF	PART NUMBER	QTY	PART NAME 1 2 3 4 5 6 (PRODUCT LEVEL)	SEE PAGE
M	1	1	**191-8921**	2	BOLT-SOCKET HEAD (M6X1X25-MM)	
	2	1	**9X-8256**	2	WASHER (6.6X12X2-MM THK)	

M - METRIC PART

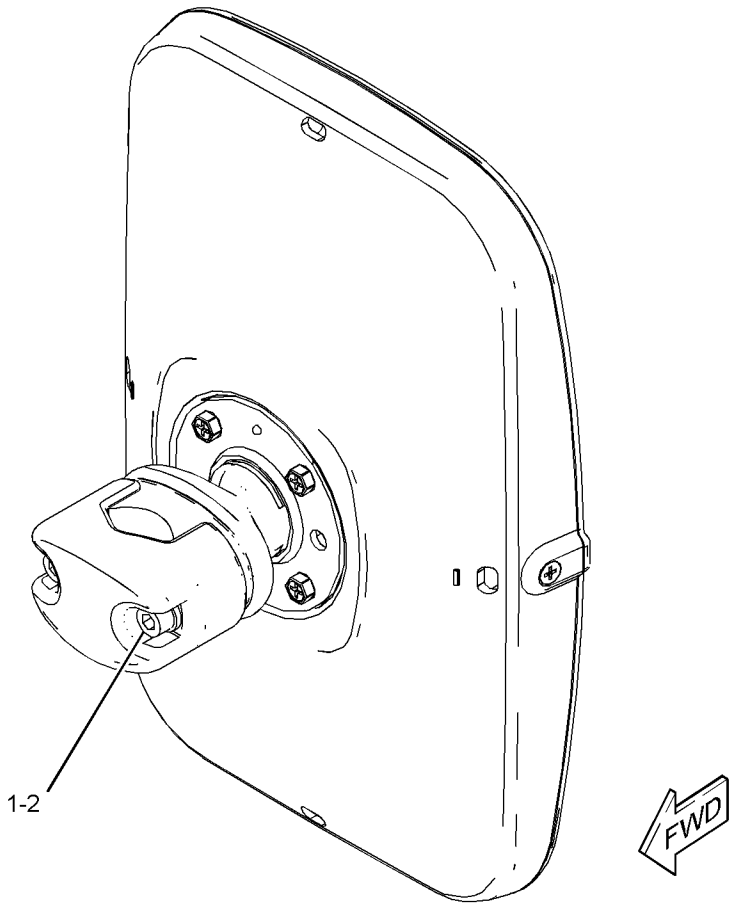

GRAPHIC #1 <END> g03652607

330-1162 MIRROR GP-DOWN VIEW—FUEL TANK, RH

S/N: DLP1-UP
PART OF 330-1323 TANK & MTG AR-FUEL
AN ATTACHMENT
TYPE 1

SMCS-7319 **i03117525**

NOTE	REF NO	GRAPHIC REF	PART NUMBER	QTY	PART NAME 1 2 3 4 5 6 (PRODUCT LEVEL)	SEE PAGE
	1	1	**135-8575**	3	BOLT AS	
	2	1	**320-5525**	1	TUBE AS	
	3	1	**327-3062**	1	MIRROR GP-DOWN VIEW	
M		1	**8T-0269**	2	BOLT-SOCKET HEAD (M6X1X20-MM)	
		1	**9X-8256**	2	WASHER (6.6X12X2-MM THK)	
	4	1	**327-3063**	1	MIRROR GP-DOWN VIEW	
M		1	**8T-0269**	2	BOLT-SOCKET HEAD (M6X1X20-MM)	
		1	**9X-8256**	2	WASHER (6.6X12X2-MM THK)	

M - METRIC PART

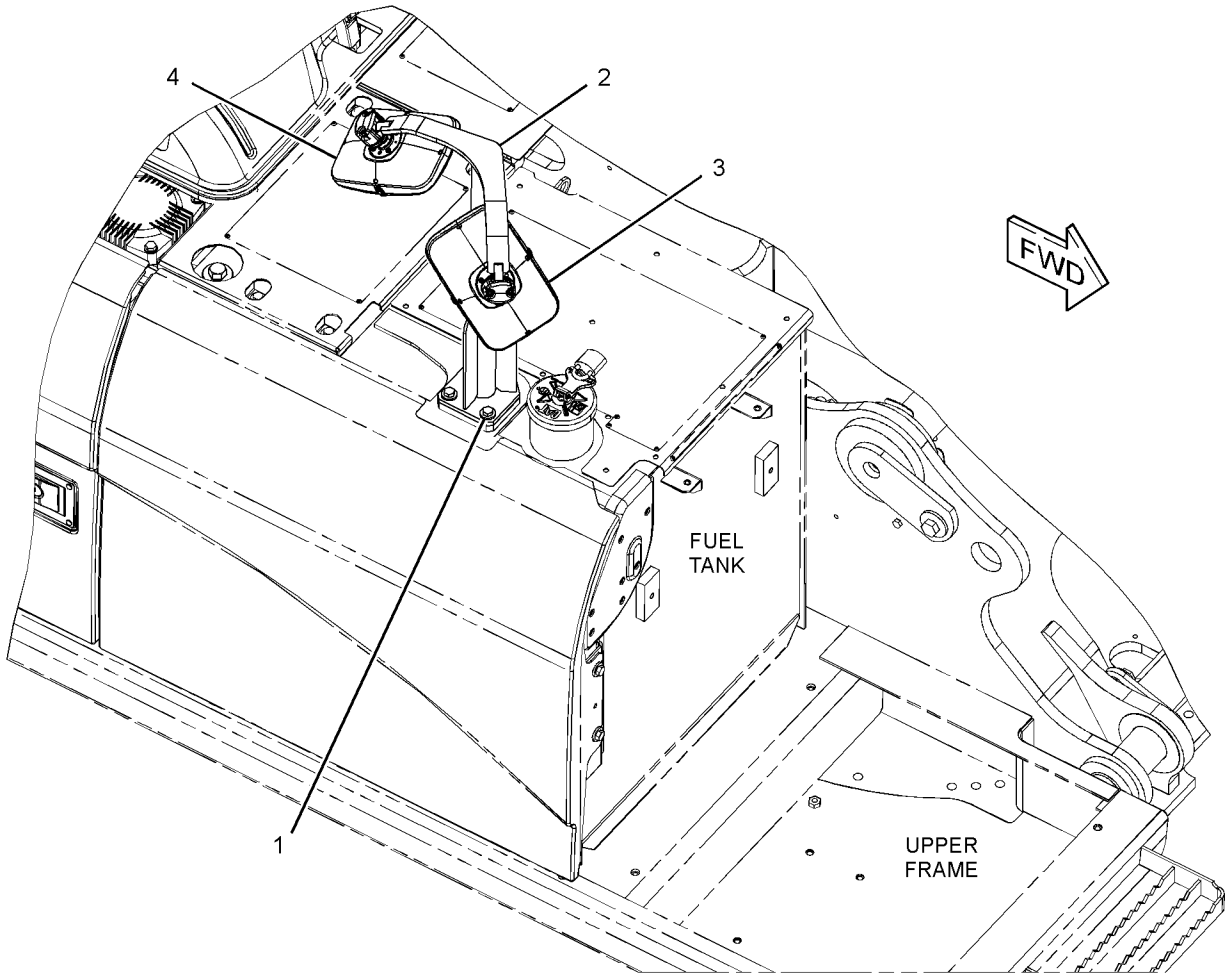

GRAPHIC #1 <END> g01619310

330-1162 MIRROR GP-DOWN VIEW—FUEL TANK, RH

S/N: DLP1-UP
PART OF 330-1323 TANK & MTG AR-FUEL
AN ATTACHMENT
TYPE 2

SMCS-7319 **i05146273**

NOTE	REF NO	GRAPHIC REF	PART NUMBER	QTY	PART NAME 1 2 3 4 5 6 (PRODUCT LEVEL)	SEE PAGE
	1	1	**135-8575**	3	BOLT AS	
	2	1	**320-5525**	1	TUBE AS	
C	3	1	**369-2775**	1	MIRROR GP-REAR VIEW	
M		1	**8T-0269**	2	BOLT-SOCKET HEAD (M6X1X20-MM)	
		1	**9X-8256**	2	WASHER (6.6X12X2-MM THK)	
C	4	1	**369-2776**	1	MIRROR GP-REAR VIEW	
M		1	**8T-0269**	2	BOLT-SOCKET HEAD (M6X1X20-MM)	
		1	**9X-8256**	2	WASHER (6.6X12X2-MM THK)	

C - CHANGE FROM PREVIOUS TYPE
M - METRIC PART

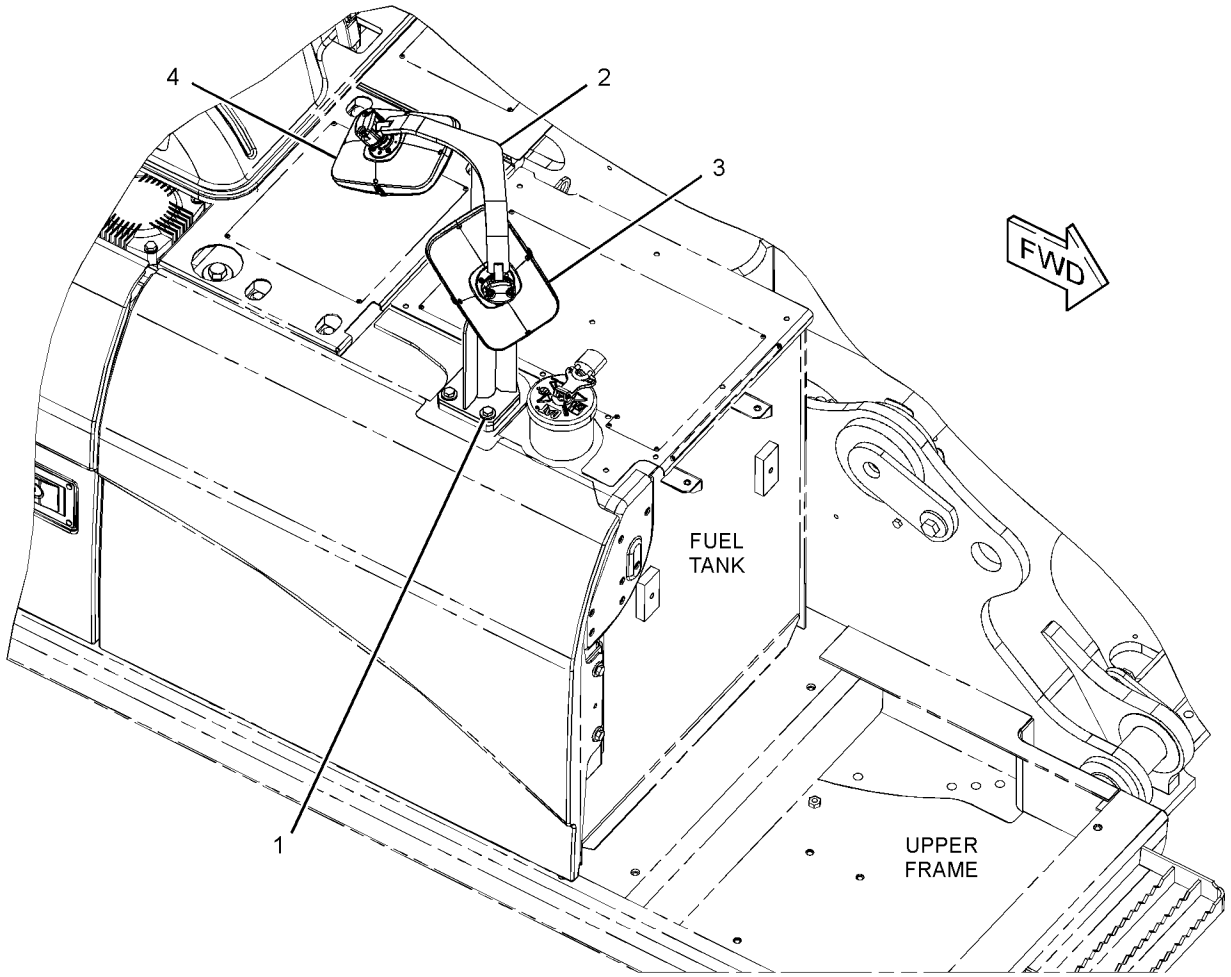

GRAPHIC #1 <END> g01619310

330-1162 MIRROR GP-DOWN VIEW—FUEL TANK, RH

S/N: DLP1-UP
PART OF 330-1323 TANK & MTG AR-FUEL
AN ATTACHMENT
TYPE 3

SMCS-7319 **i05164798**

NOTE	REF NO	GRAPHIC REF	PART NUMBER	QTY	PART NAME 1 2 3 4 5 6 (PRODUCT LEVEL)	SEE PAGE
	1	1	**135-8575**	3	BOLT AS	
	2	1	**320-5525**	1	TUBE AS	
C	3	1	**394-9459**	1	MIRROR AS (SIDE, RH)	
M		1	**191-8921**	2	BOLT-SOCKET HEAD (M6X1X25-MM)	
		1	**9X-8256**	2	WASHER (6.6X12X2-MM THK)	
C	4	1	**394-9460**	1	MIRROR GP (FUEL TANK)	
M		1	**191-8921**	2	BOLT-SOCKET HEAD (M6X1X25-MM)	
		1	**9X-8256**	2	WASHER (6.6X12X2-MM THK)	

C - CHANGE FROM PREVIOUS TYPE
M - METRIC PART

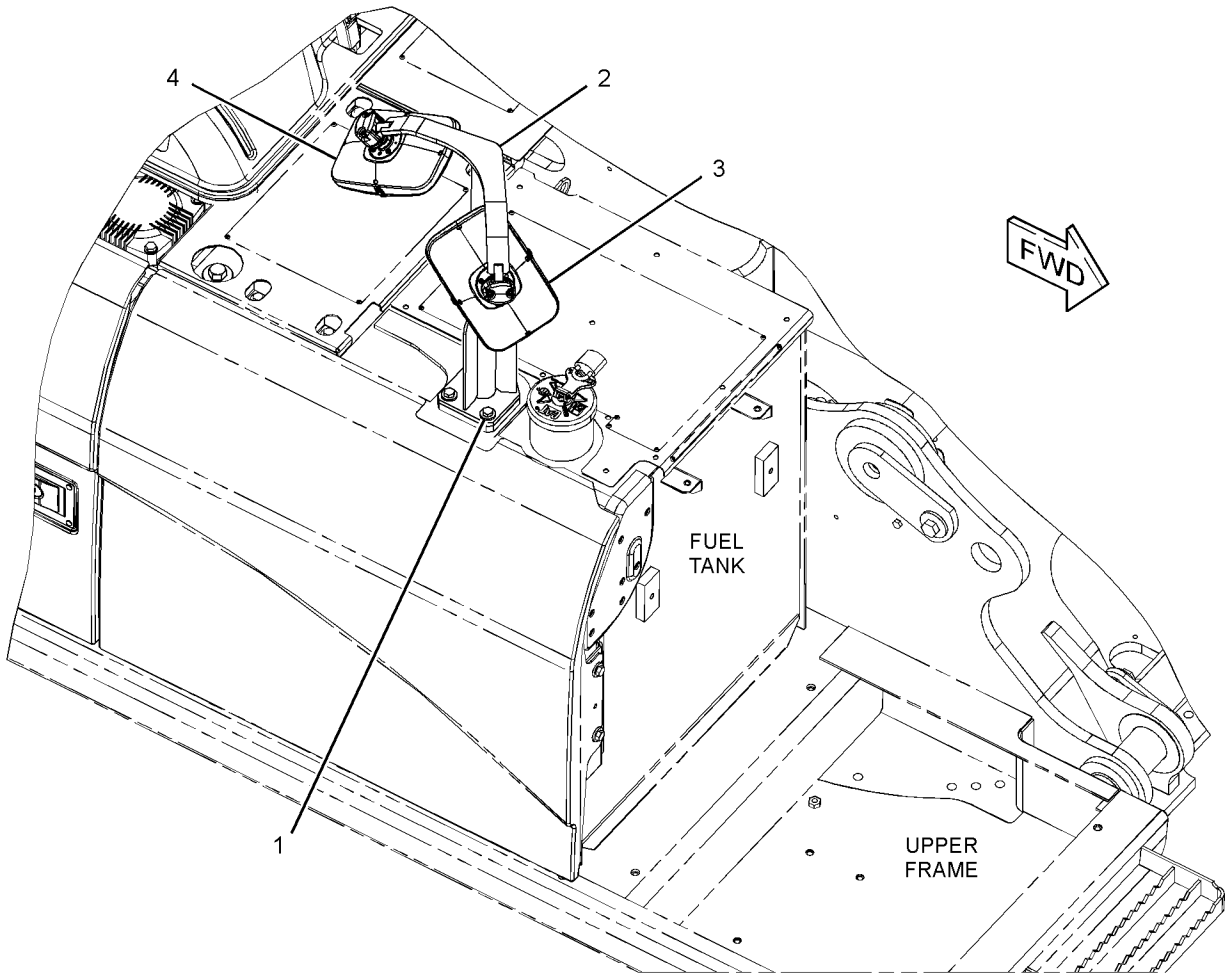

GRAPHIC #1 <END> g01619310

330-1162 MIRROR GP-DOWN VIEW—FUEL TANK, RH

S/N: DLP1-UP
PART OF 330-1323 TANK & MTG AR-FUEL
AN ATTACHMENT
TYPE 4

SMCS-7319 **i06612786**

NOTE	REF NO	GRAPHIC REF	PART NUMBER	QTY	PART NAME 1 2 3 4 5 6 (PRODUCT LEVEL)	SEE PAGE
	1	1	**135-8575**	3	BOLT AS	
	2	1	**320-5525**	1	TUBE AS	
CY	3	1	**443-7858**	1	MIRROR GP-REAR VIEW	1117
C	4	1	**443-7855**	1	MIRROR GP-SIDE VIEW	
M		1	**105-3487**	2	BOLT-SOCKET HEAD (M6X1X20-MM)	
		1	**9X-8256**	2	WASHER (6.6X12X2-MM THK)	

C - CHANGE FROM PREVIOUS TYPE
M - METRIC PART
Y - SEPARATE ILLUSTRATION

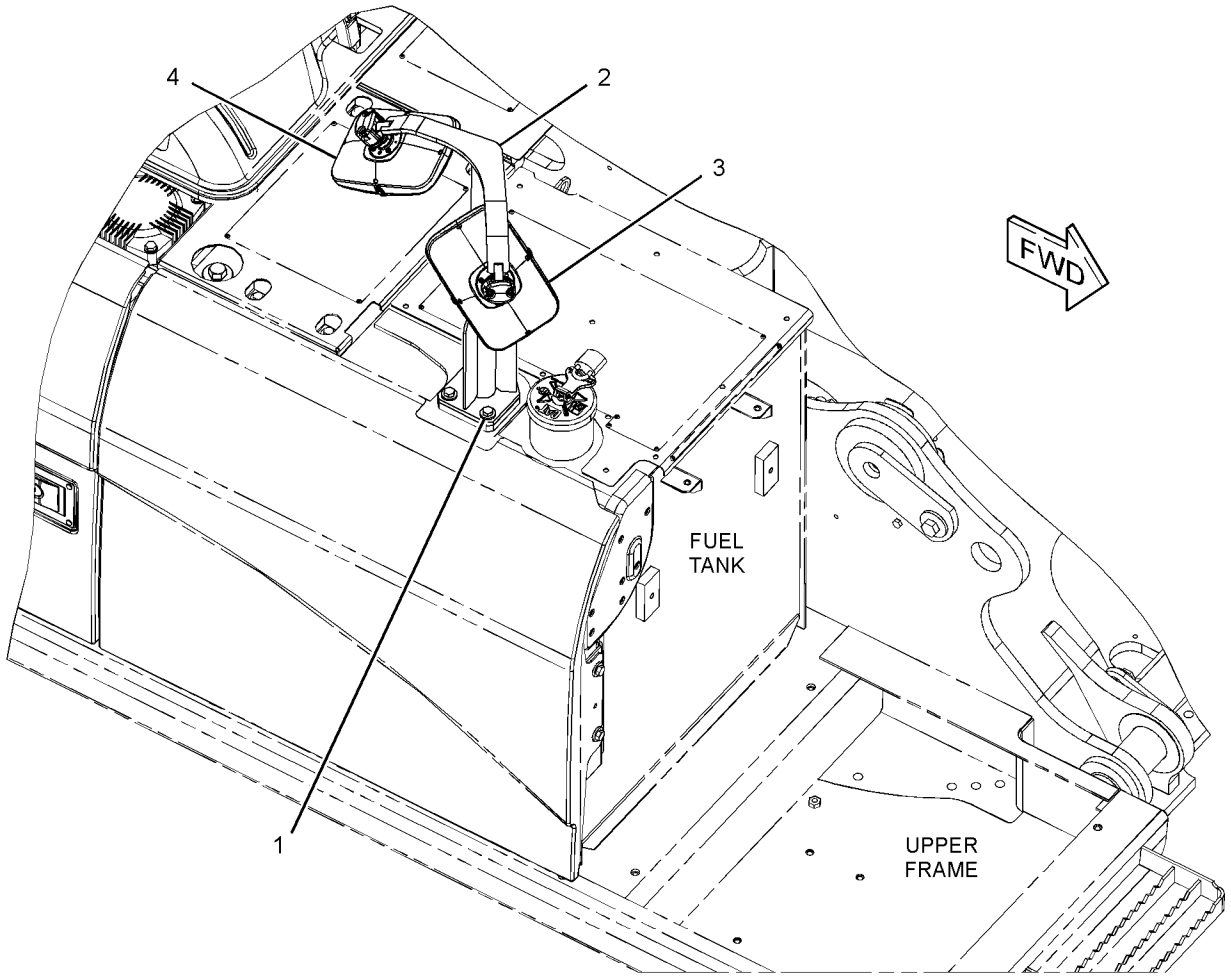

GRAPHIC #1 <END> g01619310

330-1162 MIRROR GP-DOWN VIEW—FUEL TANK, RH

S/N: DLP1-UP
PART OF 330-1323 TANK & MTG AR-FUEL
AN ATTACHMENT
TYPE 5

SMCS-7319 **i06747303**

NOTE	REF NO	GRAPHIC REF	PART NUMBER	QTY	PART NAME 1 2 3 4 5 6 (PRODUCT LEVEL)	SEE PAGE
	1	1	**135-8575**	3	BOLT AS	
	2	1	**320-5525**	1	TUBE AS	
C	3	1	**394-9459**	1	MIRROR AS	
M		1	**191-8921**	2	BOLT-SOCKET HEAD (M6X1X25-MM)	
		1	**9X-8256**	2	WASHER (6.6X12X2-MM THK)	
CY	4	1	**394-9460**	1	MIRROR GP (SIDE VIEW)	1102

C - CHANGE FROM PREVIOUS TYPE
M - METRIC PART
Y - SEPARATE ILLUSTRATION

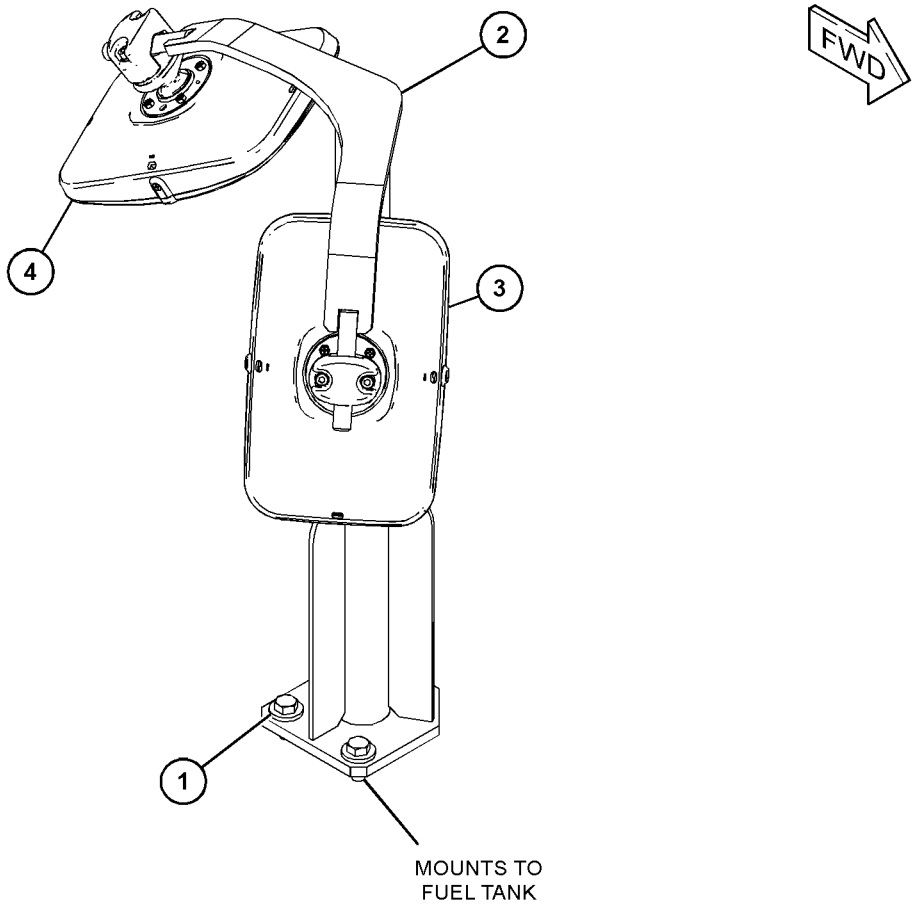

GRAPHIC #1 <END> g06144685

142-3836 MIRROR GP-REAR VIEW

S/N: DLP1-UP
PART OF 301-2680 CHASSIS AR
TYPE 1

SMCS-7319 **i01584884**

NOTE	REF NO	GRAPHIC REF	PART NUMBER	QTY	PART NAME 1 2 3 4 5 6 (PRODUCT LEVEL)	SEE PAGE
	1	1	**2M-0849**	4	WASHER-HARD (13.5X25.5X5-MM THK)	
	2	1	**137-2270**	1	MIRROR	
	3	1	**165-3065**	1	BRACKET-MIRROR	
	4	1	**177-6315**	4	PLUG	
M	5	1	**8T-4192**	4	BOLT (M12X1.75X25-MM)	

M - METRIC PART

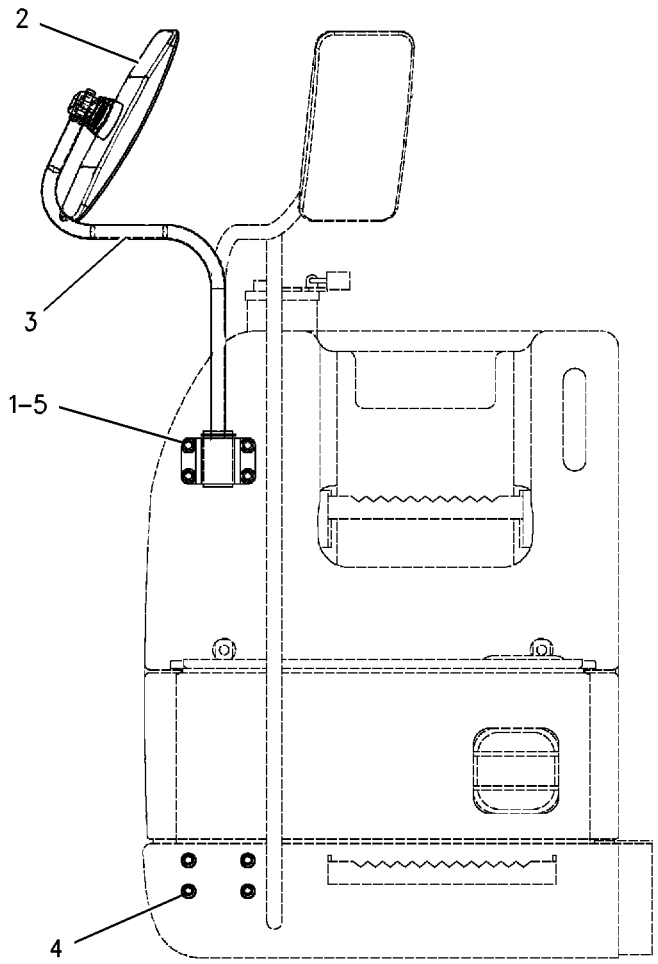

FRONT VIEW

GRAPHIC #1 <END> g00682738

142-3836 MIRROR GP-REAR VIEW

S/N: DLP1-UP
PART OF 301-2680 CHASSIS AR
TYPE 2

SMCS-7319 **i05253856**

NOTE	REF NO	GRAPHIC REF	PART NUMBER	QTY	PART NAME 1 2 3 4 5 6 (PRODUCT LEVEL)	SEE PAGE
	1	1	**8T-7971**	4	WASHER-HARD (13.5X25.5X5-MM THK)	
	2	1	**137-2270**	1	MIRROR	
	3	1	**165-3065**	1	BRACKET-MIRROR	
M	4	1	**8T-4192**	4	BOLT (M12X1.75X25-MM)	

M - METRIC PART

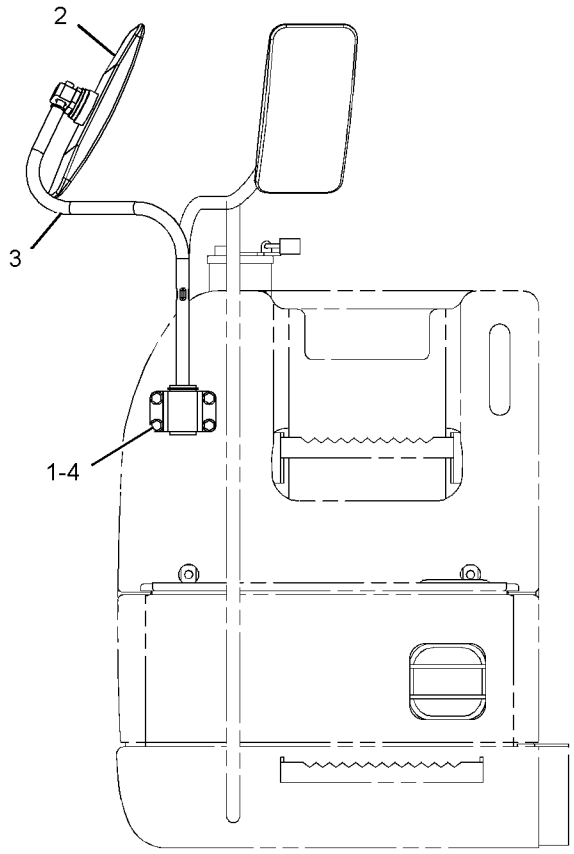

FRONT VIEW

GRAPHIC #1 <END> g02169635

327-6550 MIRROR GP-REAR VIEW

S/N: DLP1-UP

PART OF 235-8910, 346-8058 CAB GP, 327-6552, 327-6553 MIRROR GP-REAR VIEW

AN ATTACHMENT

SMCS-7319 **i06886874**

NOTE	REF NO	GRAPHIC REF	PART NUMBER	QTY	PART NAME 1 2 3 4 5 6 (PRODUCT LEVEL)	SEE PAGE
M	1	1	**105-3487**	2	BOLT-SOCKET HEAD (M6X1X20-MM)	
	2	1	**9X-8256**	2	WASHER (6.6X12X2-MM THK)	

M - METRIC PART

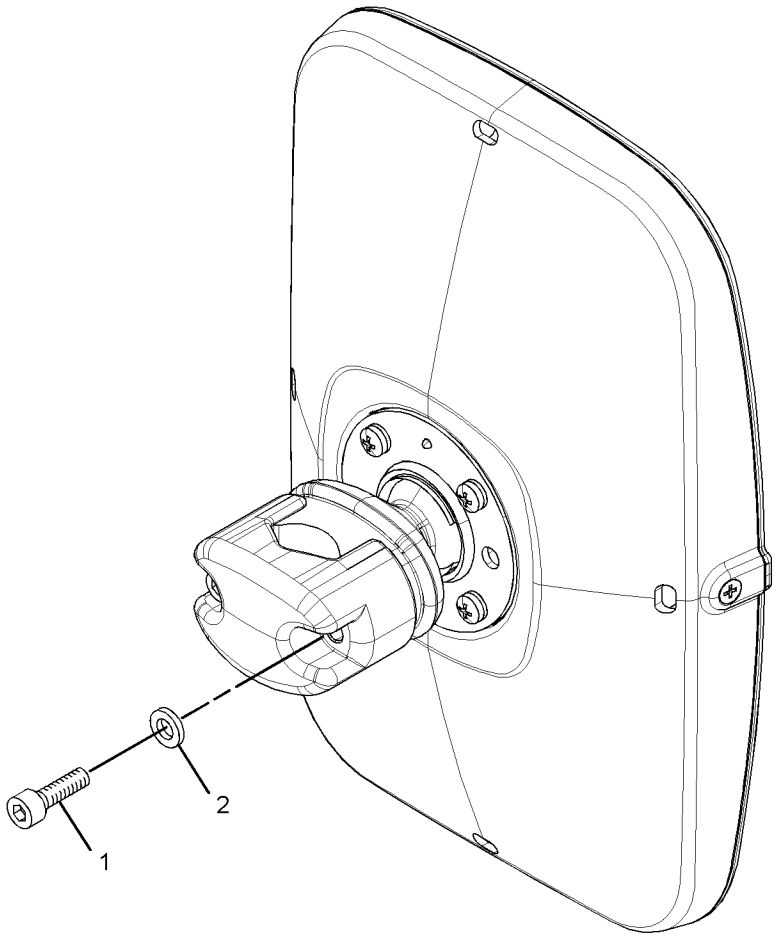

GRAPHIC #1 <END> g03058362

327-6552 MIRROR GP-REAR VIEW

S/N: DLP1-UP
CANNOT BE USED WITH WINDOW GUARD, 171-7485—PAGE: 1064, 164-0534—PAGE: 1059
AN ATTACHMENT
TYPE 1

SMCS-7319 **i05694537**

NOTE	REF NO	GRAPHIC REF	PART NUMBER	QTY	PART NAME 1 2 3 4 5 6 (PRODUCT LEVEL)	SEE PAGE
Y	1	1	**327-6550**	1	MIRROR GP-REAR VIEW	1110
	2	1	**327-6576**	1	SUPPORT AS (MIRROR)	
M	3	1	**447-1704**	1	BOLT (M16X2X90-MM)	
	4	1	**451-2175**	1	WASHER-HARD (17.5X30X3.5-MM THK)	

M - METRIC PART
Y - SEPARATE ILLUSTRATION

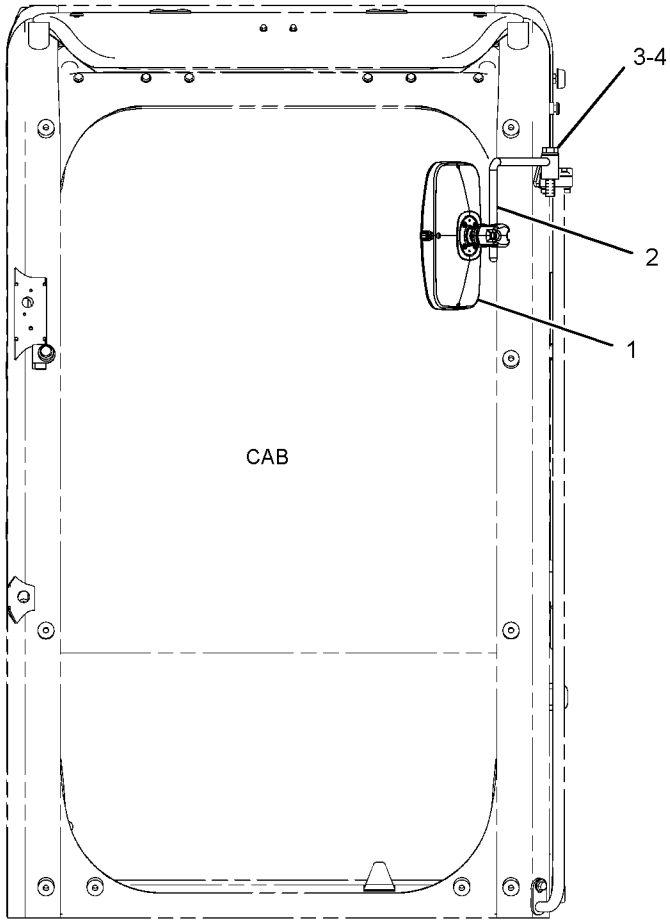

FRONT VIEW

GRAPHIC #1 <END> g01615557

327-6552 MIRROR GP-REAR VIEW

S/N: DLP1-UP
CANNOT BE USED WITH WINDOW GUARD, 171-7485—PAGE: 1064, 164-0534—PAGE: 1059
AN ATTACHMENT
TYPE 2

SMCS-7319 **i06574683**

NOTE	REF NO	GRAPHIC REF	PART NUMBER	QTY	PART NAME 1 2 3 4 5 6 (PRODUCT LEVEL)	SEE PAGE
CY	1	1	**443-7858**	1	MIRROR GP-REAR VIEW	1117
	2	1	**327-6576**	1	SUPPORT AS (MIRROR)	
M	3	1	**447-1704**	1	BOLT (M16X2X90-MM)	
	4	1	**451-2175**	1	WASHER-HARD (17.5X30X3.5-MM THK)	

C - CHANGE FROM PREVIOUS TYPE
M - METRIC PART
Y - SEPARATE ILLUSTRATION

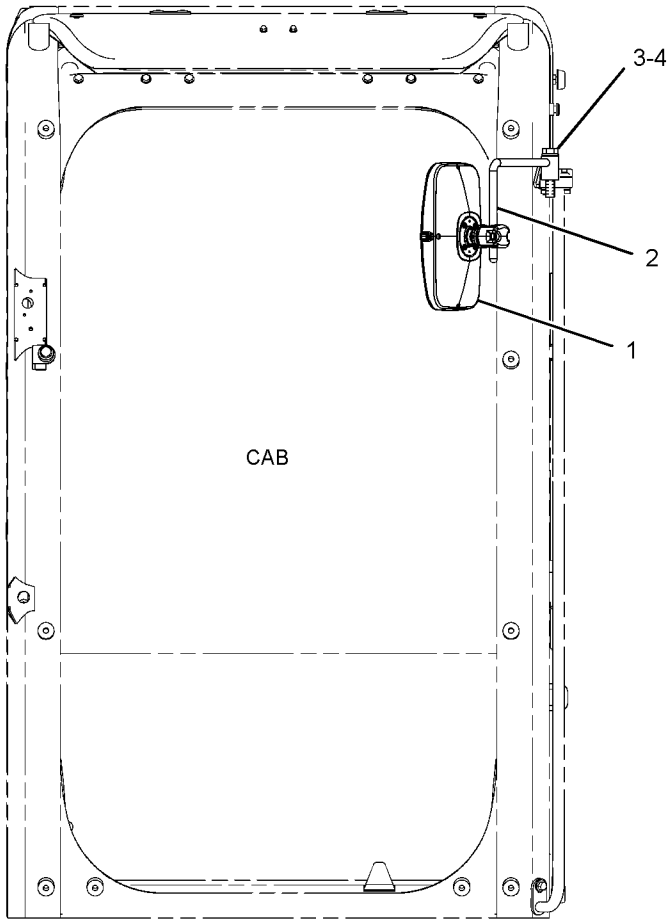

FRONT VIEW

GRAPHIC #1 <END> g01615557

327-6552 MIRROR GP-REAR VIEW

S/N: DLP1-UP
CANNOT BE USED WITH WINDOW GUARD, 171-7485—PAGE: 1064, 164-0534—PAGE: 1059
AN ATTACHMENT
TYPE 3

SMCS-7319 **i07282212**

NOTE	REF NO	GRAPHIC REF	PART NUMBER	QTY	PART NAME 1 2 3 4 5 6 (PRODUCT LEVEL)	SEE PAGE
CY	1	1	**394-9460**	1	MIRROR GP	1102
	2	1	**327-6576**	1	SUPPORT AS (MIRROR)	
M	3	1	**453-2839**	1	BOLT (M16X2X100-MM)	
	4	1	**451-2175**	1	WASHER-HARD (17.5X30X3.5-MM THK)	

C - CHANGE FROM PREVIOUS TYPE
M - METRIC PART
Y - SEPARATE ILLUSTRATION

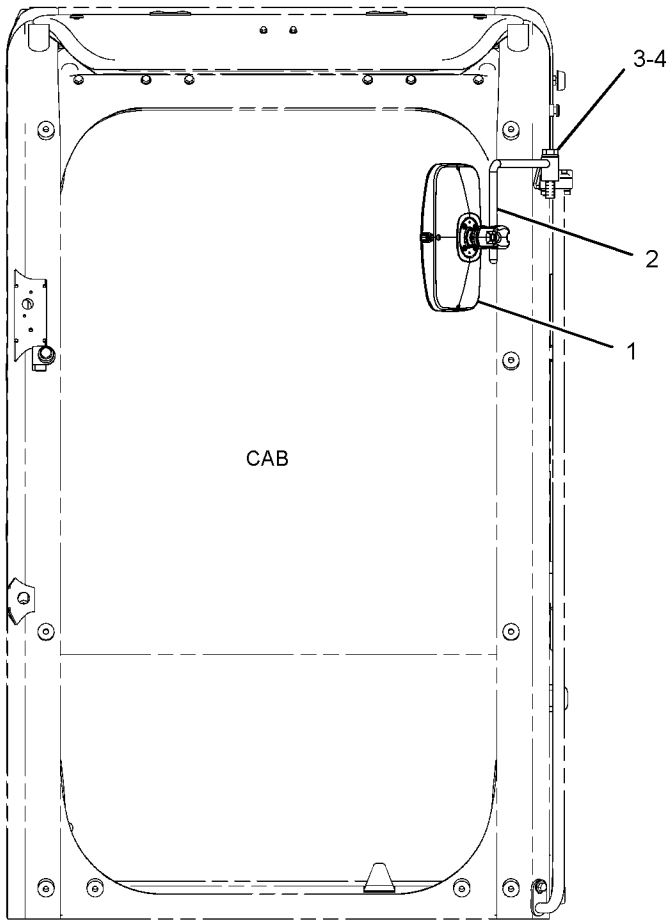

FRONT VIEW

GRAPHIC #1 <END> g01615557

327-6553 MIRROR GP-REAR VIEW

S/N: DLP1-UP
FOR USE WITH WINDOW GUARD, 171-7485—PAGE: 1064, 164-0534—PAGE: 1059
AN ATTACHMENT
TYPE 1

SMCS-7319 **i06945008**

NOTE	REF NO	GRAPHIC REF	PART NUMBER	QTY	PART NAME 1 2 3 4 5 6 (PRODUCT LEVEL)	SEE PAGE
	1	1	**316-8989**	1	SUPPORT AS	
Y	2	1	**327-6550**	1	MIRROR GP-REAR VIEW	1110
M	3	1	**447-1711**	1	BOLT (M16X2X50-MM)	
	4	1	**451-2175**	1	WASHER-HARD (17.5X30X3.5-MM THK)	

M - METRIC PART
Y - SEPARATE ILLUSTRATION

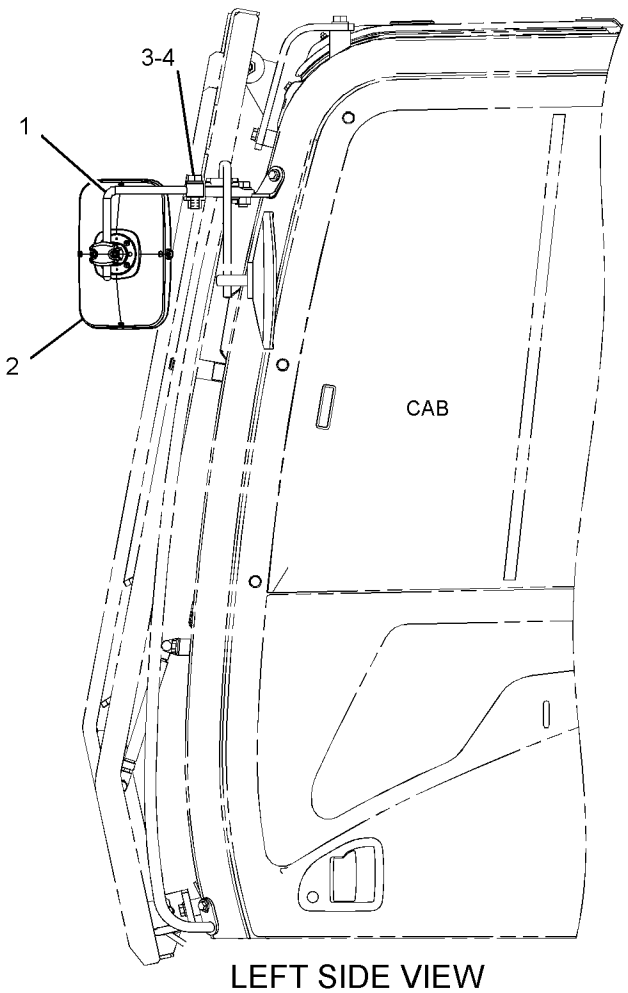

LEFT SIDE VIEW

GRAPHIC #1 <END> g01615542

327-6553 MIRROR GP-REAR VIEW

S/N: DLP1-UP
FOR USE WITH WINDOW GUARD, 171-7485—PAGE: 1064, 164-0534—PAGE: 1059
AN ATTACHMENT
TYPE 2

SMCS-7319 **i06587978**

NOTE	REF NO	GRAPHIC REF	PART NUMBER	QTY	PART NAME 1 2 3 4 5 6 (PRODUCT LEVEL)	SEE PAGE
	1	1	**316-8989**	1	SUPPORT AS	
CY	2	1	**443-7858**	1	MIRROR GP-REAR VIEW	1117
M	3	1	**447-1711**	1	BOLT (M16X2X50-MM)	
	4	1	**451-2175**	1	WASHER-HARD (17.5X30X3.5-MM THK)	

C - CHANGE FROM PREVIOUS TYPE
M - METRIC PART
Y - SEPARATE ILLUSTRATION

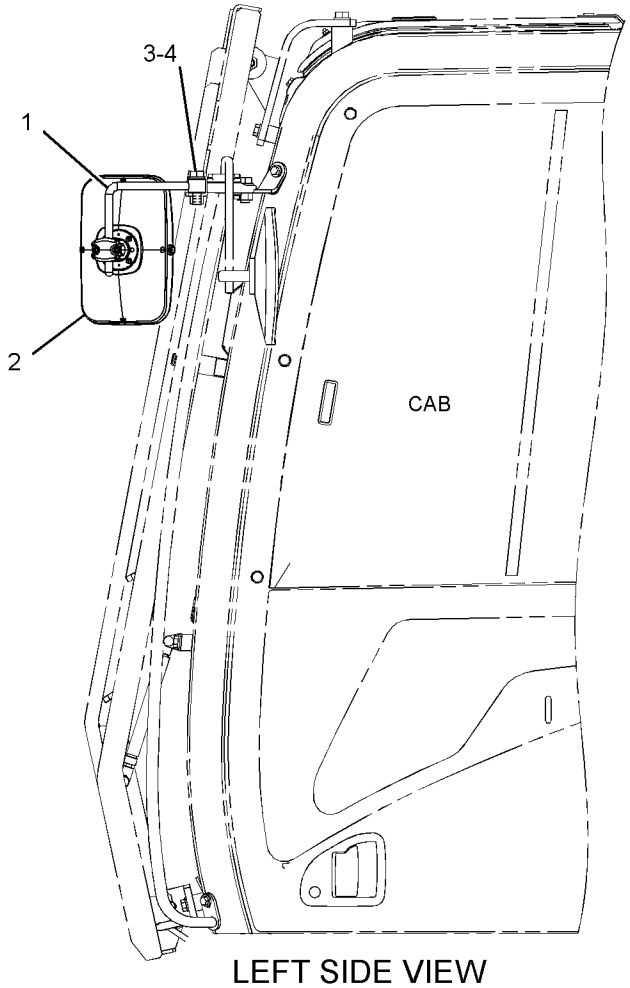

LEFT SIDE VIEW

GRAPHIC #1 <END> g01615542

327-6553 MIRROR GP-REAR VIEW

S/N: DLP1-UP
FOR USE WITH WINDOW GUARD, 171-7485—PAGE: 1064, 164-0534—PAGE: 1059
AN ATTACHMENT
TYPE 3

SMCS-7319 **i07250262**

NOTE	REF NO	GRAPHIC REF	PART NUMBER	QTY	PART NAME 1 2 3 4 5 6 (PRODUCT LEVEL)	SEE PAGE
	1	1	**316-8989**	1	SUPPORT AS	
CY	2	1	**394-9460**	1	MIRROR GP	1102
M	3	1	**447-1711**	1	BOLT (M16X2X50-MM)	
	4	1	**451-2175**	1	WASHER-HARD (17.5X30X3.5-MM THK)	

C - CHANGE FROM PREVIOUS TYPE
M - METRIC PART
Y - SEPARATE ILLUSTRATION

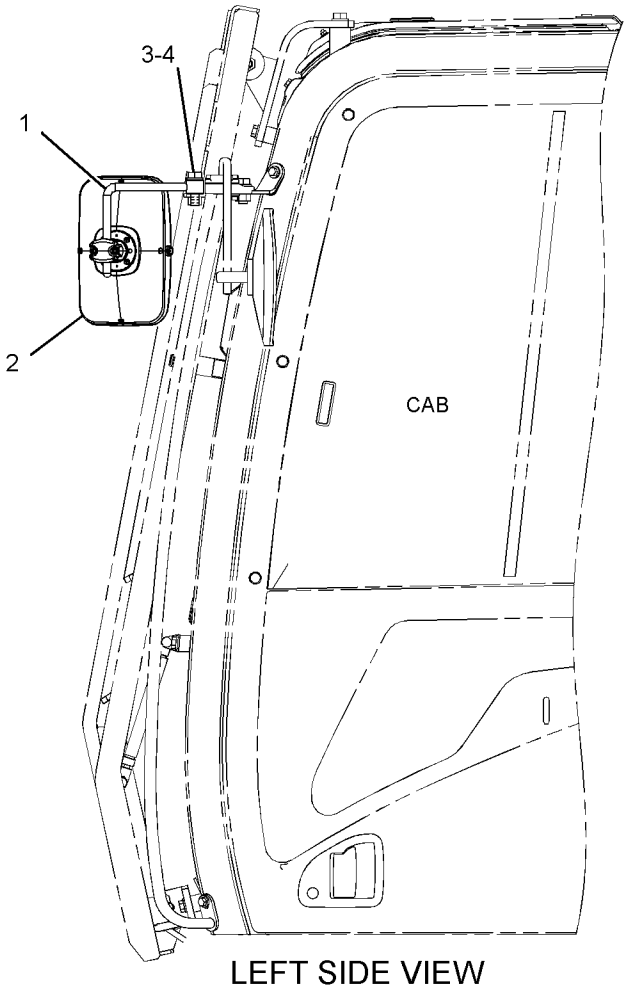

LEFT SIDE VIEW

GRAPHIC #1 <END> g01615542

443-7858 MIRROR GP-REAR VIEW

S/N: DLP1-UP

PART OF 235-8910, 346-8058 CAB GP, 330-1162 MIRROR GP-DOWN VIEW, 327-6552, 327-6553 MIRROR GP-REAR VIEW

AN ATTACHMENT

SMCS-7319 **i06738446**

NOTE	REF NO	GRAPHIC REF	PART NUMBER	QTY	PART NAME 1 2 3 4 5 6 (PRODUCT LEVEL)	SEE PAGE
M	1	1	**105-3487**	2	BOLT-SOCKET HEAD (M6X1X20-MM)	
	2	1	**9X-8256**	2	WASHER (6.6X12X2-MM THK)	

M - METRIC PART

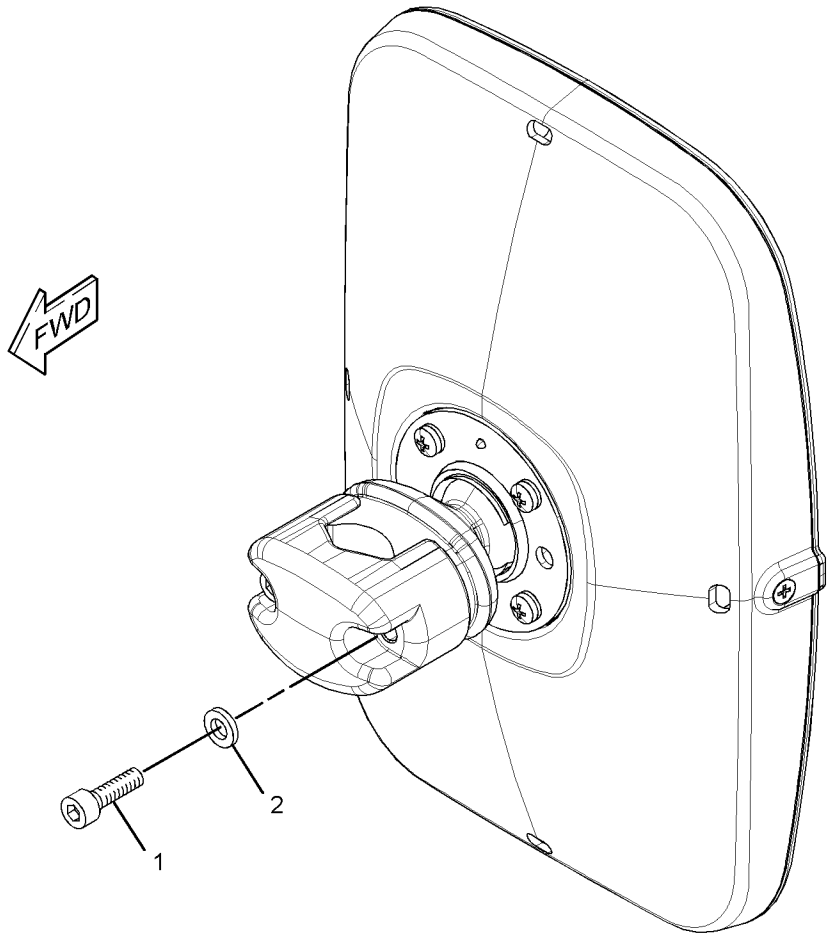

GRAPHIC #1 <END> g01615528

221-8813 MONITOR & MTG GP-OPERATOR

S/N: DLP1-UP

PART OF 273-5363, 340-6773, 383-5596 OPERATOR AR

SMCS-7490 **i03675640**

NOTE	REF NO	GRAPHIC REF	PART NUMBER	QTY	PART NAME 1 2 3 4 5 6 (PRODUCT LEVEL)	SEE PAGE
Y	1	1	**327-7482**	1	MONITOR GP-OPERATOR	1120
M	2	1	**9X-2046**	3	SCREW-TRUSS HEAD (M6X1X35-MM)	

M - METRIC PART
Y - SEPARATE ILLUSTRATION

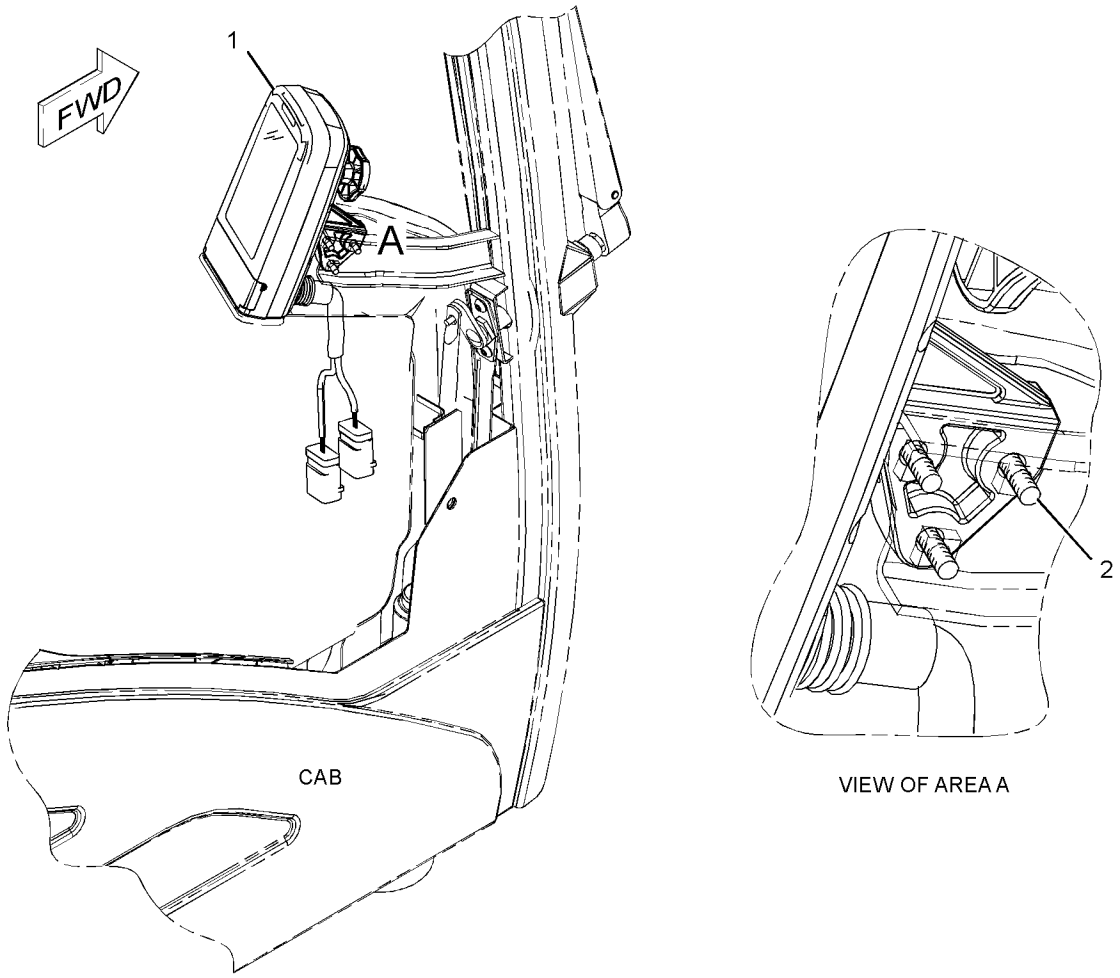

GRAPHIC #1 <END> g01231835

221-8813 MONITOR & MTG GP-OPERATOR

S/N: DLP632-UP

PART OF 340-6773 OPERATOR AR

SMCS-7490 **i05261418**

NOTE	REF NO	GRAPHIC REF	PART NUMBER	QTY	PART NAME 1 2 3 4 5 6 (PRODUCT LEVEL)	SEE PAGE
CY	1	1	**386-3457**	1	MONITOR GP-OPERATOR	1121
M	2	1	**9X-2046**	3	SCREW-TRUSS HEAD (M6X1X35-MM)	

C - CHANGE FROM PREVIOUS TYPE
M - METRIC PART
Y - SEPARATE ILLUSTRATION

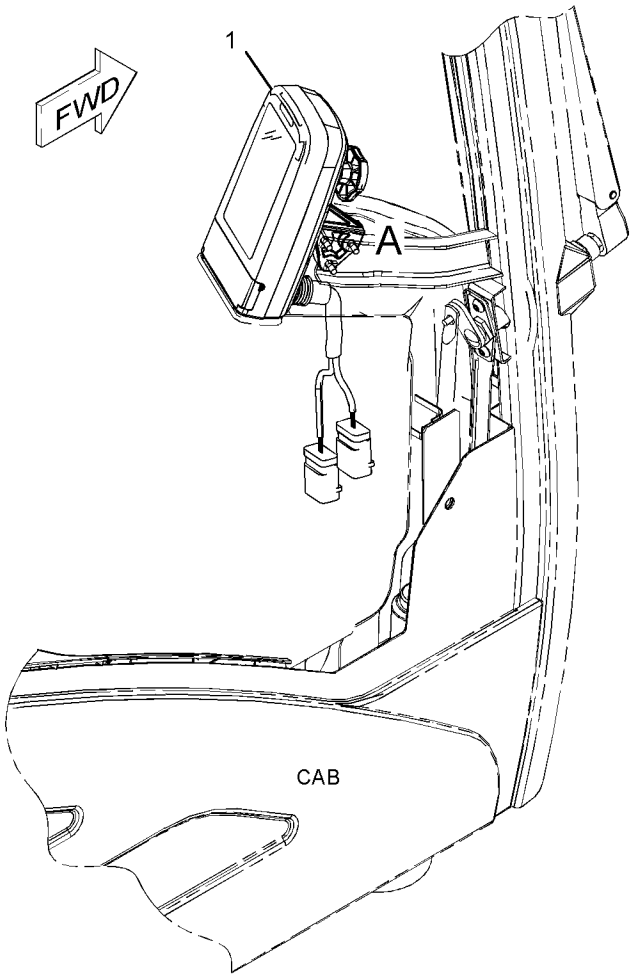

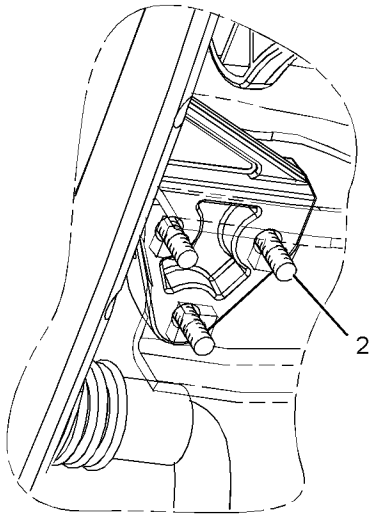

VIEW OF AREA A

GRAPHIC #1 <END> g01231835

327-7482 MONITOR GP-OPERATOR

S/N: DLP1-UP

PART OF 221-8813 MONITOR & MTG GP-OPERATOR

SMCS-7490 **i04482394**

NOTE	REF NO	GRAPHIC REF	PART NUMBER	QTY	PART NAME 1 2 3 4 5 6 (PRODUCT LEVEL)	SEE PAGE
	1	1	**247-2694**	1	RECEPTACLE AS-CONNECTOR (12-PIN)	
	2	1	**247-2695**	1	RECEPTACLE AS-CONNECTOR (12-PIN)	
	3	1	**144-1636**	17	PIN-CONNECTOR (14-GA TO 18-GA)	
	4	1	**8T-8737**	7	PLUG-SEAL	
	5	1	**366-8749**	1	COVER AS-MONITOR	

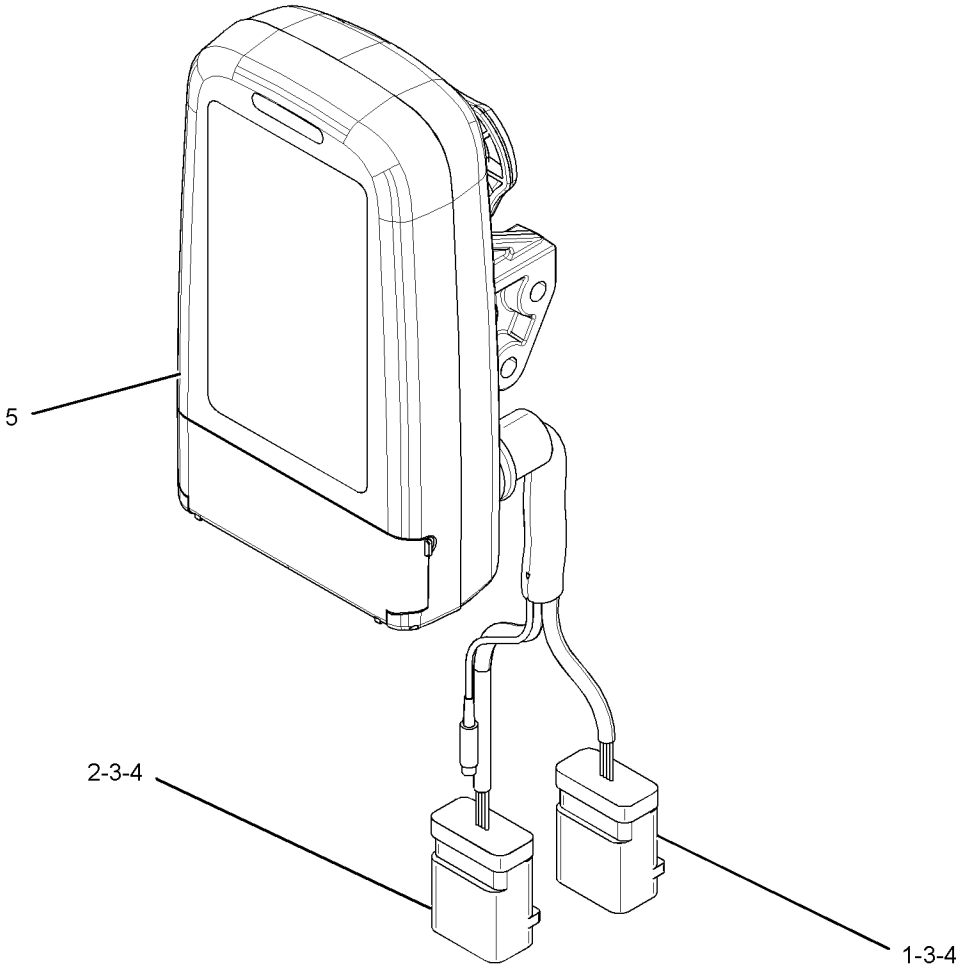

GRAPHIC #1 <END> g02046156

386-3457 MONITOR GP-OPERATOR

S/N: DLP632-UP

PART OF 221-8813 MONITOR & MTG GP-OPERATOR

SMCS-7490 **i05261422**

NOTE	REF NO	GRAPHIC REF	PART NUMBER	QTY	PART NAME 1 2 3 4 5 6 (PRODUCT LEVEL)	SEE PAGE
	1	1	**247-2694**	1	RECEPTACLE AS-CONNECTOR (12-PIN)	
	2	1	**247-2695**	1	RECEPTACLE AS-CONNECTOR (12-PIN)	
	3	1	**144-1636**	17	PIN-CONNECTOR (14-GA TO 18-GA)	
	4	1	**8T-8737**	7	PLUG-SEAL	
	5	1	**366-8749**	1	COVER AS-MONITOR	

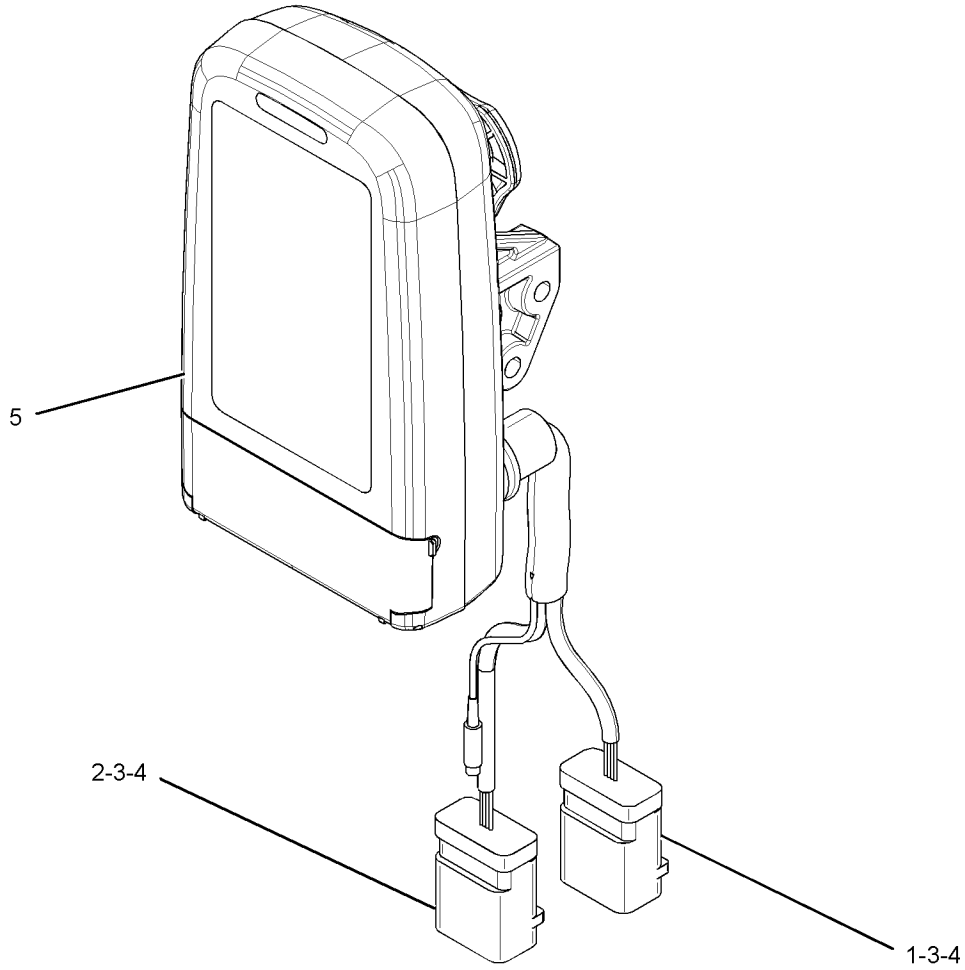

GRAPHIC #1 <END> g02046156

366-9355 MOUNTING GP-ANTENNA—PRODUCT LINK

S/N: DLP1-UP

PART OF 367-8780 CONTROL AR-COMMUNICATION

AN ATTACHMENT

SMCS-7338, 7606

i06238996

NOTE	REF NO	GRAPHIC REF	PART NUMBER	QTY	PART NAME 1 2 3 4 5 6 (PRODUCT LEVEL)	SEE PAGE
	1	1	**7I-2673**	1	STRAP-CABLE	
	2	1	**111-4836**	1	CLIP	
M	3	1	**143-9397**	3	SCREW-PAN HEAD (M4X0.7X12-MM)	
	4	1	**346-9376**	1	ANTENNA AS	
		1	**355-1213**	1	PLUG	
		1	**361-1045**	1	NUT-SPECIAL (5/8-18-THD)	
	5	1	**373-8961**	1	BRACKET	
	6	1	**373-8970**	1	CABLE AS-COMMUNICATION	
	7	1	**381-7417**	1	BRACKET AS	
M		1	**9T-6001**	4	BOSS (M10X1.5-THD)	
	8	1	**096-2626**	3	CLIP	
	9	1	**161-6987**	3	WASHER-HARD (5.2X16X1.5-MM THK)	
	10	1	**3S-2093**	2	STRAP-CABLE	
	11	1	**7K-1181**	5	STRAP-CABLE	
	12	1	**8T-4121**	3	WASHER-HARD (11X21X2.5-MM THK)	
M	13	1	**8T-4137**	1	BOLT (M10X1.5X20-MM)	
M	14	1	**447-1730**	1	BOLT (M16X2X25-MM)	
M	15	1	**8T-4191**	2	BOLT (M10X1.5X16-MM)	
M	16	1	**8T-4970**	1	BOLT (M6X1X14-MM)	
	17	1	**114-6658**	1	WASHER (6.5X17X1-MM THK)	
	18	1	**451-2175**	1	WASHER-HARD (17.5X30X3.5-MM THK)	

M - METRIC PART

366-9355 **MOUNTING GP-ANTENNA (**contd.**)** **i06238996**

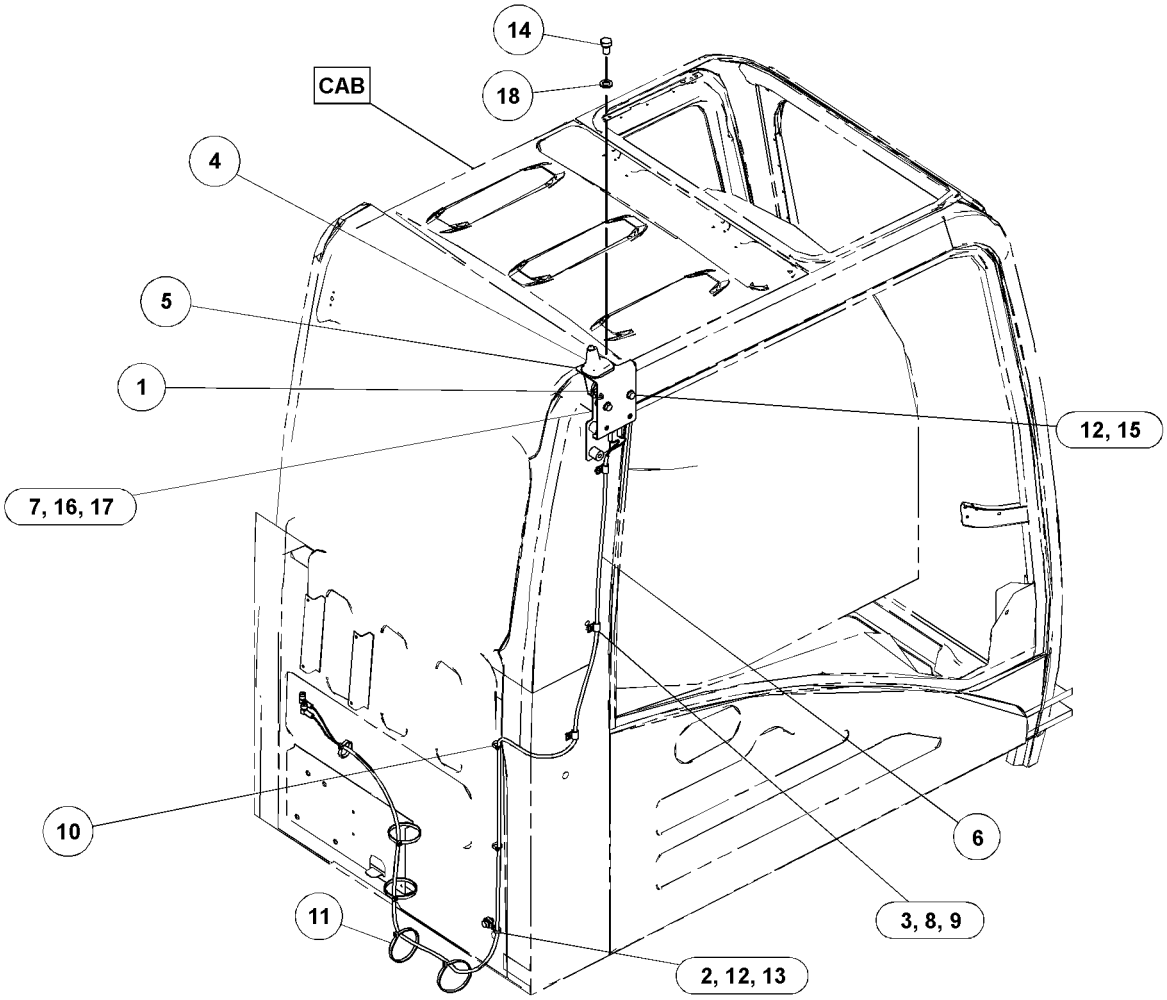

GRAPHIC #1 <END> g03097196

346-7375 MOUNTING GP-MIRROR

S/N: DLP1-UP
PART OF 235-8910, 346-8058 CAB GP
AN ATTACHMENT
TYPE 1

SMCS-7319 **i07026204**

NOTE	REF NO	GRAPHIC REF	PART NUMBER	QTY	PART NAME 1 2 3 4 5 6 (PRODUCT LEVEL)	SEE PAGE
	1	1	**2U-2552**	5	LOCKWASHER	
M	2	1	**6V-5683**	3	BOLT (M6X1X16-MM)	
M	3	1	**9X-6153**	2	BOLT (M6X1X10-MM)	

PARTS SHOWN IN GRAPHIC(S) WITHOUT A REFERENCE NUMBER ARE NOT SERVICED SEPARATELY

M - METRIC PART

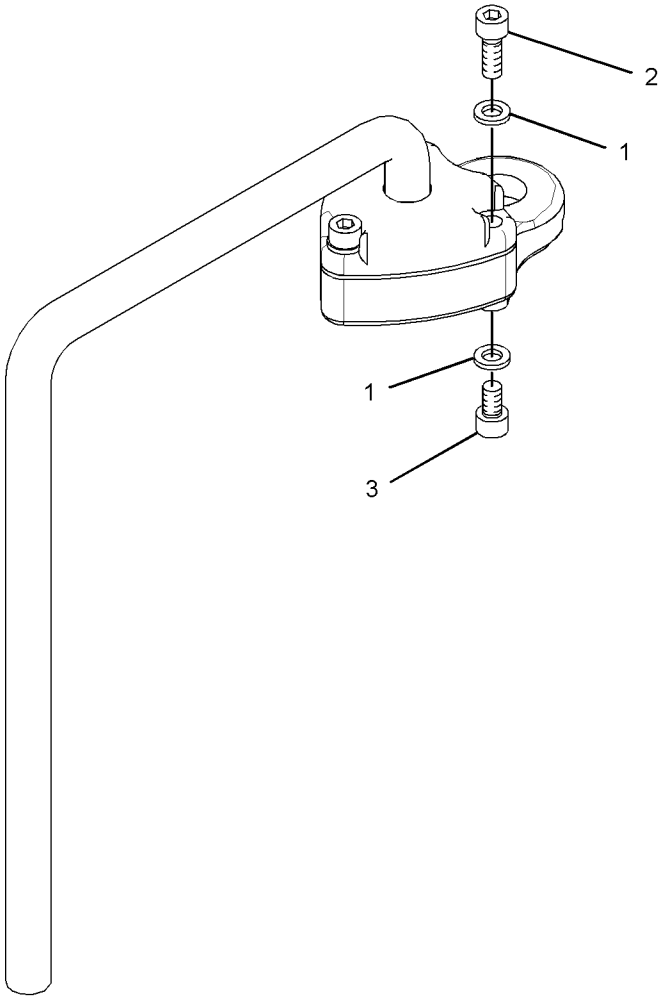

GRAPHIC #1 <END> g01962144

346-7375 MOUNTING GP-MIRROR

S/N: DLP1-UP
PART OF 235-8910, 346-8058 CAB GP
AN ATTACHMENT
TYPE 2

SMCS-7319 **i07332983**

NOTE	REF NO	GRAPHIC REF	PART NUMBER	QTY	PART NAME 1 2 3 4 5 6 (PRODUCT LEVEL)	SEE PAGE
C	1	1	**3B-4504**	2	LOCKWASHER	
M	2	1	**9X-6153**	2	BOLT (M6X1X10-MM)	

PARTS SHOWN IN GRAPHIC(S) WITHOUT A REFERENCE NUMBER ARE NOT SERVICED SEPARATELY

C - CHANGE FROM PREVIOUS TYPE
M - METRIC PART

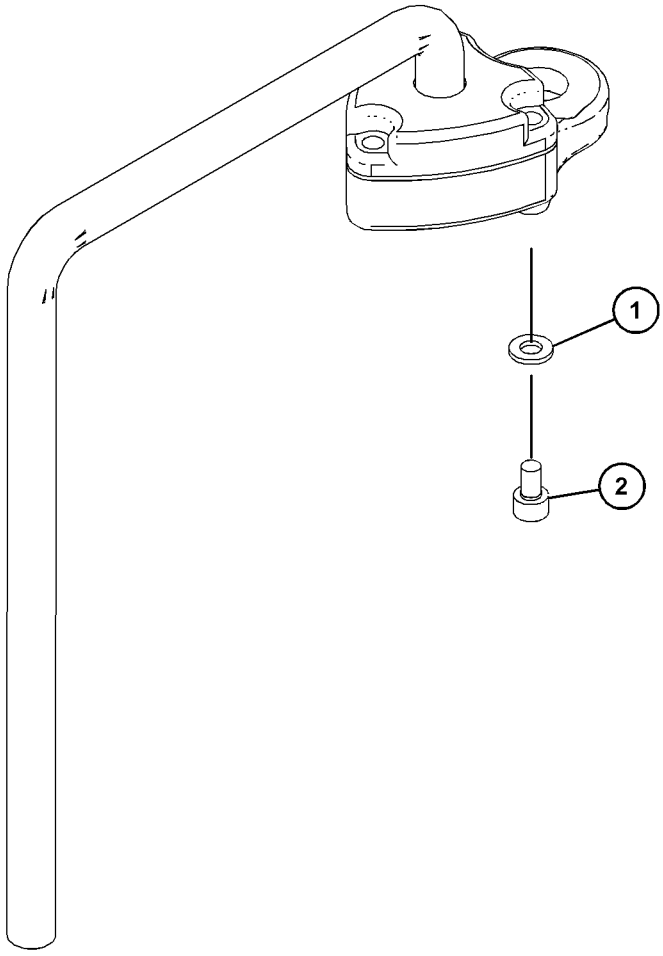

GRAPHIC #1 <END> g06168655

245-7811 MOUNTING GP-PLATFORM

S/N: DLP1-UP

PART OF 301-2680 CHASSIS AR

SMCS-7253 **i02217210**

NOTE	REF NO	GRAPHIC REF	PART NUMBER	QTY	PART NAME 1 2 3 4 5 6 (PRODUCT LEVEL)	SEE PAGE
	1	1	**235-8862**	4	MOUNT AS	
	2	1	**8T-4121**	16	WASHER-HARD (11X21X2.5-MM THK)	
M	3	1	**8T-4195**	16	BOLT (M10X1.5X30-MM)	

M - METRIC PART

245-7811 **MOUNTING GP-PLATFORM (**contd.**)** **i02217210**

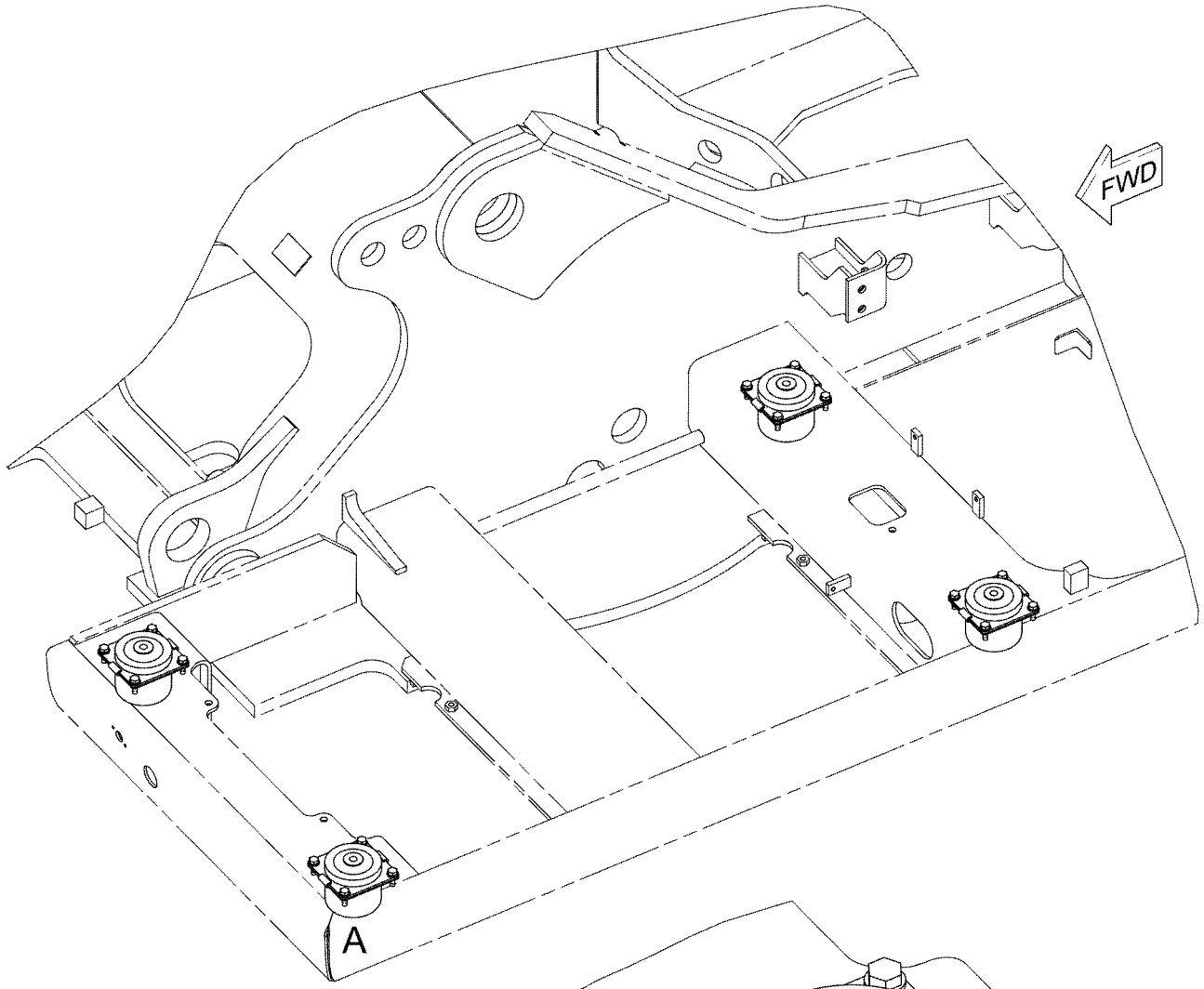

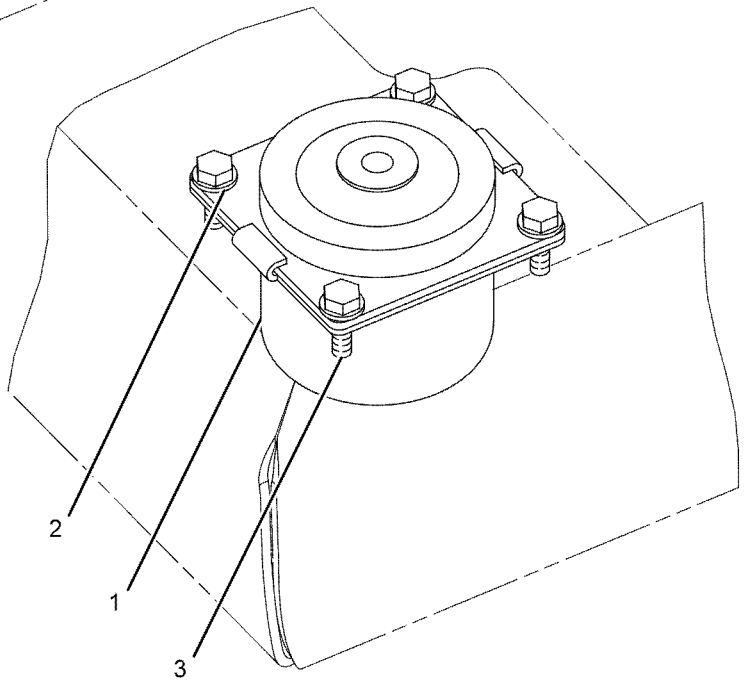

VIEW OF AREA A

GRAPHIC #1 <END> g01101486

273-5363 OPERATOR AR

S/N: DLP1-390

PART OF 301-2680 CHASSIS AR

SMCS-7301 **i04047437**

NOTE	PART NUMBER	QTY	PART NAME 1 2 3 4 5 6 (PRODUCT LEVEL)	SEE PAGE
Y	*245-7922*	1	CONSOLE GP-OPERATOR	1013
Y	*221-8872*	1	CONTROL & MTG GP-MACHINE	188
Y	*170-9497*	1	CONTROL GP-PILOT OPERATED HYD (TRAVEL)	1045
Y	*221-8813*	1	MONITOR & MTG GP-OPERATOR	1118
Y	*275-6926*	1	PANEL & MTG GP-CIRCUIT BREAKER	219
Y	*273-5433*	1	PLATFORM GP-OPERATOR	1133
Y	*251-0538*	1	RADIO GP (AM/FM)	1134
Y	*327-6523*	1	SUPPORT GP-SEAT	1166
Y	*259-5161*	1	WIRING GP-CAB	269
Y	*251-0433*	1	WIRING GP-CONSOLE	295
Y	*275-7051*	1	WIRING GP-PLATFORM	313

Y - SEPARATE ILLUSTRATION

<END>

340-6773 OPERATOR AR

S/N: DLP390-622, 632-UP

PART OF 301-2680 CHASSIS AR

SMCS-7301 **i03900859**

NOTE	PART NUMBER	QTY	PART NAME 1 2 3 4 5 6 (PRODUCT LEVEL)	SEE PAGE
Y	*245-7922*	1	CONSOLE GP-OPERATOR	1013
Y	*221-8872*	1	CONTROL & MTG GP-MACHINE	188
Y	*170-9497*	1	CONTROL GP-PILOT OPERATED HYD (TRAVEL)	1045
Y	*221-8813*	1	MONITOR & MTG GP-OPERATOR	1118
Y	*328-0118*	1	PANEL & MTG GP-CIRCUIT BREAKER	220
Y	*273-5433*	1	PLATFORM GP-OPERATOR	1133
Y	*251-0538*	1	RADIO GP (AM/FM)	1134
Y	*327-6523*	1	SUPPORT GP-SEAT	1166
Y	*259-5161*	1	WIRING GP-CAB	269
Y	*251-0433*	1	WIRING GP-CONSOLE	295
Y	*275-7051*	1	WIRING GP-PLATFORM	313

Y - SEPARATE ILLUSTRATION

<END>

383-5596 OPERATOR AR

S/N: DLP623-UP

PART OF 301-2680 CHASSIS AR

SMCS-7301 **i04657150**

NOTE	PART NUMBER	QTY	PART NAME 1 2 3 4 5 6 (PRODUCT LEVEL)	SEE PAGE
Y	*245-7922*	1	CONSOLE GP-OPERATOR	1013
Y	*221-8872*	1	CONTROL & MTG GP-MACHINE	188
Y	*170-9497*	1	CONTROL GP-PILOT OPERATED HYD (TRAVEL)	1045
Y	*221-8813*	1	MONITOR & MTG GP-OPERATOR	1118
Y	*328-0118*	1	PANEL & MTG GP-CIRCUIT BREAKER	220
Y	*273-5433*	1	PLATFORM GP-OPERATOR	1133
Y	*327-6523*	1	SUPPORT GP-SEAT	1166
Y	*259-5161*	1	WIRING GP-CAB	269
Y	*251-0433*	1	WIRING GP-CONSOLE	295
Y	*275-7051*	1	WIRING GP-PLATFORM	313
	185-8284	1	COVER	

Y - SEPARATE ILLUSTRATION

<END>

307-1818 PARTS GP-DOOR

S/N: DLP1-UP

PART OF 316-6166 DOOR & MTG GP-CAB

AN ATTACHMENT

SMCS-7308 **i05343738**

NOTE	REF NO	GRAPHIC REF	PART NUMBER	QTY	PART NAME 1 2 3 4 5 6 (PRODUCT LEVEL)	SEE PAGE
	1	1	**151-6703**	1	HANDLE-PULL	
	2	1	**151-6704**	2	CAP	
Y	3	1	**151-6792**	1	WINDOW GP-DOOR	1187
	4	1	**156-6471**	1	GLASS	
	5	1	**156-6598**	1	HOOK	
	6	1	**156-6600**	1	LOCK AS	
		1	**164-0514**	1	CLIP	
	6A	1	**164-0519**	1	CLIP (13-MM)	
	7	1	**156-6643**	2	COVER	
	8	1	**156-6645**	1	HANDLE AS	
		1	**201-4391**	1	CLIP	
	9	1	**161-3639**	1	HANDLE AS	
	10	1	**161-3650**	1	COVER AS	
	11	1	**161-3663**	1	SEAL AS	
		1	**151-9497**	45	CLIP	
	12	1	**161-3665**	1	SEAL	
	13	1	**164-0515**	1	JOINT	
	14	1	**167-7039**	1	GROMMET	
M	15	1	**185-8180**	3	SCREW (M6X1X16-MM)	
	16	1	**8T-4224**	2	WASHER-HARD (8.8X16X2-MM THK)	
	17	1	**259-7354**	1	COVER	
M	18	1	**096-2622**	2	SCREW-MACHINE (M4X0.7X8-MM)	
M	19	1	**096-3884**	2	NUT-SPRING (M8X1.25-THD)	
M	20	1	**101-8899**	2	SCREW AS (M6X1.0X16-MM)	
M	21	1	**101-8900**	2	SCREW AS (M6X1X20-MM)	
	22	1	**151-9461**	4	SPACER	
	23	1	**178-5573**	4	SPACER	
	24	1	**178-5574**	2	SPACER	
	25	1	**189-2690**	1	HANDLE	
	26	1	**4I-4286**	1	KNOB	
M	27	1	**9X-2042**	8	SCREW-TRUSS HEAD (M6X1X12-MM)	

M - METRIC PART
Y - SEPARATE ILLUSTRATION

307-1818 **PARTS GP-DOOR (**contd.**)** **i05343738**

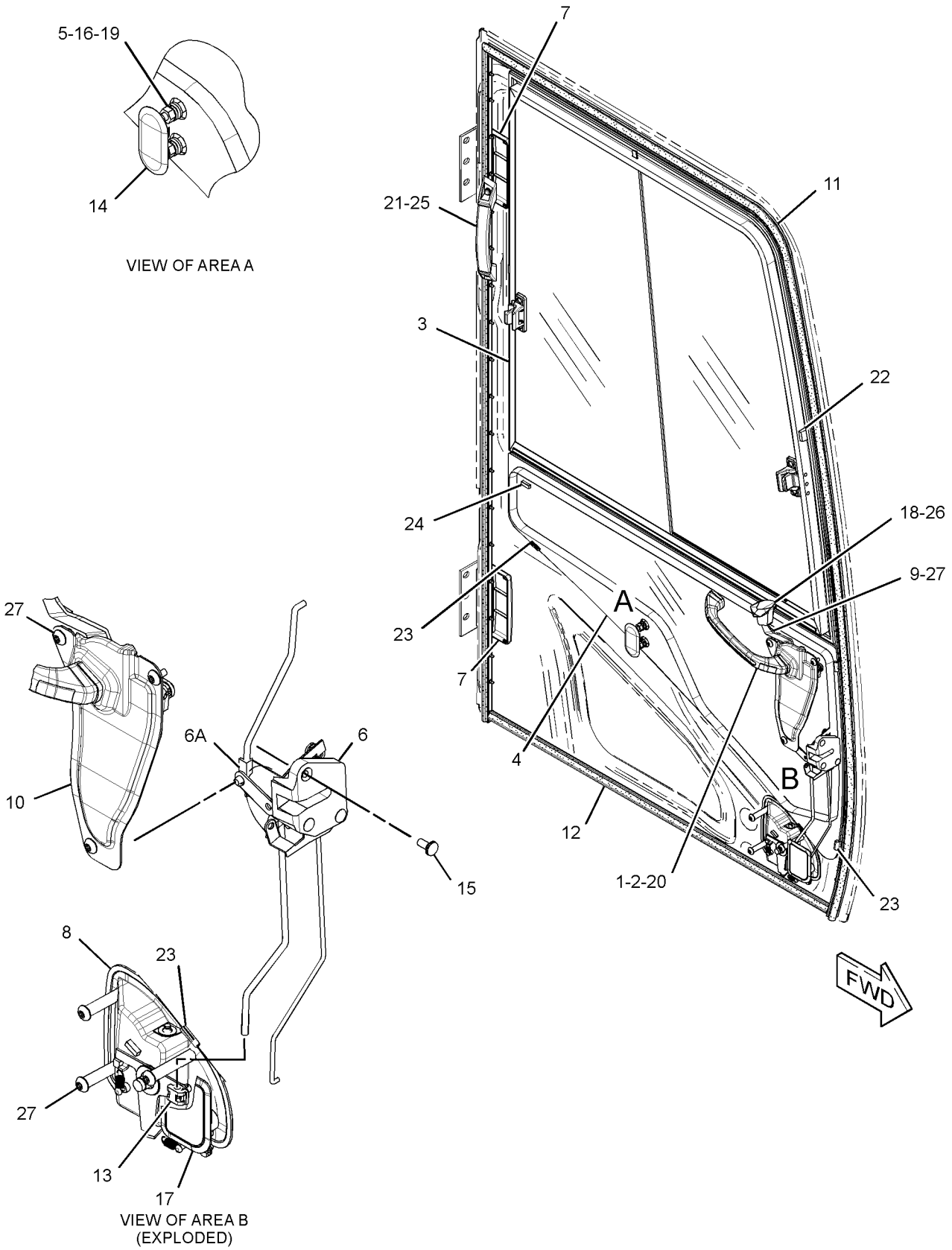

GRAPHIC #1 <END> g02178270

255-5845 PEDAL AR-AUXILIARY—HIGH PRESSURE, LH

S/N: DLP1-UP

AN ATTACHMENT

SMCS-5059 **i03196539**

NOTE	PART NUMBER	QTY	PART NAME 1 2 3 4 5 6 (PRODUCT LEVEL)	SEE PAGE
Y	*221-8884*	1	CONTROL & MTG GP-PEDAL (LH)	1028
Y	*259-5293*	1	FASTENER GP-WIRING HARNESS (PEDAL CONTROL)	192
Y	*247-7418*	1	FILM GP (OPERATOR CONTROLS, NOTICE)	1197

Y - SEPARATE ILLUSTRATION

<END>

273-5433 PLATFORM GP-OPERATOR

S/N: DLP1-UP

PART OF 273-5363, 340-6773, 383-5596 OPERATOR AR

SMCS-7253 **i05663101**

NOTE	REF NO	GRAPHIC REF	PART NUMBER	QTY	PART NAME 1 2 3 4 5 6 (PRODUCT LEVEL)	SEE PAGE
	1	1	**4I-3266**	1	STRIP	
	2	1	**135-8965**	1	GROMMET	
	3	1	**135-8966**	1	GROMMET	
	4	1	**161-3717**	1	STRIP	
	5	1	**167-7135**	1	PLATE AS	
	6	1	**171-7370**	1	PLATE	
	7	1	**273-5434**	1	PLATFORM AS	
M	8	1	**453-1259**	4	BOLT (M16X2X40-MM)	
	9	1	**8T-4121**	6	WASHER-HARD (11X21X2.5-MM THK)	
M	10	1	**8T-4191**	6	BOLT (M10X1.5X16-MM)	
	11	1	**451-2175**	4	WASHER-HARD (17.5X30X3.5-MM THK)	

M - METRIC PART

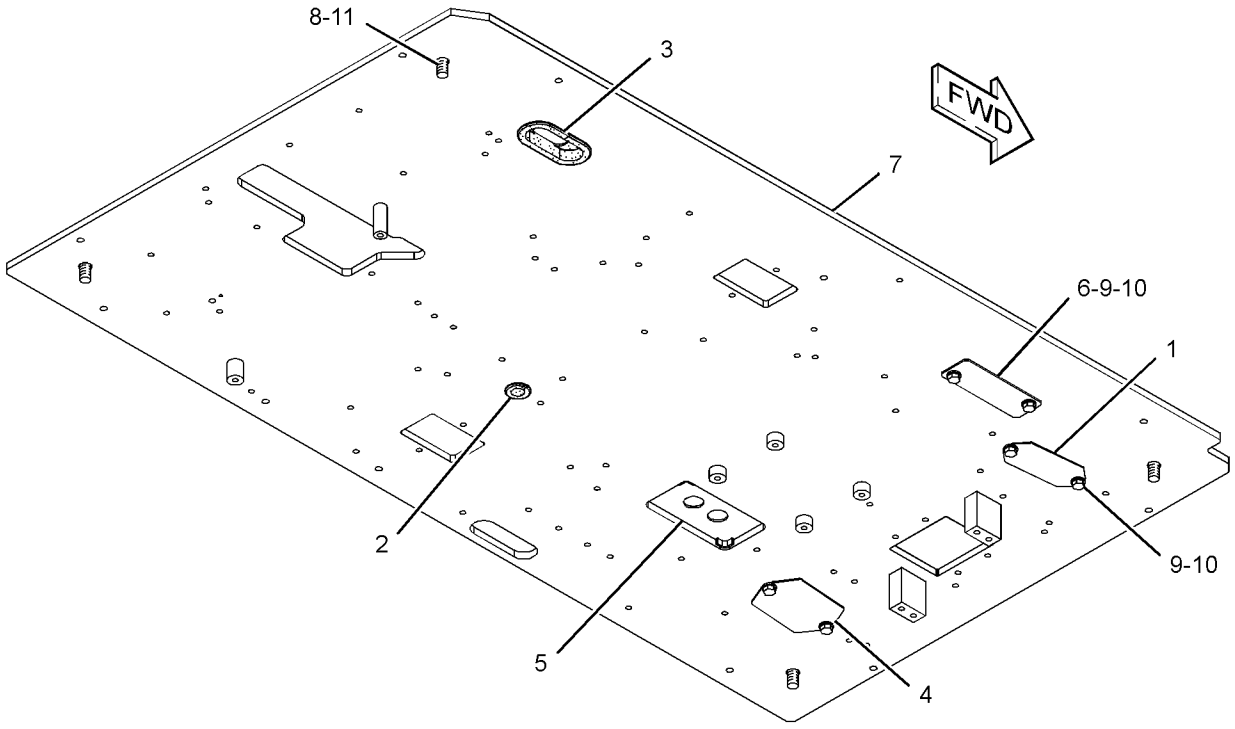

GRAPHIC #1 <END> g01414332

251-0538 RADIO GP–AM/FM

S/N: DLP1-UP

PART OF 273-5363, 340-6773 OPERATOR AR

TYPE 1

SMCS-7338, 733C **i05162351**

NOTE	REF NO	GRAPHIC REF	PART NUMBER	QTY	PART NAME 1 2 3 4 5 6 (PRODUCT LEVEL)	SEE PAGE
	1	1	**3S-2093**	2	STRAP-CABLE	
	2	1	**7K-1181**	2	STRAP-CABLE	
M	3	1	**095-0736**	2	SCREW-MACHINE (M5X0.8X10-MM)	
	4	1	**238-2260**	1	CABLE	
	5	1	**306-8802**	1	RADIO-AM/FM	
	6	1	**259-4914**	1	BRACKET AS	
	7	1	**119-5026**	2	SCREW-PAN HEAD (10-16X0.63-IN)	

M - METRIC PART

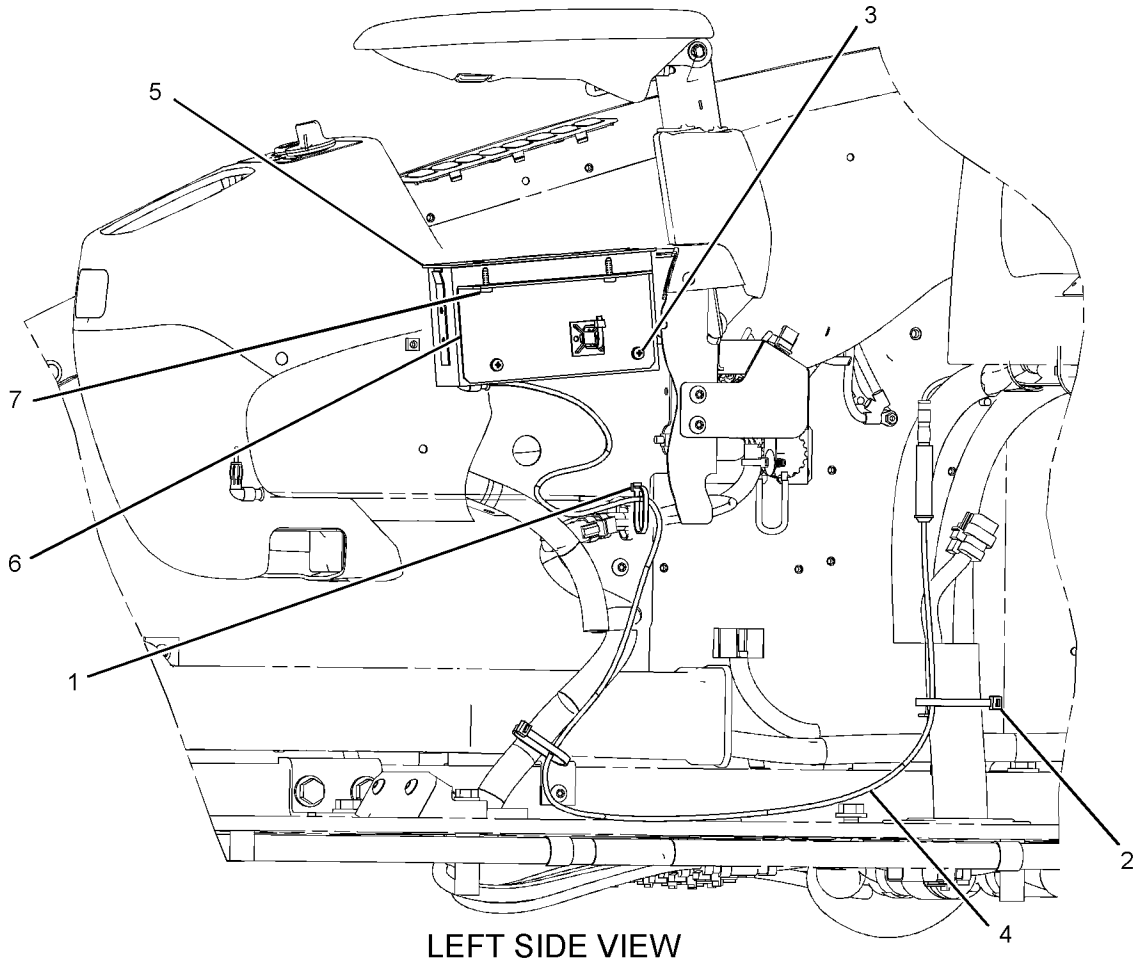

LEFT SIDE VIEW

GRAPHIC #1 <END> g01520813

251-0538 RADIO GP–AM/FM

S/N: DLP1-UP
PART OF 340-6773 OPERATOR AR
TYPE 2

SMCS-7338, 733C **i06592306**

NOTE	REF NO	GRAPHIC REF	PART NUMBER	QTY	PART NAME 1 2 3 4 5 6 (PRODUCT LEVEL)	SEE PAGE
C	1	1	**3S-2093**	4	STRAP-CABLE	
C	2	1	**7K-1181**	2	STRAP-CABLE	
CM	3	1	**096-2617**	2	SCREW-MACHINE (M5X0.8X6-MM)	
	4	1	**238-2260**	1	CABLE	
C	5	1	*450-7110*	1	RADIO AS (AM/FM)	
		1	**389-7123**	1	RADIO AS	
		1	**459-4117**	1	COVER	
	6	1	**259-4914**	1	BRACKET AS	
		1	**235-8966**	1	BASE-MOUNTING	
		1	**259-4915**	1	BRACKET	
	7	1	**119-5026**	2	SCREW-PAN HEAD (10-16X0.63-IN)	
C	8	1	**467-4835**	1	HARNESS AS-RADIO	
		1	**3S-2093**	1	STRAP-CABLE	
		1	**163-6808**	1	CONNECTOR-RECEPTACLE	
		1	**163-6809**	8	TERMINAL (MALE)	
C	9	1	**8T-0328**	2	WASHER-HARD (5.5X10X1-MM THK)	

C - CHANGE FROM PREVIOUS TYPE
M - METRIC PART

251-0538 **RADIO GP (**contd.**)** **i06592306**

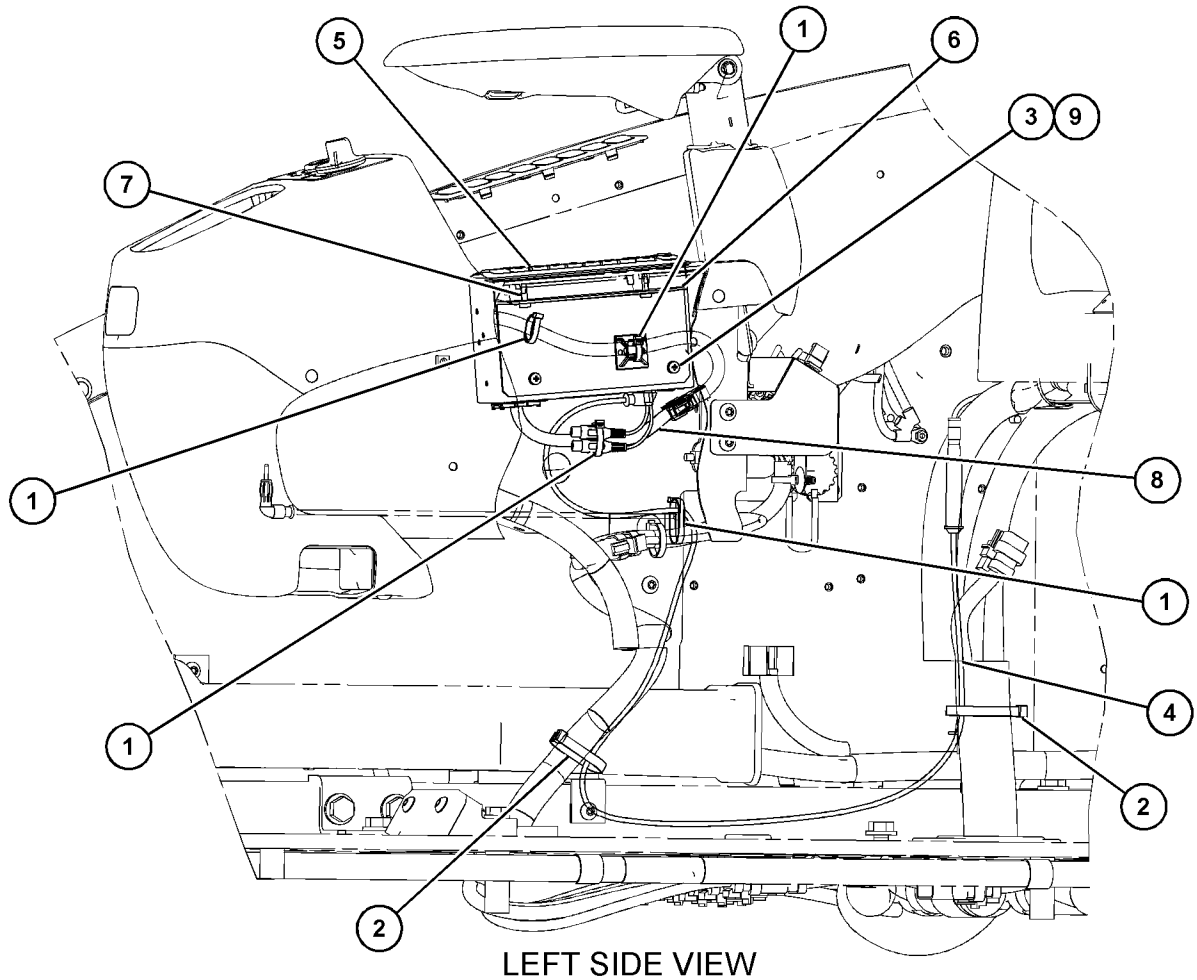

LEFT SIDE VIEW

GRAPHIC #1 <END> g06114731

251-0538 RADIO GP–AM/FM

S/N: DLP1-UP
PART OF 340-6773 OPERATOR AR
TYPE 3

SMCS-7338, 733C **i06939148**

NOTE	REF NO	GRAPHIC REF	PART NUMBER	QTY	PART NAME 1 2 3 4 5 6 (PRODUCT LEVEL)	SEE PAGE
C	1	1	**3S-2093**	1	STRAP-CABLE	
	2	1	**7K-1181**	2	STRAP-CABLE	
M	3	1	**096-2617**	2	SCREW-MACHINE (M5X0.8X6-MM)	
	4	1	**238-2260**	1	CABLE	
	5	1	**450-7110**	1	RADIO AS (AM/FM)	
		1	**389-7123**	1	RADIO AS	
		1	**459-4117**	1	COVER	
C	6	1	**259-4915**	1	BRACKET	
	7	1	**119-5026**	2	SCREW-PAN HEAD (10-16X0.63-IN)	
	8	1	**8T-0328**	2	WASHER-HARD (5.5X10X1-MM THK)	

C - CHANGE FROM PREVIOUS TYPE
M - METRIC PART

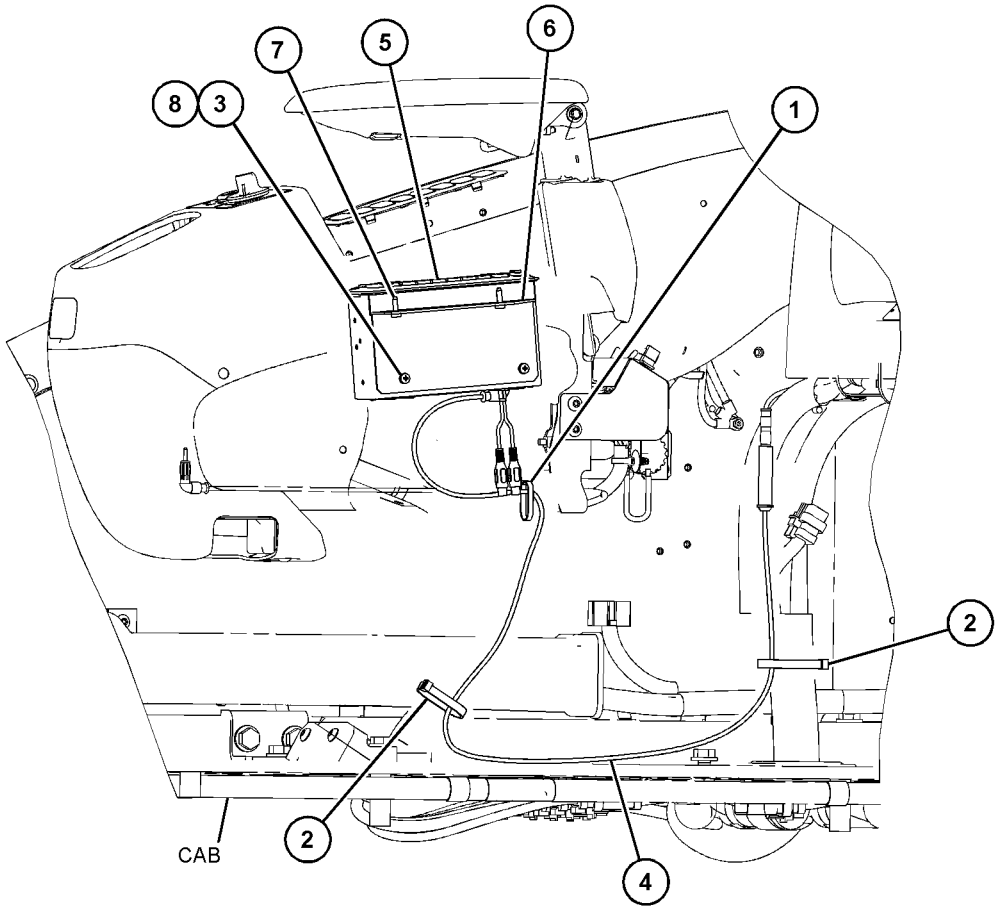

LEFT SIDE VIEW

GRAPHIC #1 <END> g06175025

245-7881 SCREEN GP-SUN

S/N: DLP1-UP
PART OF 336-3354 OPTION AR-CAB
AN ATTACHMENT

SMCS-7165 **i06674905**

NOTE	REF NO	GRAPHIC REF	PART NUMBER	QTY	PART NAME 1 2 3 4 5 6 (PRODUCT LEVEL)	SEE PAGE
	1	1	**255-4410**	1	SCREEN-SUN (CAB)	
	2	1	**259-7214**	3	HOOK-RETAINER	
	3	1	**259-7215**	3	HOOK-RETAINER	
M	4	1	**153-3568**	6	BOLT-SOCKET HEAD (M5X0.8X10-MM)	

M - METRIC PART

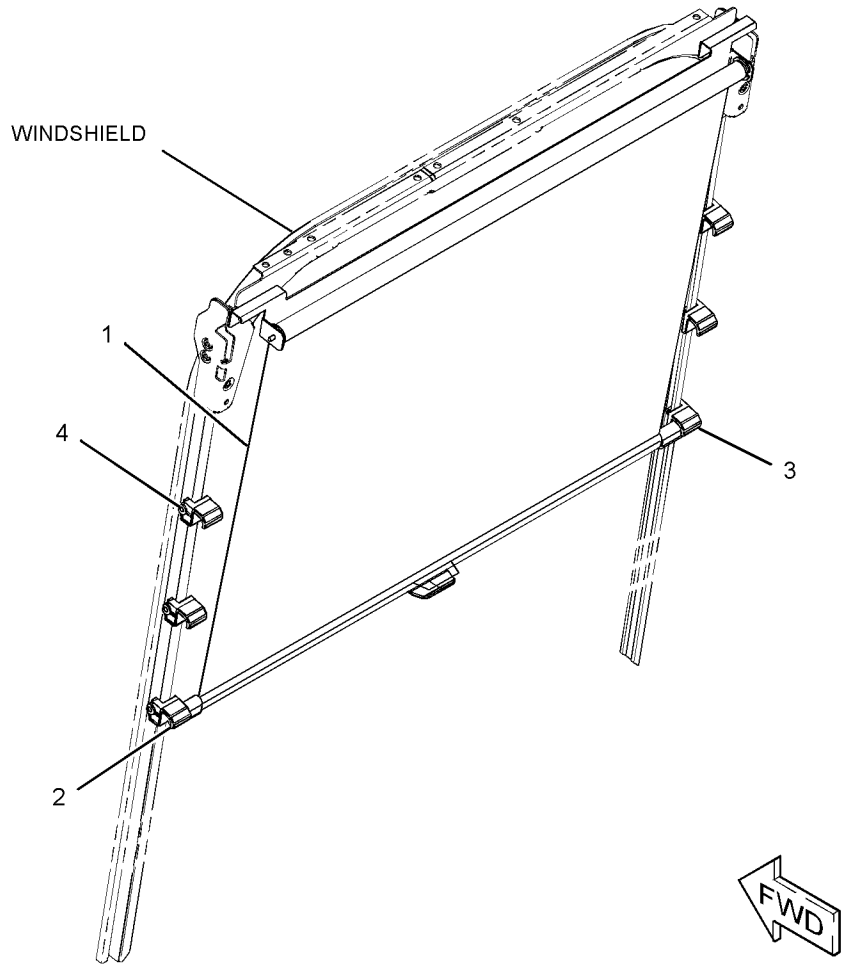

GRAPHIC #1 <END> g01177458

240-5003 SEAT & MOUNTING GP—HIGH BACK, TILT

S/N: DLP1-UP
CLOTH
AN ATTACHMENT

SMCS-7312 **i02707796**

NOTE	REF NO	GRAPHIC REF	PART NUMBER	QTY	PART NAME 1 2 3 4 5 6 (PRODUCT LEVEL)	SEE PAGE
Y	1	1	*229-9089*	1	SEAT GP-SUSPENSION (HIGH BACK, TILT)	1161
M	2	1	**6V-8202**	4	BOLT-SOCKET HEAD (M8X1.25X16-MM)	

M - METRIC PART
Y - SEPARATE ILLUSTRATION

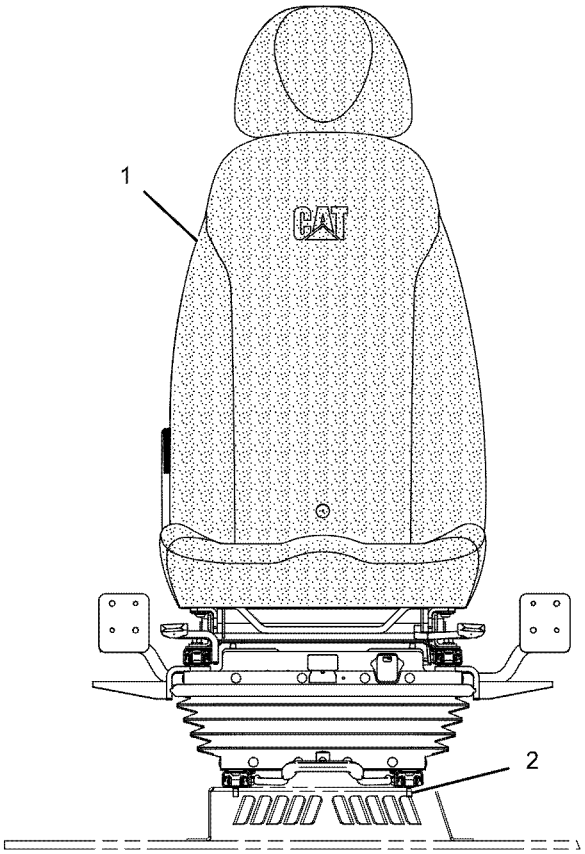

FRONT VIEW

GRAPHIC #1 <END> g01103598

327-6501 SEAT & MOUNTING GP—HIGH BACK, TILT

S/N: DLP1-UP
CLOTH
PART OF 336-3352, 336-3353 OPTION AR-CAB
AN ATTACHMENT

SMCS-7312 **i06674330**

NOTE	REF NO	GRAPHIC REF	PART NUMBER	QTY	PART NAME 1 2 3 4 5 6 (PRODUCT LEVEL)	SEE PAGE
Y	1	1	*327-6507*	1	SEAT GP-SUSPENSION (HIGH BACK, TILT)	1162
M	2	1	**6V-8202**	4	BOLT-SOCKET HEAD (M8X1.25X16-MM)	

M - METRIC PART
Y - SEPARATE ILLUSTRATION

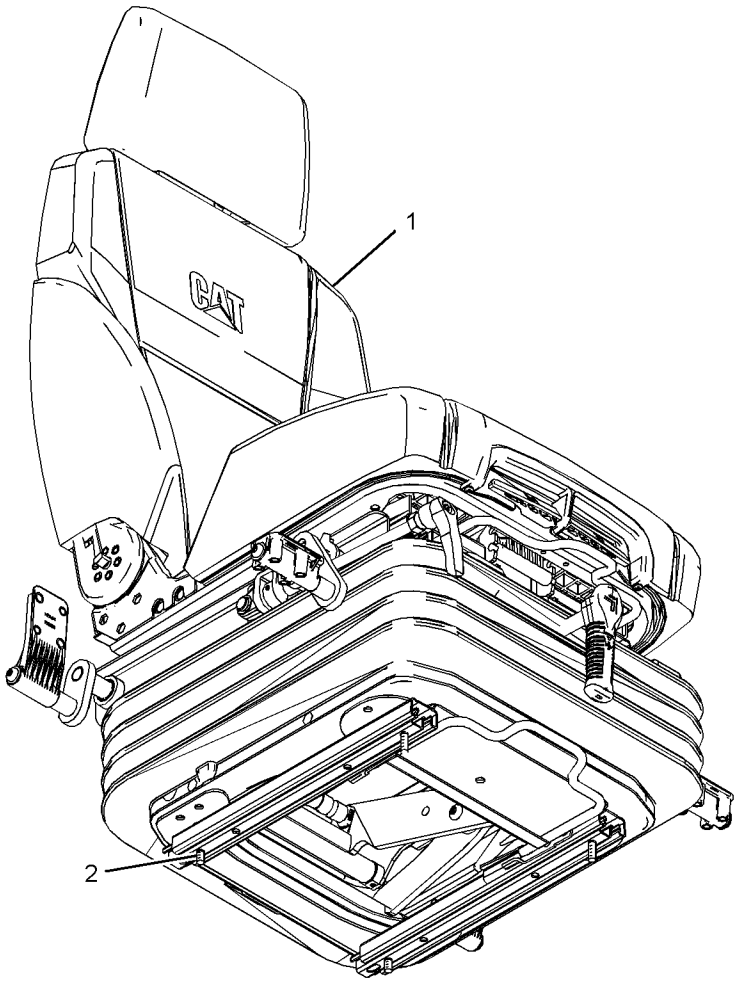

GRAPHIC #1 <END> g03058376

327-6503 SEAT & MOUNTING GP—HIGH BACK, WITH HEATER

S/N: DLP1-UP
CLOTH
PART OF 336-3354 OPTION AR-CAB
AN ATTACHMENT
TYPE 1

SMCS-7312 **i04903807**

NOTE	REF NO	GRAPHIC REF	PART NUMBER	QTY	PART NAME 1 2 3 4 5 6 (PRODUCT LEVEL)	SEE PAGE
	1	1	**316-8987**	2	BRACKET	
Y	2	1	*327-6509*	1	SEAT GP-SUSPENSION (HIGH BACK, WITH HEATER)	1163
M	3	1	**5A-3604**	2	BOLT-SOCKET HEAD (M8X1.25X25-MM)	
M	4	1	**6V-8202**	2	BOLT-SOCKET HEAD (M8X1.25X16-MM)	
	5	1	**238-2211**	1	SWITCH AS-ROCKER (HEATED SEAT)	
		1	**167-3542**	1	RECEPTACLE-CONNECTOR (5-PIN)	
		1	**167-3543**	4	TERMINAL (MALE)	

M - METRIC PART
Y - SEPARATE ILLUSTRATION

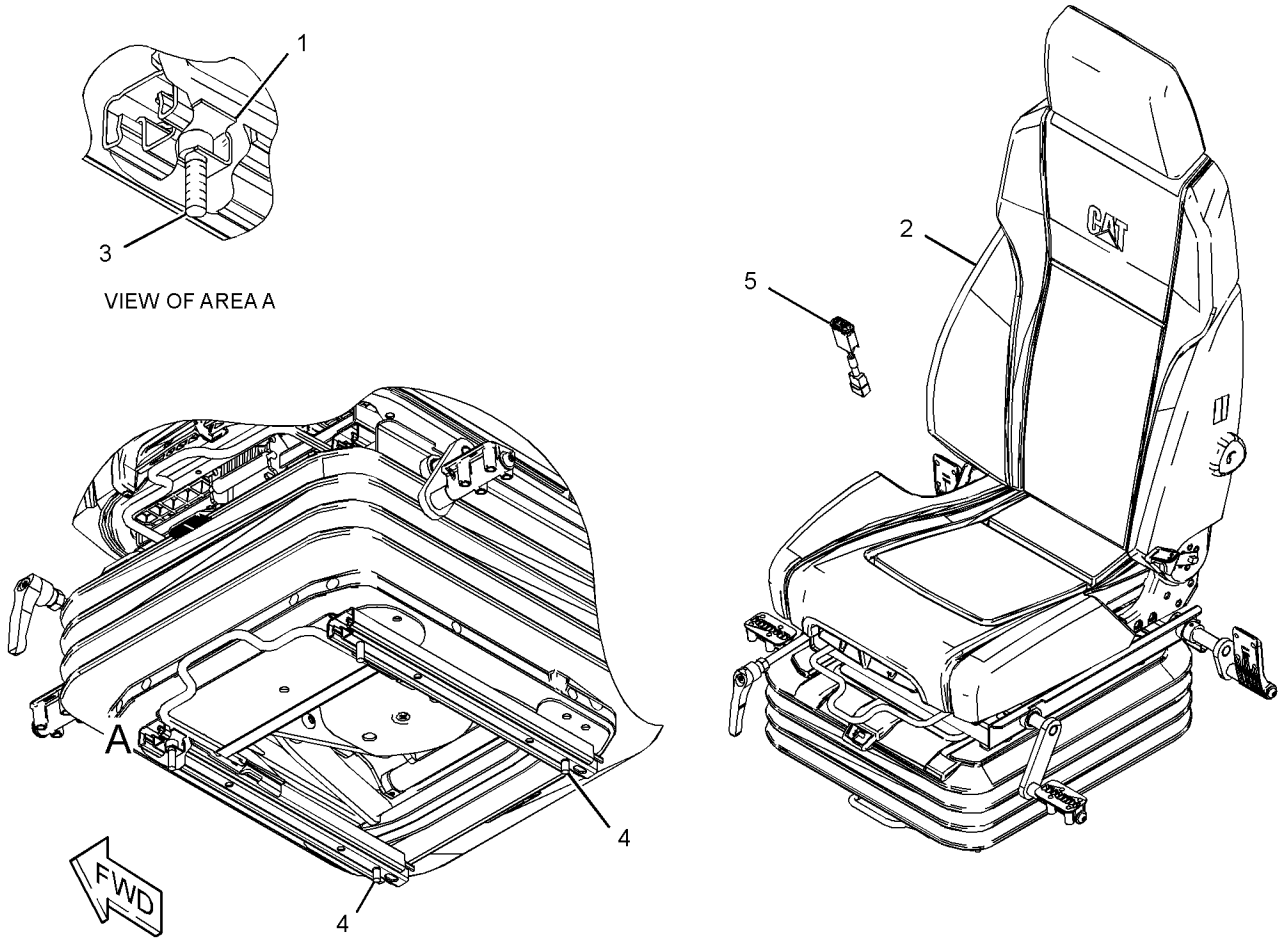

GRAPHIC #1 <END> g03058419

327-6503 SEAT & MOUNTING GP–HIGH BACK, WITH HEATER

S/N: DLP1-UP
CLOTH
PART OF 336-3354 OPTION AR-CAB
AN ATTACHMENT
TYPE 2

SMCS-7312 **i06584286**

NOTE	REF NO	GRAPHIC REF	PART NUMBER	QTY	PART NAME 1 2 3 4 5 6 (PRODUCT LEVEL)	SEE PAGE
	1	1	**238-2211**	1	SWITCH AS-ROCKER (HEATED SEAT)	
		1	**167-3542**	1	RECEPTACLE-CONNECTOR (5-PIN)	
		1	**167-3543**	4	TERMINAL (MALE)	
Y	2	1	*327-6509*	1	SEAT GP-SUSPENSION (HIGH BACK, WITH HEATER)	1163
M	3	1	**6V-8202**	4	BOLT-SOCKET HEAD (M8X1.25X16-MM)	

M - METRIC PART
Y - SEPARATE ILLUSTRATION

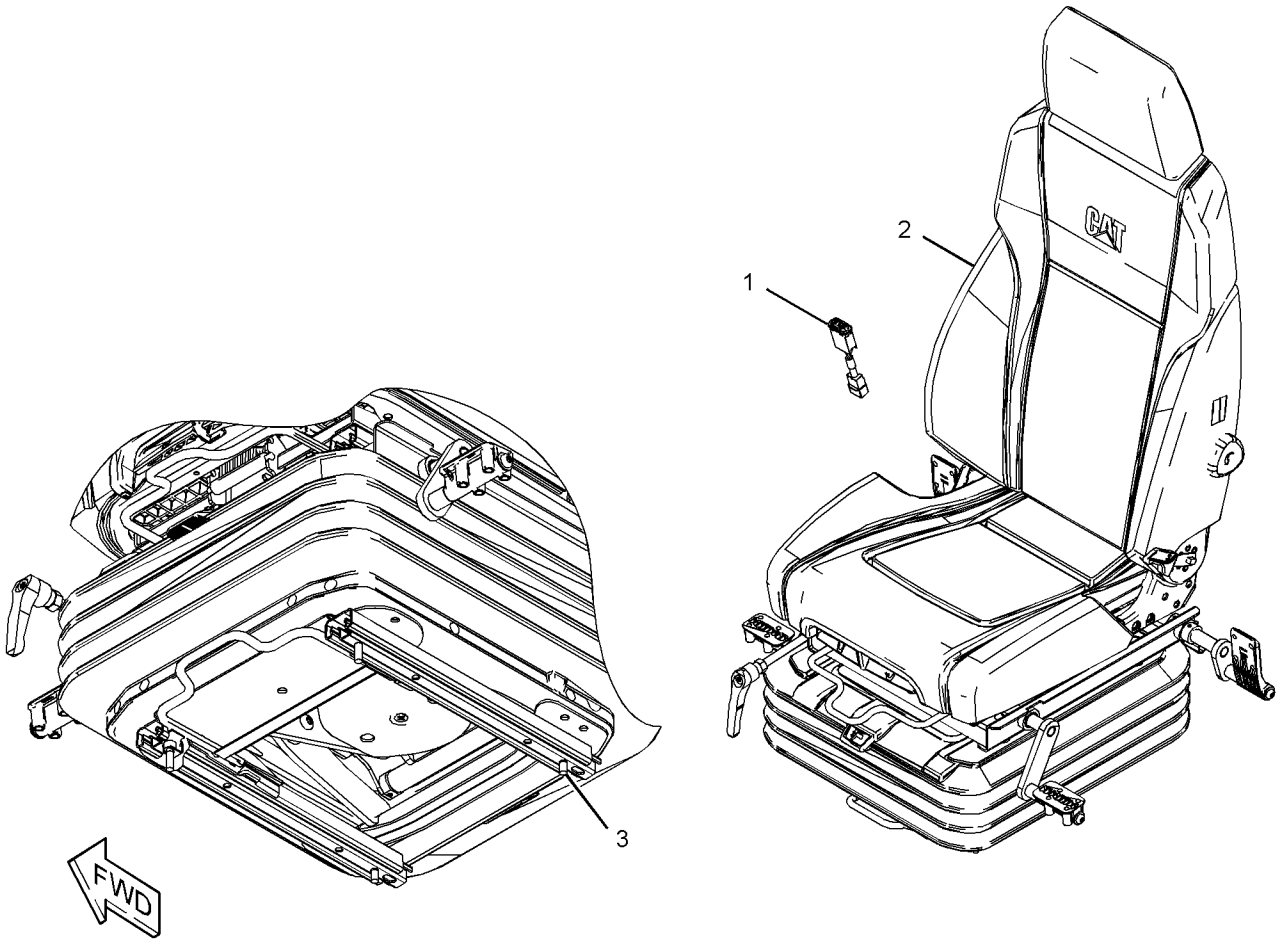

GRAPHIC #1 <END> g03058436

336-1230 SEAT & MOUNTING GP—LOW BACK, TILT

S/N: DLP1-UP
VINYL
AN ATTACHMENT

SMCS-7312 **i04002810**

NOTE	REF NO	GRAPHIC REF	PART NUMBER	QTY	PART NAME 1 2 3 4 5 6 (PRODUCT LEVEL)	SEE PAGE
Y	1	1	*340-6474*	1	SEAT GP-SUSPENSION (LOW BACK, TILT)	1164
M	2	1	**6V-8202**	4	BOLT-SOCKET HEAD (M8X1.25X16-MM)	

M - METRIC PART
Y - SEPARATE ILLUSTRATION

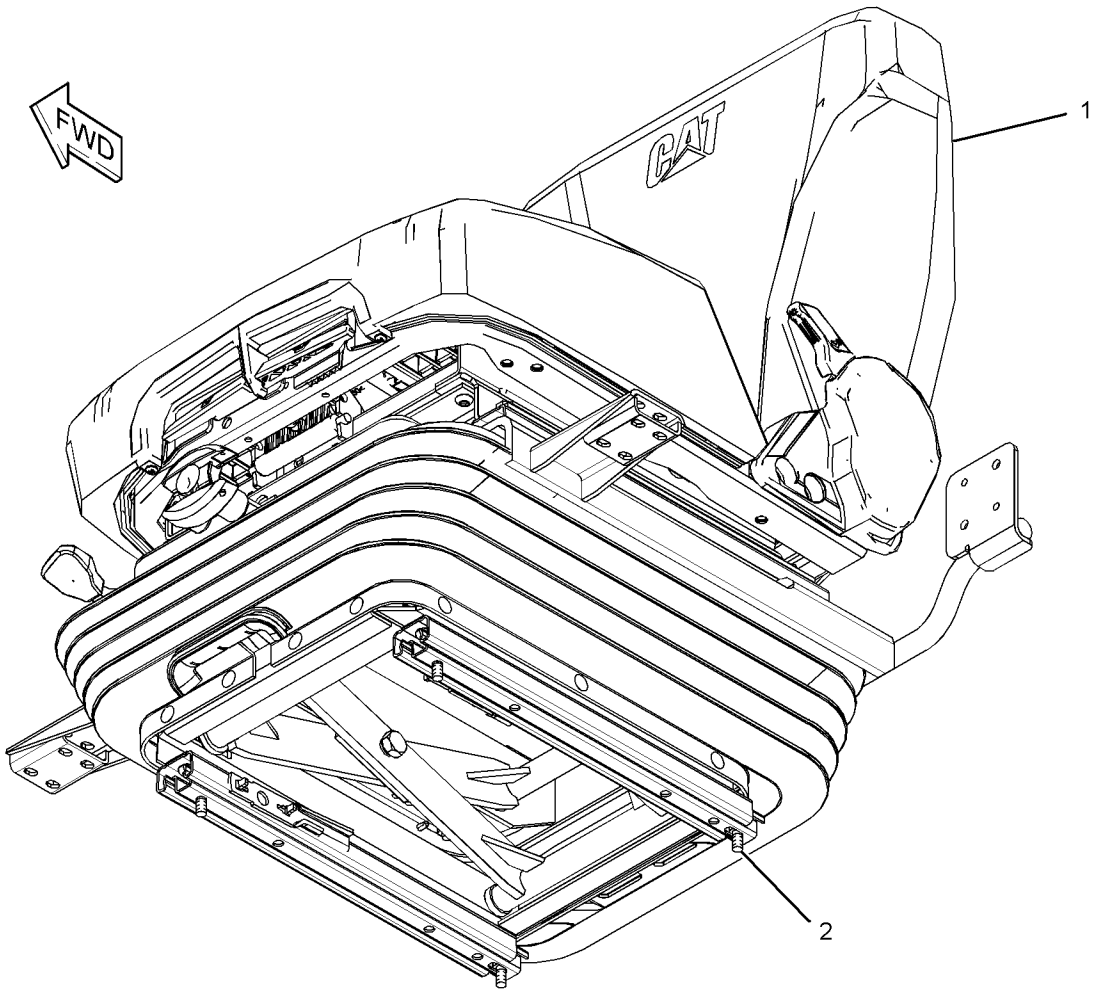

GRAPHIC #1 <END> g01955966

340-6478 SEAT & MOUNTING GP—LOW BACK, TILT

S/N: DLP1-UP
CLOTH
AN ATTACHMENT

SMCS-7312 **i05192592**

NOTE	REF NO	GRAPHIC REF	PART NUMBER	QTY	PART NAME 1 2 3 4 5 6 (PRODUCT LEVEL)	SEE PAGE
Y	1	1	*340-6479*	1	SEAT GP-SUSPENSION (LOW BACK, TILT)	1165
M	2	1	**6V-8202**	4	BOLT-SOCKET HEAD (M8X1.25X16-MM)	

M - METRIC PART
Y - SEPARATE ILLUSTRATION

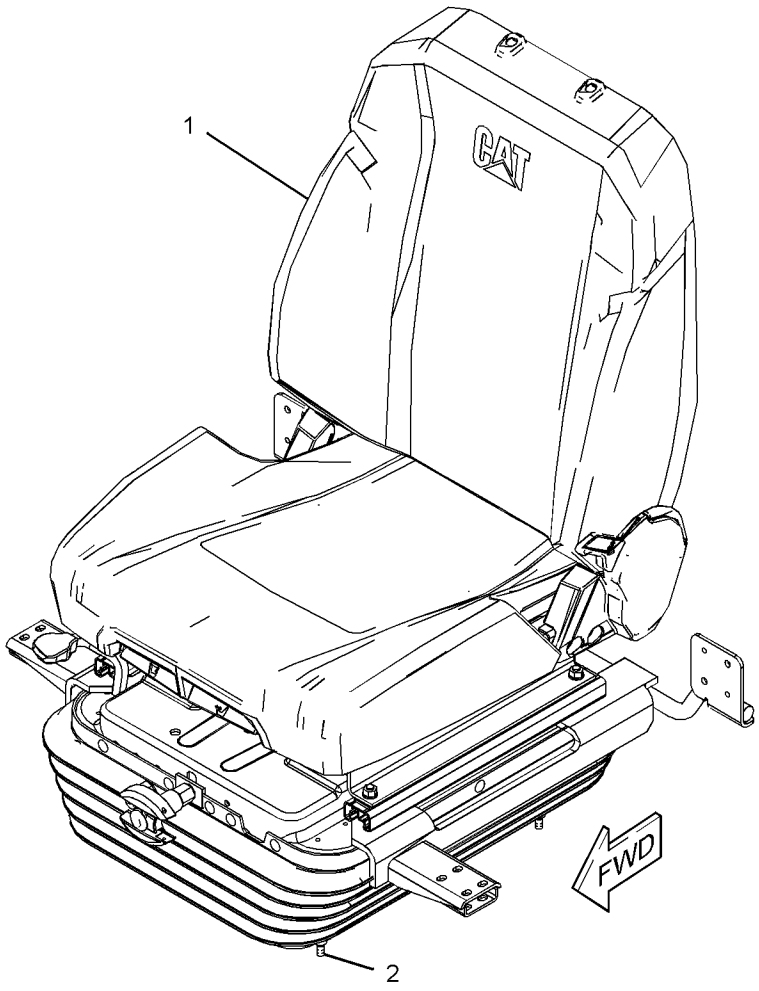

GRAPHIC #1 <END> g01960170

235-9020 SEAT BELT GP—RETRACTABLE, 76-MM (3-IN)

S/N: DLP1-UP
PART OF 240-5039 SEAT BELT GP
AN ATTACHMENT

SMCS-7327 **i02212218**

NOTE	REF NO	GRAPHIC REF	PART NUMBER	QTY	PART NAME 1 2 3 4 5 6 (PRODUCT LEVEL)	SEE PAGE
	1	1	**8S-4724**	1	BOLT (7/16-20X2.25-IN)	
	2	1	**8S-4723**	1	BOLT (7/16-20X1.5-IN)	
	3	1	**8S-0934**	1	LOCKNUT-FLANGE (7/16-20-THD)	

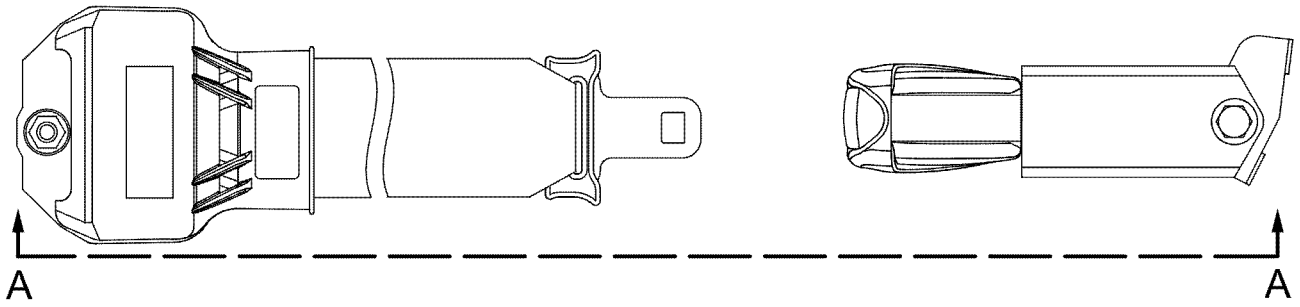

TOP VIEW

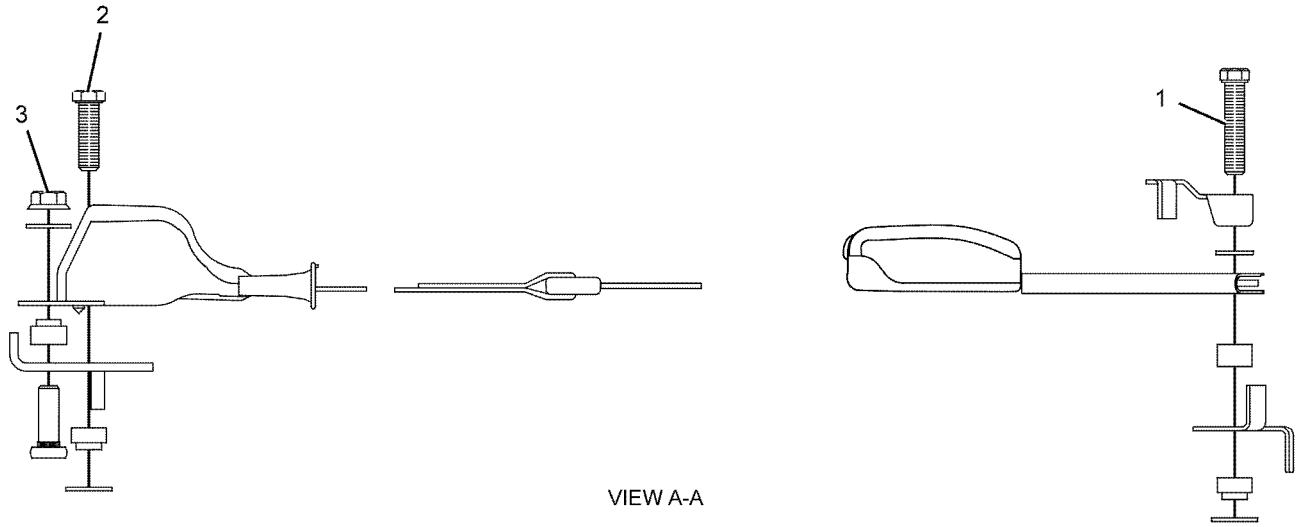

VIEW A-A

GRAPHIC #1 <END> g01131817

240-5039 SEAT BELT GP—RETRACTABLE, 76-MM (3-IN)

S/N: DLP1-UP

AN ATTACHMENT

SMCS-7327 **i04902942**

NOTE	REF NO	GRAPHIC REF	PART NUMBER	QTY	PART NAME 1 2 3 4 5 6 (PRODUCT LEVEL)	SEE PAGE
Y	1	1	**235-9020**	1	SEAT BELT GP (RETRACTABLE, 76-MM (3-IN))	1145

Y - SEPARATE ILLUSTRATION

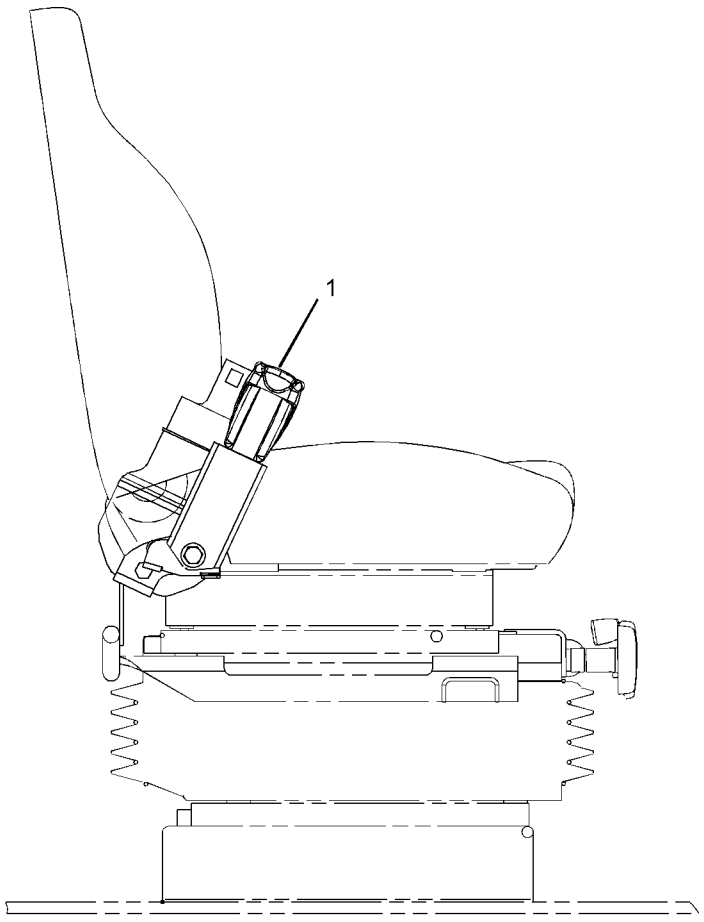

RIGHT SIDE VIEW

GRAPHIC #1 <END> g01071676

258-4095 SEAT BELT GP–RETRACTABLE

S/N: DLP1-UP
51-MM (2-IN)
PART OF 305-0467 SEAT BELT GP
AN ATTACHMENT

SMCS-7327 **i05190627**

NOTE	REF NO	GRAPHIC REF	PART NUMBER	QTY	PART NAME 1 2 3 4 5 6 (PRODUCT LEVEL)	SEE PAGE
F			**2D-6412**	2	WASHER (7/16X15/16X1/4-IN THK)	
F			**8S-0934**	2	LOCKNUT-FLANGE (7/16-20-THD)	
F			**8S-4723**	2	BOLT (7/16-20X1.5-IN)	
F			**8T-4223**	2	WASHER-HARD (13.5X25.5X3-MM THK)	

F - NOT SHOWN

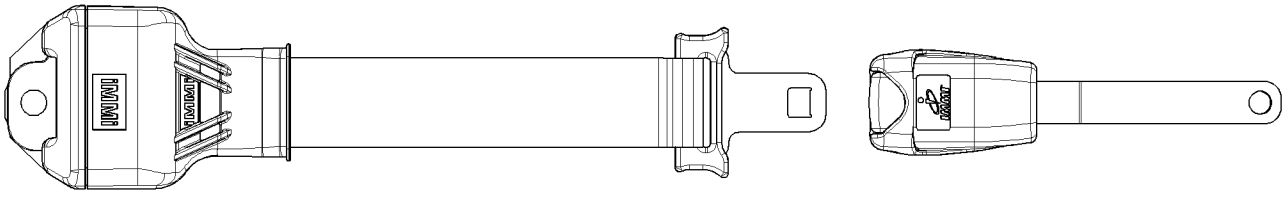

GRAPHIC #1 <END> g01345229

258-4096 SEAT BELT GP—RETRACTABLE, 76-MM (3-IN)

S/N: DLP1-UP
PART OF 305-0466 SEAT BELT GP
AN ATTACHMENT

SMCS-7327 **i05366275**

NOTE	REF NO	GRAPHIC REF	PART NUMBER	QTY	PART NAME 1 2 3 4 5 6 (PRODUCT LEVEL)	SEE PAGE
F			**2D-6412**	2	WASHER (7/16X15/16X1/4-IN THK)	
F			**8S-0934**	2	LOCKNUT-FLANGE (7/16-20-THD)	
F			**8S-4723**	2	BOLT (7/16-20X1.5-IN)	
F			**8T-4223**	2	WASHER-HARD (13.5X25.5X3-MM THK)	

F - NOT SHOWN

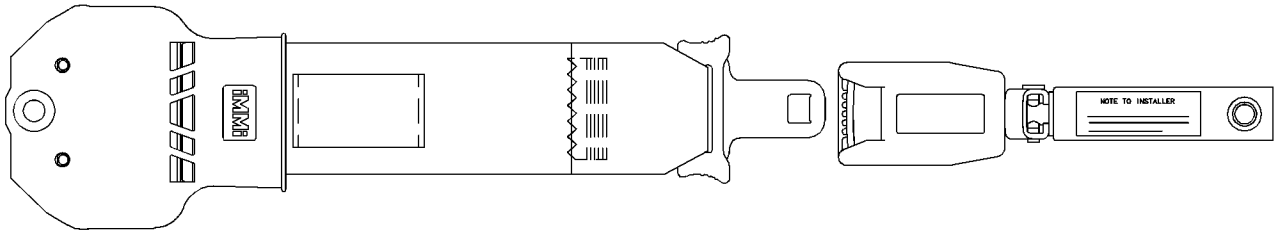

GRAPHIC #1 <END> g01196135

305-0466 SEAT BELT GP–RETRACTABLE

S/N: DLP1-UP
76-MM (3-IN)
PART OF 336-3345 DISTRIBUTION AR, 336-3346 OPTION AR-CAB, 351-9714, 359-2252 OPTION AR-REGIONAL
AN ATTACHMENT
TYPE 1

SMCS-7327 **i06042051**

NOTE	REF NO	GRAPHIC REF	PART NUMBER	QTY	PART NAME 1 2 3 4 5 6 (PRODUCT LEVEL)	SEE PAGE
	1	1	**327-6540**	1	SEAT BELT GP (RETRACTABLE, 76-MM (3-IN))	

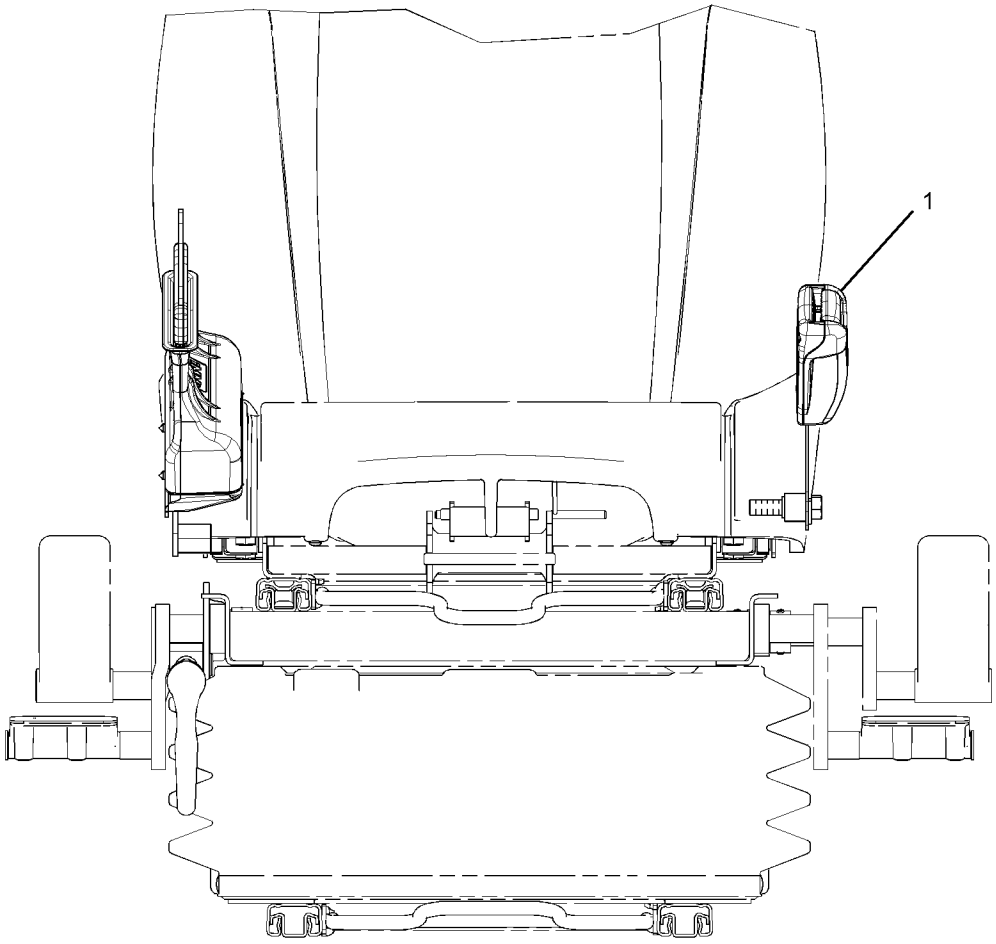

FRONT VIEW

GRAPHIC #1 <END> g01576875

305-0466 SEAT BELT GP–RETRACTABLE

S/N: DLP1-UP
76-MM (3-IN)
PART OF 336-3345 DISTRIBUTION AR, 336-3346 OPTION AR-CAB, 351-9714, 359-2252 OPTION AR-REGIONAL
AN ATTACHMENT
TYPE 2

SMCS-7327 **i05621413**

NOTE	REF NO	GRAPHIC REF	PART NUMBER	QTY	PART NAME 1 2 3 4 5 6 (PRODUCT LEVEL)	SEE PAGE
CY	1	1	**258-4096**	1	SEAT BELT GP (RETRACTABLE, 76-MM (3-IN))	1148
					(INCLUDES MOUNTING HARDWARE)	
C	2	1	**372-9498**	1	BRACKET AS	
		1	**5B-3254**	1	NUT-JAM (7/16-20-THD)	
C	3	1	**205-6388**	3	BOLT (7/16-20X1.75-IN)	
C	4	1	**7J-8337**	1	BOLT (7/16-20-THD)	
C	5	1	**8D-7209**	3	BOSS	
C	6	1	**8T-5360**	4	WASHER (12X22.5X2.5-MM THK)	

C - CHANGE FROM PREVIOUS TYPE
Y - SEPARATE ILLUSTRATION

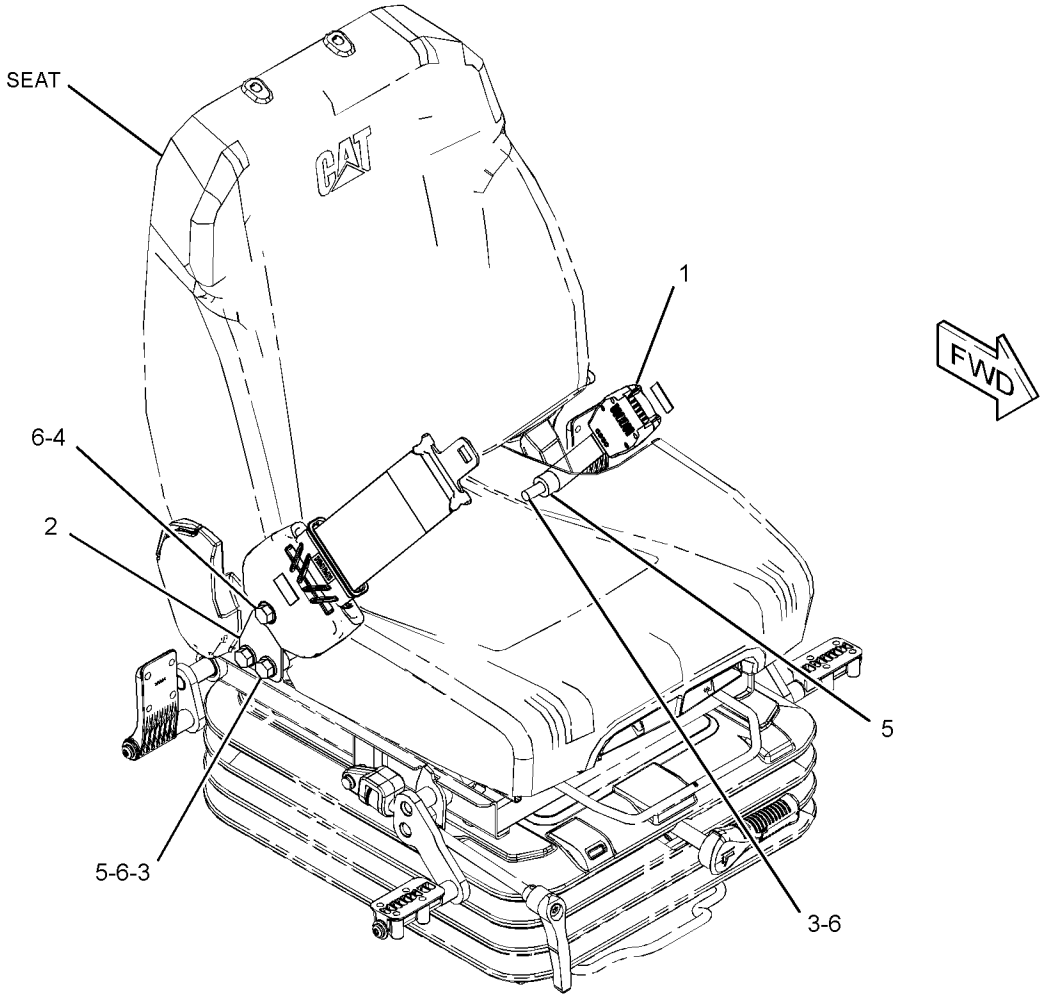

GRAPHIC #1 <END> g03177154

305-0466 SEAT BELT GP–RETRACTABLE

S/N: DLP1-UP
76-MM (3-IN)
PART OF 336-3345 DISTRIBUTION AR, 336-3346 OPTION AR-CAB, 351-9714, 359-2252 OPTION AR-REGIONAL
AN ATTACHMENT
TYPE 3

SMCS-7327 **i06042053**

NOTE	REF NO	GRAPHIC REF	PART NUMBER	QTY	PART NAME 1 2 3 4 5 6 (PRODUCT LEVEL)	SEE PAGE
C	1	1	**327-6540**	1	SEAT BELT GP (RETRACTABLE, 76-MM (3-IN))	
					(INCLUDES MOUNTING HARDWARE)	

C - CHANGE FROM PREVIOUS TYPE

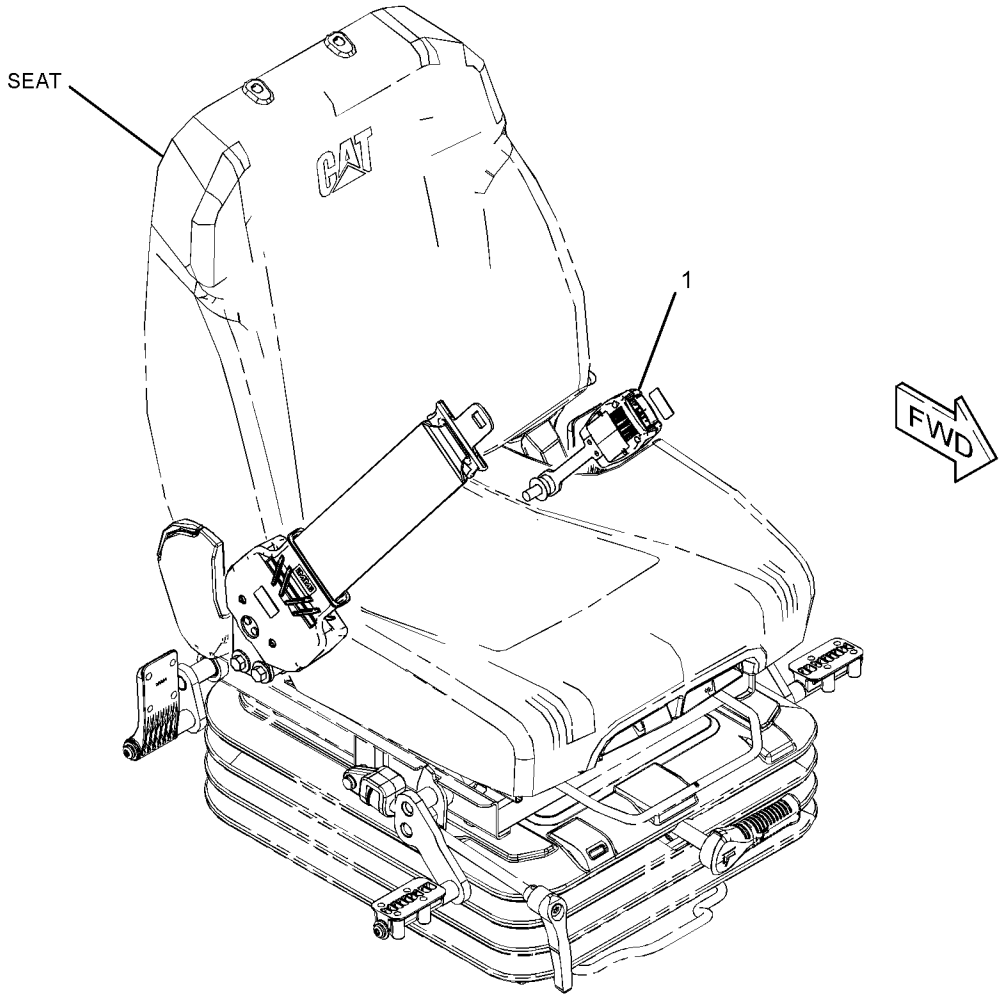

GRAPHIC #1 <END> g03407743

305-0467 SEAT BELT GP–RETRACTABLE

S/N: DLP1-UP
51-MM (2-IN)
PART OF 359-2483, 367-8791, 379-7090 OPTION AR-REGIONAL
AN ATTACHMENT
TYPE 1

SMCS-7327 **i05182905**

NOTE	REF NO	GRAPHIC REF	PART NUMBER	QTY	PART NAME 1 2 3 4 5 6 (PRODUCT LEVEL)	SEE PAGE
	1	1	**327-6541**	1	SEAT BELT GP (RETRACTABLE, 51-MM (2-IN))	

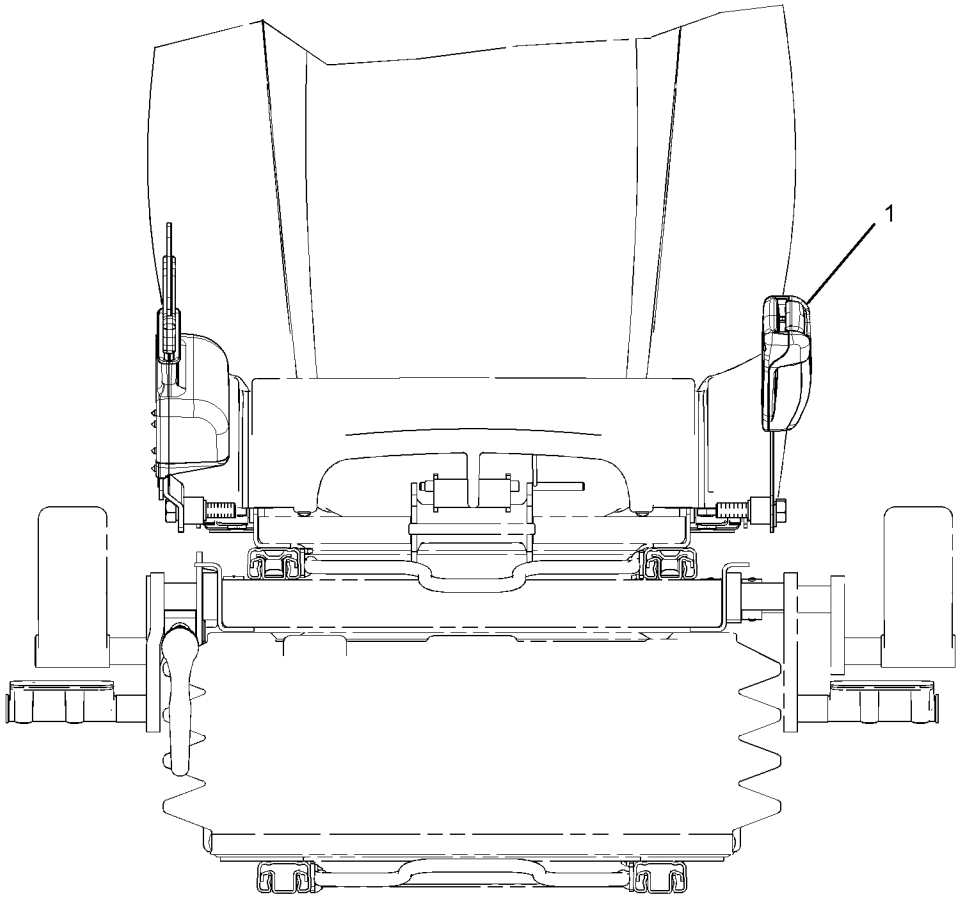

FRONT VIEW

GRAPHIC #1 <END> g01576478

305-0467 SEAT BELT GP–RETRACTABLE

S/N: DLP1-UP
51-MM (2-IN)
PART OF 359-2483, 367-8791, 379-7090 OPTION AR-REGIONAL
AN ATTACHMENT
TYPE 2

SMCS-7327 **i05214086**

NOTE	REF NO	GRAPHIC REF	PART NUMBER	QTY	PART NAME 1 2 3 4 5 6 (PRODUCT LEVEL)	SEE PAGE
CY	1	1	**258-4095**	1	SEAT BELT GP (RETRACTABLE, 51-MM (2-IN))	1147
C	2	1	**372-9498**	1	BRACKET AS	
C	3	1	**205-6388**	3	BOLT (7/16-20X1.75-IN)	
C	4	1	**7J-8337**	1	BOLT (7/16-20-THD)	
C	5	1	**8D-7209**	3	BOSS	
C	6	1	**8T-5360**	4	WASHER (12X22.5X2.5-MM THK)	

C - CHANGE FROM PREVIOUS TYPE
Y - SEPARATE ILLUSTRATION

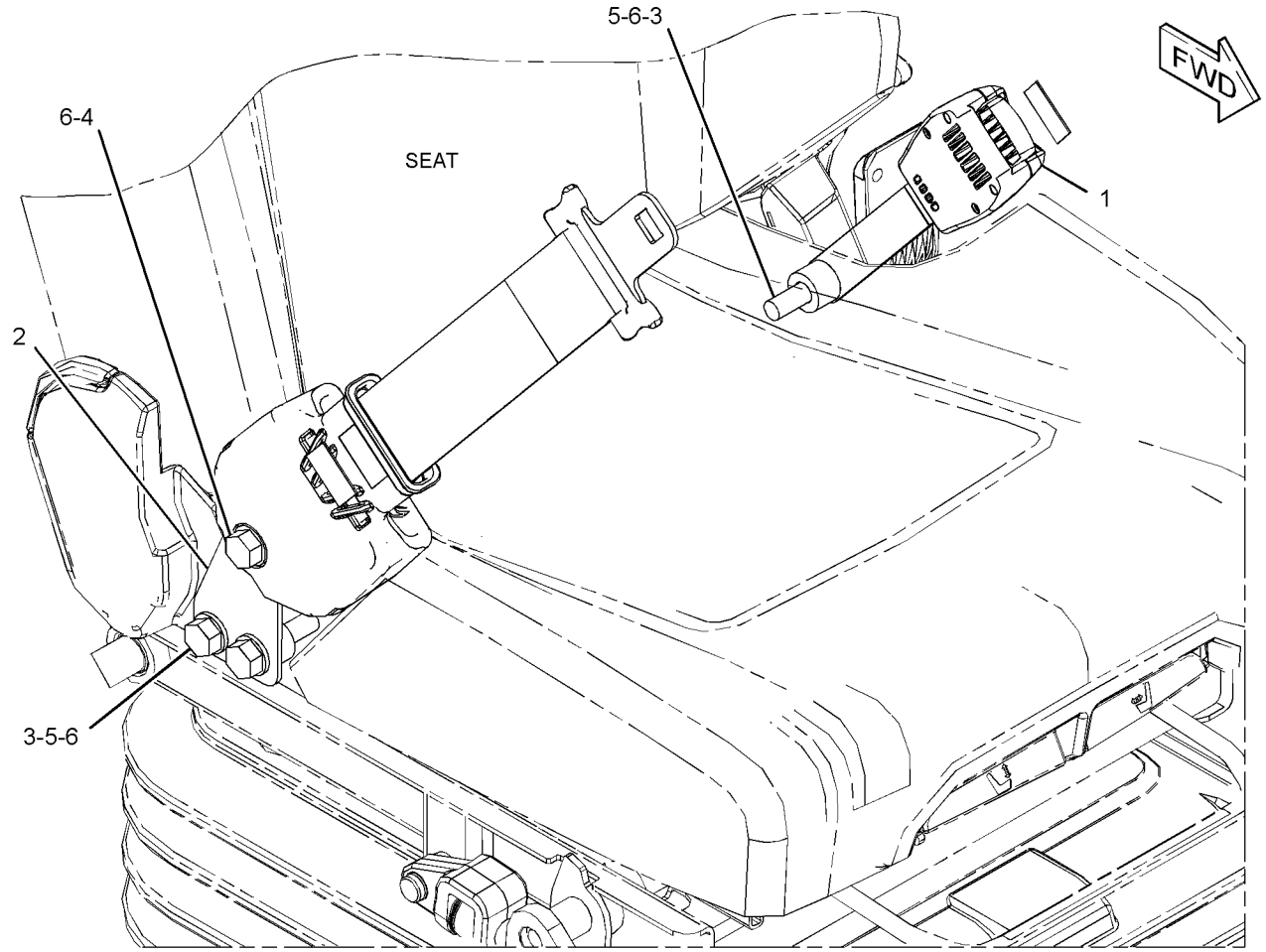

GRAPHIC #1 <END> g03203069

305-0467 SEAT BELT GP–RETRACTABLE

S/N: DLP1-UP
51-MM (2-IN)
PART OF 359-2483, 367-8791, 379-7090 OPTION AR-REGIONAL
AN ATTACHMENT
TYPE 3

SMCS-7327 **i06726054**

NOTE	REF NO	GRAPHIC REF	PART NUMBER	QTY	PART NAME 1 2 3 4 5 6 (PRODUCT LEVEL)	SEE PAGE
C	1	1	**327-6541**	1	SEAT BELT GP (RETRACTABLE, 51-MM (2-IN))	

C - CHANGE FROM PREVIOUS TYPE

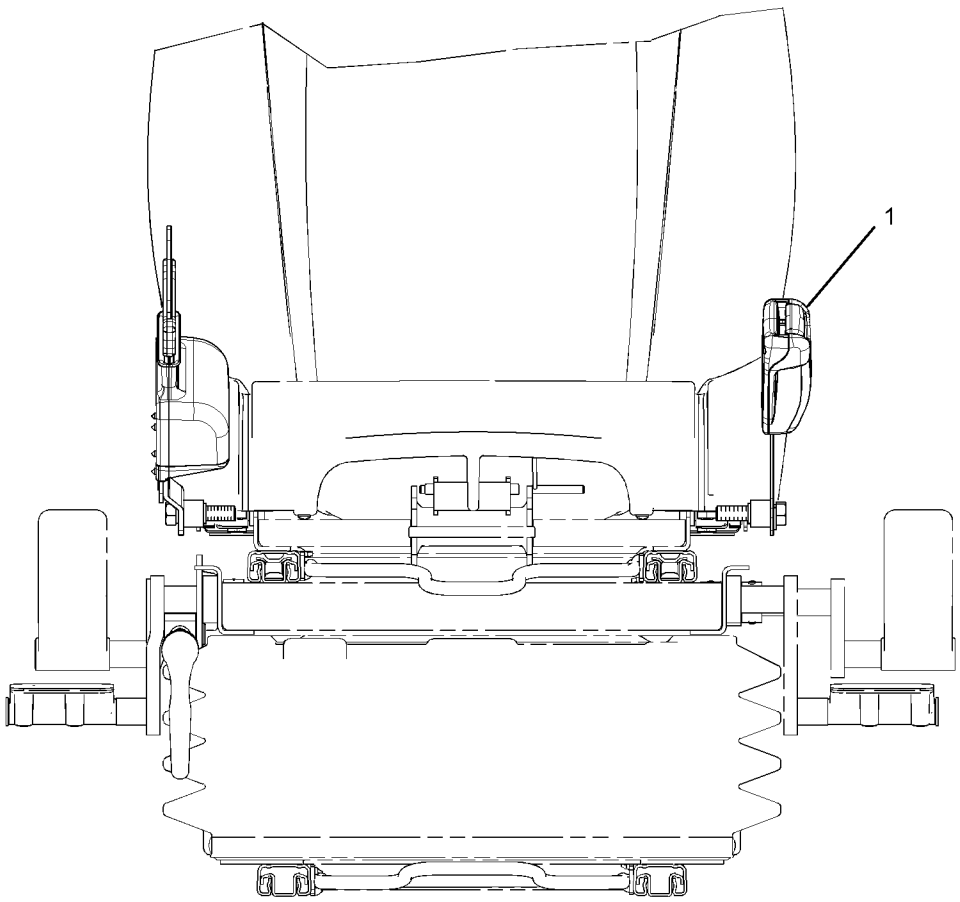

FRONT VIEW

GRAPHIC #1 <END> g01576478

229-9090 SEAT GP—HIGH BACK, TILT

S/N: DLP1-UP
PART OF 229-9089 SEAT GP-SUSPENSION
AN ATTACHMENT

SMCS-7312 **i04903851**

NOTE	REF NO	GRAPHIC REF	PART NUMBER	QTY	PART NAME 1 2 3 4 5 6 (PRODUCT LEVEL)	SEE PAGE
	1	1	**245-7884**	1	KIT-SEAT	
M	1A	1	**245-7898**	4	SCREW-BUTTON HEAD (M8X1.25X25-MM)	
	1B	1	**8T-4224**	4	WASHER-HARD (8.8X16X2-MM THK)	
	1C	1	**178-5659**	1	HANDLE (LUMBAR SUPPORT ADJUSTER)	
	1D	1	**229-9094**	1	HEADREST AS-SEAT	
	1E	1	**245-7887**	1	LEVER-CONTROL	
	2	1	**245-7888**	1	KIT-SEAT SUPPORT (TILT)	
M	2A	1	**245-7898**	4	SCREW-BUTTON HEAD (M8X1.25X25-MM)	
	2B	1	**8T-4224**	8	WASHER-HARD (8.8X16X2-MM THK)	
M	2C	1	**5C-7261**	4	NUT (M8X1.25-THD)	

M - METRIC PART

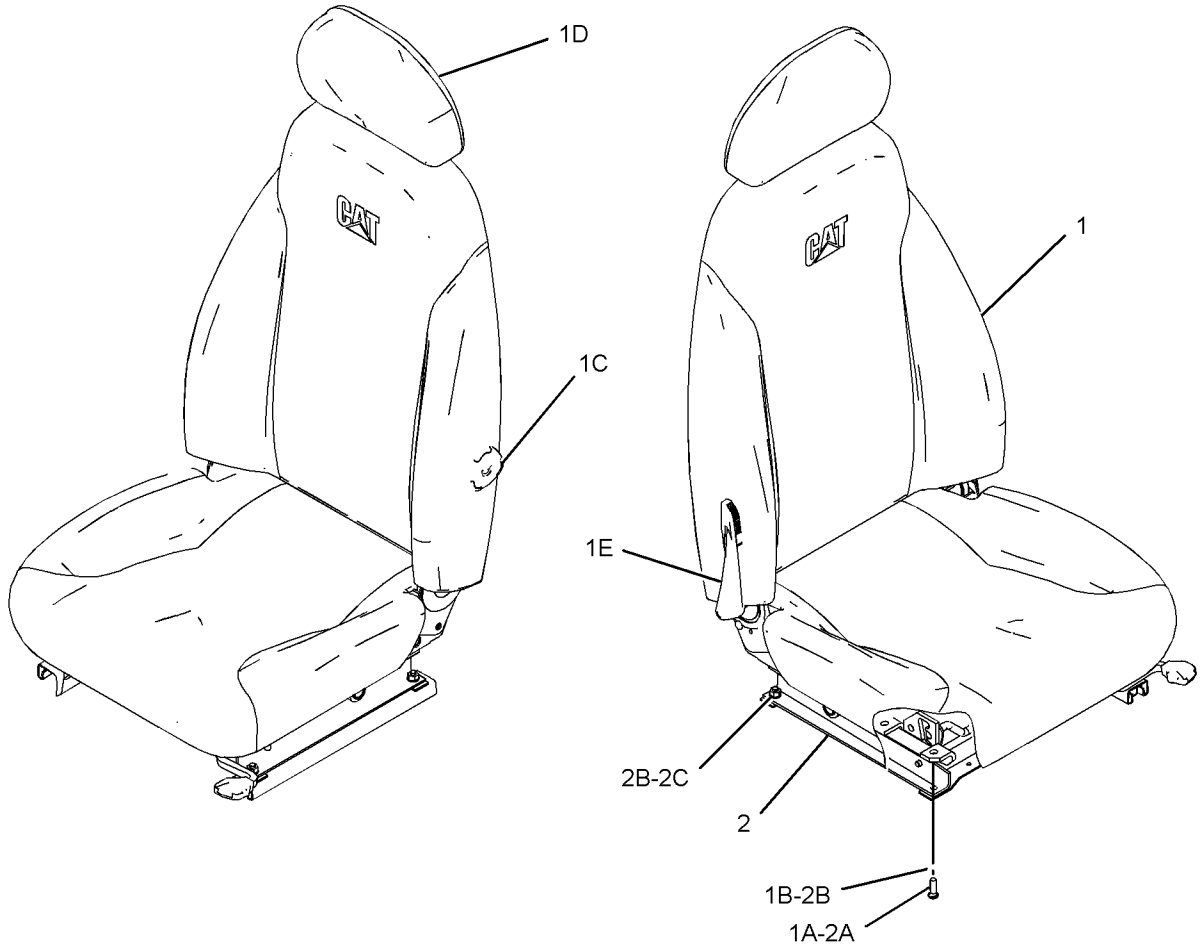

GRAPHIC #1 <END> g02949822

327-6512 SEAT GP—HIGH BACK, TILT

S/N: DLP1-UP

PART OF 327-6507 SEAT GP-SUSPENSION

AN ATTACHMENT

SMCS-7312 **i05733600**

NOTE	REF NO	GRAPHIC REF	PART NUMBER	QTY	PART NAME 1 2 3 4 5 6 (PRODUCT LEVEL)	SEE PAGE
	1	1	**178-5659**	1	HANDLE (LUMBAR SUPPORT ADJUSTER)	
	2	1	**316-8987**	2	BRACKET	
	3	1	**327-6515**	1	HEADREST AS-SEAT (CLOTH)	
	4	1	**327-6640**	1	KIT-HANDLE (RECLINER)	
	5	1	**327-6642**	1	KIT-SEAT TILT (ADJUSTER)	
	6	1	**327-6643**	1	KIT-ADJUSTER (CUSHION POSITIONING)	
	7	1	**333-4160**	1	KIT-SEAT (HIGH BACK, MANUAL)	
		1	**332-0195**	1	CLIP	
		1	**383-5647**	1	SPRING	
		1	**440-5584**	1	LEVER	
		1	**440-5585**	1	PIN	
	8	1	**333-4179**	2	BOLT-SPECIAL	
M	9	1	**9X-2616**	4	SCREW-SOCKET (M8X1.25X16-MM)	

M - METRIC PART

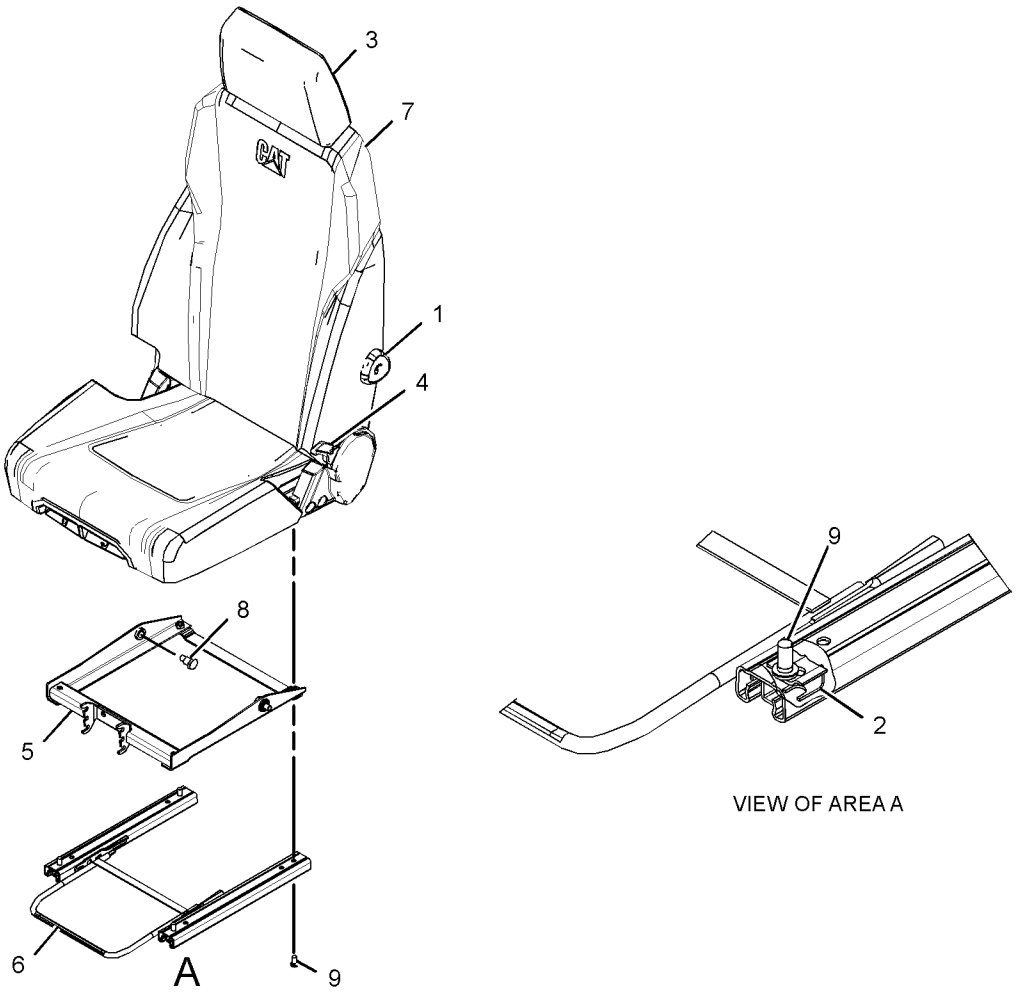

GRAPHIC #1 <END> g03058636

327-6513 SEAT GP–HIGH BACK, WITH HEATER

S/N: DLP1-UP

PART OF 327-6509 SEAT GP-SUSPENSION

AN ATTACHMENT

SMCS-7312 **i05770073**

NOTE	REF NO	GRAPHIC REF	PART NUMBER	QTY	PART NAME 1 2 3 4 5 6 (PRODUCT LEVEL)	SEE PAGE
	1	1	**178-5659**	1	HANDLE (LUMBAR SUPPORT ADJUSTER)	
	2	1	**316-8987**	2	BRACKET	
	3	1	**327-6515**	1	HEADREST AS-SEAT (CLOTH)	
	4	1	**327-6640**	1	KIT-HANDLE (RECLINER)	
	5	1	**327-6642**	1	KIT-SEAT TILT (ADJUSTER)	
	6	1	**327-6643**	1	KIT-ADJUSTER (CUSHION POSITIONING)	
	7	1	**423-6161**	1	KIT-SEAT (HIGH BACK, WITH HEATER)	
	8	1	**333-4179**	2	BOLT-SPECIAL	
M	9	1	**9X-2616**	4	SCREW-SOCKET (M8X1.25X16-MM)	

M - METRIC PART

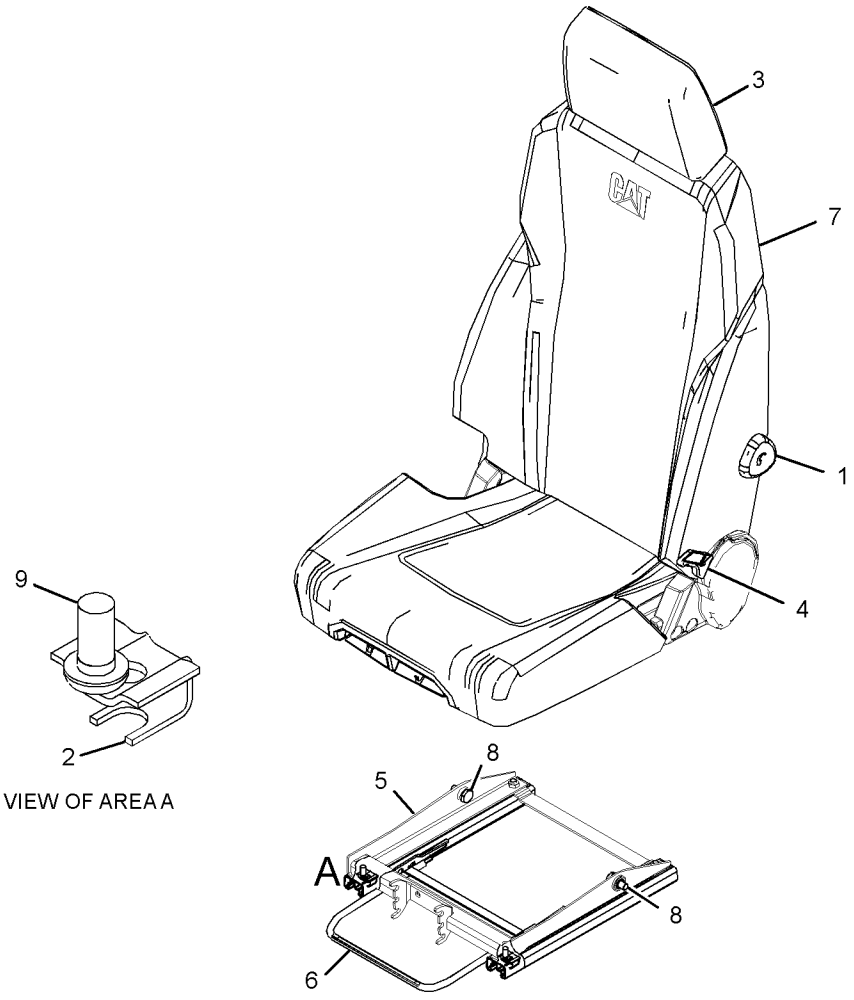

GRAPHIC #1 <END> g03058639

340-6475 SEAT GP—LOW BACK, TILT

S/N: DLP1-UP
PART OF 340-6474 SEAT GP-SUSPENSION
AN ATTACHMENT
TYPE 1

SMCS-7312 **i04046077**

NOTE	REF NO	GRAPHIC REF	PART NUMBER	QTY	PART NAME 1 2 3 4 5 6 (PRODUCT LEVEL)	SEE PAGE
Y	1	1	**333-4172**	1	KIT-SEAT (LOW BACK, VINYL)	1088
	2	1	**327-6642**	1	KIT-SEAT TILT	
Y	3	1	**340-6477**	1	KIT-SEAT SUPPORT	1089

Y - SEPARATE ILLUSTRATION

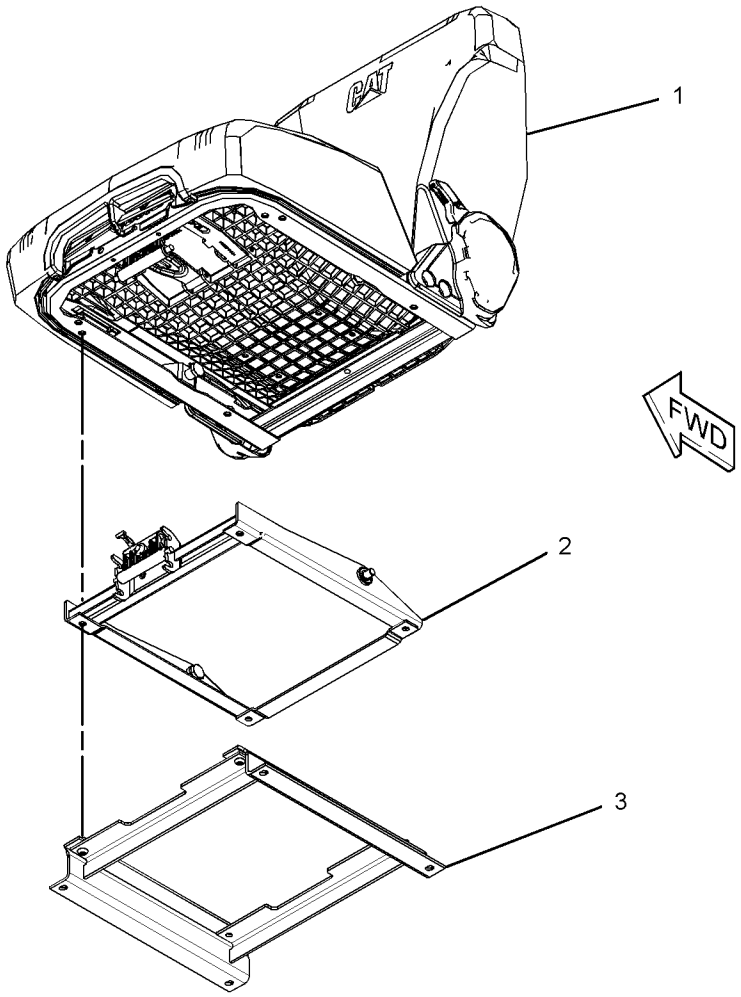

GRAPHIC #1 <END> g01955694

340-6475 SEAT GP—LOW BACK, TILT

S/N: DLP1-UP
PART OF 340-6474 SEAT GP-SUSPENSION
AN ATTACHMENT
TYPE 2

SMCS-7312 **i06091338**

NOTE	REF NO	GRAPHIC REF	PART NUMBER	QTY	PART NAME 1 2 3 4 5 6 (PRODUCT LEVEL)	SEE PAGE
Y	1	1	**333-4172**	1	KIT-SEAT (LOW BACK, VINYL)	1088
	2	1	**327-6642**	1	KIT-SEAT TILT	
Y	3	1	**340-6477**	1	KIT-SEAT SUPPORT	1089

Y - SEPARATE ILLUSTRATION

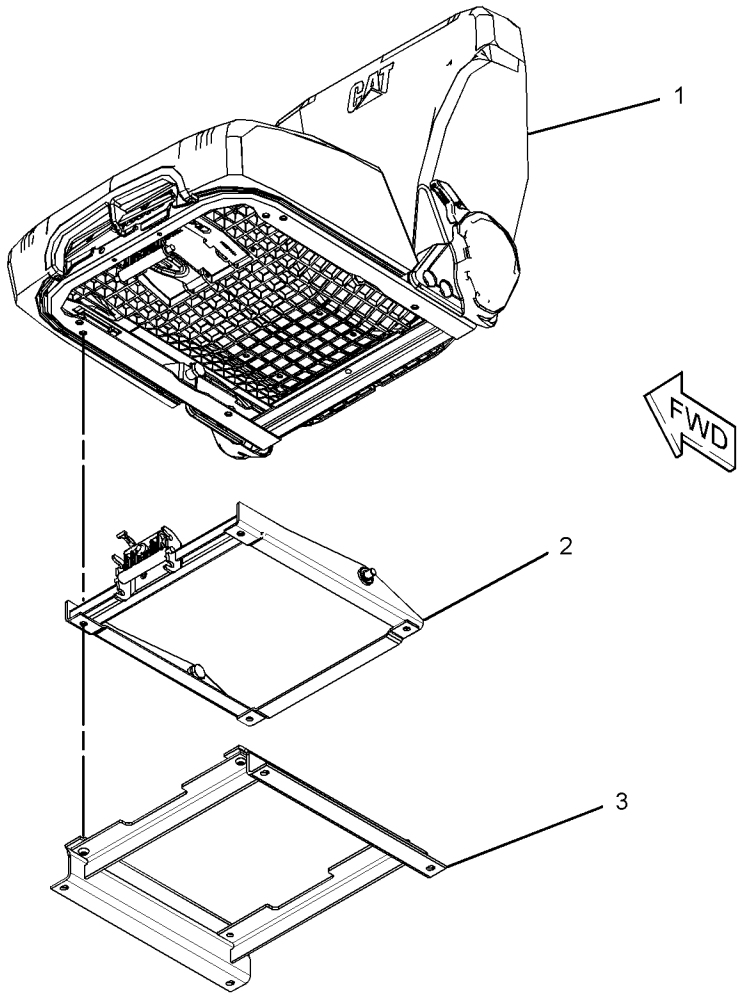

GRAPHIC #1 <END> g01955694

340-6480 SEAT GP—LOW BACK, TILT

S/N: DLP1-UP

PART OF 340-6479 SEAT GP-SUSPENSION

AN ATTACHMENT

SMCS-7312 **i06086008**

NOTE	REF NO	GRAPHIC REF	PART NUMBER	QTY	PART NAME 1 2 3 4 5 6 (PRODUCT LEVEL)	SEE PAGE
Y	1	1	**327-6639**	1	KIT-SEAT (CLOTH, LOW BACK)	1087
Y	2	1	**327-6642**	1	KIT-SEAT TILT	1091
Y	3	1	**340-6477**	1	KIT-SEAT SUPPORT	1089

Y - SEPARATE ILLUSTRATION

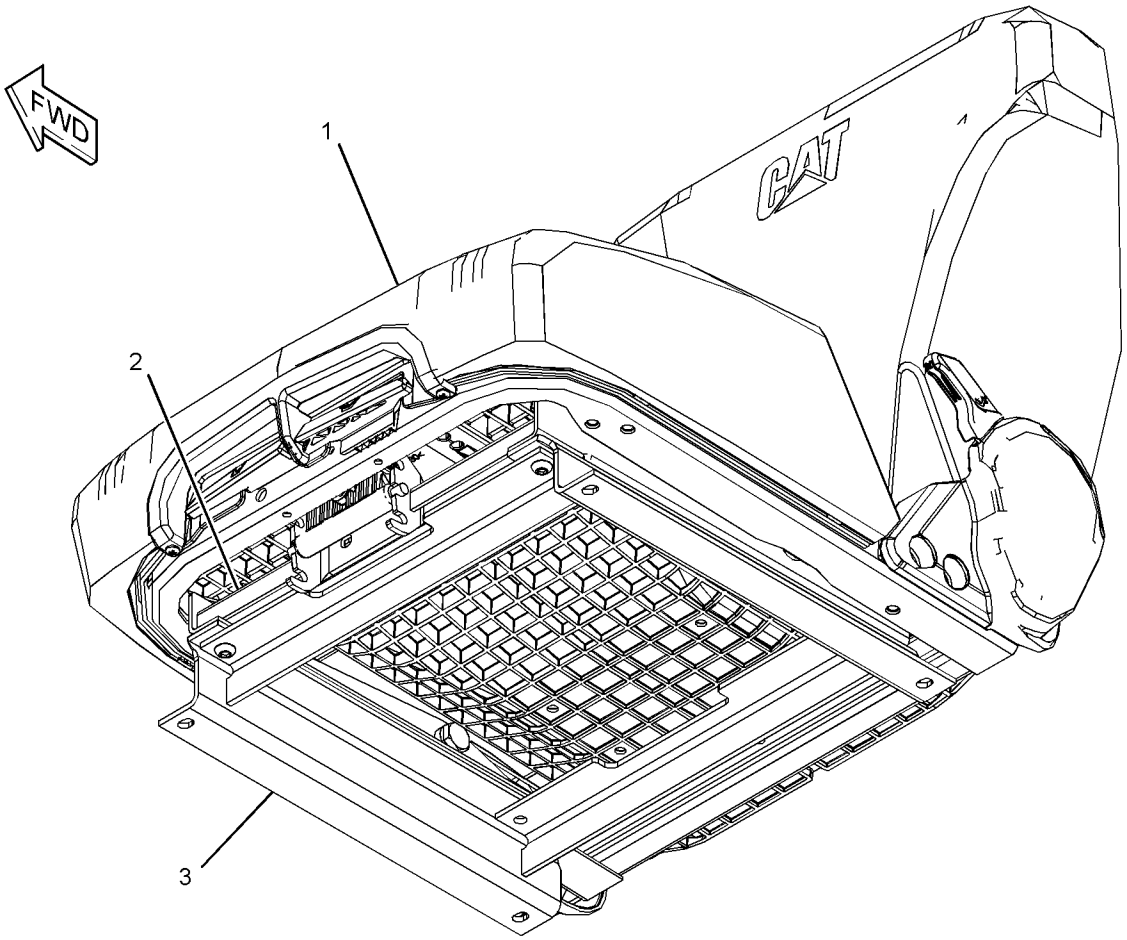

GRAPHIC #1 <END> g01956223

229-9089 SEAT GP-SUSPENSION—HIGH BACK, TILT

S/N: DLP1-UP
PART OF 240-5003 SEAT & MOUNTING GP
AN ATTACHMENT

SMCS-7324, 7336

i03303522

NOTE	REF NO	GRAPHIC REF	PART NUMBER	QTY	PART NAME 1 2 3 4 5 6 (PRODUCT LEVEL)	SEE PAGE
Y	1	1	**229-9077**	1	SUSPENSION GP-SEAT (MECHANICAL)	1167
Y	2	1	**229-9090**	1	SEAT GP (HIGH BACK, TILT)	1155
M	3	1	**5C-7261**	4	NUT (M8X1.25-THD)	
	4	1	**8T-4224**	4	WASHER-HARD (8.8X16X2-MM THK)	

M - METRIC PART
Y - SEPARATE ILLUSTRATION

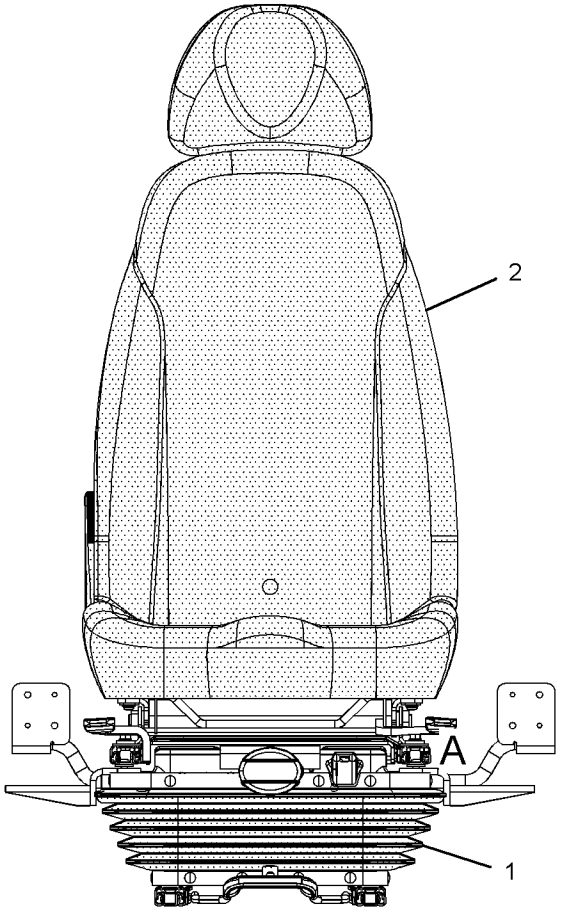

FRONT VIEW

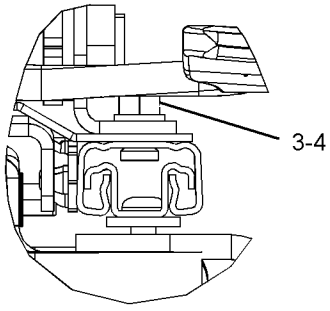

VIEW OF AREA A

GRAPHIC #1

<END>

g01172597

327-6507 SEAT GP-SUSPENSION—HIGH BACK, TILT

S/N: DLP1-UP
PART OF 327-6501 SEAT & MOUNTING GP
AN ATTACHMENT

SMCS-7324, 7336 **i05443860**

NOTE	REF NO	GRAPHIC REF	PART NUMBER	QTY	PART NAME 1 2 3 4 5 6 (PRODUCT LEVEL)	SEE PAGE
	1	1	**316-8987**	2	BRACKET	
Y	2	1	**327-6512**	1	SEAT GP (HIGH BACK, TILT)	1156
Y	3	1	**327-6520**	1	SUSPENSION GP-SEAT (MECHANICAL)	1170
M	4	1	**5A-3604**	4	BOLT-SOCKET HEAD (M8X1.25X25-MM)	

M - METRIC PART
Y - SEPARATE ILLUSTRATION

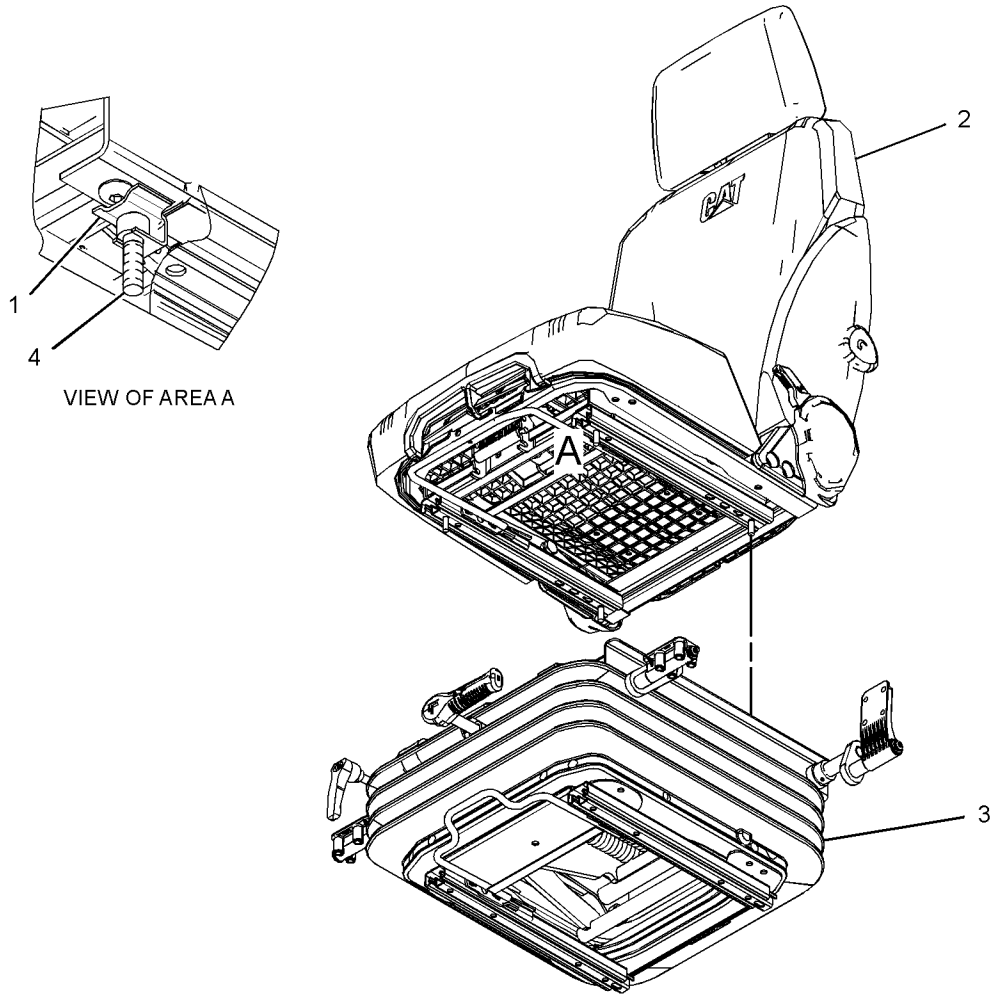

VIEW OF AREA A

GRAPHIC #1 <END> g03058768

327-6509 SEAT GP-SUSPENSION—HIGH BACK, WITH HEATER

S/N: DLP1-UP
PART OF 327-6503 SEAT & MOUNTING GP
AN ATTACHMENT

SMCS-7324, 7336 **i04903896**

NOTE	REF NO	GRAPHIC REF	PART NUMBER	QTY	PART NAME 1 2 3 4 5 6 (PRODUCT LEVEL)	SEE PAGE
	1	1	**316-8987**	2	BRACKET	
Y	2	1	**327-6513**	1	SEAT GP (HIGH BACK, WITH HEATER)	1157
Y	3	1	**327-6521**	1	SUSPENSION GP-SEAT (AIR)	1171
M	4	1	**5A-3604**	4	BOLT-SOCKET HEAD (M8X1.25X25-MM)	
	5	1	**7I-2673**	1	STRAP-CABLE	

M - METRIC PART
Y - SEPARATE ILLUSTRATION

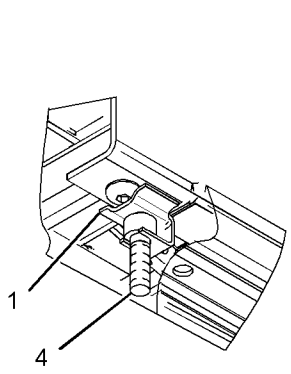

VIEW OF AREA A

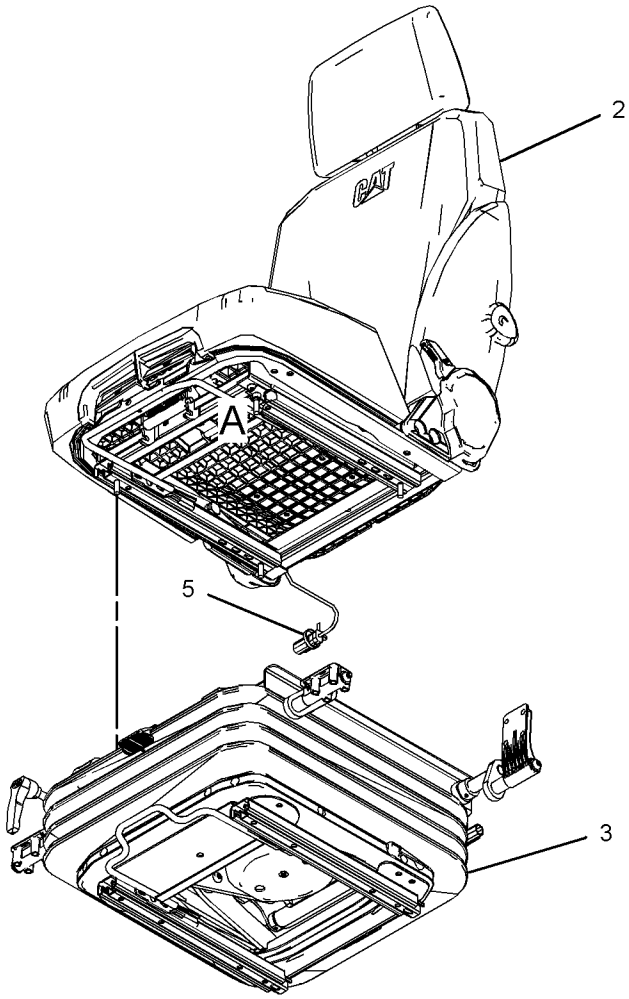

GRAPHIC #1 <END> g03058786

340-6474 SEAT GP-SUSPENSION—LOW BACK, TILT

S/N: DLP1-UP
PART OF 336-1230 SEAT & MOUNTING GP
AN ATTACHMENT

SMCS-7324, 7336 **i03636307**

NOTE	REF NO	GRAPHIC REF	PART NUMBER	QTY	PART NAME 1 2 3 4 5 6 (PRODUCT LEVEL)	SEE PAGE
Y	1	1	**340-6475**	1	SEAT GP (LOW BACK, TILT)	1158
Y	2	1	**340-6476**	1	SUSPENSION GP-SEAT	1172
M	3	1	**5C-7261**	4	NUT (M8X1.25-THD)	
	4	1	**8T-4224**	4	WASHER-HARD (8.8X16X2-MM THK)	

M - METRIC PART
Y - SEPARATE ILLUSTRATION

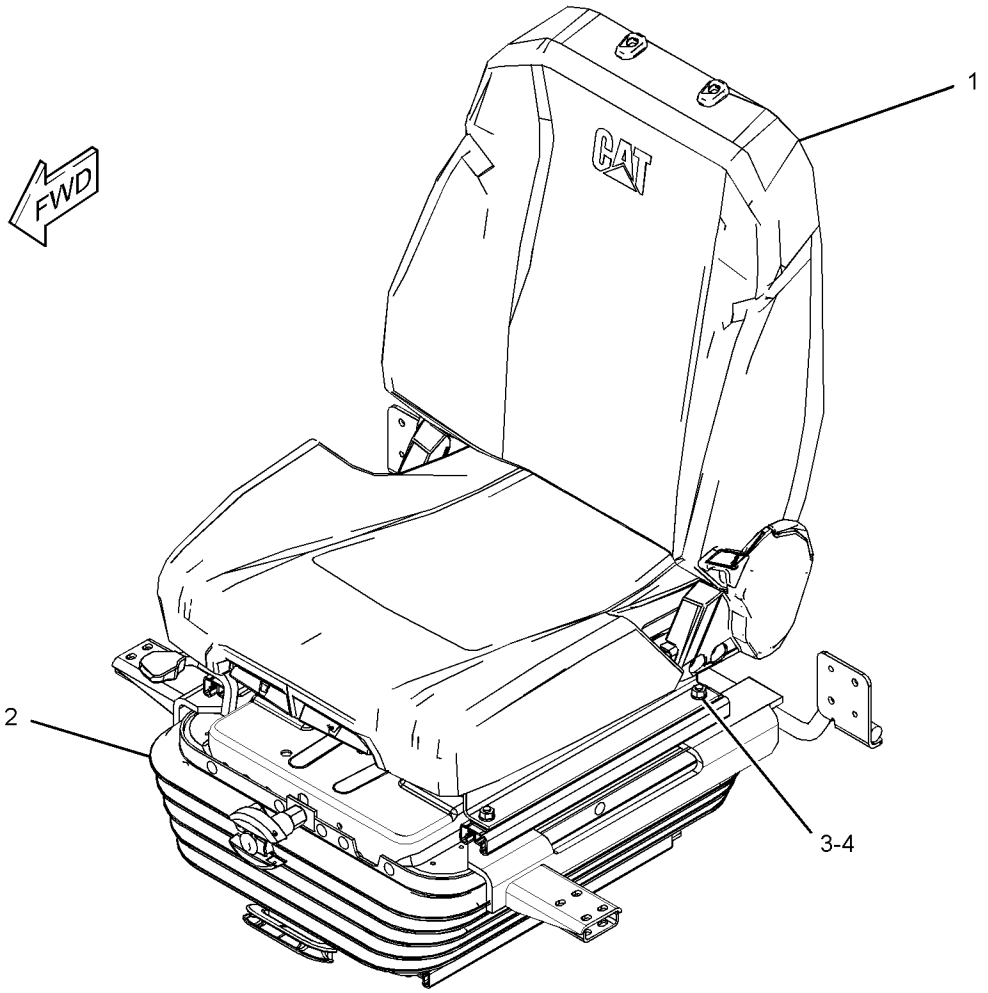

GRAPHIC #1 <END> g01955722

340-6479 SEAT GP-SUSPENSION—LOW BACK, TILT

S/N: DLP1-UP
PART OF 340-6478 SEAT & MOUNTING GP
AN ATTACHMENT

SMCS-7324, 7336 **i03636250**

NOTE	REF NO	GRAPHIC REF	PART NUMBER	QTY	PART NAME 1 2 3 4 5 6 (PRODUCT LEVEL)	SEE PAGE
Y	1	1	**340-6476**	1	SUSPENSION GP-SEAT	1172
Y	2	1	**340-6480**	1	SEAT GP (LOW BACK, TILT)	1160
M	3	1	**5C-7261**	4	NUT (M8X1.25-THD)	
	4	1	**8T-4224**	4	WASHER-HARD (8.8X16X2-MM THK)	

M - METRIC PART
Y - SEPARATE ILLUSTRATION

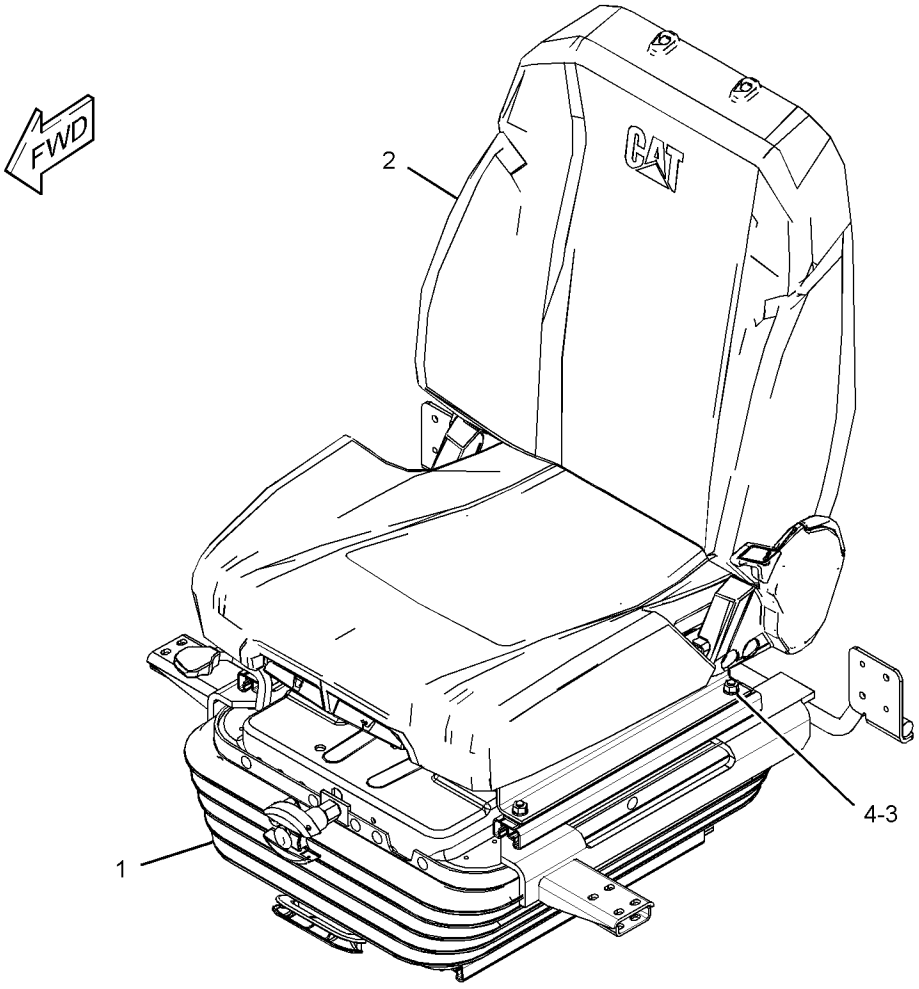

GRAPHIC #1 <END> g01955996

327-6523 SUPPORT GP-SEAT

S/N: DLP1-UP

PART OF 273-5363, 340-6773, 383-5596 OPERATOR AR

SMCS-7321 **i03467960**

NOTE	REF NO	GRAPHIC REF	PART NUMBER	QTY	PART NAME 1 2 3 4 5 6 (PRODUCT LEVEL)	SEE PAGE
	1	1	**327-6538**	1	SUPPORT AS-SEAT	
	2	1	**8T-4121**	4	WASHER-HARD (11X21X2.5-MM THK)	
M	3	1	**8T-4191**	4	BOLT (M10X1.5X16-MM)	

M - METRIC PART

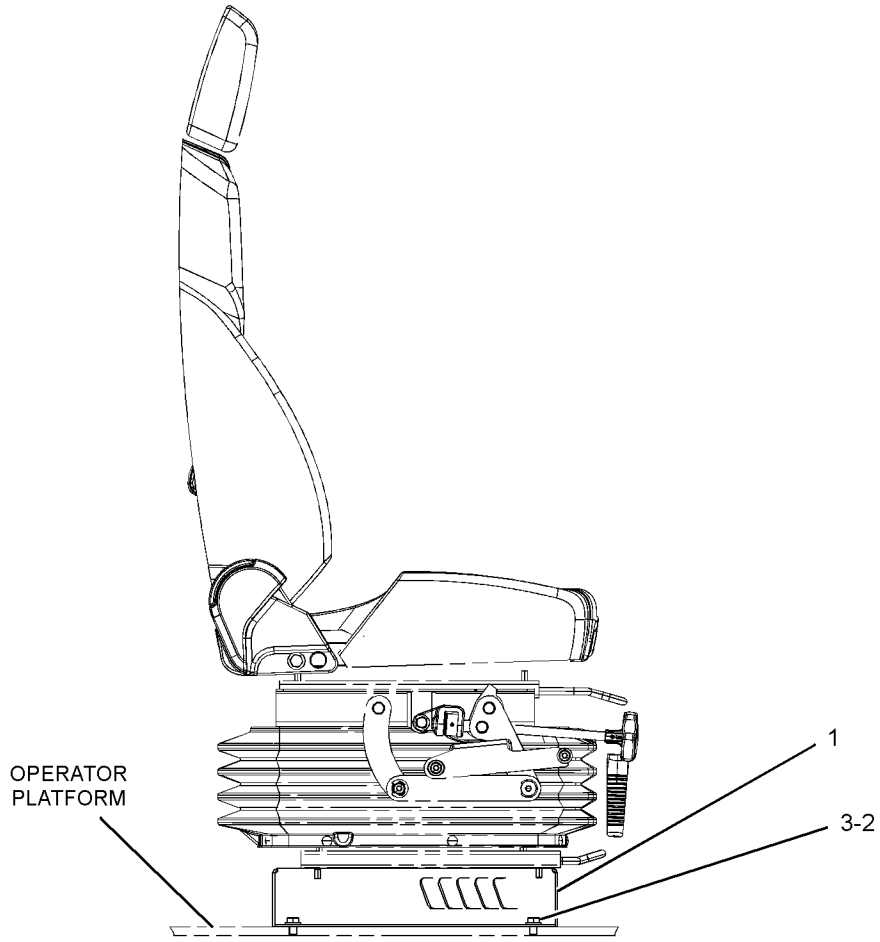

RIGHT SIDE VIEW

GRAPHIC #1 <END> g01809475

229-9077 SUSPENSION GP-SEAT—MECHANICAL

S/N: DLP1-UP
PART OF 229-9089 SEAT GP-SUSPENSION
AN ATTACHMENT

SMCS-7324 **i04903900**

NOTE	REF NO	GRAPHIC REF	PART NUMBER	QTY	PART NAME 1 2 3 4 5 6 (PRODUCT LEVEL)	SEE PAGE
	1	1	**242-8768**	1	COVER AS	
		1	**147-4921**	1	KIT-CLIP (SEAT)	
					(INCLUDES 22-CLIPS)	
Y	2	1	**245-7889**	1	ADJUSTER GP-SEAT (UPPER SLIDE)	929
Y	3	1	**245-7890**	1	BRACKET GP-MOUNTING (SUSPENSION SEAT)	944
Y	4	1	**245-7892**	1	SUSPENSION GP-SEAT (MECHANICAL)	1169
	5	1	**245-7895**	1	KIT-CLIP	
					(INCLUDES 28-CLIPS)	
Y	6	1	**245-7896**	1	ADJUSTER GP-SEAT (LOWER SLIDE)	930

Y - SEPARATE ILLUSTRATION

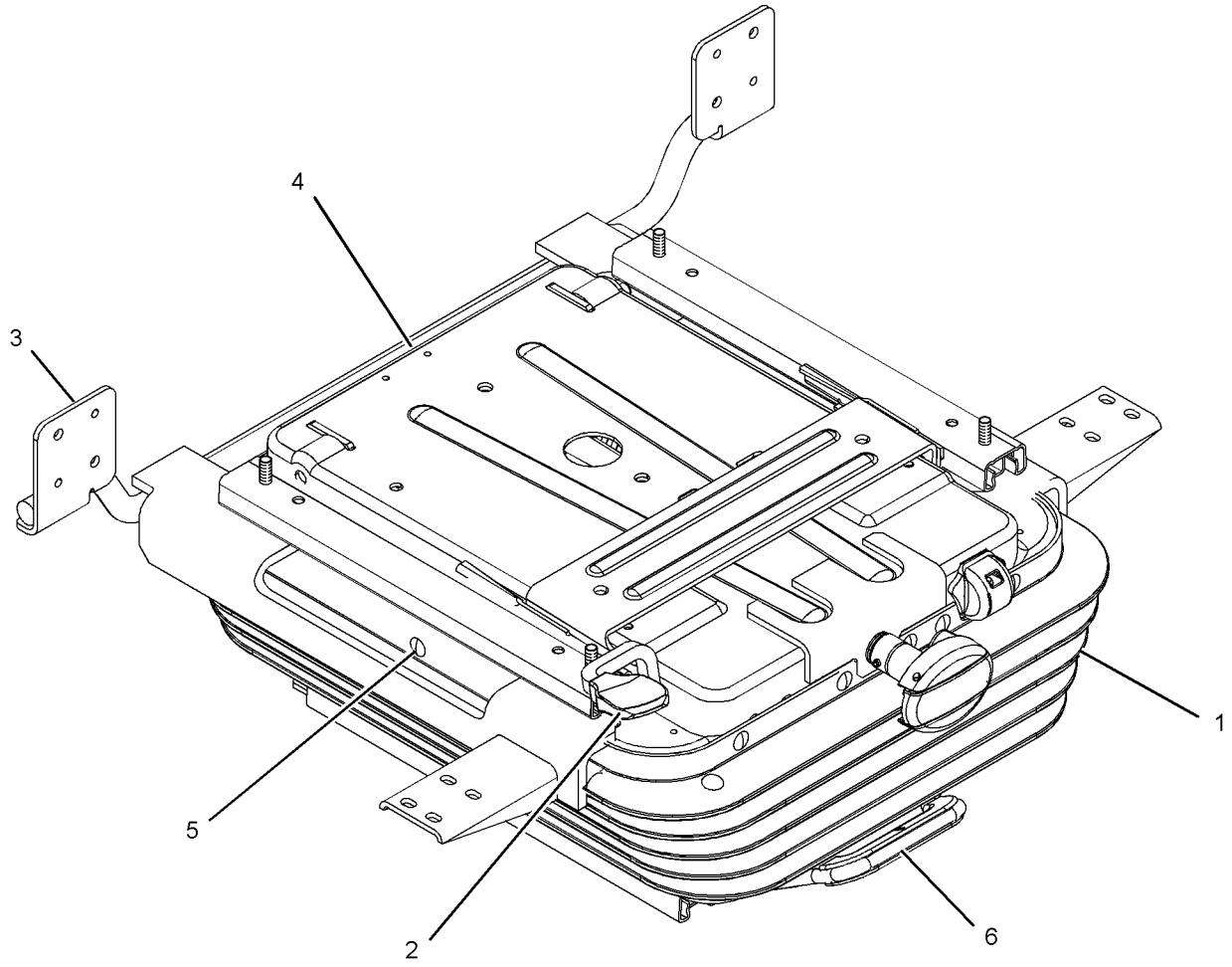

GRAPHIC #1 <END> g03058780

245-7891 SUSPENSION GP-SEAT—MECHANICAL

S/N: DLP1-UP

PART OF 340-6476 SUSPENSION GP-SEAT

AN ATTACHMENT

SMCS-7324 **i02407043**

NOTE	REF NO	GRAPHIC REF	PART NUMBER	QTY	PART NAME 1 2 3 4 5 6 (PRODUCT LEVEL)	SEE PAGE
M	1	1	**198-3899**	2	SCREW-BUTTON HEAD (M8X1.25X20-MM)	
	2	1	**245-7897**	8	PLATE	
M	3	1	**245-7898**	2	SCREW-BUTTON HEAD (M8X1.25X25-MM)	
M	4	1	**245-7899**	4	SCREW-BUTTON HEAD (M8X1.25X30-MM)	
M	5	1	**5C-7261**	8	NUT (M8X1.25-THD)	
	6	1	**8T-4224**	8	WASHER-HARD (8.8X16X2-MM THK)	

M - METRIC PART

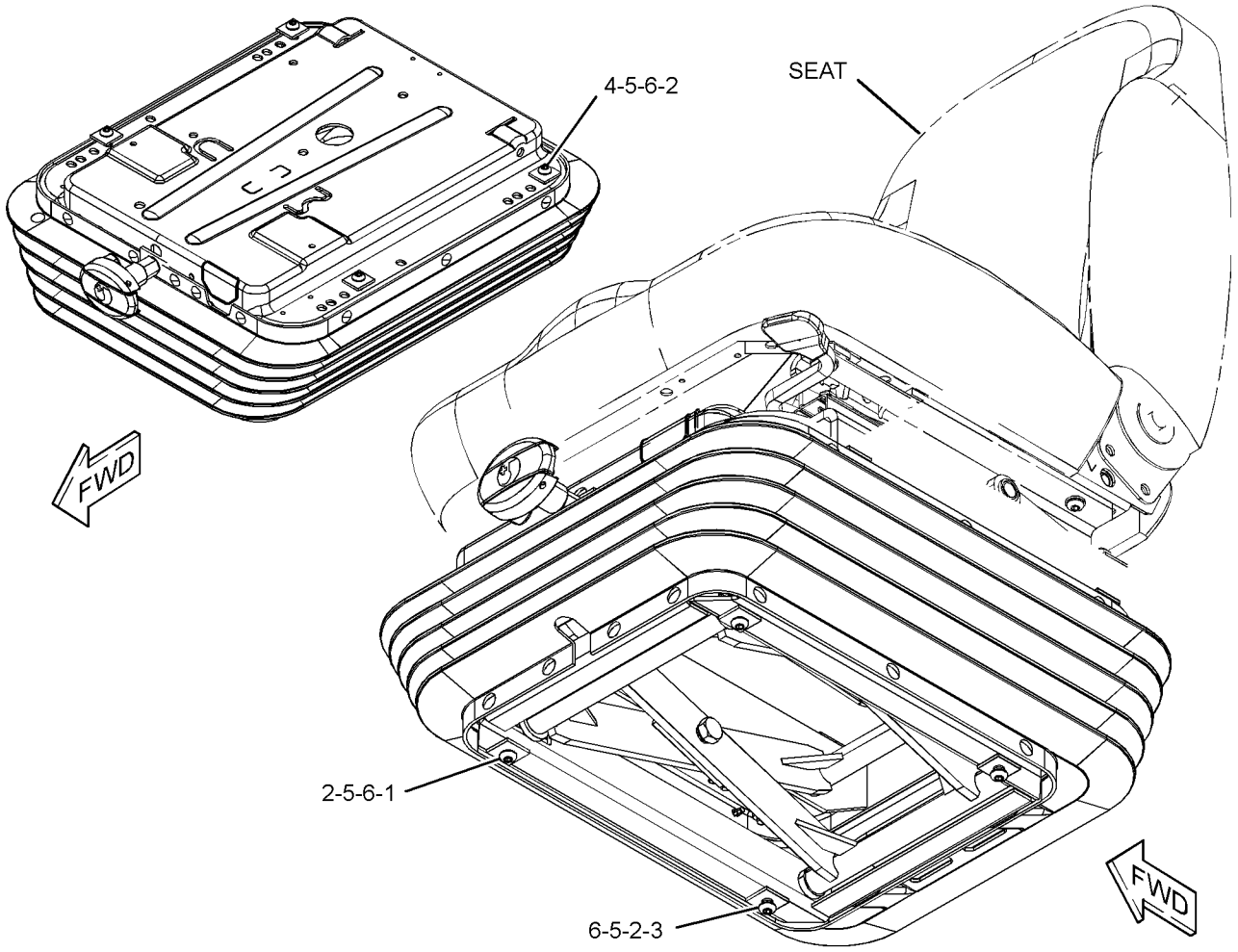

GRAPHIC #1 <END> g01231529

245-7892 SUSPENSION GP-SEAT—MECHANICAL

S/N: DLP1-UP

PART OF 229-9077 SUSPENSION GP-SEAT

AN ATTACHMENT

SMCS-7324 **i04903897**

NOTE	REF NO	GRAPHIC REF	PART NUMBER	QTY	PART NAME 1 2 3 4 5 6 (PRODUCT LEVEL)	SEE PAGE
M	1	1	**198-3899**	2	SCREW-BUTTON HEAD (M8X1.25X20-MM)	
	2	1	**209-4280**	1	CYLINDER-DAMPER	
	3	1	**245-7897**	8	PLATE	
M	4	1	**245-7898**	2	SCREW-BUTTON HEAD (M8X1.25X25-MM)	
M	5	1	**245-7899**	4	SCREW-BUTTON HEAD (M8X1.25X30-MM)	
M	6	1	**5C-7261**	8	NUT (M8X1.25-THD)	
	7	1	**8T-4224**	8	WASHER-HARD (8.8X16X2-MM THK)	

M - METRIC PART

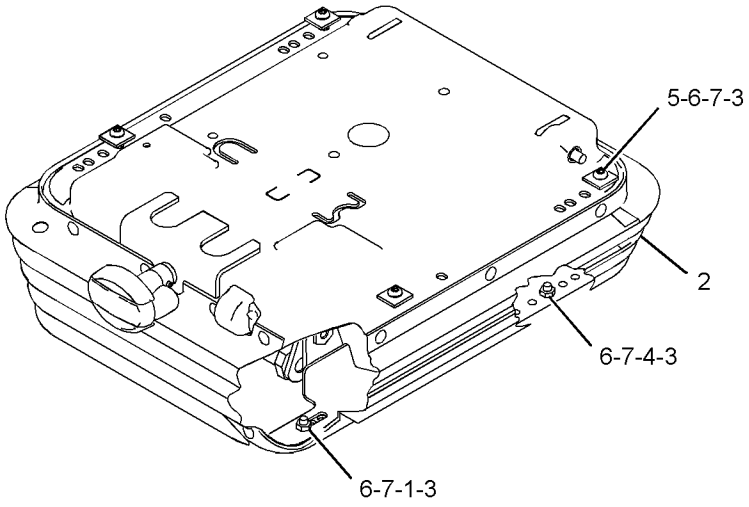

VIEW OF AREA A

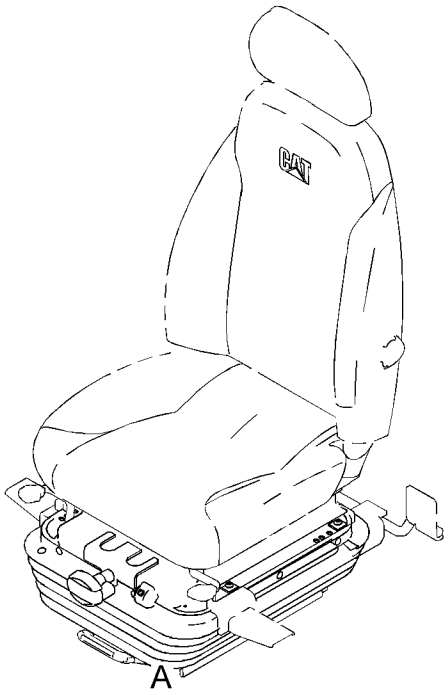

GRAPHIC #1 <END> g03058781

327-6520 SUSPENSION GP-SEAT—MECHANICAL

S/N: DLP1-UP

PART OF 327-6507 SEAT GP-SUSPENSION

AN ATTACHMENT

SMCS-7324 **i07189908**

NOTE	REF NO	GRAPHIC REF	PART NUMBER	QTY	PART NAME 1 2 3 4 5 6 (PRODUCT LEVEL)	SEE PAGE
	1	1	**327-6644**	1	KIT-BRACKET (CONSOLE RAISE, LOWER)	
	1A	1	**372-9306**	16	SPACER (16.5X28.5X0.1-MM THK)	
	2	1	**327-6645**	1	KIT-SEAT SUSPENSION (MECHANICAL)	
	3	1	**327-6648**	1	KIT-ADJUSTER (SEAT POSITION)	
M	4	1	**198-3899**	4	SCREW-BUTTON HEAD (M8X1.25X20-MM)	
	5	1	**245-7895**	1	KIT-CLIP (SEAT)	
					(INCLUDES 28 CLIPS)	
	6	1	**327-6646**	1	KIT-CYLINDER (DAMPENER)	
	7	1	**327-6647**	1	KIT-COVER (SUSPENSION)	
	8	1	**333-4180**	6	SCREW-BUTTON HEAD (M8X1.25X20-MM)	
	9	1	**333-4181**	1	KIT-HANDLE (SEAT HEIGHT)	

M - METRIC PART

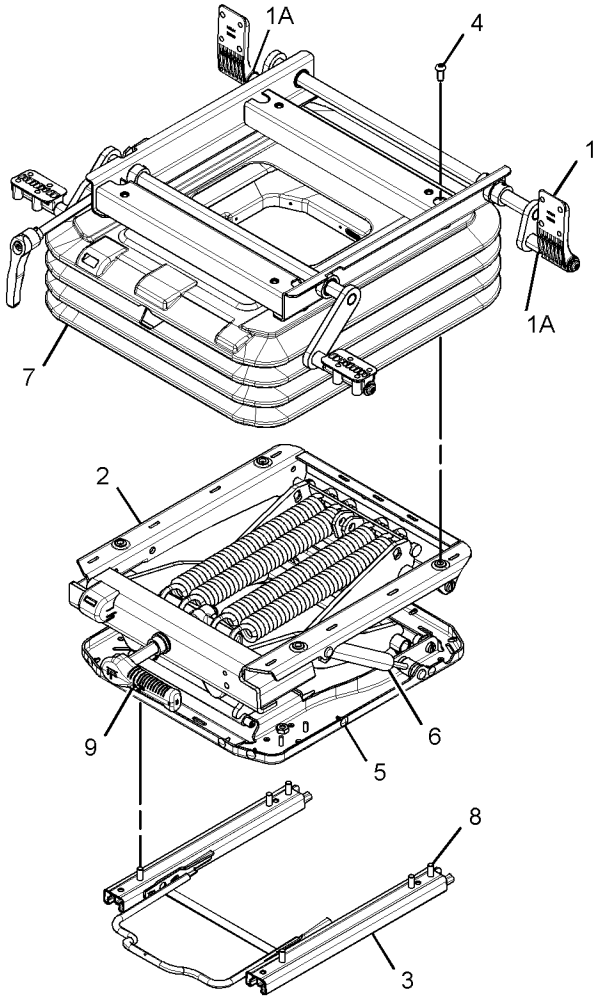

GRAPHIC #1 <END> g03058881

327-6521 SUSPENSION GP-SEAT–AIR

S/N: DLP1-UP
PART OF 327-6509 SEAT GP-SUSPENSION
AN ATTACHMENT

SMCS-7324 **i05589888**

NOTE	REF NO	GRAPHIC REF	PART NUMBER	QTY	PART NAME 1 2 3 4 5 6 (PRODUCT LEVEL)	SEE PAGE
	1	1	**7I-2673**	1	STRAP-CABLE	
M	2	1	**198-3899**	4	SCREW-BUTTON HEAD (M8X1.25X20-MM)	
	3	1	**245-7895**	1	KIT-CLIP	
					(INCLUDES 28 CLIPS)	
	4	1	**327-6644**	1	KIT-BRACKET (CONSOLE RAISE, LOWER)	
	4A	1	**372-9306**	16	SPACER (16.5X28.5X0.1-MM THK)	
	5	1	**327-6646**	1	KIT-CYLINDER (DAMPENER)	
	6	1	**327-6648**	1	KIT-ADJUSTER (SEAT POSITION)	
	7	1	**333-4157**	1	KIT-SEAT SUSPENSION (AIR)	
	8	1	**333-4158**	1	KIT-COVER (SUSPENSION)	
	9	1	**333-4159**	1	KIT-VALVE (AIR SEAT)	
	10	1	**333-4178**	1	NUT-SPECIAL	
	11	1	**333-4180**	6	SCREW-BUTTON HEAD (M8X1.25X20-MM)	

M - METRIC PART

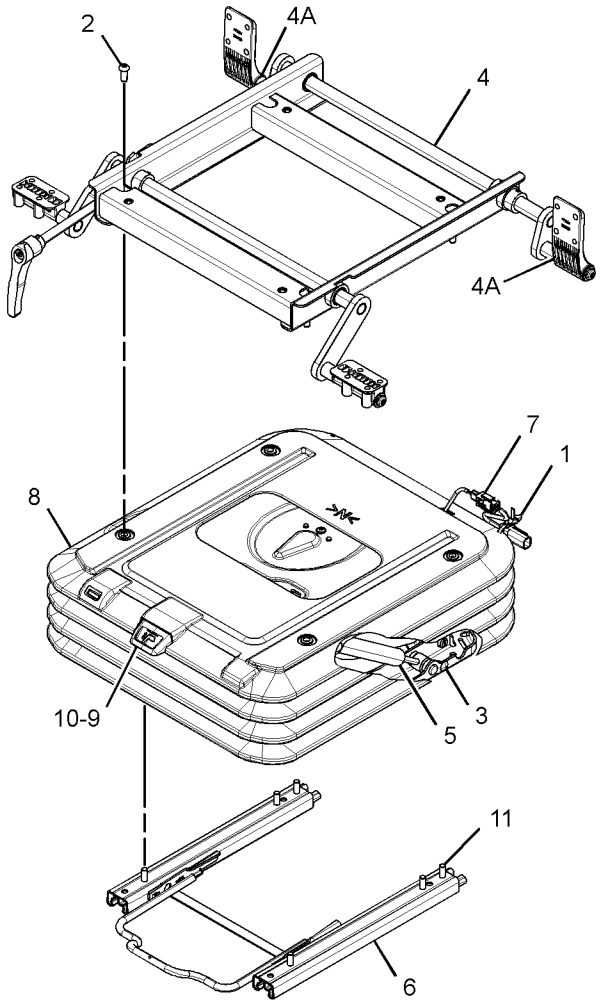

GRAPHIC #1 <END> g03058882

340-6476 SUSPENSION GP-SEAT—MECHANICAL

S/N: DLP1-UP

PART OF 340-6474, 340-6479 SEAT GP-SUSPENSION

AN ATTACHMENT

SMCS-7324 **i03636260**

NOTE	REF NO	GRAPHIC REF	PART NUMBER	QTY	PART NAME 1 2 3 4 5 6 (PRODUCT LEVEL)	SEE PAGE
	1	1	**242-8768**	1	COVER AS	
	1A	1	**245-7895**	1	KIT-CLIP (SEAT)	
Y	2	1	**245-7889**	1	ADJUSTER GP-SEAT	929
	3	1	**245-7897**	4	PLATE	
Y	4	1	**340-6481**	1	KIT-SEAT SUPPORT	1090
Y	5	1	**245-7891**	1	SUSPENSION GP-SEAT	1168
Y	6	1	**245-7896**	1	ADJUSTER GP-SEAT	930

Y - SEPARATE ILLUSTRATION

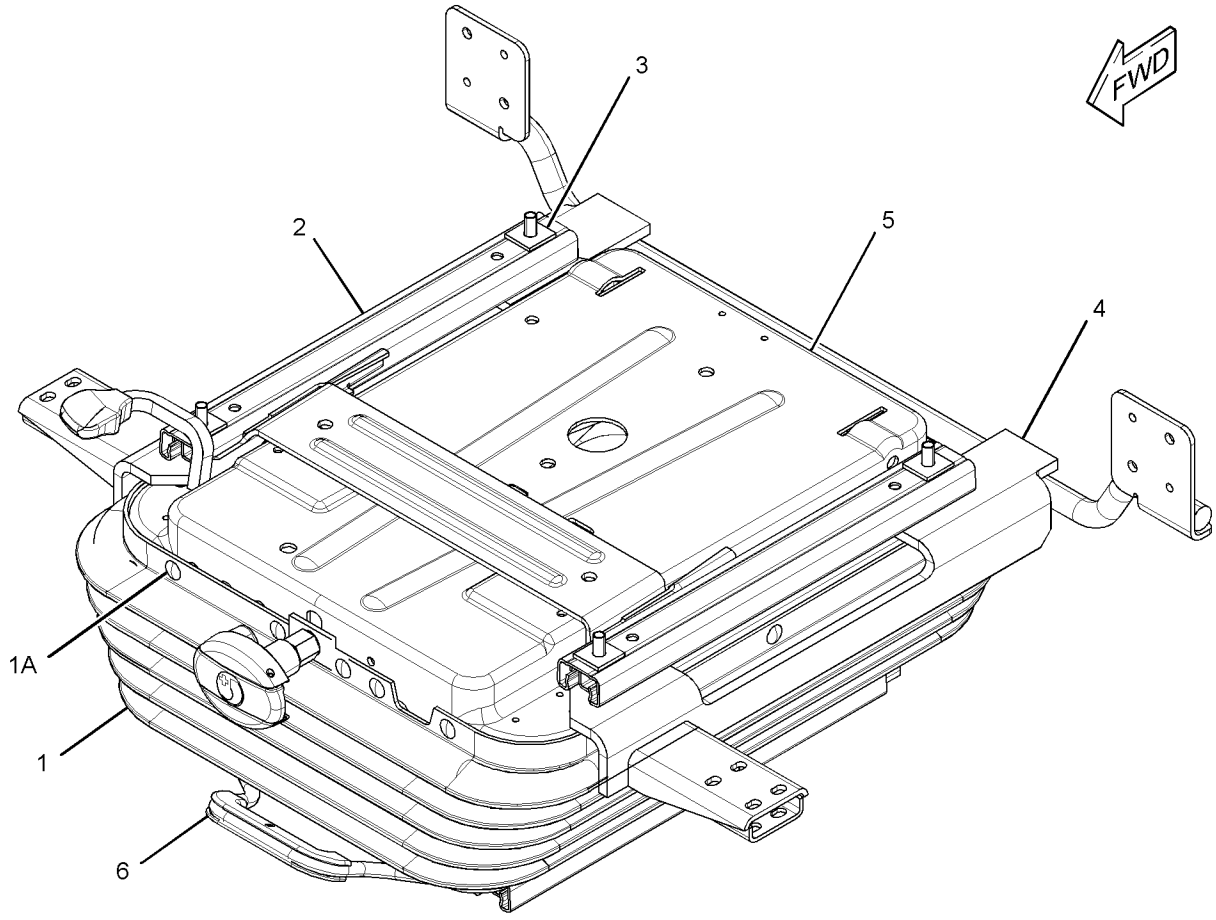

GRAPHIC #1 <END> g01956236

161-3751 VISOR GP-CAB–SUN

S/N: DLP1-UP

AN ATTACHMENT

SMCS-7301 **i05227471**

NOTE	REF NO	GRAPHIC REF	PART NUMBER	QTY	PART NAME 1 2 3 4 5 6 (PRODUCT LEVEL)	SEE PAGE
	1	1	**164-0639**	1	BRACKET AS	
	2	1	**210-5827**	1	PLATE	
	3	1	**210-5828**	1	PLATE	
M	4	1	**210-5829**	2	BOLT (M6X1X20-MM)	
	5	1	**210-5834**	1	BRACKET AS	
	6	1	**210-5836**	1	VISOR	
	7	1	**210-5837**	2	STRIP	
	8	1	**210-5838**	4	PACKING	
	9	1	**8H-3481**	2	LOCKWASHER	
M	10	1	**9X-2044**	8	SCREW-TRUSS HEAD (M6X1X16-MM)	
M	11	1	**9X-2046**	2	SCREW-TRUSS HEAD (M6X1X35-MM)	
	12	1	**9X-8256**	2	WASHER (6.6X12X2-MM THK)	

M - METRIC PART

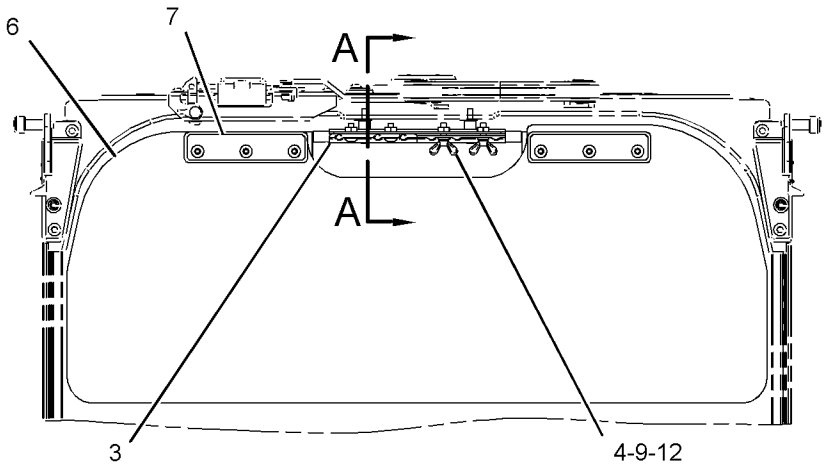

FRONT VIEW

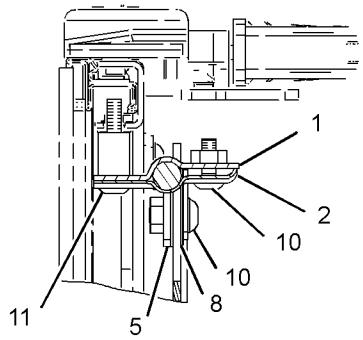

SECTION A-A

GRAPHIC #1 <END> g01447299

229-9070 WASHER GP-WINDOW

S/N: DLP1-UP

PART OF 359-2474, 367-8776, 367-8790, 367-8792, 379-7089, 379-7091 DISTRIBUTION AR AN ATTACHMENT

SMCS-7306 **i06668606**

NOTE	REF NO	GRAPHIC REF	PART NUMBER	QTY	PART NAME 1 2 3 4 5 6 (PRODUCT LEVEL)	SEE PAGE
	1	1	**7Y-3474**	1	VALVE AS-CHECK (WINDOW WASHER)	
	2	1	**163-6795**	2	STRAP-CABLE	
	3	1	**176-1931**	1	TANK AS-WINDOW WASHER	
		1	**5C-8138**	1	GROMMET	
		1	**7T-8890**	1	PUMP AS-WASHER (24-VOLT)	
		1	**178-5431**	1	CAP AS-FILLER (WINDOW WASHER)	
		1	**3W-6399**		PACKING	
	4	1	**235-9012**	1	SUPPORT AS	
M	5	1	**8T-4970**	2	BOLT (M6X1X14-MM)	
	6	1	**9X-8256**	2	WASHER (6.6X12X2-MM THK)	
CE	7	1	**144-0195**		HOSE (13-CM)	
	8	1	**3S-2093**	1	STRAP-CABLE	

C - CHANGE FROM PREVIOUS TYPE
E - ORDER BY THE CENTIMETER
M - METRIC PART

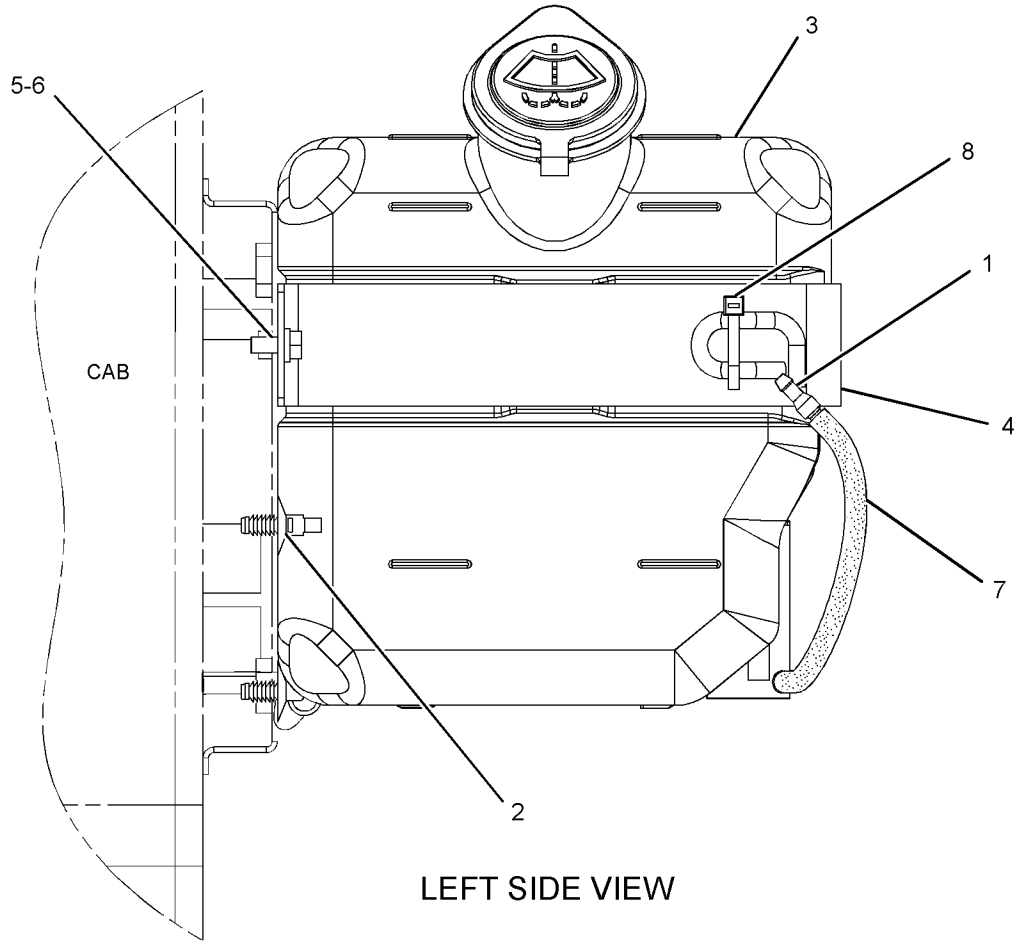

LEFT SIDE VIEW

GRAPHIC #1 <END> g01307642

229-9088 WASHER GP-WINDOW—LOWER

S/N: DLP1-UP

PART OF 273-5388 WIPER AR-WINDOW

AN ATTACHMENT

SMCS-7306 **i02703029**

NOTE	REF NO	GRAPHIC REF	PART NUMBER	QTY	PART NAME 1 2 3 4 5 6 (PRODUCT LEVEL)	SEE PAGE
	1	1	**3S-2093**	2	STRAP-CABLE	
	2	1	**293-1256**	2	VALVE AS-CHECK	
	3	1	**163-6795**	2	STRAP-CABLE	
	4	1	**170-9492**	1	PLATE	
E	5	1	**144-0195**		HOSE (290-CM)	
E	5A	1	**144-0195**		HOSE (30-CM)	
E	5B	1	**144-0195**		HOSE (13-CM)	
	6	1	**235-9012**	1	SUPPORT AS	
	7	1	**176-1932**	1	TANK AS-WINDOW WASHER	
	8	1	**178-5500**	1	NOZZLE AS	
		1	**085-8037**	1	NOZZLE	
		1	**105-9526**	1	ADAPTER	
		1	**105-9527**	1	GASKET	
M	9	1	**3E-9872**	2	SCREW AS (M4X0.7X12-MM)	
	10	1	**6V-3265**	10	CLIP	
	11	1	**8T-4121**	10	WASHER-HARD (11X21X2.5-MM THK)	
M	12	1	**8T-4191**	10	BOLT (M10X1.5X16-MM)	
M	13	1	**8T-4970**	2	BOLT (M6X1X14-MM)	
	14	1	**9X-8256**	2	WASHER (6.6X12X2-MM THK)	

E - ORDER BY THE CENTIMETER
M - METRIC PART

229-9088 **WASHER GP-WINDOW (**contd.**)** **i02703029**

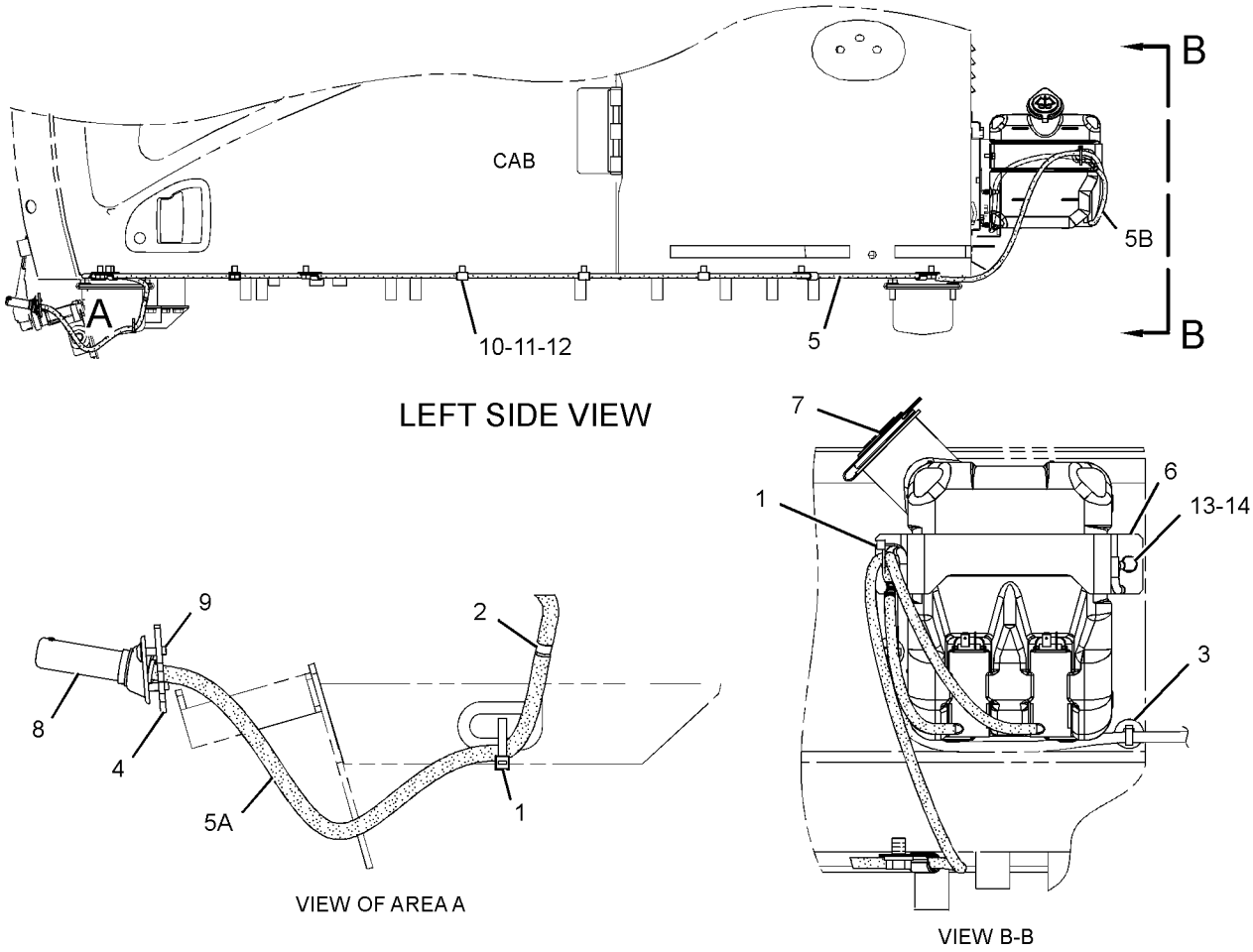

GRAPHIC #1 <END> g01292034

139-7101 WINDOW GP-CAB—FRONT, UPPER

S/N: DLP1-UP

PART OF 229-9109, 316-8815, 346-8043, 346-8053, 346-8055 CAB GP

AN ATTACHMENT

SMCS-7310 **i06182215**

NOTE	REF NO	GRAPHIC REF	PART NUMBER	QTY	PART NAME 1 2 3 4 5 6 (PRODUCT LEVEL)	SEE PAGE
	1	2	**170-9722**	1	CUSHION	
	2	1	**151-6703**	1	HANDLE-PULL	
	3	1	**151-6704**	2	CAP	
	4	2	**151-6778**	1	FRAME AS	
	4A	2	**156-6470**	1	HANDLE	
	5	1	**151-6785**	1	BRACKET AS	
	6	1	**151-6813**	1	BRACKET AS	
	7	1	**151-6815**	1	BRACKET AS	
	8	1	**273-5345**	1	LINK AS	
	9	1	**273-5346**	1	LINK AS	
	10	1	**151-6831**	1	LOCK AS	
	11	1	**151-6832**	1	LEVER AS	
	12	2	**151-6844**	1	COVER	
	13	1	**151-9557**	2	STOP-RUBBER	
	14	2	**156-6472**	1	GLASS	
	15	2	**156-6554**	1	CABLE AS	
	16	1	**156-6555**	1	STRIKER AS	
	17	2	**156-6562**	1	BRACKET	
	18	2	**273-5274**	1	CATCH AS	
					—OR—	
		2	**156-6563**	1	CATCH AS	
	19	2	**156-6579**	1	STOP	
	20	2	**156-6601**	1	SEAL AS	
	21	2	**156-6627**	1	STOP AS	
	22	1	**161-3684**	2	STOP	
	23	1	**161-3698**	1	SEAL	
	24	2	**164-0648**	1	BRACKET AS	
	25	1	**178-5576**	1	STOP	
M	26	2	**138-8454**	2	SCREW-TRUSS HEAD (M4X0.7X10-MM)	
M	27	2	**185-8182**	4	BOLT (M10X1.5X20-MM)	
M	28	2	**5C-8312**	1	NUT (M4X0.7-THD)	
	29	2	**185-8187**	4	WASHER (10.2X22X3.2-MM THK)	
M	30	1	**142-0485**	1	NUT (M10X1.5-THD)	
	31	1	**185-8221**	1	STOP	
M	32	1	**099-0823**	2	SCREW-MACHINE (M6X1X6-MM)	
M	33	1	**101-8900**	2	SCREW AS (M6X1X20-MM)	
	34	1	**117-6306**	1	SWITCH (WINDOW LOWER LIMIT)	
	35	1	**151-9576**	4	ROLLER	
	36	1	**4I-0420**	1	STRIP	
	37	1	**7X-0578**	1	WASHER-HARD (10.2X32X2.5-MM THK)	
M	38	2	**9X-2042**	20	SCREW-TRUSS HEAD (M6X1X12-MM)	
M	39	1,2	**9X-2044**	5	SCREW-TRUSS HEAD (M6X1X16-MM)	
M	40	2	**9X-2045**	3	SCREW-TRUSS HEAD (M6X1X20-MM)	
	41	2	**9X-8256**	2	WASHER (6.6X12X2-MM THK)	

M - METRIC PART

139-7101 **WINDOW GP-CAB (**contd.**)** **i06182215**

REFER TO ALL ILLUSTRATIONS OF
THIS GROUP FOR AUXILIARY VIEWS

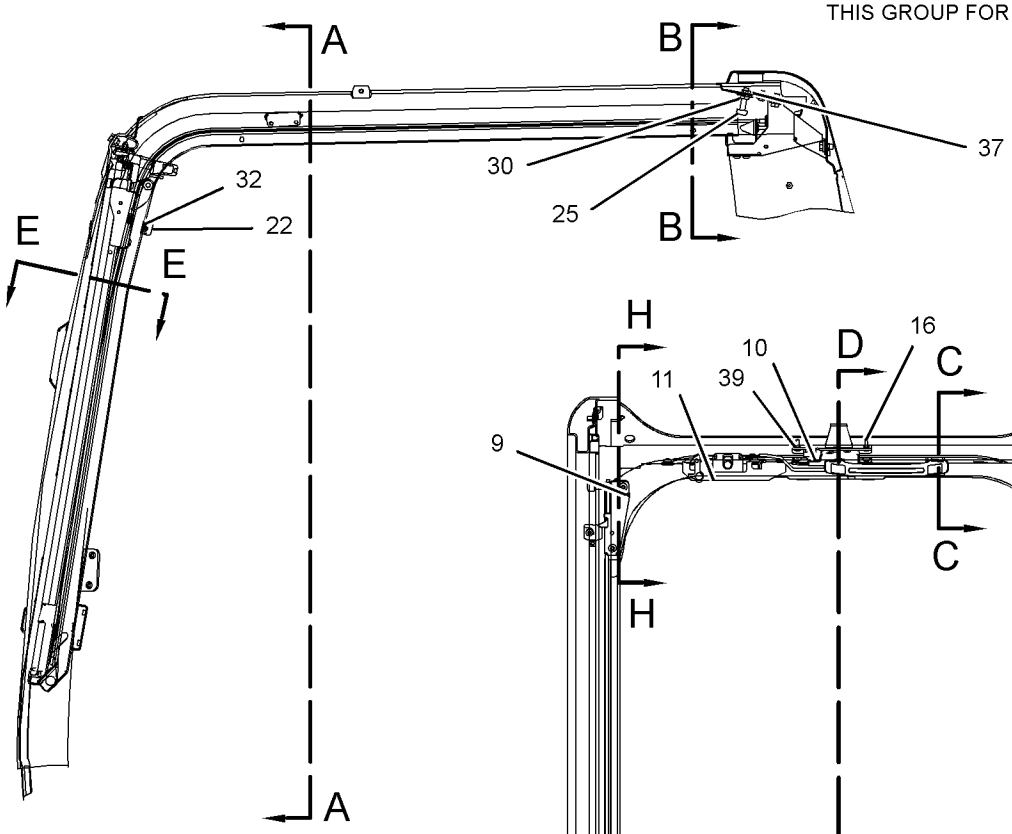

LEFT SIDE VIEW

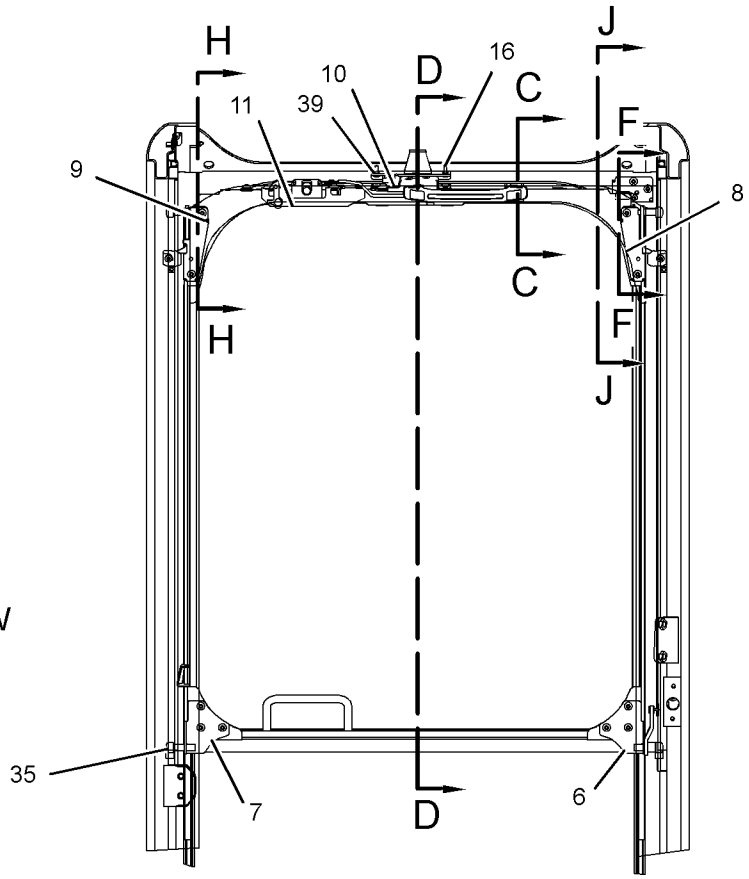

SECTION A-A

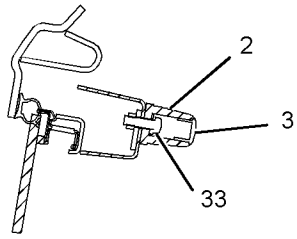

SECTION C-C

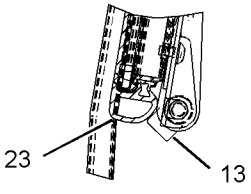

SECTION D-D

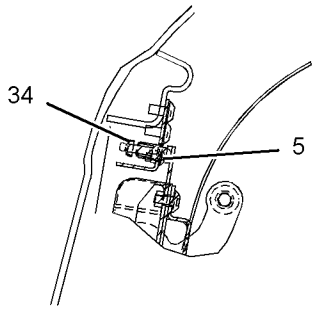

SECTION F-F

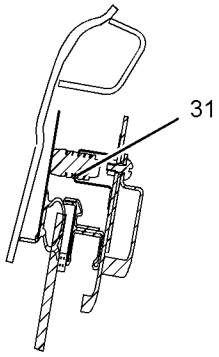

SECTION H-H

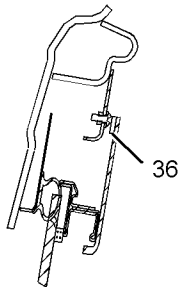

SECTION J-J

GRAPHIC #1 g01231378

139-7101 **WINDOW GP-CAB (**contd.**)** **i06182215**

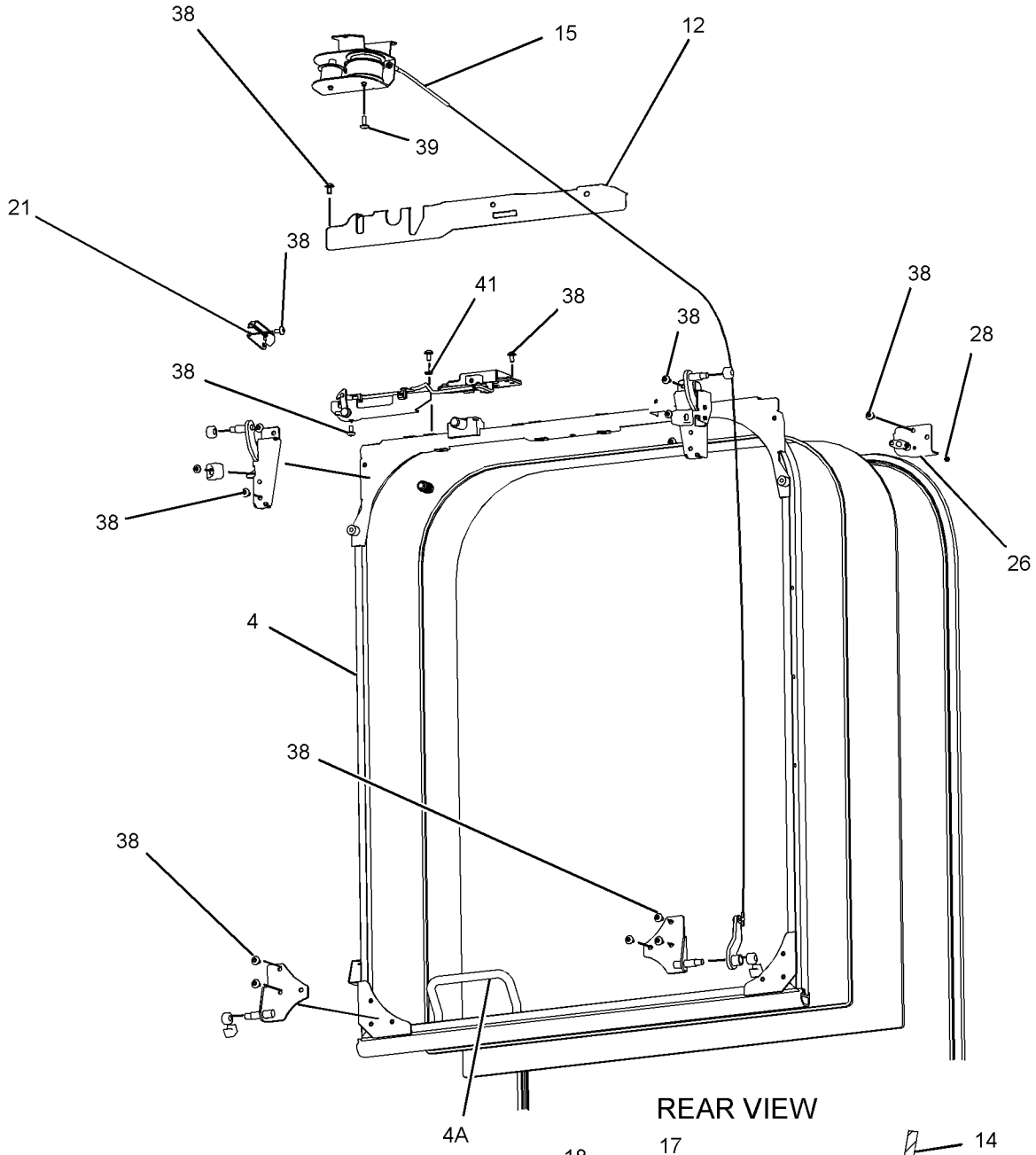

REAR VIEW

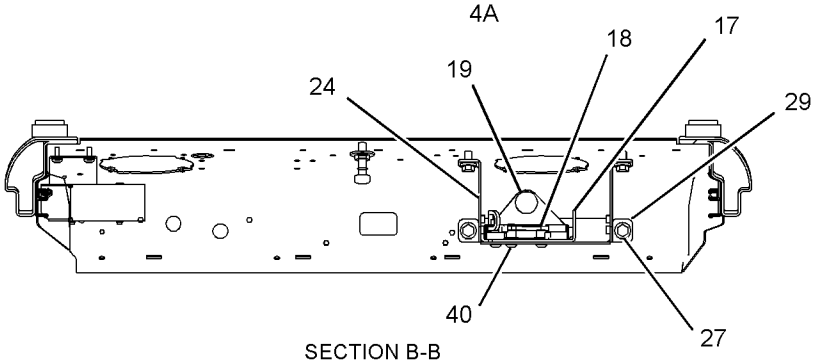

SECTION B-B

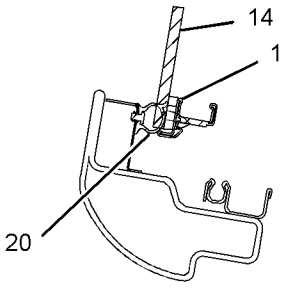

SECTION E-E

GRAPHIC #2 <END> g02157234

156-6647 WINDOW GP-CAB—FRONT, LOWER

S/N: DLP1-UP

PART OF 273-5389 WIPER & WASHER GP-WINDOW

AN ATTACHMENT

SMCS-7310 **i05458934**

NOTE	REF NO	GRAPHIC REF	PART NUMBER	QTY	PART NAME 1 2 3 4 5 6 (PRODUCT LEVEL)	SEE PAGE
	1	1	*156-6648*	1	GLASS	
M	2	1	**9X-2042**	2	SCREW-TRUSS HEAD (M6X1X12-MM)	
	3	1	**151-6705**	1	PACKING	
	4	1	**124-3966**	1	STOP	
	5	1	**144-9692**	2	RETAINER	
	6	1	**144-9691**	2	PACKING	

M - METRIC PART

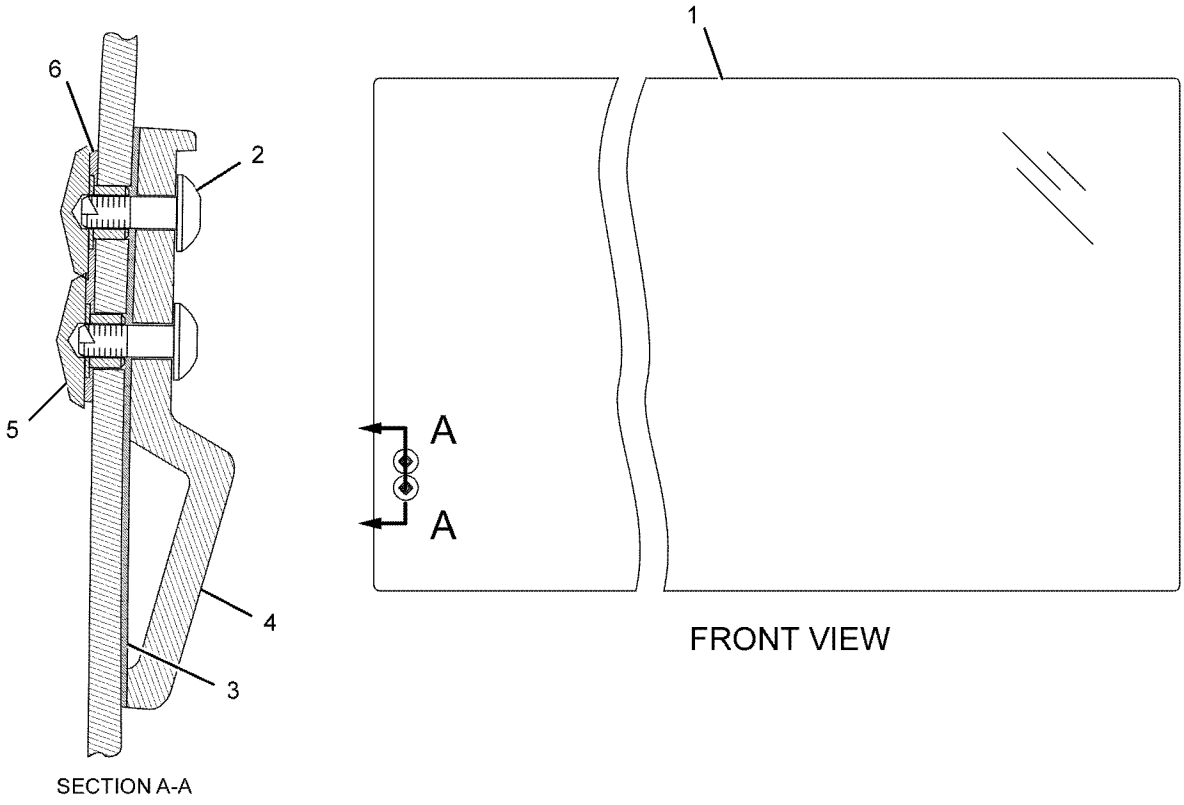

GRAPHIC #1 <END> g01131367

171-7503 WINDOW GP-CAB—FRONT, UPPER

S/N: DLP1-UP
FOR SERVICE REPAIR OF 139-7101 WINDOW GP-CAB
PART OF 229-9109, 316-8815, 346-8043, 346-8053, 346-8055 CAB GP
AN ATTACHMENT

SMCS-7310 **i05407004**

NOTE	REF NO	GRAPHIC REF	PART NUMBER	QTY	PART NAME 1 2 3 4 5 6 (PRODUCT LEVEL)	SEE PAGE
	1	1	**161-3698**	1	SEAL	
M	2	1	**101-8900**	2	SCREW AS (M6X1X20-MM)	
	3	1	**151-6703**	1	HANDLE-PULL	
	4	1	**151-6704**	2	CAP	
	5	1	**151-6778**	1	FRAME AS	
	5A	1	**156-6470**	1	HANDLE	
	6	1	**151-6813**	1	BRACKET AS	
	7	1	**151-6815**	1	BRACKET AS	
	8	1	**273-5345**	1	LINK AS	
	9	1	**273-5346**	1	LINK AS	
	10	1	**151-6831**	1	LOCK AS	
	11	1	**151-6832**	1	LEVER AS	
	12	1	**156-6472**	1	GLASS	
	13	1	**170-9722**	1	CUSHION	
	14	1	**151-9576**	4	ROLLER	
M	15	1	**9X-2042**	15	SCREW-TRUSS HEAD (M6X1X12-MM)	

M - METRIC PART

171-7503 **WINDOW GP-CAB (**contd.**)** **i05407004**

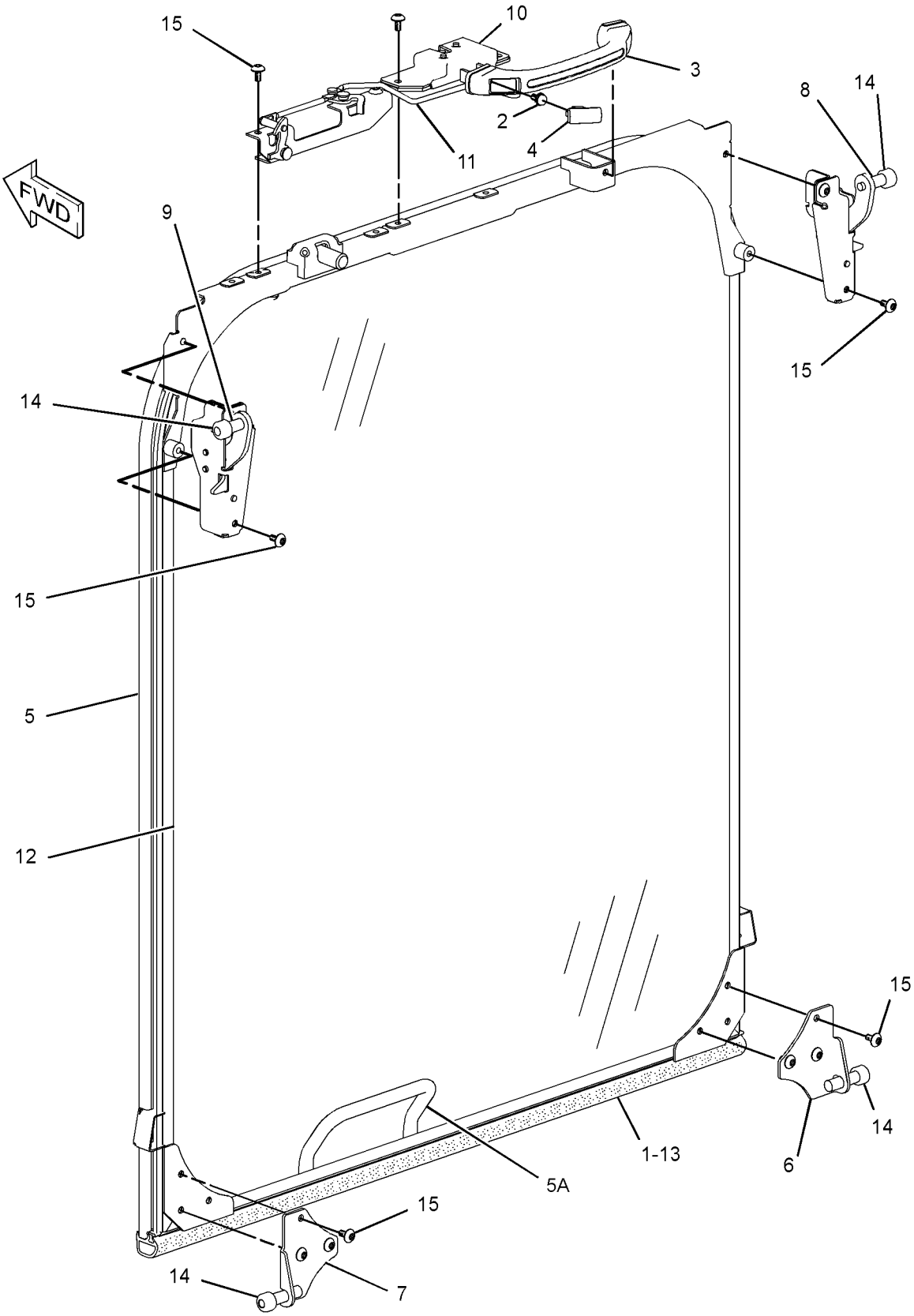

GRAPHIC #1 <END> g01935199

176-1958 WINDOW GP-CAB—FRONT, LOWER

S/N: DLP1-UP

PART OF 229-9109, 316-8815, 346-8043, 346-8053, 346-8055 CAB GP

AN ATTACHMENT

SMCS-7310 **i06187421**

NOTE	REF NO	GRAPHIC REF	PART NUMBER	QTY	PART NAME 1 2 3 4 5 6 (PRODUCT LEVEL)	SEE PAGE
	1	1	**156-6473**	1	GLASS (LOWER FRONT)	
	2	1	**156-6631**	2	STOP	
	3	1	**305-0361**	1	SEAL	
	4	1	**178-5569**	2	SEAL	
	5	1	**477-7578**	2	SEAL	
	6	1	**139-7119**	2	PLUG	

176-1958 **WINDOW GP-CAB (**contd.**)** **i06187421**

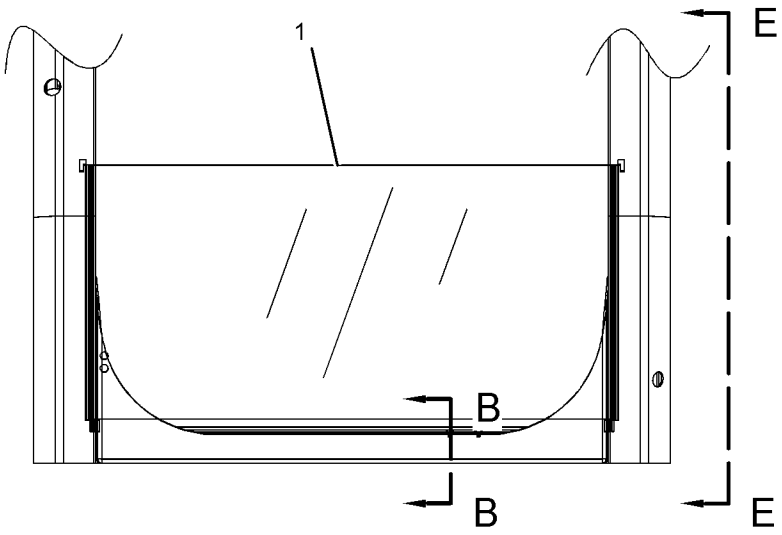

FRONT VIEW

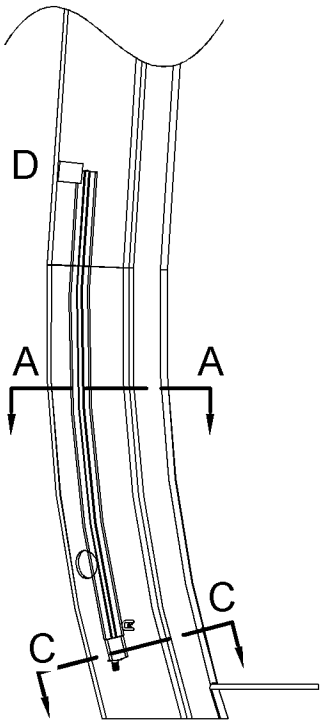

VIEW E-E

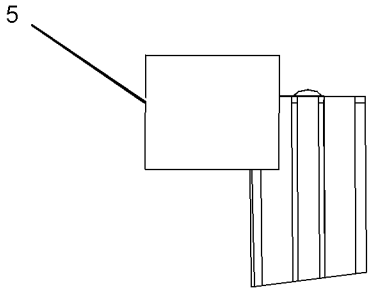

VIEW OF AREA D

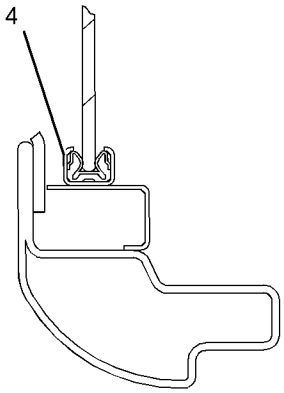

SECTION A-A

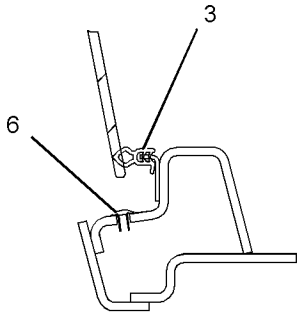

SECTION B-B

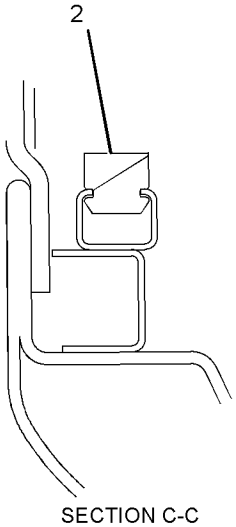

SECTION C-C

GRAPHIC #1 <END> g01398601

207-0144 WINDOW GP-CAB–FRONT, UPPER

S/N: DLP1-UP

PART OF 229-9109, 316-8815, 346-8043, 346-8053, 346-8055 CAB GP

AN ATTACHMENT

SMCS-7310 **i05458974**

NOTE	REF NO	GRAPHIC REF	PART NUMBER	QTY	PART NAME 1 2 3 4 5 6 (PRODUCT LEVEL)	SEE PAGE
	1	1	**170-9722**	1	CUSHION	
	2	1	**156-6472**	1	GLASS	
	3	1	**161-3698**	1	SEAL	
	4	1	**4I-0420**	1	STRIP	
	5	1	**156-6470**	1	HANDLE	

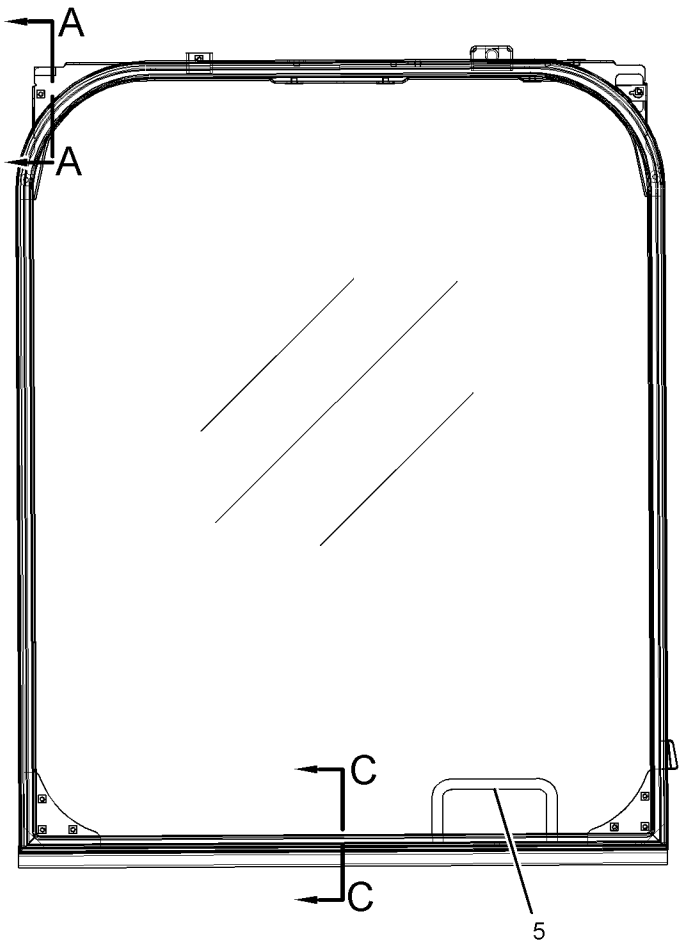

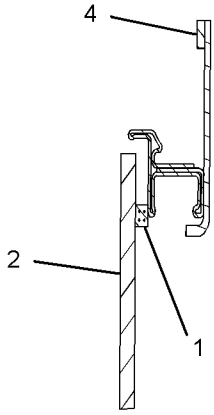

SECTION A-A

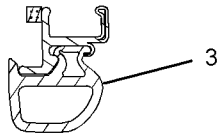

SECTION C-C

GRAPHIC #1 <END> g01935314

235-8909 WINDOW GP-CAB—SIDE, REAR

S/N: DLP1-UP

PART OF 229-9109, 316-8815, 346-8043, 346-8053, 346-8055 CAB GP

AN ATTACHMENT

SMCS-7310 **i05907469**

NOTE	REF NO	GRAPHIC REF	PART NUMBER	QTY	PART NAME 1 2 3 4 5 6 (PRODUCT LEVEL)	SEE PAGE
	1	1	**151-6790**	1	GLASS (LH)	
	2	1	**156-6469**	1	GLASS (REAR)	
	3	1	**164-0666**	1	SEAL	
	4	1	**178-5572**	4	SPACER-SPECIAL (WINDOW)	
	5	1	**234-6489**	1	GLASS (RH)	
	6	1	**099-3629**	1	RING-KEY	
	7	1	**178-5573**	4	SPACER	
	8	1	**178-5574**	9	SPACER	

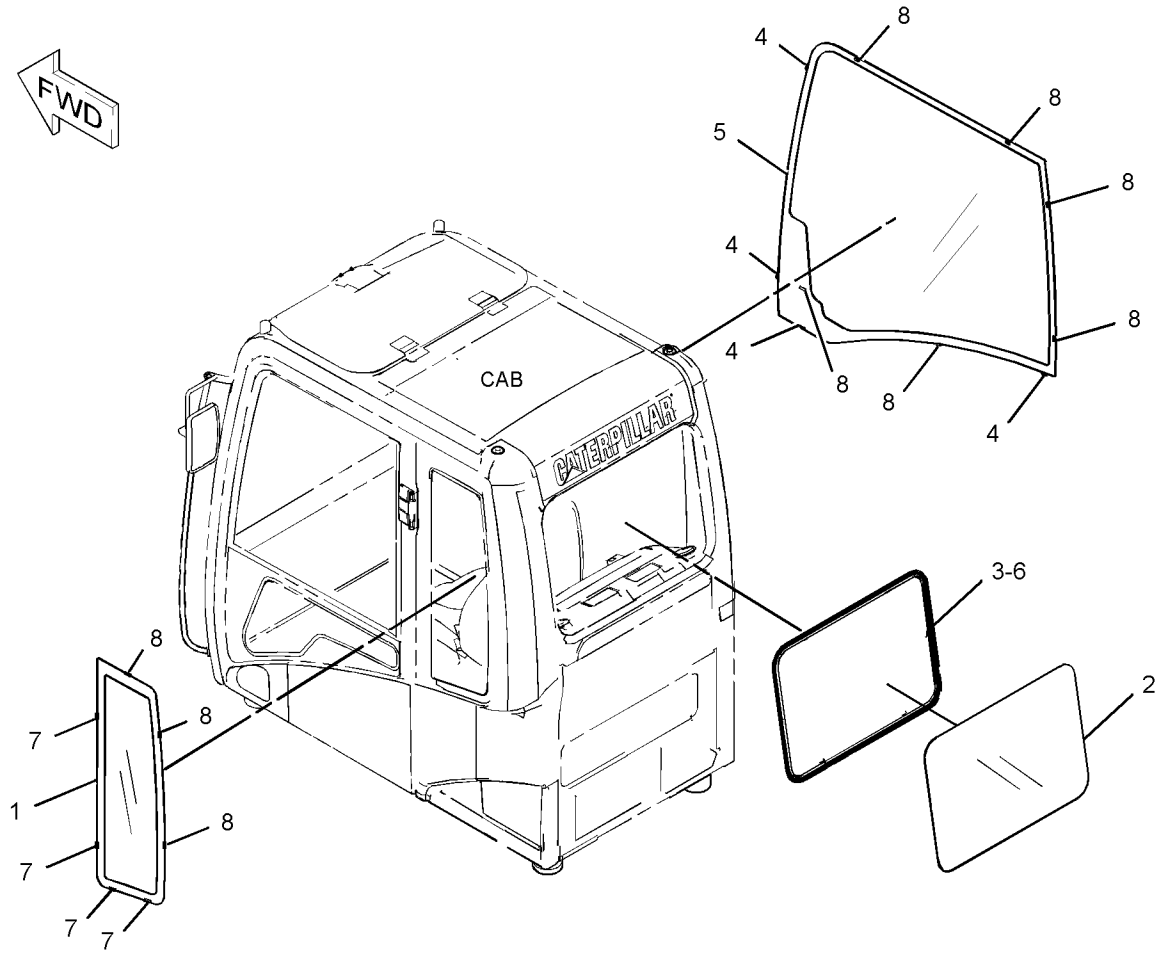

GRAPHIC #1 <END> g01432743

151-6792 WINDOW GP-DOOR

S/N: DLP1-UP

PART OF 139-7100 DOOR GP-CAB, 307-1818 PARTS GP-DOOR

AN ATTACHMENT

SMCS-7308, 7310

i05405454

NOTE	REF NO	GRAPHIC REF	PART NUMBER	QTY	PART NAME 1 2 3 4 5 6 (PRODUCT LEVEL)	SEE PAGE
Y	1	1	**085-6444**	2	LATCH GP-WINDOW	1092
	2	1	**151-6793**	1	FRAME AS	
		1	**4I-4298**	1	STOPPER	
		1	**4I-4300**	1	CATCH	
		1	**099-0139**	3	RIVET	
	3	1	**151-6841**	1	SEAL	
	4	1	**156-6474**	1	GLASS	
	5	1	**156-6475**	1	GLASS	
	6	1	**161-3695**	1	SEAL	
	7	1	**161-3705**	1	SEAL	
	8	1	**164-0516**	1	RUBBER	
	9	1	**164-0517**	1	RUBBER	
	10	1	**164-0518**	1	RUBBER	
	11	1	**171-7413**	1	SPACER	
	12	1	**171-7414**	1	SPACER	
	13	1	**176-1951**	1	SPACER	
	14	1	**176-1952**	1	SPACER	
	15	1	**176-1953**	1	STOP	
	16	1	**176-1954**	1	SEAL	
	17	1	**176-1955**	1	SEAL	
	18	1	**176-1956**	1	SEAL	
	19	1	**176-1957**	1	SEAL	

Y - SEPARATE ILLUSTRATION

151-6792 **WINDOW GP-DOOR (**contd.**)** **i05405454**

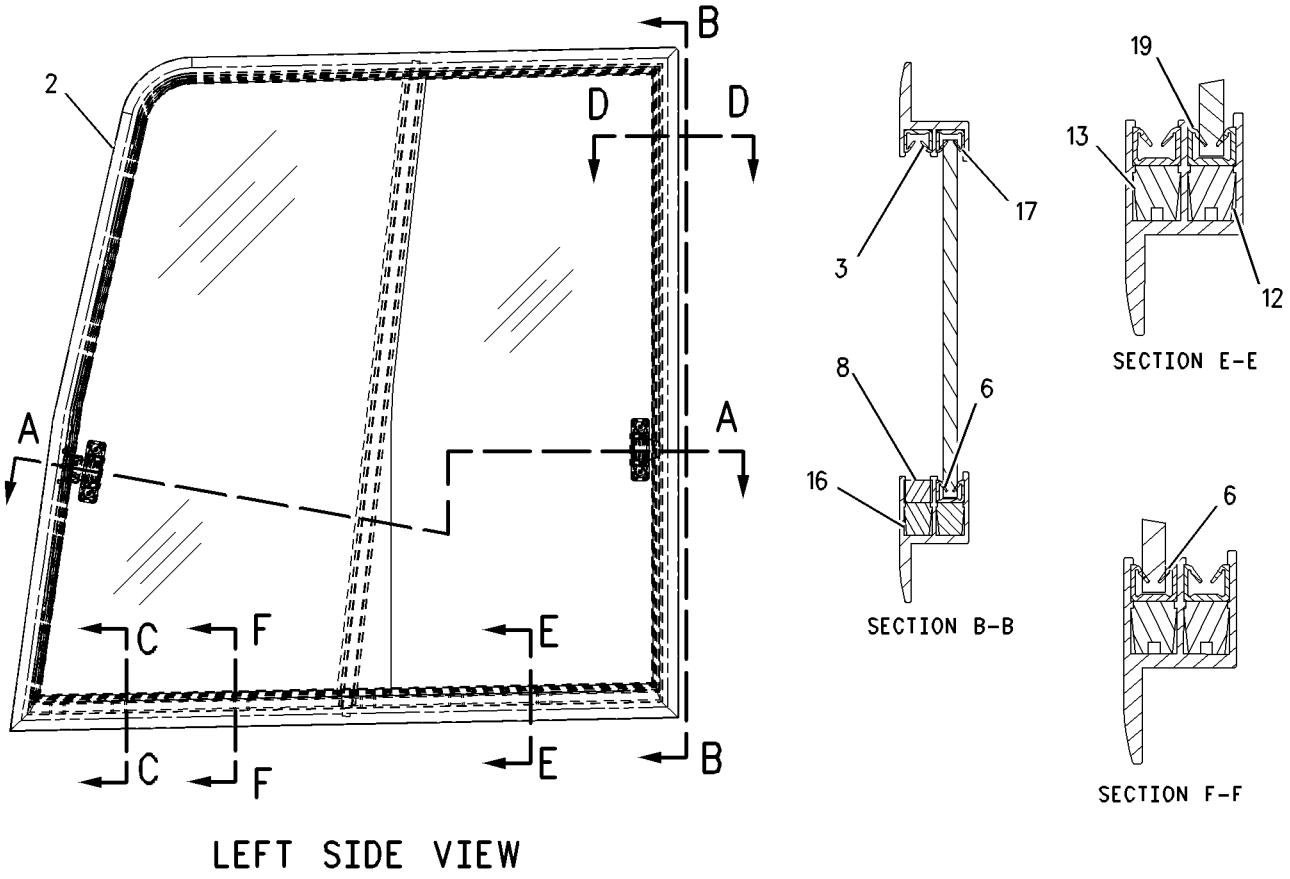

GRAPHIC #1 <END> g00722948

273-5389 WIPER & WASHER GP-WINDOW—LOWER

S/N: DLP1-UP
PART OF 273-5388 WIPER AR-WINDOW
AN ATTACHMENT

SMCS-7305, 7306

i02736326

NOTE	REF NO	GRAPHIC REF	PART NUMBER	QTY	PART NAME 1 2 3 4 5 6 (PRODUCT LEVEL)	SEE PAGE
	1	1	**3S-2093**	1	STRAP-CABLE	
	2	1	**4I-1163**	1	BRACKET	
	3	1	**129-6466**	1	SWITCH AS-ROLLER (LOWER WASHER/WIPER, DISABLE)	
		1	**2H-3922**	1	LOCKWASHER	
		1	**6V-8363**	2	SCREW (10-32X0.312-IN)	
		1	**6V-8370**	1	NUT-HEX (3/4-32-THD)	
		1	**8F-1434**	2	LOCKWASHER	
		1	**9X-0199**	1	BOOT-SWITCH	
	4	1	**156-6646**	1	BRACKET	
Y	5	1	**156-6647**	1	WINDOW GP-CAB (FRONT, LOWER)	1180
	6	1	**273-5390**	1	BRACKET AS	
	7	1	**167-7079**	1	MOTOR AS-WINDOW WIPER (LOWER)	
	8	1	**4I-5020**	1	ARM AS-WIPER	
	9	1	**4I-5021**	1	BLADE AS-WIPER (275-MM) (LOWER)	
M	10	1	**5C-2890**	3	NUT (M6X1-THD)	
M	11	1	**5C-9553**	2	BOLT (M6X1X16-MM)	
	12	1	**8T-4121**	4	WASHER-HARD (11X21X2.5-MM THK)	
M	13	1	**8T-4191**	4	BOLT (M10X1.5X16-MM)	
M	14	1	**9X-2044**	2	SCREW-TRUSS HEAD (M6X1X16-MM)	
	15	1	**9X-8256**	5	WASHER (6.6X12X2-MM THK)	

M - METRIC PART
Y - SEPARATE ILLUSTRATION

273-5389 **WIPER & WASHER GP-WINDOW (**contd.**)** **i02736326**

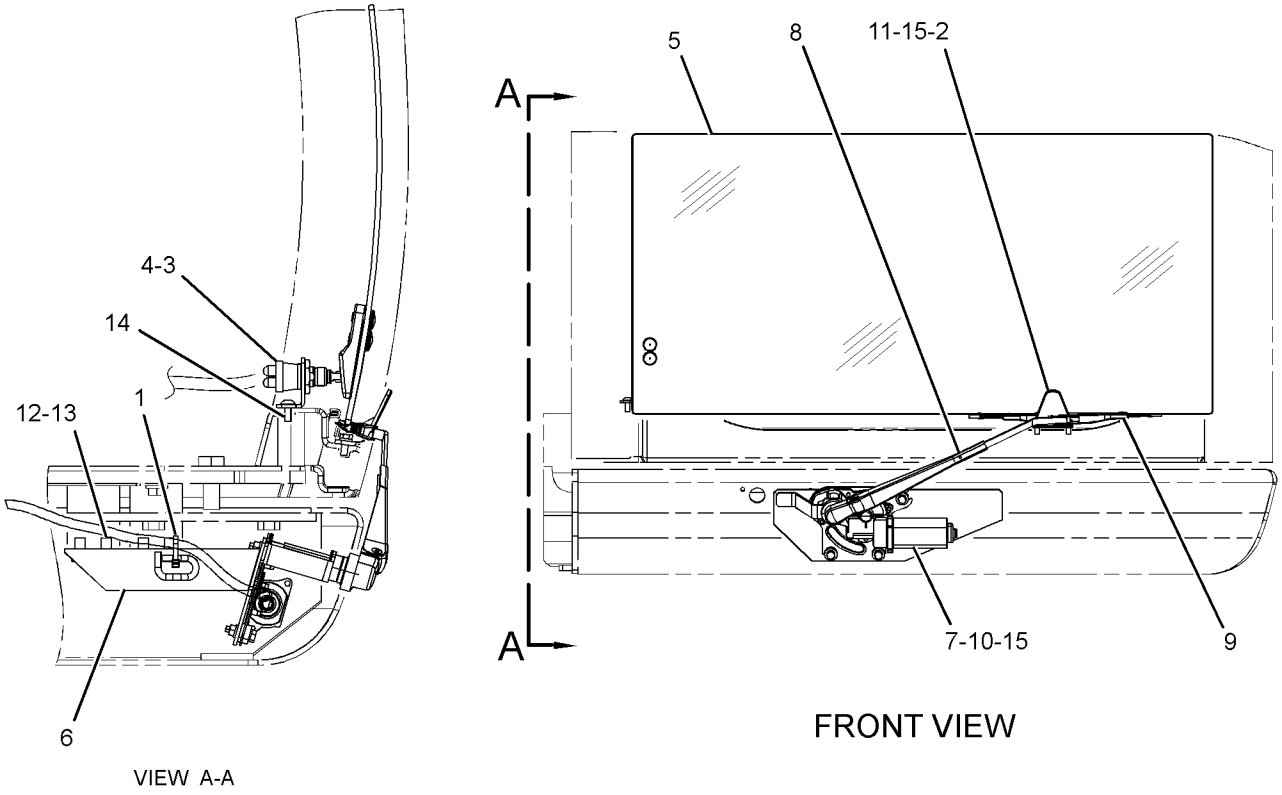

GRAPHIC #1 <END> g01374433

273-5388 WIPER AR-WINDOW

S/N: DLP1-UP

CANNOT BE USED WITH 229-9070—PAGE: 1174

AN ATTACHMENT

SMCS-7305 **i03196576**

NOTE	PART NUMBER	QTY	PART NAME 1 2 3 4 5 6 (PRODUCT LEVEL)	SEE PAGE
Y	*238-2208*	1	SWITCH GP-WIPER (LOWER)	268
Y	*229-9088*	1	WASHER GP-WINDOW (LOWER)	1175
Y	*273-5389*	1	WIPER & WASHER GP-WINDOW (LOWER)	1189

Y - SEPARATE ILLUSTRATION

<END>

234-6594 WIPER GP-WINDOW—FRONT, UPPER

S/N: DLP1-UP

PART OF 229-9109, 316-8815, 346-8043, 346-8053, 346-8055 CAB GP

AN ATTACHMENT

SMCS-7305 **i04807719**

NOTE	REF NO	GRAPHIC REF	PART NUMBER	QTY	PART NAME 1 2 3 4 5 6 (PRODUCT LEVEL)	SEE PAGE
	1	1	**161-3677**	1	HOLDER	
	2	1	**245-7931**	1	MOTOR AS-WINDOW WIPER	
M		1	**6V-8231**	1	NUT (M10X1.25-THD)	
M		1	**7Y-3470**	1	NUT (M20X1-THD)	
		1	**7Y-3472**	1	CAP	
		1	**124-3953**	1	WASHER (20.5X30X2-MM THK)	
	3	1	**235-8932**	1	NOZZLE AS	
	4	1	**155-7042**	1	RELAY AS (WIPER)	
	5	1	**372-9334**	1	ARM GP-WINDOW WIPER	
		1	**161-3669**	1	GUIDE	
		1	**161-3670**	1	BLADE AS-WIPER (600-MM)	
		1	**185-8290**	1	SCREW AS (M3.5X0.6X9-MM)	
		1	**372-9285**	1	ARM AS-WIPER	
	6	1	**163-6795**	1	STRAP-CABLE	
M	7	1	**3E-9872**	2	SCREW AS (M4X0.7X12-MM)	
	8	1	**4I-3090**	1	SEAL	
	9	1	**7Y-7364**	1	GROMMET	
M	10	1	**5C-2890**	4	NUT (M6X1-THD)	
M	11	1	**9X-2042**	2	SCREW-TRUSS HEAD (M6X1X12-MM)	
M	12	1	**9X-2044**	3	SCREW-TRUSS HEAD (M6X1X16-MM)	

M - METRIC PART

234-6594 **WIPER GP-WINDOW (**contd.**)** **i04807719**

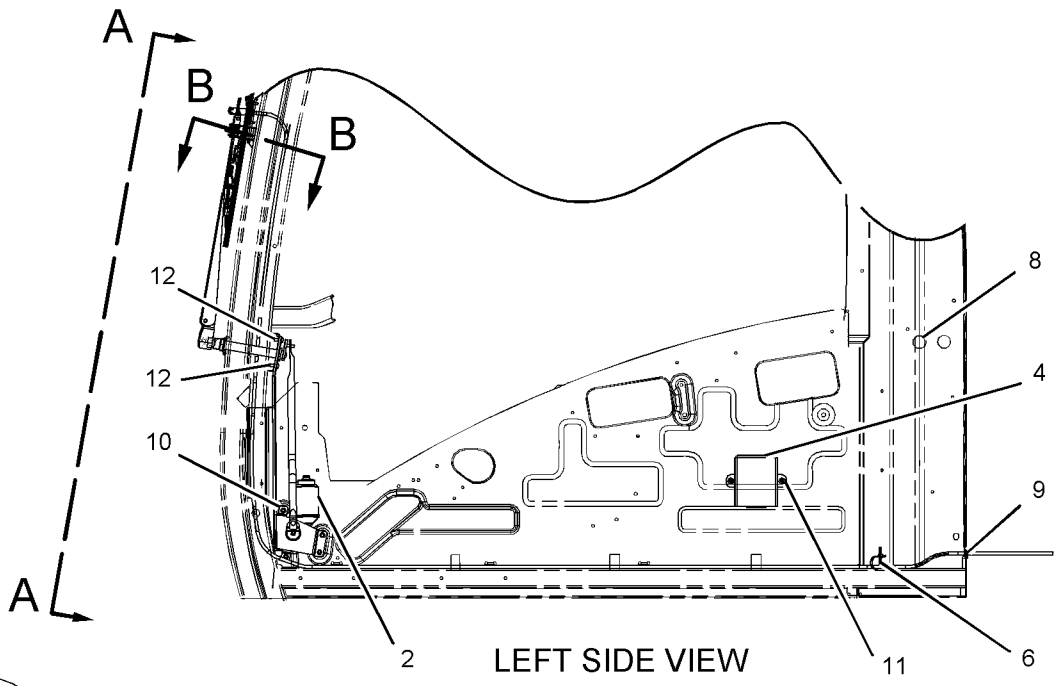

LEFT SIDE VIEW

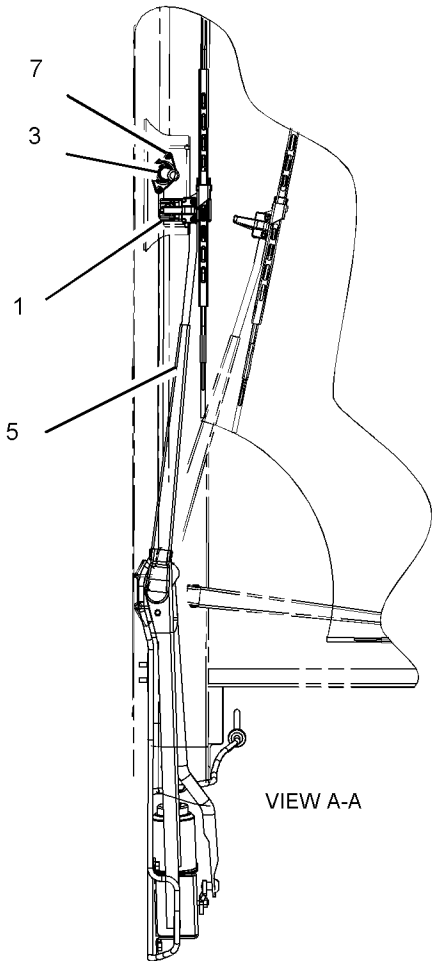

VIEW A-A

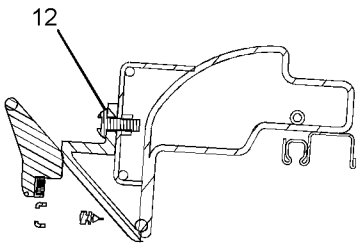

SECTION B-B

GRAPHIC #1 <END> g01098021

247-7410 FILM GP—OPERATOR CONTROLS, NOTICE

S/N: DLP1-UP

PART OF 255-5843 CONTROL AR-AUXILIARY

AN ATTACHMENT

SMCS-7405, 7557

i02426165

NOTE	REF NO	GRAPHIC REF	PART NUMBER	QTY	PART NAME 1 2 3 4 5 6 (PRODUCT LEVEL)	SEE PAGE
	1	1	**250-8054**	1	FILM-NOTICE (HAMMER, READ OMM)	
	2	1	**260-6941**	1	FILM-INFORMATION (OPERATOR CONTROLS, READ OMM)	

247-7410 **FILM GP (**contd.**)** **i02426165**

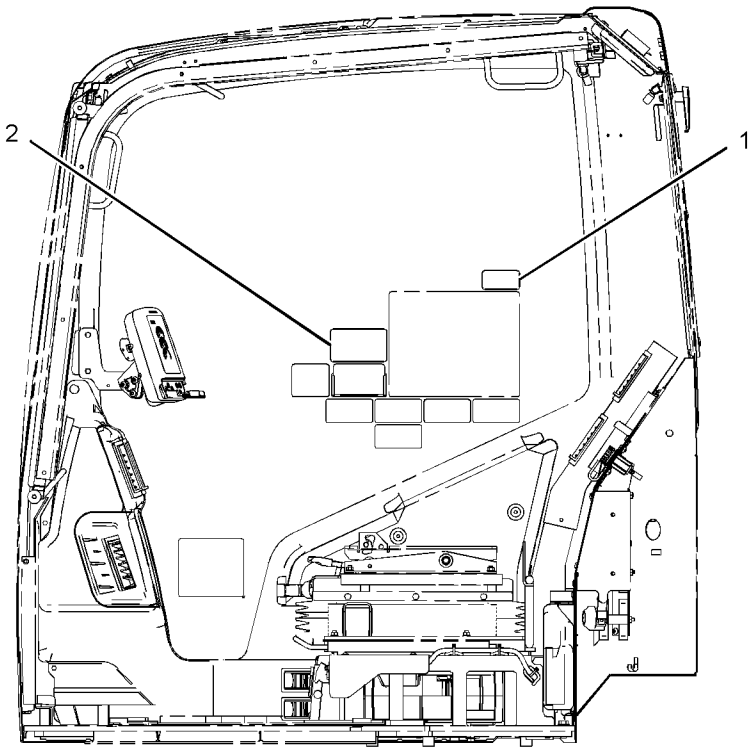

LEFT SIDE VIEW
(328D MODELS)

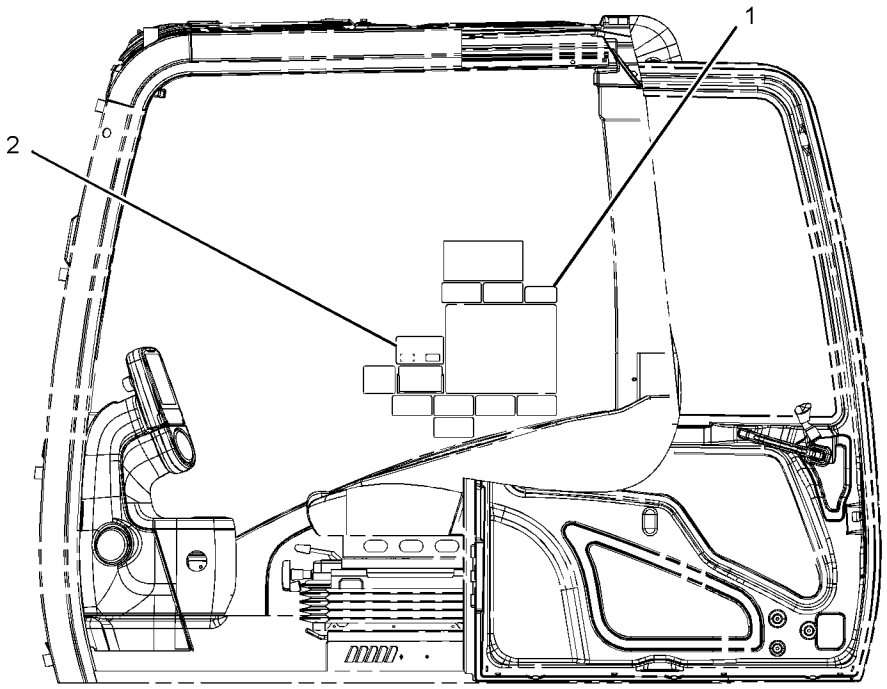

LEFT SIDE VIEW
(ALL OTHER MODELS)

GRAPHIC #1 <END> g01246655

247-7411 FILM GP—OPERATOR CONTROLS, NOTICE

S/N: DLP1-UP

PART OF 255-5844 CONTROL AR-AUXILIARY

AN ATTACHMENT

SMCS-7405, 7557

i02433607

NOTE	REF NO	GRAPHIC REF	PART NUMBER	QTY	PART NAME 1 2 3 4 5 6 (PRODUCT LEVEL)	SEE PAGE
	1	1	**260-6942**	1	FILM-INFORMATION (OPERATOR CONTROLS, READ OMM)	
	2	1	**250-8054**	1	FILM-NOTICE (HAMMER, READ OMM)	

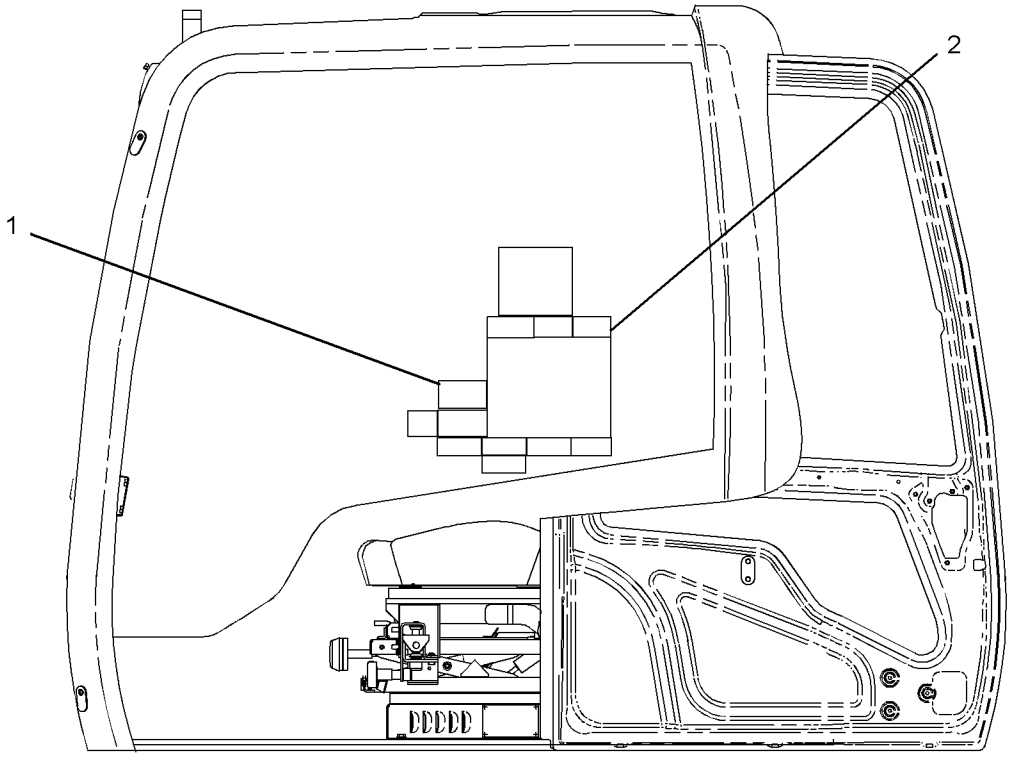

LEFT SIDE VIEW

GRAPHIC #1 <END> g01212938

247-7418 FILM GP–OPERATOR CONTROLS, NOTICE

S/N: DLP1-UP
PART OF 255-5845 PEDAL AR-AUXILIARY
AN ATTACHMENT

SMCS-7405, 7557

i02430392

NOTE	REF NO	GRAPHIC REF	PART NUMBER	QTY	PART NAME 1 2 3 4 5 6 (PRODUCT LEVEL)	SEE PAGE
	1	1	**250-8054**	1	FILM-NOTICE (HAMMER, READ OMM)	
	2	1	**260-6948**	1	FILM-INSTRUCTION (OPERATOR CONTROLS, READ OMM)	

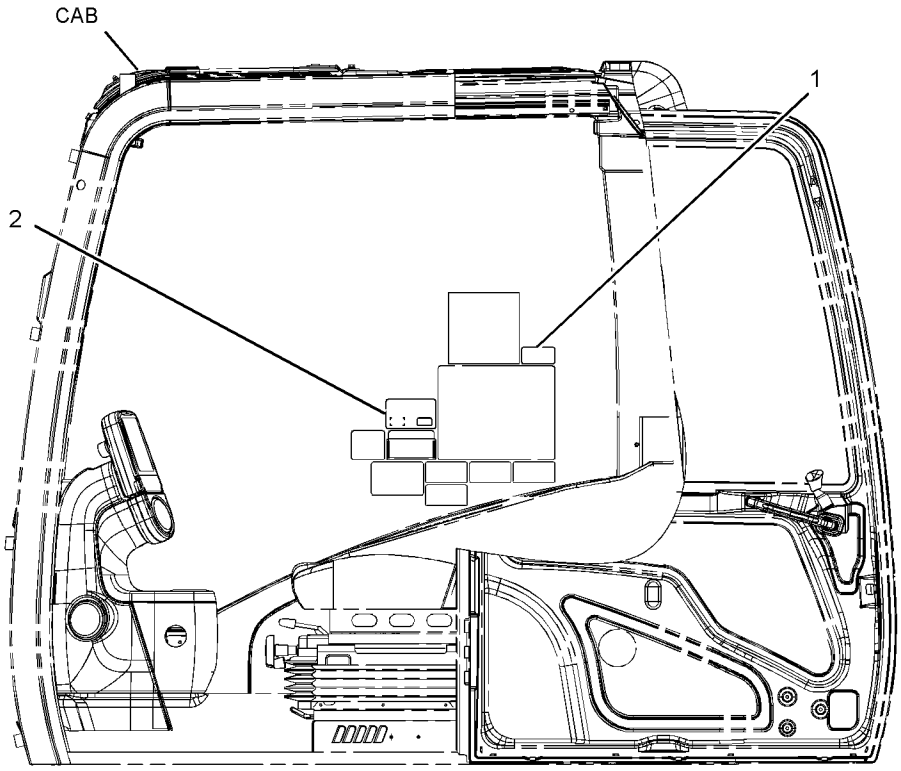

LEFT SIDE VIEW

GRAPHIC #1 <END> g01203264

247-7465 FILM GP–HAMMER CONTROL, FOOT SWITCH

S/N: DLP1-UP

PART OF 270-6106 CONTROL AR-AUXILIARY

AN ATTACHMENT

SMCS-7405, 7557

i02424961

NOTE	REF NO	GRAPHIC REF	PART NUMBER	QTY	PART NAME 1 2 3 4 5 6 (PRODUCT LEVEL)	SEE PAGE
	1	1	**176-2815**	1	FILM-INSTRUCTION (HAMMER CONTROL)	
	2	1	**250-8054**	1	FILM-NOTICE (HAMMER, READ OMM)	

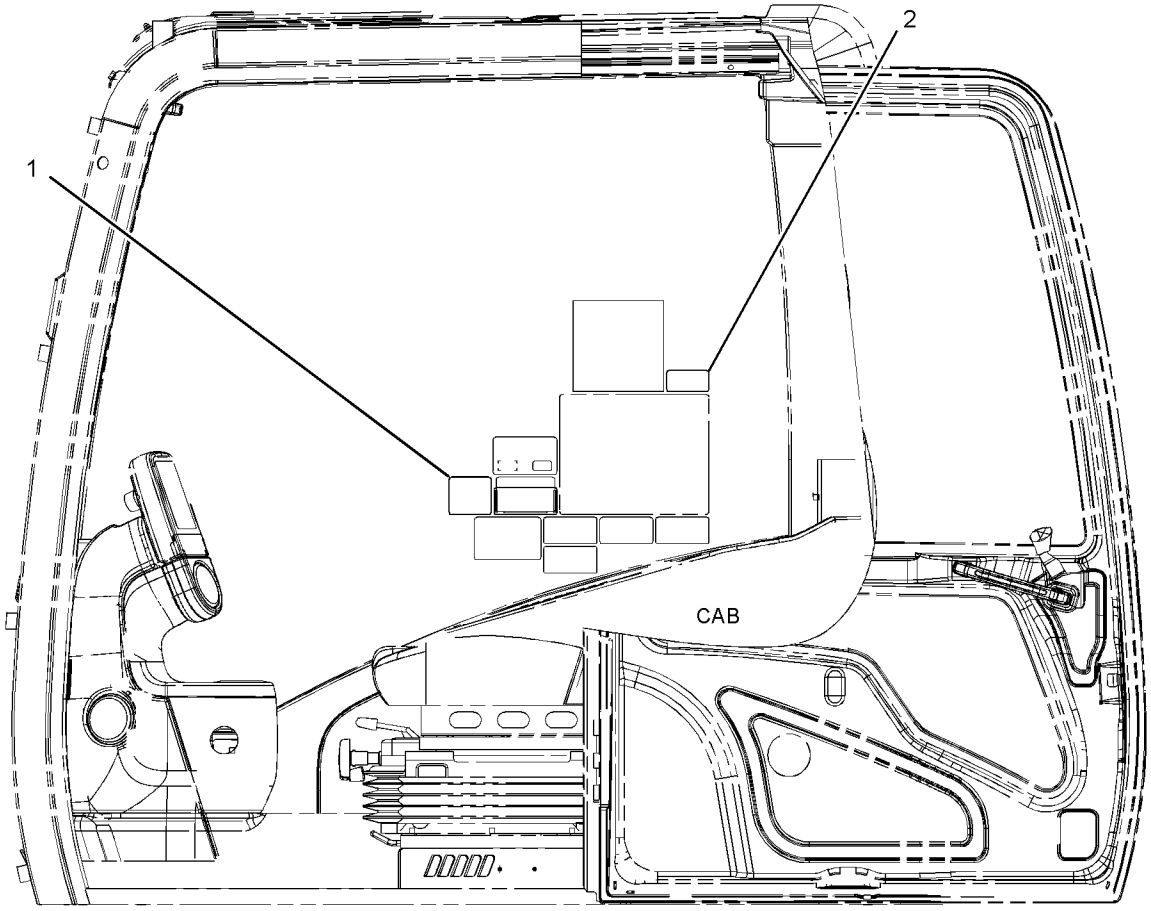

LEFT SIDE VIEW

GRAPHIC #1

<END>

g01157047

247-7494 FILM GP—CONTROL PATTERN, QUICK CHANGE

S/N: DLP1-UP
4-WAY
PART OF 270-5871 VALVE AR
AN ATTACHMENT

SMCS-7405, 7557

i02414960

NOTE	REF NO	GRAPHIC REF	PART NUMBER	QTY	PART NAME 1 2 3 4 5 6 (PRODUCT LEVEL)	SEE PAGE
	1	1	**4I-2885**	1	CASE	
	2	1	**109-1839**	1	FILM-INSTRUCTION (OPERATOR CONTROLS, READ OMM)	
	3	1	**214-4531**	1	PLATE-INSTRUCTION (OPERATOR CONTROLS, READ OMM) (MHI, SCM PATTERNS)	
	4	1	**214-4532**	1	PLATE-INSTRUCTION (OPERATOR CONTROLS, READ OMM) (KOBELCO, SAE PATTERNS)	
	5	1	**257-4547**	1	FILM-WARNING (CRUSH HAZARD, READ OMM, INTL)	

247-7494 **FILM GP (**contd.**)** **i02414960**

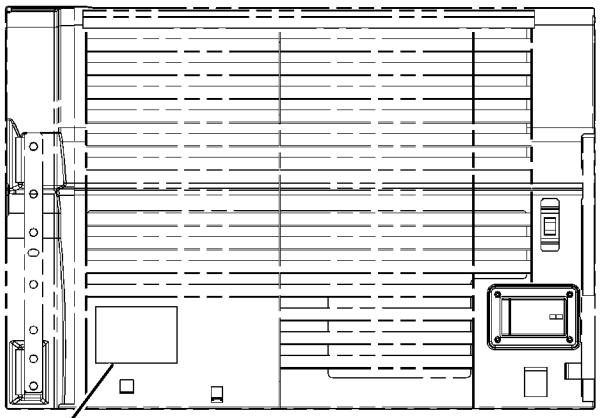

INSIDE VIEW OF RADIATOR DOOR

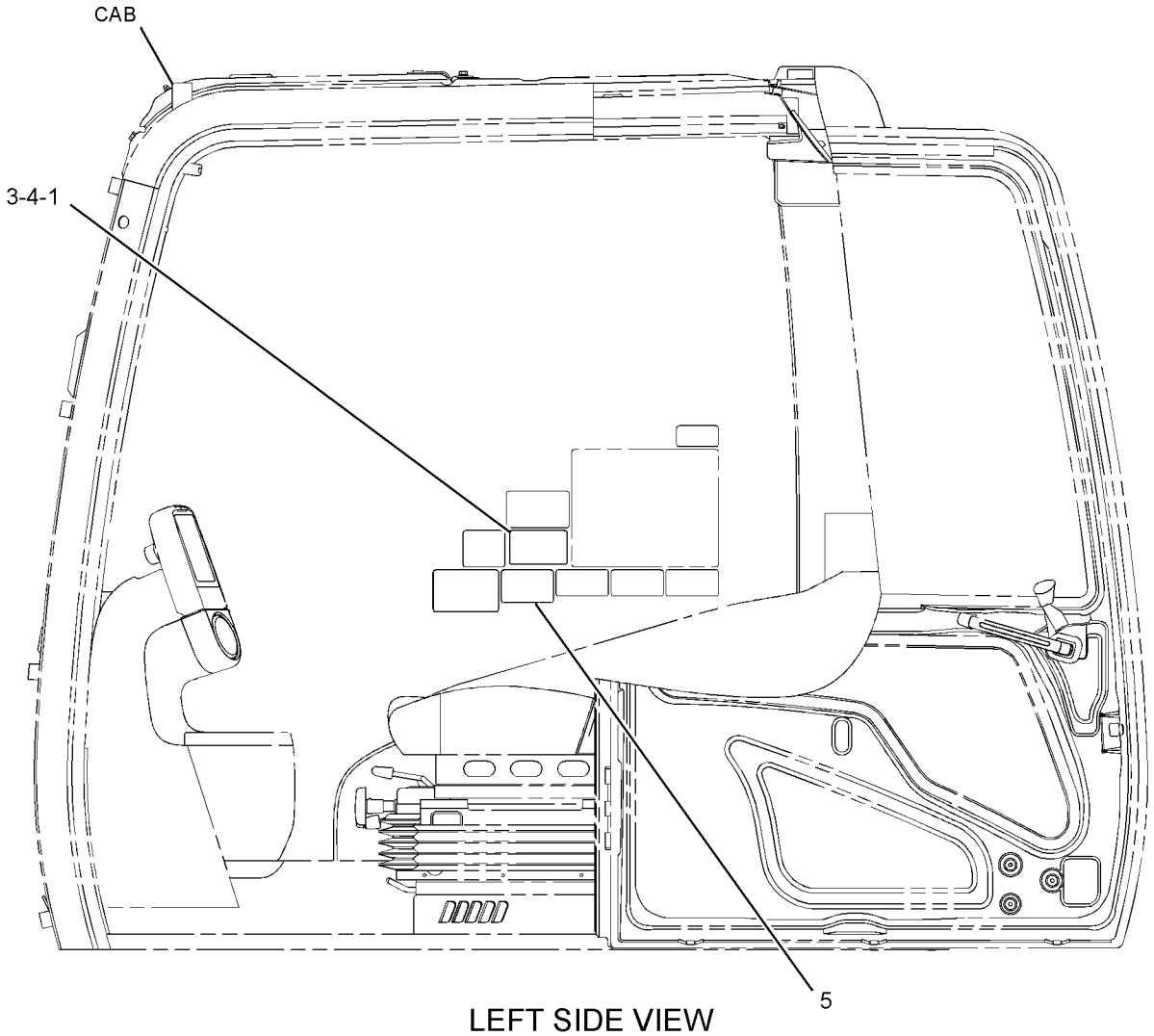

LEFT SIDE VIEW

GRAPHIC #1 <END> g01238061

260-7006 FILM GP—CONTROL PATTERN CHANGE, 2-WAY

S/N: DLP1-UP

PART OF 270-5869 VALVE AR-ALT PATTERN CONTROL AN ATTACHMENT

SMCS-7405, 7557

i02724704

NOTE	REF NO	GRAPHIC REF	PART NUMBER	QTY	PART NAME 1 2 3 4 5 6 (PRODUCT LEVEL)	SEE PAGE
	1	1	**4I-2885**	1	CASE	
	2	1	**255-3171**	1	PLATE-INSTRUCTION (CONTROL PATTERN, READ OMM)	
	3	1	**255-3173**	1	FILM-WARNING (CRUSH HAZARD, READ OMM, INTL)	
					—OR—	
		1	**257-5015**	1	FILM-WARNING (CRUSH HAZARD, READ OMM, U.S.)	

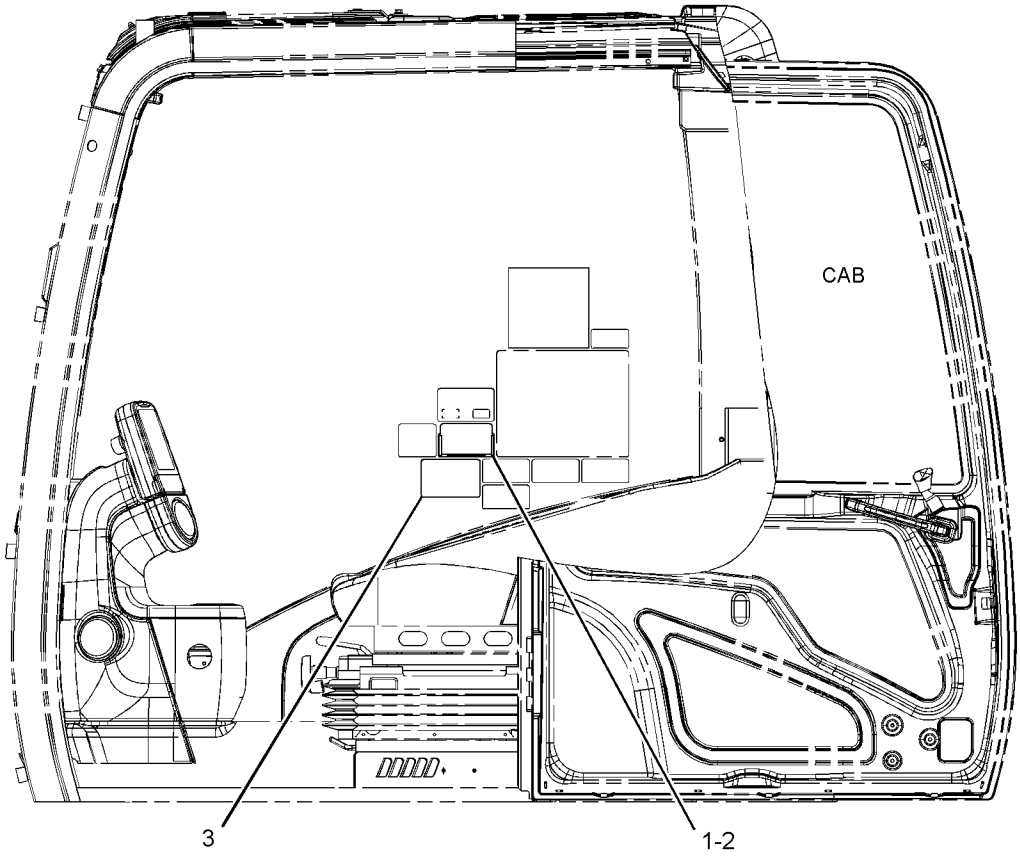

LEFT SIDE VIEW

GRAPHIC #1

<END>

g01367678

282-5705 FILM GP–QUICK COUPLER

S/N: DLP1-UP
PART OF 277-1173, 344-4405 CONTROL AR-COUPLER
AN ATTACHMENT
TYPE 1

SMCS-7405, 7557

i02817497

NOTE	REF NO	GRAPHIC REF	PART NUMBER	QTY	PART NAME 1 2 3 4 5 6 (PRODUCT LEVEL)	SEE PAGE
	1	1	**268-4530**	1	FILM-WARNING (CRUSH HAZARD, READ OMM, U.S.)	
					–OR–	
		1	**269-0120**	1	FILM-WARNING (CRUSH HAZARD, READ OMM, INTL)	
	2	1	**268-4531**	1	FILM-INSTRUCTION (COUPLER OPERATION)	
	3	1	**268-8872**	1	FILM-WARNING (CRUSH HAZARD, READ OMM, U.S.)	
					–OR–	
		1	**269-0121**	1	FILM-WARNING (CRUSH HAZARD, READ OMM, INTL)	

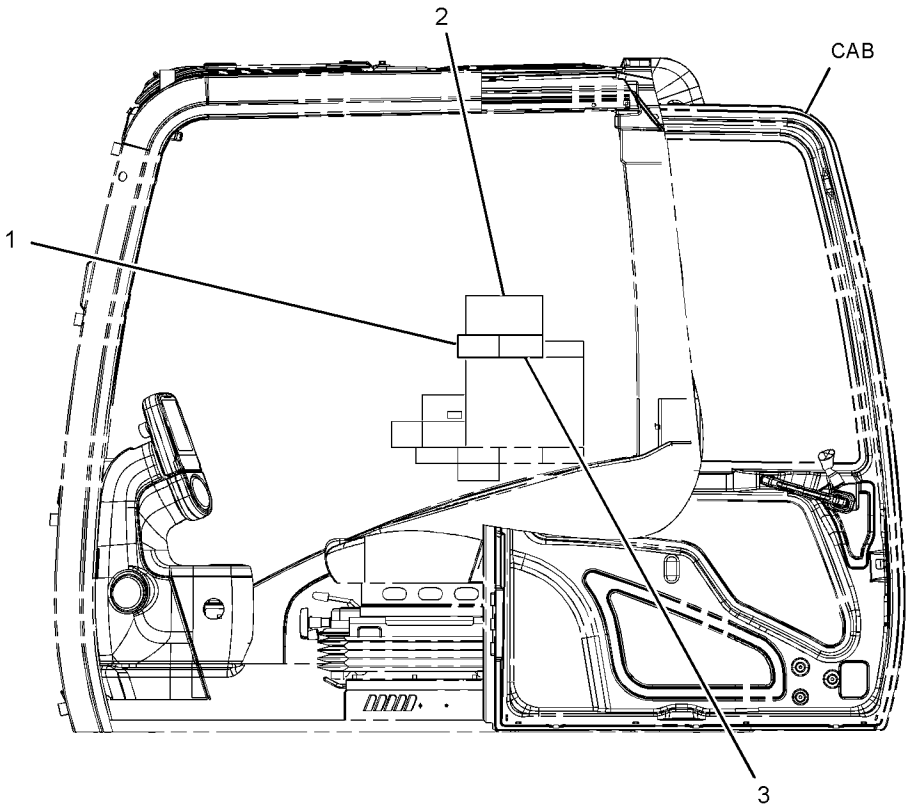

LEFT SIDE VIEW

GRAPHIC #1 <END> g01238116

282-5705 FILM GP–QUICK COUPLER

S/N: DLP1-UP
PART OF 277-1173, 344-4405 CONTROL AR-COUPLER
AN ATTACHMENT
TYPE 2

SMCS-7405, 7557

i06542318

NOTE	REF NO	GRAPHIC REF	PART NUMBER	QTY	PART NAME 1 2 3 4 5 6 (PRODUCT LEVEL)	SEE PAGE
	1	1	**269-0120**	1	FILM-WARNING (CRUSH HAZARD, READ OMM, INTL)	
	2	1	**268-4531**	1	FILM-INSTRUCTION (COUPLER OPERATION)	
	3	1	**269-0121**	1	FILM-WARNING (CRUSH HAZARD, READ OMM, INTL)	

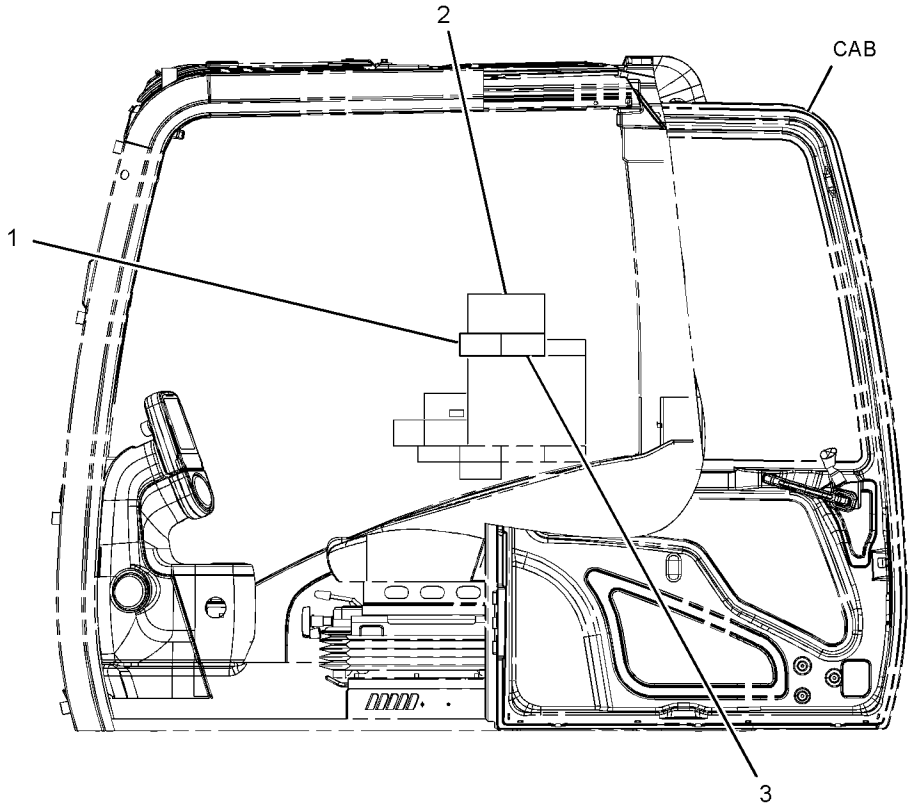

LEFT SIDE VIEW

GRAPHIC #1 <END> g01238116

301-2573 FILM GP–FUEL TRANSFER PUMP

S/N: DLP1-UP

PART OF 260-7131, 330-8781 PUMP AR-FUEL TRANSFER

AN ATTACHMENT

SMCS-7405, 7557

i02883995

NOTE	REF NO	GRAPHIC REF	PART NUMBER	QTY	PART NAME 1 2 3 4 5 6 (PRODUCT LEVEL)	SEE PAGE
B	1	1,2	**309-3872**	1	FILM-WARNING (EXPLOSION HAZARD, READ OMM)	

B - USE AS REQUIRED

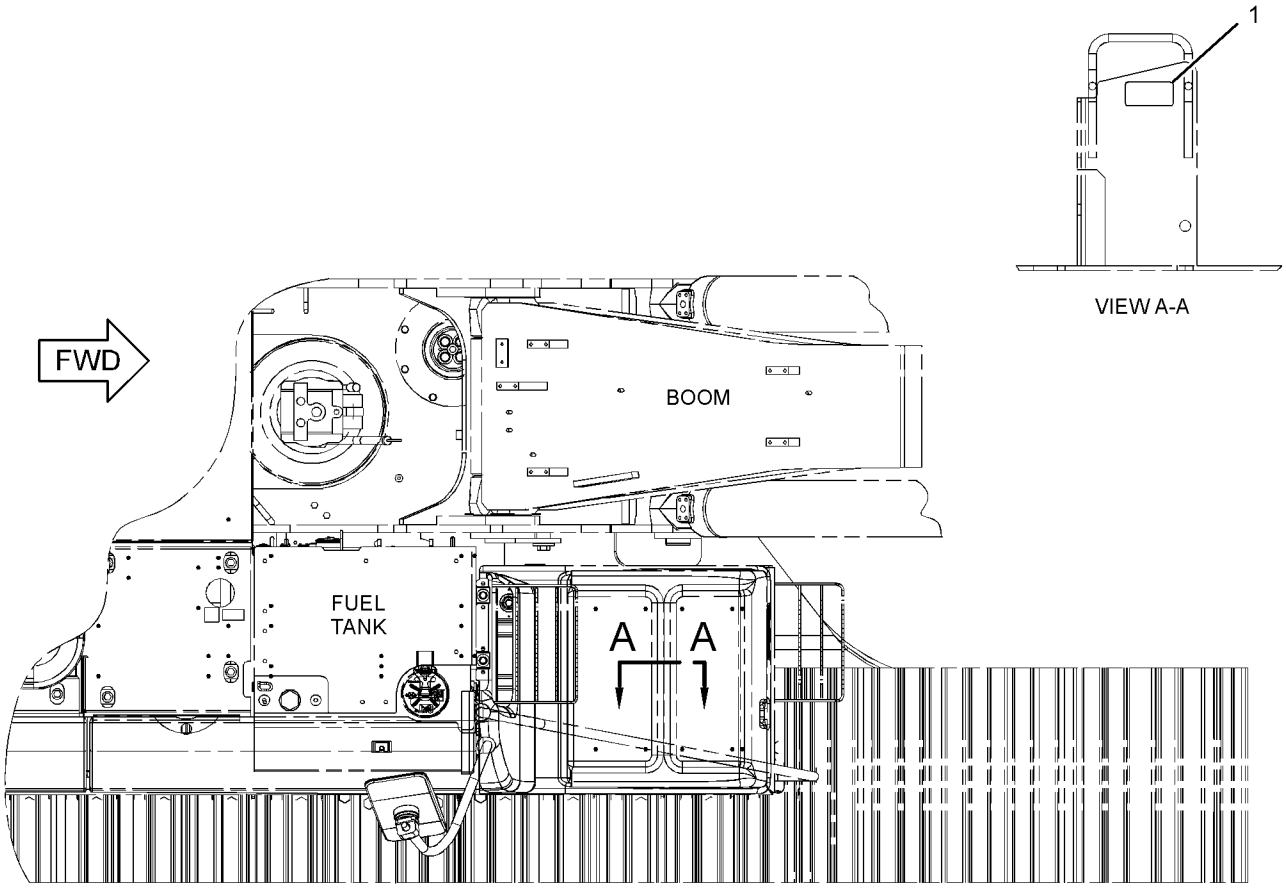

TOP VIEW
(315D & 319D)

GRAPHIC #1

g01441356

301-2573 **FILM GP (**contd.**)** **i02883995**

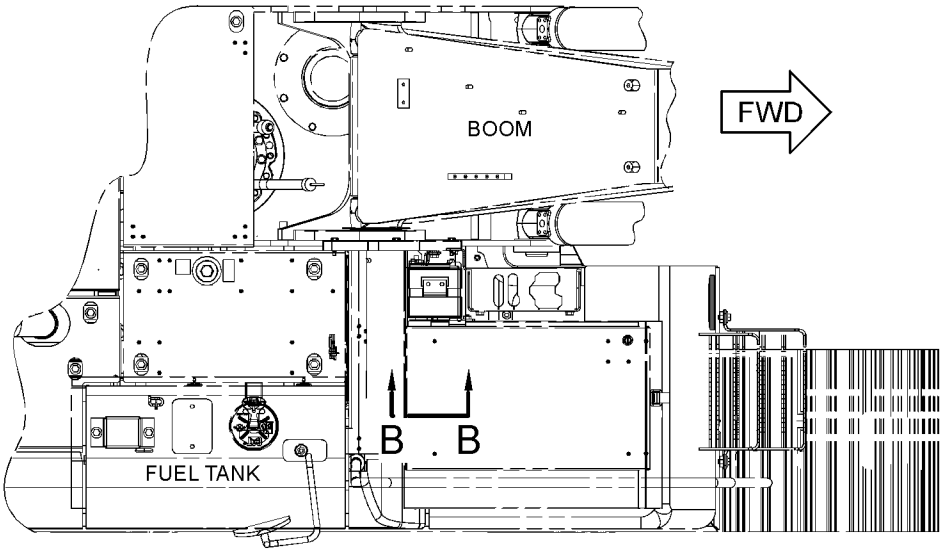

TOP VIEW
(311D)

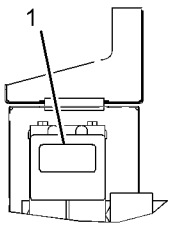

VIEW B-B

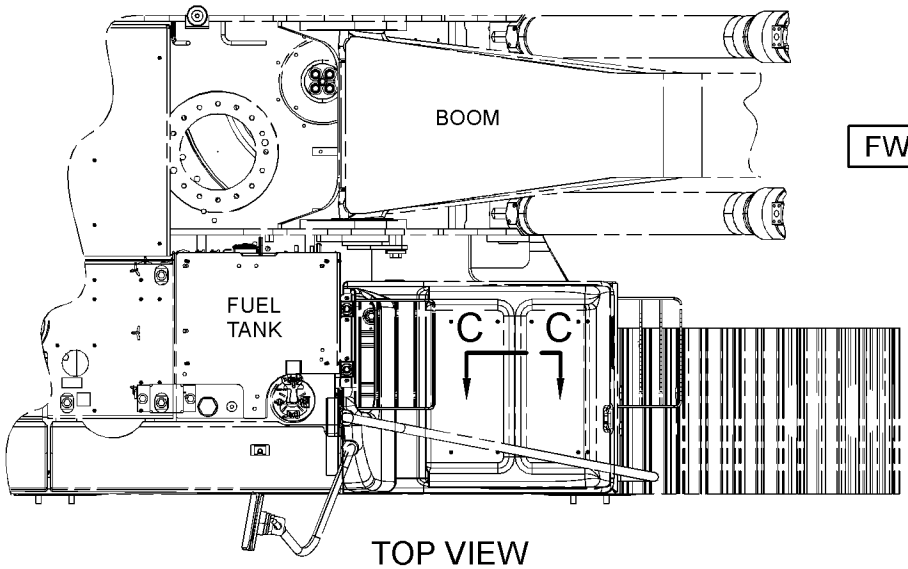

TOP VIEW
(312D)

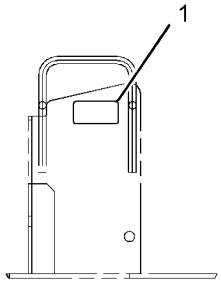

VIEW C-C

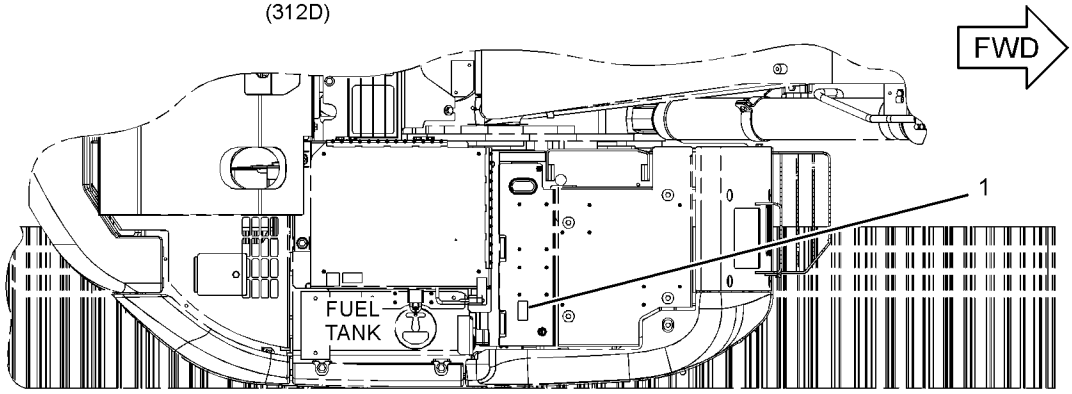

TOP VIEW
(314D)

GRAPHIC #2 <END> g01441201

301-2596 FILM GP—COUNTERWEIGHT REMOVAL

S/N: DLP1-UP
PART OF 301-2664 COUNTERWEIGHT AR
AN ATTACHMENT

SMCS-7405, 7557

i02988480

NOTE	REF NO	GRAPHIC REF	PART NUMBER	QTY	PART NAME 1 2 3 4 5 6 (PRODUCT LEVEL)	SEE PAGE
	1	1	**1P-2807**	4	FILM-IDENTIFICATION (LIFT EYE LOCATION)	

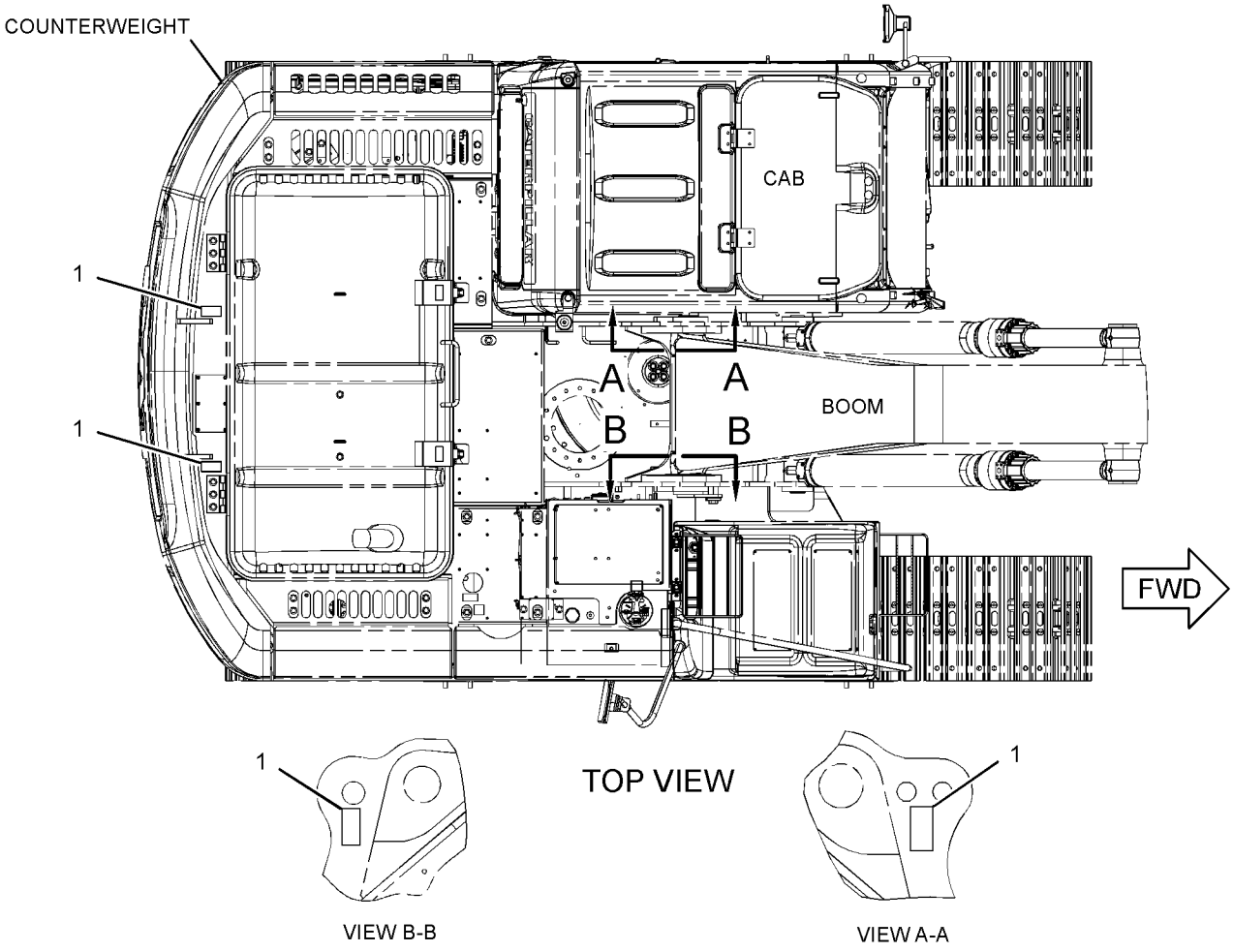

GRAPHIC #1 <END> g01527839

303-2787 FILM GP–WORK AREA VISUAL SYSTEM, REAR

S/N: DLP1-UP
PART OF 330-8749 CAMERA & WIRING GP
AN ATTACHMENT

SMCS-7405, 7557

i03128324

NOTE	REF NO	GRAPHIC REF	PART NUMBER	QTY	PART NAME 1 2 3 4 5 6 (PRODUCT LEVEL)	SEE PAGE
	1	1	**319-9152**	1	FILM-INSTRUCTION (BATTERY LIFE, CAMERA)	

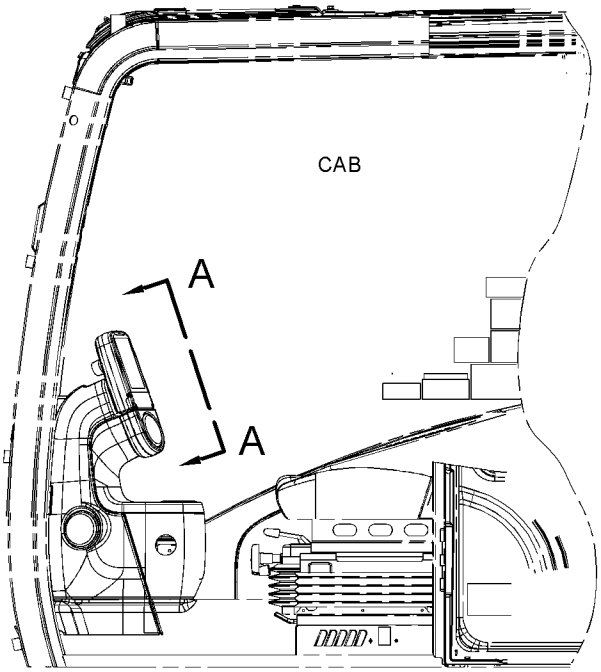

LEFT SIDE VIEW

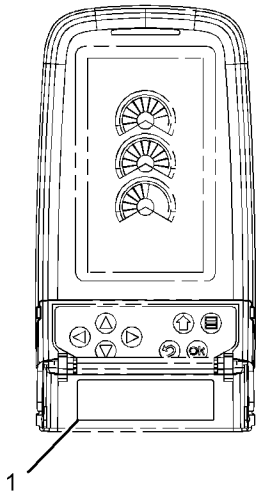

VIEW A-A

GRAPHIC #1 <END> g01620358

314-3848 FILM GP

S/N: DLP1-UP
CHINA MARKET
PART OF 367-8790, 367-8792, 379-7089, 379-7091 DISTRIBUTION AR
AN ATTACHMENT
TYPE 1

SMCS-7405, 7557

i04007166

NOTE	REF NO	GRAPHIC REF	PART NUMBER	QTY	PART NAME 1 2 3 4 5 6 (PRODUCT LEVEL)	SEE PAGE
C	1	1	**359-2380**	1	FILM-INSTRUCTION (SERVICE CHART)	
					(ON INSIDE OF CAB DOOR)	
	2	1	**312-5525**	1	FILM-WARNING (CUTTING HAZARD HAND, STAY BACK)	
					(ON TOP OF RADIATOR)	
	3	1	**158-7864**	1	FILM-IDENTIFICATION (HYDRAULIC OIL)	
					(ON TOP OF HYDRAULIC TANK)	

C - CHANGE FROM PREVIOUS TYPE

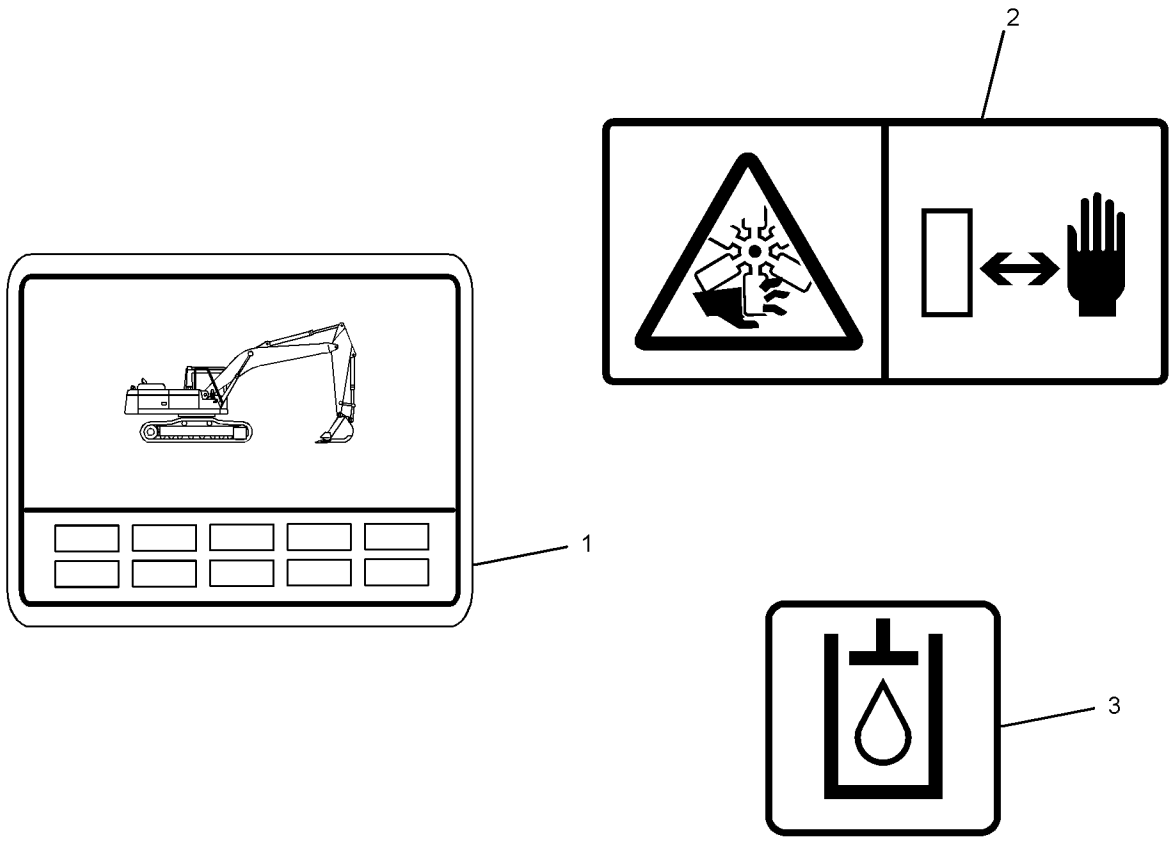

GRAPHIC #1 <END> g02477306

314-3848 FILM GP

S/N: DLP1-UP
CHINA MARKET
PART OF 367-8790, 367-8792, 379-7089, 379-7091 DISTRIBUTION AR
AN ATTACHMENT
TYPE 2

SMCS-7405, 7557

i07046302

NOTE	REF NO	GRAPHIC REF	PART NUMBER	QTY	PART NAME 1 2 3 4 5 6 (PRODUCT LEVEL)	SEE PAGE
	1	1	**359-2380**	1	FILM-INSTRUCTION (SERVICE CHART)	
					(ON INSIDE OF CAB DOOR)	

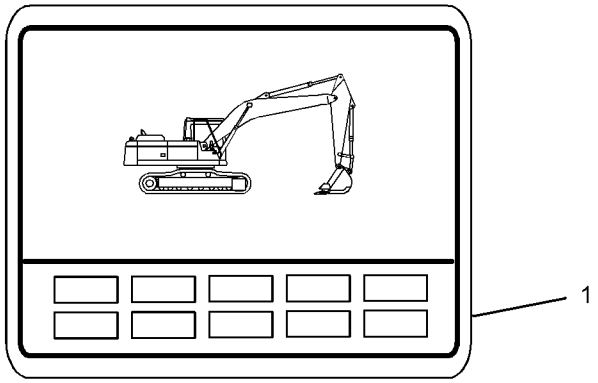

GRAPHIC #1

<END>

g03684385

194-8936 PLATE & FILM GP–BLADE

S/N: DLP1-UP

PART OF 301-2691, 385-4069 INSTALLATION AR-BLADE

AN ATTACHMENT

SMCS-7405, 7557

i01478327

NOTE	REF NO	GRAPHIC REF	PART NUMBER	QTY	PART NAME 1 2 3 4 5 6 (PRODUCT LEVEL)	SEE PAGE
	1	1	**102-5474**	**1**	FILM-INSTRUCTION (BLADE)	

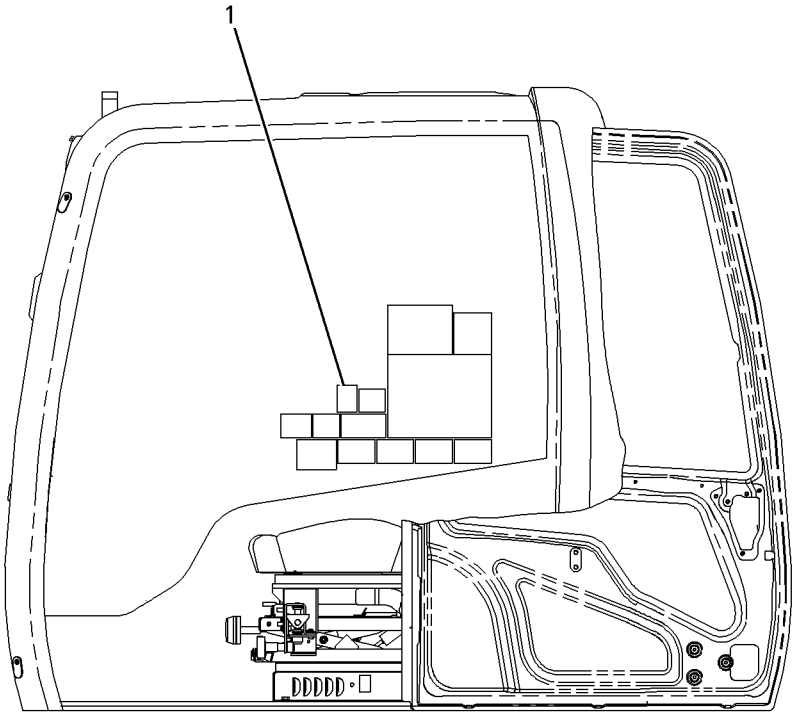

LEFT SIDE VIEW

GRAPHIC #1 <END> g00987247

301-2682 PLATE & FILM GP

S/N: DLP1-896

PART OF 301-2680 CHASSIS AR

SMCS-7405, 7557 **i03016687**

NOTE	REF NO	GRAPHIC REF	PART NUMBER	QTY	PART NAME 1 2 3 4 5 6 (PRODUCT LEVEL)	SEE PAGE
	1	4	223-9818	1	FILM-INSTRUCTION (WINDOW CLEANING, READ OMM)	
	2	4	4I-8472	1	FILM-INSTRUCTION (OPERATOR CONTROLS)	
	3	4	224-0554	1	FILM-WARNING (UNIVERSAL, READ OMM)	
	4	4	266-5431	1	FILM-WARNING (CRUSH HAZARD, READ OMM, INTL)	
	5	4	228-9254	1	FILM-WARNING (ELEC HAZARD, READ OMM, INTL)	
	6	4	283-9079	1	FILM-INFORMATION (LIFTING CAPACITIES, READ OMM)	
	7	4	221-8045	1	FILM-WARNING (SEAT BELT, INTERNATIONAL)	
	8	4	214-7915	1	FILM-INSTRUCTION (ENGINE SHUTOFF)	
	9	2	187-0661	1	FILM-INSTRUCTION (ALTERNATE EXIT)	
	10	4	242-1588	1	FILM-WARNING (FRONT WINDOW, READ OMM, INTL)	
	11	2	8T-6842	1	FILM-INSTRUCTION (PULL RING, ALTERNATE EXIT)	
	12	4	245-5457	1	FILM-INSTRUCTION (BACKUP CONTROL)	
	13	4	260-7135	1	FILM-IDENTIFICATION (FUSE PANEL)	
	14	1	7Y-0063	2	FILM-INFORMATION (DO NOT LIFT)	
	15	1,3	167-7270	2	FILM-INSTRUCTION (NO STEP)	
	16	1	158-7864	1	FILM-IDENTIFICATION (HYDRAULIC OIL)	
	17	3	144-9126	1	FILM-INSTRUCTION (OIL)	
	18	3	134-7258	1	FILM-INFORMATION (EXTENDED LIFE COOLANT)	
	19	3	242-1510	1	FILM-INSTRUCTION (HYDRAULIC OIL CHECK)	
	20	1	225-4257	2	FILM-WARNING (HOT FLUID UNDER PRESS)	
	21	1	290-1906		FILM-STRIPE (RED) (45-CM EACH)	
	22	1,2	253-0861	2	FILM-INFORMATION (CAT POWER, ACERT TECHNOLOGY)	
	23	1	290-1729	1	FILM-IDENTIFICATION (CAT)	
	24	1,2	283-9076	2	FILM-IDENTIFICATION (312D)	
	25	1,2	1P-2807	4	FILM-IDENTIFICATION (LIFT EYE LOCATION)	
	26	1	283-9074	1	FILM-IDENTIFICATION (CAT, RH)	
	27	2	7X-7644	4	FILM-IDENTIFICATION (TIE-DOWN)	
	28	3	247-7438	1	FILM-IDENTIFICATION (ELECTRICAL CIRCUIT BREAKER)	
	29	3	247-7437	1	FILM-IDENTIFICATION (BATTERY CIRCUIT BREAKER)	
	30	3	146-6747	1	FILM-INFORMATION (24-VOLT)	
	31	3	225-0312	1	FILM-WARNING (JUMP START, READ OMM, INTL)	
	32	4	224-8946	1	FILM-WARNING (NO ETHER SPRAY/AIR INTK, INTL)	
	33	4	229-0887	1	FILM-INFORMATION (AIR CLEANER)	
	34	2	257-4502	1	FILM-IDENTIFICATION (CATERPILLAR)	
	35	2	247-7436	1	FILM-IDENTIFICATION (CAT)	
	36	2	190-5386	2	FILM-IDENTIFICATION (ROUND RED REFLECTIVE)	
	37	2	283-9075	1	FILM-IDENTIFICATION (CAT, LH)	
	38	3	239-6986	1	PLATE-SERIAL NUMBER (MACHINE)	
	39	1,2	228-2781	2	FILM-WARNING (MACHINE SWING, CRUSHING, INTL)	
	40	1	242-6092	1	FILM-WARNING (ACCUMULATOR PRESSURE)	
	41	1	298-4282	2	FILM-WARNING (CRUSH HAZARD, STAY BACK, INTL)	
	42	1	312-5525	1	FILM-WARNING (CUTTING HAZARD HAND, STAY BACK)	

301-2682 **PLATE & FILM GP** (contd.) **i03016687**

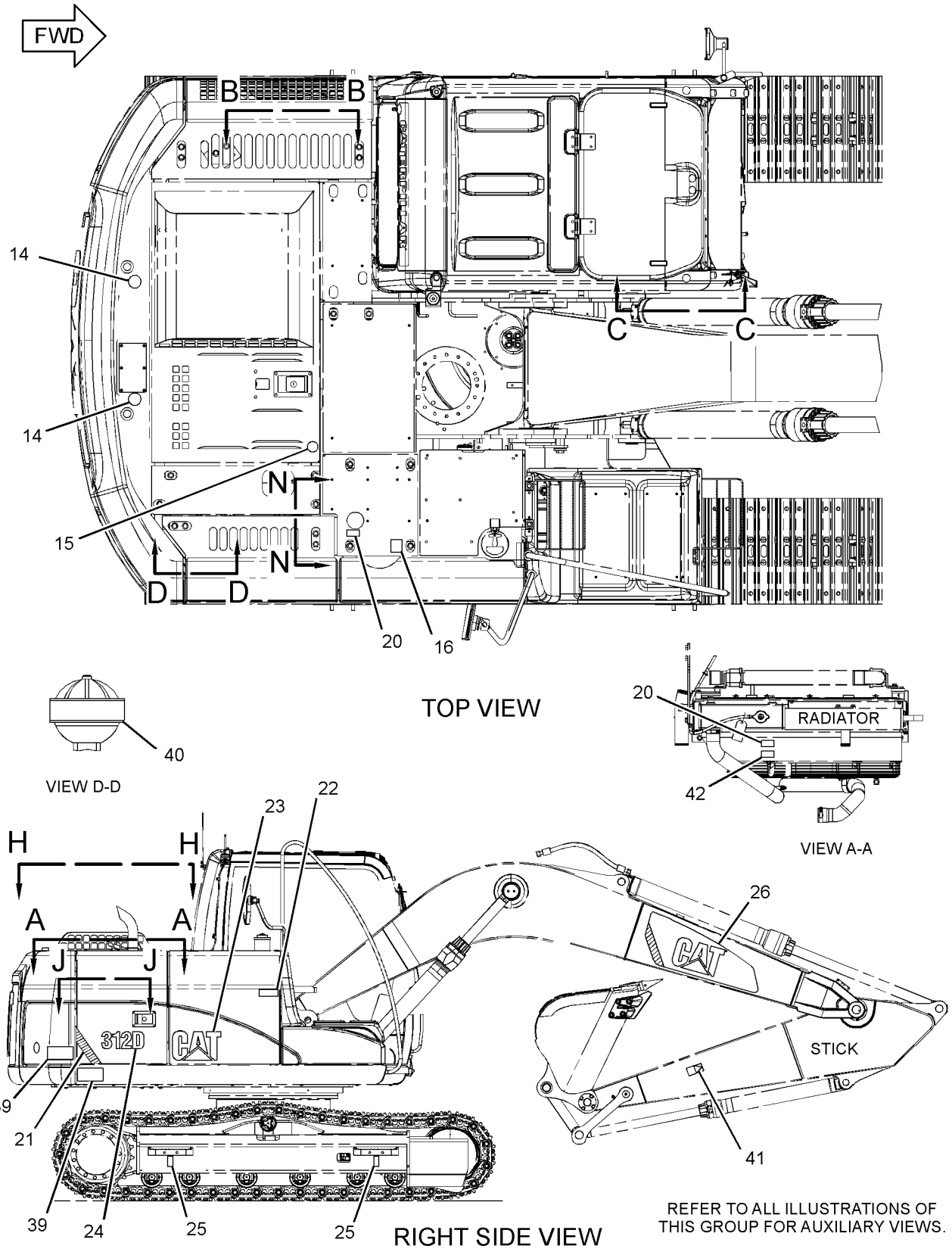

GRAPHIC #1 g01528551

301-2682 **PLATE & FILM GP (**contd.**)** **i03016687**

REFER TO ALL ILLUSTRATIONS OF
THIS GROUP FOR AUXILIARY VIEWS.

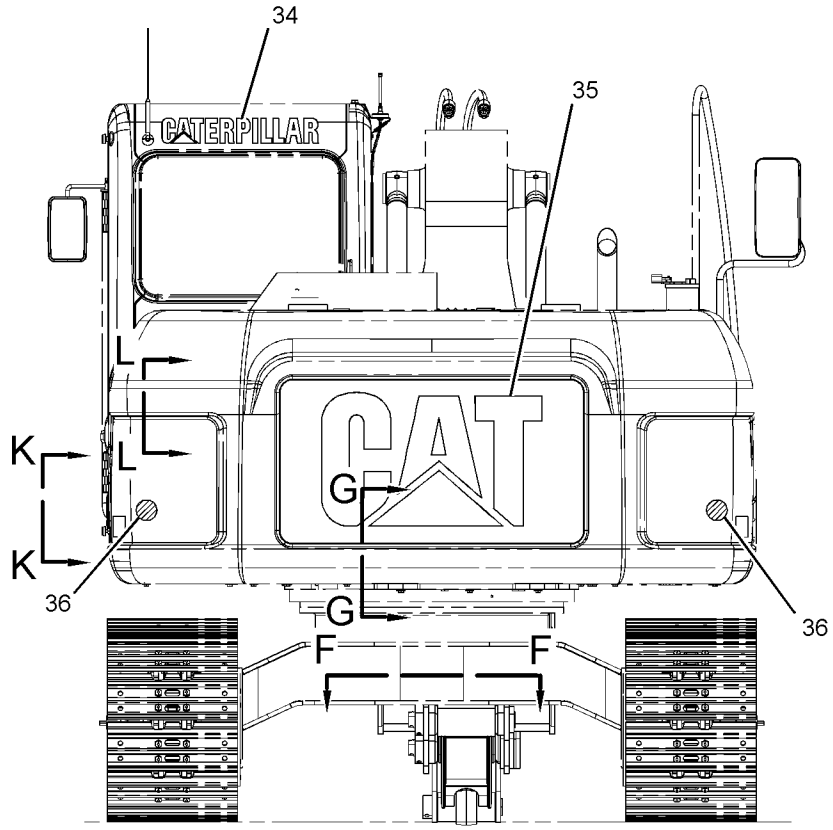

REAR VIEW

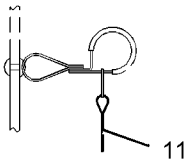

VIEW E-E

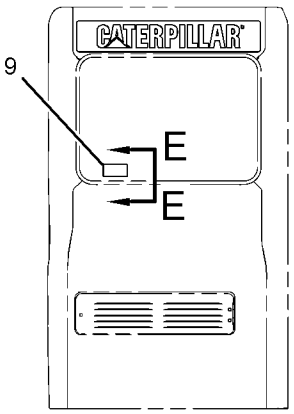

REAR VIEW
(CAB)

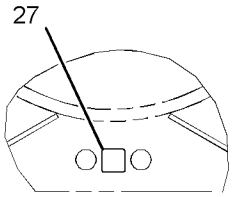

VIEW F-F

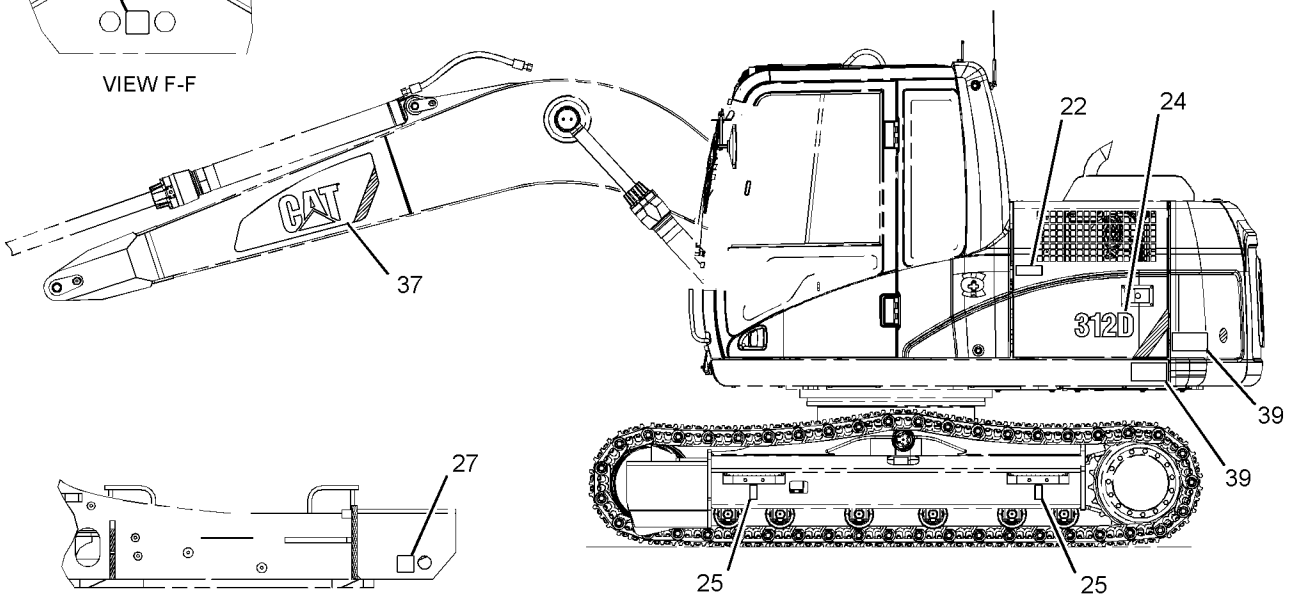

VIEW G-G

LEFT SIDE VIEW

GRAPHIC #2 g01528554

301-2682 **PLATE & FILM GP (**contd.**)** **i03016687**

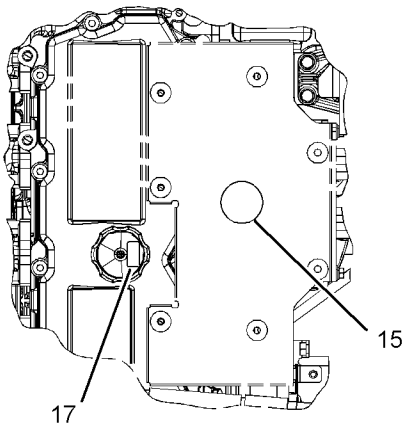

VIEW J-J

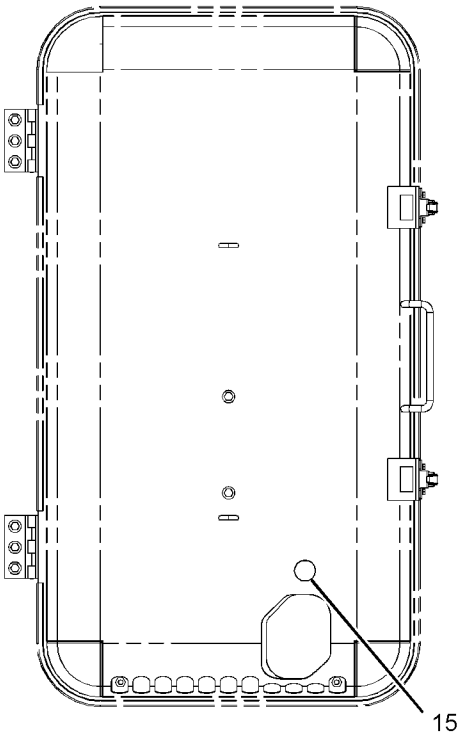

VIEW H-H

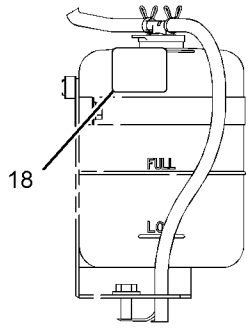

VIEW B-B

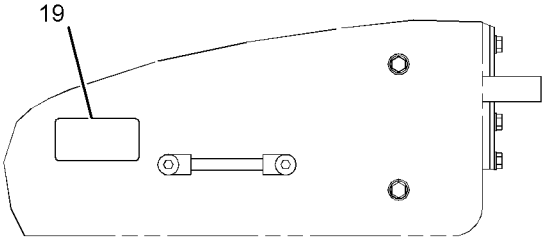

VIEW N-N

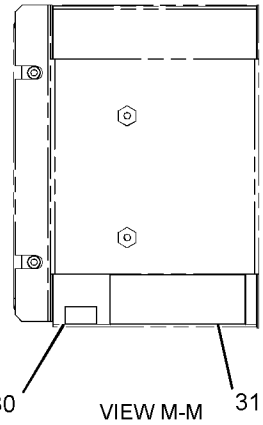

VIEW M-M

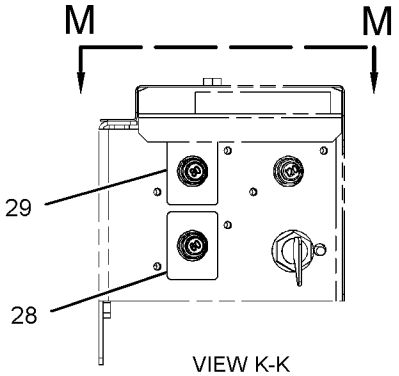

VIEW K-K

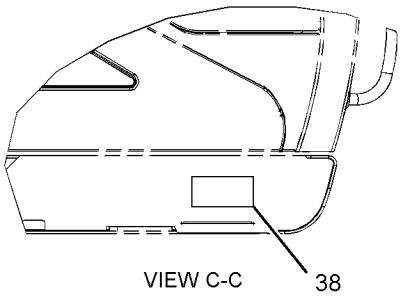

VIEW C-C

GRAPHIC #3 g01528555

301-2682 **PLATE & FILM GP (**contd.**)** **i03016687**

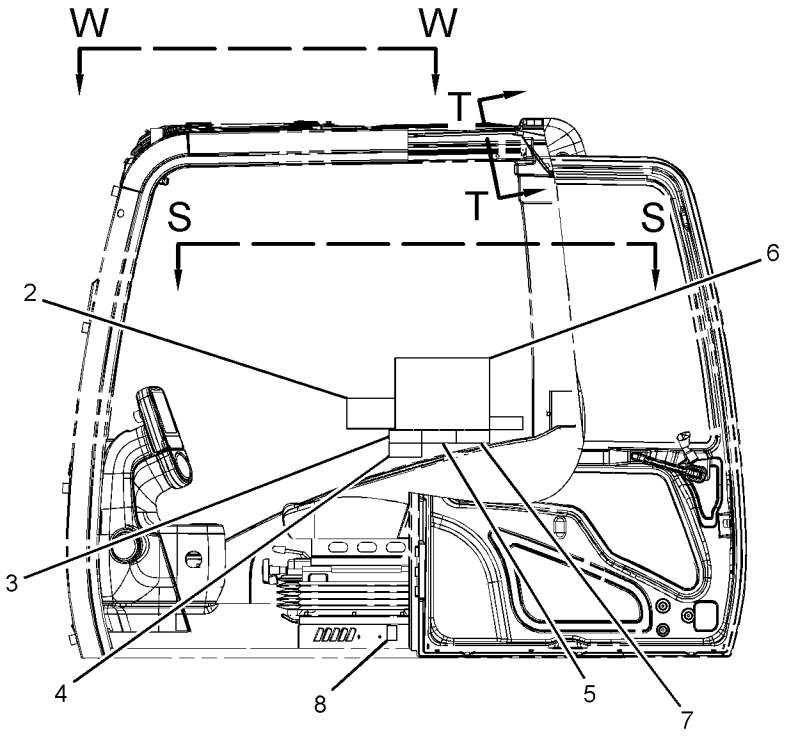

LEFT SIDE VIEW
(CAB)

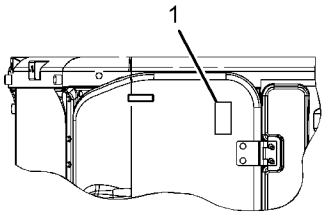

VIEW W-W

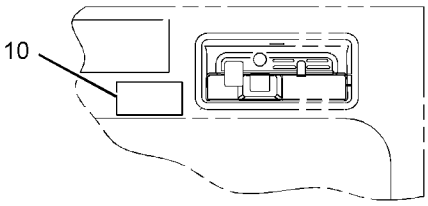

VIEW T-T

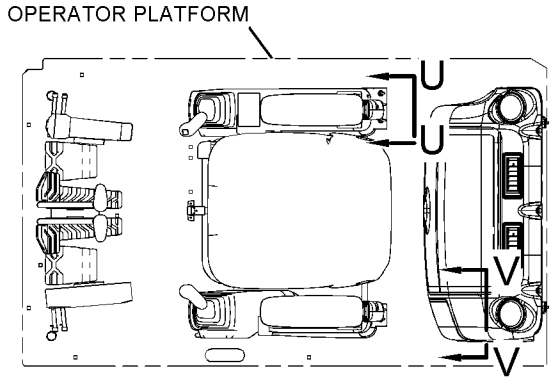

VIEW S-S

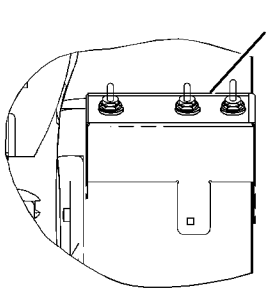

VIEW U-U

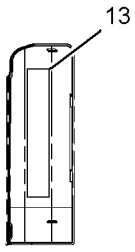

VIEW V-V

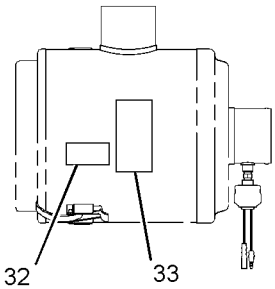

VIEW L-L

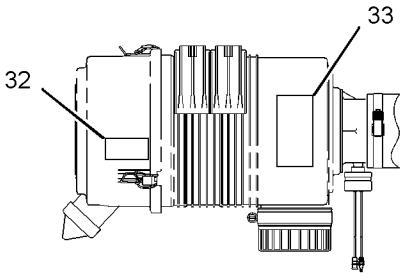

VIEW L-L
(OPTIONAL DESIGN)

GRAPHIC #4 <END> g01528549

301-2682 PLATE & FILM GP

S/N: DLP897-UP
PART OF 301-2680 CHASSIS AR
TYPE 1

SMCS-7405, 7557 **i04797636**

NOTE	REF NO	GRAPHIC REF	PART NUMBER	QTY	PART NAME 1 2 3 4 5 6 (PRODUCT LEVEL)	SEE PAGE
	1	4	223-9818	1	FILM-INSTRUCTION (WINDOW CLEANING, READ OMM)	
	2	4	4I-8472	1	FILM-INSTRUCTION (OPERATOR CONTROLS)	
	3	4	224-0554	1	FILM-WARNING (UNIVERSAL, READ OMM)	
	4	4	266-5431	1	FILM-WARNING (CRUSH HAZARD, READ OMM, INTL)	
	5	4	228-9254	1	FILM-WARNING (ELEC HAZARD, READ OMM, INTL)	
	7	4	221-8045	1	FILM-WARNING (SEAT BELT, INTERNATIONAL)	
	8	4	214-7915	1	FILM-INSTRUCTION (ENGINE SHUTOFF)	
	9	2	187-0661	1	FILM-INSTRUCTION (ALTERNATE EXIT)	
	10	4	242-1588	1	FILM-WARNING (FRONT WINDOW, READ OMM, INTL)	
	11	2	8T-6842	1	FILM-INSTRUCTION (PULL RING, ALTERNATE EXIT)	
	13	4	260-7135	1	FILM-IDENTIFICATION (FUSE PANEL)	
	14	1	7Y-0063	2	FILM-INFORMATION (DO NOT LIFT)	
	15	1,3	167-7270	2	FILM-INSTRUCTION (NO STEP)	
	16	1	158-7864	1	FILM-IDENTIFICATION (HYDRAULIC OIL)	
	17	3	144-9126	1	FILM-INSTRUCTION (OIL)	
	18	3	134-7258	1	FILM-INFORMATION (EXTENDED LIFE COOLANT)	
	19	3	242-1510	1	FILM-INSTRUCTION (HYDRAULIC OIL CHECK)	
	20	1	225-4257	2	FILM-WARNING (HOT FLUID UNDER PRESS)	
E	21	1	290-1906		FILM-STRIPE (RED) (45-CM EACH)	
	23	1	290-1729	1	FILM-IDENTIFICATION (CAT)	
	24	1,2	283-9076	2	FILM-IDENTIFICATION (312D)	
	25	1,2	1P-2807	4	FILM-IDENTIFICATION (LIFT EYE LOCATION)	
	26	1	362-3719	1	FILM-IDENTIFICATION (CAT, RH)	
	27	2	7X-7644	4	FILM-IDENTIFICATION (TIE-DOWN)	
	28	3	247-7438	2	FILM-IDENTIFICATION (ELECTRICAL CIRCUIT BREAKER)	
	29	3	247-7437	1	FILM-IDENTIFICATION (BATTERY CIRCUIT BREAKER)	
	30	3	146-6747	1	FILM-INFORMATION (24-VOLT)	
	31	3	225-0312	1	FILM-WARNING (JUMP START, READ OMM, INTL)	
	32	4	224-8946	1	FILM-WARNING (NO ETHER SPRAY/AIR INTK, INTL)	
	33	4	229-0887	1	FILM-INFORMATION (AIR CLEANER)	
	34	2	257-4502	1	FILM-IDENTIFICATION (CATERPILLAR)	
	35	2	247-7436	1	FILM-IDENTIFICATION (CAT)	
	36	2	190-5386	2	FILM-IDENTIFICATION (ROUND RED REFLECTIVE)	
	37	2	362-3720	1	FILM-IDENTIFICATION (CAT, LH)	
	38	3	239-6986	1	PLATE-SERIAL NUMBER (MACHINE)	
N	39	1,2	228-2781	2	FILM-WARNING (MACHINE SWING, CRUSHING, INTL)	
	40	1	242-6092	1	FILM-WARNING (ACCUMULATOR PRESSURE)	
	41	1	298-4282	2	FILM-WARNING (CRUSH HAZARD, STAY BACK, INTL)	
	42	1	312-5525	1	FILM-WARNING (CUTTING HAZARD HAND, STAY BACK)	
	43	4	303-2668	1	PLATE-INSTRUCTION (AIR CONDITIONER, READ OMM)	
	44	4	359-2380	1	FILM-INSTRUCTION (SERVICE CHART)	
	45	1	367-0844	1	FILM-INSTRUCTION (FUEL, READ OMM)	

E - ORDER BY THE CENTIMETER
N - PARTS MARKED N ON GRAPHIC(S) SHOW ALTERNATE FILM LOCATION ON MACHINE EQUIPPED WITH BUMPERS

301-2682 **PLATE & FILM GP (**contd.**)** **i04797636**

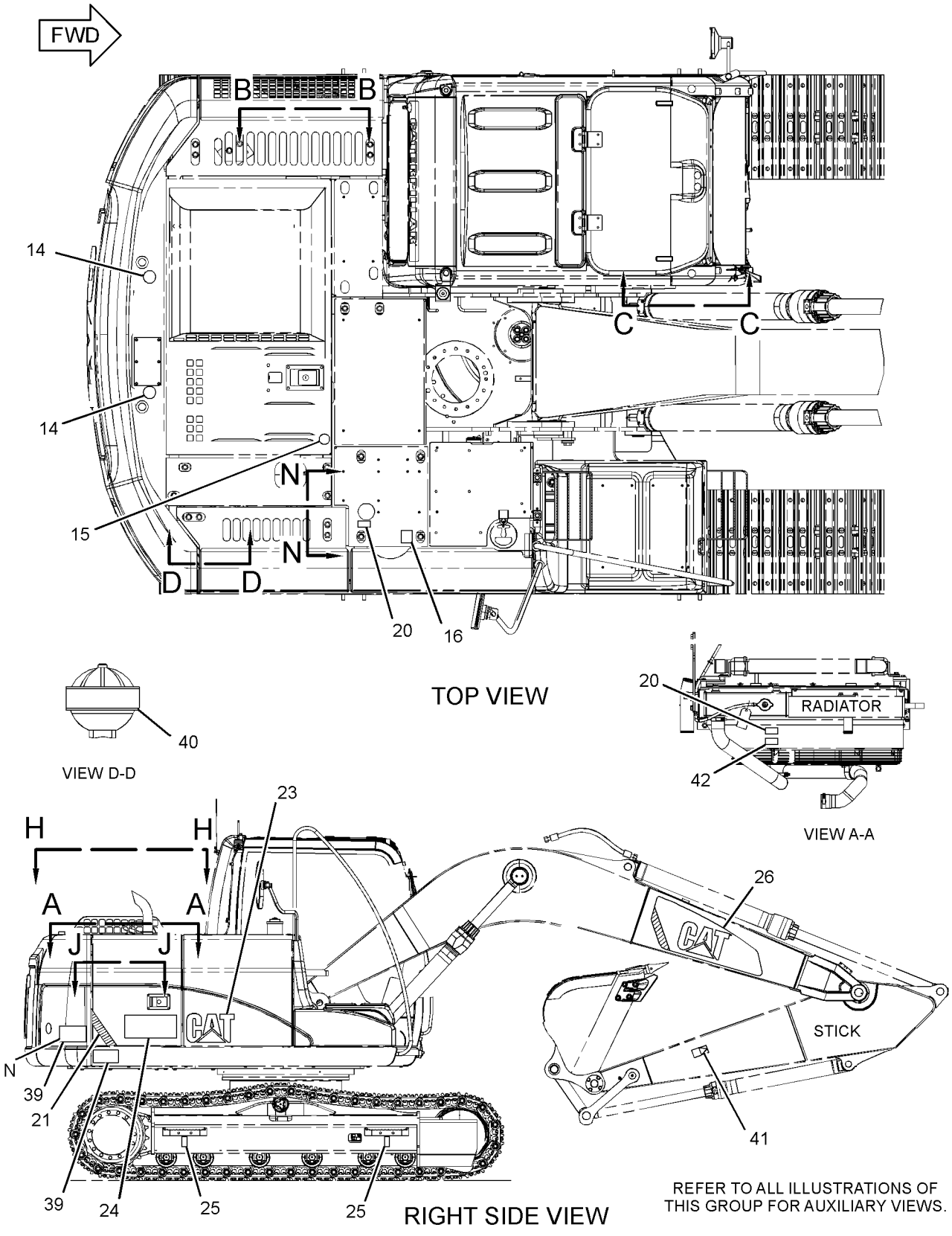

GRAPHIC #1 g02938158

301-2682 **PLATE & FILM GP (**contd.**)** **i04797636**

REFER TO ALL ILLUSTRATIONS OF
THIS GROUP FOR AUXILIARY VIEWS.

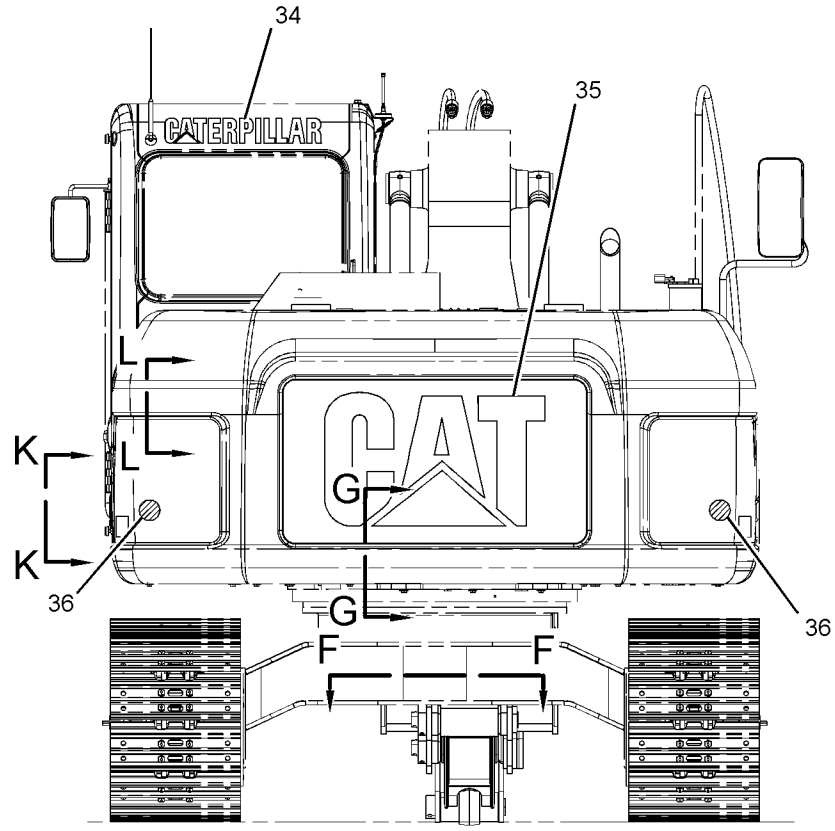

REAR VIEW

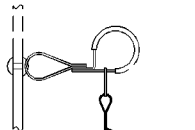

VIEW E-E

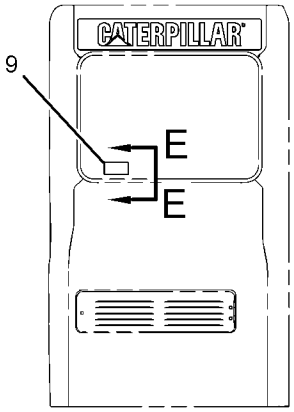

REAR VIEW
(CAB)

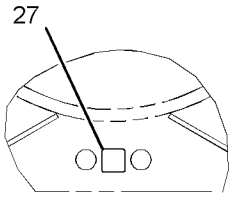

VIEW F-F

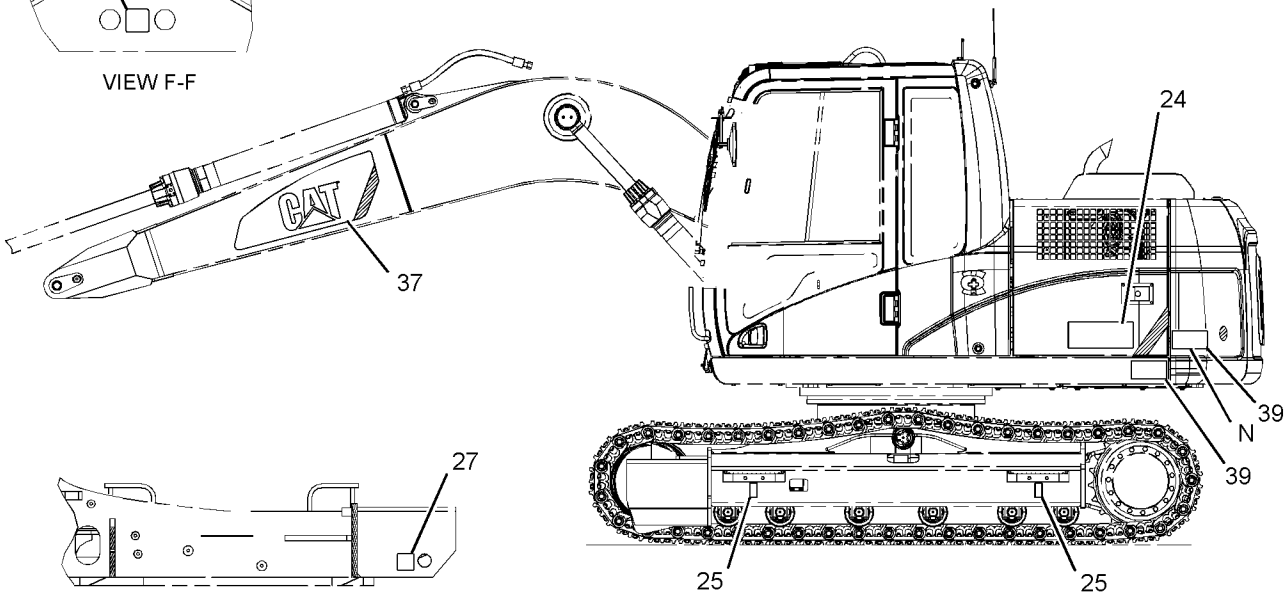

LEFT SIDE VIEW

VIEW G-G

GRAPHIC #2 g02938417

301-2682 **PLATE & FILM GP (**contd.**)** **i04797636**

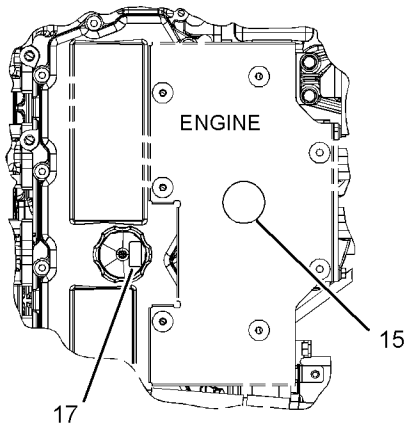

VIEW J-J

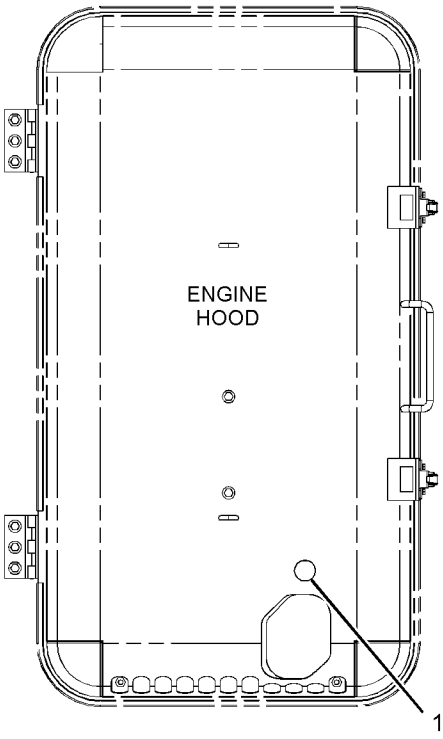

VIEW H-H

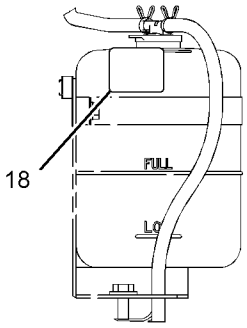

VIEW B-B

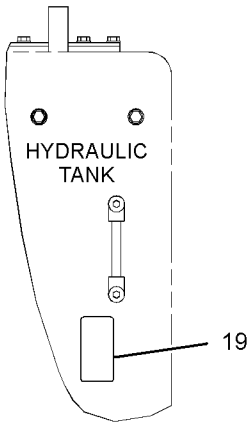

VIEW N-N

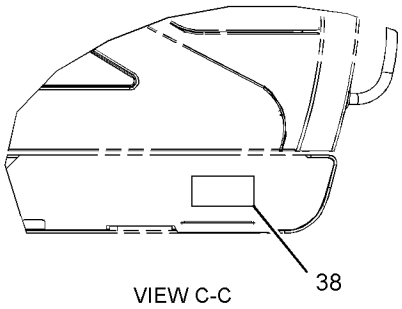

VIEW C-C

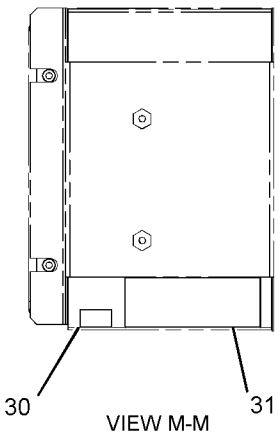

VIEW M-M

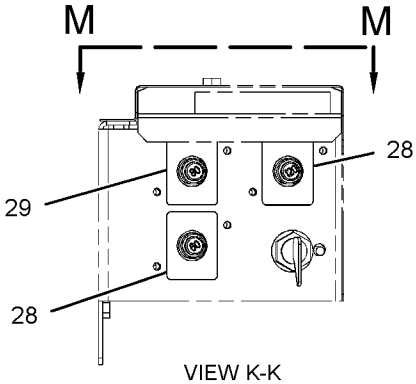

VIEW K-K

GRAPHIC #3 g01881094

301-2682 **PLATE & FILM GP** (contd.) **i04797636**

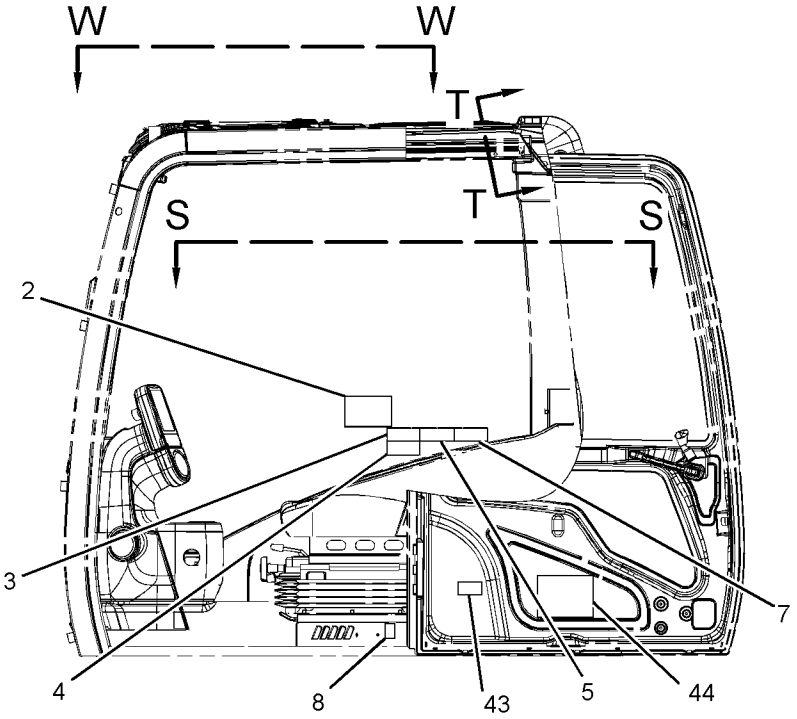

LEFT SIDE VIEW
(CAB)

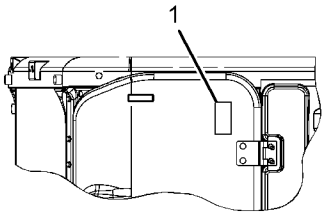

VIEW W-W

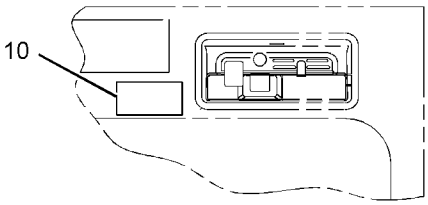

VIEW T-T

OPERATOR PLATFORM

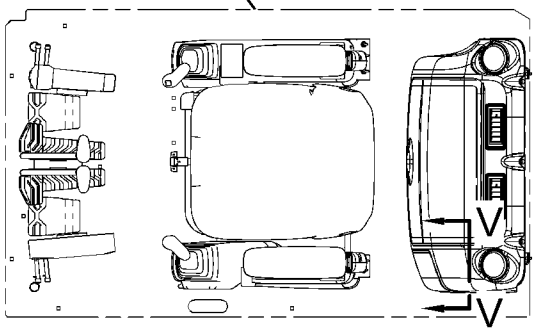

VIEW S-S

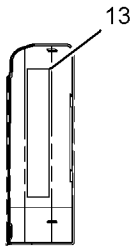

VIEW V-V

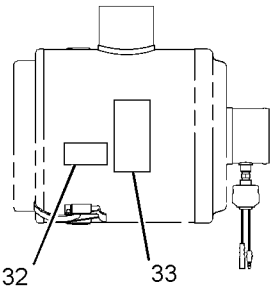

VIEW L-L

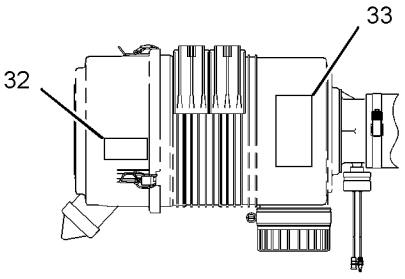

VIEW L-L
(OPTIONAL DESIGN)

GRAPHIC #4 <END> g02913417

301-2682 PLATE & FILM GP

S/N: DLP897-UP
PART OF 301-2680 CHASSIS AR
TYPE 2

SMCS-7405, 7557 **i04846371**

NOTE	REF NO	GRAPHIC REF	PART NUMBER	QTY	PART NAME 1 2 3 4 5 6 (PRODUCT LEVEL)	SEE PAGE
	1	4	223-9818	1	FILM-INSTRUCTION (WINDOW CLEANING, READ OMM)	
	2	4	4I-8472	1	FILM-INSTRUCTION (OPERATOR CONTROLS)	
	3	4	224-0554	1	FILM-WARNING (UNIVERSAL, READ OMM)	
	4	4	266-5431	1	FILM-WARNING (CRUSH HAZARD, READ OMM, INTL)	
	5	4	228-9254	1	FILM-WARNING (ELEC HAZARD, READ OMM, INTL)	
	7	4	221-8045	1	FILM-WARNING (SEAT BELT, INTERNATIONAL)	
	8	4	214-7915	1	FILM-INSTRUCTION (ENGINE SHUTOFF)	
	9	2	187-0661	1	FILM-INSTRUCTION (ALTERNATE EXIT)	
	10	4	242-1588	1	FILM-WARNING (FRONT WINDOW, READ OMM, INTL)	
	11	2	8T-6842	1	FILM-INSTRUCTION (PULL RING, ALTERNATE EXIT)	
	13	4	260-7135	1	FILM-IDENTIFICATION (FUSE PANEL)	
	14	1	7Y-0063	2	FILM-INFORMATION (DO NOT LIFT)	
	15	1,3	167-7270	2	FILM-INSTRUCTION (NO STEP)	
	17	3	144-9126	1	FILM-INSTRUCTION (OIL)	
	18	3	134-7258	1	FILM-INFORMATION (EXTENDED LIFE COOLANT)	
	19	3	242-1510	1	FILM-INSTRUCTION (HYDRAULIC OIL CHECK)	
	20	1	225-4257	2	FILM-WARNING (HOT FLUID UNDER PRESS)	
E	21	1	290-1906		FILM-STRIPE (RED) (45-CM EACH)	
	23	1	290-1729	1	FILM-IDENTIFICATION (CAT)	
	24	1,2	283-9076	2	FILM-IDENTIFICATION (312D)	
	25	1,2	1P-2807	4	FILM-IDENTIFICATION (LIFT EYE LOCATION)	
	26	1	362-3719	1	FILM-IDENTIFICATION (CAT, RH)	
	27	2	7X-7644	4	FILM-IDENTIFICATION (TIE-DOWN)	
	28	3	247-7438	2	FILM-IDENTIFICATION (ELECTRICAL CIRCUIT BREAKER)	
	29	3	247-7437	1	FILM-IDENTIFICATION (BATTERY CIRCUIT BREAKER)	
	30	3	146-6747	1	FILM-INFORMATION (24-VOLT)	
	31	3	225-0312	1	FILM-WARNING (JUMP START, READ OMM, INTL)	
	32	4	224-8946	1	FILM-WARNING (NO ETHER SPRAY/AIR INTK, INTL)	
	33	4	229-0887	1	FILM-INFORMATION (AIR CLEANER)	
	35	2	247-7436	1	FILM-IDENTIFICATION (CAT)	
	36	2	190-5386	2	FILM-IDENTIFICATION (ROUND RED REFLECTIVE)	
	37	2	362-3720	1	FILM-IDENTIFICATION (CAT, LH)	
	38	3	239-6986	1	PLATE-SERIAL NUMBER (MACHINE)	
N	39	1,2	228-2781	2	FILM-WARNING (MACHINE SWING, CRUSHING, INTL)	
	40	1	242-6092	1	FILM-WARNING (ACCUMULATOR PRESSURE)	
	41	1	298-4282	2	FILM-WARNING (CRUSH HAZARD, STAY BACK, INTL)	
	42	1	312-5525	1	FILM-WARNING (CUTTING HAZARD HAND, STAY BACK)	
	43	4	303-2668	1	PLATE-INSTRUCTION (AIR CONDITIONER, READ OMM)	
	44	4	359-2380	1	FILM-INSTRUCTION (SERVICE CHART)	
	45	1	367-0844	1	FILM-INSTRUCTION (FUEL, READ OMM)	

E - ORDER BY THE CENTIMETER
N - PARTS MARKED N ON GRAPHIC(S) SHOW ALTERNATE FILM LOCATION ON MACHINE EQUIPPED WITH BUMPERS

301-2682 **PLATE & FILM GP** (contd.) **i04846371**

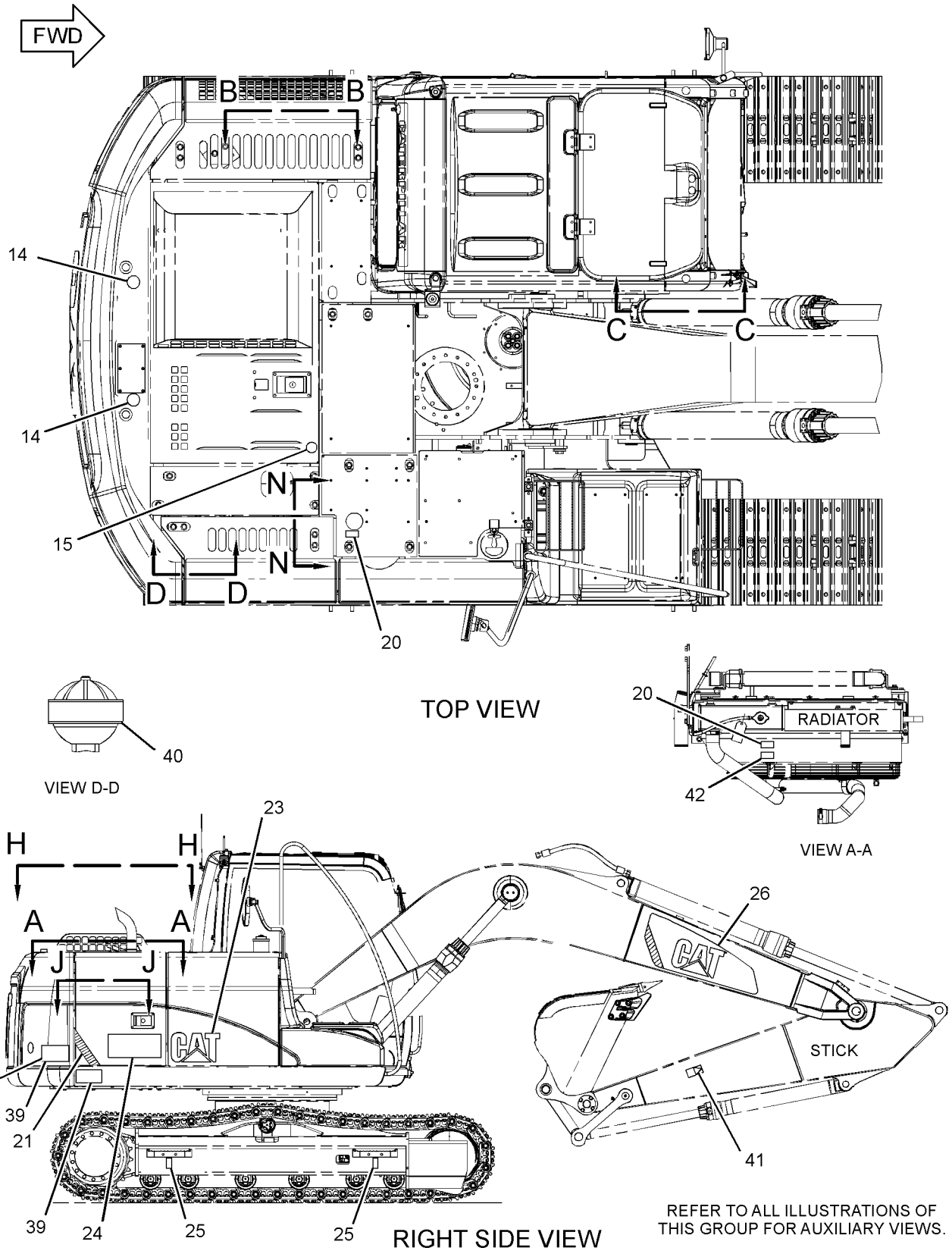

GRAPHIC #1 g02982917

301-2682 **PLATE & FILM GP (**contd.**)** **i04846371**

REFER TO ALL ILLUSTRATIONS OF
THIS GROUP FOR AUXILIARY VIEWS.

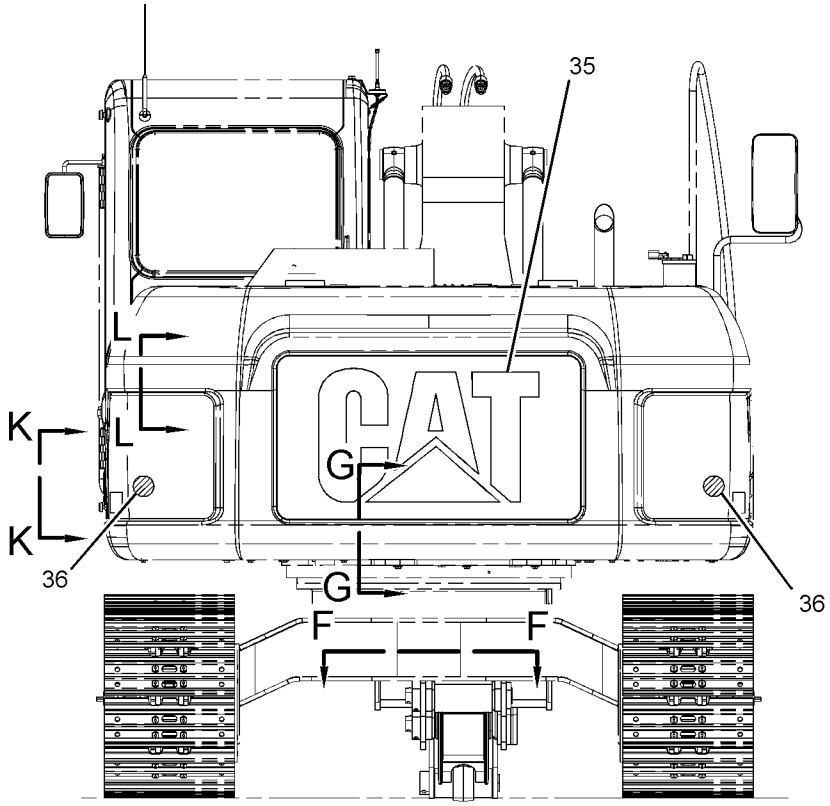

REAR VIEW

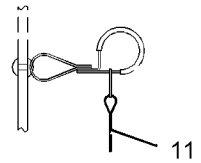

VIEW E-E

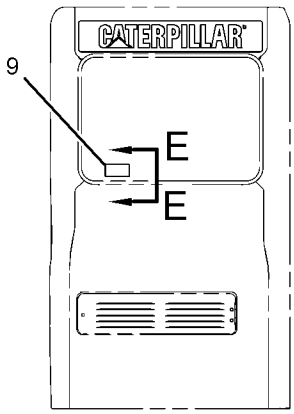

REAR VIEW
(CAB)

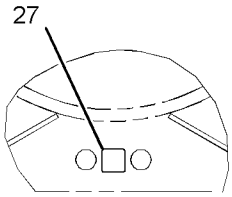

VIEW F-F

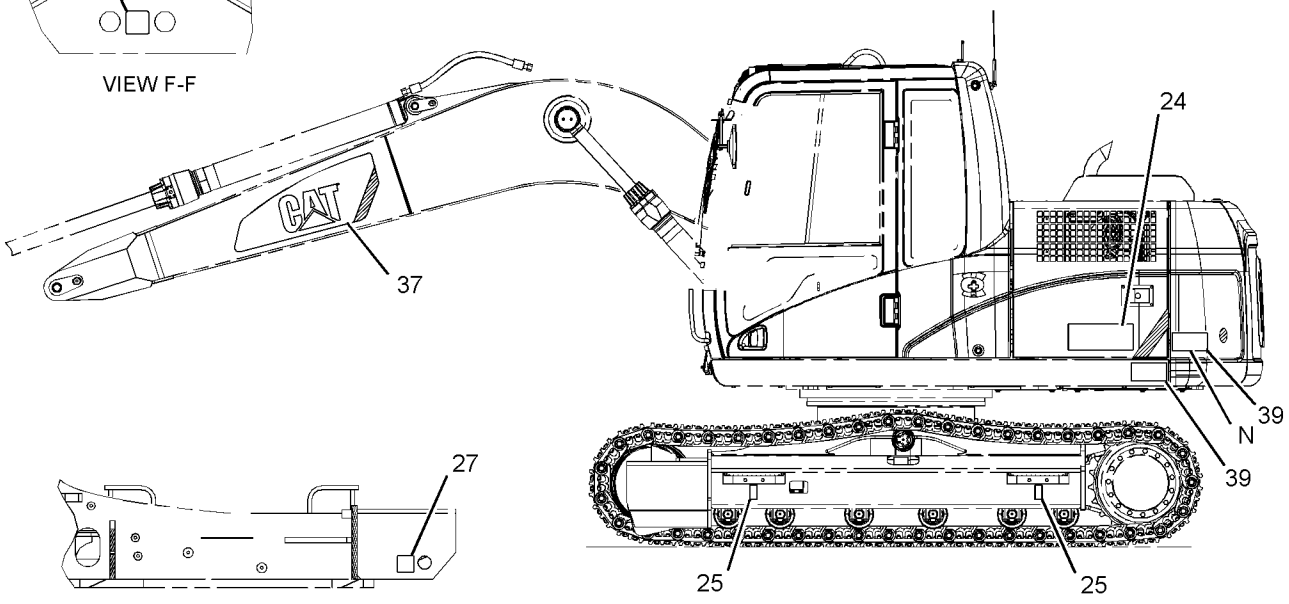

VIEW G-G

LEFT SIDE VIEW

GRAPHIC #2 g02982977

301-2682 **PLATE & FILM GP (**contd.**)** **i04846371**

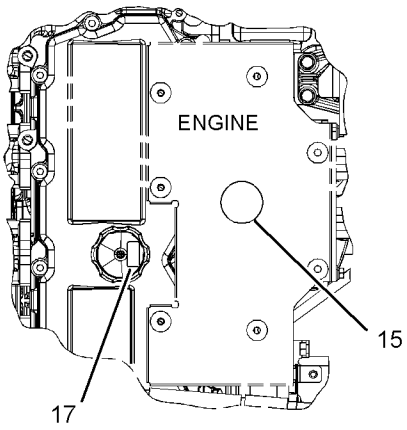

VIEW J-J

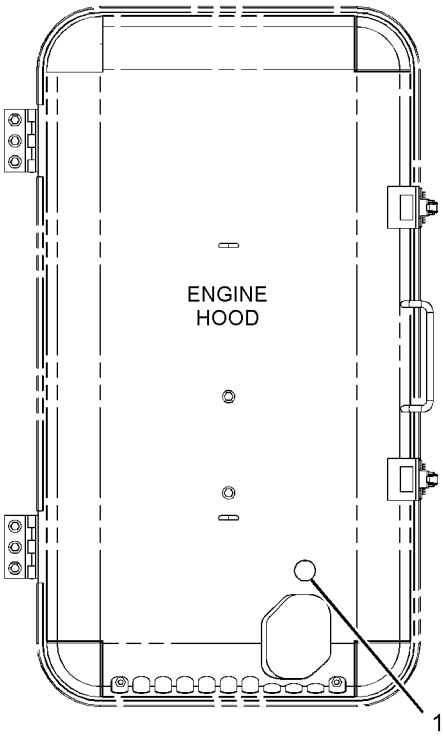

VIEW H-H

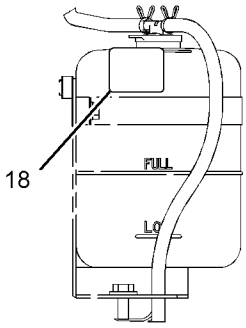

VIEW B-B

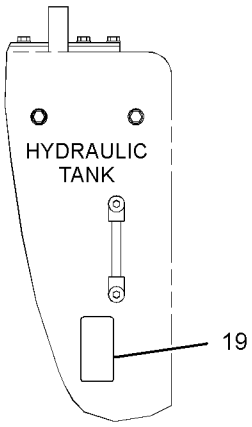

VIEW N-N

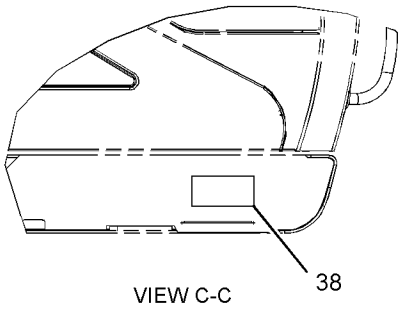

VIEW C-C

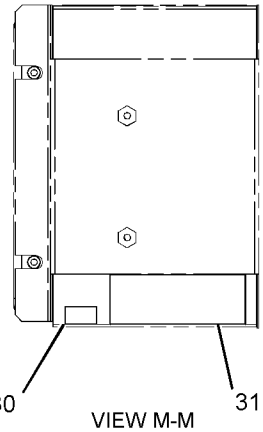

VIEW M-M

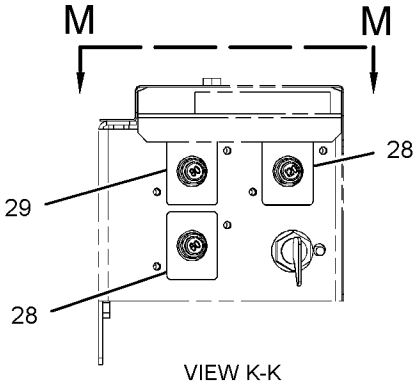

VIEW K-K

GRAPHIC #3 g01881094

301-2682 **PLATE & FILM GP (**contd.**)** **i04846371**

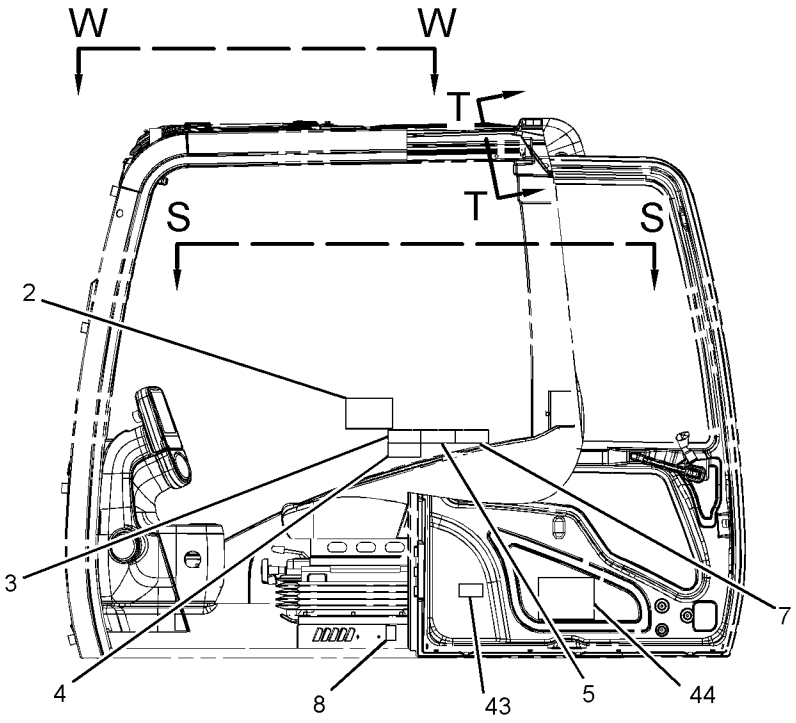

LEFT SIDE VIEW
(CAB)

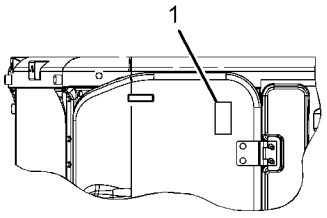

VIEW W-W

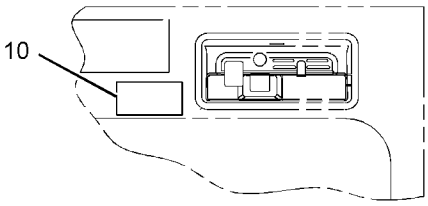

VIEW T-T

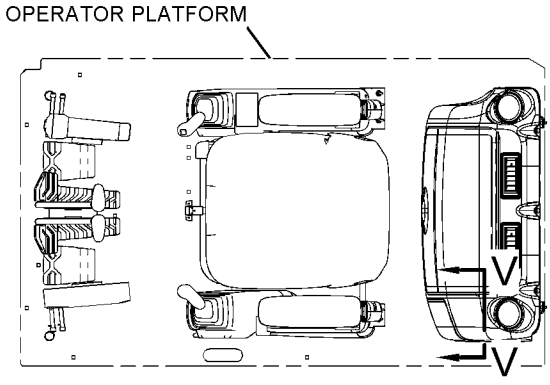

VIEW S-S

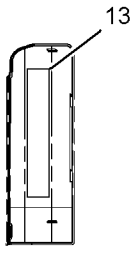

VIEW V-V

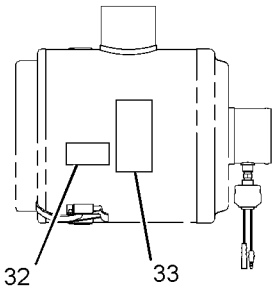

VIEW L-L

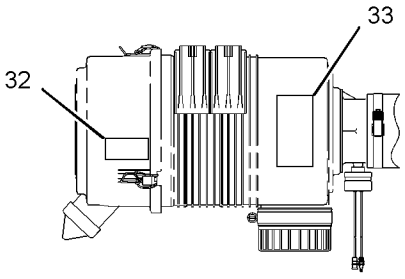

VIEW L-L
(OPTIONAL DESIGN)

GRAPHIC #4 <END> g02913417

PART NUMBER INDEX

Part Page

1

1H-3244 224
228
1H-3338 258
261
1H-4393 791
1H-7339 762
1H-8278 332
334
752
754
1J-2859 788
791
1J-2890 81
1J-5353 916
1J-6472 762
1K-8850 361
1M-6119 159
160
165
166
173
174
1M-6120 159
160
165
166
173
174
1M-6718 849
1M-7250 79
1P-2807 1206
1211
1216
1221
1P-3703 549
553
557
1P-4578 635
1R-0739 49
51
1R-0751 93
1R-5998 955
959
963
967
991
994
997
1R-6009 458
1R-6072 160
166
174
1R-6225 868
870
872
885
886
887
1R-6226 868
870
872
1R-6229 400
402
404
1R-6573 103
1S-0994 632
1S-7251 173
1S-7252 159
165
173
174
1S-9593 858

Part Page

1U-8846 318
322
325
406
408
410
412
416
522
529
745

2

2A-5222 54
2B-0858 788
791
2C-9259 895
896
897
898
905
906
907
908
910
911
912
913
2D-4534 514
2D-6412 1147
1148
2G-8767 166
171
2H-3814 60
2H-3922 257
1189
2H-3934 788
791
2H-9247 542
2L-8050 172
2L-8052 172
2L-8058 172
2L-8060 172
2L-8065 277
2L-8066 277
2L-8067 277
2L-8069 172
2L-8075 172
197
213
214
233
235
239
241
243
277
1023
2L-8076 277
2L-8077 172
197
291
2L-8078 172
225
229
2L-8079 198
2M-0849 1108
2M-4287 916
918
2M-9780 630
632

Part Page

736
739
788
791
800
804
805
863
865
2P-1279 588
920
2P-2537 49
51
2Q-4703 1023
2R-1498 105
107
2S-3440 58
118
120
2S-4078 118
120
134
138
144
146
148
150
152
2S-5926 457
2S-8439 535
2T-2991 49
51
2U-2552 943
1124
2U-5338 513
2W-5975 920
2Y-5685 1059

3

3B-0551 134
138
144
146
148
150
152
3B-4501 202
203
204
3B-4504 93
98
1125
3B-4505 45
55
58
1050
3B-4509 114
578
579
580
581
3B-4618 379
380
382
384
386
388
389
391
394
426

Part Page

3B-8485 549
916
918
3B-8489 406
408
410
412
414
415
418
480
481
482
483
484
486
488
489
490
492
493
494
495
514
876
878
880
882
885
886
887
915
916
918
3D-2824 539
565
573
574
598
603
605
607
609
610
612
613
615
616
623
627
630
632
678
681
736
739
745
788
791
807
813
819
3D-2891 542
3D-2975 916
918
3D-4603 453
3D-9143 339
3E-2310 600
649
652
654
662
670
684

PART NUMBER INDEX

Part	Page
	690
	696
	702
	708
3E-2338	318
	322
	325
3E-3383	262
3E-5169	313
3E-6910	490
3E-7410	654
	662
	670
3E-7420	736
	739
3E-8020	955
	959
	963
	967
	991
	994
	997
3E-8320	221
	224
	228
3E-9872	1175
	1192
3E-9874	955
	959
	963
	967
3F-5108	892
	893
3F-9556	259
	260
3J-1907	105
	107
	132
	134
	136
	138
	140
	142
	144
	146
	148
	150
	152
	154
	249
	516
	542
	561
	573
	574
	583
	588
	600
	622
	623
	626
	627
	630
	632
	638
	640
	641
	644
	645
	648
	649
	651
	652
	654
	655
	656
	657
	662
	663
	664
	665
	670
	671
	672
	673
	678
	681
	684
	685
	686
	690
	691
	692
	696
	697
	698
	702
	703
	704
	708
	709
	710
	714
	716
	718
	720
	722
	724
	726
	728
	730
	732
	736
	745
	748
	750
	762
	785
	807
	813
	819
	826
	845
	846
	849
	863
	865
	920
3J-7283	889
	890
3J-7354	516
	573
	583
	588
	734
	788
	791
	920
3K-0360	107
	148
	152
	253
	463
	521
	525
	555
	565
	573
	603
	605
	618
	630
	632
	640
	644
	655
	656
	663
	664
	671
	672
	673
	679
	682
	722
	734
	745
	748
	749
	786
	788
	791
	863
	865
3P-1896	20
3Q-2034	892
3S-2093	65
	68
	71
	82
	159
	165
	171
	172
	181
	194
	195
	196
	197
	198
	209
	211
	215
	224
	228
	233
	235
	237
	239
	241
	243
	245
	250
	251
	266
	269
	270
	276
	277
	284
	285
	287
	291
	293
	296
	298
	308
	309
	310
	311
	313
	316
	546
	600
	931
	933
	1078
	1082
	1084
	1094
	1122
	1134
	1135
	1137
	1174
	1175
	1189
3S-6049	159
	165
	173
3S-6050	160
	166
	174
3T-4004	269
	276
3T-5760	159
	165
	171
3V-0046	583
3W-6399	1174
4	
4B-4158	454
	455
4B-4276	224
	228
4B-4278	959
	963
	967
	991
	994
	997
4B-7739	788
	791
4B-9783	690
	845
	846
4B-9880	848
4D-1322	918
	920
4D-1836	313
4D-7388	601
4D-7794	920
4H-6112	521
	525
4I-0006	342
	343
	348
	351
4I-0232	379
	380
	382
	384
	386
	388
	389
	391
	394
4I-0378	132
	134
	136
	138
	140

PART NUMBER INDEX

Part	Page
	142
	144
	146
	148
	150
	152
4I-0379	105
	107
4I-0420	1177
	1185
4I-0754	788
	791
4I-0797	600
4I-0800	684
	690
	696
	702
	708
4I-1037	648
	651
	691
	696
	702
	708
4I-1095	569
	571
4I-1163	1189
4I-1205	379
	380
	382
	384
	386
	388
	389
	391
	394
	955
	959
	963
	967
	991
	994
	997
4I-1206	955
	959
	963
	967
	991
	994
	997
4I-1260	1073
4I-1536	461
4I-1536	▶465
4I-1539	465
4I-1671	670
4I-1674	569
	571
4I-1783	561
4I-2187	339
4I-2885	1199
	1201
4I-3038	546
4I-3063	955
	959
	963
	967
	991
	994
	997
4I-3090	956
	960
	964
	968
	991
	994
	997
	1192
4I-3123	955
	959
	963
	967
4I-3144	955
	959
	991
4I-3266	1133
4I-3309	868
	870
	872
4I-3941	648
	651
	684
	690
	696
	702
	708
4I-3988	648
	651
4I-3994	654
	662
	670
4I-4270	955
	959
	963
	967
	992
	995
	998
4I-4286	1050
	1052
	1130
4I-4298	1187
4I-4300	1187
4I-4361	1073
4I-4392	955
	959
	963
	967
	992
	995
	998
4I-4580	1094
	1098
4I-5020	1189
4I-5021	1189
4I-5399	105
	107
	159
	165
	171
4I-5409	1
	▶217
4I-5426	105
	107
4I-5479	159
	165
	171
4I-5480	159
	165
	171
4I-5795	654
	662
	670
	732
4I-5862	465
4I-5900	654
	662
	670
4I-5933	648
	651
4I-6039	654
	662
	670
	745
4I-6287	685
	692
	697
	703
	709
4I-6365	830
	832
4I-6602	1059
	1061
	1063
	1064
4I-6914	▶888
	894
	895
	896
	897
	898
4I-7326	406
	408
	410
	412
	416
4I-7337	447
	448
	▶449
4I-7343	901
	▶925
4I-7345	451
	▶452
4I-7444	406
	408
4I-7446	406
	408
	410
	412
	416
4I-7472	337
4I-7475	450
4I-7476	450
4I-7477	450
4I-7478	450
4I-7488	449
4I-7511	406
	408
4I-7512	406
	408
4I-7538	458
4I-7604	786
4I-7605	786
4I-7889	160
	166
	174
	287
	289
	622
	626
4I-8267	466
4I-8472	1211
	1216
	1221
4I-9521	600
	623
	627
	640
	644
	648
	651
	654
	662
4I-9522	600
	623
	627
	640
	644
	648
	651
	654
	662
	670
	684
	690
	696
	702
	708
	730
4I-9523	640
	644
	648
	651
	654
	662
	670
	684
	690
	696
	702
	708
	718
	720
	724
	726
	728
	730
4I-9524	561
	640
	644
	648
	651
	654
	662
	670
	684
	690
	696
	702
	708
	730
4I-9525	640
	644
	648
	651
	654
	662
	670
	724
	726
	728
	730
4I-9526	640
	644
	648
	651
	654
	662
	714

▶ PRIMARY REFERENCE

PART NUMBER INDEX

Part	Page
	716
	718
	720
	730
4I-9527	561
	630
	632
	640
	644
	648
	651
	654
	662
	670
	684
	690
	696
	702
	708
	714
	716
	724
	726
	728
	730
4I-9528	561
	640
	644
	648
	651
	654
	662
	670
	730
4I-9664	20
	25
	26
4J-0522	635
4J-0523	637
4J-0527	630
	632
	635
	788
	791
	804
	805
4J-5267	563
	564
	576
	577
	582
	742
	743
	789
	792
4J-5477	586
	588
	590
	592
	596
	600
	622
	626
	745
	920
4J-7533	536
	538
	542
	748
	863
4K-0367	892
	893
4K-1388	840
4K-8501	361
	425
4K-8864	160
	166
4L-7124	224
	228
4M-8973	920
4N-9170	406
	408
	410
	412
4P-7428	160
	166
	174
	298
	308
4P-7581	160
	166
	174
	270
	278
	298
	311
4P-8134	160
	166
	174
	1094
	1098
4S-1936	601
4S-1962	1094
	1098
4T-0928	849
4T-1860	▶849
	865
4T-6229	892
	893
4T-9905	863
5	
5A-3604	114
	115
	802
	807
	813
	819
	1141
	1162
	1163
5B-0935	920
5B-3254	1150
5B-5947	47
5C-2874	174
5C-2890	93
	98
	109
	221
	258
	261
	270
	278
	287
	1189
	1192
5C-7261	55
	160
	166
	174
	426
	836
	837
	929
	930
	944
	1090
	1155
	1161
	1164
	1165
	1168
	1169
5C-7793	955
	959
	963
	967
	992
	995
	998
5C-7883	160
	166
	174
5C-8138	1174
5C-8312	1177
5C-9553	181
	221
	339
	686
	692
	698
	704
	710
	789
	792
	931
	933
	1078
	1189
5D-1026	529
	1094
	1098
5D-4822	1061
	1064
	1072
	1074
	1091
5D-8159	62
	74
	76
5F-3144	536
	538
5F-9144	102
5H-1472	865
5H-8624	734
5I-3046	519
5I-4076	654
	662
	670
	691
	697
	703
	709
	718
	720
5I-4363	785
	786
5I-4365	159
	165
	171
	745
5I-4915	25
5I-4936	618
5I-4940	48
5I-4983	29
5I-4993	36
5I-5005	27
5I-5038	53
5I-5087	85
5I-5181	23
5I-5597	87
5I-6125	458
5I-7505	20
5I-7523	20
5I-7525	20
5I-7528	20
5I-7529	20
5I-7540	41
	42
5I-7549	85
5I-7550	85
5I-7558	30
5I-7561	54
5I-7588	23
5I-7599	35
5I-7601	85
5I-7607	29
5I-7610	30
5I-7623	54
5I-7630	45
5I-7632	30
5I-7633	87
	91
5I-7639	87
5I-7642	53
5I-7645	48
5I-7646	58
5I-7650	16
5I-7654	23
5I-7656	30
5I-7660	29
5I-7663	36
5I-7667	38
5I-7677	86
5I-7678	86
5I-7683	30
5I-7691	55
5I-7696	60
5I-7697	60
5I-7724	20
5I-7725	48
5I-7735	58
5I-7750	32
5I-7784	23
5I-7785	23
5I-7786	23
5I-7787	23
5I-7788	23
5I-7789	23
5I-7842	36
5I-7848	87
5I-7862	55
5I-7864	47
5I-7867	58
5I-7896	30
5I-7933	91
5I-7937	87
5I-7941	90
5I-7942	90
5I-7984	157
5I-7985	157
5I-7987	157
5I-7997	157
5I-8009	20
5I-8021	86
5I-8023	86
5I-8056	58
5I-8058	54
	93
	97
5I-8066	47
5I-8067	36
5I-8080	157

▶ PRIMARY REFERENCE

PART NUMBER INDEX

Part	Page
5I-8086	157
5I-8087	157
5I-8088	157
5I-8089	157
5I-8090	157
5I-8091	157
5I-8094	157
5I-8095	157
5I-8097	157
5I-8098	157
5I-8110	36
5I-8124	90
5I-8270	159
	165
	171
5I-8416	461
5I-8416	▶466
5I-8670	530
5I-8708	654
	662
	670
5I-8853	654
	662
	670
5I-8879	565
5I-9368	159
	165
	171
5I-9461	916
	918
5K-3294	1094
5K-8451	105
	107
	724
	726
	728
5K-9090	609
	610
	612
	613
	615
	616
	620
	736
	739
	740
5K-9243	406
	408
	410
	412
	876
5L-3233	81
5L-6326	60
5P-0747	159
	165
5P-0761	159
	165
	171
5P-0767	529
	1095
	1098
5P-1075	339
	398
5P-1076	79
	118
	120
	420
	421
	422
	428
	874
	875
	1061
	1064
	1091
5P-1442	82
	105
	107
5P-2321	277
5P-3454	224
	228
	309
5P-4115	221
	225
	229
	379
	380
	382
	384
	386
	388
	389
	391
	394
5P-4116	156
	339
	1005
	1006
	1007
	1009
5P-4325	1094
5P-4924	105
	107
	132
	134
	136
	138
	140
	142
	144
	146
	148
	150
	152
5P-4961	82
5P-5649	65
	68
	71
5P-5927	1015
5P-5995	293
5P-5998	546
5P-6271	270
	277
5P-6944	107
5P-7175	105
5P-7462	657
	665
	673
	686
	692
	698
	704
	710
5P-7463	657
	665
	673
	686
	692
	698
	704
	710
5P-7464	673
	737
	740
5P-7465	673
	737
	740
5P-7468	609
	612
	615
	620
5P-7469	609
	612
	615
	620
5P-7958	435
	1101
5P-7970	804
5P-8196	49
	51
5P-8247	892
	893
5P-8309	370
	380
	382
	384
	386
5P-8500	124
	125
	128
	129
	264
	1101
5P-8523	1009
5P-9297	213
5P-9909	65
	68
	71
5Q-4212	584
	586
	590
	592
	594
	596
5Q-4213	584
	594
	311
6H-3615	574
6I-1418	187
6I-1449	81
6I-5298	1030
	1032
6I-5342	1073
6I-5470	956
	960
	964
	968
	992
	995
	998
6I-6033	362
	363
	380
	382
	384
	386
	391
	394
6I-6451	453
6I-6477	449
6I-6547	107
6I-6549	453
6I-6590	449
6I-6911	826
6I-6912	826
6I-6923	843
6J-2680	734
6J-7836	920
6K-0806	1038
	1039
	1040
	1041
	1042
	1043
6K-8178	105
	107
6L-3616	876
6P-2216	362
	363
6P-8855	1094
	1098
6V-0357	567
	568
	578
	579
	580
	581
	744
6V-0400	549
	553
	557
6V-0683	657
	665
	673
	686
	692
	698
	704
	710
6V-0852	601
	657
	665
	673
	678
	681
	684
	690
	696
	702
	708
6C-6760	555
6C-8382	1059
	1061
	1064
	1091
6D-1641	49
	51
	1098
6D-3479	174
	1094
6D-4244	1094
6D-4246	160
	166
	174
	630
	632
6D-4636	105
	107
6D-5801	117
6F-4718	750
6F-4855	540
	541
6F-6672	541
6F-7045	257
6F-7556	30
6F-7557	30
6G-2256	166
	171
6G-2263	160
	166
	171

6

▶ PRIMARY REFERENCE

PART NUMBER INDEX

Part	Page
	718
	720
	736
	739
	788
	791
6V-1249	673
6V-1874	609
	612
	615
6V-1876	635
6V-1903	49
	51
6V-2235	1095
6V-2369	221
	224
	228
	309
6V-3265	1095
	1175
6V-3531	924
6V-3965	601
	656
	664
	673
	679
	681
	686
	692
	698
	704
	710
	718
	720
	736
	739
	788
	791
6V-4249	744
6V-5049	250
6V-5210	202
	203
	204
	270
	278
6V-5215	16
	30
	93
	97
6V-5266	49
	51
6V-5324	849
6V-5386	84
6V-5391	542
6V-5645	221
	225
	229
6V-5683	943
	1124
6V-5842	567
	568
	578
	579
	580
	581
	744
6V-5843	567
	568
6V-6609	107
6V-6715	199
6V-7238	521
	525
6V-7357	379
	382
	384
	386
	388
	389
	391
	394
	1025
	1026
	1027
	1095
6V-7636	956
	960
	964
	968
	992
	995
	998
6V-7646	1023
6V-7658	452
6V-7660	453
6V-7726	318
	322
	325
6V-8076	728
6V-8144	762
6V-8185	224
	228
6V-8186	259
	260
6V-8187	221
	224
	228
6V-8202	1139
	1140
	1141
	1142
	1143
	1144
6V-8231	35
	36
	87
	1192
6V-8236	30
6V-8362	264
	265
6V-8363	1189
6V-8370	1189
6V-8378	259
	260
6V-8397	561
	573
	586
	588
	590
	592
	596
	600
	622
	623
	626
	627
	638
	640
	641
	644
	645
	648
	649
	651
	652
	654
	655
	656
	657
	662
	663
	664
	665
	670
	671
	672
	678
	681
	684
	685
	686
	690
	691
	692
	696
	697
	698
	702
	703
	704
	708
	709
	710
	714
	716
	718
	720
	722
	724
	726
	728
	730
	732
	846
	920
6V-8398	539
	551
	555
	559
	573
	574
	584
	586
	590
	592
	594
	596
	603
	618
	623
	627
	630
	632
	656
	663
	664
	672
	673
	678
	679
	681
	682
	745
	850
	851
6V-8399	847
6V-8400	828
	834
6V-8467	511
6V-8556	603
6V-8625	603
6V-8627	622
	626
6V-8632	565
6V-8633	603
6V-8635	740
6V-8636	561
	573
	600
	638
	640
	644
	648
	651
	655
	663
	671
	685
	691
	697
	703
	709
	718
	720
	724
	726
	728
	730
	732
	736
	739
	745
6V-8637	598
	605
	607
	610
	613
	616
	678
	681
	745
6V-8638	630
	632
6V-8639	655
	663
	672
	745
6V-8641	600
	745
6V-8642	736
	739
6V-8647	920
6V-8713	565
	573
	598
6V-8716	598
	603
	635
6V-8721	630
	632
6V-8722	565
6V-8724	561
	600
	622
	626
	641
	645
	648
	651
	656
	664
	672
	678
	681
	685
	691

► PRIMARY REFERENCE

PART NUMBER INDEX

Part	Page
	697
	703
	709
	714
	716
	718
	720
	722
	724
	726
	728
	730
	732
6V-8774	685
	691
	697
	703
	709
6V-8775	745
6V-8778	736
	739
6V-8781	649
	652
	656
	664
	672
	685
	691
	697
	703
	709
	732
6V-8782	573
	656
	664
	672
6V-8784	539
6V-8785	609
	612
	615
6V-8935	586
	590
	592
	596
	600
	622
	626
6V-8936	586
	590
	592
	596
6V-8942	539
	603
6V-8943	49
	51
6V-8946	736
	739
6V-8979	588
	920
6V-8980	588
	920
6V-8987	640
	644
6V-9001	561
	600
	638
	648
	651
	656
	664
	672
	692
	718
	720
6V-9002	632
6V-9004	623
	627
6V-9005	620
6V-9007	49
	51
	573
	598
	609
	612
	615
	630
	632
	678
	681
6V-9008	609
	612
	615
	620
	736
	739
6V-9168	588
	641
	645
	920
6V-9182	734
	736
	739
6V-9200	573
6V-9491	233
	235
	239
	241
	243
6V-9672	270
	278
6V-9746	539
	549
	553
	557
	569
	571
	573
	574
	598
	603
	605
	607
	609
	610
	612
	613
	615
	616
	622
	623
	626
	627
	630
	632
	635
	678
	681
	734
	736
	739
	743
	744
	745
6V-9828	920
6V-9829	920
6V-9831	567
	568
	578
	579
	580
	581
6V-9832	744
6V-9836	656
	664
	672
6V-9837	603
	627
	633
6V-9850	561
	656
	664
	672
	678
	681
	685
	691
	697
	703
	709
6V-9851	618
	656
	664
	672
	678
6V-9852	736
	739
6V-9853	49
	51
	609
	612
	615
	734
	736
	739
6V-9854	736
	739
6V-9873	630
	632
6V-9876	640
	644
6V-9877	630
	632
6W-2464	583
6W-6005	159
	165
	171

7

Part	Page
7C-1493	49
	51
7D-7111	140
	142
	146
7D-7233	730
7F-0560	180
7F-3708	426
7G-1060	313
7G-5984	635
7G-5985	635
7H-3171	449
	452
7I-0057	750
7I-0058	750
7I-0060	750
7I-0061	750
7I-0062	750
7I-0063	750
7I-0375	1094
	1098
7I-0986	852
7I-1288	635
7I-1303	745
7I-2272	748
	749
	762
	853
	855
	857
	859
7I-2673	80
	81
	159
	165
	213
	214
	298
	607
	1095
	1122
	1163
	1171
7I-2753	826
7I-6843	878
	880
	882
7I-6896	876
7I-7192	807
	813
	819
7I-7203	768
	769
	770
	771
	772
	773
	774
	775
	776
	777
	778
	779
	780
	781
	782
7I-7204	802
	807
	813
	819
7I-7206	802
	807
	813
	819
7I-7207	802
	807
	813
	819
7I-7208	802
	807
	813
	819
7I-7235	807
	813
	819
7I-7241	808
	814
	820
7I-7250	808
	814
	820
7I-7321	785
	786
7I-7403	852

PART NUMBER INDEX

Part	Page
7I-7625	522
7I-7626	522
7I-7632	522
7I-7633	522
7I-7634	522
7I-7635	522
7I-7636	522
7I-7638	522
7I-7639	522
7I-7640	522
7I-7641	522
7I-7642	522
7I-7643	522
7I-7644	522
7I-7645	522
7I-7646	522
7I-7647	522
7I-7648	522
7I-7649	522
7I-8084	808
	814
	820
	848
	853
	857
7I-8102	852
7I-8252	648
	651
7I-8272	285
7J-8337	1150
	1153
7J-9108	551
	559
	563
	564
	565
	567
	568
	569
	571
	573
	574
	576
	577
	578
	579
	580
	581
	582
	598
	736
	739
	742
7K-1181	118
	120
	159
	165
	171
	279
	284
	285
	287
	289
	291
	293
	296
	298
	300
	308
	309
	310
	311
	312
	313
	316
	561
	565
	573
	588
	598
	600
	603
	622
	623
	626
	627
	630
	632
	640
	644
	648
	651
	654
	662
	670
	681
	684
	690
	696
	702
	708
	714
	716
	718
	720
	724
	726
	728
	730
	736
	739
	745
	1013
	1015
	1023
	1084
	1094
	1098
	1122
	1134
	1135
	1137
7M-7410	749
7M-8485	318
	322
	325
	598
	603
	609
	612
	615
	620
	635
	734
	736
	739
	740
	862
7N-0718	221
	224
	228
7N-0718	▶257
7N-2353	266
7N-3718	214
7N-5274	160
	166
	174
7T-1099	104
	354
	357
	1091
7T-6799	264
	265
7T-8890	1174
7W-9028	49
	51
7X-0578	956
	960
	964
	968
	992
	995
	998
	1177
7X-0796	30
	35
	36
	57
	567
	568
	578
	579
	580
	581
	744
7X-0818	657
	665
	673
7X-0873	622
	626
7X-2459	654
	662
	670
7X-2533	199
7X-2534	188
7X-2535	97
7X-2536	306
	1028
7X-2538	1095
	1098
7X-2549	549
	551
	559
	584
	594
7X-2552	757
	868
	870
7X-2553	762
	1059
7X-2554	65
	68
7X-2555	406
	410
7X-2556	762
7X-2559	1066
7X-2619	160
	166
	174
	221
	527
7X-2621	160
	166
	174
	192
	193
	196
	298
	313
7X-3164	555
7X-6315	190
7X-7478	420
	421
7X-7644	1211
	1216
	1221
7X-7729	65
	68
	71
	79
	618
	737
	740
	931
	933
	963
	967
	994
	997
	1078
7Y-0059	1
	▶1101
7Y-0063	348
	351
	1211
	1216
	1221
7Y-0203	925
7Y-0204	925
7Y-0466	472
	473
7Y-0468	472
	473
	474
	475
7Y-0623	1059
	1061
	1064
	1091
7Y-0633	400
	402
	404
7Y-1900	472
7Y-1901	472
	473
7Y-1902	472
	473
7Y-1904	472
	473
7Y-1976	62
	65
	68
	71
	74
	76
7Y-2155	452
7Y-2158	452
7Y-2159	452
7Y-2162	452
7Y-2292	354
	357
7Y-3195	165
	171
7Y-3470	1192
7Y-3472	1192
7Y-3474	1174
7Y-3732	549
	553
	557
7Y-3820	172
7Y-3821	172
7Y-3919	1082
7Y-3920	1082
7Y-3950	266
	277
7Y-3951	197

▶ PRIMARY REFERENCE

PART NUMBER INDEX

Part	Page
	233
	235
	239
	241
	243
	269
	276
	277
7Y-3952	197
	233
	235
	239
	241
	243
	269
	277
7Y-3953	266
7Y-3954	269
	276
7Y-3955	270
	277
7Y-3958	270
	277
7Y-3962	122
	172
	198
	201
	206
	208
	211
	215
	233
	235
	239
	241
	243
	277
	284
7Y-3963	122
	172
	201
	206
	208
	211
	215
	233
	235
	239
	241
	243
	277
	284
	293
	296
7Y-3964	122
	172
	201
	206
	208
	211
	215
	233
	235
	239
	243
	277
7Y-3965	122
	172
	201
	206
	208
	211
	215
	233

Part	Page
	235
	239
	243
	277
	293
	296
7Y-3967	296
7Y-3995	172
7Y-3996	172
7Y-4199	648
	651
7Y-4217	840
7Y-4224	332
	752
	754
	863
	865
7Y-4366	718
	720
7Y-4444	461
7Y-4444	▶467
7Y-4868	549
	551
	553
	557
	559
	569
	571
7Y-5010	863
	865
7Y-5088	654
	662
	670
7Y-5226	160
	166
7Y-5237	637
7Y-5456	159
	165
	171
7Y-5458	262
	263
7Y-5464	262
	263
7Y-5499	224
	228
7Y-5505	269
	276
7Y-7364	1192
7Y-8168	1095
	1098
7Y-8436	840
7Y-8437	840
7Y-8561	1007
	1009
7Y-8621	1070
	1071
7Y-8622	1070
	1071

8

Part	Page
8C-3095	199
	536
	538
8C-3205	742
8C-3290	342
	346
	347
	348
	350
8C-3312	921
8C-3338	762
8C-3445	49
8C-3446	49
	788
	791
8C-3451	789
	792
8C-5063	296
8C-5607	199
8C-5608	186
	199
8C-5918	159
	165
	171
8C-6354	270
	277
8C-6358	180
8C-6364	915
8C-6561	583
8C-6712	49
8C-6965	834
8C-8400	573
8C-8451	97
	160
	166
	174
	186
8C-8580	1023
8C-8988	685
	691
	697
	703
	709
	714
	716
	732
8C-8989	623
8C-8992	422
	428
8D-7209	1150
	1153
8E-3751	901
	▶927
8E-6259	927
	928
8E-9490	905
	906
	907
	908
	909
8F-1434	259
	260
	1189
8F-7219	102
8F-8882	536
	538
8H-2282	1070
	1071
8H-3481	1173
8H-5303	257
8H-5306	257
8H-9819	788
	791
8J-1256	160
	166
	174
8L-2779	114
	115
8L-2786	107
8L-5008	920
8L-8413	159
	160
	165
	166
	171

Part	Page
	173
	174
8M-2773	623
	627
	1095
8N-0869	159
	165
	173
8N-1549	172
8N-1725	159
	165
	173
8P-9770	902
	903
	904
	905
	906
	907
	908
	909
	910
	911
	912
	913
8R-1803	953
	972
8S-0934	1145
	1147
	1148
8S-4723	1145
	1147
	1148
8S-4724	1145
8T-0075	649
	652
	655
	663
	672
	685
	691
	697
	703
	709
8T-0077	679
	682
8T-0114	1028
8T-0164	623
	627
8T-0197	598
	603
	609
	612
	615
	734
8T-0269	1023
	1103
	1104
8T-0271	578
	579
	580
	581
	744
8T-0288	854
8T-0328	132
	134
	136
	138
	140
	142
	144
	146
	148
	150
	152

PART NUMBER INDEX

Part	Page
	154
	160
	166
	174
	221
	225
	229
	270
	278
	931
	933
	1078
	1135
	1137
8T-0337	313
8T-0341	567
	568
8T-0343	828
8T-0347	750
8T-0357	406
	408
	410
	412
	416
8T-1158	318
	322
	325
	826
	828
	834
8T-1159	452
	843
8T-1160	744
8T-1687	618
	630
	656
	664
8T-1715	107
8T-1889	174
8T-1890	174
8T-1905	623
	627
	649
	652
	656
	664
	672
	678
	681
	685
	692
	697
	703
	709
	714
	716
	724
	726
	728
	730
8T-2530	565
8T-2920	737
	740
8T-3490	51
	97
	104
	582
	1091
8T-3518	180
8T-3597	382
	384
	390
	393
	428
8T-3647	1005
	1006
8T-4121	49
	51
	57
	60
	62
	65
	68
	71
	74
	76
	82
	83
	84
	87
	93
	97
	105
	107
	118
	120
	160
	166
	174
	183
	192
	193
	195
	196
	201
	208
	211
	213
	219
	220
	250
	285
	289
	298
	300
	302
	311
	313
	361
	379
	380
	382
	384
	386
	388
	389
	391
	394
	406
	408
	410
	412
	416
	426
	522
	529
	551
	555
	559
	563
	564
	565
	576
	577
	582
	586
	588
	590
	592
	596
	601
	603
	605
	607
	616
	618
	623
	627
	630
	632
	635
	637
	638
	641
	645
	657
	665
	673
	686
	692
	698
	704
	710
	718
	720
	722
	724
	726
	728
	730
	742
	743
	745
	758
	759
	760
	762
	786
	789
	792
	876
	921
	931
	933
	1005
	1006
	1007
	1009
	1011
	1013
	1015
	1023
	1028
	1029
	1045
	1078
	1081
	1095
	1098
	1122
	1126
	1133
	1166
	1175
	1189
8T-4122	451
8T-4127	270
	278
8T-4131	924
8T-4132	542
	1068
8T-4133	105
	107
	160
	166
	174
	201
	208
	211
	213
	339
	361
	379
	380
	382
	384
	386
	388
	389
	391
	394
	542
	551
	578
	580
	767
	828
	834
	876
	959
	963
	967
	992
	995
	998
	1007
	1009
8T-4136	49
	51
	65
	68
	71
	76
	83
	84
	97
	105
	107
	160
	166
	174
	250
	289
	300
	302
	318
	322
	325
	406
	408
	410
	412
	416
	426
	555
	565
	618
	637
	638
	641
	645
	657
	665
	673
	686
	692

► PRIMARY REFERENCE

PART NUMBER INDEX

Part	Page
	698
	704
	710
	722
	737
	740
	762
	786
	789
	792
	920
	931
	933
	1028
	1045
	1078
	1095
8T-4137	30
	32
	49
	51
	65
	68
	71
	79
	105
	107
	160
	166
	174
	183
	201
	208
	211
	219
	220
	285
	298
	311
	313
	454
	455
	588
	601
	605
	607
	623
	627
	630
	632
	641
	645
	657
	665
	673
	686
	692
	698
	704
	710
	718
	720
	724
	726
	728
	745
	762
	789
	792
	920
	931
	933
	991
	994
8T-4138	117
	302
	380
	1071
	1094
8T-4139	549
	551
	553
	555
	559
	569
	571
	584
	586
	590
	592
	594
	596
	609
	612
	615
	620
	623
	627
	635
	657
	665
	673
	710
	763
	1029
	1059
	1061
	1064
	1091
8T-4140	124
	128
	757
	763
	794
8T-4171	221
	225
	229
	300
	456
	1012
	1084
8T-4172	30
	1005
	1006
	1098
8T-4174	1066
8T-4176	623
	627
8T-4177	686
	692
	698
	704
	710
8T-4178	641
	645
8T-4179	160
	166
	174
	354
	357
	400
	402
	404
	635
	730
	868
	870
	872
	885
	886
	887
	889
	890
	945
	974
	978
	980
	982
8T-4182	311
	563
	564
	576
	577
	582
	1005
	1006
8T-4183	542
	610
	613
	616
	620
	635
	888
8T-4184	118
	120
	535
	549
	553
	557
	559
	603
	613
	616
	618
	789
	792
8T-4185	76
	160
	166
	174
	318
	322
	325
	551
	555
	559
	563
	564
	576
	577
	601
	623
	627
	743
	763
8T-4186	160
	166
	174
	311
8T-4189	62
	74
	76
	156
	679
	682
	1007
	1009
	1098
8T-4190	945
	974
	978
	980
	982
8T-4191	20
	23
	82
	160
	166
	174
	195
	289
	529
	638
	724
	726
	728
	730
	876
	1028
	1045
	1095
	1098
	1122
	1133
	1166
	1175
	1189
8T-4192	79
	218
	542
	555
	574
	657
	665
	673
	686
	692
	698
	704
	868
	870
	872
	874
	875
	1007
	1009
	1059
	1061
	1063
	1064
	1091
	1108
	1109
8T-4193	734
8T-4194	557
	563
	564
	565
	582
	584
	594
	630
	632
	686
	692

PART NUMBER INDEX

Part	Page
	698
	704
	710
8T-4195	57
	62
	74
	97
	105
	118
	120
	313
	398
	522
	553
	586
	590
	592
	596
	686
	692
	698
	704
	710
	730
	760
	1013
	1015
	1126
8T-4196	49
	51
	76
	107
	563
	564
	576
	577
	582
	603
	616
	618
	635
	743
8T-4197	49
8T-4198	722
8T-4199	406
	408
	410
	412
	1095
8T-4200	65
	68
	71
	78
	114
	115
	206
	209
	215
	339
	535
	657
	665
	673
	1070
	1071
	1082
8T-4205	221
	224
	228
8T-4223	32
	160
	166
	174
	202
	203
	204
	213
	214
	218
	303
	306
	339
	354
	357
	524
	526
	535
	549
	551
	553
	555
	557
	559
	563
	564
	565
	569
	571
	574
	582
	584
	586
	590
	592
	594
	596
	601
	603
	610
	613
	616
	618
	620
	623
	627
	630
	632
	635
	637
	657
	665
	673
	686
	692
	698
	704
	710
	730
	734
	743
	783
	784
	789
	792
	888
	945
	974
	978
	980
	982
	1005
	1006
	1007
	1009
	1029
	1059
	1061
	1063
	1064
	1091
	1098
	1147
	1148
8T-4224	17
	49
	51
	62
	65
	68
	71
	74
	76
	78
	187
	206
	209
	215
	339
	426
	565
	657
	665
	673
	679
	682
	686
	692
	698
	704
	710
	789
	792
	929
	930
	944
	1005
	1006
	1028
	1059
	1061
	1064
	1070
	1071
	1082
	1090
	1091
	1095
	1098
	1130
	1155
	1161
	1164
	1165
	1168
	1169
8T-4226	160
	166
	174
8T-4240	332
	334
	752
	754
8T-4241	517
	519
8T-4244	202
	203
	204
	559
8T-4648	555
	574
	601
	783
	784
8T-4779	956
	960
	992
8T-4780	400
	402
	404
8T-4896	553
8T-4908	55
	789
	792
8T-4910	551
	553
	569
	571
	574
	584
	594
	601
	623
	627
	743
	945
	974
	978
	980
	982
	1005
	1006
	1098
8T-4944	332
	334
	752
	754
8T-4956	549
	557
	605
	607
	610
	613
	620
	637
8T-4970	206
	209
	215
	222
	225
	229
	1122
	1174
	1175
8T-4971	1007
	1009
	1011
	1095
8T-4984	65
	68
	71
	83
	84
8T-4985	79
8T-5005	160
	166
	174
	287
	289
	623
	627
	657
	665
	673
	742
8T-5041	524
	526

► PRIMARY REFERENCE

PART NUMBER INDEX

Part	Page
8T-5360	1150
	1153
8T-5413	361
8T-6411	206
	209
8T-6412	206
	209
8T-6466	174
	313
	758
	759
8T-6693	270
	278
8T-6703	65
	68
	71
	83
	635
8T-6726	78
8T-6759	749
	785
	786
	828
8T-6763	493
	494
	495
8T-6842	1211
	1216
	1221
8T-6868	557
	623
	627
	945
	974
	978
	980
	982
8T-6869	657
	665
	673
8T-6870	58
	686
	692
	698
	704
	710
	718
	720
8T-6876	633
	656
	664
	672
8T-7087	620
8T-7338	433
8T-7547	49
	51
	565
	763
8T-7964	45
8T-7971	555
	1109
8T-8441	916
	918
8T-8729	140
	142
	156
	172
	197
	215
	259
	260
	277
	291
	293
	546
	791
	856
	1004
	1084
8T-8730	172
	198
	277
	293
	1023
	1084
8T-8737	172
	197
	224
	228
	233
	235
	239
	241
	243
	262
	263
	277
	291
	293
	1035
	1036
	1044
	1084
	1098
	1120
	1121
8T-8799	172
	309
8T-8887	714
	716
8T-9515	863
	865
8T-9598	40
	60
8T-9599	763
8T-9756	159
	165
	171
8U-5470	918
8V-1715	1066
	1068
	1086
8Y-6352	949
	952
	971
8Y-6967	945
	974
	978
	980
	982
	171
9G-0005	159
	165
	171
9G-4343	172
	221
	224
	228
	269
	276
	309
9G-7641	233
	239
	241
9G-7641	►265
9G-8451	224
	228
9G-8909	160
	166
	174
9L-9188	49
	51
9M-2307	429
	431
9M-5590	857
9M-5732	429
	431
9M-7959	79
9M-8406	105
	107
9M-9439	79
9N-3666	142
	144
	150
9N-4302	927
9R-3572	1091
9S-3232	1094
9S-4167	105
9S-4181	598
	635
	734
9S-4182	734
9S-4183	807
	813
	819
9S-4185	107
	630
	632
	656
	664
	672
	722
	734
	920
9S-4188	49
	51
9S-4191	51
	641
	645
	648
	651
	656
	664
	672
	685
	691
	697
	703
	709
	722
	732
	750
	763
	807
	813
	819
9S-5282	535
9S-6130	134
	138
	144
	146
	148
	150
	152
9S-8001	542
9S-8002	117
	514
	516
9S-8004	105
	514
	516
	748
	785
	863
	865
9S-8005	748
	749
	786
9S-8006	863
	865
9T-6001	1122
9V-3659	361
9W-0335	269
	276
9W-0844	172
	277
	291
	293
	1084
9W-0852	122
	172
	197
	213
	224
	228
	291
	293
9W-1951	270
	277
9W-3340	513
9X-0196	172
9X-0199	1189
9X-1813	156
	247
	258
9X-2027	318
	322
	325
9X-2041	947
	956
	960
	964
	968
	984
	986
	989
	992
	995
	998
	1019
	1021
	1048
	1049
9X-2042	209
	211
	215
	267
	270

9

► PRIMARY REFERENCE

PART NUMBER INDEX

Part	Page
	278
	296
	950
	953
	956
	960
	964
	968
	971
	992
	995
	998
	1019
	1050
	1052
	1074
	1130
	1177
	1180
	1181
	1192
9X-2043	209
	211
	215
9X-2044	271
	278
	950
	953
	955
	956
	959
	960
	963
	964
	967
	968
	991
	992
	994
	995
	997
	998
	1173
	1177
	1189
	1192
9X-2045	362
	363
	380
	382
	384
	386
	391
	394
	956
	960
	964
	968
	992
	995
	998
	1013
	1015
	1073
	1177
9X-2046	1013
	1015
	1118
	1119
	1173
9X-2085	574
	640
	644
9X-2201	84
9X-2297	698
	704
	710
9X-2537	826
9X-2616	1156
	1157
9X-3401	36
	144
	146
	148
	152
	172
	197
	247
	252
	253
	263
	277
	291
	296
	605
	638
	655
	663
	671
	684
	691
	697
	703
	709
	724
	726
	728
	732
	1033
	1034
	1035
	1036
	1044
9X-3402	172
	197
	233
	235
	239
	241
	243
	253
	277
	291
	293
	648
	651
9X-3463	201
	205
	208
	211
9X-3592	497
	499
	501
	503
	517
	519
9X-3982	148
	152
9X-6153	943
	1124
	1125
9X-6165	186
	199
9X-6580	539
9X-6582	586
	590
	592
	596
	600
	622
	626
9X-7298	511
9X-7301	505
	507
	509
9X-8256	98
	109
	160
	166
	174
	181
	188
	206
	209
	215
	222
	225
	229
	270
	271
	278
	287
	300
	302
	339
	686
	692
	698
	704
	710
	788
	791
	931
	933
	1012
	1023
	1025
	1026
	1027
	1078
	1084
	1094
	1095
	1102
	1103
	1104
	1105
	1106
	1107
	1110
	1117
	1173
	1174
	1175
	1177
	1189
9X-8257	433
	641
	645
	734
	757
	945
	956
	960
	974
	978
	980
	982
	991
	1059
	1066
9X-8267	117
9X-8268	529
9X-8600	92
	144
	148
	150
	152
9X-9896	186

0

Part	Page
003-7764	105
	107
	132
	134
	136
	138
	142
	144
	150
004-6683	107
010-2570	514
012-0380	258
	261
030-1706	173
033-5853	49
033-6038	49
	51
033-8248	876
061-7539	93
085-6444	►1092
085-6444	1187
085-6445	1092
085-6446	1092
085-6447	1092
085-6448	1092
085-6449	1073
	1092
085-6452	956
085-7075	843
085-7076	843
085-7077	843
085-7078	843
085-7079	843
085-7080	843
085-7081	843
085-7082	843
085-7083	843
085-7084	843
085-7085	843
085-7356	573
	600
	622
	626
	630
	632
	654
	662
	670
	678
	681
	684
	690
	696
	702
	708
	714
	716
	718
	720
	724
	726
	728

► PRIMARY REFERENCE

PART NUMBER INDEX

Part	Page
085-8037	1175
085-8828	888
085-9310	124
	125
	128
	129
	406
	408
	410
	412
	794
085-9429	157
085-9513	19
085-9768	807
	813
	819
085-9769	332
	334
	752
	754
	888
086-0297	400
	402
	404
	868
	870
	872
	885
	886
	887
	889
	890
086-0298	868
	870
	872
086-0299	400
	402
	404
086-0414	888
086-0415	888
086-0416	888
086-0523	878
	880
	882
	923
087-3908	379
	382
	384
	386
	388
	389
	391
	394
087-3909	379
	382
	384
	386
	388
	389
	391
	394
087-4402	640
	644
087-4454	▶460
087-4454	466
087-4456	▶461
087-4456	463
087-4503	714
087-4575	460
087-4576	460
087-4577	460
087-4683	546
087-4710	828
	834
087-4742	332
	334
	752
	754
087-4786	865
087-5317	767
087-5631	863
	865
087-5708	828
	834
087-5767	654
	662
	670
087-5775	654
	662
	670
087-5777	648
	651
	654
	662
	670
087-6585	654
	662
	684
	690
	696
090-8865	1066
	1068
	1086
091-3474	45
	85
091-5928	513
091-9035	160
	166
	174
093-0065	400
	402
	404
	889
	890
093-0083	400
	402
	404
093-0097	400
	402
	404
	889
	890
093-0115	400
	402
	404
	868
	870
	872
093-0357	400
	402
	404
	868
	870
	872
	885
	886
	887
	889
	890
093-0363	400
	402
093-1291	551
	559
	563
	564
	582
093-1292	743
093-1295	551
	559
	565
	569
	571
	603
	618
093-1296	573
093-1519	511
093-2064	285
093-2068	159
093-2069	1023
093-3093	799
	800
	804
	805
093-3094	799
	800
	804
	805
093-3328	799
093-5432	62
	74
093-6089	522
	527
093-7521	537
093-7676	925
094-0580	318
	322
	325
094-0876	830
	832
094-1528	322
	325
094-1875	332
	334
	542
	752
	754
	762
094-1881	542
094-1882	332
	334
	752
	754
	762
	865
094-2080	269
	276
094-4628	16
	19
094-7134	38
094-7154	38
094-7516	38
094-7741	20
094-9025	97
094-9267	55
094-9424	20
094-9525	45
094-9725	93
	97
094-9950	255
094-9980	255
095-0085	255
095-0410	255
095-0673	834
095-0703	495
095-0723	270
	278
095-0728	1045
095-0735	1028
	1030
	1032
095-0736	132
	134
	136
	138
	140
	142
	144
	146
	148
	150
	152
	1134
095-0742	270
	278
095-0755	991
	994
	997
095-0757	535
095-0826	788
	1082
095-0827	1012
095-0843	339
095-0863	450
095-0879	527
095-0893	522
095-0913	1094
	1098
095-0929	527
095-0933	920
095-0936	828
095-0965	808
	814
	820
095-1260	826
	828
	834
095-1299	406
	408
	410
	412
	416
095-1386	105
	107
095-1514	841
	842
095-1519	540
	839
	841
	842
	852
	856
095-1533	862
095-1537	536
	538
095-1543	62
	74
095-1552	767
095-1575	834
	839
	841
	842
095-1578	799
	802
	807
	813
	819
	826
	848
	852
	857
095-1579	807
	813
	819
	856
095-1580	750
	836

▶ PRIMARY REFERENCE

PART NUMBER INDEX

Part	Page
	837
095-1582	533
	534
	807
	813
	819
	836
	837
	839
	843
095-1584	530
	839
095-1585	332
	334
	750
	752
	754
	807
	813
	819
	826
	863
	865
095-1586	802
	807
	813
	819
	830
	832
	840
	850
	851
095-1590	530
	836
	837
	843
	862
095-1591	841
	842
095-1592	609
	612
	615
	808
	814
	820
	841
	842
095-1593	839
095-1594	750
095-1596	530
095-1608	788
	791
095-1625	785
	786
095-1627	505
	507
	509
095-1628	497
	499
	501
	503
	517
	519
095-1662	449
095-1663	759
	762
095-1674	505
	507
	509
095-1676	497
	499
	501
	503
	517
	519
095-1696	802
	807
	813
	819
095-1698	802
	807
	813
	819
095-1700	802
	807
	813
	819
095-1701	457
	863
	865
095-1710	843
095-1713	511
095-1716	785
	786
095-1717	533
	534
095-1725	788
	791
095-1750	850
	851
095-1751	847
	850
	851
095-1777	678
	681
095-1783	839
	841
	842
095-1784	750
095-1787	843
	862
095-1788	542
095-1789	750
095-2005	20
095-2038	93
	97
095-2039	20
	23
	109
095-2040	36
095-6622	805
095-6623	805
095-6639	767
095-6824	868
	870
	872
095-7101	457
095-7380	332
	334
	752
	754
095-7382	332
	334
	752
	754
095-7930	788
	791
	1082
095-8024	841
	842
095-8575	47
095-8638	85
095-8799	17
	111
	112
096-1024	30
096-1054	497
	499
	501
	503
	517
096-1519	332
	334
	752
	754
096-1628	830
	832
096-2434	805
096-2501	23
	27
	303
	306
096-2617	1135
	1137
096-2622	1050
	1052
	1130
096-2626	1122
096-3467	505
	507
	509
096-3741	20
	45
096-3780	339
096-3884	1052
	1130
096-4035	62
	65
	68
	71
	74
	76
096-4276	457
096-4535	826
096-4543	826
096-4876	578
	580
	878
	880
	882
	916
	918
	923
096-4879	456
096-4882	1059
	1061
	1064
	1091
096-4883	637
096-5766	576
	577
096-5863	105
	107
096-5932	750
096-5933	750
096-5934	750
096-5962	270
	278
096-6073	533
	534
096-6166	233
	235
	237
	239
	241
	243
	245
	270
	278
	313
	1045
096-7074	925
096-8139	497
	499
	501
	503
	517
	519
096-8490	86
096-8569	17
096-8619	58
096-9260	109
096-9435	30
096-9528	30
096-9532	30
	58
096-9986	551
	559
099-0139	1187
099-0157	449
099-0159	449
099-0160	449
099-0163	449
099-0172	457
099-0173	457
099-0183	452
099-0194	453
099-0195	453
099-0233	522
099-0235	522
099-0320	750
099-0321	750
099-0322	750
099-0328	750
099-0329	750
099-0330	750
099-0331	750
099-0333	750
099-0334	750
099-0335	750
099-0361	826
099-0600	511
099-0653	450
099-0660	505
	507
	509
099-0661	505
	507
	509
099-0674	505
	507
	509
099-0681	497
	499
	501
	503
099-0695	497
	499
	501
	503
099-0707	878
	880
	882
099-0724	878
	882
	923
099-0822	852
099-0823	955
	959
	963
	967
	991
	994

► PRIMARY REFERENCE

PART NUMBER INDEX

Part	Page
	997
	1177
099-0913	410
	412
	416
099-1319	1094
099-2374	931
	933
	1078
099-3506	1072
	1074
099-3563	521
	525
099-3600	868
	870
	872
099-3607	956
099-3629	1186
099-3645	1101
099-3649	51
099-3669	542
099-3671	542
099-3990	804
	805
099-4420	20
099-4437	93
	97
	109
099-4460	303
	306
099-4483	23
099-4707	33
099-4739	452
099-4749	750
099-5041	93
	97
	109
099-5399	511
099-5400	511
099-5408	569
	571
	573
099-6109	542
099-6110	542
099-6111	542
099-6112	542
099-6113	542
099-6115	542
099-6137	828
	830
	832
	834
099-6141	828
	834
099-6144	828
	834
099-6145	828
	834
099-6418	369
	370
	371
	380
	382
	384
	386
	390
	393
	425
099-6530	750
099-6531	750
099-6532	750
099-6535	750
099-7091	889
	890
099-7127	269
	276
099-7241	1061
	1064

1

Part	Page
100-2881	1073
100-4336	1094
101-2846	271
	278
	279
101-7403	553
101-7404	567
	568
	635
101-8899	1050
	1052
	1054
	1130
101-8900	1050
	1052
	1130
	1177
	1181
102-0818	826
102-1173	160
	166
	174
102-5420	179
102-5474	1210
102-7024	799
102-7964	270
	277
	296
102-7965	277
	296
102-8016	269
	276
102-8801	291
102-8802	36
	132
	134
	136
	138
	140
	142
	144
	146
	148
	150
	152
	155
	156
	171
	197
	209
	211
	215
	221
	233
	235
	239
	241
	243
	258
	259
	260
	261
	291
	655
	663
	671
	684
	691
	724
	726
	728
	732
	788
	791
	799
	800
	856
102-8803	172
	209
	211
	215
	253
	270
	276
	291
	546
102-8804	172
	249
	252
102-8805	262
102-8806	296
103-2529	172
103-8411	808
	814
	820
103-8412	808
	814
	820
103-8413	807
	813
	819
103-8441	517
	519
103-8442	517
	519
104-8973	648
	651
104-8999	742
105-1766	1013
105-2169	956
	960
	964
	968
	991
	994
	997
	1072
	1074
105-3479	555
105-3487	339
	1106
	1110
	1117
105-6431	876
105-6701	118
	120
105-7398	519
105-7405	807
	813
	819
105-9526	1175
105-9527	1175
106-0107	239
106-0107	▶262
106-0210	262
	263
106-8715	573
107-1678	160
	166
	174
107-3308	927
	928
107-6479	848
	857
107-6631	641
	645
	654
	662
	670
	732
107-7640	513
108-0671	81
108-0672	81
108-1781	734
108-7360	648
	651
108-7375	654
	662
	670
108-7516	657
	665
	673
109-1839	1199
109-5815	598
109-5816	743
111-4799	546
111-4816	270
	277
111-4836	159
	165
	171
	213
	214
	285
	298
	313
	931
	933
	1078
	1122
111-4837	159
	165
	171
	213
	289
	313
111-4838	159
	165
	171
	313
111-4839	159
	165
	171
	313
111-5422	805
111-6716	734
111-6752	648
111-9916	762
111-9916	▶850
111-9916	853
	854
	855
	857
	859
111-9998	836
	837
113-6758	603
113-6803	609
	612
	615
113-8490	269
	276
113-8491	269

PART NUMBER INDEX

Part	Page
	276
113-8492	269
	276
113-8493	269
	276
114-0515	840
114-0517	840
114-0623	850
	851
114-0750	505
	507
	509
114-0753	511
114-0755	497
	499
	501
	503
	517
	519
114-1374	529
114-6658	1122
114-8223	522
114-8224	522
114-8249	785
114-8250	785
115-8645	598
	648
	651
	654
	662
	670
116-0114	221
116-0118	159
	165
	171
	192
	193
	195
	196
	213
	287
	289
	298
	311
	313
116-0210	269
	276
116-0255	277
117-1385	114
	115
117-6306	1177
117-6349	1045
117-6350	1045
117-6356	1045
117-8683	1033
	1034
	1035
	1036
117-8929	1007
	1009
	1011
118-4086	830
	832
118-4087	830
	832
118-6948	79
118-9863	1005
118-9881	15
	▶78
118-9941	33
119-3253	902
	903
	904
	910
	911
	912
	913
119-3662	172
	277
	291
119-5026	233
	235
	237
	239
	241
	243
	245
	1134
	1135
	1137
119-5362	863
	865
119-5364	863
	865
119-5388	828
	834
119-5389	828
	834
119-5391	828
	834
119-5392	828
119-5445	497
	499
	501
	503
120-7199	▶443
120-9027	546
121-0307	49
	51
121-0987	300
121-1022	270
	277
121-1023	221
121-1076	159
	165
	171
121-1168	197
	233
	235
	239
	241
	243
	270
	277
121-1173	197
	233
	235
	241
	243
	277
121-1459	840
121-1491	748
	749
121-1491	▶851
121-1865	1028
121-5203	410
	412
	416
121-5204	410
	412
	416
121-6217	576
	577
121-6219	743
121-6220	743
121-6222	582
121-6223	582
121-6303	684
	690
	696
	▶852
121-6304	852
121-7098	1094
121-7136	1000
	1002
	1094
121-7137	1000
	1002
	1094
121-7138	1094
121-8659	876
121-8662	876
122-4120	386
	388
	389
	391
	394
122-5399	804
	805
122-5420	563
	564
122-5500	563
	564
122-9605	1094
	1098
122-9608	1045
122-9609	1045
122-9610	1045
122-9617	1013
	1015
122-9657	1094
123-0707	237
	245
123-1373	159
	165
	171
	179
123-1904	618
123-2002	517
	519
123-2143	750
123-2145	750
123-2430	654
	662
	684
	▶845
123-2431	690
123-2552	690
	845
	846
123-2636	573
123-9950	497
	499
	501
	503
124-0838	742
124-3548	269
	276
124-3953	1192
124-3966	1180
124-4009	1030
	1032
124-4010	1030
	1032
124-5814	174
	▶180
125-1302	228
125-1302	▶258
125-1551	497
	499
	501
	503
125-2947	60
125-2950	30
125-2968	36
125-2983	93
	97
125-2994	32
125-2994	▶157
125-4840	277
125-4841	277
125-7192	800
	804
	805
125-7193	800
	804
	805
125-7874	172
	197
	277
	291
	293
	296
125-7875	172
	277
	284
	291
	293
	296
125-7876	122
	221
	269
	276
126-1173	239
126-1767	36
	253
	263
	277
	296
	605
	638
	655
	663
	671
	685
	691
	697
	703
	709
	724
	726
	728
	732
	1033
	1034
	1035
	1036
126-1768	172
	197
	233
	239
	253
	277
	293
	648
	651
126-1774	197
126-1865	828
	834
126-1866	828
	834
126-6872	678
	681
127-0580	955
	959

▶ PRIMARY REFERENCE

PART NUMBER INDEX

Part	Page
	963
	967
	991
	994
	997
127-3913	885
	886
	887
	889
	890
127-5483	172
127-5937	255
127-5939	255
127-5940	255
127-5941	255
127-5943	255
127-5944	255
127-5947	255
127-5948	255
127-5949	255
127-5950	255
127-5952	255
127-5953	255
128-2135	945
	949
	952
	971
	974
	978
	980
	982
	1019
	1021
128-2136	949
	952
	971
128-2173	1028
128-4411	132
	134
	136
	138
128-7471	609
	612
	615
128-8950	277
129-3400	622
	626
	788
	791
129-5959	654
	662
	670
129-6466	1189
129-7932	863
	865
130-0270	1094
130-7596	19
131-5767	807
	813
	819
131-5768	807
	813
	819
131-5818	828
	834
131-5868	805
131-5915	830
	832
131-8901	80
131-8902	80
131-8903	80
131-8915	78
131-9850	742
131-9869	598
	678
	681
131-9907	598
132-1805	159
	165
	171
132-1829	▶155
132-1829	269
	276
132-4233	1094
	1098
132-4763	926
132-5789	160
	166
	174
	270
	278
	289
	311
	312
132-7599	805
132-7600	805
132-7601	805
132-7603	805
132-7705	805
132-9046	826
133-2425	400
	402
	404
	868
	870
	872
133-2554	443
133-2717	400
	402
	404
133-2901	918
133-5813	640
	644
	648
	651
	654
	662
	670
	684
	690
	696
	702
	708
	724
	726
	728
133-6686	511
133-8016	955
	959
	963
	967
	991
	994
	997
134-3284	213
	214
134-3296	270
	277
134-3297	270
	277
	313
134-4126	190
134-6838	736
	739
134-7258	1211
	1216
	1221
135-2366	255
135-2369	35
135-2370	35
135-2381	157
135-2382	157
135-2403	55
135-2407	57
135-3980	584
	594
135-8432	36
135-8572	118
	120
	396
135-8573	160
	166
	171
	365
	366
	367
	368
	376
	377
	378
	396
	398
	423
	426
135-8575	105
	107
	362
	363
	365
	366
	367
	368
	376
	377
	378
	379
	380
	382
	384
	386
	388
	389
	391
	394
	396
	435
	1103
	1104
	1105
	1106
	1107
135-8576	419
135-8577	338
135-8578	423
135-8579	136
	138
	142
	144
	146
	148
135-8965	1133
135-8966	1133
137-2270	1108
	1109
137-2813	7
	8
	▶422
137-2853	422
	428
137-2854	422
	428
137-5541	93
	97
137-6114	458
138-8454	1177
139-1762	565
139-1765	565
139-1773	563
	564
139-7099	976
	986
	▶1072
139-7100	1048
	▶1050
	▶1052
139-7101	947
	976
	984
	986
	989
	▶1177
139-7119	1183
139-7126	955
	959
	963
	967
	991
	994
	997
139-7127	955
	959
	963
	967
	991
	994
	997
139-7814	20
140-6836	893
141-2759	224
	228
	269
	276
142-0038	610
	613
	616
142-0485	1177
142-3836	1
	▶1108
	▶1109
142-5546	1045
143-8025	511
143-8027	497
	499
	501
	503
	517
	519
143-8031	505
	507
	509
143-8150	505
	507
	509
143-8151	497
	499
	501
	503
	517
	519
143-9397	1122
144-0195	1174
	1175
144-0367	734
144-1636	262
	788
	791

▶ PRIMARY REFERENCE

PART NUMBER INDEX

Part	Page
	1120
	1121
144-9126	1211
	1216
	1221
144-9691	1180
144-9692	1180
145-2237	622
	626
145-5106	461
145-5106	▶462
146-6747	1211
	1216
	1221
147-4131	828
	834
147-4921	1167
147-6603	849
147-6604	849
147-6605	849
148-4685	414
	415
	418
148-8313	107
148-8315	736
	739
148-8325	600
	745
148-8327	598
	605
	607
	610
	613
	616
	678
	681
	745
148-8328	603
148-8335	740
148-8336	561
	573
	600
	638
	640
	644
	648
	651
	655
	663
	671
	685
	691
	697
	703
	709
	718
	720
	724
	726
	728
	730
148-8338	649
	652
	655
	663
	671
	685
	691
	697
	703
	709
148-8339	598
	603
	635
148-8340	655
	663
	672
	745
148-8341	565
	573
	598
148-8342	565
148-8345	630
	632
148-8347	573
	598
	609
	612
	615
	630
	632
	678
	681
148-8352	736
	739
148-8353	561
	600
	638
	648
	651
	656
	664
	672
	692
	718
	720
	732
148-8354	632
148-8355	620
148-8357	609
	612
	615
	620
	736
	739
148-8359	630
	632
148-8360	734
	736
	739
148-8361	573
148-8363	640
	644
148-8364	603
148-8365	632
	656
	664
	672
148-8366	640
	644
148-8367	561
	656
	664
	672
	678
	681
	685
	691
	697
	703
	709
148-8368	622
	626
148-8370	618
	656
	664
	672
	678
148-8371	685
	691
	697
	703
	709
	714
	716
	732
148-8372	630
	632
148-8377	588
148-8378	561
	600
	622
	626
	640
	644
	648
	651
	656
	664
	672
	678
	681
	685
	691
	697
	703
	709
	714
	716
	718
	720
	722
	724
	726
	728
	730
	732
148-8384	588
148-8392	609
	612
	615
	734
	736
	739
148-8393	736
	739
148-8407	641
	645
	648
	651
	656
	664
	672
	722
	734
148-8415	586
	590
	592
	596
148-8418	603
148-8419	586
	590
	592
	596
	600
	622
148-8428	573
	656
	664
	672
148-8430	622
	626
148-8431	609
	612
	615
148-8433	656
	664
	672
148-8435	649
	652
	656
	664
	672
	685
	691
	697
	703
	709
	732
148-8436	745
148-8439	685
	691
	697
	703
	709
148-8443	654
	662
	670
148-8444	603
	627
	633
149-1738	551
	555
	559
	569
	571
149-5050	287
149-5051	198
149-5069	198
	277
149-5070	198
	277
149-5071	198
	277
149-5733	926
149-6549	1094
	1098
150-3024	105
	107
	140
	142
	144
	146
	148
	150
	152
150-3033	622
	626
150-3036	623
	627
	649
	652
	656

▶ PRIMARY REFERENCE

PART NUMBER INDEX

Part	Page
	664
	672
	678
	681
	685
	691
	697
	703
	709
	714
	716
	724
	726
	728
	730
150-3037	565
150-4027	600
	649
	652
	654
	662
	670
	684
	690
	696
	702
	708
150-4041	736
	739
150-4043	630
	632
150-4048	565
150-6339	805
150-6346	805
150-6348	799
	800
	805
150-6351	799
151-5332	48
151-6703	1050
	1130
	1177
	1181
151-6704	1050
	1130
	1177
	1181
151-6705	1180
151-6767	1048
	1049
151-6777	984
	986
	989
	1048
	1049
151-6778	1177
	1181
151-6785	1177
151-6790	1186
151-6792	1050
	1052
	1130
	▶1187
151-6793	1187
151-6813	1177
	1181
151-6815	1177
	1181
151-6831	1177
	1181
151-6832	1177
	1181
151-6841	1187
151-6844	1177
151-9272	638
	671
	696
	702
	708
151-9461	1050
	1052
	1130
151-9497	1050
	1052
	1130
151-9557	1177
151-9576	1177
	1181
151-9751	438
	439
	442
152-2938	49
	51
152-2939	49
	51
152-9254	609
	612
	615
153-2521	▶202
153-2521	213
	214
153-2522	▶203
153-2523	▶204
153-2523	217
153-2540	233
	235
	239
	241
	243
153-2541	233
	235
	239
	241
	243
153-2602	270
	277
153-2620	172
153-2630	172
153-2631	277
153-3568	1138
153-4906	49
153-5223	828
	834
153-6236	736
	739
153-6237	623
	627
153-6241	623
153-6242	598
	603
	609
	612
	615
	734
153-6249	714
	716
153-6270	678
	681
153-8723	1028
153-8798	557
153-8800	783
	784
153-8867	551
	559
154-9024	58
155-0576	187
155-2255	291
155-2258	291
155-2260	270
	278
	291
	293
155-2265	296
155-2270	172
	197
	198
	233
	235
	239
	241
	243
	249
	270
	278
	291
	648
	1023
155-2271	173
	291
155-2274	239
155-3624	734
155-7024	1094
	1098
155-7042	1192
156-5970	858
156-6175	225
	229
156-6469	1186
156-6470	1177
	1181
	1185
156-6471	1050
	1052
	1130
156-6472	1177
	1181
	1185
156-6473	1183
156-6474	1187
156-6475	1187
156-6554	1177
156-6555	1177
156-6562	1177
156-6563	1177
156-6579	1177
156-6598	1050
	1052
	1130
156-6599	955
	959
	963
	967
	991
	994
	997
156-6600	1050
	1052
	1130
156-6601	1177
156-6617	955
156-6627	1177
156-6631	1183
156-6642	1093
156-6643	1050
	1052
	1130
156-6644	1050
	1052
156-6645	1050
	1052
	1130
156-6646	1189
156-6647	▶1180
	1189
156-6648	1180
156-6656	949
	952
156-6657	949
	952
156-8801	745
157-0670	58
158-7864	1208
	1211
	1216
158-8987	▶530
	788
	791
159-4700	462
159-7782	785
	786
159-8035	916
	918
159-8036	916
	918
	920
159-8049	173
	174
159-8050	174
159-9322	197
160-7690	197
161-1980	514
161-3128	269
	276
161-3639	1050
	1052
	1130
161-3663	1050
	1052
	1130
161-3665	1050
	1052
	1130
161-3669	1192
161-3670	1192
161-3677	1192
161-3684	1177
161-3685	955
	959
	963
	967
	991
	994
	997
161-3694	1073
161-3695	1187
161-3697	955
	959
	963
	967
	991
	994
	997
161-3698	1177
	1181
	1185
161-3705	1187
161-3717	1133
161-3751	▶1173
161-6987	1122
162-2222	117
162-4304	450
162-4305	450
162-4306	450

▶ PRIMARY REFERENCE

PART NUMBER INDEX

Part	Page
162-4307	450
162-4695	565
	▶785
162-4696	745
	▶786
162-6172	80
163-6637	173
163-6659	270
	278
163-6699	270
	278
163-6704	209
	211
	215
163-6711	296
163-6758	269
	276
163-6759	172
163-6772	▶206
163-6773	313
163-6790	278
163-6795	201
	206
	208
	209
	211
	215
	269
	276
	293
	296
	1174
	1175
	1192
163-6803	270
	278
163-6808	1135
163-6809	1135
163-6813	206
	209
163-6814	206
	209
164-0497	1058
	▶1066
	▶1068
164-0514	1050
	1052
	1130
164-0515	1050
	1052
	1130
164-0516	1187
164-0517	1187
164-0518	1187
164-0519	1050
	1052
	1130
164-0523	955
	959
	963
	967
	991
	994
	997
164-0527	955
	959
	963
	967
	991
	994
	997
164-0528	955
	959
	963
	967
	991
	994
	997
164-0534	▶1059
	▶1061
164-0535	▶1063
164-0639	1173
164-0643	1071
164-0646	949
	952
	971
164-0648	1177
164-0655	949
	952
	971
164-0664	1093
164-0666	1186
164-4180	598
	635
	734
164-4858	▶92
164-4858	132
	134
	136
	138
164-5546	654
	662
	670
164-5549	685
	692
	697
	703
	709
164-5567	600
	656
	664
	673
	678
	681
	686
	692
	698
	704
	710
	718
	720
	736
	739
	788
	791
164-5590	788
	791
164-5608	618
	630
	656
	664
164-5624	573
	640
	644
164-5628	641
	645
	654
	662
	670
	732
164-5629	657
	665
	673
164-6858	736
	739
164-6874	573
	600
	622
	626
	630
	632
	654
	662
	670
	678
	681
	684
	690
	696
	702
	708
	714
	716
	718
	720
	724
	726
	728
164-6979	670
	690
	696
	702
	708
	▶846
164-6981	▶463
164-6981	654
	662
	670
164-8474	945
	949
	952
	971
	974
	978
	980
	982
164-8908	679
	681
164-9640	622
	626
164-9869	698
	704
	710
165-2793	752
	762
165-2799	332
	334
	752
	754
	762
165-2801	762
165-2804	762
165-2805	762
165-3065	1108
	1109
165-3838	762
165-3839	762
165-3847	762
165-3853	762
165-5803	332
	334
	752
165-5804	332
	334
	752
	754
165-5809	752
165-5811	332
	334
	752
	754
165-5814	332
	334
	752
	754
165-5816	332
	334
	752
	754
165-5817	332
	334
	752
	754
165-5818	332
	334
	752
	754
165-5819	332
	334
	752
	754
165-5820	332
	334
	752
	754
165-5821	332
	334
	752
165-5822	332
	334
	752
	754
165-5823	332
	334
	752
	754
165-5824	332
	334
	752
	754
165-5826	332
	334
	752
	754
165-5828	332
	334
	752
	754
165-5831	332
	334
	752
	754
165-5837	863
	865
165-5839	840
165-5840	840
165-5846	863
	865
165-5850	863
	865
165-5854	318
	322
	325
165-5855	318
	322
165-5856	318
	322
	325
165-5857	318
	322
165-5859	318
	322
	325

▶ PRIMARY REFERENCE

PART NUMBER INDEX

Part	Page
165-5860	318
	322
	325
165-5864	318
	322
	325
165-5866	318
	322
	325
165-5867	318
	322
	325
165-5868	318
	322
	325
165-9283	511
165-9284	505
	507
	509
165-9285	497
	499
	501
	503
	517
	519
165-9431	830
	832
165-9435	830
	832
165-9436	830
	832
165-9438	830
	832
165-9442	830
	832
165-9443	830
	832
165-9444	830
	832
165-9460	830
	832
165-9461	832
165-9463	828
	834
165-9464	848
165-9497	802
165-9551	828
165-9552	828
	834
165-9553	828
	834
165-9554	828
	834
166-1481	885
	886
	887
166-1482	878
	880
	882
166-1486	868
	870
	872
166-1492	480
	481
	482
	483
	484
	486
	488
	489
	490
	495
	885
	886
	887
	889
	890
166-1494	488
	489
	490
	868
	870
	872
	885
	886
	887
166-1579	876
167-3437	206
	209
167-3438	206
	209
167-3441	▶205
167-3441	206
	209
	215
167-3456	206
	209
	215
167-3487	278
167-3542	268
	269
	270
	276
	278
	1084
	1141
	1142
167-3543	268
	269
	270
	276
	278
	1084
	1141
	1142
167-3593	269
	276
167-3630	278
167-3631	278
167-7018	955
	959
	963
	967
	991
	994
	997
167-7039	1050
	1052
	1130
167-7042	955
	959
	963
	967
	991
	994
	997
167-7055	1063
167-7079	1189
167-7135	1133
167-7141	1066
167-7270	1211
	1216
	1221
168-1968	678
	681
168-6728	327
	328
	329
	336
	▶337
168-9755	573
168-9759	640
	644
	722
169-1165	843
169-5546	336
	▶521
169-5549	▶522
	524
169-5567	▶406
	▶408
	437
169-5568	406
	408
	410
	412
169-5569	521
	▶524
169-7904	437
	▶444
169-7905	444
170-2602	1
	▶423
170-3014	426
170-6738	758
170-6888	269
	276
170-6890	278
170-6891	278
170-6929	159
	165
	171
170-6941	1082
170-6993	202
	203
	204
170-8553	789
	792
170-9294	▶208
170-9295	201
	208
	211
170-9324	233
	235
	237
170-9360	339
170-9394	270
	278
170-9417	202
	203
	204
170-9418	202
	203
	204
170-9419	788
	791
170-9492	1175
170-9497	▶1045
	1128
	1129
170-9498	1045
170-9499	1045
170-9722	1177
	1181
	1185
170-9724	949
	952
	971
170-9841	511
170-9842	505
	507
170-9843	497
	499
	501
	503
	517
	519
170-9857	511
170-9858	505
	507
170-9859	497
	499
	501
	503
	517
	519
170-9893	524
	526
	▶750
170-9946	497
	499
	501
	503
170-9997	808
	814
	820
171-0002	635
171-0002	▶801
171-0024	730
	▶843
171-0087	830
	832
171-0123	836
	837
171-0124	836
	837
171-0126	836
	837
171-0127	836
	837
171-0128	836
	837
171-0188	686
	692
	698
	704
	▶853
171-0198	▶847
	853
171-0596	605
171-2208	221
	224
	228
171-2210	221
	224
	228
171-3369	65
	68
	71
171-7325	941
	942
	1019
171-7370	1133
171-7413	1187
171-7414	1187
171-7420	949
	952
	971
171-7426	955
	959
	963
	967
	991

▶ PRIMARY REFERENCE

PART NUMBER INDEX

Part	Page
	994
	997
171-7477	1073
171-7485	1058
	▶1064
171-7503	947
	976
	984
	986
	989
	▶1181
171-9073	82
171-9077	65
	68
	71
172-3080	868
	870
	872
172-8406	513
172-8490	914
173-1016	117
173-1170	542
173-1203	762
173-3350	507
173-3351	505
	507
	509
173-3358	517
	519
173-3389	542
173-7895	569
	571
174-0503	291
174-3016	173
	270
	278
	291
174-7220	542
174-7221	542
174-7222	542
174-7791	202
	203
	204
174-9570	▶102
	105
175-4430	690
	846
175-7141	213
	214
176-1902	1094
176-1916	1013
	1015
176-1925	1064
	1091
176-1928	1059
	1061
	1064
	1091
176-1931	1174
176-1932	1175
176-1937	955
	959
	963
	967
	991
	994
	997
176-1938	955
	959
	963
	967
	991
	994
	997
176-1939	955
	959
	963
	967
	991
	994
	997
176-1941	1093
176-1942	955
	959
	963
	967
176-1946	949
	952
176-1947	949
	952
176-1949	1074
176-1951	1187
176-1952	1187
176-1953	1187
176-1954	1187
176-1955	1187
176-1956	1187
176-1957	1187
176-1958	947
	976
	984
	986
	989
	▶1183
176-1972	949
	952
	971
176-1986	955
	959
	963
	967
	991
	994
	997
176-1996	1054
176-2815	1198
176-4791	655
	663
	671
176-4863	2
	3
	▶458
176-4864	▶458
176-4870	▶450
	458
176-4872	450
176-8131	332
	334
	752
	754
	762
176-8132	762
176-8571	752
	754
176-8573	332
	334
	752
	754
176-8579	332
	334
	752
	754
176-8590	840
176-9299	172
	277
	291
177-1061	610
	613
	616
177-2706	801
177-5867	342
	343
	346
	347
	348
	350
	351
177-5879	423
177-5880	423
177-6048	345
	349
	352
	353
	354
	356
	357
177-6049	345
	349
	352
	353
	354
	356
	357
177-6101	425
177-6315	1108
177-9778	105
178-2334	249
178-2335	249
178-2345	▶249
178-2345	250
178-5422	1013
	1015
178-5423	1013
	1015
178-5431	1174
178-5500	1175
178-5528	1029
178-5549	9
	▶1058
178-5569	1183
178-5570	955
	959
	963
	967
	991
	994
	997
178-5572	1186
178-5573	1050
	1052
	1130
	1186
178-5574	1050
	1052
	1130
	1186
178-5576	1177
178-5659	1155
	1156
	1157
178-5883	655
	663
	671
178-5908	630
178-5955	678
	681
178-6450	65
	68
	71
	757
178-6537	30
178-6538	30
178-6543	38
178-6544	38
178-6545	38
178-6554	85
178-6572	55
178-6599	32
178-6600	32
178-6601	32
178-6633	60
178-6634	60
178-6635	60
178-6636	60
179-5030	584
	594
179-5764	456
179-7400	117
179-7464	598
179-7541	788
	791
179-7598	479
	▶582
179-7599	582
179-7601	▶742
	884
179-7602	476
	▶563
179-7603	563
179-7604	476
	▶564
179-7605	564
179-7771	745
179-7874	565
179-7875	565
180-3861	202
	203
	204
180-7614	402
	404
180-7758	876
183-1035	201
	208
	211
183-5300	928
183-8111	62
	74
183-8112	62
	74
183-8176	36
184-3841	801
184-7495	915
184-8862	369
	370
	371
	425
184-8898	369
	370
	371
	380
	382
	384
	386
	390
	393
184-9330	598
184-9336	640
	644
184-9420	655
	663
	671
185-0169	542
185-0400	802
185-0407	847
185-0423	836

▶ PRIMARY REFERENCE

PART NUMBER INDEX

Part	Page
	837
185-0462	638
	▶848
185-0463	848
	857
185-2793	47
185-8161	1013
	1015
185-8180	1050
	1052
	1130
185-8182	947
	984
	986
	989
	1177
185-8187	947
	984
	986
	989
	1177
185-8196	955
	959
	963
	967
	991
	994
	997
185-8205	949
	952
	971
185-8214	949
	952
	971
185-8221	1177
185-8280	1093
185-8281	1093
185-8284	1017
	1084
	1129
185-8286	546
	941
	942
185-8290	1192
185-8293	1094
185-8300	936
	939
	1037
185-8302	936
	939
185-8977	57
185-9123	▶445
185-9124	445
185-9125	445
185-9208	233
	235
	237
	239
	241
	243
	245
186-3735	118
	120
	132
	134
	136
	138
	150
	155
	209
	211
	221
	239
	249
	258
	261
	788
	799
	800
	858
186-3736	249
186-5639	400
	402
	404
187-0661	1211
	1216
	1221
187-5676	603
187-5741	655
	663
	671
187-5812	565
187-6692	553
187-6900	603
	618
187-7028	655
	663
	671
187-7173	573
188-7536	117
188-7541	117
189-2678	949
	952
	971
189-2690	1050
	1052
	1130
189-2693	1073
189-2694	1073
189-2704	955
	959
	963
	967
	991
	994
	997
189-2711	1050
	1052
189-2716	1073
189-2717	1074
189-2768	947
	976
	▶1048
189-2847	1072
	1074
189-2848	1073
189-2849	1072
	▶1073
189-2853	971
189-2854	971
189-2855	950
	953
	971
189-2864	956
	960
	964
	968
	991
	994
	997
189-3396	955
189-3409	955
189-9377	49
	51
189-9763	542
	762
190-4896	762
190-5283	118
190-5386	1211
	1216
	1221
190-5830	93
	97
190-6821	426
190-7674	542
190-7695	▶826
	1029
190-7875	801
190-9775	92
191-0862	318
	322
	325
191-2543	529
191-2544	406
	408
	410
	412
	416
191-2599	522
191-2600	522
191-2601	522
191-2602	522
	527
191-2603	522
191-2604	522
191-2605	522
	527
191-2607	522
191-2608	522
	527
191-2609	522
	527
191-2610	522
	527
191-2611	522
	527
191-2612	522
191-2613	522
	527
191-2614	522
191-2615	522
191-2656	521
	525
191-2657	521
	525
191-8920	789
	792
191-8921	1102
	1105
	1107
192-0573	542
	762
192-2376	542
192-3039	349
	354
	357
192-6775	655
	663
	671
192-6840	734
193-2764	1007
193-2812	62
	74
193-2888	79
193-2889	79
193-6606	551
	559
	584
	594
193-9712	423
193-9776	254
	▶361
193-9793	361
193-9994	620
194-0097	734
194-0387	603
194-0391	603
	618
194-0392	603
194-8400	750
194-8401	750
194-8936	5
	6
	▶1210
194-8989	479
	▶743
194-9041	573
194-9124	743
195-2852	916
195-5139	898
	899
	900
	▶926
195-8212	30
195-8225	30
195-8256	109
195-8322	54
195-8351	53
195-9180	901
	▶928
196-1569	1059
	1061
	1064
	1091
196-1571	1059
	1061
	1064
	1091
196-1572	1059
	1061
	1064
	1091
196-1599	1059
196-1666	1037
196-8012	87
196-8013	87
196-8014	87
196-8015	87
196-8019	53
196-8037	62
	74
196-8366	30
	54
	55
197-0143	807
	813
	819
197-0144	807
	813
	819
197-0145	807
	813
	819
197-0146	808
	814
	820
197-0147	808
	814
	820
197-0148	768
	769
	770
	771
	772
	773
	774

PART NUMBER INDEX

Part	Page
	775
	776
	777
	778
	779
	780
	781
	782
197-0149	768
	769
	770
	771
	773
	774
	775
	776
	777
	778
	779
	780
	781
	782
197-0150	768
	769
	770
	771
	772
	773
	774
	775
	776
	777
	778
	779
	780
	781
	782
197-0151	768
	769
	771
	772
	773
	774
	775
	776
	779
	780
	782
197-0152	770
197-0153	777
	778
	781
197-0156	768
197-0165	802
	807
	813
	819
197-0166	808
	814
	820
197-0167	807
	813
	819
197-0168	802
	807
	813
	819
197-0169	807
	813
	819
197-0170	802
	807
	813
	819
197-0173	▶768
	802
	807
	813
	819
197-0196	748
	749
197-0199	748
	749
197-0211	▶769
	808
	814
197-0212	769
197-0213	▶770
	807
	813
	819
197-0214	770
197-0217	▶771
	808
	814
	820
197-0218	771
197-0225	802
	807
	813
	819
197-0226	802
197-0272	807
	813
	819
197-0273	748
	749
197-0758	826
	843
197-2150	557
197-4330	221
197-4385	291
198-0370	586
	590
	592
	596
198-3899	930
	1168
	1169
	1170
	1171
198-7543	826
198-8153	826
198-8154	826
198-8156	826
198-8159	826
198-8160	826
198-8161	826
198-8162	826
198-8165	826
198-8166	826
198-8167	826
198-8168	826
198-8176	826
198-8178	826
199-0126	359
	360
199-0377	426
199-0518	762
199-1657	736
199-1689	598
199-1820	565
199-1914	655
	663
	671
199-2046	736
	739
199-2187	45
199-2188	45
199-2189	45
199-2241	93
	97
199-4573	5
	▶410
	▶412
199-4627	527
199-5152	863
	865
199-7854	313

2

Part	Page
200-3244	542
200-3255	542
200-3335	750
200-4856	799
	800
	805
201-3663	915
201-4391	1050
	1052
	1130
201-4417	955
	959
	963
	967
	991
	994
	997
201-4530	955
	959
	963
	967
	991
	994
	997
201-4534	1059
	1061
	1064
	1091
201-4535	1059
201-9271	807
	813
	819
201-9394	826
202-4010	716
202-9762	609
	612
	615
203-5001	425
203-5005	425
203-7401	876
204-1086	318
	322
	325
204-1673	171
204-1974	826
204-1976	826
205-0826	199
	239
	241
	243
	245
205-1339	1023
205-1340	1023
205-6295	955
	959
	991
	997
205-6388	1150
	1153
205-6788	27
205-8257	239
206-3288	826
206-3290	826
206-5208	241
	243
	245
207-0144	947
	976
	984
	986
	989
	▶1185
207-0159	1058
	▶1070
207-0160	1058
	▶1071
207-0161	1070
207-0164	1070
	1071
207-0167	1070
	1071
207-0170	1070
	1071
207-0173	1070
	1071
207-0176	1071
207-0216	1059
	1061
207-2985	762
207-6403	788
	791
207-6404	788
	791
207-6418	655
	663
	671
	724
	726
	728
209-4280	1169
209-5582	224
	228
209-5582	▶259
209-6002	767
210-5808	955
210-5827	1173
210-5828	1173
210-5829	1173
210-5834	1173
210-5836	1173
210-5837	1173
210-5838	1173
212-2837	400
	402
	404
212-8475	25
212-8489	85
212-8491	87
212-8521	157
212-8571	30
212-8572	30
213-0677	36
	788
	791
213-0772	269
	276
213-8433	516
213-9100	156
213-9433	93
214-4531	1199
214-4532	1199
214-7568	51

▶ PRIMARY REFERENCE

PART NUMBER INDEX

Part	Page
	252
	673
	681
	692
	698
	704
	710
	739
	788
	791
214-7915	1211
	1216
	1221
215-4855	807
	813
	819
215-4872	808
	814
	820
215-4893	826
215-4909	530
215-5037	655
	663
	671
	▶747
216-4970	224
	228
216-6676	533
	534
216-6677	533
216-6678	533
	534
217-5589	55
217-8185	148
	152
218-0404	199
218-0557	758
218-1183	655
	663
	671
218-4246	318
218-4247	318
	322
	325
219-0305	1064
	1066
	1068
	1086
	1091
219-6314	199
220-8678	102
221-5069	▶539
	622
	626
	630
	632
221-5070	539
221-5071	539
221-8045	1211
	1216
	1221
221-8813	▶1118
	▶1119
	1128
	1129
221-8859	605
221-8861	4
	▶191
221-8872	▶188
	1128
	1129
221-8884	▶1028
	1132
221-8912	678
222-0225	1030
	1032
222-2062	758
	759
222-8238	55
222-8292	30
223-7577	▶260
223-7577	303
223-9818	1211
	1216
	1221
224-0554	1211
	1216
	1221
224-1685	533
	534
224-1687	▶533
	▶534
	620
224-2908	221
224-8946	1211
	1216
	1221
225-0224	542
225-0225	542
225-0312	1211
	1216
	1221
225-4257	1211
	1216
	1221
225-4539	573
225-4804	748
	863
225-4818	748
225-5714	1095
	1098
225-6216	762
227-0590	788
	791
227-0620	▶540
227-0620	788
227-6186	416
227-6227	521
	525
227-7575	269
	276
227-7581	▶199
227-7625	1028
227-8807	▶464
228-2781	1211
	1216
	1221
228-7092	49
	51
228-7102	109
228-9254	1211
	1216
	1221
229-0887	1211
	1216
	1221
229-0992	750
229-1077	406
	410
	▶414
229-1078	414
	415
	418
229-1091	885
	886
	887
229-1092	878
	880
	882
229-1093	495
	517
229-1095	885
	886
	887
229-3218	93
	97
229-7566	905
	907
229-7567	905
	907
229-7568	905
	907
229-7573	905
	906
	907
	908
229-7626	906
	908
229-7627	906
	908
229-7628	906
	908
	909
229-7634	905
	907
229-7637	906
	908
229-9070	2
	3
	▶1174
229-9077	1161
	▶1167
229-9082	935
	▶1054
	1080
229-9084	▶1078
	1080
229-9088	▶1175
	1191
229-9089	1139
	▶1161
229-9090	▶1155
	1161
229-9094	▶1075
	1155
229-9108	6
	▶945
229-9109	945
	▶947
230-1341	186
230-4009	173
	270
	278
	296
230-4011	173
	270
	278
	293
	296
	1082
230-4012	858
230-4013	173
	253
	270
	278
230-5008	296
230-5010	173
	197
	233
	235
	241
	243
	293
	296
	1084
231-1771	▶156
231-1836	▶293
	295
231-2295	296
	1084
232-3121	804
232-3317	464
232-4102	655
	▶836
233-1277	19
233-1279	255
233-1280	255
233-5260	1028
234-1034	221
234-1036	221
234-1037	221
234-1038	221
234-1097	269
	276
234-1122	313
234-1124	1084
234-1156	233
	235
	237
	239
	241
	243
	245
234-1158	233
	235
	237
234-3344	118
234-4796	53
234-6467	947
	989
234-6468	949
	952
	971
234-6469	950
	953
	971
234-6470	949
	952
	971
234-6471	949
	952
	971
234-6472	949
	952
	971
234-6473	949
	952
	971
234-6474	949
	952
	971
234-6476	949
	952
	971
234-6477	949
	952
	971
234-6480	949
	952
	971
234-6483	949
	952
	971
234-6485	949
	952

▶ PRIMARY REFERENCE

PART NUMBER INDEX

Part	Page
	971
234-6489	1186
234-6490	949
	952
	971
234-6491	949
	952
	971
234-6497	949
	952
	971
234-6498	949
	952
	971
234-6499	1046
234-6500	7
234-6500	▶1047
234-6501	945
	974
	978
	980
	982
234-6501	▶1046
234-6502	1046
234-6521	949
	952
	971
234-6547	949
	952
	971
234-6548	949
	952
	971
234-6549	949
	952
	971
234-6550	949
	952
	971
234-6579	949
	952
	971
	1019
	1021
234-6580	1019
	1021
234-6593	1046
234-6594	947
	976
	984
	986
	989
	▶1192
234-6602	1021
234-6603	1019
234-6604	1021
234-6605	1019
234-6608	1019
	1021
234-6609	1019
	1021
234-6610	1019
	1021
234-6611	1018
234-6612	1019
234-6613	▶546
	1019
234-6614	1019
234-6615	546
235-3611	574
235-7679	492
	878
	880
	882
235-7764	▶432
	458
235-8862	1126
235-8873	931
	933
	1078
235-8874	931
	933
	1078
235-8875	931
	933
	1078
235-8876	1054
235-8877	1054
235-8878	1054
235-8879	1054
235-8880	1012
235-8891	1094
235-8893	1013
	1015
235-8894	1013
	1015
235-8908	▶949
	▶952
	986
235-8909	947
	976
	984
	986
	989
	▶1186
235-8910	947
	▶955
	▶959
	▶963
	▶967
	976
235-8912	955
	959
	963
	967
	991
	994
	997
235-8914	1019
	1021
235-8916	976
	984
	986
235-8917	947
	▶971
	976
	984
	989
235-8922	949
	952
	971
235-8923	949
	952
	971
235-8928	949
	952
235-8929	949
235-8930	971
235-8932	1192
235-8933	955
235-8950	949
	952
	971
235-8951	941
235-8952	942
235-8965	1019
235-8966	1021
	1135
235-8969	▶1030
235-8969	1039
235-8970	▶1032
235-8970	1038
235-8996	941
	942
235-8997	941
235-8998	942
235-9001	945
	974
	978
	980
	982
235-9003	7
	▶935
235-9004	▶931
	▶933
	935
235-9005	931
	933
235-9012	1174
	1175
235-9014	1094
	1098
235-9015	1094
	1098
235-9020	▶1145
235-9020	1146
236-2838	640
	644
236-2843	640
	644
236-2844	640
	644
236-3200	600
	622
	626
236-3257	540
	541
236-3258	540
236-3259	540
	541
236-3404	426
236-3670	339
236-3671	339
236-3698	398
236-3702	398
236-3703	398
236-4153	583
	▶915
236-6365	878
	880
	882
236-6717	117
236-9438	339
236-9440	339
236-9567	359
	360
237-0228	247
237-0947	516
238-0112	247
238-0118	247
238-0120	114
	115
	247
238-0751	655
	663
	671
	▶859
238-1463	1084
238-1506	224
	228
238-1627	9
	▶209
238-1628	9
	▶211
238-2208	▶268
	1191
238-2209	268
238-2210	268
238-2211	1141
	1142
238-2212	269
	276
238-2216	1084
238-2260	1134
	1135
	1137
238-2279	224
	228
238-2280	221
	224
	228
238-2319	270
	278
238-2326	209
	211
	215
238-2363	278
238-2366	197
	233
	235
	239
	241
	243
	278
238-2390	269
	276
238-2391	269
	276
238-2392	221
238-2478	▶266
	267
238-2479	266
238-2485	▶267
	471
238-2501	159
	165
	171
238-2528	159
	165
	171
239-1568	635
239-6604	85
239-6626	43
	44
239-6627	43
	44
239-6630	43
	44
239-6631	43
239-6632	43
	44
239-6681	157
239-6986	1211
	1216
	1221
239-7352	293
	296
239-7356	270
	278
239-8697	747
	▶748
239-8998	747
	▶749
240-2913	870
	872
240-5003	▶1139

PART NUMBER INDEX

Part	Page
240-5039	▶1146
240-5074	1054
241-2311	435
241-6150	574
241-6215	728
242-1510	1211
	1216
	1221
242-1588	1211
	1216
	1221
242-6092	1211
	1216
	1221
242-8768	1167
	1172
243-4505	118
	120
	173
	213
	225
	229
	270
	278
	293
	296
	1004
	1084
	1098
243-4506	122
	270
	278
243-4508	173
	197
	263
	291
	293
243-4509	1084
243-4510	173
	296
244-3712	51
244-8039	1
	▶338
244-8040	338
	▶339
244-8041	1
	▶398
245-1042	173
245-1043	173
245-1044	173
245-1045	173
245-1048	173
245-5457	1211
245-7749	1007
	1009
	1011
	▶1012
245-7750	1012
245-7751	1012
245-7760	269
	276
245-7790	949
	952
	971
	1019
	1021
245-7791	1054
245-7792	1054
245-7793	1054
245-7811	1
	▶1126
245-7813	1037
245-7814	1037
245-7815	1037
245-7816	1037
245-7817	936
	939
245-7818	936
	939
245-7819	936
	939
245-7820	936
	939
245-7823	936
	939
245-7824	936
	939
245-7825	936
	939
245-7826	936
	939
245-7827	936
	939
245-7828	936
	939
245-7829	936
	939
245-7830	936
	939
245-7831	936
	939
245-7832	936
	939
245-7833	936
	939
245-7834	936
	939
245-7835	936
	939
245-7836	936
	939
	▶1000
245-7837	1000
	1002
245-7838	936
	939
245-7839	936
	939
245-7842	1030
245-7844	1032
245-7846	936
	939
	▶1037
245-7847	936
	939
245-7850	1094
245-7851	1094
245-7856	936
	939
245-7858	1078
245-7872	1054
245-7873	1054
245-7881	7
	▶1138
245-7884	1155
245-7886	930
245-7887	1155
245-7888	1155
245-7889	▶929
	1167
	1172
245-7890	▶944
	1167
245-7891	▶1168
	1172
245-7892	1167
	▶1169
245-7895	1167
	1170
	1171
	1172
245-7896	▶930
	1167
	1172
245-7897	929
	930
	944
	1090
	1168
	1169
	1172
245-7898	930
	1155
	1168
	1169
245-7899	929
	944
	1090
	1168
	1169
245-7900	400
	402
	404
245-7901	400
	402
	404
245-7905	1000
	1002
245-7922	▶1013
	▶1015
	1128
	1129
245-7925	1019
245-7926	1021
245-7929	1046
245-7931	1192
245-7948	1019
	1021
245-8023	173
245-9205	65
	68
	71
245-9212	62
	74
245-9216	62
	74
245-9217	62
	74
245-9218	62
	74
246-2641	124
	125
	128
	129
247-2693	293
	296
	1033
	1034
	1035
	1036
	1044
247-2694	1120
	1121
247-2695	1120
	1121
247-5112	1044
247-6019	114
	115
247-7410	468
	▶1194
247-7411	468
	▶1196
247-7418	1132
	▶1197
247-7436	1211
	1216
	1221
247-7437	1211
	1216
	1221
247-7438	1211
	1216
	1221
247-7465	469
	▶1198
247-7494	798
	▶1199
247-9294	559
248-5474	880
	916
	918
248-7172	457
248-7184	437
	▶446
248-7191	456
248-7194	456
248-7197	457
248-7200	454
	455
248-7203	454
	455
248-7259	451
	▶453
248-7260	453
248-7261	453
248-7262	453
248-7268	437
	▶451
248-7284	472
	473
248-7820	878
	880
	882
248-7822	878
	880
	882
248-7823	878
	880
	882
248-7824	882
248-7835	878
	880
	882
248-7836	878
	880
	882
	885
	886
	887
248-7857	511
250-1440	555
250-8054	1194
	1196
	1197
	1198
251-0299	313
251-0304	224
	228
251-0433	▶295
	1128
	1129
251-0435	295
	▶296
251-0538	1128
	▶1134
	▶1135

▶ PRIMARY REFERENCE

PART NUMBER INDEX

Part	Page
	▶1137
251-0542	1
	6
	9
	10
	11
	▶233
	▶235
	▶237
251-0543	239
251-0544	199
	▶239
	▶241
	▶243
	▶245
251-0580	293
251-0602	296
251-0637	269
	276
251-4162	185
251-8248	285
252-6601	799
	800
252-6602	799
	800
252-6603	799
253-0861	1211
253-1346	454
	455
253-2111	221
	224
	228
253-6276	549
253-6396	▶583
	914
253-6406	914
	▶923
253-6694	553
255-1929	632
255-2751	235
	237
	243
	245
255-2751	▶264
255-2966	80
	81
255-3016	1005
	1006
255-3018	▶43
	1005
255-3020	43
	44
255-3021	43
255-3022	43
	44
255-3027	▶474
	▶475
	760
255-3035	15
	▶33
255-3171	1201
255-3173	1201
255-4410	1138
255-5843	8
	▶468
255-5844	▶468
255-5845	▶1132
256-9786	915
256-9787	915
256-9788	915
256-9790	915
256-9791	915
256-9792	915
256-9793	915
257-2381	114
	115
257-2382	114
	115
257-3023	655
	663
	671
257-4502	1211
	1216
257-4547	1199
257-5015	1201
258-0330	1059
	1061
	1064
	1091
258-4095	▶1147
258-4095	1153
258-4096	▶1148
258-4096	1150
258-8149	114
	115
259-0869	▶535
	788
	791
259-0917	5
	470
	▶758
259-0918	767
259-3891	339
259-3893	339
259-3903	398
259-4877	296
259-4883	269
	276
259-4884	267
259-4914	1134
	1135
259-4915	1135
	1137
259-5050	▶179
	254
259-5161	▶269
	▶276
	1128
	1129
259-5175	113
	▶308
259-5274	221
	224
259-5274	▶261
259-5290	269
	276
259-5293	▶192
	1132
259-5294	▶193
	469
259-5295	▶194
	468
259-5296	269
259-5303	159
	165
	171
259-7180	267
259-7202	1019
259-7214	1138
259-7215	1138
259-7244	▶1004
259-7244	1005
	1006
259-7286	1004
259-7295	▶943
	955
259-7345	941
	942
259-7346	▶941
	1021
259-7347	▶942
	1019
259-7348	1013
	1015
	▶1017
259-7349	1013
	1015
	▶1018
259-7350	947
	984
	989
	▶1074
259-7351	1074
259-7352	1074
259-7353	971
259-7354	1050
	1052
	1130
259-7430	684
	690
	696
	702
	708
	718
	720
	▶854
	▶855
259-7545	618
	▶799
	▶800
259-7598	468
	▶1025
259-7599	468
	▶1026
260-2109	▶1033
260-2109	1040
260-2110	▶1034
	1041
260-2111	1033
	1034
	1035
	1036
260-2127	▶1035
260-2127	1042
260-2128	▶1036
260-2128	1043
260-2180	678
	681
260-2191	678
	681
260-3883	858
260-6692	154
260-6941	1194
260-6942	1196
260-6948	1197
260-7006	798
	▶1201
260-7067	6
	9
	10
	▶877
260-7094	113
	▶118
	▶120
260-7114	▶1058
260-7115	8
	▶1058
260-7116	▶531
260-7122	▶89
260-7131	▶113
260-7135	1211
	1216
	1221
260-7891	469
	▶638
260-7900	684
	690
	696
	702
	708
260-9174	598
263-9574	179
264-7029	173
	270
	278
	293
	296
264-7030	173
	253
	270
	278
264-7031	296
264-7032	173
	233
	235
	241
	243
	293
	296
	1084
264-7033	296
	1084
264-7034	173
	270
	278
	296
264-9982	1004
264-9983	1004
264-9984	1004
265-3545	65
	68
	71
265-3608	▶62
	65
265-3609	15
	▶83
265-3630	62
	74
265-3654	65
	68
	71
265-3655	65
	68
	71
265-3656	65
	68
	71
265-3659	83
265-3661	83
265-3662	83
266-0136	247
266-5431	1211
	1216
	1221
266-6203	33
266-6204	33
266-6205	33
266-6206	33
266-6231	57
266-6258	33
266-6259	33
266-6280	▶472
	474
266-6303	33
266-6304	33
266-7791	535

▶ PRIMARY REFERENCE

PART NUMBER INDEX

Part	Page
266-7792	535
	▶536
266-7793	536
	538
266-7796	536
266-7797	536
	538
266-7799	535
266-7800	535
266-7940	573
266-7941	573
267-1626	542
267-1628	762
267-1629	762
267-4047	622
	626
267-4048	622
	626
267-4063	745
267-6744	521
	525
267-6786	521
	525
267-6804	4
	▶336
267-7207	173
267-7639	270
	278
267-7683	159
	165
	171
267-7689	159
	165
	171
267-7707	308
267-7976	233
	235
	237
267-7977	239
	241
	243
	245
267-8084	332
	334
	752
	754
	762
267-9572	173
268-0727	435
268-1964	269
268-4201	542
268-4203	542
268-4530	1202
268-4531	918
	1202
	1203
268-5145	573
268-6263	762
268-6265	762
268-6886	551
268-6910	600
268-8209	858
268-8872	1202
269-0120	1202
	1203
269-0121	1202
	1203
269-1653	437
	▶438
	▶439
	440
269-2433	762
269-5224	578
	579
	580
	581
269-9703	684
	690
	696
	702
	708
269-9714	630
	632
269-9853	788
	791
269-9855	788
	791
269-9858	788
	791
270-0034	788
	791
270-5664	724
	726
	728
270-5672	605
	607
	▶860
270-5757	605
	607
	▶861
270-5843	8
	▶468
270-5846	8
	▶469
270-5859	8
	▶469
270-5864	4
	▶545
270-5866	545
	796
	▶807
	▶813
270-5869	▶798
270-5871	▶798
270-5948	640
	▶828
270-5949	828
	834
270-5950	828
	834
270-5953	830
270-5978	808
	814
	820
270-5978	▶839
270-6106	▶469
270-6107	469
	▶1023
270-6110	609
	612
	615
270-6119	▶470
270-6259	187
270-6338	58
271-2158	118
	120
	▶122
271-7843	1033
	1034
	1035
	1036
	1038
	1039
272-0709	122
272-0710	122
272-4142	718
	720
272-4164	605
	607
272-4186	684
	690
	696
	702
	708
272-4514	641
	645
272-4774	35
272-4774	▶255
273-4147	▶513
	915
273-4148	915
273-4149	915
273-5274	1177
273-5345	1177
	1181
273-5346	1177
	1181
273-5349	15
	▶1007
	▶1009
273-5350	1
	▶1094
273-5363	1
	▶1128
273-5388	▶1191
273-5389	▶1189
	1191
273-5390	1189
273-5395	1029
273-5433	1128
	1129
	▶1133
273-5434	1133
273-5437	1094
273-6810	511
273-6811	507
273-6812	519
273-6813	507
273-6814	868
	870
	872
	885
	886
	887
273-6945	484
	486
	490
	497
	499
	501
	503
	892
	893
273-7765	105
273-7964	339
273-8084	391
273-8101	1
	▶424
273-8104	89
	▶373
	374
	375
273-8105	▶435
	1058
273-8106	435
273-8315	758
	759
273-8316	542
273-8317	542
273-8318	542
273-8320	762
274-2678	5
	▶476
274-2679	5
	▶476
274-2680	476
	▶480
274-2681	476
	▶481
274-2682	480
	▶497
274-2683	481
	▶499
274-2709	535
274-2726	▶767
	788
	791
274-6720	247
274-6721	247
275-1442	622
	626
	655
	663
	671
	684
	690
	696
	702
	708
275-1443	622
	626
	655
	663
	671
	684
	690
	696
	702
	708
275-1444	622
	626
	655
	663
	671
	684
	690
	696
	702
	708
275-1487	684
	690
	696
	702
	708
275-1538	730
275-6810	313
275-6874	1
	▶1081
275-6875	1081
	▶1082
275-6876	1082
275-6879	▶1084
275-6883	1
	6
	9
	▶300
275-6926	▶219
	1128
275-7048	300
275-7050	1
	▶159
	▶165
	▶171
275-7051	▶313
	1128
	1129

▶ PRIMARY REFERENCE

PART NUMBER INDEX

Part	Page
275-7052	▶213
	867
275-7053	▶316
	471
275-7058	▶298
	469
275-7060	▶311
	470
275-7061	▶312
	469
	470
275-7062	▶310
	531
275-7063	▶195
	798
275-7104	313
275-7131	159
	165
275-7132	159
275-7133	213
275-7137	171
276-4053	190
277-1002	584
	594
277-1164	547
	▶549
277-1165	547
	▶551
277-1167	548
	▶584
277-1173	▶471
277-1232	783
	784
277-1234	783
277-1237	549
277-1251	586
	590
	592
	596
277-6695	▶317
	336
277-6697	317
	320
	321
	▶752
278-1980	318
	322
278-3581	339
278-3591	1
	▶342
	▶343
278-3592	342
	▶345
278-3593	345
278-3747	1
	▶419
278-3748	7
	8
	▶420
	▶421
278-3749	1
	▶105
278-3750	1
	▶124
	▶125
278-3751	124
	▶132
278-3752	113
	▶126
	▶127
278-3753	126
	▶134
278-3818	398
	399
278-3827	345
	349
	352
	353
	354
	356
	357
278-4013	345
	349
	352
	353
	354
	356
	357
278-4027	105
278-4050	419
278-4051	419
278-4053	419
278-4056	419
278-6424	736
	739
278-6425	736
	739
278-6511	545
	▶745
278-6573	757
278-6660	545
	▶794
278-6661	▶630
	▶632
	794
278-6662	▶788
	▶791
	794
278-6664	545
	▶757
278-6665	545
	▶598
278-6666	545
	▶573
278-6667	545
	▶635
278-6670	545
	▶637
278-6671	545
	▶734
278-6672	545
	▶640
	▶644
278-6673	545
	▶648
	▶651
278-6674	545
	▶654
	▶662
	▶670
278-6675	545
	▶678
	▶681
278-6676	477
	478
	▶576
278-6677	477
	478
	▶577
278-6683	471
	▶600
278-6691	469
	470
	▶603
278-6697	468
	▶605
	▶607
278-6699	469
	▶609
	▶612
	▶615
278-6701	469
	▶684
	▶690
	▶696
	▶702
	▶708
278-6704	470
	▶618
278-6705	470
	▶714
	▶716
278-6713	469
	470
	▶718
	▶720
278-6714	8
	▶722
278-6715	531
	▶620
278-6720	▶724
	▶726
	▶728
	798
278-6721	▶730
	798
278-6728	5
	6
	▶565
278-6730	5
	6
	▶561
278-6731	5
	470
	▶736
278-6752	609
278-6753	609
278-6799	573
278-6810	757
278-6920	317
	▶318
278-9259	1
	▶400
	▶402
	▶404
278-9260	400
278-9293	877
	▶878
278-9352	5
	6
	▶440
279-7527	4
	▶191
279-7721	545
	▶760
279-7726	15
	▶84
279-7727	15
	▶82
279-7730	▶79
	89
279-7750	255
279-7779	14
	15
	▶41
279-7787	85
279-7794	4
	▶15
279-7796	7
	▶250
	▶251
279-7810	4
	▶14
279-7811	▶14
	56
279-7814	▶12
	14
279-7840	15
	▶218
279-7852	82
279-7867	218
281-0791	1000
	1002
281-3533	62
	74
281-3625	62
281-3626	62
	74
281-3627	62
	74
281-3628	62
	74
281-3629	62
	74
281-3630	62
	74
281-3631	62
	74
281-3632	62
	74
281-3633	62
	74
281-5898	678
	681
281-6847	542
282-4464	400
	402
282-4503	878
	880
282-4576	11
	▶889
282-4577	889
	▶892
282-4578	892
282-4579	11
	▶890
282-4580	890
	▶893
282-4581	893
282-5470	584
	594
282-5473	584
282-5476	584
	594
282-5479	584
282-5482	584
	594
282-5527	551
282-5528	551
282-5530	551
	559
282-5536	▶914
282-5537	▶914
282-5540	▶880
	914
282-5633	▶586
282-5705	471
	▶1202
	▶1203
282-5894	553
	▶825
282-7074	569
	571
282-7075	569
	571
282-7076	569

▶ PRIMARY REFERENCE

PART NUMBER INDEX

Part	Page
282-7077	569
282-7092	623
	627
282-7095	724
	726
	728
282-7106	600
282-7144	609
	612
	615
282-7146	609
	612
	615
282-7148	609
	612
	622
	626
282-7150	609
	612
	615
282-7171	640
282-7206	640
	644
282-7317	724
	726
	728
282-7374	630
	632
282-7482	635
282-7484	635
282-7490	637
282-7493	637
282-7566	684
	690
	696
	702
	708
282-7575	620
282-8567	303
	306
282-9155	▶542
	762
282-9192	762
283-2662	160
	166
	171
283-2727	298
283-2728	311
283-2729	312
283-2730	310
283-2733	316
283-2739	310
283-2761	6
	9
	10
	▶287
283-2762	287
283-2783	300
283-2893	1098
283-3074	296
283-3591	419
283-3593	▶396
	424
283-3594	▶376
	377
	378
	424
283-3595	▶365
	366
	367
	368
	424
283-3597	▶362
	▶363
	424
283-3598	424
	▶426
283-3599	▶364
	531
283-3600	362
283-3602	362
	363
283-3603	362
283-3604	362
283-3606	362
	363
283-3608	425
283-3609	365
	366
	▶379
283-3610	▶359
	365
283-3613	▶369
	379
283-3615	379
	380
	382
	384
283-3619	359
	360
283-3620	359
	360
283-3625	376
	▶380
283-3628	380
	382
	384
283-3632	376
	377
	378
283-3634	396
283-3636	396
283-3637	396
	▶436
283-3639	436
283-3641	396
283-3643	396
283-3644	396
283-3648	431
283-3649	431
283-3775	345
	349
	352
	353
	354
	356
	357
283-3928	396
	▶429
283-3930	430
283-3931	430
283-3933	429
283-3934	429
283-3935	396
283-3941	396
283-3942	396
283-3943	396
283-3946	431
283-3947	362
283-4079	▶425
	426
283-4085	436
283-4086	436
283-4715	542
283-5922	505
283-5926	505
	507
	509
283-5927	505
	507
	509
283-5939	517
	519
283-5940	517
	519
283-5952	511
283-5953	511
283-5971	505
	507
	509
283-5972	517
	519
283-6080	497
283-6081	499
283-6083	497
	499
	501
	503
283-6089	535
283-6090	535
283-6179	511
283-8818	▶56
283-8927	118
283-8931	118
	120
283-9074	1211
283-9075	1211
283-9076	1211
	1216
	1221
283-9079	1211
284-4376	2
	3
284-4376	▶1055
284-4377	▶1056
284-4387	1094
284-4388	1094
284-4411	1007
	1009
284-4426	955
	959
	963
	967
	991
	994
	997
284-4573	7
	▶1080
284-4574	1080
	▶1098
284-7077	341
284-7315	▶341
285-1332	1023
285-1333	1023
285-1337	1023
285-1503	807
	813
	819
285-1504	▶772
	807
	813
	819
285-1505	▶773
	808
	814
	820
285-1506	807
	813
	819
285-1507	807
	813
	819
285-1750	469
	▶796
285-2444	736
	739
285-2576	722
285-2578	684
	690
	696
	702
	708
285-2663	600
	655
	663
	671
	684
	690
	696
	702
	708
285-2664	600
	671
	696
	702
	708
285-2890	620
285-3231	199
285-3232	199
285-3254	903
285-9066	1061
	1064
	1091
286-6461	630
	632
286-6499	598
286-6647	569
286-6648	569
286-6769	655
	663
	671
287-0118	82
287-8359	17
288-7398	▶553
288-7399	▶555
288-7690	553
288-7691	553
288-7693	555
288-7694	555
288-7696	555
288-7721	553
288-7722	555
288-7723	555
288-7727	586
	590
	592
	596
288-7730	586
	590
	596
289-5547	603
	618
289-5700	622
	626
289-6570	354
	357
289-6680	425
289-6681	425
289-6682	425
289-6683	425
289-6750	354
	357
289-6751	354
	357
289-6752	354
	357

▶ PRIMARY REFERENCE

PART NUMBER INDEX

Part	Page
289-6753	354
	357
289-6817	396
289-6818	396
289-7697	▶479
	877
	914
289-7698	479
	▶492
289-7699	492
	▶511
289-7700	511
289-7702	511
289-7704	▶477
	867
289-7705	▶477
	867
289-7706	477
	▶488
289-7707	488
	▶505
289-7708	505
	507
289-7711	▶479
	867
289-7712	479
	▶493
289-7713	493
	▶517
289-7714	517
289-7716	517
	519
289-7733	505
	507
289-7743	511
289-7814	5
	▶874
289-7815	874
289-7816	874
289-7909	573
289-8067	▶478
	867
289-8068	▶478
	867
289-8069	478
	▶489
289-8070	489
	▶507
289-8074	507
289-8076	▶479
	867
289-8077	479
	▶494
289-8078	494
	▶519
289-8079	519
289-8082	519
289-8194	▶537
	788
	791
289-8195	537
290-1729	1211
	1216
	1221
290-1906	1211
	1216
	1221
290-9178	490
291-7760	160
	166
	171
291-7762	9
	▶214
291-7763	214
291-7764	5
	6
	▶196
292-3751	114
	115
292-4159	914
	▶916
	▶918
292-7176	678
	681
292-7180	648
	651
292-7183	655
	663
	671
292-7415	565
	598
292-7423	640
	644
292-7424	640
	644
292-7425	640
	644
	726
292-7426	684
	690
	696
	702
	708
292-7427	640
	644
292-7428	640
	644
292-7429	640
292-7430	684
	690
	696
	702
	708
292-7431	640
	644
292-7442	▶569
	867
292-7446	655
	663
	671
292-7461	788
	791
292-7513	640
	644
292-7555	724
	726
	728
292-7641	565
	618
292-7643	637
292-7645	637
293-1136	931
	933
293-1137	936
	939
293-1138	1078
293-1183	1054
293-1184	1054
293-1222	▶1057
293-1238	1094
293-1248	15
	▶1011
293-1249	1011
293-1256	1175
293-6733	354
	357
293-6734	345
	349
	352
	353
	354
	356
	357
293-6735	345
	349
	352
	353
	354
	356
	357
293-6788	345
	349
	352
	353
	354
	356
	357
293-6936	426
293-6937	426
	▶430
293-7005	373
	▶382
293-7007	379
293-7010	396
293-7011	396
293-7013	396
293-7014	396
293-7016	396
293-7017	396
	▶431
293-7132	420
293-7134	420
293-7137	420
294-1466	341
294-1683	26
294-1684	45
294-1685	45
294-1686	45
294-1687	45
294-1688	45
294-1689	45
294-1693	45
294-1698	45
294-1699	45
294-1700	17
	86
294-1702	45
294-1708	17
294-1710	17
294-1711	17
294-1712	17
294-1713	17
294-1714	17
294-1716	16
294-1720	20
294-1721	20
294-1722	20
294-1724	23
294-1726	29
	30
	47
294-1728	30
294-1729	30
294-1731	30
294-1732	30
294-1733	30
294-1734	30
294-1735	30
294-1737	29
294-1738	29
	41
	55
	60
294-1747	38
294-1748	38
294-1751	19
294-1753	28
294-1754	28
294-1755	28
294-1756	28
294-1757	28
294-1766	54
294-1767	53
294-1768	53
	303
	306
294-1774	48
294-1775	48
	187
294-1777	58
294-1778	58
294-1780	58
294-1784	40
294-1785	40
294-1786	40
	45
294-1788	109
294-1796	103
294-1800	103
294-1802	109
294-1803	103
294-1804	93
	97
	247
294-1805	103
294-1808	109
294-1809	93
	97
294-1811	93
	97
294-1812	109
294-1819	93
	97
294-1820	93
	97
294-1821	17
	93
	97
294-1822	93
	97
294-1831	93
	97
294-1833	97
294-1834	111
	112
294-1836	111
	112
294-1837	93
	97
294-1838	93
	97
294-1839	111
	112
294-1841	111
	112
294-1842	111
	112
294-1843	111
	112
294-1844	93
	97
294-1845	93
	97
294-1846	111
	112
294-1850	35

▶ PRIMARY REFERENCE

PART NUMBER INDEX

Part	Page
294-1851	35
294-1855	255
294-1857	255
294-1858	255
294-1860	32
294-1861	32
294-3031	114
	115
294-3032	114
	115
294-6469	551
294-6519	553
294-7251	29
	30
295-4801	114
295-9573	536
	538
295-9617	536
	538
295-9618	536
295-9619	536
	538
296-4618	303
	306
296-4619	303
	306
296-4621	247
	303
296-4631	247
296-4633	247
296-4637	12
	13
	▶35
296-4651	12
	13
	▶28
296-4655	12
	13
	▶60
296-4663	38
296-4672	20
296-4673	28
296-4689	26
296-4694	17
296-4696	17
296-4699	▶20
	23
296-4700	30
296-4701	29
296-4702	36
296-4703	36
296-4704	36
296-4706	36
296-4710	19
296-4713	27
296-4714	86
296-4716	85
296-4725	54
296-4726	54
296-4727	55
296-4728	47
296-4729	47
296-4733	58
296-4738	▶40
	41
296-4739	40
296-4740	109
296-4741	109
296-4742	109
296-4743	109
296-4744	109
296-4747	109
296-4748	109
296-4749	93
	97
296-4750	93
	97
296-4752	93
	97
296-4753	93
	97
296-4754	93
	97
296-4755	303
296-4758	32
296-4759	32
296-4761	187
296-4762	187
296-4766	303
	306
296-4777	12
	13
	▶54
296-4780	12
	13
	▶36
296-4781	12
	13
	▶53
296-4782	12
	13
	▶55
296-4783	12
	13
	▶27
296-4784	12
	13
	▶26
296-4786	12
	13
	▶17
296-4787	12
	13
	▶23
296-4788	12
	13
	▶30
296-4789	12
	13
	▶19
296-4790	12
	13
	▶86
296-4791	12
	13
	▶85
296-4792	12
	13
	▶47
296-4793	12
	13
	▶109
296-4794	12
	▶93
296-4795	12
	13
	▶58
296-4796	12
	13
	▶38
296-4798	12
	13
	▶32
296-4800	12
	13
	▶187
296-4801	12
	▶303
296-4802	12
	13
	▶247
296-4803	12
	13
	▶29
296-4804	49
	51
296-4809	84
296-4812	109
296-6304	336
	▶529
296-6928	684
	691
	696
	702
	708
296-6960	722
296-7039	577
296-7059	655
	663
	671
296-7194	576
296-7242	736
296-7318	684
296-7335	576
296-7336	577
297-0235	▶774
	808
297-0366	772
297-0374	795
	796
	797
	▶802
297-0529	▶830
	1038
	1039
297-0532	1027
	▶1038
297-0533	1027
	▶1039
297-0534	1025
	▶1040
297-0535	1025
	▶1041
297-0536	1026
	▶1042
297-0537	1026
	▶1043
297-0589	▶832
	1040
	1041
	1042
	1043
297-4589	1033
297-4590	1034
297-4595	1035
	1036
297-7646	30
297-7647	30
297-7648	38
297-7649	38
297-7650	38
297-7655	58
297-7657	109
297-7658	109
297-7660	93
	97
297-7706	93
297-7725	79
297-7726	79
297-7727	79
297-7839	57
297-7927	618
297-9133	457
297-9134	457
297-9137	456
297-9138	446
	▶447
297-9139	446
	▶448
297-9140	447
	▶454
297-9141	448
	▶455
297-9142	454
	455
	▶456
297-9143	456
	▶457
297-9161	456
298-2866	420
298-2868	420
298-2942	369
	370
	371
	380
	382
	384
	386
	390
	425
298-2985	426
298-3024	396
298-3147	105
	▶154
298-3257	154
298-3258	154
298-4105	▶254
298-4196	1066
298-4282	1211
	1216
	1221
298-5732	752
	762
299-2901	160
	166
	171
3	
300-6024	▶514
	916
	918
301-0091	173
	174
301-2543	6
	9
	10
	11
	▶867
301-2544	6
	9
	10
	11
	▶884
301-2573	113
	▶1204
301-2596	344
	▶1206
301-2664	▶344
301-2679	▶4
301-2680	▶1
	4
301-2681	4
	▶437

PART NUMBER INDEX

Part	Page
301-2682	1
	▶1211
	▶1216
	▶1221
301-2684	▶458
301-2691	▶5
	11
301-6874	542
301-8294	542
302-2872	635
302-9466	825
303-2668	1216
	1221
303-2787	184
	▶1207
303-4484	752
	▶863
303-6261	86
303-9094	867
	▶868
303-9095	868
303-9621	380
303-9622	382
303-9623	382
	386
	391
	394
303-9933	132
	134
	136
	138
	140
	142
	144
	146
	148
	150
	152
303-9937	132
	134
	136
	138
	140
	142
	144
	146
	148
	150
	152
304-0041	105
	107
304-3961	▶840
304-3961	863
	865
304-7900	916
	918
304-7906	916
	918
304-7908	916
	918
304-7914	916
	918
304-7931	916
304-7935	916
304-7938	916
	918
304-7940	916
305-0303	1094
305-0304	1094
305-0305	1094
305-0313	1011
305-0330	949
	952
	972
305-0331	1034
	1036
305-0332	1033
	1035
305-0333	949
	952
	971
305-0359	1094
305-0360	1098
305-0361	1183
305-0433	1007
305-0435	1007
305-0439	1007
	1009
305-0441	1095
	1098
305-0442	1095
	1098
305-0466	1
	6
	9
	10
	▶1149
	1150
	1151
305-0467	10
	11
	▶1152
	1153
	1154
305-1658	▶894
305-1659	894
	▶905
305-1661	905
	907
305-1662	▶894
305-1663	894
	▶906
305-1664	906
	908
305-1840	▶894
	901
305-1841	894
	▶907
305-1849	▶894
	901
305-1850	894
	▶908
305-4680	12
	13
	▶111
	▶112
305-4746	45
305-4747	45
305-4750	45
305-4751	45
305-4758	16
305-4766	▶25
	26
305-4767	17
305-4768	17
305-4769	90
305-4771	48
305-4772	109
305-4883	25
305-4884	25
305-4885	25
305-4886	93
305-4887	97
305-4891	303
	306
305-4892	47
305-4895	303
	306
305-4896	303
	306
305-4897	303
	306
305-4898	303
	306
305-4900	93
	97
305-4901	93
	97
305-4902	93
	97
305-4922	▶90
	91
305-4927	45
305-4929	45
305-4931	45
305-4944	14
	▶42
305-4954	12
	13
	▶45
305-4955	12
	13
	▶16
305-4965	90
305-7591	65
	68
	71
305-7592	65
	68
	71
305-7594	15
	▶65
	▶68
	▶71
305-7595	65
	68
	71
305-7596	65
	68
	71
305-7597	83
306-8526	171
306-8531	160
	166
	171
306-8590	284
306-8678	159
	165
306-8802	1134
307-0047	186
307-1818	1049
	▶1130
307-4837	655
	663
	671
307-4969	655
	663
	671
307-4976	718
307-5096	745
307-5228	730
307-5248	640
307-7798	344
	▶346
	347
	348
307-7799	346
	▶349
307-7800	349
307-7924	▶350
	▶351
307-7926	105
307-7927	105
307-7928	105
	107
307-7929	396
307-8082	377
	▶384
307-8083	384
307-9371	318
308-8844	884
	▶885
309-3872	1204
309-5768	648
	651
309-5769	638
	655
	663
	671
	684
	691
	696
	702
	708
	724
	726
	728
	732
309-5808	1028
309-5808	▶1044
309-9690	120
309-9973	609
	612
	615
	807
	813
	819
309-9973	▶841
310-0063	802
310-0063	▶842
310-0065	▶775
	808
	814
	820
310-0078	2
	3
	8
	▶1027
310-0115	▶776
	807
	813
310-0117	▶777
	807
	813
310-0210	663
	671
	▶837
310-0234	565
	▶804
	▶805
310-0357	▶778
	807
	813
	819
310-0415	644
	▶834
310-0419	834
310-0420	834
310-4980	318
	322
	325
310-9499	15
	▶1005
	▶1006
310-9528	86
310-9529	93

▶ PRIMARY REFERENCE

PART NUMBER INDEX

Part	Page
310-9530	93
310-9531	93
	97
310-9532	26
310-9533	93
	97
310-9534	93
	97
310-9537	109
310-9538	41
	42
310-9539	90
310-9540	48
310-9541	42
310-9543	42
310-9546	12
	13
	▶48
310-9549	12
	13
	▶57
310-9551	12
	13
	▶87
310-9560	15
	▶49
310-9561	49
	51
310-9562	49
	51
310-9591	41
310-9609	12
	13
	▶103
310-9620	12
	13
	▶91
310-9621	80
310-9622	80
310-9662	78
	▶80
310-9674	79
	▶81
310-9688	303
310-9694	1006
311-7404	760
	▶762
311-7407	762
312-2645	118
	120
312-5525	1208
	1211
	1216
	1221
312-5694	895
	896
	897
	898
	910
	911
	912
	913
	916
313-3762	76
313-3766	76
313-3769	76
313-7833	▶181
	183
313-7851	362
	363
313-7853	362
	363
313-8233	419
313-8234	420
313-8275	420
314-3848	2
	3
	▶1208
	▶1209
314-6506	76
314-6509	76
314-6510	76
314-8230	573
314-8236	678
	681
314-8239	600
314-8242	685
	691
	697
	703
	709
315-1030	867
	▶876
315-2759	12
	13
315-5313	991
	994
	997
316-3791	547
	548
	▶783
316-3873	551
316-3874	551
316-4076	583
316-4077	583
316-6166	984
	986
	989
	▶1049
316-8811	931
	▶936
316-8814	6
	▶974
316-8815	974
	▶976
316-8845	936
316-8846	936
	939
316-8847	936
	939
316-8848	936
316-8849	936
	939
316-8850	936
316-8851	5
	6
	▶1029
316-8908	1064
	1091
316-8916	933
	▶939
	1078
316-8918	939
316-8920	939
316-8921	939
316-8987	1141
	1156
	1157
	1162
	1163
316-8989	1086
	1114
	1115
	1116
317-4749	655
	663
	671
317-4793	685
	691
	697
	703
	709
317-4796	685
	691
	697
	703
	709
317-4815	5
	6
	▶732
317-4816	561
	685
317-4841	685
	691
	697
	703
	709
317-4846	655
	663
	671
319-1170	219
	▶221
319-1253	171
319-1255	▶224
	232
319-1256	224
319-1334	308
319-1342	224
	228
319-1343	224
	228
319-1344	221
319-1346	221
319-1348	309
319-1349	309
319-1354	221
319-1355	221
319-1398	1
	▶309
319-4420	233
	235
	237
	241
	243
	245
319-4420	▶263
319-9152	1207
319-9708	718
	720
319-9756	714
	716
319-9759	618
319-9762	618
319-9775	739
319-9848	600
319-9920	561
319-9966	598
320-0006	685
	691
	697
	703
	709
320-0007	655
	663
	671
320-0008	630
	682
320-0153	654
	662
	670
320-0156	655
	663
	671
320-5392	181
320-5396	183
320-5525	1103
	1104
	1105
	1106
	1107
321-0272	549
321-0276	549
	557
321-0280	549
	557
321-0344	▶547
321-0345	▶547
321-0346	▶548
322-8724	505
322-8725	517
322-8726	517
324-4022	4
	▶14
324-4023	▶14
	56
324-4060	16
324-4118	474
	475
324-4119	86
324-4128	58
324-4131	247
324-4168	1005
	1006
	1098
324-4175	23
324-4202	12
	13
	▶306
324-4203	306
324-4204	306
324-4205	306
324-4228	17
324-4229	17
324-4238	38
324-4239	38
324-4240	38
324-4248	44
324-4249	44
324-5761	118
	120
324-5770	1084
324-5771	302
324-5804	224
	228
324-5805	224
	228
324-5806	224
	228
324-5808	224
	228
325-8776	609
	612
	615
325-8793	609
	612
	615
325-8976	685
	691
	697
	703
	709
325-8979	685
	691
	697
	703
	709

▶ PRIMARY REFERENCE

PART NUMBER INDEX

Part	Page
325-9030	598
325-9033	598
326-1644	102
326-3864	68
	▶74
326-3865	74
326-4440	5
	6
	▶875
326-4441	875
326-4442	875
326-4443	5
	▶476
326-4444	476
	▶482
326-4445	482
	▶501
326-4446	501
326-4449	5
	▶476
326-4450	476
	▶483
326-4451	483
	▶503
326-4452	503
326-4634	112
	▶114
326-4756	103
326-5237	513
327-3062	1103
327-3063	1103
327-3210	123
	▶128
	▶129
327-3211	128
	▶136
327-3217	113
	▶130
	▶131
327-3218	130
	▶138
327-3329	▶183
	184
327-6501	7
	▶1140
327-6503	7
	▶1141
	▶1142
327-6507	1140
	▶1162
327-6509	1141
	1142
	▶1163
327-6512	▶1156
327-6512	1162
327-6513	▶1157
327-6513	1163
327-6514	▶1076
327-6515	▶1077
	1156
	1157
327-6520	1162
	▶1170
327-6521	1163
	▶1171
327-6523	1128
	1129
	▶1166
327-6538	1166
327-6540	1149
	1151
327-6541	1152
	1154
327-6550	959
	991
327-6550	▶1110
327-6550	1111
	1114
327-6552	▶1111
	1112
	1113
327-6553	▶1114
	1115
	1116
327-6576	1111
	1112
	1113
327-6579	1052
327-6601	1061
327-6639	▶1087
	1160
327-6640	1088
	1156
	1157
327-6642	▶1091
	1156
	1157
	1158
	1159
	1160
327-6643	1156
	1157
327-6644	1170
	1171
327-6645	1170
327-6646	1170
	1171
327-6647	1170
327-6648	1170
	1171
327-7193	▶44
	1006
327-7482	1118
327-7482	▶1120
327-8740	762
327-9998	284
328-0021	233
	235
	241
	243
328-0048	184
	▶284
328-0079	184
	▶285
328-0118	▶220
	1128
	1129
328-0176	171
328-0177	173
328-0178	173
328-0179	165
328-0181	166
	173
328-0323	173
328-0399	174
328-2035	600
	622
	626
	▶858
329-2730	654
	662
	670
330-1162	123
	▶1103
	1104
	1105
	1106
	1107
330-1163	123
	▶399
330-1164	399
330-1213	343
	▶352
330-1214	352
330-1219	347
	▶353
330-1220	353
330-1323	▶123
	1083
330-1329	350
	▶354
330-1330	354
330-1557	▶360
	366
	367
	368
330-1561	363
330-2033	795
	796
	797
330-8748	▶1083
330-8749	▶184
	1083
330-8781	▶113
331-3170	916
	918
331-4226	651
331-7539	187
332-0195	1087
	1156
332-4191	76
332-7484	322
	325
332-7485	322
	325
332-7486	318
	322
	325
332-7487	318
	322
	325
332-7499	▶320
	▶321
	328
	336
332-7500	320
	▶322
333-3048	527
333-3049	527
333-3050	527
333-3051	527
333-3058	527
333-3059	527
333-3071	336
	▶525
333-3072	525
	▶526
333-3073	526
	▶527
333-4157	1171
333-4158	1171
333-4159	1171
333-4160	1156
333-4172	▶1088
	1158
	1159
333-4178	1171
333-4179	1088
	1156
	1157
333-4180	1089
	1170
	1171
333-4181	1170
333-4609	671
333-5219	339
333-9323	916
334-2932	114
	115
335-0158	860
	861
	▶862
336-1230	▶1143
336-3345	▶1
336-3346	▶6
336-3352	▶7
336-3353	2
	3
	▶7
336-3354	▶7
336-3356	▶8
336-3370	▶9
336-3371	▶7
336-3372	▶8
336-3380	▶11
336-3381	▶11
336-3382	▶8
336-3389	▶9
336-3393	▶8
336-6684	181
	▶185
337-1176	609
	612
	615
337-1177	609
	612
	615
337-1181	573
337-1207	612
	615
337-1211	612
	615
337-1272	471
	▶622
	▶626
337-1279	622
	626
337-1280	622
	626
337-1283	622
	626
337-1286	622
	626
337-1289	622
	626
337-1324	565
337-1373	720
337-6459	863
337-6461	863
	865
340-6474	1143
	▶1164
340-6475	▶1158
	▶1159
	1164
340-6476	1164
	1165
	▶1172
340-6477	▶1089
	1158
	1159
	1160
340-6478	▶1144
340-6479	1144
	▶1165
340-6480	▶1160

▶ PRIMARY REFERENCE

PART NUMBER INDEX

Part	Page
	1165
340-6481	▶1090
	1172
340-6773	1
	▶1128
340-8206	453
341-1842	132
	134
	136
	138
	140
	142
	144
	146
	148
	150
	152
342-1822	▶538
342-1823	538
342-1824	538
342-1891	6
	470
	▶759
342-1905	759
342-2924	788
	791
342-2972	173
342-2973	173
342-2974	173
342-2976	173
342-9022	190
342-9290	190
343-5527	102
343-9326	505
343-9327	517
343-9335	505
344-4405	▶471
344-6840	438
	439
	442
344-6901	▶433
	▶434
	459
344-6902	433
346-3540	916
	918
346-5584	514
346-5585	514
346-5586	514
346-5587	514
346-5588	514
346-5589	514
346-5590	514
346-6711	514
346-7375	959
	963
	967
	991
	994
	997
	▶1124
	▶1125
346-7763	190
346-8037	10
	11
	▶978
346-8039	9
	10
	▶980
346-8042	▶982
346-8043	982
	▶984
346-8053	978
	▶986
346-8055	980
	▶989
346-8058	984
	986
	989
	▶991
	▶994
	▶997
346-9376	1122
347-1466	916
	918
347-3726	▶588
	914
347-3727	588
347-3728	588
347-3895	588
347-6081	▶541
347-6081	791
347-6082	541
348-0629	404
348-5409	369
	371
	390
	393
	430
349-4069	759
	▶761
349-4115	509
349-4117	509
349-4119	509
349-5084	278
349-5085	278
349-7059	140
	142
	144
	146
	148
	150
	152
349-9520	332
	334
	754
	▶865
349-9521	865
350-3298	▶459
350-4178	▶914
350-6522	439
	442
350-6523	439
	442
350-6526	5
	6
	▶441
350-6527	441
	▶442
350-6856	83
350-7735	140
	142
	144
	146
	148
	150
	152
350-8253	276
350-8254	10
	▶302
351-2956	363
351-3869	▶473
	475
351-4126	473
351-8749	▶914
351-9714	▶9
351-9918	202
	203
	204
352-6772	584
	594
352-6815	845
	846
352-7176	702
	708
352-7176	▶856
352-7197	▶779
	814
	820
352-8147	▶324
	327
352-8148	321
	324
	▶325
	330
	331
352-9639	402
353-0491	▶327
	336
353-0506	▶328
	336
353-0534	527
353-0535	527
353-0536	527
353-0537	527
353-0538	527
353-0539	527
353-0540	527
353-0541	527
353-0542	527
353-0543	527
353-2149	1030
353-2150	1032
353-2151	▶1002
353-5511	758
353-5545	76
353-5829	332
	334
	754
353-5837	762
354-3825	644
354-3833	644
354-3834	644
354-3864	698
	704
	710
	718
	720
354-5797	▶895
354-5798	895
	▶902
354-5799	902
354-5800	902
354-5807	902
	903
	904
354-5811	902
	903
	904
354-5813	902
	903
	904
354-5814	902
354-5816	902
355-1213	1122
355-1351	71
	▶76
355-1352	76
355-1353	76
355-1354	76
355-1355	76
355-1356	76
355-1357	76
355-1358	76
355-1359	76
355-1361	76
355-1362	76
355-1363	76
355-1364	76
355-1365	76
355-1366	76
355-2201	509
355-2208	509
355-5804	920
355-8169	348
	▶356
355-8170	356
355-8173	351
	▶357
355-8174	357
355-8241	370
355-8242	378
	▶386
355-8243	386
355-8245	386
355-8247	367
	▶388
355-8248	388
	389
355-8249	▶370
	388
355-8258	391
	394
357-1821	324
	▶332
357-1827	325
357-1828	325
357-1829	325
357-1832	332
	754
357-1942	76
357-1950	76
357-4101	1009
357-5710	870
	872
357-7540	457
358-2096	▶509
358-2097	509
358-2098	509
358-2103	517
358-4486	▶901
358-4487	▶901
358-8616	▶896
358-8621	▶897
358-8628	896
	▶903
358-8633	897
	▶904
358-8643	▶898
	901
358-8649	898
	▶909
358-9085	111
	▶115
358-9863	421
358-9865	421
358-9867	421
358-9869	421
358-9873	421
358-9875	421
358-9877	421
359-2252	▶10
359-2380	1208
	1209
	1216

▶ PRIMARY REFERENCE

PART NUMBER INDEX

Part	Page
	1221
359-2474	▶2
359-2483	2
	▶10
359-2909	588
359-2911	588
359-5808	432
359-5809	434
360-8958	▶96
	101
360-8960	96
360-9274	76
361-1045	1122
362-3719	1216
	1221
362-3720	1216
	1221
362-5412	96
	101
362-9689	101
363-6119	673
363-6120	698
	704
	710
363-6134	698
	704
	710
	718
	720
363-6137	673
363-6138	698
	704
	710
363-6187	651
363-9553	1009
363-9555	1009
364-5287	97
364-8522	1101
366-4622	276
366-6423	364
366-6465	107
366-6478	369
	371
366-8749	1120
	1121
366-8821	188
366-9313	253
366-9342	9
	▶215
366-9344	215
366-9345	215
366-9348	189
	▶289
366-9353	▶186
	189
366-9355	189
	▶1122
367-0844	1216
	1221
367-2006	909
367-8334	▶329
	336
367-8465	878
	880
	882
367-8567	903
367-8569	903
367-8776	▶2
367-8780	10
	▶189
367-8790	▶2
367-8791	2
	3
	▶10
367-8792	▶3
368-3360	903
	910
368-3361	903
368-8651	858
369-0032	291
369-0033	10
	11
	▶291
369-2775	1104
369-2776	1104
369-8394	▶780
	820
369-8395	▶781
	819
369-8434	▶782
	819
370-4396	913
370-4397	911
370-4401	910
370-4403	912
370-4404	904
370-4410	913
370-4411	911
370-4414	904
	912
370-4420	904
370-4425	904
370-8376	96
370-8824	576
	577
371-3615	909
371-3616	909
371-3618	909
371-3622	909
371-3626	909
371-4372	909
371-5461	885
372-4531	189
372-4531	▶190
372-4532	190
372-7609	363
372-7611	363
372-9285	1192
372-9306	1170
	1171
372-9334	1192
372-9498	1150
	1153
372-9565	1068
	1086
372-9700	559
372-9711	584
	594
372-9770	▶590
373-8961	1122
373-8962	186
373-8965	▶197
373-8965	289
373-8970	1122
374-4171	332
	334
	752
	754
374-4938	368
	▶389
374-4940	▶371
	389
374-4943	▶390
	391
374-4944	390
	393
374-4960	374
	▶391
374-5964	330
	▶754
374-5972	329
	▶330
375-8574	125
	▶140
375-8577	129
	▶142
375-8580	131
	▶144
	▶146
	▶148
375-8597	339
375-8632	1
	▶107
375-8686	127
	▶150
	▶152
375-8740	107
375-8752	107
376-4616	186
	▶189
376-7248	190
376-8744	228
376-8745	▶228
	232
378-3459	332
378-9588	408
	412
	▶415
378-9597	5
	6
	▶416
378-9598	416
	▶418
379-4433	29
379-4447	4
	▶15
379-4449	15
	▶51
379-7089	▶3
379-7090	3
	▶11
379-7091	▶3
379-7190	▶9
379-7295	10
	11
	▶877
380-1201	924
380-1202	924
380-1203	898
	899
	900
	901
	▶924
381-7414	220
	▶232
381-7417	1122
381-9061	107
381-9064	107
382-0664	107
382-2001	251
382-2001	▶252
383-5596	▶1129
383-5646	1088
383-5647	1087
	1088
	1156
383-5648	1088
383-5666	963
	967
	994
383-5706	949
	952
383-9558	702
	708
385-2825	▶478
	867
385-2826	▶478
	867
385-2827	478
	▶578
	▶579
385-2828	478
	▶490
385-2829	▶479
	867
385-2830	479
	▶744
385-2831	479
	▶495
385-2835	478
	▶580
	▶581
385-2838	6
	▶477
385-2839	477
	▶567
385-2840	6
	▶477
385-2841	477
	▶568
385-2886	477
	▶484
385-2887	477
	▶486
385-2890	490
385-2899	484
	486
	495
385-2900	484
	486
	495
385-2905	484
	486
	495
385-2910	495
385-2920	495
385-2922	495
385-2967	744
385-2970	744
385-3229	404
385-3232	877
	▶882
385-3241	438
385-3242	438
385-3458	393
385-4069	▶6
385-4095	▶867
385-4096	▶884
385-4097	▶884
385-8667	107
386-3457	1119
386-3457	▶1121
387-3666	739
387-3697	6
	470
	▶739
387-3699	638
387-3755	▶592
387-3756	592
388-0105	920
388-0109	920
388-0110	920
388-4928	509
388-6177	920
388-6178	920
389-2433	▶470

PART NUMBER INDEX

Part	Page
389-7123	1135
	1137
390-4188	490
390-4189	490
390-4190	490
390-4193	490
390-4194	490
390-4197	490
390-4202	495
390-4203	495
390-4204	495
390-4207	495
390-4208	495
390-4215	495
390-4232	578
	579
390-4233	578
	579
390-4236	578
	580
390-4242	578
	579
	580
	581
390-4248	580
	581
390-4249	580
	581
390-4277	▶571
	867
390-4278	547
	▶557
390-4279	548
	▶559
390-4280	548
	▶594
390-4281	547
	548
	▶784
390-4298	571
390-4299	571
390-4315	594
390-4319	594
390-4323	559
390-4327	784
390-4679	104
390-4679	▶117
390-5807	559
391-4237	557
391-4241	557
391-4597	920
391-4598	920
391-4599	920
391-6116	635
392-0343	867
	▶870
392-0346	867
	▶872
392-0347	870
	872
392-0362	884
	▶886
392-0363	886
392-0367	884
	▶887
392-0368	887
393-7870	567
	568
393-7875	484
	486
393-7879	484
	486
393-7881	484
	486
393-7882	484
	486
393-7887	490
393-7930	490
393-7931	490
393-7933	490
393-7944	744
393-7945	484
393-7946	486
393-7947	484
	486
393-7948	484
	486
393-7949	495
394-0306	899
	▶910
394-0307	910
394-0310	910
	911
	912
394-0311	910
	911
	912
	913
394-0312	910
394-0317	910
	911
	912
	913
394-1691	▶899
394-7676	97
394-9459	1105
	1107
394-9460	967
	997
	1086
394-9460	▶1102
394-9460	1105
	1107
	1113
	1116
394-9469	920
395-4045	▶516
	920
396-8956	▶901
398-0940	260
398-2282	710
	▶857
398-8994	▶547
398-8995	▶548
398-8996	▶548
399-5124	567
399-5126	567
	568
399-5127	568

4

Part	Page
416-1273	490
416-1274	490
416-1275	490
416-1276	490
416-1277	490
416-1278	490
416-1279	490
416-1280	490
416-1281	490
416-1282	490
416-1284	495
416-1285	484
	486
	495
416-1286	484
	486
	495
416-1287	484
	486
	495
416-1288	484
	486
	495
416-1289	495
416-1290	495
416-1291	495
416-1292	495
416-1293	495
416-1294	495
416-1306	484
	486
416-1307	484
	486
416-1308	484
	486
416-1309	484
	486
416-1310	484
	486
416-1311	484
	486
416-1814	104
416-1814	▶198
416-4309	959
	963
	967
	991
	994
	997
416-7101	109
416-8561	▶532
418-6282	671
418-6286	673
418-9163	920
418-9164	920
420-0099	13
	▶97
420-2168	▶15
	56
420-2179	▶13
	15
420-2241	797
	▶819
420-2242	469
	▶797
420-3860	▶104
420-5784	104
420-9205	900
	▶913
420-9206	898
	▶911
420-9207	898
	▶912
420-9208	913
420-9209	911
420-9210	912
420-9253	913
420-9255	911
420-9257	912
421-1434	1018
	▶1019
421-3682	▶393
	394
421-3694	375
	▶394
421-4381	▶331
421-4382	331
	▶334
421-4384	334
421-4385	334
422-9120	495
422-9123	484
	486
422-9124	484
	486
422-9130	579
	581
422-9132	744
422-9139	567
	568
423-6161	1157
424-6686	920
424-8398	567
	568
425-3903	918
425-3904	918
426-0877	97
	▶101
426-3617	▶900
426-3618	▶898
426-3619	▶898
434-1098	559
434-1099	559
434-3436	253
434-8214	▶253
	607
435-2848	180
436-1901	947
436-8983	117
437-0471	633
438-3414	109
440-5314	920
440-5315	920
440-5584	1087
	1156
440-5585	1087
	1156
442-3946	120
443-7115	120
443-7855	1106
443-7858	963
	994
	1106
	1112
	1115
443-7858	▶1117
444-2033	750
445-8160	191
447-1703	33
	1068
	1086
447-1704	1111
	1112
447-1707	125
	129
	447
	448
447-1708	408
	412
	416
	451
447-1709	432
	434
447-1711	1086
	1114
	1115
	1116
447-1725	451
447-1730	1122
447-1732	343
	351
447-7206	117

▶ PRIMARY REFERENCE

PART NUMBER INDEX

Part	Page
449-2156	926
449-2856	920
449-8112	920
450-0712	191
450-0714	191
450-1784	122
450-1785	122
450-1786	122
450-4908	959
	963
	967
	991
	994
	997
450-7110	1135
	1137
450-7126	120
451-2175	33
	213
	214
	432
	434
	443
	964
	968
	994
	997
	1061
	1064
	1068
	1086
	1091
	1111
	1112
	1113
	1114
	1115
	1116
	1122
	1133
451-2180	443
	964
	968
	995
	998
451-2182	33
451-2183	878
	880
	882
	1086
	1091
451-6724	120
451-6726	120
451-6728	120
451-7530	334
453-1259	1061
	1064
	1133
453-2834	213
	214
	872
453-2838	71
453-2839	1113
453-2840	1068
	1086
453-3446	33
453-3454	785
453-6525	516
453-8032	444
	445
453-8033	444
	445
454-6399	805
455-0707	197
455-3798	785
457-1156	120
457-9316	►470
458-3309	470
	►795
458-5907	862
458-6572	189
459-1731	1064
459-1732	1068
459-2215	920
459-2216	920
459-2731	1017
	►1021
459-4117	1135
	1137
461-3871	337
461-3872	529
466-3349	615
467-2159	620
467-4835	1135
471-1997	►428
475-0019	920
475-2681	302
475-4173	1015
476-7093	920
477-7578	1183
479-9396	302
481-3909	529
486-5362	►920
486-5363	920
489-4662	►596
489-5105	►1091
489-5107	►1086
489-5117	►1086
489-5118	►201
495-9718	►197
495-9718	237
	245

5

Part	Page
505-5963	393
519-8020	41

► PRIMARY REFERENCE

MEMORANDA



©2018 Caterpillar
All Rights Reserved

CAT, CATERPILLAR, their respective logos, “Caterpillar Yellow”, and the POWER EDGE trade dress as well as corporate and product identity used herein, are trademarks of Caterpillar and may not be used without permission.